RHI MAY 2019

PROJECT ID: 9215-01-63 & 9215-01-73

WITH: 9215-01-65

COUNTY: LINCOLN

43

ORDER OF SHEETS

TOTAL SHEETS = 206

STATE OF WISCONSIN
DEPARTMENT OF TRANSPORTATION

PLAN OF PROPOSED IMPROVEMENT

STATE PROJECT	FEDERAL PROJECT	
	PROJECT	CONTRACT
9215-01-63	WISC 2019315	1
9215-01-73	WISC 2019318	1

OGEMA-TOMAHAWK
PRICE CL TO WISC RIVER BR CULVERTS

STH 86

LINCOLN COUNTY

STATE PROJECT NUMBER
9215-01-63

OGEMA-TOMAHAWK
PRICE COUNTY LINE TO WISC RIVER BRIDGE

STH 86

LINCOLN COUNTY

STATE PROJECT NUMBER
9215-01-73

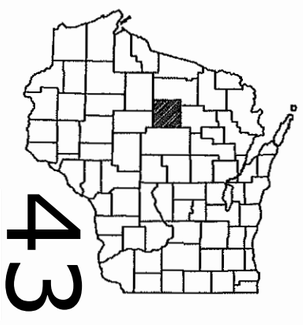

N

BEGIN PROJECT 9215-01-73
STA 30+24.47
X=301989.513
Y=222372.465

END PROJECT 9215-01-73
STA 823+81.00
X=380551.466
Y=222368.468

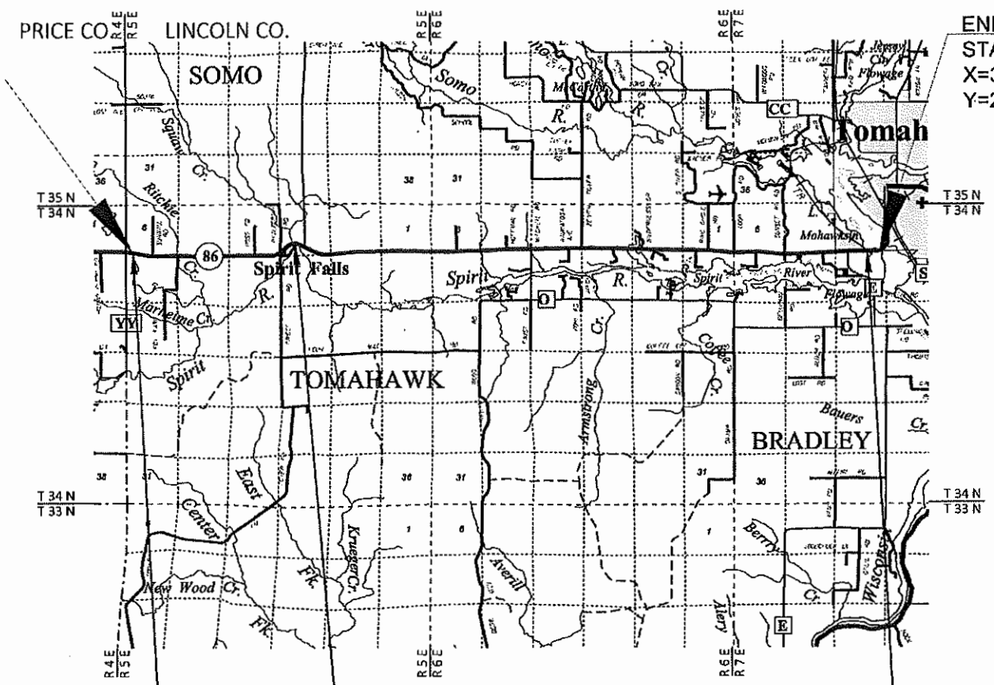

NET EXCEPTION TO CL LENGTH
STA 32+74.39 - STA 33+66.54
B-35-98

NET EXCEPTION TO CL LENGTH
STA 205+61.08 - STA 206+53.07
B-35-99

NET EXCEPTION TO CL LENGTH
STA 806+47.24 - STA 806+63.54
TOMAHAWK RAILWAY

LAYOUT

SCALE 0 3 MI

TOTAL NET LENGTH OF CENTERLINE = 15.00 MILES

HORIZONTAL POSITIONS SHOWN ON THIS PLAN ARE WISCONSIN COUNTY COORDINATES, LINCOLN COUNTY, NAD83 (2011), IN U.S. SURVEY FEET. VALUES ARE GRID COORDINATES, GRID BEARINGS, AND GRID DISTANCES. GRID DISTANCES MAY BE USED AS GROUND DISTANCES.

DESIGN DESIGNATION 9215-01-03

			WEST OF CTH O	CTH O-CTH E	EAST OF CTH E
A.A.D.T.	2019	=	700	1400	5500
A.A.D.T.	2039	=	910	1800	6100
D.H.V.		=			
D.D.		=	61/39	60/40	60/40
T.		=	7.5%	6.5%	6%
DESIGN SPEED		=	55 M.P.H		
ESALS		=			

CONVENTIONAL SYMBOLS

PLAN
- CORPORATE LIMITS
- PROPERTY LINE
- LOT LINE
- LIMITED HIGHWAY EASEMENT
- EXISTING RIGHT OF WAY
- PROPOSED OR NEW R/W LINE
- SLOPE INTERCEPT
- REFERENCE LINE
- EXISTING CULVERT
- PROPOSED CULVERT (Box or Pipe)
- COMBUSTIBLE FLUIDS (CAUTION)
- MARSH AREA
- WOODED OR SHRUB AREA

PROFILE
- GRADE LINE
- ORIGINAL GROUND
- MARSH OR ROCK PROFILE (To be noted as such) (ROCK)
- SPECIAL DITCH (LABEL)
- GRADE ELEVATION (95.36)
- CULVERT (Profile View)

UTILITIES
- ELECTRIC (E)
- FIBER OPTIC (FO)
- GAS (G)
- SANITARY SEWER (SAN)
- STORM SEWER (SS)
- TELEPHONE (T)
- WATER (W)
- UTILITY PEDESTAL
- POWER POLE
- TELEPHONE POLE

ORIGINAL PLANS PREPARED BY

QUEST CIVIL ENGINEERS, LLC

WISCONSIN ADAM J. OSYPOWSKI E-38889 STEVENS POINT WIS. PROFESSIONAL ENGINEER

1-23-19

(Date) (Signature)

STATE OF WISCONSIN
DEPARTMENT OF TRANSPORTATION

PREPARED BY

Surveyor	QUEST CIVIL ENGINEERS
Designer	QUEST CIVIL ENGINEERS
Project Manager	JESSE JEFFERSON
Regional Examiner	CHERYL SIMON
Regional Supervisor	ROBIN STAFFORD

APPROVED FOR THE DEPARTMENT

DATE: 01/24/19 (Signature)

E

FILE NAME : S:\DESIGN\DESIGN PROJECTS\NC REGION PROJECTS\9215-01-03 (STH 86)\C3D\SHEETSPLAN\010101_TI.DWG PLOT DATE : 11/14/2018 10:06 AM PLOT BY : ADAM OSYPOWSKI PLOT NAME :

GENERAL NOTES

THE ALIGNMENT IN THIS PLAN IS BASED ON THE EXISTING AS BUILTS. THE ACTUAL ROADWAY CENTERLINE MAY DEVIATE FROM THE PLAN. NEW HMA PAVEMENT SHALL FOLLOW EXISTING ROADWAY CENTERLINE. ANY ADJUSTMENTS SHALL BE INCIDENTAL TO OTHER ITEMS IN THE CONTRACT.

EXISTING CURVE SUPER ELEVATION SHALL BE RESTORED IN-KIND.

THE LOCATIONS OF EXISTING AND PROPOSED UTILITIES SHOWN ON THE PLAN ARE APPROXIMATE. THERE MAY BE OTHER UTILITY INSTALLATIONS WITHIN THE PROJECT AREA THAT ARE NOT SHOWN.

WHEN THE QUANTITY OF BASE AGGREGATE OR HMA PAVEMENT IS MEASURED FOR PAYMENT BY THE TON THE DEPTH OR THICKNESS SHOWN ON THE PLAN IS APPROXIMATE AND THE ACTUAL DEPTH WILL DEPEND ON THE DISTRIBUTION OF THE MATERIAL BY THE ENGINEER IN THE FIELD.

PURSUANT TO CHAPTER 59 OF THE WISCONSIN STATUTES, THE CONTRACTOR SHALL CAREFULLY MAKE A SEARCH FOR EVIDENCE OF ALL LANDMARKS, BENCHMARKS, AND OTHER CONTROL POINTS IN ALL AREAS WHERE SUCH LANDMARKS, BENCHMARKS, OR OTHER CONTROL POINTS MAY EXIST.

THE CONTRACTOR SHALL PROTECT ALL SURVEY MARKERS. SURVEY MARKERS SHALL NOT BE REMOVED WITHOUT THE APPROVAL OF THE ENGINEER.

THE CONTRACTOR SHALL BE RESPONSIBLE FOR RESHAPING AND RESTORATION (INCLUDING, BUT NOT LIMITED TO, SEED, FERTILIZER, MULCH, AND EROSION MAT) OF ANY DISTURBED AREAS OUTSIDE OF THE NORMAL CONSTRUCTION LIMITS AS DETERMINED BY THE ENGINEER.

UTILITY CONTACTS

CENTURYLINK - COMMUNICATIONS
BRIAN HUHN
425 ELLINGSON AVENUE
HAWKINS, WI 54530
OFFICE: 715-532-0023
CELL: 715 563-8294
E-MAIL: BRIAN.HUN@CENTURYLINK.COM

CHARTER COMMUNICATIONS - COMMUNICATIONS
STEVE BROWN
821 LINCOLN STREET
RHINELANDER, WI 54501
OFFICE: 715-420-0301
CELL: 715-519-0042
E-MAIL: STEVE.BROWN@CHARTER.COM

FRONTIER COMMUNICATIONS OF WI - COMMUNICATIONS
CAL KLADE
521 4TH ST
WAUSAU, WI 54403
CELL: 715-573-2110
E-MAIL: CALVIN.KLADE@FTR.COM

PRICE ELECTRIC COOPERATIVE - ELECRICITY
BEN ORYSEN
W6803 SPRINGS DRIVE
PHILLIPS, WI 54555
OFFICE: 715-339-2155
CELL: 715-820-0200
E-MAIL: BORYSEN@PRICE-ELECTRIC.COM

TOMAHAWK MUNICIPAL WATER & SEWER UTILITY – SANITARY SEWER & WATER
JOHN COLE
415 W. SPIRIT AVENUE
TOMAHAWK, WI 54487
OFFICE: 715- 453-3654
CELL: 715-966-0607
E-MAIL: JCOLE@CITYOFTOMAHAWK.COM

WISCONSIN PUBLIC SERVICE CORP – ELECTRIC
CLAYTON VIRCKS
PO BOX 1166
WAUSAU, WI 54402
OFFICE: 715-848-7317
CELL: 715-573-7806
E-MAIL: CLAYTON.VIRCKS@WISCONSINPUBLICSERVICE.COM

WISCONSIN PUBLIC SERVICE CORP - GAS
24 HOUR CUSTOMER SERVICE: 800-450-7260
24 HOUR EMERGENCY GAS: 800-450-7280

FIELD CONTACT: CHRIS GILMAN
2027 NAVAJO STREET
PO BOX 160
RHINELANDER, WI 54501
OFFICE: 715-369-7133
CELL: 715-490-4153
E-MAIL: CHRIS.GILMAN@WISCONSINPUBLICSERVICE.COM

RUNOFF COEFFICENT TABLE

HYDROLOGIC SOIL GROUP												
	A			B			C			D		
	SLOPE RANGE (PERCENT)			SLOPE RANGE (PERCENT)			SLOPE RANGE (PERCENT)			SLOPE RANGE (PERCENT)		
LAND USE:	0-2	2-6	6 & OVER	0-2	2-6	6 & OVER	0-2	2-6	6 & OVER	0-2	2-6	6 & OVER
ROW CROPS	.08 .22	.16 .30	.22 .38	.12 .26	.20 .34	.27 .44	.15 .30	.24 .37	.33 .50	.19 .34	.28 .41	.38 .56
MEDIAN STRIP-TURF	.19 .24	.20 .26	.24 .30	.19 .25	.22 .28	.26 .33	.20 .26	.23 .30	.30 .37	.20 .27	.25 .32	.30 .40
SIDE SLOPE-TURF			.25 .32			.27 .34			.28 .36			.30 .38
PAVEMENT:	.											
ASPHALT	.70-.95											
CONCRETE	.80-.95											
BRICK	.70-.80											
DRIVES, WALKS	.75-.85											
ROOFS	.75-.85											
GRAVEL ROADS, SHOULDERS	.40-.60											

TOTAL PROJECT AREA = 66.44 ac
TOTAL AREA EXPECTED TO BE DISTURBED BY CONSTRUCTION ACTIVITIES= 0.98 ac

DIGGERS HOTLINE
Dial 811 or (800)242-8511
www.DiggersHotline.com

DNR CONTACT

WISCONSIN DEPARTMENT OF NATURAL RESOURCES
WENDY HENNIGES
107 SUTLIFF AVENUE
RHINELANDER, WI 54501
TELEPHONE 715-365-8916
WENDY.HENNIGES@WISCONSIN.GOV

RAILROAD CONTACT

TOMAHAWK RAILWAY
SUZIE KLINGER, GENERAL MANAGER
PO BOX 130, SOUTH MARINETTE STREET
TOMAHAWK, WI 54487
TELEPHONE: 715-453-3822
SKLINGER@GWRR.COM

HMA PAVEMENT LAYER THICKNESS

TOTAL LAYER THICKNESS	LAYERS
STH 86 MILL AND OVERLAY SECTION – 2” MAINLINE AND SHOULDERS	2” UPPER LAYER HMA 4 LT 58-28 S
STH 86 PIPE REPLACEMENT SECTION – 6” MAINLINE AND SHOULDERS	ASPHALTIC SURFACE PATCHING MIX CONFORMING TO HMA 3 LT 58-28 S 3” MAXIMUM LAYER DEPTH

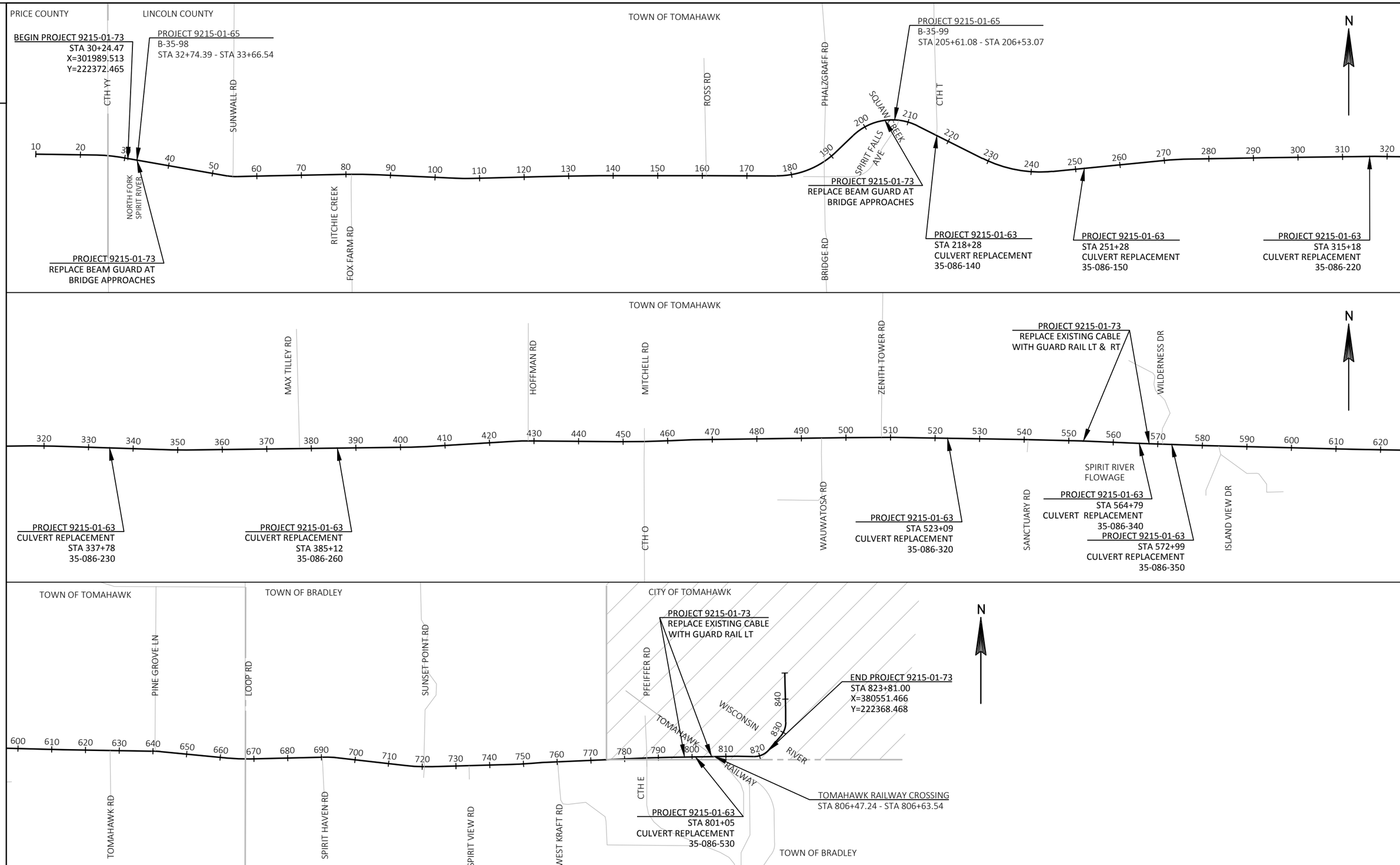

PROJECT NO: 9215-01-63/73	HWY: STH 86	COUNTY: LINCOLN	PROJECT OVERVIEW	SHEET 3	E

FILE NAME : S:\DESIGN\DESIGN PROJECTS\NC REGION PROJECTS\9215-01-03 (STH 86)\C3D\SHEETSPLAN\020201_PO.DWG
LAYOUT NAME - Plan Dbl 1 IN 200 FT
PLOT DATE : 11/14/2018 10:07 AM PLOT BY : ADAM OSYPOWSKI PLOT NAME : _____ PLOT SCALE : 1 IN:2000 FT& 1 IN:0.5 MI
WISDOT/CADDS SHEET 42

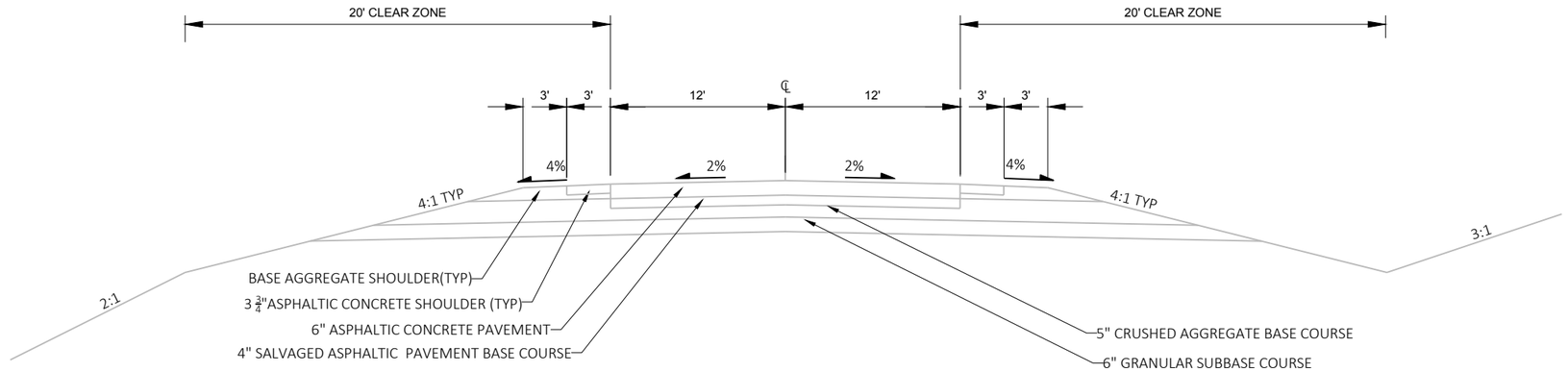

TYPICAL EXISTING SECTION
STA 30+25 TO STA 37+24
STA 33+66 TO STA 205+61
STA 206+53 TO STA 214+26

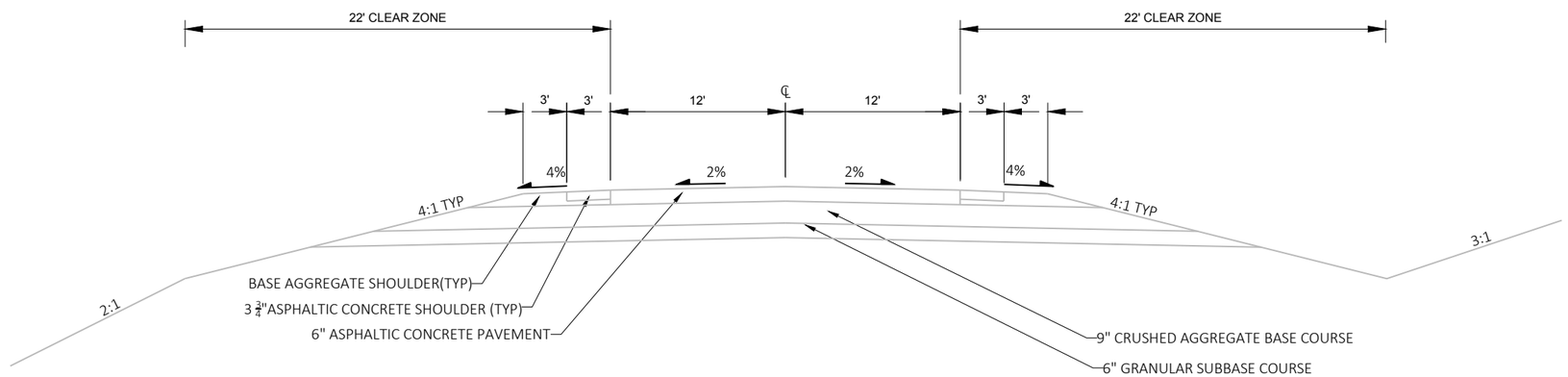

TYPICAL EXISTING SECTION
STA 214+26 TO STA 244+60
STA 279+60 TO STA 588+70
STA 592+70 TO STA 753+60
STA 784+60 TO STA 810+90

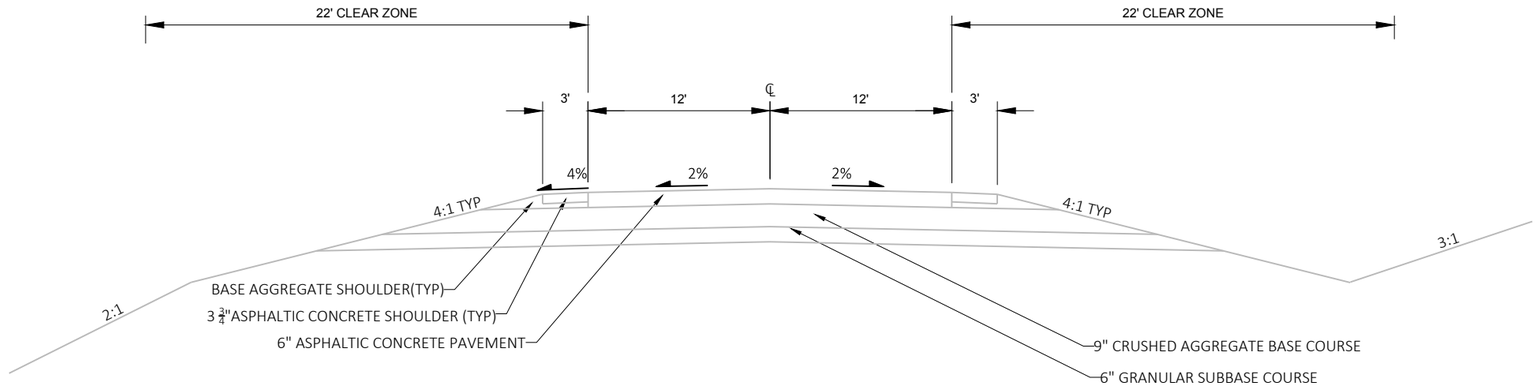

TYPICAL EXISTING SECTION
STA 244+60-STA 279+60
STA 753+60-STA 784+60 (4' SHLDR)

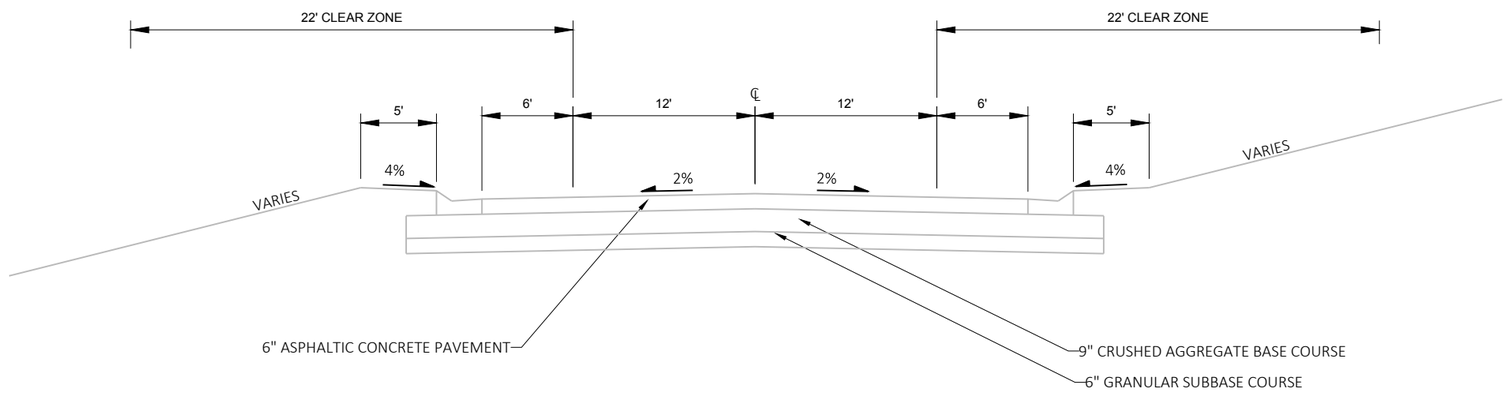

TYPICAL EXISTING SECTION
STA 588+70 TO STA 592+70

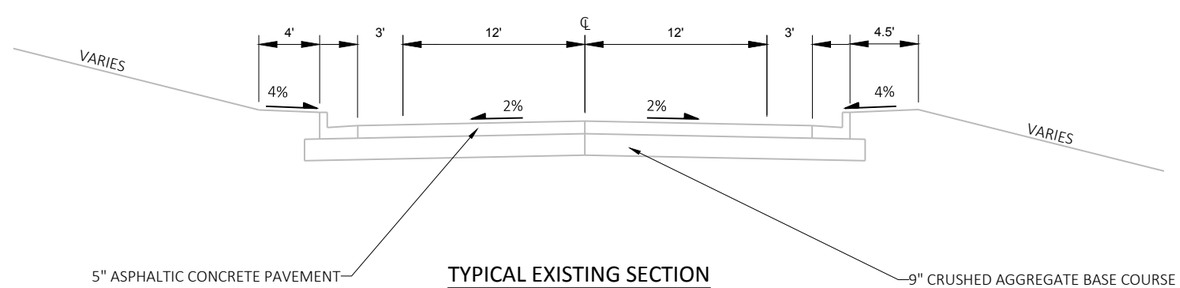

TYPICAL EXISTING SECTION
STA 810+90 TO STA 823+80

PROJECT NO: 9215-01-63/73	HWY: STH 86	COUNTY: LINCOLN	TYPICAL SECTIONS	SHEET 5	E

2

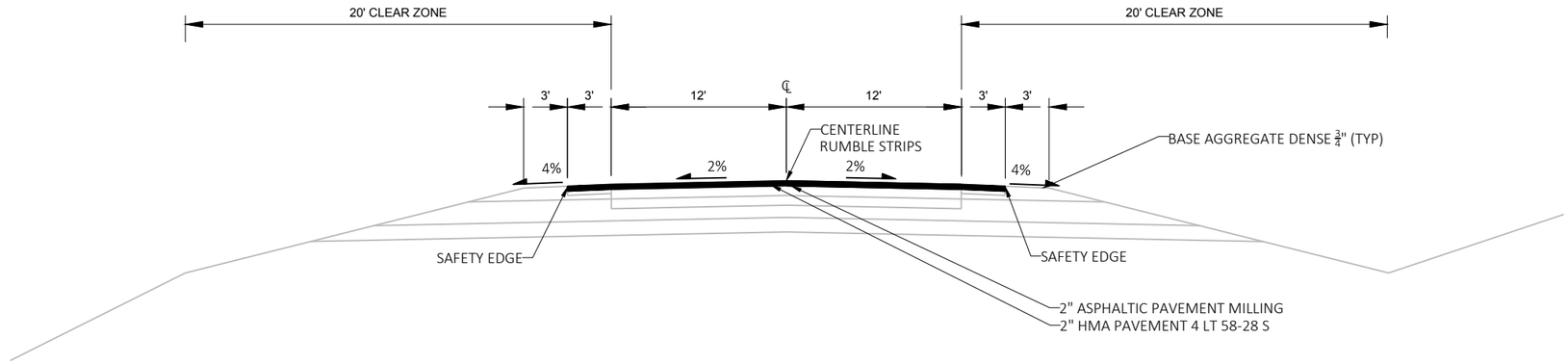

TYPICAL FINISHED SECTION
STA 30+25 TO STA 32+74
STA 33+66 TO STA 205+61
STA 206+53 TO STA 214+26

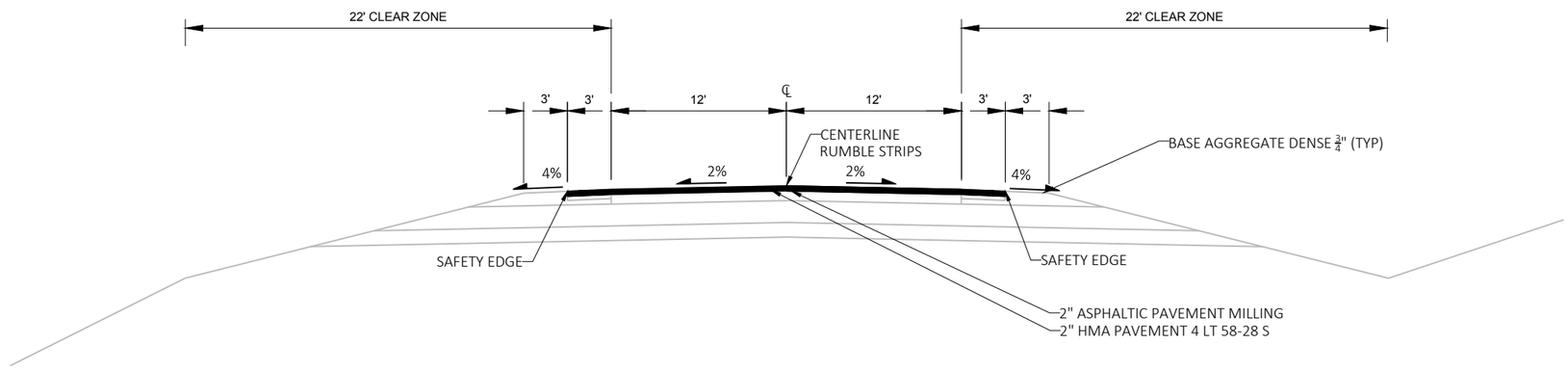

TYPICAL FINISHED SECTION
STA 214+26 TO STA 244+60
STA 279+60 TO STA 588+70
STA 592+70 TO STA 753+60
STA 784+60 TO STA 806+47
STA 806+64 TO STA 810+90

NOTES : CENTERLINE RUMBLE STRIPS END AT STA 784+50
RAILROAD CROSSING: STA 806+47 TO STA 806+64

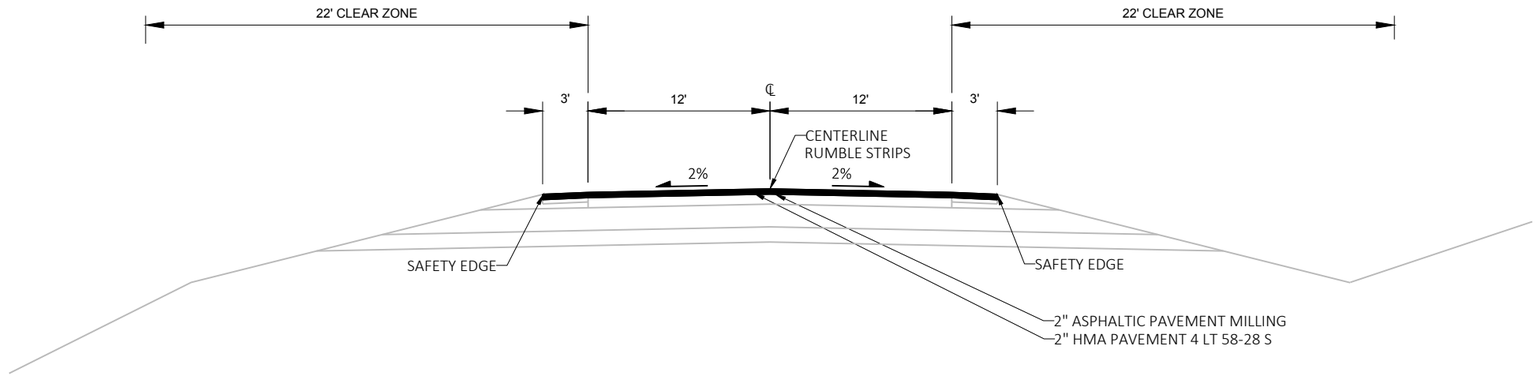

TYPICAL FINISHED SECTION
STA 244+60-STA 279+60
STA 753+60-STA 784+60 (4' SHLDR)

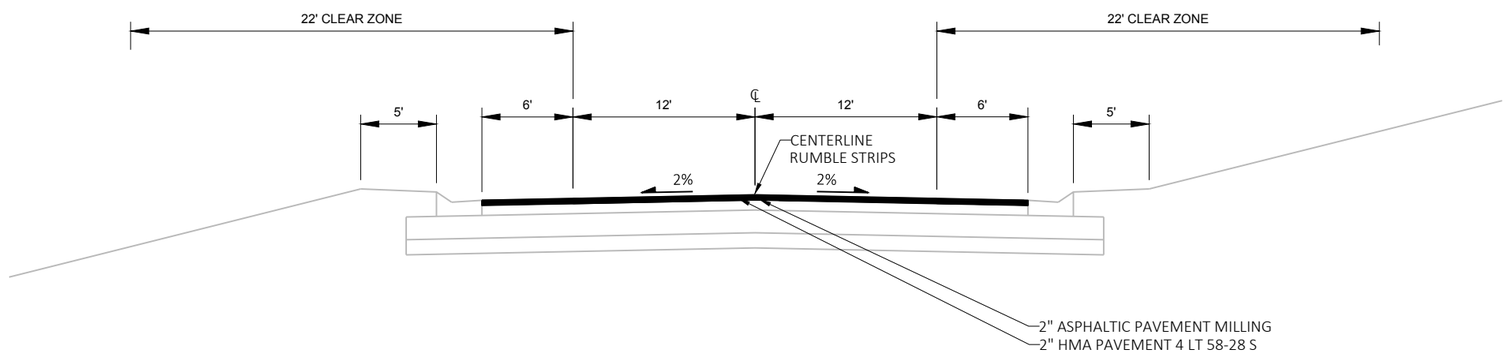

TYPICAL FINISHED SECTION
STA 588+70 TO STA 592+70

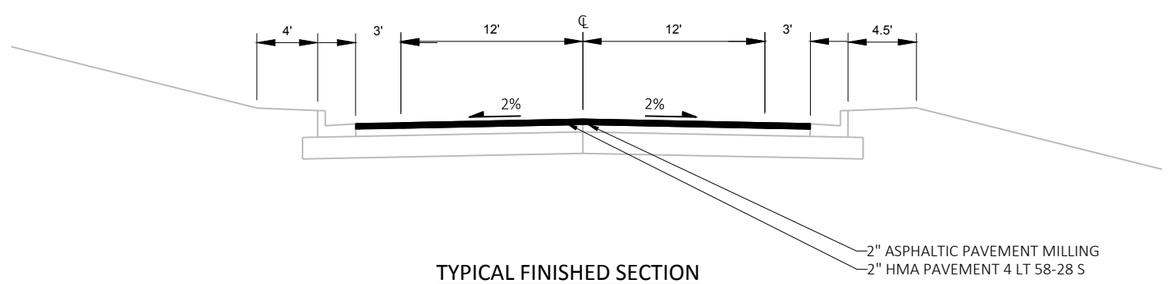

TYPICAL FINISHED SECTION
STA 810+90 TO STA 823+80

PROJECT NO: 9215-01-63/73	HWY: STH 86	COUNTY: LINCOLN	TYPICAL SECTIONS	SHEET 7	E

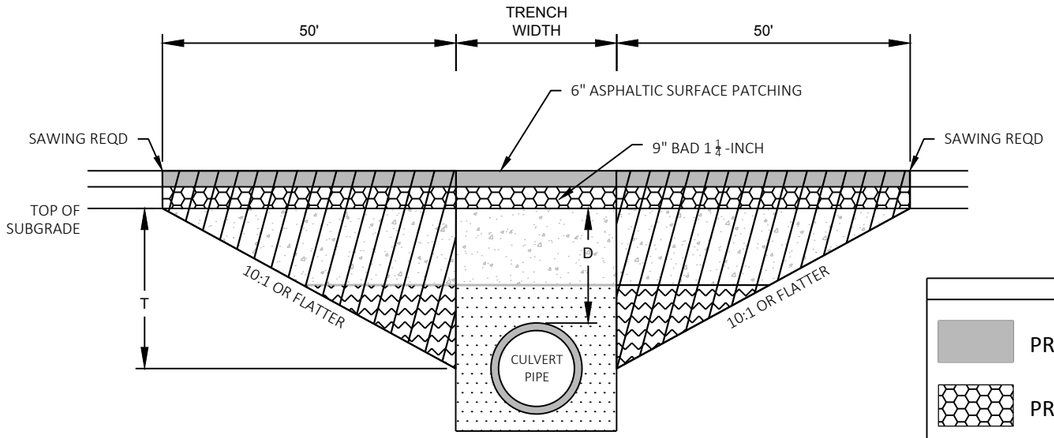

TRANSITION CUT DEPTH (T) = THE LESSER OF DEPTH TO CENTER OF PIPE OR 5 FT.
DO NOT EXTEND TRANSITION CUT BELOW HORIZONTAL CENTER OF PIPE.

DEPTH D < 6 FT

KEY

- PROPOSED SURFACE
- PROPOSED BASE
- TRENCH BACKFILL
- TRENCH OR FOUNDATION BACKFILL
- FOUNDATION BACKFILL
- TRANSITION CUT

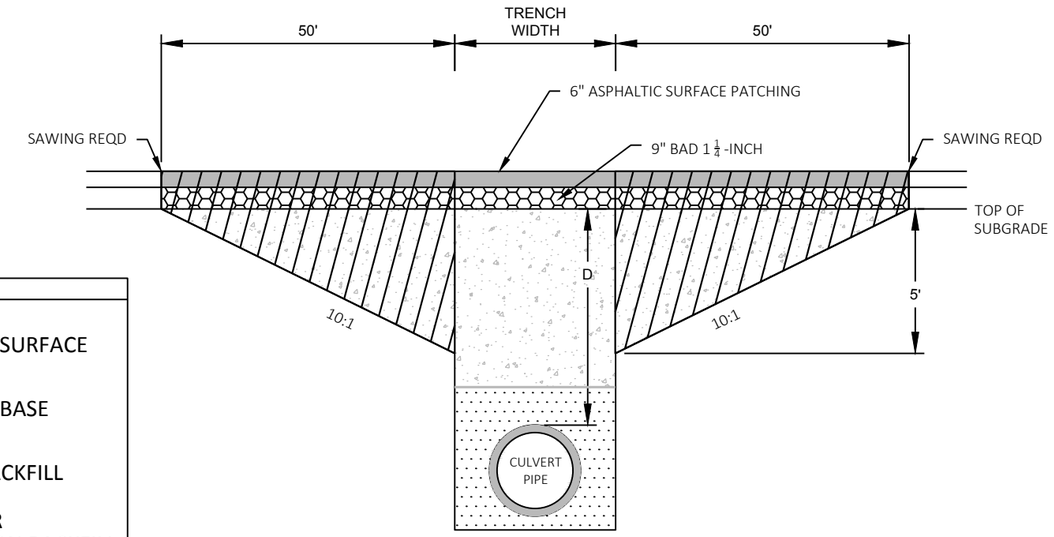

DEPTH D ≥ 6 FT

2

NOTES

TRANSITION CUT IS PAID AS EXCAVATION COMMON.
TRANSITION CUT WIDTH IS FROM SUBGRADE SHOULDER POINT TO SUBGRADE SHOULDER POINT.
BACKFILL TRANSITION CUT AREAS WITH FOUNDATION AND TRENCH BACKFILL AS SPECIFIED IN STANDARD SPEC 520.
PERFORM CULVERT PIPE INSTALLATION BEFORE MILLING AND PAVING.
COMPLETE CULVERT PIPE TRANSITION PRIOR TO ASPHALTIC SURFACE MILLING OPERATIONS.

CULVERT PIPE TRANSITION

ROUTE	STA (CL)	DEPTH D (FT)	PIPE DIA (IN)	REMARKS
STH 86	218+28	4.3	36	35-086-140
STH 86	251+28	1.7	30	35-086-150
STH 86	315+18	2.6	30	35-086-220
STH 86	337+78	3.1	30	35-086-230
STH 86	385+12	2.3	24	35-086-260
STH 86	523+09	4.4	24	35-086-320
STH 86	564+79	3.5	84	35-086-340
STH 86	572+99	6.5	30	35-086-350
STH 86	801+05	5.2	30	35-086-530

2

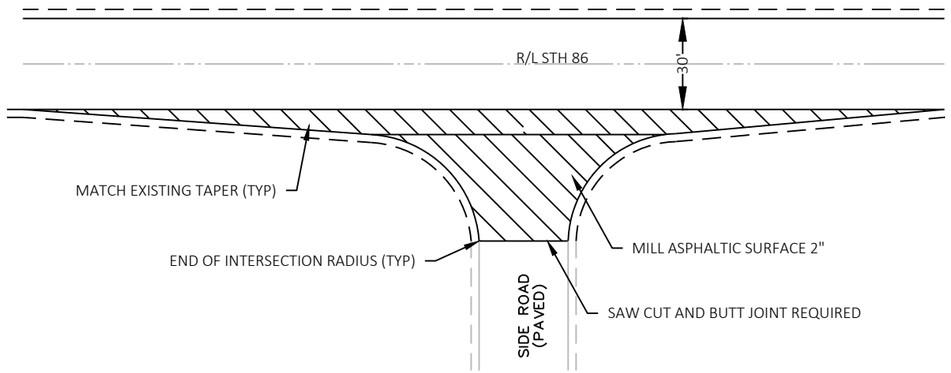

REMOVING ASPHALTIC SURFACE MILLING

PAVED SIDEROAD

BRIDGE RD (C&G RADIUS)
PHALZGRAFF RD (C&G RADIUS)
SPRIT FALLS AVE
CTH T (C&G RADIUS)
CTH O (C&G RADIUS)
WAUWATOSA AVE
ZENITH TOWER RD (C&G RADIUS)
SANCTUARY RD (NO TAPER)
WILDERNESS DR (C&G RADIUS)
ISLAND VIEW DR (NO TAPER)
TOMAHAWK RD
PINE GROVE LN (C&G RADIUS)
LOOP RD
SPIRIT HAVEN RD (C&G RADIUS)
N SUNSET POINT RD (C&G RADIUS)
S SUNSET POINT RD
SPIRIT VIEW RD (C&G RADIUS)
WEST KRAFT RD (C&G RADIUS)
PFEIFFER RD (C&G RADIUS)
CTH E (C&G RADIUS)

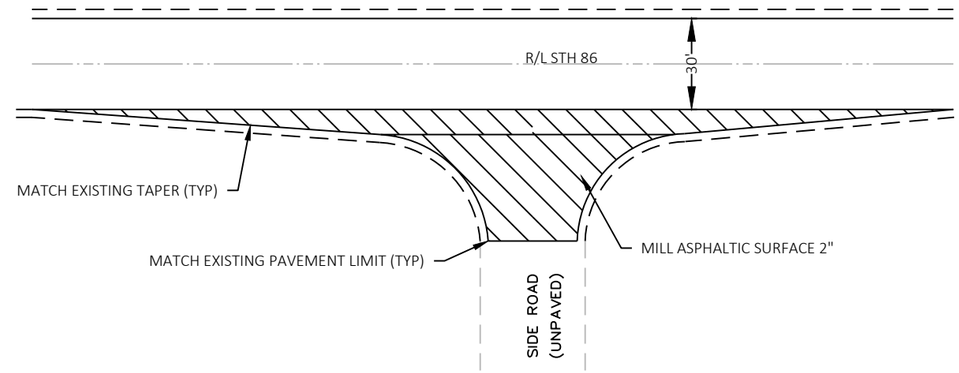

REMOVING ASPHALTIC SURFACE MILLING

UNPAVED SIDEROAD

SUNWALL RD
FOX FARM RD
ROSS RD (NO TAPER)
HOFFMAN RD
MITCHELL RD

NOTE: MAX TILLEY ROAD HAS NO PAVED INTERSECTION RADIUS-TO REMAIN

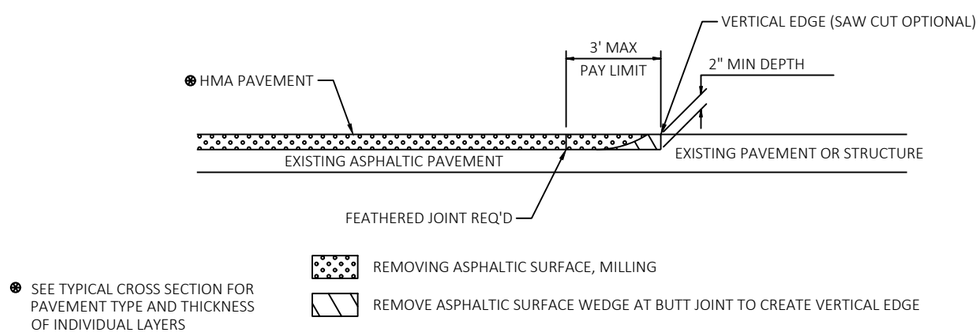

BUTT JOINT DETAIL FOR ASPHALTIC PAVEMENTS (NO PROFILE CHANGE)

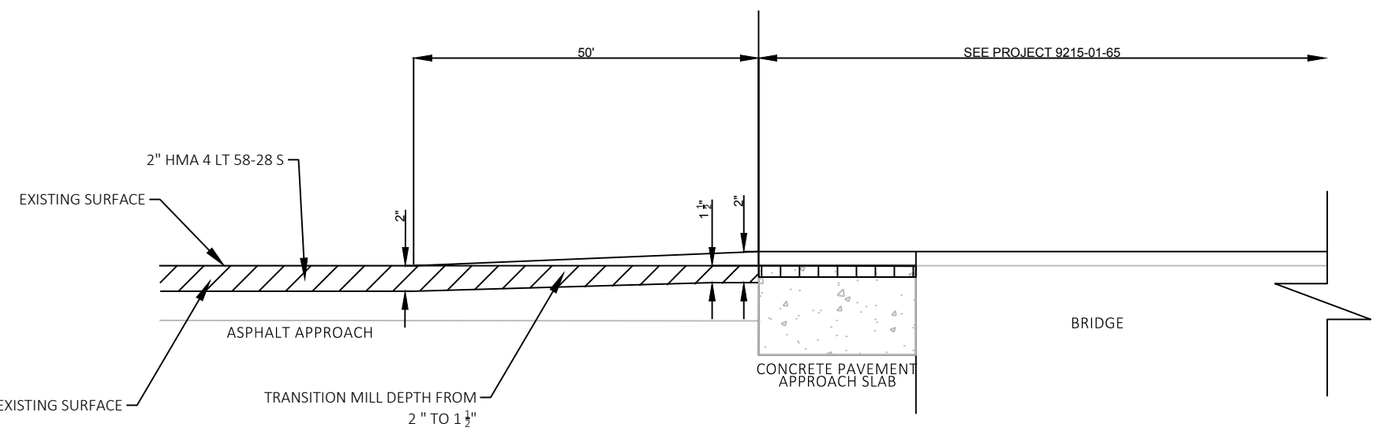

APPROACH MATCH DETAIL

B-35-98, B-35-99

2

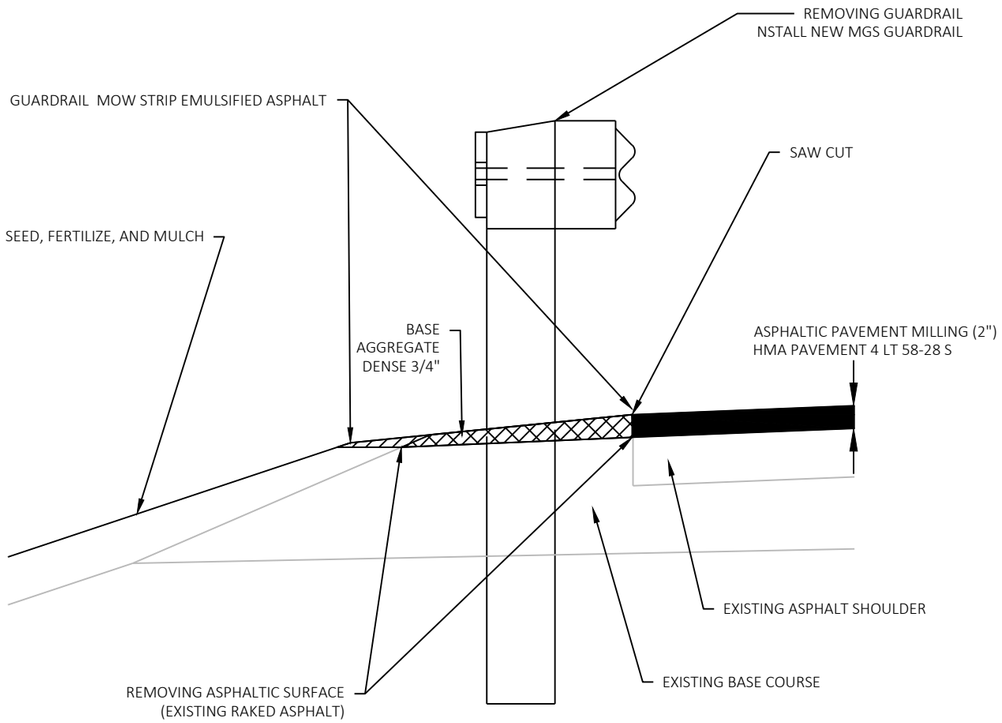

SHOULDER CONSTRUCTION FOR GUARDRAIL
AT EXISTING GUARD RAIL LOCATIONS

SAW CUT LIMITS:
STA 31+02 TO STA 32+73 LT/RT
STA 33+65 TO STA 34+83 LT
STA 33+65 TO STA 35+52 RT

STA 203+79 TO STA 205+61 LT/RT
STA 206+52 TO STA 208+42 LT
STA 206+52 TO STA 207+45 RT

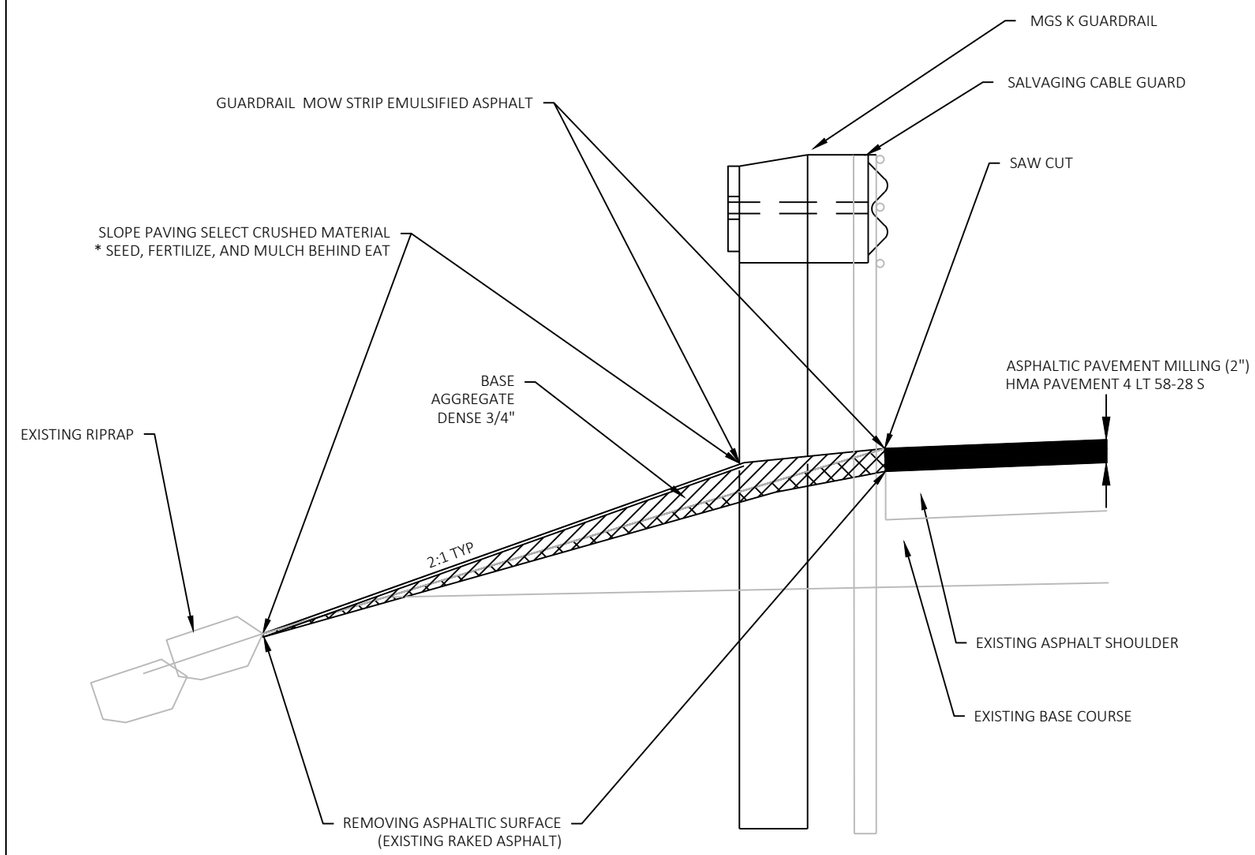

SHOULDER CONSTRUCTION FOR GUARDRAIL
AT EXISTING CABLE GUARD LOCATIONS

SAW CUT LIMITS:
STA 554+30 TO STA 566+68 LT
STA 554+95 TO STA 566+41 RT
STA 797+28 TO STA 806+00 LT

2

PROJECT NO: 9215-01-63/73	HWY: STH 86	COUNTY: LINCOLN	CONSTRUCTION DETAILS	SHEET 11	E

FILE NAME : S:\DESIGN\DESIGN PROJECTS\NC REGION PROJECTS\9215-01-03 (STH 86)\C3D\SHEETSPLAN\021001_CD.DWG
LAYOUT NAME - 03
PLOT DATE : 3/1/2019 8:16 AM PLOT BY : ADAM OSYPOWSKI PLOT NAME : PLOT SCALE : 1 IN:10 FT

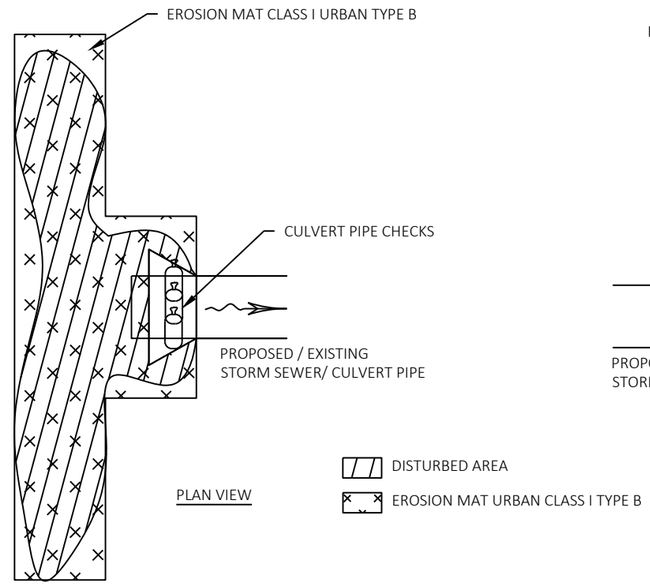

EROSION CONTROL AT INLET

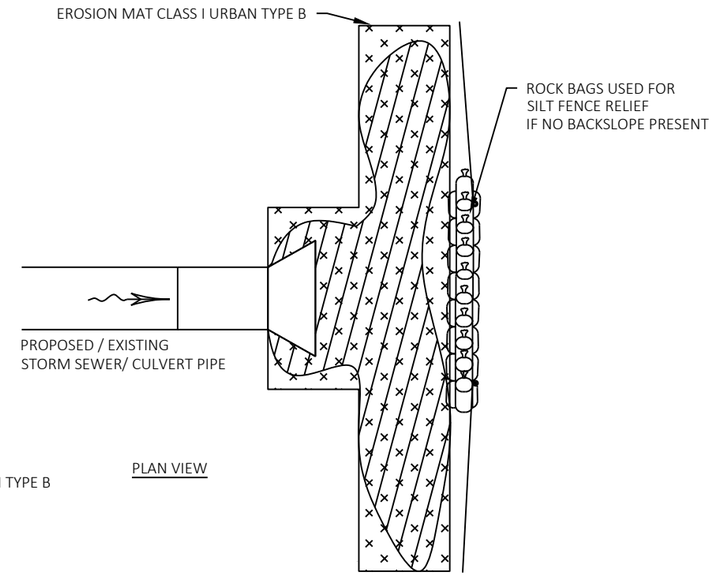

EROSION CONTROL AT OUTFALL

DISTURBED AREA

EROSION MAT URBAN CLASS I TYPE B

EROSION CONTROL AT APRON ENDWALLS

FOR USE IN DITCH CLEANING, PIPE EXTENSIONS AND ENDWALL REPLACEMENTS

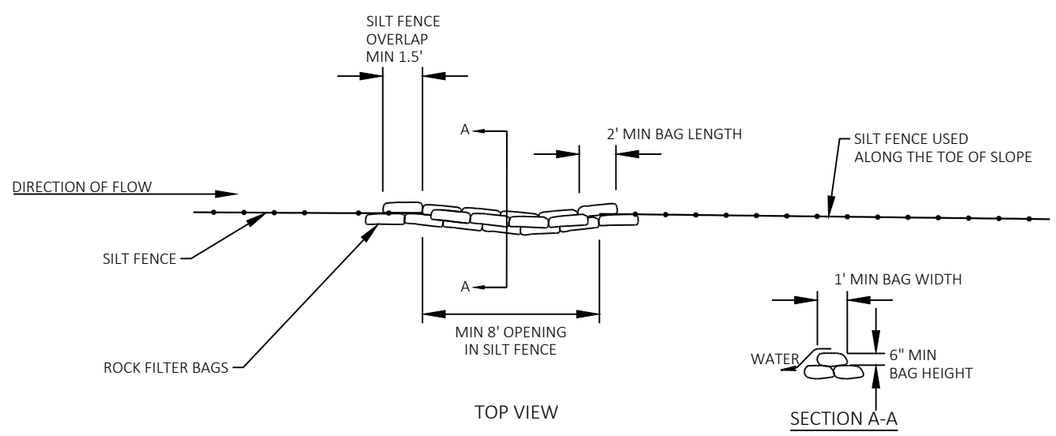

ROCK BAGS USED FOR SILT FENCE RELIEF

PROJECT NO: 9215-01-63/73	HWY: STH 86	COUNTY: LINCOLN	CONSTRUCTION DETAILS	SHEET 12	E

FILE NAME : S:\DESIGN\DESIGN PROJECTS\NC REGION PROJECTS\9215-01-03 (STH 86)\C3D\SHEETSPLAN\021001_CD.DWG
LAYOUT NAME - 04
PLOT DATE : 3/1/2019 8:16 AM PLOT BY : ADAM OSYPOWSKI PLOT NAME : PLOT SCALE : 1 IN:10 FT

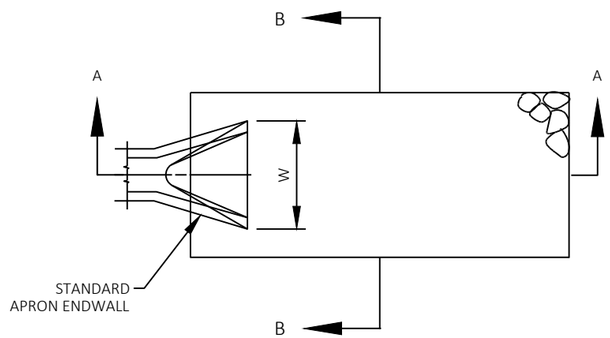

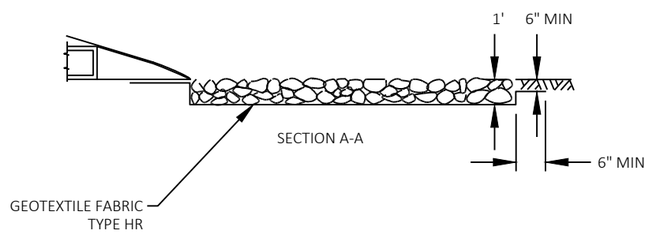

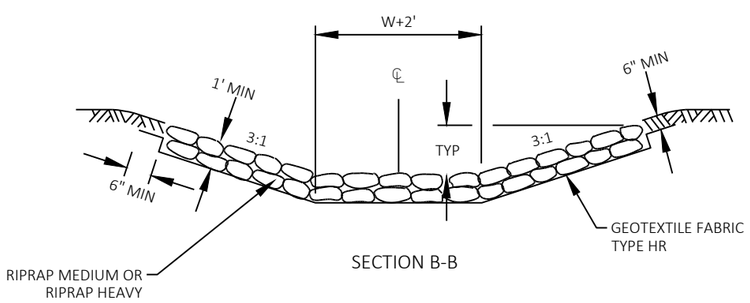

RIP RAP AND GEOTEXTILE

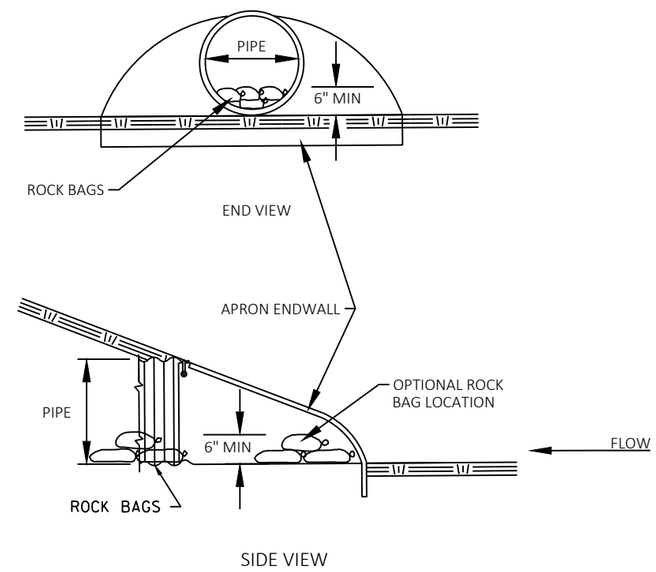

CULVERT PIPE CHECK

(INSTALL ON INLET END ONLY)

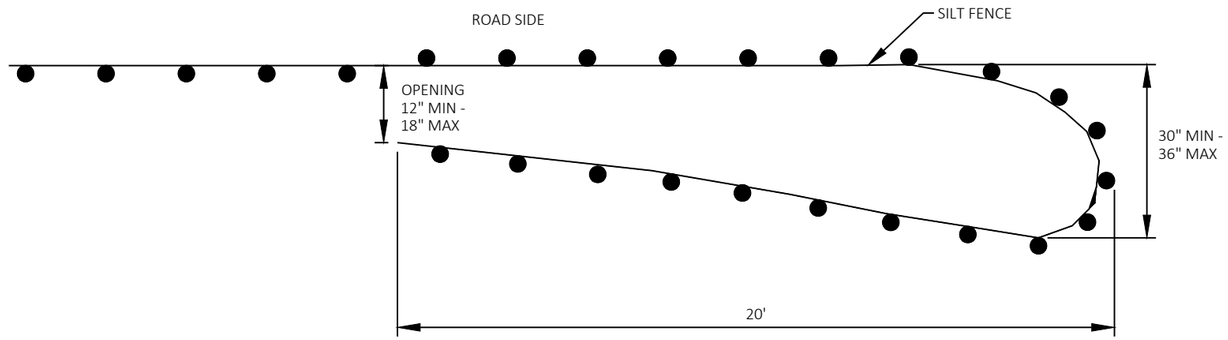

PLAN VIEW

GENERAL NOTES:

SILT FENCE POSTS FOR THE TURN-AROUND SHOULD BE ON THE OUTSIDE OF THE TURN-AROUND. AND TRENCHED IN ACCORDING TO SILT FENCE REQUIREMENTS.

TEMPORARY SMALL ANIMAL TURN-AROUND

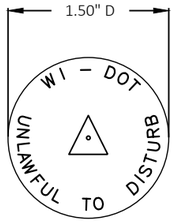

WIS DOT MONUMENT CAP MARKER LOGO (SSDR130)

CONTRACTOR TO ORDER LANDMARK REFERENCE MONUMENTS WITH THE ABOVE STAMPING

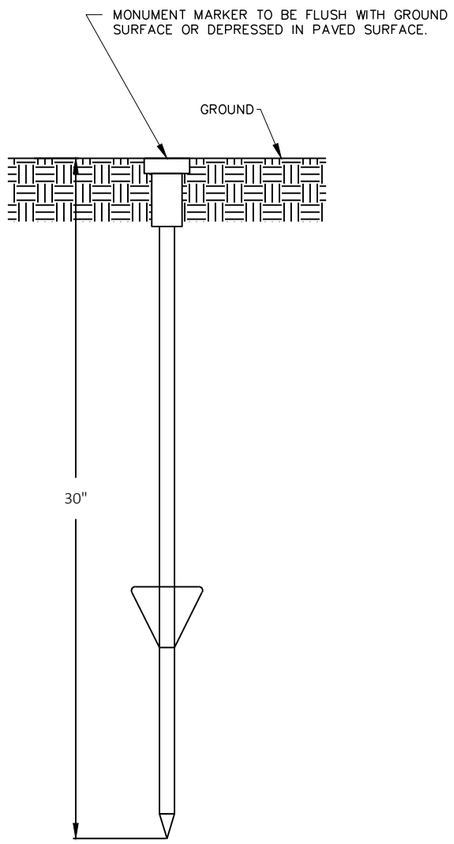

(FRONT VIEW)

BERNSTEN DRIVABLE MONUMENT SSDR130

LANDMARK REFERENCE MONUMENT (TIES ONLY)

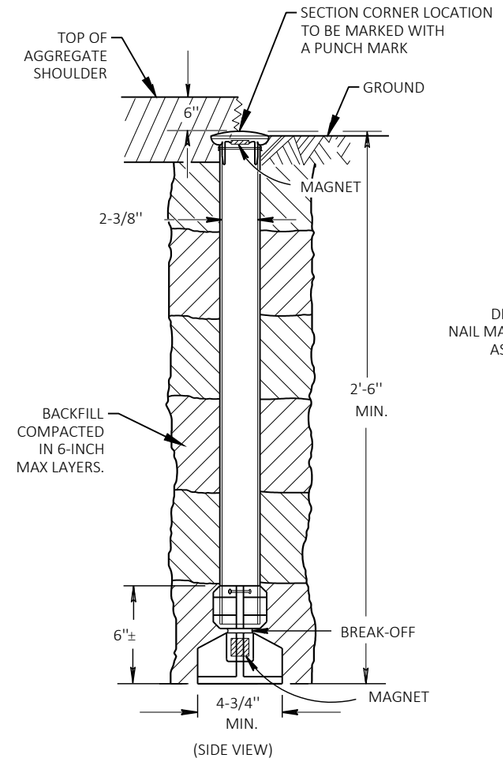

(SIDE VIEW)

OUTSIDE OF PAVEMENT

BERNTSEN A1BR30 ALUMINUM BREAK-OFF MONUMENT

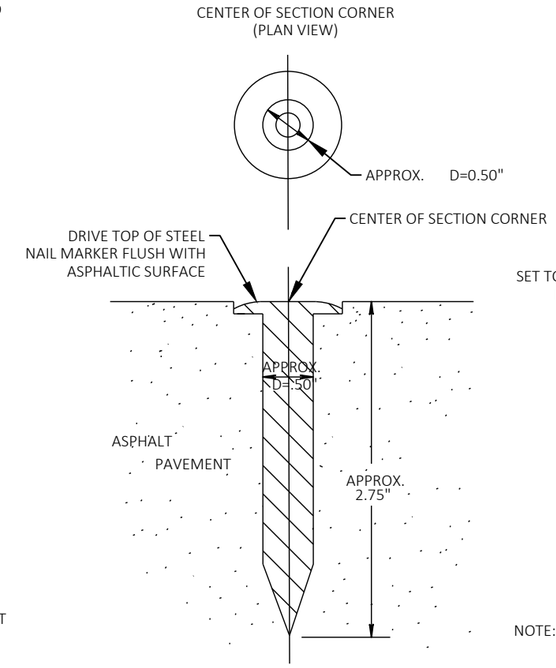

(SIDE VIEW)

IN ASPHALTIC PAVEMENT

BERNTSEN SNM1 STEEL NAIL MARKER

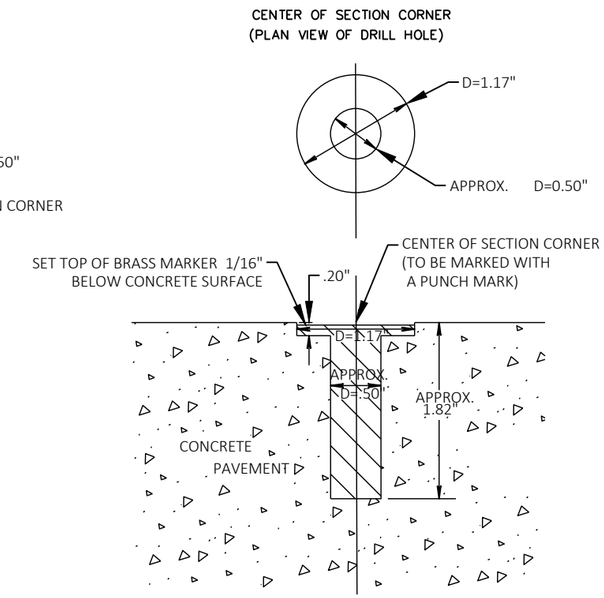

NOTE: TO DRILL HOLE, USE A "SURVEY MARKER COUNTERSINK DRILL BIT" ITEM #BPMDRL, AVAILABLE FROM BERNTSEN INTERNATIONAL INC.

(SIDE VIEW OF DRILL HOLE)

IN CONCRETE PAVEMENT

BERNTSEN BP - 1 BRASS MARKER WITH ANCHOR PLUG

SECTION CORNER MONUMENTS

GENERAL NOTES

DETAILS OF CONSTRUCTION, MATERIALS AND WORKMANSHIP NOT SHOWN ON THIS DRAWING SHALL CONFORM TO THE PERTINENT REQUIREMENTS OF THE STANDARD SPECIFICATIONS AND THE APPLICABLE SPECIAL PROVISIONS.

LOCATE LANDMARK REFERENCE MONUMENTS OUTSIDE THE CONSTRUCTION LIMITS AND WITHIN WISDOT RIGHT OF WAY. LOCATION TO BE APPROVED BY THE ENGINEER.

CONTRACTOR WILL SUPPLY ALL REQUIRED SURVEY MONUMENTS.

SECTION CORNER MONUMENT AND LANDMARK REFERENCE MONUMENT DETAIL

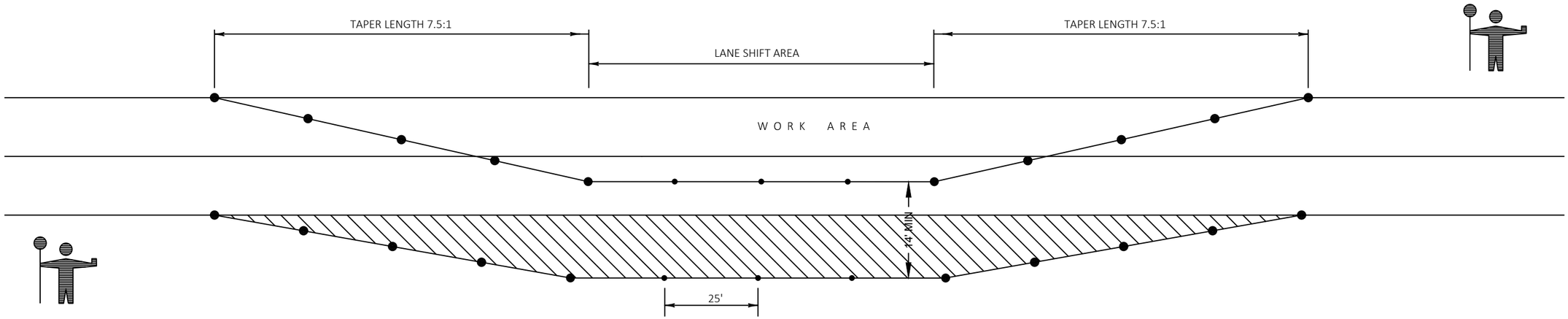

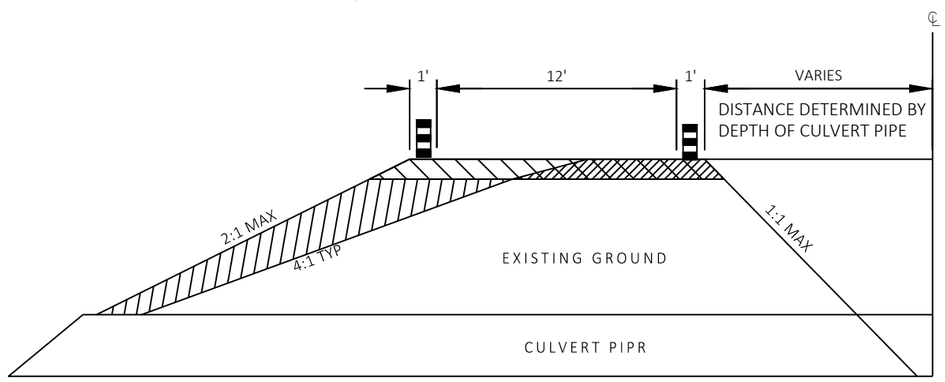

NOTES

1. EXTEND TAPERS ACROSS THE SHOULDER
   UNLESS DOING SO WOULD GREATLY CONFLICT WITH THE WORK OPERATION

2. WHEN WORK IS NOT IN PROGRESS:
   - REMOVE OR COVER ALL LANE CLOSURE SIGNS
   - MOVE ALL DEVICES A SAFE DISTANCE OUTSIDE THE SHOULDER
   - RESTORE LANES TO A SAFE OPERATING CONDITION

3. USE WITH SDD "TRAFFIC CONTROL FOR LANE CLOSURE W/FLAGGING OPERATION"

KEY

- ● CONE 42-INCH WITHOUT WARNING LIGHT
- ● DRUM WITHOUT WARNING LIGHT
- EXISTING PAVE SURFACE
  -OR-
  6" BASE AGGREGATE DENSE 1 1/4 INCH
  - INCIDENTAL TO LANE SHIFT SYSTEM
- 6" BASE AGGREGATE DENSE 1 1/4 INCH
  - INCIDENTAL TO LANE SHIFT SYSTEM
- FILL
  - INCIDENTAL TO LANE SHIFT SYSTEM

LANE SHIFT DETAIL

35-086-140
35-086-150 (2)
35-086-220
35-086-230
35-086-260
35-086-530

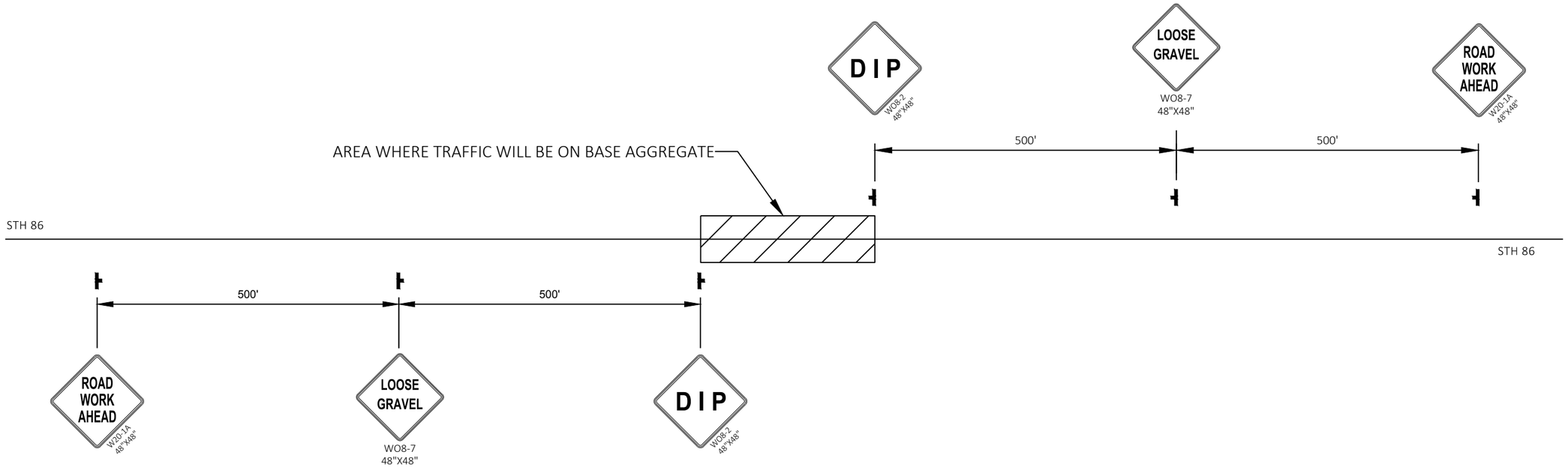

LOOSE GRAVEL SIGNING

PROJECT NO: 9215-01-63/73	HWY: STH 86	COUNTY: LINCOLN	CONSTRUCTION DETAILS	SHEET 17	E

FILE NAME : S:\DESIGN\DESIGN PROJECTS\NC REGION PROJECTS\9215-01-03 (STH 86)\C3D\SHEETSPLAN\021001_CD.DWG
LAYOUT NAME - 09
PLOT DATE : 3/1/2019 8:16 AM PLOT BY : ADAM OSYPOWSKI PLOT NAME : PLOT SCALE : 1 IN:10 FT

2

BEGIN PROJECT 9215-01-73
STA 30+24.47

FRONTIER COMMUNICATIONS

PRICE ELECTRIC COOPERATIVE INC

STA 31+85.4 - STA 32+88.5 LT
REMOVING GUARDRAIL
MGS GUARDRAIL 3
MGS THRIE BEAM TRANSITION
MGS GUARDRAIL TERMINAL EAT

THRIE BEAM TRANSITION
AND 12.5' OF MGS
3' FROM LANE

EXCEPTION TO NET CL LENGTH
PROJECT 9251-01-65; B-35-98
STA 32+74.39 - STA 34+66.54

STA 33+50.0 - STA 34+78.1 LT
REMOVING GUARDRAIL
MGS GUARDRAIL 3
MGS THRIE BEAM TRANSITION
MGS GUARDRAIL TERMINAL EAT

FRONTIER COMMUNICATIONS

N

W12046
ASPHALT PE

APPROX R/W

NORTH FORK

THRIE BEAM TRANSITION
AND 12.5' OF MGS
3' FROM LANE

PERMITTED WETLAND IMPACTS

REMOVE EXISTING CULVERT ENDWALL
CPCS 24-INCH
APRON ENDWALL FOR CULVERT PIPE STEEL 24-INCH

FLARE EAT 3' TO 8' FROM LANE

10:1 PAVED SHOULDER TAPER
3 FT TO 6 FT

END GRADING FOR EAT

30 32 34 36

FLARE EAT AND 25' OF MGS 3' TO 8' FROM LANE

10:1 PAVED SHOULDER TAPER
3 FT TO 6 FT

FLARE EAT AND 37.5' OF MGS 3' TO 8' FROM LANE

SPIRIT RIVER

10:1 PAVED SHOULDER TAPER
6 FT TO 3 FT

PRICE ELECTRIC COOPERATIVE INC

THRIE BEAM TRANSITION
AND 12.5' OF MGS
3' FROM LANE

THRIE BEAM TRANSITION
AND 12.5' OF MGS
3' FROM LANE

FLARE EAT 3' TO 8' FROM LANE

GUY POLE
GUY

CLEARING AND GRUBBING

PERMITTED WETLAND IMPACTS

STA 31+47.9 - STA 32+88.5 RT
REMOVING GUARDRAIL
MGS GUARDRAIL 3
MGS THRIE BEAM TRANSITION
MGS GUARDRAIL TERMINAL EAT

STA 33+50.0 - STA 34+53.1 RT
REMOVING GUARDRAIL
MGS GUARDRAIL 3
MGS THRIE BEAM TRANSITION
MGS GUARDRAIL TERMINAL EAT

APPROX R/W

NOTE: SEE DETAIL "SHOULDER CONSTRUCTION FOR
GUARDRAIL AT EXISTING GUARDRAIL LOCATIONS"

2

NOTE: SEE DETAIL "SHOULDER CONSTRUCTION FOR
GUARDRAIL AT EXISTING GUARDRAIL LOCATIONS"

EXCEPTION TO NET CL LENGTH
PROJECT 9251-01-65; B-35-99
STA 205+61.08 - STA 206+53.07

N

STA 204+34.9 - STA 205+63.0 LT
REMOVING GUARDRAIL
MGS GUARDRAIL 3
MGS THRIE BEAM TRANSITION
MGS GUARDRAIL TERMINAL EAT

THRIE BEAM TRANSITION
AND 12.5' OF MGS
3' FROM LANE

SQUAW CREEK

THRIE BEAM TRANSITION
AND 12.5' OF MGS
3' FROM LANE

STA 206+52.0 - STA 207+92.6 LT
REMOVING GUARDRAIL
MGS GUARDRAIL 3
MGS THRIE BEAM TRANSITION
MGS GUARDRAIL TERMINAL EAT

APPROX R/W

FLARE EAT AND 25' OF MGS 3' TO 8' FROM LANE

FLARE EAT AND 37.5' OF MGS 3' TO 8' FROM LANE

PERMITTED WETLAND IMPACTS

PERMITTED WETLAND IMPACTS

10:1 PAVED SHOULDER TAPER
3 FT TO 6 FT

10:1 PAVED SHOULDER TAPER
6 FT TO 3 FT

PRICE ELECTRIC COOPERATIVE INC

CLEARING AND GRUBBING

206

R34'

208

204

THRIE BEAM TRANSITION
AND 12.5' OF MGS
3' FROM LANE

THRIE BEAM TRANSITION
AND SHORT RADIUS HEIGHT TRANSITION
3' FROM LANE

10:1 PAVED SHOULDER TAPER
3 FT TO 6 FT

FLARE EAT AND 37.5' OF MGS 3' TO 8' FROM LANE

SAW CUT AT PROPOSED FACE OF RAIL
REMOVING ASPHALT
BAD 3/4"
GUARDRAIL MOW STRIP ASPHALT

PLACE END OF SHORT RADIUS TERMINAL AT
EDGE OF ASPHALT

GUY

STA 204+24.9 - STA 205+65.5 RT
REMOVING GUARDRAIL
MGS GUARDRAIL 3
MGS THRIE BEAM TRANSITION
MGS GUARDRAIL TERMINAL EAT

STA 206+47 - STA 207+55 RT
REMOVING GUARDRAIL
MGS THRIE BEAM TRANSITION
MGS GUARDRAIL SHORT RADUIS
MGS SHORT RADIUS TERMINAL

SPIRIT FALLS AVE

APPROX R/W

PERMITTED WETLAND IMPACTS

FRONTIER COMMUNICATIONS

PROJECT NO: 9215-01-63/73	HWY: STH 86	COUNTY: LINCOLN	PLAN DETAIL	SHEET 18	E

2

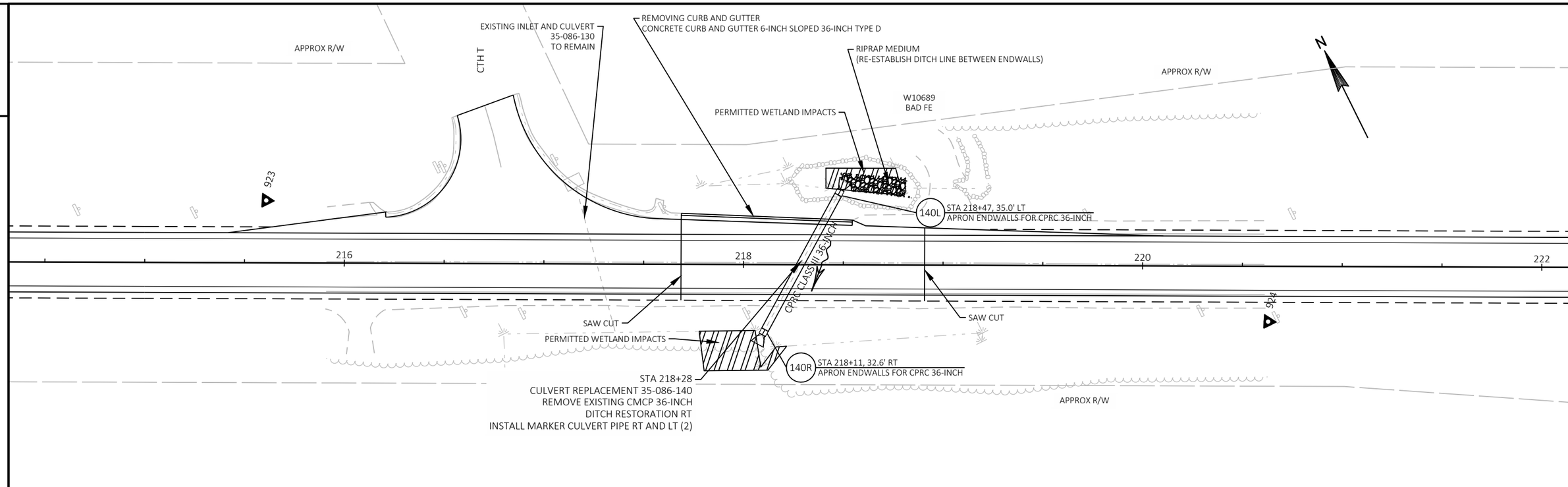

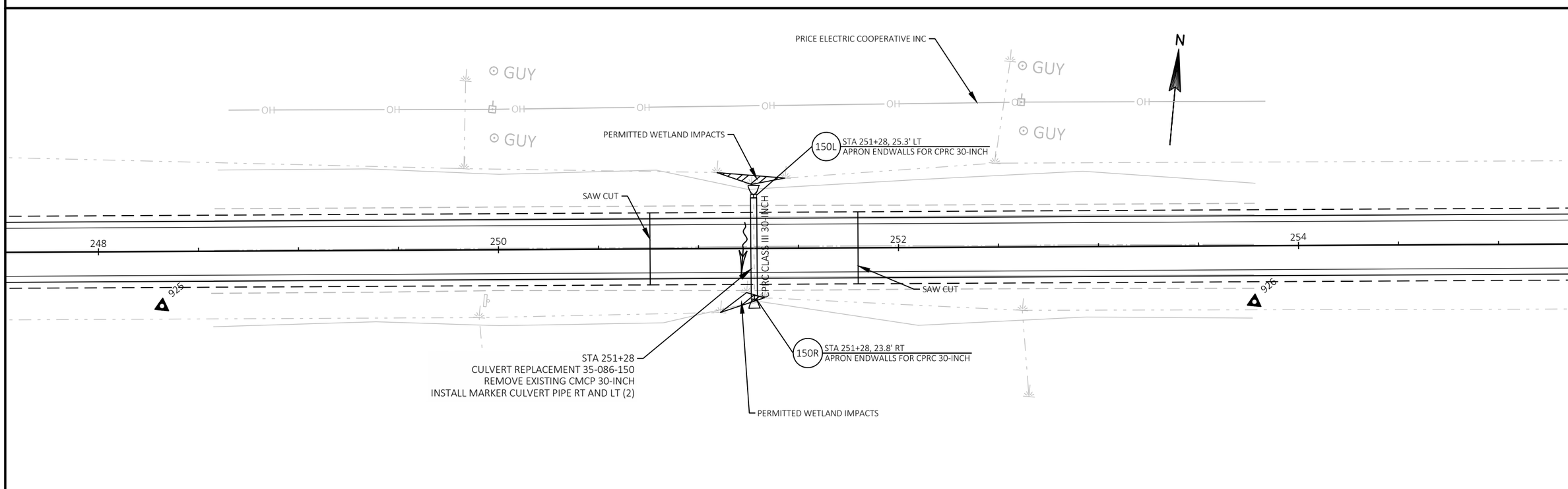

PROJECT NO: 9215-01-63/73	HWY: STH 86	COUNTY: LINCOLN	PLAN DETAIL	SHEET 19	E

FILE NAME : S:\DESIGN\DESIGN PROJECTS\NC REGION PROJECTS\9215-01-03 (STH 86)\C3D\SHEETSPLAN\021201_PD2.DWG
LAYOUT NAME - 220-250
PLOT DATE : 12/18/2018 7:24 AM PLOT BY : ADAM OSYPOWSKI PLOT NAME : PLOT SCALE : 1 IN:50 FT

2

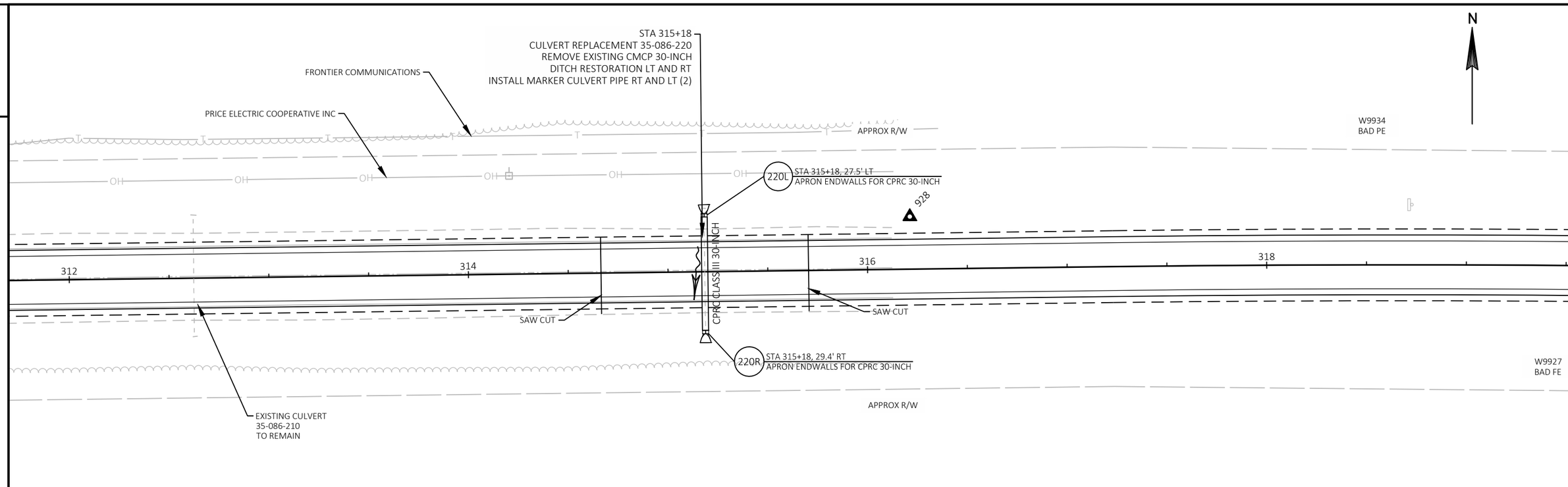

2

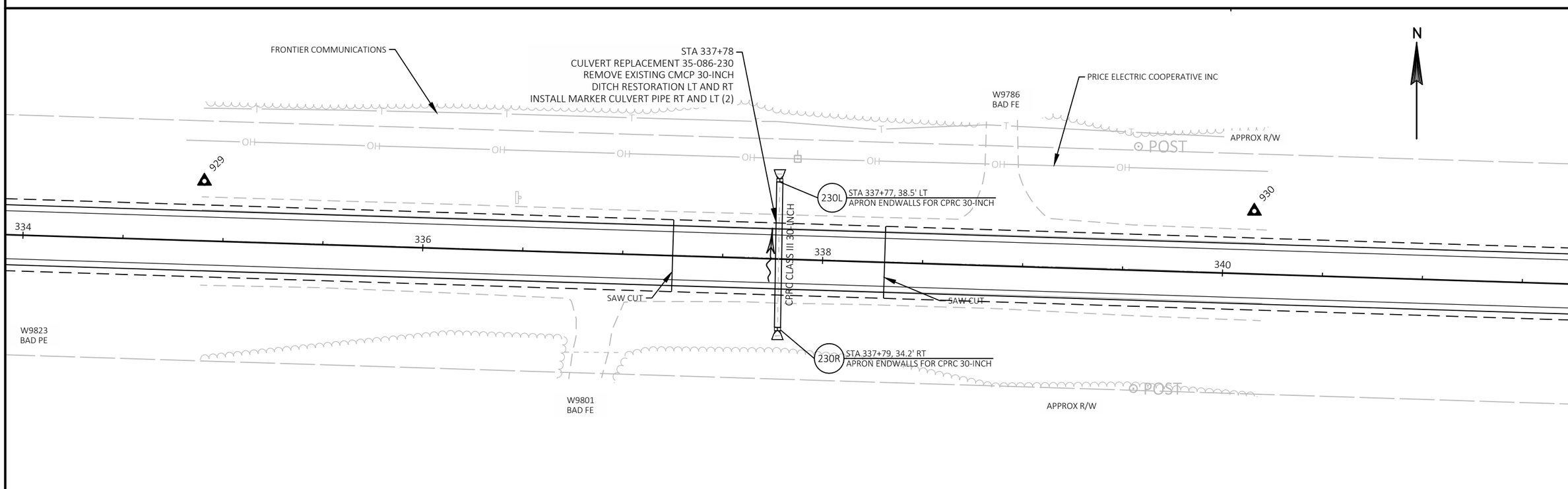

PROJECT NO: 9215-01-63/73	HWY: STH 86	COUNTY: LINCOLN	PLAN DETAIL	SHEET 20	E

FILE NAME : S:\DESIGN\DESIGN PROJECTS\NC REGION PROJECTS\9215-01-03 (STH 86)\C3D\SHEETSPLAN\021201_PD2.DWG
LAYOUT NAME - 310-350
PLOT DATE : 12/18/2018 7:25 AM PLOT BY : ADAM OSYPOWSKI PLOT NAME : PLOT SCALE : 1 IN:50 FT

2

FRONTIER COMMUNICATIONS
APPROX R/W
PRICE ELECTRIC COOPERATIVE INC
PERMITTED WETLAND IMPACTS
N
W9369
BAD FE
260L STA 385+12, 29.4' LT
APRON ENDWALLS FOR CPRC 24-INCH
CPRC CLASS III 24-INCH
382
384
386
388
SAW CUT
SAW CUT
933
932
STA 385+12
CULVERT REPLACEMENT 35-086-260
REMOVE EXISTING CMCP 24-INCH
DITCH RESTORATION LT AND RT
INSTALL MARKER CULVERT PIPE RT AND LT (2)
260R STA 385+13, 25.6' RT
APRON ENDWALLS FOR CPRC 24-INCH
PERMITTED WETLAND IMPACTS
W9383
BAD FE
W9367
BAD PE
EXISTING CULVERT
35-086-250
TO REMAIN
APPROX R/W

2

STA 523+09
CULVERT REPLACEMENT 35-086-320
REMOVE EXISTING CMCP 24-INCH
DITCH RESTORATION LT AND RT
INSTALL MARKER CULVERT PIPE RT AND LT (2)
PERMITTED WETLAND IMPACTS
FRONTIER COMMUNICATIONS
PRICE ELECTRIC COOPERATIVE INC
320L STA 523+09, 40.0' LT
APRON ENDWALLS FOR CPRC 24-INCH
W8369
W8366
BAD PE
N
APPROX R/W
CPRC CLASS III 24-INCH
POST
520
522
524
526
933
934
SAW CUT
SAW CUT
FRONTIER COMMUNICATIONS
320R STA 523+09, 31.2' RT
APRON ENDWALLS FOR CPRC 24-INCH
PERMITTED WETLAND IMPACTS
POST
APPROX R/W
BAD PE

PROJECT NO: 9215-01-63/73	HWY: STH 86	COUNTY: LINCOLN	PLAN DETAIL	SHEET 21	E

FILE NAME : S:\DESIGN\DESIGN PROJECTS\NC REGION PROJECTS\9215-01-03 (STH 86)\C3D\SHEETSPLAN\021201_PD2.DWG
LAYOUT NAME - 390-525
PLOT DATE : 12/18/2018 7:25 AM PLOT BY : ADAM OSYPOWSKI PLOT NAME : PLOT SCALE : 1 IN:50 FT

2

PRICE ELECTRIC COOPERATIVE INC

"BACK WATER HEIGHTS" PRIVATE ROAD BAD

10:1 PAVED SHOULDER TAPER 3 FT TO 6 FT

INSTALL 10 LF CPCS 24-INCH APRON ENDWALL FOR CULVERT PIPE STEEL 24-INCH

STA 555+00.0 - STA 567+81.3 LT
SALVAGED CABLE GUARD
MGS GUARDRAIL 3K
MGS GUARDRAIL TERMINAL EAT (2)

N

APPROX R/W

PERMITTED WETLAND IMPACTS

END GRADING FOR EAT

GUY

GUY

OH

REMOVING RIPRAP(EXISTING HEAVY RIPRAP)
INSTALL RIPRAP HEAVY ON NEW SLOPE

SPIRIT RIVER FLOWAGE

POST

554 556 558 560

OH

SIGN

REMOVING RIPRAP(EXISTING HEAVY RIPRAP)
INSTALL RIPRAP HEAVY ON NEW SLOPE

GUY

W8147
ASPHALT PE

APPROX R/W

FRONTIER COMMUNICATIONS

SPIRIT RIVER FLOWAGE

FRONTIER COMMUNICATIONS
(UNDER WATER-APPROXIMATE LOCATION)

REMOVE EXISTING CULVERT ENDWALL
INSTALL 30 LF CPCS 24-INCH
APRON ENDWALL FOR CULVERT PIPE STEEL 24-INCH

STA 554+28.5 - STA 567+09.8 RT
SALVAGED CABLE GUARD
MGS GUARDRAIL 3K
MGS GUARDRAIL TERMINAL EAT (2)

NOTE: SEE DETAIL "SHOULDER CONSTRUCTION FOR GUARDRAIL AT EXISTING CABLE GUARD LOCATIONS"

2

STA 564+79
CULVERT REPLACEMENT 35-086-340
REMOVE OLD STRUCTURE (EXISTING CPCS 84-INCH)
INSTALL MARKER CULVERT PIPE RT AND LT (2)

N

SPIRIT RIVER FLOWAGE

APPROX R/W

10:1 PAVED SHOULDER TAPER 6 FT TO 3 FT

340L STA 564+81, 30.4' LT
APRON ENDWALLS FOR CPRC 84-INCH

SIGN

562 564 566 568

SAW CUT

SAW CUT

10:1 PAVED SHOULDER TAPER 6 FT TO 3 FT

340R STA 564+78, 32.7' RT
APRON ENDWALLS FOR CPRC 84-INCH

END GRADING FOR EAT

APPROX R/W

SPIRIT RIVER FLOWAGE

PLACE RIPRAP HEAVY ON DISTURBED AREAS BELOW THE WATER LINE TO THE LEVEL OF THE ADJACENT RIPRAP

FRONTIER COMMUNICATIONS
(UNDER WATER-APPROXIMATE LOCATION)

PERMITTED WETLAND IMPACTS

BAD EXIT SPIRIT RESERVOIR BOAT LANDING

REMOVING RIPRAP(EXISTING HEAVY RIPRAP)
INSTALL RIPRAP HEAVY ON NEW SLOPE

NOTE: SEE DETAIL "SHOULDER CONSTRUCTION FOR GUARDRAIL AT EXISTING CABLE GUARD LOCATIONS"

PROJECT NO: 9215-01-63/73	HWY: STH 86	COUNTY: LINCOLN	PLAN DETAIL	SHEET 22	E

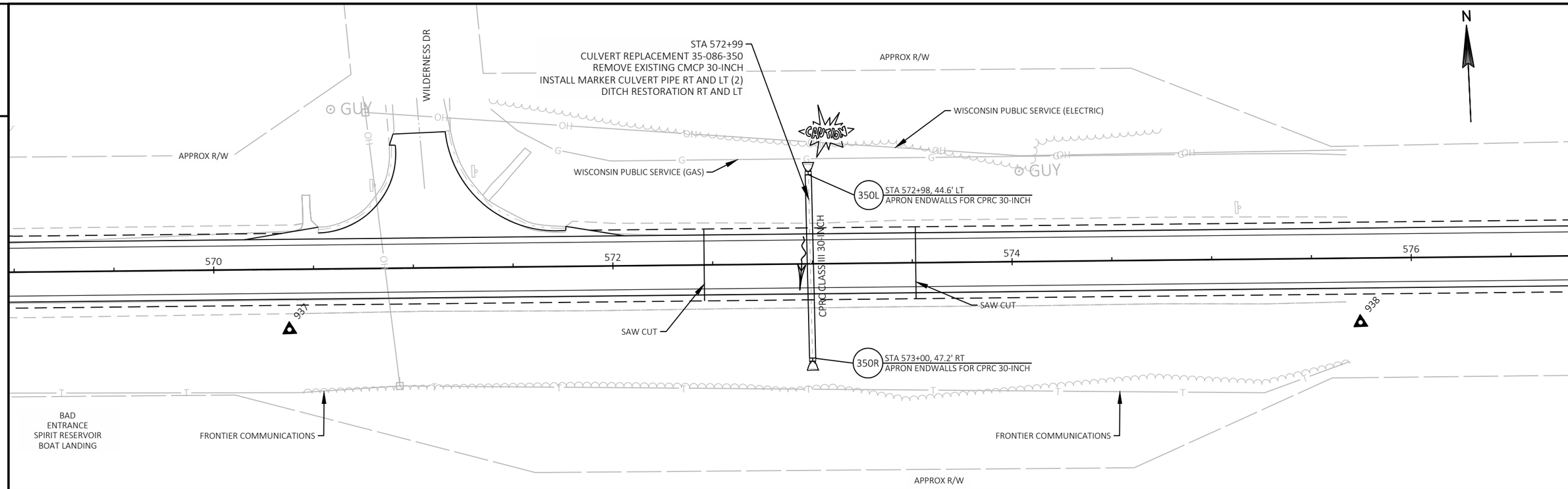

PROJECT NO: 9215-01-63/73	HWY: STH 86	COUNTY: LINCOLN	PLAN DETAIL	SHEET 23	E

FILE NAME : S:\DESIGN\DESIGN PROJECTS\NC REGION PROJECTS\9215-01-03 (STH 86)\C3D\SHEETSPLAN\021201_PD2.DWG
LAYOUT NAME - 555-590 (2)
PLOT DATE : 12/18/2018 7:25 AM PLOT BY : ADAM OSYPOWSKI PLOT NAME : PLOT SCALE : ##########

2

STA 797+51.9 - STA 805+70.6 LT
SALVAGED CABLE GUARD
MGS GUARDRAIL 3K
MGS GUARDRAIL TERMINAL EAT (2)

RIPRAP HEAVY

PERMITTED WETLAND IMPACTS

APPROX R/W

CHARTER COMMUNICATIONS

530L STA 801+07, 33.3' LT
APRON ENDWALLS FOR CPRC 30-INCH

CHARTER COMMUNICATIONS

10:1 PAVED SHOULDER TAPER
3 FT TO 6 FT

796 798 800 802

CPRC CLASS III 30-INCH

SAW CUT

SAW CUT

PERMITTED WETLAND IMPACTS

530R STA 801+04, 33.6' RT
APRON ENDWALLS FOR CPRC 30-INCH

FRONTIER COMMUNICATIONS

APPROX R/W

STA 801+05
CULVERT REPLACEMENT 35-086-530
REMOVE EXISTING CMCP 30-INCH
INSTALL MARKER CULVERT PIPE RT AND LT (2)

WISCONSIN PUBLIC SERVICE (GAS)

WISCONSIN PUBLIC SERVICE (ELECTRIC)

EXISTING CULVERT
35-086-520
TO REMAIN

NOTE: SEE DETAIL "SHOULDER CONSTRUCTION FOR GUARDRAIL AT EXISTING CABLE GUARD LOCATIONS"

N

2

PERMITTED WETLAND IMPACTS

10:1 PAVED SHOULDER TAPER
6 FT TO 3 FT

EXCEPTION TO NET CL LENGTH
TOMAHAWK RAILWAY CROSSING
STA 806+47.24 - STA 806+63.54

TOMAHAWK RAILWAY

REMOVING RIPRAP(EXISTING HEAVY RIPRAP)
INSTALL RIPRAP HEAVY ON NEW SLOPE

END GRADING FOR EAT

APPROX R/W

CHARTER COMMUNICATIONS

CHARTER COMMUNICATIONS

804 806 808 810

940

APPROX R/W

FRONTIER COMMUNICATIONS

EXISTING CULVERT
35-086-550
TO REMAIN

TOMAHAWK MUNICIPAL
WATER AND SEWER UTILITY (WATER)

EXISTING CULVERT
35-086-540
TO REMAIN

WISCONSIN PUBLIC SERVICE (ELECTRIC)

NOTE: SEE DETAIL "SHOULDER CONSTRUCTION FOR GUARDRAIL AT EXISTING CABLE GUARD LOCATIONS"

PROJECT NO: 9215-01-63/73	HWY: STH 86	COUNTY: LINCOLN	PLAN DETAIL	SHEET 24	E

FILE NAME : S:\DESIGN\DESIGN PROJECTS\NC REGION PROJECTS\9215-01-03 (STH 86)\C3D\SHEETSPLAN\021201_PD2.DWG
LAYOUT NAME - 785-805
PLOT DATE : 12/18/2018 7:25 AM PLOT BY : ADAM OSYPOWSKI PLOT NAME : PLOT SCALE : 1 IN:50 FT

2

BEGIN PROJECT 9215-01-73
STA 30+24.47

EROSION MAT
CLASS 1, TYPE B (URBAN)

TEMPORARY SMALL
ANIMAL TURNAROUND

NORTH FORK

W12046
ASPHALT PE

APPROX R/W

SILT FENCE RELIEF

TEMPORARY SMALL
ANIMAL TURNAROUND

EROSION MAT
CLASS 1, TYPE B (URBAN)

PERMITTED WETLAND IMPACTS

30 32 34 36

SPIRIT RIVER

EROSION MAT
CLASS 1, TYPE B (URBAN)

TEMPORARY SMALL
ANIMAL TURNAROUND

TEMPORARY SMALL
ANIMAL TURNAROUND

EROSION MAT
CLASS 1, TYPE B (URBAN)

PERMITTED WETLAND IMPACTS

GUY POLE
GUY

APPROX R/W

N

LEGEND

- SILT FENCE
- EROSION MAT (TYPE)
- WETLAND AREA / PERMITTED WETLAND AREA
- ROCK BAGS
- CULVERT PIPE CHECKS

2

APPROX R/W

EROSION MAT
CLASS 1, TYPE B (URBAN)

PERMITTED WETLAND IMPACTS

SQUAW
CREEK

EROSION MAT
CLASS 1, TYPE B (URBAN)

PERMITTED WETLAND IMPACTS

TEMPORARY SMALL
ANIMAL TURNAROUND

TEMPORARY SMALL
ANIMAL TURNAROUND

206

208

204

EROSION MAT
CLASS 1, TYPE B (URBAN)

TEMPORARY SMALL
ANIMAL TURNAROUND

EROSION MAT
CLASS 1, TYPE B (URBAN)

APPROX R/W

PERMITTED WETLAND IMPACTS

SPIRIT FALLS AVE

GUY

N

PROJECT NO: 9215-01-63/73	HWY: STH 86	COUNTY: LINCOLN	EROSION CONTROL	SHEET 25	E

FILE NAME : S:\DESIGN\DESIGN PROJECTS\NC REGION PROJECTS\9215-01-03 (STH 86)\C3D\SHEETSPLAN\022001_EC.DWG
LAYOUT NAME - 35-205

PLOT DATE : 3/1/2019 8:21 AM PLOT BY : ADAM OSYPOWSKI PLOT NAME : PLOT SCALE : 1 IN:50 FT

WISDOT/CADDS SHEET 44

2

APPROX R/W

CTH T

CULVERT REPLACEMENT
35-086-140

W10689
BAD FE

APPROX R/W

N

PERMITTED WETLAND IMPACTS

216

218

220

222

PERMITTED WETLAND IMPACTS

SILT FENCE RELIEF

APPROX R/W

LEGEND

SILT FENCE

EROSION MAT (TYPE)

WETLAND AREA / PERMITTED WETLAND AREA

ROCK BAGS

CULVERT PIPE CHECKS

GUY

GUY

OH

CULVERT REPLACEMENT
35-086-150

GUY

N

PERMITTED WETLAND IMPACTS

248

250

252

254

PERMITTED WETLAND IMPACTS

SILT FENCE RELIEF

2

PROJECT NO: 9215-01-63/73	HWY: STH 86	COUNTY: LINCOLN	EROSION CONTROL	SHEET 26	E

FILE NAME : S:\DESIGN\DESIGN PROJECTS\NC REGION PROJECTS\9215-01-03 (STH 86)\C3D\SHEETSPLAN\022001_EC.DWG
LAYOUT NAME - 220-250

PLOT DATE : 3/1/2019 8:21 AM PLOT BY : ADAM OSYPOWSKI PLOT NAME : PLOT SCALE : 1 IN:50 FT

WISDOT/CADDS SHEET 44

2

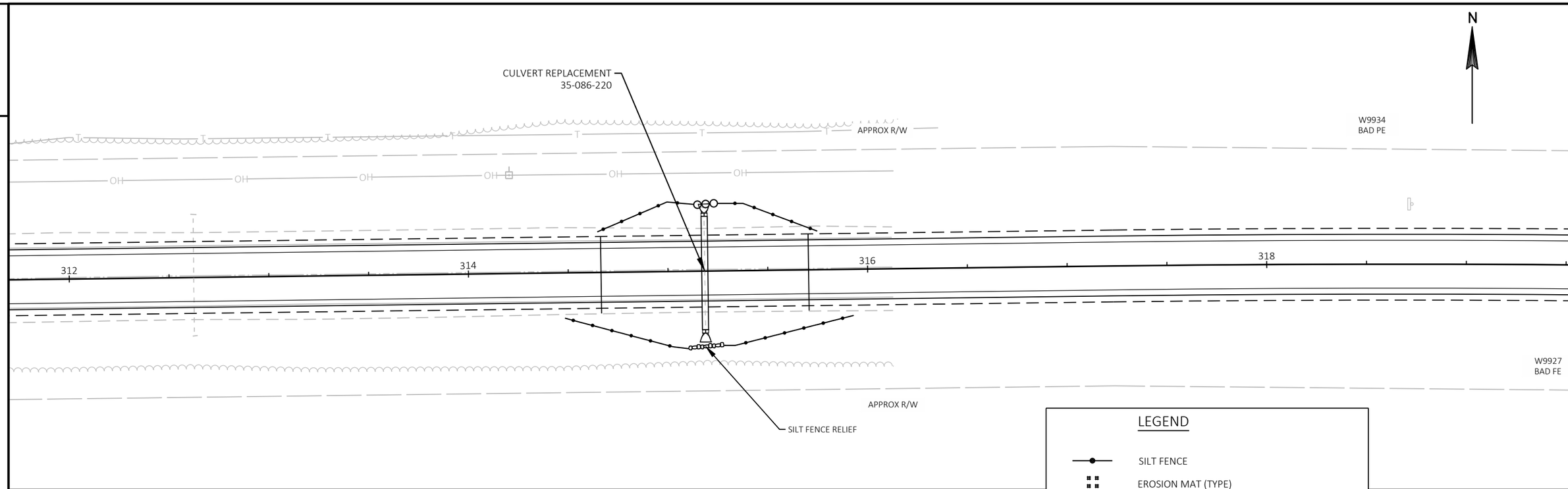

LEGEND

- SILT FENCE
- EROSION MAT (TYPE)
- WETLAND AREA / PERMITTED WETLAND AREA
- ROCK BAGS
- CULVERT PIPE CHECKS

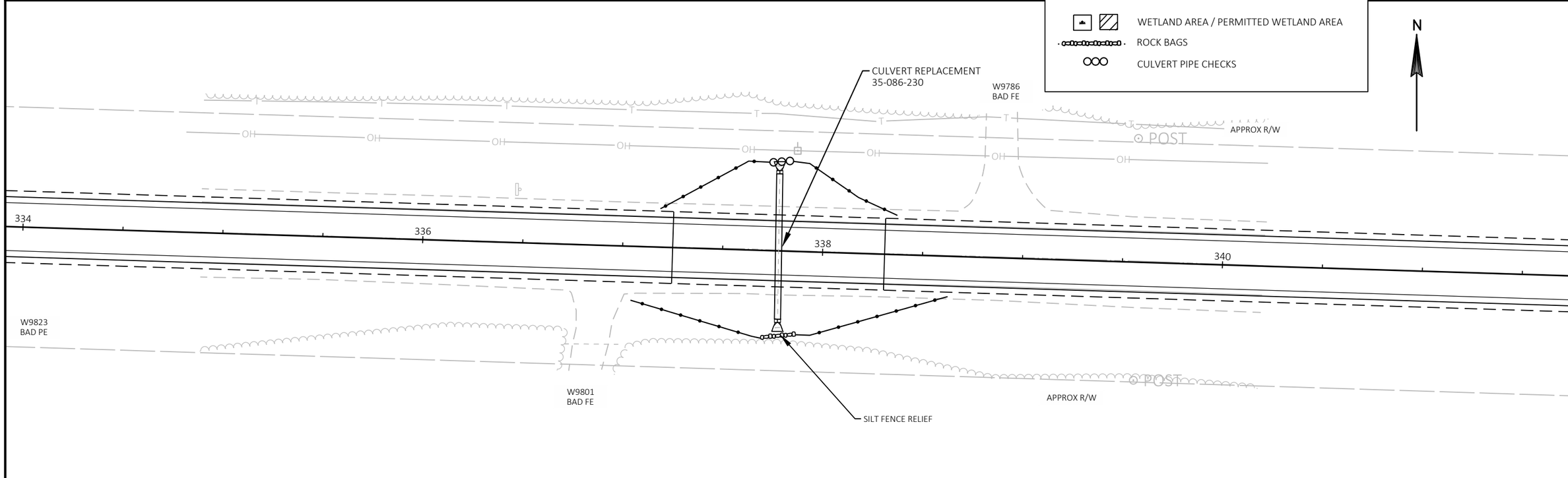

2

PROJECT NO: 9215-01-63/73	HWY: STH 86	COUNTY: LINCOLN	EROSION CONTROL	SHEET 27	E

FILE NAME : S:\DESIGN\DESIGN PROJECTS\NC REGION PROJECTS\9215-01-03 (STH 86)\C3D\SHEETSPLAN\022001_EC.DWG
LAYOUT NAME - 310-350
PLOT DATE : 3/1/2019 8:21 AM PLOT BY : ADAM OSYPOWSKI PLOT NAME : PLOT SCALE : 1 IN:50 FT

2

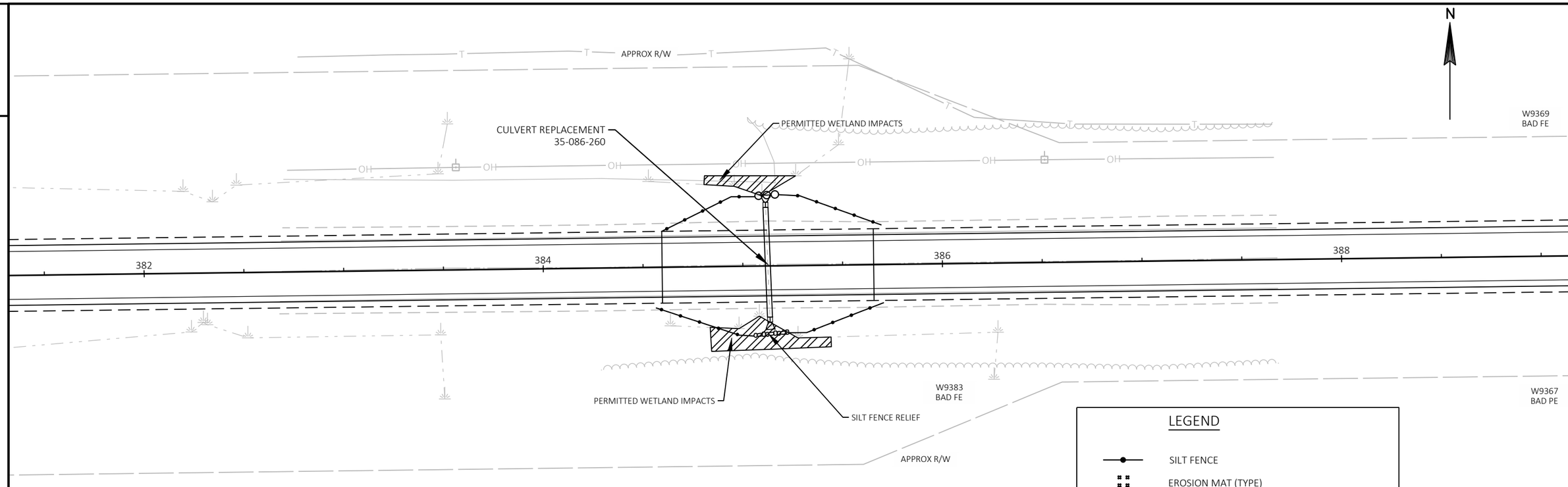

2

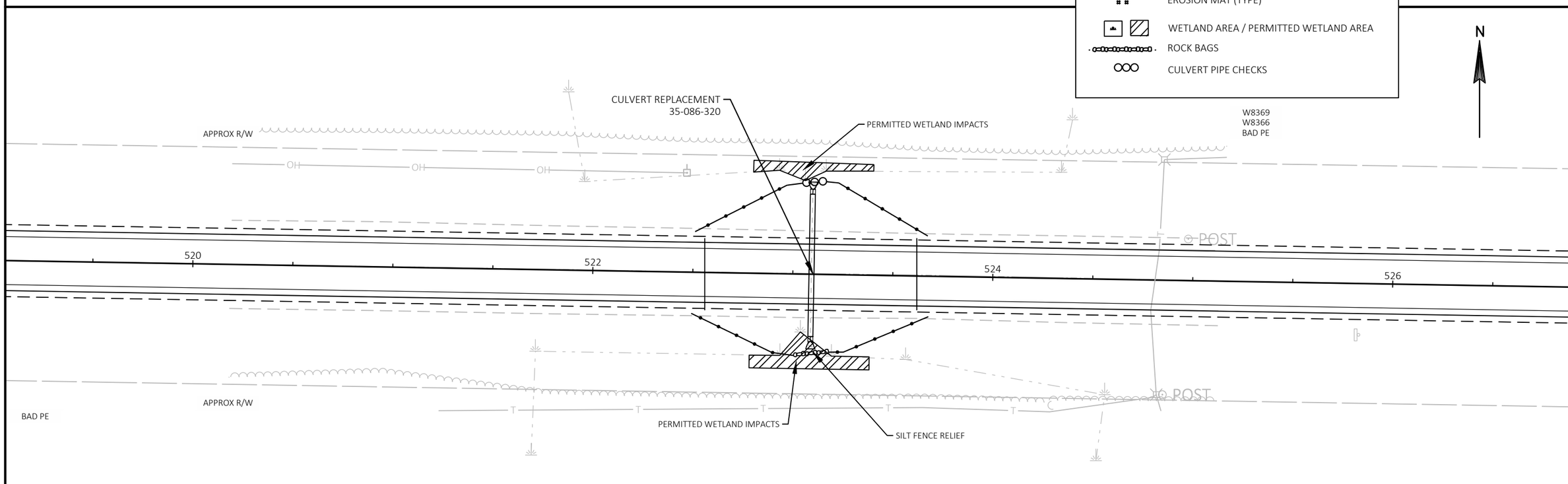

PROJECT NO: 9215-01-63/73	HWY: STH 86	COUNTY: LINCOLN	EROSION CONTROL	SHEET 28	E

FILE NAME : S:\DESIGN\DESIGN PROJECTS\NC REGION PROJECTS\9215-01-03 (STH 86)\C3D\SHEETSPLAN\022001_EC.DWG
LAYOUT NAME - 390-525
PLOT DATE : 3/1/2019 8:21 AM PLOT BY : ADAM OSYPOWSKI PLOT NAME : PLOT SCALE : 1 IN:50 FT

2

"BACK WATER HEIGHTS" PRIVATE ROAD BAD

TEMPORARY SMALL ANIMAL TURNAROUND

SILT FENCE RELIEF

APPROX R/W

GUY

GUY

OH

PERMITTED WETLAND IMPACTS

TEMPORARY SMALL ANIMAL TURNAROUND

SPIRIT RIVER FLOWAGE

POST

N

554

556

558

560

OH

SIGN

PERMITTED WETLAND IMPACTS

GUY

W8147 ASPHALT PE

SILT FENCE RELIEF

TEMPORARY SMALL ANIMAL TURNAROUND

APPROX R/W

TEMPORARY SMALL ANIMAL TURNAROUND

SPIRIT RIVER FLOWAGE

LEGEND

- SILT FENCE
- EROSION MAT (TYPE)
- WETLAND AREA / PERMITTED WETLAND AREA
- ROCK BAGS
- CULVERT PIPE CHECKS

CULVERT REPLACEMENT 35-086-340

SPIRIT RIVER FLOWAGE

APPROX R/W

N

TEMPORARY SMALL ANIMAL TURNAROUND

562

564

566

568

TEMPORARY SMALL ANIMAL TURNAROUND

TEMPORARY SMALL ANIMAL TURNAROUND

APPROX R/W

SILT FENCE RELIEF

SPIRIT RIVER FLOWAGE

PERMITTED WETLAND IMPACTS

BAD EXIT SPIRIT RESERVOIR BOAT LANDING

2

PROJECT NO: 9215-01-63/73	HWY: STH 86	COUNTY: LINCOLN	EROSION CONTROL	SHEET 29	E

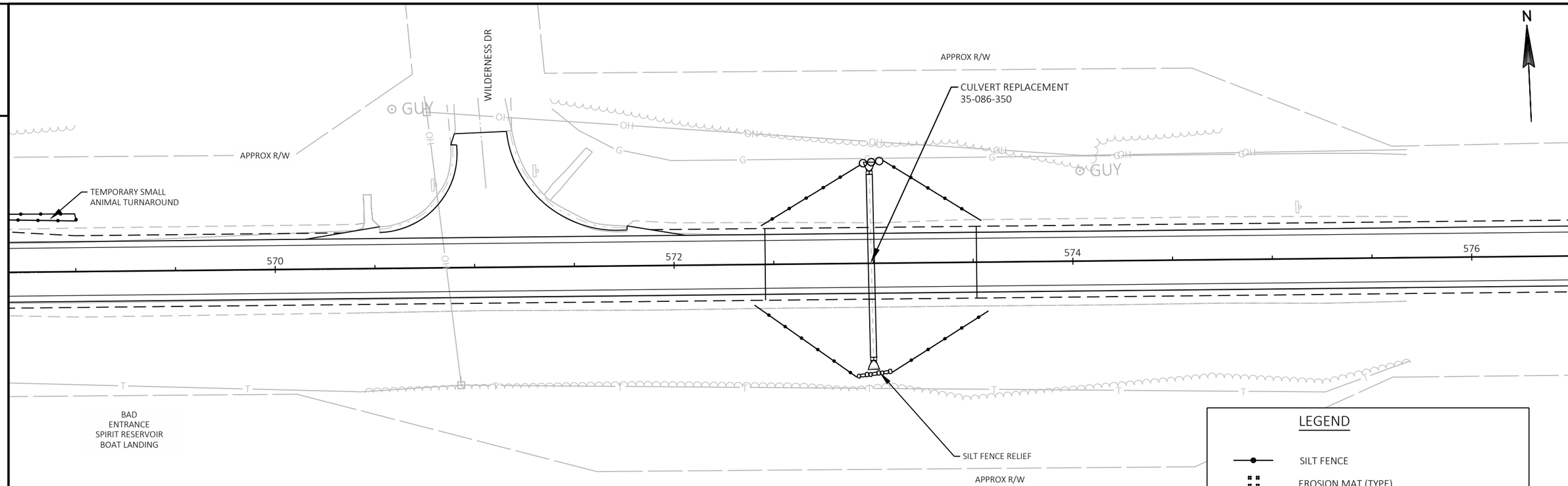

LEGEND

- SILT FENCE
- EROSION MAT (TYPE)
- WETLAND AREA / PERMITTED WETLAND AREA
- ROCK BAGS
- CULVERT PIPE CHECKS

2

CULVERT REPLACEMENT
35-086-530

SILT FENCE RELIEF

APPROX R/W

PERMITTED WETLAND IMPACTS

796 798 800 802

GUY

POST

APPROX R/W

PERMITTED WETLAND IMPACTS

N

LEGEND

- SILT FENCE
- EROSION MAT (TYPE)
- WETLAND AREA / PERMITTED WETLAND AREA
- ROCK BAGS
- CULVERT PIPE CHECKS

TOMAHAWK RAILWAY

APPROX R/W

PERMITTED WETLAND IMPACTS

GUY

SIGN

SIGN

804 806 808 810

APPROX R/W

N

PROJECT NO: 9215-01-63/73	HWY: STH 86	COUNTY: LINCOLN	EROSION CONTROL	SHEET 31	E

FILE NAME : S:\DESIGN\DESIGN PROJECTS\NC REGION PROJECTS\9215-01-03 (STH 86)\C3D\SHEETSPLAN\022001_EC.DWG
LAYOUT NAME - 785-805

PLOT DATE : 3/1/2019 8:22 AM PLOT BY : ADAM OSYPOWSKI PLOT NAME : PLOT SCALE : 1 IN:50 FT

WISDOT/CADDS SHEET 44

2

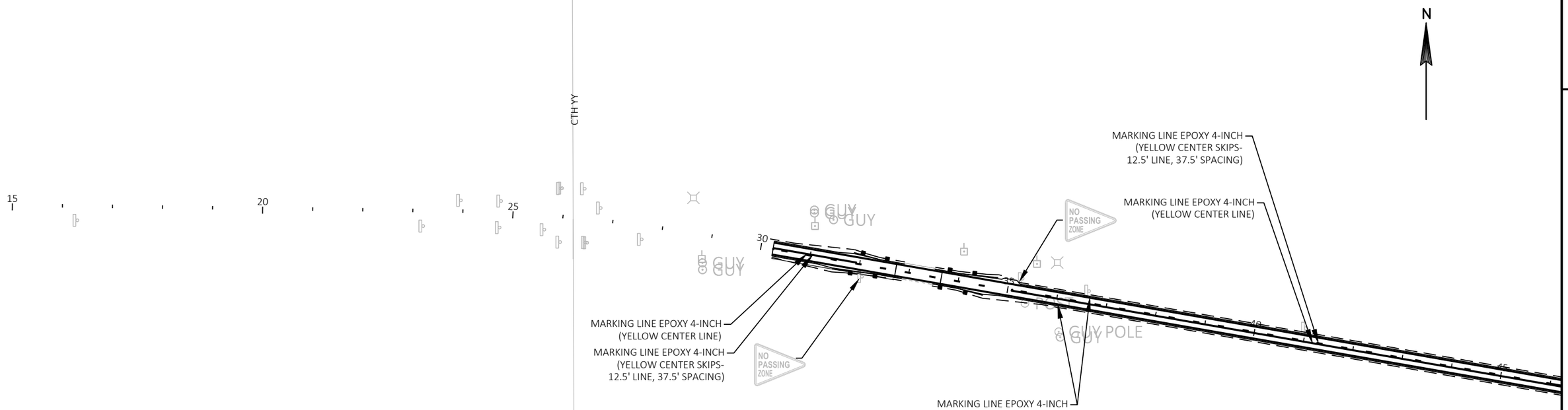

EXACT LOCATIONS OF NO PASSING ZONE LIMITS AND MOVING OF EXISTING NO PASSING ZONE SIGNS TO BE DETERMINED BY THE ITEM "LOCATING NO PASSING ZONES". SEE STANDARD DETAIL DRAWINGS. ALL OTHER EXISTING SIGNS TO REMAIN UNLESS NOTED.

2

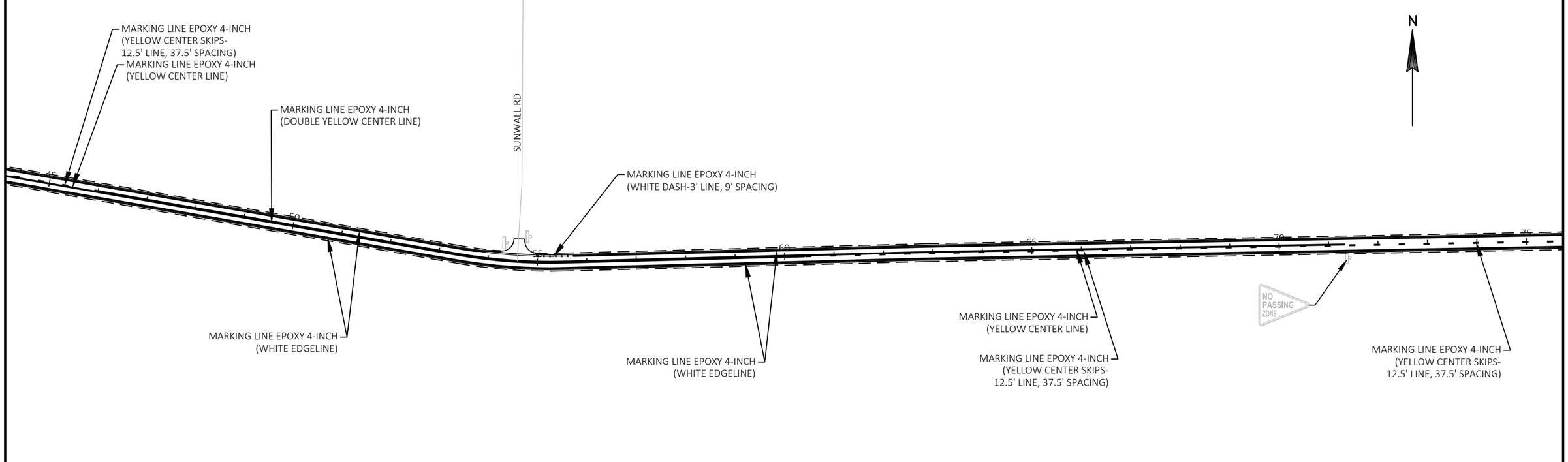

PROJECT NO: 9215-01-63/73	HWY: STH 86	COUNTY: LINCOLN	PERMANENT SIGNING AND PAVEMENT MARKING	SHEET 32	E

FILE NAME : S:\DESIGN\DESIGN PROJECTS\NC REGION PROJECTS\9215-01-03 (STH 86)\C3D\SHEETSPLAN\024501_PM_NEW.DWG
LAYOUT NAME - 15-75
PLOT DATE : 12/17/2018 9:08 AM PLOT BY : ADAM OSYPOWSKI PLOT NAME : PLOT SCALE : 1 IN:200 FT

2

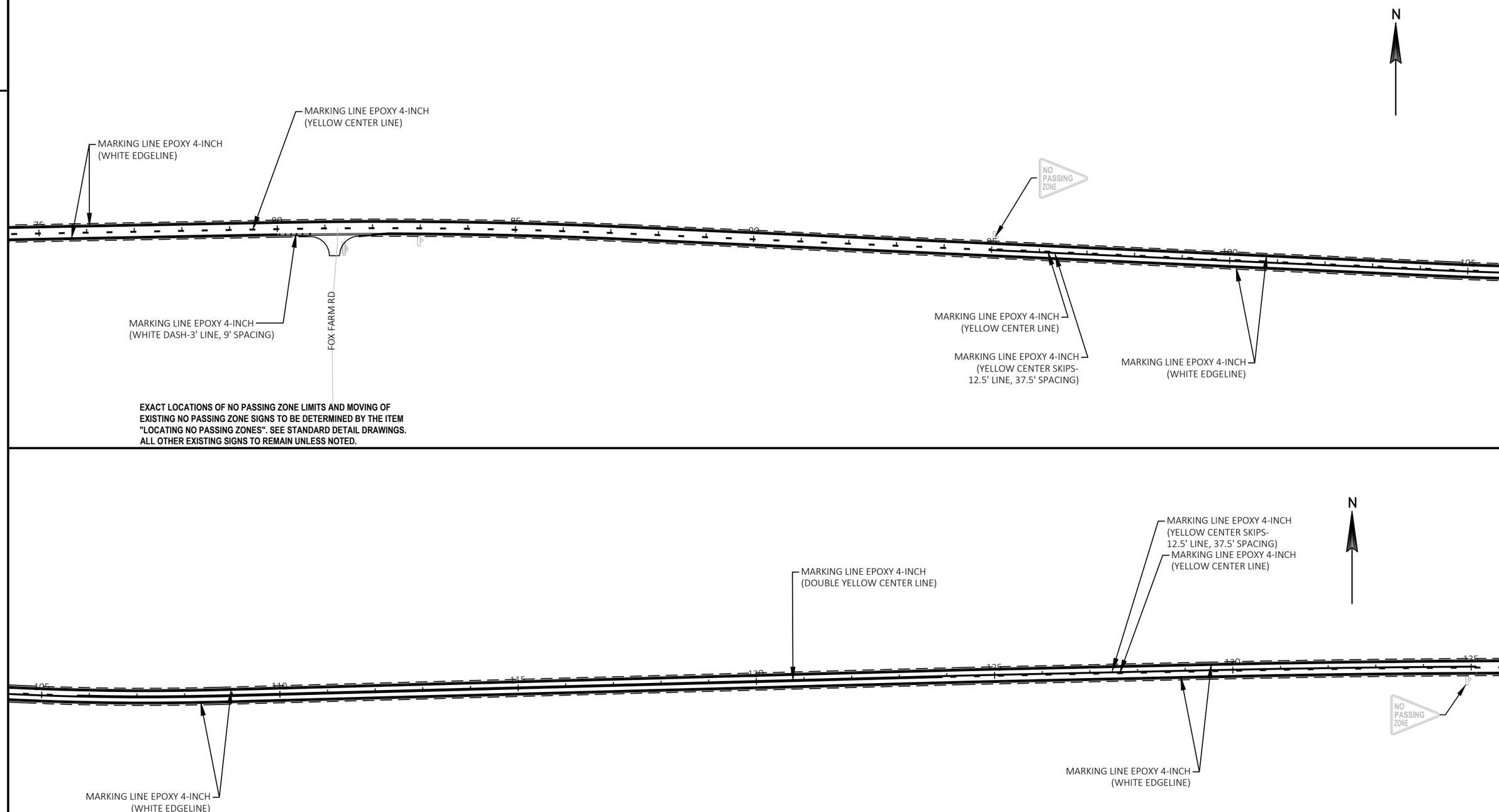

EXACT LOCATIONS OF NO PASSING ZONE LIMITS AND MOVING OF EXISTING NO PASSING ZONE SIGNS TO BE DETERMINED BY THE ITEM "LOCATING NO PASSING ZONES". SEE STANDARD DETAIL DRAWINGS. ALL OTHER EXISTING SIGNS TO REMAIN UNLESS NOTED.

2

PROJECT NO: 9215-01-63/73	HWY: STH 86	COUNTY: LINCOLN	PERMANENT SIGNING AND PAVEMENT MARKING	SHEET 33	E

2

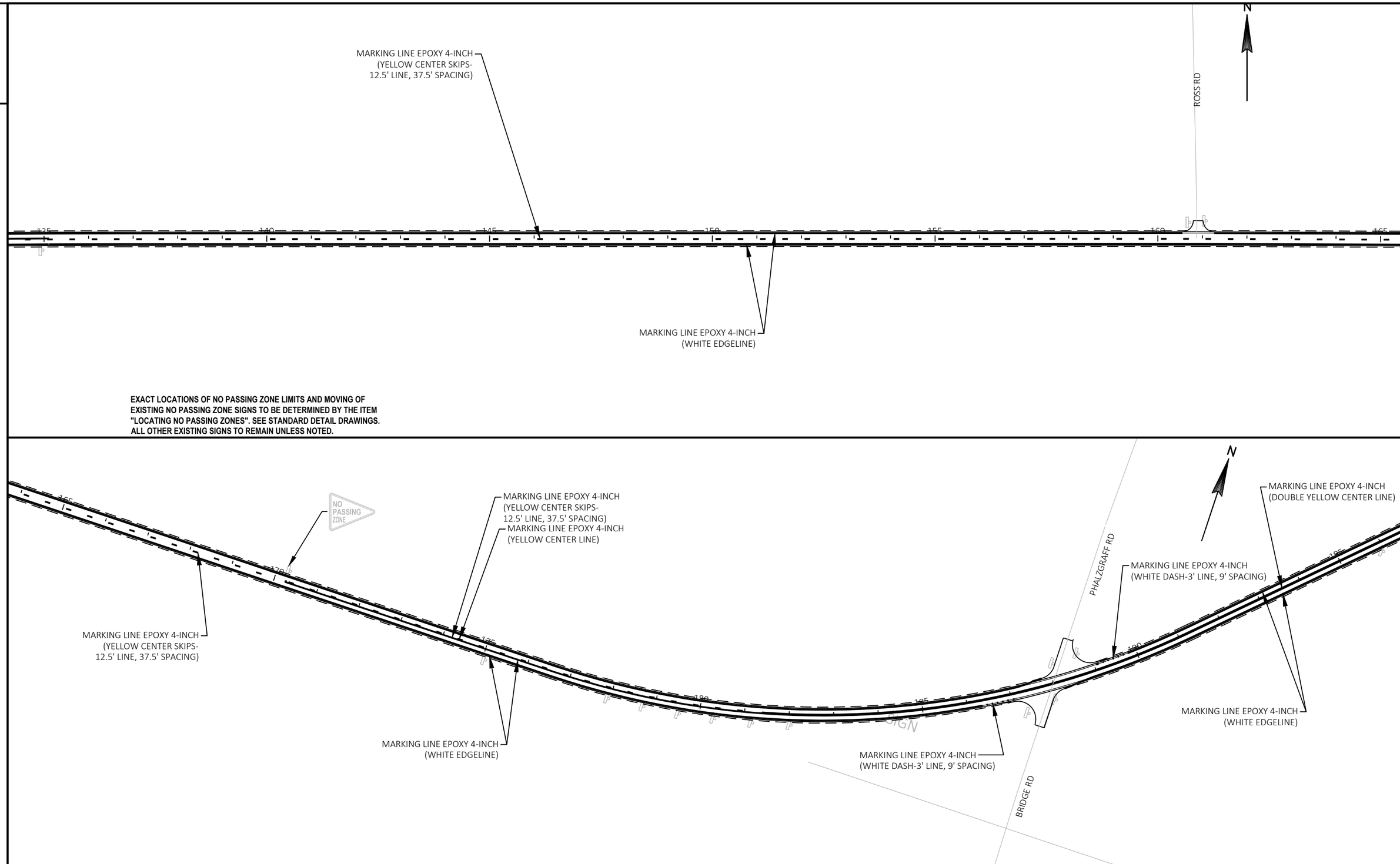

EXACT LOCATIONS OF NO PASSING ZONE LIMITS AND MOVING OF EXISTING NO PASSING ZONE SIGNS TO BE DETERMINED BY THE ITEM "LOCATING NO PASSING ZONES". SEE STANDARD DETAIL DRAWINGS. ALL OTHER EXISTING SIGNS TO REMAIN UNLESS NOTED.

PROJECT NO: 9215-01-63/73	HWY: STH 86	COUNTY: LINCOLN	PERMANENT SIGNING AND PAVEMENT MARKING	SHEET 34	E

2

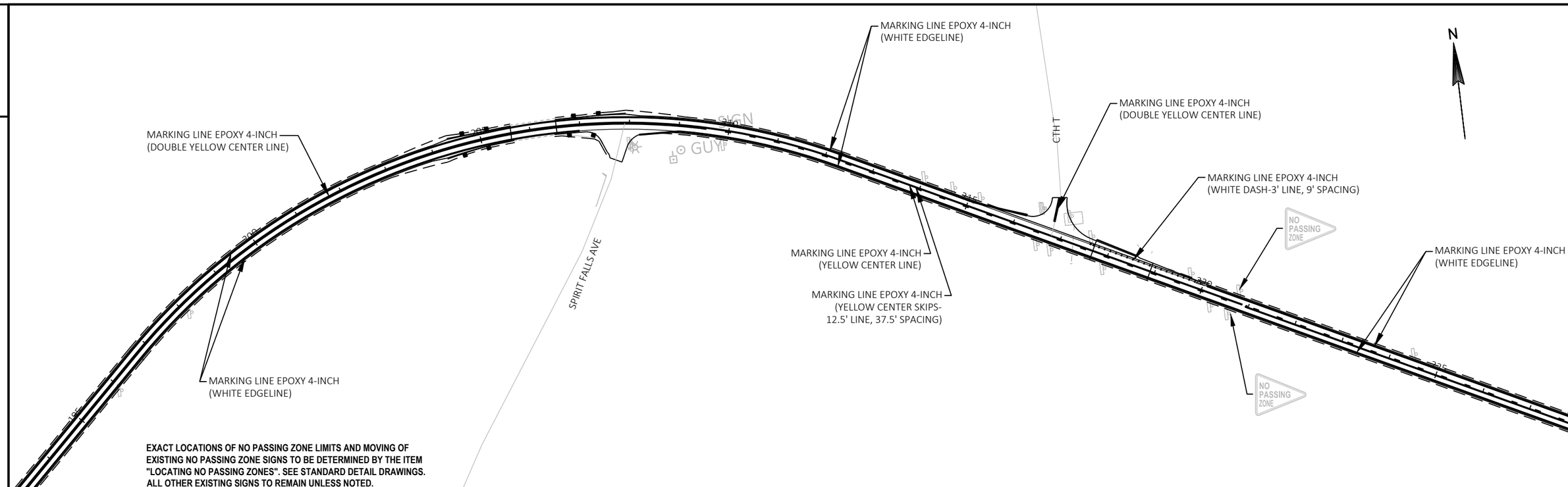

2

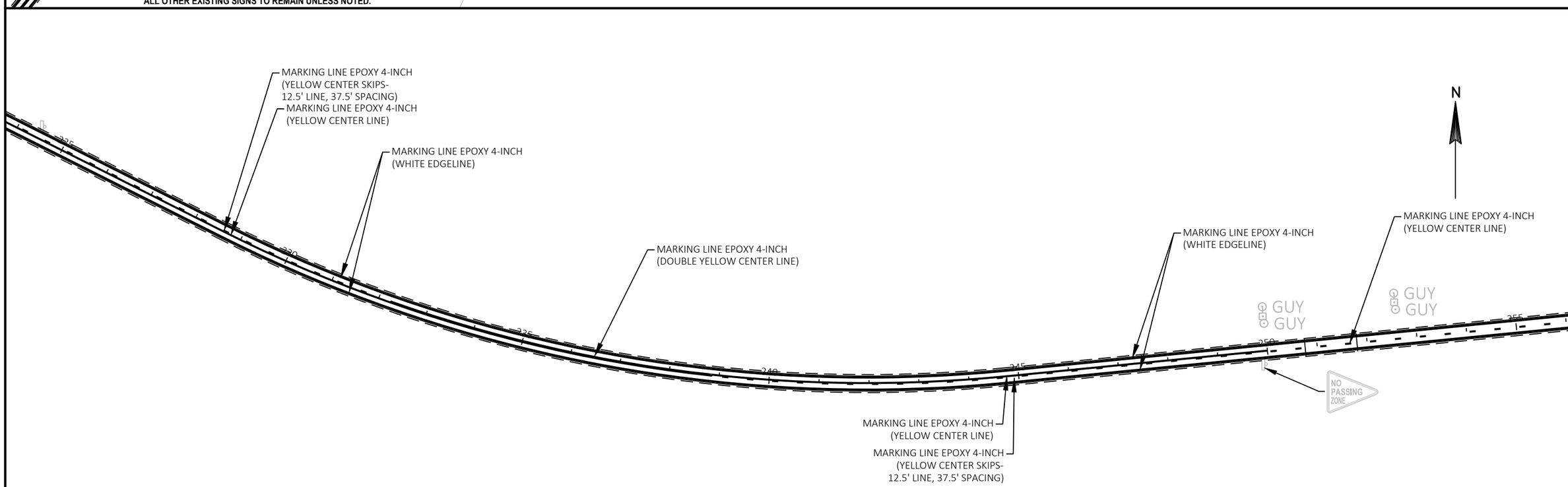

PROJECT NO: 9215-01-63/73	HWY: STH 86	COUNTY: LINCOLN	PERMANENT SIGNING AND PAVEMENT MARKING	SHEET 35	E

2

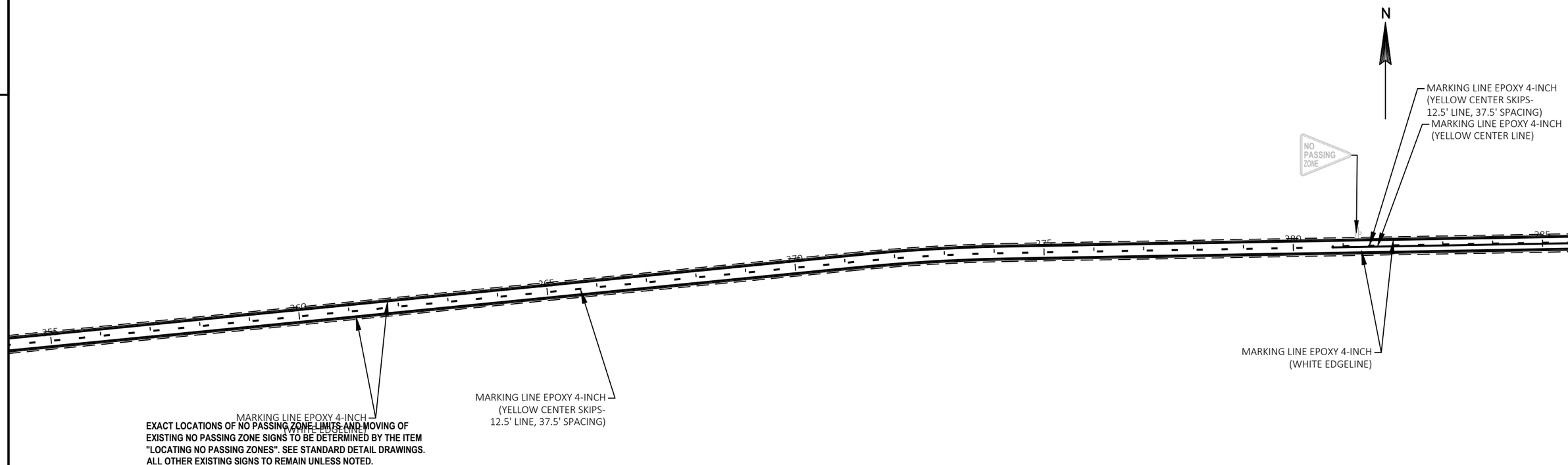

EXACT LOCATIONS OF NO PASSING ZONE LIMITS AND MOVING OF EXISTING NO PASSING ZONE SIGNS TO BE DETERMINED BY THE ITEM "LOCATING NO PASSING ZONES". SEE STANDARD DETAIL DRAWINGS. ALL OTHER EXISTING SIGNS TO REMAIN UNLESS NOTED.

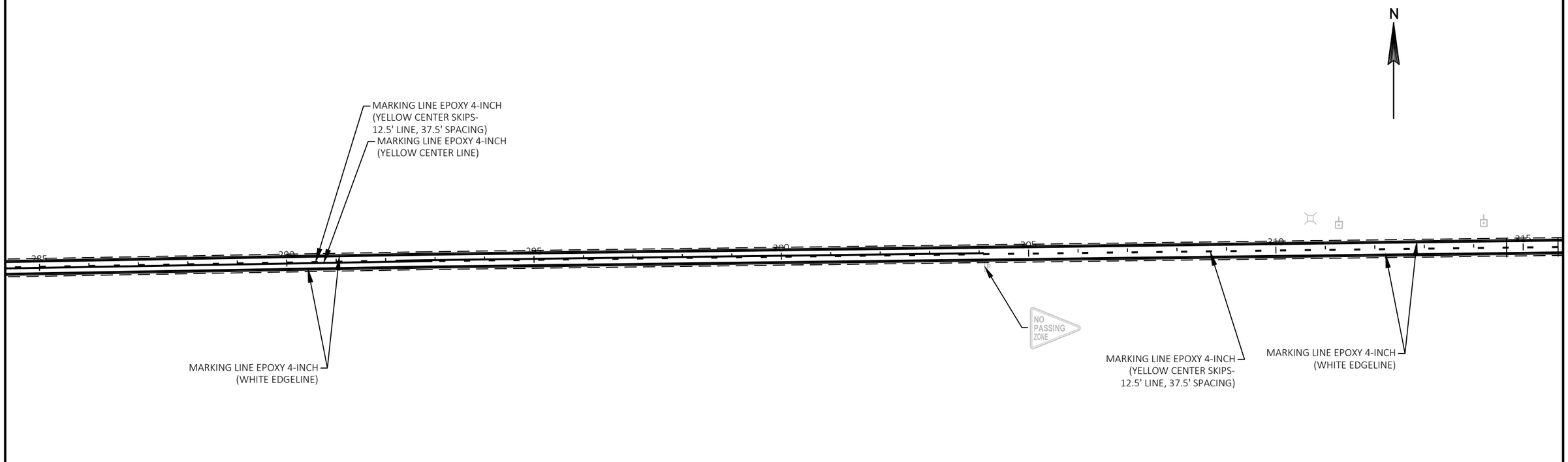

PROJECT NO: 9215-01-63/73	HWY: STH 86	COUNTY: LINCOLN	PERMANENT SIGNING AND PAVEMENT MARKING	SHEET 36	E

FILE NAME : S:\DESIGN\DESIGN PROJECTS\NC REGION PROJECTS\9215-01-03 (STH 86)\C3D\SHEETSPLAN\024501_PM_NEW.DWG
LAYOUT NAME - 255-315
PLOT DATE : 12/17/2018 9:09 AM PLOT BY : ADAM OSYPOWSKI PLOT NAME : PLOT SCALE : 1 IN:200 FT

2

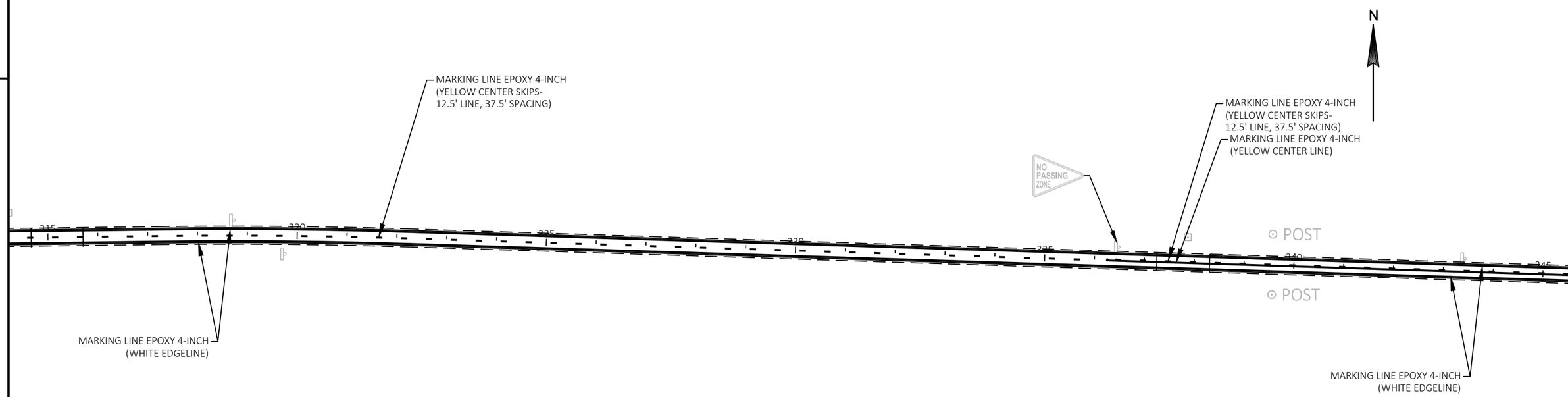

EXACT LOCATIONS OF NO PASSING ZONE LIMITS AND MOVING OF EXISTING NO PASSING ZONE SIGNS TO BE DETERMINED BY THE ITEM "LOCATING NO PASSING ZONES". SEE STANDARD DETAIL DRAWINGS. ALL OTHER EXISTING SIGNS TO REMAIN UNLESS NOTED.

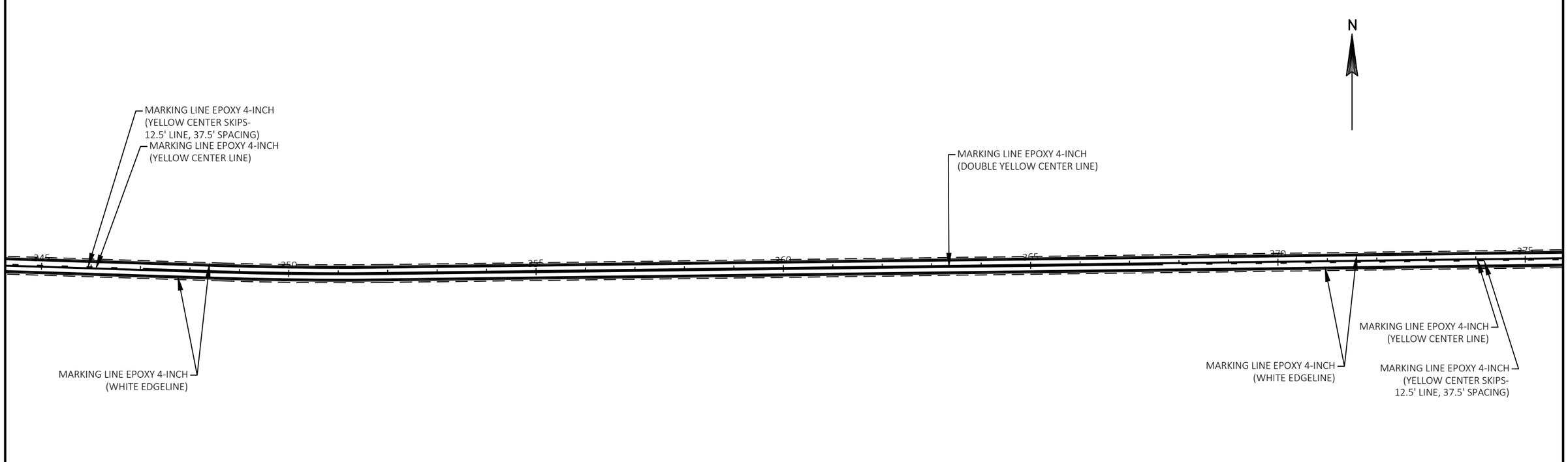

2

PROJECT NO: 9215-01-63/73	HWY: STH 86	COUNTY: LINCOLN	PERMANENT SIGNING AND PAVEMENT MARKING	SHEET 37	E

2

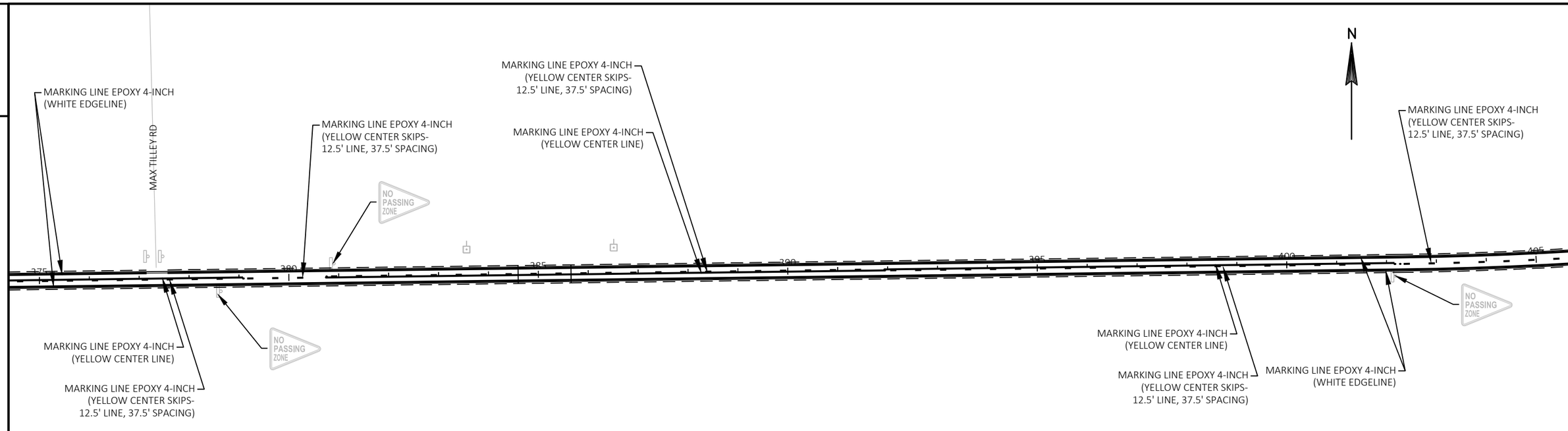

EXACT LOCATIONS OF NO PASSING ZONE LIMITS AND MOVING OF EXISTING NO PASSING ZONE SIGNS TO BE DETERMINED BY THE ITEM "LOCATING NO PASSING ZONES". SEE STANDARD DETAIL DRAWINGS. ALL OTHER EXISTING SIGNS TO REMAIN UNLESS NOTED.

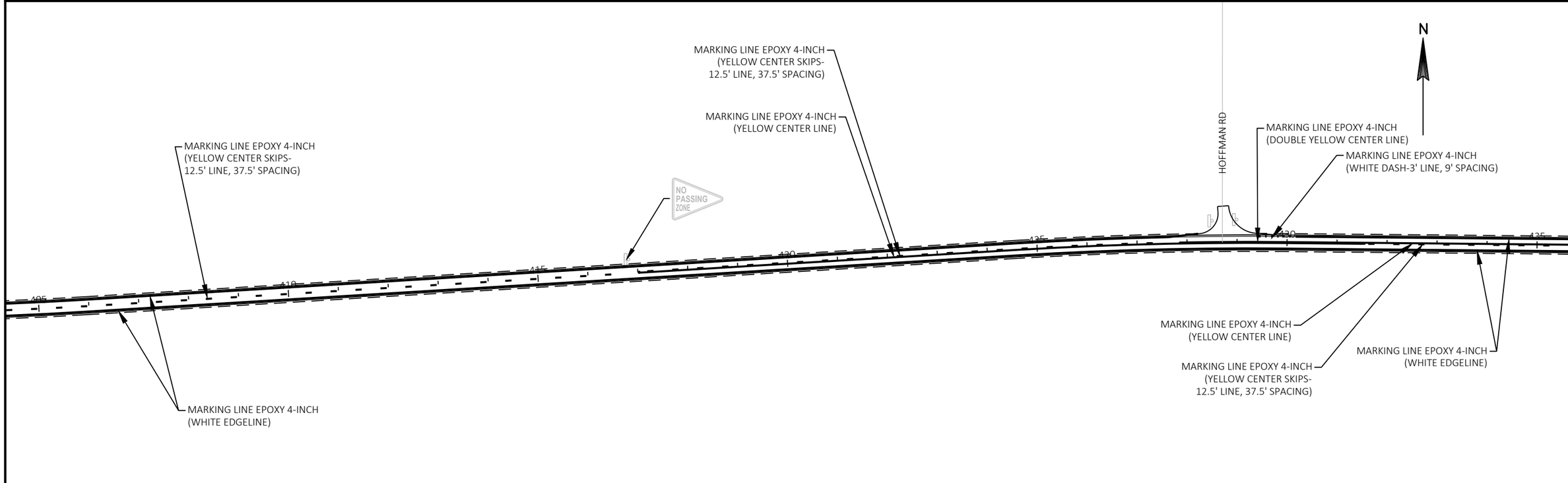

2

PROJECT NO: 9215-01-63/73	HWY: STH 86	COUNTY: LINCOLN	PERMANENT SIGNING AND PAVEMENT MARKING	SHEET 38	E

FILE NAME : S:\DESIGN\DESIGN PROJECTS\NC REGION PROJECTS\9215-01-03 (STH 86)\C3D\SHEETSPLAN\024501_PM_NEW.DWG
LAYOUT NAME - 375-435
PLOT DATE : 12/17/2018 9:09 AM PLOT BY : ADAM OSYPOWSKI PLOT NAME : PLOT SCALE : 1 IN:200 FT

2

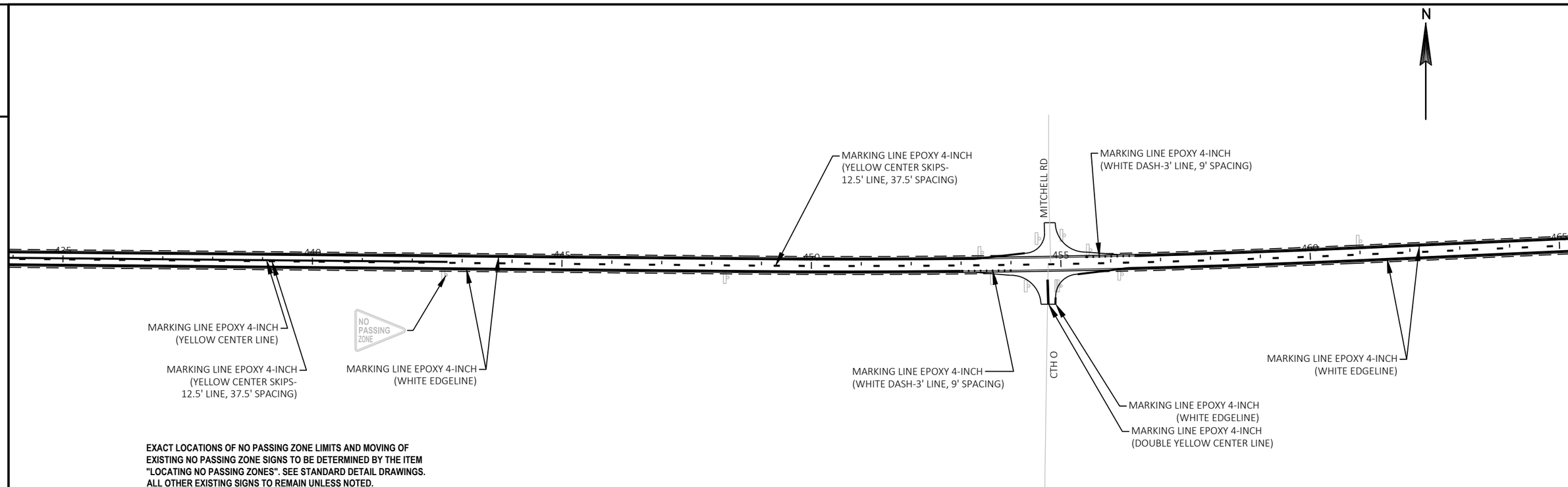

EXACT LOCATIONS OF NO PASSING ZONE LIMITS AND MOVING OF EXISTING NO PASSING ZONE SIGNS TO BE DETERMINED BY THE ITEM "LOCATING NO PASSING ZONES". SEE STANDARD DETAIL DRAWINGS. ALL OTHER EXISTING SIGNS TO REMAIN UNLESS NOTED.

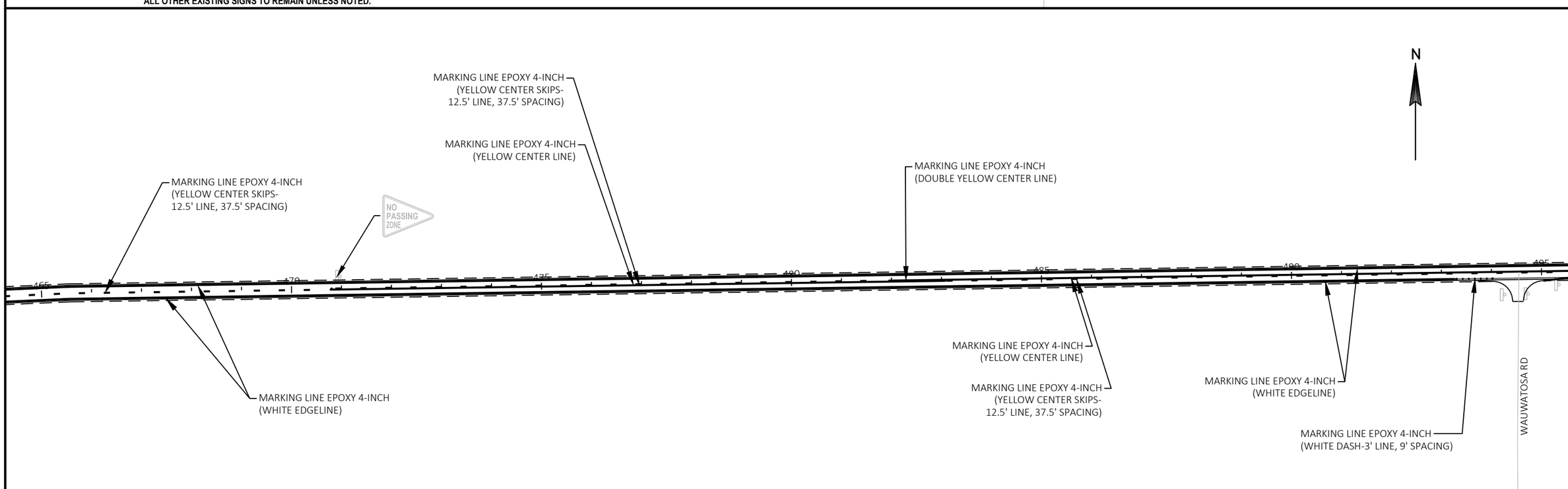

PROJECT NO: 9215-01-63/73	HWY: STH 86	COUNTY: LINCOLN	PERMANENT SIGNING AND PAVEMENT MARKING	SHEET 39	E

2

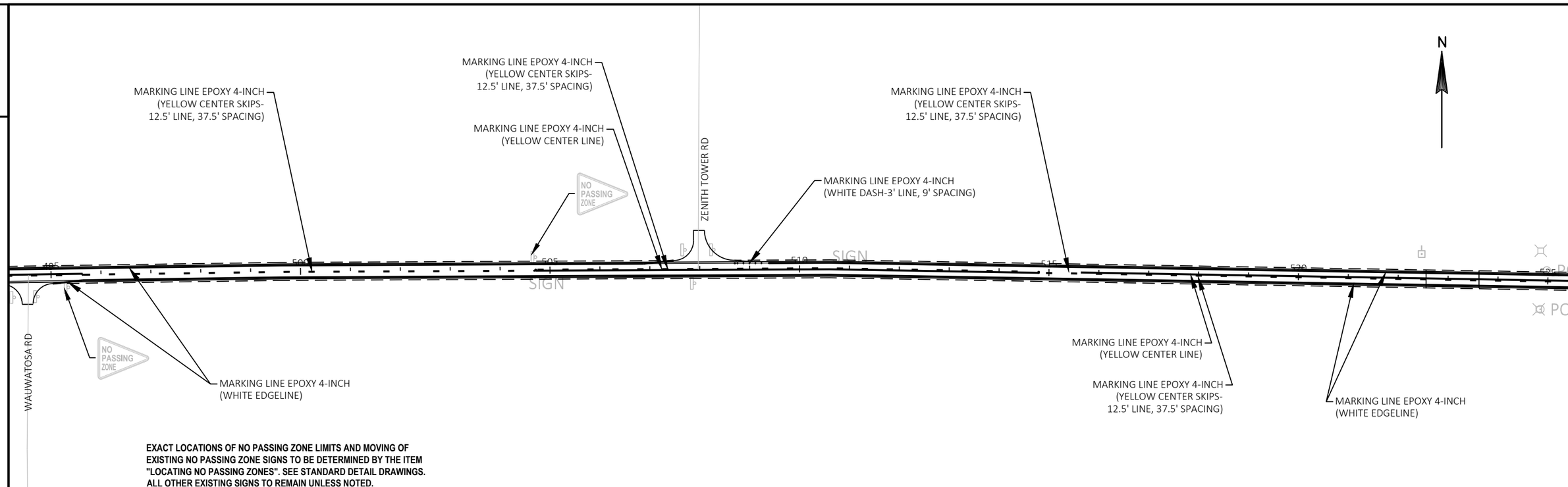

EXACT LOCATIONS OF NO PASSING ZONE LIMITS AND MOVING OF EXISTING NO PASSING ZONE SIGNS TO BE DETERMINED BY THE ITEM "LOCATING NO PASSING ZONES". SEE STANDARD DETAIL DRAWINGS. ALL OTHER EXISTING SIGNS TO REMAIN UNLESS NOTED.

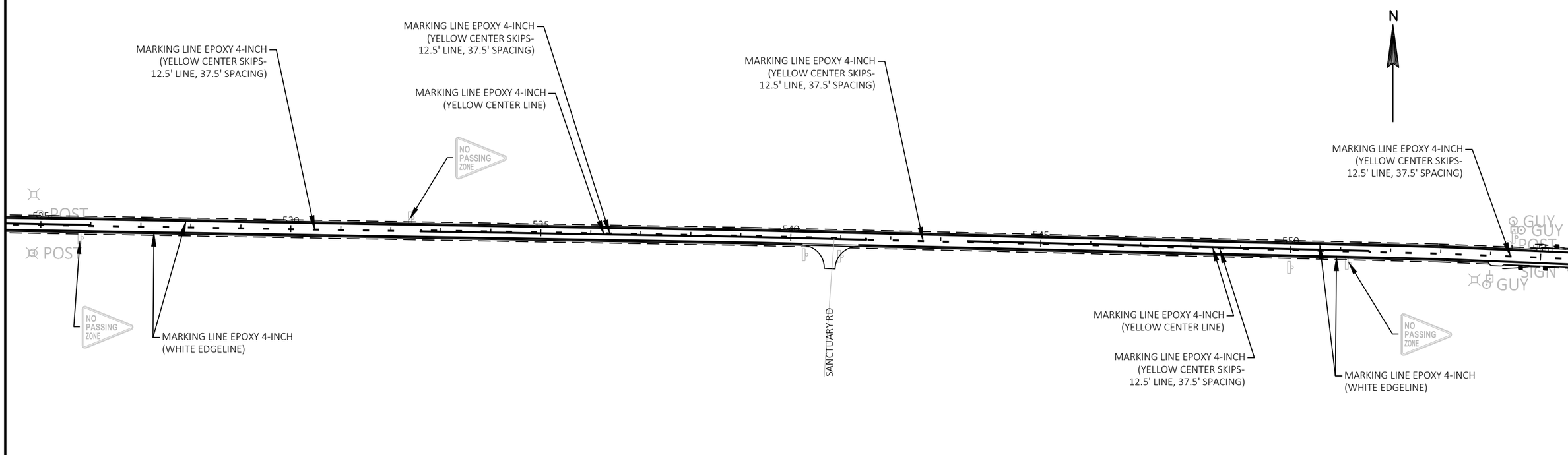

PROJECT NO: 9215-01-63/73	HWY: STH 86	COUNTY: LINCOLN	PERMANENT SIGNING AND PAVEMENT MARKING	SHEET 40	E

FILE NAME : S:\DESIGN\DESIGN PROJECTS\NC REGION PROJECTS\9215-01-03 (STH 86)\C3D\SHEETSPLAN\024501_PM_NEW.DWG
LAYOUT NAME - 495-555
PLOT DATE : 12/17/2018 9:09 AM PLOT BY : ADAM OSYPOWSKI PLOT NAME : PLOT SCALE : 1 IN:200 FT

2

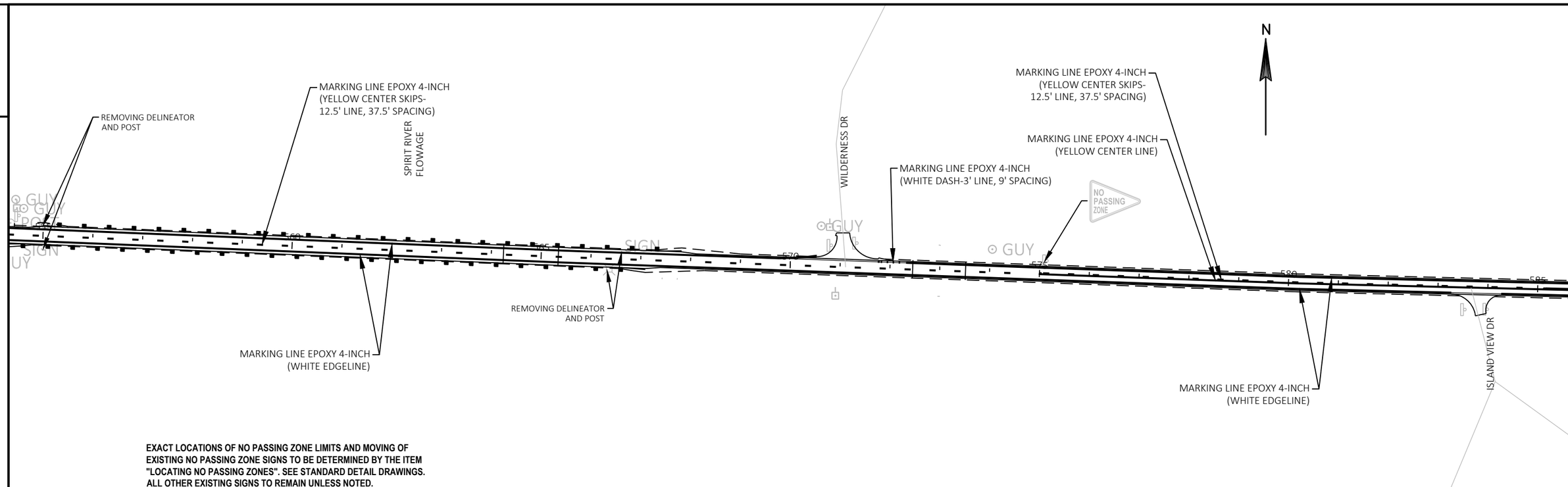

EXACT LOCATIONS OF NO PASSING ZONE LIMITS AND MOVING OF EXISTING NO PASSING ZONE SIGNS TO BE DETERMINED BY THE ITEM "LOCATING NO PASSING ZONES". SEE STANDARD DETAIL DRAWINGS. ALL OTHER EXISTING SIGNS TO REMAIN UNLESS NOTED.

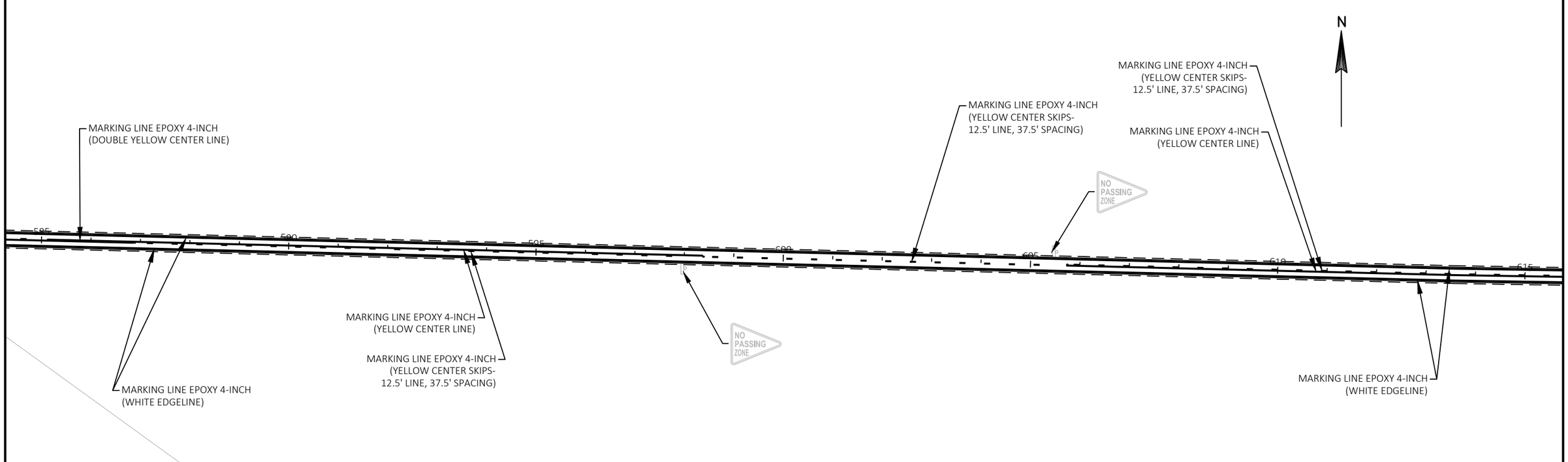

PROJECT NO: 9215-01-63/73	HWY: STH 86	COUNTY: LINCOLN	PERMANENT SIGNING AND PAVEMENT MARKING	SHEET 41	E

2

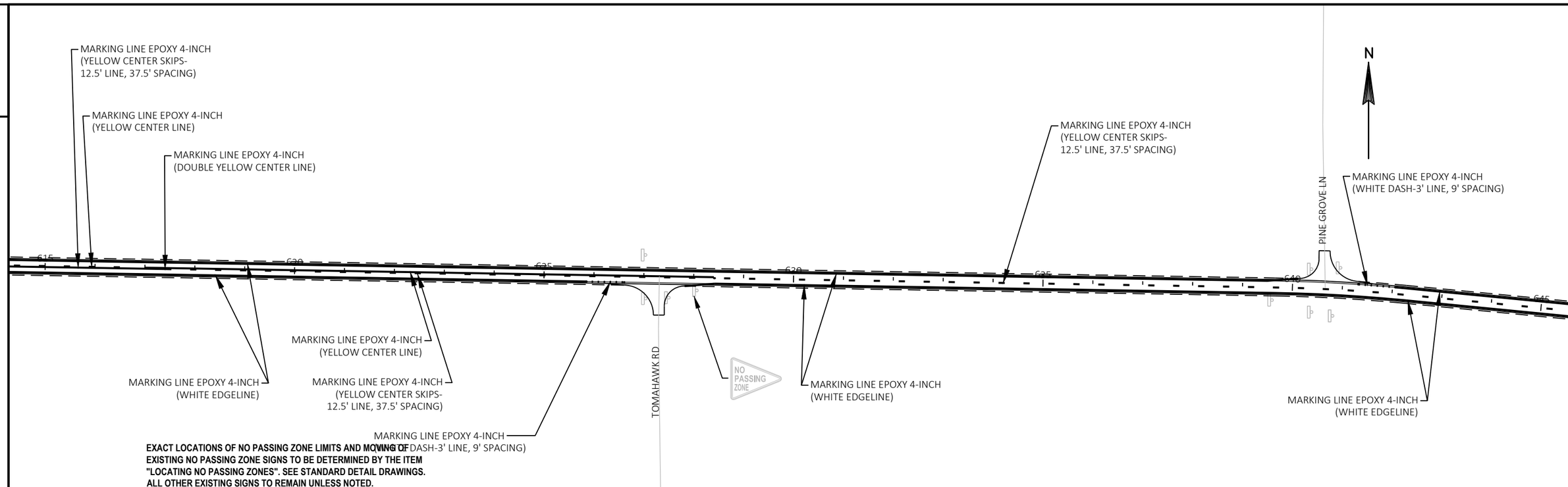

EXACT LOCATIONS OF NO PASSING ZONE LIMITS AND MOVING OF EXISTING NO PASSING ZONE SIGNS TO BE DETERMINED BY THE ITEM "LOCATING NO PASSING ZONES". SEE STANDARD DETAIL DRAWINGS. ALL OTHER EXISTING SIGNS TO REMAIN UNLESS NOTED.

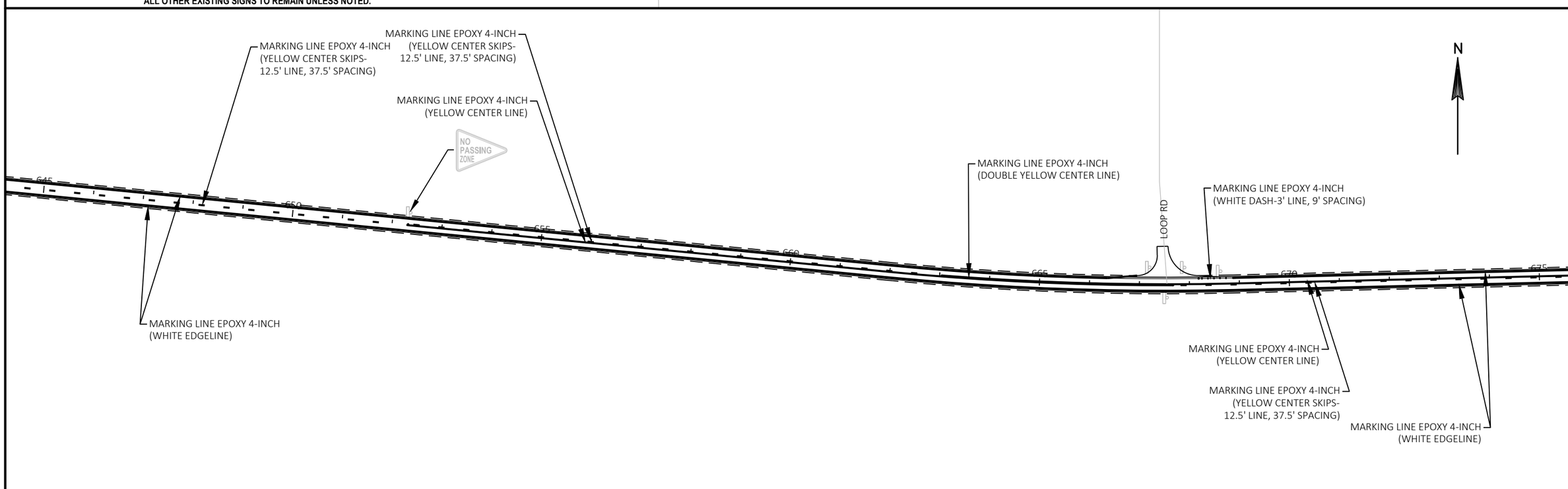

2

PROJECT NO: 9215-01-63/73	HWY: STH 86	COUNTY: LINCOLN	PERMANENT SIGNING AND PAVEMENT MARKING	SHEET 42	E

2

2

N

MARKING LINE EPOXY 4-INCH
(DOUBLE YELLOW CENTER LINE)

675 680 685 690 695 700 705

MARKING LINE EPOXY 4-INCH
(YELLOW CENTER LINE)

MARKING LINE EPOXY 4-INCH
(YELLOW CENTER SKIPS-
12.5' LINE, 37.5' SPACING)

NO PASSING ZONE

MARKING LINE EPOXY 4-INCH
(WHITE EDGELINE)

MARKING LINE EPOXY 4-INCH
(WHITE DASH-3' LINE, 9' SPACING)

SPIRIT HAVEN RD

MARKING LINE EPOXY 4-INCH
(WHITE EDGELINE)

EXACT LOCATIONS OF NO PASSING ZONE LIMITS AND MOVING OF EXISTING NO PASSING ZONE SIGNS TO BE DETERMINED BY THE ITEM "LOCATING NO PASSING ZONES". SEE STANDARD DETAIL DRAWINGS. ALL OTHER EXISTING SIGNS TO REMAIN UNLESS NOTED.

N

MARKING LINE EPOXY 4-INCH
(DOUBLE YELLOW CENTER LINE)

SUNSET POINT RD

MARKING LINE EPOXY 4-INCH
(YELLOW CENTER SKIPS-
12.5' LINE, 37.5' SPACING)

MARKING LINE EPOXY 4-INCH
(YELLOW CENTER LINE)

NO PASSING ZONE

MARKING LINE EPOXY 4-INCH
(WHITE DASH-3' LINE, 9' SPACING)

705 710 715 720 725 730 735

MARKING LINE EPOXY 4-INCH
(WHITE EDGELINE)

MARKING LINE EPOXY 4-INCH
(WHITE DASH-3' LINE, 9' SPACING)

MARKING LINE EPOXY 4-INCH
(WHITE EDGELINE)

MARKING LINE EPOXY 4-INCH
(WHITE DASH-3' LINE, 9' SPACING)

SPIRIT VIEW RD

PROJECT NO: 9215-01-63/73	HWY: STH 86	COUNTY: LINCOLN	PERMANENT SIGNING AND PAVEMENT MARKING	SHEET 43	E

2

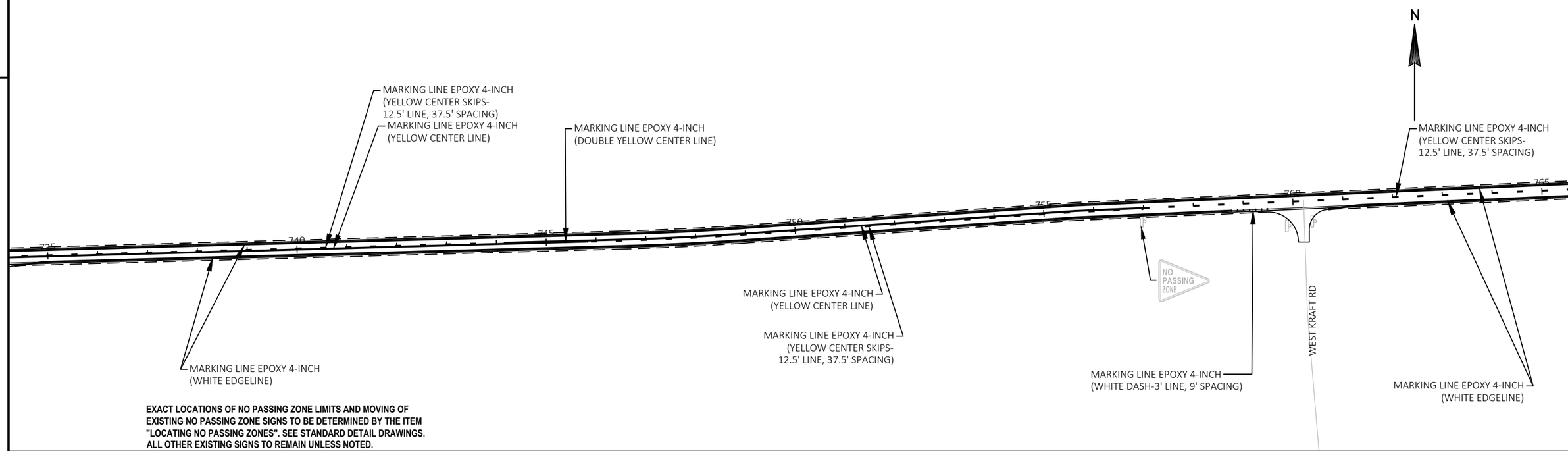

EXACT LOCATIONS OF NO PASSING ZONE LIMITS AND MOVING OF EXISTING NO PASSING ZONE SIGNS TO BE DETERMINED BY THE ITEM "LOCATING NO PASSING ZONES". SEE STANDARD DETAIL DRAWINGS. ALL OTHER EXISTING SIGNS TO REMAIN UNLESS NOTED.

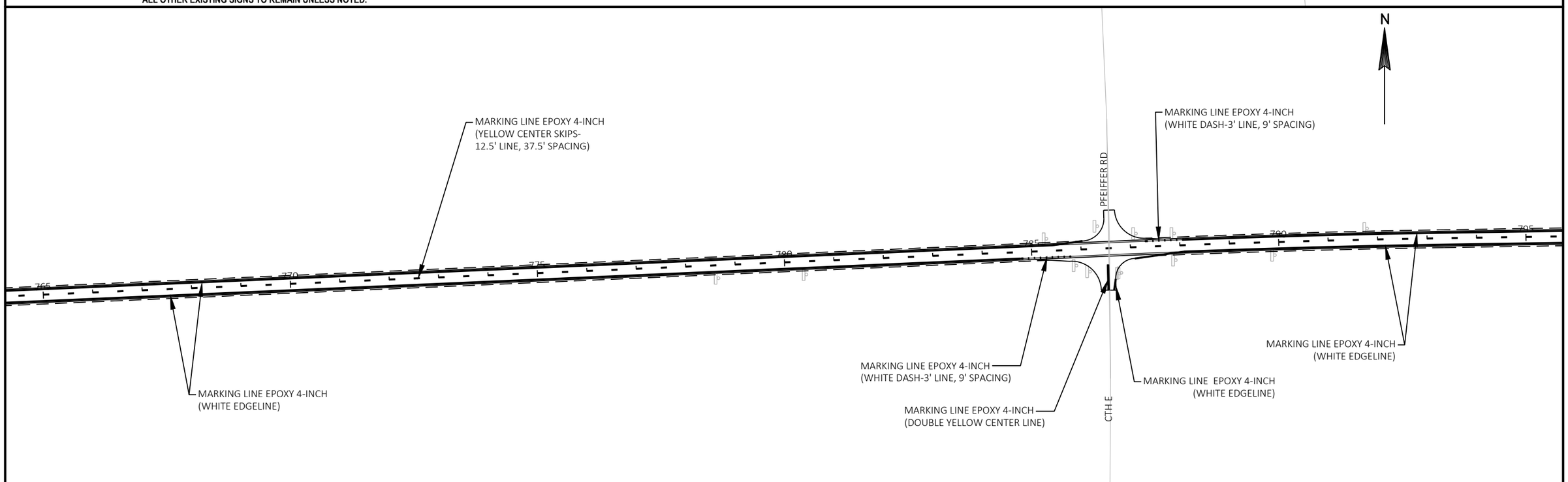

PROJECT NO: 9215-01-63/73	HWY: STH 86	COUNTY: LINCOLN	PERMANENT SIGNING AND PAVEMENT MARKING	SHEET 44	E

FILE NAME : S:\DESIGN\DESIGN PROJECTS\NC REGION PROJECTS\9215-01-03 (STH 86)\C3D\SHEETSPLAN\024501_PM_NEW.DWG
LAYOUT NAME - 735-795
PLOT DATE : 12/17/2018 9:09 AM PLOT BY : ADAM OSYPOWSKI PLOT NAME : PLOT SCALE : 1 IN:200 FT

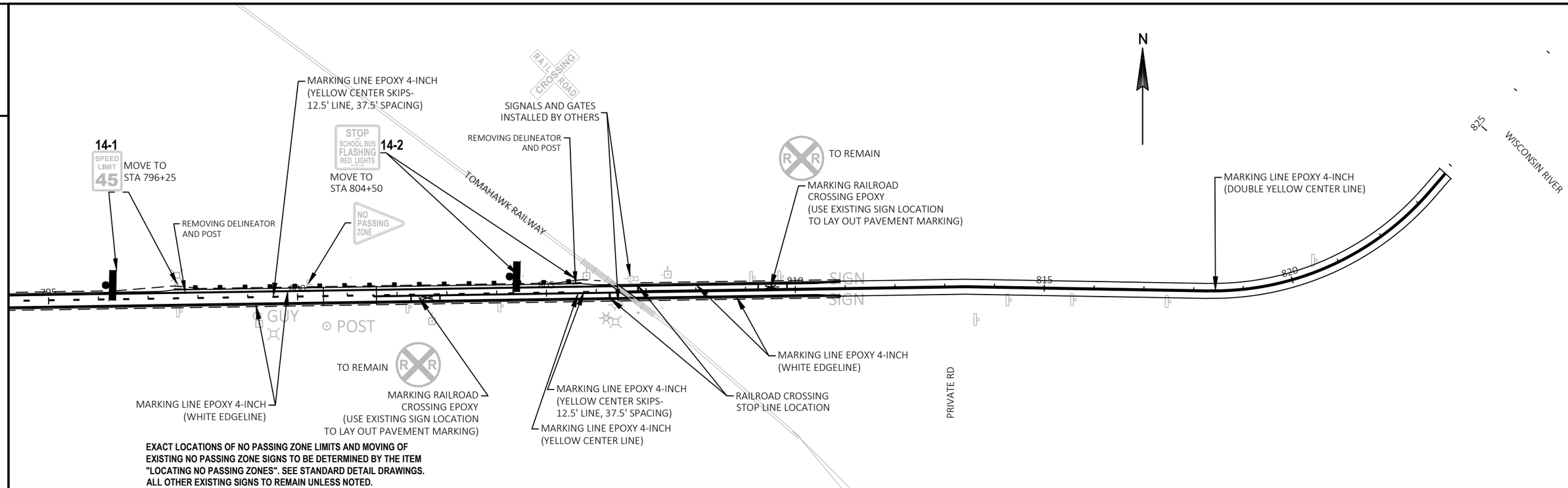

EXACT LOCATIONS OF NO PASSING ZONE LIMITS AND MOVING OF EXISTING NO PASSING ZONE SIGNS TO BE DETERMINED BY THE ITEM "LOCATING NO PASSING ZONES". SEE STANDARD DETAIL DRAWINGS. ALL OTHER EXISTING SIGNS TO REMAIN UNLESS NOTED.

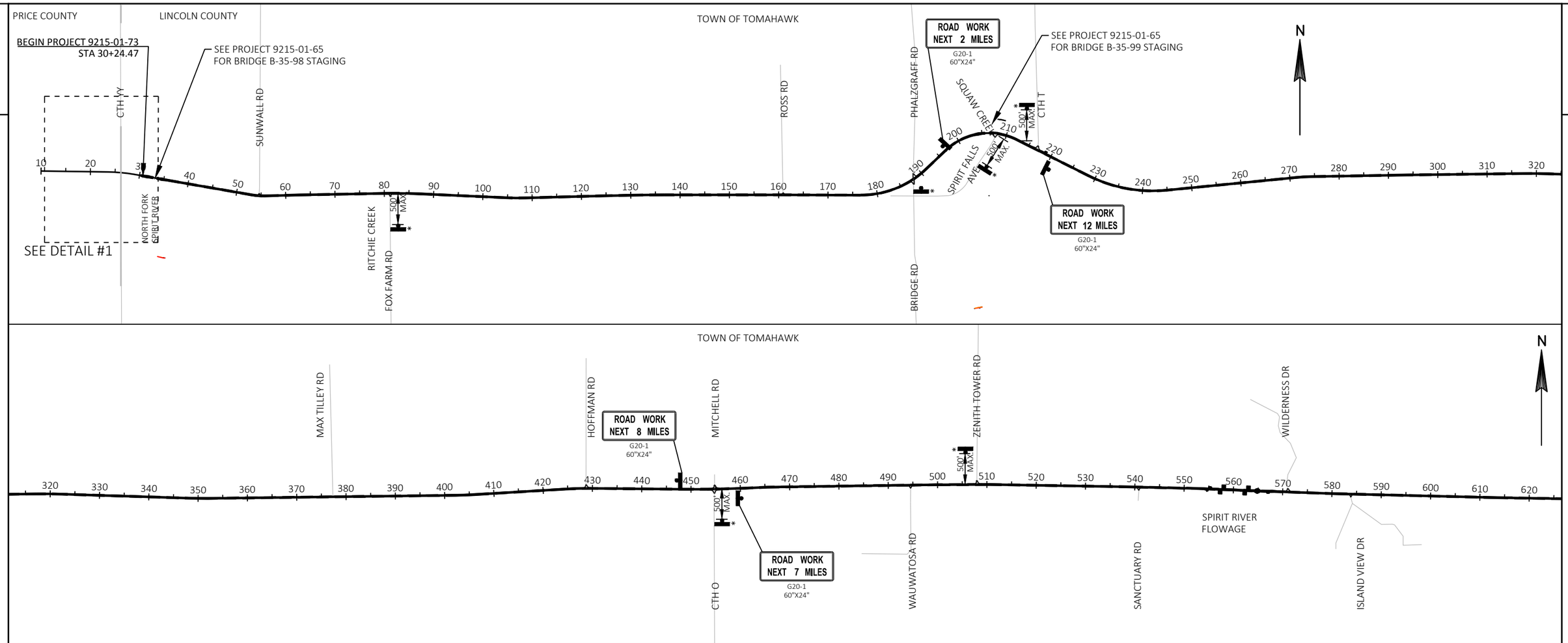

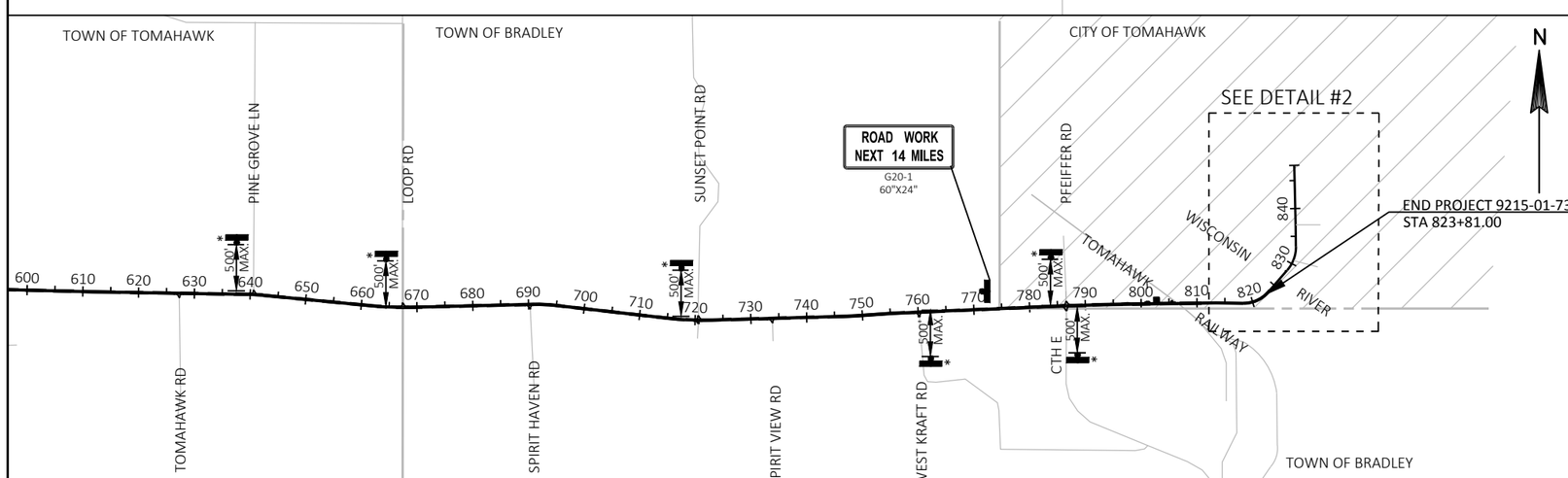

TRAFFIC CONTROL NOTES

- THE EXACT NUMBER, LOCATION, AND SPACING OF ALL TRAFFIC CONTROL SIGNS AND DEVICES SHALL BE ADJUSTED TO FIT FIELD CONDITIONS OR AS DETERMINED BY THE ENGINEER. ADJUST SIGN SPACING TO AVOID CONFLICT WITH AND TO PROVIDE A MINIMUM SPACING OF 200 FEET (500 FEET DESIRABLE) TO EXISTING SIGNS.
- ALL SIGNS ARE 48" X 48" UNLESS OTHERWISE NOTED.
- SIGNS DESIGNATED AS "WO" ARE THE SAME AS "W" EXCEPT THE BACKGROUND IS ORANGE.
-ALL TRAFFIC CONTROL SIGNING WILL CONFORM TO PART VI OF THE WISCONSIN MANUAL ON UNIFORM TRAFFIC CONTROL DEVICES, DATED MARCH 21. 2017.
- ANY SIGNS OR PAVEMENT MARKING, TEMPORARY OR EXISTING, WHICH CONFLICT WITH TRAFFIC CONTROL "IN USE" SHALL BE REMOVED OR COVERED AS NEEDED AND APPROVED BY THE ENGINEER.
- ALL SIDE STREETS SHALL BE OPEN TO TRAFFIC AT ALL TIMES DURING CONSTRUCTION.
- ACCESS SHALL BE MAINTAINED TO ALL DRIVEWAYS AT ALL TIMES DURING CONSTRUCTION.
- REFER TO STANDARD DETAIL DRAWING "TRAFFIC CONTROL ADVANCE WARNING SIGNS 45 M.P.H. OR GREATER TWO-WAY UNDIVIDED ROAD OPEN TO TRAFFIC", AND "TRAFFIC CONTROL FOR LANE CLOSURE (SUITABLE FOR MOVABLE OPERATIONS)"
-DURING HOURS OF DARKENSS, ALL BARRICADES USED TO SHIELD A HAZARD SHALL BE EQUIPPED WITH WARNING LIGHTS, TYPE A. WARNING LIGHTS SHALL NOT BE WORKING ON "COVERED" OR "DOWNED" SIGN OR BARRICADES.
- SEE SPECIAL PROVISIONS FOR ADDITIONAL TRAFFIC/STAGING REQUIREMENTS.

* W 20-1 "ROAD WORK AHEAD" REQUIRED

PROJECT NO: 9215-01-63/73	HWY: STH 86	COUNTY: LINCOLN	TRAFFIC CONTROL	SHEET 46	E

2

DETAIL #1

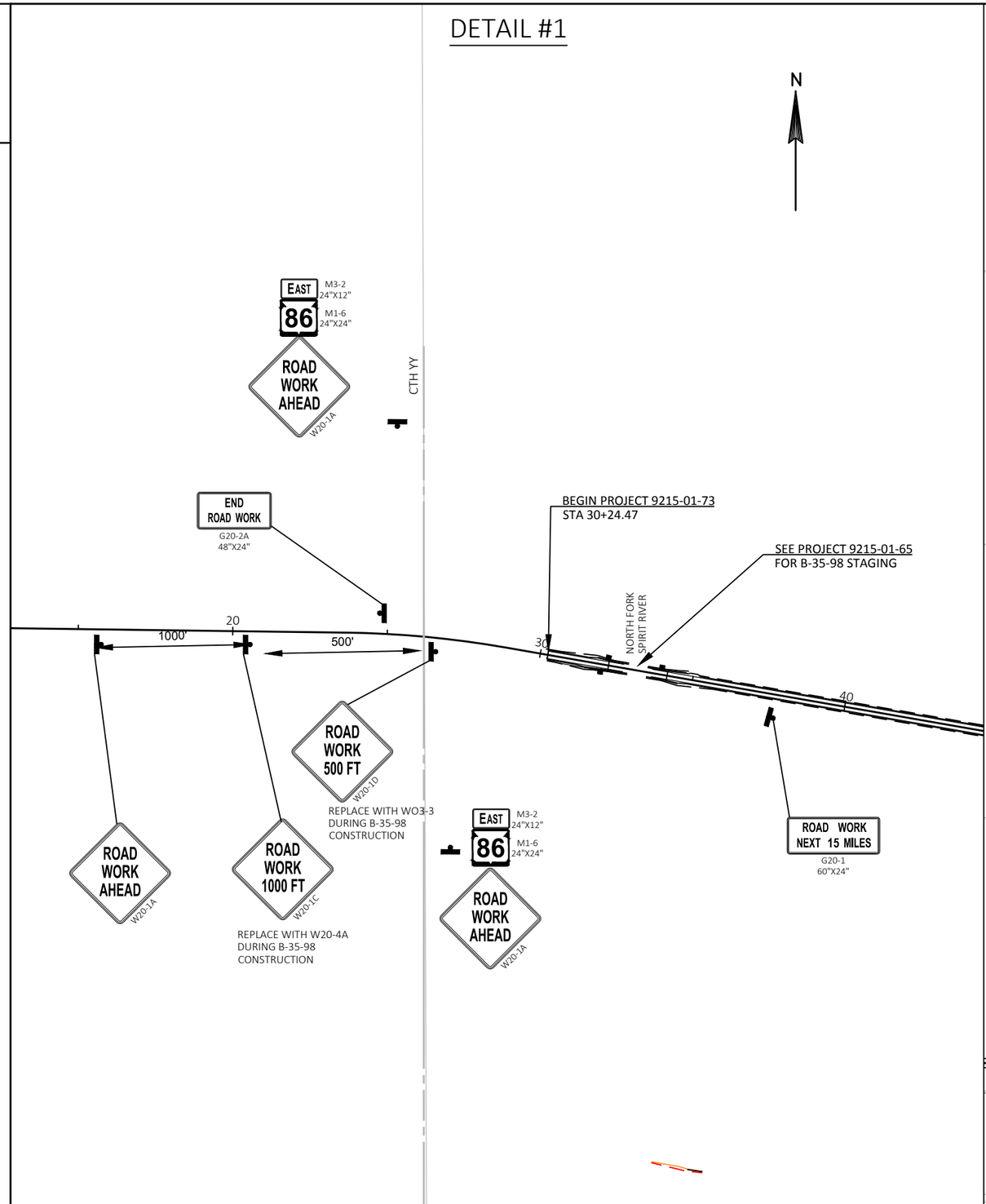

DETAIL #2

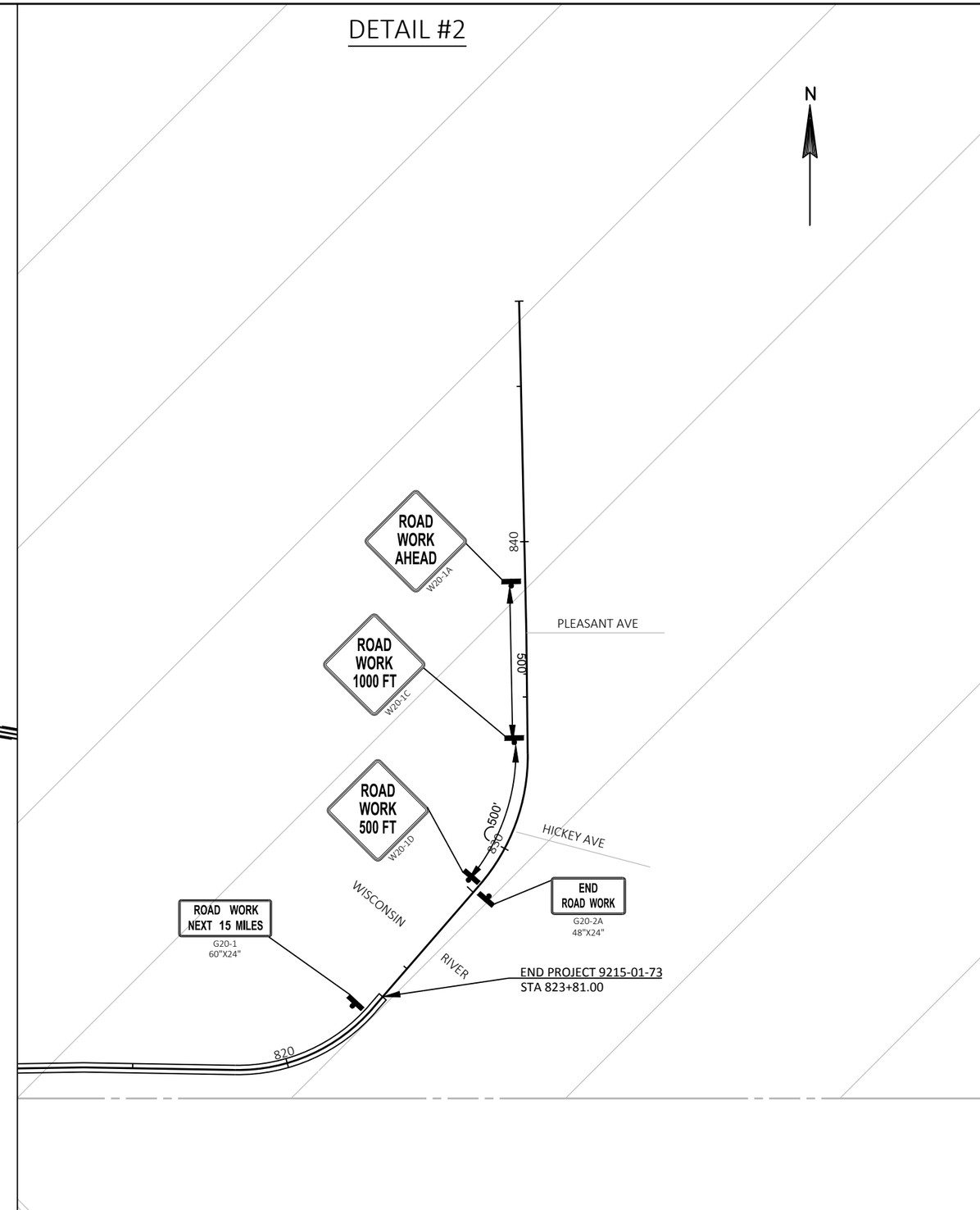

2

PROJECT NO: 9215-01-63/73	HWY: STH 86	COUNTY: LINCOLN	TRAFFIC CONTROL	SHEET 47	E

2

WEST PCMS MESSAGES

	PHASE 1	PHASE 2
1 WEEK PRIOR TO CLOSURE	ROAD TO CLOSE	DAY XX/XX
35-086-320 CLOSURE	ROAD OPEN TO	ZENITH TOWER ROAD
35-086-340 CLOSURE	ROAD OPEN TO	SANCTU-ARY ROAD
35-086-350 CLOSURE	ROAD OPEN TO	WILDER-NESS ROAD

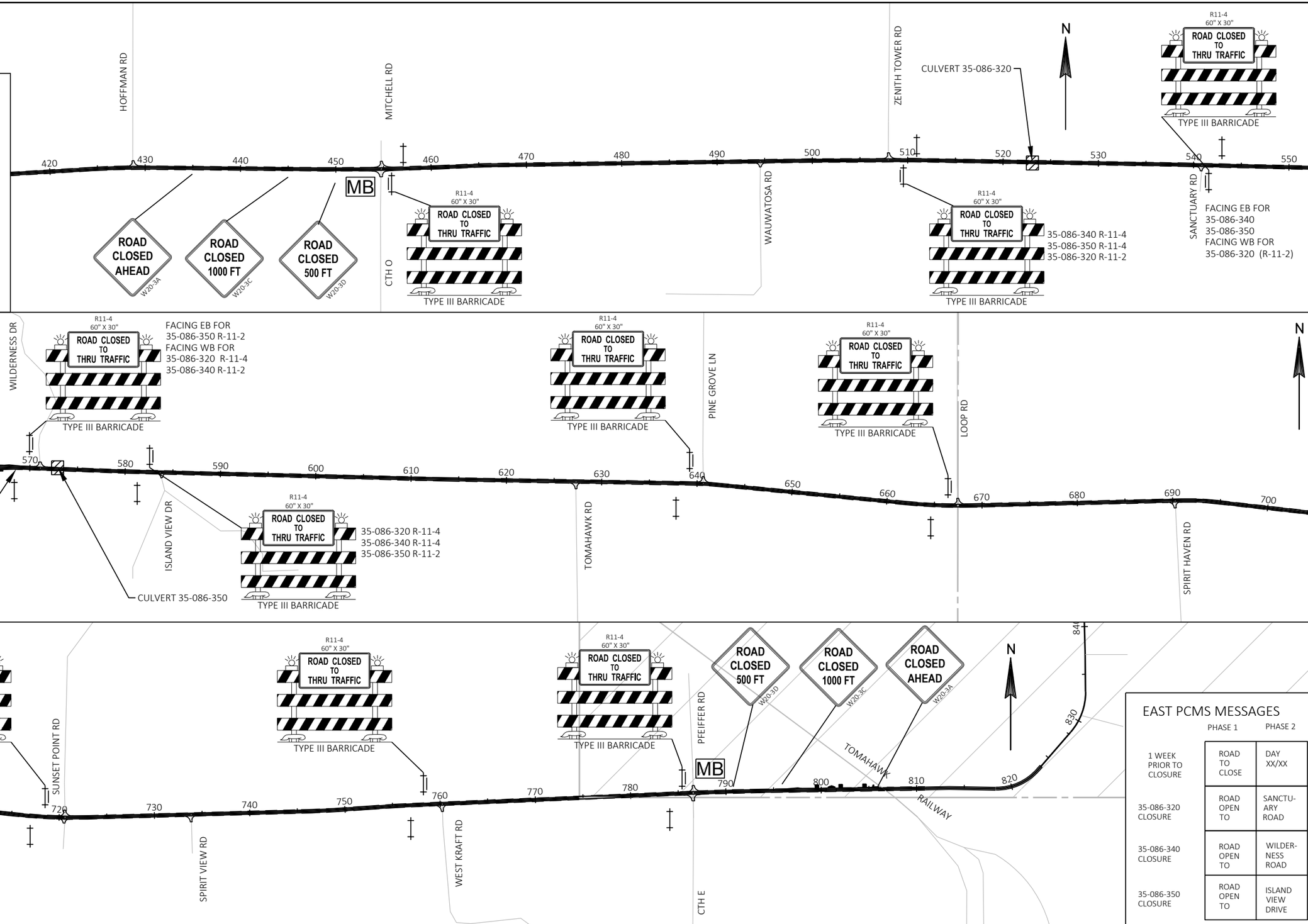

EAST PCMS MESSAGES

	PHASE 1	PHASE 2
1 WEEK PRIOR TO CLOSURE	ROAD TO CLOSE	DAY XX/XX
35-086-320 CLOSURE	ROAD OPEN TO	SANCTU-ARY ROAD
35-086-340 CLOSURE	ROAD OPEN TO	WILDER-NESS ROAD
35-086-350 CLOSURE	ROAD OPEN TO	ISLAND VIEW DRIVE

PROJECT NO: 9215-01-63/73	HWY: STH 86	COUNTY: LINCOLN	TRAFFIC CONTROL - ROAD CLOSURE	SHEET 48	E

FILE NAME : S:\DESIGN\DESIGN PROJECTS\NC REGION PROJECTS\9215-01-03 (STH 86)\C3D\SHEETSPLAN\025002_TC-CLOSURE.DWG
LAYOUT NAME - Plan Dbl 1 IN 200 FT
PLOT DATE : 12/18/2018 7:16 AM PLOT BY : ADAM OSYPOWSKI PLOT NAME : _____ PLOT SCALE : 1 IN:1000 FT& 1 IN:1000 FT

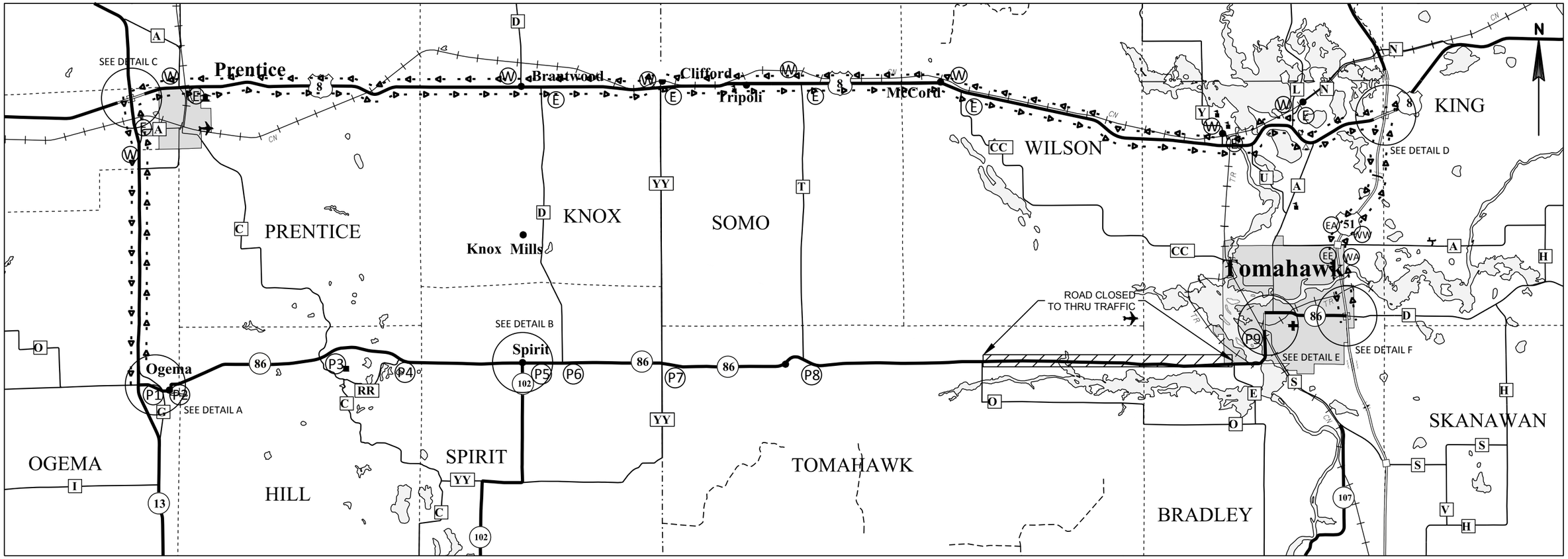

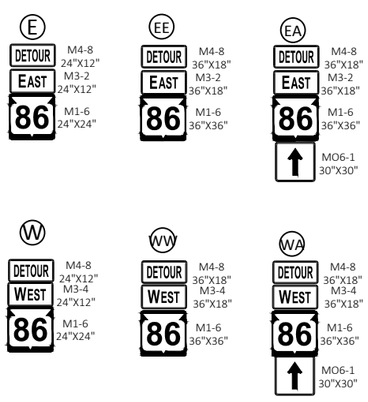

SIGN	INTERSECTION	DISTANCE
P1	STH 13	21 MILES
P2	CTH G	20 MILES
P3	CTH C	16 MILES
P4	CTH RR	14 MILES
P5	STH 102	12 MILES
P6	CTH D	10 MILES
P7	CTH YY	8 MILES
P8	CTH T	4 MILES
P9	CTH S	2 MILES

INSTALL ON
TYPE III BARRICADE

PROJECT NO: 9215-01-63/73	HWY: STH 86	COUNTY: LINCOLN	DETOUR PLAN	SHEET 49	E

FILE NAME : S:\DESIGN\DESIGN PROJECTS\NC REGION PROJECTS\9215-01-03 (STH 86)\C3D\SHEETSPLAN\027001-DT.DWG
LAYOUT NAME - Plan 1 IN 1000 FT
PLOT DATE : 1/31/2019 8:46 AM PLOT BY : ADAM OSYPOWSKI PLOT NAME : PLOT SCALE : 1 IN:2.5 MI

2

DETAIL A

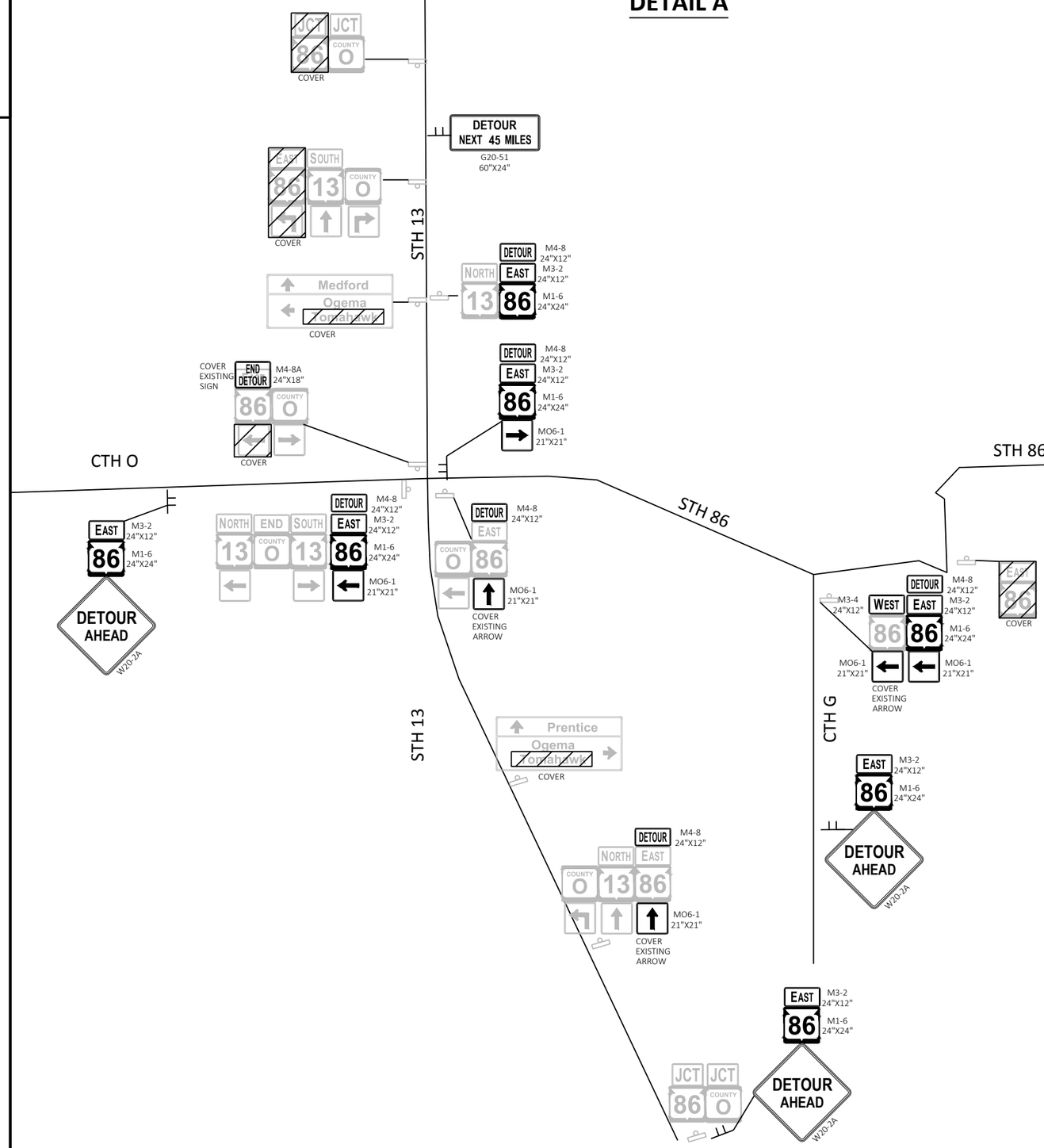

DETAIL B

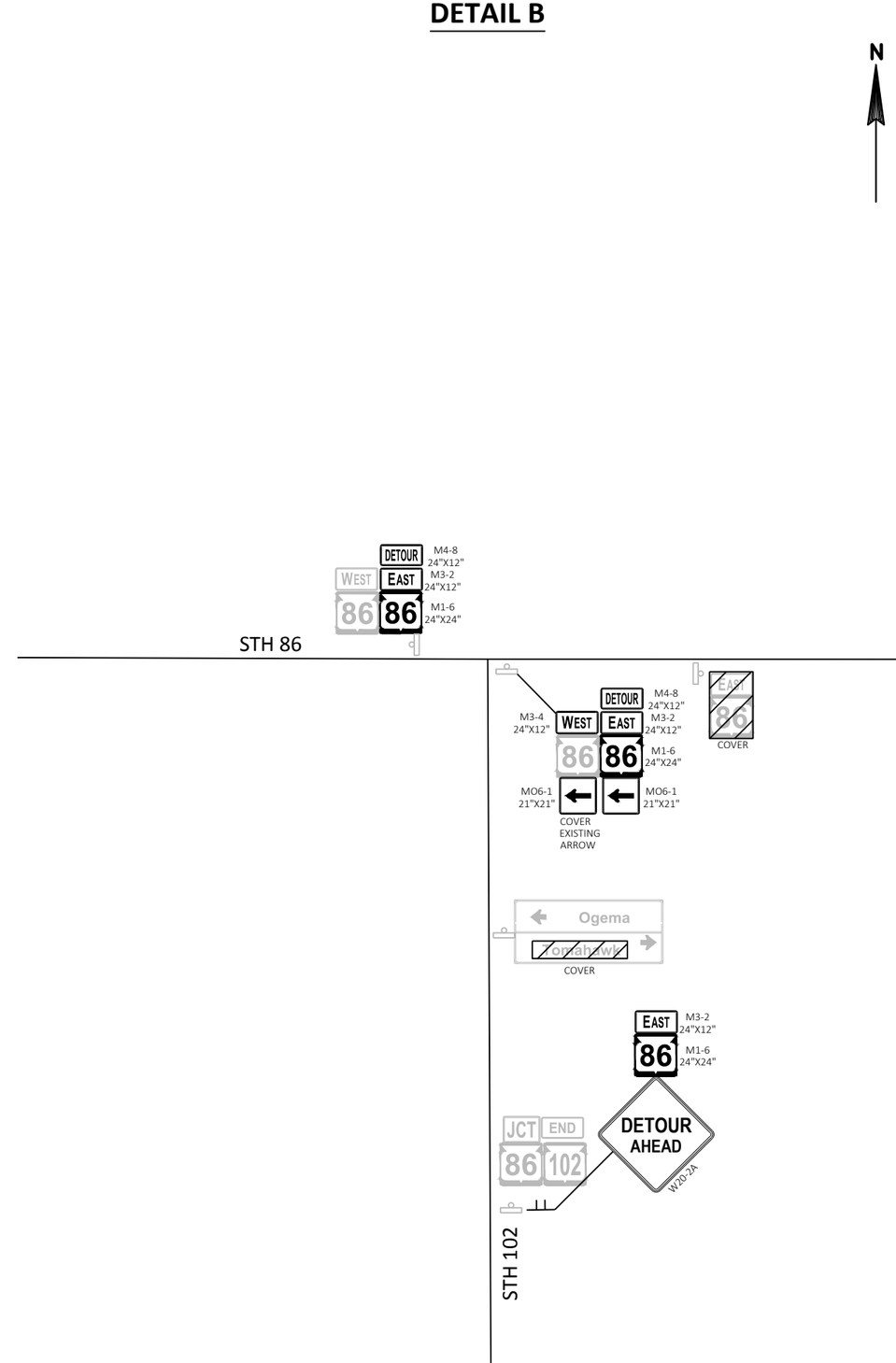

2

PROJECT NO: 9215-01-63/73	HWY: STH 86	COUNTY: LINCOLN	DETOUR PLAN	SHEET 50	E

FILE NAME : S:\DESIGN\DESIGN PROJECTS\NC REGION PROJECTS\9215-01-03 (STH 86)\C3D\SHEETSPLAN\027001-DT.DWG
LAYOUT NAME - Ogema
PLOT DATE : 1/31/2019 8:46 AM PLOT BY : ADAM OSYPOWSKI PLOT NAME : PLOT SCALE : 1 IN:1000 FT

WISDOT/CADDS SHEET 42

DETAIL C

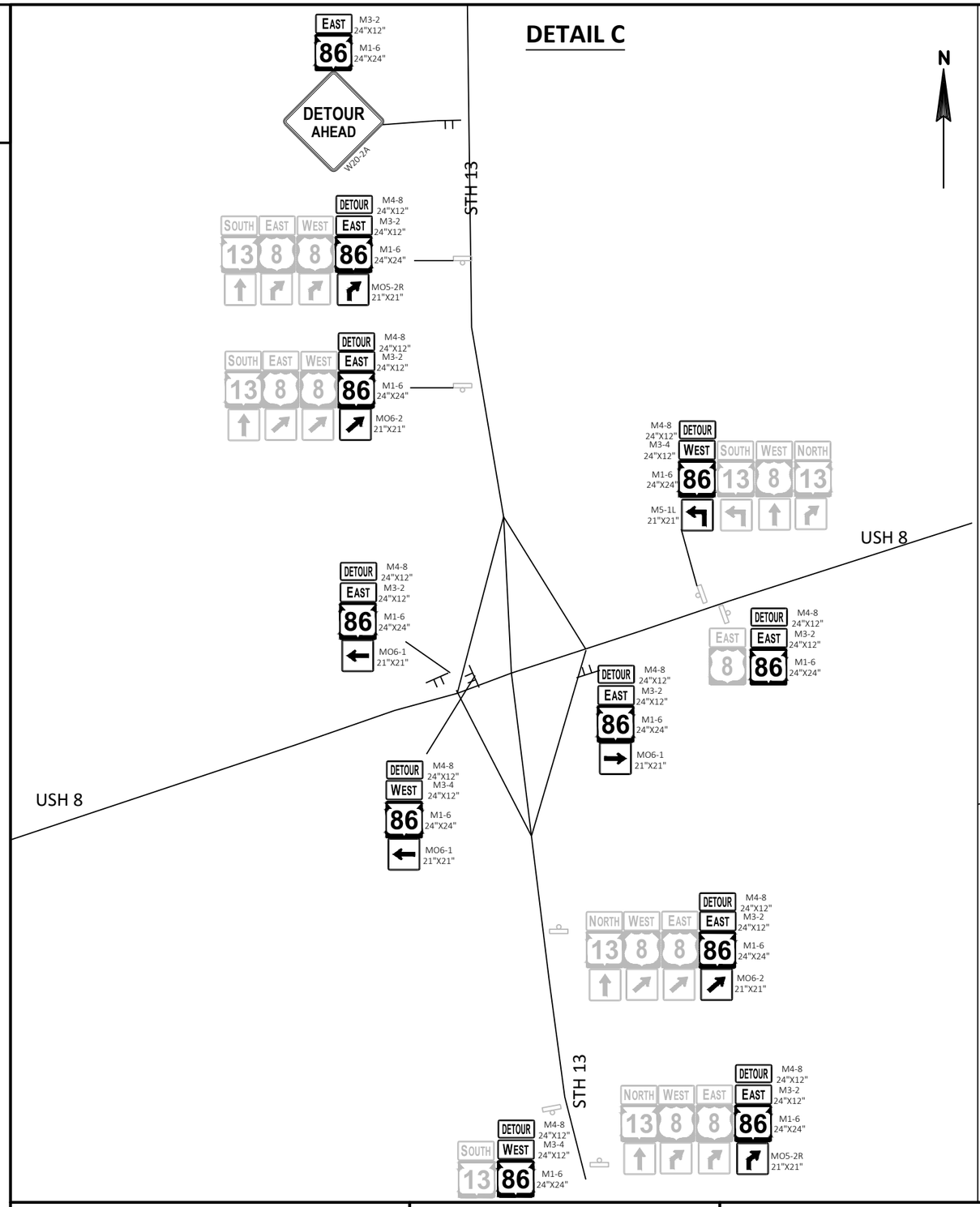

DETAIL D

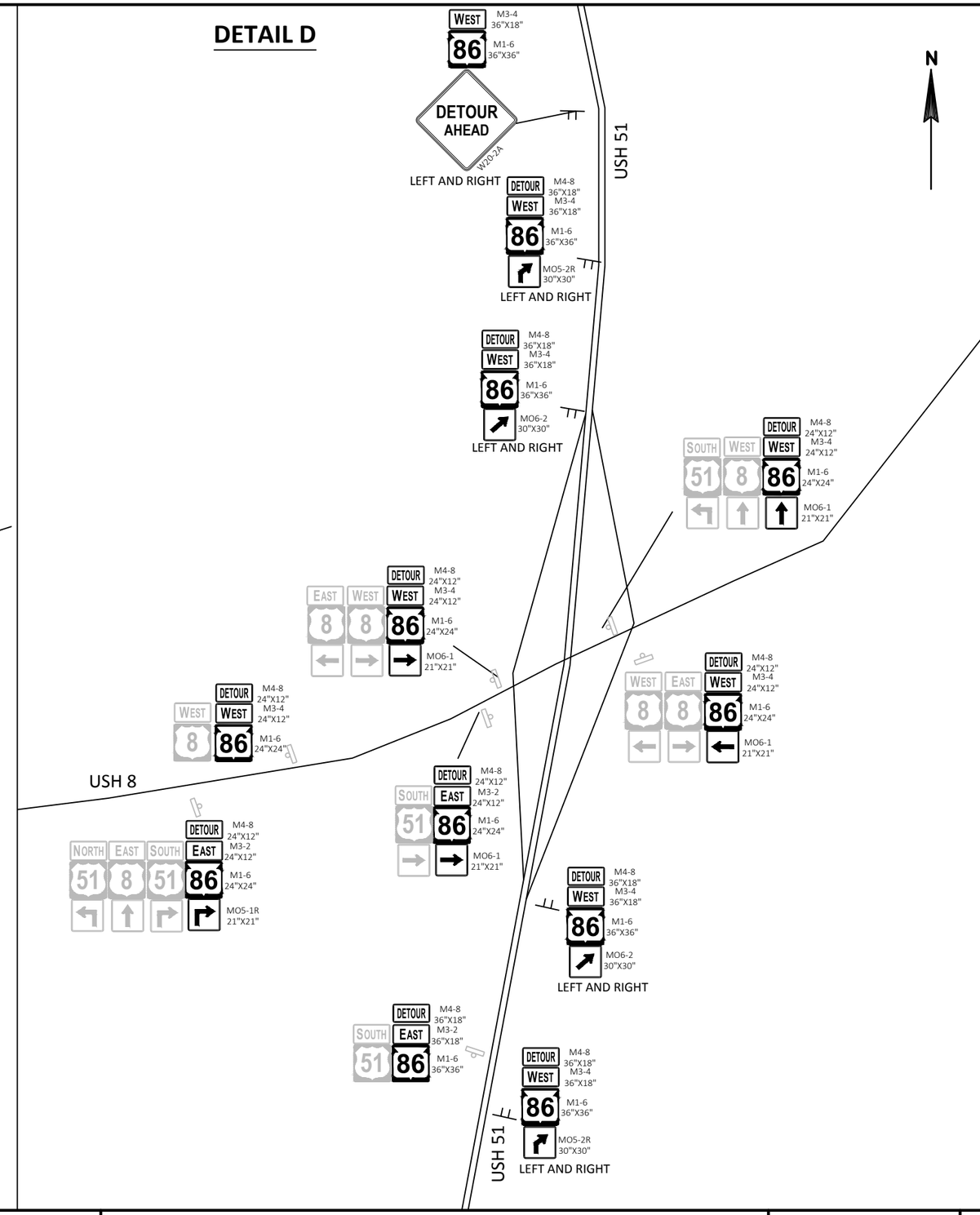

2

DETAIL E

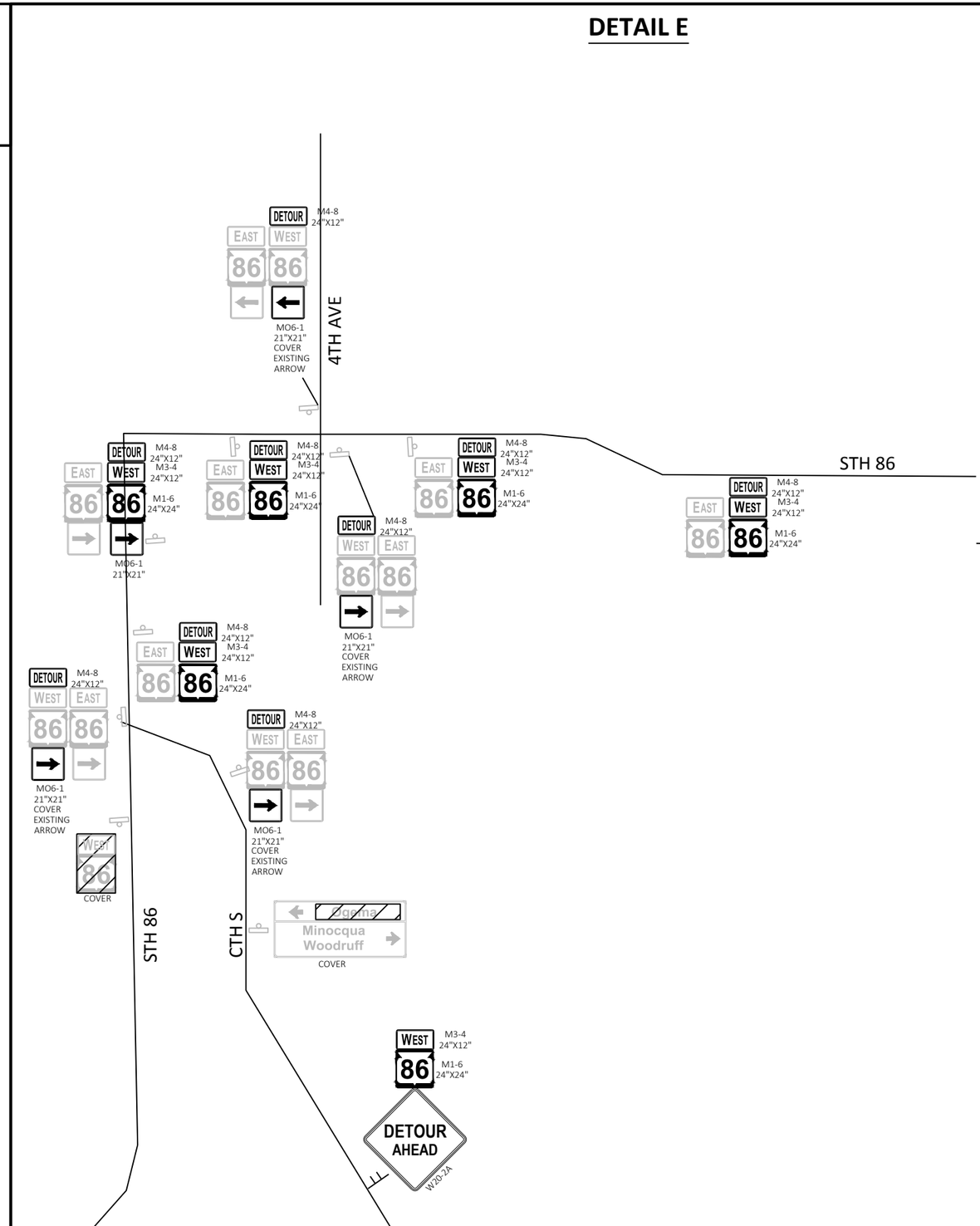

DETAIL F

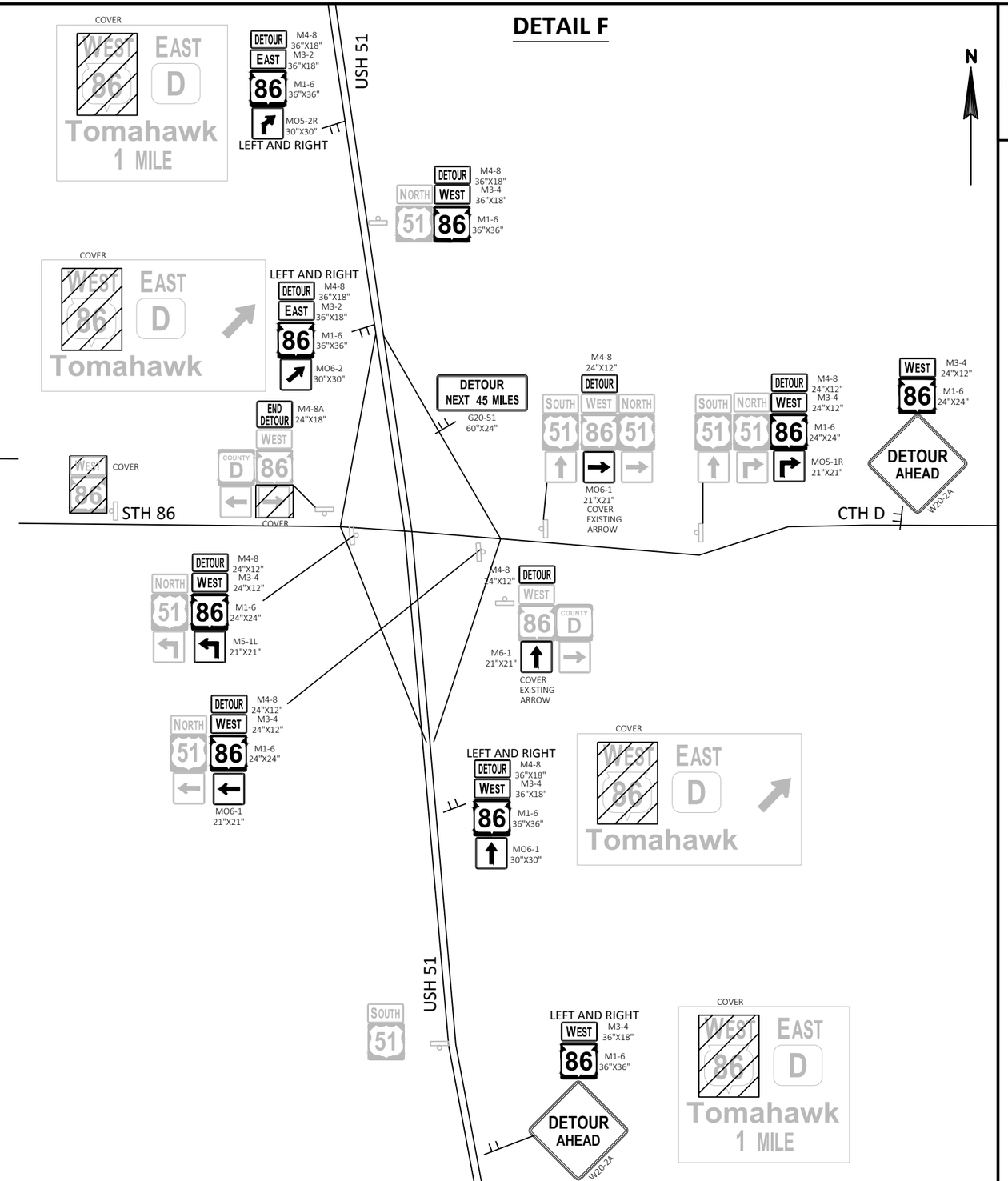

PROJECT NO: 9215-01-63/73	HWY: STH 86	COUNTY: LINCOLN	DETOUR PLAN	SHEET 52	E

FILE NAME : S:\DESIGN\DESIGN PROJECTS\NC REGION PROJECTS\9215-01-03 (STH 86)\C3D\SHEETSPLAN\027001-DT.DWG
LAYOUT NAME - 51-86
PLOT DATE : 1/31/2019 8:46 AM PLOT BY : ADAM OSYPOWSKI PLOT NAME : PLOT SCALE : 1 IN:1000 FT

Estimate Of Quantities By Plan Sets

Line	Item	Item Description	Unit	Total	9215-01-63 Qty	9215-01-73 Qty
0002	201.0110	Clearing	SY	205.000		205.000
0004	201.0210	Grubbing	SY	205.000		205.000
0006	203.0100	Removing Small Pipe Culverts	EACH	10.000	8.000	2.000
0008	203.0200	Removing Old Structure (station) 01. STA 564+79	LS	1.000	1.000	
0010	204.0110	Removing Asphaltic Surface	SY	1,844.000		1,844.000
0012	204.0115	Removing Asphaltic Surface Butt Joints	SY	264.000		264.000
0014	204.0120	Removing Asphaltic Surface Milling	SY	273,454.000		273,454.000
0016	204.0150	Removing Curb & Gutter	LF	413.000	85.000	328.000
0018	204.0165	Removing Guardrail	LF	1,137.000		1,137.000
0020	204.0180	Removing Delineators and Markers	EACH	6.000		6.000
0022	204.9180.S	Removing (item description) 01. Riprap	SY	211.000		211.000
0024	205.0100	Excavation Common	CY	4,310.000	4,310.000	
0026	208.0100	Borrow	CY	941.000		941.000
0028	211.0100	Prepare Foundation for Asphaltic Paving (project) 01. 9215-01-73	LS	1.000		1.000
0032	213.0100	Finishing Roadway (project) 02. 9215-01-73	EACH	1.000		1.000
0034	305.0110	Base Aggregate Dense 3/4-Inch	TON	3,544.000	664.000	2,880.000
0036	305.0120	Base Aggregate Dense 1 1/4-Inch	TON	4,988.000	4,878.000	110.000
0038	450.4000	HMA Cold Weather Paving	TON	2,000.000		2,000.000
0040	455.0605	Tack Coat	GAL	16,417.000		16,417.000
0042	460.0105.S	HMA Percent Within Limits (PWL) Test Strip Volumetrics	EACH	1.000		1.000
0044	460.0110.S	HMA Percent Within Limits (PWL) Test Strip Density	EACH	1.000		1.000
0046	460.2005	Incentive Density PWL HMA Pavement	DOL	24,210.000		24,210.000
0048	460.2010	Incentive Air Voids HMA Pavement	DOL	31,360.000		31,360.000
0050	460.5224	HMA Pavement 4 LT 58-28 S	TON	31,468.000		31,468.000
0052	465.0110	Asphaltic Surface Patching	TON	1,883.000	1,183.000	700.000
0054	465.0475	Asphalt Centerline Rumble Strips 2-Lane Rural	LF	66,950.000		66,950.000
0080	520.8000	Concrete Collars for Pipe	EACH	2.000		2.000
0082	521.1024	Apron Endwalls for Culvert Pipe Steel 24-Inch	EACH	3.000		3.000
0084	521.3124	Culvert Pipe Corrugated Steel 24-Inch	LF	76.000		76.000
0086	522.0124	Culvert Pipe Reinforced Concrete Class III 24-Inch	LF	126.000	126.000	
0088	522.0130	Culvert Pipe Reinforced Concrete Class III 30-Inch	LF	338.000	338.000	
0090	522.0136	Culvert Pipe Reinforced Concrete Class III 36-Inch	LF	77.000	77.000	
0092	522.0184	Culvert Pipe Reinforced Concrete Class III 84-Inch	LF	63.000	63.000	
0094	522.1024	Apron Endwalls for Culvert Pipe Reinforced Concrete 24-Inch	EACH	4.000	4.000	
0096	522.1030	Apron Endwalls for Culvert Pipe Reinforced Concrete 30-Inch	EACH	10.000	10.000	
0098	522.1036	Apron Endwalls for Culvert Pipe Reinforced Concrete 36-Inch	EACH	2.000	2.000	
0100	522.1084	Apron Endwalls for Culvert Pipe Reinforced Concrete	EACH	2.000	2.000	

Line	Item	Item Description	Unit	Total	9215-01-63 Qty	9215-01-73 Qty
		84-Inch				
0102	601.0557	Concrete Curb & Gutter 6-Inch Sloped 36-Inch Type D	LF	413.000	85.000	328.000
0108	604.0600	Slope Paving Select Crushed Material	SY	3,010.000		3,010.000
0110	606.0200	Riprap Medium	CY	12.000	12.000	
0112	606.0300	Riprap Heavy	CY	191.000	116.000	75.000
0114	614.0390	Steel Plate Beam Guard Short Radius Terminal	EACH	1.000		1.000
0116	614.0397	Guardrail Mow Strip Emulsified Asphalt	SY	1,690.000		1,690.000
0120	614.2300	MGS Guardrail 3	LF	250.000		250.000
0122	614.2330	MGS Guardrail 3 K	LF	3,062.000		3,062.000
0124	614.2350	MGS Guardrail Short Radius	LF	38.000		38.000
0126	614.2500	MGS Thrie Beam Transition	LF	300.000		300.000
0128	614.2610	MGS Guardrail Terminal EAT	EACH	13.000		13.000
0130	618.0100	Maintenance And Repair of Haul Roads (project) 01. 9215-01-63	EACH	1.000	1.000	
0132	618.0100	Maintenance And Repair of Haul Roads (project) 02. 9215-01-73	EACH	1.000		1.000
0134	619.1000	Mobilization	EACH	0.880	0.180	0.700
0136	621.0100	Landmark Reference Monuments	EACH	92.000		92.000
0138	624.0100	Water	MGAL	130.000	85.000	45.000
0140	625.0100	Topsoil	SY	4,325.000	2,040.000	2,285.000
0142	627.0200	Mulching	SY	2,440.000	2,040.000	400.000
0144	628.1504	Silt Fence	LF	5,290.000	1,950.000	3,340.000
0146	628.1520	Silt Fence Maintenance	LF	5,290.000	1,950.000	3,340.000
0148	628.1905	Mobilizations Erosion Control	EACH	2.000	1.000	1.000
0150	628.1910	Mobilizations Emergency Erosion Control	EACH	4.000	2.000	2.000
0152	628.2008	Erosion Mat Urban Class I Type B	SY	1,895.000		1,895.000
0154	628.7555	Culvert Pipe Checks	EACH	25.000	25.000	
0156	628.7570	Rock Bags	EACH	245.000	130.000	115.000
0158	629.0210	Fertilizer Type B	CWT	2.700	1.300	1.400
0160	630.0120	Seeding Mixture No. 20	LB	118.000	49.000	69.000
0162	630.0160	Seeding Mixture No. 60	LB	24.000	14.000	10.000
0164	633.5200	Markers Culvert End	EACH	18.000	18.000	
0166	634.0614	Posts Wood 4x6-Inch X 14-FT	EACH	2.000		2.000
0168	638.2102	Moving Signs Type II	EACH	4.000		4.000
0170	638.3000	Removing Small Sign Supports	EACH	4.000		4.000
0172	638.4000	Moving Small Sign Supports	EACH	2.000		2.000
0174	642.5201	Field Office Type C	EACH	1.000	1.000	
0176	643.0300	Traffic Control Drums	DAY	1,228.000	360.000	868.000
0178	643.0310.S	Temporary Portable Rumble Strips	LS	1.000	1.000	
0180	643.0420	Traffic Control Barricades Type III	DAY	468.000	468.000	

Line	Item	Item Description	Unit	Total	9215-01-63 Qty	9215-01-73 Qty
0182	643.0705	Traffic Control Warning Lights Type A	DAY	936.000	936.000	
0186	643.0900	Traffic Control Signs	DAY	7,011.000	3,972.000	3,039.000
0188	643.0910	Traffic Control Covering Signs Type I	EACH	4.000	4.000	
0190	643.0920	Traffic Control Covering Signs Type II	EACH	12.000	12.000	
0192	643.1050	Traffic Control Signs PCMS	DAY	38.000	38.000	
0194	643.1070	Traffic Control Cones 42-Inch	DAY	144.000	144.000	
0196	643.5000	Traffic Control	EACH	0.800	0.400	0.400
0198	645.0120	Geotextile Type HR	SY	287.000	175.000	112.000
0200	646.1020	Marking Line Epoxy 4-Inch	LF	253,215.000		253,215.000
0202	646.4520	Marking Line Same Day Epoxy 4-Inch	LF	99,180.000		99,180.000
0204	646.5320	Marking Railroad Crossings Epoxy	EACH	2.000		2.000
0208	648.0100	Locating No-Passing Zones	MI	15.000		15.000
0210	649.0105	Temporary Marking Line Paint 4-Inch	LF	99,180.000		99,180.000
0216	650.6000	Construction Staking Pipe Culverts	EACH	12.000	9.000	3.000
0218	650.8000	Construction Staking Resurfacing Reference	LF	79,356.000		79,356.000
0220	650.9910	Construction Staking Supplemental Control (project) 01. 9215-01-63	LS	1.000	1.000	
0222	650.9920	Construction Staking Slope Stakes	LF	3,575.000		3,575.000
0228	690.0150	Sawing Asphalt	LF	5,442.000	560.000	4,882.000
0230	690.0250	Sawing Concrete	LF	21.000	3.000	18.000
0232	740.0440	Incentive IRI Ride	DOL	30,059.000		30,059.000
0234	ASP.1T0A	On-the-Job Training Apprentice at $5.00/HR	HRS	2,400.000	2,400.000	
0236	ASP.1T0G	On-the-Job Training Graduate at $5.00/HR	HRS	1,980.000	1,980.000	
0240	SPV.0060	Special 01. Reestablish Section Corner Monuments	EACH	23.000		23.000
0242	SPV.0060	Special 02. Lane Shift 35-086-140	EACH	1.000	1.000	
0244	SPV.0060	Special 03. Lane Shift 35-086-150	EACH	2.000	2.000	
0246	SPV.0060	Special 04. Lane Shift 35-086-220	EACH	1.000	1.000	
0248	SPV.0060	Special 05. Lane Shift 35-086-230	EACH	1.000	1.000	
0250	SPV.0060	Special 06. Lane Shift 35-086-260	EACH	1.000	1.000	
0252	SPV.0060	Special 07. Lane Shift 35-086-530	EACH	1.000	1.000	
0254	SPV.0090	Special 01. Ditch Restoration	LF	550.000	550.000	
0256	SPV.0090	Special 02. Salvaged Cable Guard	LF	3,080.000		3,080.000

3

CLEARING AND GRUBBING

STA	- STA	LOCATION	201.0110 CLEARING SY	201.0210 GRUBBING SY	NOTES
9215-01-73 CATEGORY 0010					
30+50	- 31+30	RT	60	60	TO 3' BEYOND SLOPE INTERCEPT RT
203+95	- 204+55	LT	145	145	TO 3' BEYOND SLOPE INTERCEPT LT
PROJECT 9215-01-73 TOTAL			**205**	**205**	

REMOVING ASPHALTIC SURFACE BUTT JOINTS

STA-STA	LOCATION	204.0115 REMOVING ASPHALTIC SURFACE BUTT JOINTS SY
9215-01-73 CATEGORY 0010		
30+25	BEGIN PROJECT	10
	B-35-98 W	10
	B-35-98 E	10
	BRIDGE RD	8
	PHALZGRAFF RD	9
	B-35-99 W	10
	B-35-99 E	10
	SPIRIT FALLS AVE	9
	CTH T	10
	CTH O	10
	WAUWATOSA AVE	9
	ZENITH TOWER RD	8
	SANCTUARY RD	9
	WILDERNESS DR	8
	ISLAND VIEW DR	9
	TOMAHAWK RD	10
	PINE GROVE LN	8
	LOOP RD	8
	SPIRIT HAVEN RD	8
	SUNSET POINT RD N	8
	SUNSET POINT RD S	8
	SPIRIT VIEW RD	7
	WEST KRAFT RD	8
	PFEIFFER RD	9
	CTH E	11
	TOMAHAWK RAILWAY W	16
	TOMAHAWK RAILWAY E	16
823+81	END PROJECT	10
PROJECT 9215-01-73 TOTAL		**264**

REMOVING CULVERTS

STA	LOC	CULVERT #	SIZE IN	REMOVAL LENGTH FT	DESC	203.0100 REMOVING SMALL PIPE CULVERTS EACH	203.0200 REMOVING OLD STRUCTURE 01. STA 564+79 EACH	NOTES
9215-01-63 CATEGORY 0010								
218+28	STH 86	140	36	84	CPCS	1	---	
251+28	STH 86	150	30	52	CPCS	1	---	
315+18	STH 86	220	30	60	CPCS	1	---	
337+78	STH 86	230	30	76	CPCS	1	---	
385+12	STH 86	260	24	60	CPCS	1	---	
523+09	STH 86	320	54	76	CPCS	1	---	
564+79	STH 86	340	84	68	CPCS	---	1	84" METAL CULVERT
572+99	STH 86	350	30	96	CPCS	1	---	
801+05	STH 86	530	30	72	CPCS	1	---	
PROJECT 9215-01-63 TOTALS					**TOTAL**	**8**	**1**	
9215-01-73 CATEGORY 0010								
34+86		LT DRIVE	24	5	CPCS	1	---	ENDWALL ONLY
554+25		RT DRIVE	24	3	CPCS	1		ENDWALL ONLY
PROJECT 9215-01-73 TOTALS					**TOTAL**	**2**	**0**	

REMOVING ASPHALTIC SURFACE

STA	STA	LOCATION	204.0110 REMOVING ASPHALTIC SURFACE SY
9215-01-73 CATEGORY 0010			
31+32	32+89	NW B-35-99	18
31+32	32+89	SW B-35-99	18
33+50	34+69	NE B-35-99	14
33+50	35+06	SE B-35-99	18
204+09	205+63	NW B-35-98	18
204+07	205+65	SW B-35-98	18
206+51	208+05	NE B-35-98	18
206+47	207+29	SE B-35-98	10
555+28 -	566+63	SPIRIT RIVER CAUSEWAY-N	631
555+05 -	566+40	SPIRIT RIVER CAUSEWAY-S	631
797+52 -	805+62	CABLE GUARD BY RR	450
PROJECT 9215-01-73 TOTAL			**1,844**

3

3

REMOVING ASPHALTIC SURFACE MILLING

STA	-	STA	LOCATION	204.0120 REMOVING ASPHALTIC SURFACE MILLING SY
PROJECT 9215-01-73 CATEGORY 0010				
30+25	-	32+74	STH 86	830
33+66		205+61	STH 86	57,317
206+53		555+00	STH 86	116,157
555+00		567+00	STH 86	4,800
567+00		588+70	STH 86	7,233
588+70		592+70	STH 86	1,600
592+70		797+50	STH 86	68,267
797+50		806+47	STH 86	3,289
806+63		823+81	STH 86	5,727
SUNWALL RD			INTERSECTION	136
FOX FARM RD			INTERSECTION	222
ROSS RD			INTERSECTION	93
BRIDGE RD			INTERSECTION	391
PHALZGRAFF RD			INTERSECTION	421
SPIRIT FALLS AVE			INTERSECTION	431
CTH T			INTERSECTION	608
HOFFMAN RD			INTERSECTION	316
MITCHELL RD			INTERSECTION	421
CTH O			INTERSECTION	501
WAUWATOSA AVE			INTERSECTION	225
ZENITH TOWER RD			INTERSECTION	331
SANCTURARY RD			INTERSECTION	211
WILDERNESS DR			INTERSECTION	311
ISLAND VIEW DR			INTERSECTION	173
TOMAHAWK RD			INTERSECTION	323
PINE GROVE LN			INTERSECTION	314
LOOP RD			INTERSECTION	322
SPIRIT HAVEN RD			INTERSECTION	321
SUNSET POINT RD-N			INTERSECTION	330
SUNSET POINT RD-S			INTERSECTION	228
SPIRIT VIEW RD			INTERSECTION	321
WEST KRAFT RD			INTERSECTION	341
PFEIFFER RD			INTERSECTION	344
CTH E			INTERSECTION	492
ASPHALTIC DRIVES				107
PROJECT 9215-01-73 TOTAL				**273,454**

REMOVING CURB AND GUTTER

STA	-	STA	LOC	204.0150 REMOVING CURB AND GUTTER LF
PROJECT 9215-01-63 CATEGORY 0010				
217+69		218+54	CULVERT 035-086-140	85
PROJECT 9215-01-63 TOTAL				**85**
PROJECT 9215-01-73 CATEGORY 0010				
			PHALZGRAFF NW	72
			PHALZGRAFF NE	84
			BRIDGE SW	72
		UNDIST	CURB REPAIR	100
PROJECT 9215-01-73 TOTAL				**328**

REMOVING GUARDRAIL

STA	-	STA	LOC	204.0165 REMOVING GUARDRAIL LF	SPV.0090.02 SALVAGED CABLE GUARD LF	COMMENT
9215-01-73 CATEGORY 0010						
31+32	-	32+89	LT STH 86	157	---	NW B-35-99
31+32	-	32+89	RT STH 86	157	---	SW B-35-99
33+50	-	34+69	LT STH 86	119	---	NE B-35-99
33+50	-	35+06	RT STH 86	156	---	SE B-35-99
204+09	-	205+63	LT STH 86	154	---	NW B-35-98
204+07	-	205+65	RT STH 86	158	---	SW B-35-98
206+51	-	208+05	LT STH 86	154	---	NE B-35-98
206+47	-	207+29	RT STH 86	82	---	SE B-35-98
555+28	-	566+63	LT STH 86	---	1,135	CABLE GUARD
555+05	-	566+40	RT STH 86	---	1,135	CABLE GUARD
797+52	-	805+62	LT STH 86	---	810	CABLE GUARD
PROJECT 9215-01-73 TOTAL				**1,137**	**3,080**	

REMOVING RIPRAP

STA	LOC	204.9180.S REMOVING RIPRAP SY
PROJECT 9215-01-73 CATEGORY 0010		
555+00	LT	74
554+30	RT	64
566+80	RT	24
805+40	LT	48
PROJECT 9215-01-73 TOTAL		**211**

EXCAVATION

STA	-	STA	LOCATION	205.0100 EXCAVATION COMMON CY	208.0100 BORROW CY
PROJECT 9215-01-63 CATEGORY 0010					
217+69	-	218+91	CULVERT 35-086-140	530	---
250+75	-	251+80	CULVERT 35-086-150	360	---
314+66	-	315+70	CULVERT 35-086-220	435	---
337+25	-	338+31	CULVERT 35-086-230	475	---
384+59	-	385+65	CULVERT 35-086-260	390	---
522+55	-	523+61	CULVERT 35-086-320	530	---
564+24	-	565+34	CULVERT 35-086-340	530	---
572+45	-	573+52	CULVERT 35-086-350	530	---
800+52	-	801+59	CULVERT 35-086-530	530	---
PROJECT 9215-01-63 TOTAL				**4310**	**0**
PROJECT 9215-01-73 CATEGORY 0010					
30+65		34+85	B-35-98 LT	---	65
30+29		35+71	B-35-98 RT	---	440
203+18		209+10	B-35-99 LT	---	138
203+05		207+50	B-35-99 RT	---	133
554+25		567+39	CABLE-SPIRIT RIVER RT	---	60
554+91		569+00	CABLE-SPIRIT RIVER LT	---	60
797+00		805+75	CABLE-TOMAHAWK RR LT	---	45
PROJECT 9215-01-73 TOTAL				**0**	**941**

PREP AND FINISH

LOCATION	211.0100 PREPARE FOUNDATION FOR ASPHALT PAVEMENT LS	213.0100 FINISHING ROADWAY EACH
9215-01-73 CATEGORY 0010		
STA 30+24 - STA 823+81	1	1
PROJECT 9215-01-73 TOTAL	1	1

3

BASE AGGREGATE

STA	-	STA	LOCATION	305.0110 BASE AGG DENSE 3/4-INCH TON	305.0120 BASE AGG DENSE 1 1/4-INCH TON	624.0100 WATER MGAL
PROJECT 9215-01-73 CATEGORY 0010						
30+25	-	32+73	SHOULDERS	8	---	---
33+65	-	205+61	SHOULDERS	537	---	---
206+53	-	217+69	SHOULDERS	35	---	---
218+91	-	250+75	SHOULDERS	100	---	---
251+80	-	314+66	SHOULDERS	196	---	---
315+70	-	337+25	SHOULDERS	67	---	---
338+31	-	384+59	SHOULDERS	145	---	---
385+65	-	522+55	SHOULDERS	428	---	---
523+61	-	564+24	SHOULDERS	127	---	---
565+34	-	572+45	SHOULDERS	22	---	---
573+52	-	588+70	SHOULDERS	47	---	---
592+70	-	800+52	SHOULDERS	649	---	---
801+59	-	806+47	SHOULDERS	15	---	---
806+63	-	811+00	SHOULDERS	14	---	---
		B-35-98 GUARDRAIL		5	30	---
		B-35-99 GUARDRAIL		30	20	---
		GUARDRAIL-SPIRIT RIVER CAUSEWAY LT		170	25	---
		GUARDRAIL-SPIRIT RIVER CAUSEWAY RT		75	15	---
		GUARDRAIL-SNW OF RAILROAD TRACKS LT		75	15	---
			UNDISTRIBUTED	135	5	45
PROJECT 9215-01-73 TOTALS				**2880**	**110**	**45**
PROJECT 9215-01-63 CATEGORY 0010						
217+69	-	218+91	CULVERT 35-086-140	82	582	---
250+75	-	251+80	CULVERT 35-086-150	70	502	---
314+66	-	315+70	CULVERT 35-086-220	70	496	---
337+25	-	338+31	CULVERT 35-086-230	70	506	---
384+59	-	385+65	CULVERT 35-086-260	70	506	---
522+55	-	523+61	CULVERT 35-086-320	70	506	---
564+24	-	565+34	CULVERT 35-086-340	64	526	---
572+45	-	573+52	CULVERT 35-086-350	72	512	---
800+52	-	801+59	CULVERT 35-086-530	66	512	---
			UNDISTRIBUTED	30	230	85
PROJECT 9215-01-63 TOTALS				**664**	**4878**	**85**

HMA PAVEMENT

STA	-	STA	LOCATION	455.0605 TACK COAT GAL	460.5224 HMA PAVEMENT 4 LT 58-28 S TON	450.4000 HMA COLD WEATHER PAVING TON
PROJECT 9215-01-73 CATEGORY 0010						
30+25	-	32+74	STH 86	50	95	
33+66		205+61	STH 86	3,439	6,591	
206+53		555+00	STH 86	6,969	13,358	
555+00		567+00	STH 86	288	552	
567+00		588+70	STH 86	434	832	
588+70		592+70	STH 86	96	184	
592+70		797+50	STH 86	4,096	7,851	
797+50		806+47	STH 86	197	378	
806+63		823+81	STH 86	344	659	
SUNWALL RD			INTERSECTION	8	16	
FOX FARM RD			INTERSECTION	13	26	
ROSS RD			INTERSECTION	6	11	
BRIDGE RD			INTERSECTION	23	45	
PHALZGRAFF RD			INTERSECTION	25	48	
SPIRIT FALLS AVE			INTERSECTION	26	50	
CTH T			INTERSECTION	36	70	
HOFFMAN RD			INTERSECTION	19	36	
MITCHELL RD			INTERSECTION	25	48	
CTH O			INTERSECTION	30	58	
WAUWATOSA AVE			INTERSECTION	14	26	
ZENITH TOWER RD			INTERSECTION	20	38	
SANCTURARY RD			INTERSECTION	13	24	
WILDERNESS DR			INTERSECTION	19	36	
ISLAND VIEW DR			INTERSECTION	10	20	
TOMAHAWK RD			INTERSECTION	19	37	
PINE GROVE LN			INTERSECTION	19	36	
LOOP RD			INTERSECTION	19	37	
SPIRIT HAVEN RD			INTERSECTION	19	37	
SUNSET POINT RD-N			INTERSECTION	20	38	
SUNSET POINT RD-S			INTERSECTION	14	26	
SPIRIT VIEW RD			INTERSECTION	19	37	
WEST KRAFT RD			INTERSECTION	20	39	
PFEIFFER RD			INTERSECTION	21	40	
CTH E			INTERSECTION	30	57	
UNDISTRIBUTED-BEAM GUARD TERMINALS				17	32	
COLD WEATHER PAVING						2,000
PROJECT 9215-01-73 TOTALS			**TOTALS**	**16,417**	**31,468**	**2,000**

3

3

ASPHALTIC CENTER LINE RUMBLE STRIP

STA	-	STA	465.0475 ASPHALTIC CENTERLINE RUMBLE STRIPS 2-LANE RURAL FT
PROJECT 9215-01-73	CATEGORY 0010		
30+25		32+50	250
33+91		205+36	15,550
206+78		786+50	51,150
PROJECT 9215-01-73 TOTAL			66,950

ASPHALTIC SURFACE PATCHING

STA	-	STA	LOCATION		465.0110 ASPHALTIC SURFACE PATCHING TON
PROJECT 9215-01-63		CATEGORY 0010			
217+69	-	218+91	CULVERT 35-086-140	STH 86	166
250+75	-	251+80	CULVERT 35-086-150	STH 86	121
314+66	-	315+70	CULVERT 35-086-220	STH 86	120
337+25	-	338+31	CULVERT 35-086-230	STH 86	122
384+59	-	385+65	CULVERT 35-086-260	STH 86	122
522+55	-	523+61	CULVERT 35-086-320	STH 86	122
564+24	-	565+34	CULVERT 35-086-340	STH 86	152
572+45	-	573+52	CULVERT 35-086-350	STH 86	123
800+52	-	801+59	CULVERT 35-086-530	STH 86	135
PROJECT 9215-01-63 TOTALS				**TOTALS**	**1,183**
PROJECT 9215-01-73		CATEGORY 0010			
SUBSURFACE REPAIR AREAS (UNDISTRIBUTED)				STH 86	700
PROJECT 9215-01-73 TOTALS				**TOTALS**	**700**

3

PWL MIXTURE USE TABLE

PROJECT 9215-01-73 CATEGORY 0010

LOCATION	STATION	MIXTURE USE	UNDERLYING SURFACE	BID ITEM	TONS	THICKNESS	QUALITY MANAGEMENT PROGRAM TO BE USED FOR:	
							MIXTURE ACCEPTANCE	DENSITY ACCEPTANCE
12 FOOT DRIVING LANE	STA 30+24- STA 823+81	UPPER LAYER	MILLED EXISTING HMA SURFACE	4 LT 58-28 S	24270	2"	PWL INCENTIVE AIR VOIDS HMA PAVEMENT 460.2010	INCENTIVE DENSITY PWL HMA PAVEMENT 460.2005
SHOULDERS (3'-6')	STA 30+24- STA 823+81	UPPER LAYER	MILLED EXISTING HMA SURFACE	4 LT 58-28 S	6230	2"	PWL INCENTIVE AIR VOIDS HMA PAVEMENT 460.2010	ACCEPTANCE TESTING BY THE DEPARTMENT; NOT ELIGIBLE FOR INCENTIVE
VARIOUS-INTERSECTIONS		UPPER LAYER	MILLED EXISTING HMA SURFACE	4 LT 58-28 S	940	2"	PWL INCENTIVE AIR VOIDS HMA PAVEMENT 460.2010	ACCEPTANCE TESTING BY THE DEPARTMENT; NOT ELIGIBLE FOR INCENTIVE
VARIOUS-CULVERTS		CULVERT PATCHES	BASE AGGREGATE	ASPHALTIC SURFACE PATCHING	1,180	6"	QMP AS PER SS 465	ACCEPTANCE BY ORDINARY COMPACTION

3

CULVERT PIPES

CULVERT	STATION	LOCATION	520.8000 Concrete Collars for Pipe EA	521.3124 Culvert Pipe Corrugated Steel 24-Inch LF	522.0124 Culvert Pipe Reinforced Concrete Class III 24-Inch LF	522.0130 Culvert Pipe Reinforced Concrete Class III 30-Inch LF	522.0136 Culvert Pipe Reinforced Concrete Class III 36-Inch LF	522.0184 Culvert Pipe Reinforced Concrete Class III 84-Inch LF	521.1024 Apron Endwalls for Culvert Pipe Steel 24-Inch EACH	522.1024 Apron Endwalls for Culvert Pipe Reinforced Concrete 24-Inch EACH	522.1030 Apron Endwalls for Culvert Pipe Reinforced Concrete 30-Inch EACH	522.1036 Apron Endwalls for Culvert Pipe Reinforced Concrete 36-Inch EACH	522.1084 Apron Endwalls for Culvert Pipe Reinforced Concrete 84-Inch EACH	STEEL THICKNESS (INCHES)	*JOINT TIES EACH	**ELEVATIONS INLET	**ELEVATIONS OUTLET
PROJECT 9215-01-63 CATEGORY 0010																	
35-086-140	218+28	ALI-86					77					2			ALL	1463.69	1460.90
35-086-150	251+28	ALI-86				49					2				ALL	1502.44	1502.38
35-086-220	315+18	ALI-86				57					2				ALL	1490.04	1489.80
35-086-230	337+78	ALI-86				73					2				ALL	1505.25	1504.61
35-086-260	385+12	ALI-86			55					2					ALL	1490.74	1490.74
35-086-320	523+09	ALI-86			71					2					ALL	1481.12	1480.54
35-086-340	564+79	ALI-86						63					2		ALL	1431.62	1430.57
35-086-350	572+99	ALI-86				92					2				ALL	1443.02	1442.94
35-086-530	801+05	ALI-86				67					2				ALL	1435.57	1434.45
PROJECT 9215-01-63 TOTALS			**0**	**0**	**126**	**338**	**77**	**63**	**0**	**4**	**10**	**2**	**2**				
PROJECT 9215-01-73 CATEGORY 0010																	
DRIVE	554+91, LT	ALI-86	1	10					1					0.079		1442.39	1442.07
DRIVE	554+25, RT	ALI-86	1	30					1					0.079		1445.09	1444.38
DRIVE	34+85, LT	ALI-86		36					1					0.079		1539.84	1539.55
PROJECT 9215-01-73 TOTALS			**2**	**76**	**0**	**0**	**0**	**0**	**3**	**0**	**0**	**0**	**0**				

* NON-BID ITEM: FOR INFORMATION ONLY

DITCH RESTORATION

SPV.0090.01

STATION	LOCATION	Ditch Restoration LF LT	Ditch Restoration LF RT
PROJECT 9215-01-63 CATEGORY 0010			
218+28	CULVERT 35-086-140	---	50
251+28	CULVERT 35-086-150	---	---
315+18	CULVERT 35-086-220	50	50
337+78	CULVERT 35-086-230	50	50
385+12	CULVERT 35-086-260	50	50
523+09	CULVERT 35-086-320	50	50
564+79	CULVERT 35-086-340	---	---
572+99	CULVERT 35-086-350	50	50
811+05	CULVERT 35-086-530	---	---
PROJECT 9215-01-63 TOTALS		250	300
		550	

3

CONCRETE CURB AND GUTTER

STA	-	STA	LOC	601.0557 CONCRETE CURB AND GUTTER 6-INCH SLOPED 36-INCH TYPE D LF
PROJECT 9215-01-63			CATEGORY 0010	
217+69		218+54	CULVERT 35-086-140	85
PROJECT 9215-01-63 TOTALS				**85**
PROJECT 9215-01-73			CATEGORY 0010	
			PHALZGRAFF NW	72
			PHALZGRAFF NE	84
			BRIDGE SW	72
		UNDIST	CURB REPAIR	100
PROJECT 9215-01-73 TOTAL				**328**

RIPRAP

STATION	LOCATION	RIP RAP TYPE	606.0200 RIPRAP MEDIUM CY	606.0300 RIPRAP HEAVY CY	645.0120 GEOTEXTILE FABRIC TYPE HR SY
PROJECT 9215-01-63	CATEGORY 0010				
218+50	LT	M	12	---	---
564+80	LT	H	---	35	53
564+80	RT	H	---	48	72
805+40	LT	h	---	5	7
801+05	LT	h	---	29	43
PROJECT 9215-01-63 TOTALS			**12**	**116**	**175**
PROJECT 9215-01-73	CATEGORY 0010				
554+55	LT	H	---	38	57
554+55	RT	H	---	16	24
567+00	RT	H	---	17	25
805+40	LT	h	---	5	7
PROJECT 9215-01-73 TOTALS			**0**	**75**	**112**

BEAM GUARD

STA	-	STA	LOC	604.0600 SLOPE PAVING SELECT CRUSHED SY	614.0397 GUARDRAIL MOW STRIP EMULSIFIED ASPHALT SY	614.2300 MGS GUARDRAIL 3 LF	614.2330 MGS GUARDRAIL 3K LF	614.2350 MGS GUARDRAIL SHORT RADIUS LF	CONTROLLED RELEASE TERMINAL POSTS EA	614.2500 MGS THRIE BEAM TRANSITION LF	614.2610 MGS GUARDRAIL TERMINAL EAT EACH	614.0390 MGS GUARDRAIL SHORT RADIUS TERMINAL EACH
PROJECT 9215-01-73			CATEGORY 0010									
31+85		32+89	LT	---	40	12.5	---	---	---	37.5	1	---
31+48		32+89	RT	---	50	50.0	---	---	---	37.5	1	---
33+50		34+78	LT	---	50	37.5	---	---	---	37.5	1	---
33+50		34+53	RT	---	40	12.5	---	---	---	37.5	1	---
204+35		205+63	LT	---	50	37.5	---	---	---	37.5	1	---
204+24		205+65	RT	---	50	50.0	---	---	---	37.5	1	---
206+52		207+93	LT	---	50	50.0	---	---	---	37.5	1	---
206+47		207+55	RT	---	40	---	---	37.5	6.0	37.5	---	1.0
555+00		567+81	LT	1,140	500	---	1,175.0	---	---	---	2	---
554+29		567+10	LT	1,140	500	---	1,175.0	---	---	---	2	---
797+52		805+71	RT	730	320	---	712.5	---	---	---	2	---
PROJECT 9215-01-73 TOTA				**3,010**	**1,690**	**250**	**3,062**	**38**		**300**	**13**	**1**

3

3

MONUMENTS

TYPE	TOWN/RANGE	CORNER	621.0100 LANDMARK REFERENCE MONUMENTS EACH	SPV.0060.01 REESTABLISH SECTION CORNER MONUMENTS EACH	NOTES
PROJECT 9215-01-73 CATEGORY 0010					
QUARTER CORNER	T34N R5E	6-7	4	1	
SECTION CORNER	T34N R5E	5-6-7-8	4	1	
QUARTER CORNER	T34N R5E	5-8	4	1	
SECTION CORNER	T34N R5E	4-5-8-9	4	1	
QUARTER CORNER	T34N R5E	4-9	4	1	
SECTION CORNER	T34N R5E	2-3-10-11	4	1	
QUARTER CORNER	T34N R5E	2-11	4	1	
SECTION CORNER	T34N R5E	2-1-11-12	4	1	
QUARTER CORNER	T34N R5E	1-2	4	1	
SECTION CORNER	T34N R5E / T34N R6E	1-12-6-7	---	---	OFF ROADWAY
QUARTER CORNER	T34N R6E	6-7	---	---	OFF ROADWAY
SECTION CORNER	T34N R6E	5-6-7-8	---	---	OFF ROADWAY
QUARTER CORNER	T34N R6E	5-8	4	1	
SECTION CORNER	T34N R6E	4-5-8-9	4	1	
QUARTER CORNER	T34N R6E	4-9	4	1	
SECTION CORNER	T34N R6E	4-3-9-10	4	1	
QUARTER CORNER	T34N R6E	3-10	4	1	
SECTION CORNER	T34N R6E	2-3-10-11	4	1	
QUARTER CORNER	T34N R6E	2-11	4	1	
SECTION CORNER	T34N R6E	2-1-11-12	4	1	
QUARTER CORNER	T34N R6E	1-2	4	1	
SECTION CORNER	T34N R6E / T34N R7E	1-12-6-7	4	1	
QUARTER CORNER	T34N R7E	6-7	4	1	
SECTION CORNER	T34N R7E	5-6-7-8	4	1	
QUARTER CORNER	T34N R7E	5-8	4	1	
SECTION CORNER	T34N R7E	4-5-8-9	---	---	OFF ROADWAY
QUARTER CORNER	T34N R7E	4-9	4	1	
PROJECT 9215-01-73 TOTALS			**92**	**23**	

3

3

SALVAGED TOPSOIL, EROSION MAT, FERTILIZER, AND SEEDING

STA	-	STA	LOC	625.0100 TOPSOIL SY	629.0210 FERTILIZER TYPE B CWT	630.0120 SEEDING MIXTURE NO. 20 LB	630.0160 SEEDING MIXTURE NO. 60 LB	627.0200 MULCHING SY	628.2008 E MAT URBAN CLASS I TYPE B SY
PROJECT 9215-01-63 CATEGORY 0010									
CULVERT 35-086-140			LT	110	0.1	3	---	110	---
CULVERT 35-086-140			RT	245	0.2	7	---	245	---
CULVERT 35-086-150			LT	65	0.0	---	2	65	---
CULVERT 35-086-150			RT	70	0.0	---	2	70	---
CULVERT 35-086-220			LT	80	0.1	2	---	80	---
CULVERT 35-086-220			RT	125	0.1	3	---	125	---
CULVERT 35-086-230			LT	145	0.1	4	---	145	---
CULVERT 35-086-230			RT	140	0.1	4	---	140	---
CULVERT 35-086-260			LT	80	0.1	2	---	80	---
CULVERT 35-086-260			RT	90	0.1	2	---	90	---
CULVERT 35-086-320			LT	140	0.1	4	---	140	---
CULVERT 35-086-320			RT	130	0.1	4	---	130	---
CULVERT 35-086-350			LT	180	0.1	5	---	180	---
CULVERT 35-086-350			RT	215	0.1	6	---	215	---
CULVERT 35-086-530			LT	125	0.2	3	---	125	---
CULVERT 35-086-530			RT	---	0.0	---	---	---	---
UNDISTRIBUTED				100	0	0	10	100	---
PROJECT 9215-01-63 TOTALS				**2,040**	**1.3**	**49**	**14**	**2,040**	**0**
PROJECT 9215-01-73 CATEGORY 0010									
30+75	-	32+35	STH 86 LT	115	0.1	3	---	---	115
30+35	-	32+00	STH 86 RT	650	0.4	18	---	---	650
34+25	-	34+90	STH 86 LT	90	0.1	2	---	---	90
34+00	-	35+70	STH 86 RT	35	0.0	1	---	---	35
203+80	-	204+60	STH 86 LT	400	0.3	11	---	---	400
203+55	-	205+00	STH 86 RT	260	0.2	7	---	---	260
207+50	-	208+00	STH 86 LT	100	0.1	3	---	---	100
206+50	-	207+00	STH 86 RT	20	0.0	1	---	---	20
554+85	-	555+00	STH 86 LT	55	0.0	1	---	55	---
554+25	-	554+85	STH 86 RT	75	0.0	2	---	75	---
567+05	-	568+60	STH 86 LT	125	0.1	3	---	125	---
566+65	-	567+45	STH 86 RT	70	0.0	2	---	70	---
796+85	-	798+05	STH 86 LT	135	0.1	4	---	---	135
805+20	-	806+00	STH 86 LT	55	0.0	1	---	55	---
UNDISTRIBUTED				100	0	10	10	20	90
PROJECT 9215-01-73 TOTALS				**2,285**	**1.4**	**69**	**10**	**400**	**1,895**

SILT FENCE

STA	-	STA	LOC	628.1504 SILT FENCE FT	628.1520 SILT FENCE MAINT FT	628.7570 ROCK BAGS EACH
PROJECT 9215-01-63 CATEGORY 0010						
217+60	-	219+00	RT	140	140	15
250+75	-	251+85	LT	110	110	---
250+75	-	251+85	RT	110	110	15
314+60	-	315+75	LT	115	115	---
314+60	-	315+75	RT	115	115	15
337+15	-	338+40	LT	125	125	---
337+15	-	338+40	RT	125	125	15
384+55	-	385+65	LT	110	110	---
384+55	-	385+65	RT	110	110	15
522+50	-	523+70	LT	120	120	---
522+50	-	523+70	RT	120	120	15
572+40	-	573+55	LT	115	115	---
572+40	-	573+55	RT	115	115	15
800+50	-	801+60	LT	110	110	15
800+50	-	801+60	RT	110	110	---
UNDISTRUBUTED				200	200	10
PROJECT 9215-01-63 TOTALS				**1950**	**1950**	**130**
PROJECT 9215-01-73 CATEGORY 0010						
30+65	-	32+90	LT	250	250	---
30+25	-	32+90	RT	290	290	---
33+50	-	34+70	LT	145	145	15
33+50	-	35+70	RT	245	245	---
203+10	-	205+60	LT	275	275	---
202+90	-	205+60	RT	295	295	---
206+45	-	209+10	LT	290	290	---
206+45	-	207+75	RT	155	155	---
555+10	-	556+20	LT	160	160	30
554+50	-	556+40	RT	240	240	30
566+85	-	569+00	LT	265	265	---
566+50	-	567+45	RT	145	145	30
796+50	-	798+50	LT	200	200	---
804+80	-	805+65	LT	85	85	---
UNDISTRUBUTED				300	300	10
PROJECT 9215-01-73 TOTALS				**3340**	**3340**	**115**

3

3

CULVERT PIPE CHECKS

LOCATION	628.7555 CULVERT PIPE CHECKS EACH
PROJECT 9215-01-63 CATEGORY 0010	
CULVERT 35-086-140	4
CULVERT 35-086-150	3
CULVERT 35-086-220	3
CULVERT 35-086-230	3
CULVERT 35-086-260	2
CULVERT 35-086-320	2
CULVERT 35-086-340	---
CULVERT 35-086-350	3
CULVERT 35-086-530	3
UNDISTRIBUTED	2
PROJECT 9215-01-63 TOTALS	**25**

MARKERS CULVERT END

PIPE	633.5200 MARKERS CULVERT END EACH
PROJECT 9215-01-63 CATEGORY 0010	
CULVERT 35-086- 140	2
CULVERT 35-086- 150	2
CULVERT 35-086- 220	2
CULVERT 35-086- 230	2
CULVERT 35-086- 260	2
CULVERT 35-086- 320	2
CULVERT 35-086- 340	2
CULVERT 35-086- 350	2
CULVERT 35-086- 530	2
PROJECT 9215-01-63 TOTAL	**18**

MOBILIZATION EROSION CONTROL

LOCATION	628.1905 MOBILIZATION EROSION CONTROL EACH	628.1910 MOBILIZATION EMERGENCY EROSION CONTROL EACH
PROJECT 9215-01-63 CATEGORY 0010		
PROJECT	1	2
PROJECT 9215-01-63 TOTALS	**1**	**2**

LOCATION	628.1905 MOBILIZATION EROSION CONTROL EACH	628.1910 MOBILIZATION EMERGENCY EROSION CONTROL EACH
PROJECT 9215-01-73 CATEGORY 0010		
PROJECT	1	2
PROJECT 9215-01-673 TOTALS	**1**	**2**

3

TYPE II SIGNING

SIGN #	SIGN CODE	SHAPE T,O,R,D	SIGN SIZE IN	X	IN	MESSAGE	POSTS WOOI 4X6 INCH 10 FT EACH	204.0180 REMOVING DELINEATORS AND MARKERS EACH	634.0614 POSTS WOOD 4X6 INCH 14 FT EACH	638.2102 MOVING SIGNS TYPE II EACH	638.3000 REMOVING SMALL SIGN SUPPORTS EACH	638.4000 MOVING SMALL SIGN SUPPORTS EACH
PROJECT 9215-01-73 CATEGORY 0010												
14 - 01	R2-1	R	24	X	30	SPEED LIMIT 45	---	---	1	1	1	---
14 - 02	R59-51	R	36	X	36	STOP FOR SCHOOL BUS FLASHING RED LIGHTS	---	---	1	1	1	---
						UNDISTRIBUTED (NO PASSING ZONE)	---	---	---	2	2	2
						DELINEATOR POSTS AT CABLE GUARD	---	6	---	---	0	---
PROJECT 9215-01-73 TOTAL						**TOTALS**	**0**	**6**	**2**	**4**	**4**	**2**

3

PAVEMENT MARKING

STATION - STATION	LOCATION	646.1020 MARKING LINE EPOXY 4-INCH (WHITE) EDGE LF	646.1020 MARKING LINE EPOXY 4-INCH (YELLOW) CEN LINE LF	646.4520 MARKING LINE SAME DAY EPOXY 4-INCH (YELLOW) CEN LINE LF	646.5320 MARKING RAILROAD CROSSING EPOXY EACH	649.0105 TEMOPORARY MARKING PAVEMENT 4-INCH (YELLOW) CEN LINE LF
PROJECT 9215-01-73 CATEGORY 0010						
30+25 - 455+00	STH 86	84,950	---	53,095	---	53,095
455+00 - 786+50	STH 86	66,300	---	41,440	---	41,440
786+50 - 806+47	STH 86	3,995	---	2,495	---	2,495
806+63 - 823+81	STH 86	3,435	---	2,150	---	2,150
30+25 - 455+00	STH 86 AFTER RUMBLE STRIPS	---	53,095	---	---	---
455+00 - 786+50	STH 86 AFTER RUMBLE STRIPS	---	41,440	---	---	---
	CTH T	---	---	---	---	---
	CTH O	---	---	---	---	---
	CTH E	---	---	---	---	---
	RR XING	---	---	---	2	---
PROJECT 9215-01-73 TOTALS		158,680	94,535	**99,180**	**2**	**99,180**
		253,215				

LOCATE NO PASSING ZONE

STATION X STATION	648.0100 LOCATING NO-PASSING ZONE MILES
PROJECT 9215-01-73 CATEGORY 0010	
30+25.00 823+81.00	15.0
PROJECT 9215-01-73 TOTALS	15.0

3

3

TRAFFIC CONTROL

STAGE	DURATION DAYS	643.0300 TRAFFIC CONTROL DRUMS # REQ'D	DAYS	643.1070 TRAFFIC CONTROL CONES 42-INCH # REQ'D	DAYS	643.0420 TRAFFIC CONTROL BARRICADES TYPE III # REQ'D	DAYS	643.0705 TRAFFIC CONTROL WARNING LIGHTS TYPE A # REQ'D	DAYS	643.0900 TRAFFIC CONTROL SIGNS # REQ'D	DAYS	643.0910 COVERING SIGNS TYPE I CYCLES	#	EACH	643.0920 COVERING SIGNS TYPE II CYCLES	#	EACH	643.1050 TRAFFIC CONTROL PCMS # REQ'D	DAYS
PROJECT 9215-01-63 CATEGORY 0010																			
PROJECT 9215-01-63.		---	---	---	---	---	---	---	---	---	---	---	---	---	---	---	---	---	---
CULVERT PIPES (UNDER TRAFFIC)	18	20	360	8	144	---	---	---	---	8	144	---	---	---	---	---	---	---	---
PCMS ADVANCE OF CLOSURE	7	---	---	---	---	---	---	---	---	---	---	---	---	---	---	---	---	2	14
DETOUR SIGNING	12	---	---	---	---	9	108	18	216	301	3612	1	4	4	1	12	12	---	---
CULVERT PIPES (STH 86 ROAD CLOSURE)	12	---	---	---	---	30	360	60	720	18	216	---	---	---	---	---	---	2	24
PROJECT 9215-01-63 TOTALS			**360**		**144**		**468**		**936**		**3,972**			**4**			**12**		**38**
PROJECT 9215-01-73 CATEGORY 0010																			
PROJECT 9215-01-73		---	---	---	---	---	---	---	---	---	---	---	---	---	---	---	---	---	---
GENERAL ROAD WORK SIGNING	80	---	---	---	---	---	---	---	---	33	2640	---	---	---	---	---	---	---	---
GUARDRAIL B-35-98	6	24	144	---	---	---	---	---	---	8	48	---	---	---	---	---	---	---	---
GUARDRAIL B-35-99	6	24	144	---	---	---	---	---	---	8	48	---	---	---	---	---	---	---	---
GUARDRAIL-CAUSEWAY	10	42	420	---	---	---	---	---	---	8	80	---	---	---	---	---	---	---	---
GUARDRAIL-NW OF RAILROAD	5	32	160	---	---	---	---	---	---	8	40	---	---	---	---	---	---	---	---
GUARDRAIL-NIGHT SHOULDER CLOSURE	23	---	---	---	---	---	---	---	---	1	23	---	---	---	---	---	---	---	---
MILL AND OVERLAY	20	---	---	---	---	---	---	---	---	8	160	---	---	---	---	---	---	---	---
PROJECT 9215-01-73 TOTALS			**868**		**0**		**0**		**0**		**3,039**			**0**			**0**		**0**

TEMPORARY PORTABLE RUMBLE STRIPS

DISCRIPTION	LOCATION	643.0310.S TEMPORARY PORTABLE RUMBLE STRIPS LS
PROJECT 9215-01-63 CATEGORY 0010		
PROJECT	FLAGGING AREAS	1
PROJECT 9215-01-63 TOTAL		**1**

3

3

CONSTRUCTION STAKING

STA	- STA	LOCATION	650.6000 CONSTRUCTION STAKING PIPE CULVERTS EACH	650.8000 CONSTRUCTION STAKING RESURFACING REFERENCE LF	650.9910 CONSTRUCTION STAKING SUPPLIMENTAL CONTROL LS	650.9920 CONSTRUCTION STAKING SLOPE STAKES LF
PROJECT 9215-01-63		CATEGORY 0010				
PROJECT		STH 86	9	---	1	---
PROJECT 9215-01-63 TOTALS			**9**	**0**	**1**	**0**
PROJECT 9215-01-73		CATEGORY 0010				
PROJECT		STH 86	---	---	---	---
30+25	- 823+81	STH 86	---	79,356	---	---
30+25	36+00	B-35-98 BEAM GUARD	1	---	---	575
203+00	209+00	B-35-99 BEAM GUARD	---	---	---	600
554+25	569+00	CAUSEWAY BEAM GUARD	2	---	---	1475
797+00	806+25	BEAM GUARD	---	---	---	925
PROJECT 9215-01-73 TOTALS			**3**	**79,356**	**0**	**3,575**

SAWING ASPHALT

STA	LOCATION	690.0150 SAWING ASPHALT LF	690.0250 SAWING CONCRETE LF
PROJECT 9215-01-63	CATEGORY 0010		
	CULVERT 35-086-150	71	3
	CULVERT 35-086-220	60	---
	CULVERT 35-086-230	60	---
	CULVERT 35-086-260	60	---
	CULVERT 35-086-320	60	---
	CULVERT 35-086-340	72	---
	CULVERT 35-086-350	60	---
	CULVERT 35-086-530	66	---
	UNDISTRIBUTED	51	---
PROJECT 9215-01-63 TOTAL		**560**	**3**
PROJECT 9215-01-73	CATEGORY 0010		
	SPIRIT RIVER CAUSEWAY-N	1,235	---
	SPIRIT RIVER CAUSEWAY-S	1,145	---
	CABLE GUARD BY RR	872	---
	B-35-98	660	---
	B-35-99	640	---
	UNDISTRIBUTED/CURB REPAIR	330	18
PROJECT 9215-01-73 TOTAL		**4882**	**18**

3

LANE SHIFT

LOCATION	SPV.0060.02 LANE SHIFT 35-086-140 EA	SPV.0060.03 LANE SHIFT 35-086-150 EA	SPV.0060.04 LANE SHIFT 35-086-220 EA	SPV.0060.05 LANE SHIFT 35-086-230 EA	SPV.0060.06 LANE SHIFT 35-086-260 EA	SPV.0060.07 LANE SHIFT 35-086-530 EA	* FILL REQUIRED CY	* BASE AGGREGATE DENSE 1 1/4-INCH TON
PROJECT 9215-01-63 CATEGORY 0010								
35-086-140	1						5	10
35-086-150		2					10	20
35-086-220			1				40	25
35-086-230				1			45	35
35-086-260					1		5	15
35-086-530						1	70	30
PROJECT 9215-01-63 TOTALS	**1**	**2**	**1**	**1**	**1**	**1**		

* ESTIMATE ONLY FOR BID ITEM PURPOSES, INCIDENTAL TO LANE SHIFT ITEM

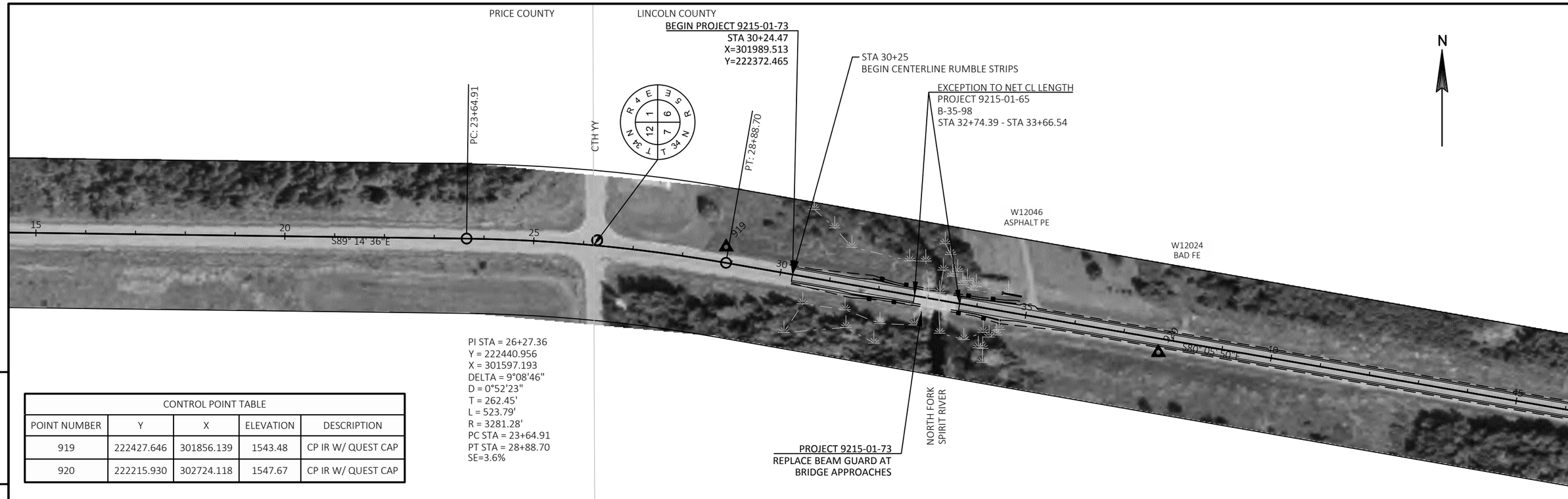

CONTROL POINT TABLE				
POINT NUMBER	Y	X	ELEVATION	DESCRIPTION
919	222427.646	301856.139	1543.48	CP IR W/ QUEST CAP
920	222215.930	302724.118	1547.67	CP IR W/ QUEST CAP

5

5

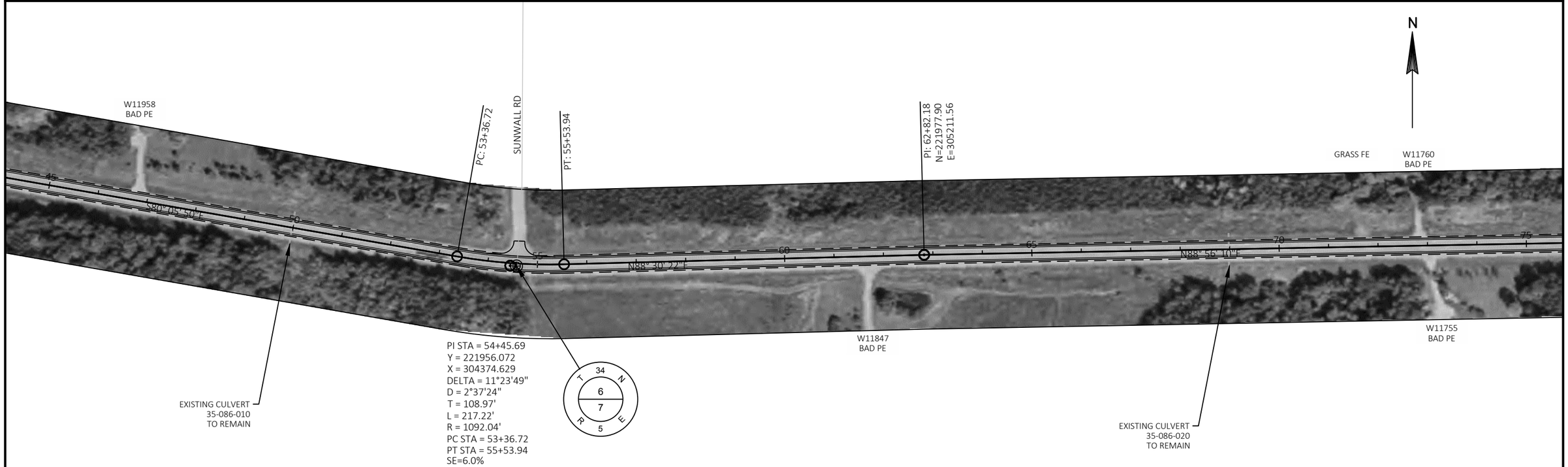

PROJECT NO: 9215-01-63/73	HWY: STH 86	COUNTY: LINCOLN	PLAN : STH 86	SHEET 68	E

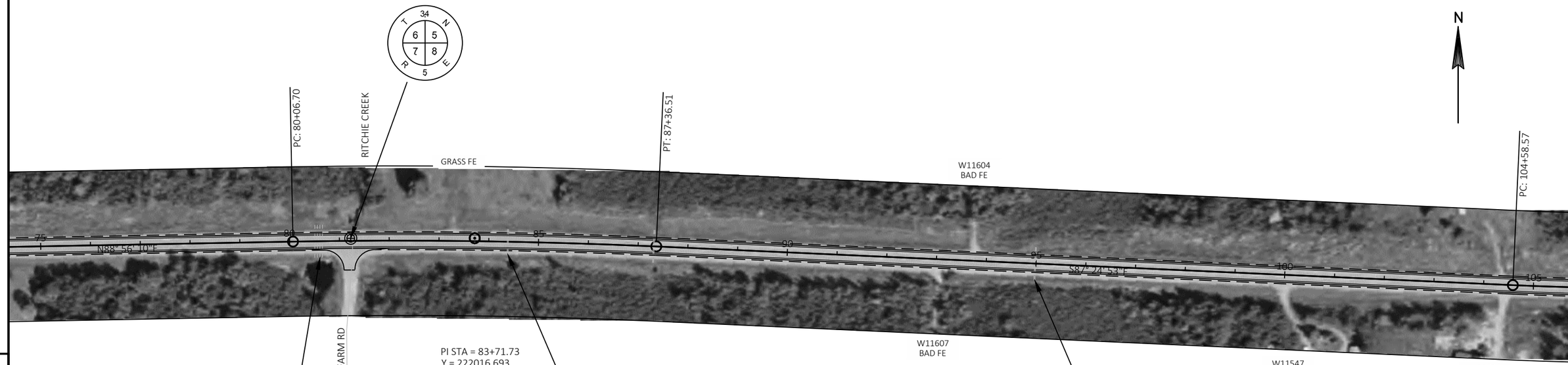

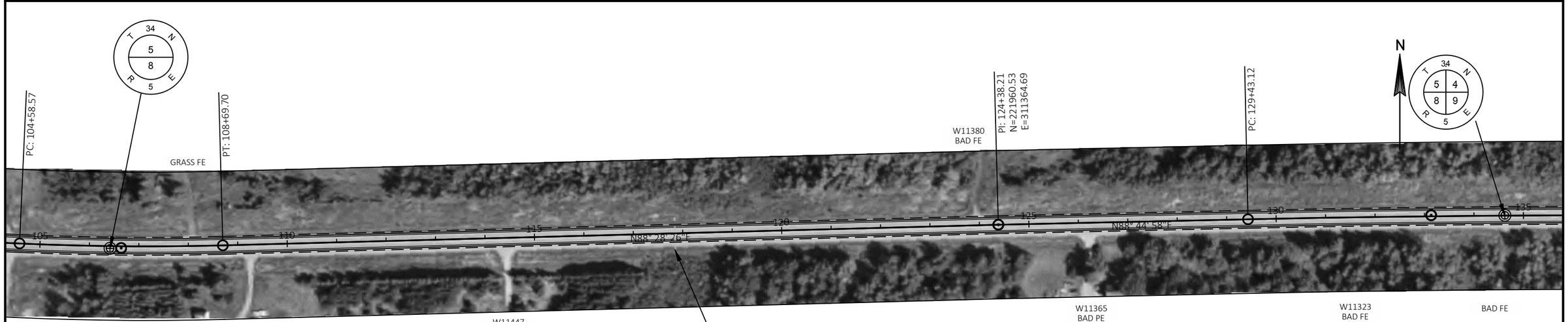

PI STA = 106+64.23
Y = 221913.278
X = 309591.154
DELTA = 4°06'41"
D = 0°30'00"
T = 205.65'
L = 411.13'
R = 5729.59'
PC STA = 104+58.57
PT STA = 108+69.70
SE=2.4%

PI STA = 133+13.45
Y = 221979.629
X = 312239.716
DELTA = 1°14'03"
D = 0°05'00"
T = 370.33'
L = 740.63'
R = 34385.70'
PC STA = 129+43.12
PT STA = 136+83.75
SE=NC

PROJECT NO: 9215-01-63/73	HWY: STH 86	COUNTY: LINCOLN	PLAN : STH 86	SHEET 69	E

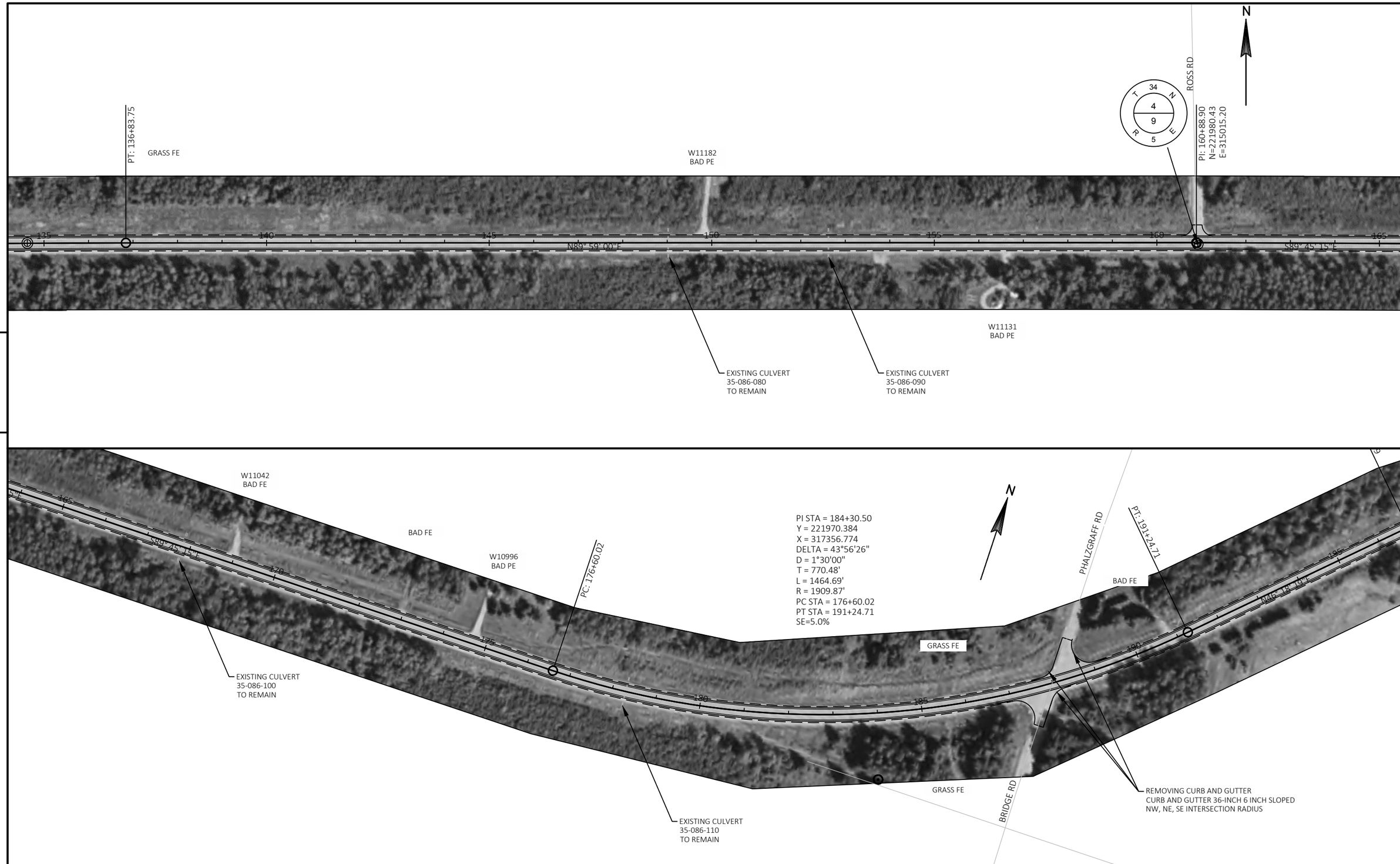

PROJECT NO: 9215-01-63/73	HWY: STH 86	COUNTY: LINCOLN	PLAN : STH 86	SHEET 70	E

FILE NAME : S:\DESIGN\DESIGN PROJECTS\NC REGION PROJECTS\9215-01-03 (STH 86)\C3D\SHEETSPLAN\050101_PP.DWG
LAYOUT NAME - 135-195
PLOT DATE : 11/14/2018 10:12 AM PLOT BY : ADAM OSYPOWSKI PLOT NAME : PLOT SCALE : ##########

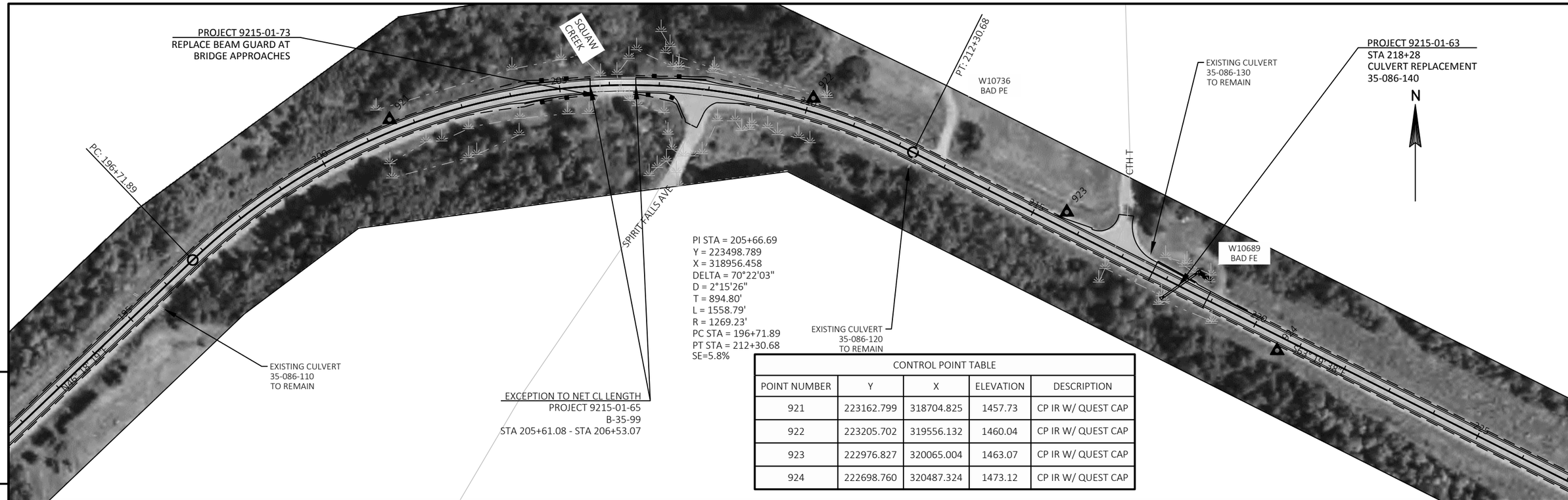

PI STA = 205+66.69
Y = 223498.789
X = 318956.458
DELTA = 70°22'03"
D = 2°15'26"
T = 894.80'
L = 1558.79'
R = 1269.23'
PC STA = 196+71.89
PT STA = 212+30.68
SE=5.8%

CONTROL POINT TABLE				
POINT NUMBER	Y	X	ELEVATION	DESCRIPTION
921	223162.799	318704.825	1457.73	CP IR W/ QUEST CAP
922	223205.702	319556.132	1460.04	CP IR W/ QUEST CAP
923	222976.827	320065.004	1463.07	CP IR W/ QUEST CAP
924	222698.760	320487.324	1473.12	CP IR W/ QUEST CAP

5

5

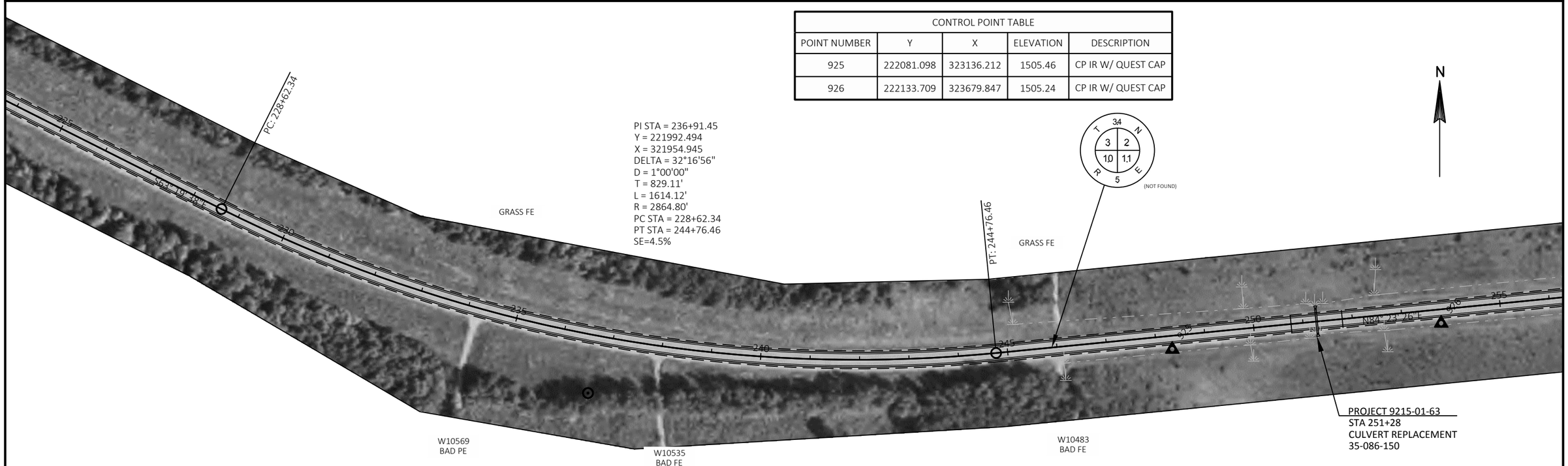

PI STA = 236+91.45
Y = 221992.494
X = 321954.945
DELTA = 32°16'56"
D = 1°00'00"
T = 829.11'
L = 1614.12'
R = 2864.80'
PC STA = 228+62.34
PT STA = 244+76.46
SE=4.5%

CONTROL POINT TABLE				
POINT NUMBER	Y	X	ELEVATION	DESCRIPTION
925	222081.098	323136.212	1505.46	CP IR W/ QUEST CAP
926	222133.709	323679.847	1505.24	CP IR W/ QUEST CAP

PROJECT NO: 9215-01-63/73	HWY: STH 86	COUNTY: LINCOLN	PLAN : STH 86	SHEET 71	E

FILE NAME : S:\DESIGN\DESIGN PROJECTS\NC REGION PROJECTS\9215-01-03 (STH 86)\C3D\SHEETSPLAN\050101_PP.DWG
LAYOUT NAME - 195-255
PLOT DATE : 11/14/2018 10:12 AM PLOT BY : ADAM OSYPOWSKI PLOT NAME : PLOT SCALE : 1 IN:200 FT

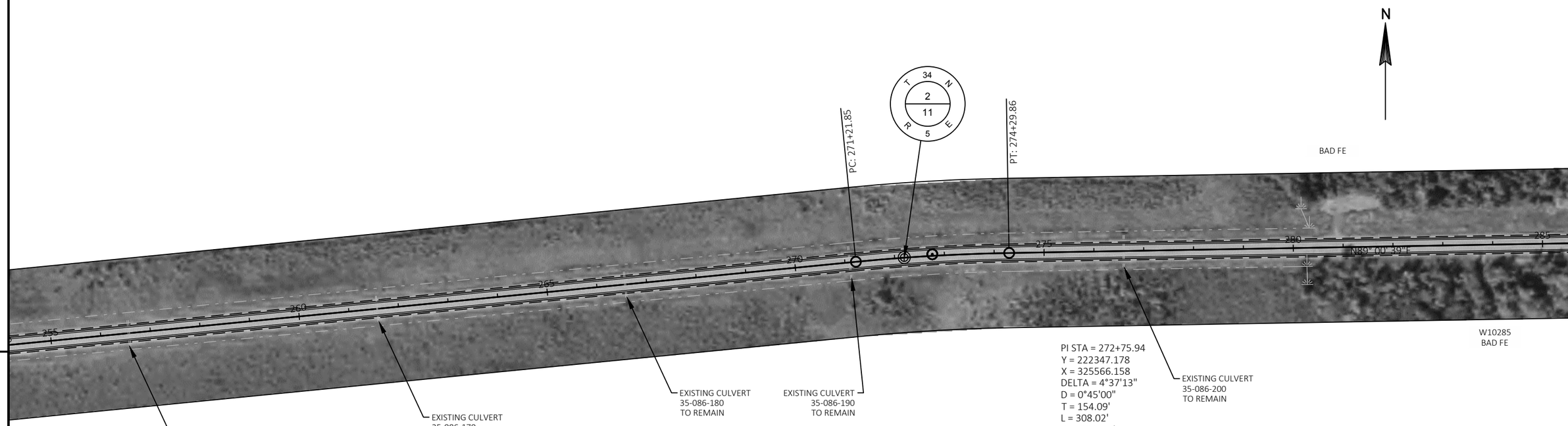

5

5

CONTROL POINT TABLE				
POINT NUMBER	Y	X	ELEVATION	DESCRIPTION
927	222432.724	329301.087	1493.69	CP IR W/ QUEST CAP

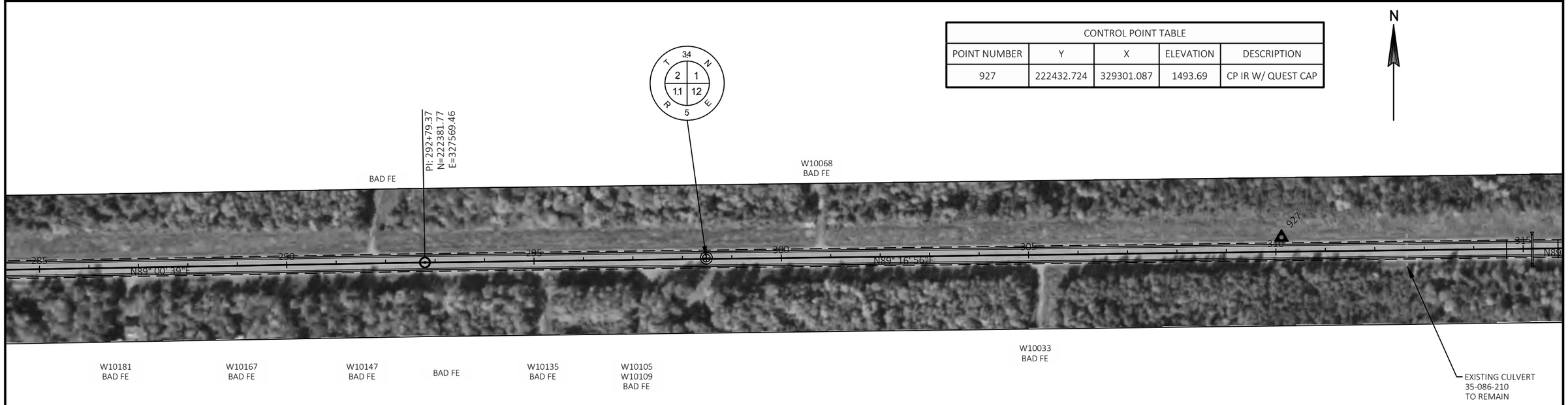

PROJECT NO: 9215-01-63/73	HWY: STH 86	COUNTY: LINCOLN	PLAN : STH 86	SHEET 72	E

FILE NAME : S:\DESIGN\DESIGN PROJECTS\NC REGION PROJECTS\9215-01-03 (STH 86)\C3D\SHEETSPLAN\050101_PP.DWG
LAYOUT NAME - 255-315
PLOT DATE : 11/14/2018 10:12 AM PLOT BY : ADAM OSYPOWSKI PLOT NAME : PLOT SCALE : 1 IN:200 FT

CONTROL POINT TABLE				
POINT NUMBER	Y	X	ELEVATION	DESCRIPTION
928	222437.443	329911.032	1495.20	CP IR W/ QUEST CAP
929	222397.698	331779.957	1507.73	CP IR W/ QUEST CAP
930	222382.688	332304.880	1513.39	CP IR W/ QUEST CAP

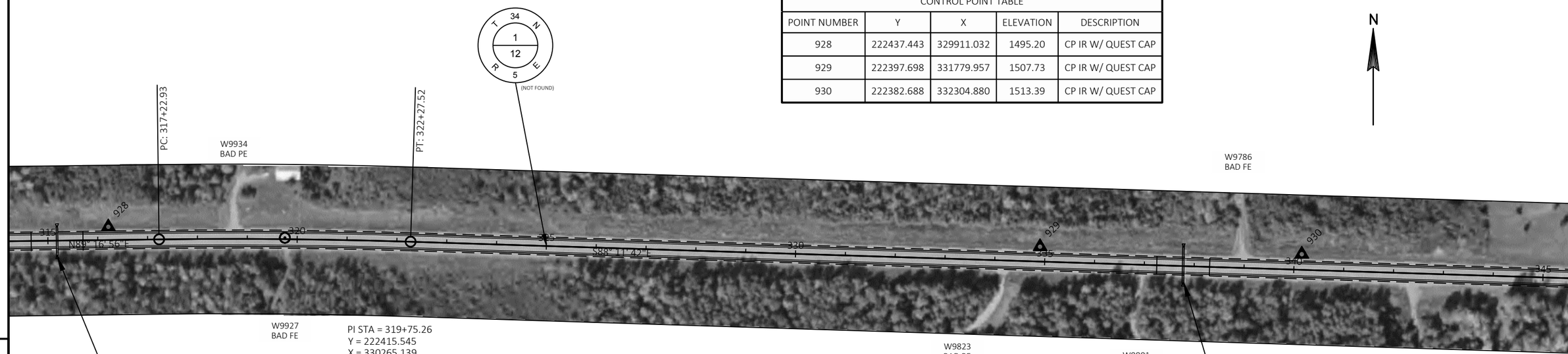

5

5

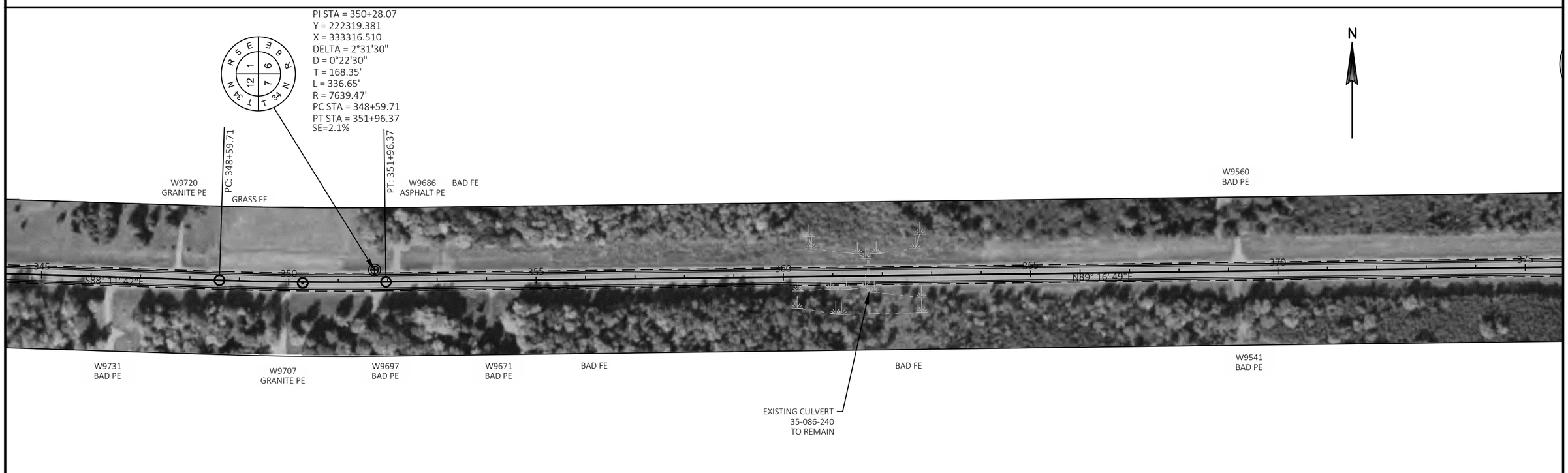

PROJECT NO: 9215-01-63/73	HWY: STH 86	COUNTY: LINCOLN	PLAN : STH 86	SHEET 73	E

FILE NAME : S:\DESIGN\DESIGN PROJECTS\NC REGION PROJECTS\9215-01-03 (STH 86)\C3D\SHEETSPLAN\050101_PP.DWG
LAYOUT NAME - 315-375
PLOT DATE : 11/14/2018 10:12 AM PLOT BY : ADAM OSYPOWSKI PLOT NAME : PLOT SCALE : 1 IN:200 FT

CONTROL POINT TABLE				
POINT NUMBER	Y	X	ELEVATION	DESCRIPTION
931	222332.230	336543.149	1493.45	CP IR W/ QUEST CAP
932	222338.044	337057.408	1494.44	CP IR W/ QUEST CAP

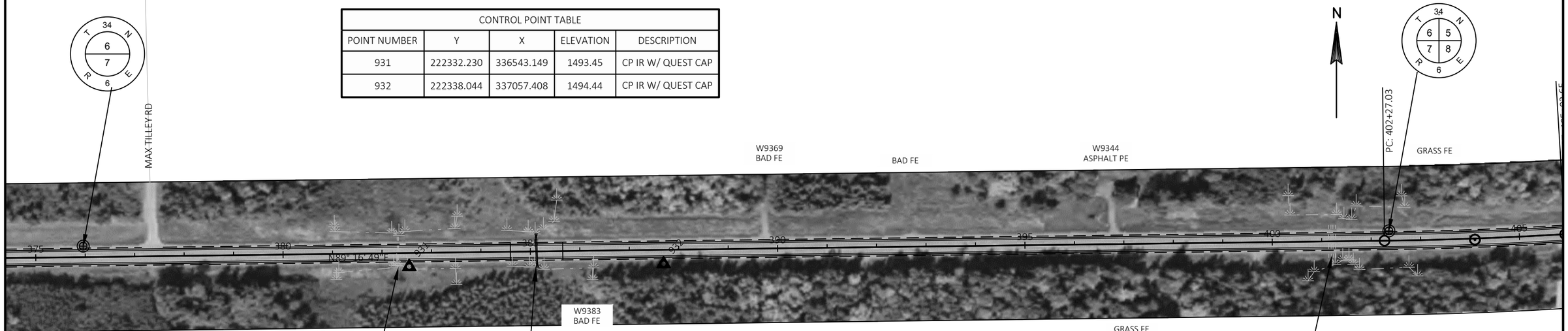

PI STA = 404+09.87
Y = 222386.993
X = 338697.945
DELTA = 2°44'32"
D = 0°22'30"
T = 182.84'
L = 365.62'
R = 7639.47'
PC STA = 402+27.03
PT STA = 405+92.65
SE=2.1%

5

5

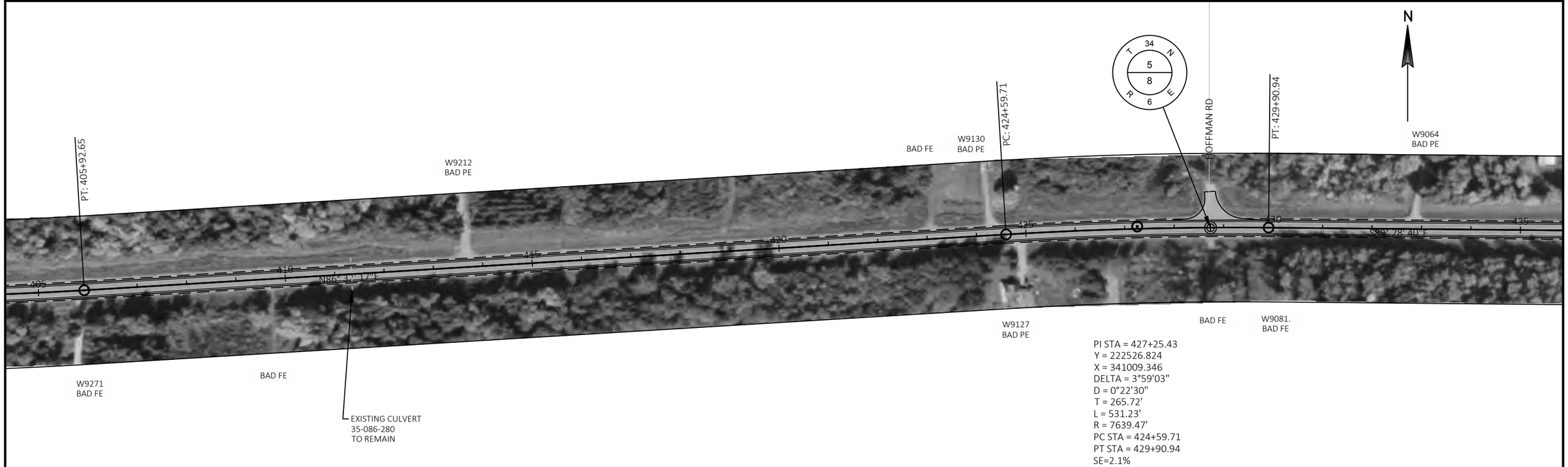

PI STA = 427+25.43
Y = 222526.824
X = 341009.346
DELTA = 3°59'03"
D = 0°22'30"
T = 265.72'
L = 531.23'
R = 7639.47'
PC STA = 424+59.71
PT STA = 429+90.94
SE=2.1%

PROJECT NO: 9215-01-63/73	HWY: STH 86	COUNTY: LINCOLN	PLAN : STH 86	SHEET 74	E

FILE NAME : S:\DESIGN\DESIGN PROJECTS\NC REGION PROJECTS\9215-01-03 (STH 86)\C3D\SHEETSPLAN\050101_PP.DWG
LAYOUT NAME - 375-435
PLOT DATE : 11/14/2018 10:12 AM PLOT BY : ADAM OSYPOWSKI PLOT NAME : PLOT SCALE : 1 IN:200 FT

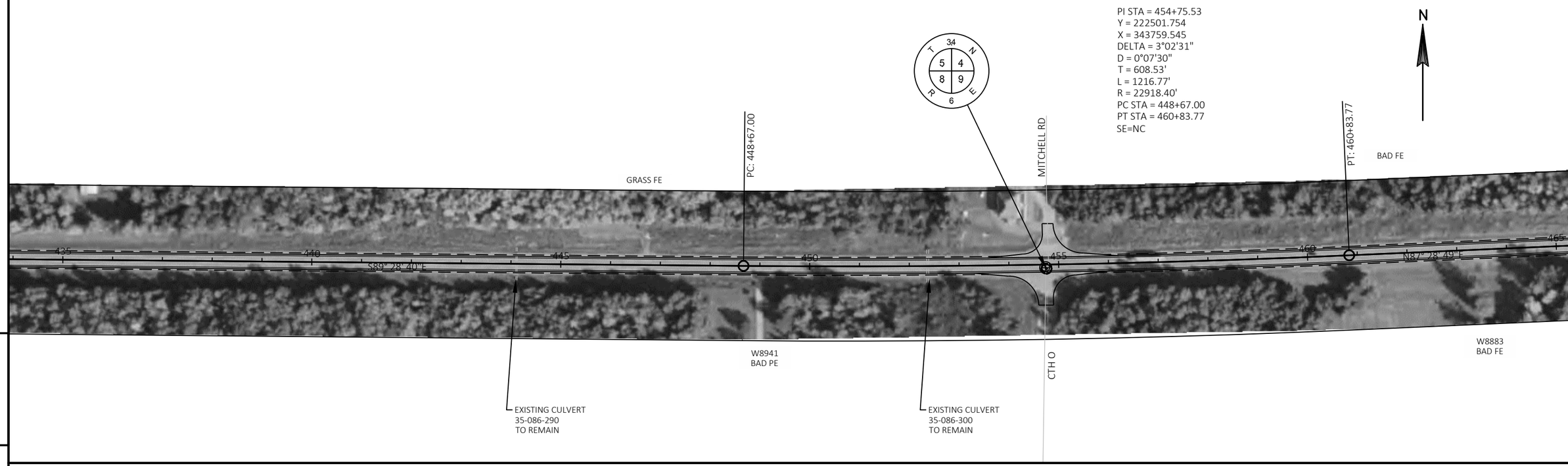

5

5

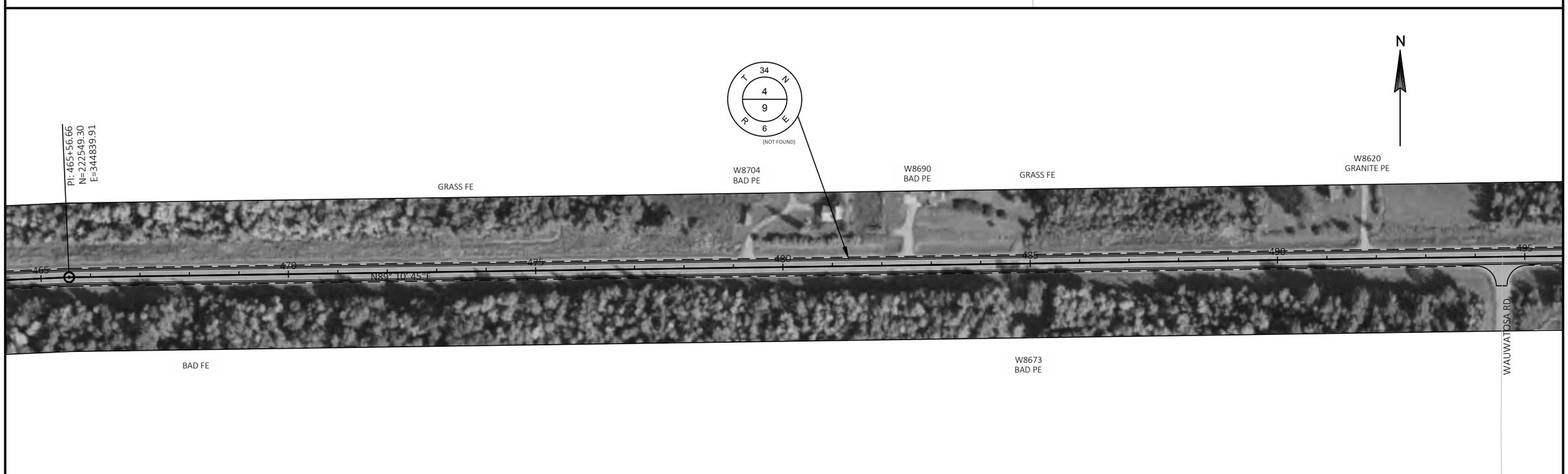

PROJECT NO: 9215-01-63/73	HWY: STH 86	COUNTY: LINCOLN	PLAN : STH 86	SHEET 75	E

FILE NAME : S:\DESIGN\DESIGN PROJECTS\NC REGION PROJECTS\9215-01-03 (STH 86)\C3D\SHEETSPLAN\050101_PP.DWG
LAYOUT NAME - 435-495
PLOT DATE : 11/14/2018 10:12 AM PLOT BY : ADAM OSYPOWSKI PLOT NAME : PLOT SCALE : 1 IN:200 FT

CONTROL POINT TABLE				
POINT NUMBER	Y	X	ELEVATION	DESCRIPTION
933	222559.773	350295.800	1484.09	CP IR W/ QUEST CAP

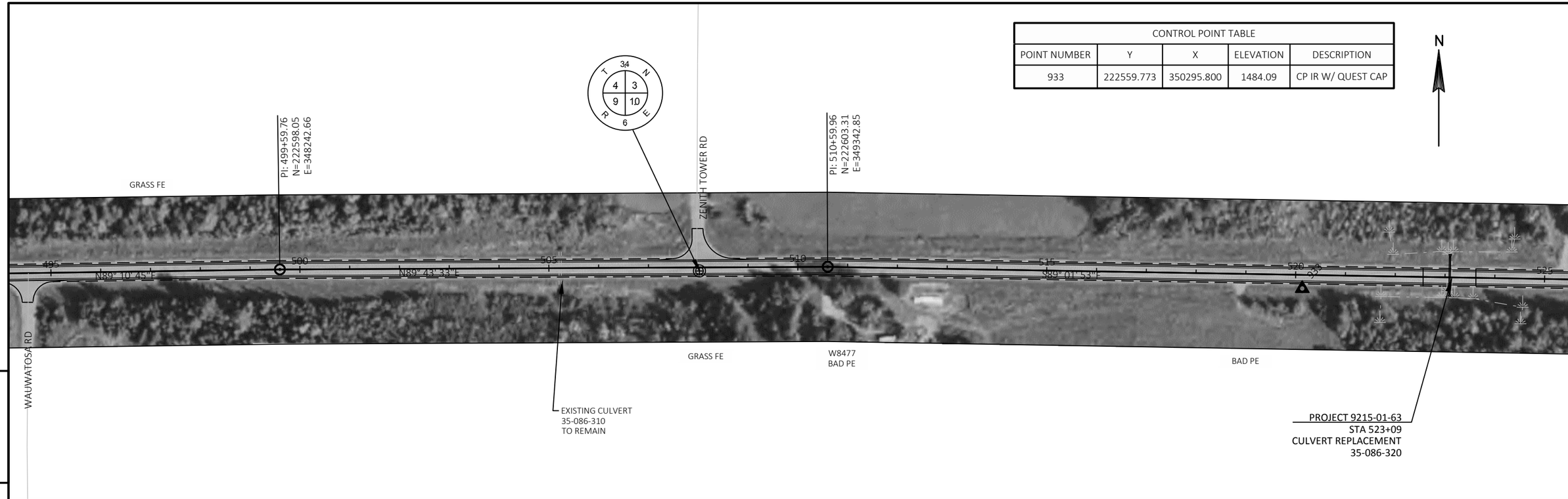

5

5

CONTROL POINT TABLE				
POINT NUMBER	Y	X	ELEVATION	DESCRIPTION
934	222548.159	350860.092	1486.77	CP IR W/ QUEST CAP
935	222497.047	353443.023	1454.04	CP IR W/ QUEST CAP

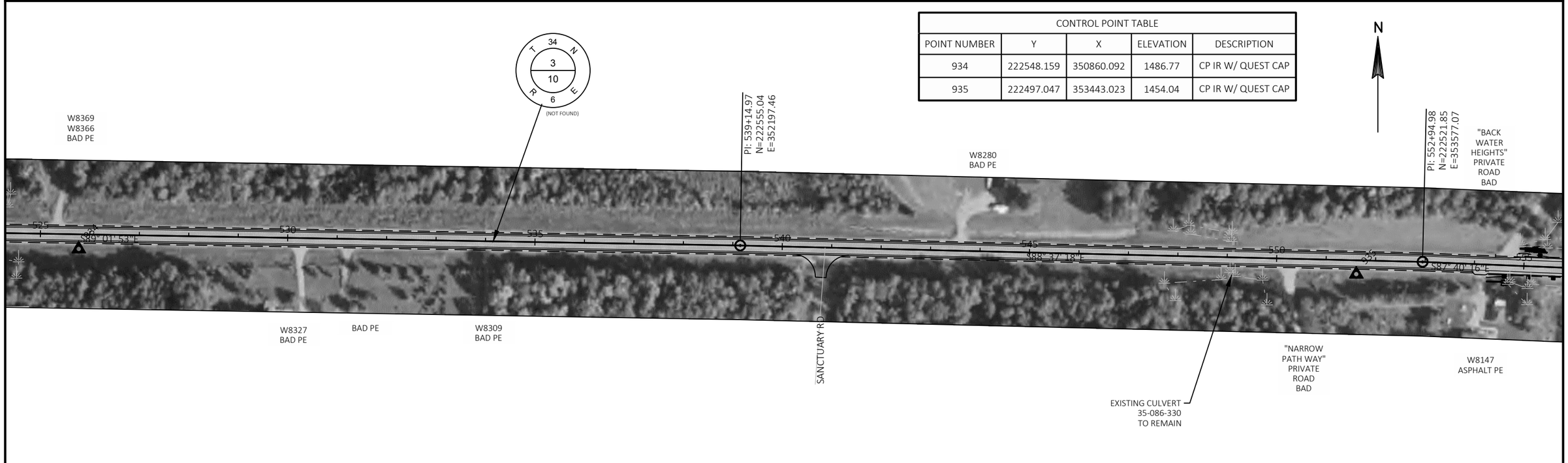

PROJECT NO: 9215-01-63/73	HWY: STH 86	COUNTY: LINCOLN	PLAN : STH 86	SHEET 76	E

FILE NAME : S:\DESIGN\DESIGN PROJECTS\NC REGION PROJECTS\9215-01-03 (STH 86)\C3D\SHEETSPLAN\050101_PP.DWG
LAYOUT NAME - 495-555
PLOT DATE : 11/14/2018 10:12 AM PLOT BY : ADAM OSYPOWSKI PLOT NAME : PLOT SCALE : 1 IN:200 FT

CONTROL POINT TABLE				
POINT NUMBER	Y	X	ELEVATION	DESCRIPTION
936	222486.737	355154.738	1444.03	CP IR W/ QUEST CAP
937	222423.239	355317.290	1446.30	CP IR W/ QUEST CAP
938	222402.044	355853.510	1454.15	CP IR W/ QUEST CAP

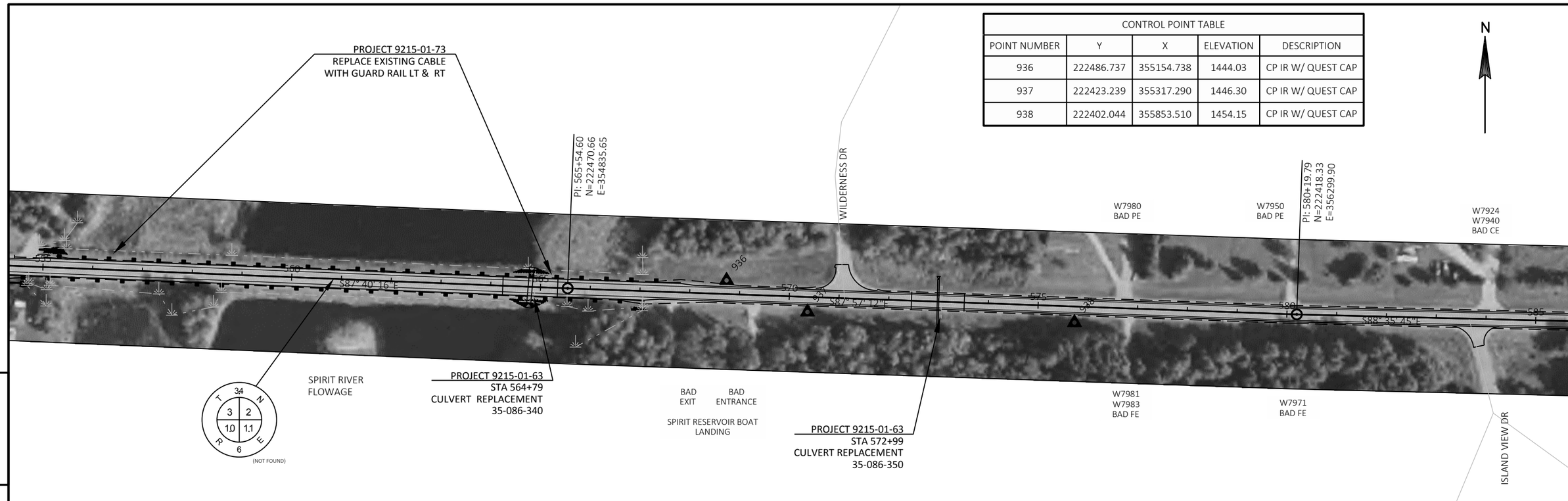

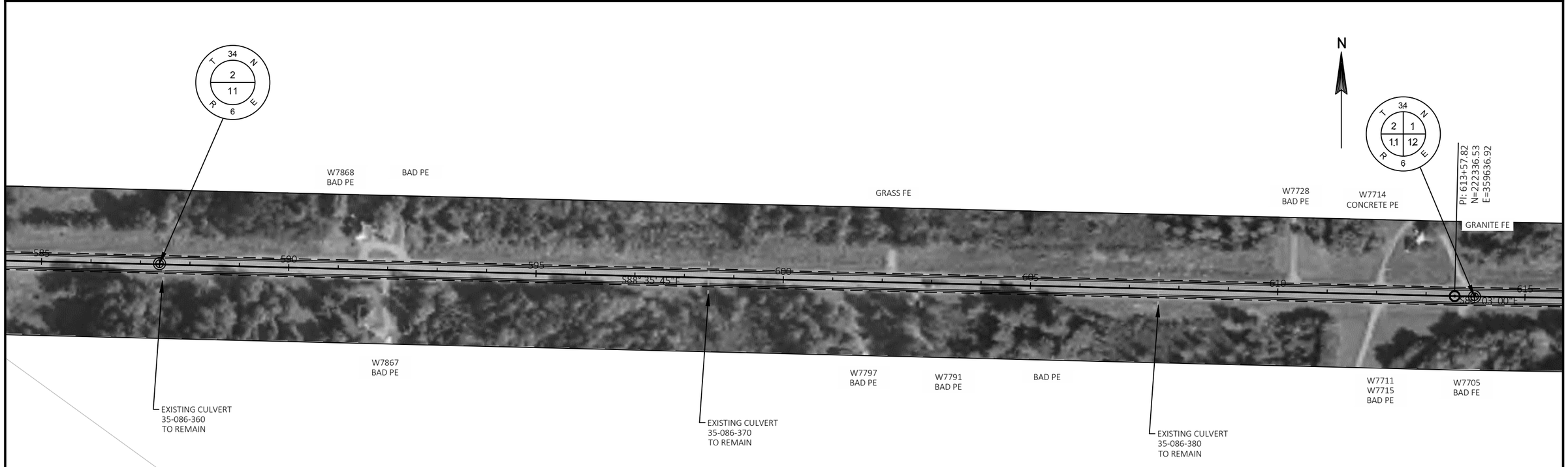

PROJECT NO: 9215-01-63/73	HWY: STH 86	COUNTY: LINCOLN	PLAN : STH 86	SHEET 77	E

FILE NAME : S:\DESIGN\DESIGN PROJECTS\NC REGION PROJECTS\9215-01-03 (STH 86)\C3D\SHEETSPLAN\050101_PP.DWG
LAYOUT NAME - 555-615
PLOT DATE : 11/14/2018 10:12 AM PLOT BY : ADAM OSYPOWSKI PLOT NAME : PLOT SCALE : 1 IN:200 FT

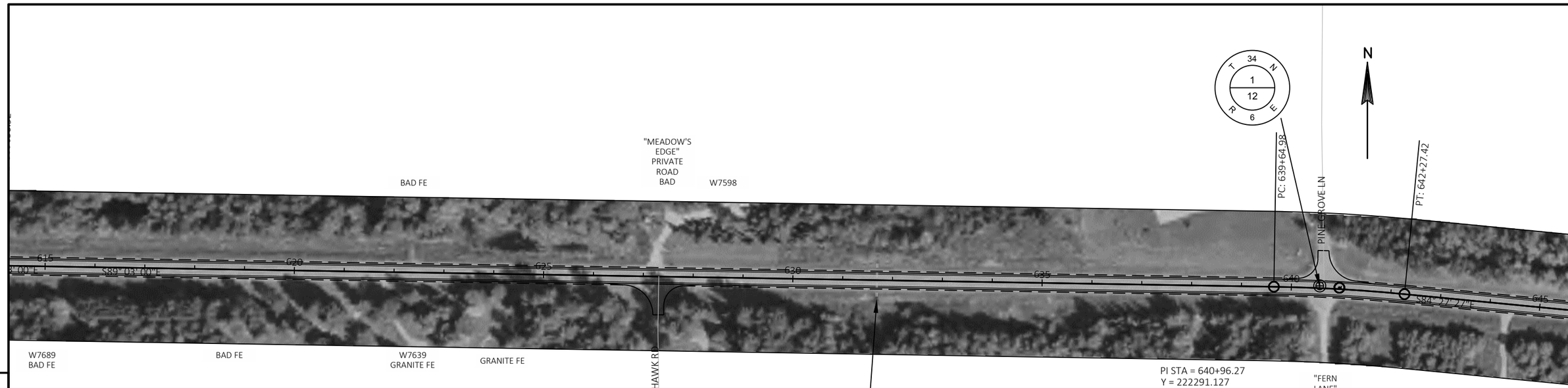

5

5

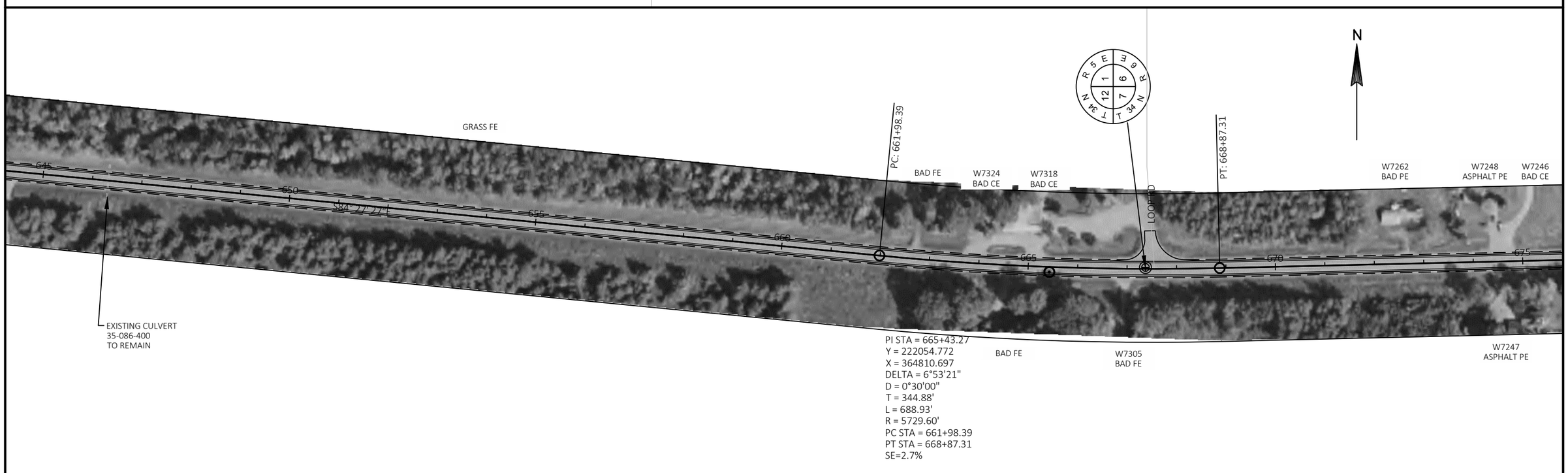

PROJECT NO: 9215-01-63/73	HWY: STH 86	COUNTY: LINCOLN	PLAN : STH 86	SHEET 78	E

FILE NAME : S:\DESIGN\DESIGN PROJECTS\NC REGION PROJECTS\9215-01-03 (STH 86)\C3D\SHEETSPLAN\050101_PP.DWG
LAYOUT NAME - 615-675
PLOT DATE : 11/14/2018 10:12 AM PLOT BY : ADAM OSYPOWSKI PLOT NAME : PLOT SCALE : 1 IN:200 FT

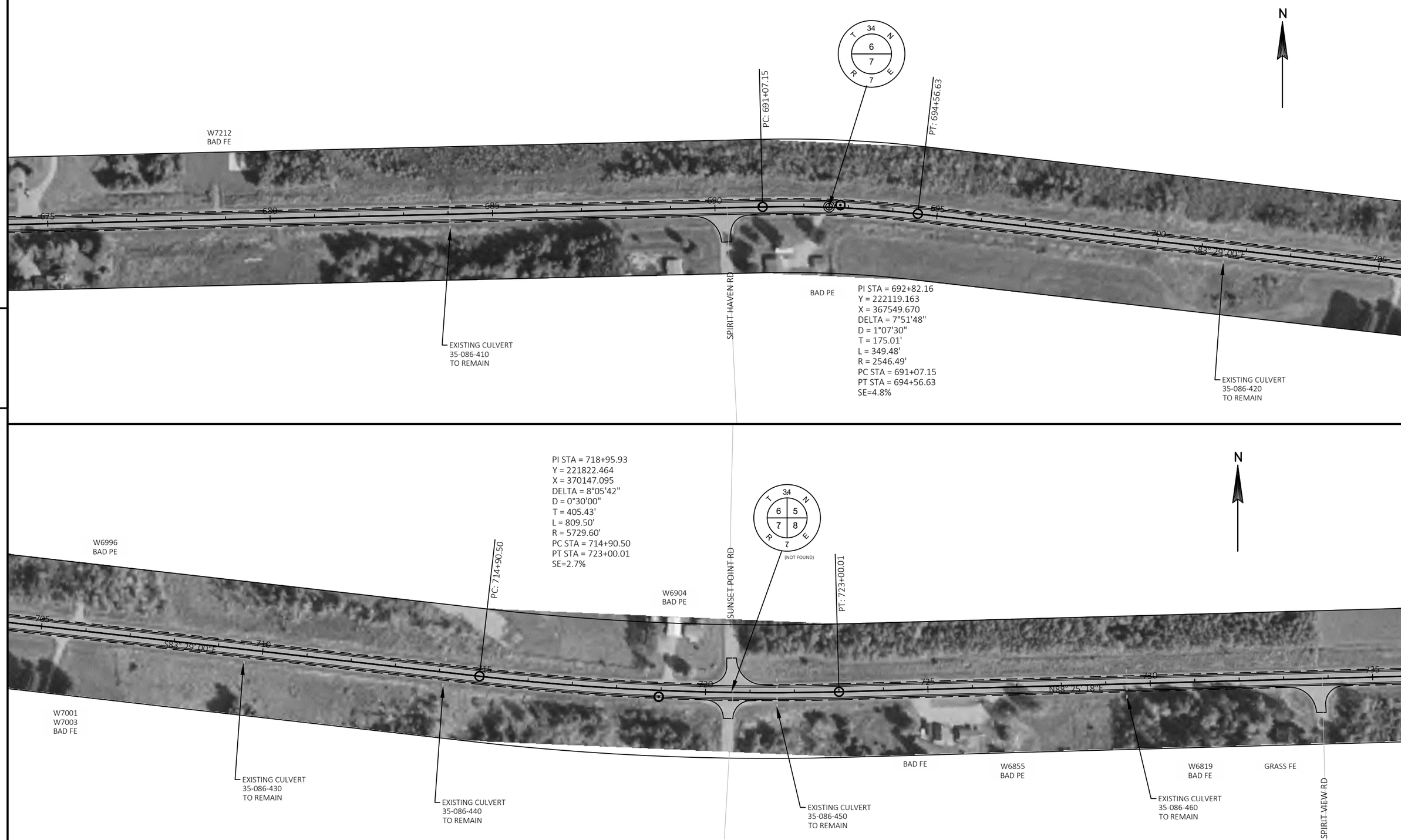

5

5

PROJECT NO: 9215-01-63/73	HWY: STH 86	COUNTY: LINCOLN	PLAN : STH 86	SHEET 79	E

FILE NAME : S:\DESIGN\DESIGN PROJECTS\NC REGION PROJECTS\9215-01-03 (STH 86)\C3D\SHEETSPLAN\050101_PP.DWG
LAYOUT NAME - 675-735
PLOT DATE : 11/14/2018 10:12 AM PLOT BY : ADAM OSYPOWSKI PLOT NAME : PLOT SCALE : 1 IN:200 FT

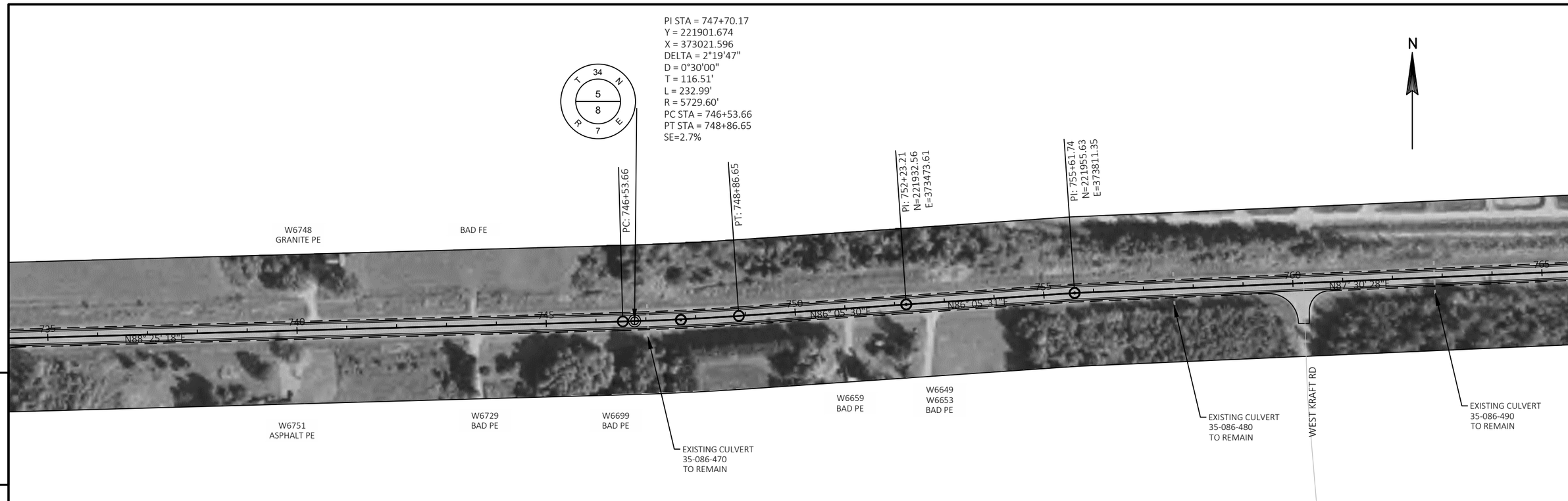

5

5

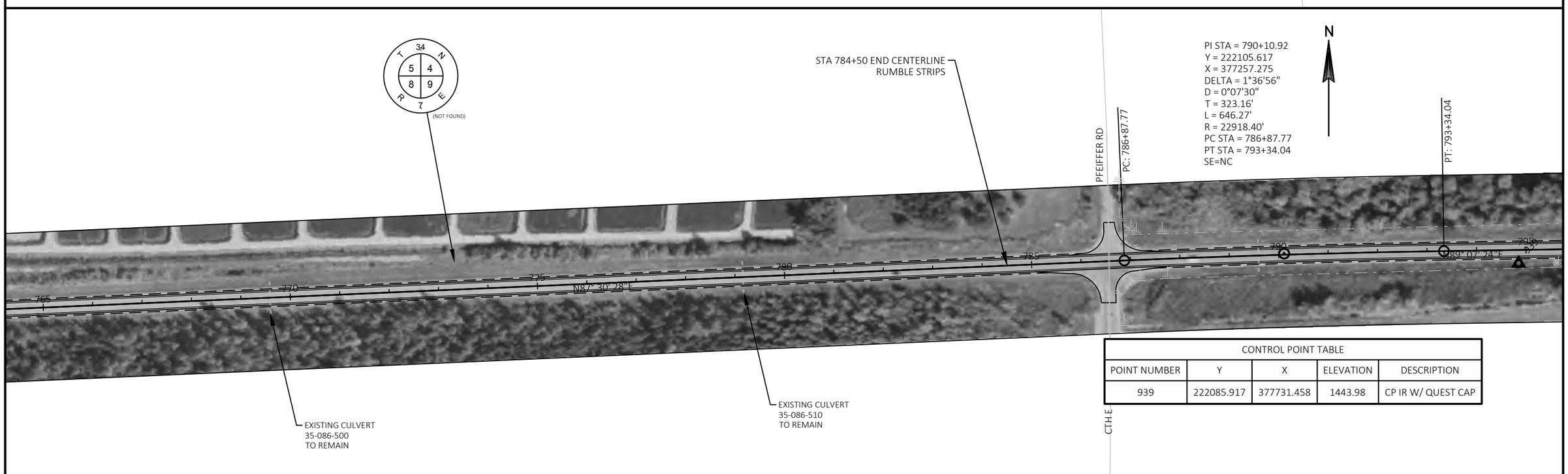

CONTROL POINT TABLE				
POINT NUMBER	Y	X	ELEVATION	DESCRIPTION
939	222085.917	377731.458	1443.98	CP IR W/ QUEST CAP

PROJECT NO: 9215-01-63/73	HWY: STH 86	COUNTY: LINCOLN	PLAN : STH 86	SHEET 80	E

FILE NAME : S:\DESIGN\DESIGN PROJECTS\NC REGION PROJECTS\9215-01-03 (STH 86)\C3D\SHEETSPLAN\050101_PP.DWG
LAYOUT NAME - 735-795
PLOT DATE : 11/14/2018 10:13 AM PLOT BY : ADAM OSYPOWSKI PLOT NAME : PLOT SCALE : 1 IN:200 FT

CONTROL POINT TABLE				
POINT NUMBER	Y	X	ELEVATION	DESCRIPTION
940	222093.665	378856.031	1439.77	CP IR W/ QUEST CAP

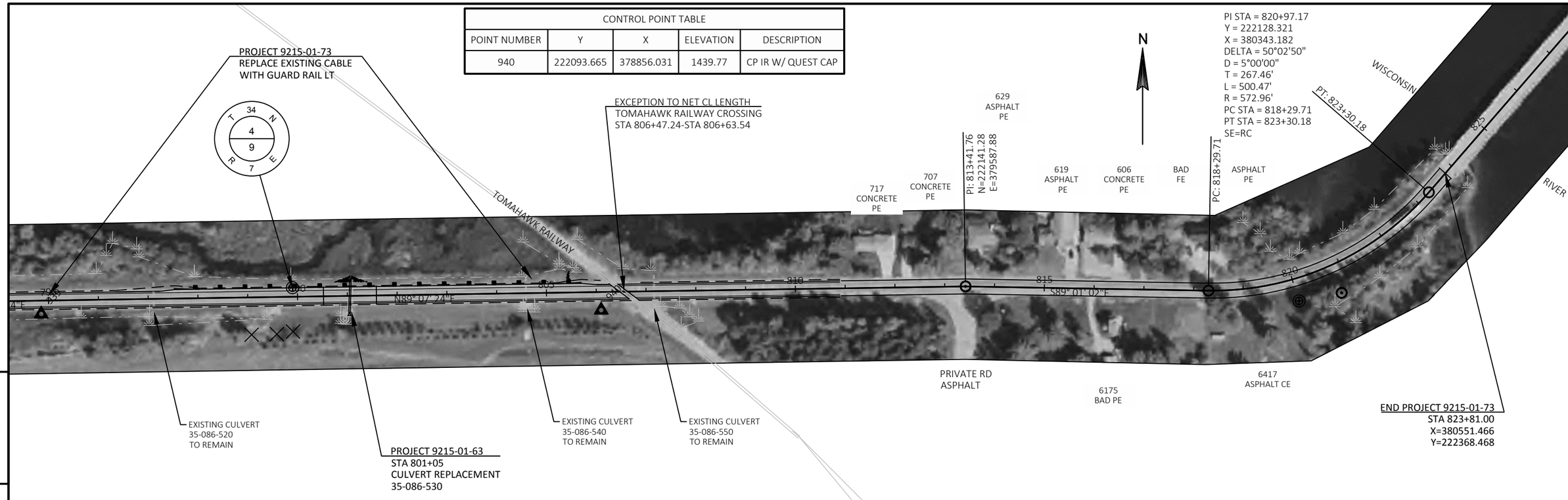

5

5

PROJECT NO: 9215-01-63/73	HWY: STH 86	COUNTY: LINCOLN	PLAN : STH 86	SHEET 81	E

FILE NAME : S:\DESIGN\DESIGN PROJECTS\NC REGION PROJECTS\9215-01-03 (STH 86)\C3D\SHEETSPLAN\050101_PP.DWG
LAYOUT NAME - 795-825
PLOT DATE : 11/14/2018 10:13 AM PLOT BY : ADAM OSYPOWSKI PLOT NAME : PLOT SCALE : ##########

Standard Detail Drawing List

08D01-20A	CONCRETE CURB & GUTTER
08D01-20B	CONCRETE CURB, TIES AND CURB AND GUTTER APPLICATIONS
08E09-06	SILT FENCE
08F01-11	APRON ENDWALLS FOR CULVERT PIPE
08F04-07	JOINT TIES FOR CONCRETE PIPE AND CONCRETE COLLAR DETAIL
13A11-03A	2-LANE RURAL CENTER LINE RUMBLE STRIP, MILLING
13A11-03B	2-LANE RURAL CENTER LINE RUMBLE STRIP, MILLING
13B01-10	PAVEMENT DETAILS FOR RAILROAD APPROACH
14B28-03	GUARDRAIL MOW STRIP
14B29-01	SAFETY EDGE
14B42-06A	MIDWEST GUARDRAIL SYSTEM (MGS) GUARDRAIL
14B42-06B	MIDWEST GUARDRAIL SYSTEM (MGS) GUARDRAIL
14B42-06C	MIDWEST GUARDRAIL SYSTEM (MGS) GUARDRAIL
14B42-06D	MIDWEST GUARDRAIL SYSTEM (MGS) GUARDRAIL
14B44-04A	MIDWEST GUARDRAIL SYSTEM ENERGY ABSORBING TERMINAL (MGS)
14B44-04B	MIDWEST GUARDRAIL SYSTEM ENERGY ABSORBING TERMINAL (MGS)
14B44-04C	MIDWEST GUARDRAIL SYSTEM ENERGY ABSORBING TERMINAL (MGS)
14B45-05A	MIDWEST GUARDRAIL SYSTEM THRIE BEAM TRANSITION (MGS)
14B45-05B	MIDWEST GUARDRAIL SYSTEM THRIE BEAM TRANSITION (MGS)
14B45-05C	MIDWEST GUARDRAIL SYSTEM THRIE BEAM TRANSITION (MGS)
14B45-05F	MIDWEST GUARDRAIL SYSTEM THRIE BEAM TRANSITION (MGS)
14B53-01A	SHORT RADIUS BEAM GUARD (MGS) SHORT RADIUS TERMINAL (MGS)
14B53-01B	SHORT RADIUS BEAM GUARD (MGS) SHORT RADIUS TERMINAL (MGS)
14B53-01C	SHORT RADIUS BEAM GUARD (MGS) SHORT RADIUS TERMINAL (MGS)
14B53-01D	SHORT RADIUS BEAM GUARD (MGS) SHORT RADIUS TERMINAL (MGS)
14B53-01E	SHORT RADIUS BEAM GUARD (MGS) SHORT RADIUS TERMINAL (MGS)
14B53-01F	SHORT RADIUS BEAM GUARD (MGS) SHORT RADIUS TERMINAL (MGS)
14B53-01G	SHORT RADIUS BEAM GUARD (MGS) SHORT RADIUS TERMINAL (MGS)
14B53-01H	SHORT RADIUS BEAM GUARD (MGS) SHORT RADIUS TERMINAL (MGS)
14B53-01I	SHORT RADIUS BEAM GUARD (MGS) SHORT RADIUS TERMINAL (MGS)
15A03-02A	FLEXIBLE MARKER POST FOR CULVERT END
15A03-02B	FLEXIBLE MARKER POST FOR CULVERT END
15C02-07A	BARRICADES AND SIGNS FOR MAINLINE CLOSURES
15C02-07B	BARRICADES AND SIGNS FOR VARIOUS CLOSURES
15C02-07C	DETOUR SIGNING FOR MAINLINE CLOSURES
15C04-05	TRAFFIC CONTROL, ADVANCE WARNING SIGNS 45 M.P.H. OR GREATER TWO-WAY UNDIVIDED ROAD OPEN TO TRAFFIC
15C08-19A	LONGITUDINAL MARKING (MAINLINE)
15C09-11A	SIGNING AND PAVEMENT MARKING DETAILS FOR RAILROAD-HIGHWAY GRADE CROSSINGS
15C11-07B	CHANNELIZING DEVICES DRUMS, CONES, BARRICADES AND VERTICAL PANELS
15C12-06	TRAFFIC CONTROL FOR LANE CLOSURE WITH FLAGGING OPERATION
15C19-05A	MOVING PAVEMENT MARKING OPERATION TWO-LANE TWO-WAY ROADWAY
15C35-03A	PAVEMENT MARKING (INTERSECTIONS)
15D28-03	TRAFFIC CONTROL, WORK ON SHOULDER OR PARKING LANE, UNDIVIDED ROADWAY
15D38-02A	TEMPORARY TRAFFIC CONTROL SIGN MOUNTING
15D38-02B	ATTACHMENT OF SIGNS TO POSTS
15D39-02	TRAFFIC CONTROL, DROP-OFF SIGNING

6

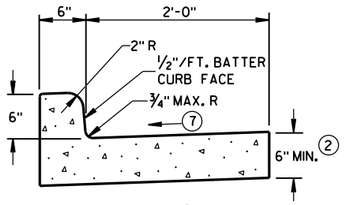

TYPES A[1] & D

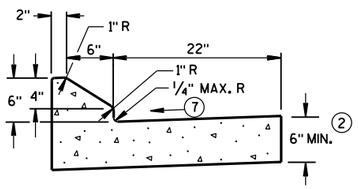

6" SLOPED CURB TYPES G[1] & J

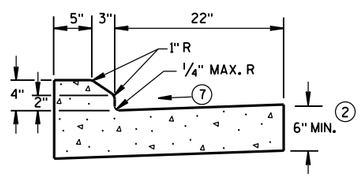

4" SLOPED CURB TYPES G[1] & J

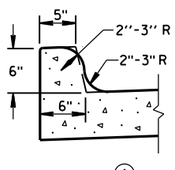

TYPES K[1] & L
(OPTIONAL CURB SHAPE)

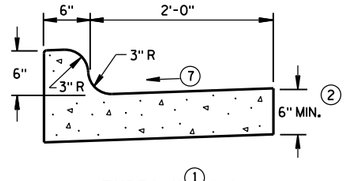

TYPES K[1] & L

CONCRETE CURB & GUTTER 30"

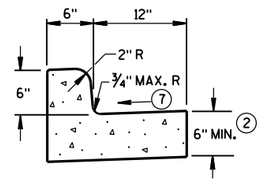

TYPES A[1] & D

CONCRETE CURB & GUTTER 18"

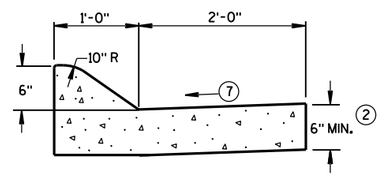

6" SLOPED CURB TYPES A[1] & D

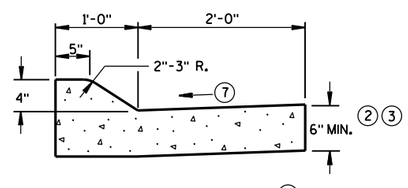

4" SLOPED CURB TYPES A[1] & D

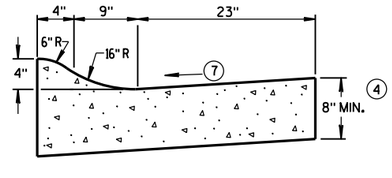

4" SLOPED CURB TYPES R[1] & T[5]

CONCRETE CURB & GUTTER 36"

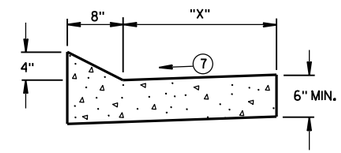

TYPES TBT & TBTT[1]

CONCRETE CURB & GUTTER

TBT & TBTT	"X"
30"	22"
36"	28"

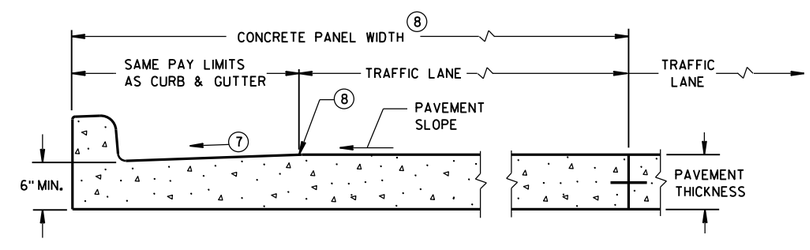

PARTIAL SECTION OF PAVEMENT*
WITH INTEGRAL CURB & GUTTER

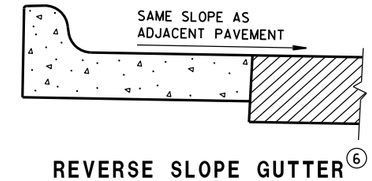

REVERSE SLOPE GUTTER[6]
(TYPICAL FOR ALL CURB & GUTTER TYPES)

GENERAL NOTES

DETAILS OF CONSTRUCTION, MATERIALS AND WORKMANSHIP NOT SHOWN ON THIS DRAWING SHALL CONFORM TO THE PERTINENT REQUIREMENTS OF THE CONTRACT.

PAVEMENT TIES AND TIE BARS SHALL BE EPOXY COATED IN CONFORMANCE WITH SUBSECTION 505.2.6.2 OF THE STANDARD SPECIFICATIONS.

INTEGRAL CURB & GUTTER SHALL CONFORM TO THE DETAILS SHOWN FOR CONCRETE CURB & GUTTER INCLUDING THE TRANSVERSE GUTTER SLOPE.

WHERE THE TRANSVERSE JOINTS IN THE PAVEMENT ARE REQUIRED TO BE SEALED, THE JOINTS IN THE INTEGRAL CURB AND GUTTER SHALL BE SEALED TO THE FACE OF CURB WITH THE SAME TYPE OF SEALANT. THE COST OF FURNISHING AND INSTALLING THIS SEALANT SHALL BE INCIDENTAL TO THE ITEM CONCRETE CURB AND GUTTER.

UNLESS OTHERWISE SHOWN ON THE TYPICAL CROSS SECTIONS, THE BASE AGGREGATE AND COMMON EXCAVATION LIMITS ARE 2'-0" BEHIND THE BACK OF CURBS.

1. TIE BARS ARE REQUIRED FOR CURB AND GUTTER TYPES A, G, K, R AND TBTT.
2. THE BOTTOM OF CURB AND GUTTER MAY BE CONSTRUCTED EITHER LEVEL OR PARALLEL TO THE SLOPE OF THE SUBGRADE OR BASE AGGREGATE PROVIDED A 6" MINIMUM GUTTER THICKNESS IS MAINTAINED.
3. USE 8" MINIMUM GUTTER THICKNESS WHEN USED WITH AN ADJACENT CONCRETE TRUCK APRON PLACED BEHIND BACK OF CURB.
4. THE BOTTOM OF CURB AND GUTTER MAY BE CONSTRUCTED EITHER LEVEL OR PARALLEL TO THE SLOPE OF THE SUBGRADE OR BASE AGGREGATE PROVIDED A 8" MINIMUM GUTTER THICKNESS IS MAINTAINED.
5. THE FACE OF CURB IS 6" FROM THE BACK OF CURB.
6. WHEN REVERSE SLOPE GUTTER IS REQUIRED, THE LOCATION(S) WILL BE SHOWN ELSEWHERE IN THE PLAN.
7. USE 4% GUTTER CROSS SLOPE UNLESS OTHERWISE NOTED IN THE PLANS.
8. INCLUDE LONGITUDINAL JOINT AND TIE BARS ALONG LANE EDGE WHEN CONCRETE PANEL WIDTH EXCEEDS THE MAXIMUM WIDTH PER TABLE BELOW. LONGITUDINAL JOINT(S) ARE NOT ALLOWED WITHIN TRAFFIC LANES AND BIKE LANES. LONGITUDINAL JOINT MAY BE SAWED.

PAVEMENT THICKNESS AND MAXIMUM CONCRETE PANEL WIDTH TABLE

PAVEMENT THICKNESS	MAXIMUM PANEL WIDTH
LESS THAN 10"	12'
10" & ABOVE	15'

* BIKE LANE IS NOT SHOWN.

CONCRETE CURB & GUTTER

STATE OF WISCONSIN
DEPARTMENT OF TRANSPORTATION

GENERAL NOTES

DETAILS OF CONSTRUCTION, MATERIALS AND WORKMANSHIP NOT SHOWN ON THIS DRAWING SHALL CONFORM TO THE PERTINENT REQUIREMENTS OF THE CONTRACT.

PAVEMENT TIES AND TIE BARS SHALL BE EPOXY COATED IN CONFORMANCE WITH SUBSECTION 505.2.6.2 OF THE STANDARD SPECIFICATIONS.

UNLESS OTHERWISE SHOWN ON THE TYPICAL CROSS SECTIONS, THE BASE AGGREGATE AND COMMON EXCAVATION LIMITS ARE 2'-0" BEHIND THE BACK OF CURBS.

(1) TIE BARS ARE REQUIRED FOR CURB AND GUTTER TYPES A, G, K, R AND TBTT.

(2) THE BOTTOM OF CURB AND GUTTER MAY BE CONSTRUCTED EITHER LEVEL OR PARALLEL TO THE SLOPE OF THE SUBGRADE OR BASE AGGREGATE PROVIDED A 6" MINIMUM GUTTER THICKNESS IS MAINTAINED.

(9) REFER TO SDD 8D18 AND SDD 8D19 FOR ADDITIONAL DRIVEWAY ENTRANCE CURB DETAILS.

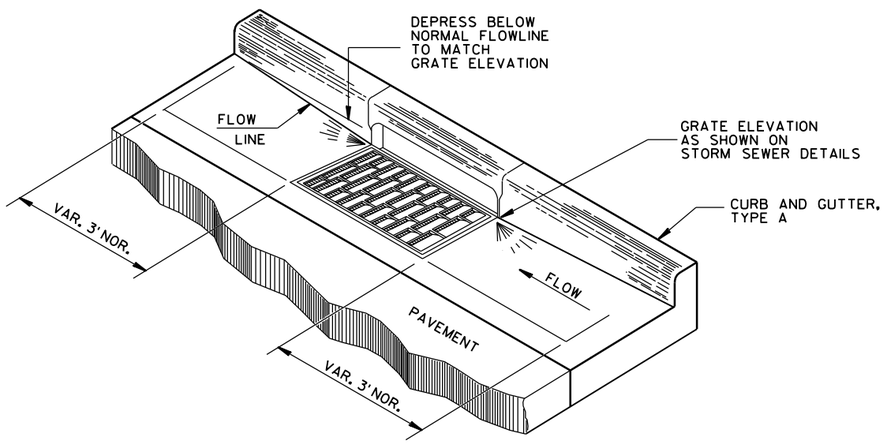

DETAIL OF CURB AND GUTTER AT INLETS

(TYPE H INLET COVER SHOWN)

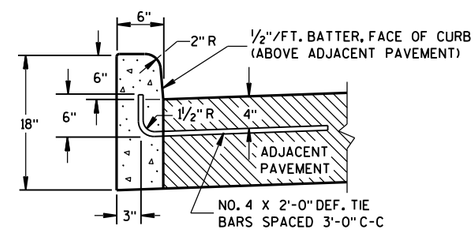

TYPES A(1) & D

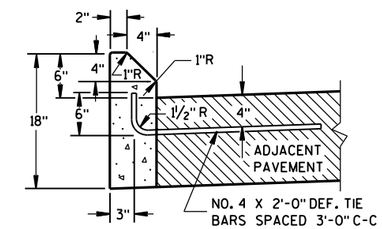

TYPES G(1) & J

CONCRETE CURB

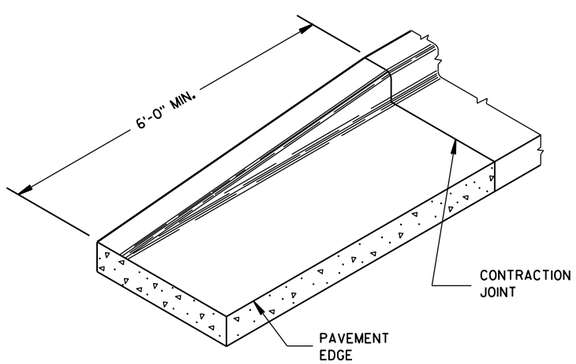

END SECTION CURB & GUTTER

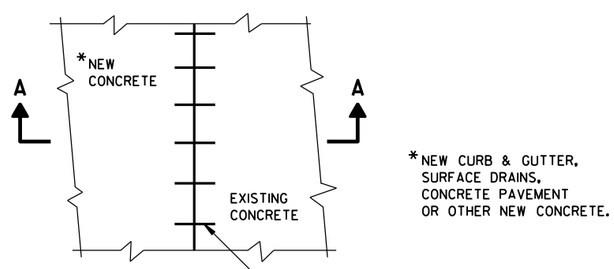

PLAN VIEW

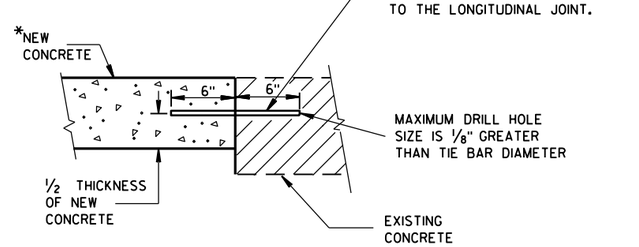

SECTION A-A

TIE BARS DRILLED INTO EXISTING PAVEMENT

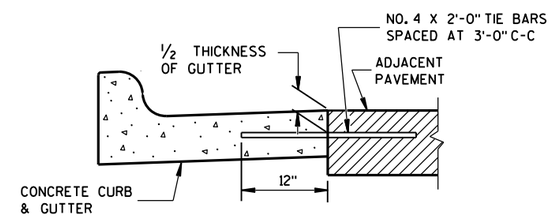

TYPICAL TIE BAR LOCATION (1)

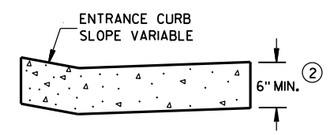

DRIVEWAY ENTRANCE CURB (9)

(WHEN DIRECTED BY THE ENGINEER)

CONCRETE CURB, TIES AND CURB AND GUTTER APPLICATIONS

STATE OF WISCONSIN
DEPARTMENT OF TRANSPORTATION

APPROVED
June, 2017 — DATE
/S/ Rodney Taylor — ROADWAY STANDARDS UNIT SUPERVISOR
ENT
FHWA

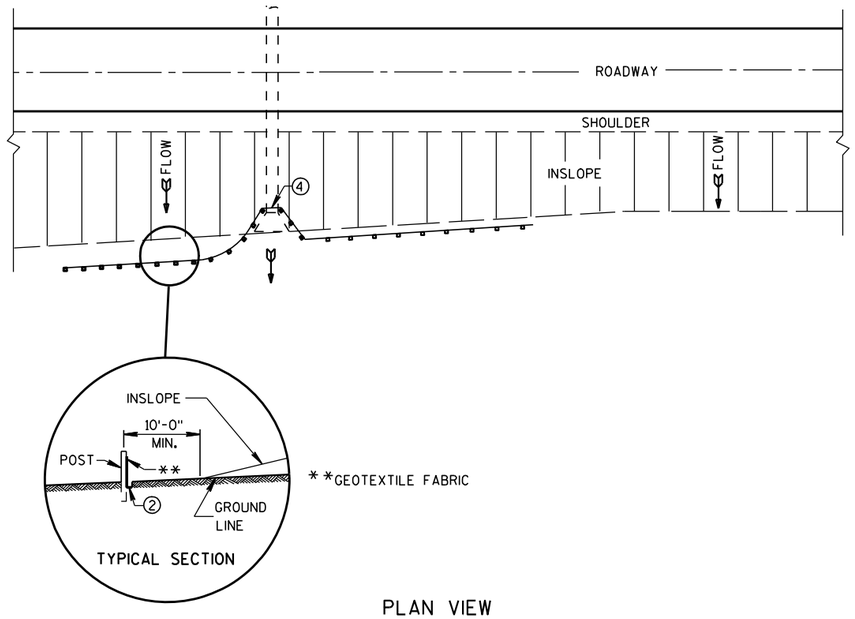

PLAN VIEW

TYPICAL APPLICATION OF SILT FENCE

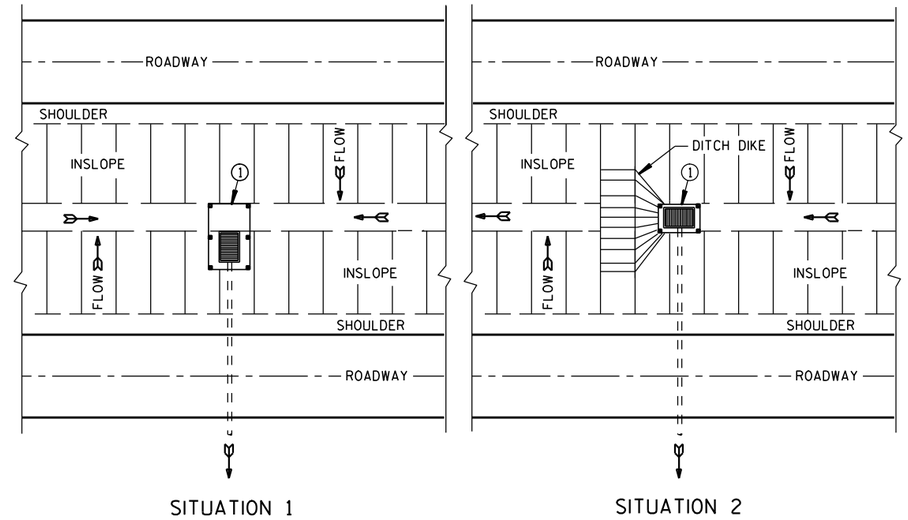

PLAN VIEW

SILT FENCE AT MEDIAN SURFACE DRAINS

GENERAL NOTES

DETAILS OF CONSTRUCTION NOT SHOWN ON THIS DRAWING SHALL CONFORM TO THE PERTINENT REQUIREMENTS OF THE STANDARD SPECIFICATIONS AND APPLICABLE SPECIAL PROVISIONS.

① HORIZONTAL BRACE REQUIRED WITH 2" X 4" WOODEN FRAME OR EQUIVALENT AT TOP OF POSTS.

② FOR MANUAL INSTALLATIONS THE TRENCH SHALL BE A MINIMUM OF 4" WIDE & 6" DEEP TO BURY AND ANCHOR THE GEOTEXTILE FABRIC. FOLD MATERIAL TO FIT TRENCH AND BACKFILL & COMPACT TRENCH WITH EXCAVATED SOIL.

③ WOOD POSTS SHALL BE A MINIMUM SIZE OF 1⅛" X 1⅛" OF OAK OR HICKORY.

④ SILT FENCE TO EXTEND ACROSS THE TOP OF THE PIPE.

⑤ CONSTRUCT SILT FENCE FROM A CONTINUOUS ROLL IF POSSIBLE BY CUTTING LENGTHS TO AVOID JOINTS. IF A JOINT IS NECESSARY USE ONE OF THE FOLLOWING TWO METHODS; A) OVERLAP THE END POSTS AND TWIST, OR ROTATE, AT LEAST 180 DEGREES. B) HOOK THE END OF EACH SILT FENCE LENGTH.

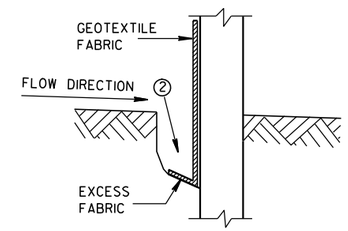

TRENCH DETAIL

NOTE: ADDITIONAL POST DEPTH OR TIE BACKS MAY BE REQUIRED IN UNSTABLE SOILS

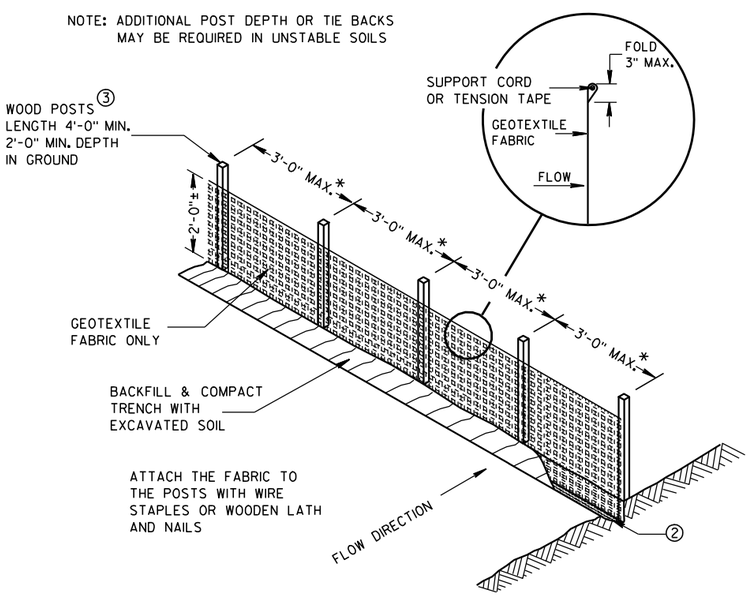

*NOTE: 8'-0" POST SPACING ALLOWED IF A WOVEN GEOTEXTILE FABRIC IS USED.

SILT FENCE

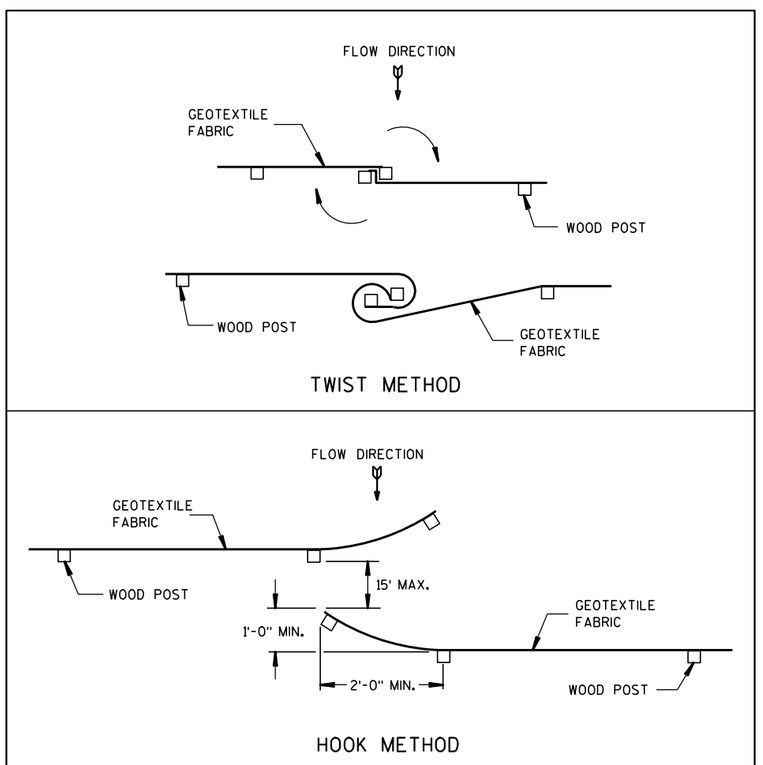

JOINING TWO LENGTHS OF SILT FENCE ⑤

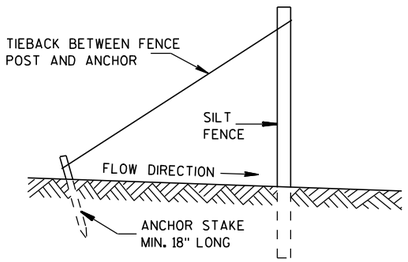

SILT FENCE TIE BACK

(WHEN REQUIRED BY THE ENGINEER)

SILT FENCE
STATE OF WISCONSIN DEPARTMENT OF TRANSPORTATION
APPROVED 4-29-05 /S/ Beth Cann----- DATE CHIEF ROADWAY DEVELOP ENGINEER FHWA

6

6

S.D.D. 8 E 9-6

S.D.D. 8 E 9-6

METAL APRON ENDWALLS

PIPE DIA. (IN.)	MIN. THICK. (Inches) STEEL	MIN. THICK. (Inches) ALUM.	DIMENSIONS (Inches) A (±1")	B (MAX.)	H (±1")	L (±1 1/2")	L1 ①	L2 ①	W (±2")	APPROX. SLOPE	BODY
12	.064	.060	6	6	6	21	12	17 1/2	24	2 1/2 to 1	1 Pc.
15	.064	.060	7	8	6	26	14	21 3/4	30	2 1/2 to 1	1 Pc.
18	.064	.060	8	10	6	31	15	28 1/4	36	2 1/2 to 1	1 Pc.
21	.064	.060	9	12	6	36	18	29 5/8	42	2 1/2 to 1	1 Pc.
24	.064	.075	10	13	6	41	18	37 1/4	48	2 1/2 to 1	1 Pc.
30	.079	.075	12	16	8	51	18	52 1/4	60	2 1/2 to 1	1 Pc.
36	.079	.105	14	19	9	60	24	59 3/4	72	2 1/2 to 1	2 Pc.
42	.109	.105	16	22	11	69	24	75 5/8	84	2 1/2 to 1	2 Pc.
48	.109	.105	18	27	12	78	24	81	90	2 1/4 to 1	3 Pc.
54	.109	.105	18	30	12	84	30	85 1/2	102	2 1/4 to 1	3 Pc.
60	.109×	.105×	18	33	12	87	—	—	114	2 to 1	3 Pc.
66	.109×	.105×	18	36	12	87	—	—	120	2 to 1	3 Pc.
72	.109×	.105×	18	39	12	87	—	—	126	2 to 1	3 Pc.
78	.109×	.105×	18	42	12	87	—	—	132	1 1/2 to 1	3 Pc.
84	.109×	.105×	18	45	12	87	—	—	138	1 1/2 to 1	3 Pc.
90	.109×	.105×	18	37	12	87	—	—	144	1 1/2 to 1	3 Pc.
96	.109×	.105×	18	35	12	87	—	—	150	1 1/2 to 1	3 Pc.

× EXCEPT CENTER PANEL
SEE GENERAL NOTES

REINFORCED CONCRETE APRON ENDWALLS

PIPE DIA. (IN.)	DIMENSIONS (Inches) T	A	B	C	D	E	G	APPROX. SLOPE
12	2	4	24	48 7/8	72 7/8	24	2	3 to 1
15	2 1/4	6	27	46	73	30	2 1/4	3 to 1
18	2 1/2	9	27	46	73	36	2 1/2	3 to 1
21	2 3/4	9	36	37 1/2	73 1/2	42	2 3/4	3 to 1
24	3	9 1/2	43 1/2	30	73 1/2	48	3	3 to 1
27	3 1/4	10 1/2	49 1/2	24	73 1/2	54	3 1/4	3 to 1
30	3 1/2	12	54	19 3/4	73 1/2	60	3 1/2	3 to 1
36	4	15	63	34 3/4	97 3/4	72	4	3 to 1
42	4 1/2	21	63	35	98	78	4 1/2	3 to 1
48	5	24	72	26	98	84	5	3 to 1
54	5 1/2	27	65	*33 1/4-**35	*98 1/4-**100	90	5 1/2	2 2/5 to 1
60	6	*30-**35	60	39	99	96	5	2 to 1
66	6 1/2	*24-**30	*72-**78	*21-**27	99	102	5 1/2	2 to 1
72	7	*24-**36	78	21	99	108	6	2 to 1
78	7 1/2	*24-**36	78	21	99	114	6 1/2	2 to 1
84	8	36	90 1/2	21	111 1/2	120	6 1/2	1 1/2 to 1
90	8 1/2	41	87 1/2	24	111 1/2	132	6 1/2	1 1/2 to 1

*MINIMUM
**MAXIMUM

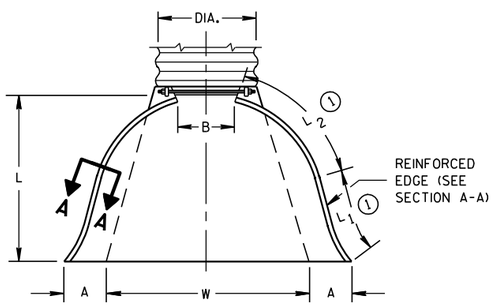

PLAN VIEW

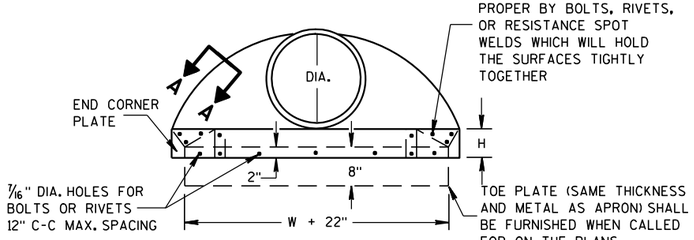

END VIEW

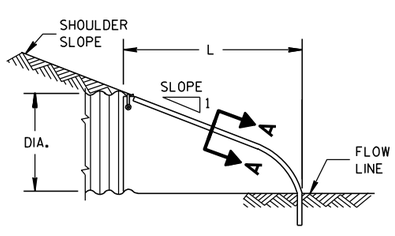

SIDE ELEVATION

METAL ENDWALLS

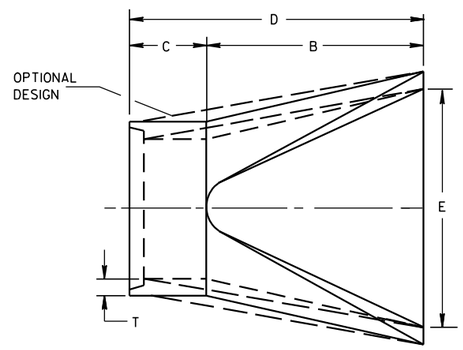

PLAN

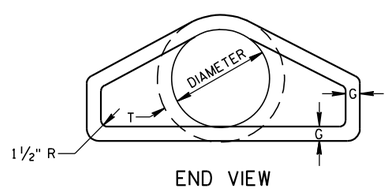

END VIEW

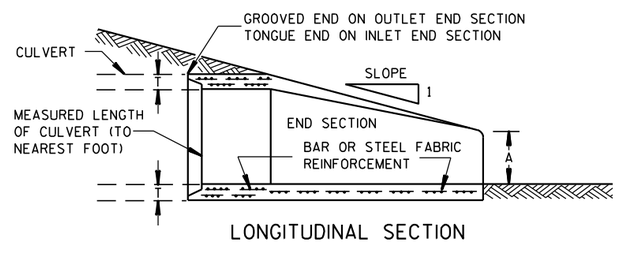

LONGITUDINAL SECTION

CONCRETE ENDWALLS

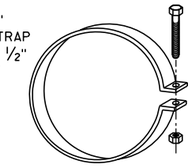

ALTERNATE FOR TYPE 1 CONNECTION

END SECTION CONNECTOR STRAP

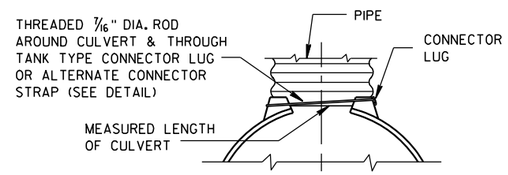

TYPE 1
FOR 12" THRU 24" CORR. PIPE

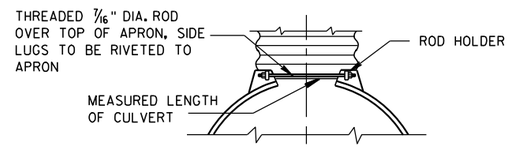

TYPE 2
FOR 30" THRU 96" CORR. PIPE

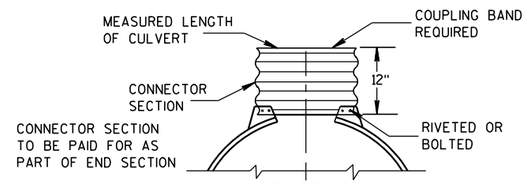

TYPE 3
FOR 42" THRU 96" CORR. PIPE

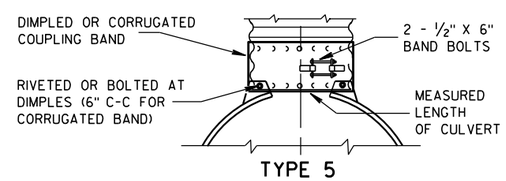

TYPE 5
ALTERNATE FOR:
ALL SIZES CORRUGATED CIRCULAR PIPE

NOTE: DIMPLED BAND FITS OVER OUTSIDE OF ENDWALL, AND CORRUGATED BAND FITS INSIDE ENDWALL. DIMPLED BAND MAY BE USED WITH HELICALLY CORRUGATED PIPE.

FOR CIRCUMFERENTIALLY CORRUGATED PIPE USE ENDWALL CONNECTION DETAILS 1, 2, 3 OR 5 AS APPLICABLE.

FOR HELICALLY CORRUGATED PIPE USE ENDWALL CONNECTION DETAILS 1, 2 OR 5.

FOR HELICALLY CORRUGATED PIPES WITH TWO CIRCUMFERENTIAL CORRUGATIONS AT EACH END USE ENDWALL CONNECTION DETAILS 1, 2 OR 3.

CONNECTION DETAILS

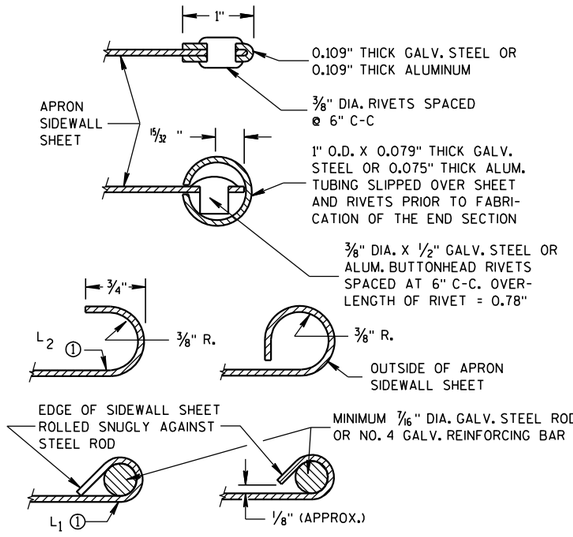

SECTION A-A

GENERAL NOTES

DETAILS OF CONSTRUCTION, MATERIALS AND WORKMANSHIP NOT SHOWN ON THIS DRAWING SHALL CONFORM TO THE PERTINENT REQUIREMENTS OF THE STANDARD SPECIFICATIONS AND THE APPLICABLE SPECIAL PROVISIONS.

CONCRETE CULVERT ENDWALLS MAY NOT BE USED WITH GALVANIZED STEEL OR ALUMINUM CULVERT PIPE OR VISE VERSA. GALVANIZED STEEL OR ALUMINUM ENDWALLS SHALL NORMALLY BE INSTALLED ON CULVERT PIPE OF THE SAME METAL.

ALL THREE PIECE STEEL APRON ENDWALLS FOR 60" DIAMETER PIPE AND LARGER SHALL HAVE 0.109" SIDES AND 0.138" CENTER PANELS. ALL THREE PIECE ALUMINUM APRON ENDWALLS FOR 60" DIAMETER PIPE AND LARGER SHALL HAVE 0.105" SIDES AND 0.134" CENTER PANELS. THE WIDTH OF CENTER PANELS SHALL BE GREATER THAN 20 PERCENT OF THE PIPE PERIMETER.

LAP SEAMS SHALL BE TIGHTLY JOINED BY GALVANIZED RIVETS OR BOLTS FOR STEEL UNITS AND ALUMINUM RIVETS AND BOLTS FOR ALUMINUM UNITS. FOR THE 60" THROUGH 96" DIAMETER APRON ENDWALL SIZES, THE REINFORCED EDGES AND CENTER PANEL SEAMS SHALL BE FURTHER REINFORCED WITH GALVANIZED STEEL OR ALUMINUM STIFFENER ANGLES. THE ANGLES SHALL BE ATTACHED BY GALVANIZED NUTS AND BOLTS FOR STEEL UNITS AND ALUMINUM NUTS AND BOLTS FOR ALUMINUM UNITS.

WHERE TWO OR MORE PIPES WITH APRON ENDWALLS ARE LAID ADJACENT TO EACH OTHER, THEY SHALL BE SEPARATED BY A DISTANCE SUFFICIENT TO PROVIDE A MINIMUM CLEARANCE OF 6 INCHES BETWEEN APRON ENDWALLS.

① FOR PIPE SIZES UP TO 60" DIAMETER, A 180° ROLLED EDGE MAY BE USED INSTEAD OF STEEL ROD REINFORCEMENT. SEE SECTION A-A.

APRON ENDWALLS FOR CULVERT PIPE

STATE OF WISCONSIN
DEPARTMENT OF TRANSPORTATION

APPROVED
11/30/94 — DATE
/S/ Rory L. Rhinesmith — CHIEF ROADWAY DEVELOPMENT ENGINEER
FHWA

6
S.D.D. 8 F 1-11

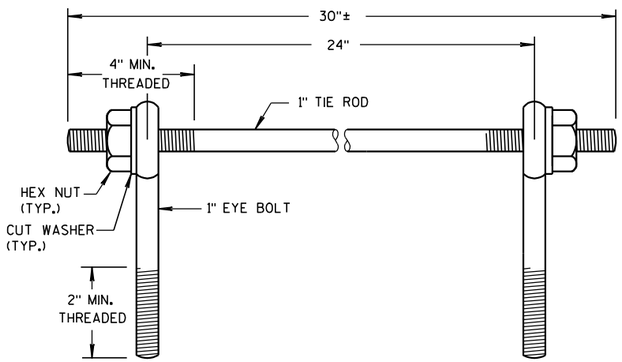

EYE BOLTS AND TIE ROD

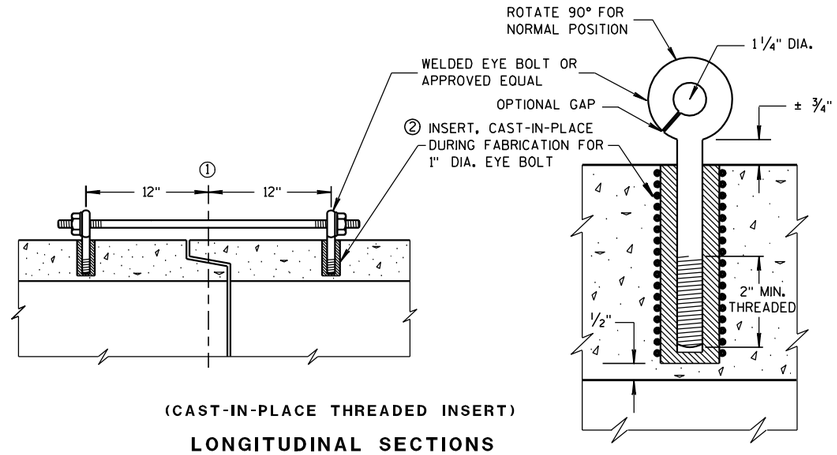

(CAST-IN-PLACE THREADED INSERT)

LONGITUDINAL SECTIONS

EYE BOLT AND TIE ROD ASSEMBLY (ALTERNATE NO. 1)

GENERAL NOTES

DETAILS OF CONSTRUCTION, MATERIALS, AND WORKMANSHIP NOT SHOWN ON THIS DRAWING SHALL CONFORM TO THE PERTINENT REQUIREMENTS OF THE STANDARD SPECIFICATIONS AND APPLICABLE SPECIAL PROVISIONS.

CONCRETE CULVERT AND STORM SEWER PIPE SHALL BE TIED TOGETHER IN THE MANNER ILLUSTRATED BY THIS DETAIL AT LOCATIONS DESIGNATED IN THE STANDARD SPECIFICATIONS AND THE PLAN. THE CONTRACTOR MAY USE EITHER ALTERNATE 1, 2 OR 3 FOR DRAINAGE STRUCTURES. ONLY ALTERNATE 1 AND 3 MAY BE USED FOR CATTLE PASSES, UNLESS OTHERWISE STATED IN THE CONTRACT. THE MATERIALS, FABRICATION AND WORK NECESSARY TO TIE THE PIPE BY THIS DETAIL WILL BE CONSIDERED INCIDENTAL TO THE PIPE AND APRON ENDWALLS IF REQUIRED.

DETAILED DRAWINGS FOR PROPOSED ALTERNATE DESIGNS FOR JOINT TIES SHALL BE SUBMITTED TO THE ENGINEER FOR APPROVAL.

JOINT TIES TO BE HOT-DIP GALVANIZED PER ASTM A 153.

① ℄ OF TONGUE AND GROOVE OR BELL AND SPIGOT JOINTS.

② THE INSIDE OF THE THREADED INSERTS SHALL BE CLEAN TO ALLOW THE INSERTION OF THREADED EYE BOLTS.

③ HOLES SHALL BE CAST-IN-PLACE OR DRILLED 12 INCHES FROM ℄ OF TONGUE AND GROOVE.

④ BOLT PROJECTION INSIDE OF PIPE SHALL NOT EXCEED 2 INCHES.

⑤ OPENING TO BE ROD DIAMETER PLUS 1 INCH.

⑥ LENGTH ADEQUATE TO EXTEND TO WITHIN 1/2 INCH OF THE INNER SURFACE OF THE PIPE.

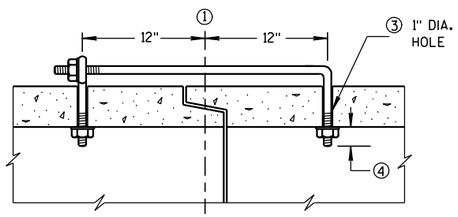

(TONGUE & GROOVE PIPE)

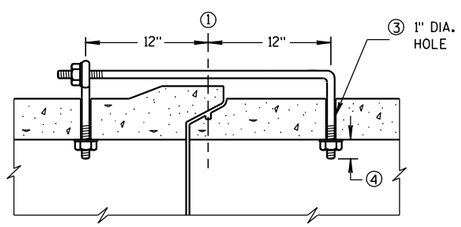

(MODIFIED BELL PIPE)

LONGITUDINAL SECTION

EYE BOLT DIMENSION TABLE

PIPE SIZE	L = LENGTH	
	TONGUE & GROOVE PIPE	MODIFIED BELL PIPE
18" TO 24"	4 1/2"	6 1/4"
30"	5"	7"
36"	5 1/2"	7"
42"	6"	
48"	6 1/2"	
60"	7 1/2"	
66"	8"	

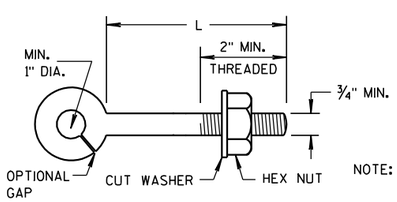

EYE BOLT

NOTE:

NOTE: TWO EYE BOLTS MAY BE USED WITH A 30" LONG THREADED ROD IN LIEU OF THE 90° BENT TIE ROD.

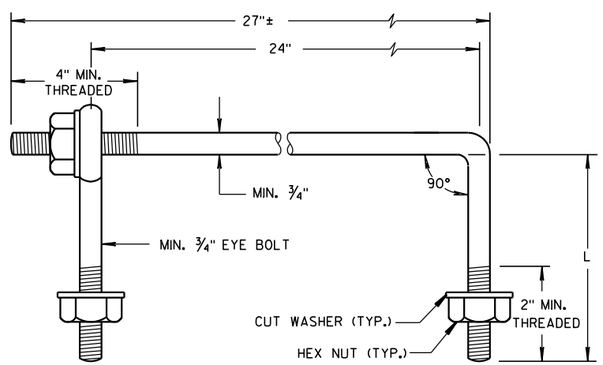

EYE BOLT AND TIE ROD

(JOINT TIES FOR 18" TO 66" DIA. CONCRETE PIPE)

EYE BOLT AND TIE ROD ASSEMBLY (ALTERNATE NO. 2)

ADJUSTABLE TIE ROD TABLE

PIPE DIAMETER	TIE ROD DIAMETER	D	L_1	N
12-60	5/8	5/8	5	1/2
66-84	3/4	3/4	5	1/2
90-108	1	1	7	1 7/16

DIMENSIONS SHOWN ARE IN INCHES

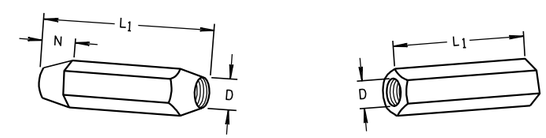

TAPERED PLAIN

RIGHT AND LEFT THREADS

SLEEVE NUTS

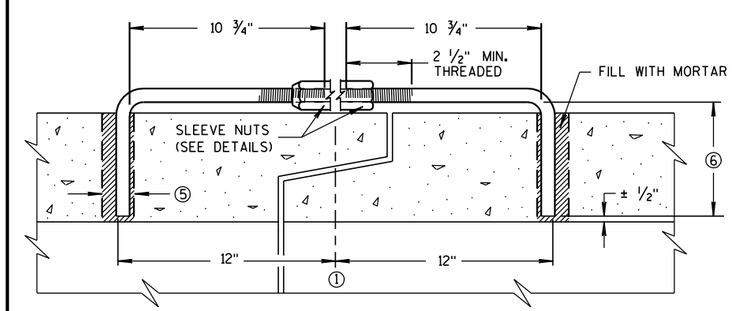

LONGITUDINAL SECTION

(JOINT TIES FOR 12" TO 108" DIA. CONCRETE PIPE)

ADJUSTABLE TIE ROD (ALTERNATE NO. 3)

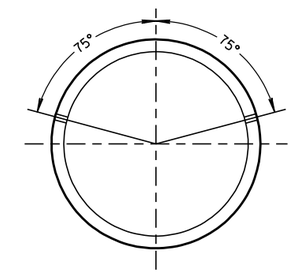

PLACEMENT OF (2) CAST-IN-PLACE INSERTS OR HOLES DURING FABRICATION FOR PIPE SECTIONS REQUIRING TIE RODS

TRANSVERSE SECTION

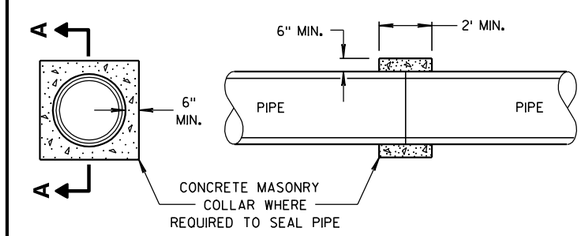

SECTION A-A

CONCRETE COLLAR DETAIL

JOINT TIES FOR CONCRETE PIPE AND CONCRETE COLLAR DETAIL

STATE OF WISCONSIN
DEPARTMENT OF TRANSPORTATION

APPROVED
6/5/2012 /S/ Jerry H. Zogg
DATE ROADWAY STANDARDS DEVELOPMENT ENGINEER
FHWA

6

6

S.D.D. 8 F 4-7

S.D.D. 8 F 4-7

GENERAL NOTES

DETAILS OF CONSTRUCTION SHOWN ON THIS DRAWING SHALL CONFORM TO THE PERTINENT REQUIREMENTS OF THE STANDARD SPECIFICATIONS AND APPLICABLE SPECIAL PROVISIONS.

DO NOT MILL CENTER LINE GROOVES THROUGH ANY INTERSECTION, MARKED CROSSWALK, NON-MOTORIZED PATH CROSSING, OR SNOWMOBILE CROSSING.

INSTALL PERMANENT MARKING EPOXY 4-INCH AFTER THE GROOVES ARE INSTALLED.

SEE SIGNING PLAN FOR SIGN REQUIREMENTS THAT MAY BE NEEDED.

(1) CENTERLINE GROOVES MAY BE OMITTED IN AREAS WITH HIGH CONCENTRATIONS OF DRIVEWAYS, WHEN DIRECTED BY THE ENGINEER.

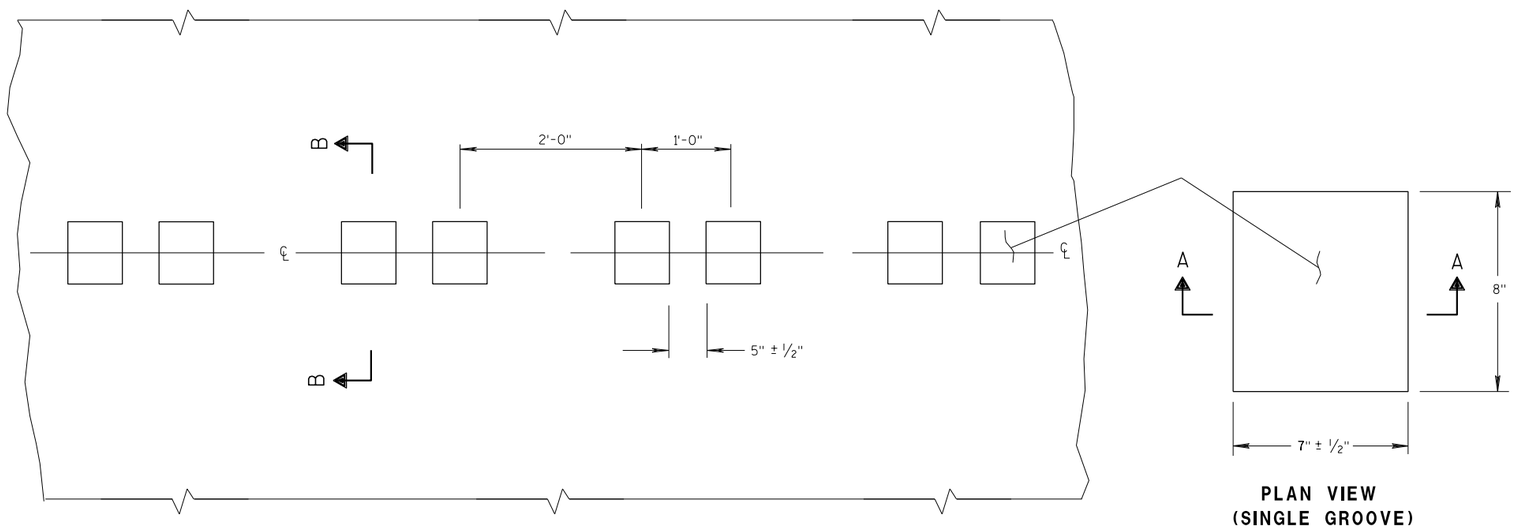

PLAN VIEW
CENTER LINE WITH GROOVES

PLAN VIEW
(SINGLE GROOVE)

PLACEMENT DETAIL FOR MILLED RUMBLE STRIP

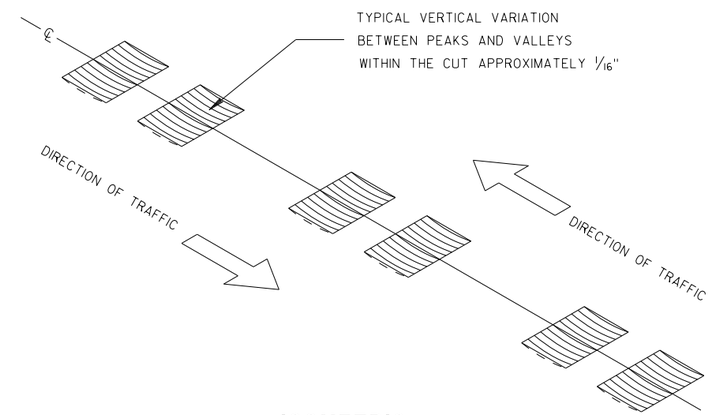

ISOMETRIC

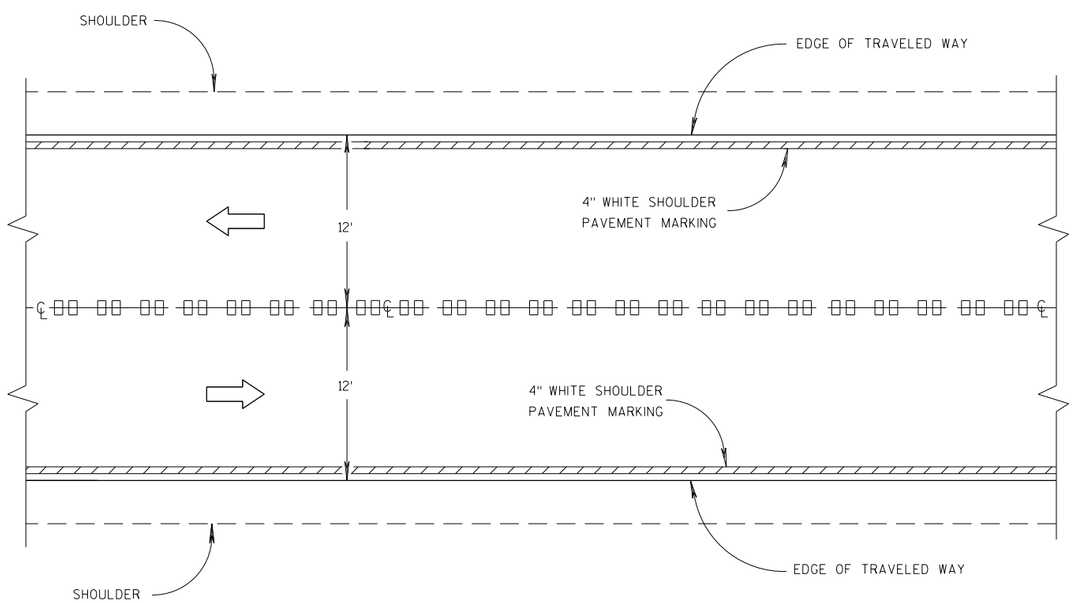

CENTER LINE GROOVES ON TWO-WAY ROADWAYS

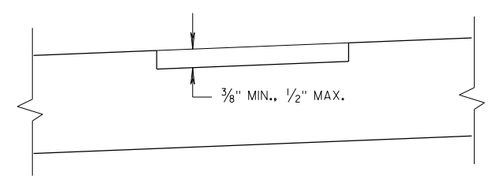

SECTION B-B
SUPERELEVATED ROADWAY

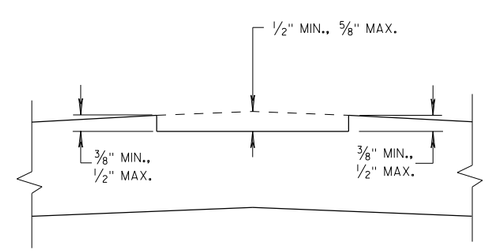

SECTION B-B
CROWNED ROADWAY

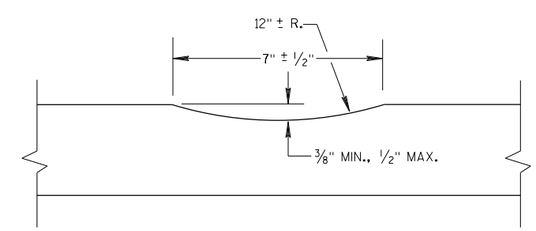

SECTION A-A

2-LANE RURAL
CENTER LINE RUMBLE STRIP, MILLING

STATE OF WISCONSIN
DEPARTMENT OF TRANSPOR

6
S.D.D. 13 A 11-3a

(1) CENTERLINE GROOVES MAY BE OMITTED IN AREAS WITH HIGH CONCENTRATIONS OF DRIVEWAYS, WHEN DIRECTED BY THE ENGINEER.

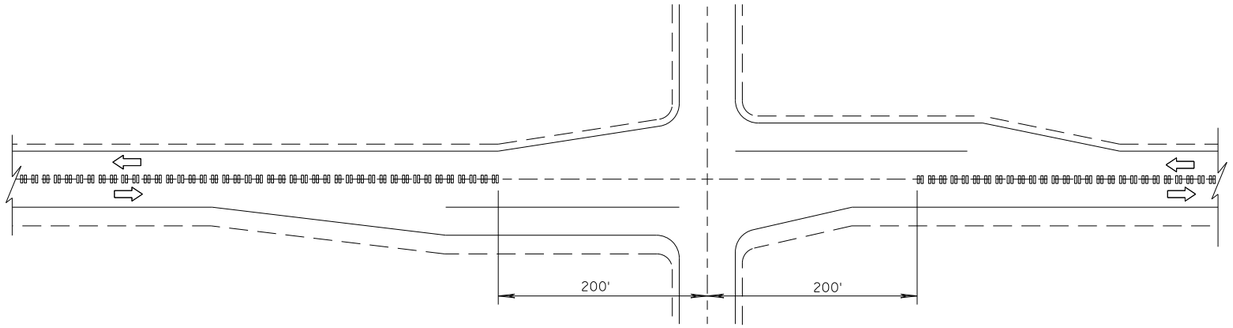

CENTER LINE GROOVES AT INTERSECTIONS

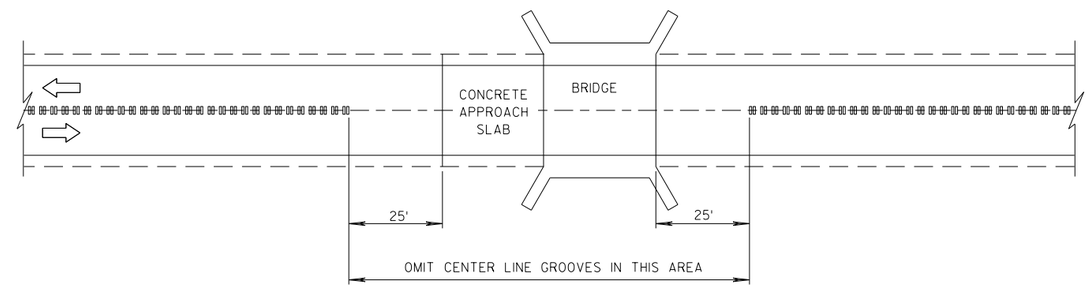

CENTER LINE GROOVES AT BRIDGES

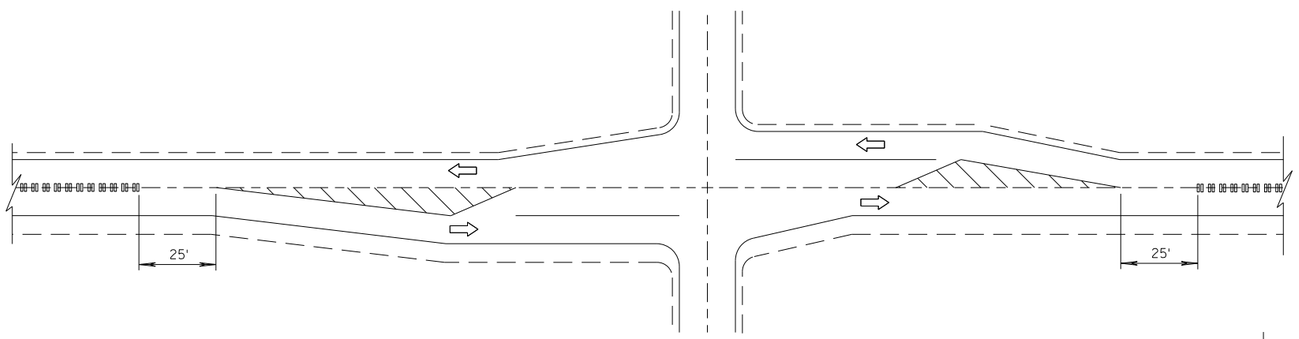

CENTER LINE GROOVES AT INTERSECTIONS
(WITH LEFT TURN LANES)

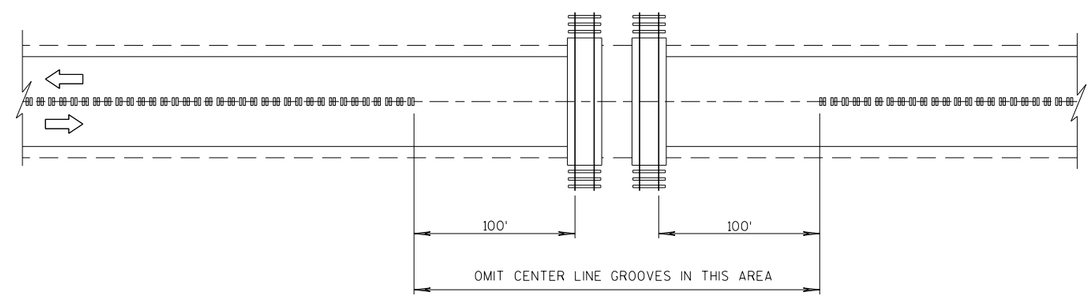

CENTER LINE GROOVES AT RAILROADS

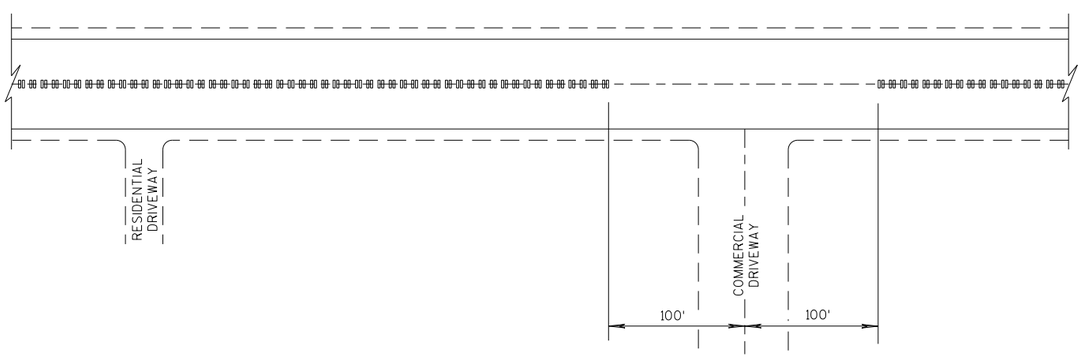

CENTER LINE GROOVES AT DRIVEWAYS (1)

2-LANE RURAL
CENTER LINE RUMBLE STRIP, MILLING

STATE OF WISCONSIN
DEPARTMENT OF TRANSPORTATION

APPROVED
7/2018 — DATE
/S/ Rodney T — ROADWAY STANDARDS DEVELOPMENT UNIT SUPERVISOR
FHWA

6

S.D.D. 13 A 11-3b

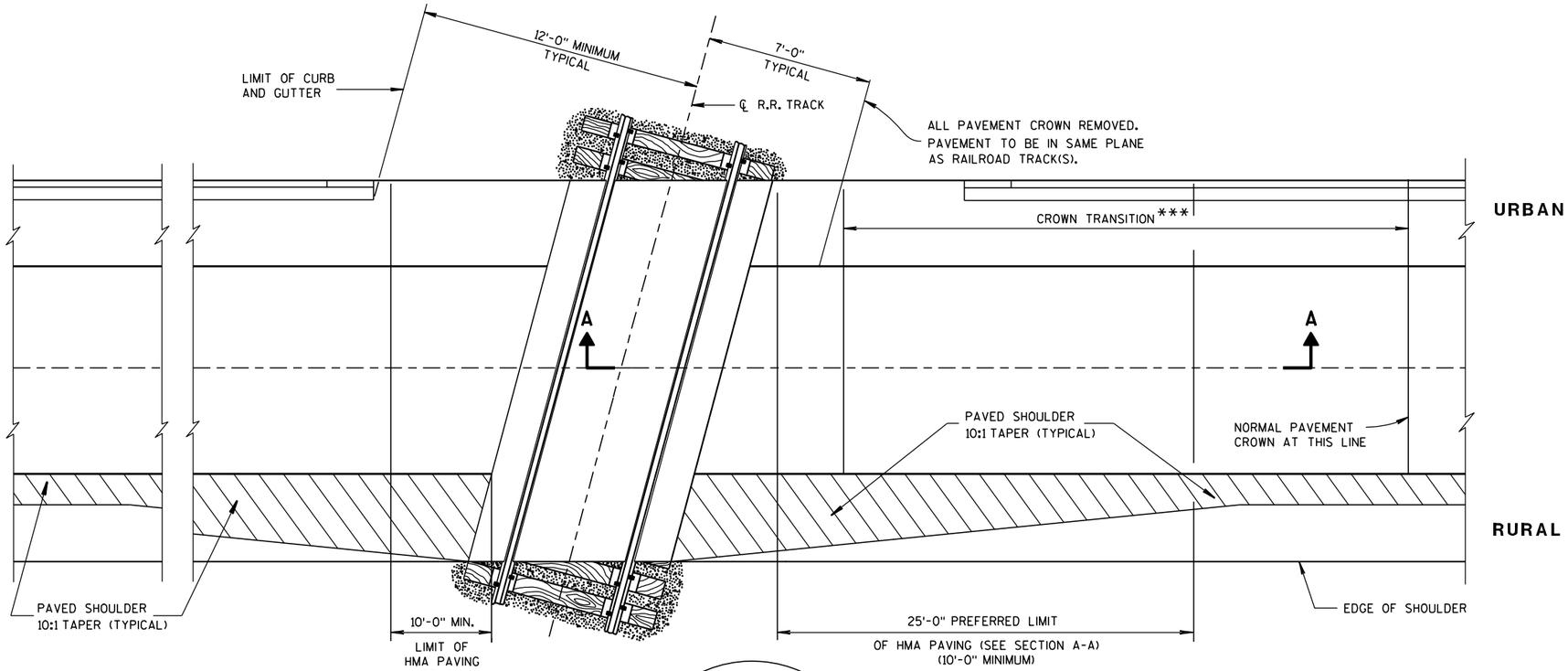

GENERAL NOTES

DETAILS OF CONSTRUCTION, MATERIALS AND WORKMANSHIP NOT SHOWN ON THIS DRAWING SHALL CONFORM TO THE PERTINENT REQUIREMENTS OF THE STANDARD SPECIFICATIONS AND THE APPLICABLE SPECIAL PROVISIONS.

TIMBER, CONCRETE OR RUBBER CROSSING SURFACE MATERIAL, RAILS, TIES, BALLAST, GEOTEXTILE FABRIC AND CROSSING DRAINAGE SYSTEM BY OTHERS UNLESS OTHERWISE PROVIDED.

HMA PAVEMENT APPROACHES AND HMA PAVEMET CROSSING SURFACES TO BE PLACED BY CONTRACTOR UNLESS OTHERWISE PROVIDED.

HMA FLANGEWAY AND FIELD FILLERS TO BE PLACED AND THOROUGHLY HAND COMPACTED BY THE CONTRACTOR WHEN NOT PROVIDED BY OTHERS. SEE DETAIL B. HMA FILLERS NOT REQUIRED WHEN RUBBER FILLERS ARE PROVIDED.

HMA PAVEMENT SHALL BE ROLLED PARALLEL TO THE TRACK.

** CROSSING SURFACE MAY BE TIMBER, RUBBER, CONCRETE, HMA PAVEMENT OR A COMBINATION OF SUCH MATERIALS.

*** CROWN TRANSITION LENGTH SHOWN ELSEWHERE IN THE PLAN.

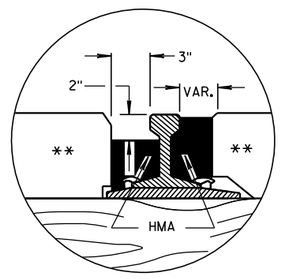

DETAIL B

HMA FLANGEWAY AND FIELD FILLERS

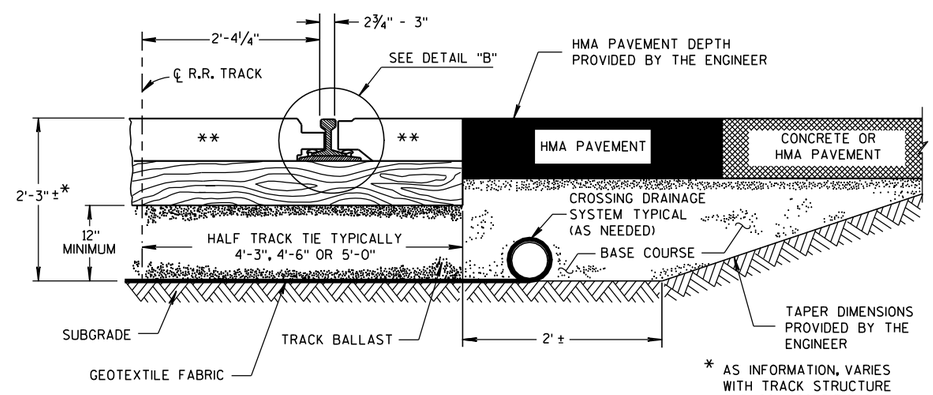

* AS INFORMATION, VARIES WITH TRACK STRUCTURE AND SOIL CONDITIONS

TYPICAL HALF SECTION

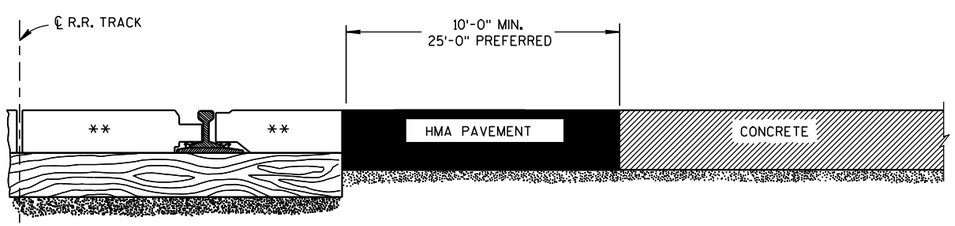

SECTION A-A

CONCRETE PAVEMENT APPROACH

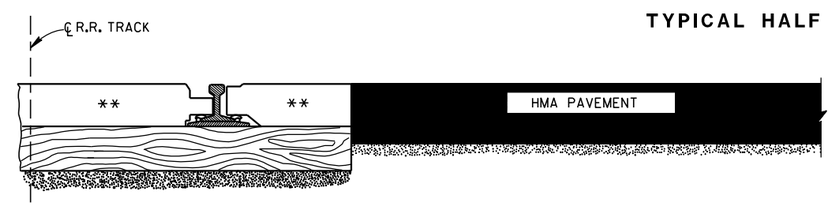

SECTION A-A

HMA PAVEMENT APPROACH

EXAMPLES OF PAVEMENT APPROACHES

PAVEMENT DETAILS FOR RAILROAD APPROACH

STATE OF WISCONSIN
DEPARTMENT OF TRANSPORTATION

APPROVED
8-28-09 /S/ Ronald E. Adams
DATE CHIEF, RAILROADS & HAF CTION
FHWA

6

S.D.D. 13 B 1-10

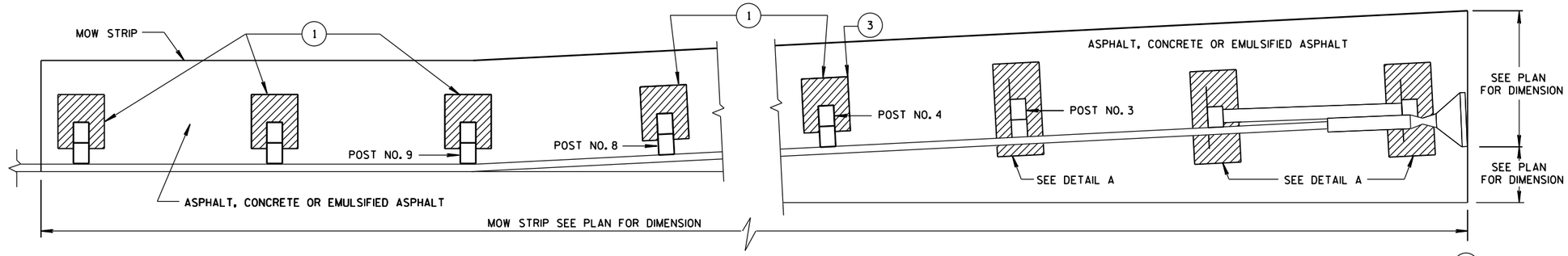

PLAN VIEW

MOW STRIP LAYOUT FOR ENERGY ABORBING TERMINAL

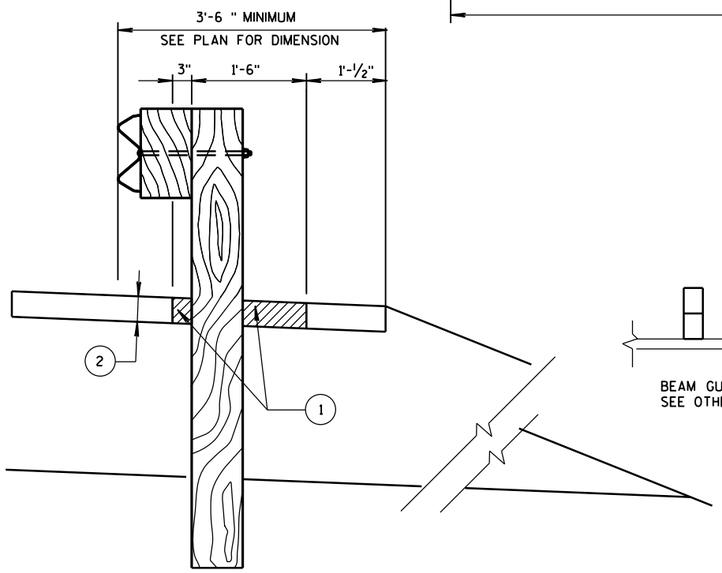

SECTION A-A

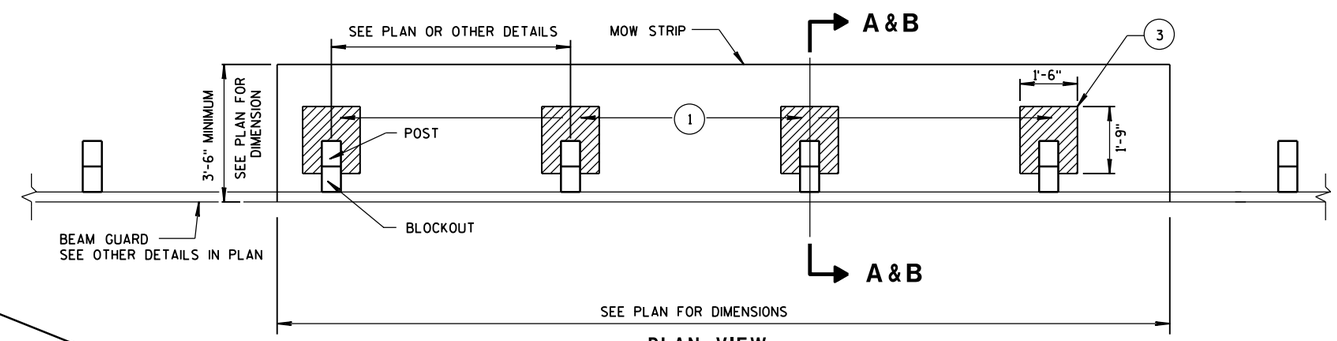

PLAN VIEW

MOW STRIP FOR TYPICAL BLOCKOUT LAYOUT

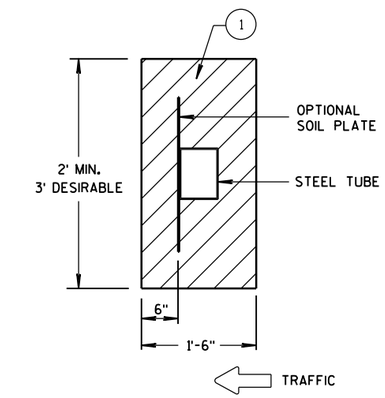

DETAIL A

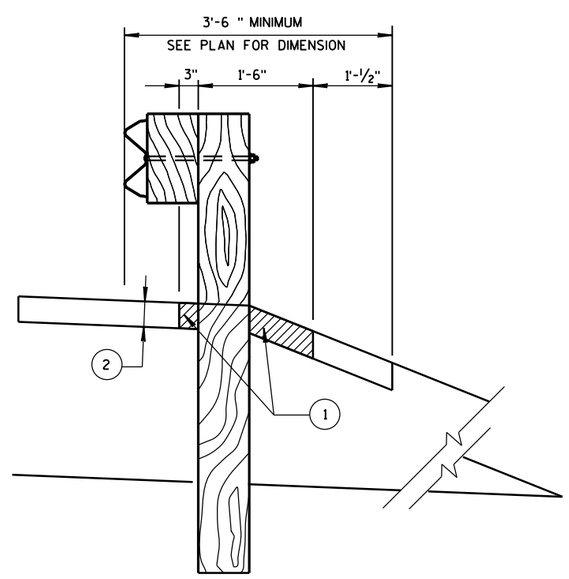

SECTION B-B

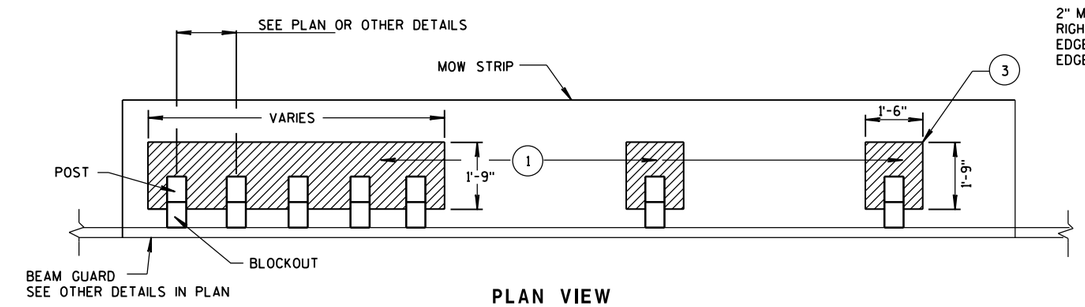

PLAN VIEW

MOW STRIP FOR TIGHT SPACING LAYOUT

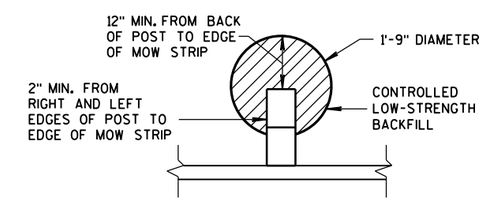

ALTERNATIVE HMA
MOW STRIP DESIGN

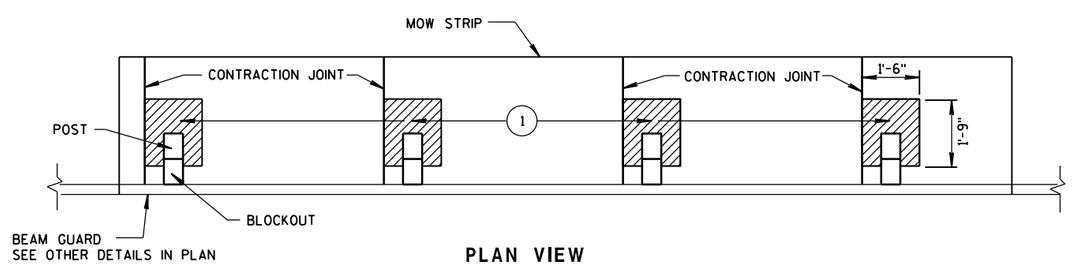

PLAN VIEW

JOINT PLACEMENT FOR CONCRETE MOW STRIP

1. CONTROLLED LOW-STRENGTH BACKFILL OR EMULSIFIED ASPHALT.
2. DEPTH OF MOW STRIP:
   ASPHALT - 4"
   CONCRETE - 4"
   EMULSIFIED ASPHALT - 1" OR LESS
3. FOR EMULSIFIED ASPHALT MOW STRIP LEAVE OUTS NOT REQUIRED. (TYPICAL FOR ALL POSTS.)

GUARDRAIL MOW STRIP

STATE OF WISCONSIN
DEPARTMENT OF TRANSPORTATION

APPROVED
June 2014 — DATE
/S/ Jerry H. Zogg — ROADWAY STANDARDS DEVELOPMENT ENGINEER
FHWA
NT

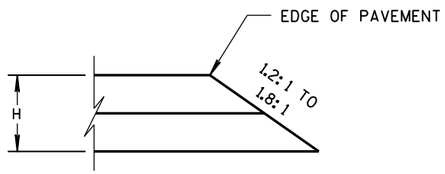

CONSTRUCTED WITH FINAL TWO LAYERS

FOR H 5" OR LESS

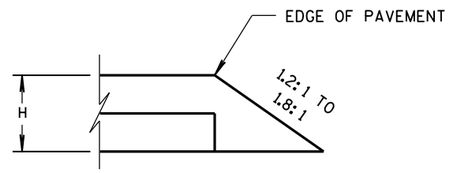

CONSTRUCTED WITH FINAL LAYER

FOR H 5" OR LESS

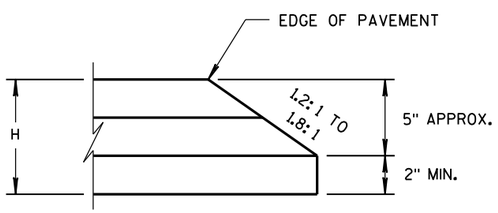

CONSTRUCTED WITH FINAL TWO LAYERS

FOR H GREATER THAN 5"

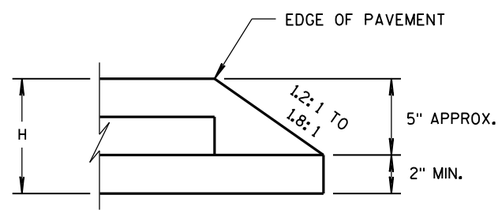

CONSTRUCTED WITH FINAL LAYER

FOR H GREATER THAN 5"

HMA PAVEMENT AND HMA OVERLAYS

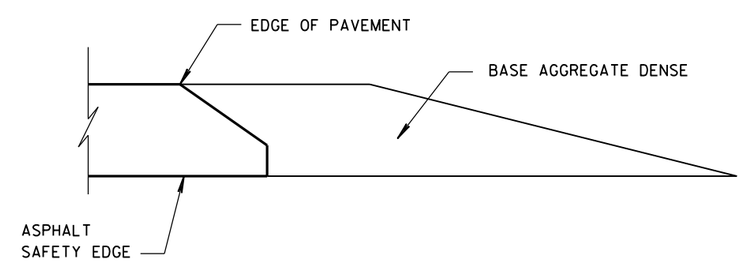

FINISHED SHOULDER AGGREGATE PLACEMENT

6

6

S.D.D. 14 B 29-1

SAFETY EDGE SM

STATE OF WISCONSIN
DEPARTMENT OF TRANSPORTATION

APPROVED

11/30/2012 — DATE

/S/ Jerry H. Zogg — ROADWAY STANDARDS DEVELOPMENT ENGINEER

FHWA

S.D.D. 14 B 29-1

1. WOOD OR STEEL POSTS (w6X9 OR w6X8.5) MAY BE USED. DO NOT INTERMIX WOOD AND STEEL POSTS. INSTALL STEEL POSTS WITH HOLES ON APPROACHING TRAFFIC SIDE.
2. USE WOOD OR APPROVED PLASTIC BLOCKOUTS. WOOD BLOCKOUTS MAY BE CONSTRUCTED OUT OF TWO OR MORE WOOD BLOCKOUTS. SEE ALTERNATE WOOD BLOCKOUT DETAIL. DIMENSIONS OF APPROVED PLASTIC BLOCKOUTS MAY VARY.
3. IF ROCK IS ENCOUNTERED DURING EXCAVATION, PROVIDE A HOLE 12 INCHES IN DIAMETER EXTENDING 20 INCHES DEEP INTO THE ROCK. PLACE APPROXIMATELY 2 1/2" INCHES OF GRANULAR MATERIAL IN THE BOTTOM OF THE HOLE. CUT THE POSTS THE TO LENGTH AMD INSTALL. BACKFILL WITH EXCAVATED MATERIAL AND COMPACT. BACKFILL IS TO BE FREE OF LARGE ROCKS.
4. WHEN THE DISTANCE FROM BACK OF POST TO SHOULDER HINGE POINT IS LESS THAN 2 FEET INSTALL LONGER POST AT HALF POST SPACING (K).
5. FOR NEW MGS INSTALLATION TOP OF W-BEAM RAIL TOLERANCE IS ±1". FOR EXISTING MGS INSTALLATION TOP OF W-BEAM IS BETWEEN 27 ¾" TO 32".
6. WHEN USING STEEL POST AND WOOD BLOCKOUTS INSTALL FOUR 16D GALVANIZED NAILS. INSTALL NAILS AT THE BACK CORNERS OF THE BLOCK AND BEND THE NAILS OVER THE FLANGE OF THE STEEL POST.
7. TOTAL POST LENGTH FOR TYPE K IS 7' - 0".
   TOTAL POST LENGTH FOR OTHER MGS TYPES IS 6' - 0".

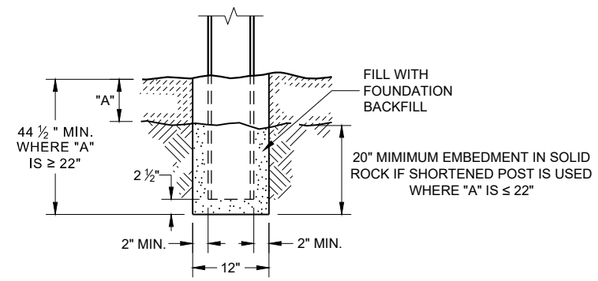

END VIEW
SETTING STEEL OR WOOD POST IN ROCK (3)

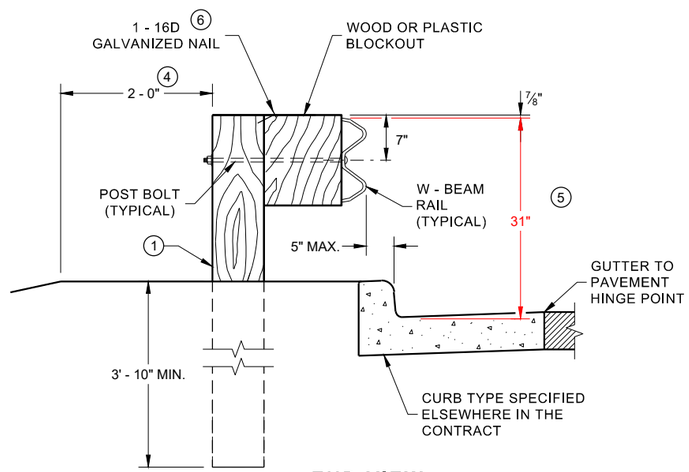

END VIEW
LOCATED ALONG A CURBED ROADWAY

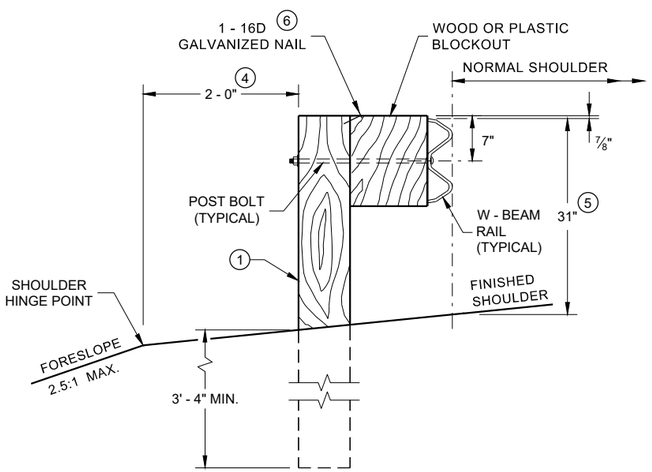

END VIEW
LOCATED ALONG A ROADWAY SHOULDER
STANDARD INSTALLATION

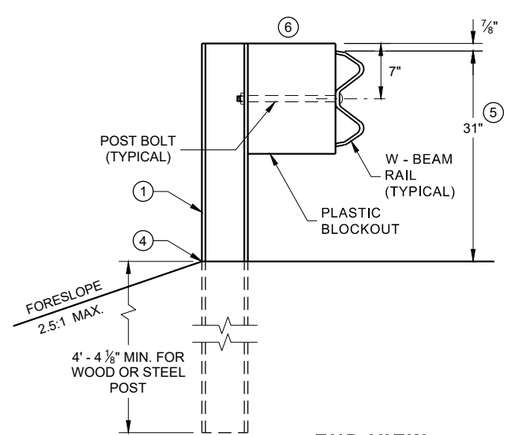

END VIEW
MGS LONGER POST AT HALFPOST
SPACING W BEAM (K)

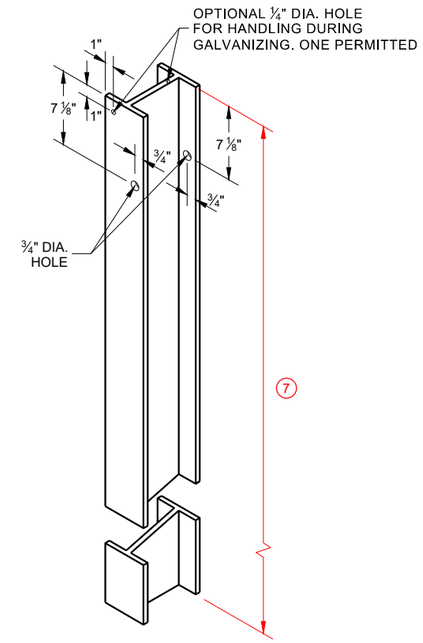

STEEL POST & HOLE
PUNCHING DETAIL
(W 6 X 9) (1)

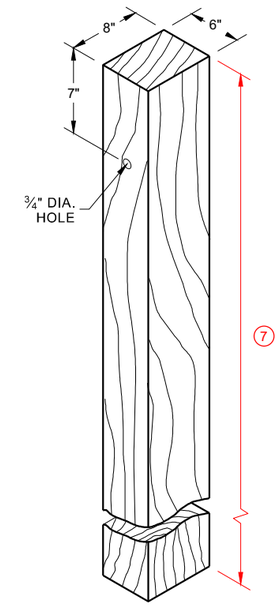

WOOD POST
(6" X 8") NOMINAL (1)

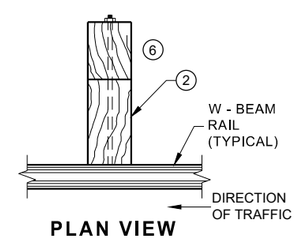

PLAN VIEW
WOOD POST,
BLOCKOUT & BEAM

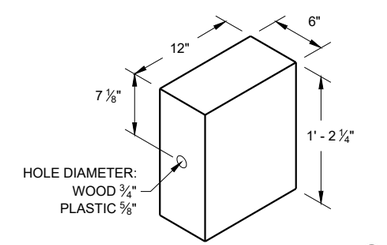

WOOD OR PLASTIC (2)
BLOCKOUT

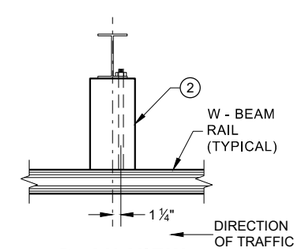

PLAN VIEW
STEEL POST,
PLASTIC BLOCKOUT & BEAM

MIDWEST GUARDRAIL SYSTEM (MGS) GUARDRAIL

STATE OF WISCONSIN
DEPARTMENT OF TRANSPORTATION

6

SDD 14B42 - 06a

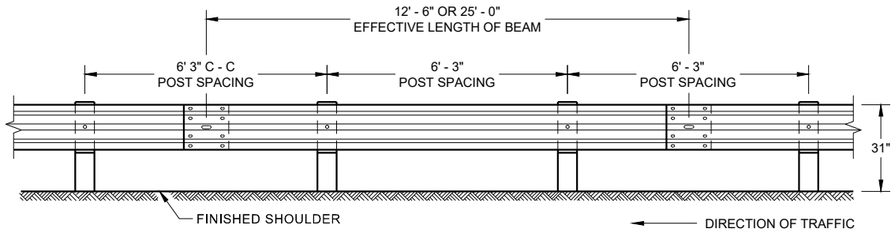

FRONT VIEW
POST SPACING STANDARD INSTALLATION

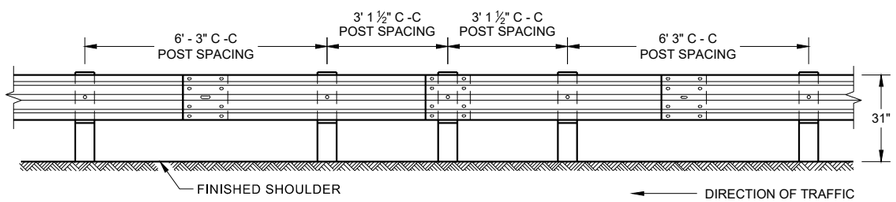

FRONT VIEW
HALF POST SPACING (HS) AND HALF POST SPACING WITH LONGER POSTS (K)

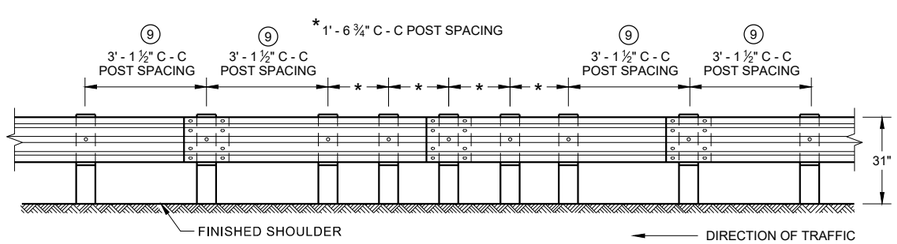

FRONT VIEW
QUARTER POST SPACING (QS)

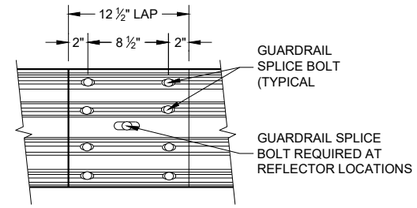

FRONT VIEW
MID-SPAN BEAM SPLICE

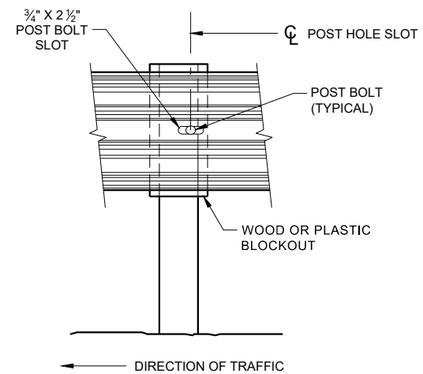

FRONT VIEW AT STEEL POST

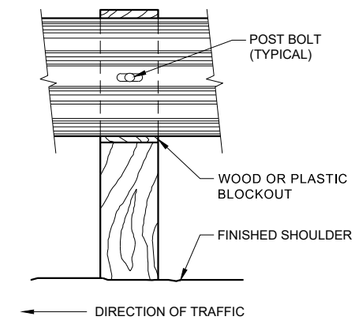

FRONT VIEW AT WOOD POST

GENERAL NOTES

8 DO NOT INSTALL REFLECTORS ON THE FIRST 50 FEET OF THE APPROACH END OF THE ENERGY ABSORBING TERMINAL. RAIL SPLICE LOCATIONS ARE THE ONLY ACCEPTABLE LOCATIONS FOR REFLECTORS.

9 25 FEET OF HALF POST SPACING IS REQUIRED ON APPROACH AND DEPARTURE ENDS OF QUARTER POST SPACING.

POST BOLTS ARE A ⅝" DIAMETER ASTM A307 GUARDRAIL BOLT. A POST BOLT REQUIRES ⅝" DIAMETER A563A DOUBLE RECESSED (DR) HEAVY HEX NUT AND ⅝" DIAMETER F844 FLAT WASHER. POST BOLTS MAY BE LONGER IF MULTIPLE BLOCKOUTS ARE BEING USED.

GUARD RAIL SPLICE BOLTS ARE A ⅝" DIAMETER ASTM A307 GUARDRAIL HEAD BOLT. A GUARDRAIL SPLICE BOLT REQUIRES ⅝" DIAMETER A563A DOUBLE RECESSED (DR) HEAVY HEX NUT.

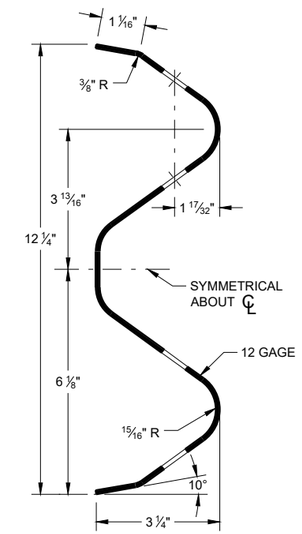

SECTION THRU W-BEAM RAIL

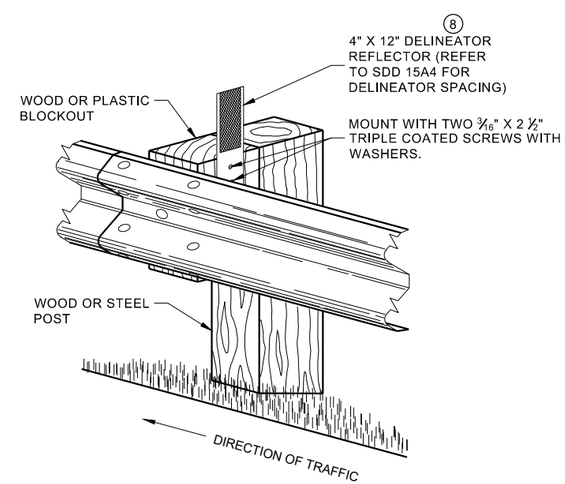

ONE SIDED REFLECTOR DETAIL AND TYPICAL INSTALLATION

MIDWEST GUARDRAIL SYSTEM (MGS) GUARDRAIL

STATE OF WISCONSIN
DEPARTMENT OF TRANSPORTAT

6

6

SDD 14B42 - 06b

SDD 14B42 - 06b

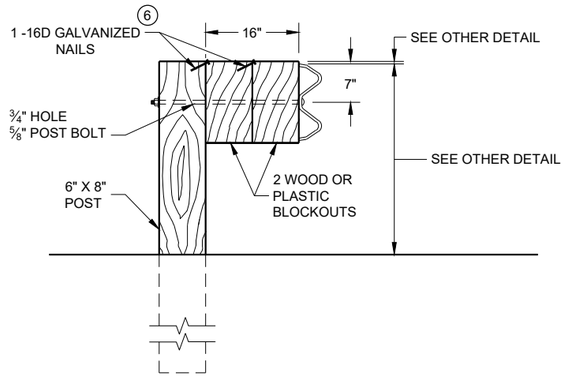

DETAIL FOR 16" BLOCKOUT DEPTH

IT IS ACCEPTABLE TO USE BLOCKOUTS UP TO 16" DEEP TO INCREASE THE POST OFFSET TO AVOID UNDERGROUND OBSTACLES. THERE IS NO LIMIT TO THE NUMBER OF POSTS THAT CAN HAVE ADDITIONAL BLOCKOUTS UP TO 16" DEEP.

NOTE:

1. ALL FILLETS SHALL HAVE A MINIMUM RADIUS OF 3/16".
2. IF THE BOLT EXTENDS MORE THAN ¼" FROM THE NUT THE BOLT SHOULD BE TRIMMED BACK.

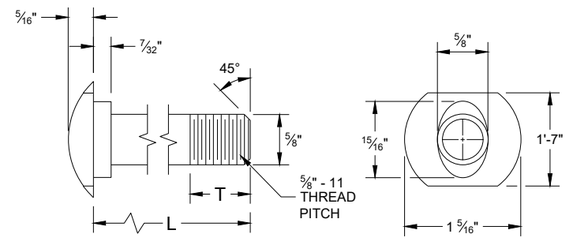

POST BOLT TABLE

L	T (MIN.)
1 ¼"	1 ⅛"
2"	1 ¾"
10"	4"
14"	4 1/16"
18"	4"
21"	4 1/16"
25"	4"

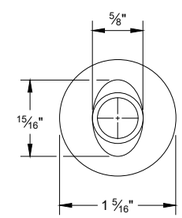

ALTERNATE BOLT HEAD

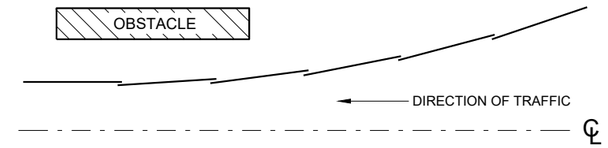

PLAN VIEW
BEAM LAPPING DETAIL

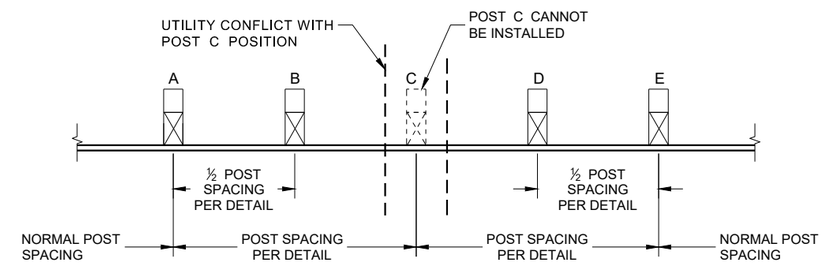

POST DRIVING FOR CONTINUOUS UNDERGROUND OBSTRUCTION

6

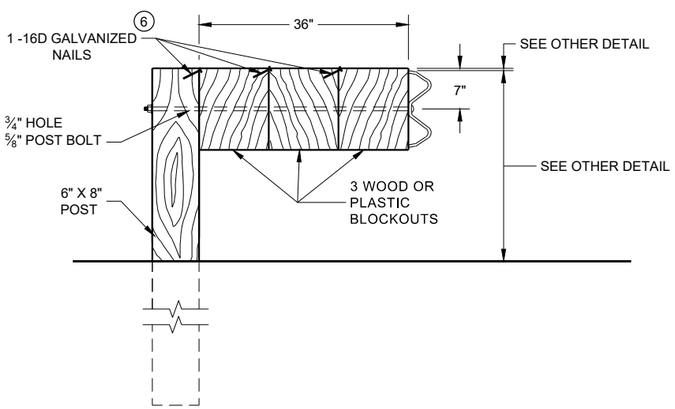

DETAIL FOR 36" BLOCKOUT DEPTH

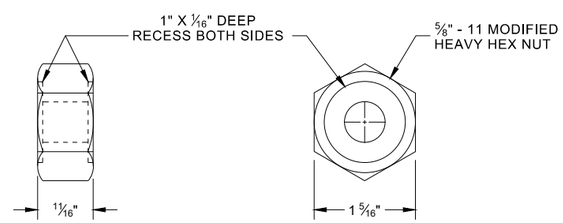

POST BOLT, SPLICE BOLT AND RECESS NUT

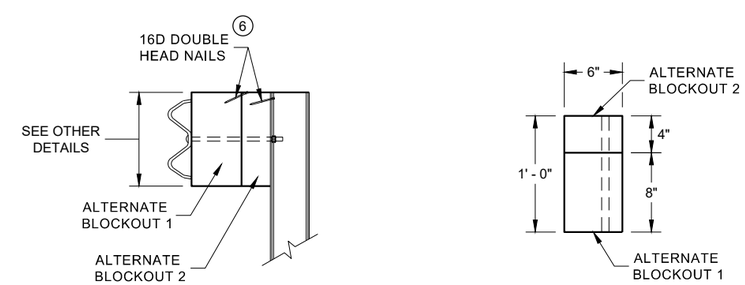

SIDE VIEW

PLAN VIEW

ALTERNATE WOOD BLOCKOUT DETAIL

NOTES: UNDER SPECIAL CIRCUMSTANCES, SUCH AS AVOIDING OBSTACLES THAT ARE NOT RELOCATED, IT IS ACCEPTABLE TO INSTALL ADDITIONAL BLOCKOUTS TO OBTAIN UP TO 36" DEPTH FOR ONE OR TWO POSTS IN A SECTION OF GUARDRAIL.

DO NOT USE 16" OR 36" BLOCKOUTS IF IT CAUSES THE POST TO BE DRIVEN BEYOND SHOULDER HINGE POINT OR CAUSES A FIXED OBJECT TO BE WITHIN THE DEFLECTION DISTANCE OF THE BARRIER.

(6) WHEN USING STEEL POST AD WOOD BLOCKOUTS, INSTALL FOUR 16D GALVANIZED NAILS. INSTALL NAILS AT THE BACK CORNERS OF THE BLOCK AND BEND THE NAILS OVER THE FLANGE OF THE STEEL POST.

MIDWEST GUARDRAIL SYSTEM (MGS) GUARDRAIL

STATE OF WISCONSIN
DEPARTMENT OF TRANSPORTA

SDD 14B42 - 06c

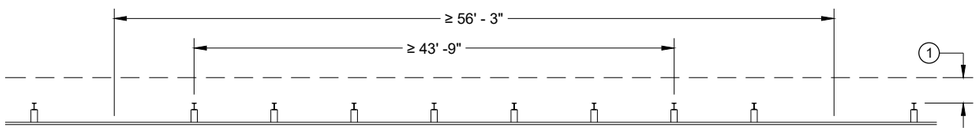

MISSING POST IN NORMAL BEAM GUARD RUN

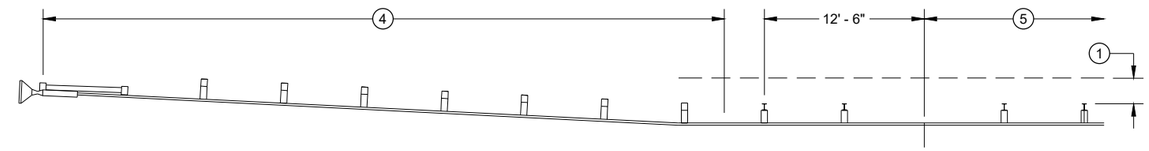

MISSING POST IN NORMAL BEAM GUARD RUN NEAR EAT

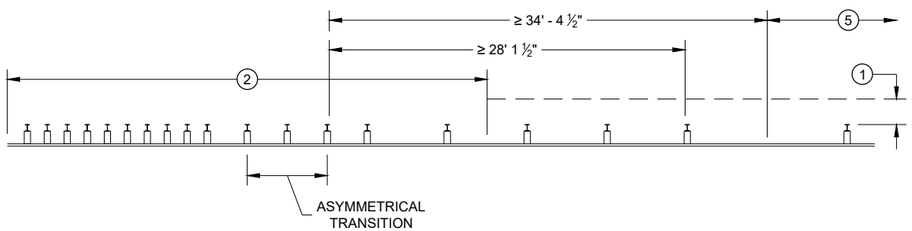

MISSING POST NEAR APPROACH THRIE BEAM TRANSITION

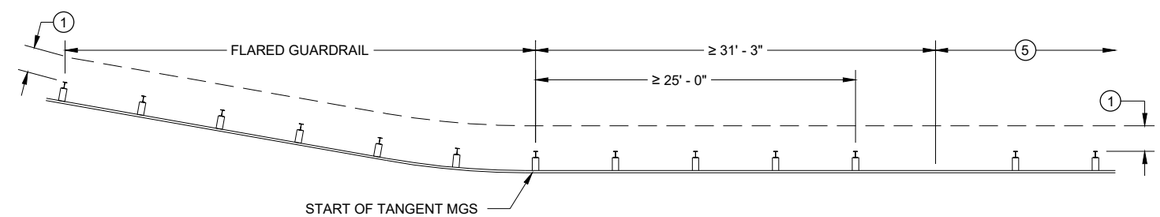

MISSING POST IN NORMAL BEAM GUARD RUN NEAR FLARED BEAM GUARD

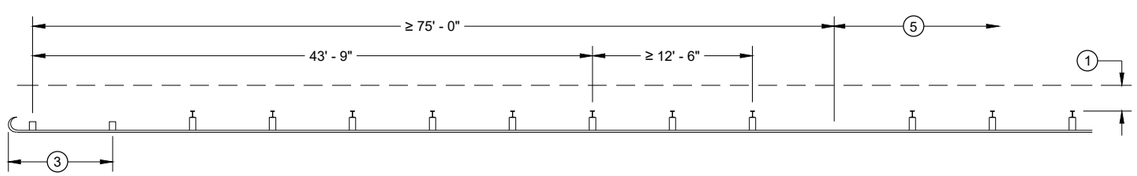

MISSING POST IN NORMAL BEAM GUARD RUN NEAR TYPE 2 TERMINAL

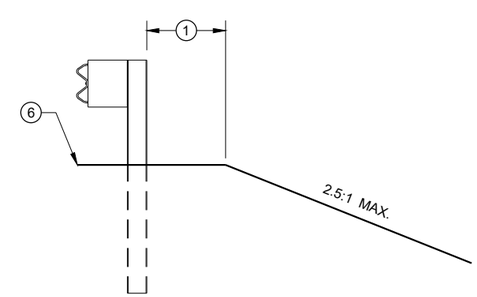

CROSS SECTION VIEW

1. MINIMUM OF 2 FEET OF GRADING BEHIND POST.
2. SEE SDD 14B45 FOR MORE DETAILS.
3. SEE SDD 14B47 FOR MORE DETAILS.
4. SEE SDD 14B44 FOR MORE DETAILS.
5. SEE MISSING POST IN NORMAL BEAM GUARD RUN FOR DISTANCE TO NEXT MISSING POST AND AREA FOR WELL DRAINED, COMPACTED SOILS.
6. SEE PLAN FOR SHOULDER DESIGN.

MIDWEST GUARDRAIL SYSTEM (MGS) GUARDRAIL

STATE OF WISCONSIN
DEPARTMENT OF TRANSPORTATION

APPROVED
7/2018 — DATE
/S/ Rodney Taylor — ROADWAY STANDARDS DEVE UNIT SUPERVISOR
FHWA

6

SDD 14B42 - 06d

GENERAL NOTES

(A) THE SLOPE IN THE AREA BOUNDED BY THE GRADELINE, THE HINGE POINT LINE (HPL) AND THE CLEAR ZONE LIMITS (CZL) SHALL BE 4:1 OR FLATTER.

(B) AFTER FINAL ASSEMBLY, RECHECK CABLE TO BE SURE IT IS TAUT AND HAS NOT RELAXED

(C) DIFFERENT MANUFACTURERS REQUIRE DIFFERENT PERFORATED W - BEAM RAIL END PANELS. SEE MANUFACTURER'S INFORMATION.

(D) ATTACH ALUMINUM SHEET TO E.A.T. HEAD USING 4 STAINLESS STEEL SELF - TAPPING SCREWS. ONE SCREW PER CORNER.

(E) HARDWARE MAY VARY BETWEEN MANUFACTURER. SEE MANUFACTURER'S DRAWING FOR INFORMATION.

DIMENSIONS MAY VARY, MANUFACTURER'S INFORMATION.

SEE SDD 14B42 FOR MORE INFORMATION.

* DO NOT ATTACH BLOCKOUTS TO POST 1 AND 2.

DO NOT INSTALL REFLECTORS ON THE FIRST 50 FEET OF THE APPROACH END OF THE ENERGY ABSORBING TERMINAL.

SEE MANUFACTURER'S DRAWING FOR SPLICE LOCATION, HARDWARE DIMENSIONS AND INSTALLATION INSTRUCTIONS.

THE CENTER OF THE UPPER 3 ½" DIAMETER HOLE ON POST NUMBER 3 THROUGH POST 9 IS TO BE FLUSH WITH THE GROUND LINE UP TO A MAXIMUM OF 2" ABOVE GROUND LINE. WOOD BLOCKS ON POSTS NUMBERED 3 THROUGH 9 MAY BE ADJUSTED UP TO 3" ABOVE THE TOP OF POST.

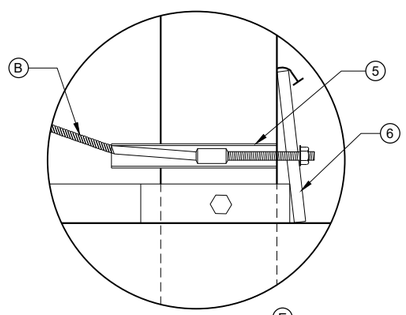

DETAIL "A" (E)

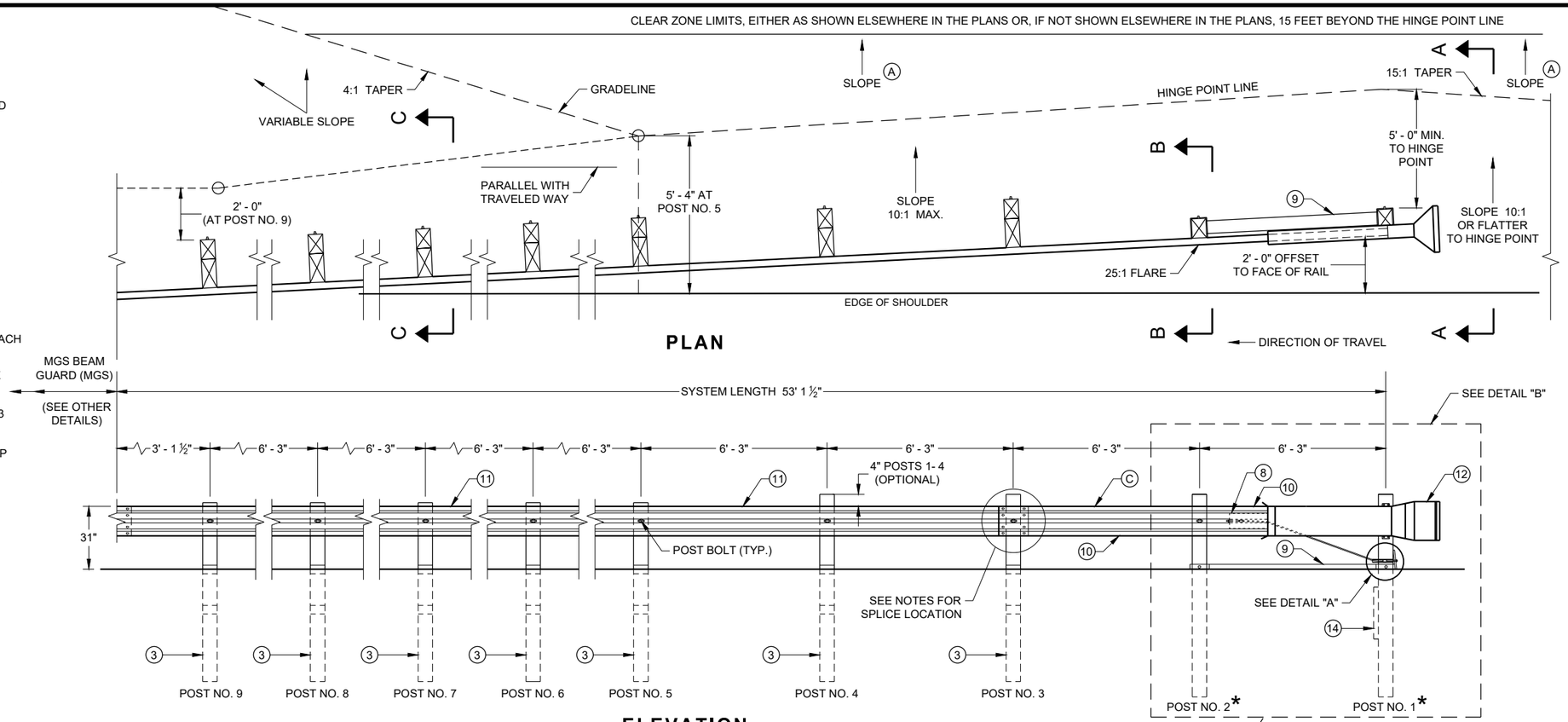

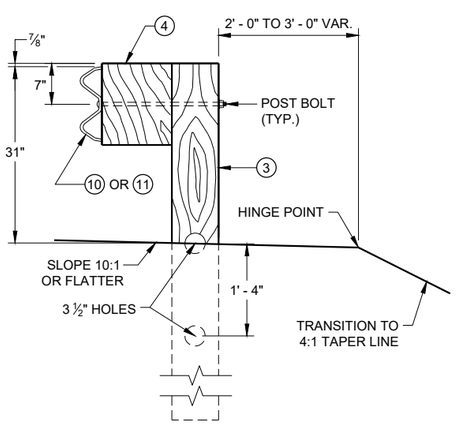

SECTION C - C
TYPICAL AT POST NOS. 3 - 9

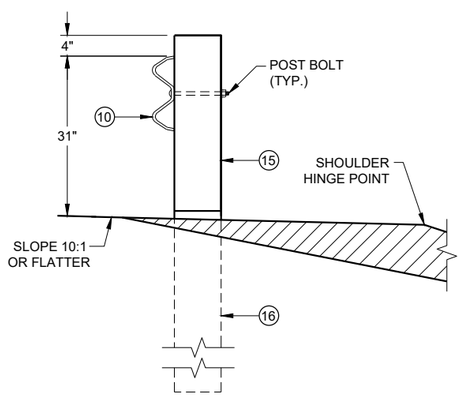

SECTION B - B
TYPICAL AT POST NO. 2*

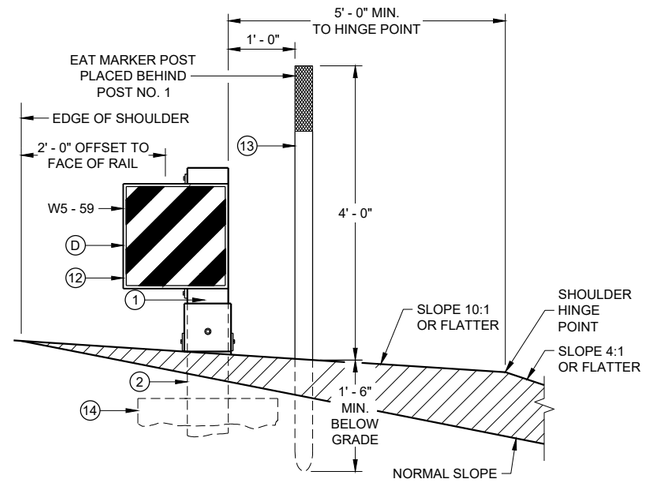

SECTION A - A
TYPICAL AT POST NO. 1*

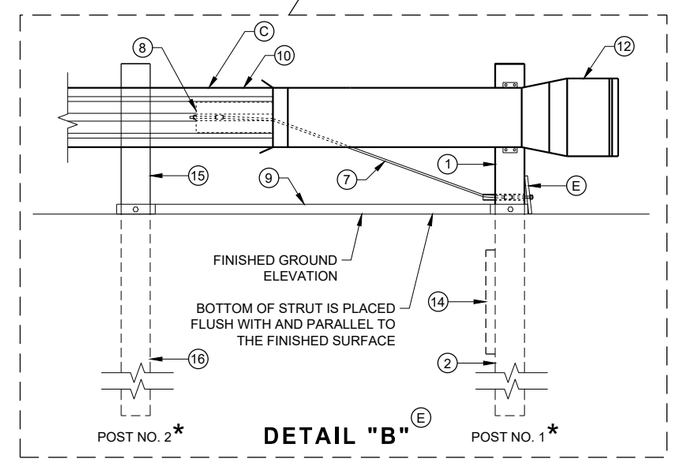

DETAIL "B" (E)

MIDWEST GUARDRAIL SYSTEM ENERGY ABSORBING TERMINAL (MGS)

STATE OF WISCONSIN
DEPARTMENT OF TRANSPORTATION

6

6

SDD 14B44 - 04a

SDD 14B44 - 04a

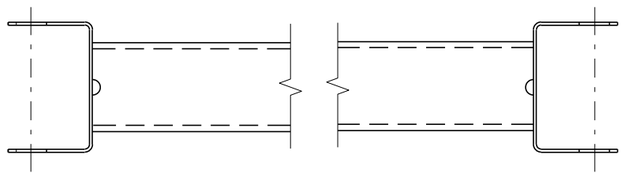

GENERIC GROUND STRUT (9)(E)

BILL OF MATERIALS

PART NO.	DESCRIPTION MATERIALS PROVIDED BY MGS EAT MANUFACTURER. SEE MANUGACTURER'S DETAILS FOR MORE INFORMATION.
1	UPPER POST NO. 1 6" X 6" TUBE
2	LOWER POST NO. 1
3	WOOD CRT
4	WOOD BLOCKOUT
5	PIPE SLEEVE
6	BEARING PLATE
7	BCT CABLE ASSEMBLY
8	ANCHOR CABLE BOX
9	GROUND STRUT
10	PERFORATED W-BEAM RAIL END PANEL, 12'-6" LONG.
11	STANDARD W-BEAM RAIL. MULTIPLE SECTIONS REQUIRED. SECTIONS VARY IN LENGTH.
12	IMPACT HEAD
13	EAT MARKER POST - YELLOW (SEE APPROVED PRODUCTS LIST)
14	SOIL PLATE
15	UPPER POST NO. 2
16	LOWER POST NO. 2

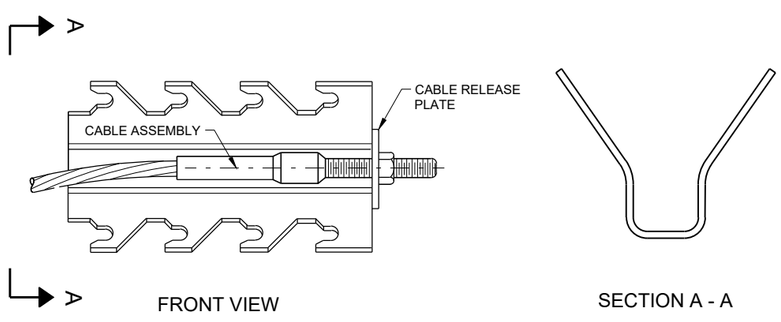

GENERIC ANCHOR CABLE BOX (9)(E)

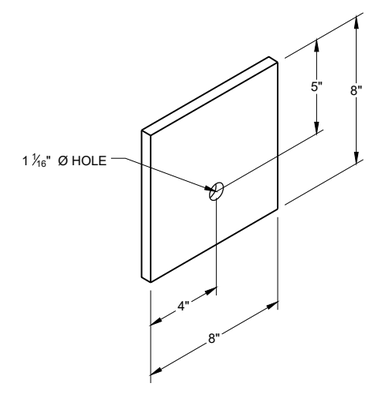

BEARING PLATE (6)(E)

MIDWEST GUARDRAIL SYSTEM ENERGY ABSORBING TERMINAL (MGS)

STATE OF WISCONSIN
DEPARTMENT OF TRANSPORTAT

SDD 14B45 - 04b

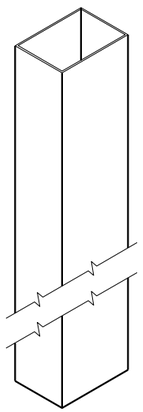

UPPER POST NO. 1 (1) (E)

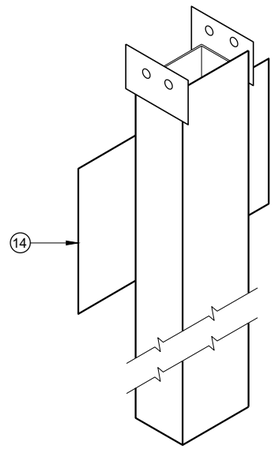

LOWER POST NO. 1 (2) (E)

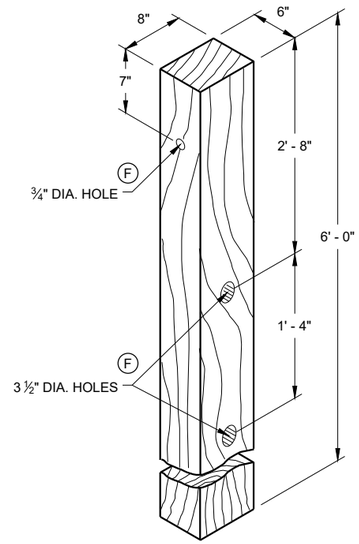

WOOD CRT POST (3) (E)
POSTS NUMBER 3-9

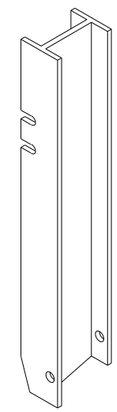

UPPER POST NO. 2 (15) (E)

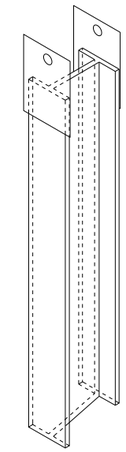

LOWER POST NO. 2 (16) (E)

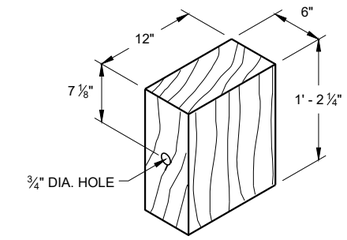

WOOD BLOCKOUT (4)
REQ'D. AT ALL POSTS EXCEPT POST NO'S 1 & 2

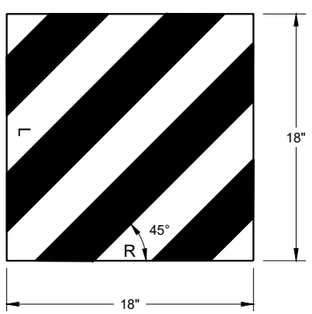

W5 - 59

REFLECTIVE SHEETING DETAIL (E)

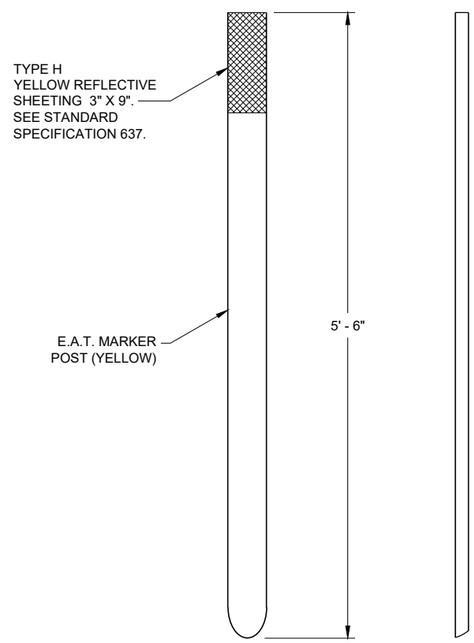

FRONT VIEW SIDE VIEW

E.A.T. MARKER POST (13)

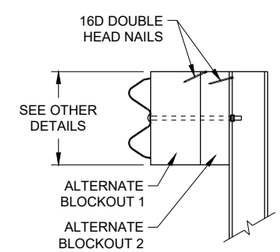

SIDE VIEW

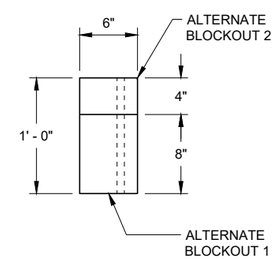

TOP VIEW

ALTERNATE WOOD BLOCKOUT DETAIL

MIDWEST GUARDRAIL SYSTEM ENERGY ABSORBING TERMINAL (MGS)

STATE OF WISCONSIN
DEPARTMENT OF TRANSPORTATION

APPROVED
7/2018 — DATE
/S/ Rodney Taylor — ROADWAY STANDARDS DEVE UNIT SUPERVISOR
FHWA

6
SDD 14B44 - 04c

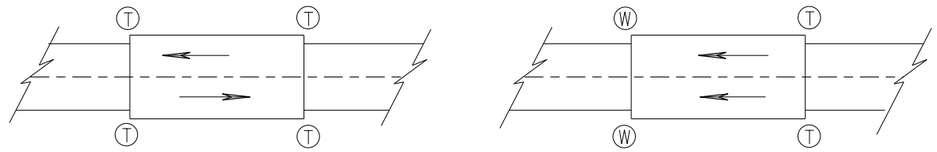

TWO WAY TRAFFIC **ONE WAY TRAFFIC**

(T) THRIE BEAM CONNECTION

(W) W-BEAM CONNECTION WHEN REQUIRED

TYPICAL LOCATIONS OF THRIE BEAM AND W-BEAM CONNECTIONS TO BRIDGE

GENERAL NOTES

IF ROCK IS ENCOUNTERED, REMOVE ROCK TO FULL DEPTH OF POST PLUS 2½", AND 12" DIAMETER AROUND POST. SEE 14B42 FOR MORE DETAILS.

TRANSITION USES STEEL POSTS ONLY.

SEE STANDARD DETAIL DRAWING 14 B 42 FOR MORE INFORMATION.

POST 2 THROUGH 17 USES STEEL POST ONLY

(1) BRIDGE RAILING TYPE "W" DOES NOT REQUIRE A TERMINAL CONNECTOR.

(2) OPTIONAL CURB AND GUTTER OR DRAINAGE FEATURE SEE PLAN FOR INFORMATION.

(13) STEEL OR WOOD POST IS ACCEPTABLE AT POST 1. SEE SDD14B42

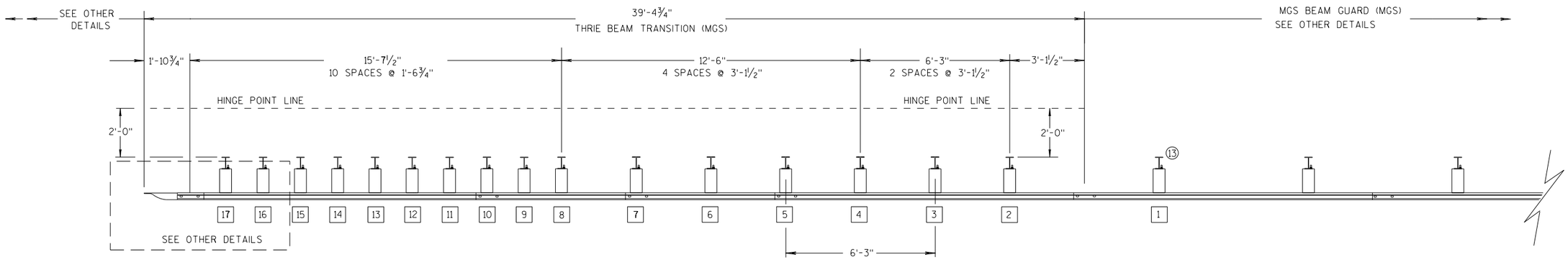

PLAN VIEW

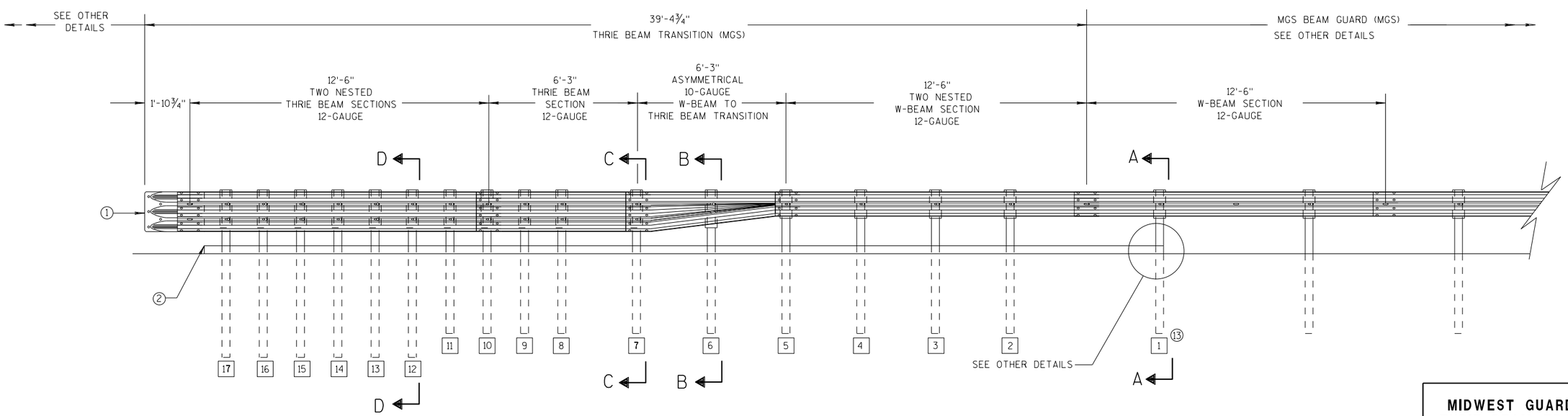

ELEVATION VIEW

MIDWEST GUARDRAIL SYSTEM THRIE BEAM TRANSITION

MIDWEST GUARDRAIL SYSTEM THRIE BEAM TRANSITION (MGS)

STATE OF WISCONSIN
DEPARTMENT OF TRANSPOR

6

S.D.D. 14 B 45-5a

GENERAL NOTES

(2) OPTIONAL CURB AND GUTTER OR DRAINAGE FEATURE SEE PLAN FOR INFORMATION.

(3) WHEN USING STEEL POSTS AND WOOD BLOCKOUTS INSTALL FOUR 10D GALVANIZED NAILS. INSTALL NAILS AT THE BACK CORNERS OF THE BLOCK AND BEND THE NAILS OVER THE FLANGE OF THE STEEL POST.

(4) TOLERANCE FOR TOP OF W-BEAM RAIL IS ± 1".

(13) STEEL OR WOOD POST IS ACCEPTABLE AT POST 1. SEE SDD 14B42

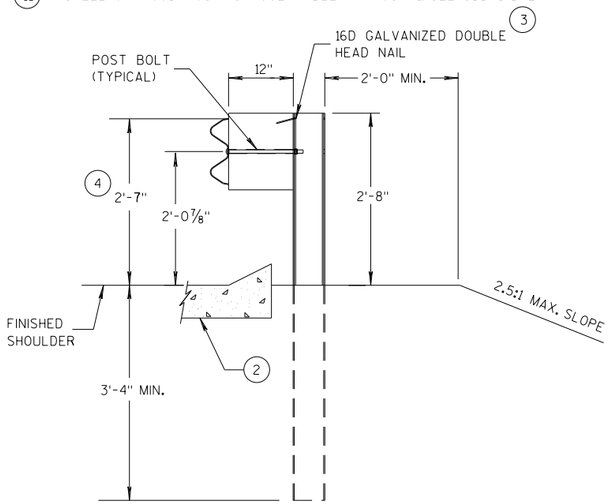

SECTION A-A (13)

POSTS 1-5

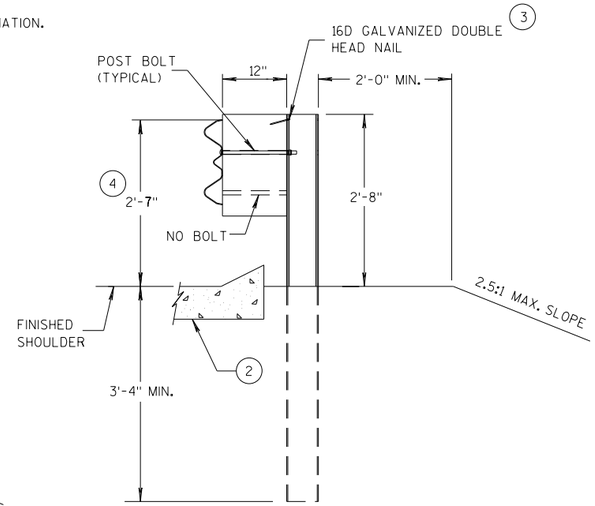

SECTION B-B

POST 6

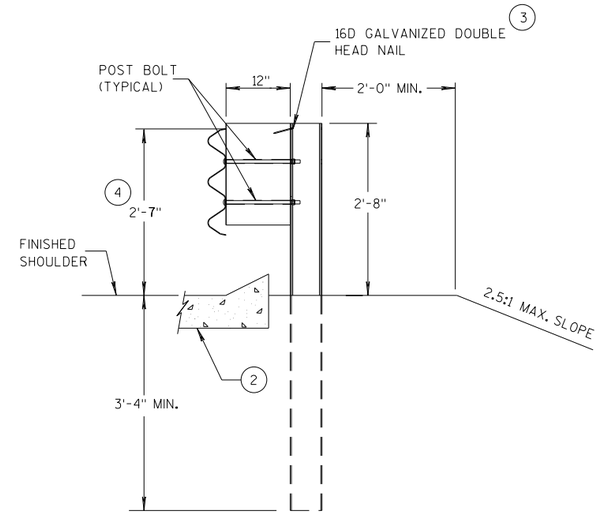

SECTION C-C

POSTS 7-11

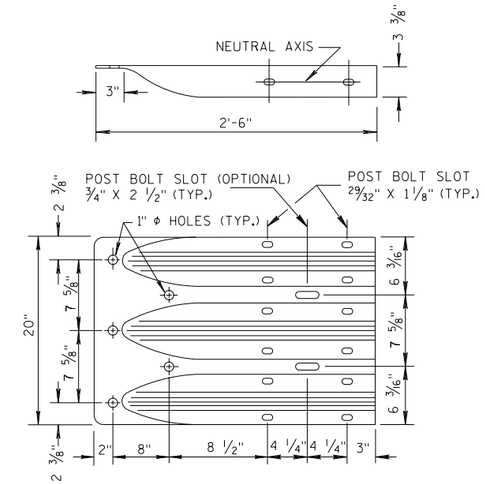

THRIE BEAM TERMINAL CONNECTOR

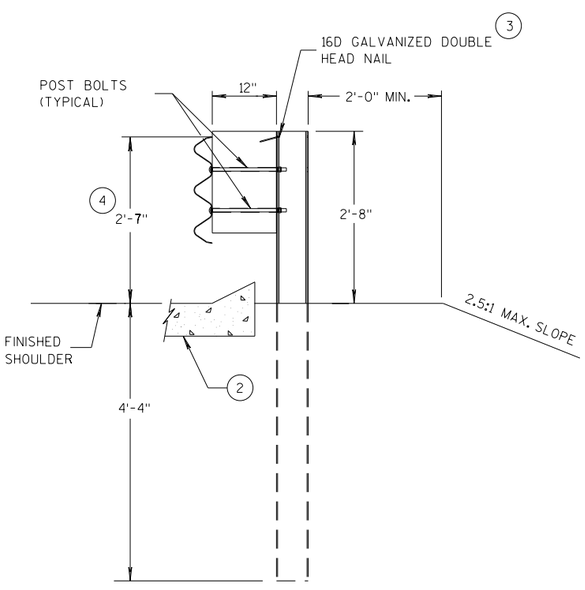

SECTION D-D

POSTS 12-17

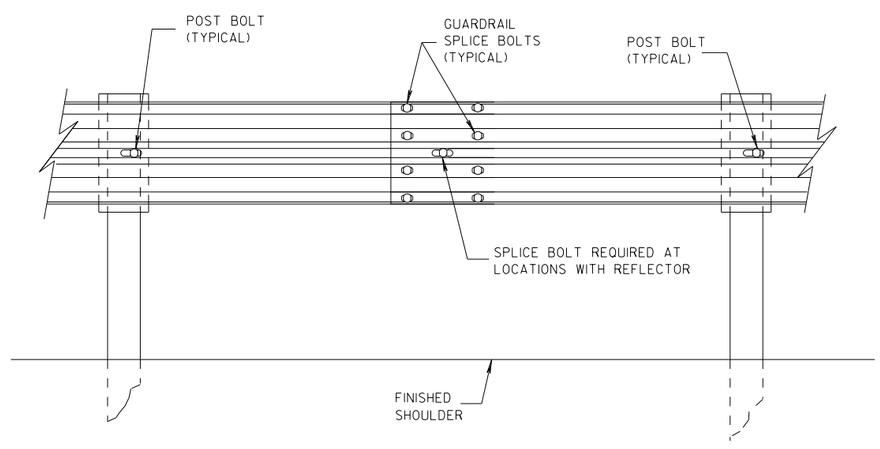

SPLICE DETAIL

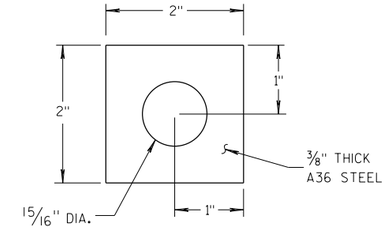

PLATE WASHER DETAIL

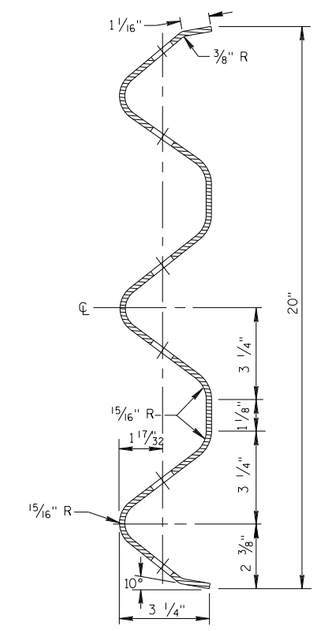

SECTION THRU THRIE BEAM RAIL ELEMENT

MIDWEST GUARDRAIL SYSTEM
THRIE BEAM TRANSITION (MGS)

STATE OF WISCONSIN
DEPARTMENT OF TRANSPORTATION

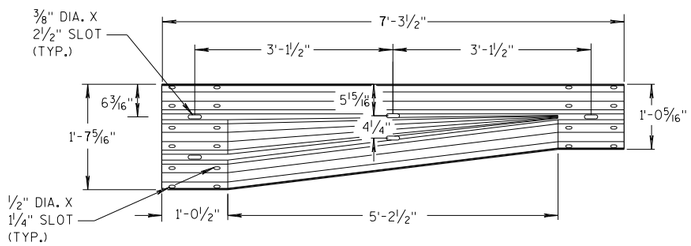

W-BEAM TO THRIE BEAM TRANSITION SECTION

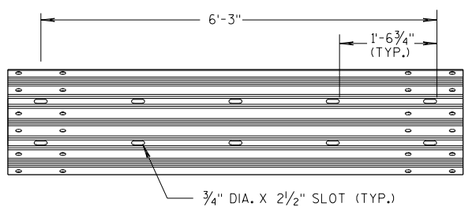

6'-3" THRIE BEAM SECTION

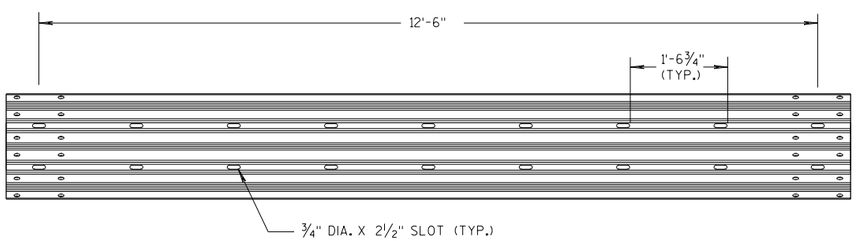

12'-6" THRIE BEAM SECTION

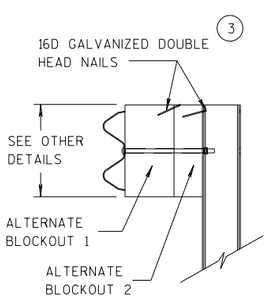

SIDE VIEW

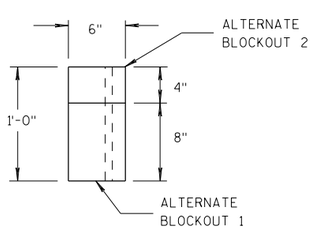

TOP VIEW

ALTERNATE WOOD BLOCKOUT DETAIL

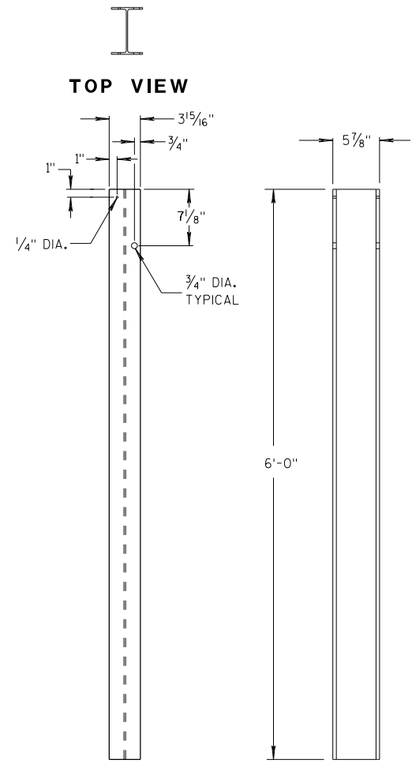

STEEL POSTS 1-5 (13)

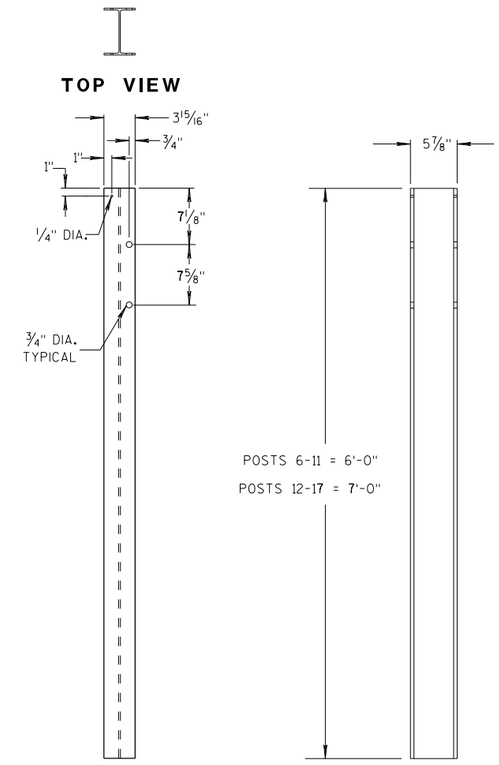

STEEL POSTS 6-17

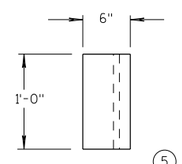

TOP VIEW (5)

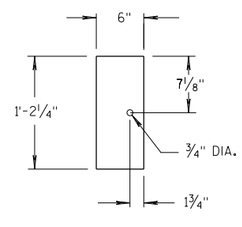

FRONT VIEW

BLOCKOUT POSTS 1-5

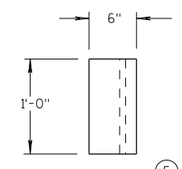

TOP VIEW (5)

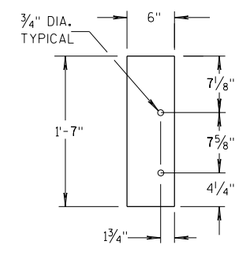

FRONT VIEW

BLOCKOUT POSTS 6-17

GENERAL NOTES

STEEL POSTS ARE W6X9 OR W6X8.5.

BOLT HOLES FOR POST ARE ON FRONT AND OF SIDE OF POST.

(3) WHEN USING STEEL POSTS AND WOOD BLOCKOUTS INSTALL FOUR 16D GALVANIZED NAILS. INSTALL NAILS AT THE BACK CORNERS OF THE BLOCK AND BEND THE NAILS OVER THE FLANGE OF THE STEEL POST.

(5) WOOD BLOCKS MAY BE CONSTRUCTED OUT OF 2 WOOD BLOCKS. SEE ALTERNATE WOOD BLOCK DETAIL.

(13) STEEL OR WOOD POST IS ACCEPTABLE AT POST 1. SEE SDD 14B42.

MIDWEST GUARDRAIL SYSTEM
THRIE BEAM TRANSITION (MGS)

STATE OF WISCONSIN
DEPARTMENT OF TRANSPOR

6

S.D.D. 14 B 45-5c

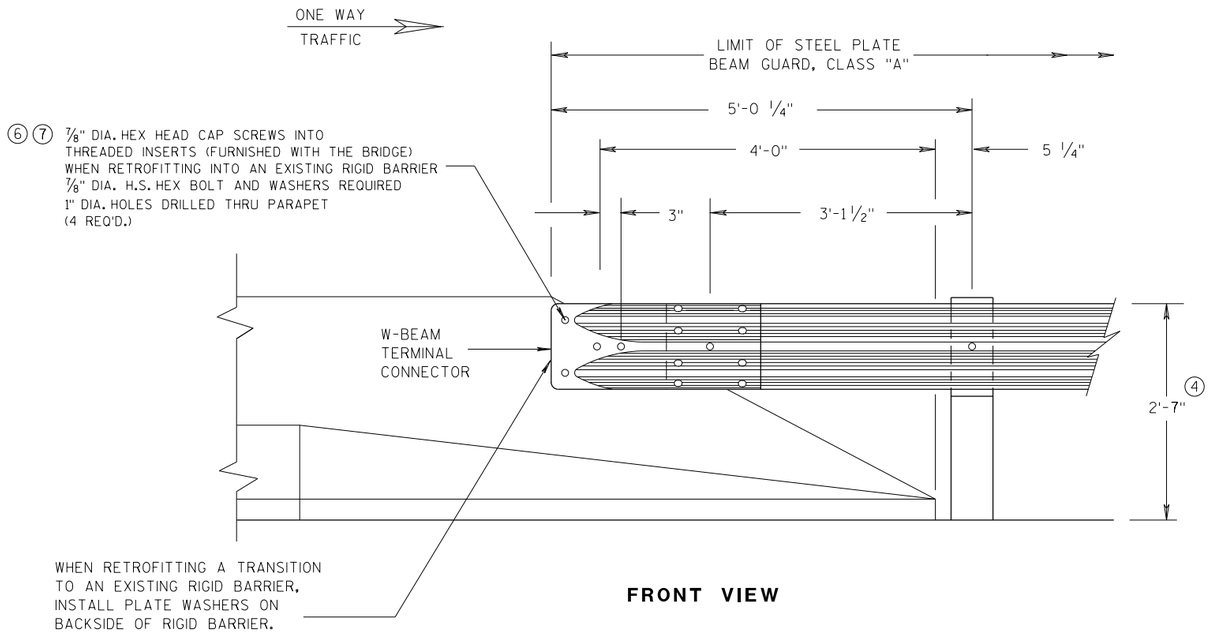

FRONT VIEW

W BEAM CONNECTION TO PARAPETS WITH SLOPED ENDS

(USE ONLY AT TRAFFIC EXIT END OF ONE WAY BRIDGE)

GENERAL NOTES

② OPTIONAL CURB AND GUTTER OR DRAINAGE FEATURE SEE PLAN FOR INFORMATION.

④ TOLERANCE FOR TOP OF BEAM IS ± 1".

⑥ DRILLING BOLT HOLES THROUGH THE PARAPET, BOLTS, NUTS, WASHERS AND REPAIRING DAMAGED CONCRETE ARE INCIDENTAL TO THE CONTRACT.

⑦ BOLTS MAY BE A325 BOLTS OR A449 BOLTS. BOLT LENGTH AND THREADING LENGTH ARE TO ALLOW FOR A TIGHT CONNECTION BETWEEN RIGID BARRIER AND THRIE BEAM CONNECTION PLATE. CONTRACTOR IS TO FIELD VERIFY BOLT LENGTH AND THREAD LENGTH. ONE ROUND WASHER REQUIRED BETWEEN BOLT HEAD AND THRIE BEAM CONNECTOR PLATE. BOLTS THAT EXTEND THROUGH THE PARAPET AND OUT THE BACK FACE REQUIRE A HARDENED ROUND STEEL WASHER THAT IS 2" O.D. X 5/8" THICK AND ONE PLATE WASHER. REPAIR ANY DAMAGED CONCRETE FROM BOLT INSTALLATION.

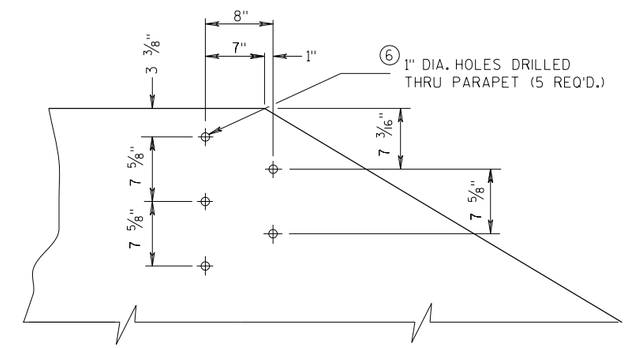

DRILL HOLE LOCATION AND PATTERN
FOR THRIE BEAM CONNECTION

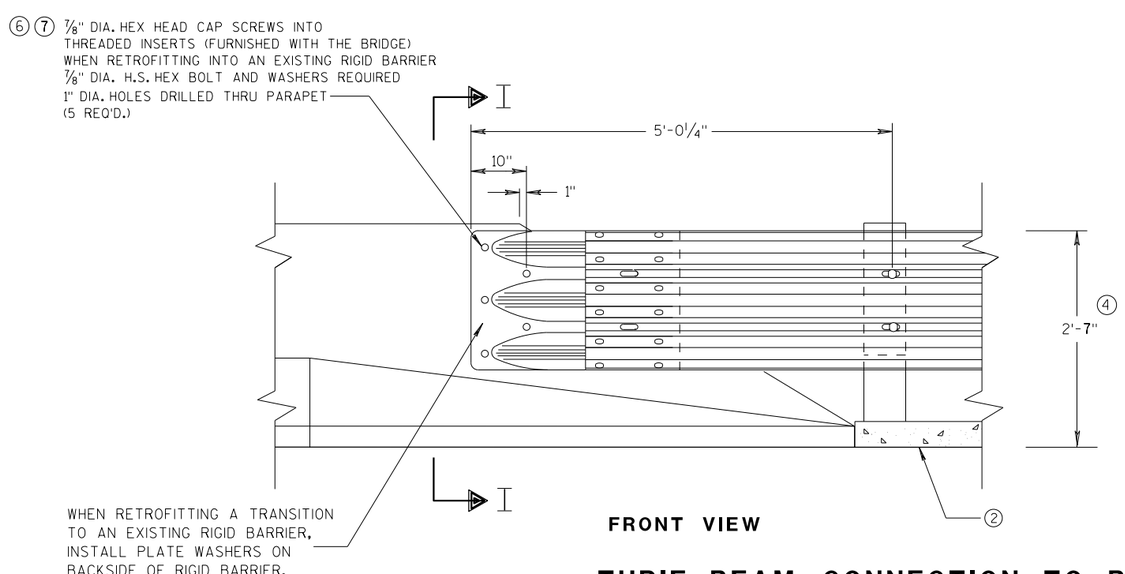

FRONT VIEW

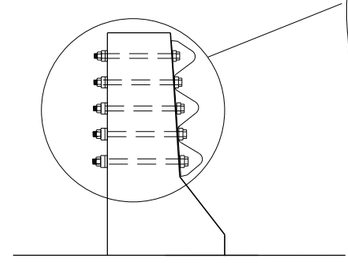

SECTION I-I

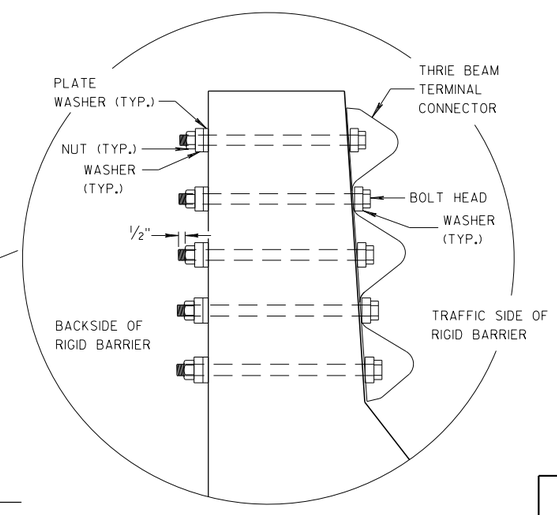

THRIE BEAM CONNECTION TO BRIDGE PARAPETS WITH SLOPED ENDS

MIDWEST GUARDRAIL SYSTEM
THRIE BEAM TRANSITION (MGS)

STATE OF WISCONSIN
DEPARTMENT OF TRANSPORTATION

APPROVED
07/2018 — DATE
/S/ Rodney Taylor
ROADWAY STANDARDS DEVELOPMENT UNIT SUPERVISOR
FHWA

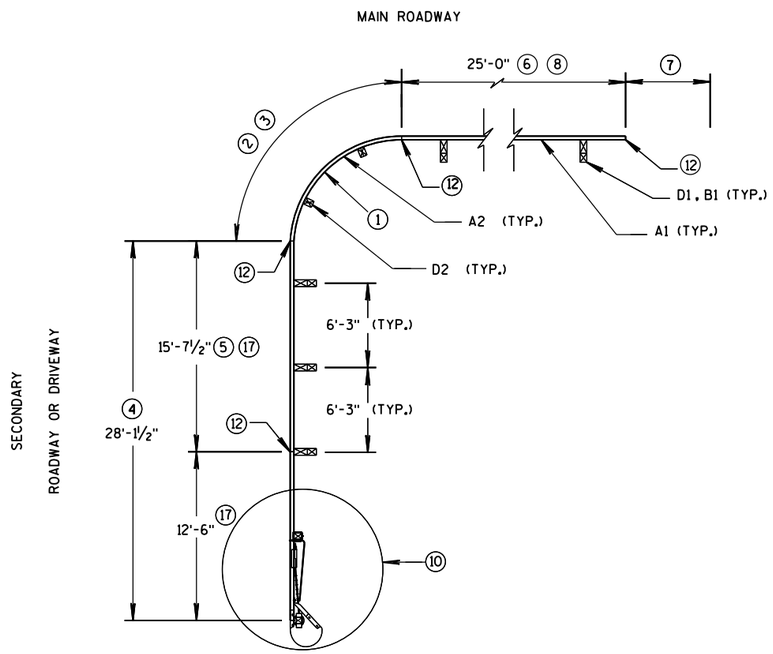

SHORT RADIUS BEAM GUARD WITH SHORT RADIUS TERMINAL ON SECONDARY ROAD OR DRIVEWAY PLAN VIEW

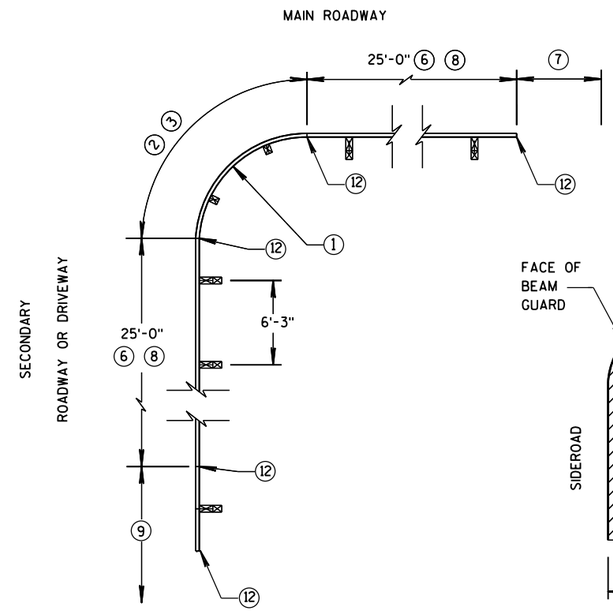

SHORT RADIUS BEAM GUARD WITH EAT, ADDITIONAL BEAM GUARD OR TRANSITION TO RIGID BARRIER ON SECONDARY ROAD OR DRIVEWAY PLAN VIEW

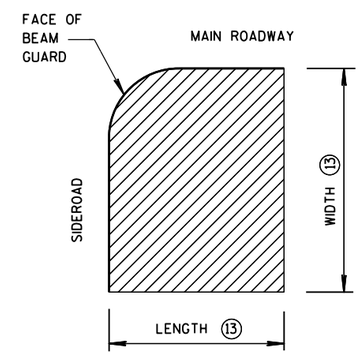

AREA FREE OF FIXED OBJECTS FOR RADIUS 32' AND LESS 16

TABLE FOR RADIUS OF 32' AND LESS

RADIUS FT	LENGTH FT	WIDTH FT
8	25	15
16	30	15
24	40	20
32	50	30

GENERAL NOTES

SEE PLANS FOR OTHER BARRIER SYSTEM AND LOCATION SPECIFICS.

SEE 14B42 FOR MORE INFORMATION ON BEAM GUARD INSTALLATION, PARTS, MATERIALS, AND INSTALLATION INFORMATION.

GALVANIZE PARTS AFTER FABRICATION.

WELDING IS TO FOLLOW CURRENT REQUIREMENTS OF THE AMERICAN WELDING SOCIETY STRUCTURAL WELDING CODE ANSI/AWS D1.1

UNLESS NOTED OTHERWISE, ALL PLATES ARE FLAT AND FREE OF WARP.

UNLESS NOTED OTHERWISE, ALL EDGES ARE SMOOTH, STRAIGHT AND VERITCAL.

ALL CUTS AND HOLES, EXCEPT IN BEAM GUARD RAIL ARE TO BE MACHINED OR MACHINE FLAME CUTS.

UNLESS NOTED OTHERWISE CUT OR PROVIDE BOLTS THAT ARE ¼" TO ½" BEYOND THE NUT

DRAWINGS ARE NOT TO SCALE.

1. RADIUS MEASURE FROM INSIDE OF RAIL. LENGTH OF BEAM GUARD SHORT RADIUS GUARD MEASURED ALONG TRAFFIC SIDE OF RAIL. RADIUS BETWEEN 8 FEET TO 150 FEET. SEE PLAN FOR REQUIRED RADIUS. BEAM GUARD RAIL IN RADIUS IS SHOP BENT. ODD RAIL LENGTH OR FIELD CUTS MAY BE REQUIRED.
2. CONTROLLED RELEASE TERMINAL (CRT) POSTS ARE USED IN THE RADIUS. CONTROLLED RELEASE TERMINAL (CRT) POSTS ARE SPACED 6'-3". SEE PLAN FOR NUMBER OF CONTROLLED RELEASE TERMINAL (CRT) POSTS.
3. WITHIN RADIUS BEAM GUARD RAILS ARE NOT BOLTED TO POSTS. BEAM GUARD RAILS RESTED ON TOP OF LAG SCREW.
4. MINIMUM LENGTH OF BEAM GUARD ALONG SIDE ROAD OR DRIVEWAY TO INSTALL SHORT RADIUS TERMINAL. BEAM GUARD IS PAID FOR WITH BEAM GUARD ITEM.
5. ODD LENGTH OF BEAM GUARD REQUIRED TO INSTALL SHORT RADIUS TERMINAL.
6. MINIMUM AMOUNT OF BEAM GUARD TO BE INSTALLED PRIOR TRANSITION TO RIGID BARRIER, ADDITIONAL BEAM GUARD, OR EAT. BEAM GUARD PAID FOR WITH BEAM GUARD ITEM. SEE PLANS FOR MORE DETAIL.
7. BEAM GUARD, EAT OR TRANSITION TO RIGID BARRIER. SEE PLAN.
8. TOP OF BEAM GUARD BY THE RADIUS IS 27". HEIGHT OF BEAM GUARD IS 31" BY TRANSITION TO RIGID BARRIER, ADDITIONAL BEAM GUARD OR EAT.
9. ADDITIONAL BEAM GUARD, EAT OR TRANSITION TO RIGID BARRIER. BEAM GUARD SHOWN. SEE PLAN FOR DETAILS.
10. SHORT RADIUS TERMINAL (SEE OTHER DETAILS)
11. HEIGHT VARIES. SEE NOTE 8 AND 17.
12. BEAM GUARD RAIL SPLICE LOCATION. SPLICE LOCATION REQUIRE PART F1 AND F2. SEE SDD 14B42 FOR DETAILS.
13. SEE TABLE FOR VALUES.
14. MAXIMUM HEIGHT FOR CENTER OF HOLE IS ¾" ABOVE FINISHED GROUND ±1".
15. DRILL 15/64" DIA. PILOT HOLE. DO NOT HAMMER LAG SCREW INTO POST.
16. SMALL SIGNS ON BREAKAWAY HARDWARE ARE ACCEPTABLE.
17. TOP OF RAIL HEIGHT IS 27" WHEN USING A SHORT RADIUS TERMINAL.

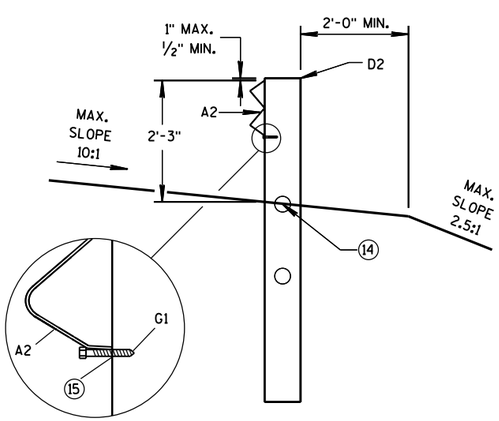

CONTROLLED RELEASE TERMINAL POST (CRT) IN RADIUS

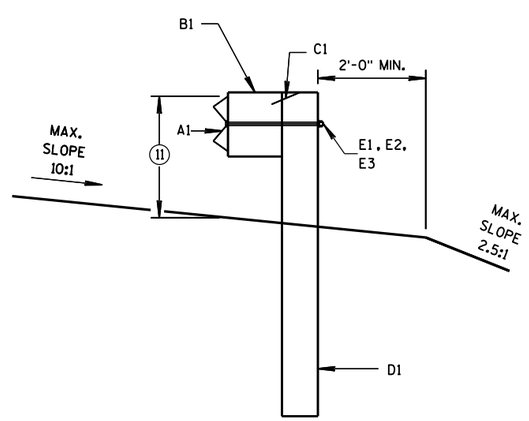

BEAM GUARD POSTS IN HEIGHT TRANSITION

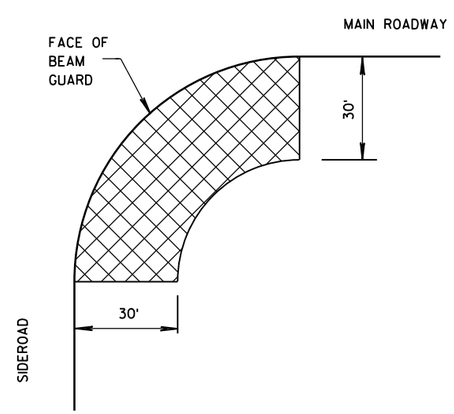

AREA FREE OF FIXED OBJECTS 16 RADIUS GREATER THAN 32'

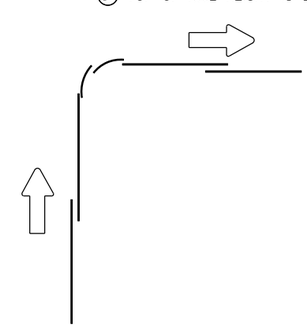

LAP SPLICE DETAIL

SHORT RADIUS BEAM GUARD (MGS) SHORT RADIUS TERMINAL (MGS)

STATE OF WISCONSIN
DEPARTMENT OF TRANSPOR

6

S.D.D. 14 B 53-1a

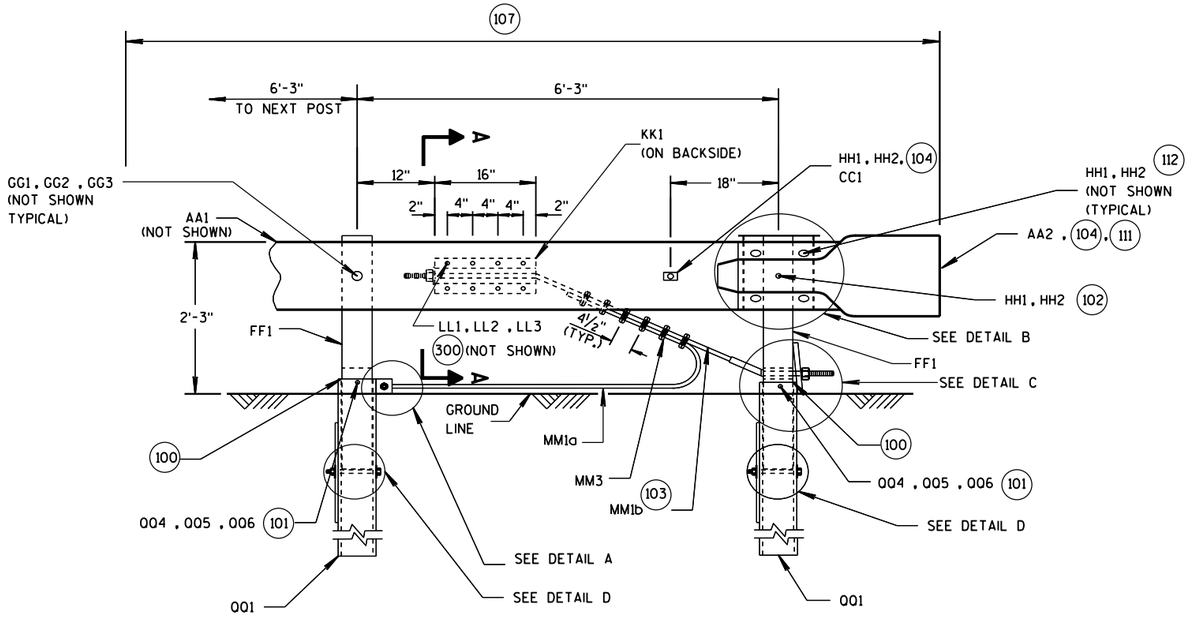

SHORT RADIUS TERMINAL
PROFILE VIEW

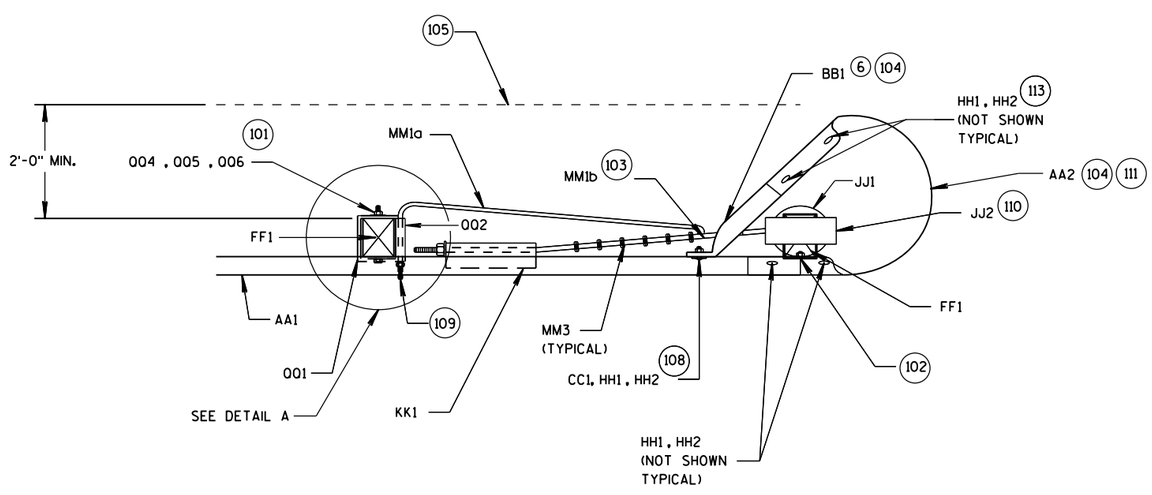

SHORT RADIUS TERMINAL
TOP VIEW

100 TOP OF FOUNDATION TUBE 2 INCHES MAXIMUM ABOVE FINISHED GROUND.

101 WASHERS REQUIRED BETWEEN BOLT HEAD AND FOUNDATION TUBE AND BETWEEN NUT AND FOUNDATION TUBE.

102 SPLICE BOLT AND NUT CONNECTS BEAM GUARD RAIL, W-BEAM END SECTION BUFFER, AND STEEL PIPE ASSEMBLY. NO WASHER REQUIRED. SEE DETAIL B.

103 CABLE IS TAUT.

104 ADJUST AA2 AND BB1 TO FIT.

105 BREAK POINT OF SHOULDER.

106 TACK WELD CABLE CONNECTOR TUBE PLATE TO CABLE CONNECTION TUBE. SEE DETAIL A PROFILE VIEW.

107 PAY LIMIT FOR BEAM GUARD.

108 SQUARE WASHER BETWEEN HEAD OF BOLT AND TRAFFIC FACE OF BEAM GUARD. ROUND WASHER REQUIRED BETWEEN NUT AND BB1.

109 CUT OR PROVIDE THREADED STUD THAT IS FLUSH WITH FACE OF BEAM GUARD RAIL KK1 (PLUS OR MINUS 1/2" TOLERANCE). DEBURR AFTER CUTTING.

110 SEE STEEL PIPE ASSEMBLY DETAILS.

111 ATTACH UU2 WITH UU3. SHOP APPLY UU1 TO UU2.

112 FOUR HH1 AND HH2 REQUIRED TO ATTACH AA1 TO AA2.

113 FOUR HH1 AND HH2 REQUIRED TO ATTACH AA2 TO BB1.

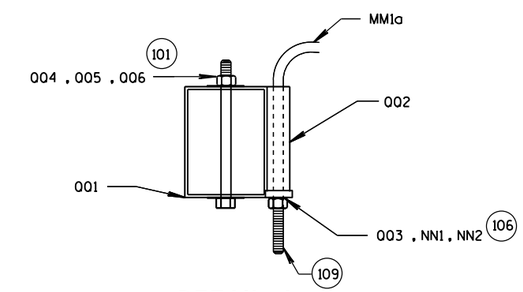

DETAIL A
TOP VIEW
(WOOD BREAKAWAY AND BEAM
GUARD RAIL POSTS NOT SHOWN)

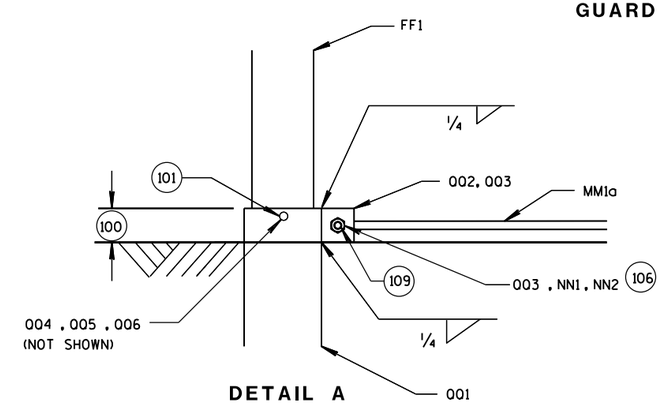

DETAIL A
PROFILE VIEW

STEEL PLATE BEAM GUARD
SHORT RADIUS TERMINAL
MGS

STATE OF WISCONSIN
DEPARTMENT OF TRANSPOR

6

S.D.D. 14 B 53-1b

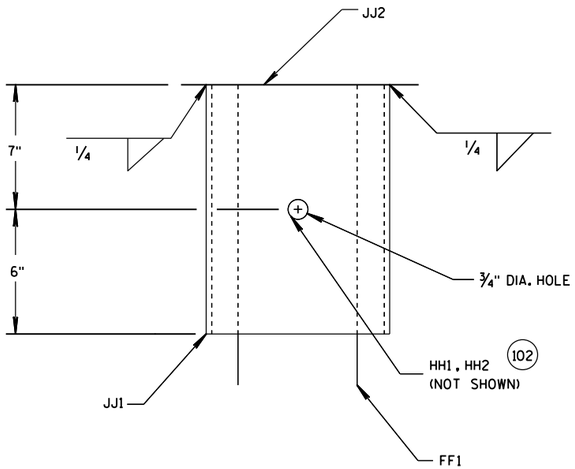

DETAIL B
PROFILE VIEW OF STEEL PIPE ASSEMBLY
(BEAM GUARD AND W-BEAM
END SECTION NOT SHOWN)

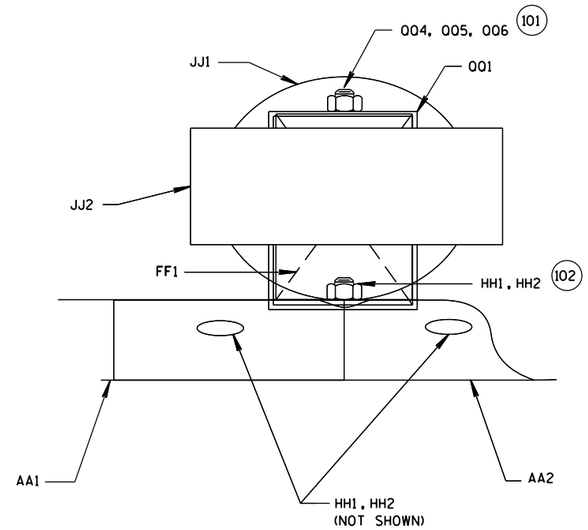

DETAIL B
PLAN VIEW OF STEEL PIPE ASSEMBLY

200 2 NAILS SPACED 4 INCHES CENTER TO CENTER.

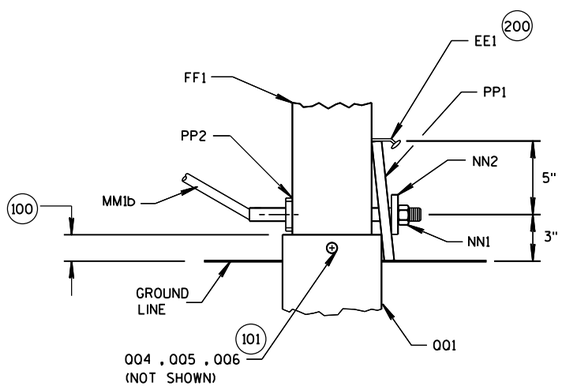

DETAIL C
PROFILE VIEW

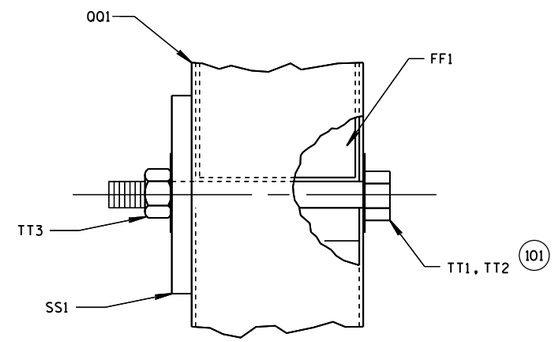

DETAIL D
PROFILE VIEW

SHORT RADIUS BEAM GUARD (MGS) SHORT RADIUS TERMINAL (MGS)

STATE OF WISCONSIN
DEPARTMENT OF TRANSPOR

6

S.D.D. 14 B 53-1c

(300) WASHERS REQUIRED BETWEEN BOLT HEAD AND BEAM GUARD RAIL AND BETWEEN NUT AND ANCHOR BRACKET. EIGHT LL1 AND LL3 REQUIRED. SIXTEEN LL2 REQUIRED.

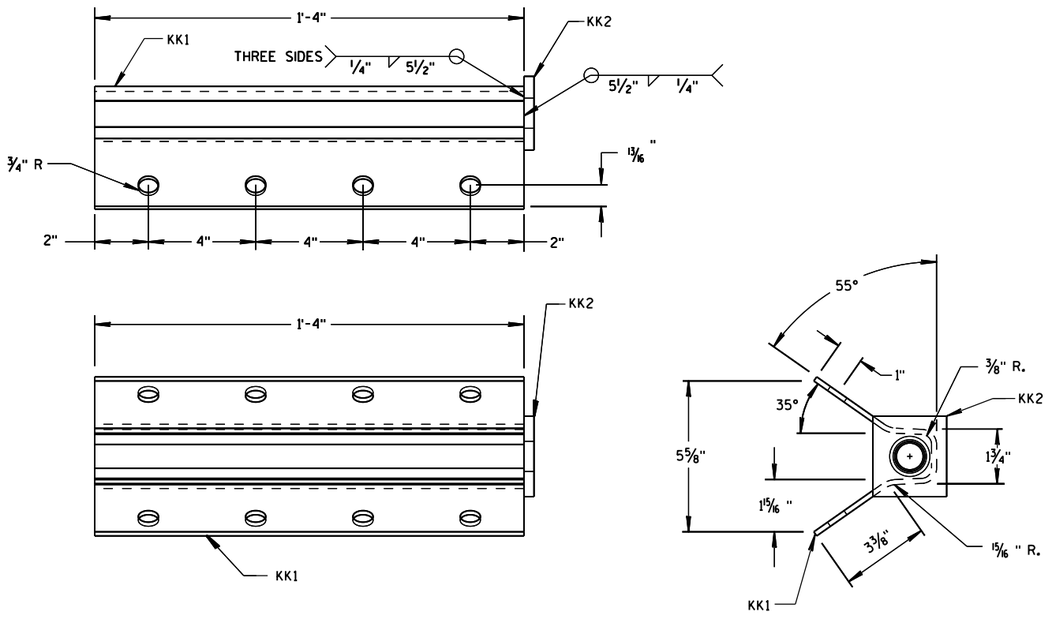

ANCHOR BRACKET (KK1, KK2)

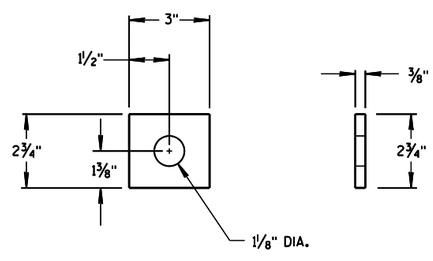

ANCHOR BRACKET BEARING PLATE (KK2)

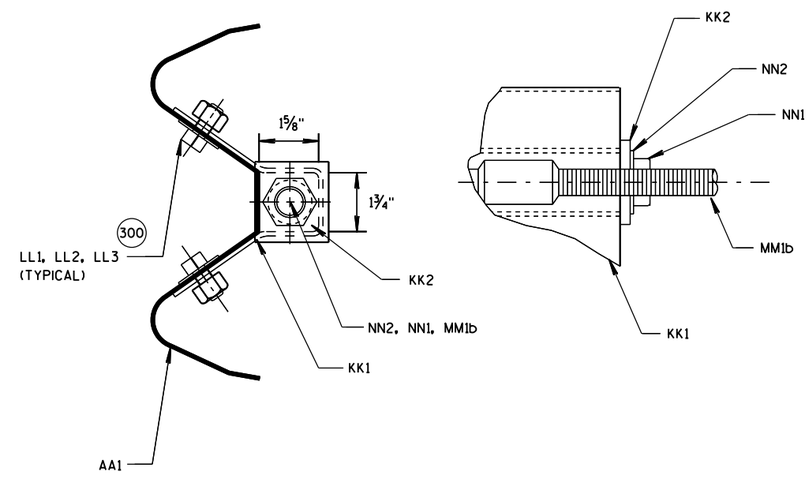

SECTION A-A

6

6

S.D.D. 14 B 53-1d

S.D.D. 14 B 53-1d

SHORT RADIUS BEAM GUARD
(MGS) SHORT RADIUS
TERMINAL (MGS)

STATE OF WISCONSIN
DEPARTMENT OF TRANSPO

400 CROSS SECTON OF PART IS TO FIT OVER AA1.

401 CROSS SECTON OF PART IS TO FIT OVER OR UNDER AA1.

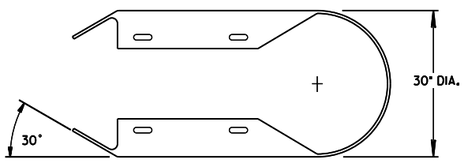

TOP VIEW

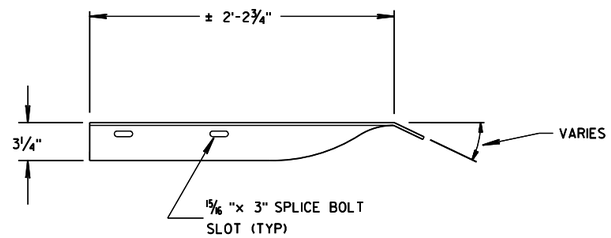

TOP VIEW

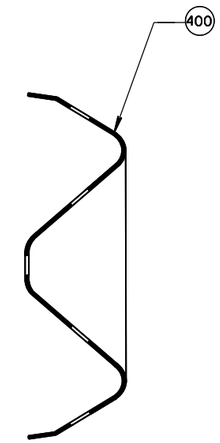

SECTION B-B

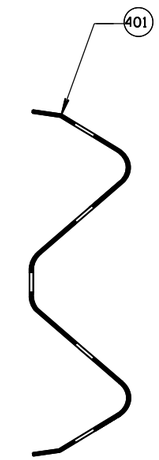

SECTION C-C

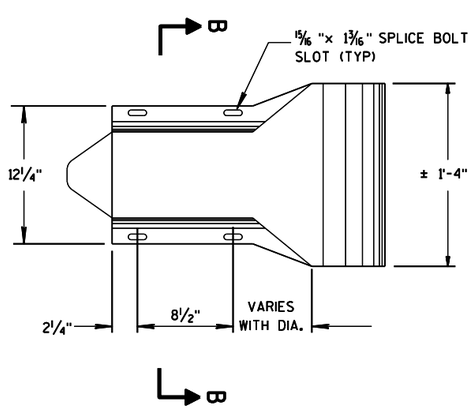

W-BEAM
END SECTION BUFFER (AA2)

PROFILE VIEW

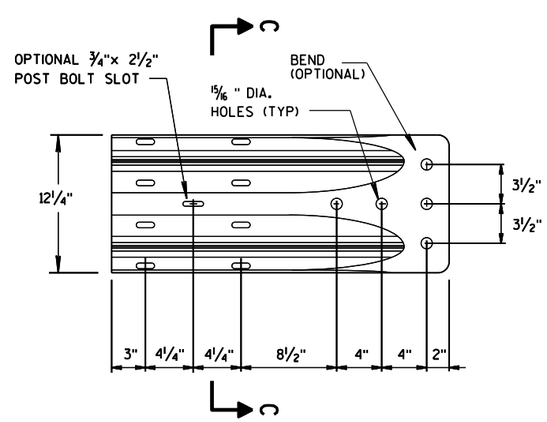

W-BEAM
TERMINAL CONNECTOR (BB1)

PROFILE VIEW

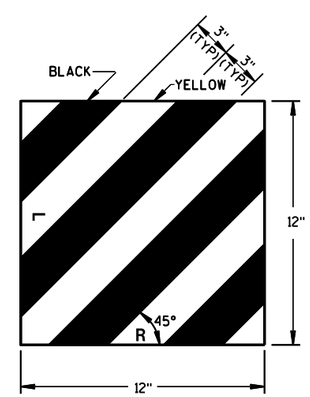

REFLECTIVE SHEETING
(UU1, UU2)

SHORT RADIUS BEAM GUARD
(MGS) SHORT RADIUS
TERMINAL (MGS)

STATE OF WISCONSIN
DEPARTMENT OF TRANSPOI

6

S.D.D. 14 B 53-1e

(500) SEE DETAIL "D" FOR LOCATION AND ATTACHING SS1.

(501) FOR MM1a THREADED STUD ONLY REQUIRED ON ONE END. SWAGED FITTING REQUIRED.

(502) LOCATE HOLES ON THE CENTERLINE OF THE SIDE OF THE POST.

(503) MM1a MAY HAVE ONE THREADED STUD 4 INCHES LONG. SEE NOTE (109).

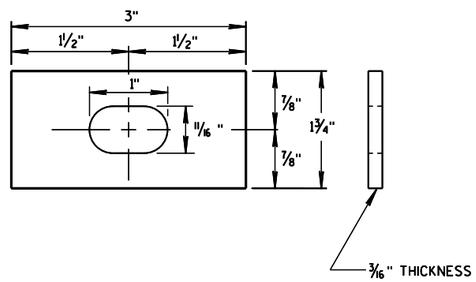

RECTANGULAR PLATE WASHER (CC1)

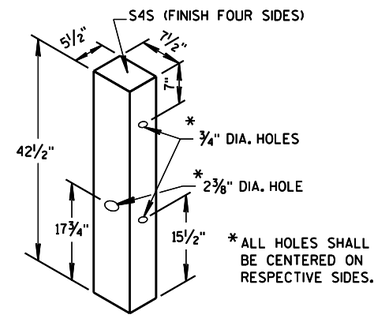

WOOD BREAKAWAY POST (FF1)

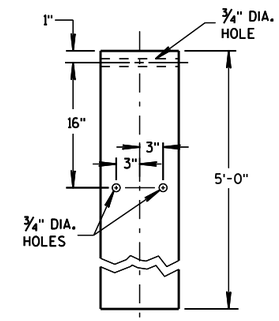

FOUNDATION TUBE (QQ1) (500)

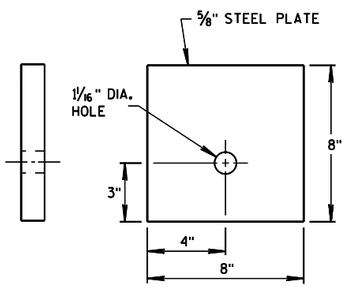

BEARING PLATE (PP1)

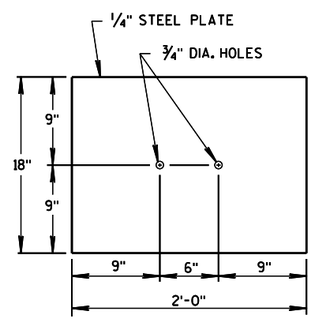

SOIL PLATE (SS1)

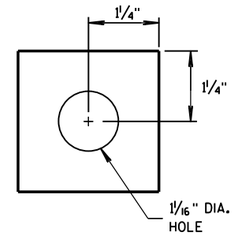

TUBE END PLATE (QQ3)

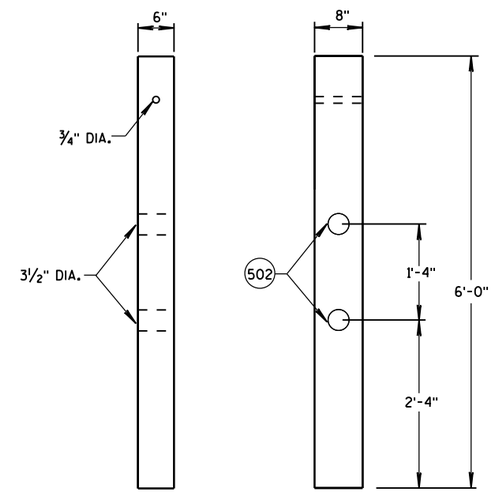

FRONT VIEW SIDE VIEW

CONTROLLED RELEASE TERMINAL POST (CRT) (D2)

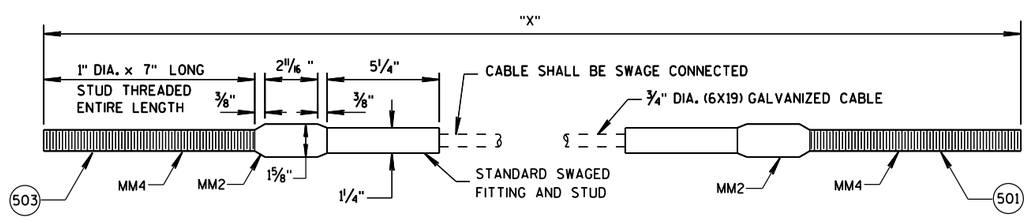

"X" LENGTH

MM1a	9'-0"
MM1b	6'-8"

CABLE ASSEMBLY (MM1a , MM1b)

SHORT RADIUS BEAM GUARD (MGS) SHORT RADIUS TERMINAL (MGS)

STATE OF WISCONSIN
DEPARTMENT OF TRANSPOR

6

S.D.D. 14 B 53-1f

BILL OF MATERIALS - SHORT RADIUS BEAM GUARD (MGS)

PART	DESCRIPTION	MATERIALS SPECIFICATIONS	NOTES
A1	BEAM GUARD RAIL	AASHTO M180, CLASS A, TYPE 2	
		APPROVED PRODUCER	
A2	BEAM GUARD RAIL - SHOP BENT	INDICATE ON BACK OF RAIL RADIUS THAT RAIL WAS BENT TO. SHOP BEND RADIUS IS TO THE NEAREST FOOT. FOLLOW AASHTO M180 ON HOW TO MARK RADIUS INFORMATION.	
		AASHTO M180, CLASS A, TYPE 2	
		APPROVED PRODUCER	
B1	BLOCK - WOOD	WISDOT SPEC. 614	SEE SDD 14B42
C1	NAIL	ASTM A153 HOT DIP CLASS D	
		ASTM F1667 TYPE 1 STYLE 12 (16 DOUBLE HEAD)	
D1	POST-STRONG POST-WOOD	WISDOT SPEC. 614	SEE SDD 14B42
D2	POST-CRT-WOOD	WISDOT SPEC. 614	
E1	POST BOLT	ASTM A307 GRADE A OR SAE J429 GRADE 2	5/8" DIA. SEE SDD 14B42 FOR BOLT GEOMETRY
		AASHTO M180	
		GALV. HOT DIP TO AASHTO M232 CLASS C/ASTM A153 CLASS C/ASTM F2329 OR GALV. MECHANICALLY TO AASHTO M298 CLASS 50, TYPE 1/ASTM B695 CLASS 50, TYPE 1	
		UNC	
E2	POST BOLT-WASHER	ASTM F436 TYPE 1 (HARDEN TYPICALLY USED WITH STEEL) OR ASTM F844 (UNHARDENED TYPICALLY WITH WOOD)	5/8" DIA.
		GALV. AASHTO M111/ASTM A 123 OR GALV. HOT DIP. TO AASHTO M232 CLASS C/ASTM A153 CLASS C/ASTM F2329	
E3	POST BOLT - NUT		5/8" DIA. SEE SDD 14B42 FOR GEOMETRY
		AASHTO M180 DOUBLE RECESSED HEAVY HEX HEAD	
		GALV. HOT DIP TO AASHTO M232 CLASS C/ASTM A153 CLASS C/ASTM F2329 OR GALV. MECHANICALLY TO AASHTO M298 CLASS 50, TYPE 1/ASTM B695 CLASS 50, TYPE 1	
		UNC	
		OVER TAPPED NUTS OVER-SIZE AS SPECIFIED IN AASHTO 291/ ASTM A 563	
		ASTM A563 GRADE A HEAVY HEX HEAD	
F1	SPLICE BOLT	GALV. HOT DIP TO AASHTO M232 CLASS C/ASTM A153 CLASS C/ASTM F2329 OR GALV. MECHANICALLY TO AASHTO M298 CLASS 50, TYPE 1/ASTM B695 CLASS 50, TYPE 1	5/8" DIA. SEE SDD 14B42 FOR GEOMETRY AND OTHER INFORMATION
		ASTM A307 GRADE A OR SAE J429 GRADE 2	
		UNC	
		AASHTO M180	

PART	DESCRIPTION	MATERIALS SPECIFICATIONS	NOTES
F2	SPLICE BOLT - NUT	ASTM A563 GRADE A	5/8" DIA. SEE SDD 14B42 FOR GEOMETRY
		AASHTO M180 DOUBLE RECESSED HEAVY HEX HEAD	
		GALV. HOT DIP TO AASHTO M232 CLASS C/ASTM A153 CLASS C/ASTM F2329 OR GALV. MECHANICALLY TO AASHTO M298 CLASS 50, TYPE 1/ASTM B695 CLASS 50, TYPE 1	
		OVER TAPPED NUTS OVER-SIZE AS SPECIFIED IN AASHTO 291/ ASTM A 563	
		UNC	
G1	LAG SCREW	ASTM A308 GRADE A ASTM A153 CLASS D	3/8" DIA. 3" LONG
H1	DELINEATOR - BEAM GUARD		SEE SDD 14B42 FOR MORE INFORMATION
H2	DELINEATION - SHEETING	YELLOW OR WHITE	
		WISDOT SPEC 637 TYPE SH	
		APPROVED PRODUCT LIST	
J1	FOUNDATION BACKFILL	STANDARD SPEC. 614	
AA1	BEAM GUARD RAIL - PUNCHED	AASHTO M180, CLASS A, TYPE 2	
		APPROVED PRODUCER	
AA2	BEAM GUARD RAIL - END SECTION BUFFER	AASHTO M180, CLASS A, TYPE 2	
		APPROVED PRODUCER	
BB1	BEAM GUARD RAIL - TERMINAL CONNECTOR MODIFIED	AASHTO M180, CLASS A, TYPE 2	
		APPROVED PRODUCER	
CC1	SHORT RADIUS - SQUARE WASHER	AASHTO M180	
		GALV. AASHTO M111 / ASTM A123	
EE1	NAIL	ASTM A153 HOT DIP CLASS D	
		ASTM F1667 TYPE 1 STYLE 12 (16 DOUBLE HEADED)	
FF1	POST - BCT - WOOD	S4S FINISH ON 4 SIDES	
		WISDOT SPEC. 614	
GG1	POST BOLT	ASTM A307 GRADE A OR SAE J429 GRADE 2	3/8" DIA. SEE SDD 14B42 FOR GEOMETRY
		AASHTO M180	
		GALV. HOT DIP TO AASHTO M232 CLASS C/ASTM A153 CLASS C / ASTM F2329 OR GALV. MECHANICALLY TO AASHTO M298 CLASS 50, TYPE 1/ASTM B695 CLASS 50, TYPE 1	
		UNC	
GG2	POST BOLT - WASHER	ASTM F436 TYPE 1 (HARDEN TYPICALLY USED WITH STEEL) OR ASTM F844 (UNHARDENED TYPICALLY WITH WOOD)	3/8" DIA.
		GALV. AASHTO M111 / ASTM A123 OR5 GALV. HOT DIP TO AASHTO M232 CLASS C / ASTM A153 CLASS C / ASTM F2329	

6

S.D.D. 14 B 53-1g

SHORT RADIUS BEAM GUARD (MGS) SHORT RADIUS TERMINAL (MGS)

STATE OF WISCONSIN
DEPARTMENT OF TRANSPO

6

S.D.D. 14 B 53-1g

BILL OF MATERIALS - SHORT RADIUS BEAM GUARD (MGS)

PART	DESCRIPTION	MATERIALS SPECIFICATIONS	NOTES
GG3	POST BOLT - NUT	ASTM A563 GRADE A	3/8" DIA.
		AASHTO M180 DOUBLE RECESSED HEAVY HEX HEAD	SEE 14B42 FOR GEOMETRY
		GALV. HOT DIP TO AASHTO M232 CLASS C/ASTM A153 CLASS C / ASTM F2329 OR GALV. MECHANICALLY TO AASHTO M298 CLASS 50, TYPE 1/ASTM B695 CLASS 50, TYPE 1	
		UNC	
		OVER TAPPED NUTS OVER-SIZE AS SPECIFIED IN AASHTO 291 / ASTM A 563	
		ASTM A563 GRADE A HEAVY HEX HEAD	
HH1	SPLICE BOLT	GALV. HOT DIP TO AASHTO M232 CLASS C/ASTM A153 CLASS C / ASTM F2329 OR GALV. MECHANICALLY TO AASHTO M298 CLASS 50, TYPE 1/ASTM B695 CLASS 50, TYPE 1	3/8" DIA. SEE 14B42 FOR GEOMETRY
		ASTM A307 GRADE A OR SAE J429 GRADE 2	
		UNC	
		AASHTO M180 HEAD GEOMETRY	
HH2	SPLICE BOLT - NUT	ASTM A563 GRADE A	3/8" DIA.
		AASHTO M180 DOUBLE RECESSED HEAVY HEX HEAD	
		GALV. HOT DIP TO AASHTO M232 CLASS C/ASTM A153 CLASS C / ASTM F2329 OR GALV. MECHANICALLY TO AASHTO M298 CLASS 50, TYPE 1/ASTM B695 CLASS 50, TYPE 1	SEE 14B42 FOR GEOMETRY
		OVER TAPPED NUTS OVER-SIZE AS SPECIFIED IN AASHTO 291 / ASTM A 563	
		UNC	
JJ1	PIPE - STEEL	ASTM A53 GALVANIZED GRADE B SCHEDULE 40	10" O.D.
JJ2	TOP PLATE	ASTM A36 MIN STRENGTH 36 KSI, OR ASTM A529 MAX. STRENGTH 50 KSI, OR ASTM A572 MAX STRENGTH 50 KSI OR ASTM A709 MAX STRENGTH 50 KSI OR ASTM A992 MAX STRENGTH 50 KSI	DIMENSIONS 3/8" X 4" X 1'-0"
		GALV. AASHTO M111 / ASTM A123	
KK1	ANCHOR BRACKET	ASTM A36 MIN STRENGTH 36 KSI, OR ASTM A529 MAX. STRENGTH 50 KSI, OR ASTM A572 MAX STRENGTH 50 KSI OR ASTM A709 MAX STRENGTH 50 KSI OR ASTM A992 MAX STRENGTH 50 KSI	
		GALV. AASHTO M111 / ASTM A123	
KK2	ANCHOR BRACKET - BEARING PLATE	ASTM A36 MIN STRENGTH 36 KSI, OR ASTM A529 MAX. STRENGTH 50 KSI, OR ASTM A572 MAX STRENGTH 50 KSI OR ASTM A709 MAX STRENGTH 50 KSI OR ASTM A992 MAX STRENGTH 50 KSI	
		GALV. AASHTO M111 / ASTM A123	
LL1	ANCHOR BRACKET - BOLT	ASTM A307 GRADE B HEAVY HEX HEAD OR SAE J429 GRADE 2 HEAVY HEX HEAD	5/8" DIA.
		GALV. HOT DIP TO AASHTO M232 CLASS C/ASTM A153 CLASS C / ASTM F2329 OR GALV. MECHANICALLY TO AASHTO M298 CLASS 50, TYPE 1/ASTM B695 CLASS 50, TYPE 1	
		UNC	
LL2	ANCHOR BRACKET - WASHER	ASTM F436 TYPE 1 (HARDEN WASHER ONLY)	5/8" DIA.
		GALV. AASHTO M111 / ASTM A123 OR5 GALV. HOT DIP TO AASHTO M232 CLASS C / ASTM A153 CLASS C / ASTM F2329	
LL3	ANCHOR BRACKET - NUT	ASTM A563 GRADE A	5/8" DIA.
		GALV. HOT DIP TO AASHTO M232 CLASS C/ASTM A153 CLASS C / ASTM F2329 OR GALV. MECHANICALLY TO AASHTO M298 CLASS 50, TYPE 1/ASTM B695 CLASS 50, TYPE 1	
		OVER TAPPED NUTS OVER-SIZE AS SPECIFIED IN AASHTO 291 / ASTM A563	
		UNC	

PART	DESCRIPTION	MATERIALS SPECIFICATIONS	NOTES
MM1a	ANCHOR CABLE	AASHTO M30 / ASTM A741 INDEPENDENT WIRE CORE (IWRC) OR WIRE STRAND CORE (WCS), IMPROVED PLOW STEEL (IPS), 6X19, TYPE II OR IIc CLASS C ZINC COATED	
MM1b	ANCHOR CABLE	AASHTO M30 / ASTM A741 INDEPENDENT WIRE CORE (IWRC) OR WIRE STRAND CORE (WCS), IMPROVED PLOW STEEL (IPS), 6X19, TYPE II OR IIc CLASS C ZINC COATED	
MM2	ANCHOR CABLE - SWAGE FITTING	ASTM A576 GRADE 1035	
		SWAGE FITTINGS ARE TO BE FACTORY SWEDGED. WITH A BREAKING STRENGTH 40,000 LBS.	
		GALV. AASHTO M111 / ASTM A123	
		ASME B30.26 FORGED, CAST, OR DIE STAMPED WITH THE FOLLOWING INTO CONNECTION: NAME OF MANUFACTURER OR TRADEMARK OF CONNECTION'S MANUFACTURER, SIZE OR RATED LOAD, GRADE.	
MM3	WIRE ROPE CABLE CLAMPS	FF-C-450D TYPE 1 CLASS 1	3/4"
		ASTM A153 HOT DIP CLASS D	
MM4	ANCHOR CABLE - SWAGE FITTING - STUD	ASTM F3125 GRADE A325 TYPE 1 OR SAE GRADE 5 OR ASTM A449 TYPE 1 HEAVY HEX HEAD	
		GALV. HOT DIP TO AASHTO M232 CLASS C/ASTM A153 CLASS C / ASTM F2329 OR GALV. MECHANICALLY TO AASHTO M298 CLASS 50, TYPE 1/ASTM B695 CLASS 50, TYPE 1	
		UNC	
NN1	ANCHOR CABLE - NUT	ASTM A563 GRADE A	1" DIA.
		AASHTO M180 DOUBLE RECESSED HEAVY HEX HEAD	
		GALV. HOT DIP TO AASHTO M232 CLASS C/ASTM A153 CLASS C / ASTM F2329 OR GALV. MECHANICALLY TO AASHTO M298 CLASS 50, TYPE 1/ASTM B695 CLASS 50, TYPE 1	
		OVER TAPPED NUTS OVER-SIZE AS SPECIFIED IN AASHTO 291 / ASTM A563	
		UNC	
NN2	ANCHOR CABLE - NUT - WASHER	ASTM F436 TYPE 1 (HARDEN WASHER ONLY)	1" DIA.
		GALV. AASHTO M111 / ASTM A123 OR5 GALV. HOT DIP TO AASHTO M232 CLASS C / ASTM A153 CLASS C / ASTM F2329	
PP1	BEARING PLATE AT POST	ASTM A36 MIN STRENGTH 36 KSI, OR ASTM A529 MAX. STRENGTH 50 KSI, OR ASTM A572 MAX STRENGTH 50 KSI OR ASTM A709 MAX STRENGTH 50 KSI OR ASTM A992 MAX STRENGTH 50 KSI	
		GALV. AASHTO M111 / ASTM A123	
PP2	PIPE - STEEL	ASTM A53 GALVANIZED GRADE B SCHEDULE 40	2" DIA. x 6" LONG
OO1	FOUNDATION TUBE	ASTM A500 GRADE B	8" X 6" X 3/16"
		GALV. AASHTO M111 / ASTM A123	
OO2	SHORT RADIUS - FOUNDATION TUBE - ANCHOR CABLE - TUBE	ASTM A500 GRADE B	DIMENSIONS 2 1/2" X 2 1/4" X 1/4" X 8"
		GALV. AASHTO M111 / ASTM A123	

6

S.D.D. 14 B 53-1h

SHORT RADIUS BEAM GUARD (MGS) SHORT RADIUS TERMINAL (MGS)

STATE OF WISCONSIN
DEPARTMENT OF TRANSPOI

6

S.D.D. 14 B 53-1h

BILL OF MATERIALS - SHORT RADIUS BEAM GUARD (MGS)

PART	DESCRIPTION	MATERIALS SPECIFICATIONS	NOTES
003	SHORT RADIUS - SOIL TUBE - ANCHOR CABLE - TUBE - END PLATE	ASTM A36 MIN STRENGTH 36 KSI, OR ASTM A529 MAX. STRENGTH 50 KSI, OR ASTM A572 MAX STRENGTH 50 KSI OR ASTM A709 MAX STRENGTH 50 KSI OR ASTM A992 MAX STRENGTH 50 KSI	DIMENSIONS 2½" X 2½" X ¼"
		GALV. AASHTO M111 / ASTM A123	
004	GROUND STRUT AND YOKE - BOLT	GALV. HOT DIP TO AASHTO M232 CLASS C/ASTM A153 CLASS C / ASTM F2329 OR GALV. MECHANICALLY TO AASHTO M298 CLASS 50, TYPE 1 / ASTM B695 CLASS 50, TYPE 1	⅝" DIA.
		ASTM A307 GRADE B HEAVY HEX HEAD OR SAE J429 GRADE 2 HEAVY HEX HEAD	
		UNC	
005	GROUND PLATE AND YOKE - WASHER	ASTM F436 TYPE 1 (HARDEN WASHER ONLY)	⅝" DIA.
		GALV. AASHTO M111 / ASTM A123 OR5 GALV. HOT DIP TO AASHTO M232 CLASS C / ASTM A153 CLASS C / ASTM F2329	
006	GROUND STRUT AND YOKE - NUT	HEAVY HEX	⅝" DIA.
		UNC	
		ASTM A563 GRADE A	
		OVER TAPPED NUTS AS SPECIFIED IN AASHTO 291 / ASTM A 563	
		GALV. HOT DIP TO AASHTO M232 CLASS C/ASTM A153 CLASS C / ASTM F2329 OR GALV. MECHANICALLY TO AASHTO M298 CLASS 50, TYPE 1 / ASTM B695 CLASS 50, TYPE 1	
SS1	SOIL PLATE	ASTM A36 MIN STRENGTH 36 KSI, OR ASTM A529 MAX. STRENGTH 50 KSI, OR ASTM A572 MAX STRENGTH 50 KSI OR ASTM A709 MAX STRENGTH 50 KSI OR ASTM A992 MAX STRENGTH 50 KSI	
		GALV. AASHTO M111 / ASTM A123	
TT1	SOIL PLATE - BOLT	ASTM A307 GRADE B HEAVY HEX HEAD OR SAE J429 GRADE 2 HEAVY HEX HEAD	⅝" DIA.
		GALV. HOT DIP TO AASHTO M232 CLASS C/ASTM A153 CLASS C / ASTM F2329 OR GALV. MECHANICALLY TO AASHTO M298 CLASS 50, TYPE 1/ASTM B695 CLASS 50, TYPE 1	
		UNC	
TT2	SOIL PLATE - WASHER	ASTM F436 TYPE 1 (HARDEN WASHER ONLY)	⅝" DIA.
		GALV. AASHTO M111 / ASTM A123 OR5 GALV. HOT DIP TO AASHTO M232 CLASS C / ASTM A153 CLASS C / ASTM F2329	
TT3	SOIL PLATE - NUT	GALV. HOT DIP TO AASHTO M232 CLASS C/ASTM A153 CLASS C / ASTM F2329 OR GALV. MECHANICALLY TO AASHTO M298 CLASS 50, TYPE 1 / ASTM B695 CLASS 50, TYPE 1	⅝" DIA.
UU1	OBJECT MARKER - SHEETING	MUTCD / WISDOT OBJECT MARKER TYPE 3	PATTERN AND COLOR FOR SHEETING SHEETING TYPE FOR MARKER
		WISDOT SPEC 637 TYPE F	
		APPROVED PRODUCT LIST	
UU2	OBJECT MARKER - ALUMINUM PLATE	WISDOT SPEC 637 ALUMINUM PLATE	MATERIAL AND THICKNESS OF MATERIALS
UU3	OBJECT MARKER - SCREWS	STAINLESS SELF-TAPPING SCREWS	
VV1	FOUNDATION BACKFILL	WISDOT SPEC 614	

6

S.D.D. 14 B 53-1i

SHORT RADIUS BEAM GUARD (MGS) SHORT RADIUS TERMINAL (MGS)

STATE OF WISCONSIN
DEPARTMENT OF TRANSPORTATION

APPROVED
June 2017 — /S/ Rodney Taylor
DATE — ROADWAY STANDARDS D[illegible] UNIT SUPERVI[illegible] [illegible]NT
FHWA

6

S.D.D. 14 B 53-1i

GENERAL NOTES

DETAILS OF CONSTRUCTION, MATERIALS AND WORKMANSHIP NOT SHOWN ON THIS DRAWING SHALL CONFORM TO THE PERTINENT REQUIREMENTS OF THE STANDARD SPECIFICATIONS AND THE APPLICABLE SPECIAL PROVISIONS.

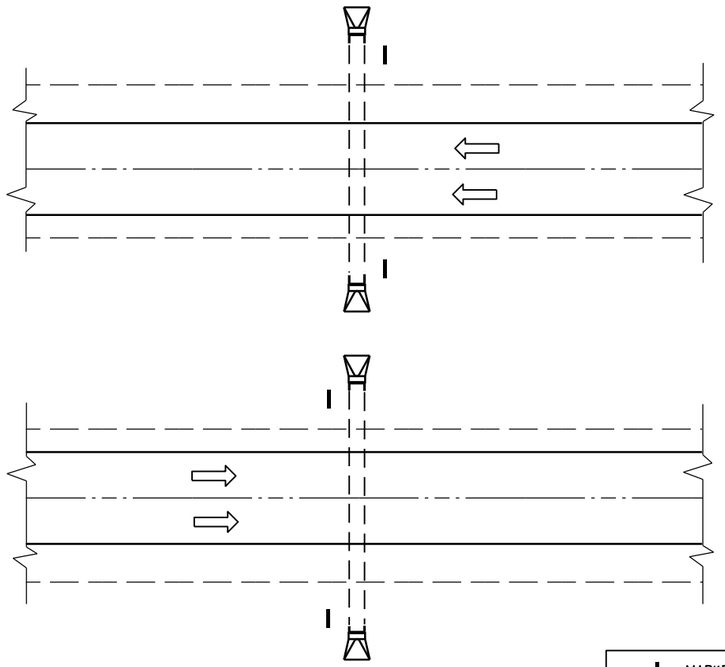

PLAN VIEW

DIVIDED HIGHWAY

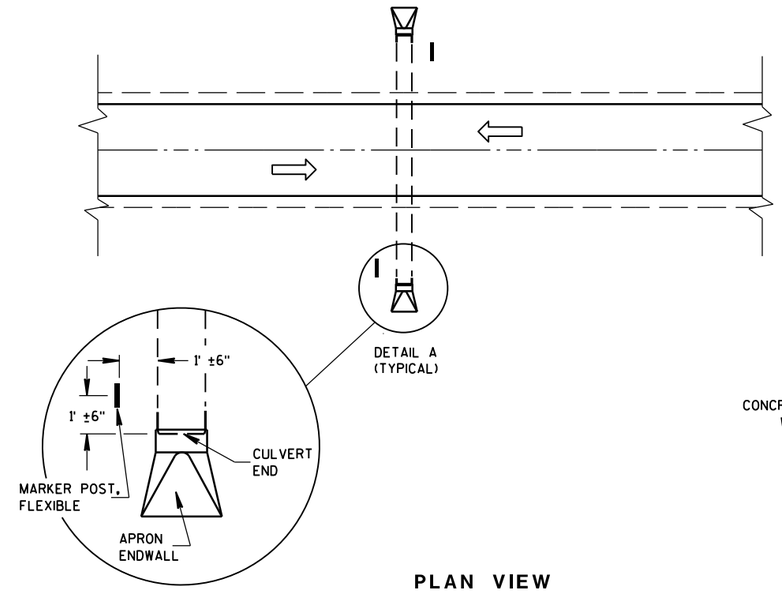

DETAIL A
(TYPICAL)

PLAN VIEW

UNDIVIDED HIGHWAY

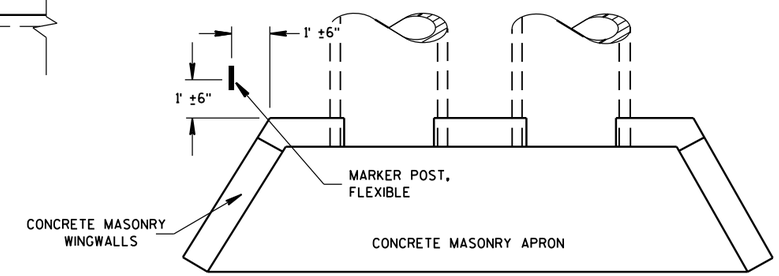

PLAN VIEW

CONCRETE MASONRY ENDWALLS FOR CULVERT PIPE AND PIPE ARCH

MARKER POST, FLEXIBLE

DIRECTION OF TRAFFIC FLOW

FLEXIBLE MARKER POST LOCATION

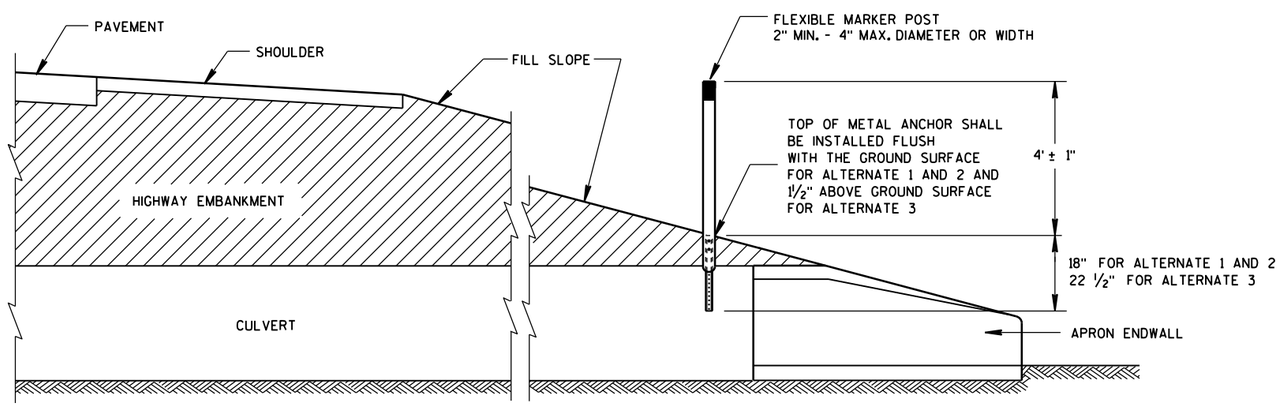

CROSS SECTION

FLEXIBLE MARKER POST

FLEXIBLE MARKER POST FOR CULVERT END

STATE OF WISCONSIN
DEPARTMENT OF TRANSPOR

6

6

S.D.D. 15 A 3-2a

S.D.D. 15 A 3-2a

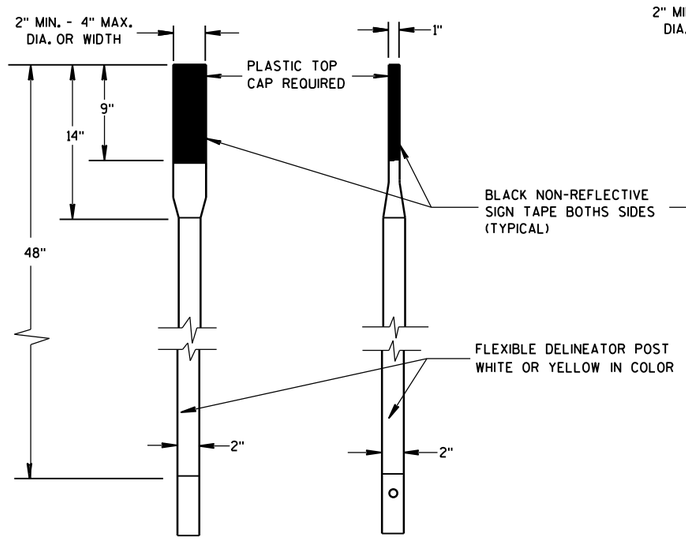

FRONT VIEW SIDE VIEW

ALTERNATE 1

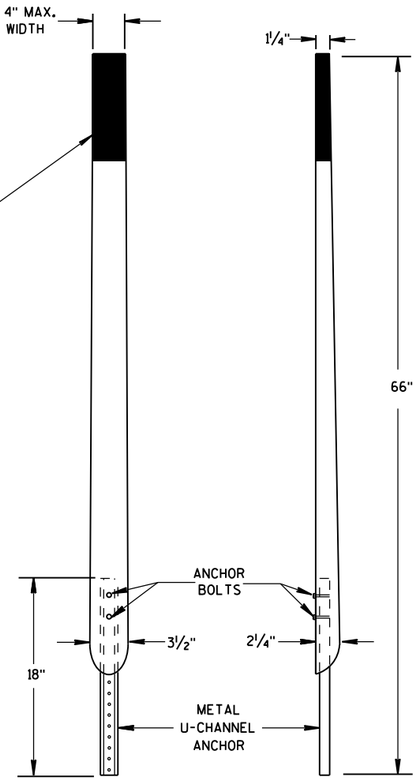

FRONT VIEW SIDE VIEW

ALTERNATE 2

FLEXIBLE MARKER POSTS

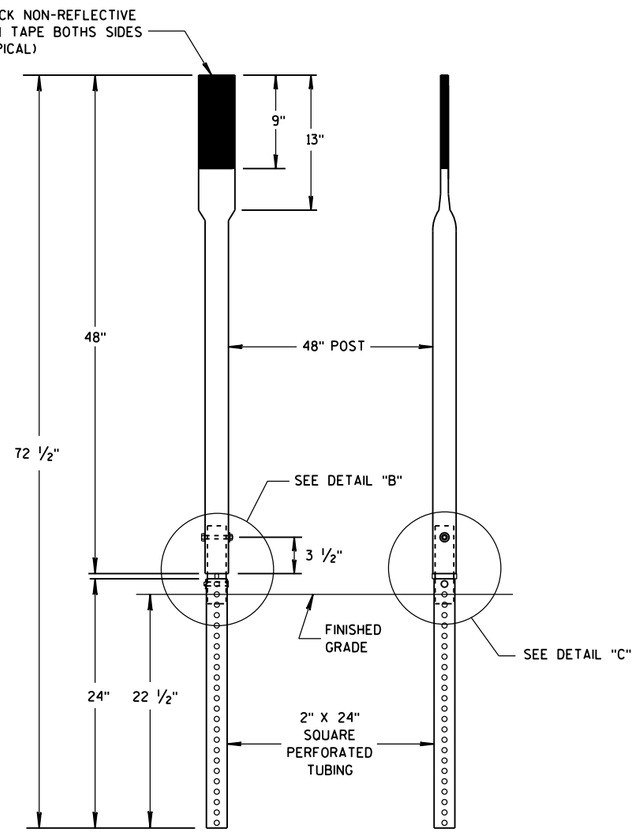

FRONT VIEW SIDE VIEW

ALTERNATE 3

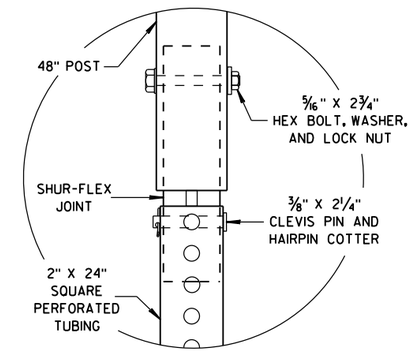

DETAIL B

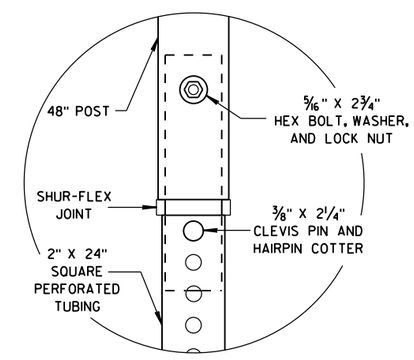

DETAIL C

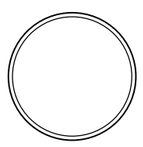

SECTION A-A

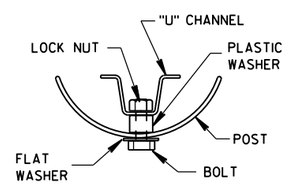

SECTION B-B

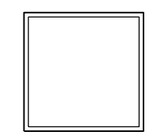

SECTION C-C

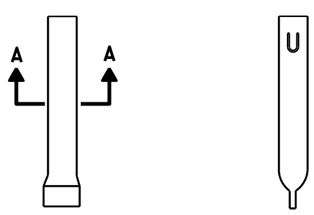

FRONT VIEW SIDE VIEW

ALTERNATE 1

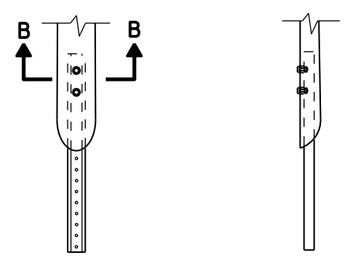

FRONT VIEW SIDE VIEW

ALTERNATE 2

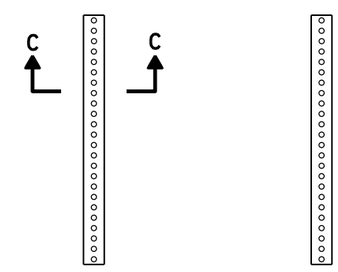

FRONT VIEW SIDE VIEW

ALTERNATE 3

FLEXIBLE MARKER POST ANCHORS

FLEXIBLE MARKER POST
FOR CULVERT END

STATE OF WISCONSIN
DEPARTMENT OF TRANSPORTATION

APPROVED
10/1/2012 /S/ Travis Feltes
DATE STATE TRAFFIC ENGINEER
FHWA

6

6

S.D.D. 15 A 3-2b

S.D.D. 15 A 3-2b

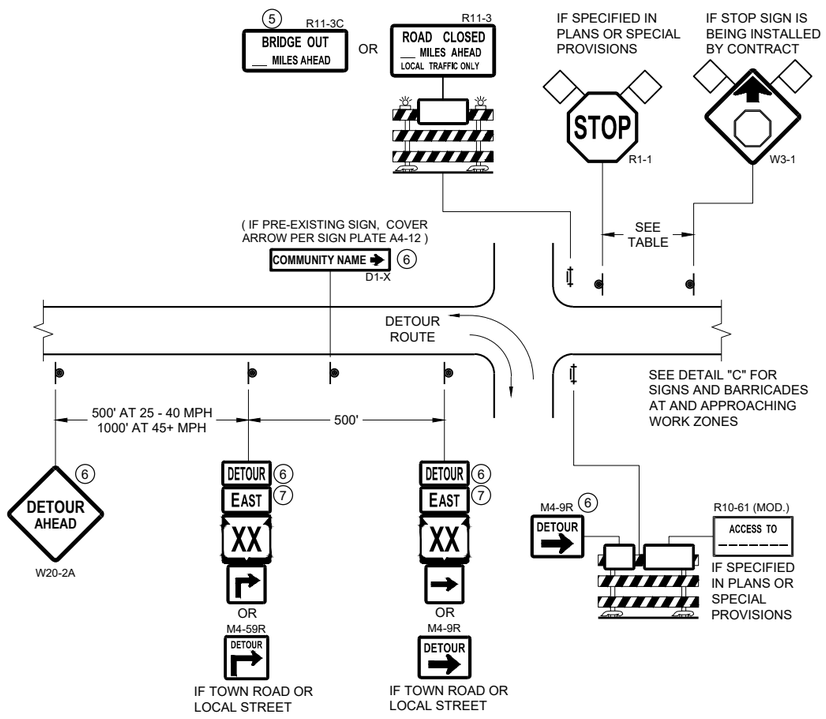

DETAIL A

MAINLINE CLOSURE WITH POSTED DETOUR

WORK ZONE GREATER LESS THAN ½ MILE FROM DETOUR ROUTE (1000 FEET IF URBAN)

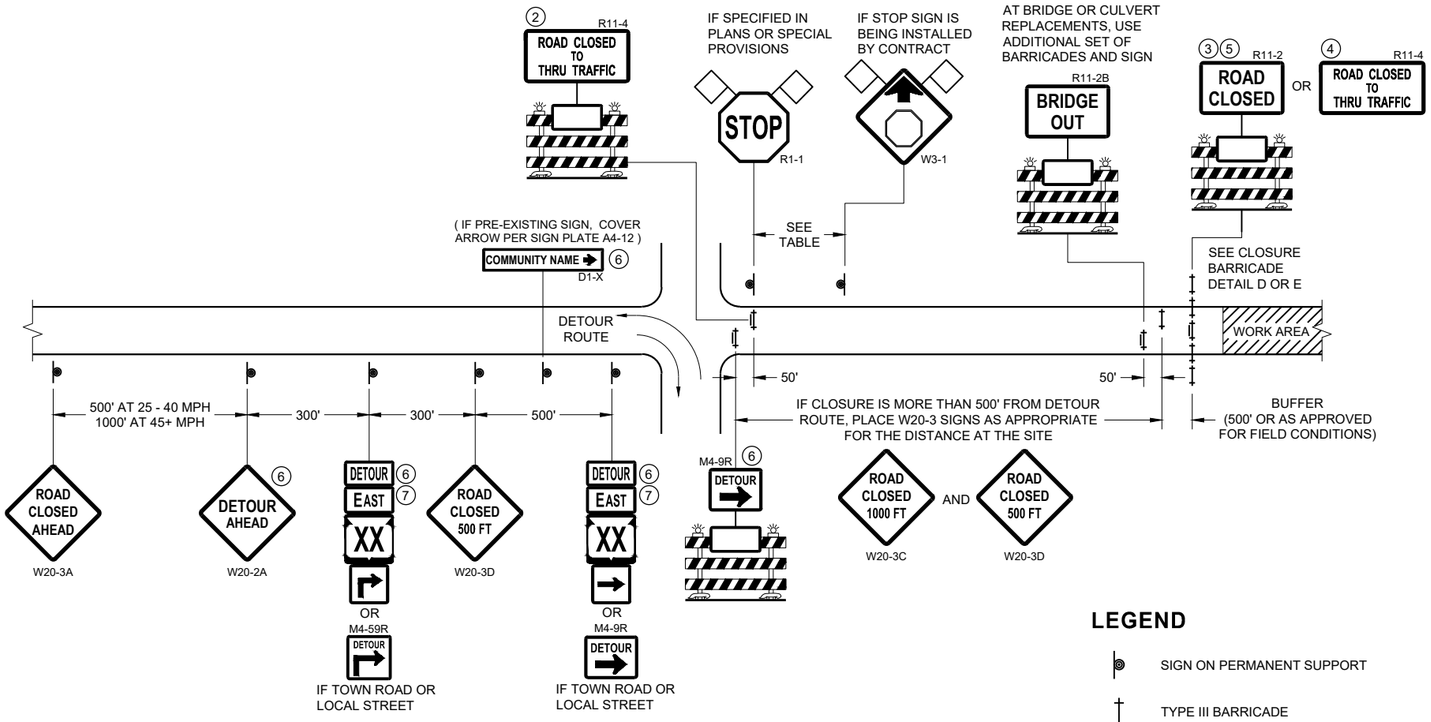

DETAIL B

MAINLINE CLOSURE WITH POSTED DETOUR

WORK ZONE LESS THAN ½ MILE FROM DETOUR ROUTE (1000 FEET IF URBAN)

LEGEND

- SIGN ON PERMANENT SUPPORT
- TYPE III BARRICADE
- TYPE III BARRICADE WITH ATTACHED SIGN
- TYPE "A" WARNING LIGHT (FLASHING)
- WORK AREA
- FLAGS, 16" X 16" MIN. (ORANGE)
- DETOUR — M4 - 8
- EAST — M3 - X
- XX (M1 - 4) OR XX (M1 - 6) OR COUNTY X (M1 - 5A)
- M05 - 1 OR M06 - 1

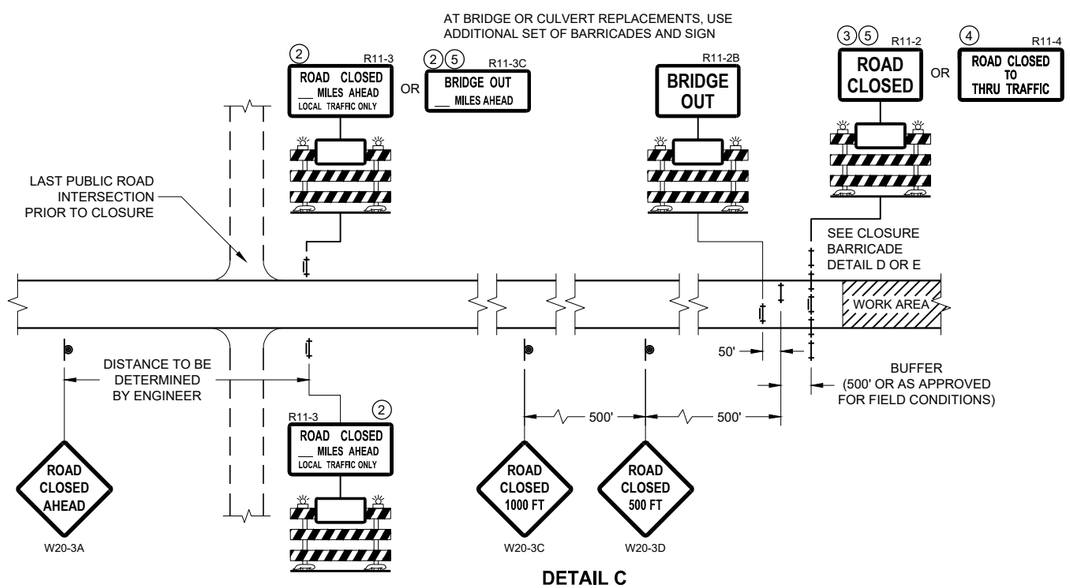

DETAIL C

MAINLINE CLOSURE, NO POSTED DETOUR

SPEED LIMIT (MPH)	"STOP AHEAD" ADVANCE WARNING DISTANCE (FT)
25	200
30	200
35	350
40	350
45	500
50	550
55	750

SEE SDD 15C2-SHEET "b" FOR GENERAL NOTES AND FOOTNOTES 1 THROUGH 7

BARRICADES AND SIGNS FOR MAINLINE CLOSURES

STATE OF WISCONSIN
DEPARTMENT OF TRANSPORTATION

APPROVED
November 2018 — DATE
/S/ Andrew Heidtke — WORK ZONE ENGINEER
FHWA

6

SDD 15C02 - 07a

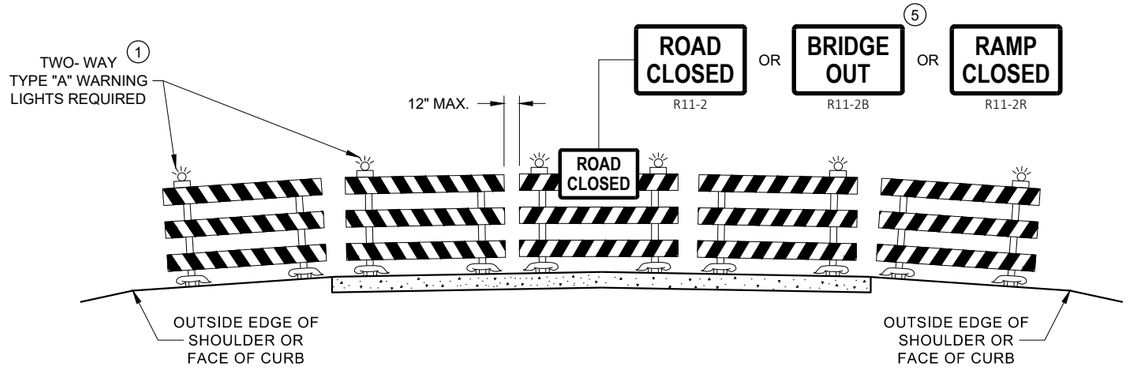

DETAIL D
ROAD CLOSURE BARRICADE DETAIL
APPROACH VIEW

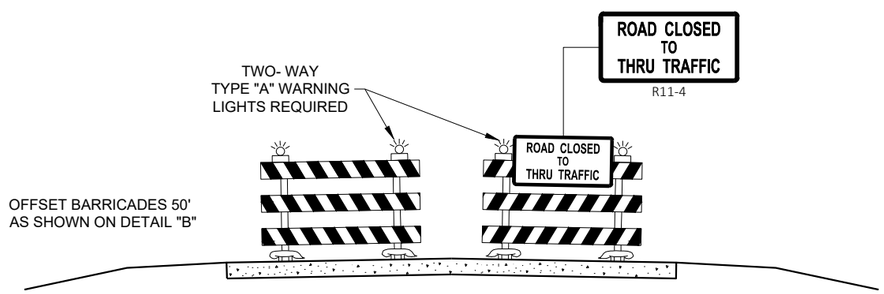

DETAIL E
LANE CLOSURE BARRICADE DETAIL
APPROACH VIEW

SEE SDD 15C2 - SHEET "a" FOR LEGEND

GENERAL NOTES

THE EXACT NUMBER, LOCATION, AND SPACING OF ALL SIGNS AND BARRICADES SHALL BE ADJUSTED TO FIT FIELD CONDITIONS AS APPROVED BY THE ENGINEER.

ANY SIGNS TEMPORARY OR EXISTING, WHICH CONFLICT WITH TRAFFIC CONTROL "IN USE", SHALL BE REMOVED OR COVERED AS NEEDED AND AS APPROVED BY THE ENGINEER.

THE SPACING BETWEEN TRAFFIC CONTROL SIGNS SHOULD BE ADJUSTED TO NOT CONFLICT WITH AND SHOULD PROVIDE A DESIRABLE MINIMUM OF 200 FEET CLEARANCE TO EXISTING SIGNS THAT WILL REMAIN IN PLACE.

BARRICADES THAT MUST BE MOVED FOR A WORK OPERATION SHALL BE IMMEDIATELY RE-ESTABLISHED UPON COMPLETION OF THE OPERATION, OR FOR CONTINUING OPERATIONS, AT THE END OF EACH WORKING DAY.

SIGNS THAT WILL BE IN PLACE LESS THAN 7 CONTINUOUS DAYS AND NIGHTS MAY BE MOUNTED ON PORTABLBLE SUPPORTS.

ALL TYPE III BARRICADES SHALL HAVE RAILS REFLECTORIZED ON BOTH FACES. STRIPES SHALL BE PROPERLY SLOPED DOWN TOWARD THE TRAFFIC SIDE OR AS SHOWN IN THE ROAD CLOSURE BARRICADE DETAIL "D" FOR FULL ROAD CLOSURES.

TYPE "A" LOW - INTENSITY FLASHING WARNING LIGHTS SHALL BE VISIBLE ON BOTH SIDES OF THE BARRICADE.

THE R11 - 2, R11 - 3, M4 - 9, R11 - 4, AND R10 - 61 SIGNS PLACED ON THE BARRICADES SHALL COVER NO MORE THAN THE TOP RAIL. THE SIGNS SHALL NOT COVER ANY PORTION OF THE MIDDLE RAIL OR BOTTOM RAILS.

"WO" AND "MO" SIGNS ARE THE SAME AS "W" AND "M" SIGNS EXCEPT THE BACKGROUND IS ORANGE.

ALL SIGNS SHALL BE 48" X 48" UNLESS OTHERWISE NOTED BELOW:
- R11 - 2 SHALL BE 48" X 30"
- R11 - 3 SHALL, R11 - 4 AND R10 - 61 SHALL BE 60 " X 30"
- M4 - 9 SHALL BE 30" X 24"
- M3 - X SHALL BE 24" X 12" (36" X 18" IF NEEDED TO MATCH EXISTING SIGNS)
- M4 - 8 SHALL BE 24" X 12" (36" X 15" IF NEEDED TO MATCH EXISTING SIGNS)
- M1 - 4, M1 - 5A AND M1 - 6 SHALL BE 24" X 24" (36" X 36" IF NEEDED TO MATCH EXISTING SIGNS)
- MO5 - 1 AND MO6 - 1 SHALL BE 21" X 21" (30" X 30" IF NEEDED TO MATCH EXISTING SIGNS)
- D1 - X SHALL BE AS SHOWN ON SPECIFIC PROJECT SIGNING DETAIL SHEETS.
- R1 - 1 SHALL BE 36" X 36"

1. TWO WARNING LIGHTS SHALL BE PROVIDED ON THE CENTER BARRICADE AND A MINIMUM OF ONE WARNING LIGHT SHALL BE PROVIDED ON EACH OF THE OTHER BARRICADES WITHIN THE ROADWAY LIMITS. SPACING OF THE WARNING LIGHTS SHALL BE UNIFORM TO THE EDGE OF ROADWAY AS SHOWN (APPROX. 8 FOOT LIGHT SPACING.
2. THESE SIGNS AND BARRICADES ARE NOT REQUIRED IF ROAD CLOSURE BEGINS AT AN INTERSECTION.
3. FOR ROAD CLOSURE WITHOUT LOCAL ACCESS TO PROJECT, SEE ROAD CLOSURE BARRICADE DETAIL "D".
4. FOR ROAD CLOSURE WITH LOCAL ACCESS TO PROJECT, SEE ROAD CLOSURE BARRICADE DETAIL "E".
5. FOR BRIDGE OR CULVERT REPLACEMENTS, SUBSTITUTE "BRIDGE OUT" INSTEAD OF "ROAD CLOSED" ON R11 - 2 AND R11 - 3 SIGNS.
6. INSTALL DETOUR AND COMMUNITY GUIDE SIGNS AND ARROWS ONLY IF SPECIFIED IN THE CONTRACT. IF THERE ARE EXISTING ROUTE MARKER ASSEMBLIES THAT WILL REMAIN IN PLACE, ADJUST THE LOCATION OF THE DETOUR ROUTE SIGNS TO CORRESPOND WITH THE EXISTING ASSEMBLIES. MODIFY EXISTING SIGNS WHERE POSSIBLE. SEE SPECIFIC PROJECT DETOUR SIGNING DETAIL SHEETS. IF DETOUR SIGNS ARE BEING INSTALLED BY OTHERS, PLACE THE CONTRACTED TRAFFIC CONTROL SIGNS TO ALLOW FOR PLACEMENT OF ALL WARNING, DETOUR AND GUIDE SIGNS AS SHOWN.
7. "EAST" CARDINAL DIRECTION MARKERS AND RIGHT TURN ARROWS ARE SHOWN. USE OTHER CARDIANAL DIRECTIONS AND ARROWS AS APPROPRIATE.

BARRICADES AND SIGNS FOR VARIOUS CLOSURES

STATE OF WISCONSIN
DEPARTMENT OF TRANSPORTATION

APPROVED
November 2018 — DATE
/S/ Andrew Heidtke — WORK ZONE ENGINEE
FHWA

6

SDD 15C02 - 07b

THIS DRAWING PROVIDES GENERAL GUIDANCE ON TYPICAL DETOUR SIGN LAYOUT AND SPACING. SEE PROJECT DETOUR SIGNING SHEETS FOR SPECIFIC DETAILS FOR EACH PROJECT.

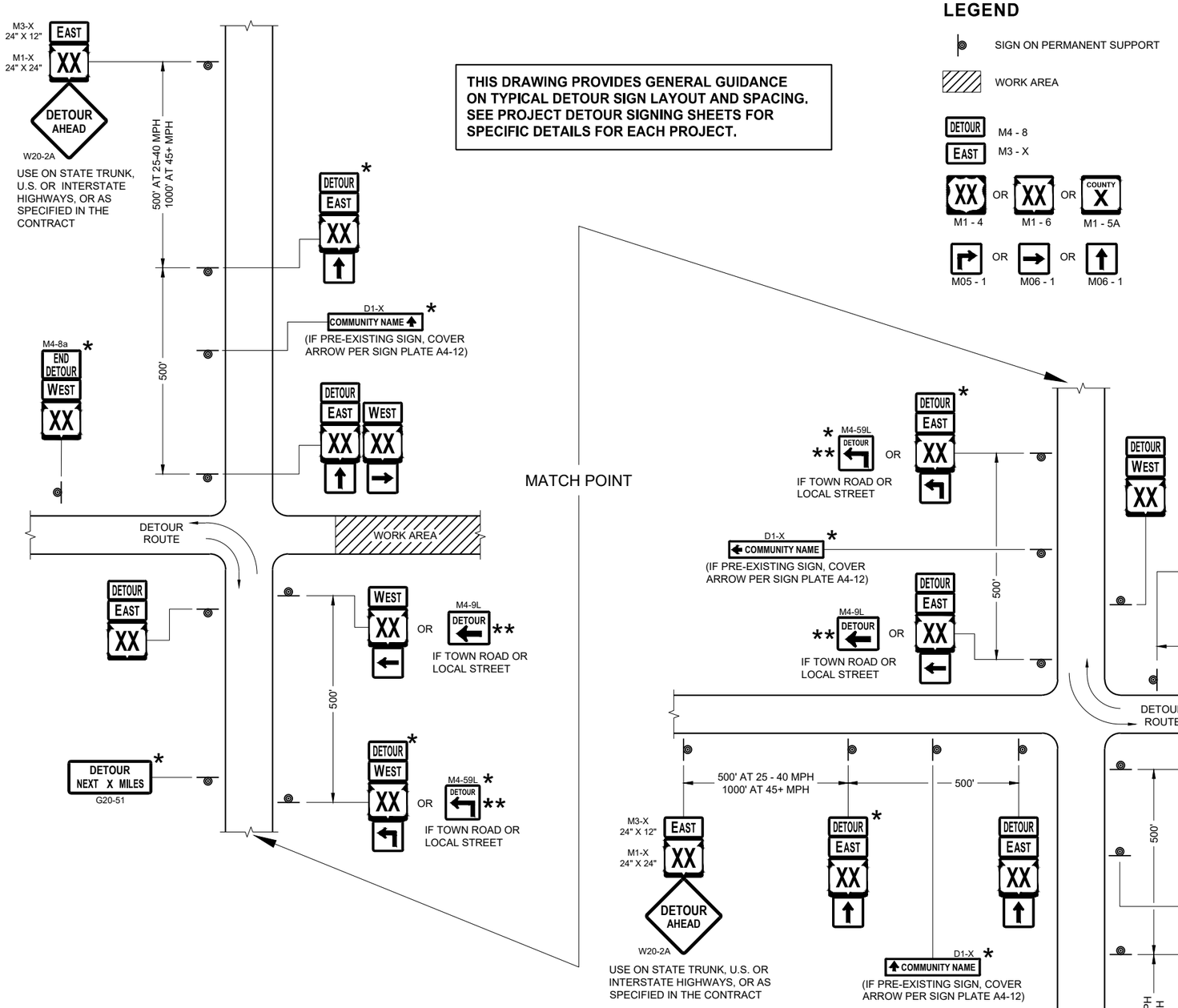

LEGEND

- SIGN ON PERMANENT SUPPORT
- WORK AREA
- DETOUR — M4 - 8
- EAST — M3 - X
- XX — M1 - 4 OR XX — M1 - 6 OR COUNTY X — M1 - 5A
- M05 - 1 OR M06 - 1 OR M06 - 1

GENERAL NOTES

THE EXACT NUMBER, LOCATION AND SPACING OF ALL SIGNS SHALL BE ADJUSTED TO FIT FIELD CONDITIONS AS APPROVED BY THE ENGINEER.

IF THERE ARE EXISTING ROUTE MARKER ASSEMBLIES THAT WILL REMAIN IN PLACE, ADJUST THE LOCATION OF THE DETOUR ROUTE SIGNS TO CORRESPOND WITH THE EXISTING ASSEMBLIES. SEE SPECIFIC PROJECT DETOUR SIGNING DETAIL SHEETS. MODIFY EXISTING SIGNS WHERE POSSIBLE.

THE SPACING BETWEEN TRAFFIC CONTROL AND DETOUR SIGNS SHOULD BE ADJUSTED TO NOT CONFLICT WITH AND TO PROVIDE A DESIRABLE MINIMUM OF 200 FEET CLEARANCE TO EXISTING SIGNS THAT WILL REMAIN IN PLACE.

ANY SIGNS TEMPORARY OR EXISTING, WHICH CONFLICT WITH TRAFFIC CONTROL "IN USE" SHALL BE REMOVED OR COVERED AS NEEDED AND AS APPROVED BY THE ENGINEER.

SIGNS THAT WILL BE IN PLACE LESS THAN 7 CONTINUOUS DAYS AND NIGHTS MAY BE MOUNTED ON PORTABLE SUPPORTS.

"MO" SIGNS ARE THE SAME AS "M" SIGNS EXCEPT THE BACKGROUND IS ORANGE.

SIGN SIZES SHALL BE AS FOLLOWS:

M3-X SHALL BE 24" X 12" (36" X 18" IF NEEDED TO MATCH EXISTING SIGNS)
M4-8 SHALL BE 24" X 12" (30" X 15" IF NEEDED TO MATCH EXISTING SIGNS)
M1-4, M1-5A AND M1-6 SHALL BE 24" X 24" (30" X 30" IF NEEDED TO MATCH EXISTING SIGNS)
M05-1 AND M06-1 SHALL BE 21" X 21" (30" X 30" IF NEEDED TO MATCH EXISTING SIGNS)
M4-9 AND M4-59 SHALL BE 30" X 24"
M4-8a SHALL BE 24" X 18"
G20-51 SHALL BE 60" X 24"
W20-2 SHALL BE 48" X 48"
D1-X SHALL BE AS SHOWN ON SPECIFIC PROJECT SIGNING DETAIL SHEETS.

* OPTIONAL SIGNS. SEE SPECIFIC PROJECT DETOUR SIGNING DETAIL SHEETS.

** FOR A TOWN ROAD OR LOCAL STREET DETOURED ONTO A STATE TRUNK HIGHWAY, PLACE A ROAD NAME PLAQUE ABOVE THE M4-9 SIGN AS SPECIFIED IN THE CONTRACT.

SEE SPECIFIC PROJECT DETOUR SIGNING DETAIL SHEETS AND DETAIL A OR B ON SDD SHEET 15C02 - SHEET "a"

DETAIL F
DETOUR SIGNING

DETOUR SIGNING FOR MAINLINE CLOSURES

STATE OF WISCONSIN
DEPARTMENT OF TRANSPORTATION

APPROVED
November 2018 /S/ Andrew Heidtke
DATE WORK ZONE ENGINEER
FHWA

6

SDD 15C02 - 07c

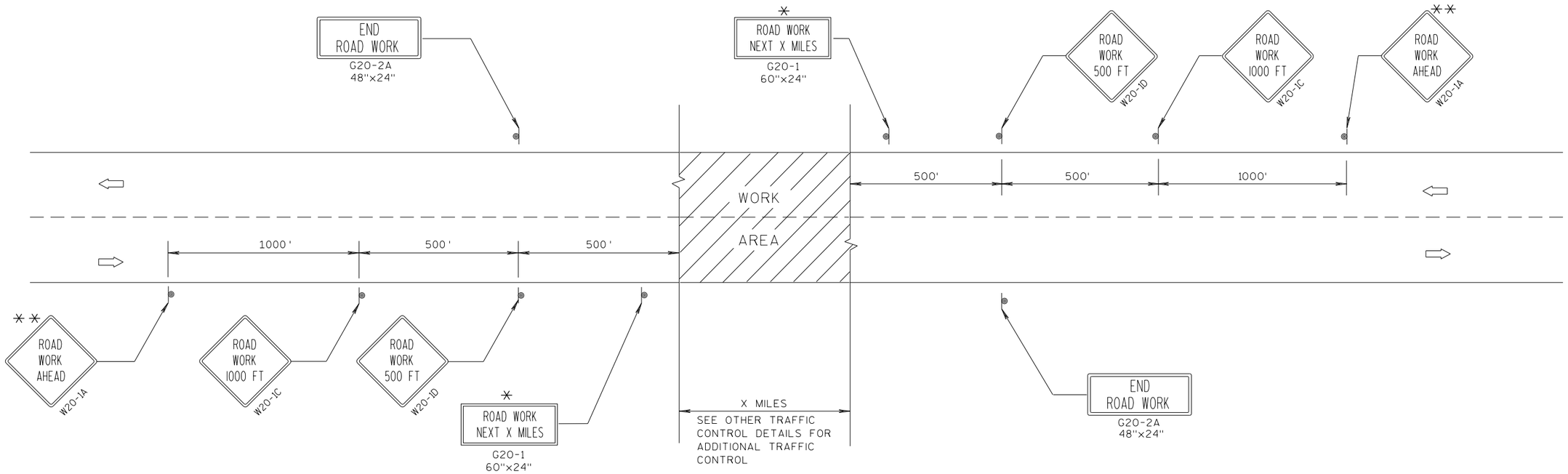

TYPICAL SIDEROAD APPROACH WARNING SIGN DETAIL

GENERAL NOTES

THE EXACT NUMBER, LOCATION, AND SPACING OF ALL SIGNS AND DEVICES SHALL BE ADJUSTED TO FIT FIELD CONDITIONS.

THE SPACING BETWEEN TRAFFIC CONTROL SIGNS SHOULD BE ADJUSTED TO NOT CONFLICT WITH AND SHOULD PROVIDE A MINIMUM OF 200 FEET (500 FEET DESIRABLE) CLEARANCE TO EXISTING SIGNS THAT WILL REMAIN IN PLACE.

ALL SIGNS ARE 48"x48" UNLESS OTHERWISE NOTED.

SIGNS THAT WILL BE IN PLACE LESS THAN 7 CONTINUOUS DAYS AND NIGHTS MAY BE MOUNTED ON PORTABLE SUPPORTS.

IF A "STOP" SIGN MUST BE REMOVED FOR A WORK OPERATION, A TEMPORARY "STOP" SIGN SHALL BE PLACED PRIOR TO THE SIGN REMOVAL, OR A FLAGGER SHALL BE PROVIDED UNTIL THE SIGN IS RE-ESTABLISHED.

* OMIT G20-1 SIGNS IF LENGTH OF WORK AREA IS 2 MILES OR LESS.

** PLACE ADDITIONAL W20-1A "ROAD WORK AHEAD" SIGN IF WORK AREA WITHIN THE PROJECT IS SEPARATED BY MORE THAN 2 MILES FROM PREVIOUS WORK AREA.

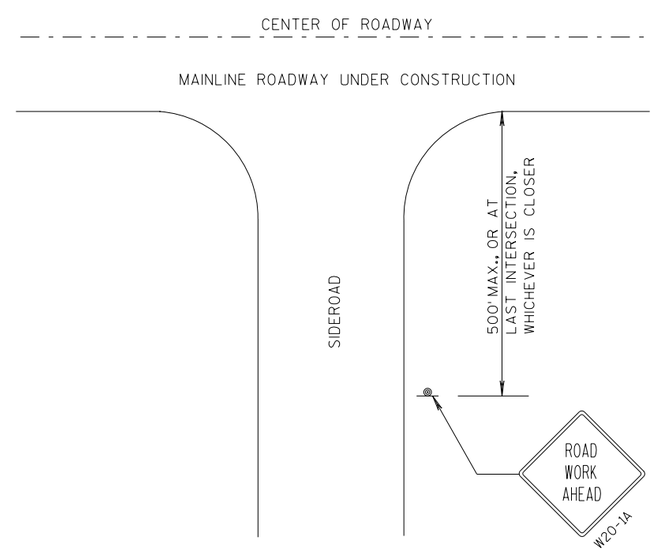

LEGEND

- SIGN ON PERMANENT SUPPORT
- DIRECTION OF TRAFFIC
- WORK AREA

TRAFFIC CONTROL, ADVANCE WARNING SIGNS 45 M.P.H. OR GREATER TWO-WAY UNDIVIDED ROAD OPEN TO TRAFFIC

STATE OF WISCONSIN
DEPARTMENT OF TRANSPORTATION

APPROVED
7/2018 — DATE
/S/ Andrew Heldtke — WORK ZONE ENGI
FHWA

6

S.D.D. 15 C 4-5

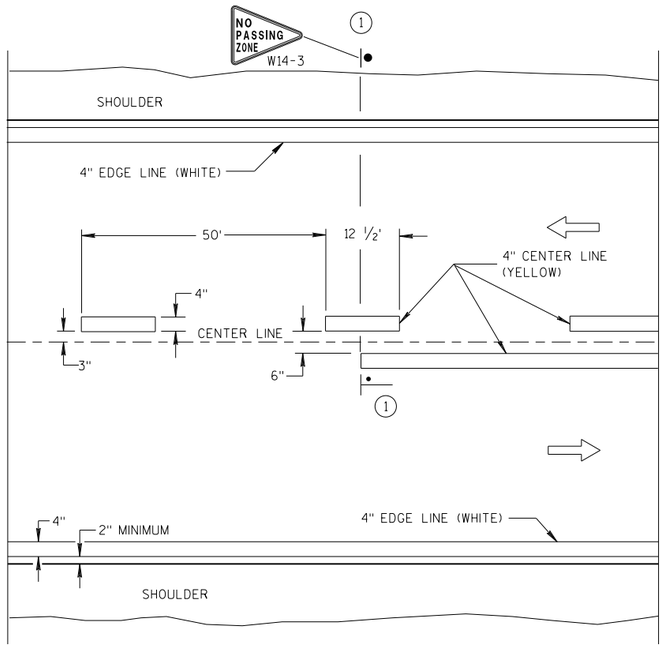

TWO WAY TRAFFIC

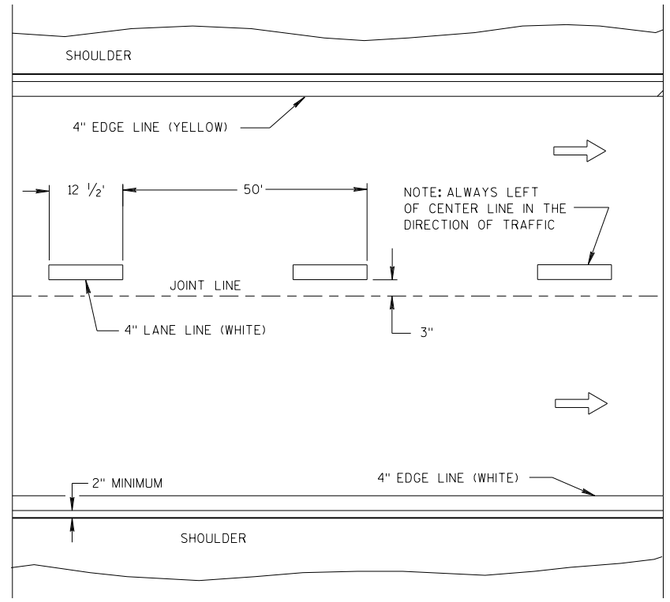

ONE WAY TRAFFIC

PERMANENT PAVEMENT MARKING

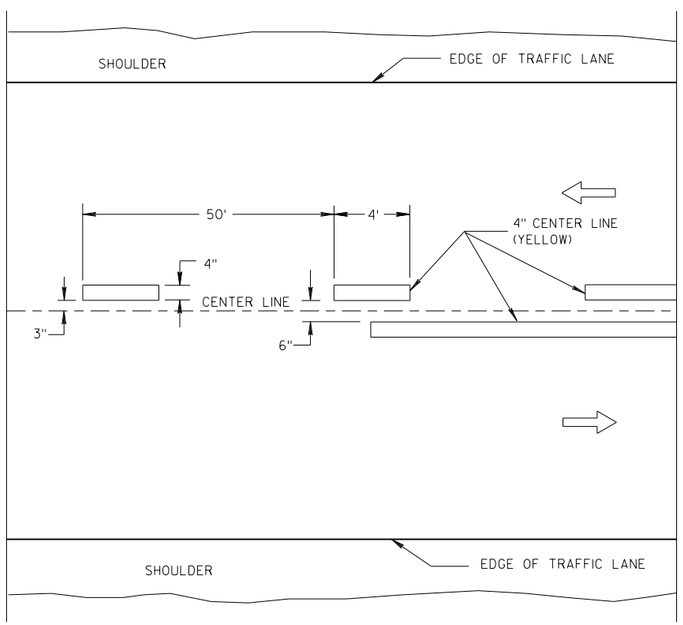

TWO WAY TRAFFIC

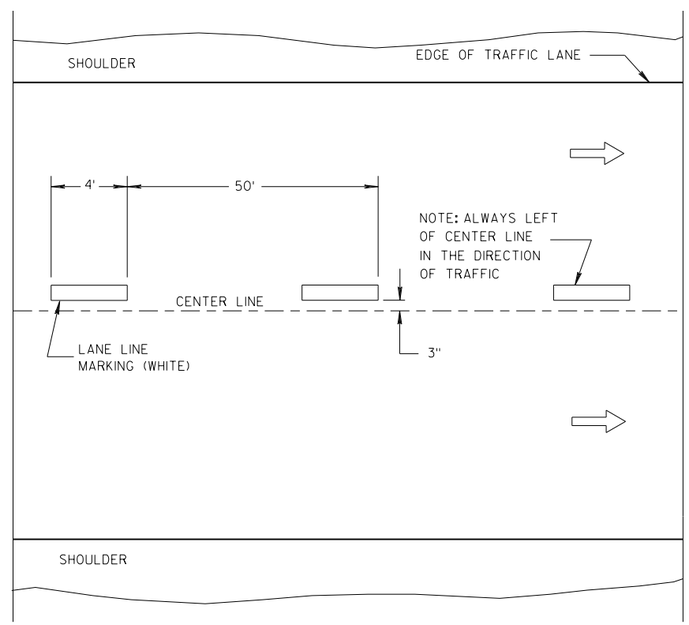

ONE WAY TRAFFIC

TEMPORARY PAVEMENT MARKING

GENERAL NOTES

DETAILS OF CONSTRUCTION NOT SHOWN ON THIS DRAWING SHALL CONFORM TO STANDARD SPECIFICATIONS AND SPECIAL PROVISIONS.

(1) LOCATE THE NO PASSING ZONE W14-3 SIGN WITHIN 50 FEET OF THE "T" MARKING.

NOTE

ARROW SYMBOL (⇨) SHOWS DIRECTION OF TRAVEL

LEGEND

"T" MARKING

POST MOUNTED SIGN

LONGITUDINAL MARKING (MAINLINE)

STATE OF WISCONSIN
DEPARTMENT OF TRANSPORTATION

APPROVED
7/2018 — DATE
/S/ Matthew R. Rauch — STATE SIGNING AND MAR INEER
FHWA

6

S.D.D. 15 C 8-19a

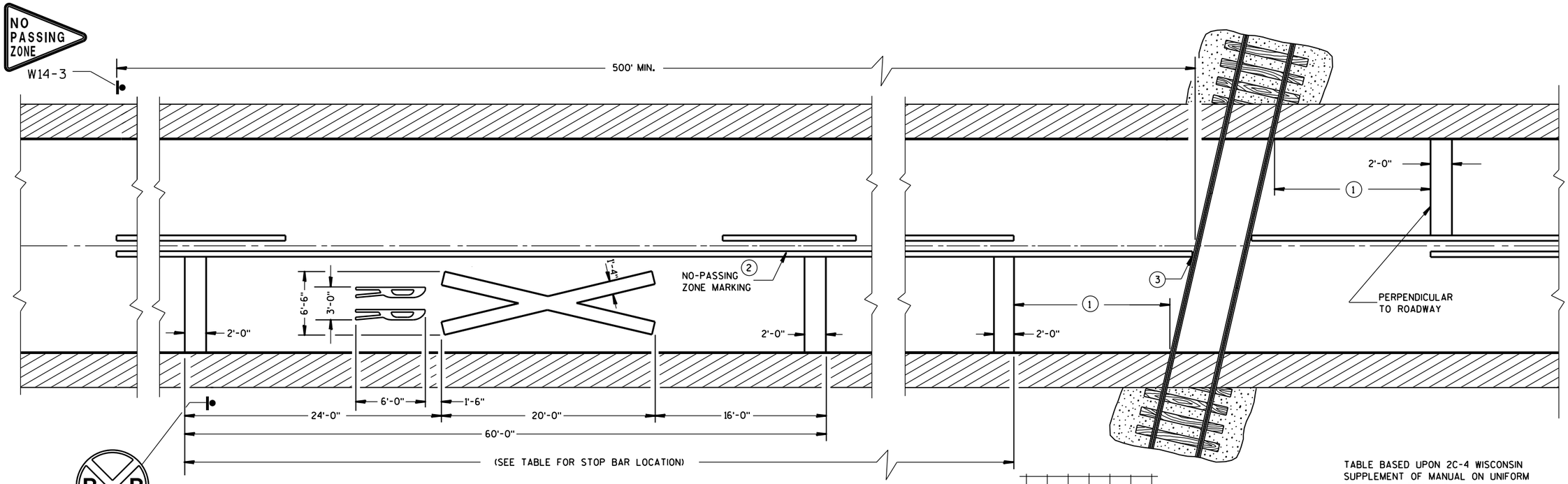

PAVEMENT MARKING

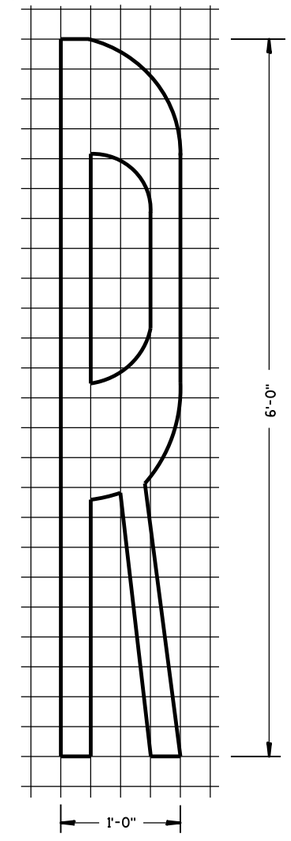

TABLE BASED UPON 2C-4 WISCONSIN SUPPLEMENT OF MANUAL ON UNIFORM TRAFFIC CONTROL DEVICES.

Posted Speed (M.P.H.)	Dimension Range (Feet)
25	150*- 250
30	200*- 300
35	250*- 450
40	300*- 500
45	400*- 650
50	550*- 800
55	750*- 1000
60	1000*- 1250
65	1000*- 1250

* THE MINIMUM DISTANCES IN THE TABLE ARE DESIRABLE AND SHOULD BE USED. THE DISTANCES MAY BE INCREASED UP TO THE MAXIMUM TO ALLOW FOR FIELD CONDITIONS SUCH AS THE CLOSE PROXIMITY OF DRIVEWAYS, BRIDGES, SIDEROADS OR OTHER FEATURES THAT WOULD PROHIBIT THE MINIMUM DISTANCES FROM BEING USED.

GENERAL NOTES

DETAILS OF CONSTRUCTION, MATERIALS, AND WORKMANSHIP NOT SHOWN ON THIS DRAWING SHALL CONFORM TO THE PERTINENT REQUIREMENTS OF THE STANDARD SPECIFICATIONS AND THE APPLICABLE SPECIAL PROVISIONS.

ON MULTI-LANE ROADS THE TRANSVERSE BANDS SHOULD EXTEND ACROSS ALL APPROACH LANES, AND INDIVIDUAL R X R SYMBOLS SHOULD BE USED IN EACH APPROACH LANE.

CENTER OR LANE LINES AND NO-PASSING ZONE MARKINGS SHOWN ON THIS DRAWING ARE REQUIRED AND PAID FOR UNDER OTHER ITEMS IN THE CONTRACT.

RETRACE EXISTING SYMBOL WHERE EXISTING SYMBOLS ARE PLACED.

1. MINIMUM 8' FROM ANY RAILROAD WARNING DEVICES (SIGNALS, GATES, ETC.) OR 25' FROM THE NEAREST RAIL, WHICHEVER DISTANCE IS GREATER.
2. 500' MINIMUM. MARKING LIMITS MAY BE EXTENDED AS DIRECTED BY THE ENGINEER TO MEET ADJACENT NO-PASSING ZONE MARKINGS.
3. FOR MULTIPLE TRACK CROSSINGS, THE BARRIER LINE SHALL EXTEND TO THE NEAR RAIL OF THE FURTHEST TRACK IN THE DIRECTION OF HIGHWAY TRAVEL.

SIGNING AND PAVEMENT MARKING DETAILS FOR RAILROAD-HIGHWAY GRADE CROSSINGS

STATE OF WISCONSIN
DEPARTMENT OF TRANSPORTATION

APPROVED

Sept., 2017 — /S/ Matthew R. Rauch
DATE — STATE SIGNING AND MAI[illegible]GINEER

FHWA

6

S.D.D. 15 C 9-11a

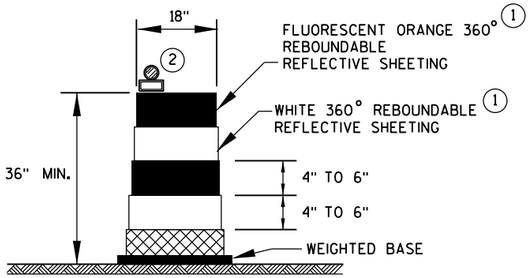

DRUM

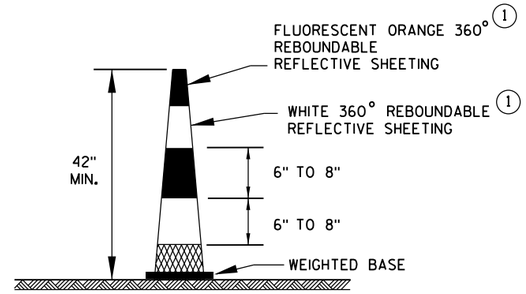

42" CONE

DO NOT USE IN TAPERS
½ SPACING OF DRUMS

GENERAL NOTES

1. REFLECTIVE SHEETING SHALL FOLLOW THE REQUIREMENTS IN THE APPROVED PRODUCTS LISTING FOR SIGN SHEETING.
2. LOCATION OF WARNING LIGHTS WHEN SHOWN ON THE PLAN.

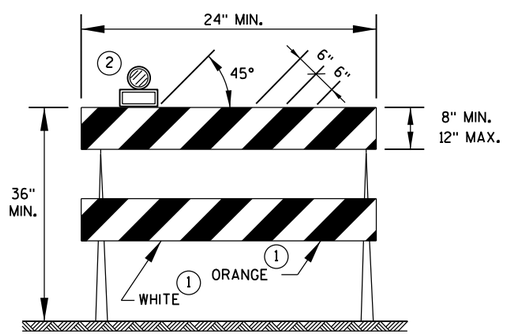

TYPE 2 BARRICADE

FOR RAILS LESS THAN 36" LONG, 4" WIDE STRIPES MAY BE USED. ALL STRIPES SHALL SLOPE DOWNWARD TO THE TRAFFIC SIDE FOR CHANNELIZATION.

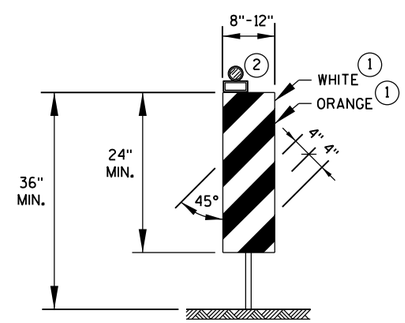

VERTICAL PANEL

THE STRIPES SHALL SLOPE DOWNWARD TO THE TRAFFIC SIDE FOR CHANNELIZATION.

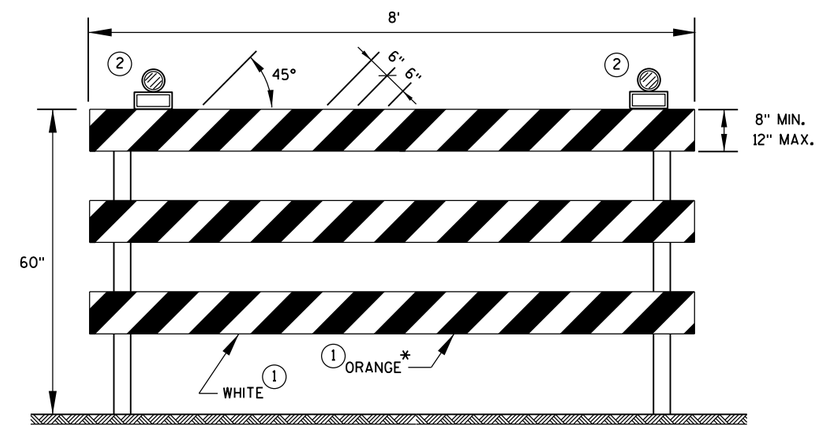

TYPE 3 BARRICADE

IF SIGN MOUNTED, DO NOT COVER MORE THAN 50% OF THE TOP TWO RAILS OR 33% OF THE TOTAL AREA OF THE THREE RAILS.

* IF USED FOR A PERMANENT APPLICATION, USE RED SHEETING.

CHANNELIZING DEVICES DRUMS, CONES, BARRICADES AND VERTICAL PANELS	
STATE OF WISCONSIN DEPARTMENT OF TRANSPORTATION	
APPROVED	
June 2017	/S/ Andrew Heldtke
DATE	WORK ZONE ENG
FHWA	

LEGEND

- SIGN ON PORTABLE OR PERMANENT SUPPORT
- DIRECTION OF TRAFFIC
- WORK AREA
- FLAGGER, EQUIPPED WITH STOP/SLOW PADDLE FASTENED ON SUPPORT STAFF

SIGN AND TEMPORARY RUMBLE STRIP ARRAY SPACING TABLE

SPEED LIMIT	SPACING A
25-35 MPH	200'
35-40 MPH	350'
45-55 MPH	500'

USE OF THE "BE PREPARED TO STOP" SIGN IS OPTIONAL. WHEN USED, THIS SIGN SHALL BE LOCATED BETWEEN THE W20-7A AND W20-4A SIGNS, USING SPACING A.

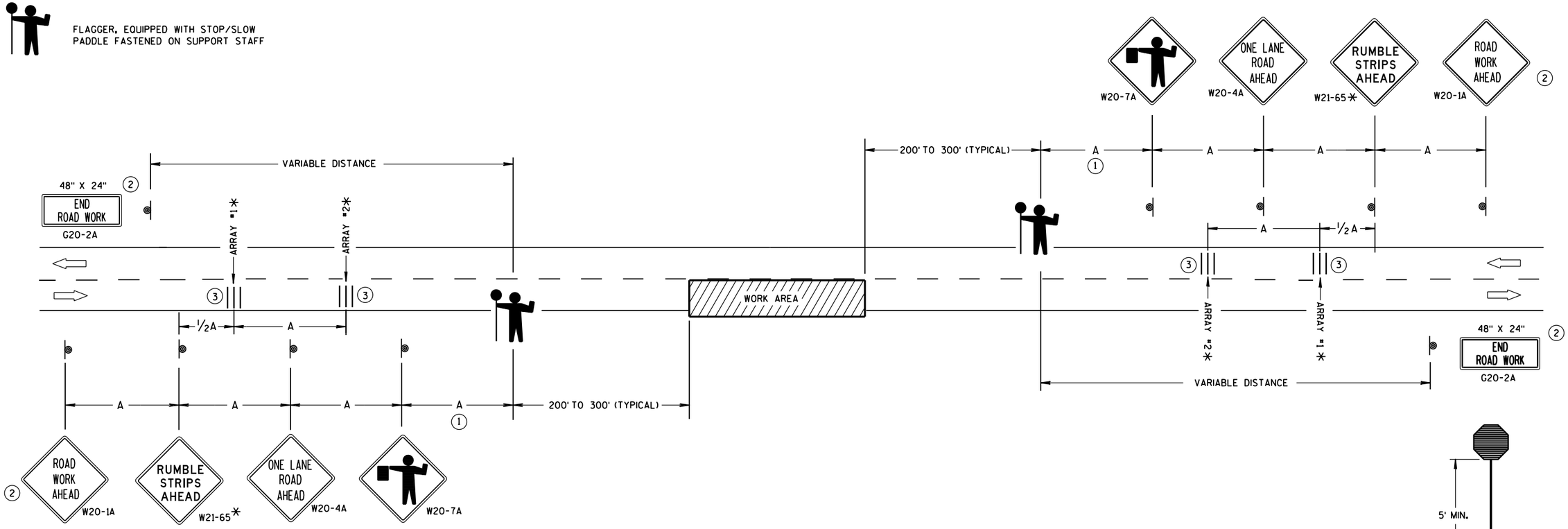

TRAFFIC CONTROL FOR LANE CLOSURE WITH FLAGGING OPERATION

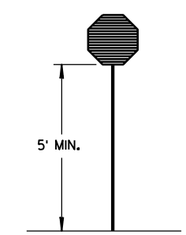

STOP/SLOW PADDLE ON SUPPORT STAFF

GENERAL NOTES

DETAILS OF TRAFFIC CONTROL DEVICES AND INSTALLATION NOT SHOWN ON THIS DRAWING SHALL CONFORM TO THE PERTINENT REQUIREMENTS OF THE STANDARD SPECIFICATIONS, THE SPECIAL PROVISIONS, AND THE MANUAL ON UNIFORM TRAFFIC CONTROL DEVICES.

THE EXACT NUMBER, LOCATION AND SPACING OF ALL SIGNS AND DEVICES (AND THE LOCATION OF ALL FLAGGERS) SHALL BE ADJUSTED TO FIT FIELD CONDITIONS AS APPROVED BY THE ENGINEER.

THE FIRST ADVANCE WARNING SIGN SHOULD TYPICALLY BE LOCATED IN ADVANCE OF THE ANTICIPATED TRAFFIC BACKUP OR QUEUE.

"WO" SIGNS ARE THE SAME AS "W" SIGNS EXCEPT THE BACKGROUND IS ORANGE.

WHEN A SIDE ROAD OR RAMP INTERSECTS THE FACILITY ON WHICH THE WORK IS BEING PERFORMED, ADDITIONAL TRAFFIC CONTROLS SHALL BE PROVIDED AS SPECIFIED IN THE PLANS AND/OR THE SPECIAL PROVISIONS OR AS APPROVED BY THE ENGINEER.

INSTALL TEMPORARY RUMBLE STRIPS PER MANUFACTURER'S RECOMMENDATIONS.

PLACE ADVANCE SIGNING PRIOR TO INSTALLING TEMPORARY RUMBLE STRIPS.

ALL SIGNS ARE 48" X 48" UNLESS OTHERWISE NOTED.

FLAGGERS SHALL BE IN SIGHT OF EACH OTHER OR IN DIRECT COMMUNICATION AT ALL TIMES. THEY SHALL BE EQUIPPED WITH STOP/SLOW PADDLES FASTENED ON SUPPORT STAFFS. WHEN THE FLAGGING OPERATION IS NOT IN EFFECT, REMOVE TEMPORARY RUMBLE STRIPS PRIOR TO COVERING OR REMOVING ALL ADVANCE SIGNING.

* UTILIZE TEMPORARY RUMBLE STRIPS WHEN FLAGGING OPERATION IS ANTICIPATED TO BE STATIONARY IN EXCESS OF TWO HOURS.

1. FOR A MOVING WORK OPERATION, SIGNING AND TEMPORARY RUMBLE STRIPS (IF USED) SHALL BE REESTABLISHED (AS SIMULTANEOUSLY AS PRACTICAL) AT APPROXIMATELY 3,500 FOOT INTERVALS IN THE MOVING WORK OPERATION OR AS APPROVED BY THE ENGINEER.
2. SIGN NOT REQUIRED IF FLAGGING OPERATION OCCURS WITHIN A SIGNED ROAD WORK ZONE AREA.
3. EACH TEMPORARY RUMBLE STRIP ARRAY CONSISTS OF THREE RUMBLE STRIPS SPACED ACCORDING TO MANUFACTURER'S RECOMMENDATION, PLACED TRANSVERSE ACROSS THE LANE AT LOCATIONS SHOWN.

TRAFFIC CONTROL FOR LANE CLOSURE WITH FLAGGING OPERATION

STATE OF WISCONSIN
DEPARTMENT OF TRANSPORTATION

APPROVED
June 2017 — DATE
/S/ Andrew Heldtke — WORK ZONE ENG
FHWA

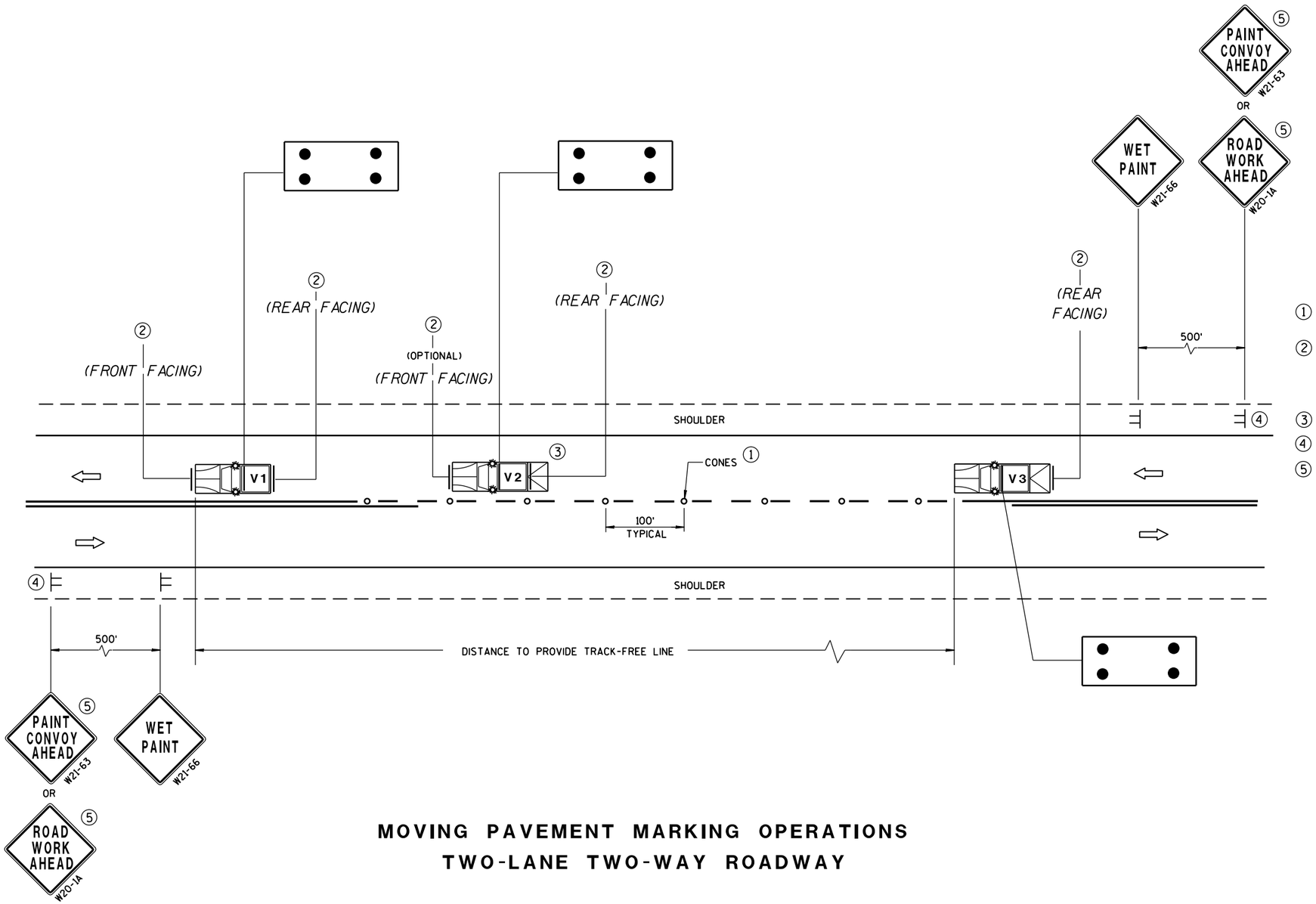

GENERAL NOTES

ALL VEHICLES SHALL BE EQUIPPED WITH TWO 360 DEGREE HIGH INTENSITY YELLOW FLASHING LIGHTS OR STROBE LIGHTS AND OPERATED WITH HEADLIGHTS TURNED ON.

VEHICLES SHALL BE EQUIPPED WITH REAR FACING TYPE B OR C FLASHING ARROW PANEL OPERATING IN CAUTION MODE. SIGNS PLACED ON VEHICLES MUST NOT OBSCURE THE ARROW PANEL.

ALL SIGNS ARE 48" X 48" UNLESS OTHERWISE SPECIFIED.

IF SPEED LIMIT IS 40 MPH OR LESS STATIONARY SIGNS MAY BE OMITTED IF CONES ARE USED.

ALTERNATE SIGN MESSAGES, SUCH AS "PAINT CREW AHEAD" OR "ROAD PAINTING AHEAD" MAY BE USED.

DISTANCE BETWEEN VEHICLES MAY VARY ACCORDING TO TERRAIN, SIGHT DISTANCE, PAINT DRYING TIME, AND OTHER FACTORS. WHENEVER ADEQUATE STOPPING SIGHT DISTANCE EXISTS TO THE REAR, SHADOW VEHICLES SHOULD MAINTAIN THE MINIMUM DISTANCE FROM THE WORK VEHICLE AND PROCEED AT THE SAME SPEED AS THE WORK VEHICLE. SHADOW VEHICLES SHOULD SLOW DOWN IN ADVANCE OF VERTICAL OR HORIZONTAL CURVES THAT RESTRICT SIGHT DISTANCE.

THE WORK AND SHADOW VEHICLES SHOULD PULL OVER PERIODICALLY TO ALLOW TRAFFIC TO PASS.

THIS DRAWING SHALL BE USED FOR CENTERLINE OR EDGELINE MARKING.

WHEN NO WORK ACTIVITY IS TAKING PLACE, REMOVE OR TURN THE STATIONARY WARNING SIGNS AWAY FROM TRAFFIC.

1. CONES MAY BE OMITTED ON PAINTED LINE IF APPROVED BY THE ENGINEER. CONSIDER PAVEMENT MARKING DRY OR CURE TIMES AND TRAFFIC VOLUME.
2. USE STANDARD SIGN W21-64 WITH APPROPRIATE ARROW.

   WET PAINT (W21-64) OR WET PAINT (W21-64)

3. OPTIONAL TRUCK-MOUNTED ATTENUATOR.
4. SIGNS SHALL BE REPEATED APPROXIMATELY EVERY THREE MILES.
5. IF CONSTRUCTION WORK ZONE SIGNS ARE IN PLACE, W20-1 OR W21-63 ARE NOT REQUIRED.

LEGEND

V1	LEAD VEHICLE
V2	SHADOW VEHICLE
V3	TRAIL VEHICLE WITH TMA
TMA	TRUCK-MOUNTED ATTENUATOR
	SIGN ON TEMPORARY SUPPORT
	DIRECTION OF TRAFFIC
	CONES
	FLASHING ARROW PANEL (CAUTION)

MOVING PAVEMENT MARKING OPERATIONS
TWO-LANE TWO-WAY ROADWAY

MOVING PAVEMENT MARKING OPERATION
TWO-LANE TWO-WAY ROADWAY

STATE OF WISCONSIN
DEPARTMENT OF TRANSPORTATION

APPROVED
Sept., 2017 — DATE
/S/ Andrew Heldtke — WORK ZONE ENGR
FHWA

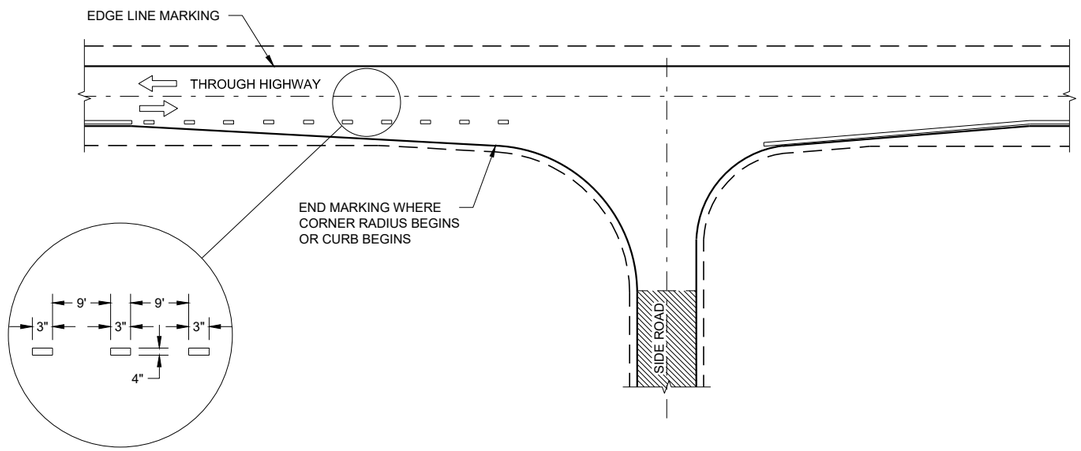

MINOR INTERSECTION

GENERAL NOTES

OMIT EDGE LINES THROUGH INTERSECTIONS. CONTINUE EDGE LINES THROUGH DRIVEWAYS.

1. WHEN DISTANCE "A" IS LESS THAN 250 FEET, OMIT LANE LINE.
2. WHEN DISTANCE "B" IS LESS THAN 100 FEET, OMIT CHANNELIZING LANE LINE.
3. BARRIER LINE ENDS AT SIDE ROAD PAVEMENT / SURFACE EDGE EXTENSION.
4. BARRIER LINE STARTS 500 FEET PRIOR TO THE BYPASS TAPER

ARROW SYMBOL (⇨) SHOWS DIRECTION OF TRAVEL

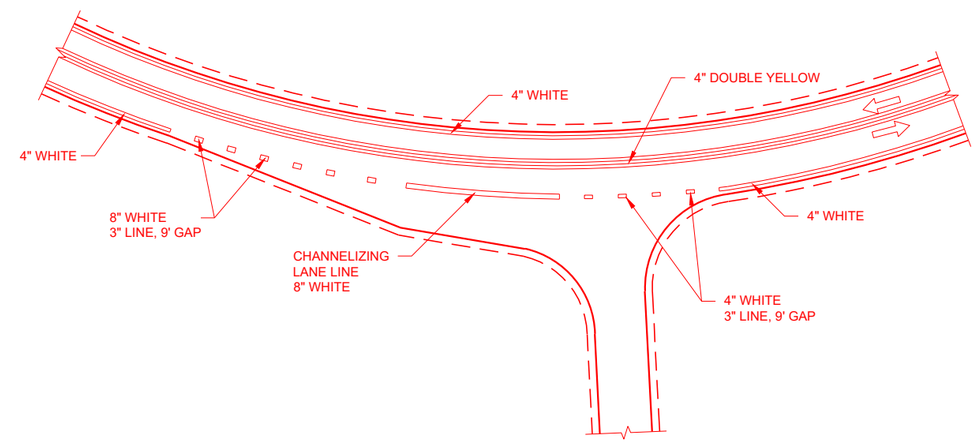

INTERSECTION ON OUTSIDE OF CURVE

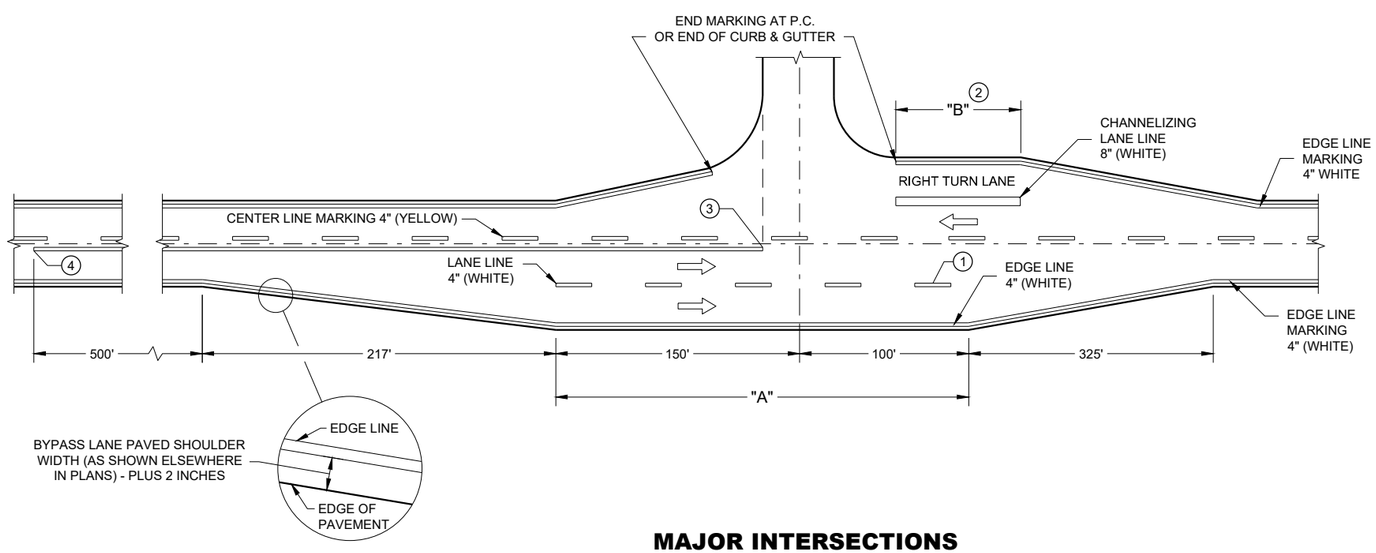

MAJOR INTERSECTIONS

(INTERSECTION WITH FULL RIGHT TURN LANE OR BYPASS LANE)

6

6

SDD 15C35 - 03a

SDD 15C35 - 03a

PAVEMENT MARKING (INTERSECTIONS)

STATE OF WISCONSIN
DEPARTMENT OF TRANSPORTAT

GENERAL NOTES

THE EXACT NUMBER, LOCATION AND SPACING OF ALL SIGNS AND DEVICES SHALL BE ADJUSTED TO FIT FIELD CONDITIONS AS APPROVED BY THE ENGINEER.

ALL SIGNS ARE 48" X 48" UNLESS OTHERWISE NOTED. IF NECESSARY DUE TO SPACE CONSTRAINTS IN URBAN AREAS, 36" X 36" SIGNS MAY BE USED IF APPROVED BY DISTRICT TRAFFIC UNIT.

"WO" SIGNS ARE THE SAME AS "W" SIGNS EXCEPT THE BACKGROUND IS ORANGE.

SIGNS THAT WILL BE IN PLACE LESS THAN 7 CONTINUOUS DAYS AND NIGHTS MAY BE MOUNTED ON PORTABLE SUPPORTS.

ANY SIGNS TEMPORARY OR EXISTING, WHICH CONFLICT WITH TRAFFIC CONTROL "IN USE" SHALL BE REMOVED OR COVERED AS NEEDED AND AS APPROVED BY THE ENGINEER.

W20-1A AND G20-2A SIGNS ARE NOT REQUIRED IF THE WORK AREA IS WITHIN A LARGER WORK ZONE WHERE THESE SIGNS ARE ALREADY PRESENT. G20-2A SIGNS MAY ALSO BE OMITTED IF DURATION OF WORK IS LESS THAN 7 CONTINUOUS DAYS AND NIGHTS.

CHANNELIZING DEVICES PLACED ADJACENT TO THE WORK AREA SHALL BE PULLED BACK FROM THE TRAVEL LANE WHEN WORK IS NOT IN PROGRESS.

TABLE A

S \ W	SHOULDER TAPER LENGTH (FEET) 4	6	8	10	BUFFER SPACE (FEET)
30	20	30	40	50	200
35	30	45	55	70	250
40	40	55	75	90	305
45	60	90	120	150	360
50	70	100	135	170	425
55	75	110	150	185	495

SHOULDER TAPER LENGTH = $\frac{1}{3}L$

W = SHOULDER WIDTH (FEET)
S = NON-CONSTRUCTION SPEED LIMIT (MPH)

TAPER LENGTH

$L = WS$ AT 45 MPH OR GREATER

$L = \frac{WS^2}{60}$ AT 40 MPH OR LESS

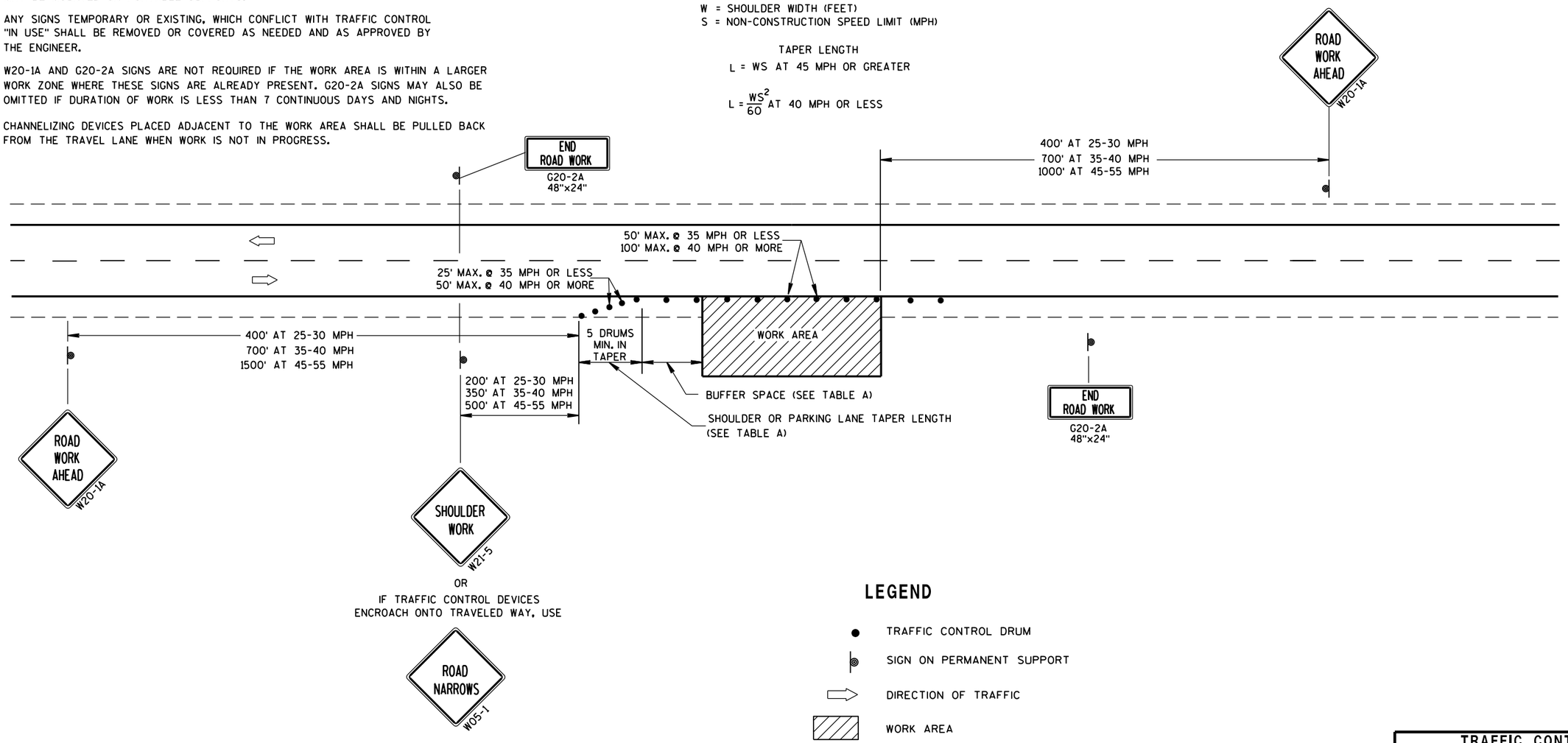

LEGEND

- TRAFFIC CONTROL DRUM
- SIGN ON PERMANENT SUPPORT
- DIRECTION OF TRAFFIC
- WORK AREA

TRAFFIC CONTROL, WORK ON SHOULDER OR PARKING LANE, UNDIVIDED ROADWAY

STATE OF WISCONSIN
DEPARTMENT OF TRANSPORTATION

APPROVED

July 14, 2015 — DATE

/S/ Peter Amakobe Atepe — STATEWIDE WORK ZONE TRAFFIC SAFETY ENGIN

FHWA

6

S.D.D. 15 D 28-3

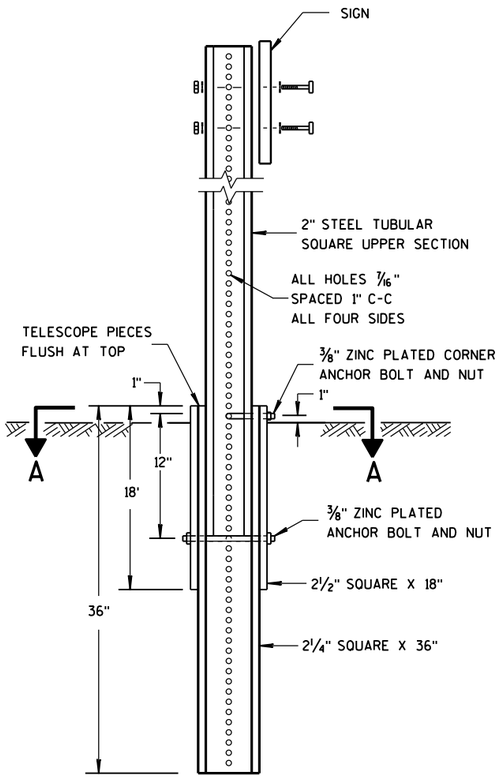

DETAIL OF TUBULAR STEEL SIGN POST

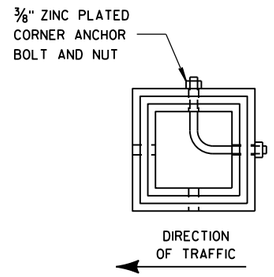

SECTION A-A

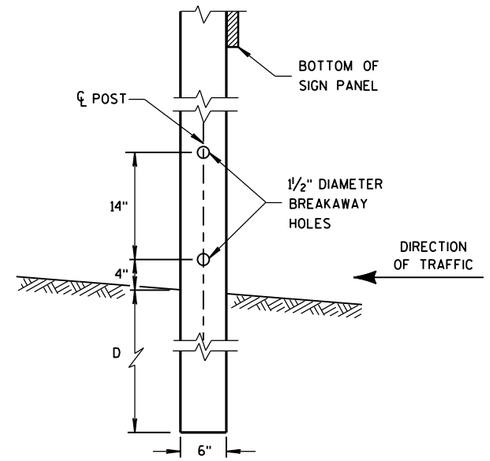

4"x6" WOOD POST MODIFICATION

GENERAL NOTES

1. 6 FEET FROM THE EDGE OF PAVEMENT (EDGE LINE LOCATION) UNLESS OTHERWISE DIRECTED BY THE PROJECT ENGINEER. LATERAL OFFSET SHOULD BE ADJUSTED TO AVOID THE DITCH FLOWLINE.
2. THE EXISTENCE OF CURB AND GUTTER DOES NOT IN ITSELF MANDATE THE VERTICAL CLEARANCE ILLUSTRATED. THAT HEIGHT IS TYPICALLY MEASURED WHERE THERE IS SIDEWALK ADJACENT TO THE ROADWAY OR PARKING IS PERMITTED. IN THE ABSENCE OF SIDEWALK, VERTICAL CLEARANCE IS MEASURED FROM THE TOP OF THE CURB. IF NO SIDEWALK AND NO PARKING, VERTICAL CLEARANCE MAY BE REDUCED TO 5 FOOT MINIMUM. OFFSET OF SIGNS IS MEASURED FROM THE CURB FLOWLINE.
3. FOR SIGNS REQUIRING 4 POSTS, SPACE INTERMEDIATE POSTS EVENLY.

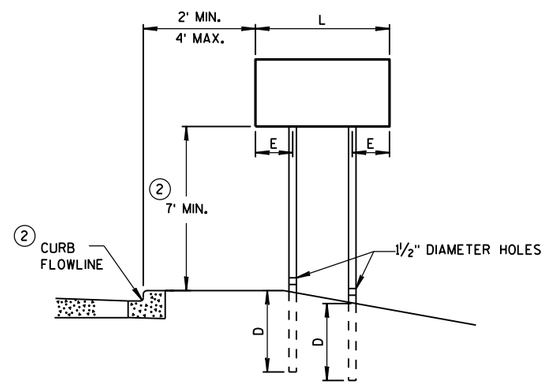

URBAN AREA

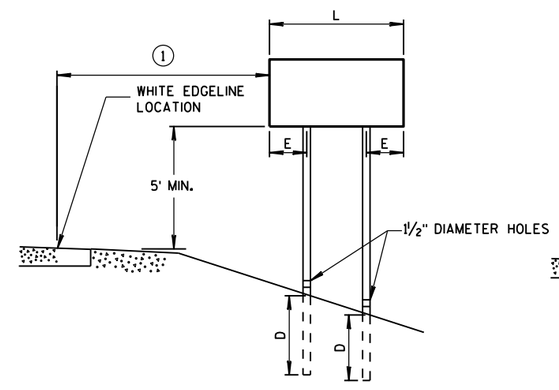

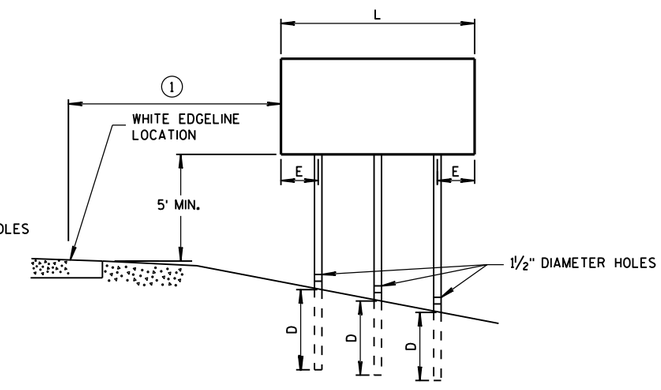

RURAL AREA

POST MOUNTING DETAIL FOR TEMPORARY TRAFFIC CONTROL FIXED MESSAGE SIGNS

TUBULAR STEEL POSTS

AREA OF SIGN INSTALLATION (SQ. FT.)	NUMBER OF REQUIRED TUBULAR STEEL POSTS
9 OR LESS	1
GREATER THAN 9 LESS THAN OR EQUAL TO 18	2
GREATER THAN 18 LESS THAN OR EQUAL TO 27	3

SIGNS WIDER THAN 3 FEET OR LARGER THAN 9 SQ. FT. SHALL BE MOUNTED ON MULTIPLE POSTS (SEE ABOVE TABLE).

SIGNS LARGER THAN 27 SQ. FT. SHALL NOT BE MOUNTED ON TUBULAR STEEL POSTS.

WOOD POST EMBEDMENT DEPTH

AREA OF SIGN INSTALLATION (SQ. FT.)	D (MIN)
20 OR LESS	4'
GREATER THAN 20	5'

4" X 6" WOOD POST

POST SPACING REQUIREMENTS		NUMBER OF WOOD POSTS REQUIRED
L	E	
48" OR LESS AND LESS THAN 20 SQ. FT.	-	1
LESS THAN 60"	12"	2
60" TO 120"	L/5	2
GREATER THAN 120" LESS THAN 168"	12"	3
168" AND GREATER	12"	4

SEE NOTE 3

TEMPORARY TRAFFIC CONTROL SIGN MOUNTING

STATE OF WISCONSIN
DEPARTMENT OF TRANSPO

6

S.D.D. 15 D 38-2a

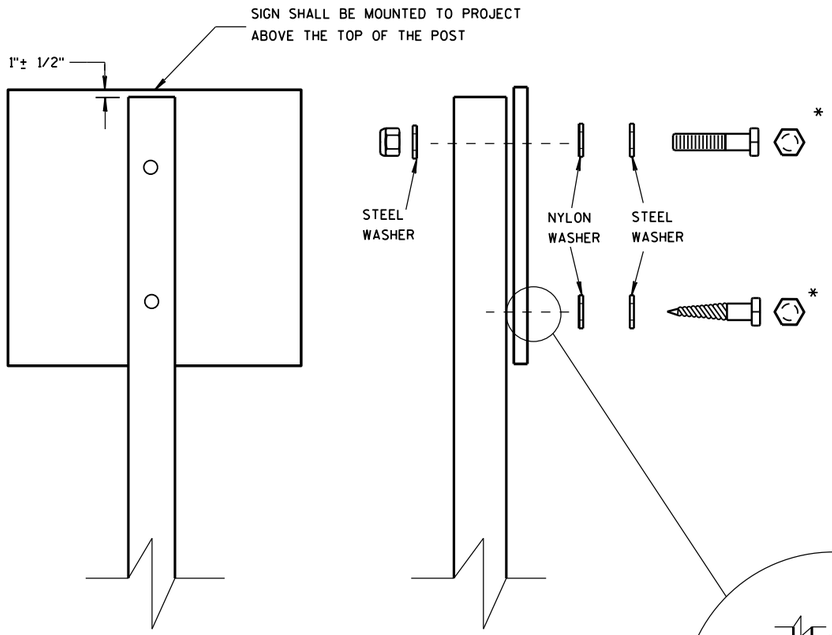

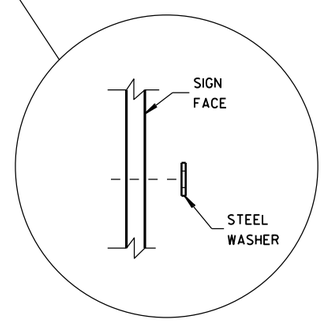

WASHER PLACEMENT WHEN SIGN HAS OTHER THAN TYPE H OR TYPE F FACE

NUTS, BOLTS AND LAGS USED FOR MOUNTING SIGNS SHALL HAVE HEXAGONAL HEADS AND SHALL BE EITHER:

A. HOT DIP GALVANIZED IN ACCORDANCE WITH ASTM DESIGNATION: A 153, CLASS D, OR SC 3

B. ELECTRO-GALVANIZED IN ACCORDANCE WITH ASTM DESIGNATION: B 633, TYPE III, SC 3

THREADS ON BOLTS AND NUTS SHALL BE MANUFACTURED WITH SUFFICIENT ALLOWANCE FOR THE CADMIUM PLATE OR GALVANIZED COATING TO PERMIT THE NUTS TO RUN FREELY ON THE BOLTS.

WOOD POSTS (4" x 4" or 4" x 6")

LAG SCREWS - 3/8" X 3"

MACHINE BOLTS - 5/16" X 6-1/2" OR 7" LENGTH W/ NUTS

SQUARE STEEL POSTS (2" x 2")

MACHINE BOLTS - 3/8" X 3-1/4" LENGTH W/ NUTS

RIVETS - 9/32" (6605-9-6) BULB-TITE, TRI-FOLD, ALUMINUM BODY/MANDREL O.D. FLANGE .720-.765 INCH, GRIP RANGE .042-.375 INCH

WASHERS (ALL POSTS) -

1-1/4" O.D. X 3/8" I.D. X 1/16" STEEL

1-1/4" O.D. X 3/8" I.D. X .080 NYLON FOR ALL TYPE H SIGNS

* TWO DIFFERENT FASTENING SYSTEMS ARE SHOWN FOR ILLUSTRATION PURPOSES. ON ANY INDIVIDUAL SIGN, EITHER ONE OR THE OTHER SYSTEM SHALL BE USED. ACTUAL NUMBER OF FASTENERS PER SIGN VARIES WITH THE SIGN AREA. FOR A SINGLE POST INSTALLATION, ALL SIGNS GREATER THAN 9 SQ. FT. REQUIRE THE USE OF 3 FASTENERS.

6

6

S.D.D. 15 D 38-2b

S.D.D. 15 D 38-2b

ATTACHMENT OF SIGNS TO POSTS

STATE OF WISCONSIN
DEPARTMENT OF TRANSPORTATION

APPROVED

June 2017 — /S/ Andrew Heldtke
DATE — WORK ZONE ENG

FHWA

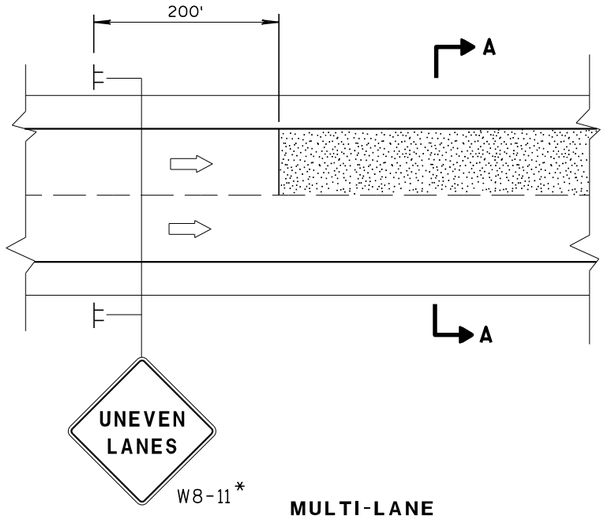

MULTI-LANE

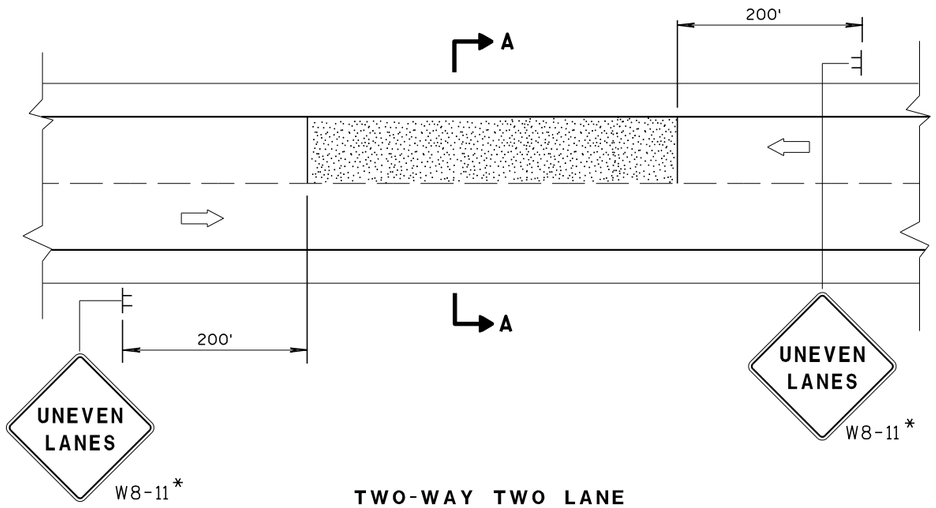

TWO-WAY TWO LANE

SECTION A-A

OR

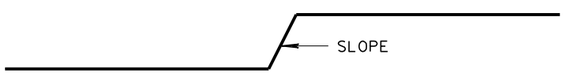

SECTION A-A

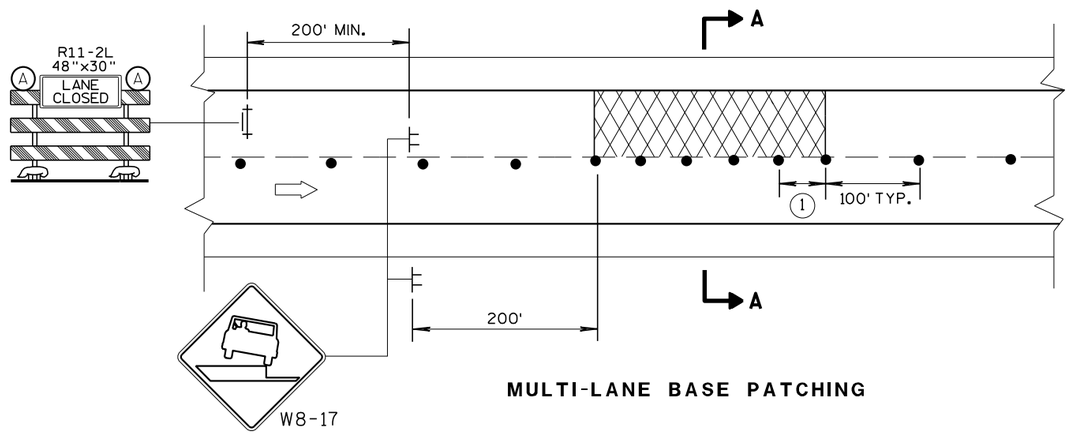

MULTI-LANE BASE PATCHING

ADJACENT LANE DROP-OFFS

GENERAL NOTES

FOR SPOT LOCATIONS USE ENGINEERING JUDGEMENT WHEN PLACING ADDITIONAL SIGNS.

ALL SIGNS ARE 48" X 48" UNLESS OTHERWISE NOTED.

"WO" SIGNS ARE THE SAME AS "W" SIGNS EXCEPT THE BACKGROUND IS ORANGE.

WARNING LIGHTS ARE NOT REQUIRED IF THE LANE CLOSURE IS A DAYTIME ONLY OPERATION.

* IF THE DROP-OFF IS CONTINUOUS ALONG THE PROJECT, PLACE ADDITIONAL SIGNS EVERY 1 MILE AND AFTER EACH ENTRANCE RAMP.

(1) USE CLOSER SPACING WHEN DELINEATING DROP-OFF.

LEGEND

- TYPE III BARRICADE WITH ATTACHED SIGN
- SIGN ON TEMPORARY SUPPORT
- TRAFFIC CONTROL DRUM
- (A) TYPE "A" WARNING LIGHT (FLASHING)
- DIRECTION OF TRAFFIC
- WORK AREA WITH DROP-OFF
- MILLED SURFACE

D	SIGN (C)
< 2" WITH A SLOPE STEEPER THAN 3:1	LOW SHOULDER WO8-9
2" < 6" WITH A SLOPE STEEPER THAN 3:1	SHOULDER DROP-OFF W8-9A PROVIDE A 3:1 OR FLATTER SLOPE OF MATERIAL ADJACENT TO THE PAVEMENT

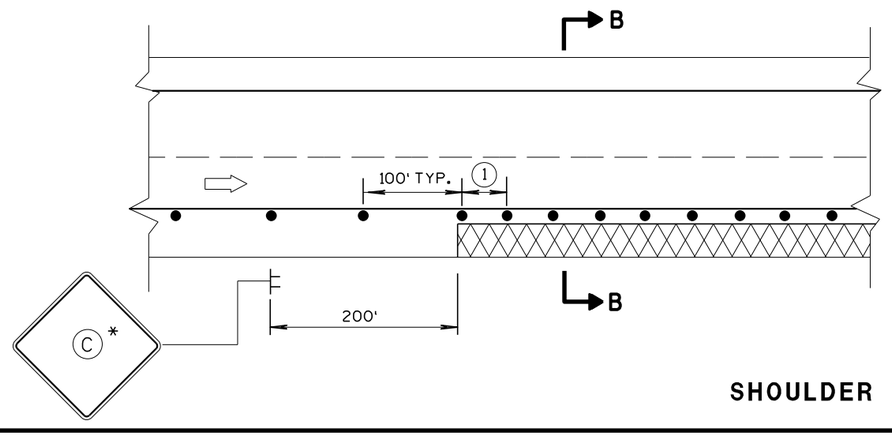

SHOULDER DROP-OFFS

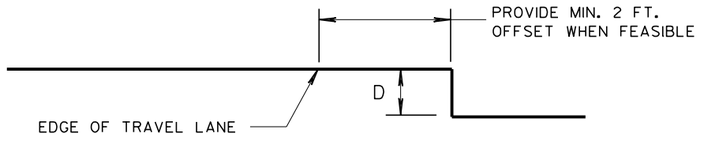

SECTION B-B

TRAFFIC CONTROL, DROP-OFF SIGNING

STATE OF WISCONSIN
DEPARTMENT OF TRANSPORTATION

APPROVED
March 2018 — DATE
/S/ Andrew H — WORK ZONE EN
FHWA

6

S.D.D. 15 D 39-2

URBAN AREA

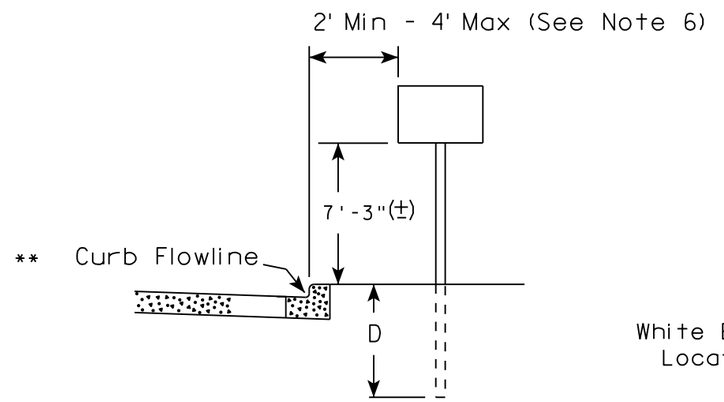

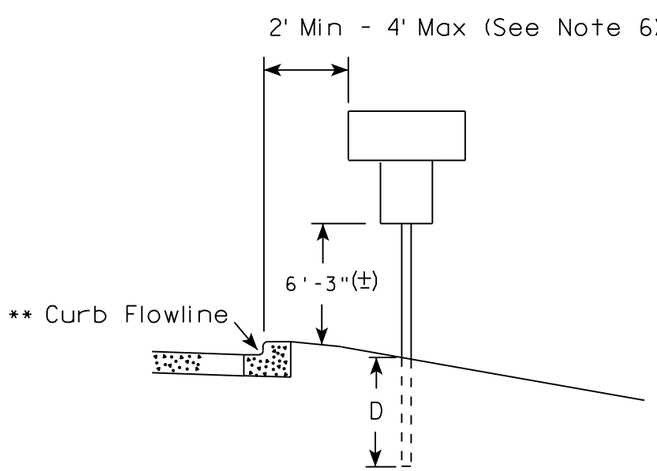

RURAL AREA (See Note 2)

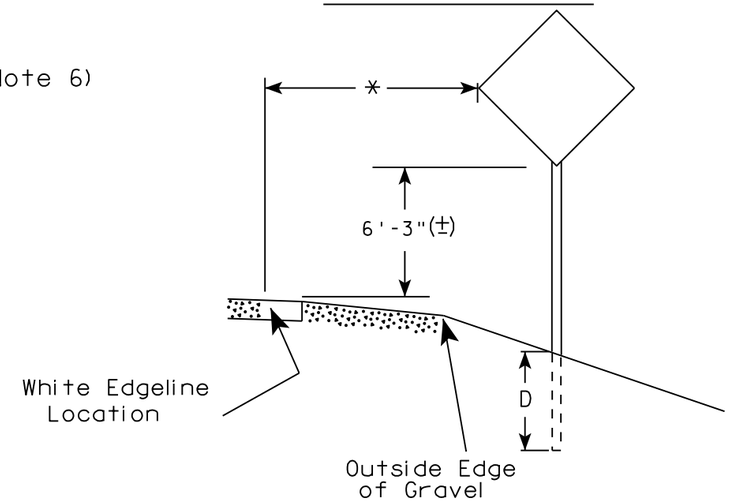

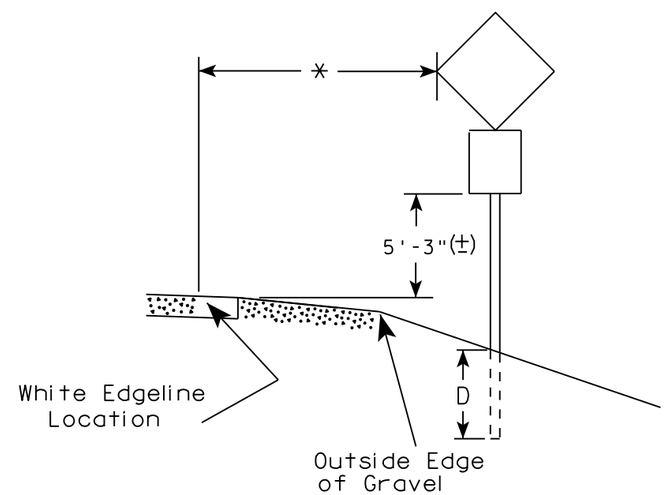

** The existence of curb and gutter does not in itself mandate the vertical clearance illustrated. That height is typically measured where there is sidewalk adjacent to the roadway or parking is permitted. In the absence of sidewalk vertical clearance is measured from the top of the curb. Offset of signs is measured from the flow line.

* 6 feet from edge of a paved shoulder or 12 feet from the edge of pavement (edge line location) or 2 feet from outside edge of gravel, whichever is greater unless directed by project engineer.

GENERAL NOTES

1. Signs wider than 4 feet or 20 sq.ft or larger, shall be mounted on multiple posts. Refer to plate A4-4.
2. If signs are mounted on barrier wall, see A4-10 sign plate.
3. For expressways and freeways, mounting height is 7'- 3" (±) or 6'-3" (±) depending upon existence of a sub-sign.
4. J-Assemblies are considered to be one sign for mounting height.
5. Minimum mounting height for signs mounted on traffic signal poles is 5'- 3" (±).
6. Offset distance shall be consistent with existing signs or consistent throughout length of project.
7. The (±) tolerance for mounting height is 3 inches.
8. Folding signs shall be mounted at a height of 5'-3" (±) or as directd by the Engineer.
9. The Double Arrow sign (W12-1) shall be mounted at a height of 2'-3" (±). The Chevron sign (W1-8), Roundabout Chevron panel (R6-4B), Enhanced Reference Markers, Clearance Markers (W5-52), Mile Markers (D10 series), In Road Object Markers (W5-54) & End of Road Markers (W5-56) shall be mounted at a height of 4'-3" (±).

POST EMBEDMENT DEPTH

Area of Sign Installation (Sq. Ft.)	D (Min)
20 or Less	4'
Greater than 20	5'

TYPICAL INSTALLATION OF PERMANENT TYPE II SIGNS ON SINGLE POSTS

WISCONSIN DEPT OF TRANSPORTATION

APPROVED Matthew R Rauch for State Traffic Engineer

DATE 8/21/17 PLATE NO. A4-3.21

7

7

PROJECT NO:	HWY:	COUNTY:		SHEET NO: 129	E

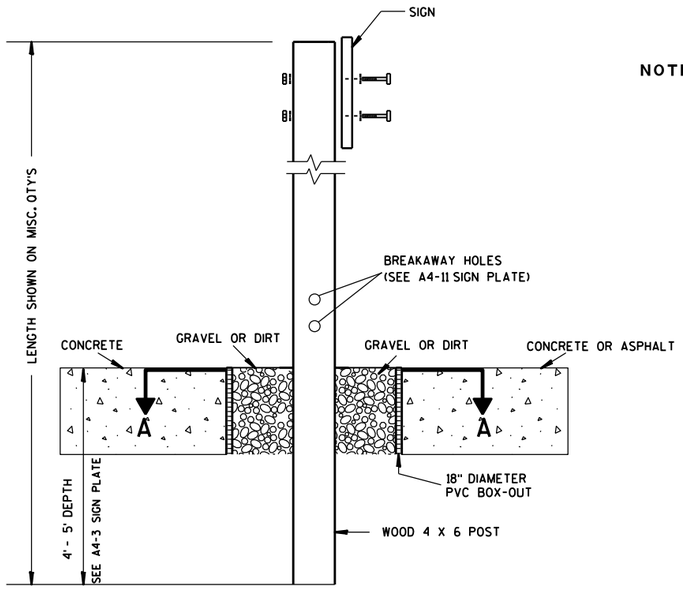

ELEVATION VIEW

DETAIL OF WOOD 4 X 6 SIGN POST IN BOX-OUT

NOTES:
1. ALL MATERIAL TO BE APPROVED BY ENGINEER PRIOR TO INSTALLATION
2. SEE SIGN PLATE A4-8 FOR SIGN HARDWARE REQUIREMENTS
3. 18 INCH X 18 INCH SQUARE BOX-OUTS MAY BE USED FOR INSTALLATIONS IN EXISTING CONCRETE OR ASPHALT LOCATIONS.

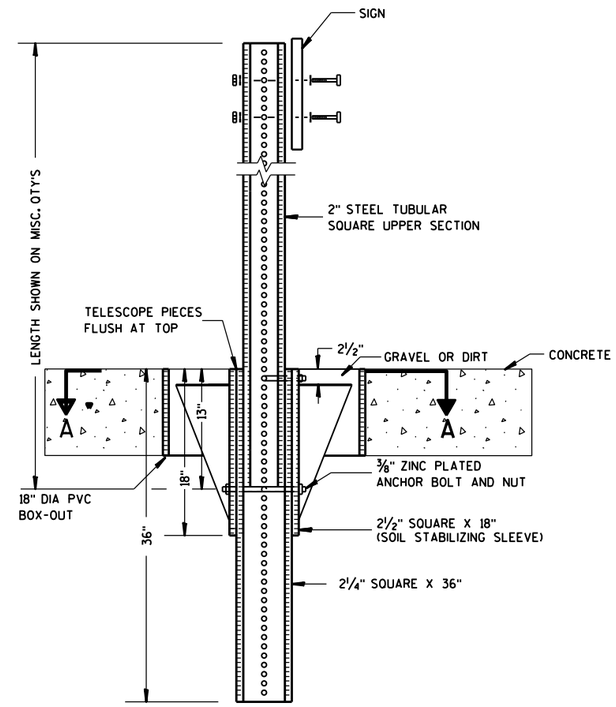

ELEVATION VIEW

DETAIL OF STEEL 2 X 2 SIGN POST IN BOX-OUT

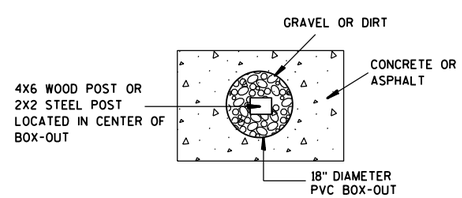

PLAN VIEW

FOR NEW CONCRETE/ASPHALT INSTALLATIONS

SIGN POST
BOX-OUTS
A4-3B

WISCONSIN DEPT OF TRANSPORTATION

APPROVED Matthew R Rauch
for State Traffic Engineer

DATE 1/27/14 PLATE NO. A4-3B.1

PROJECT NO:	HWY:	COUNTY:		SHEET NO:	E

URBAN AREA

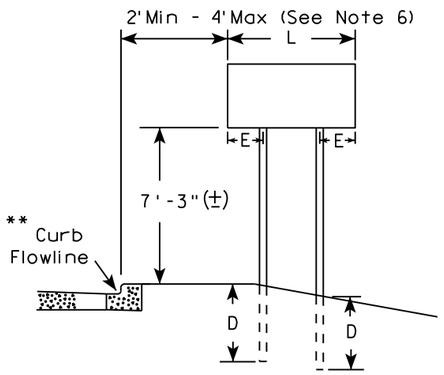

RURAL AREA (See Note 3)

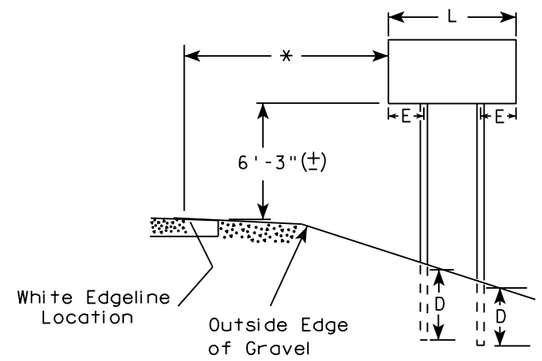

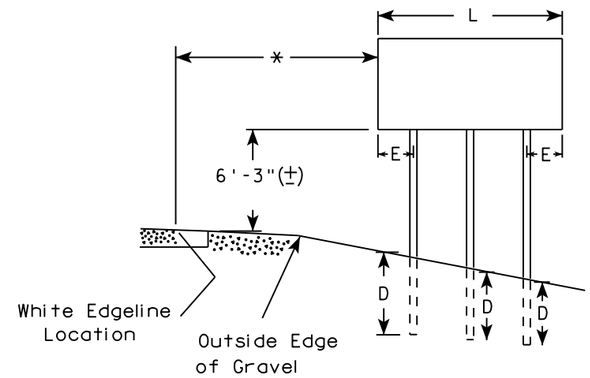

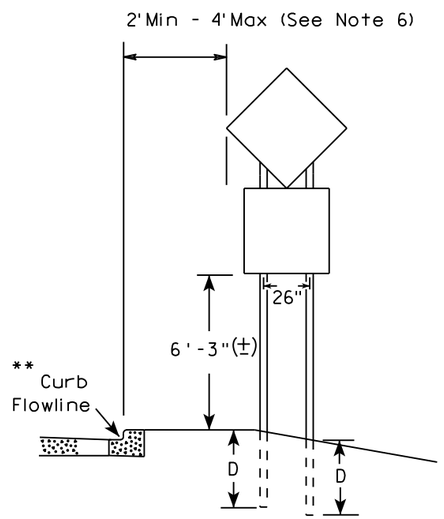

48" DIAMOND WARNING SIGN

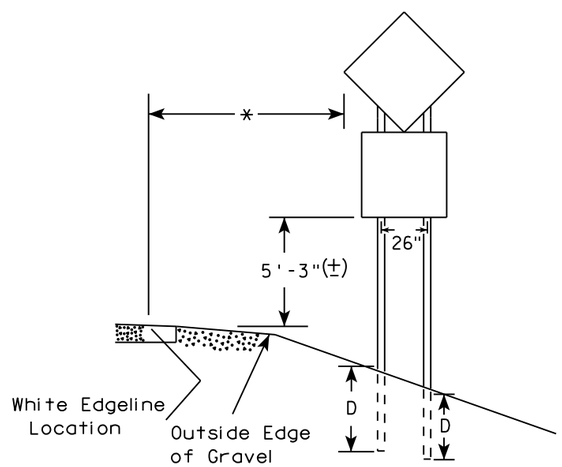

48" DIAMOND WARNING SIGN

SIGN SHAPE OTHER THAN DIAMOND (TWO POSTS REQUIRED)	
L	E
*** Greater than 48" Less than 60"	12"
60" to 108"	L/5

SIGN SHAPE OTHER THAN DIAMOND (THREE POSTS REQUIRED)	
L	E
Greater than 108" to 144"	12"

GENERAL NOTES

1. For 3 or 4 post installations, individual post spacing shall be greater than 3'-6".
2. See tables below for required number of posts.
3. For expressways and freeways, mounting height is 7'-3" (±) or 6'-3" (±) depending upon existence of sub-sign.
4. The (±) tolerance for mounting height is 3 inches.
5. J-Assemblies are considered to be one sign for mounting height.
6. Offset distance shall be consistent with existing signs or consistent throughout length of project.
7. Folding signs shall be mounted at a height of 5'-3" (±) or as directed by the engineer.
8. The Double Arrow sign (W12-1) shall be mounted at a height of 2'-3" (±). The Chevron sign (W1-8), Roundabout Chevron panel (R6-4B), Clearance Markers (W5-52), Mile Markers (D10 series), In Road Object Markers (W5-54) & End of Road Markers (W5-56) shall be mounted at a height of 4"-3" (±).

* 6 feet from edge of a paved shoulder or 12 feet from the edge of pavement (edge line location) or 2 feet from outside edge of gravel, whichever is greater unless directed by project engineer.

** The existence of curb and gutter does not in itself mandate the vertical clearance illustrated. That height is typically measured where there is sidewalk adjacent to the roadway or parking is permitted. In the absence of sidewalk vertical clearance is measured from the top of the curb. Offset of signs is measured from the flow line.

*** See A4-3 sign plate for signs 4' or less in width and less than 20 S.F. in area.

POST EMBEDMENT DEPTH

Area of Sign Installation (Sq. Ft.)	D (Min)
20 or Less	4'
Greater than 20	5'

TYPICAL INSTALLATION OF TYPE II SIGNS ON MULTIPLE POSTS

WISCONSIN DEPT OF TRANSPORTATION

APPROVED Matthew R Rauch
For State Traffic Engineer

DATE 8/21/17 PLATE NO. A4-4.15

7

7

PROJECT NO:	HWY:	COUNTY:		SHEET NO: 131	E

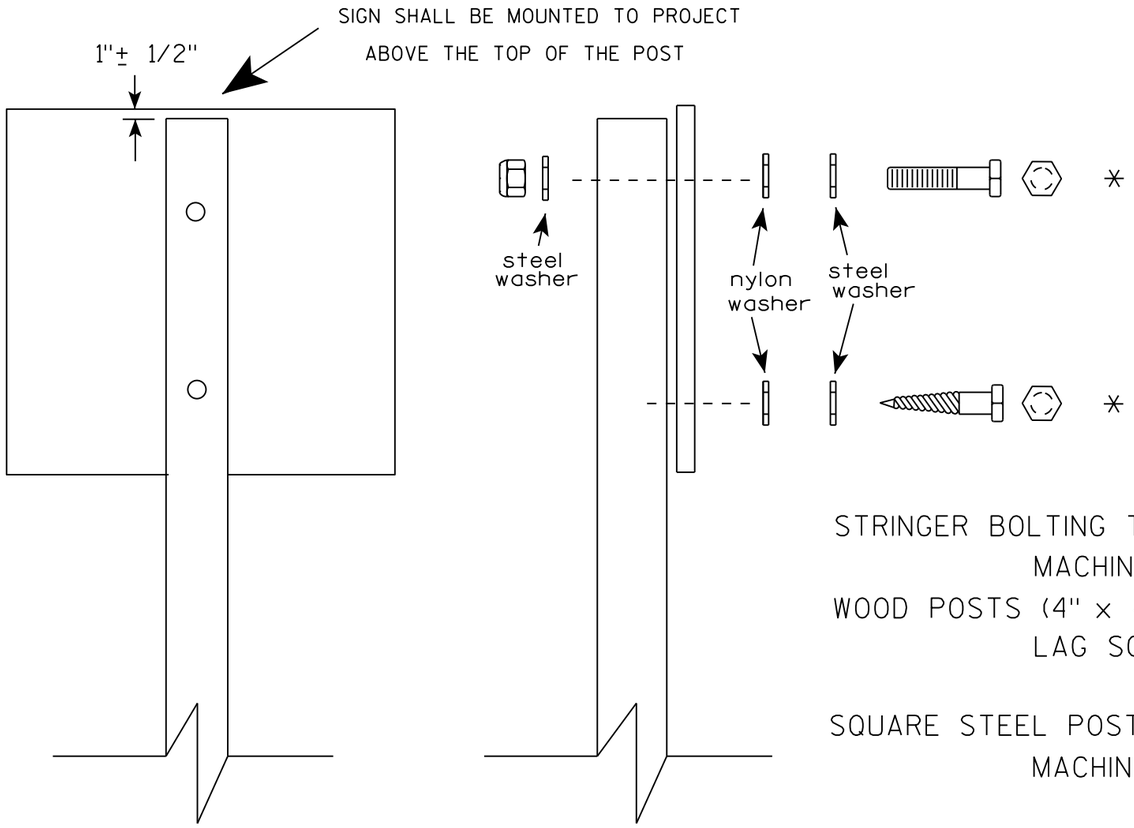

Nuts, bolts and lags used for mounting signs shall have hexagonal heads and shall be either :

a. Hot dip galvanized in accordance with ASTM Designation: A 153, Class D, or SC 3

b. Electro-galvanized in accordance with ASTM Designation : B 633, TYPE III, SC 3.

Threads on bolts and nuts shall be manufactured with sufficient allowance for the cadmium plate or galvanized coating to permit the nuts to run freely on the bolts.

STRINGER BOLTING TO ALUMINUM SIGNS (SEE SIGN PLATE A4-18)

MACHINE BOLTS - 5/16" X 1-3/4" Length w/ lock nuts

WOOD POSTS (4" x 4" or 4" x 6")

LAG SCREWS - 3/8" X 3" (NO STRINGERS ON BACK OF SIGN)

3/8" X 4" (STRINGERS ON BACK OF SIGN)

SQUARE STEEL POSTS (2" x 2")

MACHINE BOLTS - 3/8" X 3-1/4" Length w/ nuts (NO STRINGER ON BACK OF SIGN)

3/8" X 5" Length w/ nuts (STRINGERS ON BACK OF SIGN)

RIVETS - 9/32 " (6605-9-6) BULB-TITE, TRI-FOLD, ALUMINUM BODY/MANDREL

O.D. FLANGE .720-.765 INCH, GRIP RANGE .042-.375 INCH

WASHERS (ALL POSTS) -

1-1/4" O.D. X 3/8" I.D. X 1/16" STEEL

1-1/4" O.D. X 3/8" I.D. X .080 NYLON

* Two different fastening systems are shown for illustration purposes. On any individual sign, either one or the other system shall be used. Actual number of fasteners per sign varies with the sign area, but normally there are two. For a single post installation, all signs greater than 9 sq. ft. require the use of 3 fasteners.

ATTACHMENT OF SIGNS TO POSTS

WISCONSIN DEPT OF TRANSPORTATION

APPROVED Matthew R Rauch for State Traffic Engineer

DATE 8/11/16 PLATE NO. A4-8.8

PROJECT NO: SHEET NO: E

TELESCOPIC TUBING ANCHORS
TWO PIECE SYSTEM

2 1/4" SQUARE
12 GAUGE
PERFORATED
GALVANIZED FINISH

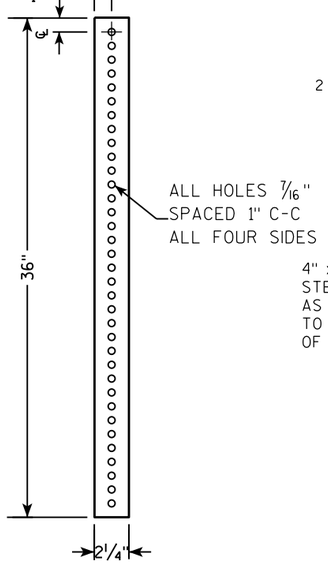

2 1/2" SQUARE
12 GAUGE
OMNI-DIRECTIONAL
PERFORATED
SOIL STABILIZING SLEEVE
GALVANIZED FINISH

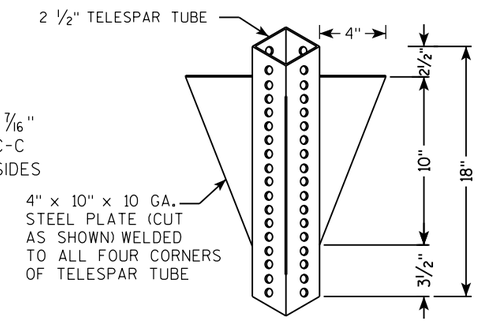

DETAIL OF TUBULAR STEEL SIGN POST
(IN POURED CONCRETE OR ASPHALT)

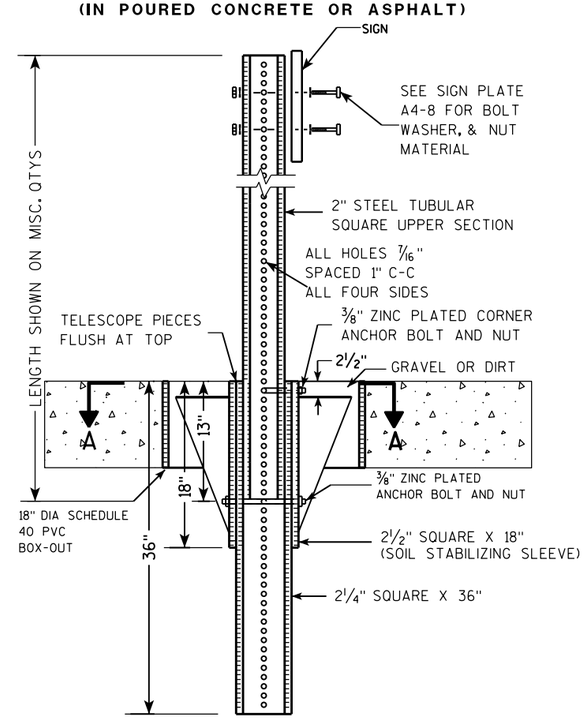

DETAIL OF TUBULAR STEEL SIGN POST
(IN LOCATIONS OTHER THAN POURED CONCRETE OR ASPHALT)

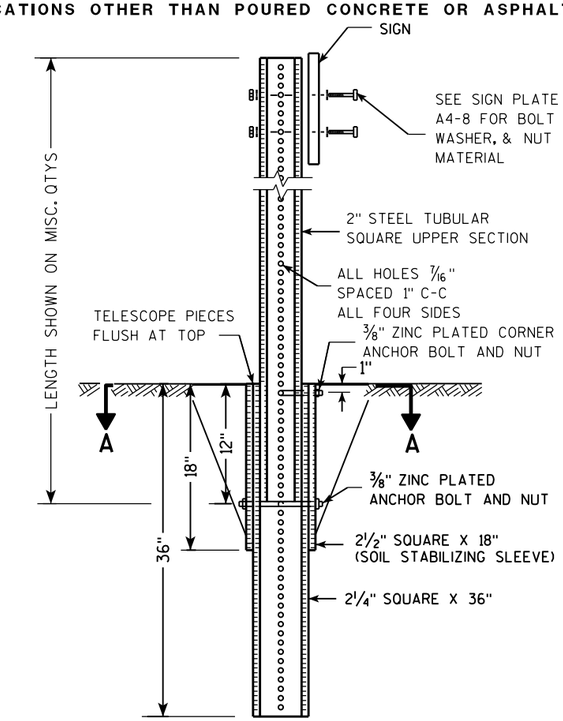

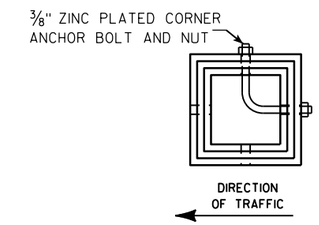

SECTION A-A

Area of Sign Installation (Sq. Ft.)	Number of Required Posts
9 or less	1
Greater than 9 less than or equal to 18	2
Greater than 18 less than or equal to 27	3

Signs wider than 3 feet or larger than 9 sq. ft shall be mounted on multiple posts (see above table).

TUBULAR STEEL
SIGN POST
A4-9

WISCONSIN DEPT OF TRANSPORTATION

APPROVED Matthew R Rauch
for State Traffic Engineer

DATE 2/05/15 PLATE A4-9.9

PROJECT NO:	HWY:	COUNTY:		SHEET NO:	E

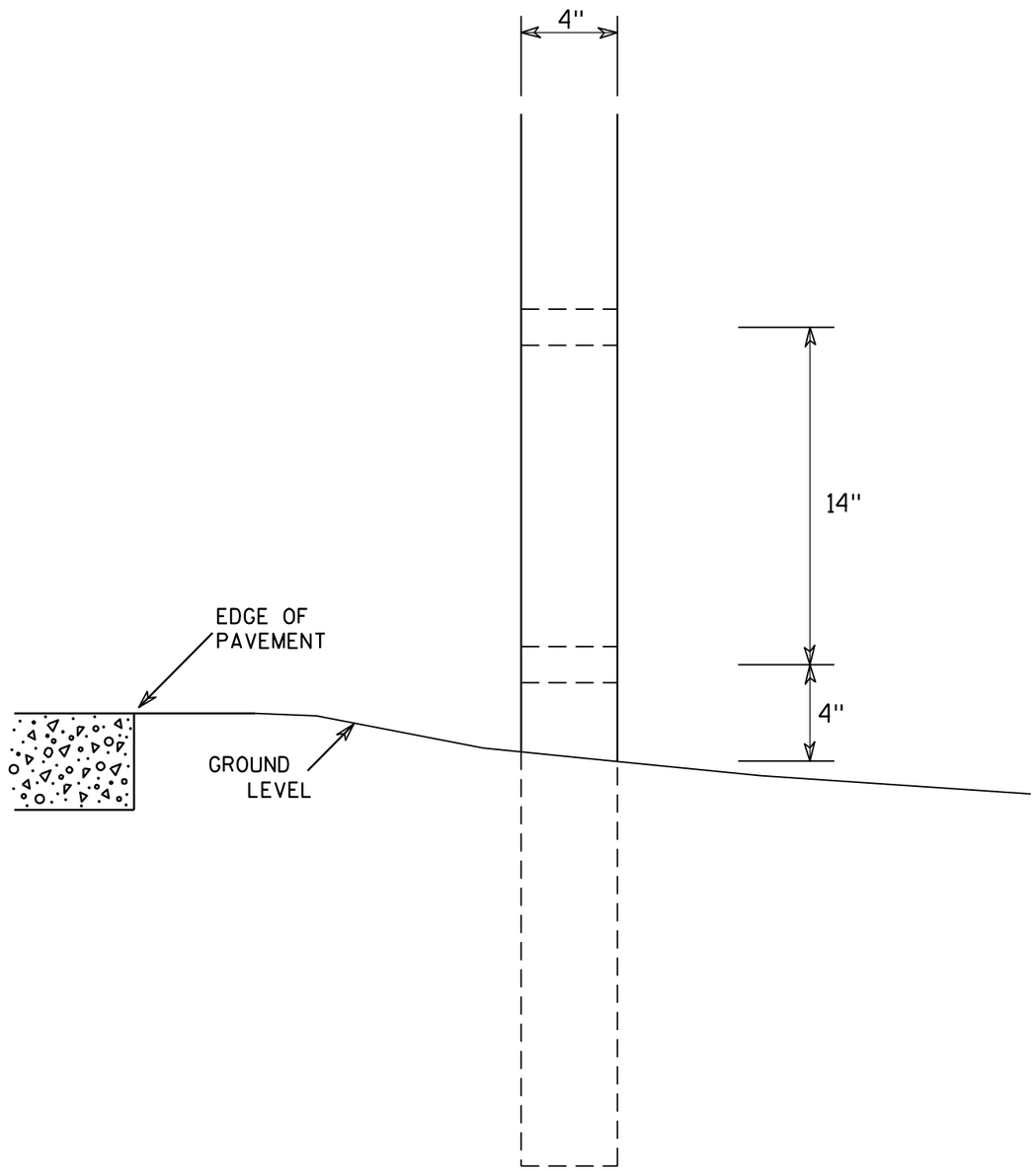

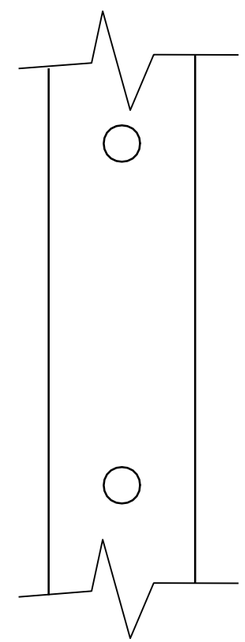

SIDE VIEW

GENERAL NOTES

1. All 4 x 6 Wood Posts shall be modified by having two 1½" diameter holes drilled perpendicular to the roadway centerline.

7

7

4 X 6 WOOD POST MODIFICATIONS

WISCONSIN DEPT OF TRANSPORTATION

APPROVED Chester J Spang for State Traffic Engineer

DATE 3/27/97 PLATE NO. A4-11.2

PROJECT NO:	HWY:	COUNTY:		SHEET NO: 134	E

BANDING

SINGLE SIGN

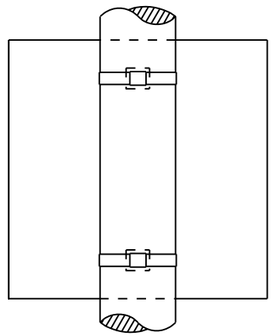

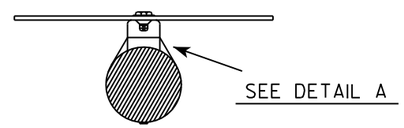

"J" ASSEMBLY

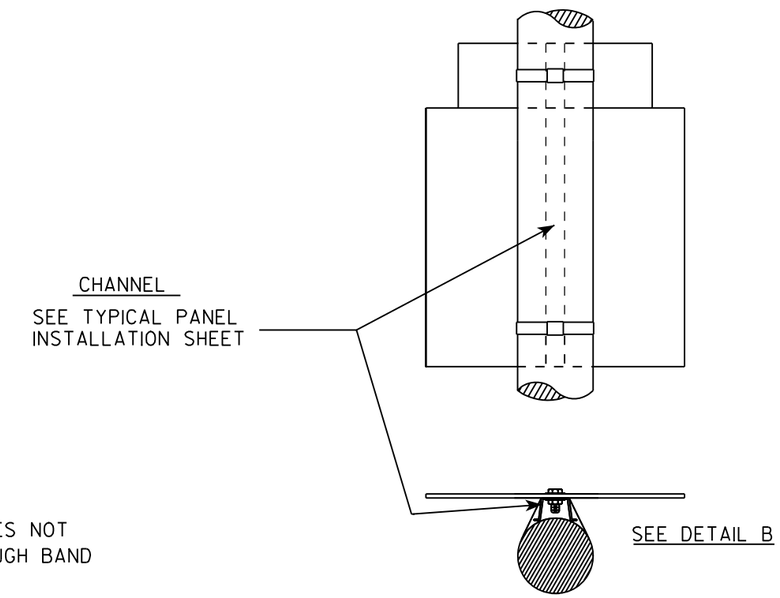

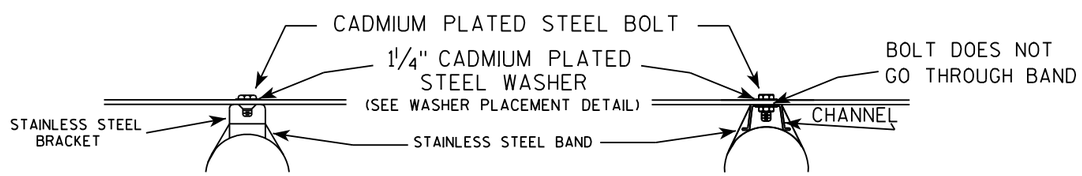

WASHER PLACEMENT

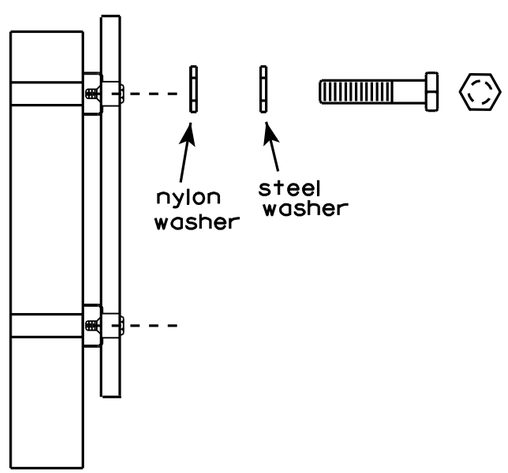

WASHERS (ALL POSTS) -

1-1/4" O.D. X 3/8" I.D. X 1/16" STEEL

1-1/4" O.D. X 3/8" I.D. X .080 NYLON

FOR ALL TYPE H SIGNS

GENERAL NOTES

1. Any sign over 3 feet in width shall use the V-Block banding method. See A5-10 standard plate.
2. Signs 3 feet or greater in height shall have three bracket bands installed. Signs less than 3 feet in height shall have two bracket bands installed.
3. Banding and assembly bracket shall be stainless steel. All bands shall be ¾" in width and 0.025" thickness.

STANDARD SIGN

SIGN BANDING DETAILS

WISCONSIN DEPT OF TRANSPORTATION

APPROVED Matthew R Rauch for State Traffic Engineer

DATE 8/16/13 PLATE NO. A5-9.3

PROJECT NO:	HWY:	COUNTY:		SHEET NO: 135	E

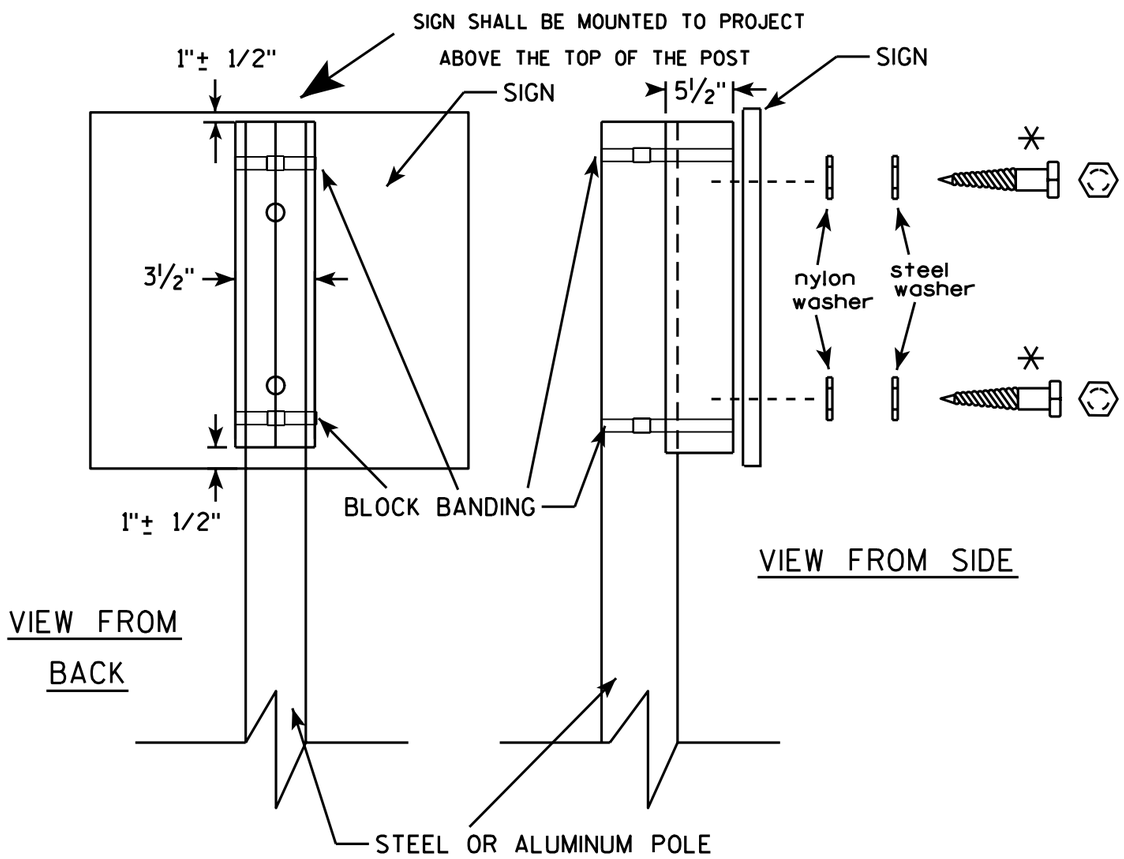

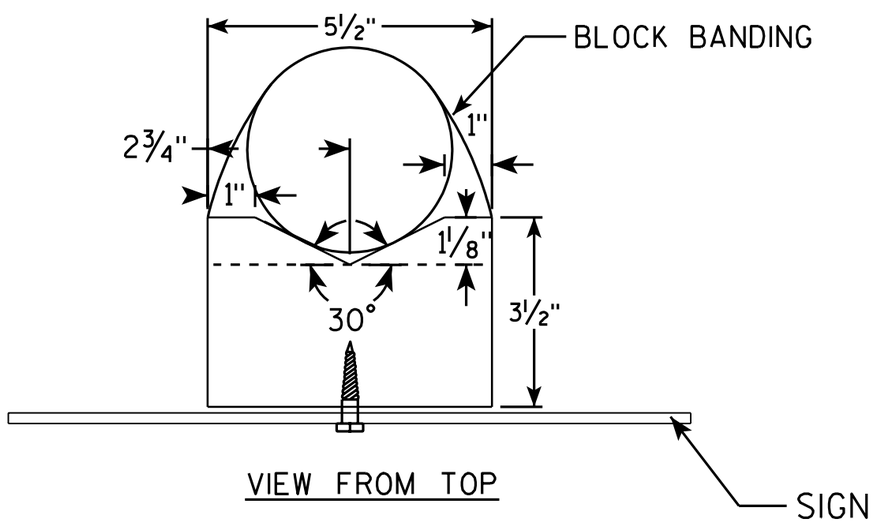

GENERAL NOTES

1. WOOD 4"X6" POST MATERIAL SHALL CONFORM TO 507.2.2 OF THE WisDOT STANDARD SPECIFICATIONS
2. BLOCK BANDING AND CLIPS SHALL BE STAINLESS STEEL, ¾" WIDTH AND 0.025" THICKNESS
3. SIGNS 3' OR GREATER IN HEIGHT SHALL UTILIZE 3 BLOCK BANDS. SIGNS UNDER 3' IN HEIGHT SHALL UTILIZE 2 BLOCK BANDS
4. ACTUAL NUMBER OF FASTENERS PER SIGN VARIES WITH THE SIGN AREA, BUT NORNALLY THERE ARE TWO. FOR SIGNS GREATER THAN 9 S.F. 3 FASTENERS SHALL BE USED.
5. ALL SIGN MOUNTING BOLTS AND WASHERS SHALL BE EITHER:
   a. Hot dip or mechanically galvanized in accordance with ASTM Designation: A 153, Class D, or
   b. Cadmium plated in accordance with ASTM Designation : B 766 TYPE 3, Class 12, or
   c. Electro-galvanized in accordance with ASTM Designation : B 633, TYPE III, SC 3.
6. ALL BOLTS SHALL HAVE HEXAGONAL HEADS.
7. STEEL WASHERS SHALL BE 1¼" O.D. X ⅜" I.D. X 1/16"
8. NYLON WASHERS SHALL BE 1¼" O.D. X ⅜" I.D. X .080 FOR TYPE H OR TYPE F FACE SIGN

✳ LAG BOLTS SHALL BE ⅜" X 2½"

BLOCK BANDING DETAIL
(V-BLOCK OPTION)

WISCONSIN DEPT OF TRANSPORTATION

APPROVED Matthew R Rauch
for State Traffic Engineer

DATE 7/12/07 PLATE NO. A5-10.1

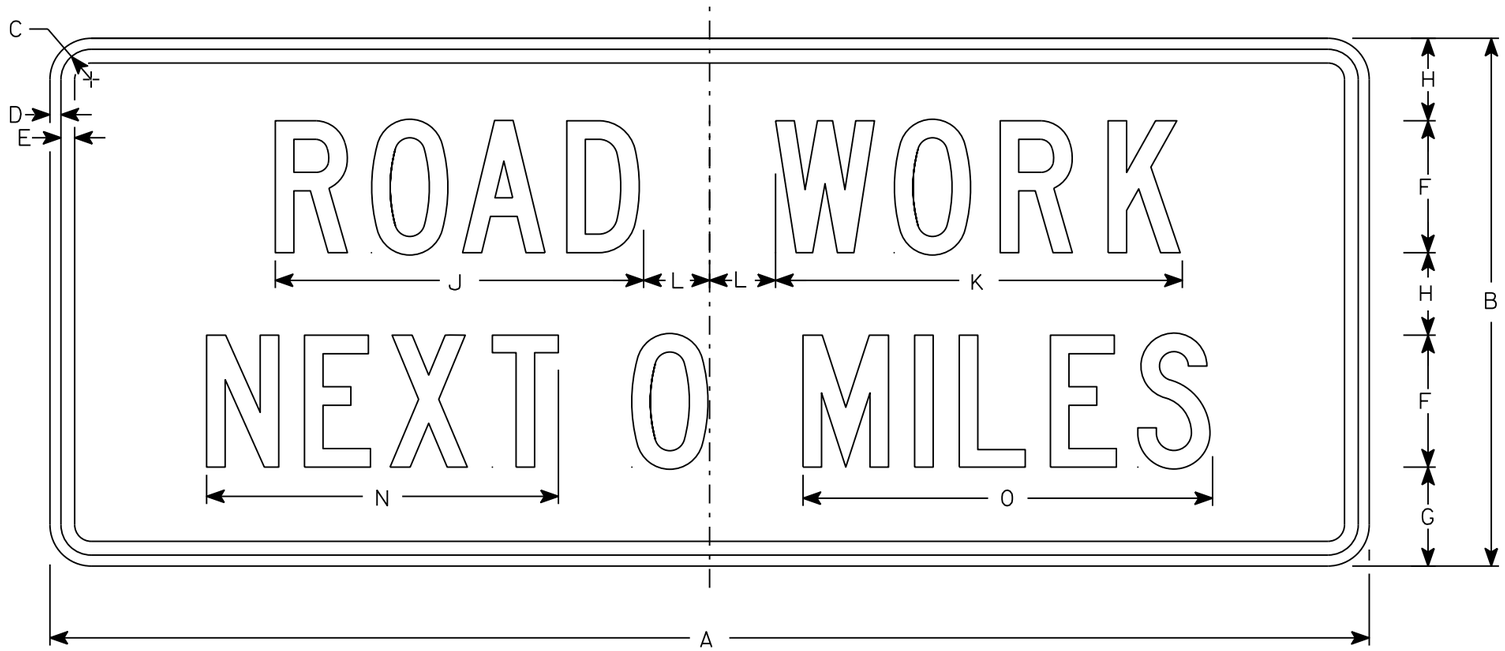

G20-1

NOTES

1. Sign is Type II - Type F Reflective
2. Color:
   Background - Orange
   Message - Black
3. Message Series - C
4. Corners may be square or rounded when base material is plywood but borders shall be rounded as shown. When base material is metal, the corners and borders shall be rounded.
5. Round distance to nearest whole Mile and substitute appropriate numerals and optically adjust spacing to achieve proper balance

SIZE	A	B	C	D	E	F	G	H	I	J	K	L	M	N	O	P	Q	R	S	T	U	V	W	X	Y	Z	Area sq. ft.
1																											
2	60	24	1 3/8	1/2	5/8	6	4 1/2	3 3/4		16 3/4	18 1/2	3		16	18 5/8												10
3																											
4	60	24	1 3/8	1/2	5/8	6	4 1/2	3 3/4		16 3/4	18 1/2	3		16	18 5/8												10
5																											

STANDARD SIGN
G20-1

WISCONSIN DEPT OF TRANSPORTATION

APPROVED Matthew R Rauch
for State Traffic Engineer
DATE 3/14/17 PLATE NO. G20-1.8

PROJECT NO: | HWY: | COUNTY: | SHEET NO: 137 | E

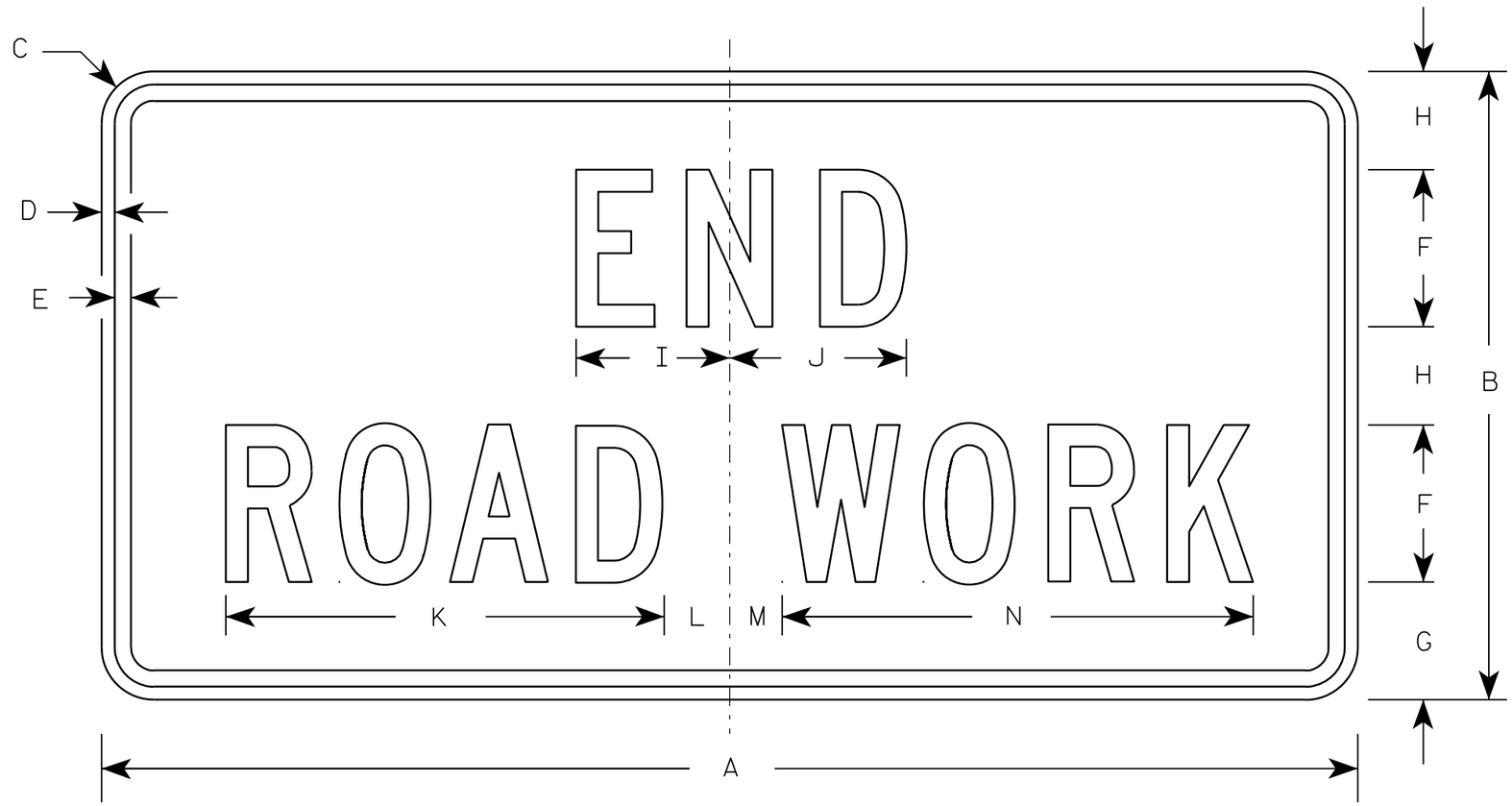

G20-2A

NOTES

1. Sign is Type II - Type F Reflective - reference WIS DOT Standard Specification for HIGHWAY and STRUCTURE CONSTRUCTION latest edition.
2. Color:
   Background - Orange
   Message - Black
3. Message Series - C
4. Corners may be square or rounded when base material is plywood but borders shall be rounded as shown. When base material is metal, the corners and borders shall be rounded.

Metric equivalent for this sign is:

SIZE	
1	900 mm X 450 mm
2	1200 mm X 600 mm
3	1200 mm X 600 mm
4	1200 mm X 600 mm
5	1200 mm X 600 mm

SIZE	A	B	C	D	E	F	G	H	I	J	K	L	M	N	O	P	Q	R	S	T	U	V	W	X	Y	Z	Area sq. ft.	Area m2
1	36	18	1 1/8	3/8	1/2	4	3 3/4	2 1/2	4 1/8	4 1/8	11 1/8	2	1	12 1/8													4.5	0.41
2	48	24	1 1/2	1/2	5/8	6	4 1/2	3 3/4	5 7/8	6 3/4	16 3/4	2 1/2	1 3/4	18 1/2													8.0	0.72
3	48	24	1 1/2	1/2	5/8	6	4 1/2	3 3/4	5 7/8	6 3/4	16 3/4	2 1/2	1 3/4	18 1/2													8.0	0.72
4	48	24	1 1/2	1/2	5/8	6	4 1/2	3 3/4	5 7/8	6 3/4	16 3/4	2 1/2	1 3/4	18 1/2													8.0	0.72
5	48	24	1 1/2	1/2	5/8	6	4 1/2	3 3/4	5 7/8	6 3/4	16 3/4	2 1/2	1 3/4	18 1/2													8.0	0.72

STANDARD SIGN

G20-2A

WISCONSIN DEPT OF TRANSPORTATION

APPROVED Matthew R Rauch
for State Traffic Engineer

DATE 9/30/09 PLATE NO. G20-2A.8

PROJECT NO:	HWY:	COUNTY:		SHEET NO: 138	E

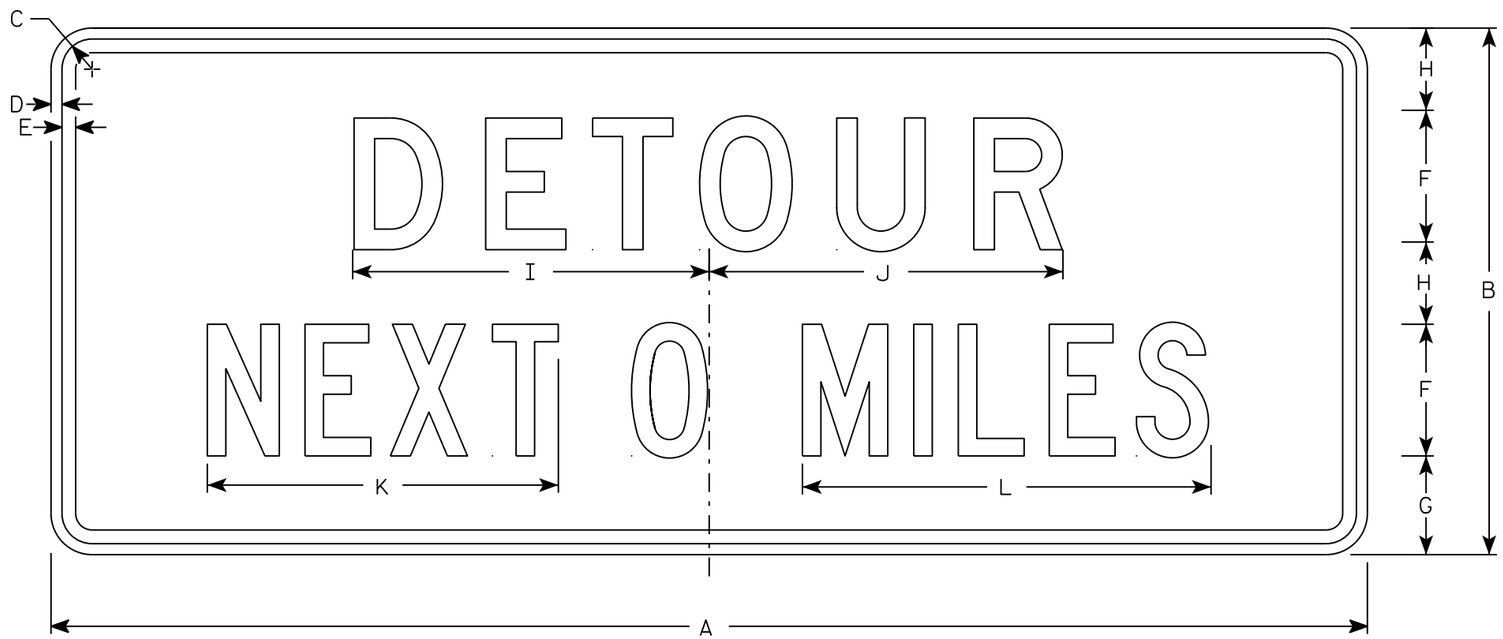

G20-51

NOTES

1. Sign is Type II - Type F Reflective
2. Color:
   Background - Orange
   Message - Black
3. Message Series - Line 1 is D and Line 2 is C
4. Corners may be square or rounded when base material is plywood but borders shall be rounded as shown. When base material is metal, the corners and borders shall be rounded.
5. Round distance to nearest whole Mile and substitute appropriate numerals and optically adjust spacing to achieve proper balance

SIZE	A	B	C	D	E	F	G	H	I	J	K	L	M	N	O	P	Q	R	S	T	U	V	W	X	Y	Z	Area sq. ft.
1																											
2	60	24	1 3/8	1/2	5/8	6	4 1/2	3 3/4	16 1/4	16 1/8	16	18 5/8															10
3																											
4	60	24	1 3/8	1/2	5/8	6	4 1/2	3 3/4	16 1/4	16 1/8	16	18 5/8															10
5																											

STANDARD SIGN
G20-51

WISCONSIN DEPT OF TRANSPORTATION

APPROVED Matthew R Rauch
for State Traffic Engineer

DATE 3/14/17 PLATE NO. G20-51.2

PROJECT NO:	HWY:	COUNTY:		SHEET NO: 139	E

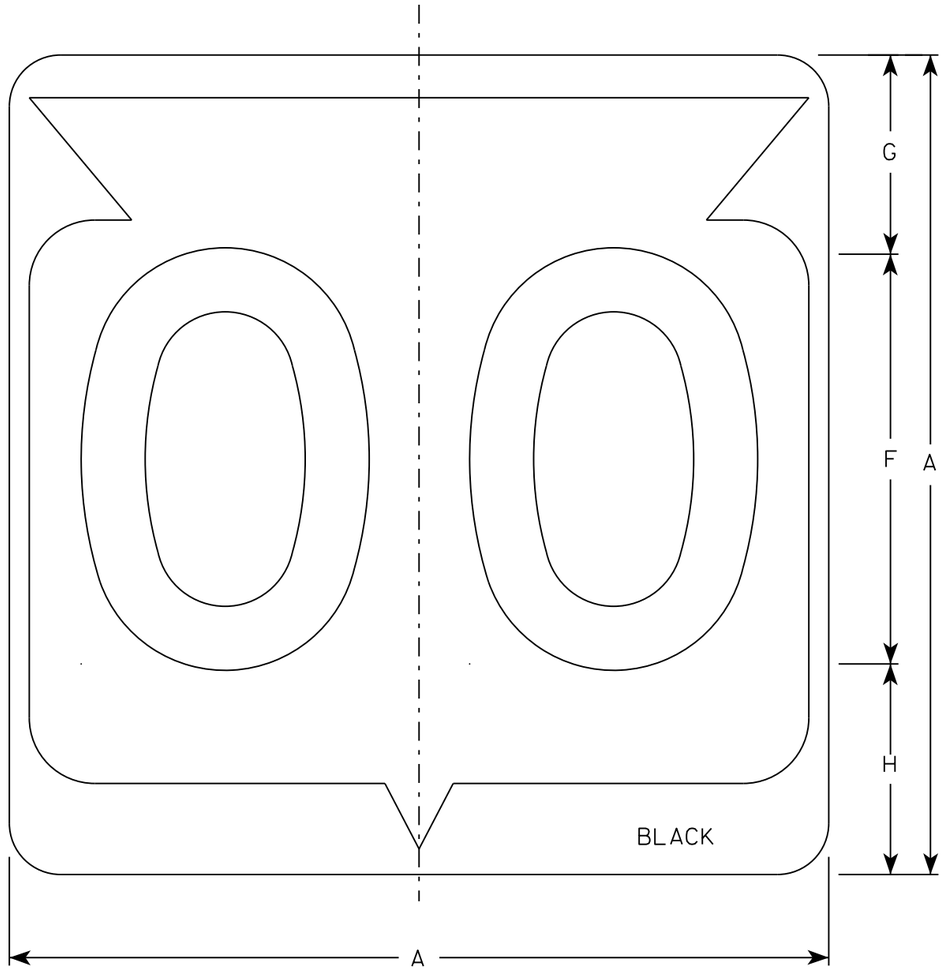

M1-6

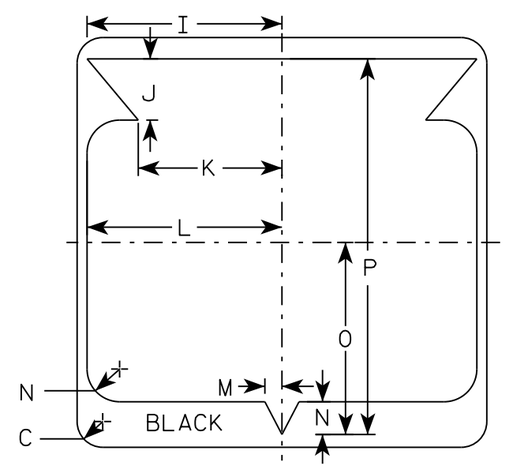

NOTES

1. Sign is Type II - Type H Reflective
2. Color:
   Background - White
   Message - Black
3. Message Series - D except 3 number signs Series C
4. Corners may be square or rounded when base material is plywood but borders shall be rounded as shown. When base material is metal, the corners and borders shall be rounded.

SIZE	A	B	C	D	E	F	G	H	I	J	K	L	M	N	O	P	Q	R	S	T	U	V	W	X	Y	Z	Area sq. ft.
1																											
2	24		1 1/2			12	5 1/2	6 1/2	10 1/4	2 1/2	8 7/8	11 1/2	1	1 7/8	11 1/4	21 7/8											4.0
3	36		2 1/4			18	8 3/4	9 1/4	15 3/8	5 3/8	12 5/8	17 1/8	1 1/2	2 7/8	16 7/8	33											9.0
4	36		2 1/4			18	8 3/4	9 1/4	15 3/8	5 3/8	12 5/8	17 1/8	1 1/2	2 7/8	16 7/8	33											9.0
5	36		2 1/4			18	8 3/4	9 1/4	15 3/8	5 3/8	12 5/8	17 1/8	1 1/2	2 7/8	16 7/8	33											9.0

STATE ROUTE MARKER
M1-6 FOR ASSEMBLIES

WISCONSIN DEPT OF TRANSPORTATION

APPROVED Matthew R Rauch
for State Traffic Engineer

DATE 3/16/18 PLATE NO. M1-6.10

PROJECT NO: | HWY: | COUNTY: | SHEET NO: 140 | E

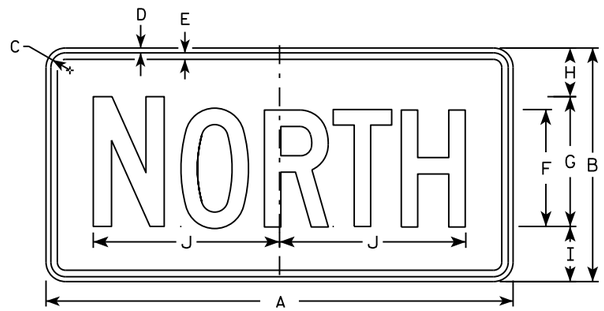

M3-1
MM3-1
MP3-1

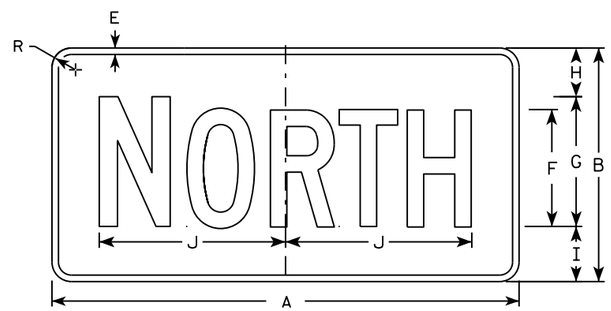

MB3-1
MK3-1
MN3-1

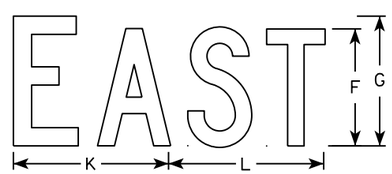

M3-2
MM3-2
MP3-2

MB3-2
MK3-2
MN3-2

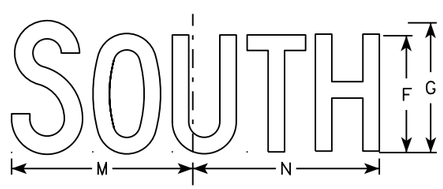

M3-3
MM3-3
MP3-3

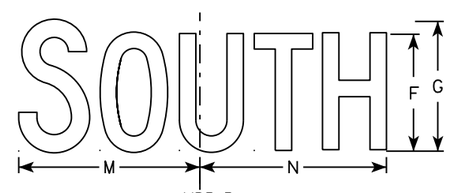

MB3-3
MK3-3
MN3-3

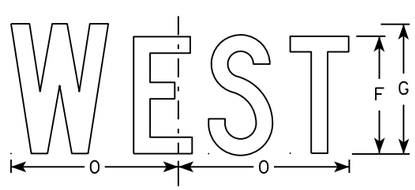

M3-4
MM3-4
MP3-4

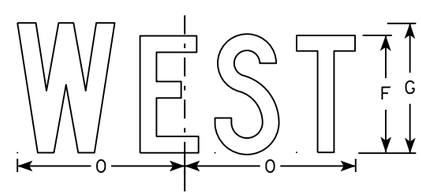

MB3-4
MK3-4
MN3-4

NOTES

1. All Signs Type II - Type H
2. Color:
   Background - See note 5
   Message - See note 5
3. Message Series - C
4. Corners may be square or rounded when base material is plywood but borders shall be rounded as shown. When base material is metal, the corners and borders shall be rounded.
5. M3-1 thru M3-4 Background - White
   Message - Black
   MB3-1 thru MB3-4 Background - Blue
   Message - White
   MK3-1 thru MK3-4 Background - Green
   Message - White
   MM3-1 thru MM3-4 Background - White
   Message - Green
   MN3-1 thru MN3-4 Background - Brown
   Message - White
   MP3-1 thru MP3-4 Background - White
   Message - Blue
6. Note the first letter of each direction is larger than the remainder of the message.

SIZE	A	B	C	D	E	F	G	H	I	J	K	L	M	N	O	P	Q	R	S	T	U	V	W	X	Y	Z	Area sq. ft.
1																											
2	24	12	1 1/8	3/8	3/8	6	7	2 1/4	2 3/4	10 1/4	7 7/8	8 3/8	10 1/4	9 3/4	8 3/4			1 1/2									2.00
3	36	18	1 1/8	3/8	1/2	9	10	3 3/4	4 1/4	14 3/8	12	12 1/8	14	14 1/8	13			1 1/2									4.5
4	36	18	1 1/8	3/8	1/2	9	10	3 3/4	4 1/4	14 3/8	12	12 1/8	14	14 1/8	13			1 1/2									4.5
5	36	18	1 1/8	3/8	1/2	9	10	3 3/4	4 1/4	14 3/8	12	12 1/8	14	14 1/8	13			1 1/2									4.5

STANDARD SIGNS
M3-1 thur M3-4
SERIES

WISCONSIN DEPT OF TRANSPORTATION

APPROVED Matthew R Rauch
for State Traffic Engineer

DATE 10/15/15 PLATE NO M3-1.14

PROJECT NO: | HWY: | COUNTY: | SHEET NO: | E

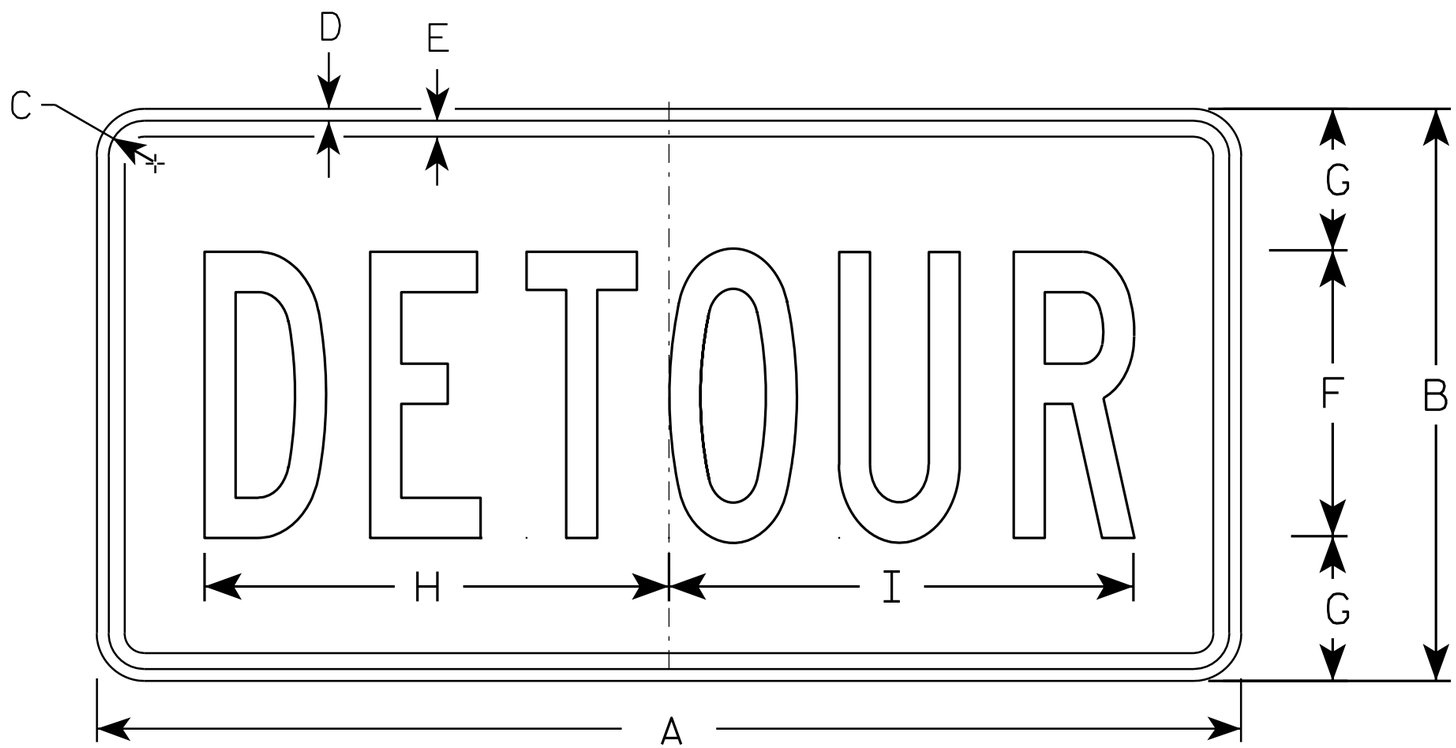

M4-8

NOTES

1. Sign is Type II - Type F Reflective - reference WIS DOT Standard Specification for HIGHWAY and STRUCTURE CONSTRUCTION latest edition.
2. Color:
   Background - Orange
   Message - Black
3. Message Series - B
4. Corners may be square or rounded when base material is plywood but borders shall be rounded as shown. When base material is metal, the corners and borders shall be rounded.

SIZE	A	B	C	D	E	F	G	H	I	J	K	L	M	N	O	P	Q	R	S	T	U	V	W	X	Y	Z	Area sq. ft.
1																											
2	24	12	1 1/8	3/8	3/8	6	3	10	10 1/4																		2.0
3	36	18	1 1/8	3/8	1/2	9	4 1/2	14 5/8	14 1/2																		4.5
4																											
5																											

STANDARD SIGN
M4-8

WISCONSIN DEPT OF TRANSPORTATION

APPROVED Matthew R Rauch
for State Traffic Engineer

DATE 11/10/10 PLATE NO. M4-8.2

PROJECT NO: | HWY: | COUNTY: | SHEET NO: 142 | E

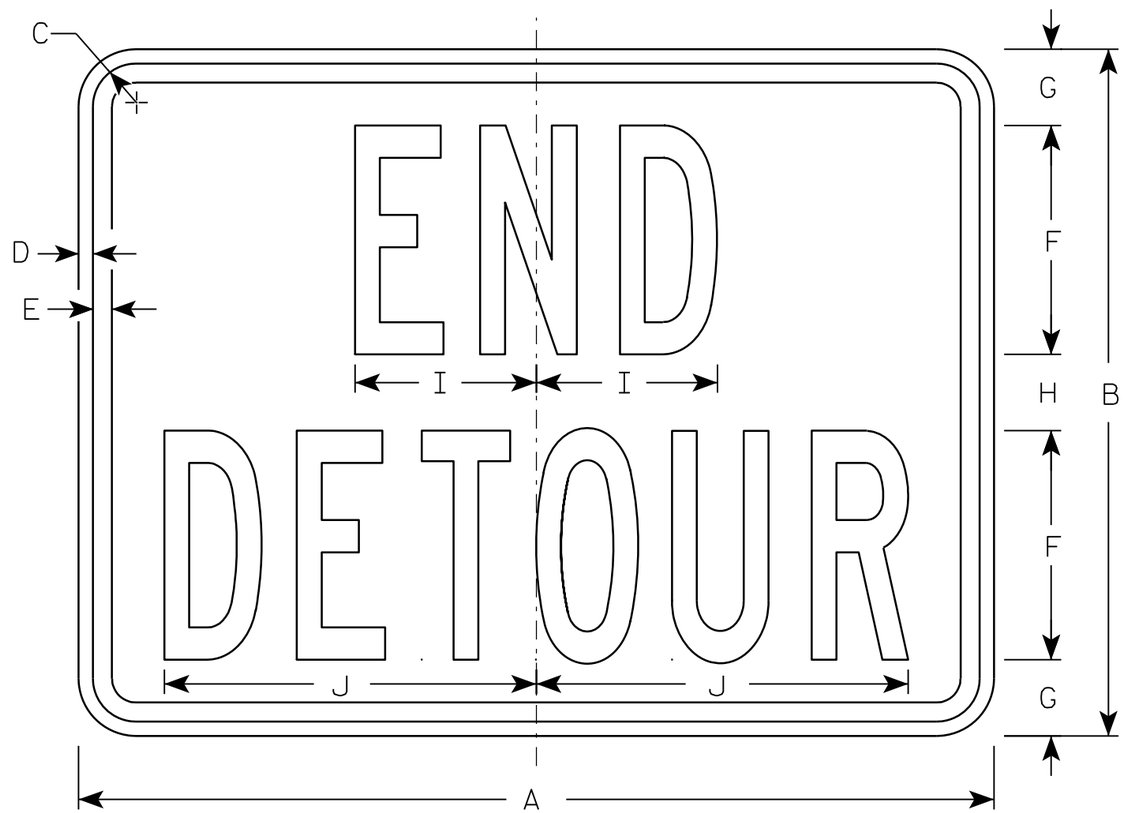

M4-8A

NOTES

1. Sign is Type II - Type F Reflective - reference WIS DOT Standard Specification for HIGHWAY and STRUCTURE CONSTRUCTION latest edition.
2. Color:
   Background - Orange
   Message - Black
3. Message Series - B
4. Corners may be square or rounded when base material is plywood but borders shall be rounded as shown. When base material is metal, the corners and borders shall be rounded.

SIZE	A	B	C	D	E	F	G	H	I	J	K	L	M	N	O	P	Q	R	S	T	U	V	W	X	Y	Z	Area sq. ft.
1																											
2	24	18	1 1/8	3/8	1/2	6	2	2	4 3/4	9 3/4																	3.0
3	30	24	1 1/8	3/8	1/2	8	2 1/2	3	6 3/4	13																	5.0
4																											
5																											

STANDARD SIGN
M4-8A

WISCONSIN DEPT OF TRANSPORTATION

APPROVED Matthew R Rauch
for State Traffic Engineer

DATE 3/9/11 PLATE NO. M4-8A.2

PROJECT NO: | HWY: | COUNTY: | SHEET NO: 143 | E

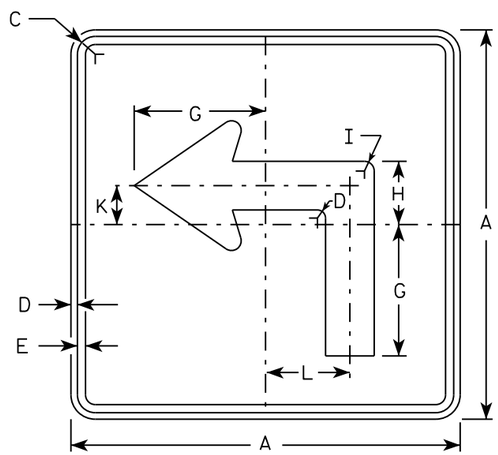

M5-1L
MM5-1L
MO5-1L
MP5-1L

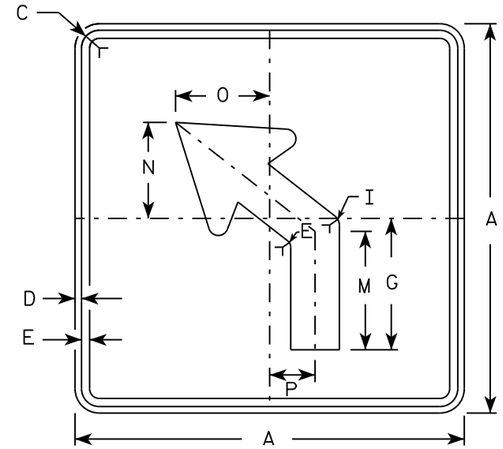

M5-2L
MM5-2L
MO5-2L
MP5-2L

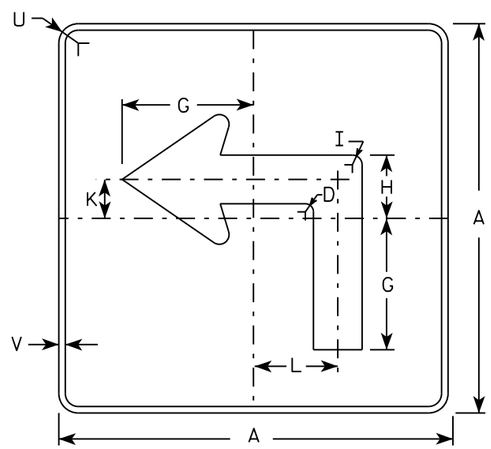

MB5-1L
MK5-1L
MN5-1L
MR5-1L

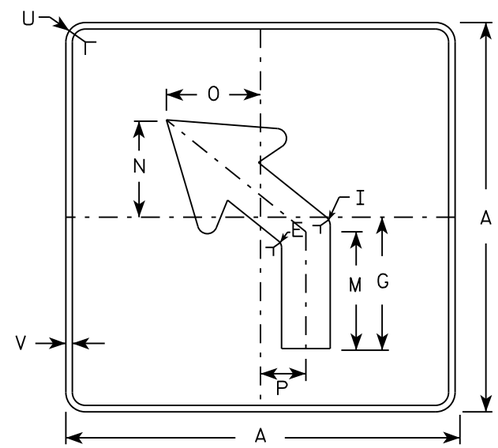

MB5-2L
MK5-2L
MN5-2L
MR5-2L

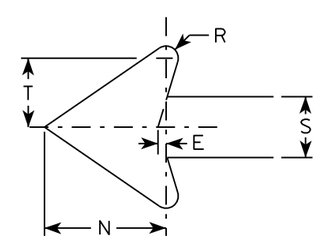

NOTES

1. Signs are Type II - Type H reflective except as shown
2. Color:
   Background - See note 4
   Message - See note 4
3. Corners may be square or rounded when base material is plywood but borders shall be rounded as shown. When base material is metal, the corners and borders shall be rounded.
4. M5-1 and M5-2 Background - White
   Message - Black
   MB5-1 and MB5-2 Background - Blue
   Message - White
   MK5-1 and MK5-2 Background - Green
   Message - White
   MM5-1 and MM5-2 Background - White
   Message - Green
   MN5-1 and MN5-2 Background - Brown
   Message - White
   MO5-1 and MO5-2 Background - Orange - Type F Reflective
   Message - Black
   MP5-1 and MP5-2 Background - White - Type H Reflective
   Message - Blue
   MR5-1 and MR5-2 Background - Brown
   Message - Yellow
5. M5-1R same as M5-1L except arrow points right.
6. M5-2R same as M5-2L except arrow tilts right.

SIZE	A	B	C	D	E	F	G	H	I	J	K	L	M	N	O	P	Q	R	S	T	U	V	W	X	Y	Z	Area sq. ft.
1																											
2	21		1 1/8	3/8	3/8		7	3 3/8	5/8		2 1/8	4 1/2	6 3/8	5 1/4	5	2 1/2		1/2	2 5/8	3	1 1/2	1/2					3.06
3	30		1 3/8	1/2	5/8		10 1/8	4 7/8	7/8		3	6 1/2	9 1/8	7 1/2	7 1/4	3 1/2		3/4	3 3/4	4 1/4	1 7/8	1/2					6.25
4	30		1 3/8	1/2	5/8		10 1/8	4 7/8	7/8		3	6 1/2	9 1/8	7 1/2	7 1/4	3 1/2		3/4	3 3/4	4 1/4	1 7/8	1/2					6.25
5	30		1 3/8	1/2	5/8		10 1/8	4 7/8	7/8		3	6 1/2	9 1/8	7 1/2	7 1/4	3 1/2		3/4	3 3/4	4 1/4	1 7/8	1/2					6.25

STANDARD SIGN
M5-1 & M5-2

WISCONSIN DEPT OF TRANSPORTATION

APPROVED Matthew R Rauch
for State Traffic Engineer

DATE 10/15/15 PLATE NO. M5-1.13

PROJECT NO: | HWY: | COUNTY: | SHEET NO: | E

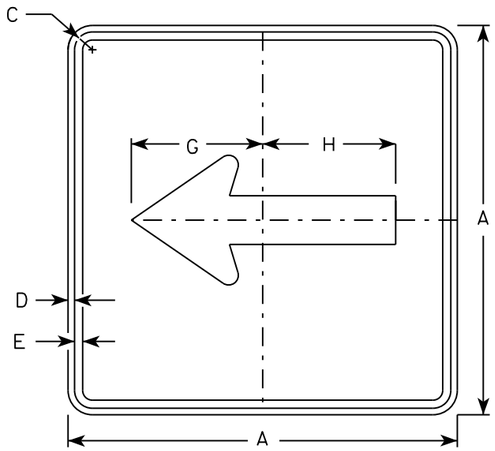

M6-1
MM6-1
MO6-1
MP6-1

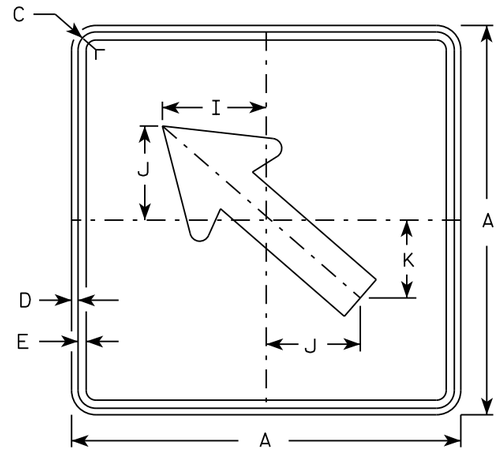

M6-2
MM6-2
MO6-2
MP6-2

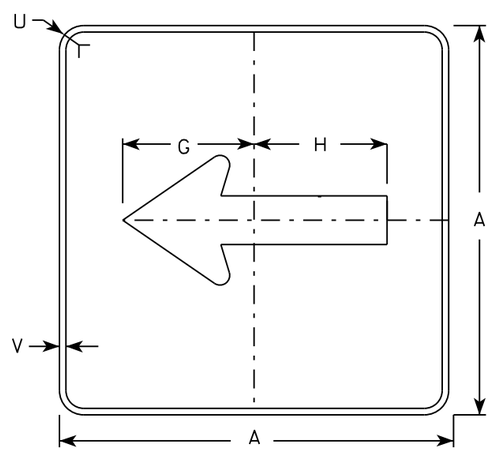

MB6-1
MK6-1
MN6-1
MR6-1

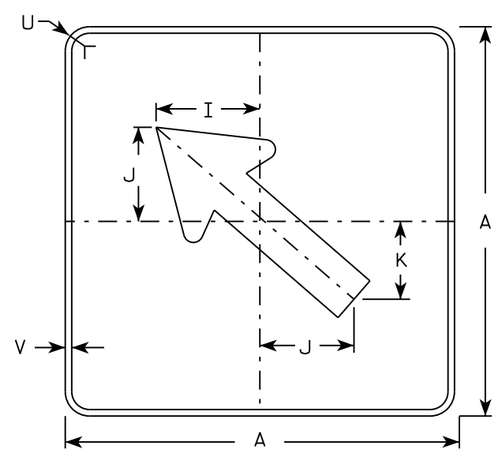

MB6-2
MK6-2
MN6-2
MR6-2

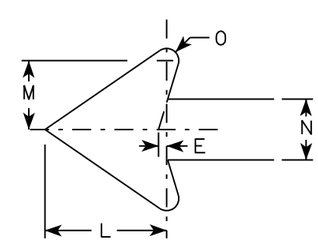

NOTES

1. Signs are Type II - Type H except as Shown
2. Color:
   Background - See note 4
   Message - See note 4
3. Corners may be square or rounded when base material is plywood but borders shall be rounded as shown. When base material is metal, the corners and borders shall be rounded.
4. M6-1 and M6-2 Background - White
   Message - Black
   MB6-1 and MB6-2 Background - Blue
   Message - White
   MK6-1 and MK6-2 Background - Green
   Message - White
   MM6-1 and MM6-2 Background - White
   Message - Green
   MN6-1 and MN6-2 Background - Brown
   Message - White
   MO6-1 and MO6-2 Background - Orange - Type F Reflective
   Message - Black
   MP6-1 and MP6-2 Background - White
   Message - Blue
   MR6-1 and MR6-2 Background - Brown
   Message - Yellow

SIZE	A	B	C	D	E	F	G	H	I	J	K	L	M	N	O	P	Q	R	S	T	U	V	W	X	Y	Z	Area sq. ft.
1																											
2	21		1 1/8	3/8	3/8		7 1/2	7 1/8	5 5/8	5	4 1/4	5 1/4	3	2 5/8	1/2						1 1/2	1/2					3.06
3	30		1 3/8	1/2	5/8		10 3/4	10 1/4	8	7 1/4	6	7 1/2	4 1/4	3 3/4	3/4						1 7/8	1/2					6.25
4	30		1 3/8	1/2	5/8		10 3/4	10 1/4	8	7 1/4	6	7 1/2	4 1/4	3 3/4	3/4						1 7/8	1/2					6.25
5	30		1 3/8	1/2	5/8		10 3/4	10 1/4	8	7 1/4	6	7 1/2	4 1/4	3 3/4	3/4						1 7/8	1/2					6.25

STANDARD SIGN
M6-1 & M6-2
SERIES

WISCONSIN DEPT OF TRANSPORTATION

APPROVED Matthew R Rauch
for State Traffic Engineer

DATE 10/15/15 PLATE 145 M6-1.15

PROJECT NO: | HWY: | COUNTY: | SHEET NO: | E

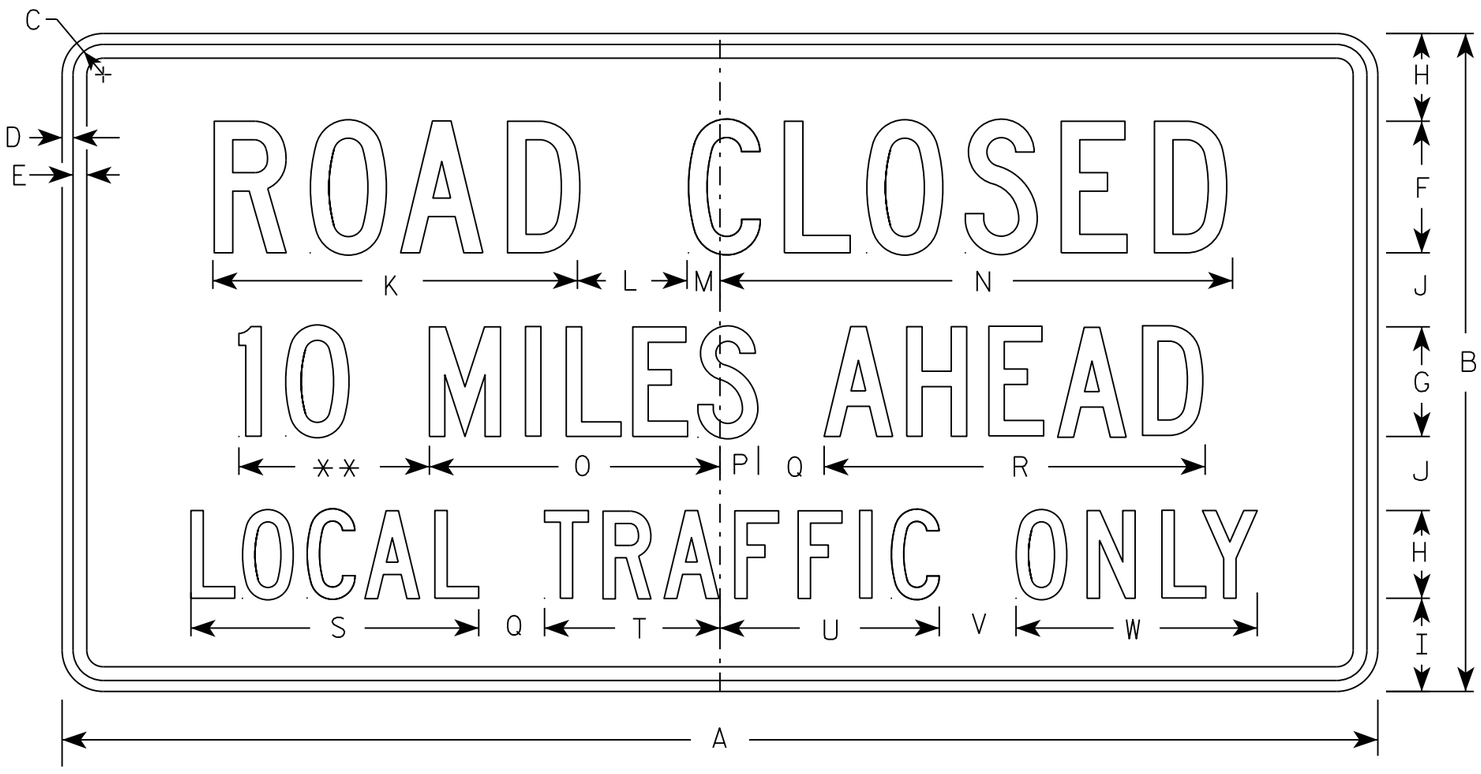

R11-3

** See Note 5

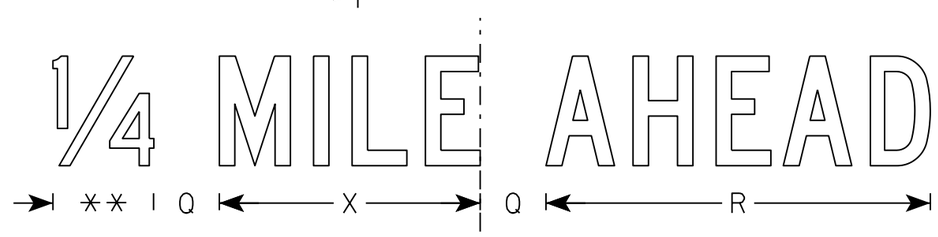

NOTES

1. Sign is Type II - Type H Reflective
2. Color:
   Background - White
   Message - Black
3. Message Series - C
4. Corners may be square or rounded when base material is plywood but borders shall be rounded as shown. When base material is metal, the corners and borders shall be rounded.
5. Substitute appropriate numerals to nearest quarter mile and optically adjust spacing to achieve proper balance.

SIZE	A	B	C	D	E	F	G	H	I	J	K	L	M	N	O	P	Q	R	S	T	U	V	W	X	Y	Z	Area sq. ft.
1	36	18	1 3/8	1/2	5/8	4	3	2 1/2	2	2	11 1/8	3	1 1/8	15 1/4	8	1 1/2	2	10 3/4	8 3/8	4 3/4	6 1/2	2	6 3/4	7 1/8			4.5
2S	60	30	1 3/8	1/2	5/8	6	5	4	4 1/4	3 3/8	16 5/8	5	1 1/2	23	13 1/4	1 3/4	3	17 3/8	13 1/8	8	10	3 1/2	11	11 7/8			12.5
2M	60	30	1 3/8	1/2	5/8	6	5	4	4 1/4	3 3/8	16 5/8	5	1 1/2	23	13 1/4	1 3/4	3	17 3/8	13 1/8	8	10	3 1/2	11	11 7/8			12.5
3																											
4																											
5																											

STANDARD SIGN
R11-3

WISCONSIN DEPT OF TRANSPORTATION

APPROVED Matthew R Rauch
for State Traffic Engineer

DATE 3/15/17 PLATE NO. R11-3.8

PROJECT NO: | HWY: | COUNTY: | SHEET NO: 146 | E

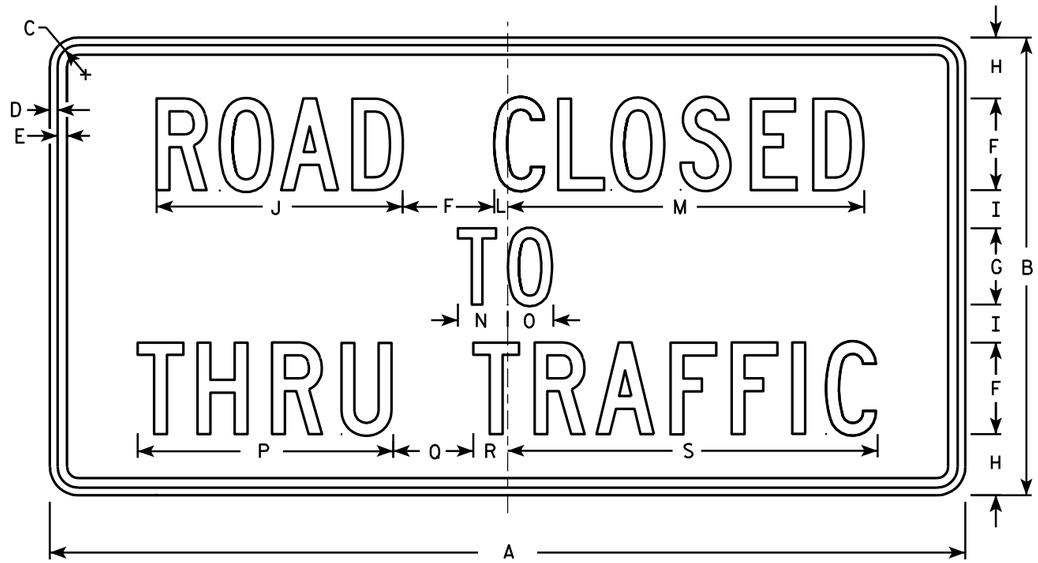

R11-4

NOTES

1. Sign is Type II - Type H Reflective - reference WIS DOT Standard Specification for HIGHWAY and STRUCTURE CONSTRUCTION latest edition.
2. Color:
   Background - White
   Message - Black
3. Message Series - C
4. Corners may be square or rounded when base material is plywood but borders shall be rounded as shown. When base material is metal, the corners and borders shall be rounded.

SIZE	A	B	C	D	E	F	G	H	I	J	K	L	M	N	O	P	Q	R	S	T	U	V	W	X	Y	Z	Area sq. ft.
1																											
2S	60	30	1 3/8	1/2	5/8	6	5	4	2 1/2	16 1/8		7/8	23 3/8	3 1/4	3	16 3/4	5 1/4	2 1/4	24 1/4								12.5
2M	60	30	1 3/8	1/2	5/8	6	5	4	2 1/2	16 1/8		7/8	23 3/8	3 1/4	3	16 3/4	5 1/4	2 1/4	24 1/4								12.5
3																											
4																											
5																											

STANDARD SIGN
R11 - 4

WISCONSIN DEPT OF TRANSPORTATION

APPROVED Matthew R Rauch for State Traffic Engineer

DATE 4/1/11 PLATE NO. R11-4.3

PROJECT NO:	HWY:	COUNTY:		SHEET NO: 147	E

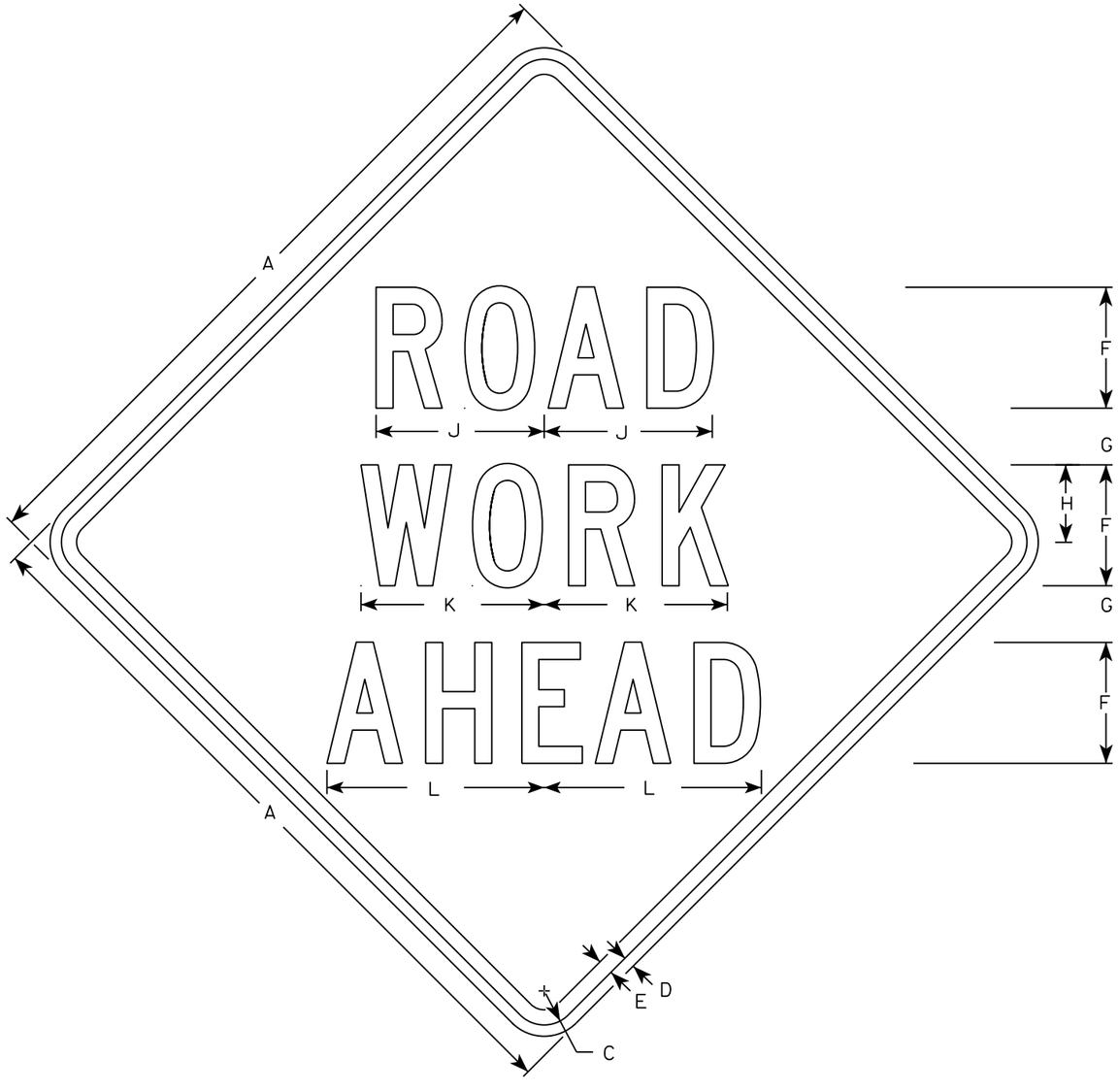

W20-1A

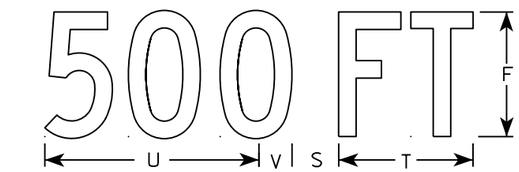

W20-1D

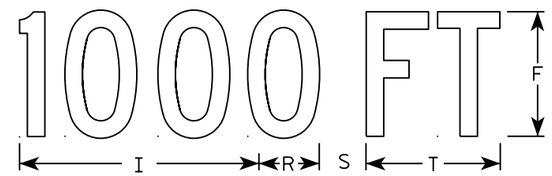

W20-1C

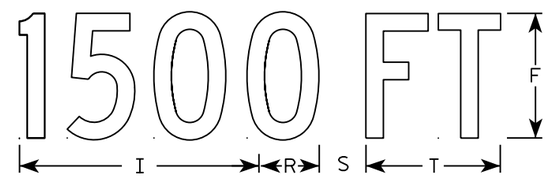

W20-1B

W20-1G

W20-1F

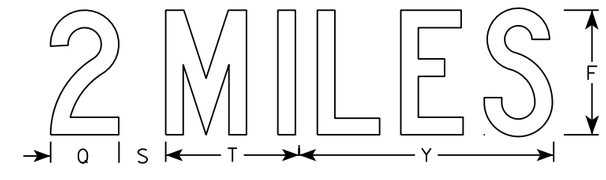

W20-1E

NOTES

1. Sign is Type II - Type F Reflective
2. Color:
   Background - Orange
   Message - Black
3. Message Series - C
4. Corners may be square or rounded when base material is plywood but borders shall be rounded as shown. When base material is metal, the corners and borders shall be rounded.

SIZE	A	B	C	D	E	F	G	H	I	J	K	L	M	N	O	P	Q	R	S	T	U	V	W	X	Y	Z	Area sq. ft.
1	36		1 3/8	1/2	5/8	5	2 5/8	3 1/4	10 1/8	7	7 5/8	8 7/8	1 1/8	4 1/2	3 1/2	9		2 1/2	2 1/4	5 5/8	9	1 3/8	8	1 3/4	10 3/4	6	9.0
2S	48		2 1/4	3/4	1	8	3 3/4	5 1/8	15 3/8	11 1/8	12 1/8	14 3/8	1 5/8	6 7/8	5 3/8	13 7/8	4 3/8	3 7/8	3	8 5/8	13 3/4	2 1/8	11 7/8	2 3/4	16 3/8	9	16.0
2M	48		2 1/4	3/4	1	8	3 3/4	5 1/8	15 3/8	11 1/8	12 1/8	14 3/8	1 5/8	6 7/8	5 3/8	13 7/8	4 3/8	3 7/8	3	8 5/8	13 3/4	2 1/8	11 7/8	2 3/4	16 3/8	9	16.0
3	48		2 1/4	3/4	1	8	3 3/4	5 1/8	15 3/8	11 1/8	12 1/8	14 3/8	1 5/8	6 7/8	5 3/8	13 7/8	4 3/8	3 7/8	3	8 5/8	13 3/4	2 1/8	11 7/8	2 3/4	16 3/8	9	16.0
4	48		2 1/4	3/4	1	8	3 3/4	5 1/8	15 3/8	11 1/8	12 1/8	14 3/8	1 5/8	6 7/8	5 3/8	13 7/8	4 3/8	3 7/8	3	8 5/8	13 3/4	2 1/8	11 7/8	2 3/4	16 3/8	9	16.0
5	48		2 1/4	3/4	1	8	3 3/4	5 1/8	15 3/8	11 1/8	12 1/8	14 3/8	1 5/8	6 7/8	5 3/8	13 7/8	4 3/8	3 7/8	3	8 5/8	13 3/4	2 1/8	11 7/8	2 3/4	16 3/8	9	16.0

STANDARD SIGN
W20-1A, B, C, D, F & G

WISCONSIN DEPT OF TRANSPORTATION

APPROVED Matthew R Rauch
for State Traffic Engineer

DATE 5/07/15 PLATE NO. W20-1.10

PROJECT NO:

SHEET NO: E

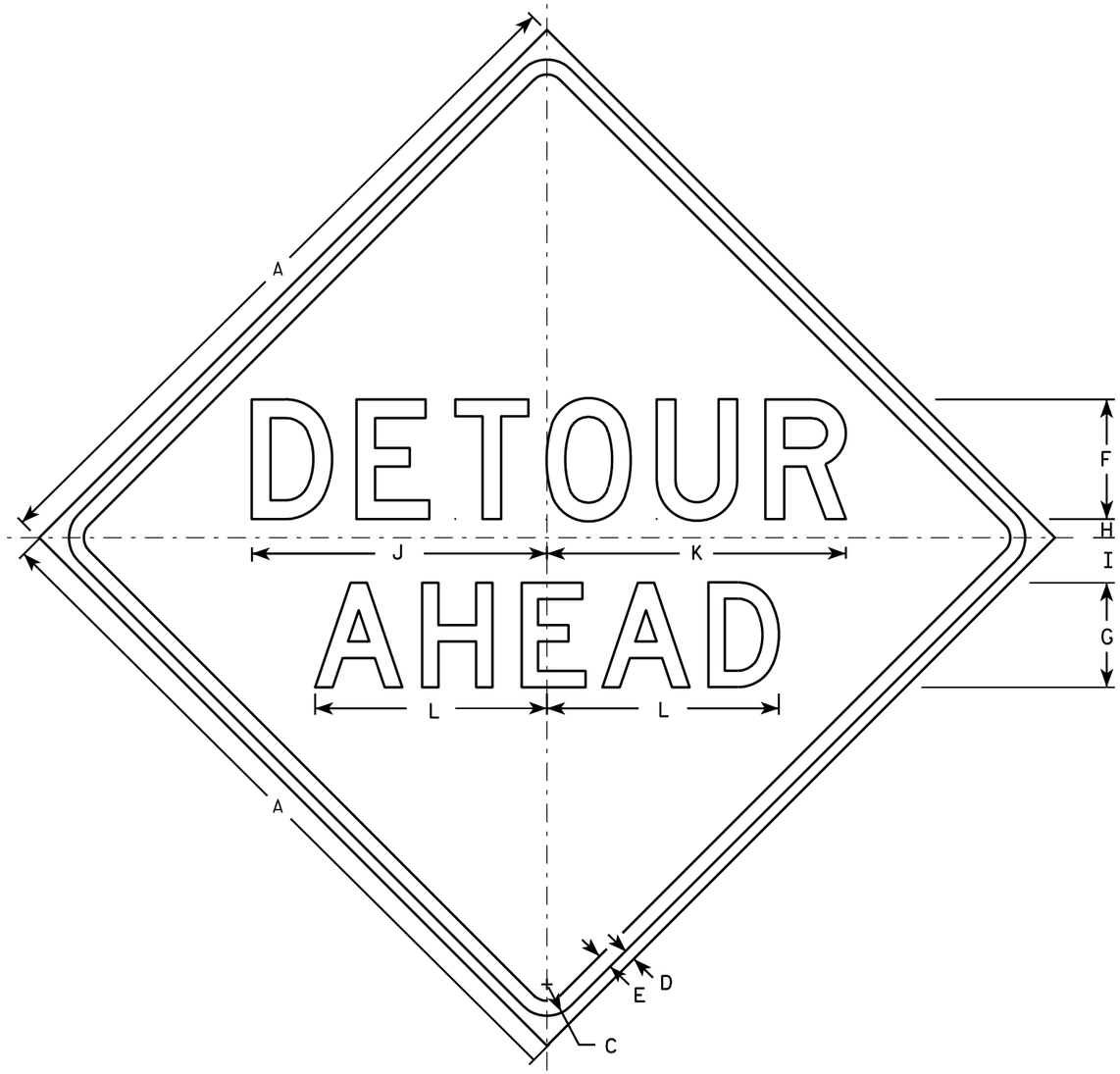

W20-2A

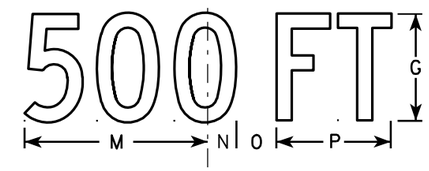

W20-2D

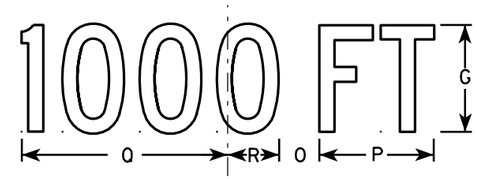

W20-2C

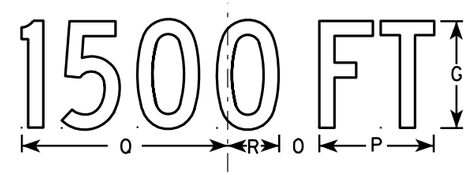

W20-2B

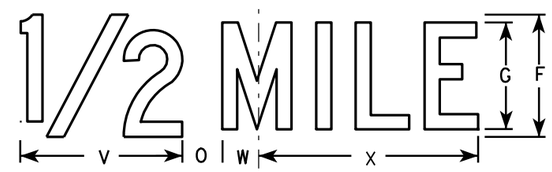

W20-2G

W20-2F

NOTES

1. Sign is Type II - Type F Reflective - reference WIS DOT Standard Specification for HIGHWAY and STRUCTURE CONSTRUCTION latest edition.
2. Color:
   Background - Orange
   Message - Black
3. Message Series - See note 5
4. Corners may be square or rounded when base material is plywood but borders shall be rounded as shown. When base material is metal, the corners and borders shall be rounded.
5. Line 1 is Series D.
   Line 2 is Series D for AHEAD and Series C for all other distances.

SIZE	A	B	C	D	E	F	G	H	I	J	K	L	M	N	O	P	Q	R	S	T	U	V	W	X	Y	Z	Area sq. ft.
1	36		1 5/8	5/8	3/4	6	5	1	2 1/4	14 3/4	15	11 5/8	9	1 3/8	1 7/8	5 5/8	10 1/8	2 1/2	1 1/8	4 1/2	3 1/2	8	1 3/4	10 3/4			9.0
2S	48		2 1/4	3/4	1	8	7	1 1/4	3	19 3/4	20	15 1/2	12	1 7/8	2 5/8	7 1/2	13 1/2	3 3/8	1 1/2	6	4 5/8	10 5/8	2 3/8	14 3/8			16.0
2M	48		2 1/4	3/4	1	8	7	1 1/4	3	19 3/4	20	15 1/2	12	1 7/8	2 5/8	7 1/2	13 1/2	3 3/8	1 1/2	6	4 5/8	10 5/8	2 3/8	14 3/8			16.0
3	48		2 1/4	3/4	1	8	7	1 1/4	3	19 3/4	20	15 1/2	12	1 7/8	2 5/8	7 1/2	13 1/2	3 3/8	1 1/2	6	4 5/8	10 5/8	2 3/8	14 3/8			16.0
4	48		2 1/4	3/4	1	8	7	1 1/4	3	19 3/4	20	15 1/2	12	1 7/8	2 5/8	7 1/2	13 1/2	3 3/8	1 1/2	6	4 5/8	10 5/8	2 3/8	14 3/8			16.0
5	48		2 1/4	3/4	1	8	7	1 1/4	3	19 3/4	20	15 1/2	12	1 7/8	2 5/8	7 1/2	13 1/2	3 3/8	1 1/2	6	4 5/8	10 5/8	2 3/8	14 3/8			16.0

STANDARD SIGN
W20-2A,B,C,D,F & G

WISCONSIN DEPT OF TRANSPORTATION

APPROVED Matthew R Rauch
for State Traffic Engineer
DATE 3/18/11 PLATE NO. W20-2.6

PROJECT NO:	HWY:	COUNTY:		SHEET NO: 149	E

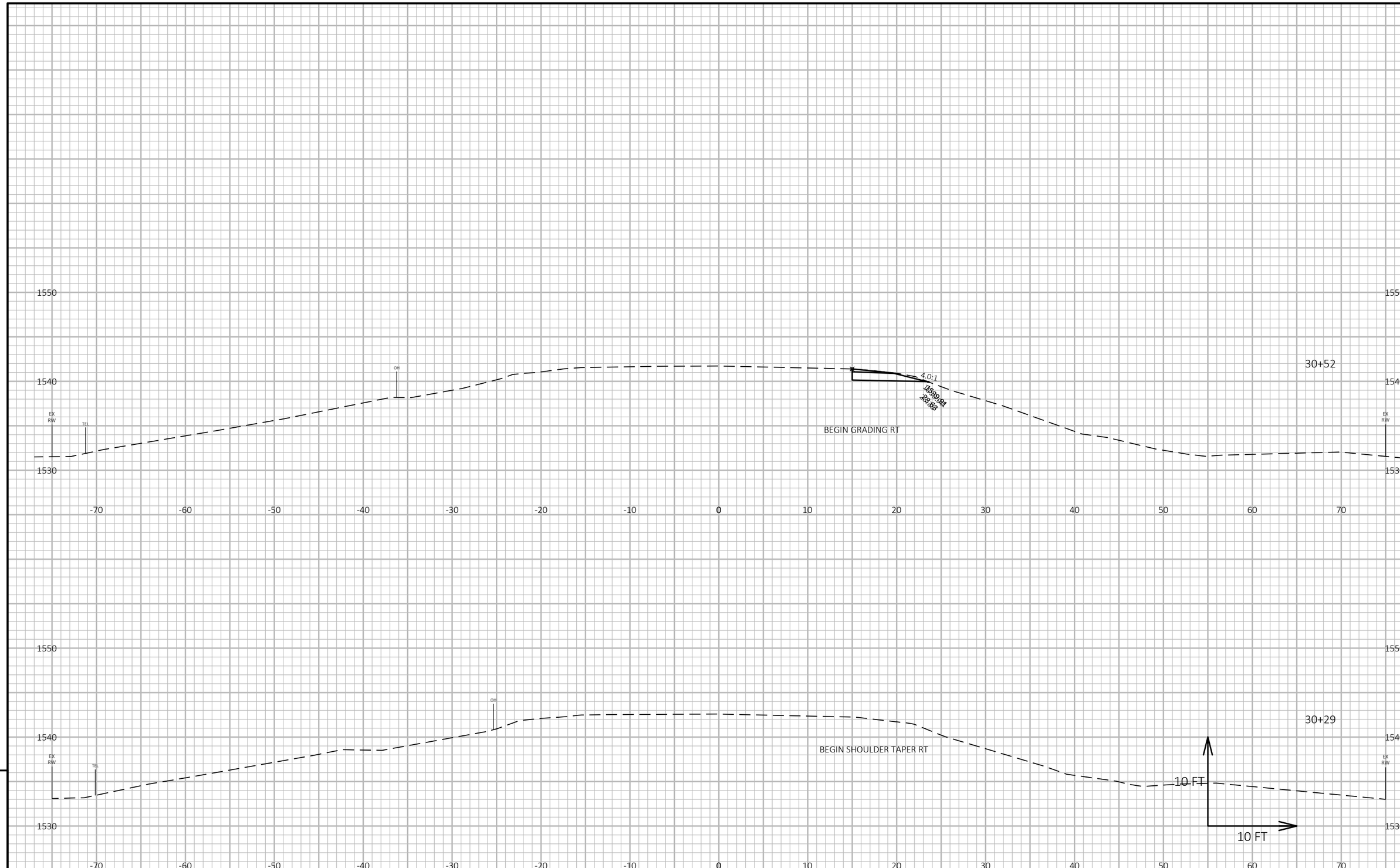

9

9

PROJECT NO: 9215-01-63/73	HWY: STH 86	COUNTY: LINCOLN	CROSS SECTIONS: STH 86 BEAM GUARD	SHEET 150	E

FILE NAME : S:\DESIGN\DESIGN PROJECTS\NC REGION PROJECTS\9215-01-03 (STH 86)\C3D\SHEETSPLAN\090201_XS.DWG
LAYOUT NAME - 1

PLOT DATE : 10/15/2018 3:13 PM PLOT BY : ADAM OSYPOWSKI PLOT NAME : PLOT SCALE : 1 IN:10 FT HORZ. / 1 IN:10 FT VERT.

WISDOT/CADDS SHEET 49

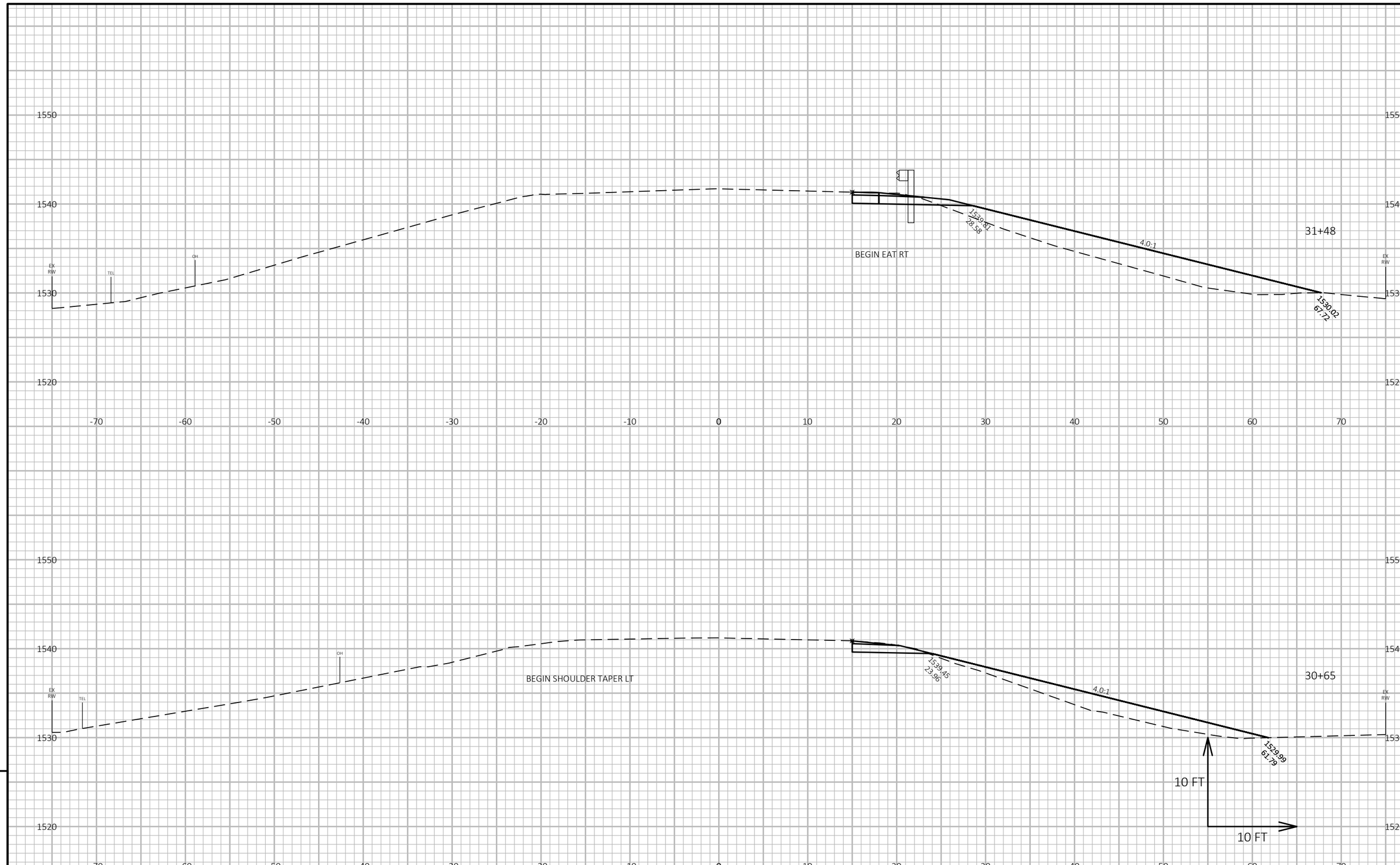

9

9

PROJECT NO: 9215-01-63/73	HWY: STH 86	COUNTY: LINCOLN	CROSS SECTIONS: STH 86 BEAM GUARD	SHEET 151	E

FILE NAME : S:\DESIGN\DESIGN PROJECTS\NC REGION PROJECTS\9215-01-03 (STH 86)\C3D\SHEETSPLAN\090201_XS.DWG
LAYOUT NAME - 2
PLOT DATE : 10/15/2018 3:13 PM
PLOT BY : ADAM OSYPOWSKI
PLOT NAME :
PLOT SCALE : 1 IN:10 FT HORZ. / 1 IN:10 FT VERT.

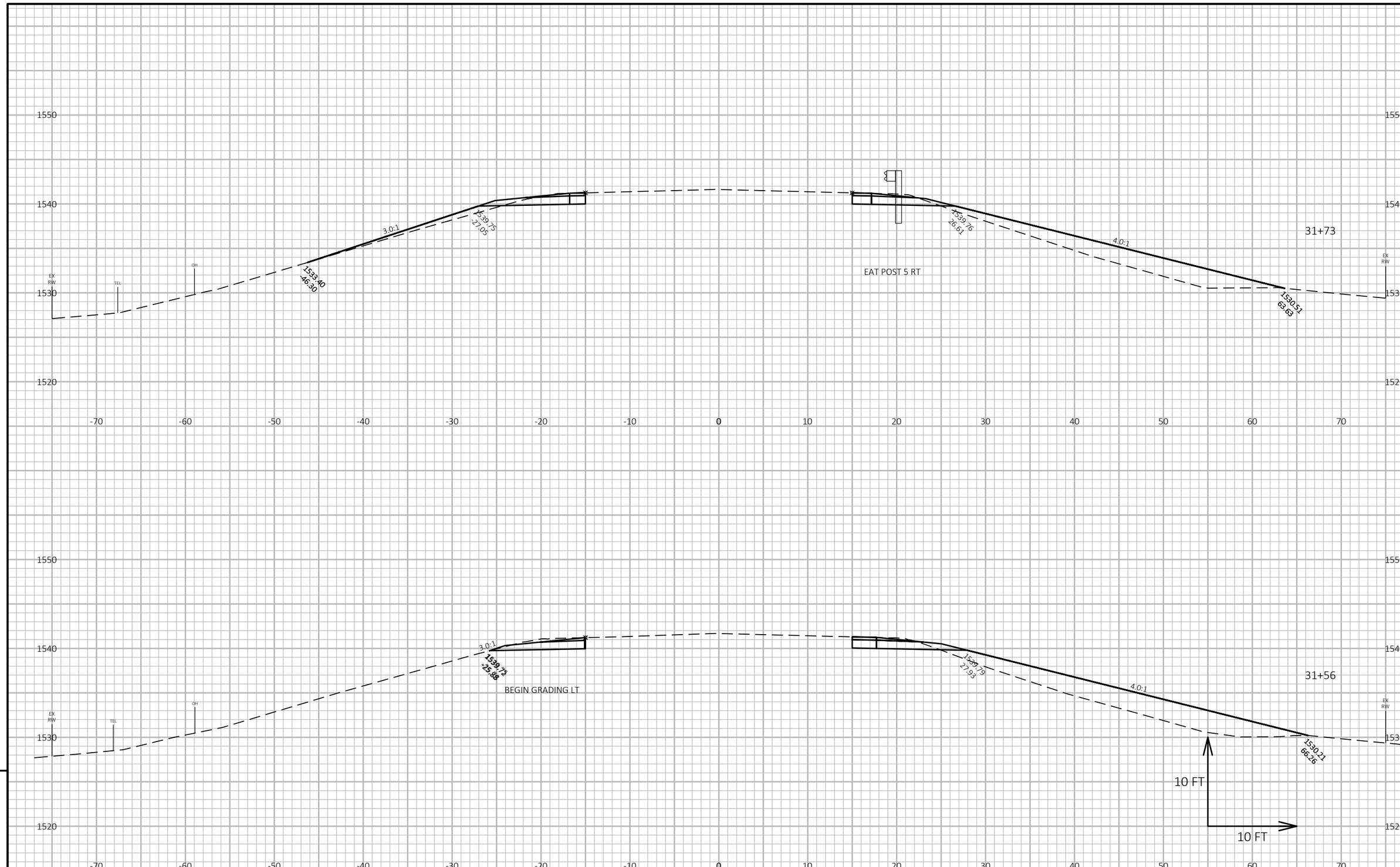

9

9

PROJECT NO: 9215-01-63/73	HWY: STH 86	COUNTY: LINCOLN	CROSS SECTIONS: STH 86 BEAM GUARD	SHEET 152	E

FILE NAME : S:\DESIGN\DESIGN PROJECTS\NC REGION PROJECTS\9215-01-03 (STH 86)\C3D\SHEETSPLAN\090201_XS.DWG
LAYOUT NAME - 3
PLOT DATE : 10/15/2018 3:13 PM
PLOT BY : ADAM OSYPOWSKI
PLOT NAME :
PLOT SCALE : 1 IN:10 FT HORZ. / 1 IN:10 FT VERT.
WISDOT/CADDS SHEET 49

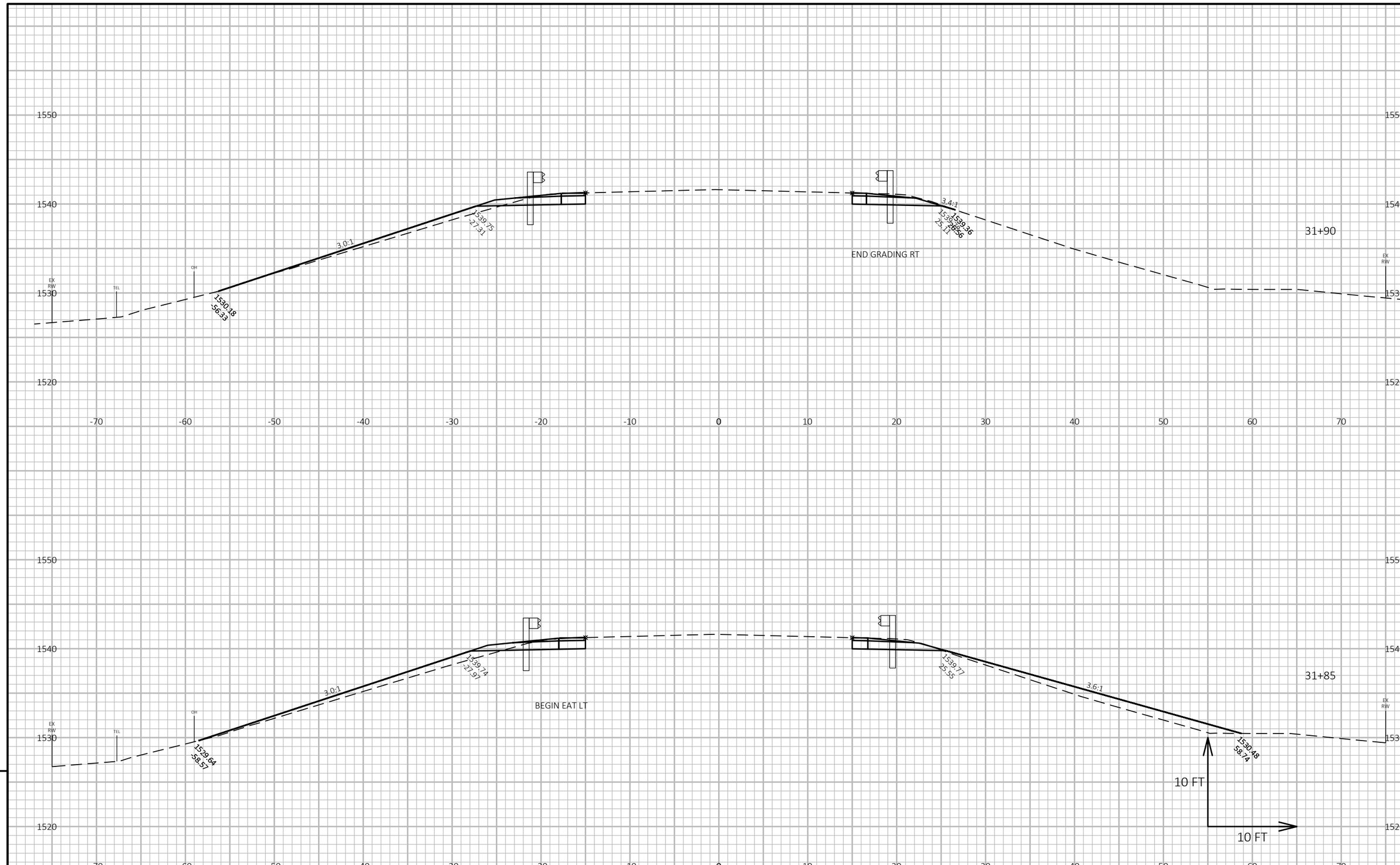

9

9

PROJECT NO: 9215-01-63/73	HWY: STH 86	COUNTY: LINCOLN	CROSS SECTIONS: STH 86 BEAM GUARD	SHEET 153	E

FILE NAME : S:\DESIGN\DESIGN PROJECTS\NC REGION PROJECTS\9215-01-03 (STH 86)\C3D\SHEETSPLAN\090201_XS.DWG
LAYOUT NAME - 4
PLOT DATE : 10/15/2018 3:13 PM
PLOT BY : ADAM OSYPOWSKI
PLOT NAME :
PLOT SCALE : 1 IN:10 FT HORZ. / 1 IN:10 FT VERT.

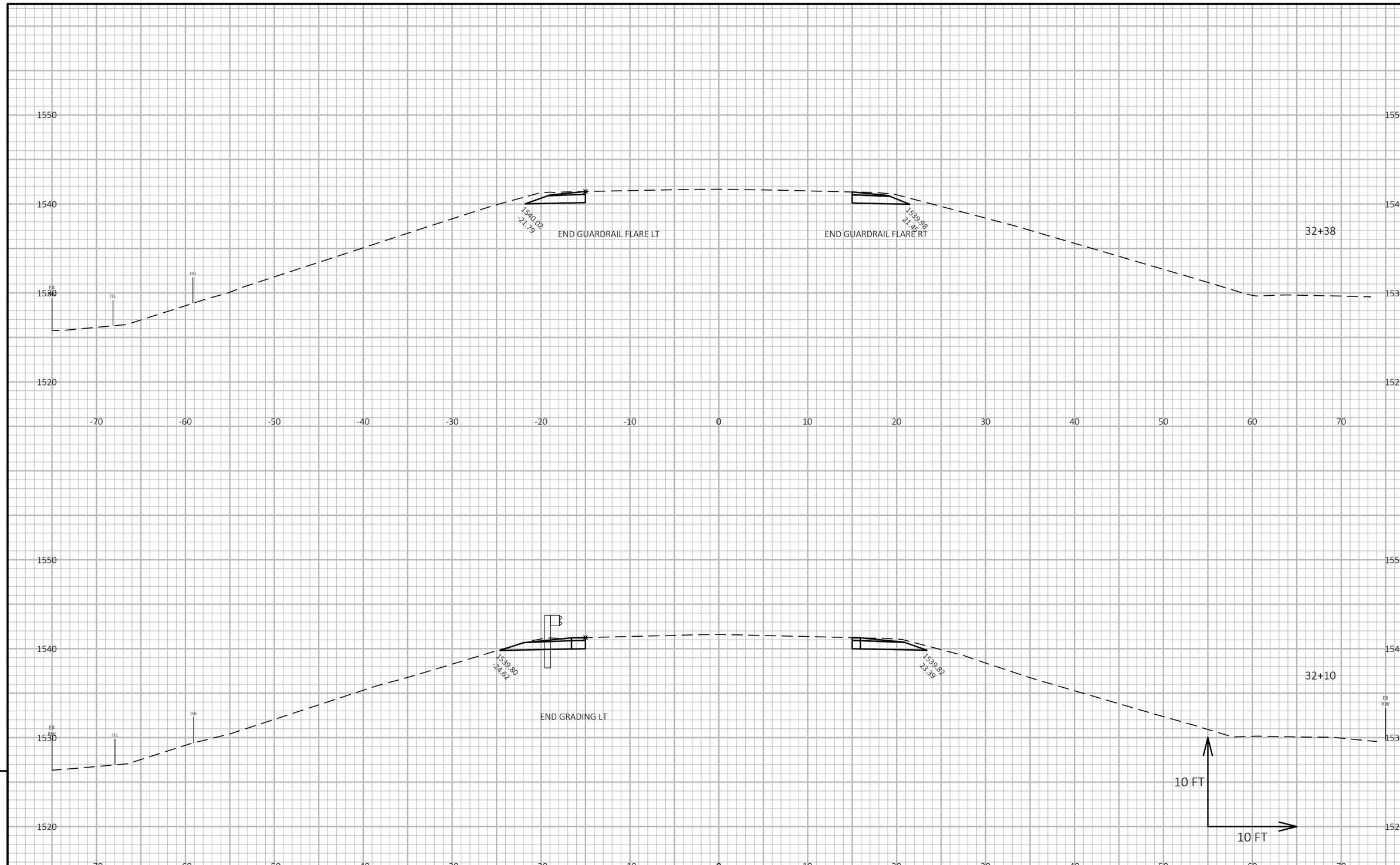

9

9

PROJECT NO: 9215-01-63/73	HWY: STH 86	COUNTY: LINCOLN	CROSS SECTIONS: STH 86 BEAM GUARD	SHEET 154	E

FILE NAME : S:\DESIGN\DESIGN PROJECTS\NC REGION PROJECTS\9215-01-03 (STH 86)\C3D\SHEETSPLAN\090201_XS.DWG
LAYOUT NAME - 5

PLOT DATE : 10/15/2018 3:13 PM PLOT BY : ADAM OSYPOWSKI PLOT NAME : **PLOT SCALE :** 1 IN:10 FT HORZ. / 1 IN:10 FT VERT.

WISDOT/CADDS SHEET 49

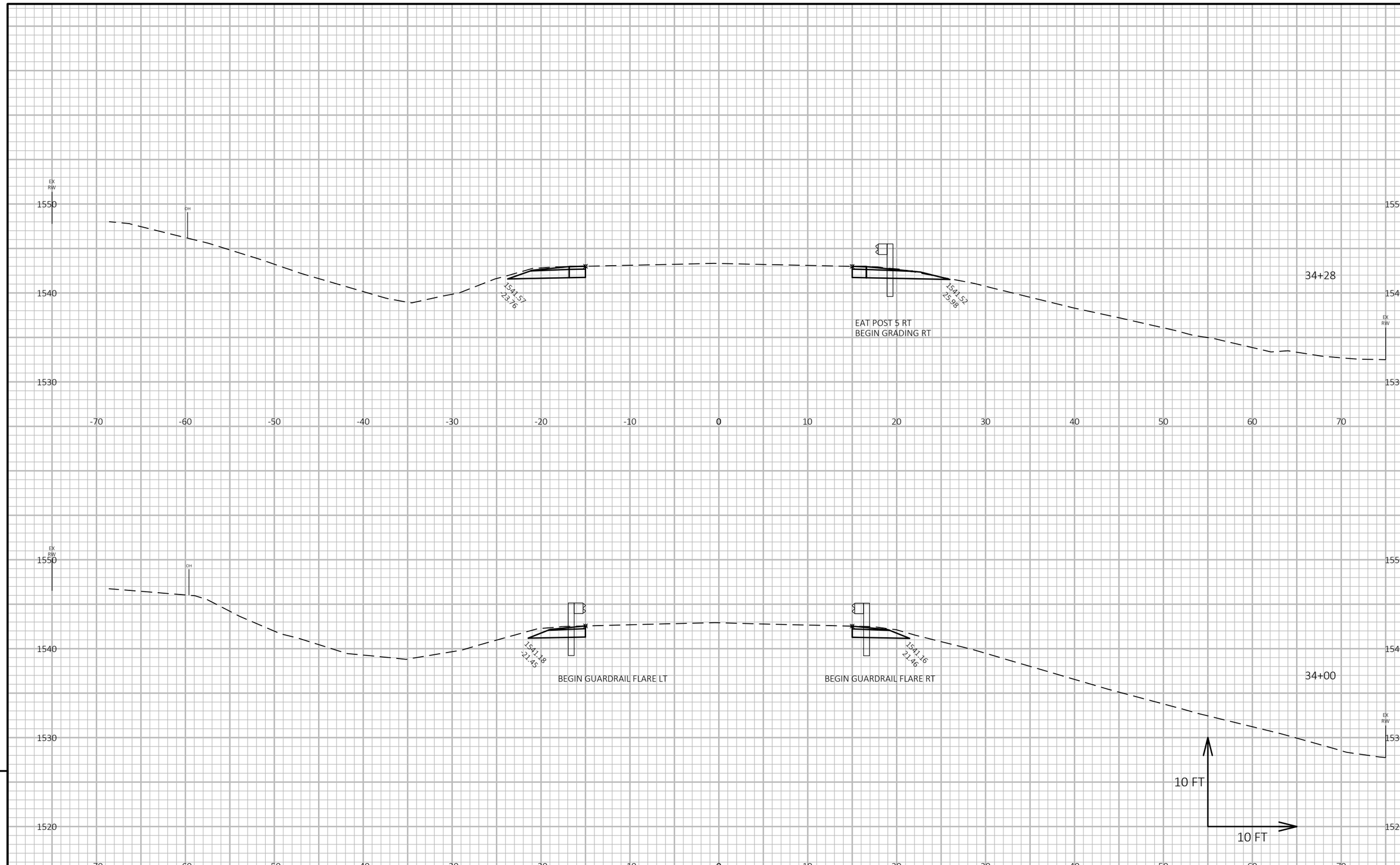

9

9

PROJECT NO: 9215-01-63/73	HWY: STH 86	COUNTY: LINCOLN	CROSS SECTIONS: STH 86 BEAM GUARD	SHEET 155	E

FILE NAME : S:\DESIGN\DESIGN PROJECTS\NC REGION PROJECTS\9215-01-03 (STH 86)\C3D\SHEETSPLAN\090201_XS.DWG
LAYOUT NAME - 6
PLOT DATE : 10/15/2018 3:13 PM
PLOT BY : ADAM OSYPOWSKI
PLOT NAME :
PLOT SCALE : 1 IN:10 FT HORZ. / 1 IN:10 FT VERT.
WISDOT/CADDS SHEET 49

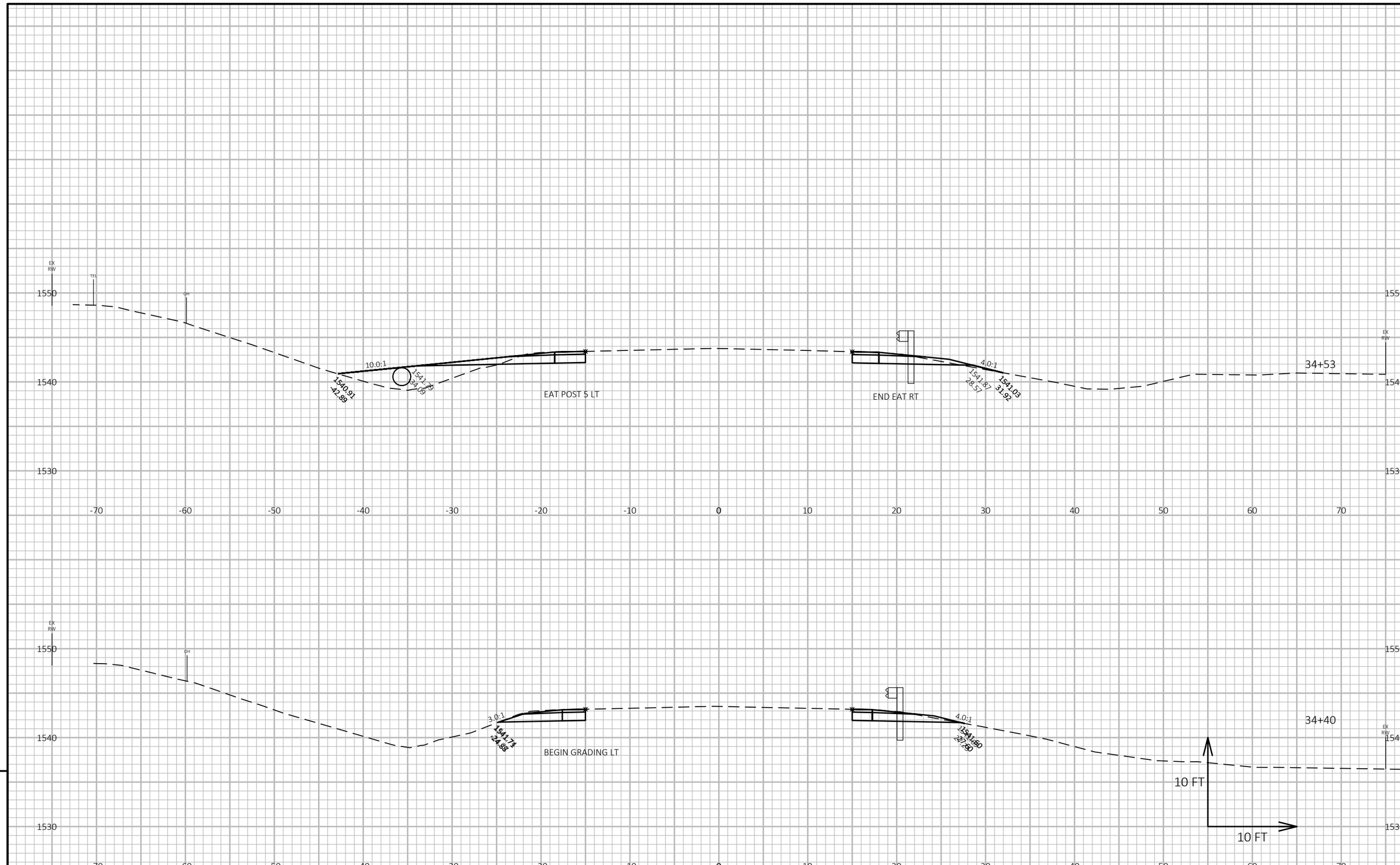

9

9

PROJECT NO: 9215-01-63/73	HWY: STH 86	COUNTY: LINCOLN	CROSS SECTIONS: STH 86 BEAM GUARD	SHEET 156	E

FILE NAME : S:\DESIGN\DESIGN PROJECTS\NC REGION PROJECTS\9215-01-03 (STH 86)\C3D\SHEETSPLAN\090201_XS.DWG
LAYOUT NAME - 7
PLOT DATE : 10/15/2018 3:14 PM
PLOT BY : ADAM OSYPOWSKI
PLOT NAME :
PLOT SCALE : 1 IN:10 FT HORZ. / 1 IN:10 FT VERT.
WISDOT/CADDS SHEET 49

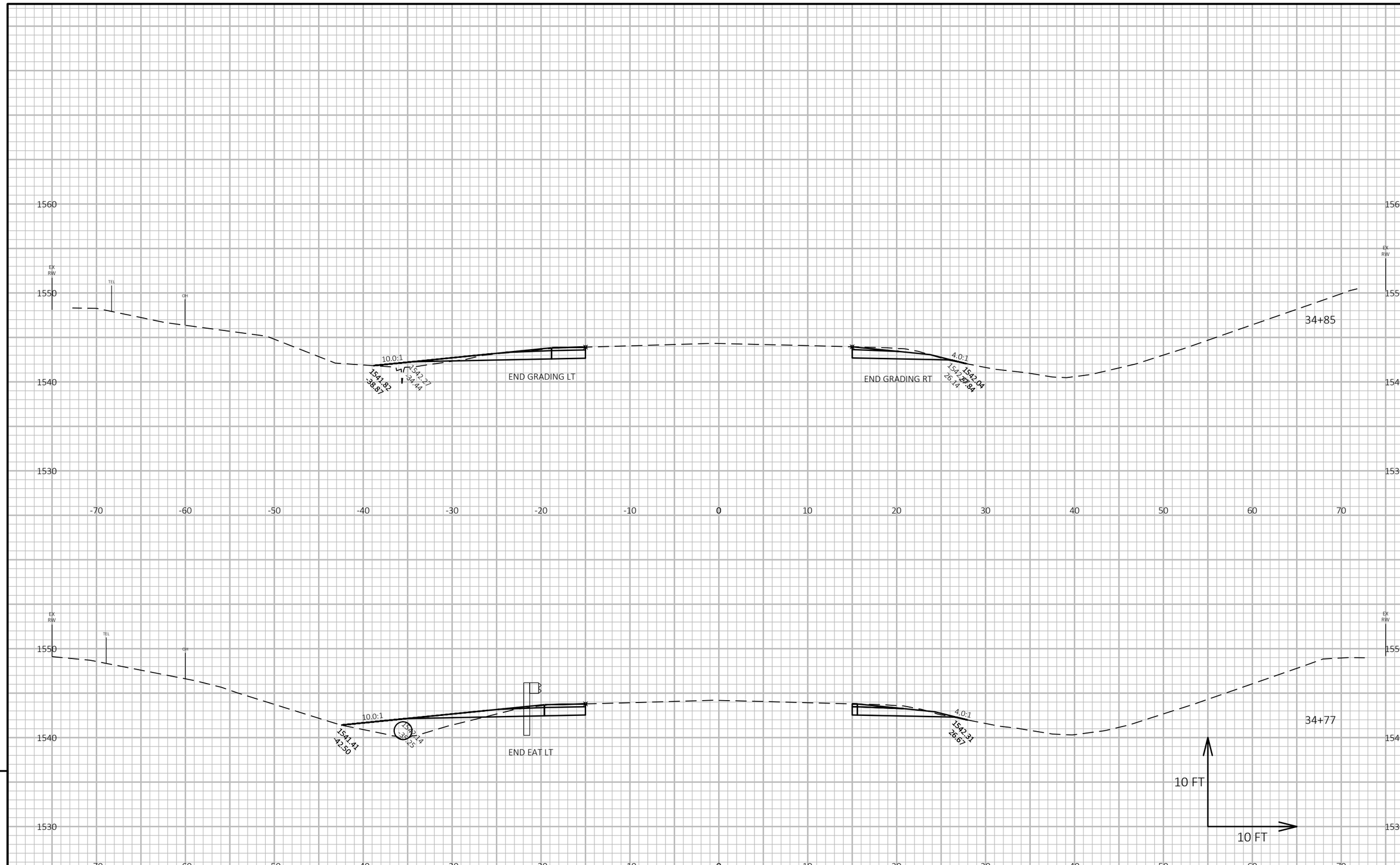

9

9

PROJECT NO: 9215-01-63/73	HWY: STH 86	COUNTY: LINCOLN	CROSS SECTIONS: STH 86 BEAM GUARD	SHEET 157	E

FILE NAME : S:\DESIGN\DESIGN PROJECTS\NC REGION PROJECTS\9215-01-03 (STH 86)\C3D\SHEETSPLAN\090201_XS.DWG
LAYOUT NAME - 8
PLOT DATE : 10/15/2018 3:14 PM
PLOT BY : ADAM OSYPOWSKI
PLOT NAME :
PLOT SCALE : 1 IN:10 FT HORZ. / 1 IN:10 FT VERT.
WISDOT/CADDS SHEET 49

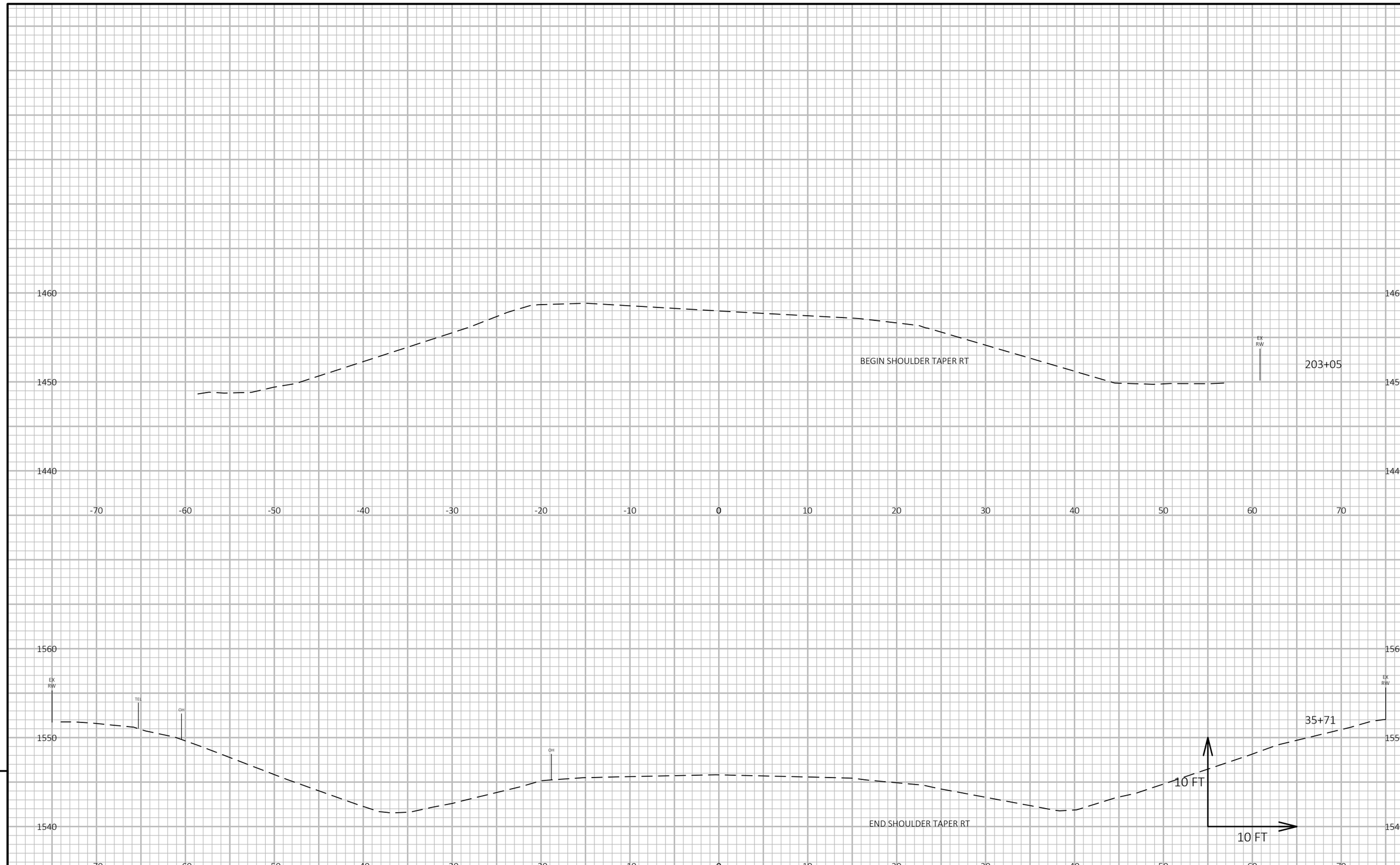

9

9

PROJECT NO: 9215-01-63/73	HWY: STH 86	COUNTY: LINCOLN	CROSS SECTIONS: STH 86 BEAM GUARD	SHEET 158	E

FILE NAME : S:\DESIGN\DESIGN PROJECTS\NC REGION PROJECTS\9215-01-03 (STH 86)\C3D\SHEETSPLAN\090201_XS.DWG
LAYOUT NAME - 9
PLOT DATE : 10/15/2018 3:14 PM
PLOT BY : ADAM OSYPOWSKI
PLOT NAME :
PLOT SCALE : 1 IN:10 FT HORZ. / 1 IN:10 FT VERT.
WISDOT/CADDS SHEET 49

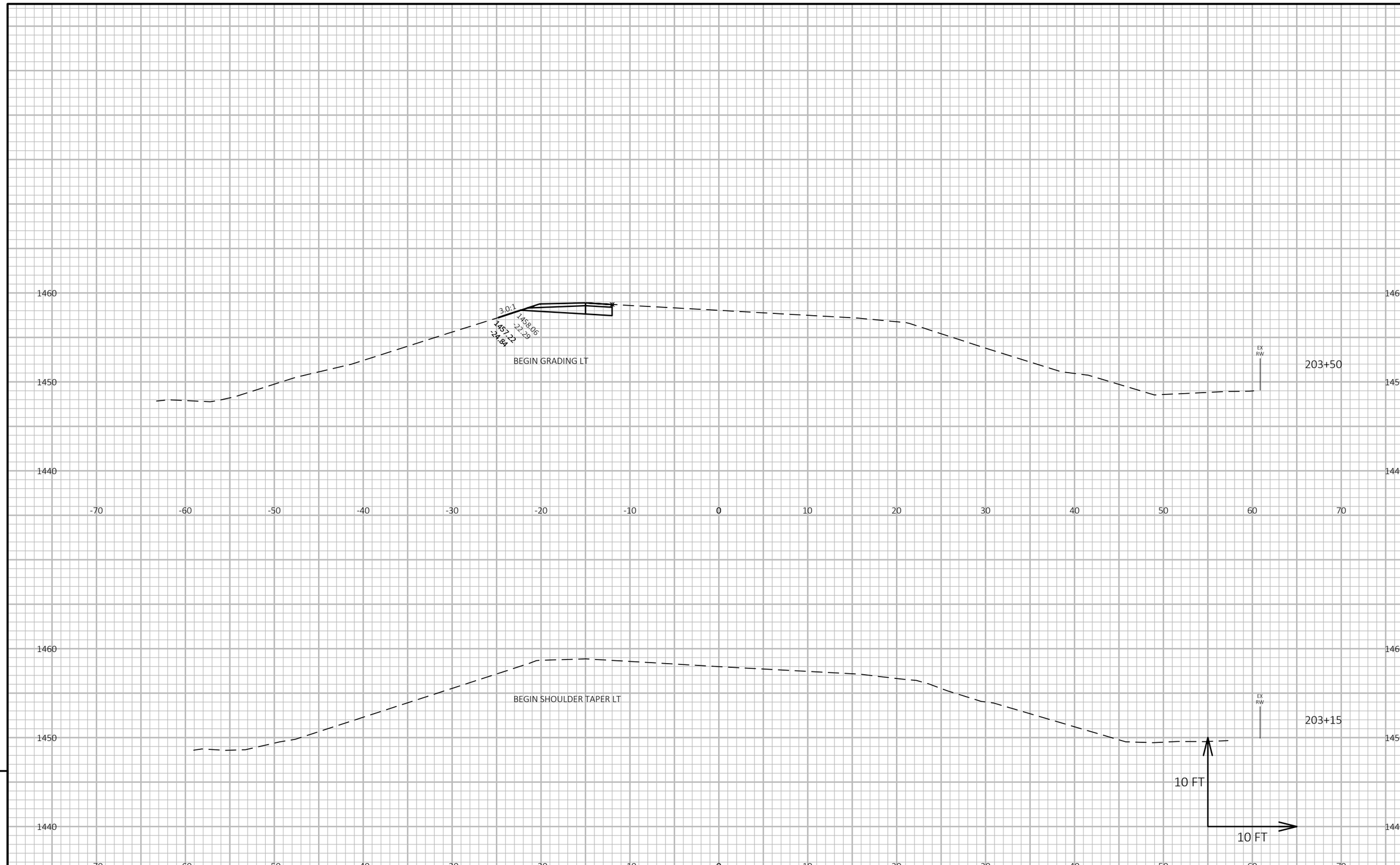

9

9

PROJECT NO: 9215-01-63/73	HWY: STH 86	COUNTY: LINCOLN	CROSS SECTIONS: STH 86 BEAM GUARD	SHEET 159	E

FILE NAME : S:\DESIGN\DESIGN PROJECTS\NC REGION PROJECTS\9215-01-03 (STH 86)\C3D\SHEETSPLAN\090201_XS.DWG
LAYOUT NAME - 10
PLOT DATE : 10/15/2018 3:14 PM
PLOT BY : ADAM OSYPOWSKI
PLOT NAME :
PLOT SCALE : 1 IN:10 FT HORZ. / 1 IN:10 FT VERT.

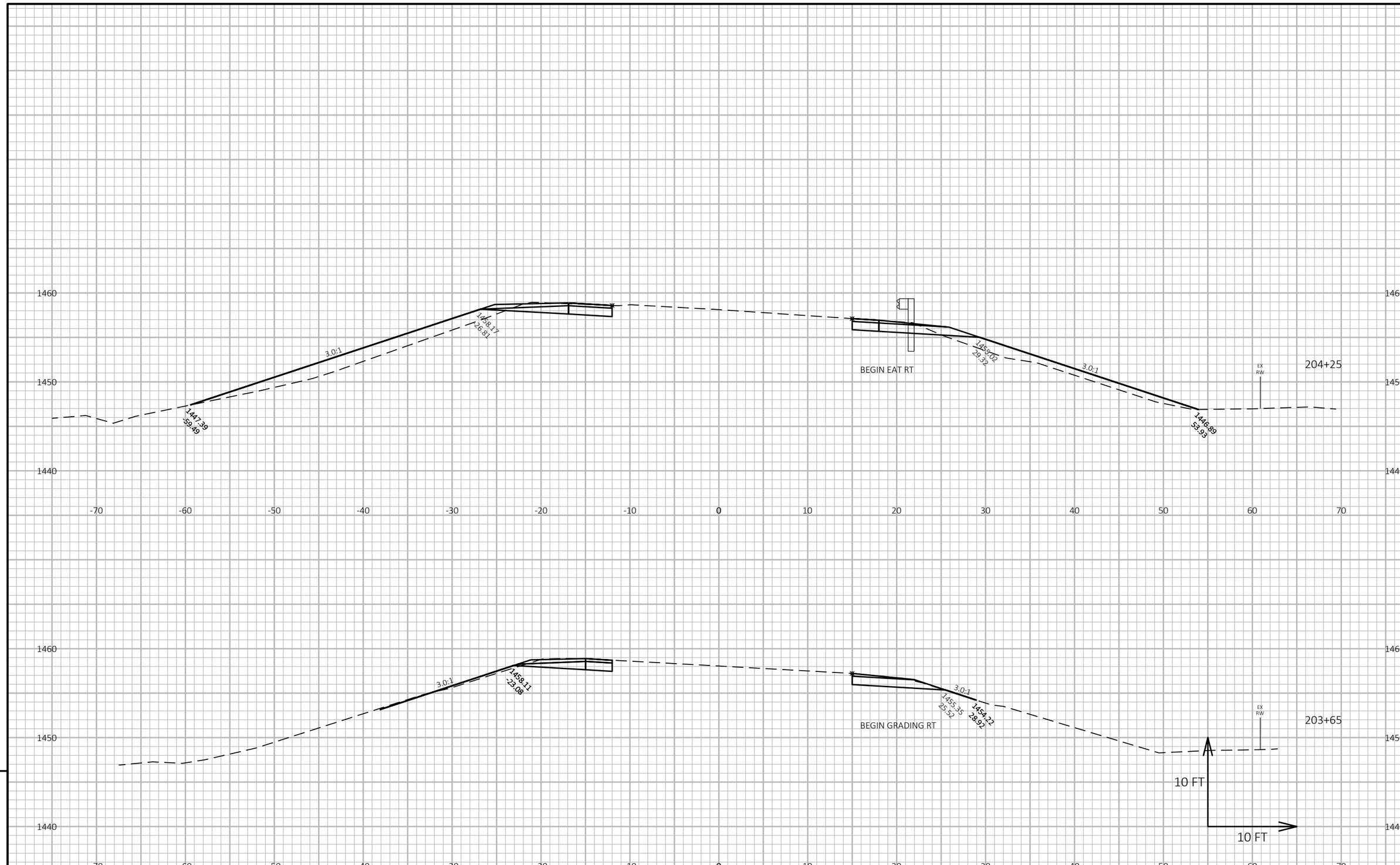

9

9

PROJECT NO: 9215-01-63/73	HWY: STH 86	COUNTY: LINCOLN	CROSS SECTIONS: STH 86 BEAM GUARD	SHEET 160	E

FILE NAME : S:\DESIGN\DESIGN PROJECTS\NC REGION PROJECTS\9215-01-03 (STH 86)\C3D\SHEETSPLAN\090201_XS.DWG
LAYOUT NAME - 11
PLOT DATE : 10/15/2018 3:14 PM
PLOT BY : ADAM OSYPOWSKI
PLOT NAME :
PLOT SCALE : 1 IN:10 FT HORZ. / 1 IN:10 FT VERT.
WISDOT/CADDS SHEET 49

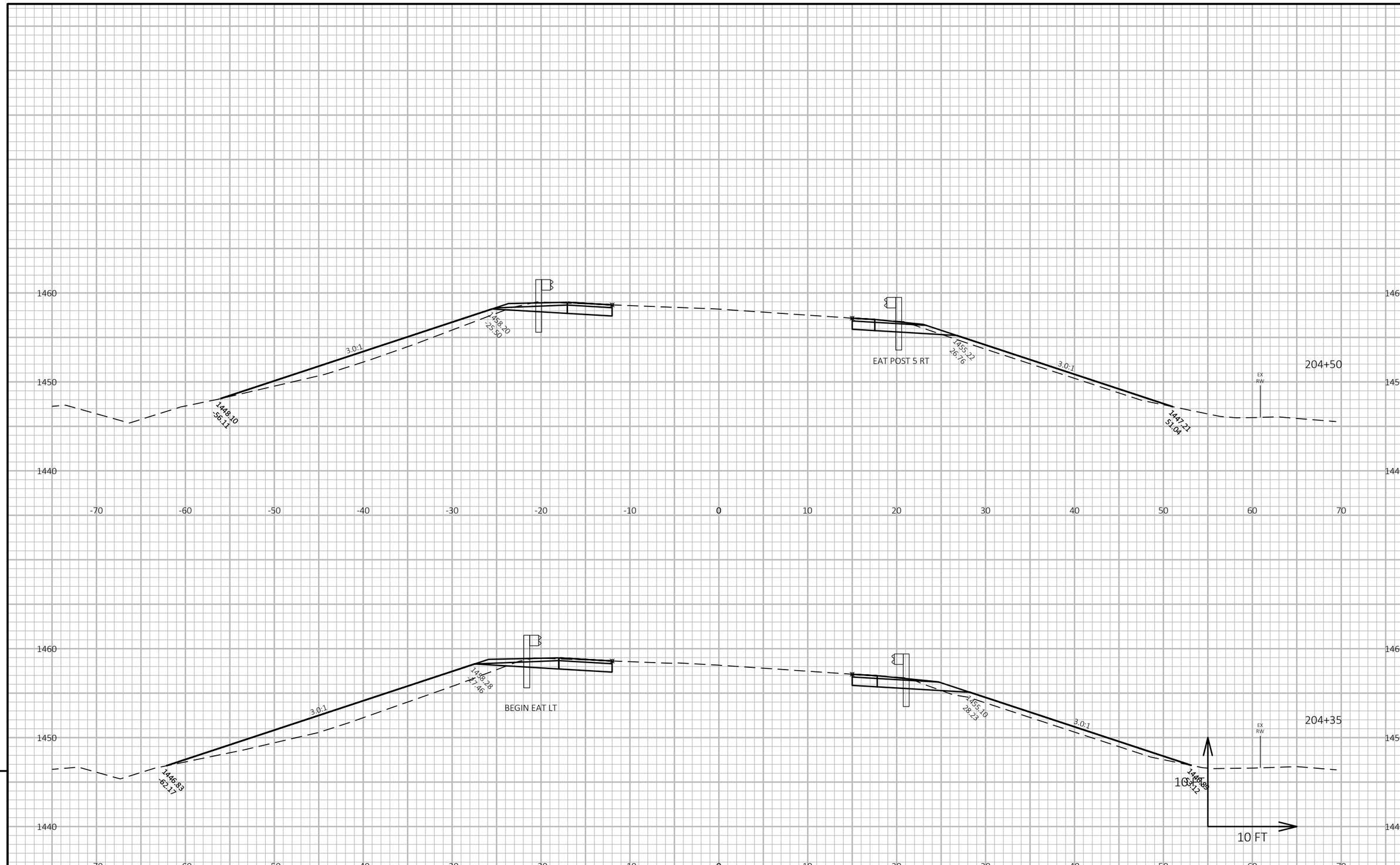

9

9

PROJECT NO: 9215-01-63/73	HWY: STH 86	COUNTY: LINCOLN	CROSS SECTIONS: STH 86 BEAM GUARD	SHEET 161	E

FILE NAME : S:\DESIGN\DESIGN PROJECTS\NC REGION PROJECTS\9215-01-03 (STH 86)\C3D\SHEETSPLAN\090201_XS.DWG
LAYOUT NAME - 12
PLOT DATE : 10/15/2018 3:14 PM
PLOT BY : ADAM OSYPOWSKI
PLOT NAME :
PLOT SCALE : 1 IN:10 FT HORZ. / 1 IN:10 FT VERT.
WISDOT/CADDS SHEET 49

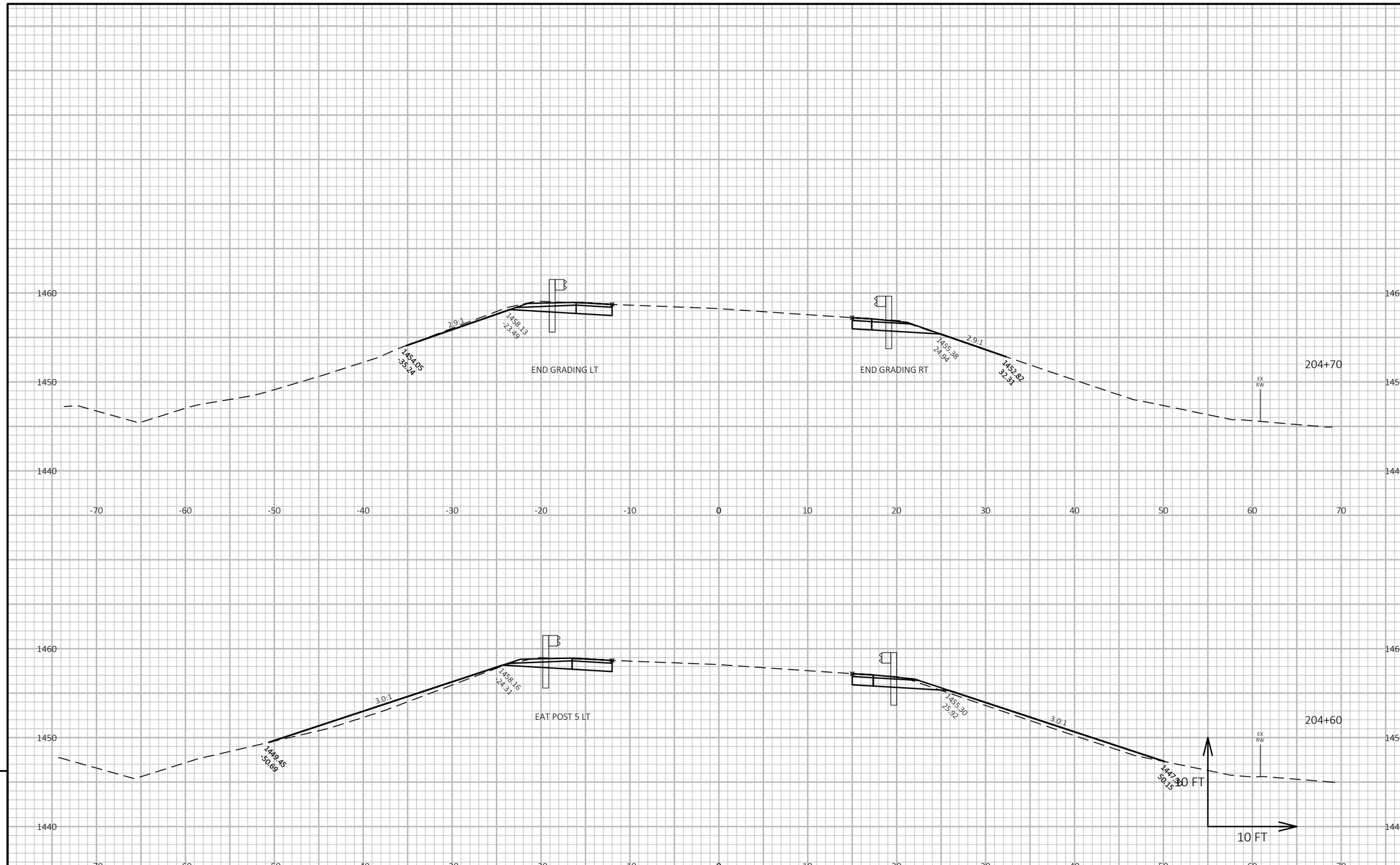

9

9

PROJECT NO: 9215-01-63/73	HWY: STH 86	COUNTY: LINCOLN	CROSS SECTIONS: STH 86 BEAM GUARD	SHEET 162	E

FILE NAME : S:\DESIGN\DESIGN PROJECTS\NC REGION PROJECTS\9215-01-03 (STH 86)\C3D\SHEETSPLAN\090201_XS.DWG
LAYOUT NAME - 13
PLOT DATE : 10/15/2018 3:15 PM
PLOT BY : ADAM OSYPOWSKI
PLOT NAME :
PLOT SCALE : 1 IN:10 FT HORZ. / 1 IN:10 FT VERT.

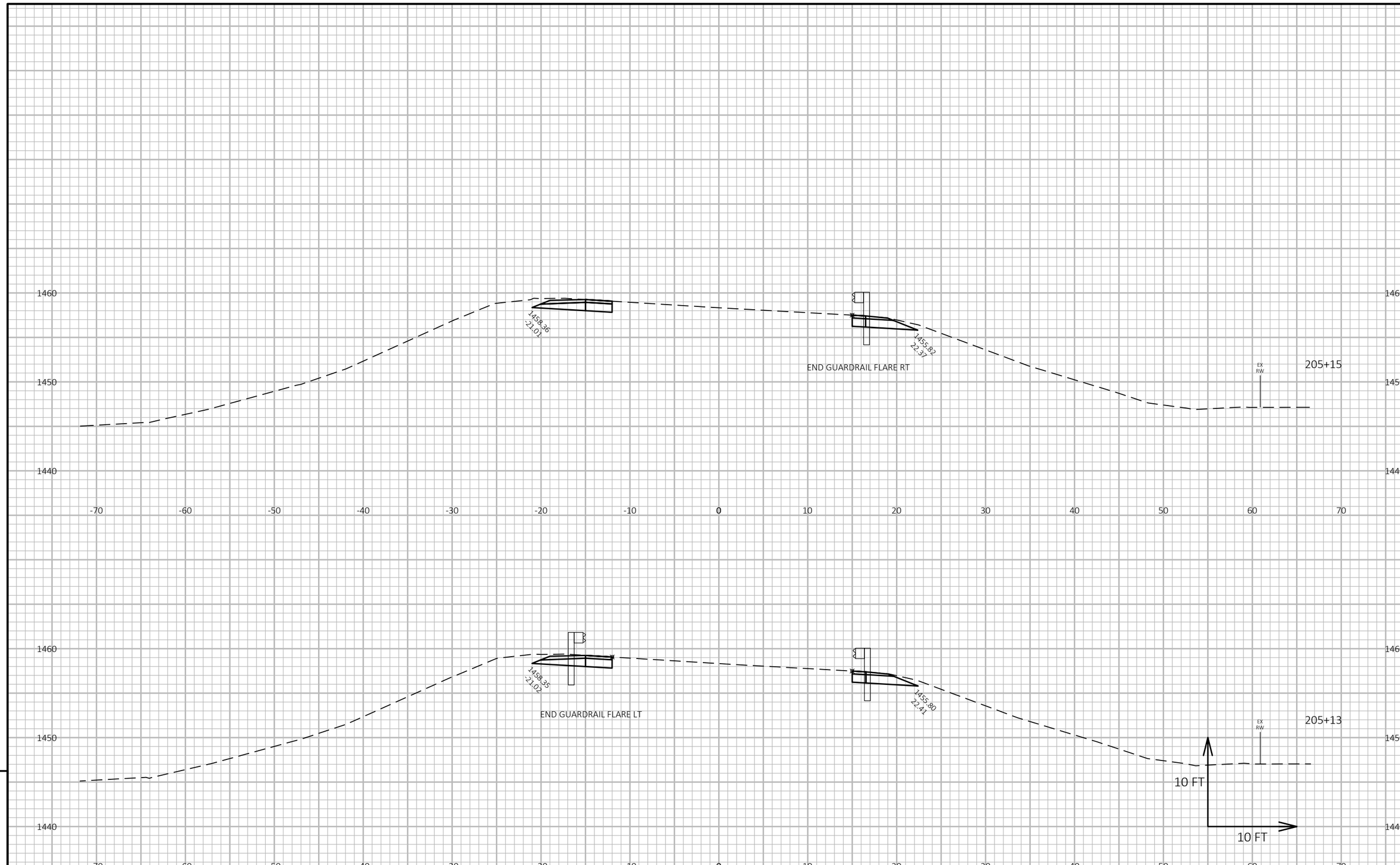

9

9

PROJECT NO: 9215-01-63/73	HWY: STH 86	COUNTY: LINCOLN	CROSS SECTIONS: STH 86 BEAM GUARD	SHEET 163	E

FILE NAME : S:\DESIGN\DESIGN PROJECTS\NC REGION PROJECTS\9215-01-03 (STH 86)\C3D\SHEETSPLAN\090201_XS.DWG
LAYOUT NAME - 14
PLOT DATE : 10/15/2018 3:15 PM
PLOT BY : ADAM OSYPOWSKI
PLOT NAME :
PLOT SCALE : 1 IN:10 FT HORZ. / 1 IN:10 FT VERT.
WISDOT/CADDS SHEET 49

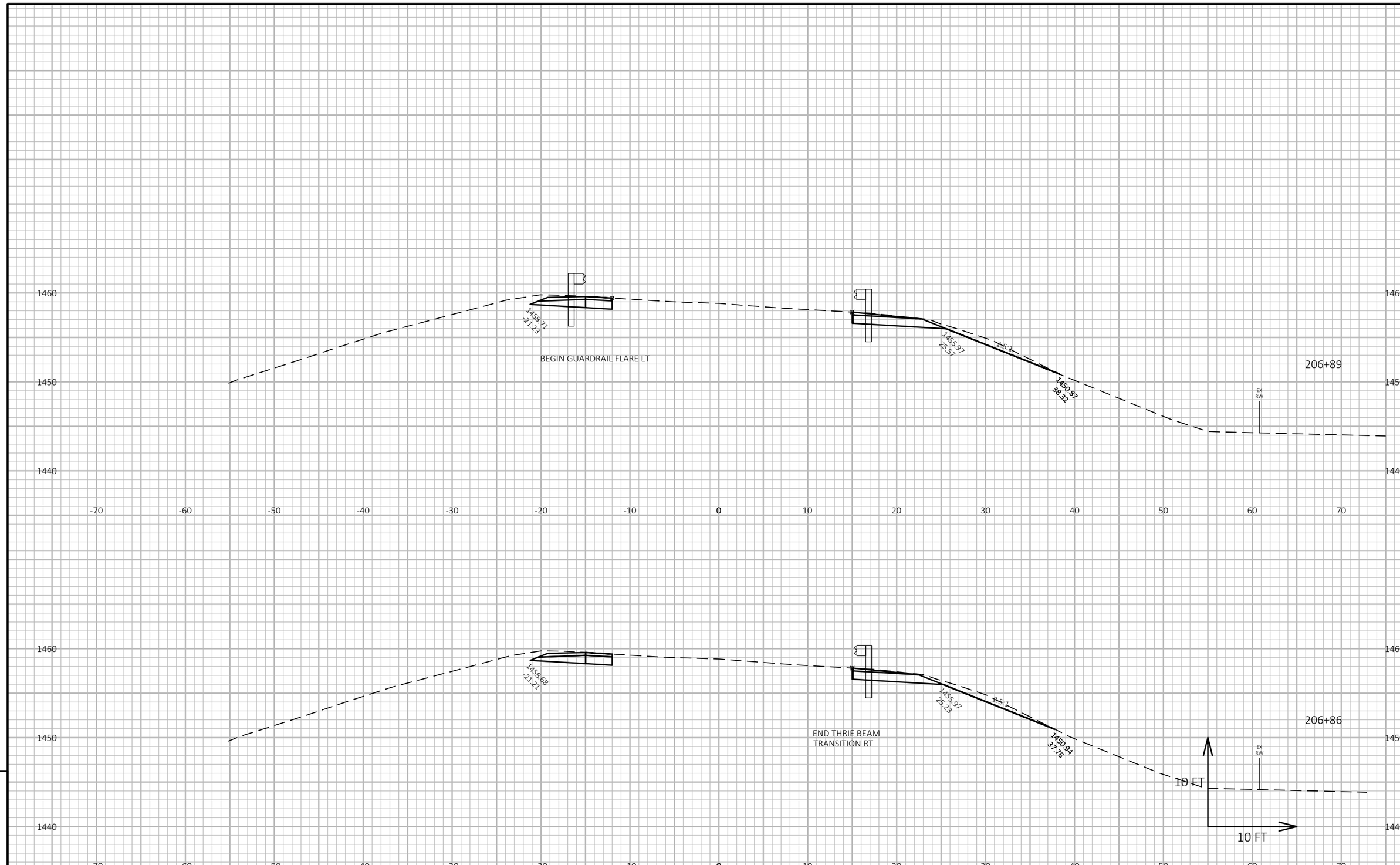

9

9

PROJECT NO: 9215-01-63/73	HWY: STH 86	COUNTY: LINCOLN	CROSS SECTIONS: STH 86 BEAM GUARD	SHEET 164	E

FILE NAME : S:\DESIGN\DESIGN PROJECTS\NC REGION PROJECTS\9215-01-03 (STH 86)\C3D\SHEETSPLAN\090201_XS.DWG
LAYOUT NAME - 15
PLOT DATE : 10/15/2018 3:15 PM
PLOT BY : ADAM OSYPOWSKI
PLOT NAME :
PLOT SCALE : 1 IN:10 FT HORZ. / 1 IN:10 FT VERT.

WISDOT/CADDS SHEET 49

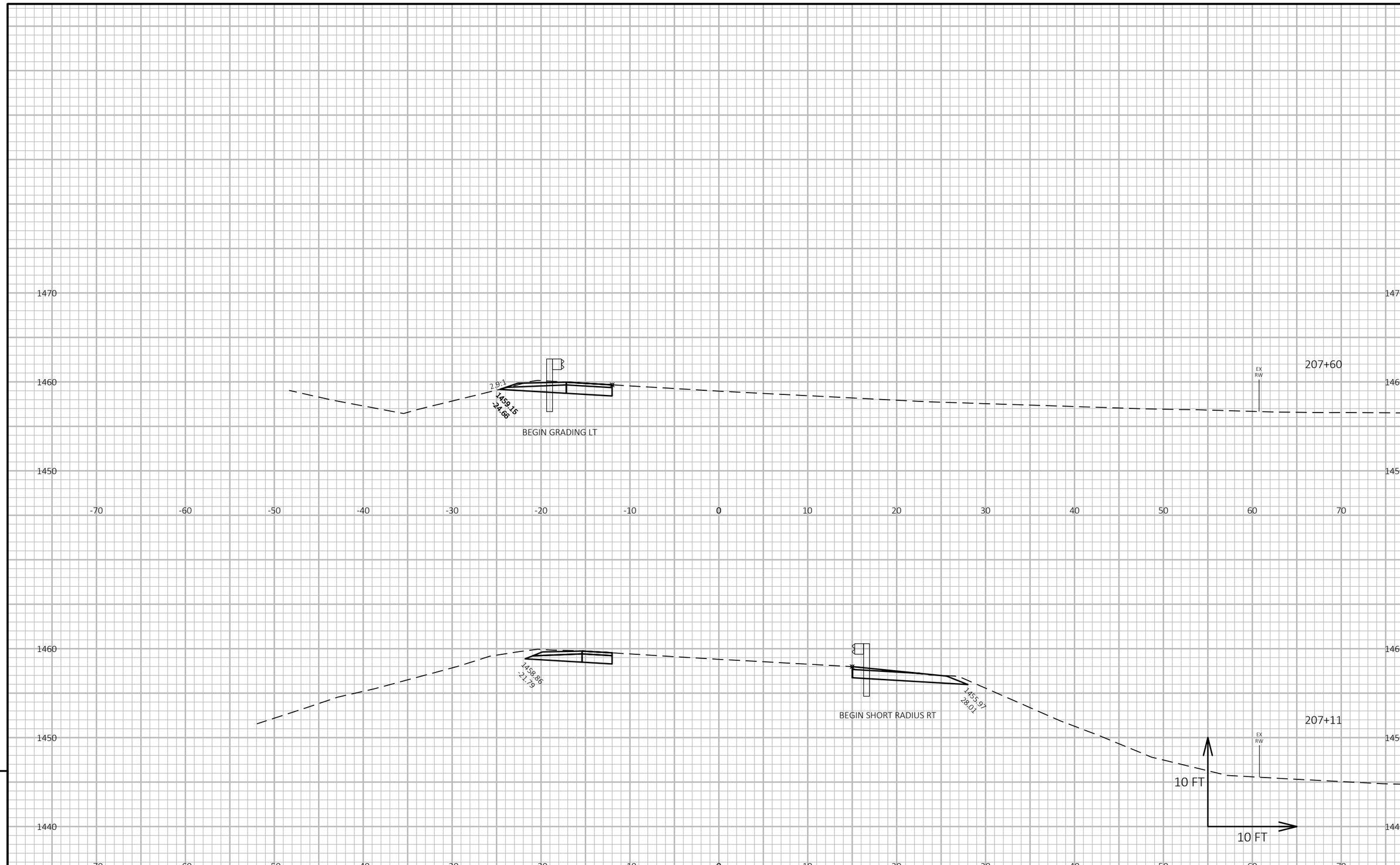

9

9

PROJECT NO: 9215-01-63/73	HWY: STH 86	COUNTY: LINCOLN	CROSS SECTIONS: STH 86 BEAM GUARD	SHEET 165	E

FILE NAME : S:\DESIGN\DESIGN PROJECTS\NC REGION PROJECTS\9215-01-03 (STH 86)\C3D\SHEETSPLAN\090201_XS.DWG
LAYOUT NAME - 16
PLOT DATE : 10/15/2018 3:15 PM
PLOT BY : ADAM OSYPOWSKI
PLOT NAME :
PLOT SCALE : 1 IN:10 FT HORZ. / 1 IN:10 FT VERT.
WISDOT/CADDS SHEET 49

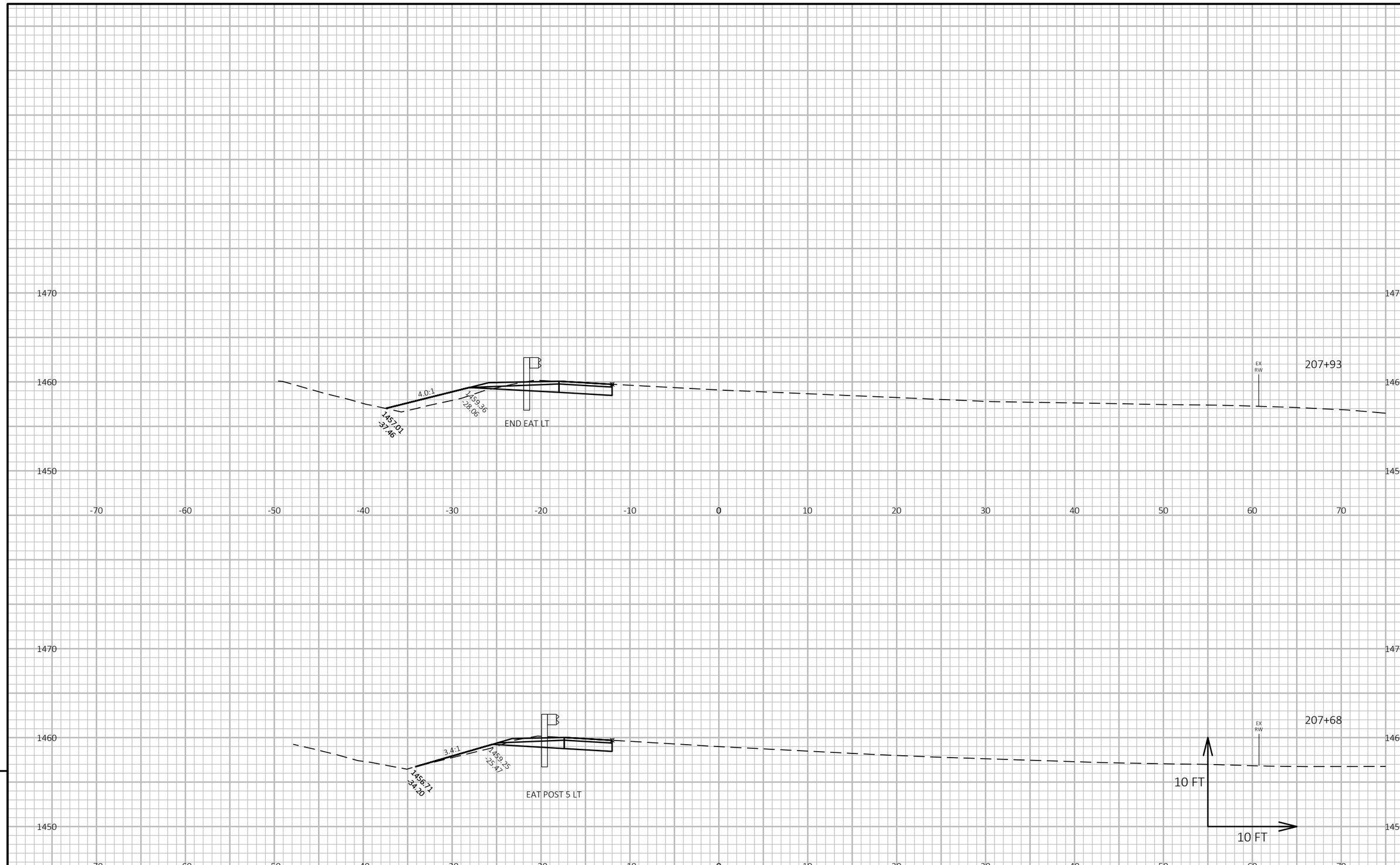

9

9

PROJECT NO: 9215-01-63/73	HWY: STH 86	COUNTY: LINCOLN	CROSS SECTIONS: STH 86 BEAM GUARD	SHEET 166	E

FILE NAME : S:\DESIGN\DESIGN PROJECTS\NC REGION PROJECTS\9215-01-03 (STH 86)\C3D\SHEETSPLAN\090201_XS.DWG
LAYOUT NAME - 17

PLOT DATE : 10/15/2018 3:15 PM PLOT BY : ADAM OSYPOWSKI PLOT NAME : PLOT SCALE : 1 IN:10 FT HORZ. / 1 IN:10 FT VERT.

WISDOT/CADDS SHEET 49

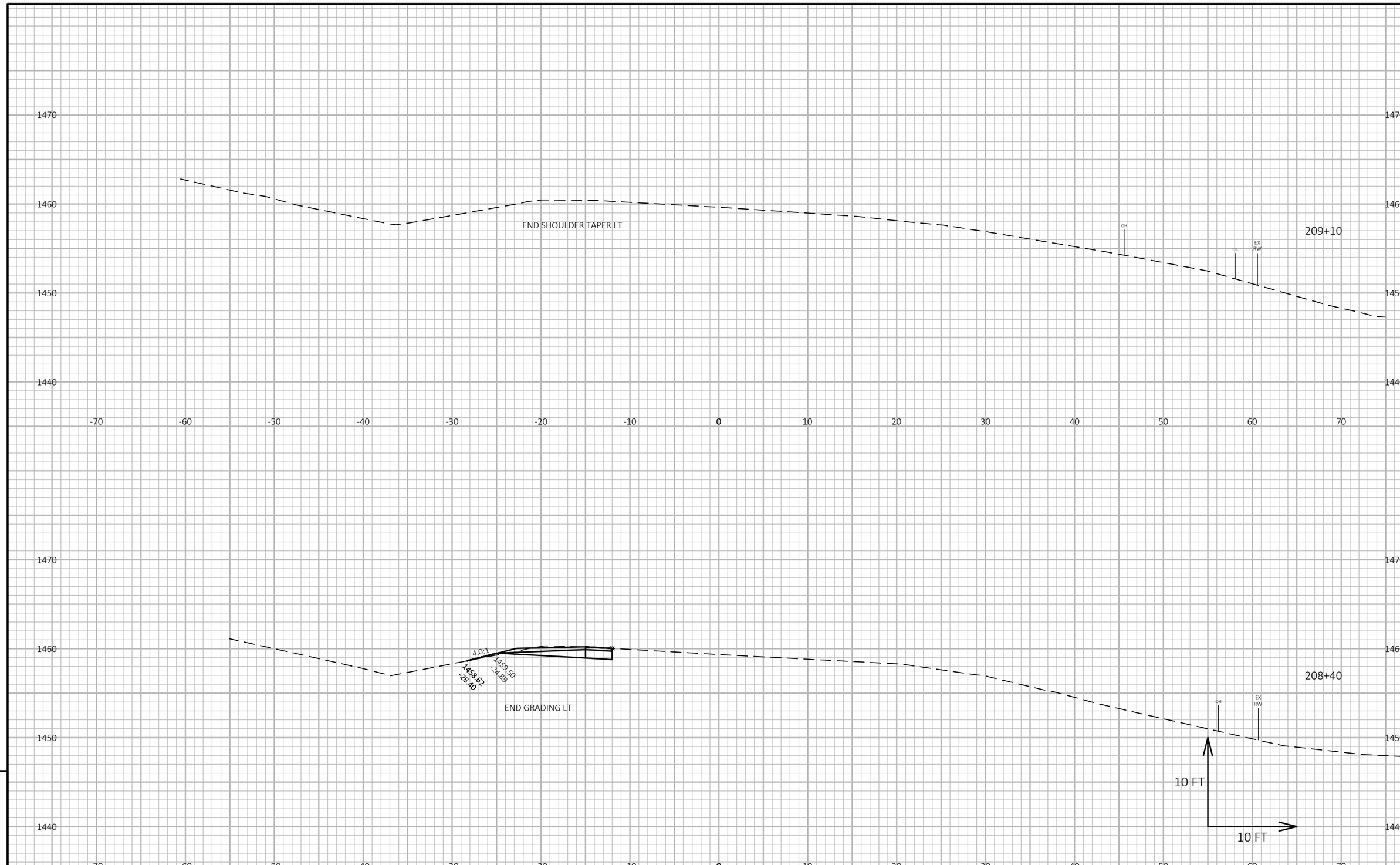

9

9

PROJECT NO: 9215-01-63/73	HWY: STH 86	COUNTY: LINCOLN	CROSS SECTIONS: STH 86 BEAM GUARD	SHEET 167	E

FILE NAME : S:\DESIGN\DESIGN PROJECTS\NC REGION PROJECTS\9215-01-03 (STH 86)\C3D\SHEETSPLAN\090201_XS.DWG
LAYOUT NAME - 18

PLOT DATE : 10/15/2018 3:16 PM PLOT BY : ADAM OSYPOWSKI PLOT NAME : PLOT SCALE : 1 IN:10 FT HORZ. / 1 IN:10 FT VERT.

WISDOT/CADDS SHEET 49

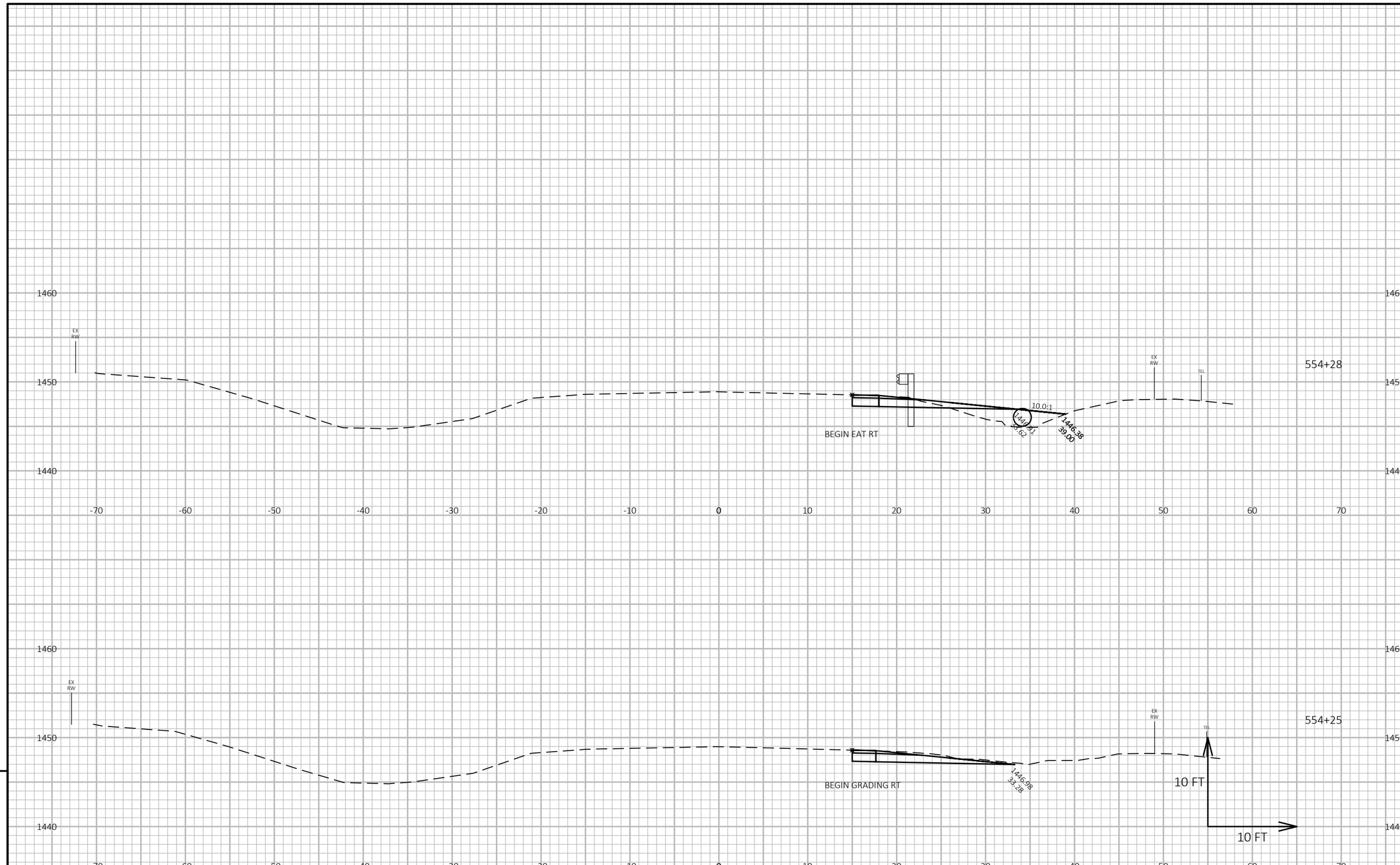

9

9

PROJECT NO: 9215-01-63/73	HWY: STH 86	COUNTY: LINCOLN	CROSS SECTIONS: STH 86 BEAM GUARD	SHEET 168	E

FILE NAME : S:\DESIGN\DESIGN PROJECTS\NC REGION PROJECTS\9215-01-03 (STH 86)\C3D\SHEETSPLAN\090201_XS.DWG
LAYOUT NAME - 19

PLOT DATE : 10/15/2018 3:16 PM PLOT BY : ADAM OSYPOWSKI PLOT NAME : PLOT SCALE : 1 IN:10 FT HORZ. / 1 IN:10 FT VERT.

WISDOT/CADDS SHEET 49

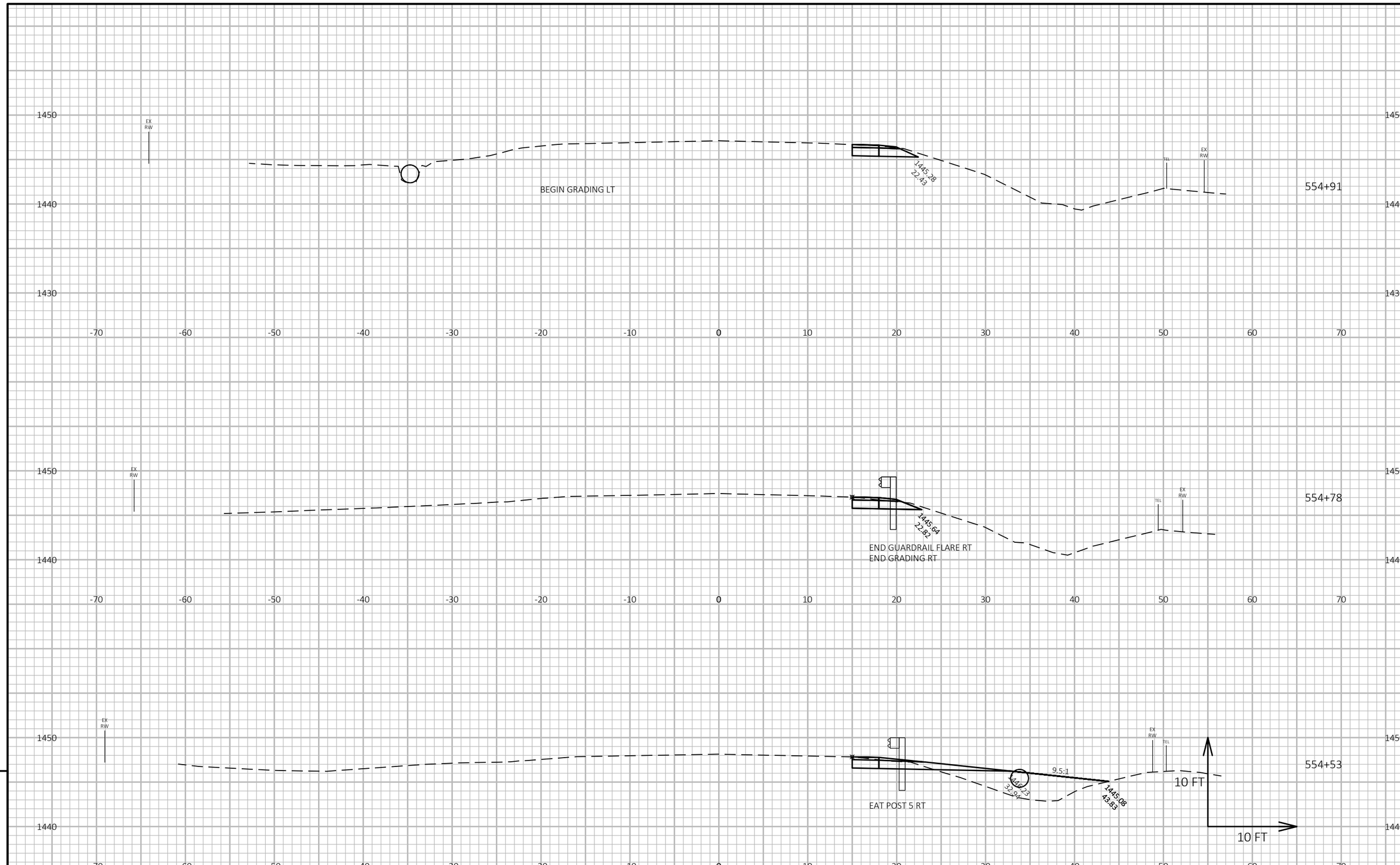

9

9

PROJECT NO: 9215-01-63/73	HWY: STH 86	COUNTY: LINCOLN	CROSS SECTIONS: STH 86 BEAM GUARD	SHEET 169	E

FILE NAME : S:\DESIGN\DESIGN PROJECTS\NC REGION PROJECTS\9215-01-03 (STH 86)\C3D\SHEETSPLAN\090201_XS.DWG
LAYOUT NAME - 20
PLOT DATE : 10/15/2018 3:16 PM
PLOT BY : ADAM OSYPOWSKI
PLOT NAME :
PLOT SCALE : 1 IN:10 FT HORZ. / 1 IN:10 FT VERT.

WISDOT/CADDS SHEET 49

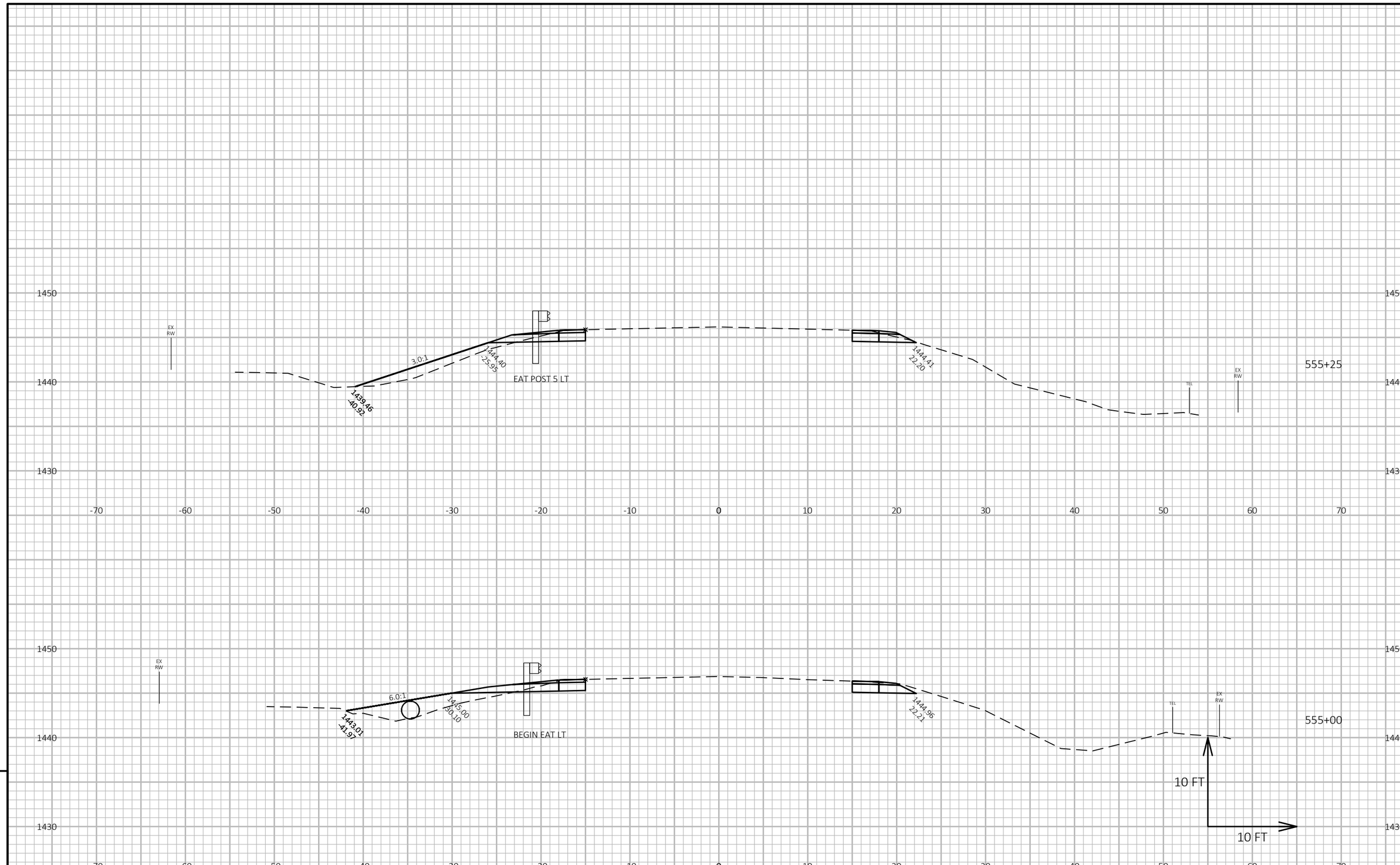

9

9

PROJECT NO: 9215-01-63/73	HWY: STH 86	COUNTY: LINCOLN	CROSS SECTIONS: STH 86 BEAM GUARD	SHEET 170	E

FILE NAME : S:\DESIGN\DESIGN PROJECTS\NC REGION PROJECTS\9215-01-03 (STH 86)\C3D\SHEETSPLAN\090201_XS.DWG
LAYOUT NAME - 21
PLOT DATE : 10/15/2018 3:16 PM
PLOT BY : ADAM OSYPOWSKI
PLOT NAME :
PLOT SCALE : 1 IN:10 FT HORZ. / 1 IN:10 FT VERT.

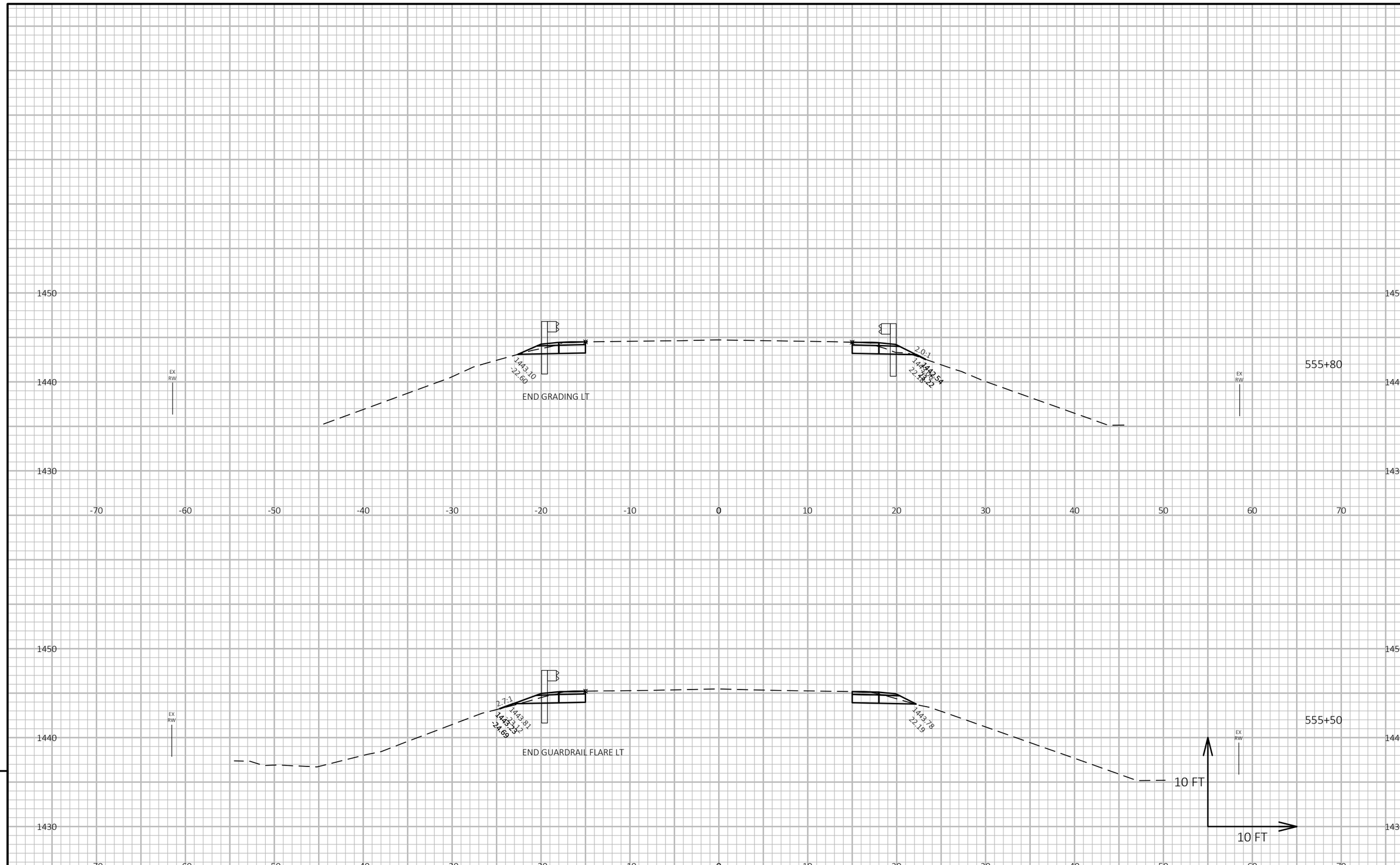

9

9

PROJECT NO: 9215-01-63/73	HWY: STH 86	COUNTY: LINCOLN	CROSS SECTIONS: STH 86 BEAM GUARD	SHEET 171	E

FILE NAME : S:\DESIGN\DESIGN PROJECTS\NC REGION PROJECTS\9215-01-03 (STH 86)\C3D\SHEETSPLAN\090201_XS.DWG
LAYOUT NAME - 22

PLOT DATE : 10/15/2018 3:16 PM PLOT BY : ADAM OSYPOWSKI PLOT NAME : PLOT SCALE : 1 IN:10 FT HORZ. / 1 IN:10 FT VERT.

WISDOT/CADDS SHEET 49

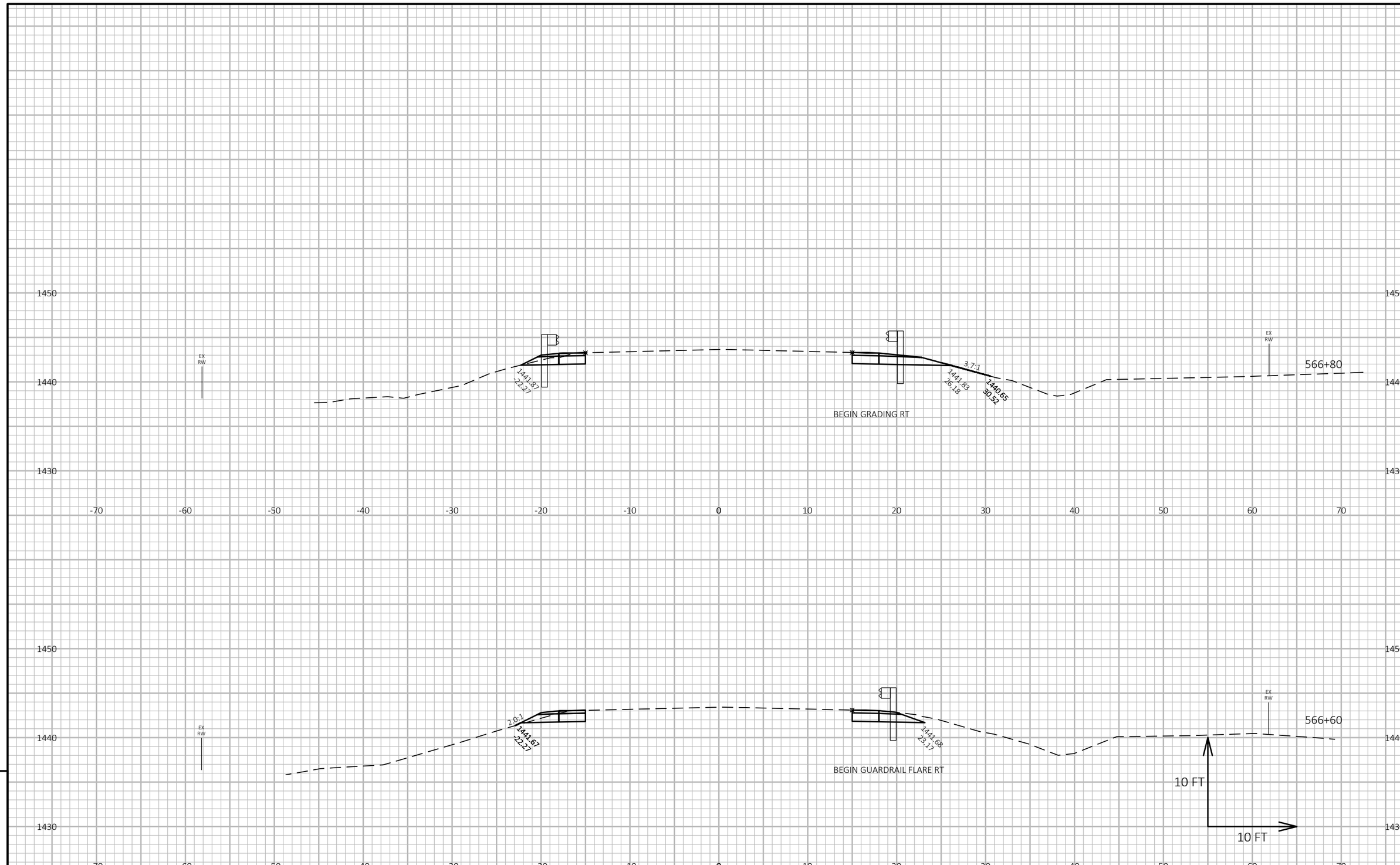

9

9

PROJECT NO: 9215-01-63/73	HWY: STH 86	COUNTY: LINCOLN	CROSS SECTIONS: STH 86 BEAM GUARD	SHEET 172	E

FILE NAME : S:\DESIGN\DESIGN PROJECTS\NC REGION PROJECTS\9215-01-03 (STH 86)\C3D\SHEETSPLAN\090201_XS.DWG
LAYOUT NAME - 23

PLOT DATE : 10/15/2018 3:16 PM PLOT BY : ADAM OSYPOWSKI PLOT NAME : PLOT SCALE : 1 IN:10 FT HORZ. / 1 IN:10 FT VERT.

WISDOT/CADDS SHEET 49

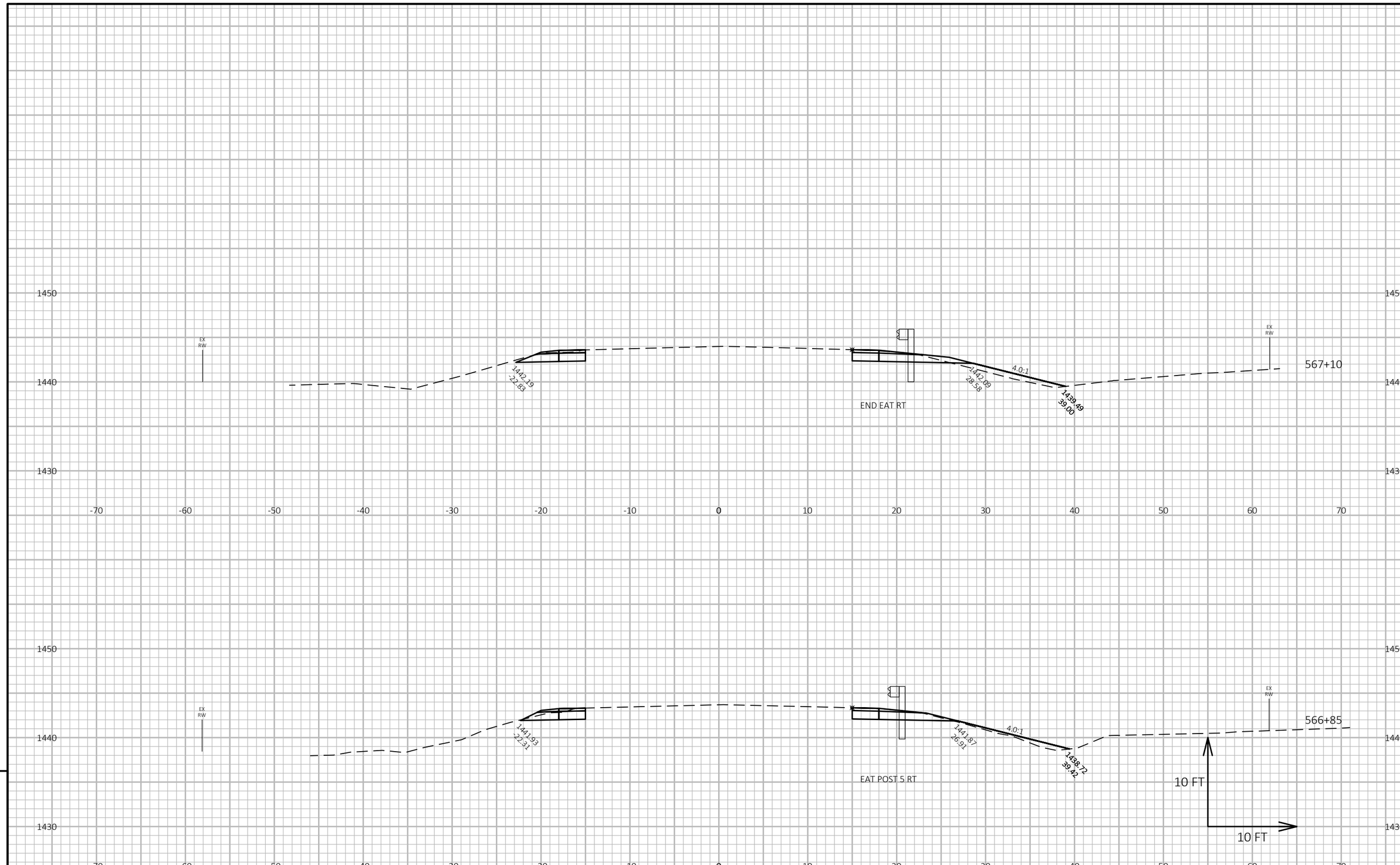

9

9

PROJECT NO: 9215-01-63/73	HWY: STH 86	COUNTY: LINCOLN	CROSS SECTIONS: STH 86 BEAM GUARD	SHEET 173	E

FILE NAME : S:\DESIGN\DESIGN PROJECTS\NC REGION PROJECTS\9215-01-03 (STH 86)\C3D\SHEETSPLAN\090201_XS.DWG
LAYOUT NAME - 24

PLOT DATE : 10/15/2018 3:17 PM PLOT BY : ADAM OSYPOWSKI PLOT NAME : PLOT SCALE : 1 IN:10 FT HORZ. / 1 IN:10 FT VERT.

WISDOT/CADDS SHEET 49

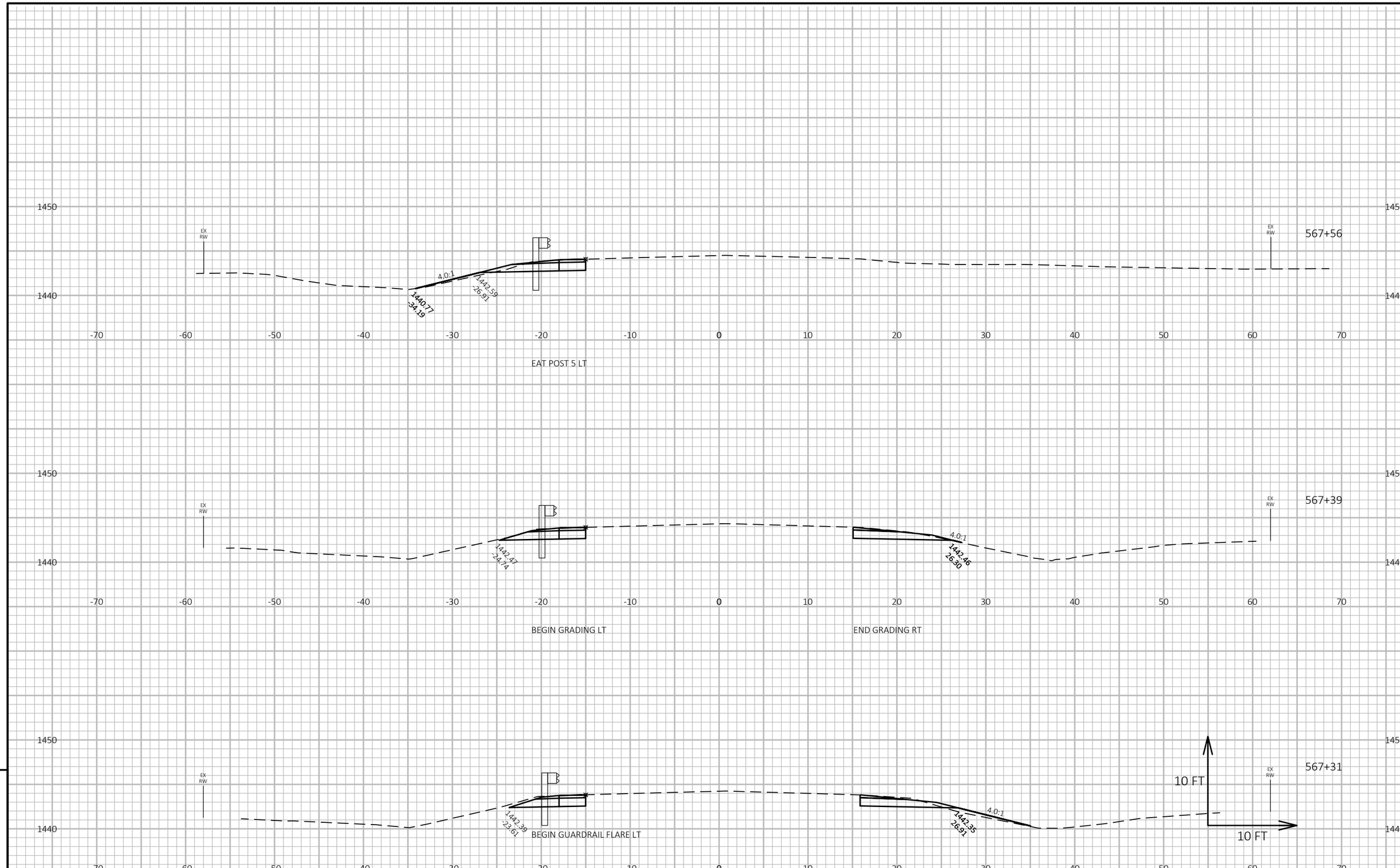

9

9

PROJECT NO: 9215-01-63/73	HWY: STH 86	COUNTY: LINCOLN	CROSS SECTIONS: STH 86 BEAM GUARD	SHEET 174	E

FILE NAME : S:\DESIGN\DESIGN PROJECTS\NC REGION PROJECTS\9215-01-03 (STH 86)\C3D\SHEETSPLAN\090201_XS.DWG
LAYOUT NAME - 25
PLOT DATE : 10/15/2018 3:17 PM PLOT BY : ADAM OSYPOWSKI PLOT NAME : PLOT SCALE : 1 IN:10 FT HORZ. / 1 IN:10 FT VERT.

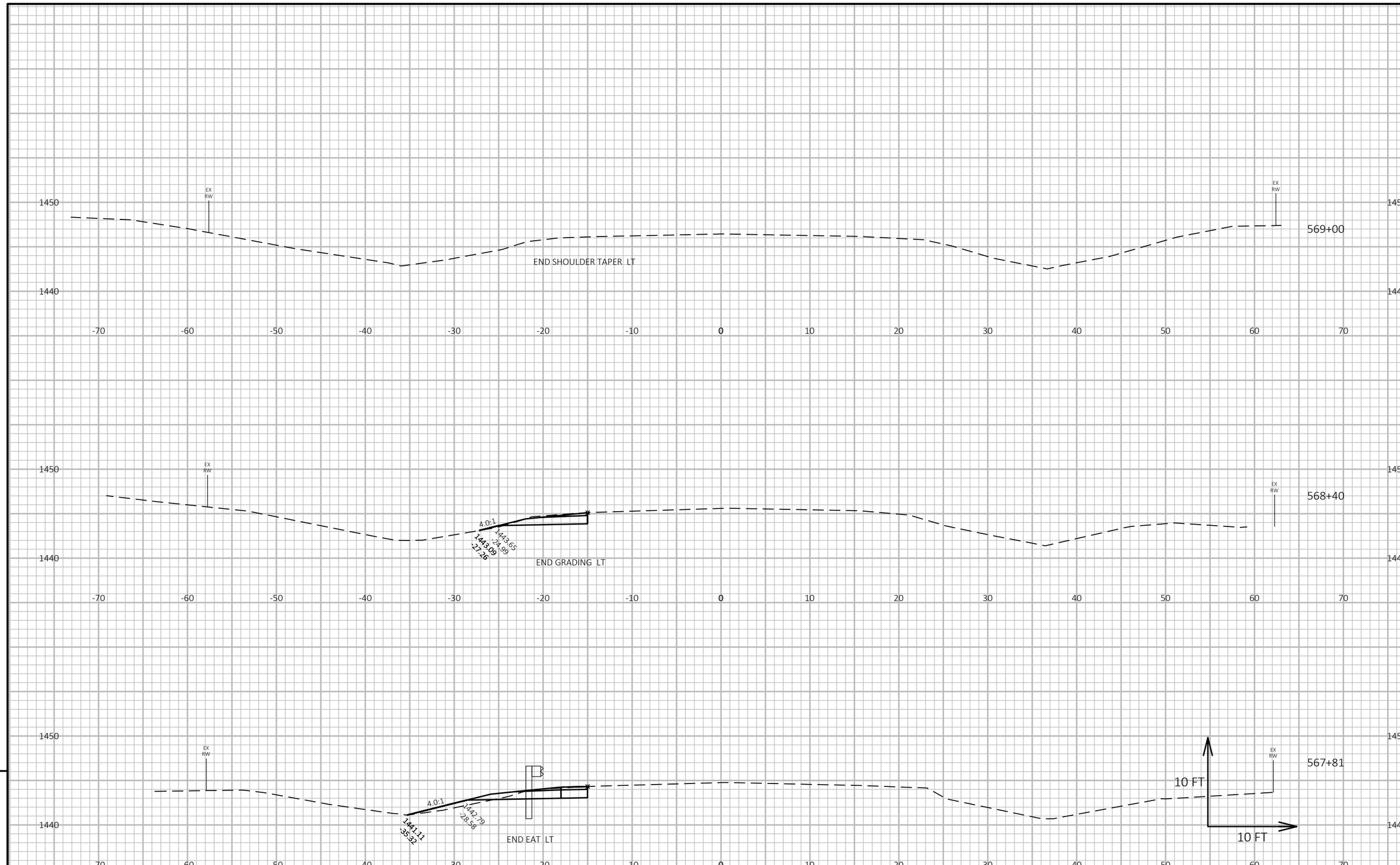

9

9

PROJECT NO: 9215-01-63/73	HWY: STH 86	COUNTY: LINCOLN	CROSS SECTIONS: STH 86 BEAM GUARD	SHEET 175	E

FILE NAME : S:\DESIGN\DESIGN PROJECTS\NC REGION PROJECTS\9215-01-03 (STH 86)\C3D\SHEETSPLAN\090201_XS.DWG
LAYOUT NAME - 26
PLOT DATE : 10/15/2018 3:17 PM PLOT BY : ADAM OSYPOWSKI PLOT NAME : PLOT SCALE : 1 IN:10 FT HORZ. / 1 IN:10 FT VERT.

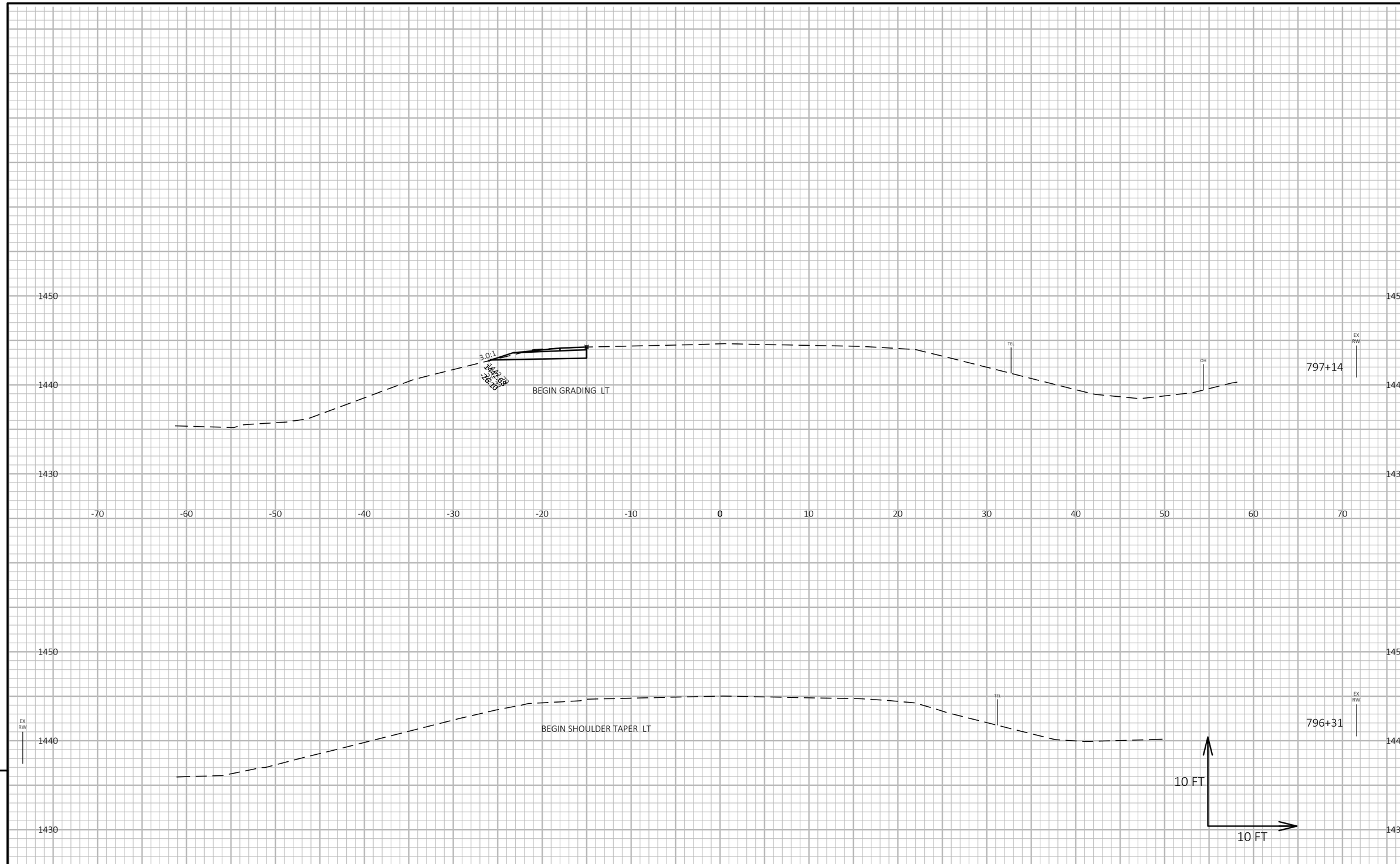

9

9

PROJECT NO: 9215-01-63/73	HWY: STH 86	COUNTY: LINCOLN	CROSS SECTIONS: STH 86 BEAM GUARD	SHEET 176	E

FILE NAME : S:\DESIGN\DESIGN PROJECTS\NC REGION PROJECTS\9215-01-03 (STH 86)\C3D\SHEETSPLAN\090201_XS.DWG
LAYOUT NAME - 27

PLOT DATE : 10/15/2018 3:17 PM PLOT BY : ADAM OSYPOWSKI PLOT NAME : PLOT SCALE : 1 IN:10 FT HORZ. / 1 IN:10 FT VERT.

WISDOT/CADDS SHEET 49

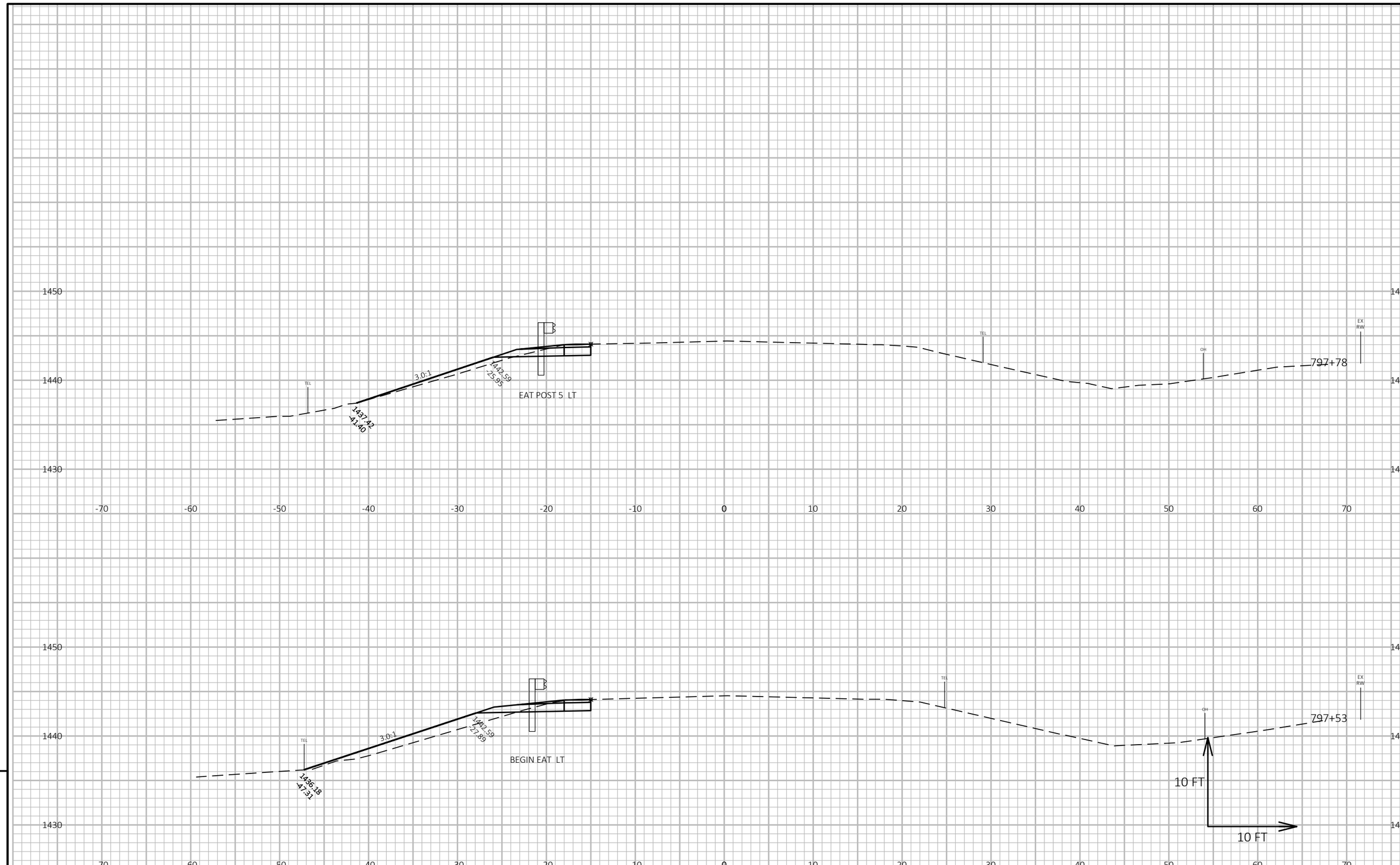

9

9

PROJECT NO: 9215-01-63/73	HWY: STH 86	COUNTY: LINCOLN	CROSS SECTIONS: STH 86 BEAM GUARD	SHEET 177	E

FILE NAME : S:\DESIGN\DESIGN PROJECTS\NC REGION PROJECTS\9215-01-03 (STH 86)\C3D\SHEETSPLAN\090201_XS.DWG
LAYOUT NAME - 28

PLOT DATE : 10/15/2018 3:17 PM PLOT BY : ADAM OSYPOWSKI PLOT NAME : PLOT SCALE : 1 IN:10 FT HORZ. / 1 IN:10 FT VERT.

WISDOT/CADDS SHEET 49

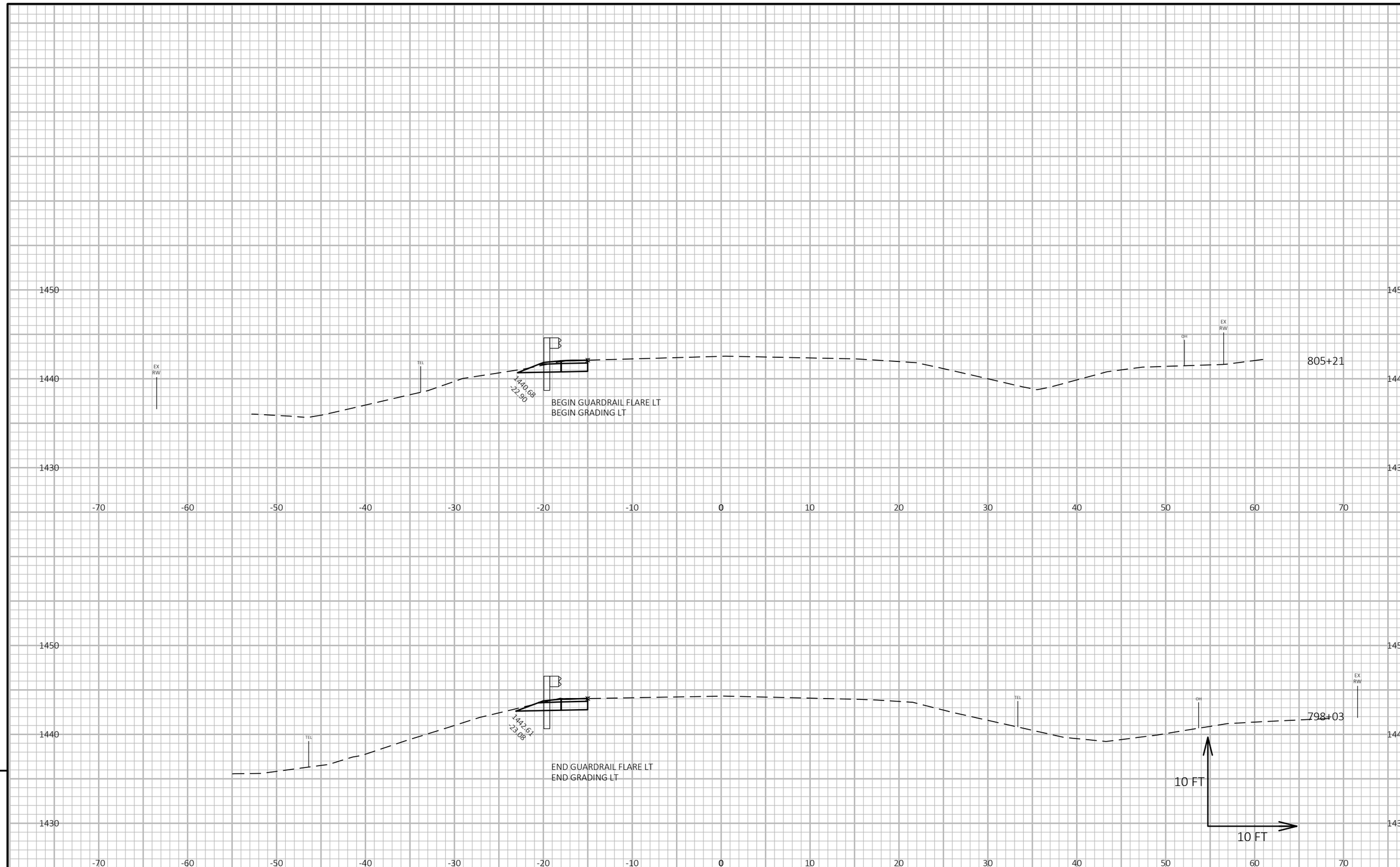

9

9

PROJECT NO: 9215-01-63/73	HWY: STH 86	COUNTY: LINCOLN	CROSS SECTIONS: STH 86 BEAM GUARD	SHEET 178	E

FILE NAME : S:\DESIGN\DESIGN PROJECTS\NC REGION PROJECTS\9215-01-03 (STH 86)\C3D\SHEETSPLAN\090201_XS.DWG
LAYOUT NAME - 29
PLOT DATE : 10/15/2018 3:17 PM
PLOT BY : ADAM OSYPOWSKI
PLOT NAME :
PLOT SCALE : 1 IN:10 FT HORZ. / 1 IN:10 FT VERT.

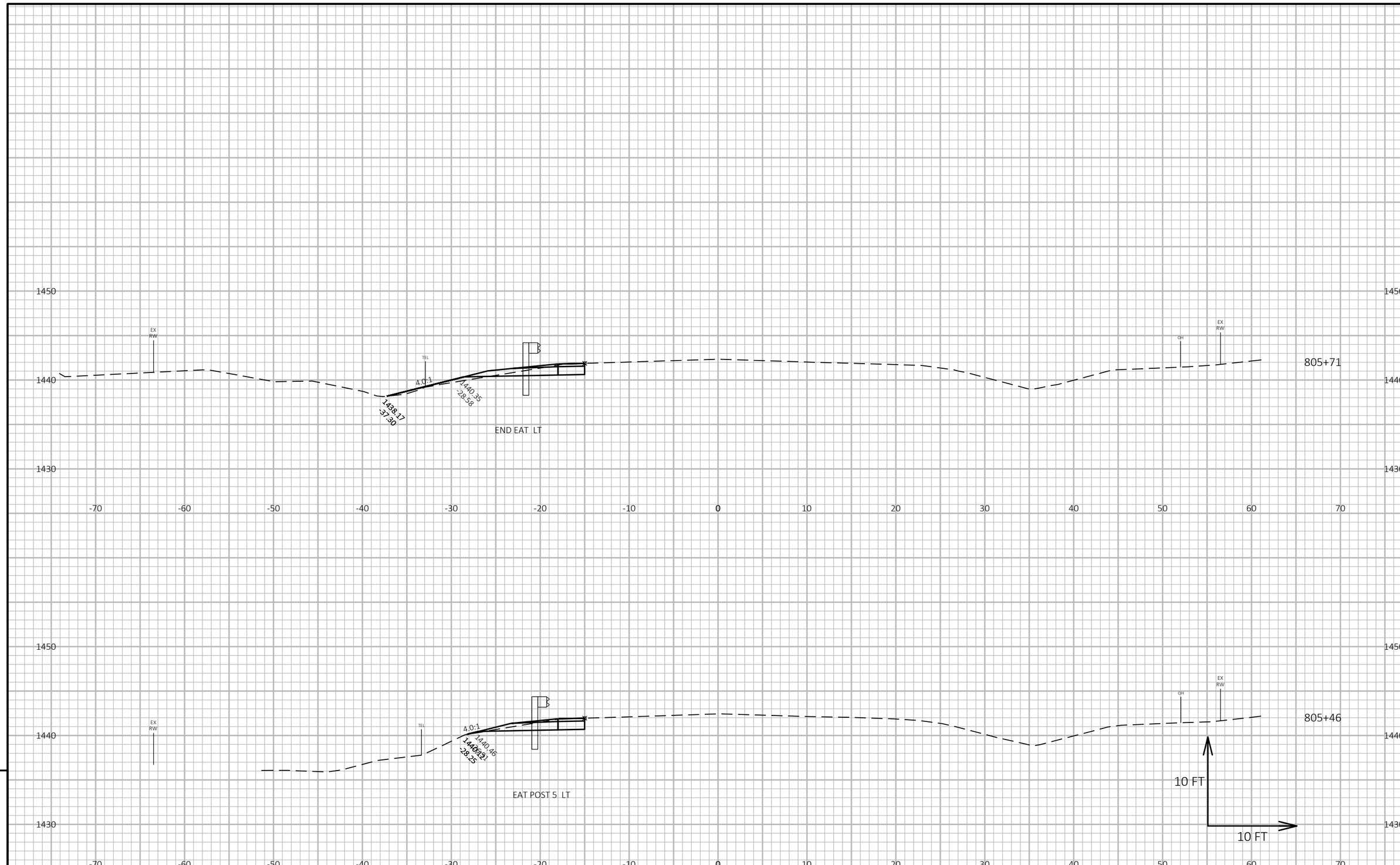

9

9

PROJECT NO: 9215-01-63/73	HWY: STH 86	COUNTY: LINCOLN	CROSS SECTIONS: STH 86 BEAM GUARD	SHEET 179	E

FILE NAME : S:\DESIGN\DESIGN PROJECTS\NC REGION PROJECTS\9215-01-03 (STH 86)\C3D\SHEETSPLAN\090201_XS.DWG
LAYOUT NAME - 30

PLOT DATE : 10/15/2018 3:18 PM PLOT BY : ADAM OSYPOWSKI PLOT NAME : PLOT SCALE : 1 IN:10 FT HORZ. / 1 IN:10 FT VERT.

WISDOT/CADDS SHEET 49

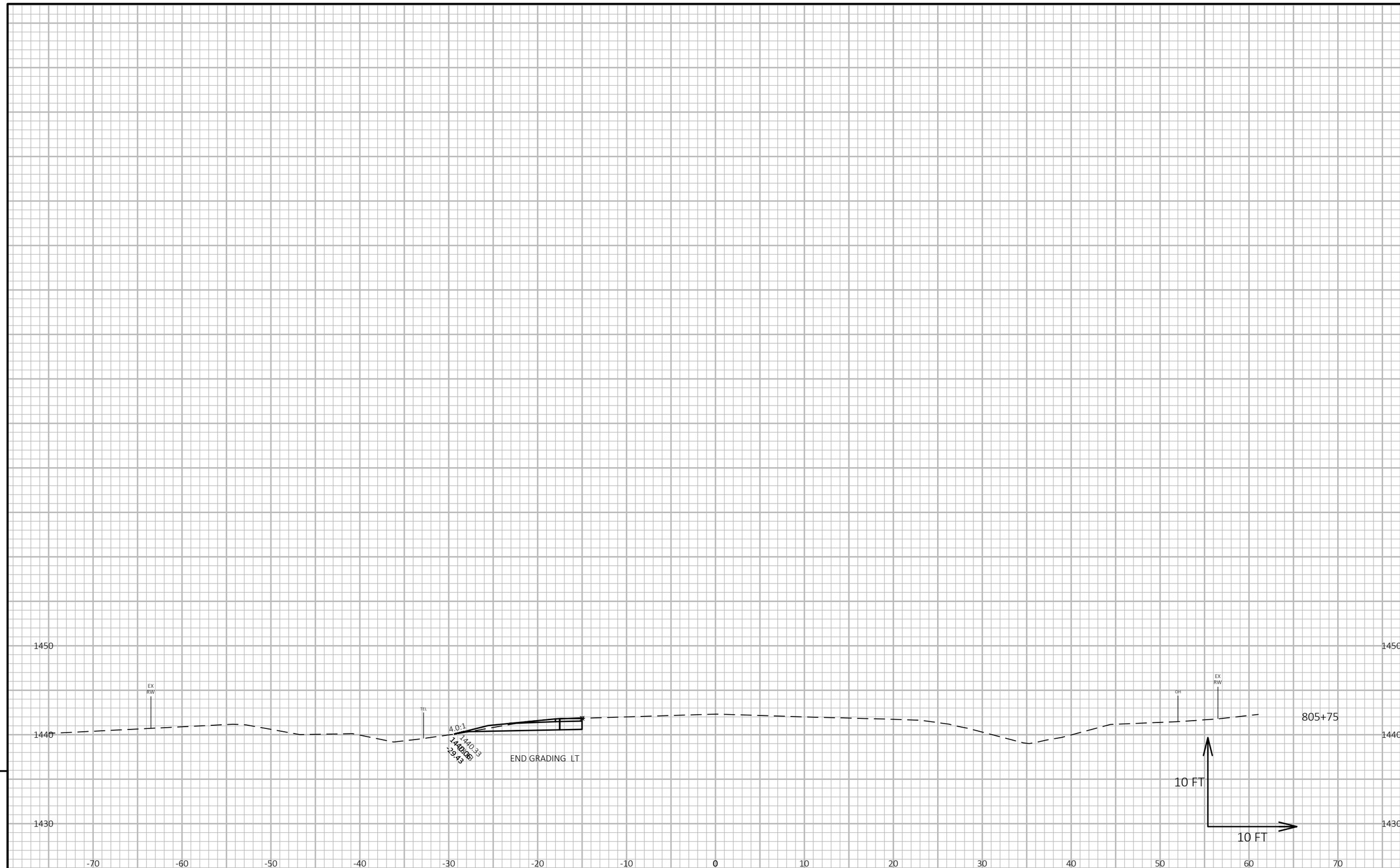

9

9

PROJECT NO: 9215-01-63/73	HWY: STH 86	COUNTY: LINCOLN	CROSS SECTIONS: STH 86 BEAM GUARD	SHEET 180	E

FILE NAME : S:\DESIGN\DESIGN PROJECTS\NC REGION PROJECTS\9215-01-03 (STH 86)\C3D\SHEETSPLAN\090201_XS.DWG
LAYOUT NAME - 31

PLOT DATE : 10/15/2018 3:18 PM PLOT BY : ADAM OSYPOWSKI PLOT NAME : PLOT SCALE : 1 IN:10 FT HORZ. / 1 IN:10 FT VERT.

WISDOT/CADDS SHEET 49

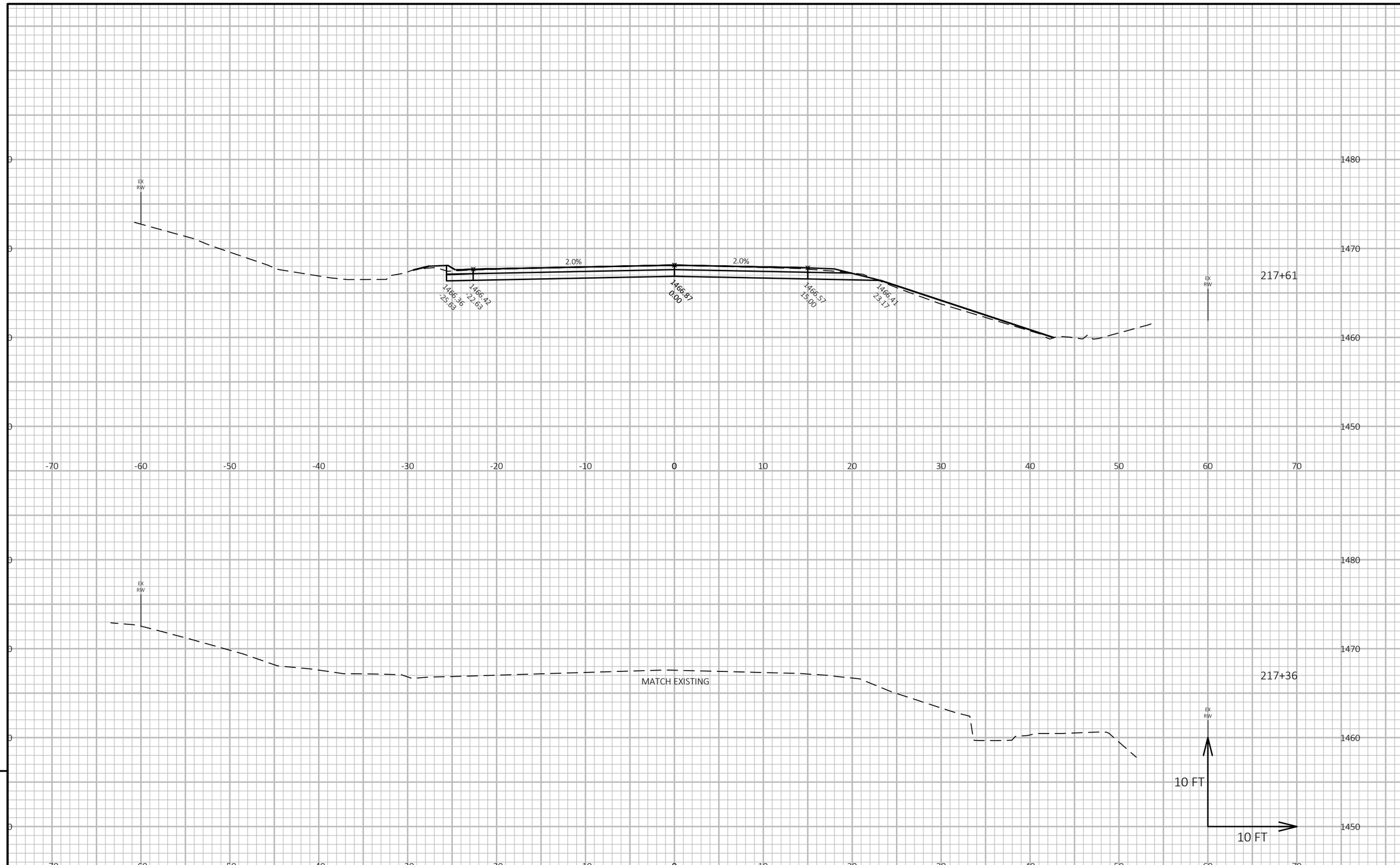

9

9

PROJECT NO: 9215-01-63/73	HWY: STH 86	COUNTY: LINCOLN	CROSS SECTIONS: STH 86 CULVERTS	SHEET 181	E

FILE NAME : S:\DESIGN\DESIGN PROJECTS\NC REGION PROJECTS\9215-01-03 (STH 86)\C3D\SHEETSPLAN\090201_XS2.DWG
LAYOUT NAME - 1

PLOT DATE : 10/11/2018 11:38 AM PLOT BY : ADAM OSYPOWSKI PLOT NAME : PLOT SCALE : 1 IN:10 FT HORZ. / 1 IN:10 FT VERT.

WISDOT/CADDS SHEET 49

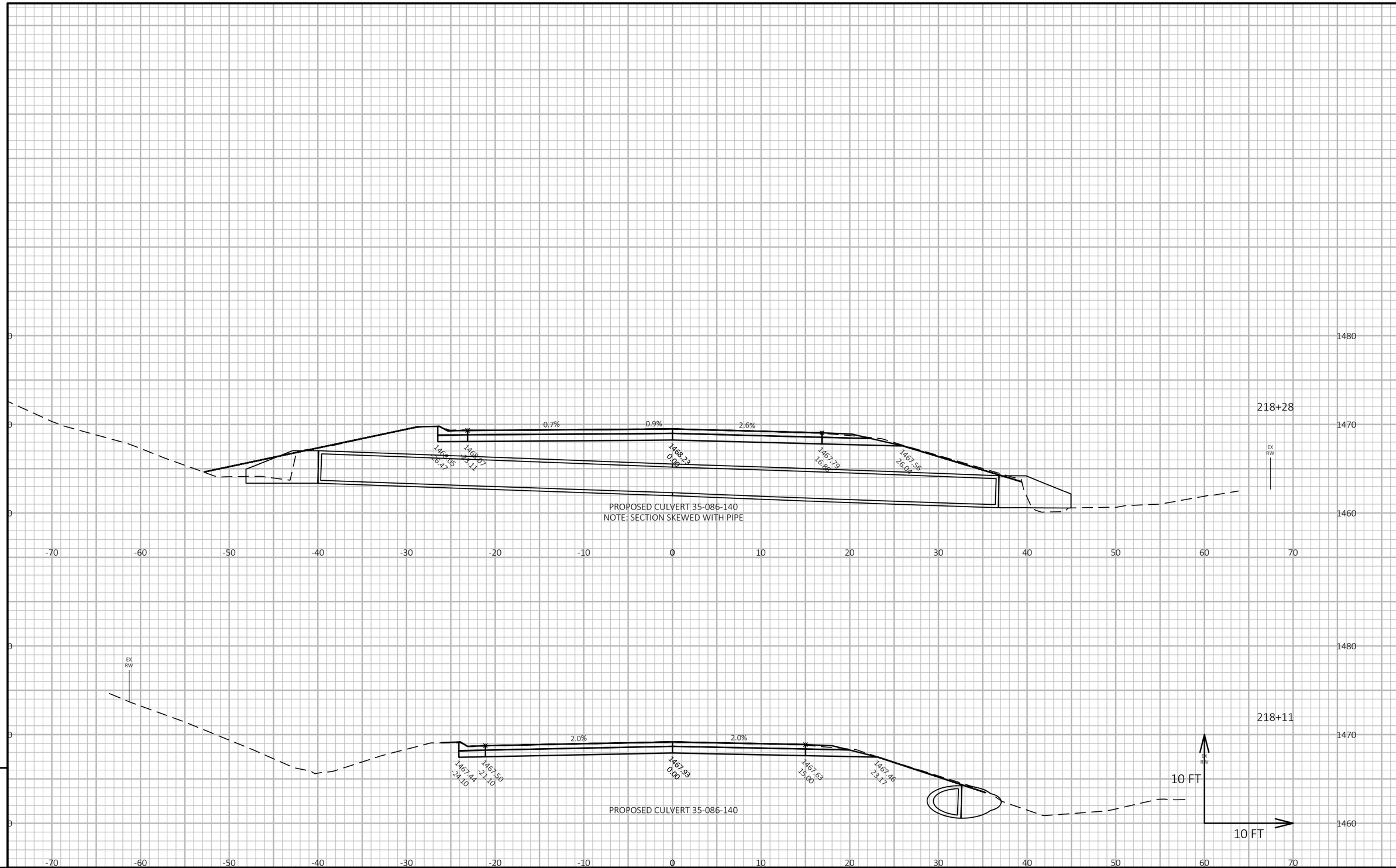

9

9

PROJECT NO: 9215-01-63/73	HWY: STH 86	COUNTY: LINCOLN	CROSS SECTIONS: STH 86 CULVERTS	SHEET 182	E

FILE NAME : S:\DESIGN\DESIGN PROJECTS\NC REGION PROJECTS\9215-01-03 (STH 86)\C3D\SHEETSPLAN\090201_XS2.DWG
LAYOUT NAME - 2
PLOT DATE : 10/11/2018 11:38 AM PLOT BY : ADAM OSYPOWSKI PLOT NAME : PLOT SCALE : 1 IN:10 FT HORZ. / 1 IN:10 FT VERT.

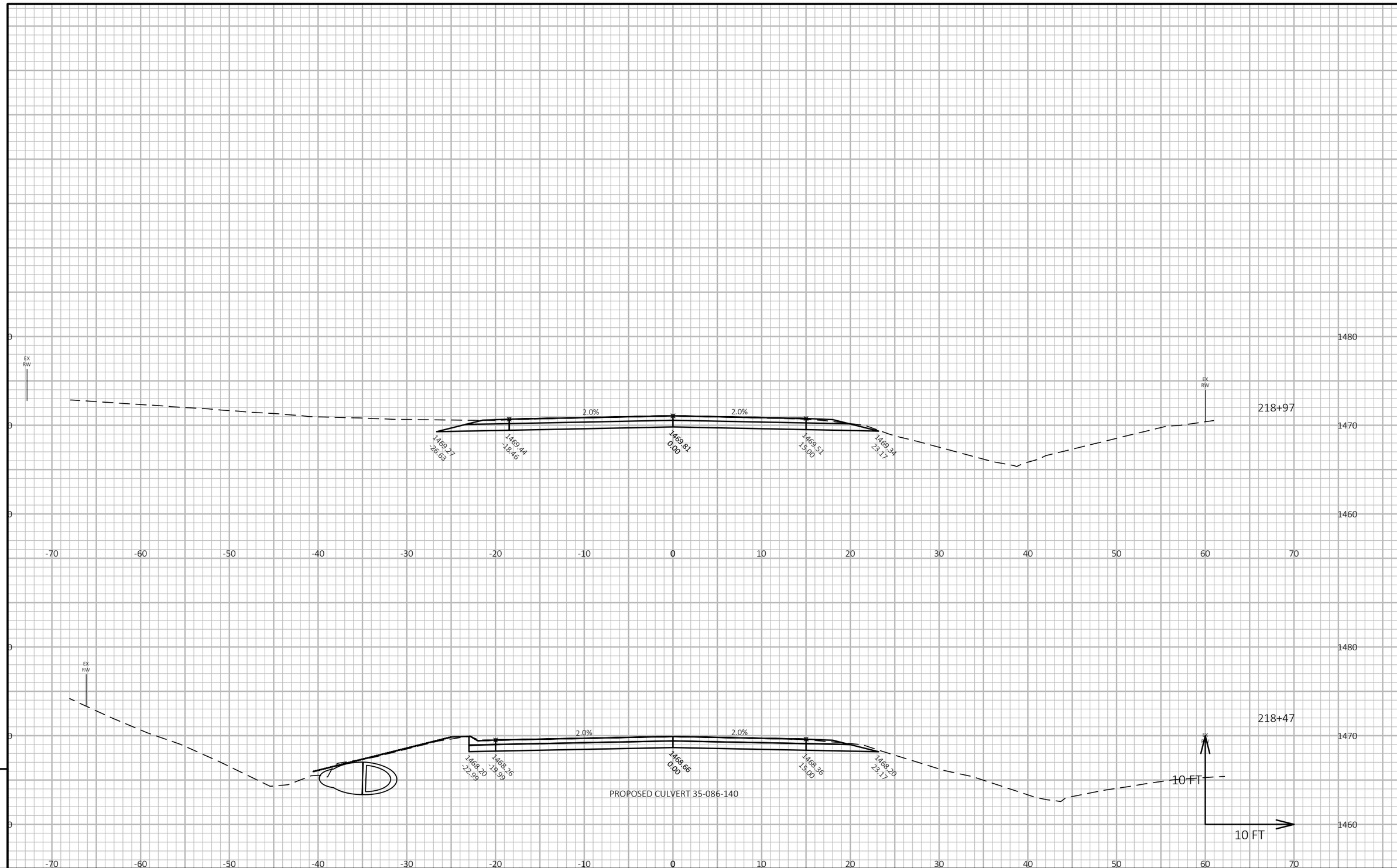

9

9

PROJECT NO: 9215-01-63/73	HWY: STH 86	COUNTY: LINCOLN	CROSS SECTIONS: STH 86 CULVERTS	SHEET 183	E

FILE NAME : S:\DESIGN\DESIGN PROJECTS\NC REGION PROJECTS\9215-01-03 (STH 86)\C3D\SHEETSPLAN\090201_XS2.DWG
LAYOUT NAME - 3

PLOT DATE : 10/11/2018 11:38 AM PLOT BY : ADAM OSYPOWSKI PLOT NAME : PLOT SCALE : 1 IN:10 FT HORZ. / 1 IN:10 FT VERT.

WISDOT/CADDS SHEET 49

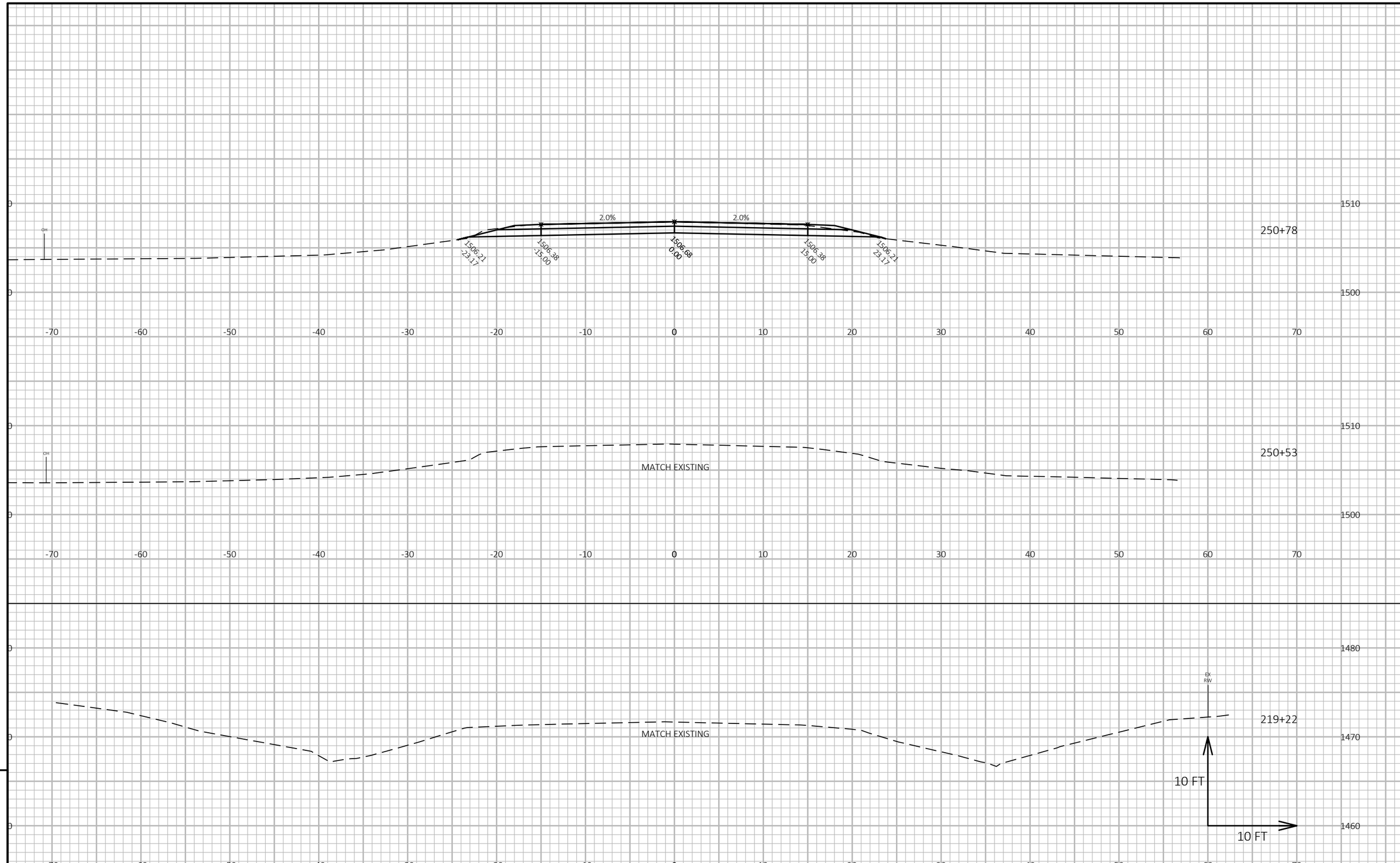

9

9

PROJECT NO: 9215-01-63/73	HWY: STH 86	COUNTY: LINCOLN	CROSS SECTIONS: STH 86 CULVERTS	SHEET 184	E

FILE NAME : S:\DESIGN\DESIGN PROJECTS\NC REGION PROJECTS\9215-01-03 (STH 86)\C3D\SHEETSPLAN\090201_XS2.DWG
LAYOUT NAME - 4

PLOT DATE : 10/11/2018 11:38 AM PLOT BY : ADAM OSYPOWSKI PLOT NAME : **PLOT SCALE :** 1 IN:10 FT HORZ. / 1 IN:10 FT VERT.

WISDOT/CADDS SHEET 49

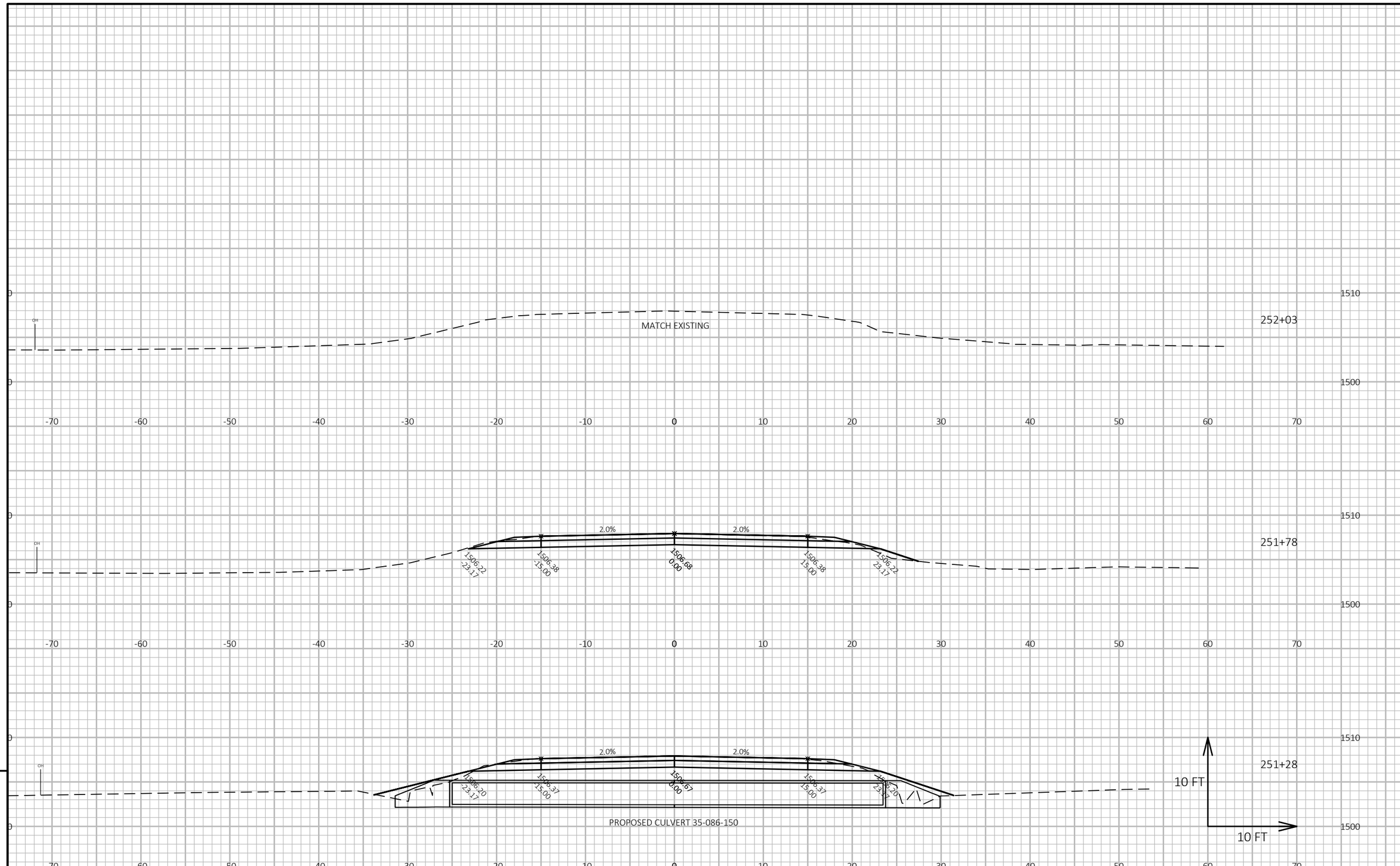

9

9

PROJECT NO: 9215-01-63/73	HWY: STH 86	COUNTY: LINCOLN	CROSS SECTIONS: STH 86 CULVERTS	SHEET 185	E

FILE NAME : S:\DESIGN\DESIGN PROJECTS\NC REGION PROJECTS\9215-01-03 (STH 86)\C3D\SHEETSPLAN\090201_XS2.DWG
LAYOUT NAME - 5

PLOT DATE : 10/11/2018 11:38 AM PLOT BY : ADAM OSYPOWSKI PLOT NAME : PLOT SCALE : 1 IN:10 FT HORZ. / 1 IN:10 FT VERT.

WISDOT/CADDS SHEET 49

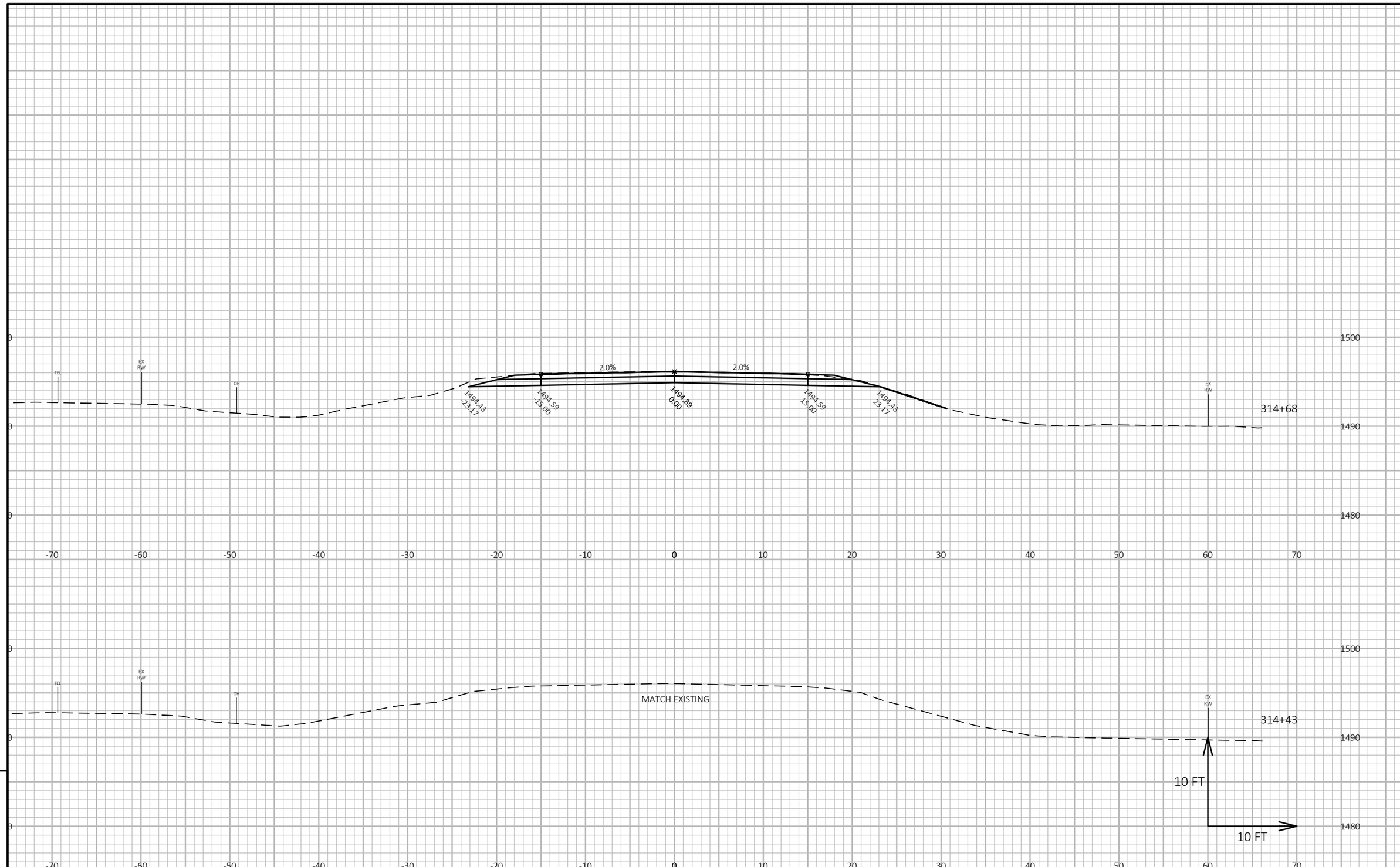

9

9

PROJECT NO: 9215-01-63/73	HWY: STH 86	COUNTY: LINCOLN	CROSS SECTIONS: STH 86 CULVERTS	SHEET 186	E

FILE NAME : S:\DESIGN\DESIGN PROJECTS\NC REGION PROJECTS\9215-01-03 (STH 86)\C3D\SHEETSPLAN\090201_XS2.DWG
LAYOUT NAME - 6

PLOT DATE : 10/11/2018 11:38 AM PLOT BY : ADAM OSYPOWSKI PLOT NAME : PLOT SCALE : 1 IN:10 FT HORZ. / 1 IN:10 FT VERT.

WISDOT/CADDS SHEET 49

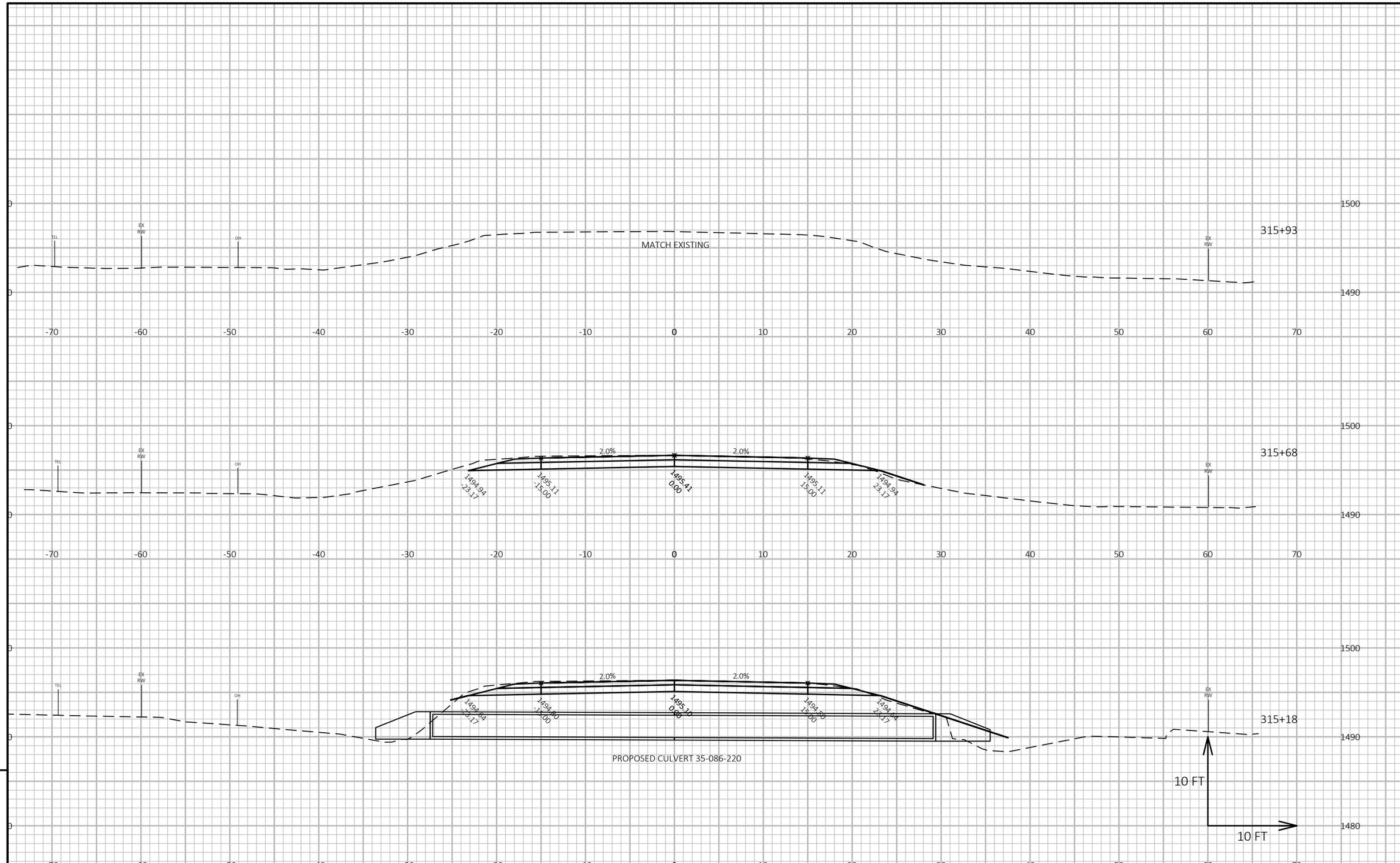

9

9

PROJECT NO: 9215-01-63/73	HWY: STH 86	COUNTY: LINCOLN	CROSS SECTIONS: STH 86 CULVERTS	SHEET 187	E

FILE NAME : S:\DESIGN\DESIGN PROJECTS\NC REGION PROJECTS\9215-01-03 (STH 86)\C3D\SHEETSPLAN\090201_XS2.DWG
LAYOUT NAME - 7
PLOT DATE : 10/11/2018 11:39 AM
PLOT BY : ADAM OSYPOWSKI
PLOT NAME :
PLOT SCALE : 1 IN:10 FT HORZ. / 1 IN:10 FT VERT.
WISDOT/CADDS SHEET 49

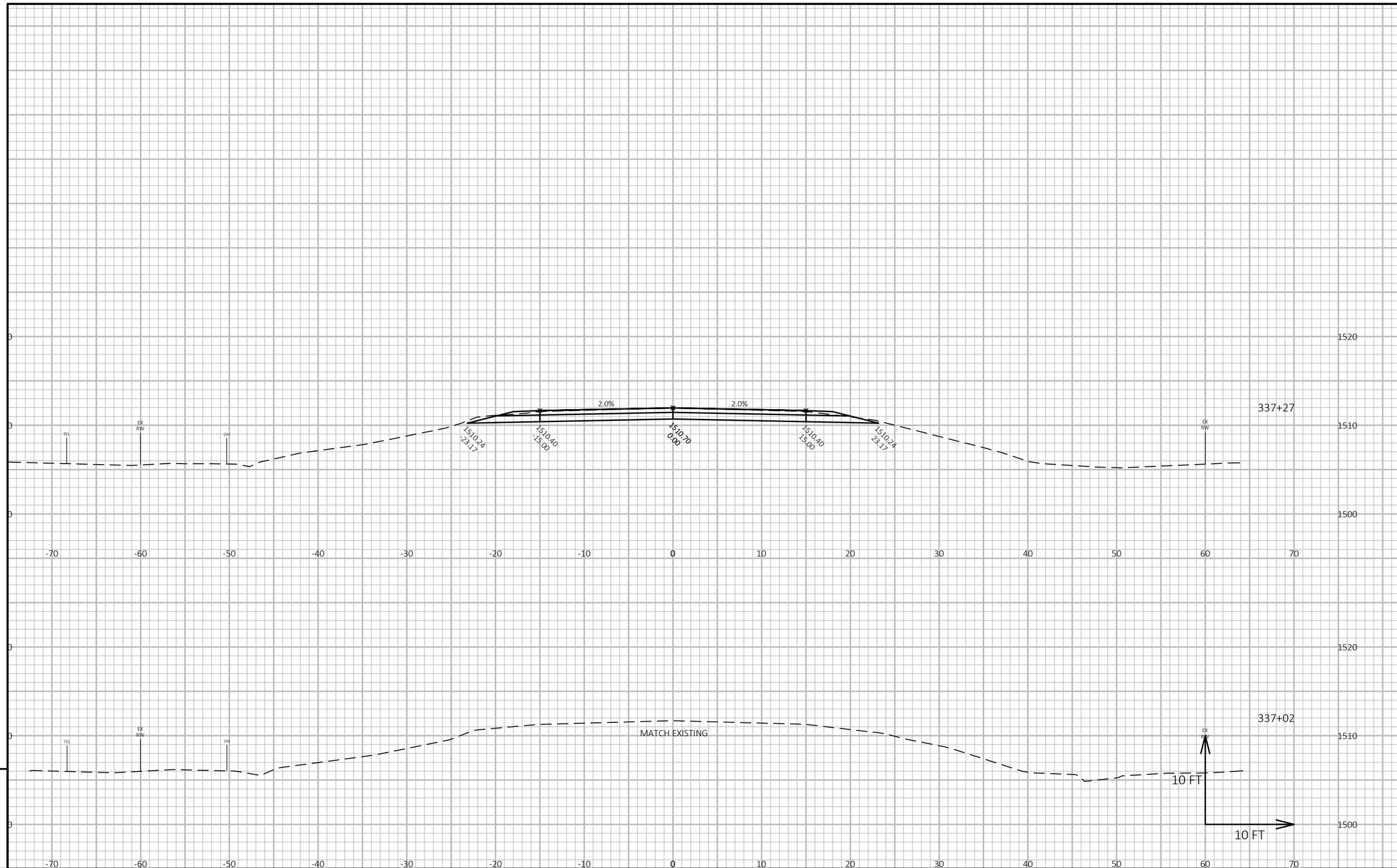

9

9

PROJECT NO: 9215-01-63/73	HWY: STH 86	COUNTY: LINCOLN	CROSS SECTIONS: STH 86 CULVERTS	SHEET 188	E

FILE NAME : S:\DESIGN\DESIGN PROJECTS\NC REGION PROJECTS\9215-01-03 (STH 86)\C3D\SHEETSPLAN\090201_XS2.DWG
LAYOUT NAME - 8

PLOT DATE : 10/11/2018 11:39 AM PLOT BY : ADAM OSYPOWSKI PLOT NAME : **PLOT SCALE :** 1 IN:10 FT HORZ. / 1 IN:10 FT VERT.

WISDOT/CADDS SHEET 49

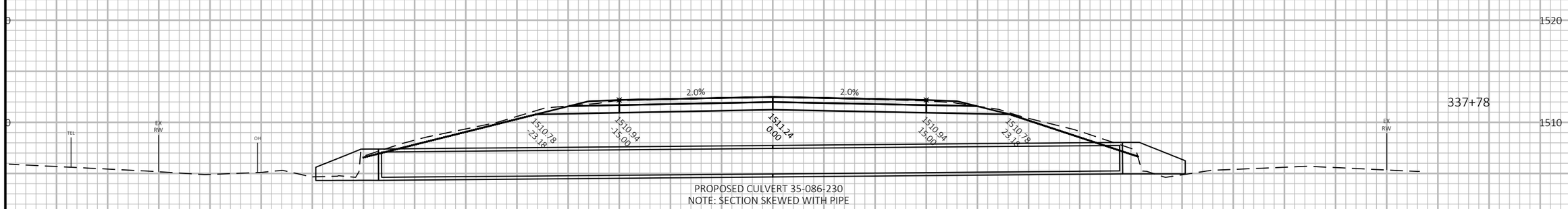

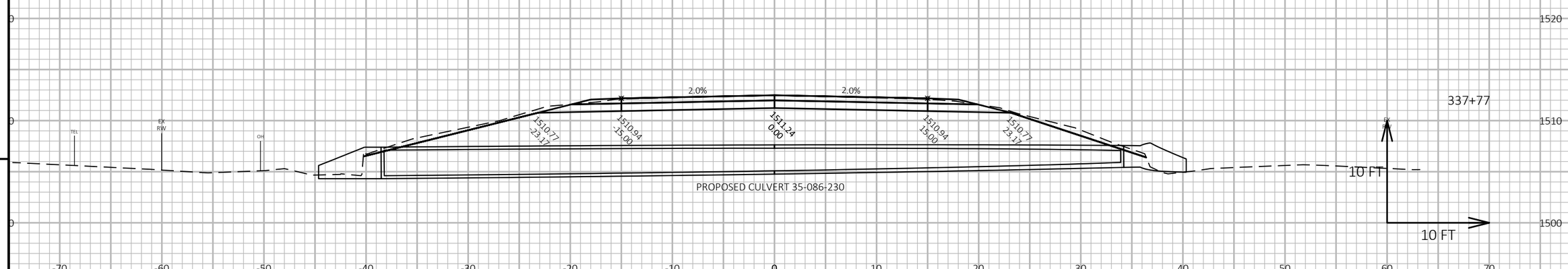

9

9

PROJECT NO: 9215-01-63/73	HWY: STH 86	COUNTY: LINCOLN	CROSS SECTIONS: STH 86 CULVERTS	SHEET 189	E

FILE NAME : S:\DESIGN\DESIGN PROJECTS\NC REGION PROJECTS\9215-01-03 (STH 86)\C3D\SHEETSPLAN\090201_XS2.DWG
LAYOUT NAME - 9
PLOT DATE : 10/11/2018 11:39 AM
PLOT BY : ADAM OSYPOWSKI
PLOT NAME :
PLOT SCALE : 1 IN:10 FT HORZ. / 1 IN:10 FT VERT.
WISDOT/CADDS SHEET 49

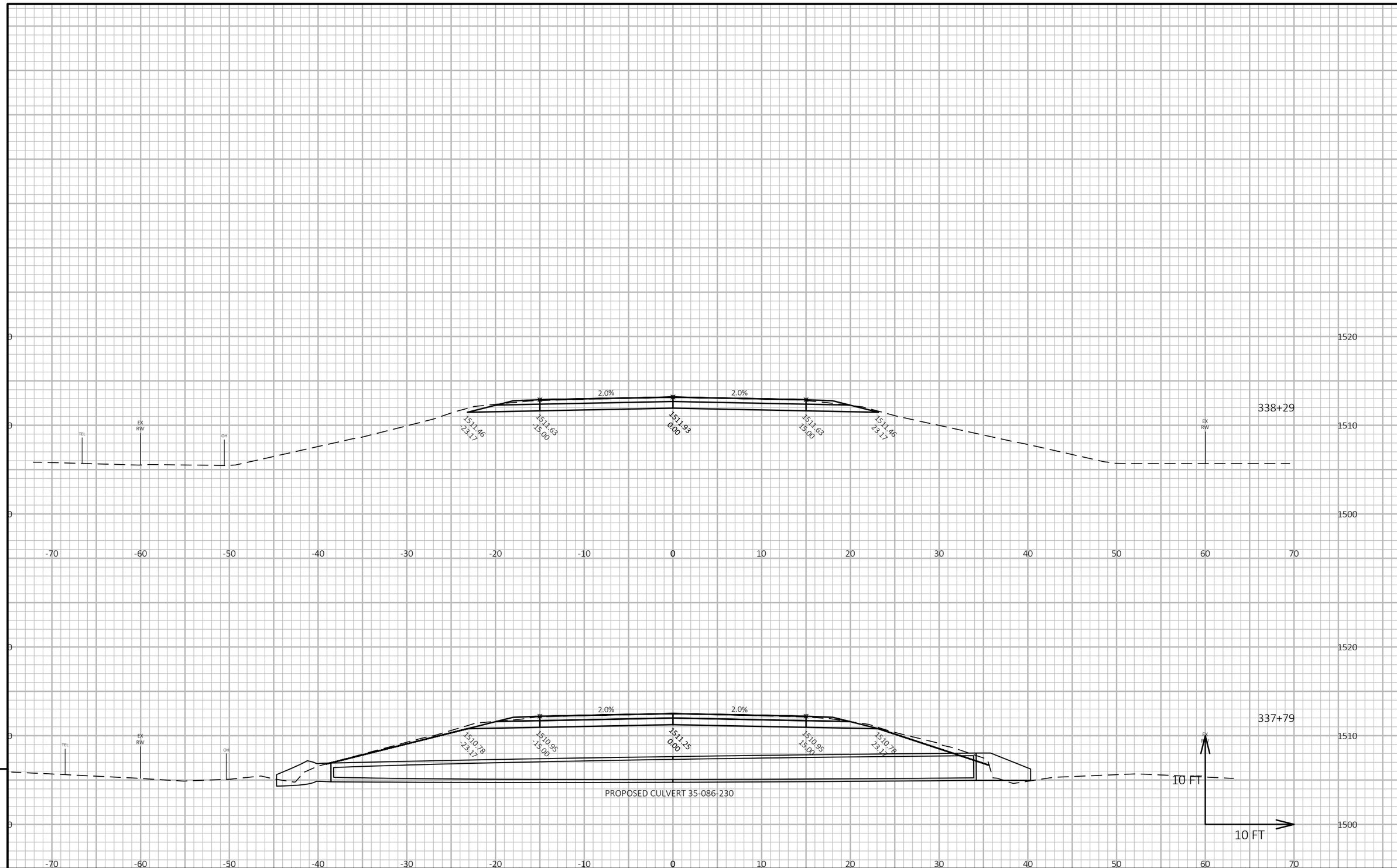

9

9

PROJECT NO: 9215-01-63/73	HWY: STH 86	COUNTY: LINCOLN	CROSS SECTIONS: STH 86 CULVERTS	SHEET 190	E

FILE NAME : S:\DESIGN\DESIGN PROJECTS\NC REGION PROJECTS\9215-01-03 (STH 86)\C3D\SHEETSPLAN\090201_XS2.DWG
LAYOUT NAME - 10

PLOT DATE : 10/11/2018 11:39 AM PLOT BY : ADAM OSYPOWSKI PLOT NAME : PLOT SCALE : 1 IN:10 FT HORZ. / 1 IN:10 FT VERT.

WISDOT/CADDS SHEET 49

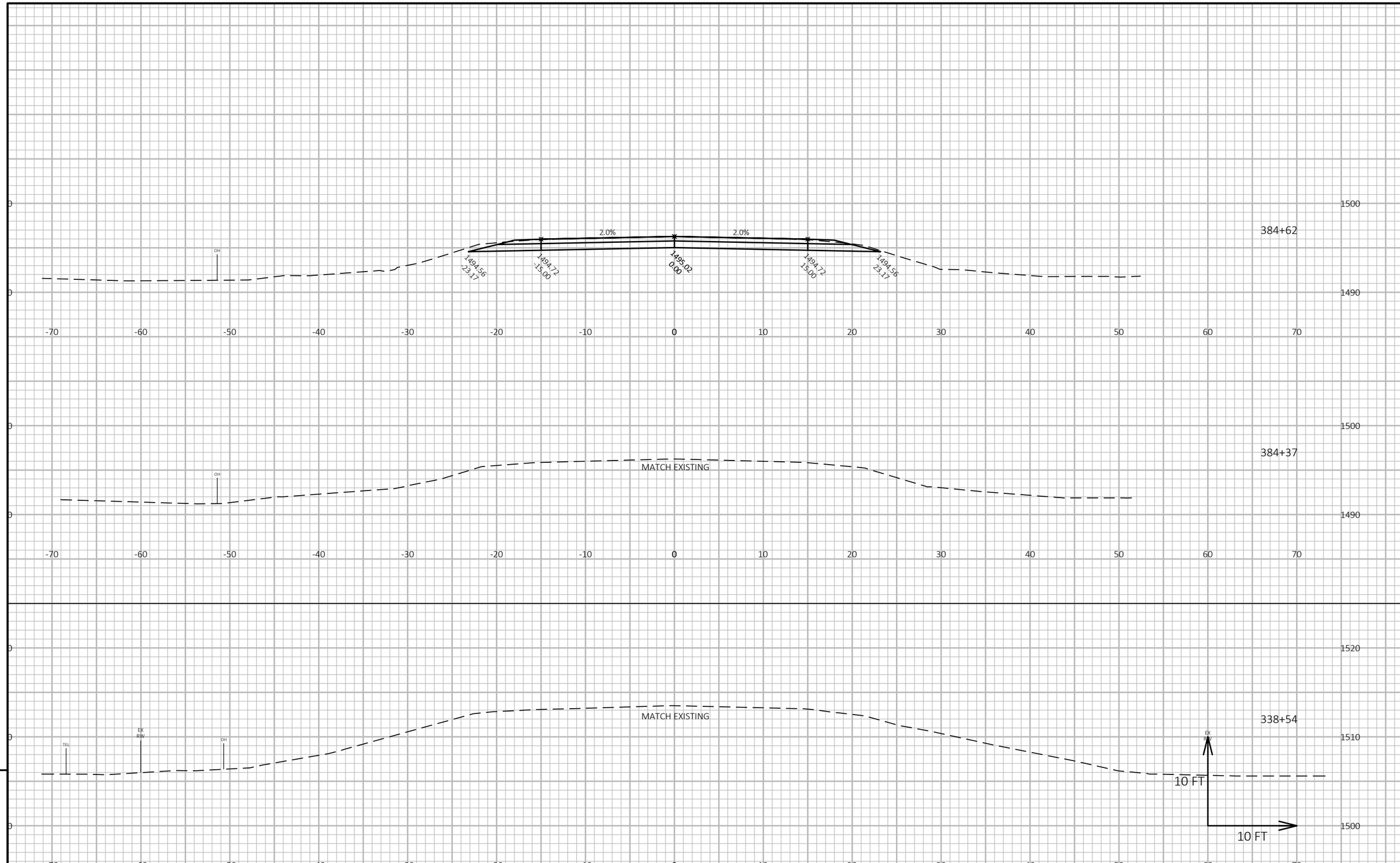

PROJECT NO: 9215-01-63/73	HWY: STH 86	COUNTY: LINCOLN	CROSS SECTIONS: STH 86 CULVERTS	SHEET 191	E

FILE NAME : S:\DESIGN\DESIGN PROJECTS\NC REGION PROJECTS\9215-01-03 (STH 86)\C3D\SHEETSPLAN\090201_XS2.DWG
LAYOUT NAME - 11
PLOT DATE : 10/11/2018 11:39 AM PLOT BY : ADAM OSYPOWSKI PLOT NAME : PLOT SCALE : 1 IN:10 FT HORZ. / 1 IN:10 FT VERT.

WISDOT/CADDS SHEET 49

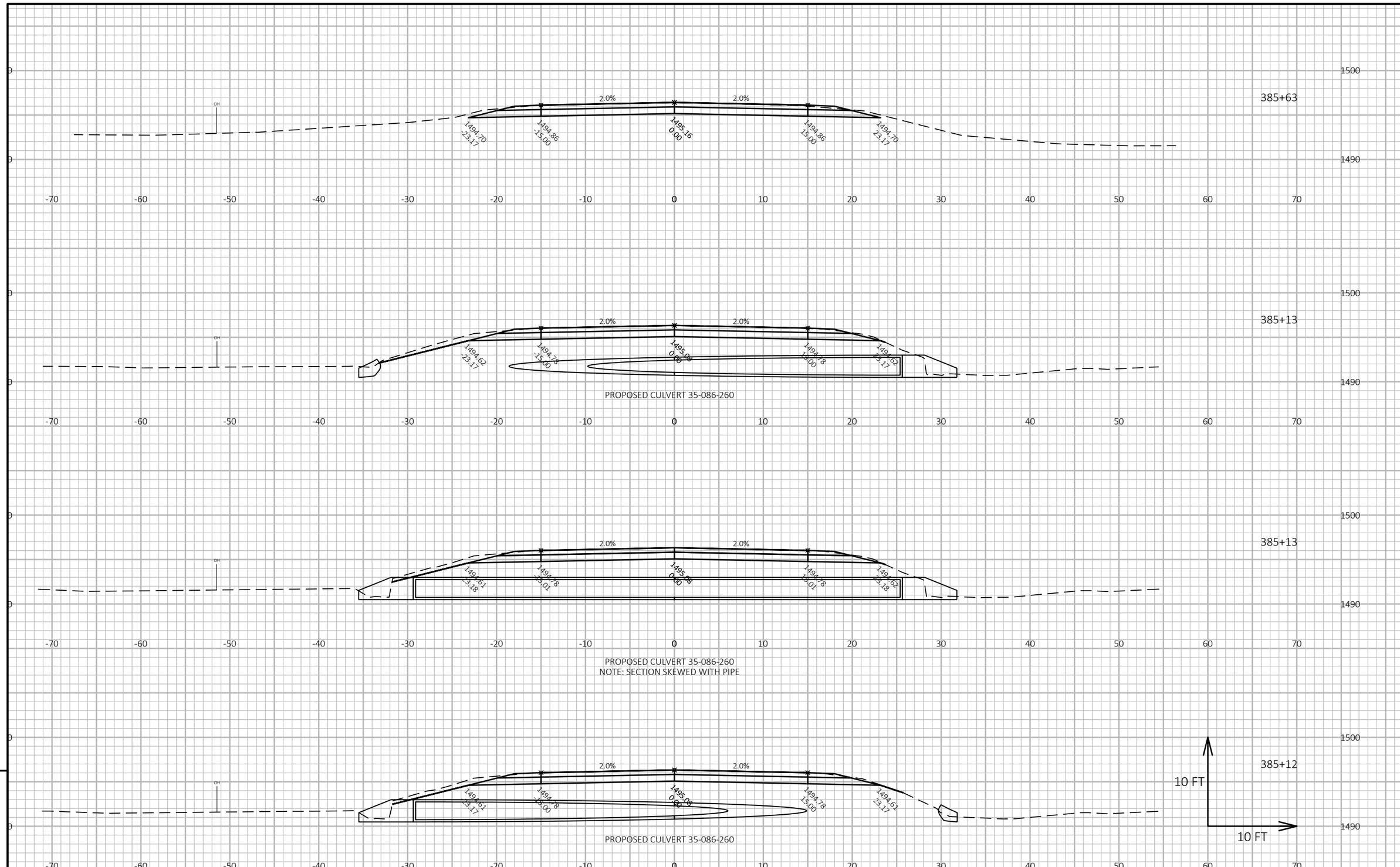

PROJECT NO: 9215-01-63/73	HWY: STH 86	COUNTY: LINCOLN	CROSS SECTIONS: STH 86 CULVERTS	SHEET 192	E

FILE NAME : S:\DESIGN\DESIGN PROJECTS\NC REGION PROJECTS\9215-01-03 (STH 86)\C3D\SHEETSPLAN\090201_XS2.DWG
LAYOUT NAME - 12
PLOT DATE : 10/11/2018 11:39 AM PLOT BY : ADAM OSYPOWSKI PLOT NAME : PLOT SCALE : 1 IN:10 FT HORZ. / 1 IN:10 FT VERT.

WISDOT/CADDS SHEET 49

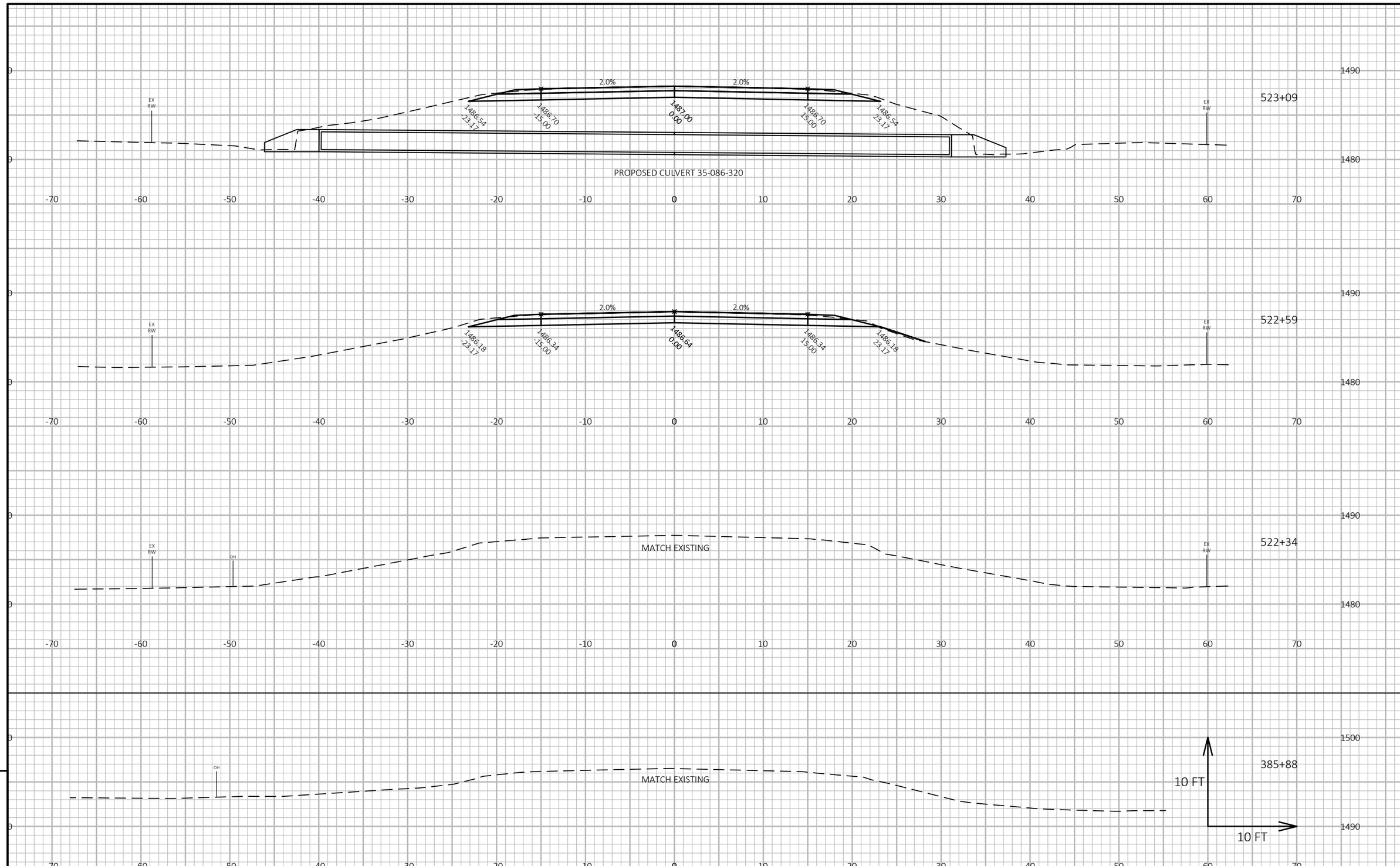

PROJECT NO: 9215-01-63/73	HWY: STH 86	COUNTY: LINCOLN	CROSS SECTIONS: STH 86 CULVERTS	SHEET 193	E

FILE NAME : S:\DESIGN\DESIGN PROJECTS\NC REGION PROJECTS\9215-01-03 (STH 86)\C3D\SHEETSPLAN\090201_XS2.DWG
LAYOUT NAME - 13
PLOT DATE : 10/11/2018 11:40 AM
PLOT BY : ADAM OSYPOWSKI
PLOT NAME :
PLOT SCALE : 1 IN:10 FT HORZ. / 1 IN:10 FT VERT.

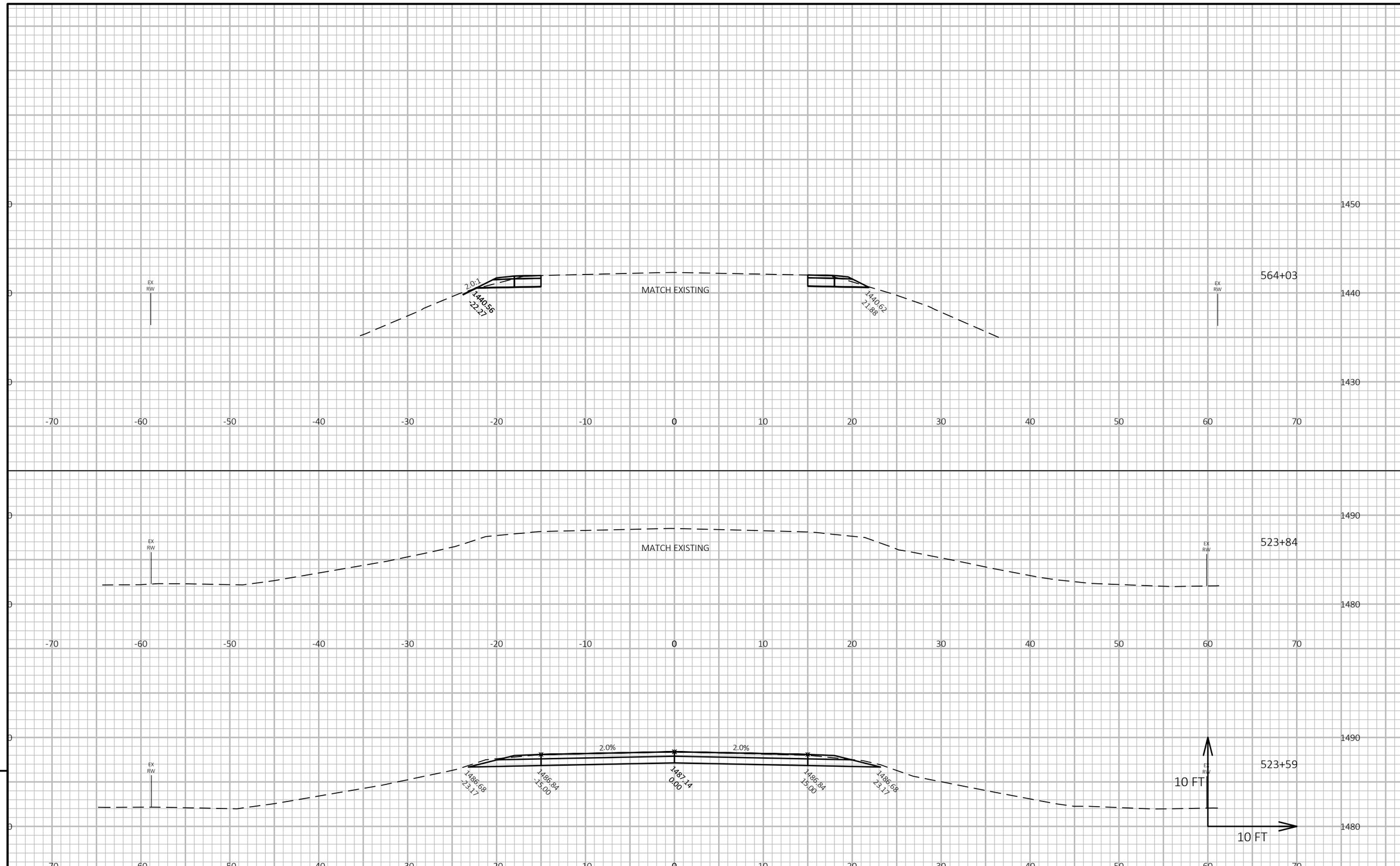

PROJECT NO: 9215-01-63/73	HWY: STH 86	COUNTY: LINCOLN	CROSS SECTIONS: STH 86 CULVERTS	SHEET 194	E

FILE NAME : S:\DESIGN\DESIGN PROJECTS\NC REGION PROJECTS\9215-01-03 (STH 86)\C3D\SHEETSPLAN\090201_XS2.DWG
LAYOUT NAME - 14
PLOT DATE : 10/11/2018 11:40 AM
PLOT BY : ADAM OSYPOWSKI
PLOT NAME :
PLOT SCALE : 1 IN:10 FT HORZ. / 1 IN:10 FT VERT.

WISDOT/CADDS SHEET 49

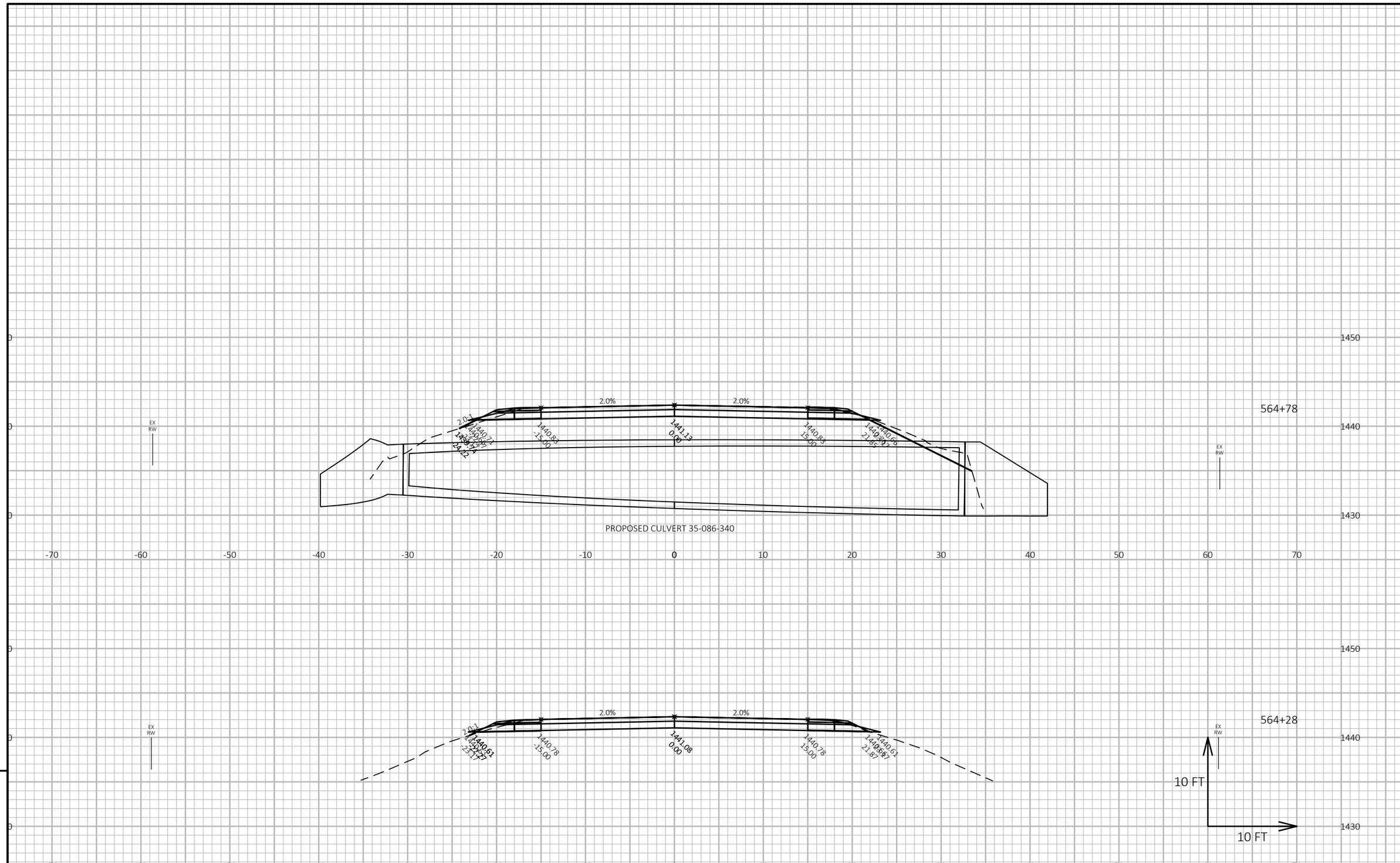

PROJECT NO: 9215-01-63/73	HWY: STH 86	COUNTY: LINCOLN	CROSS SECTIONS: STH 86 CULVERTS	SHEET 195	E

FILE NAME : S:\DESIGN\DESIGN PROJECTS\NC REGION PROJECTS\9215-01-03 (STH 86)\C3D\SHEETSPLAN\090201_XS2.DWG
LAYOUT NAME - 15
PLOT DATE : 10/11/2018 11:40 AM PLOT BY : ADAM OSYPOWSKI PLOT NAME : PLOT SCALE : 1 IN:10 FT HORZ. / 1 IN:10 FT VERT.

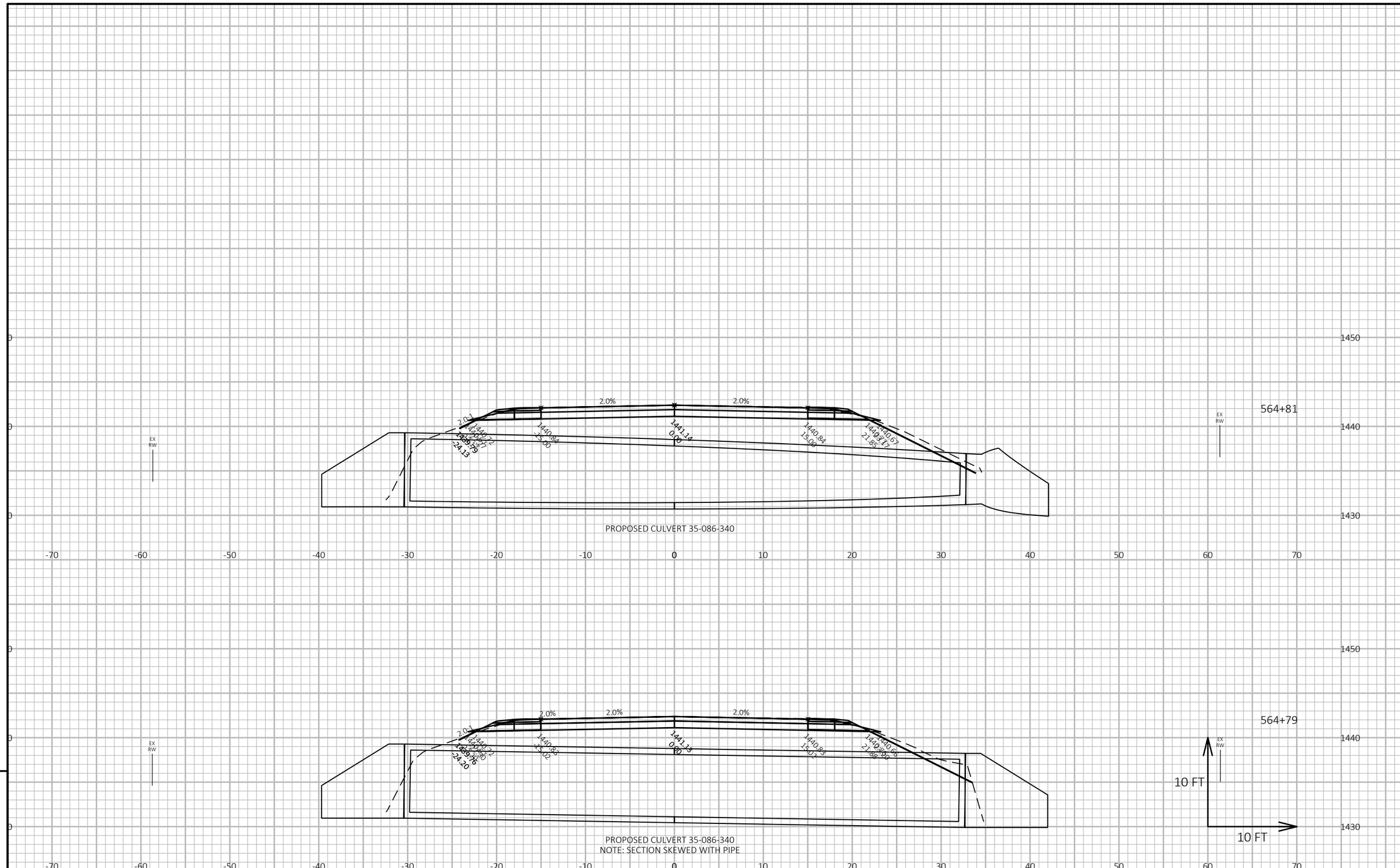

PROJECT NO: 9215-01-63/73	HWY: STH 86	COUNTY: LINCOLN	CROSS SECTIONS: STH 86 CULVERTS	SHEET 196	E

FILE NAME : S:\DESIGN\DESIGN PROJECTS\NC REGION PROJECTS\9215-01-03 (STH 86)\C3D\SHEETSPLAN\090201_XS2.DWG
LAYOUT NAME - 16
PLOT DATE : 10/11/2018 11:40 AM PLOT BY : ADAM OSYPOWSKI PLOT NAME : PLOT SCALE : 1 IN:10 FT HORZ. / 1 IN:10 FT VERT.
WISDOT/CADDS SHEET 49

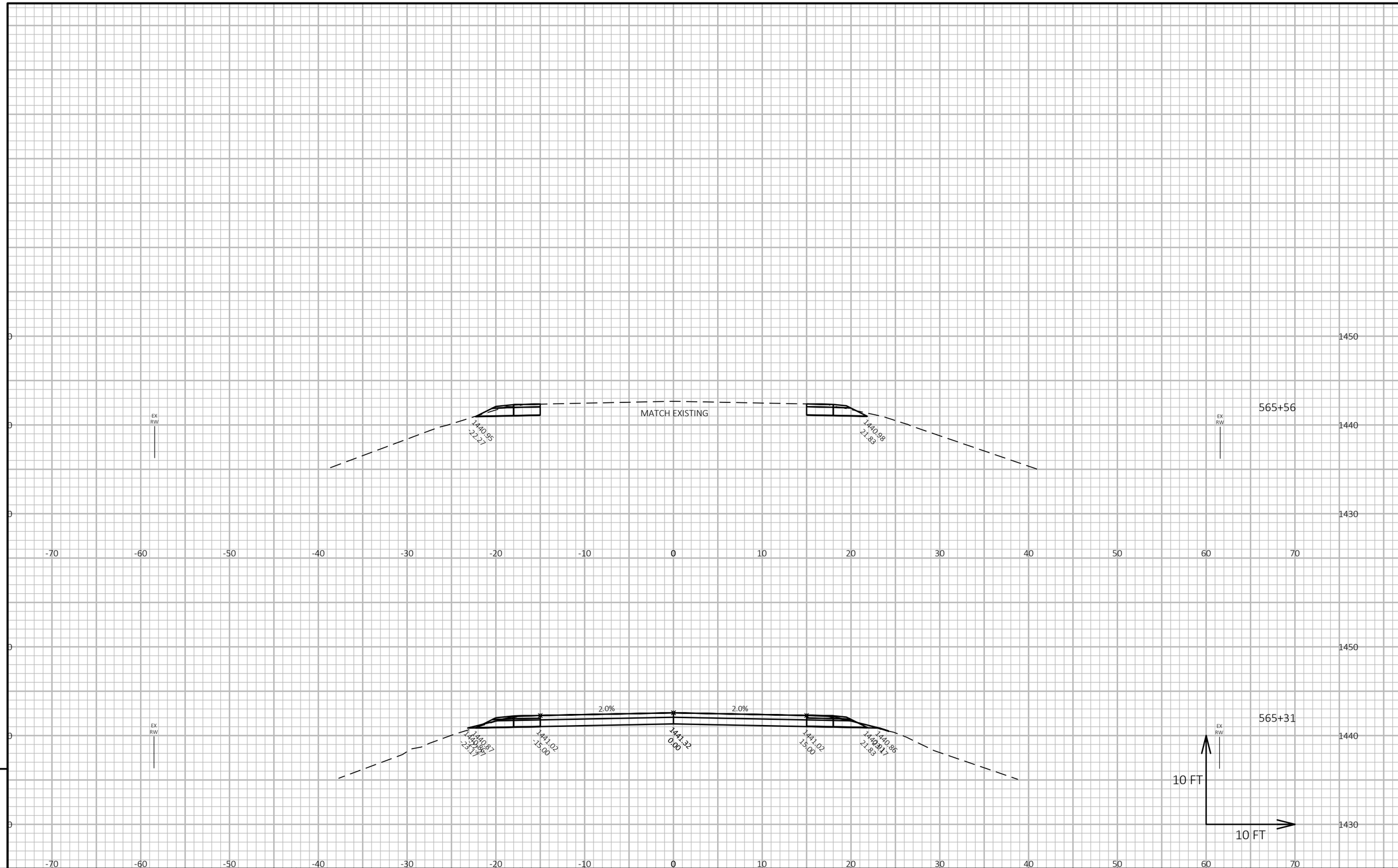

9

9

PROJECT NO: 9215-01-63/73	HWY: STH 86	COUNTY: LINCOLN	CROSS SECTIONS: STH 86 CULVERTS	SHEET 197	E

FILE NAME : S:\DESIGN\DESIGN PROJECTS\NC REGION PROJECTS\9215-01-03 (STH 86)\C3D\SHEETSPLAN\090201_XS2.DWG
LAYOUT NAME - 17
PLOT DATE : 10/11/2018 11:40 AM
PLOT BY : ADAM OSYPOWSKI
PLOT NAME :
PLOT SCALE : 1 IN:10 FT HORZ. / 1 IN:10 FT VERT.
WISDOT/CADDS SHEET 49

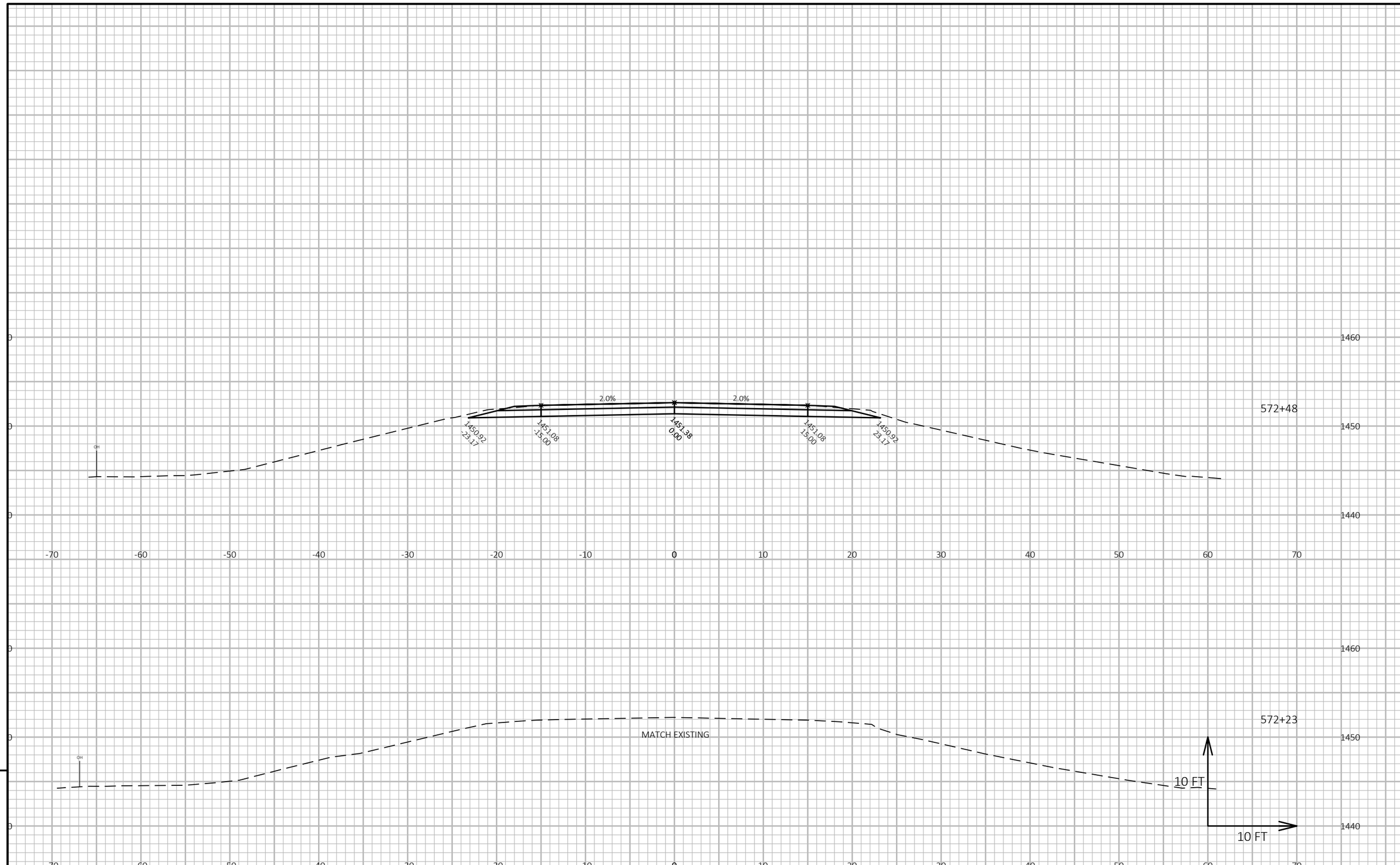

9

9

PROJECT NO: 9215-01-63/73	HWY: STH 86	COUNTY: LINCOLN	CROSS SECTIONS: STH 86 CULVERTS	SHEET 198	E

FILE NAME : S:\DESIGN\DESIGN PROJECTS\NC REGION PROJECTS\9215-01-03 (STH 86)\C3D\SHEETSPLAN\090201_XS2.DWG
LAYOUT NAME - 18

PLOT DATE : 10/11/2018 11:40 AM PLOT BY : ADAM OSYPOWSKI PLOT NAME : PLOT SCALE : 1 IN:10 FT HORZ. / 1 IN:10 FT VERT.

WISDOT/CADDS SHEET 49

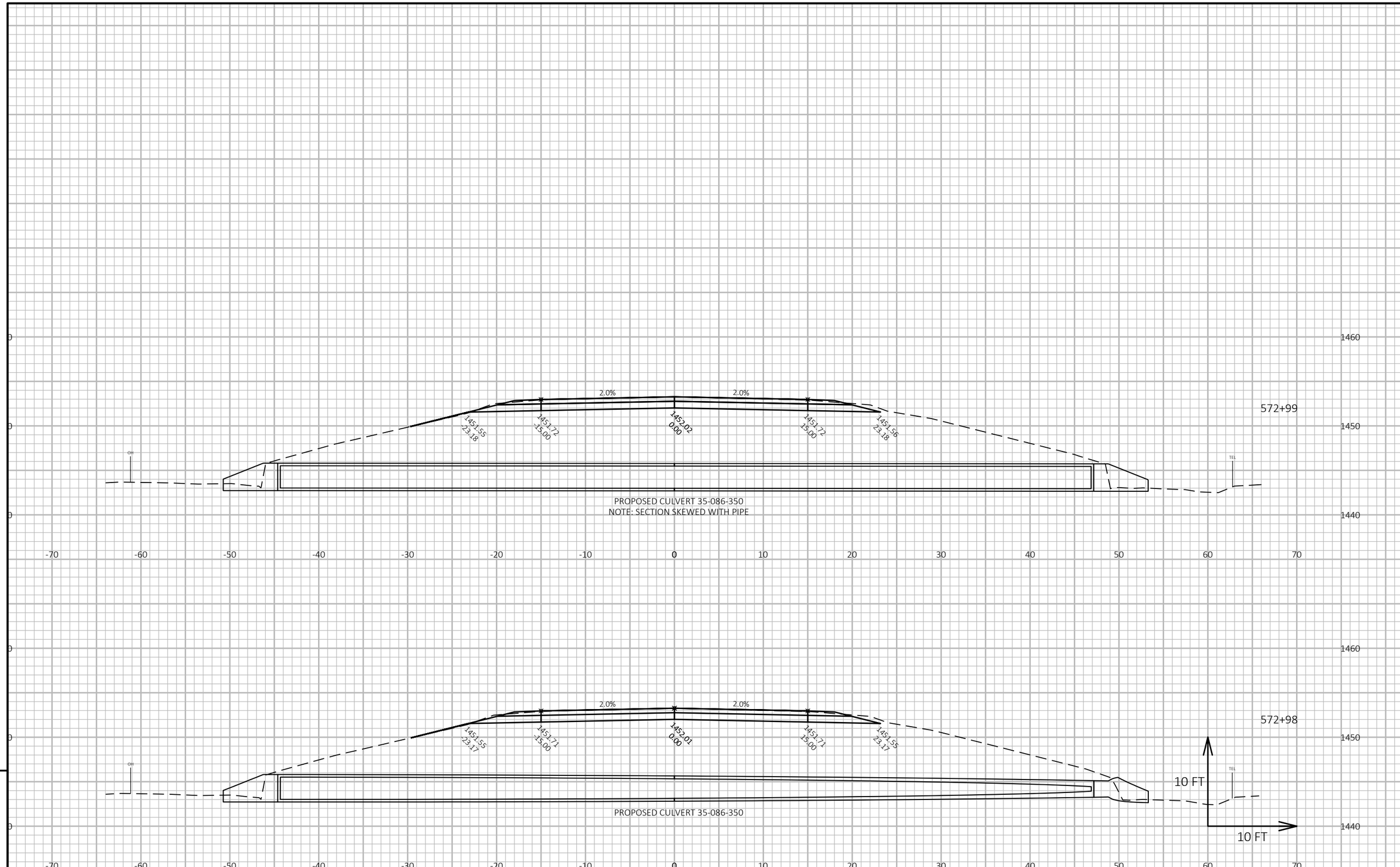

PROJECT NO: 9215-01-63/73	HWY: STH 86	COUNTY: LINCOLN	CROSS SECTIONS: STH 86 CULVERTS	SHEET 199	E

FILE NAME : S:\DESIGN\DESIGN PROJECTS\NC REGION PROJECTS\9215-01-03 (STH 86)\C3D\SHEETSPLAN\090201_XS2.DWG
LAYOUT NAME - 19
PLOT DATE : 10/11/2018 11:41 AM PLOT BY : ADAM OSYPOWSKI PLOT NAME : PLOT SCALE : 1 IN:10 FT HORZ. / 1 IN:10 FT VERT.

WISDOT/CADDS SHEET 49

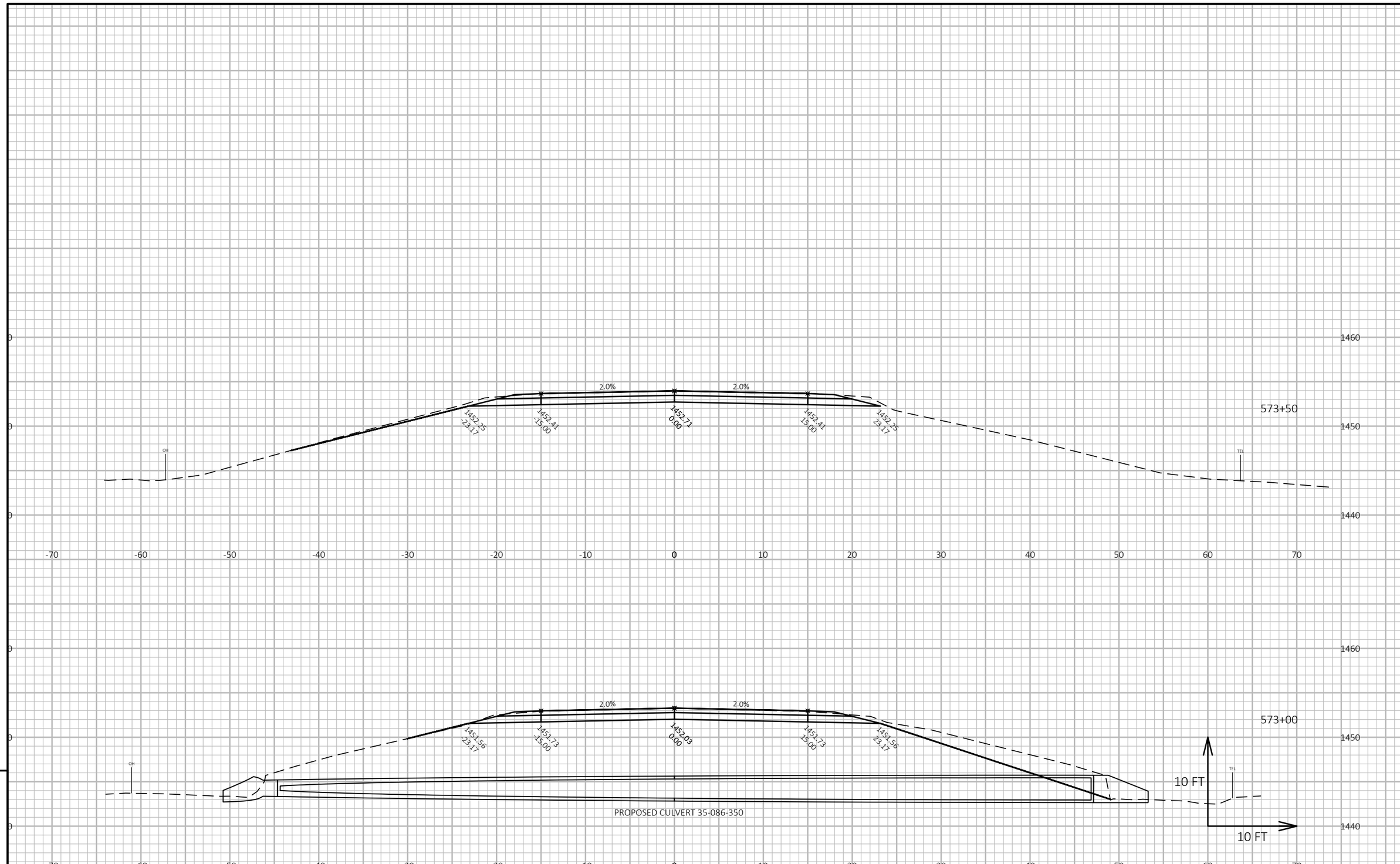

9

9

PROJECT NO: 9215-01-63/73	HWY: STH 86	COUNTY: LINCOLN	CROSS SECTIONS: STH 86 CULVERTS	SHEET 200	E

FILE NAME : S:\DESIGN\DESIGN PROJECTS\NC REGION PROJECTS\9215-01-03 (STH 86)\C3D\SHEETSPLAN\090201_XS2.DWG
LAYOUT NAME - 20

PLOT DATE : 10/11/2018 11:41 AM PLOT BY : ADAM OSYPOWSKI PLOT NAME : PLOT SCALE : 1 IN:10 FT HORZ. / 1 IN:10 FT VERT.

WISDOT/CADDS SHEET 49

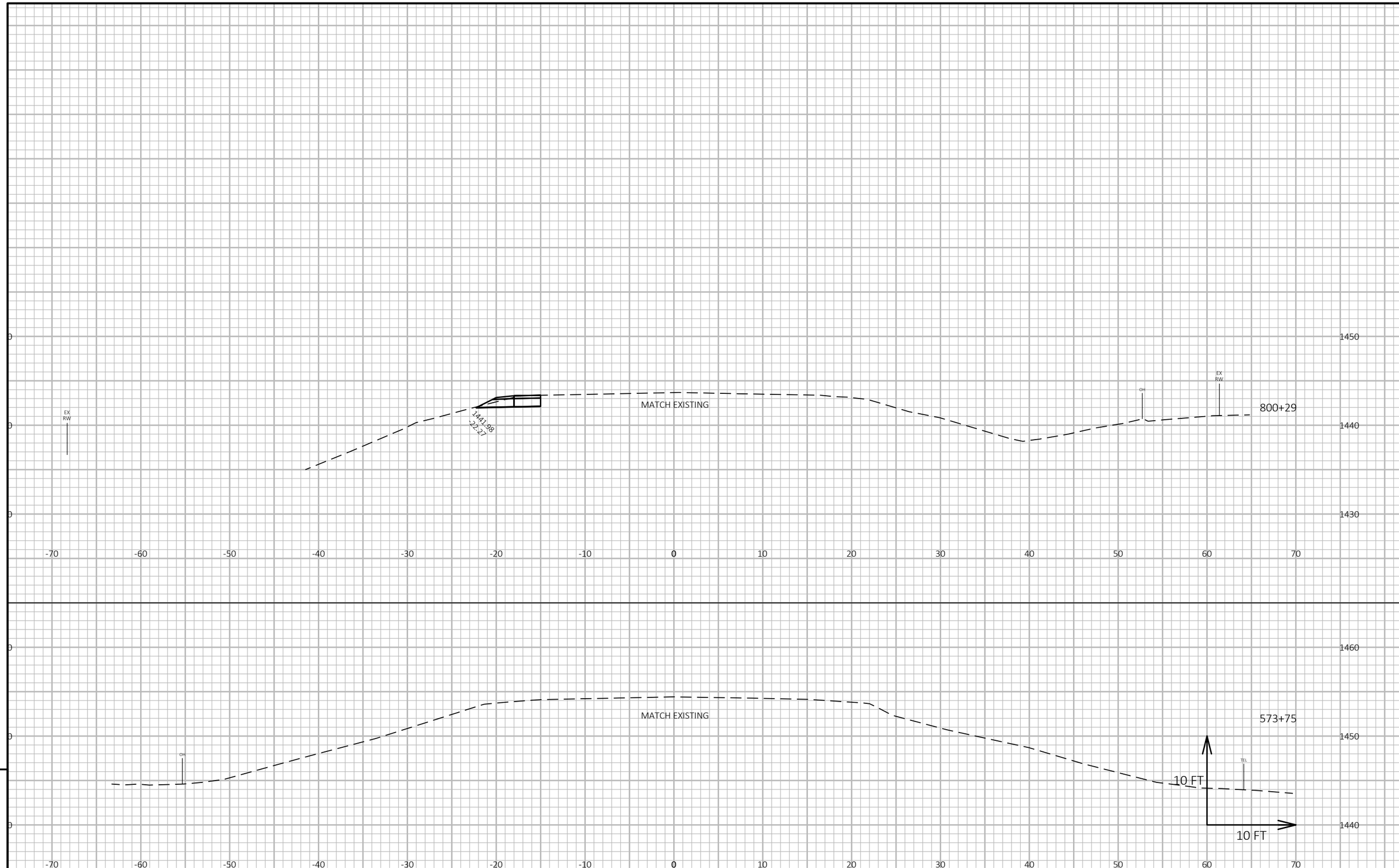

9

9

PROJECT NO: 9215-01-63/73	HWY: STH 86	COUNTY: LINCOLN	CROSS SECTIONS: STH 86 CULVERTS	SHEET 201	E

FILE NAME : S:\DESIGN\DESIGN PROJECTS\NC REGION PROJECTS\9215-01-03 (STH 86)\C3D\SHEETSPLAN\090201_XS2.DWG
LAYOUT NAME - 21
PLOT DATE : 10/11/2018 11:41 AM
PLOT BY : ADAM OSYPOWSKI
PLOT NAME :
PLOT SCALE : 1 IN:10 FT HORZ. / 1 IN:10 FT VERT.
WISDOT/CADDS SHEET 49

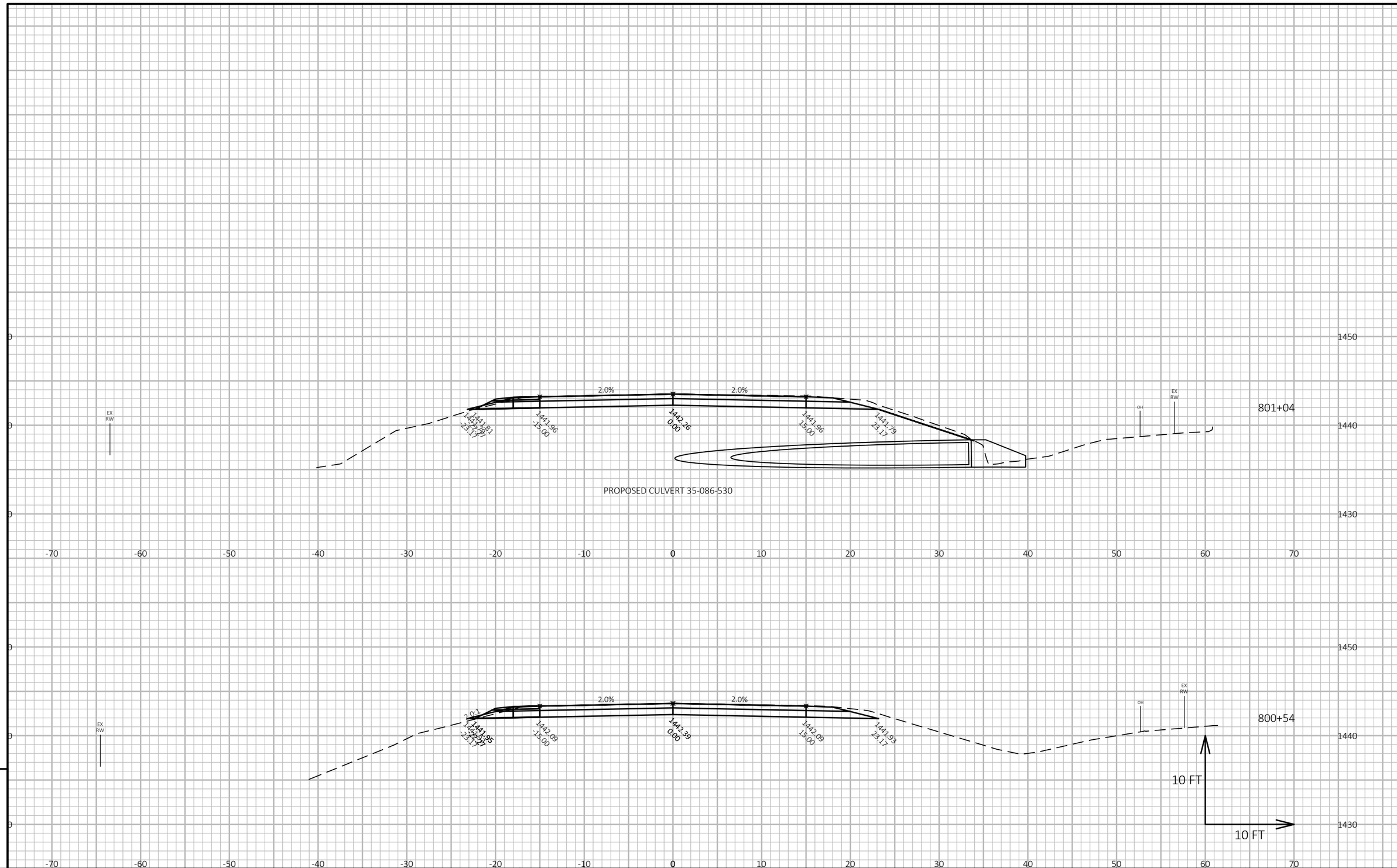

9

9

PROJECT NO: 9215-01-63/73	HWY: STH 86	COUNTY: LINCOLN	CROSS SECTIONS: STH 86 CULVERTS	SHEET 202	E

FILE NAME : S:\DESIGN\DESIGN PROJECTS\NC REGION PROJECTS\9215-01-03 (STH 86)\C3D\SHEETSPLAN\090201_XS2.DWG
LAYOUT NAME - 22

PLOT DATE : 10/11/2018 11:41 AM PLOT BY : ADAM OSYPOWSKI PLOT NAME : **PLOT SCALE :** 1 IN:10 FT HORZ. / 1 IN:10 FT VERT.

WISDOT/CADDS SHEET 49

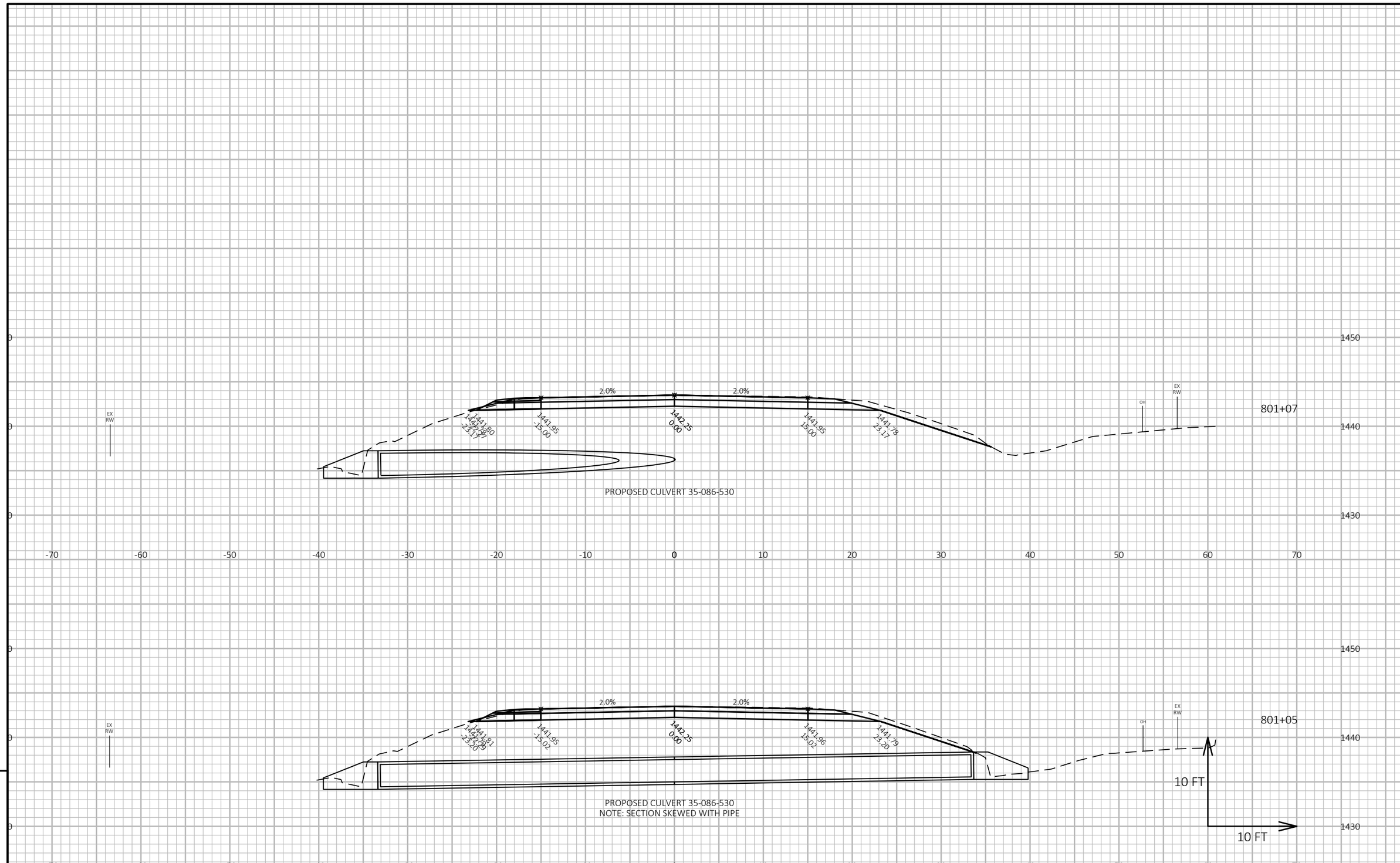

PROJECT NO: 9215-01-63/73	HWY: STH 86	COUNTY: LINCOLN	CROSS SECTIONS: STH 86 CULVERTS	SHEET 203	E

FILE NAME : S:\DESIGN\DESIGN PROJECTS\NC REGION PROJECTS\9215-01-03 (STH 86)\C3D\SHEETSPLAN\090201_XS2.DWG
LAYOUT NAME - 23
PLOT DATE : 10/11/2018 11:41 AM
PLOT BY : ADAM OSYPOWSKI
PLOT NAME :
PLOT SCALE : 1 IN:10 FT HORZ. / 1 IN:10 FT VERT.

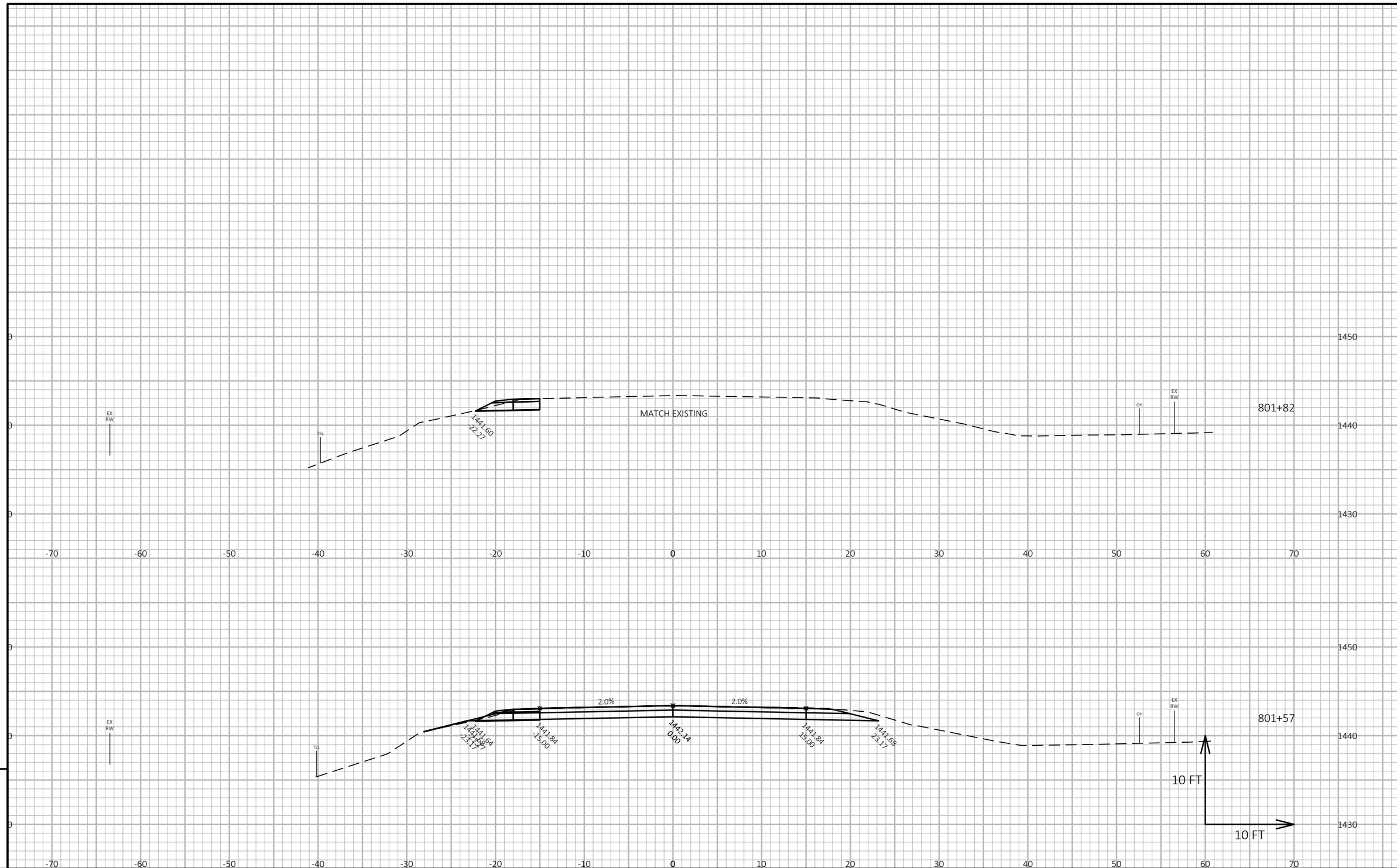

PROJECT NO: 9215-01-63/73	HWY: STH 86	COUNTY: LINCOLN	CROSS SECTIONS: STH 86 CULVERTS	SHEET 204	E

FILE NAME : S:\DESIGN\DESIGN PROJECTS\NC REGION PROJECTS\9215-01-03 (STH 86)\C3D\SHEETSPLAN\090201_XS2.DWG
LAYOUT NAME - 24
PLOT DATE : 10/11/2018 11:41 AM
PLOT BY : ADAM OSYPOWSKI
PLOT NAME :
PLOT SCALE : 1 IN:10 FT HORZ. / 1 IN:10 FT VERT.
WISDOT/CADDS SHEET 49

Notes

Wisconsin Department of Transportation

Dedicated people creating transportation solutions through innovation and exceptional service.

http://www.dot.wisconsin.gov

RHI

MAY 2019

PROJECT ID: 9215-01-65

WITH: 9215-01-63 & 9215-01-73

COUNTY: LINCOLN

ORDER OF SHEETS

TOTAL SHEETS = 46

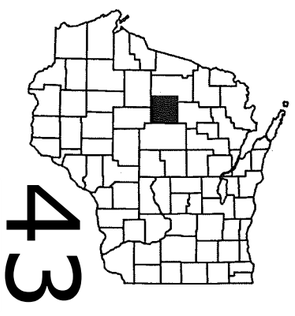

43

N

DESIGN DESIGNATION 9215-01-65

A.A.D.T.	2019	=	700
A.A.D.T.	2039	=	910
D.H.V.		=	100
D.D.		=	61/39
T.		=	7.1
DESIGN SPEED		=	60 MPH
ESALS		=	N/A

CONVENTIONAL SYMBOLS

PLAN

CORPORATE LIMITS
PROPERTY LINE
LOT LINE
LIMITED HIGHWAY EASEMENT
EXISTING RIGHT OF WAY
PROPOSED OR NEW R/W LINE
SLOPE INTERCEPT
REFERENCE LINE
EXISTING CULVERT
PROPOSED CULVERT (Box or Pipe)
COMBUSTIBLE FLUIDS — CAUTION
MARSH AREA
WOODED OR SHRUB AREA

PROFILE

GRADE LINE
ORIGINAL GROUND
MARSH OR ROCK PROFILE (To be noted as such) — ROCK
SPECIAL DITCH — LABEL
GRADE ELEVATION — 95.36
CULVERT (Profile View)

UTILITIES

ELECTRIC — E
FIBER OPTIC — FO
GAS — G
SANITARY SEWER — SAN
STORM SEWER — SS
TELEPHONE — T
WATER — W
UTILITY PEDESTAL
POWER POLE
TELEPHONE POLE

STATE OF WISCONSIN
DEPARTMENT OF TRANSPORTATION

PLAN OF PROPOSED IMPROVEMENT

OMEGA - TOMAHAWK

N FK SPIRIT RVR/SQUAW CREEK BRIDGE

STH 86
LINCOLN COUNTY

STATE PROJECT	FEDERAL PROJECT	
	PROJECT	CONTRACT
9215-01-65	WISC 2019317	1

STATE PROJECT NUMBER
9215-01-65

STH 86
STRUCTURE B-35-99

STH 86
STRUCTURE B-35-98

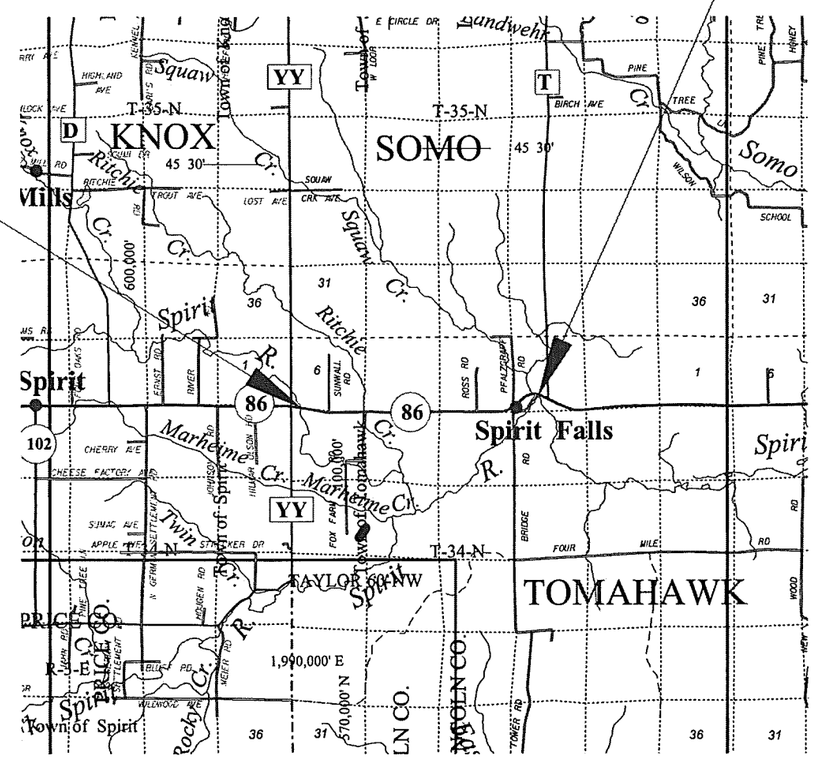

LAYOUT

SCALE 0 — 2 MI

TOTAL NET LENGTH OF CENTERLINE = N/A

HORIZONTAL POSITIONS SHOWN ON THIS PLAN ARE WISCONSIN COUNTY COORDINATES, LINCOLN COUNTY, NAD83 (YEAR), IN U.S. SURVEY FEET. VALUES ARE GRID COORDINATES, GRID BEARINGS, AND GRID DISTANCES. GRID DISTANCES MAY BE USED AS GROUND DISTANCES.

VERTICAL DATUM IS NAVD 88.

ORIGINAL PLANS PREPARED BY

OMNNI ASSOCIATES

WISCONSIN KRISTOFER R. OLSON E-35236 APPLETON, WI PROFESSIONAL ENGINEER

2/1/19

STATE OF WISCONSIN
DEPARTMENT OF TRANSPORTATION

PREPARED BY

Surveyor	OMNNI ASSOCIATES INC
Designer	OMNNI ASSOCIATES INC
Project Manager	STACY HAGENBUCHER
Regional Examiner	
Regional Supervisor	MIKE WENDT

APPROVED FOR THE DEPARTMENT

DATE: 2/1/19 (Signature)

E

FILE NAME : F:\TR\JOBS\E2297A17\CIVIL 3D 2014 B-35-99 B-35-98\SHEETSPLAN\92150165-010101-TI.DWG PLOT DATE : 12/20/2018 1:31 PM PLOT BY : MATT TOMSOVIC PLOT NAME :

GENERAL NOTES

LOCATIONS OF EXISTING AND PROPOSED UTILITY FACILITIES AS SHOWN ON THE PLANS ARE APPROXIMATE. THERE MAY BE OTHER UTILITY FACILITIES WITHIN THE PROJECT AREA THAT ARE NOT SHOWN.

WHEN THE QUANTITY OF THE ITEM OF BASE OR ASPHALT PAVEMENT IS MEASURED FOR PAYMENT BY THE TON, THE DEPTH IS APPROXIMATE AND THE ACTUAL THICKNESS WILL DEPEND ON THE DISTRIBUTION OF THE MATERIAL AS DIRECTED BY THE ENGINEER.

CONTRACTOR WILL BE RESPONSIBLE FOR RESHAPING AND SEEDING ANY PREVIOUSLY GRASSED AREAS WHICH ARE DISTURBED BY HIS OPERATION OUTSIDE THE NORMAL CONSTRUCTION LIMITS.

UTILITIES - PROJECT ID 9215-01-65

COMMUNICATIONS	CENTURYLINK 20 S WILSON AVE RICE LAKE, WI 54868 ATTN: MONTY PARKER (715) 234-5528 MONTY.PARKER@CENTURYLINK.COM
ELECTRICITY	PRICE ELECTRIC COOPERATIVE INC P.O. BOX 110 PHILLIPS, WI 54555 ATTN: BEN ORYSEN (715) 339-2155 BORYSEN@PRICE-ELECTRIC.COM

OTHER CONTACTS

DNR LIAISON	DEPARTMENT OF NATURAL RESOURCES NORTHERN REGION HEADQUARTERS 107 SUTLIFF AVE RHINELANDER, WI 54501 ATTN: WENDY HENNIGES TELEPHONE: 715-365-8916

THE CONTRACTOR SHALL NOTIFY DIGGER'S HOTLINE AND AFFECTED UTILITIES PRIOR TO THE START OF WORK. ANY UTILITY WHICH IS NOT A MEMBER OF DIGGER'S HOTLINE MUST BE CONTACTED SEPERATELY.

DIGGERS HOTLINE

Dial 811 or (800) 242-8511

www.DiggersHotline.com

2

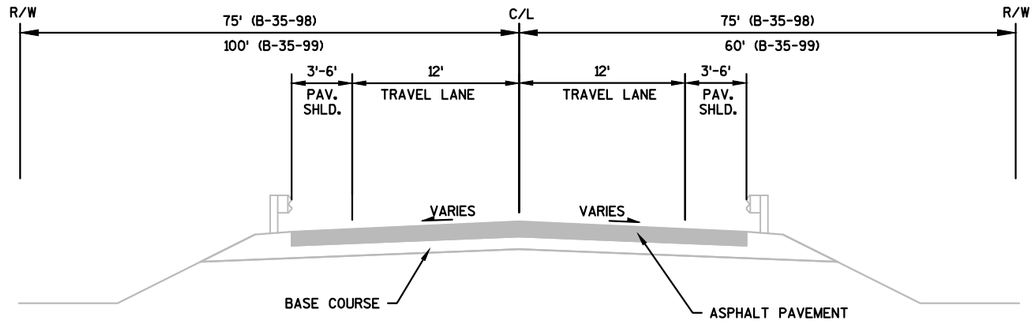

EXISTING TYPICAL SECTION STH 86 (ASPHALT PAVEMENT APPROACH)

STA. 32+24.36 TO STA. 32+74.39
STA. 33+66.54 TO STA. 34+16.55
STA. 205+11.18TO STA. 205+61.28
STA. 206+53.17 TO STA. 207+03.17

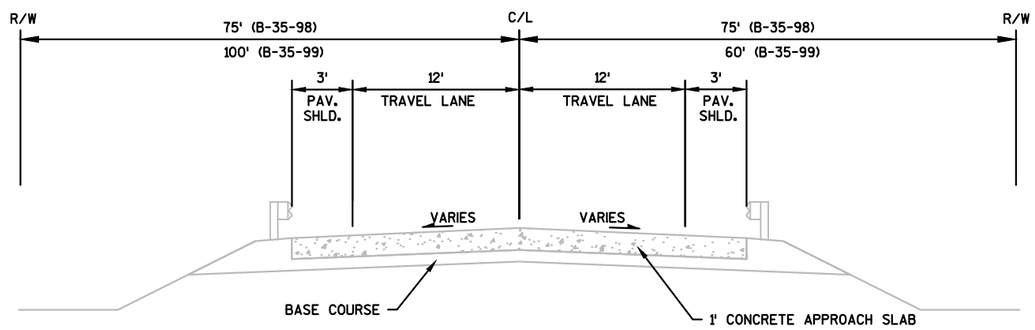

EXISTING TYPICAL SECTION STH 86 (CONCRETE PAVEMENT APPROACH SLAB)

STA. 32+74.39 TO STA. 32+89.85
STA. 33+50.82 TO STA. 33+66.54
STA. 205+61.28TO STA. 205+77.05
STA. 206+37.29 TO STA. 206+53.17

PROJECT NO:9215-01-65	HWY:STH 86	COUNTY:LINCOLN	TYPICAL SECTIONS	SHEET 3	E

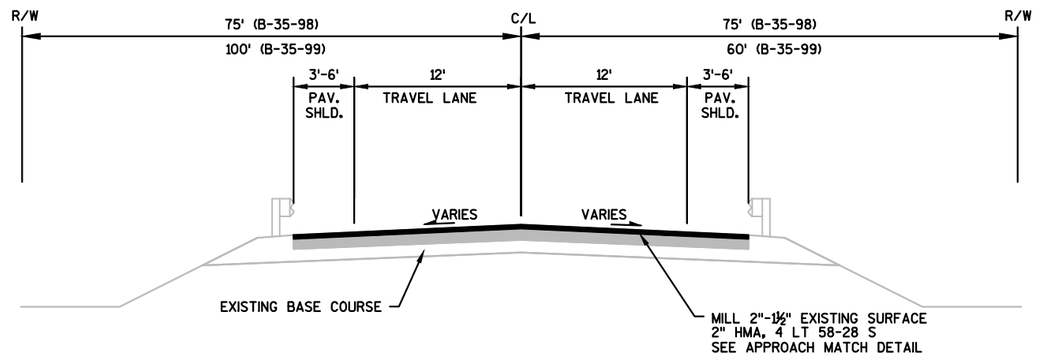

FINISHED TYPICAL SECTION STH 86 (ASPHALT PAVEMENT APPROACH)

STA. 32+24.36 TO STA. 32+74.39
STA. 33+66.54 TO STA. 34+16.55
STA. 205+11.18TO STA. 205+61.28
STA. 206+53.17 TO STA. 207+03.17

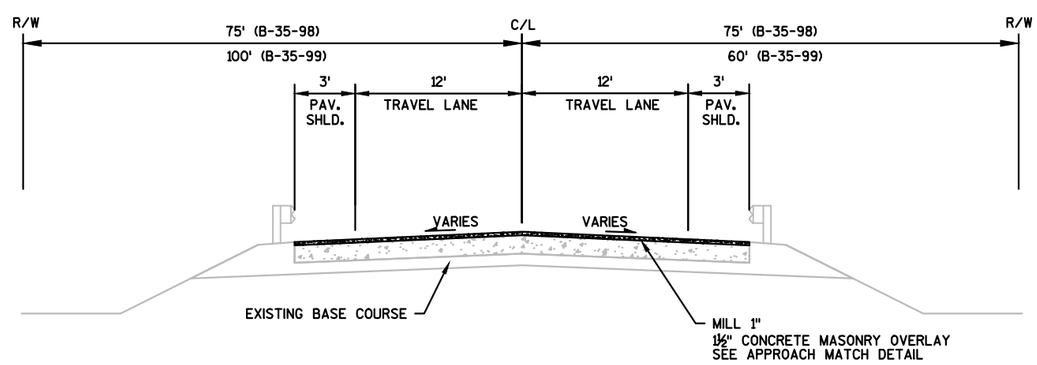

FINISHED TYPICAL SECTION STH 86 (CONCRETE PAVEMENT APPROACH SLAB)

STA. 32+74.39 TO STA. 32+89.85
STA. 33+50.82 TO STA. 33+66.54
STA. 205+61.28TO STA. 205+77.05
STA. 206+37.29 TO STA. 206+53.17

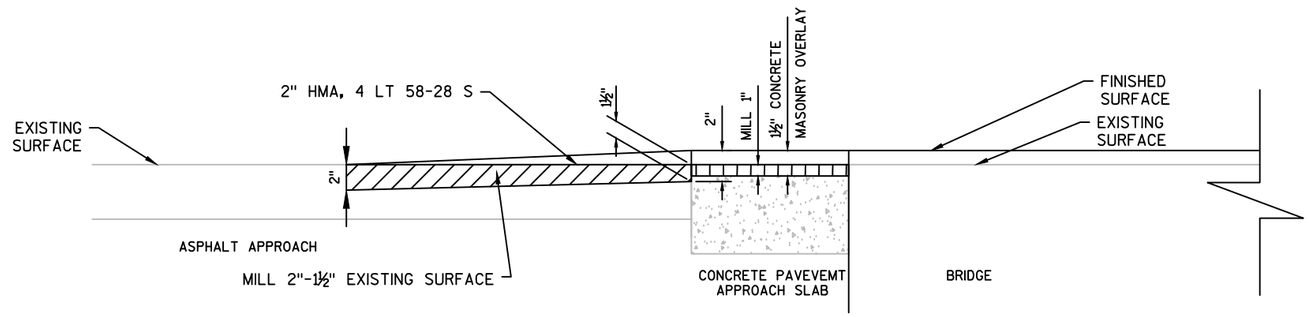

APPROACH MATCH DETAIL STH 86

B-35-98, B-35-99

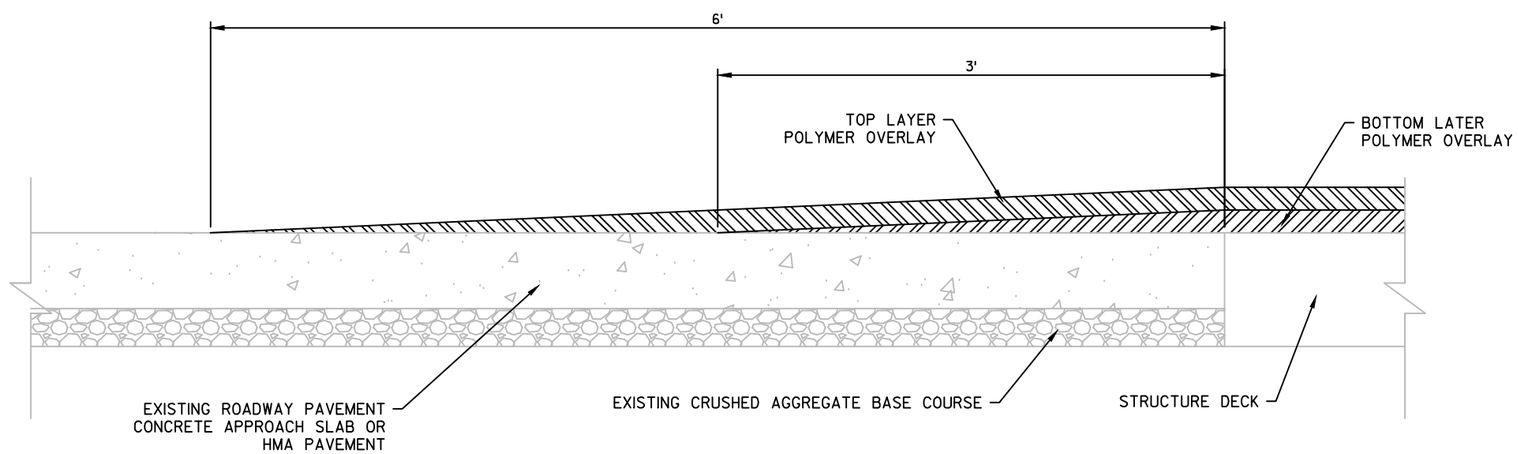

POLYMER OVERLAY TRANSITION DETAIL

NOTE:
PLYMER OVERLAY TO BE PLACED FULL WIDTH COVERING PAVEMENT AND SHOULDERS.

PLACE AFTER MILLING AND HMA APPROACH PAVEMENT COMPLETED.

POLYMER TRANSITION INCIDENTAL TO "POLYMER OVERLAY" BID ITEM ON STRUCTURE PLAN.

2

TRAFFIC CONTROL GENERAL NOTES

1. DRAWINGS SHOW TRAFFIC CONTROL FOR A TYPICAL SITUATION. ADDITIONAL TRAFFIC CONTROL DEVICES MAY BE REQUIRED AND/OR LAYOUT DETAILS MODIFIED DEPENDING ON METHODS OR SEQUENCE OF OPERATIONS.

2. ADJUST SIGN SPACING TO AVOID CONFLICT WITH AND TO PROVIDE A MINIMUM SPACING OF 200 FEET (500 FEET DESIRABLE) DISTANCE TO EXISTING SIGNS.

3. ALL SIGNS SHALL BE 48" x 48" UNLESS OTHERWISE NOTED.

4. "WO" SIGNS ARE THE SAME AS "W" SIGNS EXCEPT THE BACKGROUND IS ORANGE.

5. ALL DETOUR ASSEMBLIES SHALL HAVE ORANGE DIRECTIONAL ARROWS.

6. ALL TRAFFIC CONTROL SIGNING WILL CONFORM TO THE WISCONSIN MANUAL ON UNIFORM TRAFFIC CONTROL DEVICES.

7. CONSIDER GEOMETRICS WHEN LOCATING SIGNS AND ARROW BOARDS SO THE DRIVER HAS A CLEAR VIEW OF THE ARROW BOARD AND LANE CLOSURE DRUMS FOR A MINIMUM OF 1500 FEET IN FRONT OF DRUMS.

8. IF LANE CLOSURES ARE IN PLACE LESS THAN 7 CONTINUOUS DAYS AND NIGHTS, THE ADVANCED WARNING SIGNS MAY BE MOUNTED ON PORTABLE SUPPORTS.

9. WARNING LIGHTS SHALL NOT BE WORKING ON "COVERED" OR "DOWNED" SIGN OR BARRICADE.

10. DURING HOURS OF DARKNESS, ALL BARRICADES USED TO SHIELD A HAZARD SHALL BE EQUIPPED WITH TYPE "A" LIGHTS.

11. FOR NIGHTTIME OPERATION, ALL DRUMS IN TAPERS SHALL HAVE A TYPE C WARNING LIGHT.

12. FIXED MESSAGE SIGNS SHALL BE PLACED APPROXIMATELY AT THE PROJECT LOCATION, ONE WEEK IN ADVANCE OF INITIAL LANE CLOSURE AND AS NEEDED THROUGHOUT THE PROJECT.

13. LAYOUT INFORMATION PROVIDED IS NOT INTENDED TO REPLACE WHAT IS PROVIDED IN APPLICABLE STANDARD DETAIL DRAWINGS.

14. SEE ADDITIONAL TRAFFIC CONTROL DETAIL SHEETS AND STANDARD DETAIL DRAWINGS FOR ADDITIONAL TRAFFIC CONTROL REQUIREMENTS.

PORTABLE CHANGEABLE MESSAGE SIGNS

			PRIOR TO CONSTRUCTION		STAGE 1		STAGE 2	
SITE NO	LOCATION	ROADWAY CONDITION/ CONSTRUCTION	PHASE I (2 SEC)	PHASE II (2 SEC)	PHASE I (2 SEC)	PHASE II (2 SEC)	PHASE I (2 SEC)	PHASE II (2 SEC)
PCMS 1	ON EB STH 86 AT B-35-98	GENERAL	STH 86 BRIDGE WORK	BEGINS XX/XX/XX	(NO MESSAGE)		(NO MESSAGE)	
PCMS 2	ON WB STH 86 AT B-35-98	GENERAL	STH 86 BRIDGE WORK	BEGINS XX/XX/XX	(NO MESSAGE)		(NO MESSAGE)	
PCMS 3	ON EB STH 86 AT B-35-99	GENERAL	STH 86 BRIDGE WORK	BEGINS XX/XX/XX	(NO MESSAGE)		(NO MESSAGE)	
PCMS 4	ON WB STH 86 AT B-35-99	GENERAL	STH 86 BRIDGE WORK	BEGINS XX/XX/XX	(NO MESSAGE)		(NO MESSAGE)	

PCMS TO BE INSTALLED SEVEN DAYS IN ADVANCE OF CONSTRUCTION

2

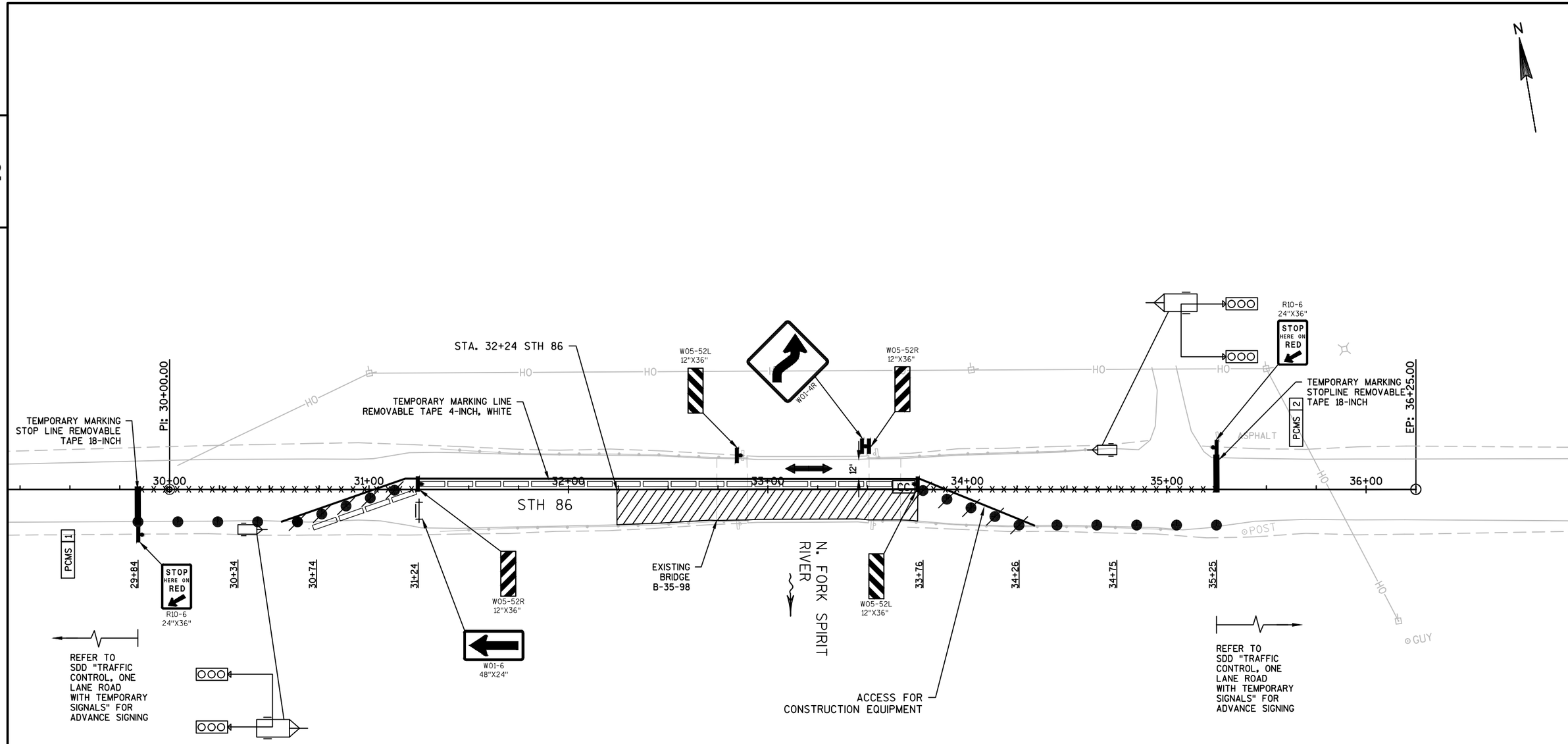

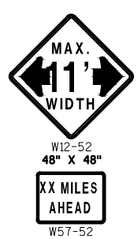

NOTES:
1. TRAILER MOUNTED SIGNALS REQUIRED AT THIS LOCATION.

2. WIDTH RESTRICTION SIGNS TO SHOW MAX 11' WIDTH. INSTALLED PER SDD "TRAFFIC CONTROL, ONE LANE ROAD WITH TEMPORARY SIGNALS. SIGNS TO BE INSTALLED ON BOTH APPROACHES AT STH 13 AND USH 51

LEGEND

- WORK AREA
- X X X REMOVE EXISTING PAVEMENT MARKING
- TRAFFIC CONTROL DRUM
- TRAFFIC CONTROL DRUM WITH TYPE "C" STEADY BURN LIGHT
- TRAILER MOUNTED TRAFFIC SIGNAL
- DIRECTION OF TRAFFIC
- TYPE III BARRICADE WITHOUT/ WITH SIGN
- SIGN ON TEMPORARY SUPPORT
- TEMPORARY PRECAST CONCRETE BARRIER
- CC CRASH CUSHION TEMPORARY
- PCMS PORTABLE CHANGEABLE MESSAGE SIGN

PROJECT NO:9215-01-65	HWY:STH 86	COUNTY:LINCOLN	TRAFFIC CONTROL - STAGE 1	SHEET 7	E

2

2

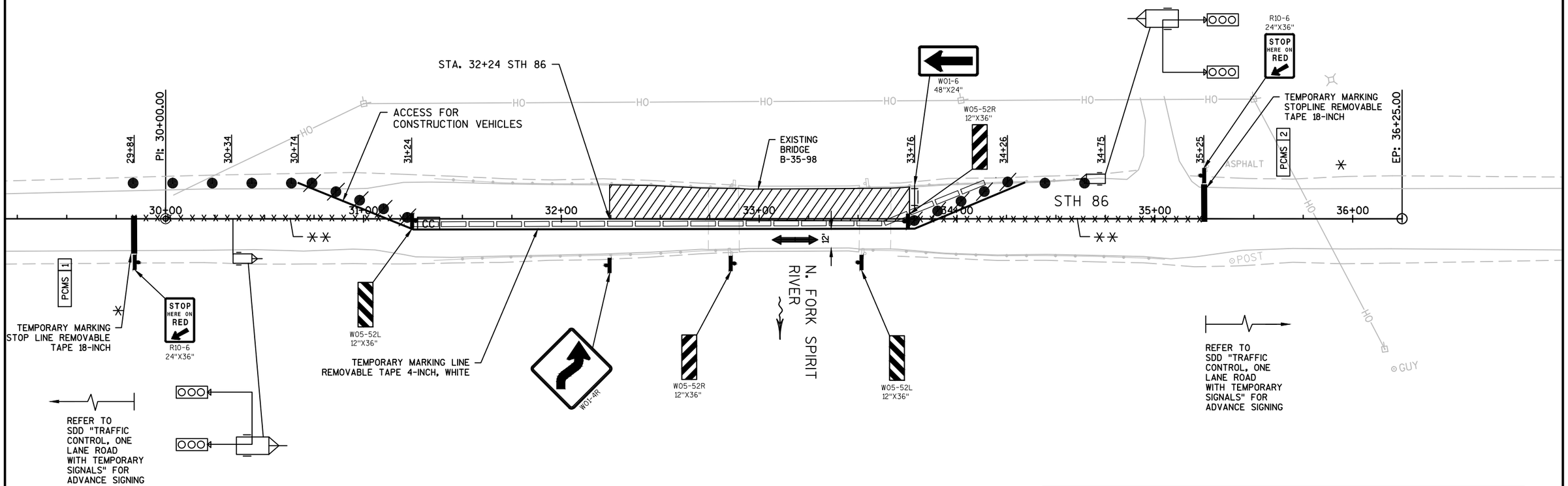

NOTES:
1. TRAILER MOUNTED SIGNALS REQUIRED AT THIS LOCATION.

2. WIDTH RESTRICTION SIGNS TO SHOW MAX 11' WIDTH. INSTALLED PER SDD "TRAFFIC CONTROL, ONE LANE ROAD WITH TEMPORARY SIGNALS. SIGNS TO BE INSTALLED ON BOTH APPROACHES AT STH 13 AND USH 51

MAX. 11' WIDTH
W12-52
48" X 48"

XX MILES AHEAD
W57-52
36" X 24"

LEGEND

- WORK AREA
- X X X REMOVE EXISTING PAVEMENT MARKING
- TRAFFIC CONTROL DRUM
- TRAFFIC CONTROL DRUM WITH TYPE "C" STEADY BURN LIGHT
- TRAILER MOUNTED TRAFFIC SIGNAL
- DIRECTION OF TRAFFIC
- PLACED IN STAGE 1
- REMOVED IN STAGE 1
- TYPE III BARRICADE WITHOUT/ WITH SIGN
- SIGN ON TEMPORARY SUPPORT
- TEMPORARY PRECAST CONCRETE BARRIER
- CC CRASH CUSHION TEMPORARY
- PCMS PORTABLE CHANGEABLE MESSAGE SIGN

PROJECT NO:9215-01-65	HWY:STH 86	COUNTY:LINCOLN	TRAFFIC CONTROL - STAGE 2	SHEET 8	E

FILE NAME : F:\TR\JOBS\E2297A17\CIVIL 3D 2014 B-35-99 B-35-98\SHEETSPLAN\B-35-98 S1-S2\92150165-026001-S2.DWG
LAYOUT NAME - 92150165-026002-S2
PLOT DATE : 12/3/2018 8:43 AM PLOT BY : MATT TOMSOVIC PLOT NAME : PLOT SCALE : 1 IN:50 FT

2

2

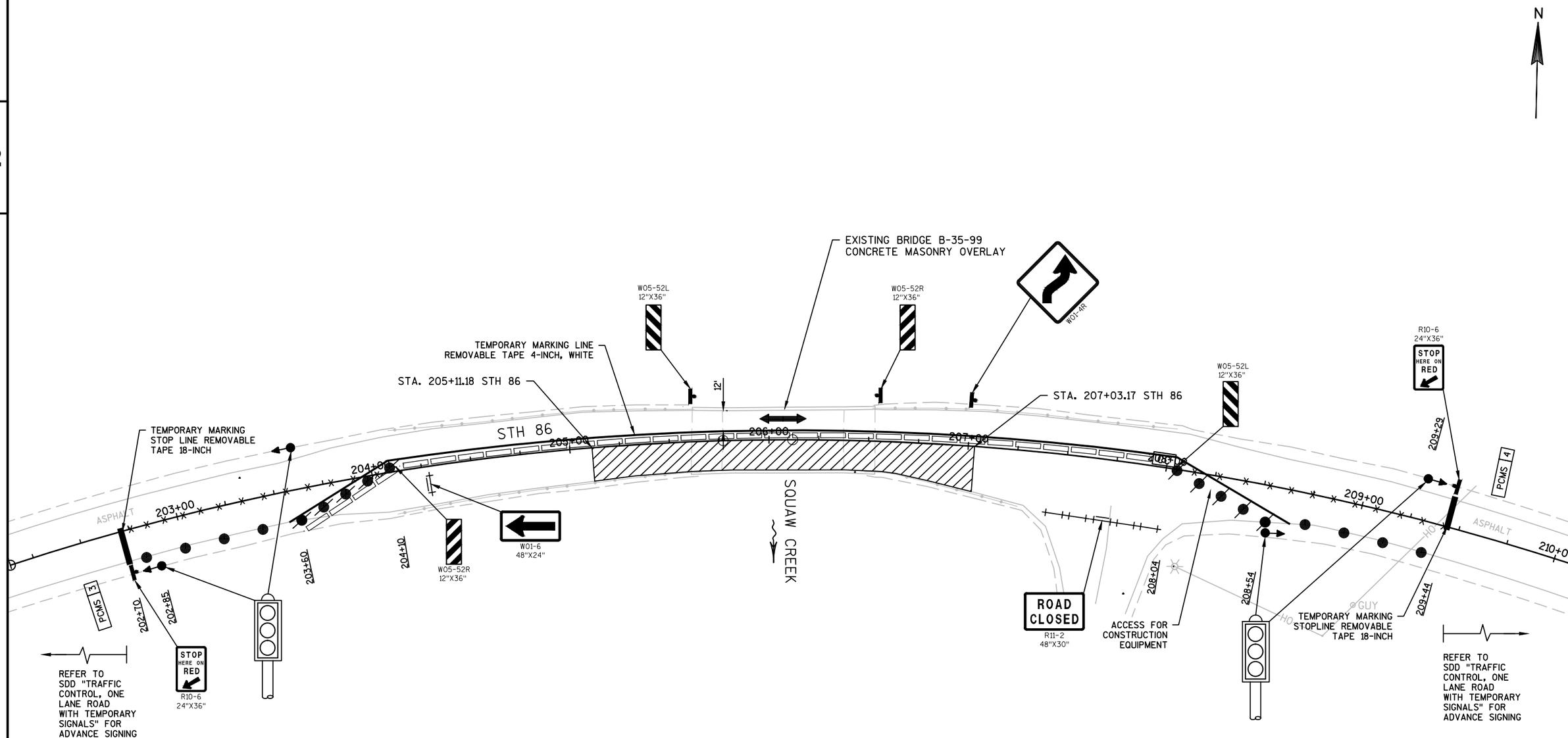

NOTE:
WIDTH RESTRICTION SIGNS TO SHOW MAX 11' WIDTH. INSTALLED PER SDD "TRAFFIC CONTROL, ONE LANE ROAD WITH TEMPORARY SIGNALS. SIGNS TO BE INSTALLED ON BOTH APPROACHES AT STH 13 AND USH 51

PROJECT NO:9215-01-65	HWY:STH 86	COUNTY:LINCOLN	TRAFFIC CONTROL - STAGE 1	SHEET 9	E

2

2

N

EXISTING BRIDGE B-35-99
CONCRETE MASONRY OVERLAY

STA. 207+03.17 STH 86

STA. 205+11.18 STH 86

W05-52L
12"X36"

ACCESS FOR
CONSTRUCTION
EQUIPMENT

TEMPORARY MARKING
STOP LINE REMOVABLE
TAPE 18-INCH

STH 86

205+00

206+00

207+00

208+00

209+00

210+00

203+00

204+00

CC

W01-6
48"X24"

W05-52R
12"X36"

R10-6
24"X36"
STOP
HERE ON
RED

209+29

PCMS 4

ASPHALT

TEMPORARY MARKING LINE
REMOVABLE TAPE 4-INCH, WHITE

204+10

203+50

202+70

202+30

PCMS 3

STOP
HERE ON
RED

R10-6
24"X36"

W01-4R

W05-52R
12"X36"

SQUAW CREEK

W05-52L
12"X36"

ROAD
CLOSED

R11-2
48"X30"

208+04

208+54

209+44

GUY

TEMPORARY MARKING
STOPLINE REMOVABLE
TAPE 18-INCH

REFER TO
SDD "TRAFFIC
CONTROL, ONE
LANE ROAD
WITH TEMPORARY
SIGNALS" FOR
ADVANCE SIGNING

REFER TO
SDD "TRAFFIC
CONTROL, ONE
LANE ROAD
WITH TEMPORARY
SIGNALS" FOR
ADVANCE SIGNING

MAX.
11'
WIDTH

W12-52
48" X 48"

XX MILES
AHEAD

W57-52
36" X 24"

NOTE:
WIDTH RESTRICTION SIGNS TO SHOW
MAX 11' WIDTH. INSTALLED PER
SDD "TRAFFIC CONTROL, ONE LANE ROAD
WITH TEMPORARY SIGNALS. SIGNS TO
BE INSTALLED ON BOTH APPROACHES
AT STH 13 AND USH 51

LEGEND

- WORK AREA
- X X X REMOVE EXISTING PAVEMENT MARKING
- TRAFFIC CONTROL DRUM
- TRAFFIC CONTROL DRUM WITH TYPE "C" STEADY BURN LIGHT
- TRAILER MOUNTED TRAFFIC SIGNAL
- DIRECTION OF TRAFFIC
- PLACED IN STAGE 1
- REMOVED IN STAGE 1
- TYPE III BARRICADE WITHOUT/ WITH SIGN
- SIGN ON TEMPORARY SUPPORT
- TEMPORARY PRECAST CONCRETE BARRIER
- CC CRASH CUSHION TEMPORARY
- TEMPORARY TRAFFIC SIGNAL
- PCMS PORTABLE CHANGEABLE MESSAGE SIGN

PROJECT NO:9215-01-65	HWY:STH 86	COUNTY:LINCOLN	TRAFFIC CONTROL - STAGE 2	SHEET 10	E

FILE NAME : F:\TR\JOBS\E2297A17\CIVIL 3D 2014 B-35-99 B-35-98\SHEETSPLAN\B-35-99 S1-S2\92150165-026004-S2.DWG
LAYOUT NAME - 92150165-026003-S1
PLOT DATE : 12/18/2018 10:16 AM PLOT BY : MATT TOMSOVIC PLOT NAME : PLOT SCALE : 1 IN:50 FT

Estimate Of Quantities By Plan Sets

9215-01-65

Line	Item	Item Description	Unit	Total	Qty
0014	204.0120	Removing Asphaltic Surface Milling	SY	770.000	770.000
0030	213.0100	Finishing Roadway (project) 01. 9215-01-65	EACH	1.000	1.000
0036	305.0120	Base Aggregate Dense 1 1/4-Inch	TON	5.000	5.000
0040	455.0605	Tack Coat	GAL	60.000	60.000
0050	460.5224	HMA Pavement 4 LT 58-28 S	TON	100.000	100.000
0052	465.0110	Asphaltic Surface Patching	TON	25.000	25.000
0056	502.3200	Protective Surface Treatment	SY	404.000	404.000
0058	502.3210	Pigmented Surface Sealer	SY	115.000	115.000
0060	509.0301	Preparation Decks Type 1	SY	12.000	12.000
0062	509.0302	Preparation Decks Type 2	SY	6.000	6.000
0064	509.0500	Cleaning Decks	SY	404.000	404.000
0066	509.0600	Cleaning Approaches	SY	216.000	216.000
0068	509.1500	Concrete Surface Repair	SF	13.000	13.000
0070	509.2000	Full-Depth Deck Repair	SY	2.000	2.000
0072	509.2500	Concrete Masonry Overlay Decks	CY	24.000	24.000
0074	509.2600	Concrete Masonry Overlay Approaches	CY	16.000	16.000
0076	509.5100.S	Polymer Overlay	SY	404.000	404.000
0078	509.9050.S	Cleaning Parapets	LF	296.000	296.000
0104	603.8000	Concrete Barrier Temporary Precast Delivered	LF	856.000	856.000
0106	603.8125	Concrete Barrier Temporary Precast Installed	LF	1,492.000	1,492.000
0118	614.0905	Crash Cushions Temporary	EACH	4.000	4.000
0134	619.1000	Mobilization	EACH	0.120	0.120
0176	643.0300	Traffic Control Drums	DAY	1,243.000	1,243.000
0180	643.0420	Traffic Control Barricades Type III	DAY	67.000	67.000
0184	643.0715	Traffic Control Warning Lights Type C	DAY	671.000	671.000
0186	643.0900	Traffic Control Signs	DAY	2,055.000	2,055.000
0192	643.1050	Traffic Control Signs PCMS	DAY	28.000	28.000
0196	643.5000	Traffic Control	EACH	0.200	0.200
0200	646.1020	Marking Line Epoxy 4-Inch	LF	381.000	381.000
0206	646.9000	Marking Removal Line 4-Inch	LF	772.000	772.000
0212	649.0150	Temporary Marking Line Removable Tape 4-Inch	LF	5,869.000	5,869.000
0214	649.0850	Temporary Marking Stop Line Removable Tape 18-Inch	LF	48.000	48.000
0224	661.0100	Temporary Traffic Signals for Bridges (structure) 01. B-35-98	LS	1.000	1.000
0226	661.0100	Temporary Traffic Signals for Bridges (structure) 02. B-35-99	LS	1.000	1.000
0228	690.0150	Sawing Asphalt	LF	147.000	147.000
0238	SPV.0025	Special 01. Abutment Undercut Slurry Backfill	CF	58.000	58.000

SEQUENCE OF OPERATIONS				
STRUCTURE: B-35-98 STH 86				
PRE - TIMED CYCLE 1 = 78 seconds				
TIME: 8:00 AM - 6:00 PM				
INTERVAL	EB	WB	INTERVAL LENGTH (SEC)	% OF CYCLE
PHASE A	G	R	15	19.2%
CLEARANCE	Y	R	5	6.4%
CLEARANCE	R	R	19	24.4%
PHASE B	R	G	15	19.2%
CLEARANCE	R	Y	5	6.4%
CLEARANCE	R	R	19	24.4%
			78	100.0%

SEQUENCE OF OPERATIONS				
STRUCTURE: B-35-98 STH 86				
PRE - TIMED CYCLE 2 = 70 seconds				
TIME: 6:00 PM - 8:00 AM				
INTERVAL	EB	WB	INTERVAL LENGTH (SEC)	% OF CYCLE
PHASE A	G	R	11	15.7%
CLEARANCE	Y	R	5	7.1%
CLEARANCE	R	R	19	27.1%
PHASE B	R	G	11	15.7%
CLEARANCE	R	Y	5	7.1%
CLEARANCE	R	R	19	27.1%
			70	100.0%

NOTES:

1. G = GREEN, Y = YELLOW, R = RED

2. THE ALL-RED CLEARANCE (INTERVAL 3 & 6) IS BASED ON A STOPLINE TO STOPLINE DISTANCE = 540 FT. IF THIS DISTANCE IS MODIFIED IN THE FIELD, CONTACT CHRIS DROES, NC REGION, AT 715-365-5749 FOR TRAFFIC TIMING MODIFICATIONS.

SEQUENCE OF OPERATIONS				
STRUCTURE: B-35-99 STH 86				
PRE - TIMED CYCLE 1 = 86 seconds				
TIME: 8:00 AM - 6:00 PM				
INTERVAL	EB	WB	INTERVAL LENGTH (SEC)	% OF CYCLE
PHASE A	G	R	16	18.6%
CLEARANCE	Y	R	5	5.8%
CLEARANCE	R	R	22	25.6%
PHASE B	R	G	16	18.6%
CLEARANCE	R	Y	5	5.8%
CLEARANCE	R	R	22	25.6%
			86	100.0%

SEQUENCE OF OPERATIONS				
STRUCTURE: B-35-99 STH 86				
PRE - TIMED CYCLE 2 = 76 seconds				
TIME: 6:00 PM - 8:00 AM				
INTERVAL	EB	WB	INTERVAL LENGTH (SEC)	% OF CYCLE
PHASE A	G	R	11	14.5%
CLEARANCE	Y	R	5	6.6%
CLEARANCE	R	R	22	28.9%
PHASE B	R	G	11	14.5%
CLEARANCE	R	Y	5	6.6%
CLEARANCE	R	R	22	28.9%
			76	100.0%

NOTES:

1. G = GREEN, Y = YELLOW, R = RED

2. THE ALL-RED CLEARANCE (INTERVAL 3 & 6) IS BASED ON A STOPLINE TO STOPLINE DISTANCE = 675 FT. IF THIS DISTANCE IS MODIFIED IN THE FIELD, CONTACT CHRIS DROES, NC REGION, AT 715-365-5749 FOR TRAFFIC TIMING MODIFICATIONS.

ALL ITEMS ARE CATEGORY 0010 UNLESS OTHERWISE NOTED

3

REMOVING ASPHALTIC SURFACE MILLING

PROJECT	STATION TO STATION	LOCATION	204.0120 SY
9215-01-65	32+24.36 - 32+74.39	STH 86/B-35-98	190
	33+66.54 - 34+16.55	STH 86/B-35-98	190
	205+11.18 - 205+61.18	STH 86/B-35-99	190
	206+53.17 - 207+03.17	STH 86/B-35-99	200
		TOTAL	**770**

SAWING ASPHALT

PROJECT	STATION	LOCATION	690.0150 SAWING ASPHALT LF
9215-01-65	32+24.36	STH 86/B-35-98	35
	34+16.55	STH 86/B-35-98	36
	205+11.18	STH 86/B-35-99	35
	207+03.17	STH 86/B-35-99	41
		TOTAL	**147**

BASE AGGREGATE DENSE

PROJECT	STATION TO STATION	LOCATION	305.0120 BASE AGGREGATE DENSE 1 1/4-INCH TON
9215-01-65	UNDISTRIBUTED *	STH 86	5
		TOTAL	**5**

* INCLUDED QUANTITY FOR PCMS PAD IF NECESSARY

3

ASPHALTIC ITEMS

PROJECT	STATION TO STATION	LOCATION	455.0605 TACK COAT GAL	460.5224 HMA PAVEMENT 4 LT 58-28 S TON	465.0110 ASPHALTIC SURFACE PATCHING TON
9215-01-65	32+24.36 - 32+74.39	STH 86/B-35-98	15	25	
	33+66.54 - 34+16.55	STH 86/B-35-98	15	25	
	205+11.18 - 205+61.18	STH 86/B-35-99	15	25	
	206+53.17 - 207+03.17	STH 86/B-35-99	15	25	
	UNDISTRIBUTED	STH 86/B-35-98,99			25
		TOTAL	**60**	**100**	**25**

CONCRETE ITEMS - BRIDGE APPROACHES

PROJECT	STATION TO STATION	LOCATION	509.0600 CLEANING APPROACHES SY	509.2600 CONCRETE MASONRY OVERLAY APPROACHES CY
9215-01-65	32+74.39 - 32+89.87	STH 86/B-35-98	54	4
	33+50.82 - 33+66.54	STH 86/B-35-98	55	4
	205+11.18 - 205+27.01	STH 86/B-35-99	53	4
	207+03.17 - 207+19.04	STH 86/B-35-99	54	4
		TOTAL	**216**	**16**

CONCRETE BARRIER

STATION	TO	STATION	LOCATION	CONSTRUCTION STAGING	603.8000 CONCRETE BARRIER TEMPORARY PRECAST DELIVERED LF	603.8125 CONCRETE BARRIER TEMPORARY PRECAST INSTALLED LF
30+74	-	33+76	STH 86 (B-35-98)	1	302	302
31+24	-	34+26	STH 86 (B-35-98)	2	55	302
203+60	-	208+04	STH 86 (B-35-99)	1	444	444
204+10	-	208+54	STH 86 (B-35-99)	2	55	444
			PROJECT TOTALS		856	1,492

ALL ITEMS ARE CATEGORY 0010 UNLESS OTHERWISE NOTED

3

CRASH CUSHIONS TEMPORARY

STATION	LOCATION	CONSTRUCTION STAGING	614.0905 CRASH CUSHIONS TEMPORARY ** EACH	BACK WIDTH FT	OBJECT MARKING PATTERN	CRASH TEST LEVEL	TRAFFIC DIRECTION	TRAFFIC LOCATION	CRASH CUSHION SHIELDS
33+76 LT	STH 86 (B-35-98)	1	1	2	OM-3R	TL-3	BIDIRECTIONAL	LT	TEMPORARY BARRIER END
31+24 RT	STH 86 (B-35-98)	2	1	2	OM-3L	TL-3	BIDIRECTIONAL	RT	TEMPORARY BARRIER END
208+04 LT	STH 86 (B-35-99)	1	1	2	OM-3R	TL-3	BIDIRECTIONAL	LT	TEMPORARY BARRIER END
204+10 RT	STH 86 (B-35-99)	2	1	2	OM-3L	TL-3	BIDIRECTIONAL	RT	TEMPORARY BARRIER END
	PROJECT TOTAL		4						

** CRASH CUSHION DESIGN PARAMETERS
AREA REQUIREMENTS L = 22', N = 6', F = 2'

TRAFFIC CONTROL

STAGE	LOCATION	APPROX. SERVICE PERIOD DAYS	643.0300 DRUMS NO.	643.0300 DRUMS DAYS	643.0420 BARRICADES TYPE III NO.	643.0420 BARRICADES TYPE III DAYS	643.0715 WARNING LIGHTS TYPE C NO.	643.0715 WARNING LIGHTS TYPE C DAYS	643.0900 SIGNS NO.	643.0900 SIGNS DAYS	643.1050 SIGNS PCMS NO.	643.1050 SIGNS PCMS DAYS
1	STH 86 (B-35-98)	16	20	320	1	16	10	160	22	352	2	14
2	STH 86 (B-35-98)	15	17	255	1	15	10	150	22	330	--	--
1	STH 86 (B-35-99)	15	18	270	1	15	10	150	23	345	2	14
2	STH 86 (B-35-99)	15	19	285	1	15	10	150	23	345	--	--
ALL	WIDTH WARNING SIGNS AT STH 13 AND USH 51	31	0	0	0	0	0	0	16	496	--	--
	PROJECT SUBTOTALS			1,130		61		610		1,868	28	
	UNDISTRIBUTED			113		6		61		187	0	
	TOTALS			1,243		67		671		2,055	28	

PAVEMENT MARKING

STATION	TO	STATION	LOCATION	646.1020 MARKING LINE EPOXY 4-INCH WHITE LF	646.1020 MARKING LINE EPOXY 4-INCH YELLOW LF	REMARKS
CONSTRUCTION YEAR 2 - AFTER POLYMER OVERLAY IS INSTALLED						
32+89	-	33+50	STH 86 (B-35-98)	122	15	SKIP DASH
205+76	-	206+37	STH 86 (B-35-99)	122	122	DOUBLE YELLOW
			CONSTRUCTION YEAR 2 SUBTOTALS	244	137	
			PROJECT TOTAL	381		

REMOVING PAVEMENT MARKINGS

STATION	TO	STATION	LOCATION	646.9000 MARKING REMOVAL LINE 4-INCH LF	
29+84	-	31+24	STH 86 (B-35-98)	175	SKIP DASH, SOLID
33+76	-	35+25	STH 86 (B-35-98)	37	SKIP DASH
202+70	-	204+10	STH 86 (B-35-99)	280	DOUBLE
208+04	-	209+44	STH 86 (B-35-99)	280	DOUBLE
			TOTAL	772	

ALL ITEMS ARE CATEGORY 0010 UNLESS OTHERWISE NOTED

TEMPORARY PAVEMENT MARKING

STAGE	STATION	TO	STATION	LOCATION	649.0150 TEMPORARY MARKING LINE REMOVABLE TAPE 4-INCH (WHITE) LF	649.0150 TEMPORARY MARKING LINE REMOVABLE TAPE 4-INCH (YELLOW) LF	649.0850 TEMPORARY MARKING STOP LINE REMOVABLE TAPE 18-INCH (WHITE) LF	REMARKS
1	29+84	-	35+25	STH 86 (B-35-98)	380	--	24	
2	29+84	-	35+25	STH 86 (B-35-98)	370	--	--	
2*	29+84	-	32+10	STH 86 (B-35-98)	452	283	--	SKIP DASH, SOLID
2*	32+10	-	35+25	STH 86 (B-35-98)	630	79	--	SKIP DASH
1	202+70	-	209+44	STH 86 (B-35-99)	520	--	24	
2	202+70	-	209+44	STH 86 (B-35-99)	520	--	--	
2*	202+70	-	209+29	STH 86 (B-35-99)	1,318	1,318	--	DOUBLE YELLOW
				SUBTOTALS	4,190	1,679	48	
				TOTALS	5,869		48	

* INSTALL TEMPORARY MARKING LINE REMOVEABLE TAPE PRIOR TO OPENING TO TRAFFIC. PERMANENT PAVEMENT MARKING INCLUDED IN PROJECT ID 9215-01-63

TEMPORARY SIGNALS

LOCATION	661.0100 TEMPORARY TRAFFIC SIGNALS FOR BRIDGES (STRUCTURE B-35-98) LS
STH 86	1
PROJECT TOTAL	1

NOTE: TRAILER MOUNTED SIGNALS REQUIRED AT THIS LOCATION.

TEMPORARY SIGNALS

LOCATION	661.0100 TEMPORARY TRAFFIC SIGNALS FOR BRIDGES (STRUCTURE B-35-99) LS
STH 86	1
PROJECT TOTAL	1

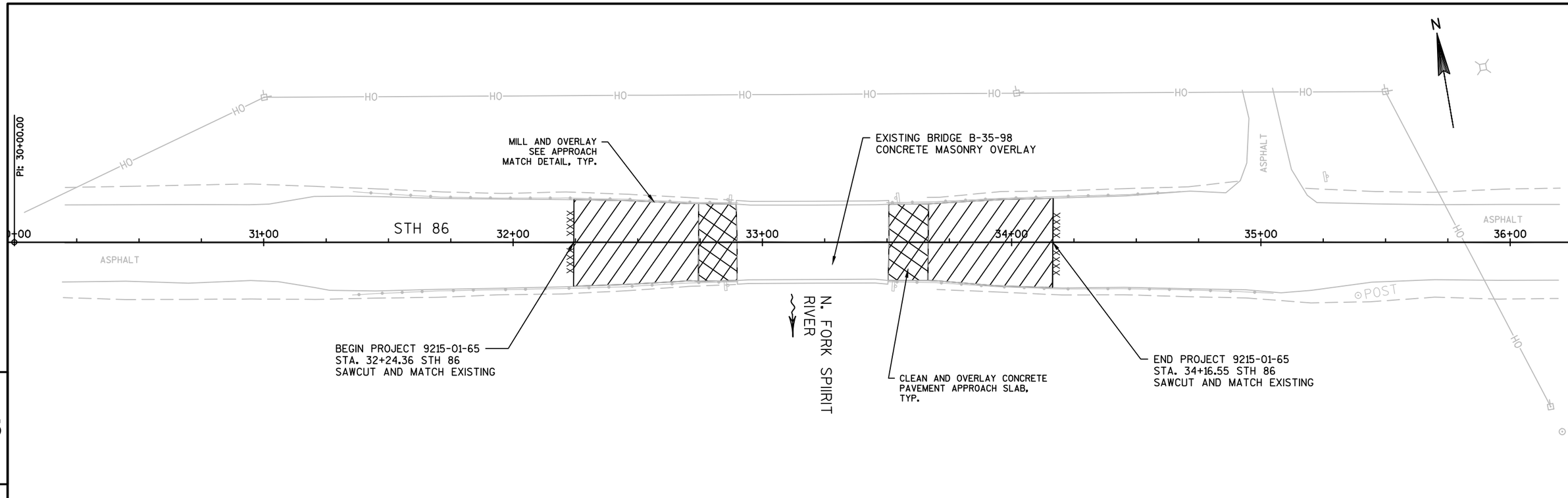

5

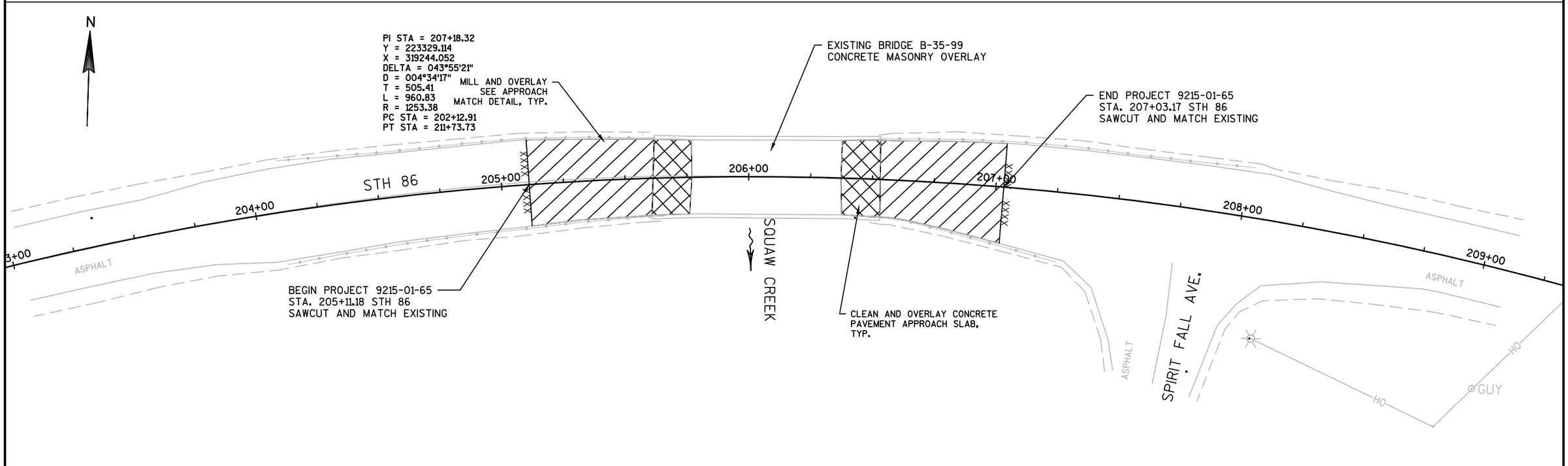

5

PROJECT NO: 9215-01-65	HWY: STH 86	COUNTY: LINCOLN	PLAN	SHEET 16	E

Standard Detail Drawing List

09G02-05A	BRIDGE TEMPORARY TRAFFIC SIGNAL INSTALLATION
09G02-05B	BRIDGE TEMPORARY TRAFFIC SIGNAL INSTALLATION
09G02-05C	BRIDGE TEMPORARY TRAFFIC SIGNAL INSTALLATION
14B07-15A	CONCRETE BARRIER TEMPORARY PRECAST, 12'-6"
14B07-15B	CONCRETE BARRIER TEMPORARY PRECAST, 12'-6"
14B07-15C	CONCRETE BARRIER TEMPORARY PRECAST, 12'-6"
14B07-15D	CONCRETE BARRIER TEMPORARY PRECAST, 12'-6"
14B07-15E	CONCRETE BARRIER TEMPORARY PRECAST, 12'-6"
14B07-15F	CONCRETE BARRIER TEMPORARY PRECAST, 12'-6"
14B07-15G	CONCRETE BARRIER TEMPORARY PRECAST, 12'-6"
14B07-15H	CONCRETE BARRIER TEMPORARY PRECAST, 12'-6"
14B07-15I	CONCRETE BARRIER TEMPORARY PRECAST, 12'-6"
14B08-02A	CRASH CUSHION/SAND BARREL ARRAY AND OTHER TEMPORARY BARRIER LAYOUT DETAILS
14B08-02B	CRASH CUSHION/SAND BARREL ARRAY AND OTHER TEMPORARY BARRIER LAYOUT DETAILS
14B08-02C	CRASH CUSHION/SAND BARREL ARRAY AND OTHER TEMPORARY BARRIER LAYOUT DETAILS
14B08-02D	CRASH CUSHION/SAND BARREL ARRAY AND OTHER TEMPORARY BARRIER LAYOUT DETAILS
14B08-02E	CRASH CUSHION/SAND BARREL ARRAY AND OTHER TEMPORARY BARRIER LAYOUT DETAILS
15C06-09	SIGNING & MARKING FOR TWO LANE BRIDGES
15C08-19A	LONGITUDINAL MARKING (MAINLINE)
15C11-07B	CHANNELIZING DEVICES DRUMS, CONES, BARRICADES AND VERTICAL PANELS
15C12-06	TRAFFIC CONTROL FOR LANE CLOSURE WITH FLAGGING OPERATION
15D33-05	TRAFFIC CONTROL, ONE LANE ROAD WITH TEMPORARY SIGNALS
15D38-02A	TEMPORARY TRAFFIC CONTROL SIGN MOUNTING
15D38-02B	ATTACHMENT OF SIGNS TO POSTS

6

6

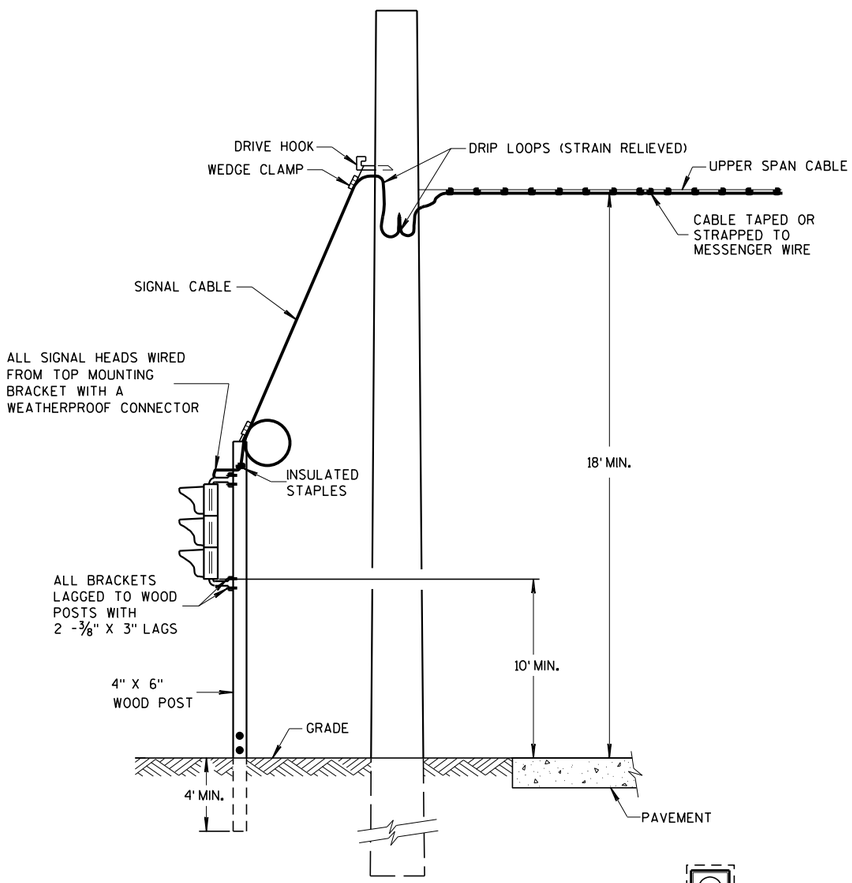

TYPICAL DROP TO TRAFFIC SIGNAL FACE

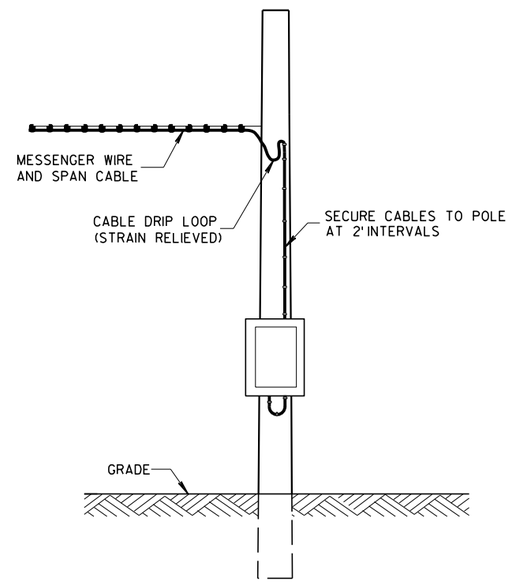

POLE MOUNT CABINET INSTALLATION

GENERAL NOTES

DETAILS OF CONSTRUCTION, MATERIALS AND WORKMANSHIP NOT SHOWN ON THIS DRAWING SHALL CONFORM TO THE PERTINENT REQUIREMENTS OF THE CONTRACT.

POLE MOUNTED TRAFFIC SIGNAL CONTROL CABINET MAYBE MOUNTED ON THE SERVICE POLE IF THE ELECTRICAL UTILITY ALLOWS THE INSTALLATION.

WHEN UTILITY POLES ARE USED TO SPAN THE TEMPORARY OVERHEAD CABLE, WRITTEN PERMISSION MUST BE OBTAINED FROM THE OWNER OF THE POLES AND GIVEN TO THE PROJECT MANAGER. ALL PERTINENT UTILITY AND CODE CLEARANCES SHALL BE MAINTAINED.

WOOD POLES (NONBREAKAWAY) SHALL BE NO CLOSER TO EDGE OF PAVEMENT THAN OFFSET DISTANCE CHART ALLOWS OR 4 FEET BEHIND PROTECTIVE BARRIER (BEAM GUARD, ETC.).

WOOD POSTS (BREAKAWAY) SHALL BE NO CLOSER THAN 2 FEET OUTSIDE OF SHOULDER.

VERTICAL CLEARANCE ETC. PER NEC.

TRAFFIC SIGNAL FACES SHALL BE TYPICALLY PLACED 12 FEET FROM EDGE OF PAVEMENT.

EACH TRAFFIC SIGNAL FACE SHALL HAVE A BACKPLATE.

SIGNING, PAVEMENT MARKING AND LANE CONTROL REQUIREMENTS SHALL CONFORM TO STANDARD DETAIL DRAWING 15 D 33.

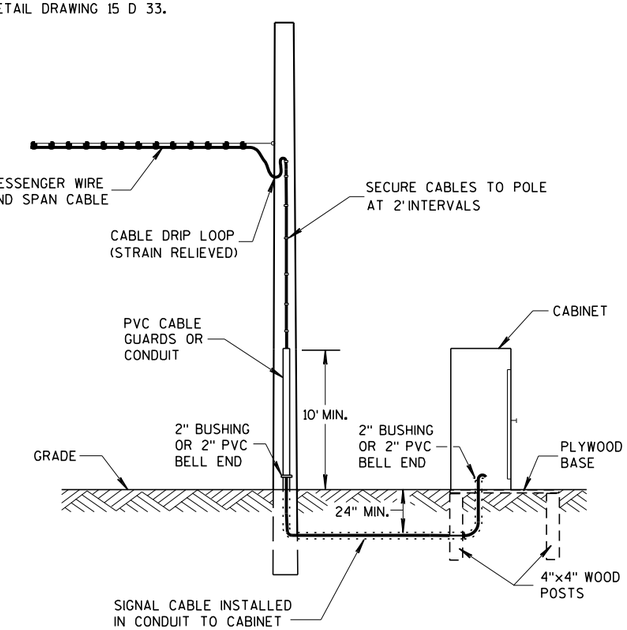

GROUND MOUNT CABINET INSTALLATION

OFFSET DISTANCES FOR TEMPORARY NON-BREAKAWAY POLES	
SPEED LIMIT	OFFSET DISTANCE**
GREATER THAN 45 MPH	18 FT
45 MPH OR LESS	12 FT
45 MPH OR LESS W/ CURBS	2 FT

**NOTE: OFFSET MEASURED FROM OUTER EDGE OF OUTSIDE THRU LANE.

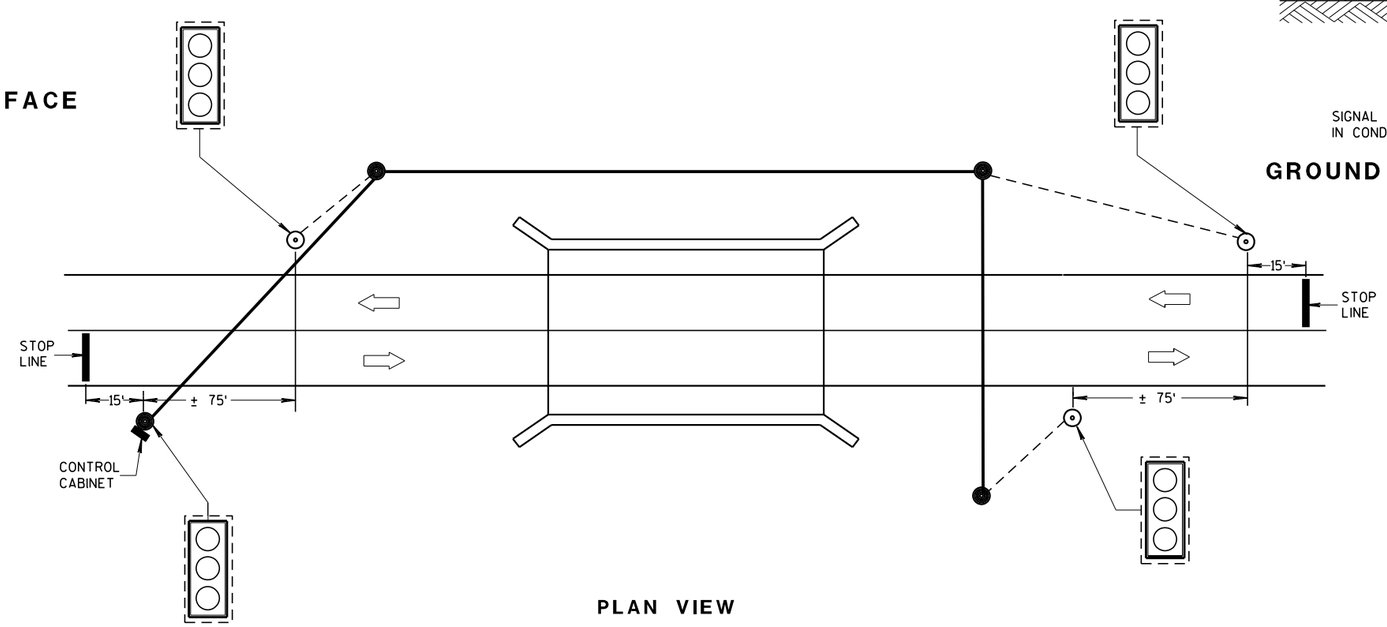

PLAN VIEW

TYPICAL BRIDGE TEMPORARY TRAFFIC SIGNAL LOCATION

LEGEND

- WOOD POLE (NON-BREAKAWAY)
- WOOD POST (BREAKAWAY)
- SIGNAL CABLE
- SIGNAL CABLE W/MESSENGER
- LED TRAFFIC SIGNAL FACE WITH BACKPLATE (3-12")
- DIRECTION OF TRAFFIC

MINIMUM POLE LENGTHS	CLASS	MINIMUM BURIAL DEPTHS
25 FEET	V	5 FEET
30 FEET	V	6 FEET
35 FEET	IV	7 FEET
40 FEET	IV	8 FEET
45 FEET	IV	9 FEET

BRIDGE TEMPORARY TRAFFIC SIGNAL INSTALLATION

STATE OF WISCONSIN
DEPARTMENT OF TRANSPORTATION

APPROVED
March 2018 — DATE
/S/ Ahmet Demirbilek — STATE ELECTRICA
FHWA

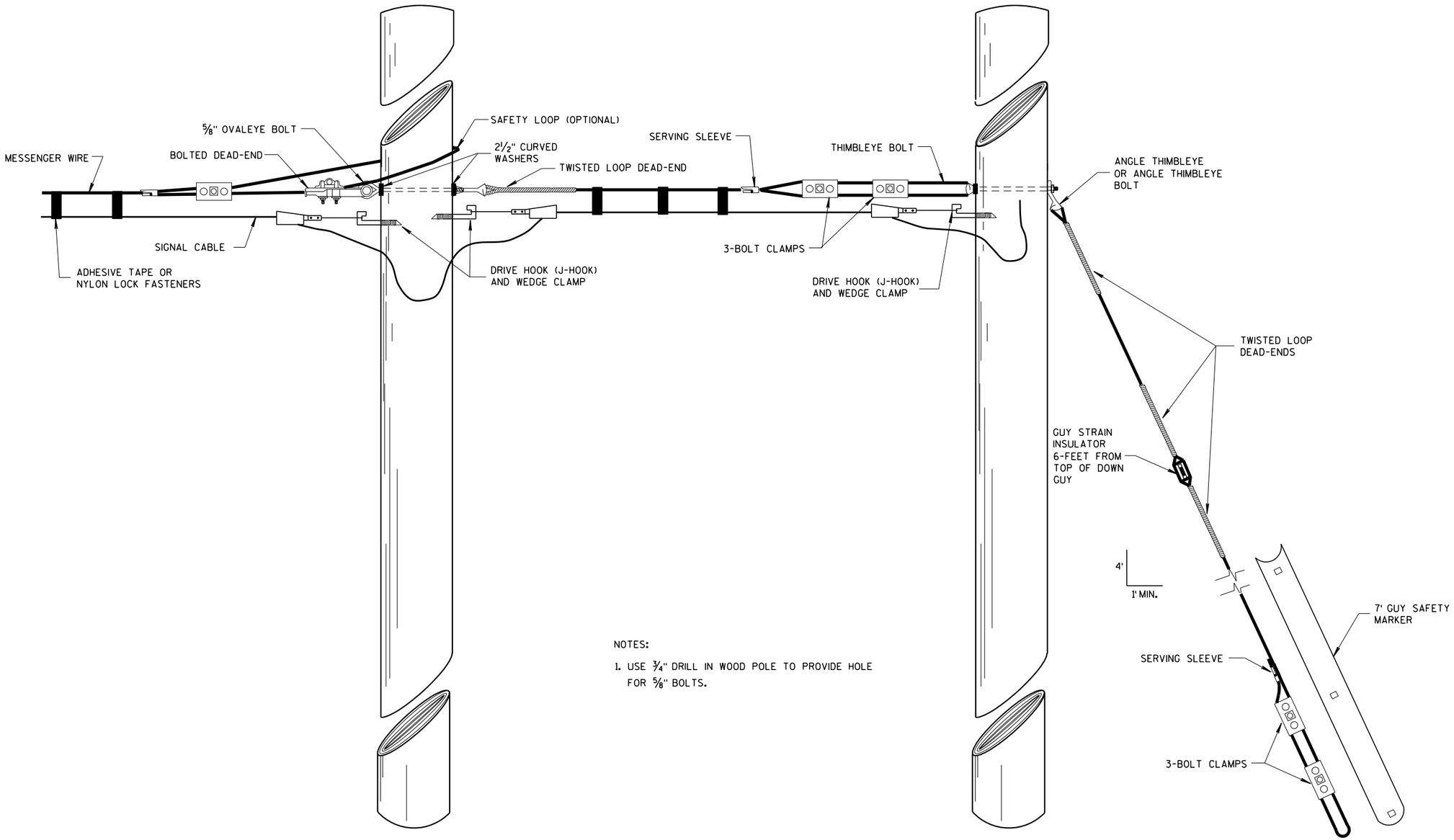

NOTES:

1. USE 3/4" DRILL IN WOOD POLE TO PROVIDE HOLE FOR 5/8" BOLTS.

SPAN WIRE POLE

GUY POLE

TYPICAL DEAD-ENDINGS OR GUYING

BRIDGE TEMPORARY TRAFFIC SIGNAL INSTALLATION

STATE OF WISCONSIN
DEPARTMENT OF TRANSPORTATION

APPROVED
March 2018 — DATE
/S/ Ahmet Demirbilek — STATE ELECTRICAL ENGINEER
FHWA

6

S.D.D. 9 G 2-5b

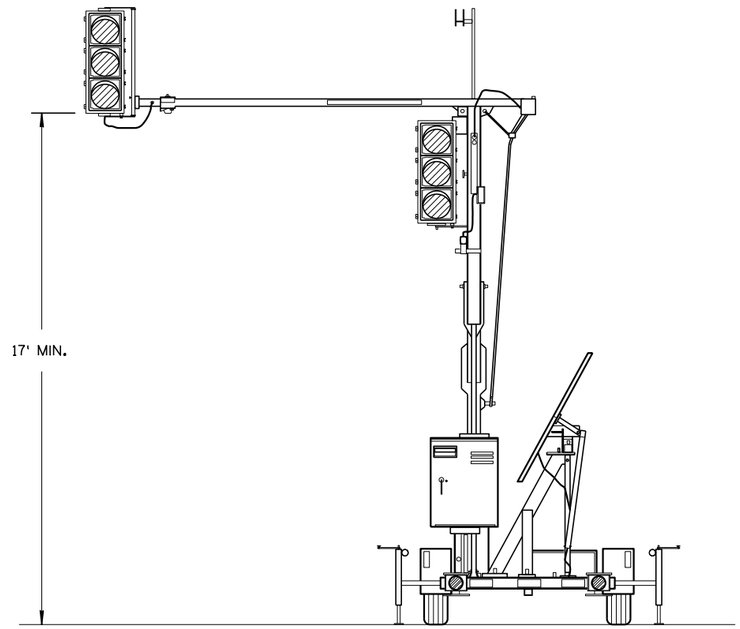

TRAILER MOUNTED TRAFFIC SIGNAL

GENERAL NOTES

DETAILS OF CONSTRUCTION, MATERIALS AND WORKMANSHIP NOT SHOWN ON THIS DRAWING SHALL CONFORM TO THE PERTINENT REQUIREMENTS OF THE CONTRACT.

SIGNING, PAVEMENT MARKING AND LANE CONTROL REQUIREMENTS SHALL CONFORM TO STANDARD DETAIL DRAWING 15 D 33.

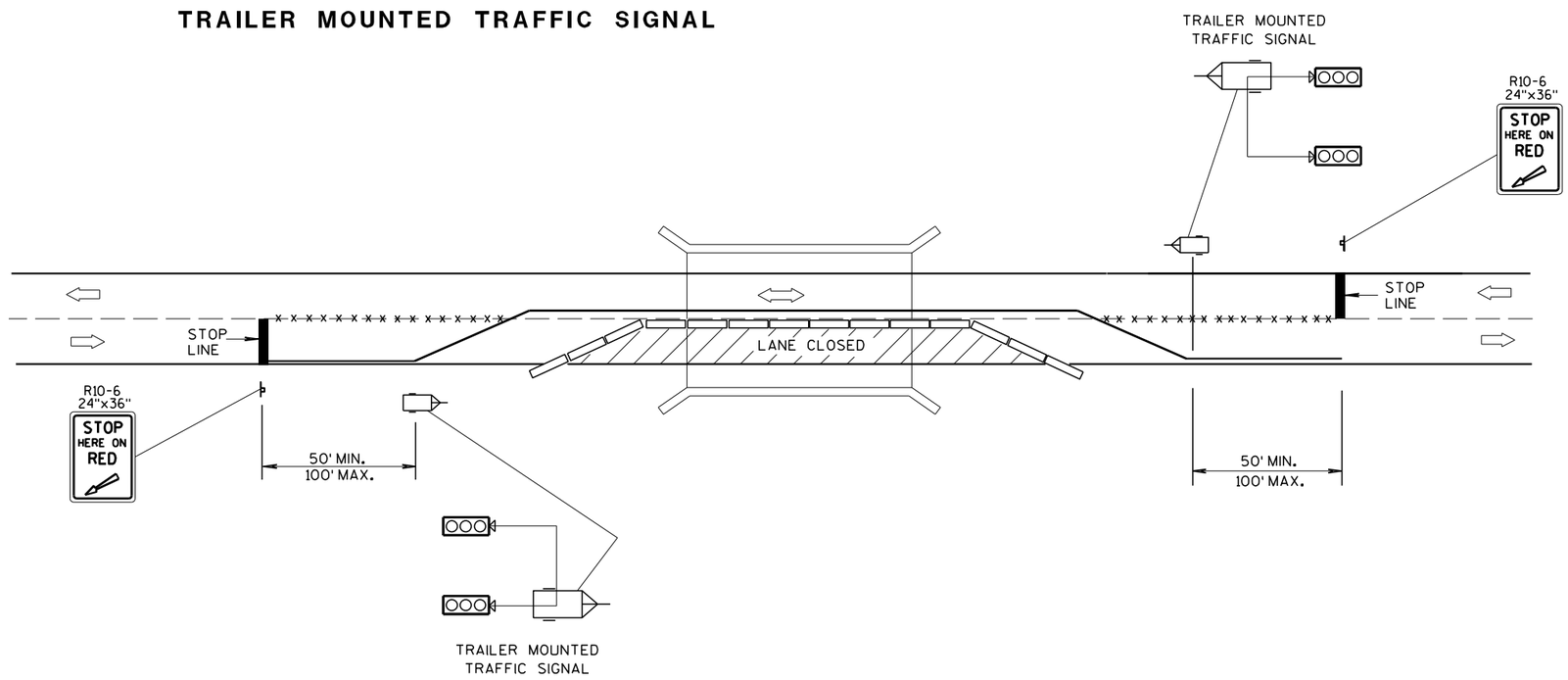

TYPICAL TRAILER MOUNTED TRAFFIC SIGNAL LOCATION

LEGEND

- POST MOUNTED SIGN
- REMOVING PAVEMENT MARKING
- TEMPORARY PRECAST CONCRETE BARRIER
- TRAILER MOUNTED TRAFFIC SIGNAL
- DIRECTION OF TRAFFIC FLOW

BRIDGE TEMPORARY TRAFFIC SIGNAL INSTALLATION

STATE OF WISCONSIN
DEPARTMENT OF TRANSPORTATION

APPROVED
March 2018 — /S/ Ahmet Demirbilek
DATE — STATE ELECTRICAL ENGINEER
FHWA

6

S.D.D. 9 G 2-5c

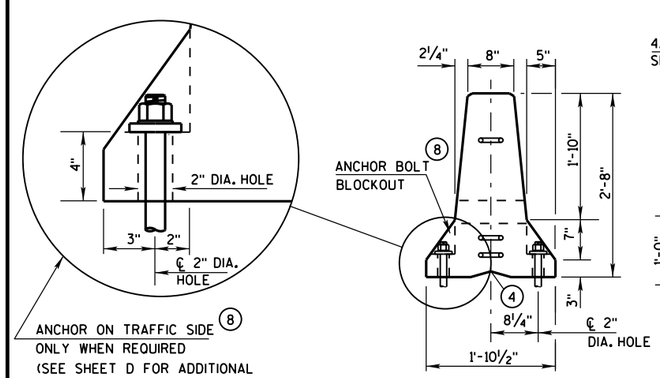

END VIEW

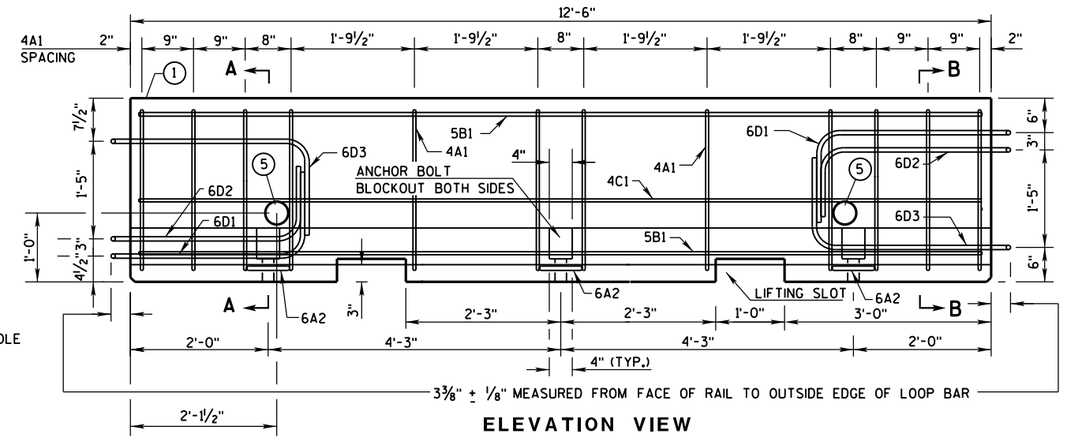

ELEVATION VIEW

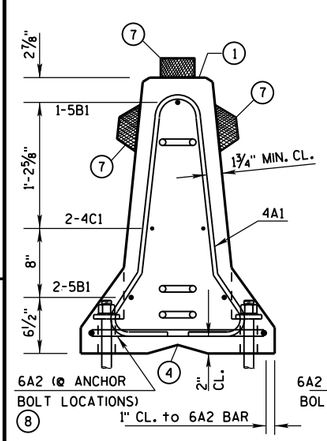

SECTION A-A
(STIRRUP PLACEMENT)

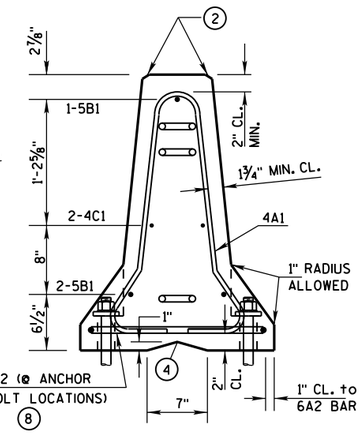

SECTION B-B
(STIRRUP PLACEMENT)

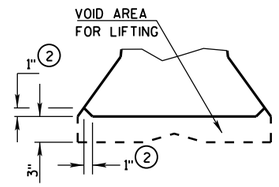

DETAIL "B"
LIFTING SLOT DETAIL

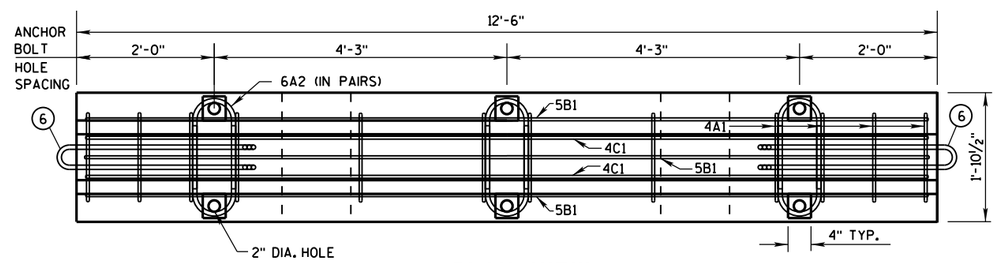

PLAN VIEW

DETAILS OF BARRIER SECTION

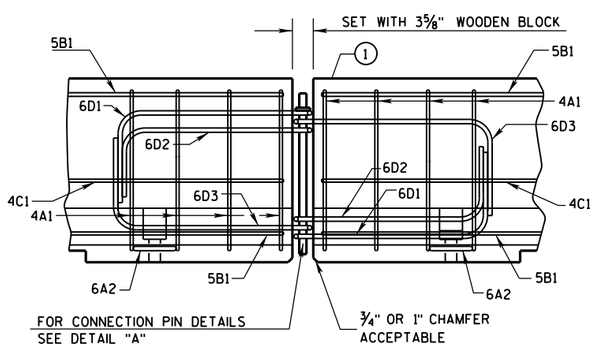

DETAILS OF BARRIER CONNECTION

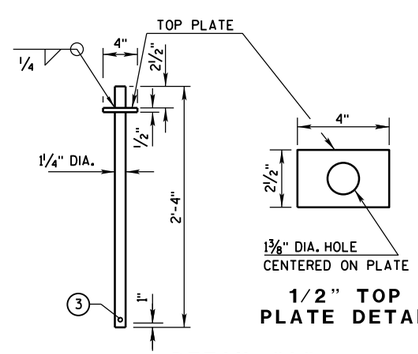

1/2" TOP PLATE DETAIL

DETAIL "A"
CONNECTION PIN
(A36 STEEL (10.9 LB EACH))

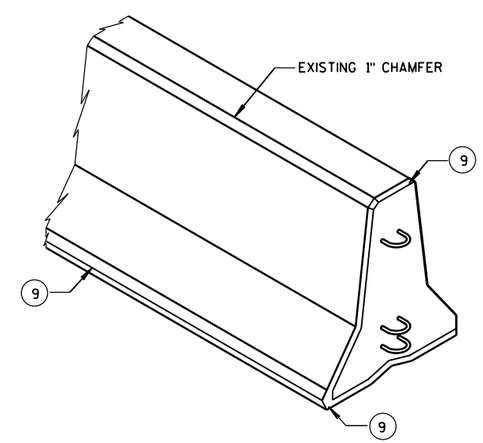

GENERAL NOTES

THESE GENERAL NOTES APPLY TO SHEETS 14B7-15(a) THRU 14B7-15(i).

DO NOT INTERMIX CONCRETE BARRIER TEMPORARY PRCAST, 12'-6" (CBTP12.5) WITH OTHER TEMPORARY CONCRETE BARRIERS.

USE ASTM A-615, GRADE 60, DEFORMED STEEL BARS FOR BARS 4A1, 6A2, 5B1 AND 4C1 IN THE BARRIER SECTION AND FOR 4V1, 4V2, 4V3, 4V4, 4V5, 4V6, 4F1, 4F2 AND 5F3 IN THE BARRIER TAPER SECTION.

LOOP BARS 6D1, 6D2 AND 6D3 SHALL BE ¾" SMOOTH STEEL BARS WITH A MINIMUM YIELD STRENGTH OF 60 KSI, A TENSILE STRENGTH OF NOT LESS THAN 1.25 TIMES THE YIELD STRENGTH BUT A MINIMUM OF 80 KSI, A MINIMUM 14% ELONGATION IN 8 INCHES AND PASSING A 180 DEGREE BEND TEST USING A 3-½" PIN BEND DIAMETER FOR BEND TESTS. THE LOOPS SHALL BE INSTALLED WITHIN ⅛" OF THE PLAN DIMENSION.

CONSTRUCT LIFTING SLOTS AS SPECIFIED ON THE PLANS TO FACILITATE THE DRAINAGE OF WATER AFTER INSTALLATION.

PLACE BARRIER ON A PAVED SURFACE. REMOVE ALL LOOSE DIRT AND SAND FROM THE ROADWAY SURFACE PRIOR TO PLACEMENT OF THE BARRIER.

INSTALL MECHANICAL OR ADHESIVE ANCHORS PER MANUFACTURER'S RECOMMENDATIONS. PROVIDE MANUFACTURER'S INFORMATION TO PROJECT ENGINEER.

1. MARK ONE END OF EACH BARRIER PERMANENTLY BY FORMING INTO THE BARRIER THE FOLLOWING INFORMATION:
   a. TYPE: WI CBTP
   b. MANUFACTURER
   c. DATE MANUFACTURED (MONTH AND YEAR)
2. 1" CHAMFER TO PREVENT SPALLING.
3. A ⅜" HOLE IN THE CONNECTION PIN, AT THE LOCATION SHOWN, IS ACCEPTABLE, BUT NOT REQUIRED..
4. "V" NOTCH IS OPTIONAL.
5. THE 4" DIAMETER, 11 GAUGE STEEL, ROUND MECHANICAL TUBING SLEEVE FOR LIFTING (OPTIONAL).
6. NEVER USE LOOP BARS (6D1, 6D2 OR 6D3) TO LIFT, MOVE OR REPOSITION THE BARRIER.
7. USE DELINEATORS CONFORMING TO SECTION 633 OF THE STANDARD SPECIFICATIONS. CONTRACTOR MAY USE ALTERNATE SHAPES AND HOUSING. INSTALL DELINEATORS ACCORDING TO MANUFACTURES INSTRUCTION. INSTALL YELLOW REFLECTORS WHEN BARRIER IS LOCATED TO THE LEFT OF TRAFFIC AND WHITE REFLECTORS WHEN BARRIER IS LOCATED TO THE RIGHT OF TRAFFIC. SPACE DELINEATORS A MAXIMUM OF 25 FEET APART. PROVIDE TOP MOUNTED DELINEATORS IN ADDITION TO THE SIDE MOUNTED DELINEATORS ON ALL BARRIER INSTALLATIONS LOCATED ON A CURVED ALIGNMENT LONGER THAN 200 FEET AND ON BARRIERS USED TO SEPARATE OPPOSING TRAFFIC.
8. SEE SHEET D FOR HOW TO ANCHOR BARRIER. SEE SHEET E FOR WHEN TO ANCHOR BARRIER.
9. 1" CHAMFER OPTIONAL.

f'c = 4,000 psi

CONCRETE BARRIER
TEMPORARY PRECAST, 12'-6"

STATE OF WISCONSIN
DEPARTMENT OF TRANSPOI

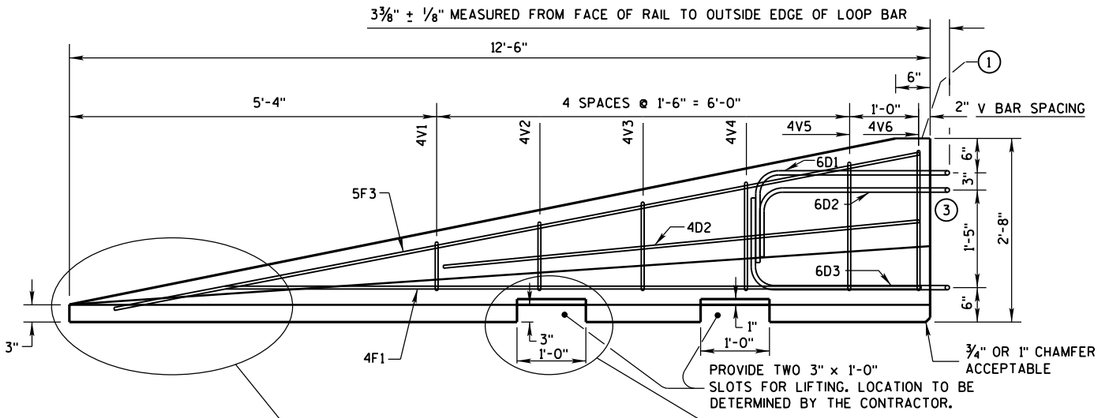

SIDE ELEVATION

(FOR CONNECTION TO LEFT END OF BARRIER)

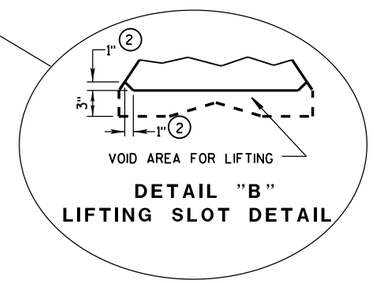

DETAIL "B"
LIFTING SLOT DETAIL

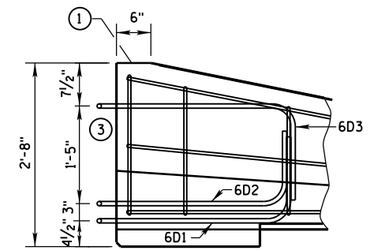

SIDE ELEVATION

LOOP BAR ASSEMBLY INVERTED
FOR OPPOSITE END.
(FOR CONNECTION TO RIGHT END OF BARRIER)

GENERAL NOTES

1. MARK ONE END OF EACH BARRIER PERMANENTLY BY FORMING INTO THE BARRIER THE FOLLOWING INFORMATION:
   a. TYPE WICBTP
   b. MANUFACTURER
   c. DATE MANUFACTURED (MONTH AND YEAR)
2. 1" CHAMFER TO PREVENT SPALLING.
3. NEVER USE LOOP BARS (6D1, 6D2 OR 6D3) TO LIFT, MOVE OR REPOSITION THE BARRIER.

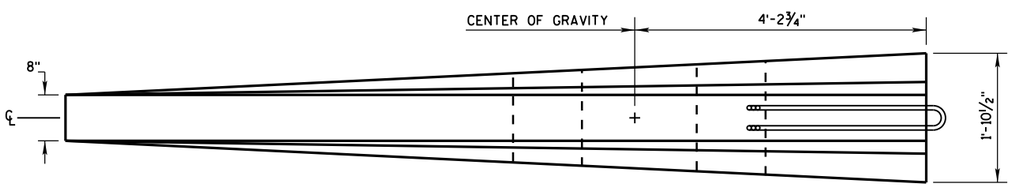

PLAN VIEW

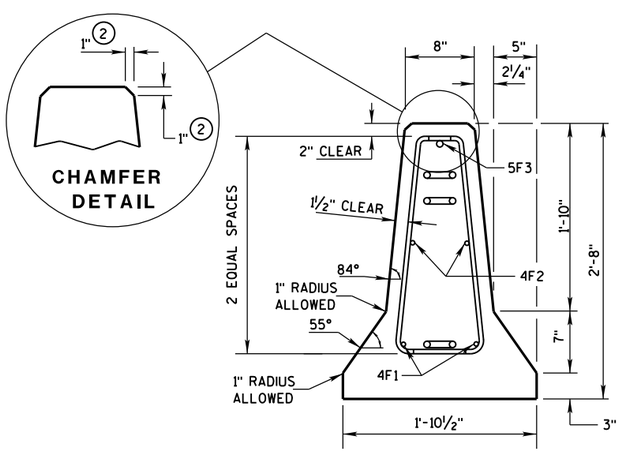

END SECTION

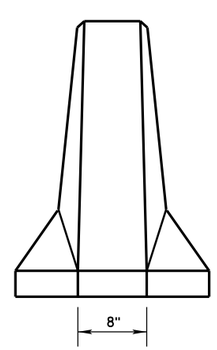

FRONT ELEVATION

DETAILS OF BARRIER TAPER SECTION

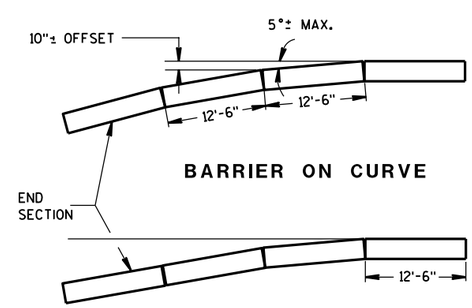

BARRIER ON CURVE

FLARE AT BARRIER END

POSTED SPEED, (MPH)	FLARE RATE
40 OR LESS	6:1
45 OR GREATER	8:1

CONCRETE BARRIER
TEMPORARY PRECAST, 12'-6"

STATE OF WISCONSIN
DEPARTMENT OF TRANSPORTATION

6

S.D.D. 14 B 7-15b

GENERAL NOTES

(1) NEVER USE LOOP BARS (6D1, 6D2 OR 6D3) TO LIFT, MOVE OR REPOSITION THE BARRIER.

BARRIER TAPER SECTION BILL OF MATERIALS

(PER 12'-6" BARRIER TAPER SECTION)

BAR	BAR SIZE	NO. OF BARS	LENGTH FT.
4V1	4	2	1'-11"
4V2	4	2	2'-2"
4V3	4	2	2'-6"
4V4	4	2	2'-9"
4V5	4	2	3'-2"
4V6	4	2	3'-4"
4F1	4	2	12'-0"
4F2	4	2	7'-6"
5F3	5	1	11'-9"
LOOP ASSEMBLY			
6D1	6	1	8'-5"
6D2	6	1	7'-7"
6D3	6	1	8'-6"

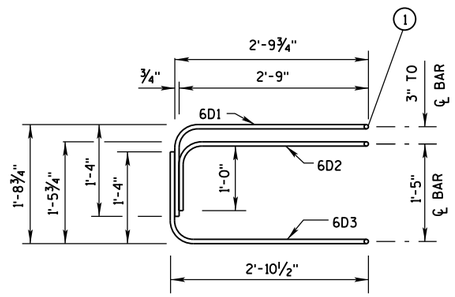

ELEVATION
LOOP BAR ASSEMBLY

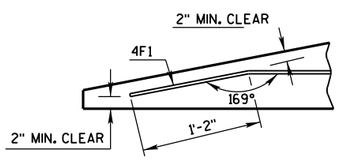

DETAIL "C"
BENT BAR DETAIL

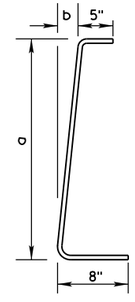

BAR	a	b
V1	10"	1"
V2	1'-1"	1¼"
V3	1'-5"	1⅝"
V4	1'-8"	1⅞"
V5	2'-0½"	2⅜"
V6	2'-3"	2¾"

4V BARS
2 AT EACH SIZE REQUIRED
FOR STIRRUP ASSEMBLY

TAPER BARRIER SECTION

BARRIER SECTION BILL OF MATERIALS

(PER 12'-6" BARRIER SECTION)

BAR	BAR SIZE	NO. OF BARS	LENGTH FT.
4A1	4	12	6'-0"
6A2	6	6	2'-11"
5B1	5	3	12'-2"
4C1	4	2	12'-2"
LOOP ASSEMBLY			
6D1	6	2	8'-5"
6D2	6	2	7'-7"
6D3	6	2	8'-6"

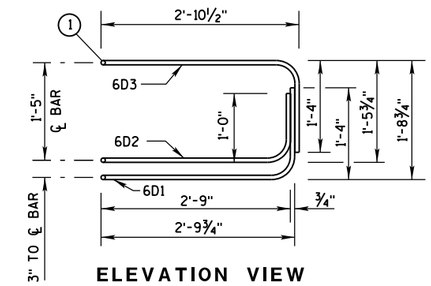

ELEVATION VIEW

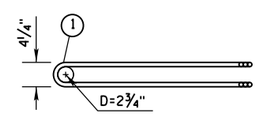

PLAN VIEW
LOOP BAR ASSEMBLY
(MARKED END SHOWN, INVERT FOR OTHER END)

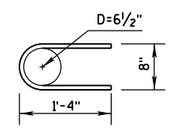

6A2

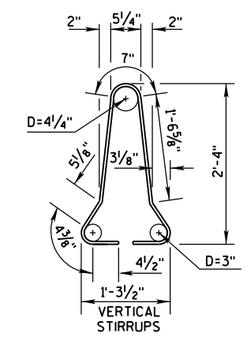

VERTICAL STIRRUPS
4A1

BARRIER SECTION

6

6

S.D.D. 14 B 7-15c

S.D.D. 14 B 7-15c

CONCRETE BARRIER
TEMPORARY PRECAST, 12'-6"

STATE OF WISCONSIN
DEPARTMENT OF TRANSPOR

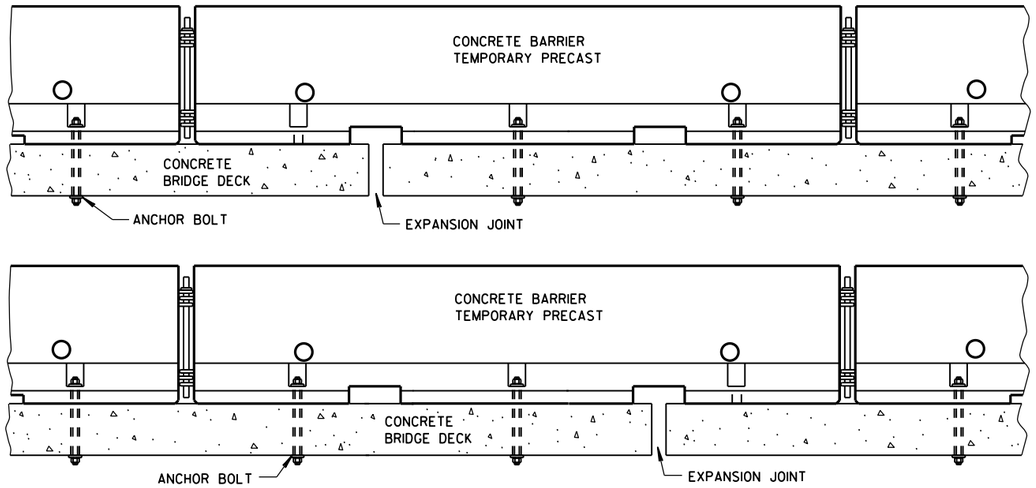

TREATMENT AT BRIDGE DECK EXPANSION JOINTS

(NO SINGLE CONCRETE BARRIER SECTION SHALL BE ANCHORED TO BOTH THE BRIDGE DECK AND THE APPROACH SLAB. ALL ANCHOR BOLT LOCATIONS SHALL BE ANCHORED TO THE DECK IN ACCORDANCE WITH THE DETAIL. NO MORE THAN ONE ANCHOR BOLT SHALL BE ELIMINATED FROM A BARRIER SECTION WHEN SPANNING AN EXPANSION JOINT.)

GENERAL NOTES

SEE SHEET E FOR WHEN TO ANCHOR. OTHER PARTS OF THE PLAN MAY SHOW ADDITIONAL LOCATIONS REQUIRING ANCHORING.

REMOVE ALL ANCHORS WHEN NO LONGER NEEDED. FILL CONCRETE PAVEMENTS, DECKS AND APPROACH SLABS WITH NON-SHRINK COMMERICAL GROUT FROM THE APPROVED PRODUCT LIST. FILL ASPHALT PAVEMENTS WITH ASTM D6690 TYPE II RUBBERIZED CRACK FILLER.

1. 1⅛" DIAMENTER A307 THREADED ROD, ½" X 3" X 3" SQUARE PLATE WASHER WITH ASTM A36 STEEL. ASTM A563A HEAVY HEX NUT.
2. ADHESIVE ANCHORS WITH A MINIMUM BOND STRENGTH OF 1,800 PSI AND 5¼" EMBEDMENT. SEE 603.2 AND 603.3.1.2 OF THE WISCONSIN STANDARD SPECIFICATIONS FOR MORE INFORMATION ON ADHESIVE ANCHORS.
3. ASPHALT SURFACE SHOWN. CONTRACTOR MAY DRILL THROUGH CONCRETE PAVEMENT AND THAN DRIVE ASPHALT ANCHOR PIN.

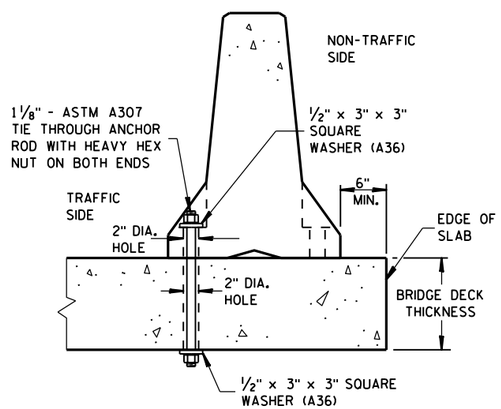

THROUGH BOLTED ANCHOR INSTALLATION ON BRIDGE DECK

(DO NOTUSE ON CONCRETE BRIDGE DECK WITH ASPHALT OVERLAY)

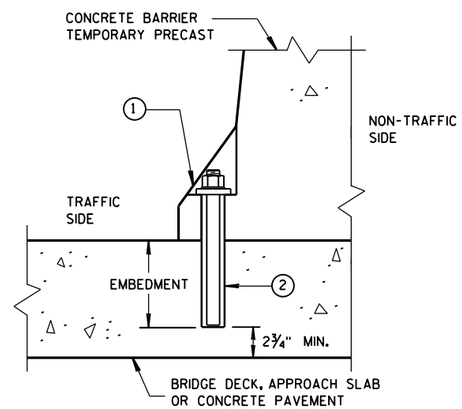

REMOVABLE ADHESIVE ANCHOR INSTALLATION ON CONCRETE BRIDGE DECK, CONCRETE APPROACH SLAB, OR CONCRETE PAVEMENT

(DO NOT USE ON CONCRETE WITH AN ASPHALTIC OVERLAY)

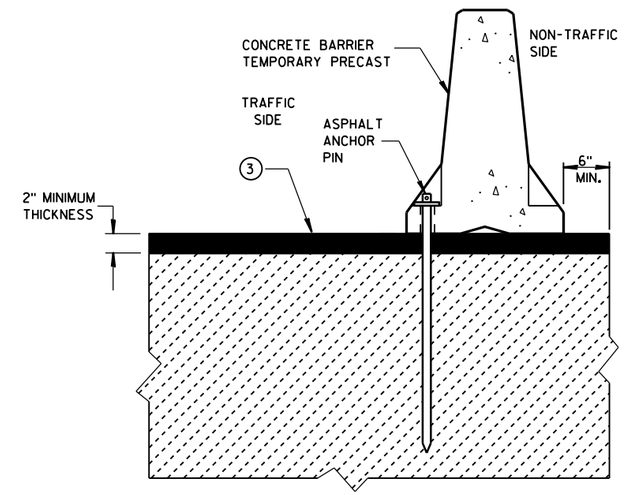

STAKE DOWN INSTALLATION FOR ASPHALTIC SURFACE

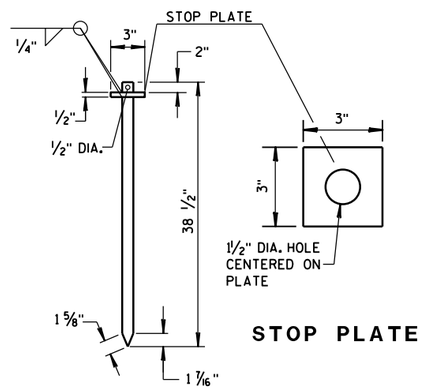

STOP PLATE

ASPHALT ANCHOR PIN

(ASTM A36 STEEL)

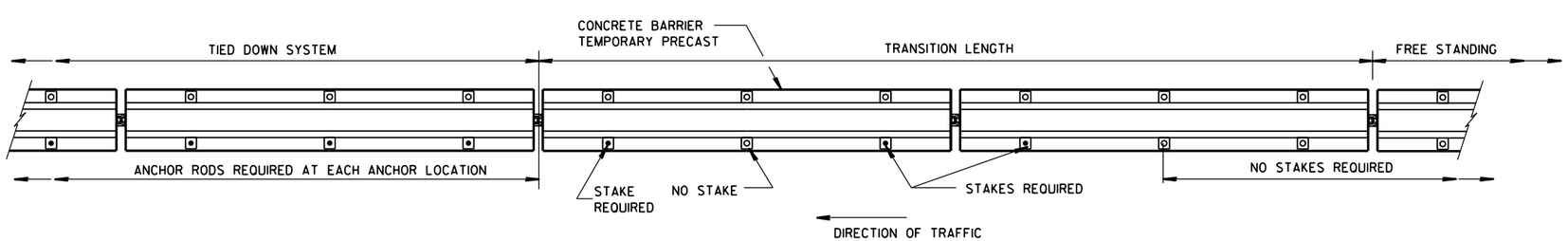

PLAN VIEW

FREE STANDING TRANSITION TO TIED-DOWN SYSTEM

(PLACE TRANSITION IN A TANGENT SECTION OF BARRIER PARALLEL TO THE ROADWAY. IF TRANSITION OCCURS ON STRUCTURAL SLAB, ANCHOR AS SHOWN.)

CONCRETE BARRIER
TEMPORARY PRECAST, 12'-6"

STATE OF WISCONSIN
DEPARTMENT OF TRANSPOI

6

S.D.D. 14 B 7-15d

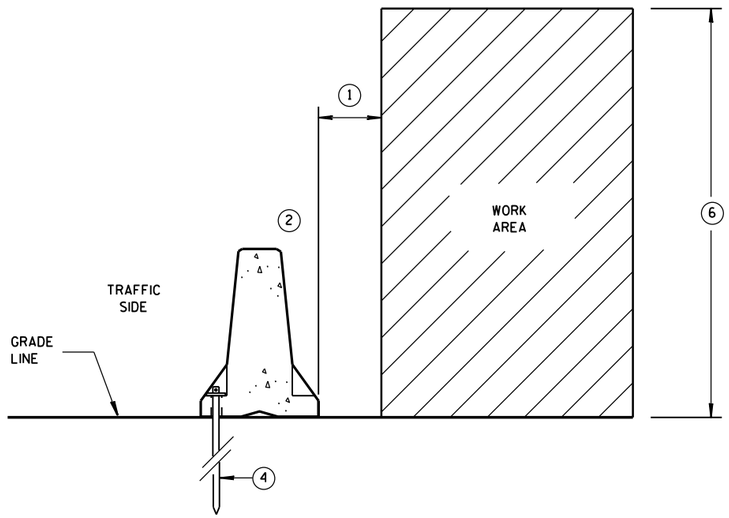

ANCHORED BARRIER SPACE REQUIREMENTS FOR HAZARDS EXTENDED ABOVE THE GRADE LINE

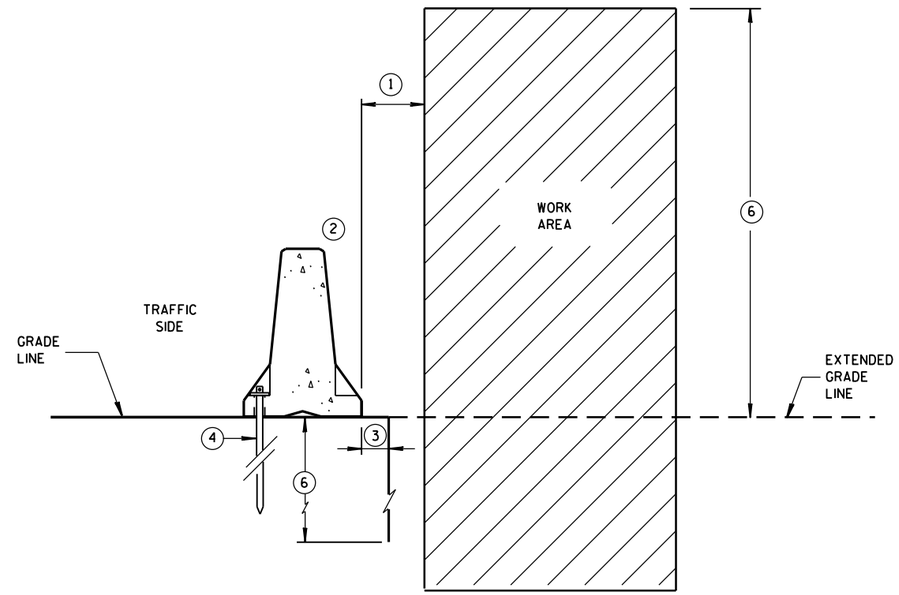

ANCHORED BARRIER SPACE REQUIREMENTS ON VERTICAL DROP OFFS

GENERAL NOTES

1. WHEN OBJECTS EXTEND ABOVE THE GRADE, A MINIMUM OF 1 FOOT IS REQUIRED FROM BACK OF BARRIER TO OBJECT. SEE OTHER DETAILS FOR FOR THE MINIMUM OFFSET FROM BACK OF BARRIER TO SLOPES OR VERTICAL DROPS.
2. OBJECTS ARE NOT TO BE PLACED ON, MOUNTED TO, OR LEANED AGAINST THE BARRIER WITHOUT PERMISSION OF THE PROJECT ENGINEER.
3. SEE OTHER DETAIL ON SHEET "D" FOR SPACE REQUIREMENTS.
4. SEE BOLT THROUGH DECK, REMOVABLE ADHESIVE ANCHOR, OR A STAKE DOWN FOR ASPHALTIC SURFACE TREATMENT DETAILS. ASPHALTIC ANCHOR SHOWN.
5. DEPTH OF 3 FEET OR MORE.
6. Y = 6'-6".

POSTED SPEED MPH	X
45 OR GREATER	4'
40 OR LESS	2'

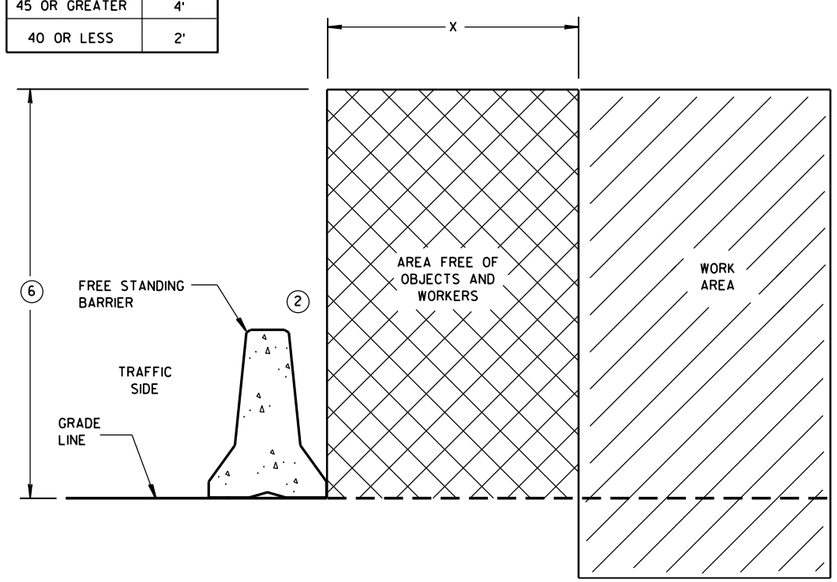

FREE STANDING BARRIER SPACE REQUIREMENTS

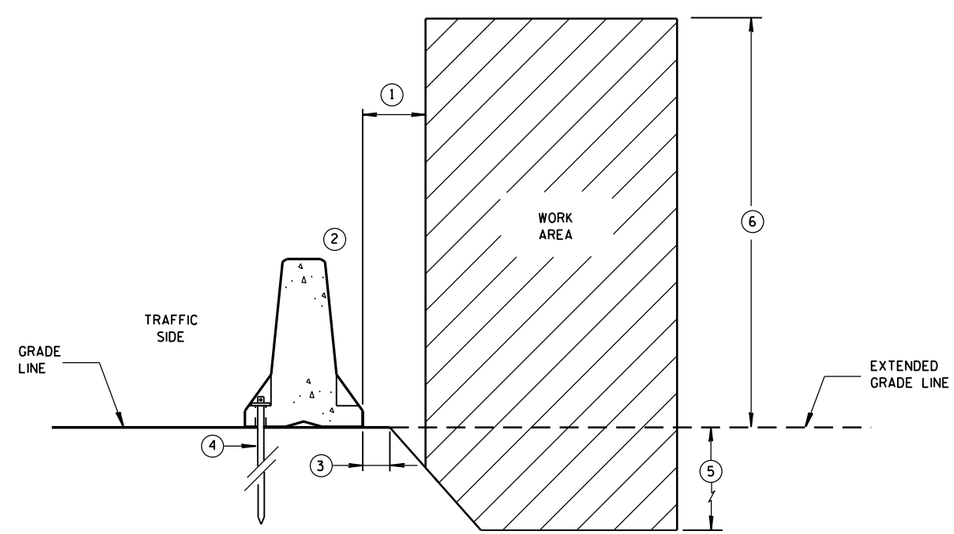

ANCHORED BARRIER SPACE REQUIREMENTS ON SLOPES

CONCRETE BARRIER
TEMPORARY PRECAST, 12'-6"

STATE OF WISCONSIN
DEPARTMENT OF TRANSPOR

6

S.D.D. 14 B 7-15e

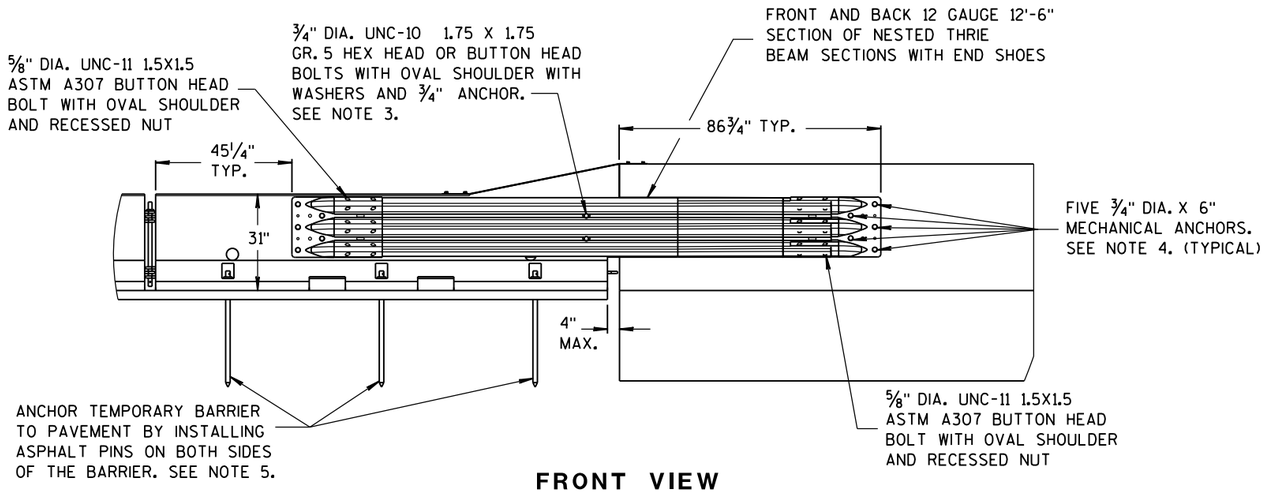

FRONT VIEW

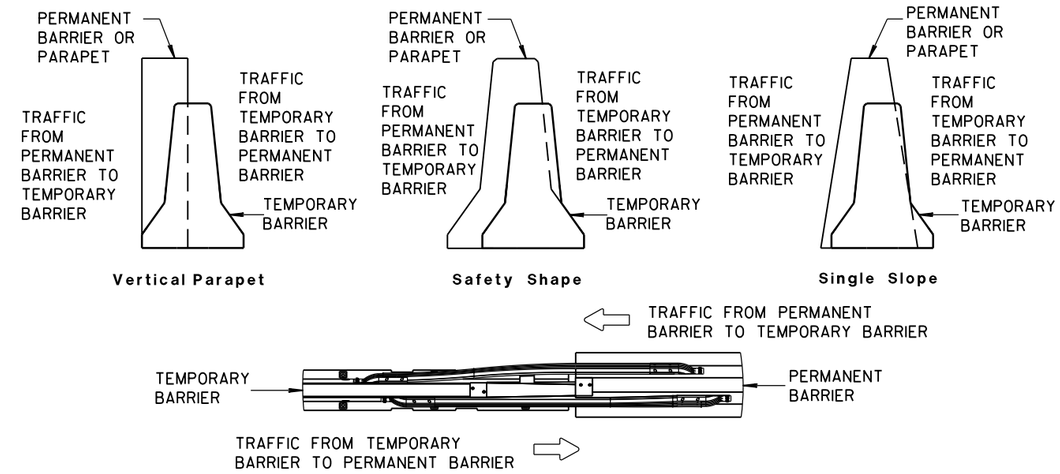

TEMPORARY BARRIER PLACEMENT FOR BI-DIRECTIONAL TRANSITION TO TIED-DOWN SYSTEM

NOTES

NESTED THRIE BEAM IS REQUIRED ON BOTH SIDES OF THE TEMPORARY BARRIER FOR ALL INSTALLATIONS REGARDLESS OF TRAFFIC.

1. CAP END PLATE PLACED FLUSH WITH UPSTREAM END OF PERMANENT BARRIER OR PARAPET.
2. THRIE BEAM PIECES ARE OFFSET 15 1/4" TO PREVENT INTERFERENCE FROM THE ANCHORS ON OPPOSING SIDES.
3. MINIMUM MECHANICAL OR ADHESIVE ANCHOR STRENGTH REQUIREMENTS: ULTIMATE TENSILE LOAD 9.48 KIPS AND ULTIMATE SHEAR LOAD 10.48 KIPS.
4. MINIMUM MECHANICAL OR ADHESIVE ANCHOR STRENGTH REQUIREMENTS: ULTIMATE TENSILE LOAD 17.9 KIPS AND ULTIMATE SHEAR LOAD 21.96 KIPS.
5. MAY BE USED ON CONCRETE OR ASPHALT PAVEMENTS. ASPHALT OPTION SHOWN. FOR CONCRETE OPTION SEE OTHER DETAILS.
6. MINIMUM MECHANICAL OR ADHESIVE ANCHOR STRENGTH REQUIREMENTS: ULTIMATE TENSILE LOAD 12.14 KIPS AND ULTIMATE SHEAR LOAD 17.5 KIPS.

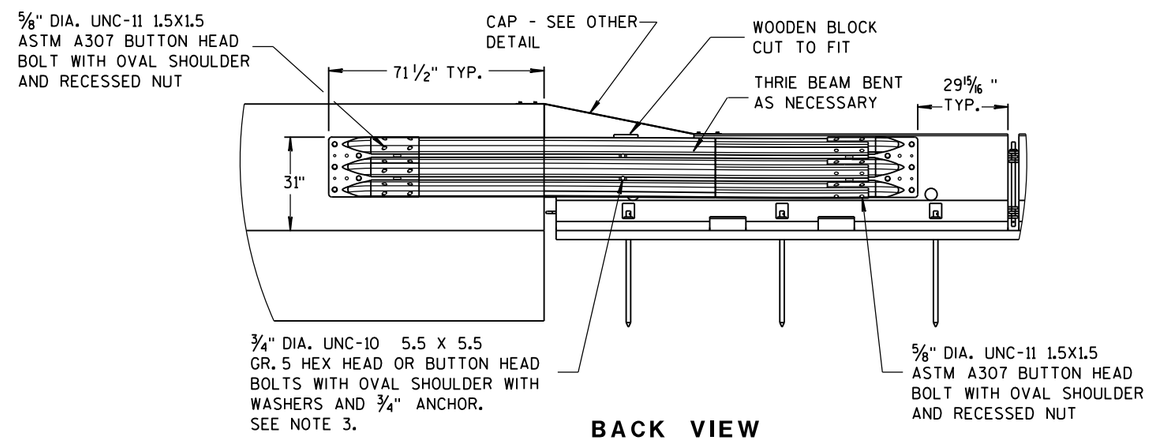

BACK VIEW

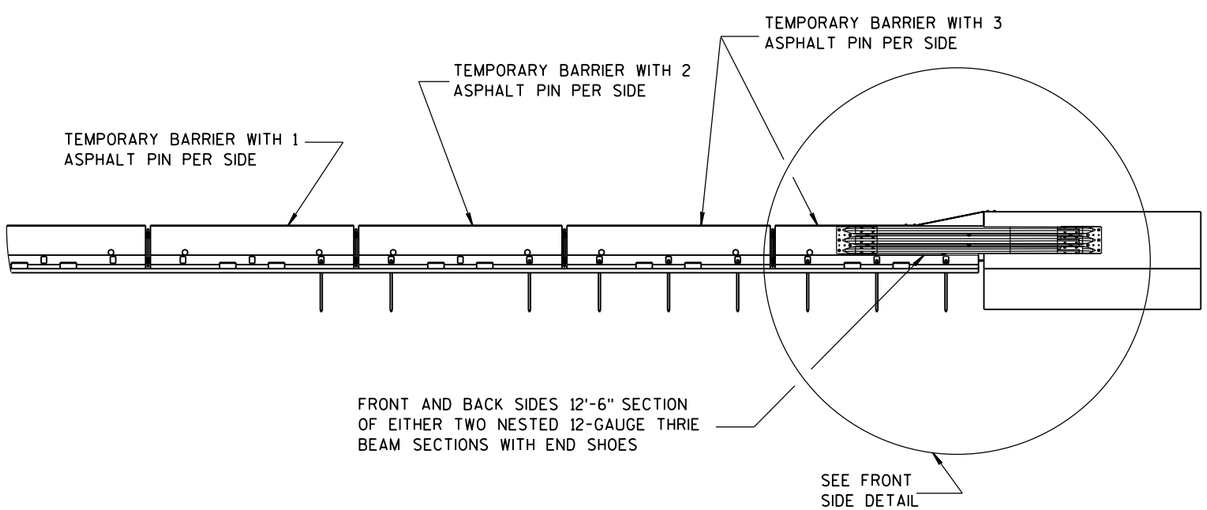

FRONT VIEW

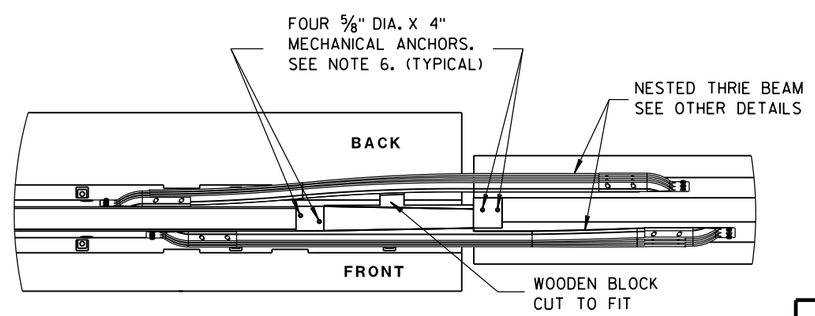

PLAN VIEW

BI-DIRECTIONAL TRANSITION TO TIED-DOWN SYSTEM

CONCRETE BARRIER
TEMPORARY PRECAST, 12'-6"

STATE OF WISCONSIN
DEPARTMENT OF TRANSPO

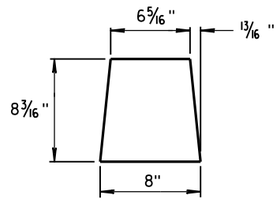

GUSSET 1

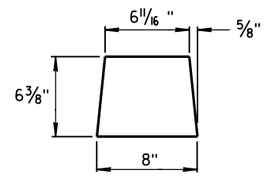

GUSSET 2

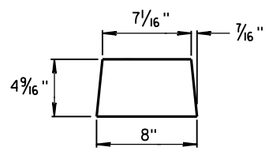

GUSSET 3

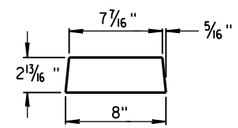

GUSSET 4

GUSSETS

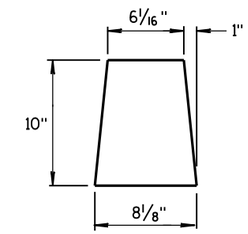

END PLATE

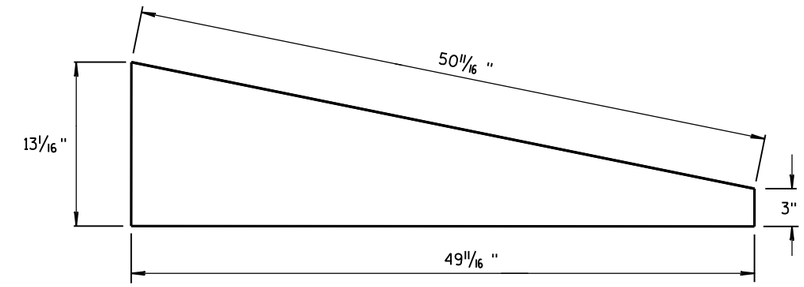

SIDE PLATE

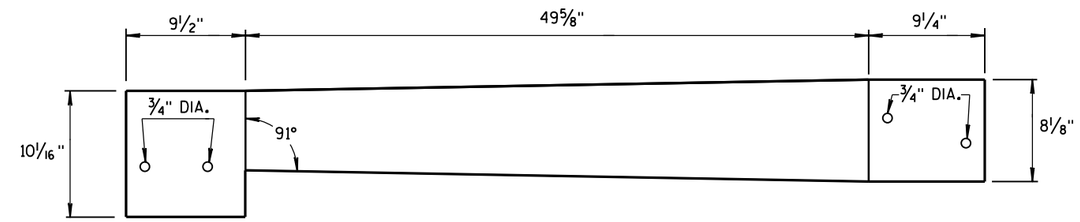

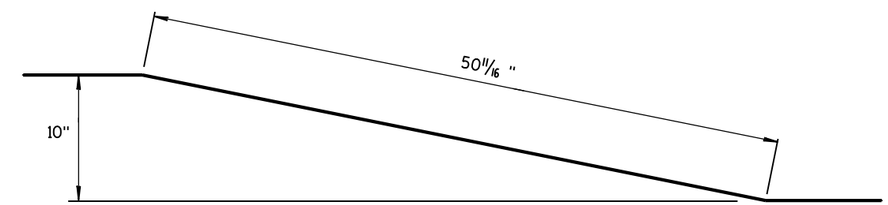

TOP PLATE

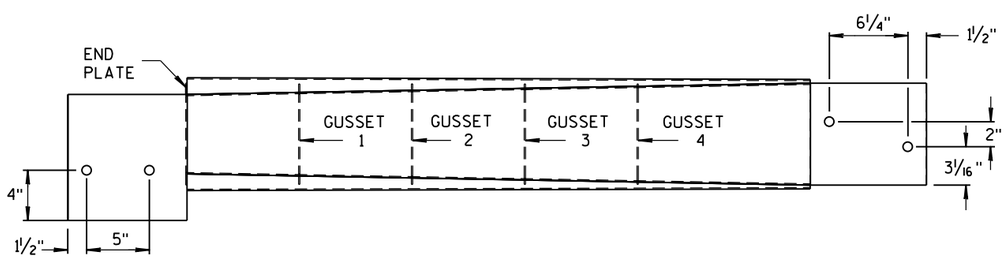

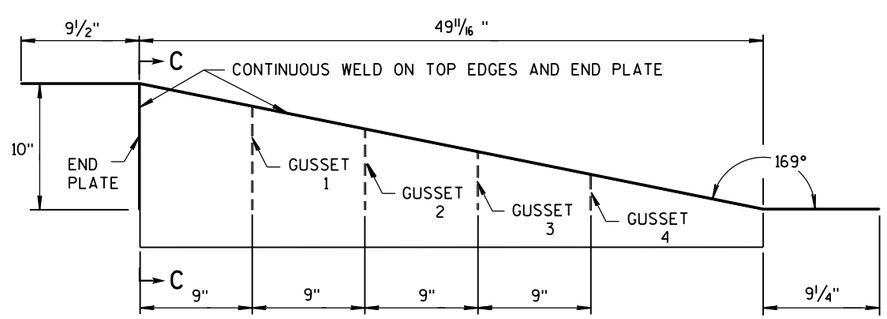

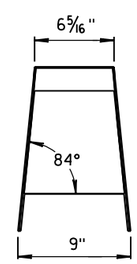

SECTION C-C

SIDE, TOP AND END PLATES FOR CAP FROM TEMPORARY CONCRETE BARRIER TO 42" PERMANENT CONCRETE BARRIER

SIDE PLATES, TOP PLATE, END PLATE AND GUSSETS ARE 12 GAUGE ASTM A36 GALVANIZED STEEL.

NOTES

1. FOUR GUSSETS AND END PLATE ARE STITCH WELDED ON THREE SIDES.
2. TWO TRIANGULAR SIDE PLATES ARE STITCH WELDED TO TOP PLATE, END PLATE, AND GUSSETS.

CAP DETAILS FOR TEMPORARY CONCRETE BARRIER TO 42" PERMANENT CONCRETE BARRIER

CONCRETE BARRIER
TEMPORARY PRECAST, 12'-6"

STATE OF WISCONSIN
DEPARTMENT OF TRANSPOR

6

S.D.D. 14 B 7-15g

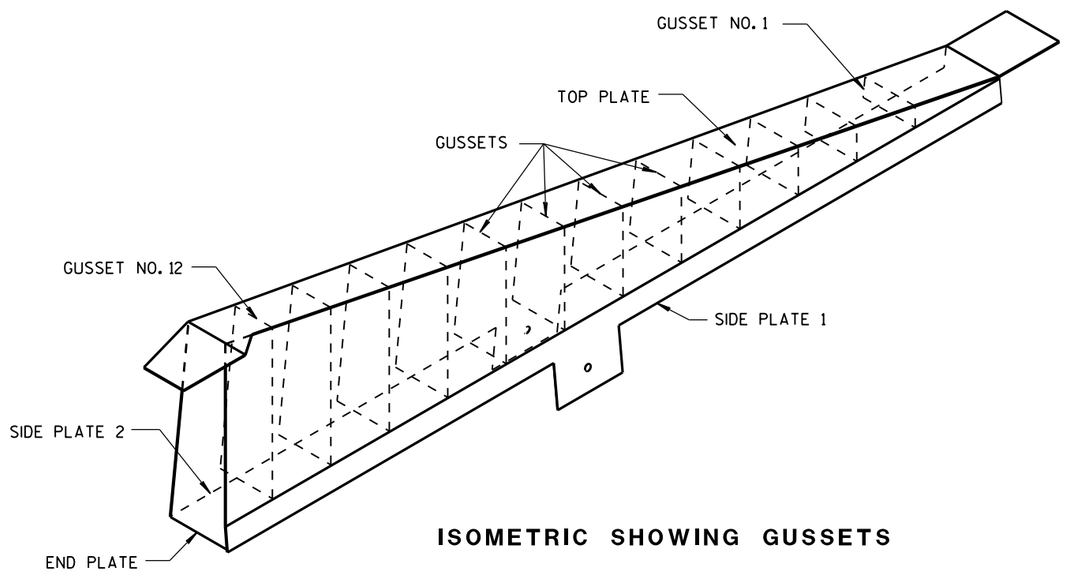

ISOMETRIC SHOWING GUSSETS

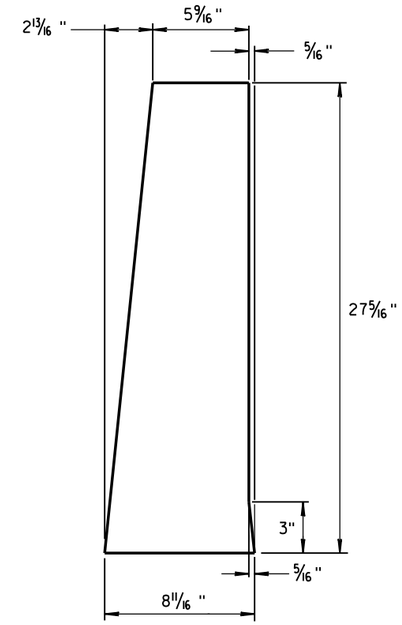

END PLATE

1/8" STEEL PLATE

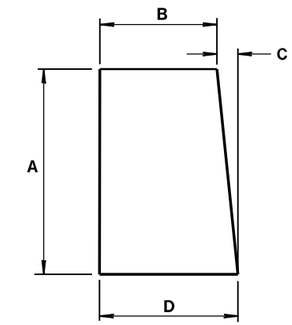

GUSSETS 1 - 12

ALL GUSSETS 1/8" STEEL PLATE

GUSSET DIMENSIONS				
GUSSET NO.	A	B	C	D
1	2 7/8"	7 3/4"	1/4"	8
2	4 11/16 "	7 9/16 "	1/2"	8
3	6 1/2"	7 3/8"	11/16 "	8 1/16 "
4	8 5/16 "	7 3/16 "	7/8"	8 1/16 "
5	10 1/8"	7"	1 1/16 "	8 1/16 "
6	11 15/16 "	6 13/16 "	1 1/4"	8 1/16 "
7	13 3/4"	6 5/8"	1 7/16 "	8 1/16 "
8	15 9/16 "	6 7/16 "	1 9/16 "	8 1/16 "
9	17 3/8"	6 1/4"	1 13/16 "	8 1/16 "
10	19 3/16 "	6 1/16 "	1 15/16 "	8 1/16 "
11	21"	5 7/8"	2 3/16 "	8 1/16 "
12	22 13/16 "	5 11/16 "	2 5/16 "	8 1/16 "

SIDE PLATES, TOP PLATE, END PLATE AND GUSSETS ARE 12 GAUGE ASTM A36 STEEL AND GALVANIZED.

GUSSETS AND END PLATE ARE STITCH WELDED ON 3 SIDES. TWO TRIANGULAR SIDE PLATES ARE STITCH WELDED TO TOP PLATE, END PLATE AND GUSSETS.

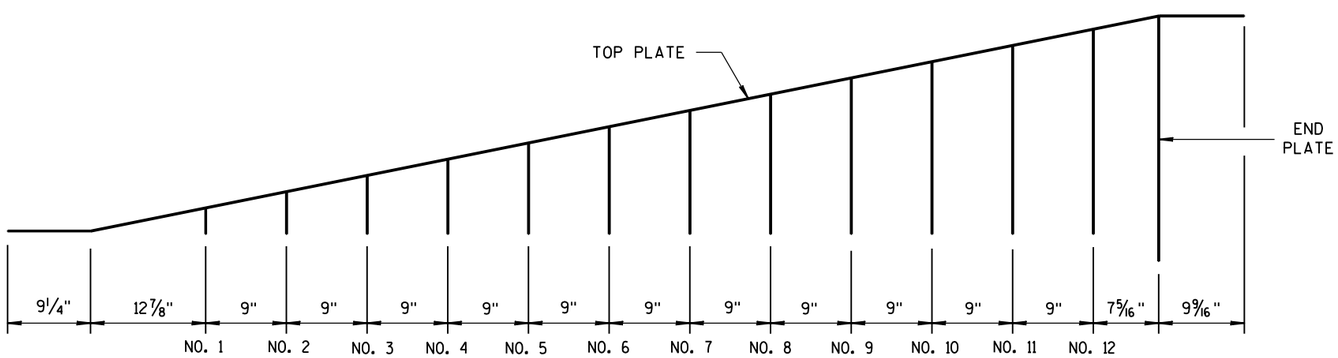

GUSSET LOCATION

CAP DETAILS FOR TEMPORARY CONCRETE BARRIER TO 56" PERMANENT CONCRETE BARRIER

CONCRETE BARRIER
TEMPORARY PRECAST, 12'-6"

STATE OF WISCONSIN
DEPARTMENT OF TRANSPOI

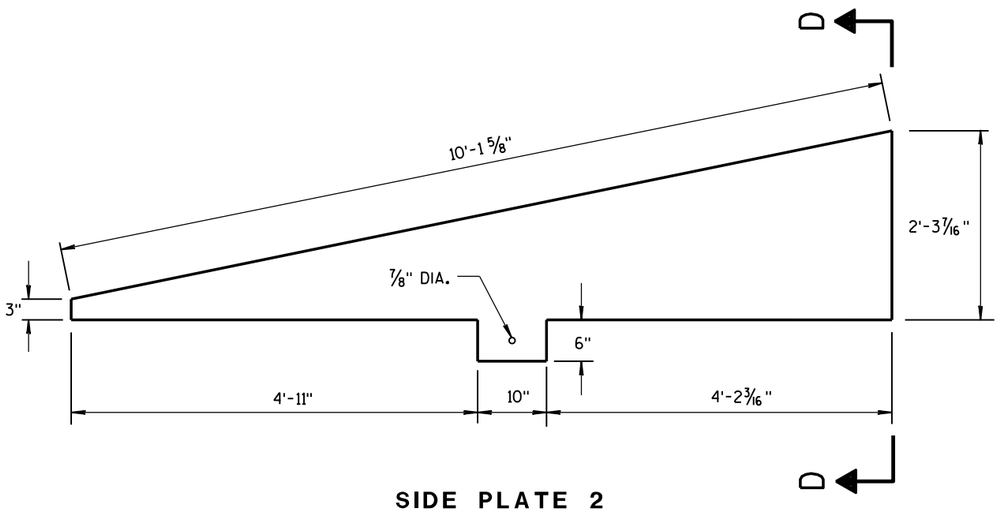

SIDE PLATE 2

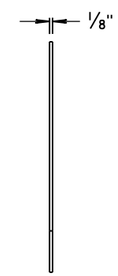

END VIEW

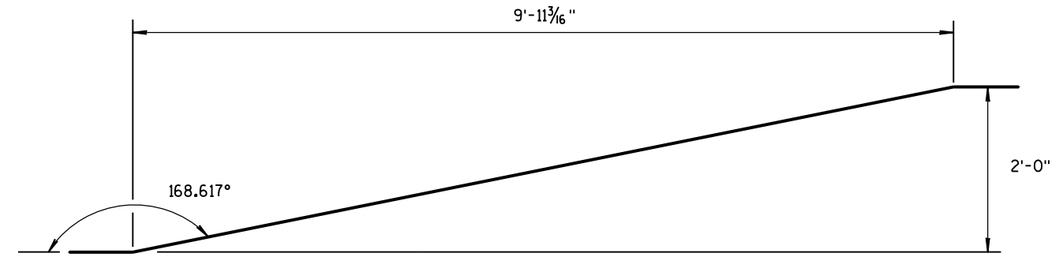

SIDE VIEW

TOP PLATE

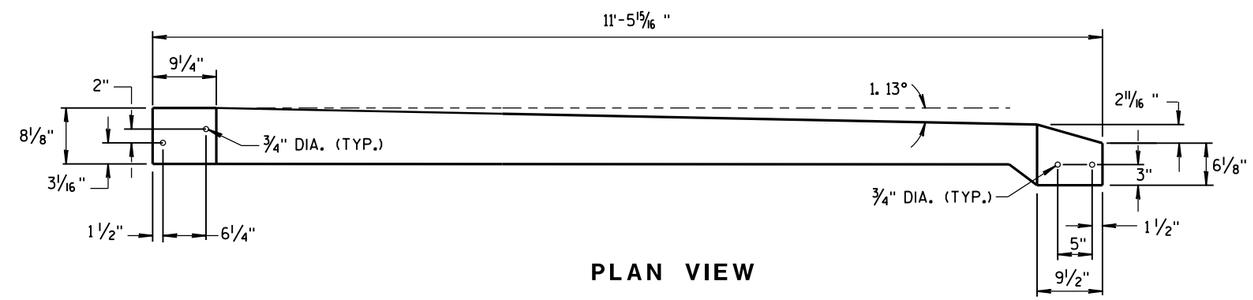

PLAN VIEW

TOP PLATE

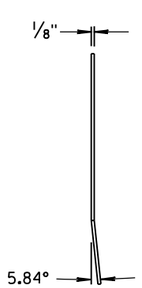

END VIEW

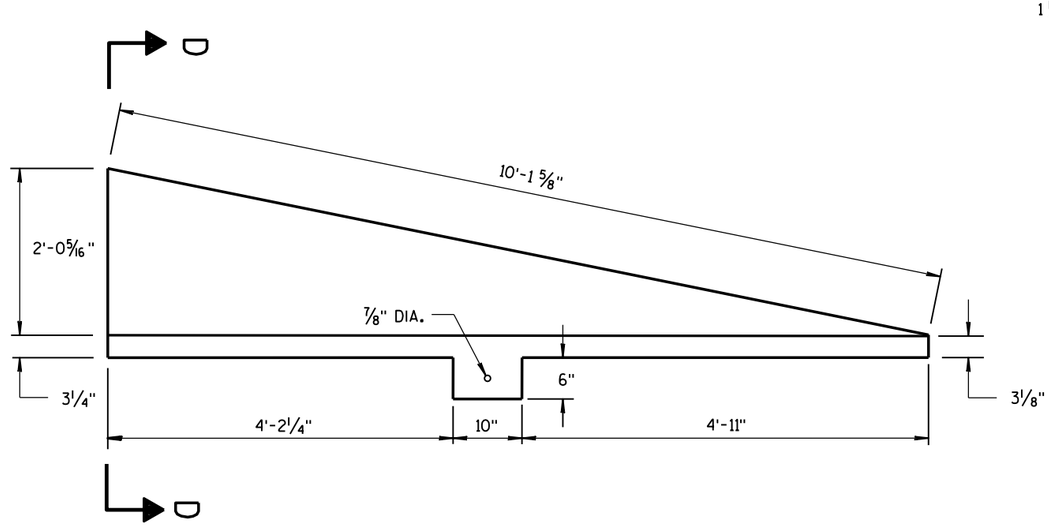

SIDE PLATE 1

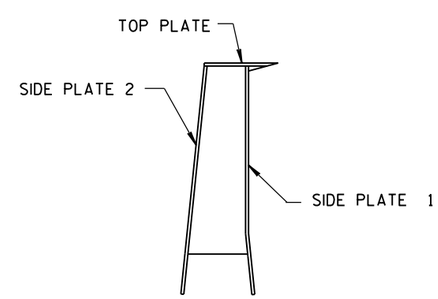

SECTION D-D

CAP DETAILS FOR TEMPORARY CONCRETE BARRIER TO 56" PERMANENT CONCRETE BARRIER

CONCRETE BARRIER
TEMPORARY PRECAST, 12'-6"

STATE OF WISCONSIN
DEPARTMENT OF TRANSPORTATION

APPROVED
June 2017 — DATE
/S/ Rodney Taylor — ROADWAY STANDARD UNIT SUPERV
FHWA

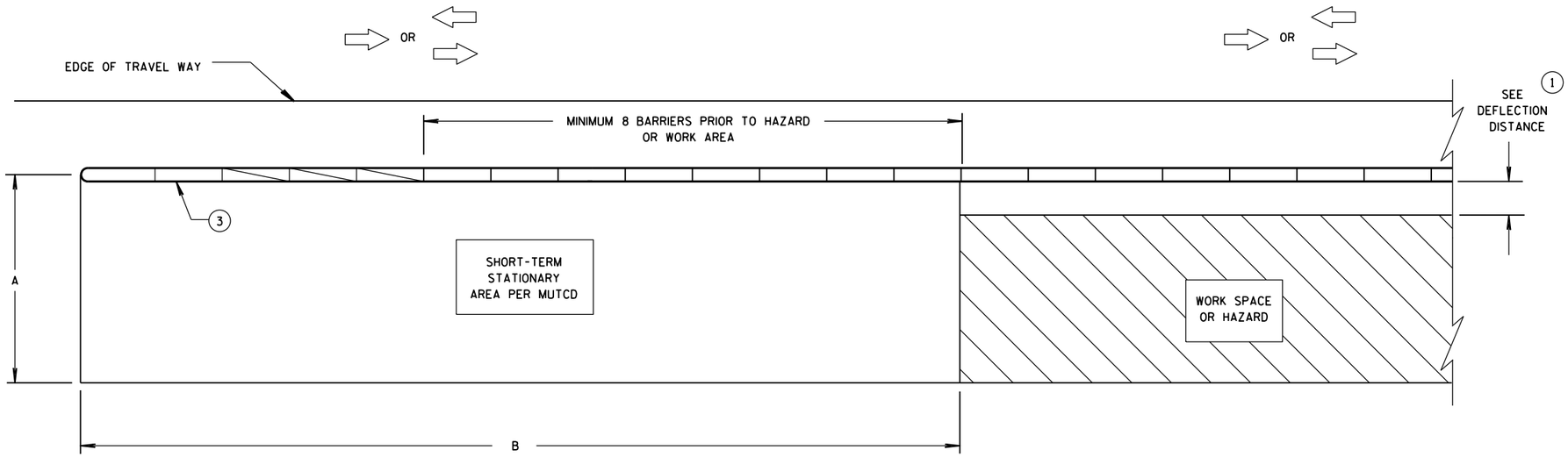

CRASH CUSHION/SAND BARREL ARRAY AND TEMPORARY BARRIER INSTALLATION FOR TRAFFIC ON ONE SIDE OF BARRIER

DIMENSION A TABLE (2)

FACILITY	POSTED SPEED MPH	DIMENSION A MIN. FT	DIMENSION A MAX. FT
FREEWAY/EXPRESSWAY	ALL	15	20
NON-FREEWAY/EXPRESSWAY	GREATER THAN OR EQUAL TO 45	10	15
NON-FREEWAY/EXPRESSWAY	LESS THAN 45	8	10
AADT LESS THAN 1,500	ALL	8	10

DIMENSION B TABLE (2)

POSTED SPEEDS MPH	DIMENSION B FT
20	115
25	155
30	200
35	250
40	305
45	360
50	425
55	495
60	570
65	645

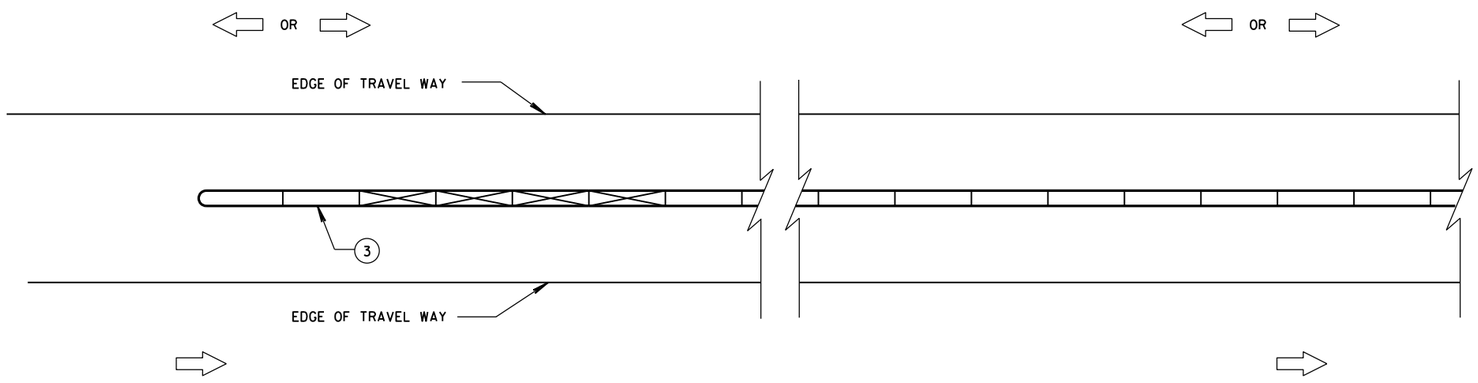

CRASH CUSHION/SAND BARREL ARRAY AND TEMPORARY BARRIER INSTALLATION FOR TRAFFIC ON BOTH SIDES OF BARRIER

LEGEND

- DIRECTION OF TRAVEL
- CRASH CUSHION OR SAND BARREL ARRAY
- SEE FREE STANDING TRANSITION TO TIED-DOWN SYSTEM DETAILS
- SEE BI-DIRECTIONAL TRANSITION TO TIED-DOWN SYSTEM DETAILS
- 3 PINS PLACED ON TRAFFIC SIDE OF BARRIER
- PERMANENT CONCRETE BARRIER OR CONCRETE PARAPET
- FREE STANDING TEMPORARY BARRIER

GENERAL NOTES

SEE STANDARD DETAIL DRAWING 14B7 FOR MORE INFORMATION.

DETAILS PROVIDE A GENERAL LAYOUT OF TEMPORARY CONCRETE BARRIER, CRASH CUSHIONS, SAND BARREL ARRAYS AND TIE DOWN TRANSITIONS. DETAILS PROVIDED MAY NOT FIT ALL POSSIBLE SITUATIONS OR SITE CONDITIONS. SEE OTHER SECTIONS OF THE CONTRACT OR PROJECT ENGINEER FOR MORE DETAILS.

ADDITIONAL TEMPORARY BARRIER MAY BE REQUIRED TO PROTECT TRAVELING PUBLIC FROM HAZARDS, CONTRACTOR'S OPERATIONS OR TO CONTROL TRAFFIC.

TEMPORARY BARRIER MAY BE REQUIRED TO BE ANCHORED TO PAVEMENT OR BRIDGE DECK.

FOR DETAILS ON CRASH CUSHION OR SAND BARREL ARRAYS SEE OTHER SECTIONS OF THE PLAN AND MANUFACTURE'S DETAILS.

SLOPES LEADING TO TEMPORARY BARRIER, CRASH CUSHION OR SAND BARREL ARRAY ARE 10:1 OR LESS.

(1) FOR DEFLECTION INFORMATION SEE STANDARD DETAIL DRAWING 14B7.

(2) VALUES PROVIDED MAY NOT FIT ALL POSSIBLE SITUATIONS OR SITE CONDITIONS. SEE OTHER SECTIONS OF THE CONTRACT OR PROJECT ENGINEER FOR MORE DETAILS.

(3) ANCHOR TEMPORARY BARRIER ACCORDING TO CRASH CUSHION OR SAND BARREL MANUFACTURER'S RECOMMENDATIONS. IF MANUFACTURER'S RECOMMENDATIONS ARE NOT PROVIDED, ANCHOR 3 PINS ON TRAFFIC SIDE.

CRASH CUSHION/SAND BARREL ARRAY AND OTHER TEMPORARY BARRIER LAYOUT DETAILS

STATE OF WISCONSIN
DEPARTMENT OF TRANSPOR

6

S.D.D. 14 B 8-2a

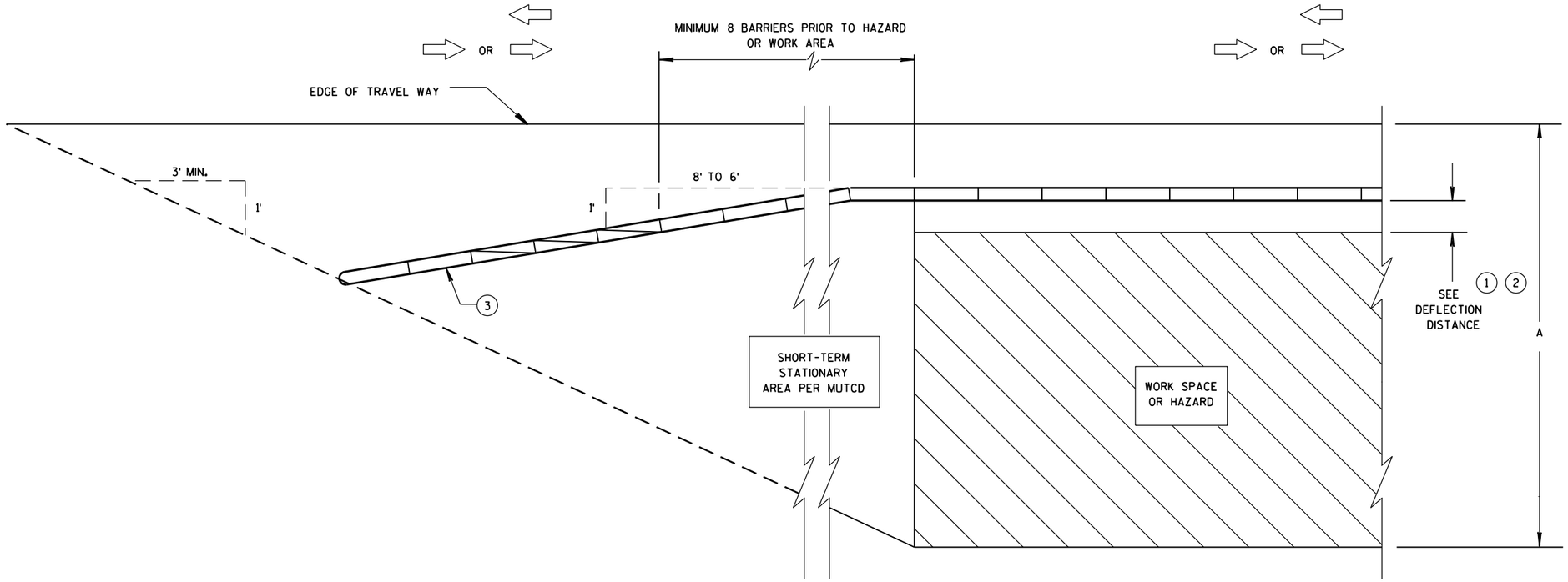

CRASH CUSHION/SAND BARREL ARRAY AND TEMPORARY BARRIER INSTALLATION FOR TRAFFIC ON ONE SIDE - FLARED INSTALLATION

6

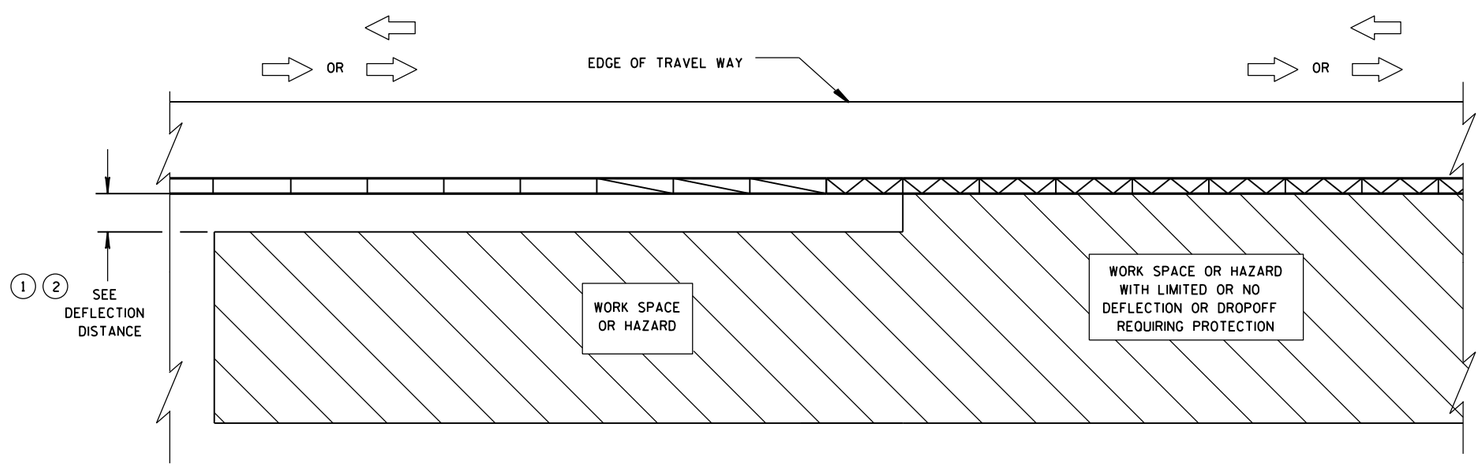

TRANSITION FROM FREE STANDING TEMPORARY BARRIER TO ANCHORED BARRIER

LEGEND

- DIRECTION OF TRAVEL
- CRASH CUSHION OR SAND BARREL ARRAY
- SEE FREE STANDING TRANSITION TO TIED-DOWN SYSTEM DETAILS
- SEE BI-DIRECTIONAL TRANSITION TO TIED-DOWN SYSTEM DETAILS
- 3 PINS PLACED ON TRAFFIC SIDE OF BARRIER
- PERMANENT CONCRETE BARRIER OR CONCRETE PARAPET
- FREE STANDING TEMPORARY BARRIER

CRASH CUSHION/SAND BARREL ARRAY AND OTHER TEMPORARY BARRIER LAYOUT DETAILS

STATE OF WISCONSIN
DEPARTMENT OF TRANSPOR

S.D.D. 14 B 8-2b

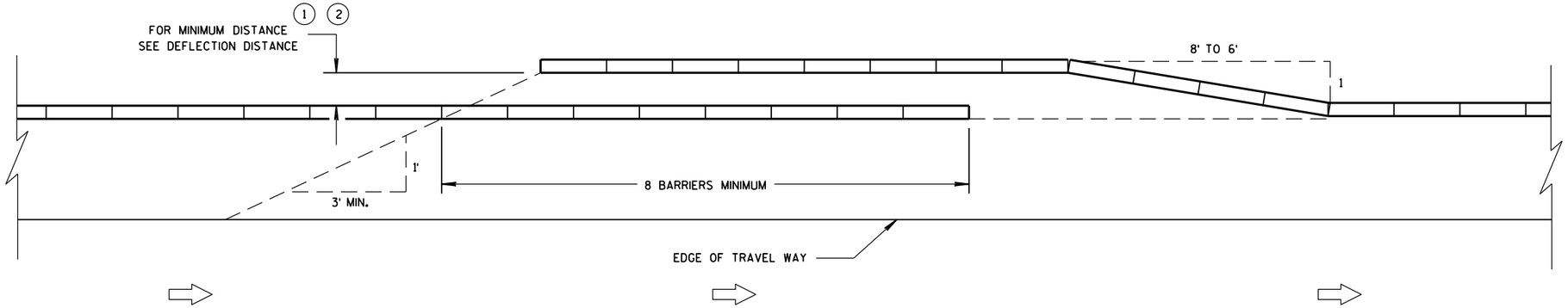

TEMPORARY BARRIER OVERLAP - ONE-WAY TRAFFIC

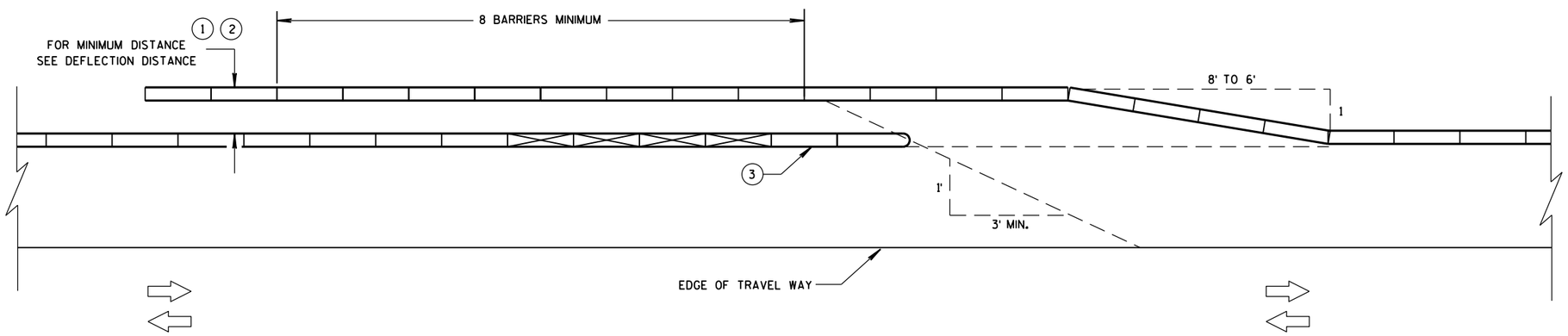

TEMPORARY BARRIER OVERLAP - TWO-WAY TRAFFIC

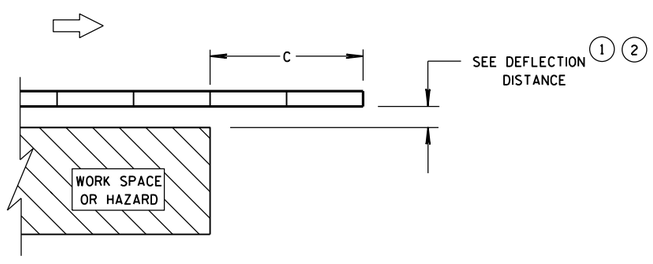

ENDING TEMPORARY BARRIER DOWNSTREAM - UNANCHORED

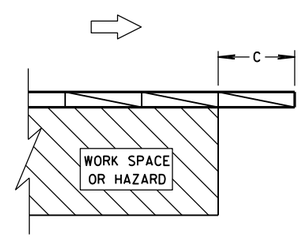

ENDING TEMPORARY BARRIER DOWNSTREAM - ANCHORED

LEGEND

- DIRECTION OF TRAVEL
- CRASH CUSHION OR SAND BARREL ARRAY
- SEE FREE STANDING TRANSITION TO TIED-DOWN SYSTEM DETAILS
- SEE BI-DIRECTIONAL TRANSITION TO TIED-DOWN SYSTEM DETAILS
- 3 PINS PLACED ON TRAFFIC SIDE OF BARRIER
- PERMANENT CONCRETE BARRIER OR CONCRETE PARAPET
- FREE STANDING TEMPORARY BARRIER

CRASH CUSHION/SAND BARREL ARRAY AND OTHER TEMPORARY BARRIER LAYOUT DETAILS

STATE OF WISCONSIN
DEPARTMENT OF TRANSPOR

6

6

S.D.D. 14 B 8-2c

S.D.D. 14 B 8-2c

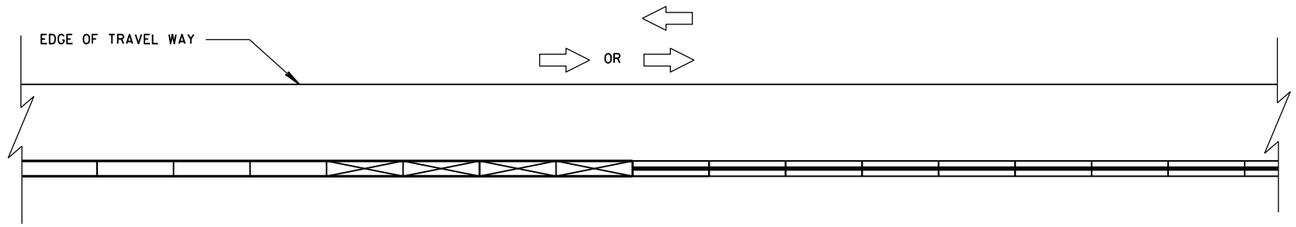

CONNECTING TEMPORARY BARRIER TO PERMANENT
CONCRETE BARRIER-TRAFFIC ON ONE SIDE

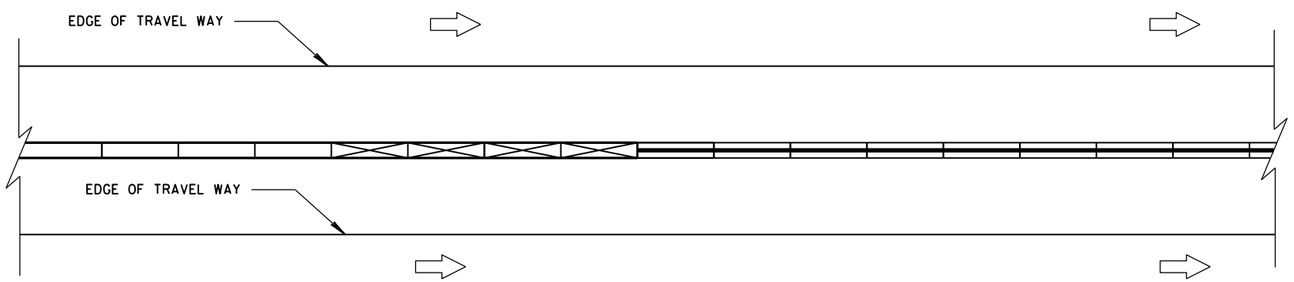

CONNECTING TEMPORARY BARRIER TO PERMANENT
CONCRETE BARRIER-TRAFFIC ON BOTH SIDES

LEGEND

DIRECTION OF TRAVEL

CRASH CUSHION OR
SAND BARREL ARRAY

SEE FREE STANDING TRANSITION
TO TIED-DOWN SYSTEM DETAILS

SEE BI-DIRECTIONAL TRANSITION
TO TIED-DOWN SYSTEM DETAILS

3 PINS PLACED ON
TRAFFIC SIDE OF BARRIER

PERMANENT CONCRETE BARRIER
OR CONCRETE PARAPET

FREE STANDING TEMPORARY
BARRIER

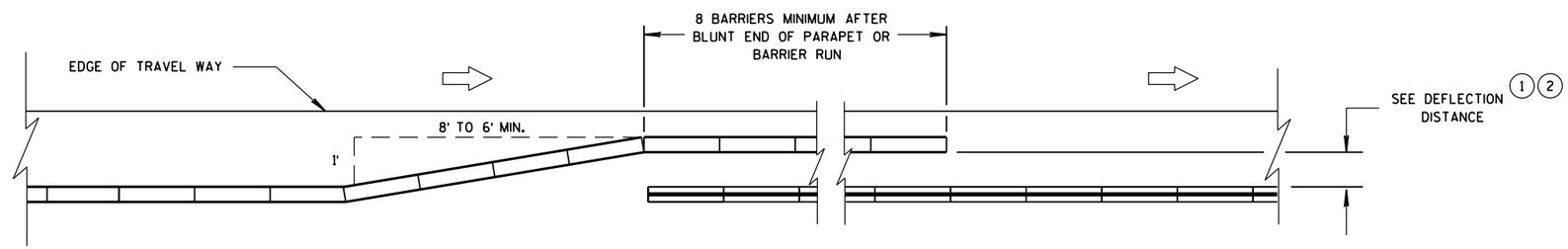

OVERLAPPING TEMPORARY BARRIER AND PERMANENT BARRIER -
ONE WAY TRAFFIC

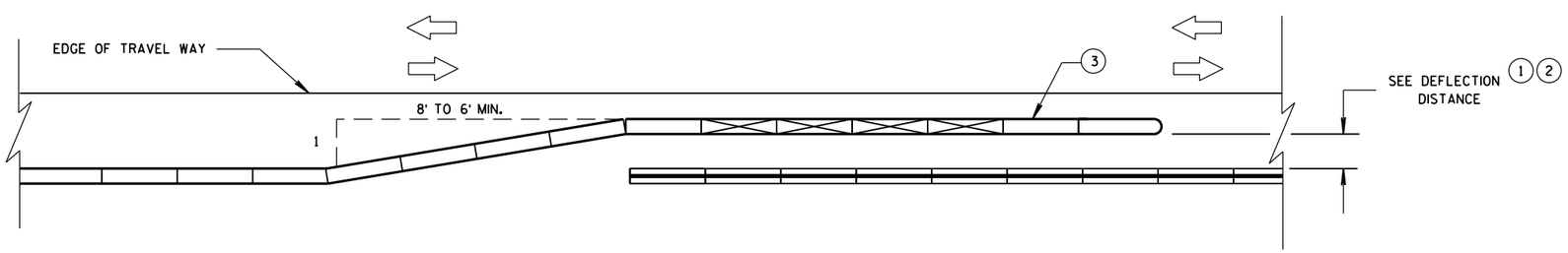

OVERLAPPING TEMPORARY BARRIER AND PERMANENT BARRIER -
TWO WAY TRAFFIC

CRASH CUSHION/SAND BARREL
ARRAY AND OTHER TEMPORARY
BARRIER LAYOUT DETAILS

STATE OF WISCONSIN
DEPARTMENT OF TRANSPOR

6

S.D.D. 14 B 8-2d

LEGEND

DIRECTION OF TRAVEL

CRASH CUSHION OR SAND BARREL ARRAY

SEE FREE STANDING TRANSITION TO TIED-DOWN SYSTEM DETAILS

SEE BI-DIRECTIONAL TRANSITION TO TIED-DOWN SYSTEM DETAILS

3 PINS PLACED ON TRAFFIC SIDE OF BARRIER

PERMANENT CONCRETE BARRIER OR CONCRETE PARAPET

FREE STANDING TEMPORARY BARRIER

DIMENSION C TABLE (2)

AVAILABLE DEFLECTION DISTANCE	MINIMUM LENGTH OF BARRIER BEYOND HAZARD FT
GREATER THAN 8'	12.5
LESS THAN OR EQUAL TO 8' BUT GREATER THAN 4'	50
LESS THAN OR EQUAL TO 4'	100

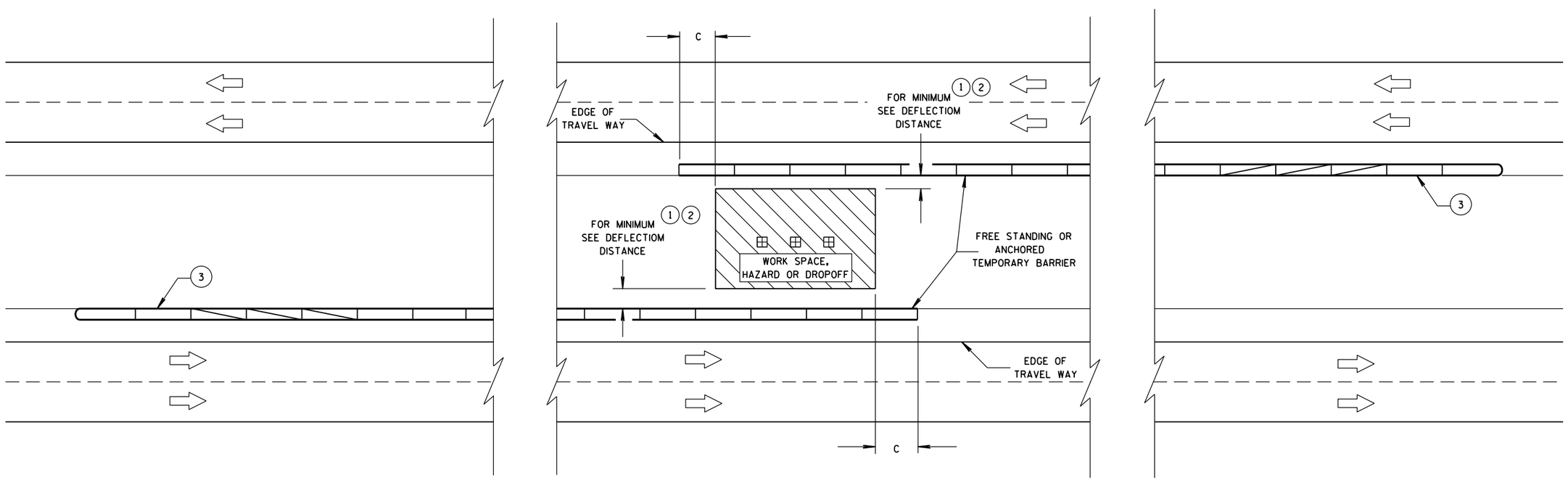

CRASH CUSHION/SAND BARREL ARRAY AND OTHER TEMPORARY BARRIER LAYOUT DETAILS

STATE OF WISCONSIN
DEPARTMENT OF TRANSPORTATION

APPROVED
June, 2015 — DATE
/S/ Jerry H. Zogg — ROADWAY STANDARDS DEVELOPMENT ENGINNER
FHWA

6
S.D.D. 14 B 8-2e

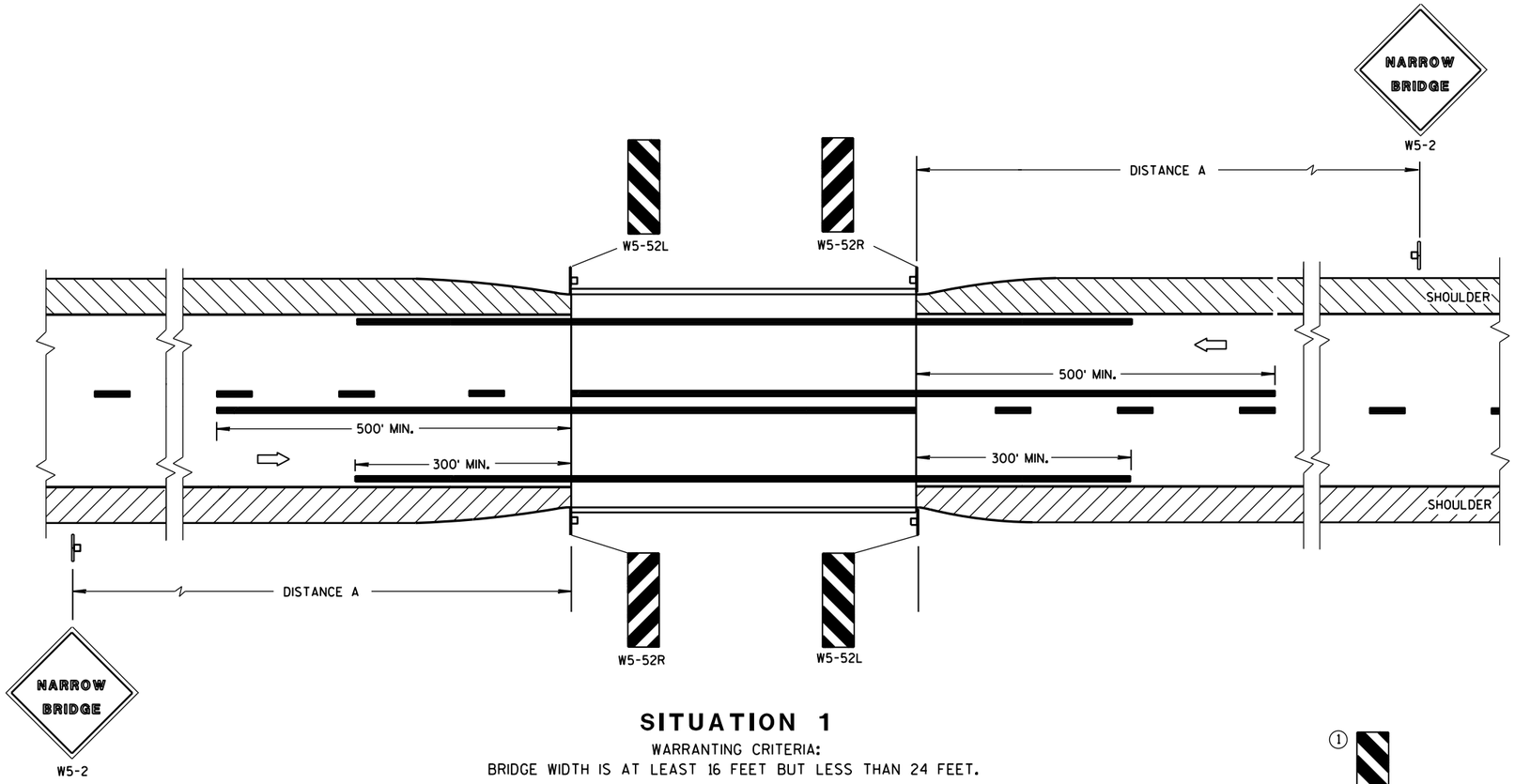

SITUATION 1

WARRANTING CRITERIA:
BRIDGE WIDTH IS AT LEAST 16 FEET BUT LESS THAN 24 FEET.

GENERAL NOTES

DETAILS OF TRAFFIC CONTROL DEVICES AND INSTALLATION NOT SHOWN ON THIS DRAWING SHALL CONFORM TO THE PERTINENT REQUIREMENTS OF THE STANDARD SPECIFICATIONS, THE SPECIAL PROVISIONS, AND THE MANUAL ON UNIFORM TRAFFIC CONTROL DEVICES.

LOCATE W5-52 SIGN POST(S) BEHIND GUARDRAIL WHEN PRESENT.

PLACE THE EDGE OF THE W5-52 SIGN IN LINE WITH FACE OF CURB OR PARAPET.

(1) OMIT ON ONE-WAY TRAVELLED WAYS.

⇨ DIRECTION OF TRAFFIC

DISTANCE TABLE

POSTED OR 85th PERCENTILE SPEED	DISTANCE "A"
25	150'
30	200'
35	250'
40	300'
45	400'
50	550'
55	750'

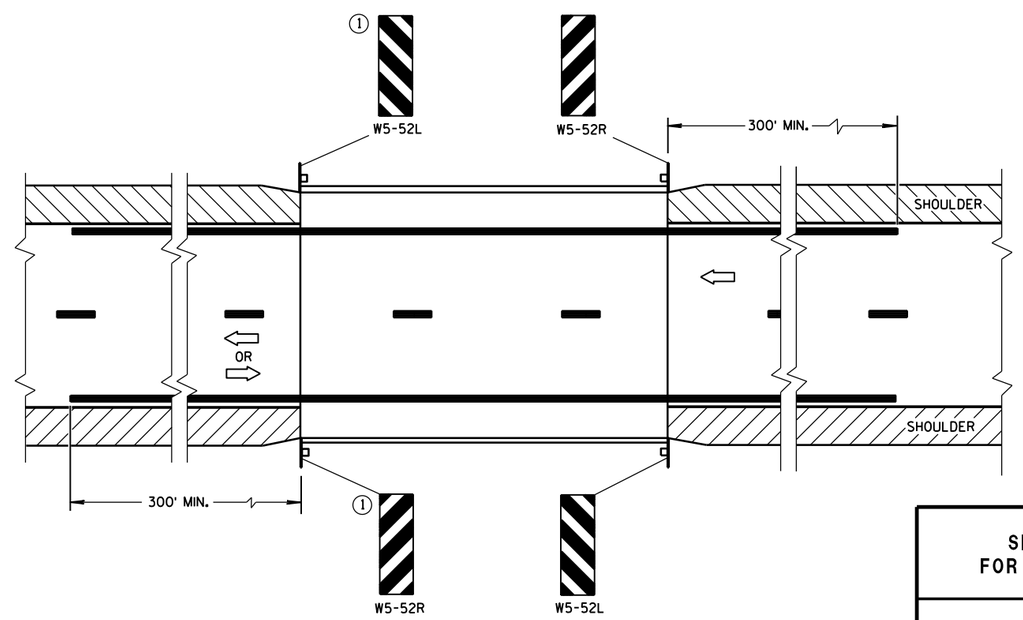

SITUATION 2

WARRANTING CRITERIA:

1. BRIDGE WIDTH IS AT LEAST 24 FEET AND
2. BRIDGE SHOULDER WIDTH IS LESS THAN 6 FEET.

SIGNING & MARKING FOR TWO LANE BRIDGES

STATE OF WISCONSIN
DEPARTMENT OF TRANSPORTATION

APPROVED
June 2017 — DATE
/S/ Matthew R. Rauch — STATE SIGNING AND MAR[illegible]EER
FHWA

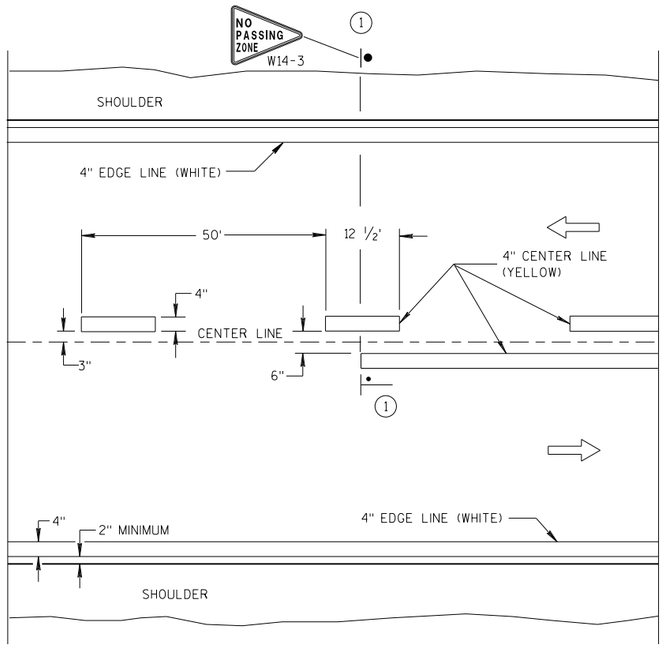

TWO WAY TRAFFIC

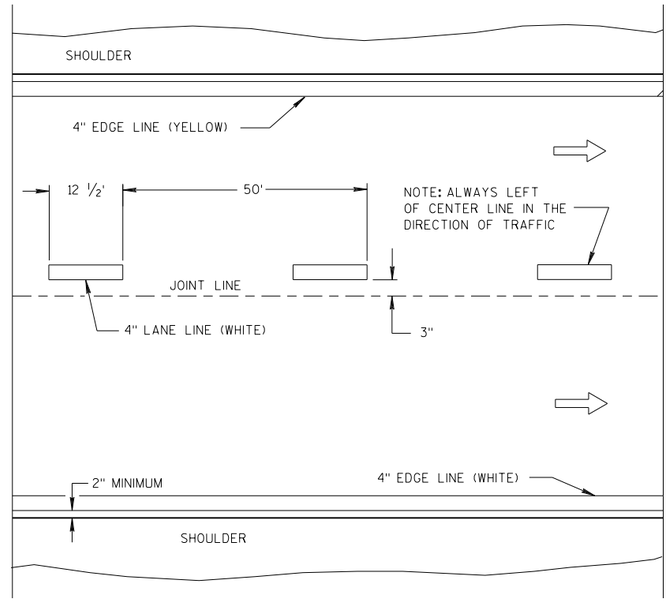

ONE WAY TRAFFIC

PERMANENT PAVEMENT MARKING

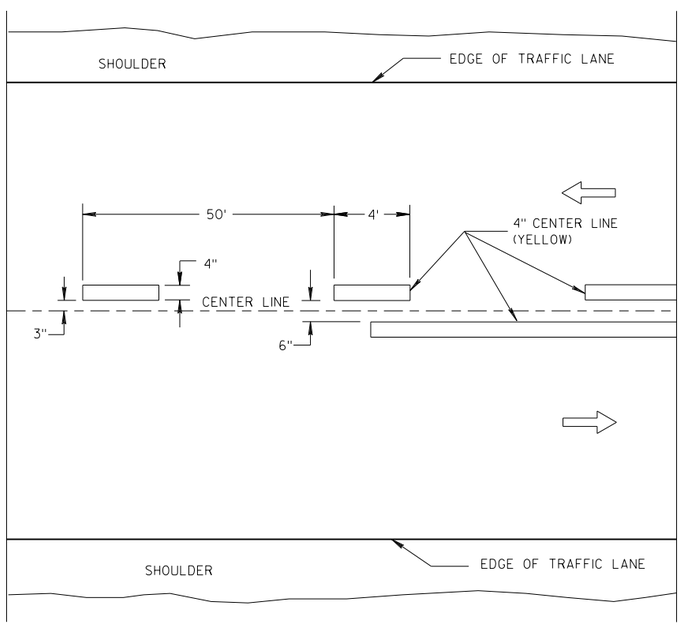

TWO WAY TRAFFIC

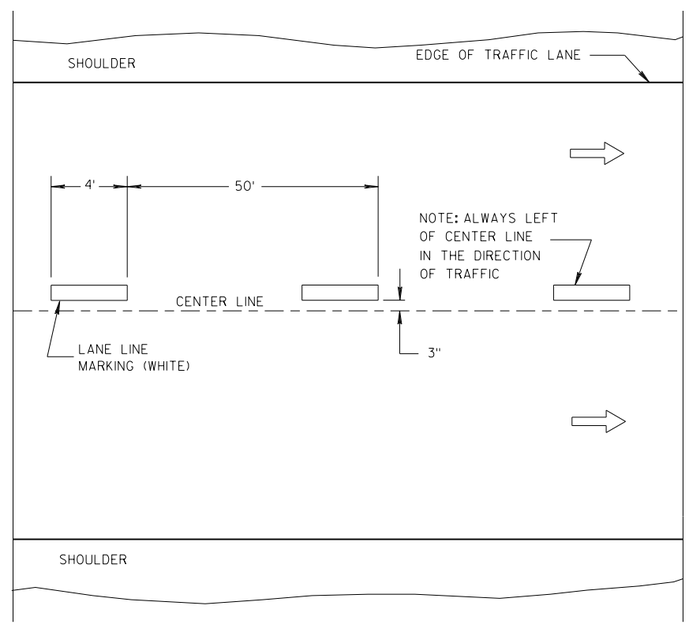

ONE WAY TRAFFIC

TEMPORARY PAVEMENT MARKING

GENERAL NOTES

DETAILS OF CONSTRUCTION NOT SHOWN ON THIS DRAWING SHALL CONFORM TO STANDARD SPECIFICATIONS AND SPECIAL PROVISIONS.

(1) LOCATE THE NO PASSING ZONE W14-3 SIGN WITHIN 50 FEET OF THE "T" MARKING.

NOTE

ARROW SYMBOL (⇨) SHOWS DIRECTION OF TRAVEL

LEGEND

"T" MARKING

POST MOUNTED SIGN

LONGITUDINAL MARKING (MAINLINE)

STATE OF WISCONSIN
DEPARTMENT OF TRANSPORTATION

APPROVED

7/2018 — DATE

/S/ Matthew R. Rauch — STATE SIGNING AND MAR INEER

FHWA

6

S.D.D. 15 C 8-19a

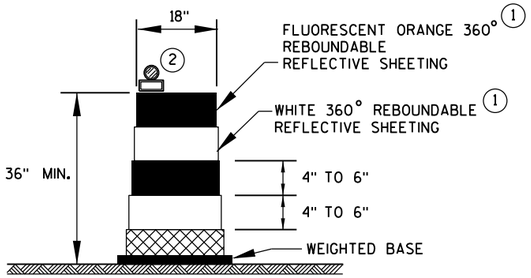

DRUM

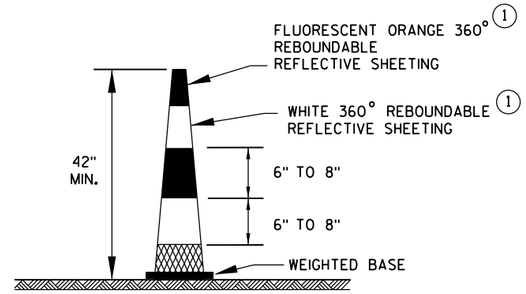

42" CONE

DO NOT USE IN TAPERS
½ SPACING OF DRUMS

GENERAL NOTES

1. REFLECTIVE SHEETING SHALL FOLLOW THE REQUIREMENTS IN THE APPROVED PRODUCTS LISTING FOR SIGN SHEETING.
2. LOCATION OF WARNING LIGHTS WHEN SHOWN ON THE PLAN.

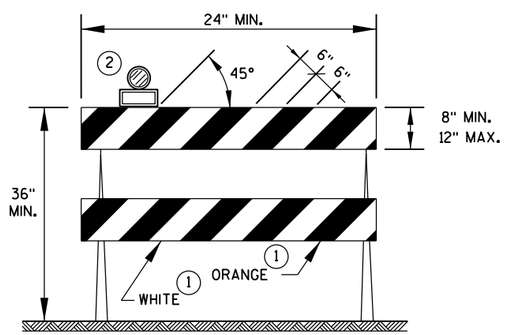

TYPE 2 BARRICADE

FOR RAILS LESS THAN 36" LONG, 4" WIDE STRIPES MAY BE USED. ALL STRIPES SHALL SLOPE DOWNWARD TO THE TRAFFIC SIDE FOR CHANNELIZATION.

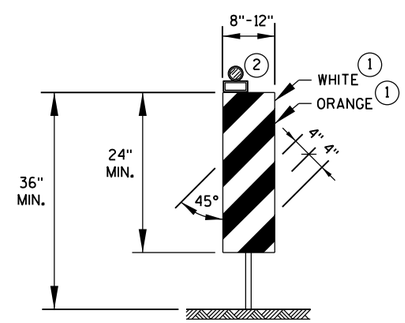

VERTICAL PANEL

THE STRIPES SHALL SLOPE DOWNWARD TO THE TRAFFIC SIDE FOR CHANNELIZATION.

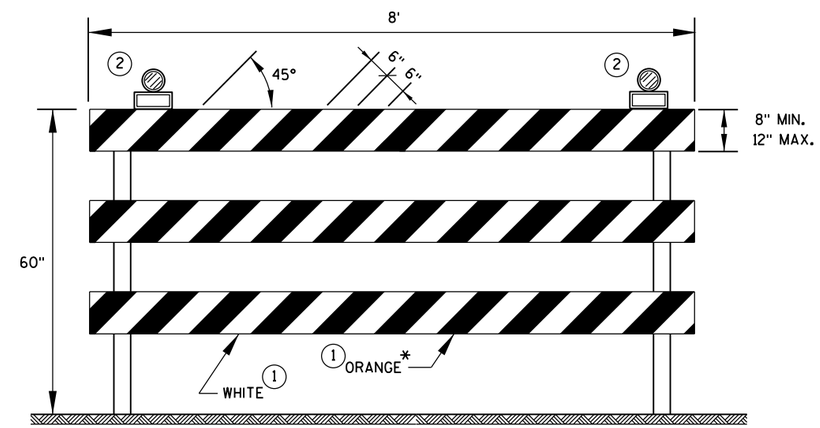

TYPE 3 BARRICADE

IF SIGN MOUNTED, DO NOT COVER MORE THAN 50% OF THE TOP TWO RAILS OR 33% OF THE TOTAL AREA OF THE THREE RAILS.

* IF USED FOR A PERMANENT APPLICATION, USE RED SHEETING.

CHANNELIZING DEVICES DRUMS, CONES, BARRICADES AND VERTICAL PANELS	
STATE OF WISCONSIN DEPARTMENT OF TRANSPORTATION	
APPROVED	
June 2017	/S/ Andrew Heldtke
DATE	WORK ZONE ENG
FHWA	

LEGEND

SIGN ON PORTABLE OR PERMANENT SUPPORT

DIRECTION OF TRAFFIC

WORK AREA

FLAGGER, EQUIPPED WITH STOP/SLOW PADDLE FASTENED ON SUPPORT STAFF

SIGN AND TEMPORARY RUMBLE STRIP ARRAY SPACING TABLE

SPEED LIMIT	SPACING A
25-35 MPH	200'
35-40 MPH	350'
45-55 MPH	500'

USE OF THE "BE PREPARED TO STOP" SIGN IS OPTIONAL. WHEN USED, THIS SIGN SHALL BE LOCATED BETWEEN THE W20-7A AND W20-4A SIGNS, USING SPACING A.

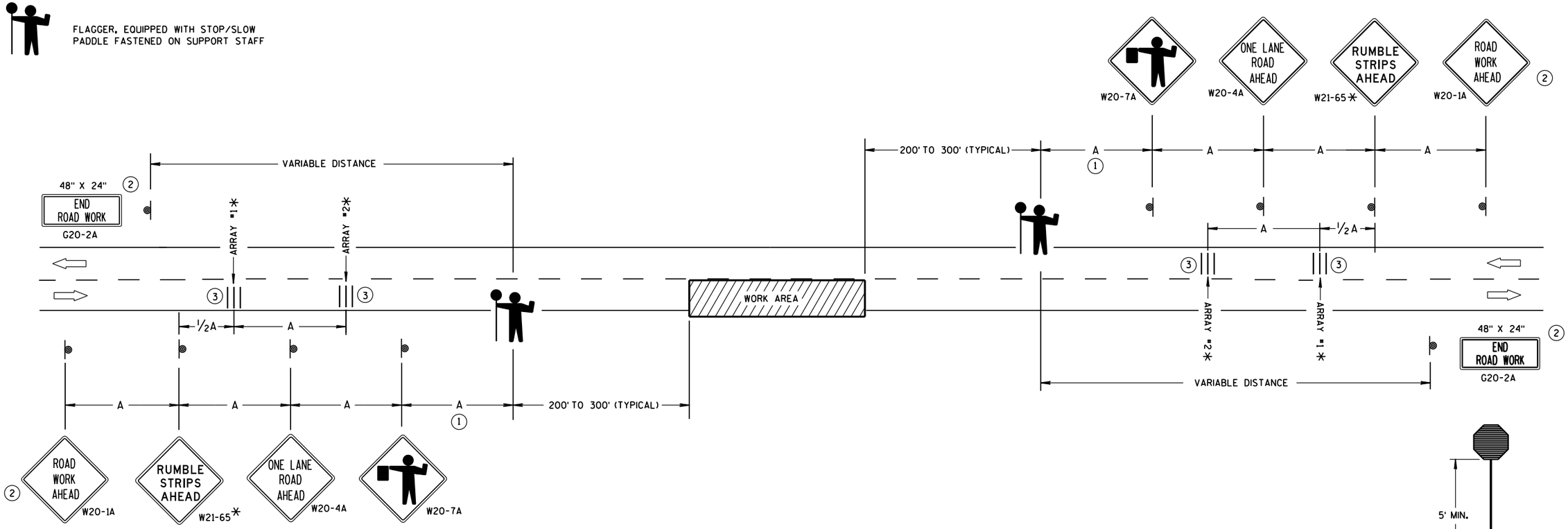

TRAFFIC CONTROL FOR LANE CLOSURE WITH FLAGGING OPERATION

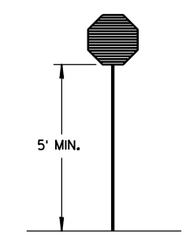

STOP/SLOW PADDLE ON SUPPORT STAFF

GENERAL NOTES

DETAILS OF TRAFFIC CONTROL DEVICES AND INSTALLATION NOT SHOWN ON THIS DRAWING SHALL CONFORM TO THE PERTINENT REQUIREMENTS OF THE STANDARD SPECIFICATIONS, THE SPECIAL PROVISIONS, AND THE MANUAL ON UNIFORM TRAFFIC CONTROL DEVICES.

THE EXACT NUMBER, LOCATION AND SPACING OF ALL SIGNS AND DEVICES (AND THE LOCATION OF ALL FLAGGERS) SHALL BE ADJUSTED TO FIT FIELD CONDITIONS AS APPROVED BY THE ENGINEER.

THE FIRST ADVANCE WARNING SIGN SHOULD TYPICALLY BE LOCATED IN ADVANCE OF THE ANTICIPATED TRAFFIC BACKUP OR QUEUE.

"WO" SIGNS ARE THE SAME AS "W" SIGNS EXCEPT THE BACKGROUND IS ORANGE.

WHEN A SIDE ROAD OR RAMP INTERSECTS THE FACILITY ON WHICH THE WORK IS BEING PERFORMED, ADDITIONAL TRAFFIC CONTROLS SHALL BE PROVIDED AS SPECIFIED IN THE PLANS AND/OR THE SPECIAL PROVISIONS OR AS APPROVED BY THE ENGINEER.

INSTALL TEMPORARY RUMBLE STRIPS PER MANUFACTURER'S RECOMMENDATIONS.

PLACE ADVANCE SIGNING PRIOR TO INSTALLING TEMPORARY RUMBLE STRIPS.

ALL SIGNS ARE 48" X 48" UNLESS OTHERWISE NOTED.

FLAGGERS SHALL BE IN SIGHT OF EACH OTHER OR IN DIRECT COMMUNICATION AT ALL TIMES. THEY SHALL BE EQUIPPED WITH STOP/SLOW PADDLES FASTENED ON SUPPORT STAFFS. WHEN THE FLAGGING OPERATION IS NOT IN EFFECT, REMOVE TEMPORARY RUMBLE STRIPS PRIOR TO COVERING OR REMOVING ALL ADVANCE SIGNING.

* UTILIZE TEMPORARY RUMBLE STRIPS WHEN FLAGGING OPERATION IS ANTICIPATED TO BE STATIONARY IN EXCESS OF TWO HOURS.

1. FOR A MOVING WORK OPERATION, SIGNING AND TEMPORARY RUMBLE STRIPS (IF USED) SHALL BE REESTABLISHED (AS SIMULTANEOUSLY AS PRACTICAL) AT APPROXIMATELY 3,500 FOOT INTERVALS IN THE MOVING WORK OPERATION OR AS APPROVED BY THE ENGINEER.
2. SIGN NOT REQUIRED IF FLAGGING OPERATION OCCURS WITHIN A SIGNED ROAD WORK ZONE AREA.
3. EACH TEMPORARY RUMBLE STRIP ARRAY CONSISTS OF THREE RUMBLE STRIPS SPACED ACCORDING TO MANUFACTURER'S RECOMMENDATION, PLACED TRANSVERSE ACROSS THE LANE AT LOCATIONS SHOWN.

TRAFFIC CONTROL FOR LANE CLOSURE WITH FLAGGING OPERATION

STATE OF WISCONSIN
DEPARTMENT OF TRANSPORTATION

APPROVED
June 2017 — DATE
/S/ Andrew Heldtke — WORK ZONE ENG
FHWA

LEGEND

- TYPE III BARRICADE WITH ATTACHED SIGN
- SIGN ON PERMANENT SUPPORT
- TRAFFIC CONTROL DRUM WITH TYPE "C" STEADY BURN LIGHT
- TRAFFIC CONTROL DRUM
- FLAGS, 16" X 16" MIN. (ORANGE)
- REMOVING PAVEMENT MARKING
- DIRECTION OF TRAFFIC
- ASPHALTIC PAVEMENT WIDENING
- CONCRETE BARRIER TEMPORARY PRECAST
- TEMPORARY SIGNAL. SEE SDD 09G02 FOR EXACT PLACEMENT

1. 500 FOOT SPACING SHOWN IS FOR ROADWAYS WITH A PRE-CONSTRUCTION REGULATORY SPEED LIMIT OF 45 MPH OR MORE. FOR 35 - 40 MPH, USE 350 FOOT TYPICAL SPACING. FOR 25 - 30 MPH, USE 200 FOOT TYPICAL SPACING.
2. USE 300 FOOT SPACING IF THE PRE - CONSTRUCTION REGULATORY SPEED IS 35 MPH OR LESS.
3. DIMENSION DETERMINED BY CBTP TAPER FROM EDGE LINE TO TANGENT SECTION OF THE ROAD.
4. TEMPORARY MARKING STOP LINE REMOVABLE TAPE 18 - INCH.
5. 700 FOOT TEMPORARY MARKING DOUBLE YELLOW LINE 4 - INCH. WHEN THE DISTANCE FOR THE PRECEDING NO - PASSING ZONE IS LESS THAN THE MINIMUM DISTANCE BETWEEN ZONES AS INDICATED IN THE SPECIFICATIONS, THE TWO ZONES SHALL BE CONNECTED.
6. SEE SDD 15C02 - SHEET "F" FOR ADVANCED WIDTH RESTRICTION SIGNING.

GENERAL NOTES

THE EXACT NUMBER, LOCATION, AND SPACING OF ALL SIGNS AND DEVICES SHALL BE ADJUSTED TO FIT FIELD CONDITIONS AS APPROVED BY THE ENGINEER.

THE SPACING BETWEEN TRAFFIC CONTROL SIGNS SHOULD BE ADJUSTED TO NOT CONFLICT WITH AND TO PROVIDE A MINIMUM OF 200 FEET (500 FEET DESIRABLE) CLEARANCE TO EXISTING SIGNS THAT WILL REMAIN IN PLACE..

THIS LANE CLOSURE IS TYPICAL FOR CLOSING RIGHT LANE - REVERSE FOR CLOSING LEFT LANE.

ALL SIGNS ARE 48" x 48" UNLESS OTHERWISE NOTED.

"WO" IS THE SAME AS "W" EXCEPT THE BACKGROUND IS ORANGE.

ANY SIGNS TEMPORARY OR EXISTING, WHICH CONFLICT WITH TRAFFIC CONTROL "IN USE" SHALL BE REMOVED OR COVERED AS NEEDED OR AS APPROVED BY THE ENGINEER.

PLACE TEMPORARY PAVEMENT MARKING EDGELINE AND CENTERLINE AND REMOVE EXISTING PAVEMENT MARKINGS IF LANE CLOSURE IS TO BE IN PLACE 4 OR MORE CONTINUOUS DAYS AND NIGHTS OR AS NOTED ON DETAIL.

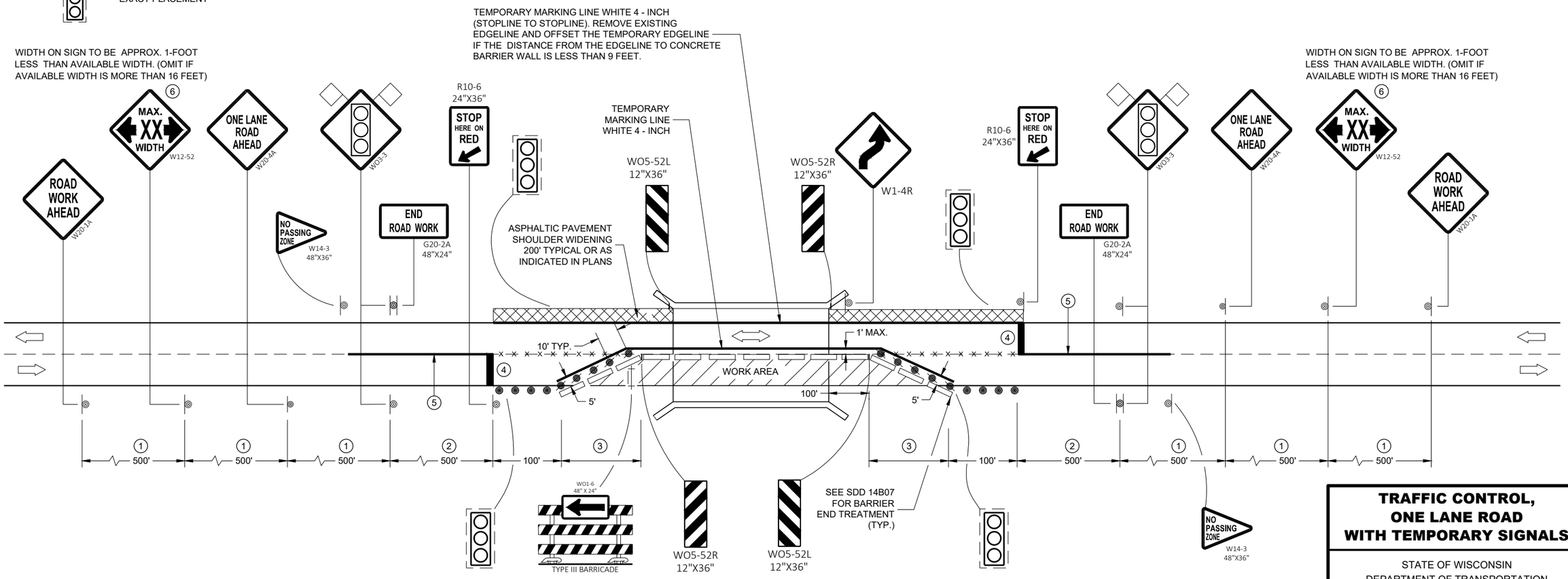

TRAFFIC CONTROL, ONE LANE ROAD WITH TEMPORARY SIGNALS

STATE OF WISCONSIN
DEPARTMENT OF TRANSPORTATION

APPROVED
November 2018 /S/ Andrew Heidtke
DATE WORK ZONE ENGINEE
FHWA

6

SDD 15D33 - 05

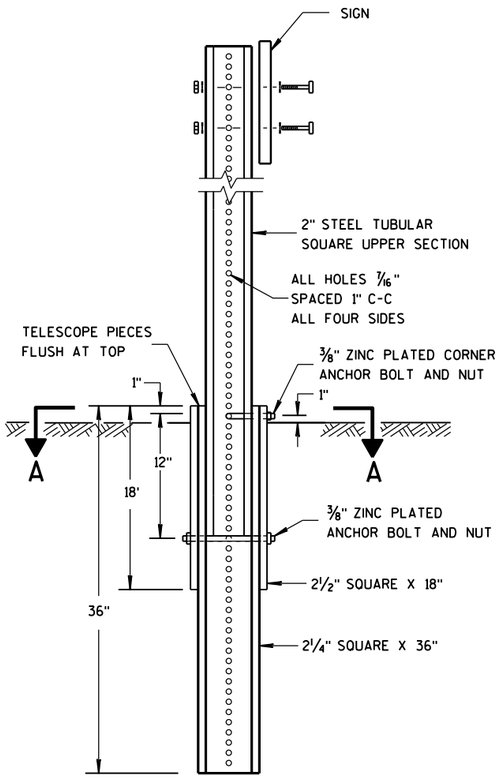

DETAIL OF TUBULAR STEEL SIGN POST

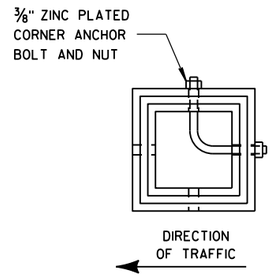

SECTION A-A

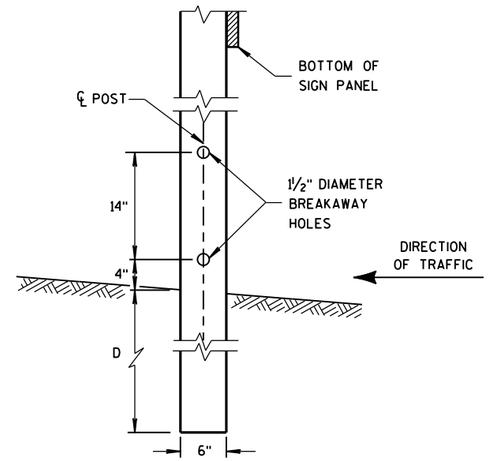

4"x6" WOOD POST MODIFICATION

GENERAL NOTES

1. 6 FEET FROM THE EDGE OF PAVEMENT (EDGE LINE LOCATION) UNLESS OTHERWISE DIRECTED BY THE PROJECT ENGINEER. LATERAL OFFSET SHOULD BE ADJUSTED TO AVOID THE DITCH FLOWLINE.
2. THE EXISTENCE OF CURB AND GUTTER DOES NOT IN ITSELF MANDATE THE VERTICAL CLEARANCE ILLUSTRATED. THAT HEIGHT IS TYPICALLY MEASURED WHERE THERE IS SIDEWALK ADJACENT TO THE ROADWAY OR PARKING IS PERMITTED. IN THE ABSENCE OF SIDEWALK, VERTICAL CLEARANCE IS MEASURED FROM THE TOP OF THE CURB. IF NO SIDEWALK AND NO PARKING, VERTICAL CLEARANCE MAY BE REDUCED TO 5 FOOT MINIMUM. OFFSET OF SIGNS IS MEASURED FROM THE CURB FLOWLINE.
3. FOR SIGNS REQUIRING 4 POSTS, SPACE INTERMEDIATE POSTS EVENLY.

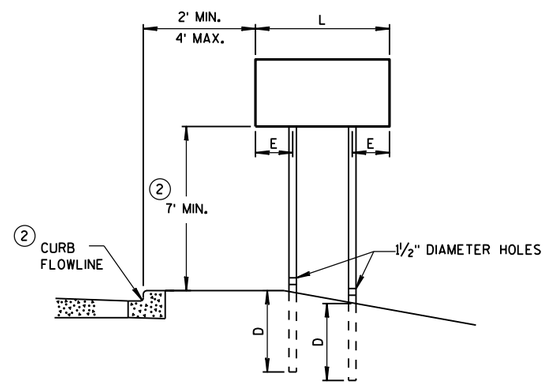

URBAN AREA

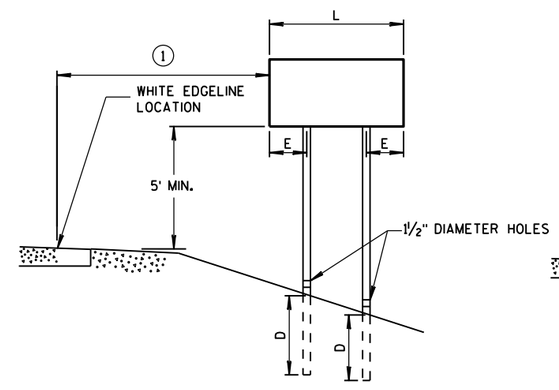

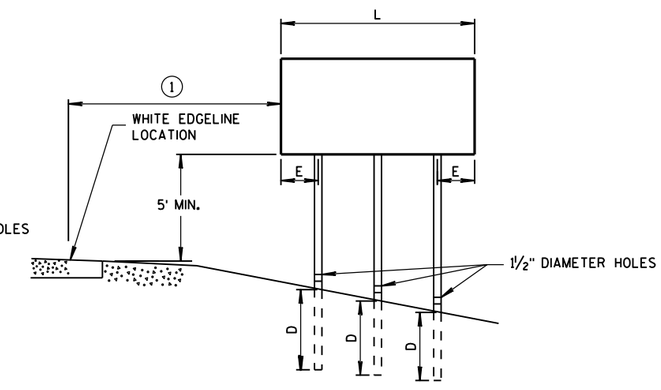

RURAL AREA

POST MOUNTING DETAIL FOR TEMPORARY TRAFFIC CONTROL FIXED MESSAGE SIGNS

TUBULAR STEEL POSTS

AREA OF SIGN INSTALLATION (SQ. FT.)	NUMBER OF REQUIRED TUBULAR STEEL POSTS
9 OR LESS	1
GREATER THAN 9 LESS THAN OR EQUAL TO 18	2
GREATER THAN 18 LESS THAN OR EQUAL TO 27	3

SIGNS WIDER THAN 3 FEET OR LARGER THAN 9 SQ. FT. SHALL BE MOUNTED ON MULTIPLE POSTS (SEE ABOVE TABLE).

SIGNS LARGER THAN 27 SQ. FT. SHALL NOT BE MOUNTED ON TUBULAR STEEL POSTS.

WOOD POST EMBEDMENT DEPTH

AREA OF SIGN INSTALLATION (SQ. FT.)	D (MIN)
20 OR LESS	4'
GREATER THAN 20	5'

4" X 6" WOOD POST

POST SPACING REQUIREMENTS		NUMBER OF WOOD POSTS REQUIRED
L	E	
48" OR LESS AND LESS THAN 20 SQ. FT.	-	1
LESS THAN 60"	12"	2
60" TO 120"	L/5	2
GREATER THAN 120" LESS THAN 168"	12"	3
168" AND GREATER	12"	4

SEE NOTE 3

TEMPORARY TRAFFIC CONTROL SIGN MOUNTING

STATE OF WISCONSIN
DEPARTMENT OF TRANSPO

6

S.D.D. 15 D 38-2a

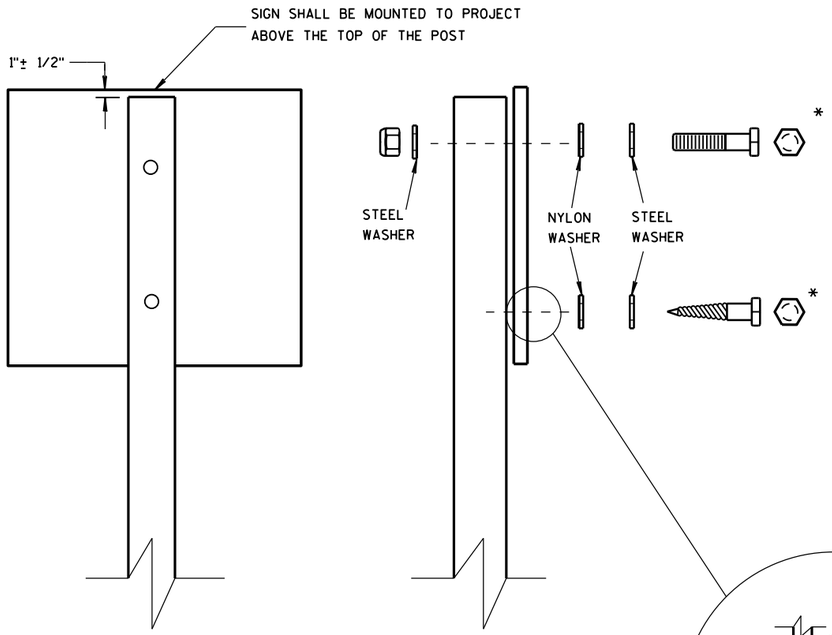

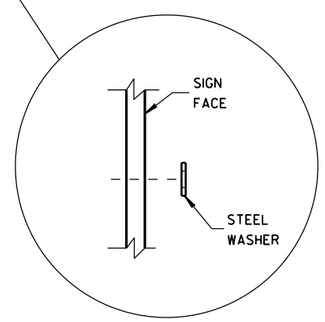

WASHER PLACEMENT WHEN SIGN HAS OTHER THAN TYPE H OR TYPE F FACE

NUTS, BOLTS AND LAGS USED FOR MOUNTING SIGNS SHALL HAVE HEXAGONAL HEADS AND SHALL BE EITHER:

A. HOT DIP GALVANIZED IN ACCORDANCE WITH ASTM DESIGNATION: A 153, CLASS D, OR SC 3

B. ELECTRO-GALVANIZED IN ACCORDANCE WITH ASTM DESIGNATION: B 633, TYPE III, SC 3

THREADS ON BOLTS AND NUTS SHALL BE MANUFACTURED WITH SUFFICIENT ALLOWANCE FOR THE CADMIUM PLATE OR GALVANIZED COATING TO PERMIT THE NUTS TO RUN FREELY ON THE BOLTS.

WOOD POSTS (4" x 4" or 4" x 6")

LAG SCREWS - 3/8" X 3"

MACHINE BOLTS - 5/16" X 6-1/2" OR 7" LENGTH W/ NUTS

SQUARE STEEL POSTS (2" x 2")

MACHINE BOLTS - 3/8" X 3-1/4" LENGTH W/ NUTS

RIVETS - 9/32" (6605-9-6) BULB-TITE, TRI-FOLD, ALUMINUM BODY/MANDREL O.D. FLANGE .720-.765 INCH, GRIP RANGE .042-.375 INCH

WASHERS (ALL POSTS) -

1-1/4" O.D. X 3/8" I.D. X 1/16" STEEL

1-1/4" O.D. X 3/8" I.D. X .080 NYLON FOR ALL TYPE H SIGNS

* TWO DIFFERENT FASTENING SYSTEMS ARE SHOWN FOR ILLUSTRATION PURPOSES. ON ANY INDIVIDUAL SIGN, EITHER ONE OR THE OTHER SYSTEM SHALL BE USED. ACTUAL NUMBER OF FASTENERS PER SIGN VARIES WITH THE SIGN AREA. FOR A SINGLE POST INSTALLATION, ALL SIGNS GREATER THAN 9 SQ. FT. REQUIRE THE USE OF 3 FASTENERS.

6

6

S.D.D. 15 D 38-2b

S.D.D. 15 D 38-2b

ATTACHMENT OF SIGNS TO POSTS

STATE OF WISCONSIN
DEPARTMENT OF TRANSPORTATION

APPROVED

June 2017 — /S/ Andrew Heldtke
DATE — WORK ZONE ENG

FHWA

STATE PROJECT NUMBER
9215-01-65

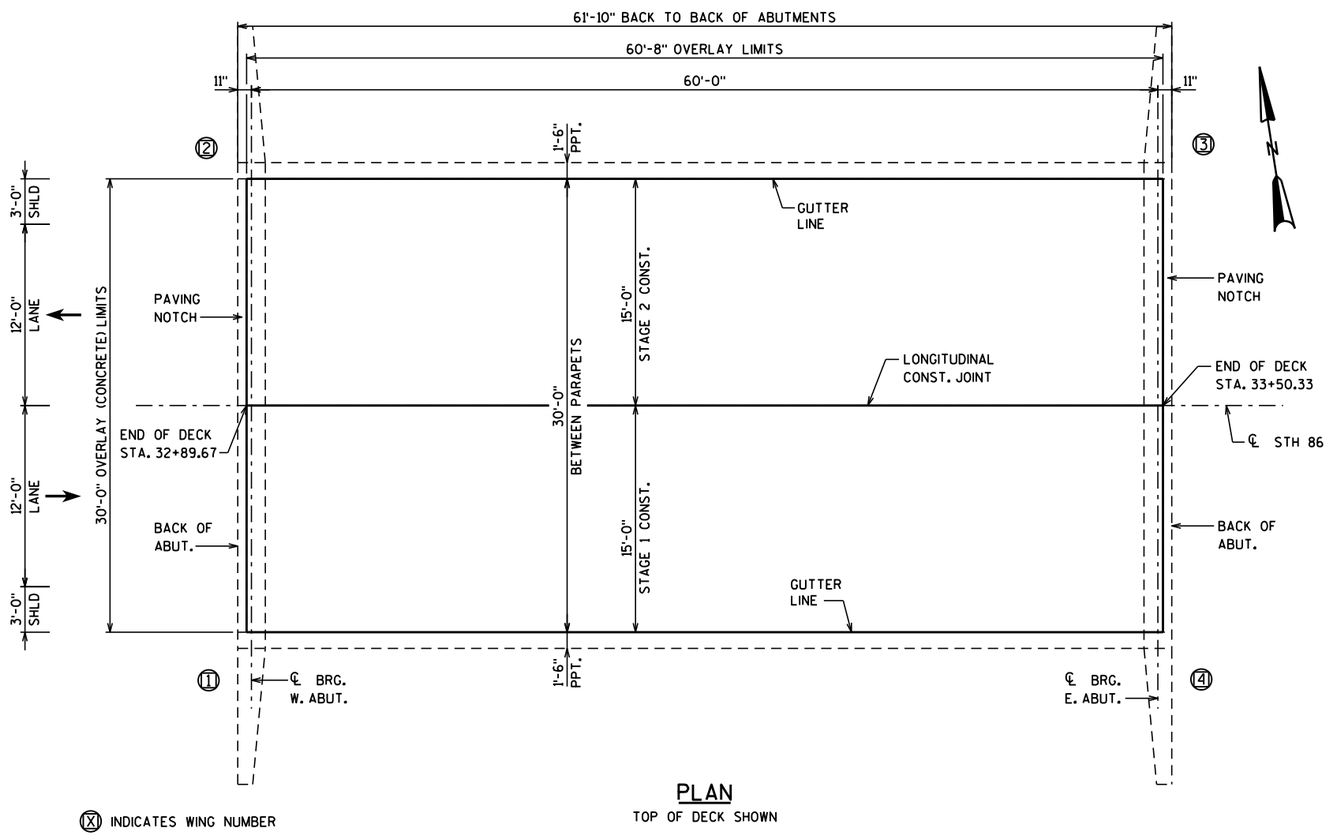

INDICATES WING NUMBER

PLAN

TOP OF DECK SHOWN

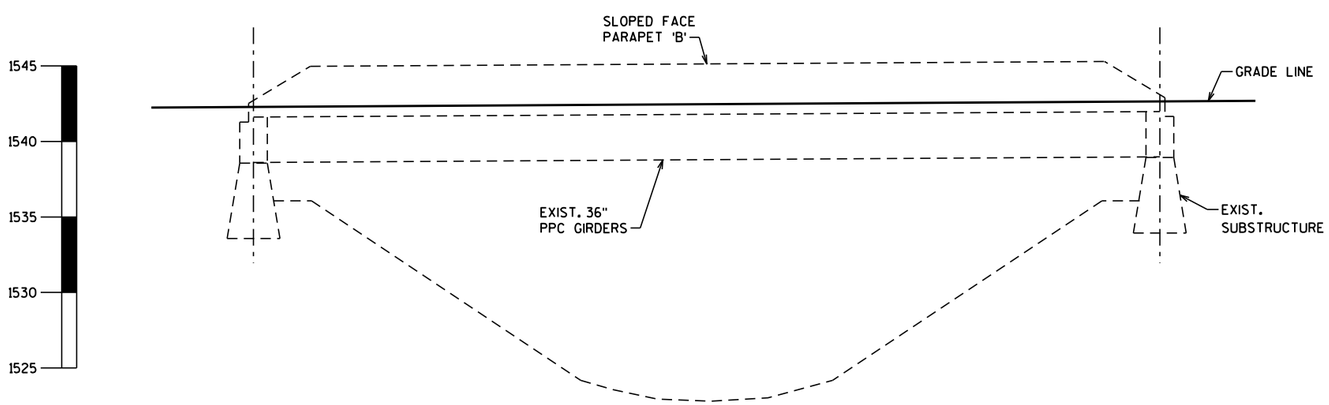

ELEVATION

DESIGN DATA

LIVE LOAD:

INVENTORY RATING ——— HS-20
OPERATING RATING ——— HS-37
WISCONSIN STANDARD PERMIT
VEHICLE (Wis-SPV) ——— 250 KIPS

MATERIAL PROPERTIES:

CONCRETE MASONRY
OVERLAY DECKS ——— f'c = 4,000 P.S.I.

LIST OF DRAWINGS

1. GENERAL PLAN
2. CROSS SECTION & QUANTITIES

TRAFFIC DATA

ADT = 700 (2019)
910 (2039)
RDS = 60 M.P.H.

WISCONSIN
KRISTOFER R. OLSON
E-35236
APPLETON, WI
PROFESSIONAL ENGINEER

12/3/18

CONSULTANT CONTACT

KRISTOFER OLSON
OMNNI ASSOCIATES, INC.
(920) 735-6900

BRIDGE OFFICE CONTACT

WILLIAM DREHER
(608) 266-8489

NO.	DATE	REVISION	BY

ORIGINAL PLANS PREPARED BY

OMNNI ASSOCIATES

STATE OF WISCONSIN
DEPARTMENT OF TRANSPORTATION

ACCEPTED William C. Dreher SDR 02/06/19
CHIEF STRUCTURES DESIGN ENGINEER DATE

STRUCTURE B-35-98

STH 86 OVER NORTH FORK SPIRIT RIVER

COUNTY LINCOLN | TOWN TOMAHAWK

DESIGN SPEC. REHABILITATION N/A

DESIGNED BY BRE	DESIGN CK'D. KRO	DRAWN BY BRE	PLANS CK'D. KRO

GENERAL PLAN

SHEET 1 OF 2

8

8

STATE PROJECT NUMBER
9215-01-65

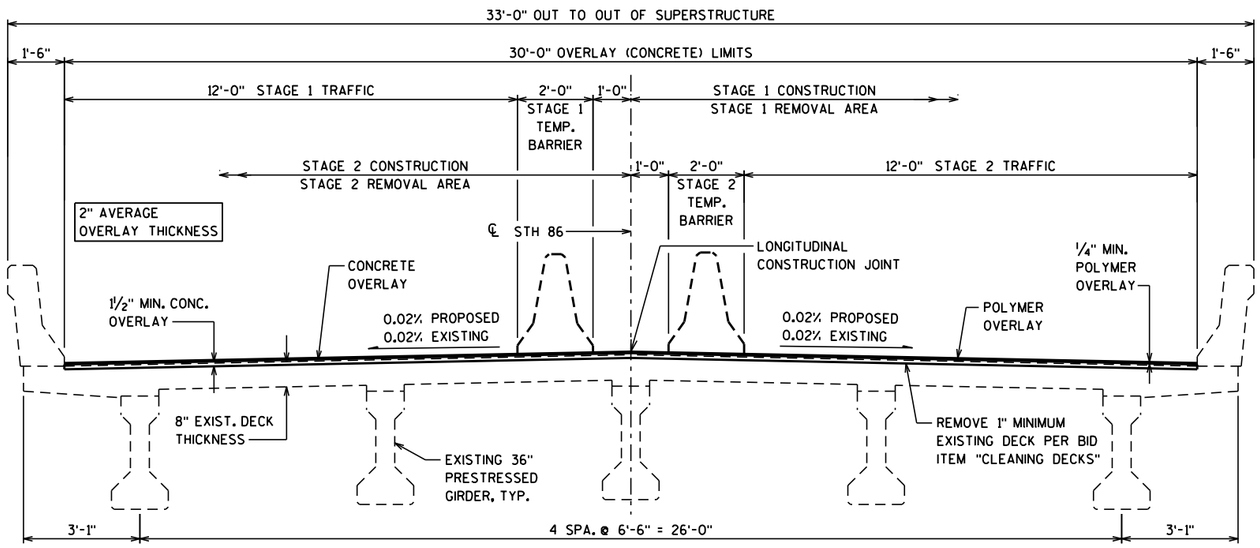

CROSS SECTION THRU ROADWAY

LOOKING EAST

NOTES

DRAWINGS SHALL NOT BE SCALED.

DIMENSIONS SHOWN ARE BASED ON THE ORIGINAL STRUCTURE PLANS.

ALL CONCRETE REMOVAL NOT COVERED WITH A CONCRETE OVERLAY SHALL BE DEFINED BY A 1-INCH DEEP SAW CUT.

PROTECTIVE SURFACE TREATMENT SHALL BE APPLIED TO THE ENTIRE TOP SURFACE OF THE NEW CONCRETE OVERLAY.

SEAL OVERLAY CONSTRUCTION JOINTS ACCORDING TO SECTION 502.3.13.1 OF THE STANDARD SPECIFICATIONS. COST INCIDENTAL TO BID ITEM "CONCRETE MASONRY OVERLAY DECKS".

PIGMENTED SURFACE SEALER SHALL BE APPLIED TO THE ENTIRE FRONT FACES AND TOPS OF BOTH WING & DECK PARAPETS.

A MINIMUM OF 1-INCH OF CONCRETE SHALL BE REMOVED FROM THE ENTIRE BRIDGE DECK UNDER THE BID ITEM "CLEANING DECKS".

THE AVERAGE OVERLAY THICKNESS IS BASED ON THE MINIMUM OVERLAY THICKNESS PLUS ½-INCH TO ACCOUNT FOR VARIATIONS IN THE DECK SURFACE.

PREPARATION DECKS TYPE 1, PREPARATION DECKS TYPE 2, CONCRETE SURFACE REPAIR, AND FULL-DEPTH DECK REPAIR AREAS ARE BASED ON THE PLANS AND AS DETERMINED BY THE ENGINEER. "CONCRETE SURFACE REPAIR" TO INCLUDE BUT NOT LIMITED TO PARAPETS AND WINGWALLS. DECK PREPARATION AND FULL-DEPTH DECK REPAIRS SHALL BE FILLED WITH "CONCRETE MASONRY OVERLAY DECKS".

ANY EXCAVATION REQUIRED TO COMPLETE THE OVERLAY AT THE ABUTMENTS TO BE CONSIDERED INCIDENTAL TO THE BID ITEM "CONCRETE MASONRY OVERLAY DECKS".

PROFILE GRADE LINE SHALL BE DETERMINED IN THE FIELD BASED ON A MINIMUM OVERLAY THICKNESS OF 1½" PLACED ABOVE THE DECK SURFACE AFTER SURFACE PREPARATION. EXPECTED AVERAGE OVERLAY THICKNESS IS 2" (OR AS GIVEN ON THE PLANS). IF EXPECTED AVERAGE OVERLAY THICKNESS IS EXCEEDED BY MORE THAN ½", CONTACT THE STRUCTURES DESIGN SECTION.

TOTAL ESTIMATED QUANTITIES

ITEM NO.	BID ITEMS	UNIT	TOTALS
502.3200	PROTECTIVE SURFACE TREATMENT	SY	202
502.3210	PIGMENTED SURFACE SEALER	SY	48
509.0301	PREPARATION DECKS TYPE 1	SY	8
509.0302	PREPARATION DECKS TYPE 2	SY	4
509.0500	CLEANING DECKS	SY	202
509.1500	CONCRETE SURFACE REPAIR	SF	13
509.2000	FULL-DEPTH DECK REPAIR	SY	1
509.2500	CONCRETE MASONRY OVERLAY DECKS	CY	12
509.5100.S	POLYMER OVERLAY	SY	202
509.9050.S	CLEANING PARAPETS	LF	124
SPV.0025	ABUTMENT UNDERCUT SLURRY BACKFILL	CF	29

8

8

NO.	DATE	REVISION	BY

STATE OF WISCONSIN
DEPARTMENT OF TRANSPORTATION

STRUCTURE B-35-98

DRAWN BY BRE PLANS CK'D. KRO

CROSS SECTION & QUANTITIES

SHEET 2 OF 2

STATE PROJECT NUMBER
9215-01-65

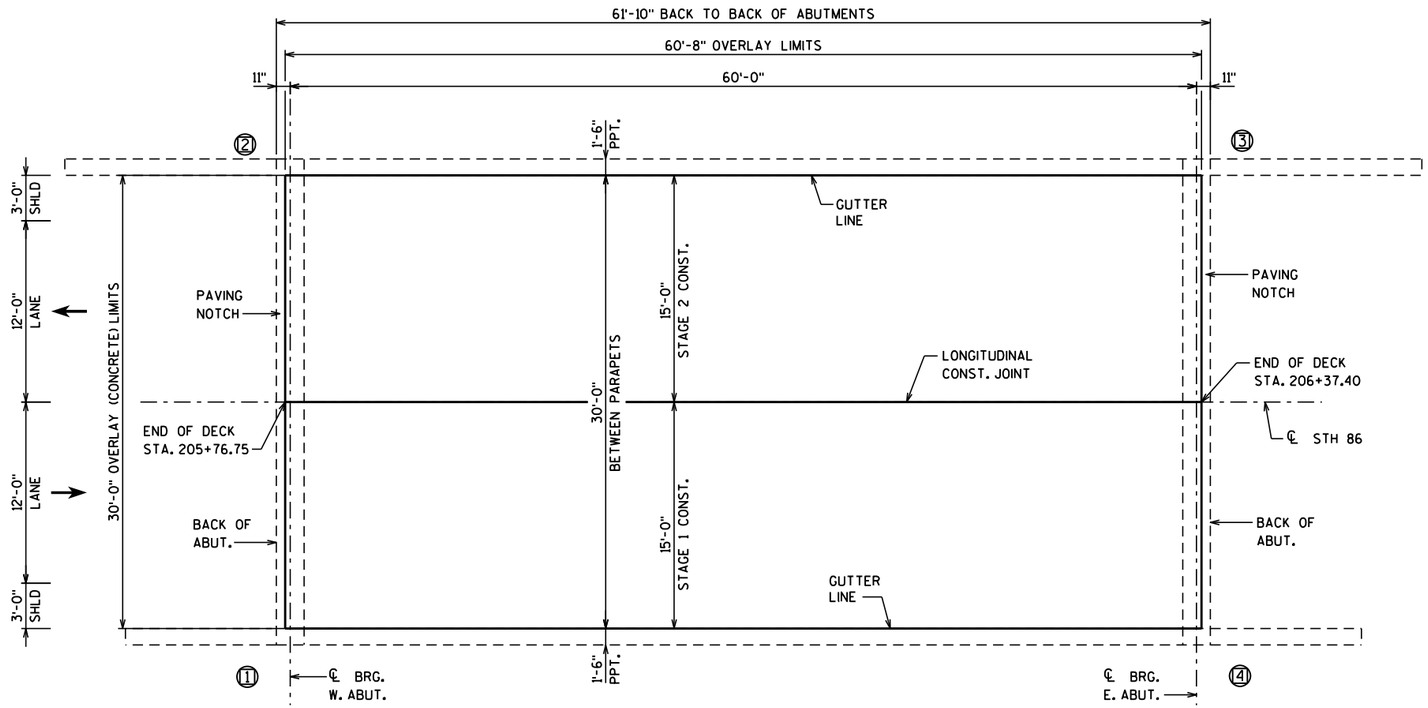

(X) INDICATES WING NUMBER

PLAN

TOP OF DECK SHOWN

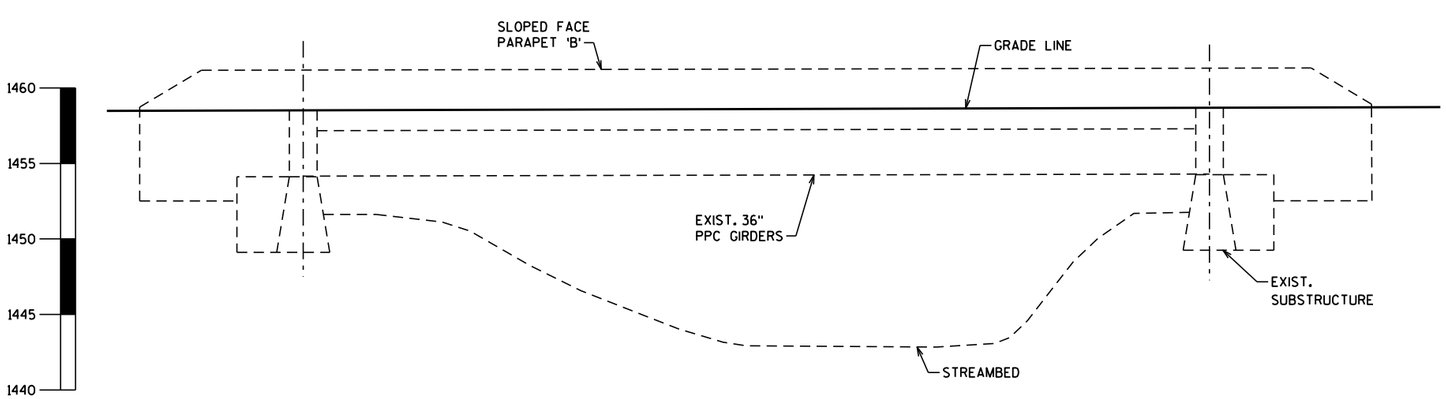

ELEVATION

DESIGN DATA

LIVE LOAD:

INVENTORY RATING ———— HS-20
OPERATING RATING ———— HS-37
WISCONSIN STANDARD PERMIT
VEHICLE (Wis-SPV) ———— 250 KIPS

MATERIAL PROPERTIES:

CONCRETE MASONRY
OVERLAY DECKS ———— f'c = 4,000 P.S.I.

LIST OF DRAWINGS

1. GENERAL PLAN
2. CROSS SECTION & QUANTITIES

TRAFFIC DATA

ADT = 700 (2019)
910 (2039)
RDS = 60 M.P.H.

WISCONSIN
KRISTOFER R. OLSON
E-35236
APPLETON, WI
PROFESSIONAL ENGINEER

12/3/18

CONSULTANT CONTACT

KRISTOFER OLSON
OMNNI ASSOCIATES, INC.
(920) 735-6900

BRIDGE OFFICE CONTACT

WILLIAM DREHER
(608) 266-8489

NO.	DATE	REVISION	BY

ORIGINAL PLANS PREPARED BY

OMNI ASSOCIATES

STATE OF WISCONSIN
DEPARTMENT OF TRANSPORTATION

ACCEPTED William C. Dreher SDR 02/06/19
CHIEF STRUCTURES DESIGN ENGINEER DATE

STRUCTURE B-35-99

STH 86 OVER SQUAW CREEK

COUNTY	TOWN
LINCOLN	TOMAHAWK

DESIGN SPEC. REHABILITATION N/A

DESIGNED BY	DESIGN CK'D.	DRAWN BY	PLANS CK'D.
BRE	KRO	BRE	KRO

GENERAL PLAN

SHEET 1 OF 2

44

8

8

STATE PROJECT NUMBER
9215-01-65

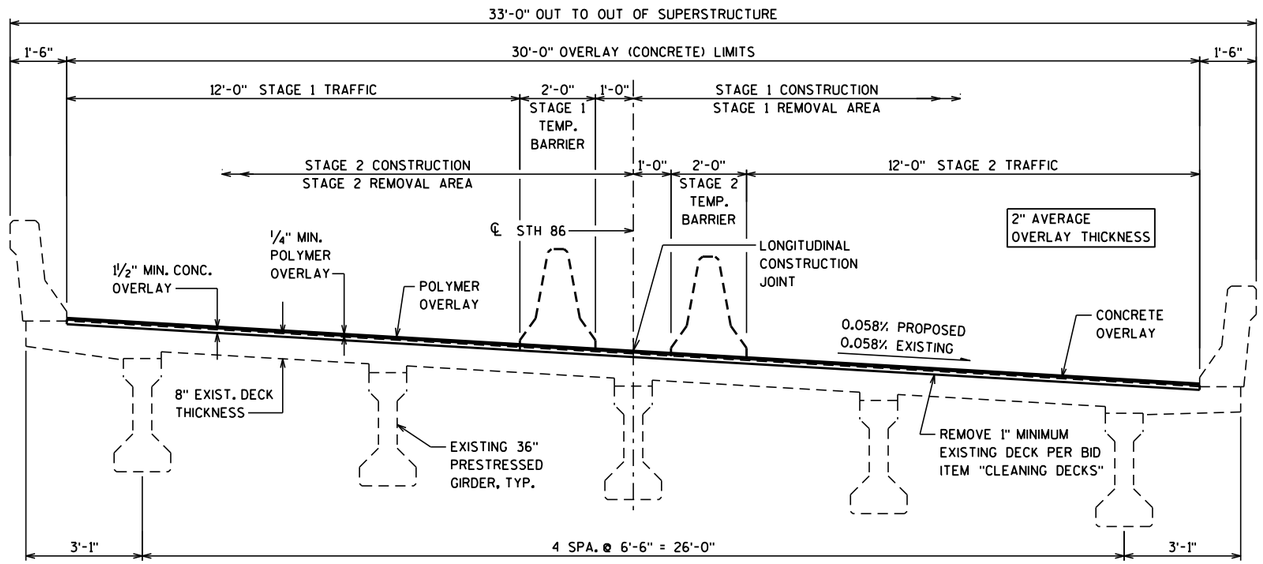

CROSS SECTION THRU ROADWAY

LOOKING EAST

NOTES

DRAWINGS SHALL NOT BE SCALED

DIMENSIONS SHOWN ARE BASED ON THE ORIGINAL STRUCTURE PLANS.

ALL CONCRETE REMOVAL NOT COVERED WITH A CONCRETE OVERLAY SHALL BE DEFINED BY A 1-INCH DEEP SAW CUT.

PROTECTIVE SURFACE TREATMENT SHALL BE APPLIED TO THE ENTIRE TOP SURFACE OF THE NEW CONCRETE OVERLAY.

SEAL OVERLAY CONSTRUCTION JOINTS ACCORDING TO SECTION 502.3.13.1 OF THE STANDARD SPECIFICATIONS. COST INCIDENTAL TO BID ITEM "CONCRETE MASONRY OVERLAY DECKS".

PIGMENTED SURFACE SEALER SHALL BE APPLIED TO THE ENTIRE FRONT FACES AND TOPS OF BOTH WING & DECK PARAPETS.

A MINIMUM OF 1-INCH OF CONCRETE SHALL BE REMOVED FROM THE ENTIRE BRIDGE DECK UNDER THE BID ITEM "CLEANING DECKS".

THE AVERAGE OVERLAY THICKNESS IS BASED ON THE MINIMUM OVERLAY THICKNESS PLUS ½-INCH TO ACCOUNT FOR VARIATIONS IN THE DECK SURFACE.

PREPARATION DECKS TYPE 1, PREPARATION DECKS TYPE 2, CONCRETE SURFACE REPAIR, AND FULL-DEPTH DECK REPAIR AREAS ARE BASED ON THE PLANS AND AS DETERMINED BY THE ENGINEER. DECK PREPARATION AND FULL-DEPTH DECK REPAIRS SHALL BE FILLED WITH "CONCRETE MASONRY OVERLAY DECKS".

ANY EXCAVATION REQUIRED TO COMPLETE THE OVERLAY AT THE ABUTMENTS TO BE CONSIDERED INCIDENTAL TO THE BID ITEM "CONCRETE MASONRY OVERLAY DECKS".

PROFILE GRADE LINE SHALL BE DETERMINED IN THE FIELD BASED ON A MINIMUM OVERLAY THICKNESS OF 1½" PLACED ABOVE THE DECK SURFACE AFTER SURFACE PREPARATION. EXPECTED AVERAGE OVERLAY THICKNESS IS 2" (OR AS GIVEN ON THE PLANS). IF EXPECTED AVERAGE OVERLAY THICKNESS IS EXCEEDED BY MORE THAN ½", CONTACT THE STRUCTURES DESIGN SECTION.

TOTAL ESTIMATED QUANTITIES

ITEM NO.	BID ITEMS	UNIT	TOTALS
502.3200	PROTECTIVE SURFACE TREATMENT	SY	202
502.3210	PIGMENTED SURFACE SEALER	SY	67
509.0301	PREPARATION DECKS TYPE 1	SY	4
509.0302	PREPARATION DECKS TYPE 2	SY	2
509.0500	CLEANING DECKS	SY	202
509.2000	FULL-DEPTH DECK REPAIR	SY	1
509.2500	CONCRETE MASONRY OVERLAY DECKS	CY	12
509.5100.S	POLYMER OVERLAY	SY	202
509.9050.S	CLEANING PARAPETS	LF	172
SPV.0025	ABUTMENT UNDERCUT SLURRY BACKFILL	CF	29

NO.	DATE	REVISION	BY

STATE OF WISCONSIN
DEPARTMENT OF TRANSPORTATION

STRUCTURE B-35-99

DRAWN BY BRE | PLANS CK'D. KRO

CROSS SECTION & QUANTITIES

SHEET 2 OF 2

8

8

Wisconsin Department of Transportation

Dedicated people creating transportation solutions through innovation and exceptional service.

http://www.dot.wisconsin.gov