RHI

MAY 2019

PROJECT ID: 9030-11-60

WITH: 9215-01-64

COUNTY: LINCOLN

41

ORDER OF SHEETS

TOTAL SHEETS = 74

STATE OF WISCONSIN
DEPARTMENT OF TRANSPORTATION

PLAN OF PROPOSED IMPROVEMENT

MERRILL - RHINELANDER

BIG HAY MEADOW CREEK BRIDGE B-35-20

STH 17

LINCOLN COUNTY

STATE PROJECT	FEDERAL PROJECT	
	PROJECT	CONTRACT
9030-11-60	WISC 2019312	1

STATE PROJECT NUMBER
9030-11-60

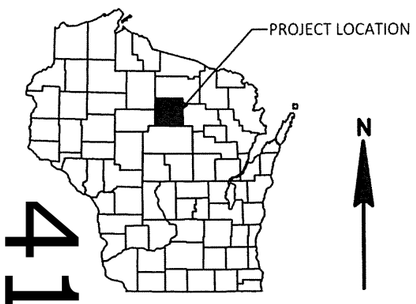

DESIGN DESIGNATION

A.A.D.T.	2019	=	3,120
A.A.D.T.	2039	=	3,480
D.H.V.		=	5.0
D.D.		=	60
T.		=	6.0%
DESIGN SPEED		=	55 MPH
ESALS		=	950,000

CONVENTIONAL SYMBOLS

PLAN

CORPORATE LIMITS
PROPERTY LINE
LOT LINE
LIMITED HIGHWAY EASEMENT
EXISTING RIGHT OF WAY
PROPOSED OR NEW R/W LINE
SLOPE INTERCEPT
REFERENCE LINE
EXISTING CULVERT
PROPOSED CULVERT (Box or Pipe)
COMBUSTIBLE FLUIDS — CAUTION
MARSH AREA
WOODED OR SHRUB AREA

PROFILE

GRADE LINE
ORIGINAL GROUND
MARSH OR ROCK PROFILE (To be noted as such) — ROCK
SPECIAL DITCH — LABEL
GRADE ELEVATION — 95.36
CULVERT (Profile View)

UTILITIES

ELECTRIC — E
FIBER OPTIC — FO
GAS — G
SANITARY SEWER — SAN
STORM SEWER — SS
TELEPHONE — T
WATER — W
UTILITY PEDESTAL
POWER POLE
TELEPHONE POLE

STRUCTURE B-35-020

BEGIN CONSTRUCTION
STA 449+10.00

END PROJECT
STA 453+60.00

BEGIN PROJECT
STA 449+60.00
Y = 152,817.228
X = 428,813.288

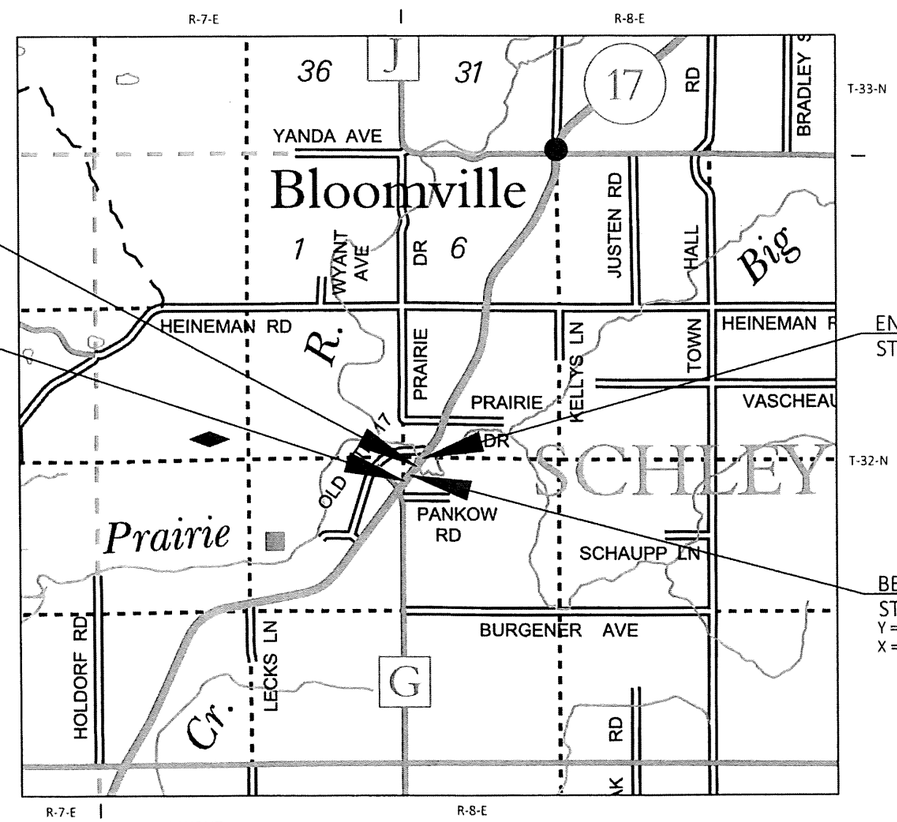

LAYOUT

SCALE 0 — 1 MI

TOTAL NET LENGTH OF CENTERLINE = 0.076 MI.

HORIZONTAL POSITIONS SHOWN ON THIS PLAN ARE WISCONSIN COUNTY COORDINATES, LINCOLN COUNTY, NAD83 (2011), IN U.S. SURVEY FEET. VALUES ARE GRID COORDINATES, GRID BEARINGS, AND GRID DISTANCES. GRID DISTANCES MAY BE USED AS GROUND DISTANCES.

ELEVATIONS SHOWN ON THE PLAN ARE REFERENCED TO NORTH AMERICAN VERTICAL DATUM NAV88 (2012).

ORIGINAL PLANS PREPARED BY

CORRE ENGINEERING

WISCONSIN PROFESSIONAL ENGINEER
KEVIN L. MEYER
E-38309-006
ELK MOUND
WI

DATE: 11/1/18 (Signature)

STATE OF WISCONSIN
DEPARTMENT OF TRANSPORTATION

PREPARED BY

Surveyor	WISDOT & CORRE, INC.
Designer	CORRE, INC.
Project Manager	JESSE JEFFERSON
Regional Examiner	
Regional Supervisor	

APPROVED FOR THE DEPARTMENT

DATE: 11/01/18 (Signature)

E

GENERAL NOTES

THE LOCATION OF THE EXISTING UTILITIES AS SHOWN ON THE PLANS IS APPROXIMATE. THERE MAY BE OTHER UTILITY INSTALLATIONS WITHIN THE PROJECT AREA THAT ARE NOT SHOWN.

DISTURBED AREAS WITHIN THE RIGHT-OF-WAY, ARE TO BE SEEDED, FERTILIZED AND MULCHED AS DIRECTED BY THE ENGINEER. ALL OTHER DISTURBED AREAS ARE TO BE SEEDED, FERTILIZED AND MULCHED AT THE CONTRACTOR'S EXPENSE.

PAVE APPROACH SLAB 1/4-INCH HIGHER THAN CONCRETE OVERLAY ON BRIDGE DECK TO ACCOMMODATE POLYMER OVERLAY THICKNESS.

DNR CONTACT

DNR NORTHERN REGION HQ
ATTN: WENDY HENNIGES
107 SUTLIFF ST
RHINELANDER, WI 54501
TELEPHONE: (715) 365-8916
E-MAIL: Wendy.Henniges@Wisconsin.gov

UTILITIES

NET LEC LLC - COMMUNICATION
ATTN: RICK VINCENT
450 SECURITY BLVD
P.O. BOX 19079
GREEN BAY, WI 54307-9001
TELEPHONE: (920) 433-1703
E-MAIL: rick.vincent@nsight.com

CENTURY LINK - COMMUNICATION
ATTN: BRIAN HUHN
425 ELLINGSON AVE
HAWKINS, WI 54530
TELEPHONE: (715) 532-0023
E-MAIL: BRIAN.HUHN@CENTURYLINK.COM

	HYDROLOGIC SOIL GROUP											
	A			B			C			D		
	SLOPE RANGE (PERCENT)			SLOPE RANGE (PERCENT)			SLOPE RANGE (PERCENT)			SLOPE RANGE (PERCENT)		
LAND USE:	0 - 2	2 - 6	6 & OVER	0 - 2	2 - 6	6 & OVER	0 - 2	2 - 6	6 & OVER	0 - 2	2 - 6	6 & OVER
ROW CROPS	.08 .22	.16 .30	.22 .38	.12 .26	.20 .34	.27 .44	.15 .30	.24 .37	.33 .50	.19 .34	.28 .41	.38 .56
MEDIAN STRIP-TURF	.19 .24	.20 .26	.24 .30	.19 .25	.22 .28	.26 .33	.20 .26	.23 .30	.30 .37	.20 .27	.25 .32	.30 .40
SIDE SLOPE-TURF			.25 .32			.27 .34			.28 .36			.30 .38
PAVEMENT:												
ASPHALT	.70 - .95											
CONCRETE	.80 - .95											
BRICK	.70 - .80											
DRIVES, WALKS	.75 - .85											
ROOFS	.75 - .95											
GRAVEL ROADS, SHOULDERS	.40 - .60											

DIGGERS HOTLINE
Dial 811 or (800)242-8511
www.DiggersHotline.com

TOTAL PROJECT AREA = 2.76 ACRES

TOTAL AREA EXPECTED TO BE DISTURBED BY CONSTRUCTION ACTIVITIES = 0.20 ACRES

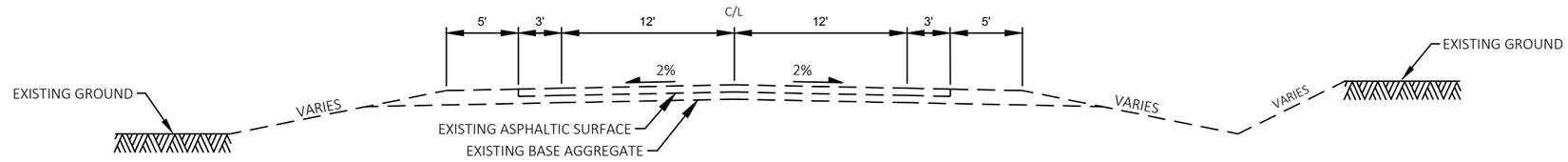

EXISTING TYPICAL SECTION

STA 449+60.00 TO STA 451+00.00

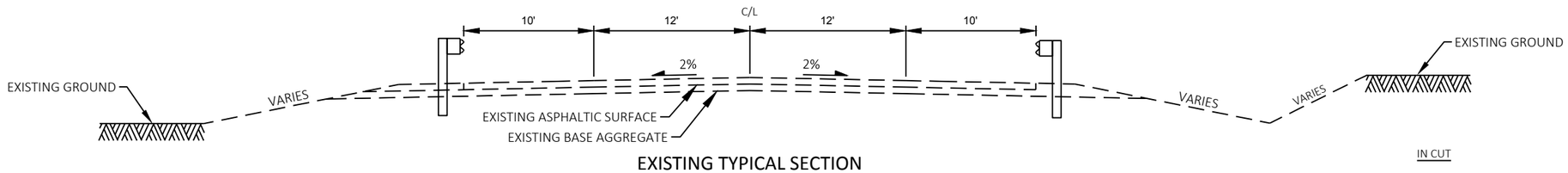

EXISTING TYPICAL SECTION

STA 451+00.00 TO STA 452+02.75
STA 452+97.25 TO STA 453+60.00

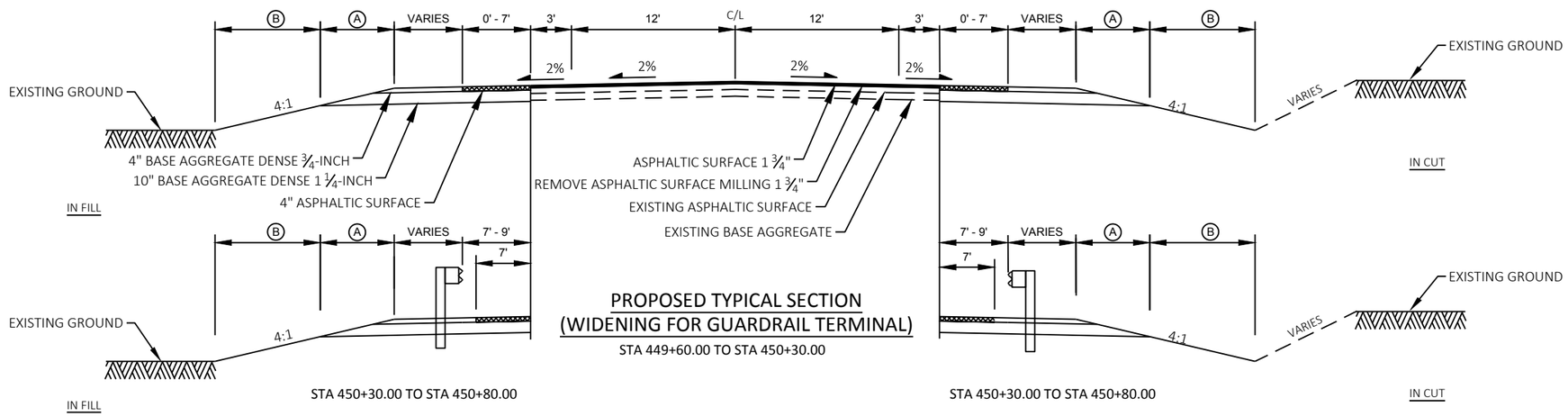

PROPOSED TYPICAL SECTION (WIDENING FOR GUARDRAIL TERMINAL)

STA 449+60.00 TO STA 450+30.00

STA 450+30.00 TO STA 450+80.00

STA 450+30.00 TO STA 450+80.00

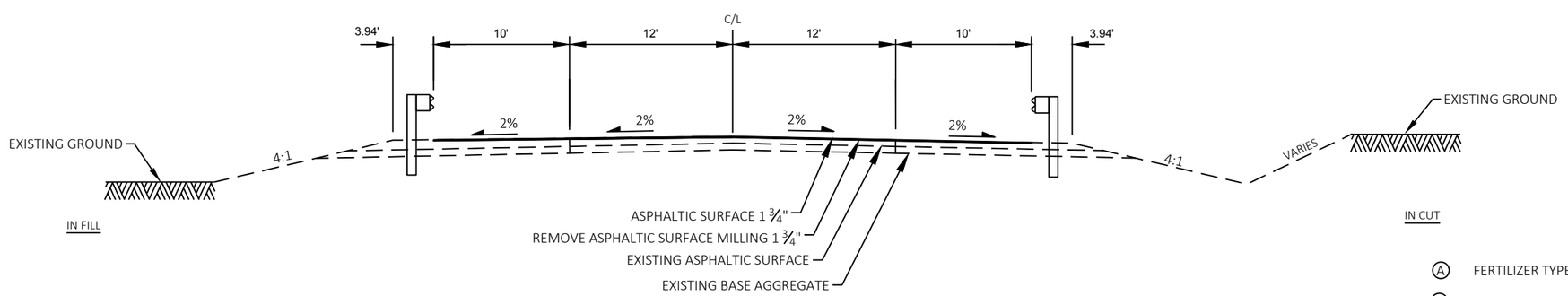

PROPOSED TYPICAL SECTION

STA 450+80.00 TO STA 452+97.25
STA 453+92.82 TO STA 453+60.00

Ⓐ FERTILIZER TYPE B; SEEDING MIXTURE NO. 20

Ⓑ TOPSOIL; EROSION MAT; FERTILIZER TYPE B; SEEDING MIXTURE NO. 20

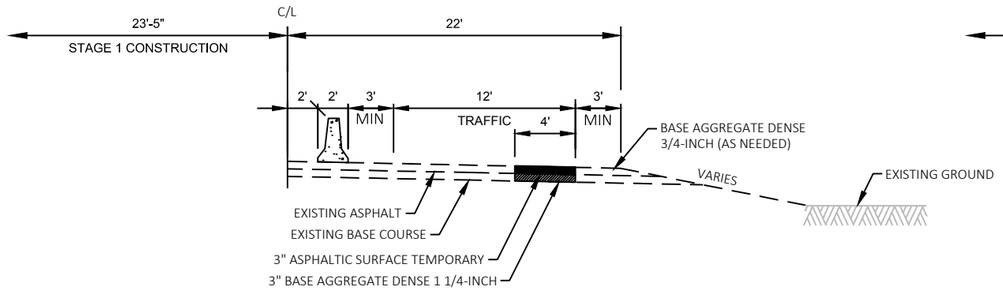

TYPICAL SECTION - STH 17 - STAGE 1
STA 447+60 TO STA 450+46

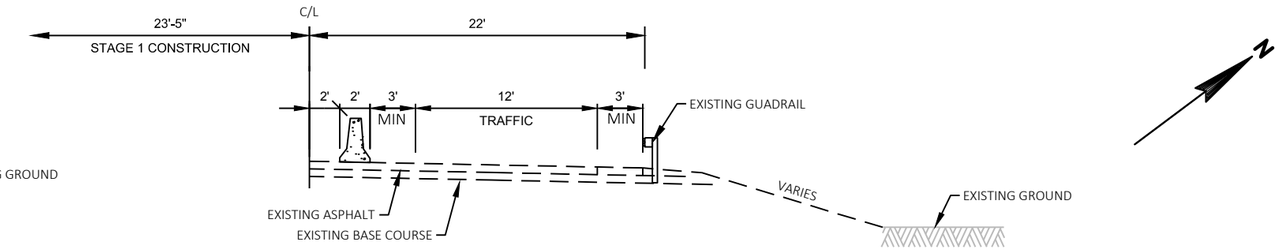

TYPICAL SECTION - STH 17 - STAGE 1
STA 450+46 TO STA 456+00

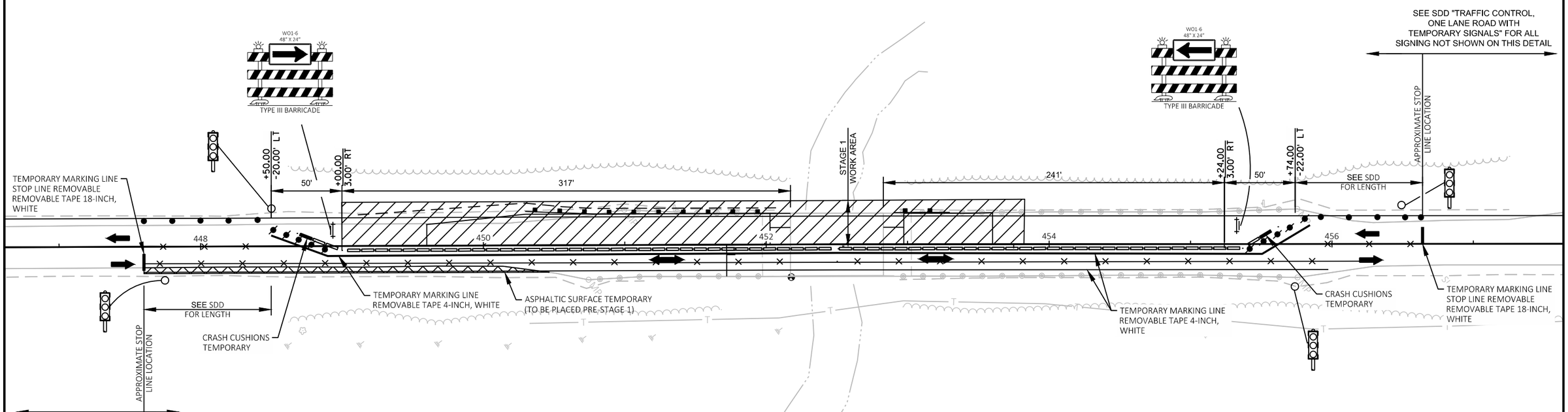

NOTES:

1. USE THIS DETAIL IN COORDINATION WITH SDD "TRAFFIC CONTROL, ONE LANE ROAD WITH TEMPORARY SIGNALS".

STAGE 1 SEQUENCE:

1. SET UP TRAFFIC CONTROL PER THIS SHEET AND SDD "TRAFFIC CONTROL, ONE LANE ROAD WITH TEMPORARY SIGNALS".
2. COMPLETE NB STRUCTURE AND APPROACH WORK.

TEMPORARY TRAFFIC SIGNAL TIMING 7:00AM TO 6:00PM				
NB	SB	YELLOW	ALL RED	GREEN
RED	RED		27.00 S	
GREEN	RED			25.00 S
YELLOW	RED	5.00 S		
RED	RED		27.00 S	
RED	GREEN			25.00 S
RED	YELLOW	5.00 S		
TOTAL CYCLE LENGTH = 114.0 S		10.00 S	54.00 S	50.00 S

TEMPORARY TRAFFIC SIGNAL TIMING 6:00PM TO 7:00AM				
NB	SB	YELLOW	ALL RED	GREEN
RED	RED		27.00 S	
GREEN	RED			19.00 S
YELLOW	RED	5.00 S		
RED	RED		27.00 S	
RED	GREEN			19.00 S
RED	YELLOW	5.00 S		
TOTAL CYCLE LENGTH = 102.0 S		10.00 S	54.00 S	38.00 S

LEGEND

- BARRICADE WTH ATTACHED SIGN
- TRAFFIC CONTROL DRUM
- TRAFFIC CONTROL DRUM WITH TYPE C STEADY BURN LIGHT
- CONCRETE BARRIER TEMPORARY PRECAST
- CRASH CUSHIONS TEMPORARY
- WORK AREA
- DIRECTION OF TRAFFIC
- REMOVE PAVEMENT MARKING
- TEMPORARY SIGNAL

PROJECT NO: 9030-11-60	HWY: STH 17	COUNTY: LINCOLN	STAGE 1 CONSTRUCTION TRAFFIC CONTROL	SHEET 4	E

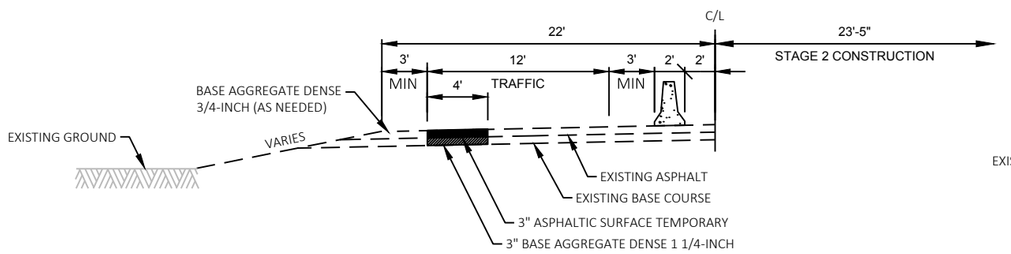

TYPICAL SECTION - STH 17 - STAGE 2
STA 447+60 TO STA 450+46

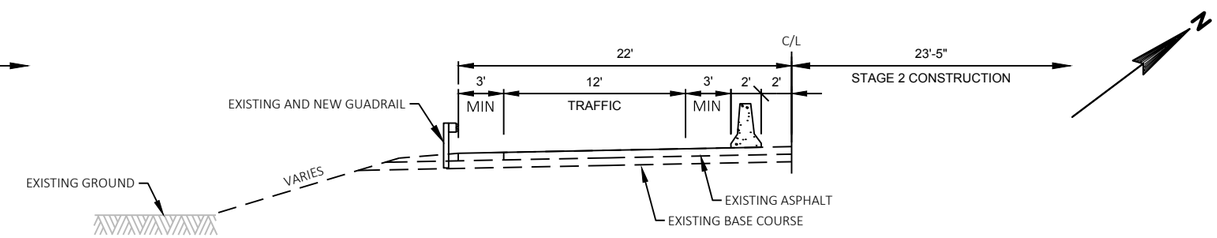

TYPICAL SECTION - STH 17 - STAGE 2
STA 450+46 TO STA 456+00

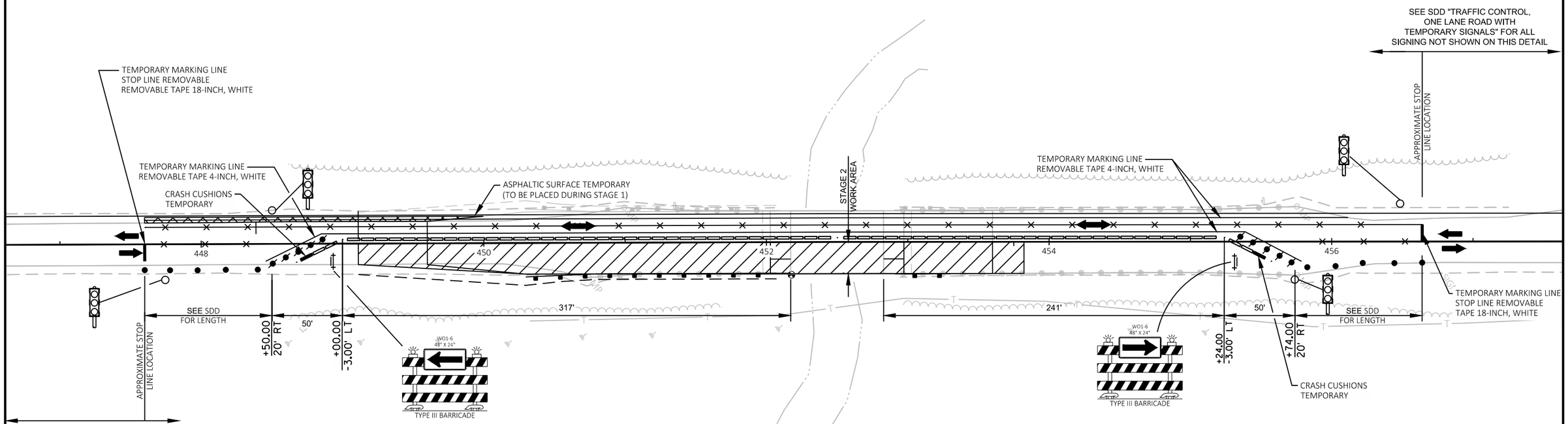

NOTES:

1. USE THIS DETAIL IN COORDINATION WITH SDD "TRAFFIC CONTROL, ONE LANE ROAD WITH TEMPORARY SIGNALS".

STAGE 2 SEQUENCE:

1. SET UP TRAFFIC CONTROL PER THIS SHEET AND SDD "TRAFFIC CONTROL, ONE LANE ROAD WITH TEMPORARY SIGNALS".
2. COMPLETE SB STRUCTURE AND APPROACH WORK.

TEMPORARY TRAFFIC SIGNAL TIMING 7:00AM TO 6:00PM				
NB	SB	YELLOW	ALL RED	GREEN
RED	RED		27.00 S	
GREEN	RED			25.00 S
YELLOW	RED	5.00 S		
RED	RED		27.00 S	
RED	GREEN			25.00 S
RED	YELLOW	5.00 S		
TOTAL CYCLE LENGTH = 114.0 S		10.00 S	54.00 S	50.00 S

TEMPORARY TRAFFIC SIGNAL TIMING 6:00PM TO 7:00AM				
NB	SB	YELLOW	ALL RED	GREEN
RED	RED		27.00 S	
GREEN	RED			19.00 S
YELLOW	RED	5.00 S		
RED	RED		27.00 S	
RED	GREEN			19.00 S
RED	YELLOW	5.00 S		
TOTAL CYCLE LENGTH = 102.0 S		10.00 S	54.00 S	38.00 S

LEGEND

- BARRICADE WTH ATTACHED SIGN
- TRAFFIC CONTROL DRUM
- TRAFFIC CONTROL DRUM WITH TYPE C STEADY BURN LIGHT
- CONCRETE BARRIER TEMPORARY PRECAST
- CRASH CUSHIONS TEMPORARY
- WORK AREA
- DIRECTION OF TRAFFIC
- REMOVE PAVEMENT MARKING
- TEMPORARY SIGNAL

PROJECT NO: 9030-11-60	HWY: STH 17	COUNTY: LINCOLN	STAGE 2 CONSTRUCTION TRAFFIC CONTROL	SHEET 5	E

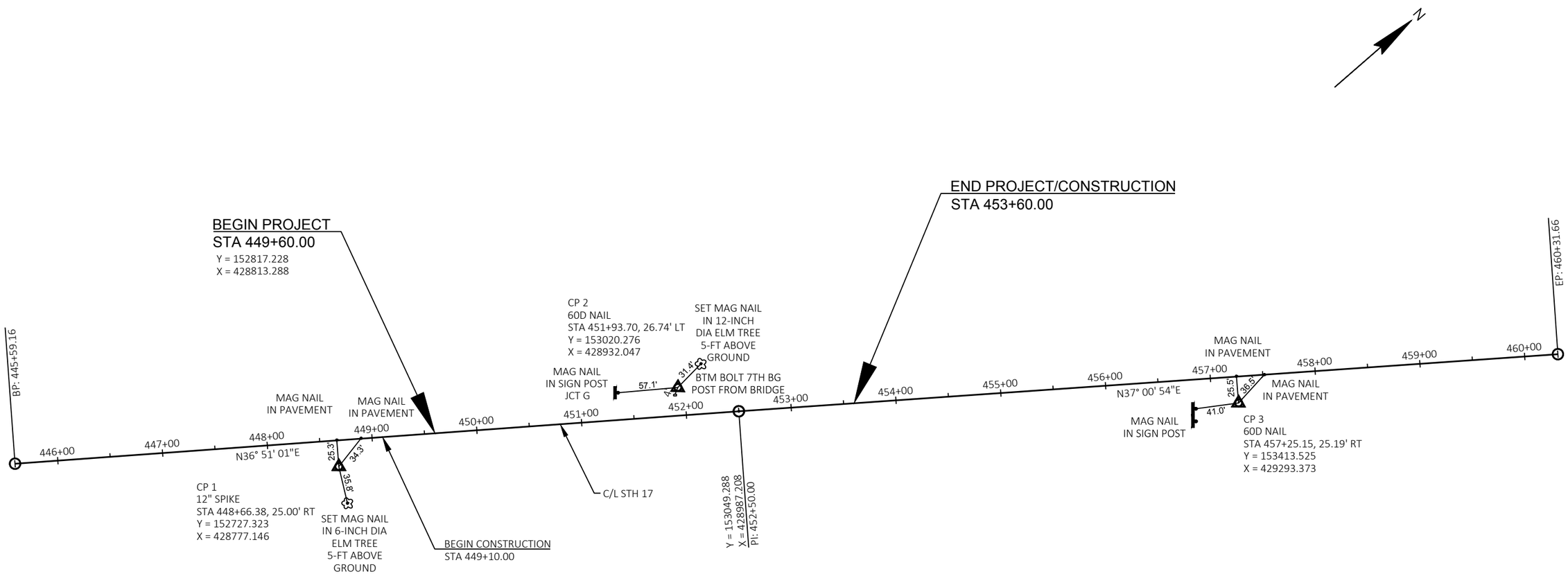
N
END PROJECT/CONSTRUCTION
STA 453+60.00
BEGIN PROJECT
STA 449+60.00
Y = 152817.228
X = 428813.288
EP: 460+31.66
BP: 445+59.16
CP 2
60D NAIL
STA 451+93.70, 26.74' LT
Y = 153020.276
X = 428932.047
SET MAG NAIL
IN 12-INCH
DIA ELM TREE
5-FT ABOVE
GROUND
MAG NAIL
IN SIGN POST
JCT G
57.1'
31.4'
BTM BOLT 7TH BG
POST FROM BRIDGE
MAG NAIL
IN PAVEMENT
MAG NAIL
IN PAVEMENT
MAG NAIL
IN PAVEMENT
MAG NAIL
IN PAVEMENT
446+00
447+00
448+00
449+00
450+00
451+00
452+00
453+00
454+00
455+00
456+00
457+00
458+00
459+00
460+00
N36° 51' 01"E
N37° 00' 54"E
25.3'
34.3'
35.8'
25.5'
36.5'
41.0'
MAG NAIL
IN SIGN POST
CP 3
60D NAIL
STA 457+25.15, 25.19' RT
Y = 153413.525
X = 429293.373
CP 1
12" SPIKE
STA 448+66.38, 25.00' RT
Y = 152727.323
X = 428777.146
SET MAG NAIL
IN 6-INCH DIA
ELM TREE
5-FT ABOVE
GROUND
BEGIN CONSTRUCTION
STA 449+10.00
C/L STH 17
Y = 153049.288
X = 428987.208
PI: 452+50.00

Estimate Of Quantities By Plan Sets

9030-11-60

Line	Item	Item Description	Unit	Total	Qty
0002	201.0105	Clearing	STA	2.000	2.000
0004	201.0205	Grubbing	STA	2.000	2.000
0006	203.0200	Removing Old Structure (station) 01. STA 452+50	LS	1.000	1.000
0010	204.0100	Removing Pavement	SY	200.000	200.000
0012	204.0120	Removing Asphaltic Surface Milling	SY	1,345.000	1,345.000
0016	204.0165	Removing Guardrail	LF	308.000	308.000
0020	205.0100	Excavation Common	CY	96.000	96.000
0022	208.0100	Borrow	CY	346.000	346.000
0024	213.0100	Finishing Roadway (project) 01. 9030-11-60	EACH	1.000	1.000
0028	305.0110	Base Aggregate Dense 3/4-Inch	TON	60.000	60.000
0030	305.0120	Base Aggregate Dense 1 1/4-Inch	TON	220.000	220.000
0032	415.0410	Concrete Pavement Approach Slab	SY	148.000	148.000
0034	455.0605	Tack Coat	GAL	101.000	101.000
0036	465.0105	Asphaltic Surface	TON	162.000	162.000
0038	465.0125	Asphaltic Surface Temporary	TON	19.000	19.000
0040	502.0100	Concrete Masonry Bridges	CY	14.000	14.000
0044	502.3200	Protective Surface Treatment	SY	317.000	317.000
0046	502.3210	Pigmented Surface Sealer	SY	80.000	80.000
0048	502.4204	Adhesive Anchors No. 4 Bar	EACH	202.000	202.000
0050	502.4205	Adhesive Anchors No. 5 Bar	EACH	154.000	154.000
0052	505.0600	Bar Steel Reinforcement HS Coated Structures	LB	1,950.000	1,950.000
0060	509.0301	Preparation Decks Type 1	SY	24.000	24.000
0062	509.0302	Preparation Decks Type 2	SY	10.000	10.000
0066	509.0505.S	Cleaning Decks to Reapply Concrete Masonry Overlay	SY	317.000	317.000
0072	509.1500	Concrete Surface Repair	SF	10.000	10.000
0074	509.2000	Full-Depth Deck Repair	SY	1.000	1.000
0076	509.2500	Concrete Masonry Overlay Decks	CY	32.000	32.000
0078	509.5100.S	Polymer Overlay	SY	317.000	317.000
0080	509.9005.S	Removing Concrete Masonry Deck Overlay (structure) 01. B-35-20	SY	317.000	317.000
0088	603.8000	Concrete Barrier Temporary Precast Delivered	LF	675.000	675.000
0090	603.8125	Concrete Barrier Temporary Precast Installed	LF	1,350.000	1,350.000
0092	606.0200	Riprap Medium	CY	50.000	50.000
0098	614.0150	Anchor Assemblies for Steel Plate Beam Guard	EACH	4.000	4.000
0100	614.0905	Crash Cushions Temporary	EACH	4.000	4.000
0102	614.2300	MGS Guardrail 3	LF	200.000	200.000
0104	614.2500	MGS Thrie Beam Transition	LF	156.000	156.000
0106	614.2610	MGS Guardrail Terminal EAT	EACH	2.000	2.000
0108	618.0100	Maintenance And Repair of Haul Roads (project) 01. 9030-11-60	EACH	1.000	1.000

9030-11-60

Line	Item	Item Description	Unit	Total	Qty
0112	619.1000	Mobilization	EACH	0.350	0.350
0114	624.0100	Water	MGAL	5.000	5.000
0116	625.0100	Topsoil	SY	1,200.000	1,200.000
0118	627.0200	Mulching	SY	100.000	100.000
0120	628.1504	Silt Fence	LF	720.000	720.000
0122	628.1520	Silt Fence Maintenance	LF	720.000	720.000
0124	628.1905	Mobilizations Erosion Control	EACH	2.000	2.000
0126	628.1910	Mobilizations Emergency Erosion Control	EACH	2.000	2.000
0128	628.2004	Erosion Mat Class I Type B	SY	1,100.000	1,100.000
0130	629.0210	Fertilizer Type B	CWT	0.760	0.760
0132	630.0120	Seeding Mixture No. 20	LB	32.000	32.000
0134	634.0616	Posts Wood 4x6-Inch X 16-FT	EACH	1.000	1.000
0136	638.2102	Moving Signs Type II	EACH	2.000	2.000
0138	638.3000	Removing Small Sign Supports	EACH	1.000	1.000
0140	642.5201	Field Office Type C 01. 9030-11-60	EACH	1.000	1.000
0144	643.0300	Traffic Control Drums	DAY	3,000.000	3,000.000
0148	643.0420	Traffic Control Barricades Type III	DAY	260.000	260.000
0150	643.0715	Traffic Control Warning Lights Type C	DAY	1,300.000	1,300.000
0152	643.0900	Traffic Control Signs	DAY	3,120.000	3,120.000
0154	643.5000	Traffic Control	EACH	0.500	0.500
0156	646.1020	Marking Line Epoxy 4-Inch	LF	2,118.000	2,118.000
0158	646.9000	Marking Removal Line 4-Inch	LF	1,619.000	1,619.000
0160	649.0150	Temporary Marking Line Removable Tape 4-Inch	LF	3,256.000	3,256.000
0162	649.0850	Temporary Marking Stop Line Removable Tape 18-Inch	LF	30.000	30.000
0164	650.4500	Construction Staking Subgrade	LF	120.000	120.000
0166	650.5000	Construction Staking Base	LF	120.000	120.000
0170	650.8000	Construction Staking Resurfacing Reference	LF	215.000	215.000
0172	650.9910	Construction Staking Supplemental Control (project) 01. 9030-11-60	LS	1.000	1.000
0176	650.9920	Construction Staking Slope Stakes	LF	120.000	120.000
0178	661.0100	Temporary Traffic Signals for Bridges (structure) 01. B-35-020	LS	1.000	1.000
0182	690.0150	Sawing Asphalt	LF	240.000	240.000
0186	715.0415	Incentive Strength Concrete Pavement	DOL	500.000	500.000
0188	715.0502	Incentive Strength Concrete Structures	DOL	500.000	500.000
0190	ASP.1T0A	On-the-Job Training Apprentice at $5.00/HR	HRS	300.000	300.000
0192	ASP.1T0G	On-the-Job Training Graduate at $5.00/HR	HRS	600.000	600.000
0194	SPV.0090	Special 01. Cleaning Parapets Special	LF	172.000	172.000

3

CLEARING AND GRUBBING ITEMS

STATION	LOCATION	201.0105 CLEARING STA	201.0205 GRUBBING STA
CATEGORY CODE 0010			
449+00 - 451+00	RT	2	2
	TOTALS	**2**	**2**

REMOVING PAVEMENT

	STATION	TO	STATION	LOCATION	204.0100 REMOVING PAVEMENT SY
CATEGORY CODE 0010					
STAGE 1	451+97	-	452+18	LT	51
	452+82	-	453+02	LT	49
STAGE 2	451+97	-	452+18	RT	51
	452+82	-	453+02	RT	49
				TOTALS	**200**

REMOVING ASPHALTIC SURFACE MILLING

STATION	TO	STATION	LOCATION	204.0120 REMOVING ASPHALTIC SURFACE MILLING SY
CATEGORY CODE 0010				
449+60	-	451+97	STH 17	1,060
453+02	-	453+60	STH 17	285
			TOTALS	**1,345**

3

REMOVING GUARDRAIL

	STATION	TO	STATION	LOCATION	204.0165 REMOVING GUARDRAIL LF
CATEGORY 0010					
STAGE 1	451+00	-	452+03	LT	103
	452+83	-	453+22	LT	39
STAGE 2	450+76	-	452+03	RT	127
	452+83	-	453+22	RT	39
				TOTAL	**308**

FROM/TO STATION	LOCATION	205.0100 COMMON EXCAVATION (1)		SALVAGED/UNUSABLE PAVEMENT MATERIAL (4)	AVAILABLE MATERIAL (5)	UNEXPANDED FILL	EXPANDED FILL (6)	MASS ORDINATE +/- (7)	WASTE	208.0100 BORROW
		Cut (2)	EBS Excavation				Factor 1.25			
449+10 - 450+80	LT	50	0	49	1	43	54	-53		
449+10 - 450+80	RT	46	0	46	0	234	293	-293		
TOTAL		96	0	95	1	277	347	-346	0	346
TOTAL COMMON EXC		96								

Notes:

(1) Common Excavation is the sum of the Cut and EBS Excavation columns. Item number 205.0100

(2) Salvaged/Unsuable Pavement Material is included in Cut.

(4) Salvaged/Unusable Pavement Material

(5) Available Material = Cut - Salvaged/Unusuable Pavement Material

(6) Expanded Fill Factor = 1.25

(7) The Mass Ordinate + or - Qty calculated for the Section. Plus quantity indicates an excess of material within the Section. Minus indicates a shortage of material within the Section.

FINISHING ROADWAY (9030-11-60)

LOCATION	213.0100 EACH
CATEGORY CODE 0010	
STH 17	1
TOTALS	**1**

3

BASE AGGREGATE DENSE

STATION - STATION	LOCATION	305.0120 BASE AGGREGATE DENSE 1 1/4-INCH TON	305.0110 BASE AGGREGATE DENSE 3/4-INCH TON	COMMENTS
CATEGORY CODE 0010				
449+10 - 450+80	STH 17	150	30	GUARDRAIL TERMINAL WIDENING
452+03 - 452+18	STH 17	25	--	AS NEEDED, APPROACH SLAB CONST.
452+82 - 452+97	STH 17	25	--	AS NEEDED, APPROACH SLAB CONST.
UNDISTRIBUTED	STH 17	20	30	
	TOTAL	**220**	**60**	

ASPHALTIC ITEMS

STATION - STATION	LOCATION	455.0605 TACK COAT GAL	465.0105 ASPHALTIC SURFACE TON	465.0125 ASPHALTIC SURFACE TEMP. TON	COMMENTS
CATEGORY CODE 0010					
447+60 - 450+30	RT	--	--	10	TEMP. WIDENING FOR STAGE 1
447+60 - 450+00	LT	--	--	9	TEMP. WIDENING FOR STAGE 2
449+60 - 453+60	STH 17	101	162	--	
	TOTALS	**101**	**162**	**19**	

3

TEMPORARY BARRIER ITEMS

LOCATION	603.8000 CONCRETE BARRIER TEMP. PRECAST DELIVERED LF	603.8125 CONCRETE BARRIER TEMP. PRECAST INSTALLED LF	614.0905 CRASH CUSHIONS TEMPORARY EACH	BACK WIDTH FT	OBJECT MARKING PATTERN	CRASH TEST LEVEL	TRAFFIC DIRECTION	TRAFFIC LOCATION	CRASH CUSHION SHIELDS
CATEGORY CODE 0010									
STAGE 1	675	675	1	2	OM-3R	TL-3	UNIDIRECTIONAL	LT	BLUNT END OF TEMP BARRIER
	---	---	1	2	OM-3L	TL-3	UNIDIRECTIONAL	RT	BLUNT END OF TEMP BARRIER
STAGE 2	---	675	1	2	OM-3L	TL-3	UNIDIRECTIONAL	RT	BLUNT END OF TEMP BARRIER
	---	---	1	2	OM-3R	TL-3	UNIDIRECTIONAL	LT	BLUNT END OF TEMP BARRIER
TOTALS	**675**	**1,350**	**4**						

CONCRETE PAVEMENT APPROACH SLAB

	STATION - STATION	LOCATION	415.0410 SY
CATEGORY 0010			
STAGE 1	452+03 - 452+18	LT	37
	452+82 - 452+97	LT	37
STAGE 2	452+03 - 452+18	RT	37
	452+82 - 452+97	RT	37
		TOTAL	**148**

MGS GUARDRAIL

	STATION TO STATION	LOCATION	614.2300 MGS GUARDRAIL 3 LF	614.2500 MGS THRIE BEAM TRANSITION LF	614.2610 MGS GUARDRAIL TERMINAL EAT EACH
CATEGORY CODE 0010					
STAGE 1	450+30 - 450+80	LT	--	--	1
	450+80 - 451+80	LT	100	--	--
	451+80 - 452+18	LT	--	39	--
	452+83 - 453+22	LT	--	39	--
STAGE 2	450+30 - 450+80	RT	--	--	1
	450+80 - 451+80	RT	100	--	--
	451+80 - 452+18	RT	--	39	--
	452+83 - 453+22	RT	--	39	--
		TOTAL	**200**	**156**	**2**

WATER

LOCATION	624.0100 MGAL
CATEGORY CODE 0010	
BASE COMPACTION	5
TOTALS	**5**

3

LANDSCAPING ITEMS

STATION - STATION	LOCATION	625.0100 TOPSOIL SY	627.0200 MULCHING SY	628.2004 EROSION MAT CLASS 1 TYPE B SY	629.0210 FERTILIZER TYPE B CWT	630.0120 SEED MIX NO. 20 LBS	628.1905 MOBILIZATION EROSION CONTROL EACH	628.1910 EMERGENCY MOBILIZATION EROSION CONTROL EACH
CATEGORY CODE 0010								
449+10 - 451+00	LT & RT	1,000	--	1,000	0.63	27	--	--
Undistributed		200	100	100	0.13	5	2	2
	TOTALS	**1,200**	**100**	**1,100**	**0.76**	**32**	**2**	**2**

SILT FENCE

STATION - STATION	LOCATION	628.1504 SILT FENCE LF	628.1520 MAINTENANCE LF
CATEGORY CODE 0010			
449+10 - 452+00	LT	290	290
449+10 - 452+00	RT	290	290
452+80 - 453+50	LT	70	70
452+80 - 453+50	RT	70	70
	TOTALS	**720**	**720**

3

SIGNING ITEMS

STATION	LOCATION	SIGN NUMBER	SIGN CODE	SIZE	634.0616 POSTS WOOD 4X6X16 EACH	638.2102 MOVING SIGNS TYPE II EACH	638.3000 REMOVING SMALL SIGN SUPPORTS EACH
CATEGORY CODE 0010							
451+30	LT	1-1	M1-5A	24" X 24"	1	1	1
451+30	LT	1-2	M2-1	21" X 15"	---	1	---
					1	**2**	**1**

FIELD OFFICE TYPE C (9030-11-60)

LOCATION	642.5201 EACH
CATEGORY CODE 0010	
STH 17	1
	1

MARKING LINE ITEMS

STATION - STATION	LOCATION	646.1020 MARKING LINE EPOXY 4-INCH LF	COMMENTS
CATEGORY CODE 0010			
447+60 - 456+64	LT & RT	1,808	EDGELINE (WHITE)
447+60 - 449+00	CL	35	DASED CL (YELLOW)
449+60 - 453+60	CL	100	DASED CL (YELLOW)
455+24 - 446+64	CL	175	DASED/SOLID CL (YELLOW)
	TOTALS	**2,118**	

TRAFFIC CONTROL ITEMS

LOCATION	643.0300 DRUMS EACH	643.0300 DRUMS DAYS	643.0420 BARRICADES TYPE III EACH	643.0420 BARRICADES TYPE III DAYS	643.0715 WARNING LIGHTS TYPE C EACH	643.0715 WARNING LIGHTS TYPE C DAYS	643.0900 SIGNS EACH	643.0900 SIGNS DAYS
CATEGORY CODE 0010								
STAGE 1	20	1300	2	130	10	650	24	1,560
STAGE 2	20	1300	2	130	10	650	24	1,560
UNDISTRIBUTED		400						
TOTALS		**3,000**		**260**		**1,300**		**3,120**

MARKING REMOVAL LINE

STATION - STATION	LOCATION	646.9000 4-INCH LF
CATEGORY CODE 0010		
447+60 - 456+64	RT EDGELINE	905
447+60 - 449+00	DASHED CL	35
455+24 - 456+64	DASHED/SOLID CL	175
447+60 - 449+60	LT EDGELINE	200
453+60 - 456+64	LT EDGELINE	304
	TOTALS	**1,619**

TEMPORARY MARKING LINE ITEMS

	STATION	LOCATION	649.0850 STOP LINE REMOVEABLE TAPE 18-INCH LF	649.0150 MARKING LINE REMOVEABLE TAPE 4-INCH LF
CATEGORY CODE 0010				
STAGE 1 & 2	447+60	RT	15	---
STAGE 1 & 2	456+64	LT	15	---
STAGE 1	448+50 - 455+74	ALONG BARRIER	---	724
STAGE 1	447+60 - 456+64	OUTSIDE EDGELINE	---	904
STAGE 2	448+50 - 455+74	ALONG BARRIER	---	724
STAGE 2	447+60 - 456+64	OUTSIDE EDGELINE	---	904
		TOTALS	**30**	**3,256**

3

CONSTRUCTION STAKING ITEMS

STATION - STATION	LOCATION	650.9920 SLOPE STAKES LF	650.4500 SUBGRADE LF	650.5000 BASE LF	650.8000 RESURFACING REFERENCE LF	650.9910 SUPPLEMENTAL CONTROL (9030-11-60) LS
CATEGORY CODE 0010						
449+60 - 450+80	LT & RT	120	120	120	---	---
450+80 - 452+18		---	---	---	138	---
452+83 453+60		---	---	---	77	---
UNDISTRIBUTED		---	---	---	---	1
	TOTALS	**120**	**120**	**120**	**215**	**1**

TEMPORARY TRAFFIC SIGNALS FOR BRIDGES

LOCATION	661.0100 B-35-020 LS
CATEGORY CODE 0010	
STH 17	1
TOTALS	**1**

3

SAWING ASPHALT

STATION	LOCATION	690.0150 ASPHALT LF	COMMENTS
CATEGORY 0010			
449+60 - 450+80	15' LT & RT	240	WIDENING AREA
	TOTALS	**240**	

BENCHMARKS			
NO.	STATION	ELEV.	DESCRIPTION
1	452+17.59	1408.38	TOP BRONZE DISC TOP PARAPET, 23.10' RT

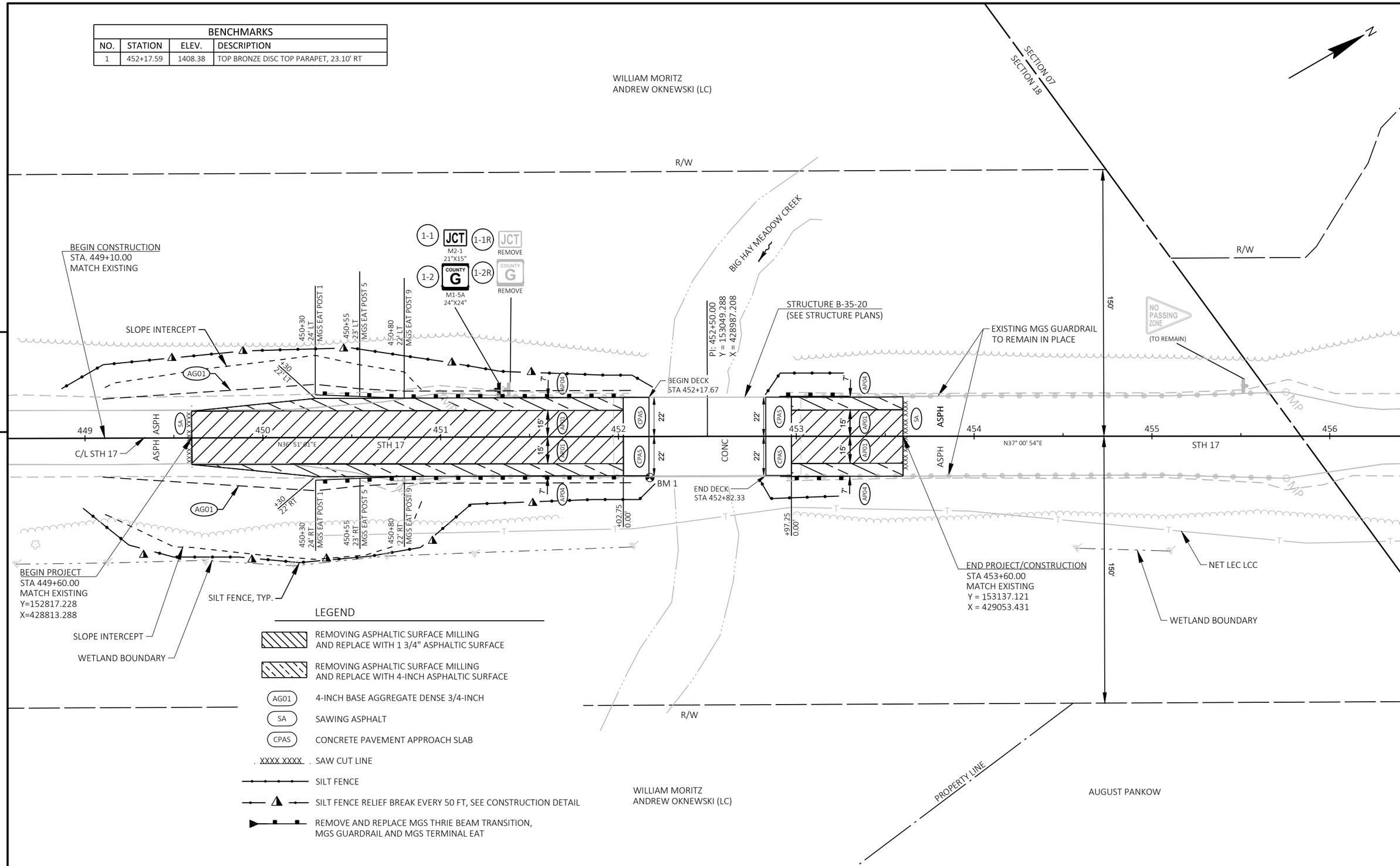

PROJECT NO: 9030-11-60	HWY: STH 17	COUNTY: LINCOLN	PLAN DETAILS	SHEET 14	E

FILE NAME : P:\WI - NC REGION\9030-11-30_VAR BRIDGES_LINCOLN COUNTY\500_CADD\501_C3D_2016\90301130\SHEETSPLAN\9030-11-60 STH 17\050201-PN.DWG
LAYOUT NAME - 01
PLOT DATE : 3/11/2019 10:43 AM PLOT BY : BOBBY JONES PLOT NAME : PLOT SCALE : 1 IN:50 FT

Standard Detail Drawing List

08E09-06	SILT FENCE
09G02-05A	BRIDGE TEMPORARY TRAFFIC SIGNAL INSTALLATION
09G02-05B	BRIDGE TEMPORARY TRAFFIC SIGNAL INSTALLATION
09G02-05C	BRIDGE TEMPORARY TRAFFIC SIGNAL INSTALLATION
13B02-09A	CONCRETE PAVEMENT APPROACH SLAB
14B07-15A	CONCRETE BARRIER TEMPORARY PRECAST, 12'-6"
14B07-15B	CONCRETE BARRIER TEMPORARY PRECAST, 12'-6"
14B07-15C	CONCRETE BARRIER TEMPORARY PRECAST, 12'-6"
14B07-15D	CONCRETE BARRIER TEMPORARY PRECAST, 12'-6"
14B07-15E	CONCRETE BARRIER TEMPORARY PRECAST, 12'-6"
14B07-15F	CONCRETE BARRIER TEMPORARY PRECAST, 12'-6"
14B07-15G	CONCRETE BARRIER TEMPORARY PRECAST, 12'-6"
14B07-15H	CONCRETE BARRIER TEMPORARY PRECAST, 12'-6"
14B07-15I	CONCRETE BARRIER TEMPORARY PRECAST, 12'-6"
14B08-02A	CRASH CUSHION/SAND BARREL ARRAY AND OTHER TEMPORARY BARRIER LAYOUT DETAILS
14B08-02B	CRASH CUSHION/SAND BARREL ARRAY AND OTHER TEMPORARY BARRIER LAYOUT DETAILS
14B08-02C	CRASH CUSHION/SAND BARREL ARRAY AND OTHER TEMPORARY BARRIER LAYOUT DETAILS
14B08-02D	CRASH CUSHION/SAND BARREL ARRAY AND OTHER TEMPORARY BARRIER LAYOUT DETAILS
14B08-02E	CRASH CUSHION/SAND BARREL ARRAY AND OTHER TEMPORARY BARRIER LAYOUT DETAILS
14B42-06A	MIDWEST GUARDRAIL SYSTEM (MGS) GUARDRAIL
14B42-06B	MIDWEST GUARDRAIL SYSTEM (MGS) GUARDRAIL
14B42-06C	MIDWEST GUARDRAIL SYSTEM (MGS) GUARDRAIL
14B42-06D	MIDWEST GUARDRAIL SYSTEM (MGS) GUARDRAIL
14B44-04A	MIDWEST GUARDRAIL SYSTEM ENERGY ABSORBING TERMINAL (MGS)
14B44-04B	MIDWEST GUARDRAIL SYSTEM ENERGY ABSORBING TERMINAL (MGS)
14B44-04C	MIDWEST GUARDRAIL SYSTEM ENERGY ABSORBING TERMINAL (MGS)
14B45-05A	MIDWEST GUARDRAIL SYSTEM THRIE BEAM TRANSITION (MGS)
14B45-05B	MIDWEST GUARDRAIL SYSTEM THRIE BEAM TRANSITION (MGS)
14B45-05C	MIDWEST GUARDRAIL SYSTEM THRIE BEAM TRANSITION (MGS)
14B45-05E	MIDWEST GUARDRAIL SYSTEM THRIE BEAM TRANSITION (MGS)
15C04-05	TRAFFIC CONTROL, ADVANCE WARNING SIGNS 45 M.P.H. OR GREATER TWO-WAY UNDIVIDED ROAD OPEN TO TRAFFIC
15C06-09	SIGNING & MARKING FOR TWO LANE BRIDGES
15C08-19A	LONGITUDINAL MARKING (MAINLINE)
15C11-07B	CHANNELIZING DEVICES DRUMS, CONES, BARRICADES AND VERTICAL PANELS
15C12-06	TRAFFIC CONTROL FOR LANE CLOSURE WITH FLAGGING OPERATION
15D33-05	TRAFFIC CONTROL, ONE LANE ROAD WITH TEMPORARY SIGNALS
15D38-02A	TEMPORARY TRAFFIC CONTROL SIGN MOUNTING
15D38-02B	ATTACHMENT OF SIGNS TO POSTS

6

6

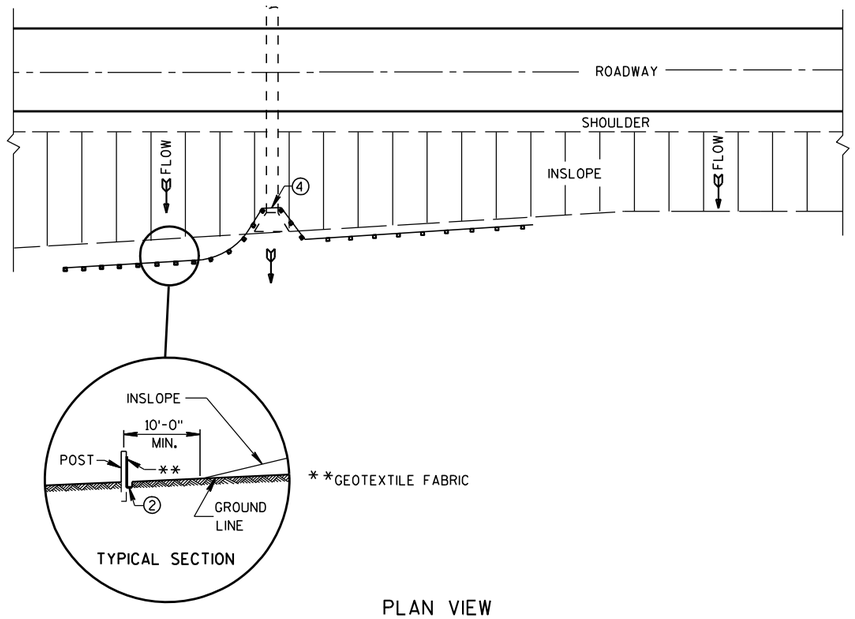

PLAN VIEW

TYPICAL APPLICATION OF SILT FENCE

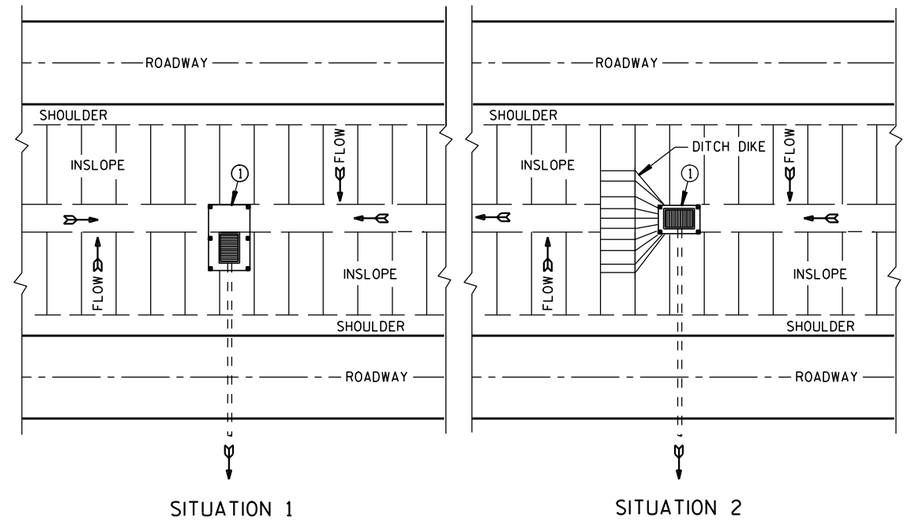

PLAN VIEW

SILT FENCE AT MEDIAN SURFACE DRAINS

GENERAL NOTES

DETAILS OF CONSTRUCTION NOT SHOWN ON THIS DRAWING SHALL CONFORM TO THE PERTINENT REQUIREMENTS OF THE STANDARD SPECIFICATIONS AND APPLICABLE SPECIAL PROVISIONS.

① HORIZONTAL BRACE REQUIRED WITH 2" X 4" WOODEN FRAME OR EQUIVALENT AT TOP OF POSTS.

② FOR MANUAL INSTALLATIONS THE TRENCH SHALL BE A MINIMUM OF 4" WIDE & 6" DEEP TO BURY AND ANCHOR THE GEOTEXTILE FABRIC. FOLD MATERIAL TO FIT TRENCH AND BACKFILL & COMPACT TRENCH WITH EXCAVATED SOIL.

③ WOOD POSTS SHALL BE A MINIMUM SIZE OF 1⅛" X 1⅛" OF OAK OR HICKORY.

④ SILT FENCE TO EXTEND ACROSS THE TOP OF THE PIPE.

⑤ CONSTRUCT SILT FENCE FROM A CONTINUOUS ROLL IF POSSIBLE BY CUTTING LENGTHS TO AVOID JOINTS. IF A JOINT IS NECESSARY USE ONE OF THE FOLLOWING TWO METHODS; A) OVERLAP THE END POSTS AND TWIST, OR ROTATE, AT LEAST 180 DEGREES. B) HOOK THE END OF EACH SILT FENCE LENGTH.

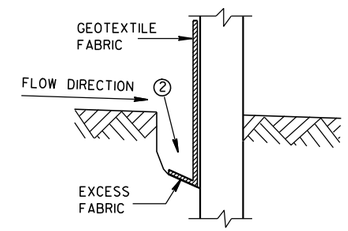

TRENCH DETAIL

NOTE: ADDITIONAL POST DEPTH OR TIE BACKS MAY BE REQUIRED IN UNSTABLE SOILS

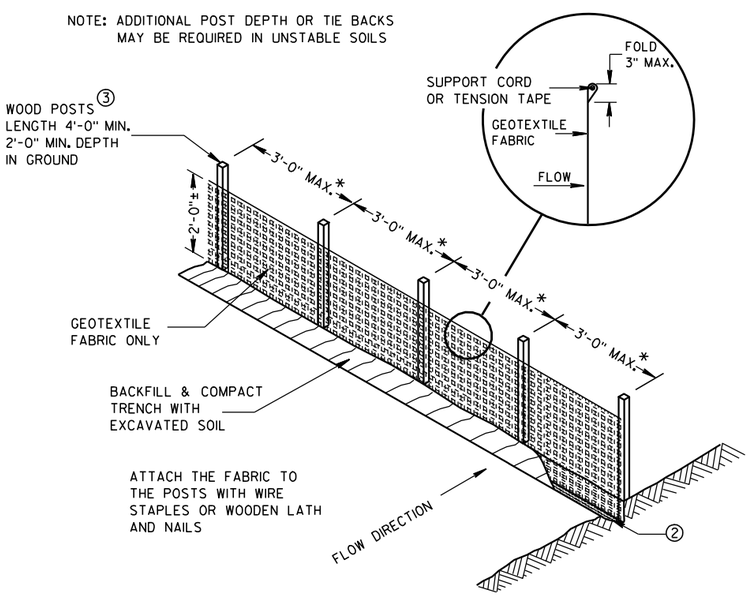

*NOTE: 8'-0" POST SPACING ALLOWED IF A WOVEN GEOTEXTILE FABRIC IS USED.

SILT FENCE

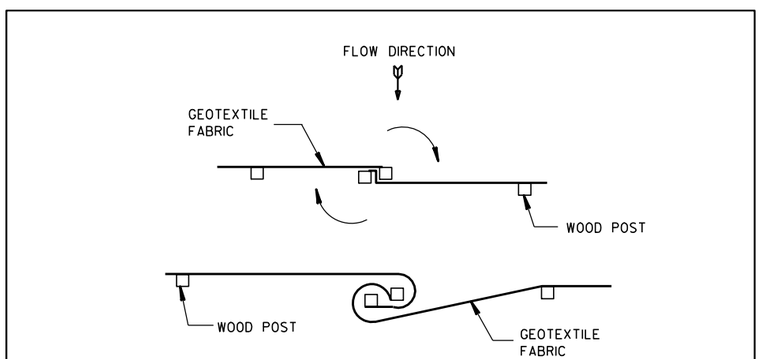

TWIST METHOD

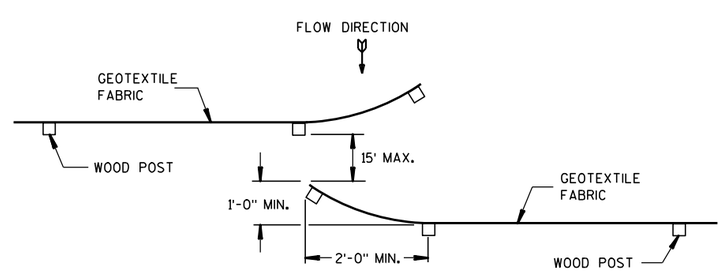

HOOK METHOD

JOINING TWO LENGTHS OF SILT FENCE ⑤

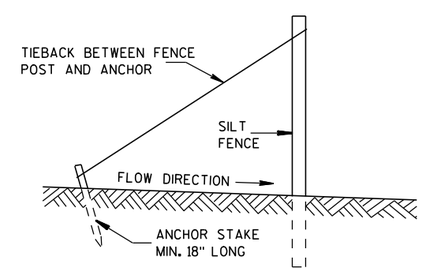

SILT FENCE TIE BACK

(WHEN REQUIRED BY THE ENGINEER)

SILT FENCE
STATE OF WISCONSIN DEPARTMENT OF TRANSPORTATION
APPROVED 4-29-05 DATE — /S/ Beth Cann-- CHIEF ROADWAY DEVELOP ENGINEER FHWA

6

6

S.D.D. 8 E 9-6

S.D.D. 8 E 9-6

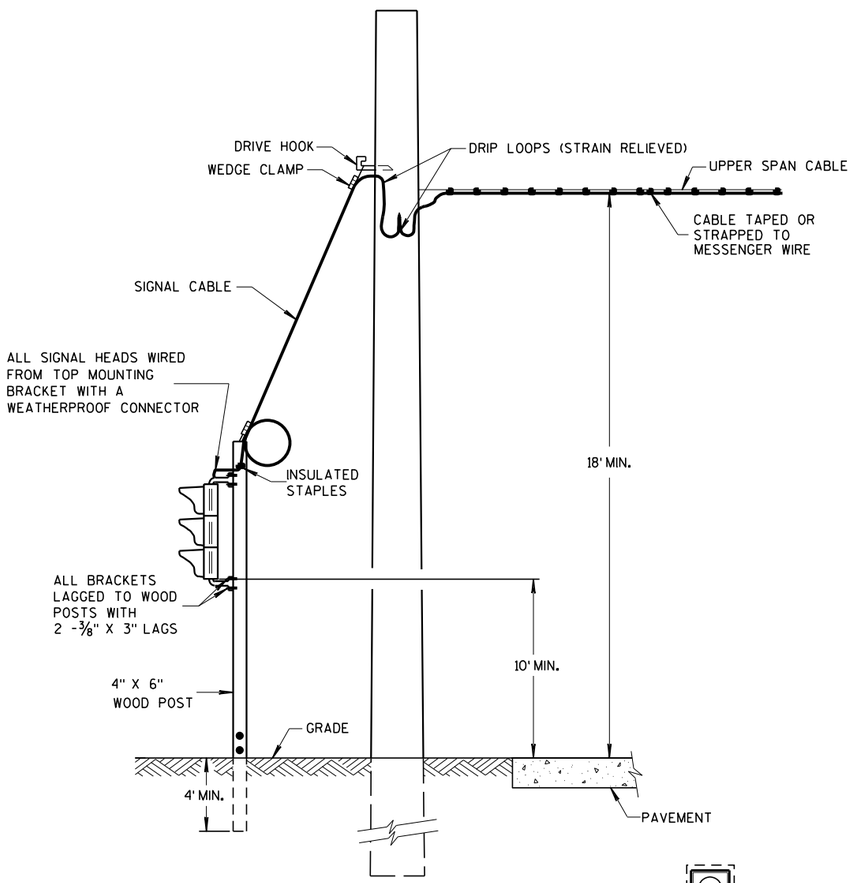

TYPICAL DROP TO TRAFFIC SIGNAL FACE

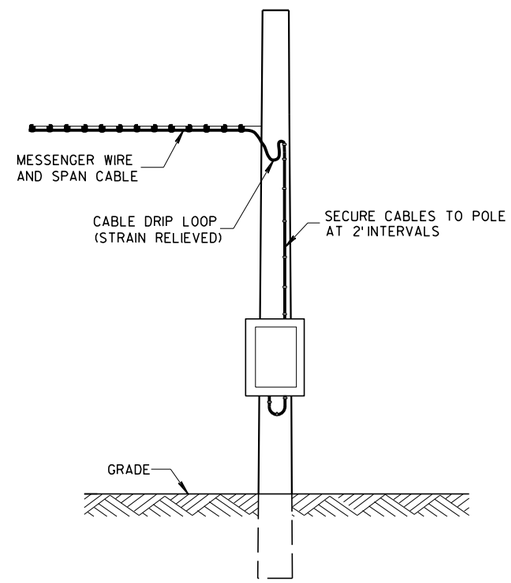

POLE MOUNT CABINET INSTALLATION

GENERAL NOTES

DETAILS OF CONSTRUCTION, MATERIALS AND WORKMANSHIP NOT SHOWN ON THIS DRAWING SHALL CONFORM TO THE PERTINENT REQUIREMENTS OF THE CONTRACT.

POLE MOUNTED TRAFFIC SIGNAL CONTROL CABINET MAYBE MOUNTED ON THE SERVICE POLE IF THE ELECTRICAL UTILITY ALLOWS THE INSTALLATION.

WHEN UTILITY POLES ARE USED TO SPAN THE TEMPORARY OVERHEAD CABLE, WRITTEN PERMISSION MUST BE OBTAINED FROM THE OWNER OF THE POLES AND GIVEN TO THE PROJECT MANAGER. ALL PERTINENT UTILITY AND CODE CLEARANCES SHALL BE MAINTAINED.

WOOD POLES (NONBREAKAWAY) SHALL BE NO CLOSER TO EDGE OF PAVEMENT THAN OFFSET DISTANCE CHART ALLOWS OR 4 FEET BEHIND PROTECTIVE BARRIER (BEAM GUARD, ETC.).

WOOD POSTS (BREAKAWAY) SHALL BE NO CLOSER THAN 2 FEET OUTSIDE OF SHOULDER.

VERTICAL CLEARANCE ETC. PER NEC.

TRAFFIC SIGNAL FACES SHALL BE TYPICALLY PLACED 12 FEET FROM EDGE OF PAVEMENT.

EACH TRAFFIC SIGNAL FACE SHALL HAVE A BACKPLATE.

SIGNING, PAVEMENT MARKING AND LANE CONTROL REQUIREMENTS SHALL CONFORM TO STANDARD DETAIL DRAWING 15 D 33.

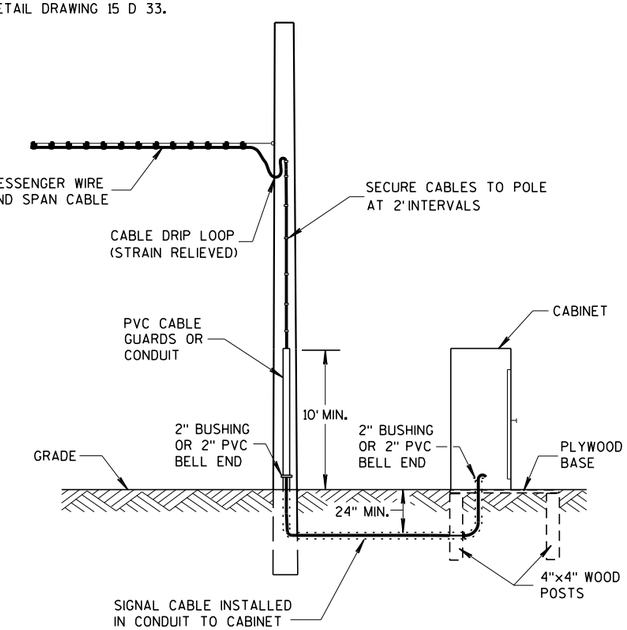

GROUND MOUNT CABINET INSTALLATION

OFFSET DISTANCES FOR TEMPORARY NON-BREAKAWAY POLES	
SPEED LIMIT	OFFSET DISTANCE**
GREATER THAN 45 MPH	18 FT
45 MPH OR LESS	12 FT
45 MPH OR LESS W/ CURBS	2 FT

**NOTE: OFFSET MEASURED FROM OUTER EDGE OF OUTSIDE THRU LANE.

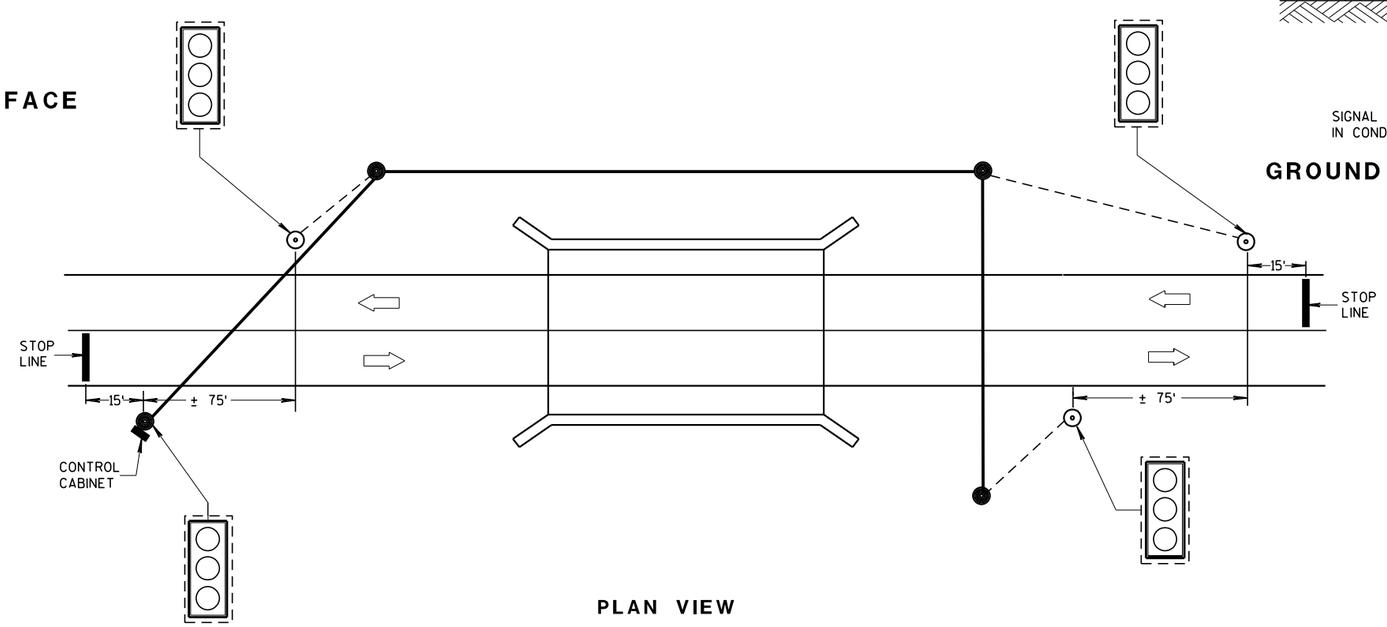

PLAN VIEW

TYPICAL BRIDGE TEMPORARY TRAFFIC SIGNAL LOCATION

LEGEND

- WOOD POLE (NON-BREAKAWAY)
- WOOD POST (BREAKAWAY)
- SIGNAL CABLE
- SIGNAL CABLE W/MESSENGER
- LED TRAFFIC SIGNAL FACE WITH BACKPLATE (3-12")
- DIRECTION OF TRAFFIC

MINIMUM POLE LENGTHS	CLASS	MINIMUM BURIAL DEPTHS
25 FEET	V	5 FEET
30 FEET	V	6 FEET
35 FEET	IV	7 FEET
40 FEET	IV	8 FEET
45 FEET	IV	9 FEET

BRIDGE TEMPORARY TRAFFIC SIGNAL INSTALLATION

STATE OF WISCONSIN
DEPARTMENT OF TRANSPORTATION

APPROVED
March 2018 — DATE
/S/ Ahmet Demirbilek — STATE ELECTRICAL ENGINEER
FHWA

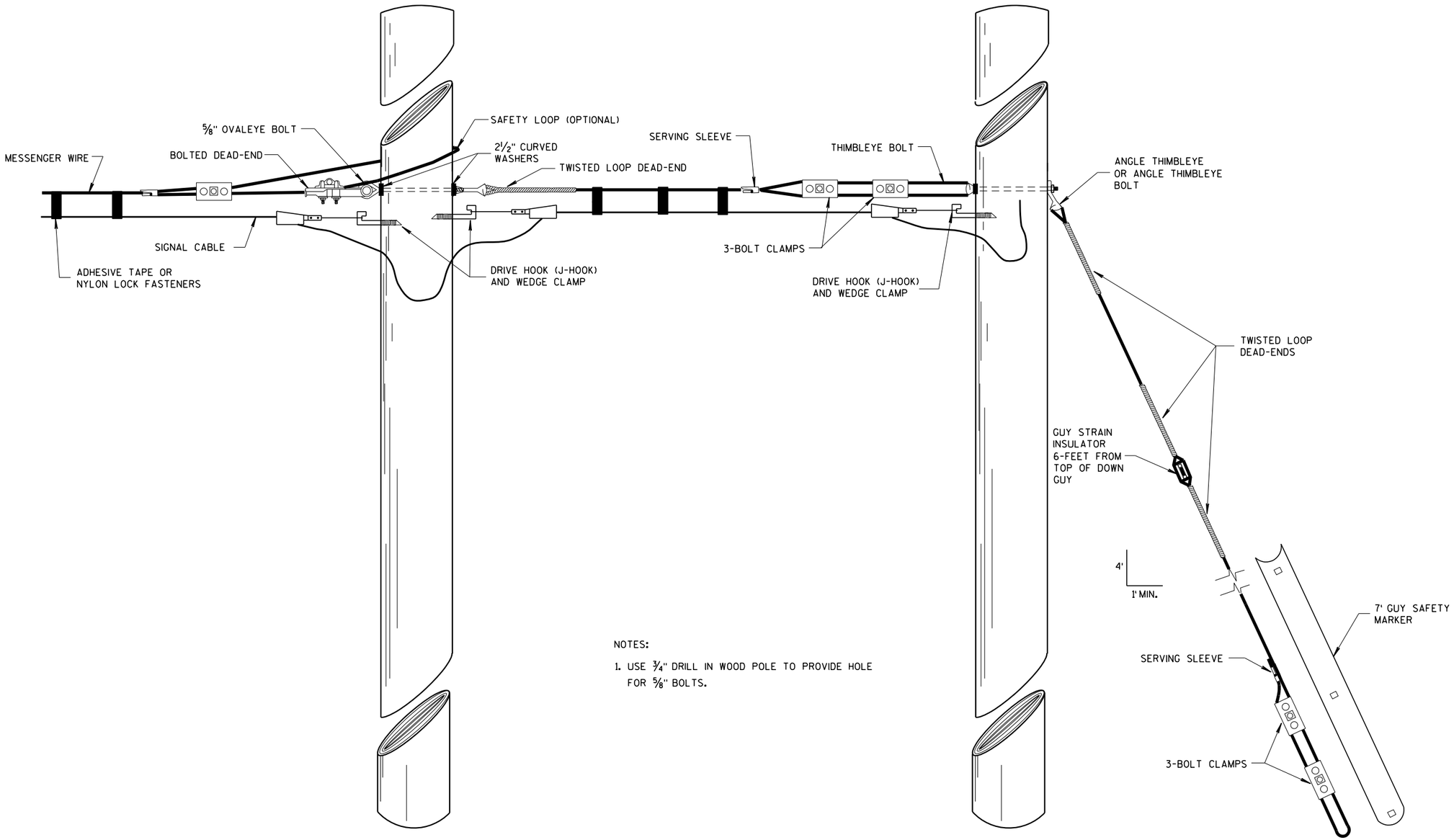

NOTES:

1. USE 3/4" DRILL IN WOOD POLE TO PROVIDE HOLE FOR 5/8" BOLTS.

SPAN WIRE POLE

GUY POLE

TYPICAL DEAD-ENDINGS OR GUYING

BRIDGE TEMPORARY TRAFFIC SIGNAL INSTALLATION

STATE OF WISCONSIN
DEPARTMENT OF TRANSPORTATION

APPROVED
March 2018 — /S/ Ahmet Demirbilek
DATE — STATE ELECTRICAL ENGINEER
FHWA

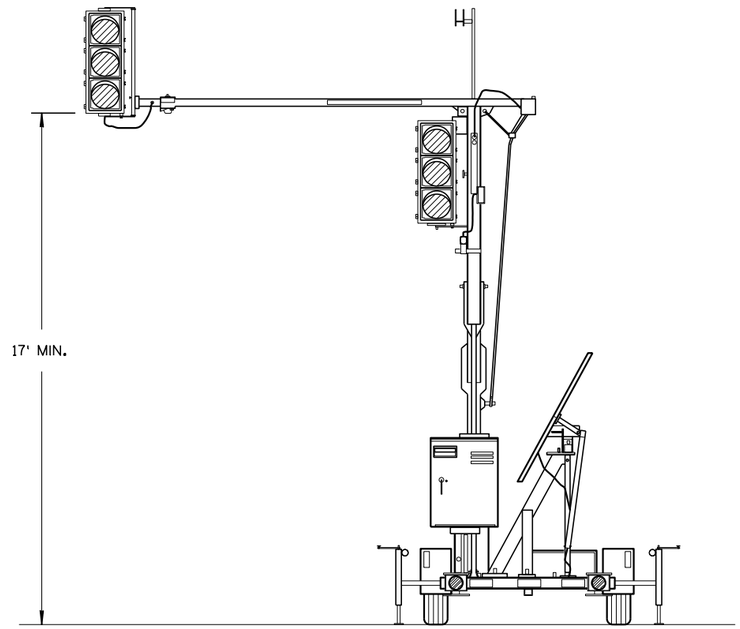

TRAILER MOUNTED TRAFFIC SIGNAL

GENERAL NOTES

DETAILS OF CONSTRUCTION, MATERIALS AND WORKMANSHIP NOT SHOWN ON THIS DRAWING SHALL CONFORM TO THE PERTINENT REQUIREMENTS OF THE CONTRACT.

SIGNING, PAVEMENT MARKING AND LANE CONTROL REQUIREMENTS SHALL CONFORM TO STANDARD DETAIL DRAWING 15 D 33.

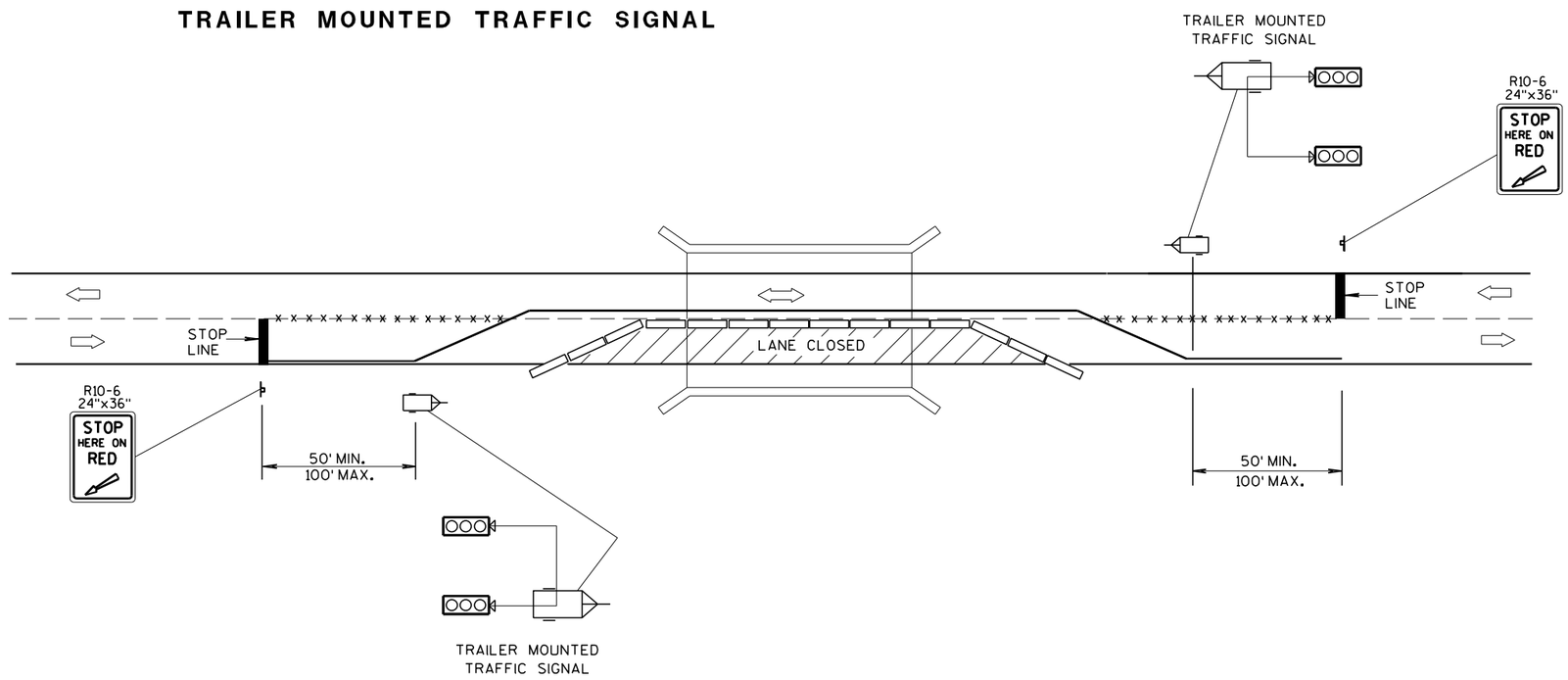

TYPICAL TRAILER MOUNTED TRAFFIC SIGNAL LOCATION

LEGEND

- POST MOUNTED SIGN
- REMOVING PAVEMENT MARKING
- TEMPORARY PRECAST CONCRETE BARRIER
- TRAILER MOUNTED TRAFFIC SIGNAL
- DIRECTION OF TRAFFIC FLOW

BRIDGE TEMPORARY TRAFFIC SIGNAL INSTALLATION

STATE OF WISCONSIN
DEPARTMENT OF TRANSPORTATION

APPROVED
March 2018 — /S/ Ahmet Demirbilek
DATE — STATE ELECTRICAL ENGINEER
FHWA

6

S.D.D. 9 G 2-5c

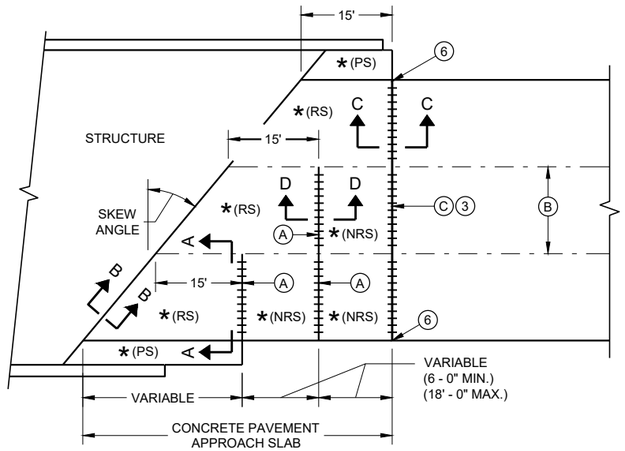

SKEWED APPROACH
(PAVEMENT MORE THAN TWO LANES)

* (RS) = REINFORCED CONCRETE SLAB

* (PS) = PAVECD CONCRETE SHOULDER OR CONCRETE DRAINAGE SLAB

* (NRS) - NON - REINFORCED CONCRETE SLAB

*** STANDARD DOWEL BAR DIAMETER (SEE SDD 13C11 AND SDD 13C13)

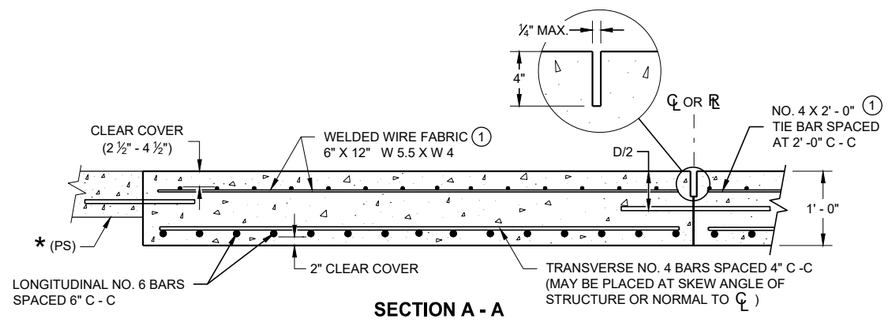

SECTION A - A
REINFORCEMENT POSITIONING DETAIL

GENERAL NOTES

THE CONTRACTOR MAY SPLICE NO. 6 BARS IN THE APPROACH SLAB FOR SKEWED STRUCTURES ONLY. STAGGER SPLICES WITH A MAXIMUM OF ONE SPLICE PER BAR. THE LENGTH OF LAP IS 20 INCHES.

TACK WELD DOWEL BARS TO THE BASKETS ON ALTERNATE ENDS.

1. THE CONTRACTOR MAY USE NO. 4 BARS SPACED AT 2' - 0 " C - C IN BOTH THE LONGITUDINAL AND TRANSVERSE DIRECTIONS FOR TOP REINFORCEMENT AS AN ALTERNATIVE TO THE WELDED WIRE FABRIC.
2. THE CONTRACTOR MAY OMIT THE BARS BETWEEN REINFORCED SLABS WHERE SLAB REINFORCEMENT BARS EXTEND ACROSS THE CENTERLINE OR REFERENCE LINE.
3. DO NOT CONSTRUCT AN EXPANSION JOINT OR INSTALL DOWEL BARS WHEN ABUTTING AN HMA PAVEMENT.
4. USE A JOINT SEALANT MEETING THE REQUIREMENTS OF ASTM D6690.
5. PLACE EXPANSION CAP ON THE END OF THE DOWEL THAT IS NOT TACK WELDED TO THE BASKET. DO NOT FORCE DOWEL BAR PAST THE DOWEL STOP.
6. EXTEND EXPANSION JOINT THROUGH ANY ADJACENT TIED CONCRETE.

A. STANDARD CONTRACTION JOINT NORMAL TO ℄ OR ℞.

B. STANDARD LONGITUDINAL JOINT WITH TIE BARS.

C. 1 ½" EXPANSIONT JOINT WITH DOWEL BARS NORMAL TO ℄ OR ℞.

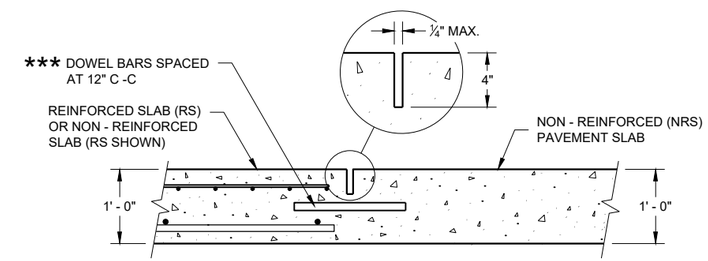

SECTION D - D
CONTRACTION JOINT

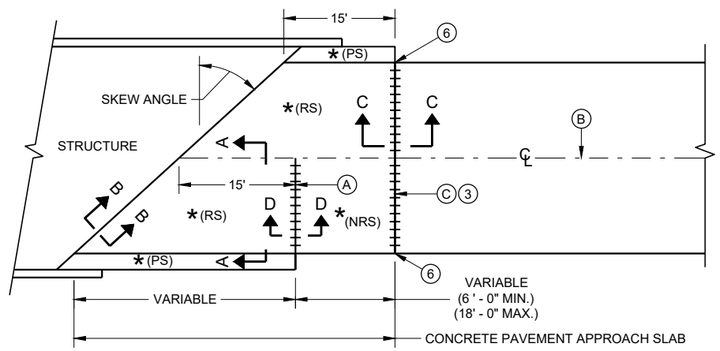

SKEWS > 20°
(PAVEMENT WIDTH ≤ 30')

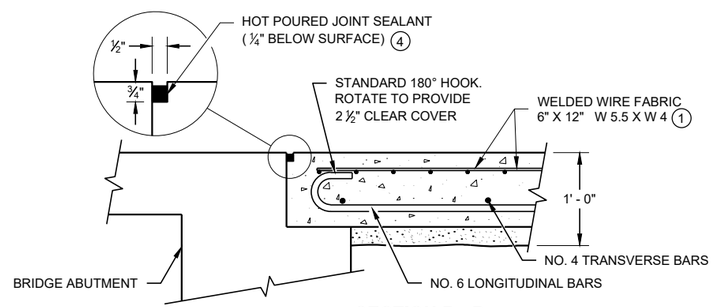

SECTION B - B
BEND DETAIL
BOTTOM REINFORCEMENT

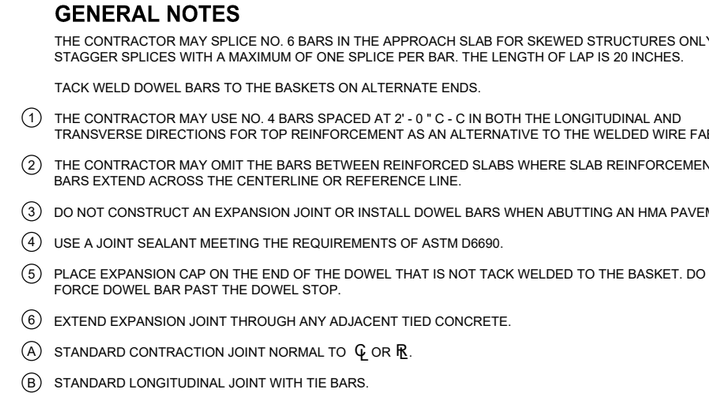

EXPANSION JOINT DETAIL

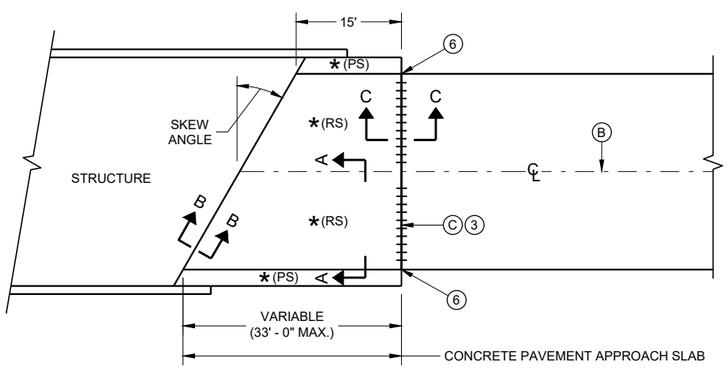

SKEWS ≤ 20°
(PAVEMENT WIDTH ≤ 30')

APPROACH SLAB AND ADJACENT PAVEMENT

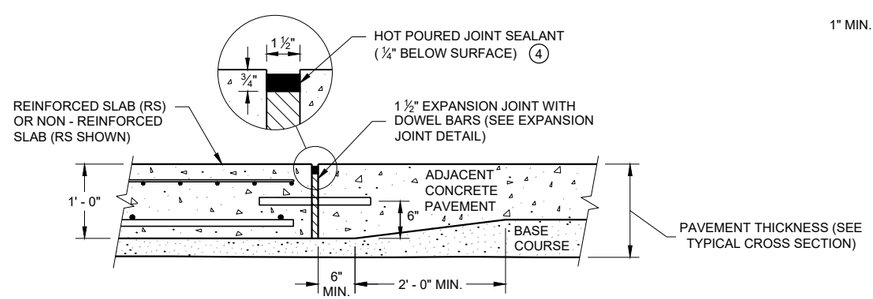

SECTION C - C
TRANSITION DETAIL
APPROACH SLAB TO ADJACENT PAVEMENT

CONCRETE PAVEMENT APPROACH SLAB

STATE OF WISCONSIN
DEPARTMENT OF TRANSPORTATION

APPROVED
November 2018 /S/ Peter Kemp P.E.
DATE PAVEMENT SUPERVISOR
FHWA

6

SDD 13B02 - 09a

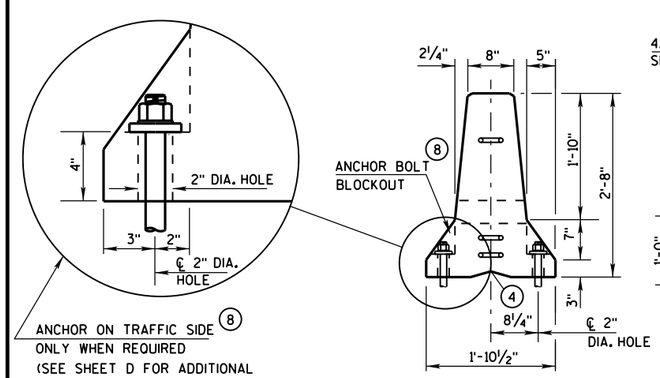

END VIEW

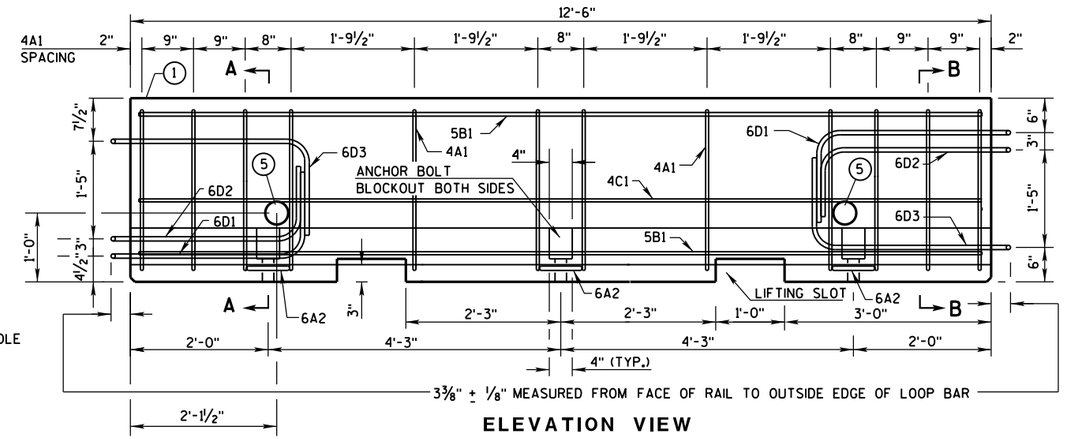

ELEVATION VIEW

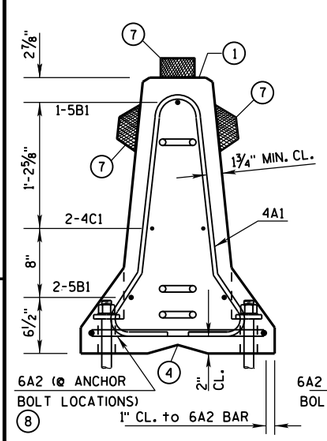

SECTION A-A
(STIRRUP PLACEMENT)

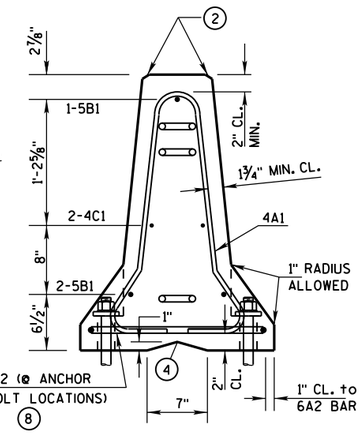

SECTION B-B
(STIRRUP PLACEMENT)

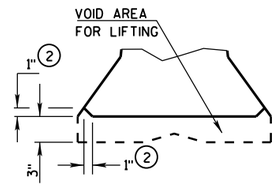

DETAIL "B"
LIFTING SLOT DETAIL

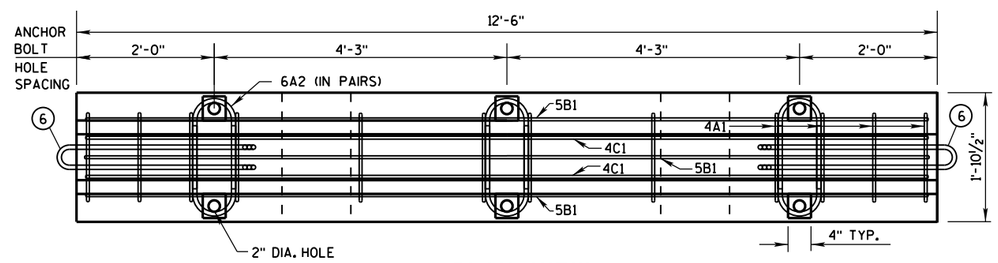

PLAN VIEW

DETAILS OF BARRIER SECTION

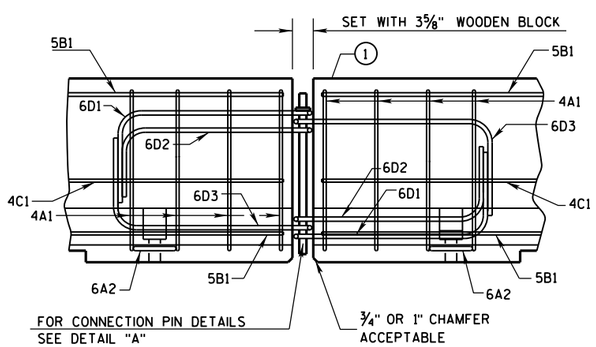

DETAILS OF BARRIER CONNECTION

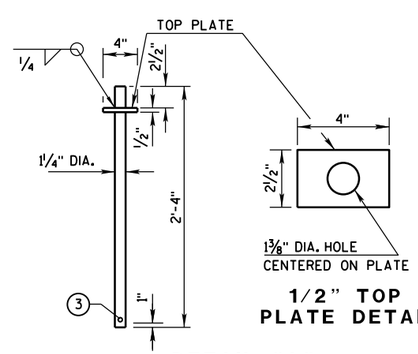

1/2" TOP PLATE DETAIL

DETAIL "A"
CONNECTION PIN
(A36 STEEL (10.9 LB EACH))

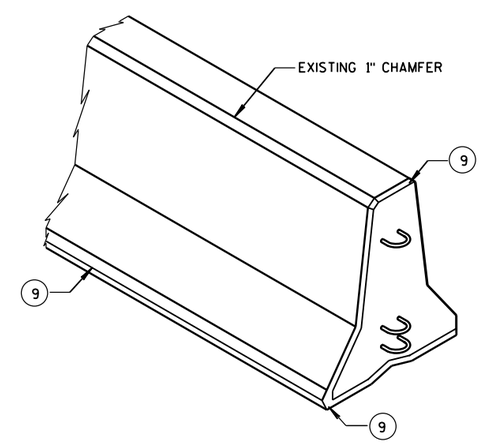

GENERAL NOTES

THESE GENERAL NOTES APPLY TO SHEETS 14B7-15(a) THRU 14B7-15(i).

DO NOT INTERMIX CONCRETE BARRIER TEMPORARY PRCAST, 12'-6" (CBTP12.5) WITH OTHER TEMPORARY CONCRETE BARRIERS.

USE ASTM A-615, GRADE 60, DEFORMED STEEL BARS FOR BARS 4A1, 6A2, 5B1 AND 4C1 IN THE BARRIER SECTION AND FOR 4V1, 4V2, 4V3, 4V4, 4V5, 4V6, 4F1, 4F2 AND 5F3 IN THE BARRIER TAPER SECTION.

LOOP BARS 6D1, 6D2 AND 6D3 SHALL BE ¾" SMOOTH STEEL BARS WITH A MINIMUM YIELD STRENGTH OF 60 KSI, A TENSILE STRENGTH OF NOT LESS THAN 1.25 TIMES THE YIELD STRENGTH BUT A MINIMUM OF 80 KSI, A MINIMUM 14% ELONGATION IN 8 INCHES AND PASSING A 180 DEGREE BEND TEST USING A 3-½" PIN BEND DIAMETER FOR BEND TESTS. THE LOOPS SHALL BE INSTALLED WITHIN ⅛" OF THE PLAN DIMENSION.

CONSTRUCT LIFTING SLOTS AS SPECIFIED ON THE PLANS TO FACILITATE THE DRAINAGE OF WATER AFTER INSTALLATION.

PLACE BARRIER ON A PAVED SURFACE. REMOVE ALL LOOSE DIRT AND SAND FROM THE ROADWAY SURFACE PRIOR TO PLACEMENT OF THE BARRIER.

INSTALL MECHANICAL OR ADHESIVE ANCHORS PER MANUFACTURER'S RECOMMENDATIONS. PROVIDE MANUFACTURER'S INFORMATION TO PROJECT ENGINEER.

1. MARK ONE END OF EACH BARRIER PERMANENTLY BY FORMING INTO THE BARRIER THE FOLLOWING INFORMATION:
   a. TYPE: WI CBTP
   b. MANUFACTURER
   c. DATE MANUFACTURED (MONTH AND YEAR)
2. 1" CHAMFER TO PREVENT SPALLING.
3. A ⅜" HOLE IN THE CONNECTION PIN, AT THE LOCATION SHOWN, IS ACCEPTABLE, BUT NOT REQUIRED..
4. "V" NOTCH IS OPTIONAL.
5. THE 4" DIAMETER, 11 GAUGE STEEL, ROUND MECHANICAL TUBING SLEEVE FOR LIFTING (OPTIONAL).
6. NEVER USE LOOP BARS (6D1, 6D2 OR 6D3) TO LIFT, MOVE OR REPOSITION THE BARRIER.
7. USE DELINEATORS CONFORMING TO SECTION 633 OF THE STANDARD SPECIFICATIONS. CONTRACTOR MAY USE ALTERNATE SHAPES AND HOUSING. INSTALL DELINEATORS ACCORDING TO MANUFACTURES INSTRUCTION. INSTALL YELLOW REFLECTORS WHEN BARRIER IS LOCATED TO THE LEFT OF TRAFFIC AND WHITE REFLECTORS WHEN BARRIER IS LOCATED TO THE RIGHT OF TRAFFIC. SPACE DELINEATORS A MAXIMUM OF 25 FEET APART. PROVIDE TOP MOUNTED DELINEATORS IN ADDITION TO THE SIDE MOUNTED DELINEATORS ON ALL BARRIER INSTALLATIONS LOCATED ON A CURVED ALIGNMENT LONGER THAN 200 FEET AND ON BARRIERS USED TO SEPARATE OPPOSING TRAFFIC.
8. SEE SHEET D FOR HOW TO ANCHOR BARRIER. SEE SHEET E FOR WHEN TO ANCHOR BARRIER.
9. 1" CHAMFER OPTIONAL.

f'c = 4,000 psi

CONCRETE BARRIER
TEMPORARY PRECAST, 12'-6"

STATE OF WISCONSIN
DEPARTMENT OF TRANSPOI

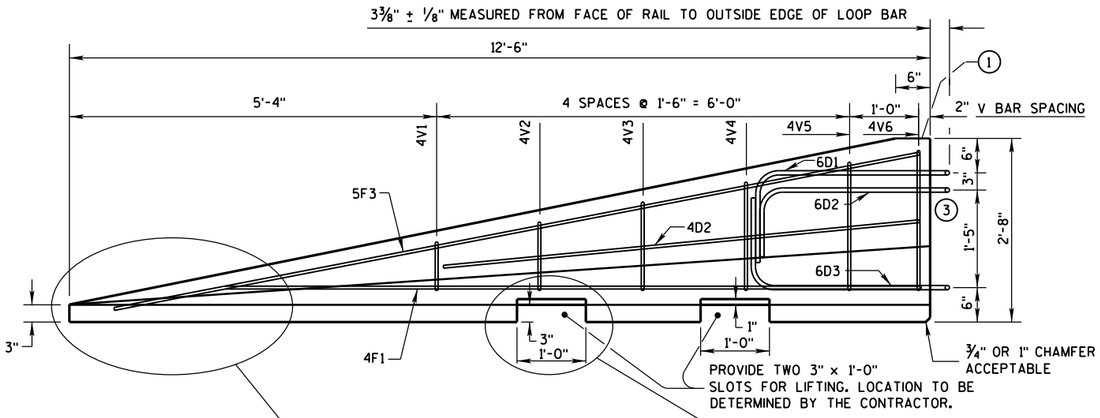

SIDE ELEVATION

(FOR CONNECTION TO LEFT END OF BARRIER)

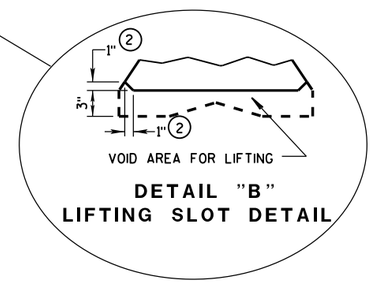

DETAIL "B"
LIFTING SLOT DETAIL

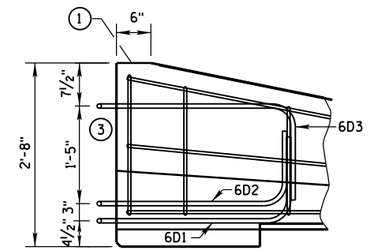

SIDE ELEVATION

LOOP BAR ASSEMBLY INVERTED
FOR OPPOSITE END.
(FOR CONNECTION TO RIGHT END OF BARRIER)

GENERAL NOTES

1. MARK ONE END OF EACH BARRIER PERMANENTLY BY FORMING INTO THE BARRIER THE FOLLOWING INFORMATION:
   a. TYPE WICBTP
   b. MANUFACTURER
   c. DATE MANUFACTURED (MONTH AND YEAR)
2. 1" CHAMFER TO PREVENT SPALLING.
3. NEVER USE LOOP BARS (6D1, 6D2 OR 6D3) TO LIFT, MOVE OR REPOSITION THE BARRIER.

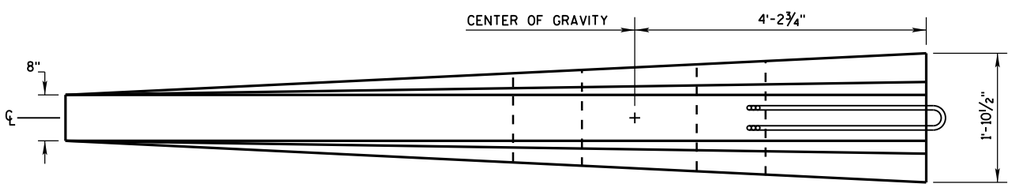

PLAN VIEW

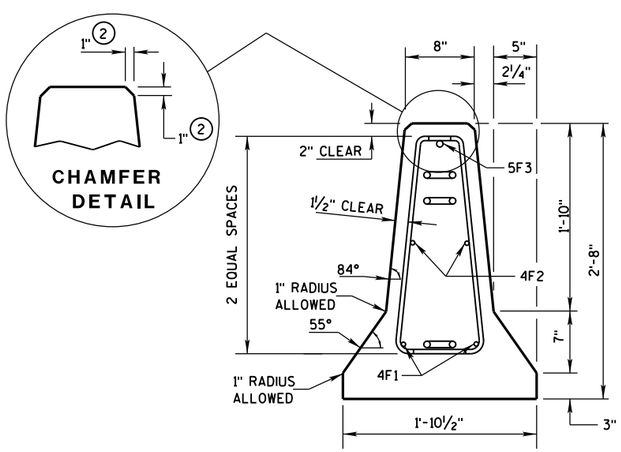

END SECTION

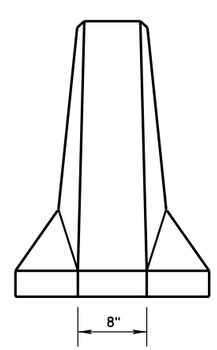

FRONT ELEVATION

DETAILS OF BARRIER TAPER SECTION

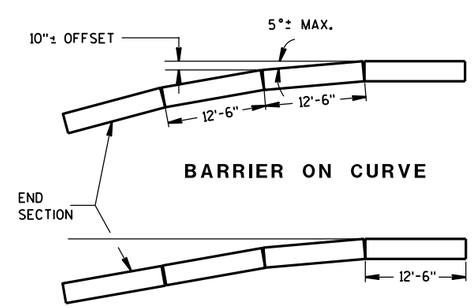

BARRIER ON CURVE

FLARE AT BARRIER END

POSTED SPEED, (MPH)	FLARE RATE
40 OR LESS	6:1
45 OR GREATER	8:1

CONCRETE BARRIER
TEMPORARY PRECAST, 12'-6"

STATE OF WISCONSIN
DEPARTMENT OF TRANSPORTATION

6

S.D.D. 14 B 7-15b

GENERAL NOTES

(1) NEVER USE LOOP BARS (6D1, 6D2 OR 6D3) TO LIFT, MOVE OR REPOSITION THE BARRIER.

BARRIER TAPER SECTION BILL OF MATERIALS

(PER 12'-6" BARRIER TAPER SECTION)

BAR	BAR SIZE	NO. OF BARS	LENGTH FT.
4V1	4	2	1'-11"
4V2	4	2	2'-2"
4V3	4	2	2'-6"
4V4	4	2	2'-9"
4V5	4	2	3'-2"
4V6	4	2	3'-4"
4F1	4	2	12'-0"
4F2	4	2	7'-6"
5F3	5	1	11'-9"
LOOP ASSEMBLY			
6D1	6	1	8'-5"
6D2	6	1	7'-7"
6D3	6	1	8'-6"

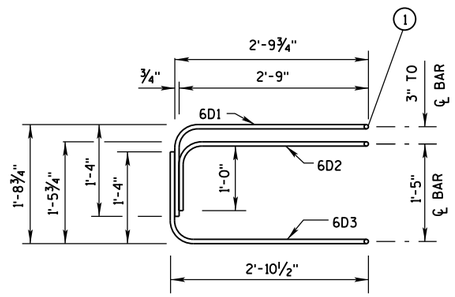

ELEVATION
LOOP BAR ASSEMBLY

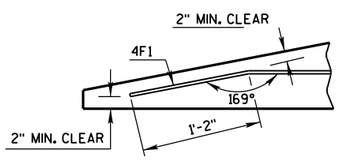

DETAIL "C"
BENT BAR DETAIL

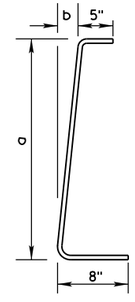

BAR	a	b
V1	10"	1"
V2	1'-1"	1¼"
V3	1'-5"	1⅝"
V4	1'-8"	1⅞"
V5	2'-0½"	2⅜"
V6	2'-3"	2¾"

4V BARS
2 AT EACH SIZE REQUIRED
FOR STIRRUP ASSEMBLY

TAPER BARRIER SECTION

BARRIER SECTION BILL OF MATERIALS

(PER 12'-6" BARRIER SECTION)

BAR	BAR SIZE	NO. OF BARS	LENGTH FT.
4A1	4	12	6'-0"
6A2	6	6	2'-11"
5B1	5	3	12'-2"
4C1	4	2	12'-2"
LOOP ASSEMBLY			
6D1	6	2	8'-5"
6D2	6	2	7'-7"
6D3	6	2	8'-6"

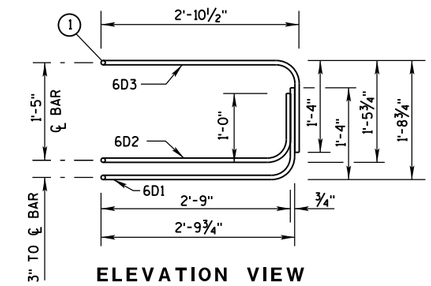

ELEVATION VIEW

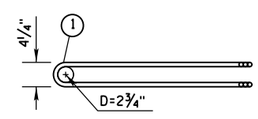

PLAN VIEW
LOOP BAR ASSEMBLY
(MARKED END SHOWN, INVERT FOR OTHER END)

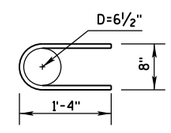

6A2

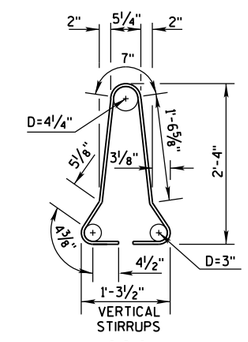

VERTICAL STIRRUPS
4A1

BARRIER SECTION

6

6

S.D.D. 14 B 7-15c

S.D.D. 14 B 7-15c

CONCRETE BARRIER
TEMPORARY PRECAST, 12'-6"

STATE OF WISCONSIN
DEPARTMENT OF TRANSPOR

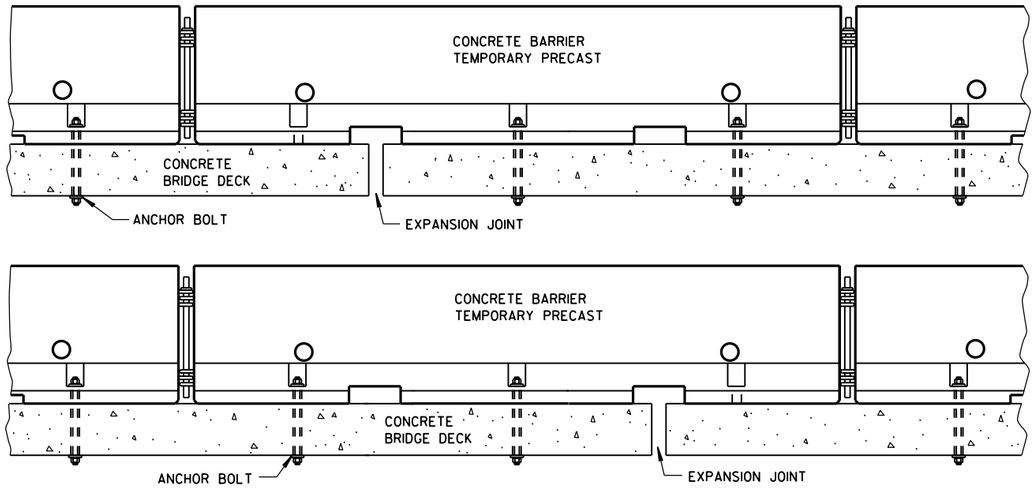

TREATMENT AT BRIDGE DECK EXPANSION JOINTS

(NO SINGLE CONCRETE BARRIER SECTION SHALL BE ANCHORED TO BOTH THE BRIDGE DECK AND THE APPROACH SLAB. ALL ANCHOR BOLT LOCATIONS SHALL BE ANCHORED TO THE DECK IN ACCORDANCE WITH THE DETAIL. NO MORE THAN ONE ANCHOR BOLT SHALL BE ELIMINATED FROM A BARRIER SECTION WHEN SPANNING AN EXPANSION JOINT.)

GENERAL NOTES

SEE SHEET E FOR WHEN TO ANCHOR. OTHER PARTS OF THE PLAN MAY SHOW ADDITIONAL LOCATIONS REQUIRING ANCHORING.

REMOVE ALL ANCHORS WHEN NO LONGER NEEDED. FILL CONCRETE PAVEMENTS, DECKS AND APPROACH SLABS WITH NON-SHRINK COMMERICAL GROUT FROM THE APPROVED PRODUCT LIST. FILL ASPHALT PAVEMENTS WITH ASTM D6690 TYPE II RUBBERIZED CRACK FILLER.

1. 1⅛" DIAMENTER A307 THREADED ROD, ½" X 3" X 3" SQUARE PLATE WASHER WITH ASTM A36 STEEL. ASTM A563A HEAVY HEX NUT.
2. ADHESIVE ANCHORS WITH A MINIMUM BOND STRENGTH OF 1,800 PSI AND 5¼" EMBEDMENT. SEE 603.2 AND 603.3.1.2 OF THE WISCONSIN STANDARD SPECIFICATIONS FOR MORE INFORMATION ON ADHESIVE ANCHORS.
3. ASPHALT SURFACE SHOWN. CONTRACTOR MAY DRILL THROUGH CONCRETE PAVEMENT AND THAN DRIVE ASPHALT ANCHOR PIN.

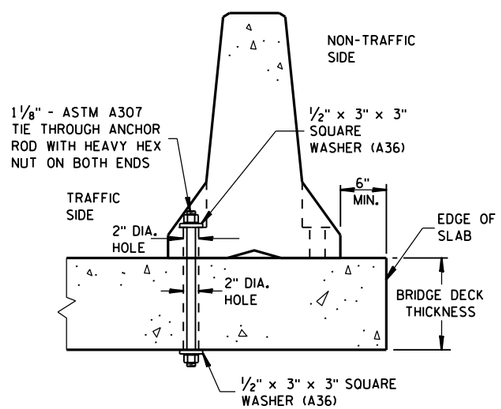

THROUGH BOLTED ANCHOR INSTALLATION ON BRIDGE DECK

(DO NOTUSE ON CONCRETE BRIDGE DECK WITH ASPHALT OVERLAY)

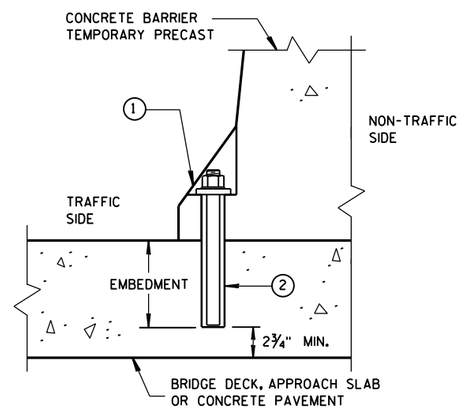

REMOVABLE ADHESIVE ANCHOR INSTALLATION ON CONCRETE BRIDGE DECK, CONCRETE APPROACH SLAB, OR CONCRETE PAVEMENT

(DO NOT USE ON CONCRETE WITH AN ASPHALTIC OVERLAY)

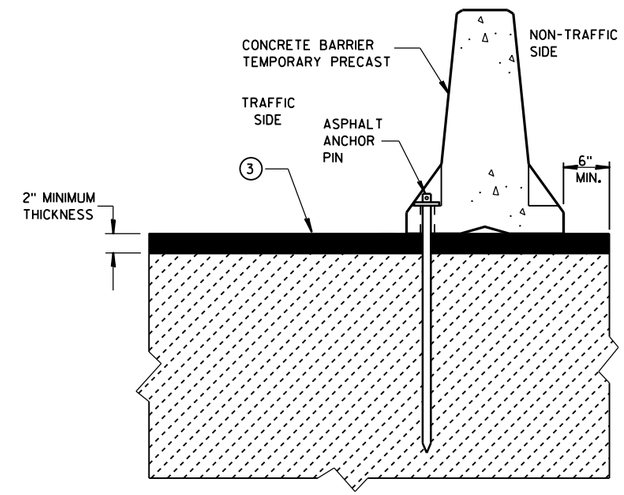

STAKE DOWN INSTALLATION FOR ASPHALTIC SURFACE

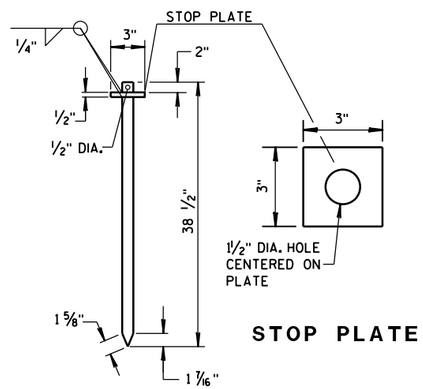

STOP PLATE

ASPHALT ANCHOR PIN

(ASTM A36 STEEL)

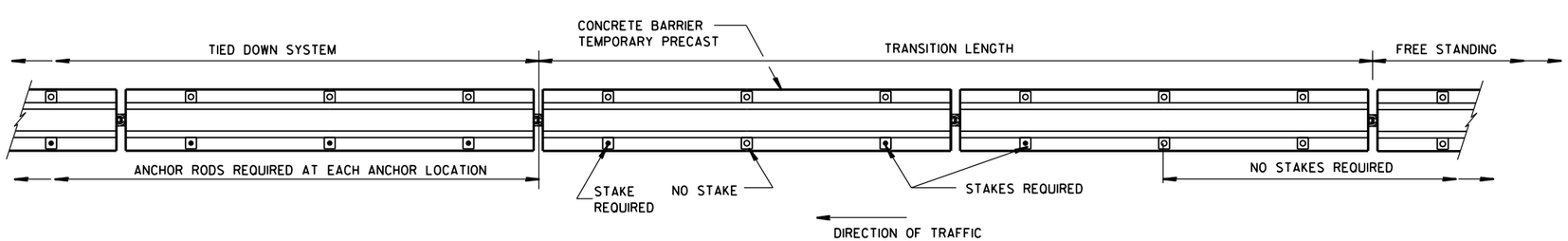

PLAN VIEW

FREE STANDING TRANSITION TO TIED-DOWN SYSTEM

(PLACE TRANSITION IN A TANGENT SECTION OF BARRIER PARALLEL TO THE ROADWAY. IF TRANSITION OCCURS ON STRUCTURAL SLAB, ANCHOR AS SHOWN.)

CONCRETE BARRIER
TEMPORARY PRECAST, 12'-6"

STATE OF WISCONSIN
DEPARTMENT OF TRANSPOI

6

S.D.D. 14 B 7-15d

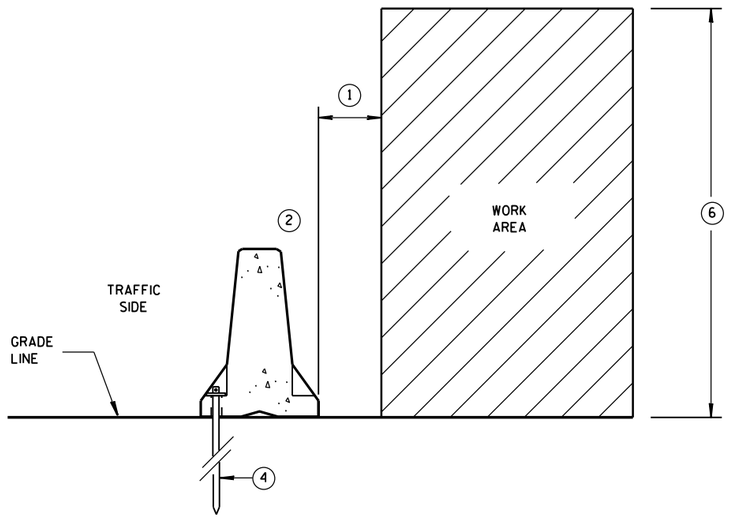

ANCHORED BARRIER SPACE REQUIREMENTS FOR HAZARDS EXTENDED ABOVE THE GRADE LINE

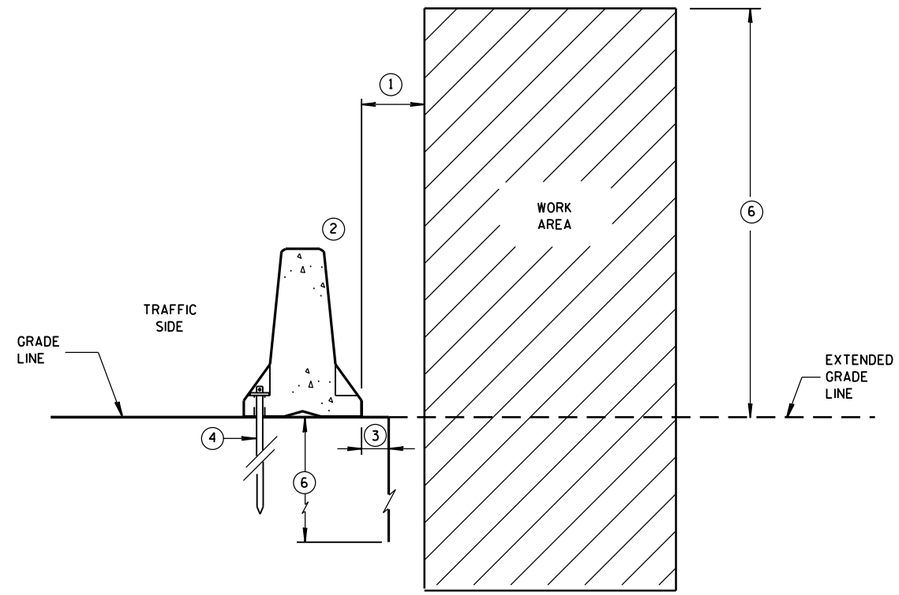

ANCHORED BARRIER SPACE REQUIREMENTS ON VERTICAL DROP OFFS

GENERAL NOTES

1. WHEN OBJECTS EXTEND ABOVE THE GRADE, A MINIMUM OF 1 FOOT IS REQUIRED FROM BACK OF BARRIER TO OBJECT. SEE OTHER DETAILS FOR FOR THE MINIMUM OFFSET FROM BACK OF BARRIER TO SLOPES OR VERTICAL DROPS.
2. OBJECTS ARE NOT TO BE PLACED ON, MOUNTED TO, OR LEANED AGAINST THE BARRIER WITHOUT PERMISSION OF THE PROJECT ENGINEER.
3. SEE OTHER DETAIL ON SHEET "D" FOR SPACE REQUIREMENTS.
4. SEE BOLT THROUGH DECK, REMOVABLE ADHESIVE ANCHOR, OR A STAKE DOWN FOR ASPHALTIC SURFACE TREATMENT DETAILS. ASPHALTIC ANCHOR SHOWN.
5. DEPTH OF 3 FEET OR MORE.
6. Y = 6'-6".

POSTED SPEED MPH	X
45 OR GREATER	4'
40 OR LESS	2'

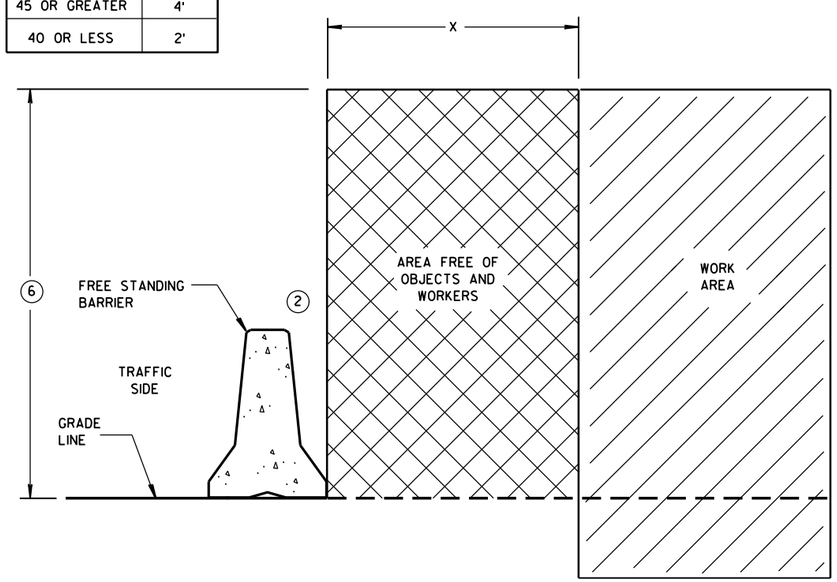

FREE STANDING BARRIER SPACE REQUIREMENTS

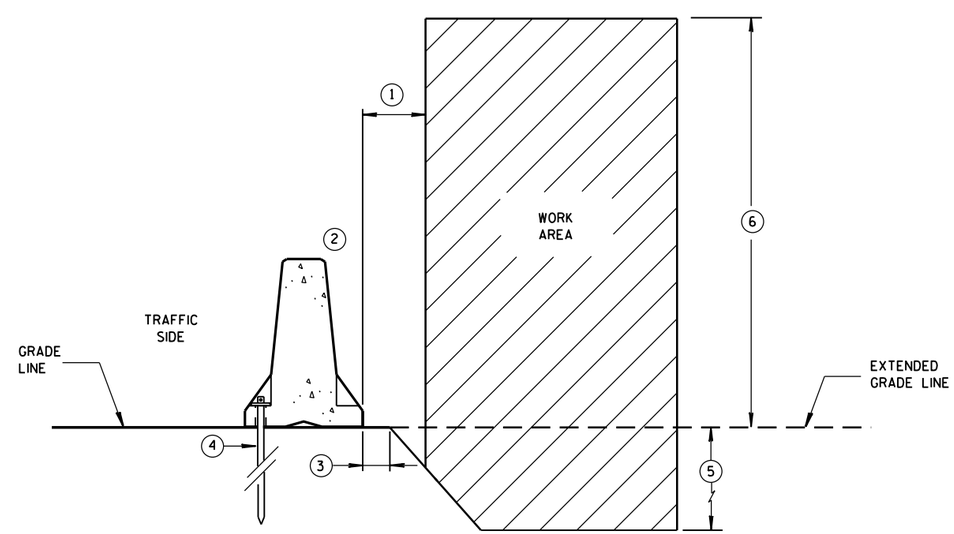

ANCHORED BARRIER SPACE REQUIREMENTS ON SLOPES

CONCRETE BARRIER
TEMPORARY PRECAST, 12'-6"

STATE OF WISCONSIN
DEPARTMENT OF TRANSPOR

6

S.D.D. 14 B 7-15e

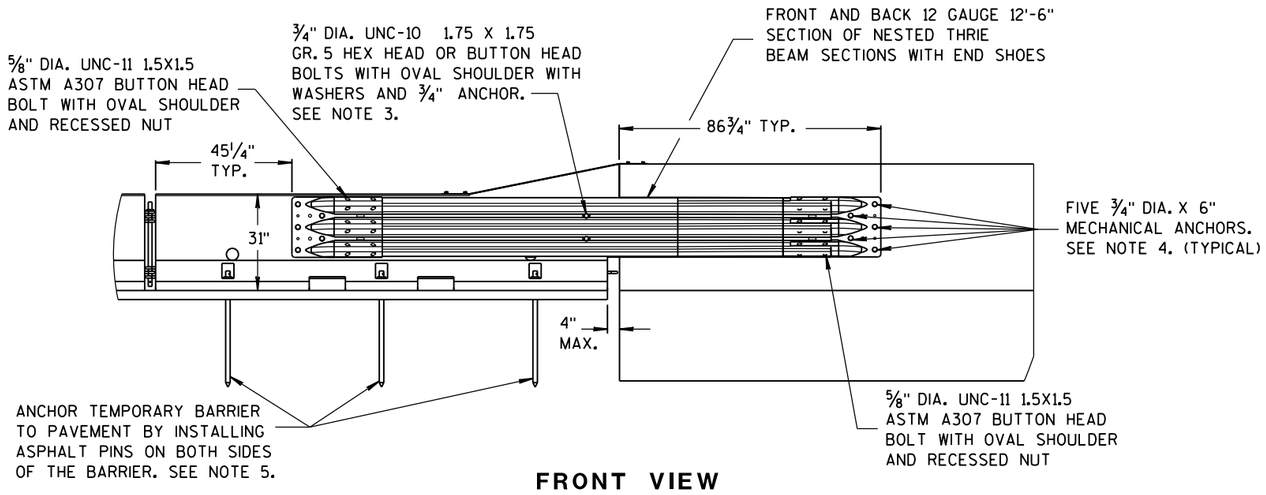

FRONT VIEW

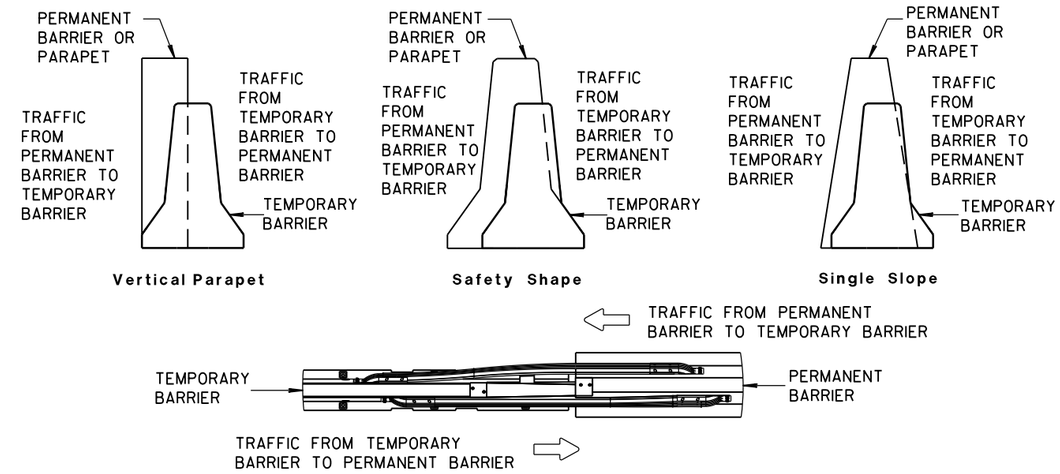

TEMPORARY BARRIER PLACEMENT FOR BI-DIRECTIONAL TRANSITION TO TIED-DOWN SYSTEM

NOTES

NESTED THRIE BEAM IS REQUIRED ON BOTH SIDES OF THE TEMPORARY BARRIER FOR ALL INSTALLATIONS REGARDLESS OF TRAFFIC.

1. CAP END PLATE PLACED FLUSH WITH UPSTREAM END OF PERMANENT BARRIER OR PARAPET.
2. THRIE BEAM PIECES ARE OFFSET 15 1/4" TO PREVENT INTERFERENCE FROM THE ANCHORS ON OPPOSING SIDES.
3. MINIMUM MECHANICAL OR ADHESIVE ANCHOR STRENGTH REQUIREMENTS: ULTIMATE TENSILE LOAD 9.48 KIPS AND ULTIMATE SHEAR LOAD 10.48 KIPS.
4. MINIMUM MECHANICAL OR ADHESIVE ANCHOR STRENGTH REQUIREMENTS: ULTIMATE TENSILE LOAD 17.9 KIPS AND ULTIMATE SHEAR LOAD 21.96 KIPS.
5. MAY BE USED ON CONCRETE OR ASPHALT PAVEMENTS. ASPHALT OPTION SHOWN. FOR CONCRETE OPTION SEE OTHER DETAILS.
6. MINIMUM MECHANICAL OR ADHESIVE ANCHOR STRENGTH REQUIREMENTS: ULTIMATE TENSILE LOAD 12.14 KIPS AND ULTIMATE SHEAR LOAD 17.5 KIPS.

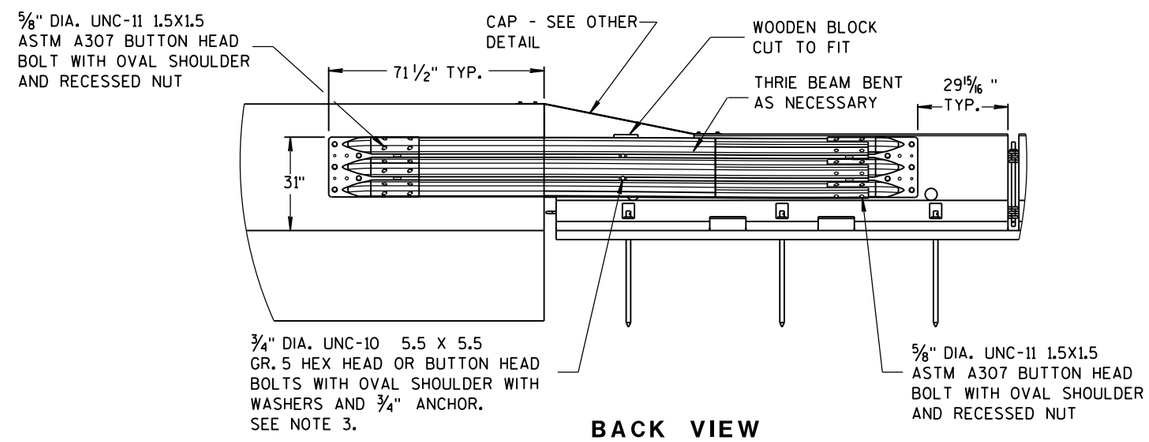

BACK VIEW

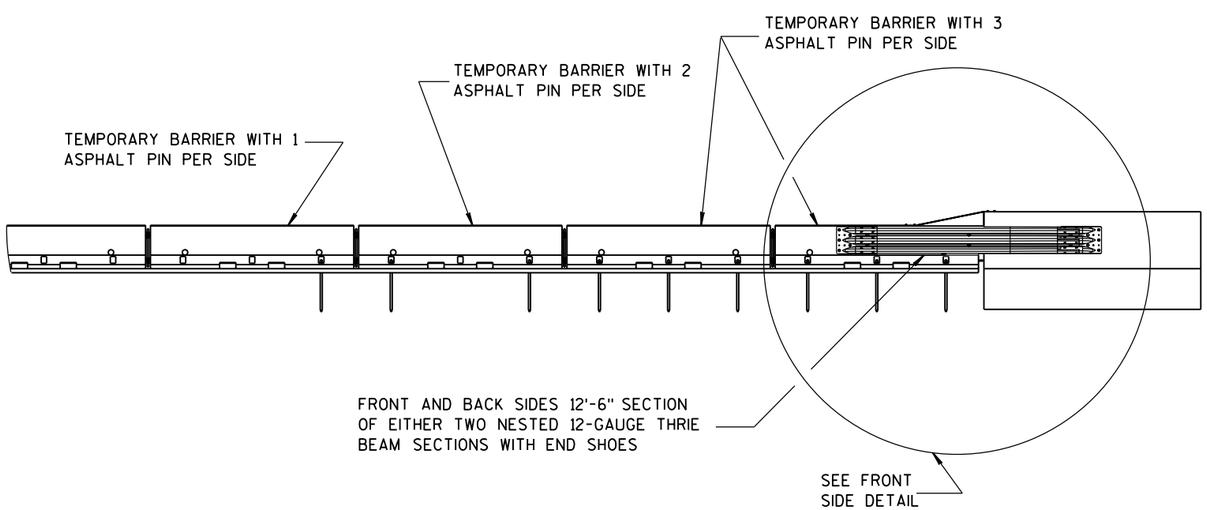

FRONT VIEW

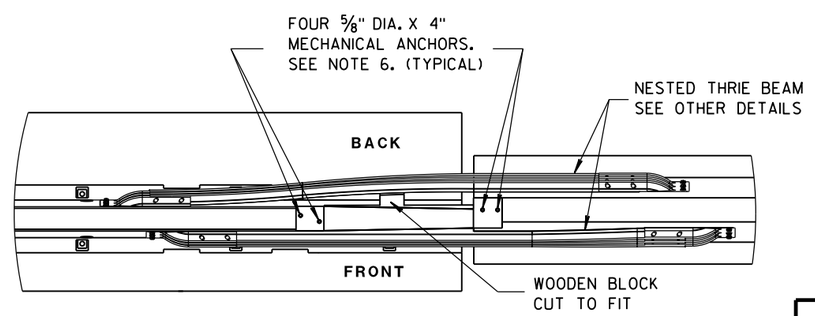

PLAN VIEW

BI-DIRECTIONAL TRANSITION TO TIED-DOWN SYSTEM

CONCRETE BARRIER
TEMPORARY PRECAST, 12'-6"

STATE OF WISCONSIN
DEPARTMENT OF TRANSPO

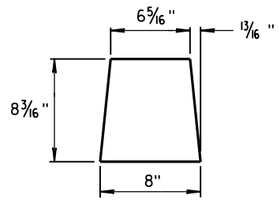

GUSSET 1

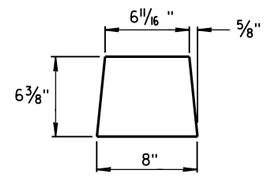

GUSSET 2

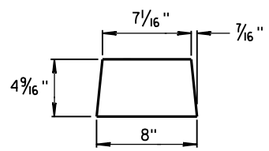

GUSSET 3

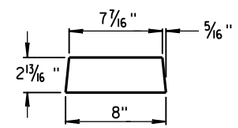

GUSSET 4

GUSSETS

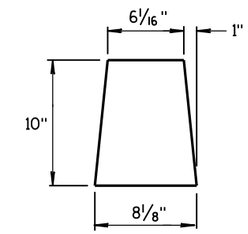

END PLATE

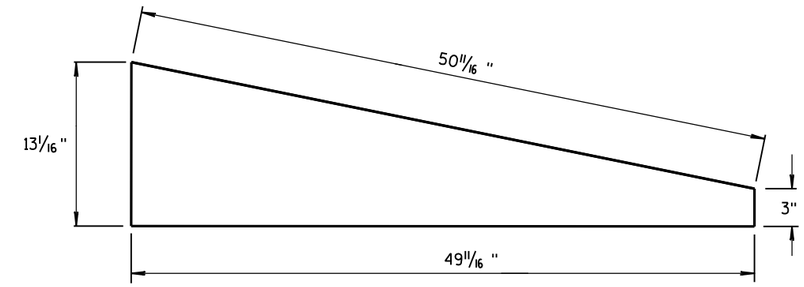

SIDE PLATE

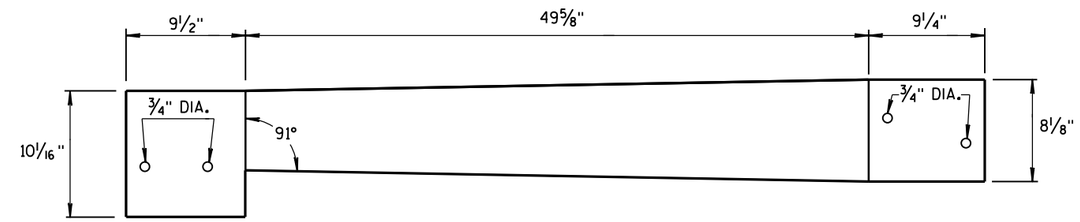

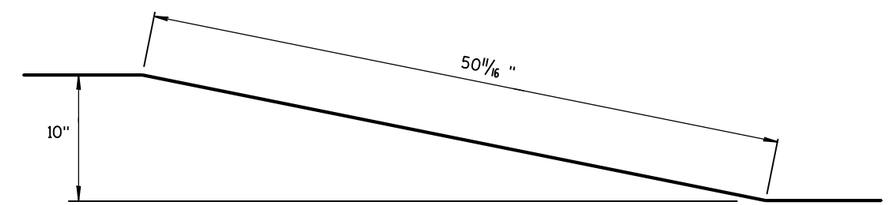

TOP PLATE

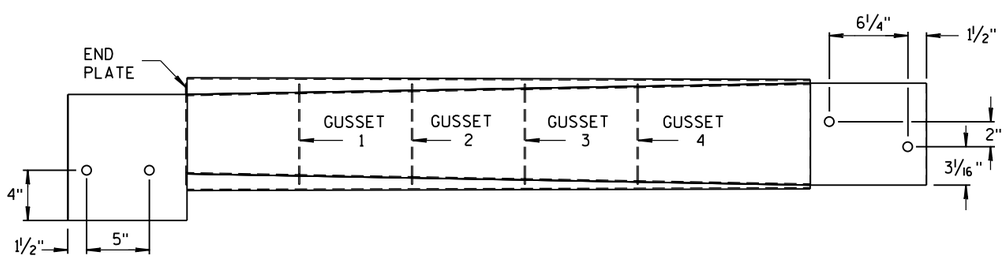

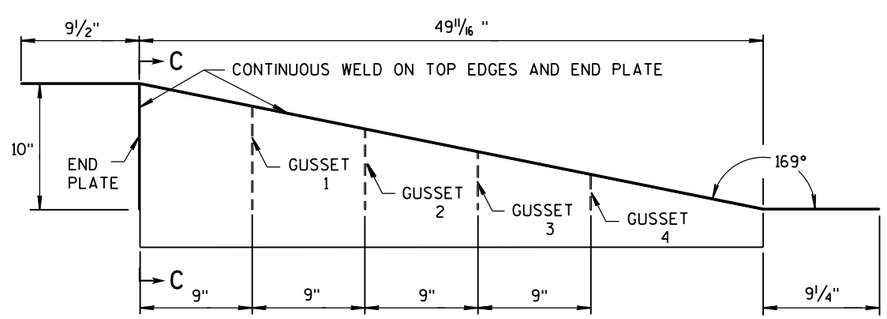

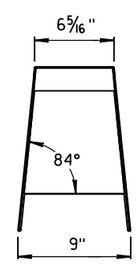

SECTION C-C

SIDE, TOP AND END PLATES FOR CAP FROM TEMPORARY CONCRETE BARRIER TO 42" PERMANENT CONCRETE BARRIER

SIDE PLATES, TOP PLATE, END PLATE AND GUSSETS ARE 12 GAUGE ASTM A36 GALVANIZED STEEL.

NOTES

1. FOUR GUSSETS AND END PLATE ARE STITCH WELDED ON THREE SIDES.
2. TWO TRIANGULAR SIDE PLATES ARE STITCH WELDED TO TOP PLATE, END PLATE, AND GUSSETS.

CAP DETAILS FOR TEMPORARY CONCRETE BARRIER TO 42" PERMANENT CONCRETE BARRIER

CONCRETE BARRIER
TEMPORARY PRECAST, 12'-6"

STATE OF WISCONSIN
DEPARTMENT OF TRANSPOR

6

S.D.D. 14 B 7-15g

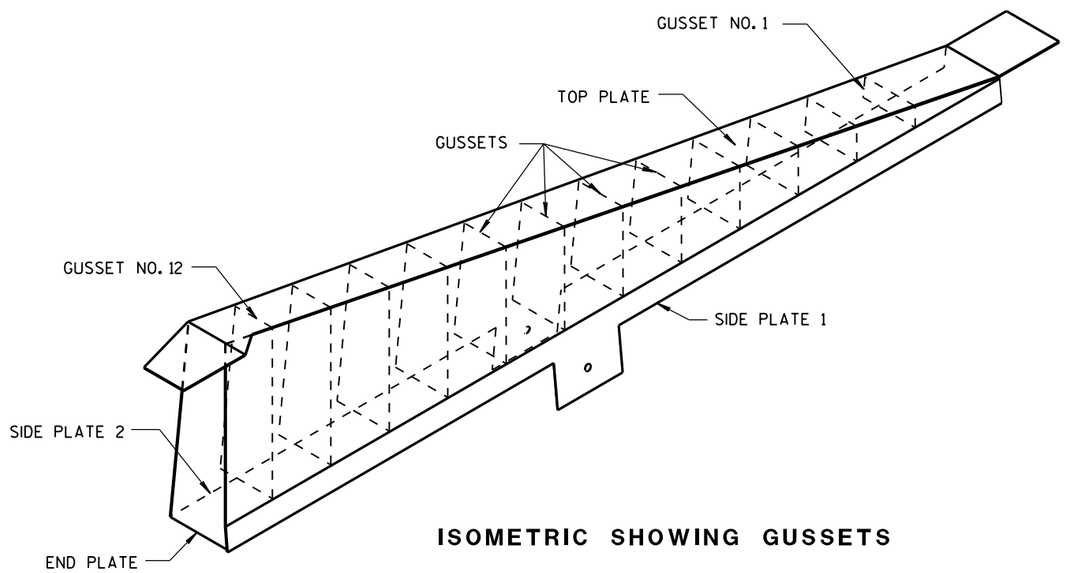

ISOMETRIC SHOWING GUSSETS

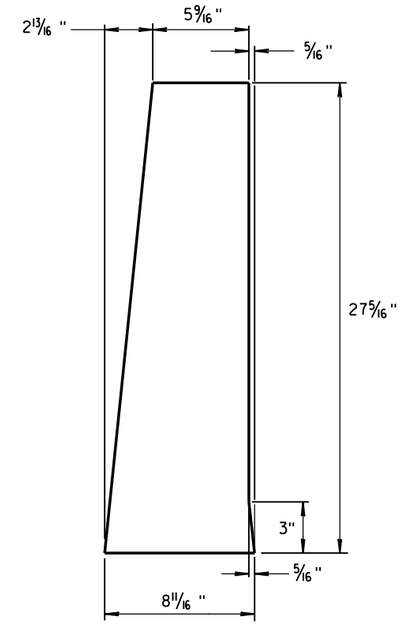

END PLATE

1/8" STEEL PLATE

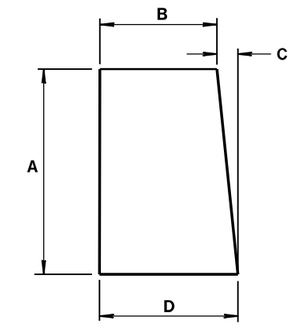

GUSSETS 1 - 12

ALL GUSSETS 1/8" STEEL PLATE

GUSSET DIMENSIONS				
GUSSET NO.	A	B	C	D
1	2 7/8"	7 3/4"	1/4"	8
2	4 11/16 "	7 9/16 "	1/2"	8
3	6 1/2"	7 3/8"	11/16 "	8 1/16 "
4	8 5/16 "	7 3/16 "	7/8"	8 1/16 "
5	10 1/8"	7"	1 1/16 "	8 1/16 "
6	11 15/16 "	6 13/16 "	1 1/4"	8 1/16 "
7	13 3/4"	6 5/8"	1 7/16 "	8 1/16 "
8	15 9/16 "	6 7/16 "	1 9/16 "	8 1/16 "
9	17 3/8"	6 1/4"	1 13/16 "	8 1/16 "
10	19 3/16 "	6 1/16 "	1 15/16 "	8 1/16 "
11	21"	5 7/8"	2 3/16 "	8 1/16 "
12	22 13/16 "	5 11/16 "	2 5/16 "	8 1/16 "

SIDE PLATES, TOP PLATE, END PLATE AND GUSSETS ARE 12 GAUGE ASTM A36 STEEL AND GALVANIZED.

GUSSETS AND END PLATE ARE STITCH WELDED ON 3 SIDES. TWO TRIANGULAR SIDE PLATES ARE STITCH WELDED TO TOP PLATE, END PLATE AND GUSSETS.

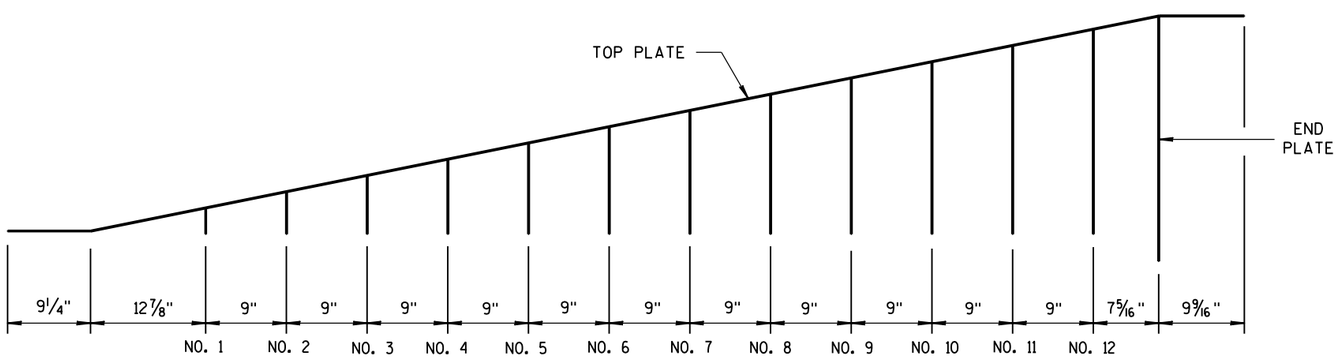

GUSSET LOCATION

CAP DETAILS FOR TEMPORARY CONCRETE BARRIER TO 56" PERMANENT CONCRETE BARRIER

CONCRETE BARRIER
TEMPORARY PRECAST, 12'-6"

STATE OF WISCONSIN
DEPARTMENT OF TRANSPOI

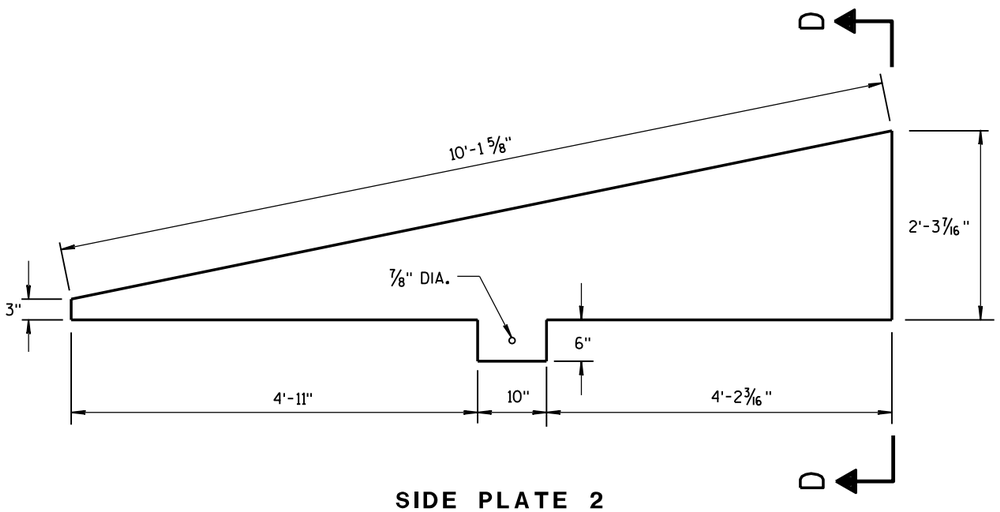

SIDE PLATE 2

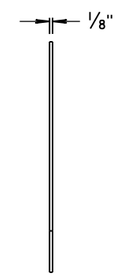

END VIEW

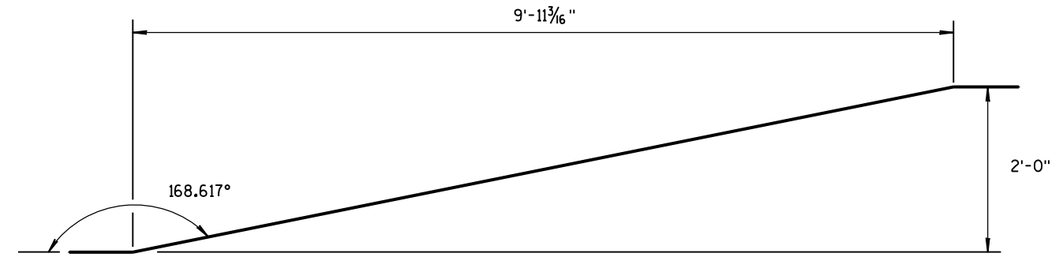

SIDE VIEW

TOP PLATE

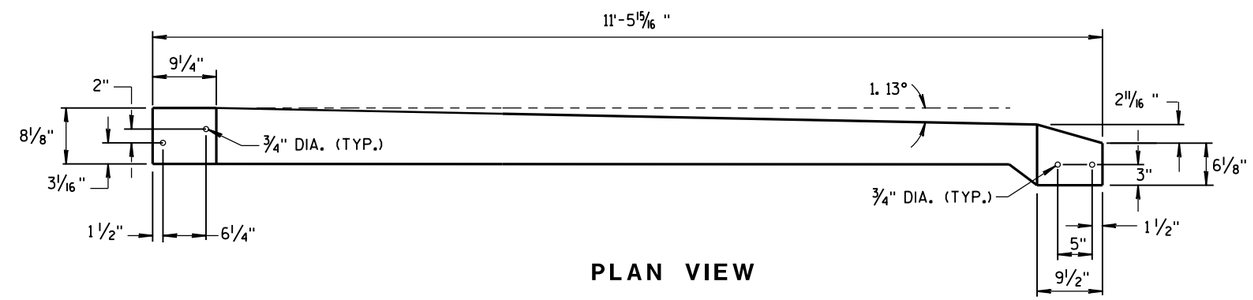

PLAN VIEW

TOP PLATE

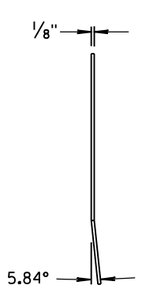

END VIEW

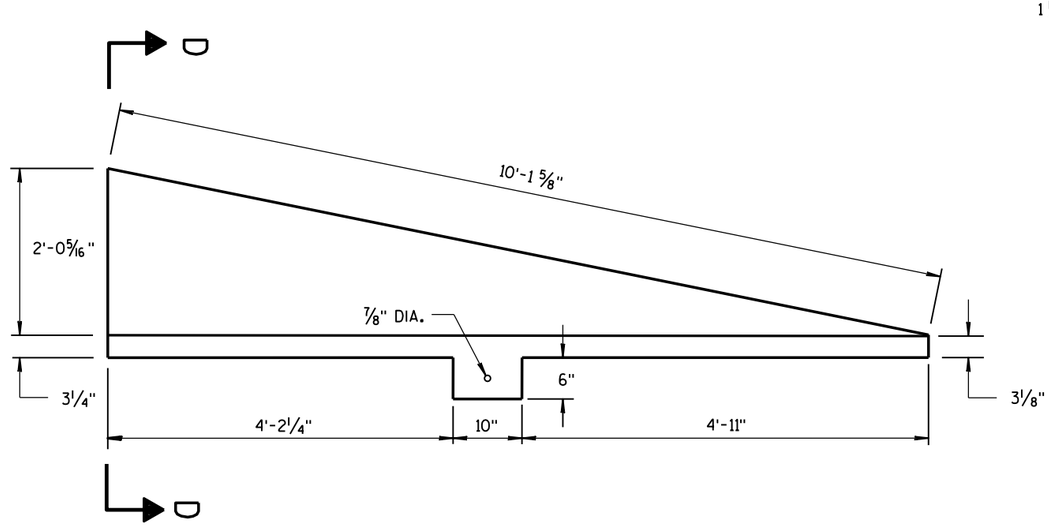

SIDE PLATE 1

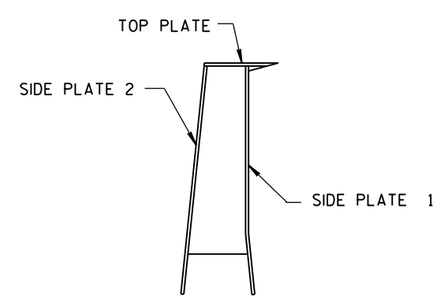

SECTION D-D

CAP DETAILS FOR TEMPORARY CONCRETE BARRIER TO 56" PERMANENT CONCRETE BARRIER

CONCRETE BARRIER
TEMPORARY PRECAST, 12'-6"

STATE OF WISCONSIN
DEPARTMENT OF TRANSPORTATION

APPROVED
June 2017 — DATE
/S/ Rodney Taylor — ROADWAY STANDARD UNIT SUPERV
FHWA

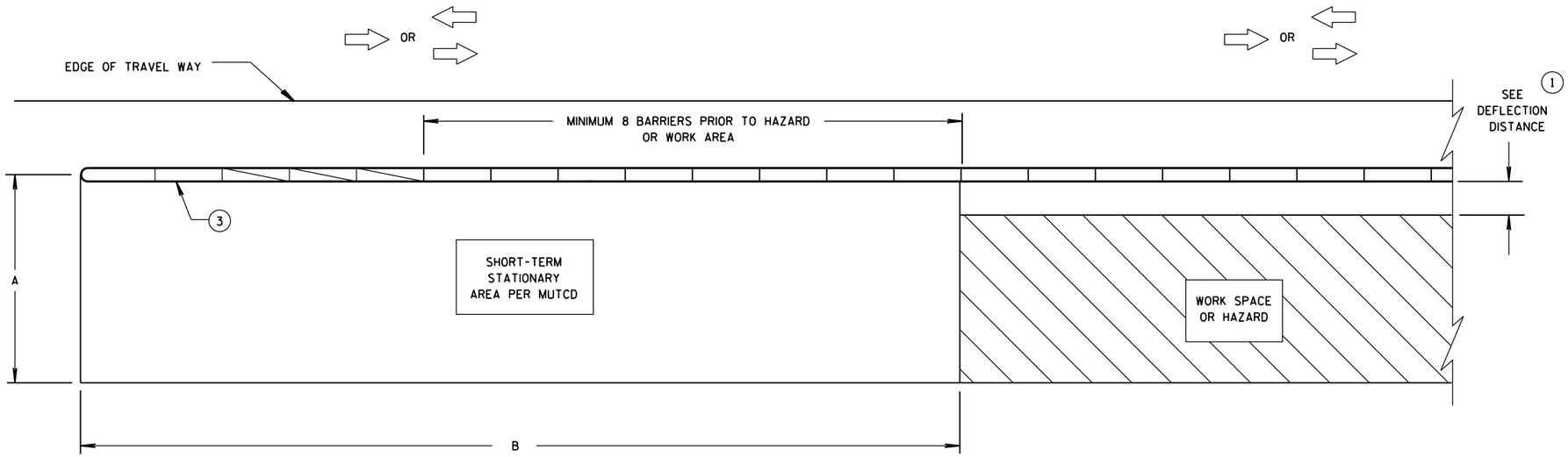

CRASH CUSHION/SAND BARREL ARRAY AND TEMPORARY BARRIER INSTALLATION FOR TRAFFIC ON ONE SIDE OF BARRIER

DIMENSION A TABLE (2)

FACILITY	POSTED SPEED MPH	DIMENSION A MIN. FT	DIMENSION A MAX. FT
FREEWAY/EXPRESSWAY	ALL	15	20
NON-FREEWAY/EXPRESSWAY	GREATER THAN OR EQUAL TO 45	10	15
NON-FREEWAY/EXPRESSWAY	LESS THAN 45	8	10
AADT LESS THAN 1,500	ALL	8	10

DIMENSION B TABLE (2)

POSTED SPEEDS MPH	DIMENSION B FT
20	115
25	155
30	200
35	250
40	305
45	360
50	425
55	495
60	570
65	645

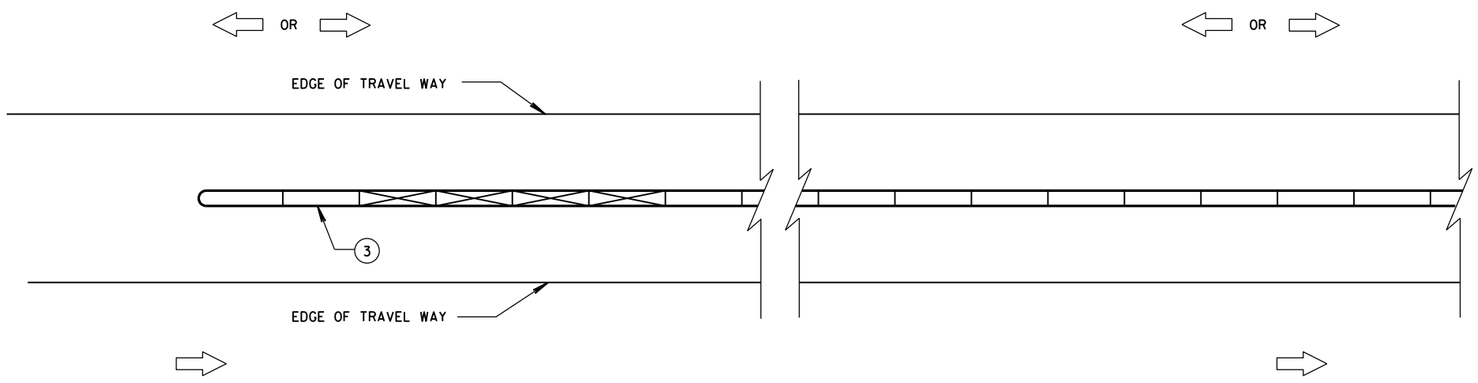

CRASH CUSHION/SAND BARREL ARRAY AND TEMPORARY BARRIER INSTALLATION FOR TRAFFIC ON BOTH SIDES OF BARRIER

LEGEND

- DIRECTION OF TRAVEL
- CRASH CUSHION OR SAND BARREL ARRAY
- SEE FREE STANDING TRANSITION TO TIED-DOWN SYSTEM DETAILS
- SEE BI-DIRECTIONAL TRANSITION TO TIED-DOWN SYSTEM DETAILS
- 3 PINS PLACED ON TRAFFIC SIDE OF BARRIER
- PERMANENT CONCRETE BARRIER OR CONCRETE PARAPET
- FREE STANDING TEMPORARY BARRIER

GENERAL NOTES

SEE STANDARD DETAIL DRAWING 14B7 FOR MORE INFORMATION.

DETAILS PROVIDE A GENERAL LAYOUT OF TEMPORARY CONCRETE BARRIER, CRASH CUSHIONS, SAND BARREL ARRAYS AND TIE DOWN TRANSITIONS. DETAILS PROVIDED MAY NOT FIT ALL POSSIBLE SITUATIONS OR SITE CONDITIONS. SEE OTHER SECTIONS OF THE CONTRACT OR PROJECT ENGINEER FOR MORE DETAILS.

ADDITIONAL TEMPORARY BARRIER MAY BE REQUIRED TO PROTECT TRAVELING PUBLIC FROM HAZARDS, CONTRACTOR'S OPERATIONS OR TO CONTROL TRAFFIC.

TEMPORARY BARRIER MAY BE REQUIRED TO BE ANCHORED TO PAVEMENT OR BRIDGE DECK.

FOR DETAILS ON CRASH CUSHION OR SAND BARREL ARRAYS SEE OTHER SECTIONS OF THE PLAN AND MANUFACTURE'S DETAILS.

SLOPES LEADING TO TEMPORARY BARRIER, CRASH CUSHION OR SAND BARREL ARRAY ARE 10:1 OR LESS.

(1) FOR DEFLECTION INFORMATION SEE STANDARD DETAIL DRAWING 14B7.

(2) VALUES PROVIDED MAY NOT FIT ALL POSSIBLE SITUATIONS OR SITE CONDITIONS. SEE OTHER SECTIONS OF THE CONTRACT OR PROJECT ENGINEER FOR MORE DETAILS.

(3) ANCHOR TEMPORARY BARRIER ACCORDING TO CRASH CUSHION OR SAND BARREL MANUFACTURER'S RECOMMENDATIONS. IF MANUFACTURER'S RECOMMENDATIONS ARE NOT PROVIDED, ANCHOR 3 PINS ON TRAFFIC SIDE.

CRASH CUSHION/SAND BARREL ARRAY AND OTHER TEMPORARY BARRIER LAYOUT DETAILS

STATE OF WISCONSIN
DEPARTMENT OF TRANSPOR

6

S.D.D. 14 B 8-2a

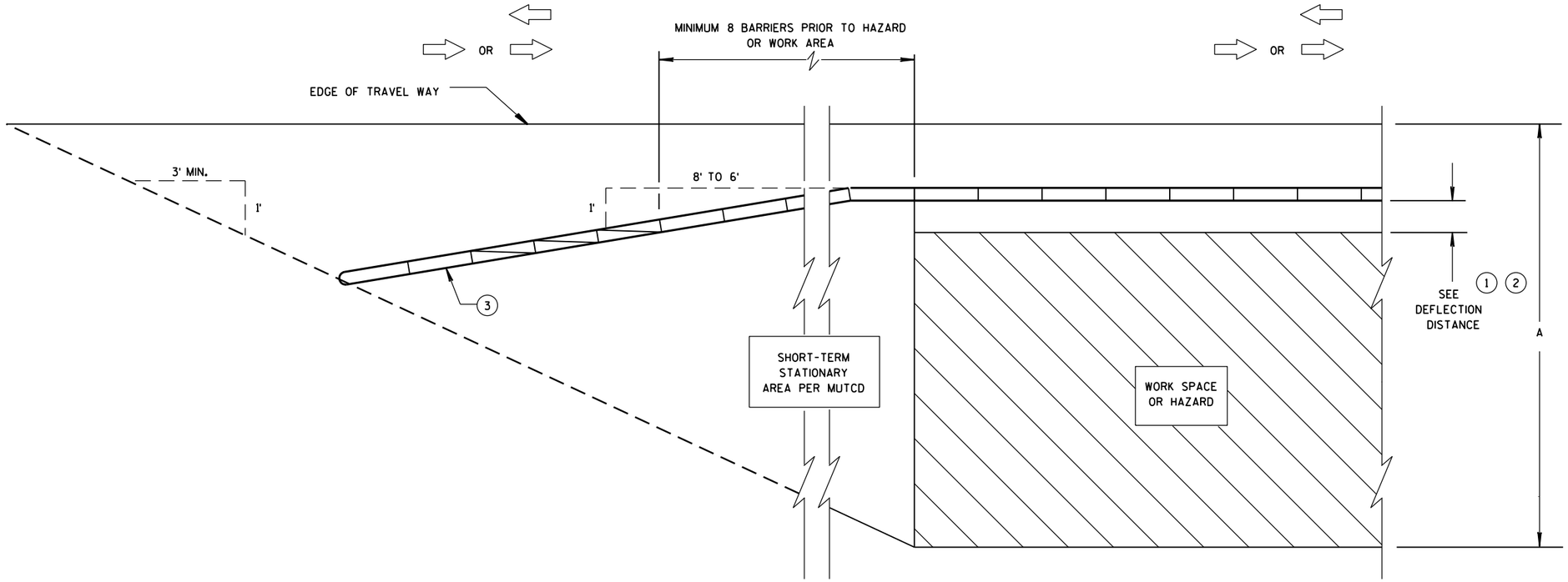

CRASH CUSHION/SAND BARREL ARRAY AND TEMPORARY BARRIER INSTALLATION FOR TRAFFIC ON ONE SIDE - FLARED INSTALLATION

6

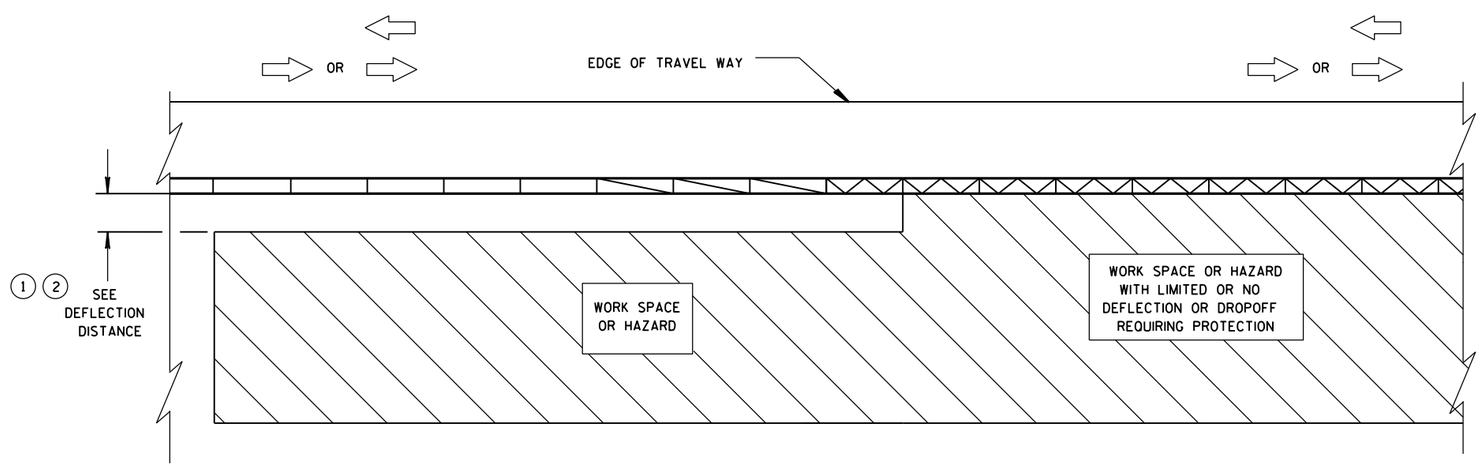

TRANSITION FROM FREE STANDING TEMPORARY BARRIER TO ANCHORED BARRIER

LEGEND

- DIRECTION OF TRAVEL
- CRASH CUSHION OR SAND BARREL ARRAY
- SEE FREE STANDING TRANSITION TO TIED-DOWN SYSTEM DETAILS
- SEE BI-DIRECTIONAL TRANSITION TO TIED-DOWN SYSTEM DETAILS
- 3 PINS PLACED ON TRAFFIC SIDE OF BARRIER
- PERMANENT CONCRETE BARRIER OR CONCRETE PARAPET
- FREE STANDING TEMPORARY BARRIER

CRASH CUSHION/SAND BARREL ARRAY AND OTHER TEMPORARY BARRIER LAYOUT DETAILS

STATE OF WISCONSIN
DEPARTMENT OF TRANSPOR

S.D.D. 14 B 8-2b

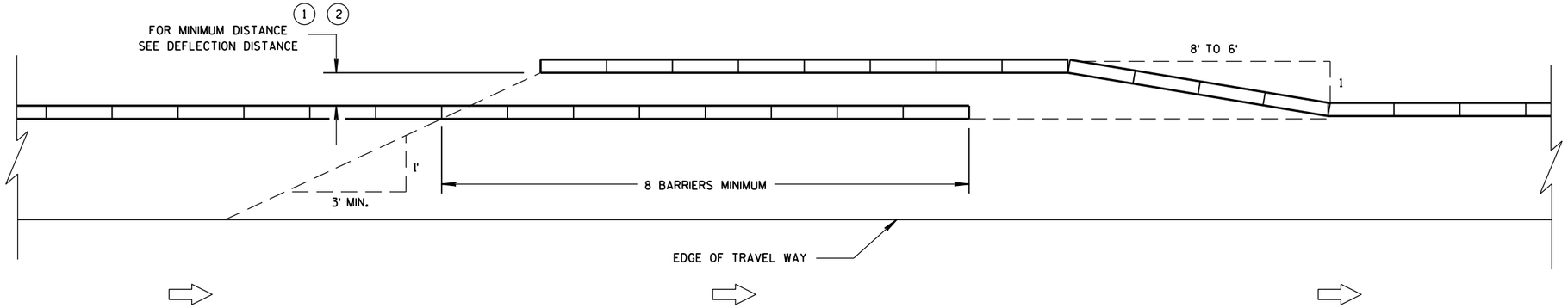

TEMPORARY BARRIER OVERLAP - ONE-WAY TRAFFIC

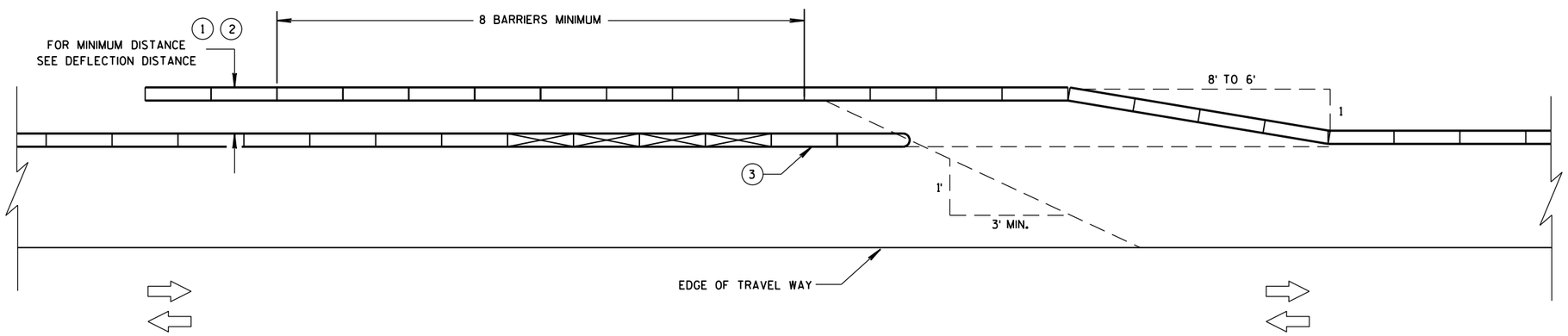

TEMPORARY BARRIER OVERLAP - TWO-WAY TRAFFIC

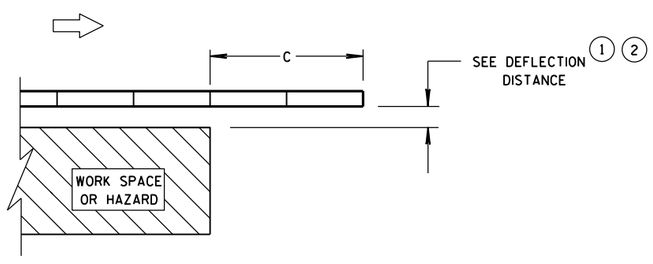

ENDING TEMPORARY BARRIER DOWNSTREAM - UNANCHORED

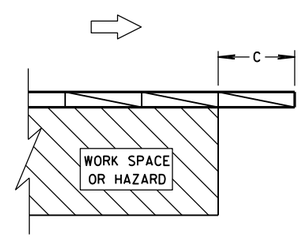

ENDING TEMPORARY BARRIER DOWNSTREAM - ANCHORED

LEGEND

- DIRECTION OF TRAVEL
- CRASH CUSHION OR SAND BARREL ARRAY
- SEE FREE STANDING TRANSITION TO TIED-DOWN SYSTEM DETAILS
- SEE BI-DIRECTIONAL TRANSITION TO TIED-DOWN SYSTEM DETAILS
- 3 PINS PLACED ON TRAFFIC SIDE OF BARRIER
- PERMANENT CONCRETE BARRIER OR CONCRETE PARAPET
- FREE STANDING TEMPORARY BARRIER

CRASH CUSHION/SAND BARREL ARRAY AND OTHER TEMPORARY BARRIER LAYOUT DETAILS

STATE OF WISCONSIN
DEPARTMENT OF TRANSPOR

6

6

S.D.D. 14 B 8-2c

S.D.D. 14 B 8-2c

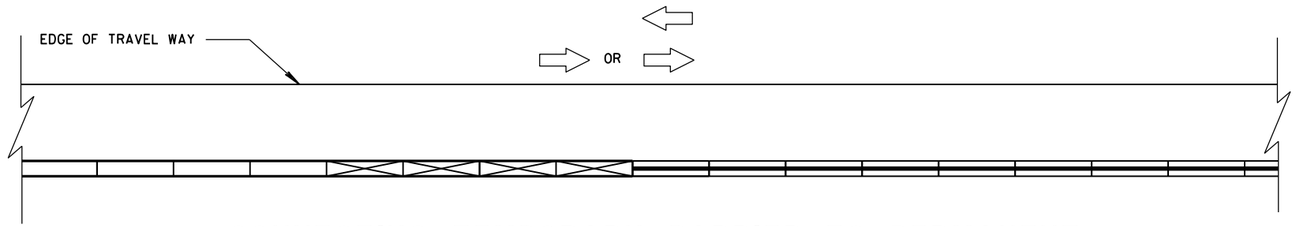

CONNECTING TEMPORARY BARRIER TO PERMANENT
CONCRETE BARRIER-TRAFFIC ON ONE SIDE

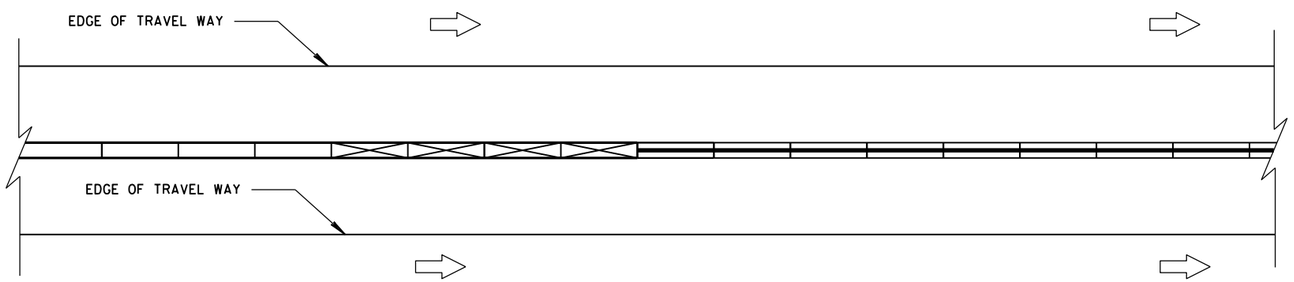

CONNECTING TEMPORARY BARRIER TO PERMANENT
CONCRETE BARRIER-TRAFFIC ON BOTH SIDES

LEGEND

DIRECTION OF TRAVEL

CRASH CUSHION OR
SAND BARREL ARRAY

SEE FREE STANDING TRANSITION
TO TIED-DOWN SYSTEM DETAILS

SEE BI-DIRECTIONAL TRANSITION
TO TIED-DOWN SYSTEM DETAILS

3 PINS PLACED ON
TRAFFIC SIDE OF BARRIER

PERMANENT CONCRETE BARRIER
OR CONCRETE PARAPET

FREE STANDING TEMPORARY
BARRIER

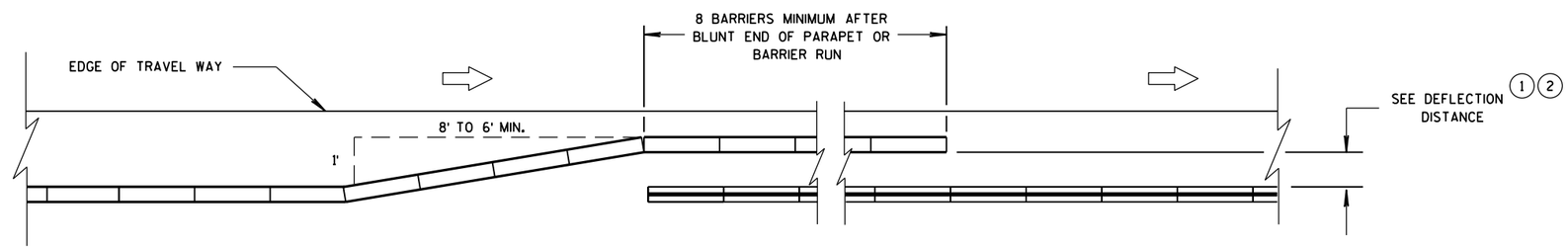

OVERLAPPING TEMPORARY BARRIER AND PERMANENT BARRIER -
ONE WAY TRAFFIC

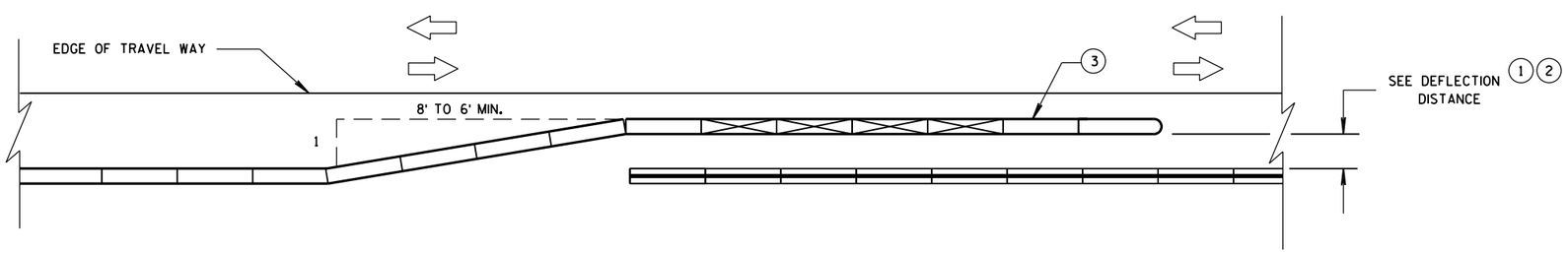

OVERLAPPING TEMPORARY BARRIER AND PERMANENT BARRIER -
TWO WAY TRAFFIC

CRASH CUSHION/SAND BARREL
ARRAY AND OTHER TEMPORARY
BARRIER LAYOUT DETAILS

STATE OF WISCONSIN
DEPARTMENT OF TRANSPOR

6

S.D.D. 14 B 8-2d

LEGEND

DIRECTION OF TRAVEL

CRASH CUSHION OR SAND BARREL ARRAY

SEE FREE STANDING TRANSITION TO TIED-DOWN SYSTEM DETAILS

SEE BI-DIRECTIONAL TRANSITION TO TIED-DOWN SYSTEM DETAILS

3 PINS PLACED ON TRAFFIC SIDE OF BARRIER

PERMANENT CONCRETE BARRIER OR CONCRETE PARAPET

FREE STANDING TEMPORARY BARRIER

DIMENSION C TABLE (2)

AVAILABLE DEFLECTION DISTANCE	MINIMUM LENGTH OF BARRIER BEYOND HAZARD FT
GREATER THAN 8'	12.5
LESS THAN OR EQUAL TO 8' BUT GREATER THAN 4'	50
LESS THAN OR EQUAL TO 4'	100

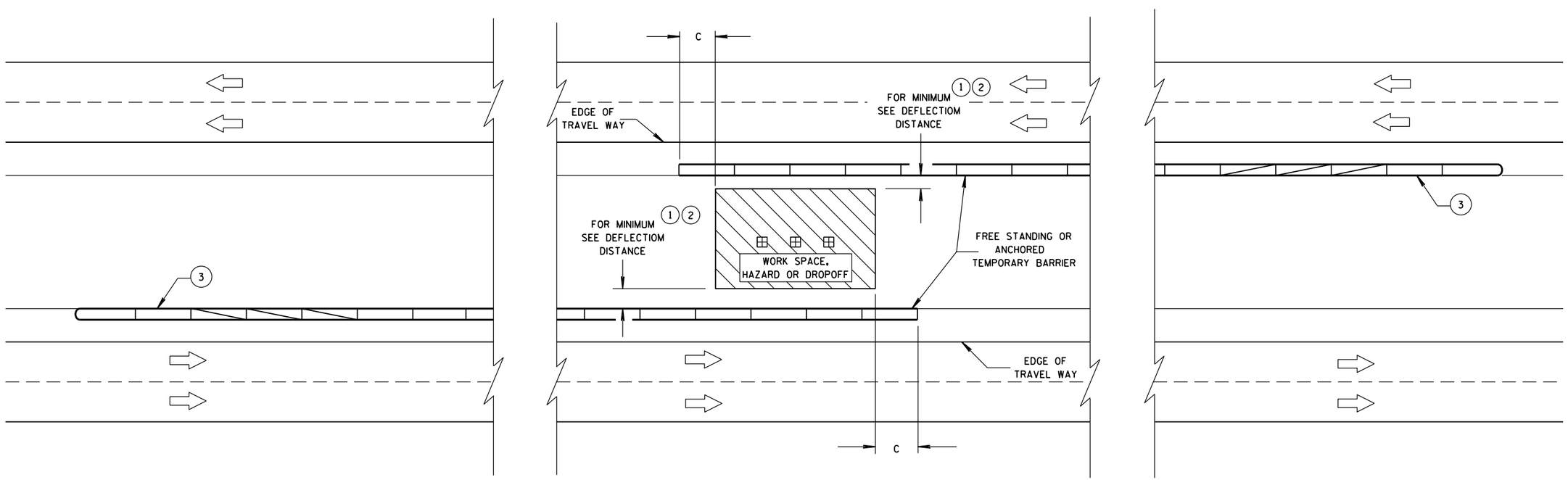

CRASH CUSHION/SAND BARREL ARRAY AND OTHER TEMPORARY BARRIER LAYOUT DETAILS

STATE OF WISCONSIN
DEPARTMENT OF TRANSPORTATION

APPROVED
June, 2015 — DATE
/S/ Jerry H. Zogg — ROADWAY STANDARDS DEVELOPMENT ENGINNER
FHWA

6
S.D.D. 14 B 8-2e

1. WOOD OR STEEL POSTS (w6X9 OR w6X8.5) MAY BE USED. DO NOT INTERMIX WOOD AND STEEL POSTS. INSTALL STEEL POSTS WITH HOLES ON APPROACHING TRAFFIC SIDE.
2. USE WOOD OR APPROVED PLASTIC BLOCKOUTS. WOOD BLOCKOUTS MAY BE CONSTRUCTED OUT OF TWO OR MORE WOOD BLOCKOUTS. SEE ALTERNATE WOOD BLOCKOUT DETAIL. DIMENSIONS OF APPROVED PLASTIC BLOCKOUTS MAY VARY.
3. IF ROCK IS ENCOUNTERED DURING EXCAVATION, PROVIDE A HOLE 12 INCHES IN DIAMETER EXTENDING 20 INCHES DEEP INTO THE ROCK. PLACE APPROXIMATELY 2 1/2" INCHES OF GRANULAR MATERIAL IN THE BOTTOM OF THE HOLE. CUT THE POSTS THE TO LENGTH AMD INSTALL. BACKFILL WITH EXCAVATED MATERIAL AND COMPACT. BACKFILL IS TO BE FREE OF LARGE ROCKS.
4. WHEN THE DISTANCE FROM BACK OF POST TO SHOULDER HINGE POINT IS LESS THAN 2 FEET INSTALL LONGER POST AT HALF POST SPACING (K).
5. FOR NEW MGS INSTALLATION TOP OF W-BEAM RAIL TOLERANCE IS ±1". FOR EXISTING MGS INSTALLATION TOP OF W-BEAM IS BETWEEN 27 ¾" TO 32".
6. WHEN USING STEEL POST AND WOOD BLOCKOUTS INSTALL FOUR 16D GALVANIZED NAILS. INSTALL NAILS AT THE BACK CORNERS OF THE BLOCK AND BEND THE NAILS OVER THE FLANGE OF THE STEEL POST.
7. TOTAL POST LENGTH FOR TYPE K IS 7' - 0".
   TOTAL POST LENGTH FOR OTHER MGS TYPES IS 6' - 0".

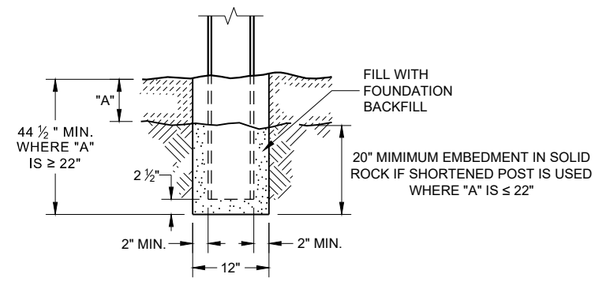

END VIEW
SETTING STEEL OR WOOD POST IN ROCK (3)

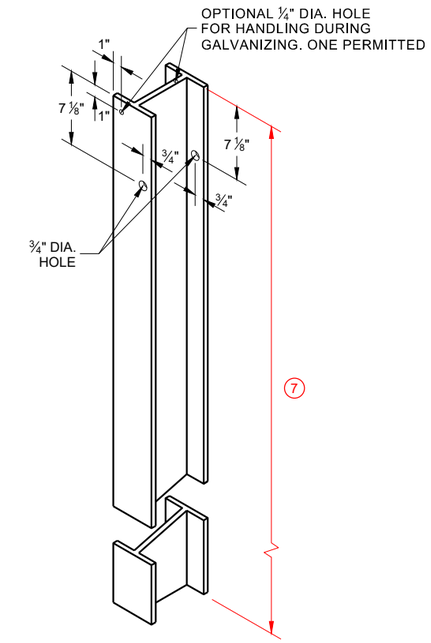

STEEL POST & HOLE PUNCHING DETAIL (W 6 X 9) (1)

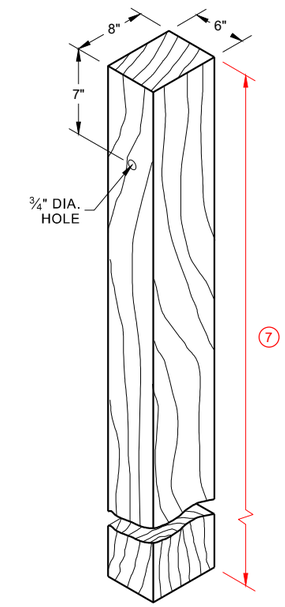

WOOD POST (6" X 8") NOMINAL (1)

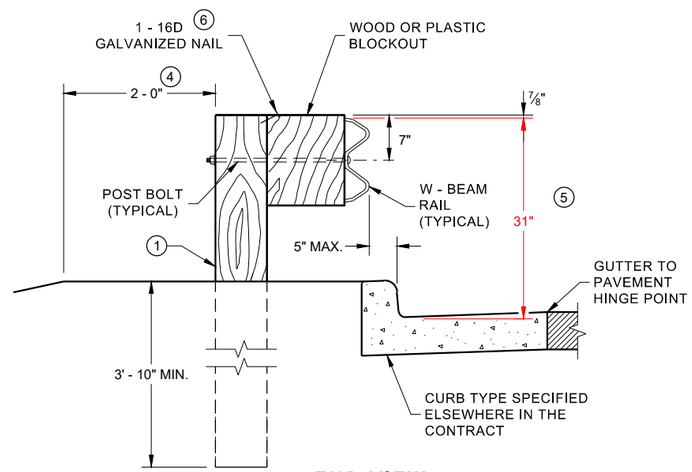

END VIEW
LOCATED ALONG A CURBED ROADWAY

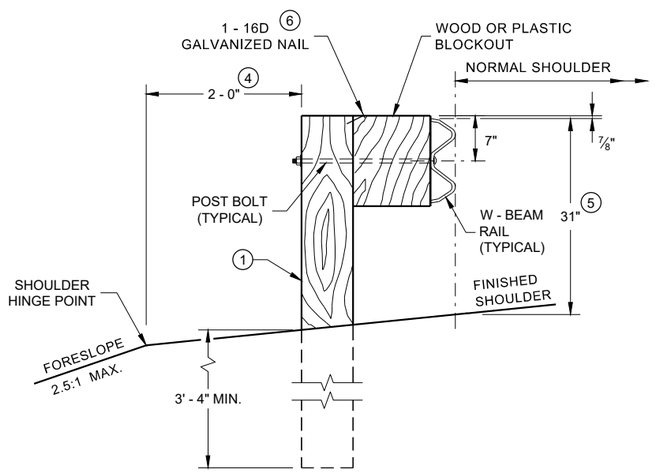

END VIEW
LOCATED ALONG A ROADWAY SHOULDER STANDARD INSTALLATION

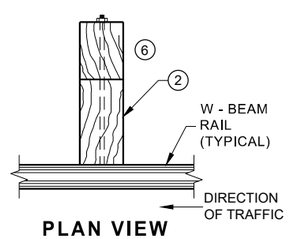

PLAN VIEW
WOOD POST, BLOCKOUT & BEAM

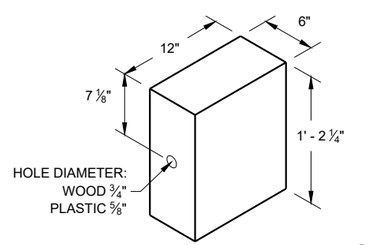

WOOD OR PLASTIC BLOCKOUT (2)

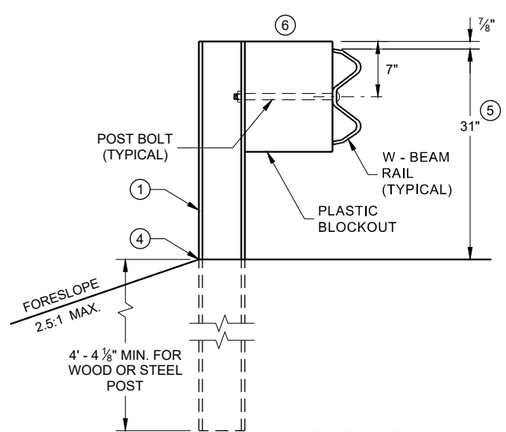

END VIEW
MGS LONGER POST AT HALFPOST SPACING W BEAM (K)

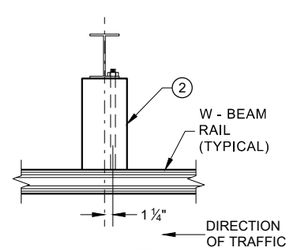

PLAN VIEW
STEEL POST, PLASTIC BLOCKOUT & BEAM

MIDWEST GUARDRAIL SYSTEM (MGS) GUARDRAIL

STATE OF WISCONSIN
DEPARTMENT OF TRANSPORTA

6

6

SDD 14B42 - 06a

SDD 14B42 - 06a

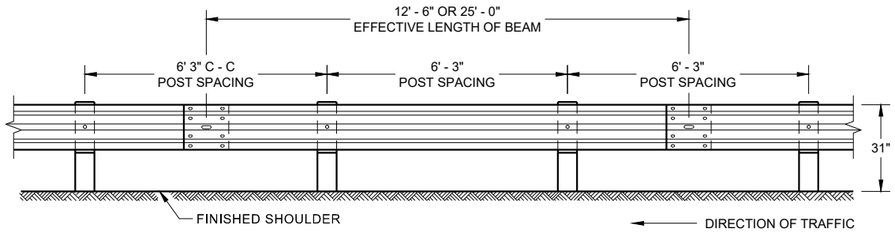

FRONT VIEW
POST SPACING STANDARD INSTALLATION

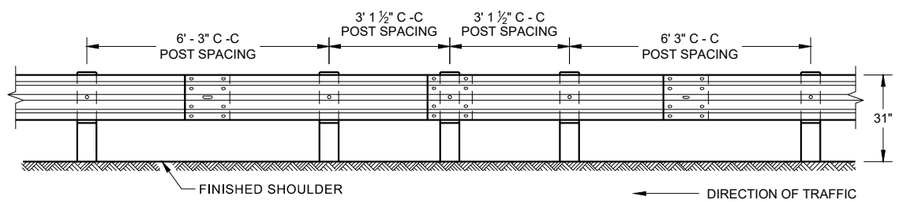

FRONT VIEW
HALF POST SPACING (HS) AND HALF POST SPACING WITH LONGER POSTS (K)

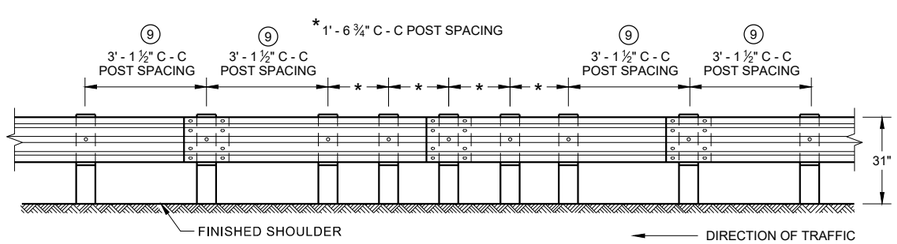

FRONT VIEW
QUARTER POST SPACING (QS)

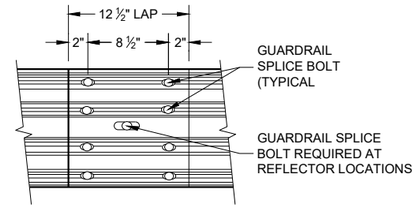

FRONT VIEW
MID-SPAN BEAM SPLICE

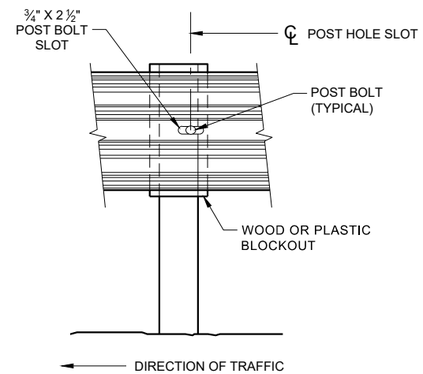

FRONT VIEW AT STEEL POST

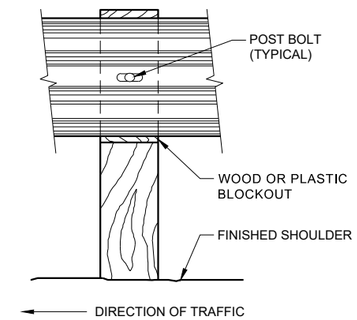

FRONT VIEW AT WOOD POST

GENERAL NOTES

(8) DO NOT INSTALL REFLECTORS ON THE FIRST 50 FEET OF THE APPROACH END OF THE ENERGY ABSORBING TERMINAL. RAIL SPLICE LOCATIONS ARE THE ONLY ACCEPTABLE LOCATIONS FOR REFLECTORS.

(9) 25 FEET OF HALF POST SPACING IS REQUIRED ON APPROACH AND DEPARTURE ENDS OF QUARTER POST SPACING.

POST BOLTS ARE A ⅝" DIAMETER ASTM A307 GUARDRAIL BOLT. A POST BOLT REQUIRES ⅝" DIAMETER A563A DOUBLE RECESSED (DR) HEAVY HEX NUT AND ⅝" DIAMETER F844 FLAT WASHER. POST BOLTS MAY BE LONGER IF MULTIPLE BLOCKOUTS ARE BEING USED.

GUARD RAIL SPLICE BOLTS ARE A ⅝" DIAMETER ASTM A307 GUARDRAIL HEAD BOLT. A GUARDRAIL SPLICE BOLT REQUIRES ⅝" DIAMETER A563A DOUBLE RECESSED (DR) HEAVY HEX NUT.

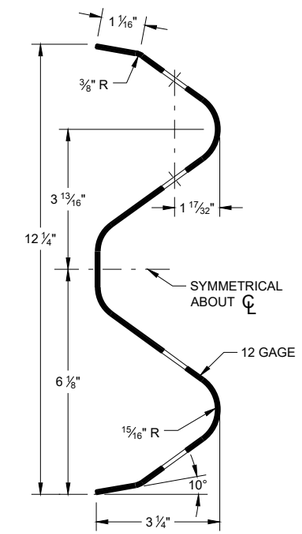

SECTION THRU W-BEAM RAIL

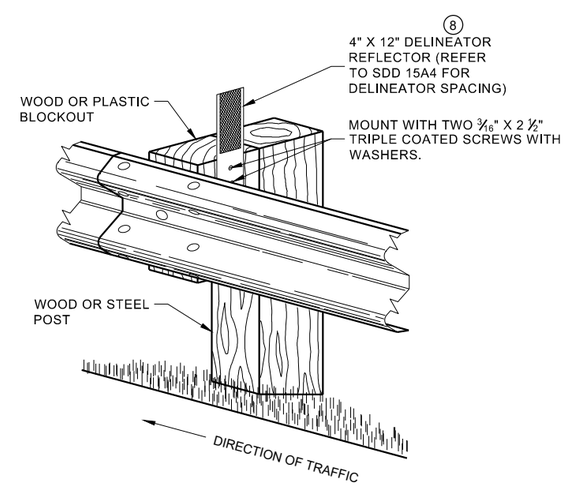

ONE SIDED REFLECTOR DETAIL AND TYPICAL INSTALLATION

MIDWEST GUARDRAIL SYSTEM (MGS) GUARDRAIL

STATE OF WISCONSIN
DEPARTMENT OF TRANSPORTATION

6

6

SDD 14B42 - 06b

SDD 14B42 - 06b

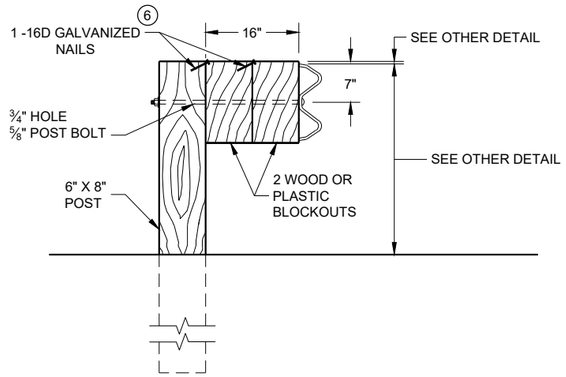

DETAIL FOR 16" BLOCKOUT DEPTH

IT IS ACCEPTABLE TO USE BLOCKOUTS UP TO 16" DEEP TO INCREASE THE POST OFFSET TO AVOID UNDERGROUND OBSTACLES. THERE IS NO LIMIT TO THE NUMBER OF POSTS THAT CAN HAVE ADDITIONAL BLOCKOUTS UP TO 16" DEEP.

NOTE:

1. ALL FILLETS SHALL HAVE A MINIMUM RADIUS OF 3/16".
2. IF THE BOLT EXTENDS MORE THAN ¼" FROM THE NUT THE BOLT SHOULD BE TRIMMED BACK.

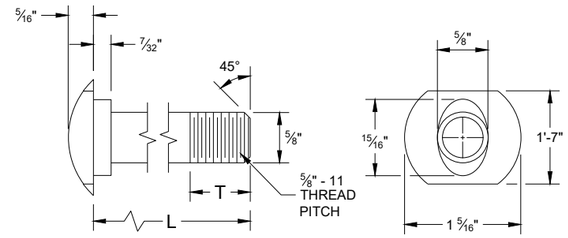

POST BOLT TABLE

L	T (MIN.)
1 ¼"	1 ⅛"
2"	1 ¾"
10"	4"
14"	4 1/16"
18"	4"
21"	4 1/16"
25"	4"

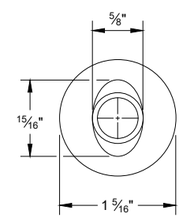

ALTERNATE BOLT HEAD

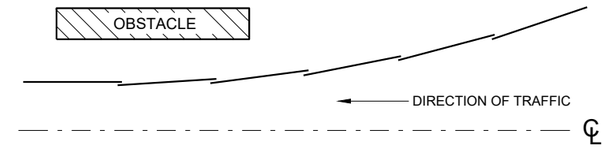

PLAN VIEW
BEAM LAPPING DETAIL

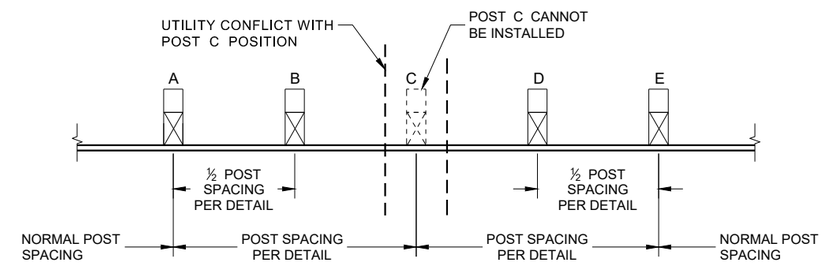

POST DRIVING FOR CONTINUOUS UNDERGROUND OBSTRUCTION

6

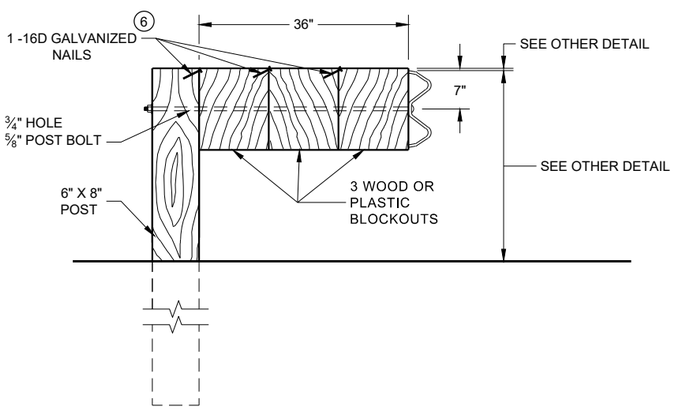

DETAIL FOR 36" BLOCKOUT DEPTH

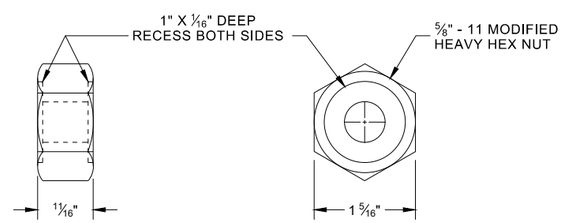

POST BOLT, SPLICE BOLT AND RECESS NUT

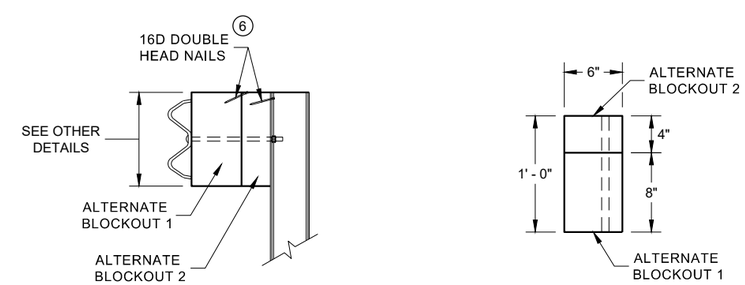

SIDE VIEW

PLAN VIEW

ALTERNATE WOOD BLOCKOUT DETAIL

NOTES: UNDER SPECIAL CIRCUMSTANCES, SUCH AS AVOIDING OBSTACLES THAT ARE NOT RELOCATED, IT IS ACCEPTABLE TO INSTALL ADDITIONAL BLOCKOUTS TO OBTAIN UP TO 36" DEPTH FOR ONE OR TWO POSTS IN A SECTION OF GUARDRAIL.

DO NOT USE 16" OR 36" BLOCKOUTS IF IT CAUSES THE POST TO BE DRIVEN BEYOND SHOULDER HINGE POINT OR CAUSES A FIXED OBJECT TO BE WITHIN THE DEFLECTION DISTANCE OF THE BARRIER.

(6) WHEN USING STEEL POST AD WOOD BLOCKOUTS, INSTALL FOUR 16D GALVANIZED NAILS. INSTALL NAILS AT THE BACK CORNERS OF THE BLOCK AND BEND THE NAILS OVER THE FLANGE OF THE STEEL POST.

MIDWEST GUARDRAIL SYSTEM (MGS) GUARDRAIL

STATE OF WISCONSIN
DEPARTMENT OF TRANSPORTA

SDD 14B42 - 06c

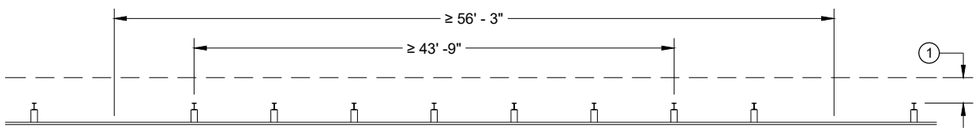

MISSING POST IN NORMAL BEAM GUARD RUN

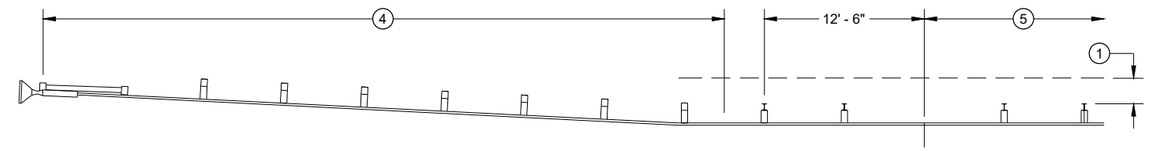

MISSING POST IN NORMAL BEAM GUARD RUN NEAR EAT

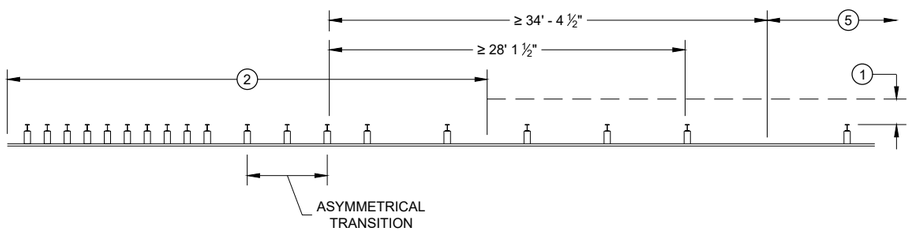

MISSING POST NEAR APPROACH THRIE BEAM TRANSITION

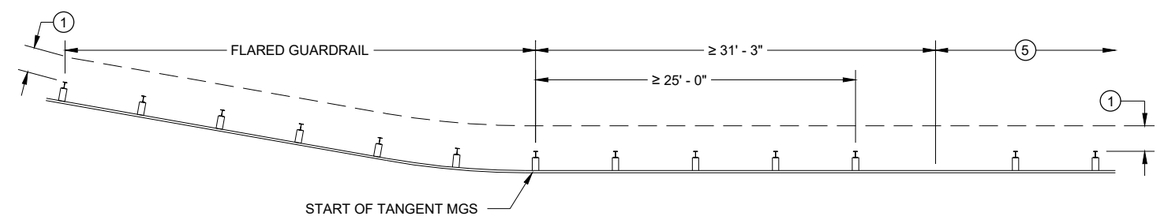

MISSING POST IN NORMAL BEAM GUARD RUN NEAR FLARED BEAM GUARD

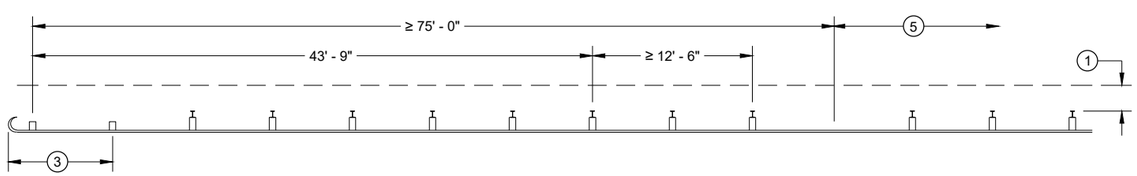

MISSING POST IN NORMAL BEAM GUARD RUN NEAR TYPE 2 TERMINAL

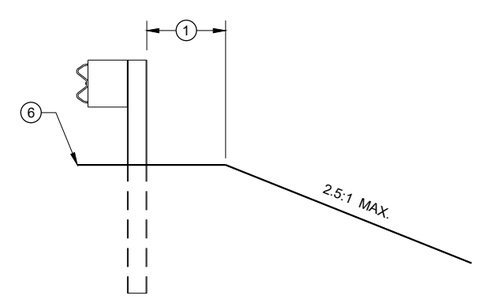

CROSS SECTION VIEW

1. MINIMUM OF 2 FEET OF GRADING BEHIND POST.
2. SEE SDD 14B45 FOR MORE DETAILS.
3. SEE SDD 14B47 FOR MORE DETAILS.
4. SEE SDD 14B44 FOR MORE DETAILS.
5. SEE MISSING POST IN NORMAL BEAM GUARD RUN FOR DISTANCE TO NEXT MISSING POST AND AREA FOR WELL DRAINED, COMPACTED SOILS.
6. SEE PLAN FOR SHOULDER DESIGN.

MIDWEST GUARDRAIL SYSTEM (MGS) GUARDRAIL

STATE OF WISCONSIN
DEPARTMENT OF TRANSPORTATION

APPROVED
7/2018 — DATE
/S/ Rodney Taylor — ROADWAY STANDARDS DEVE UNIT SUPERVISOR
FHWA

6

SDD 14B42 - 06d

GENERAL NOTES

(A) THE SLOPE IN THE AREA BOUNDED BY THE GRADELINE, THE HINGE POINT LINE (HPL) AND THE CLEAR ZONE LIMITS (CZL) SHALL BE 4:1 OR FLATTER.

(B) AFTER FINAL ASSEMBLY, RECHECK CABLE TO BE SURE IT IS TAUT AND HAS NOT RELAXED

(C) DIFFERENT MANUFACTURERS REQUIRE DIFFERENT PERFORATED W - BEAM RAIL END PANELS. SEE MANUFACTURER'S INFORMATION.

(D) ATTACH ALUMINUM SHEET TO E.A.T. HEAD USING 4 STAINLESS STEEL SELF - TAPPING SCREWS. ONE SCREW PER CORNER.

(E) HARDWARE MAY VARY BETWEEN MANUFACTURER. SEE MANUFACTURER'S DRAWING FOR INFORMATION.

DIMENSIONS MAY VARY, MANUFACTURER'S INFORMATION.

SEE SDD 14B42 FOR MORE INFORMATION.

* DO NOT ATTACH BLOCKOUTS TO POST 1 AND 2.

DO NOT INSTALL REFLECTORS ON THE FIRST 50 FEET OF THE APPROACH END OF THE ENERGY ABSORBING TERMINAL.

SEE MANUFACTURER'S DRAWING FOR SPLICE LOCATION, HARDWARE DIMENSIONS AND INSTALLATION INSTRUCTIONS.

THE CENTER OF THE UPPER 3 ½" DIAMETER HOLE ON POST NUMBER 3 THROUGH POST 9 IS TO BE FLUSH WITH THE GROUND LINE UP TO A MAXIMUM OF 2" ABOVE GROUND LINE. WOOD BLOCKS ON POSTS NUMBERED 3 THROUGH 9 MAY BE ADJUSTED UP TO 3" ABOVE THE TOP OF POST.

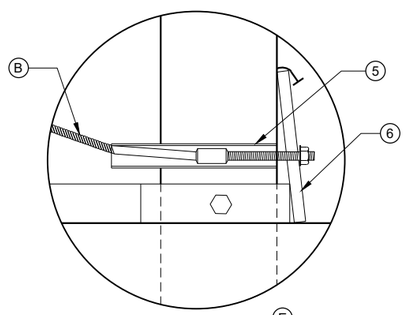

DETAIL "A" (E)

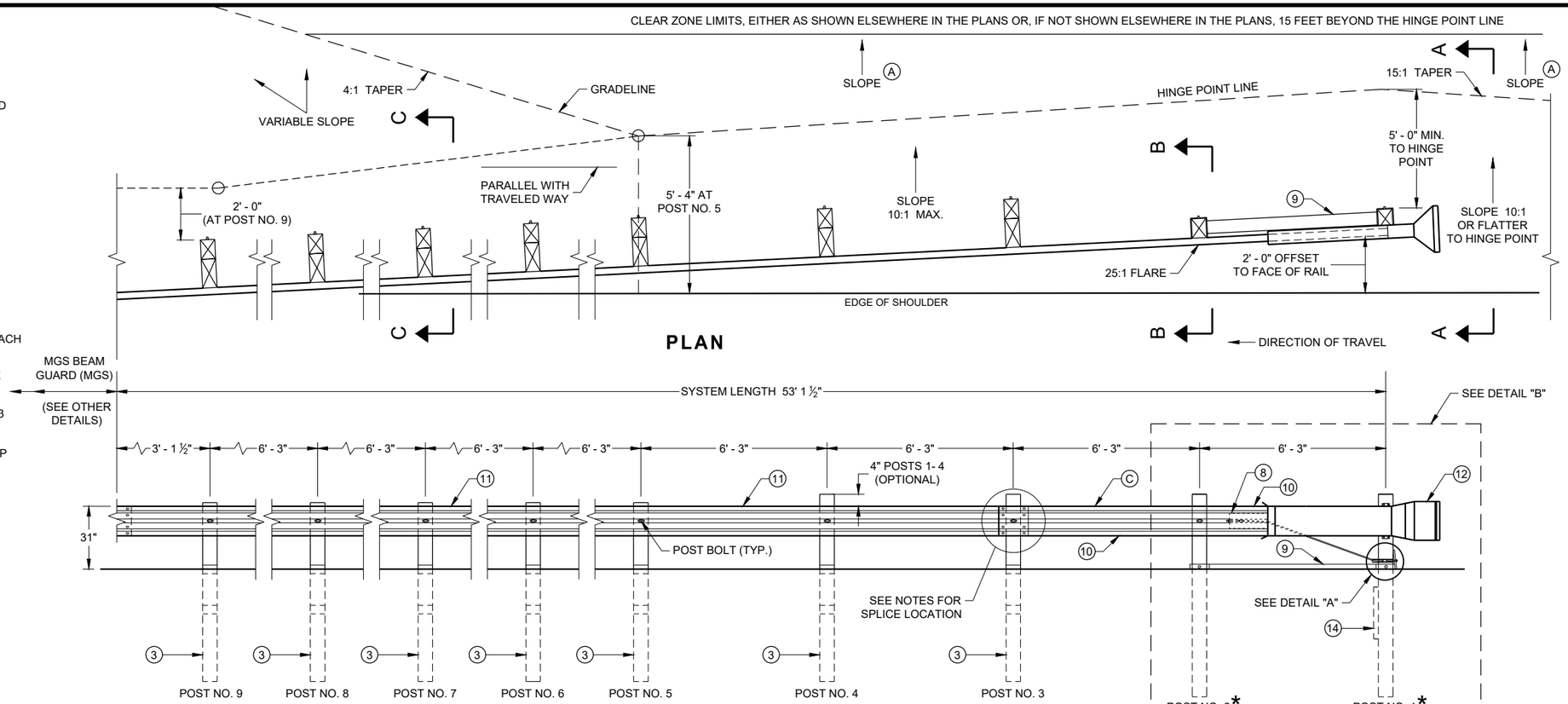

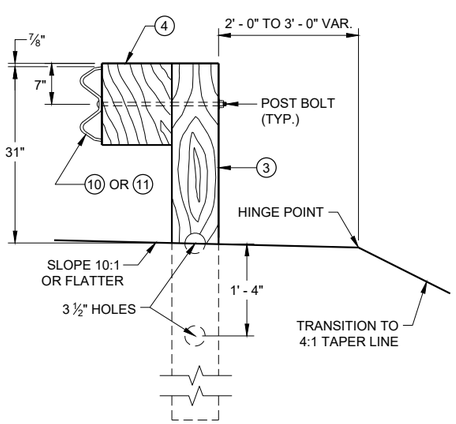

SECTION C - C
TYPICAL AT POST NOS. 3 - 9

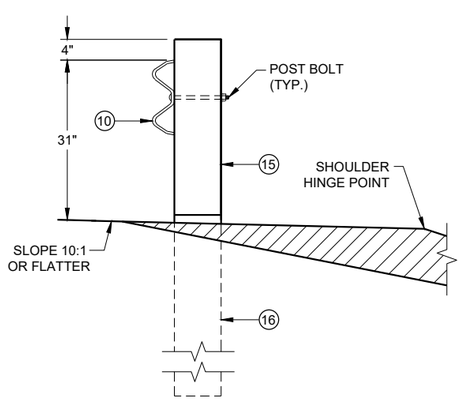

SECTION B - B
TYPICAL AT POST NO. 2*

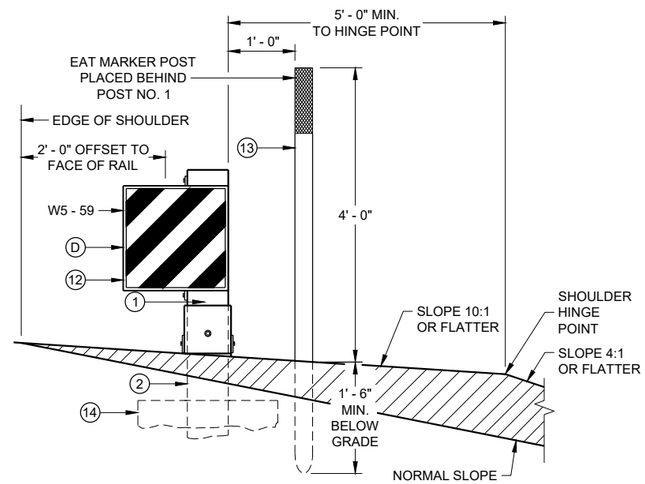

SECTION A - A
TYPICAL AT POST NO. 1*

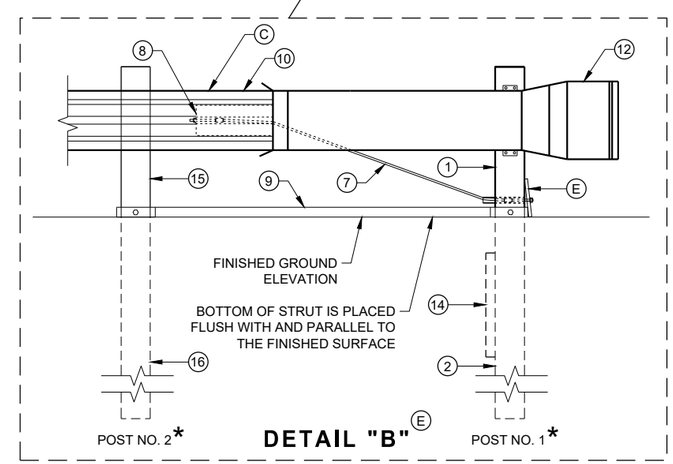

DETAIL "B" (E)

MIDWEST GUARDRAIL SYSTEM ENERGY ABSORBING TERMINAL (MGS)

STATE OF WISCONSIN
DEPARTMENT OF TRANSPORTATION

6

6

SDD 14B44 - 04a

SDD 14B44 - 04a

BILL OF MATERIALS

PART NO.	DESCRIPTION MATERIALS PROVIDED BY MGS EAT MANUFACTURER. SEE MANUGACTURER'S DETAILS FOR MORE INFORMATION.
1	UPPER POST NO. 1 6" X 6" TUBE
2	LOWER POST NO. 1
3	WOOD CRT
4	WOOD BLOCKOUT
5	PIPE SLEEVE
6	BEARING PLATE
7	BCT CABLE ASSEMBLY
8	ANCHOR CABLE BOX
9	GROUND STRUT
10	PERFORATED W-BEAM RAIL END PANEL, 12'-6" LONG.
11	STANDARD W-BEAM RAIL. MULTIPLE SECTIONS REQUIRED. SECTIONS VARY IN LENGTH.
12	IMPACT HEAD
13	EAT MARKER POST - YELLOW (SEE APPROVED PRODUCTS LIST)
14	SOIL PLATE
15	UPPER POST NO. 2
16	LOWER POST NO. 2

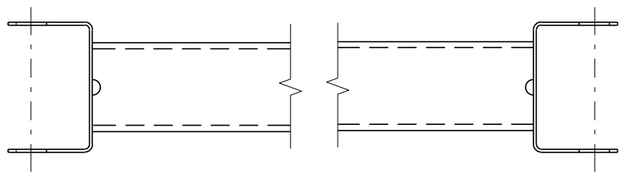

GENERIC GROUND STRUT 9 E

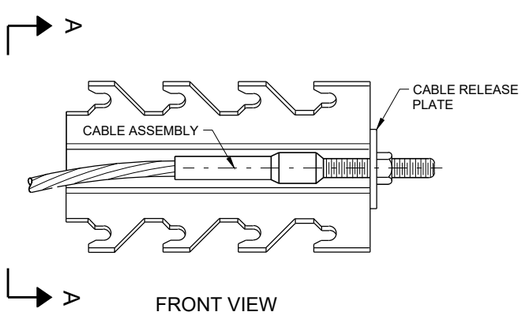

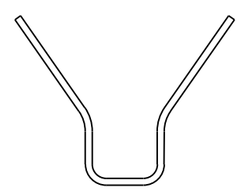

SECTION A - A

GENERIC ANCHOR CABLE BOX 9 E

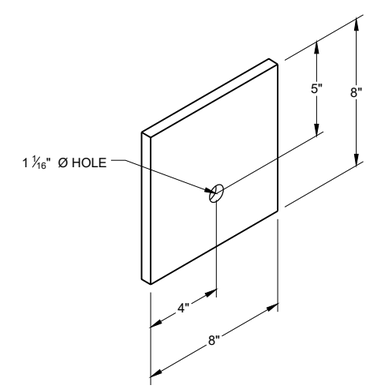

BEARING PLATE 6 E

6

6

SDD 14B45 - 04b

SDD 14B45 - 04b

MIDWEST GUARDRAIL SYSTEM ENERGY ABSORBING TERMINAL (MGS)

STATE OF WISCONSIN
DEPARTMENT OF TRANSPORTAT

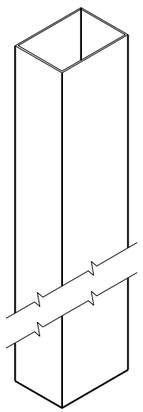

UPPER POST NO. 1 (1) (E)

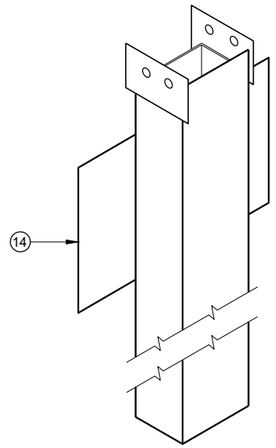

LOWER POST NO. 1 (2) (E)

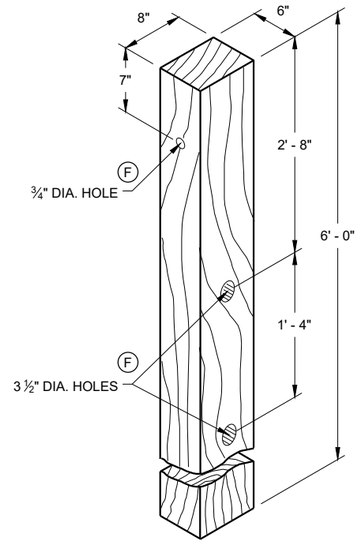

WOOD CRT POST (3) (E)

POSTS NUMBER 3-9

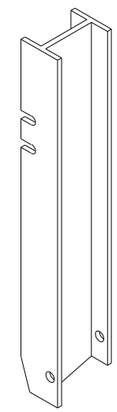

UPPER POST NO. 2 (15) (E)

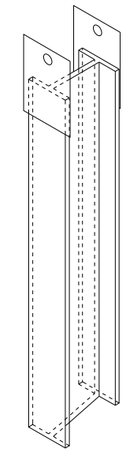

LOWER POST NO. 2 (16) (E)

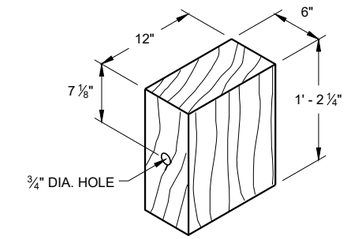

WOOD BLOCKOUT (4)

REQ'D. AT ALL POSTS EXCEPT POST NO'S 1 & 2

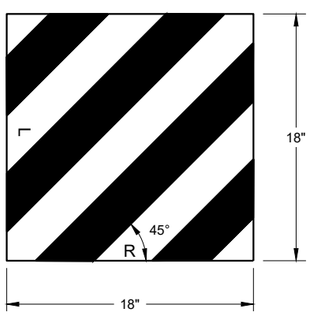

W5 - 59

REFLECTIVE SHEETING DETAIL (E)

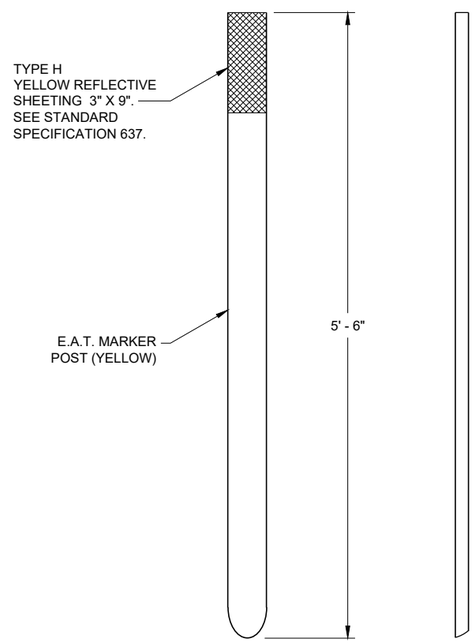

FRONT VIEW SIDE VIEW

E.A.T. MARKER POST (13)

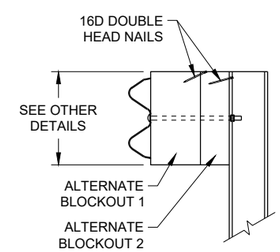

SIDE VIEW

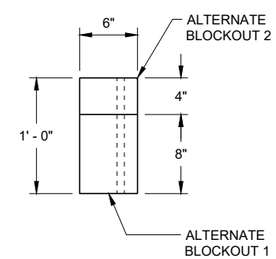

TOP VIEW

ALTERNATE WOOD BLOCKOUT DETAIL

MIDWEST GUARDRAIL SYSTEM ENERGY ABSORBING TERMINAL (MGS)

STATE OF WISCONSIN
DEPARTMENT OF TRANSPORTATION

APPROVED
7/2018 — DATE
/S/ Rodney Taylor — ROADWAY STANDARDS DEVE UNIT SUPERVISOR
FHWA

6

SDD 14B44 - 04c

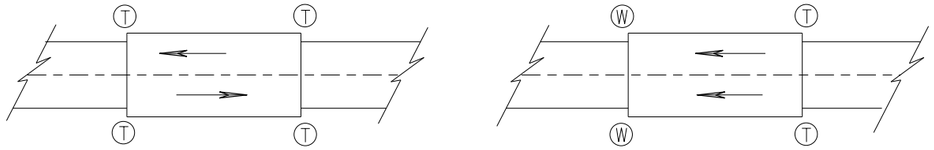

TWO WAY TRAFFIC **ONE WAY TRAFFIC**

(T) THRIE BEAM CONNECTION

(W) W-BEAM CONNECTION WHEN REQUIRED

TYPICAL LOCATIONS OF THRIE BEAM AND W-BEAM CONNECTIONS TO BRIDGE

GENERAL NOTES

IF ROCK IS ENCOUNTERED, REMOVE ROCK TO FULL DEPTH OF POST PLUS 2½", AND 12" DIAMETER AROUND POST. SEE 14B42 FOR MORE DETAILS.

TRANSITION USES STEEL POSTS ONLY.

SEE STANDARD DETAIL DRAWING 14 B 42 FOR MORE INFORMATION.

POST 2 THROUGH 17 USES STEEL POST ONLY

(1) BRIDGE RAILING TYPE "W" DOES NOT REQUIRE A TERMINAL CONNECTOR.

(2) OPTIONAL CURB AND GUTTER OR DRAINAGE FEATURE SEE PLAN FOR INFORMATION.

(13) STEEL OR WOOD POST IS ACCEPTABLE AT POST 1. SEE SDD14B42

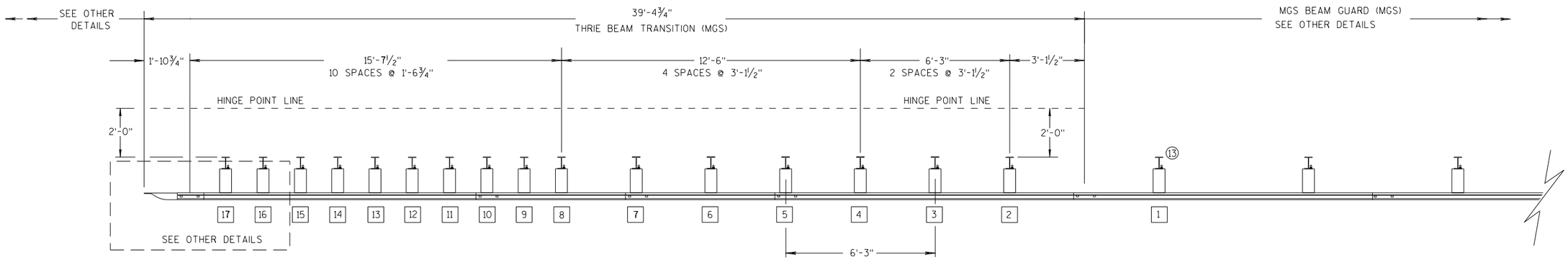

PLAN VIEW

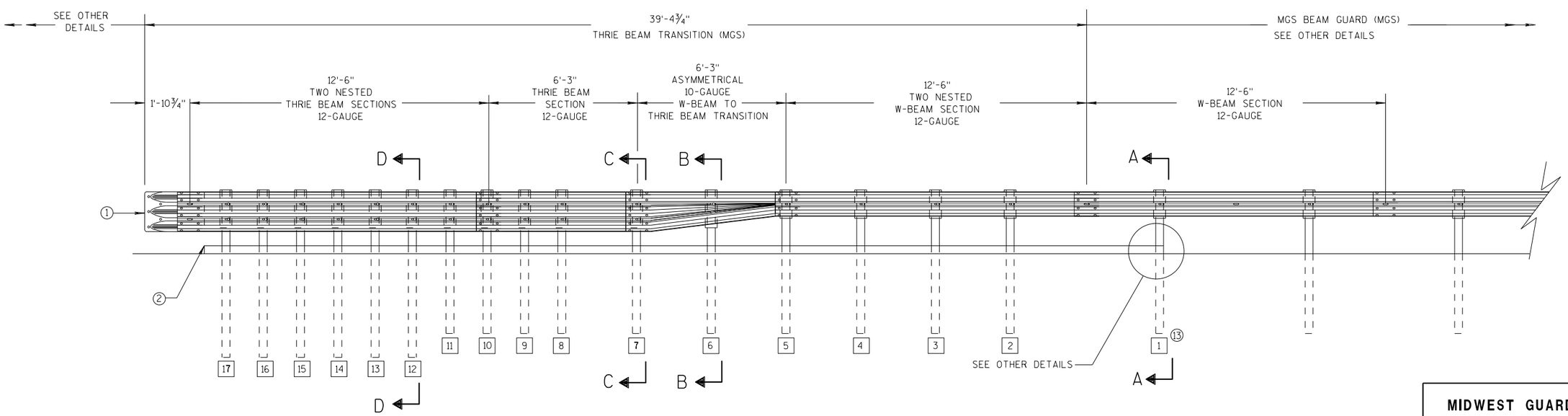

ELEVATION VIEW

MIDWEST GUARDRAIL SYSTEM THRIE BEAM TRANSITION

MIDWEST GUARDRAIL SYSTEM THRIE BEAM TRANSITION (MGS)

STATE OF WISCONSIN
DEPARTMENT OF TRANSPOR

6

S.D.D. 14 B 45-5a

GENERAL NOTES

(2) OPTIONAL CURB AND GUTTER OR DRAINAGE FEATURE SEE PLAN FOR INFORMATION.

(3) WHEN USING STEEL POSTS AND WOOD BLOCKOUTS INSTALL FOUR 10D GALVANIZED NAILS. INSTALL NAILS AT THE BACK CORNERS OF THE BLOCK AND BEND THE NAILS OVER THE FLANGE OF THE STEEL POST.

(4) TOLERANCE FOR TOP OF W-BEAM RAIL IS ± 1".

(13) STEEL OR WOOD POST IS ACCEPTABLE AT POST 1. SEE SDD 14B42

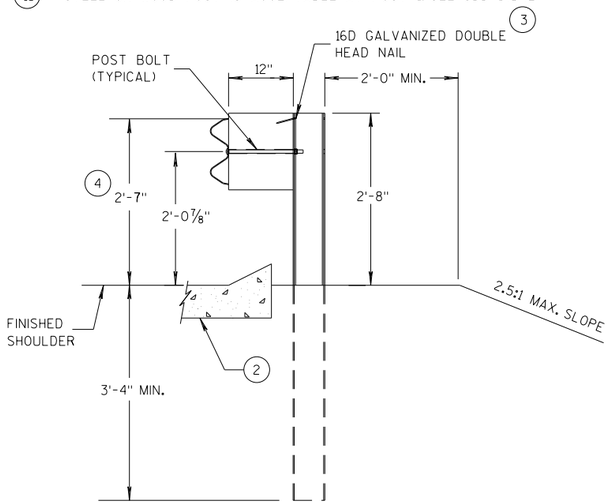

SECTION A-A (13)

POSTS 1-5

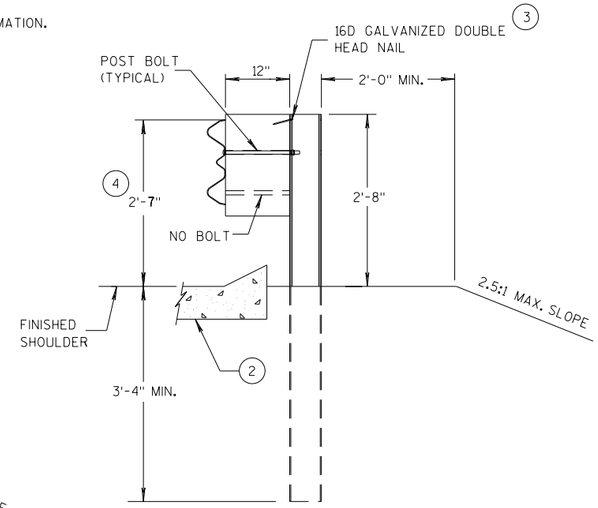

SECTION B-B

POST 6

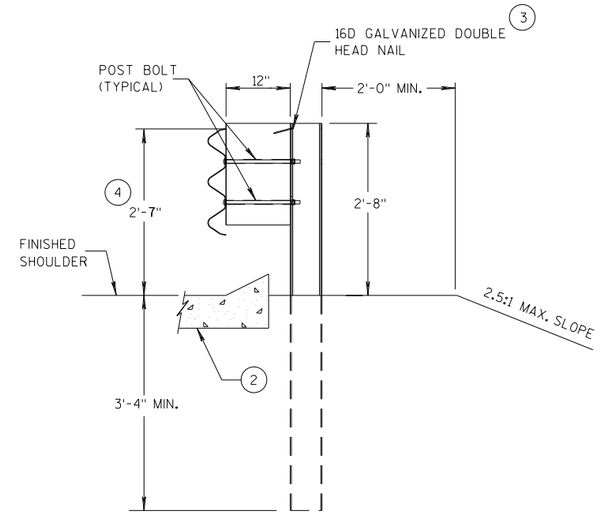

SECTION C-C

POSTS 7-11

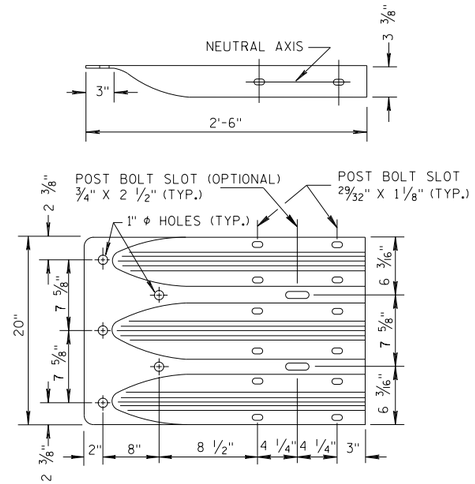

THRIE BEAM TERMINAL CONNECTOR

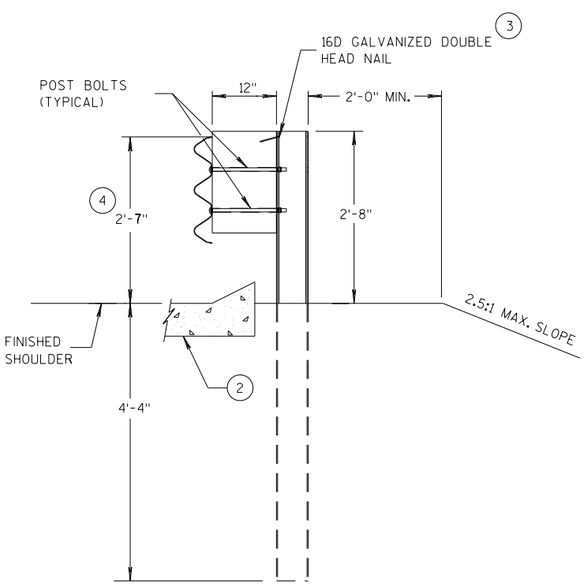

SECTION D-D

POSTS 12-17

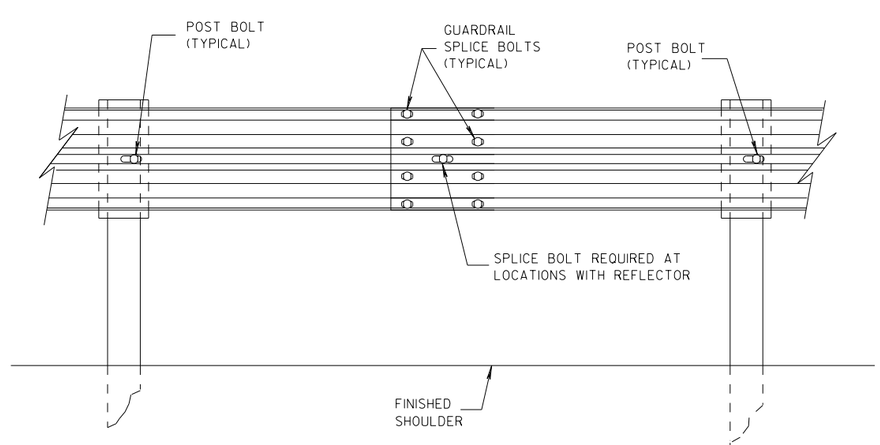

SPLICE DETAIL

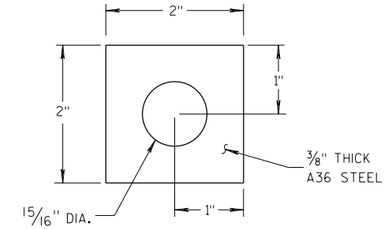

PLATE WASHER DETAIL

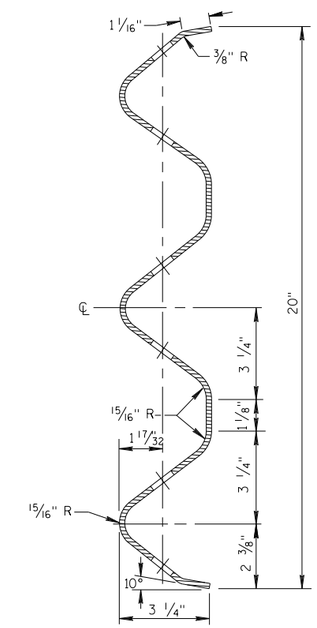

SECTION THRU THRIE BEAM RAIL ELEMENT

MIDWEST GUARDRAIL SYSTEM
THRIE BEAM TRANSITION (MGS)

STATE OF WISCONSIN
DEPARTMENT OF TRANSPORT

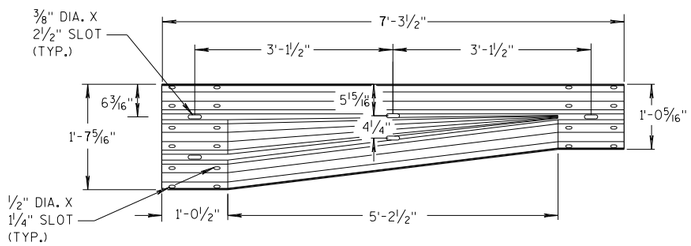

W-BEAM TO THRIE BEAM TRANSITION SECTION

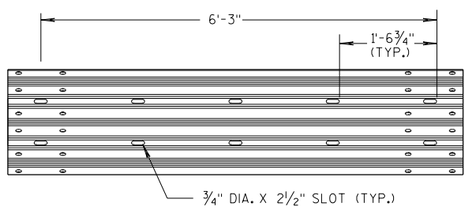

6'-3" THRIE BEAM SECTION

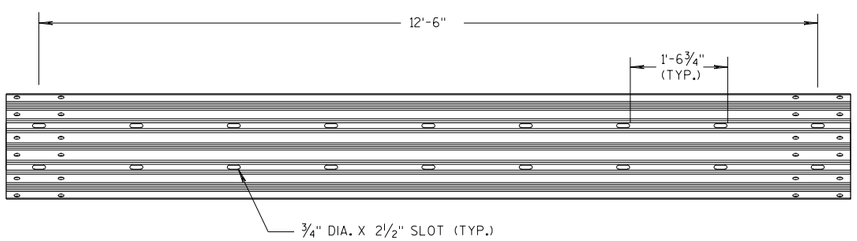

12'-6" THRIE BEAM SECTION

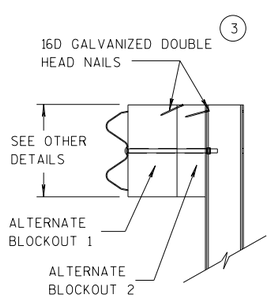

SIDE VIEW

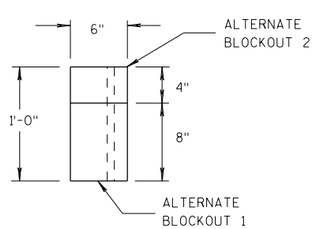

TOP VIEW

ALTERNATE WOOD BLOCKOUT DETAIL

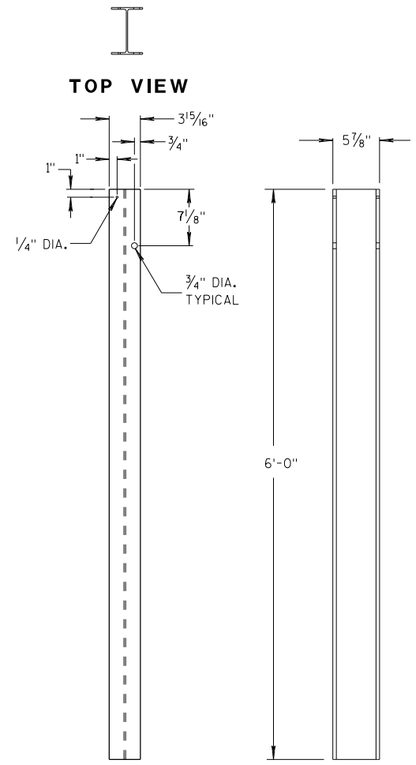

STEEL POSTS 1-5 (13)

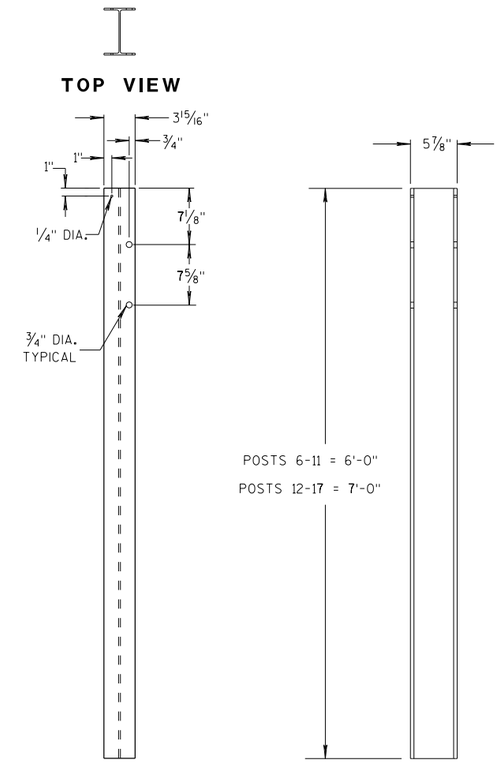

STEEL POSTS 6-17

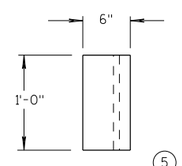

TOP VIEW (5)

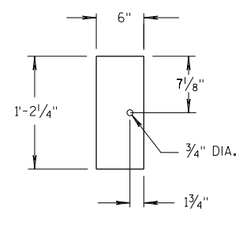

FRONT VIEW

BLOCKOUT POSTS 1-5

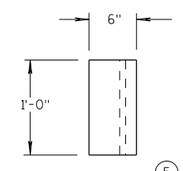

TOP VIEW (5)

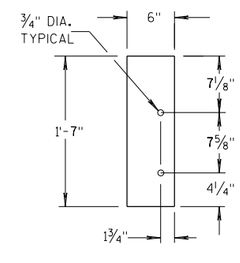

FRONT VIEW

BLOCKOUT POSTS 6-17

GENERAL NOTES

STEEL POSTS ARE W6X9 OR W6X8.5.

BOLT HOLES FOR POST ARE ON FRONT AND OF SIDE OF POST.

(3) WHEN USING STEEL POSTS AND WOOD BLOCKOUTS INSTALL FOUR 16D GALVANIZED NAILS. INSTALL NAILS AT THE BACK CORNERS OF THE BLOCK AND BEND THE NAILS OVER THE FLANGE OF THE STEEL POST.

(5) WOOD BLOCKS MAY BE CONSTRUCTED OUT OF 2 WOOD BLOCKS. SEE ALTERNATE WOOD BLOCK DETAIL.

(13) STEEL OR WOOD POST IS ACCEPTABLE AT POST 1. SEE SDD 14B42.

MIDWEST GUARDRAIL SYSTEM THRIE BEAM TRANSITION (MGS)

STATE OF WISCONSIN
DEPARTMENT OF TRANSPOR

6

S.D.D. 14 B 45-5c

GENERAL NOTES

THESE ARE TYPICAL CONNECTION DETAILS. ADJUST THE POSTION OF CONNECTIONS TO EXISTING BRIDGES TO FIT THE ACTUAL BRIDGE AND SITE DIMENSIONS.

(2) OPTIONAL CURB AND GUTTER OR DRAINAGE FEATURE SEE PLAN FOR INFORMATION.

(4) TOLERANCE FOR TOP OF BEAM IS ± 1".

(6) DRILLING BOLT HOLES THROUGH THE PARAPET, BOLTS, NUTS, WASHERS AND REPAIRING DAMAGED CONCRETE ARE INCIDENTAL TO THE CONTRACT.

(7) BOLTS MAY BE A325 BOLTS OR A449 BOLTS. BOLT LENGTH AND THREADING LENGTH ARE TO ALLOW FOR A TIGHT CONNECTION BETWEEN RIGID BARRIER AND THRIE BEAM CONNECTION PLATE. CONTRACTOR IS TO FIELD VERIFY BOLT LENGTH AND THREAD LENGTH. ONE ROUND WASHER REQUIRED BETWEEN BOLT HEAD AND THRIE BEAM CONNECTOR PLATE. BOLTS THAT EXTEND THROUGH THE PARAPET AND OUT THE BACK FACE REQUIRE A HARDENED ROUND STEEL WASHER THAT IS 2" O.D. X 5/8" THICK AND ONE PLATE WASHER. REPAIR ANY DAMAGED CONCRETE FROM BOLT INSTALLATION.

(8) THE RECESS FOR A W-BEAM CONNECTION, WHICH EXISTS ON SOME PARAPETS OF THIS TYPE, SHALL BE FILLED WITH A TREATED TIMBER BLOCKOUT. BLOCKOUT SIZE IS 1'-6" X 2'-0" X 3 1/2".

(9) BOLT, NUT AND WASHERS NOT REQUIRED FOR THIS LOCATION WHEN RETROFITTING AN EXISTING PAPAPET AND THE HOLE IS EITHER ABOVE PARAPET OR WITHIN 4 INCHES OF THE EDGE OF PARAPET.

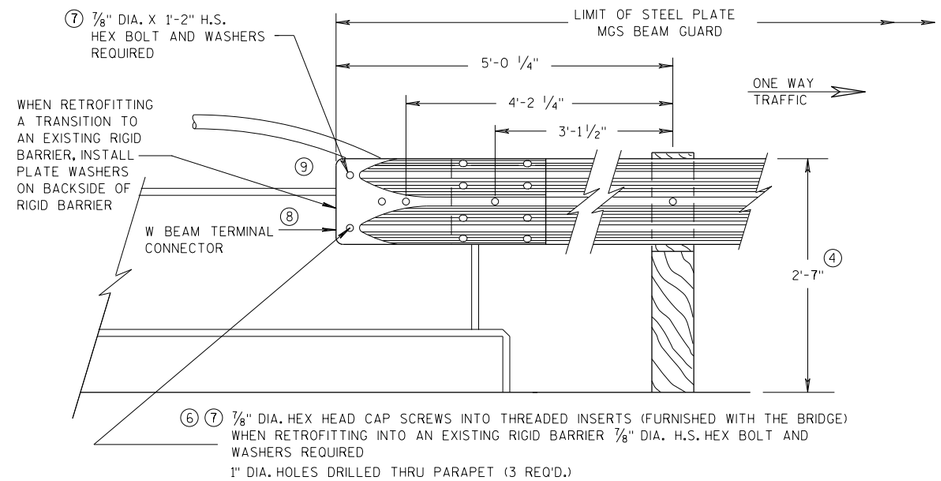

FRONT VIEW

W BEAM CONNECTION TO VERTICAL FACE PARAPET

(USE ONLY ON THE TRAFFIC EXIT END OF ONE WAY BRIDGES)

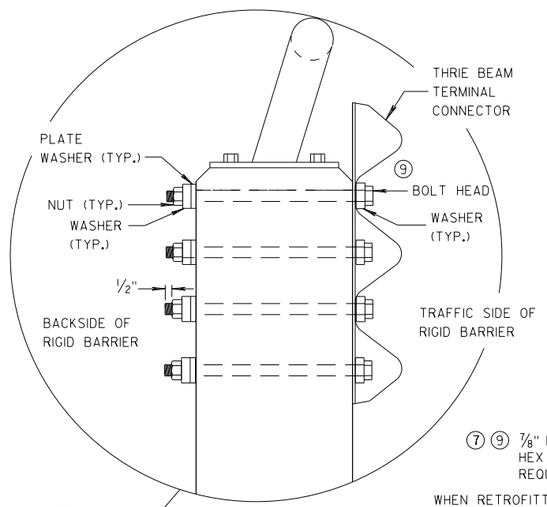

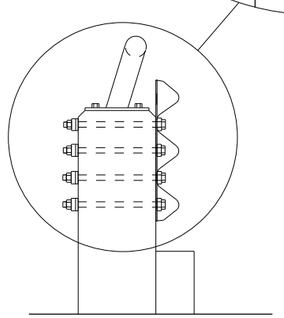

SECTION G-G

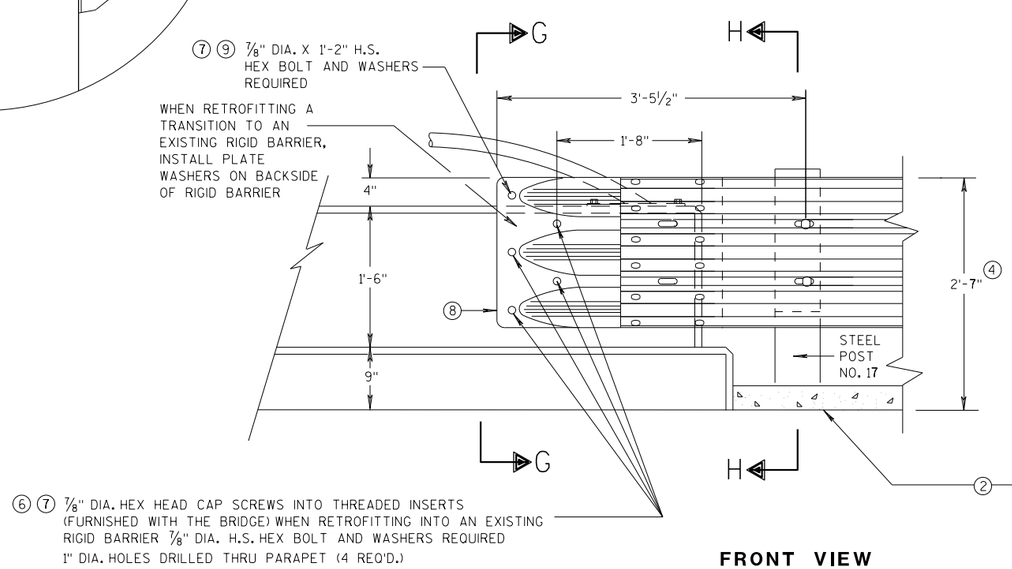

FRONT VIEW

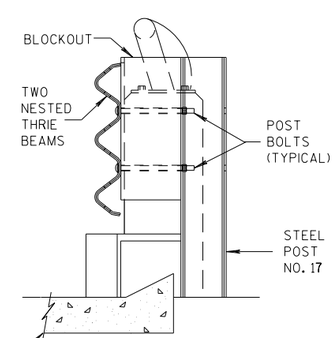

SECTION H-H

THRIE BEAM CONNECTION TO VERTICAL FACED PARAPETS

MIDWEST GUARDRAIL SYSTEM
THRIE BEAM TRANSITION (MGS)

STATE OF WISCONSIN
DEPARTMENT OF TRANSPORTATION

APPROVED
07/2018 — DATE
/S/ Rodney Taylor
ROADWAY STANDARDS D[illegible] UNIT SUPERVI[illegible]
FHWA

TYPICAL SIDEROAD APPROACH WARNING SIGN DETAIL

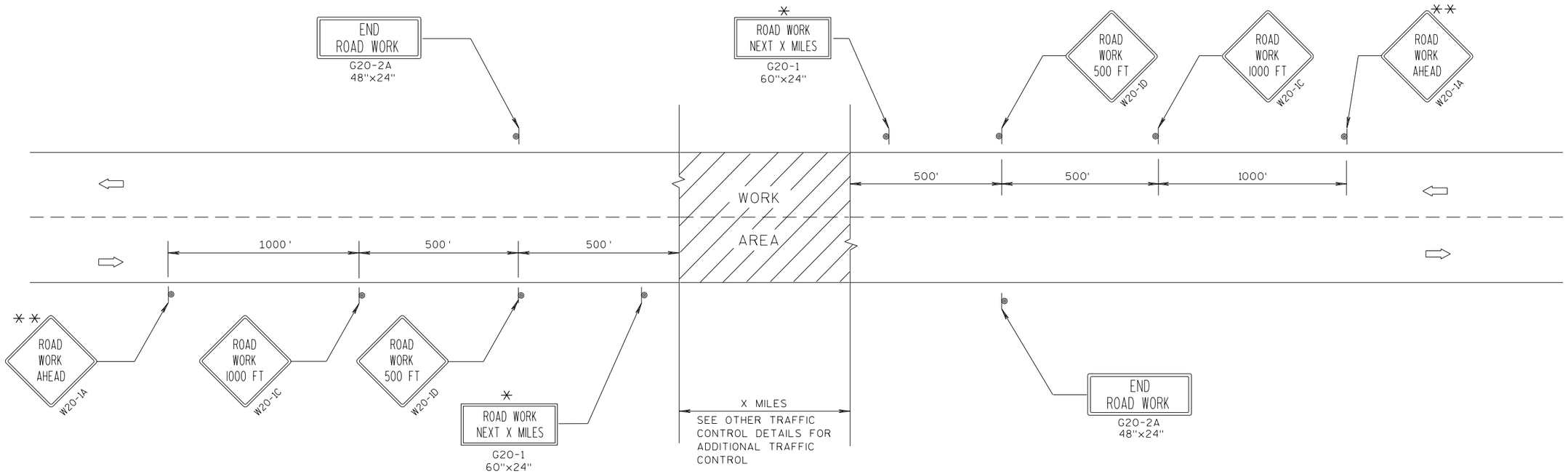

GENERAL NOTES

THE EXACT NUMBER, LOCATION, AND SPACING OF ALL SIGNS AND DEVICES SHALL BE ADJUSTED TO FIT FIELD CONDITIONS.

THE SPACING BETWEEN TRAFFIC CONTROL SIGNS SHOULD BE ADJUSTED TO NOT CONFLICT WITH AND SHOULD PROVIDE A MINIMUM OF 200 FEET (500 FEET DESIRABLE) CLEARANCE TO EXISTING SIGNS THAT WILL REMAIN IN PLACE.

ALL SIGNS ARE 48"x48" UNLESS OTHERWISE NOTED.

SIGNS THAT WILL BE IN PLACE LESS THAN 7 CONTINUOUS DAYS AND NIGHTS MAY BE MOUNTED ON PORTABLE SUPPORTS.

IF A "STOP" SIGN MUST BE REMOVED FOR A WORK OPERATION, A TEMPORARY "STOP" SIGN SHALL BE PLACED PRIOR TO THE SIGN REMOVAL, OR A FLAGGER SHALL BE PROVIDED UNTIL THE SIGN IS RE-ESTABLISHED.

* OMIT G20-1 SIGNS IF LENGTH OF WORK AREA IS 2 MILES OR LESS.

** PLACE ADDITIONAL W20-1A "ROAD WORK AHEAD" SIGN IF WORK AREA WITHIN THE PROJECT IS SEPARATED BY MORE THAN 2 MILES FROM PREVIOUS WORK AREA.

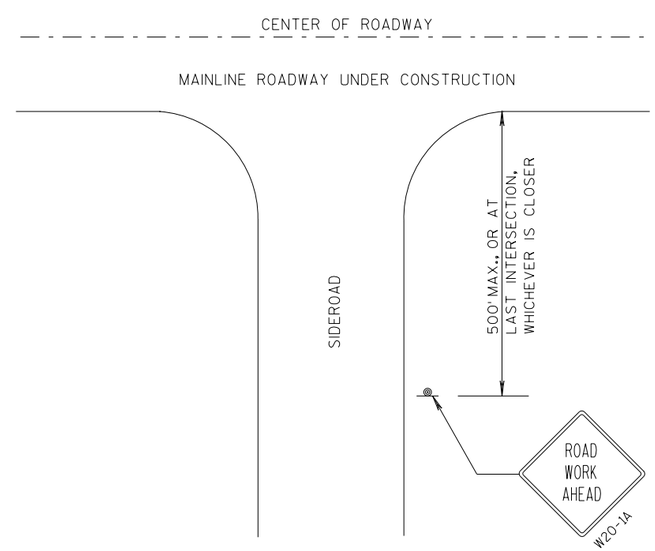

LEGEND

- SIGN ON PERMANENT SUPPORT
- DIRECTION OF TRAFFIC
- WORK AREA

TRAFFIC CONTROL, ADVANCE WARNING SIGNS 45 M.P.H. OR GREATER TWO-WAY UNDIVIDED ROAD OPEN TO TRAFFIC

STATE OF WISCONSIN
DEPARTMENT OF TRANSPORTATION

APPROVED
7/2018 — DATE
/S/ Andrew Heldtke — WORK ZONE ENGI
FHWA

6

S.D.D. 15 C 4-5

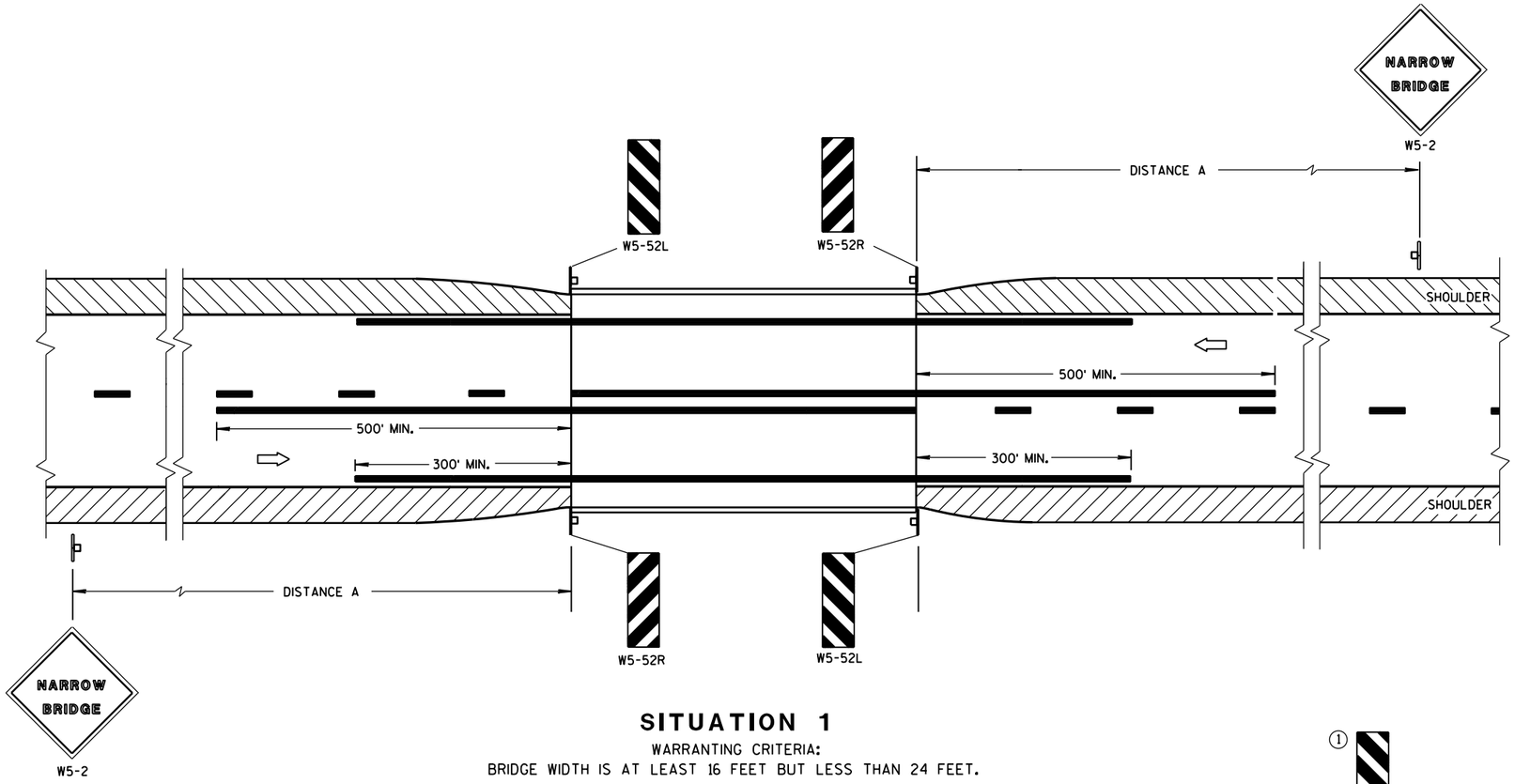

SITUATION 1

WARRANTING CRITERIA:
BRIDGE WIDTH IS AT LEAST 16 FEET BUT LESS THAN 24 FEET.

GENERAL NOTES

DETAILS OF TRAFFIC CONTROL DEVICES AND INSTALLATION NOT SHOWN ON THIS DRAWING SHALL CONFORM TO THE PERTINENT REQUIREMENTS OF THE STANDARD SPECIFICATIONS, THE SPECIAL PROVISIONS, AND THE MANUAL ON UNIFORM TRAFFIC CONTROL DEVICES.

LOCATE W5-52 SIGN POST(S) BEHIND GUARDRAIL WHEN PRESENT.

PLACE THE EDGE OF THE W5-52 SIGN IN LINE WITH FACE OF CURB OR PARAPET.

(1) OMIT ON ONE-WAY TRAVELLED WAYS.

⇨ DIRECTION OF TRAFFIC

DISTANCE TABLE

POSTED OR 85th PERCENTILE SPEED	DISTANCE "A"
25	150'
30	200'
35	250'
40	300'
45	400'
50	550'
55	750'

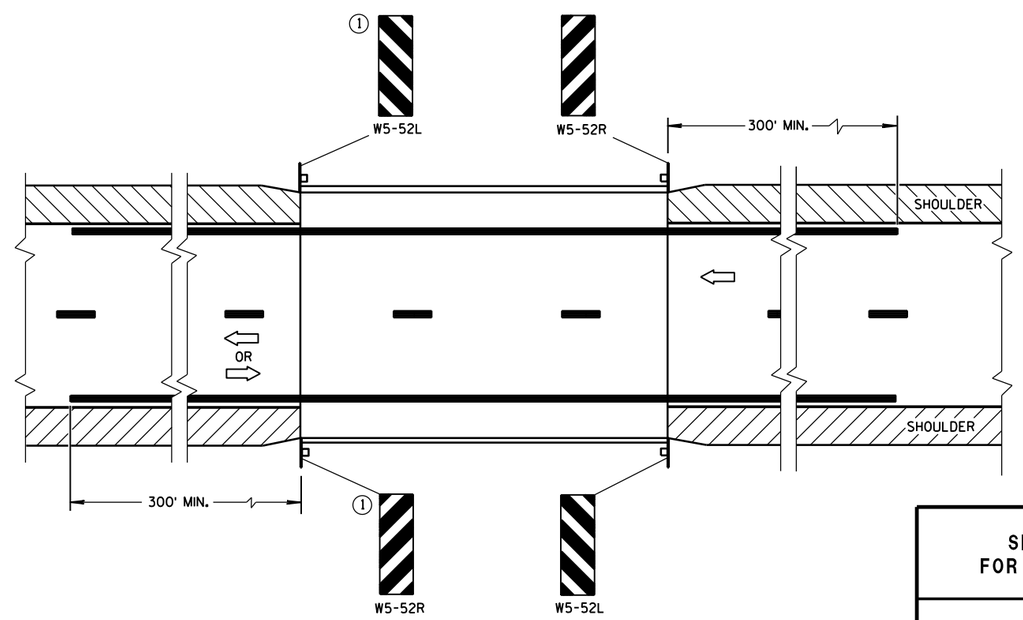

SITUATION 2

WARRANTING CRITERIA:

1. BRIDGE WIDTH IS AT LEAST 24 FEET AND
2. BRIDGE SHOULDER WIDTH IS LESS THAN 6 FEET.

SIGNING & MARKING FOR TWO LANE BRIDGES

STATE OF WISCONSIN
DEPARTMENT OF TRANSPORTATION

APPROVED
June 2017 — DATE
/S/ Matthew R. Rauch — STATE SIGNING AND MAR... ...NEER
FHWA

6

6

S.D.D. 15 C 6-9

S.D.D. 15 C 6-9

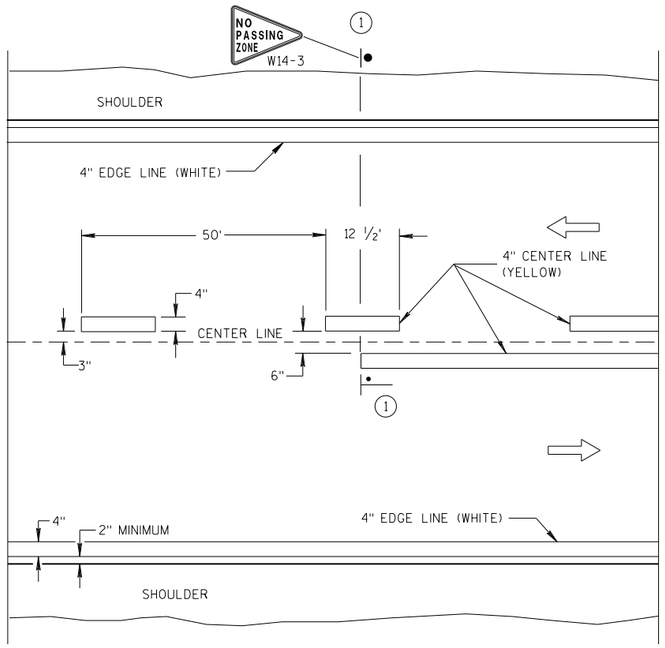

TWO WAY TRAFFIC

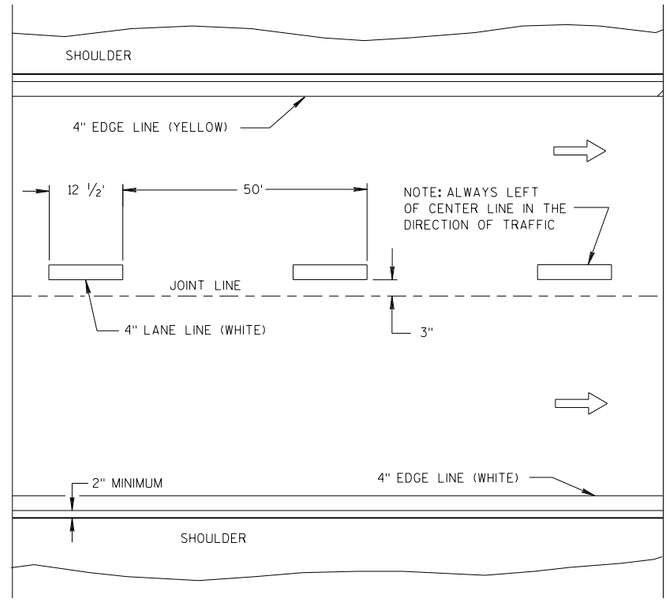

ONE WAY TRAFFIC

PERMANENT PAVEMENT MARKING

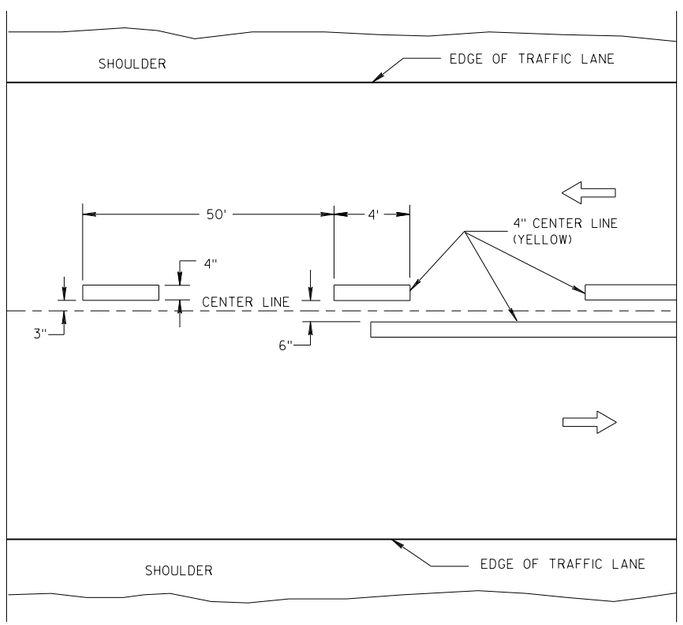

TWO WAY TRAFFIC

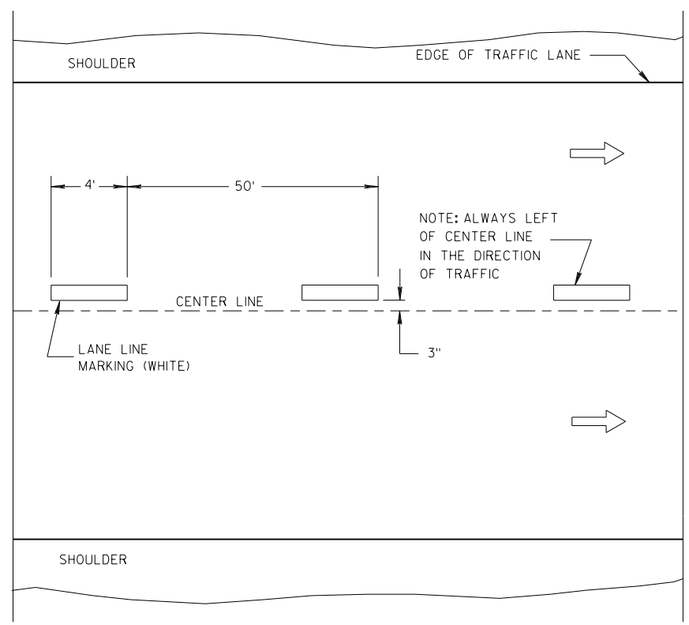

ONE WAY TRAFFIC

TEMPORARY PAVEMENT MARKING

GENERAL NOTES

DETAILS OF CONSTRUCTION NOT SHOWN ON THIS DRAWING SHALL CONFORM TO STANDARD SPECIFICATIONS AND SPECIAL PROVISIONS.

(1) LOCATE THE NO PASSING ZONE W14-3 SIGN WITHIN 50 FEET OF THE "T" MARKING.

NOTE

ARROW SYMBOL (⇨) SHOWS DIRECTION OF TRAVEL

LEGEND

"T" MARKING

POST MOUNTED SIGN

LONGITUDINAL MARKING (MAINLINE)

STATE OF WISCONSIN
DEPARTMENT OF TRANSPORTATION

APPROVED
7/2018 — DATE
/S/ Matthew R. Rauch — STATE SIGNING AND MAR INEER
FHWA

6

S.D.D. 15 C 8-19a

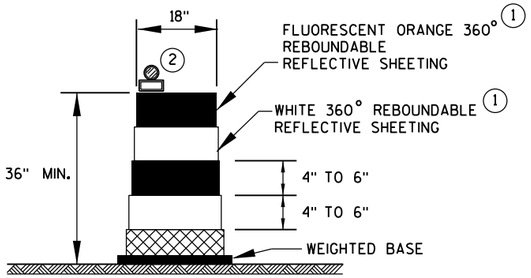

DRUM

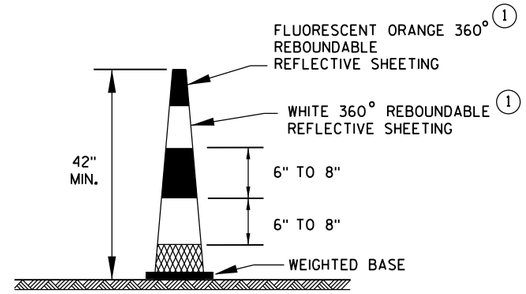

42" CONE

DO NOT USE IN TAPERS
½ SPACING OF DRUMS

GENERAL NOTES

1. REFLECTIVE SHEETING SHALL FOLLOW THE REQUIREMENTS IN THE APPROVED PRODUCTS LISTING FOR SIGN SHEETING.
2. LOCATION OF WARNING LIGHTS WHEN SHOWN ON THE PLAN.

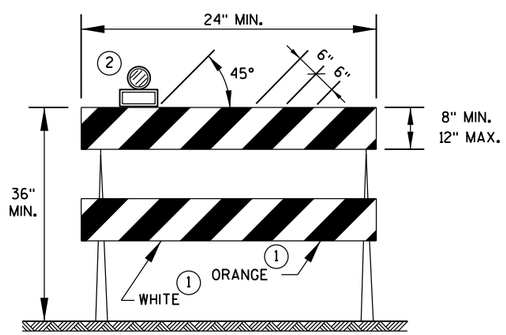

TYPE 2 BARRICADE

FOR RAILS LESS THAN 36" LONG, 4" WIDE STRIPES MAY BE USED. ALL STRIPES SHALL SLOPE DOWNWARD TO THE TRAFFIC SIDE FOR CHANNELIZATION.

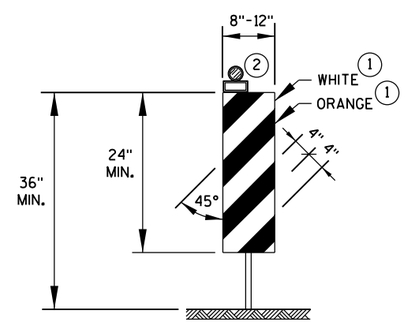

VERTICAL PANEL

THE STRIPES SHALL SLOPE DOWNWARD TO THE TRAFFIC SIDE FOR CHANNELIZATION.

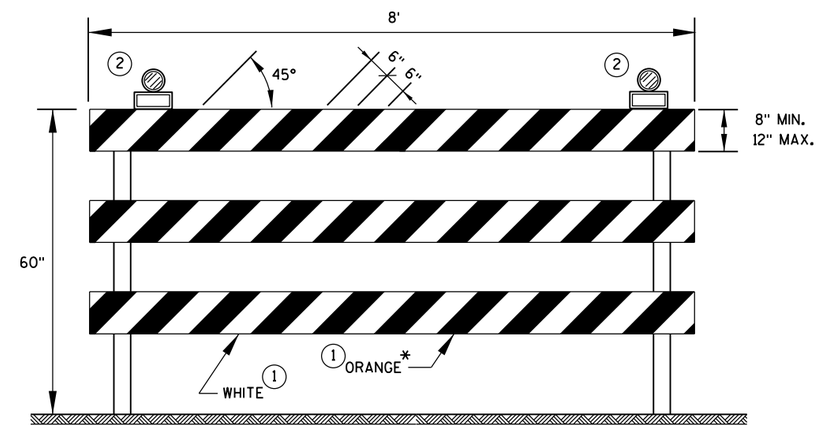

TYPE 3 BARRICADE

IF SIGN MOUNTED, DO NOT COVER MORE THAN 50% OF THE TOP TWO RAILS OR 33% OF THE TOTAL AREA OF THE THREE RAILS.

* IF USED FOR A PERMANENT APPLICATION, USE RED SHEETING.

CHANNELIZING DEVICES DRUMS, CONES, BARRICADES AND VERTICAL PANELS	
STATE OF WISCONSIN DEPARTMENT OF TRANSPORTATION	
APPROVED	
June 2017	/S/ Andrew Heldtke
DATE	WORK ZONE ENG
FHWA	

LEGEND

- SIGN ON PORTABLE OR PERMANENT SUPPORT
- DIRECTION OF TRAFFIC
- WORK AREA
- FLAGGER, EQUIPPED WITH STOP/SLOW PADDLE FASTENED ON SUPPORT STAFF

SIGN AND TEMPORARY RUMBLE STRIP ARRAY SPACING TABLE

SPEED LIMIT	SPACING A
25-35 MPH	200'
35-40 MPH	350'
45-55 MPH	500'

USE OF THE "BE PREPARED TO STOP" SIGN IS OPTIONAL. WHEN USED, THIS SIGN SHALL BE LOCATED BETWEEN THE W20-7A AND W20-4A SIGNS, USING SPACING A.

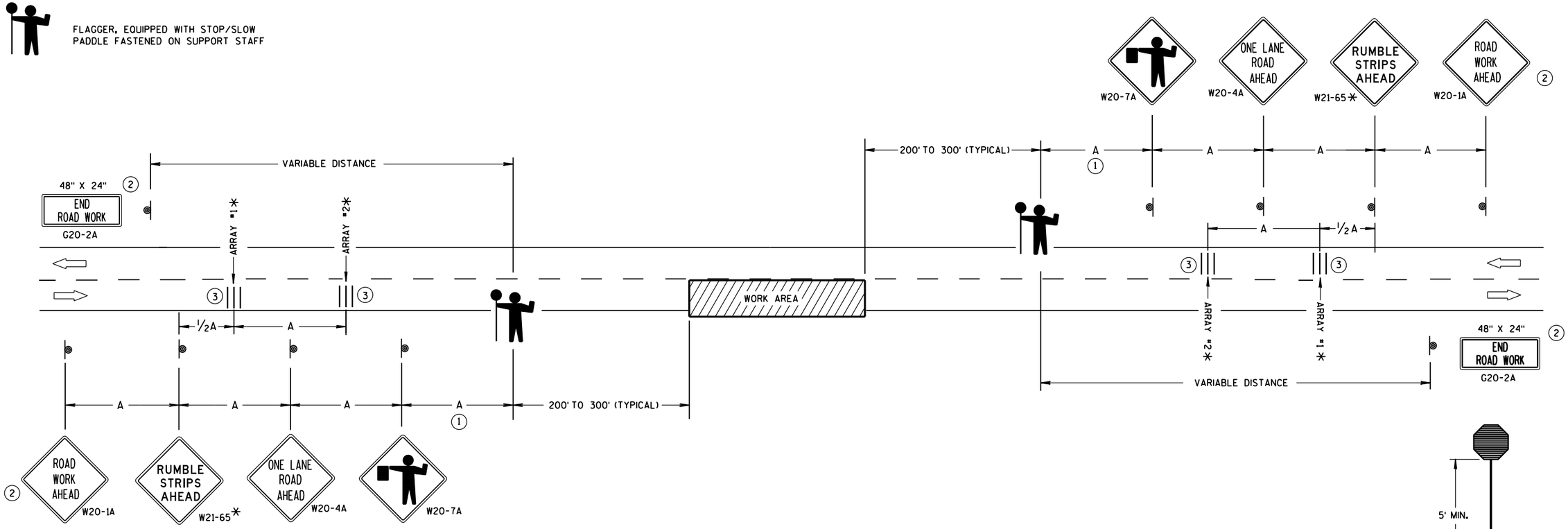

TRAFFIC CONTROL FOR LANE CLOSURE WITH FLAGGING OPERATION

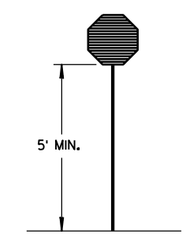

STOP/SLOW PADDLE ON SUPPORT STAFF

GENERAL NOTES

DETAILS OF TRAFFIC CONTROL DEVICES AND INSTALLATION NOT SHOWN ON THIS DRAWING SHALL CONFORM TO THE PERTINENT REQUIREMENTS OF THE STANDARD SPECIFICATIONS, THE SPECIAL PROVISIONS, AND THE MANUAL ON UNIFORM TRAFFIC CONTROL DEVICES.

THE EXACT NUMBER, LOCATION AND SPACING OF ALL SIGNS AND DEVICES (AND THE LOCATION OF ALL FLAGGERS) SHALL BE ADJUSTED TO FIT FIELD CONDITIONS AS APPROVED BY THE ENGINEER.

THE FIRST ADVANCE WARNING SIGN SHOULD TYPICALLY BE LOCATED IN ADVANCE OF THE ANTICIPATED TRAFFIC BACKUP OR QUEUE.

"WO" SIGNS ARE THE SAME AS "W" SIGNS EXCEPT THE BACKGROUND IS ORANGE.

WHEN A SIDE ROAD OR RAMP INTERSECTS THE FACILITY ON WHICH THE WORK IS BEING PERFORMED, ADDITIONAL TRAFFIC CONTROLS SHALL BE PROVIDED AS SPECIFIED IN THE PLANS AND/OR THE SPECIAL PROVISIONS OR AS APPROVED BY THE ENGINEER.

INSTALL TEMPORARY RUMBLE STRIPS PER MANUFACTURER'S RECOMMENDATIONS.

PLACE ADVANCE SIGNING PRIOR TO INSTALLING TEMPORARY RUMBLE STRIPS.

ALL SIGNS ARE 48" X 48" UNLESS OTHERWISE NOTED.

FLAGGERS SHALL BE IN SIGHT OF EACH OTHER OR IN DIRECT COMMUNICATION AT ALL TIMES. THEY SHALL BE EQUIPPED WITH STOP/SLOW PADDLES FASTENED ON SUPPORT STAFFS. WHEN THE FLAGGING OPERATION IS NOT IN EFFECT, REMOVE TEMPORARY RUMBLE STRIPS PRIOR TO COVERING OR REMOVING ALL ADVANCE SIGNING.

* UTILIZE TEMPORARY RUMBLE STRIPS WHEN FLAGGING OPERATION IS ANTICIPATED TO BE STATIONARY IN EXCESS OF TWO HOURS.

1. FOR A MOVING WORK OPERATION, SIGNING AND TEMPORARY RUMBLE STRIPS (IF USED) SHALL BE REESTABLISHED (AS SIMULTANEOUSLY AS PRACTICAL) AT APPROXIMATELY 3,500 FOOT INTERVALS IN THE MOVING WORK OPERATION OR AS APPROVED BY THE ENGINEER.
2. SIGN NOT REQUIRED IF FLAGGING OPERATION OCCURS WITHIN A SIGNED ROAD WORK ZONE AREA.
3. EACH TEMPORARY RUMBLE STRIP ARRAY CONSISTS OF THREE RUMBLE STRIPS SPACED ACCORDING TO MANUFACTURER'S RECOMMENDATION, PLACED TRANSVERSE ACROSS THE LANE AT LOCATIONS SHOWN.

TRAFFIC CONTROL FOR LANE CLOSURE WITH FLAGGING OPERATION

STATE OF WISCONSIN
DEPARTMENT OF TRANSPORTATION

APPROVED
June 2017 — DATE
/S/ Andrew Heldtke — WORK ZONE ENG
FHWA

6

S.D.D. 15 C 12-6

LEGEND

- TYPE III BARRICADE WITH ATTACHED SIGN
- SIGN ON PERMANENT SUPPORT
- TRAFFIC CONTROL DRUM WITH TYPE "C" STEADY BURN LIGHT
- TRAFFIC CONTROL DRUM
- FLAGS, 16" X 16" MIN. (ORANGE)
- REMOVING PAVEMENT MARKING
- DIRECTION OF TRAFFIC
- ASPHALTIC PAVEMENT WIDENING
- CONCRETE BARRIER TEMPORARY PRECAST
- TEMPORARY SIGNAL. SEE SDD 09G02 FOR EXACT PLACEMENT

1. 500 FOOT SPACING SHOWN IS FOR ROADWAYS WITH A PRE-CONSTRUCTION REGULATORY SPEED LIMIT OF 45 MPH OR MORE. FOR 35 - 40 MPH, USE 350 FOOT TYPICAL SPACING. FOR 25 - 30 MPH, USE 200 FOOT TYPICAL SPACING.
2. USE 300 FOOT SPACING IF THE PRE - CONSTRUCTION REGULATORY SPEED IS 35 MPH OR LESS.
3. DIMENSION DETERMINED BY CBTP TAPER FROM EDGE LINE TO TANGENT SECTION OF THE ROAD.
4. TEMPORARY MARKING STOP LINE REMOVABLE TAPE 18 - INCH.
5. 700 FOOT TEMPORARY MARKING DOUBLE YELLOW LINE 4 - INCH. WHEN THE DISTANCE FOR THE PRECEDING NO - PASSING ZONE IS LESS THAN THE MINIMUM DISTANCE BETWEEN ZONES AS INDICATED IN THE SPECIFICATIONS, THE TWO ZONES SHALL BE CONNECTED.
6. SEE SDD 15C02 - SHEET "F" FOR ADVANCED WIDTH RESTRICTION SIGNING.

GENERAL NOTES

THE EXACT NUMBER, LOCATION, AND SPACING OF ALL SIGNS AND DEVICES SHALL BE ADJUSTED TO FIT FIELD CONDITIONS AS APPROVED BY THE ENGINEER.

THE SPACING BETWEEN TRAFFIC CONTROL SIGNS SHOULD BE ADJUSTED TO NOT CONFLICT WITH AND TO PROVIDE A MINIMUM OF 200 FEET (500 FEET DESIRABLE) CLEARANCE TO EXISTING SIGNS THAT WILL REMAIN IN PLACE..

THIS LANE CLOSURE IS TYPICAL FOR CLOSING RIGHT LANE - REVERSE FOR CLOSING LEFT LANE.

ALL SIGNS ARE 48" x 48" UNLESS OTHERWISE NOTED.

"WO" IS THE SAME AS "W" EXCEPT THE BACKGROUND IS ORANGE.

ANY SIGNS TEMPORARY OR EXISTING, WHICH CONFLICT WITH TRAFFIC CONTROL "IN USE" SHALL BE REMOVED OR COVERED AS NEEDED OR AS APPROVED BY THE ENGINEER.

PLACE TEMPORARY PAVEMENT MARKING EDGELINE AND CENTERLINE AND REMOVE EXISTING PAVEMENT MARKINGS IF LANE CLOSURE IS TO BE IN PLACE 4 OR MORE CONTINUOUS DAYS AND NIGHTS OR AS NOTED ON DETAIL.

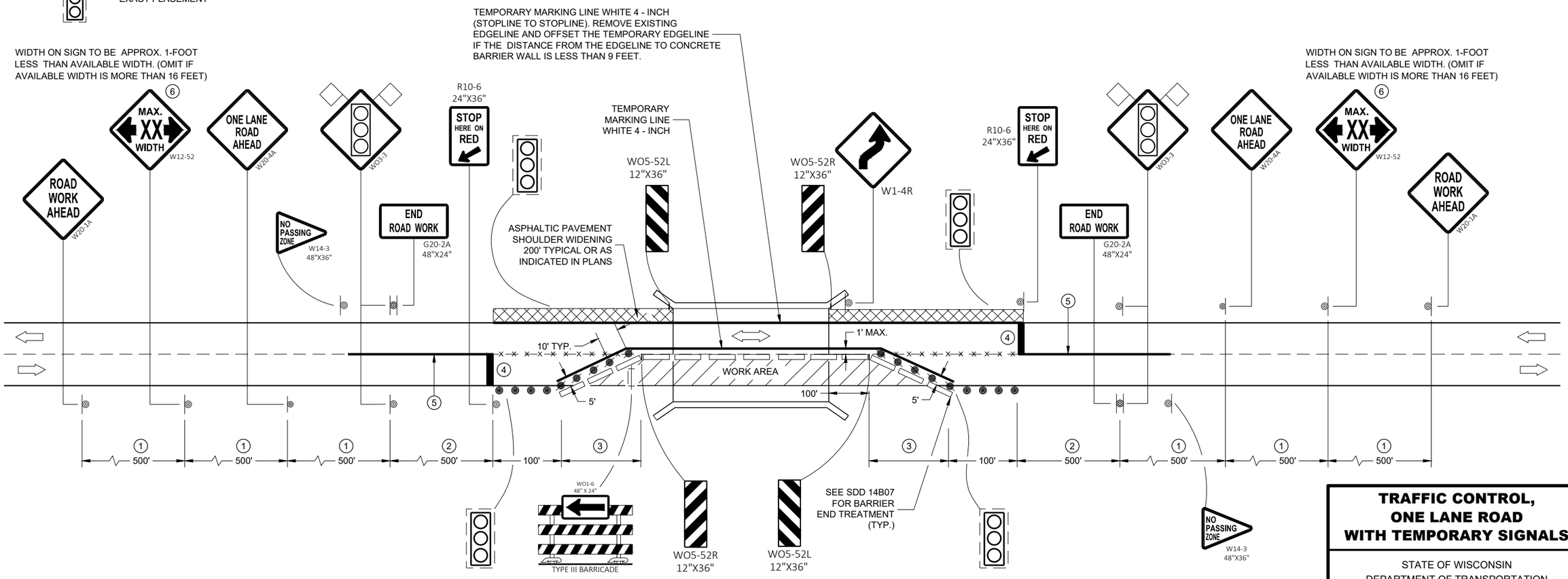

TRAFFIC CONTROL, ONE LANE ROAD WITH TEMPORARY SIGNALS

STATE OF WISCONSIN
DEPARTMENT OF TRANSPORTATION

APPROVED
November 2018 /S/ Andrew Heidtke
DATE WORK ZONE ENGINEE
FHWA

6

SDD 15D33 - 05

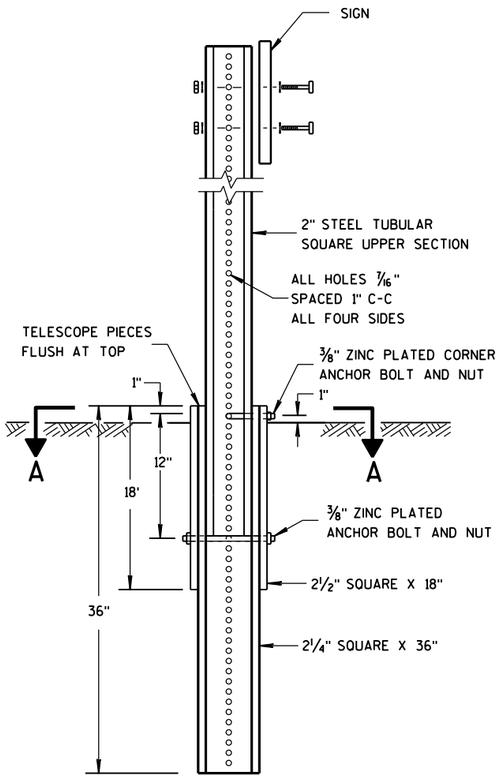

DETAIL OF TUBULAR STEEL SIGN POST

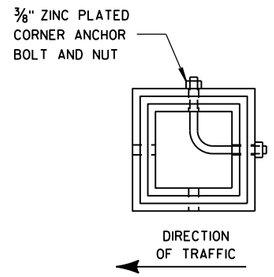

SECTION A-A

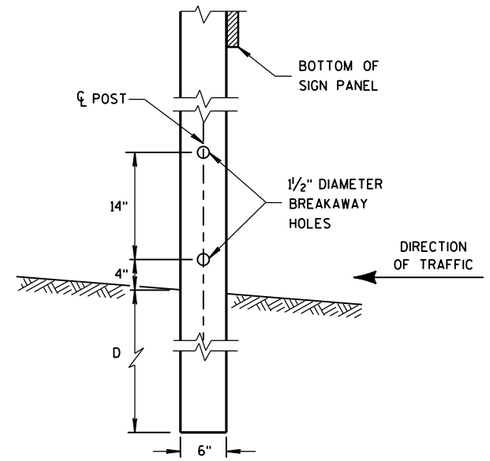

4"x6" WOOD POST MODIFICATION

GENERAL NOTES

1. 6 FEET FROM THE EDGE OF PAVEMENT (EDGE LINE LOCATION) UNLESS OTHERWISE DIRECTED BY THE PROJECT ENGINEER. LATERAL OFFSET SHOULD BE ADJUSTED TO AVOID THE DITCH FLOWLINE.
2. THE EXISTENCE OF CURB AND GUTTER DOES NOT IN ITSELF MANDATE THE VERTICAL CLEARANCE ILLUSTRATED. THAT HEIGHT IS TYPICALLY MEASURED WHERE THERE IS SIDEWALK ADJACENT TO THE ROADWAY OR PARKING IS PERMITTED. IN THE ABSENCE OF SIDEWALK, VERTICAL CLEARANCE IS MEASURED FROM THE TOP OF THE CURB. IF NO SIDEWALK AND NO PARKING, VERTICAL CLEARANCE MAY BE REDUCED TO 5 FOOT MINIMUM. OFFSET OF SIGNS IS MEASURED FROM THE CURB FLOWLINE.
3. FOR SIGNS REQUIRING 4 POSTS, SPACE INTERMEDIATE POSTS EVENLY.

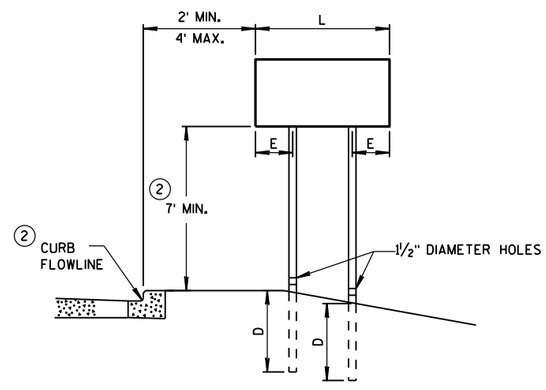

URBAN AREA

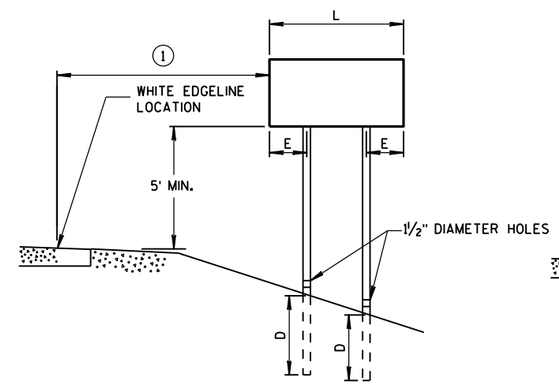

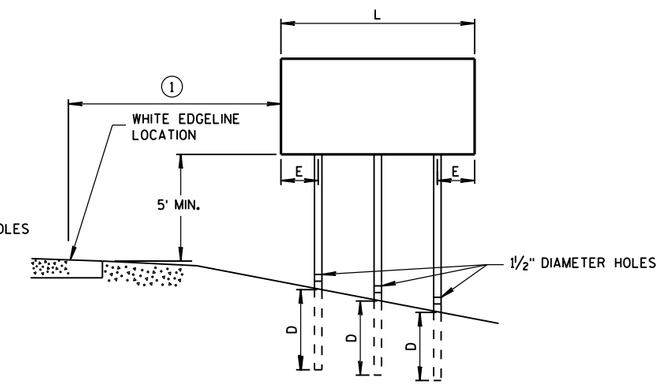

RURAL AREA

POST MOUNTING DETAIL FOR TEMPORARY TRAFFIC CONTROL FIXED MESSAGE SIGNS

TUBULAR STEEL POSTS

AREA OF SIGN INSTALLATION (SQ. FT.)	NUMBER OF REQUIRED TUBULAR STEEL POSTS
9 OR LESS	1
GREATER THAN 9 LESS THAN OR EQUAL TO 18	2
GREATER THAN 18 LESS THAN OR EQUAL TO 27	3

SIGNS WIDER THAN 3 FEET OR LARGER THAN 9 SQ. FT. SHALL BE MOUNTED ON MULTIPLE POSTS (SEE ABOVE TABLE).

SIGNS LARGER THAN 27 SQ. FT. SHALL NOT BE MOUNTED ON TUBULAR STEEL POSTS.

WOOD POST EMBEDMENT DEPTH

AREA OF SIGN INSTALLATION (SQ. FT.)	D (MIN)
20 OR LESS	4'
GREATER THAN 20	5'

4" X 6" WOOD POST

POST SPACING REQUIREMENTS		NUMBER OF WOOD POSTS REQUIRED
L	E	
48" OR LESS AND LESS THAN 20 SQ. FT.	-	1
LESS THAN 60"	12"	2
60" TO 120"	L/5	2
GREATER THAN 120" LESS THAN 168"	12"	3
168" AND GREATER	12"	4

SEE NOTE 3

TEMPORARY TRAFFIC CONTROL SIGN MOUNTING

STATE OF WISCONSIN
DEPARTMENT OF TRANSPO

6
S.D.D. 15 D 38-2a

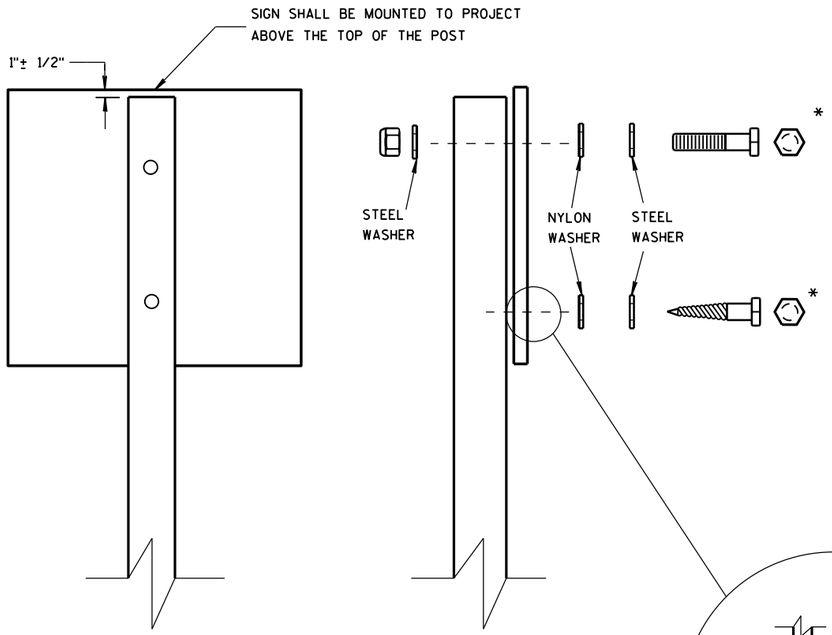

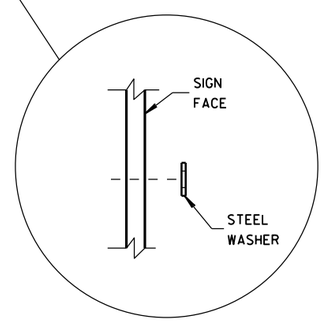

WASHER PLACEMENT WHEN SIGN HAS OTHER THAN TYPE H OR TYPE F FACE

NUTS, BOLTS AND LAGS USED FOR MOUNTING SIGNS SHALL HAVE HEXAGONAL HEADS AND SHALL BE EITHER:

A. HOT DIP GALVANIZED IN ACCORDANCE WITH ASTM DESIGNATION: A 153, CLASS D, OR SC 3

B. ELECTRO-GALVANIZED IN ACCORDANCE WITH ASTM DESIGNATION: B 633, TYPE III, SC 3

THREADS ON BOLTS AND NUTS SHALL BE MANUFACTURED WITH SUFFICIENT ALLOWANCE FOR THE CADMIUM PLATE OR GALVANIZED COATING TO PERMIT THE NUTS TO RUN FREELY ON THE BOLTS.

WOOD POSTS (4" x 4" or 4" x 6")

LAG SCREWS - 3/8" X 3"

MACHINE BOLTS - 5/16" X 6-1/2" OR 7" LENGTH W/ NUTS

SQUARE STEEL POSTS (2" x 2")

MACHINE BOLTS - 3/8" X 3-1/4" LENGTH W/ NUTS

RIVETS - 9/32" (6605-9-6) BULB-TITE, TRI-FOLD, ALUMINUM BODY/MANDREL O.D. FLANGE .720-.765 INCH, GRIP RANGE .042-.375 INCH

WASHERS (ALL POSTS) -

1-1/4" O.D. X 3/8" I.D. X 1/16" STEEL

1-1/4" O.D. X 3/8" I.D. X .080 NYLON FOR ALL TYPE H SIGNS

* TWO DIFFERENT FASTENING SYSTEMS ARE SHOWN FOR ILLUSTRATION PURPOSES. ON ANY INDIVIDUAL SIGN, EITHER ONE OR THE OTHER SYSTEM SHALL BE USED. ACTUAL NUMBER OF FASTENERS PER SIGN VARIES WITH THE SIGN AREA. FOR A SINGLE POST INSTALLATION, ALL SIGNS GREATER THAN 9 SQ. FT. REQUIRE THE USE OF 3 FASTENERS.

6

6

S.D.D. 15 D 38-2b

S.D.D. 15 D 38-2b

ATTACHMENT OF SIGNS TO POSTS

STATE OF WISCONSIN
DEPARTMENT OF TRANSPORTATION

APPROVED

June 2017 — /S/ Andrew Heldtke
DATE — WORK ZONE ENG

FHWA

TYPICAL ASSEMBLIES

J1-1

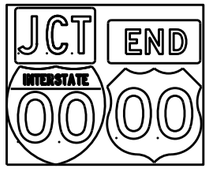

J1-2

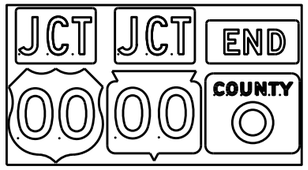

J1-3

J2-1

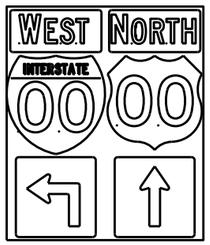

J2-2

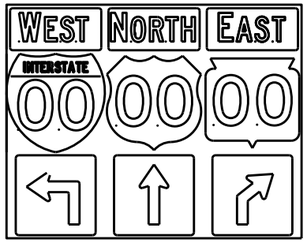

J2-3

JV

(Typical Vertical J-Assembly
See Note 10 and 11)

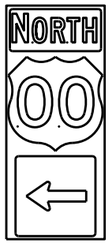

J3-1

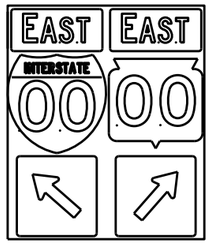

J3-2

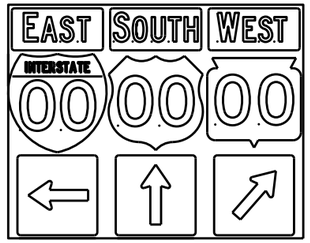

J3-3

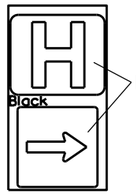

Blue Background

JH-1

J4-1

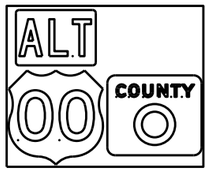

J4-2

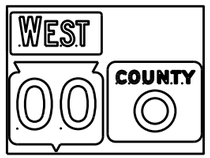

J4-2

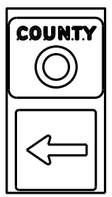

J13-1

J12-1

J32-1

J33-1

J23-1

J22-1

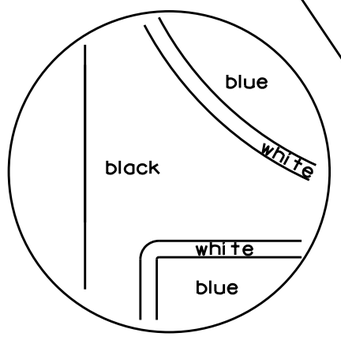

blue background
with interstate

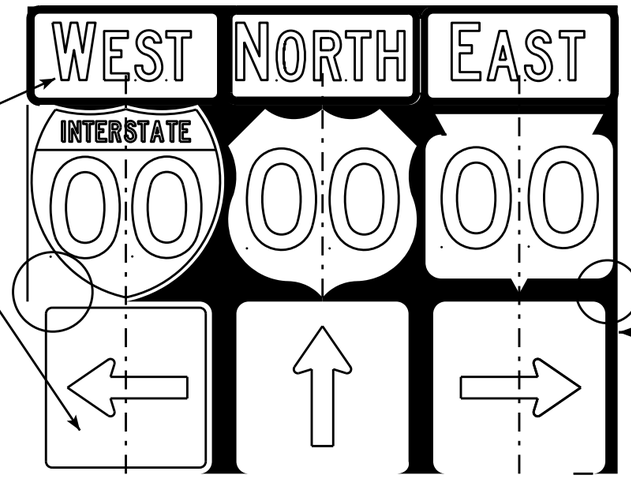

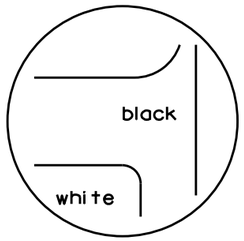

black background

NOTES

1. Signs are Type II - Type H Reflective - reference WIS DOT Standard Specification for HIGHWAY and STRUCTURE CONSTRUCTION latest edition.
2. Color:
   Background - Black Non-reflective
   Message - see Note 5
3. Message Series - See Note 5
4. Corners shall be square or rounded if base material is plywood. If base material is metal the corners shall be rounded.
5. The colors and message spacing on each marker shall be according to the applicable route marker panel specifications.
6. Certain marker heads require the component pieces to be the same color. As an example, all the components used with an M1-1 Interstate marker shall be blue.
7. Single panel j-assemblies shall only be used with route marker shields that are same size. If the route marker shields are different size use multiple piece component.
8. Route assemblies that have 24 inch route shields and have dimensions greater than 48 inches (both vertical and horizontal) shall have one horizontal splice between the arrows and route shields. Vertical splices shall not be used on route assemblies with a horizontal dimension of 144 inches or less. The contractor shall not use more than one vertical joint per sign and the joint shall be between route shields.
9. Route assemblies that have 36 inch shields and have dimensions greater than 48 inchs (both vertical and horizontal) shall have two horizontal splices. One horizontal splice shall be between the cardinal direction and route shields and the other horizontal splice shall be between the arrows and route shields. Vertical splices shall not be used on route assemblies with a horizontal dimension of 144 or less. The contractor shall not use more than one vertical joint per sign and the joint shall be between route shields.
10. All Vertical J Assemblies are given a Sign Code of JV
11. For JV Assemblies that have a mixture of Interstate and non Interstate shields, arrows and cardinals shall be white on blue.

ROUTE MARKERS & COMPONENTS
IN TYPICAL ASSEMBLIES

WISCONSIN DEPT OF TRANSPORTATION

APPROVED Matthew R Rauch
for State Traffic Engineer

DATE 2/06/14 PLATE A2-1S.8

PROJECT NO: | SHEET NO: E

URBAN AREA

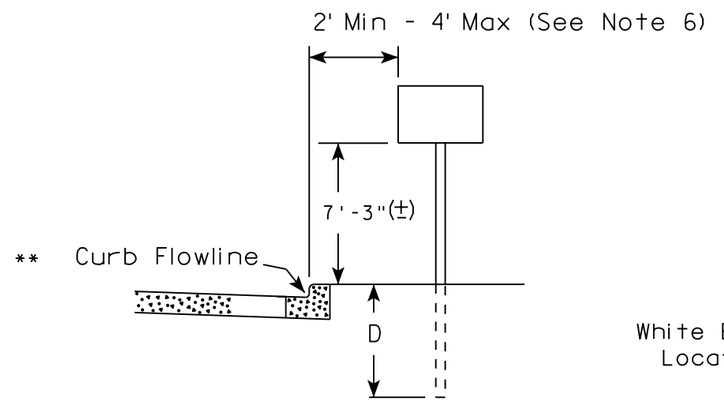

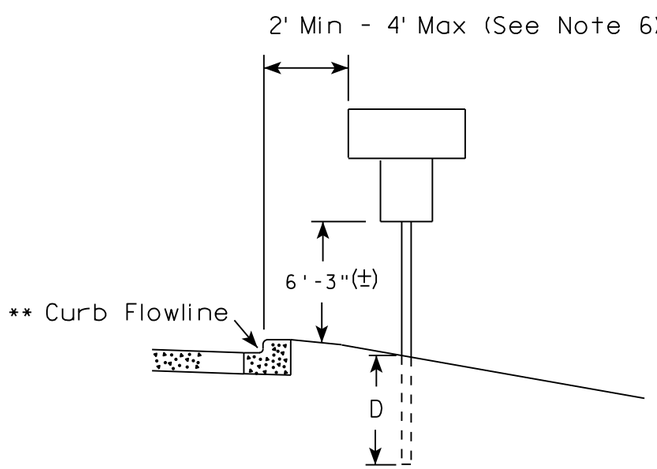

RURAL AREA (See Note 2)

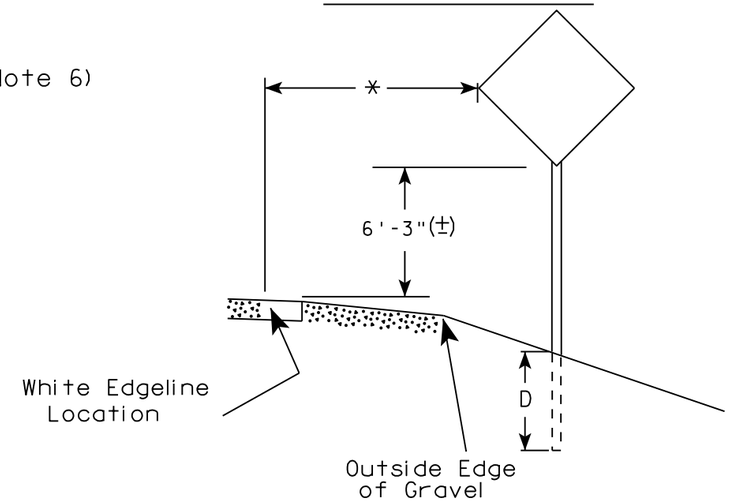

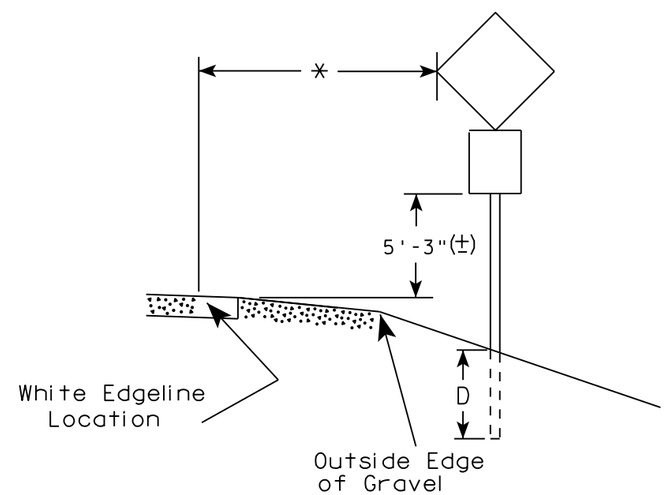

** The existence of curb and gutter does not in itself mandate the vertical clearance illustrated. That height is typically measured where there is sidewalk adjacent to the roadway or parking is permitted. In the absence of sidewalk vertical clearance is measured from the top of the curb. Offset of signs is measured from the flow line.

* 6 feet from edge of a paved shoulder or 12 feet from the edge of pavement (edge line location) or 2 feet from outside edge of gravel, whichever is greater unless directed by project engineer.

GENERAL NOTES

1. Signs wider than 4 feet or 20 sq.ft or larger, shall be mounted on multiple posts. Refer to plate A4-4.
2. If signs are mounted on barrier wall, see A4-10 sign plate.
3. For expressways and freeways, mounting height is 7'- 3" (±) or 6'-3" (±) depending upon existence of a sub-sign.
4. J-Assemblies are considered to be one sign for mounting height.
5. Minimum mounting height for signs mounted on traffic signal poles is 5'- 3" (±).
6. Offset distance shall be consistent with existing signs or consistent throughout length of project.
7. The (±) tolerance for mounting height is 3 inches.
8. Folding signs shall be mounted at a height of 5'-3" (±) or as directd by the Engineer.
9. The Double Arrow sign (W12-1) shall be mounted at a height of 2'-3" (±). The Chevron sign (W1-8), Roundabout Chevron panel (R6-4B), Enhanced Reference Markers, Clearance Markers (W5-52), Mile Markers (D10 series), In Road Object Markers (W5-54) & End of Road Markers (W5-56) shall be mounted at a height of 4'-3" (±).

POST EMBEDMENT DEPTH

Area of Sign Installation (Sq. Ft.)	D (Min)
20 or Less	4'
Greater than 20	5'

TYPICAL INSTALLATION OF PERMANENT TYPE II SIGNS ON SINGLE POSTS

WISCONSIN DEPT OF TRANSPORTATION

APPROVED Matthew R Rauch for State Traffic Engineer

DATE 8/21/17 PLATE NO. A4-3.21

7 7

PROJECT NO:	HWY:	COUNTY:		SHEET NO: 55	E

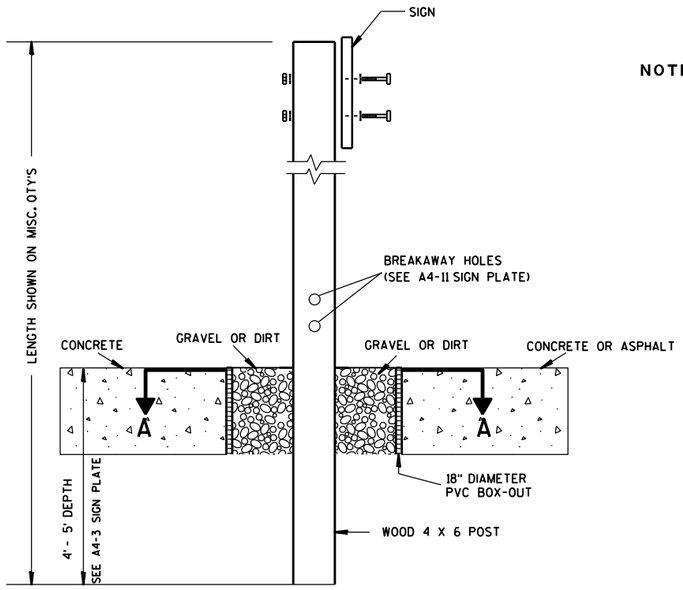

ELEVATION VIEW

DETAIL OF WOOD 4 X 6 SIGN POST IN BOX-OUT

NOTES:
1. ALL MATERIAL TO BE APPROVED BY ENGINEER PRIOR TO INSTALLATION
2. SEE SIGN PLATE A4-8 FOR SIGN HARDWARE REQUIREMENTS
3. 18 INCH X 18 INCH SQUARE BOX-OUTS MAY BE USED FOR INSTALLATIONS IN EXISTING CONCRETE OR ASPHALT LOCATIONS.

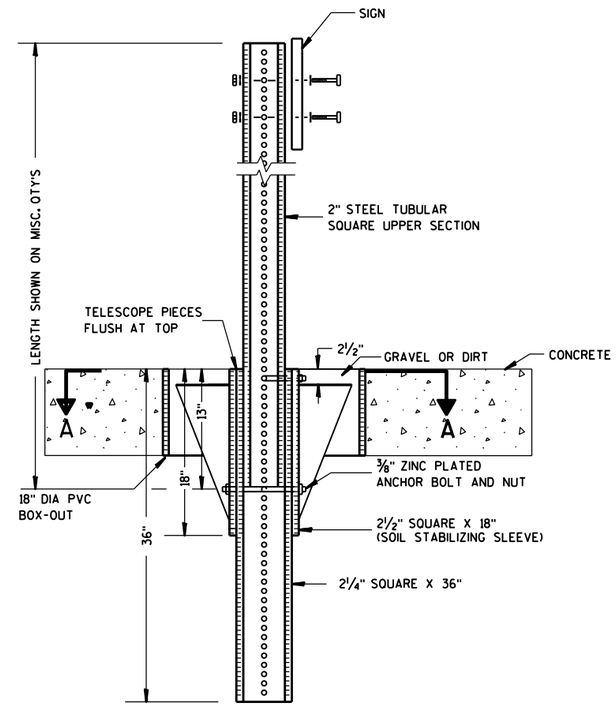

ELEVATION VIEW

DETAIL OF STEEL 2 X 2 SIGN POST IN BOX-OUT

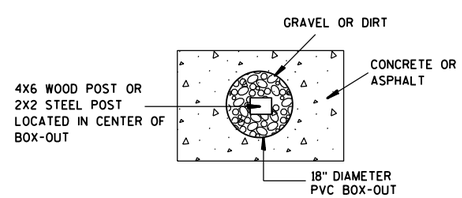

PLAN VIEW

FOR NEW CONCRETE/ASPHALT INSTALLATIONS

SIGN POST
BOX-OUTS
A4-3B

WISCONSIN DEPT OF TRANSPORTATION

APPROVED Matthew R Rauch
for State Traffic Engineer

DATE 1/27/14 PLATE NO. A4-3B.1

PROJECT NO:	HWY:	COUNTY:		SHEET NO:	E

URBAN AREA

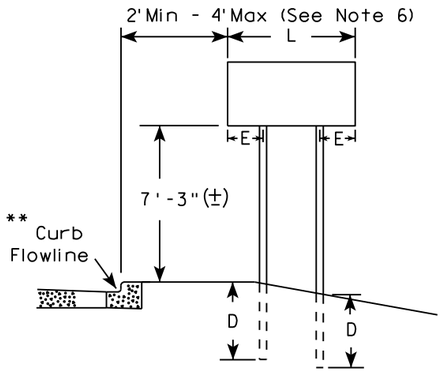

RURAL AREA (See Note 3)

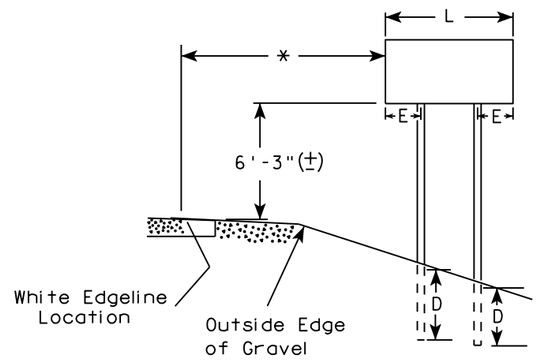

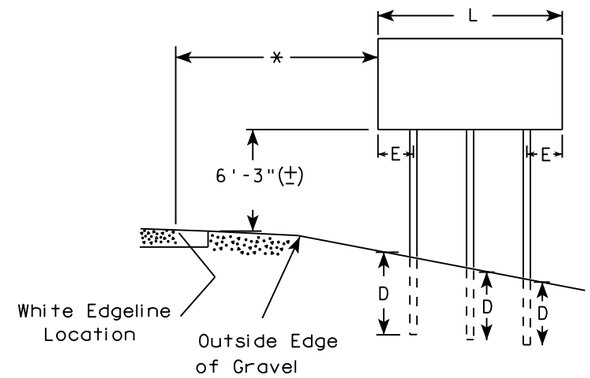

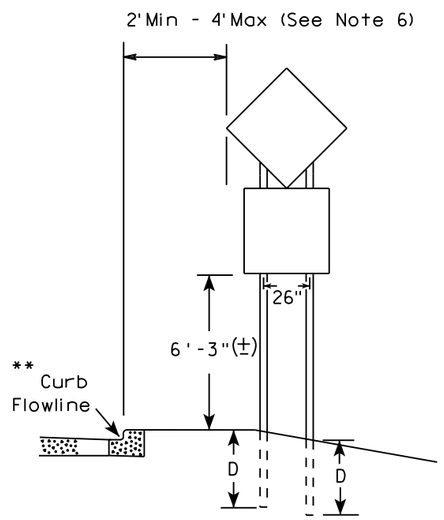

48" DIAMOND WARNING SIGN

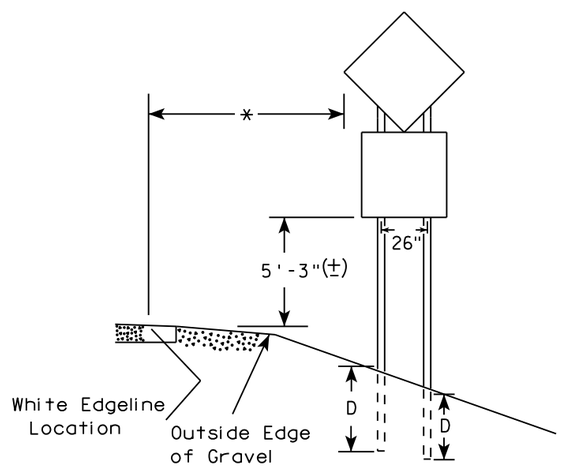

48" DIAMOND WARNING SIGN

GENERAL NOTES

1. For 3 or 4 post installations, individual post spacing shall be greater than 3'-6".
2. See tables below for required number of posts.
3. For expressways and freeways, mounting height is 7'-3" (±) or 6'-3" (±) depending upon existence of sub-sign.
4. The (±) tolerance for mounting height is 3 inches.
5. J-Assemblies are considered to be one sign for mounting height.
6. Offset distance shall be consistent with existing signs or consistent throughout length of project.
7. Folding signs shall be mounted at a height of 5'-3" (±) or as directed by the engineer.
8. The Double Arrow sign (W12-1) shall be mounted at a height of 2'-3" (±). The Chevron sign (W1-8), Roundabout Chevron panel (R6-4B), Clearance Markers (W5-52), Mile Markers (D10 series), In Road Object Markers (W5-54) & End of Road Markers (W5-56) shall be mounted at a height of 4"-3" (±).

* 6 feet from edge of a paved shoulder or 12 feet from the edge of pavement (edge line location) or 2 feet from outside edge of gravel, whichever is greater unless directed by project engineer.

** The existence of curb and gutter does not in itself mandate the vertical clearance illustrated. That height is typically measured where there is sidewalk adjacent to the roadway or parking is permitted. In the absence of sidewalk vertical clearance is measured from the top of the curb. Offset of signs is measured from the flow line.

*** See A4-3 sign plate for signs 4' or less in width and less than 20 S.F. in area.

SIGN SHAPE OTHER THAN DIAMOND (TWO POSTS REQUIRED)	
L	E
*** Greater than 48" Less than 60"	12"
60" to 108"	L/5

SIGN SHAPE OTHER THAN DIAMOND (THREE POSTS REQUIRED)	
L	E
Greater than 108" to 144"	12"

POST EMBEDMENT DEPTH

Area of Sign Installation (Sq. Ft.)	D (Min)
20 or Less	4'
Greater than 20	5'

TYPICAL INSTALLATION OF TYPE II SIGNS ON MULTIPLE POSTS

WISCONSIN DEPT OF TRANSPORTATION

APPROVED Matthew R Rauch
For State Traffic Engineer

DATE 8/21/17 PLATE NO. A4-4.15

PROJECT NO:	HWY:	COUNTY:		SHEET NO: 57	E

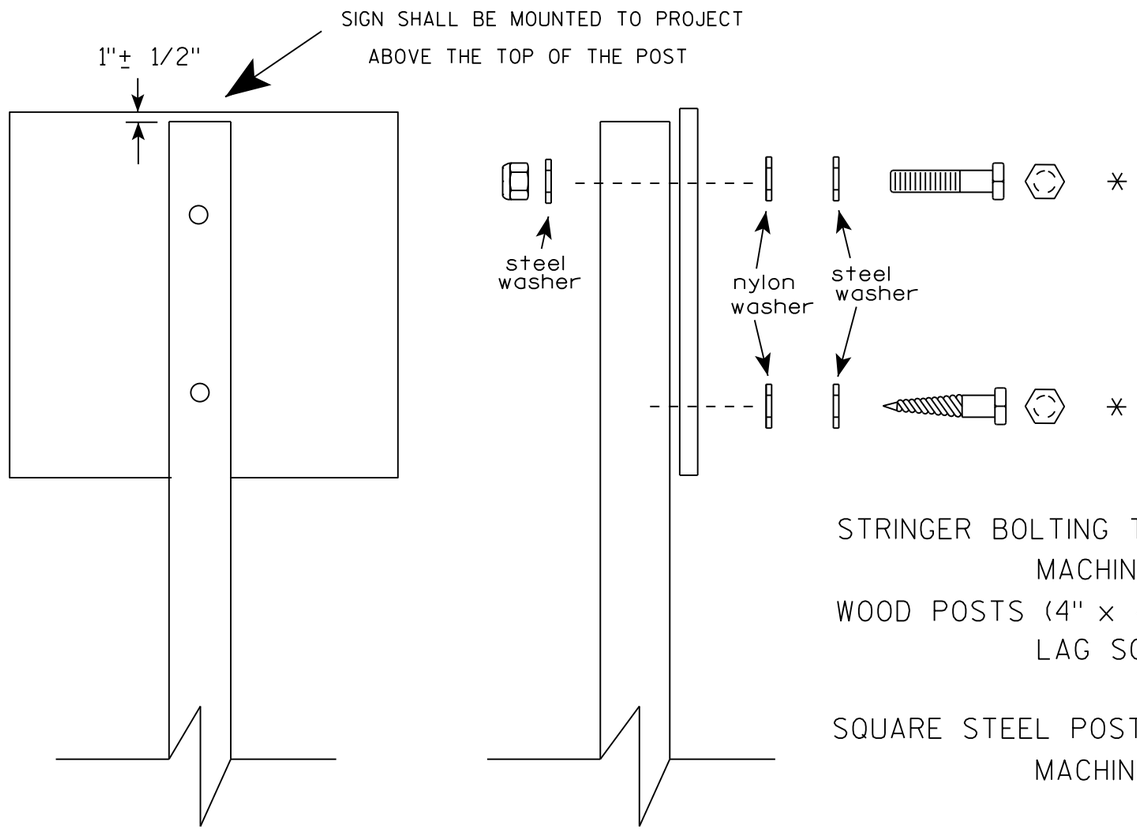

Nuts, bolts and lags used for mounting signs shall have hexagonal heads and shall be either :

a. Hot dip galvanized in accordance with ASTM Designation: A 153, Class D, or SC 3

b. Electro-galvanized in accordance with ASTM Designation : B 633, TYPE III, SC 3.

Threads on bolts and nuts shall be manufactured with sufficient allowance for the cadmium plate or galvanized coating to permit the nuts to run freely on the bolts.

STRINGER BOLTING TO ALUMINUM SIGNS (SEE SIGN PLATE A4-18)

MACHINE BOLTS - 5/16" X 1-3/4" Length w/ lock nuts

WOOD POSTS (4" x 4" or 4" x 6")

LAG SCREWS - 3/8" X 3" (NO STRINGERS ON BACK OF SIGN)

3/8" X 4" (STRINGERS ON BACK OF SIGN)

SQUARE STEEL POSTS (2" x 2")

MACHINE BOLTS - 3/8" X 3-1/4" Length w/ nuts (NO STRINGER ON BACK OF SIGN)

3/8" X 5" Length w/ nuts (STRINGERS ON BACK OF SIGN)

RIVETS - 9/32 " (6605-9-6) BULB-TITE, TRI-FOLD, ALUMINUM BODY/MANDREL

O.D. FLANGE .720-.765 INCH, GRIP RANGE .042-.375 INCH

WASHERS (ALL POSTS) -

1-1/4" O.D. X 3/8" I.D. X 1/16" STEEL

1-1/4" O.D. X 3/8" I.D. X .080 NYLON

* Two different fastening systems are shown for illustration purposes. On any individual sign, either one or the other system shall be used. Actual number of fasteners per sign varies with the sign area, but normally there are two. For a single post installation, all signs greater than 9 sq. ft. require the use of 3 fasteners.

ATTACHMENT OF SIGNS TO POSTS

WISCONSIN DEPT OF TRANSPORTATION

APPROVED Matthew R Rauch
for State Traffic Engineer

DATE 8/11/16 PLATE NO. A4-8.8

PROJECT NO:

SHEET NO: E

TELESCOPIC TUBING ANCHORS
TWO PIECE SYSTEM

2 1/4 " SQUARE
12 GAUGE
PERFORATED
GALVANIZED FINISH

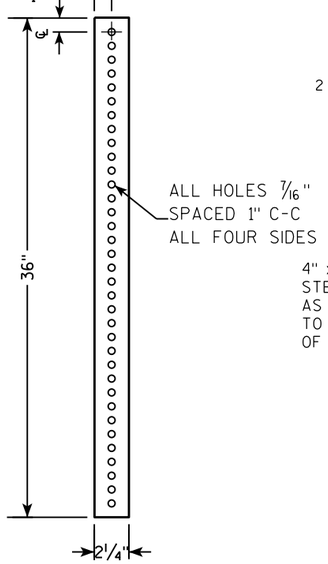

2 1/2 " SQUARE
12 GAUGE
OMNI-DIRECTIONAL
PERFORATED
SOIL STABILIZING SLEEVE
GALVANIZED FINISH

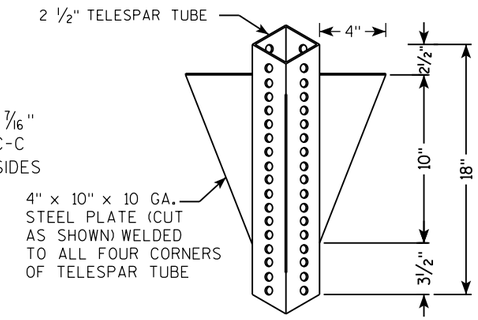

DETAIL OF TUBULAR STEEL SIGN POST
(IN POURED CONCRETE OR ASPHALT)

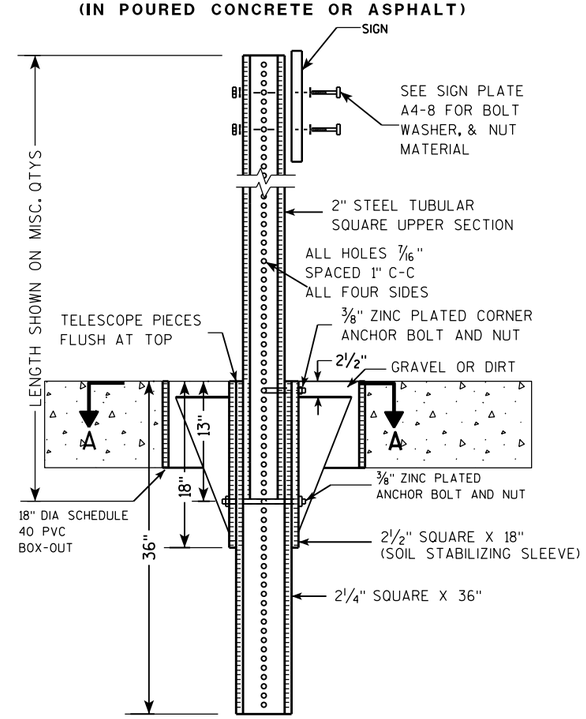

DETAIL OF TUBULAR STEEL SIGN POST
(IN LOCATIONS OTHER THAN POURED CONCRETE OR ASPHALT)

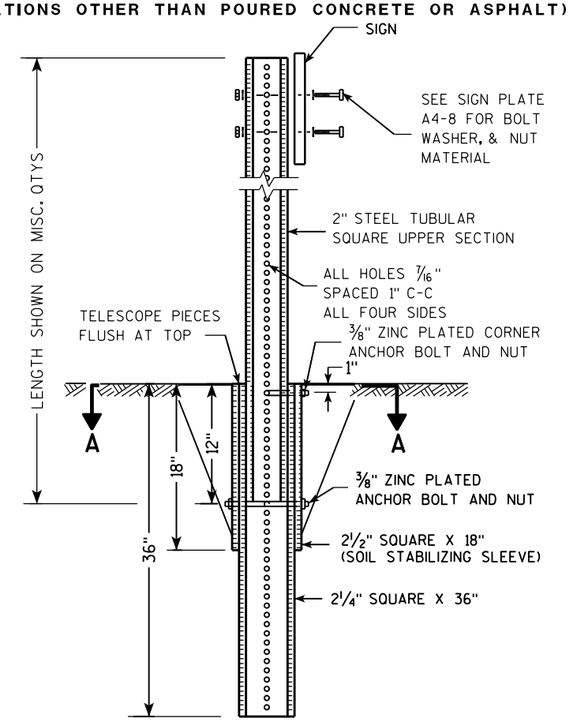

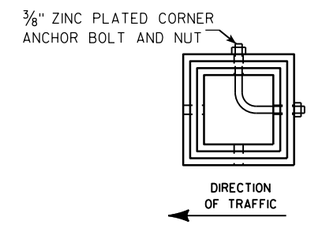

SECTION A-A

Area of Sign Installation (Sq. Ft.)	Number of Required Posts
9 or less	1
Greater than 9 less than or equal to 18	2
Greater than 18 less than or equal to 27	3

Signs wider than 3 feet or larger than 9 sq. ft shall be mounted on multiple posts (see above table).

TUBULAR STEEL
SIGN POST
A4-9

WISCONSIN DEPT OF TRANSPORTATION

APPROVED Matthew R Rauch
for State Traffic Engineer

DATE 2/05/15 PLATE A4-9.9

7

7

PROJECT NO:	HWY:	COUNTY:		SHEET NO:	E

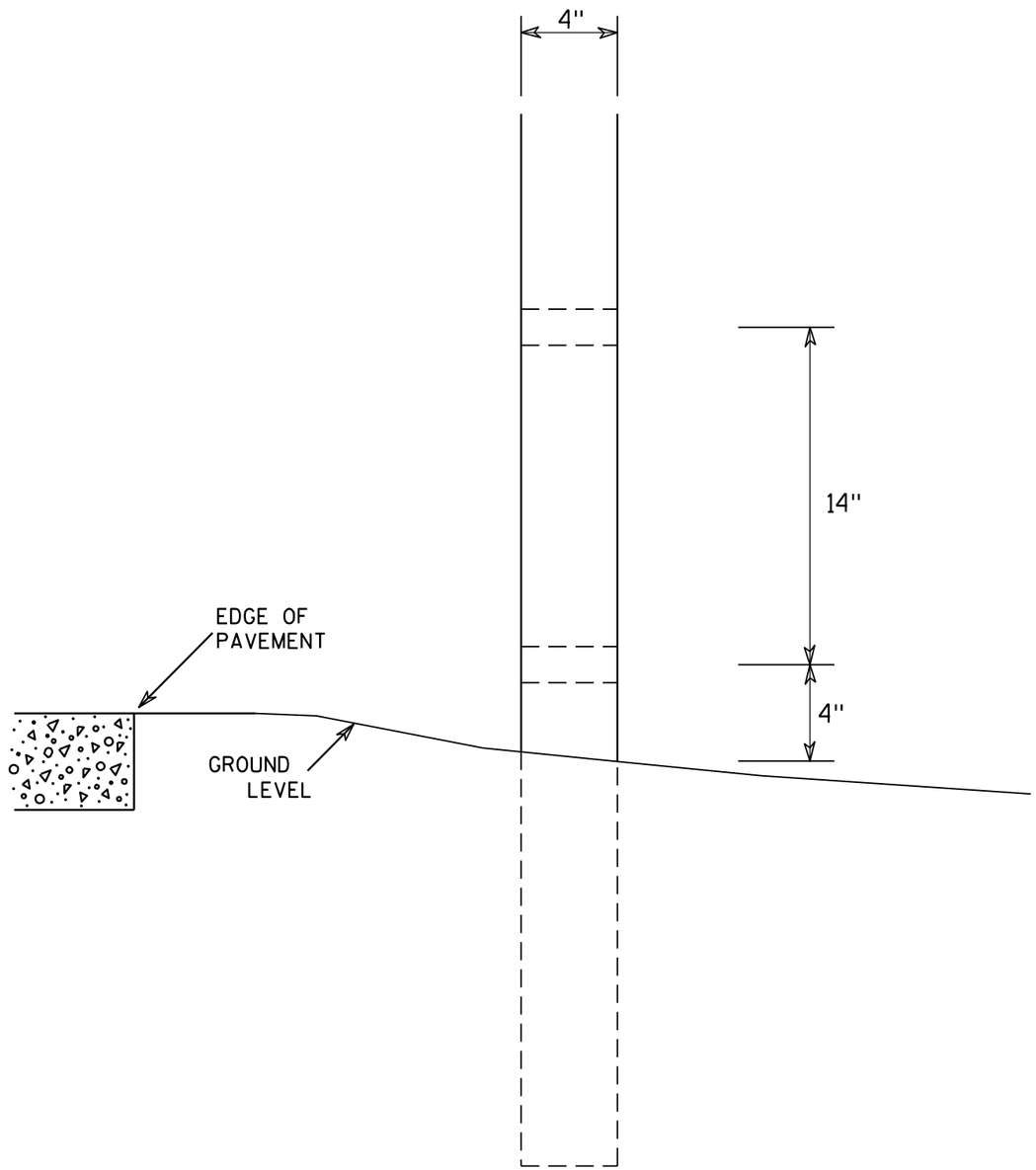

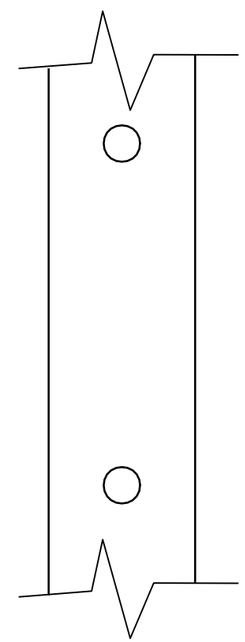

SIDE VIEW

GENERAL NOTES

1. All 4 x 6 Wood Posts shall be modified by having two 1½" diameter holes drilled perpendicular to the roadway centerline.

7

7

4 X 6 WOOD POST MODIFICATIONS

WISCONSIN DEPT OF TRANSPORTATION

APPROVED Chester J Spang for State Traffic Engineer

DATE 3/27/97 PLATE NO. A4-11.2

PROJECT NO:	HWY:	COUNTY:		SHEET NO: 60	E

BANDING

SINGLE SIGN

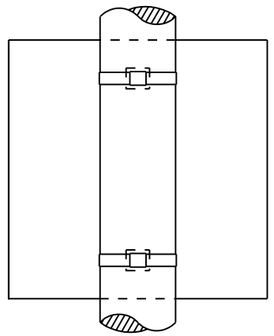

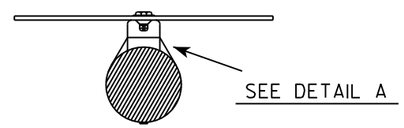

"J" ASSEMBLY

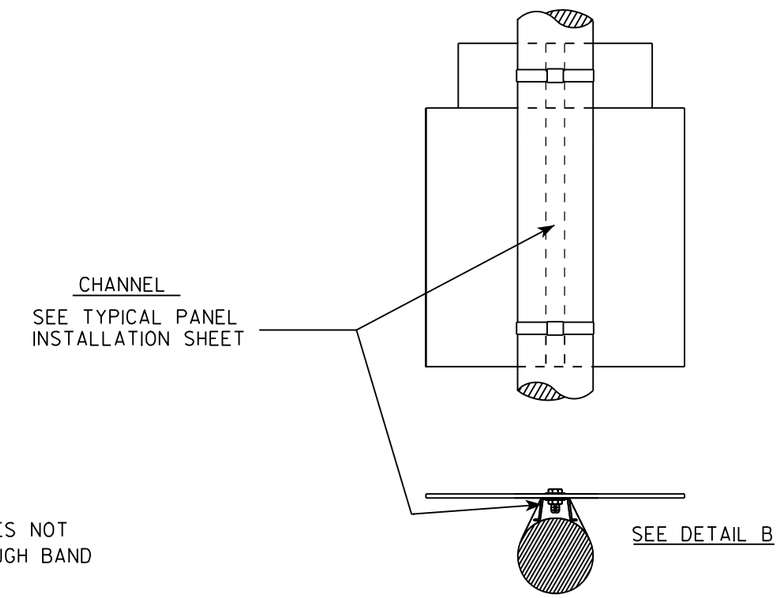

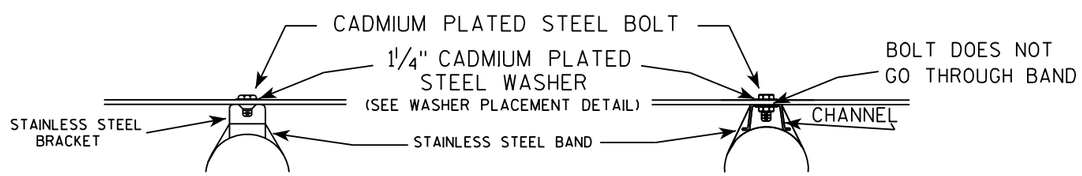

WASHER PLACEMENT

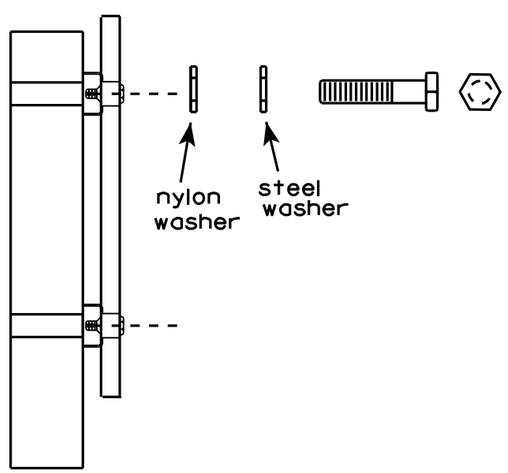

WASHERS (ALL POSTS) -

1-1/4" O.D. X 3/8" I.D. X 1/16" STEEL

1-1/4" O.D. X 3/8" I.D. X .080 NYLON

FOR ALL TYPE H SIGNS

GENERAL NOTES

1. Any sign over 3 feet in width shall use the V-Block banding method. See A5-10 standard plate.
2. Signs 3 feet or greater in height shall have three bracket bands installed. Signs less than 3 feet in height shall have two bracket bands installed.
3. Banding and assembly bracket shall be stainless steel. All bands shall be ¾" in width and 0.025" thickness.

STANDARD SIGN

SIGN BANDING DETAILS

WISCONSIN DEPT OF TRANSPORTATION

APPROVED Matthew R Rauch for State Traffic Engineer

DATE 8/16/13 PLATE NO. A5-9.3

PROJECT NO:	HWY:	COUNTY:		SHEET NO: 61	E

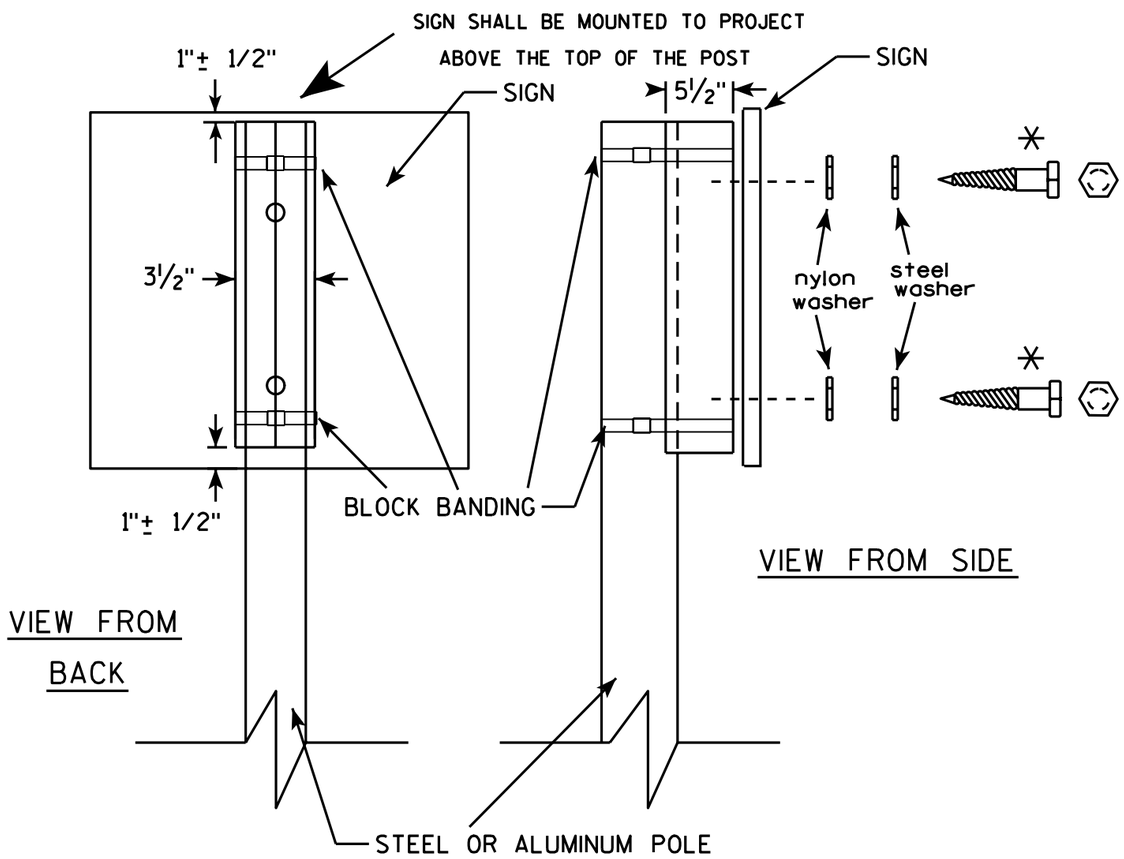

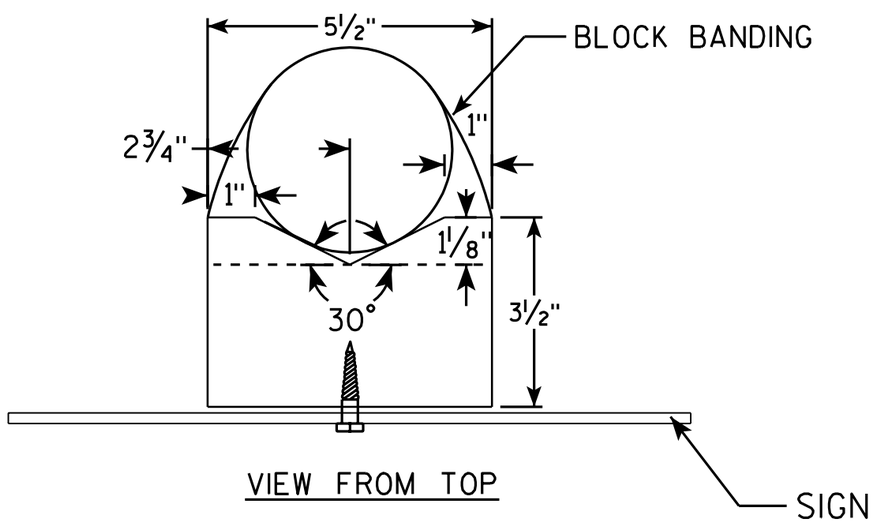

GENERAL NOTES

1. WOOD 4"X6" POST MATERIAL SHALL CONFORM TO 507.2.2 OF THE WisDOT STANDARD SPECIFICATIONS
2. BLOCK BANDING AND CLIPS SHALL BE STAINLESS STEEL, ¾" WIDTH AND 0.025" THICKNESS
3. SIGNS 3' OR GREATER IN HEIGHT SHALL UTILIZE 3 BLOCK BANDS. SIGNS UNDER 3' IN HEIGHT SHALL UTILIZE 2 BLOCK BANDS
4. ACTUAL NUMBER OF FASTENERS PER SIGN VARIES WITH THE SIGN AREA, BUT NORNALLY THERE ARE TWO. FOR SIGNS GREATER THAN 9 S.F. 3 FASTENERS SHALL BE USED.
5. ALL SIGN MOUNTING BOLTS AND WASHERS SHALL BE EITHER:
   a. Hot dip or mechanically galvanized in accordance with ASTM Designation: A 153, Class D, or
   b. Cadmium plated in accordance with ASTM Designation : B 766 TYPE 3, Class 12, or
   c. Electro-galvanized in accordance with ASTM Designation : B 633, TYPE III, SC 3.
6. ALL BOLTS SHALL HAVE HEXAGONAL HEADS.
7. STEEL WASHERS SHALL BE 1¼" O.D. X ⅜" I.D. X 1/16"
8. NYLON WASHERS SHALL BE 1¼" O.D. X ⅜" I.D. X .080 FOR TYPE H OR TYPE F FACE SIGN

✳ LAG BOLTS SHALL BE ⅜" X 2½"

BLOCK BANDING DETAIL
(V-BLOCK OPTION)

WISCONSIN DEPT OF TRANSPORTATION

APPROVED Matthew R Rauch
for State Traffic Engineer

DATE 7/12/07 PLATE NO. A5-10.1

PROJECT NO:				SHEET NO: 62	E

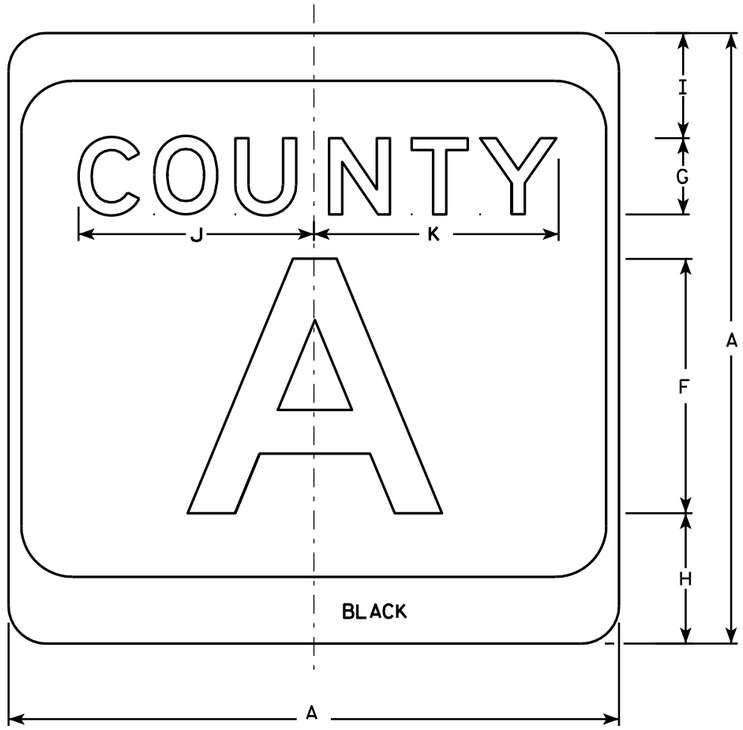

M1-5A

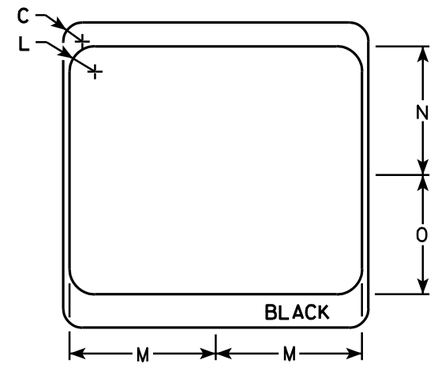

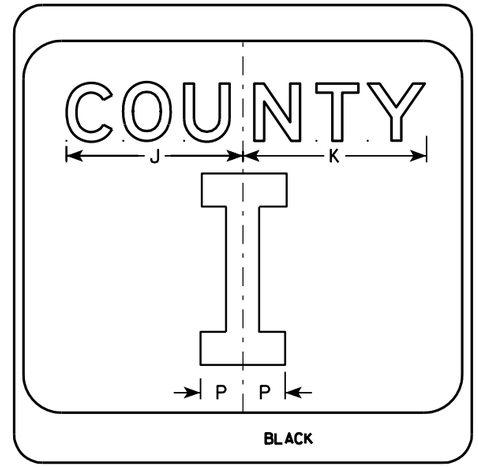

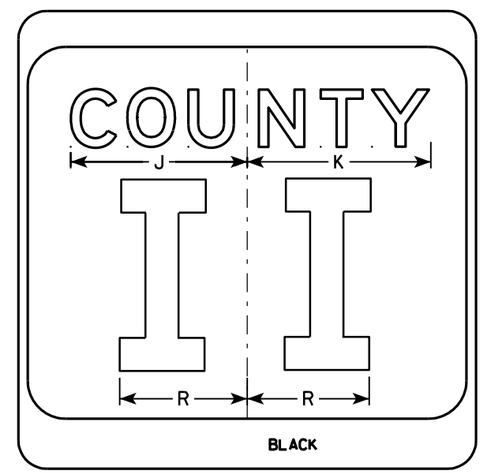

NOTES

1. Sign is Type II - see Note 7 - reference WIS DOT Standard Specification for HIGHWAY and STRUCTURE CONSTRUCTION latest edition.
2. Color:
   Background - White & Black - See Note 7
   Message - Black
3. Message Series - see Note 5
4. Corners may be square or rounded when base material is plywood but borders shall be rounded as shown. When base material is metal, the corners and borders shall be rounded.
5. Message Series E for 1 letter.
   Message Series D for 2 letters unless message is too big then Series C.
   Message Series C for 3 letters unless message is too big then Series B.
6. Substitute appropriate letters & optically center to achieve proper balance.
7. Permanent Signs
   Background - Type H Reflective
   Detour or temporary Signs
   Background - Reflective

SIZE	A	B	C	D	E	F	G	H	I	J	K	L	M	N	O	P	Q	R	S	T	U	V	W	X	Y	Z	Area sq. ft.
1																											
2	24		1 1/2			10	3	5 1/8	4 1/8	9 1/4	9 5/8	2	11 1/2	10 1/8	9 3/8	2 1/4		6 5/8									4.0
3	36		2 1/4			16	4	7 5/8	5 5/8	12 1/4	12 7/8	3	17 1/8	15 1/4	14	3 3/8		10									9.0
4	36		2 1/4			16	4	7 5/8	5 5/8	12 1/4	12 7/8	3	17 1/8	15 1/4	14	3 3/8		10									9.0
5	36		2 1/4			16	4	7 5/8	5 5/8	12 1/4	12 7/8	3	17 1/8	15 1/4	14	3 3/8		10									9.0

CTH MARKER
M1-5A FOR ASSEMBLIES

WISCONSIN DEPT OF TRANSPORTATION

APPROVED Matthew R Rauch
for State Traffic Engineer

DATE 9/27/11 PLATE NO. M1-5A.8

PROJECT NO: | HWY: | COUNTY: | SHEET NO: 63 | E

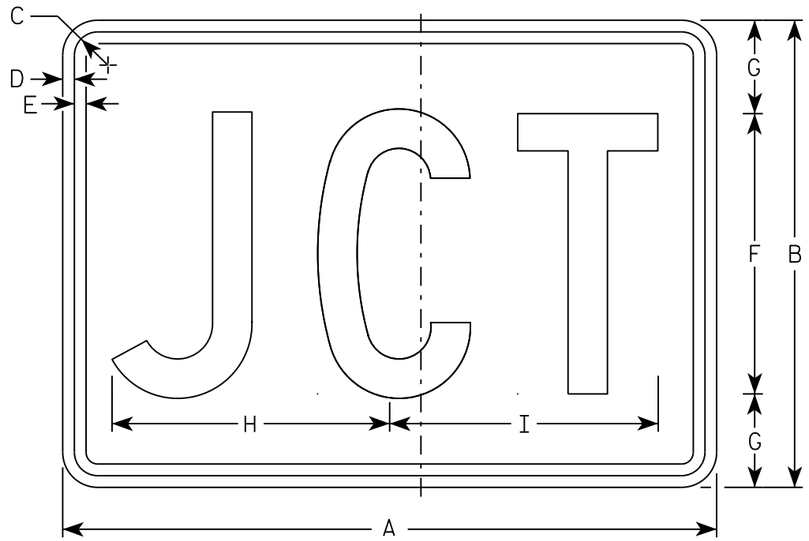

M2-1
MM2-1
MP2-1

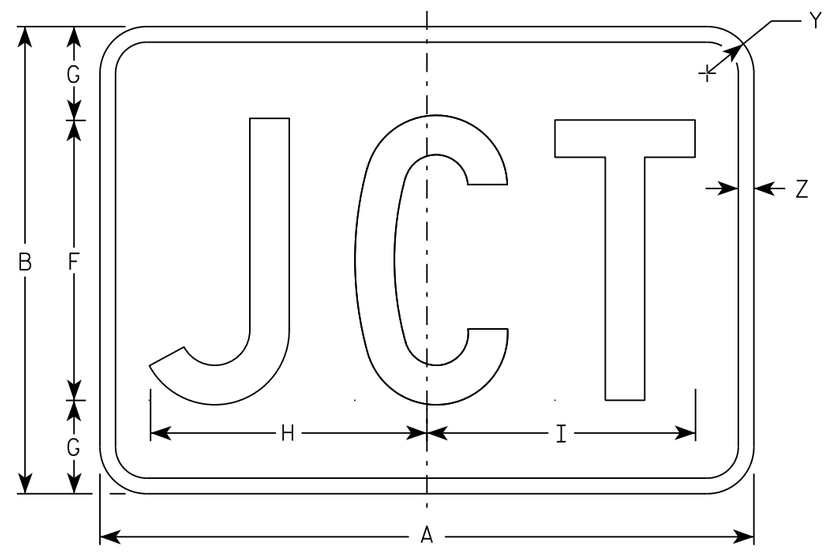

MB2-1
MK2-1
MN2-1
MR2-1

NOTES

1. Sign is Type II - Type H
2. Color:
   Background - See note 5
   Message - See note 5
3. Message Series - C
4. Corners may be square or rounded when base material is plywood but borders shall be rounded as shown. When base material is metal, the corners and borders shall be rounded.
5. M2-1 Background - White
   Message - Black
   MB2-1 Background - Blue
   Message - White
   MK2-1 Background - Green
   Message - White
   MM2-1 Background - White
   Message - Green
   MN2-1 Background - Brown
   Message - White
   MP2-1 Background - White
   Message - Blue
   MR2-1 Background - Brown
   Message - Yellow

SIZE	A	B	C	D	E	F	G	H	I	J	K	L	M	N	O	P	Q	R	S	T	U	V	W	X	Y	Z	Area sq. ft.
1																											
2	21	15	1 1/8	3/8	3/8	9	3	8 7/8	8 5/8																1 1/2	1/2	2.20
3	30	21	1 1/8	3/8	3/8	13	4	12 7/8	12 3/8																1 1/2	1/2	4.40
4	30	21	1 1/8	3/8	3/8	13	4	12 7/8	12 3/8																1 1/2	1/2	4.40
5	30	21	1 1/8	3/8	3/8	13	4	12 7/8	12 3/8																1 1/2	1/2	4.40

STANDARD SIGN
M2-1

WISCONSIN DEPT OF TRANSPORTATION

APPROVED Matthew R Rauch
for State Traffic Engineer

DATE 10/15/15 PLATE 64 M2-1.12

PROJECT NO: | HWY: | COUNTY: | SHEET NO: E

NOTES

1. Sign is Type II - Type F Reflective - reference WIS DOT Standard Specification for HIGHWAY and STRUCTURE CONSTRUCTION latest edition.
2. Color:
   Background - Orange
   Message - Black
3. Corners may be square or rounded when base material is plywood but borders shall be rounded as shown. When base material is metal, the corners and borders shall be rounded.

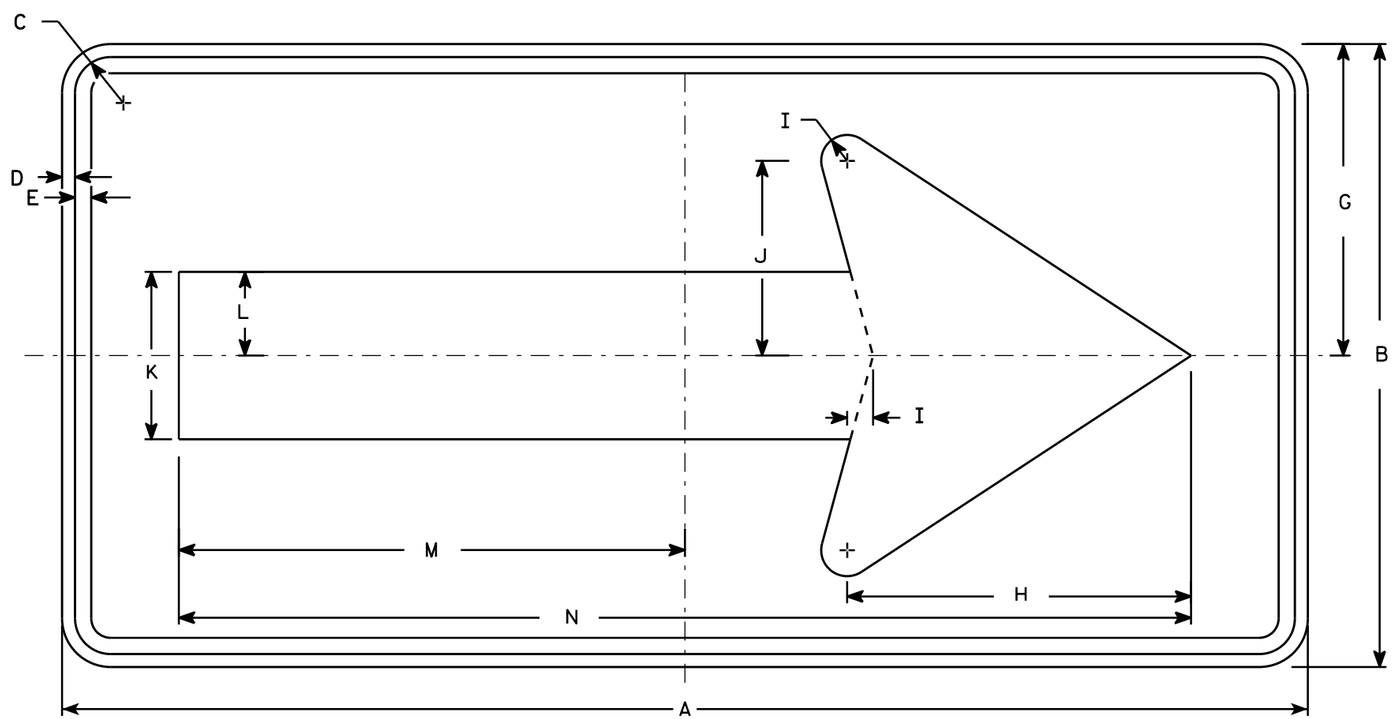

W01-6

SIZE	A	B	C	D	E	F	G	H	I	J	K	L	M	N	O	P	Q	R	S	T	U	V	W	X	Y	Z	Area sq. ft.
1																											
2S	48	24	1 3/8	1/2	5/8		12	13 1/4	1	7 1/2	6 1/2	3 1/4	19 1/2	39													8.0
2M	48	24	1 3/8	1/2	5/8		12	13 1/4	1	7 1/2	6 1/2	3 1/4	19 1/2	39													8.0
3	60	30	1 3/8	1/2	5/8		15	16 1/4	1 1/4	9 1/4	8	4	24 3/8	48 3/4													12.5
4	60	30	1 3/8	1/2	5/8		15	16 1/4	1 1/4	9 1/4	8	4	24 3/8	48 3/4													12.5
5	60	30	1 3/8	1/2	5/8		15	16 1/4	1 1/4	9 1/4	8	4	24 3/8	48 3/4													12.5

STANDARD SIGN
W01-6

WISCONSIN DEPT OF TRANSPORTATION

APPROVED Matthew R Rauch
for State Traffic Engineer

DATE 11/18/13 PLATE NO W01-6.1

PROJECT NO: | HWY: | COUNTY: | SHEET NO: | E

STATE PROJECT NUMBER

9030-11-60

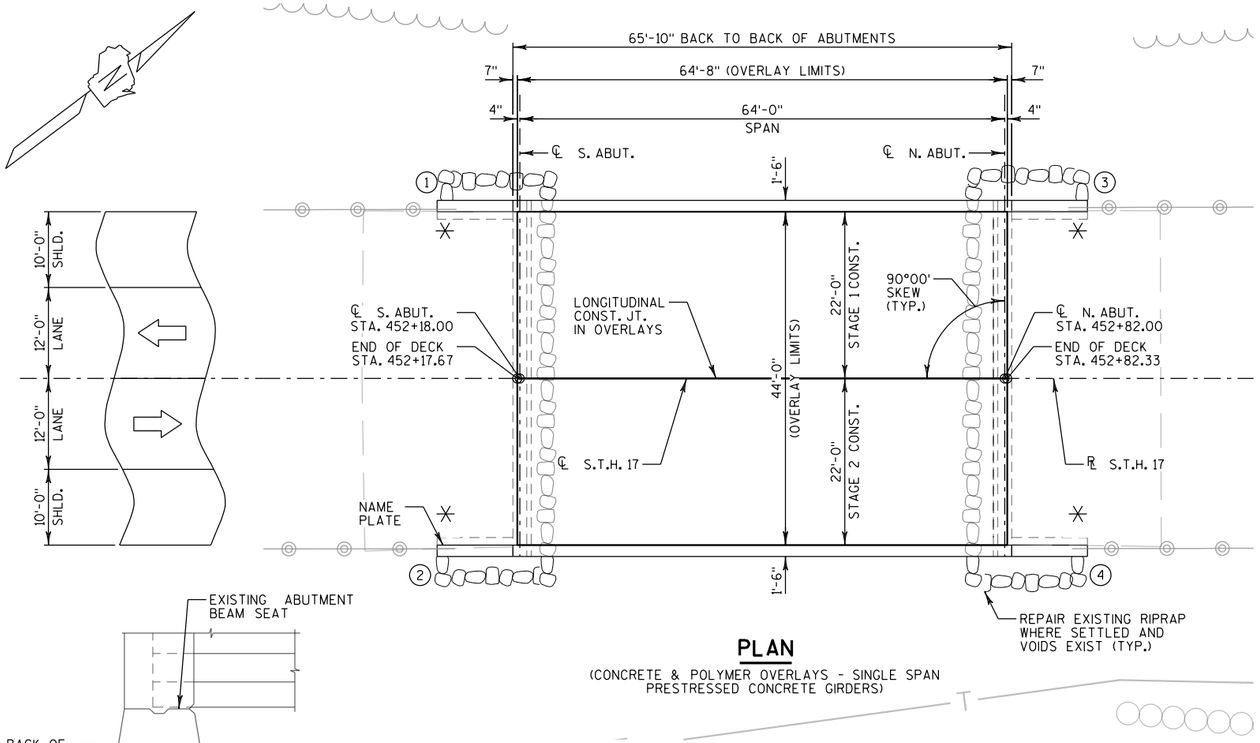

PLAN

(CONCRETE & POLYMER OVERLAYS - SINGLE SPAN PRESTRESSED CONCRETE GIRDERS)

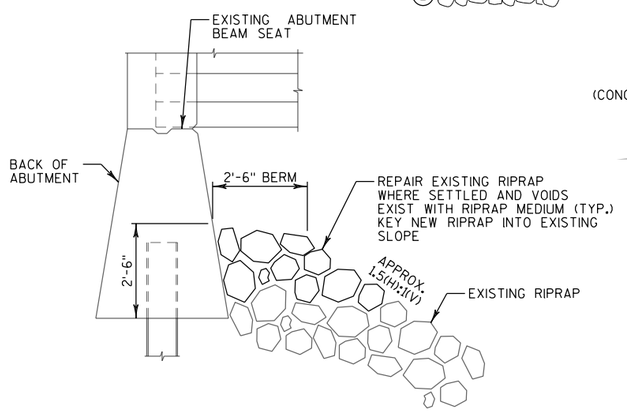

SECTION THROUGH ABUTMENT

(SLOPE REPAIR DETAIL)

ELEVATION

NORMAL TO HAY MEADOW CREEK AT DOWNSTREAM EDGE OF BRIDGE

WISCONSIN ERIC T. PRICE E-39027 MADISON WI PROFESSIONAL ENGINEER

December 17, 2018

DESIGN DATA

DESIGN LOADING — HS-20
INVENTORY RATING — HS-14
OPERATING RATING — HS-35
WISCONSIN STANDARD PERMIT VEHICLE (WIS-SPV) — 250 KIPS

MATERIAL PROPERTIES

CONCRETE MASONRY, OVERLAY DECKS — f'c = 4,000 PSI
CONCRETE MASONRY BRIDGES — f'c = 4,000 PSI
HIGH STRENGTH BAR STEEL
REINFORCEMENT GRADE 60 — fy = 60,000 PSI

TRAFFIC DATA:

AADT (2039) = 3,480
DESIGN SPEED = 55 MPH

TOTAL ESTIMATED QUANTITIES

BID ITEM NUMBER	BID ITEM	UNIT	SOUTH ABUTMENT	NORTH ABUTMENT	SUPER.	TOTALS
203.0200	REMOVING OLD STRUCTURE STA. 452+50	LS	--	--	--	1
502.0100	CONCRETE MASONRY BRIDGES	CY	2	2	10	14
502.3200	PROTECTIVE SURFACE TREATMENT	SY	--	--	317	317
502.3210	PIGMENTED SURFACE SEALER	SY	10	10	60	80
502.4204	ADHESIVE ANCHORS NO. 4 BAR	EACH	32	32	138	202
502.4205	ADHESIVE ANCHORS NO. 5 BAR	EACH	8	8	138	154
505.0600	BAR STEEL REINFORCEMENT HS COATED STRUCTURES	LB	--	--	1,950	1,950
509.0301	PREPARATION DECKS TYPE 1	SY	--	--	24	24
509.0302	PREPARATION DECKS TYPE 2	SY	--	--	10	10
509.0505.S	CLEANING DECKS TO REAPPLY CONCRETE MASONRY OVERLAY	SY	--	--	317	317
509.1500	CONCRETE SURFACE REPAIR	SF	5	5	--	10
509.2000	FULL-DEPTH DECK REPAIR	SY	--	--	1	1
509.2500	CONCRETE MASONRY OVERLAY DECKS	CY	--	--	32	32
509.5100.S	POLYMER OVERLAY	SY	--	--	317	317
509.9005.S	REMOVING CONCRETE MASONRY DECK OVERLAY B-35-20	SY	--	--	317	317
606.0200	RIPRAP MEDIUM	CY	25	25	--	50
614.0150	ANCHOR ASSEMBLIES FOR STEEL PLATE BEAM GUARD	EACH	2	2	--	4
SPV.0090	CLEANING PARAPETS SPECIAL	LF	20	20	132	172
	NON-BID ITEMS					
	FILLER					1/2"

ALL ITEMS ARE CATEGORY 0020

LEGEND

✳ MGS THRIE BEAM ATTACHMENT

(X) INDICATES WING NUMBER

LIST OF DRAWINGS

1. GENERAL PLAN
2. CROSS SECTION & QUANTITIES
3. PARAPET DETAILS-1
4. PARAPET DETAILS-2

NC REGION CONTACT:
JESSE JEFFERSON (715) 365-5714

BUREAU OF STRUCTURES CONTACT:
BILL DREHER (608) 266-8489

CONSULTANT CONTACT:
ERIC PRICE (608) 826-6146

NO.	DATE	REVISION	BY

CORRE

STATE OF WISCONSIN
DEPARTMENT OF TRANSPORTATION

ACCEPTED William C. Dreher SDR 12/18/18
CHIEF STRUCTURES DESIGN ENGINEER DATE

STRUCTURE B-35-20

S.T.H. 17 OVER BIG HAY MEADOW CREEK

COUNTY LINCOLN | TOWN/~~CITY/VILLAGE~~ SCHLEY

DESIGN SPEC. REHABILITATION N/A

DESIGNED BY ETP | DESIGN CK'D. BH | DRAWN BY TKB | PLANS CK'D. ETP

GENERAL PLAN

SHEET 1 OF 4

STATE PROJECT NUMBER

9030-11-60

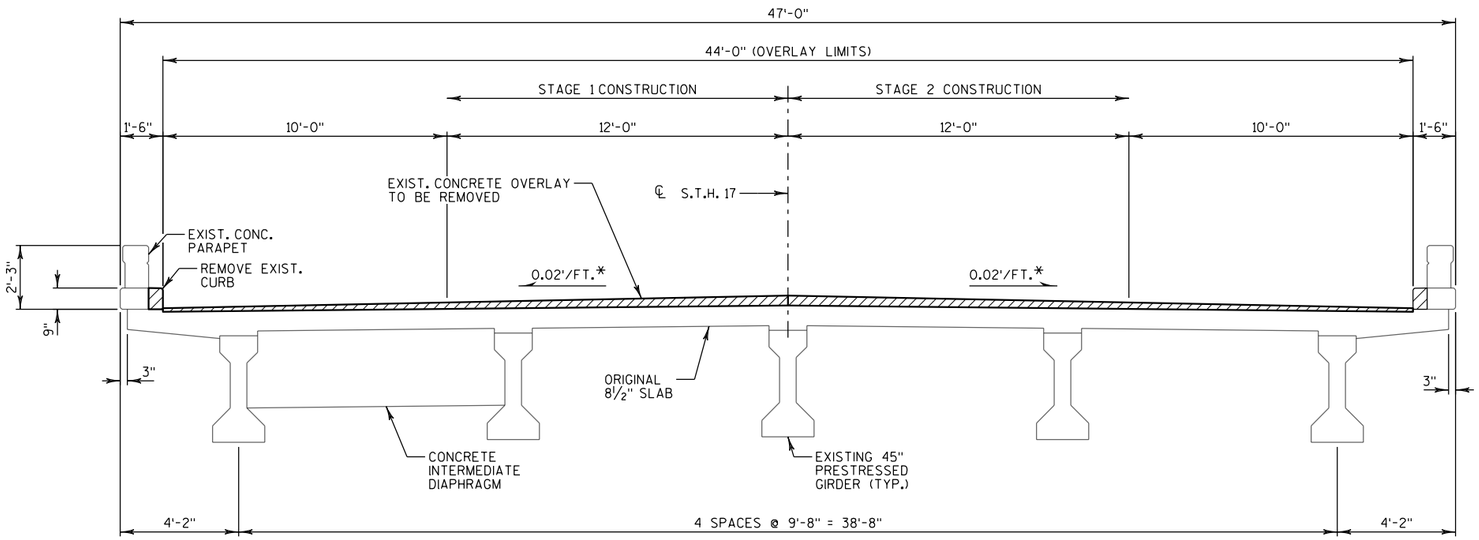

EXISTING CROSS SECTION THRU ROADWAY

(LOOKING NORTH)

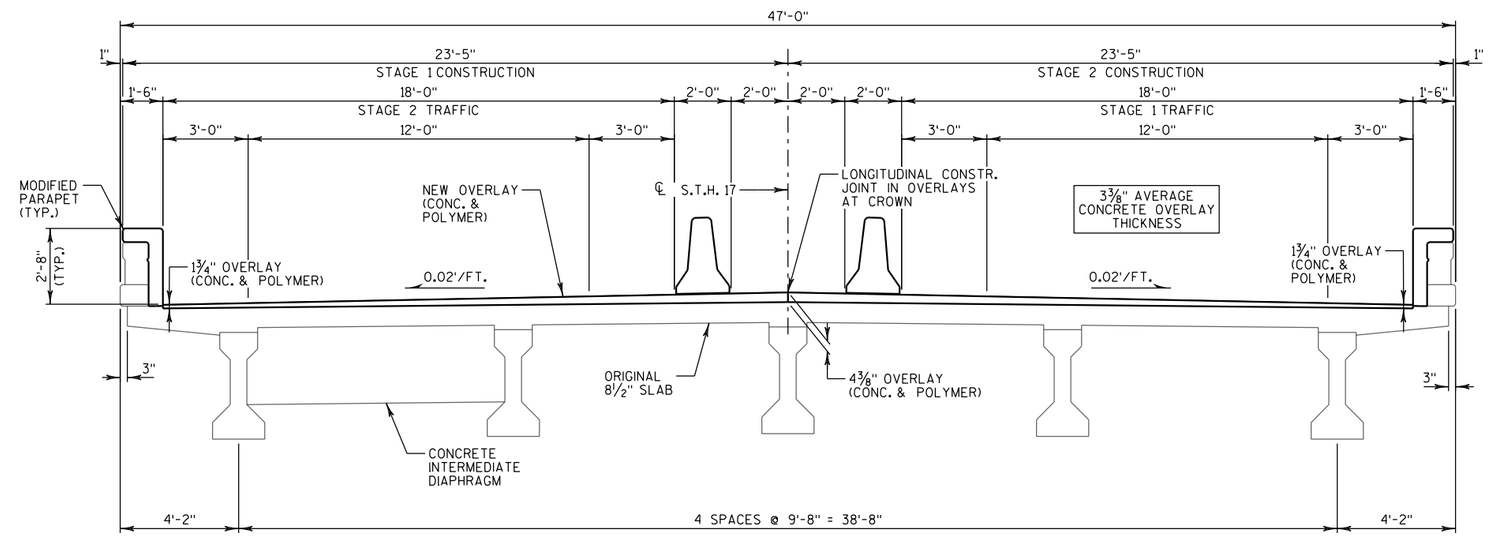

PROPOSED CROSS SECTION THRU ROADWAY

(LOOKING NORTH)

LEGEND

▨ - DENOTES REMOVAL LIMITS

* ORIGINAL DECK SLOPE IS 0.01'/FT. EXISTING OVERLAY SLOPE IS 0.02'/FT.

GENERAL NOTES

THE PROPOSED WORK INCLUDES PLACEMENT OF A CONCRETE OVERLAY, POLYMER OVERLAY, CONCRETE SURFACE REPAIR, AND REFACING THE EXISTING PARAPETS.

DRAWINGS SHALL NOT BE SCALED.

DIMENSIONS SHOWN ARE BASED ON THE ORIGINAL STRUCTURE PLANS.

THE EXISTING CONCRETE MASONRY OVERLAY SHALL BE REMOVED FROM THE ENTIRE BRIDGE DECK UNDER THE BID ITEM "REMOVING CONCRETE MASONRY DECK OVERLAY". A MINIMUM 1-INCH OF EXISTING CONCRETE COVER SHALL BE MAINTAINED.

ANY EXCAVATION REQUIRED TO COMPLETE THE OVERLAY IS INCIDENTAL TO THE BID ITEM "CONCRETE MASONRY OVERLAY DECKS".

BAR STEEL REINFORCEMENT SHALL BE EMBEDDED 2" CLEAR UNLESS OTHERWISE SHOWN OR NOTED.

THE FIRST DIGIT OF A THREE DIGIT AND THE FIRST TWO DIGITS OF A FOUR DIGIT BAR MARK SIGNIFY THE BAR SIZE.

CLEAN, STRAIGHTEN, AND EXTEND EXISTING BAR STEEL REINFORCEMENT 24 BAR DIAMETERS INTO NEW CONSTRUCTION WHERE APPLICABLE.

ALL CONCRETE REMOVAL NOT COVERED WITH A CONCRETE OVERLAY SHALL BE DEFINED BY A 1" DEEP SAW CUT.

"PREPARATION DECKS TYPE 1", "PREPARATION DECKS TYPE 2", "FULL-DEPTH DECK REPAIR", AND "CONCRETE SURFACE REPAIR" QUANTITIES ARE APPROXIMATE. CONTRACTOR SHALL COORDINATE THE FIELD IDENTIFICATION AND DETERMINATION OF ALL REPAIR LOCATIONS WITH THE ENGINEER. DECK PREPARATION AND FULL-DEPTH DECK REPAIRS SHALL BE FILLED WITH "CONCRETE MASONRY OVERLAY DECKS".

ALL PREVIOUS PATCHES SHALL BE REMOVED UNDER THE BID ITEM FOR "PREPARATION DECKS TYPE 1" AND "PREPARATION DECKS TYPE 2".

MATERIALS, EQUIPMENT, ETC. SHALL NOT BE STOCKPILED/STORED ON THE BRIDGE DECK WITHOUT PRIOR APPROVAL FROM THE ENGINEER.

PROTECTIVE SURFACE TREATMENT SHALL BE APPLIED TO THE ENTIRE SURFACE OF THE NEW CONCRETE OVERLAY.

PIGMENTED SURFACE SEALER TO BE APPLIED TO THE FRONT FACE AND TOP OF THE PARAPET, INCLUDING PARAPETS ON ABUTMENT WINGS.

THE CONTRACTOR SHALL SUPPLY THE NEW NAME PLATE IN ACCORDANCE WITH SECTION 502.3.11 OF THE STANDARD SPECIFICATIONS AND THE STANDARD DETAIL DRAWINGS. NAME PLATE TO SHOW ORIGINAL CONSTRUCTION YEAR 1972.

THE ENTIRE EXPOSED TOP AND INSIDE FACES OF THE EXISTING PARAPET SURFACES SHALL BE BLAST CLEANED AND ANY EXPOSED STEEL SHALL BE BRUSH CLEANED PRIOR TO THE PARAPET BEING BUILT UP (MODIFIED). ALL WORK DESCRIBED ABOVE SHALL BE INCLUDED AND/OR CONSIDERED INCIDENTAL TO THE BID ITEM "CLEANING PARAPETS SPECIAL".

DECK SURFACE PREPARATION INCLUDED IN THE BID ITEM "POLYMER OVERLAY".

THE AVERAGE OVERLAY THICKNESS IS THE MINIMUM CONCRETE OVERLAY THICKNESS PLUS ½" TO ACCOUNT FOR VARIATIONS IN THE DECK, PLUS ¼" FOR THE POLYMER OVERLAY.

PROFILE GRADE LINE SHALL BE DETERMINED IN THE FIELD BASED ON A MINIMUM CONCRETE OVERLAY THICKNESS OF 1½" PLACED ABOVE THE DECK SURFACE AFTER SURFACE PREPARATION. AVERAGE CONCRETE OVERLAY THICKNESS IS 2¾". IF EXPECTED AVERAGE CONCRETE OVERLAY THICKNESS IS EXCEEDED BY MORE THAN ½", CONTACT THE STRUCTURES DESIGN SECTION.

THE POLYMER OVERLAY SHALL BE APPLIED DURING THE NEXT CONSTRUCTION SEASON.

SEAL OVERLAY CONSTRUCTION JOINTS ACCORDING TO SECTION 502.3.13.1 OF THE STANDARD SPECIFICATIONS. COST INCIDENTAL TO BID ITEM "CONCRETE MASONRY OVERLAY DECKS".

ABBREVIATIONS:

ABUT. - ABUTMENT
B.F. - BACK FACE
BOT - BOTTOM
BRG. - BEARING
CL. - CLEAR
CONST. - CONSTRUCTION
DIA. - DIAMETER
E.F. - EACH FACE
F.F. - FRONT FACE
HORIZ. - HORIZONTAL
JT. - JOINT
LONG. - LONGITUDINAL
PPT. - PARAPET
SPA. - SPACED
STD. - STANDARD
T&B - TOP AND BOTTOM
TRANS. - TRANSVERSE
TYP. - TYPICAL
VERT. - VERTICAL

NO.	DATE	REVISION	BY

STATE OF WISCONSIN
DEPARTMENT OF TRANSPORTATION

STRUCTURE B-35-20

DRAWN BY TKB | PLANS CK'D. ETP

CROSS SECTION & QUANTITIES

SHEET 2 OF 4

STATE PROJECT NUMBER

9030-11-60

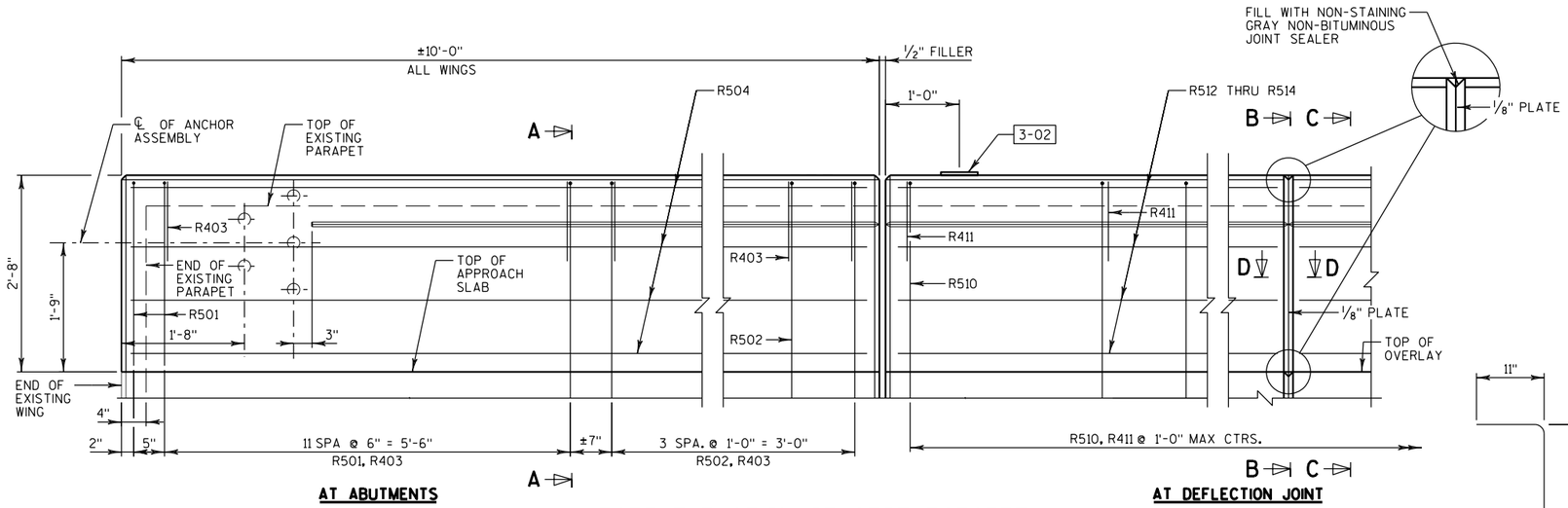

AT ABUTMENTS

AT DEFLECTION JOINT

PART ELEVATION OF WEST PARAPET

(EAST SIMILAR)

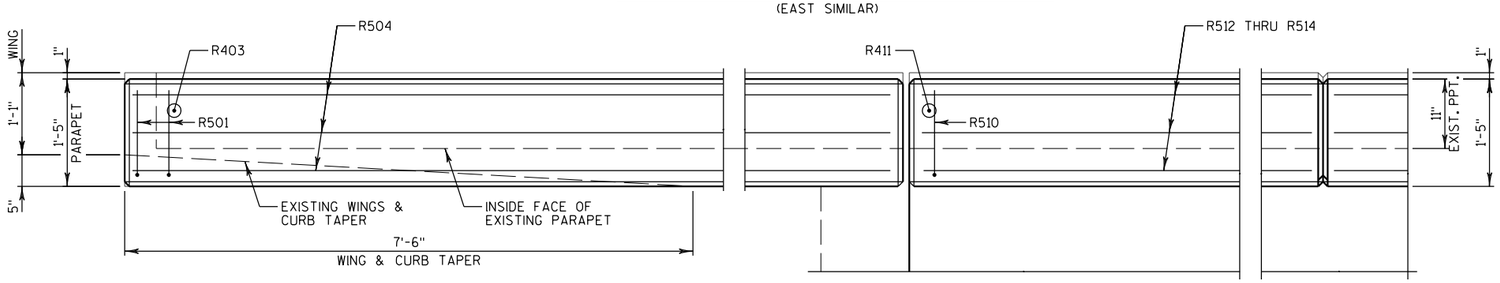

AT ABUTMENTS

AT DEFLECTION JOINT

PART PLAN OF WEST PARAPET

(EAST SIMILAR)

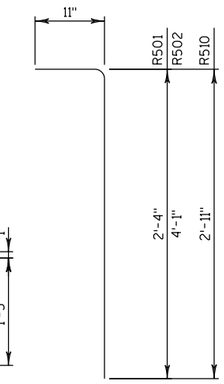

R501, R502, R510

NOTES & LEGEND

EXISTING DEFLECTION JOINT LOCATIONS SHALL BE MATCHED WITH THE PROPOSED WORK. DEFLECTION JOINTS SHALL CONSIST OF 1/8" ZINC OR PLASTIC PLATE CUT AS SHOWN IN SECTION B-B BY SHADED AREA. IF CONSTRUCTION JOINTS IN PARAPETS ARE USED AT THE DEFLECTION JOINTS, ONE SIDE OF JOINT SHALL BE COATED WITH AN APPROVED LIQUID BOND BREAKER AND PLATE SEPARATORS MAY BE OMITTED.

3-01 CONST. JOINT - STRIKE OFF AS SHOWN AND LEAVE ROUGH. FOR DECK POUR, MATCH BRIDGE X-SLOPE.

3-02 BENCH MARK CAP (WHEN SUPPLIED). SEE SHEET 1 FOR LOCATION.

FOR SECTION VIEWS A & C SEE SHEET 4.

BILL OF BARS - PARAPETS

BAR MARK	COAT	NO. REQ'D. STAGE 1	NO. REQ'D. STAGE 2	LENGTH	BENT	bar series	LOCATION
R501	X	26	26	3'-2"	X		PARAPET ON WINGS - VERT.
R502	X	8	8	4'-11"			PARAPET ON WINGS - VERT.
R403	X	32	32	0'-9"			PARAPET ON WINGS - VERT.
R504	X	12	12	9'-8"			PARAPET ON WINGS - VERT.
R510	X	69	69	3'-10"	X		PARAPET ON BRIDGE - VERT.
R411	X	69	69	0'-9"			PARAPET ON BRIDGE - VERT.
R512	X	12	12	16'-8"			PARAPET ON BRIDGE - HORIZ.
R513	X	6	6	10'-3"			PARAPET ON BRIDGE - HORIZ.
R514	X	6	6	20'-10"			PARAPET ON BRIDGE - HORIZ.
TOTAL WEIGHT =							1,950 LBS.

THE FIRST DIGIT OF THE BAR MARK SIGNIFIES THE BAR SIZE.
DIMENSIONS IN BENDING DETAILS ARE OUT TO OUT OF BAR.

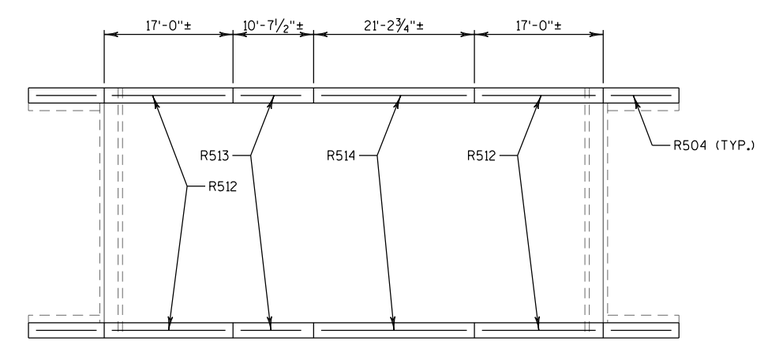

DEFLECTION JOINT SPACING

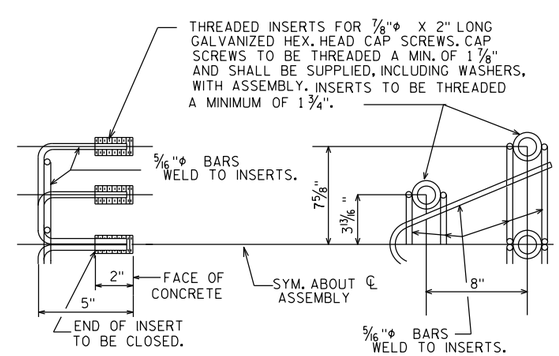

DETAIL OF ANCHOR ASSEMBLY

NOTE: HEX. HEAD CAP SCREWS & WASHERS TO BE GALVANIZED IN ACCORDANCE WITH AASHTO M232 CLASS C.

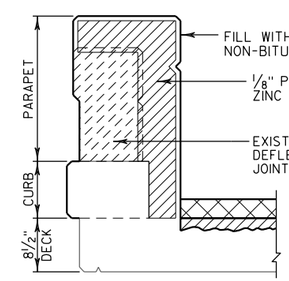

SECTION B-B

(SHOWING DEFLECTION JOINT IN PARAPET)

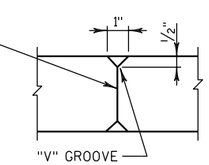

SECTION D-D

NO.	DATE	REVISION	BY

STATE OF WISCONSIN
DEPARTMENT OF TRANSPORTATION

STRUCTURE B-35-20

DRAWN BY TKB | PLANS CK'D. ETP

PARAPET DETAILS-1

SHEET 3 OF 4

STATE PROJECT NUMBER
9030-11-60

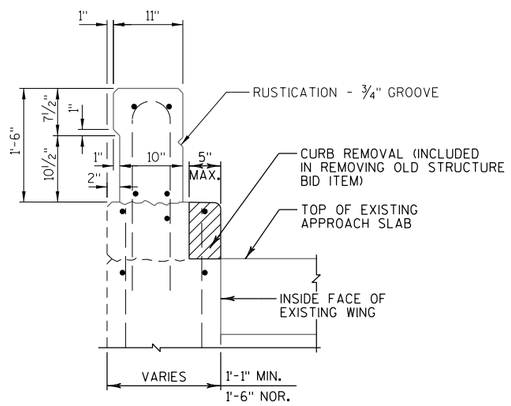

EXISTING SECTION THRU WINGS

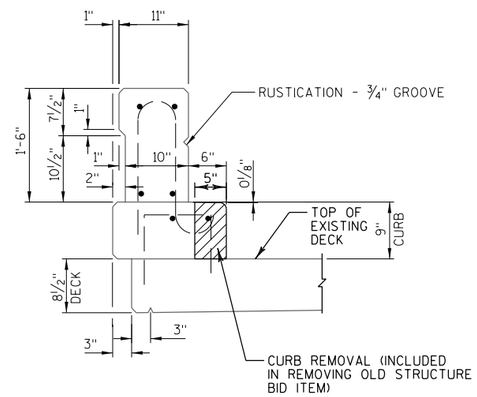

EXISTING SECTION THRU PARAPET & CURB ON BRIDGE

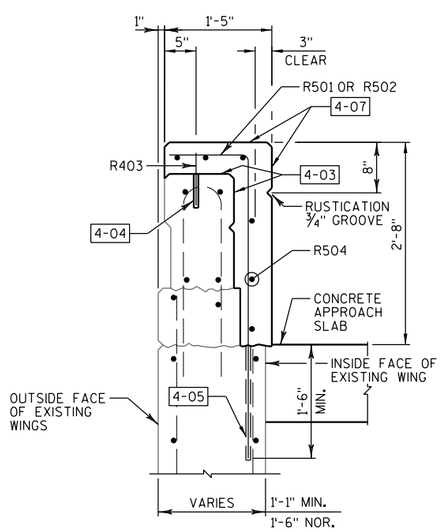

SECTION A-A

(SEE SHEET 3 FOR LOCATION)

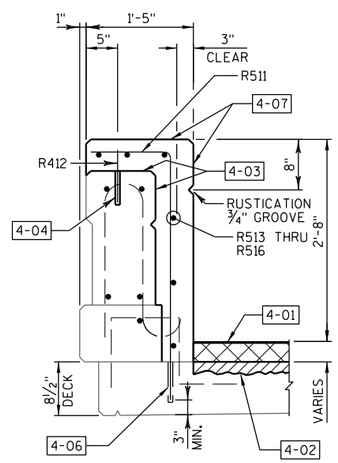

SECTION C-C

(SEE SHEET 3 FOR LOCATION)

LEGEND

4-01 CONCRETE MASONRY & POLYMER OVERLAY.

4-02 PREPARATION DECKS TYPE 1 AND TYPE 2 WHERE REQUIRED.

4-03 SOUND CONCRETE SURFACES TO RECEIVE "CLEANING PARAPETS SPECIAL". DETERIORATED CONCRETE SURFACES TO BE REMOVED TO SOUND CONCRETE OR TO ONE INCH BEHIND EXISTING REINFORCING STEEL, WHICHEVER DEPTH IS GREATER, UNDER THE BID ITEM "REMOVING OLD STRUCTURE". SALVAGE EXISTING REINFORCING STEEL.

4-04 ADHESIVE ANCHORS NO. 4 BARS. EMBED 5" INTO EXISTING CONCRETE. EPOXY ANCHORED.

4-05 ADHESIVE ANCHORS NO. 5 BARS. EMBED 1'-6" MIN. INTO EXISTING CONCRETE WING. INCREASE EMBEDMENT IF REQUIRED TO MAINTAIN CLEARANCE FROM TOP OF PARAPET TO TOP OF BAR. EPOXY ANCHORED. ANCHORS REQUIRED FOR R502 BARS ONLY.

4-06 ADHESIVE ANCHORS NO. 5 BARS. EMBED 5" INTO EXISTING CONCRETE DECK. EPOXY ANCHORED. MAINTAIN 3" CLEARANCE FROM BOTTOM OF DRILLED HOLE TO BOTTOM OF DECK.

4-07 PIGMENTED SURFACE SEALER APPLIED TO THE FRONT FACE AND TOP OF THE PARAPET.

NOTES:

CLEAN, STRAIGHTEN AND EXTEND EXISTING BAR STEEL REINFORCEMENT A MINIMUM OF 24 BAR DIAMETERS INTO NEW CONSTRUCTION WHERE APPLICABLE. DO NOT CUT EXISTING DOWELS OR STIRRUPS THAT EXTEND INTO EXISTING WINGS OR DECK.

8

8

NO.	DATE	REVISION	BY

STATE OF WISCONSIN
DEPARTMENT OF TRANSPORTATION

STRUCTURE B-35-20

DRAWN BY TKB | PLANS CK'D. ETP

PARAPET DETAILS-2

SHEET 4 OF 4

STAGE 1		AREA (SF)				Incremental Vol (CY) (Unadjusted)				Cumulative Vol (CY)				
STATION	Distance	Cut	Salvaged/Unusable Pavement Material	Fill	EBS	Cut Note 1	Salvaged/Unusable Pavement Material Note 2	Fill	EBS	Cut 1.00 Note 1	Expanded Fill 1.25	Expanded EBS Backfill 1.30 Note 5	Reduced EBS in Fill 0.80 Note 7	Mass Ordinate Note 8
449+10 LT	0.00	-	0.00	-	-	-	-	-	-	-	-	-	-	0
450+30 LT	120.00	12.00	12.00	14.00	-	27	27	31	-	27	39	-	-	-39
450+55 LT	25.00	12.00	12.00	6.00	-	11	11	9	-	38	50	-	-	-50
450+80 LT	25.00	15.00	13.00	-	-	13	12	3	-	50	54	-	-	-53
					TOTAL =	50	49	43	0					

STAGE 2		AREA (SF)				Incremental Vol (CY) (Unadjusted)				Cumulative Vol (CY)				
STATION	Distance	Cut	Salvaged/Unusable Pavement Material	Fill	EBS	Cut Note 1	Salvaged/Unusable Pavement Material Note 2	Fill	EBS	Cut 1.00 Note 1	Expanded Fill 1.25	Expanded EBS Backfill 1.30 Note 5	Reduced EBS in Fill 0.80 Note 7	Mass Ordinate Note 8
449+10 RT	0.00	-	0.00	-	-	-	-	-	-	-	-	-	-	0
450+30 RT	120.00	10.00	10.00	70.00	-	22	22	156	-	22	194	-	-	-194
450+55 RT	25.00	15.00	15.00	45.00	-	12	12	53	-	34	261	-	-	-261
450+80 RT	25.00	12.00	12.00	10.00	-	13	13	25	-	46	293	-	-	-293
					TOTAL =	46	46	234	0					

(NOTE 1) SALVAGED/UNUSABLE PAVEMENT MATERIAL IS INCLUDED IN CUT.
(NOTE 2) DOES NOT SHOW UP IN CROSS SECTIONS.
(NOTE 3) DOES NOT INCLUDE UNUSABLE PAVEMENT VOLUME.
(NOTE 7) REDUCED EBS IN FILL: EXCAVATED EBS MATERIAL IS USABLE IN FILLS OUTSIDE THE 1:1 SLOPE.
(NOTE 8) THE MASS ORDINATE +/- QTY CALCLATED FOR EACH SECTION. + QTY INDICATES AN EXCESS OF MATERIAL. - INDICATED A SHORTAGE OF MATERIAL. M.O. INCLUDES UNUSABLE MATERIAL.

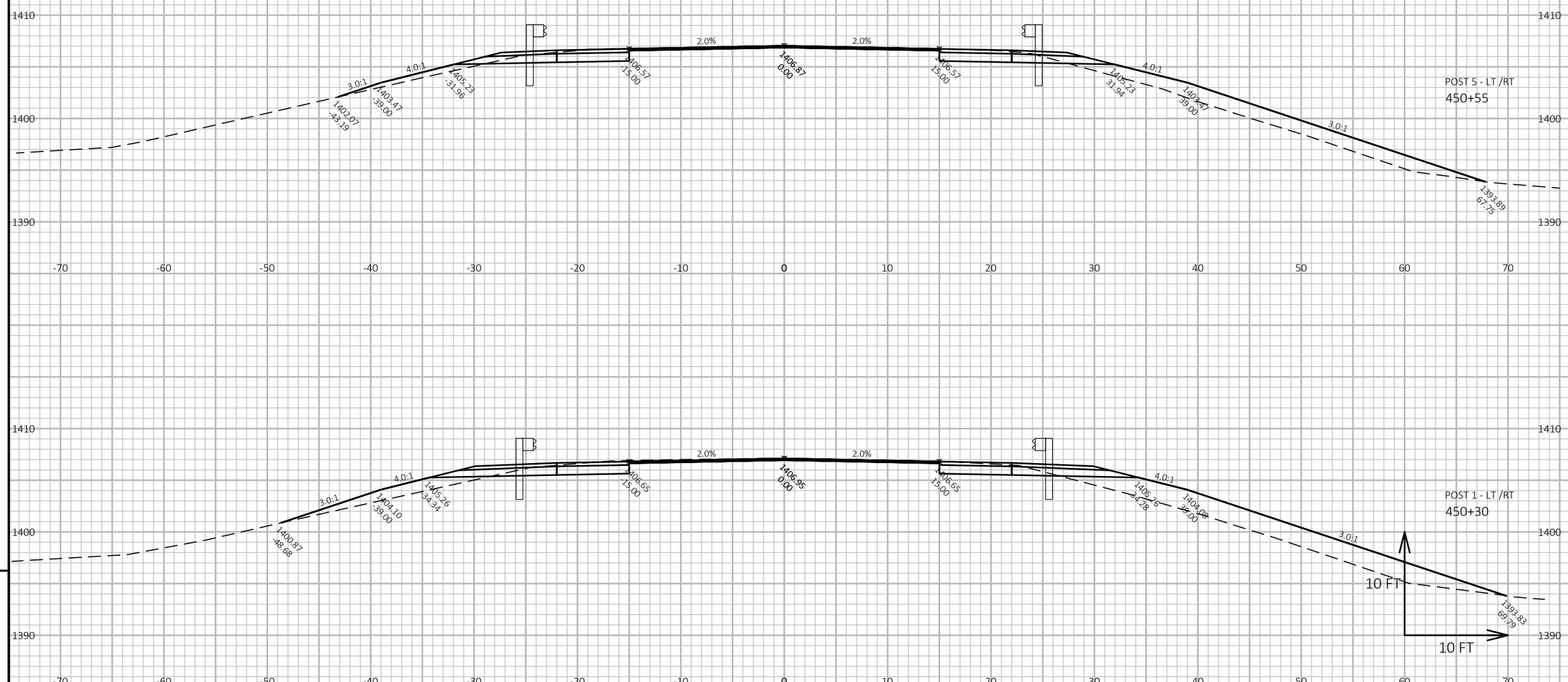

9

9

PROJECT NO: 9030-11-60	HWY: STH 17	COUNTY: LINCOLN	CROSS SECTIONS: STH 17	SHEET 71	E

FILE NAME : P:\WI - NC REGION\9030-11-30_VAR BRIDGES_LINCOLN COUNTY\500_CADD\501_C3D_2016\90301130\SHEETSPLAN\9030-11-60 STH 17\090201-XS.DWG
LAYOUT NAME - 01
PLOT DATE : 8/31/2018 3:30 PM
PLOT BY : ANDREW PETERSON, EIT
PLOT NAME :
PLOT SCALE : 1 IN:10 FT HORZ. / 1 IN:10 FT VERT.
WISDOT/CADDS SHEET 49

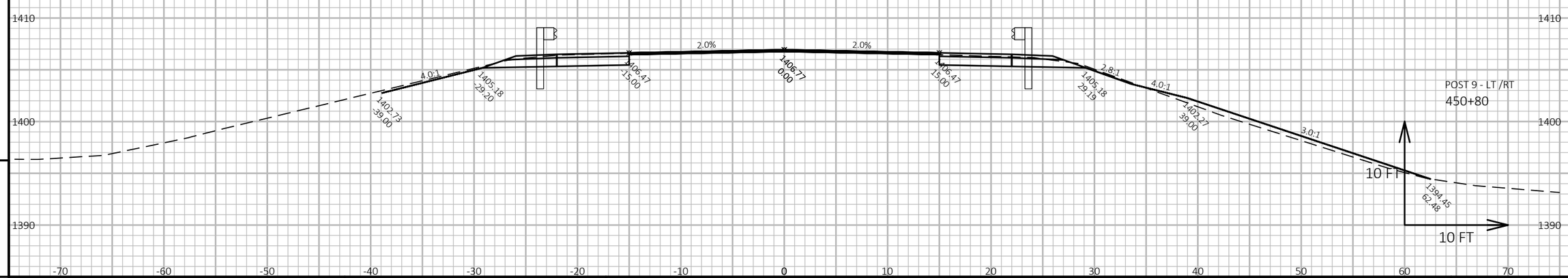

9

9

PROJECT NO: 9030-11-60	HWY: STH 17	COUNTY: LINCOLN	CROSS SECTIONS: STH 17	SHEET 72	E

FILE NAME : P:\WI - NC REGION\9030-11-30_VAR BRIDGES_LINCOLN COUNTY\500_CADD\501_C3D_2016\90301130\SHEETSPLAN\9030-11-60 STH 17\090201-XS.DWG
LAYOUT NAME - 02
PLOT DATE : 8/31/2018 3:30 PM
PLOT BY : ANDREW PETERSON, EIT
PLOT NAME :
PLOT SCALE : 1 IN:10 FT HORZ. / 1 IN:10 FT VERT.

Notes

Wisconsin Department of Transportation

Dedicated people creating transportation solutions through innovation and exceptional service.

http://www.dot.wisconsin.gov

RHI

MAY 2019

PROJECT ID: 9215-01-64

WITH: 9030-11-60

COUNTY: LINCOLN

ORDER OF SHEETS

TOTAL SHEETS = 88

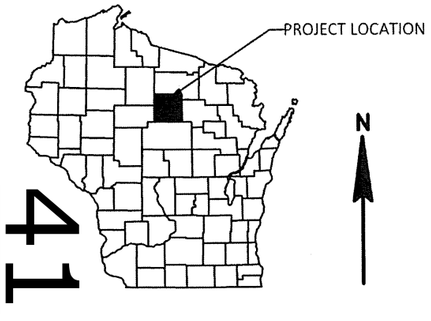

41

DESIGN DESIGNATION

A.A.D.T.	2019	=	5,500
A.A.D.T.	2039	=	6,100
D.H.V.		=	5.0
D.D.		=	60
T.		=	6.0%
DESIGN SPEED		=	25 MPH
ESALS		=	1,700,000

CONVENTIONAL SYMBOLS

PLAN

CORPORATE LIMITS
PROPERTY LINE
LOT LINE
LIMITED HIGHWAY EASEMENT
EXISTING RIGHT OF WAY
PROPOSED OR NEW R/W LINE
SLOPE INTERCEPT
REFERENCE LINE (300'EB')
EXISTING CULVERT
PROPOSED CULVERT (Box or Pipe)
COMBUSTIBLE FLUIDS (CAUTION)
MARSH AREA
WOODED OR SHRUB AREA

PROFILE

GRADE LINE
ORIGINAL GROUND
MARSH OR ROCK PROFILE (To be noted as such) (ROCK)
SPECIAL DITCH (LABEL)
GRADE ELEVATION (95.36)
CULVERT (Profile View)

UTILITIES

ELECTRIC — E —
FIBER OPTIC — FO —
GAS — G —
SANITARY SEWER — SAN —
STORM SEWER — SS —
TELEPHONE — T —
WATER — W —
UTILITY PEDESTAL
POWER POLE
TELEPHONE POLE

STATE OF WISCONSIN
DEPARTMENT OF TRANSPORTATION

PLAN OF PROPOSED IMPROVEMENT

OGEMA - TOMAHAWK

WISCONSIN RIVER BRIDGE B-35-052

STH 86

LINCOLN COUNTY

STATE PROJECT NUMBER
9215-01-64

STATE PROJECT	FEDERAL PROJECT	
	PROJECT	CONTRACT
9215-01-64	WISC 2019316	1

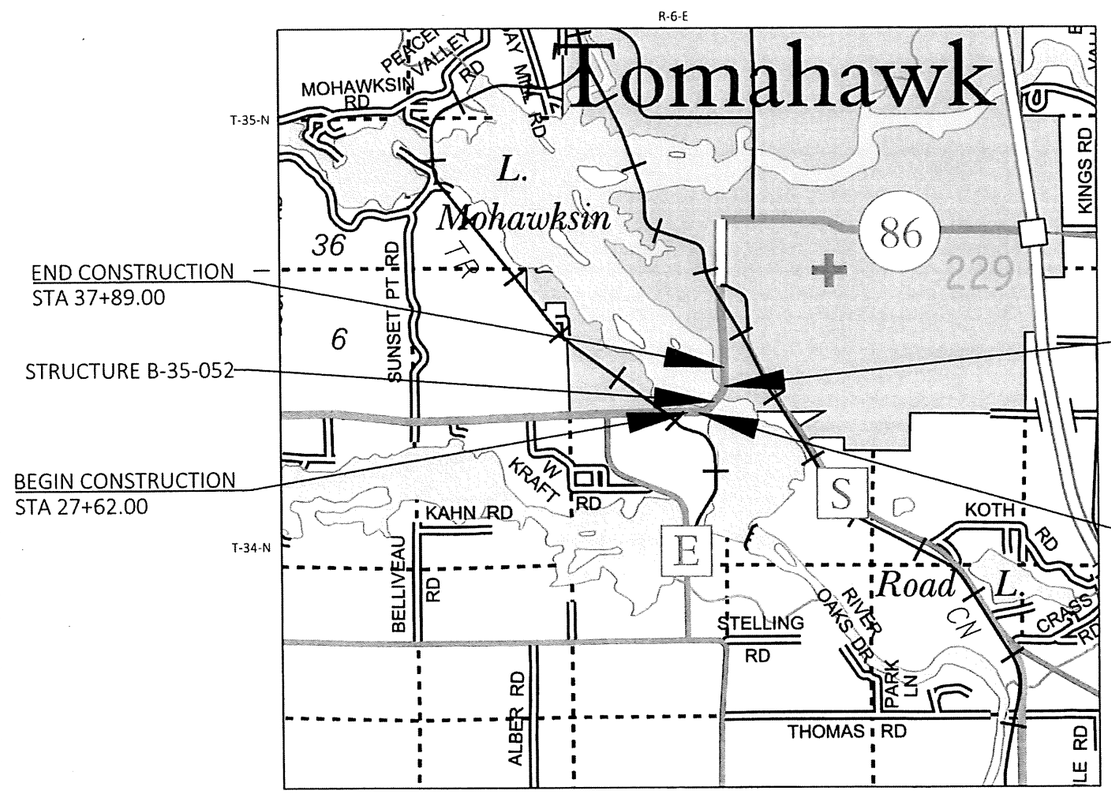

LAYOUT

SCALE 0 — 1 MI

TOTAL NET LENGTH OF CENTERLINE = 0.102 MI

HORIZONTAL POSITIONS SHOWN ON THIS PLAN ARE WISCONSIN COUNTY COORDINATES, LINCOLN COUNTY, NAD83 (2011), IN U.S. SURVEY FEET. VALUES ARE GRID COORDINATES, GRID BEARINGS, AND GRID DISTANCES. GRID DISTANCES MAY BE USED AS GROUND DISTANCES.

ELEVATIONS SHOWN ON THE PLAN ARE REFERENCED TO NORTH AMERICAN VERTICAL DATUM NAV88 (2012).

ORIGINAL PLANS PREPARED BY

CORRE ENGINEERING

WISCONSIN KEVIN L. MEYER E-38809-006 ELK MOUND WI PROFESSIONAL ENGINEER

DATE: 11/01/18 (Signature)

STATE OF WISCONSIN
DEPARTMENT OF TRANSPORTATION

PREPARED BY

Surveyor	WISDOT & CORRE, INC.
Designer	CORRE, INC.
Project Manager	JESSE JEFFERSON
Regional Examiner	
Regional Supervisor	

APPROVED FOR THE DEPARTMENT

DATE: 11/01/18 (Signature)

E

GENERAL NOTES

THE LOCATION OF THE EXISTING UTILITIES AS SHOWN ON THE PLANS IS APPROXIMATE. THERE MAY BE OTHER UTILITY INSTALLATIONS WITHIN THE PROJECT AREA THAT ARE NOT SHOWN.

DISTURBED AREAS ARE TO BE SEEDED, FERTILIZED AND MULCHED AT THE CONTRACTOR'S EXPENSE.

GRATE ELEVATIONS SHOWN IN PLANS DENOTE FLOW LINE ELEVATION OF INLET COVER.

PAVE APPROACH SLAB 1/4-INCH HIGHER THAN CONCRETE OVERLAY ON BRIDGE DECK TO ACCOMMODATE POLYMER OVERLAY THICKNESS.

DNR CONTACT

DNR NORTHERN REGION HQ
ATTN: WENDY HENNIGES
107 SUTLIFF ST
RHINELANDER, WI 54501
TELEPHONE: (715) 365-8916
E-MAIL:
Wendy.Henniges@Wisconsin.gov

UTILITIES

WISCONSIN PUBLIC SERVICE CORPORATION - GAS
ATTN: CHRIS GILMAN
2027 NAVAJO ST
P.O. BOX 160
RHINELANDER, WI 54501
TELEPHONE: (715) 369-7133
E-MAIL: CHRIS.GILMAN@WISCONSINPUBLICSERVICE.COM

TOMAHAWK MUN. WATER & SEWER
ATTN: JOHN COLE
415 W. SPIRIT AVE
TOMAHAWK, WI 54487
TELEPHONE: (715) 453-3654
E-MAIL: JCOLE@CITYOFTOMAHAWK.COM

FRONTIER COMMUNICATIONS OF WI LLC
ATTN: CALVIN KLADE
1851 N 14 TH AVE
WAUSAU, WI 54418
TELEPHONE: (715) 847-1525
E-MAIL: CALVIN.KLADE@FTR.COM

WISCONSIN PUBLIC SERVICE CORPORATION - ELECTRIC
ATTN: CLAYTON VIRCKS
P.O. BOX 1166
WAUSAU, WI 54402
TELEPHONE: (715) 848-7317
E-MAIL: CLAYTON.VIRCKS @WISCONSINPUBLICSERVICE.COM

CHARTER - COMMUNICATION
ATTN: STEVE BROWN
821 LINCOLN STREET
RHINELANDER, WI 54501
TELEPHONE: (715) 420-0301 EXT 61162
E-MAIL: STEVE.BROWN@CHARTER.COM

RUNOFF COEFFICIENT TABLE

	HYDROLOGIC SOIL GROUP											
	A			B			C			D		
	SLOPE RANGE (PERCENT)			SLOPE RANGE (PERCENT)			SLOPE RANGE (PERCENT)			SLOPE RANGE (PERCENT)		
LAND USE:	0 - 2	2 - 6	6 & OVER	0 - 2	2 - 6	6 & OVER	0 - 2	2 - 6	6 & OVER	0 - 2	2 - 6	6 & OVER
ROW CROPS	.08 .22	.16 .30	.22 .38	.12 .26	.20 .34	.27 .44	.15 .30	.24 .37	.33 .50	.19 .34	.28 .41	.38 .56
MEDIAN STRIP-TURF	.19 .24	.20 .26	.24 .30	.19 .25	.22 .28	.26 .33	.20 .26	.23 .30	.30 .37	.20 .27	.25 .32	.30 .40
SIDE SLOPE-TURF			.25 .32			.27 .34			.28 .36			.30 .38
PAVEMENT:												
ASPHALT	.70 - .95											
CONCRETE	.80 - .95											
BRICK	.70 - .80											
DRIVES, WALKS	.75 - .85											
ROOFS	.75 - .95											
GRAVEL ROADS, SHOULDERS	.40 - .60											

TOTAL PROJECT AREA = 0.81 ACRES

TOTAL AREA EXPECTED TO BE DISTURBED BY CONSTRUCTION ACTIVITIES = 0.07 ACRES

DIGGERS HOTLINE
Dial 811 or (800)242-8511
www.DiggersHotline.com

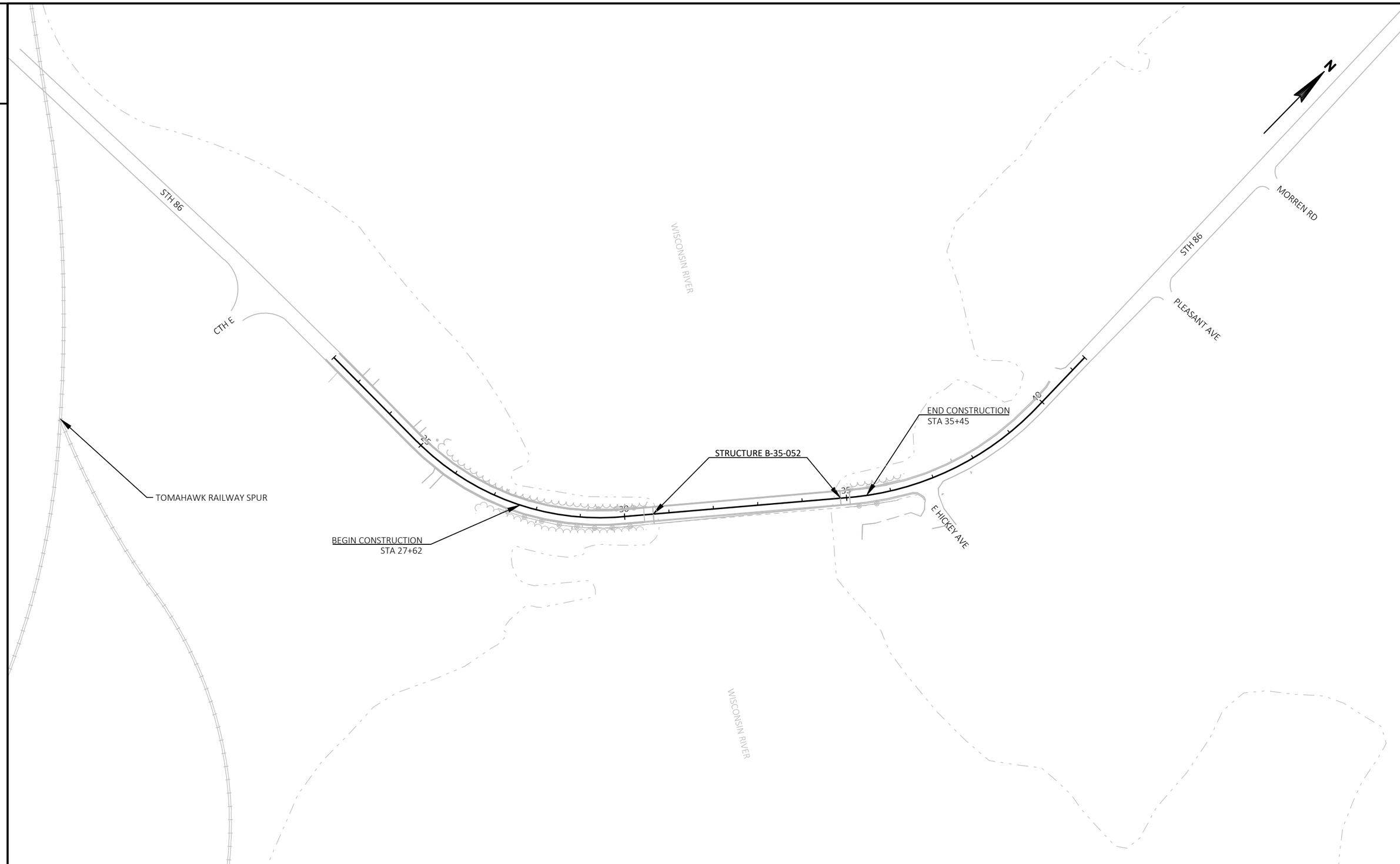
N
STH 86
CTH E
WISCONSIN RIVER
MORREN RD
STH 86
PLEASANT AVE
END CONSTRUCTION
STA 35+45
STRUCTURE B-35-052
TOMAHAWK RAILWAY SPUR
BEGIN CONSTRUCTION
STA 27+62
E HICKEY AVE
WISCONSIN RIVER

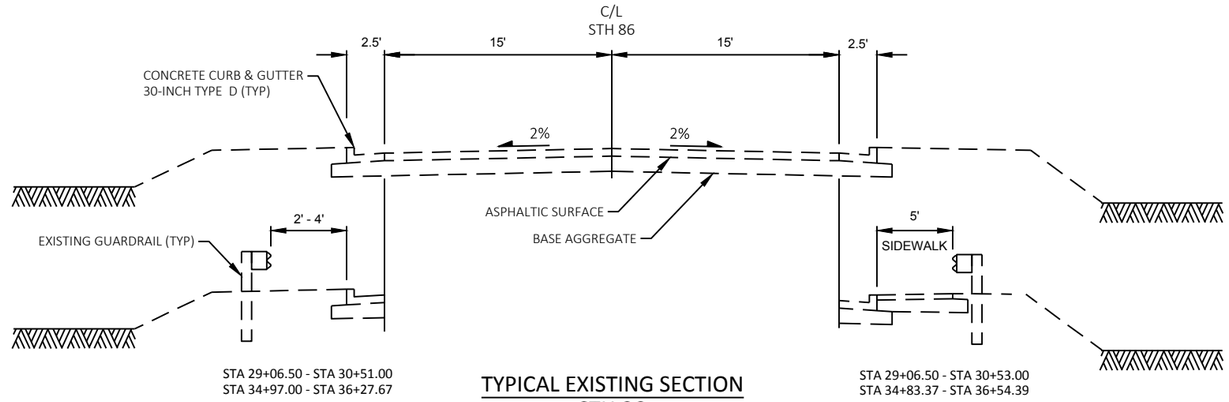

TYPICAL EXISTING SECTION
STH 86
STA 27+62.00 - STA 30+05.00
STA 35+01.37 - STA 37+89.00

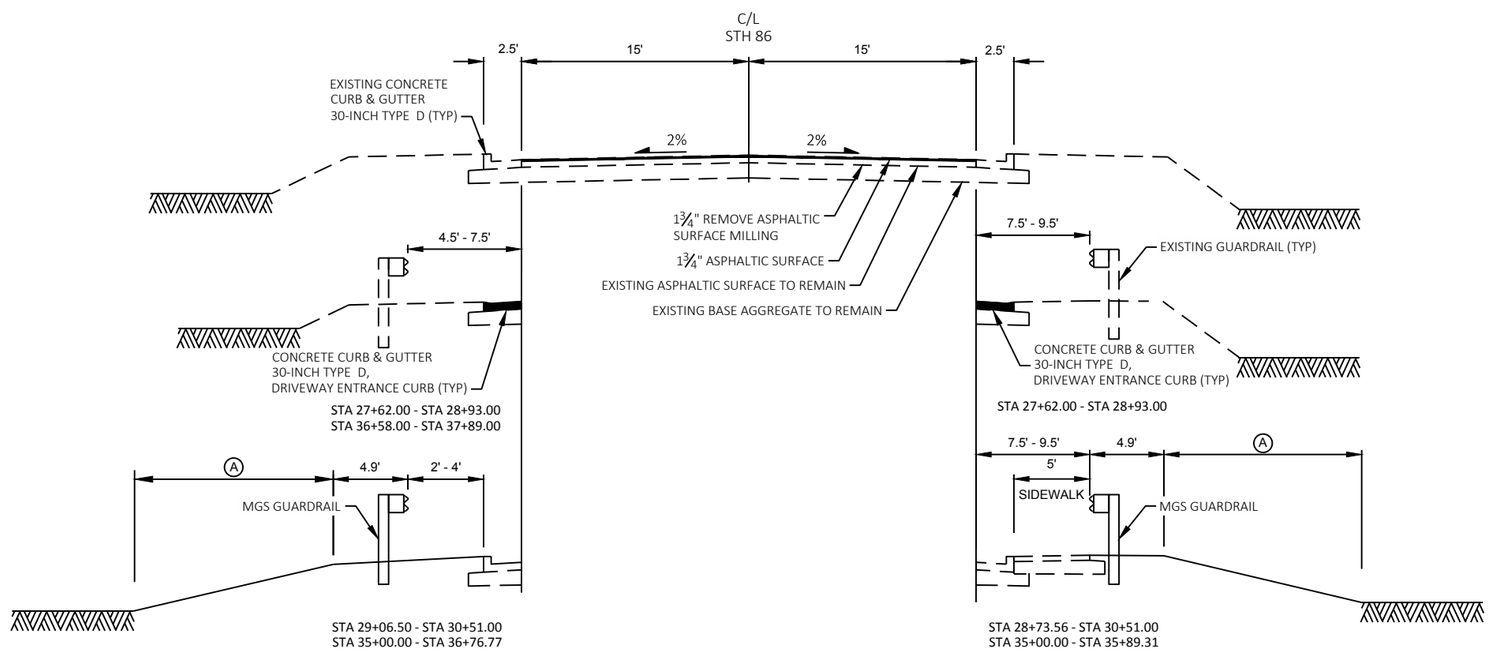

TYPICAL FINSHED SECTION
STH 86
STA 27+62.00 - STA 30+05.00
STA 35+01.37 - STA 37+89.00

(A) TOPSOIL; EROSION MAT;
FERTILIZER TYPE B; SEEDING MIXTURE NO. 20

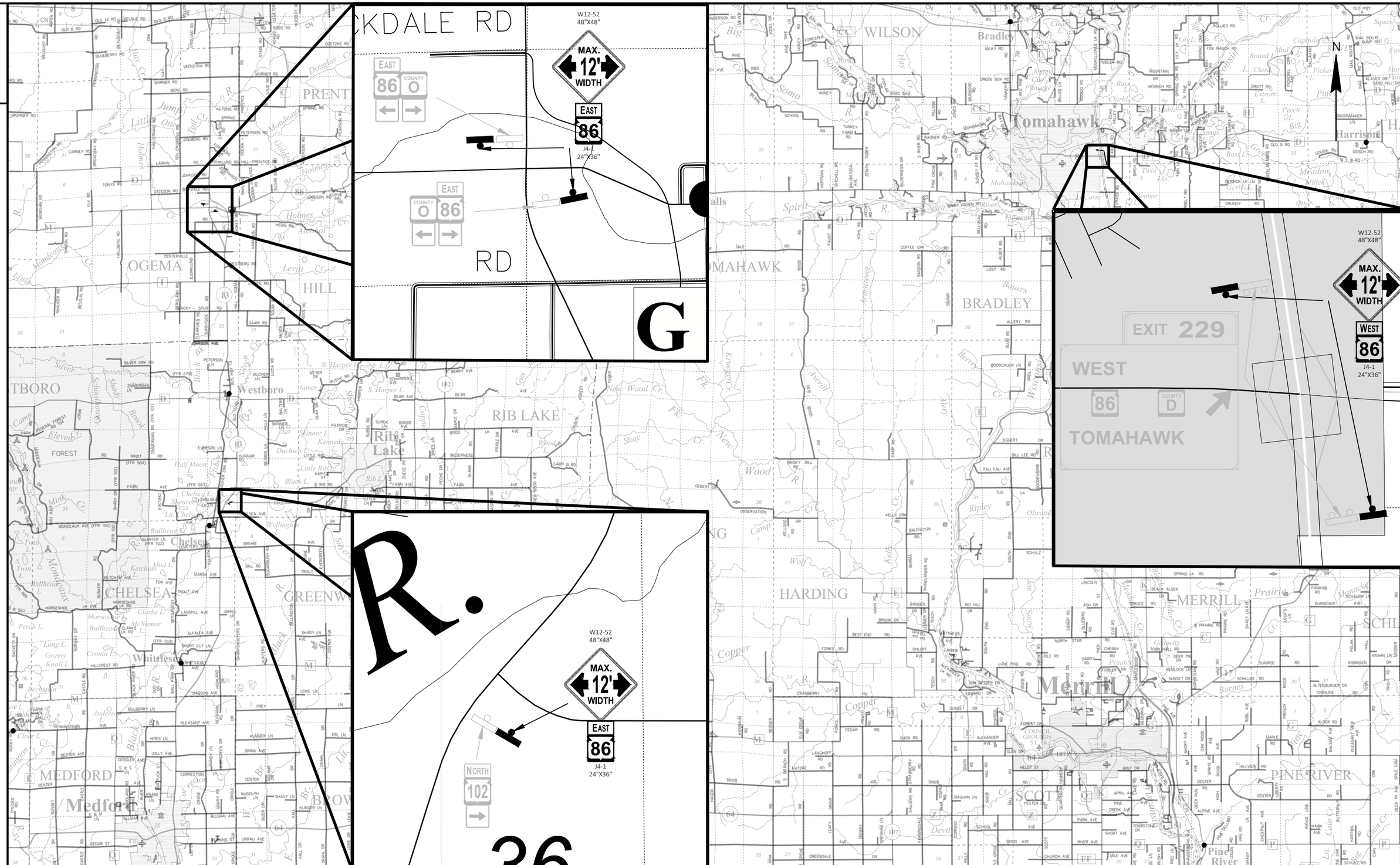

PROJECT NO: 9215-01-64	HWY: STH 86	COUNTY: LINCOLN	ADVANCED WARNING SIGNING	SHEET 5	E

FILE NAME : P:\WI - NC REGION\9030-11-30_VAR BRIDGES_LINCOLN COUNTY\500_CADD\501_C3D_2016\90301130\SHEETSPLAN\9215-01-64 STH 86\023301-AW.DWG
LAYOUT NAME - 01
PLOT DATE : 1/21/2019 8:44 AM
PLOT BY : NICHOLAS WATHKE
PLOT NAME :
PLOT SCALE : 1 IN:3 MI
WISDOT/CADDS SHEET 42

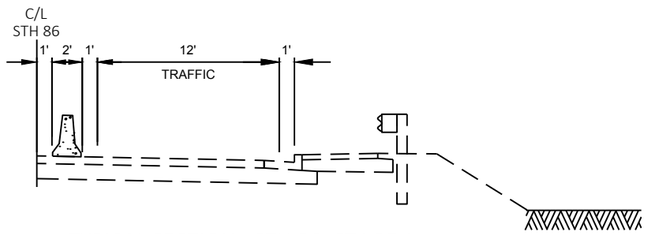

TYPICAL SECTION - STH 86 -STAGE 1
STA 27+62 TO STA 35+75

LEGEND

- BARRICADE WTH ATTACHED SIGN
- TRAFFIC CONTROL DRUM
- TRAFFIC CONTROL DRUM WITH TYPE C STEADY BURN LIGHT
- CONCRETE BARRIER TEMPORARY PRECAST
- WORK AREA
- DIRECTION OF TRAFFIC
- REMOVE PAVEMENT MARKING
- TEMPORARY SIGNAL
- TRAFFIC CONTROL SIGN ON PERMANENT SUPPORT

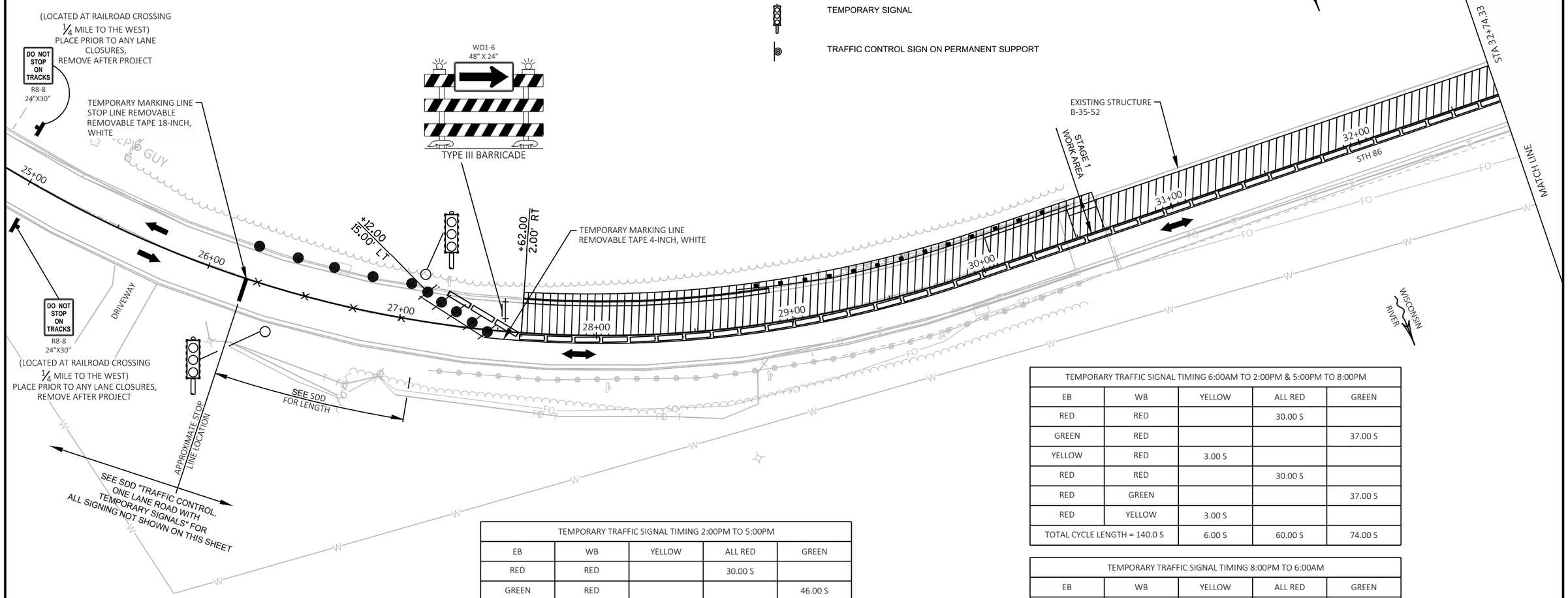

TEMPORARY TRAFFIC SIGNAL TIMING 6:00AM TO 2:00PM & 5:00PM TO 8:00PM				
EB	WB	YELLOW	ALL RED	GREEN
RED	RED		30.00 S	
GREEN	RED			37.00 S
YELLOW	RED	3.00 S		
RED	RED		30.00 S	
RED	GREEN			37.00 S
RED	YELLOW	3.00 S		
TOTAL CYCLE LENGTH = 140.0 S		6.00 S	60.00 S	74.00 S

TEMPORARY TRAFFIC SIGNAL TIMING 2:00PM TO 5:00PM				
EB	WB	YELLOW	ALL RED	GREEN
RED	RED		30.00 S	
GREEN	RED			46.00 S
YELLOW	RED	3.00 S		
RED	RED		30.00 S	
RED	GREEN			46.00 S
RED	YELLOW	3.00 S		
TOTAL CYCLE LENGTH = 158.0 S		6.00 S	60.00 S	92.00 S

TEMPORARY TRAFFIC SIGNAL TIMING 8:00PM TO 6:00AM				
EB	WB	YELLOW	ALL RED	GREEN
RED	RED		30.00 S	
GREEN	RED			23.00 S
YELLOW	RED	3.00 S		
RED	RED		30.00 S	
RED	GREEN			23.00 S
RED	YELLOW	3.00 S		
TOTAL CYCLE LENGTH = 112.0 S		6.00 S	60.00 S	46.00 S

NOTES:

1. USE THIS DETAIL IN COORDINATION WITH SDD "TRAFFIC CONTROL, ONE LANE ROAD WITH TEMPORARY SIGNALS".

STAGE 1 SEQUENCE:

1. SET UP TRAFFIC CONTROL PER THIS SHEET AND SDD "TRAFFIC CONTROL, ONE LANE ROAD WITH TEMPORARY SIGNALS".
2. COMPLETE WB STRUCTURE AND APPROACH WORK.

TYPICAL SECTION - STH 86 -STAGE 1
STA 27+62 TO STA 35+75

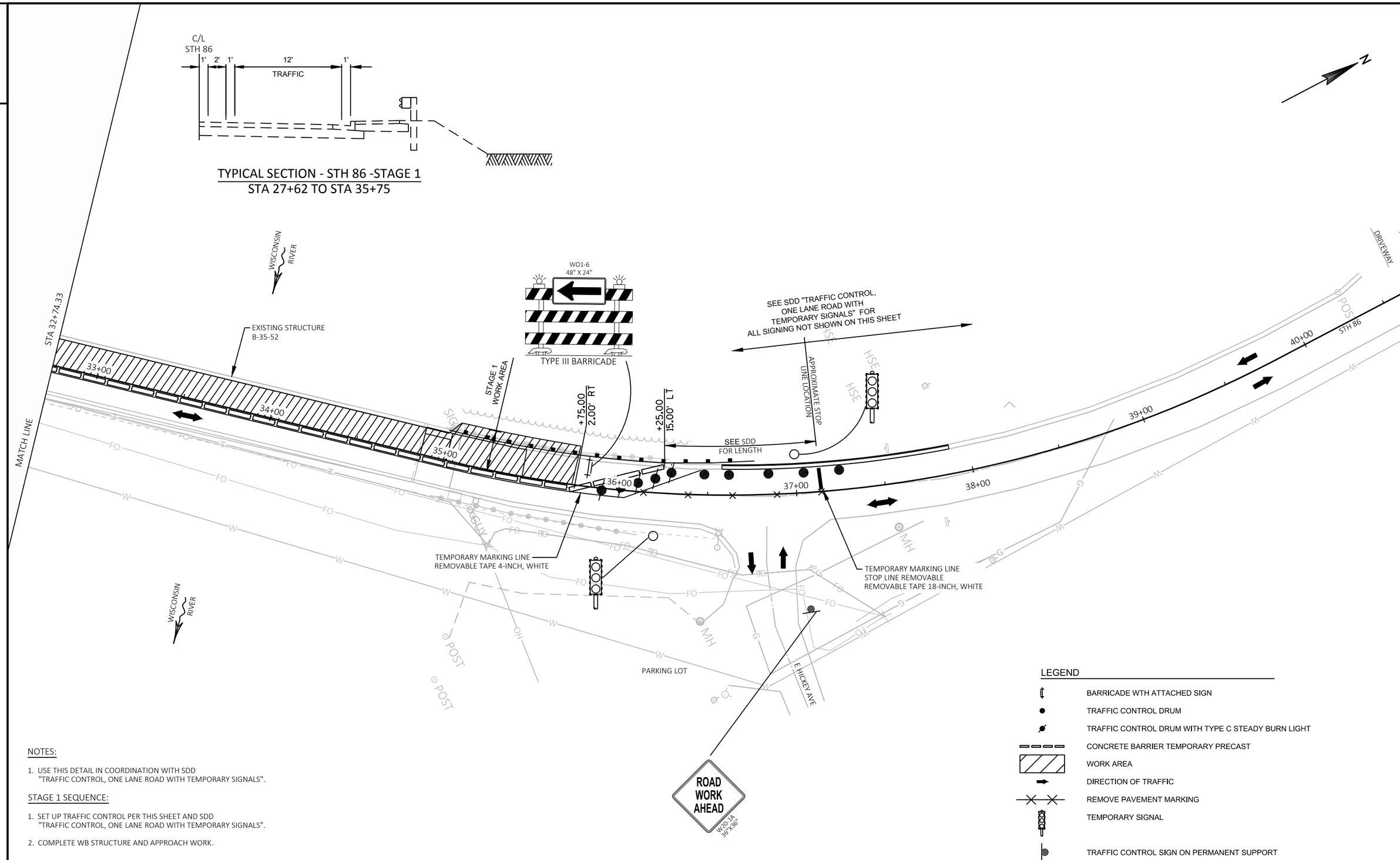

NOTES:

1. USE THIS DETAIL IN COORDINATION WITH SDD "TRAFFIC CONTROL, ONE LANE ROAD WITH TEMPORARY SIGNALS".

STAGE 1 SEQUENCE:

1. SET UP TRAFFIC CONTROL PER THIS SHEET AND SDD "TRAFFIC CONTROL, ONE LANE ROAD WITH TEMPORARY SIGNALS".
2. COMPLETE WB STRUCTURE AND APPROACH WORK.

LEGEND

- BARRICADE WTH ATTACHED SIGN
- TRAFFIC CONTROL DRUM
- TRAFFIC CONTROL DRUM WITH TYPE C STEADY BURN LIGHT
- CONCRETE BARRIER TEMPORARY PRECAST
- WORK AREA
- DIRECTION OF TRAFFIC
- REMOVE PAVEMENT MARKING
- TEMPORARY SIGNAL
- TRAFFIC CONTROL SIGN ON PERMANENT SUPPORT

PROJECT NO: 9215-01-64	HWY: STH 86	COUNTY: LINCOLN	TRAFFIC CONTROL: STAGE 1	SHEET 7	E

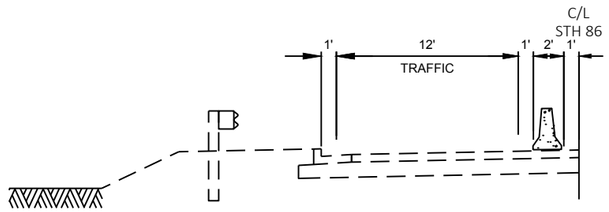

TYPICAL SECTION - STH 86 - STAGE 2
STA 27+62 TO STA 35+92

TEMPORARY TRAFFIC SIGNAL TIMING 6:00AM TO 2:00PM & 5:00PM TO 8:00PM				
EB	WB	YELLOW	ALL RED	GREEN
RED	RED		30.00 S	
GREEN	RED			37.00 S
YELLOW	RED	3.00 S		
RED	RED		30.00 S	
RED	GREEN			37.00 S
RED	YELLOW	3.00 S		
TOTAL CYCLE LENGTH = 140.0 S		6.00 S	60.00 S	74.00 S

TEMPORARY TRAFFIC SIGNAL TIMING 8:00PM TO 6:00AM				
EB	WB	YELLOW	ALL RED	GREEN
RED	RED		30.00 S	
GREEN	RED			23.00 S
YELLOW	RED	3.00 S		
RED	RED		30.00 S	
RED	GREEN			23.00 S
RED	YELLOW	3.00 S		
TOTAL CYCLE LENGTH = 112.0 S		6.00 S	60.00 S	46.00 S

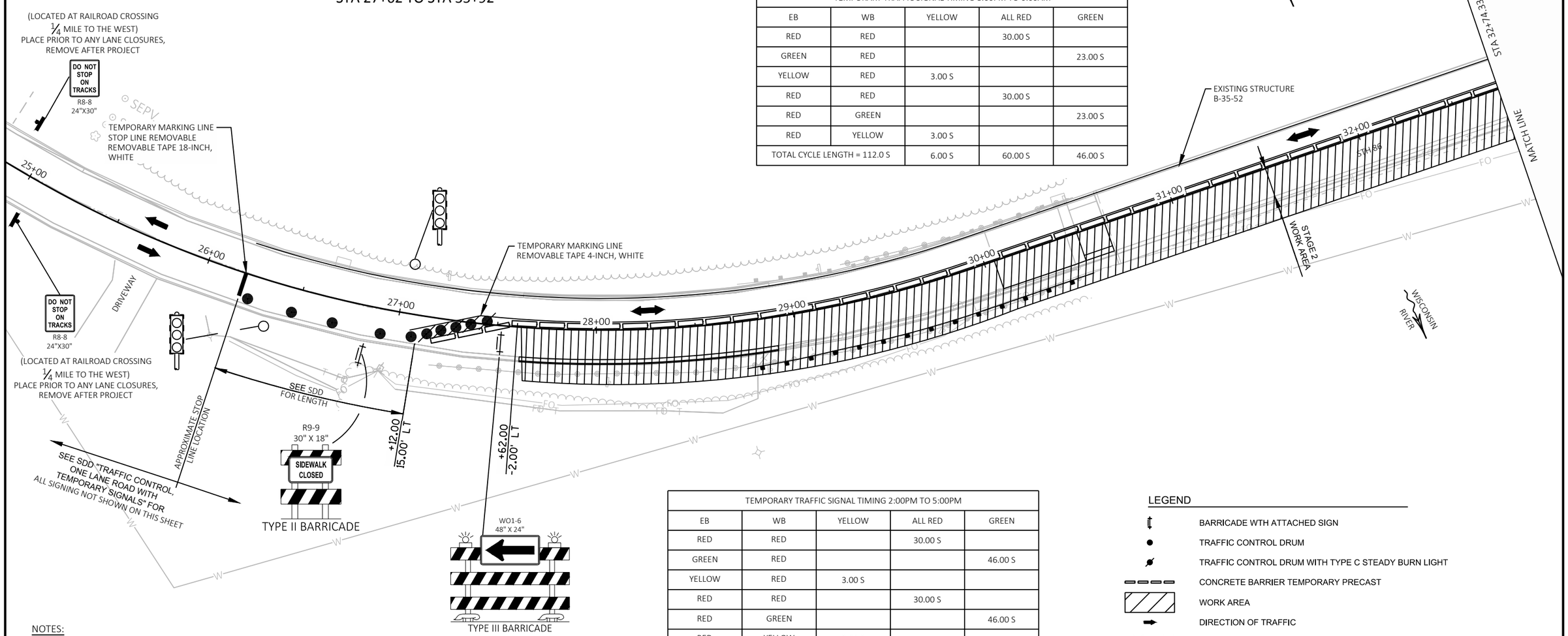

TEMPORARY TRAFFIC SIGNAL TIMING 2:00PM TO 5:00PM				
EB	WB	YELLOW	ALL RED	GREEN
RED	RED		30.00 S	
GREEN	RED			46.00 S
YELLOW	RED	3.00 S		
RED	RED		30.00 S	
RED	GREEN			46.00 S
RED	YELLOW	3.00 S		
TOTAL CYCLE LENGTH = 158.0 S		6.00 S	60.00 S	92.00 S

LEGEND

- BARRICADE WTH ATTACHED SIGN
- TRAFFIC CONTROL DRUM
- TRAFFIC CONTROL DRUM WITH TYPE C STEADY BURN LIGHT
- CONCRETE BARRIER TEMPORARY PRECAST
- WORK AREA
- DIRECTION OF TRAFFIC
- REMOVE PAVEMENT MARKING
- TEMPORARY SIGNAL
- TRAFFIC CONTROL SIGN ON PERMANENT SUPPORT

NOTES:

1. USE THIS DETAIL IN COORDINATION WITH SDD "TRAFFIC CONTROL, ONE LANE ROAD WITH TEMPORARY SIGNALS".

STAGE 2 SEQUENCE:

1. SET UP TRAFFIC CONTROL PER THIS SHEET AND SDD "TRAFFIC CONTROL, ONE LANE ROAD WITH TEMPORARY SIGNALS".
2. COMPLETE EB STRUCTURE AND APPROACH WORK.

TYPICAL SECTION - STH 86 - STAGE 2
STA 27+62 TO STA 35+92

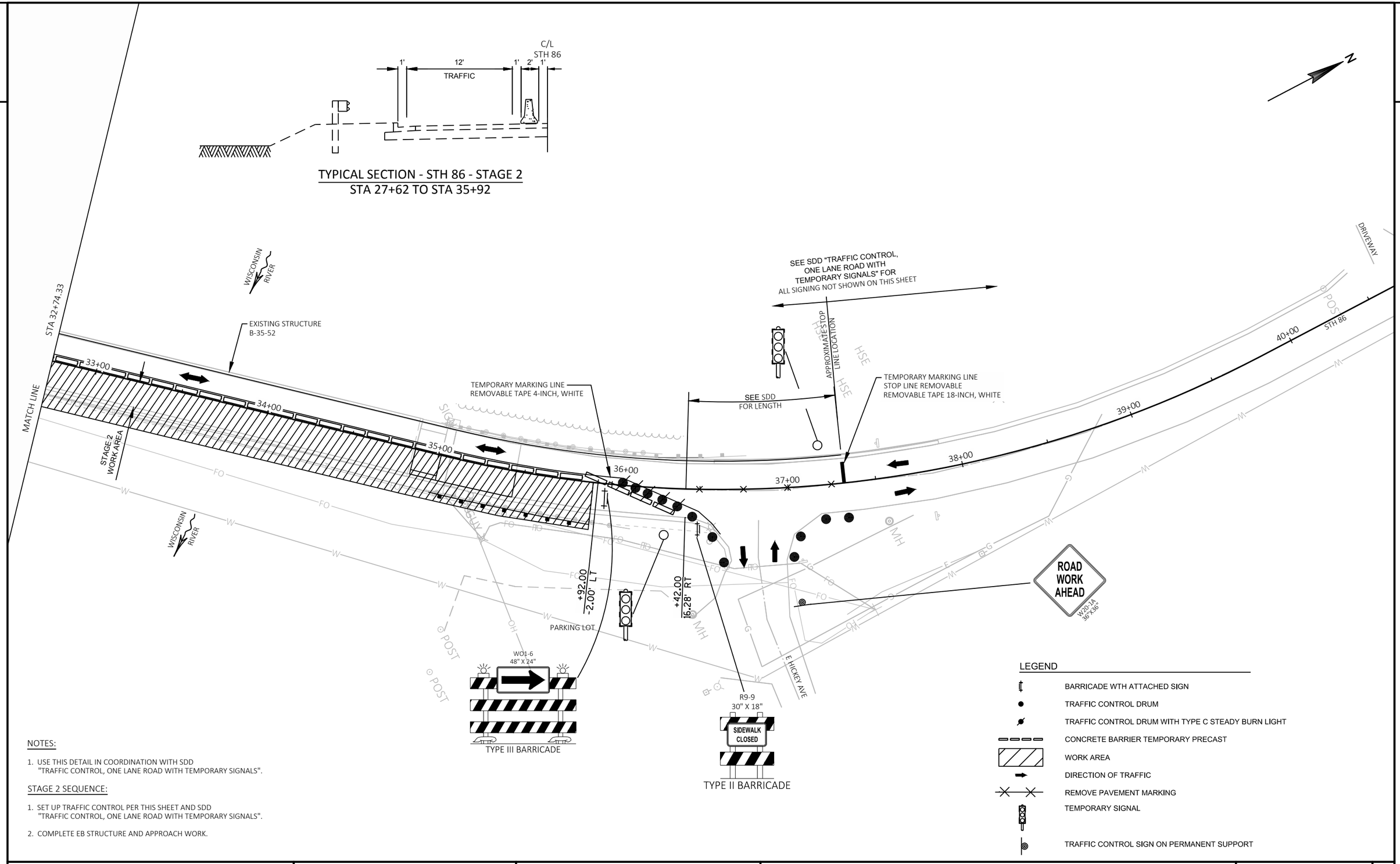

NOTES:

1. USE THIS DETAIL IN COORDINATION WITH SDD "TRAFFIC CONTROL, ONE LANE ROAD WITH TEMPORARY SIGNALS".

STAGE 2 SEQUENCE:

1. SET UP TRAFFIC CONTROL PER THIS SHEET AND SDD "TRAFFIC CONTROL, ONE LANE ROAD WITH TEMPORARY SIGNALS".
2. COMPLETE EB STRUCTURE AND APPROACH WORK.

PROJECT NO: 9215-01-64	HWY: STH 86	COUNTY: LINCOLN	TRAFFIC CONTROL: STAGE 2	SHEET 9	E

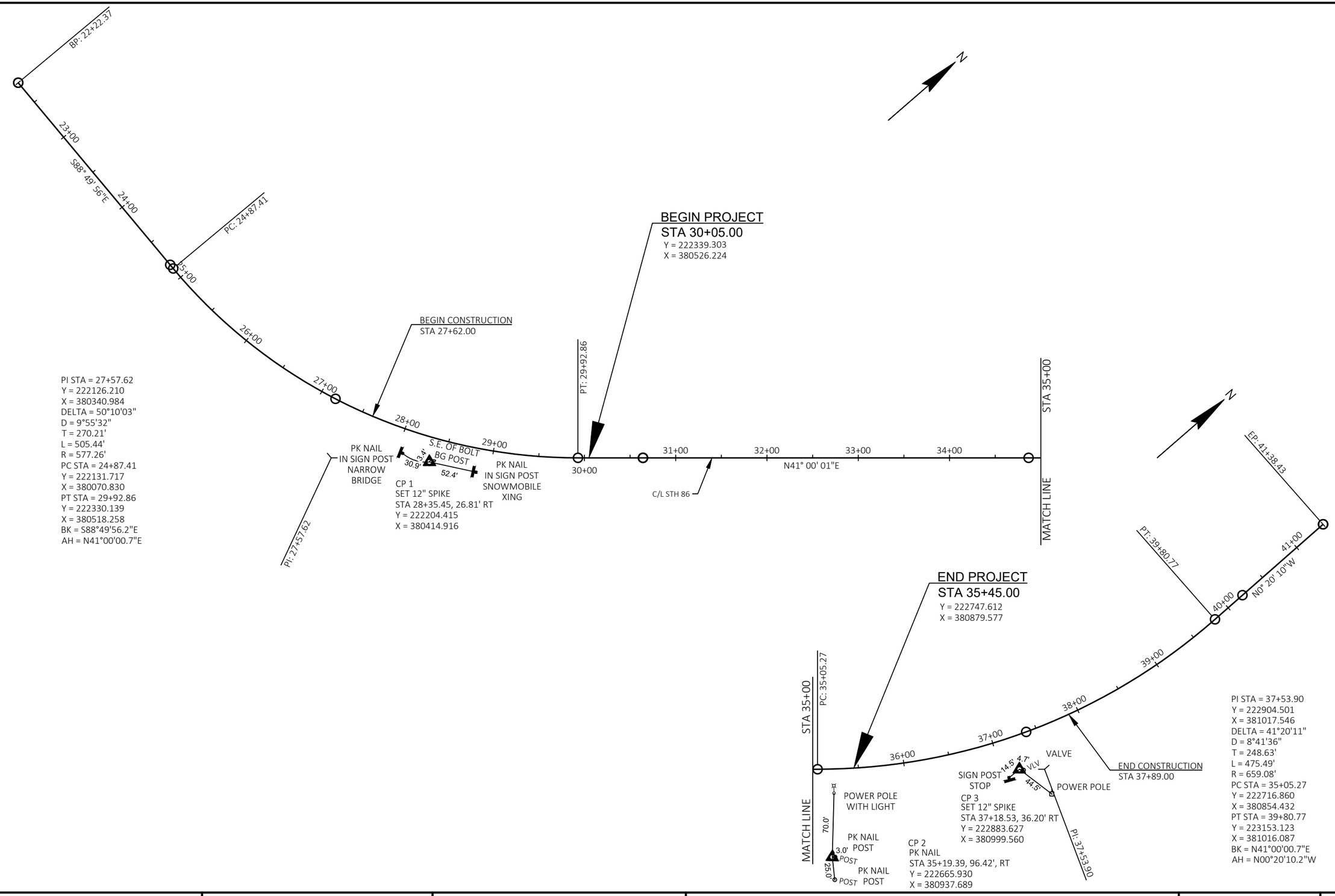
BP: 22+22.37
23+00
S88° 49' 56"E
24+00
PC: 24+87.41
25+00
26+00
27+00
28+00
29+00
30+00
31+00
32+00
33+00
34+00
35+00
N41° 00' 01"E
BEGIN PROJECT
STA 30+05.00
Y = 222339.303
X = 380526.224
BEGIN CONSTRUCTION
STA 27+62.00
PT: 29+92.86
PI STA = 27+57.62
Y = 222126.210
X = 380340.984
DELTA = 50°10'03"
D = 9°55'32"
T = 270.21'
L = 505.44'
R = 577.26'
PC STA = 24+87.41
Y = 222131.717
X = 380070.830
PT STA = 29+92.86
Y = 222330.139
X = 380518.258
BK = S88°49'56.2"E
AH = N41°00'00.7"E
PI: 27+57.62
PK NAIL
IN SIGN POST
NARROW
BRIDGE
S.E. OF BOLT
BG POST
3.4'
30.9'
52.4'
CP 1
SET 12" SPIKE
STA 28+35.45, 26.81' RT
Y = 222204.415
X = 380414.916
PK NAIL
IN SIGN POST
SNOWMOBILE
XING
C/L STH 86
STA 35+00
MATCH LINE
N
EP: 41+38.43
PT: 39+80.77
41+00
40+00
N0° 20' 10"W
39+00
38+00
37+00
36+00
END PROJECT
STA 35+45.00
Y = 222747.612
X = 380879.577
STA 35+00
PC: 35+05.27
MATCH LINE
POWER POLE
WITH LIGHT
70.0'
PK NAIL
POST
3.0'
POST
25.0'
POST
PK NAIL
POST
CP 2
PK NAIL
STA 35+19.39, 96.42', RT
Y = 222665.930
X = 380937.689
SIGN POST
STOP
14.5'
4.7'
VLV
VALVE
44.5'
POWER POLE
CP 3
SET 12" SPIKE
STA 37+18.53, 36.20' RT
Y = 222883.627
X = 380999.560
PI: 37+53.90
END CONSTRUCTION
STA 37+89.00
PI STA = 37+53.90
Y = 222904.501
X = 381017.546
DELTA = 41°20'11"
D = 8°41'36"
T = 248.63'
L = 475.49'
R = 659.08'
PC STA = 35+05.27
Y = 222716.860
X = 380854.432
PT STA = 39+80.77
Y = 223153.123
X = 381016.087
BK = N41°00'00.7"E
AH = N00°20'10.2"W

Estimate Of Quantities By Plan Sets

9215-01-64

Line	Item	Item Description	Unit	Total	Qty
0008	203.0200	Removing Old Structure (station) 02. STA 32+75	LS	1.000	1.000
0010	204.0100	Removing Pavement	SY	134.000	134.000
0012	204.0120	Removing Asphaltic Surface Milling	SY	344.000	344.000
0014	204.0150	Removing Curb & Gutter	LF	629.000	629.000
0016	204.0165	Removing Guardrail	LF	715.000	715.000
0018	204.0220	Removing Inlets	EACH	3.000	3.000
0026	213.0100	Finishing Roadway (project) 02. 9215-01-64	EACH	1.000	1.000
0030	305.0120	Base Aggregate Dense 1 1/4-Inch	TON	40.000	40.000
0032	415.0410	Concrete Pavement Approach Slab	SY	100.000	100.000
0034	455.0605	Tack Coat	GAL	20.000	20.000
0036	465.0105	Asphaltic Surface	TON	30.000	30.000
0040	502.0100	Concrete Masonry Bridges	CY	53.000	53.000
0042	502.3100	Expansion Device (structure) 01. B-35-52	LS	1.000	1.000
0044	502.3200	Protective Surface Treatment	SY	1,596.000	1,596.000
0046	502.3210	Pigmented Surface Sealer	SY	246.000	246.000
0048	502.4204	Adhesive Anchors No. 4 Bar	EACH	472.000	472.000
0050	502.4205	Adhesive Anchors No. 5 Bar	EACH	558.000	558.000
0052	505.0600	Bar Steel Reinforcement HS Coated Structures	LB	8,430.000	8,430.000
0054	505.0905	Bar Couplers No. 5	EACH	22.000	22.000
0056	506.2610	Bearing Pads Elastomeric Laminated	EACH	12.000	12.000
0058	506.7050.S	Removing Bearings (structure) 01. B-35-52	EACH	12.000	12.000
0060	509.0301	Preparation Decks Type 1	SY	50.000	50.000
0062	509.0302	Preparation Decks Type 2	SY	20.000	20.000
0064	509.0500	Cleaning Decks	SY	1,565.000	1,565.000
0068	509.1000	Joint Repair	SY	39.000	39.000
0070	509.1200	Curb Repair	LF	10.000	10.000
0072	509.1500	Concrete Surface Repair	SF	60.000	60.000
0074	509.2000	Full-Depth Deck Repair	SY	1.000	1.000
0076	509.2500	Concrete Masonry Overlay Decks	CY	126.000	126.000
0078	509.5100.S	Polymer Overlay	SY	1,596.000	1,596.000
0082	520.8000	Concrete Collars for Pipe	EACH	3.000	3.000
0084	601.0409	Concrete Curb & Gutter 30-Inch Type A	LF	60.000	60.000
0086	601.0411	Concrete Curb & Gutter 30-Inch Type D	LF	569.000	569.000
0088	603.8000	Concrete Barrier Temporary Precast Delivered	LF	938.000	938.000
0090	603.8125	Concrete Barrier Temporary Precast Installed	LF	1,858.000	1,858.000
0094	611.0600	Inlet Covers Type A	EACH	3.000	3.000
0096	611.3230	Inlets 2x3-FT	EACH	3.000	3.000
0098	614.0150	Anchor Assemblies for Steel Plate Beam Guard	EACH	2.000	2.000
0102	614.2300	MGS Guardrail 3	LF	264.000	264.000
0104	614.2500	MGS Thrie Beam Transition	LF	156.000	156.000

9215-01-64

Line	Item	Item Description	Unit	Total	Qty
0106	614.2610	MGS Guardrail Terminal EAT	EACH	4.000	4.000
0110	618.0100	Maintenance And Repair of Haul Roads (project) 02. 9215-01-64	EACH	1.000	1.000
0112	619.1000	Mobilization	EACH	0.650	0.650
0116	625.0100	Topsoil	SY	334.000	334.000
0118	627.0200	Mulching	SY	334.000	334.000
0120	628.1504	Silt Fence	LF	428.000	428.000
0122	628.1520	Silt Fence Maintenance	LF	428.000	428.000
0124	628.1905	Mobilizations Erosion Control	EACH	2.000	2.000
0126	628.1910	Mobilizations Emergency Erosion Control	EACH	2.000	2.000
0130	629.0210	Fertilizer Type B	CWT	0.210	0.210
0132	630.0120	Seeding Mixture No. 20	LB	9.000	9.000
0142	642.5201	Field Office Type C 02. 9215-01-64	EACH	1.000	1.000
0144	643.0300	Traffic Control Drums	DAY	3,000.000	3,000.000
0146	643.0410	Traffic Control Barricades Type II	DAY	130.000	130.000
0148	643.0420	Traffic Control Barricades Type III	DAY	260.000	260.000
0150	643.0715	Traffic Control Warning Lights Type C	DAY	1,300.000	1,300.000
0152	643.0900	Traffic Control Signs	DAY	4,810.000	4,810.000
0154	643.5000	Traffic Control	EACH	0.500	0.500
0156	646.1020	Marking Line Epoxy 4-Inch	LF	2,034.000	2,034.000
0158	646.9000	Marking Removal Line 4-Inch	LF	548.000	548.000
0160	649.0150	Temporary Marking Line Removable Tape 4-Inch	LF	1,915.000	1,915.000
0162	649.0850	Temporary Marking Stop Line Removable Tape 18-Inch	LF	45.000	45.000
0168	650.5500	Construction Staking Curb Gutter and Curb & Gutter	LF	629.000	629.000
0170	650.8000	Construction Staking Resurfacing Reference	LF	605.000	605.000
0174	650.9910	Construction Staking Supplemental Control (project) 02. 9215-01-64	LS	1.000	1.000
0180	661.0100	Temporary Traffic Signals for Bridges (structure) 02. B-35-052	LS	1.000	1.000
0182	690.0150	Sawing Asphalt	LF	447.000	447.000
0184	690.0250	Sawing Concrete	LF	26.000	26.000
0186	715.0415	Incentive Strength Concrete Pavement	DOL	500.000	500.000
0188	715.0502	Incentive Strength Concrete Structures	DOL	500.000	500.000
0190	ASP.1T0A	On-the-Job Training Apprentice at $5.00/HR	HRS	300.000	300.000
0192	ASP.1T0G	On-the-Job Training Graduate at $5.00/HR	HRS	600.000	600.000
0194	SPV.0090	Special 01. Cleaning Parapets Special	LF	441.000	441.000
0196	SPV.0165	Special 01. Prestressed Concrete Girder Repair	SF	30.000	30.000

3

REMOVING PAVEMENT

	STATION	TO	STATION	LOCATION	204.0100 REMOVING PAVEMENT SY
CATEGORY CODE 0010					
STAGE 1	30+45	-	30+64	LT	32
	34+86	-	35+07	LT	35
STAGE 2	30+45	-	30+64	RT	32
	34+86	-	35+07	RT	35
				TOTALS	**134**

REMOVING ASPHALTIC SURFACE MILLING

STATION	TO	STATION	LOCATION	204.0120 REMOVING ASPHALTIC SURFACE MILLING SY	COMMENTS
CATEGORY CODE 0010					
30+05	-	30+49	STH 86	147	1.75-INCH DEPTH
34+86	-	35+45	STH 86	197	1.75-INCH DEPTH
			TOTALS	**344**	

REMOVING CURB & GUTTER

	STATION	TO	STATION	LOCATION	204.0150 REMOVING CURB & GUTTER LF
CATEGORY 0010					
STAGE 1	27+62	-	28+93	LT	131
	30+05	-	30+64	LT	59
	34+86	-	35+45	LT	59
	36+58	-	37+89	LT	131
STAGE 2	27+62	-	28+93	RT	131
	30+05	-	30+64	RT	59
	34+86	-	35+45	RT	59
				TOTAL	**629**

3

REMOVING GUARDRAIL

	STATION	TO	STATION	LOCATION	204.0165 REMOVING GUARDRAIL LF
CATEGORY 0010					
STAGE 1	29+28	-	30+53	LT	123
	34+97	-	36+28	LT	127
STAGE 2	27+18	-	30+53	RT	346
	34+97	-	36+12	RT	119
				TOTAL	**715**

FINISHING ROADWAY (9215-01-64)

LOCATION	213.0100 EACH
CATEGORY CODE 0010	
STH 86	1
TOTALS	**1**

BASE AGGREGATE DENSE

STATION	-	STATION	LOCATION	305.0120 BASE AGGREGATE DENSE 1 1/4-INCH TON	COMMENTS
CATEGORY CODE 0010					
30+49	-	30+64	STH 86	20	AS NEEDED, APPROACH SLAB CONST.
34+86	-	35+01	STH 86	20	AS NEEDED, APPROACH SLAB CONST.
			TOTAL	**40**	

REMOVING INLETS

STATION	LOCATION	204.0220 REMOVING INLETS EACH
CATEGORY CODE 0010		
28+93	LT	1
30+46	LT	1
30+05	RT	1
	TOTALS	**3**

CONCRETE PAVEMENT APPROACH SLAB

	STATION	-	STATION	LOCATION	415.0410 SY
CATEGORY 0010					
STAGE 1	30+49	-	30+64	LT	25
	34+87	-	35+01	LT	25
STAGE 2	30+49	-	30+64	RT	25
	34+87	-	35+01	RT	25
				TOTAL	**100**

CONCRETE CURB & GUTTER

	STATION	-	STATION	LOCATION	30-INCH TYPE D 601.0411 LF	30-INCH TYPE A 601.0409 LF
CATEGORY 0010						
STAGE 1	27+62	-	28+93	LT	131	--
	30+05	-	30+49	LT	44	--
	30+49	-	30+64	LT	--	15
	34+86	-	35+01	LT	--	15
	35+01	-	35+45	LT	44	--
	36+58	-	37+89	LT	131	--
STAGE 2	27+62	-	28+93	RT	131	--
	30+05	-	30+49	RT	44	--
	30+49	-	30+64	RT	--	15
	34+86	-	35+01	RT	--	15
	35+01	-	35+45	RT	44	--
				TOTAL	**569**	**60**

3

ASPHALTIC ITEMS

STATION	-	STATION	LOCATION	455.0605 TACK COAT GAL	465.0105 ASPHALTIC SURFACE TON
CATEGORY CODE 0010					
30+05	-	30+49	STH 86	10	15
35+01	-	35+45	STH 86	10	15
			TOTALS	**20**	**30**

CONCRETE BARRIER TEMPORARY

LOCATION	603.8000 CONCRETE BARRIER TEMP. PRECAST DELIVERED LF	603.8125 CONCRETE BARRIER TEMP. PRECAST INSTALLED LF
CATEGORY CODE 0010		
STAGE 1	920	920
STAGE 1	--	--
STAGE 2	18	938
STAGE 2	--	--
TOTALS	**938**	**1,858**

3

INLET ITEMS

STATION	LOCATION	520.8000 CONCRETE COLLARS FOR PIPE EACH	611.0600 INLET COVERS TYPE A EACH	611.3230 INLETS 2X3 FT EACH
CATEGORY 0010				
28+93	LT	1	1	1
30+46	LT	1	1	1
30+05	RT	1	1	1
	TOTALS	**3**	**3**	**3**

LANDSCAPING ITEMS

STATION	-	STATION	LOCATION	625.0100 TOPSOIL SY	627.0200 MULCHING SY	629.0210 FERTILIZER TYPE B CWT	630.0120 SEED MIX NO. 20 LBS	628.1905 MOBILIZATION EROSION CONTROL EACH	628.1910 EMERGENCY MOBILIZATION EROSION CONTROL EACH
CATEGORY CODE 0010									
27+62	-	28+93	LT & RT	145	145	0.09	4	--	--
30+05	-	30+64	LT	33	33	0.02	1	--	--
34+86	-	35+45	LT	33	33	0.02	1	--	--
36+58	-	37+89	LT	73	73	0.05	2	--	--
Undistributed				50	50	0.03	1	2	2
			TOTALS	**334**	**334**	**0.21**	**9**	**2**	**2**

MGS GUARDRAIL

	STATION	TO	STATION	LOCATION	614.2300 MGS GUARDRAIL 3 LF	614.2500 MGS THRIE BEAM TRANSITION LF	614.2610 MGS GUARDRAIL TERMINAL EAT EACH
CATEGORY CODE 0010							
STAGE 1	28+74	-	29+24	LT	--	--	1
	29+24	-	30+12	LT	88	--	--
	30+12	-	30+51	LT	--	39	--
	34+99	-	35+38	LT	--	39	--
	35+38	-	36+25	LT	88	--	--
	36+25	-	36+76	LT	--	--	1
STAGE 2	28+74	-	29+24	RT	--	--	1
	29+24	-	30+12	RT	88	--	--
	30+12	-	30+51	RT	--	39	--
	34+99	-	35+38	RT	--	39	--
	35+38	-	35+88	RT	--	--	1
				TOTAL	**264**	**156**	**4**

SILT FENCE

STATION	-	STATION	LOCATION	628.1504 SILT FENCE LF	628.1520 MAINTENANCE LF
CATEGORY CODE 0010					
29+50	-	30+64	LT	114	114
34+86	-	38+00	LT	314	314
			TOTALS	**428**	**428**

PROJECT NO: 9215-01-64	HWY: STH 86	COUNTY: LINCOLN	MISCELLANEOUS QUANTITIES	SHEET NO: 14	E

3

FIELD OFFICE TYPE C (9215-01-64)

STATION TO STATION	LOCATION	642.5201 EACH
CATEGORY CODE 0010		
STH 86		1
	TOTALS	**1**

TRAFFIC CONTROL ITEMS

LOCATION	643.0300 DRUMS EACH	643.0300 DRUMS DAYS	643.0420 BARRICADES TYPE III EACH	643.0420 BARRICADES TYPE III DAYS	643.0715 WARNING LIGHTS TYPE C EACH	643.0715 WARNING LIGHTS TYPE C DAYS	643.0900 SIGNS EACH	643.0900 SIGNS DAYS	643.0410 BARRICADES TYPE II EACH	643.0410 BARRICADES TYPE II DAYS
CATEGORY CODE 0010										
STAGE 1	20	1300	2	130	10	650	38	2,470	--	--
STAGE 2	20	1300	2	130	10	650	36	2,340	2	130
UNDISTRIBUTED		400								
TOTALS		**3,000**		**260**		**1,300**		**4,810**		**130**

3

MARKING LINE ITEMS

STATION - STATION	LOCATION	646.1020 MARKING LINE EPOXY 4-INCH LF	COMMENTS
CATEGORY CODE 0010			
26+22 - 27+62	CL	280	DOUBLE YELLOW
30+05 - 35+45	CL	1,080	DOUBLE YELLOW
35+92 - 39+29	CL	674	DOUBLE YELLOW
	TOTALS	**2,034**	

MARKING REMOVAL LINE

STATION - STATION	LOCATION	646.9000 4-INCH LF
CATEGORY CODE 0010		
26+22 - 27+62	DOUBLE YELLOW CL	280
35+80 - 37+14	DOUBLE YELLOW CL	268
	TOTALS	**548**

TEMPORARY MARKING LINE ITEMS

STATION	LOCATION	649.0850 STOP LINE REMOVEABLE TAPE 18-INCH LF	649.0150 MARKING LINE REMOVEABLE TAPE 4-INCH LF
CATEGORY CODE 0010			
STAGE 1 & 2 26+22	RT	15	---
STAGE 1 37+14	LT	15	---
STAGE 2 37+32	LT	15	---
STAGE 1 27+12 - 36+42	ALONG BARRIER	---	950
STAGE 2 27+12 - 36+62	ALONG BARRIER	---	965
	TOTALS	**45**	**1,915**

CONSTRUCTION STAKING ITEMS

STATION - STATION	LOCATION	650.5500 CURB AND GUTTER LF	650.8000 RESURFACING REFERENCE LF	650.9910 SUPPLEMENTAL CONTROL (9215-01-64) LS
CATEGORY CODE 0010				
27+62 - 30+64	MAINLINE	---	302	---
34+86 - 37+89	MAINLINE	---	303	---
27+62 28+93	LT & RT	262	---	---
30+05 30+64	LT & RT	118	---	---
34+86 35+45	LT & RT	118	---	---
36+58 37+89	LT	131	---	---
UNDISTRIBUTED		---	---	1
	TOTALS	**629**	**605**	**1**

TEMPORARY TRAFFIC SIGNALS FOR BRIDGES

LOCATION	661.0100 B-35-052 LS
CATEGORY CODE 0010	
STH 86	1
TOTALS	**1**

SAWING PAVEMNENT

STATION	LOCATION	690.0150 SAWING ASPHALT LF	690.0250 SAWING CONCRETE LF
CATEGORY 0010			
27+62	LT & RT	---	5
27+62 - 28+90	LT & RT	256	---
28+93	LT & RT	---	5
30+05	LT & RT	30	5
35+45	LT & RT	30	5
36+58	LT	---	3
36+58 - 37+89	LT	131	---
37+89	LT	---	3
	TOTALS	**447**	**26**

NOTE:
CURB AND GUTTER (STA 27+62 TO STA 28+93) TO MATCH EXISTING ASPHALT SURFACE

CURB AND GUTTER (STA 30+05 TO STA 30+63.96) TO MATCH EXISTING ASPHALTIC SURFACE ON THE WEST END AND THE NEW BRIDGE SURFACE ON THE EAST END.

PLACE CONCRETE APPROACH SLAB TO ELEVATION MATCHING FINAL DECK GRADE AFTER BOTH CONCRETE AND POLYMER OVERLAY ARE COMPLETED.

LEGEND

30DWY	REMOVING CURB & GUTTER AND REPLACE WITH CONCRETE CURB & GUTTER 30-INCH TYPE D, DRIVEWAY ENTRANCE CURB
30D	REMOVING CURB & GUTTER AND REPLACE WITH CONCRETE CURB & GUTTER 30-INCH TYPE D
30A	REMOVING CURB & GUTTER AND REPLACE WITH CONCRETE CURB & GUTTER 30-INCH TYPE A
SA	SAWING ASPHALT
CPAS	CONCRETE PAVEMENT APPROACH SLAB
XXXX XXXX	SAW CUT LINE
	MGS GUARDRAIL SYSTEM
	MGS GUARDRAIL TERMINAL EAT
	REMOVING ASPHALTIC SURFACE MILLING AND REPLACE WITH 1 3/4" ASPHALTIC SURFACE

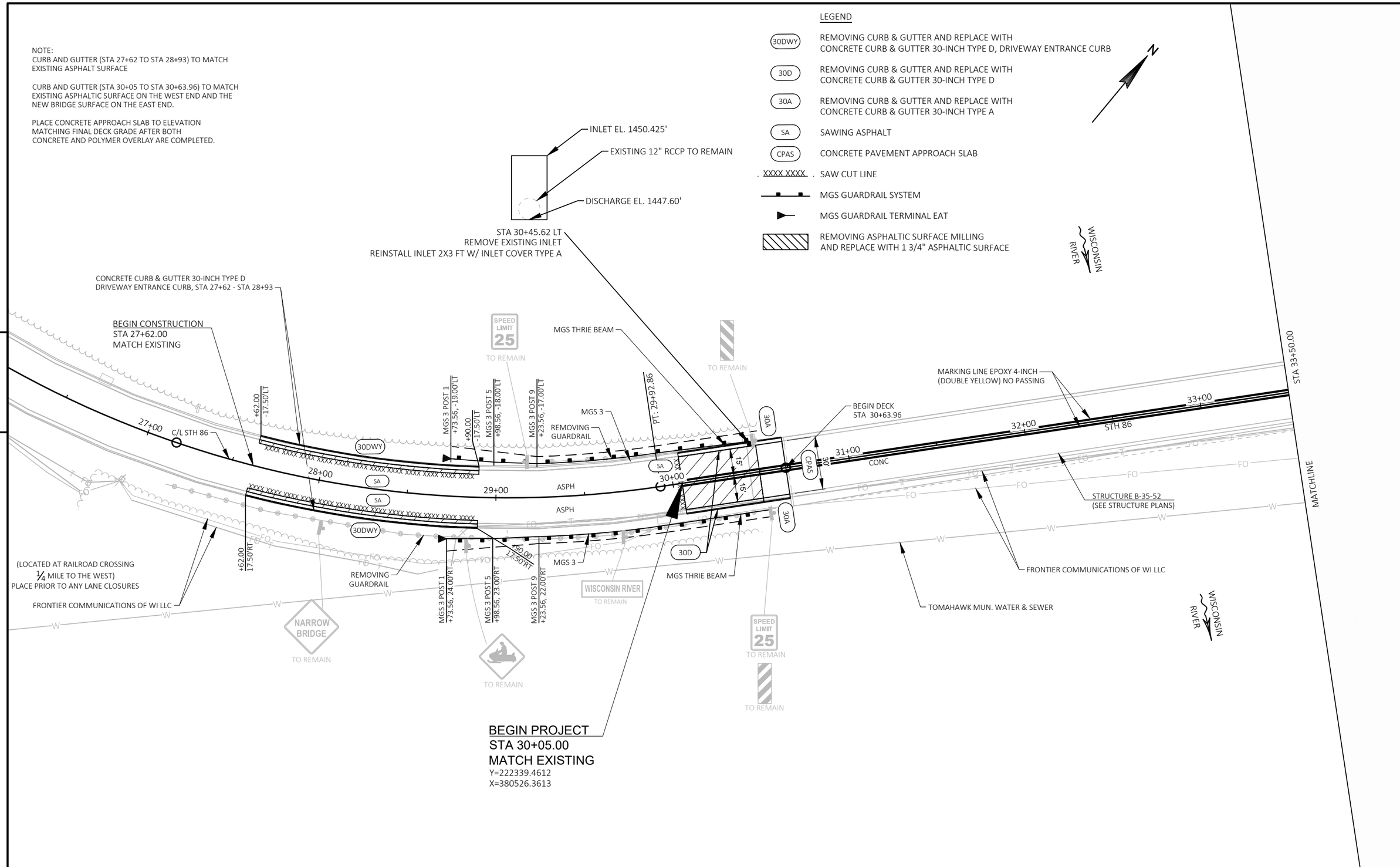

5

5

PROJECT NO: 9215-01-64	HWY: STH 86	COUNTY: LINCOLN	PLAN DETAILS	SHEET 16	E

FILE NAME : P:\WI - NC REGION\9030-11-30_VAR BRIDGES_LINCOLN COUNTY\500_CADD\501_C3D_2016\90301130\SHEETSPLAN\9215-01-64 STH 86\050201-PN.DWG
LAYOUT NAME - 050201-pn
PLOT DATE : 10/19/2018 9:43 AM PLOT BY : NICHOLAS WATHKE PLOT NAME : PLOT SCALE : 1 IN:50 FT

NOTE:
CURB AND GUTTER (STA 36+58 TO STA 37+89) TO MATCH EXISTING ASPHALT SURFACE

CURB AND GUTTER (STA 34+86.37 TO STA 35+45.00) TO MATCH THE NEW BRIDGE SURFACE ON THE WEST END AND THE EXISTING ASPHALTIC SURFACE ON THE EAST END.

PLACE CONCRETE APPROACH SLAB TO ELEVATION MATCHING FINAL DECK GRADE AFTER BOTH CONCRETE AND POLYMER OVERLAY ARE COMPLETED.

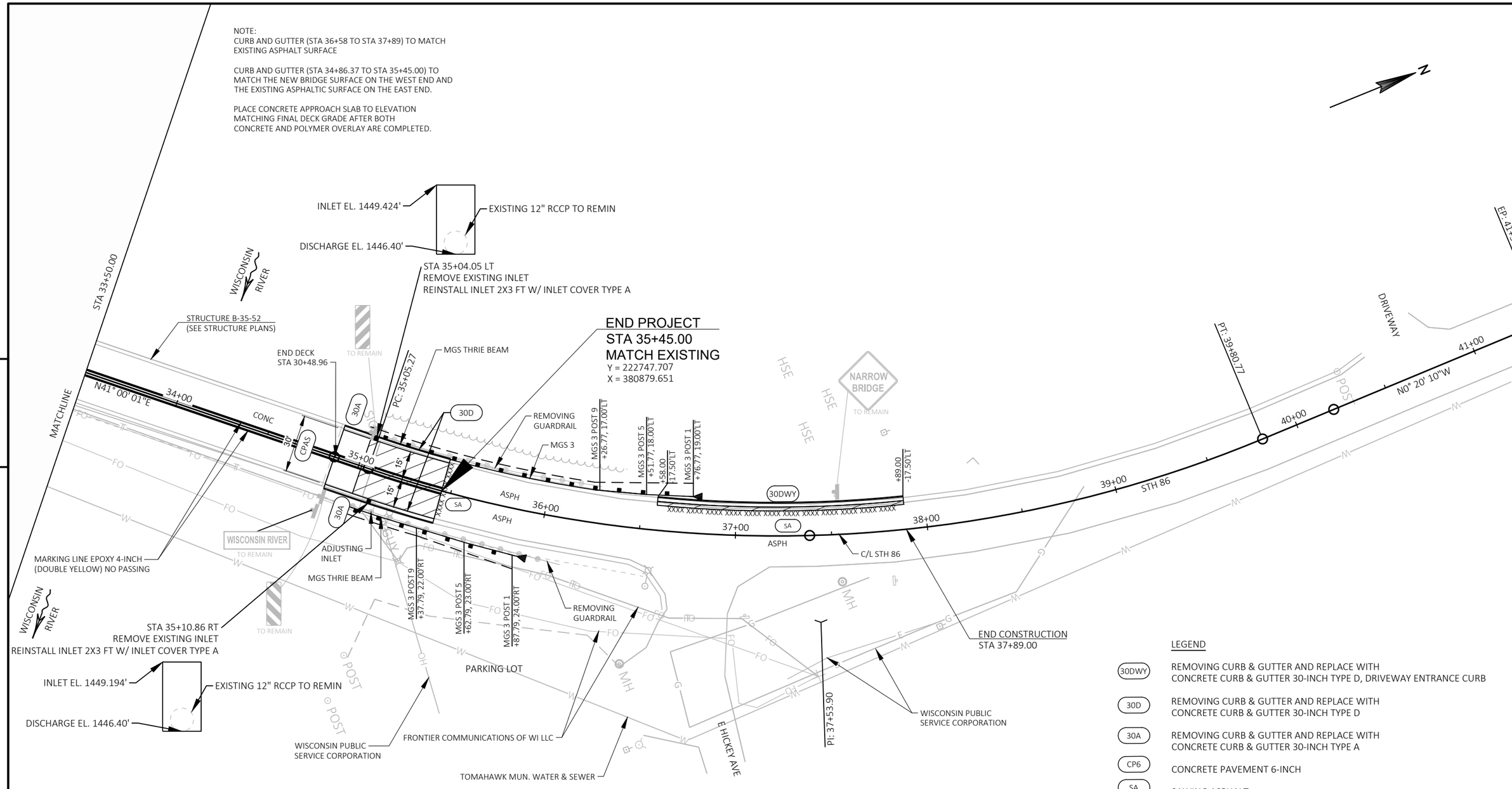

PI STA = 37+53.90
Y = 222904.501
X = 381017.546
DELTA = 41°20'11"
D = 4°20'48"
T = 248.63'
L = 475.49'
R = 659.08'
PC STA = 35+05.27
PT STA = 39+80.77

LEGEND

30DWY	REMOVING CURB & GUTTER AND REPLACE WITH CONCRETE CURB & GUTTER 30-INCH TYPE D, DRIVEWAY ENTRANCE CURB
30D	REMOVING CURB & GUTTER AND REPLACE WITH CONCRETE CURB & GUTTER 30-INCH TYPE D
30A	REMOVING CURB & GUTTER AND REPLACE WITH CONCRETE CURB & GUTTER 30-INCH TYPE A
CP6	CONCRETE PAVEMENT 6-INCH
SA	SAWING ASPHALT
CPAS	CONCRETE PAVEMENT APPROACH SLAB
XXXX XXXX	SAW CUT LINE
	MGS GUARDRAIL SYSTEM
	MGS GUARDRAIL TERMINAL EAT
	REMOVING ASPHALTIC SURFACE MILLING AND REPLACE WITH 1 3/4" ASPHALTIC SURFACE

Standard Detail Drawing List

08A05-19A	INLET COVERS TYPE A, H, A-S, H-S & Z
08C07-02	INLETS 2X2-FT, 2X2.5-FT, 2X3-FT AND 2.5X3-FT
08D01-20A	CONCRETE CURB & GUTTER
08D01-20B	CONCRETE CURB, TIES AND CURB AND GUTTER APPLICATIONS
08E09-06	SILT FENCE
09G02-05A	BRIDGE TEMPORARY TRAFFIC SIGNAL INSTALLATION
09G02-05B	BRIDGE TEMPORARY TRAFFIC SIGNAL INSTALLATION
09G02-05C	BRIDGE TEMPORARY TRAFFIC SIGNAL INSTALLATION
13B02-09A	CONCRETE PAVEMENT APPROACH SLAB
14B07-15A	CONCRETE BARRIER TEMPORARY PRECAST, 12'-6"
14B07-15B	CONCRETE BARRIER TEMPORARY PRECAST, 12'-6"
14B07-15C	CONCRETE BARRIER TEMPORARY PRECAST, 12'-6"
14B07-15D	CONCRETE BARRIER TEMPORARY PRECAST, 12'-6"
14B07-15E	CONCRETE BARRIER TEMPORARY PRECAST, 12'-6"
14B07-15F	CONCRETE BARRIER TEMPORARY PRECAST, 12'-6"
14B07-15G	CONCRETE BARRIER TEMPORARY PRECAST, 12'-6"
14B07-15H	CONCRETE BARRIER TEMPORARY PRECAST, 12'-6"
14B07-15I	CONCRETE BARRIER TEMPORARY PRECAST, 12'-6"
14B42-06A	MIDWEST GUARDRAIL SYSTEM (MGS) GUARDRAIL
14B42-06B	MIDWEST GUARDRAIL SYSTEM (MGS) GUARDRAIL
14B42-06C	MIDWEST GUARDRAIL SYSTEM (MGS) GUARDRAIL
14B42-06D	MIDWEST GUARDRAIL SYSTEM (MGS) GUARDRAIL
14B44-04A	MIDWEST GUARDRAIL SYSTEM ENERGY ABSORBING TERMINAL (MGS)
14B44-04B	MIDWEST GUARDRAIL SYSTEM ENERGY ABSORBING TERMINAL (MGS)
14B44-04C	MIDWEST GUARDRAIL SYSTEM ENERGY ABSORBING TERMINAL (MGS)
14B45-05A	MIDWEST GUARDRAIL SYSTEM THRIE BEAM TRANSITION (MGS)
14B45-05B	MIDWEST GUARDRAIL SYSTEM THRIE BEAM TRANSITION (MGS)
14B45-05C	MIDWEST GUARDRAIL SYSTEM THRIE BEAM TRANSITION (MGS)
14B45-05D	MIDWEST GUARDRAIL SYSTEM THRIE BEAM TRANSITION (MGS)
14B45-05E	MIDWEST GUARDRAIL SYSTEM THRIE BEAM TRANSITION (MGS)
14B45-05F	MIDWEST GUARDRAIL SYSTEM THRIE BEAM TRANSITION (MGS)
14B45-05G	MIDWEST GUARDRAIL SYSTEM THRIE BEAM TRANSITION (MGS)
14B45-05H	MIDWEST GUARDRAIL SYSTEM THRIE BEAM TRANSITION (MGS)
14B45-05I	MIDWEST GUARDRAIL SYSTEM THRIE BEAM TRANSITION (MGS)
14B45-05J	MIDWEST GUARDRAIL SYSTEM THRIE BEAM TRANSITION (MGS)
14B45-05K	MIDWEST GUARDRAIL SYSTEM THRIE BEAM TRANSITION (MGS)
14B45-05L	MIDWEST GUARDRAIL SYSTEM THRIE BEAM TRANSITION (MGS)
15C05-05	TRAFFIC CONTROL, ADVANCE WARNING SIGNS 40 M.P.H. OR LESS
15C06-09	SIGNING & MARKING FOR TWO LANE BRIDGES
15C08-19A	LONGITUDINAL MARKING (MAINLINE)
15C11-07B	CHANNELIZING DEVICES DRUMS, CONES, BARRICADES AND VERTICAL PANELS
15C12-06	TRAFFIC CONTROL FOR LANE CLOSURE WITH FLAGGING OPERATION
15D33-05	TRAFFIC CONTROL, ONE LANE ROAD WITH TEMPORARY SIGNALS
15D38-02A	TEMPORARY TRAFFIC CONTROL SIGN MOUNTING
15D38-02B	ATTACHMENT OF SIGNS TO POSTS

6

6

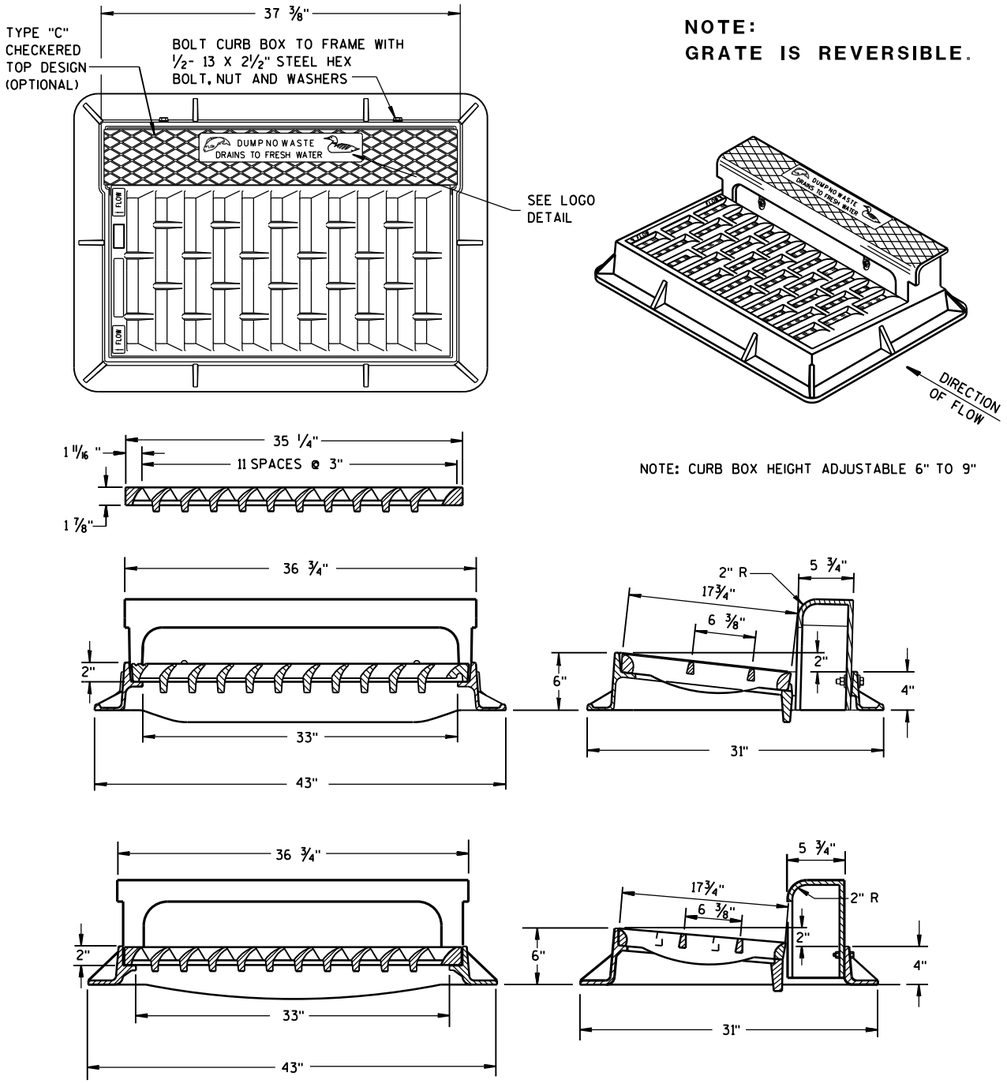

NOTE:
GRATE IS REVERSIBLE.

NOTE: CURB BOX HEIGHT ADJUSTABLE 6" TO 9"

TYPE "H"

NOTE: EITHER CASTING IS ACCEPTABLE

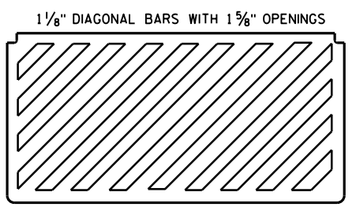

SPECIAL GRATE FOR TYPE "H" COVER

(MEASURES 35 1/4" X 17 3/4" X 2")

(NOTED AS TYPE H-S ON DRAINAGE TABLE)

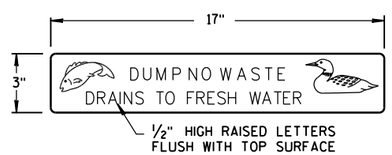

LOGO DETAIL

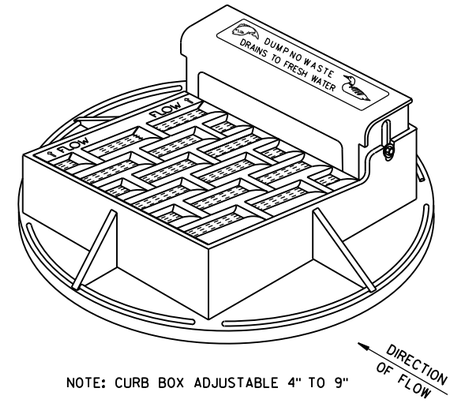

NOTE: CURB BOX ADJUSTABLE 4" TO 9"

NOTE:
GRATE IS REVERSIBLE.

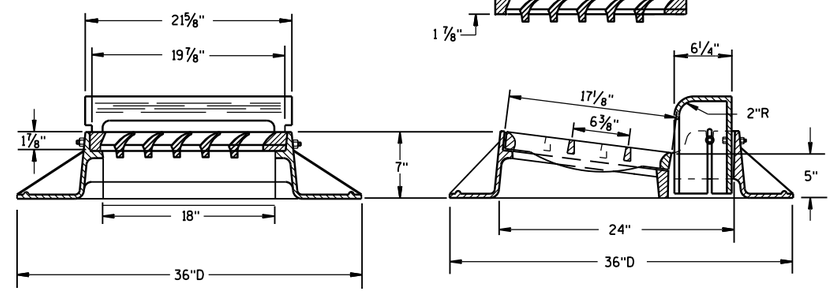

TYPE "A"

GENERAL NOTES

DETAILS OF CONSTRUCTION, MATERIALS AND WORKMANSHIP NOT SHOWN ON THIS DRAWING SHALL CONFORM TO THE PERTINENT REQUIREMENTS OF THE STANDARD SPECIFICATIONS AND THE APPLICABLE SPECIAL PROVISIONS.

DETAIL DRAWINGS FOR PROPOSED ALTERNATE DESIGNS FOR CATCH BASIN, MANHOLE AND INLET COVERS SHALL BE SUBMITTED TO THE ENGINEER FOR APPROVAL PROVIDING THAT SUCH ALTERNATE DESIGNS MAKE PROVISION FOR EQUIVALENT CAPACITY AND STRENGTH.

ROUND FRAMES AND COVERS SHALL HAVE CONTINUOUSLY MACHINED BEARING SURFACES TO PREVENT ROCKING AND RATTLING.

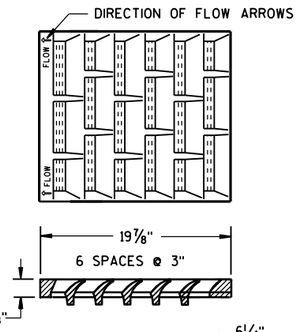

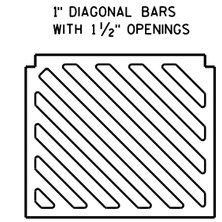

SPECIAL GRATE FOR TYPE "A" COVER

(MEASURES 19 3/4" X 17" X 1 7/8")

(NOTED AS TYPE A-S ON DRAINAGE TABLE)

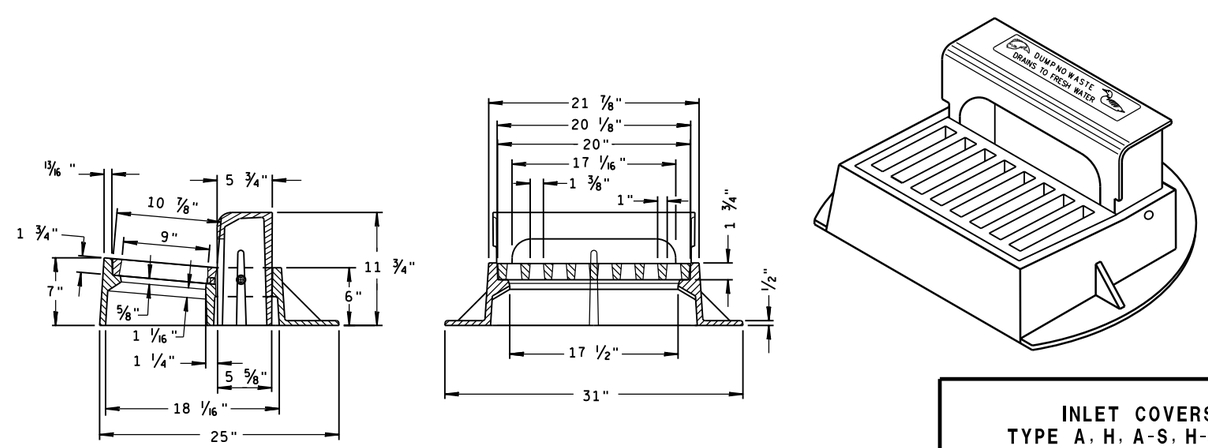

TYPE "Z"

INLET COVERS
TYPE A, H, A-S, H-S & Z

STATE OF WISCONSIN
DEPARTMENT OF TRANSPORTATION

APPROVED
11-27-13 /S/ Jerry H. Zogg
DATE ROADWAY STANDARDS DEVELOPMENT ENGINEER
FHWA

6

S.D.D. 8 A 5-19a

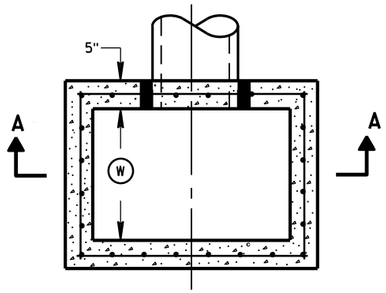

PLAN VIEW

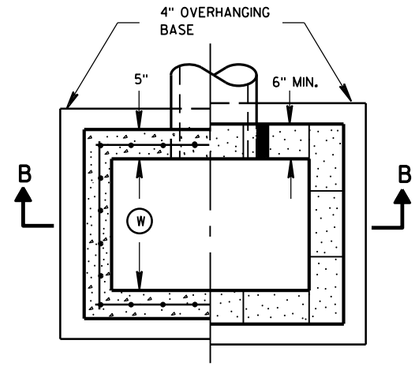

PLAN VIEW

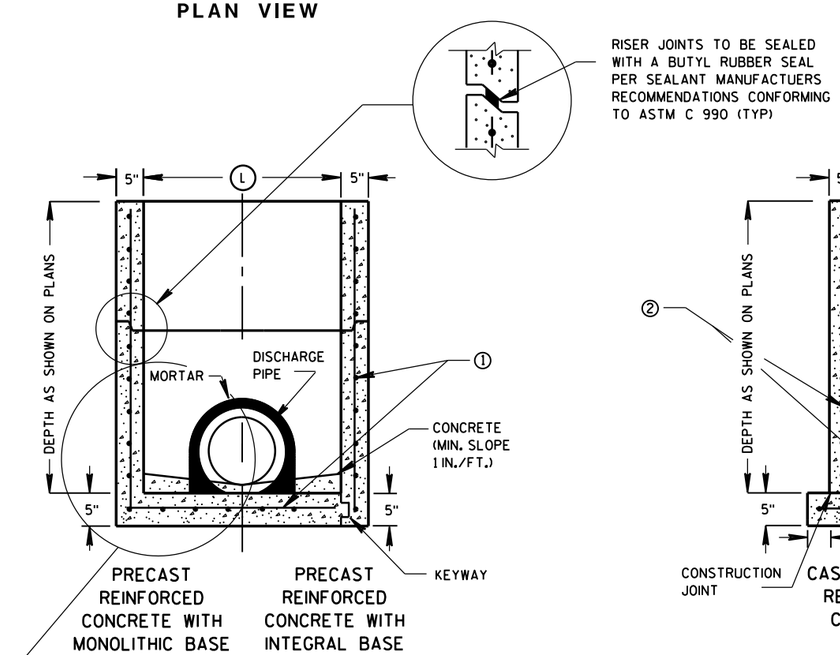

SECTION A-A

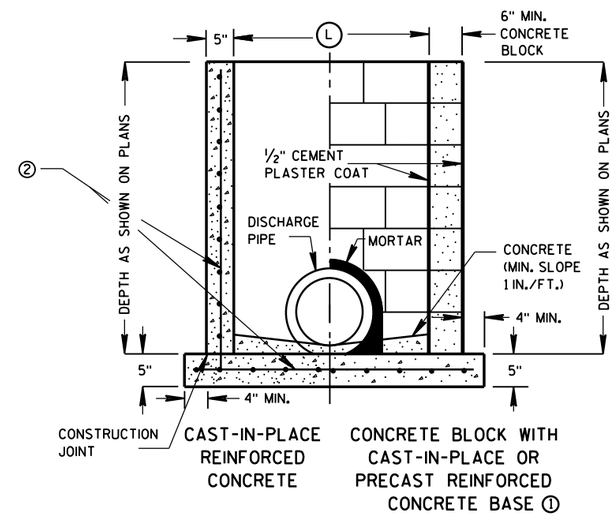

SECTION B-B

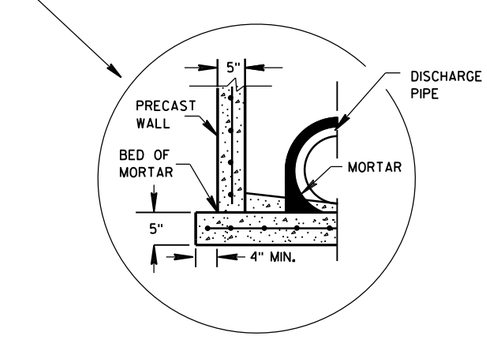

SEPARATE PRECAST REINFORCED CONCRETE BASE OPTION

GENERAL NOTES

DETAILS OF CONSTRUCTION, MATERIALS AND WORKMANSHIP NOT SHOWN ON THIS DRAWING SHALL CONFORM TO THE PERTINENT REQUIREMENTS OF THE STANDARD SPECIFICATIONS AND THE APPLICABLE SPECIAL PROVISIONS.

UNLESS OTHERWISE AUTHORIZED IN WRITING BY THE ENGINEER, THE CONTRACTOR SHALL NOT ORDER AND DELIVER PRECAST INLET UNITS REQUIRED FOR THE PROJECT UNTIL A LIST OF SIZES IS FURNISHED BY THE ENGINEER.

DETAILED DRAWINGS FOR PROPOSED ALTERNATE DESIGNS FOR UNDERGROUND DRAINAGE STRUCTURES SHALL BE SUBMITTED TO THE ENGINEER FOR APPROVAL PROVIDING THAT SUCH ALTERNATE DESIGNS MAKE PROVISION FOR EQUIVALENT CAPACITY AND STRENGTH.

ALL PRECAST INLET UNITS SHALL CONFORM TO THE PERTINENT REQUIREMENTS OF ASTM C 913.

ALL DRAINAGE STRUCTURES ARE DESIGNATED ON THE PLANS AS "MANHOLES 3X3-L", "CATCH BASINS 4-B", "INLETS 2X3-H", ETC. THE FIRST NUMBERS DESIGNATES THE SIZE OF THE STRUCTURE, AND THE FOLLOWING LETTER DESIGNATES THE TYPE OF COVER TO BE USED TO COMPRISE THE COMPLETE UNIT.

BASES SHALL BE PLACED ON A BED OF MATERIAL AT LEAST 6 INCHES IN DEPTH, WHICH MEETS THE REQUIREMENTS OF FOUNDATION BACKFILL. THIS BEDDING SHALL BE COMPACTED AND PROVIDE UNIFORM SUPPORT FOR THE ENTIRE AREA OF THE BASE.

ALL BAR STEEL REINFORCEMENT SHALL BE EMBEDDED 2 INCHES CLEAR UNLESS OTHERWISE SHOWN OR NOTED.

PRECAST REINFORCED RISERS SHALL HAVE A TONGUE AND GROOVE JOINT WITH TONGUE UP OR DOWN.

4" OVERHANGING BASES ARE REQUIRED FOR CAST-IN-PLACE REINFORCED CONCRETE AND CONCRETE BLOCK INSTALLATIONS.
4" OVERHANG IS REQUIRED WHEN SEPARATE PRECAST BASE IS PROVIDED.
OVERHANG IS NOT REQUIRED ON PRECAST STRUCTURES WITH AN INTEGRAL OR MONOLITHIC BASE.

MAXIMUM INSIDE PIPE DIAMETER DETERMINED BY 3 INCH CLEARANCE ON EACH SIDE OF THE OUTSIDE WALL OF THE PIPE. SEE DETAIL "A". ASSUMES PIPE ENTERS PERPENDICULAR TO THE STRUCTURE.

① FOR PRECAST INLETS PROVIDE REINFORCING STEEL IN ACCORDANCE TO ASTM C 913.

② CONTRACTOR TO PROVIDE DRAWING(S) STAMPED BY A PROFESSIONAL ENGINEER FOR STEEL REINFORCING DESIGN FOR CAST-IN-PLACE STRUCTURES.

INLET COVER MATRIX

INLET SIZE		INLET COVER TYPE	ALL A'S	ALL B'S	BW	F	ALL H'S	S	T	V	WM
	WIDTH (W) (FT)	LENGTH (L) (FT)									
2X2-FT	2	2	X	X				X		X	
2X2.5-FT	2	2.5			X			X	X	X	X
2X3-FT	2	3					X				
2.5X3-FT	2.5	3				X					

PIPE MATRIX

INLET SIZE	MAXIMUM INSIDE PIPE DIAMETER	
	WIDTH (IN)	LENGTH (IN)
2X2-FT	12	12
2X2.5-FT	12	18
2X3-FT	12	24
2.5X3-FT	18	24

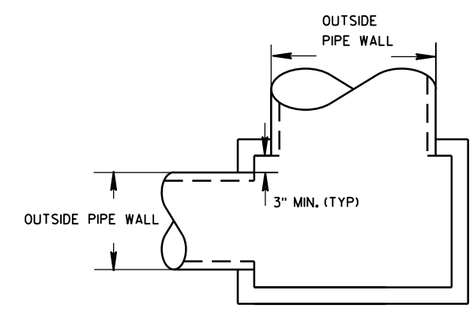

DETAIL "A"

INLETS 2X2-FT, 2X2.5-FT, 2X3-FT AND 2.5X3-FT

INLETS 2X2-FT, 2X2.5-FT, 2X3-FT AND 2.5X3-FT

STATE OF WISCONSIN
DEPARTMENT OF TRANSPORTATION

APPROVED
Sept., 2016 — DATE
/S/ Rodney Taylor
ROADWAY STANDARDS D IT
UNIT SUPERVIS
FHWA

6

6

S.D.D. 8 C 7-2

S.D.D. 8 C 7-2

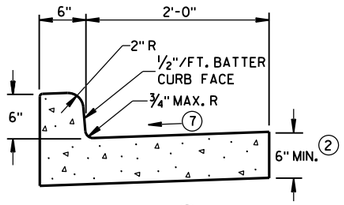

TYPES A[1] & D

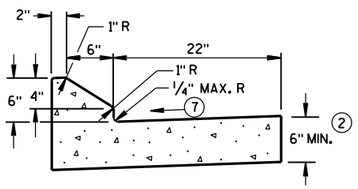

6" SLOPED CURB TYPES G[1] & J

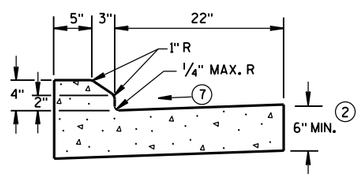

4" SLOPED CURB TYPES G[1] & J

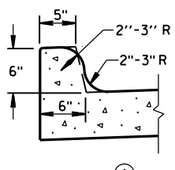

TYPES K[1] & L
(OPTIONAL CURB SHAPE)

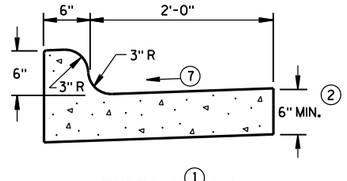

TYPES K[1] & L

CONCRETE CURB & GUTTER 30"

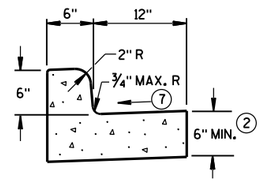

TYPES A[1] & D

CONCRETE CURB & GUTTER 18"

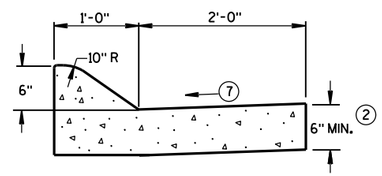

6" SLOPED CURB TYPES A[1] & D

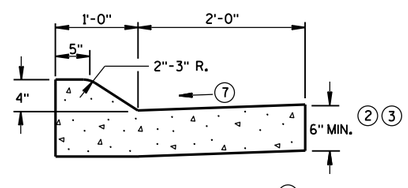

4" SLOPED CURB TYPES A[1] & D

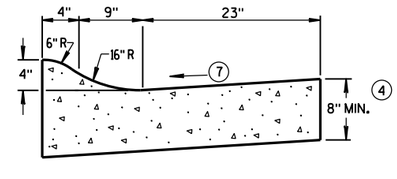

4" SLOPED CURB TYPES R[1] & T[5]

CONCRETE CURB & GUTTER 36"

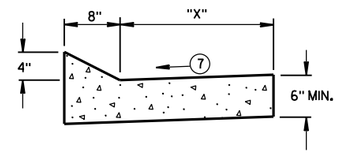

TYPES TBT & TBTT[1]

CONCRETE CURB & GUTTER

TBT & TBTT	"X"
30"	22"
36"	28"

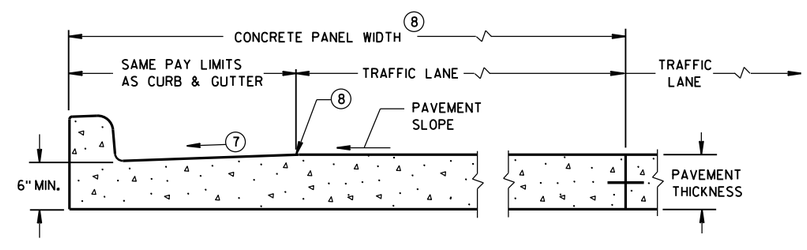

PARTIAL SECTION OF PAVEMENT*
WITH INTEGRAL CURB & GUTTER

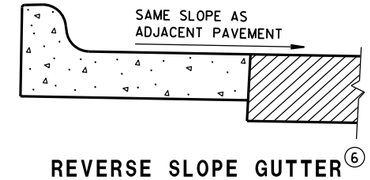

REVERSE SLOPE GUTTER[6]
(TYPICAL FOR ALL CURB & GUTTER TYPES)

GENERAL NOTES

DETAILS OF CONSTRUCTION, MATERIALS AND WORKMANSHIP NOT SHOWN ON THIS DRAWING SHALL CONFORM TO THE PERTINENT REQUIREMENTS OF THE CONTRACT.

PAVEMENT TIES AND TIE BARS SHALL BE EPOXY COATED IN CONFORMANCE WITH SUBSECTION 505.2.6.2 OF THE STANDARD SPECIFICATIONS.

INTEGRAL CURB & GUTTER SHALL CONFORM TO THE DETAILS SHOWN FOR CONCRETE CURB & GUTTER INCLUDING THE TRANSVERSE GUTTER SLOPE.

WHERE THE TRANSVERSE JOINTS IN THE PAVEMENT ARE REQUIRED TO BE SEALED, THE JOINTS IN THE INTEGRAL CURB AND GUTTER SHALL BE SEALED TO THE FACE OF CURB WITH THE SAME TYPE OF SEALANT. THE COST OF FURNISHING AND INSTALLING THIS SEALANT SHALL BE INCIDENTAL TO THE ITEM CONCRETE CURB AND GUTTER.

UNLESS OTHERWISE SHOWN ON THE TYPICAL CROSS SECTIONS, THE BASE AGGREGATE AND COMMON EXCAVATION LIMITS ARE 2'-0" BEHIND THE BACK OF CURBS.

1. TIE BARS ARE REQUIRED FOR CURB AND GUTTER TYPES A, G, K, R AND TBTT.
2. THE BOTTOM OF CURB AND GUTTER MAY BE CONSTRUCTED EITHER LEVEL OR PARALLEL TO THE SLOPE OF THE SUBGRADE OR BASE AGGREGATE PROVIDED A 6" MINIMUM GUTTER THICKNESS IS MAINTAINED.
3. USE 8" MINIMUM GUTTER THICKNESS WHEN USED WITH AN ADJACENT CONCRETE TRUCK APRON PLACED BEHIND BACK OF CURB.
4. THE BOTTOM OF CURB AND GUTTER MAY BE CONSTRUCTED EITHER LEVEL OR PARALLEL TO THE SLOPE OF THE SUBGRADE OR BASE AGGREGATE PROVIDED A 8" MINIMUM GUTTER THICKNESS IS MAINTAINED.
5. THE FACE OF CURB IS 6" FROM THE BACK OF CURB.
6. WHEN REVERSE SLOPE GUTTER IS REQUIRED, THE LOCATION(S) WILL BE SHOWN ELSEWHERE IN THE PLAN.
7. USE 4% GUTTER CROSS SLOPE UNLESS OTHERWISE NOTED IN THE PLANS.
8. INCLUDE LONGITUDINAL JOINT AND TIE BARS ALONG LANE EDGE WHEN CONCRETE PANEL WIDTH EXCEEDS THE MAXIMUM WIDTH PER TABLE BELOW. LONGITUDINAL JOINT(S) ARE NOT ALLOWED WITHIN TRAFFIC LANES AND BIKE LANES. LONGITUDINAL JOINT MAY BE SAWED.

PAVEMENT THICKNESS AND MAXIMUM CONCRETE PANEL WIDTH TABLE

PAVEMENT THICKNESS	MAXIMUM PANEL WIDTH
LESS THAN 10"	12'
10" & ABOVE	15'

* BIKE LANE IS NOT SHOWN.

CONCRETE CURB & GUTTER

STATE OF WISCONSIN
DEPARTMENT OF TRANSPORTATION

GENERAL NOTES

DETAILS OF CONSTRUCTION, MATERIALS AND WORKMANSHIP NOT SHOWN ON THIS DRAWING SHALL CONFORM TO THE PERTINENT REQUIREMENTS OF THE CONTRACT.

PAVEMENT TIES AND TIE BARS SHALL BE EPOXY COATED IN CONFORMANCE WITH SUBSECTION 505.2.6.2 OF THE STANDARD SPECIFICATIONS.

UNLESS OTHERWISE SHOWN ON THE TYPICAL CROSS SECTIONS, THE BASE AGGREGATE AND COMMON EXCAVATION LIMITS ARE 2'-0" BEHIND THE BACK OF CURBS.

(1) TIE BARS ARE REQUIRED FOR CURB AND GUTTER TYPES A, G, K, R AND TBTT.

(2) THE BOTTOM OF CURB AND GUTTER MAY BE CONSTRUCTED EITHER LEVEL OR PARALLEL TO THE SLOPE OF THE SUBGRADE OR BASE AGGREGATE PROVIDED A 6" MINIMUM GUTTER THICKNESS IS MAINTAINED.

(9) REFER TO SDD 8D18 AND SDD 8D19 FOR ADDITIONAL DRIVEWAY ENTRANCE CURB DETAILS.

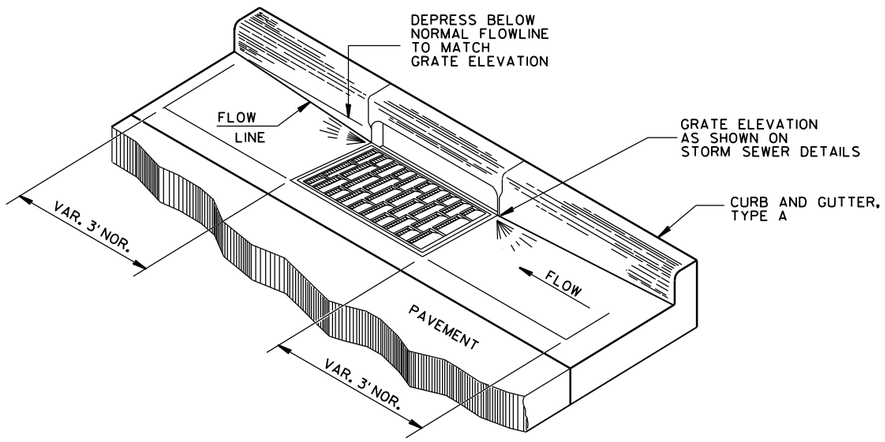

DETAIL OF CURB AND GUTTER AT INLETS

(TYPE H INLET COVER SHOWN)

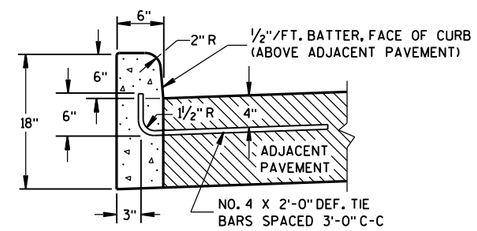

TYPES A(1) & D

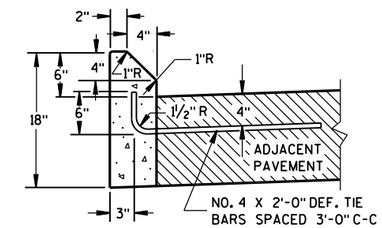

TYPES G(1) & J

CONCRETE CURB

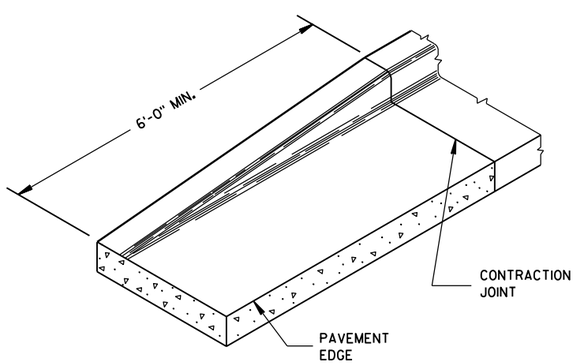

END SECTION CURB & GUTTER

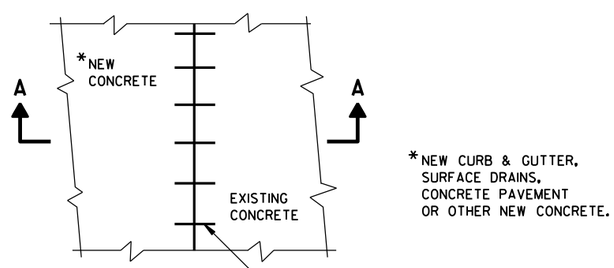

PLAN VIEW

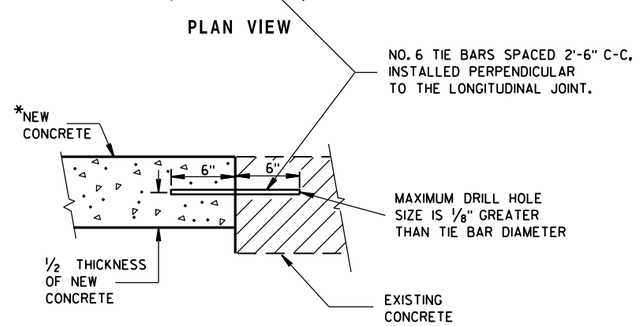

SECTION A-A

TIE BARS DRILLED INTO EXISTING PAVEMENT

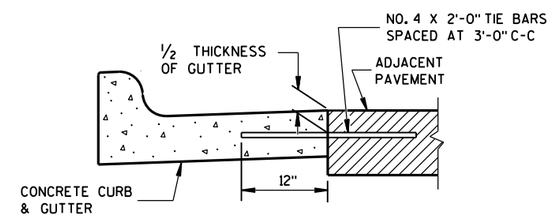

TYPICAL TIE BAR LOCATION (1)

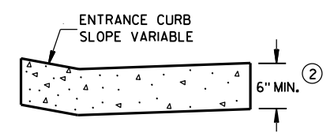

DRIVEWAY ENTRANCE CURB (9)

(WHEN DIRECTED BY THE ENGINEER)

CONCRETE CURB, TIES AND CURB AND GUTTER APPLICATIONS

STATE OF WISCONSIN
DEPARTMENT OF TRANSPORTATION

APPROVED
June, 2017 — DATE
/S/ Rodney Taylor — ROADWAY STANDARDS UNIT SUPERVISOR
ENT
FHWA

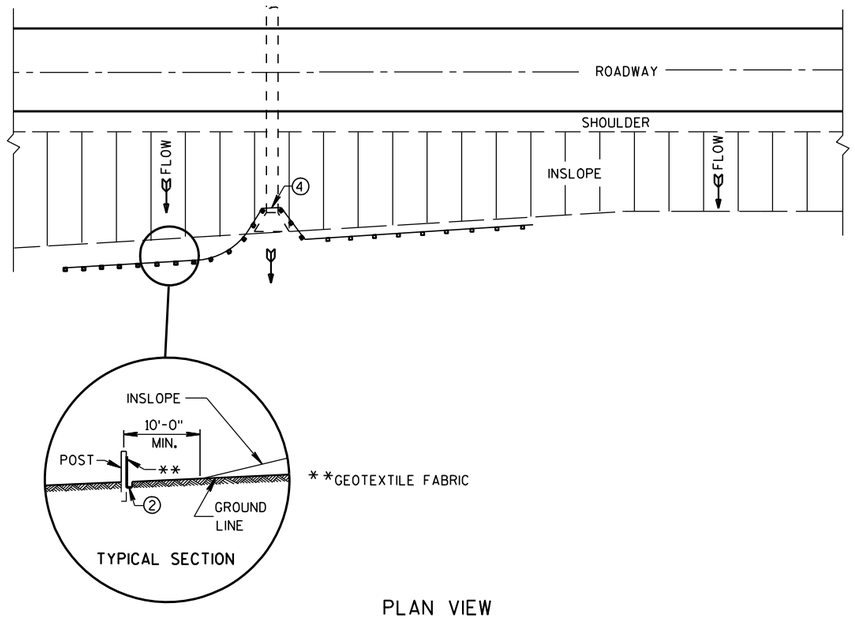

PLAN VIEW

TYPICAL APPLICATION OF SILT FENCE

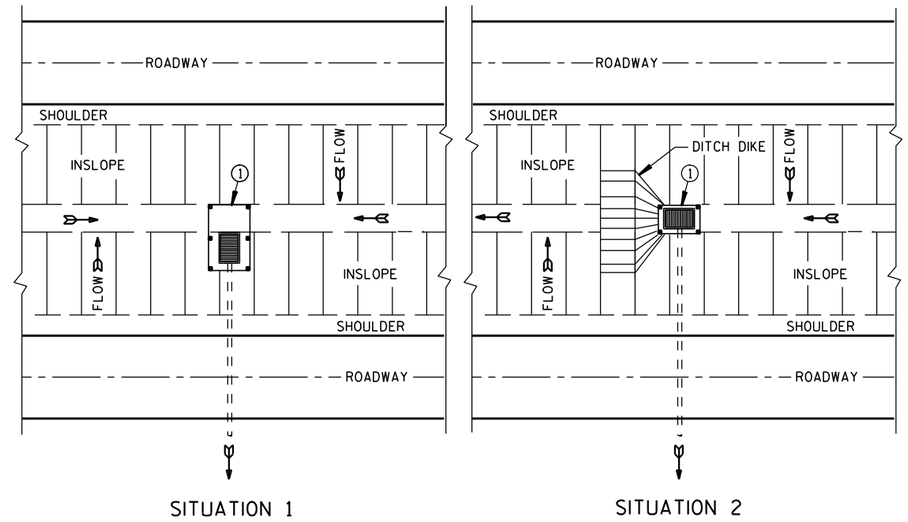

PLAN VIEW

SILT FENCE AT MEDIAN SURFACE DRAINS

GENERAL NOTES

DETAILS OF CONSTRUCTION NOT SHOWN ON THIS DRAWING SHALL CONFORM TO THE PERTINENT REQUIREMENTS OF THE STANDARD SPECIFICATIONS AND APPLICABLE SPECIAL PROVISIONS.

① HORIZONTAL BRACE REQUIRED WITH 2" X 4" WOODEN FRAME OR EQUIVALENT AT TOP OF POSTS.

② FOR MANUAL INSTALLATIONS THE TRENCH SHALL BE A MINIMUM OF 4" WIDE & 6" DEEP TO BURY AND ANCHOR THE GEOTEXTILE FABRIC. FOLD MATERIAL TO FIT TRENCH AND BACKFILL & COMPACT TRENCH WITH EXCAVATED SOIL.

③ WOOD POSTS SHALL BE A MINIMUM SIZE OF 1⅛" X 1⅛" OF OAK OR HICKORY.

④ SILT FENCE TO EXTEND ACROSS THE TOP OF THE PIPE.

⑤ CONSTRUCT SILT FENCE FROM A CONTINUOUS ROLL IF POSSIBLE BY CUTTING LENGTHS TO AVOID JOINTS. IF A JOINT IS NECESSARY USE ONE OF THE FOLLOWING TWO METHODS; A) OVERLAP THE END POSTS AND TWIST, OR ROTATE, AT LEAST 180 DEGREES. B) HOOK THE END OF EACH SILT FENCE LENGTH.

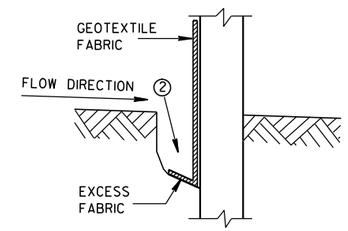

TRENCH DETAIL

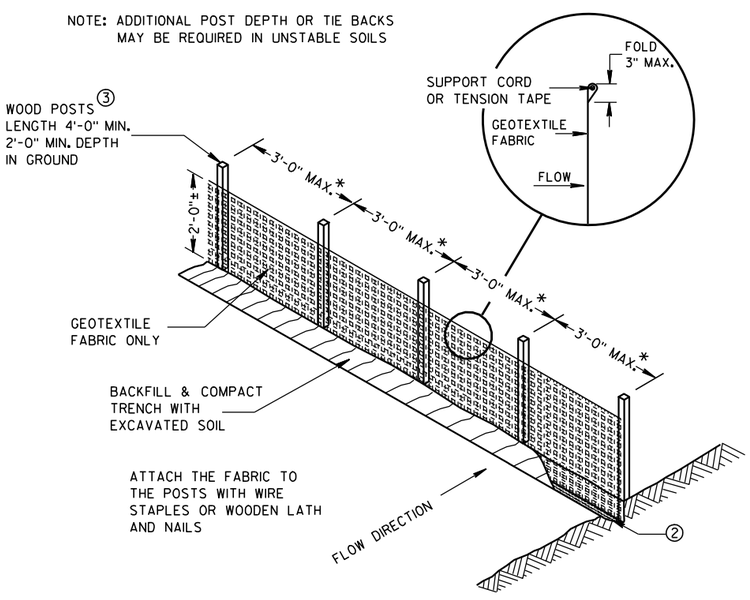

*NOTE: 8'-0" POST SPACING ALLOWED IF A WOVEN GEOTEXTILE FABRIC IS USED.

SILT FENCE

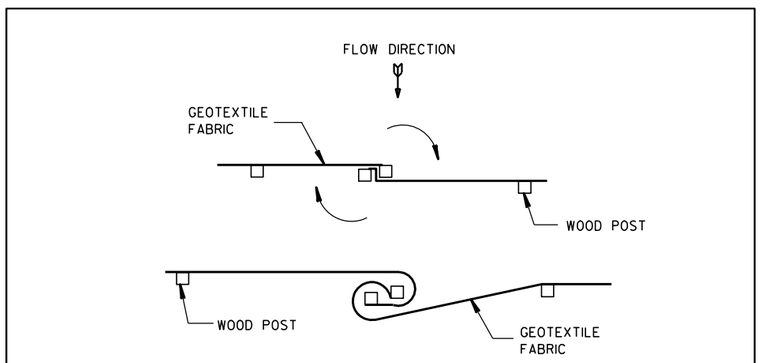

TWIST METHOD

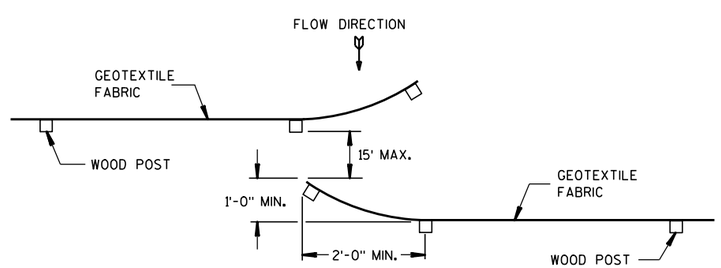

HOOK METHOD

JOINING TWO LENGTHS OF SILT FENCE ⑤

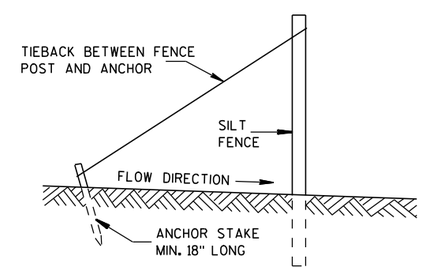

SILT FENCE TIE BACK

(WHEN REQUIRED BY THE ENGINEER)

SILT FENCE
STATE OF WISCONSIN DEPARTMENT OF TRANSPORTATION
APPROVED 4-29-05 /S/ Beth Cann----- DATE CHIEF ROADWAY DEVELOP ENGINEER FHWA

6

6

S.D.D. 8 E 9-6

S.D.D. 8 E 9-6

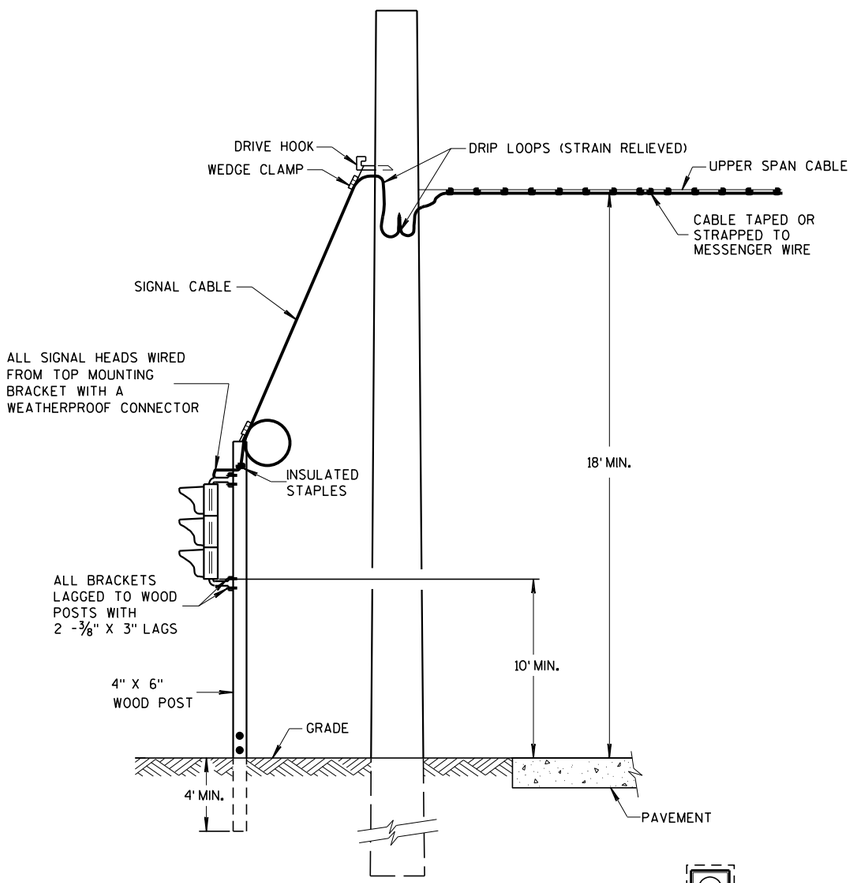

TYPICAL DROP TO TRAFFIC SIGNAL FACE

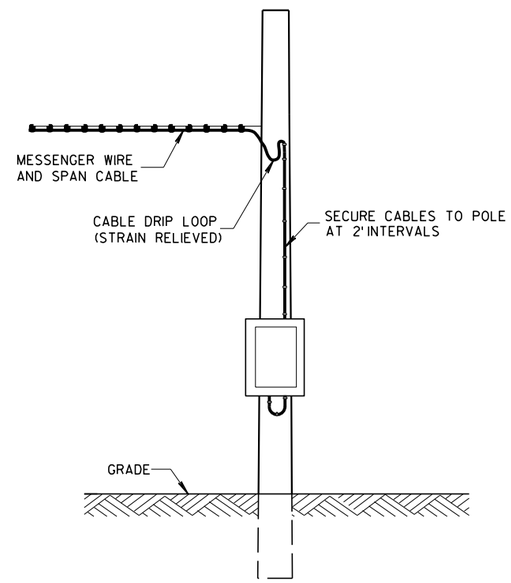

POLE MOUNT CABINET INSTALLATION

GENERAL NOTES

DETAILS OF CONSTRUCTION, MATERIALS AND WORKMANSHIP NOT SHOWN ON THIS DRAWING SHALL CONFORM TO THE PERTINENT REQUIREMENTS OF THE CONTRACT.

POLE MOUNTED TRAFFIC SIGNAL CONTROL CABINET MAYBE MOUNTED ON THE SERVICE POLE IF THE ELECTRICAL UTILITY ALLOWS THE INSTALLATION.

WHEN UTILITY POLES ARE USED TO SPAN THE TEMPORARY OVERHEAD CABLE, WRITTEN PERMISSION MUST BE OBTAINED FROM THE OWNER OF THE POLES AND GIVEN TO THE PROJECT MANAGER. ALL PERTINENT UTILITY AND CODE CLEARANCES SHALL BE MAINTAINED.

WOOD POLES (NONBREAKAWAY) SHALL BE NO CLOSER TO EDGE OF PAVEMENT THAN OFFSET DISTANCE CHART ALLOWS OR 4 FEET BEHIND PROTECTIVE BARRIER (BEAM GUARD, ETC.).

WOOD POSTS (BREAKAWAY) SHALL BE NO CLOSER THAN 2 FEET OUTSIDE OF SHOULDER.

VERTICAL CLEARANCE ETC. PER NEC.

TRAFFIC SIGNAL FACES SHALL BE TYPICALLY PLACED 12 FEET FROM EDGE OF PAVEMENT.

EACH TRAFFIC SIGNAL FACE SHALL HAVE A BACKPLATE.

SIGNING, PAVEMENT MARKING AND LANE CONTROL REQUIREMENTS SHALL CONFORM TO STANDARD DETAIL DRAWING 15 D 33.

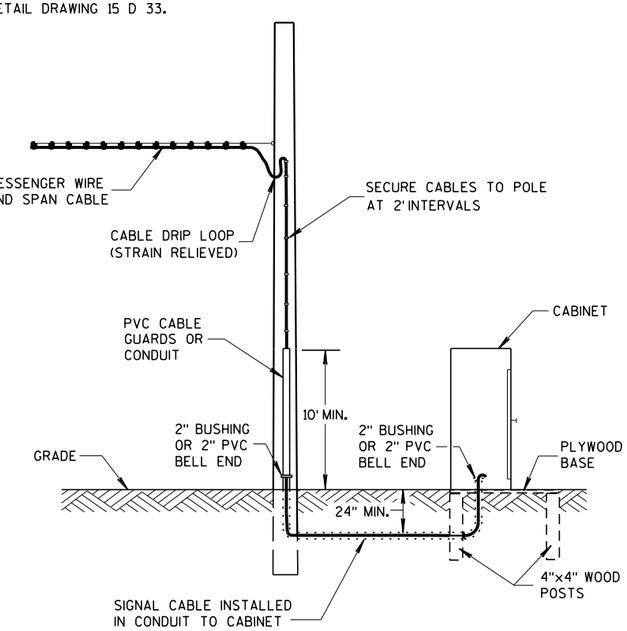

GROUND MOUNT CABINET INSTALLATION

OFFSET DISTANCES FOR TEMPORARY NON-BREAKAWAY POLES	
SPEED LIMIT	OFFSET DISTANCE**
GREATER THAN 45 MPH	18 FT
45 MPH OR LESS	12 FT
45 MPH OR LESS W/ CURBS	2 FT

**NOTE: OFFSET MEASURED FROM OUTER EDGE OF OUTSIDE THRU LANE.

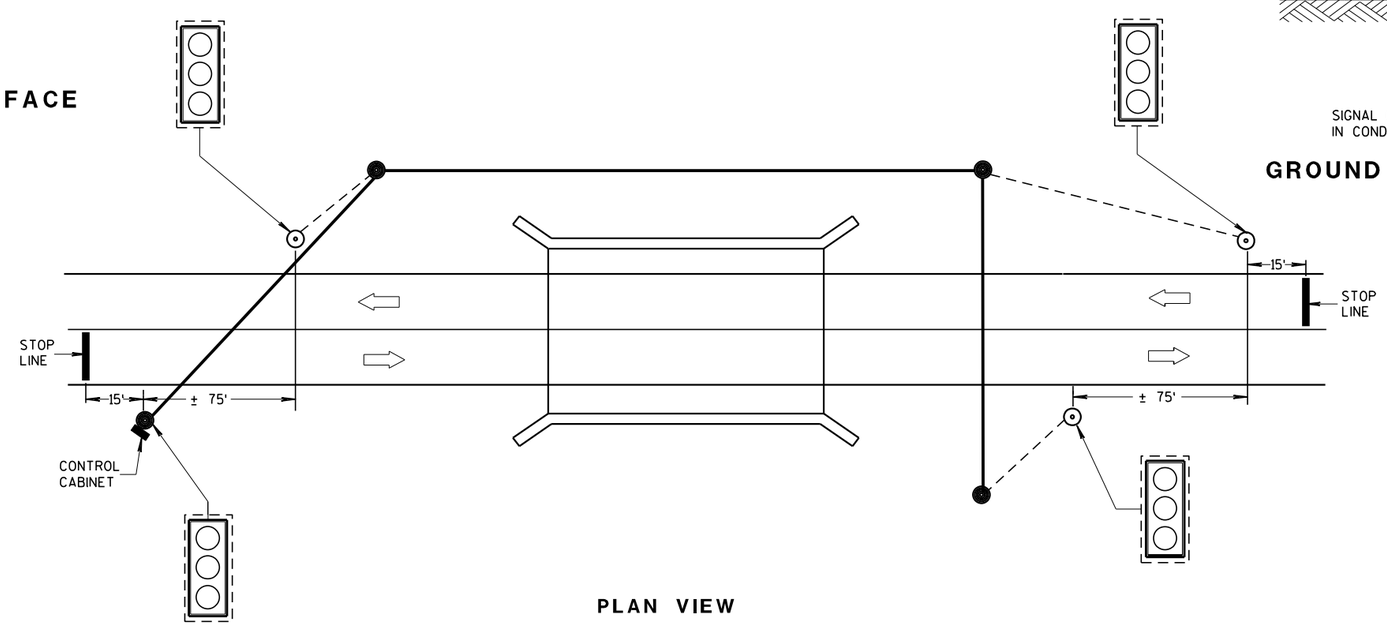

PLAN VIEW

TYPICAL BRIDGE TEMPORARY TRAFFIC SIGNAL LOCATION

LEGEND

- WOOD POLE (NON-BREAKAWAY)
- WOOD POST (BREAKAWAY)
- SIGNAL CABLE
- SIGNAL CABLE W/MESSENGER
- LED TRAFFIC SIGNAL FACE WITH BACKPLATE (3-12")
- DIRECTION OF TRAFFIC

MINIMUM POLE LENGTHS	CLASS	MINIMUM BURIAL DEPTHS
25 FEET	V	5 FEET
30 FEET	V	6 FEET
35 FEET	IV	7 FEET
40 FEET	IV	8 FEET
45 FEET	IV	9 FEET

BRIDGE TEMPORARY TRAFFIC SIGNAL INSTALLATION

STATE OF WISCONSIN
DEPARTMENT OF TRANSPORTATION

APPROVED
March 2018 — /S/ Ahmet Demirbilek
DATE — STATE ELECTRICAL ENGINEER
FHWA

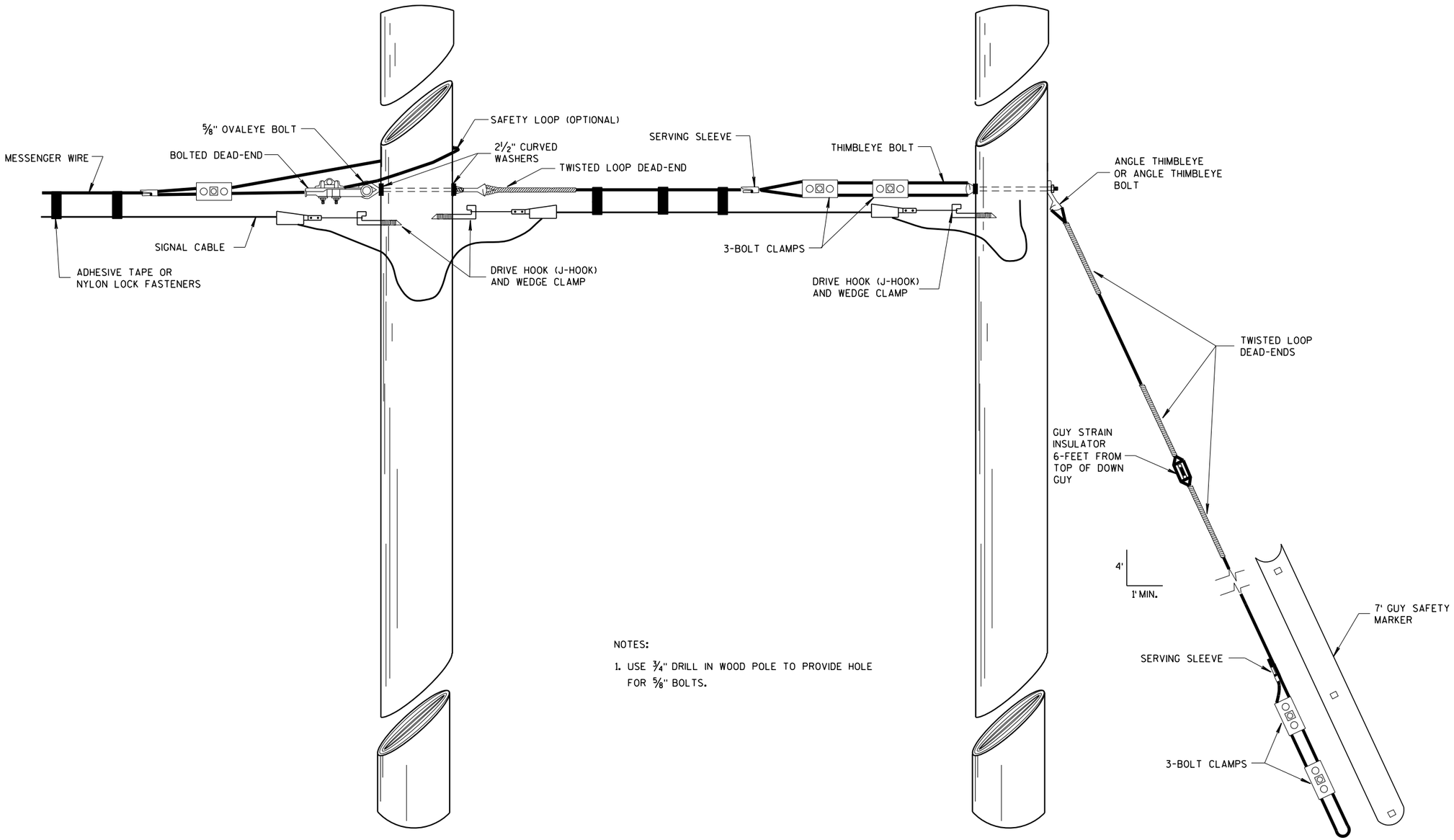

NOTES:

1. USE 3/4" DRILL IN WOOD POLE TO PROVIDE HOLE FOR 5/8" BOLTS.

SPAN WIRE POLE

GUY POLE

TYPICAL DEAD-ENDINGS OR GUYING

BRIDGE TEMPORARY TRAFFIC SIGNAL INSTALLATION

STATE OF WISCONSIN
DEPARTMENT OF TRANSPORTATION

APPROVED
March 2018 — /S/ Ahmet Demirbilek
DATE — STATE ELECTRICAL ENGINEER
FHWA

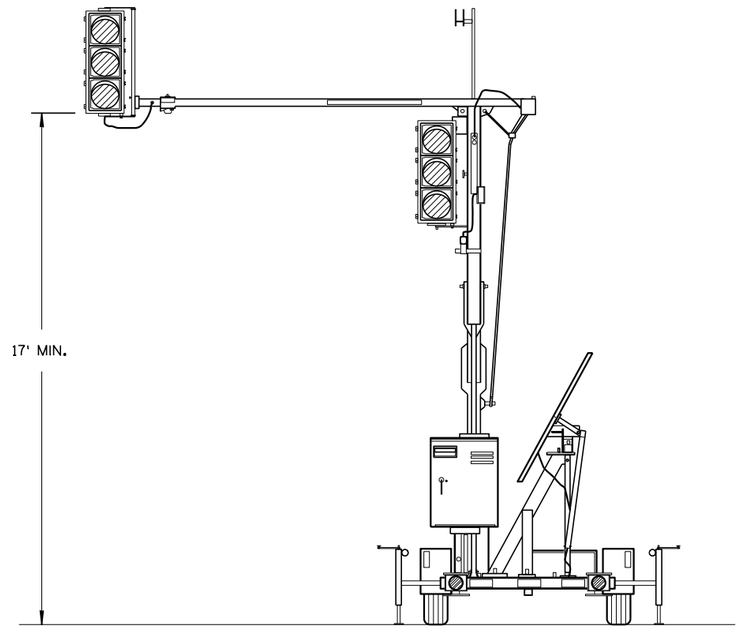

TRAILER MOUNTED TRAFFIC SIGNAL

GENERAL NOTES

DETAILS OF CONSTRUCTION, MATERIALS AND WORKMANSHIP NOT SHOWN ON THIS DRAWING SHALL CONFORM TO THE PERTINENT REQUIREMENTS OF THE CONTRACT.

SIGNING, PAVEMENT MARKING AND LANE CONTROL REQUIREMENTS SHALL CONFORM TO STANDARD DETAIL DRAWING 15 D 33.

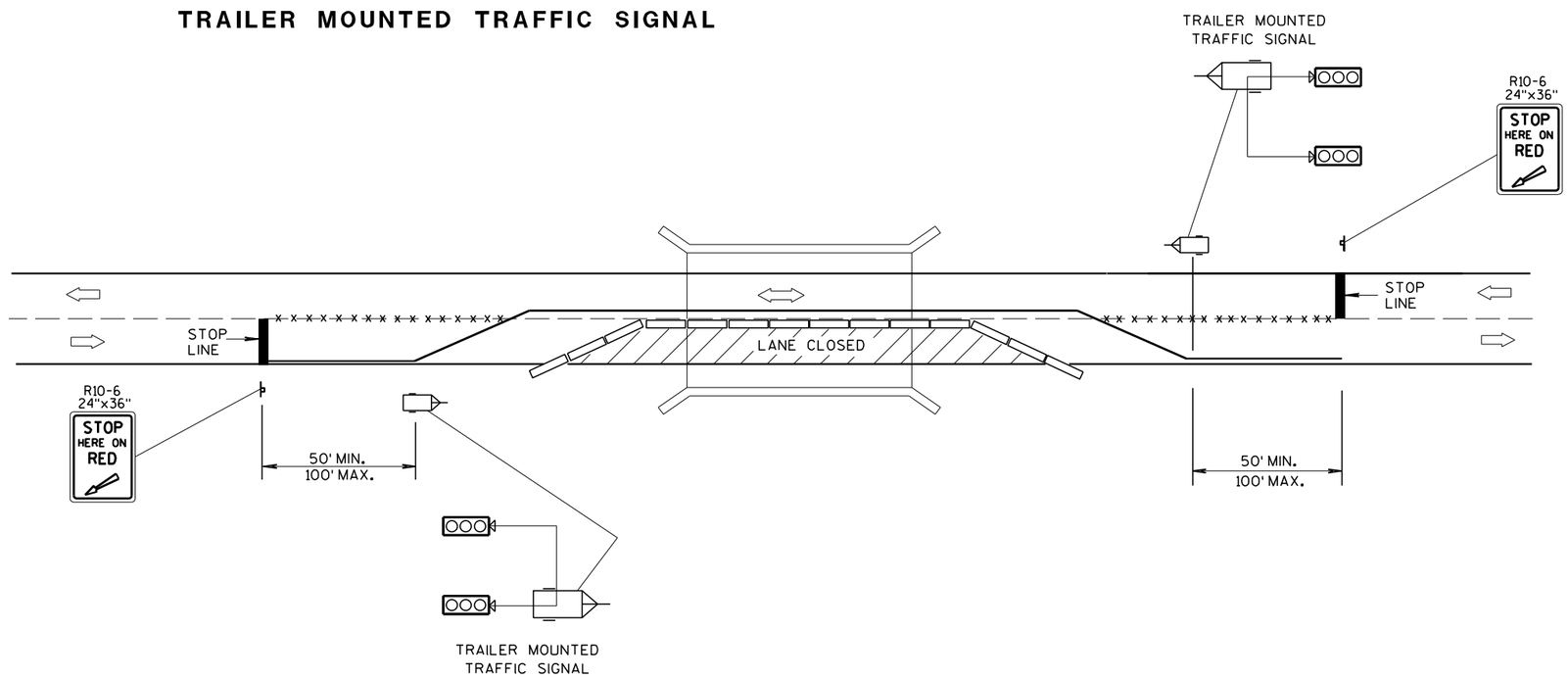

TYPICAL TRAILER MOUNTED TRAFFIC SIGNAL LOCATION

LEGEND

- POST MOUNTED SIGN
- REMOVING PAVEMENT MARKING
- TEMPORARY PRECAST CONCRETE BARRIER
- TRAILER MOUNTED TRAFFIC SIGNAL
- DIRECTION OF TRAFFIC FLOW

BRIDGE TEMPORARY TRAFFIC SIGNAL INSTALLATION

STATE OF WISCONSIN
DEPARTMENT OF TRANSPORTATION

APPROVED
March 2018 — /S/ Ahmet Demirbilek
DATE — STATE ELECTRICAL ENGINEER
FHWA

6

S.D.D. 9 G 2-5c

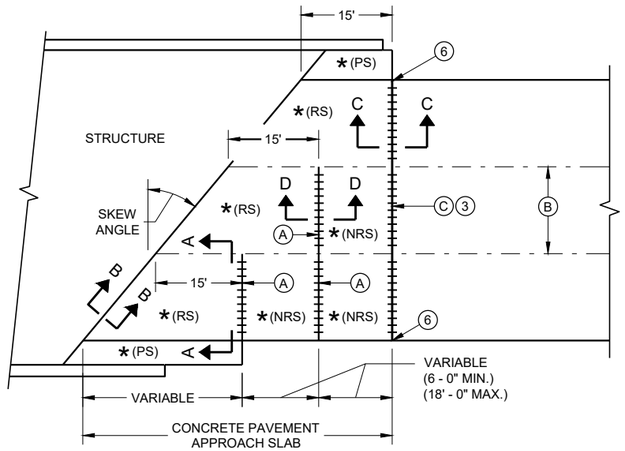

SKEWED APPROACH
(PAVEMENT MORE THAN TWO LANES)

* (RS) = REINFORCED CONCRETE SLAB

* (PS) = PAVECD CONCRETE SHOULDER OR CONCRETE DRAINAGE SLAB

* (NRS) - NON - REINFORCED CONCRETE SLAB

*** STANDARD DOWEL BAR DIAMETER (SEE SDD 13C11 AND SDD 13C13)

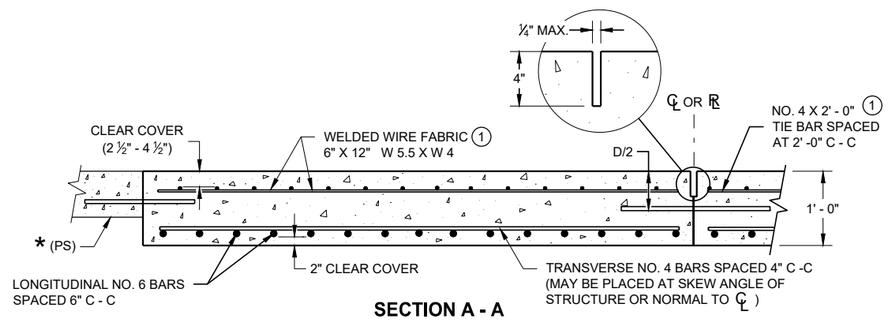

SECTION A - A
REINFORCEMENT POSITIONING DETAIL

GENERAL NOTES

THE CONTRACTOR MAY SPLICE NO. 6 BARS IN THE APPROACH SLAB FOR SKEWED STRUCTURES ONLY. STAGGER SPLICES WITH A MAXIMUM OF ONE SPLICE PER BAR. THE LENGTH OF LAP IS 20 INCHES.

TACK WELD DOWEL BARS TO THE BASKETS ON ALTERNATE ENDS.

1. THE CONTRACTOR MAY USE NO. 4 BARS SPACED AT 2' - 0 " C - C IN BOTH THE LONGITUDINAL AND TRANSVERSE DIRECTIONS FOR TOP REINFORCEMENT AS AN ALTERNATIVE TO THE WELDED WIRE FABRIC.
2. THE CONTRACTOR MAY OMIT THE BARS BETWEEN REINFORCED SLABS WHERE SLAB REINFORCEMENT BARS EXTEND ACROSS THE CENTERLINE OR REFERENCE LINE.
3. DO NOT CONSTRUCT AN EXPANSION JOINT OR INSTALL DOWEL BARS WHEN ABUTTING AN HMA PAVEMENT.
4. USE A JOINT SEALANT MEETING THE REQUIREMENTS OF ASTM D6690.
5. PLACE EXPANSION CAP ON THE END OF THE DOWEL THAT IS NOT TACK WELDED TO THE BASKET. DO NOT FORCE DOWEL BAR PAST THE DOWEL STOP.
6. EXTEND EXPANSION JOINT THROUGH ANY ADJACENT TIED CONCRETE.

A. STANDARD CONTRACTION JOINT NORMAL TO ℄ OR ℞.

B. STANDARD LONGITUDINAL JOINT WITH TIE BARS.

C. 1 ½" EXPANSIONT JOINT WITH DOWEL BARS NORMAL TO ℄ OR ℞.

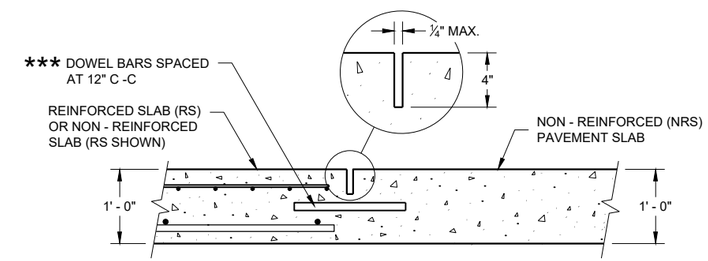

SECTION D - D
CONTRACTION JOINT

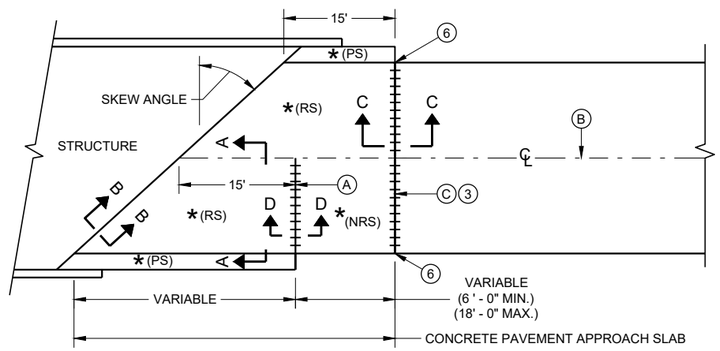

SKEWS > 20°
(PAVEMENT WIDTH ≤ 30')

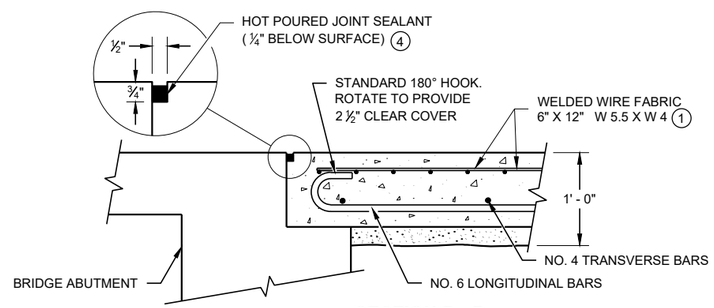

SECTION B - B
BEND DETAIL
BOTTOM REINFORCEMENT

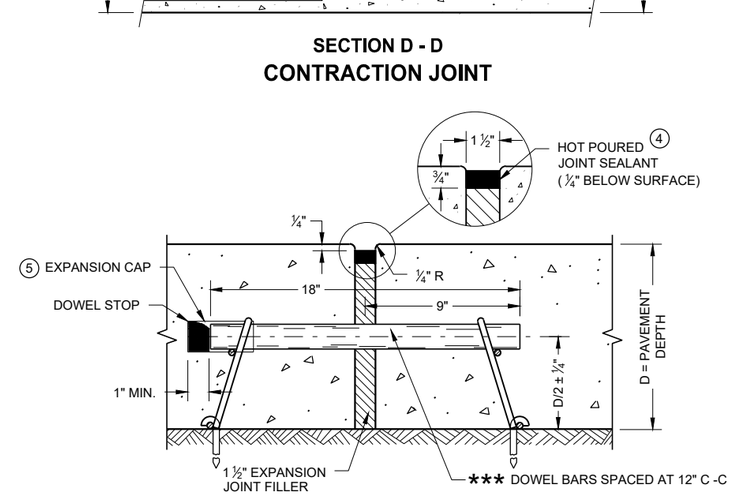

EXPANSION JOINT DETAIL

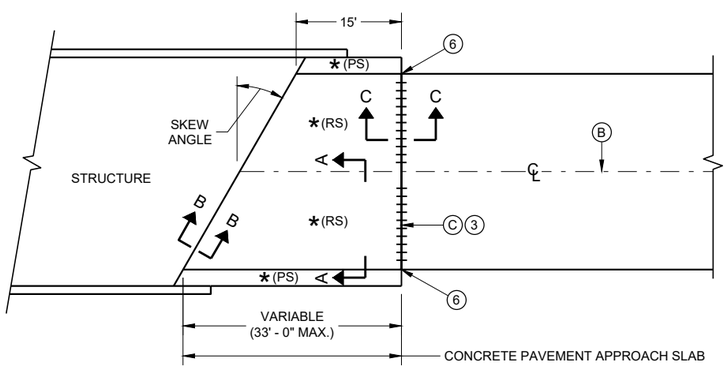

SKEWS ≤ 20°
(PAVEMENT WIDTH ≤ 30')

APPROACH SLAB AND ADJACENT PAVEMENT

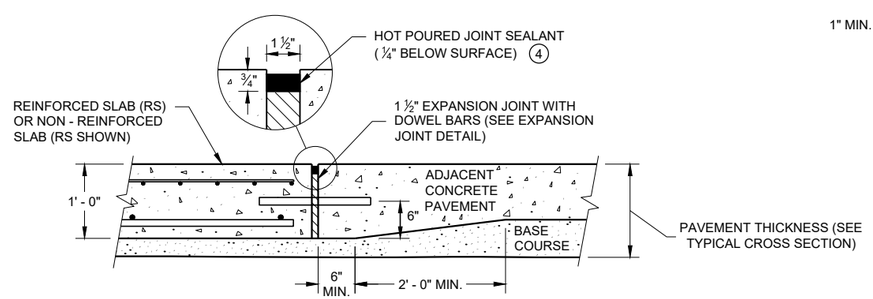

SECTION C - C
TRANSITION DETAIL
APPROACH SLAB TO ADJACENT PAVEMENT

CONCRETE PAVEMENT APPROACH SLAB

STATE OF WISCONSIN
DEPARTMENT OF TRANSPORTATION

APPROVED
November 2018 /S/ Peter Kemp P.E.
DATE PAVEMENT SUPERVISI
FHWA

6

6

SDD 13B02 - 09a

SDD 13B02 - 09a

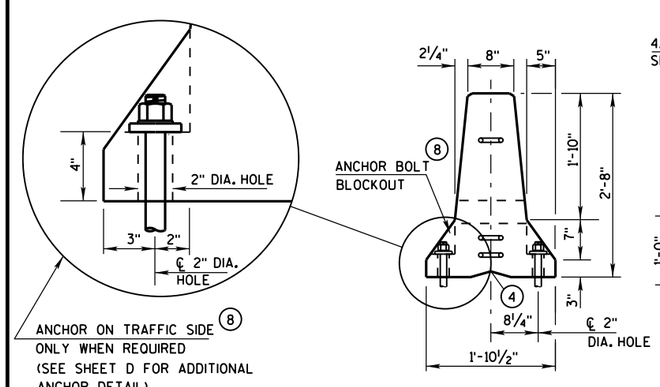

END VIEW

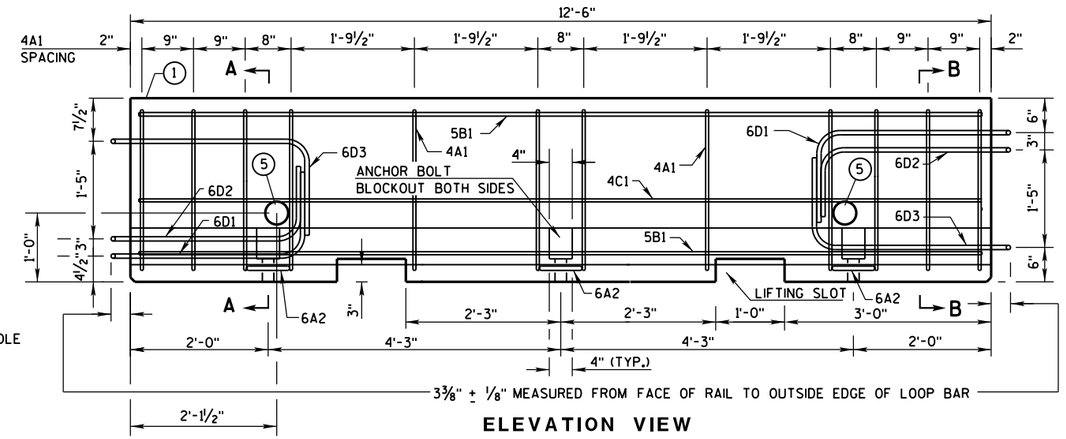

ELEVATION VIEW

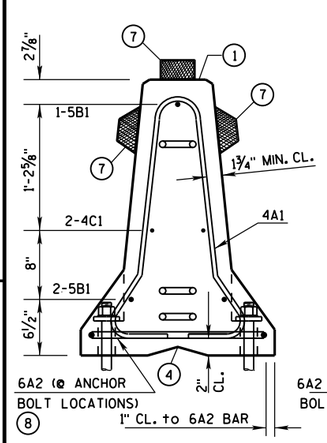

SECTION A-A
(STIRRUP PLACEMENT)

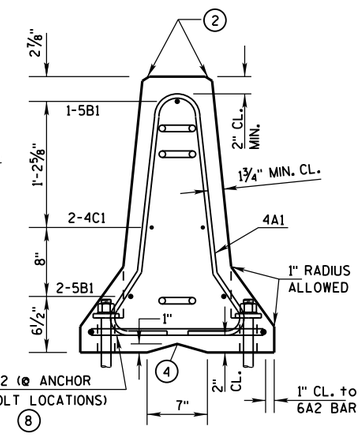

SECTION B-B
(STIRRUP PLACEMENT)

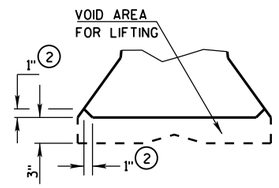

DETAIL "B"
LIFTING SLOT DETAIL

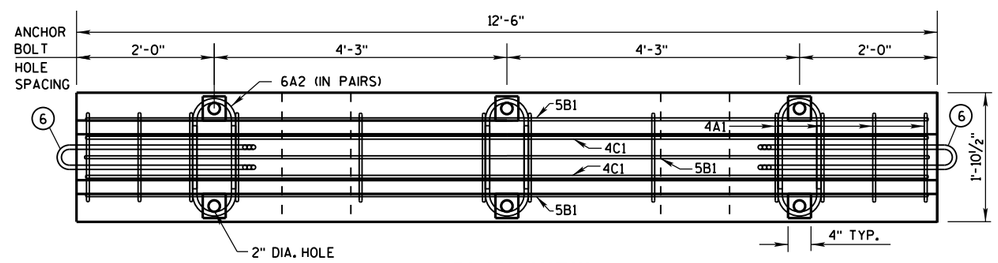

PLAN VIEW

DETAILS OF BARRIER SECTION

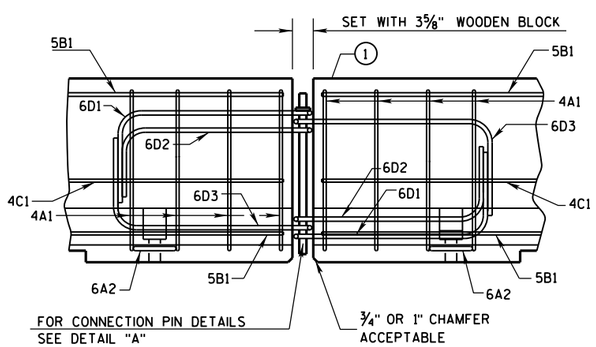

DETAILS OF BARRIER CONNECTION

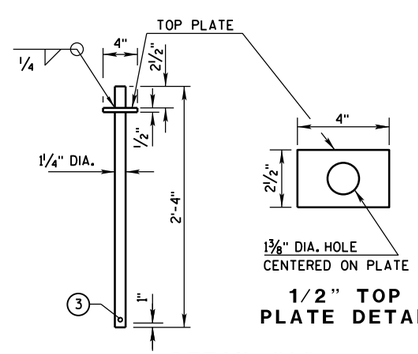

1/2" TOP PLATE DETAIL

DETAIL "A"
CONNECTION PIN
(A36 STEEL (10.9 LB EACH))

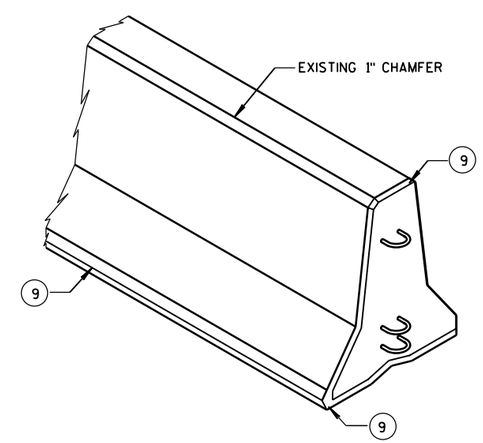

GENERAL NOTES

THESE GENERAL NOTES APPLY TO SHEETS 14B7-15(a) THRU 14B7-15(i).

DO NOT INTERMIX CONCRETE BARRIER TEMPORARY PRCAST, 12'-6" (CBTP12.5) WITH OTHER TEMPORARY CONCRETE BARRIERS.

USE ASTM A-615, GRADE 60, DEFORMED STEEL BARS FOR BARS 4A1, 6A2, 5B1 AND 4C1 IN THE BARRIER SECTION AND FOR 4V1, 4V2, 4V3, 4V4, 4V5, 4V6, 4F1, 4F2 AND 5F3 IN THE BARRIER TAPER SECTION.

LOOP BARS 6D1, 6D2 AND 6D3 SHALL BE ¾" SMOOTH STEEL BARS WITH A MINIMUM YIELD STRENGTH OF 60 KSI, A TENSILE STRENGTH OF NOT LESS THAN 1.25 TIMES THE YIELD STRENGTH BUT A MINIMUM OF 80 KSI, A MINIMUM 14% ELONGATION IN 8 INCHES AND PASSING A 180 DEGREE BEND TEST USING A 3-½" PIN BEND DIAMETER FOR BEND TESTS. THE LOOPS SHALL BE INSTALLED WITHIN ⅛" OF THE PLAN DIMENSION.

CONSTRUCT LIFTING SLOTS AS SPECIFIED ON THE PLANS TO FACILITATE THE DRAINAGE OF WATER AFTER INSTALLATION.

PLACE BARRIER ON A PAVED SURFACE. REMOVE ALL LOOSE DIRT AND SAND FROM THE ROADWAY SURFACE PRIOR TO PLACEMENT OF THE BARRIER.

INSTALL MECHANICAL OR ADHESIVE ANCHORS PER MANUFACTURER'S RECOMMENDATIONS. PROVIDE MANUFACTURER'S INFORMATION TO PROJECT ENGINEER.

1. MARK ONE END OF EACH BARRIER PERMANENTLY BY FORMING INTO THE BARRIER THE FOLLOWING INFORMATION:
   a. TYPE: WI CBTP
   b. MANUFACTURER
   c. DATE MANUFACTURED (MONTH AND YEAR)
2. 1" CHAMFER TO PREVENT SPALLING.
3. A ⅜" HOLE IN THE CONNECTION PIN, AT THE LOCATION SHOWN, IS ACCEPTABLE, BUT NOT REQUIRED..
4. "V" NOTCH IS OPTIONAL.
5. THE 4" DIAMETER, 11 GAUGE STEEL, ROUND MECHANICAL TUBING SLEEVE FOR LIFTING (OPTIONAL).
6. NEVER USE LOOP BARS (6D1, 6D2 OR 6D3) TO LIFT, MOVE OR REPOSITION THE BARRIER.
7. USE DELINEATORS CONFORMING TO SECTION 633 OF THE STANDARD SPECIFICATIONS. CONTRACTOR MAY USE ALTERNATE SHAPES AND HOUSING. INSTALL DELINEATORS ACCORDING TO MANUFACTURES INSTRUCTION. INSTALL YELLOW REFLECTORS WHEN BARRIER IS LOCATED TO THE LEFT OF TRAFFIC AND WHITE REFLECTORS WHEN BARRIER IS LOCATED TO THE RIGHT OF TRAFFIC. SPACE DELINEATORS A MAXIMUM OF 25 FEET APART. PROVIDE TOP MOUNTED DELINEATORS IN ADDITION TO THE SIDE MOUNTED DELINEATORS ON ALL BARRIER INSTALLATIONS LOCATED ON A CURVED ALIGNMENT LONGER THAN 200 FEET AND ON BARRIERS USED TO SEPARATE OPPOSING TRAFFIC.
8. SEE SHEET D FOR HOW TO ANCHOR BARRIER. SEE SHEET E FOR WHEN TO ANCHOR BARRIER.
9. 1" CHAMFER OPTIONAL.

f'c = 4,000 psi

CONCRETE BARRIER
TEMPORARY PRECAST, 12'-6"

STATE OF WISCONSIN
DEPARTMENT OF TRANSPOR

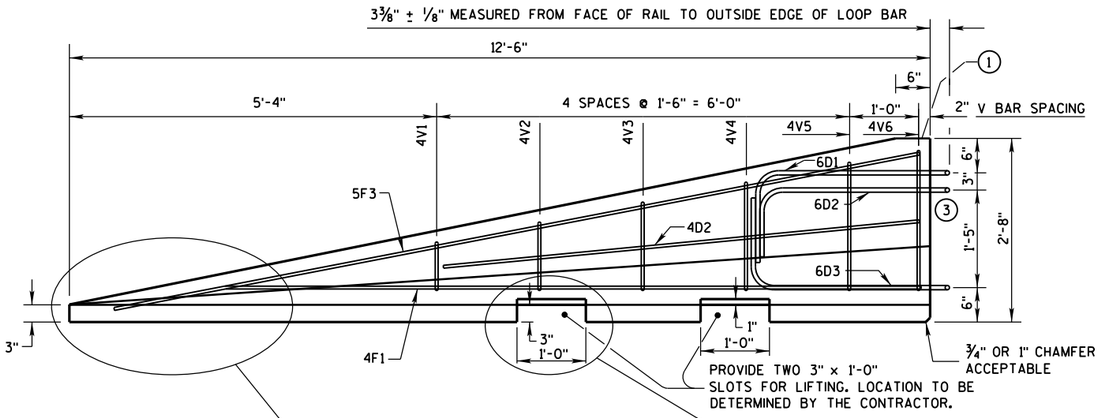

SIDE ELEVATION

(FOR CONNECTION TO LEFT END OF BARRIER)

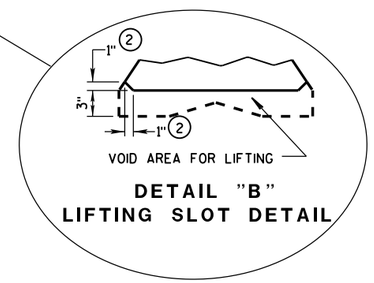

DETAIL "B"
LIFTING SLOT DETAIL

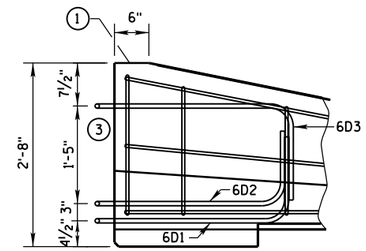

SIDE ELEVATION

LOOP BAR ASSEMBLY INVERTED
FOR OPPOSITE END.
(FOR CONNECTION TO RIGHT END OF BARRIER)

GENERAL NOTES

1. MARK ONE END OF EACH BARRIER PERMANENTLY BY FORMING INTO THE BARRIER THE FOLLOWING INFORMATION:
   a. TYPE WICBTP
   b. MANUFACTURER
   c. DATE MANUFACTURED (MONTH AND YEAR)
2. 1" CHAMFER TO PREVENT SPALLING.
3. NEVER USE LOOP BARS (6D1, 6D2 OR 6D3) TO LIFT, MOVE OR REPOSITION THE BARRIER.

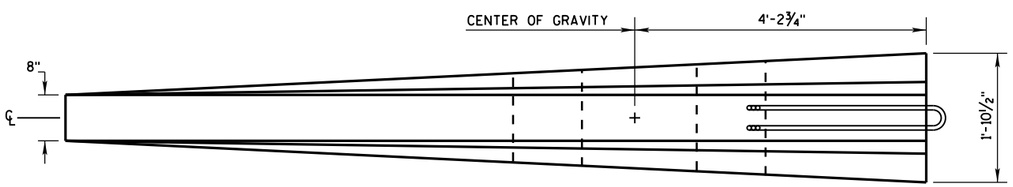

PLAN VIEW

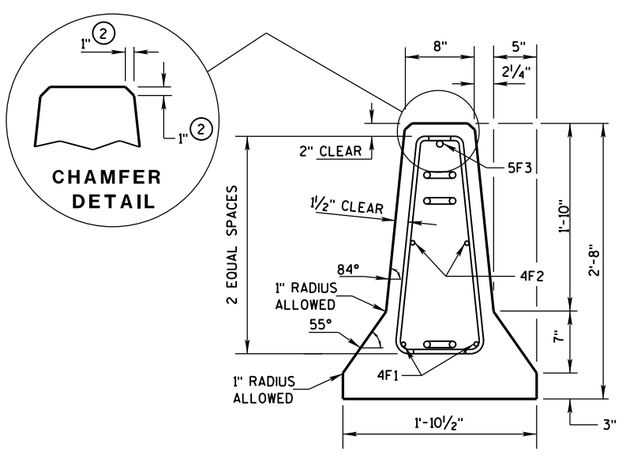

END SECTION

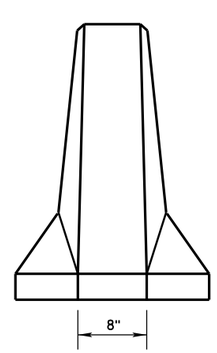

FRONT ELEVATION

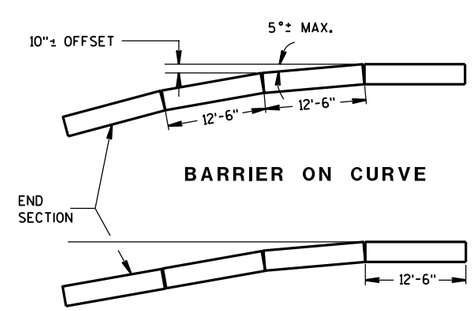

BARRIER ON CURVE

FLARE AT BARRIER END

POSTED SPEED, (MPH)	FLARE RATE
40 OR LESS	6:1
45 OR GREATER	8:1

DETAILS OF BARRIER TAPER SECTION

CONCRETE BARRIER
TEMPORARY PRECAST, 12'-6"

STATE OF WISCONSIN
DEPARTMENT OF TRANSPORTATION

6

S.D.D. 14 B 7-15b

GENERAL NOTES

(1) NEVER USE LOOP BARS (6D1, 6D2 OR 6D3) TO LIFT, MOVE OR REPOSITION THE BARRIER.

BARRIER TAPER SECTION BILL OF MATERIALS

(PER 12'-6" BARRIER TAPER SECTION)

BAR	BAR SIZE	NO. OF BARS	LENGTH FT.
4V1	4	2	1'-11"
4V2	4	2	2'-2"
4V3	4	2	2'-6"
4V4	4	2	2'-9"
4V5	4	2	3'-2"
4V6	4	2	3'-4"
4F1	4	2	12'-0"
4F2	4	2	7'-6"
5F3	5	1	11'-9"
LOOP ASSEMBLY			
6D1	6	1	8'-5"
6D2	6	1	7'-7"
6D3	6	1	8'-6"

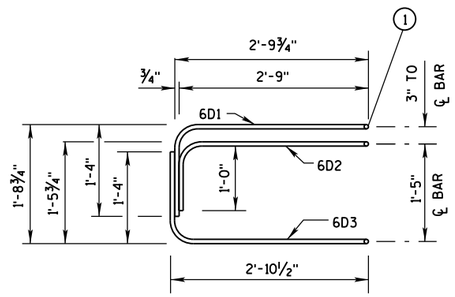

ELEVATION
LOOP BAR ASSEMBLY

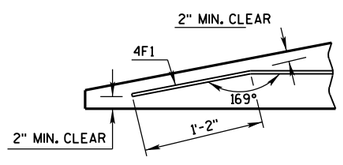

DETAIL "C"
BENT BAR DETAIL

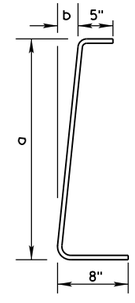

BAR	a	b
V1	10"	1"
V2	1'-1"	1¼"
V3	1'-5"	1⅝"
V4	1'-8"	1⅞"
V5	2'-0½"	2⅜"
V6	2'-3"	2¾"

4V BARS
2 AT EACH SIZE REQUIRED
FOR STIRRUP ASSEMBLY

TAPER BARRIER SECTION

BARRIER SECTION BILL OF MATERIALS

(PER 12'-6" BARRIER SECTION)

BAR	BAR SIZE	NO. OF BARS	LENGTH FT.
4A1	4	12	6'-0"
6A2	6	6	2'-11"
5B1	5	3	12'-2"
4C1	4	2	12'-2"
LOOP ASSEMBLY			
6D1	6	2	8'-5"
6D2	6	2	7'-7"
6D3	6	2	8'-6"

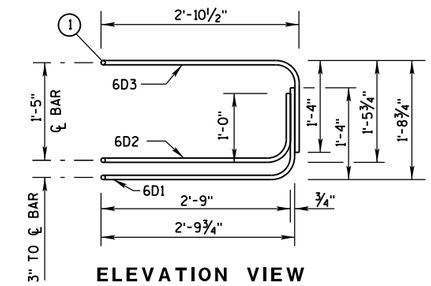

ELEVATION VIEW

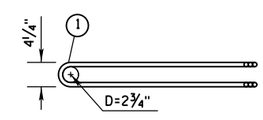

PLAN VIEW
LOOP BAR ASSEMBLY
(MARKED END SHOWN, INVERT FOR OTHER END)

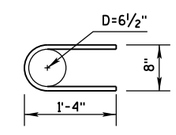

6A2

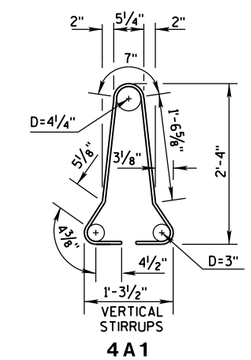

VERTICAL STIRRUPS
4A1

BARRIER SECTION

CONCRETE BARRIER
TEMPORARY PRECAST, 12'-6"

STATE OF WISCONSIN
DEPARTMENT OF TRANSPOR

6

S.D.D. 14 B 7-15c

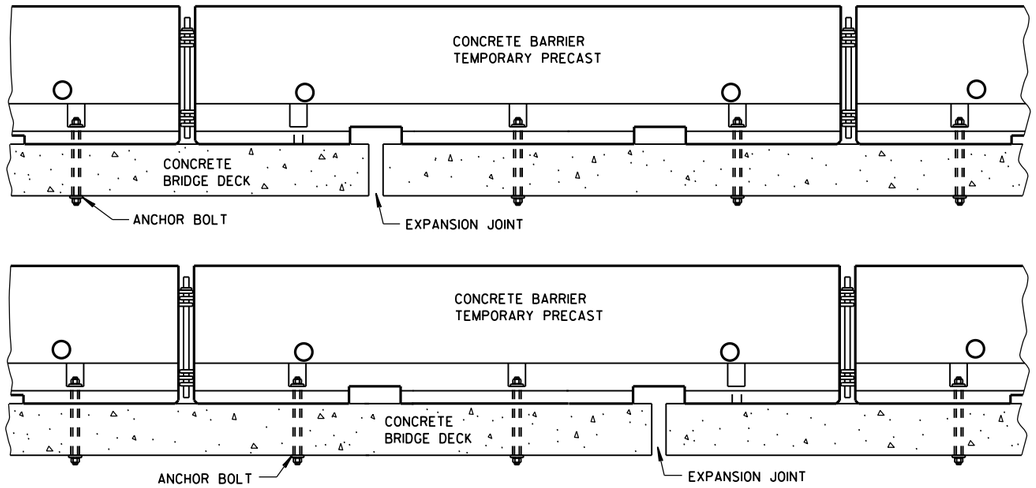

TREATMENT AT BRIDGE DECK EXPANSION JOINTS

(NO SINGLE CONCRETE BARRIER SECTION SHALL BE ANCHORED TO BOTH THE BRIDGE DECK AND THE APPROACH SLAB. ALL ANCHOR BOLT LOCATIONS SHALL BE ANCHORED TO THE DECK IN ACCORDANCE WITH THE DETAIL. NO MORE THAN ONE ANCHOR BOLT SHALL BE ELIMINATED FROM A BARRIER SECTION WHEN SPANNING AN EXPANSION JOINT.)

GENERAL NOTES

SEE SHEET E FOR WHEN TO ANCHOR. OTHER PARTS OF THE PLAN MAY SHOW ADDITIONAL LOCATIONS REQUIRING ANCHORING.

REMOVE ALL ANCHORS WHEN NO LONGER NEEDED. FILL CONCRETE PAVEMENTS, DECKS AND APPROACH SLABS WITH NON-SHRINK COMMERICAL GROUT FROM THE APPROVED PRODUCT LIST. FILL ASPHALT PAVEMENTS WITH ASTM D6690 TYPE II RUBBERIZED CRACK FILLER.

1. 1⅛" DIAMENTER A307 THREADED ROD, ½" X 3" X 3" SQUARE PLATE WASHER WITH ASTM A36 STEEL. ASTM A563A HEAVY HEX NUT.
2. ADHESIVE ANCHORS WITH A MINIMUM BOND STRENGTH OF 1,800 PSI AND 5¼" EMBEDMENT. SEE 603.2 AND 603.3.1.2 OF THE WISCONSIN STANDARD SPECIFICATIONS FOR MORE INFORMATION ON ADHESIVE ANCHORS.
3. ASPHALT SURFACE SHOWN. CONTRACTOR MAY DRILL THROUGH CONCRETE PAVEMENT AND THAN DRIVE ASPHALT ANCHOR PIN.

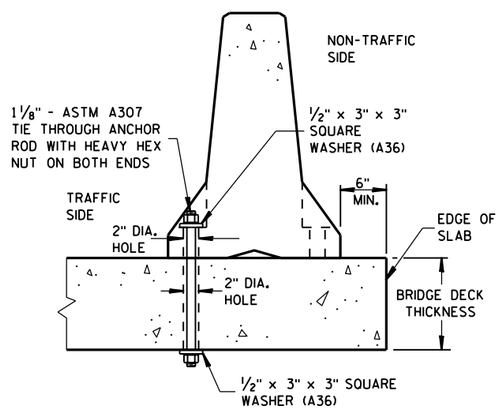

THROUGH BOLTED ANCHOR INSTALLATION ON BRIDGE DECK

(DO NOTUSE ON CONCRETE BRIDGE DECK WITH ASPHALT OVERLAY)

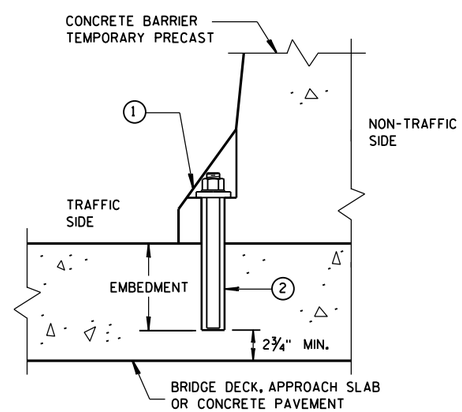

REMOVABLE ADHESIVE ANCHOR INSTALLATION ON CONCRETE BRIDGE DECK, CONCRETE APPROACH SLAB, OR CONCRETE PAVEMENT

(DO NOT USE ON CONCRETE WITH AN ASPHALTIC OVERLAY)

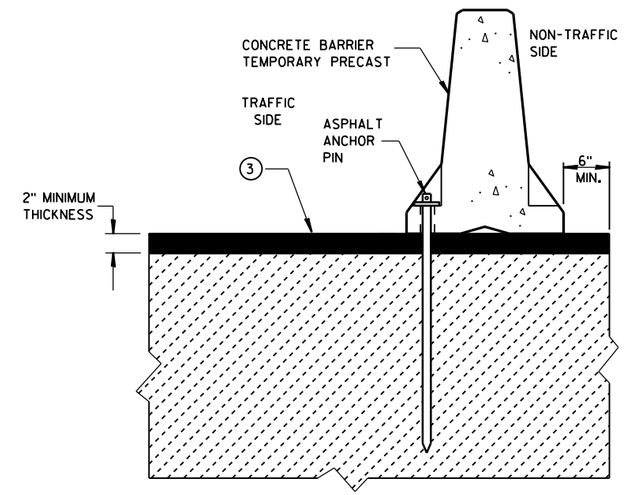

STAKE DOWN INSTALLATION FOR ASPHALTIC SURFACE

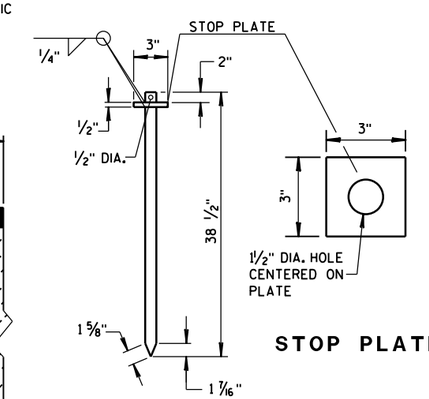

STOP PLATE

ASPHALT ANCHOR PIN

(ASTM A36 STEEL)

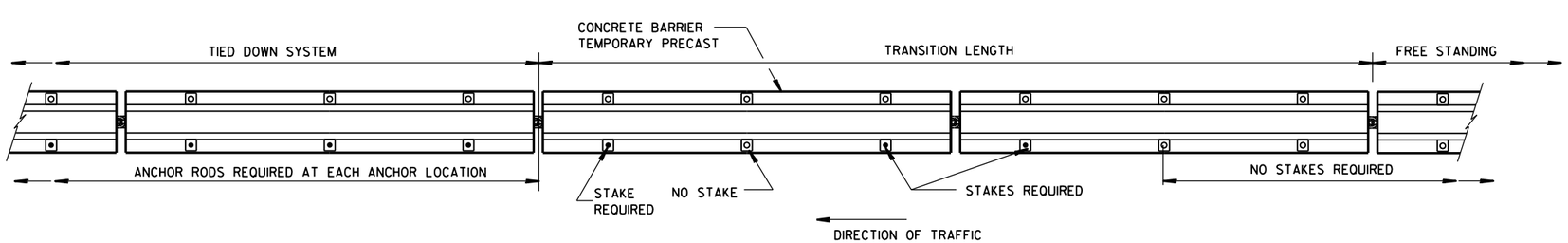

PLAN VIEW

FREE STANDING TRANSITION TO TIED-DOWN SYSTEM

(PLACE TRANSITION IN A TANGENT SECTION OF BARRIER PARALLEL TO THE ROADWAY. IF TRANSITION OCCURS ON STRUCTURAL SLAB, ANCHOR AS SHOWN.)

CONCRETE BARRIER
TEMPORARY PRECAST, 12'-6"

STATE OF WISCONSIN
DEPARTMENT OF TRANSPOI

6

S.D.D. 14 B 7-15d

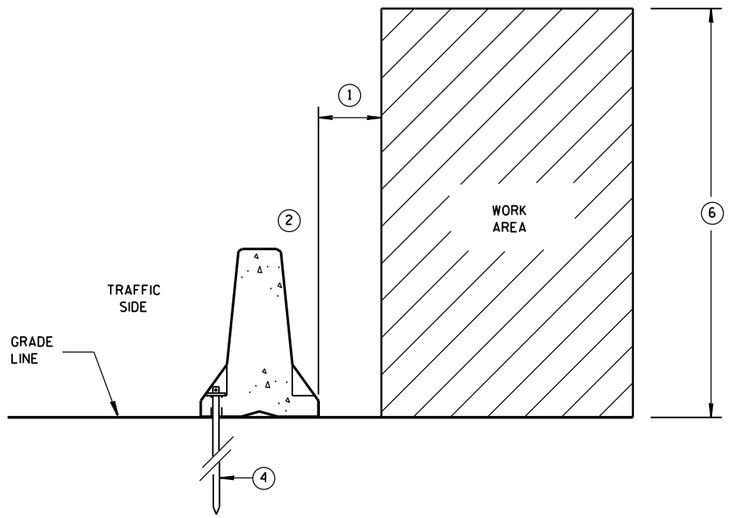

ANCHORED BARRIER SPACE REQUIREMENTS FOR HAZARDS EXTENDED ABOVE THE GRADE LINE

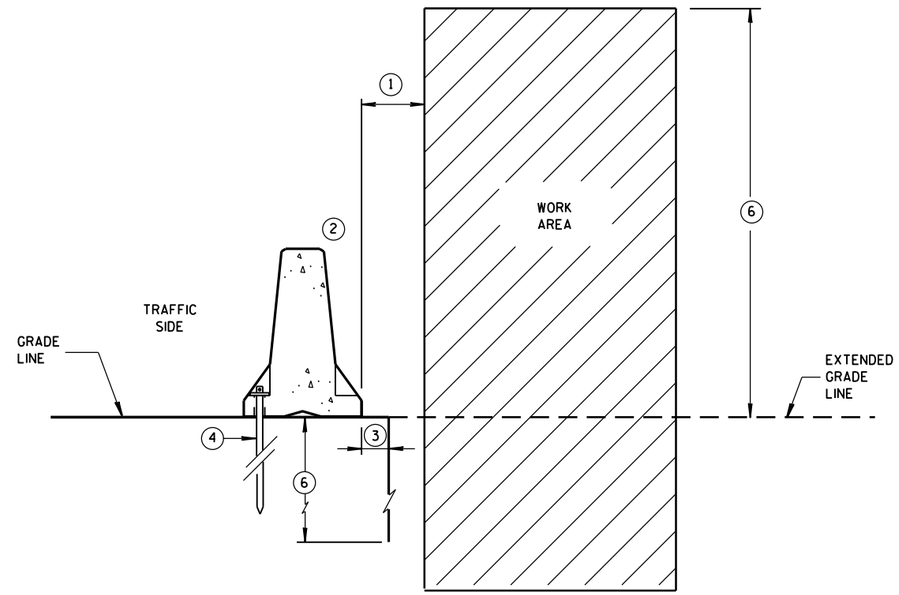

ANCHORED BARRIER SPACE REQUIREMENTS ON VERTICAL DROP OFFS

GENERAL NOTES

1. WHEN OBJECTS EXTEND ABOVE THE GRADE, A MINIMUM OF 1 FOOT IS REQUIRED FROM BACK OF BARRIER TO OBJECT. SEE OTHER DETAILS FOR FOR THE MINIMUM OFFSET FROM BACK OF BARRIER TO SLOPES OR VERTICAL DROPS.
2. OBJECTS ARE NOT TO BE PLACED ON, MOUNTED TO, OR LEANED AGAINST THE BARRIER WITHOUT PERMISSION OF THE PROJECT ENGINEER.
3. SEE OTHER DETAIL ON SHEET "D" FOR SPACE REQUIREMENTS.
4. SEE BOLT THROUGH DECK, REMOVABLE ADHESIVE ANCHOR, OR A STAKE DOWN FOR ASPHALTIC SURFACE TREATMENT DETAILS. ASPHALTIC ANCHOR SHOWN.
5. DEPTH OF 3 FEET OR MORE.
6. Y = 6'-6".

POSTED SPEED MPH	X
45 OR GREATER	4'
40 OR LESS	2'

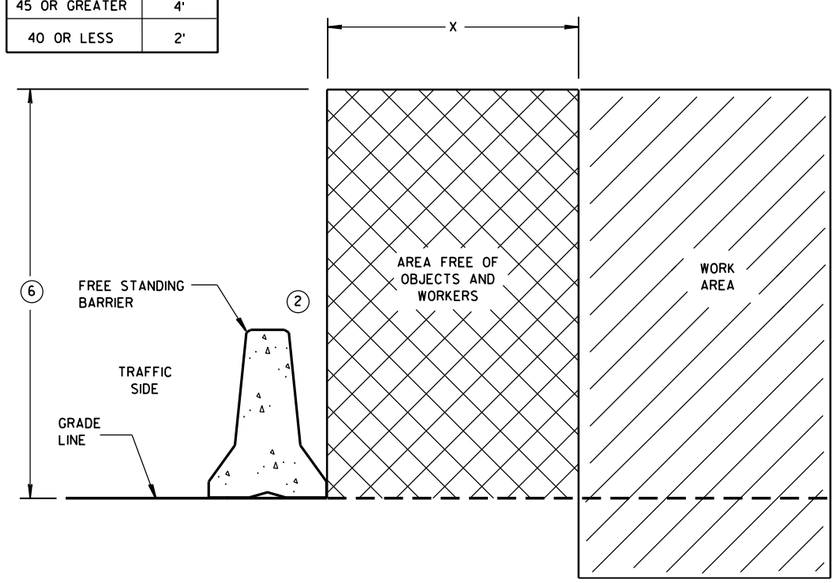

FREE STANDING BARRIER SPACE REQUIREMENTS

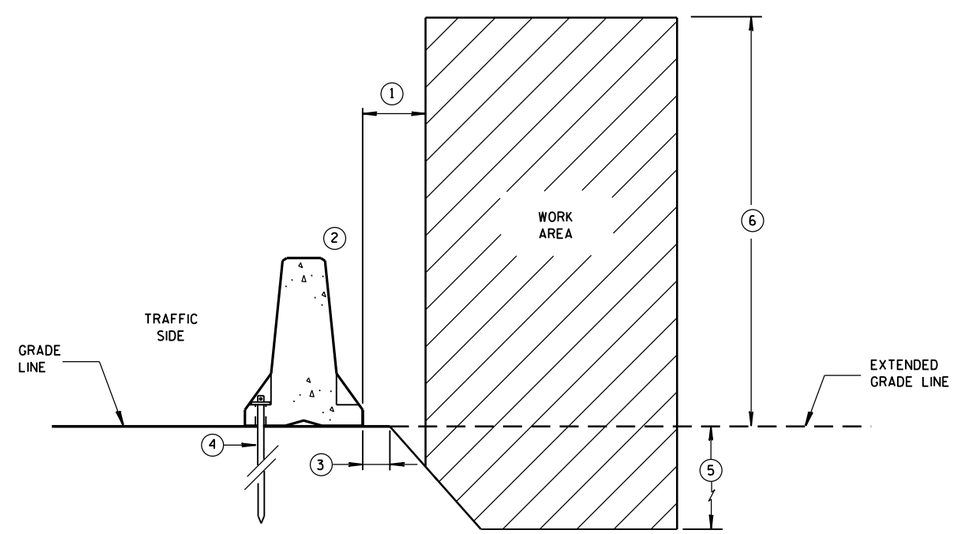

ANCHORED BARRIER SPACE REQUIREMENTS ON SLOPES

CONCRETE BARRIER
TEMPORARY PRECAST, 12'-6"

STATE OF WISCONSIN
DEPARTMENT OF TRANSPOI

6

S.D.D. 14 B 7-15e

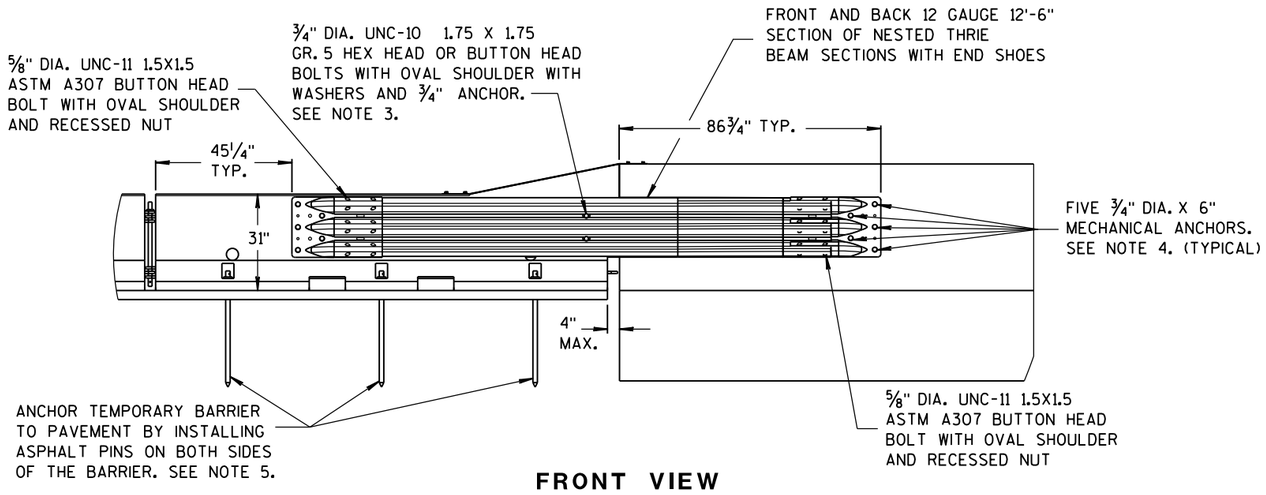

FRONT VIEW

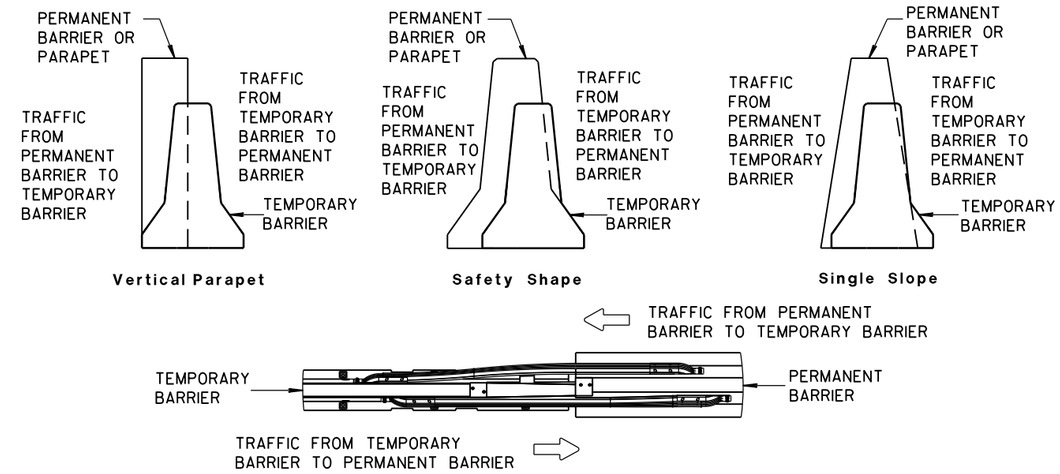

TEMPORARY BARRIER PLACEMENT FOR BI-DIRECTIONAL TRANSITION TO TIED-DOWN SYSTEM

NOTES

NESTED THRIE BEAM IS REQUIRED ON BOTH SIDES OF THE TEMPORARY BARRIER FOR ALL INSTALLATIONS REGARDLESS OF TRAFFIC.

1. CAP END PLATE PLACED FLUSH WITH UPSTREAM END OF PERMANENT BARRIER OR PARAPET.
2. THRIE BEAM PIECES ARE OFFSET 15 1/4" TO PREVENT INTERFERENCE FROM THE ANCHORS ON OPPOSING SIDES.
3. MINIMUM MECHANICAL OR ADHESIVE ANCHOR STRENGTH REQUIREMENTS: ULTIMATE TENSILE LOAD 9.48 KIPS AND ULTIMATE SHEAR LOAD 10.48 KIPS.
4. MINIMUM MECHANICAL OR ADHESIVE ANCHOR STRENGTH REQUIREMENTS: ULTIMATE TENSILE LOAD 17.9 KIPS AND ULTIMATE SHEAR LOAD 21.96 KIPS.
5. MAY BE USED ON CONCRETE OR ASPHALT PAVEMENTS. ASPHALT OPTION SHOWN. FOR CONCRETE OPTION SEE OTHER DETAILS.
6. MINIMUM MECHANICAL OR ADHESIVE ANCHOR STRENGTH REQUIREMENTS: ULTIMATE TENSILE LOAD 12.14 KIPS AND ULTIMATE SHEAR LOAD 17.5 KIPS.

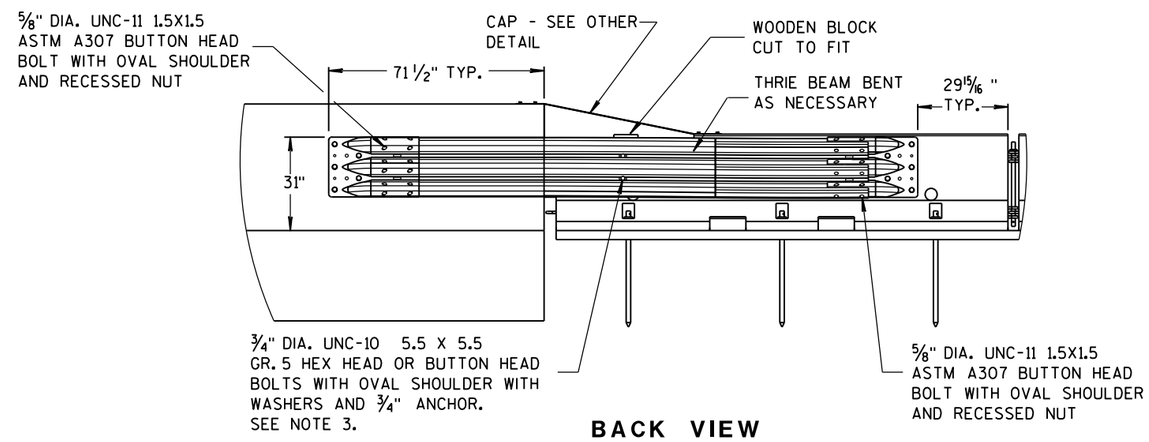

BACK VIEW

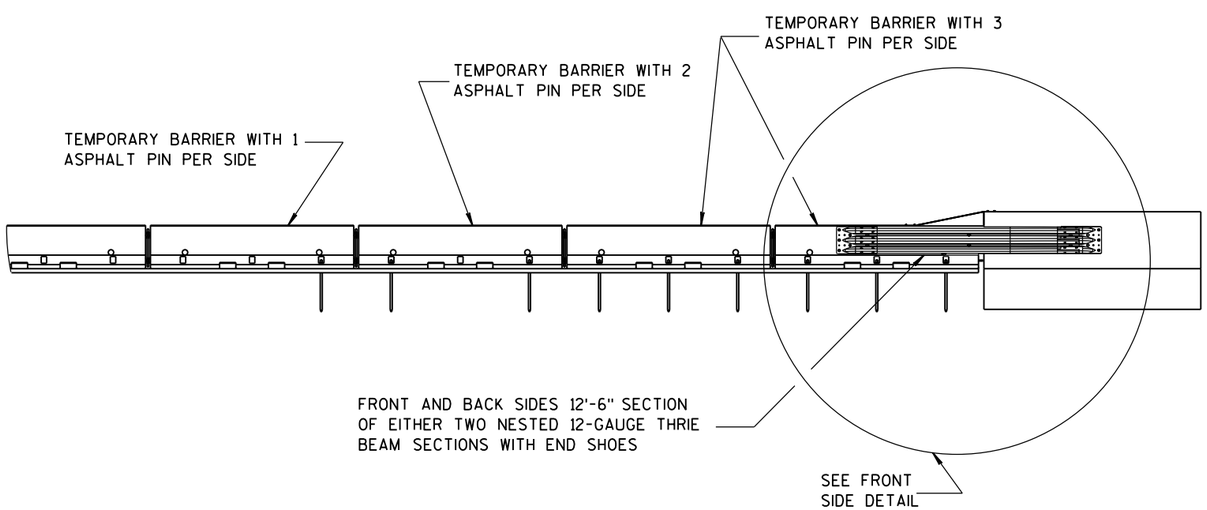

FRONT VIEW

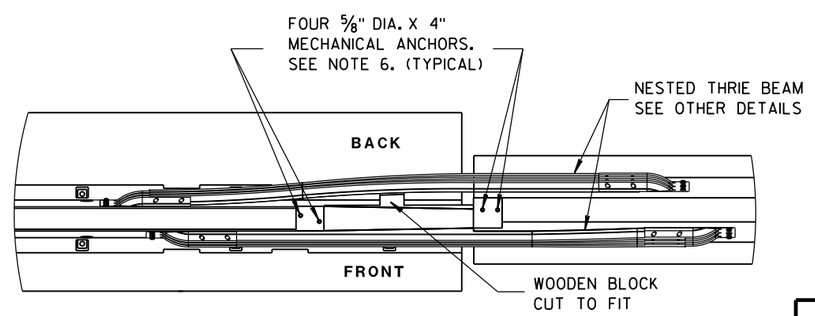

PLAN VIEW

BI-DIRECTIONAL TRANSITION TO TIED-DOWN SYSTEM

CONCRETE BARRIER
TEMPORARY PRECAST, 12'-6"

STATE OF WISCONSIN
DEPARTMENT OF TRANSPOR

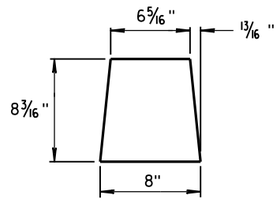

GUSSET 1

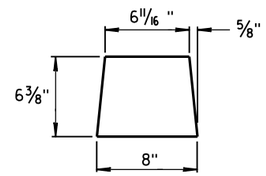

GUSSET 2

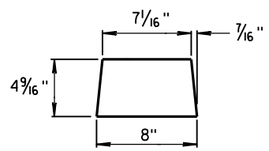

GUSSET 3

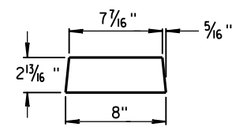

GUSSET 4

GUSSETS

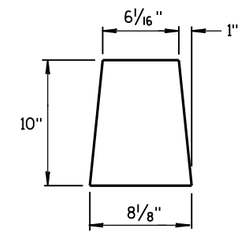

END PLATE

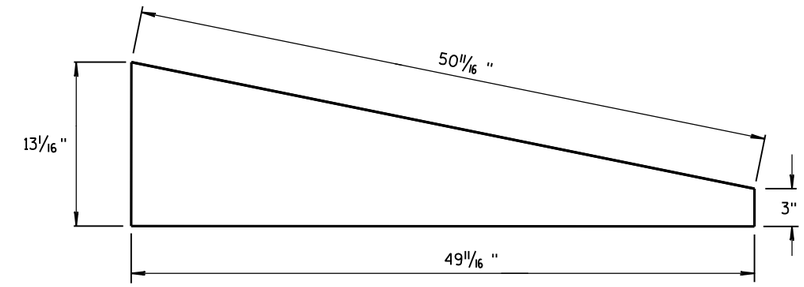

SIDE PLATE

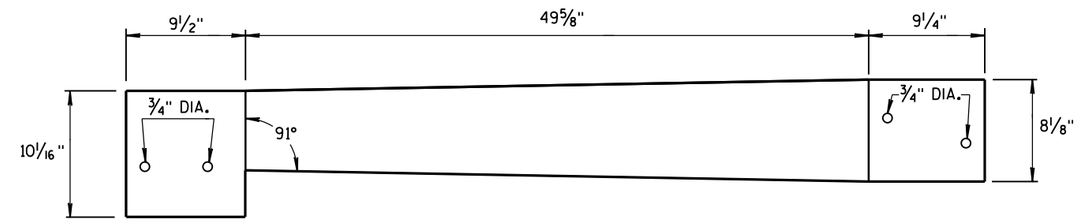

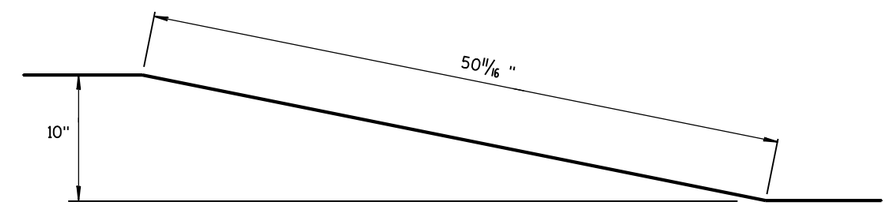

TOP PLATE

SIDE, TOP AND END PLATES FOR CAP FROM TEMPORARY CONCRETE BARRIER TO 42" PERMANENT CONCRETE BARRIER

SIDE PLATES, TOP PLATE, END PLATE AND GUSSETS ARE 12 GAUGE ASTM A36 GALVANIZED STEEL.

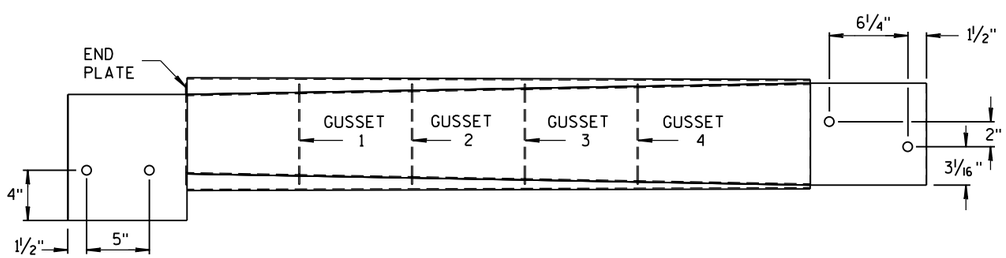

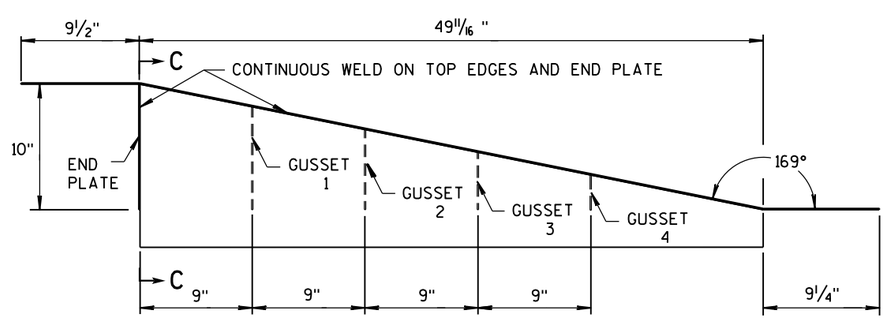

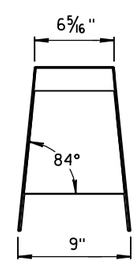

SECTION C-C

NOTES

1. FOUR GUSSETS AND END PLATE ARE STITCH WELDED ON THREE SIDES.
2. TWO TRIANGULAR SIDE PLATES ARE STITCH WELDED TO TOP PLATE, END PLATE, AND GUSSETS.

CAP DETAILS FOR TEMPORARY CONCRETE BARRIER TO 42" PERMANENT CONCRETE BARRIER

CONCRETE BARRIER
TEMPORARY PRECAST, 12'-6"

STATE OF WISCONSIN
DEPARTMENT OF TRANSPOR

6

S.D.D. 14 B 7-15g

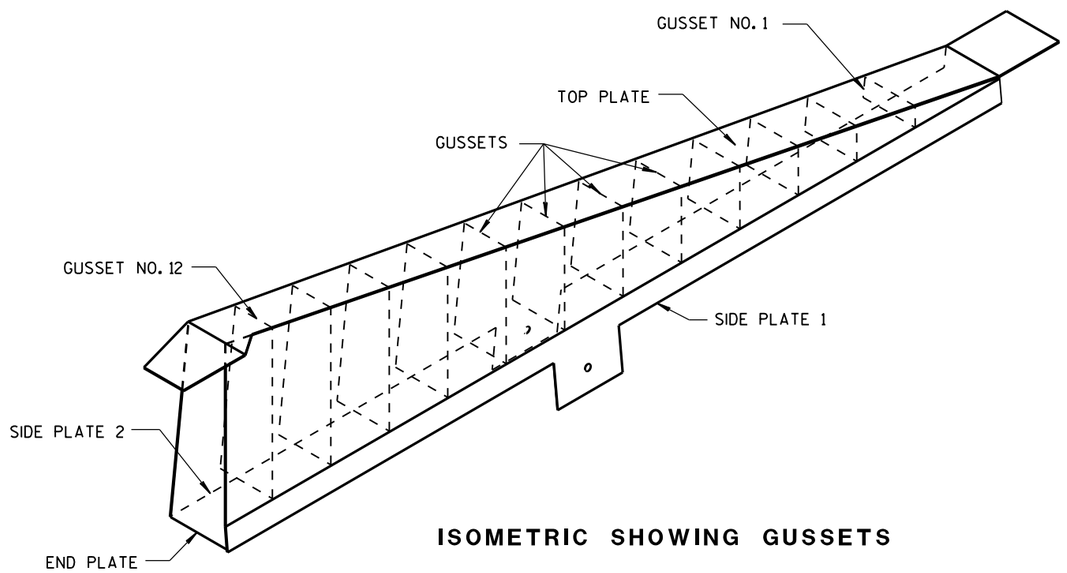

ISOMETRIC SHOWING GUSSETS

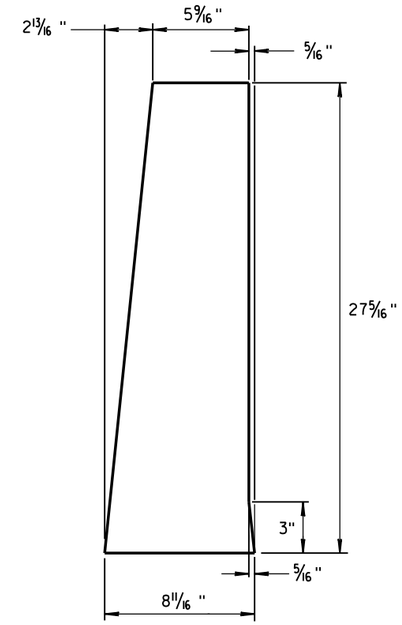

END PLATE

1/8" STEEL PLATE

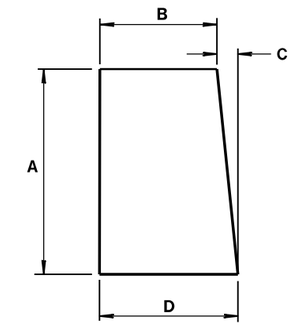

GUSSETS 1 - 12

ALL GUSSETS 1/8" STEEL PLATE

GUSSET DIMENSIONS				
GUSSET NO.	A	B	C	D
1	2 7/8"	7 3/4"	1/4"	8
2	4 11/16 "	7 9/16 "	1/2"	8
3	6 1/2"	7 3/8"	11/16 "	8 1/16 "
4	8 5/16 "	7 3/16 "	7/8"	8 1/16 "
5	10 1/8"	7"	1 1/16 "	8 1/16 "
6	11 15/16 "	6 13/16 "	1 1/4"	8 1/16 "
7	13 3/4"	6 5/8"	1 7/16 "	8 1/16 "
8	15 9/16 "	6 7/16 "	1 9/16 "	8 1/16 "
9	17 3/8"	6 1/4"	1 13/16 "	8 1/16 "
10	19 3/16 "	6 1/16 "	1 15/16 "	8 1/16 "
11	21"	5 7/8"	2 3/16 "	8 1/16 "
12	22 13/16 "	5 11/16 "	2 5/16 "	8 1/16 "

SIDE PLATES, TOP PLATE, END PLATE AND GUSSETS ARE 12 GAUGE ASTM A36 STEEL AND GALVANIZED.

GUSSETS AND END PLATE ARE STITCH WELDED ON 3 SIDES. TWO TRIANGULAR SIDE PLATES ARE STITCH WELDED TO TOP PLATE, END PLATE AND GUSSETS.

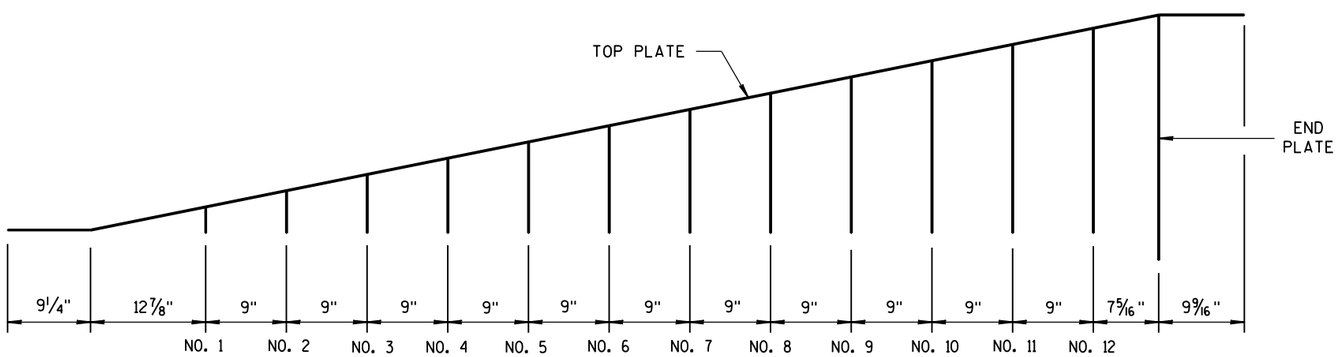

GUSSET LOCATION

CAP DETAILS FOR TEMPORARY CONCRETE BARRIER TO 56" PERMANENT CONCRETE BARRIER

CONCRETE BARRIER
TEMPORARY PRECAST, 12'-6"

STATE OF WISCONSIN
DEPARTMENT OF TRANSPOI

6

S.D.D. 14 B 7-15h

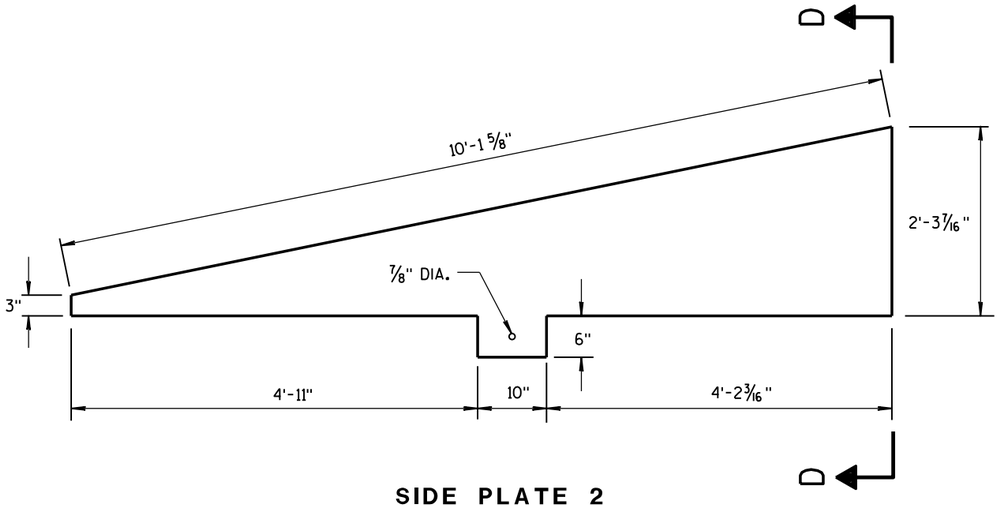

SIDE PLATE 2

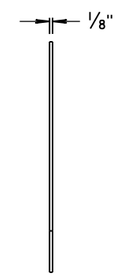

END VIEW

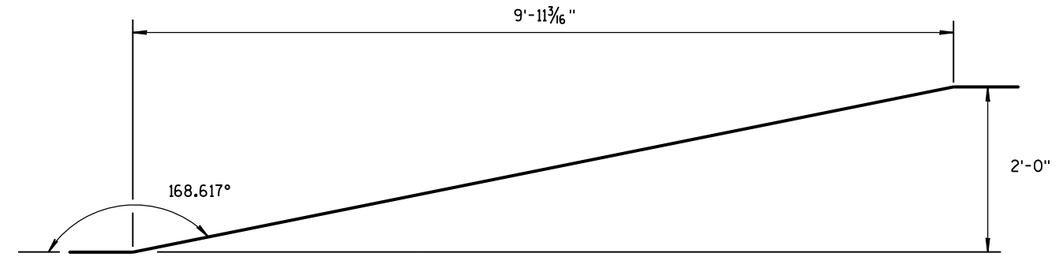

SIDE VIEW

TOP PLATE

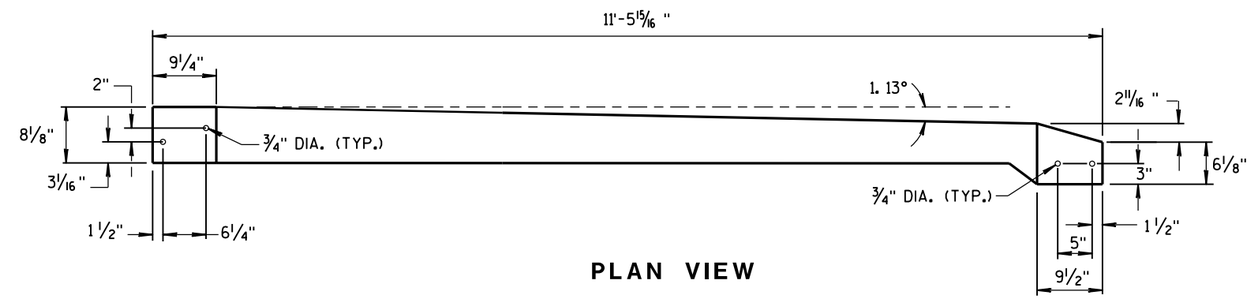

PLAN VIEW

TOP PLATE

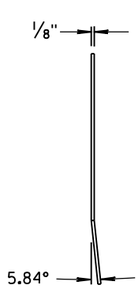

END VIEW

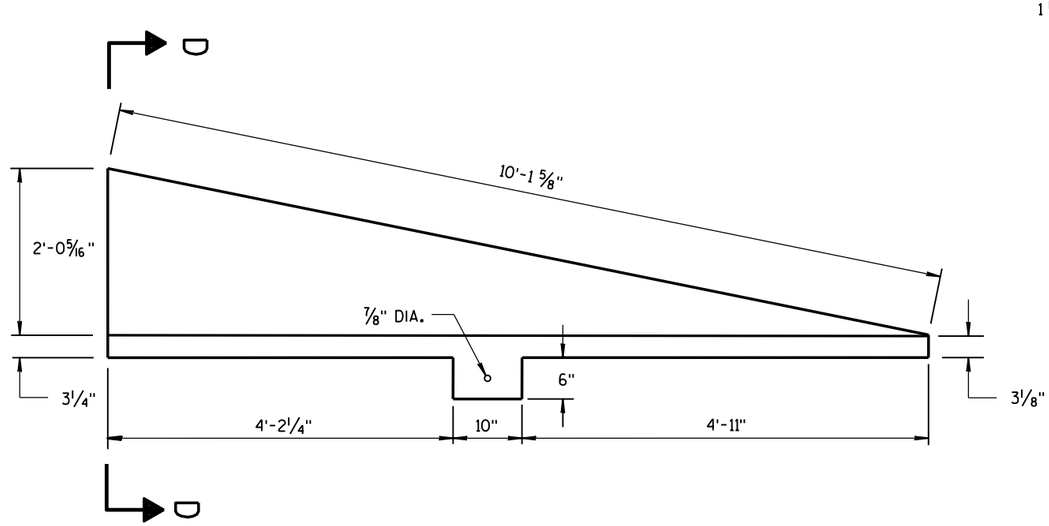

SIDE PLATE 1

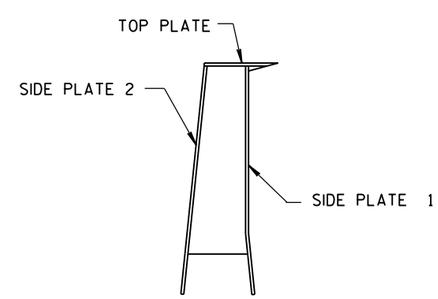

SECTION D-D

CAP DETAILS FOR TEMPORARY CONCRETE BARRIER TO 56" PERMANENT CONCRETE BARRIER

CONCRETE BARRIER
TEMPORARY PRECAST, 12'-6"

STATE OF WISCONSIN
DEPARTMENT OF TRANSPORTATION

APPROVED
June 2017 — DATE
/S/ Rodney Taylor — ROADWAY STANDARD UNIT SUPERV
ENT
FHWA

6

S.D.D. 14 B 7-15i

1. WOOD OR STEEL POSTS (w6X9 OR w6X8.5) MAY BE USED. DO NOT INTERMIX WOOD AND STEEL POSTS. INSTALL STEEL POSTS WITH HOLES ON APPROACHING TRAFFIC SIDE.
2. USE WOOD OR APPROVED PLASTIC BLOCKOUTS. WOOD BLOCKOUTS MAY BE CONSTRUCTED OUT OF TWO OR MORE WOOD BLOCKOUTS. SEE ALTERNATE WOOD BLOCKOUT DETAIL. DIMENSIONS OF APPROVED PLASTIC BLOCKOUTS MAY VARY.
3. IF ROCK IS ENCOUNTERED DURING EXCAVATION, PROVIDE A HOLE 12 INCHES IN DIAMETER EXTENDING 20 INCHES DEEP INTO THE ROCK. PLACE APPROXIMATELY 2 1/2" INCHES OF GRANULAR MATERIAL IN THE BOTTOM OF THE HOLE. CUT THE POSTS THE TO LENGTH AMD INSTALL. BACKFILL WITH EXCAVATED MATERIAL AND COMPACT. BACKFILL IS TO BE FREE OF LARGE ROCKS.
4. WHEN THE DISTANCE FROM BACK OF POST TO SHOULDER HINGE POINT IS LESS THAN 2 FEET INSTALL LONGER POST AT HALF POST SPACING (K).
5. FOR NEW MGS INSTALLATION TOP OF W-BEAM RAIL TOLERANCE IS ±1". FOR EXISTING MGS INSTALLATION TOP OF W-BEAM IS BETWEEN 27 ¾" TO 32".
6. WHEN USING STEEL POST AND WOOD BLOCKOUTS INSTALL FOUR 16D GALVANIZED NAILS. INSTALL NAILS AT THE BACK CORNERS OF THE BLOCK AND BEND THE NAILS OVER THE FLANGE OF THE STEEL POST.
7. TOTAL POST LENGTH FOR TYPE K IS 7' - 0".
   TOTAL POST LENGTH FOR OTHER MGS TYPES IS 6' - 0".

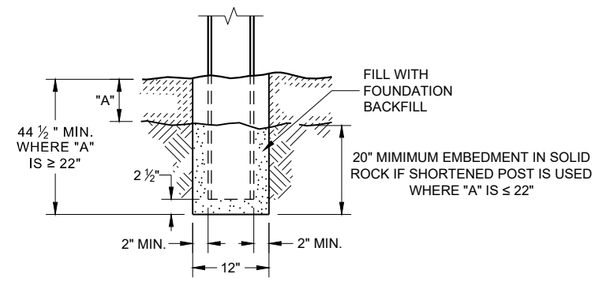

END VIEW
SETTING STEEL OR WOOD POST IN ROCK (3)

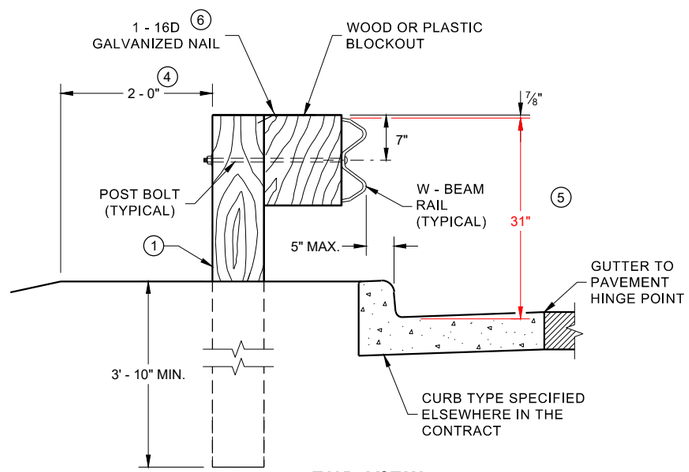

END VIEW
LOCATED ALONG A CURBED ROADWAY

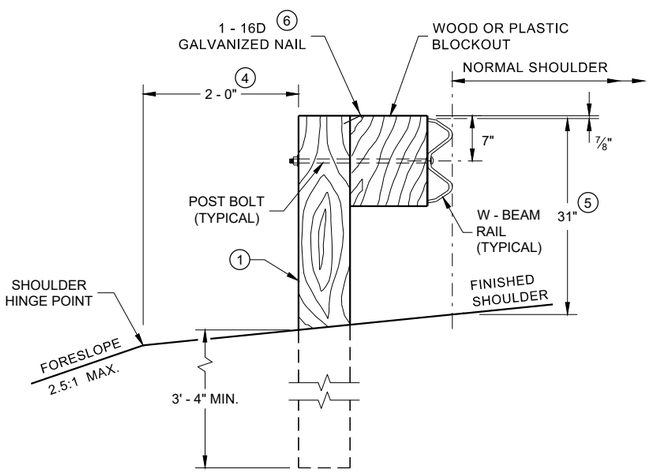

END VIEW
LOCATED ALONG A ROADWAY SHOULDER
STANDARD INSTALLATION

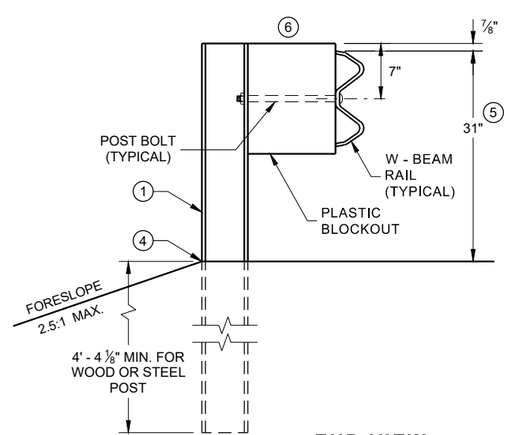

END VIEW
MGS LONGER POST AT HALFPOST
SPACING W BEAM (K)

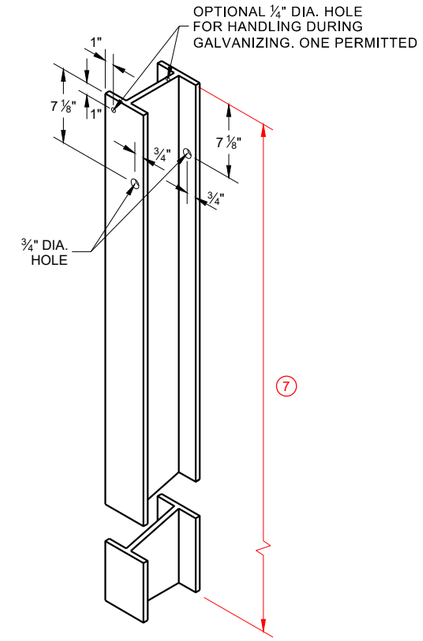

STEEL POST & HOLE
PUNCHING DETAIL
(W 6 X 9) (1)

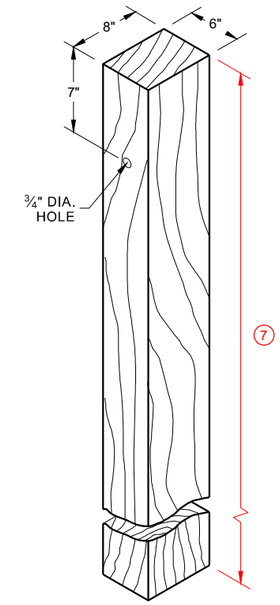

WOOD POST
(6" X 8") NOMINAL (1)

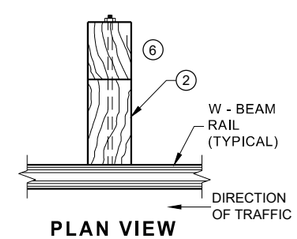

PLAN VIEW
WOOD POST,
BLOCKOUT & BEAM

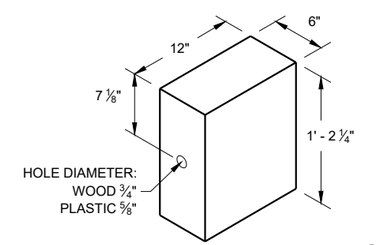

WOOD OR PLASTIC (2)
BLOCKOUT

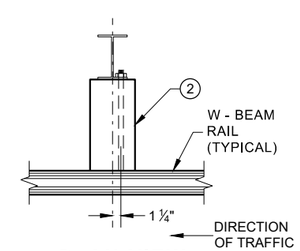

PLAN VIEW
STEEL POST,
PLASTIC BLOCKOUT & BEAM

MIDWEST GUARDRAIL SYSTEM (MGS) GUARDRAIL

STATE OF WISCONSIN
DEPARTMENT OF TRANSPORTA

6

6

SDD 14B42 - 06a

SDD 14B42 - 06a

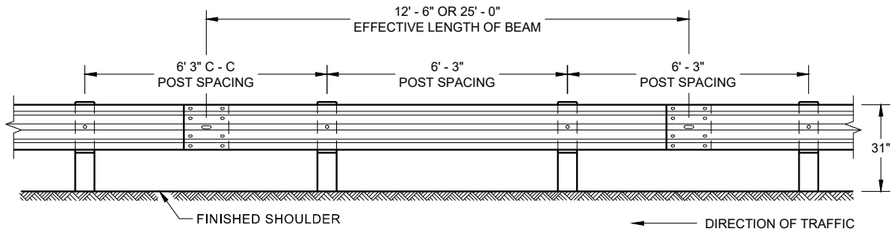

FRONT VIEW
POST SPACING STANDARD INSTALLATION

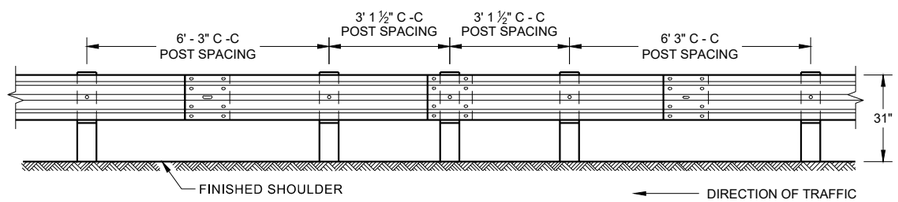

FRONT VIEW
HALF POST SPACING (HS) AND HALF POST SPACING WITH LONGER POSTS (K)

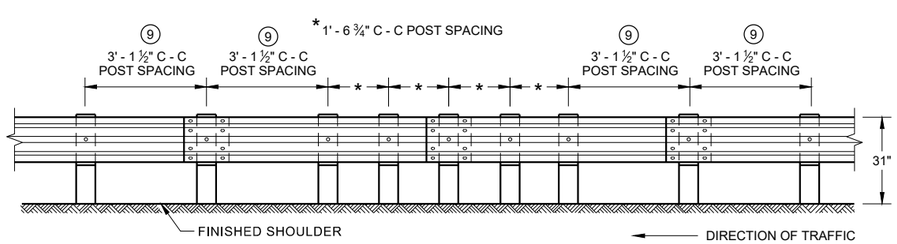

FRONT VIEW
QUARTER POST SPACING (QS)

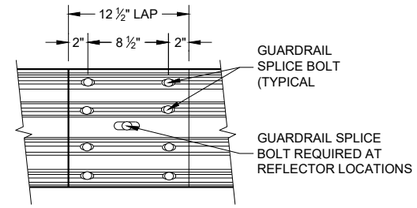

FRONT VIEW
MID-SPAN BEAM SPLICE

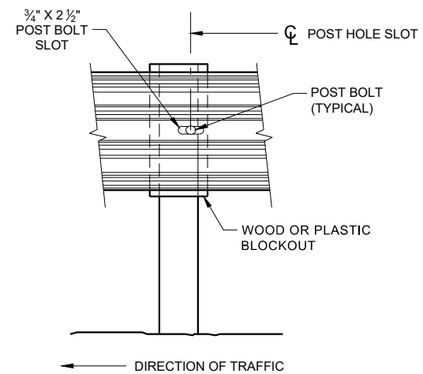

FRONT VIEW AT STEEL POST

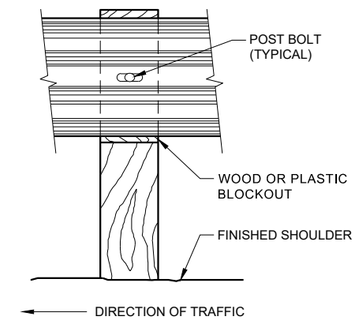

FRONT VIEW AT WOOD POST

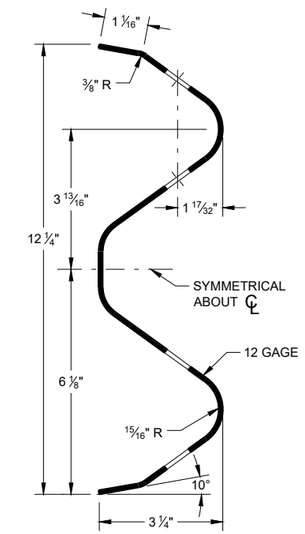

SECTION THRU W-BEAM RAIL

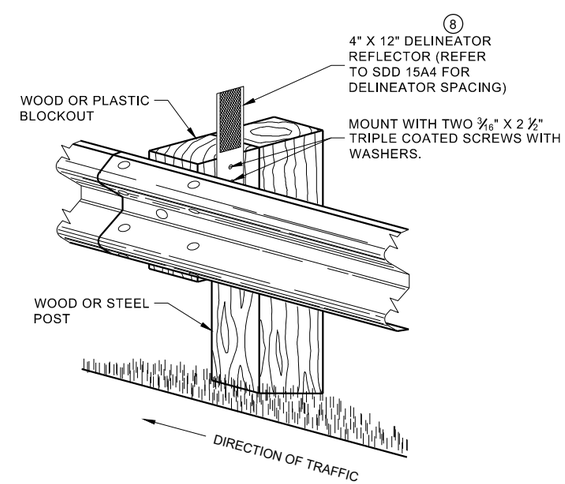

ONE SIDED REFLECTOR DETAIL AND TYPICAL INSTALLATION

GENERAL NOTES

8. DO NOT INSTALL REFLECTORS ON THE FIRST 50 FEET OF THE APPROACH END OF THE ENERGY ABSORBING TERMINAL. RAIL SPLICE LOCATIONS ARE THE ONLY ACCEPTABLE LOCATIONS FOR REFLECTORS.

9. 25 FEET OF HALF POST SPACING IS REQUIRED ON APPROACH AND DEPARTURE ENDS OF QUARTER POST SPACING.

POST BOLTS ARE A ⅝" DIAMETER ASTM A307 GUARDRAIL BOLT. A POST BOLT REQUIRES ⅝" DIAMETER A563A DOUBLE RECESSED (DR) HEAVY HEX NUT AND ⅝" DIAMETER F844 FLAT WASHER. POST BOLTS MAY BE LONGER IF MULTIPLE BLOCKOUTS ARE BEING USED.

GUARD RAIL SPLICE BOLTS ARE A ⅝" DIAMETER ASTM A307 GUARDRAIL HEAD BOLT. A GUARDRAIL SPLICE BOLT REQUIRES ⅝" DIAMETER A563A DOUBLE RECESSED (DR) HEAVY HEX NUT.

MIDWEST GUARDRAIL SYSTEM (MGS) GUARDRAIL

STATE OF WISCONSIN
DEPARTMENT OF TRANSPORTATION

6

SDD 14B42 - 06b

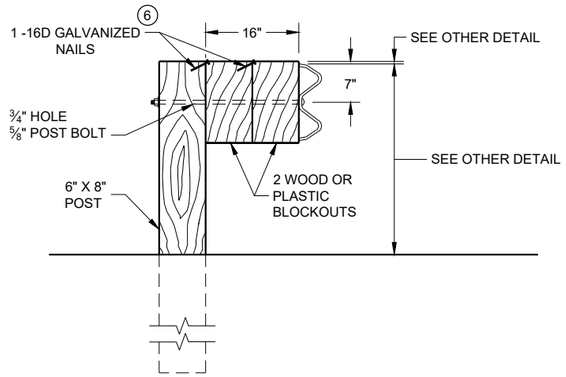

DETAIL FOR 16" BLOCKOUT DEPTH

IT IS ACCEPTABLE TO USE BLOCKOUTS UP TO 16" DEEP TO INCREASE THE POST OFFSET TO AVOID UNDERGROUND OBSTACLES. THERE IS NO LIMIT TO THE NUMBER OF POSTS THAT CAN HAVE ADDITIONAL BLOCKOUTS UP TO 16" DEEP.

NOTE:

1. ALL FILLETS SHALL HAVE A MINIMUM RADIUS OF 3/16".
2. IF THE BOLT EXTENDS MORE THAN ¼" FROM THE NUT THE BOLT SHOULD BE TRIMMED BACK.

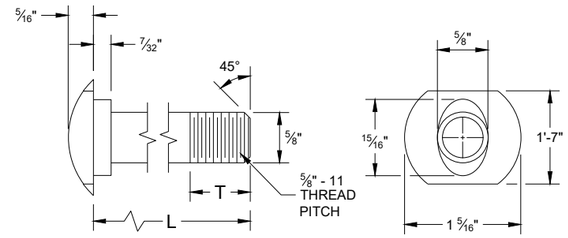

POST BOLT TABLE

L	T (MIN.)
1 ¼"	1 ⅛"
2"	1 ¾"
10"	4"
14"	4 1/16"
18"	4"
21"	4 1/16"
25"	4"

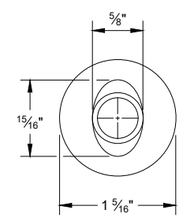

ALTERNATE BOLT HEAD

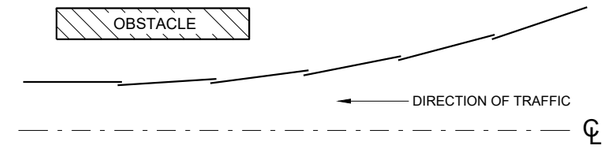

PLAN VIEW
BEAM LAPPING DETAIL

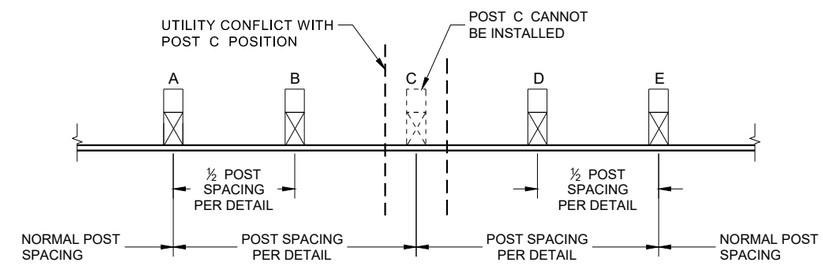

POST DRIVING FOR CONTINUOUS UNDERGROUND OBSTRUCTION

6

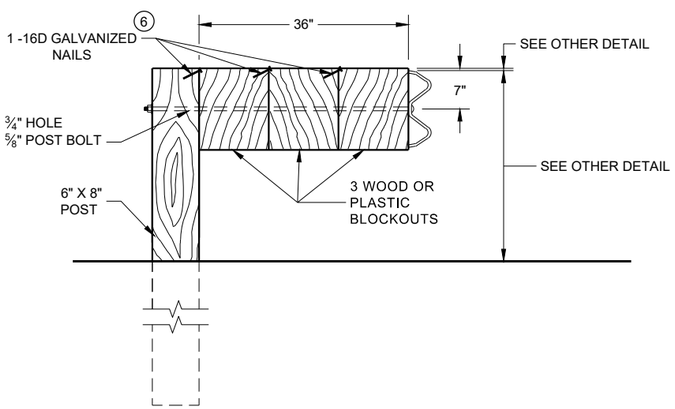

DETAIL FOR 36" BLOCKOUT DEPTH

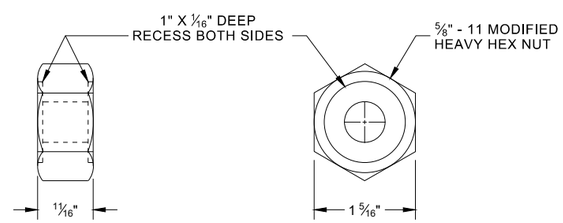

POST BOLT, SPLICE BOLT AND RECESS NUT

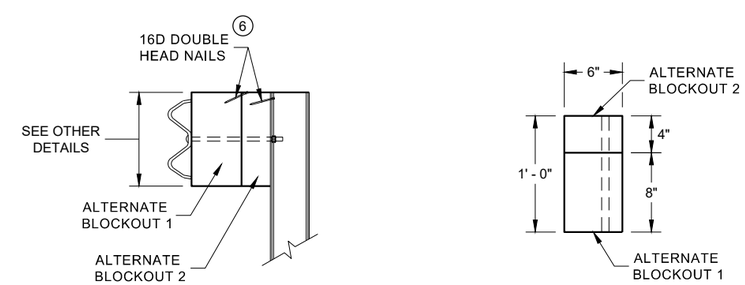

SIDE VIEW

PLAN VIEW

ALTERNATE WOOD BLOCKOUT DETAIL

NOTES: UNDER SPECIAL CIRCUMSTANCES, SUCH AS AVOIDING OBSTACLES THAT ARE NOT RELOCATED, IT IS ACCEPTABLE TO INSTALL ADDITIONAL BLOCKOUTS TO OBTAIN UP TO 36" DEPTH FOR ONE OR TWO POSTS IN A SECTION OF GUARDRAIL.

DO NOT USE 16" OR 36" BLOCKOUTS IF IT CAUSES THE POST TO BE DRIVEN BEYOND SHOULDER HINGE POINT OR CAUSES A FIXED OBJECT TO BE WITHIN THE DEFLECTION DISTANCE OF THE BARRIER.

(6) WHEN USING STEEL POST AD WOOD BLOCKOUTS, INSTALL FOUR 16D GALVANIZED NAILS. INSTALL NAILS AT THE BACK CORNERS OF THE BLOCK AND BEND THE NAILS OVER THE FLANGE OF THE STEEL POST.

MIDWEST GUARDRAIL SYSTEM (MGS) GUARDRAIL

STATE OF WISCONSIN
DEPARTMENT OF TRANSPORTA

SDD 14B42 - 06c

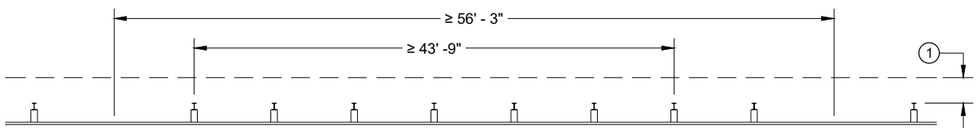

MISSING POST IN NORMAL BEAM GUARD RUN

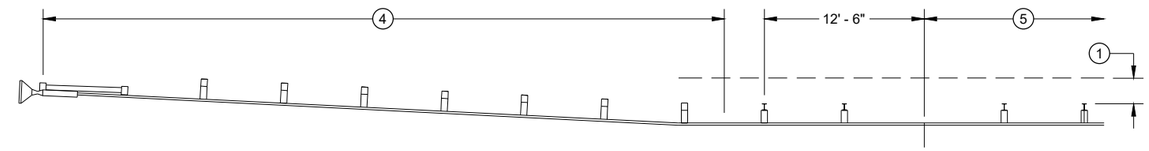

MISSING POST IN NORMAL BEAM GUARD RUN NEAR EAT

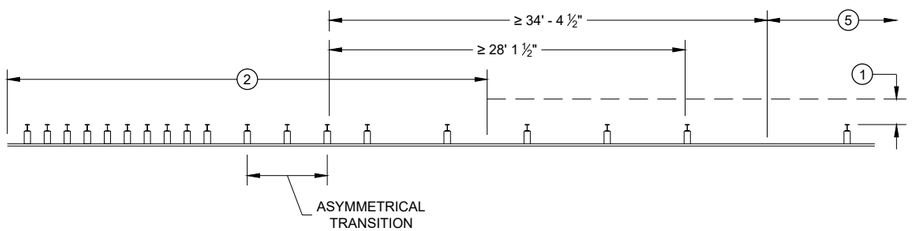

MISSING POST NEAR APPROACH THRIE BEAM TRANSITION

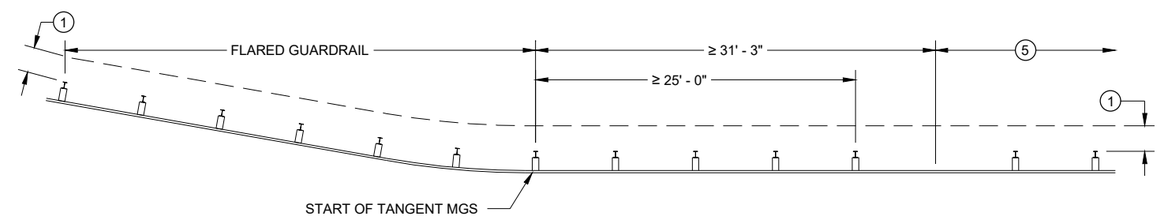

MISSING POST IN NORMAL BEAM GUARD RUN NEAR FLARED BEAM GUARD

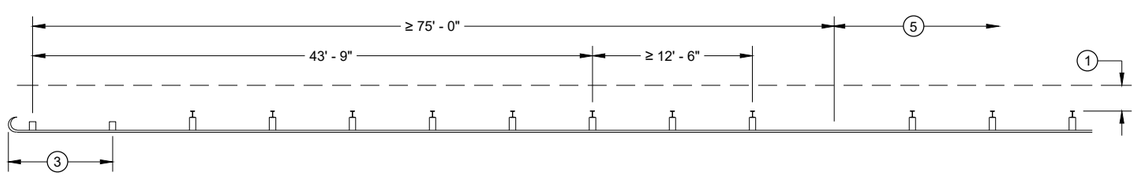

MISSING POST IN NORMAL BEAM GUARD RUN NEAR TYPE 2 TERMINAL

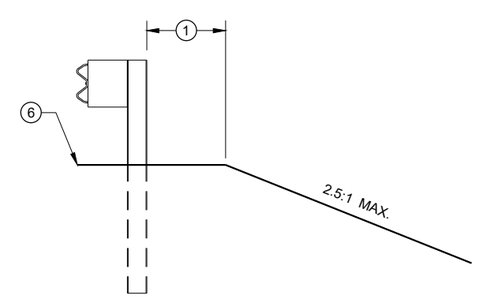

CROSS SECTION VIEW

1. MINIMUM OF 2 FEET OF GRADING BEHIND POST.
2. SEE SDD 14B45 FOR MORE DETAILS.
3. SEE SDD 14B47 FOR MORE DETAILS.
4. SEE SDD 14B44 FOR MORE DETAILS.
5. SEE MISSING POST IN NORMAL BEAM GUARD RUN FOR DISTANCE TO NEXT MISSING POST AND AREA FOR WELL DRAINED, COMPACTED SOILS.
6. SEE PLAN FOR SHOULDER DESIGN.

MIDWEST GUARDRAIL SYSTEM (MGS) GUARDRAIL

STATE OF WISCONSIN
DEPARTMENT OF TRANSPORTATION

APPROVED
7/2018 — DATE
/S/ Rodney Taylor — ROADWAY STANDARDS DEVE UNIT SUPERVISOR
FHWA

6

SDD 14B42 - 06d

GENERAL NOTES

(A) THE SLOPE IN THE AREA BOUNDED BY THE GRADELINE, THE HINGE POINT LINE (HPL) AND THE CLEAR ZONE LIMITS (CZL) SHALL BE 4:1 OR FLATTER.

(B) AFTER FINAL ASSEMBLY, RECHECK CABLE TO BE SURE IT IS TAUT AND HAS NOT RELAXED

(C) DIFFERENT MANUFACTURERS REQUIRE DIFFERENT PERFORATED W - BEAM RAIL END PANELS. SEE MANUFACTURER'S INFORMATION.

(D) ATTACH ALUMINUM SHEET TO E.A.T. HEAD USING 4 STAINLESS STEEL SELF - TAPPING SCREWS. ONE SCREW PER CORNER.

(E) HARDWARE MAY VARY BETWEEN MANUFACTURER. SEE MANUFACTURER'S DRAWING FOR INFORMATION.

DIMENSIONS MAY VARY, MANUFACTURER'S INFORMATION.

SEE SDD 14B42 FOR MORE INFORMATION.

* DO NOT ATTACH BLOCKOUTS TO POST 1 AND 2.

DO NOT INSTALL REFLECTORS ON THE FIRST 50 FEET OF THE APPROACH END OF THE ENERGY ABSORBING TERMINAL.

SEE MANUFACTURER'S DRAWING FOR SPLICE LOCATION, HARDWARE DIMENSIONS AND INSTALLATION INSTRUCTIONS.

THE CENTER OF THE UPPER 3 ½" DIAMETER HOLE ON POST NUMBER 3 THROUGH POST 9 IS TO BE FLUSH WITH THE GROUND LINE UP TO A MAXIMUM OF 2" ABOVE GROUND LINE. WOOD BLOCKS ON POSTS NUMBERED 3 THROUGH 9 MAY BE ADJUSTED UP TO 3" ABOVE THE TOP OF POST.

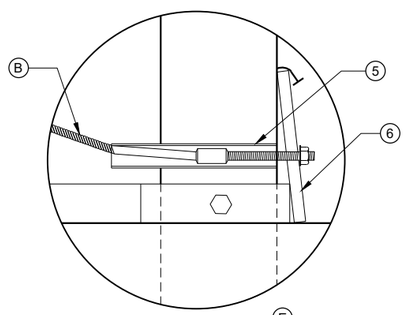

DETAIL "A" (E)

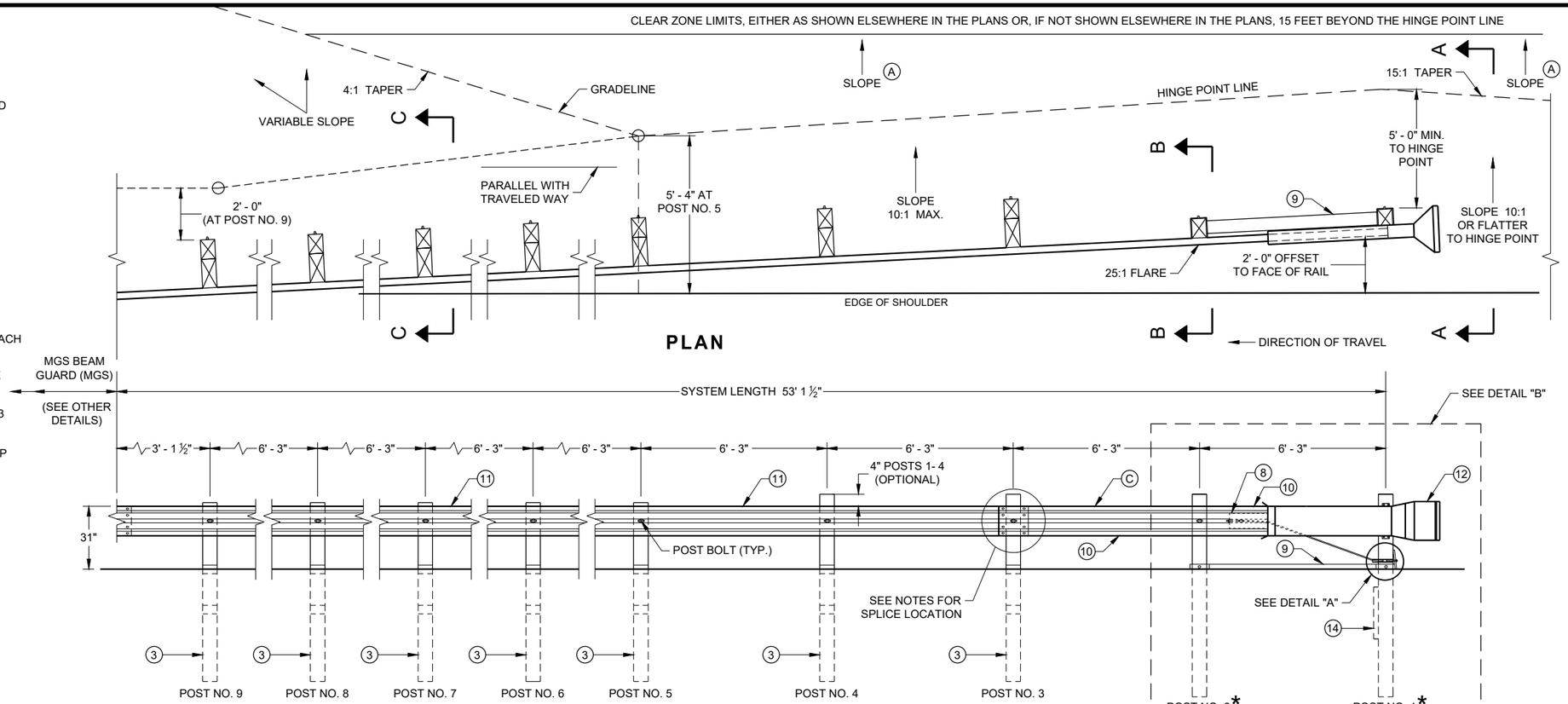

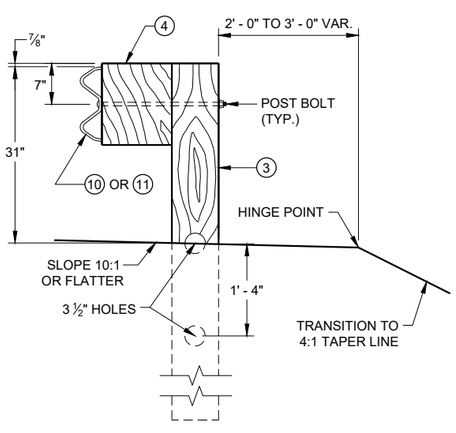

SECTION C - C
TYPICAL AT POST NOS. 3 - 9

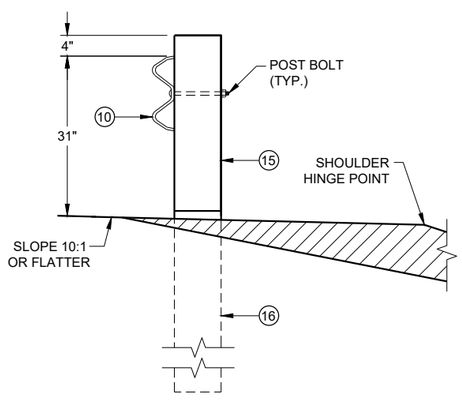

SECTION B - B
TYPICAL AT POST NO. 2*

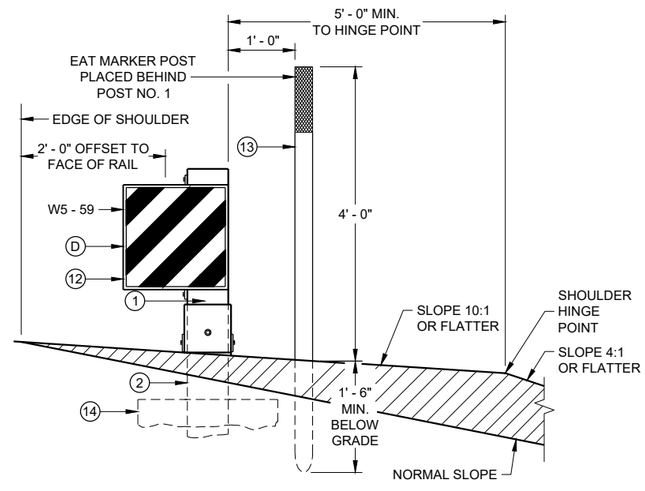

SECTION A - A
TYPICAL AT POST NO. 1*

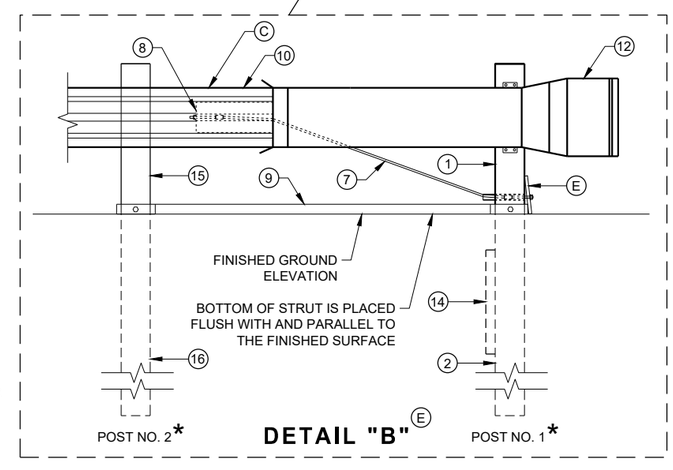

DETAIL "B" (E)

MIDWEST GUARDRAIL SYSTEM ENERGY ABSORBING TERMINAL (MGS)

STATE OF WISCONSIN
DEPARTMENT OF TRANSPORTATION

6

6

SDD 14B44 - 04a

SDD 14B44 - 04a

BILL OF MATERIALS

PART NO.	DESCRIPTION MATERIALS PROVIDED BY MGS EAT MANUFACTURER. SEE MANUGACTURER'S DETAILS FOR MORE INFORMATION.
1	UPPER POST NO. 1 6" X 6" TUBE
2	LOWER POST NO. 1
3	WOOD CRT
4	WOOD BLOCKOUT
5	PIPE SLEEVE
6	BEARING PLATE
7	BCT CABLE ASSEMBLY
8	ANCHOR CABLE BOX
9	GROUND STRUT
10	PERFORATED W-BEAM RAIL END PANEL, 12'-6" LONG.
11	STANDARD W-BEAM RAIL. MULTIPLE SECTIONS REQUIRED. SECTIONS VARY IN LENGTH.
12	IMPACT HEAD
13	EAT MARKER POST - YELLOW (SEE APPROVED PRODUCTS LIST)
14	SOIL PLATE
15	UPPER POST NO. 2
16	LOWER POST NO. 2

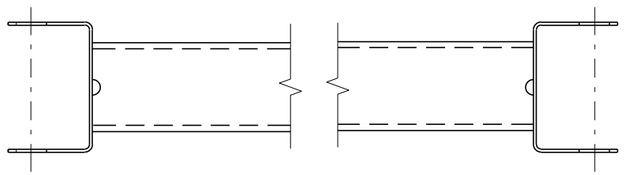

GENERIC GROUND STRUT 9 E

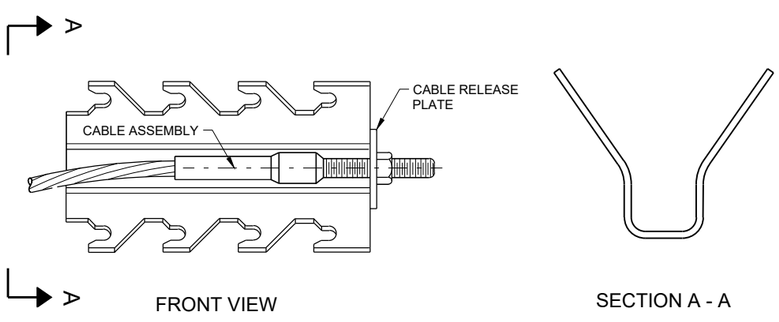

GENERIC ANCHOR CABLE BOX 9 E

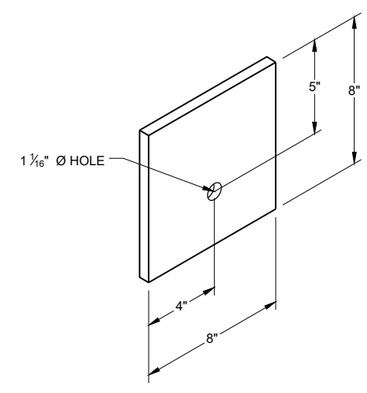

BEARING PLATE 6 E

6

6

SDD 14B45 - 04b

SDD 14B45 - 04b

MIDWEST GUARDRAIL SYSTEM ENERGY ABSORBING TERMINAL (MGS)

STATE OF WISCONSIN
DEPARTMENT OF TRANSPORTAT

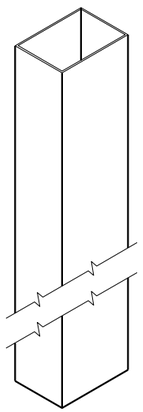

UPPER POST NO. 1 (1) (E)

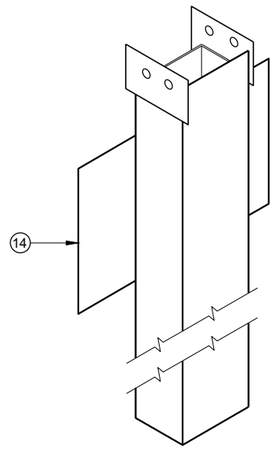

LOWER POST NO. 1 (2) (E)

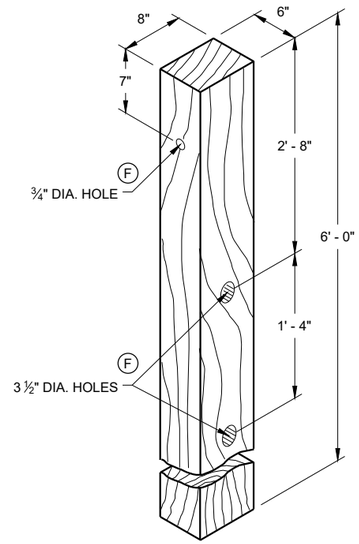

WOOD CRT POST (3) (E)
POSTS NUMBER 3-9

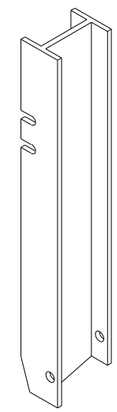

UPPER POST NO. 2 (15) (E)

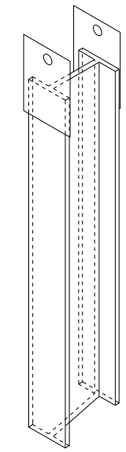

LOWER POST NO. 2 (16) (E)

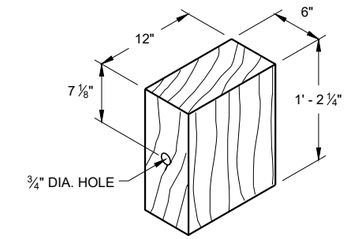

WOOD BLOCKOUT (4)
REQ'D. AT ALL POSTS EXCEPT POST NO'S 1 & 2

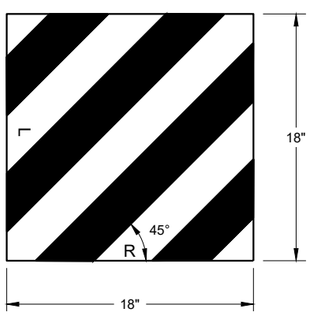

W5 - 59

REFLECTIVE SHEETING DETAIL (E)

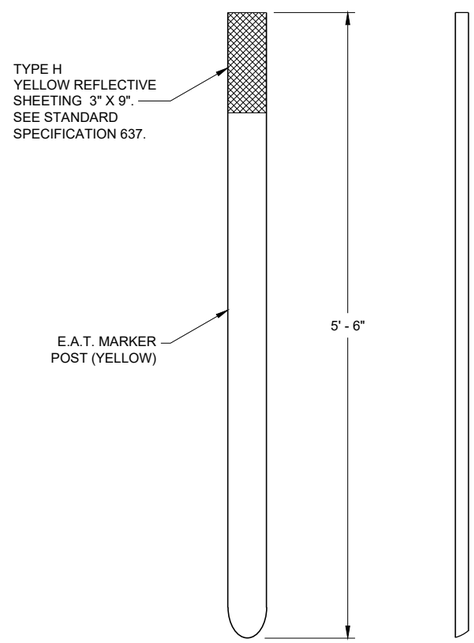

FRONT VIEW SIDE VIEW

E.A.T. MARKER POST (13)

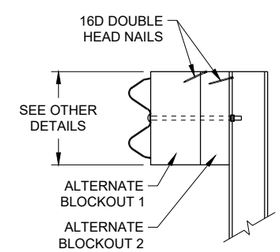

SIDE VIEW

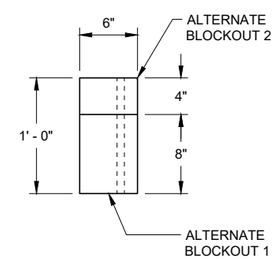

TOP VIEW

ALTERNATE WOOD BLOCKOUT DETAIL

MIDWEST GUARDRAIL SYSTEM ENERGY ABSORBING TERMINAL (MGS)

STATE OF WISCONSIN
DEPARTMENT OF TRANSPORTATION

APPROVED
7/2018 — DATE
/S/ Rodney Taylor — ROADWAY STANDARDS DEVE UNIT SUPERVISOR
FHWA

6

SDD 14B44 - 04c

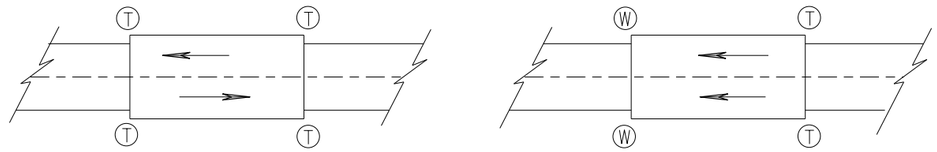

TWO WAY TRAFFIC **ONE WAY TRAFFIC**

(T) THRIE BEAM CONNECTION

(W) W-BEAM CONNECTION WHEN REQUIRED

TYPICAL LOCATIONS OF THRIE BEAM AND W-BEAM CONNECTIONS TO BRIDGE

GENERAL NOTES

IF ROCK IS ENCOUNTERED, REMOVE ROCK TO FULL DEPTH OF POST PLUS 2½", AND 12" DIAMETER AROUND POST. SEE 14B42 FOR MORE DETAILS.

TRANSITION USES STEEL POSTS ONLY.

SEE STANDARD DETAIL DRAWING 14 B 42 FOR MORE INFORMATION.

POST 2 THROUGH 17 USES STEEL POST ONLY

(1) BRIDGE RAILING TYPE "W" DOES NOT REQUIRE A TERMINAL CONNECTOR.

(2) OPTIONAL CURB AND GUTTER OR DRAINAGE FEATURE SEE PLAN FOR INFORMATION.

(13) STEEL OR WOOD POST IS ACCEPTABLE AT POST 1. SEE SDD14B42

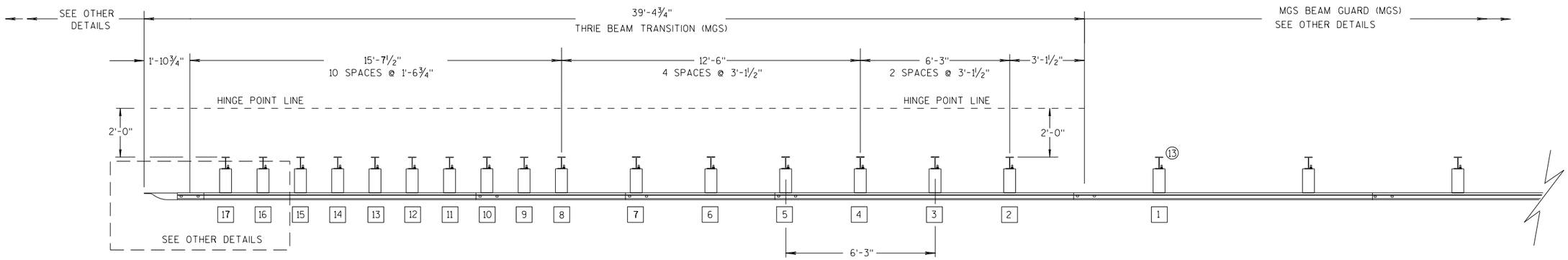

PLAN VIEW

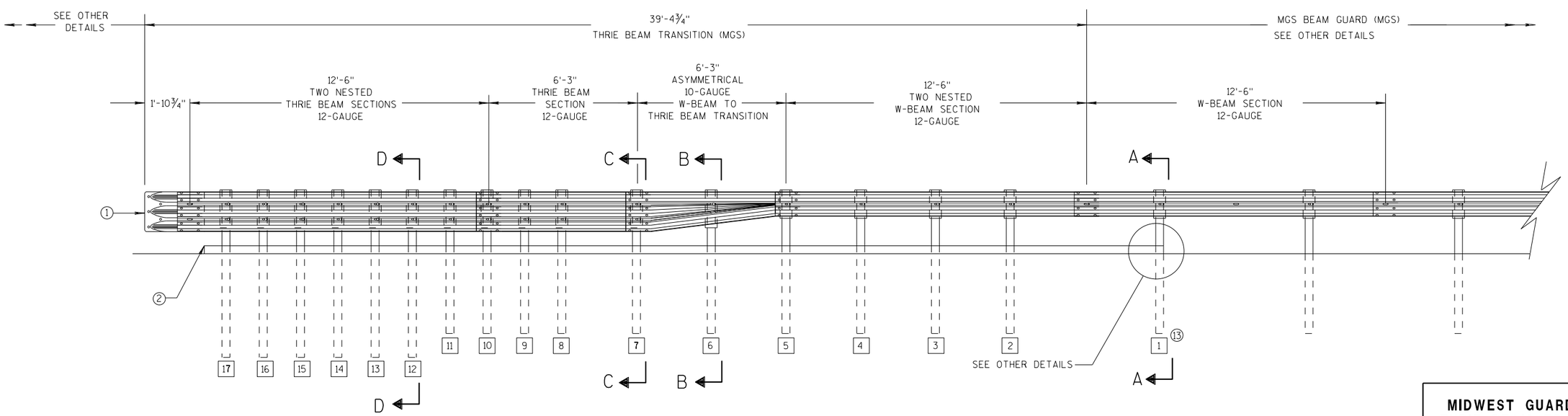

ELEVATION VIEW

MIDWEST GUARDRAIL SYSTEM THRIE BEAM TRANSITION

MIDWEST GUARDRAIL SYSTEM THRIE BEAM TRANSITION (MGS)

STATE OF WISCONSIN
DEPARTMENT OF TRANSPOR

6

S.D.D. 14 B 45-5a

GENERAL NOTES

(2) OPTIONAL CURB AND GUTTER OR DRAINAGE FEATURE SEE PLAN FOR INFORMATION.

(3) WHEN USING STEEL POSTS AND WOOD BLOCKOUTS INSTALL FOUR 10D GALVANIZED NAILS. INSTALL NAILS AT THE BACK CORNERS OF THE BLOCK AND BEND THE NAILS OVER THE FLANGE OF THE STEEL POST.

(4) TOLERANCE FOR TOP OF W-BEAM RAIL IS ± 1".

(13) STEEL OR WOOD POST IS ACCEPTABLE AT POST 1. SEE SDD 14B42

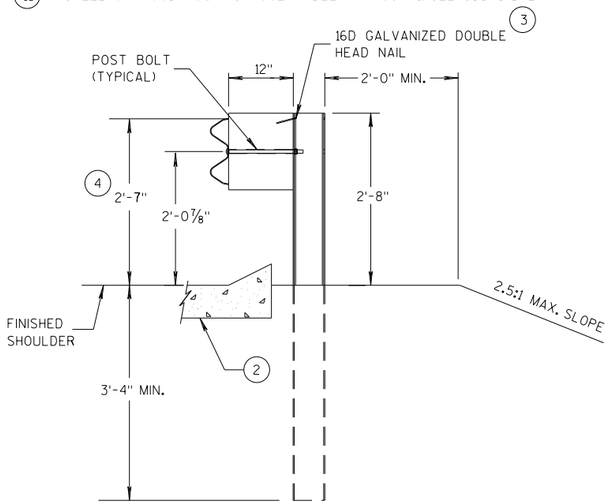

SECTION A-A (13)

POSTS 1-5

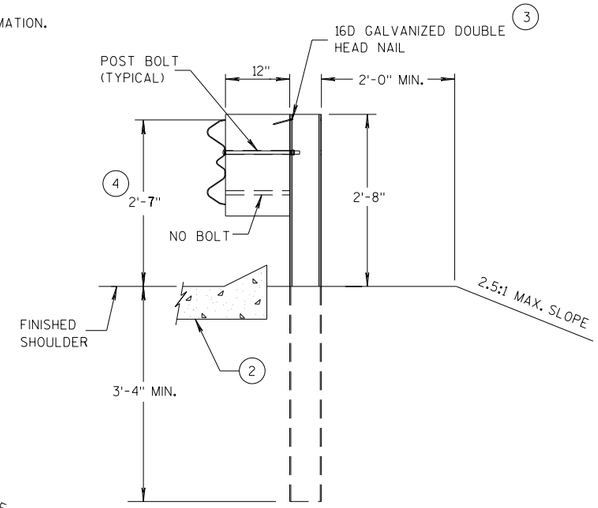

SECTION B-B

POST 6

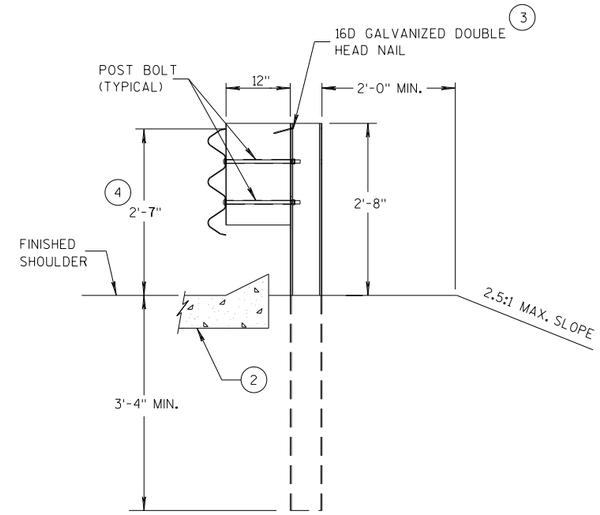

SECTION C-C

POSTS 7-11

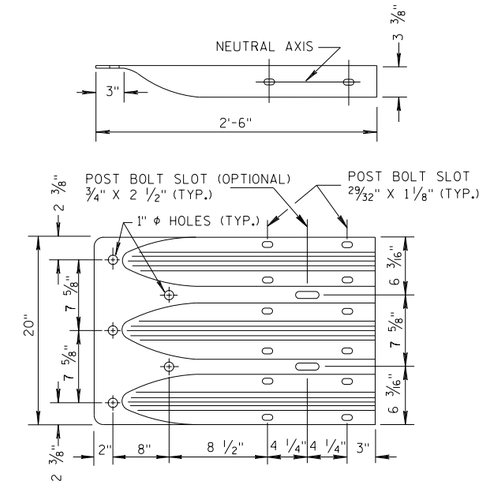

THRIE BEAM TERMINAL CONNECTOR

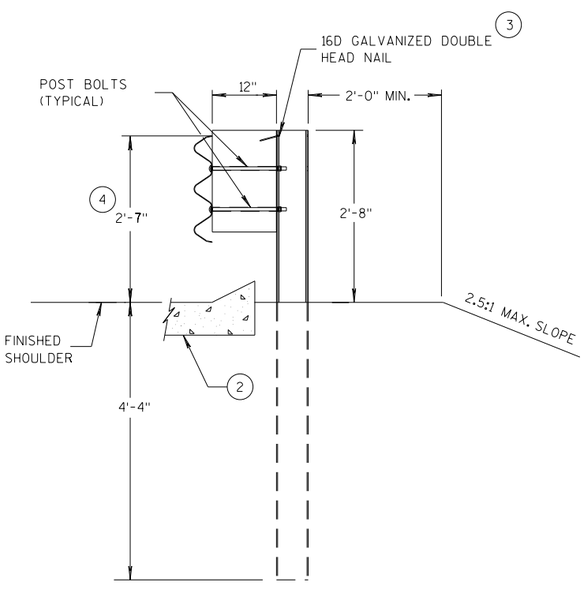

SECTION D-D

POSTS 12-17

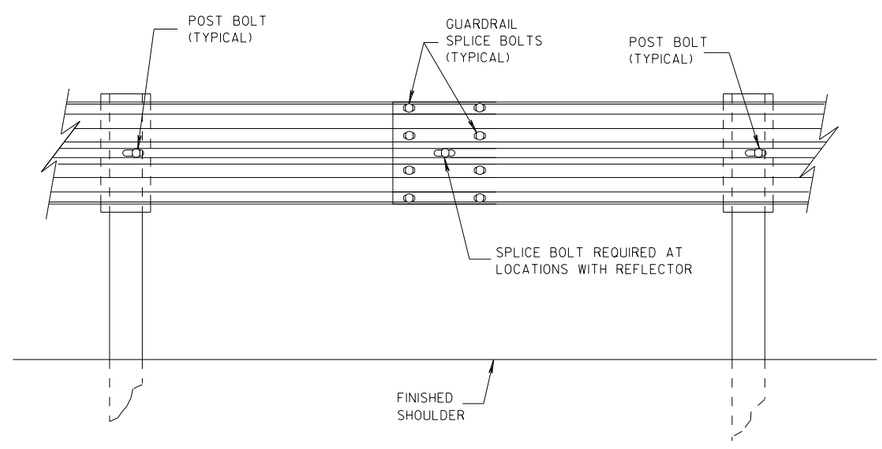

SPLICE DETAIL

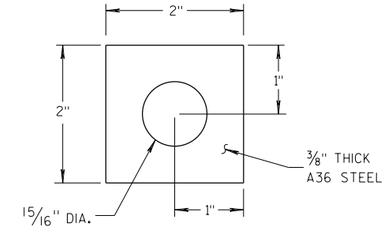

PLATE WASHER DETAIL

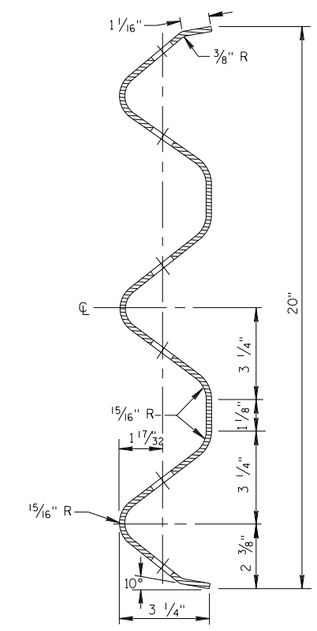

SECTION THRU THRIE BEAM RAIL ELEMENT

MIDWEST GUARDRAIL SYSTEM
THRIE BEAM TRANSITION (MGS)

STATE OF WISCONSIN
DEPARTMENT OF TRANSPORTATION

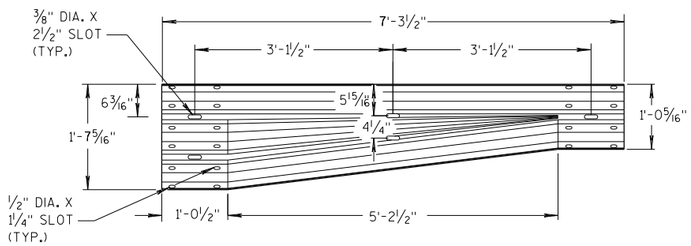

W-BEAM TO THRIE BEAM TRANSITION SECTION

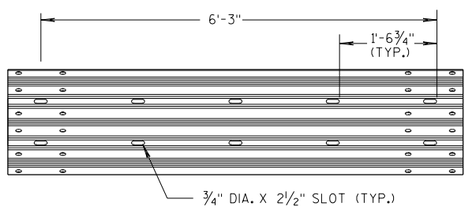

6'-3" THRIE BEAM SECTION

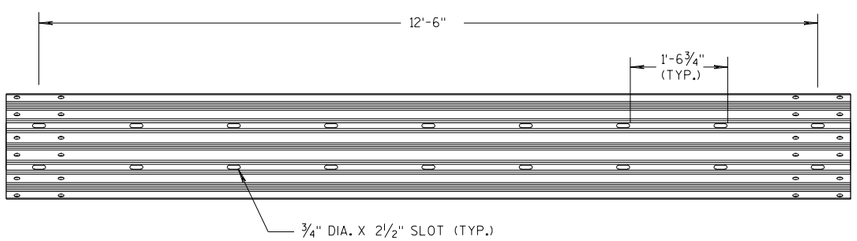

12'-6" THRIE BEAM SECTION

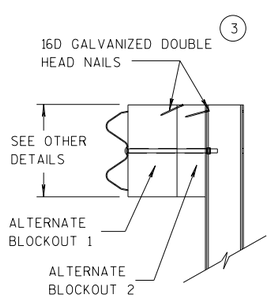

SIDE VIEW

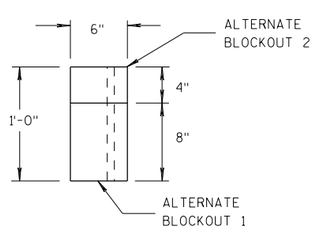

TOP VIEW

ALTERNATE WOOD BLOCKOUT DETAIL

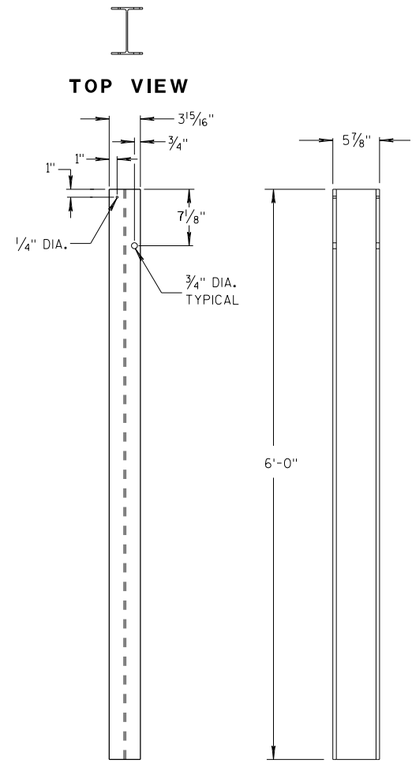

STEEL POSTS 1-5 (13)

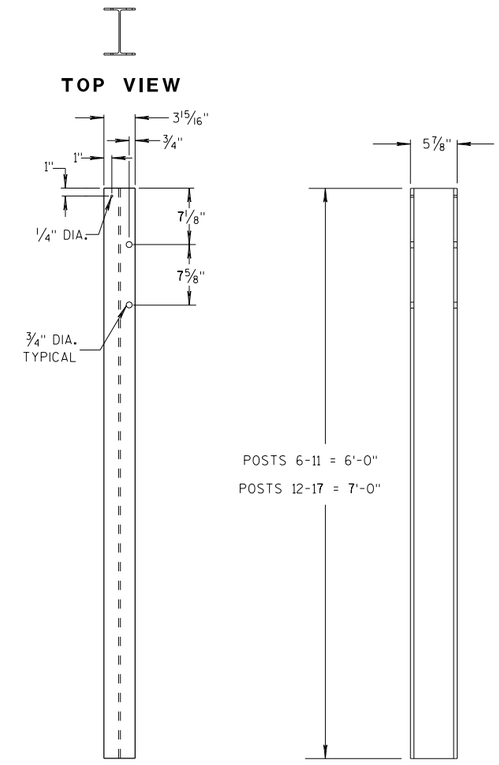

STEEL POSTS 6-17

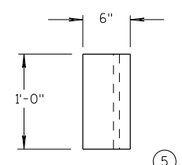

TOP VIEW (5)

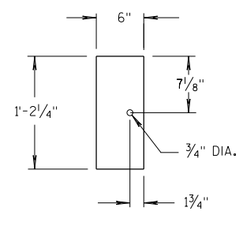

FRONT VIEW

BLOCKOUT POSTS 1-5

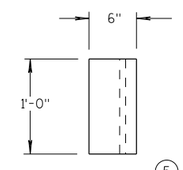

TOP VIEW (5)

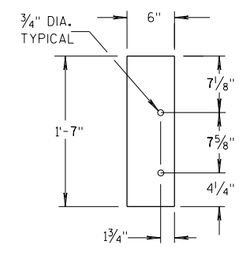

FRONT VIEW

BLOCKOUT POSTS 6-17

GENERAL NOTES

STEEL POSTS ARE W6X9 OR W6X8.5.

BOLT HOLES FOR POST ARE ON FRONT AND OF SIDE OF POST.

(3) WHEN USING STEEL POSTS AND WOOD BLOCKOUTS INSTALL FOUR 16D GALVANIZED NAILS. INSTALL NAILS AT THE BACK CORNERS OF THE BLOCK AND BEND THE NAILS OVER THE FLANGE OF THE STEEL POST.

(5) WOOD BLOCKS MAY BE CONSTRUCTED OUT OF 2 WOOD BLOCKS. SEE ALTERNATE WOOD BLOCK DETAIL.

(13) STEEL OR WOOD POST IS ACCEPTABLE AT POST 1. SEE SDD 14B42.

MIDWEST GUARDRAIL SYSTEM
THRIE BEAM TRANSITION (MGS)

STATE OF WISCONSIN
DEPARTMENT OF TRANSPOR

6

S.D.D. 14 B 45-5c

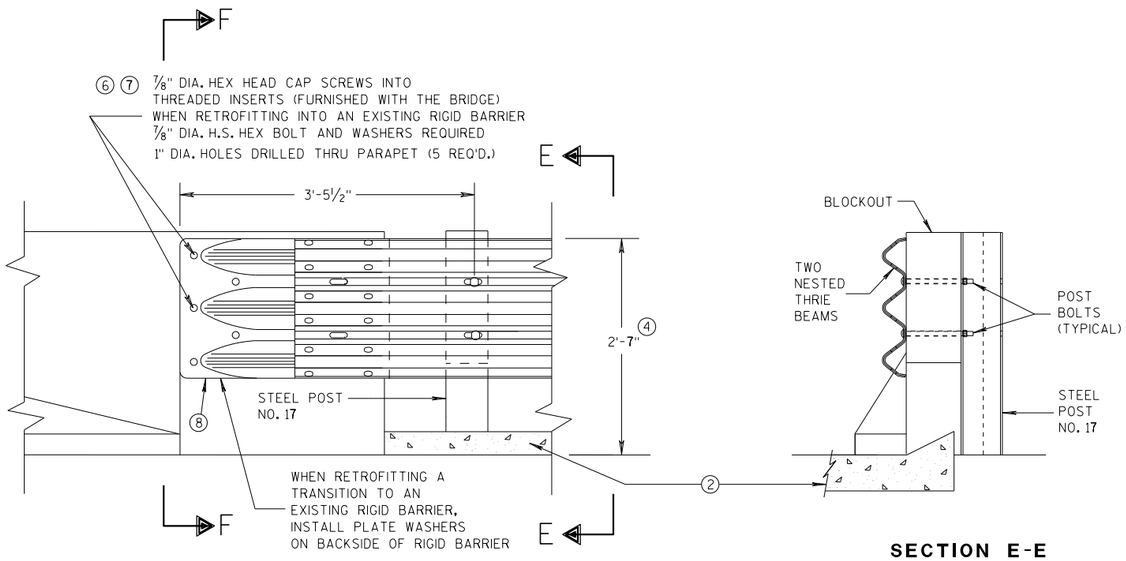

FRONT VIEW

SECTION E-E

THRIE BEAM CONNECTION TO BRIDGE PARAPET WITH SQUARE ENDS

GENERAL NOTES

THESE ARE TYPICAL CONNECTION DETAILS. ADJUST THE POSTION OF CONNECTIONS TO EXISTING BRIDGES TO FIT THE ACTUAL BRIDGE AND SITE DIMENSIONS.

② OPTIONAL CURB AND GUTTER OR DRAINAGE FEATURE SEE PLAN FOR INFORMATION.

④ TOLERANCE FOR TOP OF BEAM IS ± 1".

⑥ DRILLING BOLT HOLES THROUGH THE PARAPET, BOLTS, NUTS, WASHERS AND REPAIRING DAMAGED CONCRETE ARE INCIDENTAL TO THE CONTRACT.

⑦ BOLTS MAY BE A325 BOLTS OR A449 BOLTS. BOLT LENGTH AND THREADING LENGTH ARE TO ALLOW FOR A TIGHT CONNECTION BETWEEN RIGID BARRIER AND THRIE BEAM CONNECTION PLATE. CONTRACTOR IS TO FIELD VERIFY BOLT LENGTH AND THREAD LENGTH. ONE ROUND WASHER REQUIRED BETWEEN BOLT HEAD AND THRIE BEAM CONNECTOR PLATE. BOLTS THAT EXTEND THROUGH THE PARAPET AND OUT THE BACK FACE REQUIRE A HARDENED ROUND STEEL WASHER THAT IS 2" O.D. X 5/8" THICK AND ONE PLATE WASHER. REPAIR ANY DAMAGED CONCRETE FROM BOLT INSTALLATION.

⑧ THE RECESS FOR A W-BEAM CONNECTION, WHICH EXISTS ON SOME PARAPETS OF THIS TYPE, SHALL BE FILLED WITH A TREATED TIMBER BLOCKOUT. BLOCKOUT SIZE IS 1'-6" X 2'-0" X 3 1/2".

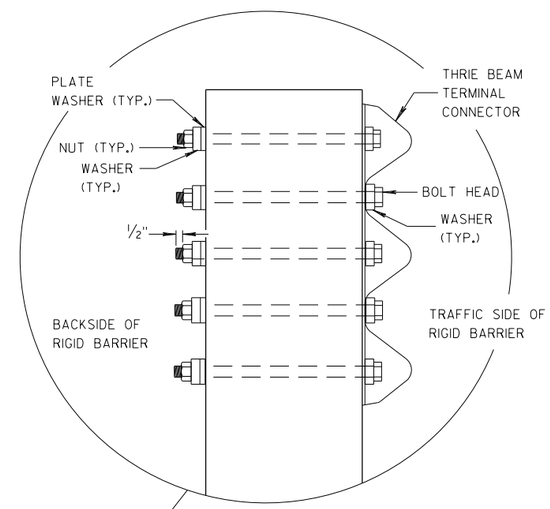

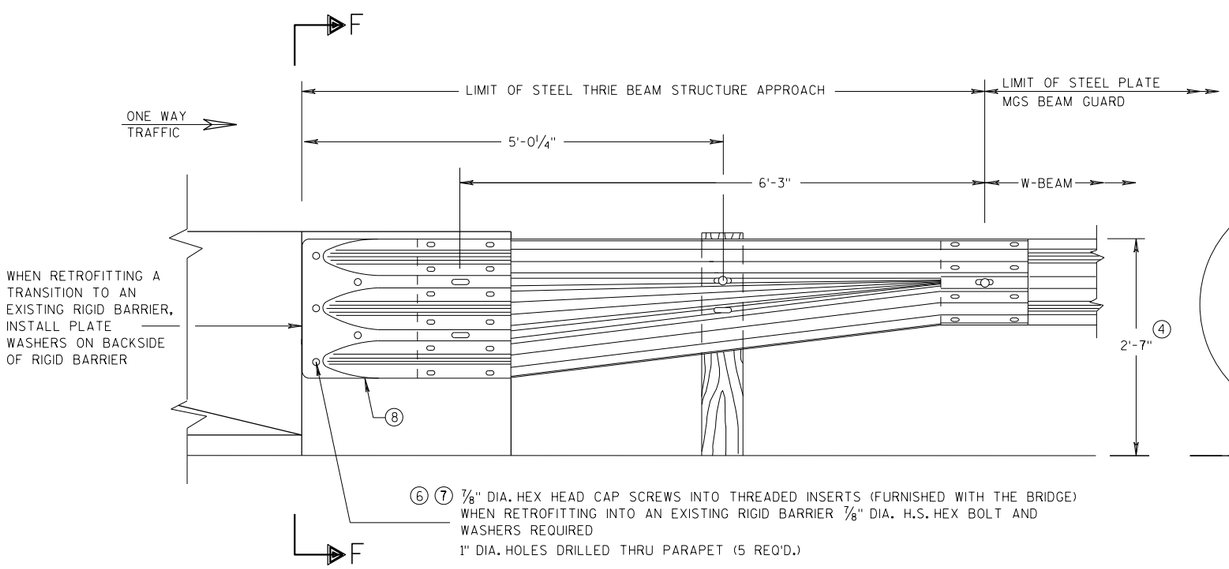

FRONT VIEW

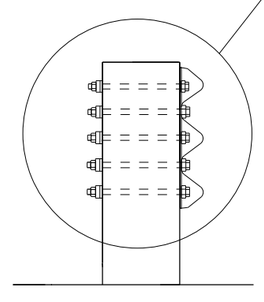

SECTION F-F

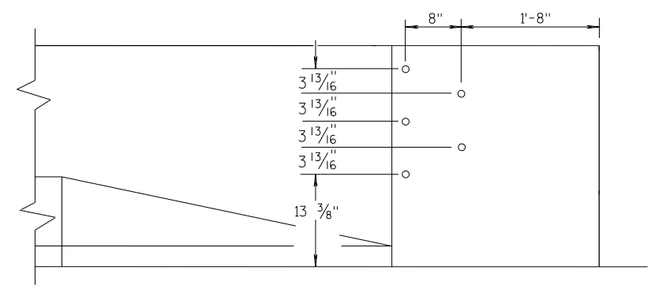

DRILL HOLE LOCATION

W BEAM TRANSITION AND CONNECTION TO BRIDGE PARAPETS WITH SQUARE ENDS

(USE ONLY ON THE TRAFFIC EXIT END OF ONE WAY BRIDGES)

MIDWEST GUARDRAIL SYSTEM THRIE BEAM TRANSITION (MGS)

STATE OF WISCONSIN
DEPARTMENT OF TRANSPORTATION

APPROVED
07/2018 — DATE
/S/ Rodney Taylor — ROADWAY STANDARDS D[illegible] UNIT SUPERVI[illegible]
FHWA

6

S.D.D. 14 B 45-5d

GENERAL NOTES

THESE ARE TYPICAL CONNECTION DETAILS. ADJUST THE POSTION OF CONNECTIONS TO EXISTING BRIDGES TO FIT THE ACTUAL BRIDGE AND SITE DIMENSIONS.

(2) OPTIONAL CURB AND GUTTER OR DRAINAGE FEATURE SEE PLAN FOR INFORMATION.

(4) TOLERANCE FOR TOP OF BEAM IS ± 1".

(6) DRILLING BOLT HOLES THROUGH THE PARAPET, BOLTS, NUTS, WASHERS AND REPAIRING DAMAGED CONCRETE ARE INCIDENTAL TO THE CONTRACT.

(7) BOLTS MAY BE A325 BOLTS OR A449 BOLTS. BOLT LENGTH AND THREADING LENGTH ARE TO ALLOW FOR A TIGHT CONNECTION BETWEEN RIGID BARRIER AND THRIE BEAM CONNECTION PLATE. CONTRACTOR IS TO FIELD VERIFY BOLT LENGTH AND THREAD LENGTH. ONE ROUND WASHER REQUIRED BETWEEN BOLT HEAD AND THRIE BEAM CONNECTOR PLATE. BOLTS THAT EXTEND THROUGH THE PARAPET AND OUT THE BACK FACE REQUIRE A HARDENED ROUND STEEL WASHER THAT IS 2" O.D. X 5/8" THICK AND ONE PLATE WASHER. REPAIR ANY DAMAGED CONCRETE FROM BOLT INSTALLATION.

(8) THE RECESS FOR A W-BEAM CONNECTION, WHICH EXISTS ON SOME PARAPETS OF THIS TYPE, SHALL BE FILLED WITH A TREATED TIMBER BLOCKOUT. BLOCKOUT SIZE IS 1'-6" X 2'-0" X 3 1/2".

(9) BOLT, NUT AND WASHERS NOT REQUIRED FOR THIS LOCATION WHEN RETROFITTING AN EXISTING PAPAPET AND THE HOLE IS EITHER ABOVE PARAPET OR WITHIN 4 INCHES OF THE EDGE OF PARAPET.

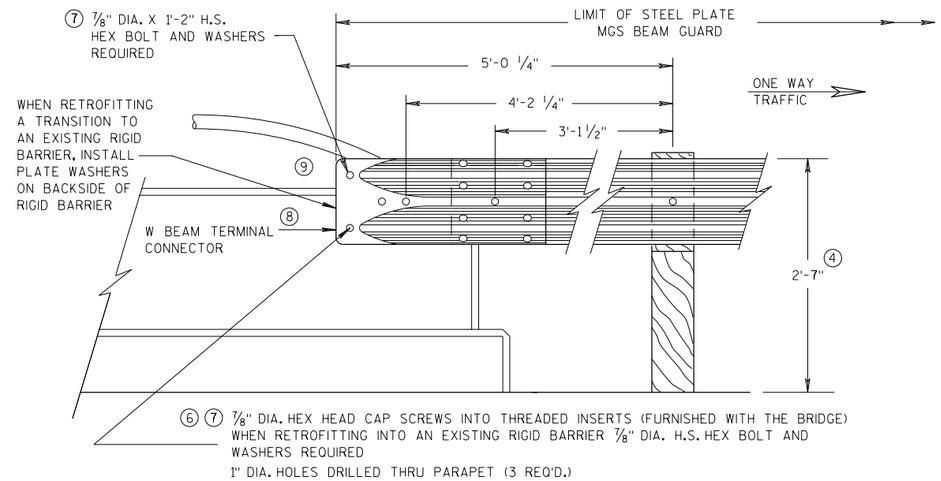

FRONT VIEW

W BEAM CONNECTION TO VERTICAL FACE PARAPET

(USE ONLY ON THE TRAFFIC EXIT END OF ONE WAY BRIDGES)

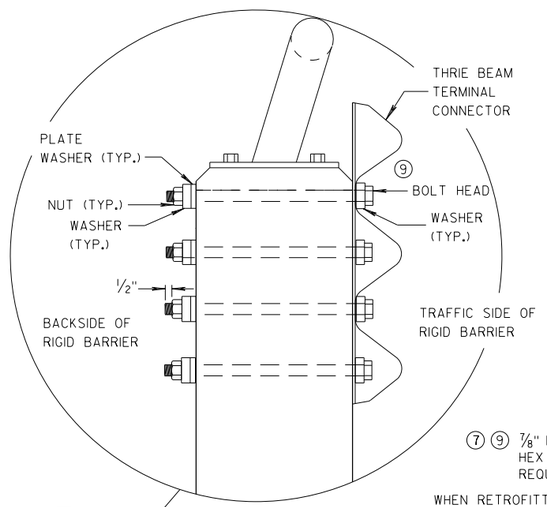

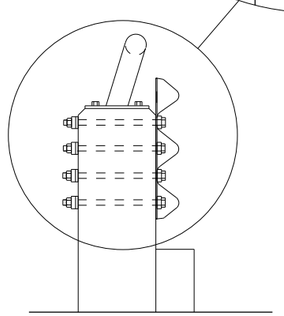

SECTION G-G

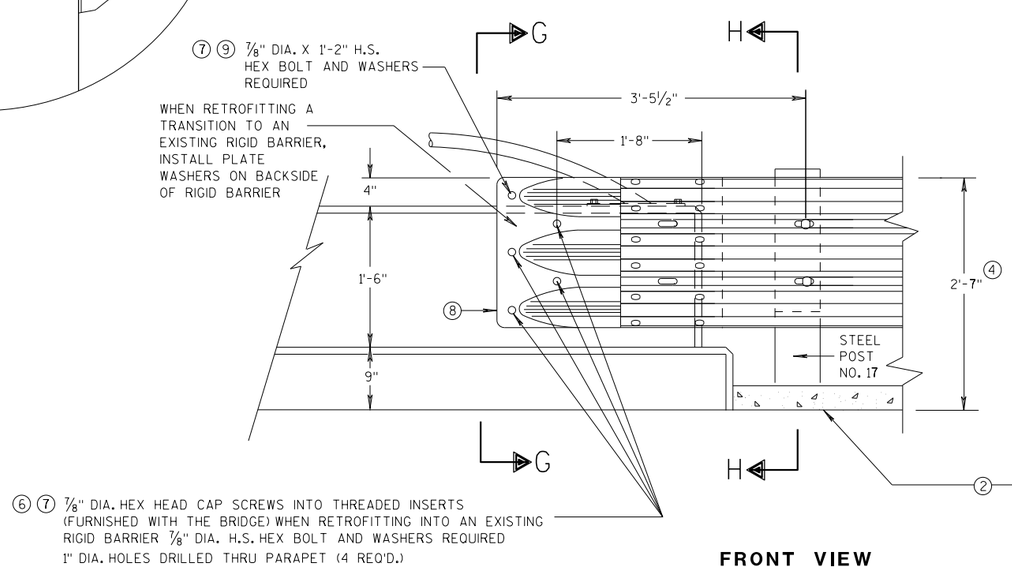

FRONT VIEW

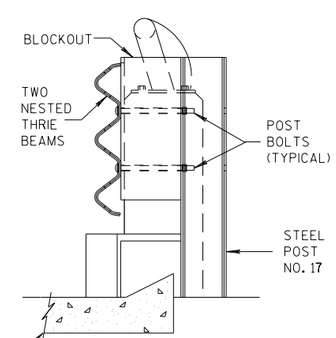

SECTION H-H

THRIE BEAM CONNECTION TO VERTICAL FACED PARAPETS

MIDWEST GUARDRAIL SYSTEM
THRIE BEAM TRANSITION (MGS)

STATE OF WISCONSIN
DEPARTMENT OF TRANSPORTATION

APPROVED
07/2018 — DATE
/S/ Rodney Taylor — ROADWAY STANDARDS D UNIT SUPERVIS
FHWA

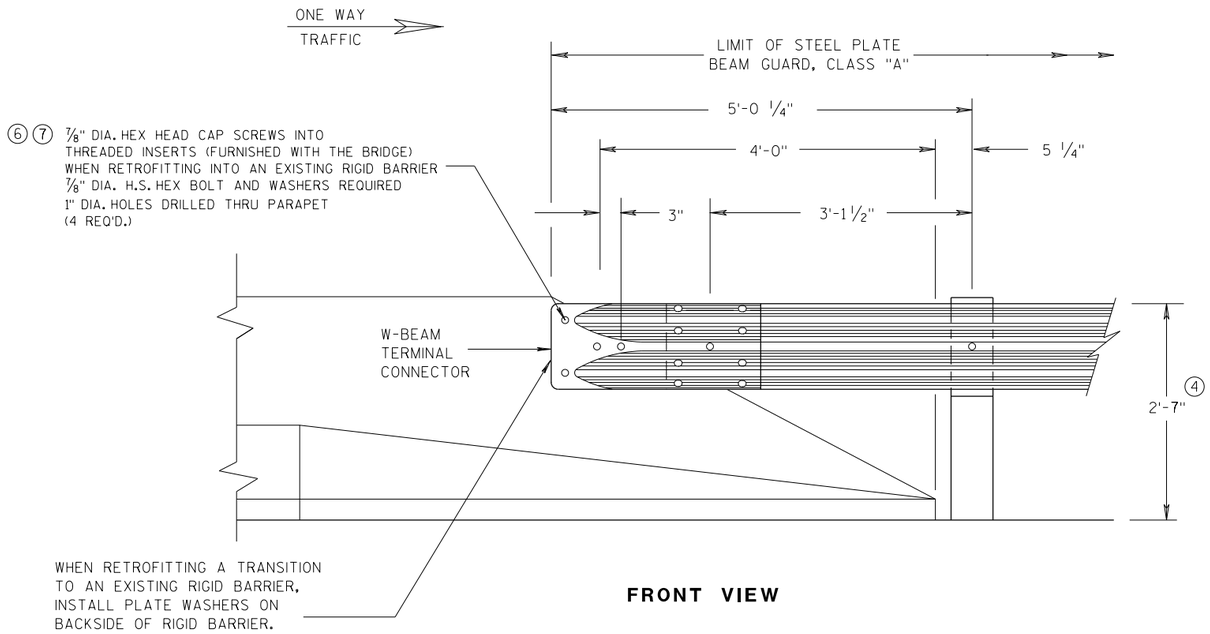

FRONT VIEW

W BEAM CONNECTION TO PARAPETS WITH SLOPED ENDS

(USE ONLY AT TRAFFIC EXIT END OF ONE WAY BRIDGE)

GENERAL NOTES

② OPTIONAL CURB AND GUTTER OR DRAINAGE FEATURE SEE PLAN FOR INFORMATION.

④ TOLERANCE FOR TOP OF BEAM IS ± 1".

⑥ DRILLING BOLT HOLES THROUGH THE PARAPET, BOLTS, NUTS, WASHERS AND REPAIRING DAMAGED CONCRETE ARE INCIDENTAL TO THE CONTRACT.

⑦ BOLTS MAY BE A325 BOLTS OR A449 BOLTS. BOLT LENGTH AND THREADING LENGTH ARE TO ALLOW FOR A TIGHT CONNECTION BETWEEN RIGID BARRIER AND THRIE BEAM CONNECTION PLATE. CONTRACTOR IS TO FIELD VERIFY BOLT LENGTH AND THREAD LENGTH. ONE ROUND WASHER REQUIRED BETWEEN BOLT HEAD AND THRIE BEAM CONNECTOR PLATE. BOLTS THAT EXTEND THROUGH THE PARAPET AND OUT THE BACK FACE REQUIRE A HARDENED ROUND STEEL WASHER THAT IS 2" O.D. X 5/8" THICK AND ONE PLATE WASHER. REPAIR ANY DAMAGED CONCRETE FROM BOLT INSTALLATION.

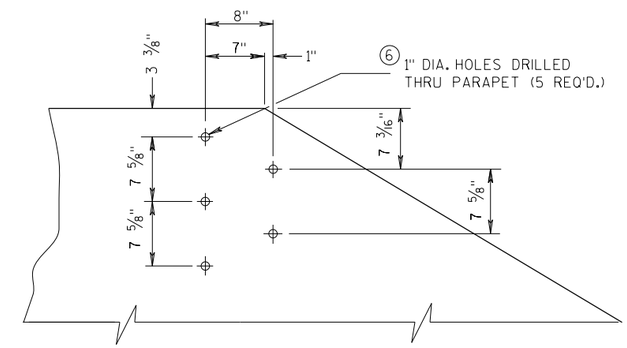

DRILL HOLE LOCATION AND PATTERN
FOR THRIE BEAM CONNECTION

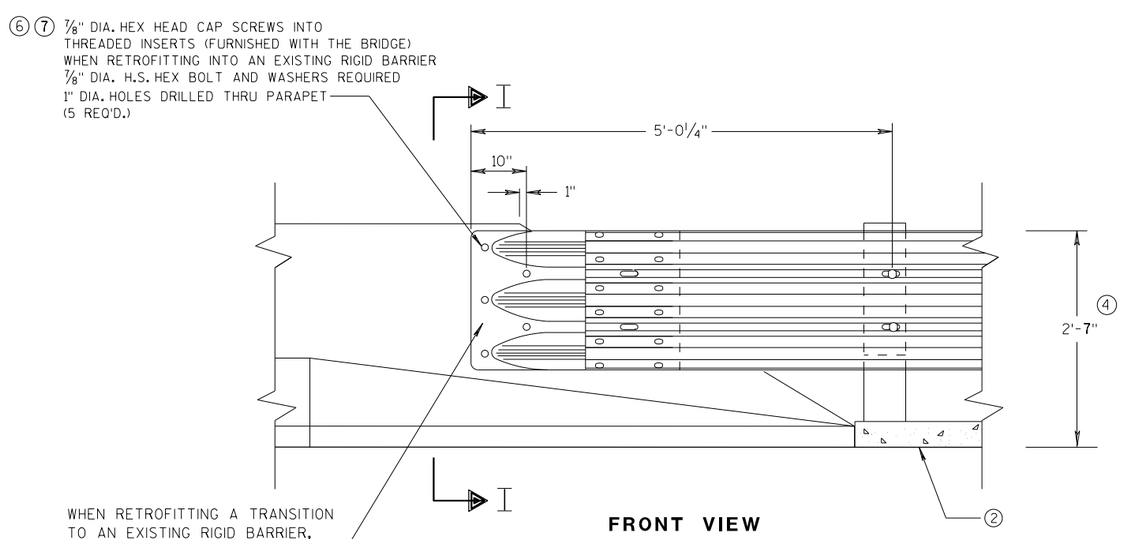

FRONT VIEW

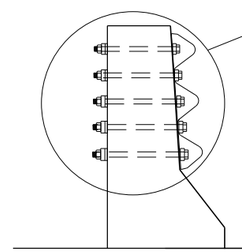

SECTION I-I

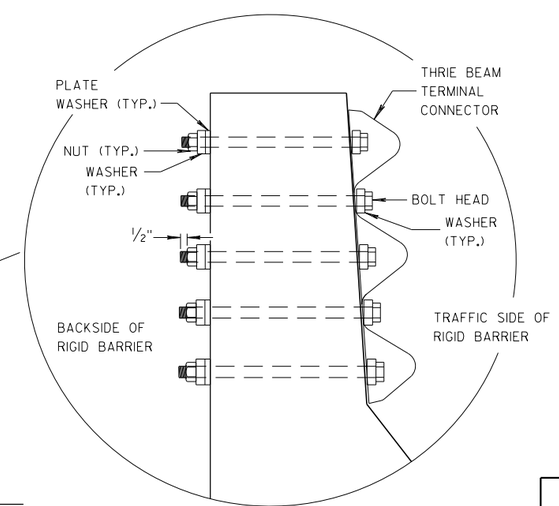

THRIE BEAM CONNECTION TO BRIDGE PARAPETS WITH SLOPED ENDS

MIDWEST GUARDRAIL SYSTEM THRIE BEAM TRANSITION (MGS)

STATE OF WISCONSIN
DEPARTMENT OF TRANSPORTATION

APPROVED
07/2018 — DATE
/S/ Rodney Taylor — ROADWAY STANDARDS DEVELOPMENT UNIT SUPERVISOR
FHWA

6

6

S.D.D. 14 B 45-5f

S.D.D. 14 B 45-5f

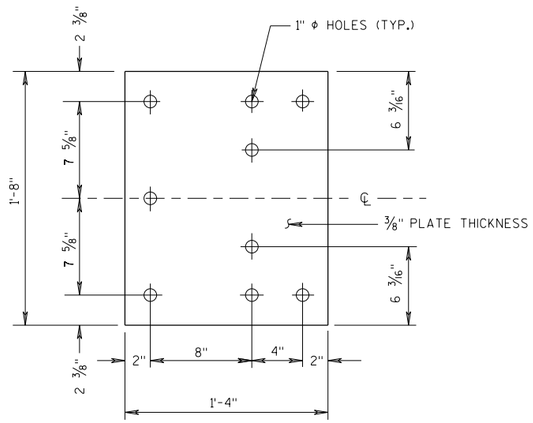

BACK-UP PLATE DETAIL

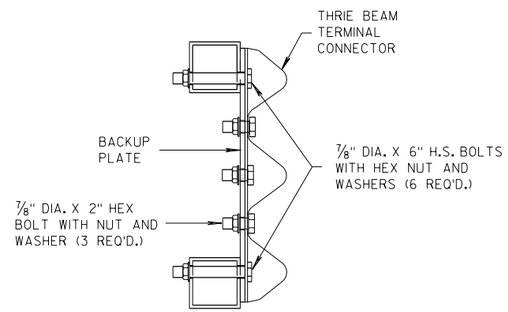

SECTION J-J

GENERAL NOTES

(4) TOLERANCE FOR TOP OF BEAM IS ± 1".

(6) DRILLING HOLES THROUGH THE PAPRPET, BOLTS, NUTS, WASHERS AND REPAIRING DAMAGED CONCRETE ARE INCIDENTAL TO THE CONTRACT.

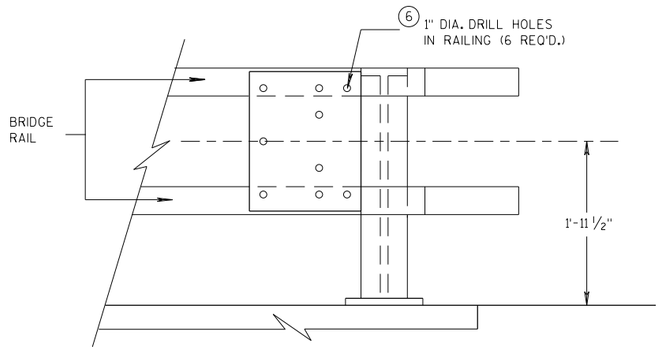

BACK-UP PLATE MOUNTING ONTO BRIDGE RAILING

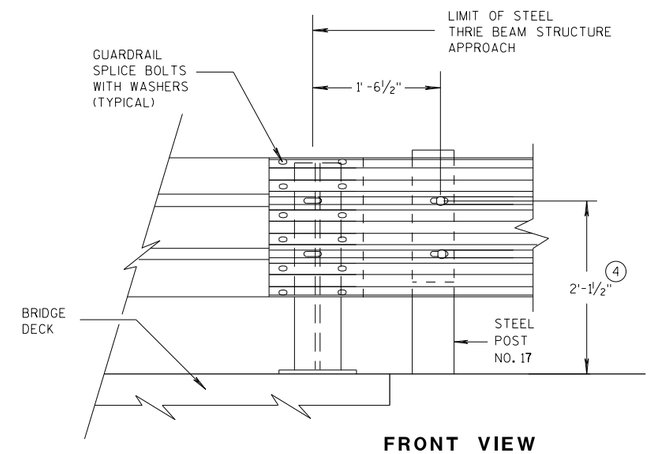

FRONT VIEW

THRIE BEAM CONNECTION TO STEEL RAILING TYPE "W"

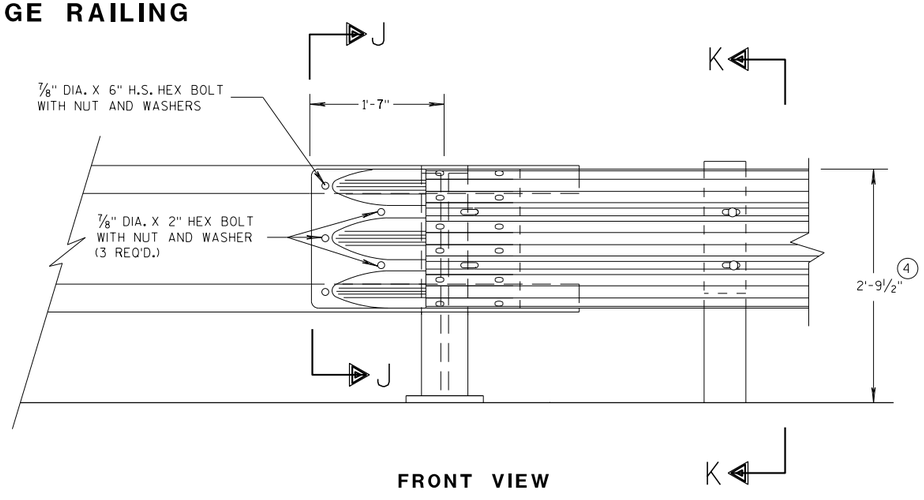

FRONT VIEW

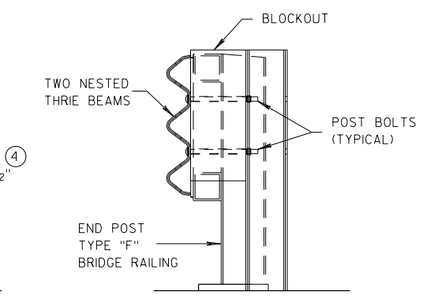

SECTION K-K

THRIE BEAM CONNECTION TO TUBULAR RAILING TYPE "F"

MIDWEST GUARDRAIL SYSTEM THRIE BEAM TRANSITION (MGS)

STATE OF WISCONSIN
DEPARTMENT OF TRANSPORTATION

APPROVED 07/2018 — DATE — FHWA

/S/ Rodney Taylor — ROADWAY STANDARDS DEVELOPMENT UNIT SUPERVISOR

S.D.D. 14 B 45-5g

GENERAL NOTES

(4) TOLERANCE FOR TOP OF W-BEAM RAIL IS ± 1".

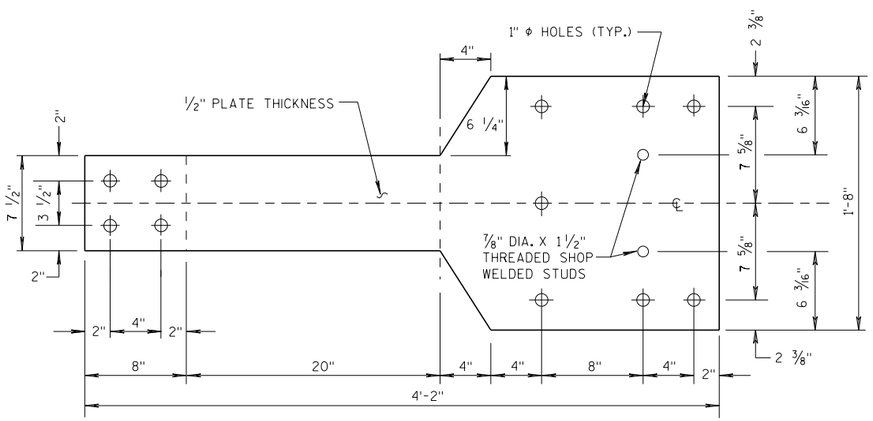

FRONT VIEW

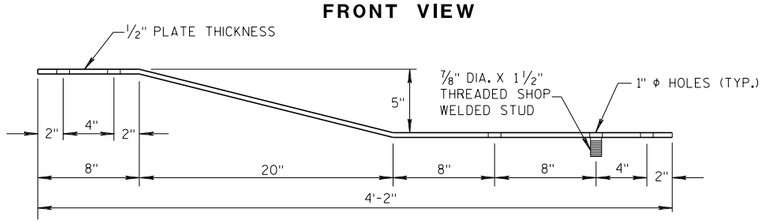

PLAN VIEW

BACK-UP PLATE DETAIL, TYPE "M"

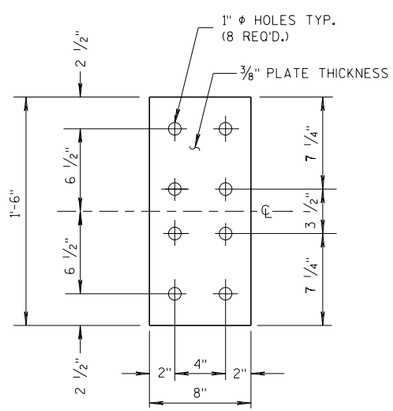

FRONT VIEW

ANCHOR PLATE DETAIL, TYPE "M"

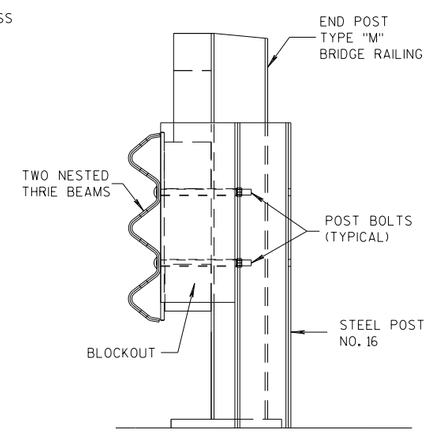

SECTION M-M

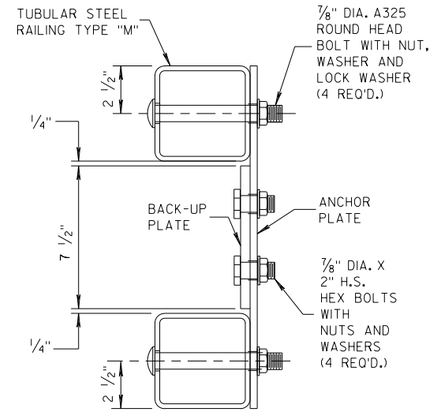

SECTION L-L

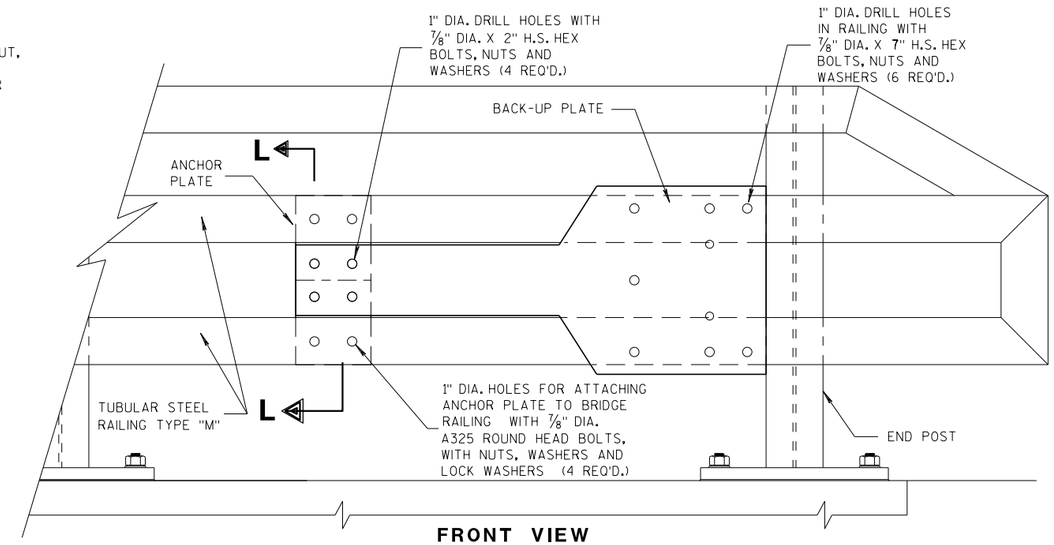

FRONT VIEW

ANCHOR AND BACK-UP PLATE MOUNTING TO BRIDGE RAILING, TYPE "M"

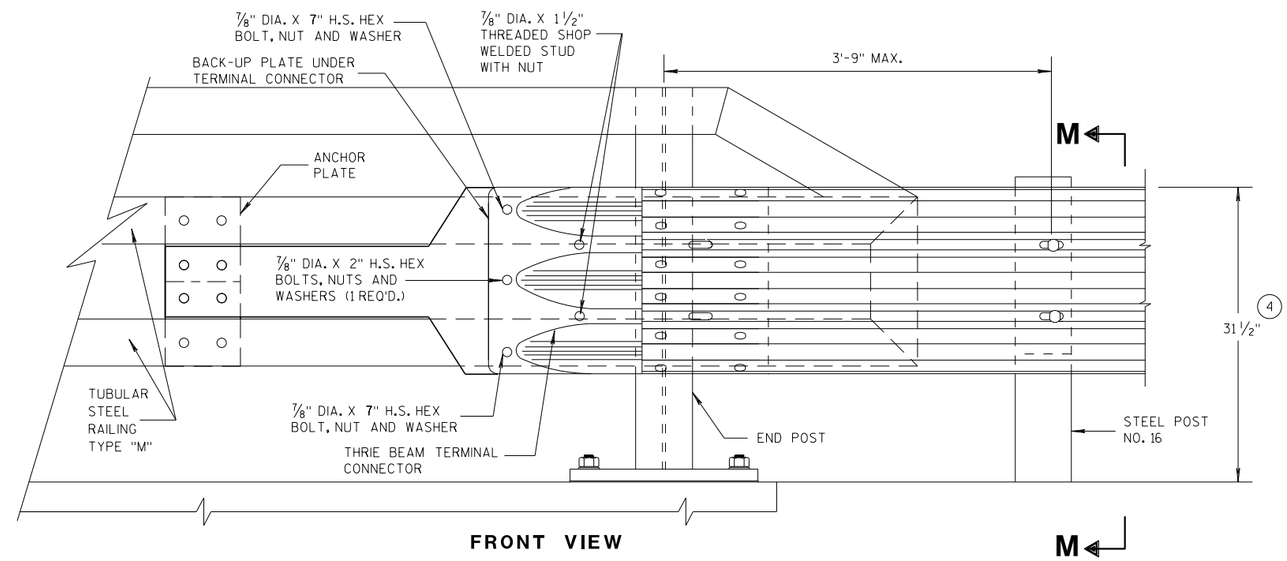

FRONT VIEW

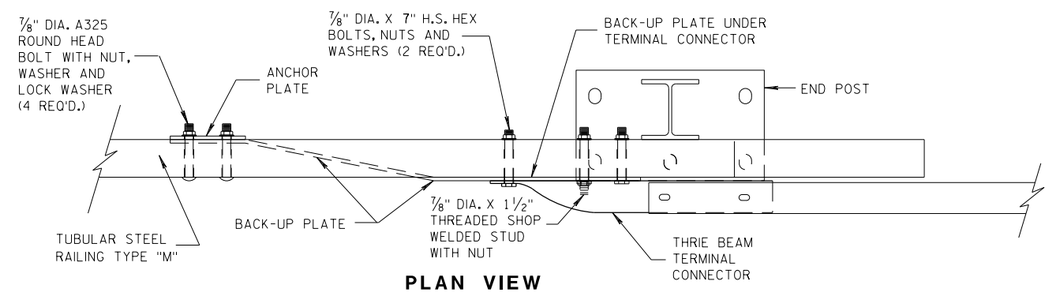

PLAN VIEW

THRIE BEAM CONNECTION TO TUBULAR RAILING, TYPE "M"

MIDWEST GUARDRAIL SYSTEM THRIE BEAM TRANSITION (MGS)

STATE OF WISCONSIN
DEPARTMENT OF TRANSPORTATION

APPROVED
07/2018 — DATE
/S/ Rodney Taylor — ROADWAY STANDARDS DEVELOPMENT UNIT SUPERVISOR
FHWA

6

6

S.D.D. 14 B 45-5h

S.D.D. 14 B 45-5h

GENERAL NOTES

COVER PLATE PANELS ARE 3/16" THICK.

ALL STIFFENERS ARE 1/4" THICK.

CONNECTOR PLATE SHALL BE FABRICATED FROM ASTM GRADE A36 STEEL AND GALVANIZED.

FOR GALVANIZED REQUIREMENTS, SEE SECTION 614 OF THE STANDARD SPECIFICATIONS.

ALL HOLE DIAMETERS SHALL BE 1".

FOR OPPOSITE SIDE INSTALLATION MIRROR DRAWINGS.

(10) STIFFENERS LOCATED AT THE OUTSIDE EDGES OF THE COVER PLATES SHALL BE WELDED AS FOLLOWS:
SINGLE BEVEL GROOVE WELD ON EXTERNAL SIDES AND 3/16" FILLET WELD BY 1" LONG SPACED AT 2" ON INTERNAL SIDES.

(11) STIFFENERS LOCATED ON THE INSIDE OF THE COVER PLATE SHALL BE WELDED AS FOLLOWS:
3/16" FILLET WELD BY 1" LONG SPACED AT 2".

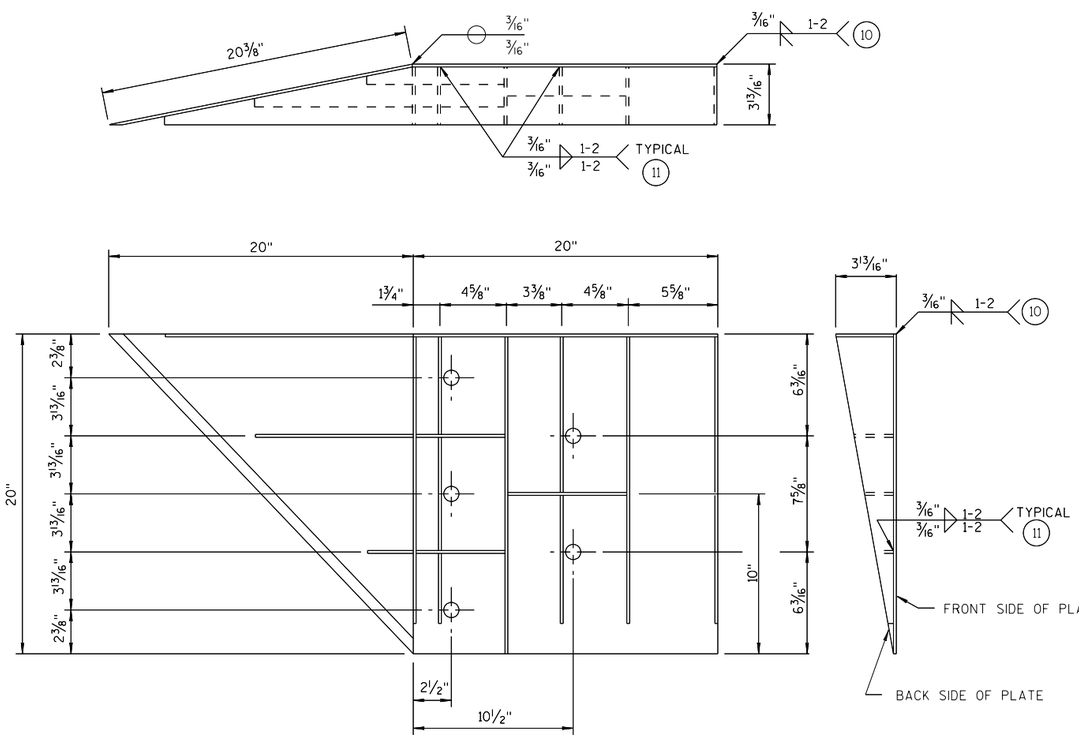

WELDING INSTRUCTION

(VIEWED FROM BACK SIDE OF PLATE)

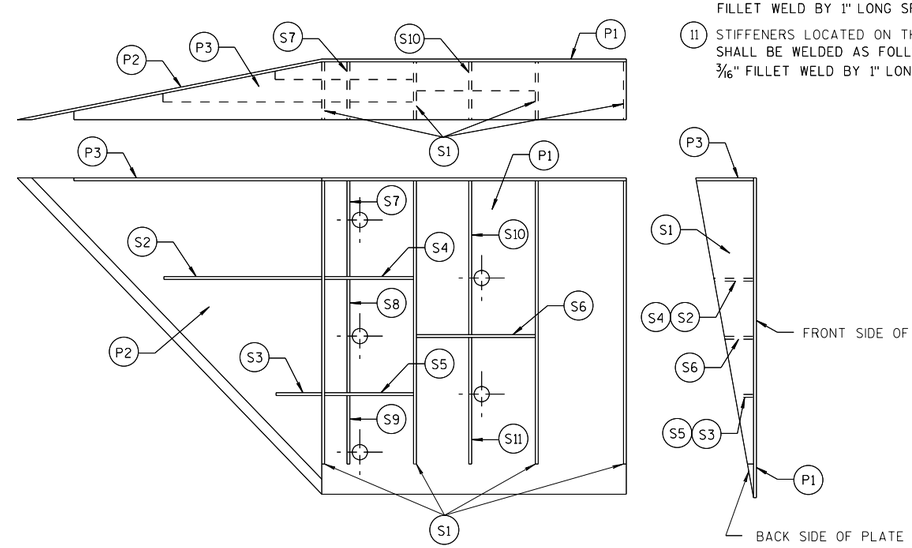

PLATE AND STIFFENER IDENTIFICATION

(VIEWED FROM BACK SIDE OF PLATE)

CONNECTOR PLATE DIMENSION (PER ASSEMBLY)				
PLATE	QUANTITY	SHAPE	SIZE (A x B x C x D)	THICKNESS
P1	1		20" x 20"	3/16"
P2	1		20" x 20" x 28 9/16"	3/16"
P3	1		39" x 3 5/8" x 20" x 19 5/16"	3/16"
S1	4		18 7/16" x 3 5/8" x 18 3/4"	1/4"
S2	1		10 1/4" x 2 7/16" x 10 3/8" x 1/2"	1/4"
S3	1		3" x 1 1/16" x 3 1/8" x 1/2"	1/4"
S4	1		6 1/8" x 2 7/16"	1/4"
S5	1		6 1/8" x 1 1/16"	1/4"
S6	1		7 3/4" x 1 3/4"	1/4"
S7	1		2 9/16" x 6" x 3 5/8" x 5 7/8"	1/4"
S8	1		1 5/32" x 7 1/2" x 2 1/2" x 7 3/8"	1/4"
S9	1		6 1/16" x 6 3/16" x 1 3/32"	1/4"
S10	1		1 7/8" x 9 7/8" x 3 5/8" x 9 11/16"	1/4"
S11	1		8 1/2" x 8 3/4" x 1 13/16"	1/4"

SINGLE SLOPE CONNECTION PLATE

MIDWEST GUARDRAIL SYSTEM THRIE BEAM TRANSITION (MGS)

STATE OF WISCONSIN
DEPARTMENT OF TRANSPORTATION

APPROVED
7/2018 /S/ Rodney Taylor
DATE ROADWAY STANDARDS DEVELOPMENT UNIT SUPERVISOR
FHWA

6

6

S.D.D. 14 B 45-5i

S.D.D. 14 B 45-5i

GENERAL NOTES

CONNECTOR PLATE, DRILLING BOLT HOLES THROUGH THE PARAPET, BOLTS, NUTS, WASHERS AND REPAIRING DAMAGED CONCRETE ARE INCIDENTAL TO THE CONTRACT.

(2) OPTIONAL CURB AND GUTTER OR DRAINAGE FEATURE SEE PLAN FOR INFORMATION.

(7) BOLTS MAY BE A325 BOLTS OR A449 BOLTS. BOLT LENGTH AND THREADING LENGTH ARE TO ALLOW FOR A TIGHT CONNECTION BETWEEN RIGID BARRIER AND THRIE BEAM CONNECTION PLATE. CONTRACTOR IS TO FIELD VERIFY BOLT LENGTH AND THREAD LENGTH. ONE ROUND WASHER REQUIRED BETWEEN BOLT HEAD AND THRIE BEAM CONNECTOR PLATE. BOLTS THAT EXTEND THROUGH THE PARAPET AND OUT THE BACK FACE REQUIRE A HARDENED ROUND STEEL WASHER THAT IS 2" O.D. X 5/8" THICK AND ONE PLATE WASHER. REPAIR ANY DAMAGED CONCRETE FROM BOLT INSTALLATION.

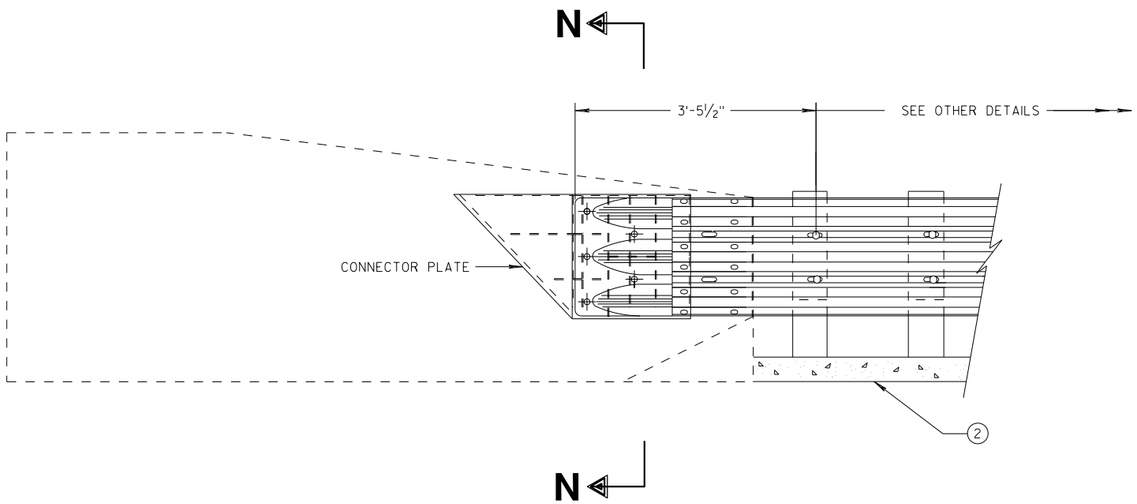

THRIE BEAM CONNECTION TO SINGLE SLOPE BARRIER

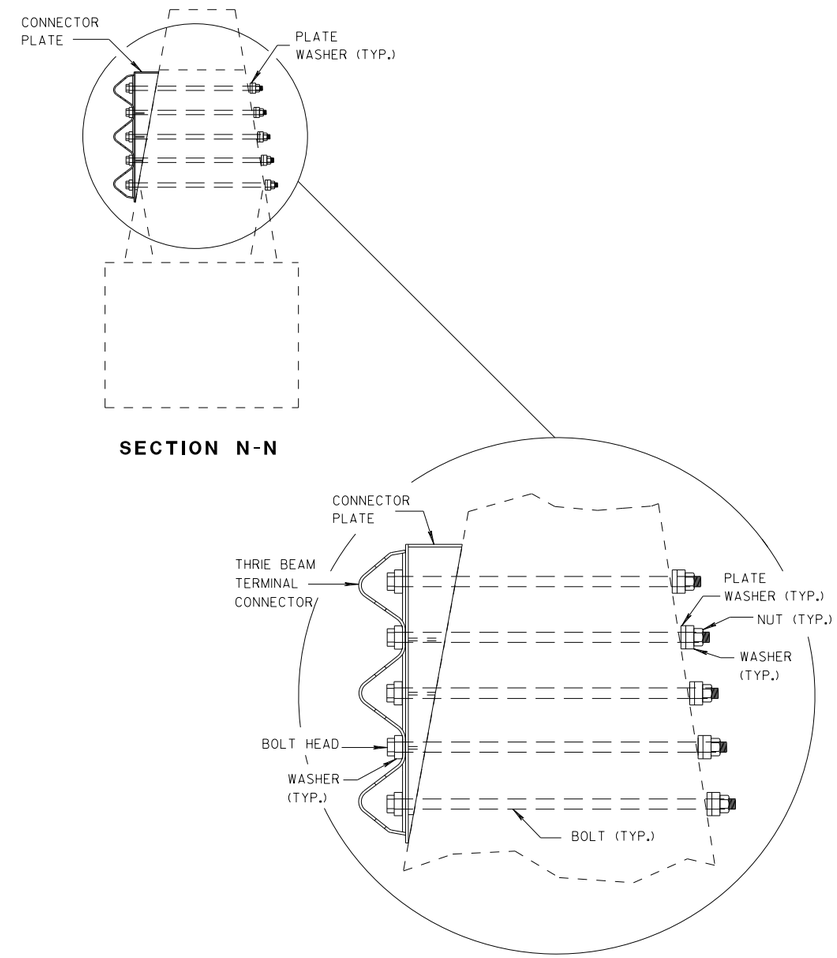

SECTION N-N

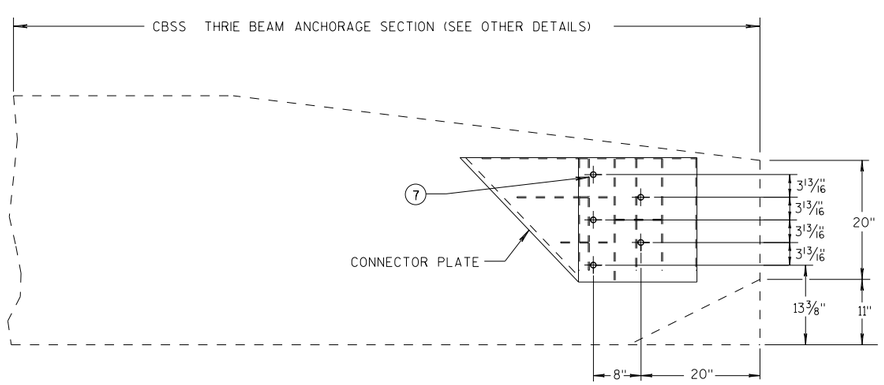

SINGLE SLOPE CONNECTION PLATE PLACEMENT

MIDWEST GUARDRAIL SYSTEM THRIE BEAM TRANSITION (MGS)

STATE OF WISCONSIN
DEPARTMENT OF TRANSPORTATION

APPROVED
7/2018 — DATE
/S/ Rodney Taylor — ROADWAY STANDARDS DEVELOPMENT UNIT SUPERVISOR
FHWA

6

S.D.D. 14 B 45-5j

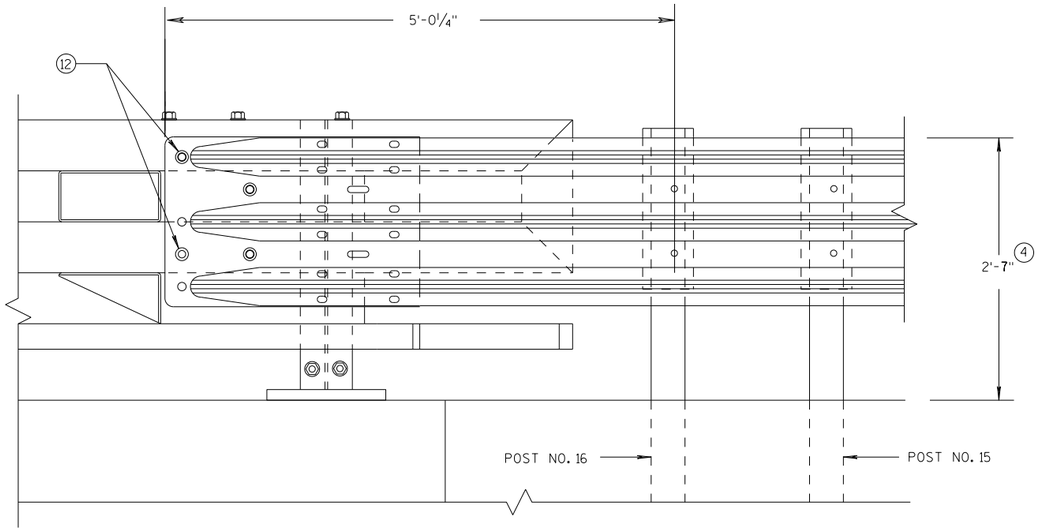

ELEVATION OF DETAIL AT NY3 END POST

THRIE BEAM RAIL ATTACHMENT

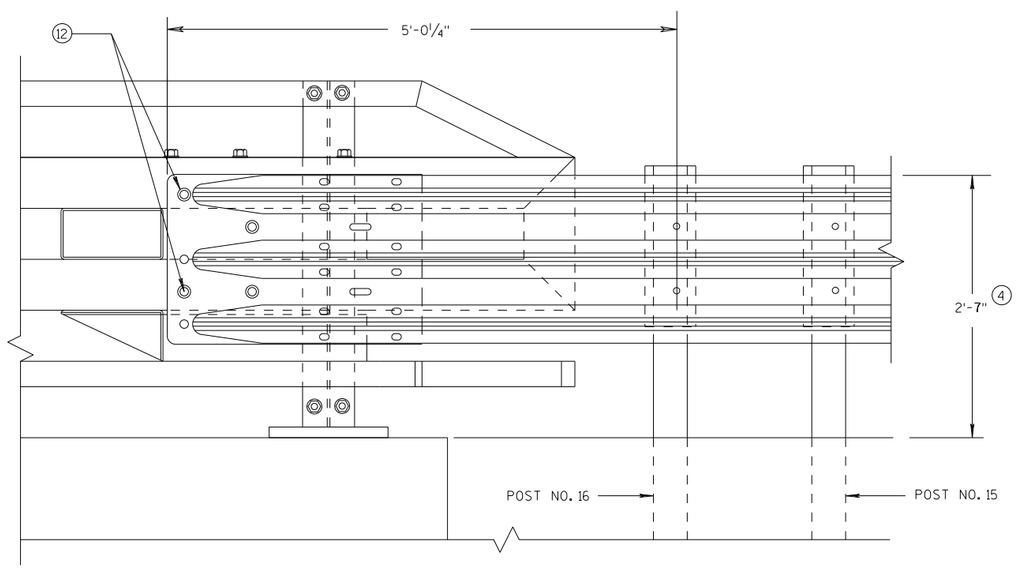

ELEVATION OF DETAIL AT NY4 END POST

THRIE BEAM RAIL ATTACHMENT

GENERAL NOTES

(4) TOLERANCE FOR TOP OF BEAM IS ± 1".

(12) BOLTS MAY BE A325 BOLTS OR A449 BOLTS. BOLT LENGTH AND THREADING LENGTH ARE TO ALLOW FOR A TIGHT CONNECTION BETWEEN RIGID BARRIER AND THRIE BEAM CONNECTION PLATE. CONTRACTOR IS TO FIELD VERIFY BOLT LENGTH AND THREAD LENGTH. ONE ROUND WASHER REQUIRED BETWEEN BOLT HEAD AND THRIE BEAM CONNECTOR PLATE. ON BACKSIDE OF PARAPET ONE ROUND WASHER, AND NUT REQUIRED. BOLT THREAD IS TO EXTEND ½-INCH BEYOND NUT.

MIDWEST GUARDRAIL SYSTEM
THRIE BEAM TRANSITION (MGS)

STATE OF WISCONSIN
DEPARTMENT OF TRANSPORTATION

APPROVED
7/2018
DATE
FHWA

/S/ Rodney Taylor
ROADWAY STANDARDS D
UNIT SUPERVIS

NT

6

S.D.D. 14 B 45-5k

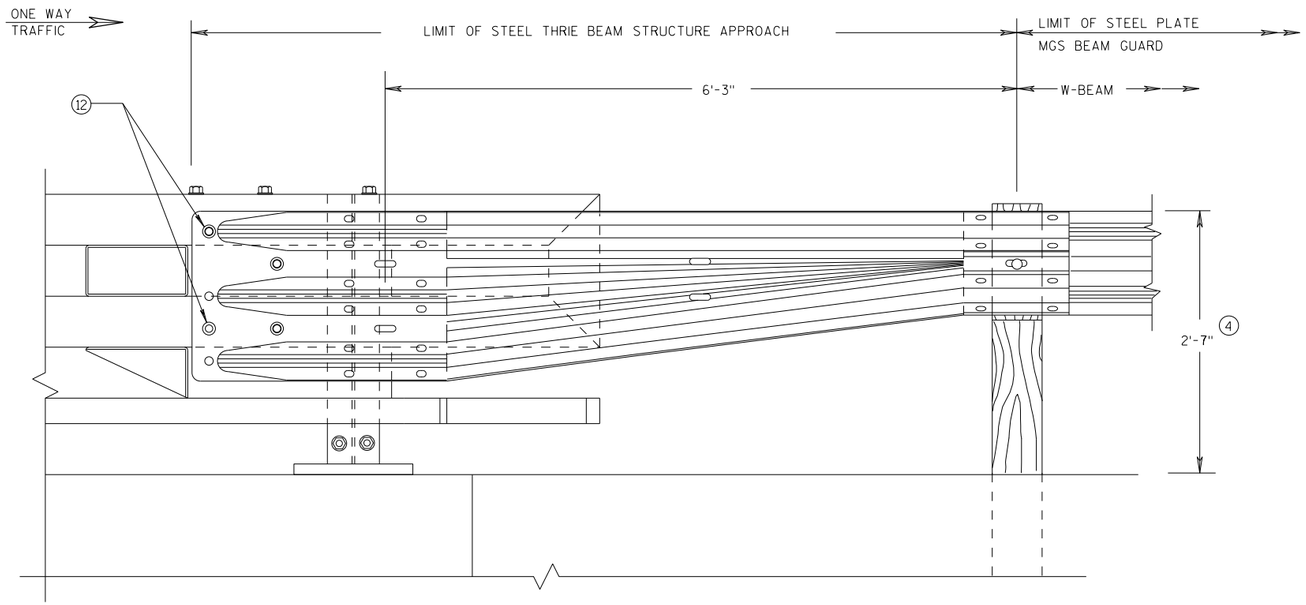

FRONT VIEW

W BEAM TRANSITION AND CONNECTION TO BRIDGE RAILING TYPE "NY3"

(USE ONLY ON THE TRAFFIC EXIT END OF ONE WAY BRIDGES)

GENERAL NOTES

(4) TOLERANCE FOR TOP OF BEAM IS ± 1".

(12) BOLTS MAY BE A325 BOLTS OR A449 BOLTS. BOLT LENGTH AND THREADING LENGTH ARE TO ALLOW FOR A TIGHT CONNECTION BETWEEN RIGID BARRIER AND THRIE BEAM CONNECTION PLATE. CONTRACTOR IS TO FIELD VERIFY BOLT LENGTH AND THREAD LENGTH. ONE ROUND WASHER REQUIRED BETWEEN BOLT HEAD AND THRIE BEAM CONNECTOR PLATE. ON BACKSIDE OF PARAPET ONE ROUND WASHER, AND NUT REQUIRED. BOLT THREAD IS TO EXTEND ½-INCH BEYOND NUT.

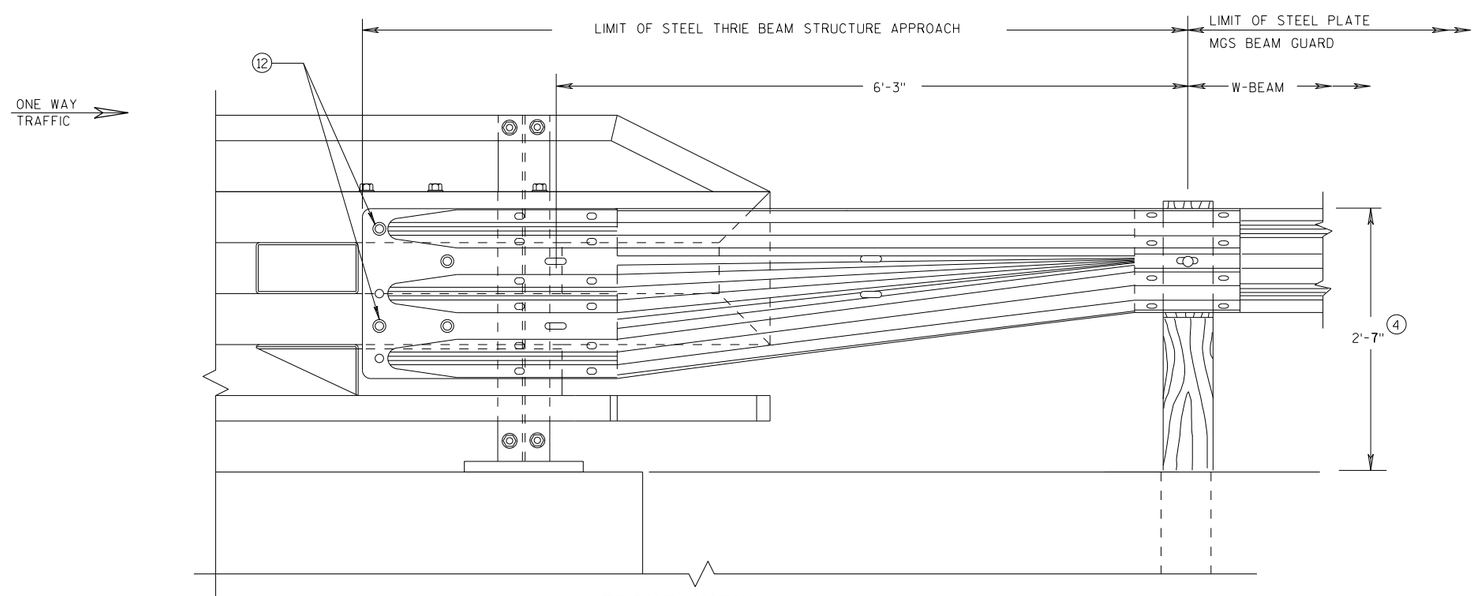

FRONT VIEW

W BEAM TRANSITION AND CONNECTION TO BRIDGE RAILING TYPE "NY4"

(USE ONLY ON THE TRAFFIC EXIT END OF ONE WAY BRIDGES)

MIDWEST GUARDRAIL SYSTEM THRIE BEAM TRANSITION (MGS)

STATE OF WISCONSIN
DEPARTMENT OF TRANSPORTATION

APPROVED
7/2018 — DATE
/S/ Rodney Taylor — ROADWAY STANDARDS DEVELOPMENT UNIT SUPERVISOR
NT
FHWA

6

S.D.D. 14 B 45-5L

TYPICAL SIDEROAD APPROACH WARNING SIGN DETAIL

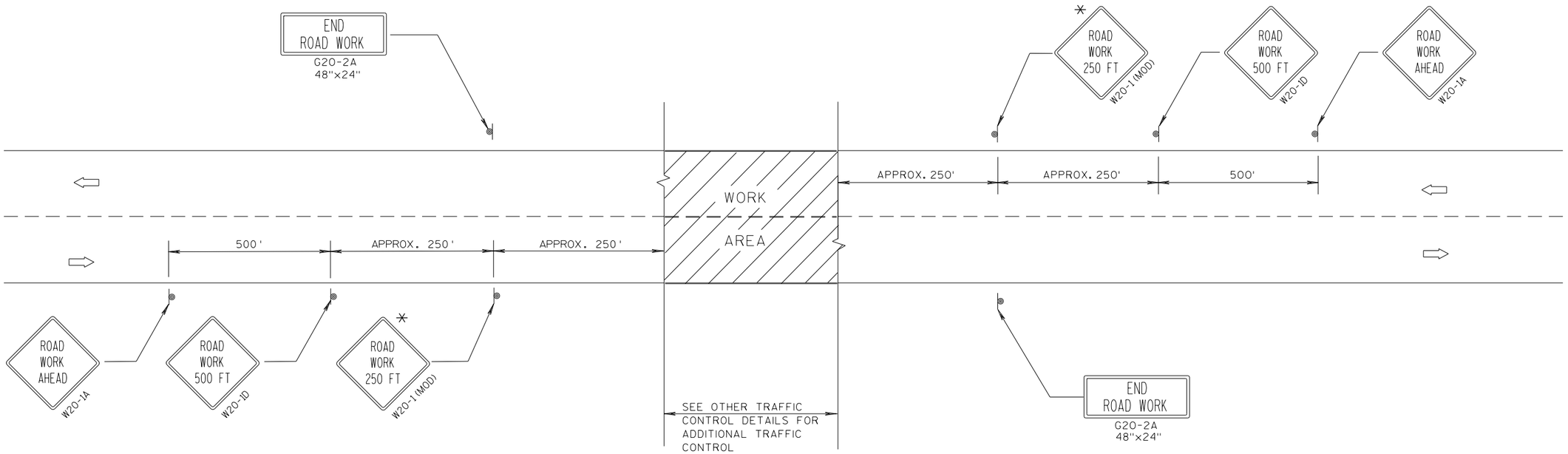

GENERAL NOTES

THE EXACT NUMBER, LOCATION, AND SPACING OF ALL SIGNS AND DEVICES SHALL BE ADJUSTED TO FIT FIELD CONDITIONS.

THE SPACING BETWEEN TRAFFIC CONTROL SIGNS SHOULD BE ADJUSTED TO NOT CONFLICT WITH AND SHOULD PROVIDE A DESIRABLE MINIMUM OF 200 FEET CLEARANCE TO EXISTING SIGNS THAT WILL REMAIN IN PLACE.

ALL SIGNS ARE 48"x48" UNLESS OTHERWISE NOTED. IF NECESSARY DUE TO SPACE CONSTRAINTS, 36"x36" SIGNS MAY BE USED INSTEAD OF 48"x48" SIGNS.

SIGNS THAT WILL BE IN PLACE LESS THAN 7 CONTINUOUS DAYS AND NIGHTS MAY BE MOUNTED ON PORTABLE SUPPORTS.

IF A "STOP" SIGN MUST BE REMOVED FOR A WORK OPERATION, A TEMPORARY "STOP" SIGN SHALL BE PLACED PRIOR TO THE SIGN REMOVAL, OR A FLAGGER SHALL BE PROVIDED UNTIL THE SIGN IS RE-ESTABLISHED.

* THE THIRD W20-1 SIGN IS REQUIRED ONLY IF THERE IS AN INTERSECTION BETWEEN THE "ROAD WORK 500 FT" SIGN AND THE WORK ZONE. ADJUST THE PLACEMENT OF THIS SIGN BASED ON INTERSECTION LOCATION AND OTHER FIELD CONDITIONS.

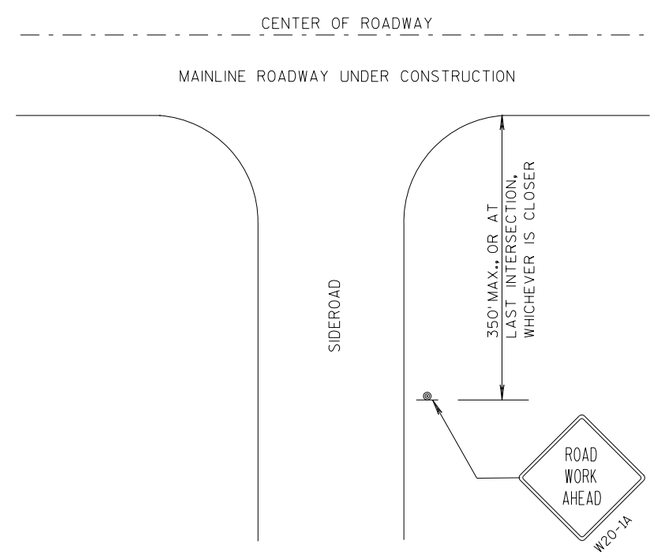

LEGEND

- SIGN ON PERMANENT SUPPORT
- DIRECTION OF TRAFFIC
- WORK AREA

TRAFFIC CONTROL, ADVANCE WARNING SIGNS 40 M.P.H. OR LESS TWO-WAY UNDIVIDED ROAD OPEN TO TRAFFIC

STATE OF WISCONSIN
DEPARTMENT OF TRANSPORTATION

APPROVED
7/2018 — DATE
/S/ Andrew Heldtke — WORK ZONE ENGI
FHWA

6
S.D.D. 15 C 5-5

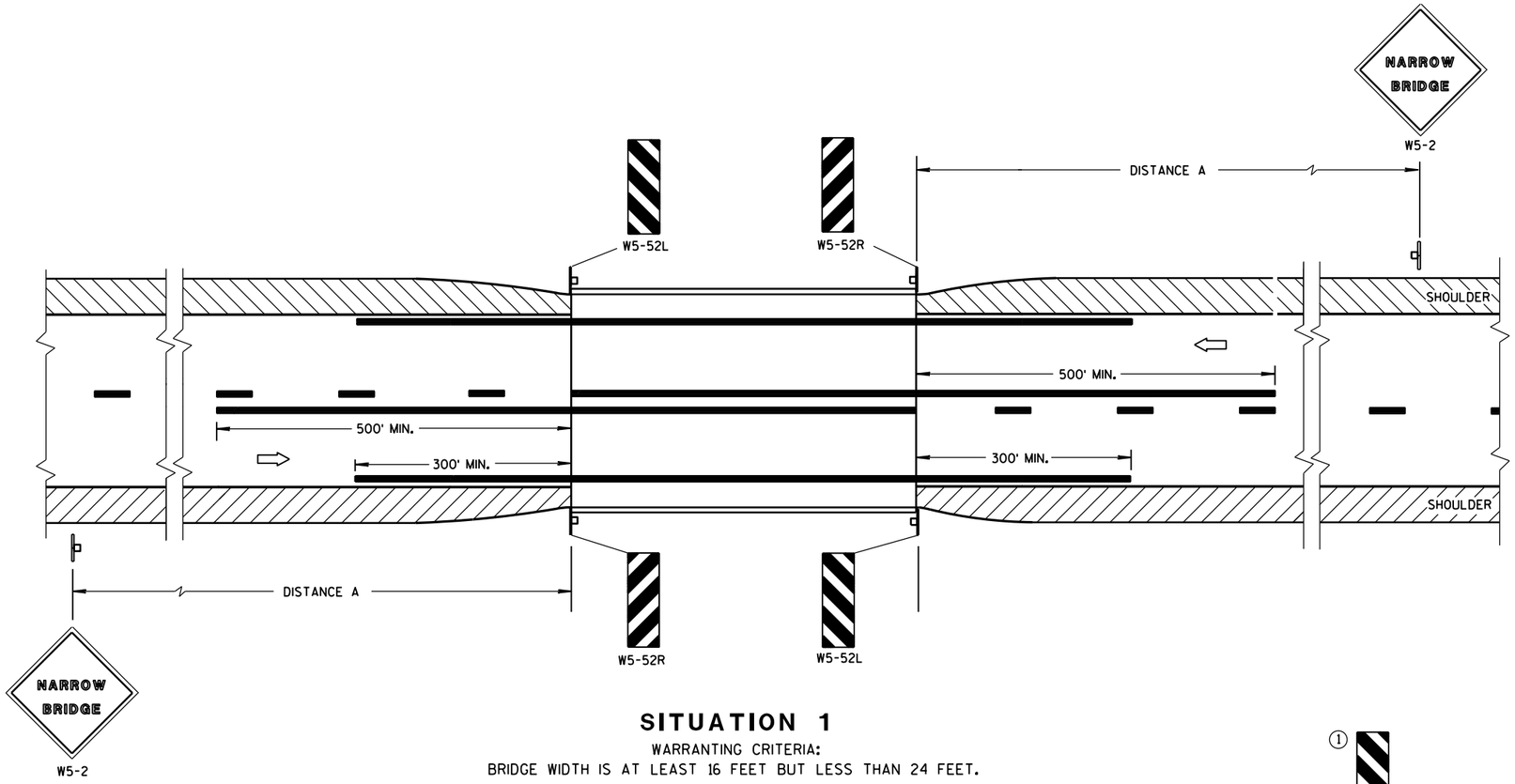

SITUATION 1

WARRANTING CRITERIA:
BRIDGE WIDTH IS AT LEAST 16 FEET BUT LESS THAN 24 FEET.

GENERAL NOTES

DETAILS OF TRAFFIC CONTROL DEVICES AND INSTALLATION NOT SHOWN ON THIS DRAWING SHALL CONFORM TO THE PERTINENT REQUIREMENTS OF THE STANDARD SPECIFICATIONS, THE SPECIAL PROVISIONS, AND THE MANUAL ON UNIFORM TRAFFIC CONTROL DEVICES.

LOCATE W5-52 SIGN POST(S) BEHIND GUARDRAIL WHEN PRESENT.

PLACE THE EDGE OF THE W5-52 SIGN IN LINE WITH FACE OF CURB OR PARAPET.

(1) OMIT ON ONE-WAY TRAVELLED WAYS.

⇨ DIRECTION OF TRAFFIC

DISTANCE TABLE

POSTED OR 85th PERCENTILE SPEED	DISTANCE "A"
25	150'
30	200'
35	250'
40	300'
45	400'
50	550'
55	750'

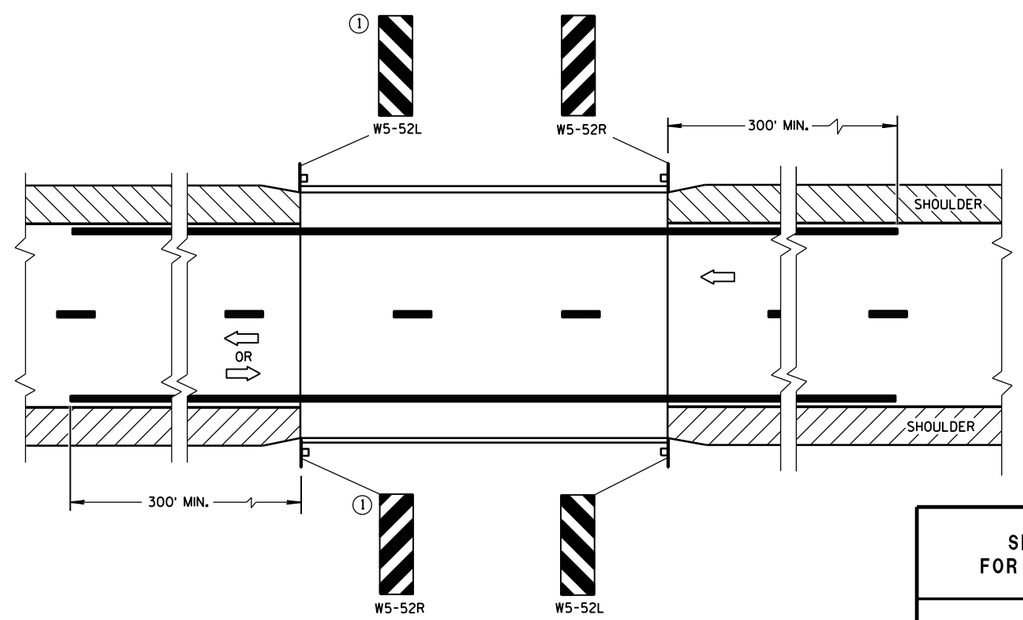

SITUATION 2

WARRANTING CRITERIA:

1. BRIDGE WIDTH IS AT LEAST 24 FEET AND
2. BRIDGE SHOULDER WIDTH IS LESS THAN 6 FEET.

SIGNING & MARKING
FOR TWO LANE BRIDGES

STATE OF WISCONSIN
DEPARTMENT OF TRANSPORTATION

APPROVED
June 2017 /S/ Matthew R. Rauch
DATE STATE SIGNING AND MAR 57 NEER
FHWA

6
S.D.D. 15 C 6-9

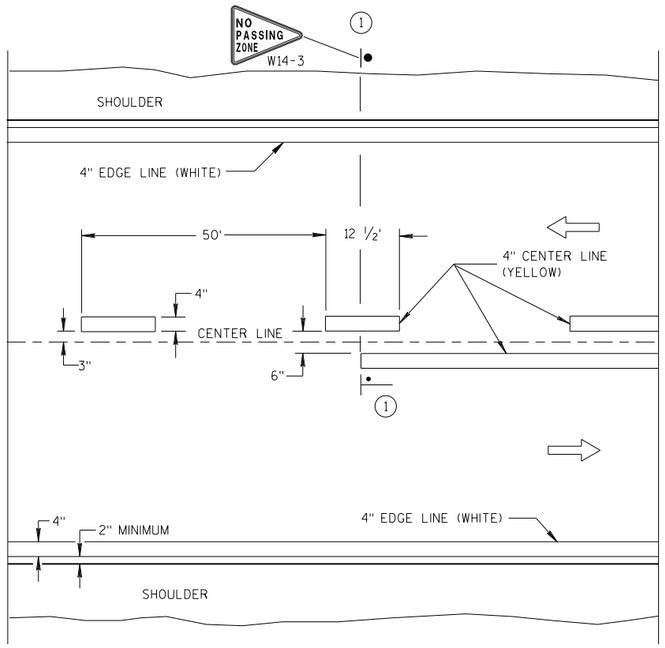

TWO WAY TRAFFIC

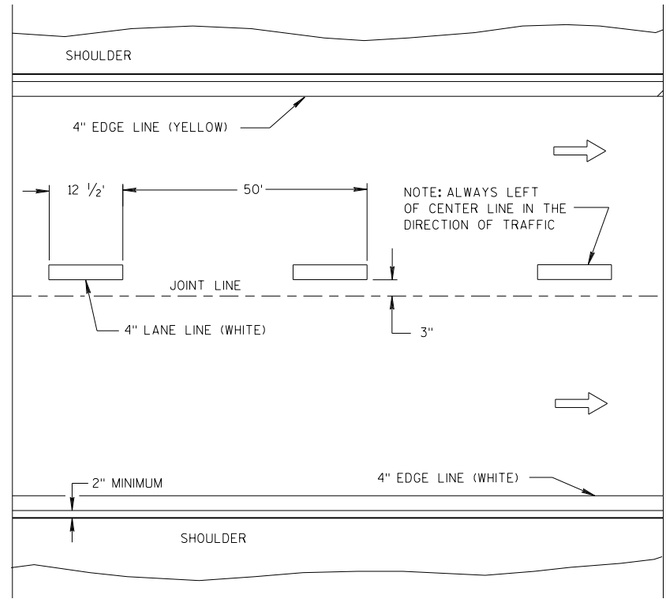

ONE WAY TRAFFIC

PERMANENT PAVEMENT MARKING

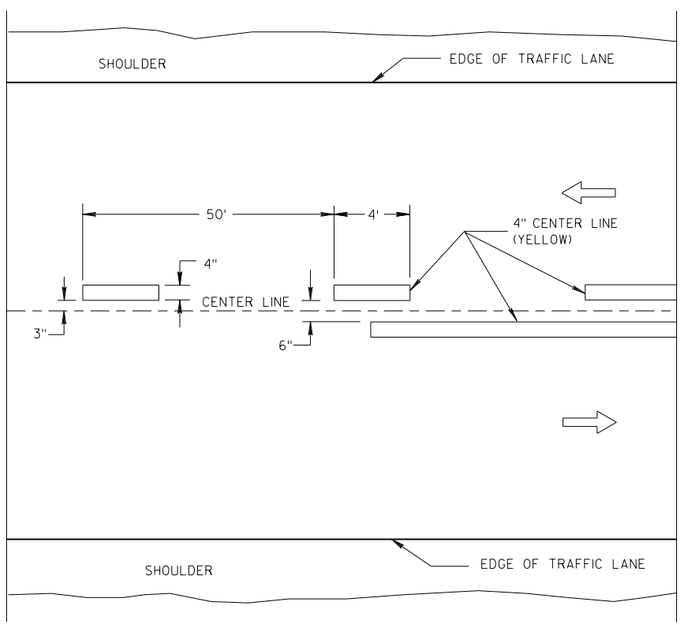

TWO WAY TRAFFIC

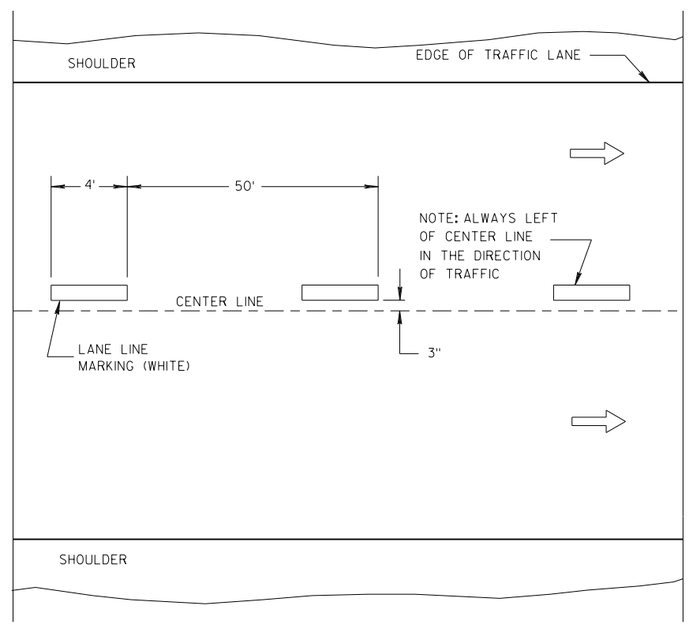

ONE WAY TRAFFIC

TEMPORARY PAVEMENT MARKING

GENERAL NOTES

DETAILS OF CONSTRUCTION NOT SHOWN ON THIS DRAWING SHALL CONFORM TO STANDARD SPECIFICATIONS AND SPECIAL PROVISIONS.

(1) LOCATE THE NO PASSING ZONE W14-3 SIGN WITHIN 50 FEET OF THE "T" MARKING.

NOTE

ARROW SYMBOL (⇨) SHOWS DIRECTION OF TRAVEL

LEGEND

"T" MARKING

POST MOUNTED SIGN

LONGITUDINAL MARKING (MAINLINE)

STATE OF WISCONSIN
DEPARTMENT OF TRANSPORTATION

APPROVED
7/2018 — DATE
/S/ Matthew R. Rauch — STATE SIGNING AND MAR INEER
FHWA

6

S.D.D. 15 C 8-19a

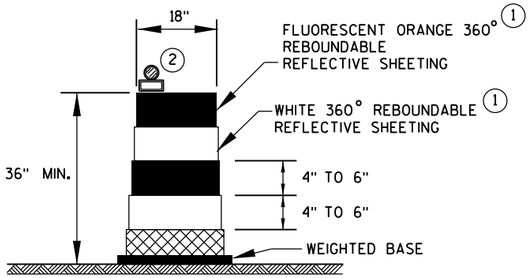

DRUM

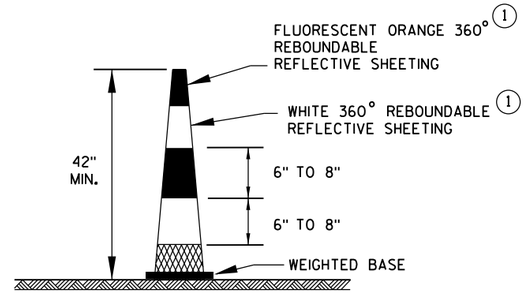

42" CONE

DO NOT USE IN TAPERS
½ SPACING OF DRUMS

GENERAL NOTES

1. REFLECTIVE SHEETING SHALL FOLLOW THE REQUIREMENTS IN THE APPROVED PRODUCTS LISTING FOR SIGN SHEETING.
2. LOCATION OF WARNING LIGHTS WHEN SHOWN ON THE PLAN.

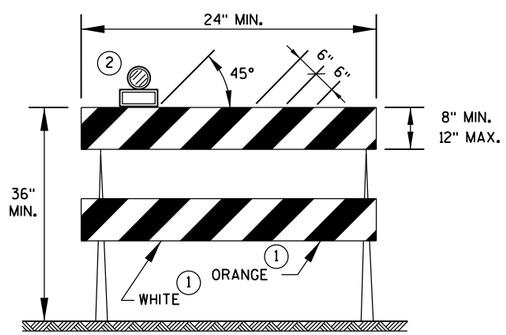

TYPE 2 BARRICADE

FOR RAILS LESS THAN 36" LONG, 4" WIDE STRIPES MAY BE USED. ALL STRIPES SHALL SLOPE DOWNWARD TO THE TRAFFIC SIDE FOR CHANNELIZATION.

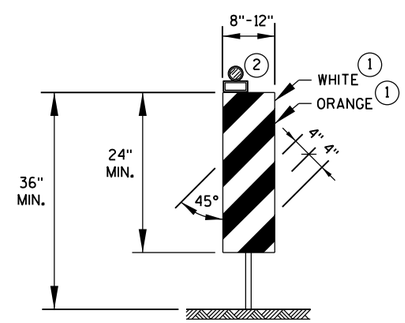

VERTICAL PANEL

THE STRIPES SHALL SLOPE DOWNWARD TO THE TRAFFIC SIDE FOR CHANNELIZATION.

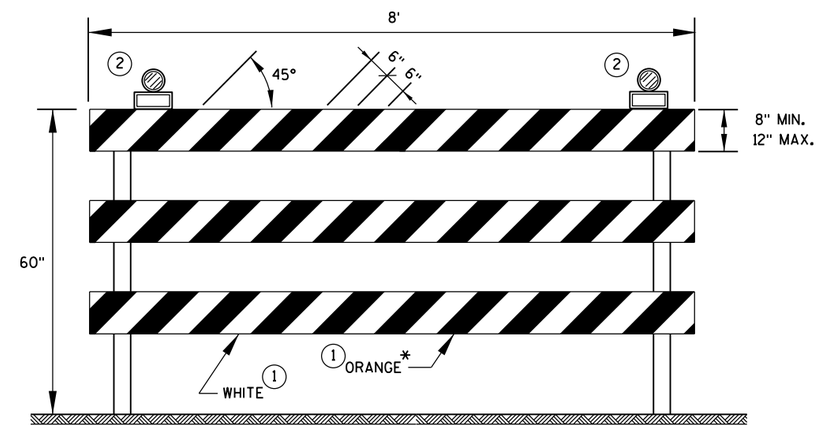

TYPE 3 BARRICADE

IF SIGN MOUNTED, DO NOT COVER MORE THAN 50% OF THE TOP TWO RAILS OR 33% OF THE TOTAL AREA OF THE THREE RAILS.

* IF USED FOR A PERMANENT APPLICATION, USE RED SHEETING.

CHANNELIZING DEVICES DRUMS, CONES, BARRICADES AND VERTICAL PANELS	
STATE OF WISCONSIN DEPARTMENT OF TRANSPORTATION	
APPROVED	
June 2017	/S/ Andrew Heldtke
DATE	WORK ZONE ENG
FHWA	

LEGEND

SIGN ON PORTABLE OR PERMANENT SUPPORT

DIRECTION OF TRAFFIC

WORK AREA

FLAGGER, EQUIPPED WITH STOP/SLOW PADDLE FASTENED ON SUPPORT STAFF

SIGN AND TEMPORARY RUMBLE STRIP ARRAY SPACING TABLE

SPEED LIMIT	SPACING A
25-35 MPH	200'
35-40 MPH	350'
45-55 MPH	500'

USE OF THE "BE PREPARED TO STOP" SIGN IS OPTIONAL. WHEN USED, THIS SIGN SHALL BE LOCATED BETWEEN THE W20-7A AND W20-4A SIGNS, USING SPACING A.

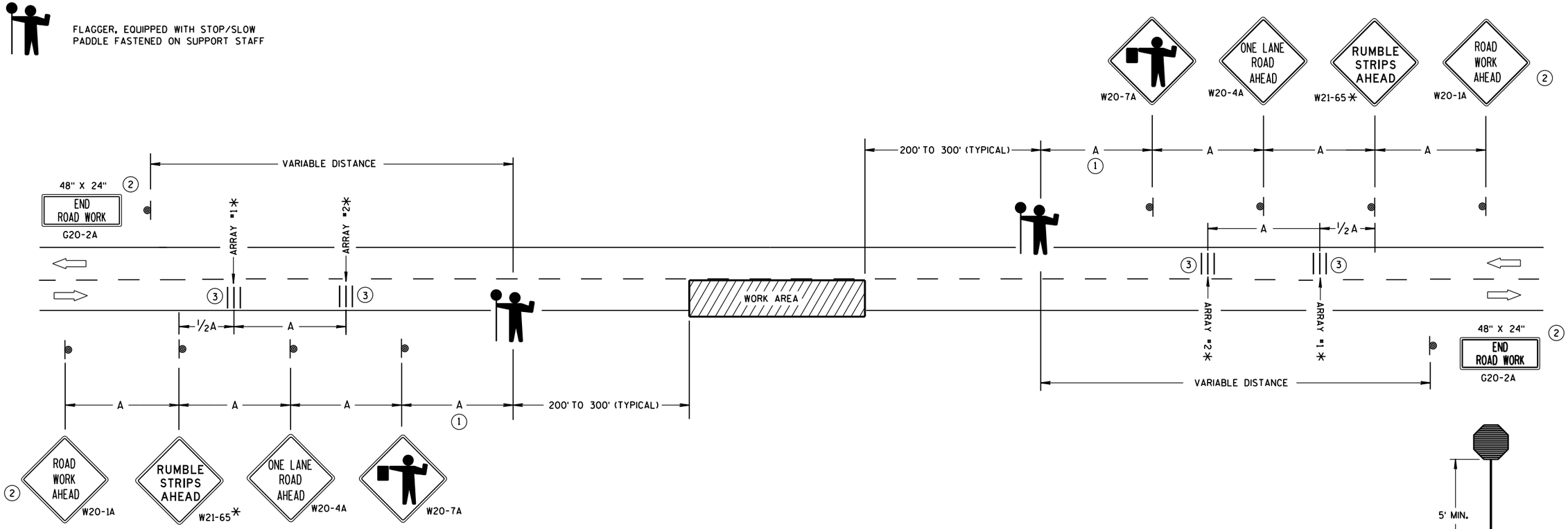

TRAFFIC CONTROL FOR LANE CLOSURE WITH FLAGGING OPERATION

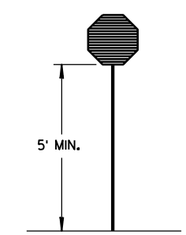

STOP/SLOW PADDLE ON SUPPORT STAFF

GENERAL NOTES

DETAILS OF TRAFFIC CONTROL DEVICES AND INSTALLATION NOT SHOWN ON THIS DRAWING SHALL CONFORM TO THE PERTINENT REQUIREMENTS OF THE STANDARD SPECIFICATIONS, THE SPECIAL PROVISIONS, AND THE MANUAL ON UNIFORM TRAFFIC CONTROL DEVICES.

THE EXACT NUMBER, LOCATION AND SPACING OF ALL SIGNS AND DEVICES (AND THE LOCATION OF ALL FLAGGERS) SHALL BE ADJUSTED TO FIT FIELD CONDITIONS AS APPROVED BY THE ENGINEER.

THE FIRST ADVANCE WARNING SIGN SHOULD TYPICALLY BE LOCATED IN ADVANCE OF THE ANTICIPATED TRAFFIC BACKUP OR QUEUE.

"WO" SIGNS ARE THE SAME AS "W" SIGNS EXCEPT THE BACKGROUND IS ORANGE.

WHEN A SIDE ROAD OR RAMP INTERSECTS THE FACILITY ON WHICH THE WORK IS BEING PERFORMED, ADDITIONAL TRAFFIC CONTROLS SHALL BE PROVIDED AS SPECIFIED IN THE PLANS AND/OR THE SPECIAL PROVISIONS OR AS APPROVED BY THE ENGINEER.

INSTALL TEMPORARY RUMBLE STRIPS PER MANUFACTURER'S RECOMMENDATIONS.

PLACE ADVANCE SIGNING PRIOR TO INSTALLING TEMPORARY RUMBLE STRIPS.

ALL SIGNS ARE 48" X 48" UNLESS OTHERWISE NOTED.

FLAGGERS SHALL BE IN SIGHT OF EACH OTHER OR IN DIRECT COMMUNICATION AT ALL TIMES. THEY SHALL BE EQUIPPED WITH STOP/SLOW PADDLES FASTENED ON SUPPORT STAFFS. WHEN THE FLAGGING OPERATION IS NOT IN EFFECT, REMOVE TEMPORARY RUMBLE STRIPS PRIOR TO COVERING OR REMOVING ALL ADVANCE SIGNING.

* UTILIZE TEMPORARY RUMBLE STRIPS WHEN FLAGGING OPERATION IS ANTICIPATED TO BE STATIONARY IN EXCESS OF TWO HOURS.

1. FOR A MOVING WORK OPERATION, SIGNING AND TEMPORARY RUMBLE STRIPS (IF USED) SHALL BE REESTABLISHED (AS SIMULTANEOUSLY AS PRACTICAL) AT APPROXIMATELY 3,500 FOOT INTERVALS IN THE MOVING WORK OPERATION OR AS APPROVED BY THE ENGINEER.
2. SIGN NOT REQUIRED IF FLAGGING OPERATION OCCURS WITHIN A SIGNED ROAD WORK ZONE AREA.
3. EACH TEMPORARY RUMBLE STRIP ARRAY CONSISTS OF THREE RUMBLE STRIPS SPACED ACCORDING TO MANUFACTURER'S RECOMMENDATION, PLACED TRANSVERSE ACROSS THE LANE AT LOCATIONS SHOWN.

TRAFFIC CONTROL FOR LANE CLOSURE WITH FLAGGING OPERATION

STATE OF WISCONSIN
DEPARTMENT OF TRANSPORTATION

APPROVED
June 2017 — DATE
/S/ Andrew Heldtke — WORK ZONE ENG
FHWA

6

S.D.D. 15 C 12-6

LEGEND

- TYPE III BARRICADE WITH ATTACHED SIGN
- SIGN ON PERMANENT SUPPORT
- TRAFFIC CONTROL DRUM WITH TYPE "C" STEADY BURN LIGHT
- TRAFFIC CONTROL DRUM
- FLAGS, 16" X 16" MIN. (ORANGE)
- REMOVING PAVEMENT MARKING
- DIRECTION OF TRAFFIC
- ASPHALTIC PAVEMENT WIDENING
- CONCRETE BARRIER TEMPORARY PRECAST
- TEMPORARY SIGNAL. SEE SDD 09G02 FOR EXACT PLACEMENT

1. 500 FOOT SPACING SHOWN IS FOR ROADWAYS WITH A PRE-CONSTRUCTION REGULATORY SPEED LIMIT OF 45 MPH OR MORE. FOR 35 - 40 MPH, USE 350 FOOT TYPICAL SPACING. FOR 25 - 30 MPH, USE 200 FOOT TYPICAL SPACING.
2. USE 300 FOOT SPACING IF THE PRE - CONSTRUCTION REGULATORY SPEED IS 35 MPH OR LESS.
3. DIMENSION DETERMINED BY CBTP TAPER FROM EDGE LINE TO TANGENT SECTION OF THE ROAD.
4. TEMPORARY MARKING STOP LINE REMOVABLE TAPE 18 - INCH.
5. 700 FOOT TEMPORARY MARKING DOUBLE YELLOW LINE 4 - INCH. WHEN THE DISTANCE FOR THE PRECEDING NO - PASSING ZONE IS LESS THAN THE MINIMUM DISTANCE BETWEEN ZONES AS INDICATED IN THE SPECIFICATIONS, THE TWO ZONES SHALL BE CONNECTED.
6. SEE SDD 15C02 - SHEET "F" FOR ADVANCED WIDTH RESTRICTION SIGNING.

GENERAL NOTES

THE EXACT NUMBER, LOCATION, AND SPACING OF ALL SIGNS AND DEVICES SHALL BE ADJUSTED TO FIT FIELD CONDITIONS AS APPROVED BY THE ENGINEER.

THE SPACING BETWEEN TRAFFIC CONTROL SIGNS SHOULD BE ADJUSTED TO NOT CONFLICT WITH AND TO PROVIDE A MINIMUM OF 200 FEET (500 FEET DESIRABLE) CLEARANCE TO EXISTING SIGNS THAT WILL REMAIN IN PLACE..

THIS LANE CLOSURE IS TYPICAL FOR CLOSING RIGHT LANE - REVERSE FOR CLOSING LEFT LANE.

ALL SIGNS ARE 48" x 48" UNLESS OTHERWISE NOTED.

"WO" IS THE SAME AS "W" EXCEPT THE BACKGROUND IS ORANGE.

ANY SIGNS TEMPORARY OR EXISTING, WHICH CONFLICT WITH TRAFFIC CONTROL "IN USE" SHALL BE REMOVED OR COVERED AS NEEDED OR AS APPROVED BY THE ENGINEER.

PLACE TEMPORARY PAVEMENT MARKING EDGELINE AND CENTERLINE AND REMOVE EXISTING PAVEMENT MARKINGS IF LANE CLOSURE IS TO BE IN PLACE 4 OR MORE CONTINUOUS DAYS AND NIGHTS OR AS NOTED ON DETAIL.

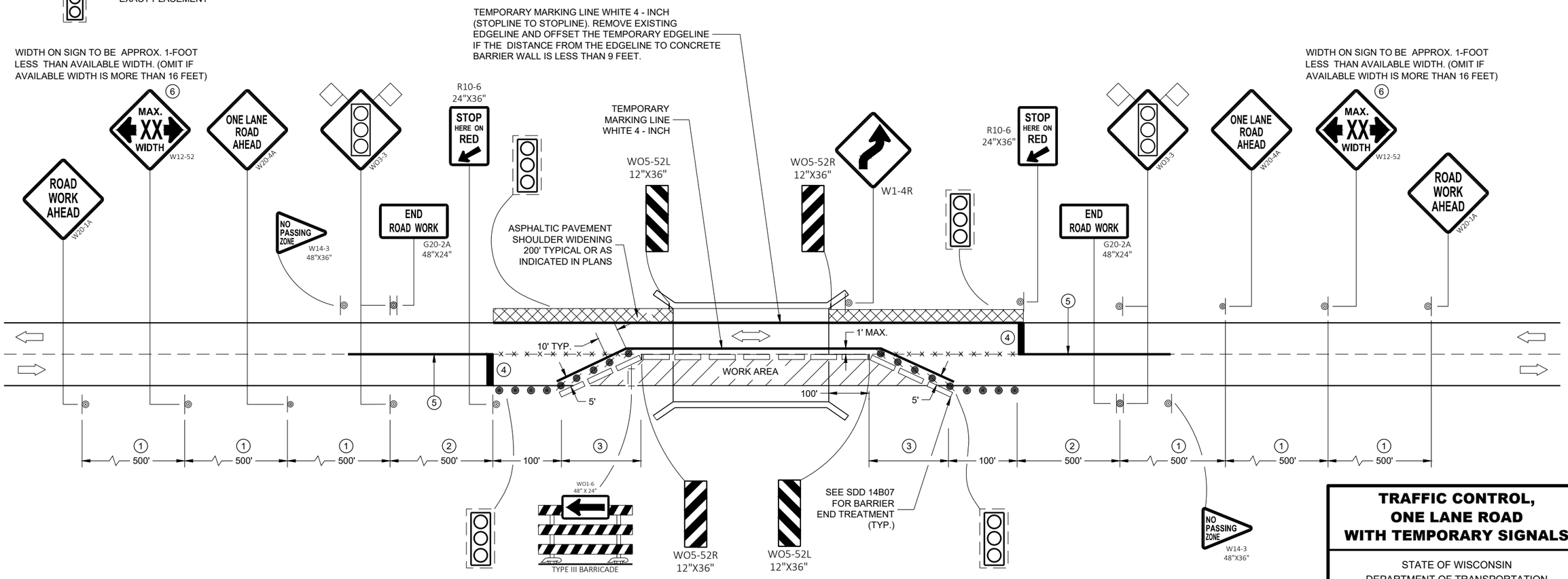

TRAFFIC CONTROL, ONE LANE ROAD WITH TEMPORARY SIGNALS

STATE OF WISCONSIN
DEPARTMENT OF TRANSPORTATION

APPROVED
November 2018 /S/ Andrew Heidtke
DATE WORK ZONE ENGINEE
FHWA

6

SDD 15D33 - 05

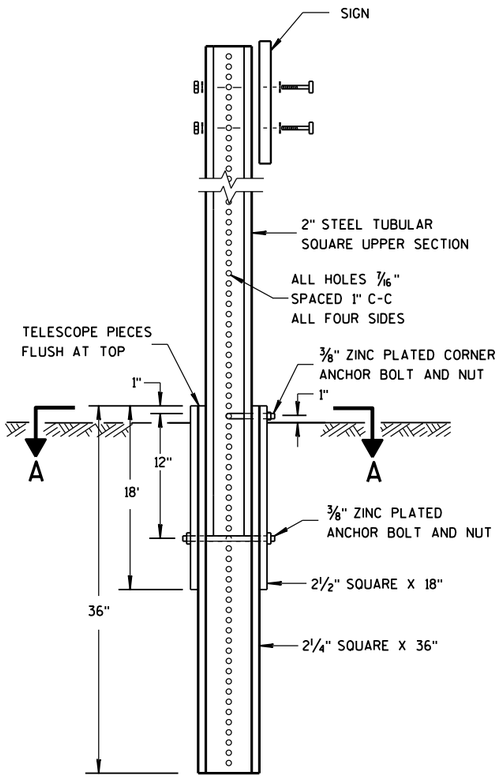

DETAIL OF TUBULAR STEEL SIGN POST

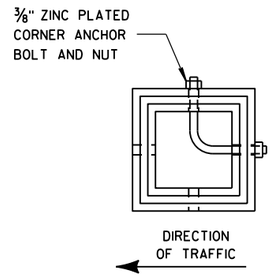

SECTION A-A

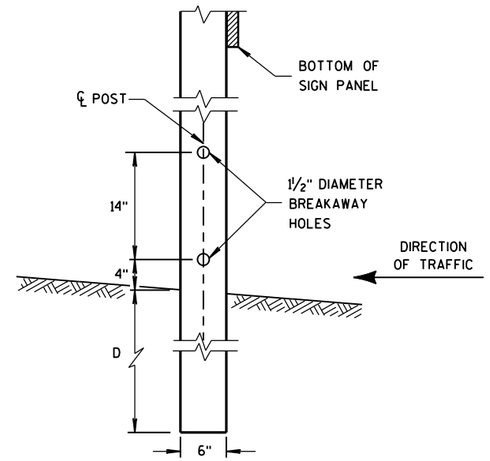

4"x6" WOOD POST MODIFICATION

GENERAL NOTES

1. 6 FEET FROM THE EDGE OF PAVEMENT (EDGE LINE LOCATION) UNLESS OTHERWISE DIRECTED BY THE PROJECT ENGINEER. LATERAL OFFSET SHOULD BE ADJUSTED TO AVOID THE DITCH FLOWLINE.
2. THE EXISTENCE OF CURB AND GUTTER DOES NOT IN ITSELF MANDATE THE VERTICAL CLEARANCE ILLUSTRATED. THAT HEIGHT IS TYPICALLY MEASURED WHERE THERE IS SIDEWALK ADJACENT TO THE ROADWAY OR PARKING IS PERMITTED. IN THE ABSENCE OF SIDEWALK, VERTICAL CLEARANCE IS MEASURED FROM THE TOP OF THE CURB. IF NO SIDEWALK AND NO PARKING, VERTICAL CLEARANCE MAY BE REDUCED TO 5 FOOT MINIMUM. OFFSET OF SIGNS IS MEASURED FROM THE CURB FLOWLINE.
3. FOR SIGNS REQUIRING 4 POSTS, SPACE INTERMEDIATE POSTS EVENLY.

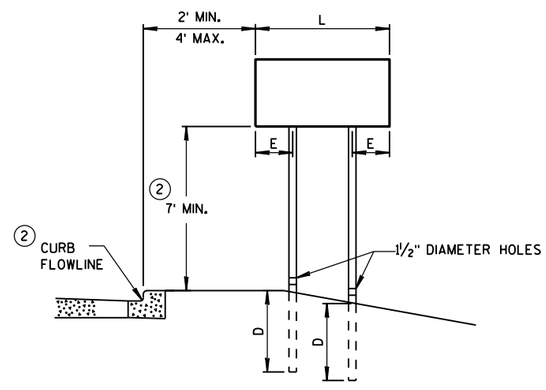

URBAN AREA

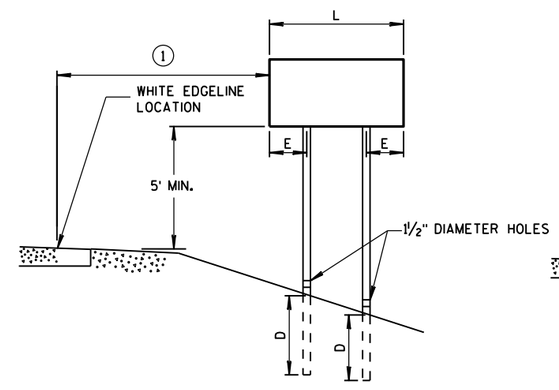

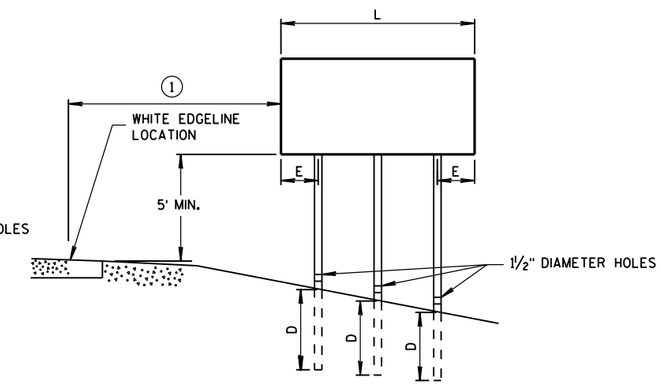

RURAL AREA

POST MOUNTING DETAIL FOR TEMPORARY TRAFFIC CONTROL FIXED MESSAGE SIGNS

TUBULAR STEEL POSTS

AREA OF SIGN INSTALLATION (SQ. FT.)	NUMBER OF REQUIRED TUBULAR STEEL POSTS
9 OR LESS	1
GREATER THAN 9 LESS THAN OR EQUAL TO 18	2
GREATER THAN 18 LESS THAN OR EQUAL TO 27	3

SIGNS WIDER THAN 3 FEET OR LARGER THAN 9 SQ. FT. SHALL BE MOUNTED ON MULTIPLE POSTS (SEE ABOVE TABLE).

SIGNS LARGER THAN 27 SQ. FT. SHALL NOT BE MOUNTED ON TUBULAR STEEL POSTS.

WOOD POST EMBEDMENT DEPTH

AREA OF SIGN INSTALLATION (SQ. FT.)	D (MIN)
20 OR LESS	4'
GREATER THAN 20	5'

4" X 6" WOOD POST

POST SPACING REQUIREMENTS		NUMBER OF WOOD POSTS REQUIRED
L	E	
48" OR LESS AND LESS THAN 20 SQ. FT.	-	1
LESS THAN 60"	12"	2
60" TO 120"	L/5	2
GREATER THAN 120" LESS THAN 168"	12"	3
168" AND GREATER	12"	4

SEE NOTE 3

TEMPORARY TRAFFIC CONTROL SIGN MOUNTING

STATE OF WISCONSIN
DEPARTMENT OF TRANSPO

6

S.D.D. 15 D 38-2a

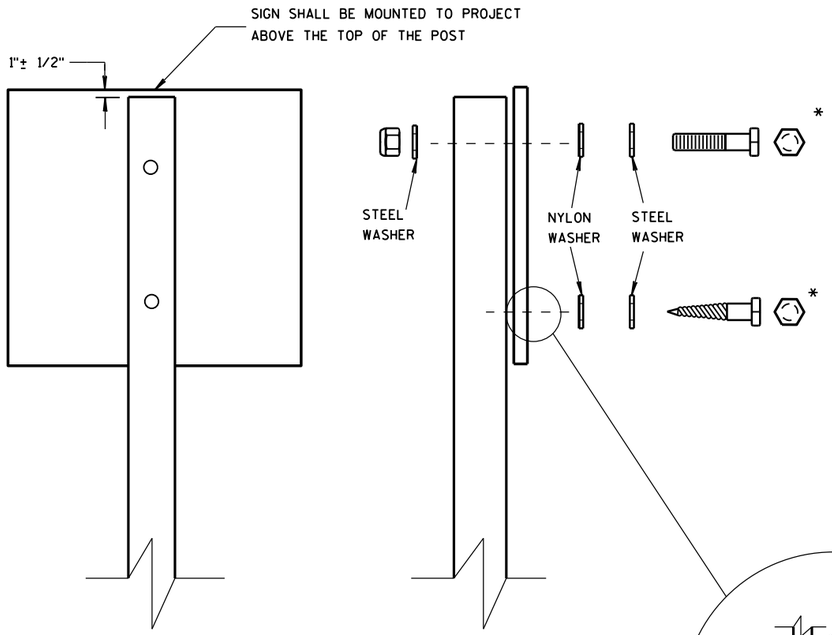

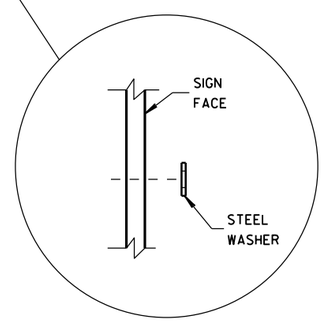

WASHER PLACEMENT WHEN SIGN HAS OTHER THAN TYPE H OR TYPE F FACE

NUTS, BOLTS AND LAGS USED FOR MOUNTING SIGNS SHALL HAVE HEXAGONAL HEADS AND SHALL BE EITHER:

A. HOT DIP GALVANIZED IN ACCORDANCE WITH ASTM DESIGNATION: A 153, CLASS D, OR SC 3

B. ELECTRO-GALVANIZED IN ACCORDANCE WITH ASTM DESIGNATION: B 633, TYPE III, SC 3

THREADS ON BOLTS AND NUTS SHALL BE MANUFACTURED WITH SUFFICIENT ALLOWANCE FOR THE CADMIUM PLATE OR GALVANIZED COATING TO PERMIT THE NUTS TO RUN FREELY ON THE BOLTS.

WOOD POSTS (4" x 4" or 4" x 6")

LAG SCREWS - 3/8" X 3"

MACHINE BOLTS - 5/16" X 6-1/2" OR 7" LENGTH W/ NUTS

SQUARE STEEL POSTS (2" x 2")

MACHINE BOLTS - 3/8" X 3-1/4" LENGTH W/ NUTS

RIVETS - 9/32" (6605-9-6) BULB-TITE, TRI-FOLD, ALUMINUM BODY/MANDREL O.D. FLANGE .720-.765 INCH, GRIP RANGE .042-.375 INCH

WASHERS (ALL POSTS) -

1-1/4" O.D. X 3/8" I.D. X 1/16" STEEL

1-1/4" O.D. X 3/8" I.D. X .080 NYLON FOR ALL TYPE H SIGNS

* TWO DIFFERENT FASTENING SYSTEMS ARE SHOWN FOR ILLUSTRATION PURPOSES. ON ANY INDIVIDUAL SIGN, EITHER ONE OR THE OTHER SYSTEM SHALL BE USED. ACTUAL NUMBER OF FASTENERS PER SIGN VARIES WITH THE SIGN AREA. FOR A SINGLE POST INSTALLATION, ALL SIGNS GREATER THAN 9 SQ. FT. REQUIRE THE USE OF 3 FASTENERS.

6

6

S.D.D. 15 D 38-2b

S.D.D. 15 D 38-2b

ATTACHMENT OF SIGNS TO POSTS

STATE OF WISCONSIN
DEPARTMENT OF TRANSPORTATION

APPROVED

June 2017 — /S/ Andrew Heldtke
DATE — WORK ZONE ENG

FHWA

URBAN AREA

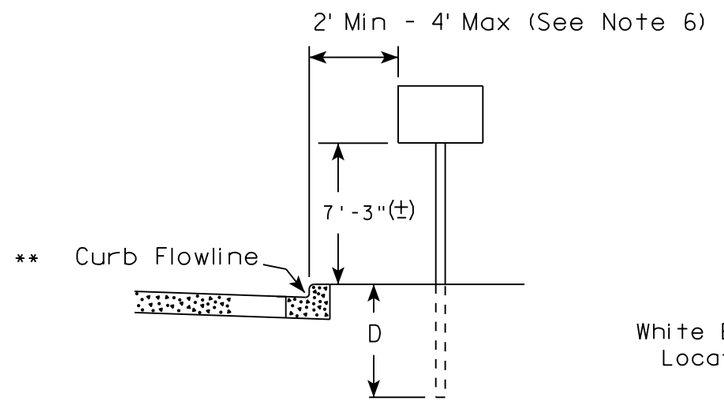

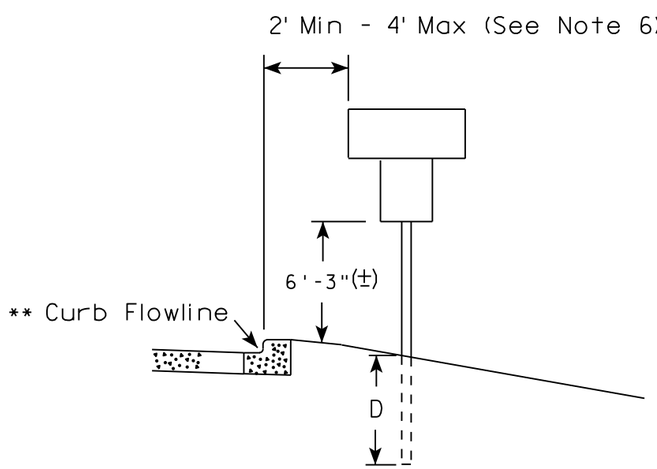

RURAL AREA (See Note 2)

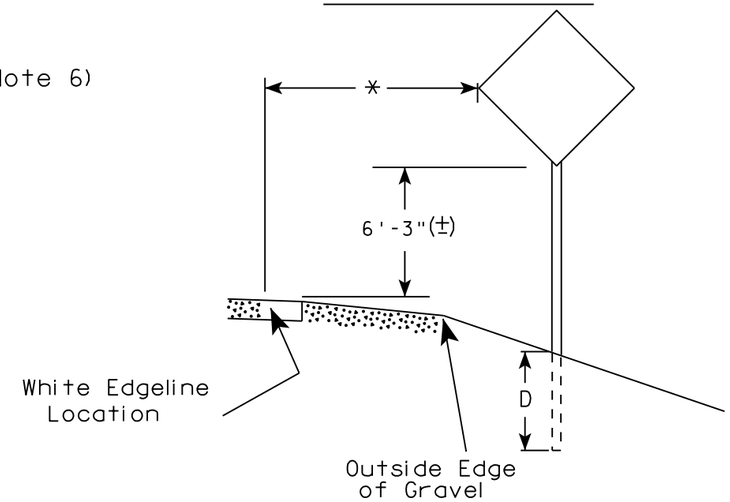

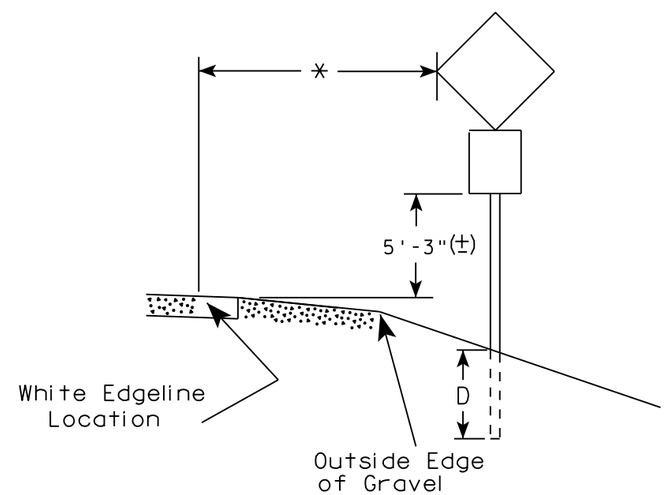

** The existence of curb and gutter does not in itself mandate the vertical clearance illustrated. That height is typically measured where there is sidewalk adjacent to the roadway or parking is permitted. In the absence of sidewalk vertical clearance is measured from the top of the curb. Offset of signs is measured from the flow line.

* 6 feet from edge of a paved shoulder or 12 feet from the edge of pavement (edge line location) or 2 feet from outside edge of gravel, whichever is greater unless directed by project engineer.

GENERAL NOTES

1. Signs wider than 4 feet or 20 sq.ft or larger, shall be mounted on multiple posts. Refer to plate A4-4.
2. If signs are mounted on barrier wall, see A4-10 sign plate.
3. For expressways and freeways, mounting height is 7'- 3" (±) or 6'-3" (±) depending upon existence of a sub-sign.
4. J-Assemblies are considered to be one sign for mounting height.
5. Minimum mounting height for signs mounted on traffic signal poles is 5'- 3" (±).
6. Offset distance shall be consistent with existing signs or consistent throughout length of project.
7. The (±) tolerance for mounting height is 3 inches.
8. Folding signs shall be mounted at a height of 5'-3" (±) or as directd by the Engineer.
9. The Double Arrow sign (W12-1) shall be mounted at a height of 2'-3" (±). The Chevron sign (W1-8), Roundabout Chevron panel (R6-4B), Enhanced Reference Markers, Clearance Markers (W5-52), Mile Markers (D10 series), In Road Object Markers (W5-54) & End of Road Markers (W5-56) shall be mounted at a height of 4'-3" (±).

POST EMBEDMENT DEPTH

Area of Sign Installation (Sq. Ft.)	D (Min)
20 or Less	4'
Greater than 20	5'

TYPICAL INSTALLATION OF PERMANENT TYPE II SIGNS ON SINGLE POSTS

WISCONSIN DEPT OF TRANSPORTATION

APPROVED Matthew R Rauch for State Traffic Engineer

DATE 8/21/17 PLATE NO. A4-3.21

7

7

PROJECT NO:	HWY:	COUNTY:		SHEET NO: 64	E

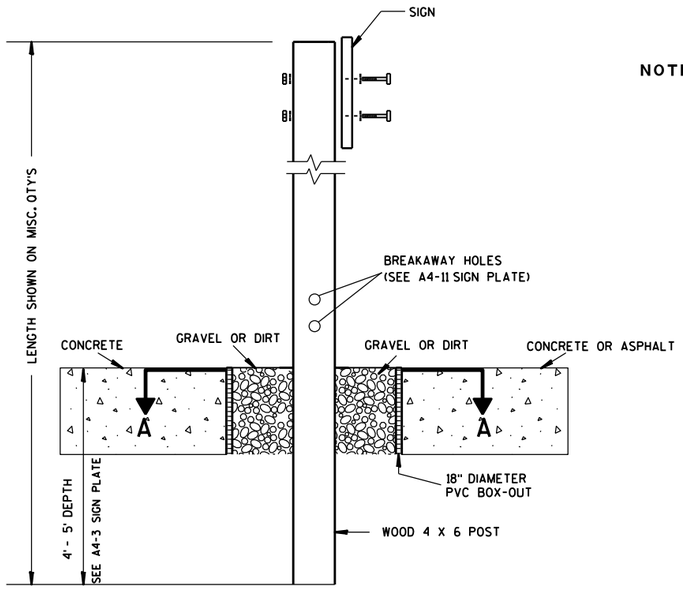

ELEVATION VIEW

DETAIL OF WOOD 4 X 6 SIGN POST IN BOX-OUT

NOTES:
1. ALL MATERIAL TO BE APPROVED BY ENGINEER PRIOR TO INSTALLATION
2. SEE SIGN PLATE A4-8 FOR SIGN HARDWARE REQUIREMENTS
3. 18 INCH X 18 INCH SQUARE BOX-OUTS MAY BE USED FOR INSTALLATIONS IN EXISTING CONCRETE OR ASPHALT LOCATIONS.

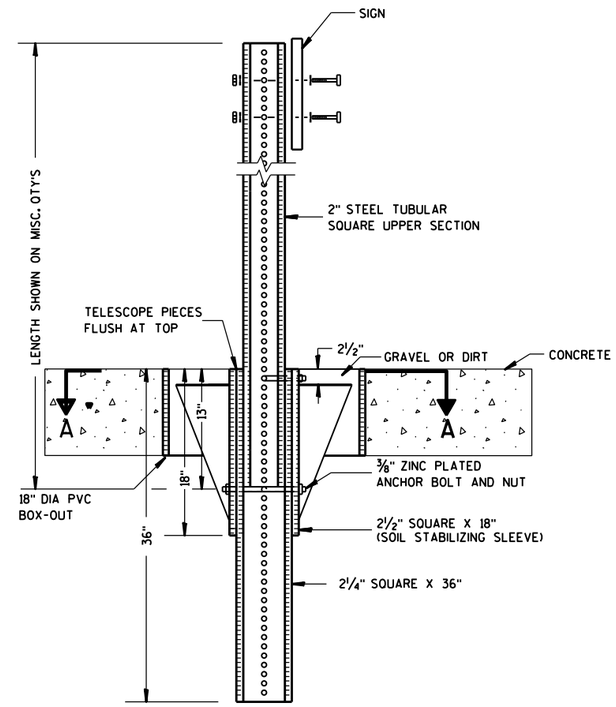

ELEVATION VIEW

DETAIL OF STEEL 2 X 2 SIGN POST IN BOX-OUT

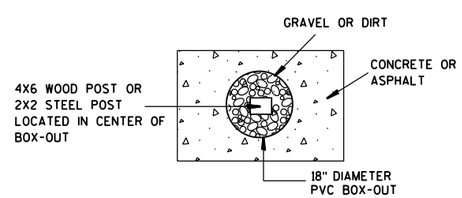

PLAN VIEW

FOR NEW CONCRETE/ASPHALT INSTALLATIONS

SIGN POST
BOX-OUTS
A4-3B

WISCONSIN DEPT OF TRANSPORTATION

APPROVED Matthew R Rauch
for State Traffic Engineer

DATE 1/27/14 PLATE NO. A4-3B.1

PROJECT NO:	HWY:	COUNTY:		SHEET NO:	E

URBAN AREA

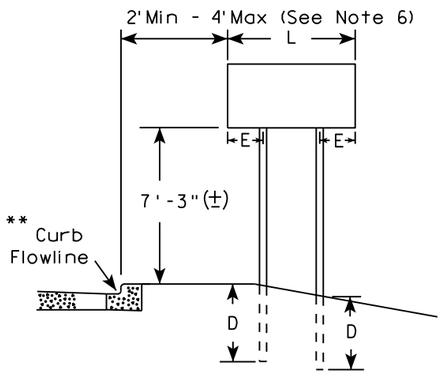

RURAL AREA (See Note 3)

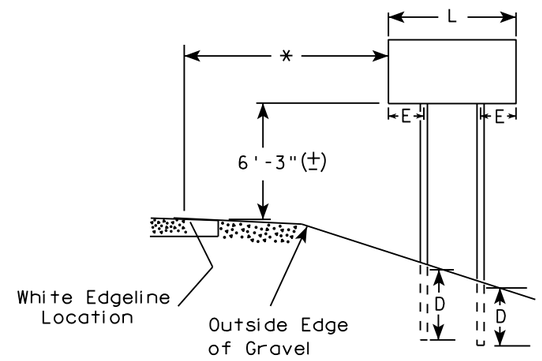

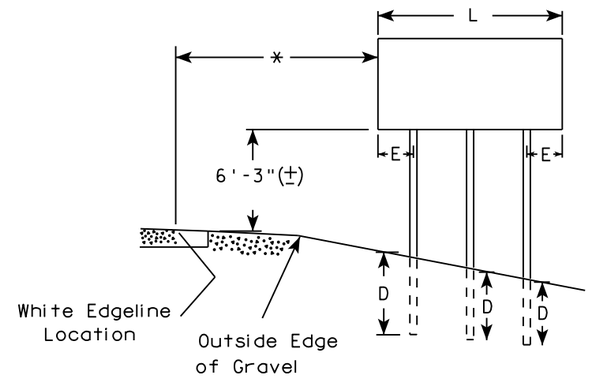

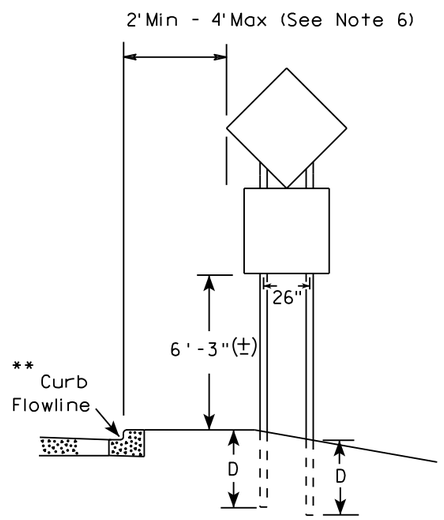

48" DIAMOND WARNING SIGN

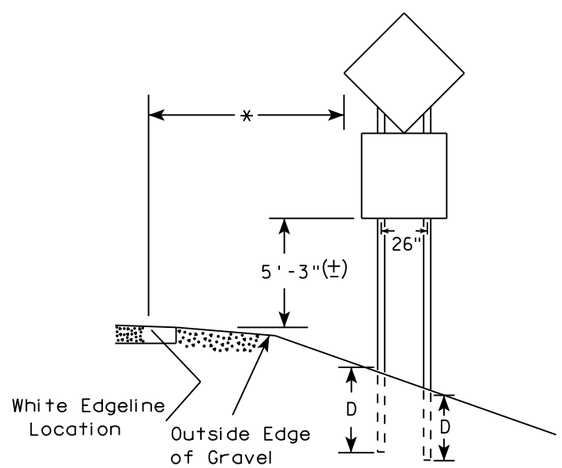

48" DIAMOND WARNING SIGN

SIGN SHAPE OTHER THAN DIAMOND (TWO POSTS REQUIRED)	
L	E
*** Greater than 48" Less than 60"	12"
60" to 108"	L/5

SIGN SHAPE OTHER THAN DIAMOND (THREE POSTS REQUIRED)	
L	E
Greater than 108" to 144"	12"

GENERAL NOTES

1. For 3 or 4 post installations, individual post spacing shall be greater than 3'-6".
2. See tables below for required number of posts.
3. For expressways and freeways, mounting height is 7'-3" (±) or 6'-3" (±) depending upon existence of sub-sign.
4. The (±) tolerance for mounting height is 3 inches.
5. J-Assemblies are considered to be one sign for mounting height.
6. Offset distance shall be consistent with existing signs or consistent throughout length of project.
7. Folding signs shall be mounted at a height of 5'-3" (±) or as directed by the engineer.
8. The Double Arrow sign (W12-1) shall be mounted at a height of 2'-3" (±). The Chevron sign (W1-8), Roundabout Chevron panel (R6-4B), Clearance Markers (W5-52), Mile Markers (D10 series), In Road Object Markers (W5-54) & End of Road Markers (W5-56) shall be mounted at a height of 4"-3" (±).

* 6 feet from edge of a paved shoulder or 12 feet from the edge of pavement (edge line location) or 2 feet from outside edge of gravel, whichever is greater unless directed by project engineer.

** The existence of curb and gutter does not in itself mandate the vertical clearance illustrated. That height is typically measured where there is sidewalk adjacent to the roadway or parking is permitted. In the absence of sidewalk vertical clearance is measured from the top of the curb. Offset of signs is measured from the flow line.

*** See A4-3 sign plate for signs 4' or less in width and less than 20 S.F. in area.

POST EMBEDMENT DEPTH

Area of Sign Installation (Sq. Ft.)	D (Min)
20 or Less	4'
Greater than 20	5'

TYPICAL INSTALLATION OF TYPE II SIGNS ON MULTIPLE POSTS

WISCONSIN DEPT OF TRANSPORTATION

APPROVED Matthew R Rauch
For State Traffic Engineer

DATE 8/21/17 PLATE NO. A4-4.15

7

7

PROJECT NO:	HWY:	COUNTY:		SHEET NO: 66	E

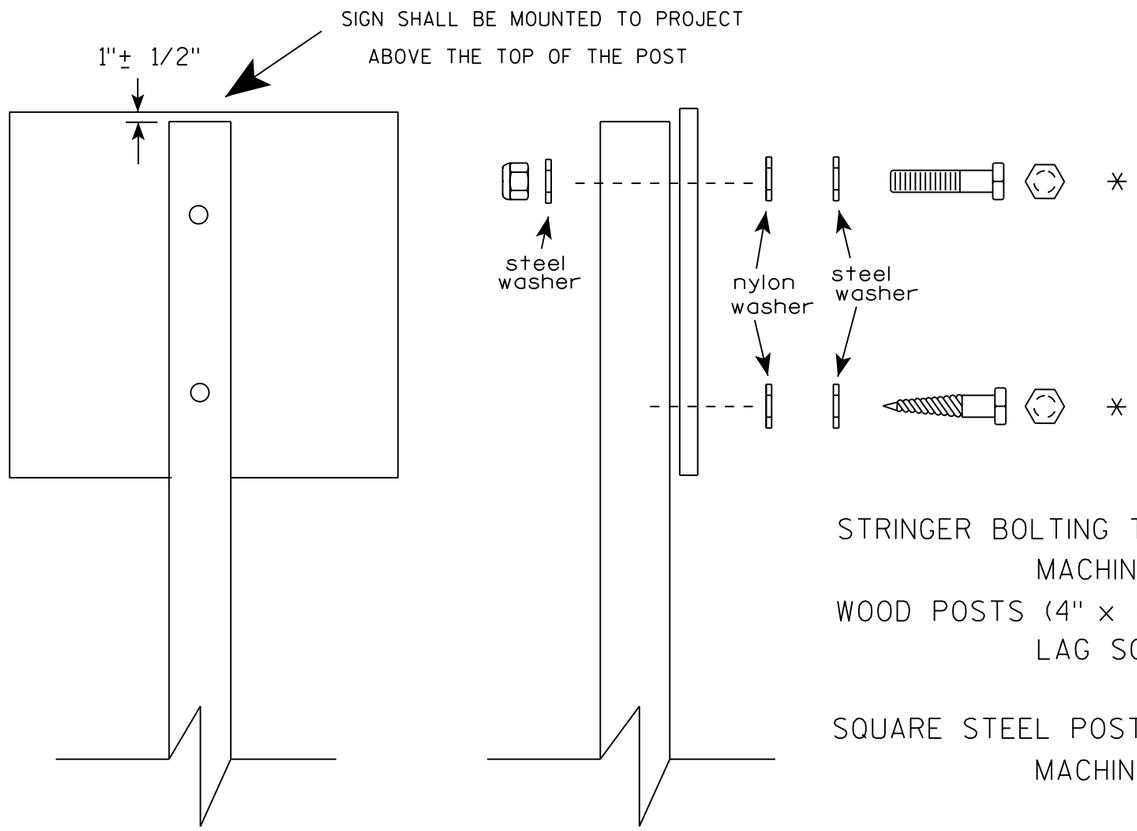

Nuts, bolts and lags used for mounting signs shall have hexagonal heads and shall be either :

a. Hot dip galvanized in accordance with ASTM Designation: A 153, Class D, or SC 3

b. Electro-galvanized in accordance with ASTM Designation : B 633, TYPE III, SC 3.

Threads on bolts and nuts shall be manufactured with sufficient allowance for the cadmium plate or galvanized coating to permit the nuts to run freely on the bolts.

STRINGER BOLTING TO ALUMINUM SIGNS (SEE SIGN PLATE A4-18)

MACHINE BOLTS - 5/16" X 1-3/4" Length w/ lock nuts

WOOD POSTS (4" x 4" or 4" x 6")

LAG SCREWS - 3/8" X 3" (NO STRINGERS ON BACK OF SIGN)

3/8" X 4" (STRINGERS ON BACK OF SIGN)

SQUARE STEEL POSTS (2" x 2")

MACHINE BOLTS - 3/8" X 3-1/4" Length w/ nuts (NO STRINGER ON BACK OF SIGN)

3/8" X 5" Length w/ nuts (STRINGERS ON BACK OF SIGN)

RIVETS - 9/32 " (6605-9-6) BULB-TITE, TRI-FOLD, ALUMINUM BODY/MANDREL

O.D. FLANGE .720-.765 INCH, GRIP RANGE .042-.375 INCH

WASHERS (ALL POSTS) -

1-1/4" O.D. X 3/8" I.D. X 1/16" STEEL

1-1/4" O.D. X 3/8" I.D. X .080 NYLON

* Two different fastening systems are shown for illustration purposes. On any individual sign, either one or the other system shall be used. Actual number of fasteners per sign varies with the sign area, but normally there are two. For a single post installation, all signs greater than 9 sq. ft. require the use of 3 fasteners.

ATTACHMENT OF SIGNS TO POSTS

WISCONSIN DEPT OF TRANSPORTATION

APPROVED Matthew R Rauch
for State Traffic Engineer

DATE 8/11/16 PLATE NO. A4-8.8

PROJECT NO:

SHEET NO: E

TELESCOPIC TUBING ANCHORS
TWO PIECE SYSTEM

2 1/4 " SQUARE
12 GAUGE
PERFORATED
GALVANIZED FINISH

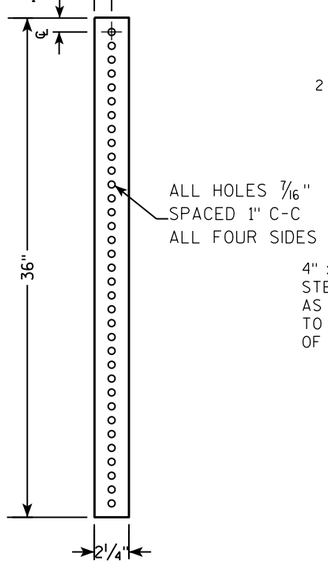

2 1/2 " SQUARE
12 GAUGE
OMNI-DIRECTIONAL
PERFORATED
SOIL STABILIZING SLEEVE
GALVANIZED FINISH

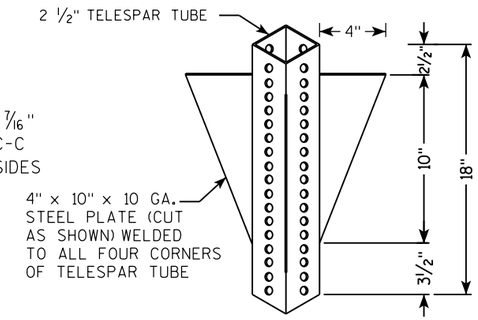

DETAIL OF TUBULAR STEEL SIGN POST
(IN POURED CONCRETE OR ASPHALT)

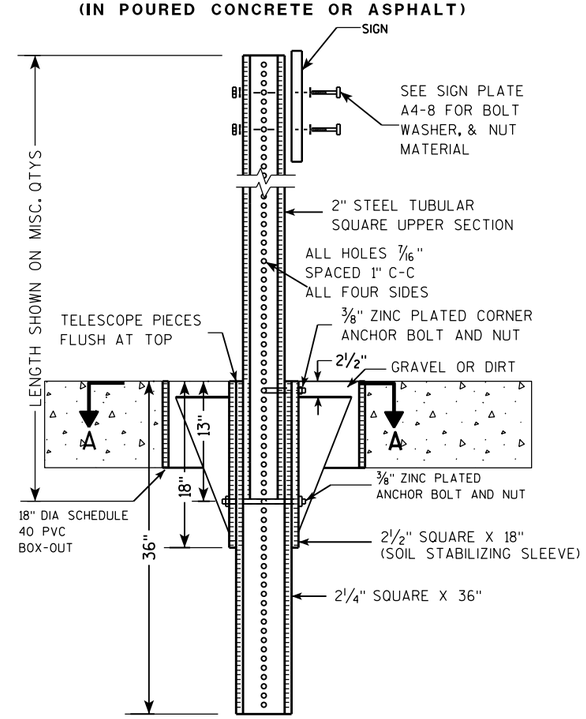

DETAIL OF TUBULAR STEEL SIGN POST
(IN LOCATIONS OTHER THAN POURED CONCRETE OR ASPHALT)

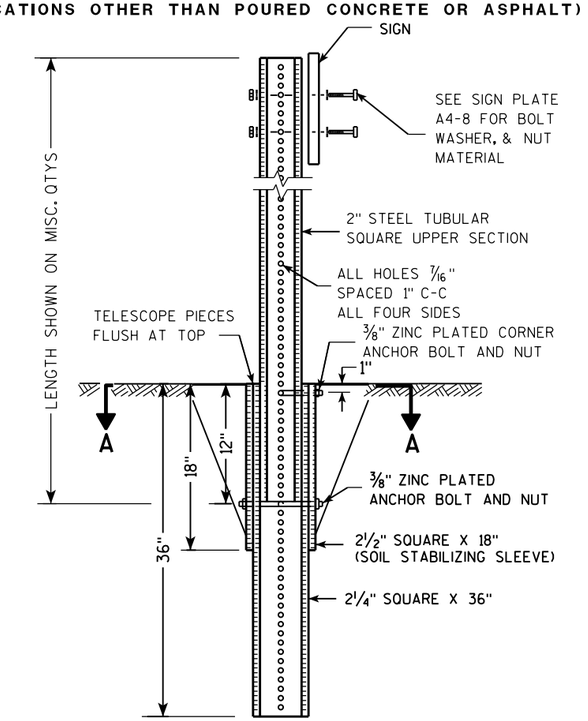

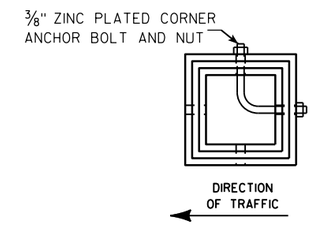

SECTION A-A

Area of Sign Installation (Sq. Ft.)	Number of Required Posts
9 or less	1
Greater than 9 less than or equal to 18	2
Greater than 18 less than or equal to 27	3

Signs wider than 3 feet or larger than 9 sq. ft shall be mounted on multiple posts (see above table).

TUBULAR STEEL
SIGN POST
A4-9

WISCONSIN DEPT OF TRANSPORTATION

APPROVED Matthew R Rauch
for State Traffic Engineer

DATE 2/05/15 PLATE A4-9.9

7 7

PROJECT NO:	HWY:	COUNTY:		SHEET NO:	E

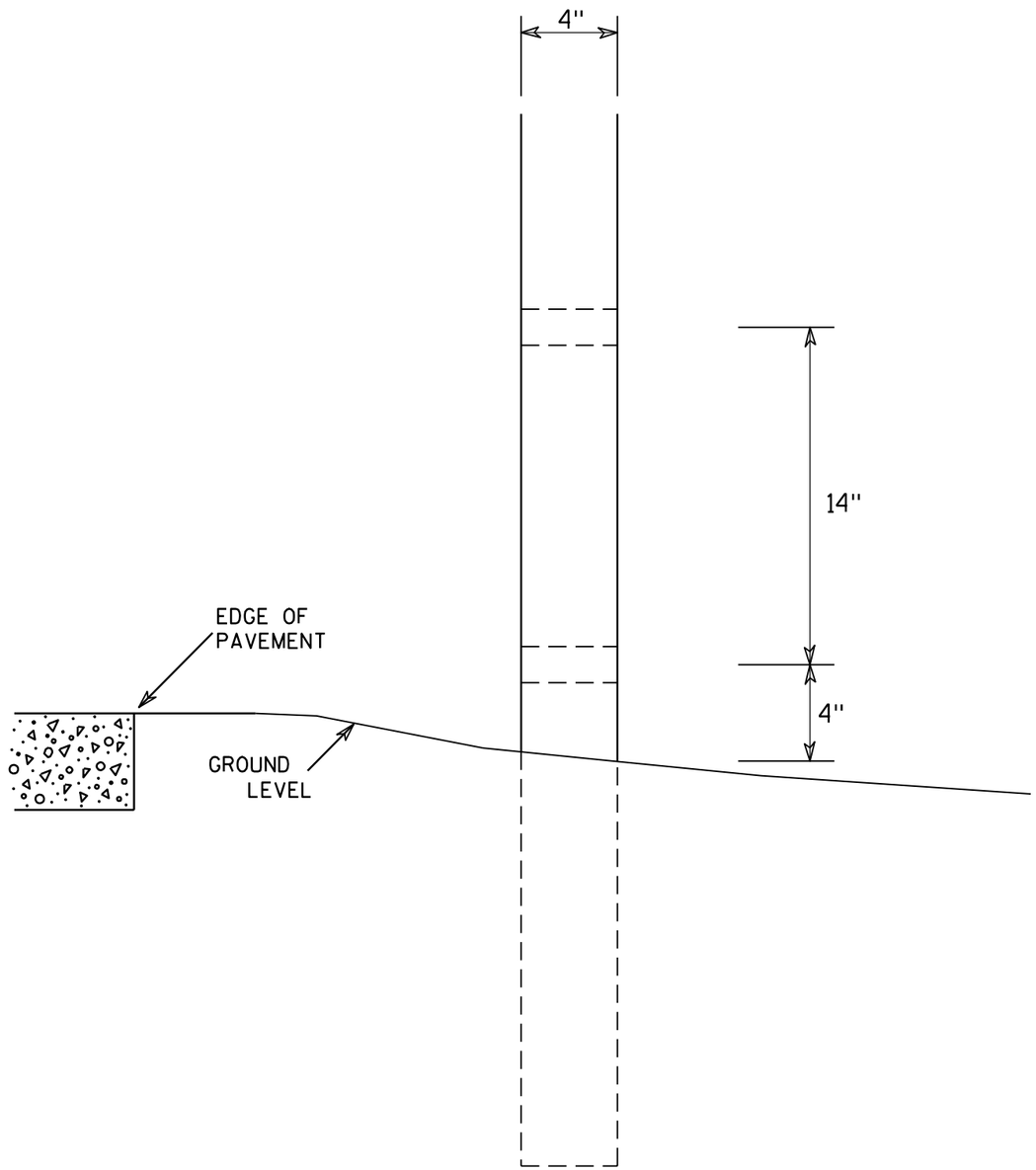

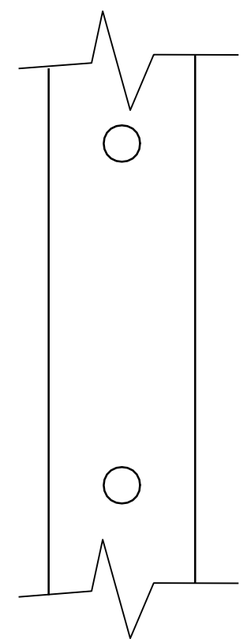

SIDE VIEW

GENERAL NOTES

1. All 4 x 6 Wood Posts shall be modified by having two 1½" diameter holes drilled perpendicular to the roadway centerline.

4 X 6 WOOD POST MODIFICATIONS

WISCONSIN DEPT OF TRANSPORTATION

APPROVED Chester J Spang for State Traffic Engineer

DATE 3/27/97 PLATE NO. A4-11.2

PROJECT NO:	HWY:	COUNTY:		SHEET NO: 69	E

BANDING

SINGLE SIGN

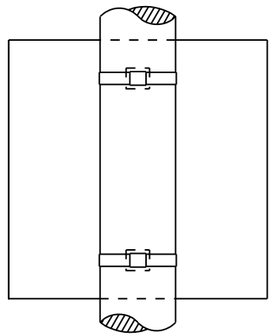

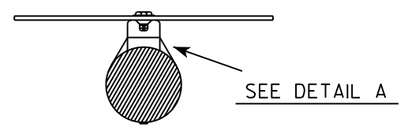

"J" ASSEMBLY

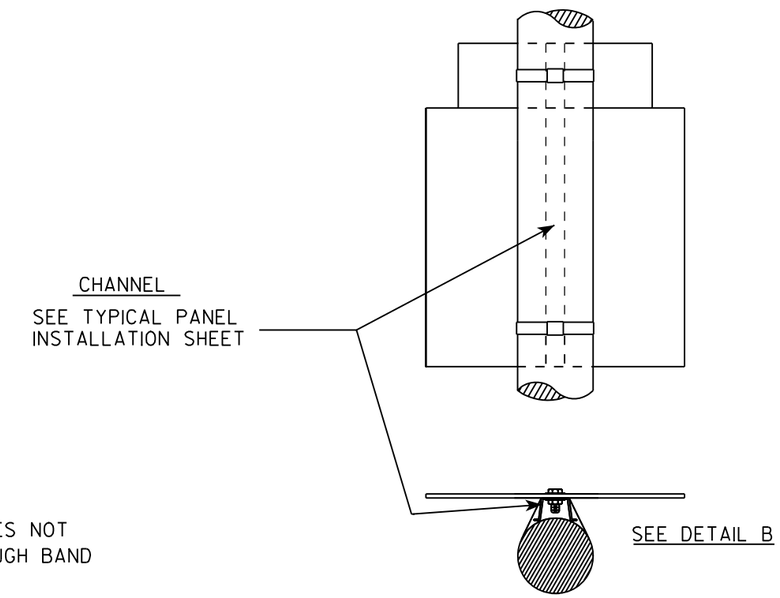

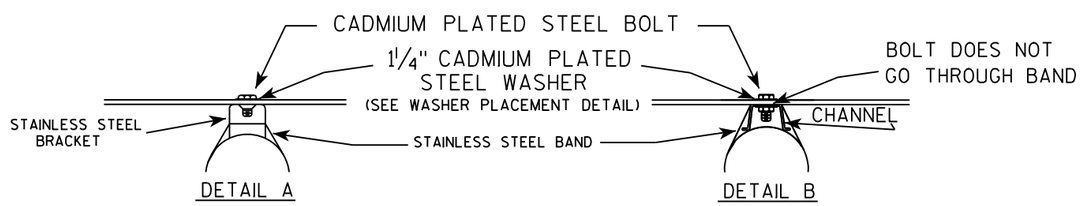

WASHER PLACEMENT

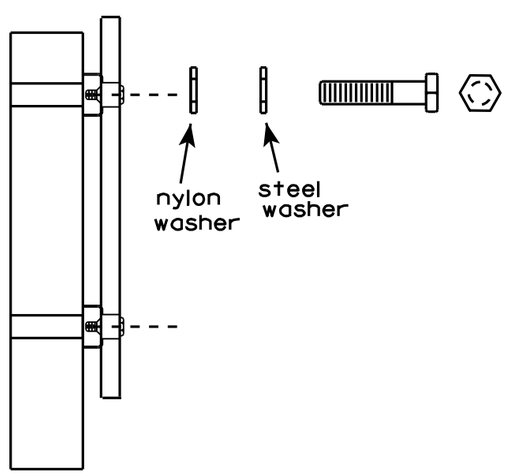

WASHERS (ALL POSTS) -

1-1/4" O.D. X 3/8" I.D. X 1/16" STEEL

1-1/4" O.D. X 3/8" I.D. X .080 NYLON

FOR ALL TYPE H SIGNS

GENERAL NOTES

1. Any sign over 3 feet in width shall use the V-Block banding method. See A5-10 standard plate.
2. Signs 3 feet or greater in height shall have three bracket bands installed. Signs less than 3 feet in height shall have two bracket bands installed.
3. Banding and assembly bracket shall be stainless steel. All bands shall be ¾" in width and 0.025" thickness.

STANDARD SIGN

SIGN BANDING DETAILS

WISCONSIN DEPT OF TRANSPORTATION

APPROVED Matthew R Rauch for State Traffic Engineer

DATE 8/16/13 PLATE NO. A5-9.3

PROJECT NO:	HWY:	COUNTY:		SHEET NO: 70	E

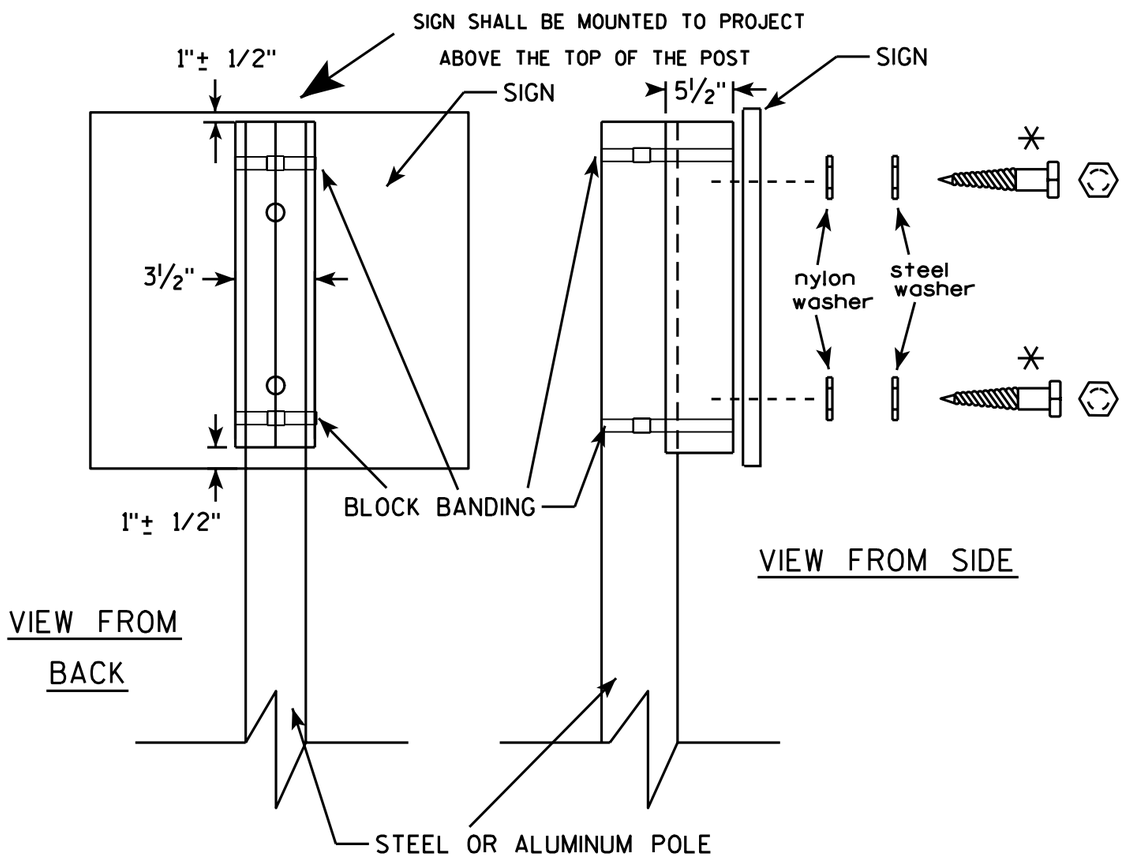

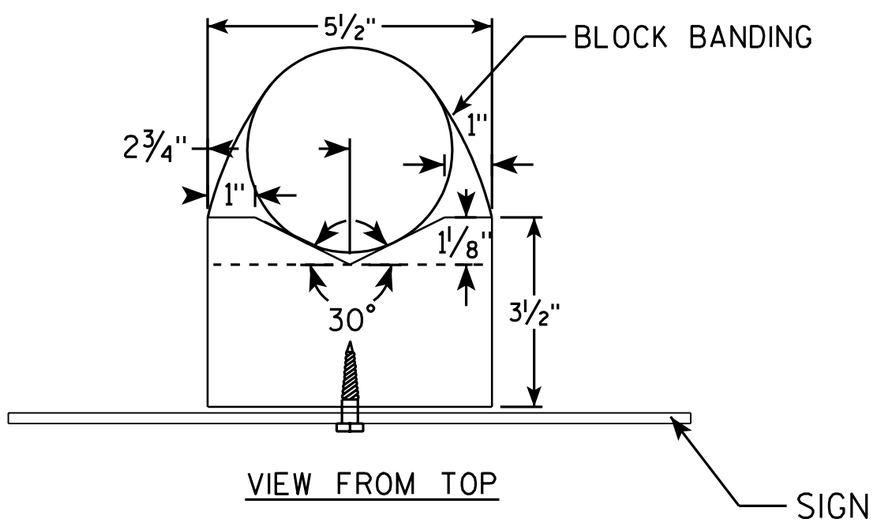

GENERAL NOTES

1. WOOD 4"X6" POST MATERIAL SHALL CONFORM TO 507.2.2 OF THE WisDOT STANDARD SPECIFICATIONS
2. BLOCK BANDING AND CLIPS SHALL BE STAINLESS STEEL, ¾" WIDTH AND 0.025" THICKNESS
3. SIGNS 3' OR GREATER IN HEIGHT SHALL UTILIZE 3 BLOCK BANDS. SIGNS UNDER 3' IN HEIGHT SHALL UTILIZE 2 BLOCK BANDS
4. ACTUAL NUMBER OF FASTENERS PER SIGN VARIES WITH THE SIGN AREA, BUT NORNALLY THERE ARE TWO. FOR SIGNS GREATER THAN 9 S.F. 3 FASTENERS SHALL BE USED.
5. ALL SIGN MOUNTING BOLTS AND WASHERS SHALL BE EITHER:
   a. Hot dip or mechanically galvanized in accordance with ASTM Designation: A 153, Class D, or
   b. Cadmium plated in accordance with ASTM Designation : B 766 TYPE 3, Class 12, or
   c. Electro-galvanized in accordance with ASTM Designation : B 633, TYPE III, SC 3.
6. ALL BOLTS SHALL HAVE HEXAGONAL HEADS.
7. STEEL WASHERS SHALL BE 1¼" O.D. X ⅜" I.D. X 1/16"
8. NYLON WASHERS SHALL BE 1¼" O.D. X ⅜" I.D. X .080 FOR TYPE H OR TYPE F FACE SIGN

✳ LAG BOLTS SHALL BE ⅜" X 2½"

BLOCK BANDING DETAIL
(V-BLOCK OPTION)

WISCONSIN DEPT OF TRANSPORTATION

APPROVED Matthew R Rauch
for State Traffic Engineer

DATE 7/12/07 PLATE NO. A5-10.1

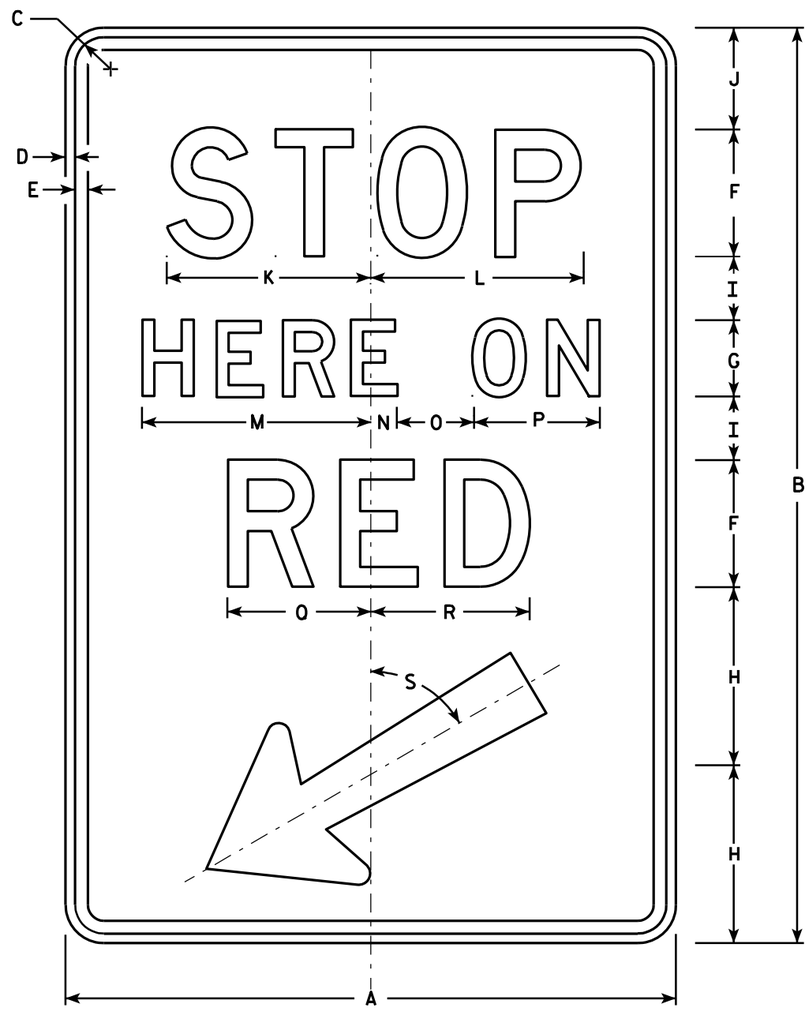

R10-6

NOTES

1. Sign is Type II - Type H Reflective - reference WIS DOT Standard Specification for HIGHWAY and STRUCTURE CONSTRUCTION latest edition.
2. Color:
   Background - White
   Message - Black
3. Message Series - D
4. Corners may be square or rounded when base material is plywood but borders shall be rounded as shown. When base material is metal, the corners and borders shall be rounded.

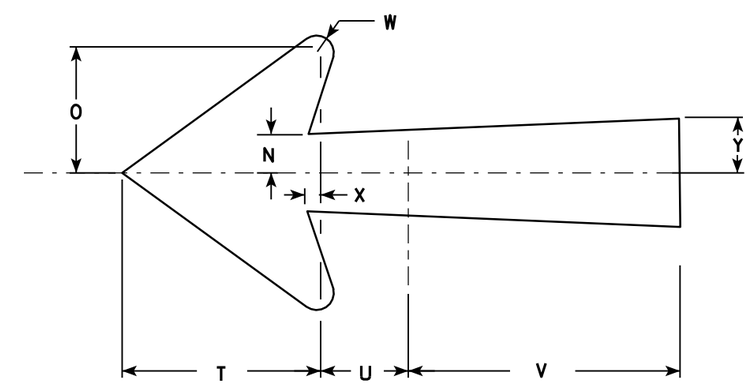

Arrow Detail

SIZE	A	B	C	D	E	F	G	H	I	J	K	L	M	N	O	P	Q	R	S	T	U	V	W	X	Y	Z	Area sq. ft.
1																											
2S	24	36	1 1/8	3/8	1/2	5	3	7	2 1/2	4	8	8 3/8	9	1	3	5	5 5/8	6 1/4	60°	5 1/4	2 1/4	7 1/8	1/2	3/8	1 3/8		6.0
2M	24	36	1 1/8	3/8	1/2	5	3	7	2 1/2	4	8	8 3/8	9	1	3	5	5 5/8	6 1/4	60°	5 1/4	2 1/4	7 1/8	1/2	3/8	1 3/8		6.0
3																											
4																											
5																											

STANDARD SIGN
R10-6

WISCONSIN DEPT OF TRANSPORTATION

APPROVED Matthew R Rauch
for State Traffic Engineer

DATE 4/5/11 PLATE NO. R10-6.6

PROJECT NO:	HWY:	COUNTY:		SHEET NO: 72	E

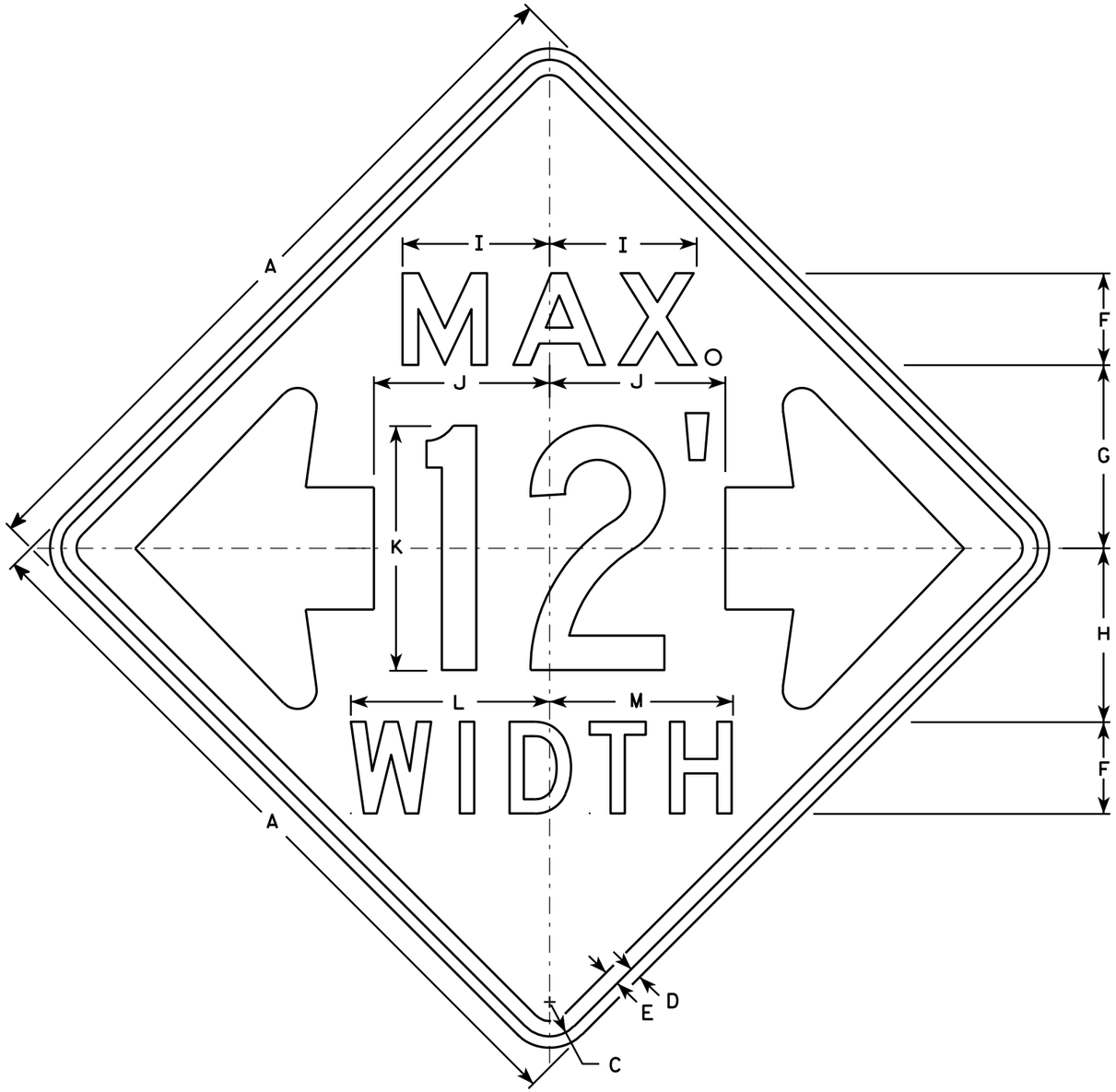

W12-52

NOTES

1. Sign is Type II - Type F Reflective - reference WIS DOT Standard Specification for HIGHWAY and STRUCTURE CONSTRUCTION latest edition.
2. Color:
   Background - Orange
   Message - Black
3. Message Series - See note 5
4. Corners may be square or rounded when base material is plywood but borders shall be rounded as shown. When base material is metal, the corners and borders shall be rounded.
5. The top line is series E, the numerals are series C, and the bottom line is series D.
6. Substitute appropriate numerals and adjust spacing as required.

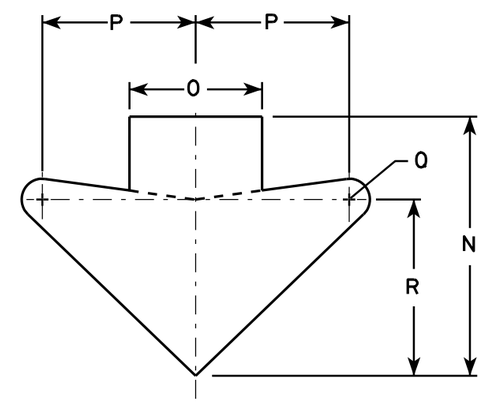

ARROW DETAIL

SIZE	A	B	C	D	E	F	G	H	I	J	K	L	M	N	O	P	Q	R	S	T	U	V	W	X	Y	Z	Area sq. ft.
1																											
2S	48		2 1/4	3/4	1	6	12	11 3/8	9 5/8	11 1/2	16	13	12	15 5/8	8	9 1/4	1 1/4	10 5/8									16.0
2M	48		2 1/4	3/4	1	6	12	11 3/8	9 5/8	11 1/2	16	13	12	15 5/8	8	9 1/4	1 1/4	10 5/8									16.0
3																											
4																											
5																											

STANDARD SIGN
W12-52

WISCONSIN DEPT OF TRANSPORTATION

APPROVED Matthew R Rauch
for State Traffic Engineer

DATE 3/16/11 PLATE NO. W12-52.7

PROJECT NO:	HWY:	COUNTY:		SHEET NO: 73	E

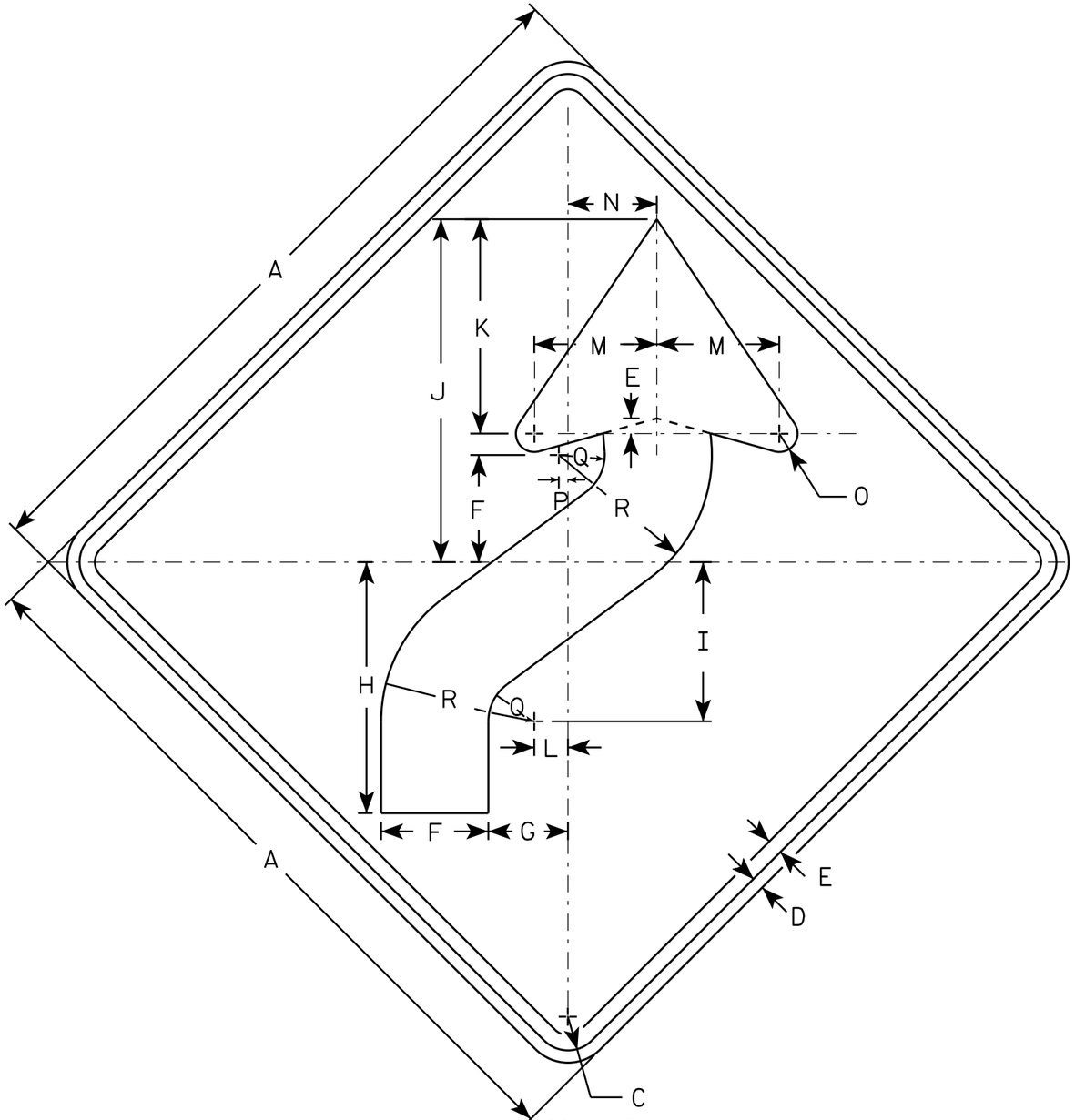

W01-4R

NOTES

1. Sign is Type II - Type F Reflective - reference WIS DOT Standard Specification for HIGHWAY and STRUCTURE CONSTRUCTION latest edition.
2. Color:
   Background - Orange
   Message - Black
3. Corners may be square or rounded when base material is plywood but borders shall be rounded as shown. When base material is metal, the corners and borders shall be rounded.
4. W01-4L is the same as W01-4R except the arrow is reversed along the vertical centerline.

SIZE	A	B	C	D	E	F	G	H	I	J	K	L	M	N	O	P	Q	R	S	T	U	V	W	X	Y	Z	Area sq. ft.
1	36		1 5/8	5/8	3/4	5 1/4	4	12 3/8	7 7/8	16 7/8	10 1/2	1 5/8	6	4 1/2	1	1/2	2 1/4	7 1/2									9.0
2S	48		2 1/4	3/4	1	7	5 1/4	16 1/2	10 1/2	22 1/2	14	2 1/4	8	6	1 1/4	5/8	3	10									16.0
2M	48		2 1/4	3/4	1	7	5 1/4	16 1/2	10 1/2	22 1/2	14	2 1/4	8	6	1 1/4	5/8	3	10									16.0
3	48		2 1/4	3/4	1	7	5 1/4	16 1/2	10 1/2	22 1/2	14	2 1/4	8	6	1 1/4	5/8	3	10									16.0
4	48		2 1/4	3/4	1	7	5 1/4	16 1/2	10 1/2	22 1/2	14	2 1/4	8	6	1 1/4	5/8	3	10									16.0
5	48		2 1/4	3/4	1	7	5 1/4	16 1/2	10 1/2	22 1/2	14	2 1/4	8	6	1 1/4	5/8	3	10									16.0

STANDARD SIGN
W01-4

WISCONSIN DEPT OF TRANSPORTATION

APPROVED Matthew R Rauch
for State Traffic Engineer

DATE 11/18/13 PLATE NO W01-4.1

PROJECT NO:	HWY:	COUNTY:		SHEET NO:	E

NOTES

1. Sign is Type II - Type F Reflective - reference WIS DOT Standard Specification for HIGHWAY and STRUCTURE CONSTRUCTION latest edition.
2. Color:
   Background - Orange
   Message - Black
3. Corners may be square or rounded when base material is plywood but borders shall be rounded as shown. When base material is metal, the corners and borders shall be rounded.

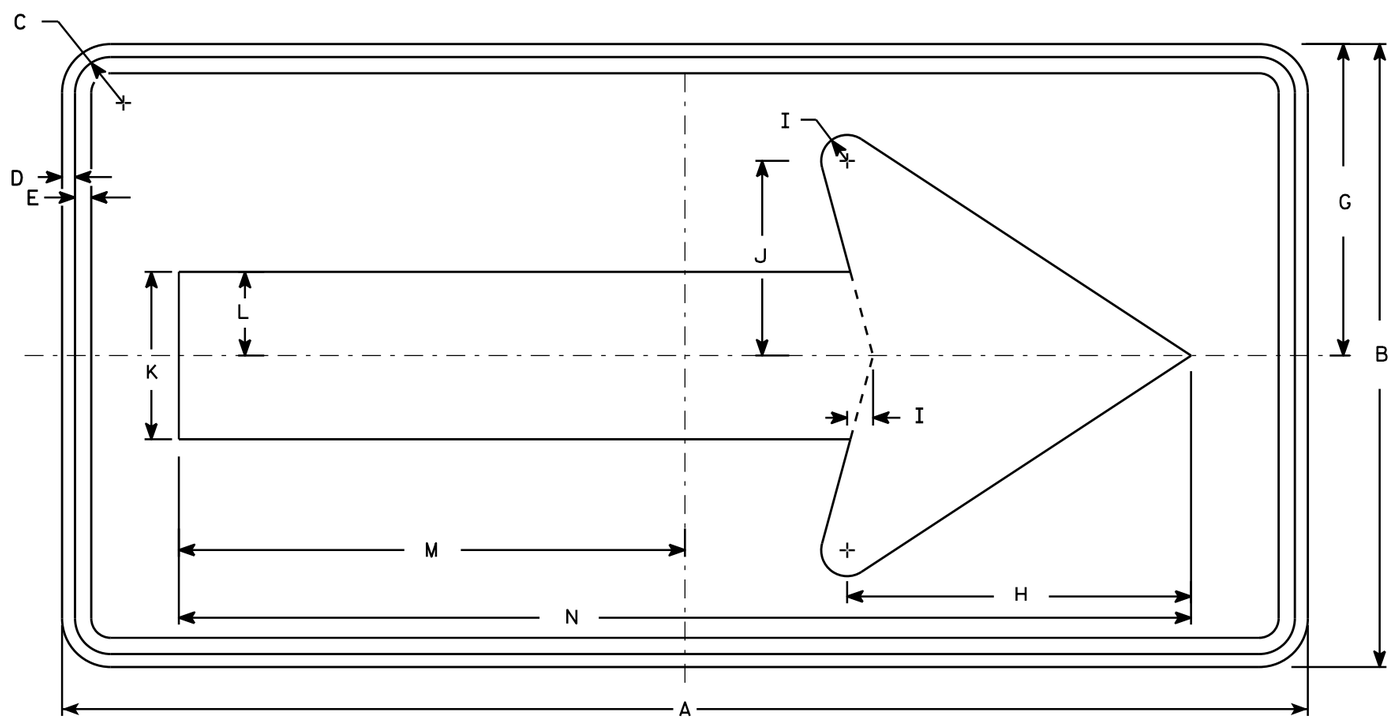

W01-6

SIZE	A	B	C	D	E	F	G	H	I	J	K	L	M	N	O	P	Q	R	S	T	U	V	W	X	Y	Z	Area sq. ft.
1																											
2S	48	24	1 3/8	1/2	5/8		12	13 1/4	1	7 1/2	6 1/2	3 1/4	19 1/2	39													8.0
2M	48	24	1 3/8	1/2	5/8		12	13 1/4	1	7 1/2	6 1/2	3 1/4	19 1/2	39													8.0
3	60	30	1 3/8	1/2	5/8		15	16 1/4	1 1/4	9 1/4	8	4	24 3/8	48 3/4													12.5
4	60	30	1 3/8	1/2	5/8		15	16 1/4	1 1/4	9 1/4	8	4	24 3/8	48 3/4													12.5
5	60	30	1 3/8	1/2	5/8		15	16 1/4	1 1/4	9 1/4	8	4	24 3/8	48 3/4													12.5

STANDARD SIGN
W01-6

WISCONSIN DEPT OF TRANSPORTATION

APPROVED Matthew R Rauch
for State Traffic Engineer

DATE 11/18/13 PLATE NO W01-6.1

PROJECT NO: | HWY: | COUNTY: | SHEET NO: | E

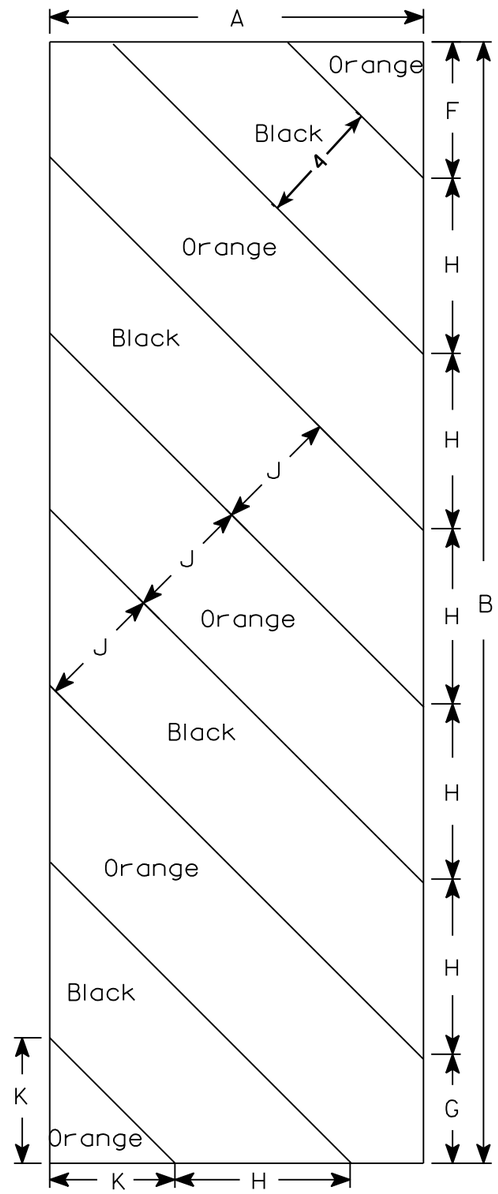

W05-52L

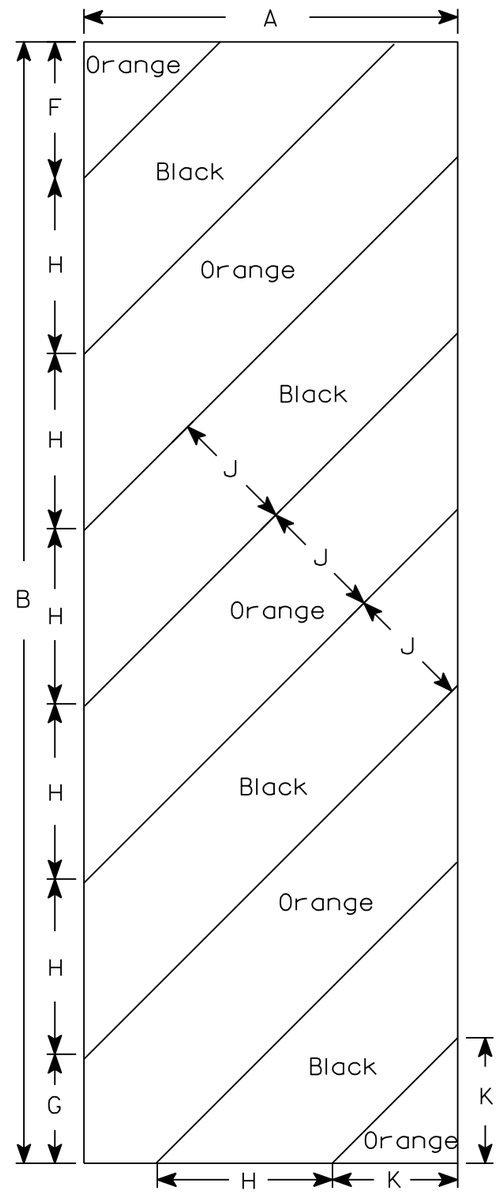

W05-52R

NOTES

1. Sign is Type II - Type F Reflective - reference WIS DOT Standard Specification for HIGHWAY and STRUCTURE CONSTRUCTION latest edition.
2. Color:
   Background - Orange
   Message - Black
3. Corners may be square or rounded when base material is plywood but borders shall be rounded as shown. When base material is metal, the corners and borders shall be rounded.
4. Alternate colors of stripes as shown.

SIZE	A	B	C	D	E	F	G	H	I	J	K	L	M	N	O	P	Q	R	S	T	U	V	W	X	Y	Z	Area sq. ft.
1																											
2S	12	36				4 3/8	3 1/2	5 5/8	45°	4	4																3.0
2M	12	36				4 3/8	3 1/2	5 5/8	45°	4	4																3.0
3	18	54				6	5 1/2	8 1/2	45°	6	6 9/16																6.75
4																											
5																											

STANDARD SIGN

W05-52L & W05-52R

WISCONSIN DEPT OF TRANSPORTATION

APPROVED Matthew R Rauch
for State Traffic Engineer

DATE 11/20/13 PLATE No. W05-52.1

76

PROJECT NO:	HWY:	COUNTY:		SHEET NO:	E

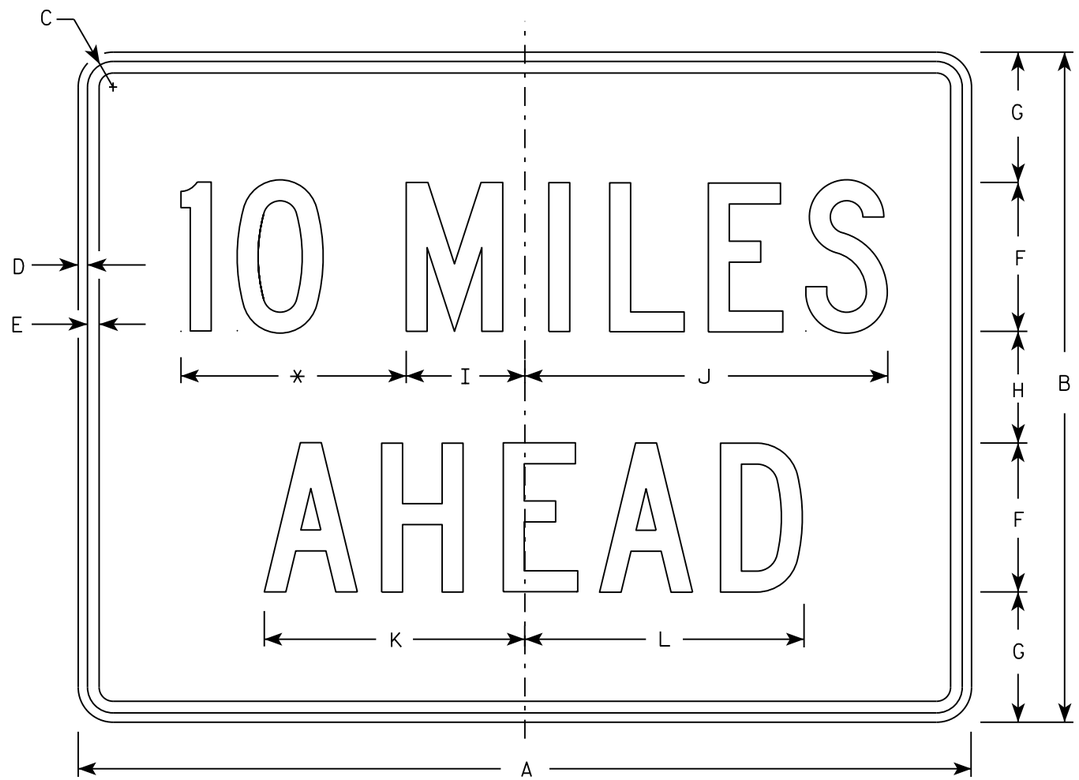

W057-52

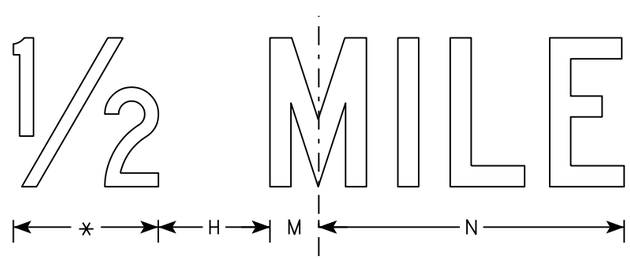

* See note 5

NOTES

1. Sign is Type II - Type F Reflective
2. Color:
   Background - Orange
   Message - Black
3. Message Series - C
4. Corners may be square or rounded when base material is plywood but borders shall be rounded as shown. When base material is metal, the corners and borders shall be rounded.
5. Substitute appropriate numerals to the nearest quarter mile and optically adjust spacing to achieve proper balance.

SIZE	A	B	C	D	E	F	G	H	I	J	K	L	M	N	O	P	Q	R	S	T	U	V	W	X	Y	Z	Area sq. ft.
1	36	24	1 1/8	3/8	1/2	6	4 1/2	3	4 3/4	14 5/8	10 5/8	11 3/8	2	12													6.0
2S	48	36	1 3/8	1/2	5/8	8	7	6	6 3/8	19 1/2	14	15	2 3/4	16 3/8													12.0
2M	48	36	1 3/8	1/2	5/8	8	7	6	6 3/8	19 1/2	14	15	2 3/4	16 3/8													12.0
3	48	36	1 3/8	1/2	5/8	8	7	6	6 3/8	19 1/2	14	15	2 3/4	16 3/8													12.0
4	48	36	1 3/8	1/2	5/8	8	7	6	6 3/8	19 1/2	14	15	2 3/4	16 3/8													12.0
5	48	36	1 3/8	1/2	5/8	8	7	6	6 3/8	19 1/2	14	15	2 3/4	16 3/8													12.0

STANDARD SIGN
W057-52

WISCONSIN DEPT OF TRANSPORTATION

APPROVED Matthew R Rauch
for State Traffic Engineer

DATE 3/21/17 PLATE NO. W057-52.2

PROJECT NO: | HWY: | COUNTY: | SHEET NO: 77 | E

STATE PROJECT NUMBER

9215-01-64

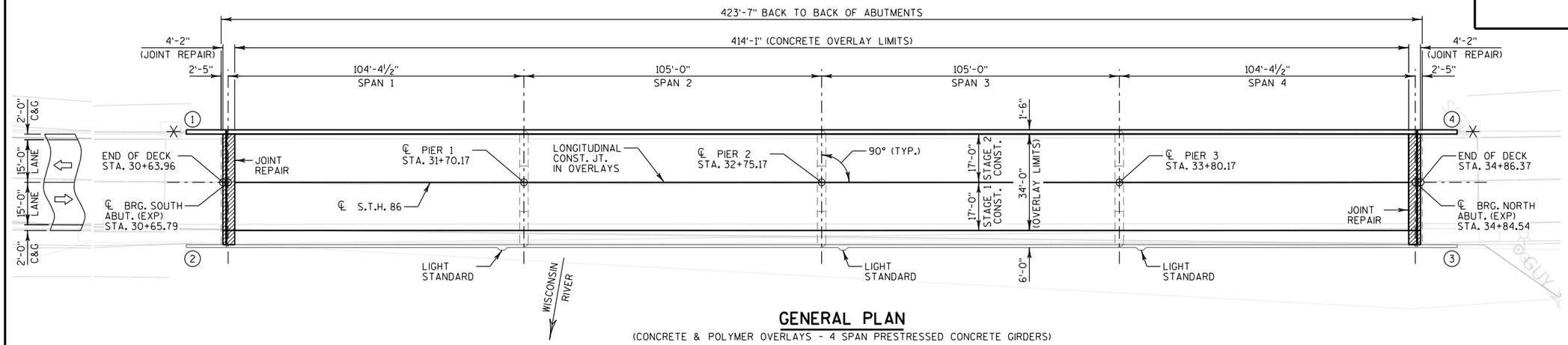

GENERAL PLAN

(CONCRETE & POLYMER OVERLAYS - 4 SPAN PRESTRESSED CONCRETE GIRDERS)

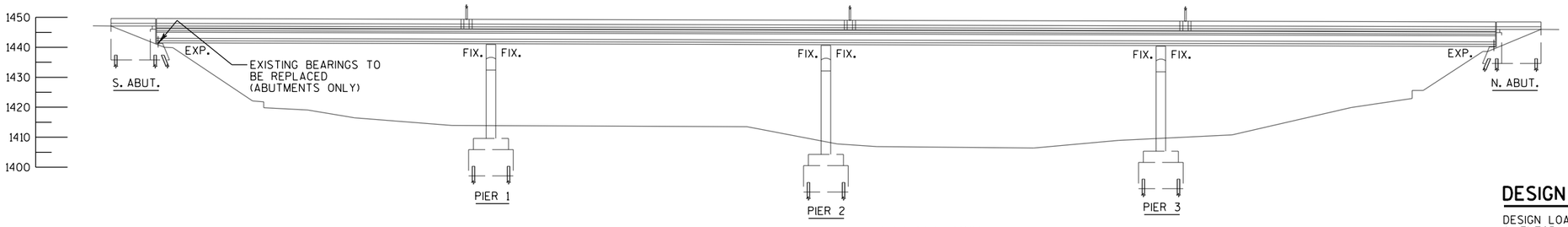

ELEVATION

(NORMAL TO WISCONSIN RIVER AT DOWNSTREAM EDGE OF BRIDGE)

DESIGN DATA

DESIGN LOADING — HS-20
INVENTORY RATING — HS-20
OPERATING RATING — HS-33
WISCONSIN STANDARD PERMIT VEHICLE (WIS-SPV) — 250 KIPS

MATERIAL PROPERTIES

CONCRETE MASONRY, OVERLAY DECKS — f'c = 4,000 PSI
CONCRETE MASONRY BRIDGES — f'c = 4,000 PSI
HIGH STRENGTH BAR STEEL REINFORCEMENT GRADE 60 — fy = 60,000 PSI

TRAFFIC DATA:

AADT (2039) = 6,100
DESIGN SPEED = 25 MPH

TOTAL ESTIMATED QUANTITIES

BID ITEM NUMBER	BID ITEM	UNIT	SOUTH ABUTMENT	NORTH ABUTMENT	SUPER.	TOTALS
203.0200	REMOVING OLD STRUCTURE STA. 32+75	LS	--	--	--	1
502.0100	CONCRETE MASONRY BRIDGES	CY	2	2	49	53
502.3100	EXPANSION DEVICE B-35-52	LS	--	--	--	1
502.3200	PROTECTIVE SURFACE TREATMENT	SY	--	--	1,596	1,596
502.3210	PIGMENTED SURFACE SEALER	SY	8	8	230	246
502.4204	ADHESIVE ANCHORS NO. 4 BAR	EACH	19	19	434	472
502.4205	ADHESIVE ANCHORS NO. 5 BAR	EACH	62	62	434	558
505.0600	BAR STEEL REINFORCEMENT HS COATED STRUCTURES	LB	370	370	7,690	8,430
505.0905	BAR COUPLERS NO. 5	EACH	--	--	22	22
506.2610	BEARING PADS ELASTOMERIC LAMINATED	EACH	6	6	--	12
506.7050.S	REMOVING BEARINGS B-35-52	EACH	6	6	--	12
509.0301	PREPARATION DECKS TYPE 1	SY	--	--	50	50
509.0302	PREPARATION DECKS TYPE 2	SY	--	--	20	20
509.0500	CLEANING DECKS	SY	--	--	1,565	1,565
509.1000	JOINT REPAIR	SY	--	--	39	39
509.1200	CURB REPAIR	LF	--	--	10	10
509.1500	CONCRETE SURFACE REPAIR	SF	5	5	50	60
509.2000	FULL-DEPTH DECK REPAIR	SY	--	--	1	1
509.2500	CONCRETE MASONRY OVERLAY DECKS	CY	--	--	126	126
509.5100.S	POLYMER OVERLAY	SY	--	--	1,596	1,596
614.0150	ANCHOR ASSEMBLIES FOR STEEL PLATE BEAM GUARD	EACH	1	1	--	2
SPV.0090	CLEANING PARAPETS SPECIAL	LF	13	13	415	441
SPV.0165	PRESTRESSED CONCRETE GIRDER REPAIR	SF	15	15	--	30

ALL ITEMS ARE CATEGORY 0020

LEGEND

⊀ MGS THRIE BEAM ATTACHMENT

(X) INDICATES WING NUMBER

LIST OF DRAWINGS

WISCONSIN ERIC T. PRICE E-39027 MADISON WI PROFESSIONAL ENGINEER

December 17, 2018

NC REGION CONTACT:
JESSE JEFFERSON (715) 365-5714

BUREAU OF STRUCTURES CONTACT:
BILL DREHER (608) 266-8489

CONSULTANT CONTACT:
ERIC PRICE (608) 826-6146

NO.	DATE	REVISION	BY

CORRE Structural Environmental Municipal Transportation
6410 GRAND TETON PLAZA, SUITE 314
MADISON, WI 53719
(608)826-0532
www.corre-engineering.com

STATE OF WISCONSIN
DEPARTMENT OF TRANSPORTATION

ACCEPTED William C. Dreher SDR 12/18/18
CHIEF STRUCTURES DESIGN ENGINEER DATE

STRUCTURE B-35-52

S.T.H. 86 OVER WISCONSIN RIVER

COUNTY LINCOLN — ~~TOWN~~/CITY/~~VILLAGE~~ TOMAHAWK

DESIGN SPEC. REHABILITATION N/A

DESIGNED BY	ETP	DESIGN CK'D.	BH	DRAWN BY	TKB	PLANS CK'D.	ETP

GENERAL PLAN

SHEET 1 OF 10

8

8

FILE NAME : C:\Users\tbetcher\Google Drive\TKB Projects\Bridge\B-35\B-35-52\500_CADD\503_Working\B-35-052_01 genplan.dgn PLOT DATE : 12/7/2018 PLOT SCALE : 2.00000 ' / ft.

STATE PROJECT NUMBER

9215-01-64

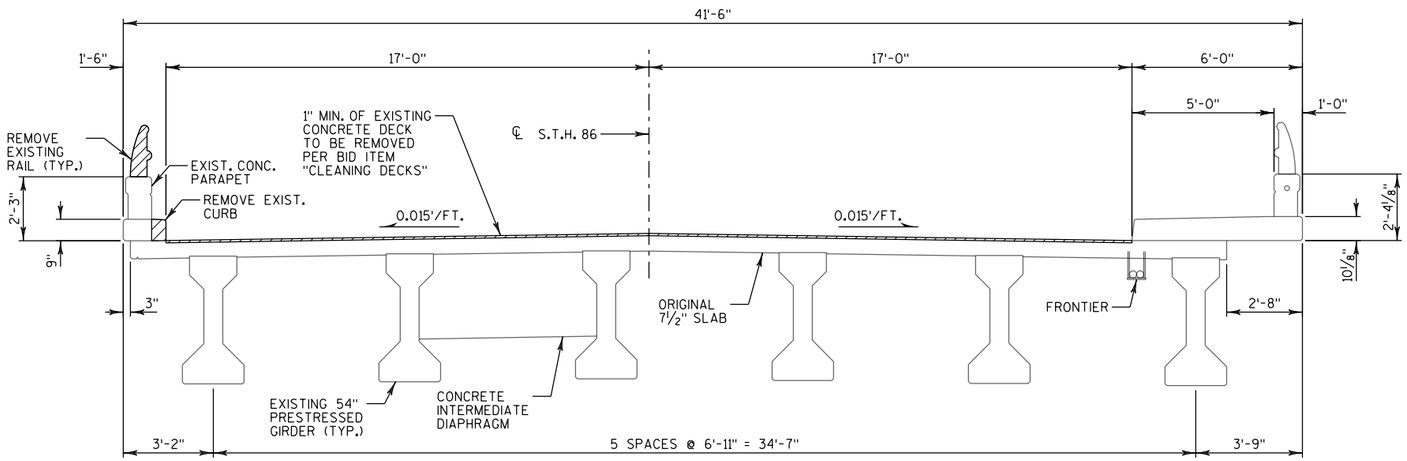

EXISTING CROSS SECTION THRU ROADWAY

(LOOKING NORTH)

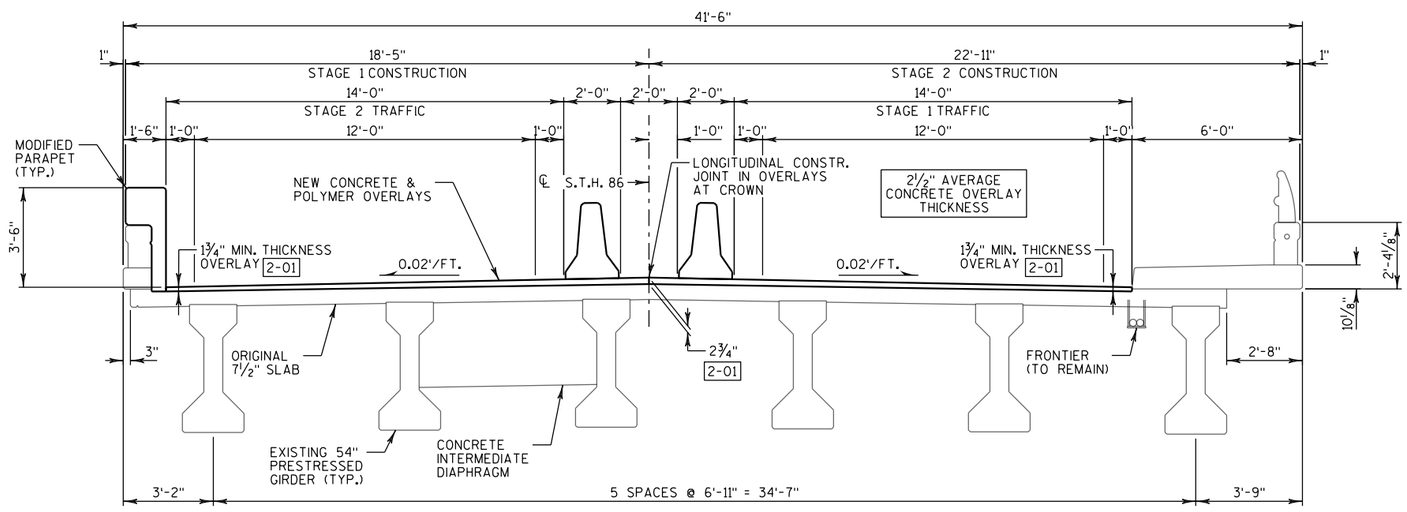

PROPOSED CROSS SECTION THRU ROADWAY

(LOOKING NORTH)

LEGEND

- DENOTES REMOVAL LIMITS

2-01 OVERLAY DEPTHS INCLUDE 1/4" FOR THE POLYMER OVERLAY.

GENERAL NOTES

THE PROPOSED WORK INCLUDES PLACEMENT OF CONCRETE AND POLYMER OVERLAYS, JOINT REPLACEMENT, BEARING REPLACEMENT, CONCRETE SURFACE REPAIR, AND REFACING THE EXISTING WEST PARAPET.

DRAWINGS SHALL NOT BE SCALED.

DIMENSIONS SHOWN ARE BASED ON THE ORIGINAL STRUCTURE PLANS.

ANY EXCAVATION REQUIRED TO COMPLETE THE OVERLAY OR THE PAVING BLOCKS AT THE ABUTMENTS IS INCIDENTAL TO THE BID ITEM "CONCRETE MASONRY OVERLAY DECKS".

BAR STEEL REINFORCEMENT SHALL BE EMBEDDED 2" CLEAR UNLESS OTHERWISE SHOWN OR NOTED.

THE FIRST DIGIT OF A THREE DIGIT AND THE FIRST TWO DIGITS OF A FOUR DIGIT BAR MARK SIGNIFY THE BAR SIZE.

CLEAN, STRAIGHTEN, AND EXTEND EXISTING BAR STEEL REINFORCEMENT 24 BAR DIAMETERS INTO NEW CONSTRUCTION WHERE APPLICABLE.

ALL CONCRETE REMOVAL NOT COVERED WITH A CONCRETE OVERLAY SHALL BE DEFINED BY A 1" DEEP SAW CUT.

"PREPARATION DECKS TYPE 1", "PREPARATION DECKS TYPE 2", "FULL-DEPTH DECK REPAIR", AND "CONCRETE SURFACE REPAIR" QUANTITIES ARE APPROXIMATE. CONTRACTOR SHALL COORDINATE THE FIELD IDENTIFICATION AND DETERMINATION OF ALL REPAIR LOCATIONS WITH THE ENGINEER. DECK PREPARATION AND FULL-DEPTH DECK REPAIRS SHALL BE FILLED WITH "CONCRETE MASONRY OVERLAY DECKS".

EXPANSION JOINT ASSEMBLY, INCLUDING ANCHOR STUDS AND HARDWARE SHALL BE PAID FOR IN THE LUMP SUM PRICE BID AS "EXPANSION DEVICE B-35-52".

MATERIALS, EQUIPMENT, ETC. SHALL NOT BE STOCKPILED/STORED ON THE BRIDGE DECK WITHOUT PRIOR APPROVAL FROM THE ENGINEER.

PROTECTIVE SURFACE TREATMENT SHALL BE APPLIED TO THE ENTIRE SURFACE OF THE NEW CONCRETE OVERLAY.

PIGMENTED SURFACE SEALER TO BE APPLIED TO THE FRONT FACE AND TOP OF THE WEST PARAPET, INCLUDING PARAPETS ON WINGS 1 & 4.

THE ENTIRE EXPOSED TOP AND INSIDE FACES OF THE EXISTING WEST PARAPET SURFACES SHALL BE BLAST CLEANED AND ANY EXPOSED STEEL SHALL BE BRUSH CLEANED PRIOR TO THE WEST PARAPET BEING BUILT UP (MODIFIED). ALL WORK DESCRIBED ABOVE SHALL BE INCLUDED AND/OR CONSIDERED INCIDENTAL TO THE BID ITEM "CLEANING PARAPETS SPECIAL".

JOINT REPAIR AREAS SHALL BE FILLED WITH "CONCRETE MASONRY OVERLAY DECKS".

DECK SURFACE PREPARATION INCLUDED IN ITEM "POLYMER OVERLAY".

A MINIMUM OF 1-INCH OF CONCRETE SHALL BE REMOVED FROM THE ENTIRE TOP SURFACE OF THE EXISTING DECK.

THE AVERAGE OVERLAY THICKNESS IS THE MINIMUM OVERLAY THICKNESS PLUS 1/2" TO ACCOUNT FOR VARIATIONS IN THE DECK PLUS 1/4" FOR THE POLYMER OVERLAY.

PROFILE GRADE LINE SHALL BE DETERMINED IN THE FIELD BASED ON A MINIMUM CONCRETE OVERLAY THICKNESS OF 1 1/2" PLACED ABOVE THE DECK SURFACE AFTER SURFACE PREPARATION. AVERAGE CONCRETE THICKNESS IS 2 1/2". IF EXPECTED AVERAGE CONCRETE OVERLAY THICKNESS IS EXCEEDED BY MORE THAN 1/2", CONTACT THE STRUCTURE DESIGN SECTION.

THE POLYMER OVERLAY SHALL BE APPLIED DURING THE NEXT CONSTRUCTION SEASON.

SEAL OVERLAY CONSTRUCTION JOINTS ACCORDING TO SECTION 502.3.13.1 OF THE STANDARD SPECIFICATIONS. COST INCIDENTAL TO BID ITEM "CONCRETE MASONRY OVERLAY DECKS".

PRESTRESSED CONCRETE GIRDER REPAIRS AT BOTH ABUTMENTS TO BE DETERMINED IN THE FIELD BY THE ENGINEER.

ABBREVIATIONS:

ABUT.	-	ABUTMENT
B.F.	-	BACK FACE
BOT	-	BOTTOM
BRG.	-	BEARING
CL.	-	CLEAR
CONST.	-	CONSTRUCTION
DIA.	-	DIAMETER
E.F.	-	EACH FACE
F.F.	-	FRONT FACE
HORIZ.	-	HORIZONTAL
JT.	-	JOINT
LONG.	-	LONGITUDINAL
PPT.	-	PARAPET
SPA.	-	SPACED
STD.	-	STANDARD
T&B	-	TOP AND BOTTOM
TRANS.	-	TRANSVERSE
TYP.	-	TYPICAL
VERT.	-	VERTICAL

NO.	DATE	REVISION	BY

STATE OF WISCONSIN
DEPARTMENT OF TRANSPORTATION

STRUCTURE B-35-52

DRAWN BY TKB | PLANS CK'D. ETP

CROSS SECTION & QUANTITIES

SHEET 2 OF 10

8

8

STATE PROJECT NUMBER

9215-01-64

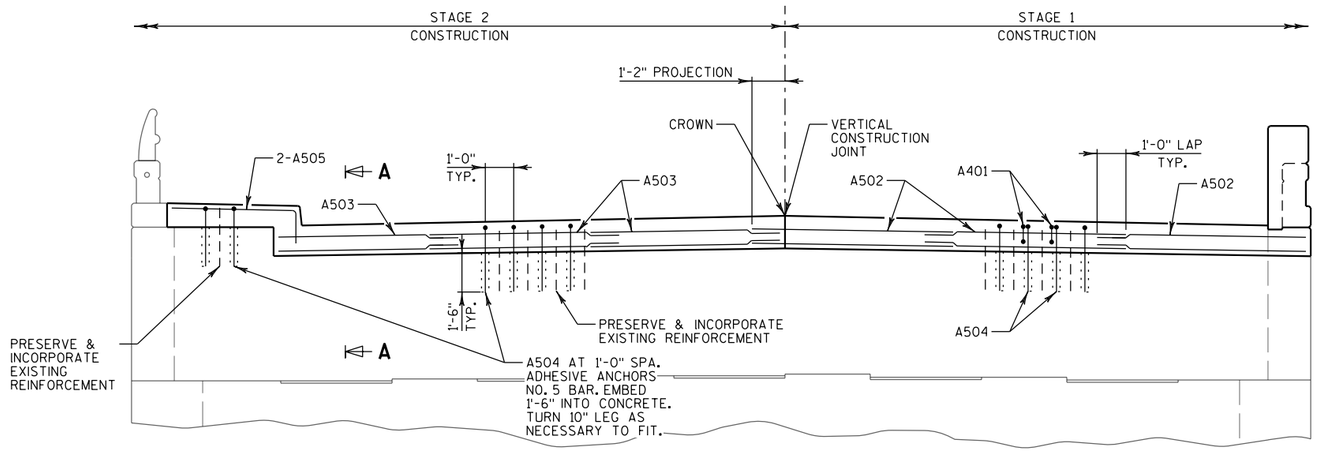

ELEVATION

(LOOKING SOUTH)

BILL OF BARS

BAR MARK	COAT	NO. REQ'D STAGE 1	NO. REQ'D STAGE 2	LENGTH	BENT	BAR SERIES	LOCATION	
A401	X	19	18	3'-4"	X		PAVING BLOCK	VERT.
A502	X	9	0	7'-2"			PAVING BLOCK	HORIZ.
A503	X	0	9	6'-7"			PAVING BLOCK	HORIZ.
A504	X	19	23	3'-1"	X		PAVING BLOCK	VERT.
A505	X	0	2	5'-8"	X		PAVING BLOCK (SDWK)	HORIZ.
							TOTAL WEIGHT =370 LBS	

THE FIRST DIGIT OF THE BAR MARK SIGNIFIES THE BAR SIZE.

LEGEND

GX INDICATES GIRDER NUMBER.

(X) INDICATES WING NUMBER.

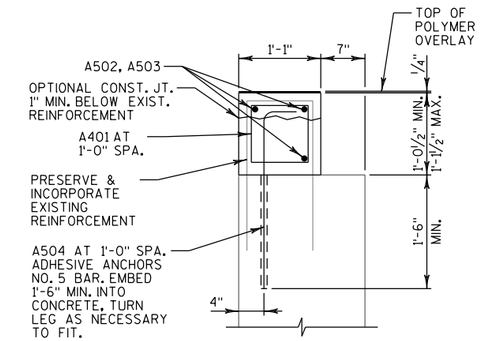

SECTION A-A

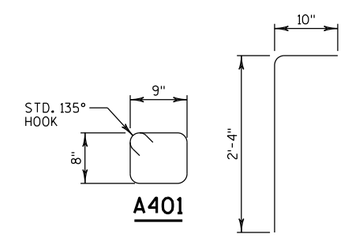

A401

A504

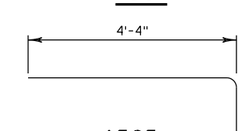

A505

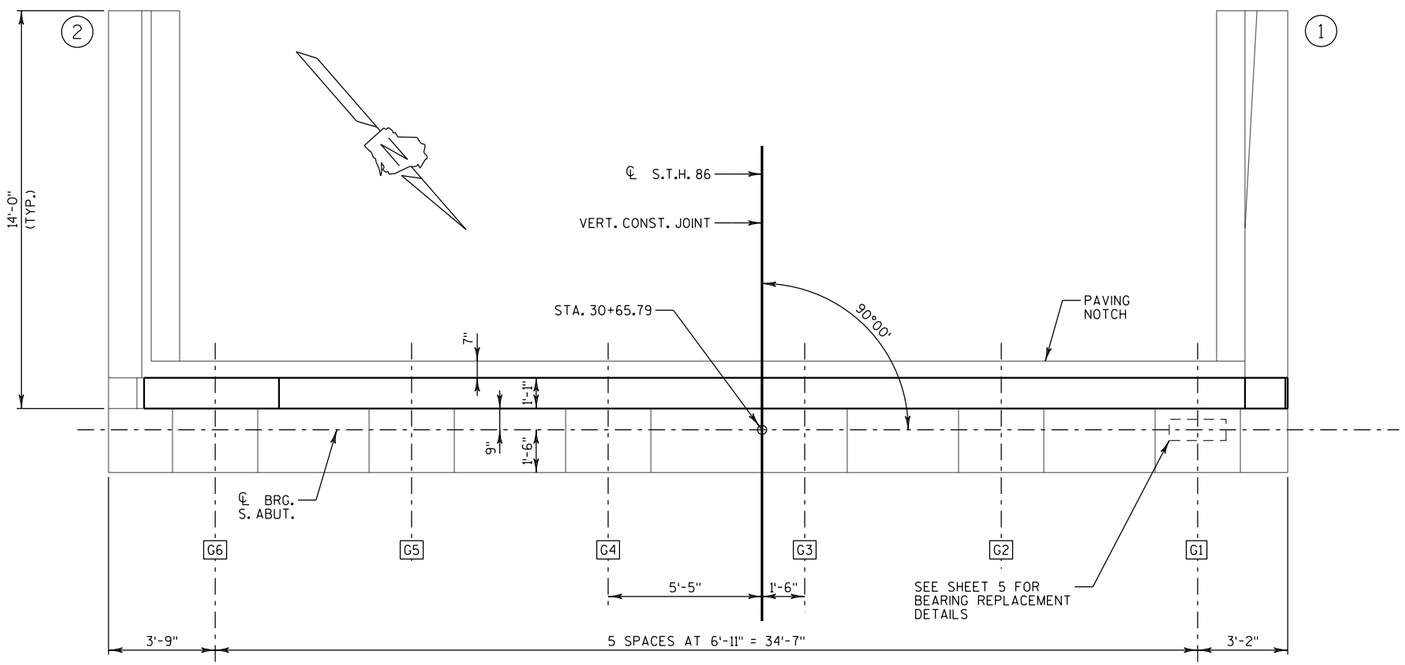

PLAN

NO.	DATE	REVISION	BY

STATE OF WISCONSIN
DEPARTMENT OF TRANSPORTATION

STRUCTURE B-35-52

DRAWN BY TKB | PLANS CK'D. ETP

SOUTH ABUTMENT

SHEET 3 OF 10

8

8

STATE PROJECT NUMBER

9215-01-64

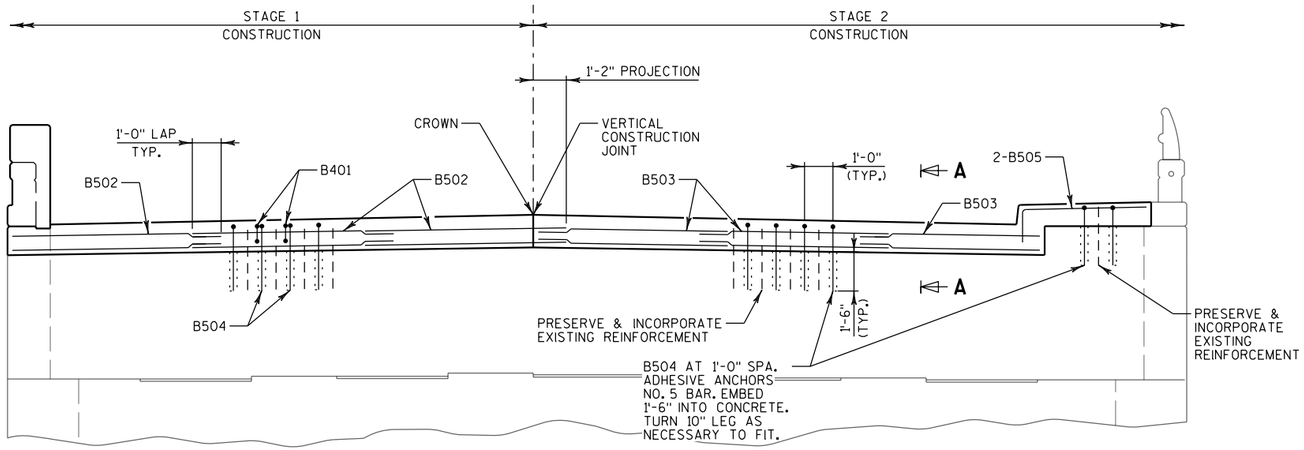

ELEVATION

(LOOKING SOUTH)

BILL OF BARS

BAR MARK	COAT	NO. REQ'D STAGE 1	NO. REQ'D STAGE 2	LENGTH	BENT	BAR SERIES	LOCATION	
B401	X	19	18	3'-4"	X		PAVING BLOCK	VERT.
B502	X	9	0	7'-2"			PAVING BLOCK	HORIZ.
B503	X	0	9	6'-7"			PAVING BLOCK	HORIZ.
B504	X	19	23	3'-1"	X		PAVING BLOCK	VERT.
B505	X	0	2	5'-8"	X		PAVING BLOCK (SDWK)	HORIZ.
							TOTAL WEIGHT =370 LBS	

THE FIRST DIGIT OF THE BAR MARK SIGNIFIES THE BAR SIZE.

LEGEND

GX INDICATES GIRDER NUMBER.

(X) INDICATES WING NUMBER.

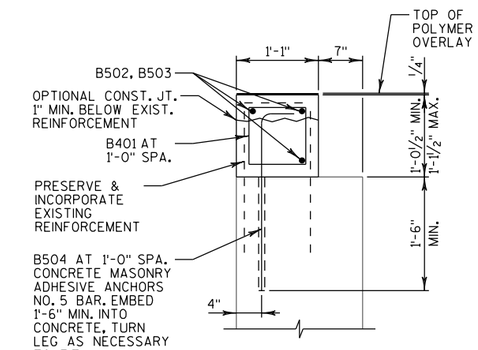

SECTION A-A

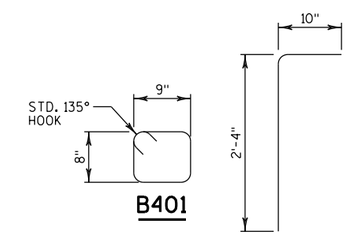

B401

B504

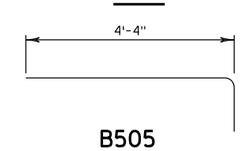

B505

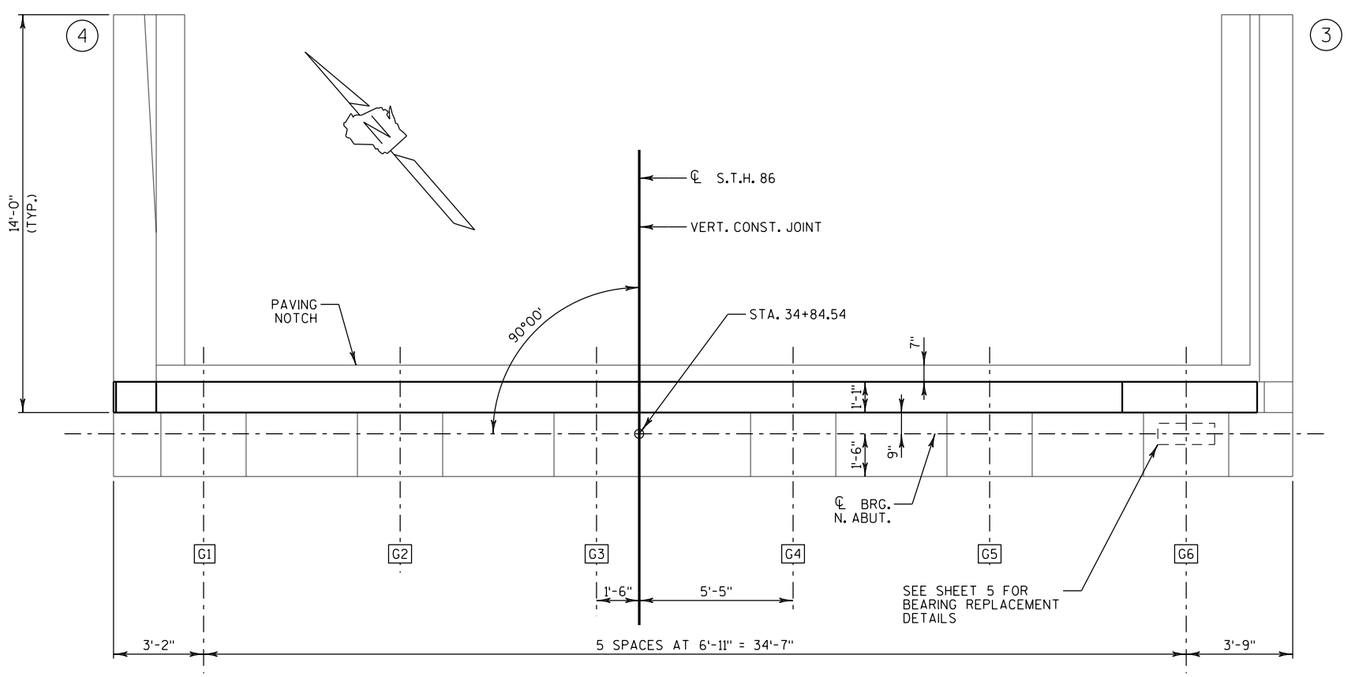

PLAN

NO.	DATE	REVISION	BY

STATE OF WISCONSIN
DEPARTMENT OF TRANSPORTATION

STRUCTURE B-35-52

DRAWN BY TKB | PLANS CK'D. ETP

NORTH ABUTMENT

SHEET 4 OF 10

FILE NAME : C:±Users±tbetcher±Google Drive±TKB Projects±Bridge±B-35±B-35-52±500_CADD±503_Working±B-35-052_04 N Abut.dgn

PLOT DATE : 12/7/2018

PLOT SCALE : 2.00000 '/ ft.

STATE PROJECT NUMBER

9215-01-64

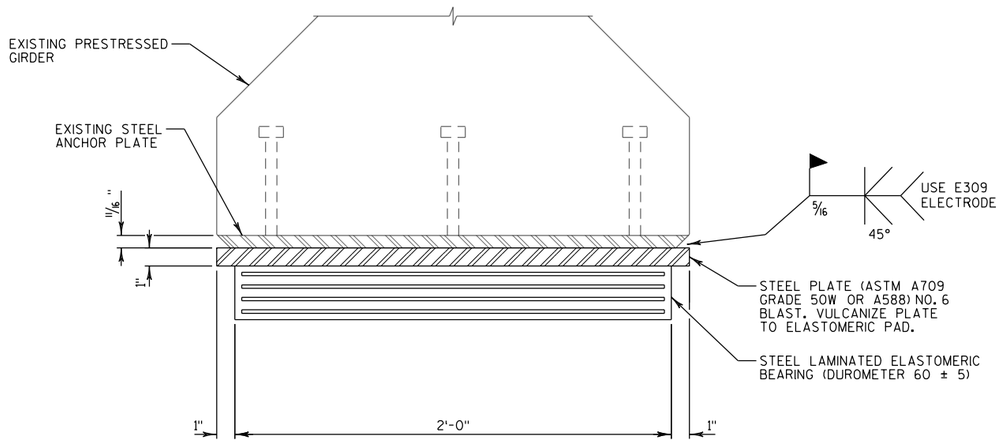

END VIEW

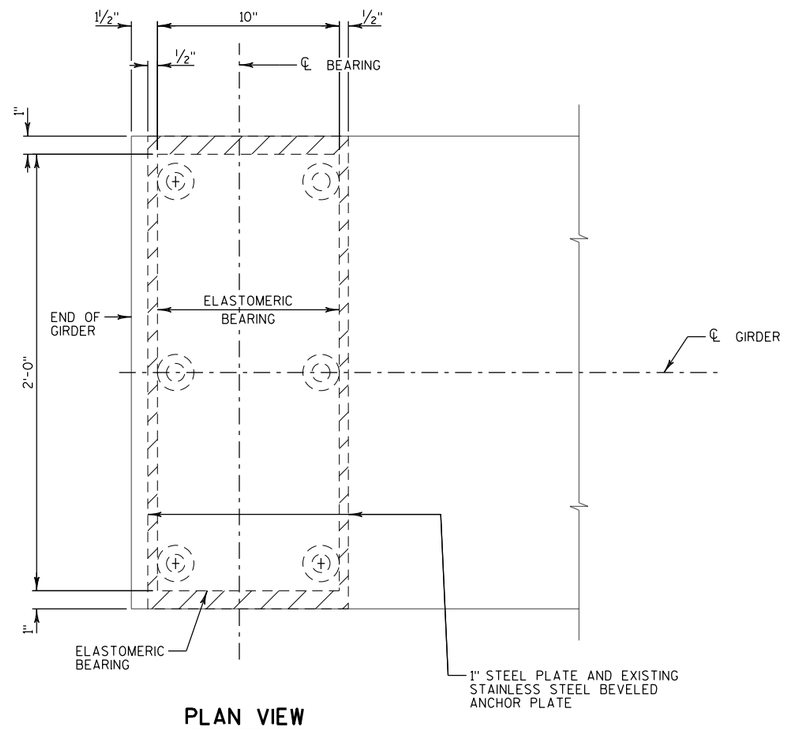

PLAN VIEW

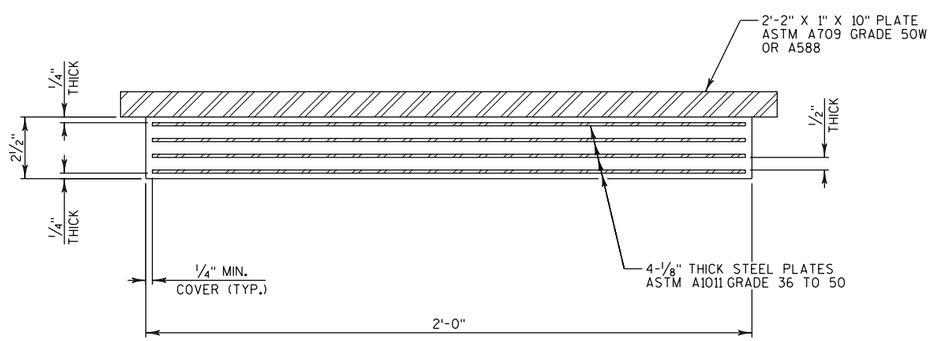

SECTION THRU ELASTOMERIC BEARING

NOTES

REPLACE ALL ABUTMENT BEARINGS.

BEARINGS SHALL NOT BE PLACED AT A TEMPERATURE GREATER THAN 85° F.

ALL MATERIAL USED FOR BEARINGS SHALL BE PAID FOR AT THE UNIT PRICE BID FOR "BEARING PADS ELASTOMERIC LAMINATED", EACH.

ALL STRUCTURAL STEEL BEARING PLATES SHALL BE FLAT ROLLED WITH ALL SURFACES SMOOTH AND FREE FROM WARP AND ALL EDGES SMOOTH, STRAIGHT AND VERTICAL.

ALL PLATE CUTS SHALL BE MACHINE OR MACHINE FLAME CUTS.

WELDING PROCEDURES SHALL BE ESTABLISHED BY THE CONTRACTOR TO RESTRICT THE MAXIMUM TEMPERATURE REACHED BY SURFACES IN CONTACT WITH ELASTOMER TO 200°F. TEMPERATURES SHALL BE CONTROLLED BY TEMPERATURE INDICATING WAX PENCIL OR OTHER SUITABLE MEANS APPROVED BY THE ENGINEER.

GRIND EXIST. WELD THAT ATTACHED EXISTING TOP PLATE TO EXISTING BOTTOM FLANGE. GRIND AFFECTED AREAS SMOOTH.

8

8

NO.	DATE	REVISION	BY

STATE OF WISCONSIN
DEPARTMENT OF TRANSPORTATION

STRUCTURE B-35-52

DRAWN BY TKB | PLANS CK'D. ETP

BEARING DETAILS

SHEET 5 OF 10

STATE PROJECT NUMBER

9215-01-64

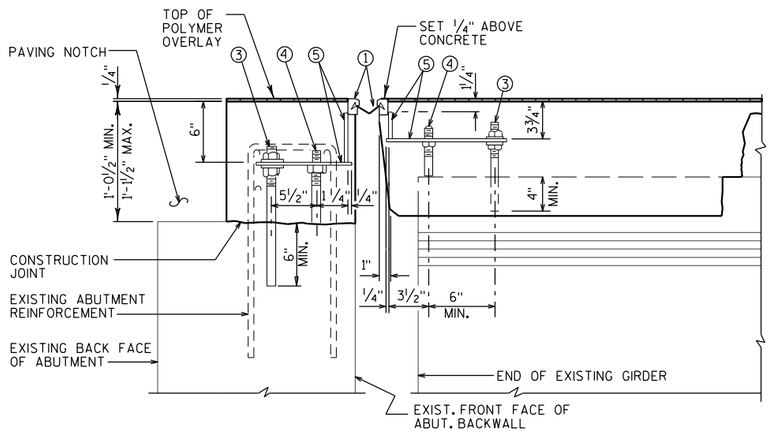

SECTION THRU JOINT AT ABUTMENT

NORMAL TO ℄ SUBSTRUCTURE

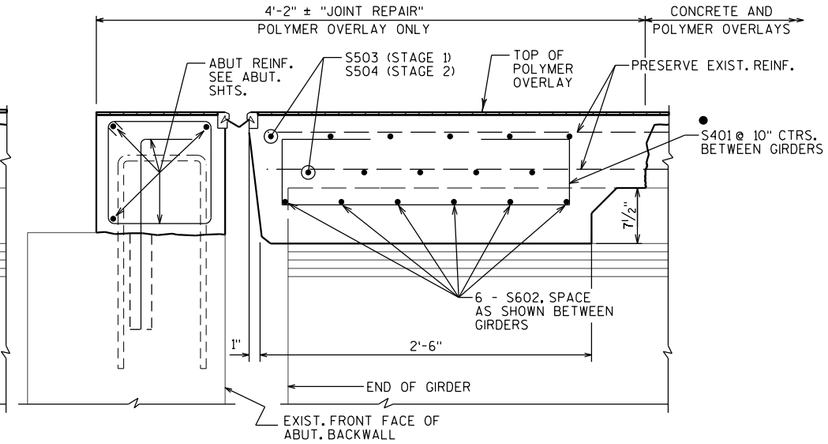

SECTION THRU JOINT AT ABUTMENT

NORMAL TO ℄ SUBSTRUCTURE

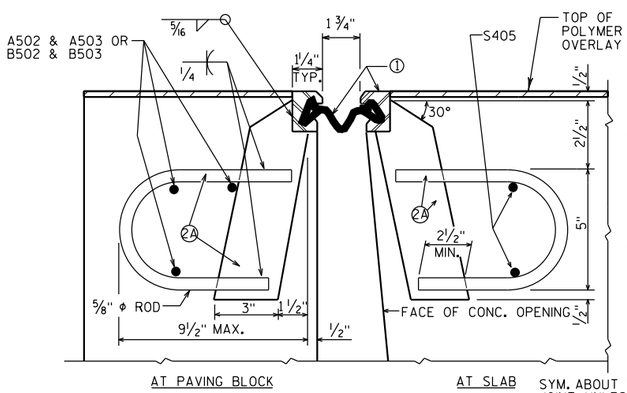

SECTION THRU JOINT

ROADWAY TRAFFIC AREA BETWEEN EXTERIOR GIRDERS.

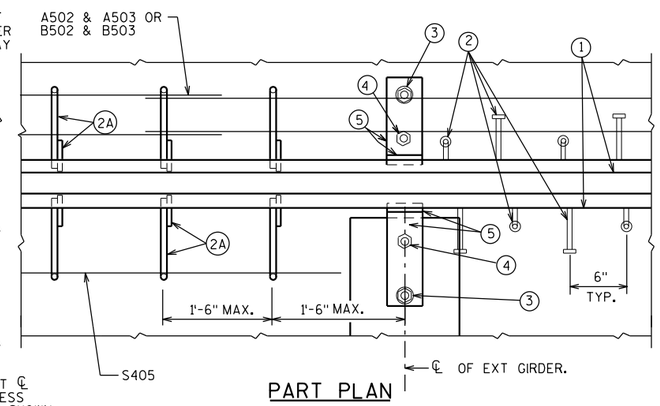

PART PLAN

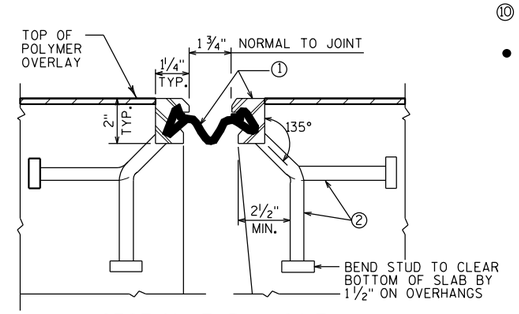

SECTION THRU JOINT

EXTERIOR GIRDER TO EDGE OF DECK & AT PARAPETS & SIDEWALKS

LEGEND

1. NEOPRENE STRIP SEAL (4-INCH) & STEEL EXTRUSIONS. SET JOINT OPENING AT 1 3/4".
2. STUDS 5/8" Φ × 6 3/8" LONG AT 6" ALTERNATE CENTERS. WELD TO EXTRUSIONS & BEND AS SHOWN AFTER WELDING.
2A. 1/2" THICK ANCHOR PLATE WITH 5/8" Φ ROD (OR ALTERNATE STRIP SEAL ANCHOR). WELD ROD TO ANCHOR PLATE, WELD ANCHOR PL. TO #1 AT 1'-6" CTRS. BETWEEN GIRDERS.
3. 3/4" Φ THREADED ROD WITH 2 NUTS AND PLATE WASHERS. GROUT THREADED ROD INTO FIELD DRILLED HOLES ON ℄ OF GIRDER. ON ABUTMENT SIDE GROUT THREADED ROD INTO FIELD DRILLED HOLES IN ABUTMENT BACKWALL AS SHOWN.
4. 3/4" Φ THREADED ROD WITH NUT. TACK WELD NUT TO #5.
5. FABRICATE SUPPORT FROM 3 1/4" × 1/2" BAR AS SHOWN OR EQUIVALENT. ONE PER GIRDER PER SIDE. SHOP OR FIELD WELD TO NO. 1. IF FIELD WELDED, COVER WELDED AREAS WITH EPOXY-COATING MATERIAL. PROVIDE 1 1/2" Φ HOLE FOR #3 & 1" Φ HOLE FOR #4.
6. GALVANIZED PLATE 3/8" × 10" × 2'-2" LONG WITH HOLES FOR #7. BEND AS SHOWN.
7. 3/4" Φ × 1 1/2" STAINLESS STEEL SOCKET FLAT HEAD SCREWS WITH ANTI-SEIZE LUBRICANT. PLACE IN COUNTERSUNK HOLE. RECESS 1/16" BELOW PLATE SURFACE.
8. 3/4" Φ × 4" GALVANIZED HEX HEAD BOLT. BEND 45°.
9. 3/4" Φ × 2 1/4" GALVANIZED THREADED COUPLING.
10. 1" × 5" SLOTTED COUNTERSUNK HOLE FOR #7. PLACE SLOT PARALLEL TO DIRECTION OF MOVEMENT.

● BARS PLACED PARALLEL TO GIRDERS. SPACING PERPENDICULAR TO ℄ GIRDERS.

GENERAL NOTES

ONE FIELD SPLICE PERMITTED IN STEEL EXTRUSIONS. IF USED, DETAILS SHALL BE SUBMITTED FOR APPROVAL. NO SPLICING PERMITTED IN NEOPRENE STRIP SEAL.

AFTER FABRICATION, BUT BEFORE SHIPMENT, STRAIGHTEN STEEL EXTRUSIONS SUCH THAT THEY SHALL BE FREE FROM WARP, TWIST & SWEEP.

FABRICATOR SHALL PROVIDE MEANS OF KEEPING GALVANIZED EXTRUSIONS CLEAN & SMOOTH DURING SHIPMENT AND PRIOR TO APPLYING LUBRICANT ADHESIVE FOR NEOPRENE GLAND INSTALLATION.

SANDBLAST PLATES, SUPPORTS, & EXTRUSIONS AFTER FABRICATION IN ACCORDANCE WITH SSPC SP. #6 "COMMERCIAL BLAST CLEANING". AFTER BLAST CLEANING, THE PLATES, SUPPORTS & EXTRUSIONS SHALL BE HOT DIPPED GALVANIZED. SLIP-RESISTANT SURFACE IS APPLIED TO SIDEWALK COVER PLATE BY THE MANUFACTURER AND THEN HOT DIPPED GALVANIZED TO THEIR RECOMMENDATIONS TO MAINTAIN THE INTEGRITY OF THIS SURFACE.

ANCHOR SYSTEM #8 & NO. #9 SHALL CONFORM TO ASTM A307 & SHALL BE GALVANIZED IN ACCORDANCE WITH ASTM A153 CLASS C & D.

STRIP SEAL EXPANSION JOINT ASSEMBLY, INCLUDING ANCHOR STUDS & HARDWARE WILL BE PAID FOR AT THE LUMP SUM PRICE BID FOR "EXPANSION DEVICE B-35-52".

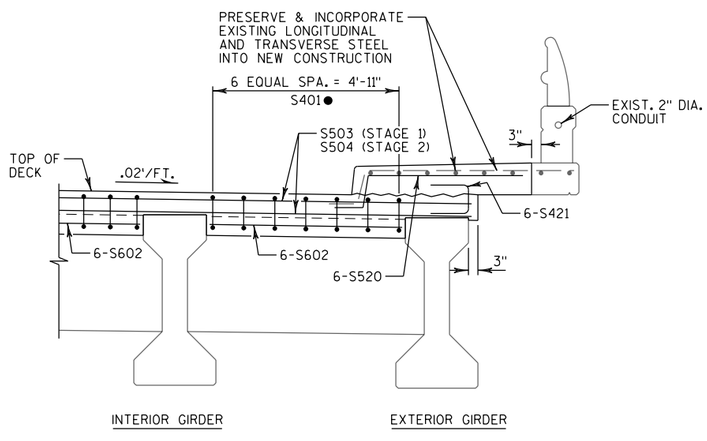

PART TRANSVERSE SECTION AT DIAPHRAGM

(DECK REINFORCEMENT NOT SHOWN FOR CLARITY)

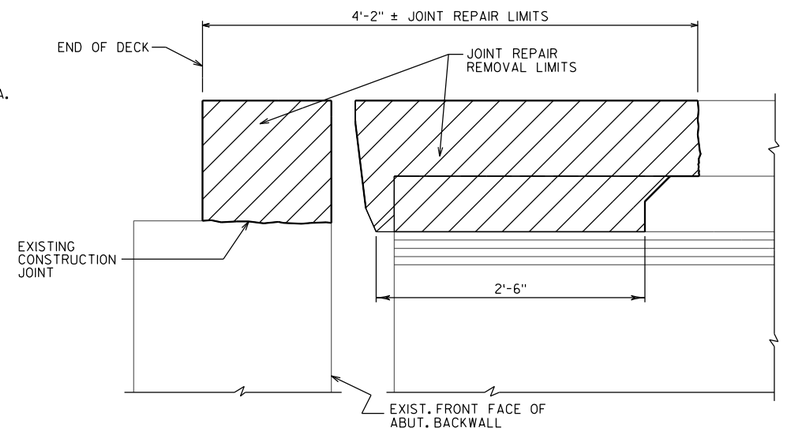

JOINT REPAIR-REMOVAL

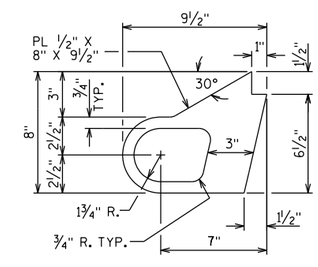

ALTERNATE STRIP SEAL ANCHOR

NO.	DATE	REVISION	BY

STATE OF WISCONSIN
DEPARTMENT OF TRANSPORTATION

STRUCTURE B-35-52

DRAWN BY TKB | PLANS CK'D. ETP

STRIP SEAL EXPANSION JOINT

SHEET 6 OF 10

STATE PROJECT NUMBER

9215-01-64

LEGEND

- (X) SEE SHEET 6 FOR DESCRIPTION
- 7-01 BLOCK OUT CONCRETE 2" EACH SIDE FOR JOINT OPENING.
- 7-02 JOINT OPENING DIM. PLUS 1/2"
- 7-03 ACCOUNTS FOR 3'-6" LAP IN BARS MIDWAY BETWEEN CONSTRUCTION JOINT. THESE BARS REQUIRE BAR COUPLERS AT STAGED CONSTRUCTION JOINT.
- 7-04 JOINT REPAIR LIMITS. REBUILD TOP OF WING/ABUTMENT, DECK AND ENTIRE WEST PARAPET IN THIS AREA. ENSURE DECK SIDE OF JOINT IS FREE TO MOVE AND NOT CONNECTED TO ABUTMENT.
- 7-05 ADHESIVE ANCHORS NO. 5 BARS. EMBED 1'-6" MINIMUM INTO EXISTING CONCRETE.

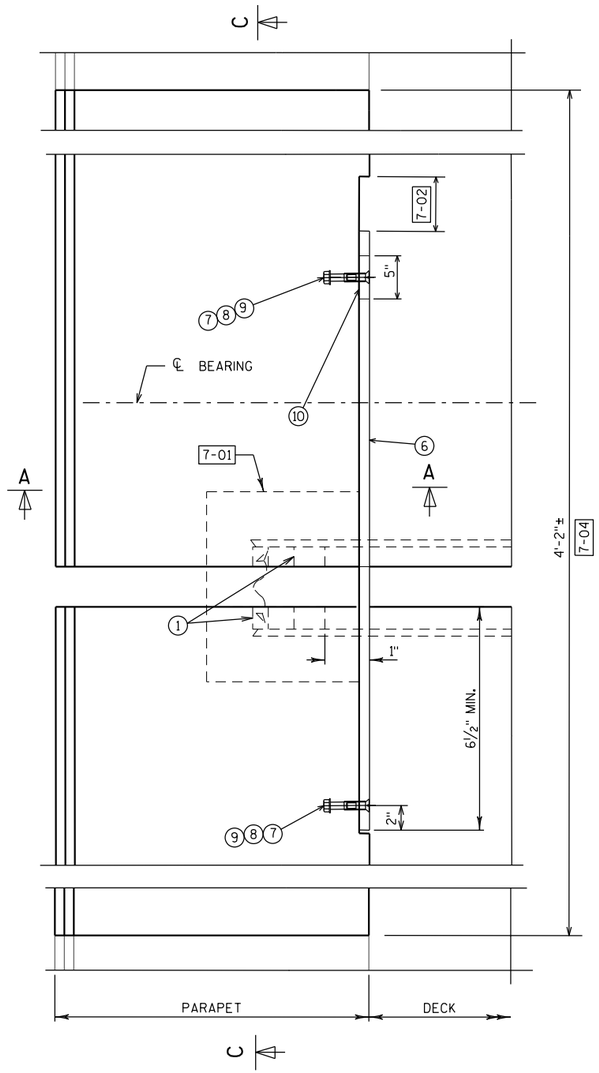

PLAN AT WEST PARAPET

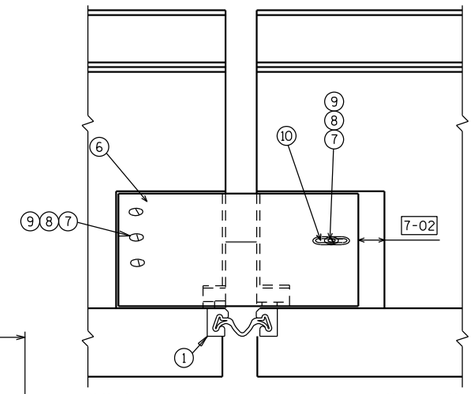

VIEW OF WEST PARAPET PLATES FROM ROADWAY

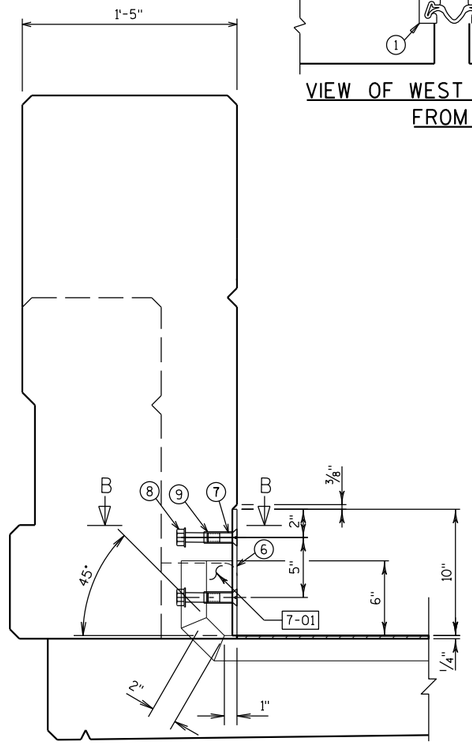

SECTION A-A
(REBAR NOT SHOWN FOR CLARITY)

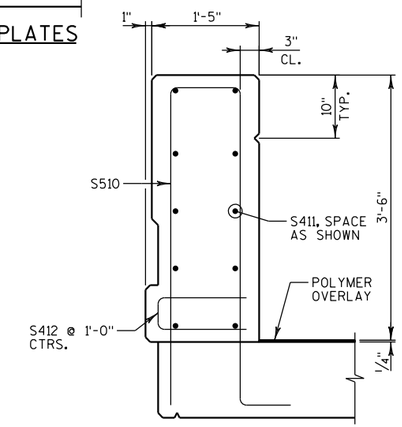

SECTION D-D

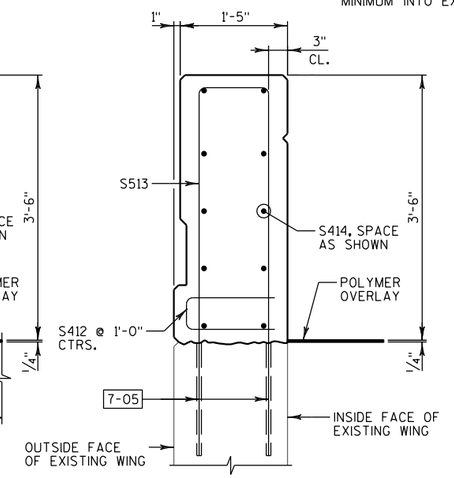

SECTION E-E

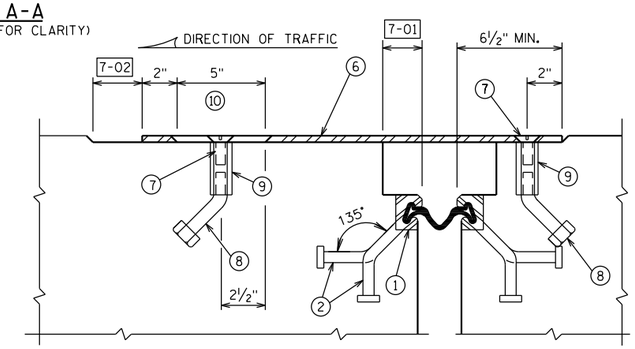

SECTION B-B

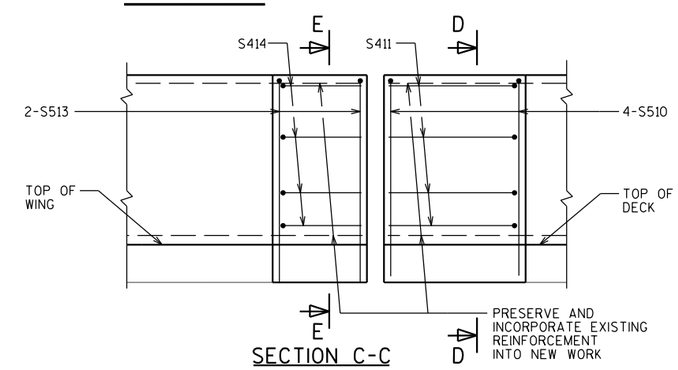

SECTION C-C

NO.	DATE	REVISION	BY

STATE OF WISCONSIN
DEPARTMENT OF TRANSPORTATION

STRUCTURE B-35-52

DRAWN BY TKB | PLANS CK'D. ETP

STRIP SEAL EXPANSION JOINT DETAILS-1

SHEET 7 OF 10

STATE PROJECT NUMBER

9215-01-64

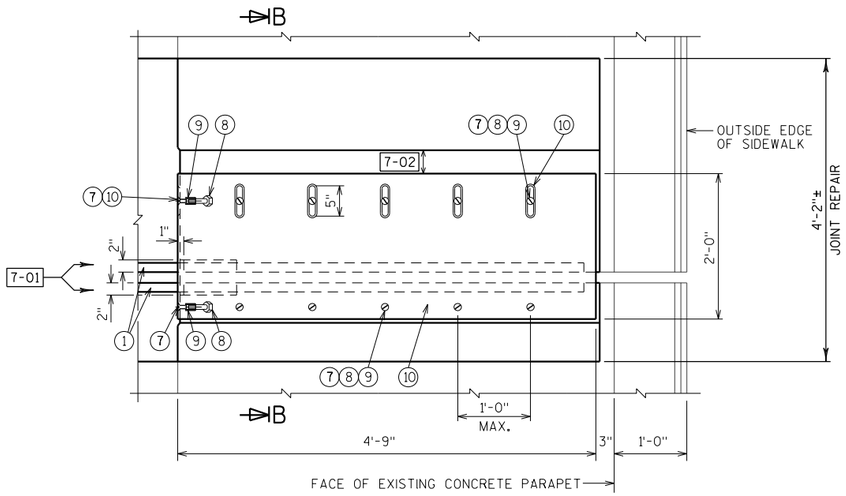

PLAN AT SIDEWALK

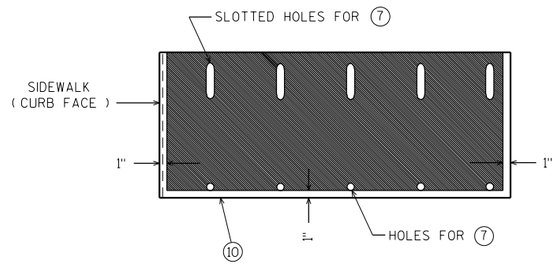

PLAN OF SIDEWALK COVER PLATE WITH SLIP-RESISTANT SURFACE

PLACE SLIP-RESISTANT SURFACE ON TOP WALKING SURFACE IN SHADED AREA ONLY (NOT ON CURB FACE).

APPROVED SLIP-RESISTANT APPLIED SURFACES FOR STEEL PLATES		
PRODUCT	MANUFACTURER	CONTACT AT
SLIPNOT GRADE 2, STEEL	W. S. MOLNAR COMPANY	1-800-SLIPNOT
ALGRIP, STEEL	ROSS TECHNOLOGY CORP.	1-800-345-8170

BILL OF BARS - SUPERSTRUCTURE

	MARK	COAT	# REQ'D. STAGE 1	# REQ'D. STAGE 2	LENGTH	BENT	BAR SERIES	LOCATION
	S401	X	30	40	4'-6"	X		SLAB - DIAPHRAGM
	S602	X	24	36	4'-11"			SLAB - DIAPHRAGM
7-03	S503	X	22	0	10'-11"			SLAB - STAGE 1
7-03	S504	X	0	22	11'-11"			SLAB - STAGE 2
	S405	X	8	12	6'-11"			SLAB - EXPANSION DEVICE - BTWN GIRDERS
	S510	X	8	0	9'-1"	X		PARAPET - AT JOINT, DECK SIDE
	S411	X	10	0	3'-1"	X		PARAPET - AT JOINT, DECK SIDE, B.F. ONLY
	S412	X	12	0	2'-5"	X		PARAPET - HORIZ.
	S513	X	4	0	10'-8"	X		PARAPET - AT JOINT, ABUTMENT SIDE
	S414	X	10	0	1'-4"	X		PARAPET - AT JOINT, ABUTMENT SIDE, B.F. ONLY
	S520	X	12	0	5'-11"	X		SIDEWALK - TRANS.
	S421	X	12	0	2'-9"	X		SIDEWALK - TRANS.
	TOTAL WEIGHT =							1,540 LBS.

THE FIRST DIGIT OF THE BAR MARK SIGNIFIES THE BAR SIZE
DIMENSIONS IN BENDING DETAILS ARE OUT TO OUT OF BAR

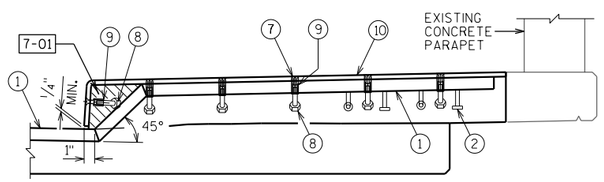

SECTION AT SIDEWALK

LEGEND

(X) SEE SHEET 6 FOR DESCRIPTION.

7-XX SEE SHEET 7 FOR NOTES.

SEE SHEET 6 FOR SIDEWALK REINFORCEMENT DETAILS.

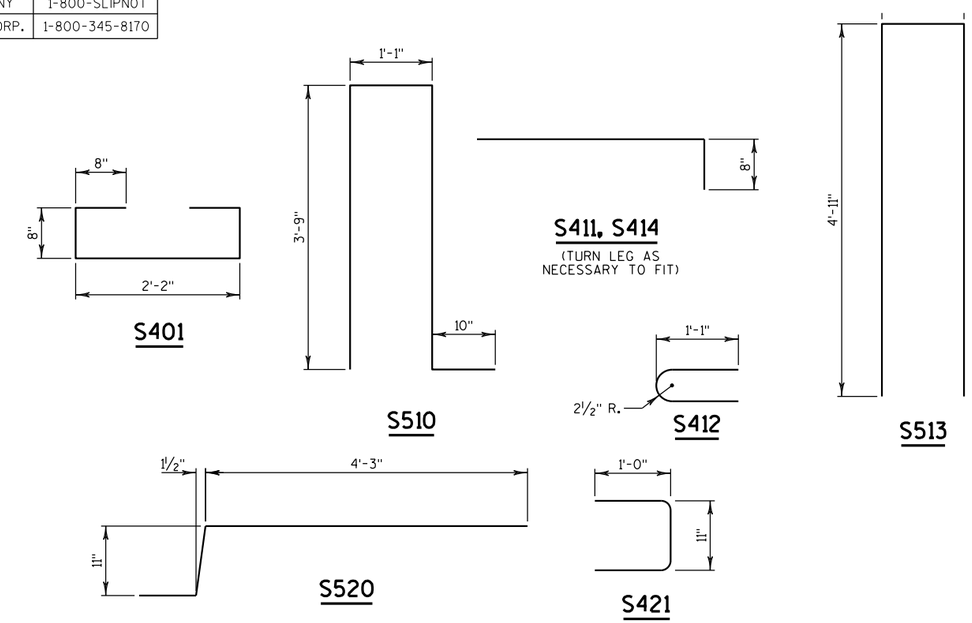

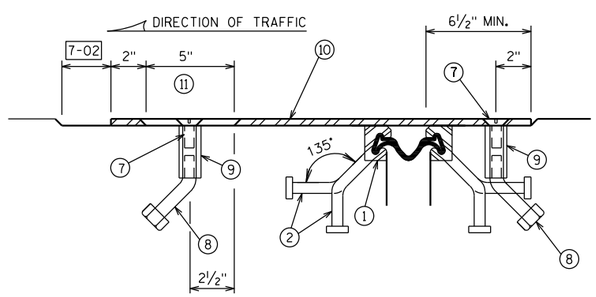

SECTION B-B

NO.	DATE	REVISION	BY

STATE OF WISCONSIN
DEPARTMENT OF TRANSPORTATION

STRUCTURE B-35-52

DRAWN BY TKB | PLANS CK'D. ETP

STRIP SEAL EXPANSION JOINT DETAILS-2

SHEET 8 OF 10

STATE PROJECT NUMBER

9215-01-64

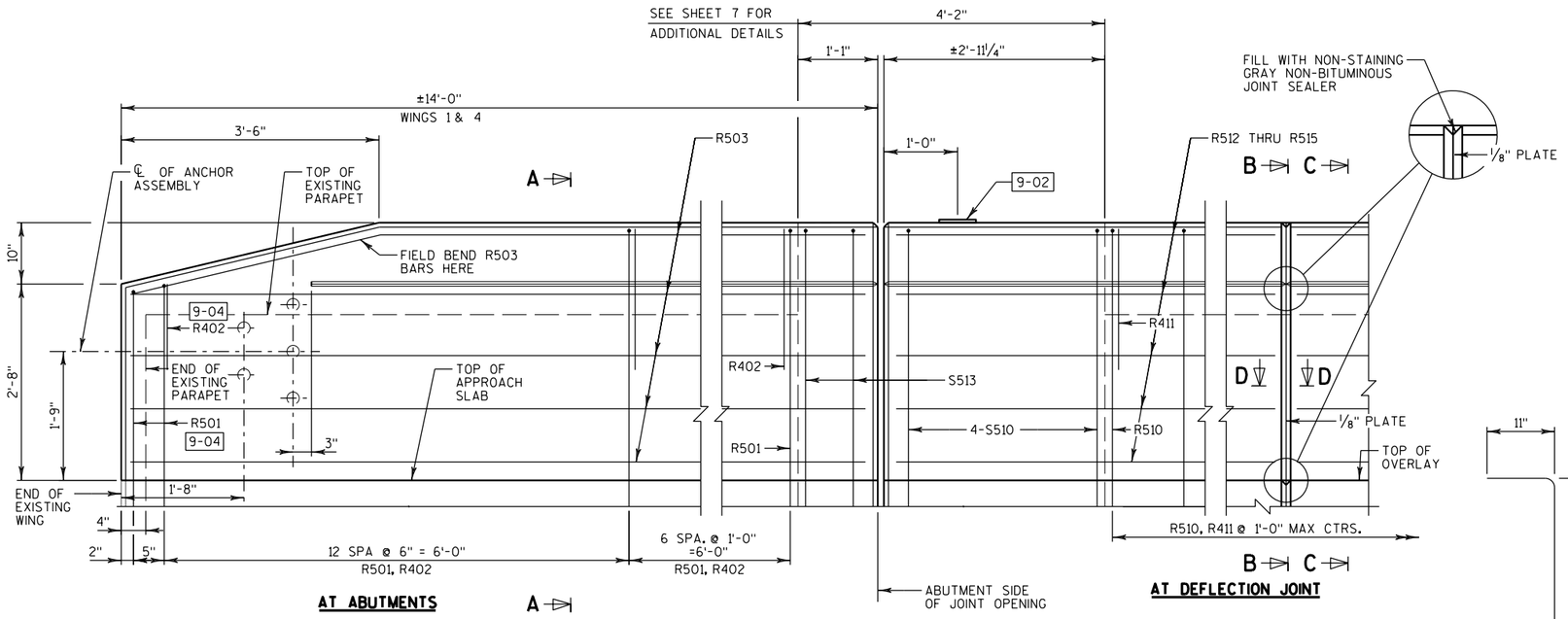

PART ELEVATION OF WEST PARAPET

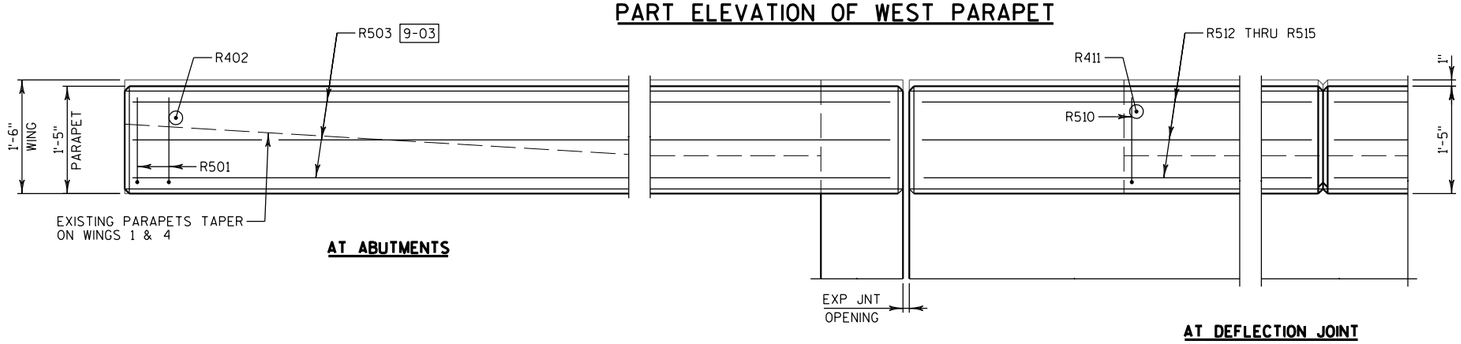

PART PLAN OF WEST PARAPET

NOTES & LEGEND

EXISTING DEFLECTION JOINT LOCATIONS SHALL BE MATCHED WITH THE PROPOSED WORK. DEFLECTION JOINTS SHALL CONSIST OF ⅛" ZINC OR PLASTIC PLATE CUT AS SHOWN IN SECTION B-B BY SHADED AREA. IF CONSTRUCTION JOINTS IN PARAPETS ARE USED AT THE DEFLECTION JOINTS, ONE SIDE OF JOINT SHALL BE COATED WITH AN APPROVED LIQUID BOND BREAKER AND PLATE SEPARATORS MAY BE OMITTED.

9-01 CONST. JOINT - STRIKE OFF AS SHOWN AND LEAVE ROUGH. FOR DECK POUR, MATCH BRIDGE X-SLOPE.

9-02 BENCH MARK CAP (WHEN SUPPLIED). SEE SHEET 1 FOR LOCATION.

9-03 FIELD CUT R503 & R512 AS REQUIRED TO MAINTAIN 2" CLEAR DISTANCE AT BLOCK EXTRUSION.

9-04 FIELD CUT R501 & R402 AS REQUIRED TO MAINTAIN 2" CLEAR DISTANCE.

FOR SECTION VIEWS A & C SEE SHEET 10.

BILL OF BARS - PARAPETS

BAR MARK	COAT	NO. REQ'D. STAGE 1	NO. REQ'D. STAGE 2	LENGTH	BENT	bar series	LOCATION
R501	X	40	0	5'-9"	X		PARAPET ON WINGS 1 & 4 - VERT.
R402	X	38	0	1'-7"			PARAPET ON WINGS 1 & 4 - VERT.
R503	X	14	0	13'-8"			PARAPET ON WINGS 1 & 4 - HORIZ.
R510	X	434	0	4'-8"	X		WEST PARAPET ON BRIDGE - VERT.
R411	X	434	0	1'-7"			WEST PARAPET ON BRIDGE - VERT.
R512	X	14	0	20'-0"			WEST PARAPET ON BRIDGE - HORIZ.
R513	X	42	0	22'-9"			WEST PARAPET ON BRIDGE - HORIZ.
R514	X	56	0	8'-5"			WEST PARAPET ON BRIDGE - HORIZ.
R515	X	56	0	22'-2"			WEST PARAPET ON BRIDGE - HORIZ.
TOTAL WEIGHT =							6,150 LBS.

THE FIRST DIGIT OF THE BAR MARK SIGNIFIES THE BAR SIZE.
DIMENSIONS IN BENDING DETAILS ARE OUT TO OUT OF BAR.

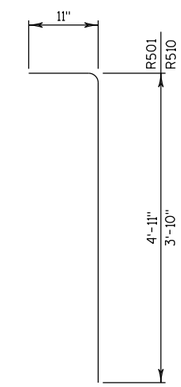

R501, R510

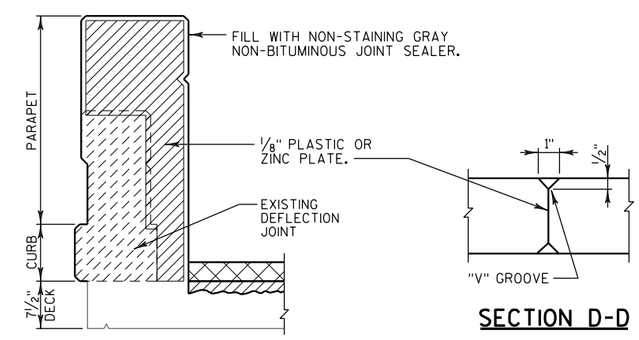

SECTION B-B
(SHOWING DEFLECTION JOINT IN PARAPET)

SECTION D-D

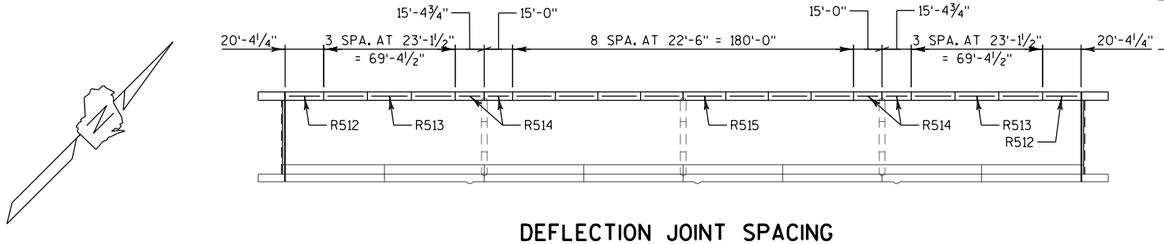

DEFLECTION JOINT SPACING

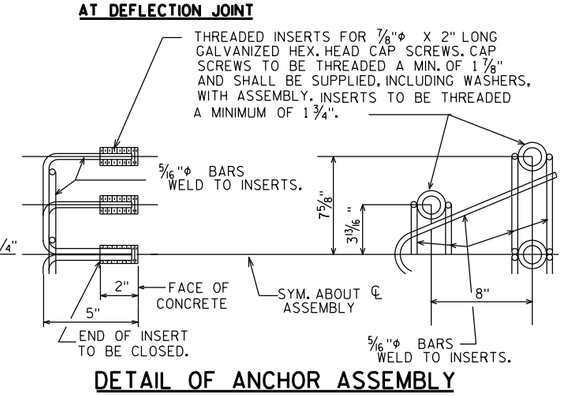

DETAIL OF ANCHOR ASSEMBLY

NOTE: HEX. HEAD CAP SCREWS & WASHERS TO BE GALVANIZED IN ACCORDANCE WITH AASHTO M232 CLASS C.

NO.	DATE	REVISION	BY

STATE OF WISCONSIN
DEPARTMENT OF TRANSPORTATION

STRUCTURE B-35-52

DRAWN BY TKB | PLANS CK'D. ETP

PARAPET DETAILS-1

SHEET 9 OF 10

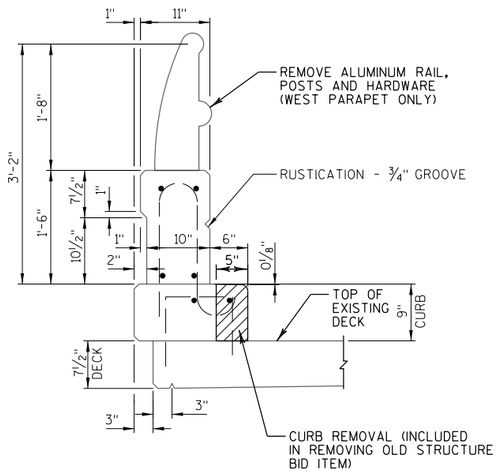

EXISTING SECTION THRU WEST PARAPET & CURB ON BRIDGE

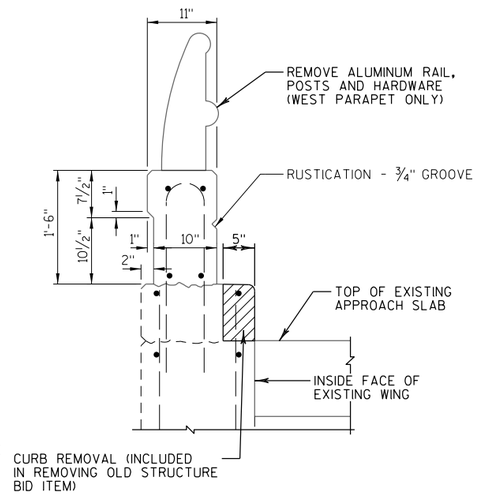

EXISTING SECTION THRU WINGS 1 & 4

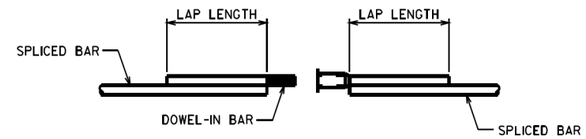

DOWEL BAR SPLICER

ONE PIECE THREADED SPLICER

SPLICER ALTERNATIVES

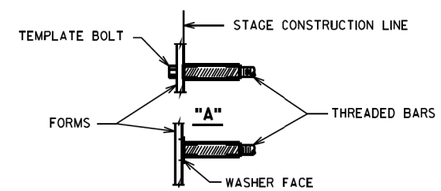

INSTALLATION AND SETTING METHODS

"A" SET SPLICER BY MEANS OF A TEMPLATE BOLT
"B" SET SPLICER BY NAILING TO WOOD FORMS OR CEMENTING TO STEEL FORMS.

LEGEND

10-01 CONCRETE MASONRY & POLYMER OVERLAY.

10-02 PREPARATION DECKS TYPE 1 AND TYPE 2 WHERE REQUIRED.

10-03 SOUND CONCRETE SURFACES TO RECEIVE "CLEANING PARAPETS SPECIAL". DETERIORATED CONCRETE SURFACES TO BE REMOVED TO SOUND CONCRETE OR TO ONE INCH BEHIND EXISTING REINFORCING STEEL, WHICHEVER DEPTH IS GREATER, UNDER THE BID ITEM "REMOVING OLD STRUCTURE". SALVAGE EXISTING REINFORCING STEEL.

10-04 ADHESIVE ANCHORS NO. 4 BARS. EMBED 5" INTO EXISTING CONCRETE. EPOXY ANCHORED.

10-05 ADHESIVE ANCHORS NO. 5 BARS. EMBED 1'-6" MIN. INTO EXISTING CONCRETE WING. INCREASE EMBEDMENT IF REQUIRED TO MAINTAIN CLEARANCE FROM TOP OF PARAPET TO TOP OF BAR. EPOXY ANCHORED.

10-06 ADHESIVE ANCHORS NO. 5 BARS. EMBED 4½" INTO EXISTING CONCRETE DECK. EPOXY ANCHORED. MAINTAIN 3" CLEARANCE FROM BOTTOM OF DRILLED HOLE TO BOTTOM OF DECK.

10-07 PIGMENTED SURFACE SEALER APPLIED TO THE FRONT FACE AND TOP OF THE PARAPET.

NOTES:

CLEAN, STRAIGHTEN AND EXTEND EXISTING BAR STEEL REINFORCEMENT A MINIMUM OF 24 BAR DIAMETERS INTO NEW CONSTRUCTION WHERE APPLICABLE. DO NOT CUT EXISTING DOWELS OR STIRRUPS THAT EXTEND INTO EXISTING WINGS OR DECK.

STEEL SPLICE (COUPLER) ASSEMBLY SHALL BE AN APPROVED TYPE AND SHALL DEVELOP IN TENSION AT LEAST 125% OF THE YIELD STRENGTH OF THE SPLICED REINFORCEMENT BARS.

DOWEL BAR SPLICERS SHALL BE OF MINIMUM 60 ksi YIELD STRENGTH, AND HAVE TENSILE STRENGTH AREA EQUAL OR GREATER THAN THAT OF THE LAPPED REINFORCEMENT BARS.

DOWEL BAR SPLICERS SHALL MEET THE DEFORMATION REQUIREMENTS FOR STANDARD ASTM DEFORMED REINFORCING BARS.

FOR DOWEL BAR SPLICERS, ALL REINFORCEMENT BARS SHALL BE LAPPED AND TIED TO THE SPLICER BARS.

SPLICER (COUPLER) ASSEMBLY IN THE SLAB SHALL BE EPOXY COATED IN ACCORDANCE WITH THE REQUIREMENTS FOR REINFORCEMENT BARS.

OTHER SYSTEMS OF SIMILAR DESIGN MAY BE SUBMITTED TO THE ENGINEER FOR APPROVAL. APPROVAL SHALL BE BASED ON CERTIFIED TEST RESULTS FROM AN APPROVED TESTING LABORATORY THAT THE PROPOSED SPLICER (COUPLER) ASSEMBLY SATISFIES THE FOLLOWING REQUIREMENT:

(1) MINIMUM CAPACITY = 1.25 X fy X AREA OF SPLICED REINFORCEMENT BAR.

WHERE fy = YIELD STRENGTH OF SPLICED REINFORCEMENT BARS.

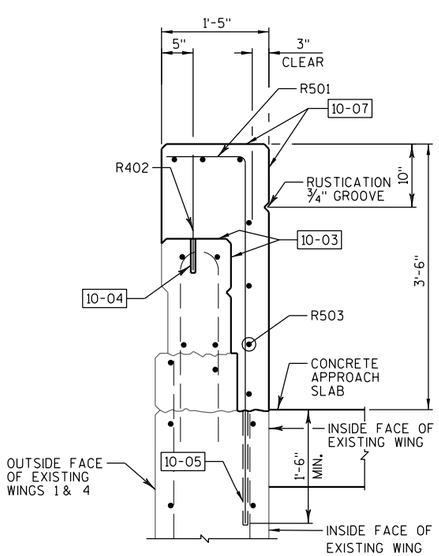

SECTION A-A

(SEE SHEET 9 FOR LOCATION)

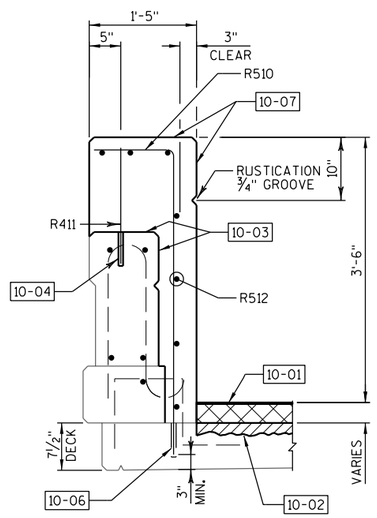

SECTION C-C

(SEE SHEET 9 FOR LOCATION)

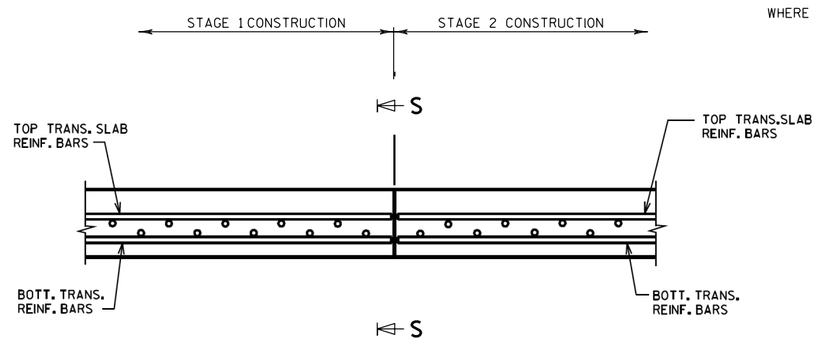

SECTION THRU SLAB

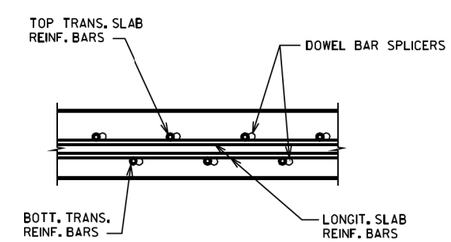

SECTION S

DOWEL BAR SPLICER LAP LENGTHS

CONCRETE UNDER BAR	BAR SIZE	4	5	6	7	8	9	10	11
12" OR LESS	f'c = 3500	1'-8"	2'-8"	3'-2"	4'-3"	5'-6"	7'-0"	8'-9"	10'-11"
	f'c = 4000	1'-8"	2'-8"	3'-2"	4'-0"	5'-2"	6'-6"	8'-3"	10'-2"
MORE THAN 12"	f'c = 3500	2'-3"	2'-11"	3'-6"	4'-8"	6'-1"	7'-10"	9'-10"	12'-1"
	f'c = 4000	2'-3"	2'-11"	3'-6"	4'-5"	5'-8"	7'-4"	9'-2"	11'-4"

BAR LENGTH COMPUTED TO ℄ LONGIT. JOINT AND SHALL BE MODIFIED IF REQ'D. TO BAR COUPLER MANUFACTURER RECOMMENDATIONS. PAY BASED ON BARS AS DETAILED.

NO.	DATE	REVISION	BY

STATE OF WISCONSIN
DEPARTMENT OF TRANSPORTATION

STRUCTURE B-35-52

DRAWN BY TKB | PLANS CK'D. ETP

PARAPET DETAILS-2

SHEET 10 OF 10

Wisconsin Department of Transportation

Dedicated people creating transportation solutions through innovation and exceptional service.

http://www.dot.wisconsin.gov