MAD

MAY 2019

PROJECT ID: 5271-08-73; 6075-00-73

WITH:

COUNTY: COLUMBIA

09

ORDER OF SHEETS

TOTAL SHEETS = 114

STATE OF WISCONSIN
DEPARTMENT OF TRANSPORTATION

PLAN OF PROPOSED IMPROVEMENT

STATE PROJECT	FEDERAL PROJECT	
	PROJECT	CONTRACT
5271-08-73	WISC 2019279	1
6075-00-73	WISC 2019283	1

SAUK CITY - IH 39

CLARK ST TO IH 39

STH 60

COLUMBIA COUNTY

STATE PROJECT NUMBER

5271-08-73

IH 39 - ARLINGTON

IH 39 TO BULLEN ROAD

STH 60

COLUMBIA COUNTY

STATE PROJECT NUMBER

6075-00-73

N

DESIGN DESIGNATION

		5271-08-73	6075-00-73
A.A.D.T	=	7900 (2014)	4200 (2011)
A.A.D.T	=	9500 (2042)	5100 (2042)
D.H.V.	=	13.4	16.9
D.D.	=	60/40	60/40
T.	=	15.9%	20.1%
DESIGN SPEED	=	60 MPH	60 MPH
ESALS	=	2,400,000	2,500,000

END PROJECT 5271-08-73
STA 218+00
X=537,712.86
Y=318,887.24

BEGIN PROJECT 5271-08-73
STA 22+05
X=520,627.45
Y=312,937.36

BEGIN PROJECT 6075-00-73
STA 263+00
X=541,838.17
Y=320,542.51

END PROJECT 6075-00-73
STA 425+35
X=558,072.76
Y=320,504.69

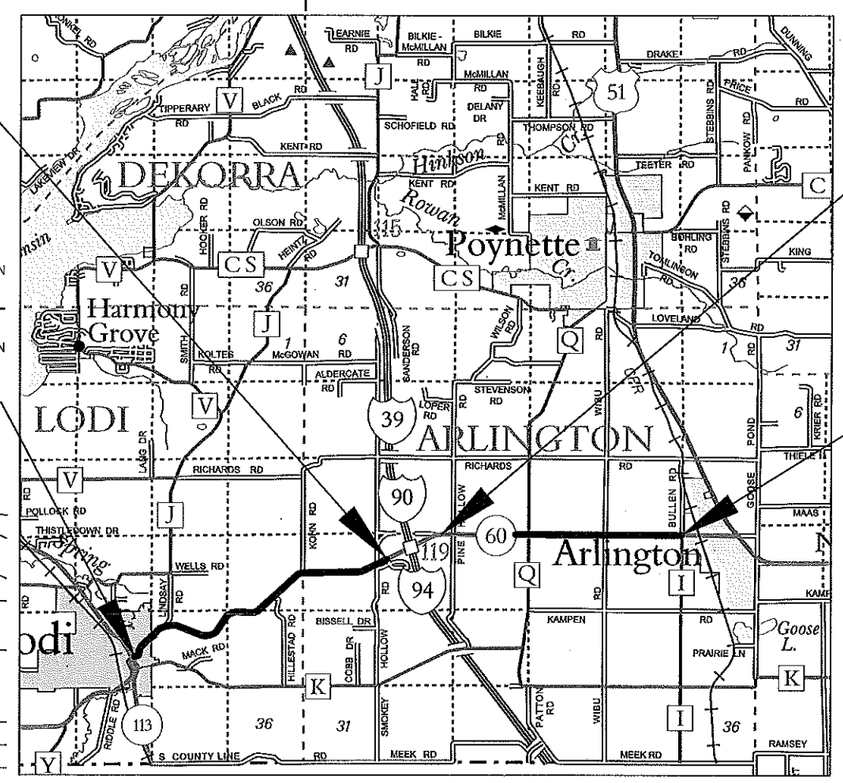

LAYOUT

SCALE 0 2 MI

TOTAL NET LENGTH OF CENTERLINE = 3.711 MI, 3.075 MI

HORIZONTAL POSITIONS SHOWN ON THIS PLAN ARE WISCONSIN COUNTY COORDINATES, COLUMBIA COUNTY, NAD83 (2011), IN U.S. SURVEY FEET. VALUES ARE GRID COORDINATES, GRID BEARINGS, AND GRID DISTANCES. GRID DISTANCES MAY BE USED AS GROUND DISTANCES.

ELEVATIONS SHOWN ON THIS PLAN ARE REFERENCED TO THE NATIONAL GEODETIC VERTICAL DATUM OF NAVD 88 (2012).

CONVENTIONAL SYMBOLS

PLAN

- CORPORATE LIMITS
- PROPERTY LINE
- LOT LINE
- LIMITED HIGHWAY EASEMENT
- EXISTING RIGHT OF WAY
- PROPOSED OR NEW R/W LINE
- SLOPE INTERCEPT
- REFERENCE LINE (300'EB)
- EXISTING CULVERT
- PROPOSED CULVERT (Box or Pipe)
- COMBUSTIBLE FLUIDS (CAUTION)
- MARSH AREA
- WOODED OR SHRUB AREA

PROFILE

- GRADE LINE
- ORIGINAL GROUND
- MARSH OR ROCK PROFILE (To be noted as such) (ROCK)
- SPECIAL DITCH (LABEL)
- GRADE ELEVATION (95.36)
- CULVERT (Profile View)

UTILITIES

- ELECTRIC (E)
- FIBER OPTIC (FO)
- GAS (G)
- SANITARY SEWER (SAN)
- STORM SEWER (SS)
- TELEPHONE (T)
- WATER (W)
- UTILITY PEDESTAL
- POWER POLE
- TELEPHONE POLE

STATE OF WISCONSIN
DEPARTMENT OF TRANSPORTATION

PREPARED BY

Surveyor	
Designer	LORRAINE BETZEL
Project Manager	CHRIS HAZARD
Regional Examiner	SW REGION
Regional Supervisor	KURT JOHNSON

APPROVED FOR THE DEPARTMENT

DATE: 1/25/19 (signature)

E

FILE NAME : N:\PDS\C3D\52710803\SHEETSPLAN\010101_TI.DWG PLOT DATE : 1/24/2019 12:05 PM PLOT BY : BETZEL, LORRAINE L PLOT NAME :

2

GENERAL NOTES

THE LOCATIONS OF EXISTING AND PROPOSED UTILITY INSTALLATIONS AS SHOWN ON THE PLANS ARE APPROXIMATE. THERE MAY BE OTHER UTILITY INSTALLATIONS WITHIN THE PROJECT AREA THAT ARE NOT SHOWN. THE CONTRACTOR SHALL COORDINATE HIS CONSTRUCTION ACTIVITIES WITH A CALL TO DIGGERS HOTLINE AND/OR A DIRECT CALL TO THE UTILITIES THAT HAVE FACILITIES IN THE AREA.

FOR PROJECT 6075-00-73, THERE ARE UTILITY FACILITIES WITHIN THE PROJECT AREA THAT ARE NOT SHOWN ON THE PLANS. THE CONTRACTOR SHALL COORDINATE HIS CONSTRUCTION ACTIVITIES WITH A CALL TO DIGGERS HOTLINE AND/OR A DIRECT CALL TO THE UTILITIES THAT HAVE FACILITIES IN THE AREA.

EXACT EROSION CONTROL DEVICE LOCATIONS WILL BE DETERMINED BY THE ENGINEER. EROSION CONTROL DEVICES SHALL BE PLACED IN SEQUENCE WITH CONSTRUCTION OPERATIONS OR AS DETERMINED BY THE ENGINEER.

NO TREES OR SHRUBS ARE TO BE REMOVED WITHOUT THE APPROVAL OF THE ENGINEER IN THE FIELD.

HMA PAVEMENT WEIGHT CALCULATIONS ARE BASED ON 112 LB/SY/IN.

THE 4" TYPE 4 MT 58-28 S HMA PAVEMENT IS TO BE PLACED USING A 2" LOWER LAYER AND A 2" UPPER LAYER. APPLY TACK COAT BETWEEN LAYERS OF PAVEMENT AND TO MILLED SURFACES. THE APPLICATION RATE IS 0.07 GALLONS PER SQUARE YARD BETWEEN THE MILLED SURFACE, 0.05 GALLONS PER SQUARE YARD BETWEEN NEW HMA PAVEMENT LAYERS, OR AS DIRECTED BY THE ENGINEER.

THE LOWER LAYER OF HMA PAVEMENT IS TO BE PLACED ON THE SAME DAY OF MILLING TO MINIMIZE DAMAGE TO THE REMAINING PAVEMENT.

THE CONTRACTOR'S PAVING OPERATIONS SHALL BE CONSISTENT WITH THE PLAN TYPICAL SECTIONS AND CONSTRUCTED TO PREVENT HMA LONGITUDINAL JOINTS FROM BEING LOCATED WITHIN A DRIVING, TURNING, PASSING, OR PARKING LANE.

PAVING LIMITS AT INTERSECTIONS AND AT THE PROJECT BEGINNING AND END ARE TO BE DETERMINED IN THE FIELD BY THE ENGINEER.

SAWCUTS, AS SHOWN ON THE PLANS, ARE SUGGESTED LOCATIONS AND MAY BE ADJUSTED AT THE DISCRETION OF THE ENGINEER TO BETTER SUIT FIELD CONDITIONS.

THE LOCATION OF STOP LINES SHALL BE DETERMINED IN THE FIELD BY THE ENGINEER.

REMOVE ANY NOTCHED WEDGE LONGITUDINAL JOINTS (MICHIGAN JOINT) USED DURING CONSTRUCTION PRIOR TO PLACING THE ABUTTING PAVEMENT.

DNR CONTACT
ERIC HEGGELUND
3911 FISH HATCHERY RD
FITCHBURG, WI 53711
(608) 275-3301
Eric.Heggelund@wisconsin.gov

WISDOT CONTACT
CHRIS HAZARD
WISDOT PROJECT MANAGER
2101 WRIGHT STREET
MADISON, WI 53704
(608)245-2652
Christopher.Hazard@dot.wi.gov

DESIGN CONTACT
LORRAINE BETZEL
DESIGN ENGINEER
2101 WRIGHT STREET
MADISON, WI 53704
(608) 246-3279
Lorraine.Betzel@dot.wi.gov

5271-08-73

UTILITY/MUNICIPALITY	CONTACT/ADDRESS	UTILITY TYPE
Alliant Energy	Michael Brolin 4902 N Biltmore Lane Madison, WI 53713 (608) 458-4871 michaelbrolin@alliantenergy.com	Electricity
Frontier Communications	Russ Ryan 107 Pleasant View Dr Plymouth, WI 53073 (920) 583-3275 russell.w.ryan@ftr.com	Communication
Madison Gas And Electric Company	Jane Rossing PO Box 1231 Madison, WI 53701-1231 (608) 252-7099 grossing@mge.com	Gas/Petroleum Electricity
Lodi Mun Light And Water Utility	Kennan Buhr 130 South Main Lodi, WI 53555 (608)592-3246 kbuhr@wppienergy.org	Sewer/Water

LIST OF STANDARD ABBREVIATIONS

AADT	ANNUAL AVERAGE DAILY TRAFFIC	Y	NORTH GRD COORDINATE
ASPH	ASPHALT	NO	NUMBER
AVG	AVERAGE	PAVT	PAVEMENT
BL	BASE LINE	PERM	PERMANENT
BM	BENCH MARK	PT	POINT
C/L	CENTER LINE	PE	PRIVATE ENTRANCE
CE	COMERCIAL ENTRANCE	PROJ	PROJECT
CO	COUNTY	PL	PROPERTY LINE
CTH	COUNTY TRUNK HIGHWAY	R	RADIUS
CY	CUBIC YARD	R/L	REFERENCE LINE
CULV	CULVERT	REQD	REQUIRED
DHV	DESIGN HOUR VOLUME	RT	RIGHT
DIA	DIAMETER	R/W	RIGHT-OF-WAY
E	EAST	RD	ROAD
X	EAST GRD COORDINATE	RDWY	ROADWAY
ELEC	ELECTRIC	SALV	SALVAGED
ELEV	ELEVATION	SAN	SANITARY SEWER
ESALS	EQUIVALENT SINGLE AXLE LOADS	SEC	SECTION
EBS	EXCAVATION BELOW SUBGRADE	SHLDR	SHOULDER
EXIST	EXISTING	SPECS	SPECIFICATIONS
FE	FIELD ENTRANCE	SQ	SQUARE
FT	FOOT	SF	SQUARE FEET
CWT	HUNDREDWEIGHT	SY	SQUARE YARD
IN DIA	INCH DIAMETER	SDD	STANDARD DETAILS DRAWINGS
INL	INLET	STH	STATE TRUNK HIGHWAYS
ID	INSIDE DIAMETER	STA	STATION
INV	INVERT	SS	STORM SEWER
IP	IRON PIPE	TEL	TELEPHONE
JT	JOINT	TEMP	TEMPORARY
LT	LEFT	T	TON
L	LENGTH OF CURVE	T	TRUCKS (PERCENT OF)
LF	LINEAR FOOT	TYP	TYPICAL
LS	LUMP SUM	UG	UNDERGROUND
MH	MANHOLE	VAR	VARIABLE
MB	MESSAGE BOARD	WV	WATER VALVE
ML	MATCH LINE	W	WEST
NC	NORMAL CROWN	WB	WEST BOUND
N	NORTH	YD	YARD

6075-00-73

UTILITY/MUNICIPALITY	CONTACT/ADDRESS	UTILITY TYPE
Alliant Energy	Michael Brolin 4902 N Biltmore Lane Madison, WI 53713 (608) 458-4871 michaelbrolin@alliantenergy.com	Electricity Gas/Petroleum
AT&T Legacy	Kenneth Colwell 866 Rock Creek Rd Plano, IL 60545 (210) 246-8099 kc1298@att.com	Communication
ATC Management, Inc.	Anthony Marciniak W234 N2000 Ridgeview Parkway Ct PO Box 47 Waukesha, WI 53187-0047 (262) 506-6814 amarciniak@atcllc.com	Electricity-transmission
CenturyLink	Kevin Zickert 224 Industrial Dr North Prairie, WI 53153 (262) 392-5200 kevin.zickert@centurylink.com	Communication
Charter Communications	Brandon Storm 2701 Daniels St Madison, WI 53718 (608)274-3822 brandon.storm@charter.com	Communication
Frontier Communications	Russ Ryan 107 Pleasant View Dr Plymouth, WI 53073 (920)583-3275 russell.w.ryan@ftr.com	Communication

DIGGERS HOTLINE
Dial 811 or (800)242-8511
www.DiggersHotline.com

2

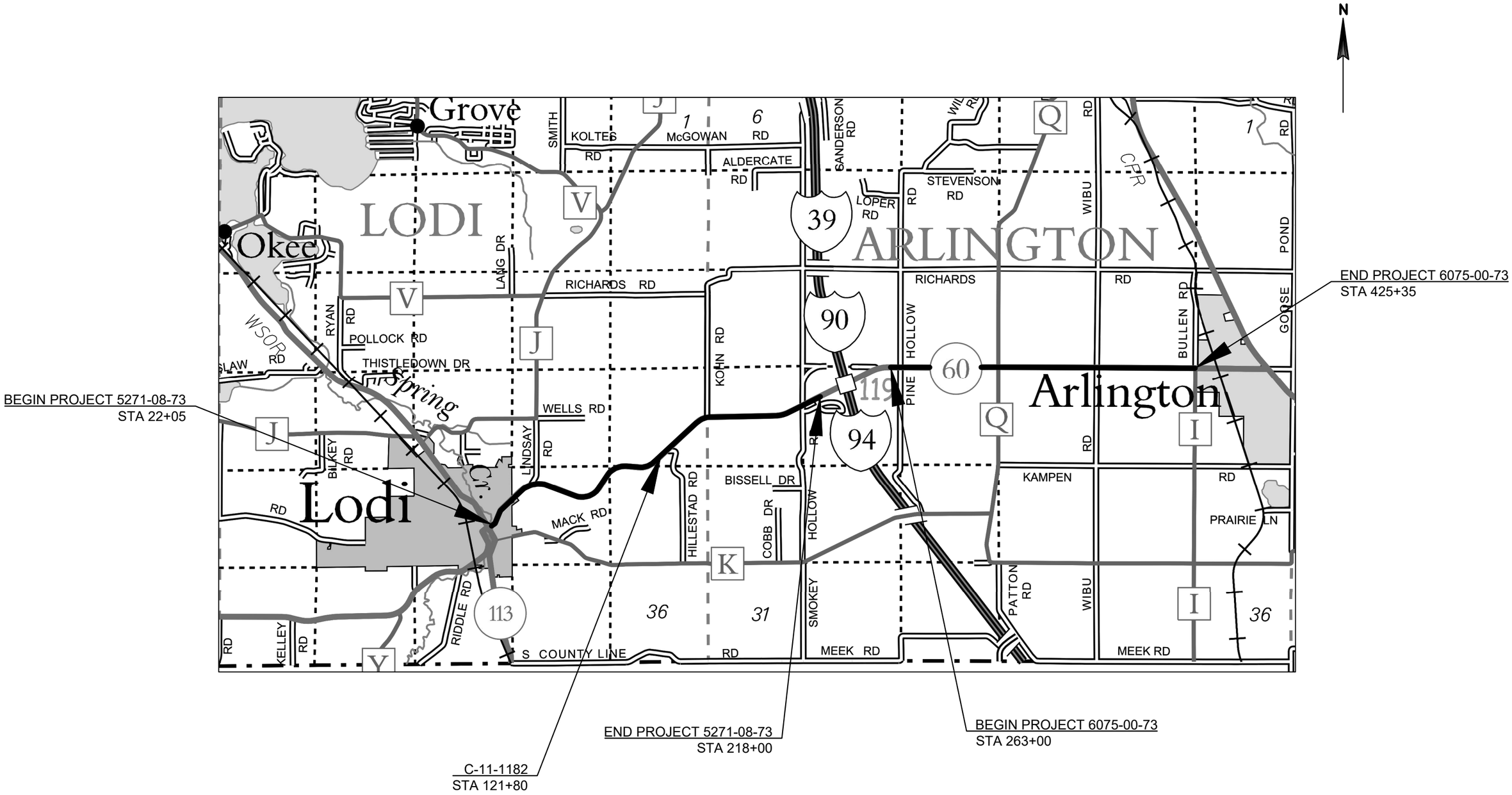

PROJECT NO: 5271-08-73 & 6075-00-73	HWY: STH 60	COUNTY: COLUMBIA	PROJECT OVERVIEW	SHEET 3	E

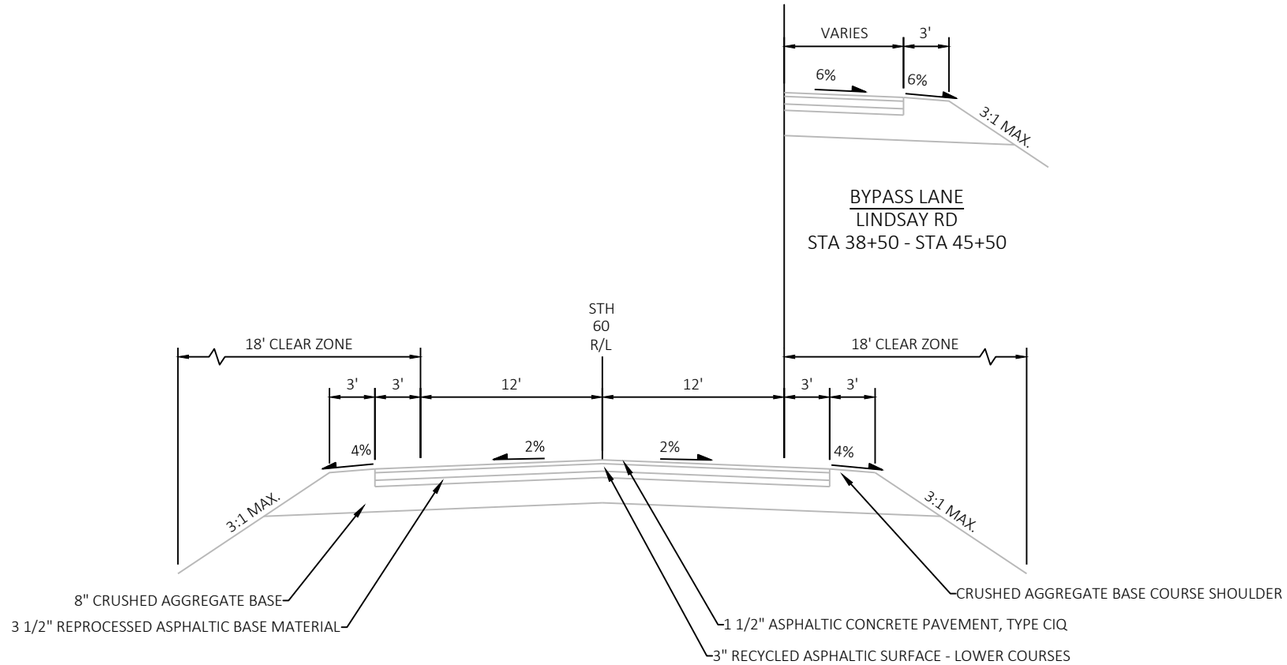

EXISTING TYPICAL SECTION
CLARK ST - KOHN RD
STA 20+70 - STA 120+00
STA 126+00 - STA 155+00

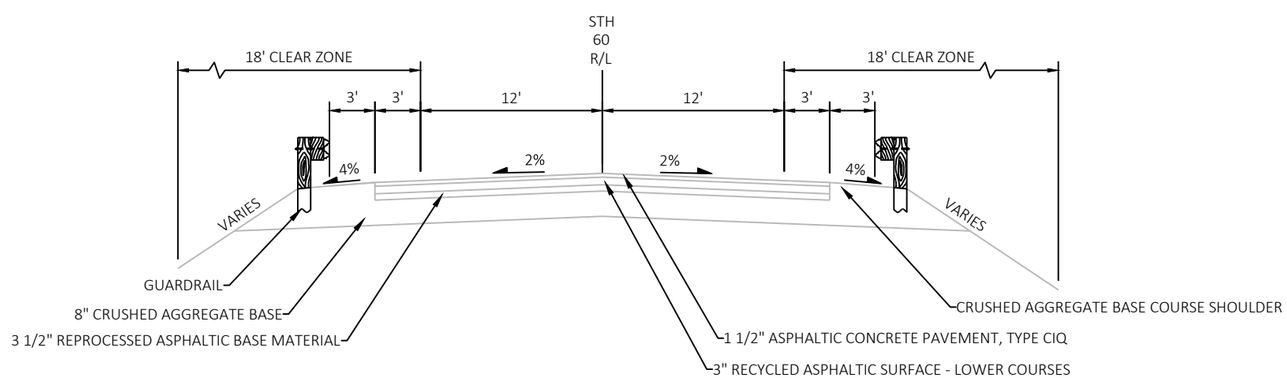

EXISTING TYPICAL SECTION
STA 120+00 - STA 126+00

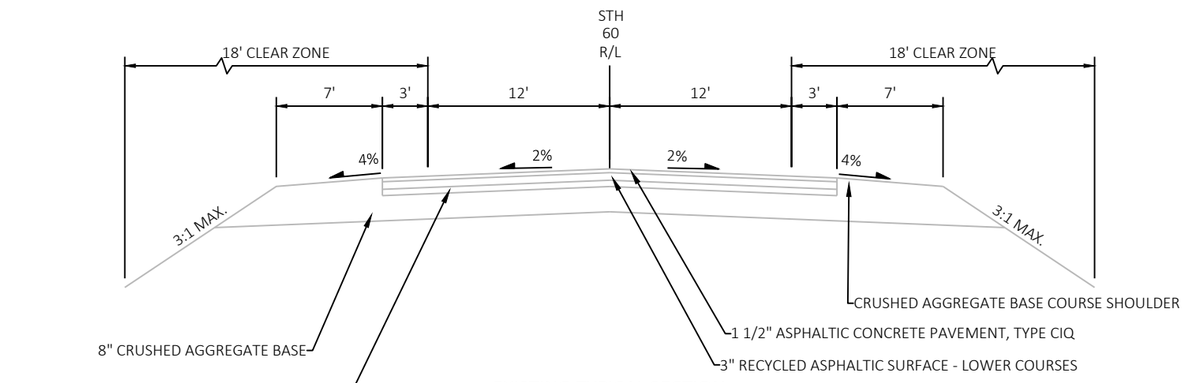

EXISTING TYPICAL SECTION
KOHN RD - IH 39/90/94
STA 155+00 - STA 218+00

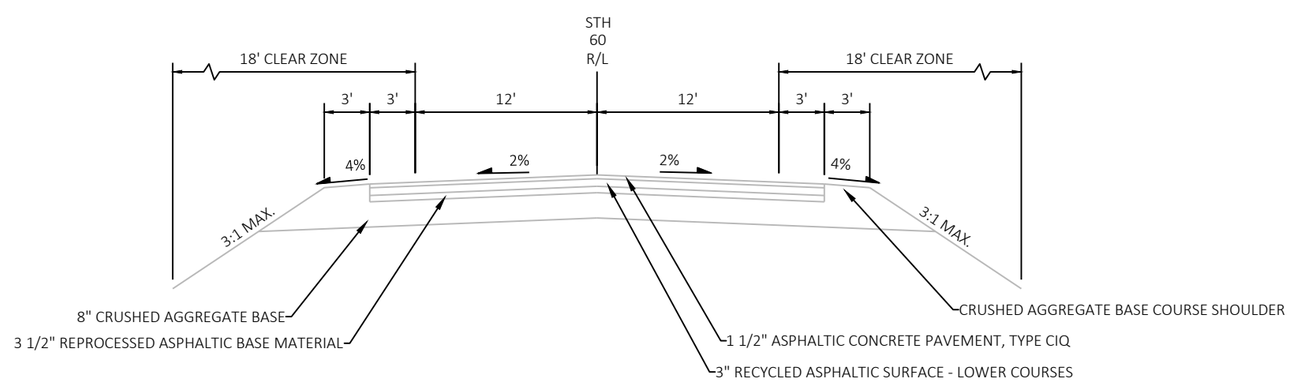

EXISTING TYPICAL SECTION
IH 39/90/94 - BULLEN RD
STA 263+00 - STA 425+35

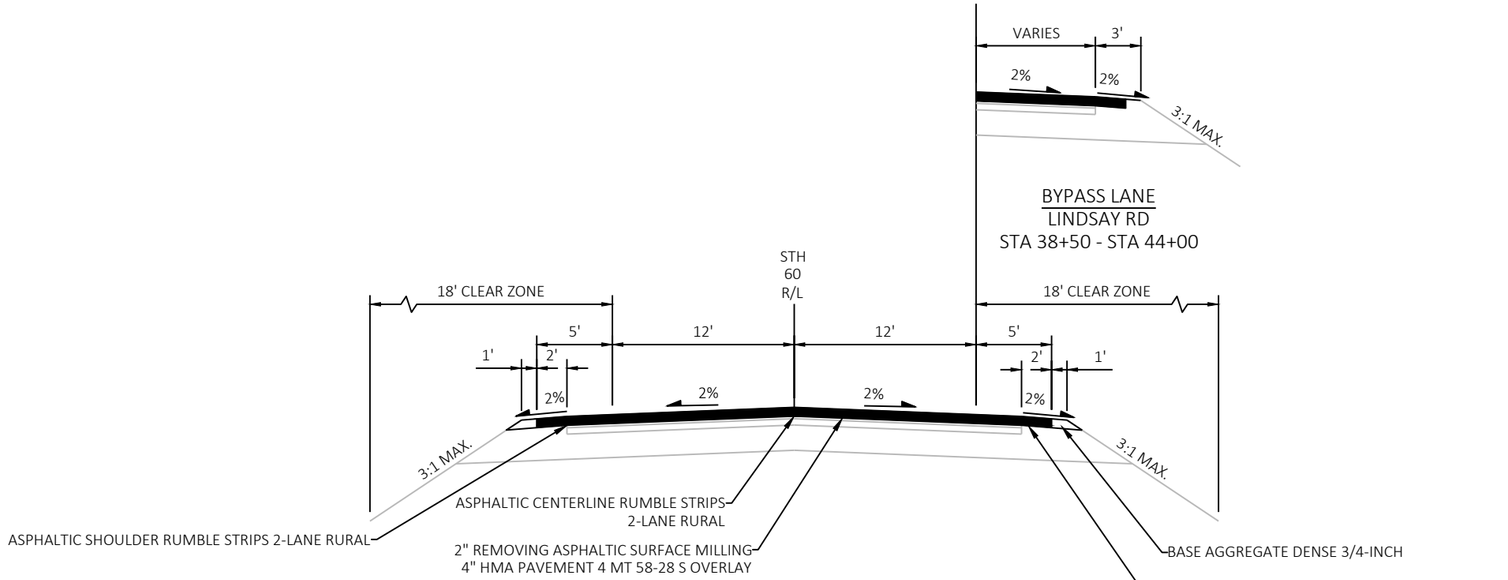

PROPOSED TYPICAL SECTION
CLARK ST - KOHN RD
STA 22+05 - STA 44+00
STA 60+25 - STA 120+00
STA 126+00 - STA 155+00

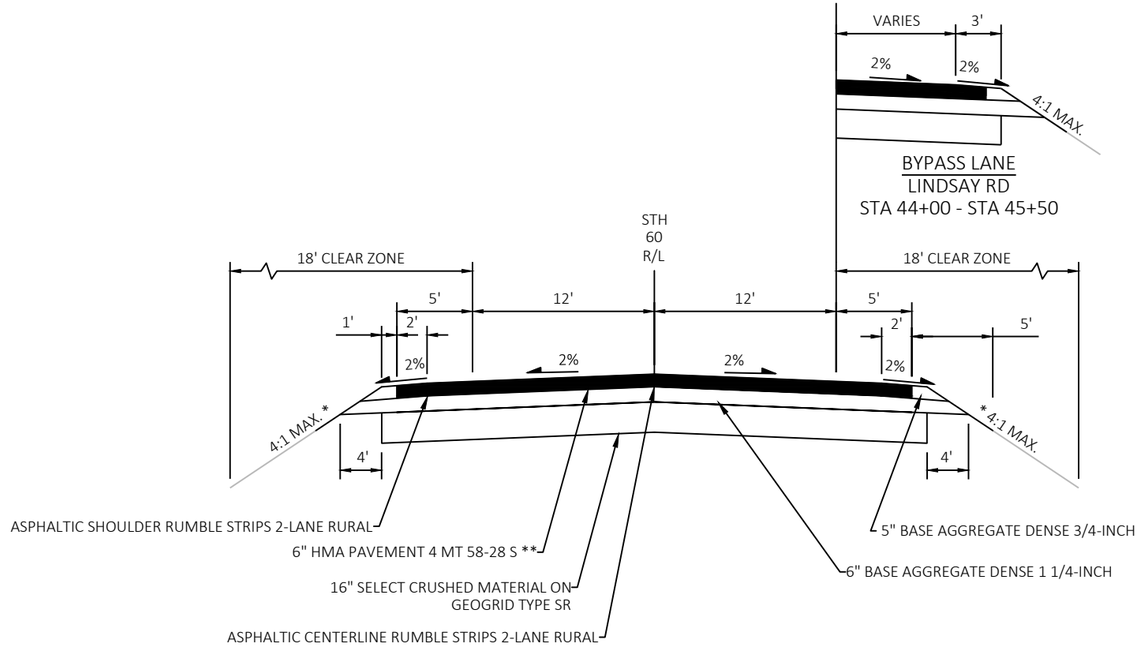

PROPOSED TYPICAL SECTION
ROADWAY RECONSTRUCTION
STA 44+00 - STA 60+25

*SEEDING MIXTURE NO. 20, FERTILIZER
TYPE B, EROSION MAT CLASS I TYPE B

** 2" LIFT PLACED PRIOR TO 4" OVERLAY

2

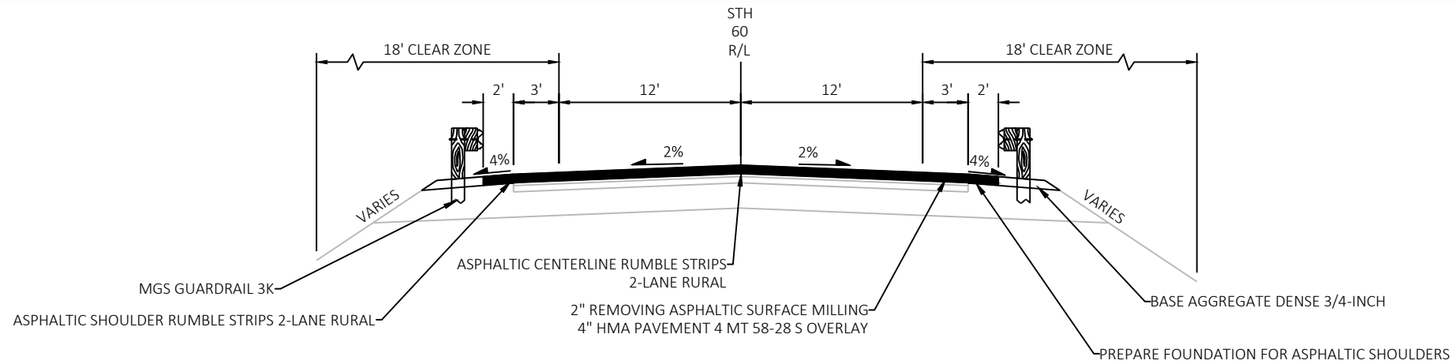

PROPOSED TYPICAL SECTION
STA 120+00 - STA 126+00

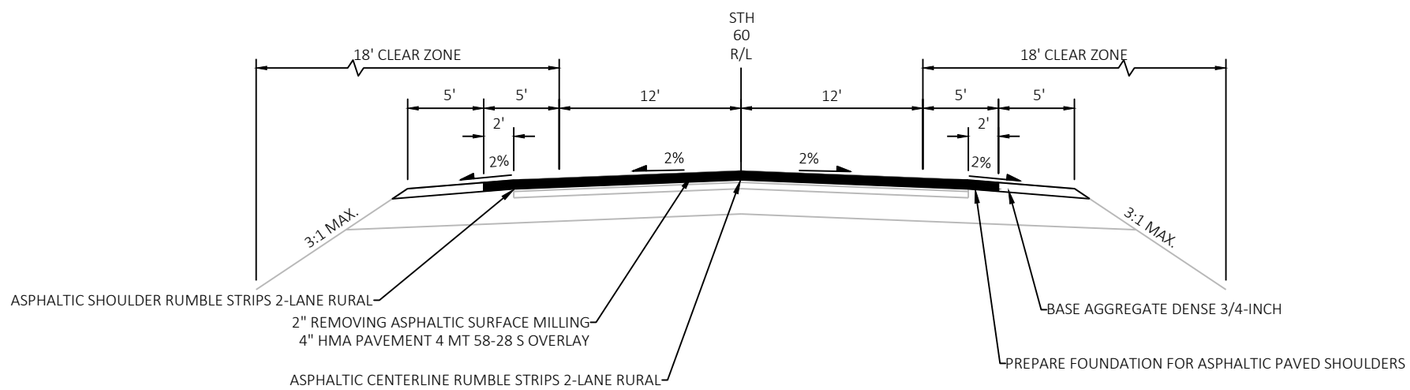

PROPOSED TYPICAL SECTION
KOHN RD - IH 39/90/94
STA 155+00 - STA 218+00

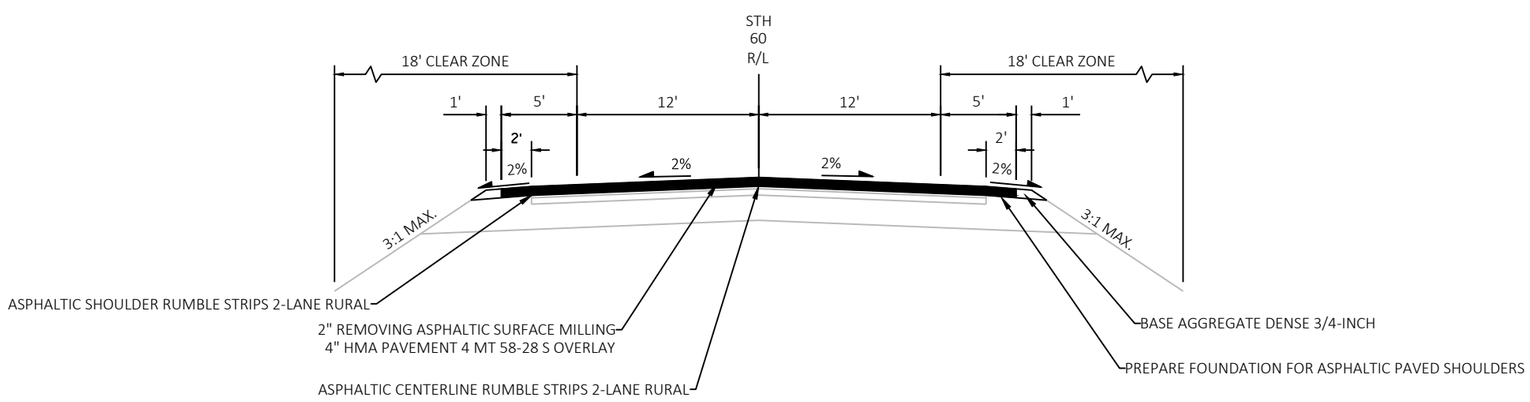

PROPOSED TYPICAL SECTION
IH 39/90/94 - BULLEN RD
STA 263+00 - STA 425+35

PROJECT NO: 5271-08-73 & 6075-00-73	HWY: STH 60	COUNTY: COLUMBIA	TYPICAL SECTIONS	SHEET 7	E

2

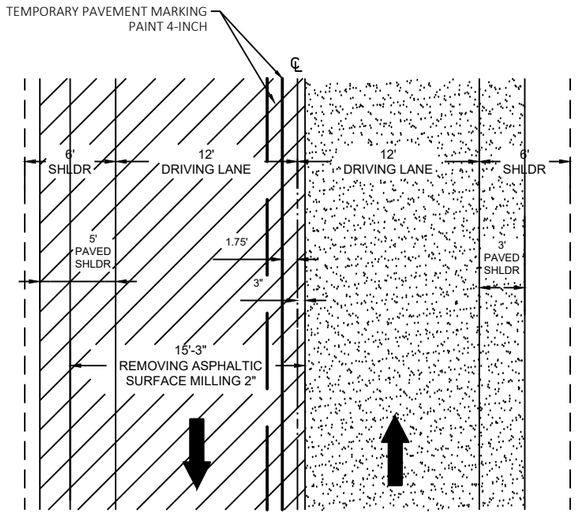

PLAN VIEW

FIRST PASS WB 2" HMA PAVEMENT 4 MT 58-28 S PAVING LIMITS

EXISTING ASPHALT SURFACE TO REMAIN

*LOCATING NO PASSING ZONES REQUIRED
PRIOR TO TEMPORARY PAVEMENT
MARKING PAINT 4-INCH PLACEMENT

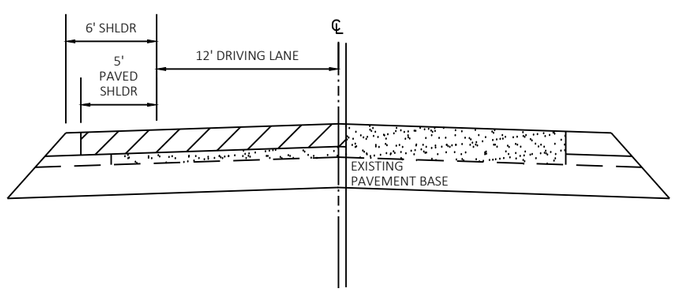

CROSS SECTION VIEW

MILLING & PAVING
FIRST PASS WB DETAIL

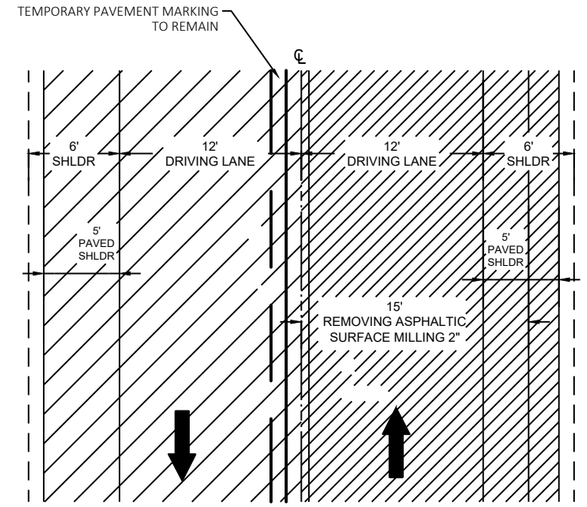

PLAN VIEW

FIRST PASS WB 2" HMA PAVEMENT 4 MT 58-28 S PAVING LIMITS

EXISTING ASPHALT SURFACE TO REMAIN

FIRST PASS EB 2" HMA PAVEMENT 4 MT 58-28 S PAVING LIMITS

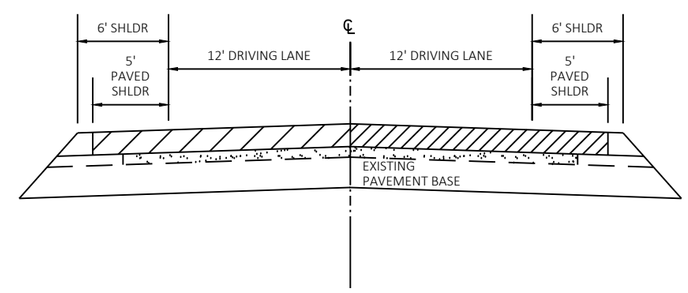

CROSS SECTION VIEW

MILLING & PAVING
FIRST PASS EB DETAIL

2

PROJECT NO: 5271-08-73 & 6075-00-73	HWY: STH 60	COUNTY: COLUMBIA	CONSTRUCTION DETAILS	SHEET 8	E

2

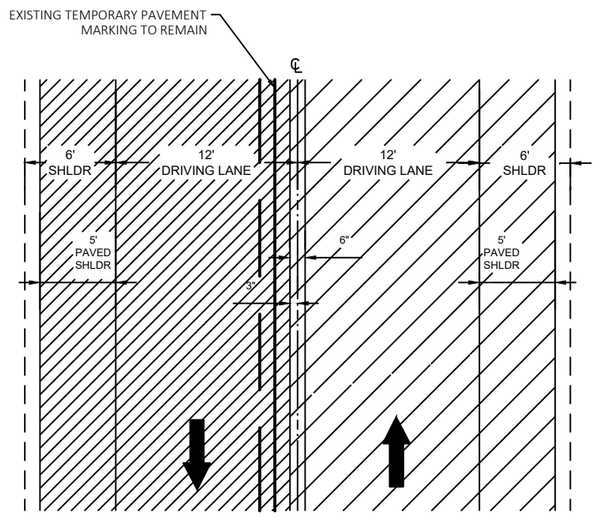

PLAN VIEW

SECOND PASS EB 2" HMA PAVEMENT 4 MT 58-28 S PAVING LIMITS

FIRST PASS 2" HMA PAVEMENT 4 MT 58-28 S PAVING LIMITS

EXISTING ASPHALT SURFACE TO REMAIN

*SEE SDD 15 D 39-2 "TRAFFIC CONTROL, DROP-OFF SIGNING"

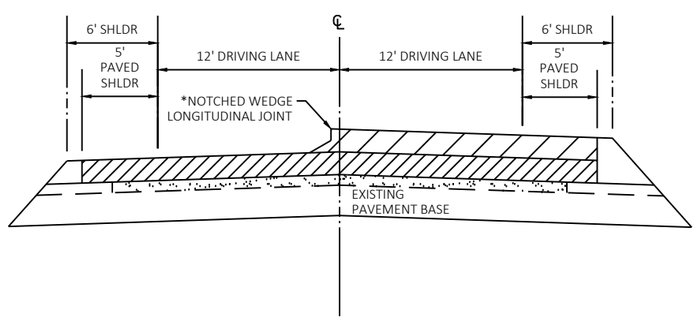

CROSS SECTION VIEW

MILLING & PAVING SECOND PASS EB DETAIL

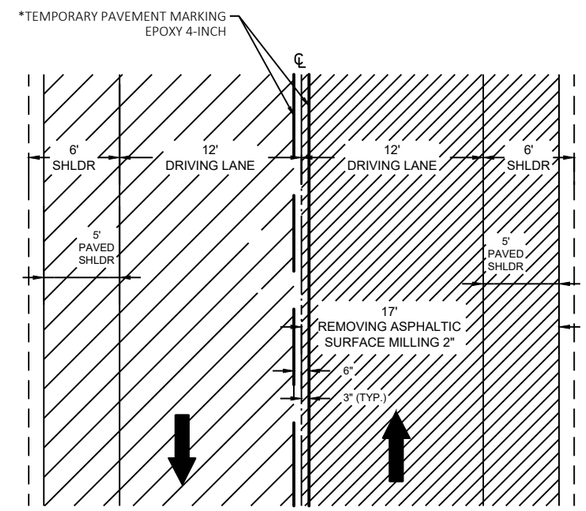

PLAN VIEW

SECOND PASS WB 2" HMA PAVEMENT 4 MT 58-28 S PAVING LIMITS

SECOND PASS EB 2" HMA PAVEMENT 4 MT 58-28 S PAVING LIMITS

FIRST PASS 2" HMA PAVEMENT 4 MT 58-28 S PAVING LIMITS

EXISTING ASPHALT SURFACE TO REMAIN

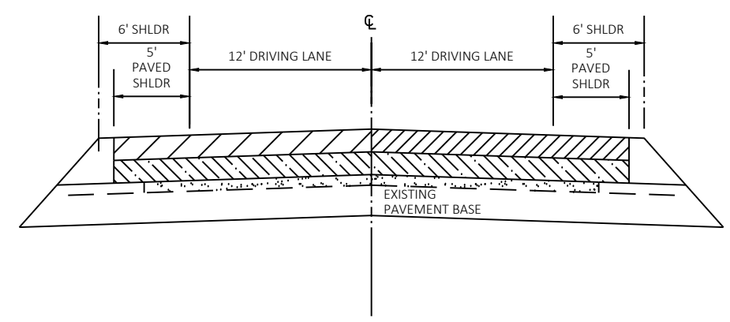

CROSS SECTION VIEW

MILLING & PAVING SECOND PASS WB DETAIL

2

PROJECT NO: 5271-08-73 & 6075-00-73	HWY: STH 60	COUNTY: COLUMBIA	CONSTRUCTION DETAILS	SHEET 9	E

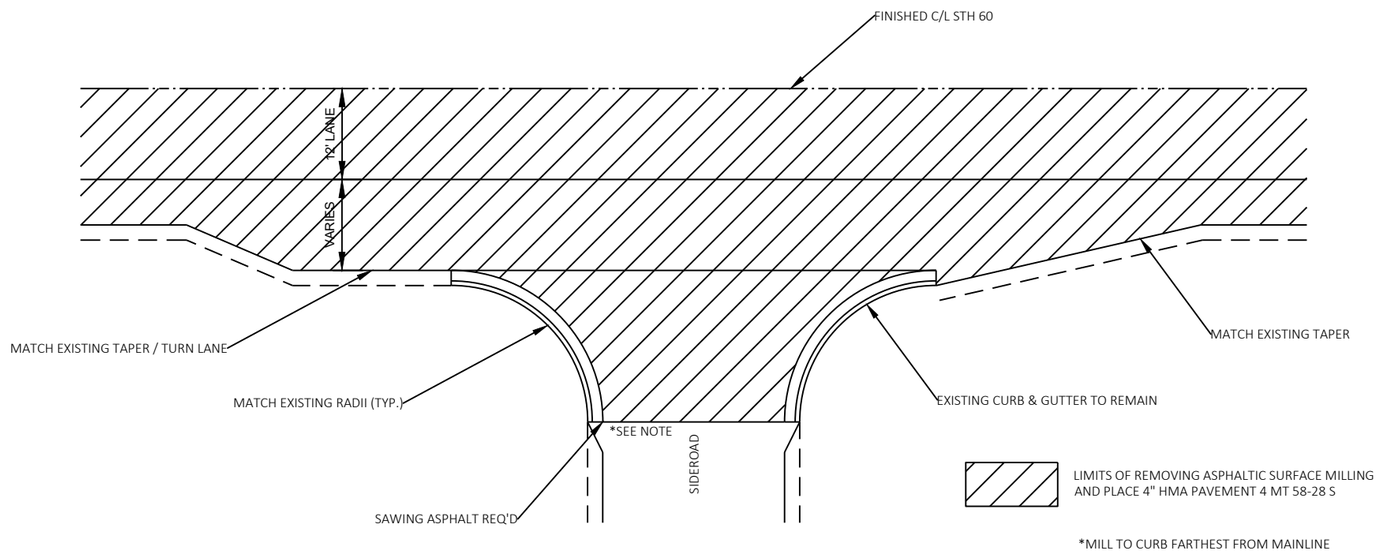

TYPICAL SIDEROAD DETAIL WITH CURB & GUTTER

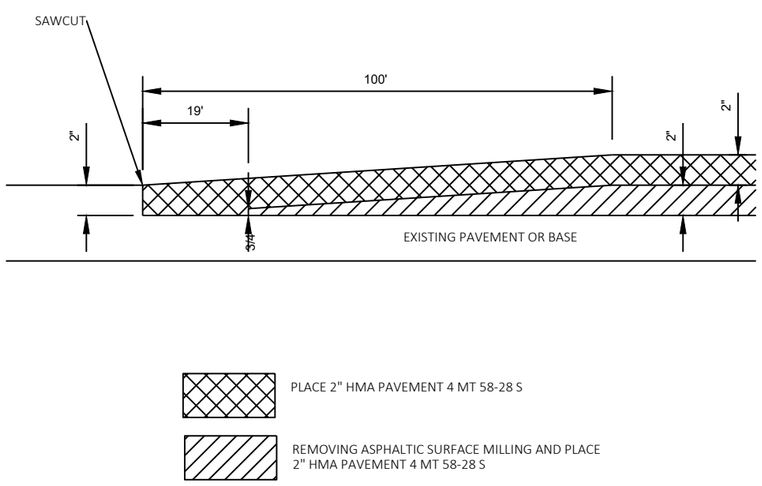

MAINLINE BUTT JOINT

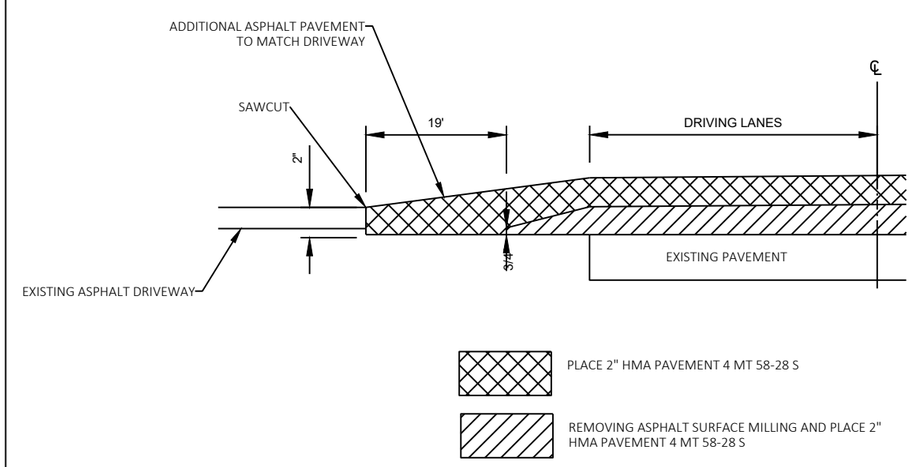

RURAL DRIVEWAY BUTT JOINT

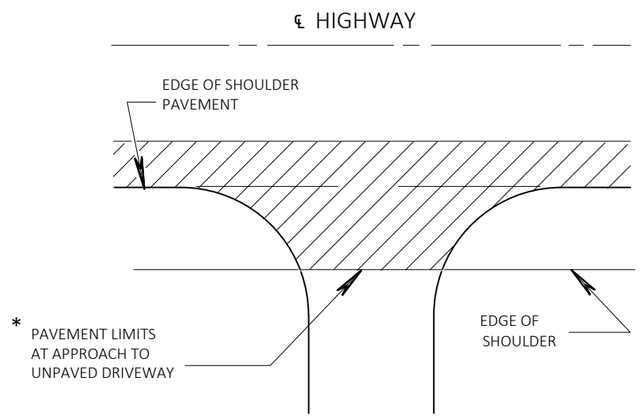

*WHERE DRIVEWAY IS PAVED, APPROACH PAVEMENT SHOULD BE EXTENDED TO MATCH DRIVEWAY PAVEMENT.

PLAN VIEW

RURAL DRIVEWAY INTERSECTION DETAIL

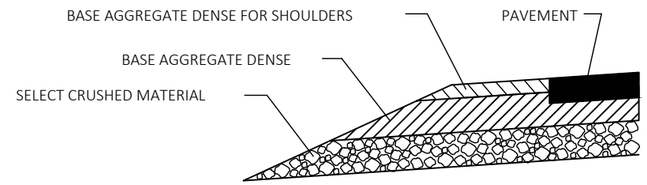

SECTION A-A

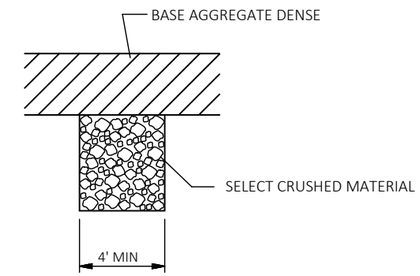

SECTION B-B

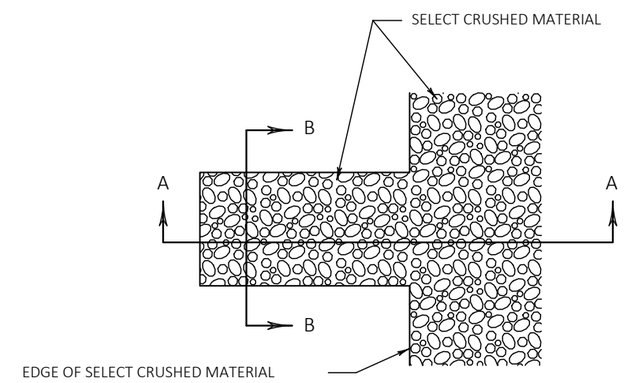

DETAIL FOR FRENCH DRAINS

DRAINS ARE TO BE CONSTRUCTED AT LEAST EVERY 250'
AND AT EACH SAG VERTICLE CURVE IN THE PROFILE.

(LOCATIONS TO BE DETERMINED IN THE FIELD BY THE ENGINEER)

EXCAVATION REQUIRED TO CONSTRUCT FRENCH DRAINS SHALL
BE CONSIDERED INCIDENTAL TO THE ITEM SELECT CRUSHED MATERIAL.

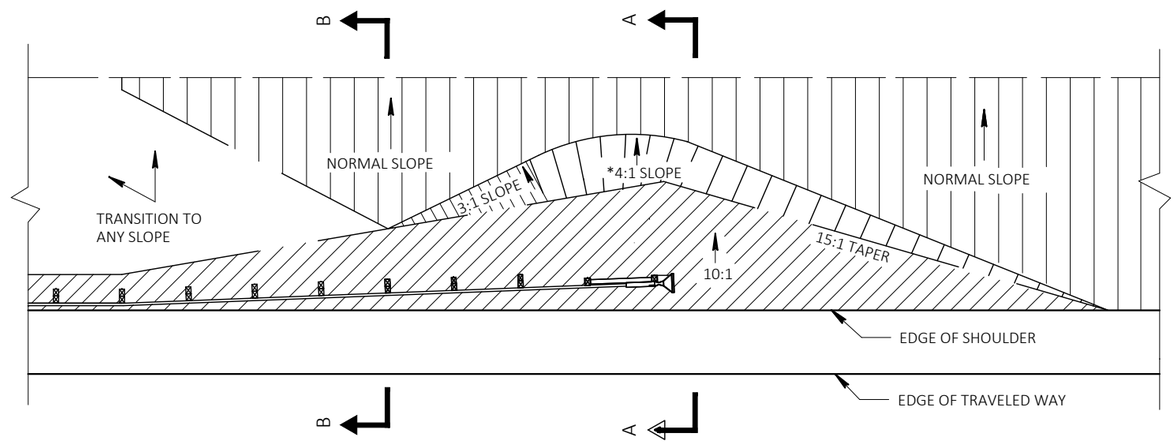

PLAN VIEW

*A 3:1 MAXIMUM SLOPE MAY BE USED FOR INSTALLATIONS ON EXISTING HIGHWAYS.

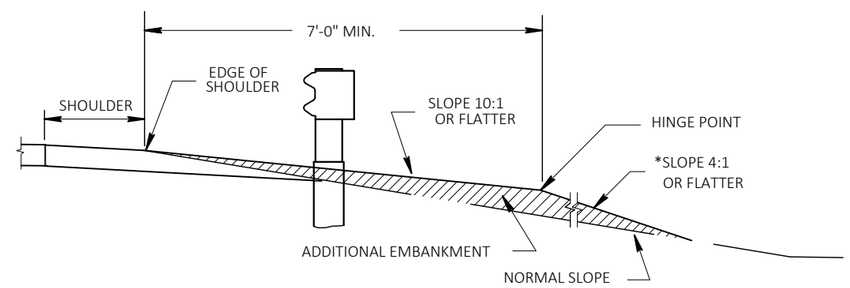

SECTION A-A

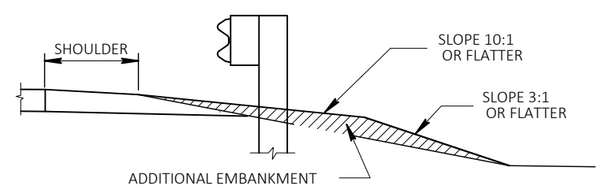

SECTION B-B

FILL AREA AT BEAM GUARD

2

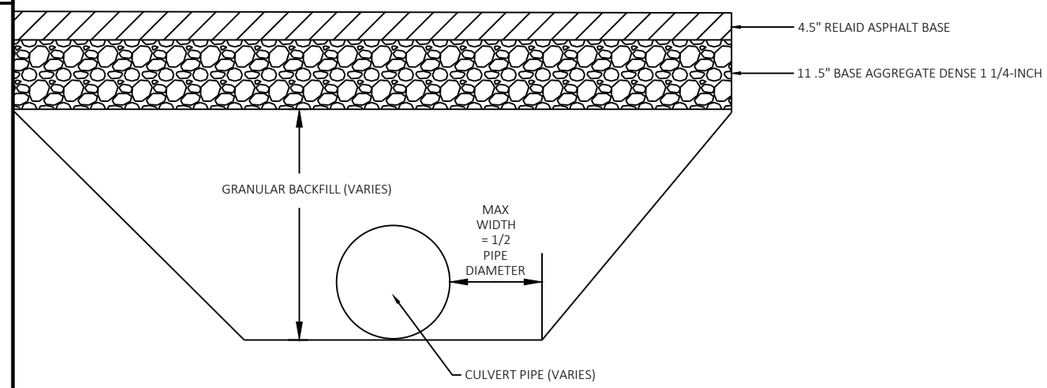

TEMPORARY TRENCH
BACKFILL DETAIL

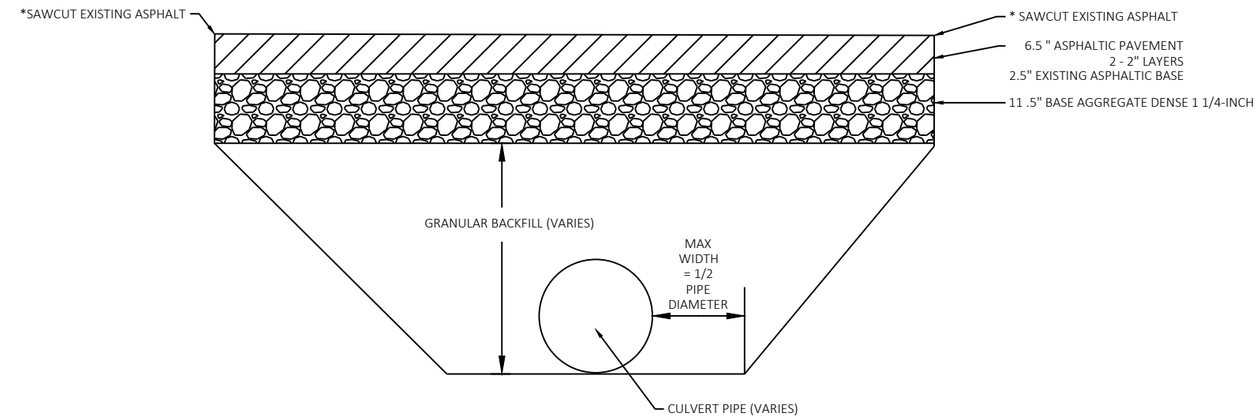

FINISHED TRENCH
BACKFILL & PAVING
DETAIL

2

2

LEGEND

- EROSION MAT CLASS I, TYPE B
- SILT FENCE
- CULVERT PIPE CHECK
- SURFACE WATER FLOW

PI STA = 19+99.62
Y = 312792.764
X = 520476.813
DELTA = 24°29'57"
D = 11°05'59"
T = 112.07'
L = 220.72'
R = 516.20'
PC STA = 18+87.55
PT STA = 21+08.27

STA 35+92
REPLACE CULVERT
30" x 50' RCCP

SAWING ASPHALT REQ'D
BUTT JOINT REQ'D

LINDSAY RD

CAUTION

MG&E
UNDERGROUND GAS

N

CLARK ST

STH 60

BEGIN PROJECT 5271-08-73
STA 22+05

MB

41+50.00

STA 42+92
REPLACE CULVERT
24" x 65' RCCP

PI STA = 44+24.94
Y = 314474.647
X = 522228.978
DELTA = 65°20'07"
D = 3°54'29"
T = 940.02'
L = 1671.76'
R = 1466.04'
PC STA = 34+84.93
PT STA = 51+56.68
E=6.0%

FRONTIER COMMUNICATIONS
UNDERGROUND TELEPHONE

ROADWAY RECONSTRUCTION
STA 44+00 - STA 60+25
SEE TYPICAL SECTION

STA 51+92
REPLACE CULVERTS
2-30"X56' RCCP

MH

TEMPORARY TRAFFIC
CONTROL SIGN

DO NOT PASS
R4-1
24"X30"

SAWING ASPHALT REQ'D
BUTT JOINT REQ'D

PORTABLE CHANGEABLE MESSAGE SIGN

PCMS MESSAGES	PHASE ONE	PHASE TWO
7 DAYS PRIOR TO CONSTRUCTION :	LANE & ROAD CLOSURES	STARTING MON 7/15

FOR TRAFFIC CONTROL DURING MILL & OVERLAY AND PIPE REPLACEMENT, SEE SDD 15 C 4-5 "TRAFFIC CONTROL, ADVANCE WARNING SIGNS 45 M.P.H. OR GREATER TWO-WAY UNDIVIDED ROAD" AND SDD 15 C 12-6 "TRAFFIC CONTROL FOR LANE CLOSURE WITH FLAGGING OPERATION"

FOR TEMPORARY AND PERMANENT PAVEMENT MARKING, SEE SDD 15 C 8-19 "LONGITUDINAL MARKING (MAINLINE), SDD 15 C 19-5 "MOVING PAVEMENT MARKING OPERATION TWO-LANE ROADWAY", AND SDD 15 C 33-3 "STOP LINE AND CROSSWALK PAVEMENT MARKING"

STA 58+66
REPLACE CULVERT
24"X65' RCCP

STH 60

MG&E
UNDERGROUND GAS

TEMPORARY TRAFFIC
CONTROL SIGN

DO NOT PASS
R4-1
24"X30"

STA 74+92
REPLACE CULVERT
24" x 52' RCCP

PI STA = 75+96.28
Y = 313235.583
X = 525373.261
DELTA = 80°07'03"
D = 4°59'30"
T = 965.15'
L = 1605.03'
R = 1147.84'
PC STA = 66+31.13
PT STA = 82+36.16

BENCHMARKS

NO.	STATION	ELEV.	DESCRIPTION
334	46+50	826.32	EASTERLY END OF DRIVEWAY PIPE
332	58+66	824.304	END OF CMCP PIPE

PROJECT NO: 5271-08-73	HWY: STH 60	COUNTY: COLUMBIA	PLAN DETAILS - PLAN, TRAFFIC CONTROL, EROSION CONTROL	SHEET 14	E

FILE NAME : N:\PDS\C3D\52710803\SHEETSPLAN\021201_PD.DWG
LAYOUT NAME - 021201_pn
PLOT DATE : 2/20/2019 9:59 AM
PLOT BY : BETZEL, LORRAINE L
PLOT NAME :
PLOT SCALE : 1 IN:200 FT

2

PI STA = 96+49.24
Y = 315265.737
X = 526612.007
DELTA = 64°24'24"
D = 4°56'08"
T = 731.16'
L = 1304.99'
R = 1160.91'
PC STA = 89+18.08
PT STA = 102+23.07

N

STH 60

95 100 105 110 115

MG&E
UNDERGROUND GAS

W1-6
48"X24"

STA 101+92
REPLACE CULVERT
24" x 73' RCCP

FRONTIER COMMUNICATIONS
UNDERGROUND TELEPHONE

TEMPORARY TRAFFIC
CONTROL SIGN

DO NOT PASS
R4-1
24"X30"

PI STA = 113+70.12
Y = 315076.025
X = 528480.605
DELTA = 48°37'03"
D = 5°01'38"
T = 514.82'
L = 967.10'
R = 1139.73'
PC STA = 108+55.30
PT STA = 118+22.40

W1-6
48"X24"

SIGN TYPE II REFLECTIVE F
ON WOOD POST(S)

FOR TRAFFIC CONTROL DURING MILL & OVERLAY AND PIPE REPLACEMENT, SEE SDD 15 C 4-5 "TRAFFIC CONTROL, ADVANCE WARNING SIGNS 45 M.P.H. OR GREATER TWO-WAY UNDIVIDED ROAD" AND SDD 15 C 12-6 "TRAFFIC CONTROL FOR LANE CLOSURE WITH FLAGGING OPERATION"

FOR TEMPORARY AND PERMANENT PAVEMENT MARKING, SEE SDD 15 C 8-19 "LONGITUDINAL MARKING (MAINLINE), SDD 15 C 19-5 "MOVING PAVEMENT MARKING OPERATION TWO-LANE ROADWAY", AND SDD 15 C 33-3 "STOP LINE AND CROSSWALK PAVEMENT MARKING"

MG&E
UNDERGROUND GAS

MGS GUARDRAIL TERMINAL EAT
STA 120+33
MGS GUARDRAIL 3 K
STA 120+83 - STA 123+10

CATTLE PASS C-11-1182
STA 121+80
SEE STRUCTURE PLANS

FRONTIER COMMUNICATIONS
UNDERGROUND TELEPHONE

MGS GUARDRAIL EAT
STA 123+60

CAUTION

120 125 130 135 140 145

STH 60

HILLESTAD RD

REMOVE EXISTING
BEAM GUARD

MGS GUARDRAIL EAT
STA 126+20

SAWING ASPHALT REQ'D
BUTT JOINT REQ'D

MGS GUARDRAIL TERMINAL EAT
STA 119+93
MGS GUARDRAIL 3 K
STA 120+43 - STA 125+70

STA 139+27
REPLACE CULVERT
24" x 51' RCCP

STA 144+27
REPLACE CULVERT
24" x 53' RCCP

LEGEND

- EROSION MAT CLASS I, TYPE B
- SILT FENCE
- CULVERT PIPE CHECK
- SURFACE WATER FLOW

BENCHMARKS

NO.	STATION	ELEV.	DESCRIPTION
335	124+15	1022.904	WESTERLY END OF DRIVEWAY PIPE

PROJECT NO: 5271-08-73	HWY: STH 60	COUNTY: COLUMBIA	PLAN DETAILS - PLAN, TRAFFIC CONTROL, EROSION CONTROL	SHEET 15	E

2

FOR TRAFFIC CONTROL DURING MILL & OVERLAY AND PIPE REPLACEMENT, SEE SDD 15 C 4-5 "TRAFFIC CONTROL, ADVANCE WARNING SIGNS 45 M.P.H. OR GREATER TWO-WAY UNDIVIDED ROAD" AND SDD 15 C 12-6 "TRAFFIC CONTROL FOR LANE CLOSURE WITH FLAGGING OPERATION"

FOR TEMPORARY AND PERMANENT PAVEMENT MARKING, SEE SDD 15 C 8-19 "LONGITUDINAL MARKING (MAINLINE), SDD 15 C 19-5 "MOVING PAVEMENT MARKING OPERATION TWO-LANE ROADWAY", AND SDD 15 C 33-3 "STOP LINE AND CROSSWALK PAVEMENT MARKING"

2

PROJECT NO: 5271-08-73	HWY: STH 60	COUNTY: COLUMBIA	PLAN DETAILS - PLAN, TRAFFIC CONTROL, EROSION CONTROL	SHEET 16	E

FILE NAME : N:\PDS\C3D\52710803\SHEETSPLAN\021201_PD.DWG
LAYOUT NAME - 021203_pn
PLOT DATE : 2/20/2019 9:59 AM PLOT BY : BETZEL, LORRAINE L PLOT NAME : PLOT SCALE : 1 IN:200 FT

2

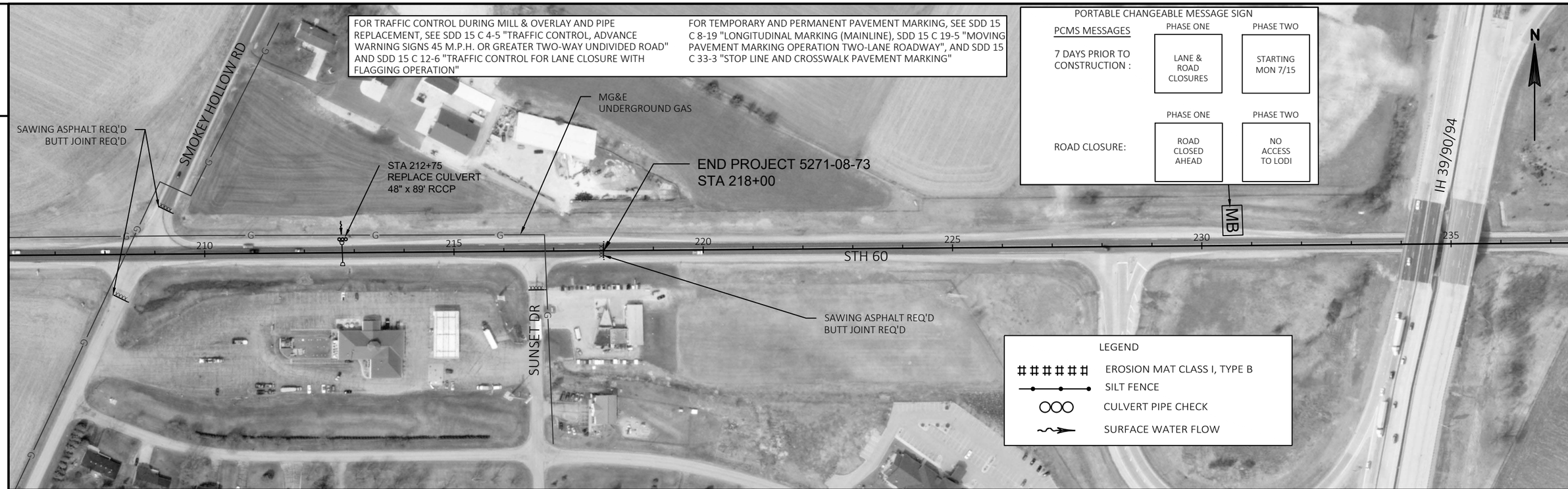

2

THIS SECTION INTENTIONALLY LEFT BLANK

PROJECT NO: 5271-08-73	HWY: STH 60	COUNTY: COLUMBIA	PLAN DETAILS - PLAN, TRAFFIC CONTROL, EROSION CONTROL	SHEET 17	E

2

N

SAWING ASPHALT REQ'D
BUTT JOINT REQ'D

STA 266+75
REPLACE CULVERT
24" x 64' RCCP

SECTION CORNER
MILL AND PAVE ADJACENT TO MONUMENT
WITHOUT DAMAGING THE MONUMENT
APPROX STA. 266+41, 1.2' LT

PROJECT BEGIN 6075-00-73
STA 263+00

STA 265+90
REPLACE CULVERT
24" x 79' RCCP

260 S89° 00' 08"E 265 S89° 00' 08"E

STH 60

1033.65' 1033.65'

255

PI STA = 255+45.03
Y = 320555.968
X = 541065.558
DELTA = 27°27'31"
D = 3°01'29"
T = 462.79'
L = 907.81'
R = 1894.25'
PC STA = 250+82.24
PT STA = 259+90.04

MB

CULVERT PIPE CHECK

250

SAWING ASPHALT REQ'D
BUTT JOINT REQ'D

PINE HOLLOW RD

CULVERT
PIPE CHECK

245

PORTABLE CHANGEABLE MESSAGE SIGN

PCMS MESSAGES	PHASE ONE	PHASE TWO
7 DAYS PRIOR TO CONSTRUCTION :	LANE CLOSURES	STARTING MON 6/24

FOR TRAFFIC CONTROL DURING MILL & OVERLAY AND PIPE REPLACEMENT, SEE SDD 15 C 4-5 "TRAFFIC CONTROL, ADVANCE WARNING SIGNS 45 M.P.H. OR GREATER TWO-WAY UNDIVIDED ROAD" AND SDD 15 C 12-6 "TRAFFIC CONTROL FOR LANE CLOSURE WITH FLAGGING OPERATION"

FOR TEMPORARY AND PERMANENT PAVEMENT MARKING, SEE SDD 15 C 8-19 "LONGITUDINAL MARKING (MAINLINE), SDD 15 C 19-5 "MOVING PAVEMENT MARKING OPERATION TWO-LANE ROADWAY", AND SDD 15 C 33-3 "STOP LINE AND CROSSWALK PAVEMENT MARKING"

N

CULVERT PIPE CHECK

QUARTER SECTION CORNER
MILL AND PAVE ADJACENT TO MONUMENT
WITHOUT DAMAGING THE MONUMENT
APPROX STA. 292+85, 21.1' LT

S89° 00' 08"E 270 S89° 30' 07"E 275 N89° 46' 33"E 280 N89° 39' 38"E 285 290 295

1033.65' 401.20' 373.81' 692.57'

STH 60

TEMPORARY TRAFFIC
CONTROL SIGN

DO NOT PASS
R4-1
24"X30"

STA 285+00
REMOVING OLD STRUCTURE
INSTALL 42" x 56' RCCP

2

PROJECT NO: 6075-00-73	HWY: STH 60	COUNTY: COLUMBIA	PLAN DETAILS - PLAN, TRAFFIC CONTROL	SHEET 18	E

FILE NAME : N:\PDS\C3D\60750003\SHEETSPLAN\021201_PD.DWG
LAYOUT NAME - 021201_pn

PLOT DATE : 1/28/2019 10:14 AM PLOT BY : BETZEL, LORRAINE L PLOT NAME : PLOT SCALE : 1 IN:200 FT

WISDOT/CADDS SHEET 44

2

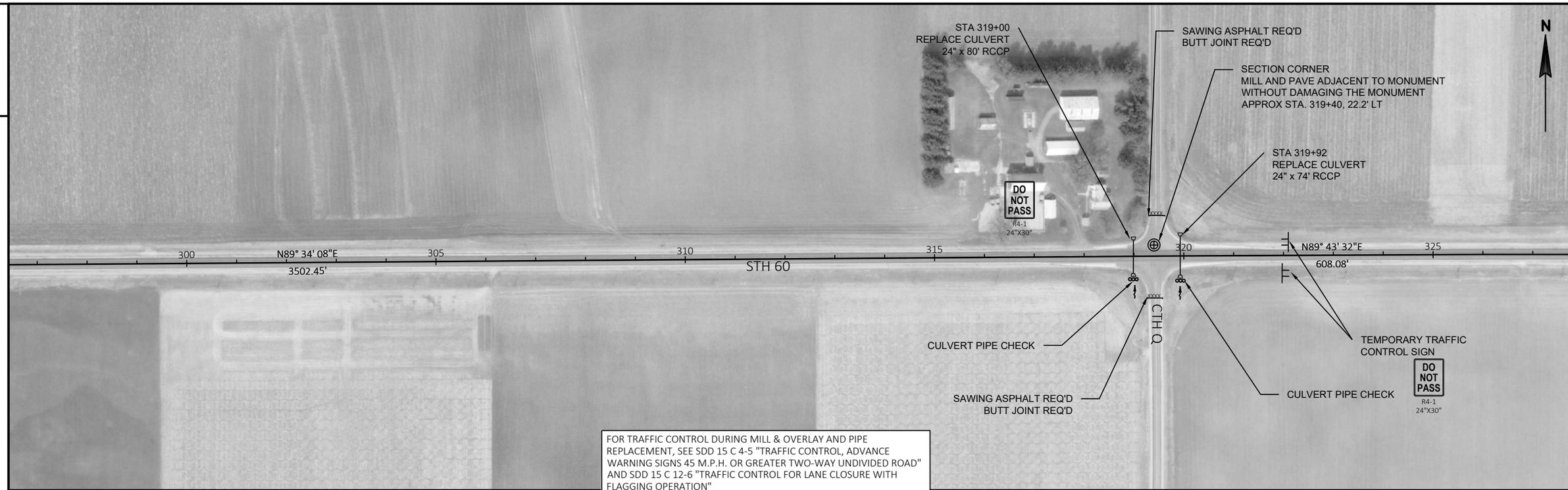

2

FOR TRAFFIC CONTROL DURING MILL & OVERLAY AND PIPE REPLACEMENT, SEE SDD 15 C 4-5 "TRAFFIC CONTROL, ADVANCE WARNING SIGNS 45 M.P.H. OR GREATER TWO-WAY UNDIVIDED ROAD" AND SDD 15 C 12-6 "TRAFFIC CONTROL FOR LANE CLOSURE WITH FLAGGING OPERATION"

FOR TEMPORARY AND PERMANENT PAVEMENT MARKING, SEE SDD 15 C 8-19 "LONGITUDINAL MARKING (MAINLINE), SDD 15 C 19-5 "MOVING PAVEMENT MARKING OPERATION TWO-LANE ROADWAY", AND SDD 15 C 33-3 "STOP LINE AND CROSSWALK PAVEMENT MARKING"

PROJECT NO: 6075-00-73	HWY: STH 60	COUNTY: COLUMBIA	PLAN DETAILS - PLAN, TRAFFIC CONTROL	SHEET 19	E

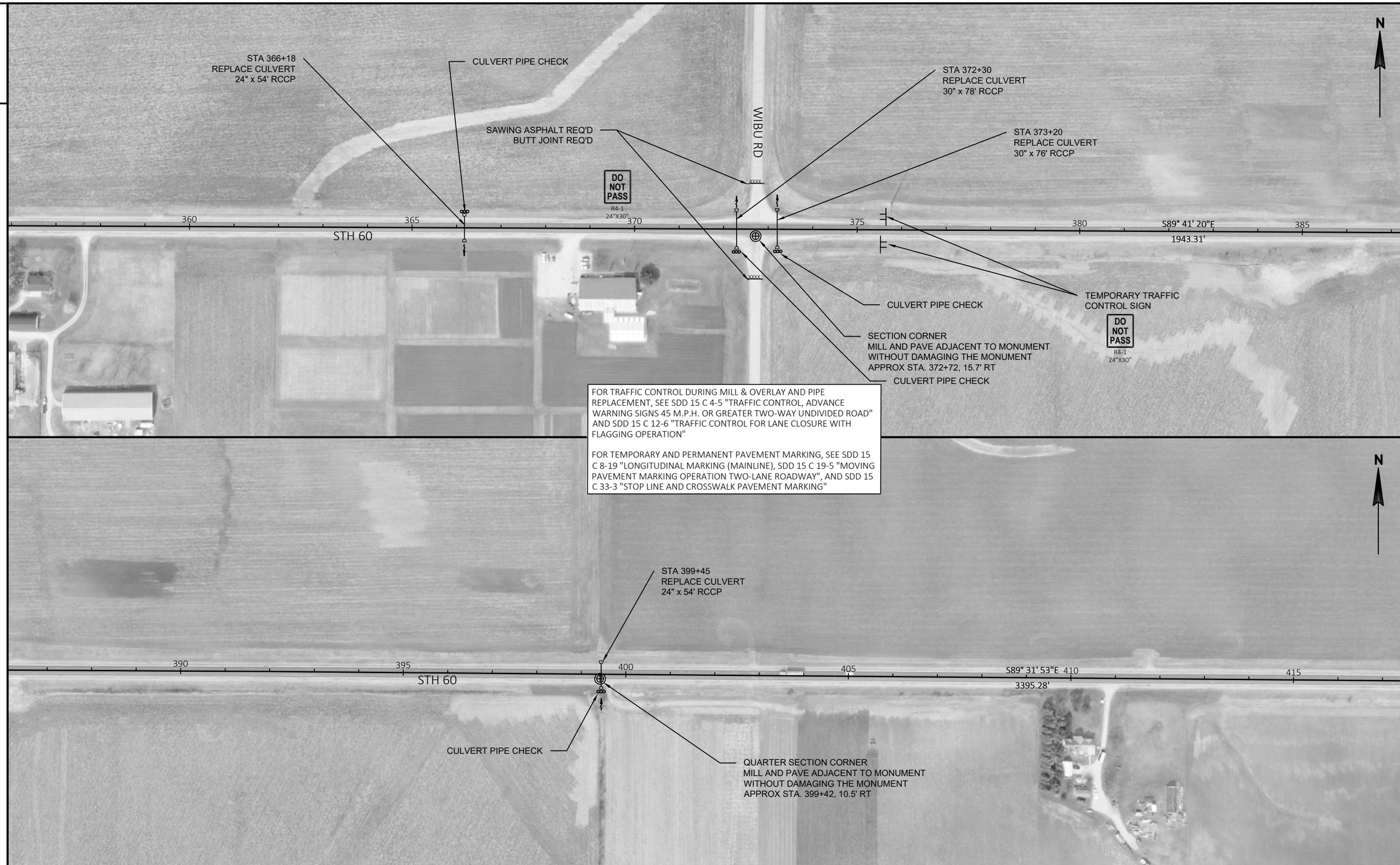

PROJECT NO: 6075-00-73	HWY: STH 60	COUNTY: COLUMBIA	PLAN DETAILS - PLAN, TRAFFIC CONTROL	SHEET 20	E

FILE NAME : N:\PDS\C3D\60750003\SHEETSPLAN\021201_PD.DWG
LAYOUT NAME - 021203_pn
PLOT DATE : 1/28/2019 10:14 AM
PLOT BY : BETZEL, LORRAINE L
PLOT NAME :
PLOT SCALE : 1 IN:200 FT

WISDOT/CADDS SHEET 44

THIS SECTION INTENTIONALLY LEFT BLANK

LEGEND

- DETOUR ROUTE
- EXISTING SIGN
- NEW SIGN
- COVER EXISTING SIGN
- NEW SIGN SINGLE/DOUBLE POST
- EXISTING SIGN SINGLE/DOUBLE POST
- BARRICADE WITH/WITHOUT SIGN

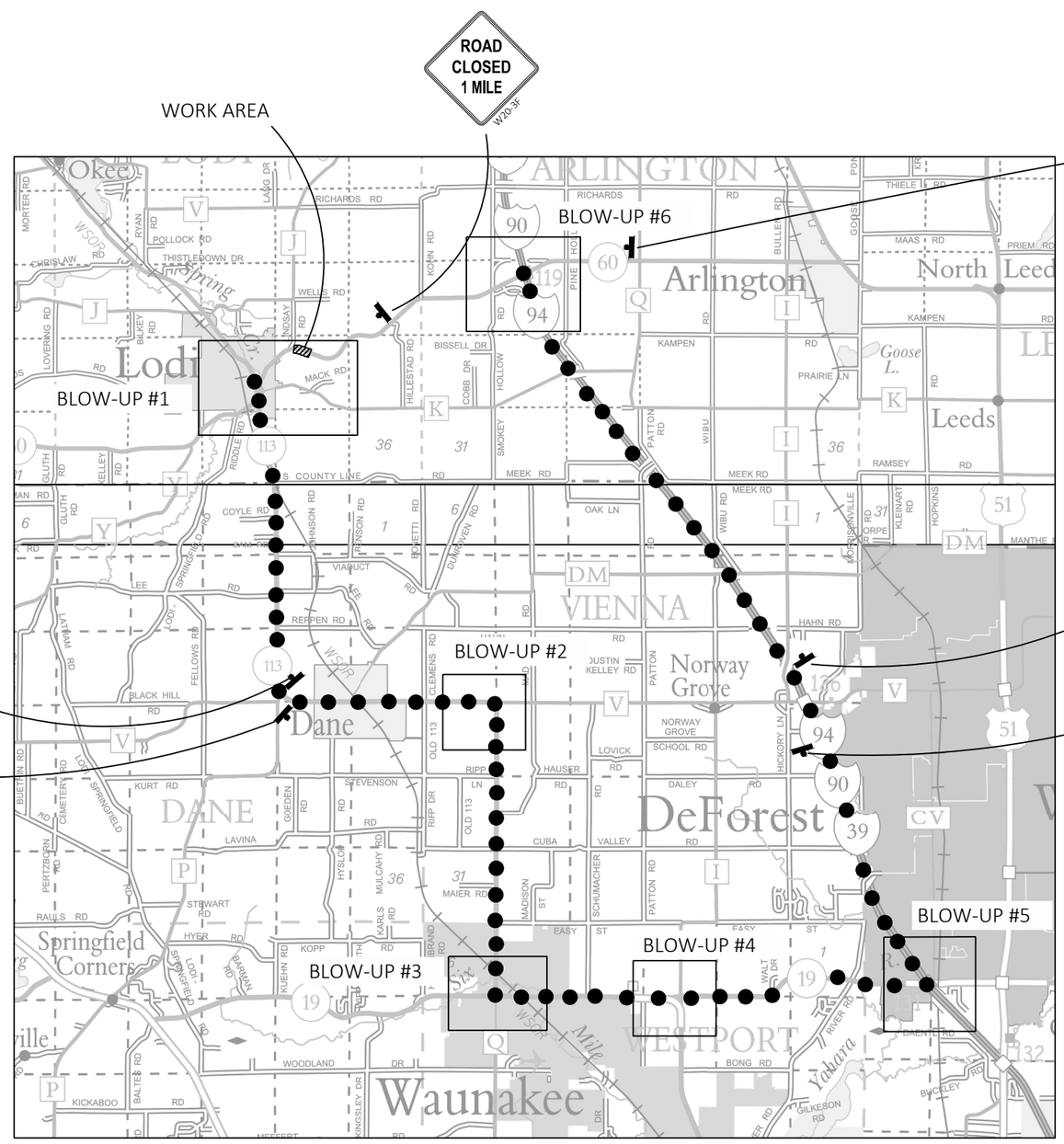

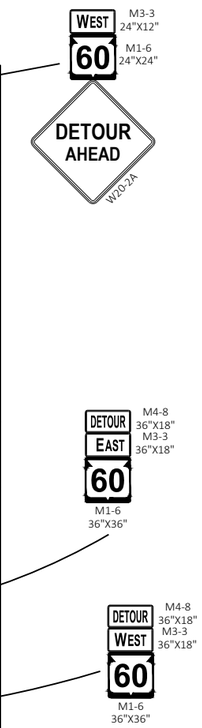

N

PROJECT NO: 5271-08-73	HWY: STH 60	COUNTY: COLUMBIA	DETOUR OVERVIEW	SHEET 22	E

FILE NAME : N:\PDS\C3D\52710803\SHEETSPLAN\027001_DT.DWG
LAYOUT NAME - OVERVIEW
PLOT DATE : 1/24/2019 12:07 PM
PLOT BY : BETZEL, LORRAINE L
PLOT NAME :
PLOT SCALE : 1 IN:40 FT

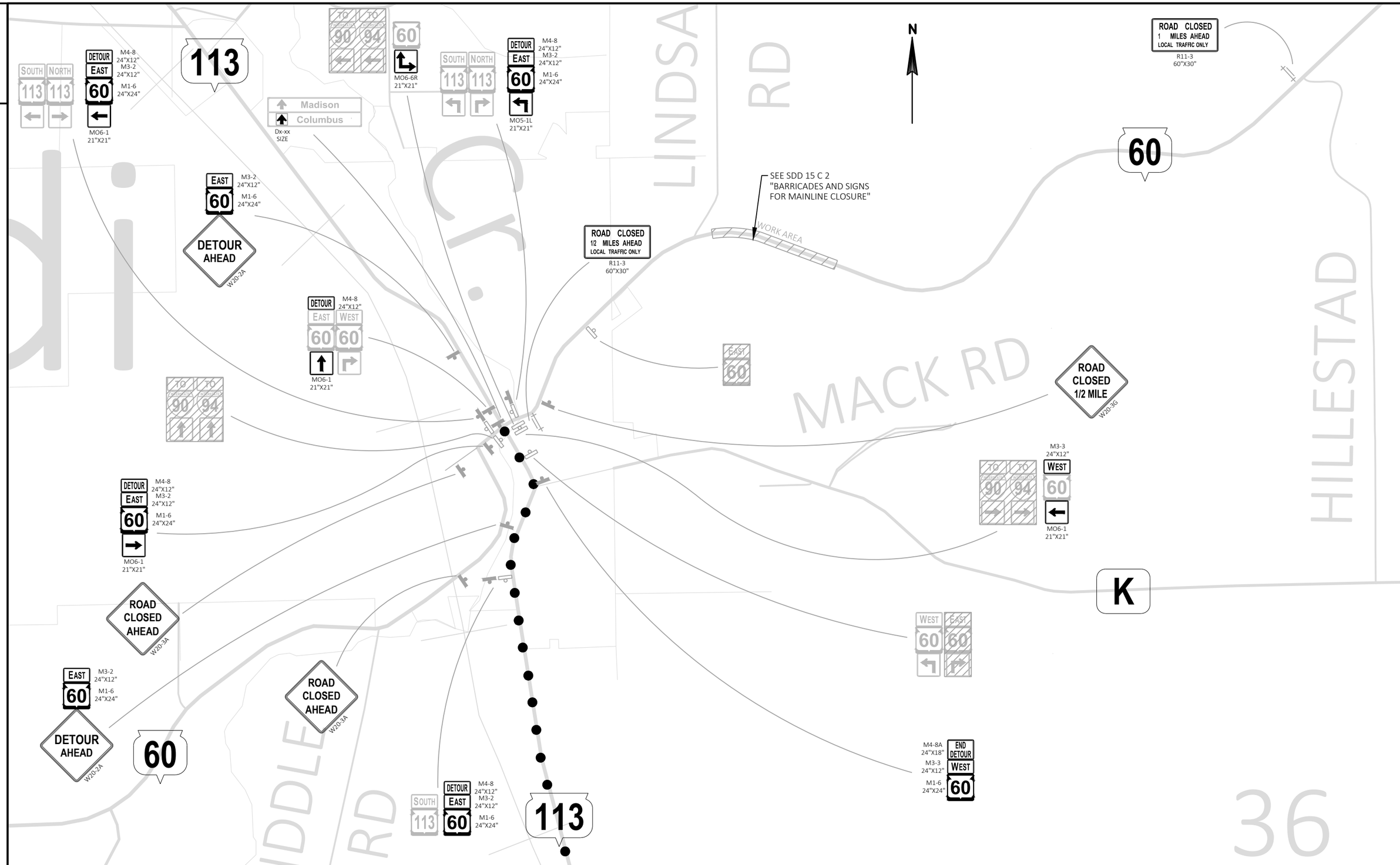

PROJECT NO: 5271-08-73	HWY: STH 60	COUNTY: COLUMBIA	DETOUR ROUTE - BLOW-UP #1	SHEET 23	E

FILE NAME : N:\PDS\C3D\52710803\SHEETSPLAN\027001_DT.DWG
LAYOUT NAME - BLOW UP #1
PLOT DATE : 1/24/2019 12:07 PM PLOT BY : BETZEL, LORRAINE L PLOT NAME : PLOT SCALE : Custom

WISDOT/CADDS SHEET 42

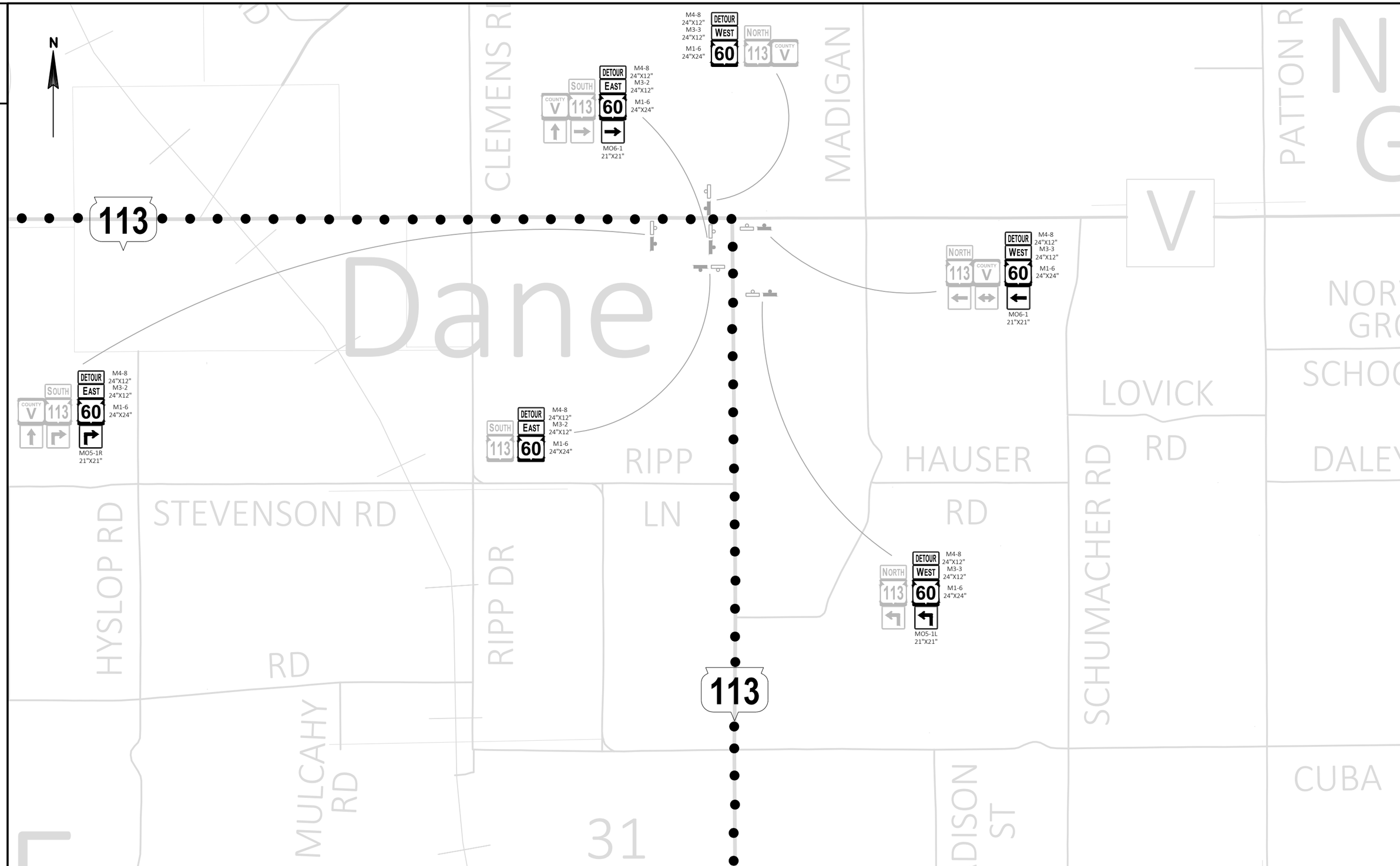

PROJECT NO: 5271-08-73	HWY: STH 60	COUNTY: COLUMBIA	DETOUR ROUTE - BLOW-UP #2	SHEET 24	E

FILE NAME : N:\PDS\C3D\52710803\SHEETSPLAN\027001_DT.DWG
LAYOUT NAME - BLOW UP #2
PLOT DATE : 1/24/2019 12:07 PM
PLOT BY : BETZEL, LORRAINE L
PLOT NAME :
PLOT SCALE : Custom

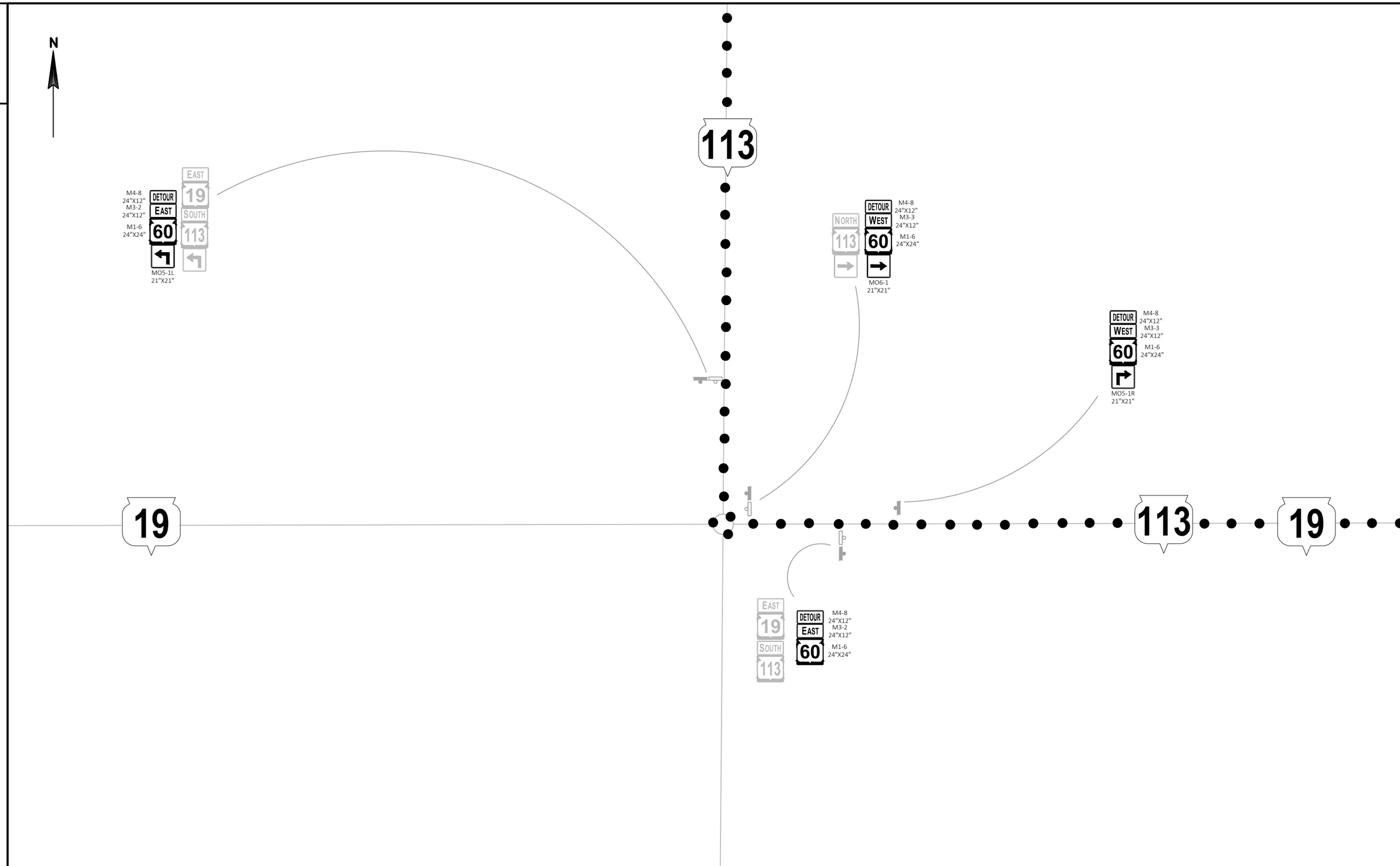

PROJECT NO: 5271-08-73	HWY: STH 60	COUNTY: COLUMBIA	DETOUR ROUTE - BLOW-UP #3	SHEET 25	E

FILE NAME : N:\PDS\C3D\52710803\SHEETSPLAN\027001_DT.DWG
LAYOUT NAME - BLOW UP #3
PLOT DATE : 1/24/2019 12:07 PM
PLOT BY : BETZEL, LORRAINE L
PLOT NAME :
PLOT SCALE : Custom

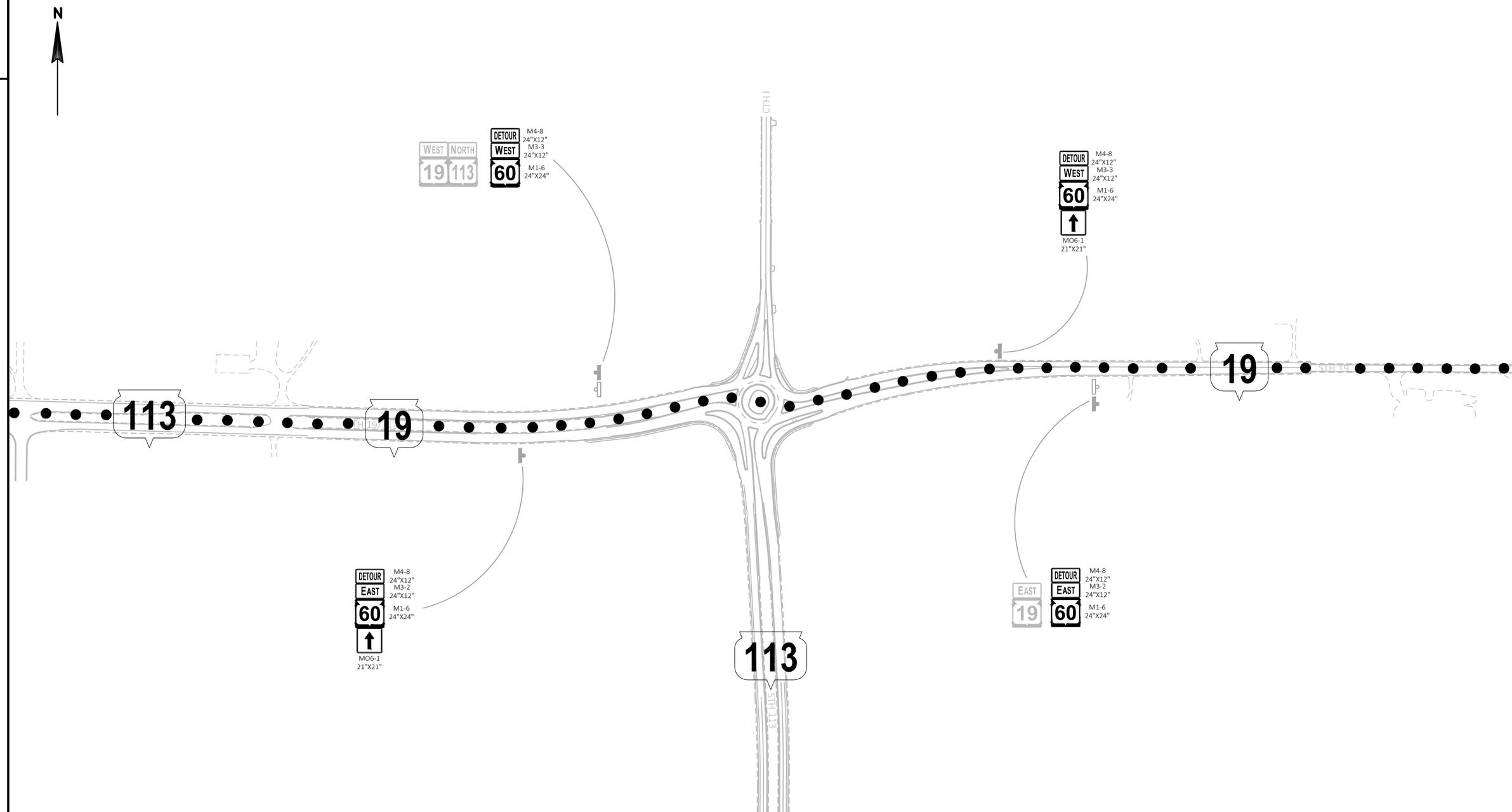

PROJECT NO: 5271-08-73	HWY: STH 60	COUNTY: COLUMBIA	DETOUR ROUTE - BLOW-UP #4	SHEET 26	E

FILE NAME : N:\PDS\C3D\52710803\SHEETSPLAN\027001_DT.DWG
LAYOUT NAME - BLOW UP #4
PLOT DATE : 1/24/2019 12:07 PM
PLOT BY : BETZEL, LORRAINE L
PLOT NAME :
PLOT SCALE : Custom

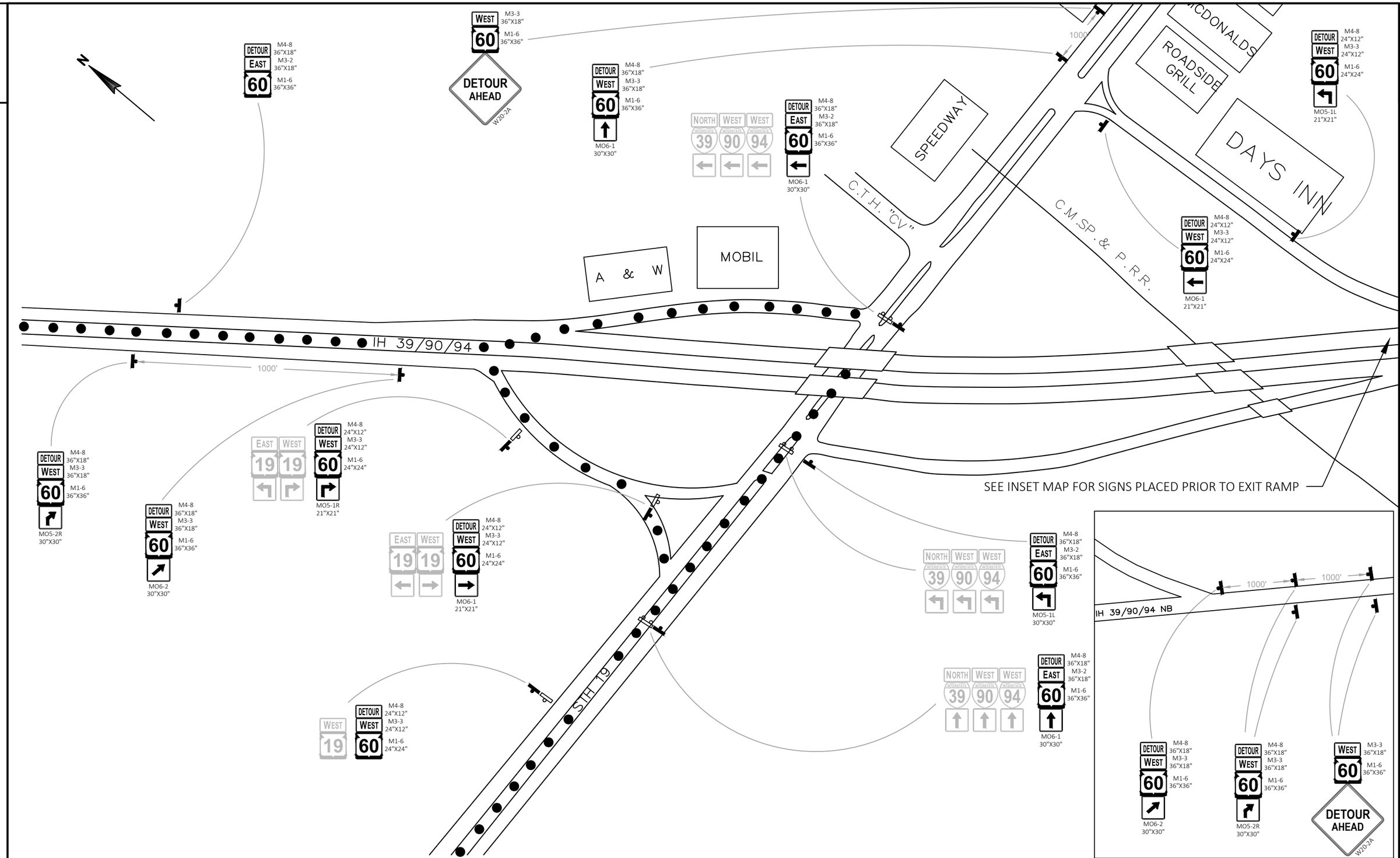

PROJECT NO: 5271-08-73	HWY: STH 60	COUNTY: COLUMBIA	DETOUR ROUTE - BLOW-UP #5	SHEET 27	E

FILE NAME : N:\PDS\C3D\52710803\SHEETSPLAN\027001_DT.DWG
LAYOUT NAME - BLOW UP #5
PLOT DATE : 1/24/2019 12:08 PM PLOT BY : BETZEL, LORRAINE L PLOT NAME : PLOT SCALE : Custom

2

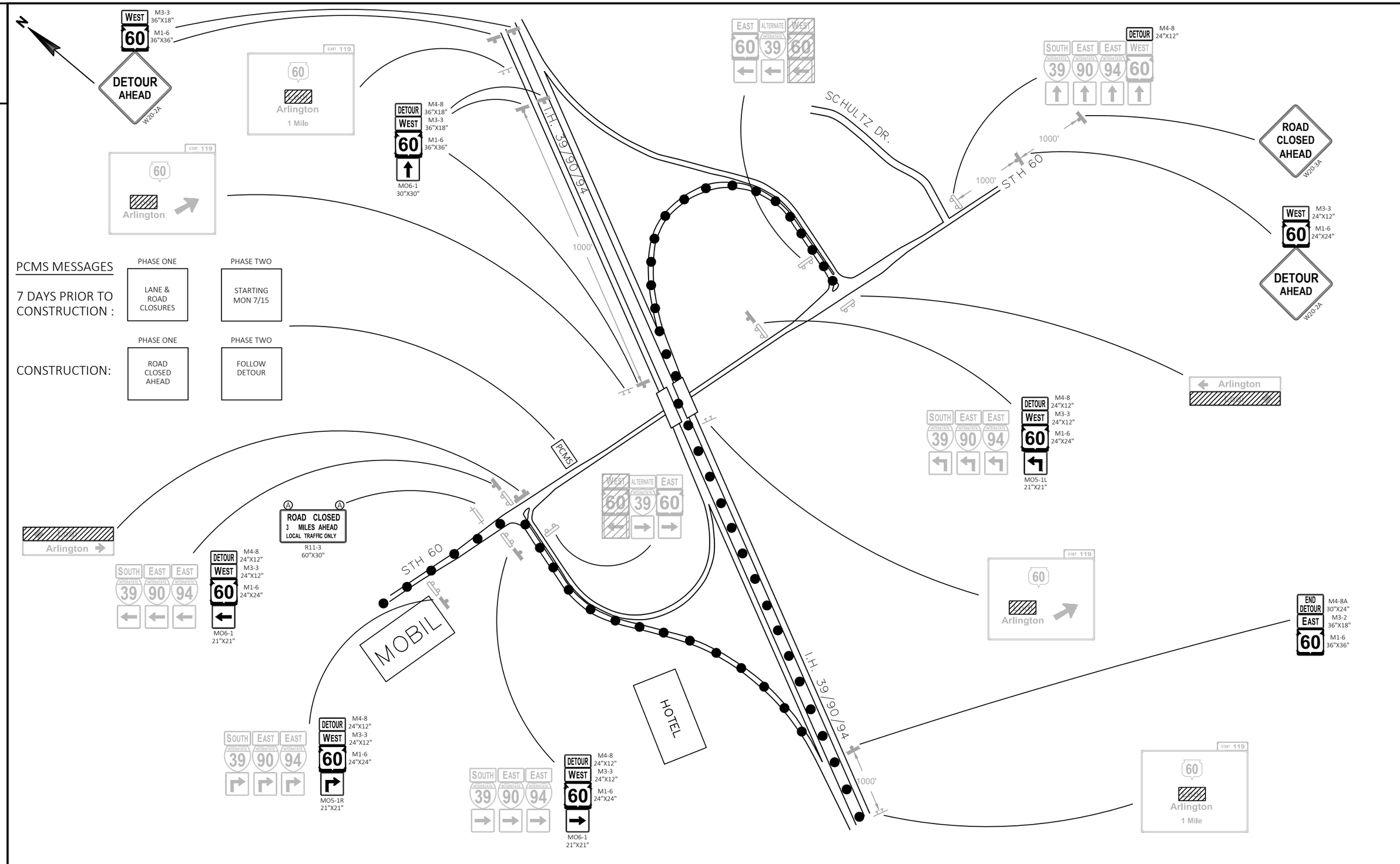

PROJECT NO: 5271-08-73	HWY: STH 60	COUNTY: COLUMBIA	DETOUR ROUTE - BLOW-UP #6	SHEET 28	E

FILE NAME : N:\PDS\C3D\52710803\SHEETSPLAN\027001_DT.DWG
LAYOUT NAME - BLOW UP #6
PLOT DATE : 1/24/2019 12:08 PM
PLOT BY : BETZEL, LORRAINE L
PLOT NAME :
PLOT SCALE : Custom

WISDOT/CADDS SHEET 42

Estimate Of Quantities

Line	Item	Item Description	Unit	Total	5271-08-73 Qty	6075-00-73 Qty
0002	203.0100	Removing Small Pipe Culverts	EACH	24.000	12.000	12.000
0004	203.0200	Removing Old Structure (station) 01. 285+00	LS	1.000		1.000
0006	204.0120	Removing Asphaltic Surface Milling	SY	120,600.000	63,900.000	56,700.000
0008	204.0165	Removing Guardrail	LF	885.000	885.000	
0010	205.0100	Excavation Common	CY	9,271.000	6,710.000	2,561.000
0012	206.2000	Excavation for Structures Culverts (structure) 01. C-11-1182	LS	1.000	1.000	
0014	208.0100	Borrow	CY	259.000	259.000	
0016	211.0400	Prepare Foundation for Asphaltic Shoulders	STA	673.000	354.000	319.000
0018	213.0100	Finishing Roadway (project) 01. 5271-08-73	EACH	1.000	1.000	
0020	213.0100	Finishing Roadway (project) 01. 6075-00-73	EACH	1.000		1.000
0022	305.0110	Base Aggregate Dense 3/4-Inch	TON	4,900.000	4,200.000	700.000
0024	305.0120	Base Aggregate Dense 1 1/4-Inch	TON	3,505.000	2,945.000	560.000
0026	312.0110	Select Crushed Material	TON	5,950.000	5,950.000	
0028	315.0100	Asphaltic Base	TON	382.000	171.000	211.000
0030	455.0605	Tack Coat	GAL	17,000.000	9,300.000	7,700.000
0032	460.0105.S	HMA Percent Within Limits (PWL) Test Strip Volumetrics	EACH	1.000	1.000	
0034	460.0110.S	HMA Percent Within Limits (PWL) Test Strip Density	EACH	2.000	2.000	
0036	460.2000	Incentive Density HMA Pavement	DOL	9,820.000	660.000	9,160.000
0038	460.2005	Incentive Density PWL HMA Pavement	DOL	20,440.000	20,440.000	
0040	460.2010	Incentive Air Voids HMA Pavement	DOL	31,730.000	31,730.000	
0042	460.4110.S	Reheating HMA Pavement Longitudinal Joints	LF	71,660.000	39,190.000	32,470.000
0044	460.6224	HMA Pavement 4 MT 58-28 S	TON	32,420.000	18,110.000	14,310.000
0046	465.0105	Asphaltic Surface	TON	671.000	356.000	315.000
0048	465.0425	Asphaltic Shoulder Rumble Strips 2-Lane Rural	LF	70,490.000	38,590.000	31,900.000
0050	465.0475	Asphalt Centerline Rumble Strips 2-Lane Rural	LF	35,070.000	19,120.000	15,950.000
0052	502.4204	Adhesive Anchors No. 4 Bar	EACH	44.000	44.000	
0054	504.0100	Concrete Masonry Culverts	CY	3.000	3.000	
0056	505.0600	Bar Steel Reinforcement HS Coated Structures	LB	420.000	420.000	
0058	516.0500	Rubberized Membrane Waterproofing	SY	11.000	11.000	
0060	522.0124	Culvert Pipe Reinforced Concrete Class III 24-Inch	LF	870.000	434.000	436.000
0062	522.0130	Culvert Pipe Reinforced Concrete Class III 30-Inch	LF	298.000	148.000	150.000
0064	522.0142	Culvert Pipe Reinforced Concrete Class III 42-Inch	LF	56.000		56.000
0066	522.0148	Culvert Pipe Reinforced Concrete Class III 48-Inch	LF	86.000	86.000	
0068	522.1024	Apron Endwalls for Culvert Pipe Reinforced Concrete 24-Inch	EACH	30.000	16.000	14.000
0070	522.1030	Apron Endwalls for Culvert Pipe Reinforced Concrete 30-Inch	EACH	10.000	6.000	4.000
0072	522.1042	Apron Endwalls for Culvert Pipe Reinforced Concrete 42-Inch	EACH	2.000		2.000
0074	522.1048	Apron Endwalls for Culvert Pipe Reinforced Concrete	EACH	2.000	2.000	

Line	Item	Item Description	Unit	Total	5271-08-73 Qty	6075-00-73 Qty
		48-Inch				
0076	522.2319	Culvert Pipe Reinforced Concrete Horizontal Elliptical Class HE-III 19x30-Inch	LF	92.000		92.000
0078	522.2324	Culvert Pipe Reinforced Concrete Horizontal Elliptical Class HE-III 24x38-Inch	LF	90.000		90.000
0080	522.2619	Apron Endwalls for Culvert Pipe Reinforced Concrete Horizontal Elliptical 19x30-Inch	EACH	2.000		2.000
0082	522.2624	Apron Endwalls for Culvert Pipe Reinforced Concrete Horizontal Elliptical 24x38-Inch	EACH	4.000		4.000
0084	611.8110	Adjusting Manhole Covers	EACH	1.000	1.000	
0086	614.2330	MGS Guardrail 3 K	LF	760.000	760.000	
0088	614.2610	MGS Guardrail Terminal EAT	EACH	4.000	4.000	
0090	618.0100	Maintenance And Repair of Haul Roads (project) 01. 5271-08-73	EACH	1.000	1.000	
0092	618.0100	Maintenance And Repair of Haul Roads (project) 01. 6075-00-73	EACH	1.000		1.000
0094	619.1000	Mobilization	EACH	1.000	0.600	0.400
0096	624.0100	Water	MGAL	74.000	67.000	7.000
0098	625.0105	Topsoil	CY	2,475.000	2,475.000	
0100	628.1504	Silt Fence	LF	4,010.000	4,010.000	
0102	628.1520	Silt Fence Maintenance	LF	4,010.000	4,010.000	
0104	628.1905	Mobilizations Erosion Control	EACH	2.000	2.000	
0106	628.1910	Mobilizations Emergency Erosion Control	EACH	2.000	2.000	
0108	628.2004	Erosion Mat Class I Type B	SY	2,475.000	2,475.000	
0110	628.7555	Culvert Pipe Checks	EACH	25.000	12.000	13.000
0112	629.0210	Fertilizer Type B	CWT	2.000	2.000	
0114	630.0120	Seeding Mixture No. 20	LB	66.000	66.000	
0116	634.0616	Posts Wood 4x6-Inch X 16-FT	EACH	2.000	2.000	
0118	637.2230	Signs Type II Reflective F	SF	16.000	16.000	
0120	642.5001	Field Office Type B	EACH	1.000		1.000
0122	643.0300	Traffic Control Drums	DAY	235.000	165.000	70.000
0124	643.0310.S	Temporary Portable Rumble Strips 01. 5271-08-73	LS	1.000	1.000	
0126	643.0310.S	Temporary Portable Rumble Strips 02. 6075-00-73	LS	1.000		1.000
0128	643.0420	Traffic Control Barricades Type III	DAY	399.000	399.000	
0130	643.0705	Traffic Control Warning Lights Type A	DAY	798.000	798.000	
0132	643.0900	Traffic Control Signs	DAY	4,731.000	4,261.000	470.000
0134	643.0910	Traffic Control Covering Signs Type I	EACH	4.000	4.000	
0136	643.0920	Traffic Control Covering Signs Type II	EACH	10.000	10.000	
0138	643.1050	Traffic Control Signs PCMS	DAY	47.000	33.000	14.000
0140	643.5000	Traffic Control	EACH	1.000	0.700	0.300
0142	645.0220	Geogrid Type SR	SY	6,500.000	6,500.000	

Line	Item	Item Description	Unit	Total	5271-08-73 Qty	6075-00-73 Qty
0144	646.1020	Marking Line Epoxy 4-Inch	LF	70,600.000	38,700.000	31,900.000
0146	646.4520	Marking Line Same Day Epoxy 4-Inch	LF	47,500.000	29,050.000	18,450.000
0148	646.6120	Marking Stop Line Epoxy 18-Inch	LF	250.000	130.000	120.000
0150	648.0100	Locating No-Passing Zones	MI	6.810	3.710	3.100
0152	649.0105	Temporary Marking Line Paint 4-Inch	LF	47,500.000	29,050.000	18,450.000
0154	649.0120	Temporary Marking Line Epoxy 4-Inch	LF	47,500.000	29,050.000	18,450.000
0156	650.4500	Construction Staking Subgrade	LF	1,630.000	1,630.000	
0158	650.5000	Construction Staking Base	LF	1,630.000	1,630.000	
0160	650.6000	Construction Staking Pipe Culverts	EACH	25.000	12.000	13.000
0162	650.8000	Construction Staking Resurfacing Reference	LF	35,830.000	19,595.000	16,235.000
0164	650.9910	Construction Staking Supplemental Control (project) 01. 5271-08-73	LS	1.000	1.000	
0166	650.9910	Construction Staking Supplemental Control (project) 01. 6075-00-73	LS	1.000		1.000
0168	650.9920	Construction Staking Slope Stakes	LF	2,405.000	2,405.000	
0170	690.0150	Sawing Asphalt	LF	1,770.000	810.000	960.000
0172	740.0440	Incentive IRI Ride	DOL	13,572.000	7,422.000	6,150.000
0174	SPV.0060	Special 01. Cast Iron Monument Covers	EACH	2.000	1.000	1.000
0176	SPV.0060	Special 02. Verify Landmark Reference Monuments	EACH	6.000	1.000	5.000
0178	SPV.0090	Special 01. Removing HMA Pavement Notched Wedge Longitudinal Joint Milling	LF	52,100.000	19,630.000	32,470.000
0180	SPV.0180	Special 01. Removing Distressed Pavement Milling	SY	6,050.000	3,200.000	2,850.000

3

Division	From/To Station	205.0100 Common Excavation (1)	Salvaged/Unusable Pavement Material (3)	Available Material (4)	Unexpanded Fill	Expanded Fill (5)	Mass Ordinate +/- (6)	208.0100 Borrow
Division 1		Cut (2)				Factor 1.30		
Reconstruction	44+00 - 60+25	4,607	3,310	1,297	516	670	627	0
	Undistributed	230						
Division 2								
Beam Guard	119+00 - 126+50	0	0	0	199	259	-259	259
Division 3								
Culvert Pipe	22+05 - 218+00	1,873	469	1,404	1,308	1,700	-296	0
Grand Total		6,710	3,779	2,701	2,023	2,629	72	259

Notes:

(1) Common Excavation is the sum of the Cut and EBS Excavation columns. Item number 205.0100

(2) Salvaged/Unsuable Pavement Material is included in Cut.

(3) Salvaged/Unusable Pavement Material

(4) Available Material = Cut - Salvaged/Unusuable Pavement Material

(5) Expanded Fill Factor = 1.3

Depending on selections: **Expanded Fill = (Unexpanded Fill - Expanded Rock - Reduced Marsh - Reduced EBS) * Fill Factor**

Expanded Fill = (Unexpanded Fill - Expanded Rock - Reduced EBS) * Fill Factor

Expanded Fill = (Unexpanded Fill - Expanded Rock - Reduced Marsh) * Fill Factor

3

CULVERT ITEMS

CATEGORY	STATION	203.0100 REMOVING SMALL PIPE CULVERTS EACH	522.0124 CULVERT PIPE REINFORCED CONCRETE CLASS III 24-INCH LF	522.0130 CULVERT PIPE REINFORCED CONCRETE CLASS III 30-INCH LF	522.0148 CULVERT PIPE REINFORCED CONCRETE CLASS III 48-INCH LF	522.1024 APRON ENDWALLS FOR CULVERT PIPE REINFORCED CONCRETE 24-INCH EACH	522.1030 APRON ENDWALLS FOR CULVERT PIPE REINFORCED CONCRETE 30-INCH EACH	522.1048 APRON ENDWALLS FOR CULVERT PIPE REINFORCED CONCRETE 48-INCH EACH	REMARKS
0010	35+92	1	-	48	-	-	2	-	REMOVE EXISTING 30"X50' CSCP
	42+92	1	62	-	-	2	-	-	REMOVE EXISTING 24"X65' CSCP
	51+92	2	-	100	-	-	4	-	REMOVE 2 EXISTING 30"X56' CSCP
	58+67	1	60	-	-	2	-	-	REMOVE EXISTING 24"X65' CSCP
	74+92	1	48	-	-	2	-	-	REMOVE EXISTING 24"X52' CSCP
	101+92	1	70	-	-	2	-	-	REMOVE EXISTING 24"X73' CSCP
	139+27	1	48	-	-	2	-	-	REMOVE EXISTING 24"X51' CSCP
	144+27	1	50	-	-	2	-	-	REMOVE EXISTING 24"X53' CSCP
	154+67	1	48	-	-	2	-	-	REMOVE EXISTING 24"X52' CSCP
	164+92	1	48	-	-	2	-	-	REMOVE EXISTING 24"X51' CSCP
	212+75	1	-	-	86	-	-	2	REMOVE EXISTING 48"X89' CSCP
	TOTALS	12	434	148	86	16	6	2	

GUARDRAIL ITEMS

CATEGORY	STATION	TO	STATION	LOCATION	204.0165 REMOVING GUARDRAIL LF	614.2330 MGS GUARDRAIL 3K LF	614.2610 MGS GUARDRAIL TERMINAL EAT EACH
0010	118+75	-	126+85	RT	580	530	-
	119+80	-	123+60	LT	305	230	-
	119+93			RT	-	-	1
	120+33			LT	-	-	1
	123+60			LT	-	-	1
	126+20			RT	-	-	1
				TOTALS	885	760	4

3

3

ASPHALTIC ITEMS

CATEGORY	STATION	TO	STATION	204.0120 REMOVING ASPHALTIC SURFACE MILLING SY	211.0400 PREPARE FOUNDATION FOR ASPHALTIC SHOULDERS STA	305.0100 ASPHALTIC BASE TON	455.0605 TACK COAT GAL	460.4110.S REHEATING HMA PAVEMENT LONGITUDINAL JOINTS LF	460.6224 HMA PAVEMENT 4 MT 58-28 S TON	465.0105 ASPHALTIC SURFACE TON	465.0425 ASPHALT SHOULDER RUMBLE STRIPS 2-LANE RURAL LF	465.0475 ASPHALT CENTERLINE RUMBLE STRIPS 2-LANE RURAL LF	SPV.0090.01 REMOVING HMA PAVEMENT NOTCHED WEDGE LONGITUDINAL JOINT MILLING LF	SPV.0180.01 REMOVING DISTRESSED PAVEMENT MILLING SY
0010	22+05	-	44+00	8200	43	-	1100	4390	2030	-	4290	2095	2200	-
	35+92			-	-	15	-	-	-	-	-	-	-	-
	42+92			-	-	17	-	-	-	-	-	-	-	-
	44+00	-	60+25	-	-	-	750	3250	2080	-	3250	1625	1630	-
	60+25	-	218+00	55700	311	-	7450	31550	14000	-	31050	15400	15800	-
	74+92			-	-	20	-	-	-	-	-	-	-	-
	101+92			-	-	20	-	-	-	-	-	-	-	-
	139+27			-	-	14	-	-	-	-	-	-	-	-
	144+27			-	-	14	-	-	-	-	-	-	-	-
	154+67			-	-	14	-	-	-	-	-	-	-	-
	164+92			-	-	25	-	-	-	-	-	-	-	-
	212+75			-	-	32	-	-	-	-	-	-	-	-
	UNDISTRIBUTED			-	-	-	-	-	-	356	-	-	-	3200
			TOTALS	63900	354	171	9300	39190	18110	356	38590	19120	19630	3200

INCENTIVE DENSITY HMA PAVEMENT

CATEGORY	STATION	TO	STATION	460.2000 DOL
0010	44+00	-	60+25	660

HMA PERCENT WITHIN LIMITS (PWL) TEST STRIP VOLUMETRICS

CATEGORY	STATION	TO	STATION	460.0105.S EACH
0010	22+05	-	418+00	1

HMA PERCENT WITHIN LIMITS (PWL) TEST STRIP DENSITY

CATEGORY	STATION	TO	STATION	460.0110.S EACH
0010	22+05	-	418+00	2

INCENTIVE DENSITY PWL HMA PAVEMENT

CATEGORY	STATION	TO	STATION	460.2005 DOL
0010	22+05	-	418+00	20440

INCENTIVE AIR VOIDS HMA PAVEMENT

CATEGORY	STATION	TO	STATION	460.2010 DOL
0010	22+05	-	418+00	31730

3

	Station								Quality Management Program to be used for:	
Location	From	-	To	Mixture Use	Underlying Surface	Bid Item	Tons	Thickness	Mixture Acceptance	Density Acceptance
2 x 12 foot driving lanes	22+05	-	44+00	Lower Layer	Milled Existing Asphaltic Surface	4 MT 58-28 S	656	2"	PWL Incentive Air Voids HMA Pavement 460.2010	Incentive Density PWL HMA Pavement 460.2005
2 x 12 foot driving lanes	22+05	-	44+00	Upper Layer	4 MT 58-28 S	4 MT 58-28 S	656	2"	PWL Incentive Air Voids HMA Pavement 460.2010	Incentive Density PWL HMA Pavement 460.2005
2 x 12 foot driving lanes	44+00	-	60+25	Lower Layer	Base Aggregate	4 MT 58-28 S	485	2"	QMP as per SS 460	Incentive Density HMA Pavement 460.2000
2 x 12 foot driving lanes	44+00	-	60+25	Middle Layer	4 MT 58-28 S	4 MT 58-28 S	485	2"	PWL Incentive Air Voids HMA Pavement 460.2010	Acceptance testing by department; Not eligible for incentive
2 x 12 foot driving lanes	44+00	-	60+25	Upper Layer	4 MT 58-28 S	4 MT 58-28 S	485	2"	PWL Incentive Air Voids HMA Pavement 460.2010	Acceptance testing by department; Not eligible for incentive
2 x 12 foot driving lanes	60+25	-	218+00	Lower Layer	Milled Existing Asphaltic Surface	4 MT 58-28 S	4711	2"	PWL Incentive Air Voids HMA Pavement 460.2010	Incentive Density PWL HMA Pavement 460.2005
2 x 12 foot driving lanes	60+25	-	218+00	Upper Layer	4 MT 58-28 S	4 MT 58-28 S	4711	2"	PWL Incentive Air Voids HMA Pavement 460.2010	Incentive Density PWL HMA Pavement 460.2005
5 foot shoulders + intersections	22+05	-	44+00	Lower Layer	Milled Existing Asphaltic Surface	4 MT 58-28 S	359	2"	PWL Incentive Air Voids HMA Pavement 460.2010	Acceptance testing by department; Not eligible for incentive
5 foot shoulders + intersections	22+05	-	44+00	Upper Layer	4 MT 58-28 S	4 MT 58-28 S	359	2"	PWL Incentive Air Voids HMA Pavement 460.2010	Acceptance testing by department; Not eligible for incentive
5 foot shoulders + bypass lane + intersections	44+00	-	60+25	Lower Layer	Base Aggregate	4 MT 58-28 S	208	2"	QMP as per SS 460	Acceptance testing by department; Not eligible for incentive
5 foot shoulders + bypass lane + intersections	44+00	-	60+25	Middle Layer	4 MT 58-28 S	4 MT 58-28 S	208	2"	PWL Incentive Air Voids HMA Pavement 460.2010	Acceptance testing by department; Not eligible for incentive
5 foot shoulders + bypass lane + intersections	44+00	-	60+25	Upper Layer	4 MT 58-28 S	4 MT 58-28 S	208	2"	PWL Incentive Air Voids HMA Pavement 460.2010	Acceptance testing by department; Not eligible for incentive
5 foot shoulders+ intersections	60+25	-	218+00	Lower Layer	Milled Existing HMS Surface	4 MT 58-28 S	2289	2"	PWL Incentive Air Voids HMA Pavement 460.2010	Acceptance testing by department; Not eligible for incentive
5 foot shoulders+ intersections	60+25	-	218+00	Upper Layer	4 MT 58-28 S	4 MT 58-28 S	2289	2"	PWL Incentive Air Voids HMA Pavement 460.2010	Acceptance testing by department; Not eligible for incentive
2 x 12 foot driving lanes	263+00	-	425+35	Lower Layer	Milled Existing HMS Surface	4 MT 58-28 S	4849	2"	PWL Incentive Air Voids HMA Pavement 460.2010	Incentive Density PWL HMA Pavement 460.2005
2 x 12 foot driving lanes	263+00	-	425+35	Upper Layer	4 MT 58-28 S	4 MT 58-28 S	4849	2"	PWL Incentive Air Voids HMA Pavement 460.2010	Incentive Density PWL HMA Pavement 460.2005
5 foot shoulders + intersections	263+00	-	425+35	Lower Layer	Milled Existing HMS Surface	4 MT 58-28 S	2306	2"	PWL Incentive Air Voids HMA Pavement 460.2010	Acceptance testing by department; Not eligible for incentive
5 foot shoulders + intersections	263+00	-	425+35	Upper Layer	4 MT 58-28 S	4 MT 58-28 S	2306	2"	PWL Incentive Air Voids HMA Pavement 460.2010	Acceptance testing by department; Not eligible for incentive

3

BASE AGGREGATE ITEMS

CATEGORY	STATION	TO	STATION	LOCATION	305.0110 BASE AGGREGATE DENSE 3/4-INCH TON	305.0120 BASE AGGREGATE DENSE 1 1/4-INCH TON	312.0110 SELECT CRUSHED MATERIAL TON
0010	22+05	-	44+00	LT	140	-	-
	22+05	-	44+00	RT	140	-	-
	35+92				-	40	-
	42+92				-	45	-
	44+00	-	60+25		350	2750	5950
	60+25	-	119+00	LT	380	-	-
	60+25	-	119+00	RT	380	-	-
	74+92				-	55	-
	101+92				-	55	-
	119+00	-	124+00	LT	40	-	-
	119+00	-	127+00	RT	70	-	-
	124+00	-	218+00	LT	1400	-	-
	127+00	-	218+00	RT	1300	-	-
	139+27				-	40	-
	144+27				-	40	-
	154+67				-	40	-
	164+92				-	65	-
	212+75				-	85	-
				TOTALS	4200	2945	5950

EROSION CONTROL ITEMS

CATEGORY	STATION	TO	STATION	LOCATON	625.0100 TOPSOIL SY	628.1504 SILT FENCE LF	628.1520 SILT FENCE MAINTENANCE LF	628.2004 EROSION MAT CLASS I TYPE B SY	628.7555 CULVERT PIPE CHECK EACH	629.0210 FERTILIZER TYPE B CWT	630.0120 SEEDING MIXTURE NO. 20 LB
0010	44+00	-	60+50		1700	3125	3125	1700	-	1	45
	118+40	-	127+00	RT	300	885	885	300	-	1	8
	119+00	-	123+60	LT	250	-	-	250	-	1	7
	22+05	-	218+00		-	-	-	-	12	-	-
	UNDISTRIBUTED				225	-	-	225	-	-	6
				TOTALS	2475	4010	4010	2475	12	2	66

ADJUSTING MANHOLE COVERS

CATEGORY	STATION	LOCATION	611.8110 EACH
0010	25+08	12' RT	1
		TOTAL	1

WATER

CATEGORY	STATION	TO	STATION	624.0100 MGAL
0010	22+05	-	218+00	67
			TOTAL	67

MOBILIZATIONS EROSION CONTROL

CATEGORY	STATION	TO	STATION	628.1905 EACH
0010	22+05	-	218+00	2
			TOTAL	2

MOBILIZATIONS EMERGENCY EROSION CONTROL

CATEGORY	STATION	TO	STATION	628.1910 EACH
0010	22+05	-	218+00	2
			TOTAL	2

3

3

SIGNING & MARKING ITEMS

CATEGORY	STATION	TO	STATION	LOCATON	634.0616 POSTS WOOD 4X6-INCH 16-FT EACH	637.2230 SIGNS TYPE II REFLECTIVE F SF	643.0310.S TEMPORARY PORTABLE RUMBLE STRIPS LS	646.1020 MARKING LINE EPOXY 4-INCH WHITE LF	646.4520 MARKING LINE SAME DAY EPOXY 4-INCH YELLOW LF	646.6120 MARKING STOP LINE EPOXY 18-INCH LF	648.0100 LOCATING NO-PASSING ZONES MI	649.0105 TEMPORARY MARKING LINE PAINT 4-INCH YELLOW LF	649.0120 TEMPORARY MARKING LINE EPOXY 4-INCH YELLOW LF
0010	42+00			LT	-	-	-	-	-	25	-	-	-
	110+67			RT	1	8	-	-	-	-	-	-	-
	116+32			RT	1	8	-	-	-	-	-	-	-
	127+50			RT	-	-	-	-	-	25	-	-	-
	155+75			LT	-	-	-	-	-	20	-	-	-
	208+50			LT	-	-	-	-	-	20	-	-	-
	208+75			RT	-	-	-	-	-	20	-	-	-
	216+75			RT	-	-	-	-	-	20	-	-	-
	22+05	-	218+00		-	-	1	38700	29050	-	3.7	29050	29050
				TOTALS	2	16	1	38700	29050	130	3.7	29050	29050

TRAFFIC CONTROL ITEMS

CATEGORY	STAGE	DAYS PER STAGE	643.0300 TRAFFIC CONTROL DRUMS *EACH	DAY	643.0310.S TEMPORARY PORTABLE RUMBLE STRIPS LS	643.0420 TRAFFIC CONTROL BARRICADES TYPE III *EACH	DAY	643.0705 TRAFFIC CONTROL WARNING LIGHTS TYPE A *EACH	DAY	643.0900 TRAFFIC CONTROL SIGNS *EACH	DAY	643.0910 TRAFFIC CONTROL COVERING SIGNS TYPE I **EACH	643.0920 TRAFFIC CONTROL COVERING SIGNS TYPE II **EACH	643.1050 TRAFFIC CONTROL SIGNS PCMS *EACH	DAY
0010	PRE-CONSTRUCTION	7	10	70	-	-	-	-	-	-	-	-	-	2	14
	PIPE REPLACEMENT	6	-	-	-	-	-	-	-	16	96	-	-	-	-
	ROAD CLOSURE	19	5	95	1.0	21	399	42	798	215	4085	4	10	1	19
	RUMBLE STRIPS & MARKING	5	-	-	-	-	-	-	-	16	80	-	-	-	-
			TOTAL	165	1.0	-	399	-	798	-	4261	4	10	-	33

*FOR INFORMATIONAL PURPOSES ONLY

**ONE CYCLE FOR TRAFFIC CONTROL COVERING SIGNS TYPE I & TYPE II DURING ROAD CLOSURE STAGE

3

GEOGRID TYPE SR

CATEGORY	STATION	TO	STATION	LOCATION	645.0220 SY
0010	44+00	-	60+25	RT & LT	6500
				TOTAL	6500

SAWING ASPHALT

CATEGORY	STATION	690.0150 LF
0010	22+05	30
	35+92	60
	42+50	30
	42+92	60
	44+00	30
	60+25	30
	74+92	60
	101+92	60
	127+75	30
	139+27	60
	144+27	60
	154+67	60
	156+00	30
	164+92	60
	208+50	30
	209+00	30
	212+75	60
	218+00	30
	TOTALS	810

CAST IRON MONUMENT COVERS

CATEGORY	STATION	TO	STATION	SPV.0060.01 EACH	REMARKS
0010	22+05	-	218+00	1	UNDISTRIBUTED
			TOTAL	1	

CONSTRUCTION STAKING ITEMS

CATEGORY	STATION	TO	STATION	LOCATON	650.4500 CONSTRUCTION STAKING SUBGRADE LF	650.5000 CONSTRUCTION STAKING BASE LF	650.6000 CONSTRUCTION STAKING PIPE CULVERTS EACH	650.8000 CONSTRUCTION STAKING RESURFACING REFERENCE LF	650.9920 CONSTRUCTION STAKING SLOPE STAKES LF
10	44+00	-	60+25	CL	1630	1630	3	-	1630
	118+75	-	126+50	CL	-	-	-	-	775
	22+05	-	218+00	CL	-	-	9	19595	-
				TOTALS	1630	1630	12	19595	2405

VERIFY LANDMARK REFERENCE MONUMENTS

CATEGORY	STATION	LOCATION	SPV.0060.02 EACH
0010	155+97	47.7' LT	1
		TOTAL	1

3

Division	From/To Station	205.0100 Common Excavation (1)	Salvaged/Unusable Pavement Material (3)	Available Material (4)	Unexpanded Fill	Expanded Fill (5)	Mass Ordinate +/- (6)
		Cut (2)				Factor 1.30	
Division 1							
Culvert Pipe	263+00 - 425+35	2,561	679	1,882	1,757	2,284	-402
Grand Total		2,561	679	1,882	1,757	2,284	-402

Notes:

(1) Common Excavation is the sum of the Cut and EBS Excavation columns. Item number 205.0100

(2) Salvaged/Unsuable Pavement Material is included in Cut.

(3) Salvaged/Unusable Pavement Material

(4) Available Material = Cut - Salvaged/Unusuable Pavement Material

(5) Expanded Fill Factor = 1.3

Depending on selec **Expanded Fill = (Unexpanded Fill - Expanded Rock - Reduced Marsh - Reduced EBS) * Fill Factor**

Expanded Fill = (Unexpanded Fill - Expanded Rock - Reduced EBS) * Fill Factor

Expanded Fill = (Unexpanded Fill - Expanded Rock - Reduced Marsh) * Fill Factor

Expanded Fill = (Unexpanded Fill - Expanded Rock) * Fill Factor

(6) The Mass Ordinate + or - Qty calculated for the Division. Plus quantity indicates an excess of material within the Division. Minus indicates a shortage of material within the Division.

3

CULVERT ITEMS

CATEGORY	STATION	203.0100 REMOVING SMALL PIPE CULVERTS EACH	203.02 REMOVING OLD STRUCTURE LS	522.0124 CULVERT PIPE REINFORCED CONCRETE CLASS III 24-INCH LF	522.0130 CULVERT PIPE REINFORCED CONCRETE CLASS III 30-INCH LF	522.0142 CULVERT PIPE REINFORCED CONCRETE CLASS III 42-INCH LF	522.1024 APRON ENDWALLS FOR CULVERT PIPE REINFORCED CONCRETE CLASS III 24-INCH EACH	522.1030 APRON ENDWALLS FOR CULVERT PIPE REINFORCED CONCRETE CLASS III 30-INCH EACH	522.1042 APRON ENDWALLS FOR CULVERT PIPE REINFORCED CONCRETE CLASS III 42-INCH EACH	522.2319 CULVERT PIPE REINFORCED CONCRETE HORIZONTAL ELLIPTICAL CLASS HE-III 19X30-INCH LF	522.2324 CULVERT PIPE REINFORCED CONCRETE HORIZONTAL ELLIPTICAL CLASS HE-III 24X38-INCH LF	522.2619 APRON ENDWALLS FOR CULVERT PIPE REINFORCED CONCRETE HORIZONTAL ELLIPTICAL CLASS HE-III 19X30-INCH EACH	522.2624 APRON EDNWALLS FOR CULVERT PIPE REINFORCED CONCRETE HORIZONTAL ELLIPTICAL CLASS HE-III 24X38-INCH EACH	REMARKS
0010	265+90	1	-	76	-	-	2	-	-	-	-	-	-	REMOVE EXISTING 24"X79' CSCP
	266+75	1	-	60	-	-	2	-	-	-	-	-	-	REMOVE EXISTING 24"X64' CSCP
	285+00	-	1	-	-	56	-	-	2	-	-	-	-	REMOVE EXISTING 3'X3'X62' RC BOX CULVERT
	319+00	1	-	76	-	-	2	-	-	-	-	-	-	REMOVE EXISTING 24"X80' CSCP
	319+92	1	-	70	-	-	2	-	-	-	-	-	-	REMOVE EXISTING 24"X74' CSCP
	333+00	1	-	54	-	-	2	-	-	-	-	-	-	REMOVE EXISTING 24"X57' CSCP
	348+96	1	-	-	-	-	-	-	-	92		2	-	REMOVE EXISTING 29"X18"X92' CSPA
	366+18	1	-	50	-	-	2	-	-	-	-	-	-	REMOVE EXISTING 24"X54' CSCP
	372+30	1	-	-	76	-	-	2	-	-	-	-	-	REMOVE EXISTING 30"X78' CSCP
	373+20	1	-	-	74	-	-	2	-	-	-	-	-	REMOVE EXISTING 30"X76' CSCP
	399+45	1	-	50	-	-	2	-	-	-	-	-	-	REMOVE EXISTING 24"X54' CSCP
	418+00	2	-	-	-	-	-	-	-	-	90	-	4	REMOVE 2 EXISTING 36"22"X48' CSPA
TOTALS		12	1	436	150	56	14	4	2	92	90	2	4	

3

3

ASPHALTIC ITEMS

CATEGORY	STATION	TO	STATION	204.0120 REMOVING ASPHALTIC SURFACE MILLING SY	211.0400 PREPARE FOUNDATION FOR ASPHALTIC SHOULDERS STA	305.0100 ASPHALTIC BASE TON	455.0605 TACK COAT GAL	460.4110.S REHEATING HMA PAVEMENT LONGITUDINAL JOINTS LF	460.6224 HMA PAVEMENT 4 MT 58-28 S TON	465.0105 ASPHALTIC SURFACE TON	465.0425 ASPHALT SHOULDER RUMBLE STRIPS 2-LANE RURAL LF	465.0475 ASPHALT CENTERLINE RUMBLE STRIPS 2-LANE RURAL LF	SPV.0090.01 REMOVING HMA PAVEMENT NOTCHED WEDGE LONGITUDINAL JOINT MILLING LF	SPV.0180.01 REMOVING DISTRESSED PAVEMENT MILLING SY
0010	263+00	-	425+35	56700	319	-	7700	32470	14310	-	31900	15950	32470	-
	265+90			-	-	20	-	-	-	-	-	-	-	-
	266+75			-	-	14	-	-	-	-	-	-	-	-
	285+00			-	-	25	-	-	-	-	-	-	-	-
	319+00			-	-	14	-	-	-	-	-	-	-	-
	319+92			-	-	20	-	-	-	-	-	-	-	-
	333+00			-	-	14	-	-	-	-	-	-	-	-
	348+96			-	-	14	-	-	-	-	-	-	-	-
	366+18			-	-	20	-	-	-	-	-	-	-	-
	372+30			-	-	15	-	-	-	-	-	-	-	-
	373+20			-	-	15	-	-	-	-	-	-	-	-
	399+45			-	-	20	-	-	-	-	-	-	-	-
	418+00			-	-	20	-	-	-	-	-	-	-	-
UNDISTRIBUTED				-	-	-	-	-	-	315	-	-	-	2850
TOTALS				56700	319	211	7700	32470	14310	315	31900	15950	32470	2850

BASE AGGREGATE ITEMS

CATEGORY	STATION	TO	STATION	305.0110 BASE AGGREGATE DENSE 3/4-INCH TON	305.0120 BASE AGGREGATE DENSE 1 1/4-INCH TON
0010	263+00	-	425+35	700	-
	265+90			-	55
	266+75			-	40
	285+00			-	65
	319+00			-	40
	319+92			-	55
	333+00			-	40
	348+96			-	35
	366+18			-	55
	372+30			-	40
	373+20			-	40
	399+45			-	40
	418+00			-	55
			TOTAL	700	560

3

3

WATER

CATEGORY	STATION	TO	STATION	624.0100 MGAL
0010	263+00	-	425+35	7
			TOTAL	7

TRAFFIC CONTROL ITEMS

CATEGORY	STAGE	DAYS PER STAGE	643.0300 TRAFFIC CONTROL DRUMS *EACH	DAY	643.0310.S TEMPORARY PORTABLE RUMBLE STRIPS LS	643.0900 TRAFFIC CONTROL SIGNS *EACH	DAY	643.1050 TRAFFIC CONTROL SIGNS PCMS *EACH	DAY
0010	PRE-CONSTRUCTION	7	10	70	-	-	-	2	14
	PIPE REPLACEMENT	7	-	-	-	16	112	-	-
	PAVING FIRST LIFT	7	-	-	0.5	16	112	-	-
	PAVING SECOND LIFT	9	-	-	0.5	22	198	-	-
	RUMBLE STRIPS & MARKING	3	-	-	-	16	48	-	-
			TOTAL	70	1.0	-	470	-	14

*FOR INFORMATIONAL PURPOSES ONLY

MARKING ITEMS

CATEGORY	STATION	TO	STATION	LOCATON	643.0310.S TEMPORARY PORTABLE RUMBLE STRIP LS	646.1020 MARKING LINE EPOXY 4-INCH WHITE LF	646.1020 MARKING LINE SAME DAY EPOXY 4-INCH YELLOW LF	646.6120 MARKING STOP LINE EPOXY 18-INCH LF	648.0100 LOCATING NO-PASSING ZONES MI	649.0105 TEMPORARY MARKING LINE PAINT 4-INCH YELLOW LF	649.0120 TEMPORARY MARKING LINE EPOXY 4-INCH YELLOW LF
0010	263+00	-	425+35		1	31900	18450	-	3.1	18450	18450
	266+30			LT	-	-	-	20	-	-	-
	266+40			RT	-	-	-	20	-	-	-
	319+50			RT	-	-	-	20	-	-	-
	319+50			LT	-	-	-	20	-	-	-
	372+50			LT	-	-	-	20	-	-	-
	372+70			RT	-	-	-	20	-	-	-
				TOTALS	1	31900	18450	120	3.1	18450	18450

CONSTRUCTION STAKING PIPE CULVERTS

CATEGORY	STATION	TO	STATION	650.6000 EACH
0010	263+00	-	425+35	13
				13

CONSTRUCTION STAKING RESURFACING REFERENCE

CATEGORY	STATION	TO	STATION	LOCATION	650.8000 LF
0010	263+00	-	425+35	RT & LT	16235
				TOTAL	16235

3

CAST IRON MONUMENT COVERS

CATEGORY	STATION	TO	STATION	SPV.0060.01 EACH	REMARKS
0010	263+00	-	425+35	1	Undistributed
			TOTAL	1	

VERIFY LANDMARK REFERENCE MONUMENTS

CATEGORY	STATION	LOCATION	SPV.0060.02 EACH
0010	266+41	1.2' LT	1
	292+85	21.1' LT	1
	319+40	22.2' LT	1
	346+06	0.9' RT	1
	426+13	3.1' RT	1
		TOTAL	5

SAWING ASPHALT

CATEGORY	STATION	LOCATION	690.0150 LF
0010	263+00		30
	265+90		60
	266+30	RT	30
	266+30	LT	30
	266+75		60
	285+00		60
	319+00		60
	319+50	RT	30
	319+50	LT	30
	319+92		60
	333+00		60
	348+96		60
	366+18		60
	372+30		60
	372+75	RT	30
	372+75	LT	30
	373+20		60
	399+45		60
	418+00		60
	425+35		30
	TOTALS		960

3

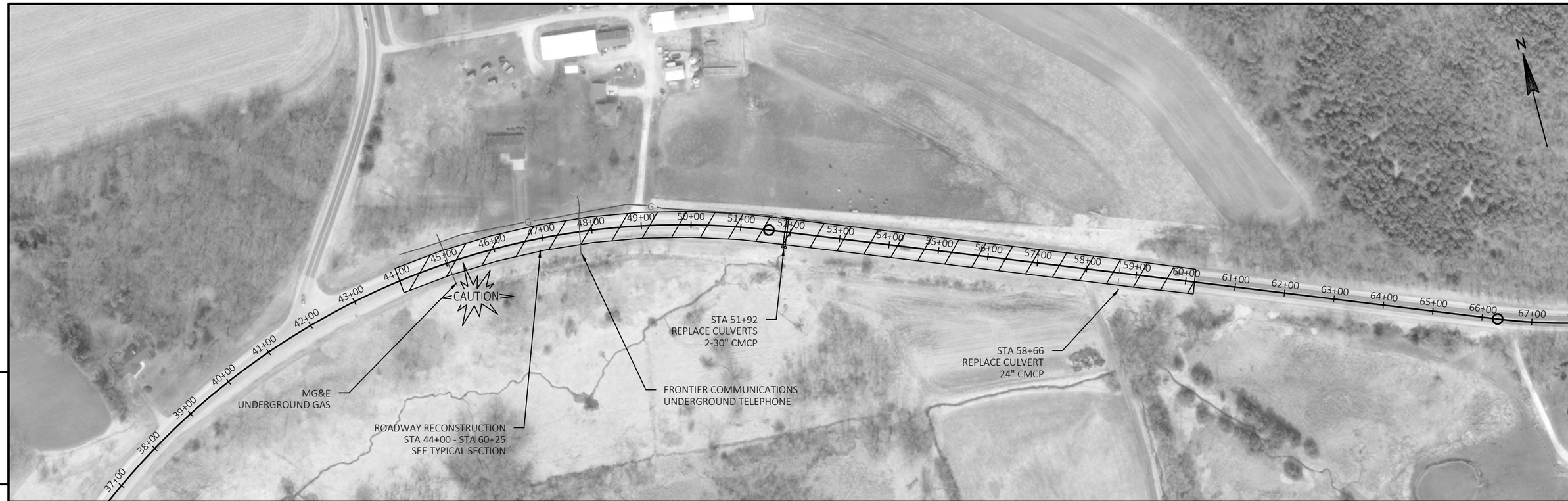

5

5

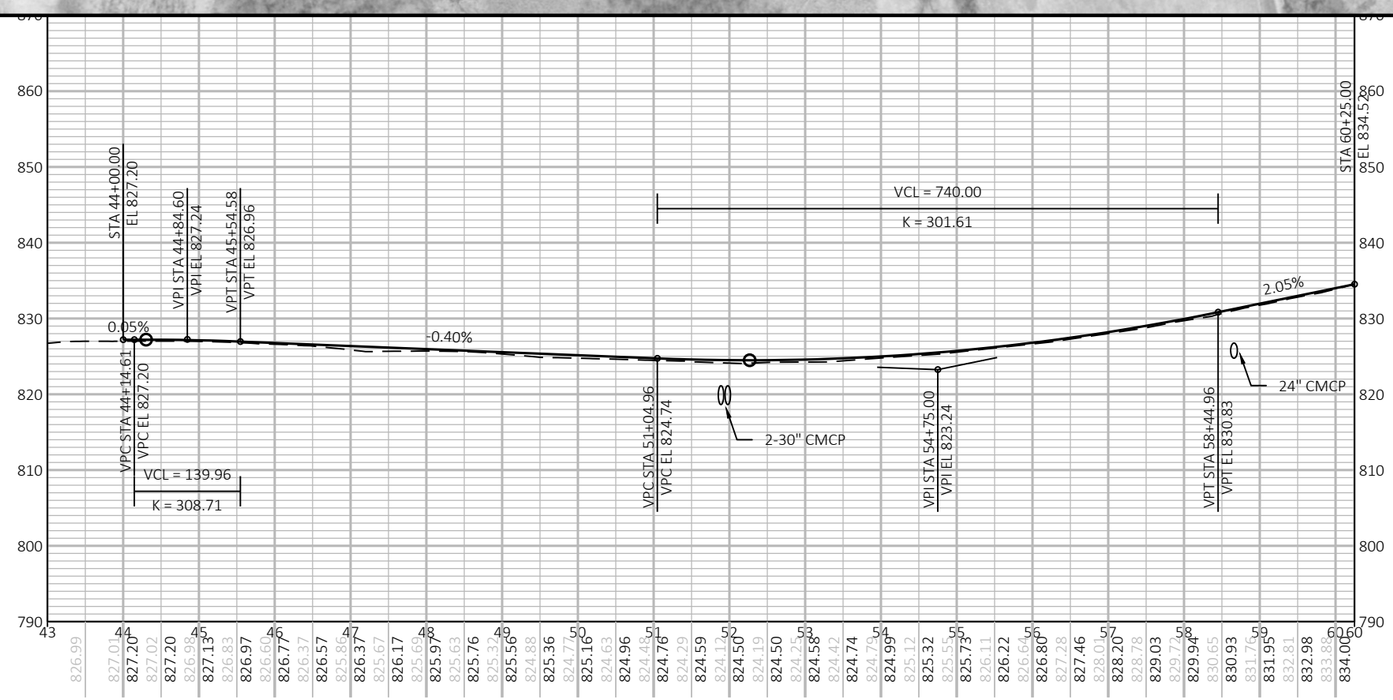

PROJECT NO: 5271-08-73	HWY: STH 60	COUNTY: COLUMBIA	PLAN AND PROFILE:	SHEET 44	E

Standard Detail Drawing List

08E09-06	SILT FENCE
08F01-11	APRON ENDWALLS FOR CULVERT PIPE
08F02-01	APRON ENDWALLS FOR PIPE ARCH AND ELLIPTICAL PIPE
08F04-07	JOINT TIES FOR CONCRETE PIPE AND CONCRETE COLLAR DETAIL
08F10-01	CONCRETE MASONRY ENDWALLS FOR CULVERT PIPE AND PIPE ARCH
13A10-02A	2-LANE RURAL SHOULDER RUMBLE STRIP, MILLING
13A10-02B	2-LANE RURAL SHOULDER RUMBLE STRIP, MILLING
13A10-02C	2-LANE RURAL SHOULDER RUMBLE STRIP, MILLING
13A10-02D	2-LANE RURAL SHOULDER RUMBLE STRIP, MILLING
13A11-03A	2-LANE RURAL CENTER LINE RUMBLE STRIP, MILLING
13A11-03B	2-LANE RURAL CENTER LINE RUMBLE STRIP, MILLING
14B42-06A	MIDWEST GUARDRAIL SYSTEM (MGS) GUARDRAIL
14B42-06B	MIDWEST GUARDRAIL SYSTEM (MGS) GUARDRAIL
14B42-06C	MIDWEST GUARDRAIL SYSTEM (MGS) GUARDRAIL
14B42-06D	MIDWEST GUARDRAIL SYSTEM (MGS) GUARDRAIL
14B44-04A	MIDWEST GUARDRAIL SYSTEM ENERGY ABSORBING TERMINAL (MGS)
14B44-04B	MIDWEST GUARDRAIL SYSTEM ENERGY ABSORBING TERMINAL (MGS)
14B44-04C	MIDWEST GUARDRAIL SYSTEM ENERGY ABSORBING TERMINAL (MGS)
14B45-05A	MIDWEST GUARDRAIL SYSTEM THRIE BEAM TRANSITION (MGS)
14B45-05B	MIDWEST GUARDRAIL SYSTEM THRIE BEAM TRANSITION (MGS)
14B45-05C	MIDWEST GUARDRAIL SYSTEM THRIE BEAM TRANSITION (MGS)
15C02-07A	BARRICADES AND SIGNS FOR MAINLINE CLOSURES
15C02-07B	BARRICADES AND SIGNS FOR VARIOUS CLOSURES
15C02-07C	DETOUR SIGNING FOR MAINLINE CLOSURES
15C04-05	TRAFFIC CONTROL, ADVANCE WARNING SIGNS 45 M.P.H. OR GREATER TWO-WAY UNDIVIDED ROAD OPEN TO TRAFFIC
15C08-19A	LONGITUDINAL MARKING (MAINLINE)
15C12-06	TRAFFIC CONTROL FOR LANE CLOSURE WITH FLAGGING OPERATION
15C19-05A	MOVING PAVEMENT MARKING OPERATION TWO-LANE TWO-WAY ROADWAY
15C33-03	STOP LINE AND CROSSWALK PAVEMENT MARKING
15D38-02A	TEMPORARY TRAFFIC CONTROL SIGN MOUNTING
15D38-02B	ATTACHMENT OF SIGNS TO POSTS
15D39-02	TRAFFIC CONTROL, DROP-OFF SIGNING
16A01-07	LANDMARK REFERENCE MONUMENTS AND COVERS

6

6

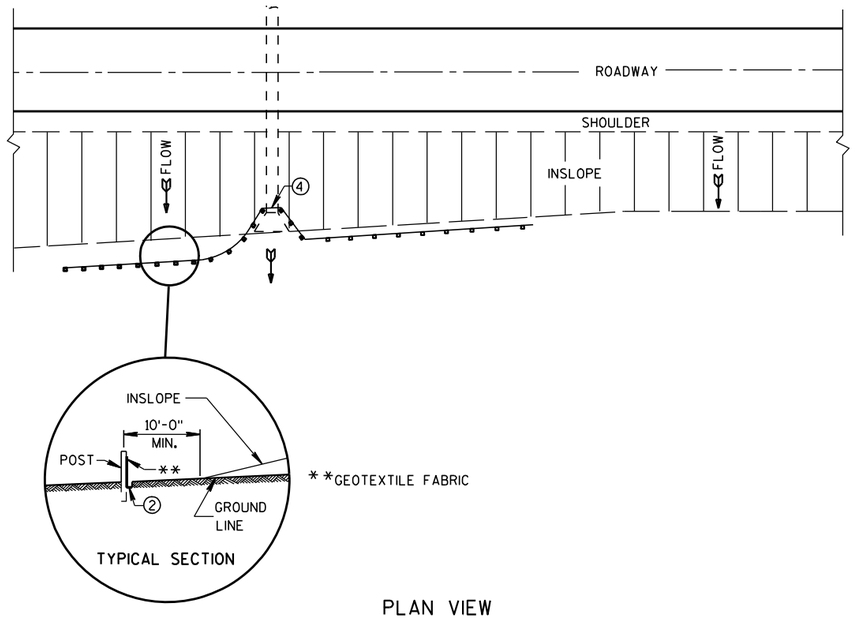

PLAN VIEW

TYPICAL APPLICATION OF SILT FENCE

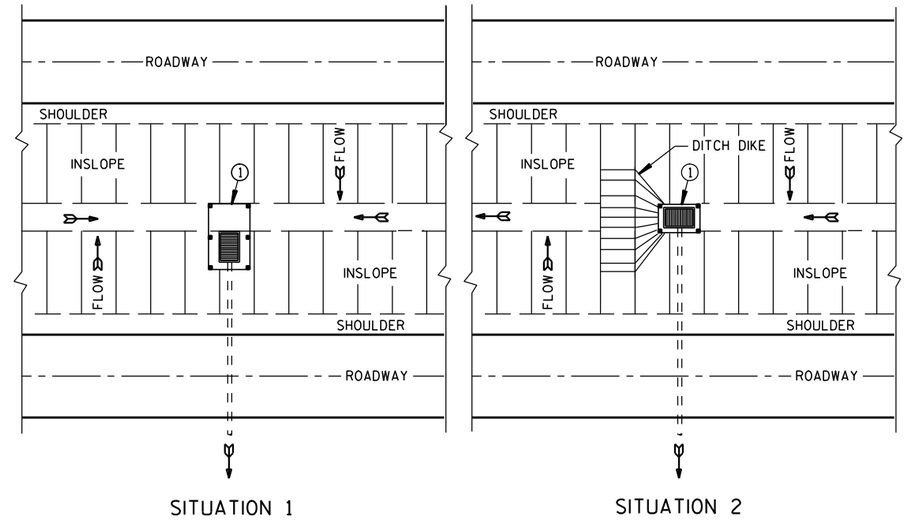

PLAN VIEW

SILT FENCE AT MEDIAN SURFACE DRAINS

GENERAL NOTES

DETAILS OF CONSTRUCTION NOT SHOWN ON THIS DRAWING SHALL CONFORM TO THE PERTINENT REQUIREMENTS OF THE STANDARD SPECIFICATIONS AND APPLICABLE SPECIAL PROVISIONS.

① HORIZONTAL BRACE REQUIRED WITH 2" X 4" WOODEN FRAME OR EQUIVALENT AT TOP OF POSTS.

② FOR MANUAL INSTALLATIONS THE TRENCH SHALL BE A MINIMUM OF 4" WIDE & 6" DEEP TO BURY AND ANCHOR THE GEOTEXTILE FABRIC. FOLD MATERIAL TO FIT TRENCH AND BACKFILL & COMPACT TRENCH WITH EXCAVATED SOIL.

③ WOOD POSTS SHALL BE A MINIMUM SIZE OF 1⅛" X 1⅛" OF OAK OR HICKORY.

④ SILT FENCE TO EXTEND ACROSS THE TOP OF THE PIPE.

⑤ CONSTRUCT SILT FENCE FROM A CONTINUOUS ROLL IF POSSIBLE BY CUTTING LENGTHS TO AVOID JOINTS. IF A JOINT IS NECESSARY USE ONE OF THE FOLLOWING TWO METHODS; A) OVERLAP THE END POSTS AND TWIST, OR ROTATE, AT LEAST 180 DEGREES. B) HOOK THE END OF EACH SILT FENCE LENGTH.

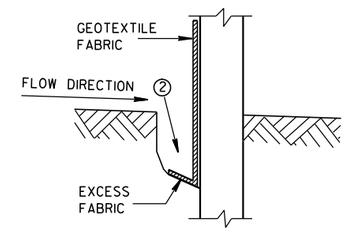

TRENCH DETAIL

NOTE: ADDITIONAL POST DEPTH OR TIE BACKS MAY BE REQUIRED IN UNSTABLE SOILS

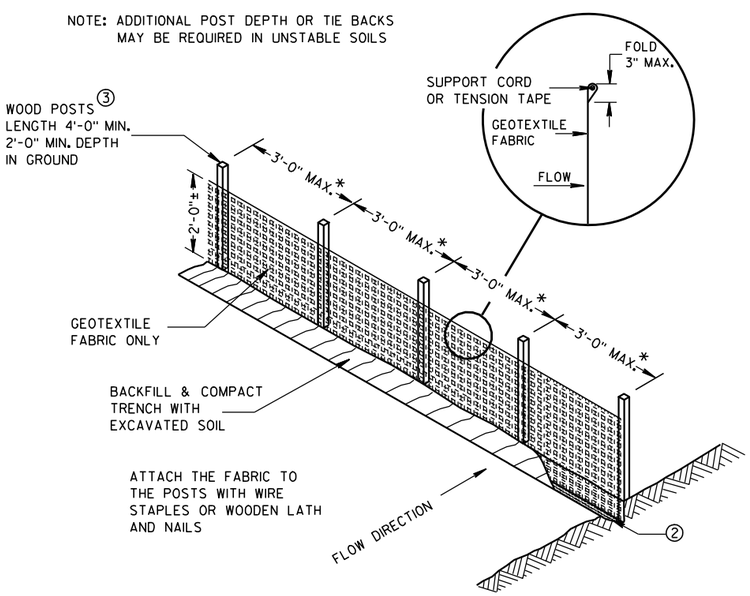

*NOTE: 8'-0" POST SPACING ALLOWED IF A WOVEN GEOTEXTILE FABRIC IS USED.

SILT FENCE

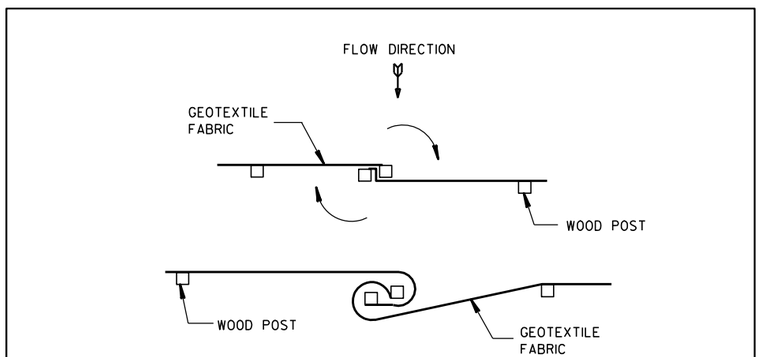

TWIST METHOD

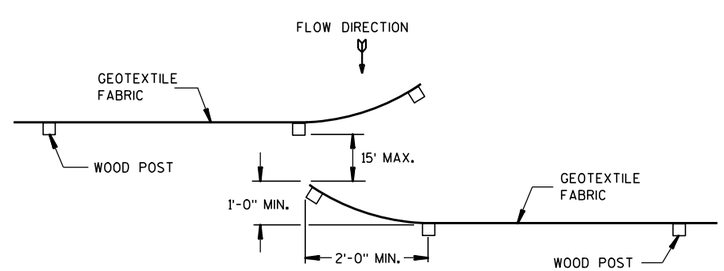

HOOK METHOD

JOINING TWO LENGTHS OF SILT FENCE ⑤

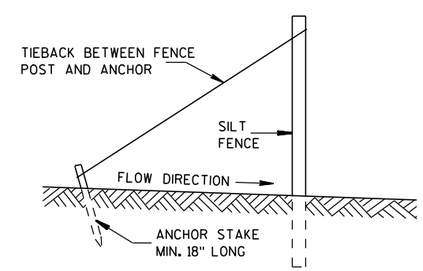

SILT FENCE TIE BACK

(WHEN REQUIRED BY THE ENGINEER)

SILT FENCE
STATE OF WISCONSIN DEPARTMENT OF TRANSPORTATION
APPROVED 4-29-05 /S/ Beth Cann----- DATE CHIEF ROADWAY DEVELOP ENGINEER FHWA

6

6

S.D.D. 8 E 9-6

S.D.D. 8 E 9-6

METAL APRON ENDWALLS

PIPE DIA. (IN.)	MIN. THICK. (Inches) STEEL	MIN. THICK. (Inches) ALUM.	DIMENSIONS (Inches) A (±1")	B (MAX.)	H (±1")	L (±1 1/2")	L1 ①	L2 ①	W (±2")	APPROX. SLOPE	BODY
12	.064	.060	6	6	6	21	12	17 1/2	24	2 1/2 to 1	1 Pc.
15	.064	.060	7	8	6	26	14	21 3/4	30	2 1/2 to 1	1 Pc.
18	.064	.060	8	10	6	31	15	28 1/4	36	2 1/2 to 1	1 Pc.
21	.064	.060	9	12	6	36	18	29 5/8	42	2 1/2 to 1	1 Pc.
24	.064	.075	10	13	6	41	18	37 1/4	48	2 1/2 to 1	1 Pc.
30	.079	.075	12	16	8	51	18	52 1/4	60	2 1/2 to 1	1 Pc.
36	.079	.105	14	19	9	60	24	59 3/4	72	2 1/2 to 1	2 Pc.
42	.109	.105	16	22	11	69	24	75 5/8	84	2 1/2 to 1	2 Pc.
48	.109	.105	18	27	12	78	24	81	90	2 1/4 to 1	3 Pc.
54	.109	.105	18	30	12	84	30	85 1/2	102	2 1/4 to 1	3 Pc.
60	.109×	.105×	18	33	12	87	—	—	114	2 to 1	3 Pc.
66	.109×	.105×	18	36	12	87	—	—	120	2 to 1	3 Pc.
72	.109×	.105×	18	39	12	87	—	—	126	2 to 1	3 Pc.
78	.109×	.105×	18	42	12	87	—	—	132	1 1/2 to 1	3 Pc.
84	.109×	.105×	18	45	12	87	—	—	138	1 1/2 to 1	3 Pc.
90	.109×	.105×	18	37	12	87	—	—	144	1 1/2 to 1	3 Pc.
96	.109×	.105×	18	35	12	87	—	—	150	1 1/2 to 1	3 Pc.

× EXCEPT CENTER PANEL
SEE GENERAL NOTES

REINFORCED CONCRETE APRON ENDWALLS

PIPE DIA. (IN.)	DIMENSIONS (Inches) T	A	B	C	D	E	G	APPROX. SLOPE
12	2	4	24	48 7/8	72 7/8	24	2	3 to 1
15	2 1/4	6	27	46	73	30	2 1/4	3 to 1
18	2 1/2	9	27	46	73	36	2 1/2	3 to 1
21	2 3/4	9	36	37 1/2	73 1/2	42	2 3/4	3 to 1
24	3	9 1/2	43 1/2	30	73 1/2	48	3	3 to 1
27	3 1/4	10 1/2	49 1/2	24	73 1/2	54	3 1/4	3 to 1
30	3 1/2	12	54	19 3/4	73 1/2	60	3 1/2	3 to 1
36	4	15	63	34 3/4	97 3/4	72	4	3 to 1
42	4 1/2	21	63	35	98	78	4 1/2	3 to 1
48	5	24	72	26	98	84	5	3 to 1
54	5 1/2	27	65	*33 1/4-**35	*98 1/4-**100	90	5 1/2	2 2/5 to 1
60	6	*30-**35	60	39	99	96	5	2 to 1
66	6 1/2	*24-**30	*72-**78	*21-**27	99	102	5 1/2	2 to 1
72	7	*24-**36	78	21	99	108	6	2 to 1
78	7 1/2	*24-**36	78	21	99	114	6 1/2	2 to 1
84	8	36	90 1/2	21	111 1/2	120	6 1/2	1 1/2 to 1
90	8 1/2	41	87 1/2	24	111 1/2	132	6 1/2	1 1/2 to 1

*MINIMUM
**MAXIMUM

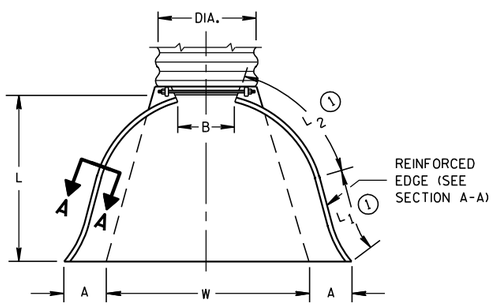

PLAN VIEW

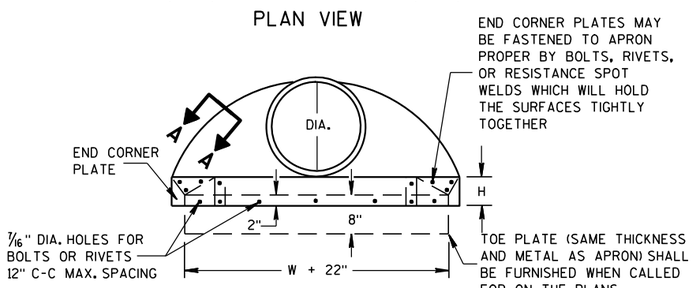

END VIEW

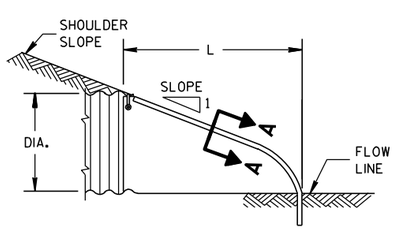

SIDE ELEVATION

METAL ENDWALLS

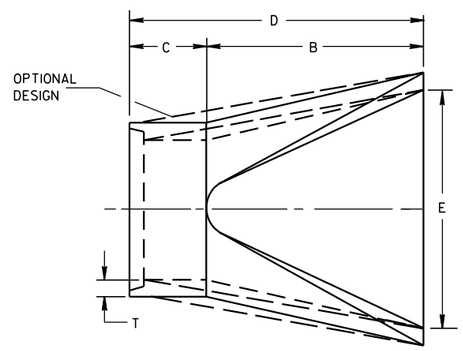

PLAN

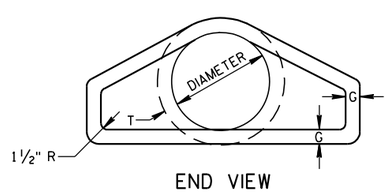

END VIEW

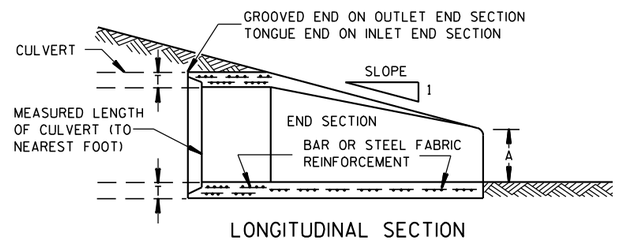

LONGITUDINAL SECTION

CONCRETE ENDWALLS

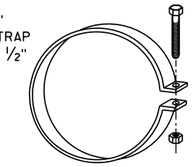

ALTERNATE FOR TYPE 1 CONNECTION

END SECTION CONNECTOR STRAP

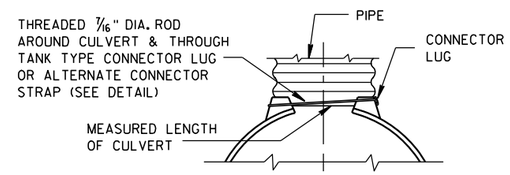

TYPE 1
FOR 12" THRU 24" CORR. PIPE

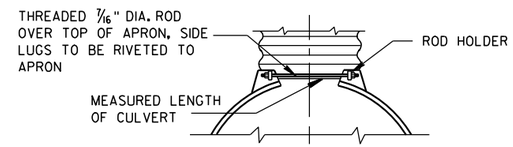

TYPE 2
FOR 30" THRU 96" CORR. PIPE

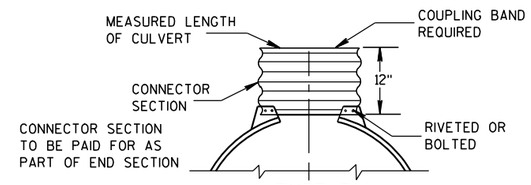

TYPE 3
FOR 42" THRU 96" CORR. PIPE

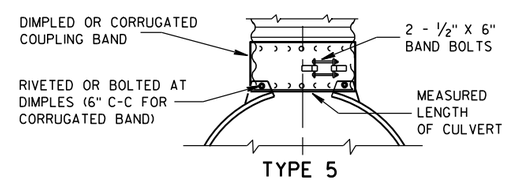

TYPE 5
ALTERNATE FOR:
ALL SIZES CORRUGATED CIRCULAR PIPE

NOTE: DIMPLED BAND FITS OVER OUTSIDE OF ENDWALL, AND CORRUGATED BAND FITS INSIDE ENDWALL. DIMPLED BAND MAY BE USED WITH HELICALLY CORRUGATED PIPE.

FOR CIRCUMFERENTIALLY CORRUGATED PIPE USE ENDWALL CONNECTION DETAILS 1, 2, 3 OR 5 AS APPLICABLE.

FOR HELICALLY CORRUGATED PIPE USE ENDWALL CONNECTION DETAILS 1, 2 OR 5.

FOR HELICALLY CORRUGATED PIPES WITH TWO CIRCUMFERENTIAL CORRUGATIONS AT EACH END USE ENDWALL CONNECTION DETAILS 1, 2 OR 3.

CONNECTION DETAILS

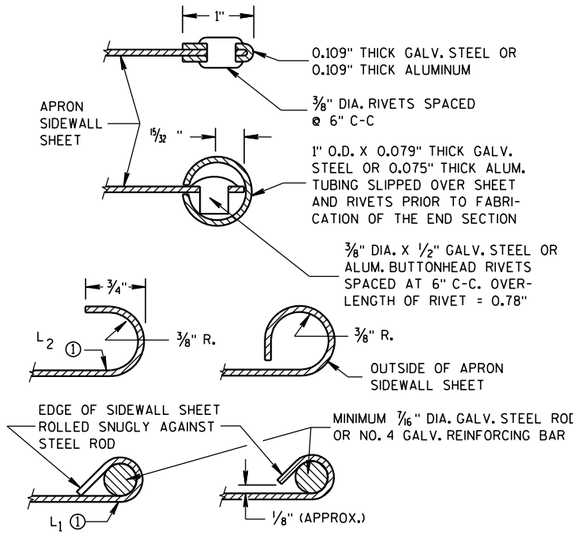

SECTION A-A

GENERAL NOTES

DETAILS OF CONSTRUCTION, MATERIALS AND WORKMANSHIP NOT SHOWN ON THIS DRAWING SHALL CONFORM TO THE PERTINENT REQUIREMENTS OF THE STANDARD SPECIFICATIONS AND THE APPLICABLE SPECIAL PROVISIONS.

CONCRETE CULVERT ENDWALLS MAY NOT BE USED WITH GALVANIZED STEEL OR ALUMINUM CULVERT PIPE OR VISE VERSA. GALVANIZED STEEL OR ALUMINUM ENDWALLS SHALL NORMALLY BE INSTALLED ON CULVERT PIPE OF THE SAME METAL.

ALL THREE PIECE STEEL APRON ENDWALLS FOR 60" DIAMETER PIPE AND LARGER SHALL HAVE 0.109" SIDES AND 0.138" CENTER PANELS. ALL THREE PIECE ALUMINUM APRON ENDWALLS FOR 60" DIAMETER PIPE AND LARGER SHALL HAVE 0.105" SIDES AND 0.134" CENTER PANELS. THE WIDTH OF CENTER PANELS SHALL BE GREATER THAN 20 PERCENT OF THE PIPE PERIMETER.

LAP SEAMS SHALL BE TIGHTLY JOINED BY GALVANIZED RIVETS OR BOLTS FOR STEEL UNITS AND ALUMINUM RIVETS AND BOLTS FOR ALUMINUM UNITS. FOR THE 60" THROUGH 96" DIAMETER APRON ENDWALL SIZES, THE REINFORCED EDGES AND CENTER PANEL SEAMS SHALL BE FURTHER REINFORCED WITH GALVANIZED STEEL OR ALUMINUM STIFFENER ANGLES. THE ANGLES SHALL BE ATTACHED BY GALVANIZED NUTS AND BOLTS FOR STEEL UNITS AND ALUMINUM NUTS AND BOLTS FOR ALUMINUM UNITS.

WHERE TWO OR MORE PIPES WITH APRON ENDWALLS ARE LAID ADJACENT TO EACH OTHER, THEY SHALL BE SEPARATED BY A DISTANCE SUFFICIENT TO PROVIDE A MINIMUM CLEARANCE OF 6 INCHES BETWEEN APRON ENDWALLS.

① FOR PIPE SIZES UP TO 60" DIAMETER, A 180° ROLLED EDGE MAY BE USED INSTEAD OF STEEL ROD REINFORCEMENT. SEE SECTION A-A.

APRON ENDWALLS FOR CULVERT PIPE

STATE OF WISCONSIN
DEPARTMENT OF TRANSPORTATION

APPROVED
11/30/94 — DATE
/S/ Rory L. Rhinesmith — CHIEF ROADWAY DEVELOPMENT ENGINEER
FHWA

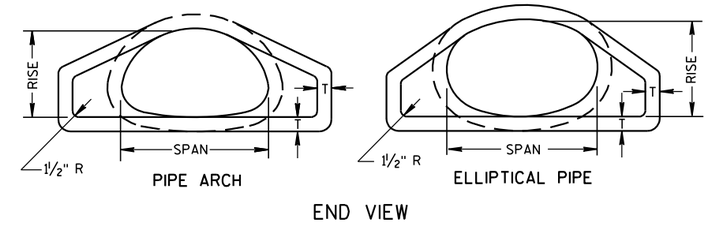

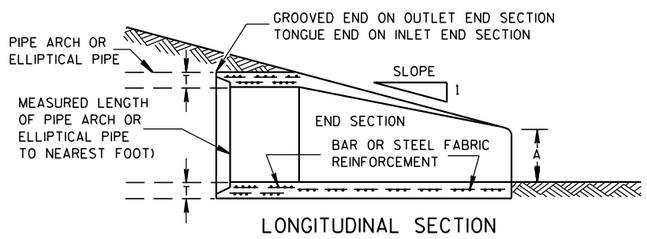

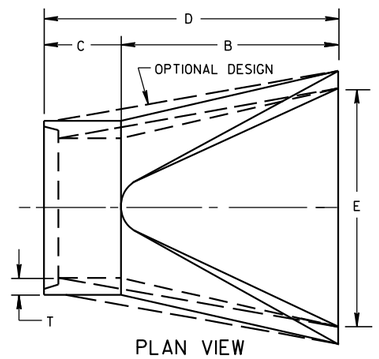

CONCRETE ENDWALLS

2- ⅔" X ½" CORRUGATIONS														
EQUIV. DIA. (Inches)	(Inches)		MIN. THICK. (Inches)		DIMENSIONS (Inches)							APPROX. SLOPE	BODY
	SPAN	RISE	STEEL	ALUM.	A (±1")	B (MAX.)	H (±1")	L (±1½")	L1 ①	L2 ①	W (±2")		
15	17	13	.064	.060	7	9	6	19	14	16	30	2½ to 1	1 Pc.
18	21	15	.064	.060	7	10	6	23	14	19⅜	36	2½ to 1	1 Pc.
21	24	18	.064	.060	8	12	6	28	18	21¾	42	2½ to 1	1 Pc.
24	28	20	.064	.060	9	14	6	32	18	27½	48	2½ to 1	1 Pc.
30	35	24	.079	.075	10	16	6	39	18	37⅝	60	2½ to 1	1 Pc.
36	42	29	.079	.075	12	18	8	46	24	45⅜	75	2½ to 1	1 Pc.
42	49	33	.109	.105	13	21	9	53	24	54¾	85	2½ to 1	2 Pc.
48	57	38	.109	.105	18	26	12	63	24	68	90	2½ to 1	3 Pc.
54	64	43	.109	.105	18	30	12	70	24	72¾	102	2¼ to 1	3 Pc.
60	71	47	.109*	.105*	18	33	12	77	30	82¼	114	2¼ to 1	3 Pc.
66	77	52	.109*	.105*	18	36	12	77	—	—	126	2 to 1	3 Pc.
72	83	57	.109*	.105*	18	39	12	77	—	—	138	2 to 1	3 Pc.

3" X 1" CORRUGATIONS														
EQUIV. DIA. (Inches)	(Inches)		MIN. THICK. (Inches)		DIMENSIONS (Inches)							APPROX. SLOPE	BODY
	SPAN	RISE	STEEL	ALUM.	A (±1")	B (MAX.)	H (±1")	L (±1½")	L1 ①	L2 ①	W (±2")		
48	53	41	.109	.105	18	26	12	63	24	72¾	90	2½ to 1	2 Pc.
54	60	46	.109	.105	18	30	12	70	30	82¼	102	2 to 1	2 Pc.
60	66	51	.109*	.105*	18	33	12	77	—	—	114	1½ to 1	3 Pc.
66	73	55	.109*	.105*	18	36	12	77	—	—	126	1½ to 1	3 Pc.
72	81	59	.109*	.105*	18	39	12	77	—	—	138	2 to 1	3 Pc.
78	87	63	.109*	.105*	22	38	12	77	—	—	148	1½ to 1	3 Pc.
84	95	67	.109*	.105*	22	34	12	77	—	—	162	1½ to 1	3 Pc.
90	103	71	.109*	.105*	22	38	12	77	—	—	174	1½ to 1	3 Pc.
96	112	75	.109*	.105*	24	40	12	77	—	—	174	1½ to 1	3 Pc.

NOTE: ALL SPLICES TO BE LAP RIVETED OR BOLTED.

* EXCEPT CENTER PANEL SEE GENERAL NOTES

REINFORCED CONCRETE PIPE ARCH									
EQUIV. DIA. (Inches)	DIMENSIONS (Inches)								APPROX. SLOPE
	** SPAN	** RISE	T	A	B	C	D	E	
24	29	18	3	8½	39	33	72	48	3 to 1
30	36	22	3½	9½	50	46	96	60	3 to 1
36	44	27	4	11⅛	60	36	96	72	3 to 1
42	51	31	4½	15 13/16	60	36	96	78	3 to 1
48	58	36	5	21	60	36	96	84	3 to 1
54	65	40	5½	25½	60	36	96	90	3 to 1
60	73	45	6	31	60	36	96	96	3 to 1
72	88	54	7	31	60	39	99	120	2 to 1
84	102	62	8	28½	83	19	102	144	2 to 1

REINFORCED CONCRETE ELLIPTICAL PIPE									
EQUIV. DIA. (Inches)	DIMENSIONS (Inches)								APPROX. SLOPE
	** SPAN	** RISE	T	A	B	C	D	E	
24	30	19	3¼	8½	39	33	72	48	3 to 1
30	38	24	3¾	9½	54	18	72	60	3 to 1
36	45	29	4½	11⅛	60	24	84	72	2½ to 1
42	53	34	5	15¾	60	36	96	78	2½ to 1
48	60	38	5½	21	60	36	96	84	2½ to 1
54	68	43	6	25½	60	36	96	90	2½ to 1
60	76	48	6½	30	60	36	96	96	2½ to 1

**NOMINAL SIZE

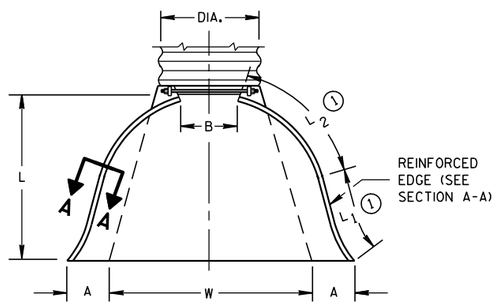

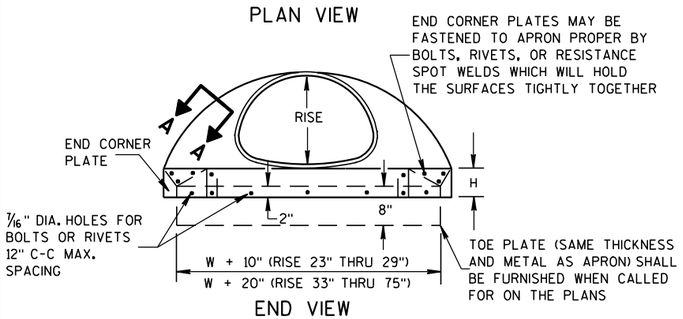

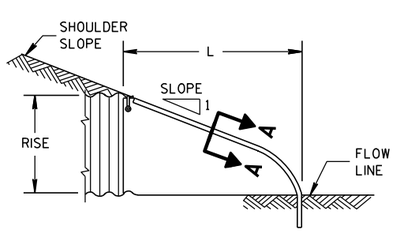

SIDE ELEVATION

METAL ENDWALLS

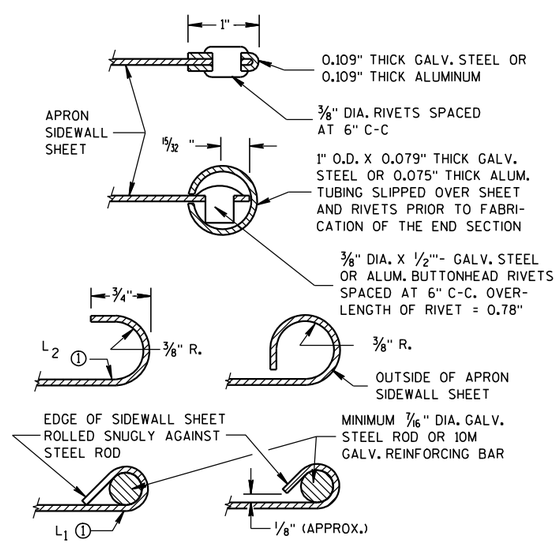

SECTION A-A

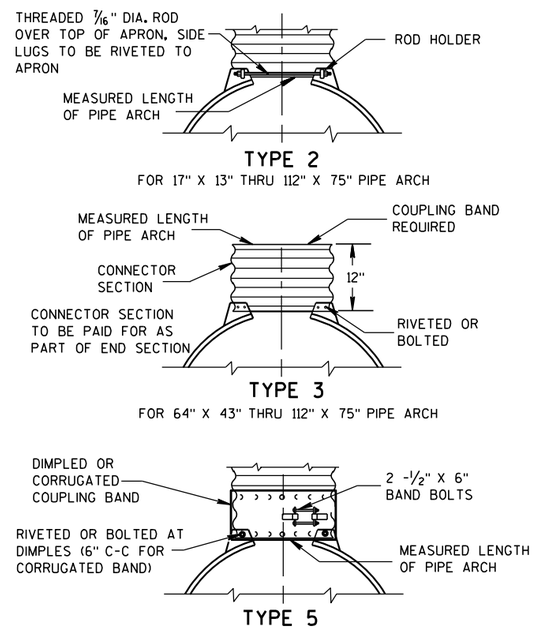

NOTE: DIMPLED BAND FITS OVER OUTSIDE OF ENDWALL, AND CORRUGATED BAND FITS INSIDE ENDWALL.

CONNECTION DETAILS

GENERAL NOTES

DETAILS OF CONSTRUCTION, MATERIALS AND WORKMANSHIP NOT SHOWN ON THIS DRAWING SHALL CONFORM TO THE PERTINENT REQUIREMENTS OF THE STANDARD SPECIFICATIONS AND THE APPLICABLE SPECIAL PROVISIONS.

CONCRETE APRON ENDWALLS MAY NOT BE USED WITH GALVANIZED STEEL OR ALUMINUM CULVERT PIPE OR VISE VERSA. GALVANIZED STEEL OR ALUMINUM APRON ENDWALLS SHALL NORMALLY BE INSTALLED ON CULVERT PIPE OF THE SAME METAL.

ALL THREE PIECE STEEL APRON ENDWALLS FOR 66" X 51" PIPE ARCH AND LARGER SHALL HAVE 0.109" SIDES AND 0.138" CENTER PANELS. ALL THREE PIECE ALUMINUM APRON ENDWALLS FOR 66" X 51" PIPE ARCH AND LARGER SHALL HAVE 0.105" SIDES AND 0.134" CENTER PANELS. THE WIDTH OF CENTER PANELS SHALL BE GREATER THAN 20 PERCENT OF THE PIPE ARCH PERIMETER.

LAP SEAMS SHALL BE TIGHTLY JOINED BY GALVANIZED RIVETS OR BOLTS FOR STEEL UNITS AND ALUMINUM RIVETS AND BOLTS FOR ALUMINUM UNITS. FOR THE 77" X 52" THROUGH 112" X 75" APRON ENDWALL SIZES, THE REINFORCED EDGES AND CENTER PANEL SEAMS SHALL BE FURTHER REINFORCED WITH GALVANIZED STEEL OR ALUMINUM STIFFENER ANGLES. THE ANGLES SHALL BE ATTACHED BY GALVANIZED NUTS AND BOLTS FOR STEEL UNITS AND ALUMINUM NUTS AND BOLTS FOR ALUMINUM UNITS.

WHERE TWO OR MORE PIPES WITH APRON ENDWALLS ARE LAID ADJACENT TO EACH OTHER, THEY SHALL BE SEPARATED BY A DISTANCE SUFFICIENT TO PROVIDE A MINIMUM CLEARANCE OF 6 INCHES BETWEEN APRON ENDWALLS.

① FOR PIPE ARCH SIZES UP TO 73" X 55" A 180° ROLLED EDGE MAY BE USED INSTEAD OF STEEL ROD REINFORCEMENT. SEE SECTION A-A.

APRON ENDWALLS FOR PIPE ARCH AND ELLIPTICAL PIPE

STATE OF WISCONSIN
DEPARTMENT OF TRANSPORTATION

APPROVED
11/30/94 — DATE
/S/ Rory L. Rhinesmith — CHIEF ROADWAY DEVELOPMENT ENGINEER
FHWA

6

S.D.D. 8 F 2-1

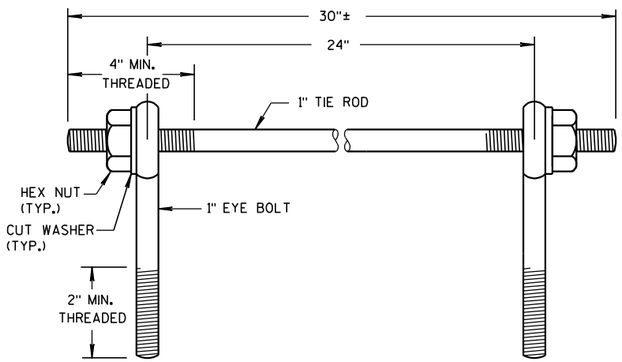

EYE BOLTS AND TIE ROD

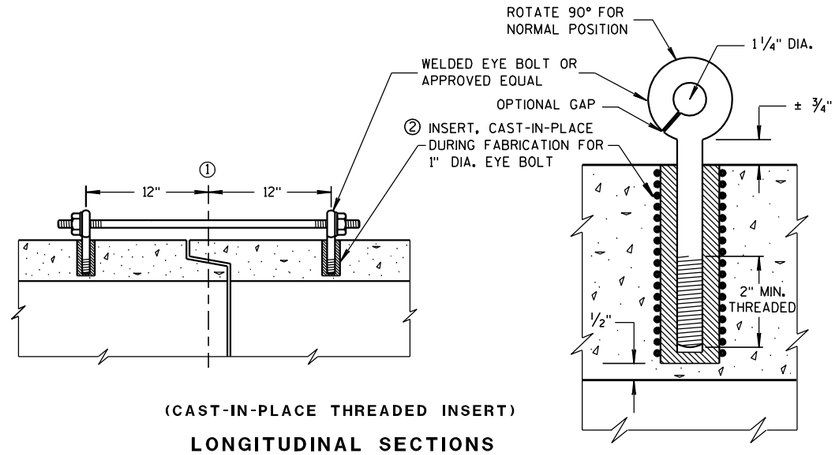

(CAST-IN-PLACE THREADED INSERT)

LONGITUDINAL SECTIONS

EYE BOLT AND TIE ROD ASSEMBLY (ALTERNATE NO. 1)

GENERAL NOTES

DETAILS OF CONSTRUCTION, MATERIALS, AND WORKMANSHIP NOT SHOWN ON THIS DRAWING SHALL CONFORM TO THE PERTINENT REQUIREMENTS OF THE STANDARD SPECIFICATIONS AND APPLICABLE SPECIAL PROVISIONS.

CONCRETE CULVERT AND STORM SEWER PIPE SHALL BE TIED TOGETHER IN THE MANNER ILLUSTRATED BY THIS DETAIL AT LOCATIONS DESIGNATED IN THE STANDARD SPECIFICATIONS AND THE PLAN. THE CONTRACTOR MAY USE EITHER ALTERNATE 1, 2 OR 3 FOR DRAINAGE STRUCTURES. ONLY ALTERNATE 1 AND 3 MAY BE USED FOR CATTLE PASSES, UNLESS OTHERWISE STATED IN THE CONTRACT. THE MATERIALS, FABRICATION AND WORK NECESSARY TO TIE THE PIPE BY THIS DETAIL WILL BE CONSIDERED INCIDENTAL TO THE PIPE AND APRON ENDWALLS IF REQUIRED.

DETAILED DRAWINGS FOR PROPOSED ALTERNATE DESIGNS FOR JOINT TIES SHALL BE SUBMITTED TO THE ENGINEER FOR APPROVAL.

JOINT TIES TO BE HOT-DIP GALVANIZED PER ASTM A 153.

① ℄ OF TONGUE AND GROOVE OR BELL AND SPIGOT JOINTS.

② THE INSIDE OF THE THREADED INSERTS SHALL BE CLEAN TO ALLOW THE INSERTION OF THREADED EYE BOLTS.

③ HOLES SHALL BE CAST-IN-PLACE OR DRILLED 12 INCHES FROM ℄ OF TONGUE AND GROOVE.

④ BOLT PROJECTION INSIDE OF PIPE SHALL NOT EXCEED 2 INCHES.

⑤ OPENING TO BE ROD DIAMETER PLUS 1 INCH.

⑥ LENGTH ADEQUATE TO EXTEND TO WITHIN 1/2 INCH OF THE INNER SURFACE OF THE PIPE.

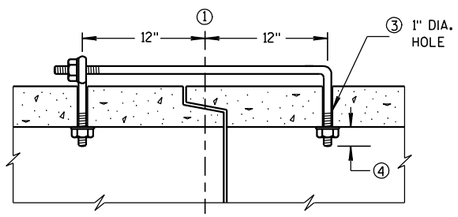

(TONGUE & GROOVE PIPE)

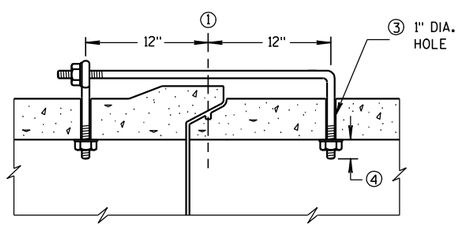

(MODIFIED BELL PIPE)

LONGITUDINAL SECTION

EYE BOLT DIMENSION TABLE

PIPE SIZE	L = LENGTH	
	TONGUE & GROOVE PIPE	MODIFIED BELL PIPE
18" TO 24"	4 1/2"	6 1/4"
30"	5"	7"
36"	5 1/2"	7"
42"	6"	
48"	6 1/2"	
60"	7 1/2"	
66"	8"	

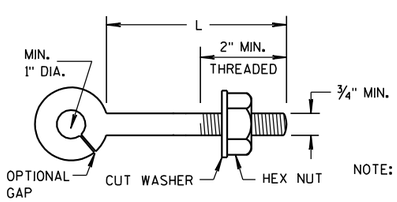

EYE BOLT

NOTE: TWO EYE BOLTS MAY BE USED WITH A 30" LONG THREADED ROD IN LIEU OF THE 90° BENT TIE ROD.

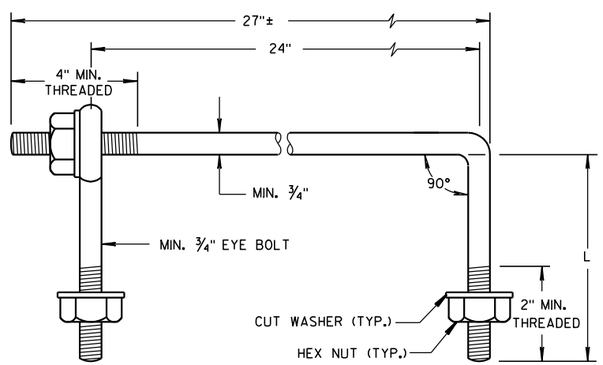

EYE BOLT AND TIE ROD

(JOINT TIES FOR 18" TO 66" DIA. CONCRETE PIPE)

EYE BOLT AND TIE ROD ASSEMBLY (ALTERNATE NO. 2)

ADJUSTABLE TIE ROD TABLE

PIPE DIAMETER	TIE ROD DIAMETER	D	L_1	N
12-60	5/8	5/8	5	1/2
66-84	3/4	3/4	5	1/2
90-108	1	1	7	1 7/16

DIMENSIONS SHOWN ARE IN INCHES

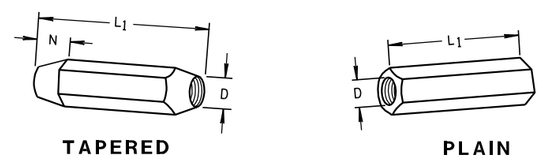

TAPERED PLAIN

RIGHT AND LEFT THREADS

SLEEVE NUTS

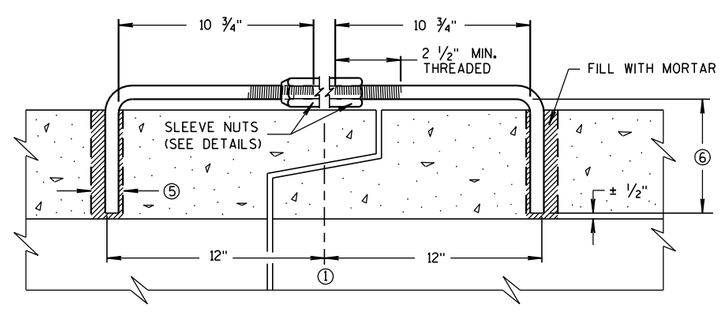

LONGITUDINAL SECTION

(JOINT TIES FOR 12" TO 108" DIA. CONCRETE PIPE)

ADJUSTABLE TIE ROD (ALTERNATE NO. 3)

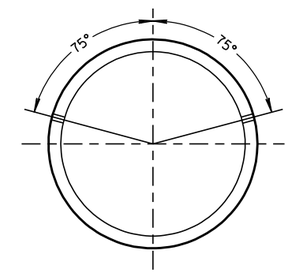

PLACEMENT OF (2) CAST-IN-PLACE INSERTS OR HOLES DURING FABRICATION FOR PIPE SECTIONS REQUIRING TIE RODS

TRANSVERSE SECTION

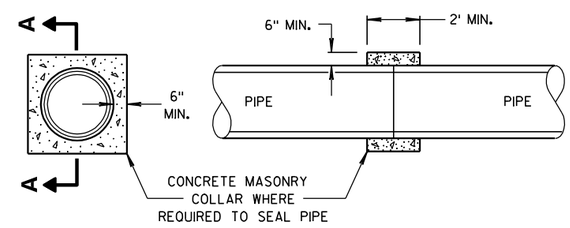

SECTION A-A

CONCRETE COLLAR DETAIL

JOINT TIES FOR CONCRETE PIPE AND CONCRETE COLLAR DETAIL

STATE OF WISCONSIN
DEPARTMENT OF TRANSPORTATION

APPROVED
6/5/2012 /S/ Jerry H. Zogg
DATE ROADWAY STANDARDS DEVELOPMENT ENGINEER
FHWA

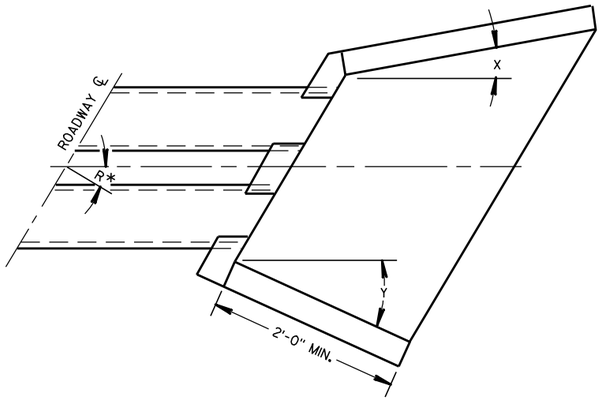

WINGWALL ANGLE DETAILS

INLET			OUTLET		
R*	X	Y	R*	X	Y
0 - 7°	30°	30°	0 - 15°	15°	15°
8 - 22°	25°	"	16 - 45°	10°	"
23 - 37°	20°	"	46 - 75°	5°	"
38 - 52°	15°	"	OVER 75°	0°	"
53 - 67°	10°	"			
68 - 82°	5°	"			
OVER 82°	0°	"			

*R = NUMBER OF DEGREES RIGHT OR LEFT HAND FORWARD

GENERAL NOTES

DETAILS OF CONSTRUCTION, MATERIALS AND WORKMANSHIP NOT SHOWN ON THIS DRAWING SHALL CONFORM TO THE PERTINENT REQUIREMENTS OF THE STANDARD SPECIFICATIONS AND THE APPLICABLE SPECIAL PROVISIONS.

FILL SLOPES FLATTER THAN 2 ½:1 SHALL BE WARPED TO MEET THE TOP OF THE WINGWALLS.

ALL STEEL REINFORCEMENT AND WELDED STEEL WIRE FABRIC SHALL BE EMBEDDED 2 INCHES CLEAR UNLESS OTHERWISE NOTED.

(1) MINIMUM REINFORCEMENT SHALL BE 6" X 6" - W4.0 X W4.0 OR NO. 3 BARS SPACED 12" C-C IN BOTH DIRECTIONS.

(2) THE SPACE BETWEEN PIPES SHALL BE AS FOLLOWS:

DIAMETER OR SPAN	SPACE
UP TO AND INCLUDING 48"	2'-0"
OVER 48" TO 72"	½ DIA. OR SPAN
OVER 72"	3'-0"

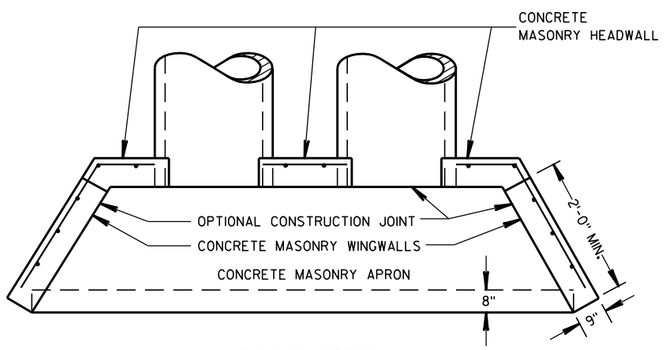

PLAN VIEW

CULVERT PIPE AND PIPE ARCH

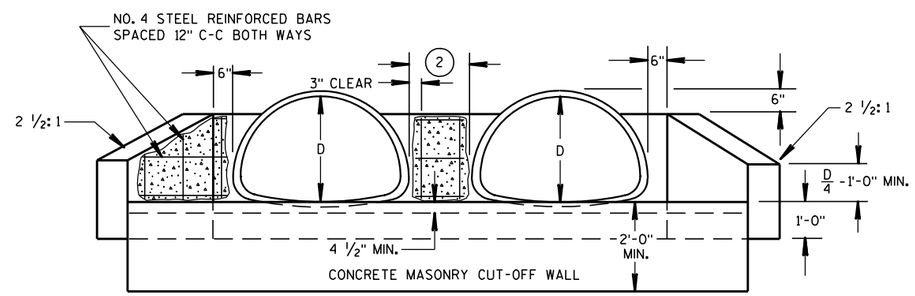

END ELEVATION

PIPE ARCH

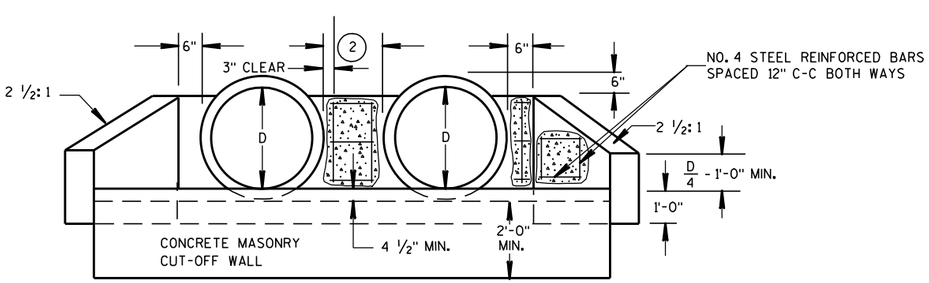

END ELEVATION

CULVERT PIPE

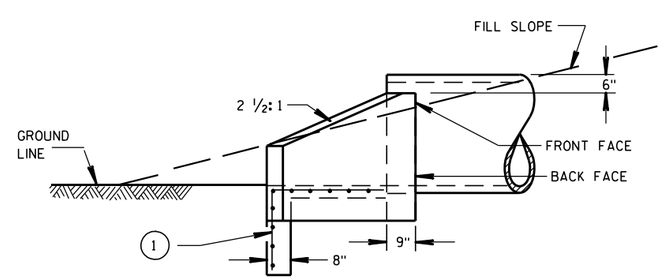

SIDE ELEVATION

CULVERT PIPE AND PIPE ARCH

CONCRETE MASONRY ENDWALLS FOR CULVERT PIPE AND PIPE ARCH

STATE OF WISCONSIN
DEPARTMENT OF TRANSPORTATION

APPROVED

9/14/98 — DATE

/S/ Rory L. Rhinehart — CHIEF ROADWAY DEVELOPMENT ENGINEER

FHWA

6

6

S.D.D. 8 F 10-1

S.D.D. 8 F 10-1

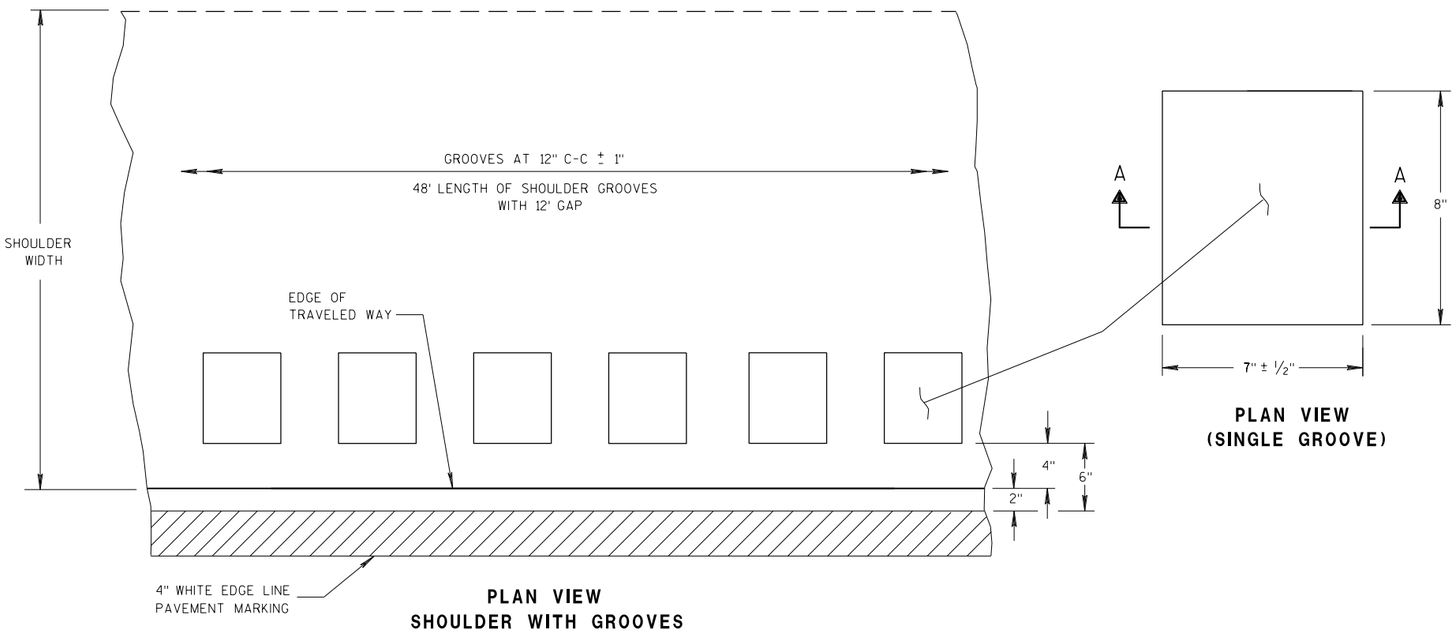

PLAN VIEW
(SINGLE GROOVE)

PLAN VIEW
SHOULDER WITH GROOVES

PLACEMENT DETAIL FOR TYPE 1 MILLED RUMBLE STRIP

GENERAL NOTES

DETAILS OF CONSTRUCTION SHOWN ON THIS DRAWING SHALL CONFORM TO THE PERTINENT REQUIREMENTS OF THE STANDARD SPECIFICATIONS AND APPLICABLE SPECIAL PROVISIONS.

DO NOT MILL SHOULDER GROOVES THROUGH ANY INTERSECTION, MARKED CROSSWALK, NON-MOTORIZED PATH CROSSING, OR SNOWMOBILE CROSSING.

(1) SHOULDER GROOVES MAY BE OMITTED IN AREAS WITH HIGH CONCENTRATIONS OF DRIVEWAYS, WHEN DIRECTED BY THE ENGINEER.

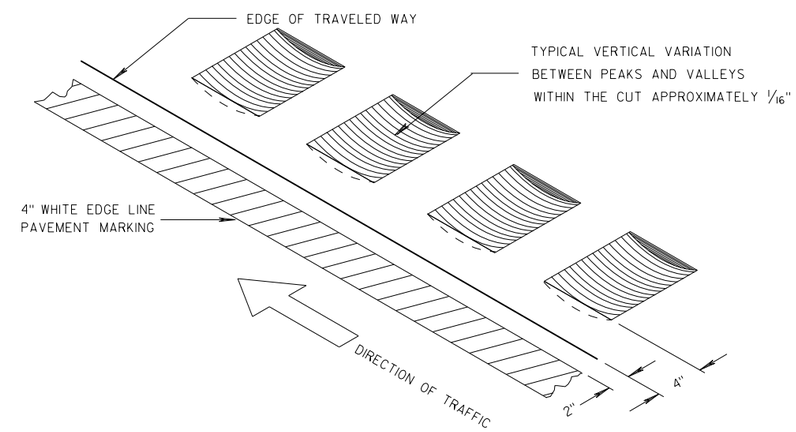

ISOMETRIC

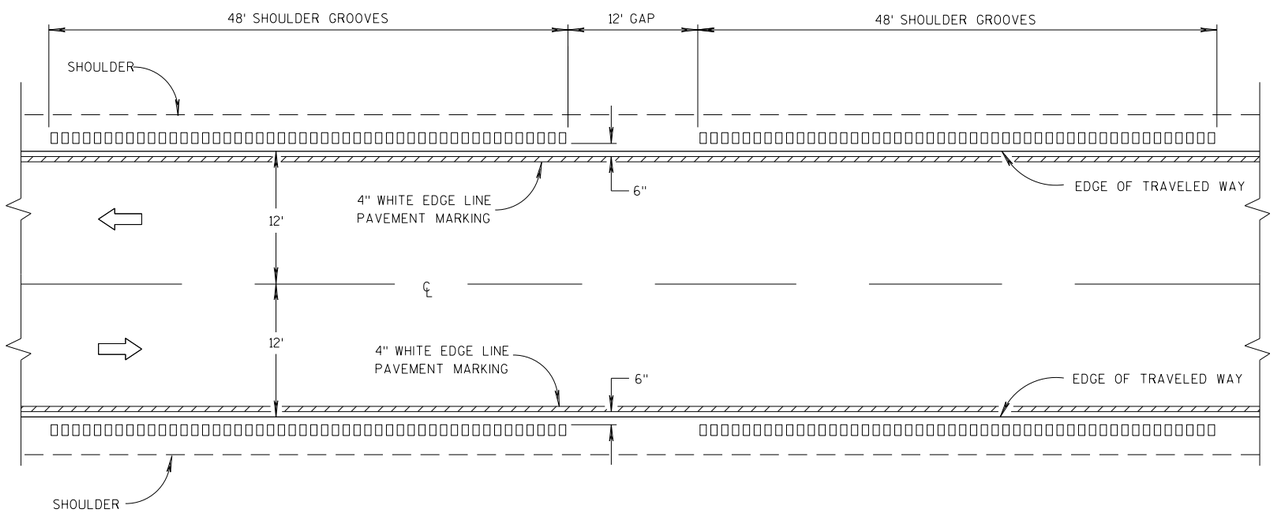

TYPE 1
2-LANE SHOULDER RUMBLE STRIP

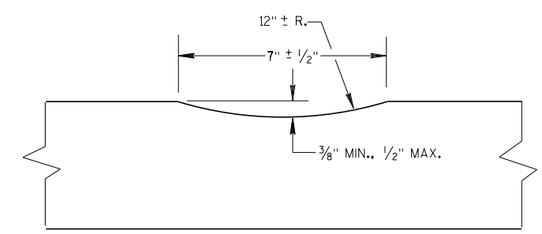

SECTION A-A

6

6

S.D.D. 13 A 10-2a

S.D.D. 13 A 10-2a

2-LANE RURAL
SHOULDER RUMBLE STRIP, MILLING

STATE OF WISCONSIN
DEPARTMENT OF TRANSPORT.

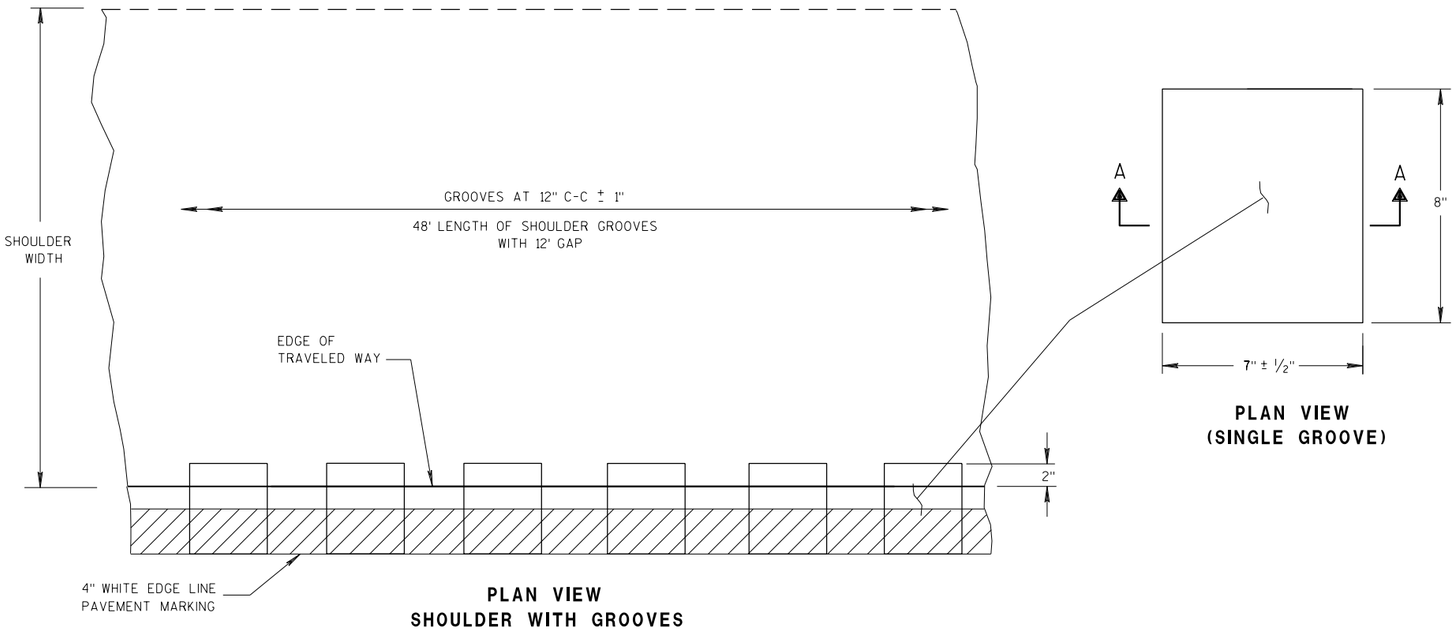

PLAN VIEW
SHOULDER WITH GROOVES

PLAN VIEW
(SINGLE GROOVE)

PLACEMENT DETAIL FOR TYPE 2 MILLED RUMBLE STRIP

GENERAL NOTES

DETAILS OF CONSTRUCTION SHOWN ON THIS DRAWING SHALL CONFORM TO THE PERTINENT REQUIREMENTS OF THE STANDARD SPECIFICATIONS AND APPLICABLE SPECIAL PROVISIONS.

DO NOT MILL SHOULDER GROOVES THROUGH ANY INTERSECTION, MARKED CROSSWALK, NON-MOTORIZED PATH CROSSING, OR SNOWMOBILE CROSSING.

(1) SHOULDER GROOVES MAY BE OMITTED IN AREAS WITH HIGH CONCENTRATIONS OF DRIVEWAYS, WHEN DIRECTED BY THE ENGINEER.

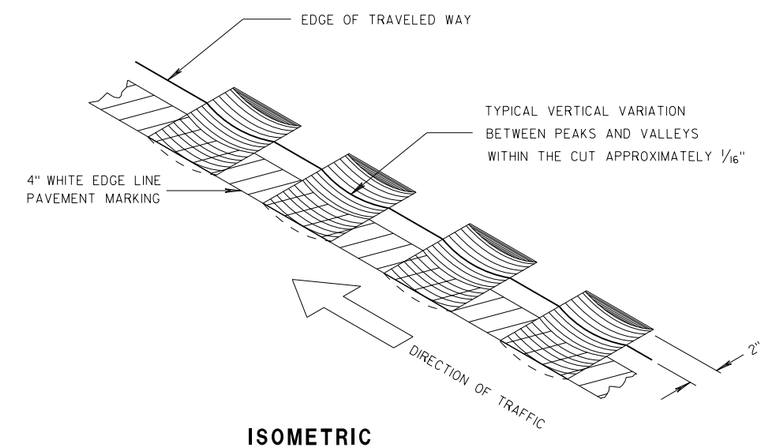

ISOMETRIC

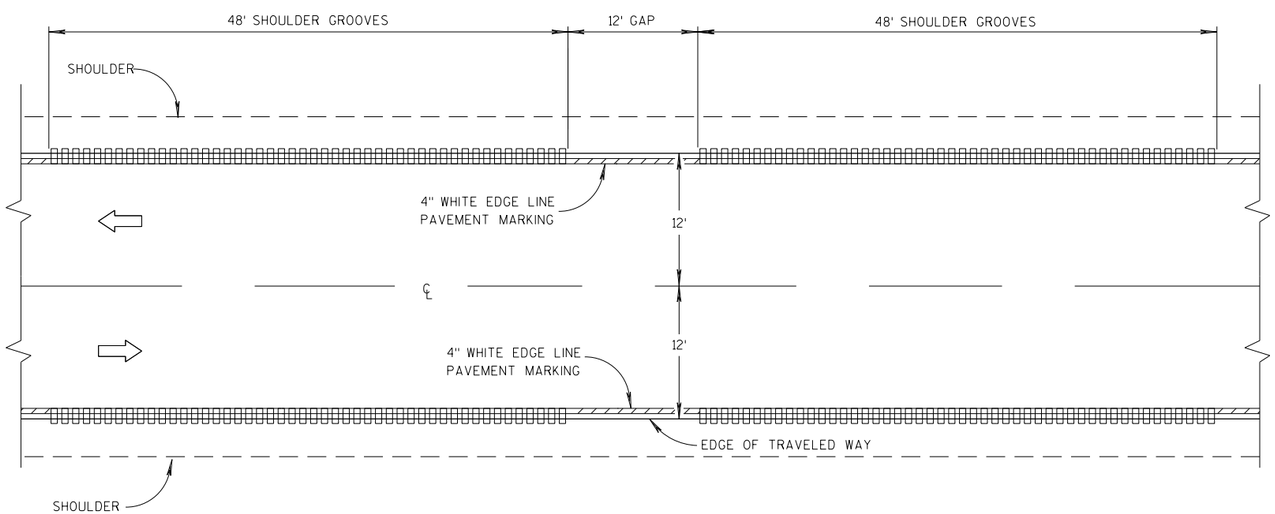

TYPE 2
2-LANE SHOULDER RUMBLE STRIP

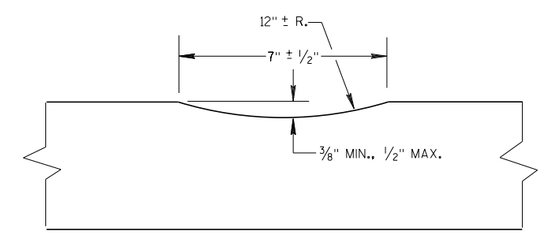

SECTION A-A

6

6

S.D.D. 13 A 10-2b

S.D.D. 13 A 10-2b

2-LANE RURAL
SHOULDER RUMBLE STRIP, MILLING

STATE OF WISCONSIN
DEPARTMENT OF TRANSPORT.

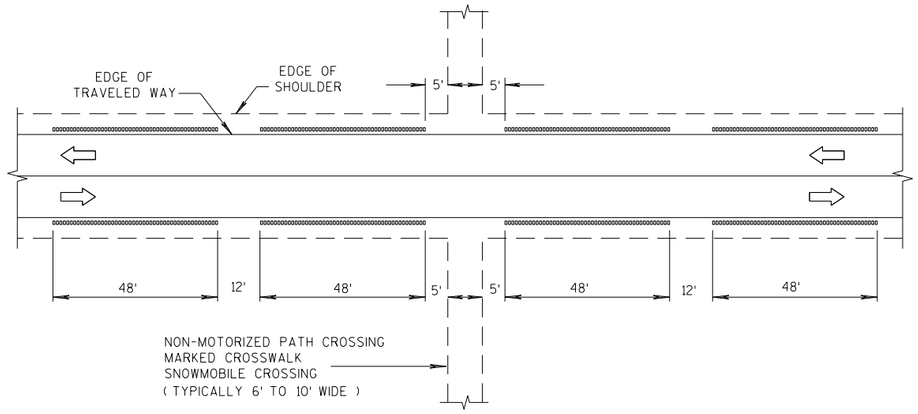

SHOULDER GROOVES AT MISCELLANEOUS CROSSINGS

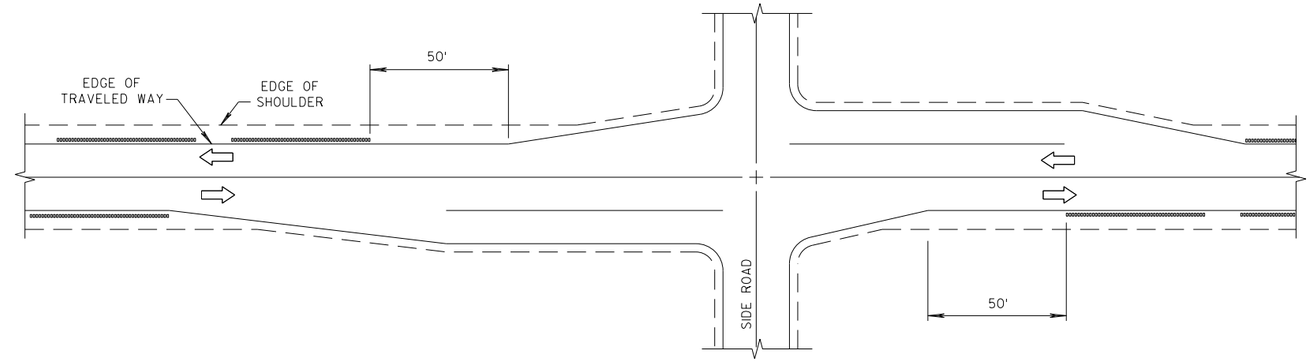

SHOULDER GROOVES AT WITH RIGHT TURN LANE

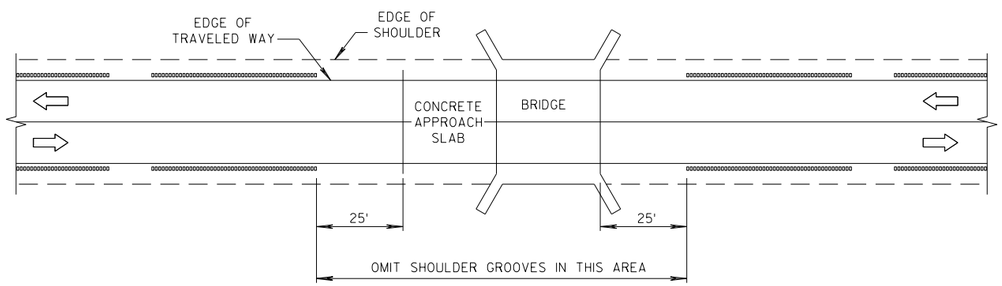

SHOULDER GROOVES AT BRIDGES

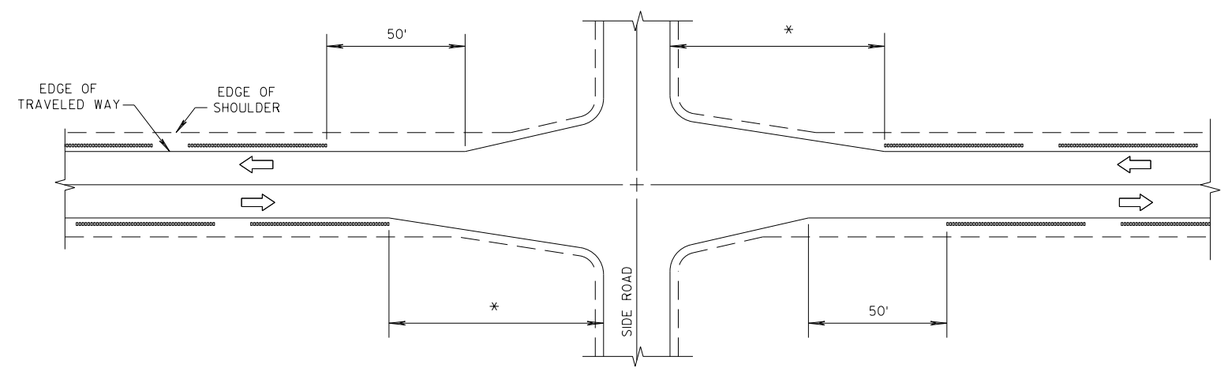

* GREATER OF 100' OR APPROACH TAPER LENGTH

SHOULDER GROOVES AT INTERSECTIONS WITH APPROACH TAPER

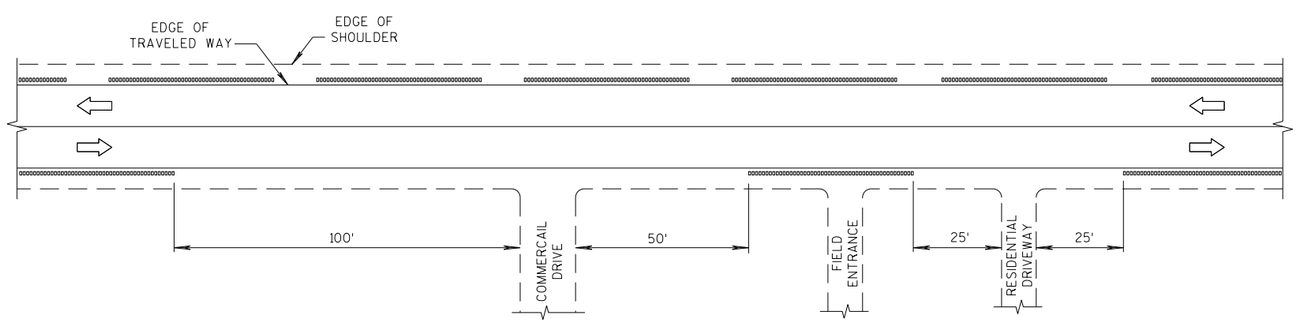

SHOULDER GROOVES AT DRIVEWAYS (1)

2-LANE RURAL
SHOULDER RUMBLE STRIP, MILLING

STATE OF WISCONSIN
DEPARTMENT OF TRANSPORT.

6

S.D.D. 13 A 10-2c

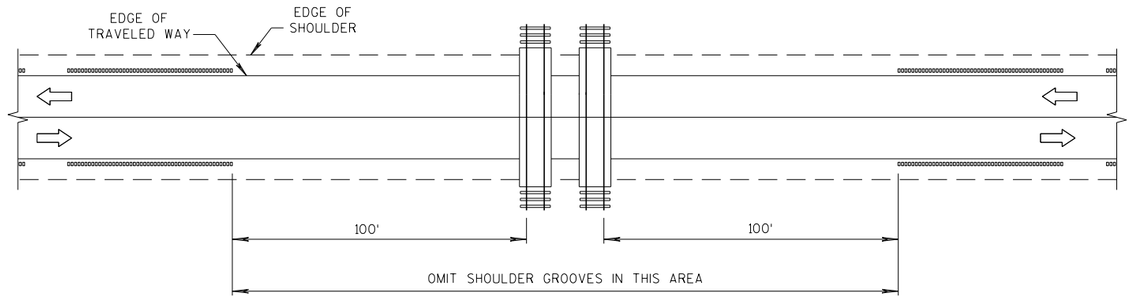

SHOULDER GROOVES AT RAILROADS

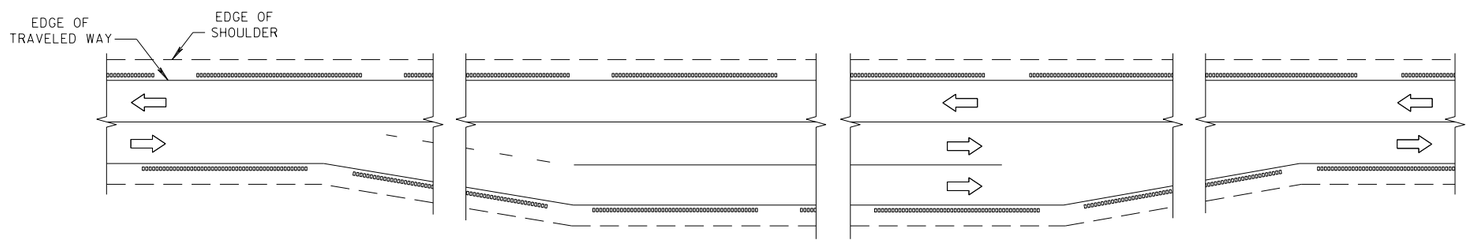

SHOULDER GROOVES AT PASSING AND CLIMBING LANES

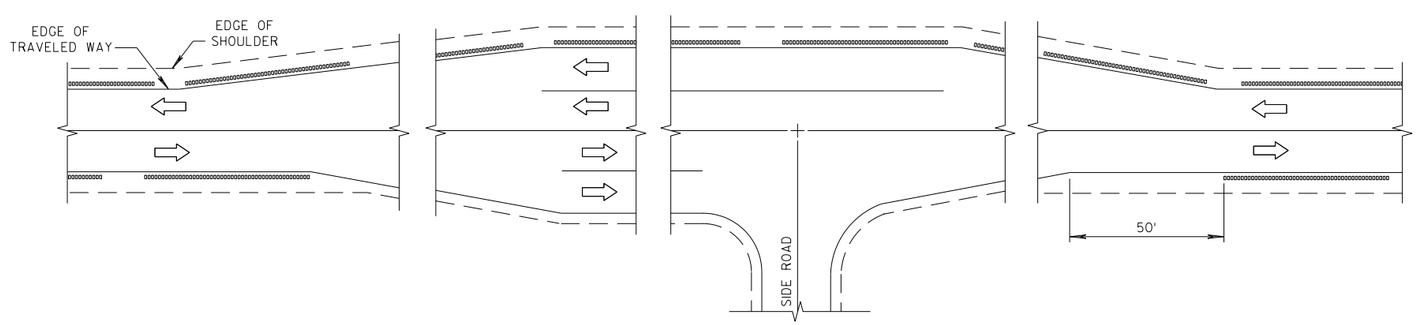

SHOULDER GROOVES AT BYPASS LANES

2-LANE RURAL
SHOULDER RUMBLE STRIP, MILLING

STATE OF WISCONSIN
DEPARTMENT OF TRANSPORTATION

APPROVED
7/2018
DATE
/S/ Rodney Taylor
ROADWAY STANDARDS DEV
UNIT SUPERVISOR
FHWA

6

S.D.D. 13 A 10-2d

GENERAL NOTES

DETAILS OF CONSTRUCTION SHOWN ON THIS DRAWING SHALL CONFORM TO THE PERTINENT REQUIREMENTS OF THE STANDARD SPECIFICATIONS AND APPLICABLE SPECIAL PROVISIONS.

DO NOT MILL CENTER LINE GROOVES THROUGH ANY INTERSECTION, MARKED CROSSWALK, NON-MOTORIZED PATH CROSSING, OR SNOWMOBILE CROSSING.

INSTALL PERMANENT MARKING EPOXY 4-INCH AFTER THE GROOVES ARE INSTALLED.

SEE SIGNING PLAN FOR SIGN REQUIREMENTS THAT MAY BE NEEDED.

(1) CENTERLINE GROOVES MAY BE OMITTED IN AREAS WITH HIGH CONCENTRATIONS OF DRIVEWAYS, WHEN DIRECTED BY THE ENGINEER.

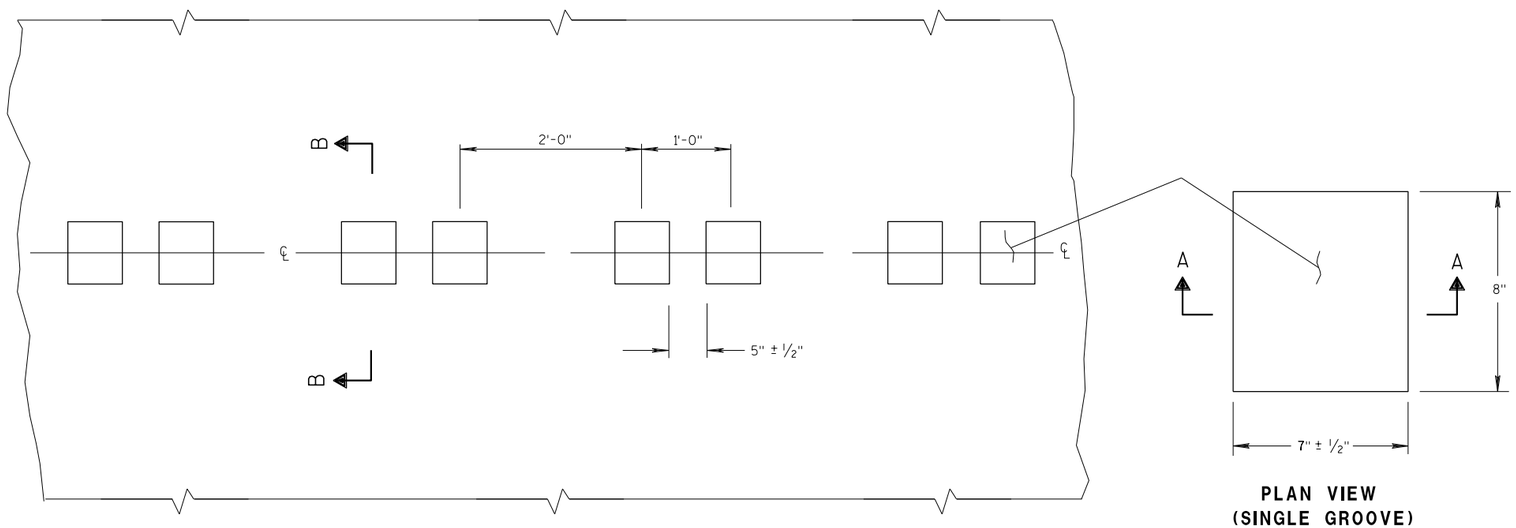

PLAN VIEW
CENTER LINE WITH GROOVES

PLAN VIEW
(SINGLE GROOVE)

PLACEMENT DETAIL FOR MILLED RUMBLE STRIP

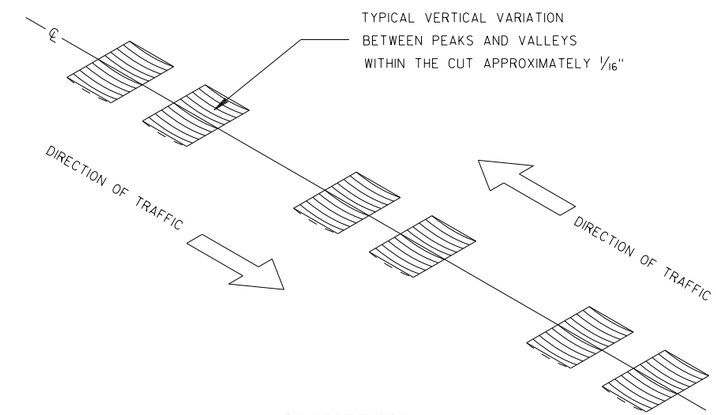

ISOMETRIC

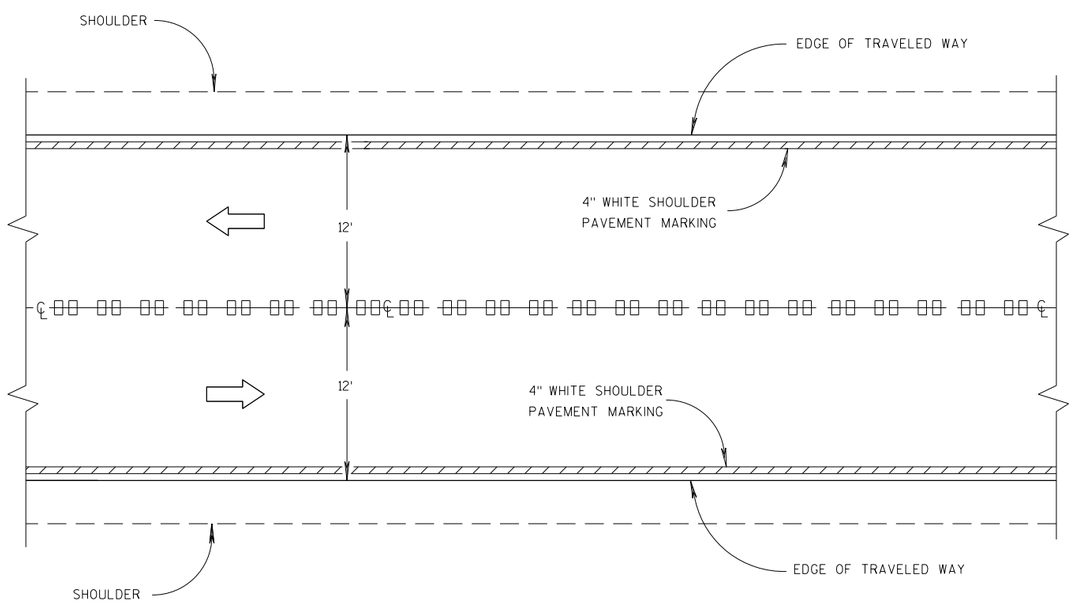

CENTER LINE GROOVES ON TWO-WAY ROADWAYS

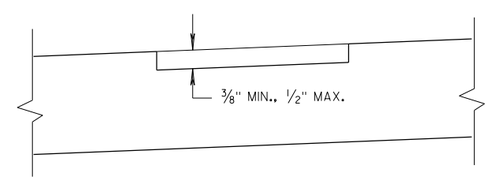

SECTION B-B
SUPERELEVATED ROADWAY

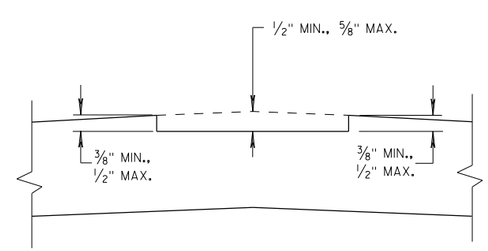

SECTION B-B
CROWNED ROADWAY

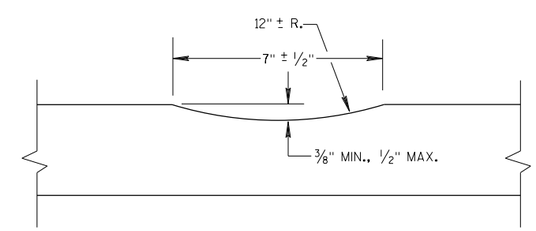

SECTION A-A

6

6

S.D.D. 13 A 11-3a

S.D.D. 13 A 11-3a

2-LANE RURAL
CENTER LINE RUMBLE STRIP, MILLING

STATE OF WISCONSIN
DEPARTMENT OF TRANSPOR

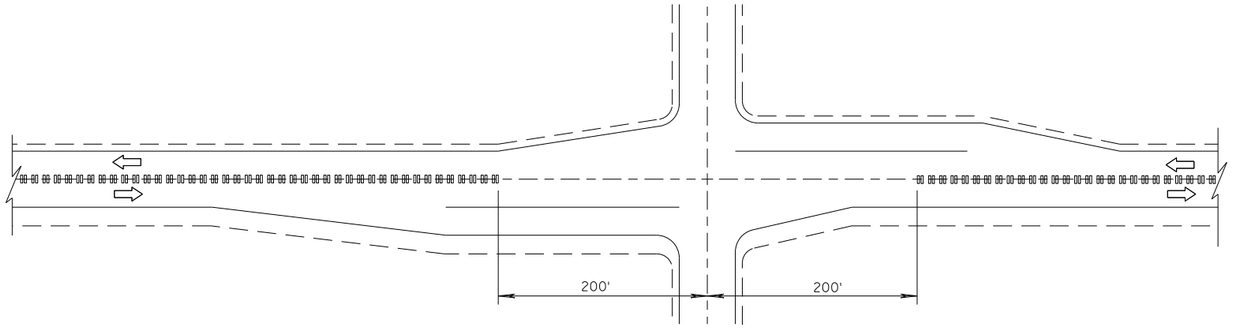

CENTER LINE GROOVES AT INTERSECTIONS

(1) CENTERLINE GROOVES MAY BE OMITTED IN AREAS WITH HIGH CONCENTRATIONS OF DRIVEWAYS, WHEN DIRECTED BY THE ENGINEER.

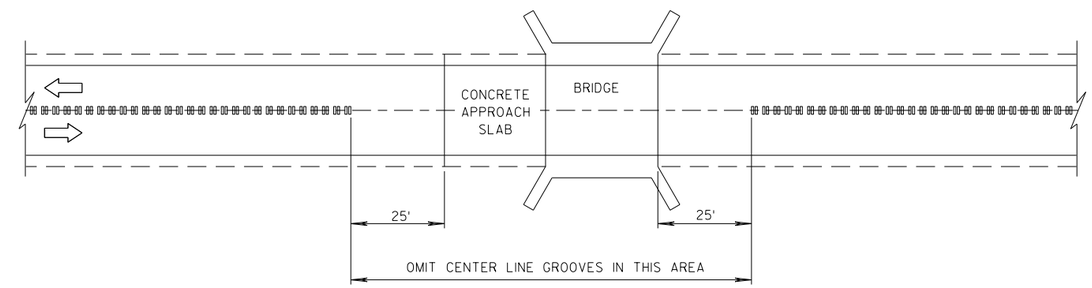

CENTER LINE GROOVES AT BRIDGES

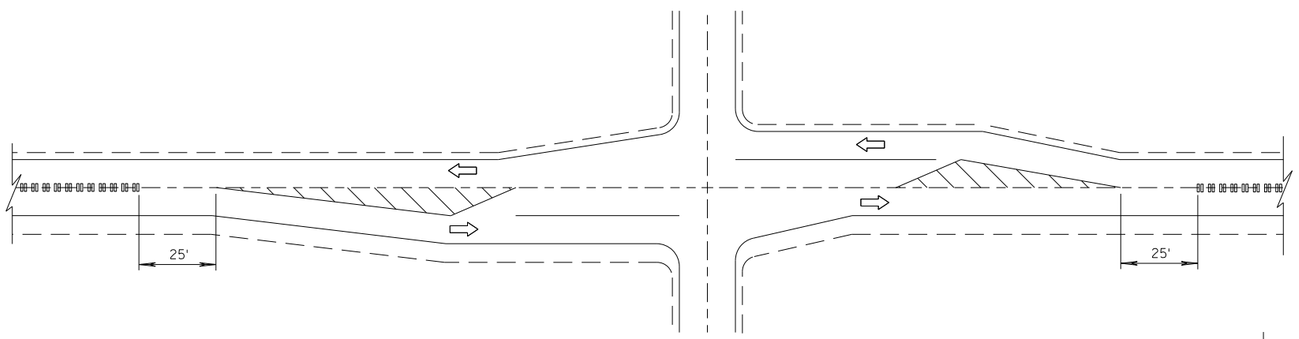

CENTER LINE GROOVES AT INTERSECTIONS

(WITH LEFT TURN LANES)

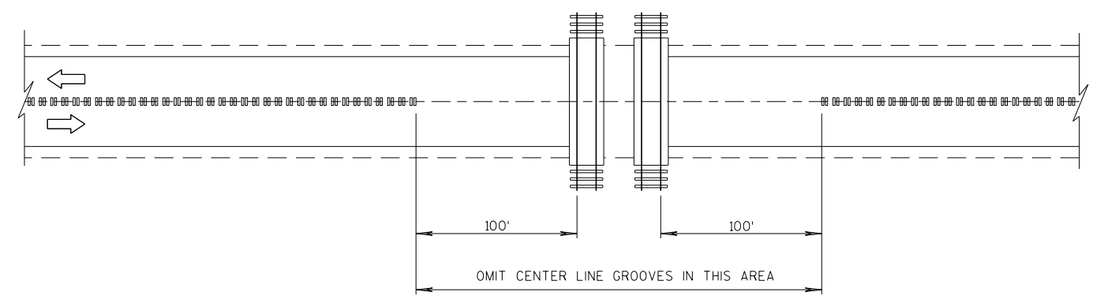

CENTER LINE GROOVES AT RAILROADS

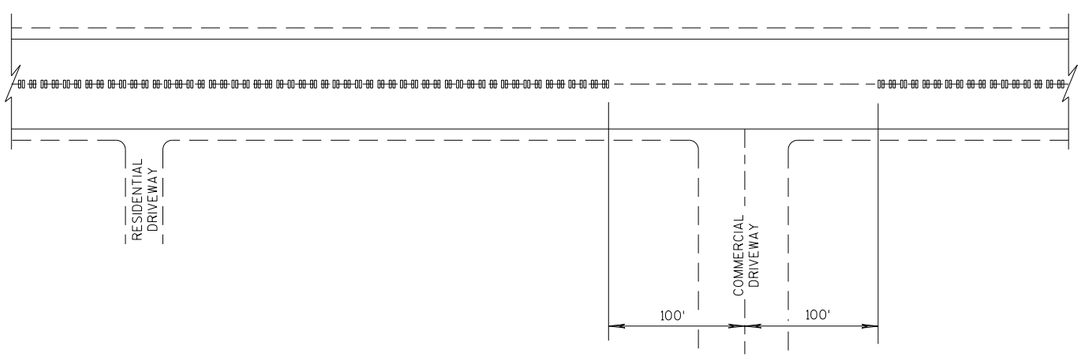

CENTER LINE GROOVES AT DRIVEWAYS (1)

2-LANE RURAL
CENTER LINE RUMBLE STRIP, MILLING

STATE OF WISCONSIN
DEPARTMENT OF TRANSPORTATION

APPROVED
7/2018 — DATE
/S/ Rodney T — ROADWAY STANDARDS DEVELOPMENT UNIT SUPERVISOR
FHWA

6

S.D.D. 13 A 11-3b

1. WOOD OR STEEL POSTS (w6X9 OR w6X8.5) MAY BE USED. DO NOT INTERMIX WOOD AND STEEL POSTS. INSTALL STEEL POSTS WITH HOLES ON APPROACHING TRAFFIC SIDE.
2. USE WOOD OR APPROVED PLASTIC BLOCKOUTS. WOOD BLOCKOUTS MAY BE CONSTRUCTED OUT OF TWO OR MORE WOOD BLOCKOUTS. SEE ALTERNATE WOOD BLOCKOUT DETAIL. DIMENSIONS OF APPROVED PLASTIC BLOCKOUTS MAY VARY.
3. IF ROCK IS ENCOUNTERED DURING EXCAVATION, PROVIDE A HOLE 12 INCHES IN DIAMETER EXTENDING 20 INCHES DEEP INTO THE ROCK. PLACE APPROXIMATELY 2 1/2" INCHES OF GRANULAR MATERIAL IN THE BOTTOM OF THE HOLE. CUT THE POSTS THE TO LENGTH AMD INSTALL. BACKFILL WITH EXCAVATED MATERIAL AND COMPACT. BACKFILL IS TO BE FREE OF LARGE ROCKS.
4. WHEN THE DISTANCE FROM BACK OF POST TO SHOULDER HINGE POINT IS LESS THAN 2 FEET INSTALL LONGER POST AT HALF POST SPACING (K).
5. FOR NEW MGS INSTALLATION TOP OF W-BEAM RAIL TOLERANCE IS ±1". FOR EXISTING MGS INSTALLATION TOP OF W-BEAM IS BETWEEN 27 ¾" TO 32".
6. WHEN USING STEEL POST AND WOOD BLOCKOUTS INSTALL FOUR 16D GALVANIZED NAILS. INSTALL NAILS AT THE BACK CORNERS OF THE BLOCK AND BEND THE NAILS OVER THE FLANGE OF THE STEEL POST.
7. TOTAL POST LENGTH FOR TYPE K IS 7' - 0".
   TOTAL POST LENGTH FOR OTHER MGS TYPES IS 6' - 0".

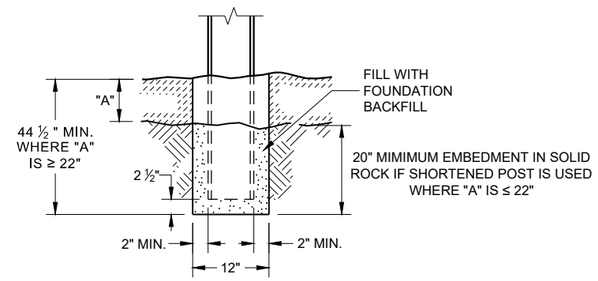

END VIEW
SETTING STEEL OR WOOD POST IN ROCK (3)

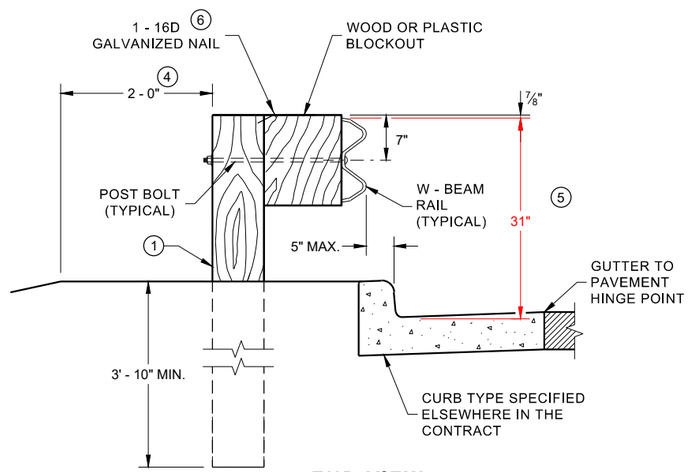

END VIEW
LOCATED ALONG A CURBED ROADWAY

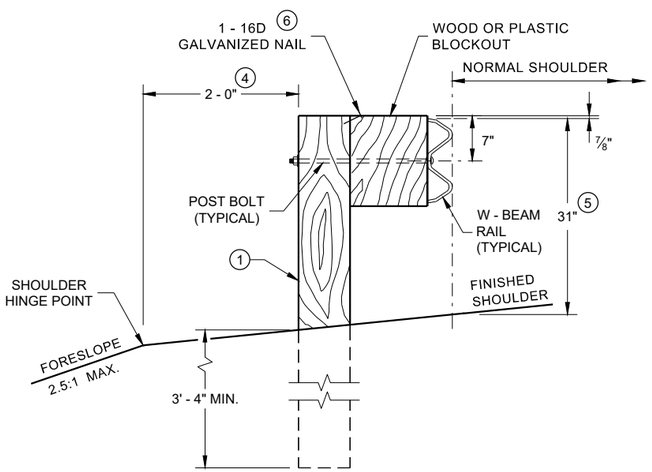

END VIEW
LOCATED ALONG A ROADWAY SHOULDER
STANDARD INSTALLATION

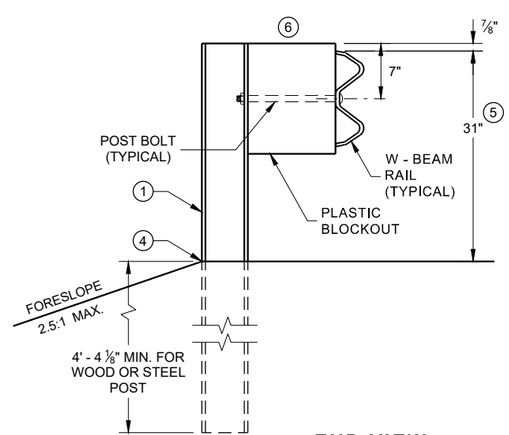

END VIEW
MGS LONGER POST AT HALFPOST
SPACING W BEAM (K)

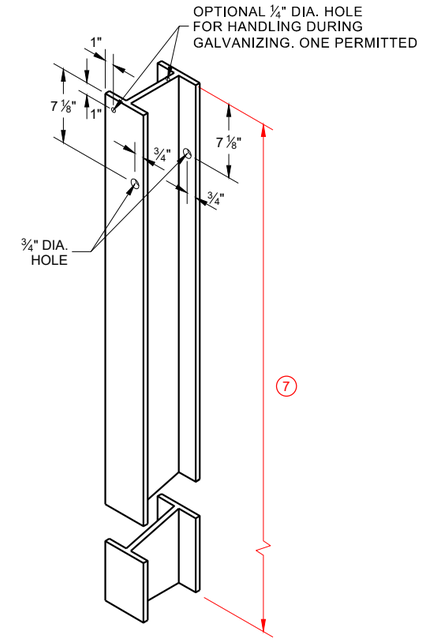

STEEL POST & HOLE
PUNCHING DETAIL
(W 6 X 9) (1)

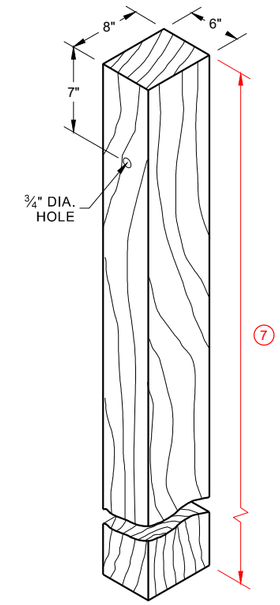

WOOD POST
(6" X 8") NOMINAL (1)

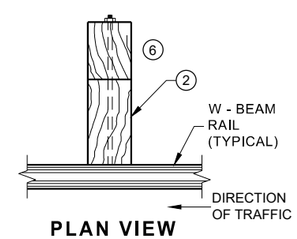

PLAN VIEW
WOOD POST,
BLOCKOUT & BEAM

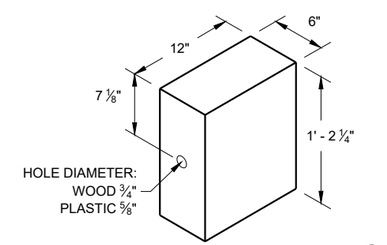

WOOD OR PLASTIC (2)
BLOCKOUT

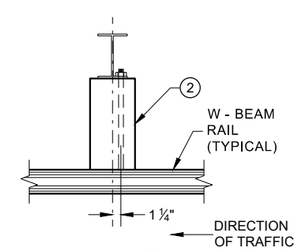

PLAN VIEW
STEEL POST,
PLASTIC BLOCKOUT & BEAM

MIDWEST GUARDRAIL SYSTEM (MGS) GUARDRAIL

STATE OF WISCONSIN
DEPARTMENT OF TRANSPORTA

6

SDD 14B42 - 06a

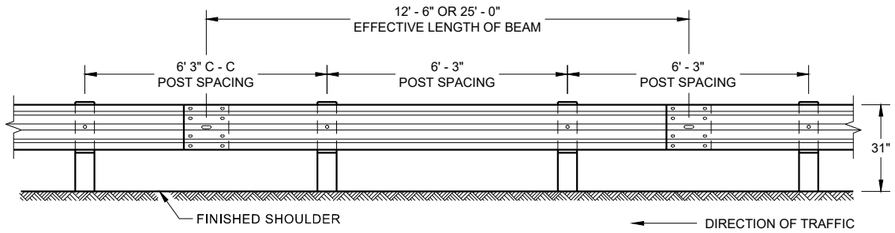

FRONT VIEW
POST SPACING STANDARD INSTALLATION

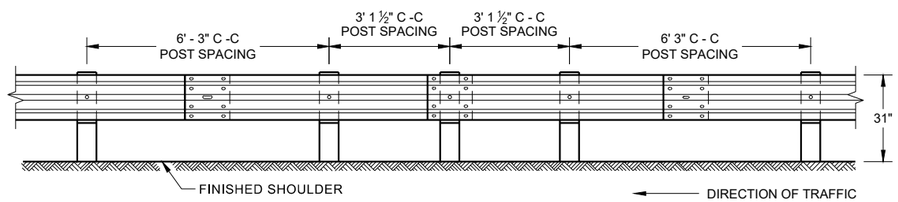

FRONT VIEW
HALF POST SPACING (HS) AND HALF POST SPACING WITH LONGER POSTS (K)

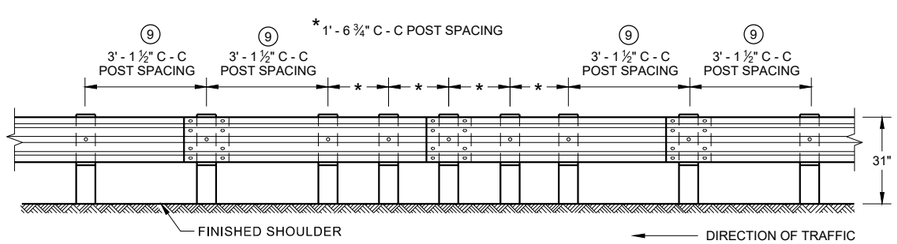

FRONT VIEW
QUARTER POST SPACING (QS)

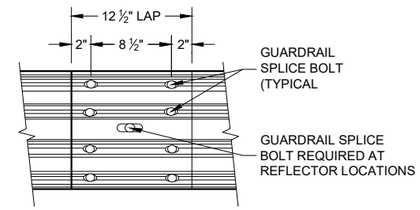

FRONT VIEW
MID-SPAN BEAM SPLICE

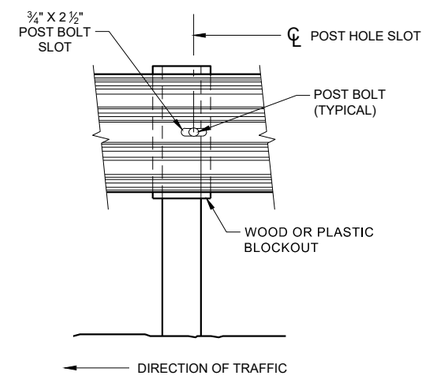

FRONT VIEW AT STEEL POST

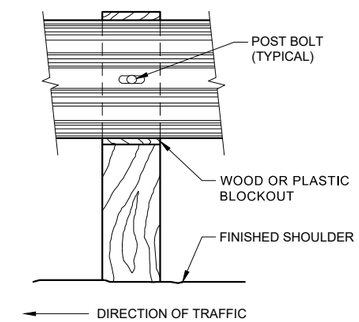

FRONT VIEW AT WOOD POST

GENERAL NOTES

(8) DO NOT INSTALL REFLECTORS ON THE FIRST 50 FEET OF THE APPROACH END OF THE ENERGY ABSORBING TERMINAL. RAIL SPLICE LOCATIONS ARE THE ONLY ACCEPTABLE LOCATIONS FOR REFLECTORS.

(9) 25 FEET OF HALF POST SPACING IS REQUIRED ON APPROACH AND DEPARTURE ENDS OF QUARTER POST SPACING.

POST BOLTS ARE A ⅝" DIAMETER ASTM A307 GUARDRAIL BOLT. A POST BOLT REQUIRES ⅝" DIAMETER A563A DOUBLE RECESSED (DR) HEAVY HEX NUT AND ⅝" DIAMETER F844 FLAT WASHER. POST BOLTS MAY BE LONGER IF MULTIPLE BLOCKOUTS ARE BEING USED.

GUARD RAIL SPLICE BOLTS ARE A ⅝" DIAMETER ASTM A307 GUARDRAIL HEAD BOLT. A GUARDRAIL SPLICE BOLT REQUIRES ⅝" DIAMETER A563A DOUBLE RECESSED (DR) HEAVY HEX NUT.

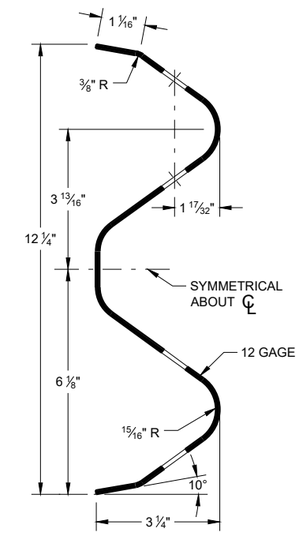

SECTION THRU W-BEAM RAIL

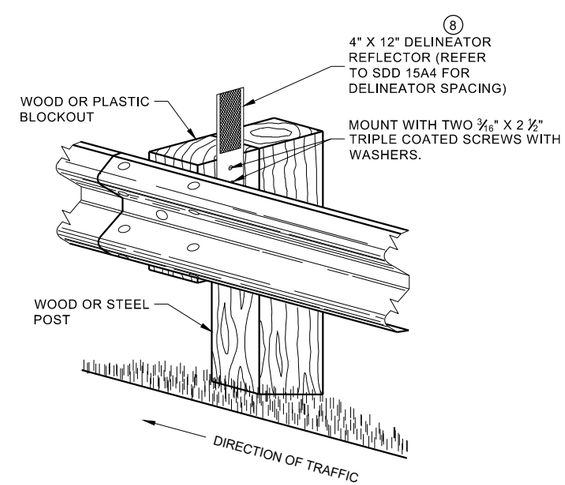

ONE SIDED REFLECTOR DETAIL AND TYPICAL INSTALLATION

MIDWEST GUARDRAIL SYSTEM (MGS) GUARDRAIL

STATE OF WISCONSIN
DEPARTMENT OF TRANSPORTA

6

SDD 14B42 - 06b

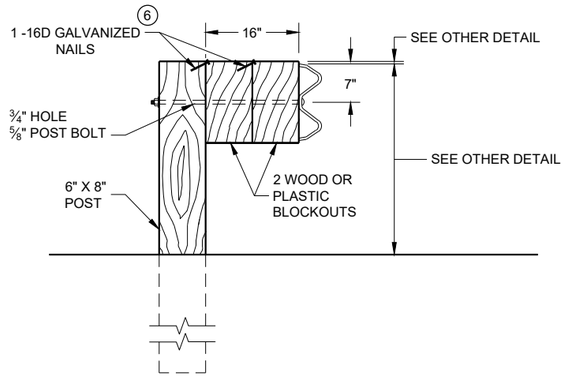

DETAIL FOR 16" BLOCKOUT DEPTH

IT IS ACCEPTABLE TO USE BLOCKOUTS UP TO 16" DEEP TO INCREASE THE POST OFFSET TO AVOID UNDERGROUND OBSTACLES. THERE IS NO LIMIT TO THE NUMBER OF POSTS THAT CAN HAVE ADDITIONAL BLOCKOUTS UP TO 16" DEEP.

NOTE:

1. ALL FILLETS SHALL HAVE A MINIMUM RADIUS OF 3/16".
2. IF THE BOLT EXTENDS MORE THAN ¼" FROM THE NUT THE BOLT SHOULD BE TRIMMED BACK.

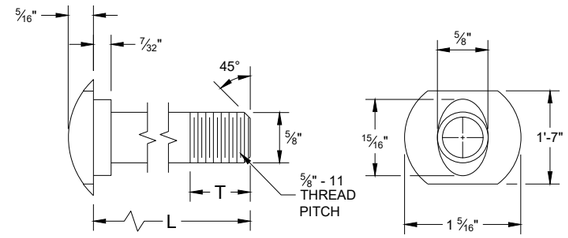

POST BOLT TABLE

L	T (MIN.)
1 ¼"	1 ⅛"
2"	1 ¾"
10"	4"
14"	4 1/16"
18"	4"
21"	4 1/16"
25"	4"

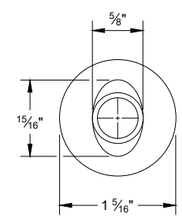

ALTERNATE BOLT HEAD

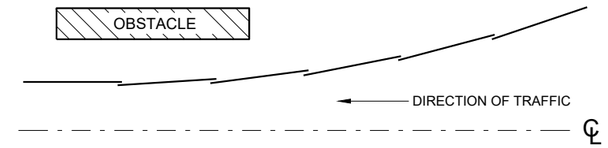

PLAN VIEW
BEAM LAPPING DETAIL

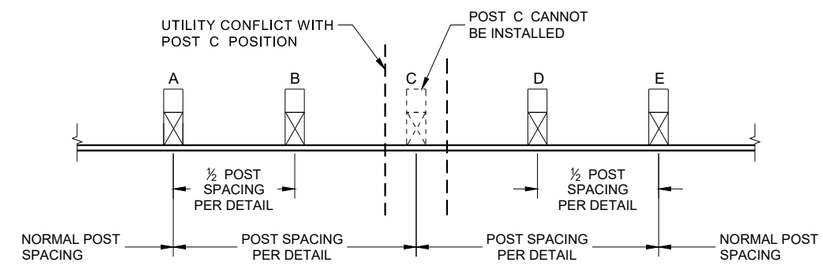

POST DRIVING FOR CONTINUOUS UNDERGROUND OBSTRUCTION

6

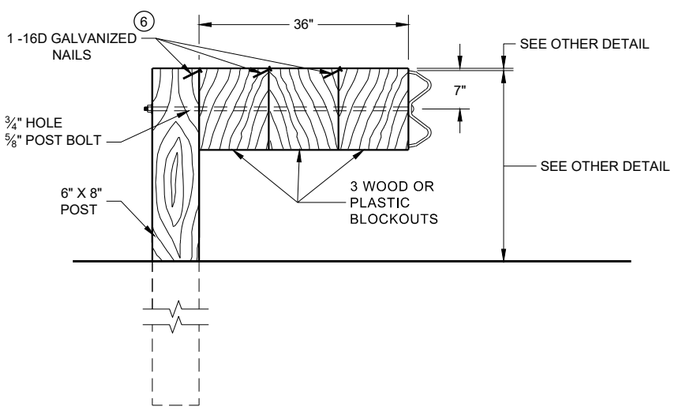

DETAIL FOR 36" BLOCKOUT DEPTH

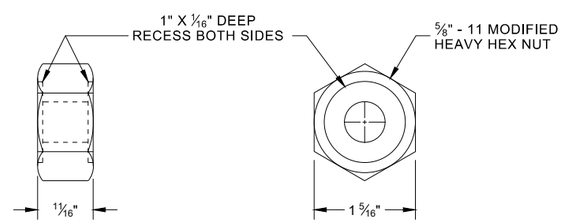

POST BOLT, SPLICE BOLT AND RECESS NUT

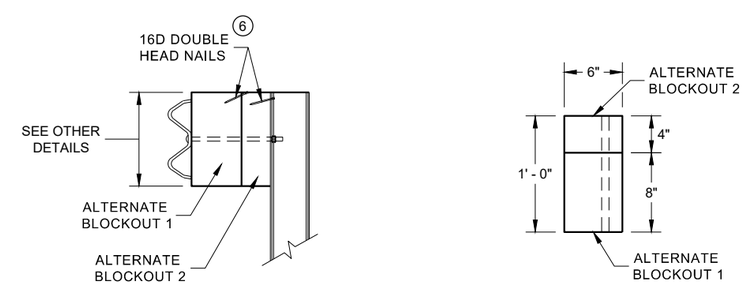

SIDE VIEW

PLAN VIEW

ALTERNATE WOOD BLOCKOUT DETAIL

NOTES: UNDER SPECIAL CIRCUMSTANCES, SUCH AS AVOIDING OBSTACLES THAT ARE NOT RELOCATED, IT IS ACCEPTABLE TO INSTALL ADDITIONAL BLOCKOUTS TO OBTAIN UP TO 36" DEPTH FOR ONE OR TWO POSTS IN A SECTION OF GUARDRAIL.

DO NOT USE 16" OR 36" BLOCKOUTS IF IT CAUSES THE POST TO BE DRIVEN BEYOND SHOULDER HINGE POINT OR CAUSES A FIXED OBJECT TO BE WITHIN THE DEFLECTION DISTANCE OF THE BARRIER.

(6) WHEN USING STEEL POST AD WOOD BLOCKOUTS, INSTALL FOUR 16D GALVANIZED NAILS. INSTALL NAILS AT THE BACK CORNERS OF THE BLOCK AND BEND THE NAILS OVER THE FLANGE OF THE STEEL POST.

MIDWEST GUARDRAIL SYSTEM (MGS) GUARDRAIL

STATE OF WISCONSIN
DEPARTMENT OF TRANSPORTA

SDD 14B42 - 06c

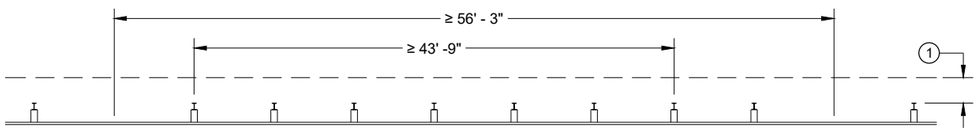

MISSING POST IN NORMAL BEAM GUARD RUN

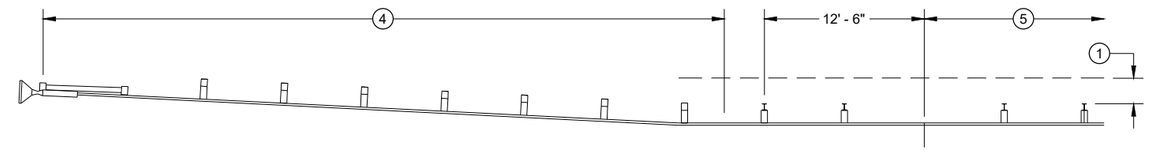

MISSING POST IN NORMAL BEAM GUARD RUN NEAR EAT

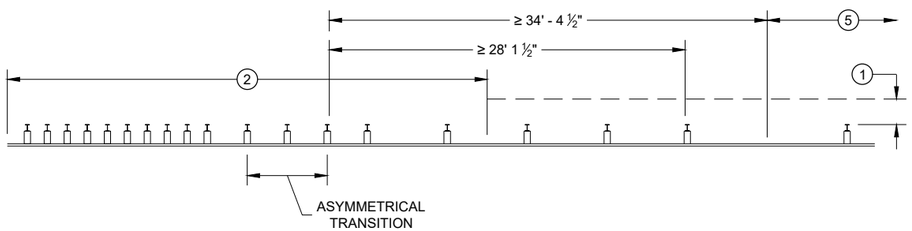

MISSING POST NEAR APPROACH THRIE BEAM TRANSITION

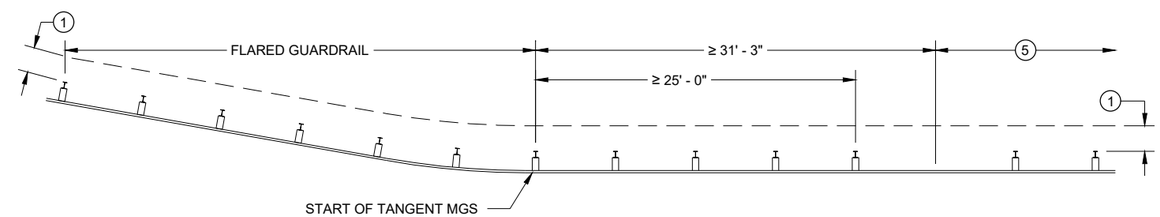

MISSING POST IN NORMAL BEAM GUARD RUN NEAR FLARED BEAM GUARD

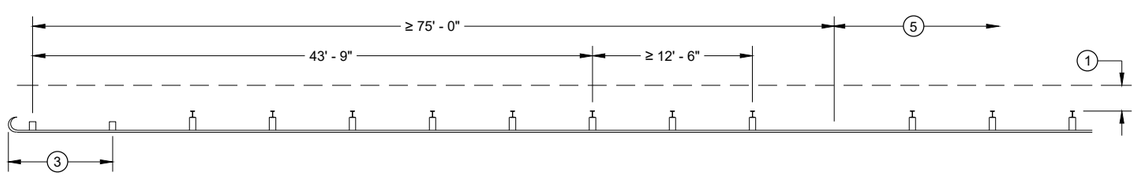

MISSING POST IN NORMAL BEAM GUARD RUN NEAR TYPE 2 TERMINAL

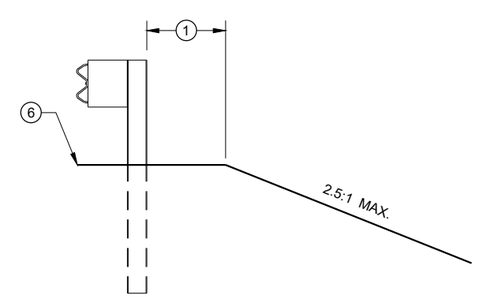

CROSS SECTION VIEW

1. MINIMUM OF 2 FEET OF GRADING BEHIND POST.
2. SEE SDD 14B45 FOR MORE DETAILS.
3. SEE SDD 14B47 FOR MORE DETAILS.
4. SEE SDD 14B44 FOR MORE DETAILS.
5. SEE MISSING POST IN NORMAL BEAM GUARD RUN FOR DISTANCE TO NEXT MISSING POST AND AREA FOR WELL DRAINED, COMPACTED SOILS.
6. SEE PLAN FOR SHOULDER DESIGN.

MIDWEST GUARDRAIL SYSTEM (MGS) GUARDRAIL

STATE OF WISCONSIN
DEPARTMENT OF TRANSPORTATION

APPROVED
7/2018 — DATE
/S/ Rodney Taylor — ROADWAY STANDARDS DEVE UNIT SUPERVISOR
FHWA

6

SDD 14B42 - 06d

GENERAL NOTES

(A) THE SLOPE IN THE AREA BOUNDED BY THE GRADELINE, THE HINGE POINT LINE (HPL) AND THE CLEAR ZONE LIMITS (CZL) SHALL BE 4:1 OR FLATTER.

(B) AFTER FINAL ASSEMBLY, RECHECK CABLE TO BE SURE IT IS TAUT AND HAS NOT RELAXED

(C) DIFFERENT MANUFACTURERS REQUIRE DIFFERENT PERFORATED W - BEAM RAIL END PANELS. SEE MANUFACTURER'S INFORMATION.

(D) ATTACH ALUMINUM SHEET TO E.A.T. HEAD USING 4 STAINLESS STEEL SELF - TAPPING SCREWS. ONE SCREW PER CORNER.

(E) HARDWARE MAY VARY BETWEEN MANUFACTURER. SEE MANUFACTURER'S DRAWING FOR INFORMATION.

DIMENSIONS MAY VARY, MANUFACTURER'S INFORMATION.

SEE SDD 14B42 FOR MORE INFORMATION.

* DO NOT ATTACH BLOCKOUTS TO POST 1 AND 2.

DO NOT INSTALL REFLECTORS ON THE FIRST 50 FEET OF THE APPROACH END OF THE ENERGY ABSORBING TERMINAL.

SEE MANUFACTURER'S DRAWING FOR SPLICE LOCATION, HARDWARE DIMENSIONS AND INSTALLATION INSTRUCTIONS.

THE CENTER OF THE UPPER 3 ½" DIAMETER HOLE ON POST NUMBER 3 THROUGH POST 9 IS TO BE FLUSH WITH THE GROUND LINE UP TO A MAXIMUM OF 2" ABOVE GROUND LINE. WOOD BLOCKS ON POSTS NUMBERED 3 THROUGH 9 MAY BE ADJUSTED UP TO 3" ABOVE THE TOP OF POST.

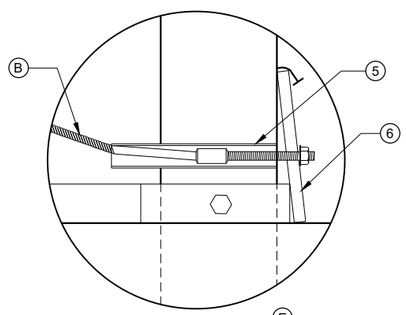

DETAIL "A" (E)

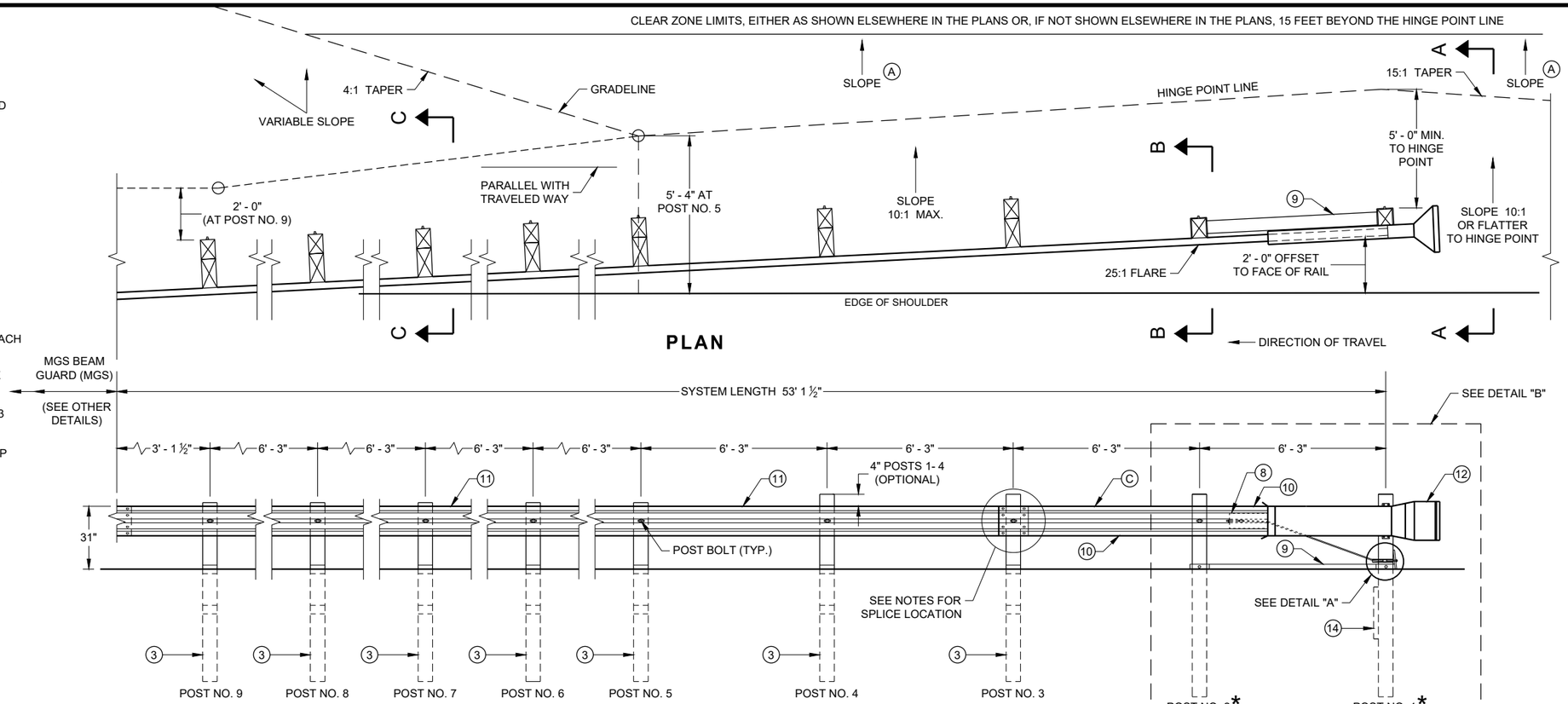

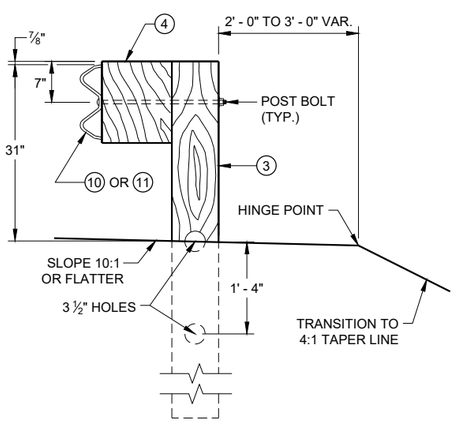

SECTION C - C
TYPICAL AT POST NOS. 3 - 9

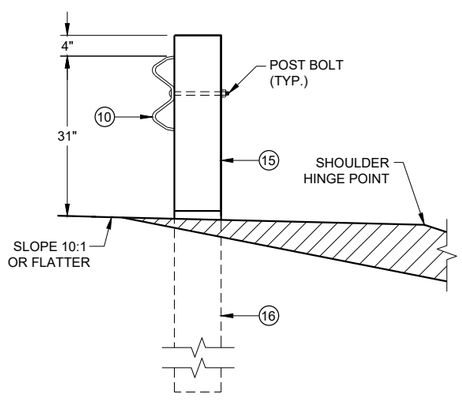

SECTION B - B
TYPICAL AT POST NO. 2*

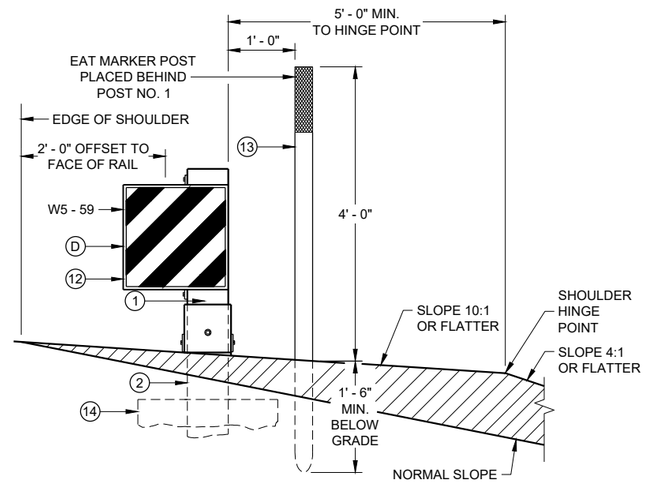

SECTION A - A
TYPICAL AT POST NO. 1*

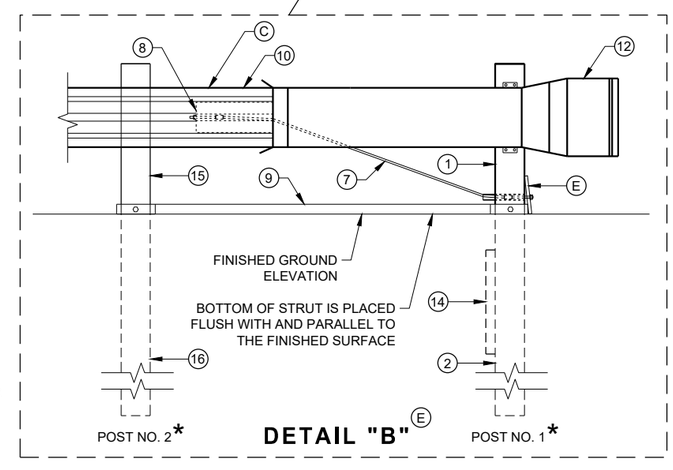

DETAIL "B" (E)

MIDWEST GUARDRAIL SYSTEM ENERGY ABSORBING TERMINAL (MGS)

STATE OF WISCONSIN
DEPARTMENT OF TRANSPORTATION

6

6

SDD 14B44 - 04a

SDD 14B44 - 04a

BILL OF MATERIALS

PART NO.	DESCRIPTION MATERIALS PROVIDED BY MGS EAT MANUFACTURER. SEE MANUGACTURER'S DETAILS FOR MORE INFORMATION.
1	UPPER POST NO. 1 6" X 6" TUBE
2	LOWER POST NO. 1
3	WOOD CRT
4	WOOD BLOCKOUT
5	PIPE SLEEVE
6	BEARING PLATE
7	BCT CABLE ASSEMBLY
8	ANCHOR CABLE BOX
9	GROUND STRUT
10	PERFORATED W-BEAM RAIL END PANEL, 12'-6" LONG.
11	STANDARD W-BEAM RAIL. MULTIPLE SECTIONS REQUIRED. SECTIONS VARY IN LENGTH.
12	IMPACT HEAD
13	EAT MARKER POST - YELLOW (SEE APPROVED PRODUCTS LIST)
14	SOIL PLATE
15	UPPER POST NO. 2
16	LOWER POST NO. 2

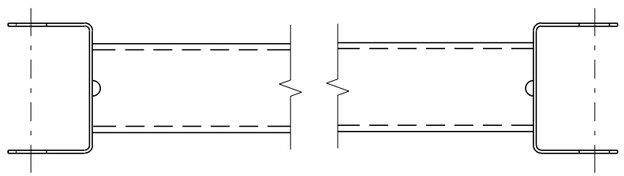

GENERIC GROUND STRUT 9 E

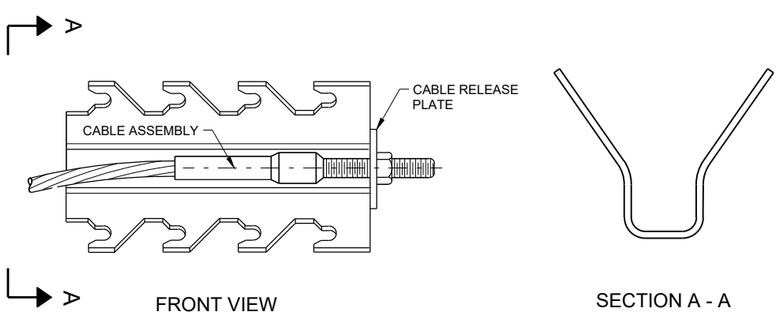

GENERIC ANCHOR CABLE BOX 9 E

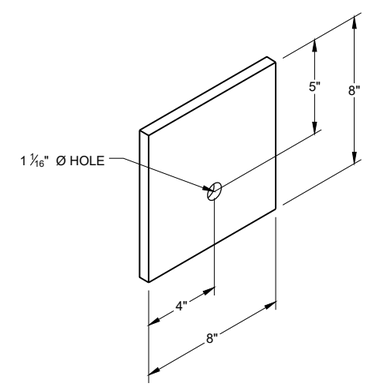

BEARING PLATE 6 E

6

6

SDD 14B45 - 04b

SDD 14B45 - 04b

MIDWEST GUARDRAIL SYSTEM ENERGY ABSORBING TERMINAL (MGS)

STATE OF WISCONSIN
DEPARTMENT OF TRANSPORTAT

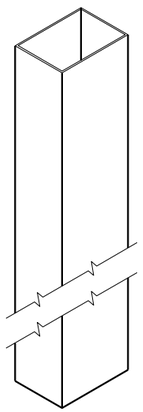

UPPER POST NO. 1 (1) (E)

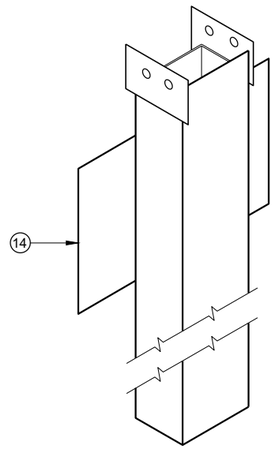

LOWER POST NO. 1 (2) (E)

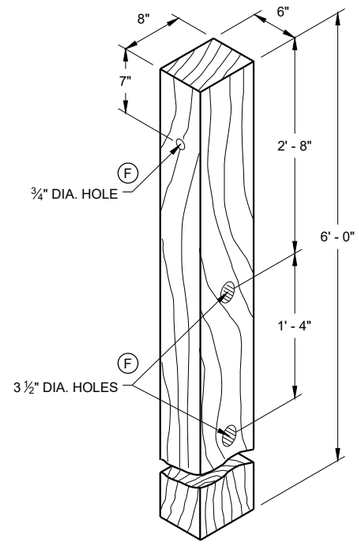

WOOD CRT POST (3) (E)
POSTS NUMBER 3-9

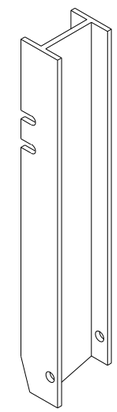

UPPER POST NO. 2 (15) (E)

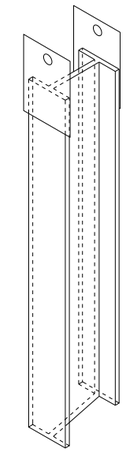

LOWER POST NO. 2 (16) (E)

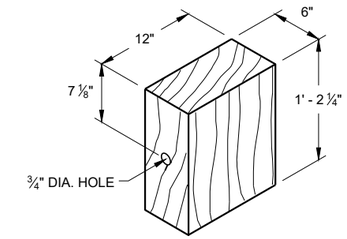

WOOD BLOCKOUT (4)
REQ'D. AT ALL POSTS EXCEPT POST NO'S 1 & 2

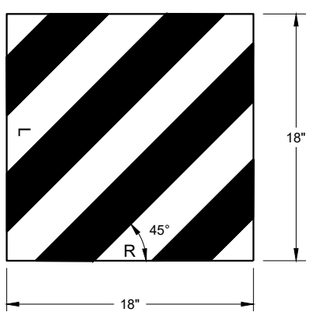

W5 - 59

REFLECTIVE SHEETING DETAIL (E)

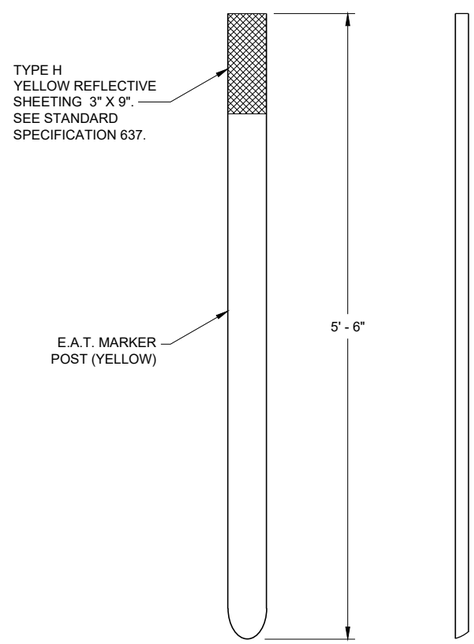

FRONT VIEW SIDE VIEW

E.A.T. MARKER POST (13)

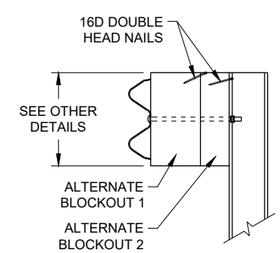

SIDE VIEW

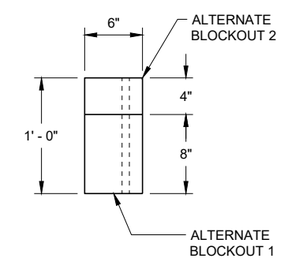

TOP VIEW

ALTERNATE WOOD BLOCKOUT DETAIL

MIDWEST GUARDRAIL SYSTEM ENERGY ABSORBING TERMINAL (MGS)

STATE OF WISCONSIN
DEPARTMENT OF TRANSPORTATION

APPROVED
7/2018 — DATE
/S/ Rodney Taylor — ROADWAY STANDARDS DEVE UNIT SUPERVISOR
FHWA

6

SDD 14B44 - 04c

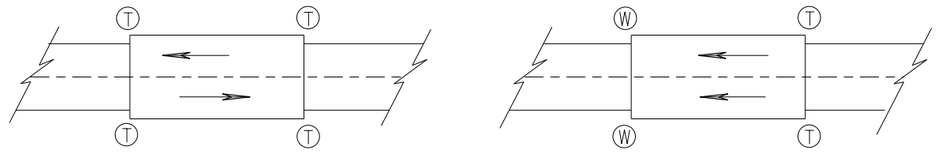

TWO WAY TRAFFIC **ONE WAY TRAFFIC**

(T) THRIE BEAM CONNECTION

(W) W-BEAM CONNECTION WHEN REQUIRED

TYPICAL LOCATIONS OF THRIE BEAM AND W-BEAM CONNECTIONS TO BRIDGE

GENERAL NOTES

IF ROCK IS ENCOUNTERED, REMOVE ROCK TO FULL DEPTH OF POST PLUS 2½", AND 12" DIAMETER AROUND POST. SEE 14B42 FOR MORE DETAILS.

TRANSITION USES STEEL POSTS ONLY.

SEE STANDARD DETAIL DRAWING 14 B 42 FOR MORE INFORMATION.

POST 2 THROUGH 17 USES STEEL POST ONLY

(1) BRIDGE RAILING TYPE "W" DOES NOT REQUIRE A TERMINAL CONNECTOR.

(2) OPTIONAL CURB AND GUTTER OR DRAINAGE FEATURE SEE PLAN FOR INFORMATION.

(13) STEEL OR WOOD POST IS ACCEPTABLE AT POST 1. SEE SDD14B42

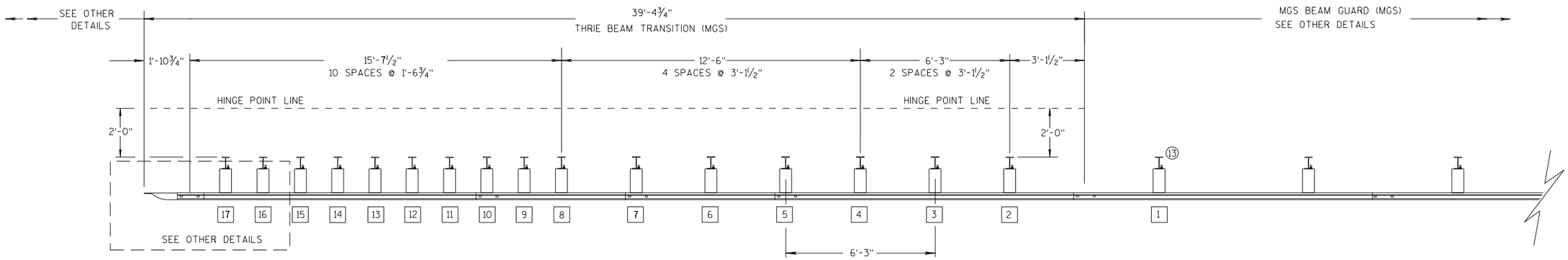

PLAN VIEW

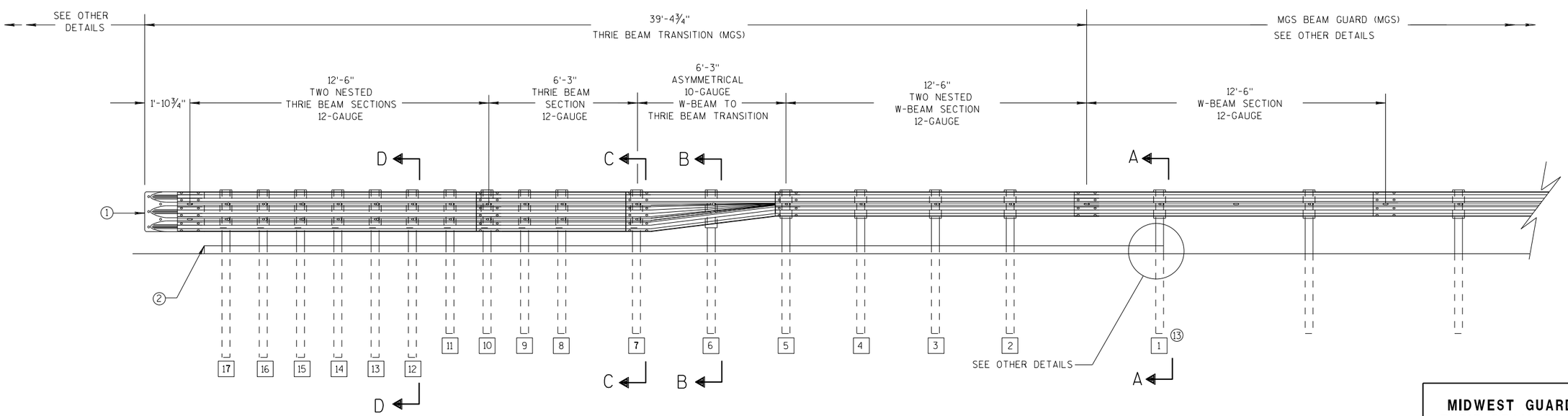

ELEVATION VIEW

MIDWEST GUARDRAIL SYSTEM THRIE BEAM TRANSITION

MIDWEST GUARDRAIL SYSTEM THRIE BEAM TRANSITION (MGS)

STATE OF WISCONSIN
DEPARTMENT OF TRANSPOR

6

S.D.D. 14 B 45-5a

GENERAL NOTES

(2) OPTIONAL CURB AND GUTTER OR DRAINAGE FEATURE SEE PLAN FOR INFORMATION.

(3) WHEN USING STEEL POSTS AND WOOD BLOCKOUTS INSTALL FOUR 10D GALVANIZED NAILS. INSTALL NAILS AT THE BACK CORNERS OF THE BLOCK AND BEND THE NAILS OVER THE FLANGE OF THE STEEL POST.

(4) TOLERANCE FOR TOP OF W-BEAM RAIL IS ± 1".

(13) STEEL OR WOOD POST IS ACCEPTABLE AT POST 1. SEE SDD 14B42

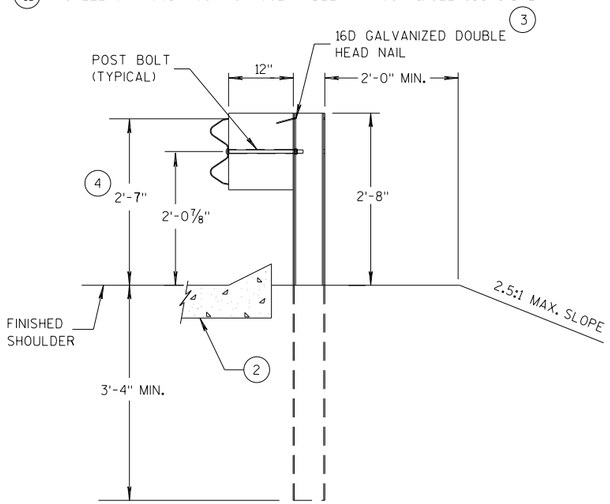

SECTION A-A (13)

POSTS 1-5

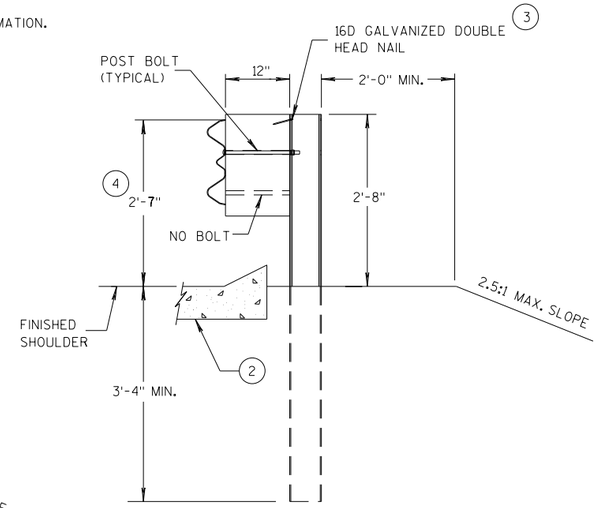

SECTION B-B

POST 6

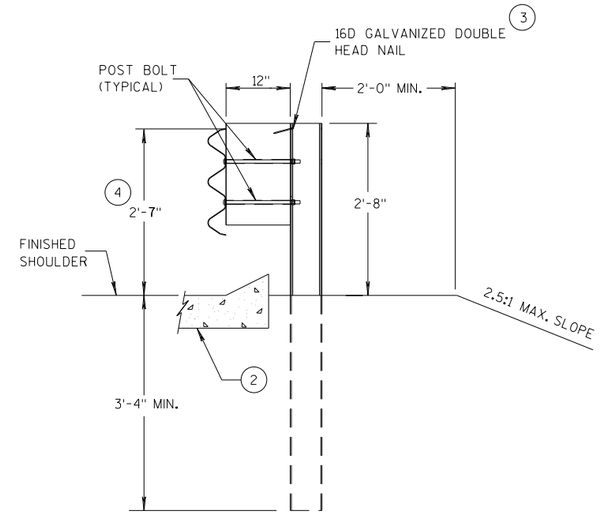

SECTION C-C

POSTS 7-11

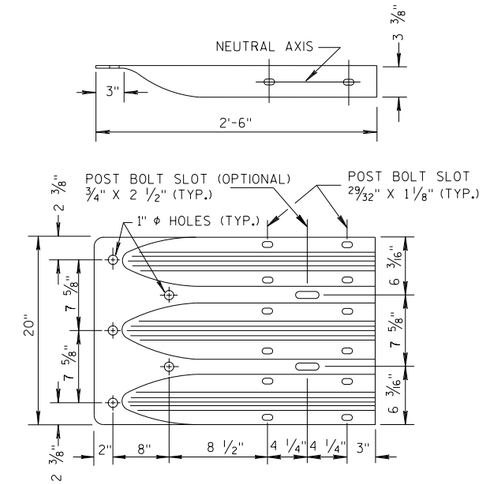

THRIE BEAM TERMINAL CONNECTOR

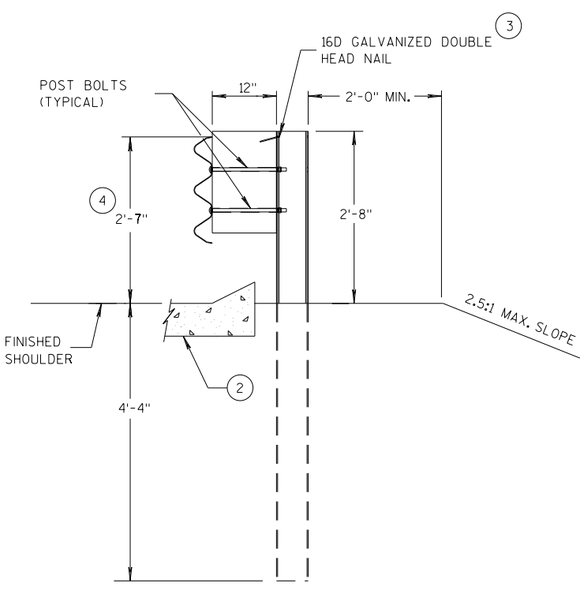

SECTION D-D

POSTS 12-17

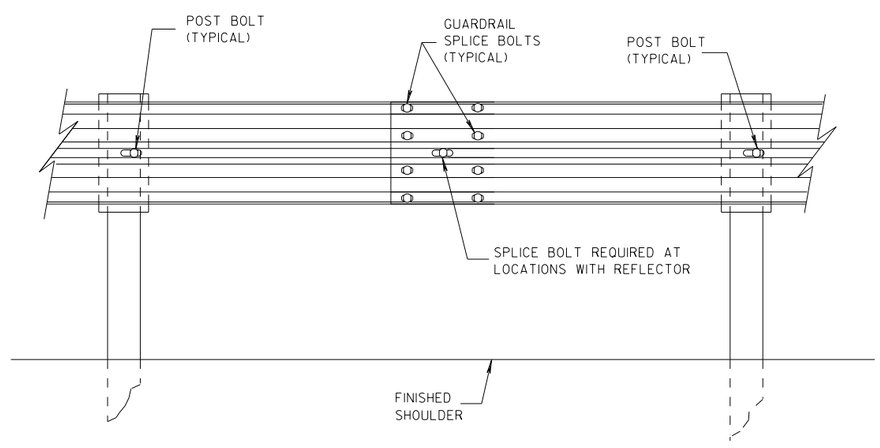

SPLICE DETAIL

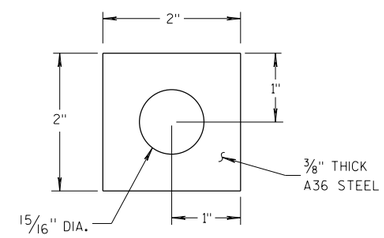

PLATE WASHER DETAIL

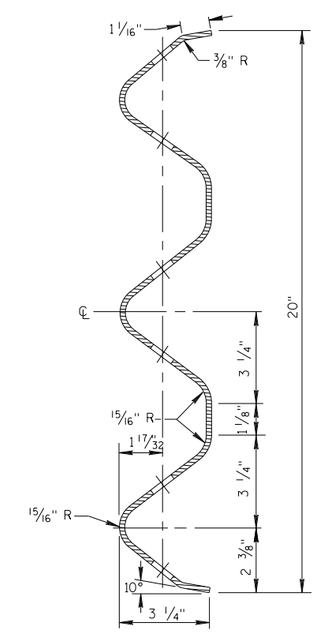

SECTION THRU THRIE BEAM RAIL ELEMENT

MIDWEST GUARDRAIL SYSTEM
THRIE BEAM TRANSITION (MGS)

STATE OF WISCONSIN
DEPARTMENT OF TRANSPORTATION

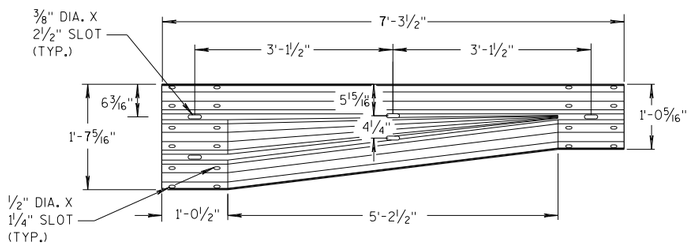

W-BEAM TO THRIE BEAM TRANSITION SECTION

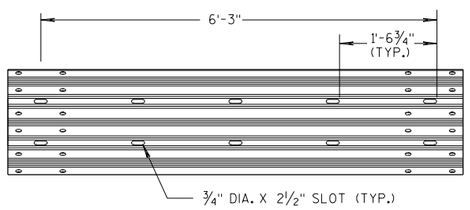

6'-3" THRIE BEAM SECTION

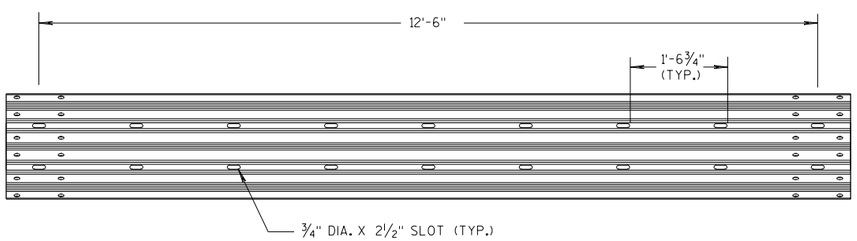

12'-6" THRIE BEAM SECTION

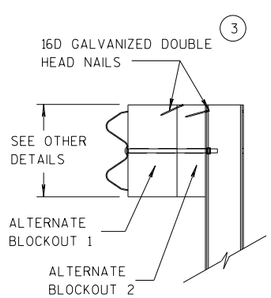

SIDE VIEW

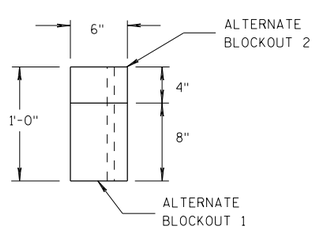

TOP VIEW

ALTERNATE WOOD BLOCKOUT DETAIL

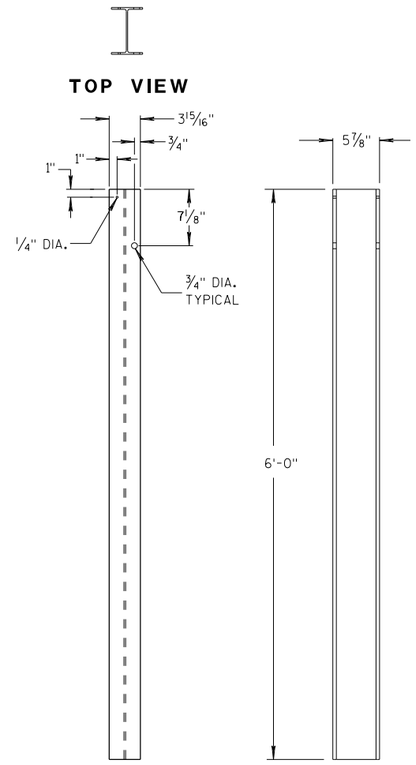

STEEL POSTS 1-5 (13)

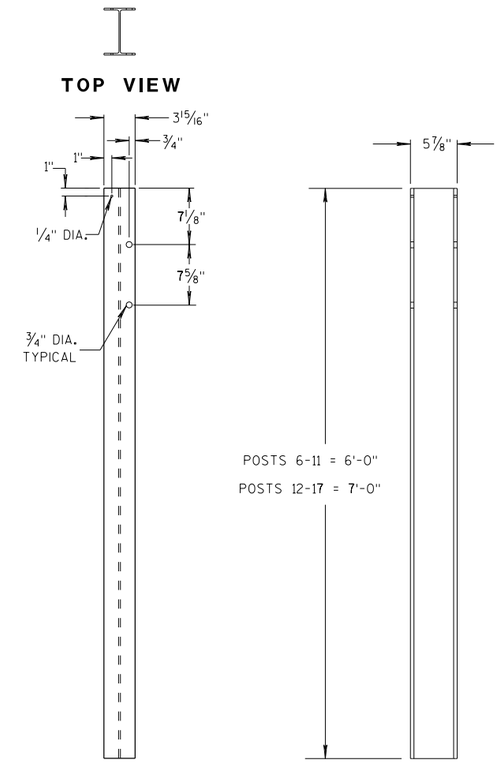

STEEL POSTS 6-17

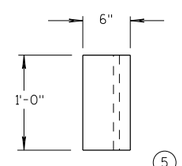

TOP VIEW (5)

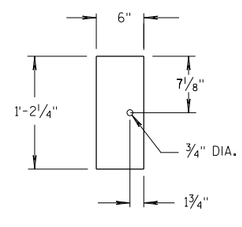

FRONT VIEW

BLOCKOUT POSTS 1-5

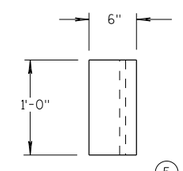

TOP VIEW (5)

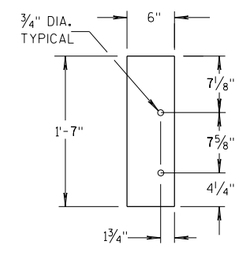

FRONT VIEW

BLOCKOUT POSTS 6-17

GENERAL NOTES

STEEL POSTS ARE W6X9 OR W6X8.5.

BOLT HOLES FOR POST ARE ON FRONT AND OF SIDE OF POST.

(3) WHEN USING STEEL POSTS AND WOOD BLOCKOUTS INSTALL FOUR 16D GALVANIZED NAILS. INSTALL NAILS AT THE BACK CORNERS OF THE BLOCK AND BEND THE NAILS OVER THE FLANGE OF THE STEEL POST.

(5) WOOD BLOCKS MAY BE CONSTRUCTED OUT OF 2 WOOD BLOCKS. SEE ALTERNATE WOOD BLOCK DETAIL.

(13) STEEL OR WOOD POST IS ACCEPTABLE AT POST 1. SEE SDD 14B42.

MIDWEST GUARDRAIL SYSTEM THRIE BEAM TRANSITION (MGS)

STATE OF WISCONSIN
DEPARTMENT OF TRANSPOR

6

S.D.D. 14 B 45-5c

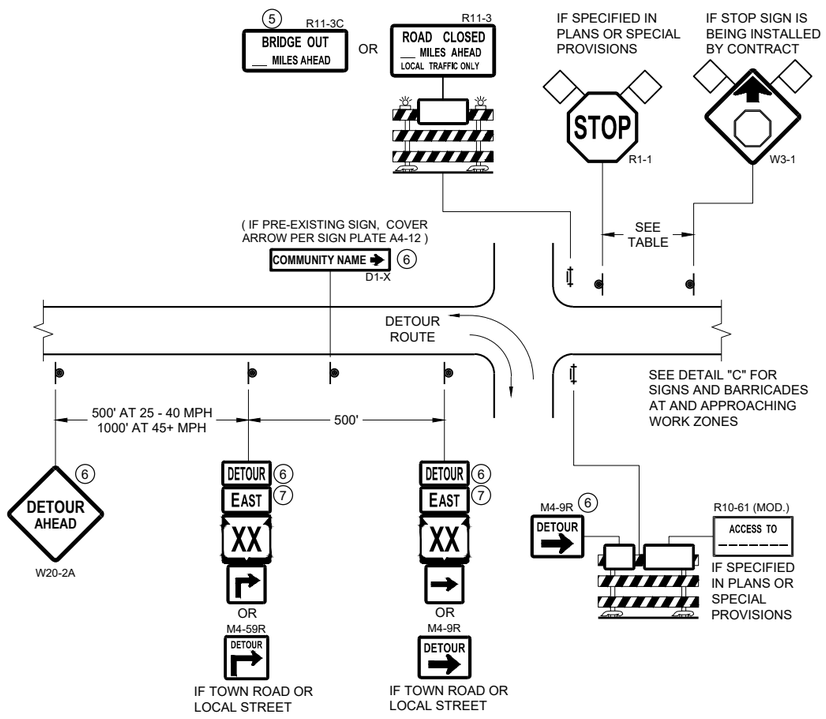

DETAIL A

MAINLINE CLOSURE WITH POSTED DETOUR

WORK ZONE GREATER LESS THAN ½ MILE FROM DETOUR ROUTE (1000 FEET IF URBAN)

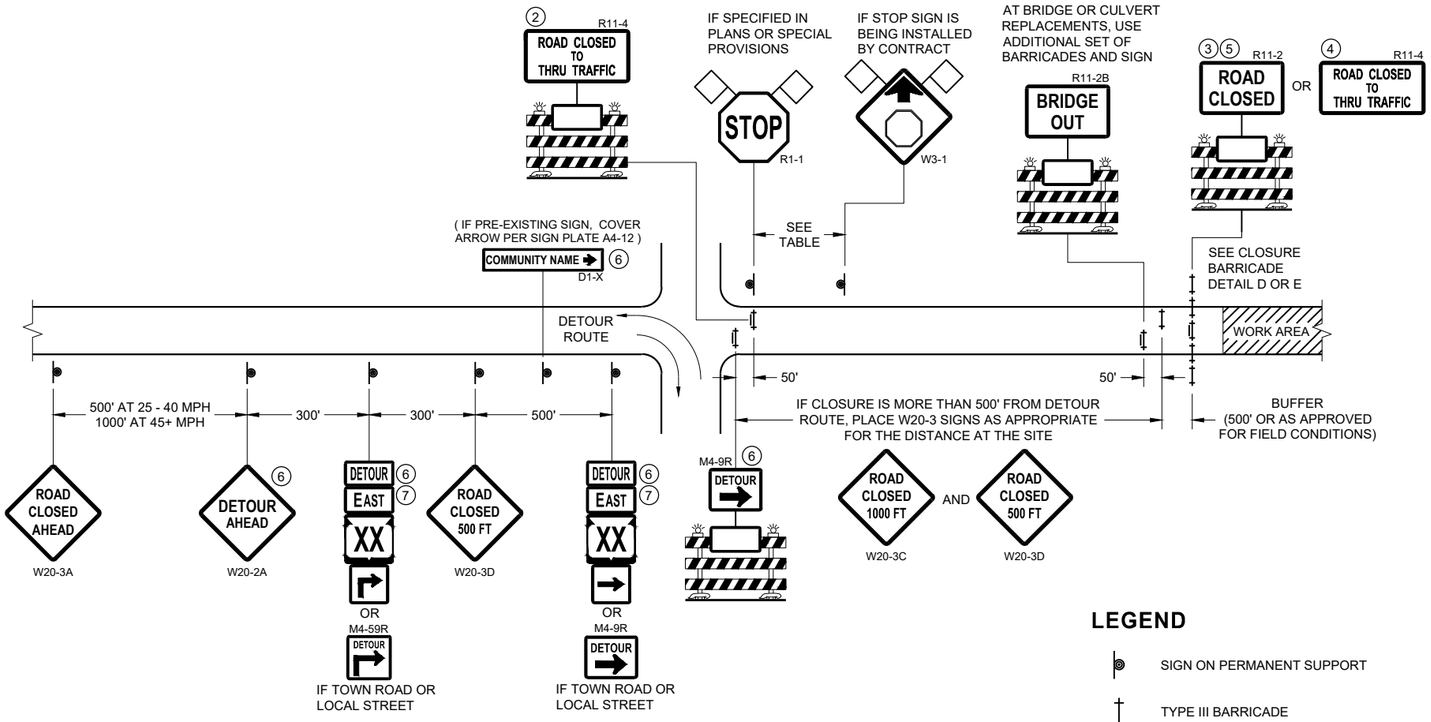

DETAIL B

MAINLINE CLOSURE WITH POSTED DETOUR

WORK ZONE LESS THAN ½ MILE FROM DETOUR ROUTE (1000 FEET IF URBAN)

LEGEND

- SIGN ON PERMANENT SUPPORT
- TYPE III BARRICADE
- TYPE III BARRICADE WITH ATTACHED SIGN
- TYPE "A" WARNING LIGHT (FLASHING)
- WORK AREA
- FLAGS, 16" X 16" MIN. (ORANGE)
- DETOUR — M4 - 8
- EAST — M3 - X
- XX — M1 - 4 OR XX — M1 - 6 OR COUNTY X — M1 - 5A
- M05 - 1 OR M06 - 1

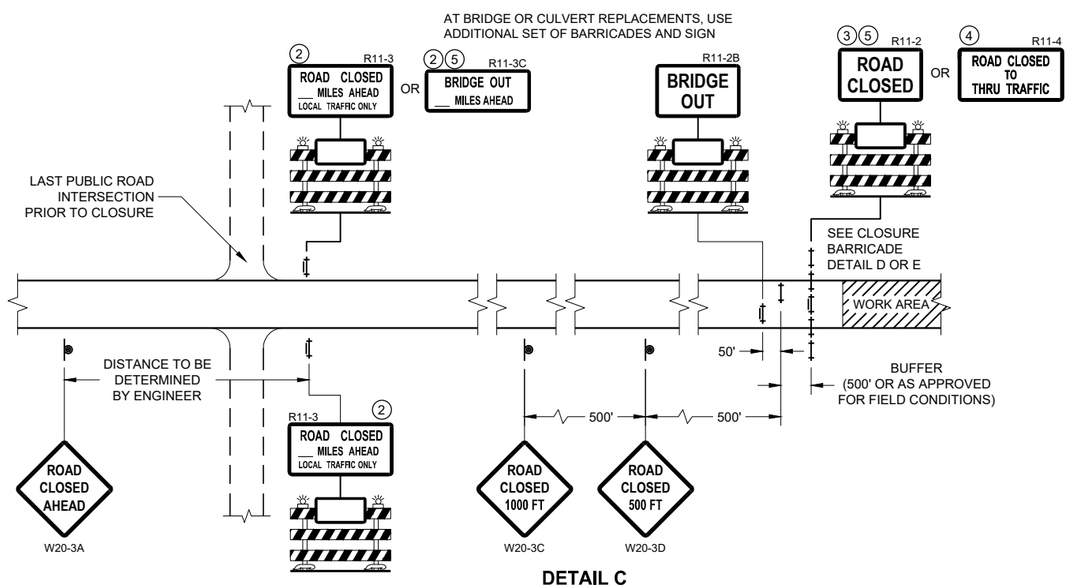

DETAIL C

MAINLINE CLOSURE, NO POSTED DETOUR

SPEED LIMIT (MPH)	"STOP AHEAD" ADVANCE WARNING DISTANCE (FT)
25	200
30	200
35	350
40	350
45	500
50	550
55	750

SEE SDD 15C2-SHEET "b" FOR GENERAL NOTES AND FOOTNOTES 1 THROUGH 7

BARRICADES AND SIGNS FOR MAINLINE CLOSURES

STATE OF WISCONSIN
DEPARTMENT OF TRANSPORTATION

APPROVED
November 2018 /S/ Andrew Heidtke
DATE WORK ZONE ENGINEER

FHWA

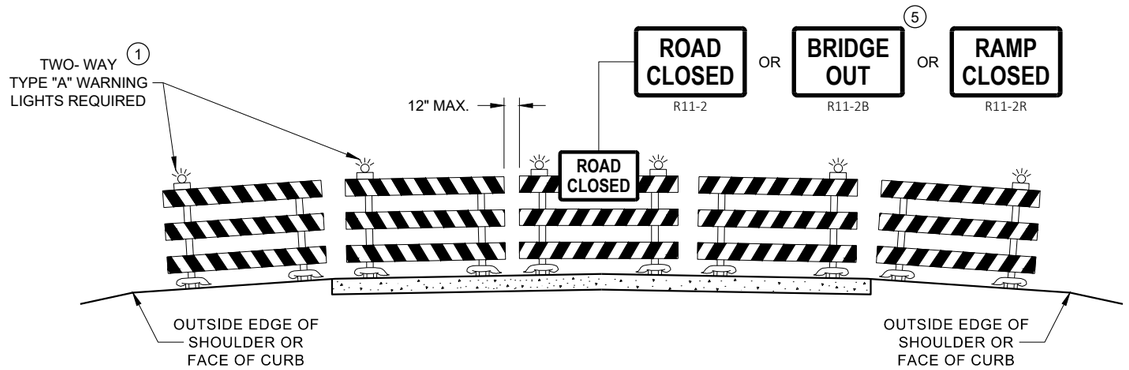

DETAIL D
ROAD CLOSURE BARRICADE DETAIL
APPROACH VIEW

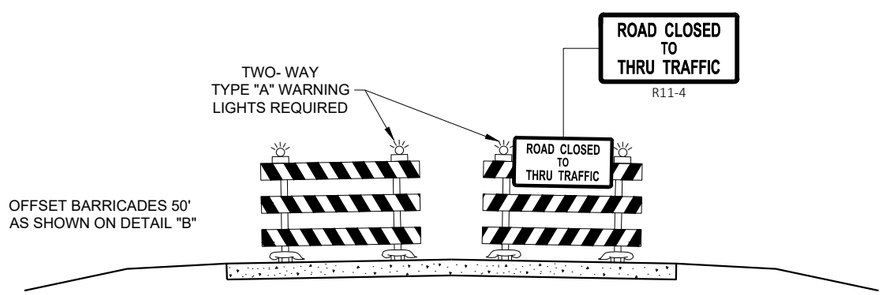

DETAIL E
LANE CLOSURE BARRICADE DETAIL
APPROACH VIEW

SEE SDD 15C2 - SHEET "a" FOR LEGEND

GENERAL NOTES

THE EXACT NUMBER, LOCATION, AND SPACING OF ALL SIGNS AND BARRICADES SHALL BE ADJUSTED TO FIT FIELD CONDITIONS AS APPROVED BY THE ENGINEER.

ANY SIGNS TEMPORARY OR EXISTING, WHICH CONFLICT WITH TRAFFIC CONTROL "IN USE", SHALL BE REMOVED OR COVERED AS NEEDED AND AS APPROVED BY THE ENGINEER.

THE SPACING BETWEEN TRAFFIC CONTROL SIGNS SHOULD BE ADJUSTED TO NOT CONFLICT WITH AND SHOULD PROVIDE A DESIRABLE MINIMUM OF 200 FEET CLEARANCE TO EXISTING SIGNS THAT WILL REMAIN IN PLACE.

BARRICADES THAT MUST BE MOVED FOR A WORK OPERATION SHALL BE IMMEDIATELY RE-ESTABLISHED UPON COMPLETION OF THE OPERATION, OR FOR CONTINUING OPERATIONS, AT THE END OF EACH WORKING DAY.

SIGNS THAT WILL BE IN PLACE LESS THAN 7 CONTINUOUS DAYS AND NIGHTS MAY BE MOUNTED ON PORTABLBLE SUPPORTS.

ALL TYPE III BARRICADES SHALL HAVE RAILS REFLECTORIZED ON BOTH FACES. STRIPES SHALL BE PROPERLY SLOPED DOWN TOWARD THE TRAFFIC SIDE OR AS SHOWN IN THE ROAD CLOSURE BARRICADE DETAIL "D" FOR FULL ROAD CLOSURES.

TYPE "A" LOW - INTENSITY FLASHING WARNING LIGHTS SHALL BE VISIBLE ON BOTH SIDES OF THE BARRICADE.

THE R11 - 2, R11 - 3, M4 - 9, R11 - 4, AND R10 - 61 SIGNS PLACED ON THE BARRICADES SHALL COVER NO MORE THAN THE TOP RAIL. THE SIGNS SHALL NOT COVER ANY PORTION OF THE MIDDLE RAIL OR BOTTOM RAILS.

"WO" AND "MO" SIGNS ARE THE SAME AS "W" AND "M" SIGNS EXCEPT THE BACKGROUND IS ORANGE.

ALL SIGNS SHALL BE 48" X 48" UNLESS OTHERWISE NOTED BELOW:
- R11 - 2 SHALL BE 48" X 30"
- R11 - 3 SHALL, R11 - 4 AND R10 - 61 SHALL BE 60 " X 30"
- M4 - 9 SHALL BE 30" X 24"
- M3 - X SHALL BE 24" X 12" (36" X 18" IF NEEDED TO MATCH EXISTING SIGNS)
- M4 - 8 SHALL BE 24" X 12" (36" X 15" IF NEEDED TO MATCH EXISTING SIGNS)
- M1 - 4, M1 - 5A AND M1 - 6 SHALL BE 24" X 24" (36" X 36" IF NEEDED TO MATCH EXISTING SIGNS)
- MO5 - 1 AND MO6 - 1 SHALL BE 21" X 21" (30" X 30" IF NEEDED TO MATCH EXISTING SIGNS)
- D1 - X SHALL BE AS SHOWN ON SPECIFIC PROJECT SIGNING DETAIL SHEETS.
- R1 - 1 SHALL BE 36" X 36"

1. TWO WARNING LIGHTS SHALL BE PROVIDED ON THE CENTER BARRICADE AND A MINIMUM OF ONE WARNING LIGHT SHALL BE PROVIDED ON EACH OF THE OTHER BARRICADES WITHIN THE ROADWAY LIMITS. SPACING OF THE WARNING LIGHTS SHALL BE UNIFORM TO THE EDGE OF ROADWAY AS SHOWN (APPROX. 8 FOOT LIGHT SPACING.
2. THESE SIGNS AND BARRICADES ARE NOT REQUIRED IF ROAD CLOSURE BEGINS AT AN INTERSECTION.
3. FOR ROAD CLOSURE WITHOUT LOCAL ACCESS TO PROJECT, SEE ROAD CLOSURE BARRICADE DETAIL "D".
4. FOR ROAD CLOSURE WITH LOCAL ACCESS TO PROJECT, SEE ROAD CLOSURE BARRICADE DETAIL "E".
5. FOR BRIDGE OR CULVERT REPLACEMENTS, SUBSTITUTE "BRIDGE OUT" INSTEAD OF "ROAD CLOSED" ON R11 - 2 AND R11 - 3 SIGNS.
6. INSTALL DETOUR AND COMMUNITY GUIDE SIGNS AND ARROWS ONLY IF SPECIFIED IN THE CONTRACT. IF THERE ARE EXISTING ROUTE MARKER ASSEMBLIES THAT WILL REMAIN IN PLACE, ADJUST THE LOCATION OF THE DETOUR ROUTE SIGNS TO CORRESPOND WITH THE EXISTING ASSEMBLIES. MODIFY EXISTING SIGNS WHERE POSSIBLE. SEE SPECIFIC PROJECT DETOUR SIGNING DETAIL SHEETS. IF DETOUR SIGNS ARE BEING INSTALLED BY OTHERS, PLACE THE CONTRACTED TRAFFIC CONTROL SIGNS TO ALLOW FOR PLACEMENT OF ALL WARNING, DETOUR AND GUIDE SIGNS AS SHOWN.
7. "EAST" CARDINAL DIRECTION MARKERS AND RIGHT TURN ARROWS ARE SHOWN. USE OTHER CARDIANAL DIRECTIONS AND ARROWS AS APPROPRIATE.

BARRICADES AND SIGNS FOR VARIOUS CLOSURES

STATE OF WISCONSIN
DEPARTMENT OF TRANSPORTATION

APPROVED
November 2018 — DATE
/S/ Andrew Heidtke — WORK ZONE ENGINEE
FHWA

6

SDD 15C02 - 07b

THIS DRAWING PROVIDES GENERAL GUIDANCE ON TYPICAL DETOUR SIGN LAYOUT AND SPACING. SEE PROJECT DETOUR SIGNING SHEETS FOR SPECIFIC DETAILS FOR EACH PROJECT.

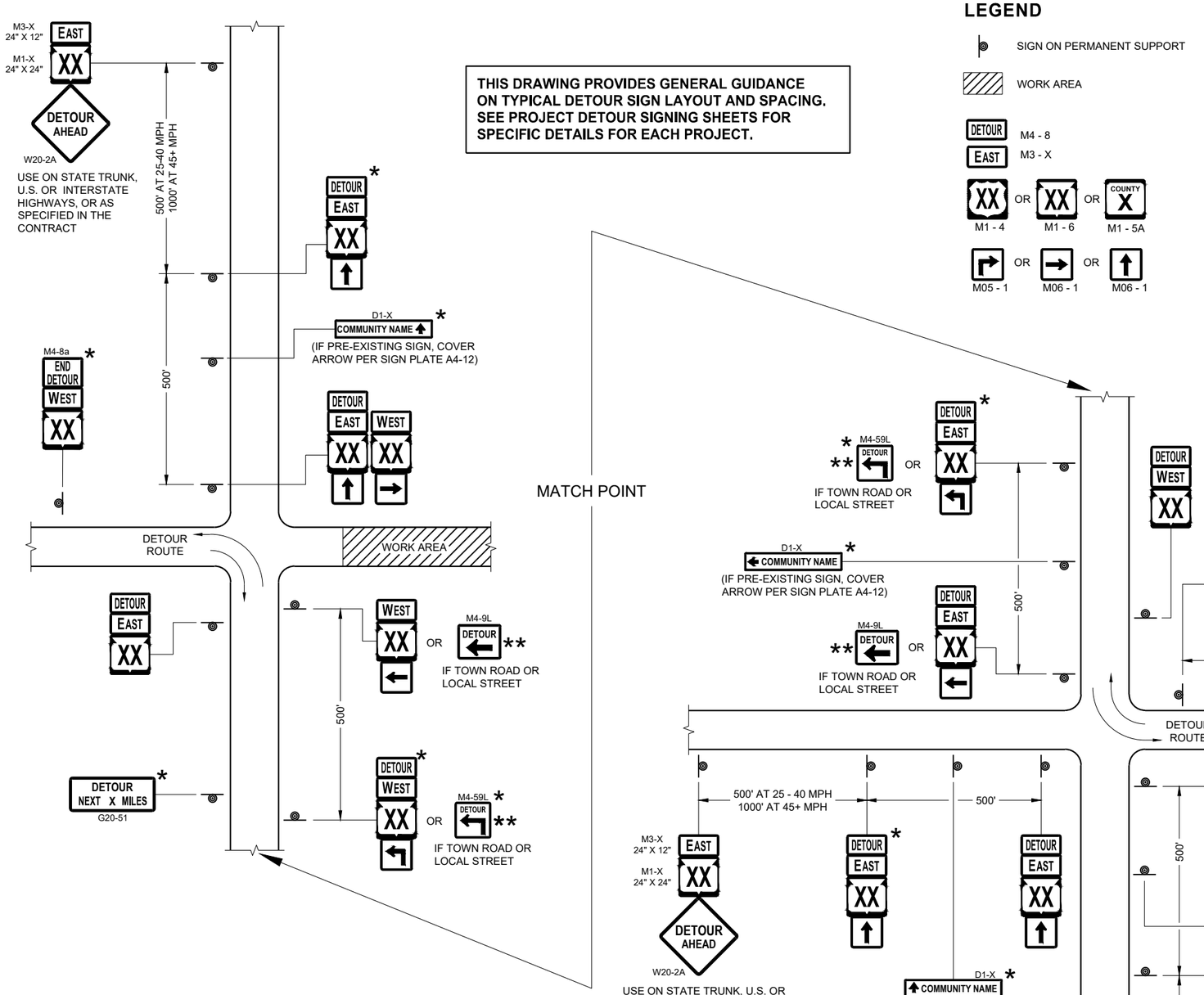

LEGEND

- SIGN ON PERMANENT SUPPORT
- WORK AREA
- DETOUR — M4 - 8
- EAST — M3 - X
- XX — M1 - 4 OR XX — M1 - 6 OR COUNTY X — M1 - 5A
- M05 - 1 OR M06 - 1 OR M06 - 1

GENERAL NOTES

THE EXACT NUMBER, LOCATION AND SPACING OF ALL SIGNS SHALL BE ADJUSTED TO FIT FIELD CONDITIONS AS APPROVED BY THE ENGINEER.

IF THERE ARE EXISTING ROUTE MARKER ASSEMBLIES THAT WILL REMAIN IN PLACE, ADJUST THE LOCATION OF THE DETOUR ROUTE SIGNS TO CORRESPOND WITH THE EXISTING ASSEMBLIES. SEE SPECIFIC PROJECT DETOUR SIGNING DETAIL SHEETS. MODIFY EXISTING SIGNS WHERE POSSIBLE.

THE SPACING BETWEEN TRAFFIC CONTROL AND DETOUR SIGNS SHOULD BE ADJUSTED TO NOT CONFLICT WITH AND TO PROVIDE A DESIRABLE MINIMUM OF 200 FEET CLEARANCE TO EXISTING SIGNS THAT WILL REMAIN IN PLACE.

ANY SIGNS TEMPORARY OR EXISTING, WHICH CONFLICT WITH TRAFFIC CONTROL "IN USE" SHALL BE REMOVED OR COVERED AS NEEDED AND AS APPROVED BY THE ENGINEER.

SIGNS THAT WILL BE IN PLACE LESS THAN 7 CONTINUOUS DAYS AND NIGHTS MAY BE MOUNTED ON PORTABLE SUPPORTS.

"MO" SIGNS ARE THE SAME AS "M" SIGNS EXCEPT THE BACKGROUND IS ORANGE.

SIGN SIZES SHALL BE AS FOLLOWS:

- M3-X SHALL BE 24" X 12" (36" X 18" IF NEEDED TO MATCH EXISTING SIGNS)
- M4-8 SHALL BE 24" X 12" (30" X 15" IF NEEDED TO MATCH EXISTING SIGNS)
- M1-4, M1-5A AND M1-6 SHALL BE 24" X 24" (30" X 30" IF NEEDED TO MATCH EXISTING SIGNS)
- M05-1 AND M06-1 SHALL BE 21" X 21" (30" X 30" IF NEEDED TO MATCH EXISTING SIGNS)
- M4-9 AND M4-59 SHALL BE 30" X 24"
- M4-8a SHALL BE 24" X 18"
- G20-51 SHALL BE 60" X 24"
- W20-2 SHALL BE 48" X 48"
- D1-X SHALL BE AS SHOWN ON SPECIFIC PROJECT SIGNING DETAIL SHEETS.

* OPTIONAL SIGNS. SEE SPECIFIC PROJECT DETOUR SIGNING DETAIL SHEETS.

** FOR A TOWN ROAD OR LOCAL STREET DETOURED ONTO A STATE TRUNK HIGHWAY, PLACE A ROAD NAME PLAQUE ABOVE THE M4-9 SIGN AS SPECIFIED IN THE CONTRACT.

SEE SPECIFIC PROJECT DETOUR SIGNING DETAIL SHEETS AND DETAIL A OR B ON SDD SHEET 15C02 - SHEET "a"

DETAIL F
DETOUR SIGNING

DETOUR SIGNING FOR MAINLINE CLOSURES

STATE OF WISCONSIN
DEPARTMENT OF TRANSPORTATION

APPROVED
November 2018 — /S/ Andrew Heidtke
DATE — WORK ZONE ENGINEER
FHWA

6
SDD 15C02 - 07c

TYPICAL SIDEROAD APPROACH WARNING SIGN DETAIL

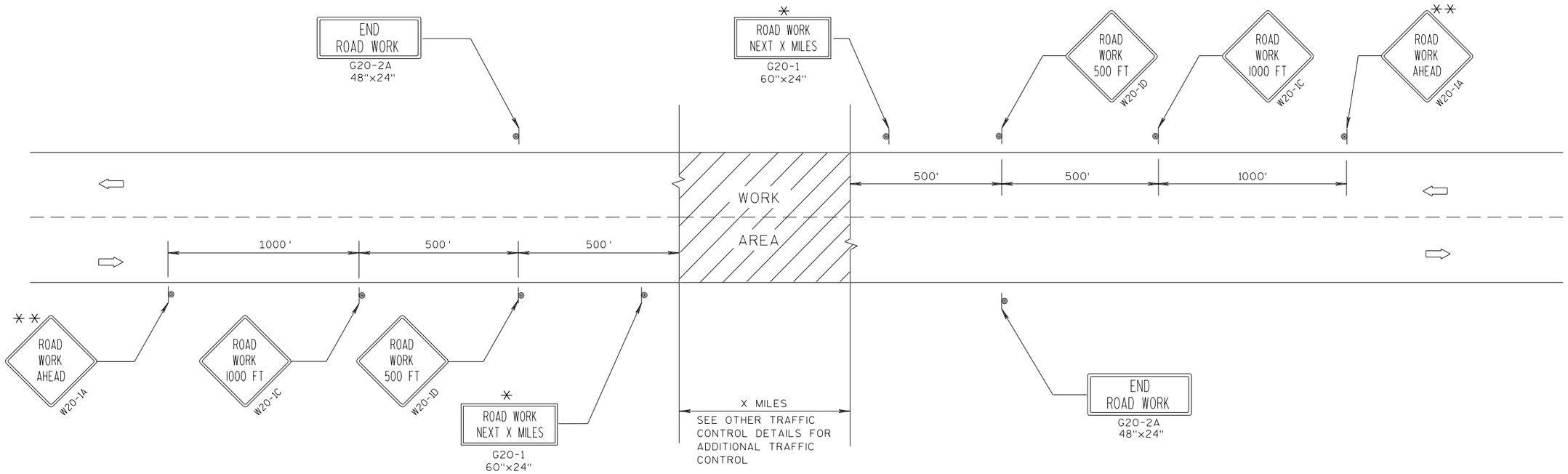

GENERAL NOTES

THE EXACT NUMBER, LOCATION, AND SPACING OF ALL SIGNS AND DEVICES SHALL BE ADJUSTED TO FIT FIELD CONDITIONS.

THE SPACING BETWEEN TRAFFIC CONTROL SIGNS SHOULD BE ADJUSTED TO NOT CONFLICT WITH AND SHOULD PROVIDE A MINIMUM OF 200 FEET (500 FEET DESIRABLE) CLEARANCE TO EXISTING SIGNS THAT WILL REMAIN IN PLACE.

ALL SIGNS ARE 48"x48" UNLESS OTHERWISE NOTED.

SIGNS THAT WILL BE IN PLACE LESS THAN 7 CONTINUOUS DAYS AND NIGHTS MAY BE MOUNTED ON PORTABLE SUPPORTS.

IF A "STOP" SIGN MUST BE REMOVED FOR A WORK OPERATION, A TEMPORARY "STOP" SIGN SHALL BE PLACED PRIOR TO THE SIGN REMOVAL, OR A FLAGGER SHALL BE PROVIDED UNTIL THE SIGN IS RE-ESTABLISHED.

* OMIT G20-1 SIGNS IF LENGTH OF WORK AREA IS 2 MILES OR LESS.

** PLACE ADDITIONAL W20-1A "ROAD WORK AHEAD" SIGN IF WORK AREA WITHIN THE PROJECT IS SEPARATED BY MORE THAN 2 MILES FROM PREVIOUS WORK AREA.

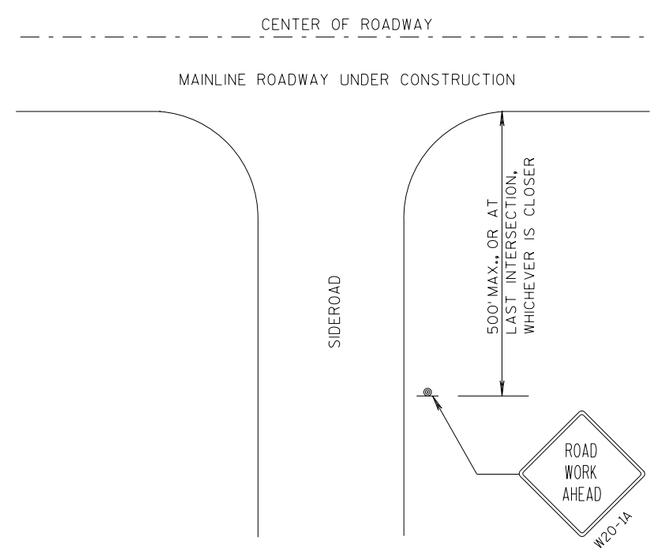

LEGEND

- SIGN ON PERMANENT SUPPORT
- DIRECTION OF TRAFFIC
- WORK AREA

TRAFFIC CONTROL, ADVANCE WARNING SIGNS 45 M.P.H. OR GREATER TWO-WAY UNDIVIDED ROAD OPEN TO TRAFFIC

STATE OF WISCONSIN
DEPARTMENT OF TRANSPORTATION

APPROVED
7/2018 — DATE
/S/ Andrew Heldtke — WORK ZONE ENGI
FHWA

6

S.D.D. 15 C 4-5

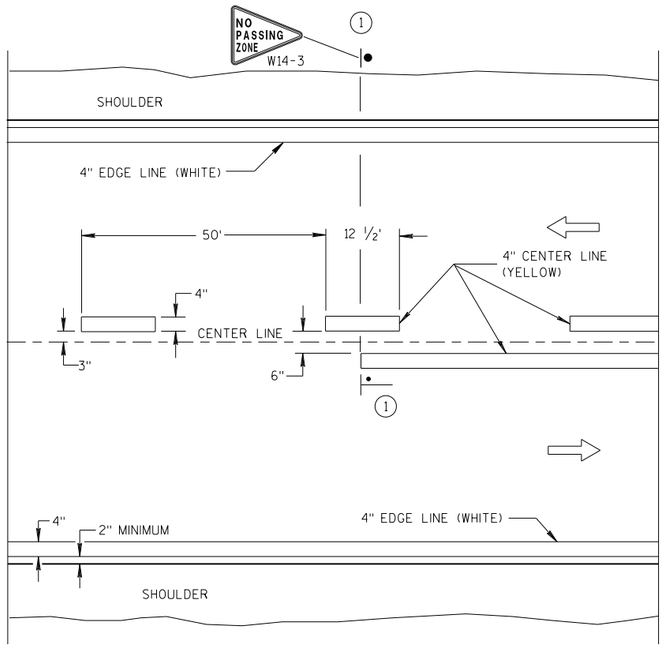

TWO WAY TRAFFIC

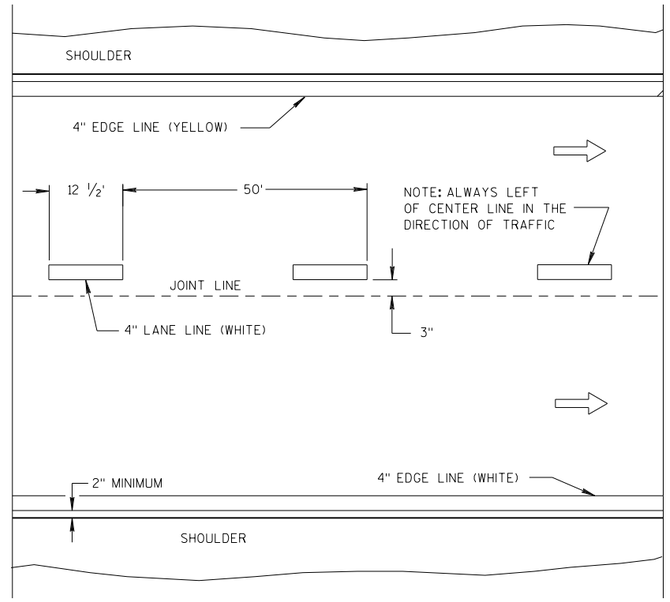

ONE WAY TRAFFIC

PERMANENT PAVEMENT MARKING

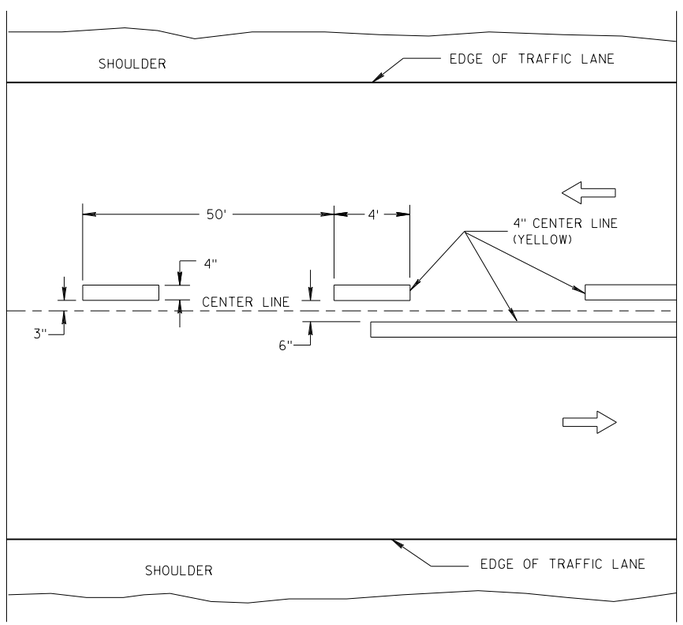

TWO WAY TRAFFIC

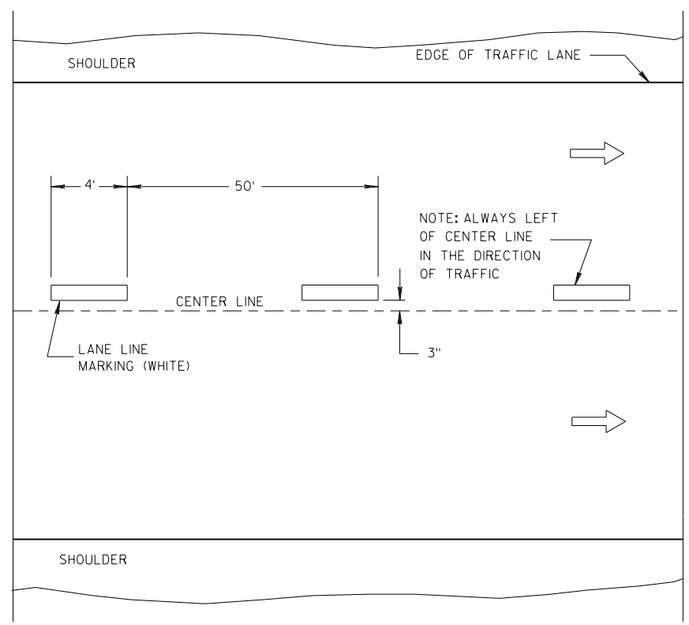

ONE WAY TRAFFIC

TEMPORARY PAVEMENT MARKING

GENERAL NOTES

DETAILS OF CONSTRUCTION NOT SHOWN ON THIS DRAWING SHALL CONFORM TO STANDARD SPECIFICATIONS AND SPECIAL PROVISIONS.

(1) LOCATE THE NO PASSING ZONE W14-3 SIGN WITHIN 50 FEET OF THE "T" MARKING.

NOTE

ARROW SYMBOL (⇨) SHOWS DIRECTION OF TRAVEL

LEGEND

"T" MARKING

POST MOUNTED SIGN

LONGITUDINAL MARKING (MAINLINE)

STATE OF WISCONSIN
DEPARTMENT OF TRANSPORTATION

APPROVED

7/2018 — DATE

/S/ Matthew R. Rauch — STATE SIGNING AND MAR INEER

FHWA

6

6

S.D.D. 15 C 8-19a

S.D.D. 15 C 8-19a

LEGEND

SIGN ON PORTABLE OR PERMANENT SUPPORT

DIRECTION OF TRAFFIC

WORK AREA

FLAGGER, EQUIPPED WITH STOP/SLOW PADDLE FASTENED ON SUPPORT STAFF

SIGN AND TEMPORARY RUMBLE STRIP ARRAY SPACING TABLE

SPEED LIMIT	SPACING A
25-35 MPH	200'
35-40 MPH	350'
45-55 MPH	500'

USE OF THE "BE PREPARED TO STOP" SIGN IS OPTIONAL. WHEN USED, THIS SIGN SHALL BE LOCATED BETWEEN THE W20-7A AND W20-4A SIGNS, USING SPACING A.

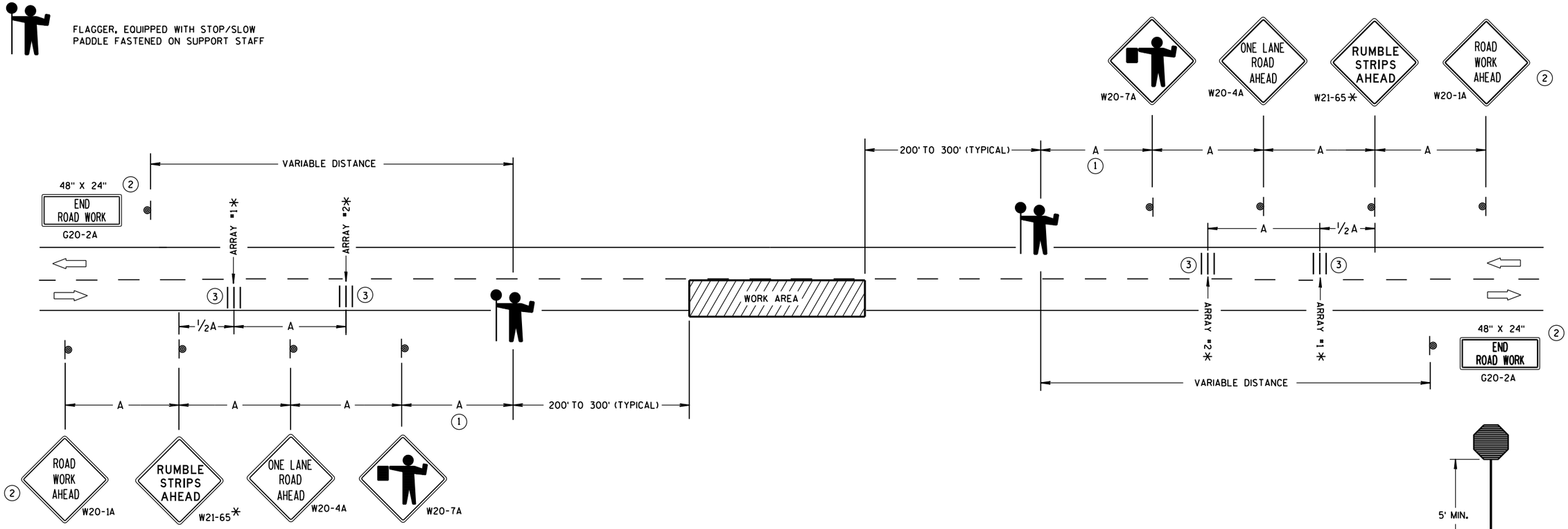

TRAFFIC CONTROL FOR LANE CLOSURE WITH FLAGGING OPERATION

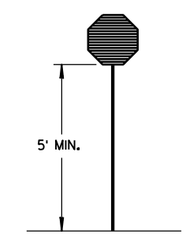

STOP/SLOW PADDLE ON SUPPORT STAFF

GENERAL NOTES

DETAILS OF TRAFFIC CONTROL DEVICES AND INSTALLATION NOT SHOWN ON THIS DRAWING SHALL CONFORM TO THE PERTINENT REQUIREMENTS OF THE STANDARD SPECIFICATIONS, THE SPECIAL PROVISIONS, AND THE MANUAL ON UNIFORM TRAFFIC CONTROL DEVICES.

THE EXACT NUMBER, LOCATION AND SPACING OF ALL SIGNS AND DEVICES (AND THE LOCATION OF ALL FLAGGERS) SHALL BE ADJUSTED TO FIT FIELD CONDITIONS AS APPROVED BY THE ENGINEER.

THE FIRST ADVANCE WARNING SIGN SHOULD TYPICALLY BE LOCATED IN ADVANCE OF THE ANTICIPATED TRAFFIC BACKUP OR QUEUE.

"WO" SIGNS ARE THE SAME AS "W" SIGNS EXCEPT THE BACKGROUND IS ORANGE.

WHEN A SIDE ROAD OR RAMP INTERSECTS THE FACILITY ON WHICH THE WORK IS BEING PERFORMED, ADDITIONAL TRAFFIC CONTROLS SHALL BE PROVIDED AS SPECIFIED IN THE PLANS AND/OR THE SPECIAL PROVISIONS OR AS APPROVED BY THE ENGINEER.

INSTALL TEMPORARY RUMBLE STRIPS PER MANUFACTURER'S RECOMMENDATIONS.

PLACE ADVANCE SIGNING PRIOR TO INSTALLING TEMPORARY RUMBLE STRIPS.

ALL SIGNS ARE 48" X 48" UNLESS OTHERWISE NOTED.

FLAGGERS SHALL BE IN SIGHT OF EACH OTHER OR IN DIRECT COMMUNICATION AT ALL TIMES. THEY SHALL BE EQUIPPED WITH STOP/SLOW PADDLES FASTENED ON SUPPORT STAFFS. WHEN THE FLAGGING OPERATION IS NOT IN EFFECT, REMOVE TEMPORARY RUMBLE STRIPS PRIOR TO COVERING OR REMOVING ALL ADVANCE SIGNING.

* UTILIZE TEMPORARY RUMBLE STRIPS WHEN FLAGGING OPERATION IS ANTICIPATED TO BE STATIONARY IN EXCESS OF TWO HOURS.

1. FOR A MOVING WORK OPERATION, SIGNING AND TEMPORARY RUMBLE STRIPS (IF USED) SHALL BE REESTABLISHED (AS SIMULTANEOUSLY AS PRACTICAL) AT APPROXIMATELY 3,500 FOOT INTERVALS IN THE MOVING WORK OPERATION OR AS APPROVED BY THE ENGINEER.
2. SIGN NOT REQUIRED IF FLAGGING OPERATION OCCURS WITHIN A SIGNED ROAD WORK ZONE AREA.
3. EACH TEMPORARY RUMBLE STRIP ARRAY CONSISTS OF THREE RUMBLE STRIPS SPACED ACCORDING TO MANUFACTURER'S RECOMMENDATION, PLACED TRANSVERSE ACROSS THE LANE AT LOCATIONS SHOWN.

TRAFFIC CONTROL FOR LANE CLOSURE WITH FLAGGING OPERATION

STATE OF WISCONSIN
DEPARTMENT OF TRANSPORTATION

APPROVED
June 2017 — DATE
/S/ Andrew Heldtke — WORK ZONE ENG
FHWA

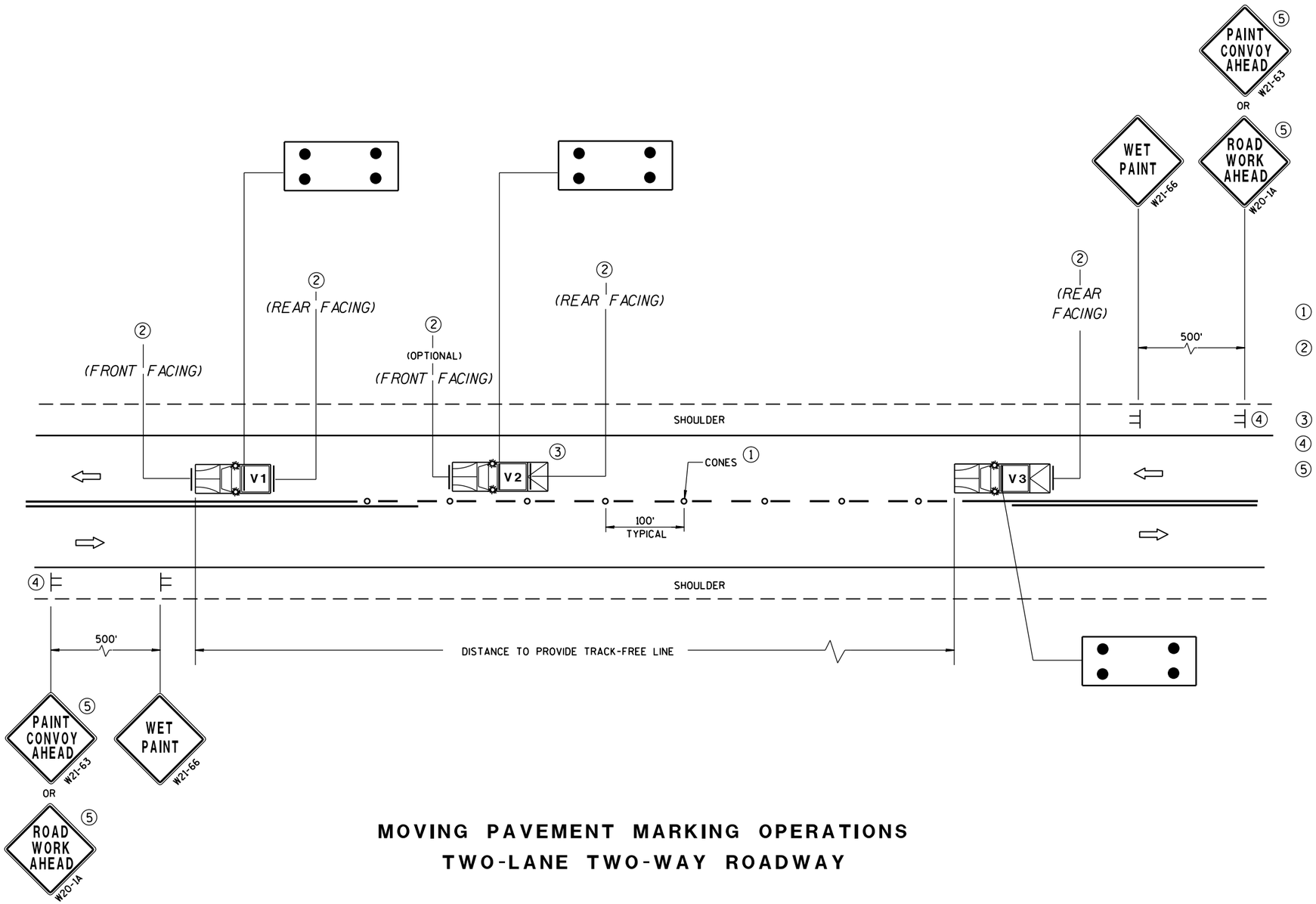

GENERAL NOTES

ALL VEHICLES SHALL BE EQUIPPED WITH TWO 360 DEGREE HIGH INTENSITY YELLOW FLASHING LIGHTS OR STROBE LIGHTS AND OPERATED WITH HEADLIGHTS TURNED ON.

VEHICLES SHALL BE EQUIPPED WITH REAR FACING TYPE B OR C FLASHING ARROW PANEL OPERATING IN CAUTION MODE. SIGNS PLACED ON VEHICLES MUST NOT OBSCURE THE ARROW PANEL.

ALL SIGNS ARE 48" X 48" UNLESS OTHERWISE SPECIFIED.

IF SPEED LIMIT IS 40 MPH OR LESS STATIONARY SIGNS MAY BE OMITTED IF CONES ARE USED.

ALTERNATE SIGN MESSAGES, SUCH AS "PAINT CREW AHEAD" OR "ROAD PAINTING AHEAD" MAY BE USED.

DISTANCE BETWEEN VEHICLES MAY VARY ACCORDING TO TERRAIN, SIGHT DISTANCE, PAINT DRYING TIME, AND OTHER FACTORS. WHENEVER ADEQUATE STOPPING SIGHT DISTANCE EXISTS TO THE REAR, SHADOW VEHICLES SHOULD MAINTAIN THE MINIMUM DISTANCE FROM THE WORK VEHICLE AND PROCEED AT THE SAME SPEED AS THE WORK VEHICLE. SHADOW VEHICLES SHOULD SLOW DOWN IN ADVANCE OF VERTICAL OR HORIZONTAL CURVES THAT RESTRICT SIGHT DISTANCE.

THE WORK AND SHADOW VEHICLES SHOULD PULL OVER PERIODICALLY TO ALLOW TRAFFIC TO PASS.

THIS DRAWING SHALL BE USED FOR CENTERLINE OR EDGELINE MARKING.

WHEN NO WORK ACTIVITY IS TAKING PLACE, REMOVE OR TURN THE STATIONARY WARNING SIGNS AWAY FROM TRAFFIC.

1. CONES MAY BE OMITTED ON PAINTED LINE IF APPROVED BY THE ENGINEER. CONSIDER PAVEMENT MARKING DRY OR CURE TIMES AND TRAFFIC VOLUME.
2. USE STANDARD SIGN W21-64 WITH APPROPRIATE ARROW.

   WET PAINT (W21-64) OR WET PAINT (W21-64)

3. OPTIONAL TRUCK-MOUNTED ATTENUATOR.
4. SIGNS SHALL BE REPEATED APPROXIMATELY EVERY THREE MILES.
5. IF CONSTRUCTION WORK ZONE SIGNS ARE IN PLACE, W20-1 OR W21-63 ARE NOT REQUIRED.

LEGEND

V1	LEAD VEHICLE
V2	SHADOW VEHICLE
V3	TRAIL VEHICLE WITH TMA
TMA	TRUCK-MOUNTED ATTENUATOR
	SIGN ON TEMPORARY SUPPORT
	DIRECTION OF TRAFFIC
	CONES
	FLASHING ARROW PANEL (CAUTION)

MOVING PAVEMENT MARKING OPERATIONS
TWO-LANE TWO-WAY ROADWAY

MOVING PAVEMENT MARKING OPERATION
TWO-LANE TWO-WAY ROADWAY

STATE OF WISCONSIN
DEPARTMENT OF TRANSPORTATION

APPROVED
Sept., 2017 — DATE
/S/ Andrew Heldtke — WORK ZONE ENG'R
FHWA

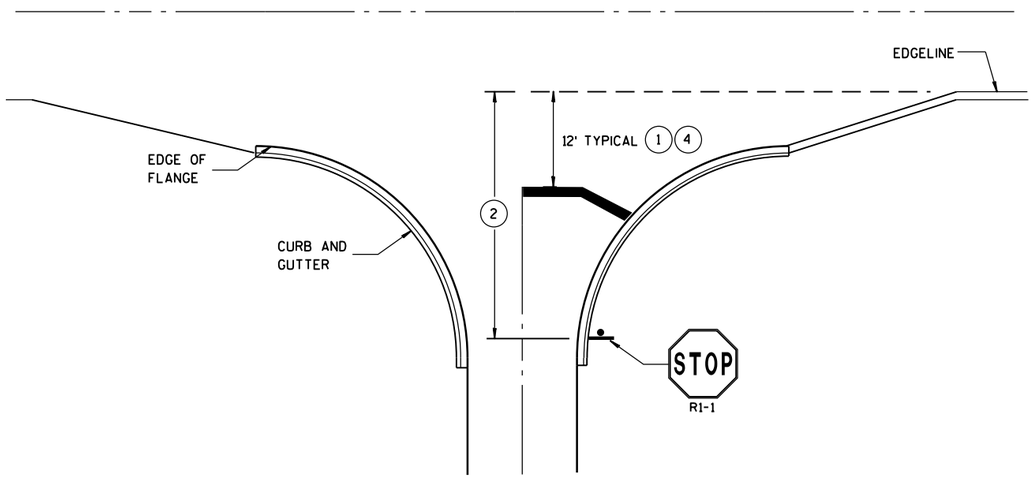

TYPICAL STOP LINE PAVEMENT MARKING WITH CURB AND GUTTER

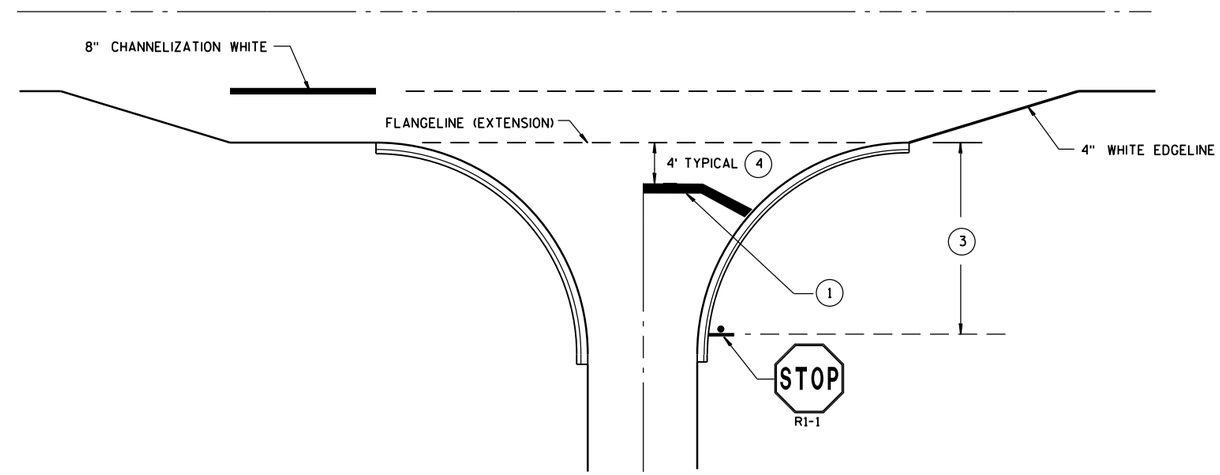

TYPICAL STOP LINE PAVEMENT MARKING FOR SIDEROADS WITH RIGHT TURN LANE

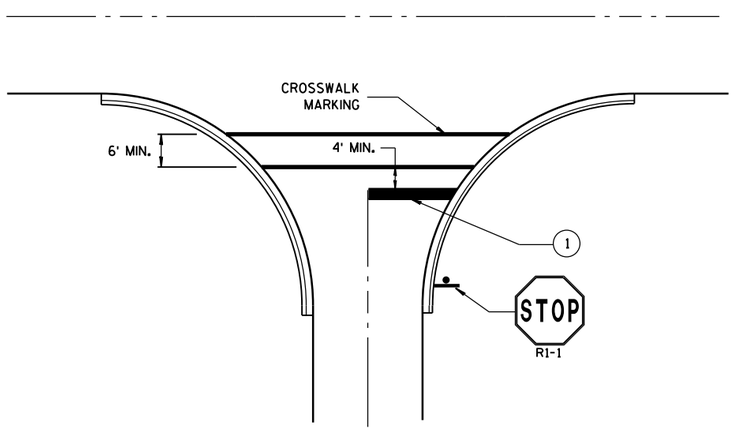

TYPICAL STOP LINE PAVEMENT MARKING FOR SIDEROADS WITH CROSSWALK MARKING

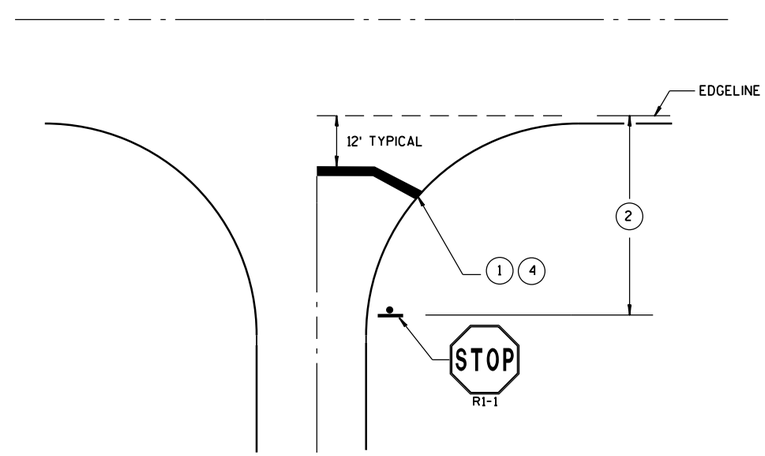

TYPICAL STOP LINE PAVEMENT MARKING WITHOUT CURB AND GUTTER

GENERAL NOTES

STOP SIGN SHALL BE PLACED A MINIMUM OF 6 FEET TO A MAXIMUM OF 50 FEET FROM THE EDGELINE LOCATION.

1. 18-INCH STOP LINES MAY BE DELETED OR ADDED BY THE PROJECT ENGINEER BASED ON VISIBILITY AND SIGHT LINES.
2. IF STOP SIGN IS LESS THAN OR EQUAL TO 40 FEET FROM THE EDGELINE THAN NO STOP LINE IS REQUIRED.
3. IF STOP SIGN IS LESS THAN OR EQUAL TO 30 FEET FROM THE FLANGELINE EXTENSION THAN NO STOP LINE IS REQUIRED.
4. MOVE CLOSER TO EDGE OF TRAVEL LANE AS NEEDED FOR VISIBILITY AND SIGHT LINES. (NO CLOSER THAN 4 FEET).

STOP LINE AND CROSSWALK PAVEMENT MARKING

STATE OF WISCONSIN
DEPARTMENT OF TRANSPORTATION

APPROVED

Sept., 2017	/S/ Matthew R. Rauch	
DATE	STATE SIGNING AND MAR	NEER

FHWA

6

S.D.D. 15 C 33-3

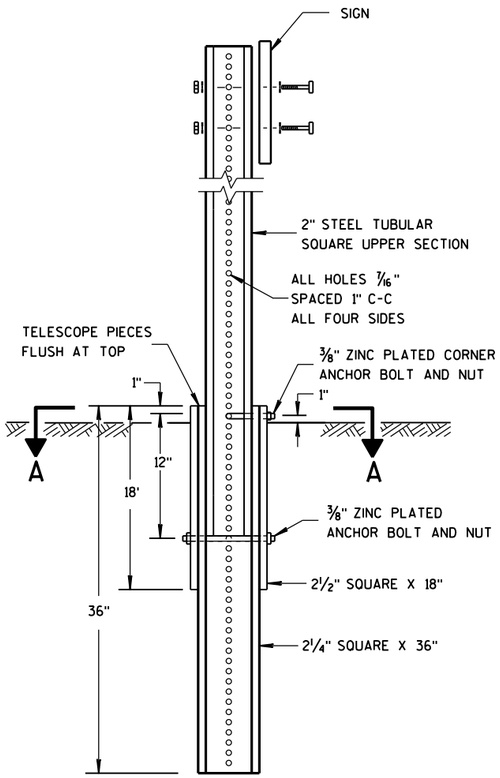

DETAIL OF TUBULAR STEEL SIGN POST

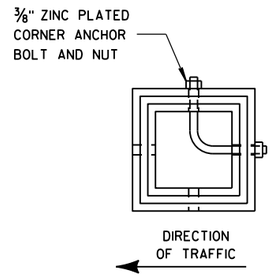

SECTION A-A

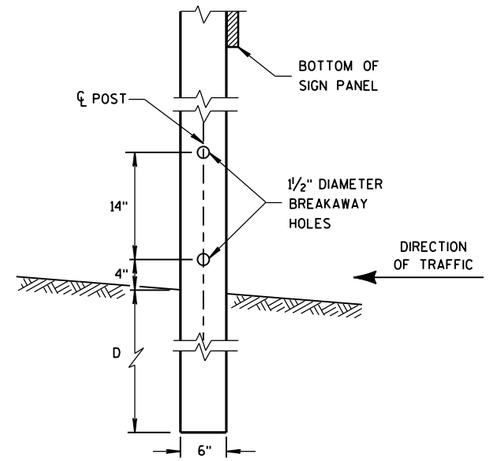

4"x6" WOOD POST MODIFICATION

GENERAL NOTES

1. 6 FEET FROM THE EDGE OF PAVEMENT (EDGE LINE LOCATION) UNLESS OTHERWISE DIRECTED BY THE PROJECT ENGINEER. LATERAL OFFSET SHOULD BE ADJUSTED TO AVOID THE DITCH FLOWLINE.
2. THE EXISTENCE OF CURB AND GUTTER DOES NOT IN ITSELF MANDATE THE VERTICAL CLEARANCE ILLUSTRATED. THAT HEIGHT IS TYPICALLY MEASURED WHERE THERE IS SIDEWALK ADJACENT TO THE ROADWAY OR PARKING IS PERMITTED. IN THE ABSENCE OF SIDEWALK, VERTICAL CLEARANCE IS MEASURED FROM THE TOP OF THE CURB. IF NO SIDEWALK AND NO PARKING, VERTICAL CLEARANCE MAY BE REDUCED TO 5 FOOT MINIMUM. OFFSET OF SIGNS IS MEASURED FROM THE CURB FLOWLINE.
3. FOR SIGNS REQUIRING 4 POSTS, SPACE INTERMEDIATE POSTS EVENLY.

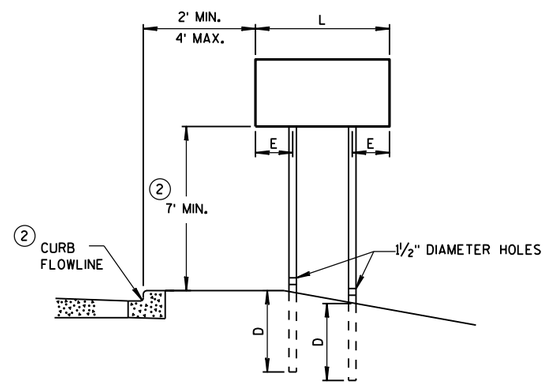

URBAN AREA

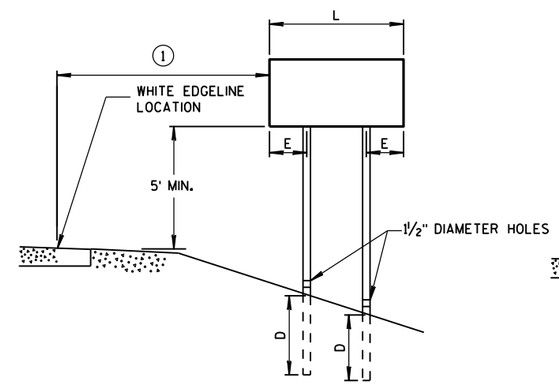

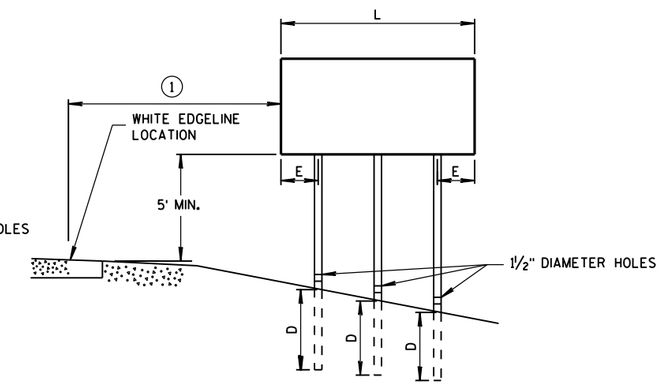

RURAL AREA

POST MOUNTING DETAIL FOR TEMPORARY TRAFFIC CONTROL FIXED MESSAGE SIGNS

TUBULAR STEEL POSTS

AREA OF SIGN INSTALLATION (SQ. FT.)	NUMBER OF REQUIRED TUBULAR STEEL POSTS
9 OR LESS	1
GREATER THAN 9 LESS THAN OR EQUAL TO 18	2
GREATER THAN 18 LESS THAN OR EQUAL TO 27	3

SIGNS WIDER THAN 3 FEET OR LARGER THAN 9 SQ. FT. SHALL BE MOUNTED ON MULTIPLE POSTS (SEE ABOVE TABLE).

SIGNS LARGER THAN 27 SQ. FT. SHALL NOT BE MOUNTED ON TUBULAR STEEL POSTS.

WOOD POST EMBEDMENT DEPTH

AREA OF SIGN INSTALLATION (SQ. FT.)	D (MIN)
20 OR LESS	4'
GREATER THAN 20	5'

4" X 6" WOOD POST

POST SPACING REQUIREMENTS		NUMBER OF WOOD POSTS REQUIRED
L	E	
48" OR LESS AND LESS THAN 20 SQ. FT.	-	1
LESS THAN 60"	12"	2
60" TO 120"	L/5	2
GREATER THAN 120" LESS THAN 168"	12"	3
168" AND GREATER	12"	4

SEE NOTE 3

TEMPORARY TRAFFIC CONTROL SIGN MOUNTING

STATE OF WISCONSIN
DEPARTMENT OF TRANSPO

6

S.D.D. 15 D 38-2a

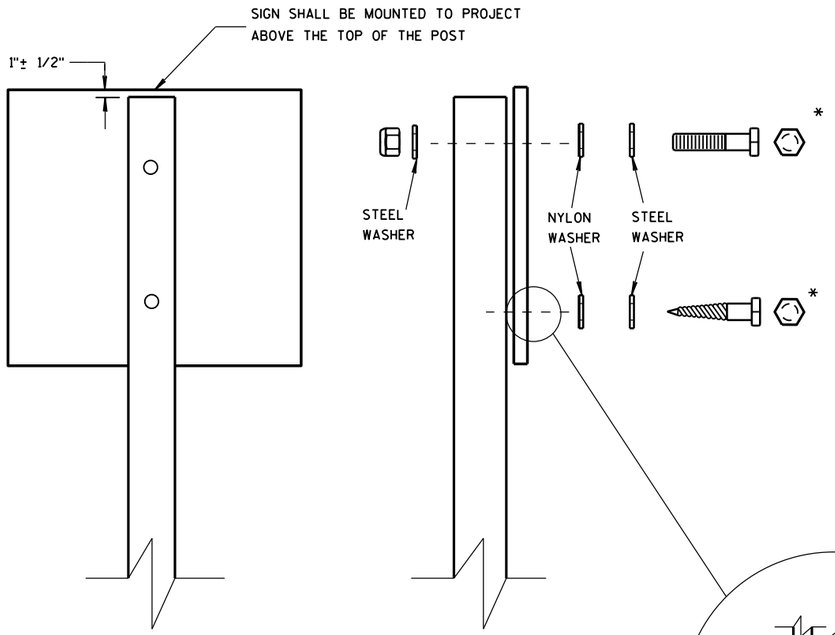

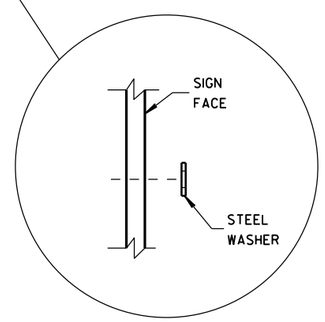

WASHER PLACEMENT WHEN SIGN HAS OTHER THAN TYPE H OR TYPE F FACE

NUTS, BOLTS AND LAGS USED FOR MOUNTING SIGNS SHALL HAVE HEXAGONAL HEADS AND SHALL BE EITHER:

A. HOT DIP GALVANIZED IN ACCORDANCE WITH ASTM DESIGNATION: A 153, CLASS D, OR SC 3

B. ELECTRO-GALVANIZED IN ACCORDANCE WITH ASTM DESIGNATION: B 633, TYPE III, SC 3

THREADS ON BOLTS AND NUTS SHALL BE MANUFACTURED WITH SUFFICIENT ALLOWANCE FOR THE CADMIUM PLATE OR GALVANIZED COATING TO PERMIT THE NUTS TO RUN FREELY ON THE BOLTS.

WOOD POSTS (4" x 4" or 4" x 6")

LAG SCREWS - 3/8" X 3"

MACHINE BOLTS - 5/16" X 6-1/2" OR 7" LENGTH W/ NUTS

SQUARE STEEL POSTS (2" x 2")

MACHINE BOLTS - 3/8" X 3-1/4" LENGTH W/ NUTS

RIVETS - 9/32" (6605-9-6) BULB-TITE, TRI-FOLD, ALUMINUM BODY/MANDREL O.D. FLANGE .720-.765 INCH, GRIP RANGE .042-.375 INCH

WASHERS (ALL POSTS) -

1-1/4" O.D. X 3/8" I.D. X 1/16" STEEL

1-1/4" O.D. X 3/8" I.D. X .080 NYLON FOR ALL TYPE H SIGNS

* TWO DIFFERENT FASTENING SYSTEMS ARE SHOWN FOR ILLUSTRATION PURPOSES. ON ANY INDIVIDUAL SIGN, EITHER ONE OR THE OTHER SYSTEM SHALL BE USED. ACTUAL NUMBER OF FASTENERS PER SIGN VARIES WITH THE SIGN AREA. FOR A SINGLE POST INSTALLATION, ALL SIGNS GREATER THAN 9 SQ. FT. REQUIRE THE USE OF 3 FASTENERS.

6

6

S.D.D. 15 D 38-2b

S.D.D. 15 D 38-2b

ATTACHMENT OF SIGNS TO POSTS

STATE OF WISCONSIN
DEPARTMENT OF TRANSPORTATION

APPROVED

June 2017 — /S/ Andrew Heldtke
DATE — WORK ZONE ENG

FHWA

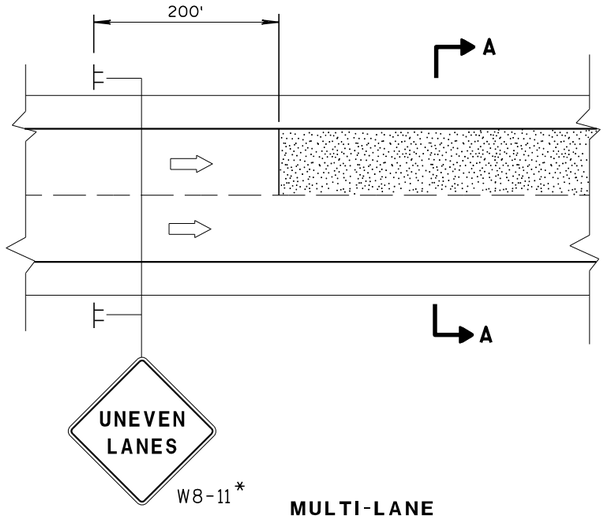

MULTI-LANE

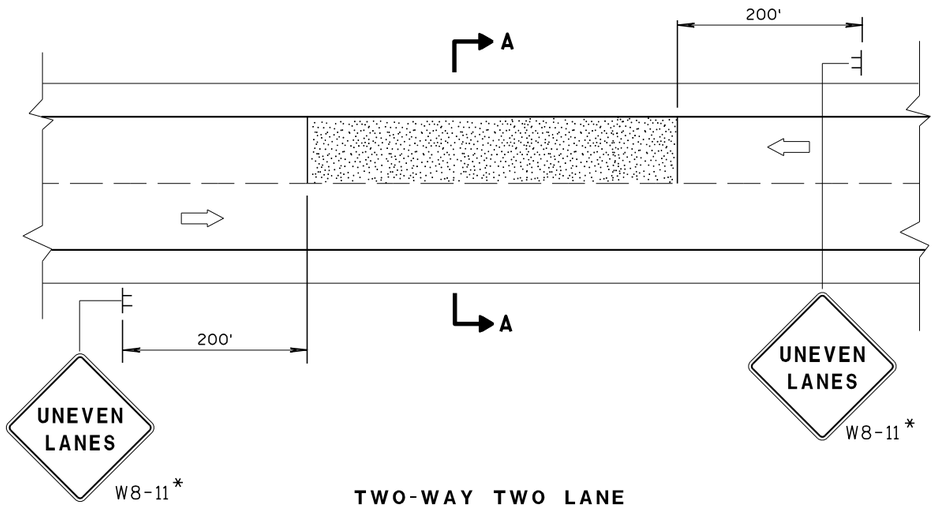

TWO-WAY TWO LANE

SECTION A-A

OR

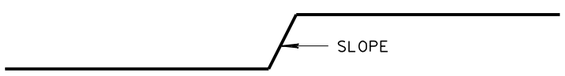

SECTION A-A

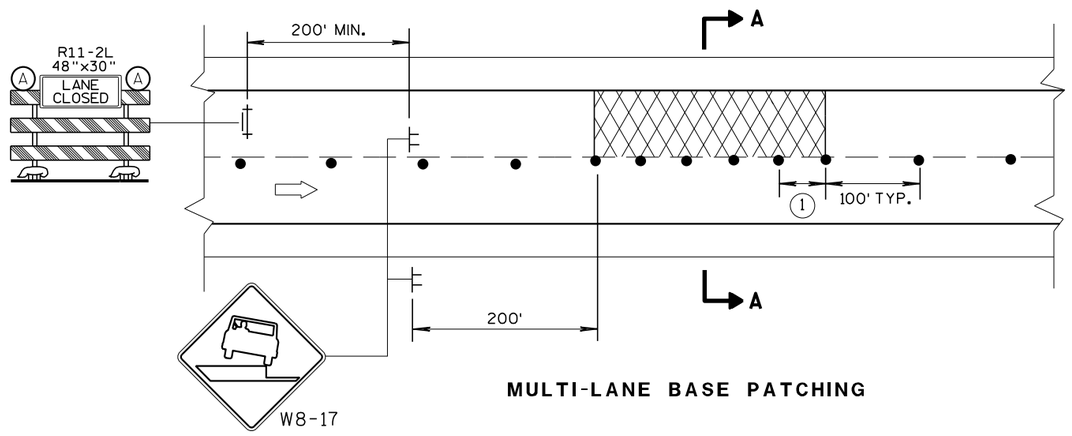

MULTI-LANE BASE PATCHING

ADJACENT LANE DROP-OFFS

GENERAL NOTES

FOR SPOT LOCATIONS USE ENGINEERING JUDGEMENT WHEN PLACING ADDITIONAL SIGNS.

ALL SIGNS ARE 48" X 48" UNLESS OTHERWISE NOTED.

"WO" SIGNS ARE THE SAME AS "W" SIGNS EXCEPT THE BACKGROUND IS ORANGE.

WARNING LIGHTS ARE NOT REQUIRED IF THE LANE CLOSURE IS A DAYTIME ONLY OPERATION.

* IF THE DROP-OFF IS CONTINUOUS ALONG THE PROJECT, PLACE ADDITIONAL SIGNS EVERY 1 MILE AND AFTER EACH ENTRANCE RAMP.

(1) USE CLOSER SPACING WHEN DELINEATING DROP-OFF.

LEGEND

- TYPE III BARRICADE WITH ATTACHED SIGN
- SIGN ON TEMPORARY SUPPORT
- TRAFFIC CONTROL DRUM
- (A) TYPE "A" WARNING LIGHT (FLASHING)
- DIRECTION OF TRAFFIC
- WORK AREA WITH DROP-OFF
- MILLED SURFACE

D	SIGN (C)
< 2" WITH A SLOPE STEEPER THAN 3:1	LOW SHOULDER WO8-9
2" < 6" WITH A SLOPE STEEPER THAN 3:1	SHOULDER DROP-OFF W8-9A PROVIDE A 3:1 OR FLATTER SLOPE OF MATERIAL ADJACENT TO THE PAVEMENT

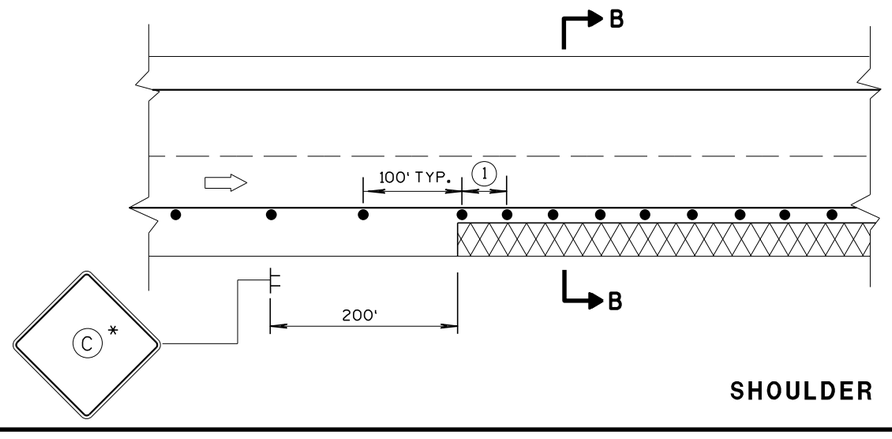

SHOULDER DROP-OFFS

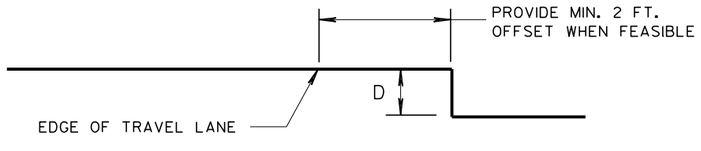

SECTION B-B

TRAFFIC CONTROL, DROP-OFF SIGNING

STATE OF WISCONSIN
DEPARTMENT OF TRANSPORTATION

APPROVED
March 2018 — DATE
/S/ Andrew H — WORK ZONE EN
FHWA

6

S.D.D. 15 D 39-2

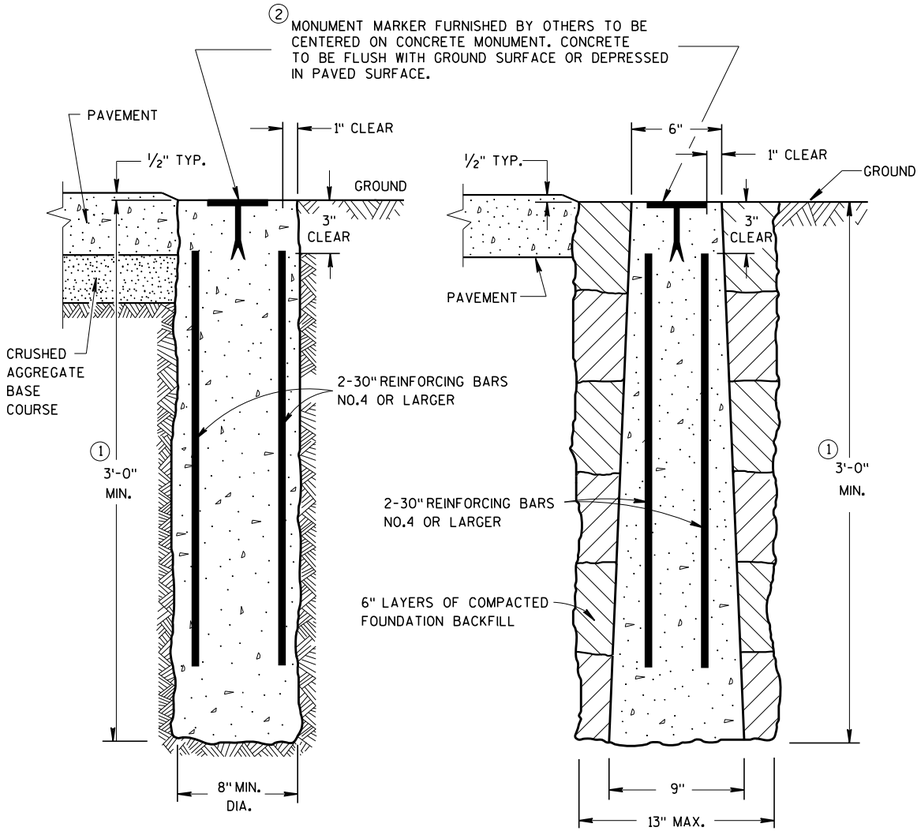

CAST-IN-PLACE

PRECAST

CONCRETE MONUMENTS

TYPE A

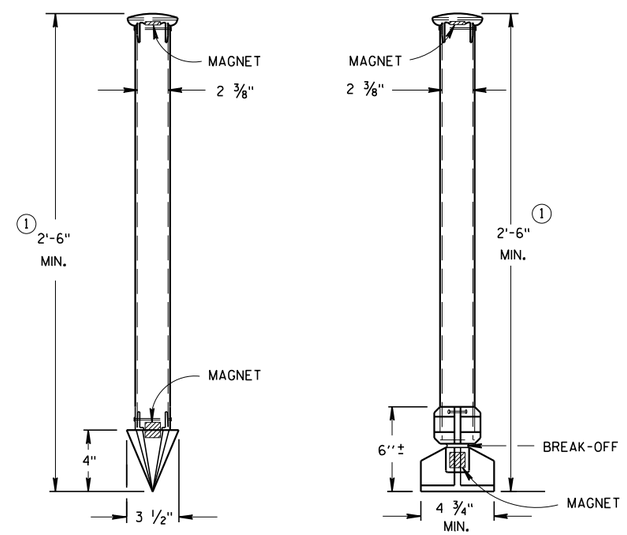

TYPE C

DRIVE-IN MONUMENT

TYPE D
NON-DRIVEN
BREAK-OFF MONUMENT

ALUMINUM MONUMENTS

(INCLUDES MARKER)

GENERAL NOTES

DETAILS OF CONSTRUCTION, MATERIALS AND WORKMANSHIP NOT SHOWN ON THIS DRAWING SHALL CONFORM TO THE PERTINENT REQUIREMENTS OF THE STANDARD SPECIFICATIONS AND THE APPLICABLE SPECIAL PROVISIONS.

DETAILED DRAWINGS OF PROPOSED ALTERNATE DESIGNS FOR METAL MONUMENTS OR MONUMENT COVERS SHALL BE SUBMITTED TO THE ENGINEER FOR APPROVAL.

PERMANENT MAGNETS SHALL BE INSERTED NEAR THE TOP AND BOTTOM OF ALL ALUMINUM MONUMENTS SO THE MONUMENT CAN EASILY BE DETECTED BY A METAL DETECTOR.

THE CAST IRON MONUMENT COVER SHALL BE A "NON-ROCKING" TYPE. ADJUSTMENT OF THE COVER TO GRADE MAY BE ACCOMPLISHED BY THE USE OF MORTAR AND BRICK, OR BY EITHER PRECAST OR CAST-IN-PLACE REINFORCED CONCRETE GRADE RINGS.

MONUMENTS SHALL BE LOCATED AND PLACED AT THE DIRECTION OF THE ENGINEER.

ALUMINUM MONUMENTS AND MONUMENT COVERS SHALL BE MADE FROM AN ALUMINUM AND MAGNESIUM ALLOY AS DETERMINED BY THE MANUFACTURER.

THE MONUMENT COVERS DETAILED ON THIS DRAWING ARE NOT EQUAL ALTERNATES. MONUMENT COVERS SHALL BE CAST IRON UNLESS ALUMINUM IS SPECIFIED ELSEWHERE IN THE CONTRACT.

MONUMENT SHALL BE CAST-IN-PLACE CONCRETE UNLESS PRECAST CONCRETE OR ALUMINUM MONUMENTS ARE SPECIFIED IN THE CONTRACT OR PERMITTED BY THE ENGINEER

① MINIMUM LENGTH SHALL BE 4'-0" FOR MONUMENTS INSTALLED IN PAVED AREAS.

② AN OFFICIAL COUNTY MONUMENT MARKER SUPPLIED BY A COUNTY MAY BE REQUIRED FOR SOME SECTION CORNERS AND WITNESS MONUMENTS INSTEAD OF THIS WIS DOT MARKER.

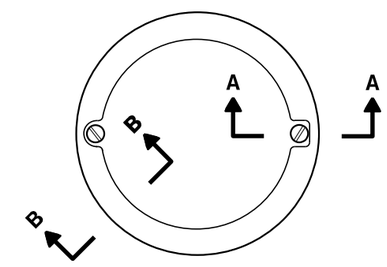

TOP VIEW

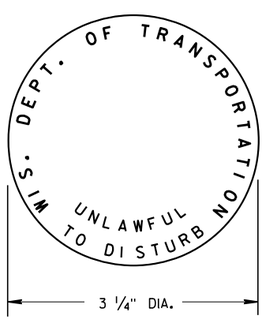

② **WIS DOT MONUMENT MARKER LOGO**

FOR TYPES "A", "C", & "D"

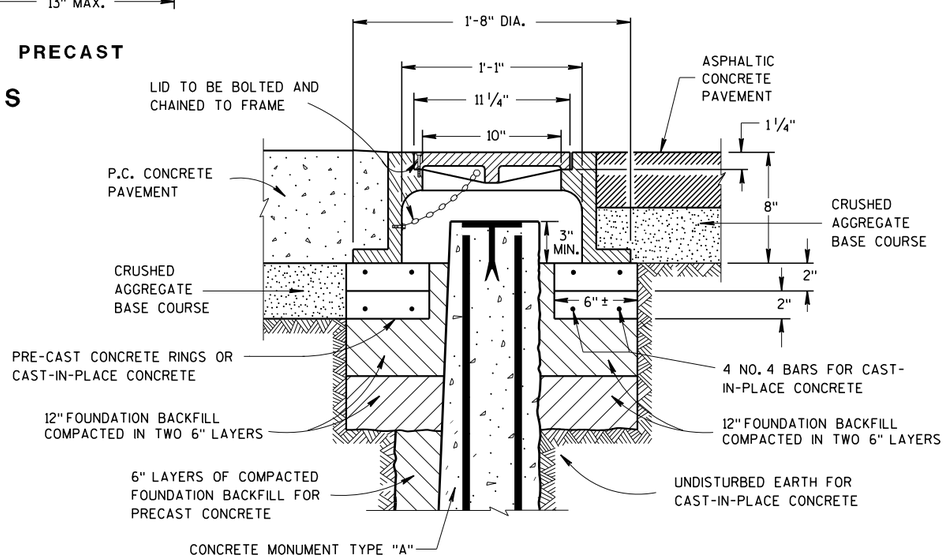

CAST IRON MONUMENT COVER

(APPROXIMATE WEIGHT 95 LBS)

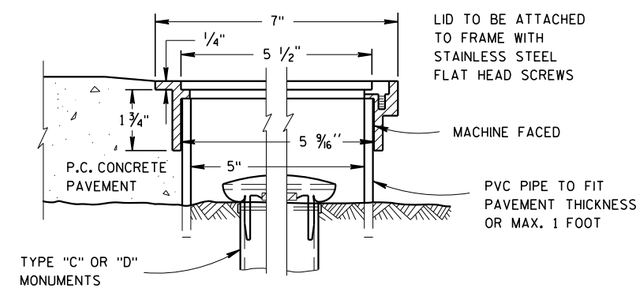

SECTION B-B SECTION A-A

ALUMINUM MONUMENT COVER

(APPROXIMATE WEIGHT 2 LBS)
(FOR CONCRETE PAVEMENT ONLY)

LANDMARK REFERENCE MONUMENTS AND COVERS

STATE OF WISCONSIN
DEPARTMENT OF TRANSPORTATION

APPROVED
March 2018 /S/ Raymond A. Kuzmanovi
DATE CHIEF SURVEYING AND M ENGINEER
FHWA

6

6

S.D.D. 16 A 1-7

S.D.D. 16 A 1-7

URBAN AREA

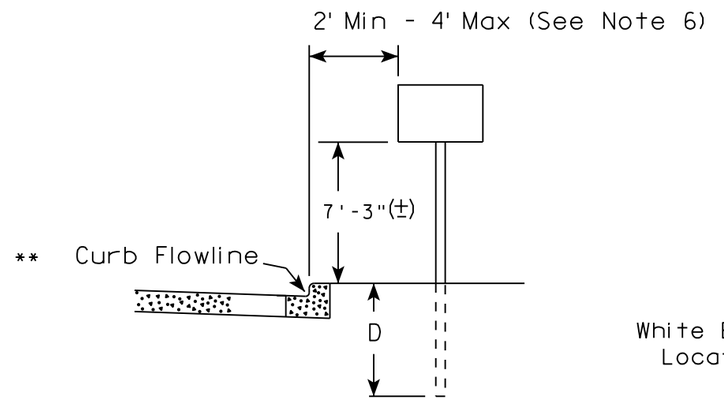

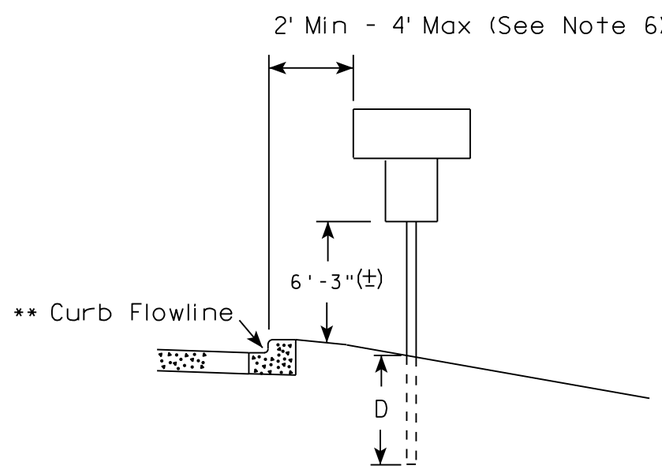

RURAL AREA (See Note 2)

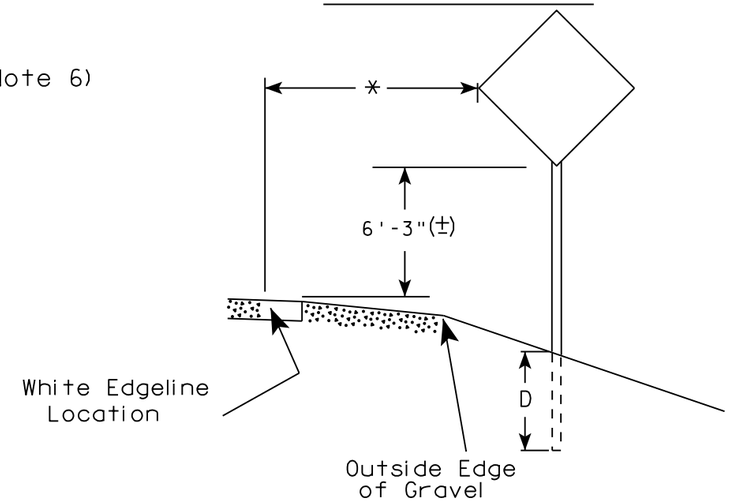

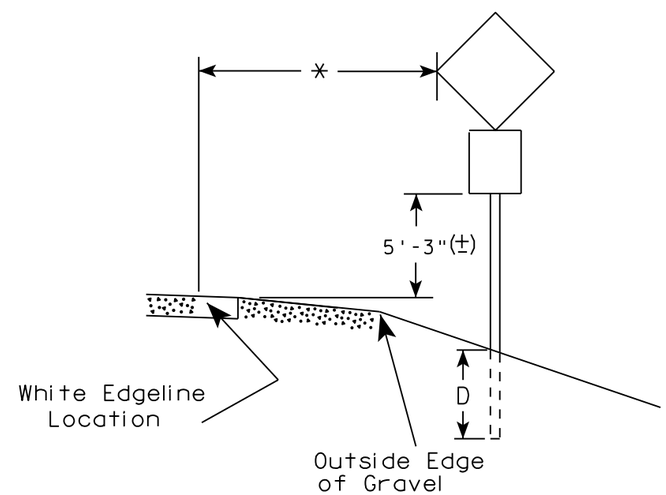

** The existence of curb and gutter does not in itself mandate the vertical clearance illustrated. That height is typically measured where there is sidewalk adjacent to the roadway or parking is permitted. In the absence of sidewalk vertical clearance is measured from the top of the curb. Offset of signs is measured from the flow line.

* 6 feet from edge of a paved shoulder or 12 feet from the edge of pavement (edge line location) or 2 feet from outside edge of gravel, whichever is greater unless directed by project engineer.

GENERAL NOTES

1. Signs wider than 4 feet or 20 sq.ft or larger, shall be mounted on multiple posts. Refer to plate A4-4.
2. If signs are mounted on barrier wall, see A4-10 sign plate.
3. For expressways and freeways, mounting height is 7'- 3" (±) or 6'-3" (±) depending upon existence of a sub-sign.
4. J-Assemblies are considered to be one sign for mounting height.
5. Minimum mounting height for signs mounted on traffic signal poles is 5'- 3" (±).
6. Offset distance shall be consistent with existing signs or consistent throughout length of project.
7. The (±) tolerance for mounting height is 3 inches.
8. Folding signs shall be mounted at a height of 5'-3" (±) or as directd by the Engineer.
9. The Double Arrow sign (W12-1) shall be mounted at a height of 2'-3" (±). The Chevron sign (W1-8), Roundabout Chevron panel (R6-4B), Enhanced Reference Markers, Clearance Markers (W5-52), Mile Markers (D10 series), In Road Object Markers (W5-54) & End of Road Markers (W5-56) shall be mounted at a height of 4'-3" (±).

POST EMBEDMENT DEPTH

Area of Sign Installation (Sq. Ft.)	D (Min)
20 or Less	4'
Greater than 20	5'

TYPICAL INSTALLATION OF PERMANENT TYPE II SIGNS ON SINGLE POSTS

WISCONSIN DEPT OF TRANSPORTATION

APPROVED Matthew R Rauch for State Traffic Engineer

DATE 8/21/17 PLATE NO. A4-3.21

7 7

PROJECT NO:	HWY:	COUNTY:		SHEET NO: 79	E

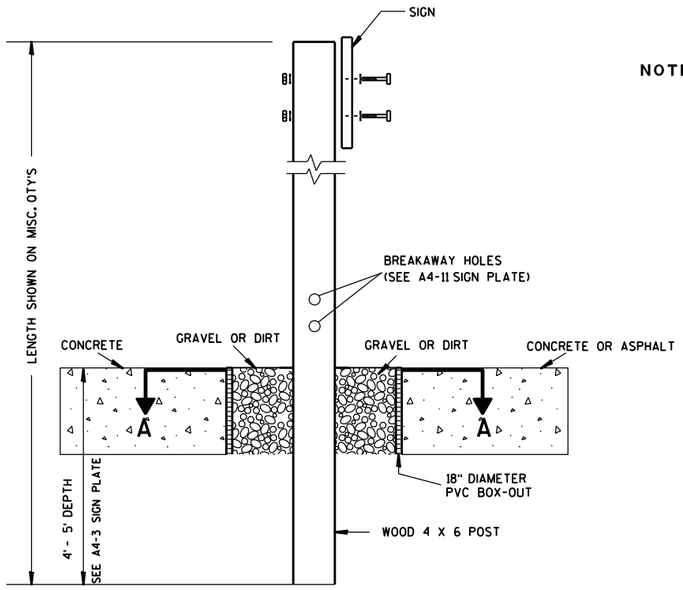

ELEVATION VIEW

DETAIL OF WOOD 4 X 6 SIGN POST IN BOX-OUT

NOTES:
1. ALL MATERIAL TO BE APPROVED BY ENGINEER PRIOR TO INSTALLATION
2. SEE SIGN PLATE A4-8 FOR SIGN HARDWARE REQUIREMENTS
3. 18 INCH X 18 INCH SQUARE BOX-OUTS MAY BE USED FOR INSTALLATIONS IN EXISTING CONCRETE OR ASPHALT LOCATIONS.

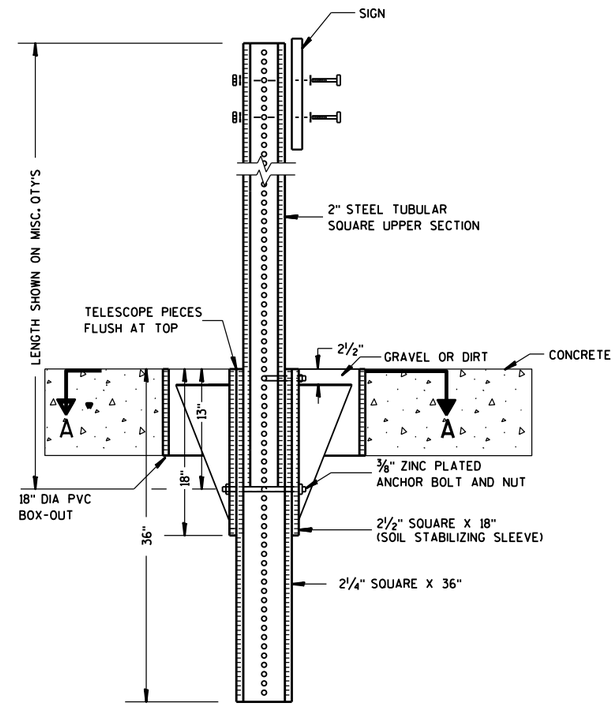

ELEVATION VIEW

DETAIL OF STEEL 2 X 2 SIGN POST IN BOX-OUT

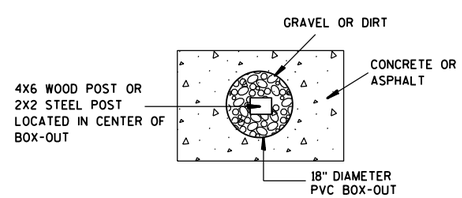

PLAN VIEW

FOR NEW CONCRETE/ASPHALT INSTALLATIONS

SIGN POST
BOX-OUTS
A4-3B

WISCONSIN DEPT OF TRANSPORTATION

APPROVED Matthew R Rauch
for State Traffic Engineer

DATE 1/27/14 PLATE NO. A4-3B.1

PROJECT NO:	HWY:	COUNTY:		SHEET NO:	E

URBAN AREA

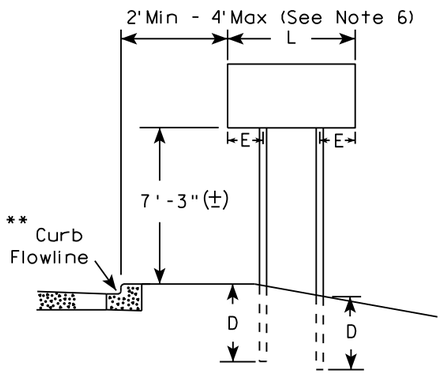

RURAL AREA (See Note 3)

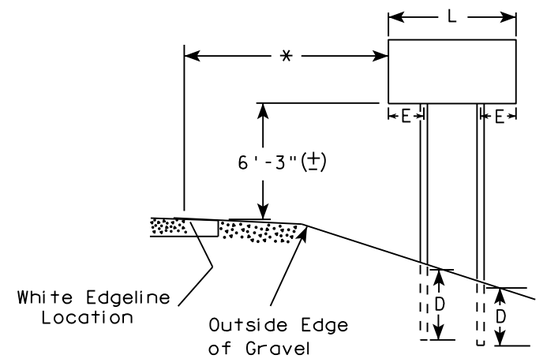

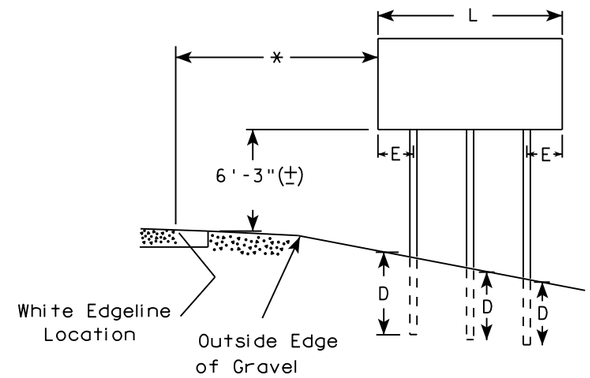

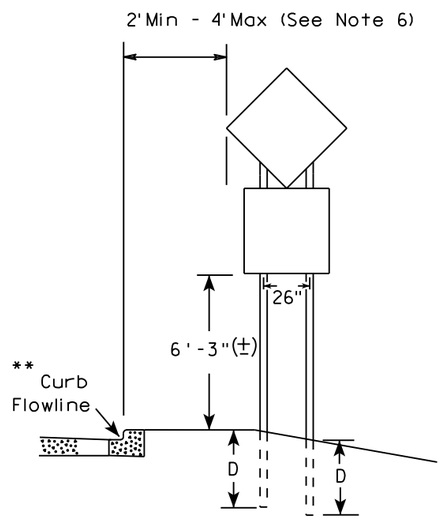

48" DIAMOND WARNING SIGN

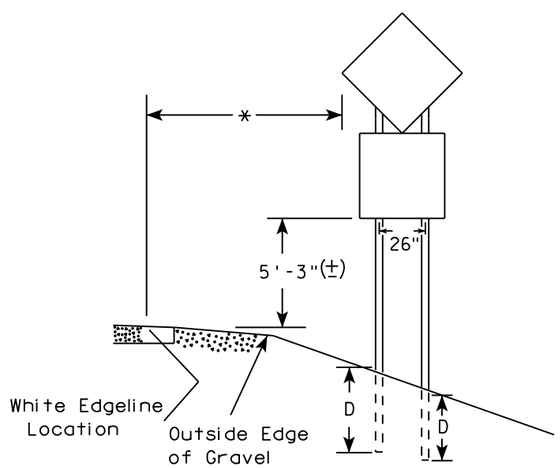

48" DIAMOND WARNING SIGN

GENERAL NOTES

1. For 3 or 4 post installations, individual post spacing shall be greater than 3'-6".
2. See tables below for required number of posts.
3. For expressways and freeways, mounting height is 7'-3" (±) or 6'-3" (±) depending upon existence of sub-sign.
4. The (±) tolerance for mounting height is 3 inches.
5. J-Assemblies are considered to be one sign for mounting height.
6. Offset distance shall be consistent with existing signs or consistent throughout length of project.
7. Folding signs shall be mounted at a height of 5'-3" (±) or as directed by the engineer.
8. The Double Arrow sign (W12-1) shall be mounted at a height of 2'-3" (±). The Chevron sign (W1-8), Roundabout Chevron panel (R6-4B), Clearance Markers (W5-52), Mile Markers (D10 series), In Road Object Markers (W5-54) & End of Road Markers (W5-56) shall be mounted at a height of 4"-3" (±).

* 6 feet from edge of a paved shoulder or 12 feet from the edge of pavement (edge line location) or 2 feet from outside edge of gravel, whichever is greater unless directed by project engineer.

** The existence of curb and gutter does not in itself mandate the vertical clearance illustrated. That height is typically measured where there is sidewalk adjacent to the roadway or parking is permitted. In the absence of sidewalk vertical clearance is measured from the top of the curb. Offset of signs is measured from the flow line.

*** See A4-3 sign plate for signs 4' or less in width and less than 20 S.F. in area.

SIGN SHAPE OTHER THAN DIAMOND (TWO POSTS REQUIRED)	
L	E
*** Greater than 48" Less than 60"	12"
60" to 108"	L/5

SIGN SHAPE OTHER THAN DIAMOND (THREE POSTS REQUIRED)	
L	E
Greater than 108" to 144"	12"

POST EMBEDMENT DEPTH

Area of Sign Installation (Sq. Ft.)	D (Min)
20 or Less	4'
Greater than 20	5'

TYPICAL INSTALLATION OF TYPE II SIGNS ON MULTIPLE POSTS

WISCONSIN DEPT OF TRANSPORTATION

APPROVED Matthew R Rauch
For State Traffic Engineer

DATE 8/21/17 PLATE NO. A4-4.15

7

7

PROJECT NO:	HWY:	COUNTY:		SHEET NO: 81	E

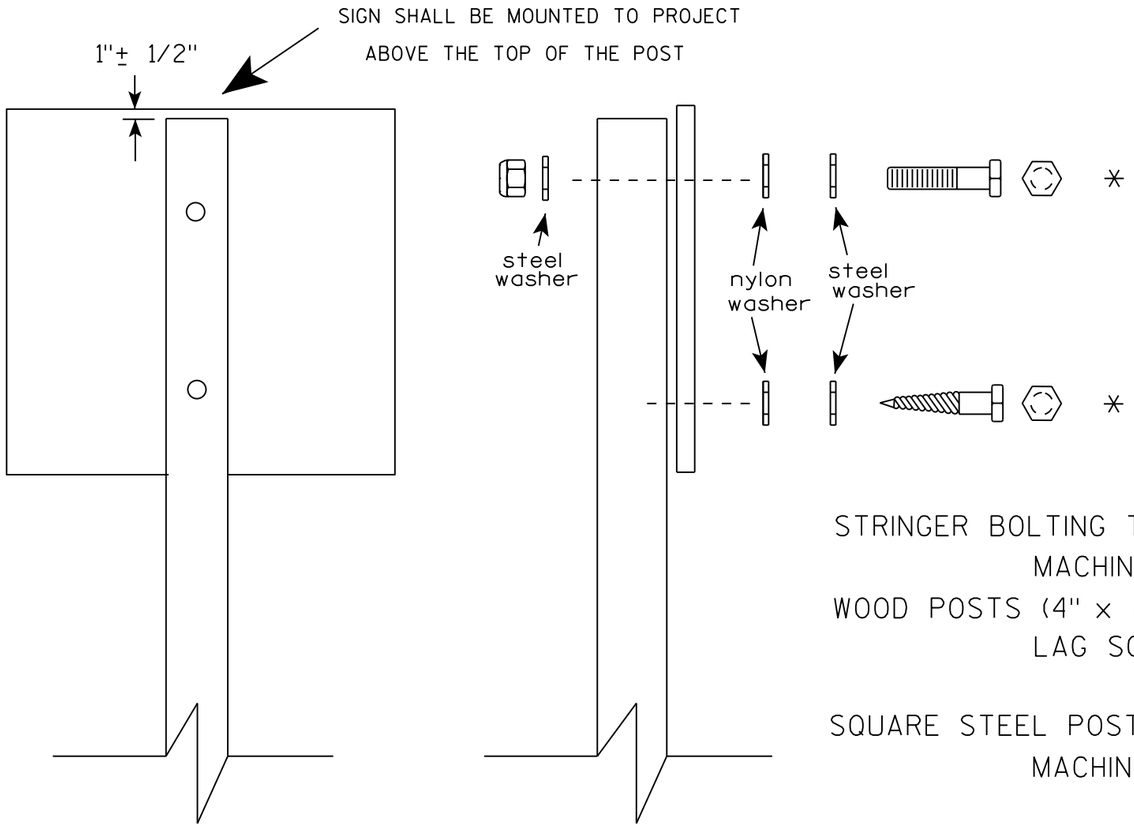

Nuts, bolts and lags used for mounting signs shall have hexagonal heads and shall be either :

a. Hot dip galvanized in accordance with ASTM Designation: A 153, Class D, or SC 3

b. Electro-galvanized in accordance with ASTM Designation : B 633, TYPE III, SC 3.

Threads on bolts and nuts shall be manufactured with sufficient allowance for the cadmium plate or galvanized coating to permit the nuts to run freely on the bolts.

STRINGER BOLTING TO ALUMINUM SIGNS (SEE SIGN PLATE A4-18)

MACHINE BOLTS - 5/16" X 1-3/4" Length w/ lock nuts

WOOD POSTS (4" x 4" or 4" x 6")

LAG SCREWS - 3/8" X 3" (NO STRINGERS ON BACK OF SIGN)

3/8" X 4" (STRINGERS ON BACK OF SIGN)

SQUARE STEEL POSTS (2" x 2")

MACHINE BOLTS - 3/8" X 3-1/4" Length w/ nuts (NO STRINGER ON BACK OF SIGN)

3/8" X 5" Length w/ nuts (STRINGERS ON BACK OF SIGN)

RIVETS - 9/32 " (6605-9-6) BULB-TITE, TRI-FOLD, ALUMINUM BODY/MANDREL

O.D. FLANGE .720-.765 INCH, GRIP RANGE .042-.375 INCH

WASHERS (ALL POSTS) -

1-1/4" O.D. X 3/8" I.D. X 1/16" STEEL

1-1/4" O.D. X 3/8" I.D. X .080 NYLON

* Two different fastening systems are shown for illustration purposes. On any individual sign, either one or the other system shall be used. Actual number of fasteners per sign varies with the sign area, but normally there are two. For a single post installation, all signs greater than 9 sq. ft. require the use of 3 fasteners.

ATTACHMENT OF SIGNS TO POSTS

WISCONSIN DEPT OF TRANSPORTATION

APPROVED Matthew R Rauch
for State Traffic Engineer

DATE 8/11/16 PLATE NO. A4-8.8

82

PROJECT NO:

SHEET NO: E

TELESCOPIC TUBING ANCHORS
TWO PIECE SYSTEM

2 1/4 " SQUARE
12 GAUGE
PERFORATED
GALVANIZED FINISH

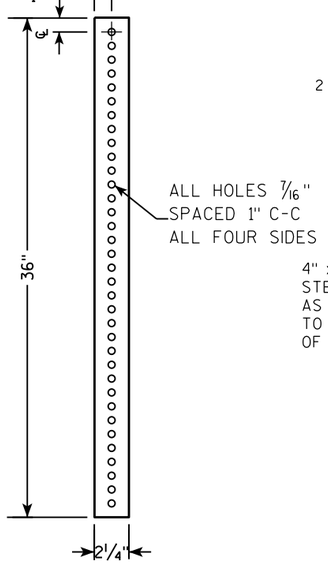

2 1/2 " SQUARE
12 GAUGE
OMNI-DIRECTIONAL
PERFORATED
SOIL STABILIZING SLEEVE
GALVANIZED FINISH

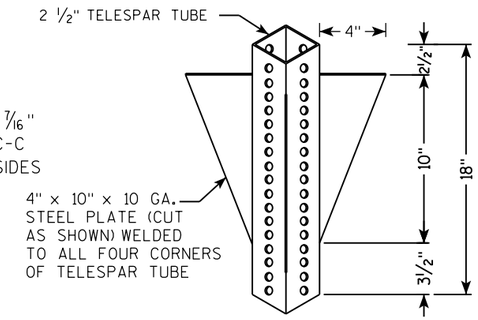

DETAIL OF TUBULAR STEEL SIGN POST
(IN POURED CONCRETE OR ASPHALT)

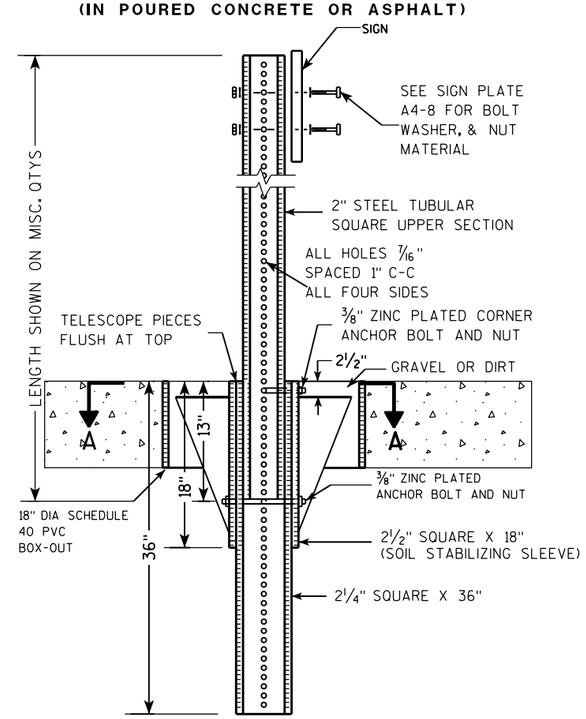

DETAIL OF TUBULAR STEEL SIGN POST
(IN LOCATIONS OTHER THAN POURED CONCRETE OR ASPHALT)

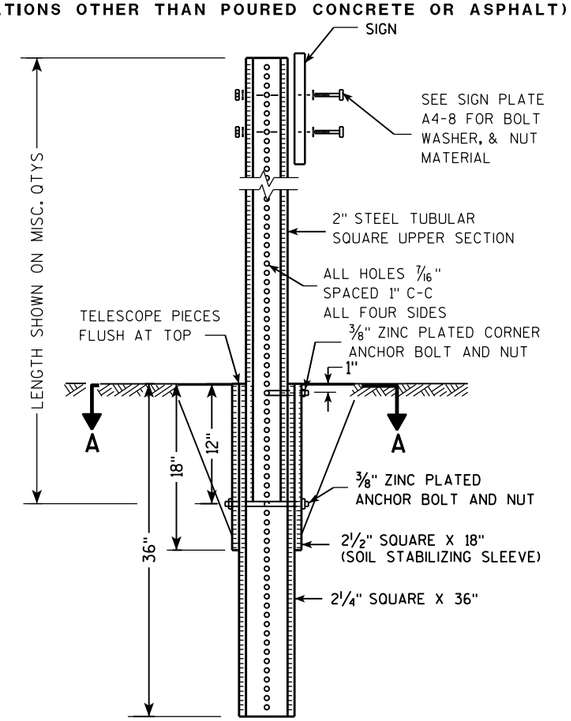

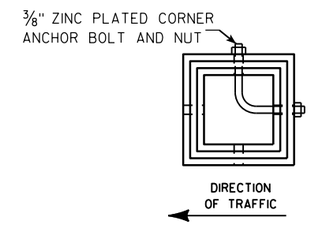

SECTION A-A

Area of Sign Installation (Sq. Ft.)	Number of Required Posts
9 or less	1
Greater than 9 less than or equal to 18	2
Greater than 18 less than or equal to 27	3

Signs wider than 3 feet or larger than 9 sq. ft shall be mounted on multiple posts (see above table).

TUBULAR STEEL
SIGN POST
A4-9

WISCONSIN DEPT OF TRANSPORTATION

APPROVED Matthew R Rauch
for State Traffic Engineer

DATE 2/05/15 PLATE A4-9.9

7 7

PROJECT NO:	HWY:	COUNTY:		SHEET NO:	E

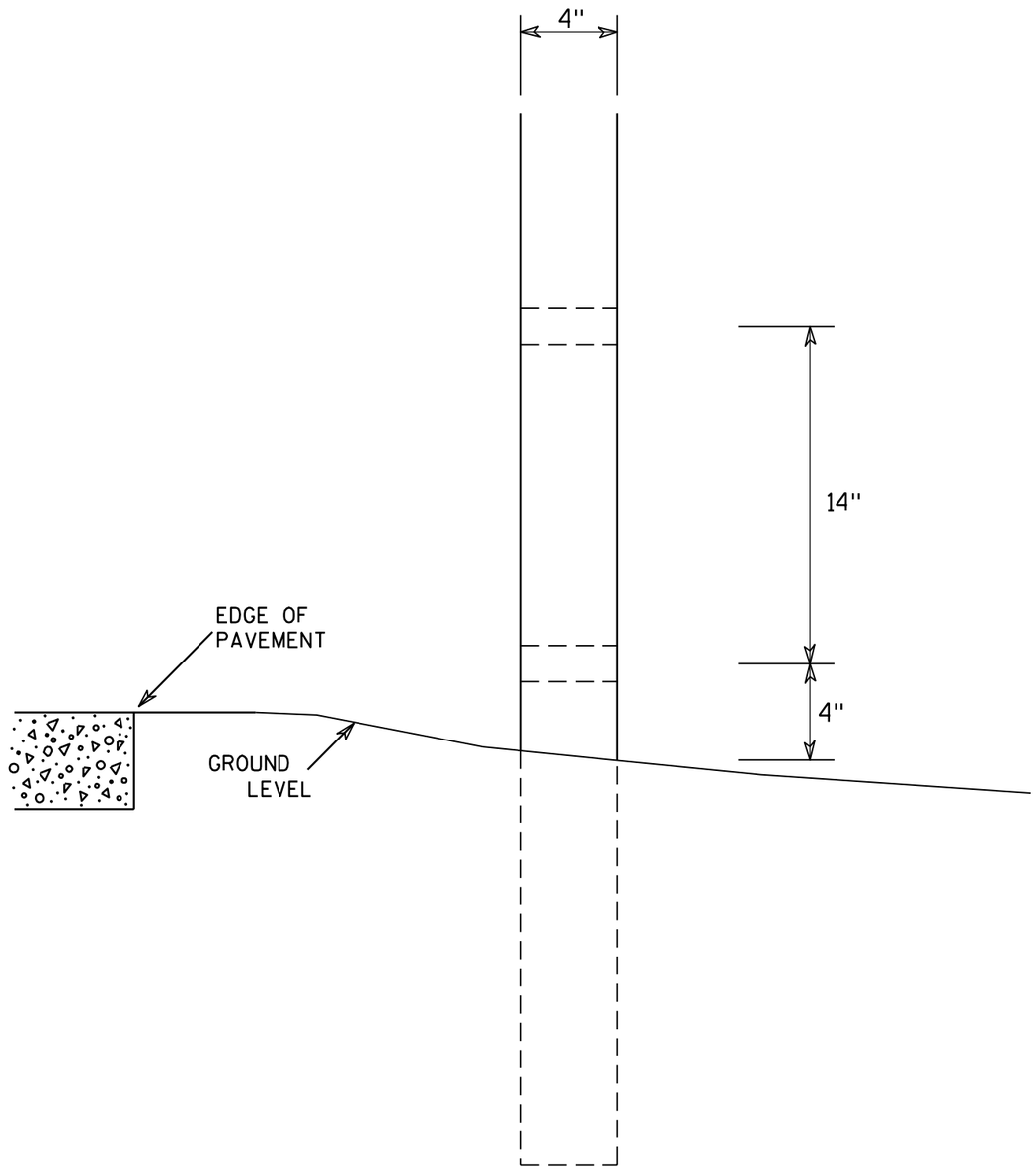

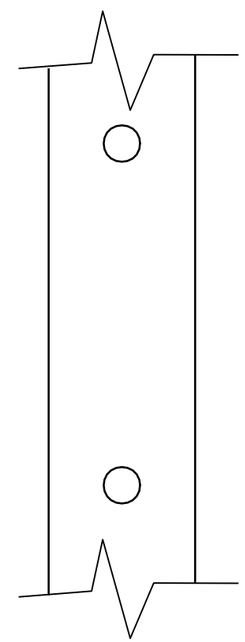

SIDE VIEW

GENERAL NOTES

1. All 4 x 6 Wood Posts shall be modified by having two 1½" diameter holes drilled perpendicular to the roadway centerline.

7

7

4 X 6 WOOD POST MODIFICATIONS

WISCONSIN DEPT OF TRANSPORTATION

APPROVED Chester J Spang for State Traffic Engineer

DATE 3/27/97 PLATE NO. A4-11.2

PROJECT NO:	HWY:	COUNTY:		SHEET NO: 84	E

BANDING

SINGLE SIGN

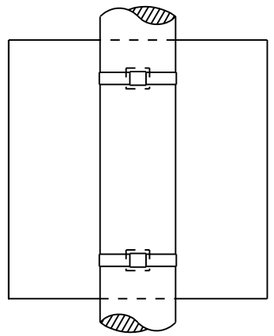

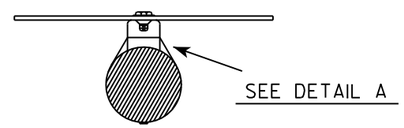

"J" ASSEMBLY

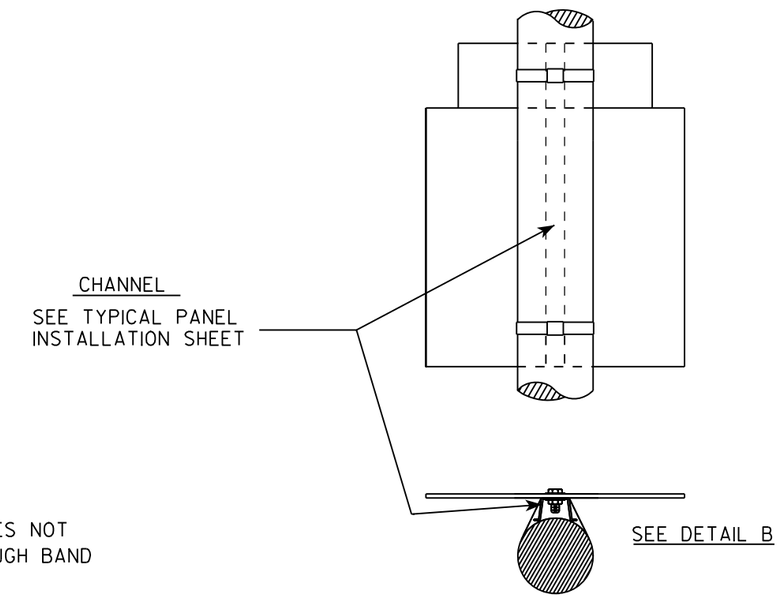

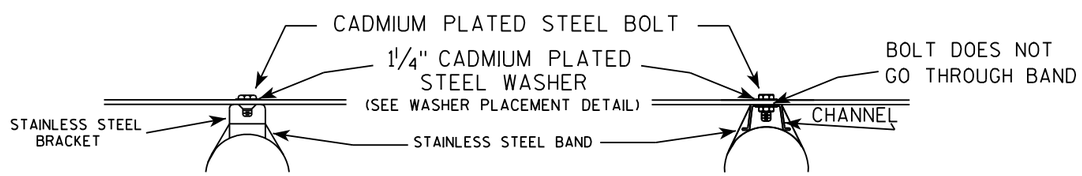

WASHER PLACEMENT

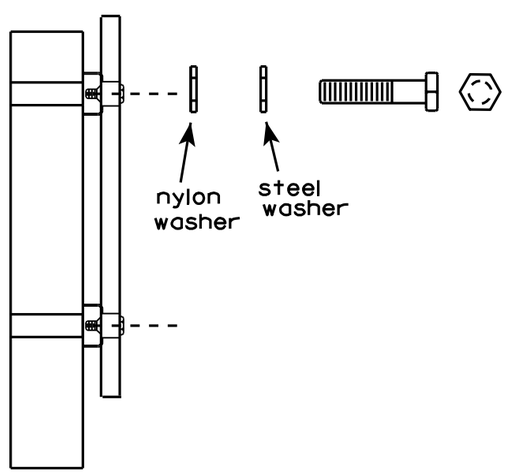

WASHERS (ALL POSTS) -

1-1/4" O.D. X 3/8" I.D. X 1/16" STEEL

1-1/4" O.D. X 3/8" I.D. X .080 NYLON

FOR ALL TYPE H SIGNS

GENERAL NOTES

1. Any sign over 3 feet in width shall use the V-Block banding method. See A5-10 standard plate.
2. Signs 3 feet or greater in height shall have three bracket bands installed. Signs less than 3 feet in height shall have two bracket bands installed.
3. Banding and assembly bracket shall be stainless steel. All bands shall be ¾" in width and 0.025" thickness.

STANDARD SIGN

SIGN BANDING DETAILS

WISCONSIN DEPT OF TRANSPORTATION

APPROVED Matthew R Rauch for State Traffic Engineer

DATE 8/16/13 PLATE NO. A5-9.3

PROJECT NO:	HWY:	COUNTY:		SHEET NO: 85	E

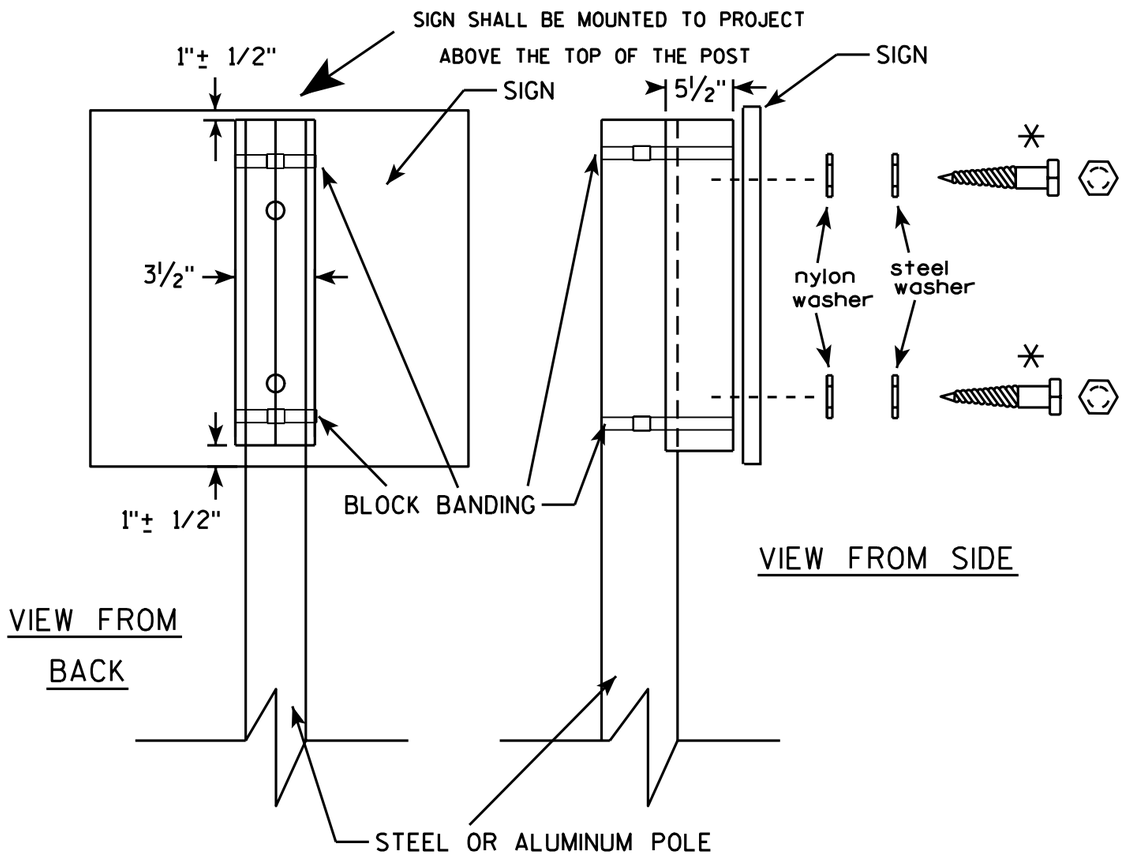

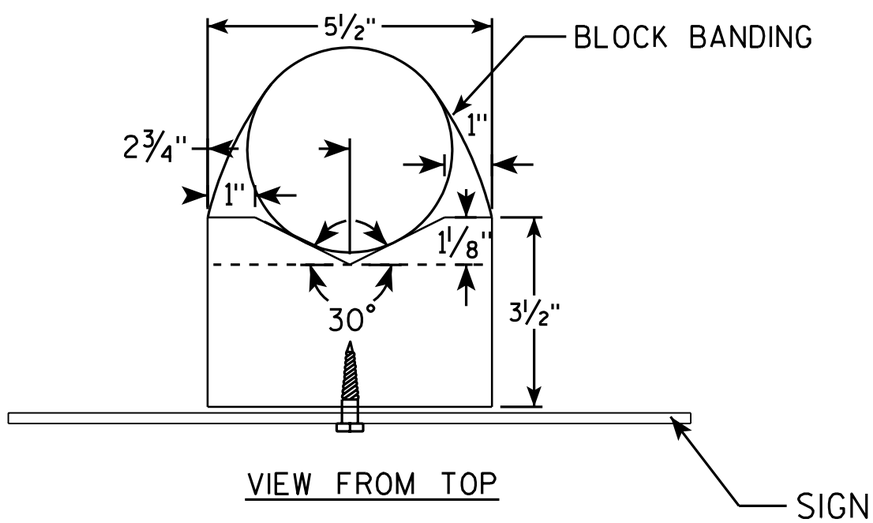

GENERAL NOTES

1. WOOD 4"X6" POST MATERIAL SHALL CONFORM TO 507.2.2 OF THE WisDOT STANDARD SPECIFICATIONS
2. BLOCK BANDING AND CLIPS SHALL BE STAINLESS STEEL, ¾" WIDTH AND 0.025" THICKNESS
3. SIGNS 3' OR GREATER IN HEIGHT SHALL UTILIZE 3 BLOCK BANDS. SIGNS UNDER 3' IN HEIGHT SHALL UTILIZE 2 BLOCK BANDS
4. ACTUAL NUMBER OF FASTENERS PER SIGN VARIES WITH THE SIGN AREA, BUT NORNALLY THERE ARE TWO. FOR SIGNS GREATER THAN 9 S.F. 3 FASTENERS SHALL BE USED.
5. ALL SIGN MOUNTING BOLTS AND WASHERS SHALL BE EITHER:
   a. Hot dip or mechanically galvanized in accordance with ASTM Designation: A 153, Class D, or
   b. Cadmium plated in accordance with ASTM Designation : B 766 TYPE 3, Class 12, or
   c. Electro-galvanized in accordance with ASTM Designation : B 633, TYPE III, SC 3.
6. ALL BOLTS SHALL HAVE HEXAGONAL HEADS.
7. STEEL WASHERS SHALL BE 1¼" O.D. X ⅜" I.D. X 1/16"
8. NYLON WASHERS SHALL BE 1¼" O.D. X ⅜" I.D. X .080 FOR TYPE H OR TYPE F FACE SIGN

✳ LAG BOLTS SHALL BE ⅜" X 2½"

BLOCK BANDING DETAIL
(V-BLOCK OPTION)

WISCONSIN DEPT OF TRANSPORTATION

APPROVED Matthew R Rauch
for State Traffic Engineer

DATE 7/12/07 PLATE NO. A5-10.1

PROJECT NO:				SHEET NO: 86	E

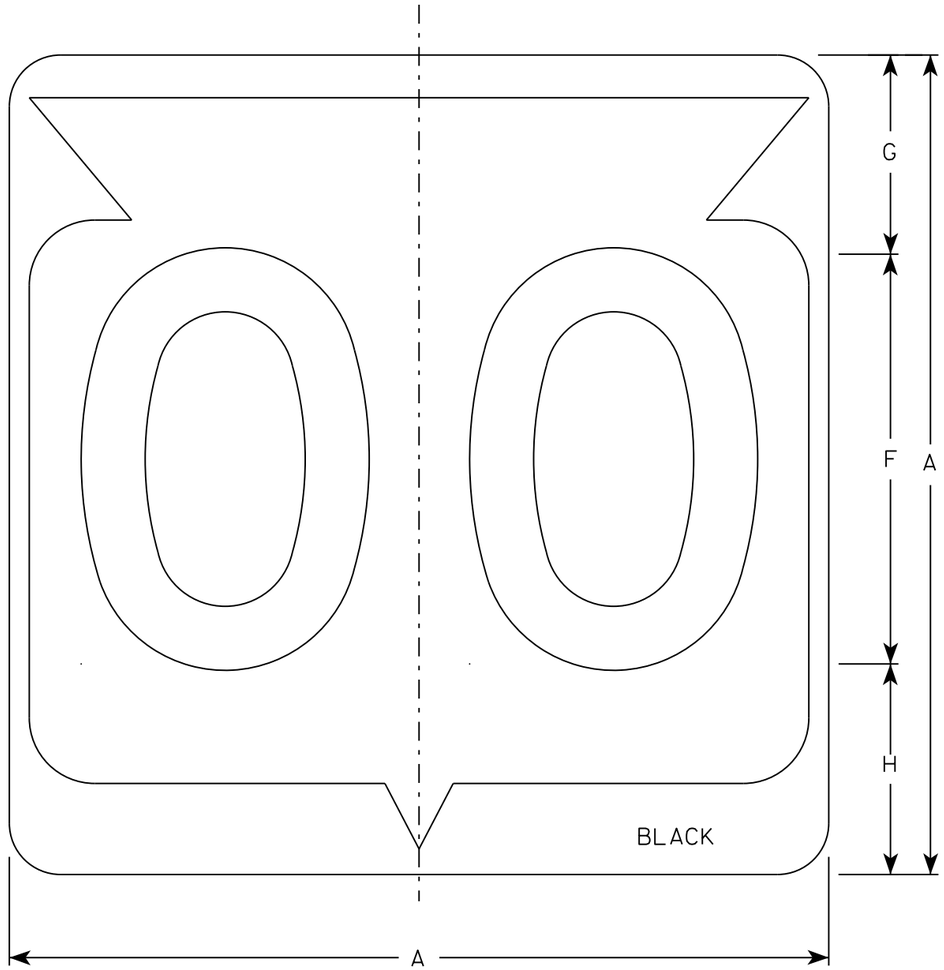

M1-6

NOTES

1. Sign is Type II - Type H Reflective
2. Color:
   Background - White
   Message - Black
3. Message Series - D except 3 number signs Series C
4. Corners may be square or rounded when base material is plywood but borders shall be rounded as shown. When base material is metal, the corners and borders shall be rounded.

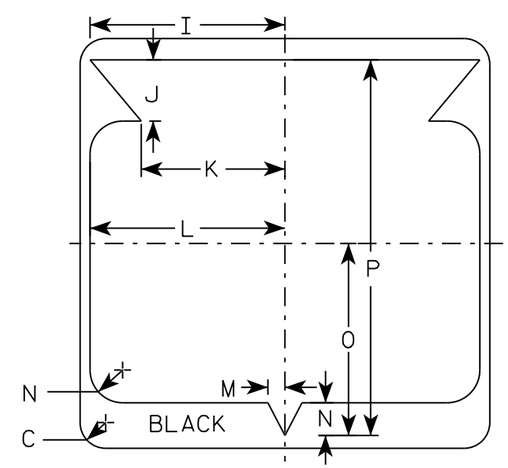

SIZE	A	B	C	D	E	F	G	H	I	J	K	L	M	N	O	P	Q	R	S	T	U	V	W	X	Y	Z	Area sq. ft.
1																											
2	24		1 1/2			12	5 1/2	6 1/2	10 1/4	2 1/2	8 7/8	11 1/2	1	1 7/8	11 1/4	21 7/8											4.0
3	36		2 1/4			18	8 3/4	9 1/4	15 3/8	5 3/8	12 5/8	17 1/8	1 1/2	2 7/8	16 7/8	33											9.0
4	36		2 1/4			18	8 3/4	9 1/4	15 3/8	5 3/8	12 5/8	17 1/8	1 1/2	2 7/8	16 7/8	33											9.0
5	36		2 1/4			18	8 3/4	9 1/4	15 3/8	5 3/8	12 5/8	17 1/8	1 1/2	2 7/8	16 7/8	33											9.0

STATE ROUTE MARKER
M1-6 FOR ASSEMBLIES

WISCONSIN DEPT OF TRANSPORTATION

APPROVED Matthew R Rauch
for State Traffic Engineer

DATE 3/16/18 PLATE NO. M1-6.10

PROJECT NO: | HWY: | COUNTY: | SHEET NO: 87 | E

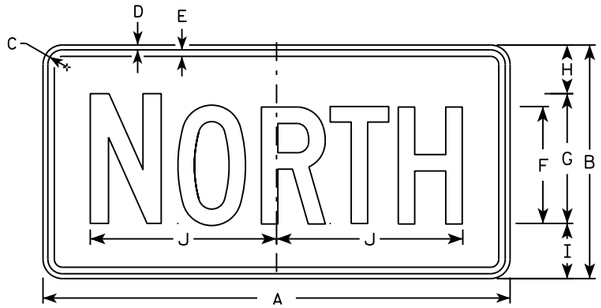

M3-1
MM3-1
MP3-1

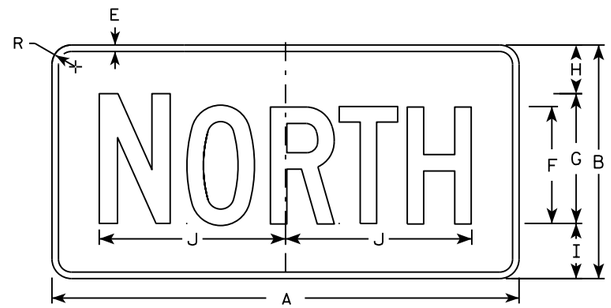

MB3-1
MK3-1
MN3-1

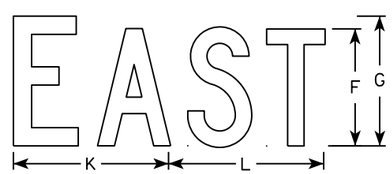

M3-2
MM3-2
MP3-2

MB3-2
MK3-2
MN3-2

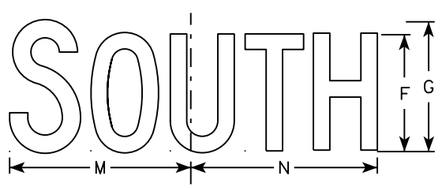

M3-3
MM3-3
MP3-3

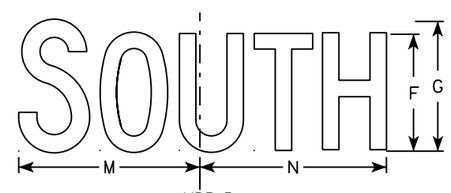

MB3-3
MK3-3
MN3-3

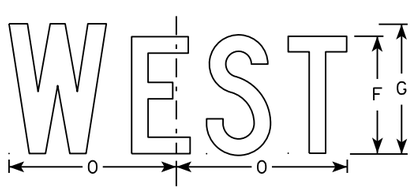

M3-4
MM3-4
MP3-4

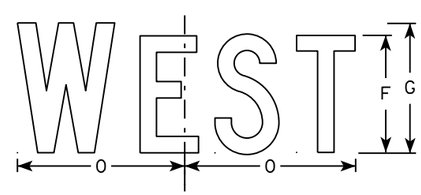

MB3-4
MK3-4
MN3-4

NOTES

1. All Signs Type II - Type H
2. Color:
   Background - See note 5
   Message - See note 5
3. Message Series - C
4. Corners may be square or rounded when base material is plywood but borders shall be rounded as shown. When base material is metal, the corners and borders shall be rounded.
5. M3-1 thru M3-4 Background - White
   Message - Black
   MB3-1 thru MB3-4 Background - Blue
   Message - White
   MK3-1 thru MK3-4 Background - Green
   Message - White
   MM3-1 thru MM3-4 Background - White
   Message - Green
   MN3-1 thru MN3-4 Background - Brown
   Message - White
   MP3-1 thru MP3-4 Background - White
   Message - Blue
6. Note the first letter of each direction is larger than the remainder of the message.

SIZE	A	B	C	D	E	F	G	H	I	J	K	L	M	N	O	P	Q	R	S	T	U	V	W	X	Y	Z	Area sq. ft.
1																											
2	24	12	1 1/8	3/8	3/8	6	7	2 1/4	2 3/4	10 1/4	7 7/8	8 3/8	10 1/4	9 3/4	8 3/4			1 1/2									2.00
3	36	18	1 1/8	3/8	1/2	9	10	3 3/4	4 1/4	14 3/8	12	12 1/8	14	14 1/8	13			1 1/2									4.5
4	36	18	1 1/8	3/8	1/2	9	10	3 3/4	4 1/4	14 3/8	12	12 1/8	14	14 1/8	13			1 1/2									4.5
5	36	18	1 1/8	3/8	1/2	9	10	3 3/4	4 1/4	14 3/8	12	12 1/8	14	14 1/8	13			1 1/2									4.5

STANDARD SIGNS
M3-1 thur M3-4
SERIES

WISCONSIN DEPT OF TRANSPORTATION

APPROVED Matthew R Rauch
for State Traffic Engineer

DATE 10/15/15 PLATE NO M3-1.14

PROJECT NO: | HWY: | COUNTY: | SHEET NO: | E

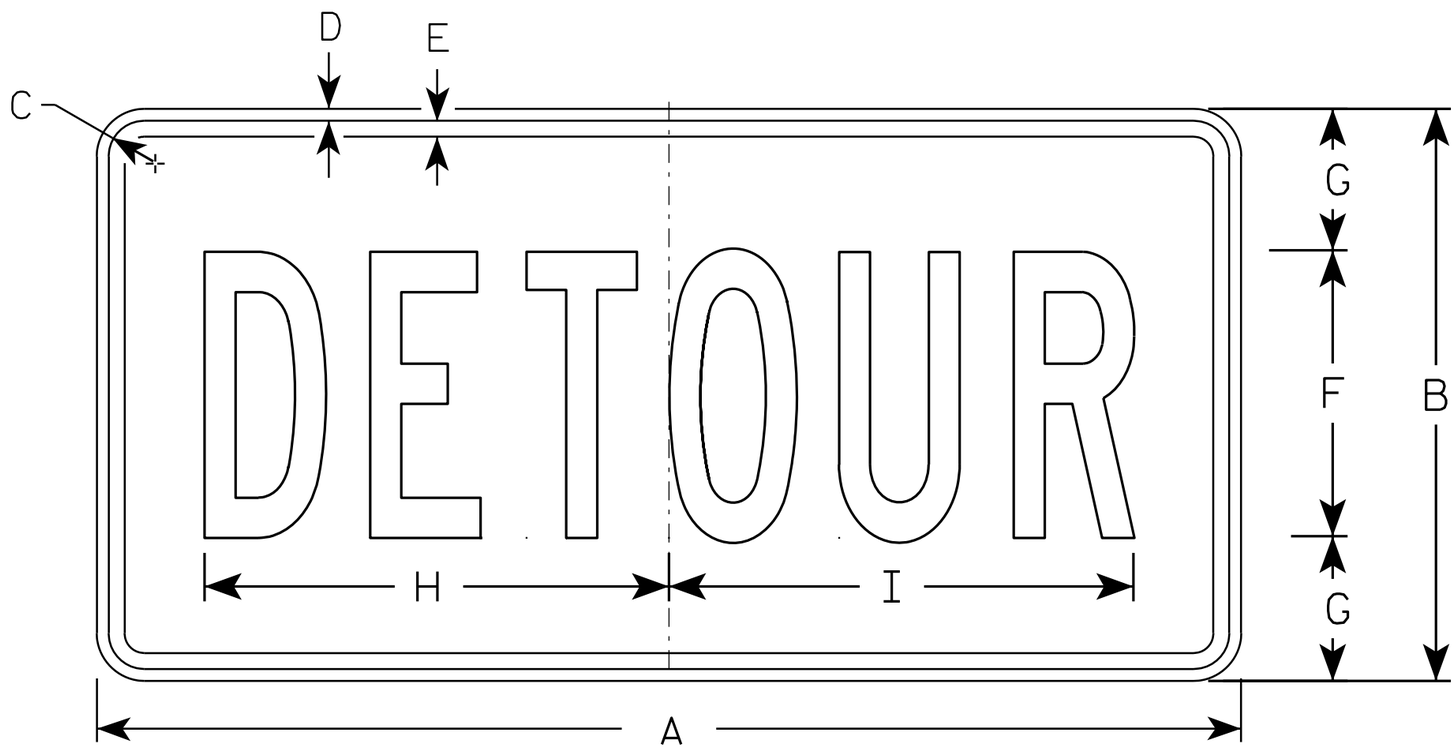

M4-8

NOTES

1. Sign is Type II - Type F Reflective - reference WIS DOT Standard Specification for HIGHWAY and STRUCTURE CONSTRUCTION latest edition.
2. Color:
   Background - Orange
   Message - Black
3. Message Series - B
4. Corners may be square or rounded when base material is plywood but borders shall be rounded as shown. When base material is metal, the corners and borders shall be rounded.

SIZE	A	B	C	D	E	F	G	H	I	J	K	L	M	N	O	P	Q	R	S	T	U	V	W	X	Y	Z	Area sq. ft.
1																											
2	24	12	1 1/8	3/8	3/8	6	3	10	10 1/4																		2.0
3	36	18	1 1/8	3/8	1/2	9	4 1/2	14 5/8	14 1/2																		4.5
4																											
5																											

STANDARD SIGN
M4-8

WISCONSIN DEPT OF TRANSPORTATION

APPROVED Matthew R Rauch
for State Traffic Engineer

DATE 11/10/10 PLATE NO. M4-8.2

PROJECT NO: | HWY: | COUNTY: | SHEET NO: 89 | E

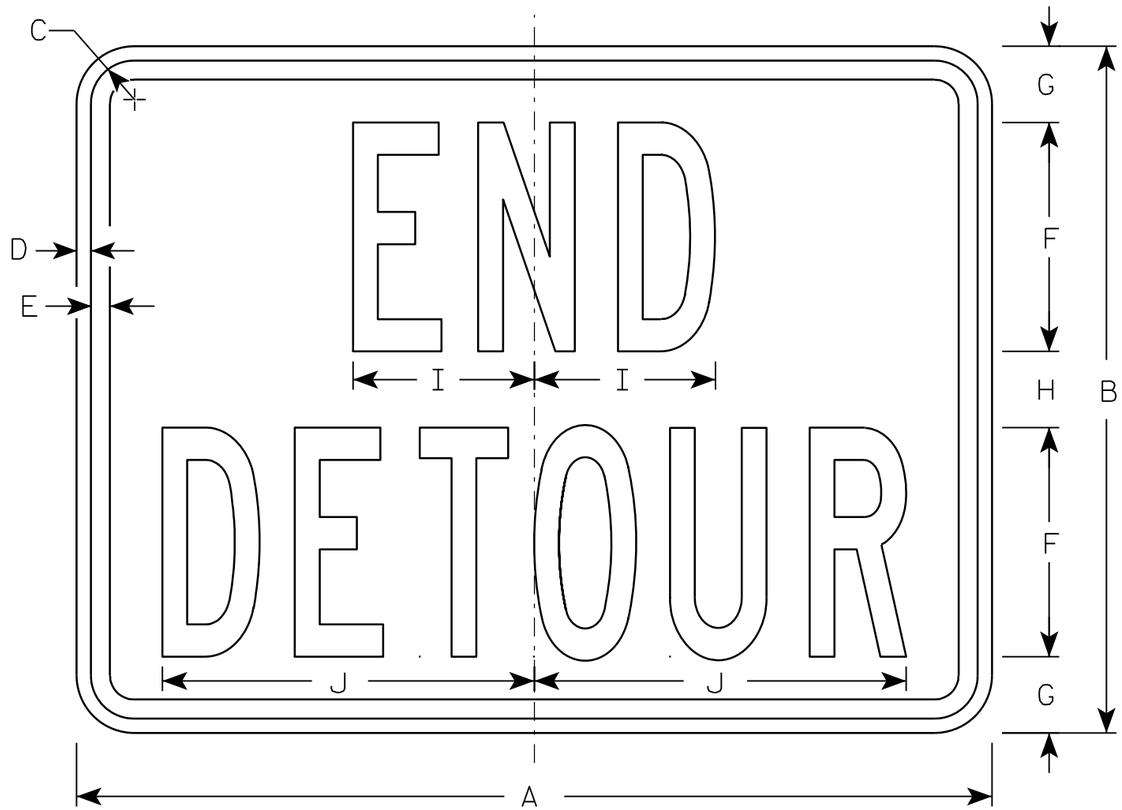

M4-8A

NOTES

1. Sign is Type II - Type F Reflective - reference WIS DOT Standard Specification for HIGHWAY and STRUCTURE CONSTRUCTION latest edition.
2. Color:
   Background - Orange
   Message - Black
3. Message Series - B
4. Corners may be square or rounded when base material is plywood but borders shall be rounded as shown. When base material is metal, the corners and borders shall be rounded.

SIZE	A	B	C	D	E	F	G	H	I	J	K	L	M	N	O	P	Q	R	S	T	U	V	W	X	Y	Z	Area sq. ft.
1																											
2	24	18	1 1/8	3/8	1/2	6	2	2	4 3/4	9 3/4																	3.0
3	30	24	1 1/8	3/8	1/2	8	2 1/2	3	6 3/4	13																	5.0
4																											
5																											

STANDARD SIGN
M4-8A

WISCONSIN DEPT OF TRANSPORTATION

APPROVED Matthew R Rauch
for State Traffic Engineer

DATE 3/9/11 PLATE NO. M4-8A.2

PROJECT NO: | HWY: | COUNTY: | SHEET NO: 90 | E

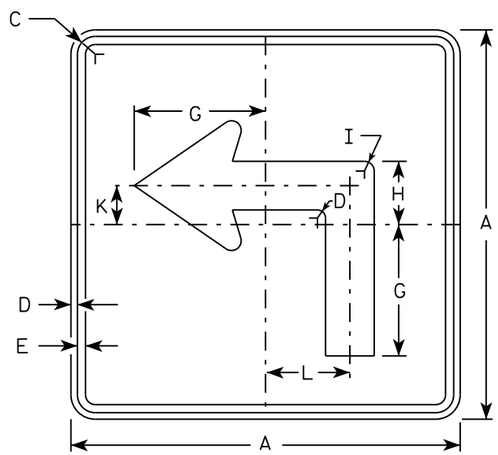

M5-1L
MM5-1L
MO5-1L
MP5-1L

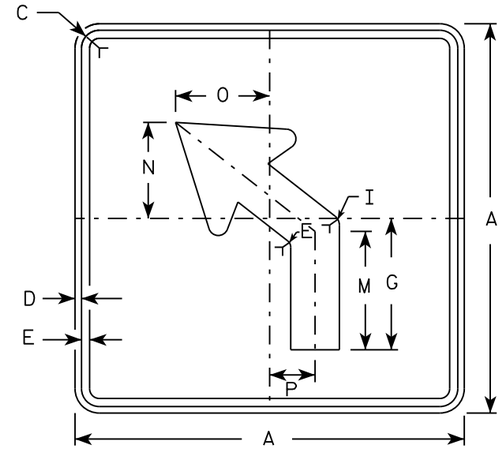

M5-2L
MM5-2L
MO5-2L
MP5-2L

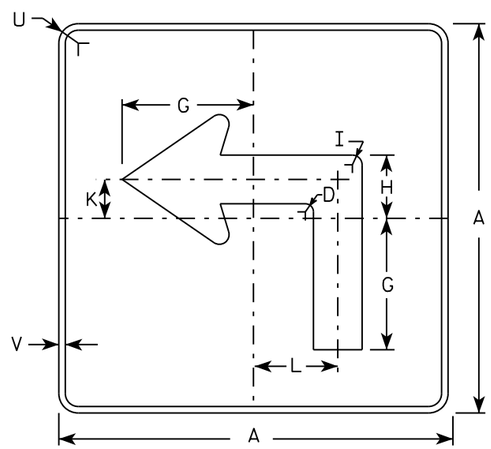

MB5-1L
MK5-1L
MN5-1L
MR5-1L

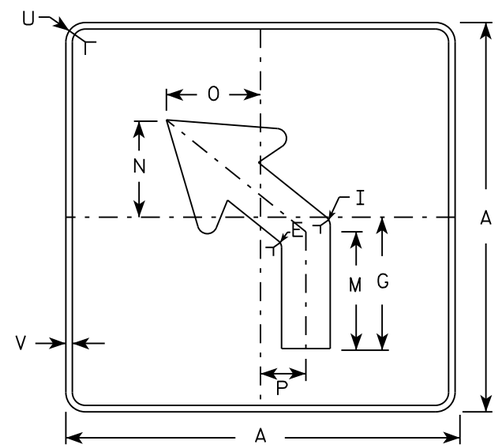

MB5-2L
MK5-2L
MN5-2L
MR5-2L

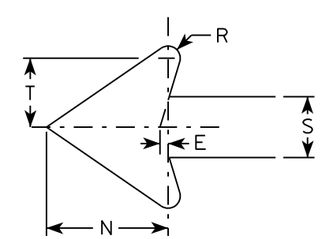

NOTES

1. Signs are Type II - Type H reflective except as shown
2. Color:
   Background - See note 4
   Message - See note 4
3. Corners may be square or rounded when base material is plywood but borders shall be rounded as shown. When base material is metal, the corners and borders shall be rounded.
4. M5-1 and M5-2 Background - White
   Message - Black
   MB5-1 and MB5-2 Background - Blue
   Message - White
   MK5-1 and MK5-2 Background - Green
   Message - White
   MM5-1 and MM5-2 Background - White
   Message - Green
   MN5-1 and MN5-2 Background - Brown
   Message - White
   MO5-1 and MO5-2 Background - Orange - Type F Reflective
   Message - Black
   MP5-1 and MP5-2 Background - White - Type H Reflective
   Message - Blue
   MR5-1 and MR5-2 Background - Brown
   Message - Yellow
5. M5-1R same as M5-1L except arrow points right.
6. M5-2R same as M5-2L except arrow tilts right.

SIZE	A	B	C	D	E	F	G	H	I	J	K	L	M	N	O	P	Q	R	S	T	U	V	W	X	Y	Z	Area sq. ft.
1																											
2	21		1 1/8	3/8	3/8		7	3 3/8	5/8		2 1/8	4 1/2	6 3/8	5 1/4	5	2 1/2		1/2	2 5/8	3	1 1/2	1/2					3.06
3	30		1 3/8	1/2	5/8		10 1/8	4 7/8	7/8		3	6 1/2	9 1/8	7 1/2	7 1/4	3 1/2		3/4	3 3/4	4 1/4	1 7/8	1/2					6.25
4	30		1 3/8	1/2	5/8		10 1/8	4 7/8	7/8		3	6 1/2	9 1/8	7 1/2	7 1/4	3 1/2		3/4	3 3/4	4 1/4	1 7/8	1/2					6.25
5	30		1 3/8	1/2	5/8		10 1/8	4 7/8	7/8		3	6 1/2	9 1/8	7 1/2	7 1/4	3 1/2		3/4	3 3/4	4 1/4	1 7/8	1/2					6.25

STANDARD SIGN
M5-1 & M5-2

WISCONSIN DEPT OF TRANSPORTATION

APPROVED Matthew R Rauch
for State Traffic Engineer

DATE 10/15/15 PLATE NO. M5-1.13

PROJECT NO: | HWY: | COUNTY: | SHEET NO: E

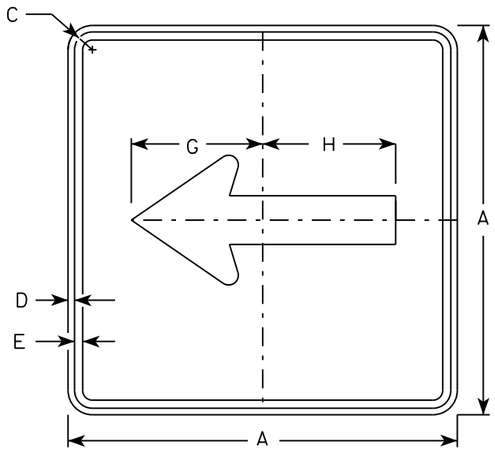

M6-1
MM6-1
MO6-1
MP6-1

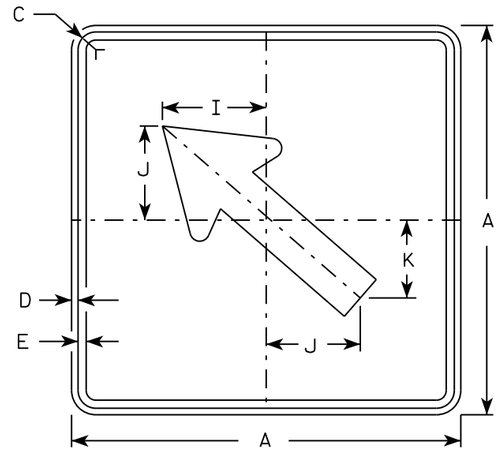

M6-2
MM6-2
MO6-2
MP6-2

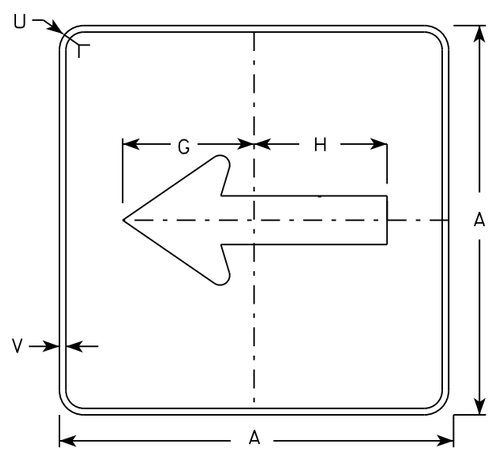

MB6-1
MK6-1
MN6-1
MR6-1

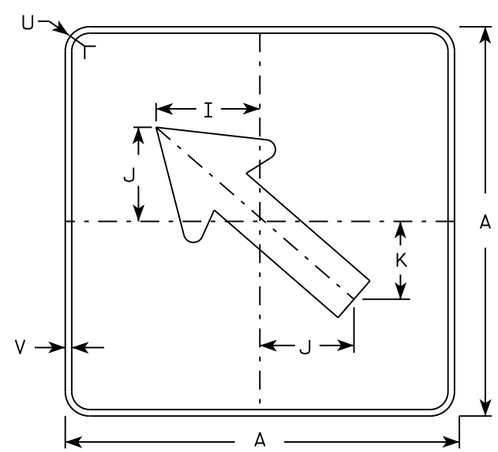

MB6-2
MK6-2
MN6-2
MR6-2

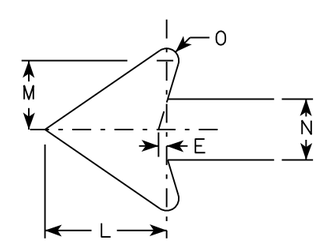

NOTES

1. Signs are Type II - Type H except as Shown
2. Color:
   Background - See note 4
   Message - See note 4
3. Corners may be square or rounded when base material is plywood but borders shall be rounded as shown. When base material is metal, the corners and borders shall be rounded.
4. M6-1 and M6-2 Background - White
   Message - Black
   MB6-1 and MB6-2 Background - Blue
   Message - White
   MK6-1 and MK6-2 Background - Green
   Message - White
   MM6-1 and MM6-2 Background - White
   Message - Green
   MN6-1 and MN6-2 Background - Brown
   Message - White
   MO6-1 and MO6-2 Background - Orange - Type F Reflective
   Message - Black
   MP6-1 and MP6-2 Background - White
   Message - Blue
   MR6-1 and MR6-2 Background - Brown
   Message - Yellow

SIZE	A	B	C	D	E	F	G	H	I	J	K	L	M	N	O	P	Q	R	S	T	U	V	W	X	Y	Z	Area sq. ft.
1																											
2	21		1 1/8	3/8	3/8		7 1/2	7 1/8	5 5/8	5	4 1/4	5 1/4	3	2 5/8	1/2						1 1/2	1/2					3.06
3	30		1 3/8	1/2	5/8		10 3/4	10 1/4	8	7 1/4	6	7 1/2	4 1/4	3 3/4	3/4						1 7/8	1/2					6.25
4	30		1 3/8	1/2	5/8		10 3/4	10 1/4	8	7 1/4	6	7 1/2	4 1/4	3 3/4	3/4						1 7/8	1/2					6.25
5	30		1 3/8	1/2	5/8		10 3/4	10 1/4	8	7 1/4	6	7 1/2	4 1/4	3 3/4	3/4						1 7/8	1/2					6.25

STANDARD SIGN
M6-1 & M6-2
SERIES

WISCONSIN DEPT OF TRANSPORTATION

APPROVED Matthew R Rauch
for State Traffic Engineer

DATE 10/15/15 PLATE 92 M6-1.15

PROJECT NO: | HWY: | COUNTY: | SHEET NO: | E

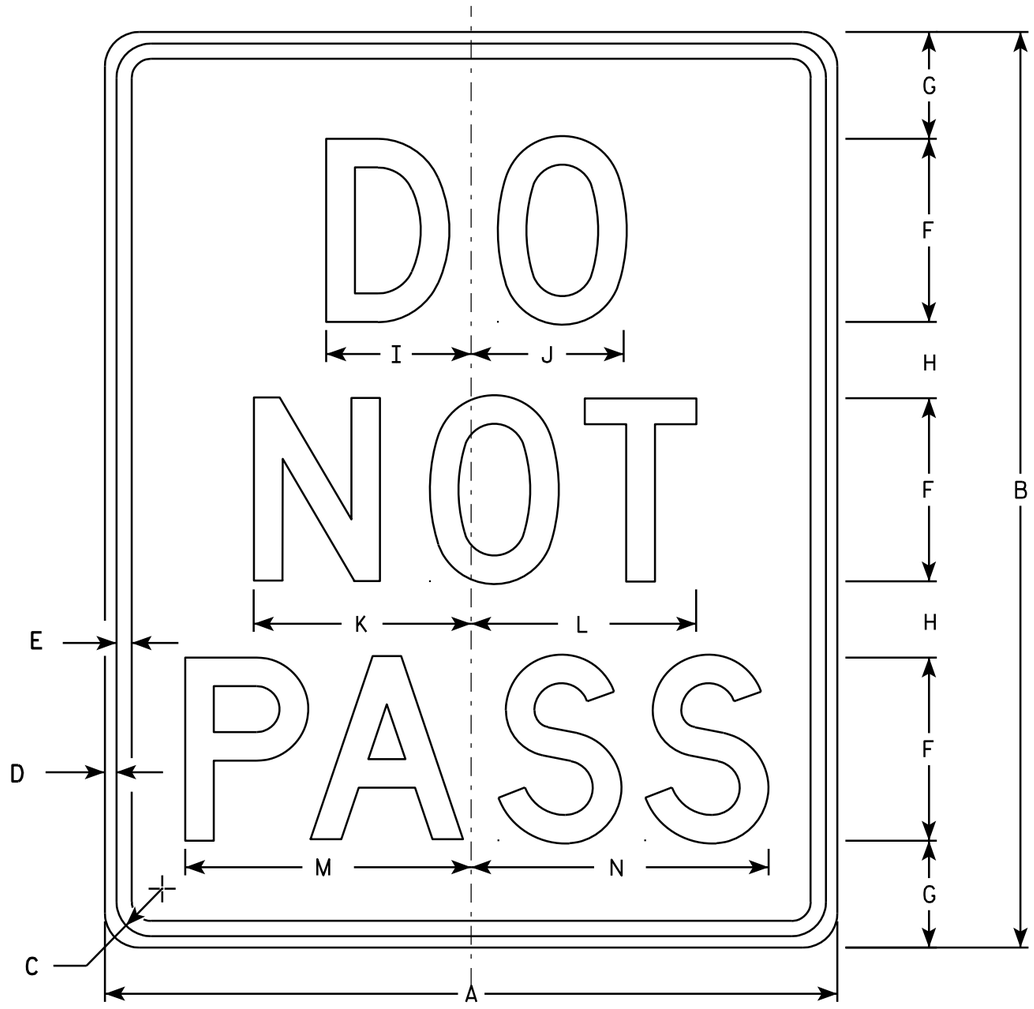

R4-1

NOTES

1. Sign is Type II - Type H Reflective - reference WIS DOT Standard Specification for HIGHWAY and STRUCTURE CONSTRUCTION latest edition.
2. Color:
   Background - White
   Message - Black
3. Message Series - D
4. Corners may be square or rounded when base material is plywood but borders shall be rounded as shown. When base material is metal, the corners and borders shall be rounded.

SIZE	A	B	C	D	E	F	G	H	I	J	K	L	M	N	O	P	Q	R	S	T	U	V	W	X	Y	Z	Area sq. ft.
1	18	24	1 1/8	3/8	1/2	4	3 1/2	2 1/2	3 1/8	3 1/4	4 3/4	4 7/8	6 1/4	6 1/2													3.0
2S	24	30	1 1/8	3/8	1/2	6	3 1/2	2 1/2	4 3/4	5	7 1/8	7 3/8	9 3/8	9 3/4													5.0
2M	24	30	1 1/8	3/8	1/2	6	3 1/2	2 1/2	4 3/4	5	7 1/8	7 3/8	9 3/8	9 3/4													5.0
3																											
4	36	48	1 5/8	5/8	3/4	8	7	5	6 1/4	6 5/8	9 1/2	9 3/4	12 1/2	13													12.0
5	48	60	2 1/4	3/4	1	10	8	7	7 3/4	8 3/8	11 7/8	12 1/4	15 5/8	16 1/4													20.0

STANDARD SIGN
R4-1

WISCONSIN DEPT OF TRANSPORTATION

APPROVED Matthew R Rauch
for State Traffic Engineer

DATE 3/25/2011 PLATE NO. R4-1.7

PROJECT NO:	HWY:	COUNTY:		SHEET NO: 93	E

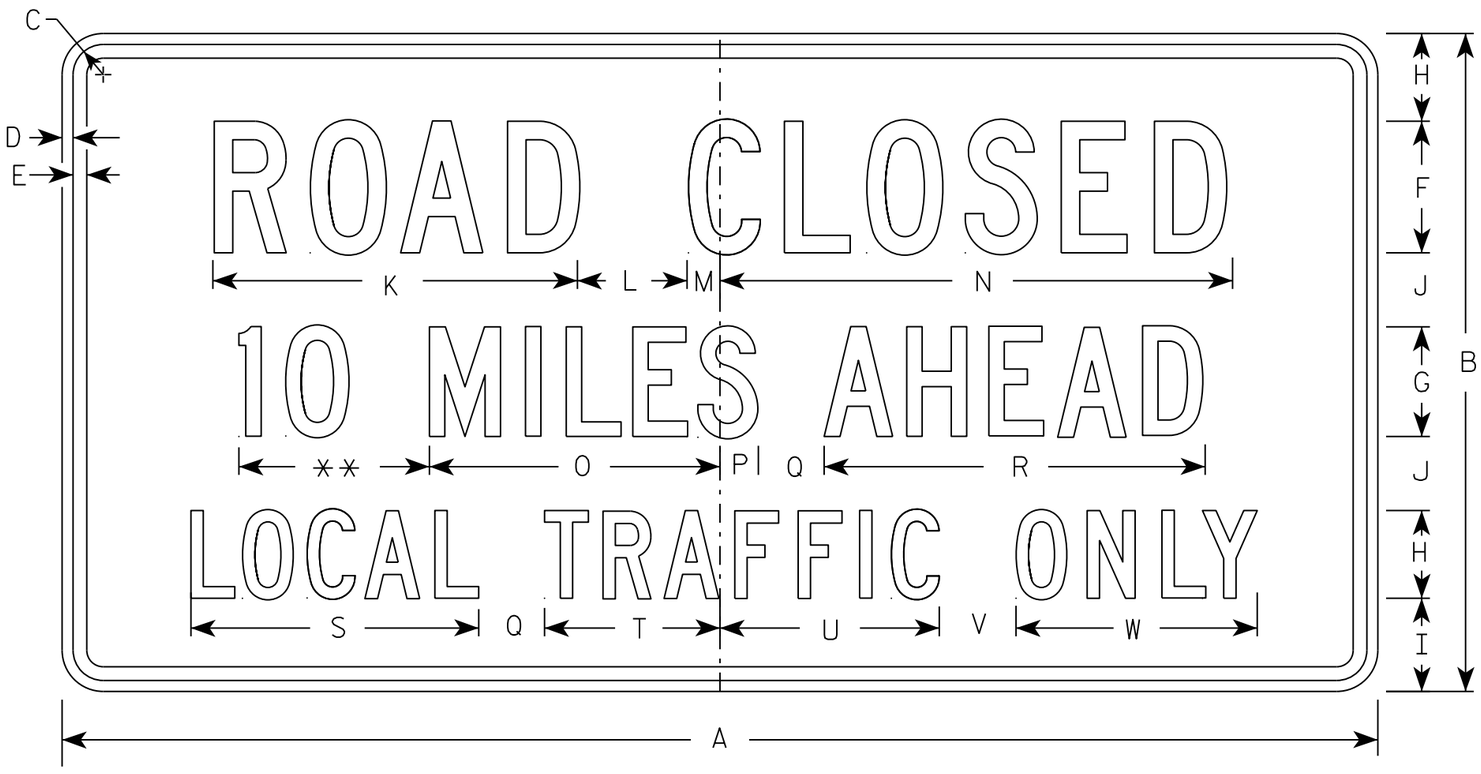

R11-3

** See Note 5

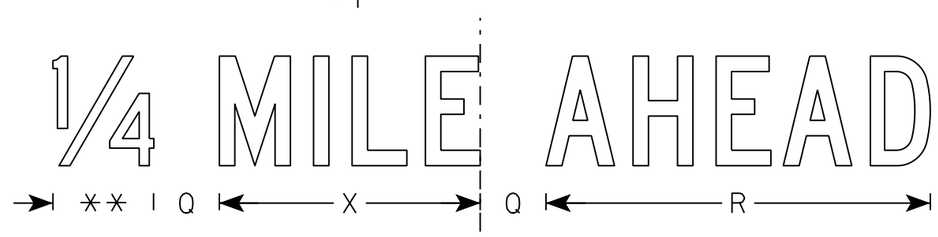

NOTES

1. Sign is Type II - Type H Reflective
2. Color:
   Background - White
   Message - Black
3. Message Series - C
4. Corners may be square or rounded when base material is plywood but borders shall be rounded as shown. When base material is metal, the corners and borders shall be rounded.
5. Substitute appropriate numerals to nearest quarter mile and optically adjust spacing to achieve proper balance.

SIZE	A	B	C	D	E	F	G	H	I	J	K	L	M	N	O	P	Q	R	S	T	U	V	W	X	Y	Z	Area sq. ft.
1	36	18	1 3/8	1/2	5/8	4	3	2 1/2	2	2	11 1/8	3	1 1/8	15 1/4	8	1 1/2	2	10 3/4	8 3/8	4 3/4	6 1/2	2	6 3/4	7 1/8			4.5
2S	60	30	1 3/8	1/2	5/8	6	5	4	4 1/4	3 3/8	16 5/8	5	1 1/2	23	13 1/4	1 3/4	3	17 3/8	13 1/8	8	10	3 1/2	11	11 7/8			12.5
2M	60	30	1 3/8	1/2	5/8	6	5	4	4 1/4	3 3/8	16 5/8	5	1 1/2	23	13 1/4	1 3/4	3	17 3/8	13 1/8	8	10	3 1/2	11	11 7/8			12.5
3																											
4																											
5																											

STANDARD SIGN
R11-3

WISCONSIN DEPT OF TRANSPORTATION

APPROVED Matthew R Rauch
for State Traffic Engineer

DATE 3/15/17 PLATE NO. R11-3.8

PROJECT NO: | HWY: | COUNTY: | SHEET NO: 94 | E

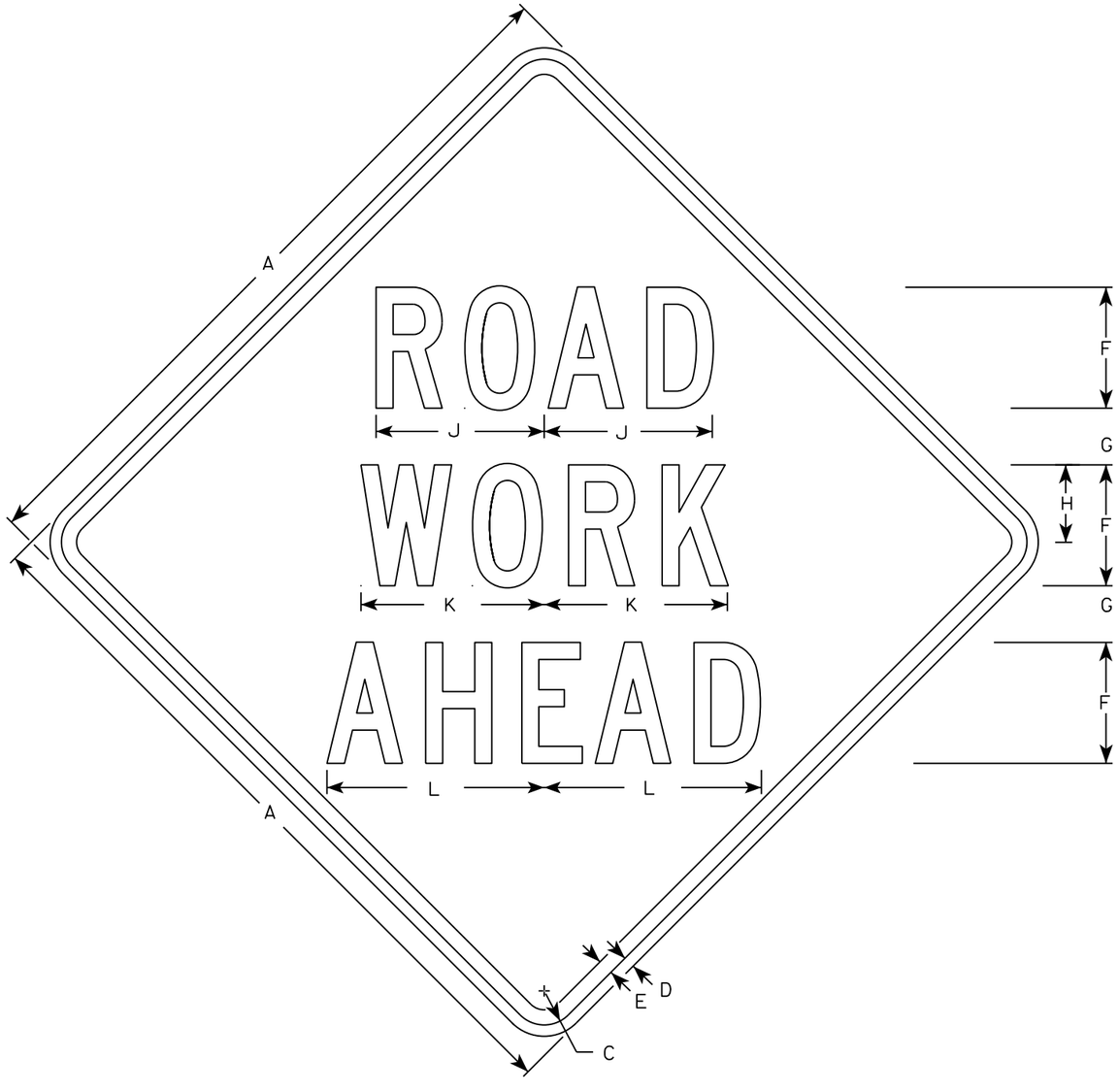

W20-1A

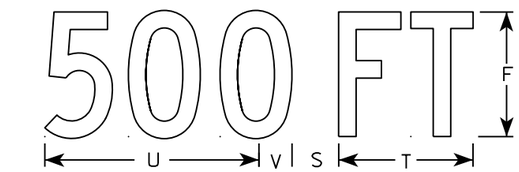

W20-1D

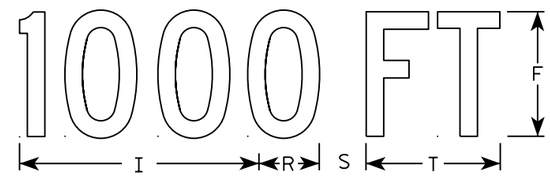

W20-1C

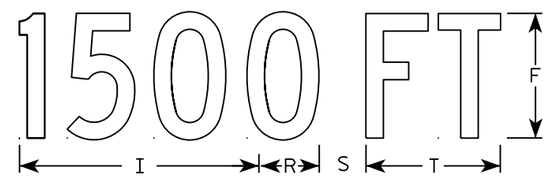

W20-1B

W20-1G

W20-1F

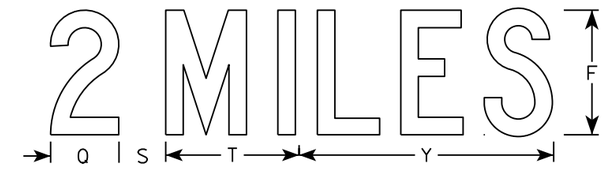

W20-1E

NOTES

1. Sign is Type II - Type F Reflective
2. Color:
   Background - Orange
   Message - Black
3. Message Series - C
4. Corners may be square or rounded when base material is plywood but borders shall be rounded as shown. When base material is metal, the corners and borders shall be rounded.

SIZE	A	B	C	D	E	F	G	H	I	J	K	L	M	N	O	P	Q	R	S	T	U	V	W	X	Y	Z	Area sq. ft.
1	36		1 3/8	1/2	5/8	5	2 5/8	3 1/4	10 1/8	7	7 5/8	8 7/8	1 1/8	4 1/2	3 1/2	9		2 1/2	2 1/4	5 5/8	9	1 3/8	8	1 3/4	10 3/4	6	9.0
2S	48		2 1/4	3/4	1	8	3 3/4	5 1/8	15 3/8	11 1/8	12 1/8	14 3/8	1 5/8	6 7/8	5 3/8	13 7/8	4 3/8	3 7/8	3	8 5/8	13 3/4	2 1/8	11 7/8	2 3/4	16 3/8	9	16.0
2M	48		2 1/4	3/4	1	8	3 3/4	5 1/8	15 3/8	11 1/8	12 1/8	14 3/8	1 5/8	6 7/8	5 3/8	13 7/8	4 3/8	3 7/8	3	8 5/8	13 3/4	2 1/8	11 7/8	2 3/4	16 3/8	9	16.0
3	48		2 1/4	3/4	1	8	3 3/4	5 1/8	15 3/8	11 1/8	12 1/8	14 3/8	1 5/8	6 7/8	5 3/8	13 7/8	4 3/8	3 7/8	3	8 5/8	13 3/4	2 1/8	11 7/8	2 3/4	16 3/8	9	16.0
4	48		2 1/4	3/4	1	8	3 3/4	5 1/8	15 3/8	11 1/8	12 1/8	14 3/8	1 5/8	6 7/8	5 3/8	13 7/8	4 3/8	3 7/8	3	8 5/8	13 3/4	2 1/8	11 7/8	2 3/4	16 3/8	9	16.0
5	48		2 1/4	3/4	1	8	3 3/4	5 1/8	15 3/8	11 1/8	12 1/8	14 3/8	1 5/8	6 7/8	5 3/8	13 7/8	4 3/8	3 7/8	3	8 5/8	13 3/4	2 1/8	11 7/8	2 3/4	16 3/8	9	16.0

STANDARD SIGN
W20-1A, B, C, D, F & G

WISCONSIN DEPT OF TRANSPORTATION

APPROVED Matthew R Rauch
for State Traffic Engineer

DATE 5/07/15 PLATE NO. W20-1.10

PROJECT NO:

SHEET NO: E

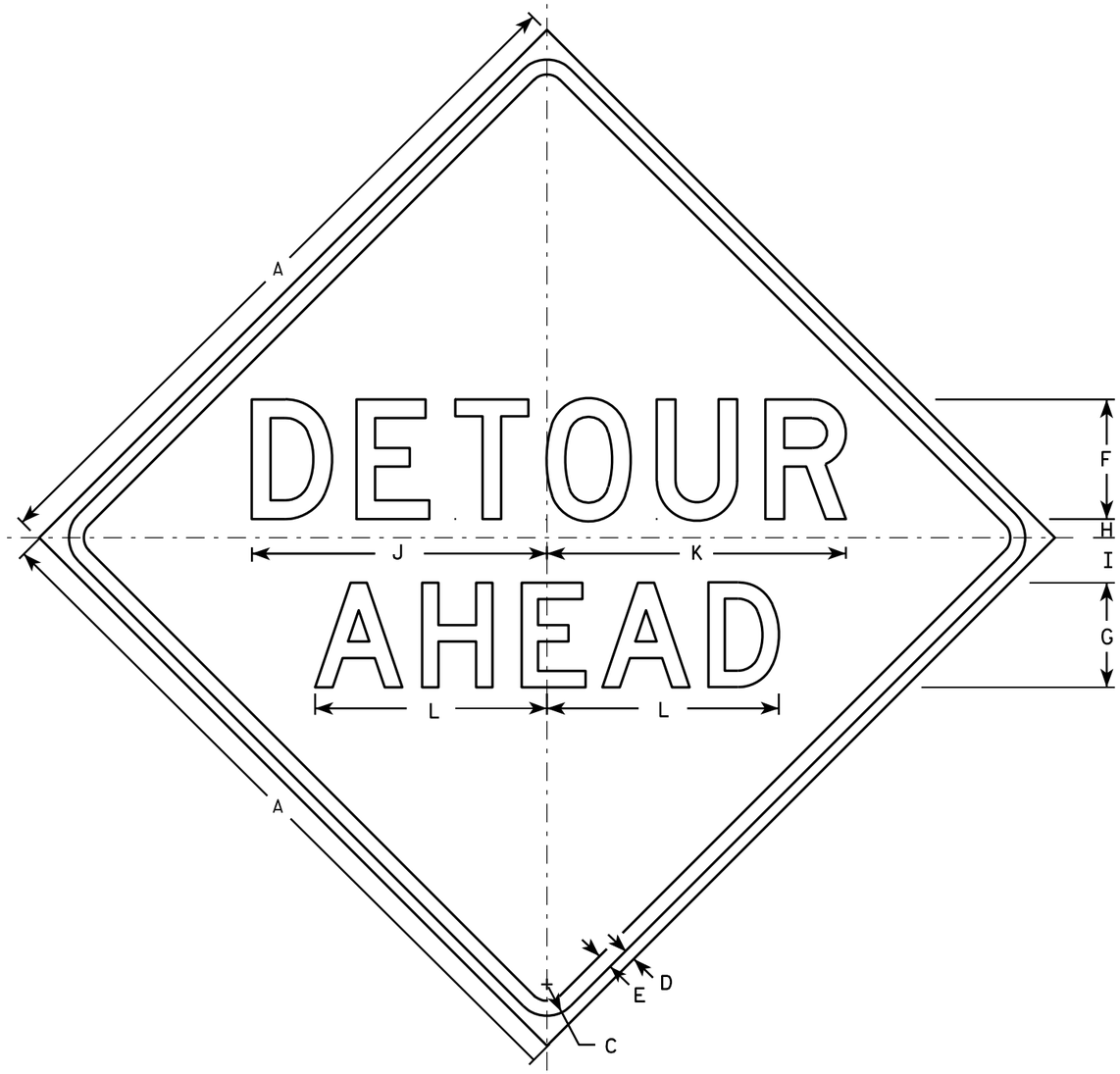

W20-2A

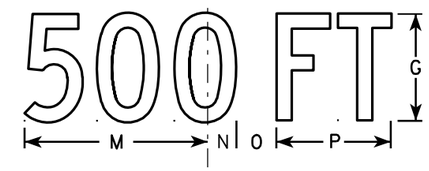

W20-2D

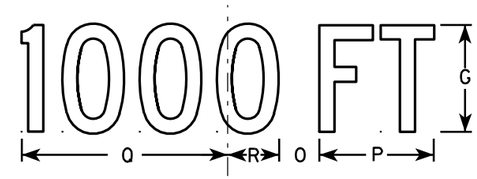

W20-2C

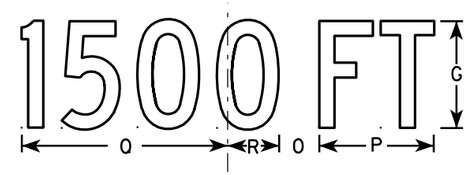

W20-2B

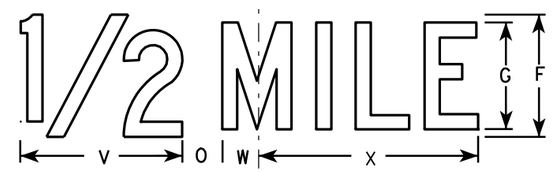

W20-2G

W20-2F

NOTES

1. Sign is Type II - Type F Reflective - reference WIS DOT Standard Specification for HIGHWAY and STRUCTURE CONSTRUCTION latest edition.
2. Color:
   Background - Orange
   Message - Black
3. Message Series - See note 5
4. Corners may be square or rounded when base material is plywood but borders shall be rounded as shown. When base material is metal, the corners and borders shall be rounded.
5. Line 1 is Series D.
   Line 2 is Series D for AHEAD and Series C for all other distances.

SIZE	A	B	C	D	E	F	G	H	I	J	K	L	M	N	O	P	Q	R	S	T	U	V	W	X	Y	Z	Area sq. ft.
1	36		1 5/8	5/8	3/4	6	5	1	2 1/4	14 3/4	15	11 5/8	9	1 3/8	1 7/8	5 5/8	10 1/8	2 1/2	1 1/8	4 1/2	3 1/2	8	1 3/4	10 3/4			9.0
2S	48		2 1/4	3/4	1	8	7	1 1/4	3	19 3/4	20	15 1/2	12	1 7/8	2 5/8	7 1/2	13 1/2	3 3/8	1 1/2	6	4 5/8	10 5/8	2 3/8	14 3/8			16.0
2M	48		2 1/4	3/4	1	8	7	1 1/4	3	19 3/4	20	15 1/2	12	1 7/8	2 5/8	7 1/2	13 1/2	3 3/8	1 1/2	6	4 5/8	10 5/8	2 3/8	14 3/8			16.0
3	48		2 1/4	3/4	1	8	7	1 1/4	3	19 3/4	20	15 1/2	12	1 7/8	2 5/8	7 1/2	13 1/2	3 3/8	1 1/2	6	4 5/8	10 5/8	2 3/8	14 3/8			16.0
4	48		2 1/4	3/4	1	8	7	1 1/4	3	19 3/4	20	15 1/2	12	1 7/8	2 5/8	7 1/2	13 1/2	3 3/8	1 1/2	6	4 5/8	10 5/8	2 3/8	14 3/8			16.0
5	48		2 1/4	3/4	1	8	7	1 1/4	3	19 3/4	20	15 1/2	12	1 7/8	2 5/8	7 1/2	13 1/2	3 3/8	1 1/2	6	4 5/8	10 5/8	2 3/8	14 3/8			16.0

STANDARD SIGN
W20-2A,B,C,D,F & G

WISCONSIN DEPT OF TRANSPORTATION

APPROVED Matthew R Rauch
for State Traffic Engineer
DATE 3/18/11 PLATE NO. W20-2.6

PROJECT NO: | HWY: | COUNTY: | SHEET NO: 96 | E

NOTES

1. Sign is Type II - Type F Reflective - reference WIS DOT Standard Specification for HIGHWAY and STRUCTURE CONSTRUCTION latest edition.
2. Color:
   Background - Orange
   Message - Black
3. Corners may be square or rounded when base material is plywood but borders shall be rounded as shown. When base material is metal, the corners and borders shall be rounded.

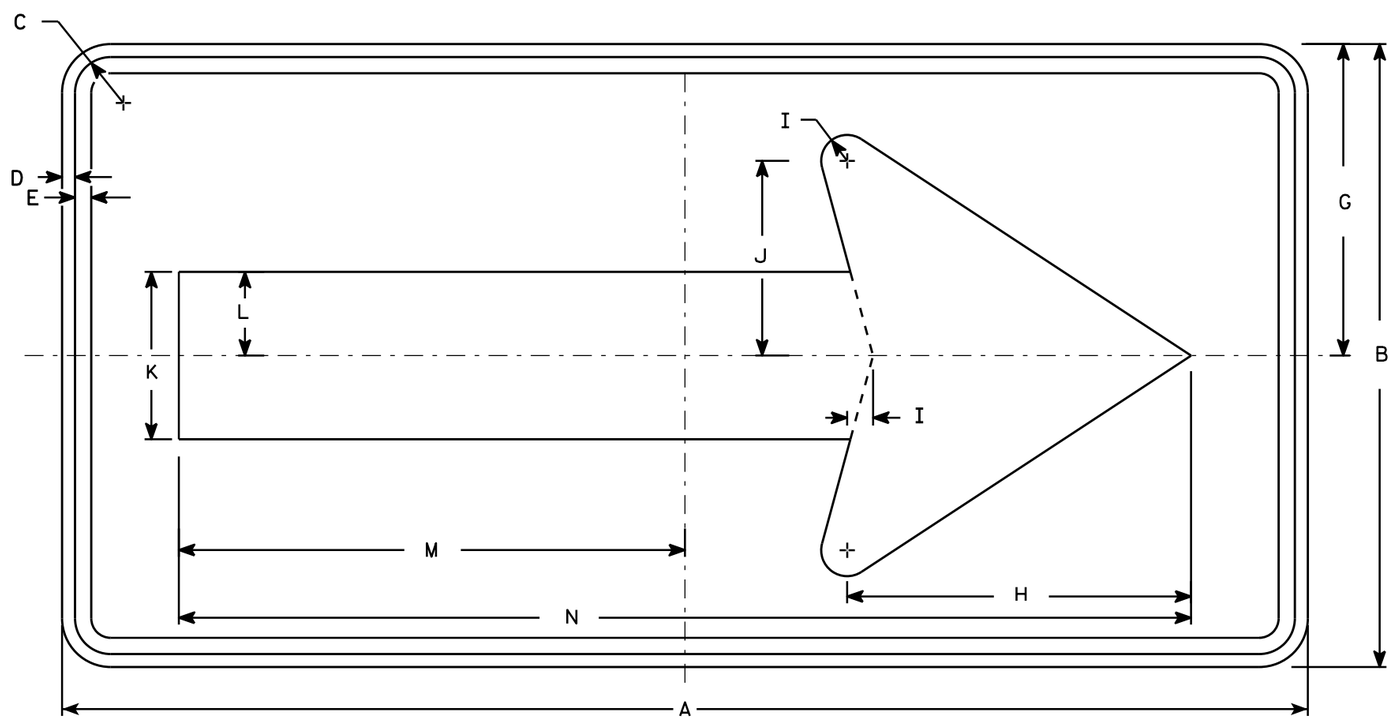

W01-6

SIZE	A	B	C	D	E	F	G	H	I	J	K	L	M	N	O	P	Q	R	S	T	U	V	W	X	Y	Z	Area sq. ft.
1																											
2S	48	24	1 3/8	1/2	5/8		12	13 1/4	1	7 1/2	6 1/2	3 1/4	19 1/2	39													8.0
2M	48	24	1 3/8	1/2	5/8		12	13 1/4	1	7 1/2	6 1/2	3 1/4	19 1/2	39													8.0
3	60	30	1 3/8	1/2	5/8		15	16 1/4	1 1/4	9 1/4	8	4	24 3/8	48 3/4													12.5
4	60	30	1 3/8	1/2	5/8		15	16 1/4	1 1/4	9 1/4	8	4	24 3/8	48 3/4													12.5
5	60	30	1 3/8	1/2	5/8		15	16 1/4	1 1/4	9 1/4	8	4	24 3/8	48 3/4													12.5

STANDARD SIGN
W01-6

WISCONSIN DEPT OF TRANSPORTATION

APPROVED Matthew R Rauch
for State Traffic Engineer

DATE 11/18/13 PLATE NO. W01-6.1

PROJECT NO: | HWY: | COUNTY: | SHEET NO: | E

STATION	Real Station	Distance	AREA (SF) Cut	AREA (SF) Salvaged/Unusable Pavement Material	AREA (SF) Fill	Incremental Vol (CY) (Unadjusted) Cut Note 1	Incremental Vol (CY) (Unadjusted) Salvaged/Unusable Pavement Material Note 2	Incremental Vol (CY) (Unadjusted) Fill Note 3	Cumulative Vol (CY) Cut 1.00 Note 1	Cumulative Vol (CY) Expanded Fill 1.30	Cumulative Vol (CY) Mass Ordinate Note 8
44+00	4400.00	0.00	100.58	55.00	1.36	0	0	0	0	0	0
44+50	4450.00	50.00	97.07	55.00	4.15	183	102	5	183	7	75
45+00	4500.00	50.00	88.32	55.00	8.26	172	102	11	355	22	129
45+50	4550.00	50.00	84.79	55.00	8.76	160	102	16	515	42	167
46+00	4600.00	50.00	82.48	55.00	4.44	155	102	12	670	58	204
46+50	4650.00	50.00	73.42	55.00	6.90	144	102	11	814	72	233
47+00	4700.00	50.00	70.62	55.00	11.63	133	102	17	948	94	243
47+50	4750.00	50.00	70.02	55.00	14.39	130	102	24	1,078	125	240
48+00	4800.00	50.00	77.92	55.00	6.95	137	102	20	1,215	151	249
48+50	4850.00	50.00	84.84	55.00	4.64	151	102	11	1,365	165	284
49+00	4900.00	50.00	76.88	55.00	2.35	150	102	6	1,515	173	323
49+50	4950.00	50.00	67.67	55.00	4.57	134	102	6	1,649	182	347
50+00	5000.00	50.00	67.89	55.00	12.28	126	102	16	1,775	202	350
50+50	5050.00	50.00	69.94	55.00	18.33	128	102	28	1,902	239	339
51+00	5100.00	50.00	73.86	55.00	24.22	133	102	39	2,035	290	319
51+50	5150.00	50.00	72.37	55.00	16.04	135	102	37	2,171	338	305
52+00	5200.00	50.00	65.83	55.00	20.88	128	102	34	2,299	383	286
52+50	5250.00	50.00	68.50	55.00	20.24	124	102	38	2,423	432	259
53+00	5300.00	50.00	70.01	55.00	13.22	128	102	31	2,551	473	245
53+50	5350.00	50.00	71.39	55.00	11.09	131	102	23	2,682	502	245
54+00	5400.00	50.00	75.47	55.00	10.08	136	102	20	2,818	527	254
54+50	5450.00	50.00	75.39	55.00	7.04	140	102	16	2,958	548	271
55+00	5500.00	50.00	75.99	55.00	3.96	140	102	10	3,098	561	296
55+50	5550.00	50.00	78.95	55.00	2.73	143	102	6	3,242	569	330
56+00	5600.00	50.00	75.91	55.00	3.52	143	102	6	3,385	577	364
56+50	5650.00	50.00	77.20	55.00	5.65	142	102	8	3,527	588	393
57+00	5700.00	50.00	78.49	55.00	7.13	144	102	12	3,671	603	419
57+50	5750.00	50.00	74.27	55.00	12.41	141	102	18	3,812	627	436
58+00	5800.00	50.00	78.86	55.00	0.75	142	102	12	3,954	643	460
58+50	5850.00	50.00	73.69	55.00	6.24	141	102	6	4,095	651	491
59+00	5900.00	50.00	75.45	55.00	0.78	138	102	7	4,233	659	518
59+50	5950.00	50.00	80.53	55.00	2.09	144	102	3	4,378	663	558
60+00	6000.00	50.00	82.34	55.00	1.47	151	102	3	4,529	667	602
60+25	6025.00	25.00	86.98	55.00	3.72	78	51	2	4,607	670	627

STATION	Real Station	Distance	AREA (SF) Cut	AREA (SF) Salvaged/Unusable Pavement Material	AREA (SF) Fill	Incremental Vol (CY) (Unadjusted) Cut Note 1	Incremental Vol (CY) (Unadjusted) Salvaged/Unusable Pavement Material Note 2	Incremental Vol (CY) (Unadjusted) Fill Note 3	Cumulative Vol (CY) Cut 1.00 Note 1	Cumulative Vol (CY) Expanded Fill 1.30	Cumulative Vol (CY) Mass Ordinate Note 8
119+00	11900.00	25.00	0.00	0.00	0.00	0	0	0	0	0	0
120+00	12000.00	100.00	0.00	0.00	17.41	0	0	32	0	42	-42
121+00	12100.00	100.00	0.00	0.00	10.34	0	0	51	0	109	-109
122+00	12200.00	100.00	0.00	0.00	5.68	0	0	30	0	147	-147
123+00	12300.00	100.00	0.00	0.00	1.90	0	0	14	0	166	-166
124+00	12400.00	100.00	0.00	0.00	2.03	0	0	7	0	175	-175
125+00	12500.00	100.00	0.00	0.00	0.93	0	0	5	0	182	-182
126+00	12600.00	100.00	0.00	0.00	30.84	0	0	59	0	259	-259
126+50	12650.00	50.00	0.00	0.00	0.00	0	0	0	0	259	-259

STATION	Real Station	Pipe Length	AREA (SF) Cut	AREA (SF) Salvaged/Unusable Pavement Material	AREA (SF) Fill	Incremental Vol (CY) (Unadjusted) Cut Note 1	Incremental Vol (CY) (Unadjusted) Salvaged/Unusable Pavement Material Note 2	Incremental Vol (CY) (Unadjusted) Fill Note 3	Cumulative Vol (CY) Cut 1.00 Note 1	Cumulative Vol (CY) Expanded Fill 1.30	Cumulative Vol (CY) Mass Ordinate Note 8
35+92	3592.00	50	70.16	20.66	44.60	130	38	83	130	107	-16
42+92	4292.00	65	58.70	18.70	36.86	141	45	89	271	223	-35
74+92	7492.00	52	117.70	26.70	87.86	227	51	169	498	443	-79
101+92	10192.00	73	117.70	26.70	87.86	318	72	238	816	752	-142
139+27	13927.00	51	58.70	18.70	36.86	111	35	70	927	842	-157
144+27	14427.00	51	58.70	18.70	36.86	111	35	70	1,038	933	-172
154+67	15467.00	52	58.70	18.70	36.86	113	36	71	1,151	1,025	-187
164+92	16492.00	51	117.70	26.70	87.86	222	50	166	1,373	1,241	-231
212+75	21275.00	89	151.75	31.75	107.44	500	105	354	1,873	1,701	-296

STATION	Real Station	Pipe Length	AREA (SF) Cut	AREA (SF) Salvaged/Unusable Pavement Material	AREA (SF) Fill	Incremental Vol (CY) (Unadjusted) Cut Note 1	Incremental Vol (CY) (Unadjusted) Salvaged/Unusable Pavement Material Note 2	Incremental Vol (CY) (Unadjusted) Fill Note 3	Cumulative Vol (CY) Cut 1.00 Note 1	Cumulative Vol (CY) Expanded Fill 1.30	Cumulative Vol (CY) Mass Ordinate Note 8
265+90	26590.00	79	117.70	26.70	87.86	344	78	257	344	334	-68
266+75	26675.00	64	58.70	18.70	36.86	139	44	87	484	448	-87
285+00	28500.00	56	168.20	32.70	125.88	349	68	261	832	787	-145
319+00	31900.00	80	58.70	18.70	36.86	174	55	109	1,006	929	-169
319+92	31992.00	74	117.70	26.70	87.86	323	73	241	1,329	1,242	-232
333+00	33300.00	57	58.70	18.70	36.86	124	39	78	1,453	1,343	-249
348+96	34896.00	96	55.20	18.20	34.60	196	65	123	1,649	1,503	-277
366+18	36618.00	54	117.70	26.70	87.86	235	53	176	1,884	1,732	-324
372+30	37230.00	78	70.15	20.65	44.60	203	60	129	2,087	1,899	-348
373+20	37320.00	76	70.15	20.65	44.60	197	58	126	2,285	2,062	-372
399+45	39945.00	54	58.70	18.70	36.86	117	37	74	2,402	2,158	-388
418+00	41800.00	48	89.61	26.41	54.20	159	47	96	2,561	2,284	-401

9

9

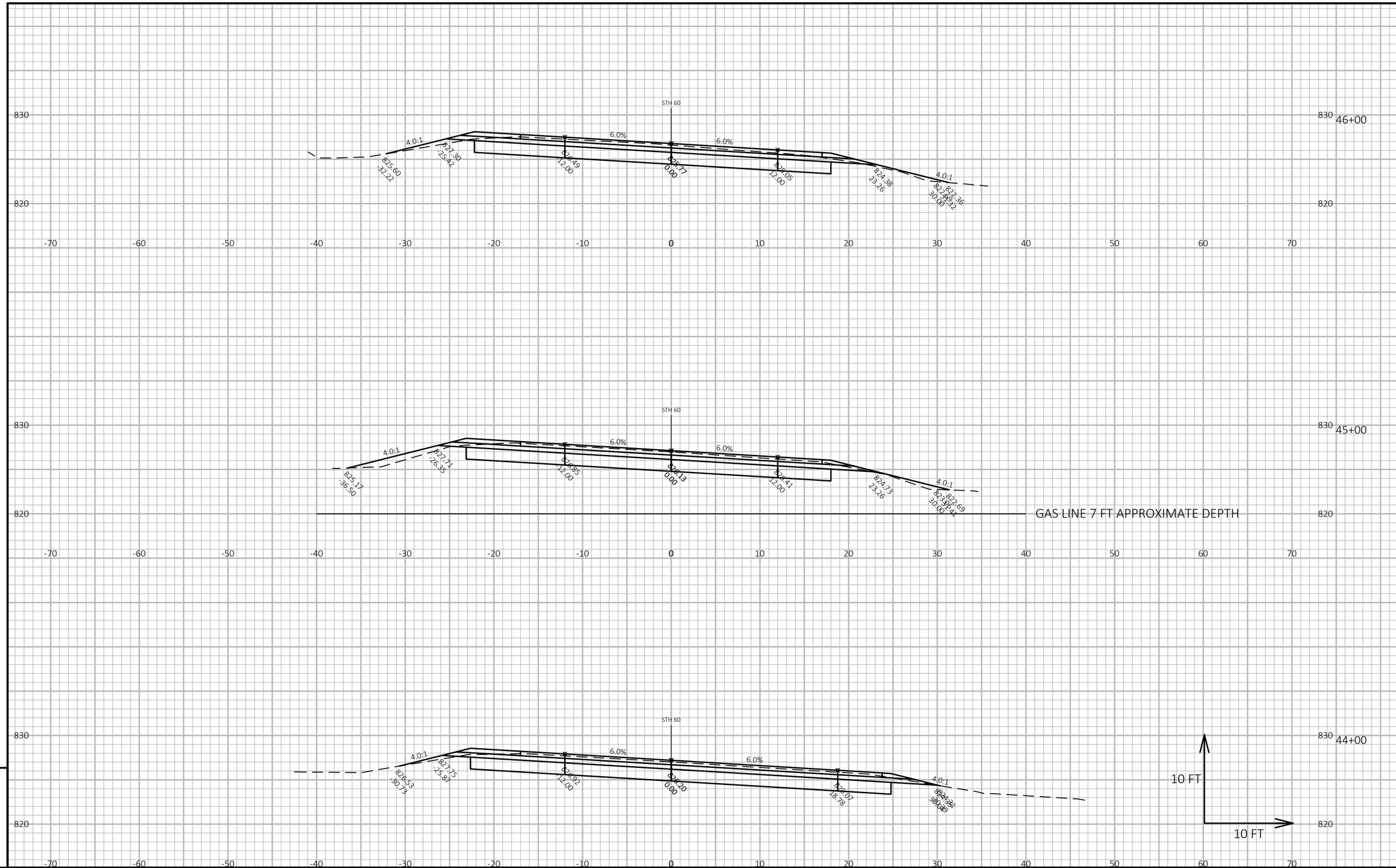

9

9

PROJECT NO: 5271-08-73	HWY: STH 60	COUNTY: COLUMBIA	CROSS SECTIONS:	SHEET 100	E

FILE NAME : N:\PDS\C3D\52710803\SHEETSPLAN\090201_XS_EBS.DWG
LAYOUT NAME - EBS XS - (1)
PLOT DATE : 1/24/2019 12:08 PM
PLOT BY : BETZEL, LORRAINE L
PLOT NAME :
PLOT SCALE : 1 IN:10 FT HORZ. / 1 IN:10 FT VERT.

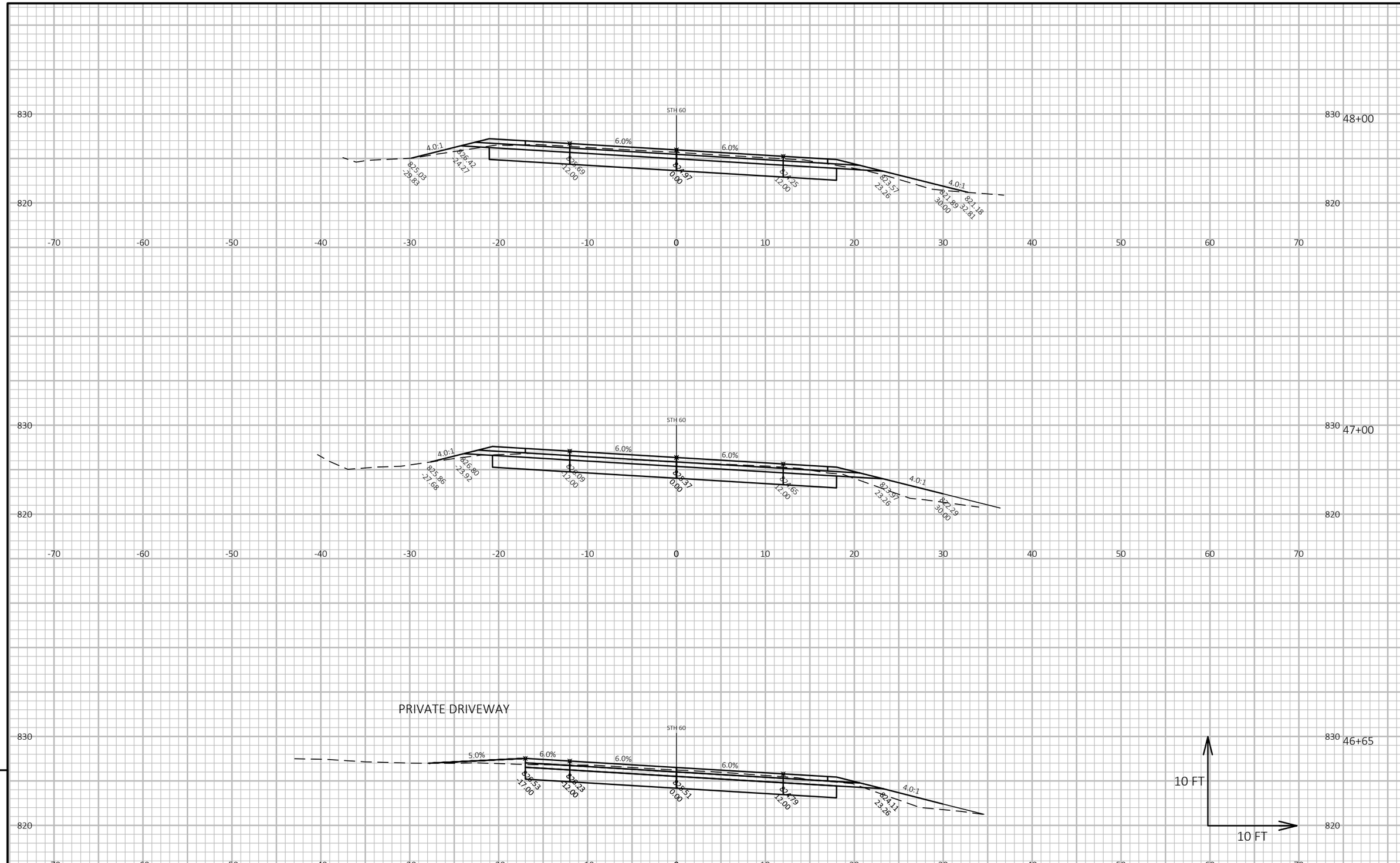

9

9

PROJECT NO: 5271-08-73	HWY: STH 60	COUNTY: COLUMBIA	CROSS SECTIONS:	SHEET 101	E

FILE NAME : N:\PDS\C3D\52710803\SHEETSPLAN\090201_XS_EBS.DWG
LAYOUT NAME - EBS XS - (2)
PLOT DATE : 1/24/2019 12:08 PM
PLOT BY : BETZEL, LORRAINE L
PLOT NAME :
PLOT SCALE : 1 IN:10 FT HORZ. / 1 IN:10 FT VERT.
WISDOT/CADDS SHEET 49

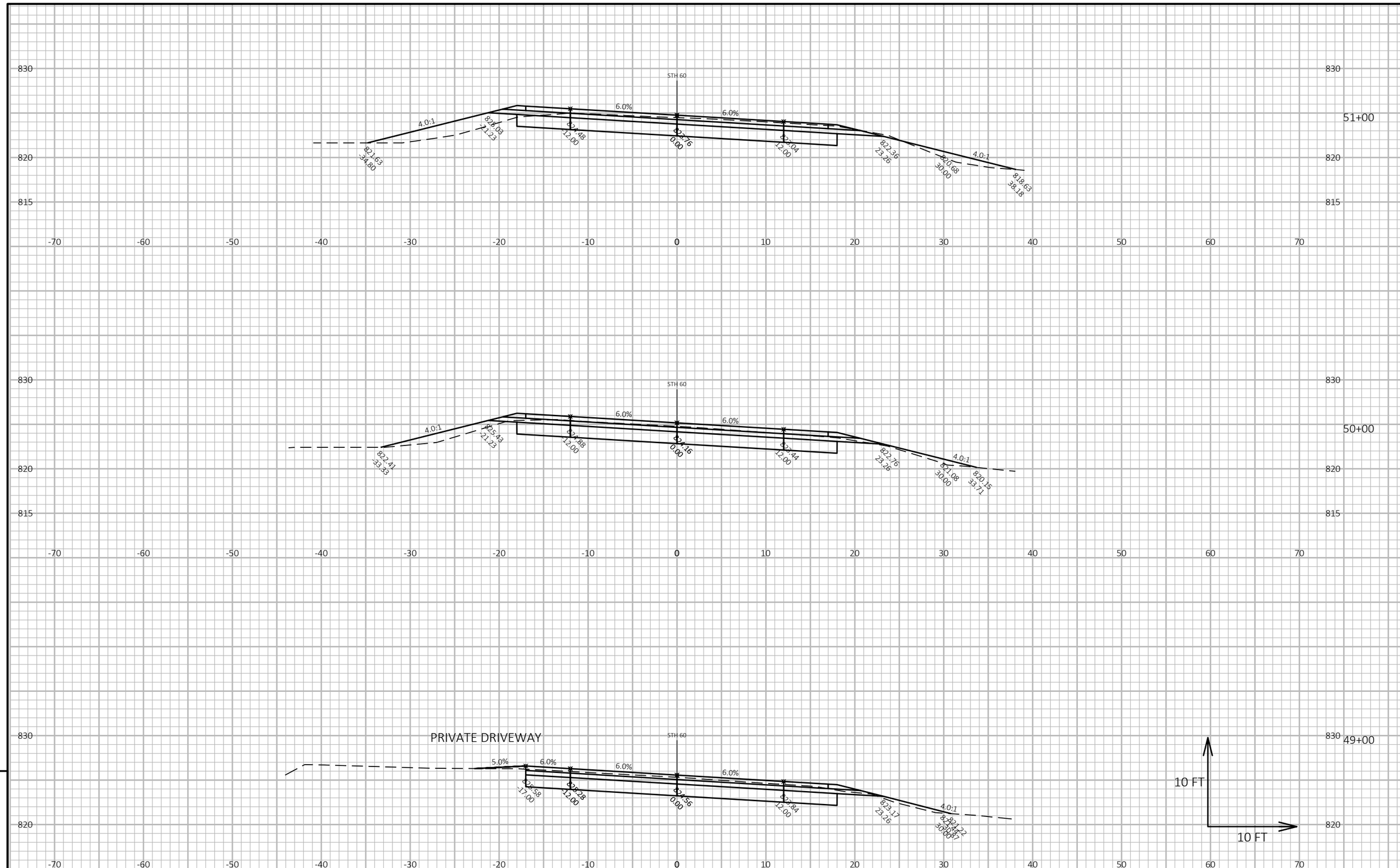

PROJECT NO: 5271-08-73	HWY: STH 60	COUNTY: COLUMBIA	CROSS SECTIONS:	SHEET 102	E

FILE NAME : N:\PDS\C3D\52710803\SHEETSPLAN\090201_XS_EBS.DWG
LAYOUT NAME - EBS XS - (3)
PLOT DATE : 1/24/2019 12:08 PM
PLOT BY : BETZEL, LORRAINE L
PLOT NAME :
PLOT SCALE : 1 IN:10 FT HORZ. / 1 IN:10 FT VERT.
WISDOT/CADDS SHEET 49

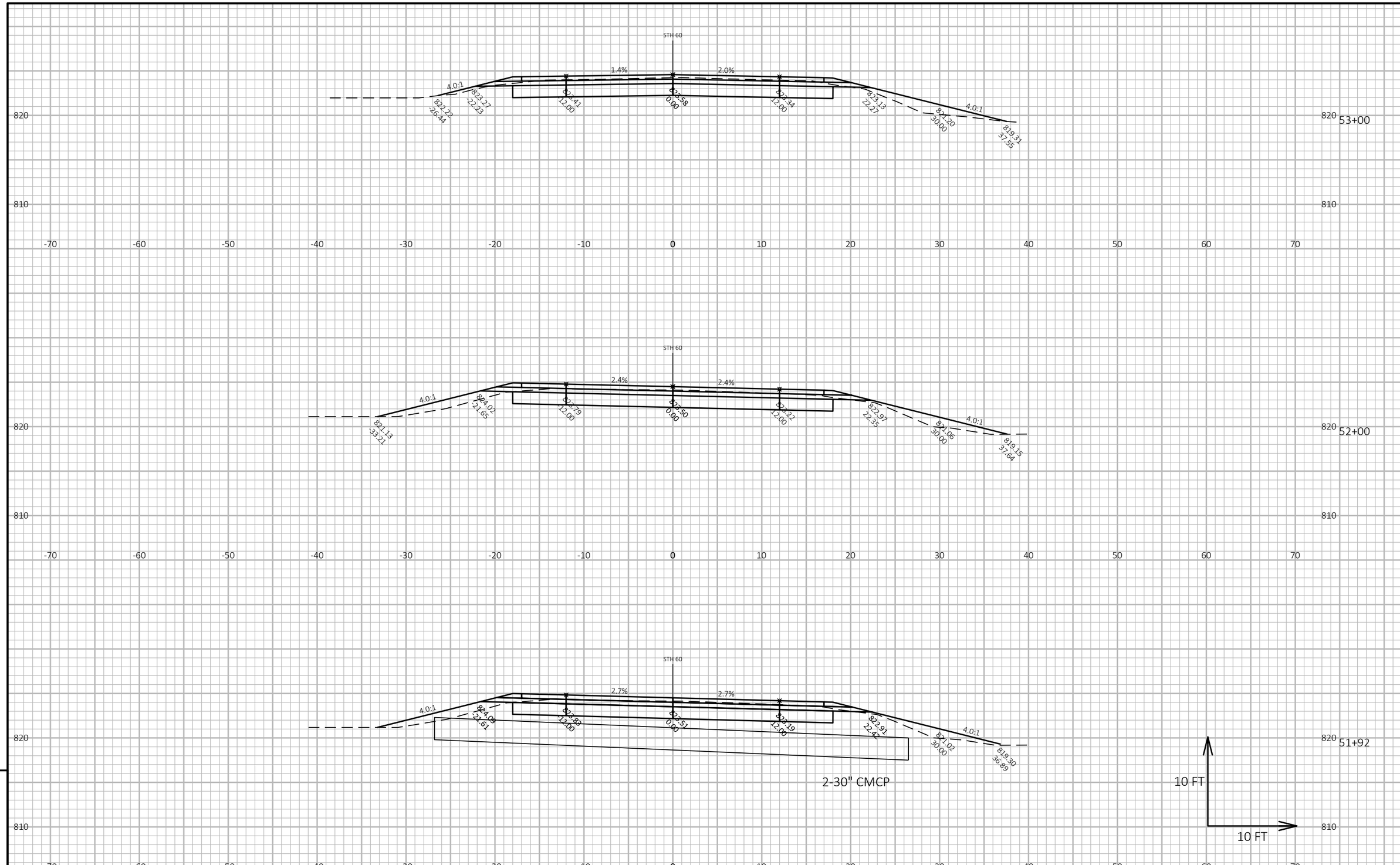

9

9

PROJECT NO: 5271-08-73	HWY: STH 60	COUNTY: COLUMBIA	CROSS SECTIONS:	SHEET 103	E

FILE NAME : N:\PDS\C3D\52710803\SHEETSPLAN\090201_XS_EBS.DWG
LAYOUT NAME - EBS XS - (4)

PLOT DATE : 1/24/2019 12:08 PM PLOT BY : BETZEL, LORRAINE L PLOT NAME : PLOT SCALE : 1 IN:10 FT HORZ. / 1 IN:10 FT VERT.

WISDOT/CADDS SHEET 49

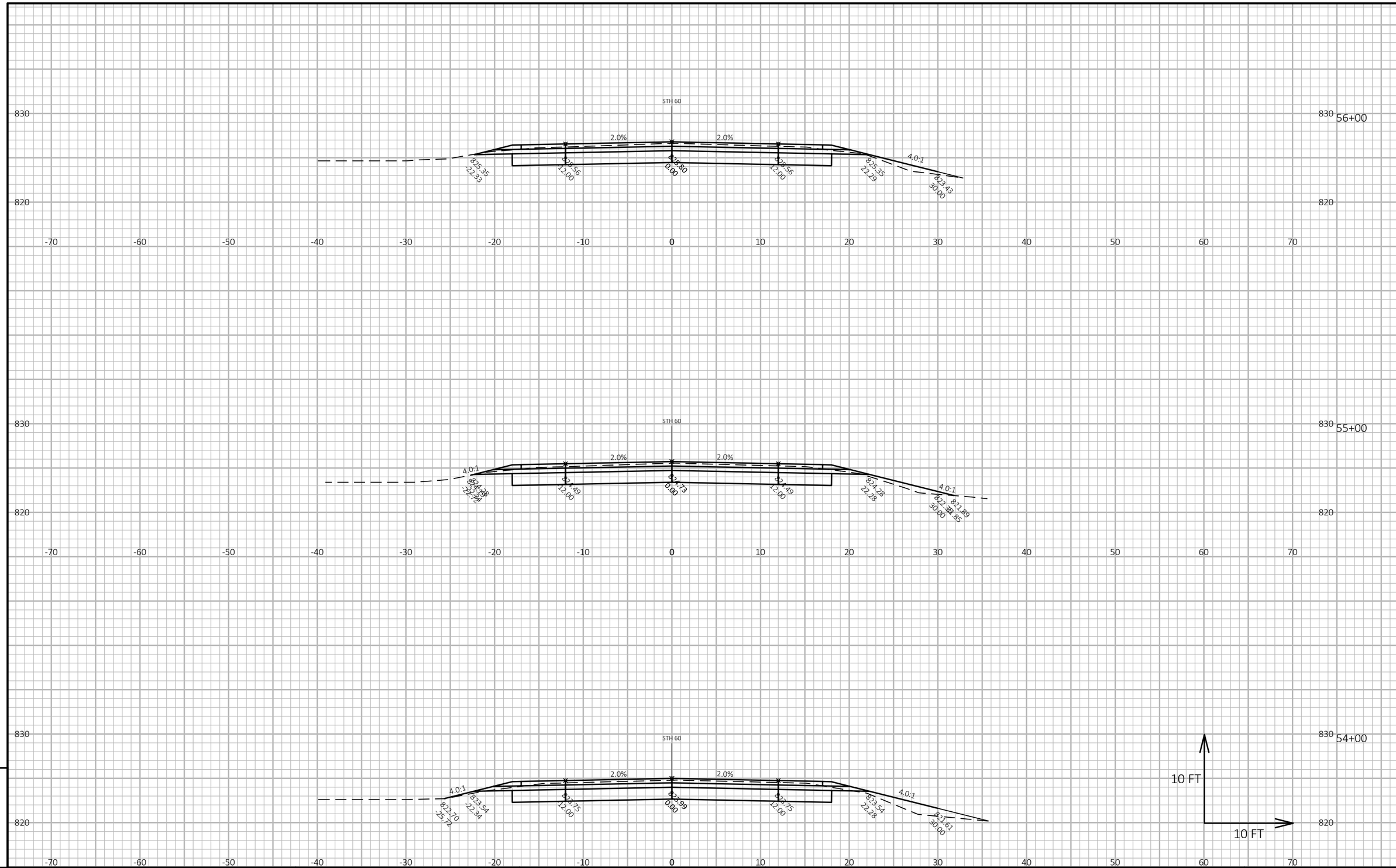

9

9

PROJECT NO: 5271-08-73	HWY: STH 60	COUNTY: COLUMBIA	CROSS SECTIONS:	SHEET 104	E

FILE NAME : N:\PDS\C3D\52710803\SHEETSPLAN\090201_XS_EBS.DWG
LAYOUT NAME - EBS XS - (5)

PLOT DATE : 1/24/2019 12:08 PM PLOT BY : BETZEL, LORRAINE L PLOT NAME : PLOT SCALE : 1 IN:10 FT HORZ. / 1 IN:10 FT VERT.

WISDOT/CADDS SHEET 49

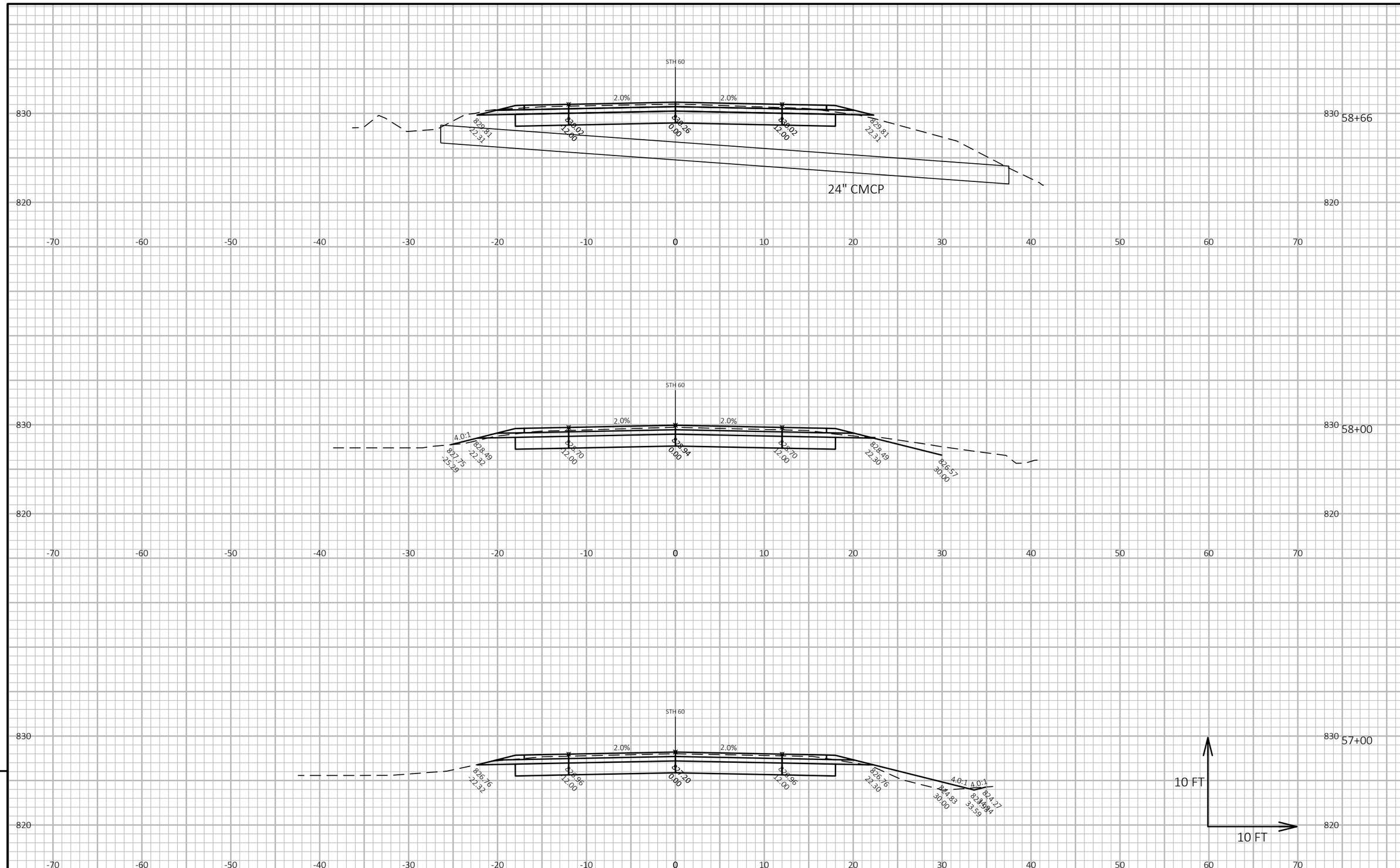

9

9

PROJECT NO: 5271-08-73	HWY: STH 60	COUNTY: COLUMBIA	CROSS SECTIONS:	SHEET 105	E

FILE NAME : N:\PDS\C3D\52710803\SHEETSPLAN\090201_XS_EBS.DWG
LAYOUT NAME - EBS XS - (6)
PLOT DATE : 1/24/2019 12:08 PM
PLOT BY : BETZEL, LORRAINE L
PLOT NAME :
PLOT SCALE : 1 IN:10 FT HORZ. / 1 IN:10 FT VERT.
WISDOT/CADDS SHEET 49

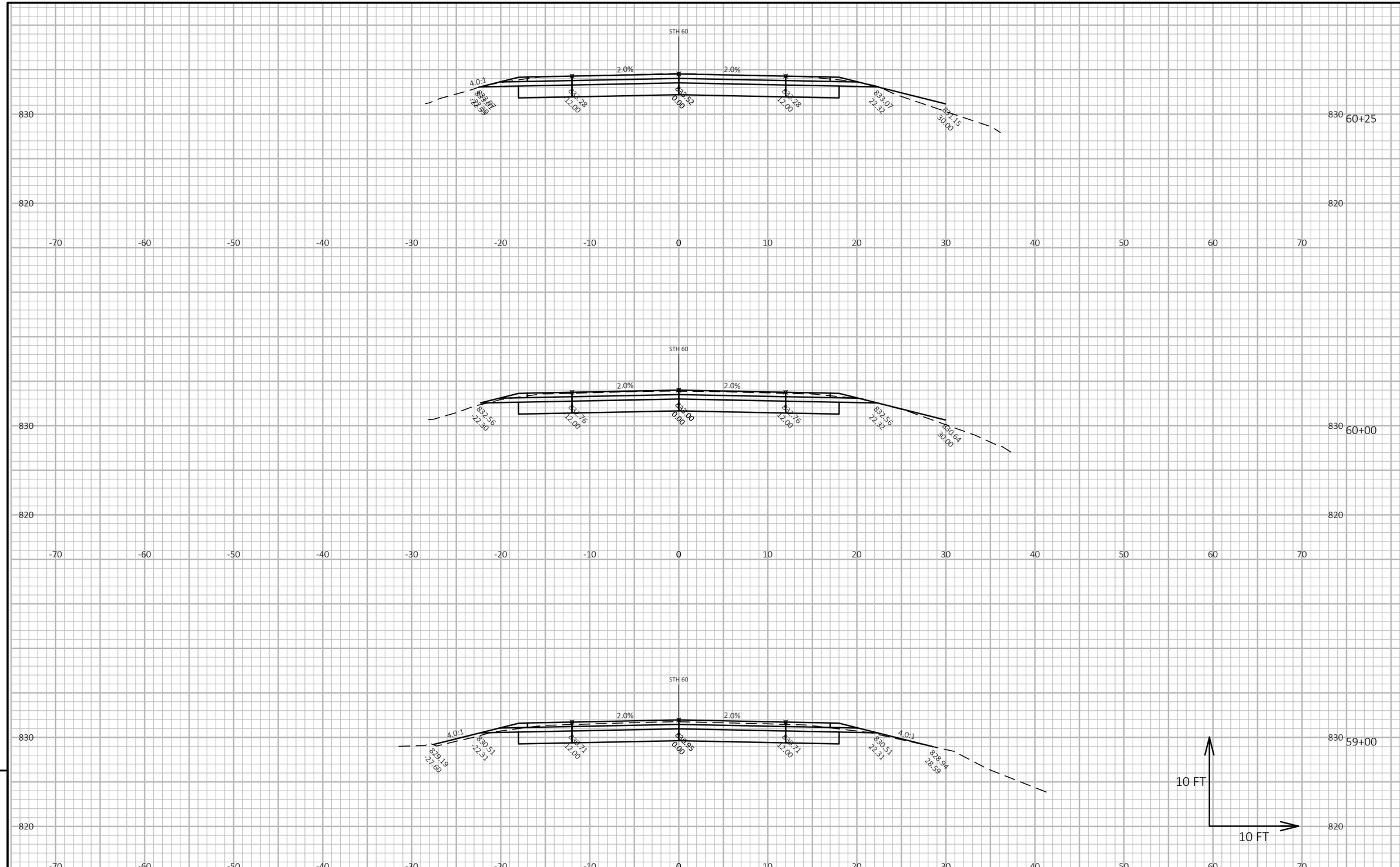

PROJECT NO: 5271-08-73	HWY: STH 60	COUNTY: COLUMBIA	CROSS SECTIONS:	SHEET 106	E

FILE NAME : N:\PDS\C3D\52710803\SHEETSPLAN\090201_XS_EBS.DWG
LAYOUT NAME - EBS XS - (7)
PLOT DATE : 1/24/2019 12:08 PM
PLOT BY : BETZEL, LORRAINE L
PLOT NAME :
PLOT SCALE : 1 IN:10 FT HORZ. / 1 IN:10 FT VERT.
WISDOT/CADDS SHEET 49

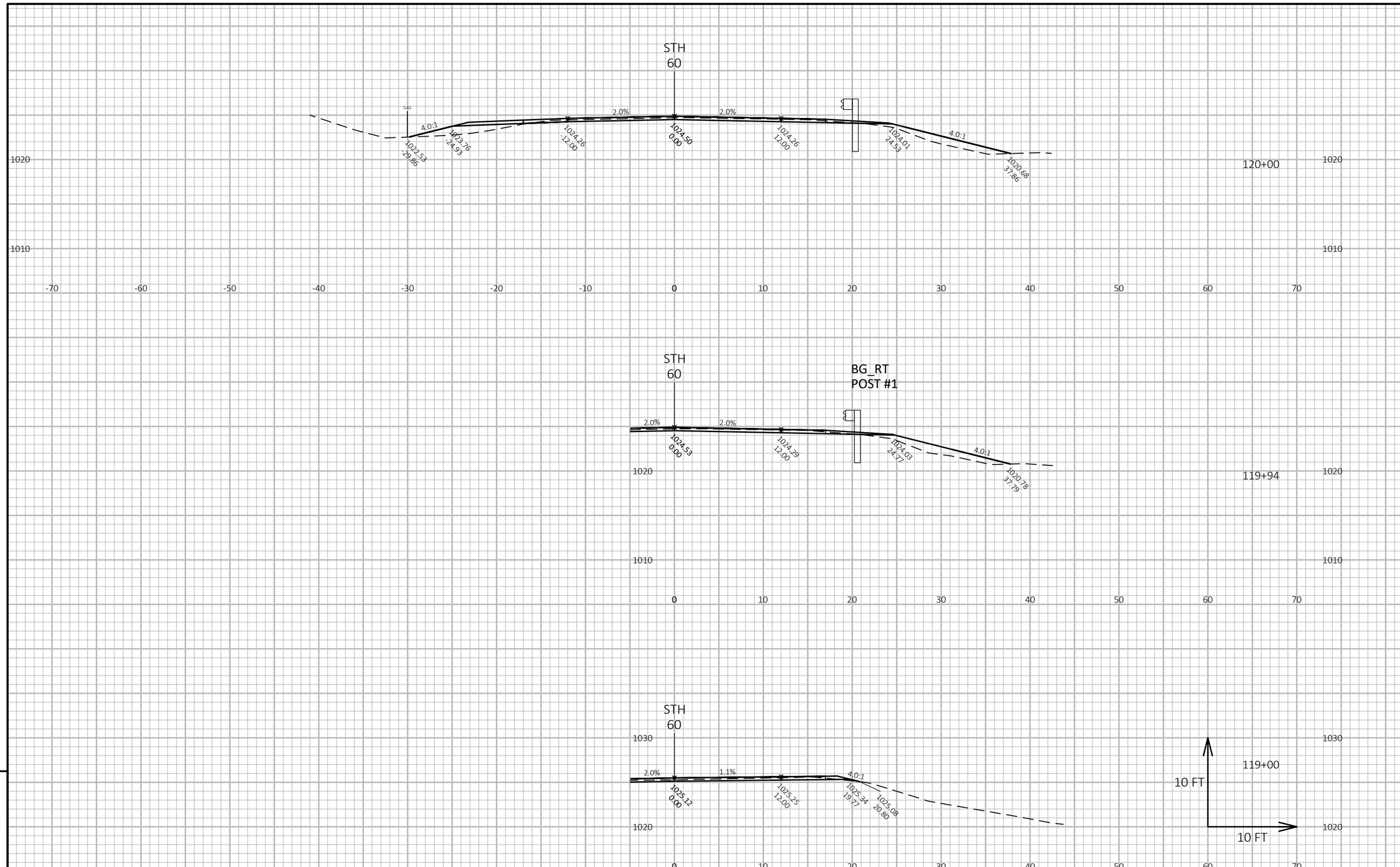

9

9

PROJECT NO: 5271-08-73	HWY: STH 60	COUNTY: COLUMBIA	CROSS SECTIONS: HILLESTAD RD BEAM GUARD	SHEET 107	E

FILE NAME : N:\PDS\C3D\52710803\SHEETSPLAN\090201_XS_EMRAN.DWG
LAYOUT NAME - Section Sheet - (1)
PLOT DATE : 2/1/2019 9:54 AM
PLOT BY : BETZEL, LORRAINE L
PLOT NAME :
PLOT SCALE : 1 IN:10 FT HORZ. / 1 IN:10 FT VERT.
WISDOT/CADDS SHEET 49

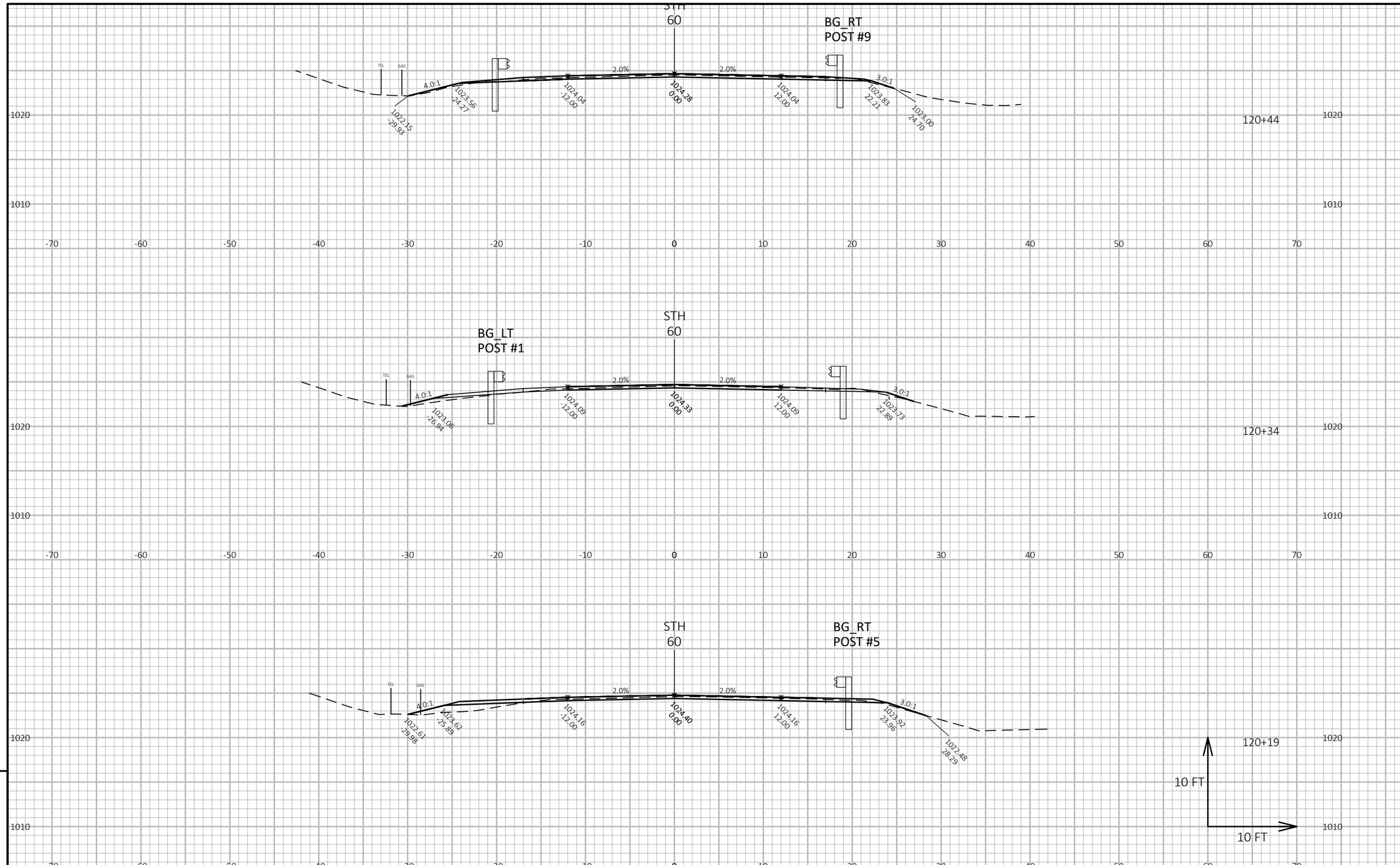

9

9

PROJECT NO: 5271-08-73	HWY: STH 60	COUNTY: COLUMBIA	CROSS SECTIONS: HILLESTAD RD BEAM GUARD	SHEET 108	E

FILE NAME : N:\PDS\C3D\52710803\SHEETSPLAN\090201_XS_EMRAN.DWG
LAYOUT NAME - Section Sheet - (2)
PLOT DATE : 2/1/2019 9:54 AM
PLOT BY : BETZEL, LORRAINE L
PLOT NAME :
PLOT SCALE : 1 IN:10 FT HORZ. / 1 IN:10 FT VERT.
WISDOT/CADDS SHEET 49

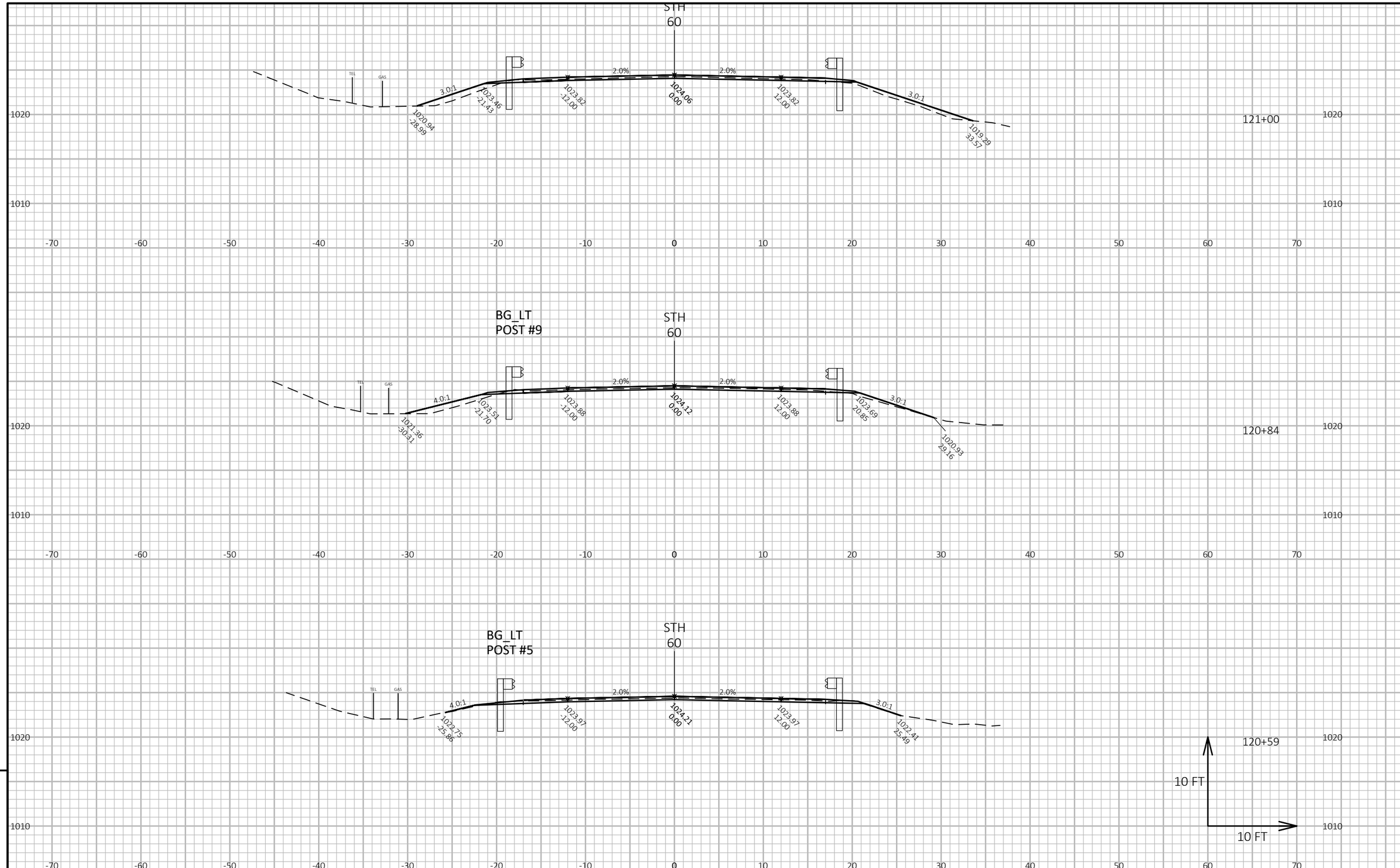

PROJECT NO: 5271-08-73	HWY: STH 60	COUNTY: COLUMBIA	CROSS SECTIONS: HILLESTAD RD BEAM GUARD	SHEET 109	E

FILE NAME : N:\PDS\C3D\52710803\SHEETSPLAN\090201_XS_EMRAN.DWG
LAYOUT NAME - Section Sheet - (3)
PLOT DATE : 2/1/2019 9:54 AM
PLOT BY : BETZEL, LORRAINE L
PLOT NAME :
PLOT SCALE : 1 IN:10 FT HORZ. / 1 IN:10 FT VERT.
WISDOT/CADDS SHEET 49

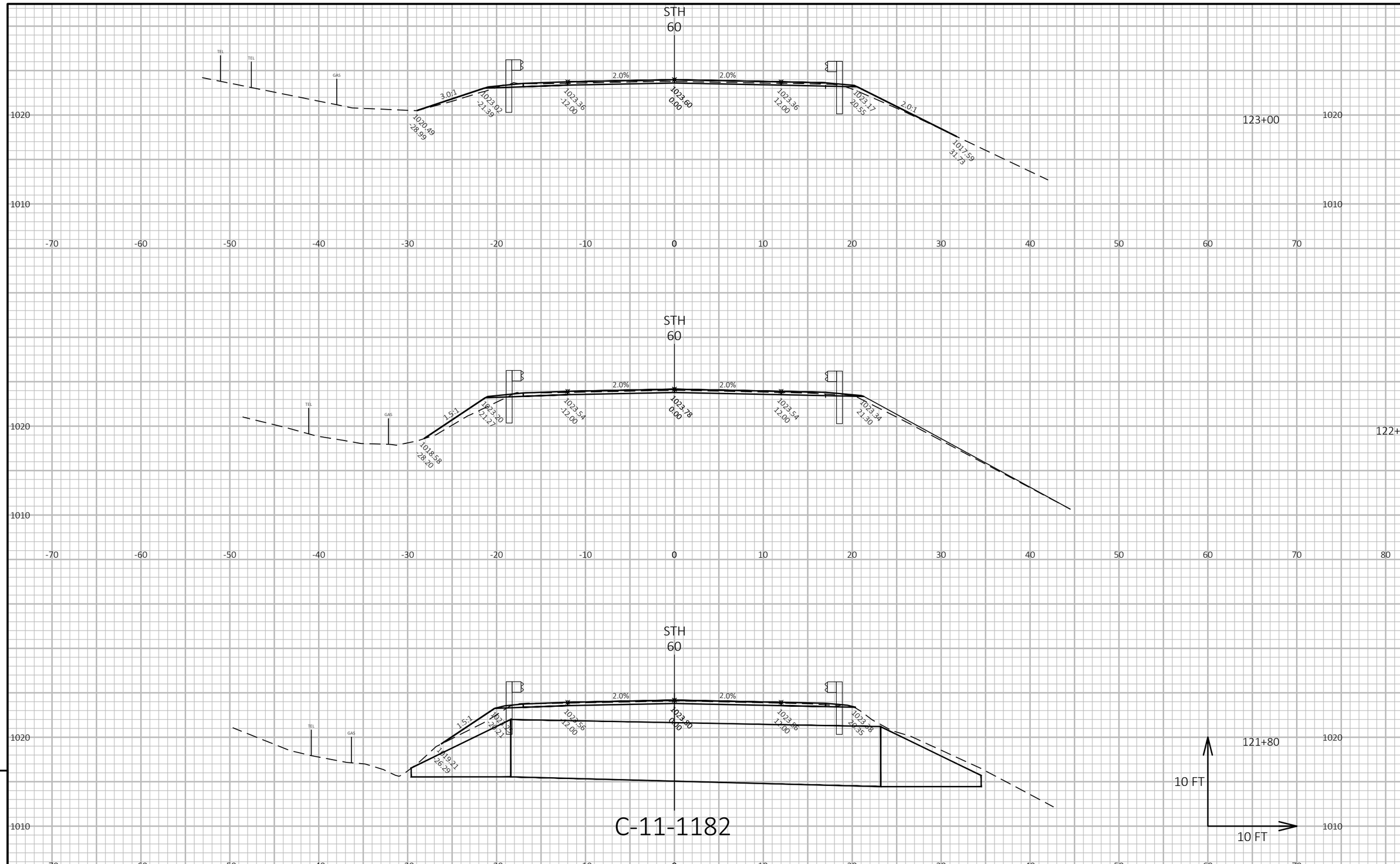

C-11-1182

9

9

PROJECT NO: 5271-08-73	HWY: STH 60	COUNTY: COLUMBIA	CROSS SECTIONS: HILLESTAD RD BEAM GUARD	SHEET 110	E

FILE NAME : N:\PDS\C3D\52710803\SHEETSPLAN\090201_XS_EMRAN.DWG
LAYOUT NAME - Section Sheet - (4)
PLOT DATE : 2/1/2019 9:54 AM
PLOT BY : BETZEL, LORRAINE L
PLOT NAME :
PLOT SCALE : 1 IN:10 FT HORZ. / 1 IN:10 FT VERT.
WISDOT/CADDS SHEET 49

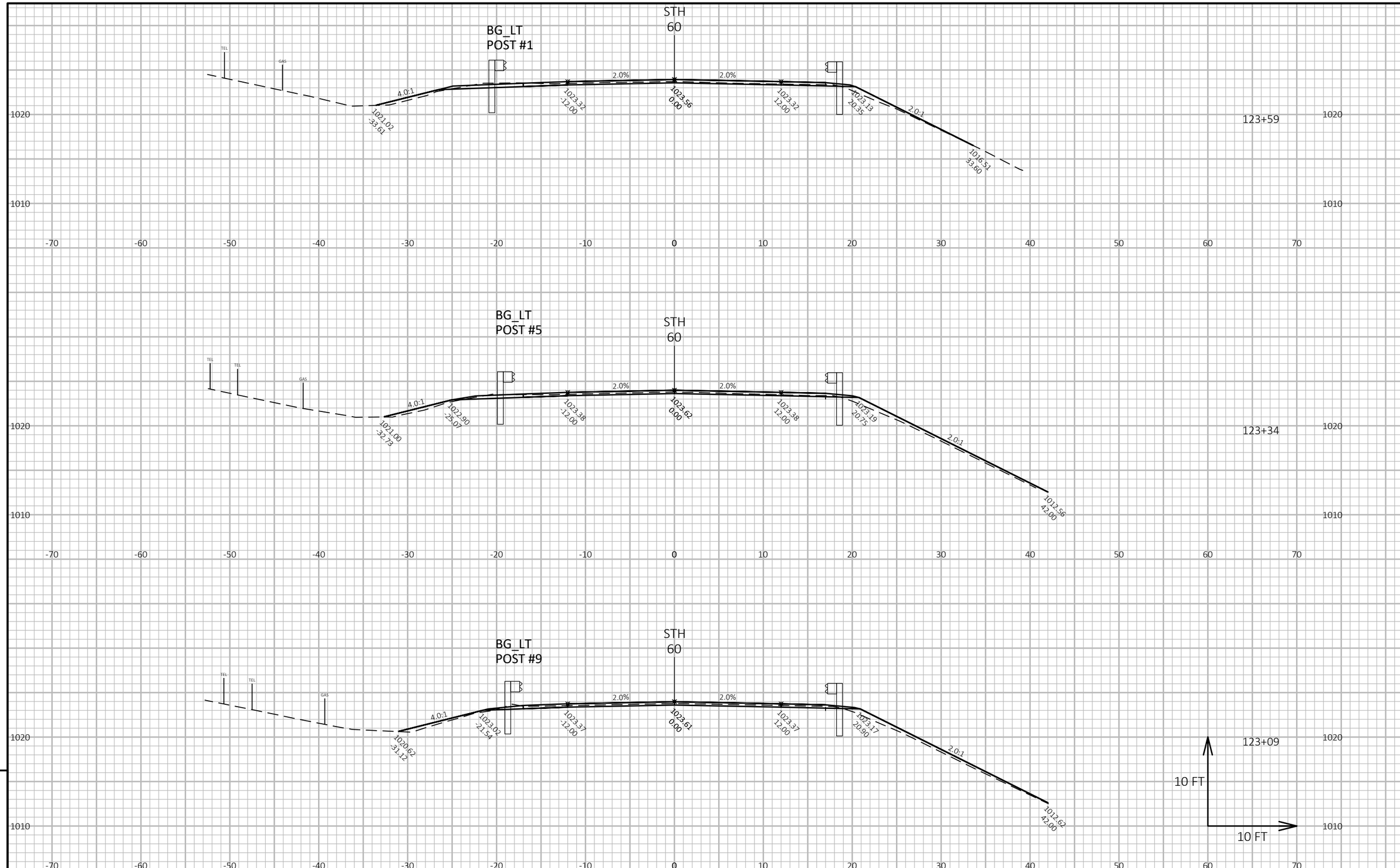

9

9

PROJECT NO: 5271-08-73	HWY: STH 60	COUNTY: COLUMBIA	CROSS SECTIONS: HILLESTAD RD BEAM GUARD	SHEET 111	E

FILE NAME : N:\PDS\C3D\52710803\SHEETSPLAN\090201_XS_EMRAN.DWG
LAYOUT NAME - Section Sheet - (5)
PLOT DATE : 2/1/2019 9:54 AM
PLOT BY : BETZEL, LORRAINE L
PLOT NAME :
PLOT SCALE : 1 IN:10 FT HORZ. / 1 IN:10 FT VERT.
WISDOT/CADDS SHEET 49

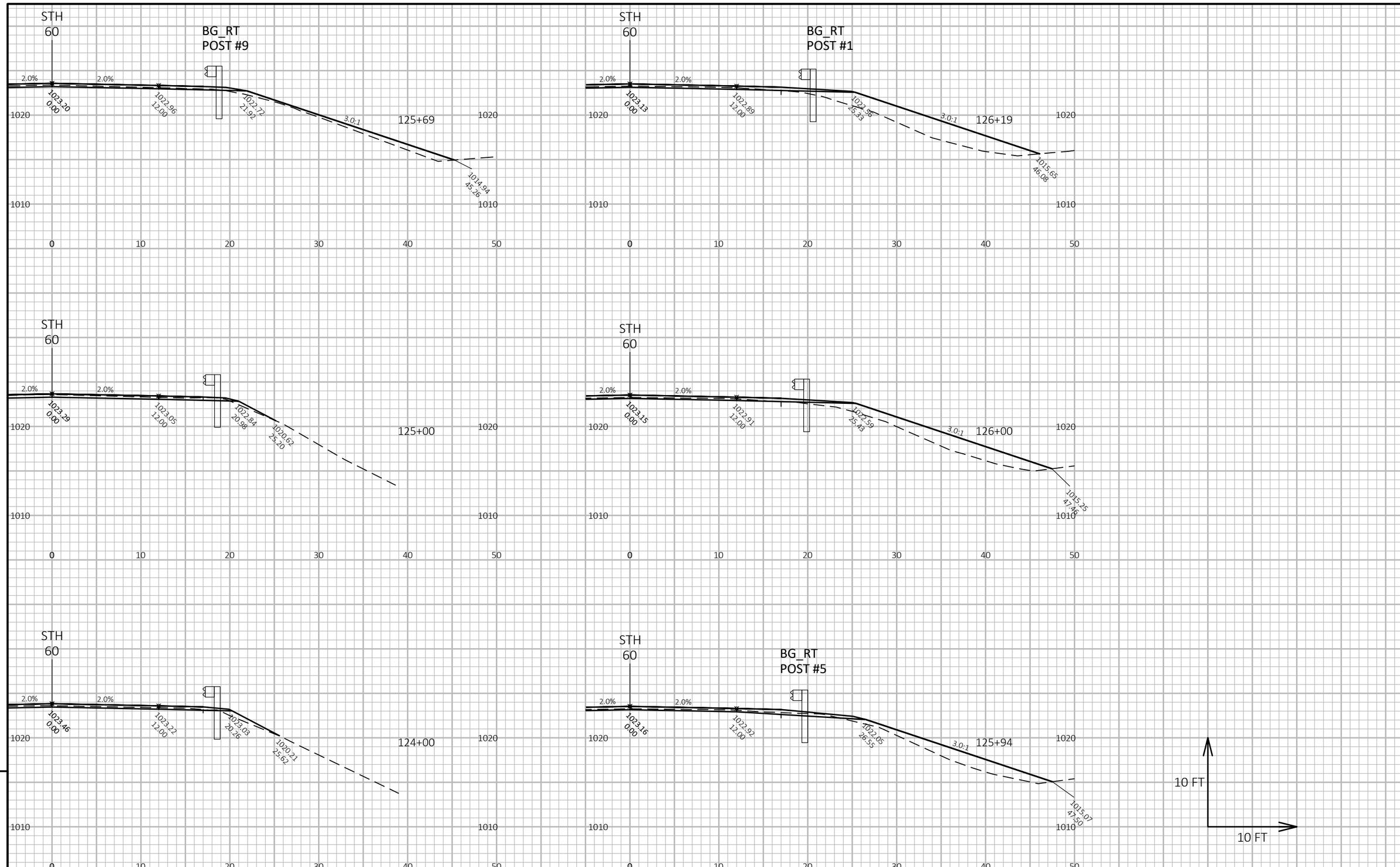

9

9

PROJECT NO: 5271-08-73	HWY: STH 60	COUNTY: COLUMBIA	CROSS SECTIONS: HILLESTAD RD BEAM GUARD	SHEET 112	E

FILE NAME : N:\PDS\C3D\52710803\SHEETSPLAN\090201_XS_EMRAN.DWG
LAYOUT NAME - Section Sheet - (6)
PLOT DATE : 2/1/2019 9:54 AM
PLOT BY : BETZEL, LORRAINE L
PLOT NAME :
PLOT SCALE : 1 IN:10 FT HORZ. / 1 IN:10 FT VERT.
WISDOT/CADDS SHEET 49

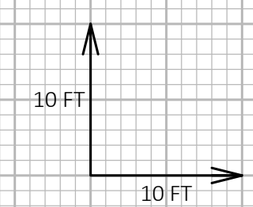

9

9

PROJECT NO: 5271-08-73	HWY: STH 60	COUNTY: COLUMBIA	CROSS SECTIONS: HILLESTAD RD BEAM GUARD	SHEET 113	E

Wisconsin Department of Transportation

Dedicated people creating transportation solutions through innovation and exceptional service.

http://www.dot.wisconsin.gov