RHI

APRIL 2019

ORDER OF SHEETS

Section No.	1	Title
Section No.	2	Typical Sections and Details
Section No.	3	Estimate of Quantities
Section No.	3	Miscellaneous Quantities
Section No.	4	Right of Way Plat
Section No.	5	Plan and Profile
Section No.	6	Standard Detail Drawings
Section No.	7	Sign Plates
Section No.	8	Structure Plans
Section No.	9	Computer Earthwork Data
Section No.	9	Cross Sections

TOTAL SHEETS = 246

PROJECT ID: 6999-18-73

WITH: N/A

COUNTY: MARATHON

27

STATE OF WISCONSIN
DEPARTMENT OF TRANSPORTATION

PLAN OF PROPOSED IMPROVEMENT

C WAUSAU, SOUTH 1ST AVENUE

THOMAS STREET TO STEWART AVENUE

LOCAL STREET

MARATHON COUNTY

STATE PROJECT NUMBER
6999-18-73

STATE PROJECT	FEDERAL PROJECT	
	PROJECT	CONTRACT
6999-18-73	WISC 2019232	1

PROJECT LOCATION

N

DESIGN DESIGNATION

A.A.D.T.	(2019)	=	4600
A.A.D.T.	(2039)	=	5100
D.H.V.	(2039)	=	385
D.D.	(%)	=	59/41
T.		=	7%
DESIGN SPEED		=	30 MPH
ESALS		=	2,300,000

CONVENTIONAL SYMBOLS

PLAN

CORPORATE LIMITS
PROPERTY LINE
LOT LINE
LIMITED HIGHWAY EASEMENT
EXISTING RIGHT OF WAY
PROPOSED OR NEW R/W LINE
SLOPE INTERCEPT
REFERENCE LINE (300'EB)
EXISTING CULVERT
PROPOSED CULVERT (Box or Pipe)
COMBUSTIBLE FLUIDS (CAUTION)
MARSH AREA
WOODED OR SHRUB AREA

PROFILE

GRADE LINE
ORIGINAL GROUND
MARSH OR ROCK PROFILE (To be noted as such) (ROCK)
SPECIAL DITCH (LABEL)
GRADE ELEVATION (95.36)
CULVERT (Profile View)

UTILITIES

ELECTRIC — E —
FIBER OPTIC — FO —
GAS — G —
SANITARY SEWER — SAN —
STORM SEWER — SS —
TELEPHONE — T —
WATER — W —
UTILITY PEDESTAL
POWER POLE
TELEPHONE POLE

R-07-E

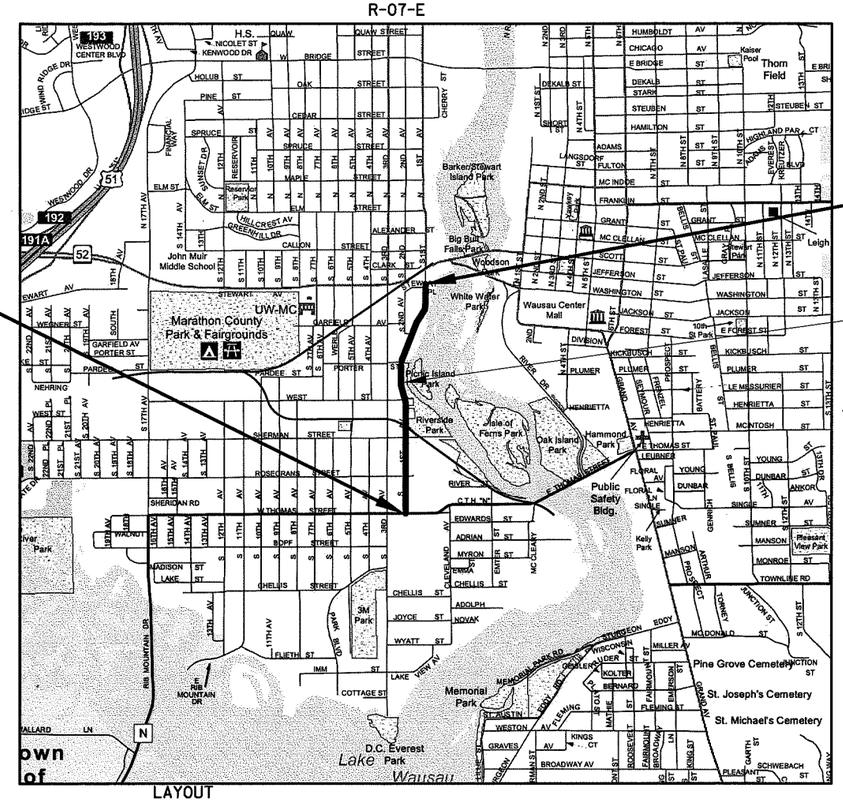

LAYOUT

SCALE 0 — 1/2 MILE

TOTAL NET LENGTH OF CENTERLINE = 0.768 MI

HORIZONTAL POSITIONS SHOWN ON THIS PLAN ARE WISCONSIN COUNTY COORDINATES, MARATHON COUNTY, NAD83 (2011), IN U.S. SURVEY FEET. VALUES ARE GRID COORDINATES, GRID BEARINGS, AND GRID DISTANCES. GRID DISTANCES MAY BE USED AS GROUND DISTANCES.

ACCEPTED FOR CITY OF WAUSAU

10-12-18 (Date) (Signature & Title of Official)

ORIGINAL PLANS PREPARED BY

AYRES ASSOCIATES

WISCONSIN BRETT L. HOLLISTER 40868 EAU CLAIRE WI PROFESSIONAL ENGINEER

10/2/2018 (Date) (Signature)

STATE OF WISCONSIN
DEPARTMENT OF TRANSPORTATION

PREPARED BY

Surveyor	CITY OF WAUSAU
Designer	AYRES ASSOCIATES INC
Management Consultant	CEDAR CORPORATION

APPROVED FOR THE DEPARTMENT

DATE: 10-31-2018 (Mangement Consultant Signature)

E

2

GENERAL NOTES

THE LOCATIONS OF EXISTING AND PROPOSED UTILITY INSTALLATIONS AS SHOWN ON THE PLAN ARE APPROXIMATE. THERE MAY BE OTHER INSTALLATIONS WITHIN THE PROJECT AREA THAT ARE NOT SHOWN.

THE CONTRACTOR SHALL NOTIFY DIGGERS HOTLINE AND AFFECTED UTILITIES PRIOR TO THE START OF WORK. ANY LOCAL MUNICIPAL UTILITY WHICH IS NOT A MEMBER OF THE DIGGERS HOTLINE MUST BE CONTACTED SEPARATELY.

SHRINKAGE OF EARTHWORK IS VARIABLE. AN AVERAGE FACTOR FOR EXCAVATION COMMON IS 25%.

EXCAVATION BELOW SUBGRADE (EBS) WILL BE MEASURED AND PAID FOR AS EXCAVATION COMMON.

EXCAVATION BELOW SUBGRADE (EBS) IS NOT USED TO BALANCE YARDAGE BUT IS MEASURED AND PAID FOR AS COMMON EXCAVATION. EBS AREAS TO BE BACKFILLED WITH BACKFILL GRANULAR GRADE.

THE EXACT LOCATION AND WIDTH OF DRIVEWAY ENTRANCES WILL BE DETERMINED IN THE FIELD BY THE ENGINEER. ALL DRIVEWAYS ARE TO BE REPLACED IN KIND UNLESS OTHERWISE DIRECTED BY THE ENGINEER OR AS SHOWN ON THE PLANS.

SAWCUT LOCATIONS SHOWN ON THE PLAN ARE SUBJECT TO ADJUSTMENT BY THE ENGINEER IN THE FIELD. THE LINE OF SUCH SAWCUTS WILL BE NEATLY DELINEATED THROUGH THE ASPHALT AND/OR CONCRETE STREETS, DRIVEWAYS AND/OR PARKING LOTS AT THE MATCH LINE AS SHOWN ON THE PLAN DETAILS OR AS DIRECTED BY THE ENGINEER WITHOUT ANY DAMAGE TO THE REMAINING PORTION OF THE EXISTING PAVEMENT.

PRIOR TO ORDERING DRAINAGE PIPES AND STRUCTURES, VERIFY RELATED DRAINAGE INFORMATION IN THE PLAN AND PROVIDE DOCUMENTATION TO THE ENGINEER.

INLET AND DISCHARGE ELEVATIONS FOR DRAINAGE STRUCTURES SHOWN ON THE PLAN MAY BE ADJUSTED BY THE ENGINEER TO FIT FIELD CONDITIONS.

TEMPORARY STORAGE OF ANY EXCAVATED MATERIAL WILL NOT BE PERMITTED IN WETLANDS, FLOODWAY OR FLOODPLAIN OF ANY WETLANDS.

SEED, FERTILIZER, AND INSTALL EROSION MAT ALL SALVAGED TOPSOILED AREAS WITHIN 7 WORKING DAYS AFTER GRADING WORK IS COMPLETED.

DO NOT APPLY FERTILIZER WITHIN 20 FEET OF A WATER BODY OR WETLAND.

SEED MIXTURE NO.40 SHALL BE USED THROUGHOUT THE PROJECT, EXCEPT STA 39+50 - STA 47+75 RT WHERE NO.20 SHALL BE USED.

EROSION CONTROL MEASURES WILL BE PLACED AS SHOWN ON THE EROSION CONTROL PLAN. THE EXACT LOCATIONS TO BE DETERMINED BY THE ENGINEER. ANY REMOVAL OF ITEMS ARE INCIDENTAL TO THE RESPECTIVE EROSION CONTROL BID ITEM COSTS.

DISTURBED AREAS WITHIN THE RIGHT-OF-WAY, SHALL BE SALVAGED TOPSOIL, FERTILIZED, SEEDED, TEMPORARY SEEDED AND MULCHED AS DIRECTED BY THE ENGINEER.

RESHAPE AND SEEDING OF ANY PREVIOUSLY GRASSED AREAS WHICH ARE DISTURBED BY OPERATIONS OUTSIDE OF THE ENGINEER DETERMINED CONSTRUCTION LIMITS ARE INCIDENTAL TO THE CONTRACT.

NO TREES OR SHRUBS SHALL BE REMOVED WITHOUT APPROVAL BY THE ENGINEER.

STATIONING FOR SIGNS SHOWN IN THE PLANS ARE APPROXIMATE AND THE FINAL LOCATION OF SIGNS ARE TO BE DETERMINED BY THE ENGINEER.

CURB AND GUTTER ELEVATIONS AND RADIUS POINTS ARE ALONG THE FLAG LINE UNLESS OTHERWISE NOTED.

PROPERTY LINES SHOWN ARE APPROXIMATE.

EXISTING ELEVATIONS SHALL BE VERIFIED IN THE FIELD.

ELEVATIONS SHOWN ON THE PLAN ARE REFERENCED TO THE NORTH AMERICAN VERTICAL DATUM OF 1988 (2012), NAVD 1988 (2012).

CATWALKS TO BE CONSTRUCTED WITH CONCRETE SIDEWALK 4-INCH AND TO BE REMOVED TO THE NEAREST JOINT.

UTILITY CONTACTS

CHARTER COMMUNICATIONS
853 MCINTOSH STREET
P.O. BOX 1818
WAUSAU, WI 54402
ATTN: SCOTT OLSON
715-301-4079
scott.olson@chartercom.com

FRONTIER COMMUNICATIONS
1851 NORTH 14TH AVENUE
WAUSAU, WI 54418
ATTN: CALVIN KLADE
715-847-1525
calvin.klade@ftr.com

NSIGHT TELSERVICES
450 SECURITY BOULEVARD
GREEN BAY, WI 54313
ATTN: RICK VINCENT
920-617-7316
rick.vincent@nsight.com

WAUSAU WATER WORKS
407 GRANT STREET
WAUSAU, WI 54403
ATTN: KEN RYE - SANITARY
715-261-6530
ken.rye@ci.wausau.wi.us
ATTN: SCOTT BOERS - WATER
715-261-7262
scott.boers@ci.wausau.wi.us

WISCONSIN PUBLIC SERVICE CORPORATION
1700 SHERMAN STREET
P.O. BOX 1166
WAUSAU, WI 54402
ATTN: CLAY VIRCKS - ELECTRIC
715-848-7317
clayton.vircks@wisconsinpublicservice.com
ATTN: MIKE BOSI - GAS
715-848-7471
mabosi@wisconsinpublicservice.com

* DENOTES NOT A MEMBER OF DIGGERS HOTLINE

DIGGERS HOTLINE
Dial 811 or (800)242-8511
www.DiggersHotline.com

RAILROAD CONTACT

WISCONSIN CENTRAL LTD
1625 DEPOT STREET
STEVENS POINT, WI 54481
ATTN: JACKIE MACEWICZ
715-345-2503
jackie.macewicz@cn.ca

WCL CALL BEFORE YOU DIG
715-783-4533

CITY OF WAUSAU

CITY OF WAUSAU
407 GRANT STREET
WAUSAU, WI 54403
ATTN: ALLEN WESOLOWSKI, PE
715-261-6762
allen.wesolowski@ci.wausau.wi.us

DESIGN CONTACT

AYRES ASSOCIATES
3433 OAKWOOD HILLS PARKWAY
EAU CLAIRE, WI 54701
ATTN: BRETT HOLLISTER, PE
715-834-3161
hollisterb@ayresassociates.com

DNR CONTACT

DNR NORTH CENTRAL REGION
DNR SERVICE CENTER
473 GRIFFITH DRIVE
WISCONSIN RAPIDS, WI 54494
ATTN: CASEY JONES
715-421-7867
casey.jones@wisconsin.gov

2

2

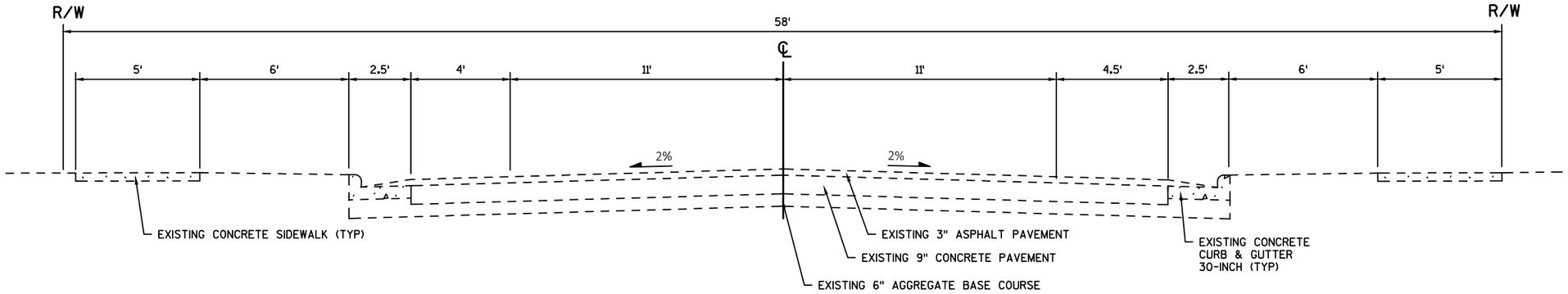

TYPICAL EXISTING SECTION
STA 21+05.00 - STA 39+50.00

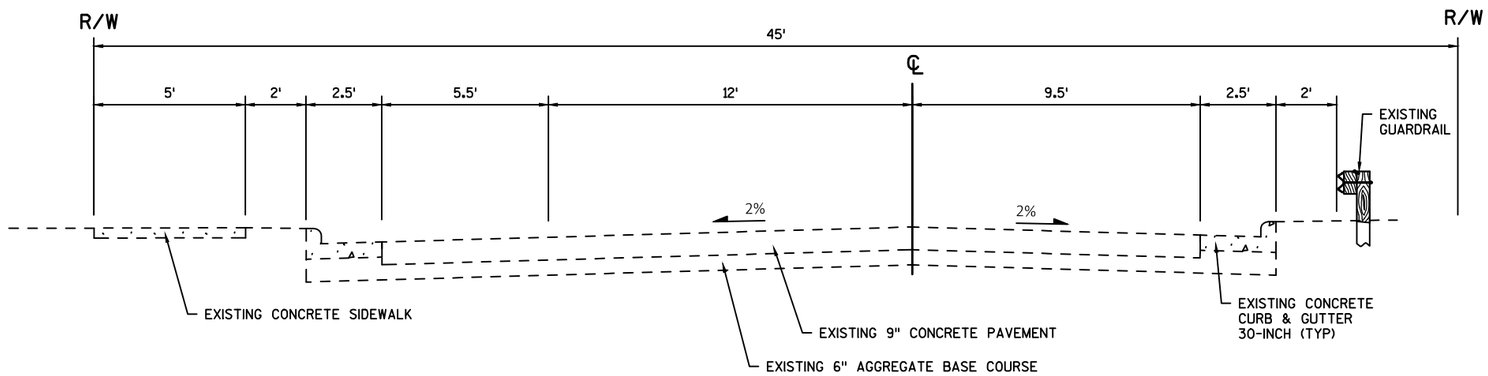

TYPICAL EXISTING SECTION
STA 39+50.00 - STA 47+25.00

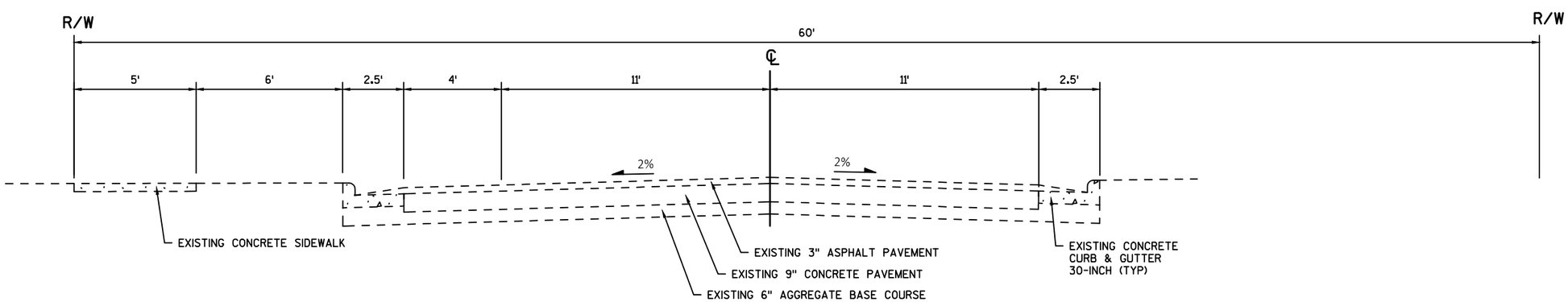

TYPICAL EXISTING SECTION
STA 47+25.00 - STA 57+50.00

PROJECT NO:6999-18-73	HWY:SOUTH 1ST AVENUE	COUNTY:MARATHON	TYPICAL SECTIONS	SHEET 3	E

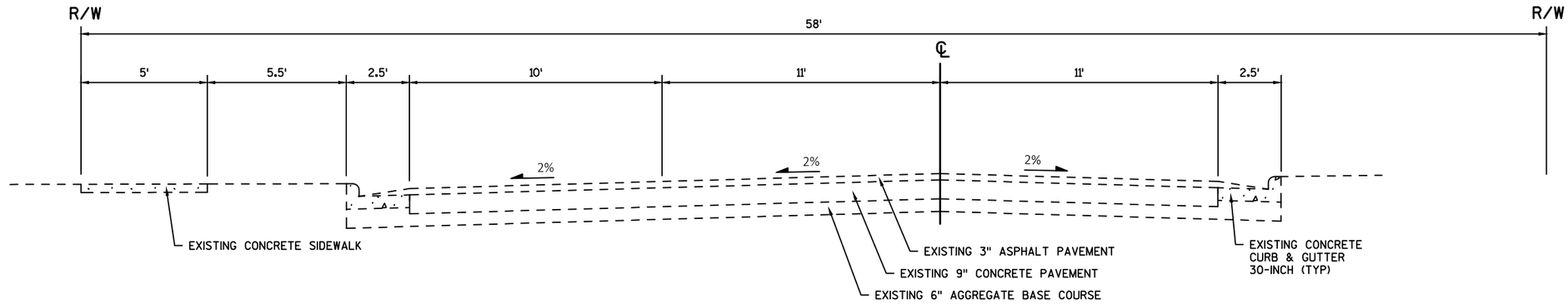

TYPICAL EXISTING SECTION
STA 57+50.00 - STA 60+70.00

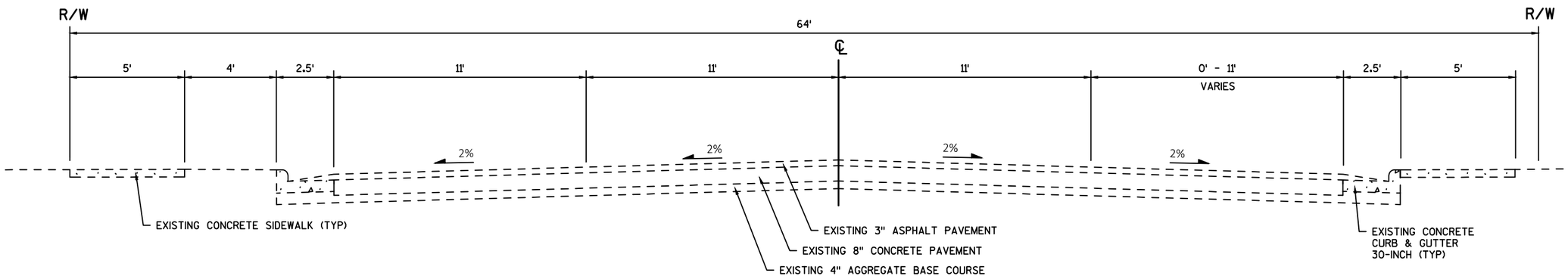

TYPICAL EXISTING SECTION
STA 60+70.00 - STA 61+58.27

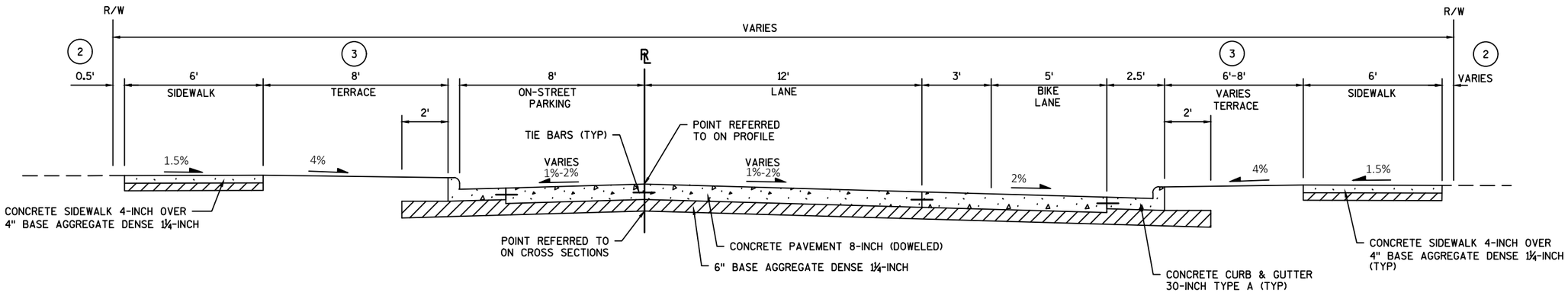

TYPICAL FINISHED SECTION
STA 21+05.00 - STA 39+50.00

1. SALVAGED TOPSOIL, SEEDING MIXTURE NO. 20, SEEDING TEMPORARY & FERTILIZER
2. TOPSOIL, SEEDING MIXTURE NO. 40, FERTILIZER & MULCHING
3. TOPSOIL, SEEDING MIXTURE NO. 40 & FERTILIZER

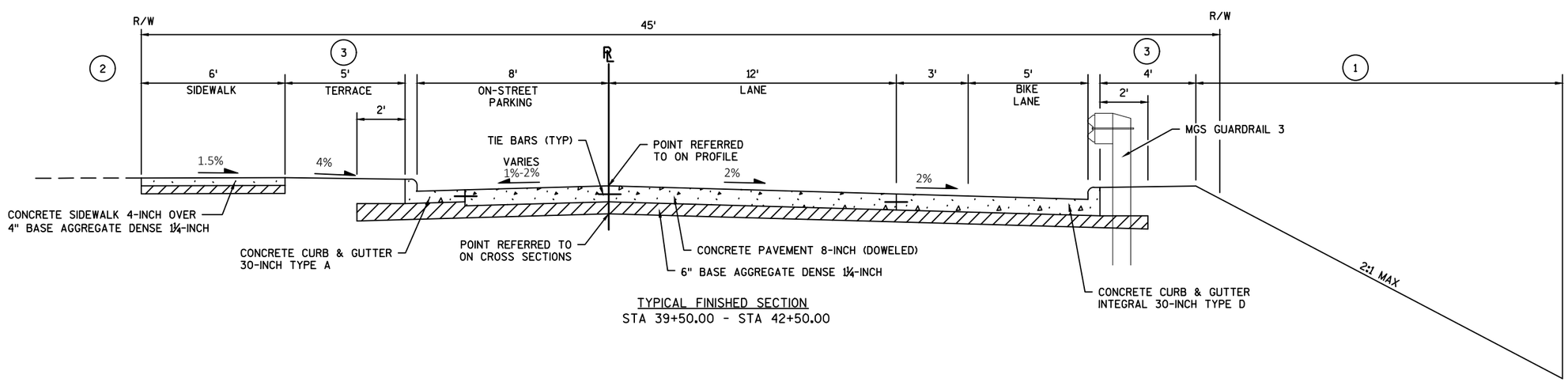

TYPICAL FINISHED SECTION
STA 39+50.00 - STA 42+50.00

PROJECT NO:6999-18-73	HWY:SOUTH 1ST AVENUE	COUNTY:MARATHON	TYPICAL SECTIONS	SHEET 5	E

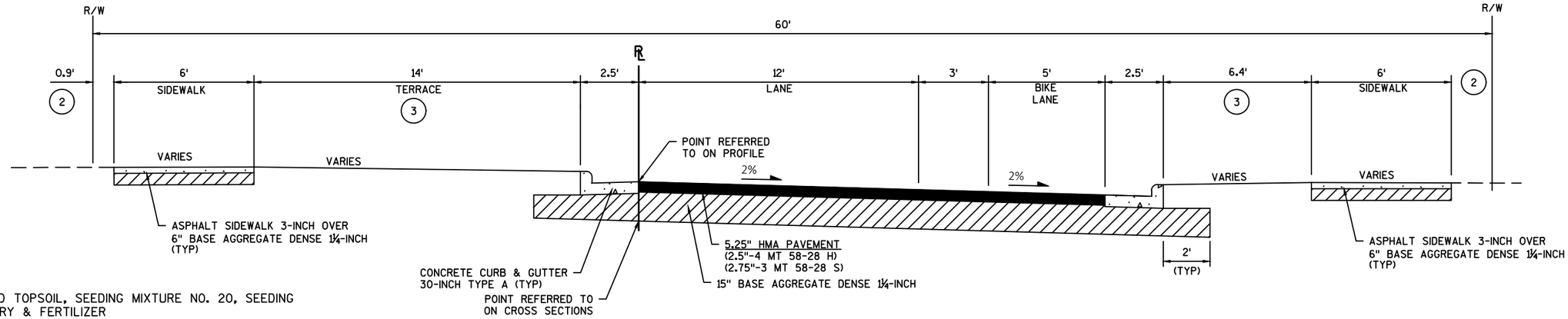

1. SALVAGED TOPSOIL, SEEDING MIXTURE NO. 20, SEEDING TEMPORARY & FERTILIZER
2. TOPSOIL, SEEDING MIXTURE NO. 40, FERTILIZER & MULCHING
3. TOPSOIL, SEEDING MIXTURE NO. 40 & FERTILIZER

TYPICAL FINISHED SECTION
STA 34+80.53 - 35+67.00

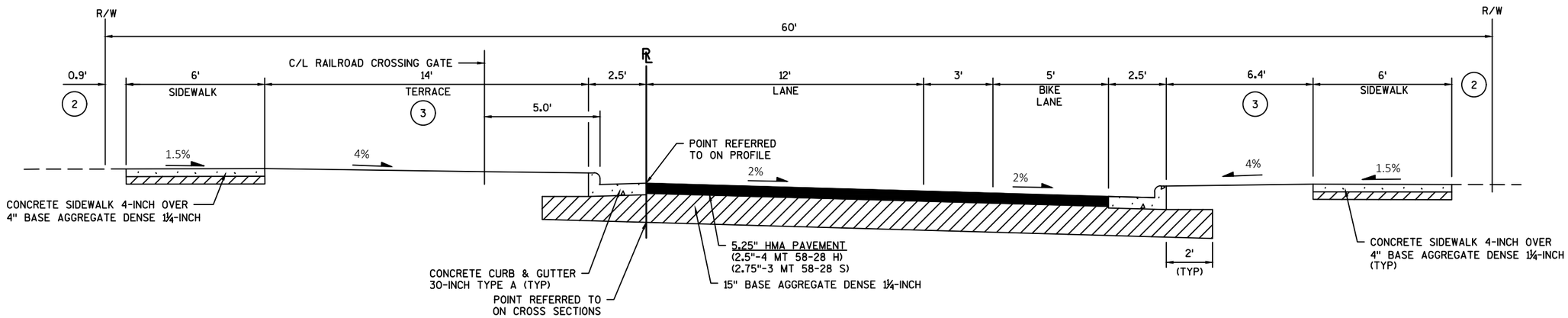

TYPICAL FINISHED SECTION
STA 34+87.39

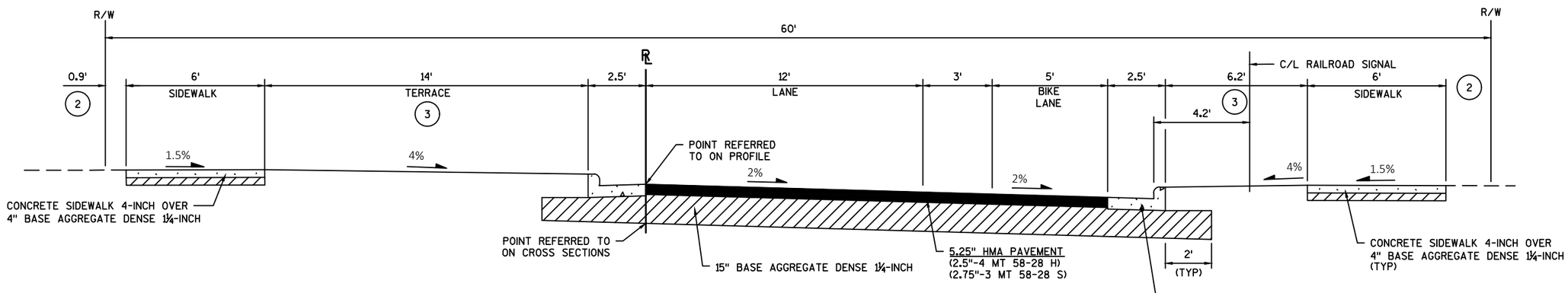

TYPICAL FINISHED SECTION
STA 34+90.96

PROJECT NO:6999-18-73	HWY:SOUTH 1ST AVENUE	COUNTY:MARATHON	TYPICAL SECTIONS	SHEET 6	E

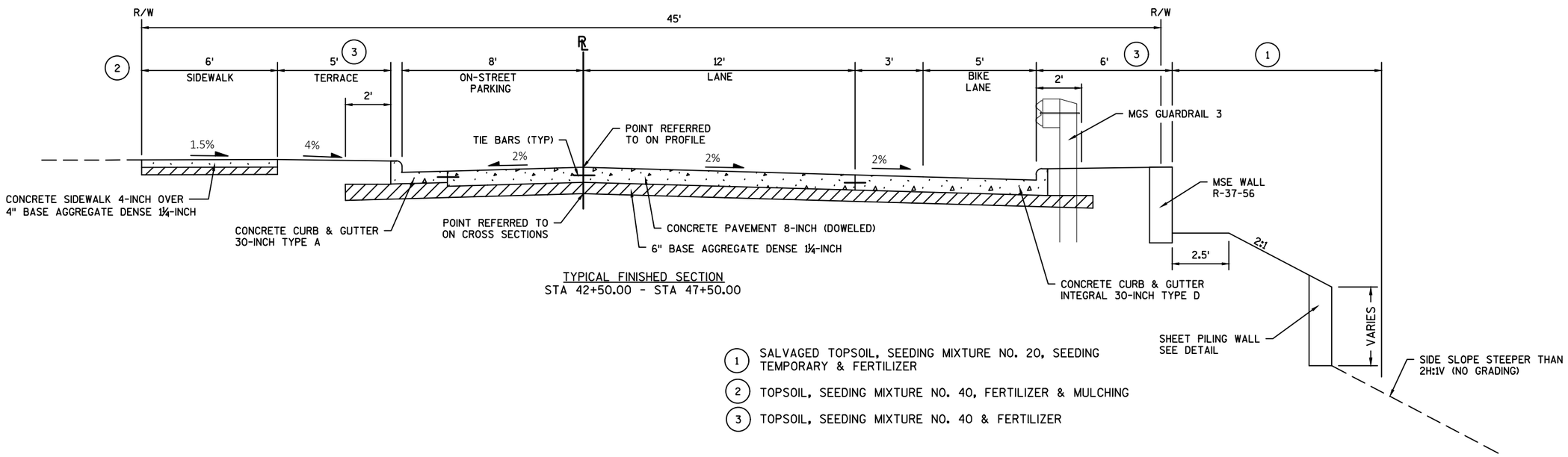

TYPICAL FINISHED SECTION
STA 42+50.00 - STA 47+50.00

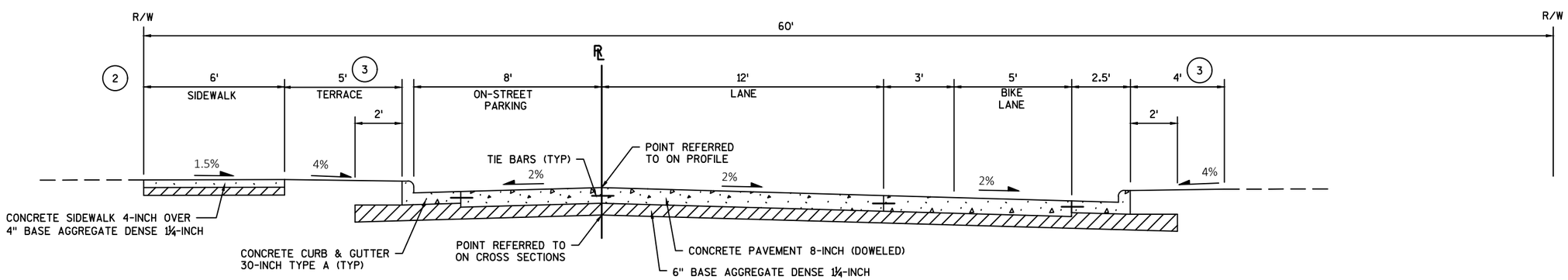

TYPICAL FINISHED SECTION
STA 47+50.00 - STA 56+75.00

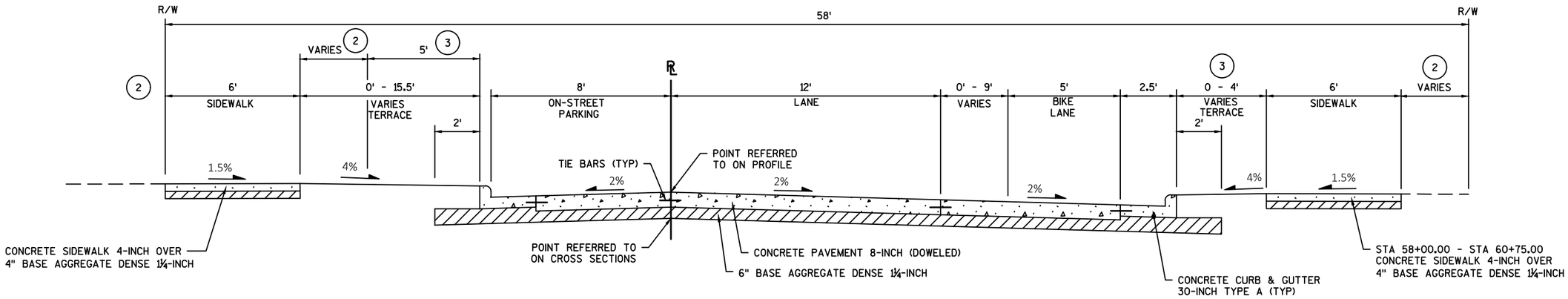

TYPICAL FINISHED SECTION
STA 56+75.00 - STA 60+75.00

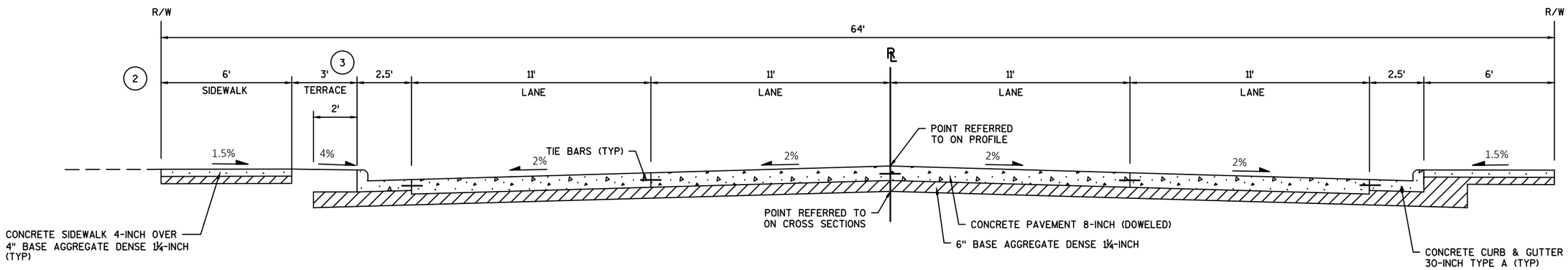

TYPICAL FINISHED SECTION
STA 60+75.00 - STA 61+58.00

1. SALVAGED TOPSOIL, SEEDING MIXTURE NO. 20, SEEDING TEMPORARY & FERTILIZER
2. TOPSOIL, SEEDING MIXTURE NO. 40, FERTILIZER & MULCHING
3. TOPSOIL, SEEDING MIXTURE NO. 40 & FERTILIZER

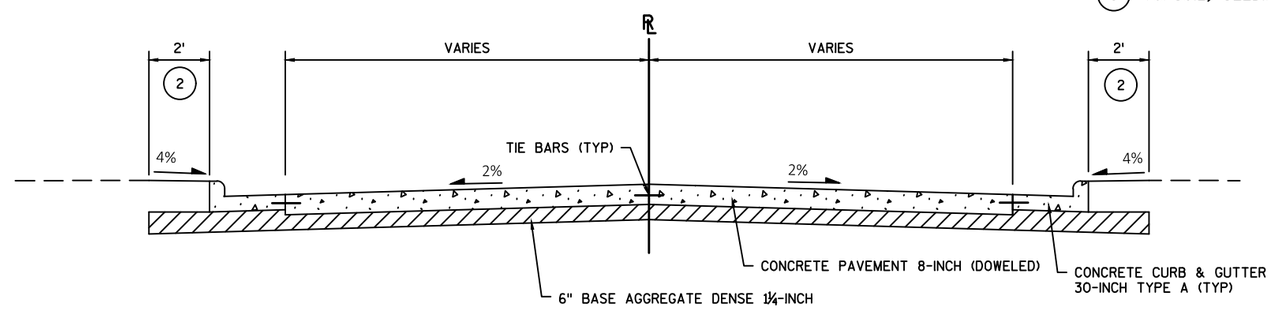

TYPICAL FINISHED SECTION - SIDEROADS

PROJECT NO:6999-18-73	HWY:SOUTH 1ST AVENUE	COUNTY:MARATHON	TYPICAL SECTIONS	SHEET 8	E

2

RUNOFF COEFFICIENT TABLE

	HYDROLOGIC SOIL GROUP											
	A			B			C			D		
	SLOPE RANGE (PERCENT)			SLOPE RANGE (PERCENT)			SLOPE RANGE (PERCENT)			SLOPE RANGE (PERCENT)		
LAND USE:	0-2	2-6	6 & OVER	0-2	2-6	6 & OVER	0-2	2-6	6 & OVER	0-2	2-6	6 & OVER
ROW CROPS	.08 .22	.16 .30	.22 .38	.12 .26	.20 .34	.27 .44	.15 .30	.24 .37	.33 .50	.19 .34	.28 .41	.38 .56
MEDIAN STRIP-TURF	.19 .24	.20 .26	.24 .30	.19 .25	.22 .28	.26 .33	.20 .26	.23 .30	.30 .37	.20 .27	.25 .32	.30 .40
SIDE SLOPE-TURF			.25 .32			.27 .34			.28 .36			.30 .38
PAVEMENT:												
ASPHALT	.70 - .95											
CONCRETE	.80 - .95											
BRICK	.70 - .80											
DRIVES, WALKS	.75 - .85											
ROOFS	.75 - .95											
GRAVEL ROADS, SHOULDERS	.40 - .60											

TOTAL PROJECT AREA = 7.098 ACRES
TOTAL AREA EXPECTED TO BE DISTURBED BY CONSTRUCTION ACTIVITIES = 5.917 ACRES

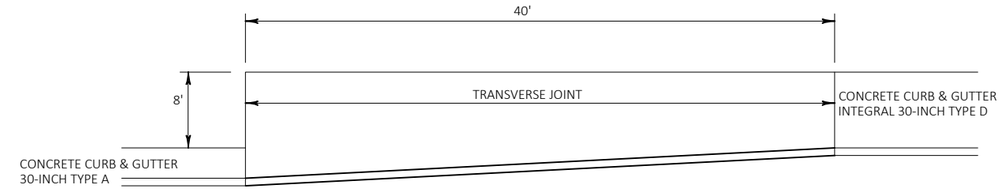

TRANSITION DETAIL

TRANSITION USED TO AVOID LONGITUDINAL JOINTLINE IN BIKE LANE

(TO BE MEASURED AND PAID FOR AS CONCRETE CURB & GUTTER 30-INCH TYPE D)

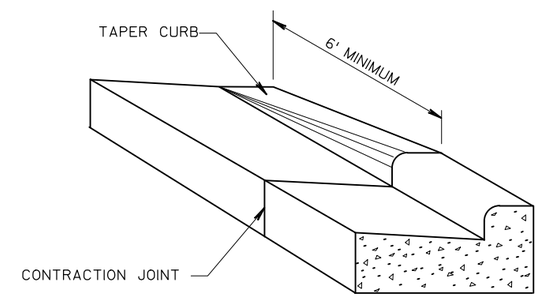

DETAIL OF CURB & GUTTER TERMINI

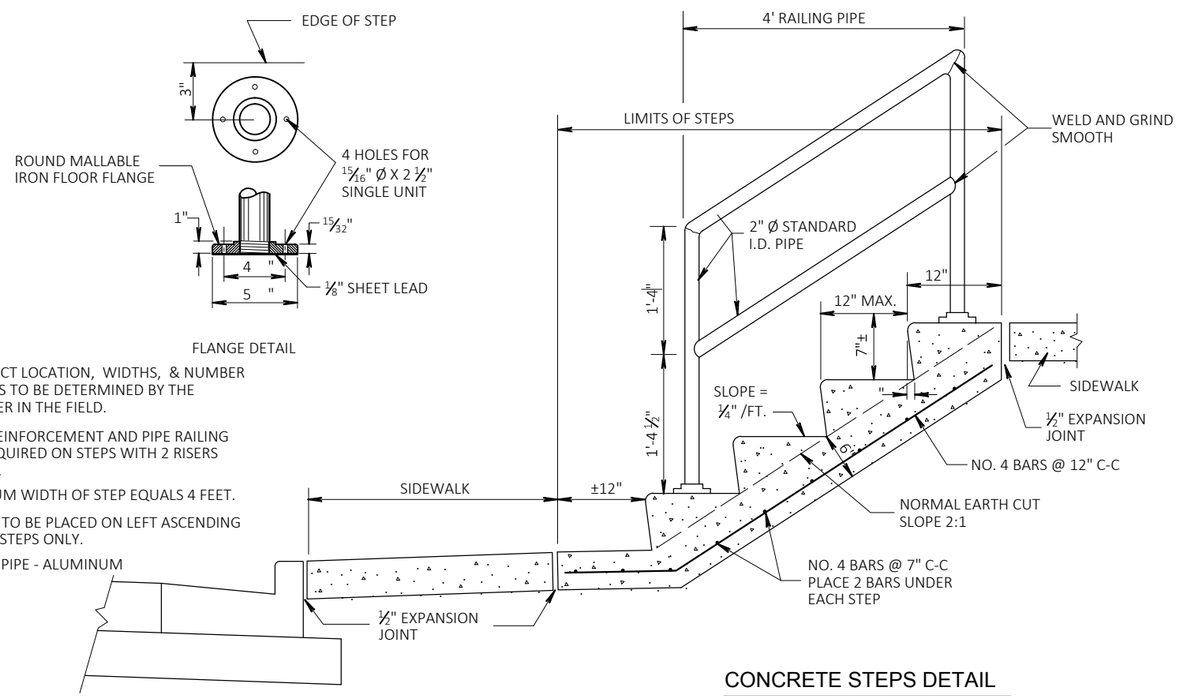

NOTE:

THE EXACT LOCATION, WIDTHS, & NUMBER OF STEPS TO BE DETERMINED BY THE ENGINEER IN THE FIELD.

STEEL REINFORCEMENT AND PIPE RAILING NOT REQUIRED ON STEPS WITH 2 RISERS OR LESS.

MINIMUM WIDTH OF STEP EQUALS 4 FEET.

RAILING TO BE PLACED ON LEFT ASCENDING SIDE OF STEPS ONLY.

RAILING PIPE - ALUMINUM

CONCRETE STEPS DETAIL

STA 32+55.17, 22.5' LT

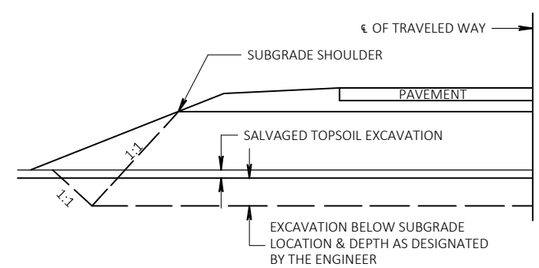

DETAIL FOR EXCAVATION BELOW SUBGRADE

2

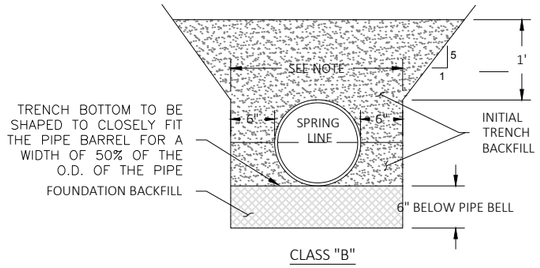

CLASS "B"

NOTE:
THE TRENCH WIDTH IS TO BE TAKEN AS THE HORIZONTAL DISTANCE AT THE OUTSIDE TOP OF THE PIPE.

NATIVE SOILS CONFORMING TO THE FOUNDATION OR INITIAL BACKFILL SPECIFICATIONS MAY BE USED.

THE MAXIMUM ALLOWABLE WIDTH SHALL BE:

1.) 3.0' GREATER THAN OUTSIDE DIA. FOR 36" OR LARGER PIPE
2.) 2.0' GREATER THAN OUTSIDE DIA. FOR PIPES LESS THAN 36" IN DIA.

FLEXIBLE & RIGID PIPE BEDDING CLASSIFICATIONS

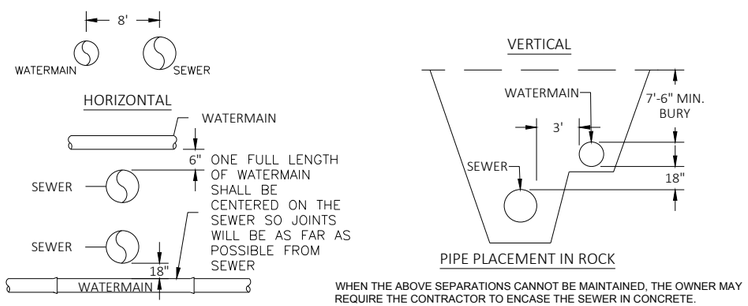

WHEN THE ABOVE SEPARATIONS CANNOT BE MAINTAINED, THE OWNER MAY REQUIRE THE CONTRACTOR TO ENCASE THE SEWER IN CONCRETE.

STORM AND SANITARY SEWER/WATERMAIN SEPARATION DISTANCE

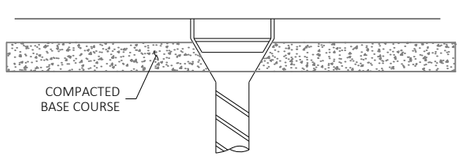

WATER VALVE BOX ADJUSTMENT

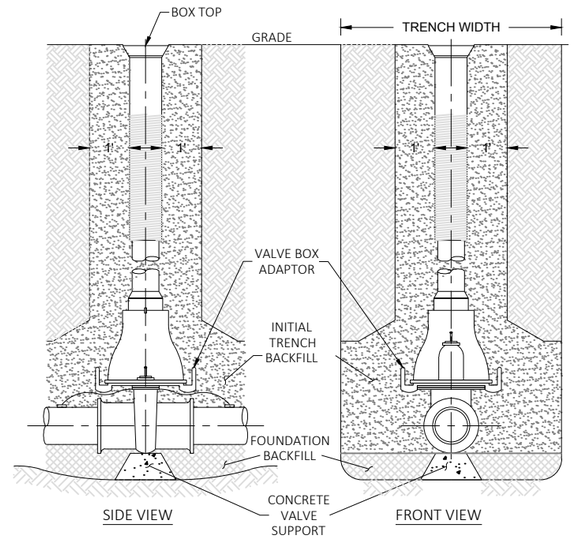

VALVE BOX SETTING

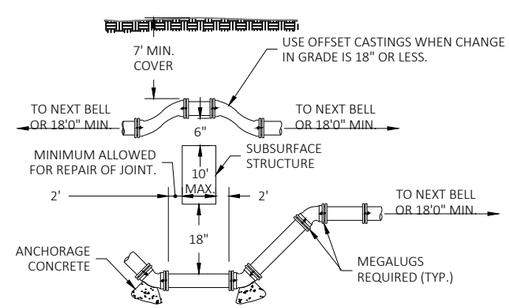

TYPICAL WATERMAIN OFFSETS 6" THRU 16"

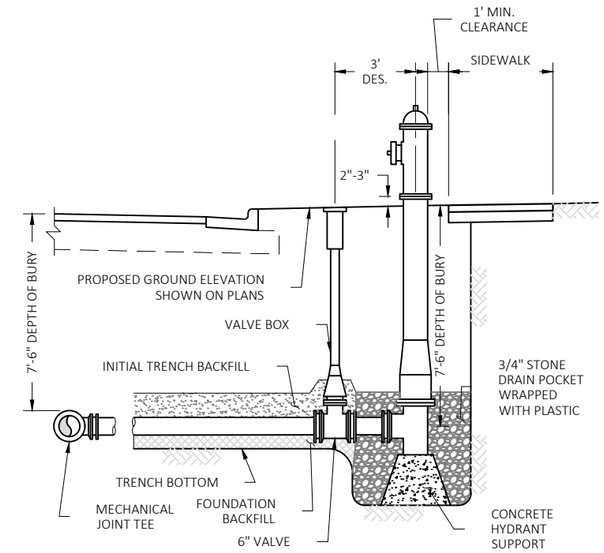

TYPICAL HYDRANT

NOTE: ALL MATERIALS SHALL BE SCHEDULE 40 PVC EXCEPT LATERAL WYE. WYE SHALL BE OF SUCH DIMENSION TO ACCOMMODATE THE DIAMETER OF THE LATERAL PIPE AND THE TYPE AND SIZE OF THE EXISTING MAIN.

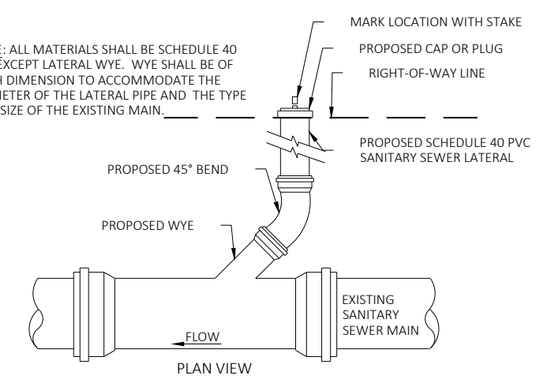

TYPICAL SANITARY SEWER LATERAL

NOT TO SCALE

2

PROJECT NO: 6999-18-73	HWY: SOUTH 1ST AVENUE	COUNTY: MARATHON	PLAN: CONSTRUCTION DETAILS	SHEET 10	E

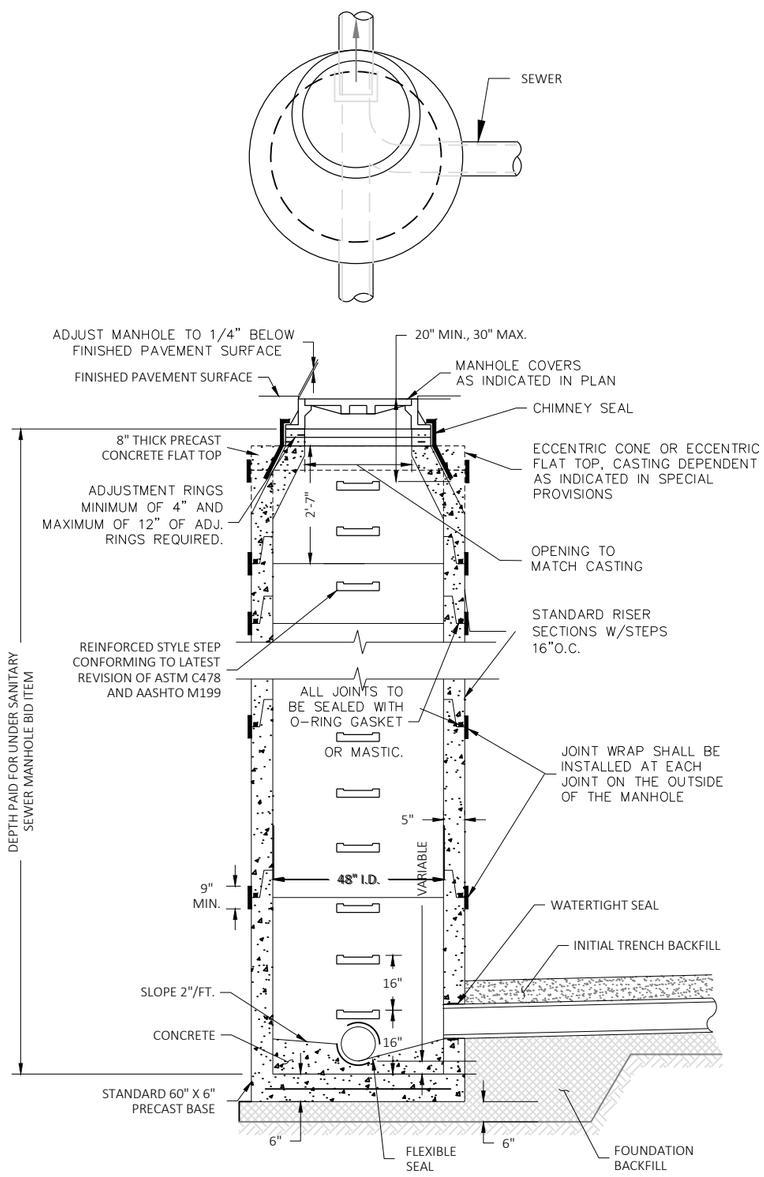

SANITARY MANHOLE

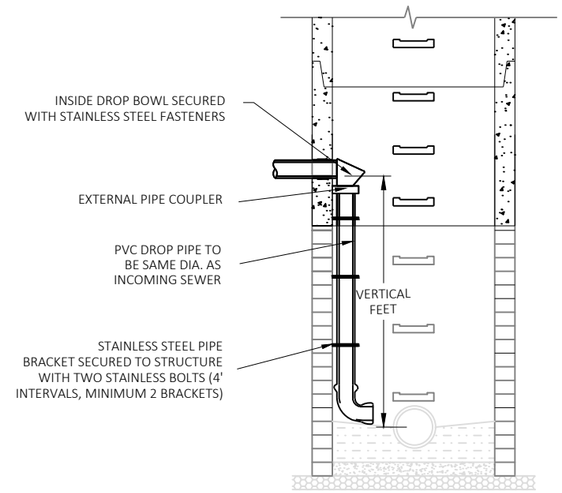

CONSTRUCTION INSIDE DROP ON EXISTING CONCRETE BLOCK, BRICK, OR PRECAST SANITARY MANHOLE

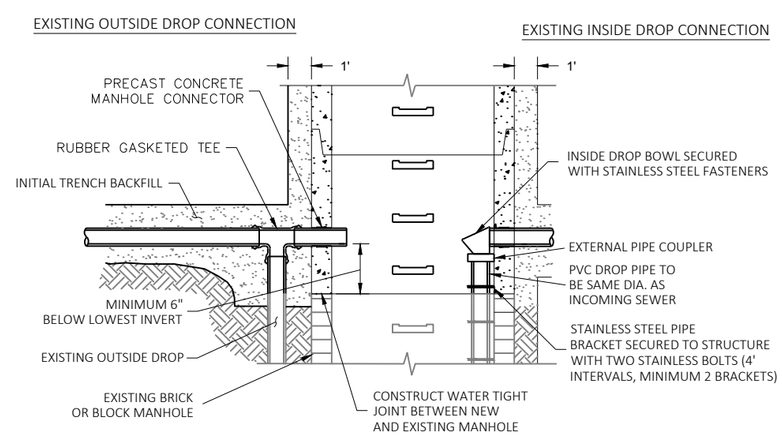

CONNECT MANHOLE TO EXISTING MANHOLE

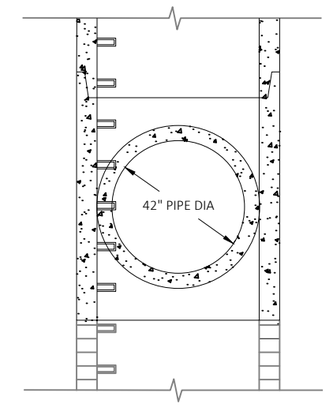

SECTION VIEW A-A

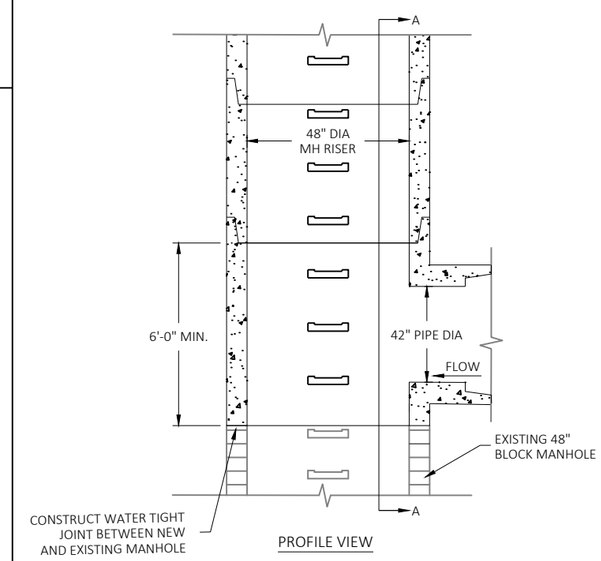

PROFILE VIEW

48X42-INCH TEE MANHOLE CONNECTION

NOT TO SCALE

2

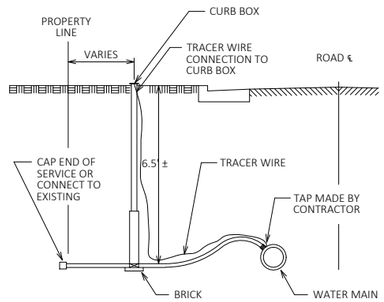

NOTE:

1. TAP WATER MAIN ON 45° WITH PIPE. MINIMUM HORIZONTAL DISTANCE BETWEEN CORP STOPS SHALL BE 3-FEET.
2. WATER SERVICES SHALL BE POLYETHYLENE UNLESS SHOWN OTHERWISE.

WATER SERVICE INSTALLATION

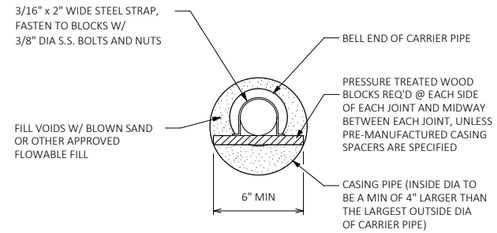

STEEL CASING PIPE FOR E72 LOADING	
MIN THICKNESS (INCHES) FOR PIPE NOT CATHODICALLY PROTECTED	CASING PIPE DIAMETER (INCHES)
0.250	UNDER 14
0.282	14 AND 16
0.312	18
0.344	20
0.375	22
0.406	24
0.438	26
0.469	28 AND 30
0.500	32
0.531	34 AND 36
0.563	38, 40 AND 42

NOTE:
WALL THICKNESS FOR STEEL CASING PIPE W/ 35,000 P.S.I. MIN YIELD STRENGTH.
FOR MATERIAL OF LOWER YIELD STRENGTH, INCREASE THICKNESS AN ADDITIONAL $\frac{1}{16}$"

CASING PIPE

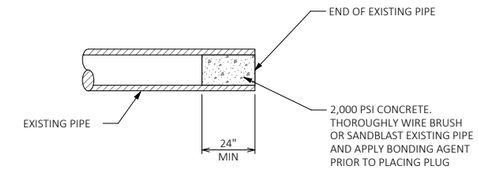

PIPE PLUG

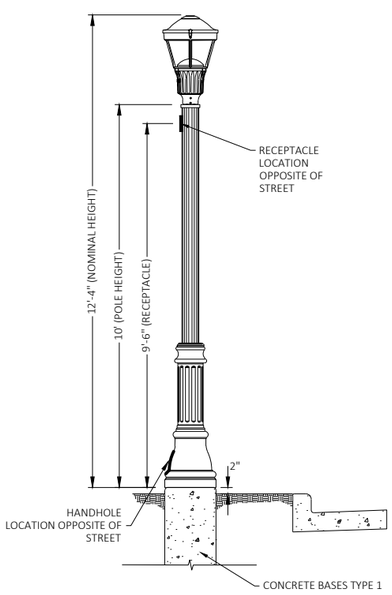

POLE

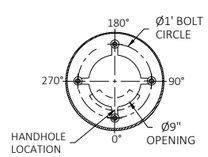

DO NOT USE TO SET ANCHOR BOLTS CONTACT CUSTOMER SERVICE FOR TEMPLATE

ANCHORAGE DETAIL

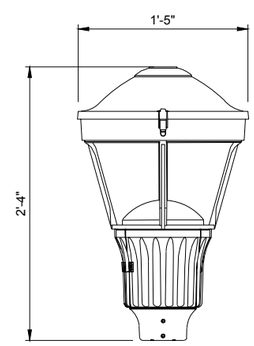

LUMINAIRE

DECORATIVE LIGHTING UNIT, TYPE A

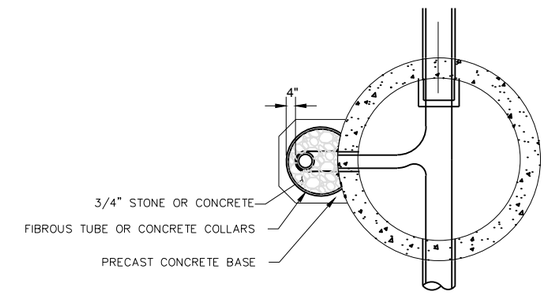

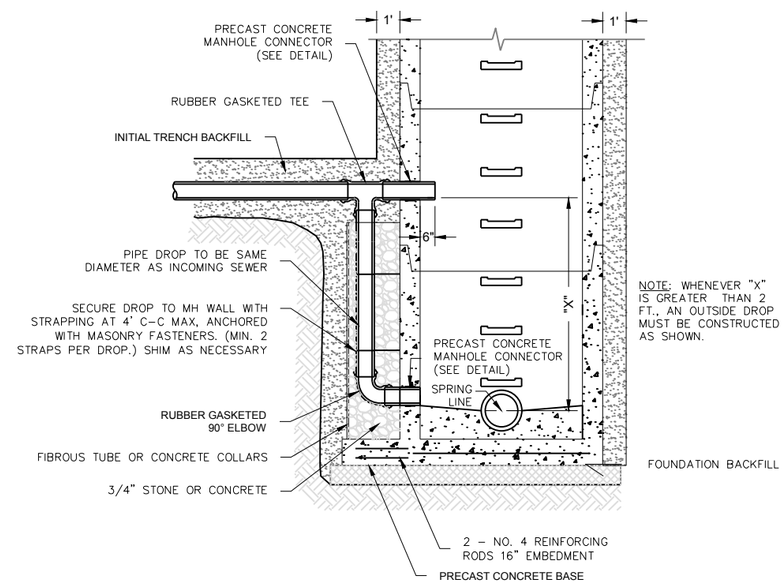

PRE-CAST SANITARY MANHOLE OUTSIDE DROP

NOT TO SCALE

2

PROJECT NO: 6999-18-73	HWY: SOUTH 1ST AVENUE	COUNTY: MARATHON	PLAN: CONSTRUCTION DETAILS	SHEET 12	E

FILE NAME : V:\TRANS-EC\410723 WAUSAU 1ST AVE\C3D\SHEETSPLAN\021004_CD.DWG
LAYOUT NAME - 021003_cd_utility
PLOT DATE : 10/15/2018 2:41 PM PLOT BY : AYRES ASSOCIATES PLOT NAME : PLOT SCALE : 1 IN:10 FT

WISDOT/CADDS SHEET 42

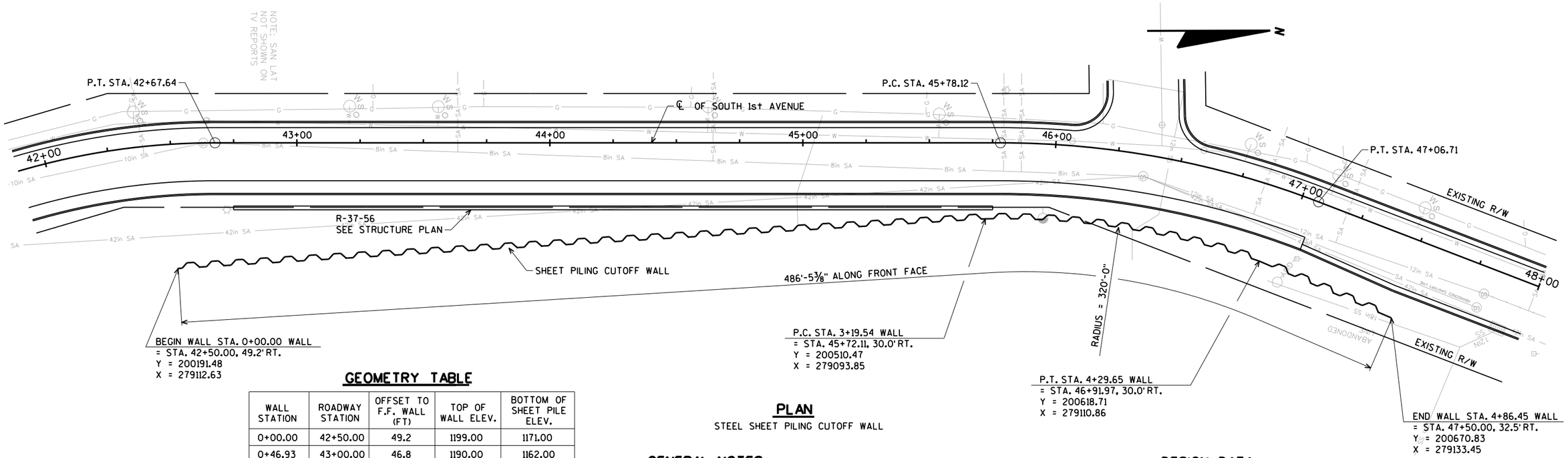

PLAN

STEEL SHEET PILING CUTOFF WALL

GEOMETRY TABLE

WALL STATION	ROADWAY STATION	OFFSET TO F.F. WALL (FT)	TOP OF WALL ELEV.	BOTTOM OF SHEET PILE ELEV.
0+00.00	42+50.00	49.2	1199.00	1171.00
0+46.93	43+00.00	46.8	1190.00	1162.00
0+97.02	43+50.00	43.7	1190.00	1156.00
1+47.11	44+00.00	40.6	1193.00	1154.00
1+97.21	44+50.00	37.6	1196.00	1162.00
2+47.22	45+00.00	34.5	1198.00	1170.00
2+97.40	45+50.00	31.4	1203.00	1175.00
3+45.55	46+00.00	30.0	1207.00	1179.00
3+91.27	46+50.00	30.0	1207.00	1174.00
4+37.00	47+00.00	30.5	1207.00	1169.00
4+86.45	47+50.00	32.5	1207.00	1169.00

GENERAL NOTES

DRAWINGS SHALL NOT BE SCALED.

THESE PLANS ARE FOR A STEEL SHEET PILE CUTOFF WALL.

THE CONTRACTOR SHALL VERIFY THE LOCATION OF ALL UTILITIES. ADDITIONAL UTILITIES NOT SHOWN ON THIS PLAN MAY BE PRESENT AT THE RETAINING WALL LOCATION.

SEE ROADWAY QUANTITIES FOR SITE PREPARATION AND RESTORATION.

PAINTING OF SHEET PILING AS STATED IN STANDARD SPECIFICATION 512.3.3 IS NOT REQUIRED.

ALL EQUIPMENT AND PERSONNEL SHALL REMAIN OFF THE SLOPE DURING SHEET PILE DRIVING OPERATIONS

DESIGN DATA

LIVE LOAD:

LIVE LOAD SURCHARGE: 240 PSF

MATERIAL PROPERTIES:

PERMANENT STEEL SHEET PILING (GRADE A992 OR A572 G50) _____ f_y = 50,000 p.s.i.

THE MINIMUM SECTION MODULUS FOR THE STEEL PILING SHALL BE 68.5 IN^3/FT.

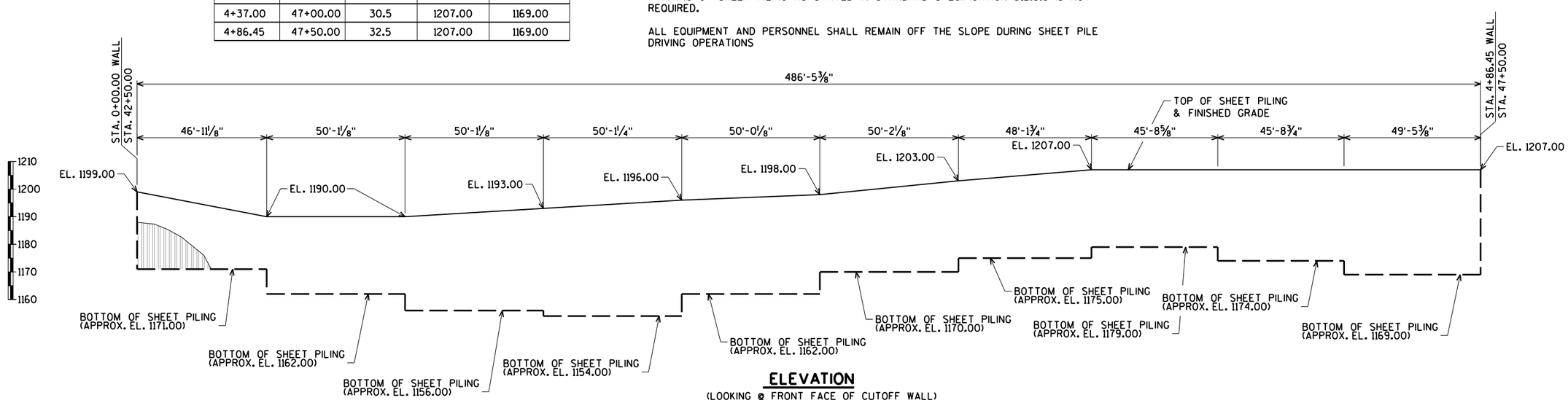

ELEVATION

(LOOKING @ FRONT FACE OF CUTOFF WALL)

PROJECT NO: 6999-18-73	HWY: SOUTH 1ST AVENUE	COUNTY: MARATHON	CONSTRUCTION DETAIL: SHEET PILING CUTOFF WALL	SHEET 13	E

POINT	STATION	OFFSET	ELEV.	Y	X
RR1	34+95.17	46.39	1201.75	199443.73	279188.17
RR2	34+91.37	42.96	1201.73	199440.11	279184.72
RR3	35+07.84	32.41	1202.22	199456.48	279174.25
RR4	35+02.52	31.18	1202.12	199451.16	279172.98
RR5	35+26.04	9.60	1202.97	199474.78	279151.53
RR6	35+20.90	8.28	1202.88	199469.66	279150.19
RR7	35+46.70	-20.74	1203.84	199495.59	279121.29
RR8	35+40.79	-20.61	1203.70	199489.69	279121.39
RR9	35+58.77	-41.03	1204.37	199507.77	279101.06
RR10	35+56.50	-46.78	1204.38	199505.52	279095.30

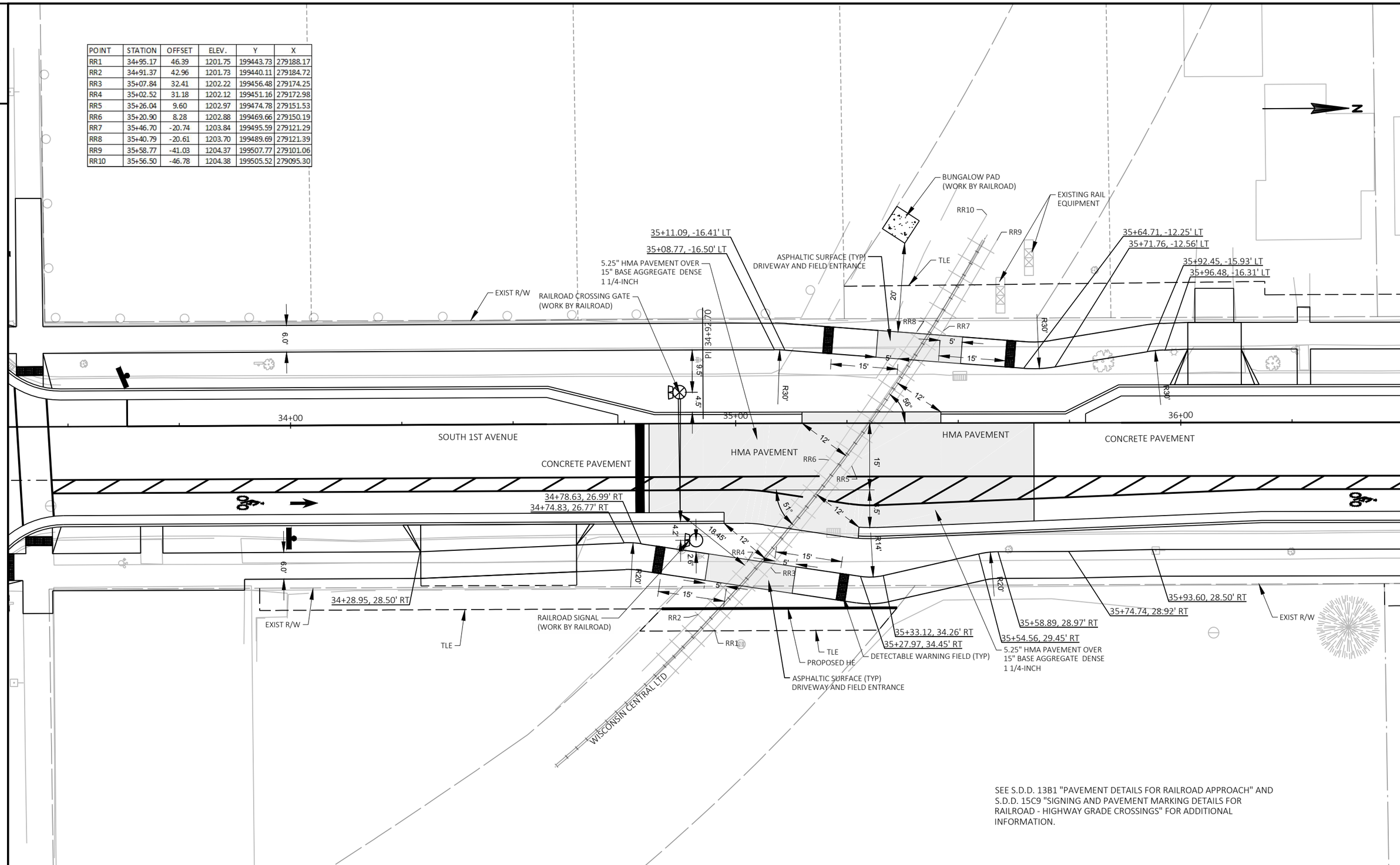

PROJECT NO: 6999-18-73	HWY: SOUTH 1ST AVENUE	COUNTY: MARATHON	CONSTRUCTION DETAIL - RAILROAD CROSSING	SHEET 14	E

FILE NAME : V:\TRANS-EC\410723 WAUSAU 1ST AVE\C3D\SHEETSPLAN\021002_CD.DWG
LAYOUT NAME - CONSTRUCTION DETAIL - RAILROAD CROSSING
PLOT DATE : 8/1/2018 8:48 AM PLOT BY : RESHESKE, CARRIE PLOT NAME : PLOT SCALE : 1 IN:20 FT

2

2

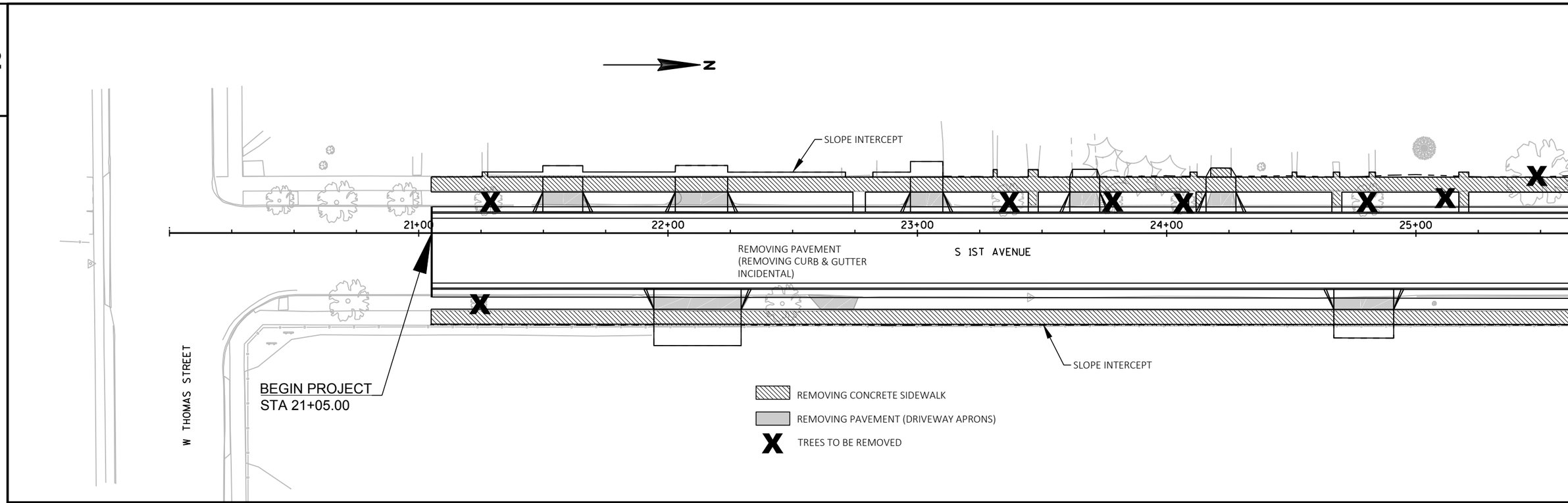

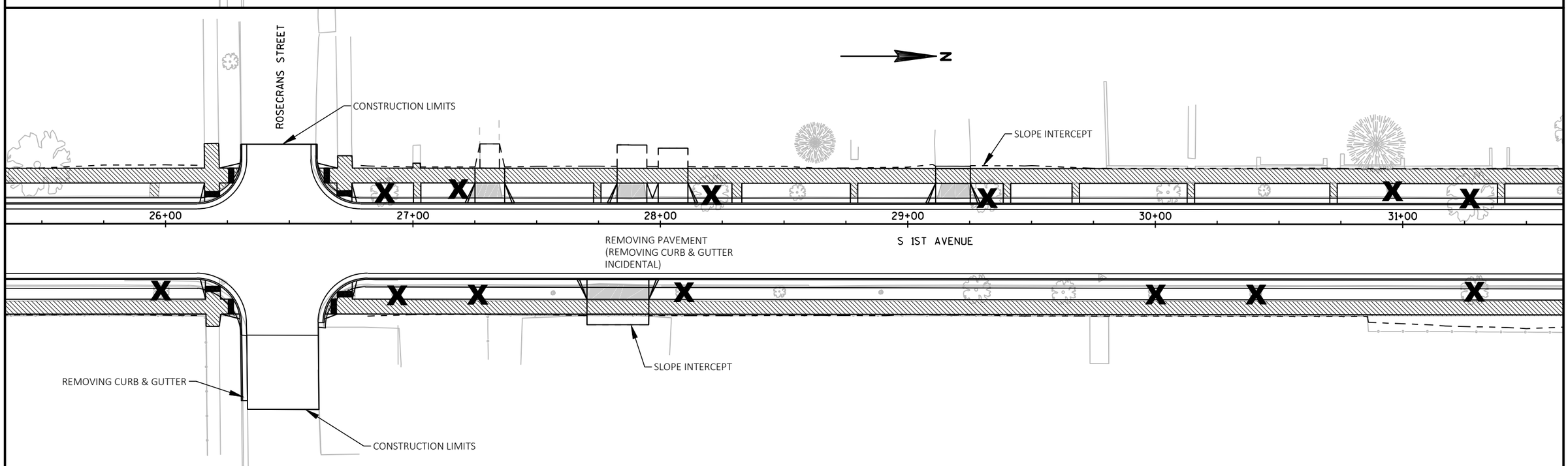

PROJECT NO:6999-18-73	HWY:SOUTH 1ST AVENUE	COUNTY:MARATHON	REMOVALS	SHEET 15	E

FILE NAME : T:\410723 WAUSAU 1ST AVE\C3D\SHEETSPLAN\021003 CD.DWG
LAYOUT NAME - 021003 CD - 021004_CD
PLOT DATE : 8/1/2018 8:48 AM PLOT BY : RESHESKE, CARRIE PLOT NAME : PLOT SCALE : 1 IN:40 FT

2

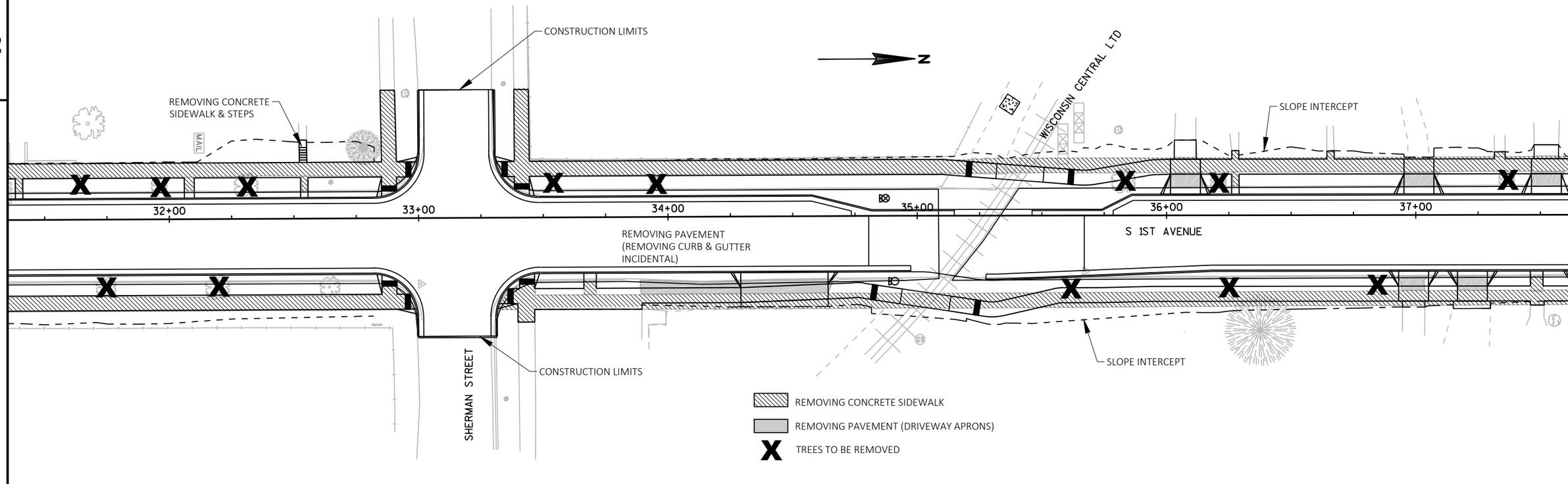

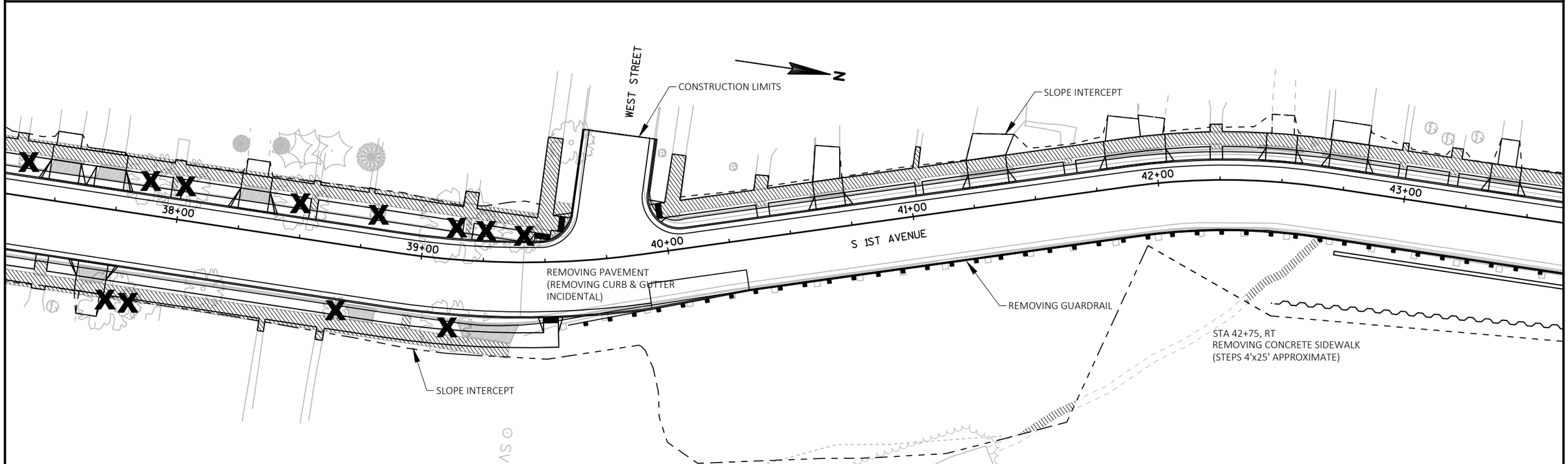

PROJECT NO:6999-18-73	HWY:SOUTH 1ST AVENUE	COUNTY:MARATHON	REMOVALS	SHEET 16	E

FILE NAME : T:\410723 WAUSAU 1ST AVE\C3D\SHEETSPLAN\021003 CD.DWG
LAYOUT NAME - 021003 CD - 021005_CD
PLOT DATE : 10/31/2018 2:51 PM PLOT BY : RESHESKE, CARRIE PLOT NAME : PLOT SCALE : 1 IN:40 FT

2

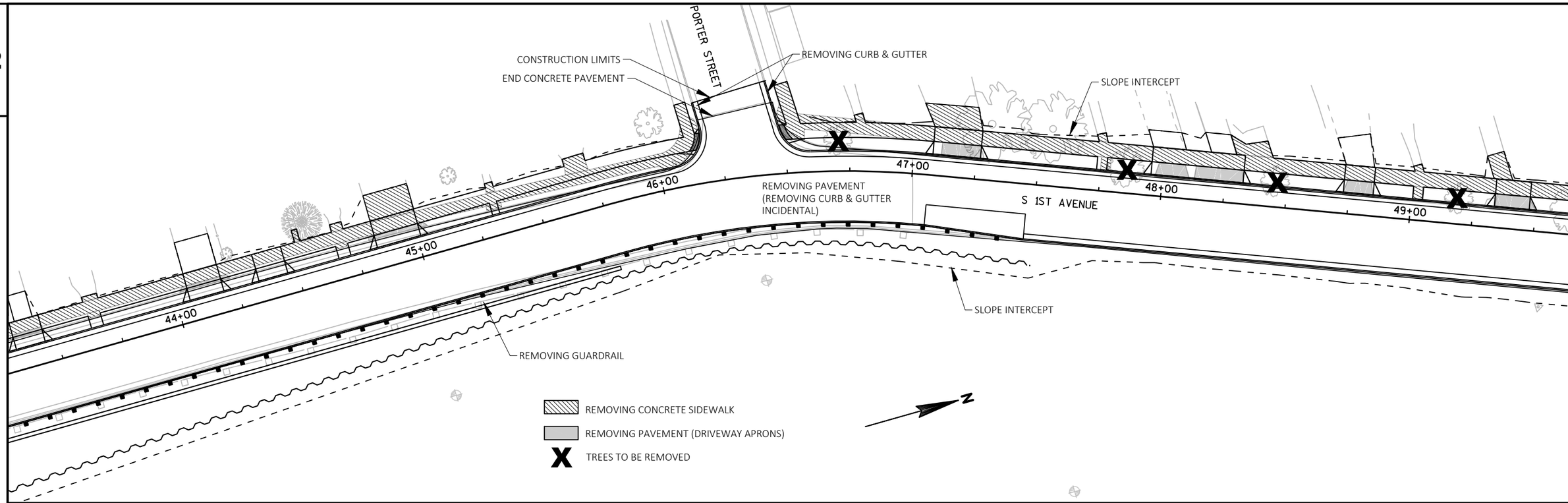

2

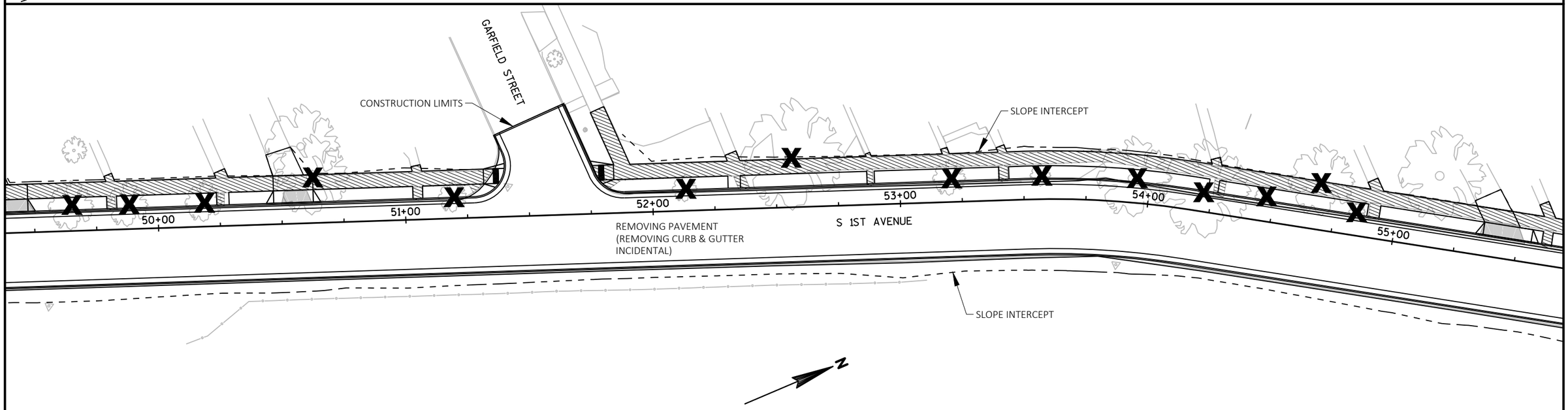

PROJECT NO:6999-18-73	HWY:SOUTH 1ST AVENUE	COUNTY:MARATHON	REMOVALS	SHEET 17	E

FILE NAME : T:\410723 WAUSAU 1ST AVE\C3D\SHEETSPLAN\021003 CD.DWG
LAYOUT NAME - 021003 CD - 021006_CD
PLOT DATE : 10/31/2018 2:23 PM PLOT BY : RESHESKE, CARRIE PLOT NAME : PLOT SCALE : 1 IN:40 FT

2

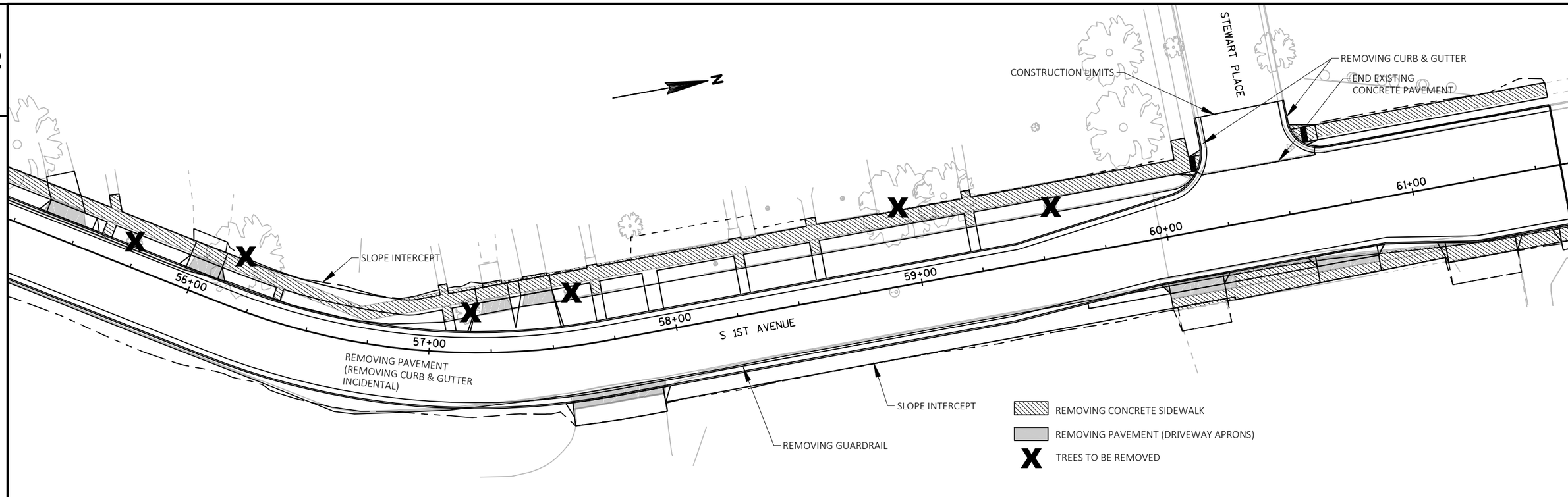

2

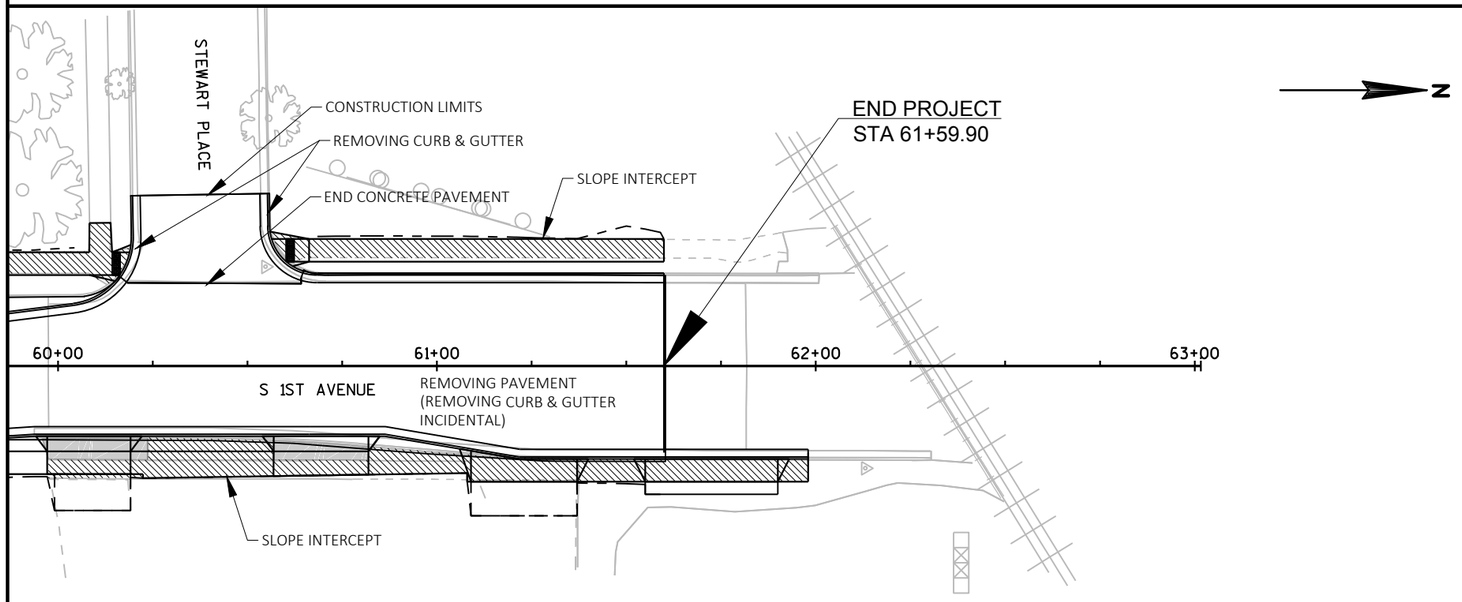

PROJECT NO:6999-18-73	HWY:SOUTH 1ST AVENUE	COUNTY:MARATHON	REMOAVALS	SHEET 18	E

2

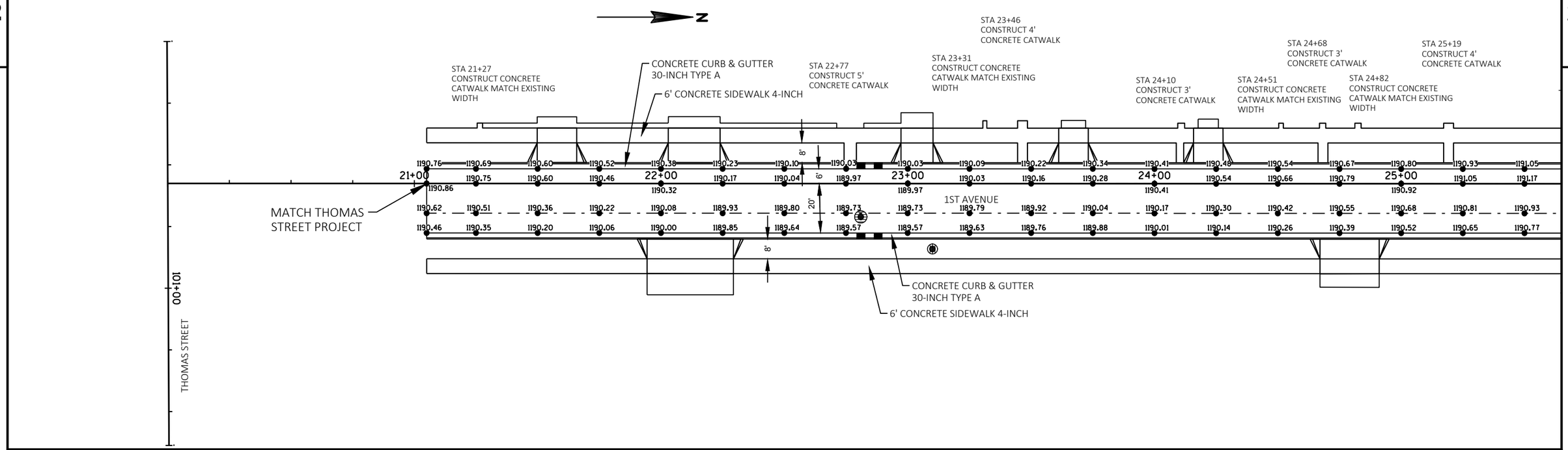

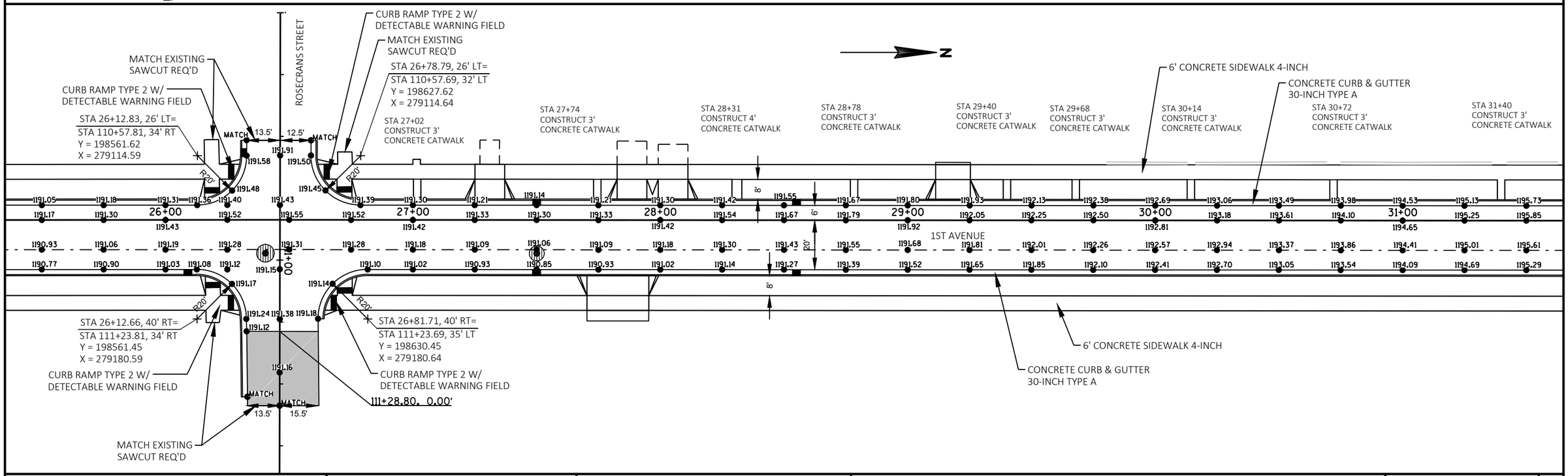

PROJECT NO:6999-18-73	HWY:SOUTH 1ST AVENUE	COUNTY:MARATHON	PAVING DETAIL	SHEET 19	E

FILE NAME : T:\410723 WAUSAU 1ST AVE\C3D\SHEETSPLAN\021201_PD.DWG
LAYOUT NAME - 021201_PD
PLOT DATE : 10/16/2018 11:21 AM PLOT BY : RESHESKE, CARRIE PLOT NAME : PLOT SCALE : 1 IN:40 FT

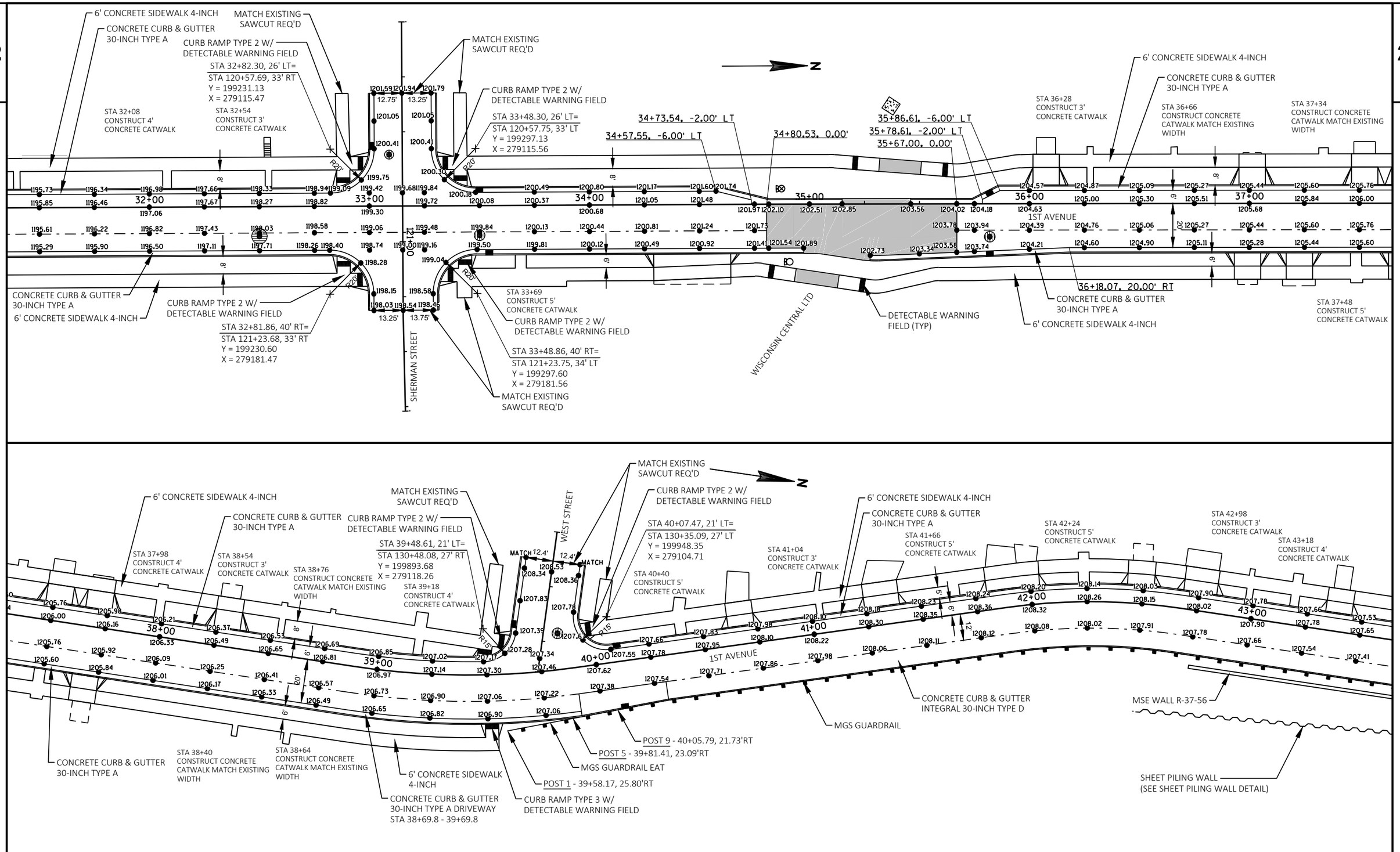

PROJECT NO:6999-18-73	HWY:SOUTH 1ST AVENUE	COUNTY:MARATHON	PAVING DETAIL	SHEET 20	E

FILE NAME : V:\TRANS-EC\410723 WAUSAU 1ST AVE\C3D\SHEETSPLAN\021201_PD.DWG
LAYOUT NAME - 021202_PD
PLOT DATE : 2/25/2019 11:48 AM PLOT BY : RESHESKE, CARRIE PLOT NAME : PLOT SCALE : 1 IN:40 FT

2

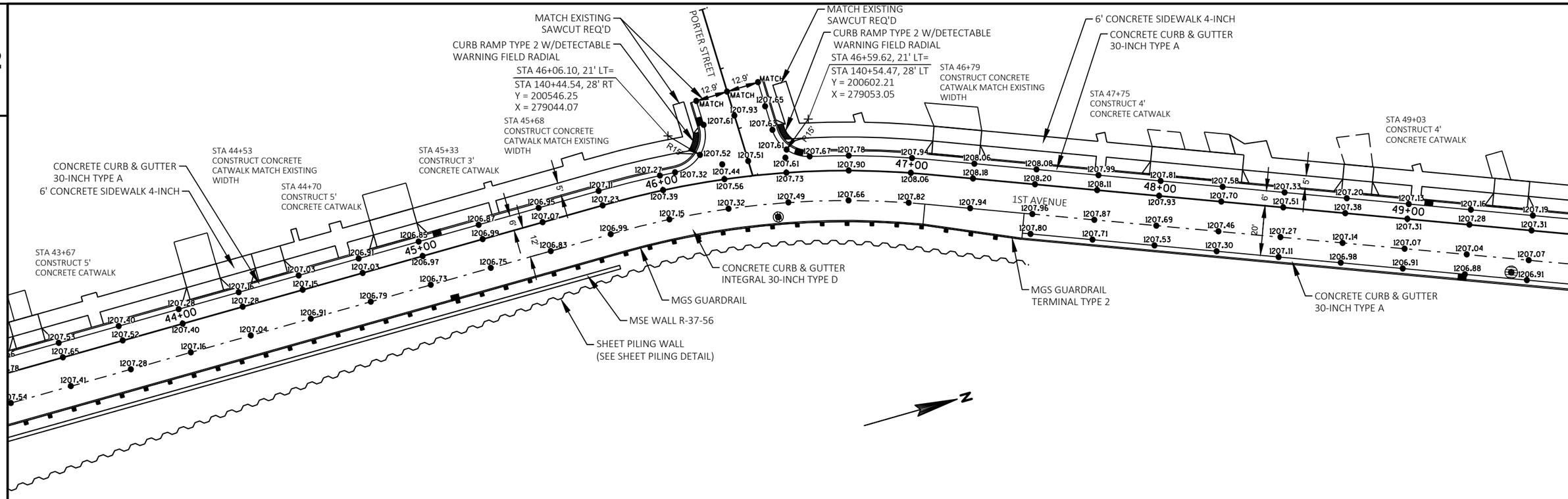

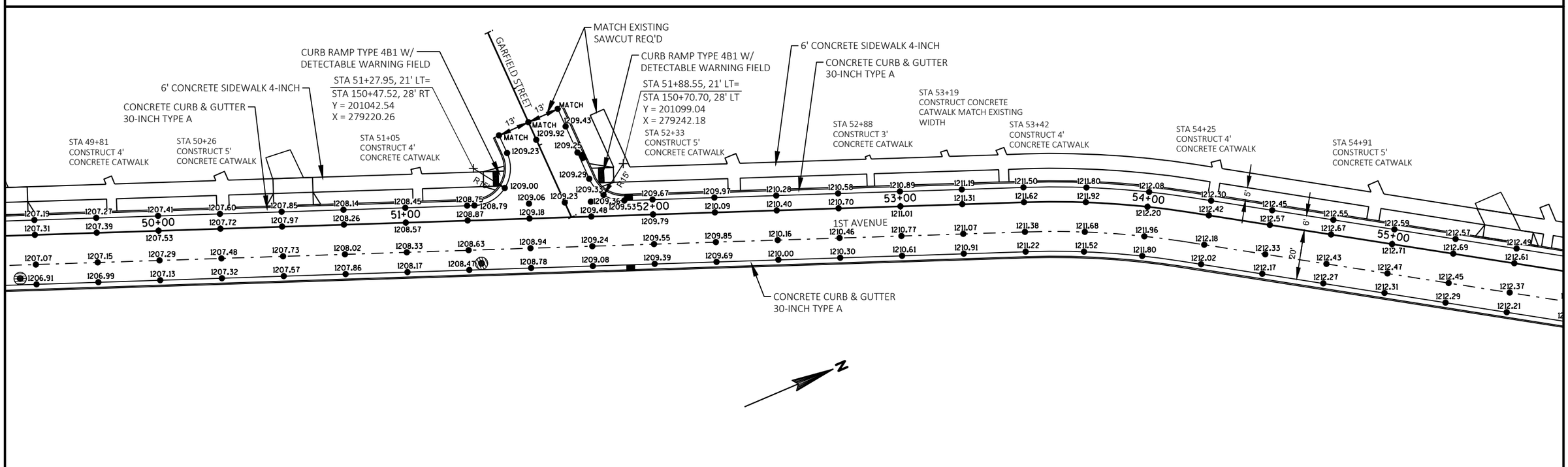

2

PROJECT NO:6999-18-73	HWY:SOUTH 1ST AVENUE	COUNTY:MARATHON	PAVING DETAIL	SHEET 21	E

FILE NAME : T:\410723 WAUSAU 1ST AVE\C3D\SHEETSPLAN\021201_PD.DWG
LAYOUT NAME - 021203_PD
PLOT DATE : 10/25/2018 4:22 PM PLOT BY : RESHESKE, CARRIE PLOT NAME : PLOT SCALE : 1 IN:40 FT

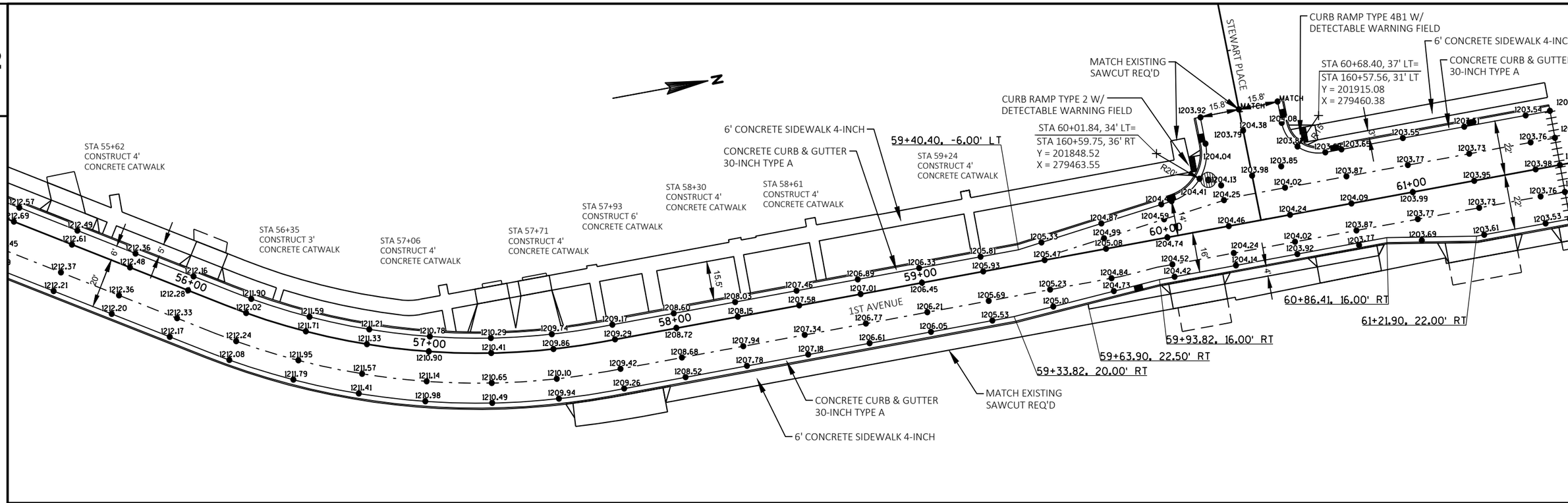

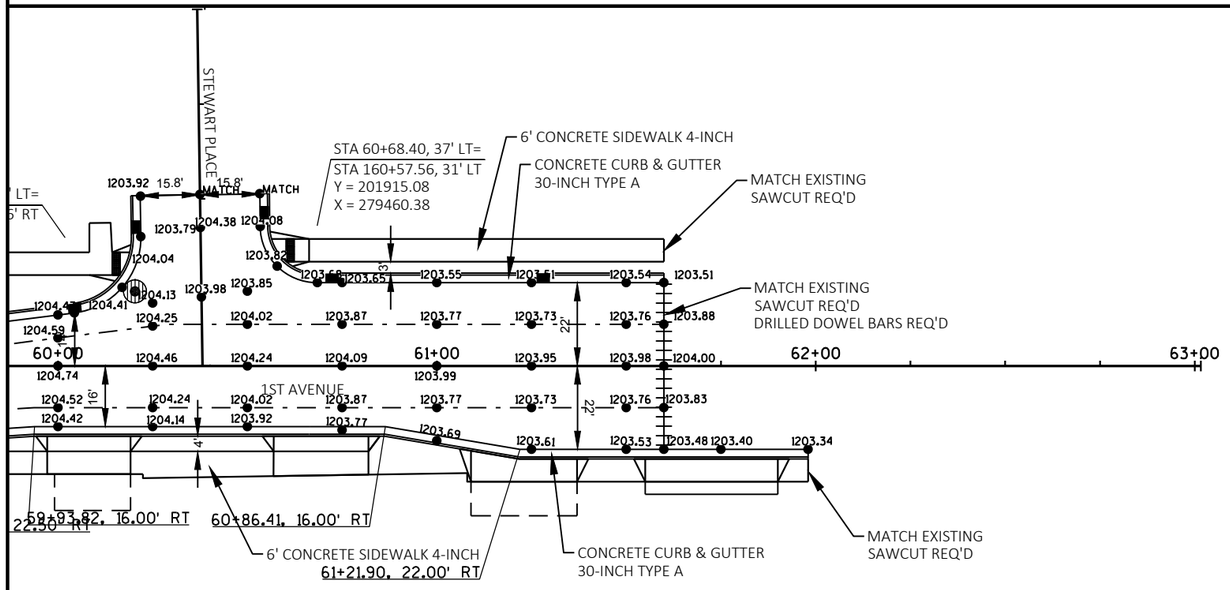

PROJECT NO:6999-18-73	HWY:SOUTH 1ST AVENUE	COUNTY:MARATHON	PAVING DETAIL	SHEET 22	E

2

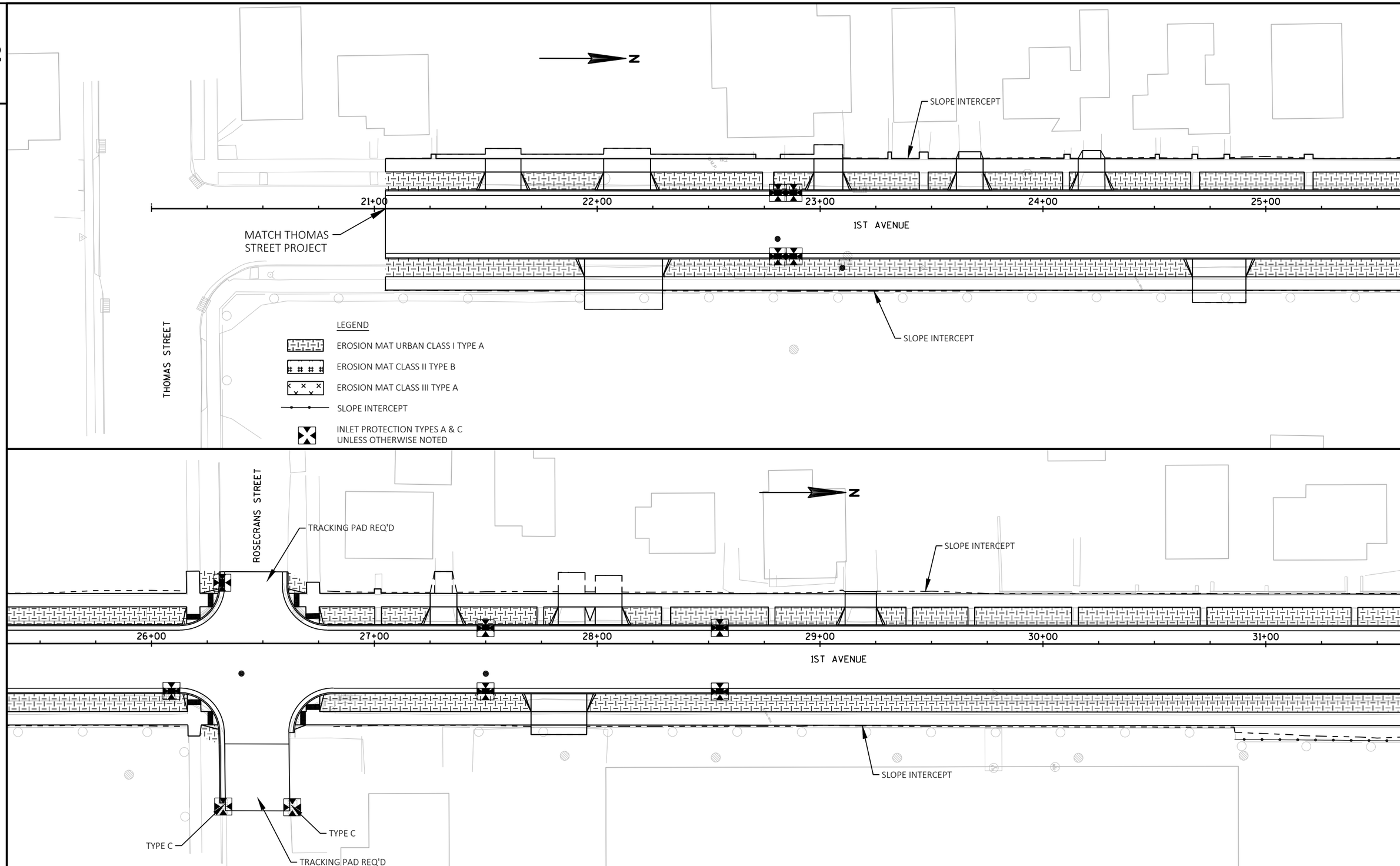

2

PROJECT NO:6999-18-73	HWY:SOUTH 1ST AVENUE	COUNTY:MARATHON	EROSION CONTROL	SHEET 23	E

FILE NAME : T:\410723 WAUSAU 1ST AVE\C3D\SHEETSPLAN\022001_EC.DWG
LAYOUT NAME - 022001_EC

PLOT DATE : 8/1/2018 9:02 AM PLOT BY : RESHESKE, CARRIE PLOT NAME : PLOT SCALE : 1 IN:40 FT

WISDOT/CADDS SHEET 44

2

TRACKING PAD REQ'D

SLOPE INTERCEPT

N

WISCONSIN CENTRAL LTD

MAIL

32+00 33+00 34+00 35+00 36+00 37+00

1ST AVENUE

TRACKING PAD REQ'D

SHERMAN STREET

SLOPE INTERCEPT

LEGEND

EROSION MAT URBAN CLASS I TYPE A

EROSION MAT CLASS II TYPE B

EROSION MAT CLASS III TYPE A

SLOPE INTERCEPT

INLET PROTECTION TYPES A & C
UNLESS OTHERWISE NOTED

2

N

WEST STREET

TRACKING PAD REQ'D

SLOPE INTERCEPT

38+00 39+00 40+00 41+00 42+00 43+00

1ST AVENUE

5' WIDE

DOUBLE ROW OF
SILT FENCE

SLOPE INTERCEPT

PROJECT NO:6999-18-73	HWY:SOUTH 1ST AVENUE	COUNTY:MARATHON	EROSION CONTROL	SHEET 24	E

FILE NAME : V:\TRANS-EC\410723 WAUSAU 1ST AVE\C3D\SHEETSPLAN\022001_EC.DWG
LAYOUT NAME - 022002_EC

PLOT DATE : 2/25/2019 11:46 AM PLOT BY : RESHESKE, CARRIE PLOT NAME : PLOT SCALE : 1 IN:40 FT

WISDOT/CADDS SHEET 44

2

PORTER STREET

SLOPE INTERCEPT

47+00

46+00

48+00

1ST AVENUE

49+00

45+00

44+00

5' WIDE

SLOPE INTERCEPT

LEGEND

EROSION MAT URBAN CLASS I TYPE A

EROSION MAT CLASS II TYPE B

EROSION MAT CLASS III TYPE A

SLOPE INTERCEPT

INLET PROTECTION TYPES A & C
UNLESS OTHERWISE NOTED

DOUBLE ROW OF
SILT FENCE

N

GARFIELD STREET

SLOPE INTERCEPT

50+00

51+00

52+00

53+00

54+00

1ST AVENUE

55+00

SLOPE INTERCEPT

N

2

PROJECT NO:6999-18-73	HWY:SOUTH 1ST AVENUE	COUNTY:MARATHON	EROSION CONTROL	SHEET 25	E

FILE NAME : T:\410723 WAUSAU 1ST AVE\C3D\SHEETSPLAN\022001_EC.DWG
LAYOUT NAME - 022003_EC

PLOT DATE : 10/25/2018 4:23 PM PLOT BY : RESHESKE, CARRIE PLOT NAME : PLOT SCALE : 1 IN:40 FT

WISDOT/CADDS SHEET 44

2

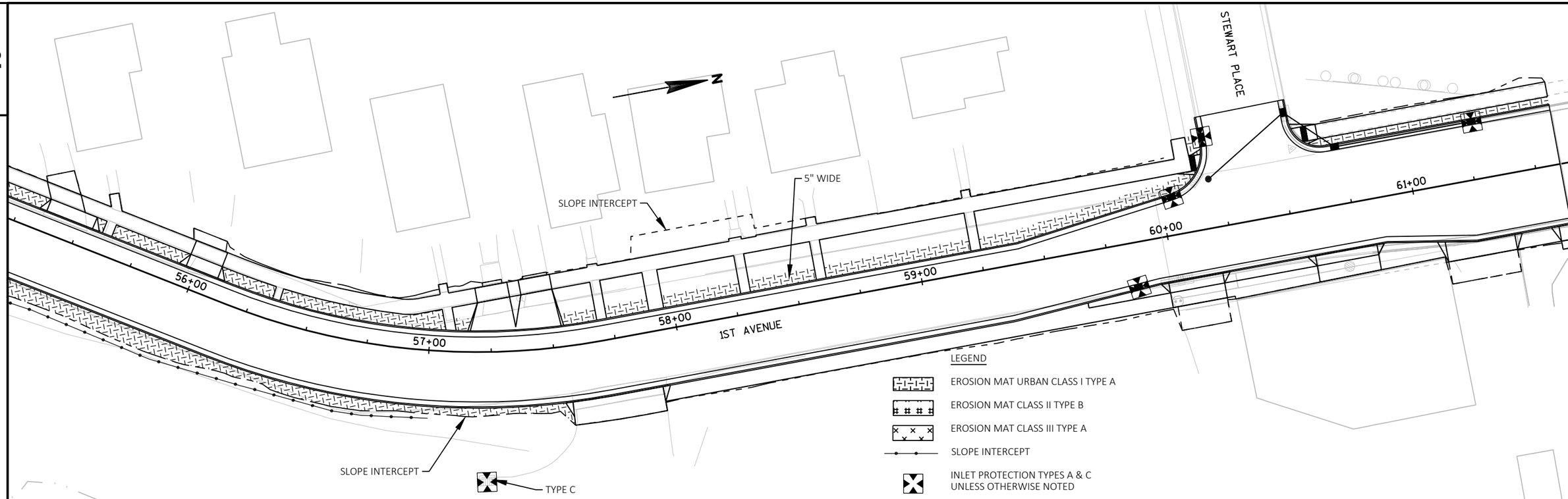

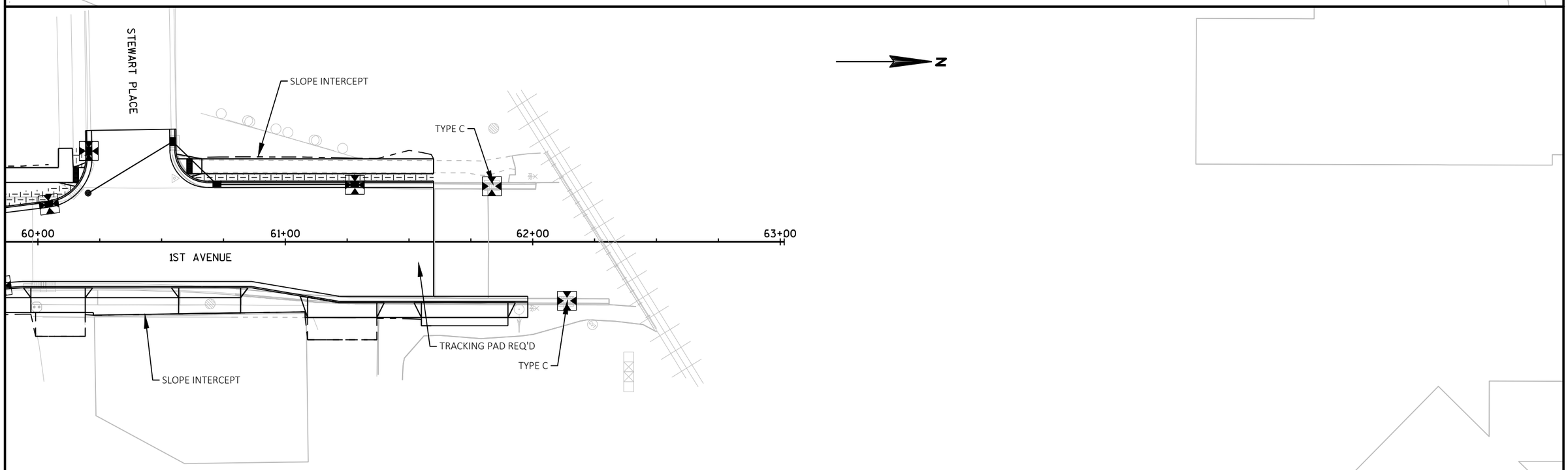

2

PROJECT NO:6999-18-73	HWY:SOUTH 1ST AVENUE	COUNTY:MARATHON	EROSION CONTROL	SHEET 26	E

FILE NAME : T:\410723 WAUSAU 1ST AVE\C3D\SHEETSPLAN\022001_EC.DWG
LAYOUT NAME - 022004_EC
PLOT DATE : 8/1/2018 9:02 AM PLOT BY : RESHESKE, CARRIE PLOT NAME : PLOT SCALE : 1 IN:40 FT

2

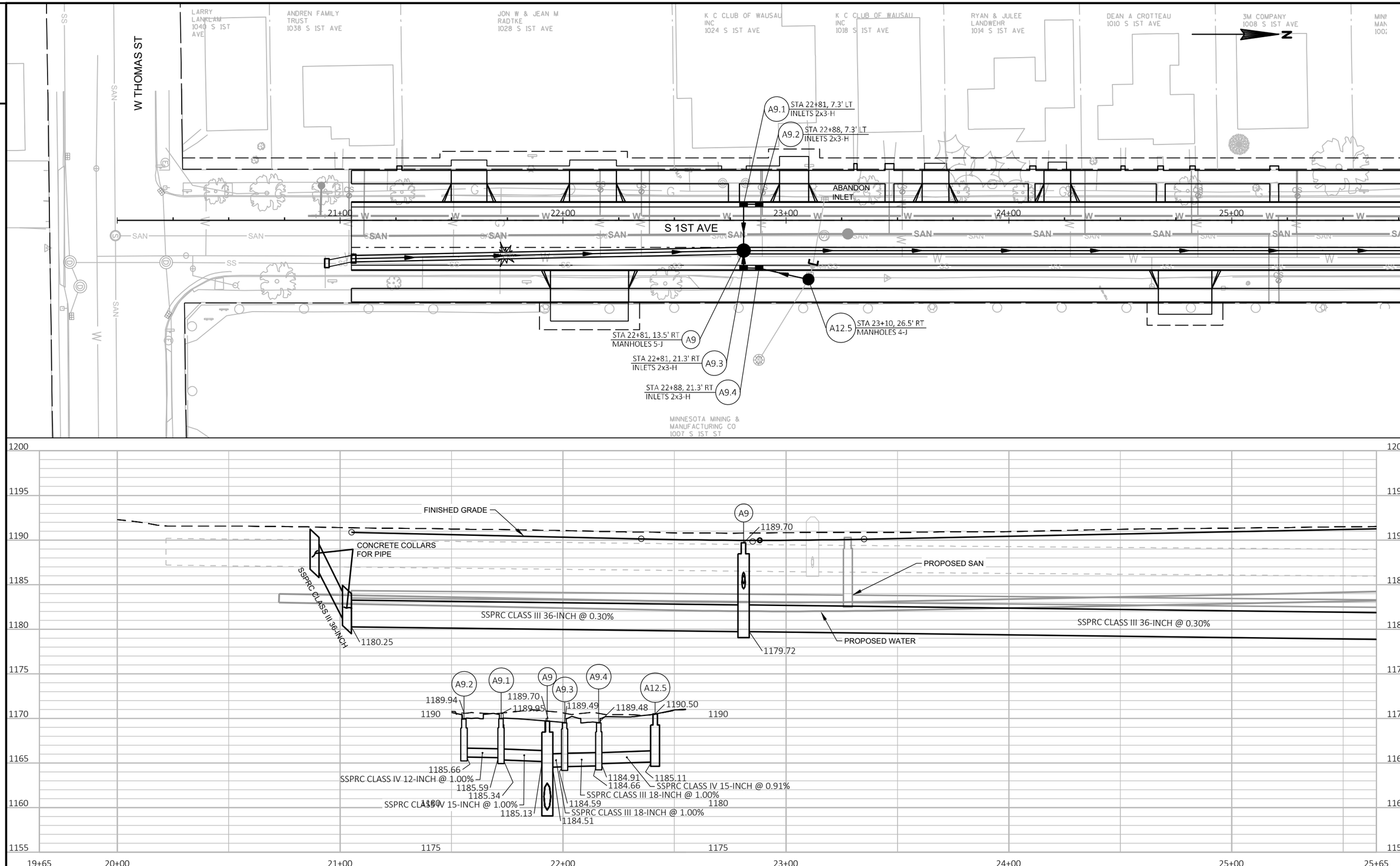

PROJECT NO: 6999-18-73	HWY: SOUTH 1ST AVENUE	COUNTY: MARATHON	STORM SEWER	SHEET 27	E

FILE NAME : V:\TRANS-EC\410723 WAUSAU 1ST AVE\C3D\SHEETSPLAN\022501_SS.DWG
LAYOUT NAME - 1
PLOT DATE : 2/22/2019 7:47 AM
PLOT BY : AYRES ASSOCIATES
PLOT NAME :
PLOT SCALE : 1 IN:40 FT
WISDOT/CADDS SHEET 41

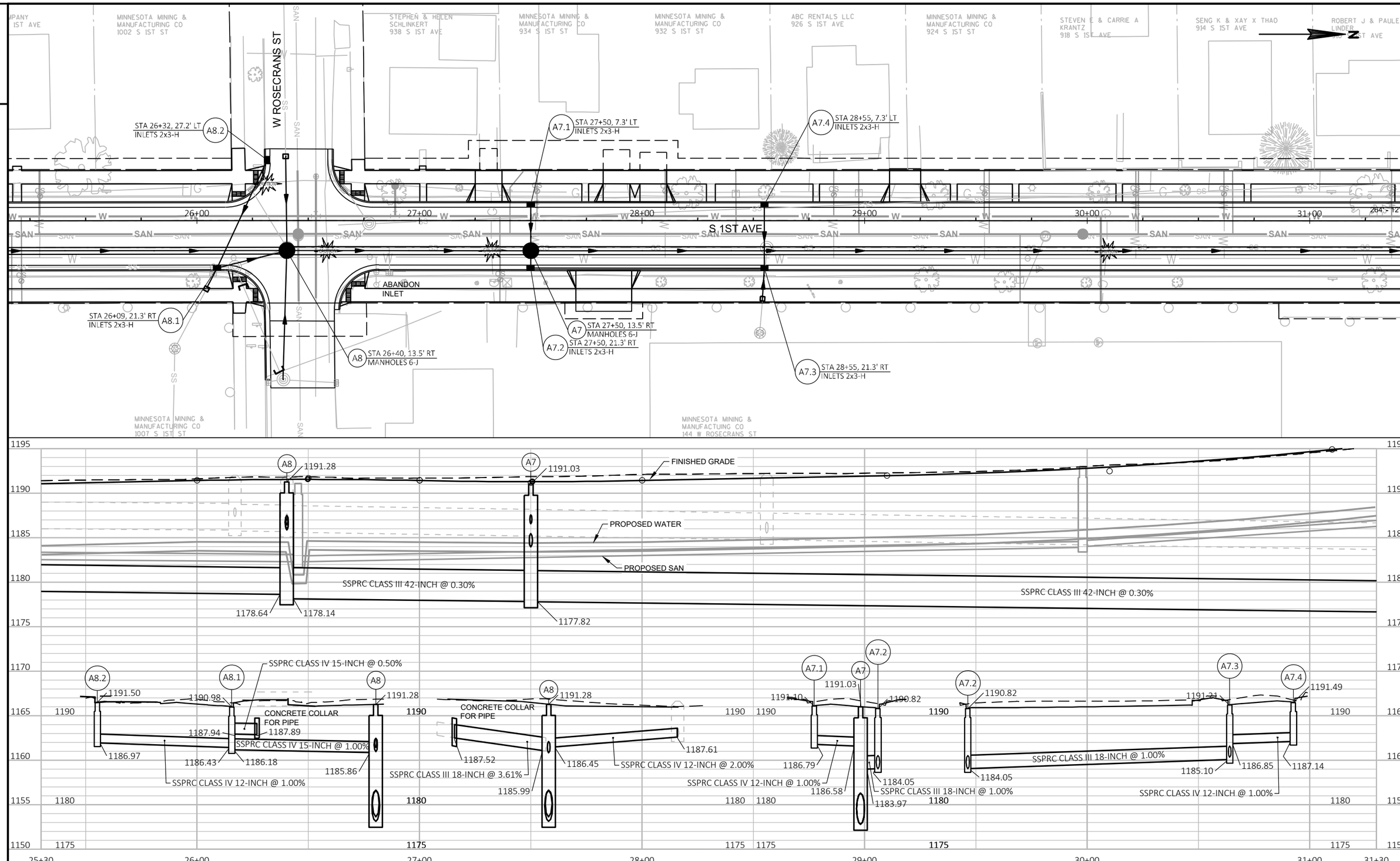

PROJECT NO: 6999-18-73	HWY: SOUTH 1ST AVENUE	COUNTY: MARATHON	STORM SEWER	SHEET 28	E

FILE NAME : V:\TRANS-EC\410723 WAUSAU 1ST AVE\C3D\SHEETSPLAN\022501_SS.DWG
LAYOUT NAME - 2
PLOT DATE : 2/22/2019 7:47 AM
PLOT BY : AYRES ASSOCIATES
PLOT NAME :
PLOT SCALE : 1 IN:40 FT
WISDOT/CADDS SHEET 41

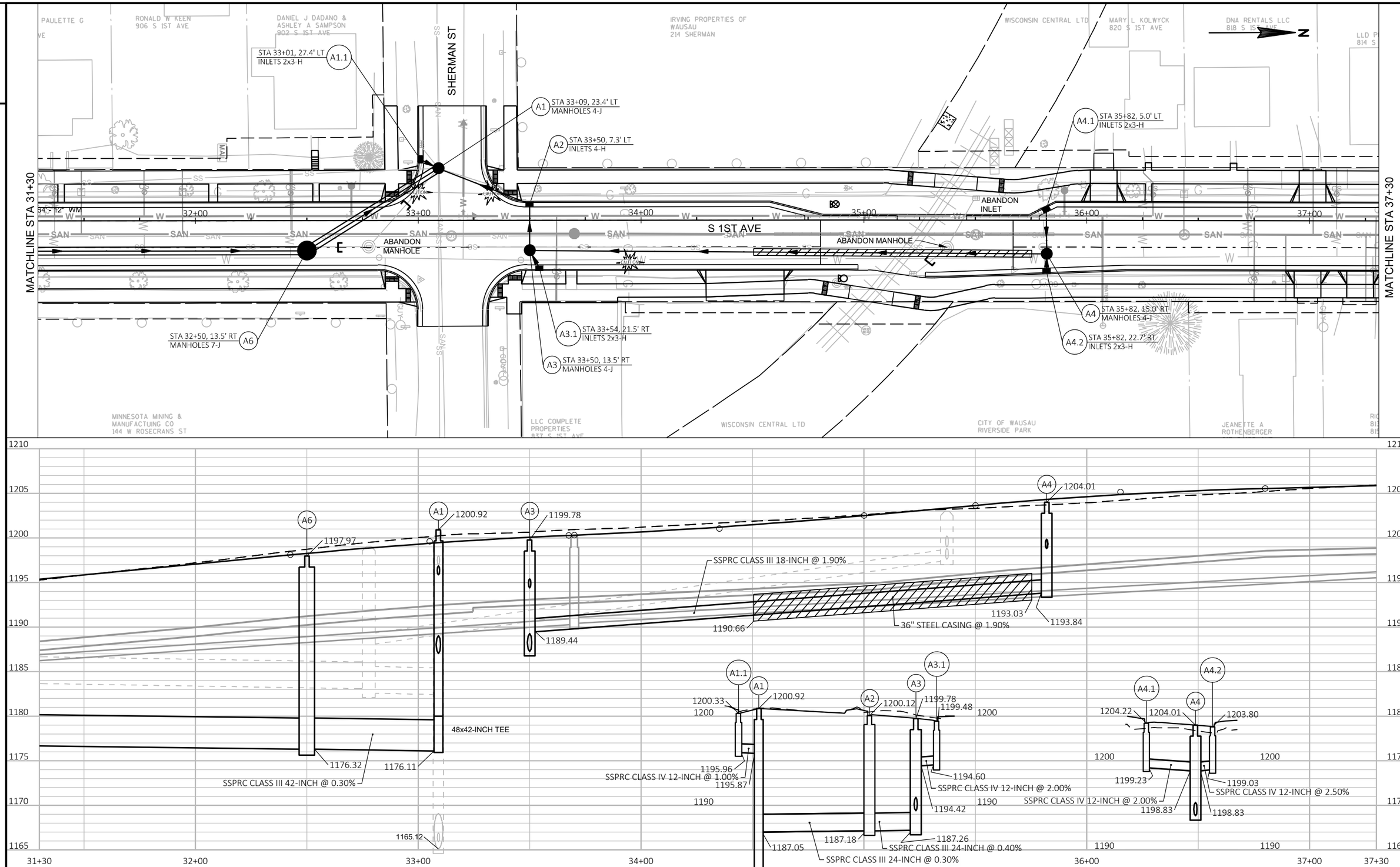

PROJECT NO: 6999-18-73	HWY: SOUTH 1ST AVENUE	COUNTY: MARATHON	STORM SEWER	SHEET 29	E

FILE NAME : V:\TRANS-EC\410723 WAUSAU 1ST AVE\C3D\SHEETSPLAN\022501_SS.DWG
LAYOUT NAME - 3
PLOT DATE : 2/25/2019 11:12 AM
PLOT BY : AYRES ASSOCIATES
PLOT NAME :
PLOT SCALE : 1 IN:40 FT

2

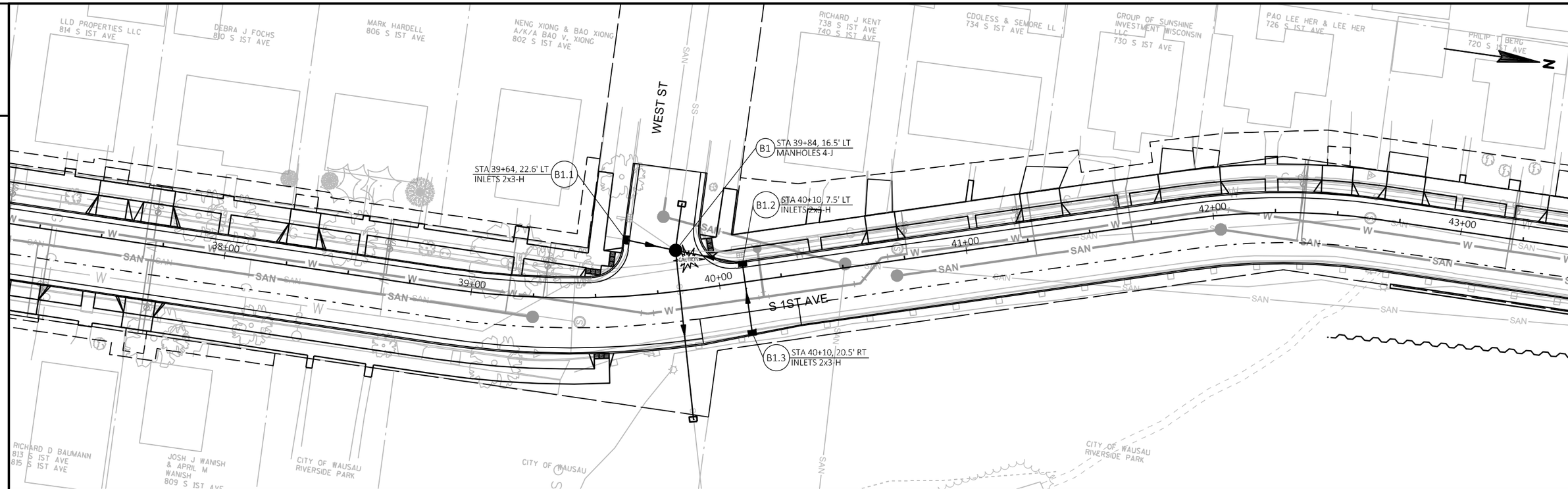

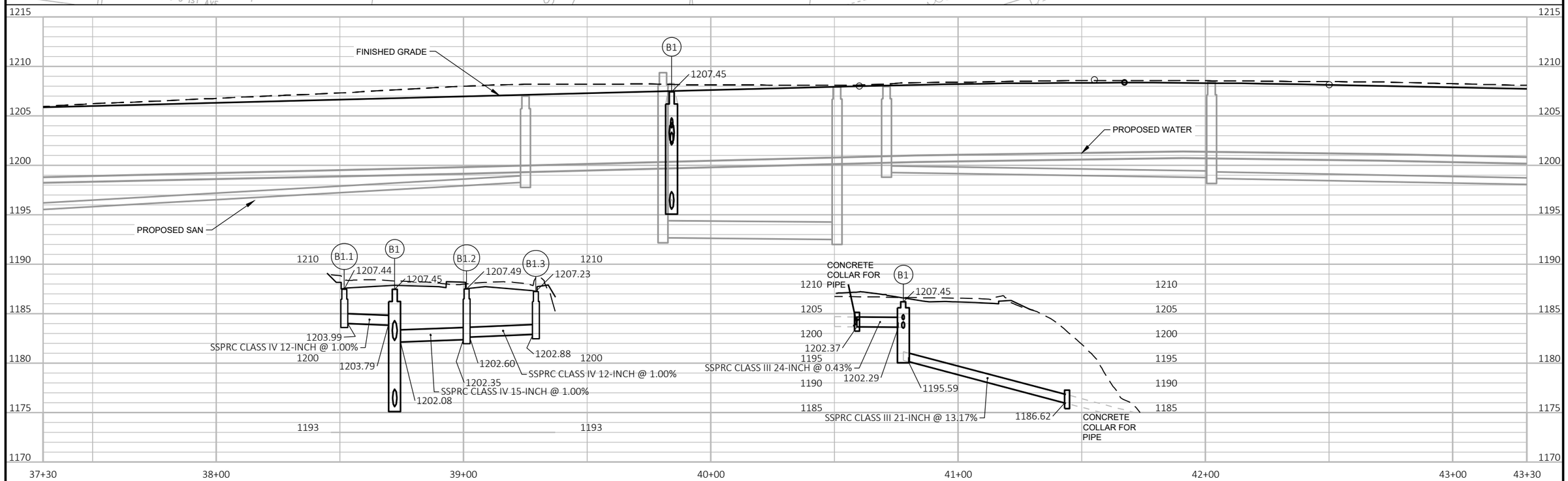

PROJECT NO: 6999-18-73	HWY: SOUTH 1ST AVENUE	COUNTY: MARATHON	STORM SEWER	SHEET 30	E

FILE NAME : V:\TRANS-EC\410723 WAUSAU 1ST AVE\C3D\SHEETSPLAN\022501_SS.DWG
LAYOUT NAME - 4
PLOT DATE : 2/22/2019 7:48 AM
PLOT BY : AYRES ASSOCIATES
PLOT NAME :
PLOT SCALE : 1 IN:40 FT
WISDOT/CADDS SHEET 41

2

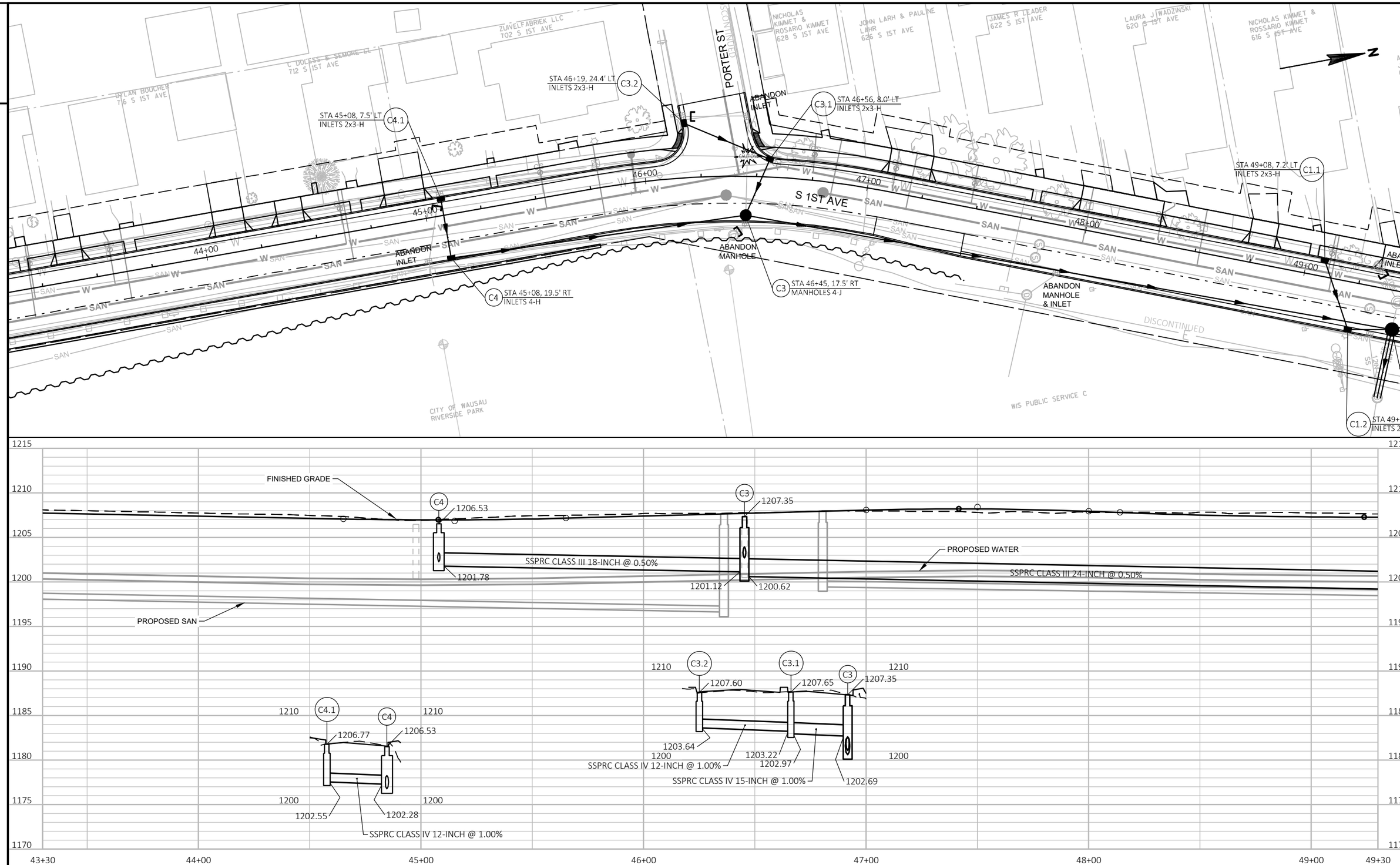

PROJECT NO: 6999-18-73	HWY: SOUTH 1ST AVENUE	COUNTY: MARATHON	STORM SEWER	SHEET 31	E

FILE NAME : V:\TRANS-EC\410723 WAUSAU 1ST AVE\C3D\SHEETSPLAN\022501_SS.DWG
LAYOUT NAME - 5
PLOT DATE : 2/22/2019 7:48 AM
PLOT BY : AYRES ASSOCIATES
PLOT NAME :
PLOT SCALE : 1 IN:40 FT

2

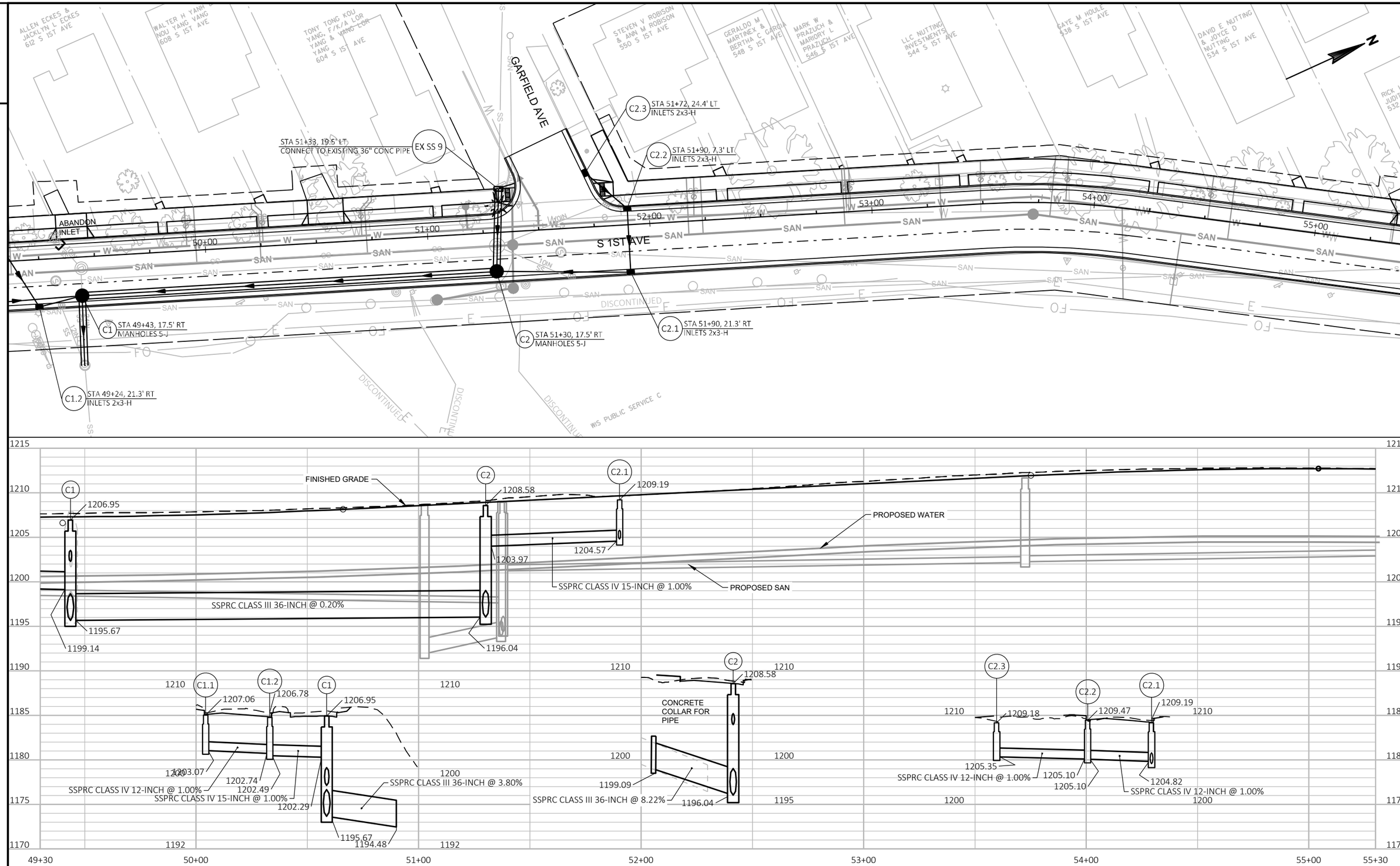

2

PROJECT NO: 6999-18-73	HWY: SOUTH 1ST AVENUE	COUNTY: MARATHON	STORM SEWER	SHEET 32	E

FILE NAME : V:\TRANS-EC\410723 WAUSAU 1ST AVE\C3D\SHEETSPLAN\022501_SS.DWG
LAYOUT NAME - 6
PLOT DATE : 2/22/2019 9:37 AM
PLOT BY : AYRES ASSOCIATES
PLOT NAME :
PLOT SCALE : 1 IN:40 FT

2

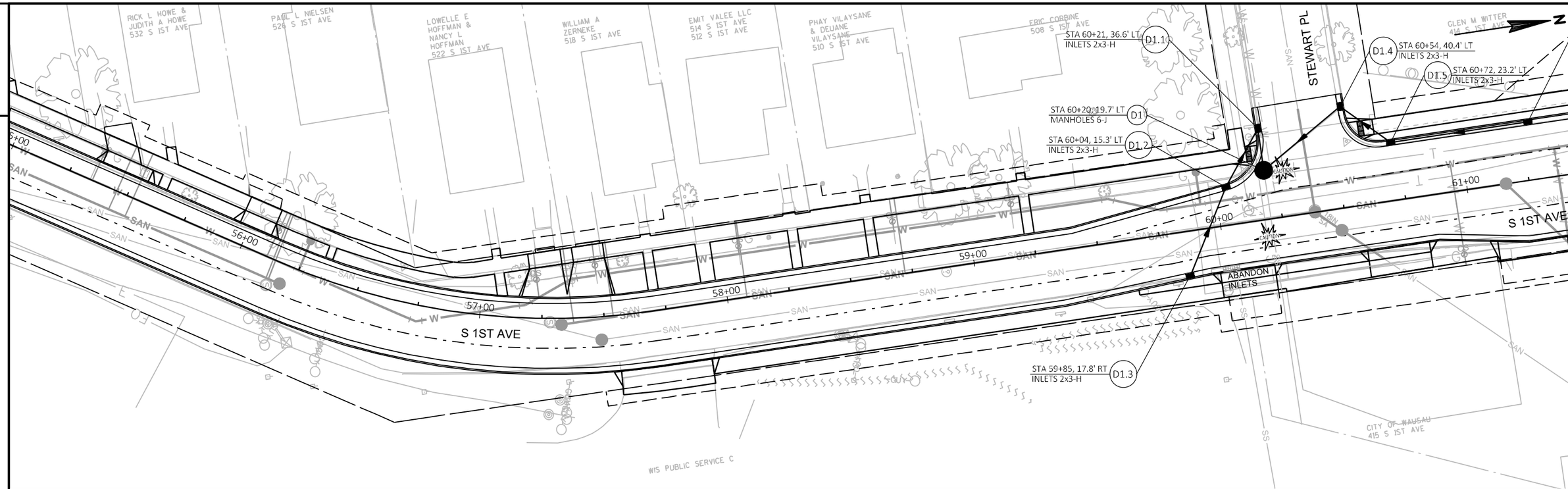

2

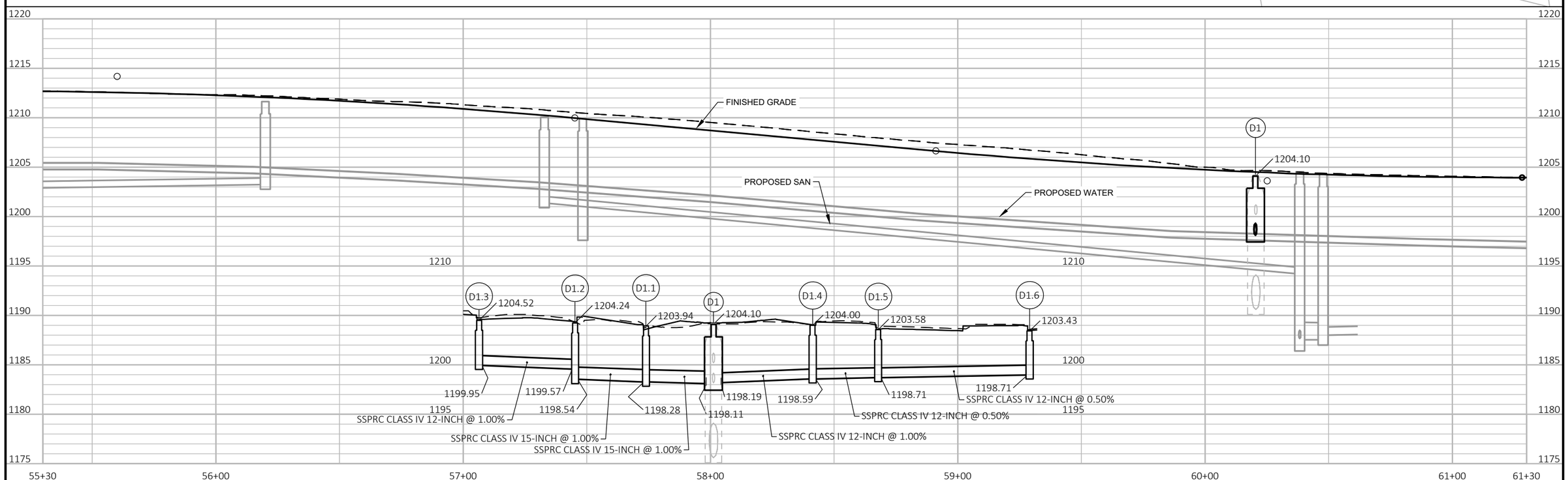

PROJECT NO: 6999-18-73	HWY: SOUTH 1ST AVENUE	COUNTY: MARATHON	STORM SEWER	SHEET 33	E

FILE NAME : V:\TRANS-EC\410723 WAUSAU 1ST AVE\C3D\SHEETSPLAN\022501_SS.DWG
LAYOUT NAME - 7
PLOT DATE : 2/22/2019 7:48 AM
PLOT BY : AYRES ASSOCIATES
PLOT NAME :
PLOT SCALE : ##########

WISDOT/CADDS SHEET 41

2

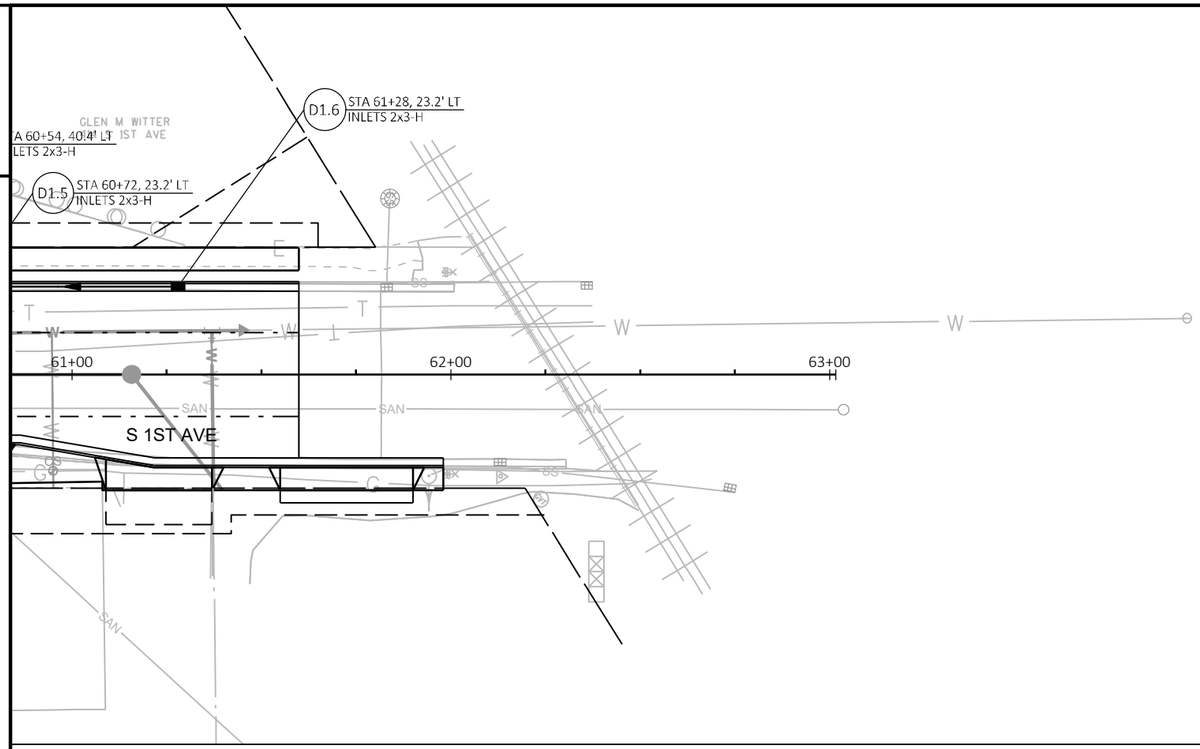

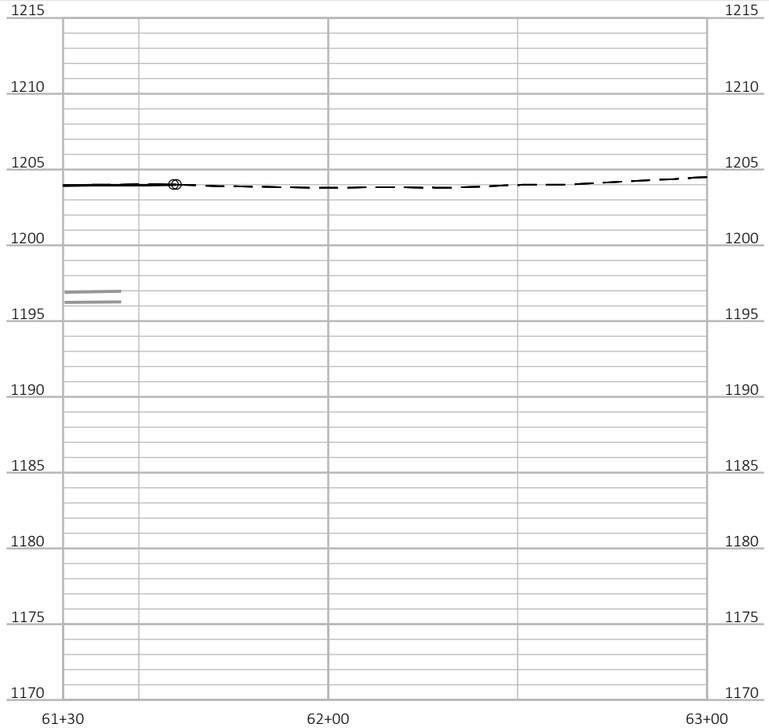

2

PROJECT NO: 6999-18-73	HWY: SOUTH 1ST AVENUE	COUNTY: MARATHON	STORM SEWER	SHEET 34	E

FILE NAME : V:\TRANS-EC\410723 WAUSAU 1ST AVE\C3D\SHEETSPLAN\022501_SS.DWG
LAYOUT NAME - 8
PLOT DATE : 2/22/2019 7:48 AM
PLOT BY : AYRES ASSOCIATES
PLOT NAME :
PLOT SCALE : 1 IN: 40 FT
WISDOT/CADDS SHEET 41

2

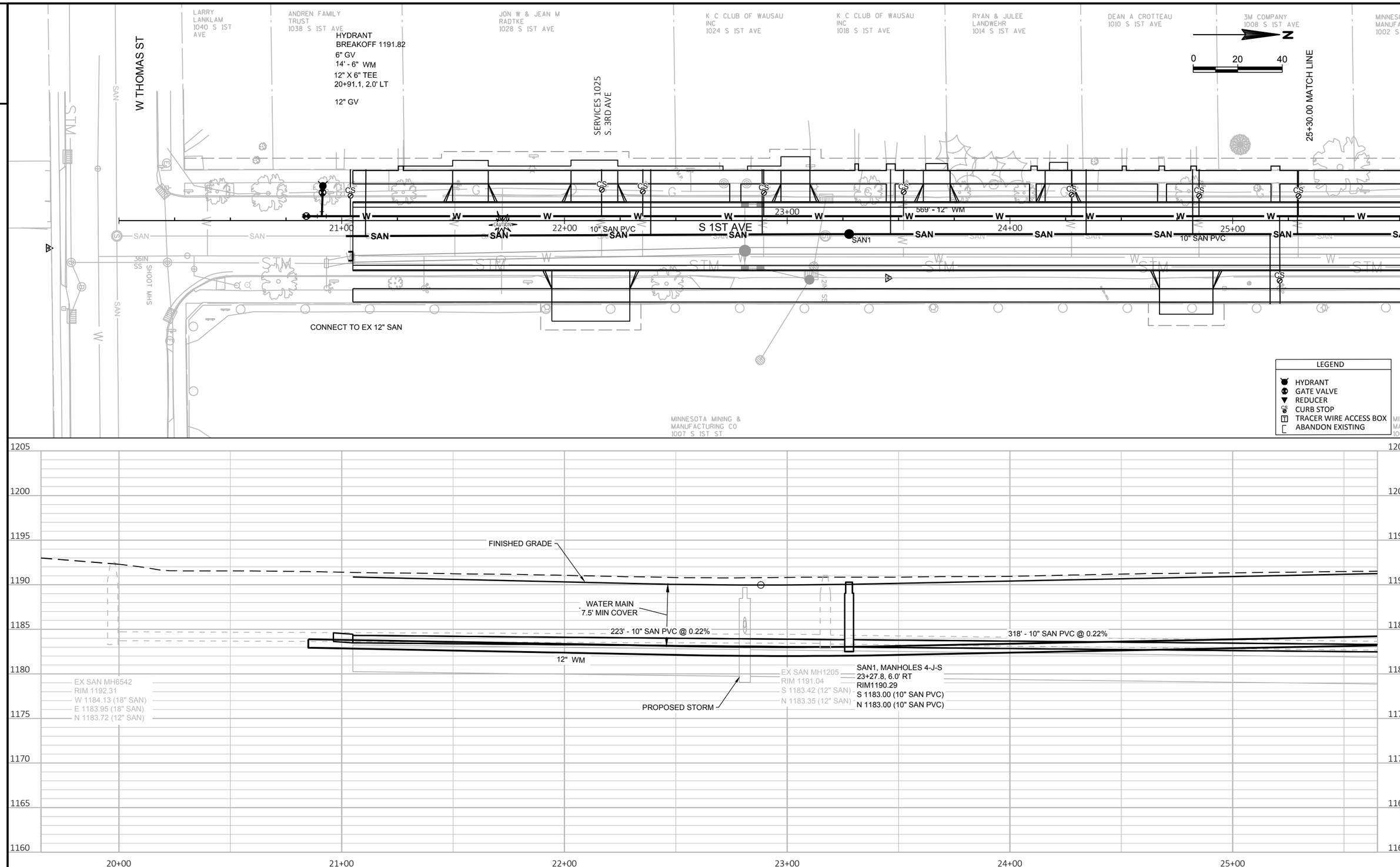

2

PROJECT NO: 6999-18-73	HWY: SOUTH 1ST AVENUE	COUNTY: MARATHON	SANITARY SEWER AND WATER MAIN	SHEET 35	E

FILE NAME : V:\TRANS-EC\410723 WAUSAU 1ST AVE\C3D\SHEETSPLAN\023100_UP.DWG
LAYOUT NAME - 1
PLOT DATE : 10/16/2018 9:37 AM
PLOT BY : AYRES ASSOCIATES
PLOT NAME :
PLOT SCALE : 1 IN:40 FT

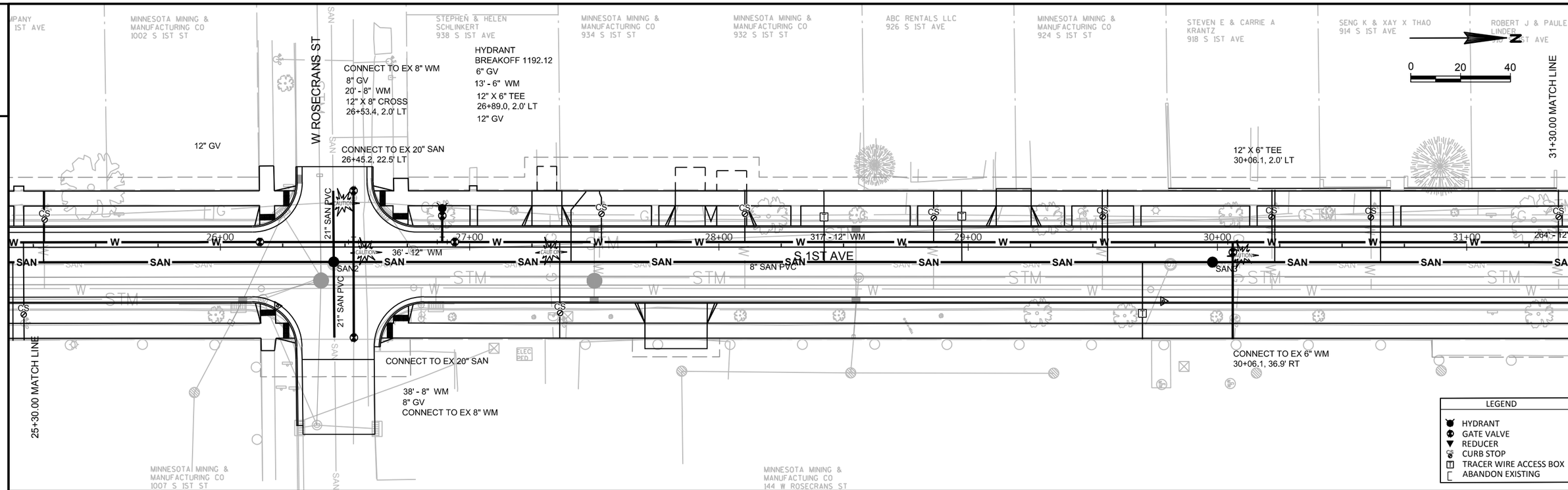

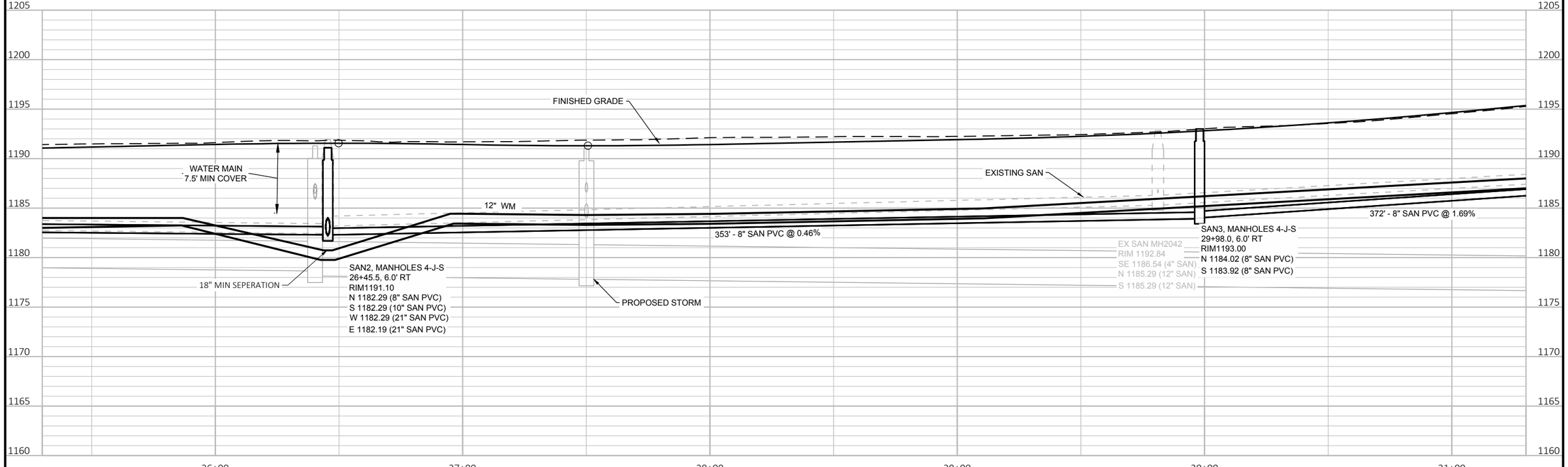

PROJECT NO: 6999-18-73	HWY: SOUTH 1ST AVENUE	COUNTY: MARATHON	SANITARY SEWER AND WATER MAIN	SHEET 36	E

FILE NAME : V:\TRANS-EC\410723 WAUSAU 1ST AVE\C3D\SHEETSPLAN\023100_UP.DWG
LAYOUT NAME - 2
PLOT DATE : 10/16/2018 9:37 AM
PLOT BY : AYRES ASSOCIATES
PLOT NAME :
PLOT SCALE : 1 IN:40 FT

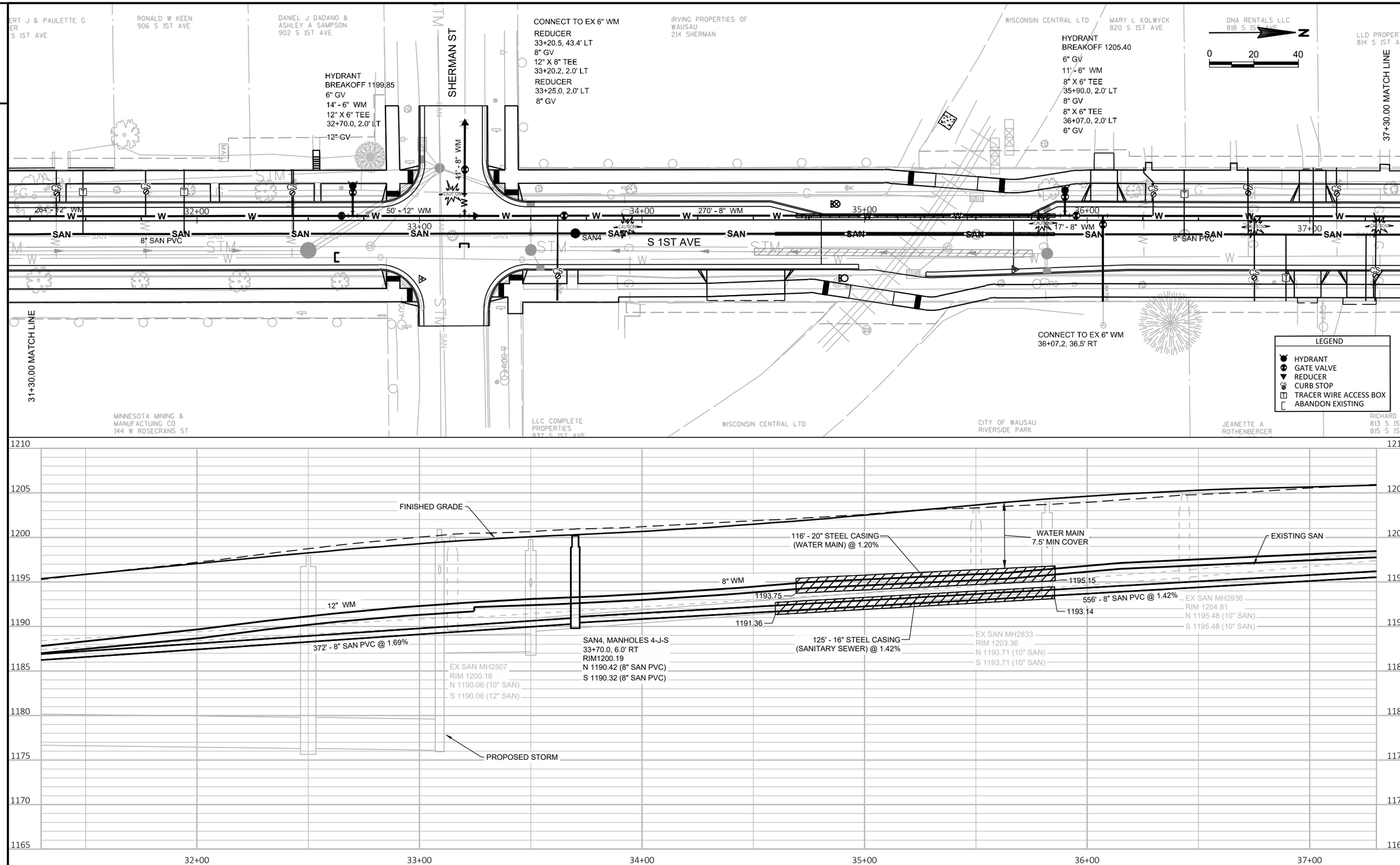

PROJECT NO: 6999-18-73	HWY: SOUTH 1ST AVENUE	COUNTY: MARATHON	SANITARY SEWER AND WATER MAIN	SHEET 37	E

FILE NAME : V:\TRANS-EC\410723 WAUSAU 1ST AVE\C3D\SHEETSPLAN\023100_UP.DWG
LAYOUT NAME - 3
PLOT DATE : 2/25/2019 1:54 PM
PLOT BY : AYRES ASSOCIATES
PLOT NAME :
PLOT SCALE : 1 IN:40 FT

2

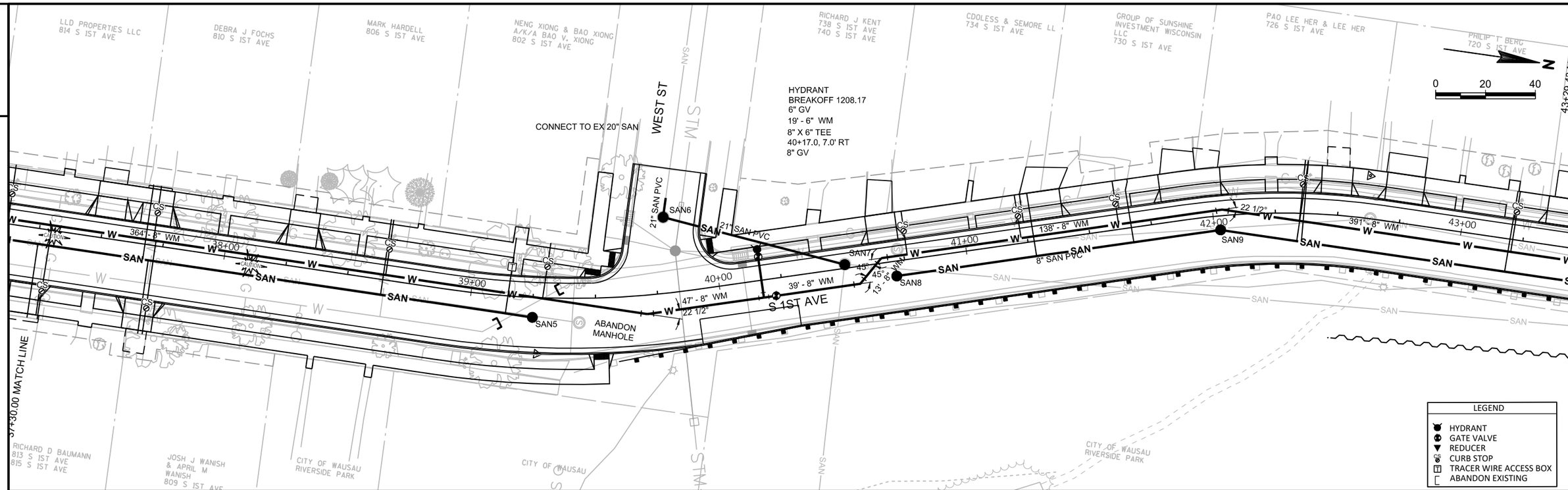

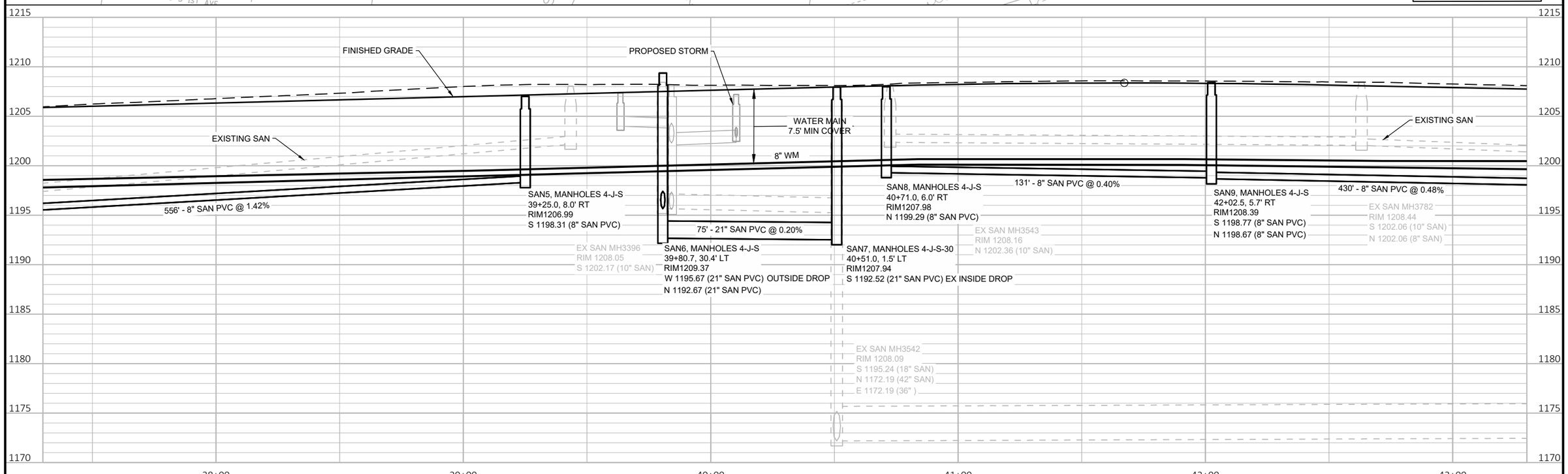

PROJECT NO: 6999-18-73	HWY: SOUTH 1ST AVENUE	COUNTY: MARATHON	SANITARY SEWER AND WATER MAIN	SHEET 38	E

FILE NAME : V:\TRANS-EC\410723 WAUSAU 1ST AVE\C3D\SHEETSPLAN\023100_UP.DWG
LAYOUT NAME - 4
PLOT DATE : 10/31/2018 2:58 PM
PLOT BY : AYRES ASSOCIATES
PLOT NAME :
PLOT SCALE : 1 IN:40 FT

2

HYDRANT
BREAKOFF 1208.05
6" GV
17' - 6" WM
8" X 6" TEE
45+95.0, 4.6' RT

CONNECT TO EX 8" WM
8" GV
8" X 8" TEE
46+42.1, 0.9' LT
8" GV

PORTER ST

S 1ST AVE

ZUIVELFABRIEK LLC
702 S 1ST AVE

C DOLESS & SEMORE LL
712 S 1ST AVE

DYLAN BOUCHER
716 S 1ST AVE

NICHOLAS KIMMET & ROSSARIO KIMMET
616 S 1ST AVE

JOHN LARH & PAULINE LARH
626 S 1ST AVE

JAMES R LEADER
622 S 1ST AVE

LAURA J WADZINSKI
620 S 1ST AVE

NICHOLAS KIMMET & ROSSARIO KIMMET
616 S 1ST AVE

CITY OF WAUSAU
RIVERSIDE PARK

WIS PUBLIC SERVICE C

DISCONTINUED

ABANDON MANHOLES

ABANDON MANHOLE

43 MATCH LINE

49+27.78 MATCH LINE

44+00
45+00
46+00
47+00
48+00
49+00

391' - 8" WM
8" SAN PVC
430' - 8" SAN PVC @ 0.48%
47' - 8" WM
SAN10
39' - 8" WM
20' - 8" WM
22 1/2°
SAN11
457' - 8" WM
8" SAN PVC

0 20 40

LEGEND
- HYDRANT
- GATE VALVE
- REDUCER
- CURB STOP
- TRACER WIRE ACCESS BOX
- ABANDON EXISTING

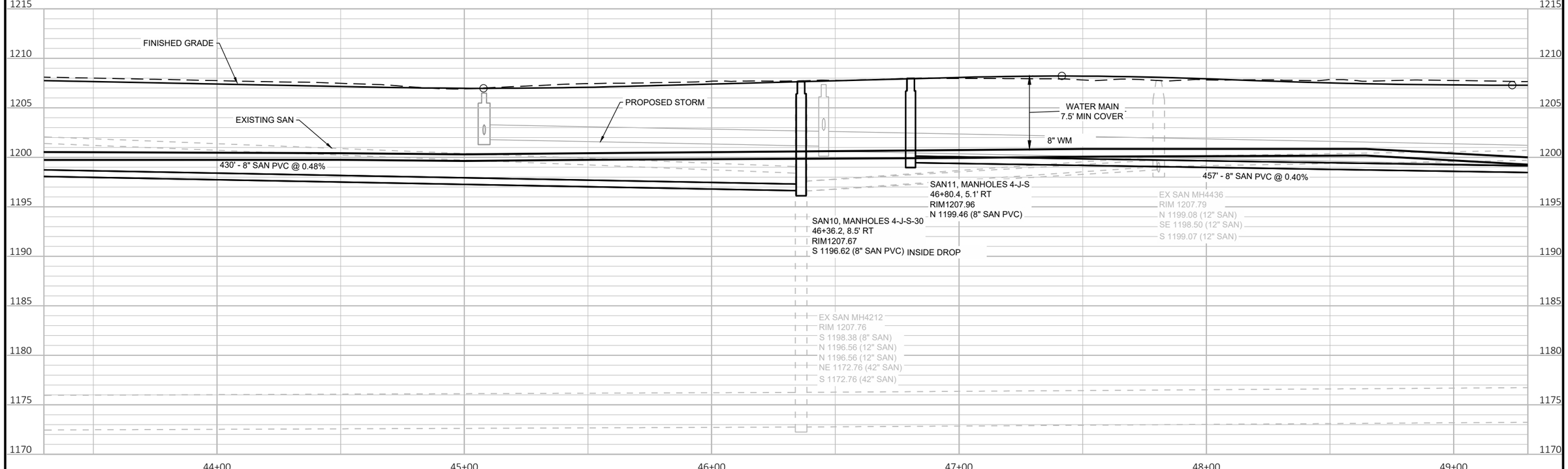

PROJECT NO: 6999-18-73	HWY: SOUTH 1ST AVENUE	COUNTY: MARATHON	SANITARY SEWER AND WATER MAIN	SHEET 39	E

FILE NAME : V:\TRANS-EC\410723 WAUSAU 1ST AVE\C3D\SHEETSPLAN\023100_UP.DWG
LAYOUT NAME - 5
PLOT DATE : 10/25/2018 4:40 PM
PLOT BY : AYRES ASSOCIATES
PLOT NAME :
PLOT SCALE : 1 IN:40 FT

2

HYDRANT
BREAKOFF 1209.21
10' - 6" WM
6" GV
8" X 6" TEE
51+18.1, 2.0' LT
8" GV

CONNECT TO EX 21" SAN
CONNECT TO EX 4" WM
8" GV
REDUCER
51+42.7, 23.5' LT
22 1/2° BEND
51+50.0, 8.9' LT
8" X 8" TEE
51+50.0, 2.0' LT
8" GV

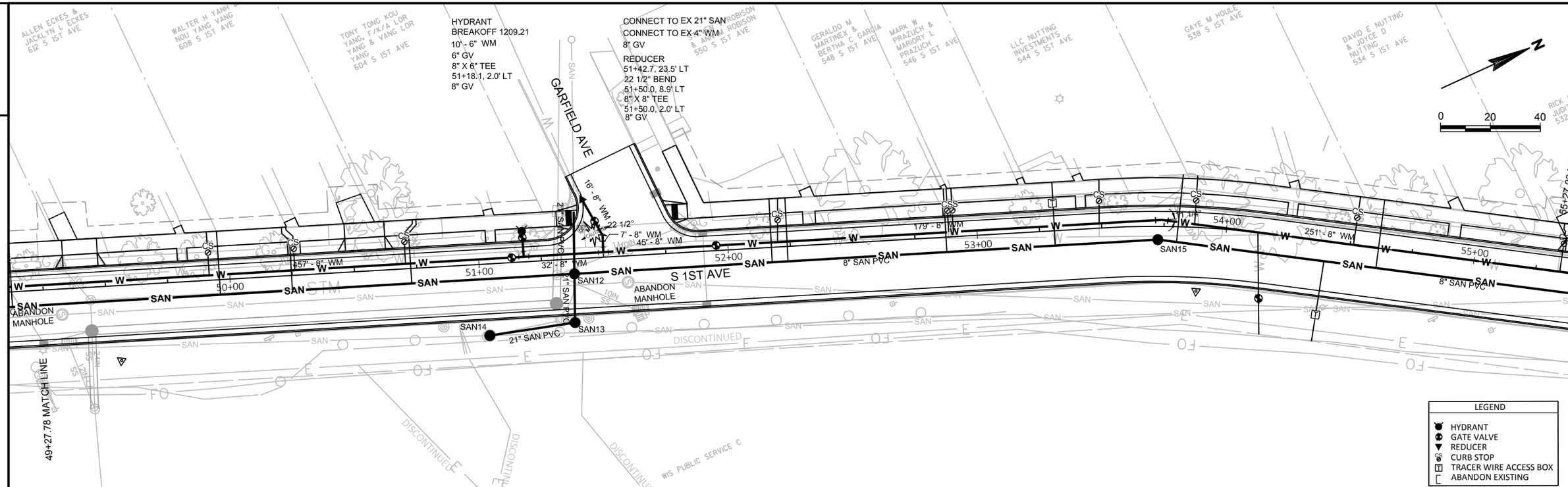

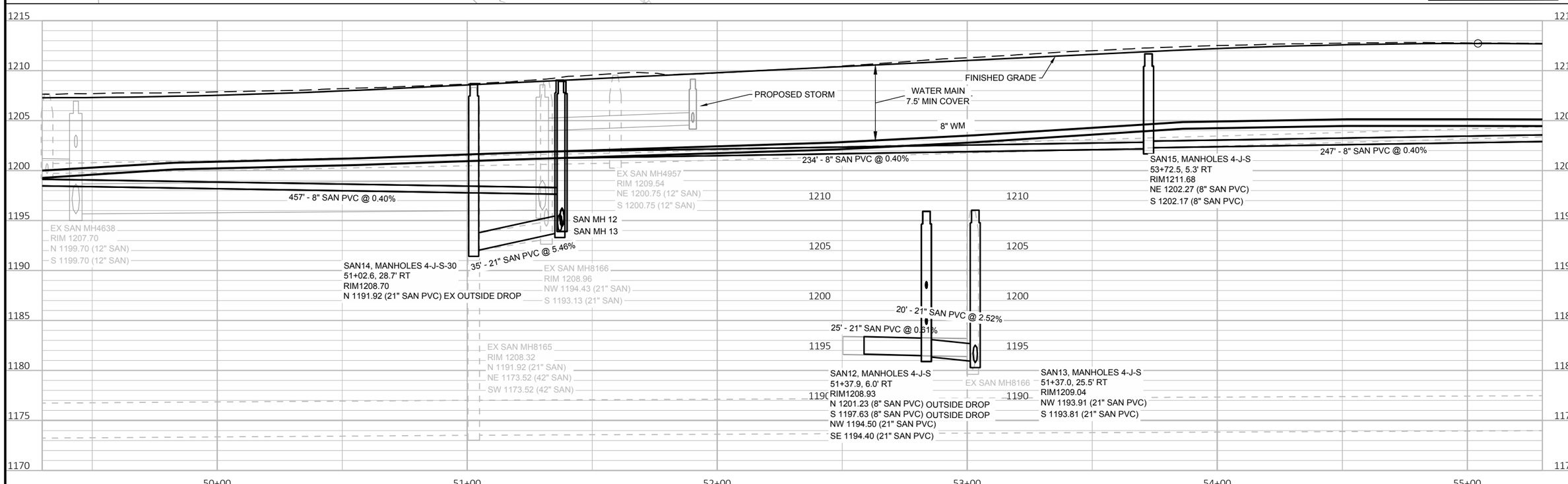

PROJECT NO: 6999-18-73	HWY: SOUTH 1ST AVENUE	COUNTY: MARATHON	SANITARY SEWER AND WATER MAIN	SHEET 40	E

FILE NAME : V:\TRANS-EC\410723 WAUSAU 1ST AVE\C3D\SHEETSPLAN\023100_UP.DWG
LAYOUT NAME - 6
PLOT DATE : 10/16/2018 9:38 AM PLOT BY : AYRES ASSOCIATES PLOT NAME : PLOT SCALE : 1 IN:40 FT

2

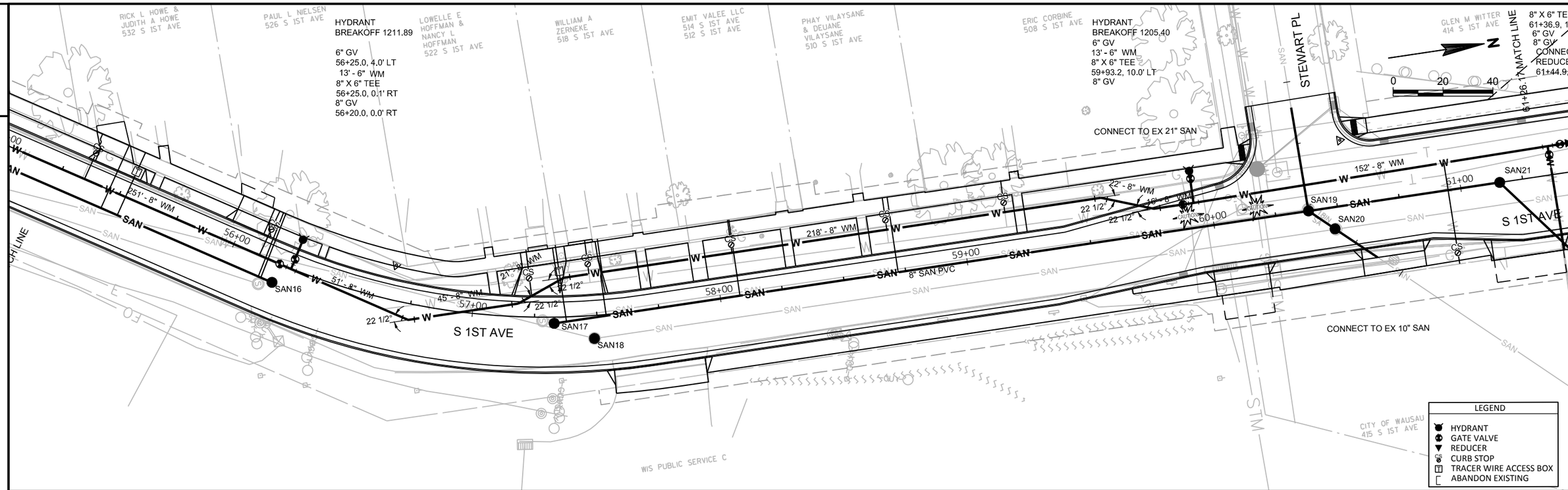

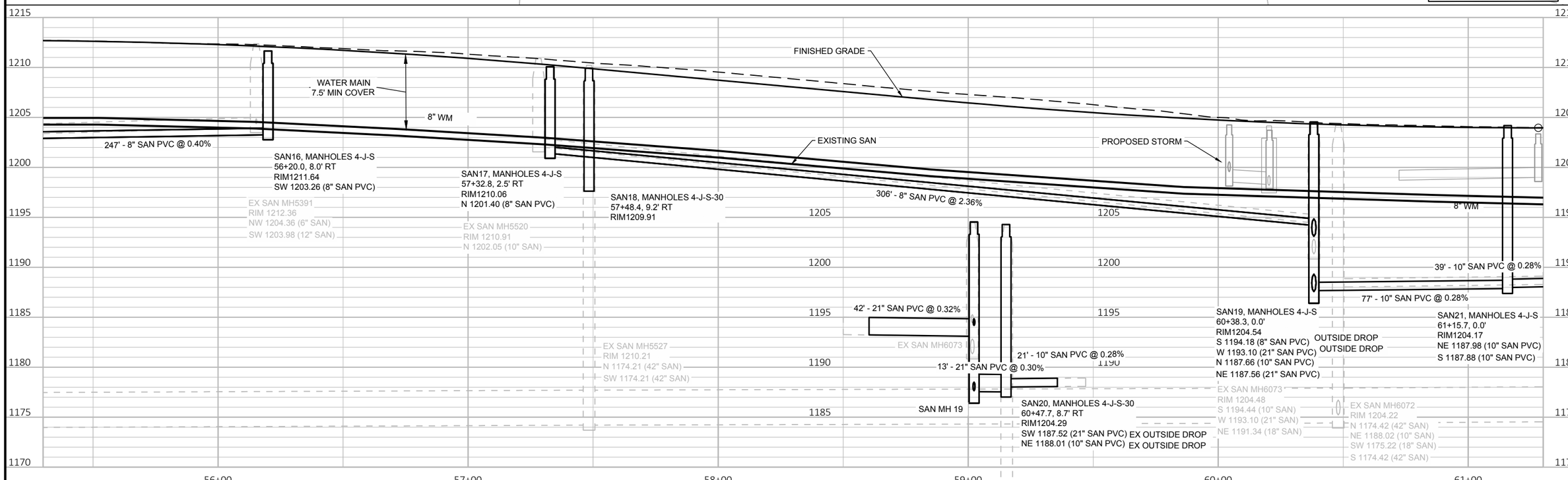

2

PROJECT NO: 6999-18-73	HWY: SOUTH 1ST AVENUE	COUNTY: MARATHON	SANITARY SEWER AND WATER MAIN	SHEET 41	E

FILE NAME : V:\TRANS-EC\410723 WAUSAU 1ST AVE\C3D\SHEETSPLAN\023100_UP.DWG
LAYOUT NAME - 7
PLOT DATE : 10/16/2018 9:38 AM
PLOT BY : AYRES ASSOCIATES
PLOT NAME :
PLOT SCALE : ##########

2

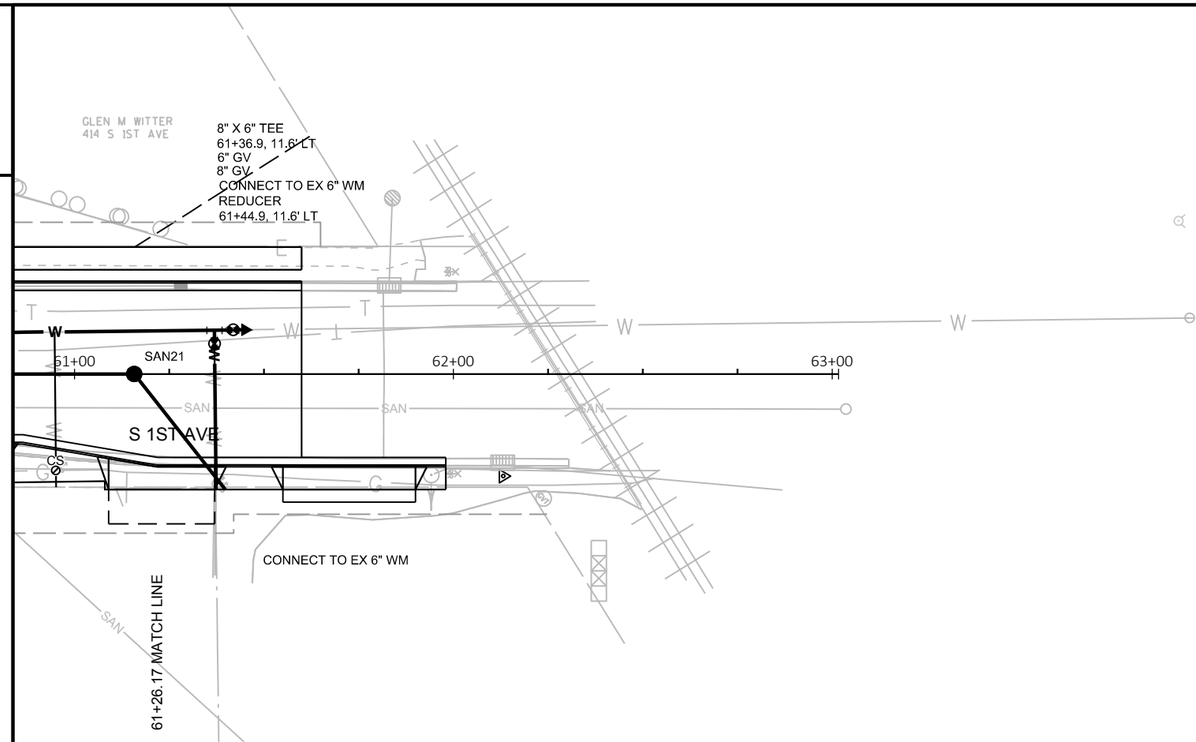

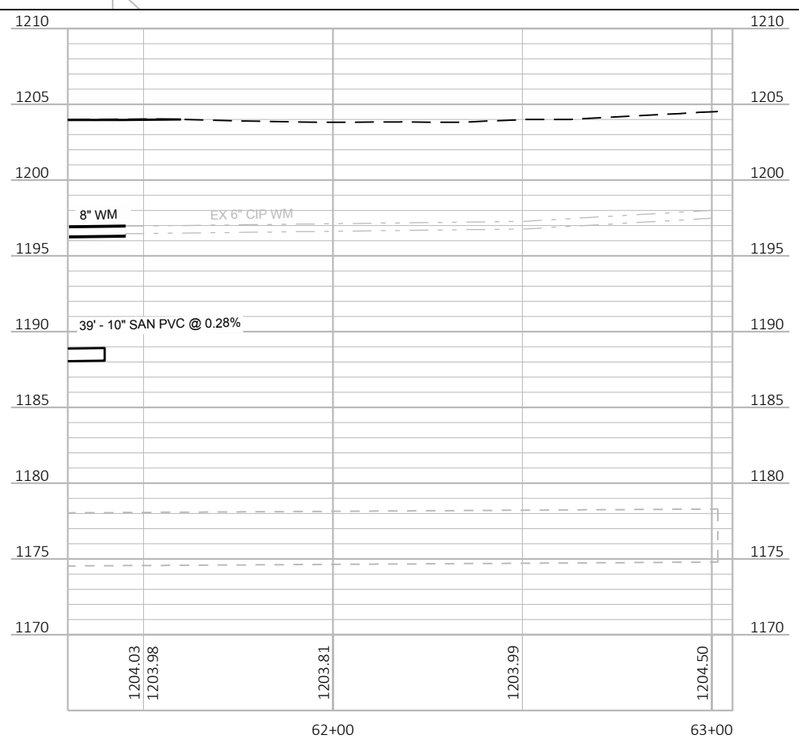

N

0 20 40

LEGEND

- HYDRANT
- GATE VALVE
- REDUCER
- CURB STOP
- TRACER WIRE ACCESS BOX
- ABANDON EXISTING

2

PROJECT NO: 6999-18-73	HWY: SOUTH 1ST AVENUE	COUNTY: MARATHON	SANITARY SEWER AND WATER MAIN	SHEET 42	E

FILE NAME : V:\TRANS-EC\410723 WAUSAU 1ST AVE\C3D\SHEETSPLAN\023100_UP.DWG
LAYOUT NAME - 8
PLOT DATE : 10/16/2018 9:38 AM PLOT BY : AYRES ASSOCIATES PLOT NAME : PLOT SCALE : 1 IN: 40 FT

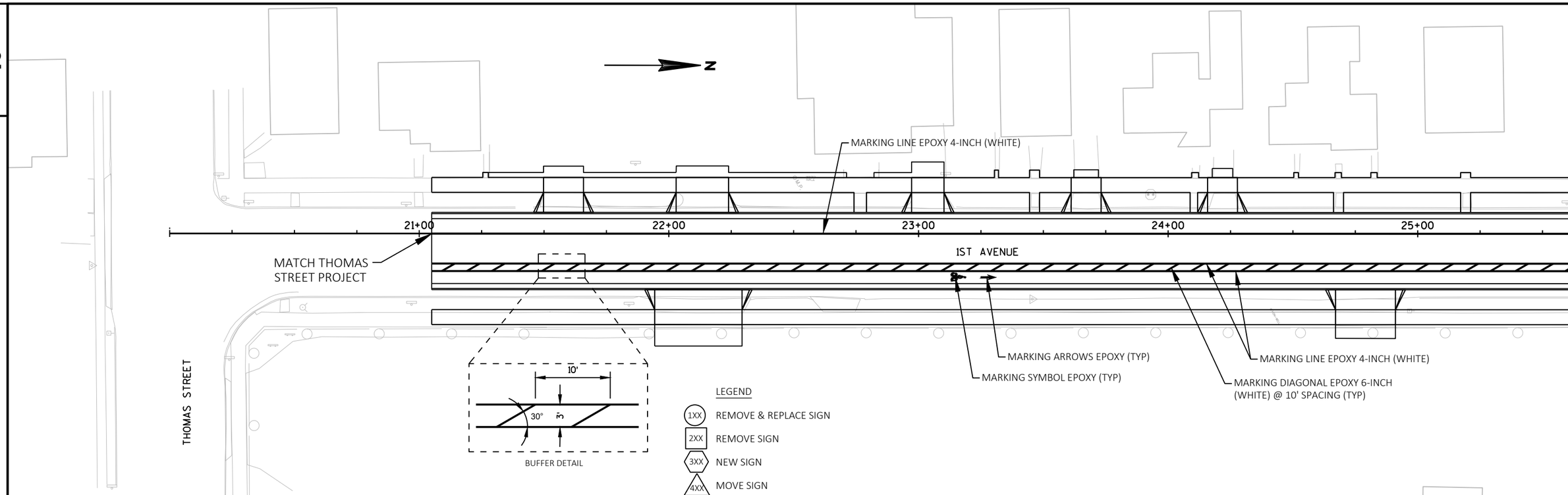

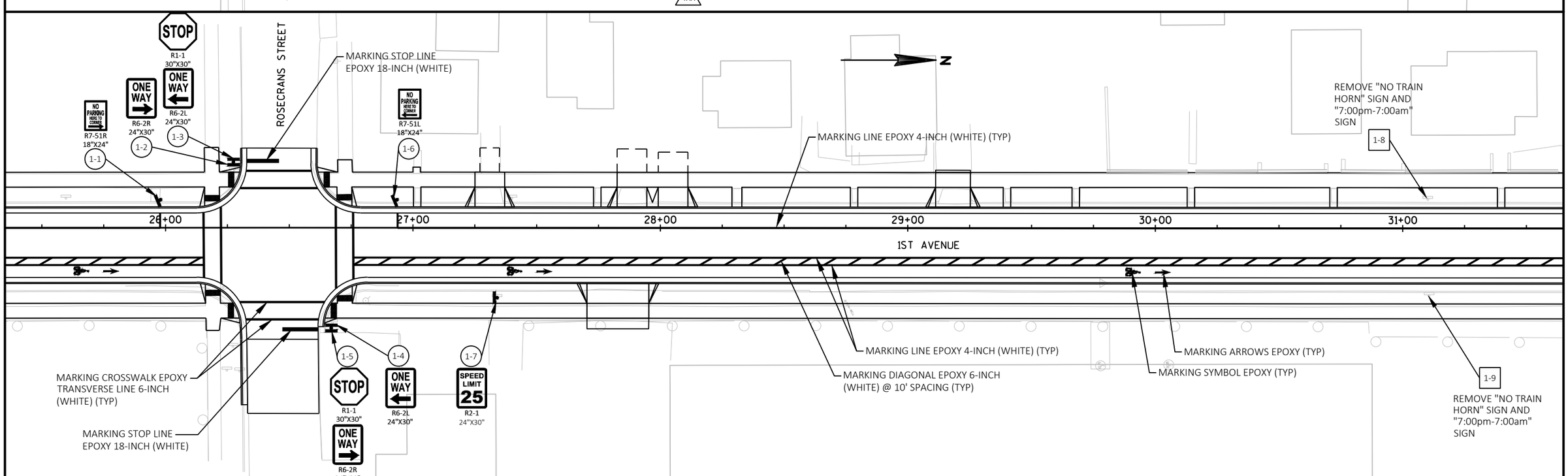

PROJECT NO:6999-18-73	HWY:SOUTH 1ST AVENUE	COUNTY:MARATHON	SIGNING & MARKING	SHEET 43	E

FILE NAME : V:\TRANS-EC\410723 WAUSAU 1ST AVE\C3D\SHEETSPLAN\023201_PS.DWG
LAYOUT NAME - 023201_PS
PLOT DATE : 8/1/2018 9:02 AM PLOT BY : RESHESKE, CARRIE PLOT NAME : PLOT SCALE : 1 IN:40 FT

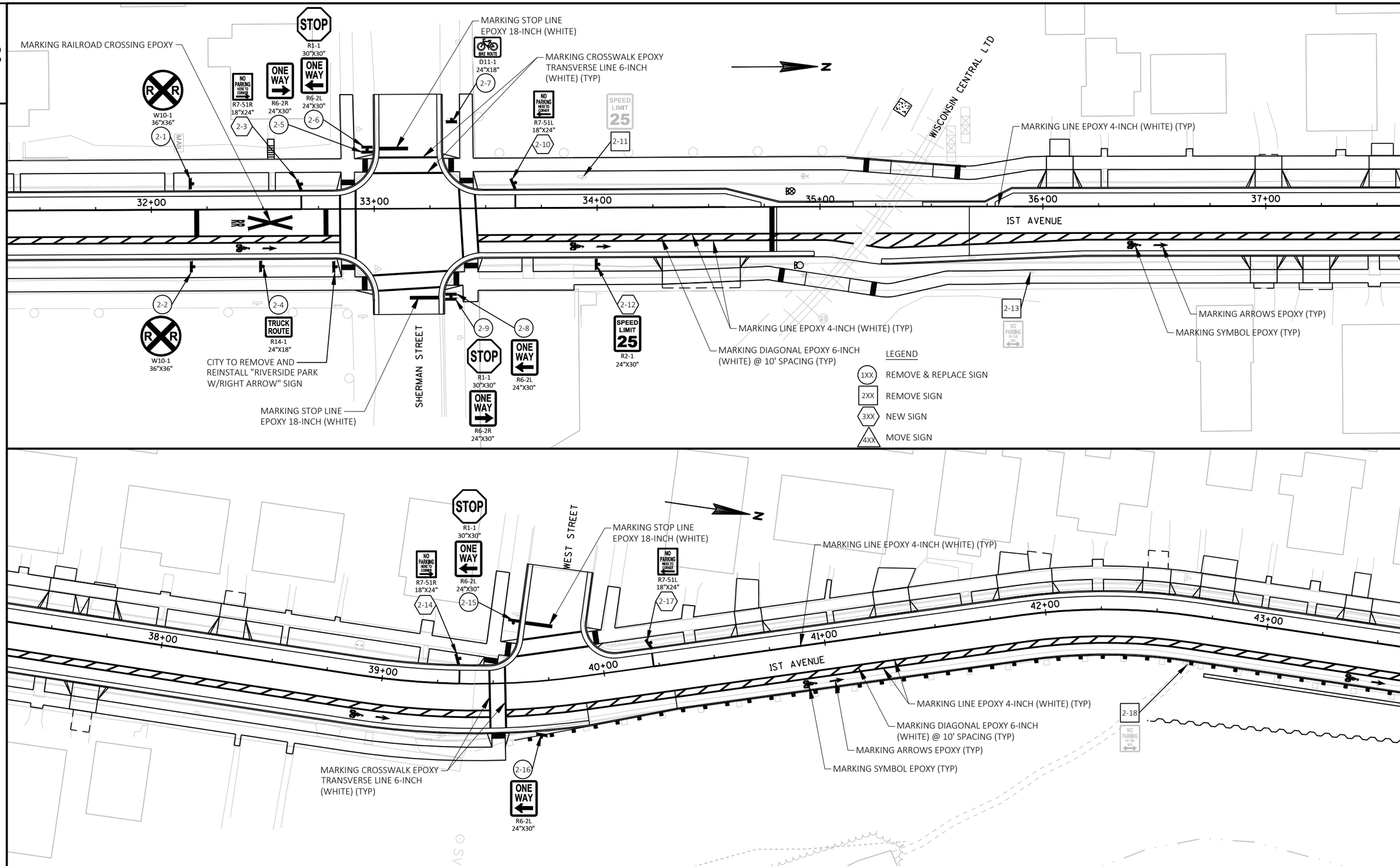

PROJECT NO:6999-18-73	HWY:SOUTH 1ST AVENUE	COUNTY:MARATHON	SIGNING & MARKING	SHEET 44	E

FILE NAME : T:\410723 WAUSAU 1ST AVE\C3D\SHEETSPLAN\023201_PS.DWG
LAYOUT NAME - 023202_PS
PLOT DATE : 10/31/2018 2:59 PM PLOT BY : RESHESKE, CARRIE PLOT NAME : PLOT SCALE : 1 IN:40 FT

2

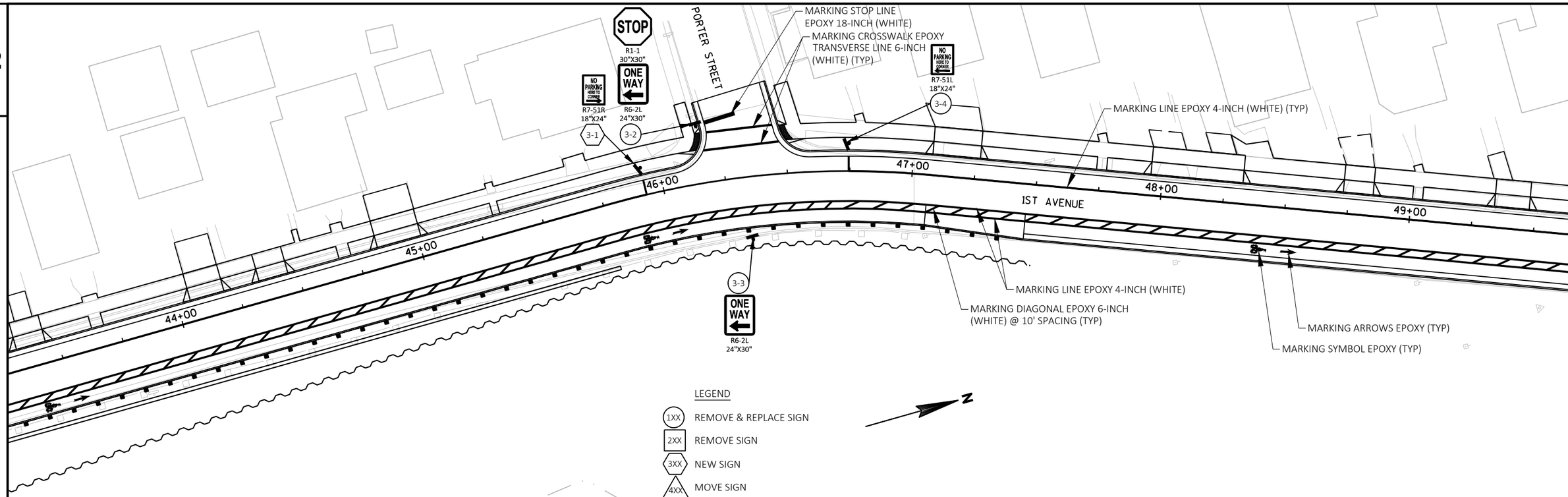

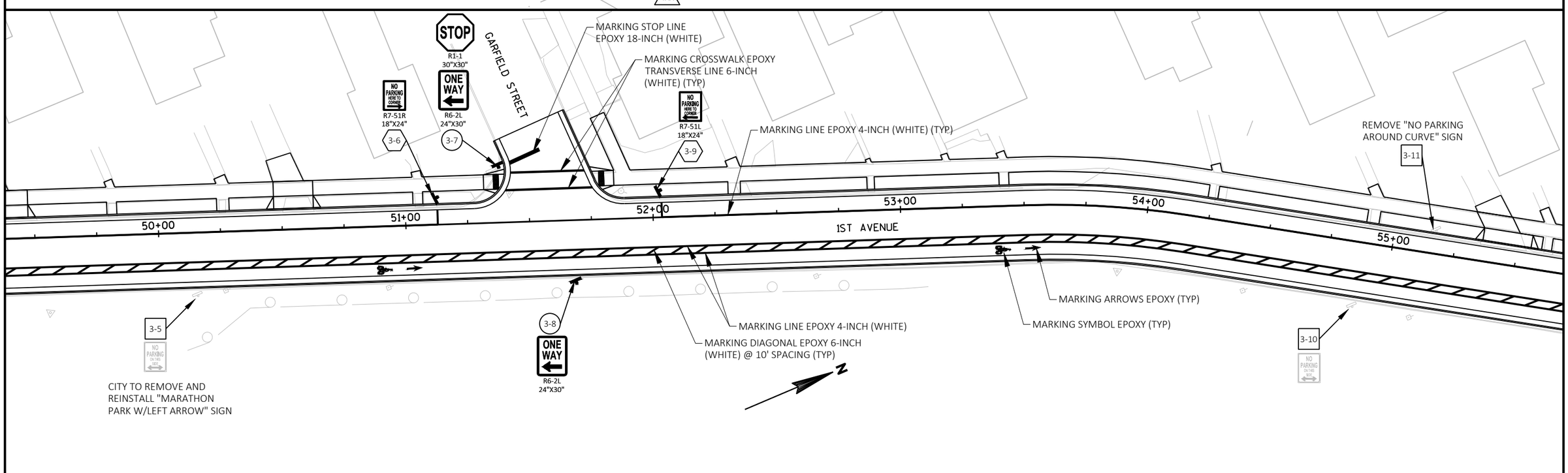

PROJECT NO:6999-18-73	HWY:SOUTH 1ST AVENUE	COUNTY:MARATHON	SIGNING & MARKING	SHEET 45	E

2

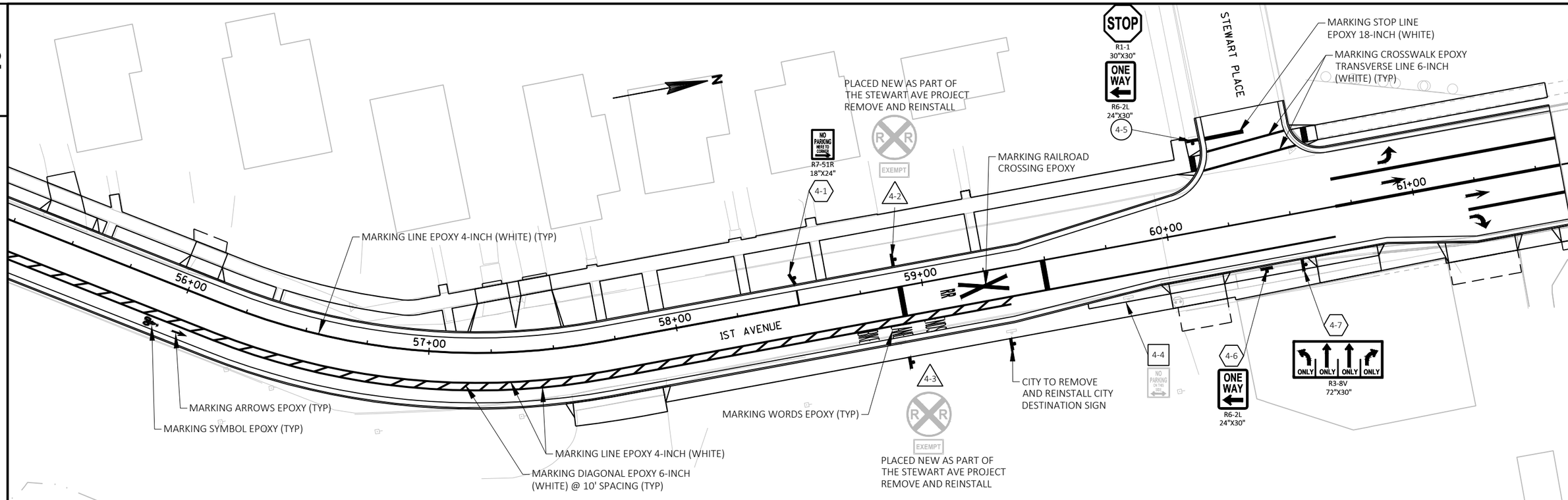

2

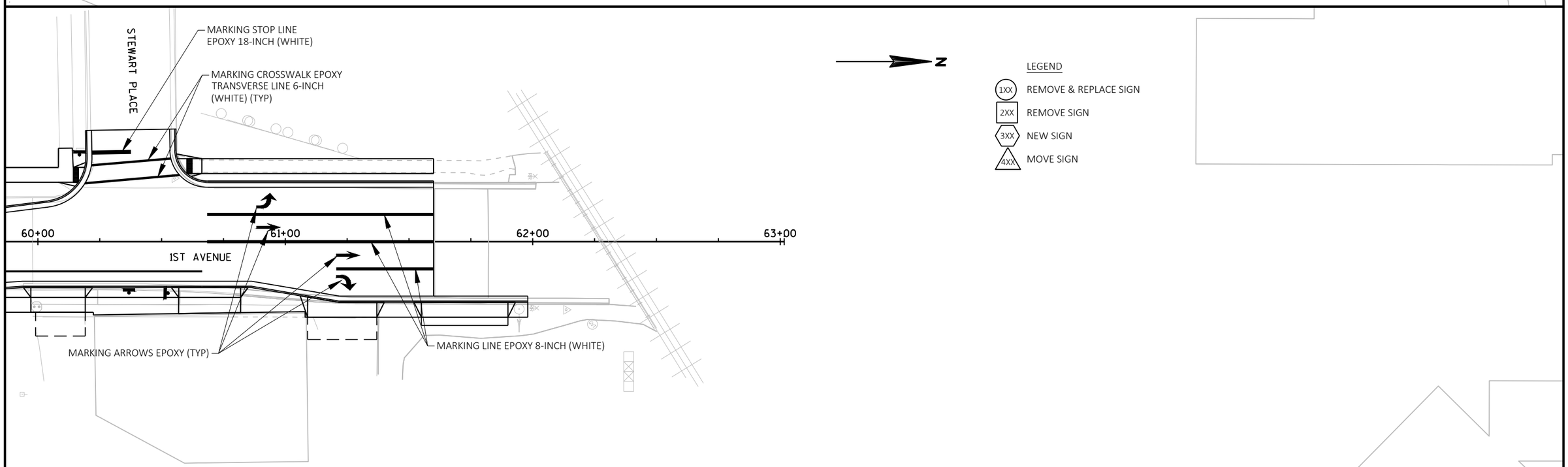

PROJECT NO:6999-18-73	HWY:SOUTH 1ST AVENUE	COUNTY:MARATHON	SIGNING & MARKING	SHEET 46	E

FILE NAME : V:\TRANS-EC\410723 WAUSAU 1ST AVE\C3D\SHEETSPLAN\023201_PS.DWG
LAYOUT NAME - 023204_PS
PLOT DATE : 8/1/2018 9:02 AM PLOT BY : RESHESKE, CARRIE PLOT NAME : PLOT SCALE : 1 IN:40 FT

2

LEGEND

- DECORATIVE LIGHTING UNIT
- PULL BOXES NON-CONDUCTIVE 24X42-INCH
- CONDUIT RIGID NON-METALLIC SCHEDULE 40 1 1/4-INCH, UNLESS NOTED
- LIGHTING CONTROL CABINET
- L1, 2-#8 / F1, 2-#6 — (CIRCUIT #) CONDUIT WIRE CONFIGURATION
- CONDUIT STUB

A-7 (L1,F1) — CONTROL CABINET DESIGNATION; POLE NUMBER; CIRCUIT(S) L-LIGHTING F-FESTOON
STATION, OFFSET — LOCATION (TO CENTER OF POLE)
A-1 — BASE TYPE; DECORATIVE LIGHTING UNIT TYPE

GENERAL LIGHTING NOTES:
1. ALL CONDUITS WITH WIRES SHALL ALSO INCLUDE 1 - #8 GROUND.
2. CONCRETE BASES TYPE 1 BOLT CIRCLE PATTERN AND DIAMETER SHALL MATCH SELECTED LIGHTING UNIT TYPES.

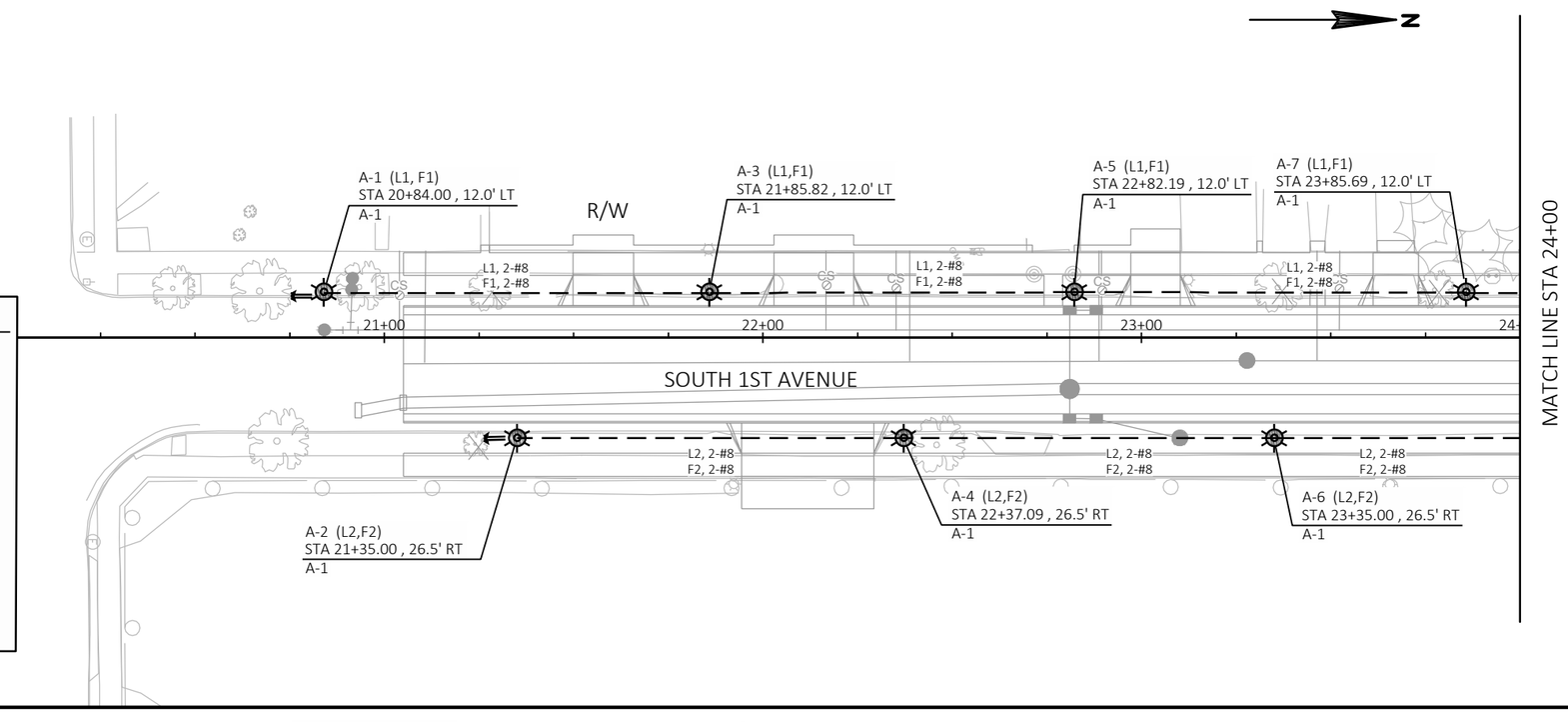

2

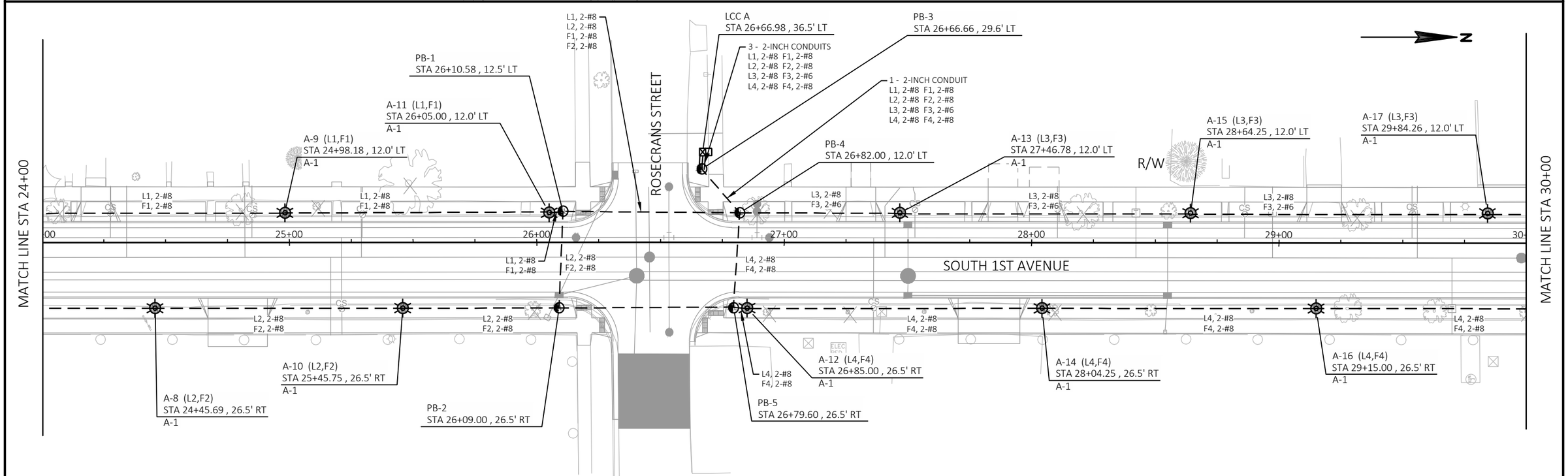

PROJECT NO: 6999-18-73	HWY: SOUTH 1ST AVENUE	COUNTY: MARATHON	LIGHTING PLAN	SHEET 47	E

FILE NAME : V:\TRANS-EC\410723 WAUSAU 1ST AVE\C3D\SHEETSPLAN\023601-LP.DWG
LAYOUT NAME - 1 LIGHTING PLAN
PLOT DATE : 10/15/2018 2:22 PM PLOT BY : AYRES ASSOCIATES PLOT NAME : PLOT SCALE : 1 IN:40 FT

WISDOT/CADDS SHEET 44

2

MATCH LINE STA 30+00

R/W

A-19 (L3,F3)
STA 31+04.26 , 12.0' LT
A-1

A-21 (L3,F3)
STA 32+24.26 , 12.0' LT
A-1

PB-7
STA 32+80.00 , 12.0' LT

SHERMAN STREET

PB-9
STA 33+48.50 , 12.0' LT

A-23 (L3,F3)
STA 33+55.00 , 12.0' LT
A-1

A-25 (L3,F3)
STA 34+94.00 , 6.0' LT
A-1

L3, 2-#8
F3, 2-#6

L3, 2-#8
F3, 2-#8

L3, 2-#8
F3, 2-#8

L3, 2-#8
F3, 2-#8

L3, 2-#8
F3, 2-#8

L3, 2-#8
F3, 2-#8

31+00

32+00

33+00

34+00

35+00

SOUTH 1ST AVENUE

L4, 2-#8
F4, 2-#8

L4, 2-#8
F4, 2-#8

L4, 2-#8
F4, 2-#8

L4, 2-#8
F4, 2-#8

L4, 2-#8
F4, 2-#8

L4, 2-#8
F4, 2-#8

A-18 (L4,F4)
STA 30+44.26 , 26.5' RT
A-1

A-20 (L4,F4)
STA 31+64.26 , 26.5' RT
A-1

A-22 (L4,F4)
STA 32+75.00 , 26.5' RT
A-1

PB-6
STA 32+81.00 , 26.5' RT

A-24 (L4,F4)
STA 34+16.00 , 26.5' RT
A-1

PB-8
STA 33+50.11 , 26.5' RT

WISCONSIN
CENTRAL LTD

B-1 (L2,F2)
STA 35+70.21 , 27.4' RT
A-1

MATCH LINE STA 36+00

2

LEGEND

- DECORATIVE LIGHTING UNIT
- PULL BOXES NON-CONDUCTIVE 24X42-INCH
- CONDUIT RIGID NON-METALLIC SCHEDULE 40 1 1/4-INCH, UNLESS NOTED
- LIGHTING CONTROL CABINET
- L1, 2-#8 F1, 2-#6 — (CIRCUIT #) CONDUIT WIRE CONFIGURATION
- CONDUIT STUB

A-7 (L1,F1)
STATION, OFFSET
A-1

- CONTROL CABINET DESIGNATION
- POLE NUMBER
- CIRCUIT(S) L-LIGHTING F-FESTOON
- LOCATION (TO CENTER OF POLE)
- BASE TYPE
- DECORATIVE LIGHTING UNIT TYPE

GENERAL LIGHTING NOTES:
1. ALL CONDUITS WITH WIRES SHALL ALSO INCLUDE 1 - #8 GROUND.
2. CONCRETE BASES TYPE 1 BOLT CIRCLE PATTERN AND DIAMETER SHALL MATCH SELECTED LIGHTING UNIT TYPES.

MATCH LINE STA 36+00

B-2 (L1,F1)
STA 36+23.62 , 12.0' LT
A-1

B-4 (L1,F1)
STA 37+39.19 , 12.0' LT
A-1

R/W

B-6 (L1,F1)
STA 38+42.88 , 12.0' LT
A-1

PB-10
STA 39+58.25 , 22.5' LT

3 - 2-INCH CONDUITS
L1, 2-#8 F1, 2-#8
L2, 2-#8 F2, 2-#8
L3, 2-#8 F3, 2-#6

1 - 2-INCH CONDUIT
L1, 2-#8 F1, 2-#8
L2, 2-#8 F2, 2-#8
L3, 2-#8 F3, 2-#6

LCC-B
STA 40+03.44 , 34.8' LT

PB-11
STA 40+02.17 , 30.0' LT

B-12 (L3,F3)
STA 41+72.89 , 11.0' LT
A-1

PB-13
STA 40+06.08 , 11.2' LT

B-11 (L3,F3)
STA 41+16.09 , 11.0' LT
A-1

B-10 (L3,F3)
STA 40+55.00 , 11.0' LT
A-1

B-8 (L1,F1)
STA 39+39.00 , 11.5' LT
A-1

WEST STREET

L1, 2-#8
F1, 2-#8

L1, 2-#8
F1, 2-#8

L1, 2-#8
F1, 2-#8

L1, 2-#8
F1, 2-#8

L1, 2-#8
F1, 2-#8

L1, 2-#8
F1, 2-#8

L3, 2-#8
F3, 2-#6

L3, 2-#8
F3, 2-#6

L3, 2-#8
F3, 2-#6

L3, 2-#8
F3, 2-#6

37+00

38+00

39+00

40+00

41+00

42+00

SOUTH 1ST AVENUE

L2, 2-#8
F2, 2-#8

L2, 2-#8
F2, 2-#8

L2, 2-#8
F2, 2-#8

L2, 2-#8
F2, 2-#8

L2, 2-#8
F2, 2-#8

L2, 2-#8
F2, 2-#8

B-3 (L2,F2)
STA 36+81.50 , 26.5' RT
A-1

B-5 (L2,F2)
STA 37+99.19 , 26.5' RT
A-1

B-7 (L2,F2)
STA 38+90.43 , 26.5' RT
A-1

B-9 (L2,F2)
STA 39+96.00 , 26.2' RT
A-1

PB-12
STA 40+03.55 , 25.8' RT

MATCH LINE STA 42+00

PROJECT NO: 6999-18-73	HWY: SOUTH 1ST AVENUE	COUNTY: MARATHON	LIGHTING PLAN	SHEET 48	E

FILE NAME : V:\TRANS-EC\410723 WAUSAU 1ST AVE\C3D\SHEETSPLAN\023601-LP.DWG
LAYOUT NAME - 2 LIGHTING PLAN
PLOT DATE : 2/25/2019 11:05 AM
PLOT BY : AYRES ASSOCIATES
PLOT NAME :
PLOT SCALE : 1 IN:40 FT

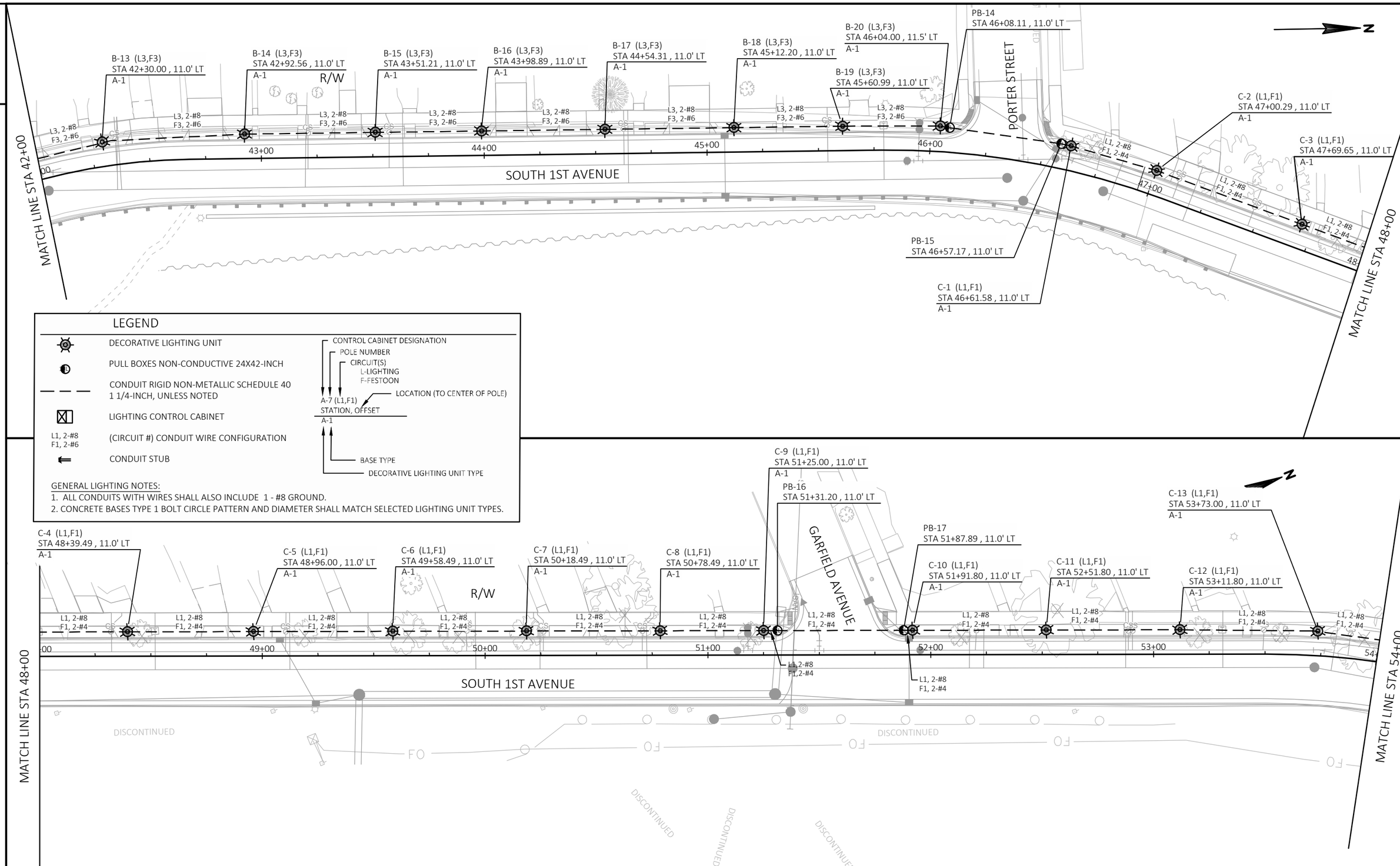
B-13 (L3,F3)
STA 42+30.00 , 11.0' LT
A-1
B-14 (L3,F3)
STA 42+92.56 , 11.0' LT
A-1
B-15 (L3,F3)
STA 43+51.21 , 11.0' LT
A-1
B-16 (L3,F3)
STA 43+98.89 , 11.0' LT
A-1
B-17 (L3,F3)
STA 44+54.31 , 11.0' LT
A-1
B-18 (L3,F3)
STA 45+12.20 , 11.0' LT
A-1
B-19 (L3,F3)
STA 45+60.99 , 11.0' LT
A-1
B-20 (L3,F3)
STA 46+04.00 , 11.5' LT
A-1
PB-14
STA 46+08.11 , 11.0' LT
PB-15
STA 46+57.17 , 11.0' LT
C-1 (L1,F1)
STA 46+61.58 , 11.0' LT
A-1
C-2 (L1,F1)
STA 47+00.29 , 11.0' LT
A-1
C-3 (L1,F1)
STA 47+69.65 , 11.0' LT
A-1
R/W
PORTER STREET
SOUTH 1ST AVENUE
MATCH LINE STA 42+00
MATCH LINE STA 48+00
43+00
44+00
45+00
46+00
47+00
L3, 2-#8
F3, 2-#6
L1, 2-#8
F1, 2-#4
LEGEND
DECORATIVE LIGHTING UNIT
PULL BOXES NON-CONDUCTIVE 24X42-INCH
CONDUIT RIGID NON-METALLIC SCHEDULE 40
1 1/4-INCH, UNLESS NOTED
LIGHTING CONTROL CABINET
L1, 2-#8
F1, 2-#6
(CIRCUIT #) CONDUIT WIRE CONFIGURATION
CONDUIT STUB
CONTROL CABINET DESIGNATION
POLE NUMBER
CIRCUIT(S)
L-LIGHTING
F-FESTOON
LOCATION (TO CENTER OF POLE)
A-7 (L1,F1)
STATION, OFFSET
A-1
BASE TYPE
DECORATIVE LIGHTING UNIT TYPE
GENERAL LIGHTING NOTES:
1. ALL CONDUITS WITH WIRES SHALL ALSO INCLUDE 1 - #8 GROUND.
2. CONCRETE BASES TYPE 1 BOLT CIRCLE PATTERN AND DIAMETER SHALL MATCH SELECTED LIGHTING UNIT TYPES.
C-4 (L1,F1)
STA 48+39.49 , 11.0' LT
A-1
C-5 (L1,F1)
STA 48+96.00 , 11.0' LT
A-1
C-6 (L1,F1)
STA 49+58.49 , 11.0' LT
A-1
C-7 (L1,F1)
STA 50+18.49 , 11.0' LT
A-1
C-8 (L1,F1)
STA 50+78.49 , 11.0' LT
A-1
C-9 (L1,F1)
STA 51+25.00 , 11.0' LT
A-1
PB-16
STA 51+31.20 , 11.0' LT
PB-17
STA 51+87.89 , 11.0' LT
C-10 (L1,F1)
STA 51+91.80 , 11.0' LT
A-1
C-11 (L1,F1)
STA 52+51.80 , 11.0' LT
A-1
C-12 (L1,F1)
STA 53+11.80 , 11.0' LT
A-1
C-13 (L1,F1)
STA 53+73.00 , 11.0' LT
A-1
R/W
GARFIELD AVENUE
SOUTH 1ST AVENUE
MATCH LINE STA 48+00
MATCH LINE STA 54+00
49+00
50+00
51+00
52+00
53+00
DISCONTINUED
FO

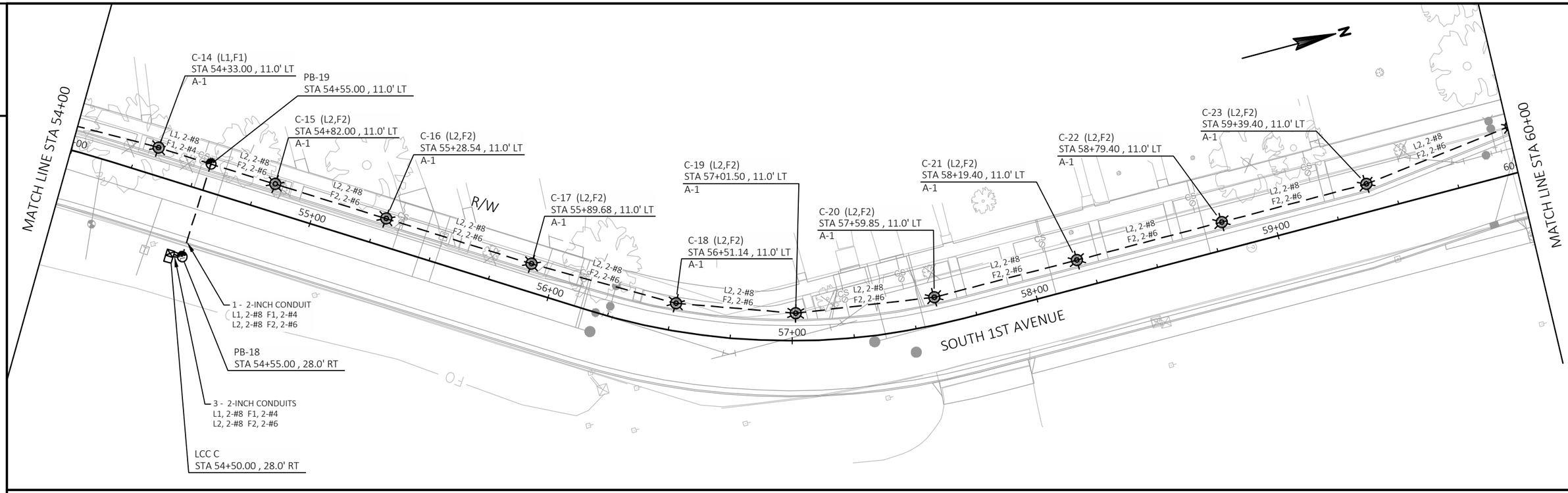

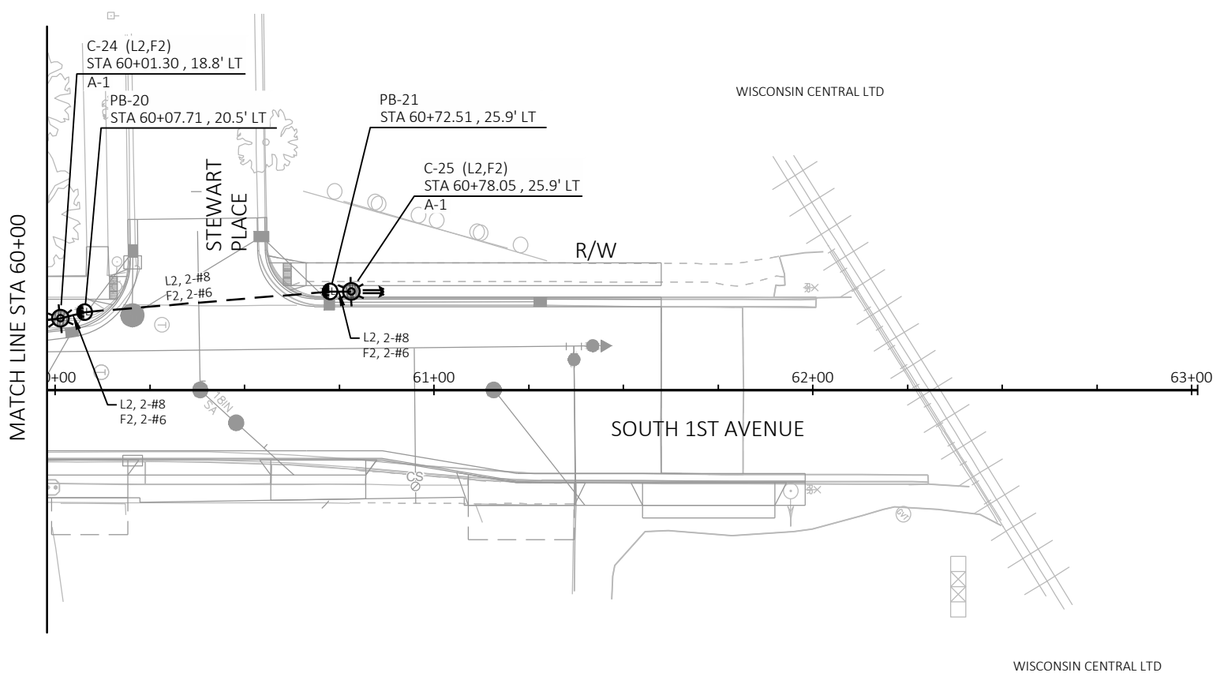

LEGEND

- DECORATIVE LIGHTING UNIT
- PULL BOXES NON-CONDUCTIVE 24X42-INCH
- CONDUIT RIGID NON-METALLIC SCHEDULE 40 1 1/4-INCH, UNLESS NOTED
- LIGHTING CONTROL CABINET
- L1, 2-#8 F1, 2-#6 — (CIRCUIT #) CONDUIT WIRE CONFIGURATION
- CONDUIT STUB

A-7 (L1,F1)
STATION, OFFSET
A-1

- CONTROL CABINET DESIGNATION
- POLE NUMBER
- CIRCUIT(S) L-LIGHTING F-FESTOON
- LOCATION (TO CENTER OF POLE)
- BASE TYPE
- DECORATIVE LIGHTING UNIT TYPE

GENERAL LIGHTING NOTES:
1. ALL CONDUITS WITH WIRES SHALL ALSO INCLUDE 1 - #8 GROUND.
2. CONCRETE BASES TYPE 1 BOLT CIRCLE PATTERN AND DIAMETER SHALL MATCH SELECTED LIGHTING UNIT TYPES.

PROJECT NO: 6999-18-73	HWY: SOUTH 1ST AVENUE	COUNTY: MARATHON	LIGHTING PLAN	SHEET 50	E

2

NOTES:

*** SEE SDD "BARRICADES AND SIGNS FOR SIDEROAD CLOSURES" DETAIL 3.

** SEE SDD "BARRICADES AND SIGNS FOR MAINLINE CLOSURES" DETAIL D.

* SEE SDD "BARRICADES AND SIGNS FOR SIDEROAD CLOSURES" DETAIL 4.

SEE CONSTRUCTION DETAILS "BARRICADES AND SIGNS FOR ALLEY CLOSURES" (TYPICAL).

LEGEND: DETOUR SIGNING

- SIGN ON PERMANENT SUPPORT
- WORK AREA
- TEMPORARY SIGNAL (SEE SIGNAL PLANS)
- DETOUR ROUTE
- BIKE DETOUR ROUTE
- PEDESTRIAN DETOUR ROUTE

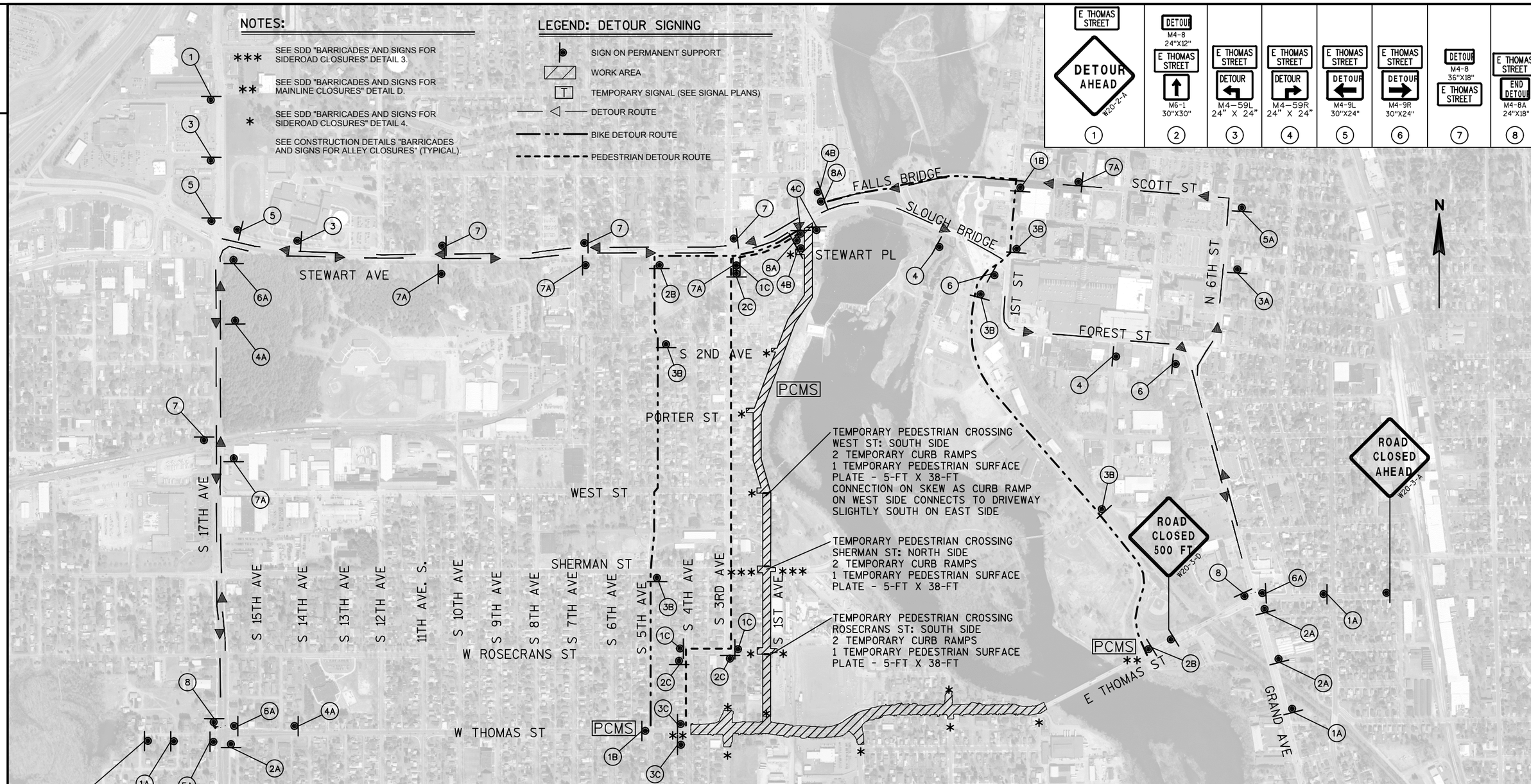

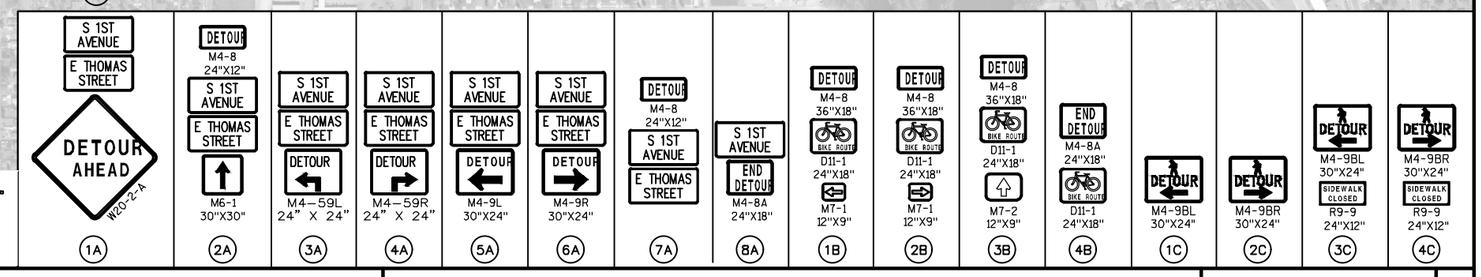

FOR INFORMATIONAL PURPOSES ONLY. THE CITY OF WAUSAU WILL BE INSTALLING TRAFFIC CONTROL ITEMS.

2

PROJECT NO: 6999-18-73	HWY: SOUTH 1ST AVENUE	COUNTY: MARATHON	DETOUR ROUTE	SHEET 51	E

FILE NAME : V:\TRANS-EC\410723 WAUSAU 1ST AVE\C3D\SHEETSPLAN\027002_DT.DWG PLOT DATE : 7/31/2018 12:28 PM PLOT BY : WOOLEVER, NATHAN PLOT NAME :

Estimate Of Quantities

6999-18-73

Line	Item	Item Description	Unit	Total	Qty
0002	201.0105	Clearing	STA	37.000	37.000
0004	201.0205	Grubbing	STA	37.000	37.000
0006	204.0100	Removing Pavement	SY	16,818.000	16,818.000
0008	204.0150	Removing Curb & Gutter	LF	89.000	89.000
0010	204.0155	Removing Concrete Sidewalk	SY	4,042.000	4,042.000
0012	204.0165	Removing Guardrail	LF	803.000	803.000
0014	204.0250	Abandoning Manholes	EACH	4.000	4.000
0016	204.0260	Abandoning Inlets	EACH	9.000	9.000
0018	205.0100	Excavation Common	CY	16,925.000	16,925.000
0020	209.1500	Backfill Granular Grade 1	TON	11,869.000	11,869.000
0022	213.0100	Finishing Roadway (project) 01. 6999-18-73	EACH	1.000	1.000
0024	305.0120	Base Aggregate Dense 1 1/4-Inch	TON	7,145.000	7,145.000
0026	415.0080	Concrete Pavement 8-Inch	SY	11,968.000	11,968.000
0028	415.0210	Concrete Pavement Gaps	EACH	1.000	1.000
0030	415.1080	Concrete Pavement HES 8-Inch	SY	445.000	445.000
0032	415.4100	Concrete Pavement Joint Filling	SY	14,256.000	14,256.000
0034	416.0160	Concrete Driveway 6-Inch	SY	1,172.000	1,172.000
0036	455.0605	Tack Coat	GAL	29.000	29.000
0038	460.2000	Incentive Density HMA Pavement	DOL	80.000	80.000
0040	460.6223	HMA Pavement 3 MT 58-28 S	TON	62.000	62.000
0042	460.6424	HMA Pavement 4 MT 58-28 H	TON	52.000	52.000
0044	465.0120	Asphaltic Surface Driveways and Field Entrances	TON	45.000	45.000
0046	512.0500	Piling Steel Sheet Permanent Delivered	SF	15,710.000	15,710.000
0048	512.0600	Piling Steel Sheet Permanent Driven	SF	15,710.000	15,710.000
0050	513.2001	Railing Pipe	LF	4.000	4.000
0052	520.8000	Concrete Collars for Pipe	EACH	8.000	8.000
0054	601.0409	Concrete Curb & Gutter 30-Inch Type A	LF	7,431.000	7,431.000
0056	601.0411	Concrete Curb & Gutter 30-Inch Type D	LF	142.000	142.000
0058	601.0452	Concrete Curb & Gutter Integral 30-Inch Type D	LF	665.000	665.000
0060	602.0405	Concrete Sidewalk 4-Inch	SF	35,963.000	35,963.000
0062	602.0505	Curb Ramp Detectable Warning Field Yellow	SF	336.000	336.000
0064	602.0605	Curb Ramp Detectable Warning Field Radial Yellow	SF	28.000	28.000
0066	602.1500	Concrete Steps	SF	18.000	18.000
0068	608.0318	Storm Sewer Pipe Reinforced Concrete Class III 18-Inch	LF	411.000	411.000
0070	608.0321	Storm Sewer Pipe Reinforced Concrete Class III 21-Inch	LF	68.000	68.000
0072	608.0324	Storm Sewer Pipe Reinforced Concrete Class III 24-Inch	LF	378.000	378.000
0074	608.0336	Storm Sewer Pipe Reinforced Concrete Class III 36-Inch	LF	790.000	790.000

6999-18-73

Line	Item	Item Description	Unit	Total	Qty
0076	608.0342	Storm Sewer Pipe Reinforced Concrete Class III 42-Inch	LF	716.000	716.000
0078	608.0412	Storm Sewer Pipe Reinforced Concrete Class IV 12-Inch	LF	577.000	577.000
0080	608.0415	Storm Sewer Pipe Reinforced Concrete Class IV 15-Inch	LF	390.000	390.000
0082	611.0530	Manhole Covers Type J	EACH	13.000	13.000
0084	611.0624	Inlet Covers Type H	EACH	33.000	33.000
0086	611.2004	Manholes 4-FT Diameter	EACH	6.000	6.000
0088	611.2005	Manholes 5-FT Diameter	EACH	3.000	3.000
0090	611.2006	Manholes 6-FT Diameter	EACH	3.000	3.000
0092	611.2007	Manholes 7-FT Diameter	EACH	1.000	1.000
0094	611.3004	Inlets 4-FT Diameter	EACH	2.000	2.000
0096	611.3230	Inlets 2x3-FT	EACH	31.000	31.000
0098	611.8110	Adjusting Manhole Covers	EACH	2.000	2.000
0100	612.0406	Pipe Underdrain Wrapped 6-Inch	LF	310.000	310.000
0102	614.2300	MGS Guardrail 3	LF	725.000	725.000
0104	614.2610	MGS Guardrail Terminal EAT	EACH	1.000	1.000
0106	614.2620	MGS Guardrail Terminal Type 2	EACH	1.000	1.000
0108	618.0100	Maintenance And Repair of Haul Roads (project) 01. 6999-18-73	EACH	1.000	1.000
0110	619.1000	Mobilization	EACH	1.000	1.000
0112	624.0100	Water	MGAL	1,000.000	1,000.000
0114	625.0100	Topsoil	SY	6,433.000	6,433.000
0116	625.0500	Salvaged Topsoil	SY	2,753.000	2,753.000
0118	627.0200	Mulching	SY	1,503.000	1,503.000
0120	628.1504	Silt Fence	LF	2,326.000	2,326.000
0122	628.1520	Silt Fence Maintenance	LF	2,326.000	2,326.000
0124	628.1905	Mobilizations Erosion Control	EACH	8.000	8.000
0126	628.1910	Mobilizations Emergency Erosion Control	EACH	5.000	5.000
0128	628.2006	Erosion Mat Urban Class I Type A	SY	5,574.000	5,574.000
0130	628.2023	Erosion Mat Class II Type B	SY	1,118.000	1,118.000
0132	628.2031	Erosion Mat Class III Type A	SY	1,725.000	1,725.000
0134	628.7005	Inlet Protection Type A	EACH	30.000	30.000
0136	628.7015	Inlet Protection Type C	EACH	42.000	42.000
0138	628.7560	Tracking Pads	EACH	6.000	6.000
0140	629.0210	Fertilizer Type B	CWT	6.600	6.600
0142	630.0120	Seeding Mixture No. 20	LB	85.000	85.000
0144	630.0140	Seeding Mixture No. 40	LB	150.000	150.000
0146	630.0200	Seeding Temporary	LB	85.000	85.000
0148	634.0614	Posts Wood 4x6-Inch X 14-FT	EACH	23.000	23.000

6999-18-73

Line	Item	Item Description	Unit	Total	Qty
0150	634.0616	Posts Wood 4x6-Inch X 16-FT	EACH	2.000	2.000
0152	634.0618	Posts Wood 4x6-Inch X 18-FT	EACH	8.000	8.000
0154	637.2210	Signs Type II Reflective H	SF	185.440	185.440
0156	637.2230	Signs Type II Reflective F	SF	14.140	14.140
0158	638.2102	Moving Signs Type II	EACH	2.000	2.000
0160	638.2602	Removing Signs Type II	EACH	26.000	26.000
0162	638.3000	Removing Small Sign Supports	EACH	24.000	24.000
0164	642.5001	Field Office Type B	EACH	1.000	1.000
0166	646.1020	Marking Line Epoxy 4-Inch	LF	10,696.000	10,696.000
0168	646.3020	Marking Line Epoxy 8-Inch	LF	222.000	222.000
0170	646.5020	Marking Arrow Epoxy	EACH	18.000	18.000
0172	646.5120	Marking Word Epoxy	EACH	3.000	3.000
0174	646.5220	Marking Symbol Epoxy	EACH	14.000	14.000
0176	646.5320	Marking Railroad Crossings Epoxy	EACH	2.000	2.000
0178	646.6120	Marking Stop Line Epoxy 18-Inch	LF	109.000	109.000
0180	646.7020	Marking Diagonal Epoxy 6-Inch	LF	2,245.000	2,245.000
0182	646.7420	Marking Crosswalk Epoxy Transverse Line 6-Inch	LF	783.000	783.000
0184	650.4000	Construction Staking Storm Sewer	EACH	46.000	46.000
0186	650.4500	Construction Staking Subgrade	LF	4,342.000	4,342.000
0188	650.5000	Construction Staking Base	LF	117.000	117.000
0190	650.5500	Construction Staking Curb Gutter and Curb & Gutter	LF	142.000	142.000
0192	650.6500	Construction Staking Structure Layout (structure) 01. R-37-0056	LS	1.000	1.000
0194	650.8500	Construction Staking Electrical Installations (project) 01. 6999-18-73	LS	1.000	1.000
0196	650.9000	Construction Staking Curb Ramps	EACH	25.000	25.000
0198	650.9910	Construction Staking Supplemental Control (project) 01. 6999-18-73	LS	1.000	1.000
0200	650.9920	Construction Staking Slope Stakes	LF	4,342.000	4,342.000
0202	652.0215	Conduit Rigid Nonmetallic Schedule 40 1 1/4-Inch	LF	5,779.000	5,779.000
0204	652.0225	Conduit Rigid Nonmetallic Schedule 40 2-Inch	LF	132.000	132.000
0206	653.0164	Pull Boxes Non-Conductive 24x42-Inch	EACH	21.000	21.000
0208	654.0101	Concrete Bases Type 1	EACH	70.000	70.000
0210	654.0224	Concrete Control Cabinet Bases Type L24	EACH	3.000	3.000
0212	655.0610	Electrical Wire Lighting 12 AWG	LF	6,020.000	6,020.000
0214	655.0620	Electrical Wire Lighting 8 AWG	LF	26,628.000	26,628.000
0216	655.0625	Electrical Wire Lighting 6 AWG	LF	3,890.000	3,890.000
0218	655.0630	Electrical Wire Lighting 4 AWG	LF	1,900.000	1,900.000
0220	656.0200	Electrical Service Meter Breaker Pedestal (location) 01. STA 26+67	LS	1.000	1.000
0222	656.0200	Electrical Service Meter Breaker Pedestal (location) 02.	LS	1.000	1.000

Line	Item	Item Description	Unit	Total	Qty
		STA 40+03			
0224	656.0200	Electrical Service Meter Breaker Pedestal (location) 03. STA 54+50	LS	1.000	1.000
0226	659.2124	Lighting Control Cabinets 120/240 24-Inch	EACH	3.000	3.000
0228	690.0150	Sawing Asphalt	LF	783.000	783.000
0230	690.0250	Sawing Concrete	LF	521.000	521.000
0232	715.0415	Incentive Strength Concrete Pavement	DOL	3,725.000	3,725.000
0234	999.1500.S	Crack and Damage Survey	LS	1.000	1.000
0236	ASP.1T0A	On-the-Job Training Apprentice at $5.00/HR	HRS	1,200.000	1,200.000
0238	ASP.1T0G	On-the-Job Training Graduate at $5.00/HR	HRS	600.000	600.000
0240	SPV.0045	Special 01. Seismograph	DAY	30.000	30.000
0242	SPV.0060	Special 01. Abandoning Storm Sewers	EACH	10.000	10.000
0244	SPV.0060	Special 02. Storm Sewer Pipe Reinforced Concrete Class III 48x42 Tee	EACH	1.000	1.000
0246	SPV.0060	Special 03. Abandon Existing Water Valves	EACH	8.000	8.000
0248	SPV.0060	Special 04. Abandon existing Water Mains	EACH	5.000	5.000
0250	SPV.0060	Special 05. Remove Existing Hydrants	EACH	4.000	4.000
0252	SPV.0060	Special 06. Valve and Box 6-Inch	EACH	11.000	11.000
0254	SPV.0060	Special 07. Valve and Box 8-Inch	EACH	14.000	14.000
0256	SPV.0060	Special 08. Valve and Box 12-Inch	EACH	3.000	3.000
0258	SPV.0060	Special 09. Hydrant	EACH	7.000	7.000
0260	SPV.0060	Special 10. Corporation Stop and Curb Stop 1-Inch	EACH	58.000	58.000
0262	SPV.0060	Special 11. Corporation Stop and Curb Stop 2-Inch	EACH	1.000	1.000
0264	SPV.0060	Special 12. Connect to Existing Water Main	EACH	9.000	9.000
0266	SPV.0060	Special 13. Construction Staking Water Main Structure	EACH	94.000	94.000
0268	SPV.0060	Special 14. Abandon Sanitary Manhole	EACH	5.000	5.000
0270	SPV.0060	Special 15. Sanitary Manhole Covers Type J-S	EACH	16.000	16.000
0272	SPV.0060	Special 16. Tracer Wire Access Box	EACH	15.000	15.000
0274	SPV.0060	Special 17. 8x4-Inch Wye	EACH	26.000	26.000
0276	SPV.0060	Special 18. 8x6-Inch Wye	EACH	24.000	24.000
0278	SPV.0060	Special 19. 10x4-Inch Wye	EACH	5.000	5.000
0280	SPV.0060	Special 20. 10x6-Inch Wye	EACH	3.000	3.000
0282	SPV.0060	Special 21. Connect Pipe to Existing Sanitary	EACH	7.000	7.000
0284	SPV.0060	Special 22. Connect Manhole to Existing Manhole	EACH	5.000	5.000
0286	SPV.0060	Special 23. Construction Staking Sanitary Structure	EACH	31.000	31.000
0288	SPV.0060	Special 24. Decorative Lighting Unit Type A	EACH	70.000	70.000
0290	SPV.0060	Special 25. Sanitary Manhole Covers Type J-S-30	EACH	5.000	5.000
0292	SPV.0090	Special 01. Bore and Jack 36-Inch Casing Steel	LF	125.000	125.000
0294	SPV.0090	Special 02. Bore and Jack 20-Inch Casing Steel	LF	116.000	116.000
0296	SPV.0090	Special 03. Bore and Jack 16-Inch Casing Steel	LF	125.000	125.000

Line	Item	Item Description	Unit	Total	Qty
0298	SPV.0090	Special 04. Storm Sewer Pipe Reinforced Concrete Class III 18-Inch in Casing	LF	125.000	125.000
0300	SPV.0090	Special 05. Water Main DI 8-Inch in Casing	LF	116.000	116.000
0302	SPV.0090	Special 06. Sanitary Sewer PVC 8-Inch in Casing	LF	125.000	125.000
0304	SPV.0090	Special 07. Water Main DI 6-Inch	LF	245.000	245.000
0306	SPV.0090	Special 08. Water Main DI 8-Inch	LF	2,879.000	2,879.000
0308	SPV.0090	Special 09. Water Main DI 12-Inch	LF	1,236.000	1,236.000
0310	SPV.0090	Special 10. Water Service Copper 1-Inch	LF	1,401.000	1,401.000
0312	SPV.0090	Special 11. Water Service Copper 2-Inch	LF	21.000	21.000
0314	SPV.0090	Special 12. Construction Staking Water Main Pipe	LF	4,360.000	4,360.000
0316	SPV.0090	Special 13. Sanitary Sewer PVC 8-Inch	LF	3,086.000	3,086.000
0318	SPV.0090	Special 14. Sanitary Sewer PVC 10-Inch	LF	678.000	678.000
0320	SPV.0090	Special 15. Sanitary Sewer PVC 21-Inch	LF	265.000	265.000
0322	SPV.0090	Special 16. Sanitary Lateral PVC 4-Inch	LF	908.000	908.000
0324	SPV.0090	Special 17. Sanitary Lateral PVC 6-Inch	LF	772.000	772.000
0326	SPV.0090	Special 18. Construction Staking Sanitary Pipe	LF	4,029.000	4,029.000
0328	SPV.0090	Special 19. Sanitary Sewer Televising	LF	4,029.000	4,029.000
0330	SPV.0105	Special 01. Temporary Water Service	LS	1.000	1.000
0332	SPV.0105	Special 02. Crack and Damage Survey Sanitary Sewer Line	LS	1.000	1.000
0334	SPV.0105	Special 03. Locate Sanitary Sewer Line	LS	1.000	1.000
0336	SPV.0165	Special 01. Wall Modular Block Mechanically Stabilized Earth Structure R-37-56	SF	1,870.000	1,870.000
0338	SPV.0200	Special 01. Sanitary Manhole 4-Foot	VF	232.680	232.680
0340	SPV.0200	Special 02. Sanitary Manhole Inside Drop	VF	23.840	23.840
0342	SPV.0200	Special 03. Sanitary Manhole Outside Drop	VF	24.920	24.920

3

CLEARING & GRUBBING

STATION TO STATION	201.0105 CLEARING STA	201.0205 GRUBBING STA
21+00 - 22+00	1	1
23+00 - 35+00	12	12
36+00 - 60+00	24	24
PROJECT ID TOTALS	**37**	**37**

REMOVING PAVEMENT

STATION TO STATION	LOCATION	204.0100 SY
21+05 - 35+09	1ST AVE	6,111
21+05 - 26+47	DRIVEWAY APRONS, LT	52
21+05 - 26-47	DRIVEWAY APRONS, RT	48
26+47 - 33+15	DRIVEWAY APRONS, LT	24
26+47 - 33+15	DRIVEWAY APRONS, RT	19
33+15 - 39+14	DRIVEWAY APRONS, LT	39
33+15 - 39+14	DRIVEWAY APRONS, RT	88
35+34 - 61+60	1ST AVE	10,258
39+14 - 46+38	DRIVEWAY APRONS, LT	29
46+38 - 51+75	DRIVEWAY APRONS, LT	55
51+75 - 60+40	DRIVEWAY APRONS, LT	37
51+75 - 61+60	DRIVEWAY APRONS, RT	58
PROJECT ID TOTAL		**16,818**

REMOVING CURB & GUTTER

LOCATION	204.0150 LF
ROSECRANS ST, RT	26
PORTER ST, LT	15
STEWART PL, LT	48
PROJECT ID TOTAL	**89**

REMOVING CONCRETE SIDEWALK

STATION TO STATION	LOCATION	204.0155 SY
21+05 - 26+47	LT	364
21+05 - 26+47	RT	349
26+47 - 33+15	LT	458
26+47 - 33+15	RT	414
33+15 - 39+70	LT	470
33+15 - 39+70	RT	409
39+70 - 46+38	LT	413
39+70 - 46+38	RT	22
46+38 - 51+75	LT	383
51+75 - 60+40	LT	563
59+95 - 61+60	RT	140
60+40 - 61+60	LT	57
PROJECT ID TOTAL		**4,042**

REMOVING GUARDRAIL

STATION TO STATION	LOCATION	204.0165 LF
39+41 - 47+00	RT	750
57+95 - 58+48	RT	53
PROJECT ID TOTAL		**803**

FINISHING ROADWAY

PROJECT	213.0100 EACH
6999-18-73	1
PROJECT ID TOTAL	**1**

BASE AGGREGATE DENSE 1 1/4-INCH

STATION TO STATION	LOCATION	305.0120 TON
DRIVEWAYS	S 1ST AVE	530
SIDEWALKS	S 1ST AVE	890
21+05 - 34+80.53	S 1ST AVE	1,915
26+33 26+62	S 1ST AVE/SHERMAN ST	80
34+80.53 - 35+67	S 1ST AVE/RR CROSING	230
35+67 - 21+59.90	S 1ST AVE	3,500
PROJECT ID TOTAL		**7,145**

CONCRETE PAVEMENT ITEMS

STATION TO STATION	LOCATION	415.0080 8-INCH SY	415.0210 GAPS EACH	415.1080 HES 8-INCH SY	415.4100 JOINT FILLING SY
21+05 - 34+81		3,967	---	---	5,016
32+82 - 33+48	SHERMAN ST	---	1	445	---
35+67 - 61+60		8,001	---	---	9,240
PROJECT ID TOTALS		**11,968**	**1**	**445**	**14,256**

PILING STEEL SHEETING

STATION TO STATION	LOCATION	512.0500 PERMANENT DELIVERED SF	512.0600 PERMANENT DRIVEN SF
42+50 - 47+50	RT	15,710	15,710
PROJECT ID TOTALS		**15,710**	**15,710**

EARTHWORK SUMMARY

DIVISION	STATION TO STATION	LOCATION	(1) 205.0100 EXCAVATION COMMON CY	EBS EXCAVATION CY	SALVAGED/ UNUSABLE PAVEMENT MATERIAL CY	(6) AVAILABLE MATERIAL CY	UNEXPANDED FILL CY	(3) (4) EXPANDED FILL CY	(5) MASS ORDINATE +/- CY	(2) WASTE CY	(7) 209.1500 BACKFILL GRANULAR GRADE 1 TON
	21+05 - 61+59	S 1ST AVE	9,943	6,982	5,300	4,643	1,899	2,374	9,251	2,269	11,869
PROJECT ID TOTALS			**16,925**								

(1) Excavation Common is the sum of the Cut and EBS Excavation columns. Item number 205.0100
(2) WASTE = EXPANDED FILL - AVAILABLE MATERIAL - EBS (FOR INFORMATION ONLY - NOT A BID ITEM)
(3) EXPANSION FACTOR = 1.25
(4) EXPANDED FILL = UNEXPANDED FILL * EXPANSION FACTOR
(5) THE MASS ORDINATE + OR - QTY CALCULATED FOR THE DIVISION. PLUS QUANTITY INDICATED AN EXCESS OF MATERIAL WITHIN THE DIVISION. MINUS INDICATES A SHORTAGE OF MATERIAL WITHIN THE DIVISION.
(6) AVAILABLE MATERIAL = COMMON EXCAVATION - SALVAGED/UNUSABLE MATERIAL
(7) BACKFILL GRANULAR = EBS EXCAVATION * EXPANSION FACTOR (1.7)

ALL ITEMS ON THIS SHEET ARE CATEGORY 0010 UNLESS OTHERWISE NOTED

3

CONCRETE DRIVEWAY & CONCRETE SIDEWALK

STATION TO STATION	LOCATION	416.0160 DRIVEWAY 6-INCH SY	602.0405 SIDEWALK 4-INCH SF
21+05 - 26+46	LT	---	3,043
21+05 - 26+46	RT	---	2,897
21+58	LT	29	---
22+11	RT	58	---
22+13	LT	37	---
23+04	LT	24	---
23+67	LT	23	---
24+22	LT	26	---
24+79	RT	41	---
26+46 - 33+20	LT	---	4,122
26+46 - 33+20	RT	---	3,764
27+31	LT	23	---
27+83	RT	43	---
27+89	LT	24	---
28+05	LT	24	---
29+18	LT	26	---
33+20 - 39+75	LT	---	4,019
33+20 - 39+75	RT	---	3,706
34+47	RT	47	---
36+08	LT	23	---
36+99	RT	19	---
37+01	LT	23	---
37+23	RT	19	---
37+52	LT	24	---
37+69	RT	19	---
37+70	LT	24	---
38+30	LT	23	---
39+75 - 46+33	LT	---	3,486
40+58	LT	17	---
41+32	LT	22	---
41+95	LT	32	---
42+49	LT	17	---
42+75	LT	21	---
43+39	LT	25	---
44+13	LT	19	---
44+40	LT	17	---
44+94	LT	24	---
46+33 - 51+65	LT	---	2,740
47+17	LT	46	---
48+02	LT	24	---
48+24	LT	32	---
48+79	LT	17	---
49+42	LT	27	---
50+55	LT	22	---
51+65 - 60+39	LT	---	5,566
51+65 - 60+39	RT	---	1,656
55+44	LT	23	---
56+03	LT	18	---
57+28	LT	34	---
57+46	LT	38	---
57+74	RT	42	---
60+08	RT	26	---
60+39 - 61+98	LT	---	626
60+39 - 61+98	RT	---	338
60+69	RT	30	---
61+24	RT	23	---
61+73	RT	26	---
PROJECT ID TOTALS		**1,172**	**35,963**

HMA PAVEMENT ITEMS

STATION TO STATION	LOCATION	460.6223 HMA PAVEMENT 3 MT 58-28 S TON	460.6424 HMA PAVEMENT 4 MT 58-28 H TON	465.0120 ASPHALTIC SURFACE DRIVEWAYS AND FIELD ENTRANCES TON	455.0605 TACK COAT GAL
21+39	PARKING LOT LT	---	---	1	---
21+58	DRIVEWAY LT	---	---	1	---
21+84	PARKING LOT LT	---	---	1	---
22+11	DRIVEWAY RT	---	---	6	---
22+13	DRIVEWAY LT	---	---	2	---
22+48	PARKING LOT LT	---	---	2	---
22+90	PARKING LOT LT	---	---	1	---
23+04	DRIVEWAY LT	---	---	1	---
24+79	DRIVEWAY RT	---	---	2	---
26+33 - 26+62	SHERMAN ST RT	15	13	---	7
27+83	DRIVEWAY RT	---	---	2	---
29+18	DRIVEWAY LT	---	---	1	---
34+81 - 35+67	RAILROAD CROSSING	32	29	4	15
36+08	DRIVEWAY LT	---	---	1	---
37+52	DRIVEWAY LT	---	---	1	---
37+70	DRIVEWAY LT	---	---	1	---
40+68	DRIVEWAY LT	---	---	3	---
41+32	DRIVEWAY LT	---	---	3	---
41+95	DRIVEWAY LT	---	---	2	---
42+75	DRIVEWAY LT	---	---	2	---
44+12	DRIVEWAY LT	---	---	3	---
50+55	DRIVEWAY LT	---	---	2	---
55+44	DRIVEWAY LT	---	---	1	---
61+73	DRIVEWAY RT	---	---	2	---
UNDISTRIBUTED	SIDEROADS	15	14	---	7
PROJECT ID TOTALS		**62.0**	**56.0**	**45.0**	**29.0**

CONCRETE CURB AND GUTTER

STATION TO STATION	LOCATION	601.0409 30-INCH TYPE A LF	601.0411 30-INCH TYPE D LF	601.0452 INTEGRAL 30-INCH TYPE D LF
21+05 - 26+47	LT	543	---	---
21+05 - 26+47	RT	538	---	---
26+47 - 33+15	LT	692	---	---
26+47 - 33+15	RT	668	---	---
33+15 - 39+14	LT	616	---	---
34+80 - 35+15	LT	---	35	---
35+46 - 35+67	LT	---	21	---
33+15 - 39+14	RT	578	---	---
34+80 - 34+97	RT	---	17	---
35+28 - 35+67	RT	---	39	---
39+14 - 46+38	LT	675	---	---
39+14 - 46+38	RT	61	---	599
46+38 - 51+75	LT	540	---	---
46+38 - 51+75	RT	469	---	66
51+75 - 60+40	LT	897	---	---
51+75 - 60+40	RT	874	---	---
60+40 - 62+00	LT	121	---	---
60+40 - 62+01	RT	159	---	---
111+29 - 111+59	ROSECRANS, RT	---	30	---
PROJECT ID TOTALS		**7,431**	**142**	**665**

RAILING PIPE

STATION	LOCATION	513.2001 LF
32+50	LT	4
PROJECT ID TOTAL		**4**

CONCRETE STEPS

STATION	LOCATION	602.1500 SF
32+50	LT	18
PROJECT ID TOTAL		**18**

CURB RAMP DETECTABLE WARNING FIELD RADIAL YELLOW

STATION	LOCATION	602.0605 SF
46+17	LT	14.5
46+49	LT	13.5
PROJECT ID TOTAL		**28**

CURB RAMP DETECTABLE WARNING FIELD YELLOW

STATION	LOCATION	602.0505 SF
26+25	LT	24
26+25	RT	24
26+67	LT	24
26+67	RT	24
32+94	LT	24
32+94	RT	24
33+36	LT	24
33+36	RT	24
34+83	RT	12
35+21	LT	12
35+24	RT	12
35+62	LT	12
39+52	RT	12
39+55	LT	24
39+96	LT	12
51+40	LT	12
51+77	LT	12
60+18	LT	12
60+58	LT	12
PROJECT ID TOTAL		**336**

ALL ITEMS ON THIS SHEET ARE CATEGORY 0010 UNLESS OTHERWISE NOTED

3

MGS GUARDRAIL ITEMS

STATION TO STATION	LOCATION	614.2300 GUARDRAIL 3 LF	614.2610 TERMINAL EAT EACH	614.2620 TERMINAL TYPE 2 EACH
39+58 - 47+47	RT	725	1	1
PROJECT ID TOTALS		**725**	**1**	**1**

ADJUSTING MANHOLE COVERS

CATEGORY	STATION	LOCATION	611.8110 EACH
0040	60+12	LT	1
0040	60+28	LT	1
PROJECT ID TOTAL			**2**

WATER

LOCATION	624.0100 MGAL
BASE COMPACTION	500
DUST CONTROL	500
PROJECT ID TOTAL	**1000**

MOBILIZATION

PROJECT	CATEGORY	619.1000 EACH
6999-18-73	0010	0.6
6999-18-73	0020	0.1
6999-18-73	0030	0.1
6999-18-73	0040	0.1
6999-18-73	0050	0.1
PROJECT ID TOTAL		**1**

TRACKING PADS

STATION TO STATION	LOCATION	628.7560 EACH
26+47	ROSECRANS ST LT,RT	2
33+17	SHERMAN ST LT,RT	2
39+75	WEST ST LT	1
61+60	S 1ST AVE	1
PROJECT ID TOTALS		**6**

SILT FENCE

STATION TO STATION	LOCATION	628.1504 LF	628.1520 MAINTENANCE LF	COMMENTS
30+86 - 32+83	RT	197	197	
35+39 - 36+89	RT	150	150	
39+60 - 47+75	RT	1,712	1,712	2 ROWS
55+00 - 57+00	RT	209	209	
UNDISTRIBUTED		58	58	
PROJECT ID TOTALS		**2,326**	**2,326**	

TOPSOIL, SALVAGED TOPSOIL, MULCHING, FERTILIZER, & SEEDING

STATION TO STATION	625.0100 TOPSOIL SY	625.0500 SALVAGED TOPSOIL SY	627.0200 MULCHING SY	629.0210 FERTILIZER TYPE B CWT	630.0120 SEEDING MIXTURE NO. 20 LB	630.0140 SEEDING MIXTURE NO. 40 LB	630.0200 SEEDING TEMPORARY LB
21+05 - 26+50	589	252	83	0.5	---	17	---
26+50 - 33+20	864	369	233	0.8	---	24	---
33+20 - 39+75	894	383	178	0.8	2	24	2
39+75 - 46+35	2,058	881	98	1.9	61	15	61
46+35 - 51+64	593	255	106	0.5	2	15	2
51+64 - 60+41	806	345	477	0.7	---	22	---
60+41 - 61+60	44	18	27	0.0	---	3	---
UNDISTRIBUTED	585	250	301	1.3	20	30	20
PROJECT ID TOTALS	**6,433**	**2,753**	**1,503**	**6.6**	**85**	**150**	**85**

EROSION MAT

STATION TO STATION	LOCATION	628.2006 URBAN CL.I TYPE A SY	628.2023 CL.II TYPE B SY	628.2031 CL.III TYPE A SY
21+05 - 26+50	LT	364	---	---
21+05 - 26+50	RT	403	---	---
26+50 - 33+20	LT	485	---	---
26+50 - 33+20	RT	516	---	---
33+20 - 39+75	LT	501	---	---
33+20 - 57+55	RT	1,285	---	---
39+55 - 41+92	RT	---	---	1,380
41+92 - 47+75	RT	---	894	---
39+75 - 46+35	LT	262	---	---
46+35 - 51+64	LT	195	---	---
51+64 - 60+41	LT	415	---	---
60+41 - 61+60	LT	33	---	---
UNDISTRIBUTED		1,115	224	345
PROJECT ID TOTALS		**5,574**	**1,118**	**1,725**

MOBILIZATIONS EROSION CONTROL AND EMERGENCY EROSION CONTROL

PROJECT	628.1905 EACH	628.1910 EMERGENCY EACH
6999-18-73	8	5
PROJECT ID TOTALS	**8**	**5**

INLET PROTECTION

STATION	LOCATION	628.7005 TYPE A EACH	628.7015 TYPE C EACH
22+81	LT	1	1
22+81	RT	1	1
22+88	LT	1	1
22+88	RT	1	1
26+09	RT	1	1
26+32	LT	1	1
26+33	RT	---	1
26+63	RT	---	1
27+50	LT	1	1
27+50	RT	1	1
28+55	LT	1	1
28+55	RT	1	1
33+01	LT	1	1
33+50	LT	1	1
33+50	RT	1	1
35+76	RT	1	1
35+82	LT	1	1
39+64	LT	1	1
40+10	LT	1	1
40+10	RT	1	1
45+08	LT	1	1
45+08	RT	1	1
46+19	LT	1	1
46+56	LT	1	1
49+08	LT	1	1
49+24	RT	1	1
51+90	LT	1	1
51+90	RT	1	1
57+23	RT	---	1
59+85	RT	1	1
60+21	LT	1	1
61+28	LT	1	1
61+84	LT	---	1
62+14	RT	---	1
UNDISTRIBUTED		1	8
PROJECT ID TOTALS		**30**	**42**

ALL ITEMS ON THIS SHEET
ARE CATEGORY 0010
UNLESS OTHERWISE NOTED

3

3

PERMANENT SIGNING

SIGN NO	APPROX STATION LOCATION	SIGN CODE	SIGN SIZE WxH (INCHES)	634.0614 POSTS WOOD 4X6-INCH 14-FT EACH	634.0616 POSTS WOOD 4X6-INCH 16-FT EACH	634.0618 POSTS WOOD 4X6-INCH 18-FT EACH	637.2210 SIGNS TYPE II REFLECTIVE H SF	637.2230 SIGNS TYPE II REFLECTIVE F SF	638.2102 MOVING SIGNS TYPE II EACH	638.2602 REMOVING SIGNS TYPE II EACH	638.3000 REMOVING SMALL SIGN SUPPORTS EACH	COMMENT
1-1	25+98, LT	R7-51R	18 X 24	1	---	---	3.00	---	---	1	1	
1-2	26+27, LT	R6-2R	24 X 30	---	---	---	5.00	---	---	---	---	SHARES POST W/R1-1
1-3	26+27, LT	R1-1	30 X 30	---	---	1	5.18	---	---	1	1	
		R6-2L	24 X 30	---	---	---	5.00	---	---	---	---	SHARES POST W/R1-1
1-4	26+67, RT	R6-2L	24 X 30	---	---	---	5.00	---	---	---	---	SHARES POST W/R1-1
1-5	26+67, RT	R1-1	30 X 30	---	---	1	5.18	---	---	1	1	
		R6-2R	24 X 30	---	---	---	5.00	---	---	---	---	SHARES POST W/R1-1
1-6	26+93, LT	R7-51L	18 X 24	1	---	---	3.00	---	---	1	1	
1-7	27+34, RT	R2-1	24 X 30	1	---	---	5.00	---	---	1	1	"25 MPH"
1-8	31+11, LT			---	---	---	---	---	---	---	---	SHARED POST W/W10-1
1-9	31+11, RT			---	---	---	---	---	---	---	---	SHARED POST W/W10-1
2-1	32+19, LT	W10-1	36 X 36	---	1	---	---	7.07	---	1	1	
2-2	32+19, RT	W10-1	36 X 36	---	1	---	---	7.07	---	1	1	
2-3	32+67, LT	R7-51R	18 X 24	1	---	---	3.00	---	---	---	---	
2-4	32+50, RT	R14-1	24 X 18	1	---	---	3.00	---	---	1	---	MOUNTED ON PPOL
2-5	32+97, LT	R6-2R	24 X 30	---	---	---	5.00	---	---	---	---	SHARES POST W/R1-1
2-6	32+97, LT	R1-1	30 X 30	---	---	1	5.18	---	---	1	1	
		R6-2L	24 X 30	---	---	---	5.00	---	---	---	---	SHARES POST W/R1-1
2-7	33+35, LT	D11-1	24 X 18	1	---	---	3.00	---	---	1	1	
2-8	33+35, RT	R6-2L	24 X 30	---	---	---	5.00	---	---	---	---	SHARES POST W/R1-1
2-9	33+35, RT	R1-1	30 X 30	---	---	1	5.18	---	---	1	1	
		R6-2R	24 X 30	---	---	---	5.00	---	---	---	---	SHARES POST W/R1-1
2-10	33+63, LT	R7-51L	18 X 24	1	---	---	3.00	---	---	---	---	
2-11	33+94, LT			---	---	---	---	---	---	1	1	
2-12	34+01, RT	R2-1	24 X 30	1	---	---	5.00	---	---	---	---	"25 MPH"
2-13	35+95, RT			---	---	---	---	---	---	1	---	MOUNTED ON PPOL
2-14	39+35, LT	R7-51R	18 X 24	1	---	---	3.00	---	---	---	---	
2-15	39+61, LT	R1-1	30 X 30	---	---	1	5.18	---	---	1	1	
		R6-2L	24 X 30	---	---	---	5.00	---	---	---	---	SHARE POST W/R1-1
2-16	39+70, RT	R6-2L	24 X 30	1	---	---	5.00	---	---	1	1	
2-17	40+23, LT	R7-51L	18 X 24	1	---	---	3.00	---	---	---	---	
2-18	42+67, RT			---	---	---	---	---	---	1	1	
3-1	45+93, LT	R7-51R	18 X 24	1	---	---	3.00	---	---	---	---	
3-2	46+17, LT	R1-1	30 X 30	---	---	1	5.18	---	---	1	1	
		R6-2L	24 X 30	---	---	---	5.00	---	---	---	---	SHARE POST W/R1-1
3-3	46+33, RT	R6-2L	24 X 30	1	---	---	5.00	---	---	1	1	
3-4	46+74, LT	R7-51L	18 X 24	1	---	---	3.00	---	---	1	1	
3-5	50+16, RT			---	---	---	---	---	---	1	1	
3-6	51+13, LT	R7-51R	18 X 24	1	---	---	3.00	---	---	---	---	
3-7	51+39, LT	R1-1	30 X 30	---	---	1	5.18	---	---	1	1	
		R6-2L	24 X 30	---	---	---	5.00	---	---	---	---	SHARE POST W/R1-1
3-8	51+68, RT	R6-2L	24 X 30	1	---	---	5.00	---	---	1	1	
3-9	52+03, LT	R7-51L	18 X 24	1	---	---	3.00	---	---	---	---	
3-10	54+88, RT			---	---	---	---	---	---	1	1	
3-11	55+17, LT			---	---	---	---	---	---	1	1	
4-1	58+50, LT	R7-51R	18 X 24	1	---	---	3.00	---	---	---	---	
4-2	58+91, LT			1	---	---	---	---	1	---	---	RAILROAD CROSSING
4-3	58+91, RT			1	---	---	---	---	1	---	---	RAILROAD CROSSING
4-4	59+81, RT			---	---	---	---	---	---	1	1	
4-5	60+17, LT	R1-1	30 X 30	---	---	1	5.18	---	---	1	1	
		R6-2L	24 X 30	1	---	---	5.00	---	---	---	---	SHARE POST W/R1-1
4-6	60+36, RT	R6-2L	24 X 30	1	---	---	5.00	---	---	---	---	
4-7	60+52, RT	R3-8V	72 X 30	1	---	---	15.00	---	---	---	---	
	PROJECT TOTALS			**23**	**2**	**8**	**185.44**	**14.14**	**2**	**26**	**24**	

ALL ITEMS ON THIS SHEET
ARE CATEGORY 0010
UNLESS OTHERWISE NOTED

3

FIELD OFFICE TYPE B

PROJECT	642.5001 EACH
6999-18-73	1
PROJECT ID TOTAL	**1**

MARKING RAILROAD CROSSING EPOXY

STATION	646.5320 EACH
32+19	1
58+90	1
PROJECT ID TOTAL	**2**

MARKING STOP LINE EPOXY 18-INCH

LOCATION	646.6120 LF
ROSECRANS ST, LT	13
ROSECRANS ST, RT	14.5
SHERMAN ST, LT	13
SHERMAN ST, RT	13
WEST ST, LT	12.5
PORTER ST, LT	13
GARFIELD ST, LT	13.5
STEWART PL, LT	16
PROJECT ID TOTAL	**109**

MARKING DIAGONAL EPOXY 6-INCH

STATION TO STATION	LOCATION	646.7020 WHITE LF
21+05 - 26+15	BUFFER	312
26+76 - 32+85	BUFFER	372
33+46 - 39+48	BUFFER	367
39+55 - 59+34	BUFFER	1,194
PROJECT ID TOTAL		**2,245**

MARKING LINE EPOXY

STATION TO STATION	DESCRIPTION	646.1020 4-INCH WHITE LF	646.3020 8-INCH WHITE LF
21+05 - 25+98	EDGELINE	493	---
21+05 - 26+15	BUFFER LINES	1,020	---
26+76 - 32+85	BUFFER LINES	1,218	---
26+94 - 32+67	EDGELINE	573	---
33+46 - 39+48	BUFFER LINES	1,204	---
33+63 - 34+58	EDGELINE	95	---
35+87 - 39+35	EDGELINE	348	---
39+55 - 59+34	BUFFER LINES	3,958	---
40+22 - 45+93	EDGELINE	571	---
46+75 - 51+13	EDGELINE	438	---
52+04 - 58+50	EDGELINE	646	---
59+34 - 60+66	EDGELINE	132	---
60+68 - 61+60	CHANNELIZING	---	183
61+20 - 61+60	CHANNELIZING	---	39
PROJECT ID TOTALS		**10,696**	**222**

SHEETING PILING WALL

LOCATION	999.1500.S CRACK AND DAMAGE SURVEY LS	SPV.0045 SEISMOGRAPH DAY
42+50 - 47+50 RT	1	30
PROJECT ID TOTALS	**1**	**30**

STRUCTURE R-37-56

CATEGORY	LOCATION	650.6500 CONSTRUCTION STAKING STRUCTURE LAYOUT LS
0020	STRUCTURE R-37-56	1
PROJECT ID TOTALS		**1**

MARKING ARROW, WORD & SYMBOL EPOXY

STATION	ARROW TYPE	SYMBOL TYPE	WORD	COLOR	646.5020 ARROW EACH	646.5120 WORD EACH	646.5220 SYMBOL EACH
23+25	BIKE LANE	BIKE LANE	---	WHITE	1	---	1
25+50	BIKE LANE	BIKE LANE	---	WHITE	1	---	1
27+50	BIKE LANE	BIKE LANE	---	WHITE	1	---	1
32+50	BIKE LANE	BIKE LANE	---	WHITE	1	---	1
34+00	BIKE LANE	BIKE LANE	---	WHITE	1	---	1
36+50	BIKE LANE	BIKE LANE	---	WHITE	1	---	1
39+00	BIKE LANE	BIKE LANE	---	WHITE	1	---	1
41+00	BIKE LANE	BIKE LANE	---	WHITE	1	---	1
43+50	BIKE LANE	BIKE LANE	---	WHITE	1	---	1
46+00	BIKE LANE	BIKE LANE	---	WHITE	1	---	1
48+50	BIKE LANE	BIKE LANE	---	WHITE	1	---	1
51+00	BIKE LANE	BIKE LANE	---	WHITE	1	---	1
53+50	BIKE LANE	BIKE LANE	---	WHITE	1	---	1
56+00	BIKE LANE	BIKE LANE	---	WHITE	1	---	1
58+75	---	---	BIKE LANE ENDS	WHITE	---	3	---
60+92	2	---	---	WHITE	1	---	---
60+92	1	---	---	WHITE	1	---	---
61+25	1	---	---	WHITE	1	---	---
61+25	2	---	---	WHITE	1	---	---
PROJECT ID TOTALS					**18**	**3**	**14**

MARKING CROSSWALK EPOXY
TRANSVERSE LINE 6-INCH

STATION	LOCATION	646.7420 LF
26+19	S 1ST AVE	58
	ROSECRANS ST, LT	58
	ROSECRANS ST, RT	64
26+72	S 1ST AVE	61
32+88	S 1ST AVE	57
	SHERMAN ST, LT	58
	SHERMAN ST, RT	62
33+43	S 1ST AVE	58
39+52	S 1ST AVE	54
	WEST ST, LT	60
	PORTER ST, LT	57
	GARFIELD ST, LT	65
	STEWART PL, LT	71
PROJECT ID TOTAL		**783**

ALL ITEMS ON THIS SHEET
ARE CATEGORY 0010
UNLESS OTHERWISE NOTED

3

SAWING

STATION TO STATION	LOCATION	690.0150 ASPHALT LF	690.0250 CONCRETE LF
21+05	BEGIN PROJECT	---	43.0
21+25	LT	---	2.5
21+28 - 23+10	LT	189.0	---
22+12	RT	52.0	---
23+31	LT	---	2.0
23+47	LT	---	4.0
24+11	LT	---	3.0
24+22	LT	---	8.0
24+51	LT	---	2.0
24+68	LT	---	2.5
24+79	RT	35.0	---
24+82	LT	---	2.5
25+19	LT	---	4.0
26+19	LT	---	6.0
26+19	RT	---	5.5
	ROSECRANS, LT	26.0	2.5
	ROSECRANS, RT	29.0	5.0
26+72	LT	---	6.0
27+01	LT	---	3.0
27+72	LT	---	3.0
27+83	RT	25.0	---
28+31	LT	---	4.0
28+77	LT	---	3.0
29+18	LT	14.0	---
29+39	LT	---	3.0
29+67	LT	---	3.0
30+15	LT	---	3.0
30+72	LT	---	3.0
31+41	LT	---	3.0
32+08	LT	---	4.0
32+53	LT	---	3.0
32+88	LT	---	6.0
	SHERMAN, LT	26.0	2.5
	SHERMAN, RT	27.0	2.5
33+41	LT	---	6.0
33+43	RT	---	6.5
36+08	LT	9.0	---
36+28	LT	---	3.0
36+66	LT	---	3.0
37+34	LT	---	4.5
37+49	RT	---	5.5
37+52	LT	10.0	---
37+71	LT	9.5	---
37+97	RT	---	3.0
37+98	LT	---	4.5
38+40	RT	---	2.5
38+54	LT	---	3.0
38+64	RT	---	3.0
38+76	LT	---	2.5
39+19	LT	---	5.5

- CONTINUED -

SAWING

STATION TO STATION	LOCATION	690.0150 ASPHALT LF	690.0250 CONCRETE LF
39+56	LT	---	6.0
	WEST	25.0	5.0
40+10	LT	---	5.5
40+42	LT	---	5.5
40+68	LT	10.0	---
41+06	LT	---	2.0
41+32	LT	17.0	---
41+93	LT	12.5	---
42+24	LT	---	5.0
42+75	LT	15.5	---
42+98	LT	---	2.5
43+19	LT	---	4.5
43+39	LT	---	7.5
43+67	LT	---	6.5
44+12	LT	14.0	---
44+52	LT	---	2.0
44+70	LT	---	5.0
44+92	LT	---	18.0
45+33	LT	---	3.0
45+68	LT	---	8.5
46+12	LT	---	4.5
	PORTER	26.0	5.0
46+50	LT	---	5.5
46+78	LT	---	3.5
47+17	LT	---	21.5
47+74	LT	---	3.5
48+34	LT	---	25.0
49+00	LT	---	3.5
49+32	LT	---	7.0
49+80	LT	---	3.5
50+25	LT	---	4.5
50+57	LT	10.5	---
51+05	LT	---	4.0
	GARFIELD	26.0	5.0
51+79	LT	---	6.0
52+32	LT	---	5.0
52+87	LT	---	2.0
53+18	LT	---	3.0
53+41	LT	---	3.5
54+24	LT	---	4.0
54+89	LT	---	4.5
55+58	LT	---	4.0
57+04	LT	---	3.5
57+29	LT	---	8.0
57+48	LT	---	10.0
57+71	LT	---	4.0
57+75	RT	38.0	---
58+29	LT	---	5.0
58+61	LT	---	4.0
59+24	LT	---	3.5
60+11	LT	---	5.5
	STEWART PL	32.0	5.0
61+45	RT	18.0	---
61+60	END PROJECT	---	52.5
61+76	RT	42.0	---
61+98	RT	---	8.5
PROJECT ID TOTALS		**738.0**	**521.0**

CONSTRUCTION STAKING

STATION TO STATION	LOCATION	650.4500 SUBGRADE LF	650.5000 BASE LF	650.9920 SLOPE STAKES LF
34+80 - 35+67		---	87	---
21+05 - 61+59.90		4,342	---	4,342
111+29 - 111+59	ROSECRANS ST	---	30	---
PROJECT ID TOTALS		**4,342**	**117**	**4,342**

CONSTRUCTION STAKING
CURB GUTTER AND CURB & GUTTER

STATION TO STATION	LOCATION	650.5500 LF
34+80 - 35+15	LT	35
35+46 - 35+67	LT	21
34+80 - 34+97	RT	17
35+28 - 35+67	RT	39
111+29 - 111+59	ROSECRANS, RT	30
PROJECT ID TOTAL		**142**

CONSTRUCTION STAKING CURB RAMPS

STATION	LOCATION	650.9000 EACH
26+25	LT	2
26+25	RT	2
26+67	LT	2
26+67	RT	2
32+94	LT	2
32+94	RT	2
33+36	LT	2
33+36	RT	2
39+52	RT	1
39+55	LT	1
39+96	LT	1
46+17	LT	1
46+49	LT	1
51+40	LT	1
51+77	LT	1
60+18	LT	1
60+58	LT	1
PROJECT ID TOTAL		**25**

CONSTRUCTION STAKING SUPPLEMENTAL CONTROL

PROJECT	650.9910.01 LS
6999-18-73	1

ALL ITEMS ON THIS SHEET
ARE CATEGORY 0010
UNLESS OTHERWISE NOTED

3

ABANDONING

STATION	LOCATION	204.0250 MANHOLES EA	204.0260 INLETS EA	SPV.0060.01 STORM SEWER EA
23+12	22' RT	---	---	1
23+17	11' LT	---	1	---
26+18	21' RT	---	---	1
26+39	71' RT	---	---	1
26+87	25' RT	---	1	---
32+65	12' RT	---	---	1
32+78	12' RT	1	---	---
32+93	8' LT	---	---	1
35+30	17' RT	---	---	1
35+37	12' RT	1	---	---
35+50	11' LT	---	1	---
44+98	20' RT	---	1	---
45+05	5' LT	---	---	1
46+22	27' LT	---	---	1
46+39	27' RT	1	---	1
46+46	27' LT	---	1	---
47+79	33' RT	1	---	---
47+91	22' RT	---	1	---
49+33	9' LT	---	1	1
60+04	18' RT	---	2	---
PROJECCT TOTAL		**4**	**9**	**10**

CONCRETE COLLARS FOR PIPE

STATION	OFFSET	520.8000 EA
20+90	19.0' RT	1
21+05	17.1' RT	1
26+09	21.3' RT	1
26+40	32.9' LT	1
28+54	39.1' RT	1
39+83	51.6' RT	1
39+90	34.6' LT	1
51+33	19.5' LT	1
PROJECT TOTAL		**8**

STORM SEWER PIPE REINFORCED CONCRETE CLASS III 48X42-INCH TEE

STATION	OFFSET	SPV.0060.02 EA
33+09	23' LT	1
PROJECT ID TOTAL		**1**

STORM RAILROAD CROSSING

STATION	OFFSET	SPV.0090.01 BORE AND JACK 36-INCH CASING STEEL LF	SPV.0090.04 STORM SEWER PIPE REINFORCED CONCRETE CLASS III 18-INCH IN CASING LF
34+50 - 35+75	14.3' - 15' RT	125	125
PROJECT TOTAL		**125**	**125**

3

ALL ITEMS ON THIS SHEET
ARE CATEGORY 0010
UNLESS OTHERWISE NOTED

3

STORM SEWER PIPES

FROM	-	TO	608.0318 18-INCH LF	608.0321 21-INCH LF	608.0324 24-INCH LF	608.0336 36-INCH LF	608.0342 42-INCH LF	608.0412 12-INCH LF	608.0415 15-INCH LF	INLET ELEVATION	DISCHARGE ELEVATION	SLOPE FT/FT
			STORM SEWER PIPE REINFORCED CONCRETE CLASS III					STORM SEWER PIPE REINFORCED CONCRETE CLASS IV				
A3	-	A2	---	---	20	---	---	---	---	1187.26	1187.18	0.0040
A6	-	A1	---	---	---	---	53	---	---	1176.32	1176.11	0.0040
A4	-	A3	103	---	---	---	---	---	---	1193.84	1189.44	0.0190
A2	-	A1	---	---	44	---	---	---	---	1187.18	1187.05	0.0030
A3.1	-	A3	---	---	---	---	---	9	---	1194.60	1194.42	0.0200
A4.1	-	A4	---	---	---	---	---	20	---	1199.23	1198.83	0.0200
A4.2	-	A4	---	---	---	---	---	8	---	1199.03	1198.83	0.0250
A8	-	A7	---	---	---	---	110	---	---	1178.14	1177.82	0.0029
A7	-	A6	---	---	---	---	500	---	---	1177.82	1176.32	0.0030
EX SS 3	-	A8	46	---	---	---	---	---	---	1187.66	1185.99	0.0363
A8	-	A9	---	---	---	359	---	---	---	1179.72	1178.64	0.0030
A9	-	EX SS 0	---	---	---	176	---	---	---	1180.25	1179.72	0.0030
B1	-	EX SS 7	---	68	---	---	---	---	---	1195.59	1186.62	0.1319
EX SS 6	-	B1	---	---	19	---	---	---	---	1202.37	1202.29	0.0042
C2	-	C1	---	---	---	187	---	---	---	1196.04	1195.67	0.0020
EX SS 9	-	C2	---	---	---	37	---	---	---	1199.09	1196.04	0.0824
C1	-	EX SS 8	---	---	---	31	---	---	---	1195.67	1194.48	0.0384
D1	-	EX SS 11	---	---	---	---	39	---	---	1190.60	1190.49	0.0028
EX SS 10	-	D1	---	---	---	---	14	---	---	1190.64	1190.60	0.0029
A9.3	-	A9	8	---	---	---	---	---	---	1184.59	1184.51	0.0100
A9.1	-	A9	---	---	---	---	---	---	21	1185.34	1185.13	0.0100
A8.1	-	A8	---	---	---	---	---	---	32	1186.18	1185.86	0.0100
A8.2	-	A8.1	---	---	---	---	---	54	---	1186.97	1186.43	0.0100
A7.1	-	A7	---	---	---	---	---	21	---	1186.79	1186.58	0.0100
A7.4	-	A7.3	---	---	---	---	---	29	---	1187.14	1186.85	0.0100
A1.1	-	A1	---	---	---	---	---	9	---	1195.96	1195.87	0.0100
B1.1	-	B1	---	---	---	---	---	20	---	1203.99	1203.79	0.0100
B1.3	-	B1.2	---	---	---	---	---	28	---	1202.88	1202.60	0.0100
B1.2	-	B1	---	---	---	---	---	---	27	1202.35	1202.08	0.0100
C4.1	-	C4	---	---	---	---	---	27	---	1202.55	1202.28	0.0100
C3.2	-	C3.1	---	---	---	---	---	42	---	1203.64	1203.22	0.0100
C3.1	-	C3	---	---	---	---	---	---	27	1202.97	1202.69	0.0104
C1.1	-	C1.2	---	---	---	---	---	33	---	1203.07	1202.74	0.0100
C1.2	-	C1	---	---	---	---	---	---	20	1202.49	1202.29	0.0100
C2.2	-	C2.1	---	---	---	---	---	29	---	1205.10	1204.82	0.0097
C2.1	-	C2	---	---	---	---	---	---	60	1204.57	1203.97	0.0100
D1.3	-	D1.2	---	---	---	---	---	38	---	1199.95	1199.57	0.0100
D1.2	-	D1.1	---	---	---	---	---	---	27	1198.54	1198.28	0.0096
D1.1	-	D1	---	---	---	---	---	---	17	1198.28	1198.11	0.0100
D1.6	-	D1.5	---	---	---	---	---	56	---	1198.99	1198.71	0.0050
D1.5	-	D1.4	---	---	---	---	---	24	---	1198.71	1198.59	0.0050
D1.4	-	D1	---	---	---	---	---	40	---	1198.59	1198.19	0.0100
EX SS 4	-	A8	---	---	---	---	---	58	---	1187.61	1186.45	0.0200
C4	-	C3	134	---	---	---	---	---	---	1201.78	1201.12	0.0049
C3	-	C1	---	---	295	---	---	---	---	1200.62	1199.14	0.0050
A9.5	-	A9.4	---	---	---	---	---	---	23	1185.11	1184.91	0.0087
EX SS 5	-	A7.3	---	---	---	---	---	---	18	1185.44	1185.35	0.0050
D1.4	-	D1	---	---	---	---	---	---	108	1198.32	1197.24	0.0100
A9.2	-	A9.1	---	---	---	---	---	7	---	1185.66	1185.59	0.0100
A8.1	-	EX SS 2	---	---	---	---	---	---	10	1187.94	1187.89	0.0050
A7.3	-	A7.2	105	---	---	---	---	---	---	1185.10	1184.05	0.0100
C2.3	-	C2.2	---	---	---	---	---	25	---	1205.35	1205.10	0.0100
A7	-	A7.2	8	---	---	---	---	---	---	1184.05	1183.97	0.0100
A9.4	-	A9.3	7	---	---	---	---	---	---	1184.66	1184.59	0.0100
PROJECT TOTALS			**411**	**68**	**378**	**790**	**716**	**577**	**390**			

ALL ITEMS ON THIS SHEET
ARE CATEGORY 0010
UNLESS OTHERWISE NOTED

3

STORM SEWER STRUCTURES

STRUCTURE	STATION	OFFSET*	611.0530 MANHOLE COVERS TYPE J EACH	611.0624 INLET COVERS TYPE H EACH	611.2004 MANHOLES 4-FT DIAMETER EACH	611.2005 MANHOLES 5-FT DIAMETER EACH	611.2006 MANHOLES 6-FT DIAMETER EACH	611.2007 MANHOLES 7-FT DIAMETER EACH	611.3004 INLETS 4-FT DIAMETER EACH	611.3230 INLETS 2X3-FT EACH	650.4000 CONSTRUCTION STAKING STORM SEWER EACH	RIM**** ELEVATION	INVERT** ELEVATION	DEPTH*** FT
A1	33+09	23.4' LT	1	---	1	---	---	---	---	---	1	1200.92	1176.11	17.56
A2	33+50	7.3' LT	---	1	---	---	---	---	1	---	1	1200.12	1187.18	12.11
A3	33+50	13.5' RT	1	---	1	---	---	---	---	---	1	1199.78	1187.26	11.27
A4	35+82	15.0' RT	1	---	1	---	---	---	---	---	1	1204.01	1193.84	8.92
A6	32+50	13.5' RT	1	---	---	---	---	1	---	---	1	1197.97	1176.32	20.40
A7	27+50	13.5' RT	1	---	---	---	1	---	---	---	1	1191.03	1177.82	11.96
A8	26+40	13.5' RT	1	---	---	---	1	---	---	---	1	1191.28	1178.14	11.89
A9	22+81	13.5' RT	1	---	---	1	---	---	---	---	1	1189.70	1179.72	8.73
B1	39+84	16.5' LT	1	---	1	---	---	---	---	---	1	1207.45	1195.59	10.61
C1	49+43	17.5' RT	1	---	---	1	---	---	---	---	1	1206.95	1195.67	10.03
C2	51+30	17.5' RT	1	---	---	1	---	---	---	---	1	1208.58	1196.04	11.29
C3	46+45	17.5' RT	1	---	1	---	---	---	---	---	1	1207.35	1200.62	5.48
C4	45+08	19.5' RT	---	1	---	---	---	---	1	---	1	1206.48	1201.78	3.87
D1	60+20	19.7' LT	1	---	---	---	1	---	---	---	1	1204.10	1198.11	4.74
A1.1	33+01	27.4' LT	---	1	---	---	---	---	---	1	1	1200.33	1195.96	3.54
A3.1	33+54	21.5' RT	---	1	---	---	---	---	---	1	1	1199.48	1194.60	4.05
A4.1	35+82	5' LT	---	1	---	---	---	---	---	1	1	1204.22	1199.23	4.16
A4.2	35+82	22.7' RT	---	1	---	---	---	---	---	1	1	1203.80	1199.03	3.94
A7.1	27+50	7.3' LT	---	1	---	---	---	---	---	1	1	1191.10	1186.79	3.48
A7.2	27+50	21.3' RT	---	1	---	---	---	---	---	1	1	1190.82	1184.05	5.94
A7.3	28+55	21.3' RT	---	1	---	---	---	---	---	1	1	1191.21	1185.10	5.28
A7.4	28+55	7.3' LT	---	1	---	---	---	---	---	1	1	1191.49	1187.14	3.52
A8.1	26+09	21.3' RT	---	1	---	---	---	---	---	1	1	1190.98	1186.18	3.97
A8.2	26+32	27.2' LT	---	1	---	---	---	---	---	1	1	1191.50	1186.97	3.70
A9.1	22+81	7.3' LT	---	1	---	---	---	---	---	1	1	1189.95	1185.34	3.78
A9.2	22+88	7.3' LT	---	1	---	---	---	---	---	1	1	1189.94	1185.66	3.45
A9.3	22+81	21.3' RT	---	1	---	---	---	---	---	1	1	1189.49	1184.59	4.07
A9.4	22+88	21.3' RT	---	1	---	---	---	---	---	1	1	1189.41	1184.66	3.92
A12.5	23+10	26.5' RT	1	---	1	---	---	---	---	---	1	1190.50	1185.11	4.14
B1.1	39+64	22.6' LT	---	1	---	---	---	---	---	1	1	1207.44	1203.99	2.62
B1.2	40+10	7.5' LT	---	1	---	---	---	---	---	1	1	1207.49	1202.35	4.31
B1.3	40+10	20.5' RT	---	1	---	---	---	---	---	1	1	1207.23	1202.88	3.52
C1.1	49+08	7.2' LT	---	1	---	---	---	---	---	1	1	1207.06	1203.07	3.16
C1.2	49+24	21.3' RT	---	1	---	---	---	---	---	1	1	1206.78	1202.49	3.46
C2.1	51+90	21.3' RT	---	1	---	---	---	---	---	1	1	1209.19	1204.57	3.79
C2.2	51+90	7.3' LT	---	1	---	---	---	---	---	1	1	1209.47	1205.10	3.54
C2.3	51+72	24.4' LT	---	1	---	---	---	---	---	1	1	1209.18	1205.35	3.00
C3.1	46+56	8' LT	---	1	---	---	---	---	---	1	1	1207.65	1202.97	3.85
C3.2	46+19	24.4' LT	---	1	---	---	---	---	---	1	1	1207.60	1203.64	3.13
C4.1	45+08	7.5' LT	---	1	---	---	---	---	---	1	1	1206.77	1202.55	3.39
D1.1	60+21	36.6' LT	---	1	---	---	---	---	---	1	1	1203.94	1198.28	4.83
D1.2	60+04	15.3' LT	---	1	---	---	---	---	---	1	1	1204.24	1198.54	4.87
D1.3	59+85	17.8' RT	---	1	---	---	---	---	---	1	1	1204.52	1199.95	3.74
D1.4	60+54	40.4' LT	---	1	---	---	---	---	---	1	1	1204.00	1198.59	4.58
D1.5	60+72	23.2' LT	---	1	---	---	---	---	---	1	1	1203.58	1198.71	4.04
D1.6	61+28	23.2' LT	---	1	---	---	---	---	---	1	1	1203.43	1198.71	3.89
PROJECT TOTAL			**13**	**33**	**6**	**3**	**3**	**1**	**2**	**31**	**46**			

REMARKS

* STATIONS AND OFFSETS ARE TO CENTER OF STRUCTURE

** FOR STRUCTURES WITH SUMPS, THE INVERT ELEVATION IS THE ELEVATION OF THE SUMP. FOR STRUCTURES WITHOUT SUMPS, THE INVERT ELEVATION IS THE ELEVATION OF THE LOWEST PIPE FLOW LINE

*** DEPTH = RIM ELEV - TOP OF STRUCTURE BASE ELEV - COVER HEIGHT - 2 -INCH ADJUSTMENT RING HEIGHT

**** RIM FOR CURB INLETS EQUALS FLOWLINE

ALL ITEMS ON THIS SHEET
ARE CATEGORY 0010
UNLESS OTHERWISE NOTED

3

ABANDONING EXISTING WATER

CATEGORY	STATION	LOCATION	SPV.0060.03 VALVES EACH	SPV.0060.04 MAINS EACH
0030	24+63	30' RT	1	---
	26+81	23' RT	1	---
	32+63	16' RT	---	1
	32+82	15' RT	1	---
	32+84	23' RT	1	---
	33+21	11' RT	---	1
	33+46	17' RT	1	---
	39+12	12' RT	---	1
	39+36	3' LT	---	1
	39+46	7' LT	1	---
	42+64	9' LT	1	---
	46+06	2' LT	1	---
	46+35	3' LT	---	1
	PROJECT TOTAL		**8**	**5**

REMOVING EXISTING HYDRANTS

CATEGORY	STATION	OFFSET	SPV.0060.05 EACH
0030	26+81	29' RT	1
	32+84	30' RT	1
	51+87	12' LT	1
	57+37	21' lt	1
	PROJECT TOTAL		**4**

HYDRANT

CATEGORY	STATION	LOCATION	SPV.0060.09 EACH
0030	26+89	15.5' LT	1
	32+70	15.5' LT	1
	35+90	13.4' LT	1
	40+17	12.5' LT	1
	45+95	12.5' LT	1
	51+20	12.5' LT	1
	59+95	23.0' LT	1
	PROJECT TOTAL		**7**

VALVE AND BOX

CATEGORY	STATION	OFFSET	SPV.0060.06 6-INCH EACH	SPV.0060.07 8-INCH EACH	SPV.0060.08 12-INCH EACH
0030	20+84	2.0' LT	1	---	---
	26+16	2.0' LT	---	---	1
	26+53	22.5' LT	---	1	---
	26+54	36.4' RT	---	1	---
	26+89	12.5' LT	1	---	---
	26+94	2.0' LT	---	---	1
	30+06	2.0' LT	1	---	---
	32+70	12.5' LT	1	---	---
	32+65	2.0' LT	---	---	1
	33+20	22.7' LT	---	1	---
	33+65	2.0' LT	---	1	---
	35+90	10.4' LT	1	---	---
	35+95	2.0' LT	---	1	---
	36+07	2.0' RT	1	---	---
	40+17	9.5' LT	1	---	---
	40+22	7.0' RT	---	1	---
	45+90	4.8' RT	---	1	---
	45+95	9.5' RT	1	---	---
	46+39	19.2' LT	---	1	---
	46+56	4.0' LT	---	1	---
	51+15	2.0' LT	---	1	---
	51+20	9.5' LT	1	---	---
	51+47	14.6' LT	---	1	---
	51+95	2.0' LT	---	1	---
	56+20	CL	---	1	---
	56+25	4.0' LT	1	---	---
	59+90	10.1' LT	---	1	---
	59+95	20.0' LT	1	---	---
	60+45	33.5' LT	1	---	---
	61+37	8.0' LT	1	---	---
	61+42	11.6' LT	---	1	---
	PROJECT TOTAL		**11**	**14**	**3**

3

ALL ITEMS ON THIS SHEET
ARE CATEGORY 0010
UNLESS OTHERWISE NOTED

3

CONNECT TO EXISTING WATER MAIN

CATEGORY	STATION	OFFSET	SPV.0060.12 EACH
0030	26+53	22.5' LT	1
	26+54	36.4' RT	1
	30+06	36.9' RT	1
	33+21	43.4' LT	1
	36+07	36.5' RT	1
	46+39	19.2' LT	1
	51+43	23.5' LT	1
	61+37	30.5' RT	1
	61+45	11.6'LT	1
	PROJECT TOTAL		**9**

CONSTRUCTION STAKING WATER MAIN STRUCTURE

CATEGORY		SPV.0060.13 EACH
0030	HYDRANT	7
	VALVE AND BOX	28
	CURB STOP	59
	PROJECT TOTAL	**94**

WATER MAIN RAILROAD CROSSING

CATEGORY	STATION	OFFSET	SPV.0090.02 BORE AND JACK 20-INCH CASING STEEL LF	SPV.0090.05 WATER MAIN DI 8-INCH IN CASING LF
0030	34+69 - 35+86	2' LT	116	116
	PROJECT TOTAL		**116**	**116**

TEMPORARY WATER SERVICE

CATEGORY		SPV.0105.01 LS
0030	PROJECT	1
	PROJECT TOTAL	**1**

WATER MAIN DI

CATEGORY	STATION	OFFSET	SPV.0090.07 6-INCH LF	SPV.0090.08 8-INCH LF	SPV.0090.09 12-INCH LF	SPV.0090.12 CONSTRUCTION STAKING WATER MAIN PIPE LF
0030	20+89	2.0' LT - 15.5' LT	14	---	---	14
	20+84 - 26+53	2.0' LT	---	---	569	569
	26+53	2.0' LT - 36.4' RT	---	38	---	38
	26+53	2.0' LT - 22.5' LT	---	20	---	20
	26+53 - 26+89	2.0' LT	---	---	36	36
	26+89	2.0' LT - 15.5' LT	13	---	---	13
	26+89 - 32+70	2.0' LT	---	---	581	581
	30+06	2.0' LT - 37.0' RT	39	---	---	39
	32+70	2.0' LT - 15.5' LT	14	---	---	14
	32+70 - 33+20	2.0' LT	---	---	50	50
	33+20	2.0' LT - 43.4' LT	---	41	---	41
	33+20 - 34+69	2.0' LT	---	150	---	150
	35+90	2.0' LT - 13.4' LT	11	---	---	11
	35+90 - 36+07	2.0' LT	---	17	---	17
	36+07	2.0' LT - 37.0' RT	39	---	---	39
	36+07 - 39+70	2.0' LT - 7.6' RT	---	364	---	364
	39+70 - 40+17	7.6' RT - 7.0' RT	---	47	---	47
	40+17	7.0' RT - 12.5' LT	19	---	---	19
	40+17 - 40+46	7.0' RT	---	39	---	39
	40+46 - 40+56	7.0' RT - 2.0' LT	---	13	---	13
	40+56 - 42+04	2.0' LT - 2.4' LT	---	138	---	138
	42+04 - 45+95	2.4' LT - 4.6' RT	---	391	---	391
	45+95	4.6' RT - 12.5' LT	17	---	---	17
	45+95 - 46+42	4.6' RT - 0.9' LT	---	47	---	47
	46+42 - 46+38	0.9' LT - 39.1' LT	---	39	---	39
	46+38 - 46+61	0.9' LT - 5.0' LT	---	20	---	20
	46+61 - 51+20	5.0' LT - 2.0' LT	---	464	---	464
	51+20	2.0' LT - 12.5' LT	11	---	---	11
	51+20 - 51+50	2.0' LT	---	30	---	30
	51+50 - 51+43	2.0' LT - 23.5' LT	---	23	---	23
	51+43 - 51+95	2.0' LT	---	45	---	45
	51+95 - 53+74	2.0' LT - 2.6' LT	---	179	---	179
	53+74 - 56+25	2.6' LT - 0.1' RT	---	251	---	251
	56+25	0.1' RT - 12.5' RT	13	---	---	13
	56+25 - 56+75	0.1' RT - 6.5' RT	---	51	---	51
	56+75 - 59+95	6.5' RT - 10.0' LT	---	323	---	323
	59+95	10.0' LT - 23.0' LT	13	---	---	13
	59+95 - 60+29	10.0' LT	---	34	---	34
	60+29 - 61+44	10.0' LT - 11.6' LT	---	115	---	115
	61+37	11.6' LT - 30.5' RT	42	---	---	42
	PROJECT TOTAL		**245**	**2879**	**1236**	**4360**

3

ALL ITEMS ON THIS SHEET
ARE CATEGORY 0010
UNLESS OTHERWISE NOTED

3

WATER SERVICE, CORPORTATION STOP AND CURB STOP

CATEGORY	STATION	LOCATION	SPV.0090.10 COPPER 1-INCH LF	SPV.0090.11 COPPER 2-INCH LF	SPV.0060.10 1-INCH EACH	SPV.0060.11 2-INCH EACH
0030	21+04	LT	22	---	1	---
	22+17	LT	---	21	---	1
	22+35	LT	21	---	1	---
	22+89	LT	21	---	1	---
	23+53	LT	21	---	1	---
	24+28	LT	21	---	1	---
	24+84	LT	20	---	1	---
	25+21	RT	39	---	1	---
	25+29	LT	21	---	1	---
	27+36	RT	38	---	1	---
	27+53	LT	21	---	1	---
	28+10	LT	21	---	1	---
	28+86	LT	21	---	1	---
	29+54	LT	21	---	1	---
	30+22	LT	21	---	1	---
	30+62	LT	21	---	1	---
	31+36	LT	22	---	1	---
	31+77	LT	22	---	1	---
	32+43	LT	22	---	1	---
	33+62	RT	37	---	1	---
	36+30	LT	23	---	1	---
	36+72	LT	23	---	1	---
	36+75	RT	36	---	1	---
	37+12	LT	23	---	1	---
	37+29	RT	36	---	1	---
	37+70	LT	23	---	1	---
	37+72	RT	38	---	1	---
	38+65	LT	23	---	1	---
	39+30	LT	24	---	1	---
	40+75	LT	25	---	1	---
	41+23	LT	26	---	1	---
	41+62	LT	26	---	1	---
	42+36	LT	31	---	1	---
	43+21	LT	33	---	1	---
	43+57	LT	33	---	1	---
	44+63	LT	33	---	1	---
	45+54	LT	33	---	1	---
	46+75	LT	22	---	1	---
	47+11	LT	21	---	1	---
	47+47	LT	21	---	1	---
	48+32	LT	20	---	1	---
	49+11	LT	21	---	1	---
	49+91	LT	21	---	1	---
	50+26	LT	21	---	1	---
	50+70	LT	22	---	1	---
	52+21	LT	22	---	1	---
	52+89	LT	21	---	1	---
	52+90	LT	21	---	1	---

WATER SERVICE, CORPORTATION STOP AND CURB STOP

CATEGORY	STATION	LOCATION	SPV.0090.10 COPPER 1-INCH LF	SPV.0090.11 COPPER 2-INCH LF	SPV.0060.10 1-INCH EACH	SPV.0060.11 2-INCH EACH
0030	53+50	LT	21	---	1	---
	53+86	LT	23	---	1	---
	54+52	LT	24	---	1	---
	55+35	LT	23	---	1	---
	56+11	LT	23	---	1	---
	57+22	LT	19	---	1	---
	57+48	LT	13	---	1	---
	58+07	LT	13	---	1	---
	58+70	LT	13	---	1	---
	59+18	LT	13	---	1	---
	60+95	RT	41	---	1	---
	PROJECT TOTAL		**1401**	**21**	**58**	**1**

3

SANITARY STRUCTURES

CATEGORY	MH NAME	STATION	OFFSET	SPV.0200.01 SANITARY MANHOLE 4-FOOT V.F.	SPV.0060.15 MANHOLE COVERS TYPE J-S EACH	SPV.0060.25 MANHOLE COVERS TYPE J-S-30 EACH	SPV.0060.22 TO EXISTING MANHOLE EACH
0040	SAN MH 1	23+28	6.0' RT	6.07	1	---	---
	SAN MH 2	26+46	6.0' RT	8.33	1	---	---
	SAN MH 3	29+98	6.0' RT	8.17	1	---	---
	SAN MH 4	33+70	6.0' RT	8.96	1	---	---
	SAN MH 5	39+25	8.0' RT	7.76	1	---	---
	SAN MH 6	39+81	30.4' LT	15.79	1	---	---
	SAN MH 7	40+51	1.5' LT	14.91	---	1	1
	SAN MH 8	40+71	6.0' RT	7.78	1	---	---
	SAN MH 9	42+03	5.7' RT	8.63	1	---	---
	SAN MH 10	46+36	8.5' RT	10.64	---	1	1
	SAN MH 11	46+80	5.1' RT	7.59	1	---	---
	SAN MH 12	51+38	6.0' RT	13.62	1	---	---
	SAN MH 13	51+37	25.5' RT	14.32	1	---	---
	SAN MH 14	51+03	28.7' RT	16.37	---	1	1
	SAN MH 15	53+73	5.3' RT	8.70	1	---	---
	SAN MH 16	56+20	8.0' RT	8.05	1	---	---
	SAN MH 17	57+33	2.5' RT	8.04	1	---	---
	SAN MH 18	57+48	9.2' RT	10.66	---	1	1
	SAN MH 19	60+38	CL	15.97	1	---	---
	SAN MH 20	60+48	8.7' RT	16.36	---	1	1
	SAN MH 21	61+16	CL	15.88	1	---	---
	PROJECT TOTAL			**232.68**	**16**	**5**	**5**

ALL ITEMS ON THIS SHEET
ARE CATEGORY 0010
UNLESS OTHERWISE NOTED

3

ABANDONING SANITARY MANHOLE

CATEGORY	STATION	OFFSET	SPV.0060.14 EACH
0040	39+43	9.8' RT	1
	47+80	16.5' RT	1
	47+80	10.5' RT	1
	49+32	10.3' RT	1
	51+59	10.6' RT	1
	PROJECT TOTAL		**5**

CONNECT PIPE TO EXISTING SANITARY

CATEGORY	STATION	OFFSET	SPV.0060.21 EACH
0040	21+05	7.0' RT	1
	26+45	22.5' LT	1
	26+46	36.0' RT	1
	39+83	38.0' LT	1
	51+39	18.9' LT	1
	60+38	30.4' LT	1
	60+63	22.5' RT	1
	PROJECT TOTAL		**7**

CONSTRUCTION STAKING SANITARY STRUCTURE

CATEGORY		SPV.0060.23 EACH
0040	MANHOLE	16
	TRACER WIRE ACCESS BOX	15
	PROJECT TOTAL	**31**

SANITARY RAILROAD CROSSING

CATEGORY	STATION	LOCATION	SPV.0090.03 BORE AND JACK 16-INCH CASING STEEL LF	SPV.0090.06 SANITARY SEWER PVC 8-INCH IN CASING LF
0040	34+60 - 35+85	6.0' RT	125	125
	PROJECT TOTAL		**125**	**125**

SANITARY SEWER PIPE

CATEGORY	FROM -	TO	SPV.0090.13 SANITARY SEWER PVC 8-INCH LF	SPV.0090.14 SANITARY SEWER PVC 10-INCH LF	SPV.0090.15 SANITARY SEWER PVC 21-INCH LF	SPV.0090.18 CONSTRUCTION STAKING SANITARY PIPE LF	SPV.0090.19 SANITARY SEWER TELEVISING LF
0040	BOP	SAN1	---	223	---	223	223
	SAN1	SAN2	---	318	---	318	318
	SAN2	WEST	---	---	29	29	29
	SAN2	EAST	---	---	30	30	30
	SAN2	SAN3	355	---	---	355	355
	SAN3	SAN4	370	---	---	370	370
	SAN4	SAN5	556	---	---	556	556
	SAN6	WEST	---	---	8	8	8
	SAN6	SAN7	---	---	75	75	75
	SAN8	SAN9	131	---	---	131	131
	SAN9	SAN10	430	---	---	430	430
	SAN11	SAN12	457	---	---	457	457
	SAN12	WEST	---	---	25	25	25
	SAN12	SAN13	---	---	20	20	20
	SAN13	SAN14	---	---	35	35	35
	SAN12	SAN15	234	---	---	234	234
	SAN15	SAN16	247	---	---	247	247
	SAN17	SAN19	306	---	---	306	306
	SAN19	WEST	---	---	30	30	30
	SAN19	SAN20	---	---	13	13	13
	SAN20	NORTH EAST	---	21	---	21	21
	SAN19	SAN21	---	77	---	77	77
	SAN21	NORTH EAST	---	39	---	39	39
	PROJECT TOTAL		**3086**	**678**	**265**	**4029**	**4029**

3

ALL ITEMS ON THIS SHEET
ARE CATEGORY 0010
UNLESS OTHERWISE NOTED

3

SANITARY LATERALS

CATEGORY	STATION	LOCATION	SPV.0090.16 SANITARY LATERAL PVC 4-INCH LF	SPV.0090.17 SANITARY LATERAL PVC 6-INCH LF	SPV.0060.17 8X4-INCH WYE EACH	SPV.0060.18 8X6-INCH WYE EACH	SPV.0060.19 10X4-INCH WYE EACH	SPV.0060.20 10X6-INCH WYE EACH	SPV.0060.16 TRACER WIRE ACCESS BOX EACH
0040	21+11	LT	---	30	---	---	---	1	---
	22+37	LT	29	---	---	---	1	---	---
	22+89	LT	29	---	---	---	1	---	---
	23+47	LT	---	29	---	---	---	1	---
	24+34	LT	---	29	---	---	---	1	---
	24+84	LT	29	---	---	---	1	---	---
	25+19	RT	32	---	---	---	1	---	---
	25+29	LT	29	---	---	---	1	---	---
	27+46	LT	---	28	---	1	---	---	---
	28+42	LT	---	29	---	1	---	---	1
	28+97	LT	---	29	---	1	---	---	1
	29+55	LT	29	---	1	---	---	---	---
	29+70	RT	31	---	1	---	---	---	1
	30+22	LT	---	29	---	1	---	---	---
	30+64	LT	---	29	---	1	---	---	---
	31+49	LT	---	29	---	1	---	---	1
	31+94	LT	---	29	---	1	---	---	1
	32+43	LT	---	29	---	1	---	---	---
	33+62	RT	---	29	---	1	---	---	---
	36+44	LT	30	---	1	---	---	---	1
	36+72	LT	30	---	1	---	---	---	---
	36+89	RT	30	---	1	---	---	---	1
	37+02	LT	30	---	1	---	---	---	---
	37+27	RT	---	30	---	1	---	---	---
	37+69	LT	---	30	---	1	---	---	---
	37+71	RT	---	30	---	1	---	---	---
	38+65	LT	30	---	1		---	---	---
	39+18	LT	---	30	---	1	---	---	1
	41+25	LT	---	26	---	1	---	---	---
	41+65	LT	---	25	---	1	---	---	---
	42+37	LT	---	33	---	1	---	---	---
	43+21	LT	---	33	---	1	---	---	---
	43+64	LT	33	---	1	---	---	---	---
	44+63	LT	33	---	1	---	---	---	---
	45+79	LT	33	---	1	---	---	---	1
	46+85	LT	29	---	1	---	---	---	---
	47+19	LT	26	---	1	---	---	---	---
	48+00	LT	26	---	1	---	---	---	1
	48+52	LT	26	---	1	---	---	---	1
	49+11	LT	26	---	1	---	---	---	---
	49+94	LT	---	26	---	1	---	---	---
	50+24	LT	---	26	---	1	---	---	---
	50+75	LT	---	26	---	1	---	---	---
	52+18	LT	26	---	1	---	---	---	---
	52+24	LT	26	---	1	---	---	---	---
	52+87	LT	26	---	1	---	---	---	---
	53+31	LT	---	26	---	1	---	---	1
	53+86	LT	---	27	---	1	---	---	---
	54+40	RT	32	---	1	---	---	---	1
	54+63	LT	---	28	---	1	---	---	---
	55+46	LT	28	---	1	---	---	---	---
	55+54	LT	---	28	---	1	---	---	1
	56+13	LT	28	---	1	---	---	---	---
	56+14	LT	28	---	1	---	---	---	---
	57+35	LT	31	---	1	---	---	---	1
	57+50	LT	31	---	1	---	---	---	---
	58+08	LT	31	---	1	---	---	---	---
	58+71	LT	31	---	1	---	---	---	---
	PROJECT TOTAL		**908**	**772**	**26**	**24**	**5**	**3**	**15**

3

SANITARY MANHOLE INSIDE DROP

CATEGORY	LOCATION	SPV.0200.02 VF
0040	SAN MH 10	23.84
	PROJECT TOTAL	**23.84**

SANITARY MANHOLE OUTSIDE DROP

CATEGORY	LOCATION	PIPE SIZE IN	SPV.0200.03 VF
0040	SAN MH 6	21	3.00
	SAN MH 12	8	3.13
	SAN MH 12	8	6.73
	SAN MH 19	8	6.52
	SAN MH 19	21	5.54
	PROJECT TOTAL		**24.92**

ALL ITEMS ON THIS SHEET
ARE CATEGORY 0010
UNLESS OTHERWISE NOTED

3

CONDUIT RIGID NONMETALLIC SCHEDULE 40 AND ELECTRICAL WIRE LIGHTING

CATEGORY	FROM	TO	652.0215 1 1/4 -INCH LF	652.0225 2-INCH LF	655.0620 8 AWG LF	655.0625 6 AWG LF	655.0630 4 AWG LF
0050	LCC A	PB-3	---	21	195	26	---
	PB-3	PB-4	---	23	435	58	---
	PB-4	PB-1	70	---	684	---	---
	PB-1	A-11	6	---	60	---	---
	A-11	A-9	107	---	565	---	---
	A-9	A-7	112	---	590	---	---
	A-7	A-5	104	---	550	---	---
	A-5	A-3	96	---	510	---	---
	A-3	A-1	102	---	540	---	---
	STUB		10	---	---	---	---
	PB-1	PB-2	39	---	225	---	---
	PB-2	A-10	63	---	345	---	---
	A-10	A-8	100	---	530	---	---
	A-8	A-6	111	---	585	---	---
	A-6	A-4	99	---	525	---	---
	A-4	A-2	101	---	535	---	---
	STUB		10	---	---	---	---
	PB-4	A-13	65	---	213	142	---
	A-13	A-15	117	---	369	246	---
	A-15	A-17	120	---	378	252	---
	A-17	A-19	120	---	378	252	---
	A-19	A-21	120	---	630	---	---
	A-21	PB-7	56	---	310	---	---
	PB-7	PB-9	69	---	375	---	---
	PB-9	A-23	6	---	108	---	---
	A-23	A-25	139	---	725	---	---
	STUB		10	---	---	---	---
	PB-2	PB-5	71	---	---	---	---
	PB-4	PB-5	38	---	220	---	---
	PB-5	A-12	6	---	60	---	---
	A-12	A-14	119	---	625	---	---
	A-14	A-16	114	---	600	---	---
	A-16	A-18	126	---	660	---	---
	A-18	A-20	120	---	630	---	---
	A-20	A-22	111	---	585	---	---
	A-22	PB-6	6	---	60	---	---
	PB-6	PB-8	69	---	375	---	---
	PB-8	A-24	67	---	365	---	---
	STUB		10	---	---	---	---
0050	LCC B	PB-11	---	15	121	22	---
	PB-11	PB-13	---	19	275	50	---
	PB-13	PB-10	47	---	265	---	---
	PB-10	B-8	21	---	135	---	---
	B-8	B-6	95	---	505	---	---
	B-6	B-4	104	---	550	---	---
	B-4	B-2	116	---	610	---	---
	STUB		10	---	---	---	---
	PB-13	PB-12	37	---	215	---	---
	PB-12	B-9	8	---	70	---	---
	B-9	B-7	113	---	595	---	---
	B-7	B-5	91	---	485	---	---
	B-5	B-3	118	---	620	---	---
	B-3	B-1	111	---	585	---	---
	STUB		10	---	---	---	---
	PB-13	B-10	50	---	168	112	---

CONDUIT RIGID NONMETALLIC SCHEDULE 40 AND ELECTRICAL WIRE LIGHTING

CATEGORY	FROM	TO	652.0215 1 1/4 -INCH LF	652.0225 2-INCH LF	655.0620 8 AWG LF	655.0625 6 AWG LF	655.0630 4 AWG LF
	B-10	B-11	60	---	198	132	---
	B-11	B-12	57	---	189	126	---
	B-12	B-13	63	---	207	138	---
	B-13	B-14	60	---	198	132	---
	B-14	B-15	59	---	195	130	---
	B-15	B-16	48	---	162	108	---
	B-16	B-17	55	---	183	122	---
	B-17	B-18	58	---	192	128	---
	B-18	B-19	49	---	165	110	---
	B-19	B-20	44	---	150	100	---
	B-20	PB-14	4	---	---	---	---
	PB-14	PB-15	51	---	---	---	---
	PB-15	C-1	5	---	---	---	---
0050	LCC C	PB-18	---	15	55	22	22
	PB-18	PB-19	---	39	225	90	90
	PB-19	C-14	25	---	93	---	62
	C-14	C-13	60	---	198	---	132
	C-13	C-12	60	---	198	---	132
	C-12	C-11	60	---	198	---	132
	C-11	C-10	60	---	198	---	132
	C-10	PB-17	4	---	30	---	20
	PB-17	PB-16	57	---	189	---	126
	PB-16	C-9	6	---	36	---	24
	C-9	C-8	47	---	159	---	106
	C-8	C-7	60	---	198	---	132
	C-7	C-6	60	---	198	---	132
	C-6	C-5	60	---	198	---	132
	C-5	C-4	59	---	195	---	130
	C-4	C-3	70	---	228	---	152
	C-3	C-2	70	---	228	---	152
	C-2	C-1	40	---	138	---	92
	PB-19	C-15	31	---	111	74	---
	C-15	C-16	43	---	147	98	---
	C-16	C-17	61	---	201	134	---
	C-17	C-18	60	---	198	132	---
	C-18	C-19	48	---	162	108	---
	C-19	C-20	55	---	183	122	---
	C-20	C-21	60	---	198	132	---
	C-21	C-22	60	---	198	132	---
	C-22	C-23	60	---	198	132	---
	C-23	C-24	62	---	204	136	---
	C-24	PB-20	7	---	39	26	---
	PB-20	PB-21	65	---	213	142	---
	PB-21	C-25	6	---	36	24	---
	STUB		10	---	---	---	---
	PROJECT TOTAL		**5,779**	**132**	**26,628**	**3,890**	**1,900**

CONSTRUCTION STAKING ELECTRICAL INSTALLATIONS

CATEGORY	PROJECT	650.8500 LS
0050	6999-18-73	1
	PROJECT TOTAL	**1**

3

ALL ITEMS ON THIS SHEET
ARE CATEGORY 0010
UNLESS OTHERWISE NOTED

3

LIGHTING UNITS

CATEGORY	UNIT NUMBER	STATION	OFFSET	SPV.0060.24 DECORATIVE LIGHTING UNIT TYPE A EACH	654.0101 CONCRETE BASES TYPE 1 EACH	655.0610 ELECTRICAL WIRE LIGHTING 12 AWG LF
0050	A-1	20+84.00	12.0' LT	1	1	86
	A-2	21+35.00	26.5' RT	1	1	86
	A-3	21+85.82	12.0' LT	1	1	86
	A-4	22+37.09	26.5' RT	1	1	86
	A-5	22+82.19	12.0' LT	1	1	86
	A-6	23+35.00	26.5' RT	1	1	86
	A-7	23+85.69	12.0' LT	1	1	86
	A-8	24+45.69	26.5' RT	1	1	86
	A-9	24+98.18	12.0' LT	1	1	86
	A-10	25+45.75	26.5' RT	1	1	86
	A-11	26+05.00	12.0' LT	1	1	86
	A-12	26+85.00	26.5' RT	1	1	86
	A-13	27+46.78	12.0' LT	1	1	86
	A-14	28+04.25	26.5' RT	1	1	86
	A-15	28+64.25	12.0' LT	1	1	86
	A-16	29+15.00	26.5' RT	1	1	86
	A-17	29+84.26	12.0' LT	1	1	86
	A-18	30+44.26	26.5' RT	1	1	86
	A-19	31+04.26	12.0' LT	1	1	86
	A-20	31+64.26	26.5' RT	1	1	86
	A-21	32+24.26	12.0' LT	1	1	86
	A-22	32+75.00	26.5' RT	1	1	86
	A-23	33+55.00	12.0' LT	1	1	86
	A-24	34+16.00	26.5' RT	1	1	86
	A-25	34+94.00	6.0' LT	1	1	86
	B-1	35+70.21	27.4' RT	1	1	86
	B-2	36+23.62	12.0' LT	1	1	86
	B-3	36+81.50	26.5' RT	1	1	86
	B-4	37+39.19	12.0' LT	1	1	86
	B-5	37+99.19	26.5' RT	1	1	86
	B-6	38+42.88	12.0' LT	1	1	86
	B-7	38+90.43	26.5' RT	1	1	86
	B-8	39+39.00	11.5' LT	1	1	86
	B-9	39+96.00	26.2' RT	1	1	86
	B-10	40+55.00	11.0' LT	1	1	86
	B-11	41+16.09	11.0' LT	1	1	86
	B-12	41+72.89	11.0' LT	1	1	86
	B-13	42+30.00	11.0' LT	1	1	86
	B-14	42+92.56	11.0' LT	1	1	86
	B-15	43+51.21	11.0' LT	1	1	86
	B-16	43+98.89	11.0' LT	1	1	86
	B-17	44+54.31	11.0' LT	1	1	86
	B-18	45+12.20	11.0' LT	1	1	86
	B-19	45+60.99	11.0' LT	1	1	86
	B-20	46+04.00	11.5' LT	1	1	86

LIGHTING UNITS

CATEGORY	UNIT NUMBER	STATION	OFFSET	SPV.0060.24 DECORATIVE LIGHTING UNIT TYPE A EACH	654.0101 CONCRETE BASES TYPE 1 EACH	655.0610 ELECTRICAL WIRE LIGHTING 12 AWG LF
0050	C-1	46+61.58	11.0' LT	1	1	86
	C-2	47+00.29	11.0' LT	1	1	86
	C-3	47+69.65	11.0' LT	1	1	86
	C-4	48+39.49	11.0' LT	1	1	86
	C-5	48+96.00	11.0' LT	1	1	86
	C-6	49+58.49	11.0' LT	1	1	86
	C-7	50+18.49	11.0' LT	1	1	86
	C-8	50+78.49	11.0' LT	1	1	86
	C-9	51+25.00	11.0' LT	1	1	86
	C-10	51+91.80	11.0' LT	1	1	86
	C-11	52+51.80	11.0' LT	1	1	86
	C-12	53+11.80	11.0' LT	1	1	86
	C-13	53+73.00	11.0' LT	1	1	86
	C-14	54+33.00	11.0' LT	1	1	86
	C-15	54+82.00	11.0' LT	1	1	86
	C-16	55+28.54	11.0' LT	1	1	86
	C-17	55+89.68	11.0' LT	1	1	86
	C-18	56+51.14	11.0' LT	1	1	86
	C-19	57+01.50	11.0' LT	1	1	86
	C-20	57+59.85	11.0' LT	1	1	86
	C-21	58+19.40	11.0' LT	1	1	86
	C-22	58+79.40	11.0' LT	1	1	86
	C-23	59+39.40	11.0' LT	1	1	86
	C-24	60+01.30	18.8' LT	1	1	86
	C-25	60+78.05	25.9' LT	1	1	86
	PROJECT TOTAL			**70**	**70**	**6,020**

PULL BOXES NON-CONDUCTIVE 24X42-INCH

CATEGORY	DESCRIPTION	STATION	LOCATION	653.0164 EACH
0050	PB-1	26+10.58	12.5' LT	1
	PB-2	26+09.00	26.5' RT	1
	PB-3	26+66.66	29.6' LT	1
	PB-4	26+82.00	12.0' LT	1
	PB-5	26+79.60	26.5' RT	1
	PB-6	32+81.00	26.5' RT	1
	PB-7	32+80.00	12.0' LT	1
	PB-8	33+50.11	26.5' RT	1
	PB-9	33+48.50	12.0' LT	1
	PB-10	39+58.25	22.5' LT	1
	PB-11	40+02.17	30.0' LT	1
	PB-12	40+03.55	25.8' RT	1
	PB-13	40+06.08	11.2' LT	1
	PB-14	46+08.11	11.0' LT	1
	PB-15	46+57.17	11.0' LT	1
	PB-16	51+31.20	11.0' LT	1
	PB-17	51+87.89	11.0' LT	1
	PB-18	54+55.00	28.0' RT	1
	PB-19	54+55.00	11.0' LT	1
	PB-20	60+07.71	20.5' LT	1
	PB-21	60+72.51	25.9' LT	1
	PROJECT TOTAL			**21**

LIGHTING CONTROL CABINET AND BASES

CATEGORY	STATION	DESCRIPTION	654.0224 CONCRETE CONTROL CABINET BASES TYPE L24 EACH	656.0200.01 ELECTRICAL SERVICE METER BREAKER PEDESTAL (LCC A) LS	656.0200.02 ELECTRICAL SERVICE METER BREAKER PEDESTAL (LCC B) LS	656.0200.03 ELECTRICAL SERVICE METER BREAKER PEDESTAL (LCC C) LS	659.2124 LIGHTING CONTROL CABINETS 120/240 24-INCH EACH
0050	26+66.98, 36.5' LT	LCC A	1	1	---	---	1
	40+03.44, 34.8' LT	LCC B	1	---	1	---	1
	54+50.00, 28.0' RT	LCC C	1	---	---	1	1
	PROJECT TOTAL		**3**	**1**	**1**	**1**	**3**

ALL ITEMS ON THIS SHEET
ARE CATEGORY 0010
UNLESS OTHERWISE NOTED

STATE OF WISCONSIN
DEPARTMENT OF TRANSPORTATION
TRANSPORTATION PROJECT PLAT TITLE SHEET
6999-18-03
C WAUSAU, SOUTH 1st AVENUE
(THOMAS STREET TO STEWART AVENUE)

LOCAL STREET
MARATHON COUNTY

CONVENTIONAL SYMBOLS

SECTION LINE
QUARTER LINE
SIXTEENTH LINE
NEW REFERENCE LINE
NEW R/W LINE
EXISTING R/W OR HE LINE
PROPERTY LINE
LOT, TIE & OTHER MINOR LINES
SLOPE INTERCEPT
CORPORATE LIMITS
UNDERGROUND FACILITY (COMMUNICATIONS, ELECTRIC, ETC)
NEW R/W (FEE OR HE) (HATCHING VARIES BY OWNER)
TEMPORARY LIMITED EASEMENT AREA
EASEMENT AREA (PERMANENT LIMITED OR RESTRICTED DEVELOPMENT)
TRANSMISSION STRUCTURES
BUILDING
TO BE REMOVED
BRIDGE

SECTION CORNER SYMBOL
SECTION CORNER MONUMENT
GEODETIC SURVEY MONUMENT
SIXTEENTH CORNER MONUMENT
SIGN
OFF-PREMISE SIGN
R/W MONUMENT (TO BE SET)
NON-MONUMENTED R/W POINT
FOUND IRON PIN (1-INCH UNLESS NOTED)

	COMPENSABLE	NON-COMPENSABLE
ELECTRIC POLE		
TELEPHONE POLE		
PEDESTAL (LABEL TYPE) (TV, TEL, ELEC, ETC.)		

ACCESS RESTRICTED BY ACQUISITION
NO ACCESS (BY STATUTORY AUTHORITY)
ACCESS RESTRICTED (BY PREVIOUS PROJECT OR CONTROL)
NO ACCESS (NEW HIGHWAY)
PARCEL NUMBER 25
UTILITY NUMBER 40
PARALLEL OFFSETS

CONVENTIONAL ABBREVIATIONS

ACCESS RIGHTS	AR	POINT OF INTERSECTION	PI
ACRES	AC	PROPERTY LINE	PL
AHEAD	AH	RECORDED AS	(100')
ALUMINUM	ALUM	REEL / IMAGE	R/I
AND OTHERS	ET AL	REFERENCE LINE	R/L
BACK	BK	REMAINING	REM
BLOCK	BLK	RESTICTIVE DEVELOPMENT EASEMENT	RDE
CENTERLINE	C/L	RIGHT	RT
CERTIFIED SURVEY MAP	CSM	RIGHT OF WAY	R/W
CONCRETE	CONC	SECTION	SEC
COUNTY	CO	SEPTIC VENT	SEPV
COUNTY TRUNK HIGHWAY	CTH	SQUARE FEET	SF
DISTANCE	DIST	STATE TRUNK HIGHWAY	STH
CORNER	COR	STATION	STA
DOCUMENT NUMBER	DOC	TELEPHONE PEDESTAL	TP
EASEMENT	EASE	TEMPORARY LIMITED EASEMENT	TLE
EXISTING	EX	TRANSPORTATION PROJECT PLAT	TPP
GAS VALVE	GV	UNITED STATES HIGHWAY	USH
GRID NORTH	GN	VOLUME	V
HIGHWAY EASEMENT	HE		
IDENTIFICATION	ID		
LAND CONTRACT	LC		
LEFT	LT		
MONUMENT	MON		
NATIONAL GEODETIC SURVEY	NGS		
NUMBER	NO		
OUTLOT	OL		
PAGE	P		
POINT OF TANGENCY	PT		
PERMANENT LIMITED EASEMENT	PLE		
POINT OF BEGINNING	POB		
POINT OF CURVATURE	PC		
POINT OF COMPOUND CURVE	PCC		

CURVE DATA

LONG CHORD	LCH
LONG CHORD BEARING	LCB
RADIUS	R
DEGREE OF CURVE	D
CENTRAL ANGLE	Δ/DELTA
LENGTH OF CURVE	L
TANGENT	T
DIRECTION AHEAD	DA
DIRECTION BACK	DB

CONVENTIONAL UTILITY SYMBOLS

WATER
GAS
TELEPHONE
OVERHEAD TRANSMISSION LINES
ELECTRIC
CABLE TELEVISION
FIBER OPTIC
SANITARY SEWER
STORM SEWER

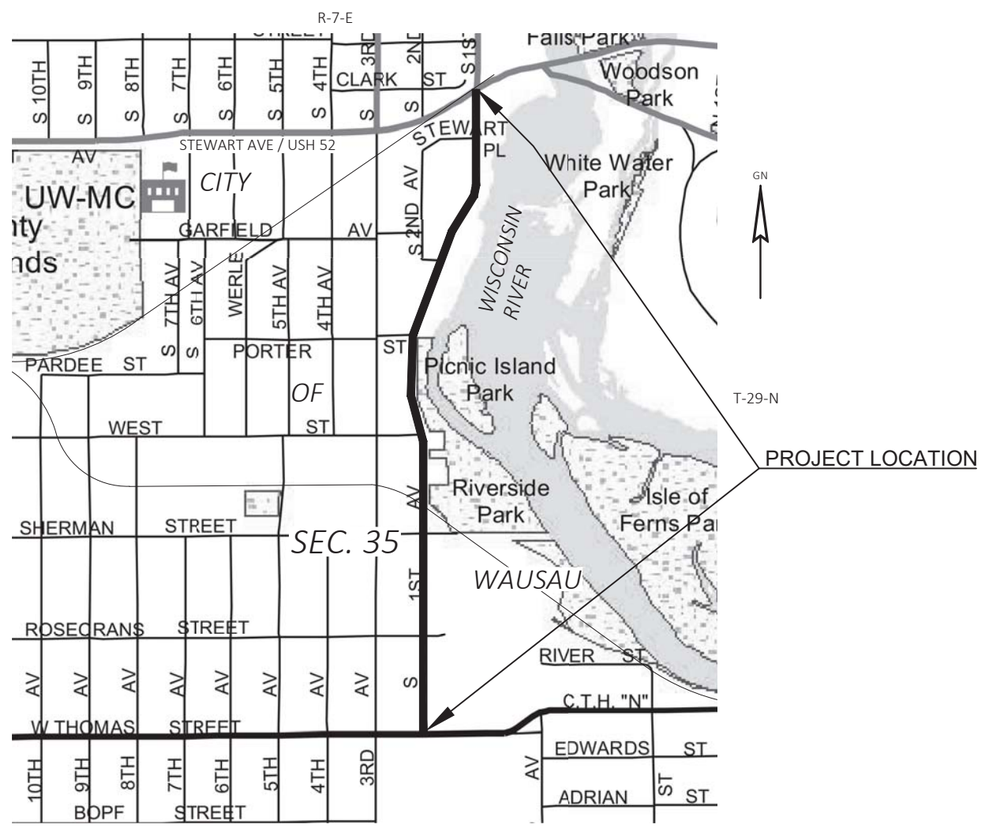

LAYOUT
SCALE 0 500 FT

THE NOTES,CONVENTIONAL SIGNS, AND ABBREVIATIONS ARE ASSOCIATED WITH EACH TRANSPORTATION PROJECT PLAT FOR PROJECT

NOTES:

POSITIONS SHOWN ON THIS PLAT ARE WISCONSIN COORDINATE REFERENCE SYSTEM COORDINATES (WISCRS), MARATHON COUNTY, NAD83(2011), IN U.S. SURVEY FEET. VALUES ARE GRID COORDINATES, GRID BEARINGS, AND GRID DISTANCES. GRID DISTANCES MAY BE USED AS GROUND DISTANCES.

ALL NEW RIGHT-OF-WAY MONUMENTS WILL BE TYPE 2 (TYPICALLY ¾" X 24" IRON REBARS), UNLESS OTHERWISE NOTED, AND WILL BE PLACED PRIOR TO THE COMPLETION OF THE PROJECT.

ALL RIGHT-OF-WAY LINES DEPICTED IN THE NON-ACQUISITION AREAS ARE INTENDED TO RE-ESTABLISH EXISTING RIGHT-OF-WAY LINES AS DETERMINED FROM PREVIOUS PROJECTS, OTHER RECORDED DOCUMENTS, OR FROM CENTERLINE OF EXISTING PAVEMENTS.

RIGHT-OF-WAY BOUNDARIES ARE DEFINED WITH COURSES OF THE PERIMETER OF THE HIGHWAY LANDS REFERENCED TO THE U.S. PUBLIC LAND SURVEY SYSTEM OR OTHER "SURVEYS" OF PUBLIC RECORD.

DIMENSIONING FOR THE NEW RIGHT-OF-WAY IS MEASURED ALONG AND PERPENDICULAR TO THE NEW REFERENCE LINES.

A **TEMPORARY LIMITED EASEMENT (TLE)** IS A RIGHT FOR CONSTRUCTION PURPOSES, AS DEFINED HEREIN, INCLUDING THE RIGHT TO OPERATE NECESSARY EQUIPMENT THEREON, THE RIGHT OF INGRESS AND EGRESS, AS LONG AS REQUIRED FOR SUCH PUBLIC PURPOSE, INCLUDING THE RIGHT TO PRESERVE, PROTECT, REMOVE, OR PLANT THEREON ANY VEGETATION THAT THE HIGHWAY AUTHORITIES MAY DEEM DESIRABLE. ALL (TLEs) ON THIS PLAT EXPIRE AT THE COMPLETION OF THE CONSTRUCTION PROJECT FOR WHICH THIS INSTRUMENT IS GIVEN.

A **HIGHWAY EASEMENT (HE)** IS AN EASEMENT FOR HIGHWAY PURPOSES, AS LONG AS SO USED, INCLUDING THE RIGHT TO PRESERVE, PROTECT, REMOVE, OR PLANT THEREON ANY VEGETATION THAT THE HIGHWAY AUTHORITIES MAY DEEM NECESSARY OR DESIRABLE.

PROPERTY LINES SHOWN ON THIS PLAT ARE DRAWN FROM DATA DERIVED FROM MAPS AND DOCUMENTS OF PUBLIC RECORD AND/OR EXISTING OCCUPATIONAL LINES. THIS PLAT MAY NOT BE A TRUE REPRESENTATION OF EXISTING PROPERTY LINES, EXCLUDING RIGHT-OF-WAY, AND SHOULD NOT BE USED AS A SUBSTITUTE FOR AN ACCURATE FIELD SURVEY.

PARCEL IDENTIFICATION NUMBERS MAY NOT POINT TO ALL AREAS OF ACQUISITION, AS NOTED ON THE SCHEDULE OF LANDS & INTERESTS REQUIRED.

EXISTING HIGHWAY RIGHT-OF-WAY SHOWN HEREIN IS BASED ON THE FOLLOWING POINTS OF REFERENCE:

EXISTING HIGHWAY RIGHT-OF-WAY FOR SOUTH FIRST AVENUE (FKA HARRISON BLVD) IS ESTABLISHED FROM JM SMITH'S ADDITION PLAT, ON PLAN OF PROPOSED EXTENSION OF HARRISON BLVD. FROM PORTER STREET TO WEST STREET, DATED MAY, 1901, ON PORTER BROTHERS ADDITION PLAT, AND FROM STEWART ALEXANDER'S SECOND ADDITION PLAT.

EXISTING HIGHWAY RIGHT-OF-WAY FOR WEST ROSECRANS STREET, AND THOMAS STREET, IS ESTABLISHED FROM JM SMITH'S ADDITION PLAT.

EXISTING HIGHWAY RIGHT-OF-WAY FOR SHERMAN STREET IS ESTABLISHED FROM JM SMITH'S ADDITION PLAT AND PORTER BROTHERS ADDITION PLAT.

EXISTING HIGHWAY RIGHT-OF-WAY FOR WEST STREET IS ESTABLISHED FROM PORTER BROTHERS ADDITION PLAT.

EXISTING HIGHWAY RIGHT-OF-WAY FOR PORTER STREET IS ESTABLISHED FROM PORTER BROTHERS ADDITION PLAT AND STEWART ALEXANDER'S SECOND ADDITION PLAT.

EXISTING HIGHWAY RIGHT-OF-WAY FOR GARFIELD AVENUE AND STEWART PLACE IS ESTABLISHED FROM STEWART ALEXANDER'S SECOND ADDITION PLAT.

PROJECT NUMBER 6999-18-03 - 4.01
SHEET 2 OF 2
AMENDMENT NO:

FILE NAME : V:\TRANS-EC\410723 WAUSAU 1ST AVE\C3D\RW\040100-TI.DWG
LAYOUT NAME: TPP Title 34x22
PLOT DATE : 9/16/2015 3:04 PM PLOT BY : CAPPEART, JAMES PLOT NAME : _____ APPRAISAL PLAT DATE : _____ 4.__

STATE OF WISCONSIN - MARATHON COUNTY
RECORDED
June 15, 2018 9:24 AM
DEAN J. STRATZ, REGISTER OF DEEDS
DOC# 1760374 PAGES: 2
1760374
Received for Record this 15
Day of June A.D. 20 18
AT 9:24 O'CLOCK A M.
In Plat cabinet no. 3 on page 166A
Dean J Stratz
REGISTAR
RESERVED FOR REGISTER OF DEEDS
PROJECT NUMBER 6999-18-03 4.01

TRANSPORTATION PROJECT PLAT NO: 6999-18-03 - 4.01

PART OF LOTS 11 THROUGH 20, BLOCK 1, AND LOTS 11 THROUGH 20, BLOCK 2, AND PART OF BLOCK 5 AND BLOCK 6, AND THAT PORTION OF VACATED CLEVELAND AVENUE BETWEEN BLOCKS 5 AND 6 PER VACATION DOCUMENT NO. 12-19652, ALL IN J.M. SMITHS ADDITION RECORDED IN VOLUME 2 OF PLATS AS PAGE 16, BEING A PART OF THE NORTHWEST 1/4 OF THE SOUTHEAST 1/4 OF SECTION 35, TOWNSHIP 29 NORTH, RANGE 7 EAST, CITY OF WAUSAU, MARATHON COUNTY, WISCONSIN.

RELOCATION ORDER C WAUSAU, SOUTH 1ST AVENUE (THOMAS STREET TO STEWART AVENUE), MARATHON COUNTY

TO PROPERLY ESTABLISH, LAY OUT, WIDEN, ENLARGE, EXTEND, CONSTRUCT, RECONSTRUCT, IMPROVE, OR MAINTAIN A PORTION OF THE HIGHWAY DESIGNATED ABOVE, THE CITY OF WAUSAU DEEMS IT NECESSARY TO RELOCATE OR CHANGE SAID HIGHWAY AND ACQUIRE CERTAIN LANDS AND INTERESTS OR RIGHTS IN LANDS FOR THE ABOVE PROJECT.

TO EFFECT THIS CHANGE, PURSUANT TO AUTHORITY GRANTED UNDER SUBSECTION 62.22, WISCONSIN STATUTES, THE CITY OF WAUSAU HEREBY ORDERS THAT:

1. THAT PORTION OF SAID HIGHWAY AS SHOWN ON THIS PLAT IS LAID OUT AND ESTABLISHED TO THE LINES AND WIDTHS AS SO SHOWN FOR THE ABOVE NAMED PROJECT.
2. THE LANDS OR INTERESTS OR RIGHTS IN LANDS AS SHOWN ON THIS PLAT ARE REQUIRED BY THE CITY FOR THE ABOVE PROJECT AND SHALL BE ACQUIRED IN THE NAME OF THE CITY OF WAUSAU, PURSUANT TO THE PROVISIONS OF SUBSECTION 62.22, WISCONSIN STATUTES.

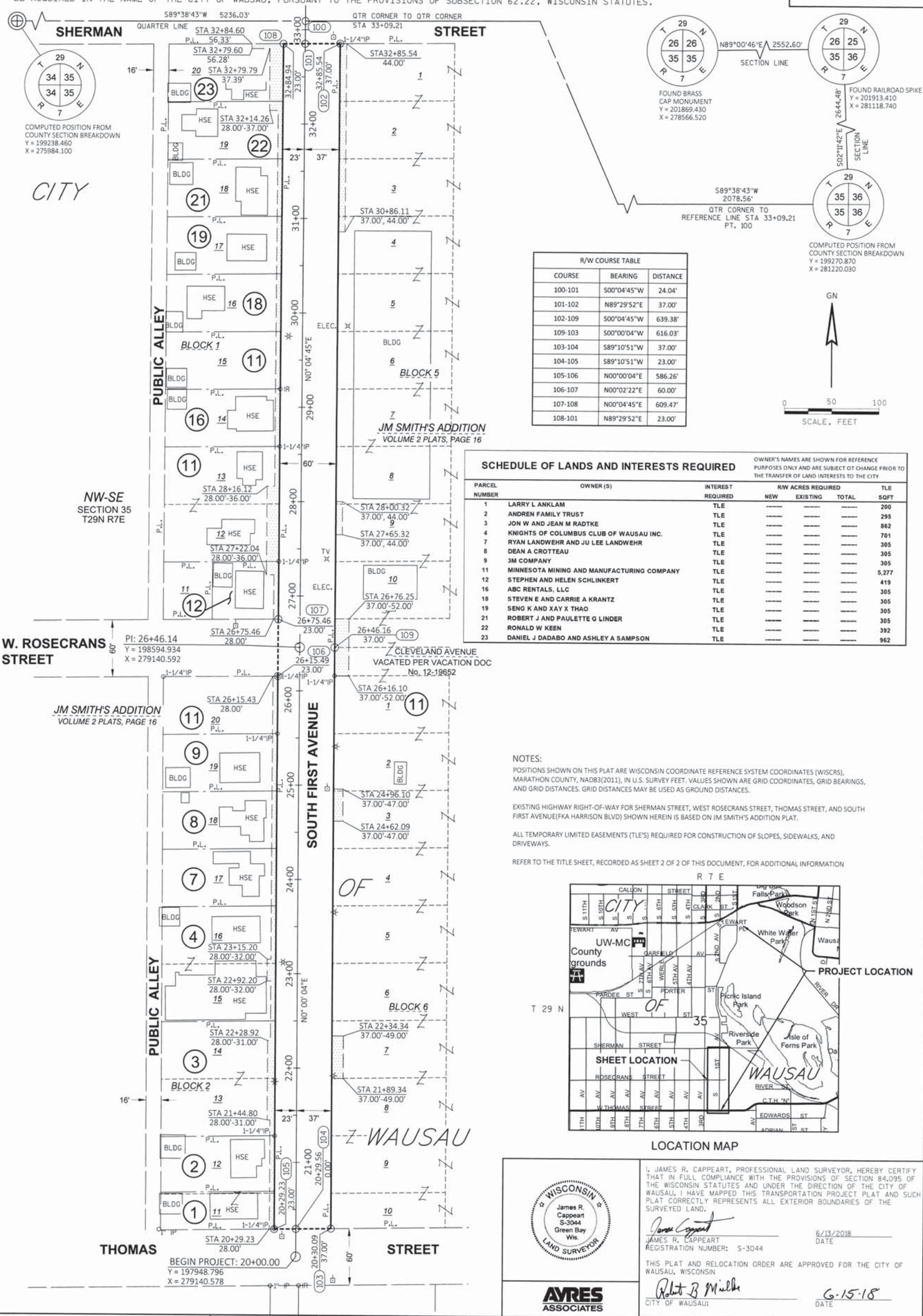

R/W COURSE TABLE		
COURSE	BEARING	DISTANCE
100-101	S00°04'45"W	24.04'
101-102	N89°29'52"E	37.00'
102-109	S00°04'45"W	639.38'
109-103	S00°00'04"W	616.03'
103-104	S89°10'51"W	37.00'
104-105	S89°10'51"W	23.00'
105-106	N00°00'04"E	586.26'
106-107	N00°02'22"E	60.00'
107-108	N00°04'45"E	609.47'
108-101	N89°29'52"E	23.00'

SCHEDULE OF LANDS AND INTERESTS REQUIRED

OWNER'S NAMES ARE SHOWN FOR REFERENCE PURPOSES ONLY AND ARE SUBJECT OT CHANGE PRIOR TO THE TRANSFER OF LAND INTERESTS TO THE CITY

PARCEL NUMBER	OWNER (S)	INTEREST REQUIRED	R/W ACRES REQUIRED NEW	EXISTING	TOTAL	TLE SQFT
1	LARRY L ANKLAM	TLE	------	------	------	200
2	ANDREN FAMILY TRUST	TLE	------	------	------	295
3	JON W AND JEAN M RADTKE	TLE	------	------	------	862
4	KNIGHTS OF COLUMBUS CLUB OF WAUSAU INC.	TLE	------	------	------	701
7	RYAN LANDWEHR AND JU LEE LANDWEHR	TLE	------	------	------	305
8	DEAN A CROTTEAU	TLE	------	------	------	305
9	3M COMPANY	TLE	------	------	------	305
11	MINNESOTA MINING AND MANUFACTURING COMPANY	TLE	------	------	------	5,277
12	STEPHEN AND HELEN SCHLINKERT	TLE	------	------	------	419
16	ABC RENTALS, LLC	TLE	------	------	------	305
18	STEVEN E AND CARRIE A KRANTZ	TLE	------	------	------	305
19	SENG K AND XAY X THAO	TLE	------	------	------	305
21	ROBERT J AND PAULETTE G LINDER	TLE	------	------	------	305
22	RONALD W KEEN	TLE	------	------	------	392
23	DANIEL J DADABO AND ASHLEY A SAMPSON	TLE	------	------	------	962

NOTES:

POSITIONS SHOWN ON THIS PLAT ARE WISCONSIN COORDINATE REFERENCE SYSTEM COORDINATES (WISCRS), MARATHON COUNTY, NAD83(2011), IN U.S. SURVEY FEET. VALUES SHOWN ARE GRID COORDINATES, GRID BEARINGS, AND GRID DISTANCES. GRID DISTANCES MAY BE USED AS GROUND DISTANCES.

EXISTING HIGHWAY RIGHT-OF-WAY FOR SHERMAN STREET, WEST ROSECRANS STREET, THOMAS STREET, AND SOUTH FIRST AVENUE(FKA HARRISON BLVD) SHOWN HEREIN IS BASED ON JM SMITH'S ADDITION PLAT.

ALL TEMPORARY LIMITED EASEMENTS (TLE'S) REQUIRED FOR CONSTRUCTION OF SLOPES, SIDEWALKS, AND DRIVEWAYS.

REFER TO THE TITLE SHEET, RECORDED AS SHEET 2 OF 2 OF THIS DOCUMENT, FOR ADDITIONAL INFORMATION

LOCATION MAP

WISCONSIN James R. Cappeart S-3044 Green Bay Wis. LAND SURVEYOR

AYRES ASSOCIATES

I, JAMES R. CAPPEART, PROFESSIONAL LAND SURVEYOR, HEREBY CERTIFY THAT IN FULL COMPLIANCE WITH THE PROVISIONS OF SECTION 84.095 OF THE WISCONSIN STATUTES AND UNDER THE DIRECTION OF THE CITY OF WAUSAU, I HAVE MAPPED THIS TRANSPORTATION PROJECT PLAT AND SUCH PLAT CORRECTLY REPRESENTS ALL EXTERIOR BOUNDARIES OF THE SURVEYED LAND.

James Cappeart — 6/13/2018
JAMES R. CAPPEART — DATE
REGISTRATION NUMBER: S-3044

THIS PLAT AND RELOCATION ORDER ARE APPROVED FOR THE CITY OF WAUSAU, WISCONSIN

Robert J Mielke — 6-15-18
CITY OF WAUSAU — DATE

PLOT SCALE : 1 IN:100 FT
PLOT NAME : Cappeart, James
PLOT BY : 6/15/2018 10:33 AM
PLOT DATE :
PLOT DATE :
FILE NAME : V:\TRANS-ECA\0723 WAUSAU 1ST AVE\C3D\WV\040101-RP.DWG
APPRAISAL PLAT DATE : 09/20/2017

STATE OF WISCONSIN - MARATHON COUNTY
RECORDED
June 19, 2018 12:13 PM
DEAN J. STRATZ, REGISTER OF DEEDS
DOC# 1760656 PAGES: 1
Received for Record this ____
Day of JUNE A.D. 20 18
AT 12:13 O'CLOCK P M.
In Plat cabinet no. 4 on page 126-B
Dean J. Stratz
REGISTER
RESERVED FOR REGISTER OF DEEDS
PROJECT NUMBER 6999-18-03 4.02

4

TRANSPORTATION PROJECT PLAT NO: 6999-18-03 - 4.02

PART OF LOTS 1 THROUGH 7, BLOCK 3, IN PORTER BROTHERS ADDITION, V. 2 OF PLATS, P. 16, & PART OF LOT 1, C.S.M. 6788, V. 25 OF C.S.M.'S, P. 188, DOC. 967457, ALL IN AND INCLUDING A PART OF GOV. LOT2, OF SECTION 35, TOWNSHIP 29 NORTH, RANGE 7 EAST, CITY OF WAUSAU, MARATHON COUNTY, WISCONSIN.

RELOCATION ORDER C WAUSAU, SOUTH 1ST AVENUE (THOMAS STREET TO STEWART AVENUE), MARATHON COUNTY

TO PROPERLY ESTABLISH, LAY OUT, WIDEN, ENLARGE, EXTEND, CONSTRUCT, RECONSTRUCT, IMPROVE, OR MAINTAIN A PORTION OF THE HIGHWAY DESIGNATED ABOVE, THE CITY OF WAUSAU DEEMS IT NECESSARY TO RELOCATE OR CHANGE SAID HIGHWAY AND ACQUIRE CERTAIN LANDS AND INTERESTS OR RIGHTS IN LANDS FOR THE ABOVE PROJECT.

TO EFFECT THIS CHANGE, PURSUANT TO AUTHORITY GRANTED UNDER SUBSECTION 62.22, WISCONSIN STATUTES, THE CITY OF WAUSAU HEREBY ORDERS THAT:

1. THAT PORTION OF SAID HIGHWAY AS SHOWN ON THIS PLAT IS LAID OUT AND ESTABLISHED TO THE LINES AND WIDTHS AS SO SHOWN FOR THE ABOVE NAMED PROJECT.
2. THE LANDS OR INTERESTS OR RIGHTS IN LANDS AS SHOWN ON THIS PLAT ARE REQUIRED BY THE CITY FOR THE ABOVE PROJECT AND SHALL BE ACQUIRED IN THE NAME OF THE CITY OF WAUSAU, PURSUANT TO THE PROVISIONS OF SUBSECTION 62.22, WISCONSIN STATUTES.

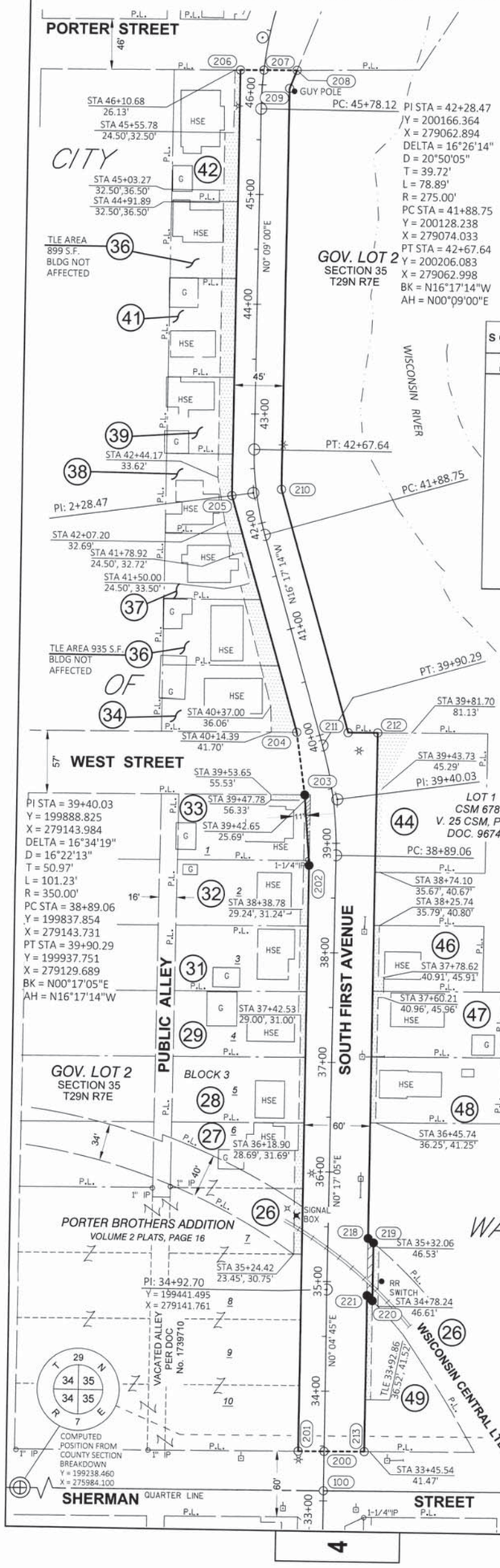

WISCONSIN James R. Cappeart S-3044 Green Bay Wis. LAND SURVEYOR

AYRES ASSOCIATES

I, JAMES R. CAPPEART, PROFESSIONAL LAND SURVEYOR, HEREBY CERTIFY THAT IN FULL COMPLIANCE WITH THE PROVISIONS OF SECTION 84.095 OF THE WISCONSIN STATUTES AND UNDER THE DIRECTION OF THE CITY OF WAUSAU, I HAVE MAPPED THIS TRANSPORTATION PROJECT PLAT AND SUCH PLAT CORRECTLY REPRESENTS ALL EXTERIOR BOUNDARIES OF THE SURVEYED LAND.

James Cappeart — JAMES R. CAPPEART, REGISTRATION NUMBER: S-3044 — 6/15/2018 DATE

THIS PLAT AND RELOCATION ORDER ARE APPROVED FOR THE CITY OF WAUSAU, WISCONSIN

Robert B Mielke — CITY OF WAUSAU: — 6-18-18 DATE

SCHEDULE OF LANDS AND INTERESTS REQUIRED

OWNER'S NAMES ARE SHOWN FOR REFERENCE PURPOSES ONLY AND ARE SUBJECT OT CHANGE PRIOR TO THE TRANSFER OF LAND INTERESTS TO THE CITY

PARCEL NUMBER	OWNER (S)	INTEREST REQUIRED	R/W SQ FT REQUIRED NEW	EXISTING	TOTAL	TLE SQ FT
---	--------	---	--------	--------	--------	--------
26	WISCONSIN CENTRAL LTD	H.E. & TLE	263 H.E.	--------	263 H.E.	608
27	MARY L KOLWYCK	TLE	--------	--------	--------	508
28	DNA RENTALS LLC	TLE	--------	--------	--------	299
29	LLD PROPERTIES LLC	TLE	--------	--------	--------	342
31	DEBRA J FOCHS	TLE	--------	--------	--------	419
32	MARK HARDELL	FEE & TLE	1	--------	1	329
33	NENG XIONG & BAO XIONG, a/k/a BAO V. XIONG	FEE & TLE	169	--------	169	285
34	RICHARD JAMES KENT	TLE	--------	--------	--------	1,084
36	DOLESS AND SEMORE LLC	TLE	--------	--------	--------	1,834
37	SUNSHINE INVESTMENT GROUP OF WISCONSIN LLC	TLE	--------	--------	--------	595
38	PAOLEE HER & LEE HER	TLE	--------	--------	--------	887
39	PHILIP T BERG	TLE	--------	--------	--------	910
41	DYLAN BOUCHER	TLE	--------	--------	--------	1,167
42	ZUIVELFABRIEK, LLC	TLE	--------	--------	--------	1,142
---	--------	---	--------	--------	--------	--------
---	--------	---	--------	--------	--------	--------
46	JOSH J WANISH & APRIL M WANISH	TLE	--------	--------	--------	372
47	RICHARD D BAUMANN	TLE	--------	--------	--------	328
48	JEANNETTE A ROTHENBERGER	TLE	--------	--------	--------	300
49	COMPLETE PROPERTIES, LLC	TLE	--------	--------	--------	464

STATION & OFFSET TABLE

POINT	STATION	OFFSET
100	33+09.21	0.00
200	33+45.17	0.00
201	33+44.93	23.53 LT
202	38+79.29	24.34 LT
203	39+47.99	25.18 LT
204	40+08.12	19.50 LT
205	42+28.19	22.56 LT
206	46+11.25	21.16 LT
207	46+13.55	0.00
208	46+17.33	29.92 RT

STATION & OFFSET TABLE

POINT	STATION	OFFSET
209	45+98.73	24.94 RT
210	42+28.19	22.91 RT
211	39+95.40	25.50 RT
212	39+88.36	51.40 RT
213	33+45.54	36.47 RT
218	35+40.24	36.51 RT
219	35+36.21	41.52 RT
220	34+83.17	41.62 RT
221	34+87.94	36.62 RT

R/W COURSE TABLE

COURSE	BEARING	DISTANCE
100-200	N00°04'45"E	35.96'
200-201	S89°29'52"W	23.53'
201-202	N00°08'28"E	534.45'
202-203	N04°33'11"W	64.43'
203-204	N08°14'51"W	57.55'
204-205	N16°17'14"W	223.16'
205-206	N00°09'00"E	388.10'
206-207	N89°22'27"E	21.29'
207-208	N89°22'27"E	30.13'
208-209	S21°14'29"W	17.85'
209-210	S00°09'00"W	365.64'
210-211	S16°17'14"E	229.38'
211-212	N89°29'40"E	26.91'
212-213	S00°08'28"W	655.75'
213-200	S89°29'52"W	36.47'

GN

0 50 100
SCALE, FEET

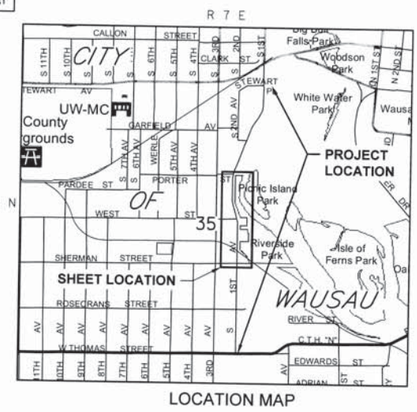

LOCATION MAP

NOTES:

POSITIONS SHOWN ON THIS PLAT ARE WISCONSIN COORDINATE REFERENCE SYSTEM COORDINATES (WISCRS), MARATHON COUNTY, NAD83(2011), IN U.S. SURVEY FEET. VALUES SHOWN ARE GRID COORDINATES, GRID BEARINGS, AND GRID DISTANCES. GRID DISTANCES MAY BE USED AS GROUND DISTANCES.

EXISTING HIGHWAY RIGHT-OF-WAY FOR SHERMAN STREET, WEST STREET, AND PORTER STREET SHOWN HEREIN IS BASED ON PORTER BROTHERS ADDITION PLAT.

EXISTING HIGHWAY RIGHT-OF-WAY FOR SOUTH FIRST AVENUE(FKA HARRISON BLVD) SHOWN HEREIN IS BASED ON PLAN OF PROPOSED EXTENSION OF HARRISON BLVD. FROM PORTER STREET TO WEST STREET, DATED MAY, 1901, AND BASED ON PORTER BROTHERS ADDITION PLAT.

ALL TEMPORARY LIMITED EASEMENTS (TLE'S) REQUIRED FOR CONSTRUCTION OF SLOPES, SIDEWALKS, AND DRIVEWAYS.

REFER TO THE TITLE SHEET, RECORDED AS SHEET 2 OF 2 OF TRANSPORTATION PROJECT PLAT PAGE 4.01, AS DOCUMENT No. 1760374 FOR ADDITIONAL INFORMATION.

PLOT SCALE: 1 IN:100 FT
PLOT NAME:
PLOT BY: Cappeart, James
PLOT DATE: 6/15/2018 10:26 AM
PLOT DATE:
FILE NAME: V:\TRANS-EC\410723 WAUSAU 1ST AVE\CD\RW\040102-RP.DWG
APPRAISAL PLAT DATE: 09/20/2017

STATE OF WISCONSIN : MARATHON COUNTY
RECORDED
June 19, 2018 12:13 PM
DEAN J. STRATZ, REGISTER OF DEEDS
DOC# 1760657 PAGES: 1
Received for Record this 11
Day of June A.D. 20 18
AT 12:13 O'CLOCK P M.
In Plat cabinet no. 1 on page 96/71
Dean J. Stratz
REGISTAR
RESERVED FOR REGISTER OF DEEDS
PROJECT NUMBER 6999-18-03 4.03

4

TRANSPORTATION PROJECT PLAT NO: 6999-18-03 - 4.03

PART OF LOTS 1 THROUGH 8, BLOCK 4, AND LOTS 1 AND 4 THROUGH 13, BLOCK 2 IN STEWART ALEXANDER'S SECOND ADDITION, V. 2 OF PLATS, P. 16, AND PART OF LOT 1, C.S.M. 79, V. 1 OF C.S.M.'S, P. 79, AND BEING IN AND ALSO INCLUDING A PART OF GOV. LOT 1, OF SECTION 35 AND PART OF LOT 1, C.S.M. 2663, V. 10 OF C.S.M.'S, P. 136, DOC. 770570 AND BEING PART OF GOV. LOT 4, OF SECTION 26, ALL IN TOWNSHIP 29 NORTH, RANGE 7 EAST, CITY OF WAUSAU, MARATHON COUNTY, WISCONSIN.

RELOCATION ORDER C WAUSAU, SOUTH 1ST AVENUE (THOMAS STREET TO STEWART AVENUE), MARATHON COUNTY

TO PROPERLY ESTABLISH, LAY OUT, WIDEN, ENLARGE, EXTEND, CONSTRUCT, RECONSTRUCT, IMPROVE, OR MAINTAIN A PORTION OF THE HIGHWAY DESIGNATED ABOVE, THE CITY OF WAUSAU DEEMS IT NECESSARY TO RELOCATE OR CHANGE SAID HIGHWAY AND ACQUIRE CERTAIN LANDS AND INTERESTS OR RIGHTS IN LANDS FOR THE ABOVE PROJECT.

TO EFFECT THIS CHANGE, PURSUANT TO AUTHORITY GRANTED UNDER SUBSECTION 62.22, WISCONSIN STATUTES, THE CITY OF WAUSAU HEREBY ORDERS THAT:

1. THAT PORTION OF SAID HIGHWAY AS SHOWN ON THIS PLAT IS LAID OUT AND ESTABLISHED TO THE LINES AND WIDTHS AS SO SHOWN FOR THE ABOVE NAMED PROJECT.
2. THE LANDS OR INTERESTS OR RIGHTS IN LANDS AS SHOWN ON THIS PLAT ARE REQUIRED BY THE CITY FOR THE ABOVE PROJECT AND SHALL BE ACQUIRED IN THE NAME OF THE CITY OF WAUSAU, PURSUANT TO THE PROVISIONS OF SUBSECTION 62.22, WISCONSIN STATUTES.

PI STA = 46+43.15	PI STA = 53+83.74	PI STA = 56+95.05
Y = 200581.588	Y = 201273.428	Y = 201537.615
X = 279063.982	X = 279332.344	X = 279497.385
DELTA = 21°03'04"	DELTA = 10°47'33"	DELTA = 31°59'37"
D = 16°22'13"	D = 16°22'13"	D = 20°50'05"
T = 65.03'	T = 33.06'	T = 78.84'
L = 128.59'	L = 65.93'	L = 153.56'
R = 350.00'	R = 350.00'	R = 275.00'
PC STA = 45+78.12	PC STA = 53+50.68	PC STA = 56+16.21
Y = 200516.558	Y = 201242.604	Y = 201470.752
X = 279063.812	X = 279320.388	X = 279455.615
PT STA = 47+06.71	PT STA = 54+16.61	PT STA = 57+69.77
Y = 200642.216	Y = 201301.467	Y = 201616.453
X = 279087.499	X = 279349.861	X = 279497.385
BK = N00°09'00"E	BK = N21°12'04"E	BK = N31°59'37"E
AH = N21°12'04"E	AH = N31°59'37"E	AH = N00°00'00"E

WISCONSIN James R. Cappeart S-3044 Green Bay Wis. LAND SURVEYOR

I, JAMES R. CAPPEART, PROFESSIONAL LAND SURVEYOR, HEREBY CERTIFY THAT IN FULL COMPLIANCE WITH THE PROVISIONS OF SECTION 84.095 OF THE WISCONSIN STATUTES AND UNDER THE DIRECTION OF THE CITY OF WAUSAU, I HAVE MAPPED THIS TRANSPORTATION PROJECT PLAT AND SUCH PLAT CORRECTLY REPRESENTS ALL EXTERIOR BOUNDARIES OF THE SURVEYED LAND.

James Cappeart — JAMES R. CAPPEART, REGISTRATION NUMBER: S-3044 — 6/15/2018 DATE

THIS PLAT AND RELOCATION ORDER ARE APPROVED FOR THE CITY OF WAUSAU, WISCONSIN

Robert B Mielke — CITY OF WAUSAU: — 6-18-18 DATE

AYRES ASSOCIATES

NOTES:

POSITIONS SHOWN ON THIS PLAT ARE WISCONSIN COORDINATE REFERENCE SYSTEM COORDINATES (WISCRS), MARATHON COUNTY, NAD83(2011), IN U.S. SURVEY FEET. VALUES SHOWN ARE GRID COORDINATES, GRID BEARINGS, AND GRID DISTANCES. GRID DISTANCES MAY BE USED AS GROUND DISTANCES.

EXISTING HIGHWAY RIGHT-OF-WAY FOR PORTER STREET, GARFIELD AVENUE, STEWART PLACE, AND SOUTH FIRST AVENUE (FKA HARRISON BLVD) SHOWN HEREIN IS BASED ON STEWART ALEXANDER'S SECOND ADDITION PLAT.

ALL TEMPORARY LIMITED EASEMENTS (TLE'S) REQUIRED FOR CONSTRUCTION OF SLOPES, SIDEWALKS, AND DRIVEWAYS.

REFER TO THE TITLE SHEET, RECORDED AS SHEET 2 OF 2 OF TRANSPORTATION PROJECT PLAT PAGE 4.01, AS DOCUMENT No. 1760374 FOR ADDITIONAL INFORMATION.

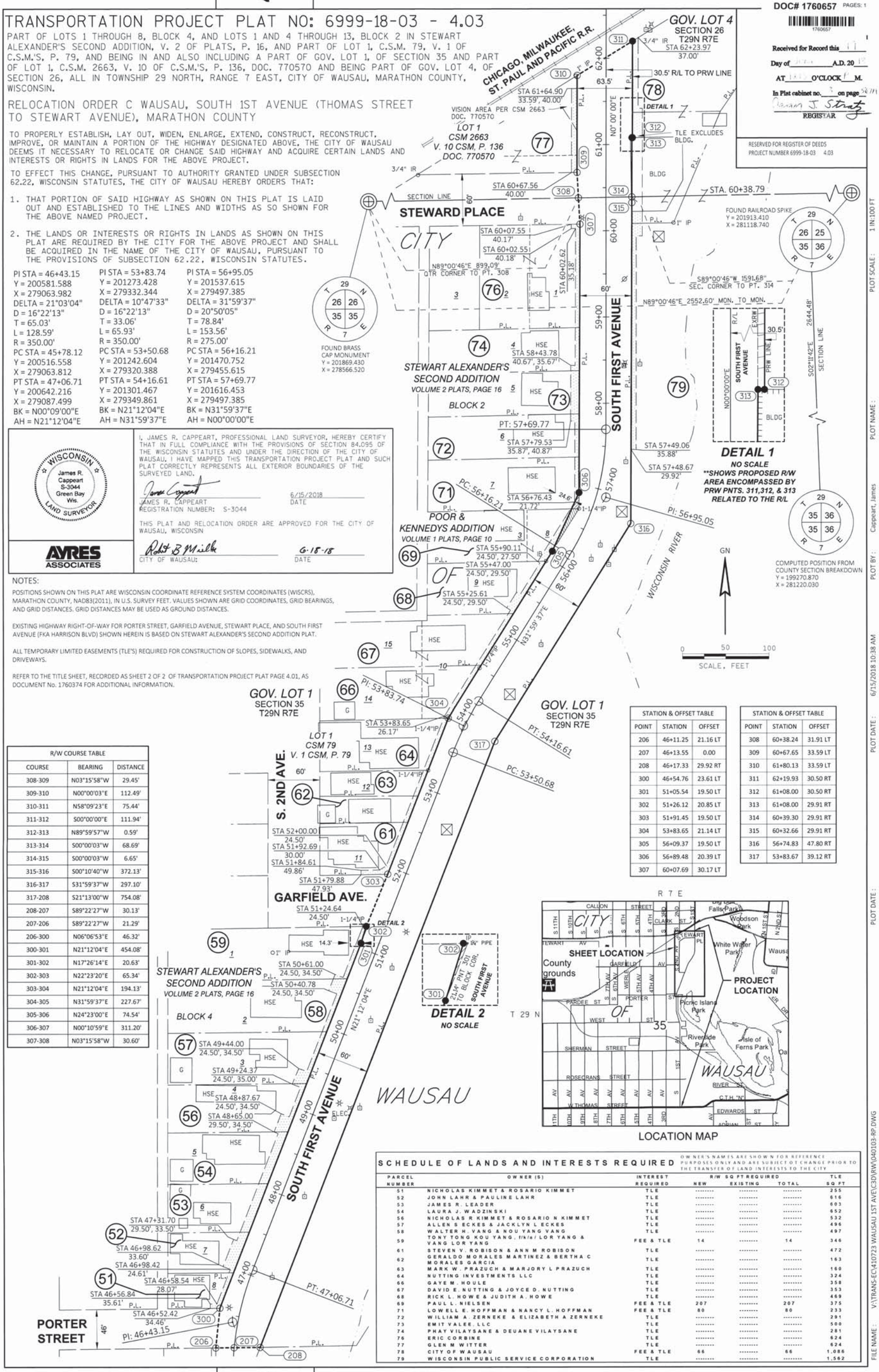

R/W COURSE TABLE		
COURSE	BEARING	DISTANCE
308-309	N03°15'58"W	29.45'
309-310	N00°00'03"E	112.49'
310-311	N58°09'23"E	75.44'
311-312	S00°00'00"E	111.94'
312-313	N89°59'57"W	0.59'
313-314	S00°00'03"W	68.69'
314-315	S00°00'03"W	6.65'
315-316	S00°10'40"W	372.13'
316-317	S31°59'37"W	297.10'
317-208	S21°13'00"W	754.08'
208-207	S89°22'27"W	30.13'
207-206	S89°22'27"W	21.29'
206-300	N06°06'53"E	46.32'
300-301	N21°12'04"E	454.08'
301-302	N17°26'14"E	20.63'
302-303	N22°23'20"E	65.34'
303-304	N21°12'04"E	194.13'
304-305	N31°59'37"E	227.67'
305-306	N24°23'00"E	74.54'
306-307	N00°10'59"E	311.20'
307-308	N03°15'58"W	30.60'

STATION & OFFSET TABLE		
POINT	STATION	OFFSET
206	46+11.25	21.16 LT
207	46+13.55	0.00
208	46+17.33	29.92 RT
300	46+54.76	23.61 LT
301	51+05.54	19.50 LT
302	51+26.12	20.85 LT
303	51+91.45	19.50 LT
304	53+83.65	21.14 LT
305	56+09.37	19.50 LT
306	56+89.48	20.39 LT
307	60+07.69	30.17 LT

STATION & OFFSET TABLE		
POINT	STATION	OFFSET
308	60+38.24	31.91 LT
309	60+67.65	33.59 LT
310	61+80.13	33.59 LT
311	62+19.93	30.50 RT
312	61+08.00	30.50 RT
313	61+08.00	29.91 RT
314	60+39.30	29.91 RT
315	60+32.66	29.91 RT
316	56+74.83	47.80 RT
317	53+83.67	39.12 RT

SCHEDULE OF LANDS AND INTERESTS REQUIRED

OWNER'S NAMES ARE SHOWN FOR REFERENCE PURPOSES ONLY AND ARE SUBJECT TO CHANGE PRIOR TO THE TRANSFER OF LAND INTERESTS TO THE CITY

PARCEL NUMBER	OWNER (S)	INTEREST REQUIRED	R/W SQ FT REQUIRED NEW	EXISTING	TOTAL	TLE SQ FT
51	NICHOLAS KIMMET & ROSARIO KIMMET	TLE	--------	--------	--------	255
52	JOHN LAHR & PAULINE LAHR	TLE	--------	--------	--------	616
53	JAMES R. LEADER	TLE	--------	--------	--------	603
54	LAURA J. WADZINSKI	TLE	--------	--------	--------	652
56	NICHOLAS R KIMMET & ROSARIO N KIMMET	TLE	--------	--------	--------	532
57	ALLEN S ECKES & JACKLYN L ECKES	TLE	--------	--------	--------	496
58	WALTER H. VANG & NOU YANG VANG	TLE	--------	--------	--------	497
59	TONY TONG KOU YANG, f/k/a/ LOR YANG & VANG LOR YANG	FEE & TLE	14	--------	14	346
61	STEVEN V. ROBISON & ANN M ROBISON	TLE	--------	--------	--------	472
62	GERALDO MORALES MARTINEZ & BERTHA C MORALES GARCIA	TLE	--------	--------	--------	163
63	MARK W. PRAZUCH & MARJORY L PRAZUCH	TLE	--------	--------	--------	160
64	NUTTING INVESTMENTS LLC	TLE	--------	--------	--------	324
66	GAYE M. HOULE	TLE	--------	--------	--------	358
67	DAVID E. NUTTING & JOYCE D. NUTTING	TLE	--------	--------	--------	353
68	RICK L. HOWE & JUDITH A. HOWE	TLE	--------	--------	--------	469
69	PAUL L. NIELSEN	FEE & TLE	207	--------	207	375
71	LOWELL E. HOFFMAN & NANCY L. HOFFMAN	FEE & TLE	80	--------	80	233
72	WILLIAM A. ZERNEKE & ELIZABETH A ZERNEKE	TLE	--------	--------	--------	291
73	EMIT VALEE, LLC	TLE	--------	--------	--------	500
74	PHAY VILAYSANE & DEUANE VILAYSANE	TLE	--------	--------	--------	281
76	ERIC CORBINE	TLE	--------	--------	--------	624
77	GLEN M WITTER	TLE	--------	--------	--------	624
78	CITY OF WAUSAU	FEE & TLE	66	--------	66	1,086
79	WISCONSIN PUBLIC SERVICE CORPORATION	TLE	--------	--------	--------	1,562

4

PLOT SCALE : 1 IN:100 FT
PLOT NAME :
PLOT BY : Cappeart, James
PLOT DATE : 6/15/2018 10:38 AM
PLOT DATE :
FILE NAME : V:\TRANS-EC\410723 WAUSAU 1ST AVE\C3D\RW\040103-RP.DWG
APPRAISAL PLAT DATE : 09/20/2017

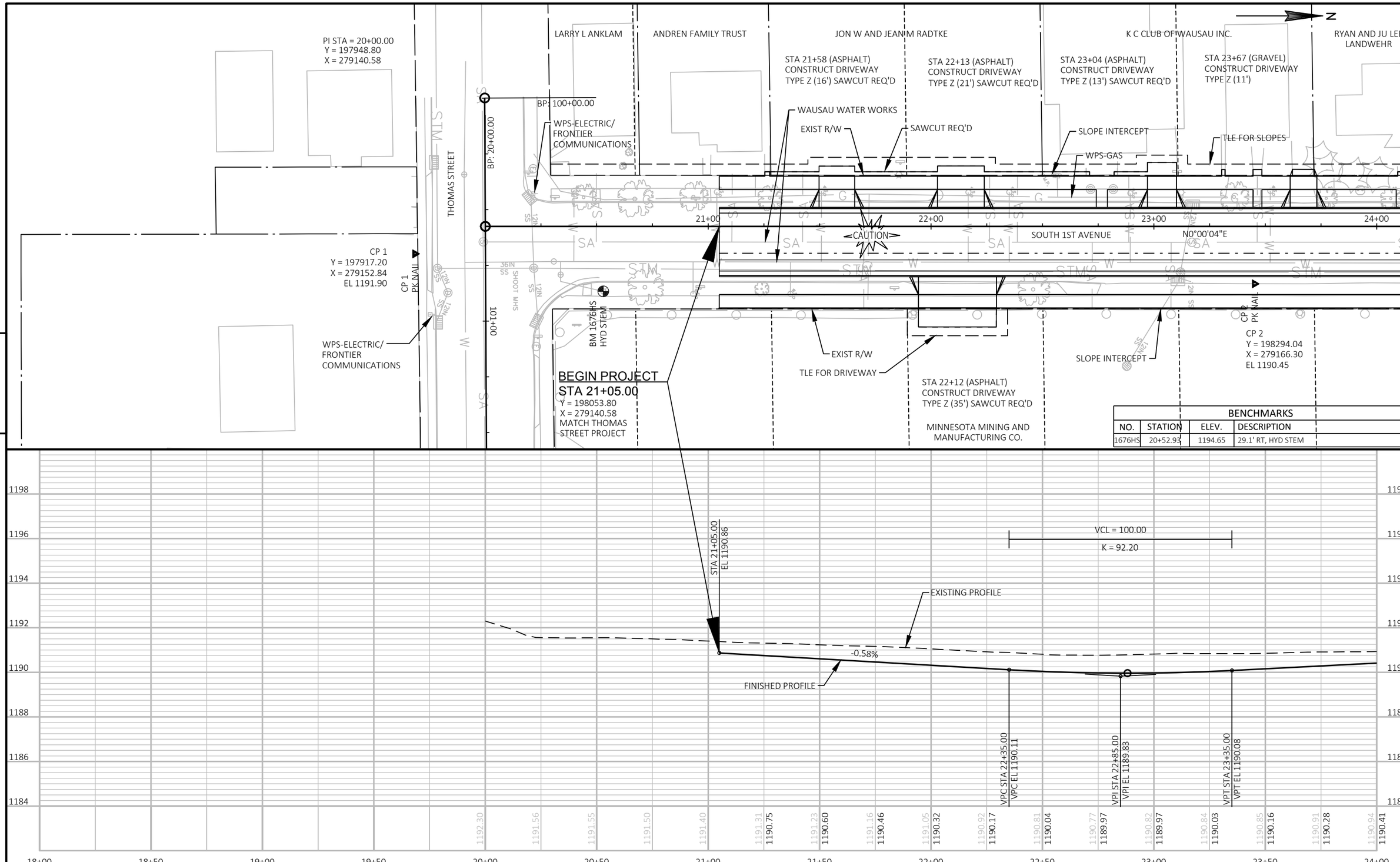

BENCHMARKS			
NO.	STATION	ELEV.	DESCRIPTION
1676HS	20+52.93	1194.65	29.1' RT, HYD STEM

PROJECT NO: 6999-18-73	HWY: SOUTH 1ST AVENUE	COUNTY: MARATHON	PLAN AND PROFILE: SOUTH 1ST AVENUE	SHEET 77	E

FILE NAME : V:\TRANS-EC\410723 WAUSAU 1ST AVE\C3D\SHEETSPLAN\050101_PP.DWG
LAYOUT NAME - 01
PLOT DATE : 10/16/2018 11:22 AM
PLOT BY : RESHESKE, CARRIE
PLOT NAME :
PLOT SCALE : 1 IN:40 FT
WISDOT/CADDS SHEET 44

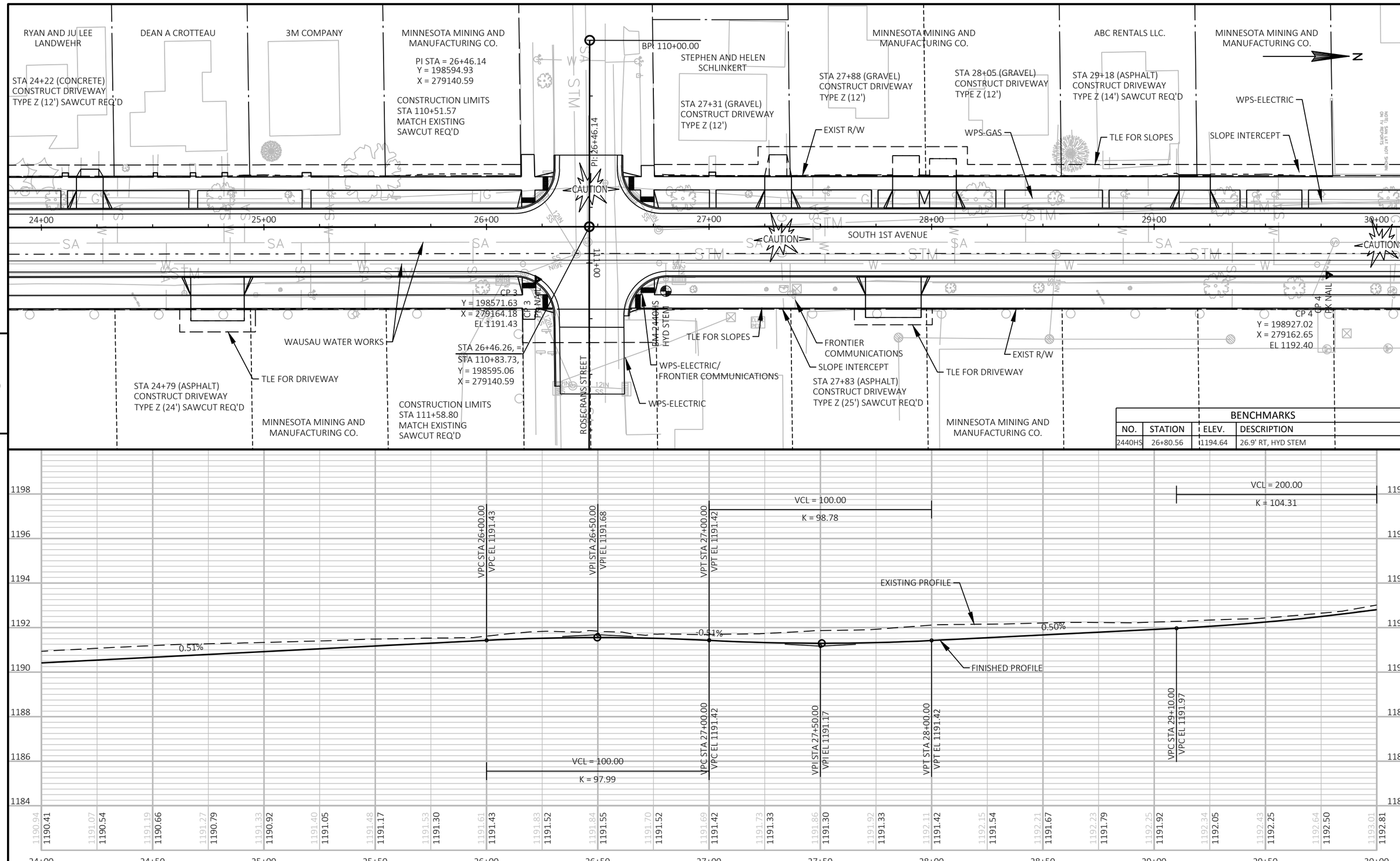

PROJECT NO: 6999-18-73	HWY: SOUTH 1ST AVENUE	COUNTY: MARATHON	PLAN AND PROFILE: SOUTH 1ST AVENUE	SHEET 78	E

FILE NAME : V:\TRANS-EC\410723 WAUSAU 1ST AVE\C3D\SHEETSPLAN\050101_PP.DWG
LAYOUT NAME - 02
PLOT DATE : 10/16/2018 11:22 AM PLOT BY : RESHESKE, CARRIE PLOT NAME : PLOT SCALE : 1 IN:40 FT

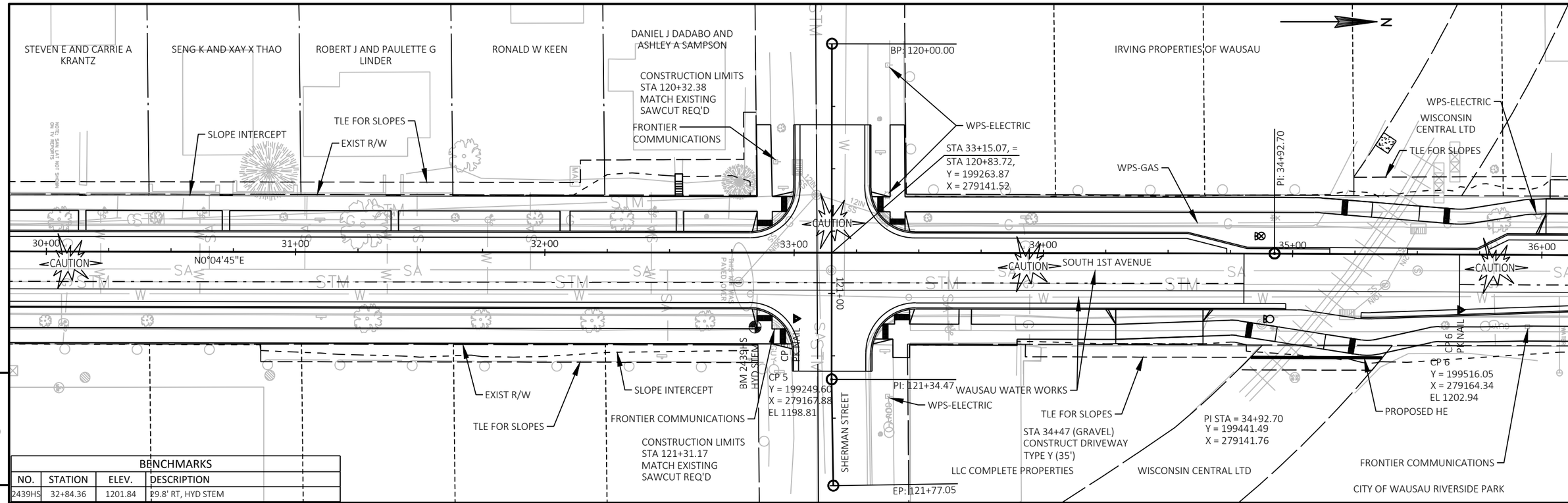

BENCHMARKS			
NO.	STATION	ELEV.	DESCRIPTION
2439HS	32+84.36	1201.84	29.8' RT, HYD STEM

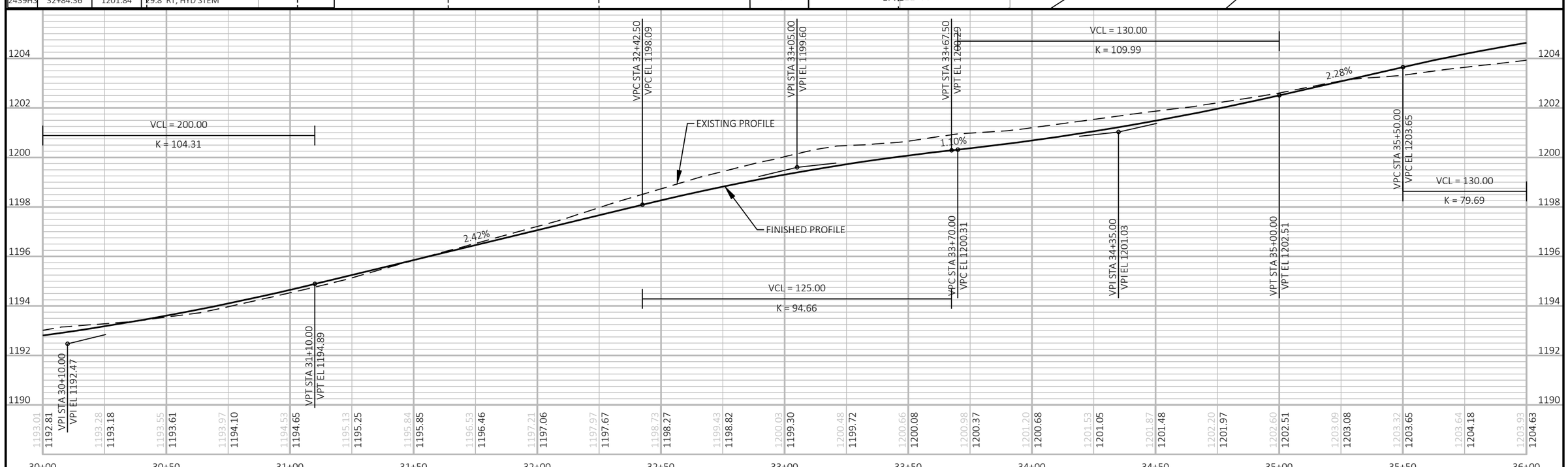

PROJECT NO: 6999-18-73	HWY: SOUTH 1ST AVENUE	COUNTY: MARATHON	PLAN AND PROFILE: SOUTH 1ST AVENUE	SHEET 79	E

FILE NAME : V:\TRANS-EC\410723 WAUSAU 1ST AVE\C3D\SHEETSPLAN\050101_PP.DWG
LAYOUT NAME - 03
PLOT DATE : 10/16/2018 11:22 AM
PLOT BY : RESHESKE, CARRIE
PLOT NAME :
PLOT SCALE : 1 IN:40 FT
WISDOT/CADDS SHEET 44

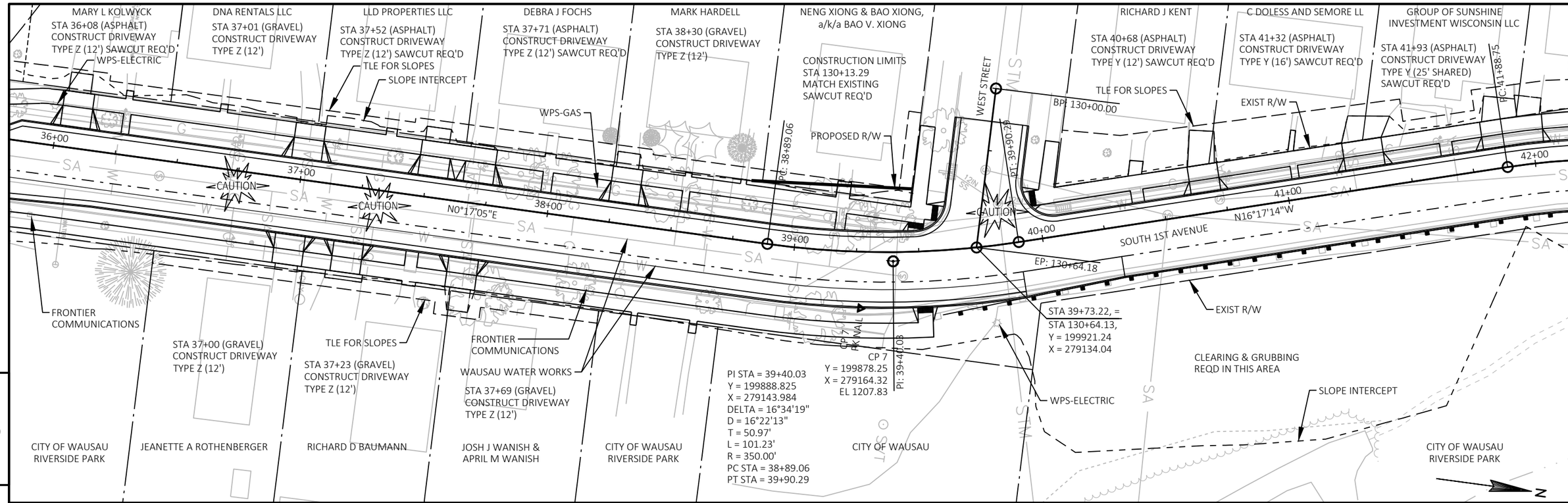

5

5

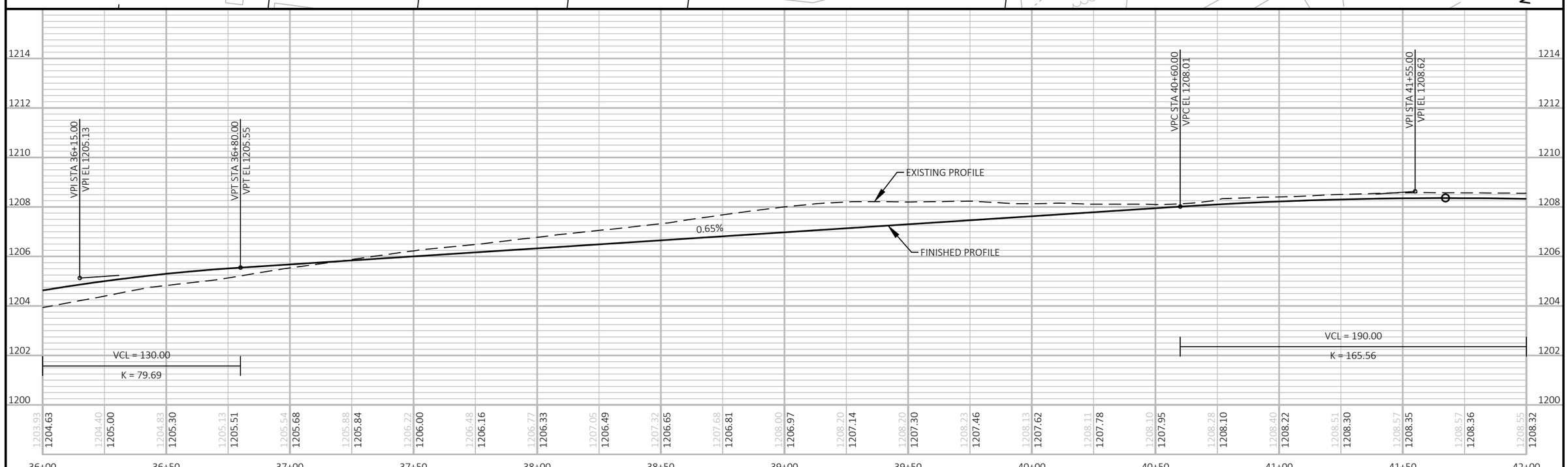

PROJECT NO: 6999-18-73	HWY: SOUTH 1ST AVENUE	COUNTY: MARATHON	PLAN AND PROFILE: SOUTH 1ST AVENUE	SHEET 80	E

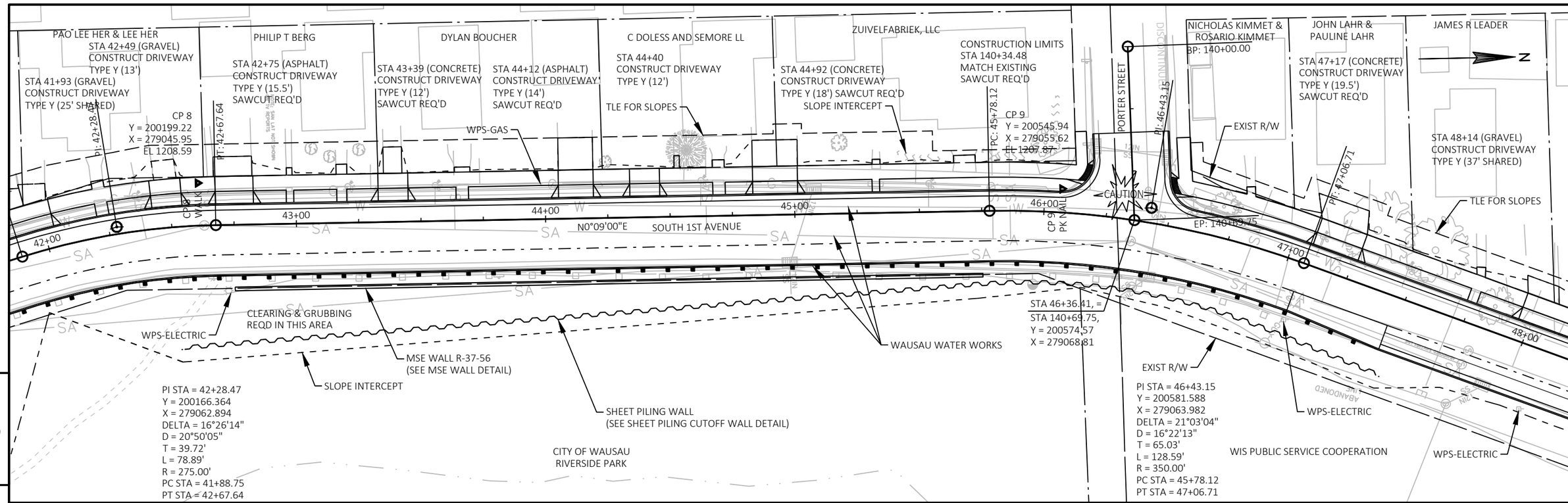

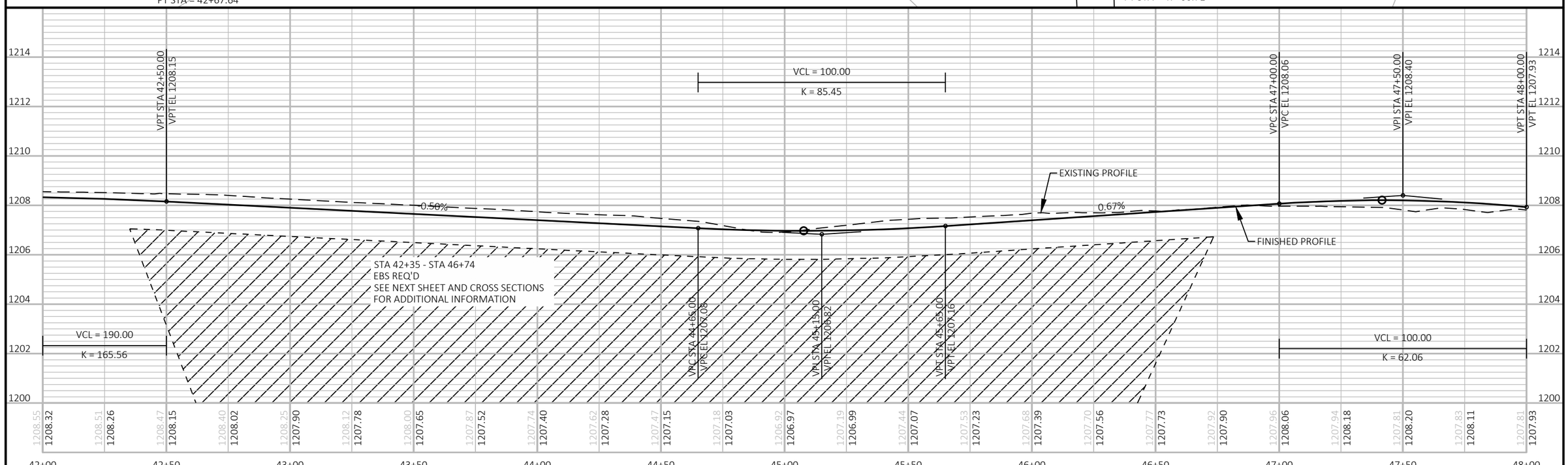

PROJECT NO: 6999-18-73	HWY: SOUTH 1ST AVENUE	COUNTY: MARATHON	PLAN AND PROFILE: SOUTH 1ST AVENUE	SHEET 81	E

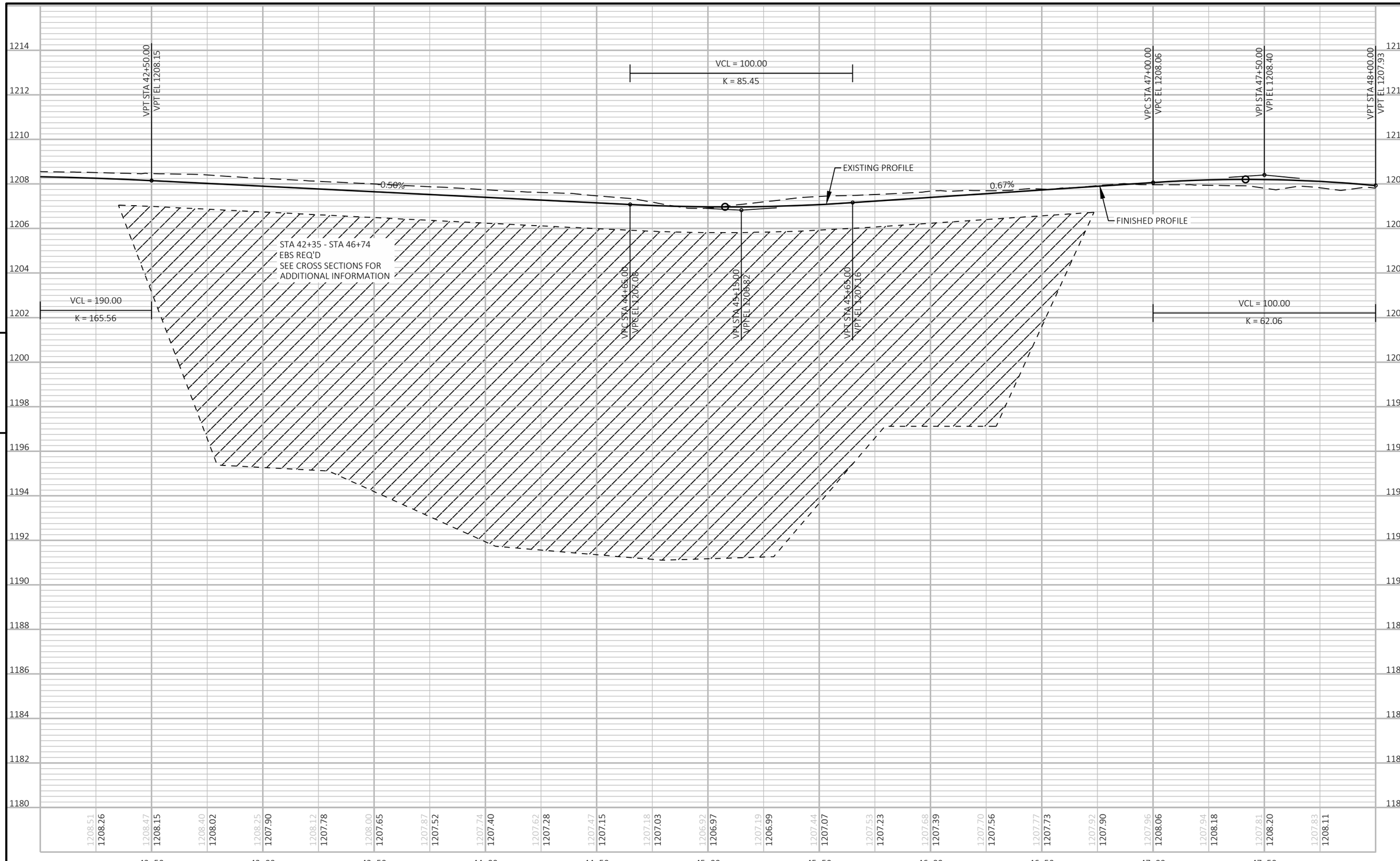

PROJECT NO: 6999-18-73	HWY: SOUTH 1ST AVENUE	COUNTY: MARATHON	SOUTH 1ST AVENUE	SHEET 82	E

FILE NAME : V:\TRANS-EC\410723 WAUSAU 1ST AVE\C3D\SHEETSPLAN\050101_PP.DWG
LAYOUT NAME - 06
PLOT DATE : 10/16/2018 11:22 AM
PLOT BY : RESHESKE, CARRIE
PLOT NAME :
PLOT SCALE : 1 IN:40 FT
WISDOT/CADDS SHEET 44

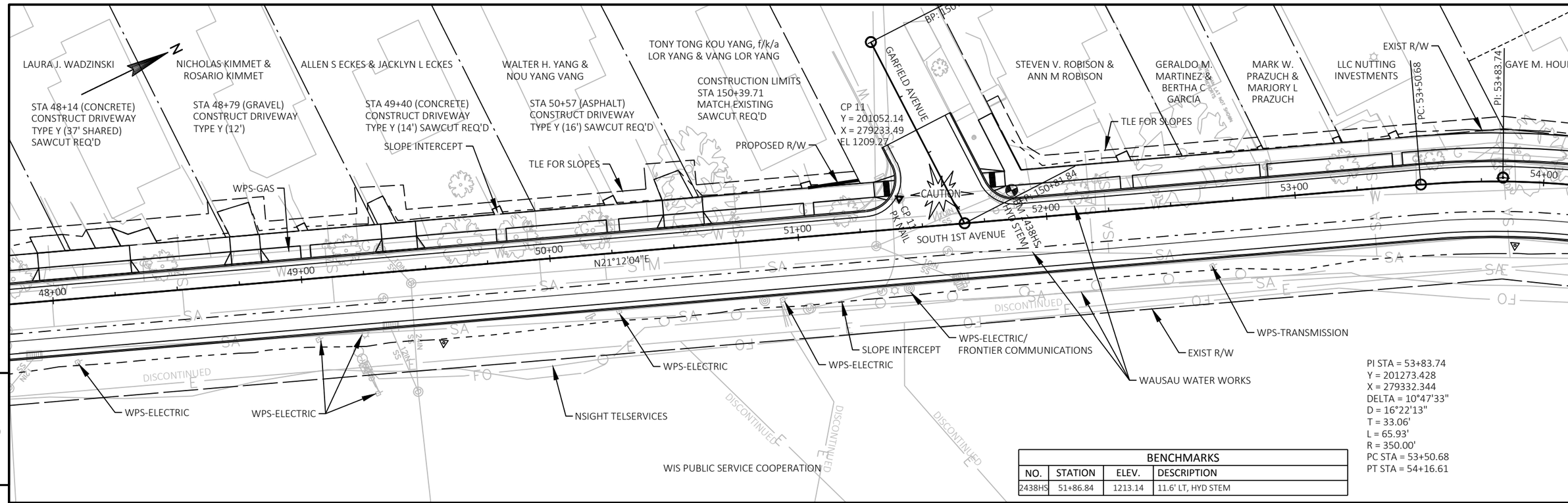

PI STA = 53+83.74
Y = 201273.428
X = 279332.344
DELTA = 10°47'33"
D = 16°22'13"
T = 33.06'
L = 65.93'
R = 350.00'
PC STA = 53+50.68
PT STA = 54+16.61

BENCHMARKS			
NO.	STATION	ELEV.	DESCRIPTION
2438HS	51+86.84	1213.14	11.6' LT, HYD STEM

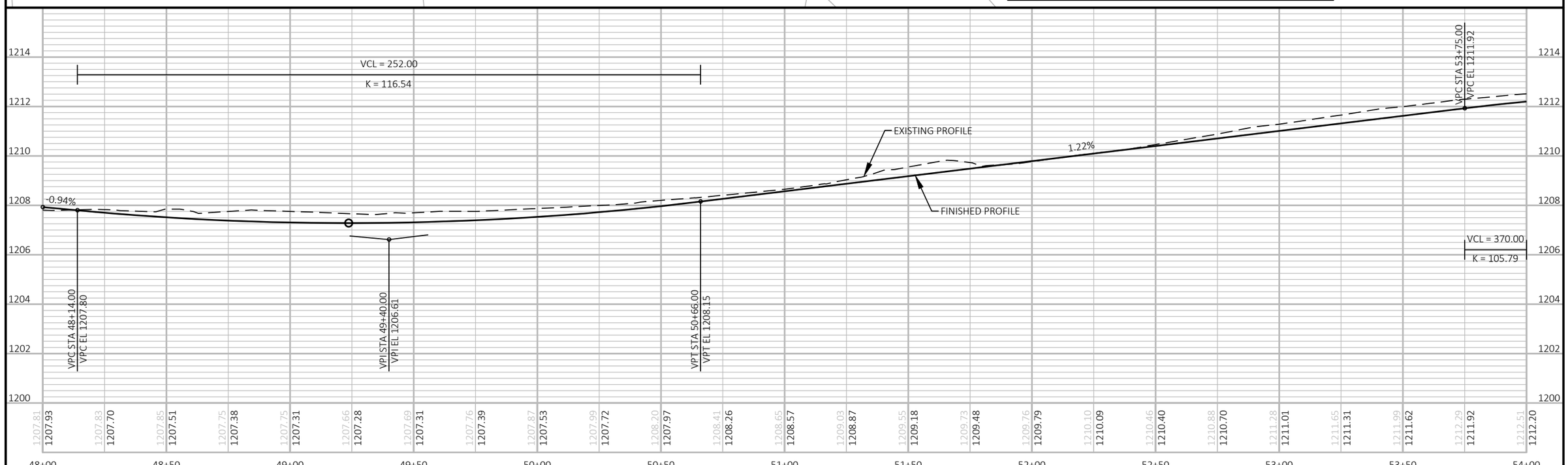

PROJECT NO: 6999-18-73	HWY: SOUTH 1ST AVENUE	COUNTY: MARATHON	PLAN AND PROFILE: SOUTH 1ST AVENUE	SHEET 83	E

FILE NAME : V:\TRANS-EC\410723 WAUSAU 1ST AVE\C3D\SHEETSPLAN\050101_PP.DWG
LAYOUT NAME - 07
PLOT DATE : 10/16/2018 11:22 AM
PLOT BY : RESHESKE, CARRIE
PLOT NAME :
PLOT SCALE : 1 IN:40 FT
WISDOT/CADDS SHEET 44

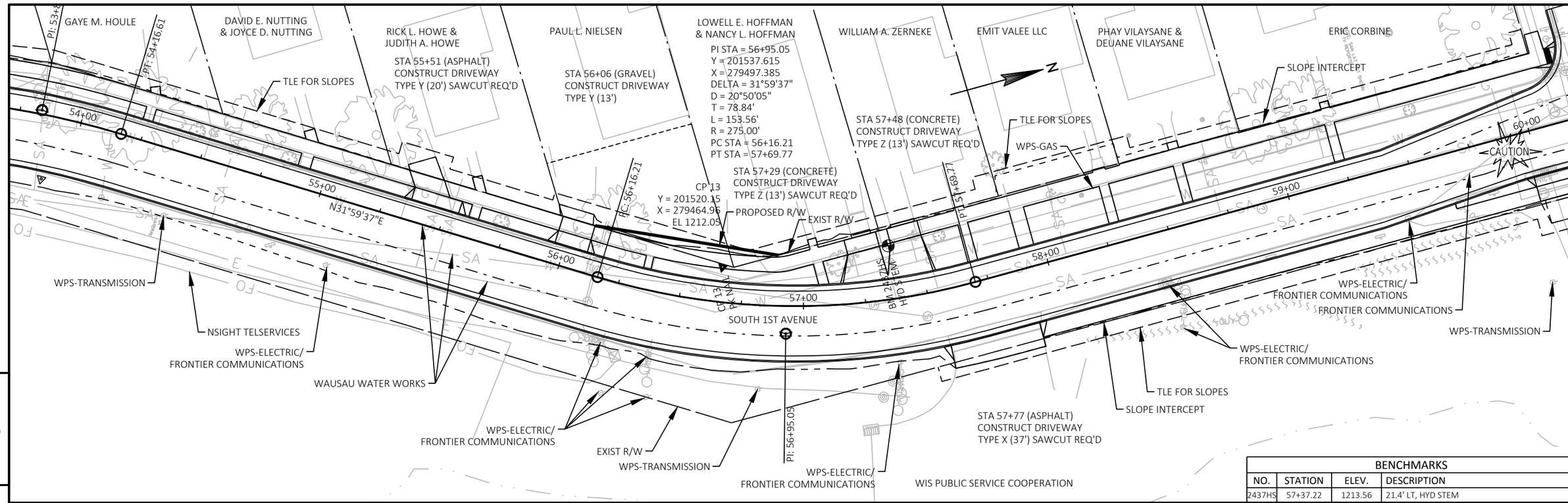

BENCHMARKS			
NO.	STATION	ELEV.	DESCRIPTION
2437HS	57+37.22	1213.56	21.4' LT, HYD STEM

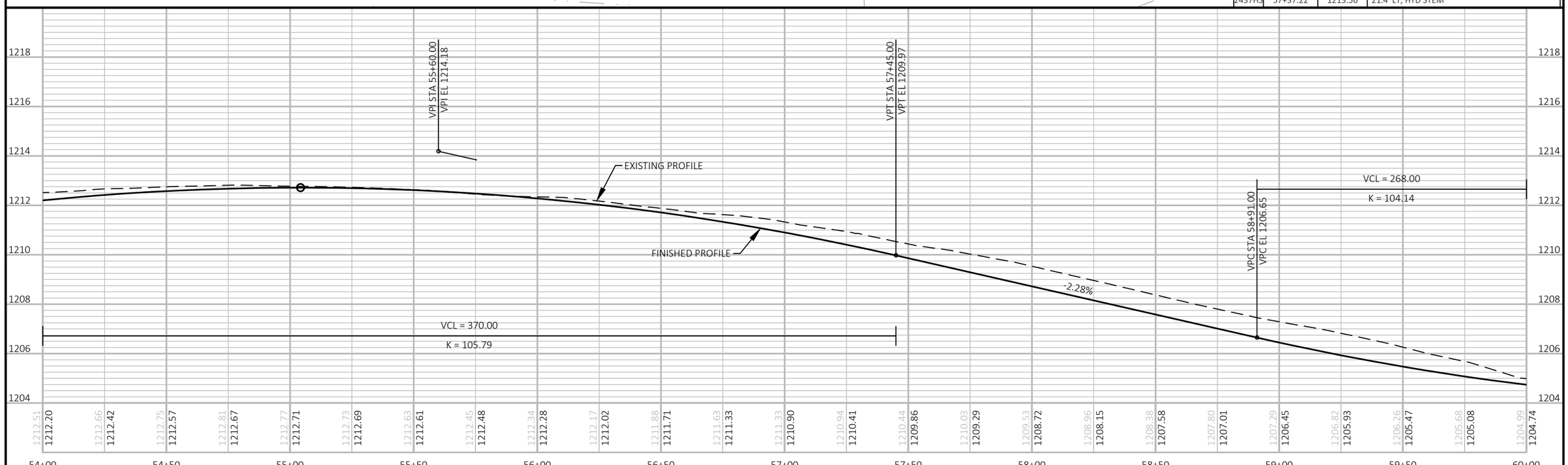

5

5

PROJECT NO: 6999-18-73	HWY: SOUTH 1ST AVENUE	COUNTY: MARATHON	PLAN AND PROFILE: SOUTH 1ST AVENUE	SHEET 84	E

FILE NAME : V:\TRANS-EC\410723 WAUSAU 1ST AVE\C3D\SHEETSPLAN\050101_PP.DWG
LAYOUT NAME - 08
PLOT DATE : 10/16/2018 11:22 AM
PLOT BY : RESHESKE, CARRIE
PLOT NAME :
PLOT SCALE : 1 IN:40 FT

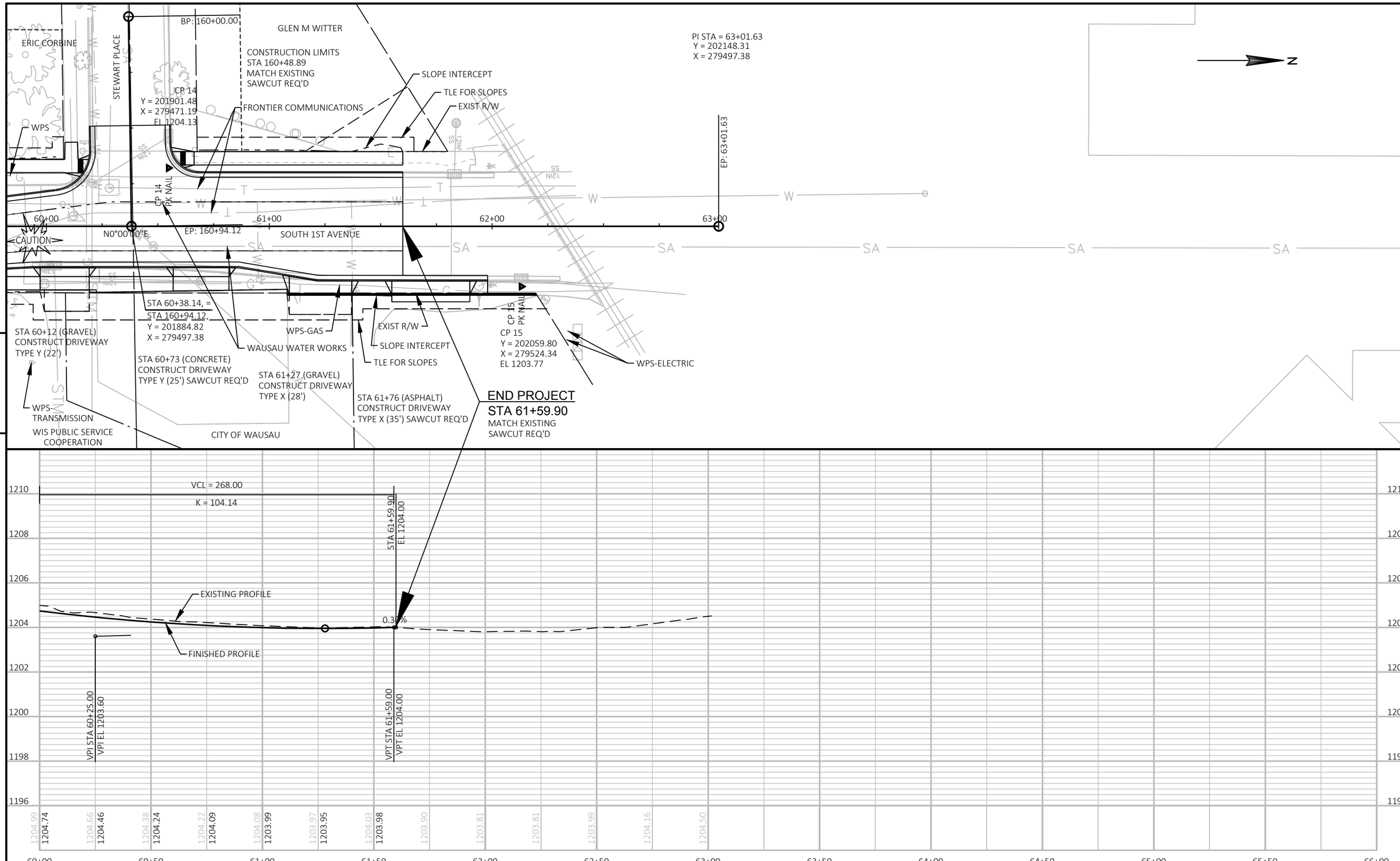

PROJECT NO: 6999-18-73	HWY: SOUTH 1ST AVENUE	COUNTY: MARATHON	PLAN AND PROFILE: SOUTH 1ST AVENUE	SHEET 85	E

FILE NAME : V:\TRANS-EC\410723 WAUSAU 1ST AVE\C3D\SHEETSPLAN\050101_PP.DWG
LAYOUT NAME - 09
PLOT DATE : 10/16/2018 11:22 AM
PLOT BY : RESHESKE, CARRIE
PLOT NAME :
PLOT SCALE : 1 IN:40 FT
WISDOT/CADDS SHEET 44

Standard Detail Drawing List

08A05-19A	INLET COVERS TYPE A, H, A-S, H-S & Z
08A05-19D	INLET COVER TYPE BW, MANHOLE COVERS, TYPE K, J, J-S, L & M
08B09-02	MANHOLES 3-FT, 4-FT, 5-FT, 6-FT, 7-FT AND 8-FT DIAMETER
08C06-02	INLETS 3-FT AND 4-FT DIAMETER
08C07-02	INLETS 2X2-FT, 2X2.5-FT, 2X3-FT AND 2.5X3-FT
08D01-20A	CONCRETE CURB & GUTTER
08D01-20B	CONCRETE CURB, TIES AND CURB AND GUTTER APPLICATIONS
08D05-19A	CURB RAMPS TYPES 1 AND 1-A
08D05-19B	CURB RAMPS TYPES 2 AND 3
08D05-19C	CURB RAMPS TYPES 4A AND 4A1
08D05-19D	CURB RAMPS TYPE 4B AND 4B1
08D05-19E	CURB RAMPS TYPES 5, 6, 7A, 7B & 8
08D05-19F	CURB RAMPS RADIAL DETECTABLE WARNING FIELD APPLICATIONS
08D05-19G	CURB RAMPS RECTANGULAR AND RADIAL DETECTABLE WARNING PLATES
08D18-02	DRIVEWAY AND SIDEWALK RAMPS TYPES X & Y
08D19-02	DRIVEWAY AND SIDEWALK RAMPS TYPE Z
08E09-06	SILT FENCE
08E10-02	INLET PROTECTION TYPE A, B, C AND D
08E14-01	TRACKING PAD
09B02-10	CONDUIT
09B16-01	PULL BOX NON-CONDUCTIVE
09C02-07	CONCRETE BASES, TYPES 1, 2, 5, & 6
09C14-02	CONCRETE CONTROL CABINET BASE, TYPE L
09D01-05	CABINET SERVICE INSTALLATION (METER BREAKER PEDESTAL)
09D04-02	LIGHTING CONTROL CABINET 120/240 VOLT
13B01-10	PAVEMENT DETAILS FOR RAILROAD APPROACH
13C01-19	CONCRETE PAVEMENT LONGITUDINAL JOINTS AND TIES
13C13-09	URBAN DOWELED CONCRETE PAVEMENT
13C18-06A	CONCRETE PAVEMENT JOINTING
13C18-06B	CONCRETE PAVEMENT STEEL REINFORCEMENT
13C18-06C	CONCRETE PAVEMENT JOINT TYPES
13C18-06D	CONCRETE PAVEMENT JOINT TYPES AT UTILITY FIXTURES
14B42-06A	MIDWEST GUARDRAIL SYSTEM (MGS) GUARDRAIL
14B42-06B	MIDWEST GUARDRAIL SYSTEM (MGS) GUARDRAIL
14B42-06C	MIDWEST GUARDRAIL SYSTEM (MGS) GUARDRAIL
14B42-06D	MIDWEST GUARDRAIL SYSTEM (MGS) GUARDRAIL
14B44-04A	MIDWEST GUARDRAIL SYSTEM ENERGY ABSORBING TERMINAL (MGS)
14B44-04B	MIDWEST GUARDRAIL SYSTEM ENERGY ABSORBING TERMINAL (MGS)
14B44-04C	MIDWEST GUARDRAIL SYSTEM ENERGY ABSORBING TERMINAL (MGS)
14B47-02A	MIDWEST GUARDRAIL SYSTEM (MGS) TYPE 2 TERMINAL
14B47-02B	MIDWEST GUARDRAIL SYSTEM (MGS) TYPE 2 TERMINAL
14B47-02C	MIDWEST GUARDRAIL SYSTEM (MGS) TYPE 2 TERMINAL
15C02-06A	BARRICADES AND SIGNS FOR MAINLINE CLOSURES
15C02-06B	BARRICADES AND SIGNS FOR MAINLINE CLOSURES
15C02-06C	DETOUR SIGNING FOR MAINLINE CLOSURES
15C03-05	BARRICADES AND SIGNS FOR SIDEROAD CLOSURES
15C07-14C	PAVEMENT MARKING ARROWS
15C07-14E	PAVEMENT MARKING FOR BIKE LANES
15C08-19A	LONGITUDINAL MARKING (MAINLINE)
15C09-11A	SIGNING AND PAVEMENT MARKING DETAILS FOR RAILROAD-HIGHWAY GRADE CROSSINGS
15C29-06A	BICYCLE LANE MARKING
15C33-03	STOP LINE AND CROSSWALK PAVEMENT MARKING

6

6

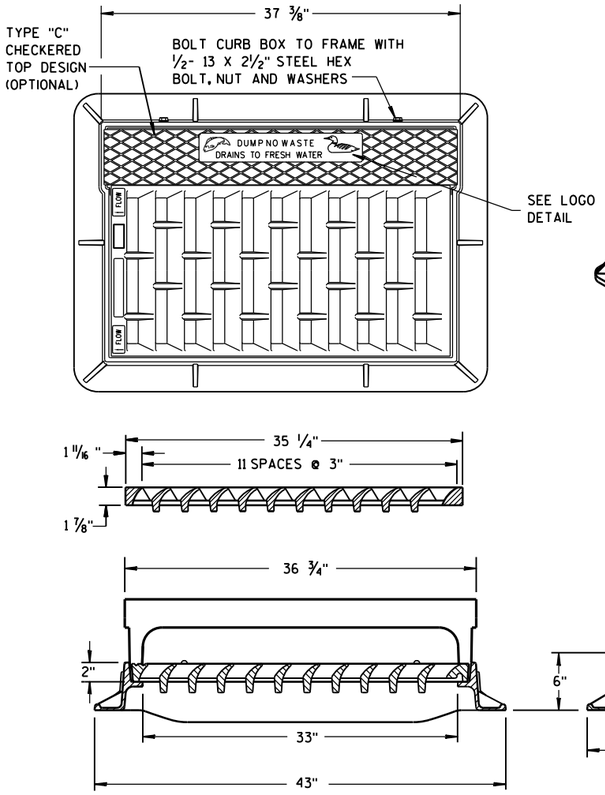

NOTE:
GRATE IS REVERSIBLE.

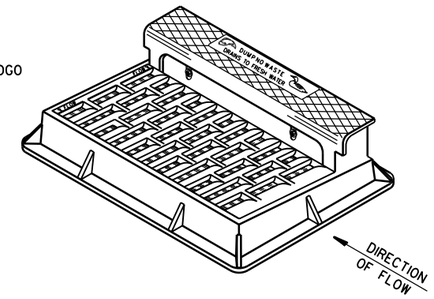

NOTE: CURB BOX HEIGHT ADJUSTABLE 6" TO 9"

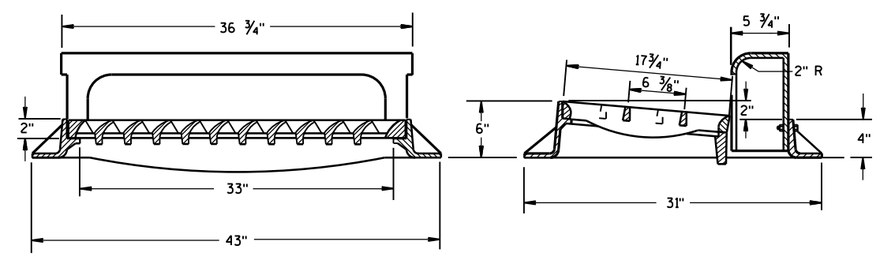

TYPE "H"

NOTE: EITHER CASTING IS ACCEPTABLE

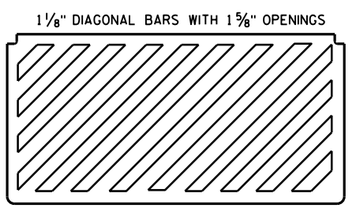

SPECIAL GRATE FOR TYPE "H" COVER

(MEASURES 35 1/4" X 17 3/4" X 2")

(NOTED AS TYPE H-S ON DRAINAGE TABLE)

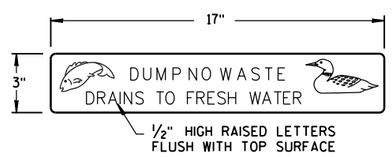

LOGO DETAIL

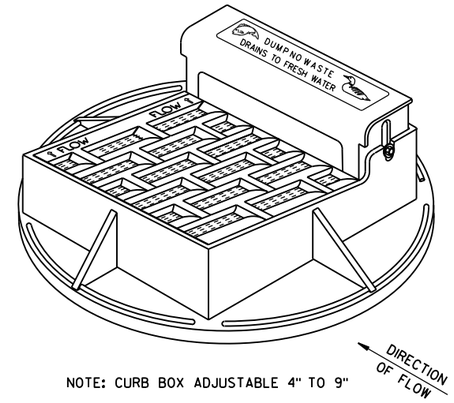

NOTE: CURB BOX ADJUSTABLE 4" TO 9"

NOTE:
GRATE IS REVERSIBLE.

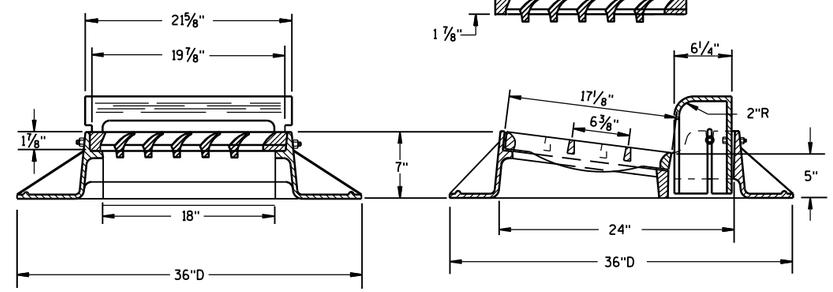

TYPE "A"

GENERAL NOTES

DETAILS OF CONSTRUCTION, MATERIALS AND WORKMANSHIP NOT SHOWN ON THIS DRAWING SHALL CONFORM TO THE PERTINENT REQUIREMENTS OF THE STANDARD SPECIFICATIONS AND THE APPLICABLE SPECIAL PROVISIONS.

DETAIL DRAWINGS FOR PROPOSED ALTERNATE DESIGNS FOR CATCH BASIN, MANHOLE AND INLET COVERS SHALL BE SUBMITTED TO THE ENGINEER FOR APPROVAL PROVIDING THAT SUCH ALTERNATE DESIGNS MAKE PROVISION FOR EQUIVALENT CAPACITY AND STRENGTH.

ROUND FRAMES AND COVERS SHALL HAVE CONTINUOUSLY MACHINED BEARING SURFACES TO PREVENT ROCKING AND RATTLING.

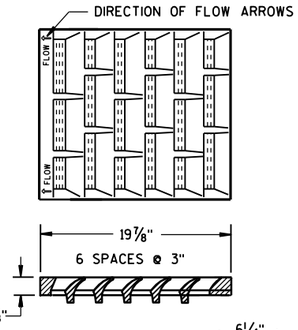

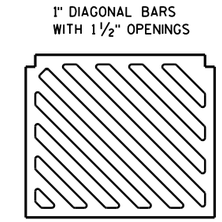

SPECIAL GRATE FOR TYPE "A" COVER

(MEASURES 19 3/4" X 17" X 1 7/8")

(NOTED AS TYPE A-S ON DRAINAGE TABLE)

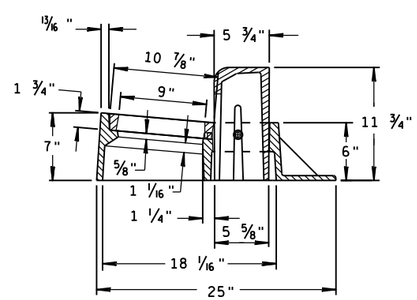

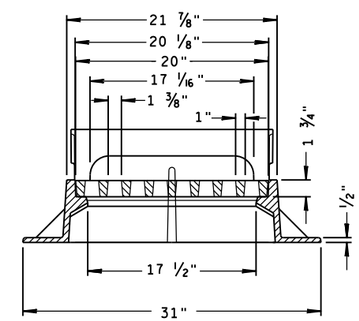

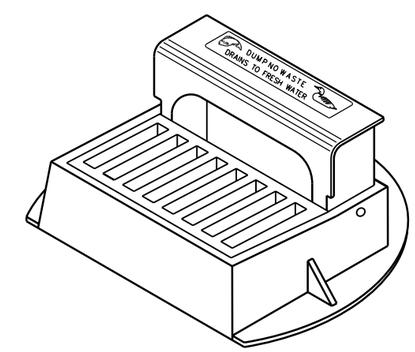

TYPE "Z"

INLET COVERS
TYPE A, H, A-S, H-S & Z

STATE OF WISCONSIN
DEPARTMENT OF TRANSPORTATION

APPROVED
11-27-13 /S/ Jerry H. Zogg
DATE ROADWAY STANDARDS DEVELOPMENT ENGINEER
FHWA

6

S.D.D. 8 A 5-19a

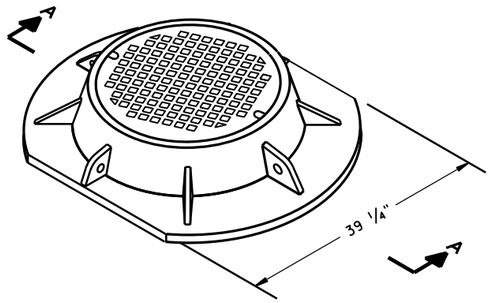

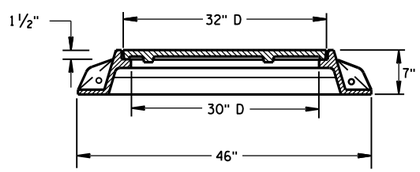

SECTION A-A
TYPE "K"

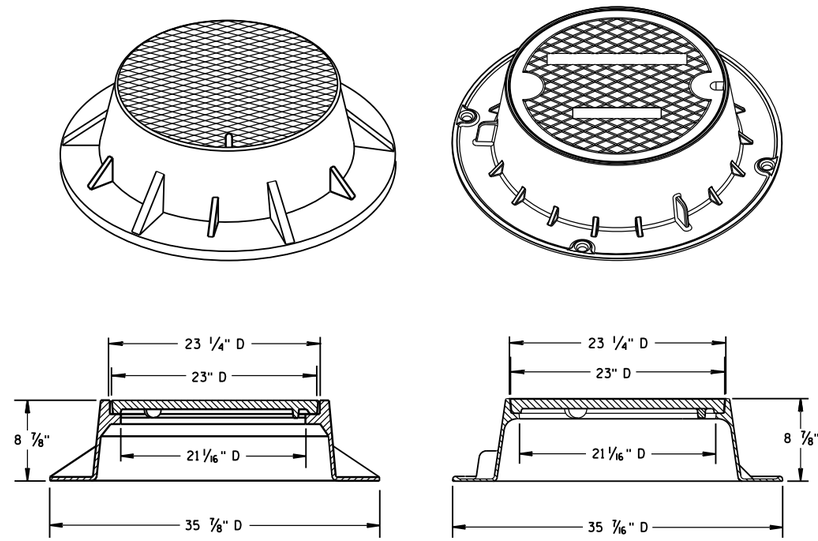

TYPE "J"
NOTE: EITHER CASTING IS ACCEPTABLE

GENERAL NOTES

DETAILS OF CONSTRUCTION, MATERIALS AND WORKMANSHIP NOT SHOWN ON THIS DRAWING SHALL CONFORM TO THE PERTINENT REQUIREMENTS OF THE STANDARD SPECIFICATIONS AND THE APPLICABLE SPECIAL PROVISIONS.

DETAIL DRAWINGS FOR PROPOSED ALTERNATE DESIGNS FOR MANHOLE COVERS SHALL BE SUBMITTED TO THE ENGINEER FOR APPROVAL PROVIDING THAT SUCH ALTERNATE DESIGNS MAKE PROVISION FOR EQUIVALENT CAPACITY AND STRENGTH.

ROUND FRAMES AND COVERS SHALL HAVE CONTINUOUSLY MACHINED BEARING SURFACES TO PREVENT ROCKING AND RATTLING.

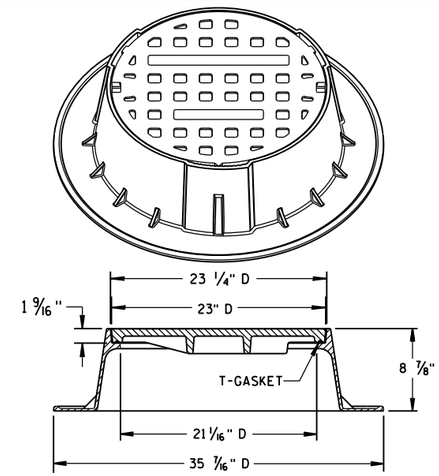

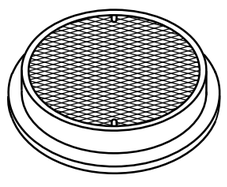

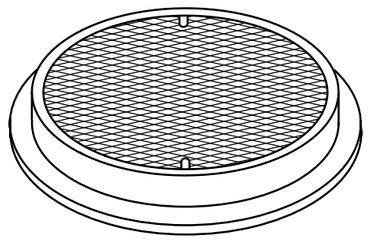

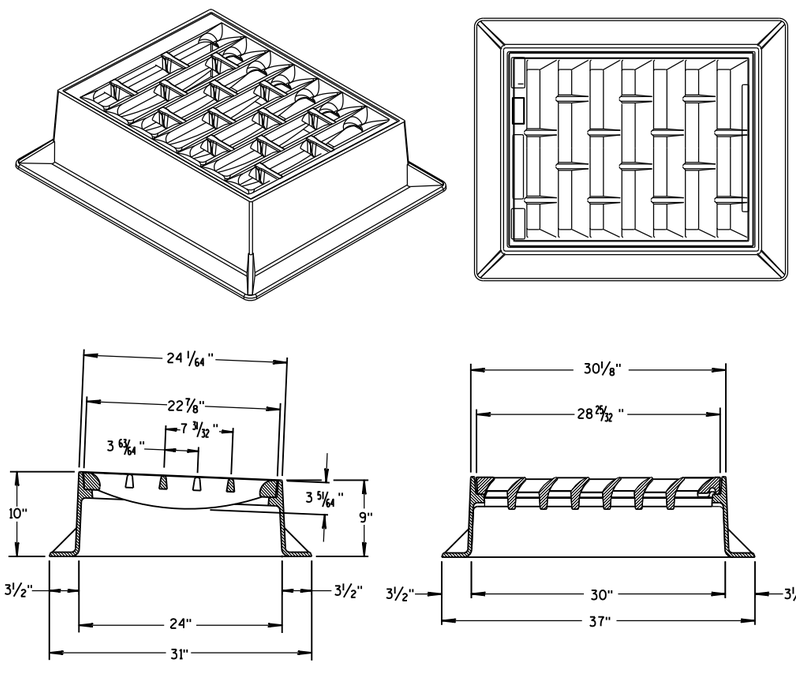

INLET COVER TYPE "BW"

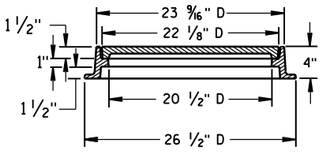

TYPE "L"

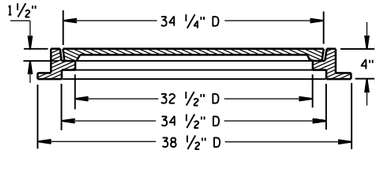

TYPE "M"

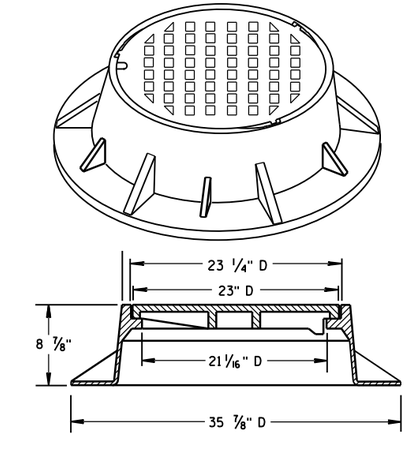

TYPE "J" SPECIAL
TYPE "B" NON-ROCKING SELF-SEAL LID
(NOTED AS TYPE J-S ON THE DRAINAGE TABLE)
NOTE: EITHER CASTING IS ACCEPTABLE

INLET COVER TYPE BW
MANHOLE COVERS, TYPE K, J, J-S, L & M

STATE OF WISCONSIN
DEPARTMENT OF TRANSPORTATION

APPROVED
11/27/2013 — DATE
/S/ Jerry H. Zogg — ROADWAY STANDARDS DEVELOPMENT ENGINEER
FHWA

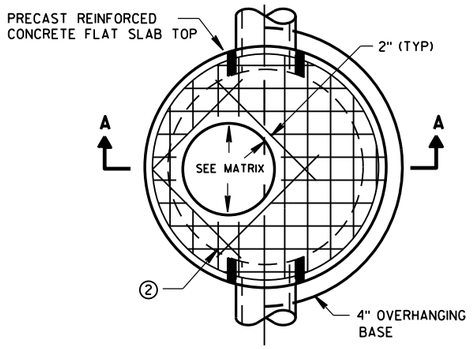

PLAN VIEW CIRCULAR OPENING

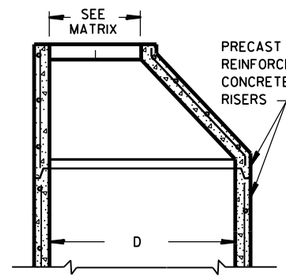

OPTIONAL PRECAST REINFORCED CONCRETE ECCENTRIC TOP

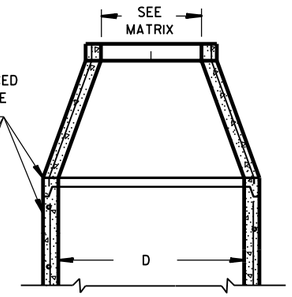

OPTIONAL PRECAST REINFORCED CONCRETE CONCENTRIC TOP

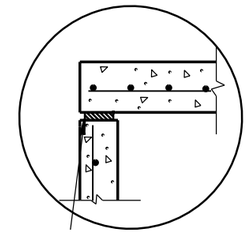

TOP WITH PLAIN END JOINT

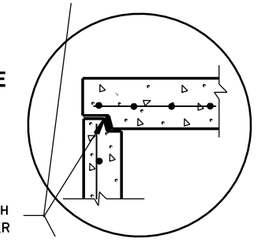

JOINTS TO BE SEALED WITH A BUTYL RUBBER SEAL PER SEALANT MANUFACTURERS RECOMMENDATIONS CONFORMING TO ASTM C990 (TYP)

TOP WITH TONGUE AND GROOVE JOINT

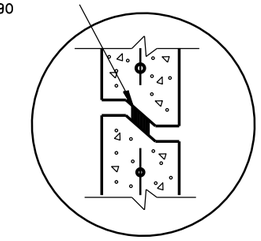

RISER WITH TONGUE AND GROOVE JOINT

DETAIL "B"

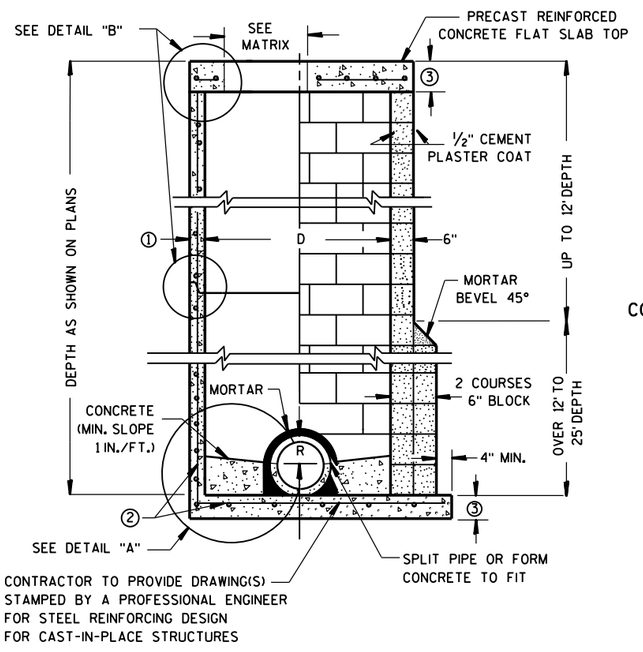

PRECAST REINFORCED CONCRETE WITH MONOLITHIC BASE

CONCRETE BLOCK WITH CAST-IN-PLACE OR PRECAST REINFORCED CONCRETE BASE ②

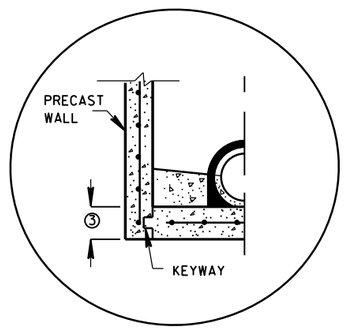

PRECAST REINFORCED CONCRETE WITH INTEGRAL BASE OPTION

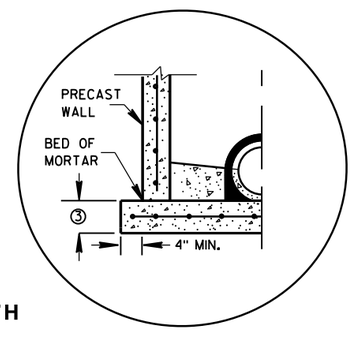

SEPARATE PRECAST REINFORCED CONCRETE BASE OPTION

DETAIL "A"

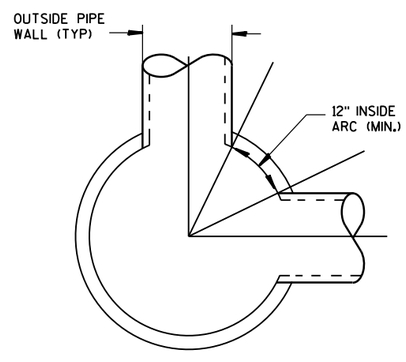

DETAIL "C"

GENERAL NOTES

DETAILS OF CONSTRUCTION, MATERIALS AND WORKMANSHIP NOT SHOWN ON THIS DRAWING SHALL CONFORM TO THE PERTINENT REQUIREMENTS OF THE STANDARD SPECIFICATIONS AND THE APPLICABLE SPECIAL PROVISIONS.

UNLESS OTHERWISE AUTHORIZED IN WRITING BY THE ENGINEER, THE CONTRACTOR SHALL NOT ORDER AND DELIVER PRECAST MANHOLE UNITS REQUIRED FOR THE PROJECT UNTIL A LIST OF SIZES IS FURNISHED BY THE ENGINEER.

DETAILED DRAWINGS FOR PROPOSED ALTERNATE DESIGNS FOR UNDERGROUND DRAINAGE STRUCTURES SHALL BE SUBMITTED TO THE ENGINEER FOR APPROVAL PROVIDING THAT SUCH ALTERNATE DESIGNS MAKE PROVISION FOR EQUIVALENT CAPACITY AND STRENGTH.

ALL DRAINAGE STRUCTURES ARE DESIGNATED ON THE PLANS AS "MANHOLES 3X3-L", "CATCH BASINS 4-B", "INLETS 2X3-H", ETC. THE FIRST NUMBERS DESIGNATE THE SIZE OF THE STRUCTURE, AND THE FOLLOWING LETTER DESIGNATES THE TYPE OF COVER TO BE USED TO COMPRISE THE COMPLETE UNIT.

BASES SHALL BE PLACED ON A BED OF MATERIAL AT LEAST 6 INCHES IN DEPTH, WHICH MEETS THE REQUIREMENTS OF FOUNDATION BACKFILL. THIS BEDDING SHALL BE COMPACTED AND PROVIDE UNIFORM SUPPORT FOR THE ENTIRE AREA OF THE BASE.

PRECAST REINFORCED CONE TOPS (ECCENTRIC OR CONCENTRIC) OR PRECAST REINFORCED FLAT SLAB TOPS MAY BE USED ON CONCRETE BLOCK STRUCTURES.

ECCENTRIC CONE TOPS MAY BE USED ON ALL STRUCTURES, AND CONCENTRIC CONE TOPS SHALL BE USED ONLY ON STRUCTURES 5 FEET OR LESS IN DEPTH, UNLESS OTHERWISE DIRECTED BY THE ENGINEER.

STEPS MEETING AASHTO M199 AND THE FOLLOWING REQUIREMENTS SHALL BE INSTALLED IN ALL STRUCTURES OVER 5 FEET IN DEPTH: 16 INCH C-C MAXIMUM SPACING; PROJECT A MINIMUM CLEAR DISTANCE OF 4 INCHES FROM THE WALL AT THE POINT OF EMBEDMENT; MINIMUM LENGTH OF 10 INCHES; MINIMUM WALL EMBEDMENT OF 3 INCHES. FERROUS METAL STEPS NOT PAINTED OR TREATED TO RESIST CORROSION SHALL HAVE A MINIMUM CROSS SECTIONAL DIMENSION OF 1 INCH.

STEPS OF APPROVED POLYPROPYLENE PLASTIC COATED REINFORCEMENT BAR ARE ACCEPTABLE. REINFORCING BAR MUST BE A MINIMUM OF ½" AND MEET THE REQUIREMENTS OF ASTM A615.

CERTIFICATION SHALL BE PROVIDED THAT INSTALLED STEPS WHEN TESTED IN ACCORDANCE WITH SECTION 10 OF AASHTO T280 CAN WITHSTAND A VERTICAL LOAD OF 800 LBS. AND A HORIZONTAL LOAD OF 400 LBS.

ALL BAR STEEL REINFORCEMENT SHALL BE EMBEDDED 2 INCHES CLEAR UNLESS OTHERWISE SHOWN OR NOTED.

CONCRETE BLOCK WILL NOT BE PERMITED FOR STRUCTURES GREATER THAN 4 FEET IN DIAMETER.

PRECAST REINFORCED RISERS SHALL HAVE A TONGUE AND GROOVE JOINT WITH TONGUE UP OR DOWN.

ALL PRECAST MANHOLE UNITS SHALL CONFORM TO THE PERTINENT REQUIREMENTS OF AASHTO DESIGNATION M 199.

4" OVERHANGING BASES ARE REQUIRED FOR ALL CONCRETE BLOCK INSTALLATIONS. 4" OVERHANG IS REQUIRED WHEN SEPARATE PRECAST BASE IS PROVIDED. OVERHANG IS NOT REQUIRED ON PRECAST STRUCTURES WITH AN INTEGRAL OR MONOLITHIC BASE.

FOR ADDITIONAL CONFIGURATIONS, MAINTAIN A MINIMUM OF 12 INCHES AS MEASURED FROM THE INSIDE OF THE STRUCTURE WALL BETWEEN THE OUTSIDE PIPE WALLS OF ADJACENT PIPES. SEE DETAIL "C".

① MINIMUM WALL THICKNESS SHALL BE 4 INCHES FOR 3-FT, 5 INCHES FOR 4-FT, 6 INCHES FOR 5-FT, 7 INCHES FOR 6-FT, 8 INCHES FOR 7-FT AND 9 INCHES FOR 8-FT DIAMETER PRECAST MANHOLES.

② FOR PRECAST MANHOLES PROVIDE REINFORCING STEEL IN ACCORDANCE TO AASHTO M199.

③ PRECAST FLAT SLAB TOPS AND BASES WITH A DIAMETER OF 48" AND LESS SHALL HAVE A MINIMUM THICKNESS OF 6". PRECAST FLAT SLAB TOPS AND BASES WITH A DIAMETER LARGER THAN 48" SHALL HAVE A MINIMUM THICKNESS OF 8".

MANHOLE COVER OPENING MATRIX

MANHOLE COVER TYPE	C	ALL J'S	K	L	M
OPENING SIZE (FT)					
2 DIA.	X	X		X	
3 DIA.			X		X

PIPE MATRIX

MANHOLE SIZE	MAXIMUM INSIDE PIPE DIAMETER FOR TWO PIPES	
	180° SEPARATION (IN)	90° SEPARATION (IN)
3-FT	15	12
4-FT	24	18
5-FT	36	24
6-FT	42	36
7-FT	48	36
8-FT	60	42

MANHOLES 3-FT, 4-FT, 5-FT, 6-FT, 7-FT AND 8-FT DIAMETER

MANHOLES 3-FT, 4-FT, 5-FT, 6-FT, 7-FT AND 8-FT DIAMETER

STATE OF WISCONSIN
DEPARTMENT OF TRANSPORTATION

APPROVED
Sept., 2016 — DATE
/S/ Rodney Taylor — ROADWAY STANDARDS DEVELOPMENT UNIT SUPERV
FHWA

6

6

S.D.D. 8 B 9-2

S.D.D. 8 B 9-2

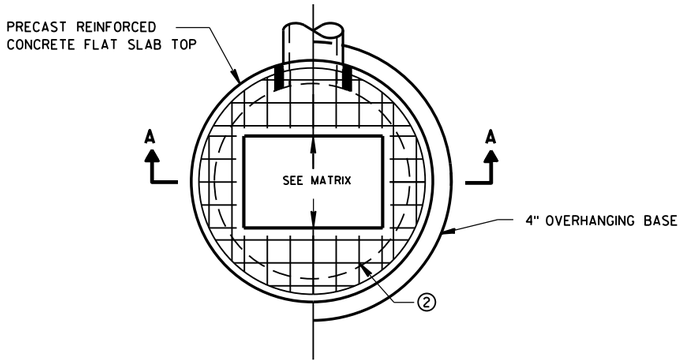

PLAN VIEW RECTANGULAR OPENING

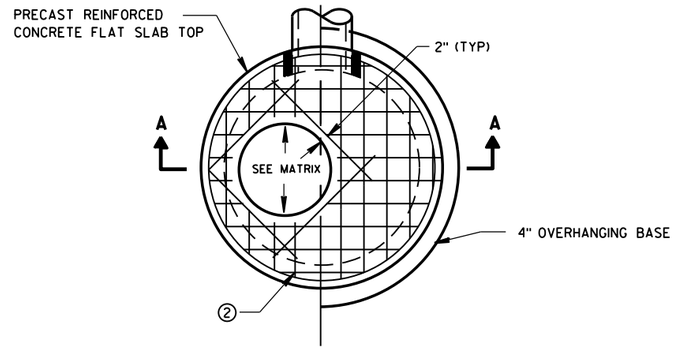

PLAN VIEW CIRCULAR OPENING

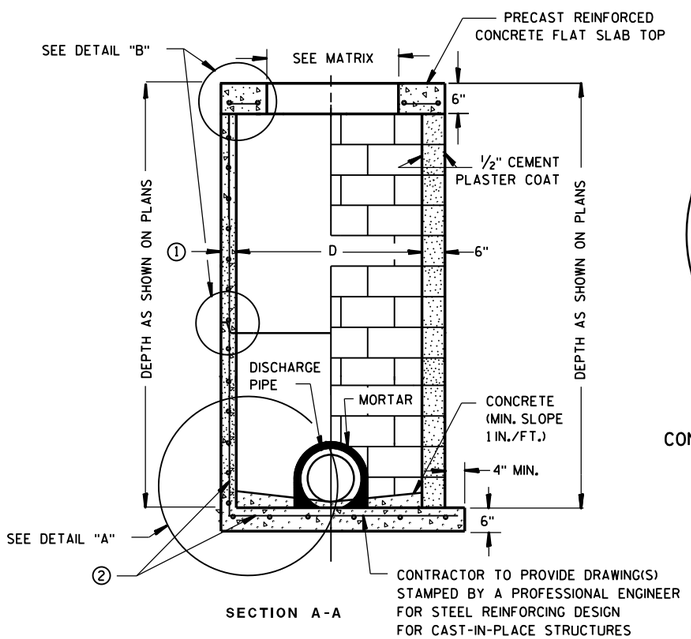

SECTION A-A

PRECAST REINFORCED CONCRETE WITH MONOLITHIC BASE

CONCRETE BLOCK WITH CAST-IN-PLACE OR PRECAST REINFORCED CONCRETE BASE ②

CIRCULAR INLETS W/ FLAT TOP

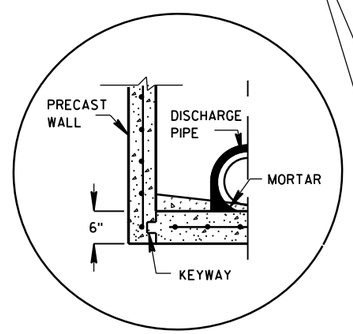

PRECAST REINFORCED CONCRETE WITH INTEGRAL BASE OPTION

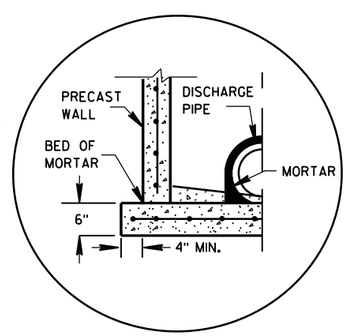

SEPARATE PRECAST REINFORCED CONCRETE BASE OPTION

DETAIL "A"

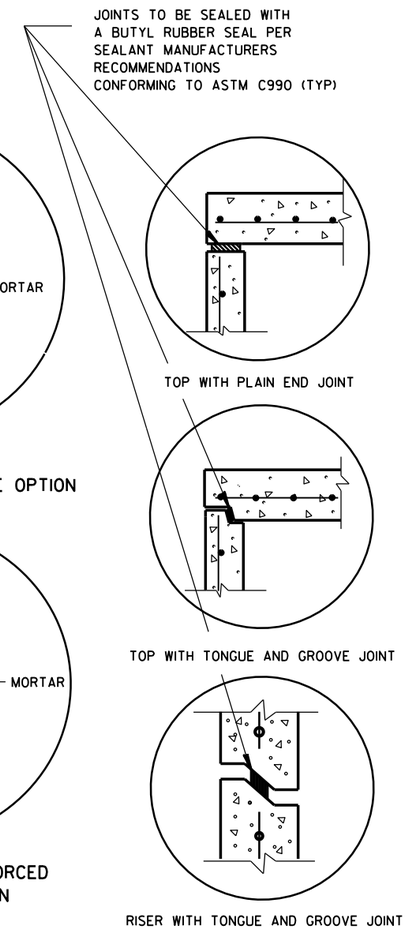

DETAIL "B"

GENERAL NOTES

DETAILS OF CONSTRUCTION, MATERIALS AND WORKMANSHIP NOT SHOWN ON THIS DRAWING SHALL CONFORM TO THE PERTINENT REQUIREMENTS OF THE STANDARD SPECIFICATIONS AND THE APPLICABLE SPECIAL PROVISIONS.

UNLESS OTHERWISE AUTHORIZED IN WRITING BY THE ENGINEER, THE CONTRACTOR SHALL NOT ORDER AND DELIVER PRECAST INLET UNITS REQUIRED FOR THE PROJECT UNTIL A LIST OF SIZES IS FURNISHED BY THE ENGINEER.

DETAILED DRAWINGS FOR PROPOSED ALTERNATE DESIGNS FOR UNDERGROUND DRAINAGE STRUCTURES SHALL BE SUBMITTED TO THE ENGINEER FOR APPROVAL PROVIDING THAT SUCH ALTERNATE DESIGNS MAKE PROVISION FOR EQUIVALENT CAPACITY AND STRENGTH.

ALL DRAINAGE STRUCTURES ARE DESIGNATED ON THE PLANS AS "MANHOLES 3X3-L", "CATCH BASINS 4-B", "INLETS 2X3-H", ETC. THE FIRST NUMBERS DESIGNATE THE SIZE OF THE STRUCTURE, AND THE FOLLOWING LETTER DESIGNATES THE TYPE OF COVER TO BE USED TO COMPRISE THE COMPLETE UNIT.

BASES SHALL BE PLACED ON A BED OF MATERIAL AT LEAST 6 INCHES IN DEPTH, WHICH MEETS THE REQUIREMENTS OF FOUNDATION BACKFILL. THIS BEDDING SHALL BE COMPACTED AND PROVIDE UNIFORM SUPPORT FOR THE ENTIRE AREA OF THE BASE.

ALL BAR STEEL REINFORCEMENT SHALL BE EMBEDDED 2 INCHES CLEAR UNLESS OTHERWISE SHOWN OR NOTED.

ALL PRECAST INLET UNITS SHALL CONFORM TO THE PERTINENT REQUIREMENTS OF AASHTO DESIGNATION M199.

PRECAST REINFORCED RISERS SHALL HAVE A TONGUE AND GROOVE JOINT WITH TONGUE UP OR DOWN.

4" OVERHANGING BASES ARE REQUIRED FOR ALL CONCRETE BLOCK INSTALLATIONS. 4" OVERHANG IS REQUIRED WHEN SEPARATE PRECAST BASE IS PROVIDED. OVERHANG IS NOT REQUIRED ON PRECAST STRUCTURES WITH AN INTEGRAL OR MONOLITHIC BASE.

FOR ADDITIONAL CONFIGURATIONS, MAINTAIN A MINIMUM OF 12 INCHES AS MEASURED FROM THE INSIDE OF THE STRUCTURE WALL BETWEEN THE OUTSIDE PIPE WALLS OF ADJACENT PIPES. SEE DETAIL "C".

① MINIMUM WALL THICKNESS SHALL BE 4-IN FOR 3-FT DIAMETER AND 5-IN FOR 4-FT DIAMETER PRECAST INLETS.

② FOR PRECAST CATCH BASINS PROVIDE REINFORCING STEEL IN ACCORDANCE TO AASHTO M199.

INLET COVER OPENING MATRIX

	INLET COVER TYPE	ALL A'S	ALL B'S	BW	C	F	ALL H'S	S	T	V	WM	Z
INLET SIZE	OPENING SIZE (FT)											
3-FT	2 DIA.				X							X
	2X2	X	X					X		X		
4-FT	2 DIA.				X							X
	2X2	X	X					X		X		
	2X2.5			X				X	X	X	X	
	2X3						X					
	2.5X3					X						

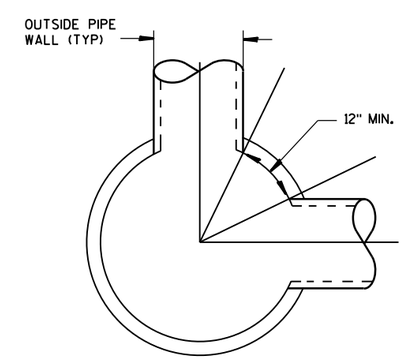

DETAIL "C"

PIPE MATRIX

INLET SIZE	MAXIMUM INSIDE PIPE DIAMETER FOR TWO PIPES	
	180° SEPARATION (IN)	90° SEPARATION (IN)
3-FT	15	12
4-FT	24	18

INLETS 3-FT AND 4-FT DIAMETER

INLETS 3-FT
AND 4-FT DIAMETER

STATE OF WISCONSIN
DEPARTMENT OF TRANSPORTATION

APPROVED
Sept., 2016 — /S/ Rodney Taylor
DATE — ROADWAY STANDARDS DEVELOPMENT UNIT SUPERVISOR
FHWA

6

S.D.D. 8 C 6-2

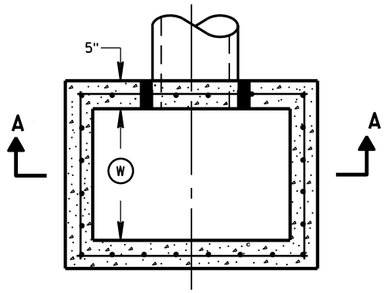

PLAN VIEW

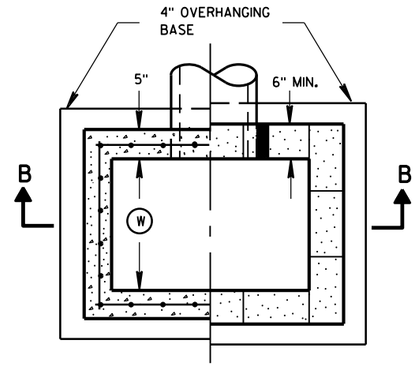

PLAN VIEW

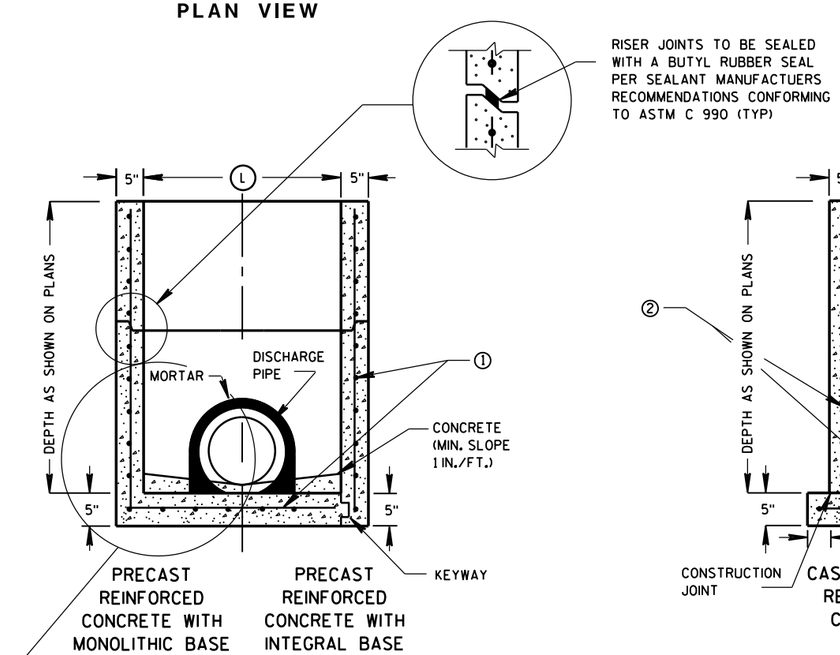

SECTION A-A

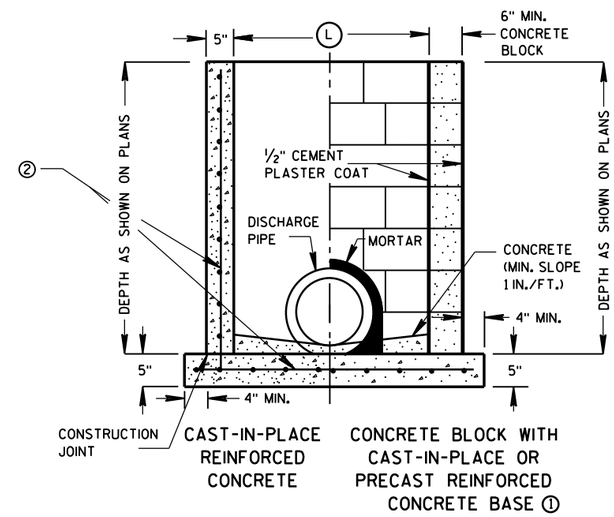

SECTION B-B

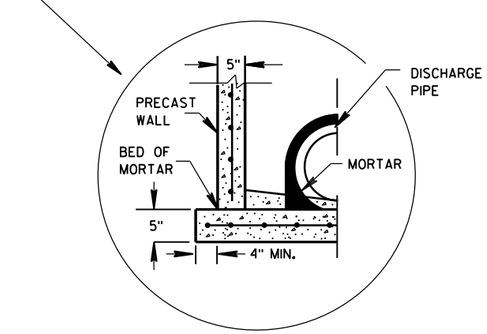

SEPARATE PRECAST REINFORCED CONCRETE BASE OPTION

GENERAL NOTES

DETAILS OF CONSTRUCTION, MATERIALS AND WORKMANSHIP NOT SHOWN ON THIS DRAWING SHALL CONFORM TO THE PERTINENT REQUIREMENTS OF THE STANDARD SPECIFICATIONS AND THE APPLICABLE SPECIAL PROVISIONS.

UNLESS OTHERWISE AUTHORIZED IN WRITING BY THE ENGINEER, THE CONTRACTOR SHALL NOT ORDER AND DELIVER PRECAST INLET UNITS REQUIRED FOR THE PROJECT UNTIL A LIST OF SIZES IS FURNISHED BY THE ENGINEER.

DETAILED DRAWINGS FOR PROPOSED ALTERNATE DESIGNS FOR UNDERGROUND DRAINAGE STRUCTURES SHALL BE SUBMITTED TO THE ENGINEER FOR APPROVAL PROVIDING THAT SUCH ALTERNATE DESIGNS MAKE PROVISION FOR EQUIVALENT CAPACITY AND STRENGTH.

ALL PRECAST INLET UNITS SHALL CONFORM TO THE PERTINENT REQUIREMENTS OF ASTM C 913.

ALL DRAINAGE STRUCTURES ARE DESIGNATED ON THE PLANS AS "MANHOLES 3X3-L", "CATCH BASINS 4-B", "INLETS 2X3-H", ETC. THE FIRST NUMBERS DESIGNATES THE SIZE OF THE STRUCTURE, AND THE FOLLOWING LETTER DESIGNATES THE TYPE OF COVER TO BE USED TO COMPRISE THE COMPLETE UNIT.

BASES SHALL BE PLACED ON A BED OF MATERIAL AT LEAST 6 INCHES IN DEPTH, WHICH MEETS THE REQUIREMENTS OF FOUNDATION BACKFILL. THIS BEDDING SHALL BE COMPACTED AND PROVIDE UNIFORM SUPPORT FOR THE ENTIRE AREA OF THE BASE.

ALL BAR STEEL REINFORCEMENT SHALL BE EMBEDDED 2 INCHES CLEAR UNLESS OTHERWISE SHOWN OR NOTED.

PRECAST REINFORCED RISERS SHALL HAVE A TONGUE AND GROOVE JOINT WITH TONGUE UP OR DOWN.

4" OVERHANGING BASES ARE REQUIRED FOR CAST-IN-PLACE REINFORCED CONCRETE AND CONCRETE BLOCK INSTALLATIONS.
4" OVERHANG IS REQUIRED WHEN SEPARATE PRECAST BASE IS PROVIDED.
OVERHANG IS NOT REQUIRED ON PRECAST STRUCTURES WITH AN INTEGRAL OR MONOLITHIC BASE.

MAXIMUM INSIDE PIPE DIAMETER DETERMINED BY 3 INCH CLEARANCE ON EACH SIDE OF THE OUTSIDE WALL OF THE PIPE. SEE DETAIL "A". ASSUMES PIPE ENTERS PERPENDICULAR TO THE STRUCTURE.

① FOR PRECAST INLETS PROVIDE REINFORCING STEEL IN ACCORDANCE TO ASTM C 913.

② CONTRACTOR TO PROVIDE DRAWING(S) STAMPED BY A PROFESSIONAL ENGINEER FOR STEEL REINFORCING DESIGN FOR CAST-IN-PLACE STRUCTURES.

INLET COVER MATRIX

INLET SIZE		INLET COVER TYPE	ALL A'S	ALL B'S	BW	F	ALL H'S	S	T	V	WM
	WIDTH (W) (FT)	LENGTH (L) (FT)									
2X2-FT	2	2	X	X				X		X	
2X2.5-FT	2	2.5			X			X	X	X	X
2X3-FT	2	3					X				
2.5X3-FT	2.5	3				X					

PIPE MATRIX

INLET SIZE	MAXIMUM INSIDE PIPE DIAMETER	
	WIDTH (IN)	LENGTH (IN)
2X2-FT	12	12
2X2.5-FT	12	18
2X3-FT	12	24
2.5X3-FT	18	24

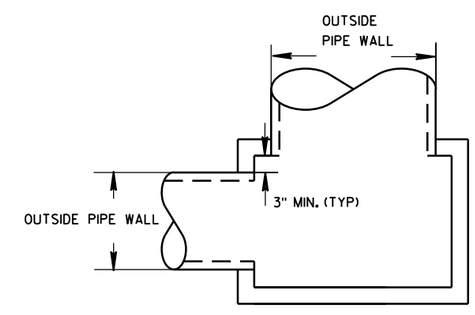

DETAIL "A"

INLETS 2X2-FT, 2X2.5-FT, 2X3-FT AND 2.5X3-FT

INLETS 2X2-FT, 2X2.5-FT, 2X3-FT AND 2.5X3-FT

STATE OF WISCONSIN
DEPARTMENT OF TRANSPORTATION

APPROVED
Sept., 2016 — DATE
/S/ Rodney Taylor
ROADWAY STANDARDS D IT
UNIT SUPERVIS
FHWA

6

6

S.D.D. 8 C 7-2

S.D.D. 8 C 7-2

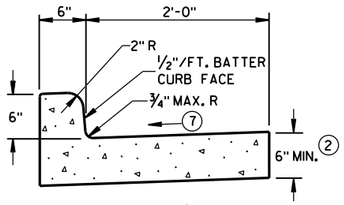

TYPES A(1) & D

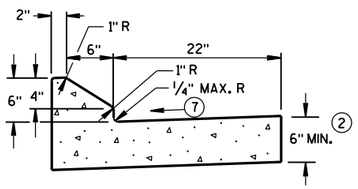

6" SLOPED CURB TYPES G(1) & J

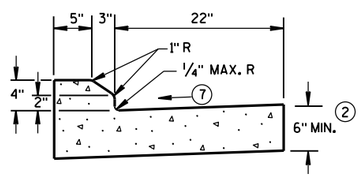

4" SLOPED CURB TYPES G(1) & J

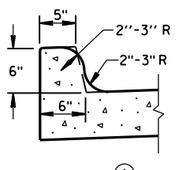

TYPES K(1) & L
(OPTIONAL CURB SHAPE)

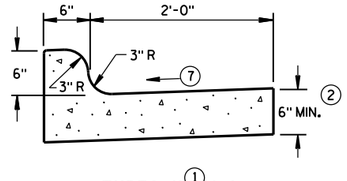

TYPES K(1) & L

CONCRETE CURB & GUTTER 30"

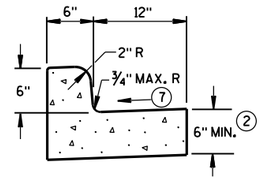

TYPES A(1) & D

CONCRETE CURB & GUTTER 18"

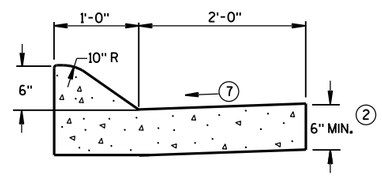

6" SLOPED CURB TYPES A(1) & D

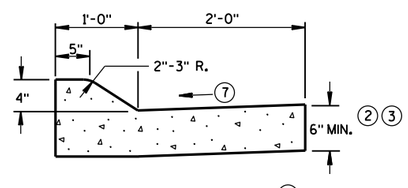

4" SLOPED CURB TYPES A(1) & D

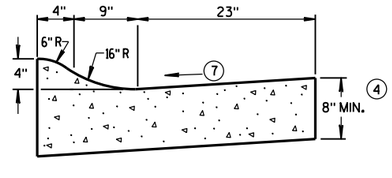

4" SLOPED CURB TYPES R(1) & T(5)

CONCRETE CURB & GUTTER 36"

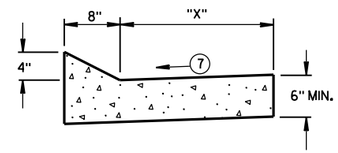

TYPES TBT & TBTT(1)

CONCRETE CURB & GUTTER

TBT & TBTT	"X"
30"	22"
36"	28"

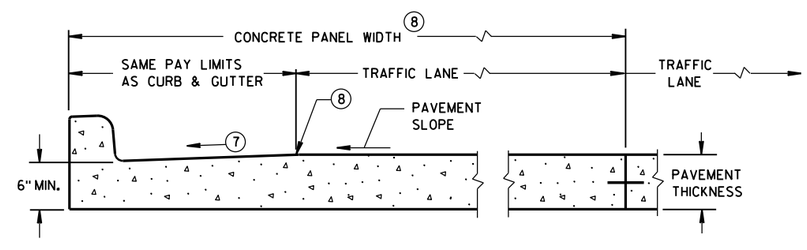

PARTIAL SECTION OF PAVEMENT*
WITH INTEGRAL CURB & GUTTER

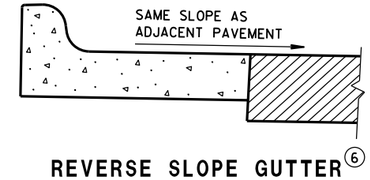

REVERSE SLOPE GUTTER(6)
(TYPICAL FOR ALL CURB & GUTTER TYPES)

GENERAL NOTES

DETAILS OF CONSTRUCTION, MATERIALS AND WORKMANSHIP NOT SHOWN ON THIS DRAWING SHALL CONFORM TO THE PERTINENT REQUIREMENTS OF THE CONTRACT.

PAVEMENT TIES AND TIE BARS SHALL BE EPOXY COATED IN CONFORMANCE WITH SUBSECTION 505.2.6.2 OF THE STANDARD SPECIFICATIONS.

INTEGRAL CURB & GUTTER SHALL CONFORM TO THE DETAILS SHOWN FOR CONCRETE CURB & GUTTER INCLUDING THE TRANSVERSE GUTTER SLOPE.

WHERE THE TRANSVERSE JOINTS IN THE PAVEMENT ARE REQUIRED TO BE SEALED, THE JOINTS IN THE INTEGRAL CURB AND GUTTER SHALL BE SEALED TO THE FACE OF CURB WITH THE SAME TYPE OF SEALANT. THE COST OF FURNISHING AND INSTALLING THIS SEALANT SHALL BE INCIDENTAL TO THE ITEM CONCRETE CURB AND GUTTER.

UNLESS OTHERWISE SHOWN ON THE TYPICAL CROSS SECTIONS, THE BASE AGGREGATE AND COMMON EXCAVATION LIMITS ARE 2'-0" BEHIND THE BACK OF CURBS.

1. TIE BARS ARE REQUIRED FOR CURB AND GUTTER TYPES A, G, K, R AND TBTT.
2. THE BOTTOM OF CURB AND GUTTER MAY BE CONSTRUCTED EITHER LEVEL OR PARALLEL TO THE SLOPE OF THE SUBGRADE OR BASE AGGREGATE PROVIDED A 6" MINIMUM GUTTER THICKNESS IS MAINTAINED.
3. USE 8" MINIMUM GUTTER THICKNESS WHEN USED WITH AN ADJACENT CONCRETE TRUCK APRON PLACED BEHIND BACK OF CURB.
4. THE BOTTOM OF CURB AND GUTTER MAY BE CONSTRUCTED EITHER LEVEL OR PARALLEL TO THE SLOPE OF THE SUBGRADE OR BASE AGGREGATE PROVIDED A 8" MINIMUM GUTTER THICKNESS IS MAINTAINED.
5. THE FACE OF CURB IS 6" FROM THE BACK OF CURB.
6. WHEN REVERSE SLOPE GUTTER IS REQUIRED, THE LOCATION(S) WILL BE SHOWN ELSEWHERE IN THE PLAN.
7. USE 4% GUTTER CROSS SLOPE UNLESS OTHERWISE NOTED IN THE PLANS.
8. INCLUDE LONGITUDINAL JOINT AND TIE BARS ALONG LANE EDGE WHEN CONCRETE PANEL WIDTH EXCEEDS THE MAXIMUM WIDTH PER TABLE BELOW. LONGITUDINAL JOINT(S) ARE NOT ALLOWED WITHIN TRAFFIC LANES AND BIKE LANES. LONGITUDINAL JOINT MAY BE SAWED.

PAVEMENT THICKNESS AND MAXIMUM CONCRETE PANEL WIDTH TABLE

PAVEMENT THICKNESS	MAXIMUM PANEL WIDTH
LESS THAN 10"	12'
10" & ABOVE	15'

* BIKE LANE IS NOT SHOWN.

CONCRETE CURB & GUTTER

STATE OF WISCONSIN
DEPARTMENT OF TRANSPORTATION

6

S.D.D. 8 D 1-20a

GENERAL NOTES

DETAILS OF CONSTRUCTION, MATERIALS AND WORKMANSHIP NOT SHOWN ON THIS DRAWING SHALL CONFORM TO THE PERTINENT REQUIREMENTS OF THE CONTRACT.

PAVEMENT TIES AND TIE BARS SHALL BE EPOXY COATED IN CONFORMANCE WITH SUBSECTION 505.2.6.2 OF THE STANDARD SPECIFICATIONS.

UNLESS OTHERWISE SHOWN ON THE TYPICAL CROSS SECTIONS, THE BASE AGGREGATE AND COMMON EXCAVATION LIMITS ARE 2'-0" BEHIND THE BACK OF CURBS.

(1) TIE BARS ARE REQUIRED FOR CURB AND GUTTER TYPES A, G, K, R AND TBTT.

(2) THE BOTTOM OF CURB AND GUTTER MAY BE CONSTRUCTED EITHER LEVEL OR PARALLEL TO THE SLOPE OF THE SUBGRADE OR BASE AGGREGATE PROVIDED A 6" MINIMUM GUTTER THICKNESS IS MAINTAINED.

(9) REFER TO SDD 8D18 AND SDD 8D19 FOR ADDITIONAL DRIVEWAY ENTRANCE CURB DETAILS.

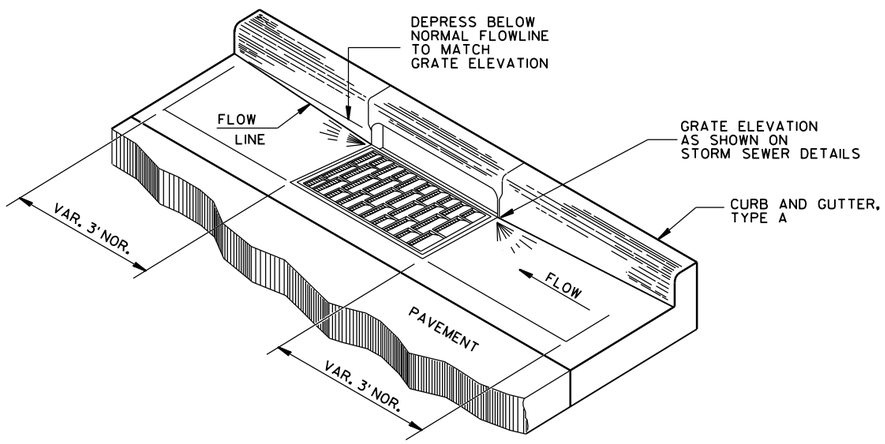

DETAIL OF CURB AND GUTTER AT INLETS

(TYPE H INLET COVER SHOWN)

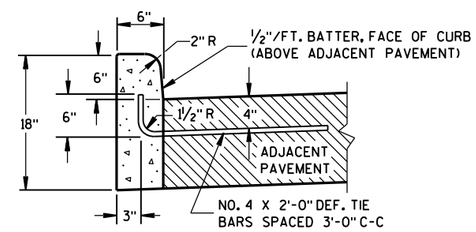

TYPES A (1) & D

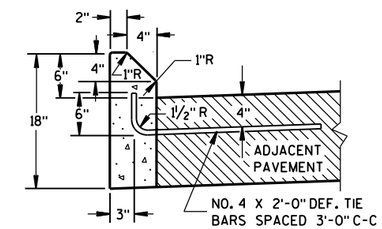

TYPES G (1) & J

CONCRETE CURB

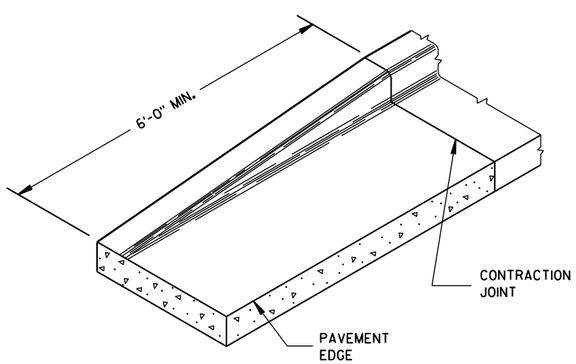

END SECTION CURB & GUTTER

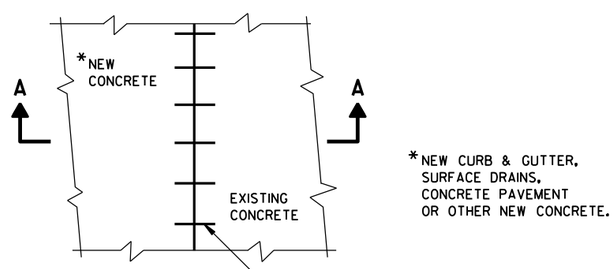

PLAN VIEW

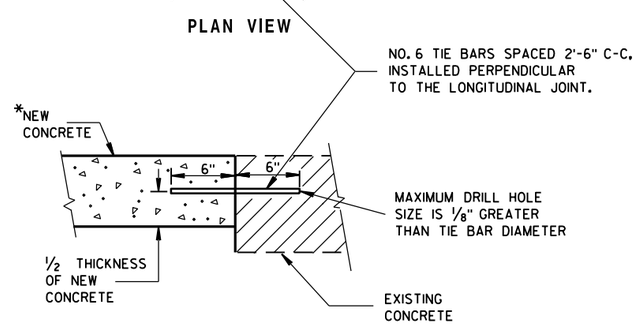

SECTION A-A

TIE BARS DRILLED INTO EXISTING PAVEMENT

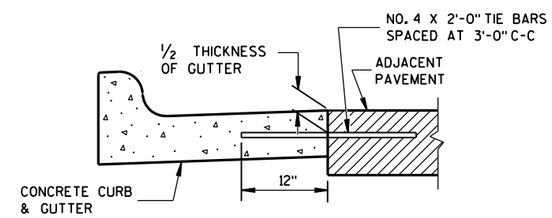

TYPICAL TIE BAR LOCATION (1)

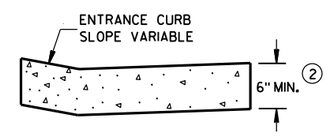

DRIVEWAY ENTRANCE CURB (9)

(WHEN DIRECTED BY THE ENGINEER)

CONCRETE CURB, TIES AND CURB AND GUTTER APPLICATIONS

STATE OF WISCONSIN
DEPARTMENT OF TRANSPORTATION

APPROVED
June, 2017 — DATE
/S/ Rodney Taylor — ROADWAY STANDARDS UNIT SUPERVISOR
ENT
FHWA

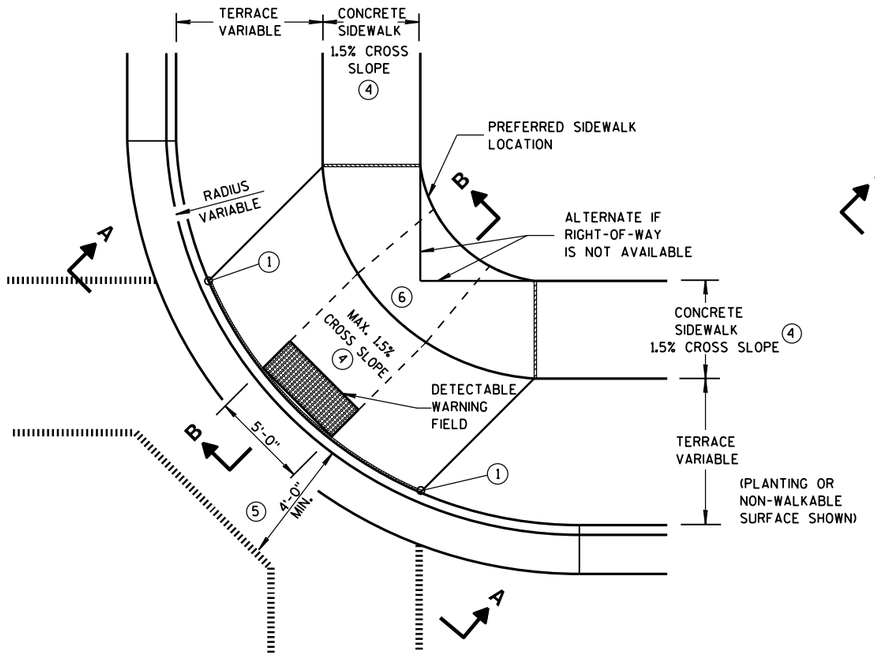

PLAN VIEW

TYPE 1 RAMP

(CENTER OF CORNER RADIUS)

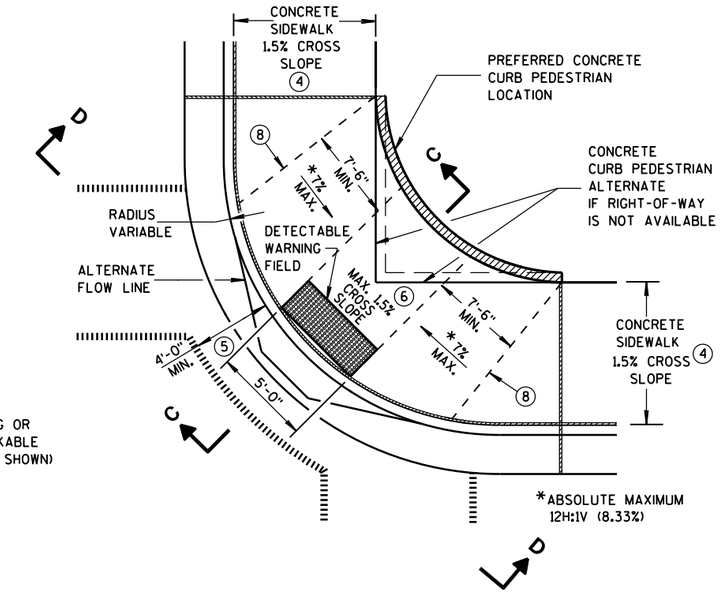

PLAN VIEW

TYPE 1-A RAMP

(NO TERRACE)

GENERAL NOTES

AVOID PLACING DRAINAGE STRUCTURES, JUNCTION BOXES OR OTHER OBSTRUCTIONS IN FRONT OF RAMP ACCESS AREAS.

DETAILS OF CONSTRUCTION, MATERIALS AND WORKMANSHIP NOT SHOWN ON THIS DRAWING SHALL CONFORM TO THE PERTINENT REQUIREMENTS OF THE STANDARD SPECIFICATIONS AND THE APPLICABLE SPECIAL PROVISIONS.

WHEN NECESSARY, THE SIDEWALK ELEVATION MAY BE LOWERED TO MEET THE HIGH POINT ON THE RAMP.

TYPE 1 RAMPS SHALL HAVE A NORMAL SIDEWALK APRON AND CURB ON BOTH SIDES OF RAMP.

DETECTABLE WARNING FIELD SHALL BE MEASURED AND PAID BY THE SQUARE FOOT AS "CURB RAMP DETECTABLE WARNING FIELD". THE CONCRETE PEDESTRIAN CURB, IF NEEDED, SHALL BE MEASURED AND PAID BY THE LINEAL FOOT AS "CONCRETE CURB PEDESTRIAN". CONCRETE SIDEWALK IN THE CURB RAMP AREA SHALL BE MEASURED AND PAID BY THE SQUARE FOOT AS CONCRETE SIDEWALK, INCLUDING THE AREA UNDER THE DETECTABLE WARNING FIELD.

SELECT CURB RAMP DETECTABLE WARNING FIELD MATERIALS AND DEVICES FROM THE DEPARTMENT'S APPROVED MATERIALS LIST. THE COLOR OF THE DETECTABLE WARNING FIELD IS SPECIFIED ELSEWHERE AND IS INCIDENTAL TO THE BID ITEM OF "CURB RAMP DETECTABLE WARNING FIELD".

DETECTABLE WARNING FIELDS THAT ARE INSTALLED AS A GROUP OR SIDE BY SIDE, SHALL BE FROM THE SAME MANUFACTURER.

SURFACE TEXTURE OF THE RAMP SHALL BE OBTAINED BY COARSE BROOMING TRANSVERSE TO THE SLOPE OF THE RAMP.

1. THIS POINT IS AN EXTENSION OF OUTSIDE EDGE OF APPROACHING SIDEWALK WHERE IT MEETS THE BACK OF CONCRETE CURB. POINT LOCATION MAY BE ADJUSTED TO ALIGN WITH BEGINNING OF FULL-HEIGHT CURB IF THIS DISTANCE IS SHORT.
2. GRADE CHANGE BETWEEN GUTTER FLAG SLOPE AND THE CURB RAMP SLOPE SHALL NOT EXCEED 11%. MAXIMUM GUTTER FLAG SLOPE IS 4%. PROVIDE LONGITUDINAL DRAINAGE AROUND CURB AND AWAY FROM CURB RAMP. NO VERTICAL LIPS OR DISCONTINUITIES GREATER THAN 1/4-INCH ARE ALLOWED. SLOPE OF CURB HEAD OPENING SHALL MATCH THE RAMP SLOPE, MINIMALLY 1.5% AND NOT TO EXCEED 7%. WHEN ADJACENT TO 1.5% LANDING, CONSTRUCT CURB HEAD OPENING AT 1.5% IN THE DIRECTION OF PEDESTRIAN TRAVEL.
3. ABSOLUTE MAXIMUM 12H:1V (8.33%) CURB RAMP SLOPE IS ALLOWABLE WITH FLATTENED GUTTER FLAG SLOPE AND NOT TO EXCEED 11% GRADE CHANGE.
4. ±0.5% CONSTRUCTION TOLERANCE IN SIDEWALK CROSS SLOPE. THE SIDEWALK CROSS SLOPE SHALL NOT EXCEED 2% WITHOUT PRIOR APPROVAL FROM THE ENGINEER.
5. PROVIDE A LEVEL LANDING IN THE STREET AND GUTTER AREA. (2% MAXIMUM SLOPE IN ANY DIRECTION). WHEN THE GUTTER SLOPE EXCEEDS 2%, CONSTRUCT THE LEVEL LANDING IN THE STREET AREA.
6. PROVIDE A LEVEL LANDING (MAXIMUM 2% SLOPE) IN ANY DIRECTION OF PEDESTRIAN TRAVEL. STANDARD LANDING SIZE IS 5 FEET X 5 FEET.
8. **PROVIDE GRADE BREAK PERPENDICULAR TO DIRECTION OF WHEELCHAIR TRAVEL.**

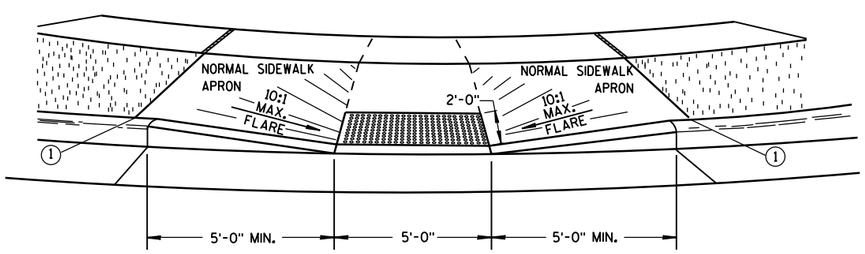

VIEW A-A

** WIDTH SHOWN ELSEWHERE IN THE PLANS

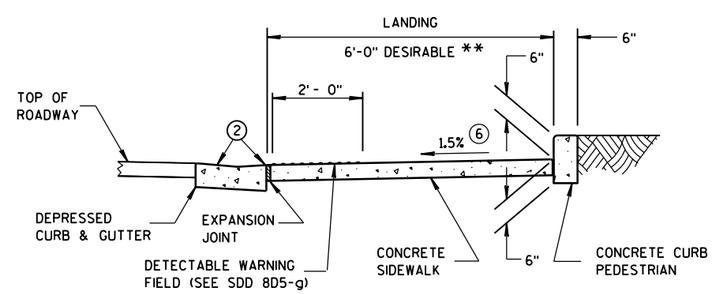

SECTION C-C

LEGEND

- ½" EXPANSION JOINT-SIDEWALK
- CONTRACTION JOINT FIELD LOCATED
- PAVEMENT MARKING CROSSWALK (WHITE)
- ALTERNATIVE LAYOUT

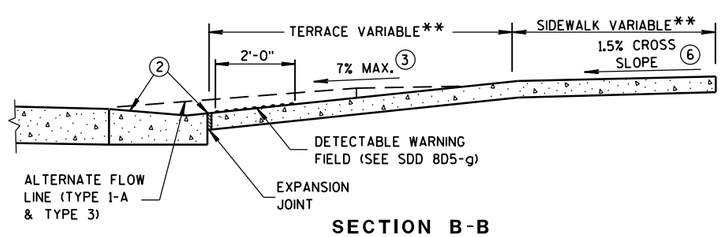

SECTION B-B

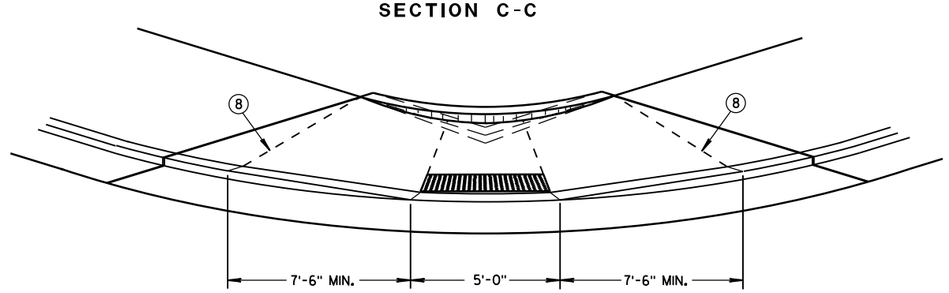

VIEW D-D

CURB RAMPS
TYPES 1 AND 1-A

STATE OF WISCONSIN
DEPARTMENT OF TRANSPORTATION

6

6

S.D.D. 8 D 5-19a

S.D.D. 8 D 5-19a

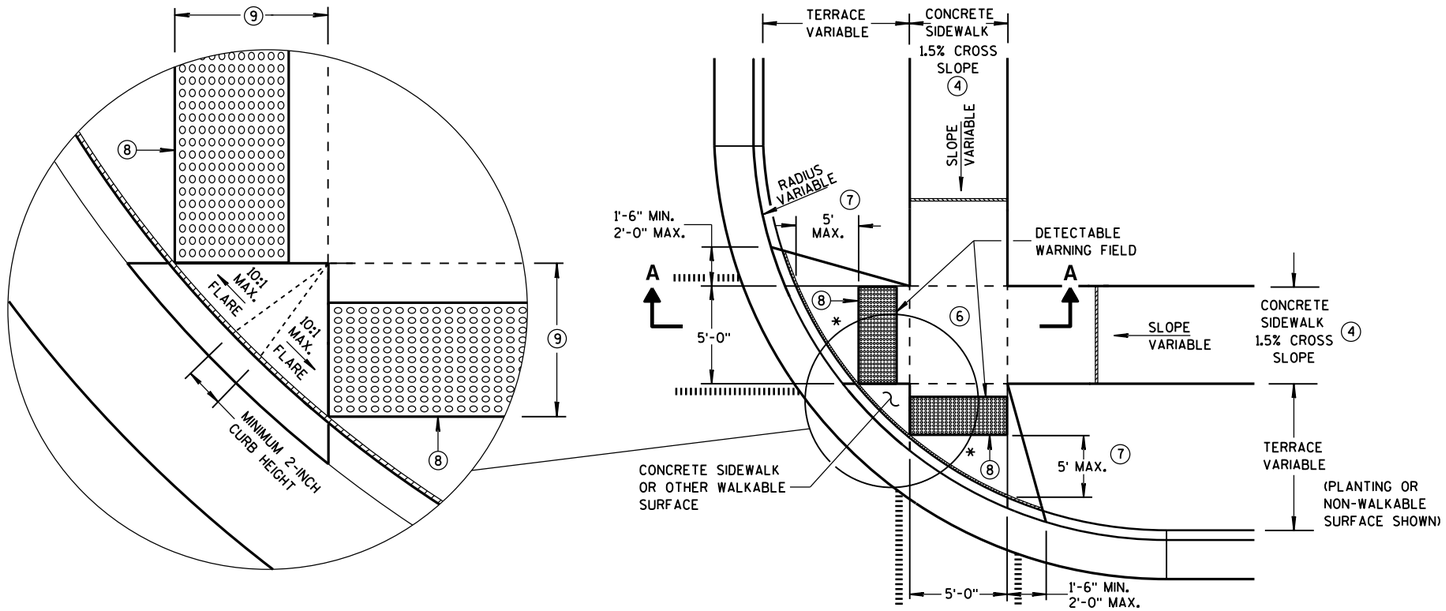

PLAN VIEW
TYPE 2 RAMP
(ON LINE WITH SIDEWALK)

* MAXIMUM 2.0% SLOPE IN ALL DIRECTIONS IN FRONT OF GRADE BREAK

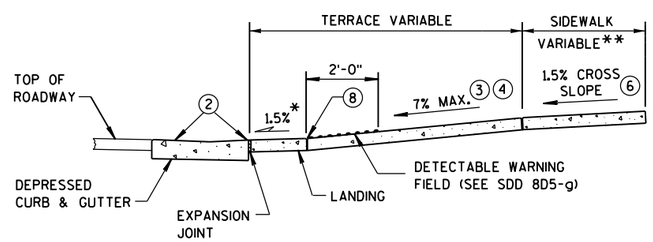

SECTION A-A

** WIDTH SHOWN ELSEWHERE IN THE PLANS

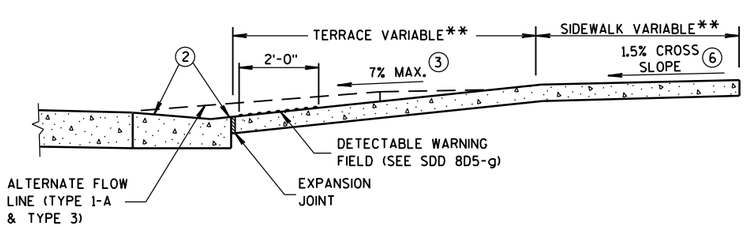

SECTION B-B

GENERAL NOTES

AVOID PLACING DRAINAGE STRUCTURES, JUNCTION BOXES OR OTHER OBSTRUCTIONS IN FRONT OF RAMP ACCESS AREAS.

DETECTABLE WARNING FIELDS THAT ARE INSTALLED AS A GROUP OR SIDE BY SIDE, SHALL BE FROM THE SAME MANUFACTURER.

(2) GRADE CHANGE BETWEEN GUTTER FLAG SLOPE AND THE CURB RAMP SLOPE SHALL NOT EXCEED 11%. MAXIMUM GUTTER FLAG SLOPE IS 4%. PROVIDE LONGITUDINAL DRAINAGE AROUND CURB AND AWAY FROM CURB RAMP. NO VERTICAL LIPS OR DISCONTINUITIES GREATER THAN 1/4-INCH ARE ALLOWED. SLOPE OF CURB HEAD OPENING SHALL MATCH THE RAMP SLOPE, MINIMALLY 1.5% AND NOT TO EXCEED 7%. WHEN ADJACENT TO 1.5% LANDING, CONSTRUCT CURB HEAD OPENING AT 1.5% IN THE DIRECTION OF PEDESTRIAN TRAVEL.

(3) ABSOLUTE MAXIMUM 12H:1V (8.33%) CURB RAMP SLOPE IS ALLOWABLE WITH FLATTENED GUTTER FLAG SLOPE AND NOT TO EXCEED 11% GRADE CHANGE.

(4) ±0.5% CONSTRUCTION TOLERANCE IN SIDEWALK CROSS SLOPE. THE SIDEWALK CROSS SLOPE SHALL NOT EXCEED 2% WITHOUT PRIOR APPROVAL FROM THE ENGINEER.

(6) PROVIDE A LEVEL LANDING (MAXIMUM 2% SLOPE) IN ANY DIRECTION OF PEDESTRIAN TRAVEL. STANDARD LANDING SIZE IS 5 FEET X 5 FEET.

(7) WHEN THIS GRADE BREAK DISTANCE EXCEEDS 5 FEET, USE RADIAL DETECTABLE WARNING FIELD PER SDD 8D5-f.

(8) PROVIDE GRADE BREAK PERPENDICULAR TO DIRECTION OF WHEELCHAIR TRAVEL.

(9) WHEN THIS DISTANCE IS LESS THAN 6'-0", IT MAY BE DIFFICULT TO ACHIEVE A 7% SLOPE OR FLATTER ALONG THE RAMP. REDUCE CURB HEIGHT IN TRIANGLE AREA TO ACHIEVE 7% SLOPE OR FLATTER ON RAMP. CONSTRUCT 2-INCH MINIMUM CURB HEIGHT BETWEEN 10:1 FLARES.

LEGEND

- 1/2" EXPANSION JOINT-SIDEWALK
- CONTRACTION JOINT FIELD LOCATED
- PAVEMENT MARKING CROSSWALK (WHITE)
- ALTERNATIVE LAYOUT

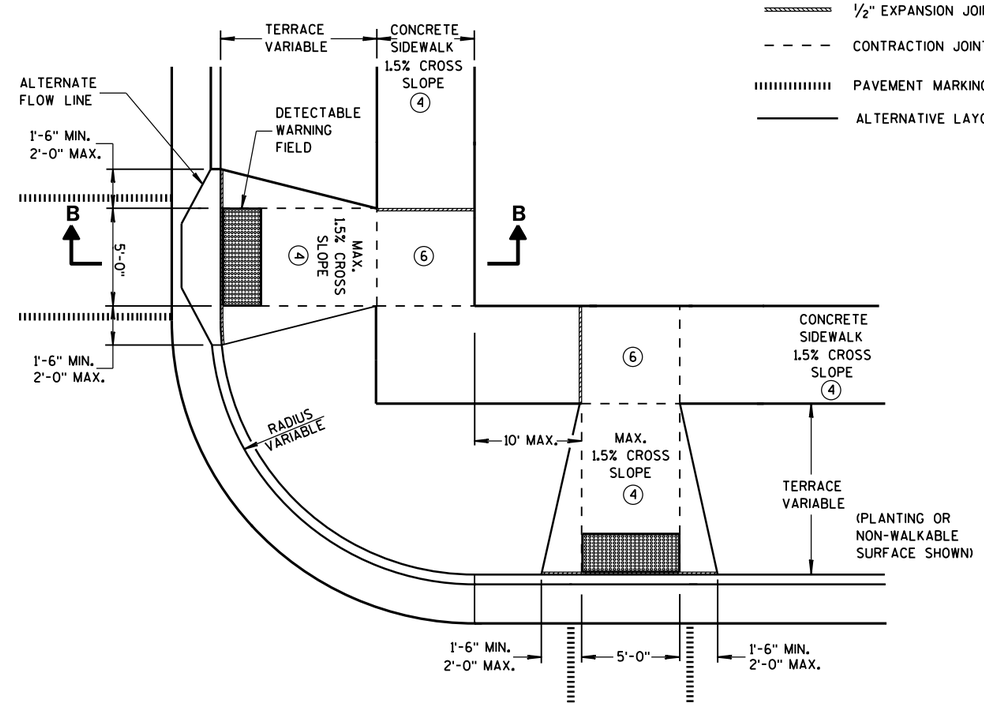

PLAN VIEW
TYPE 3 RAMP
(OUTSIDE OF CROSSWALK AREA)

CURB RAMPS
TYPES 2 AND 3

STATE OF WISCONSIN
DEPARTMENT OF TRANSPO

6

S.D.D. 8 D 5-19b

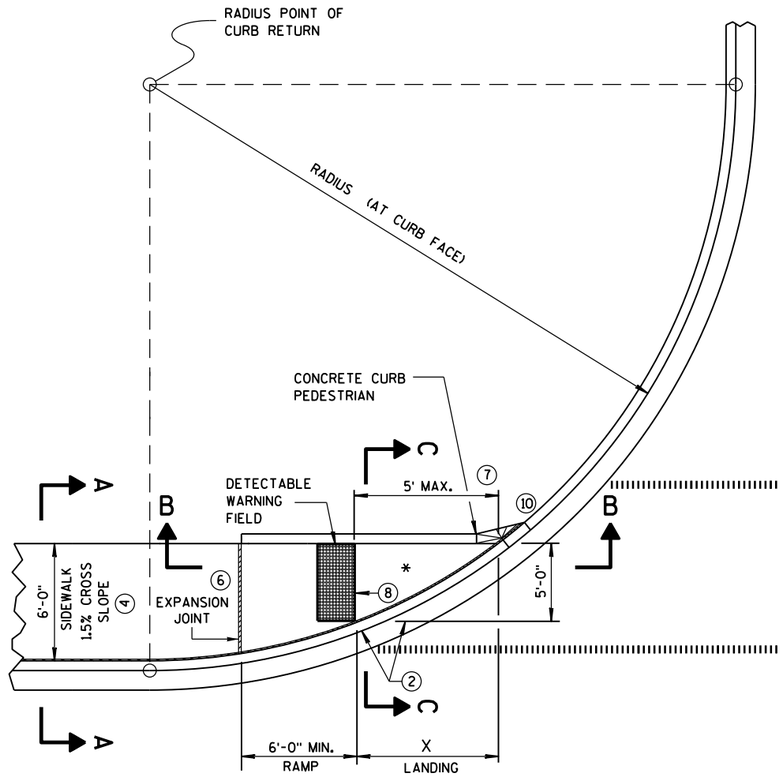

CURB RAMP TYPE 4A
PLAN VIEW

RADIUS (AT CURB FACE)	X
10 FEET	4'-7"
15 FEET	6'-5½"

INTERMEDIATE RADII CAN BE INTERPOLATED

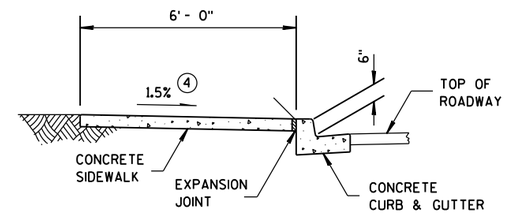

SECTION A-A FOR TYPE 4A

GENERAL NOTES

AVOID PLACING DRAINAGE STRUCTURES, JUNCTION BOXES OR OTHER OBSTRUCTIONS IN FRONT OF RAMP ACCESS AREAS.

DETECTABLE WARNING FIELDS THAT ARE INSTALLED AS A GROUP OR SIDE BY SIDE, SHALL BE FROM THE SAME MANUFACTURER.

(2) GRADE CHANGE BETWEEN GUTTER FLAG SLOPE AND THE CURB RAMP SLOPE SHALL NOT EXCEED 11%. MAXIMUM GUTTER FLAG SLOPE IS 4%. PROVIDE LONGITUDINAL DRAINAGE AROUND CURB AND AWAY FROM CURB RAMP. NO VERTICAL LIPS OR DISCONTINUITIES GREATER THAN ¼-INCH ARE ALLOWED. SLOPE OF CURB HEAD OPENING SHALL MATCH THE RAMP SLOPE, MINIMALLY 1.5% AND NOT TO EXCEED 7%. WHEN ADJACENT TO 1.5% LANDING, CONSTRUCT CURB HEAD OPENING AT 1.5% IN THE DIRECTION OF PEDESTRIAN TRAVEL.

(3) ABSOLUTE MAXIMUM 12H:1V (8.33%) CURB RAMP SLOPE IS ALLOWABLE WITH FLATTENED GUTTER FLAG SLOPE AND NOT TO EXCEED 11% GRADE CHANGE.

(4) ±0.5% CONSTRUCTION TOLERANCE IN SIDEWALK CROSS SLOPE. THE SIDEWALK CROSS SLOPE SHALL NOT EXCEED 2% WITHOUT PRIOR APPROVAL FROM THE ENGINEER.

(6) PROVIDE A LEVEL LANDING (MAXIMUM 2% SLOPE) IN ANY DIRECTION OF PEDESTRIAN TRAVEL. STANDARD LANDING SIZE IS 5 FEET X 5 FEET.

(7) WHEN THIS GRADE BREAK DISTANCE EXCEEDS 5 FEET, USE RADIAL DETECTABLE WARNING FIELD PER SDD 8D5-f.

(8) PROVIDE GRADE BREAK PERPENDICULAR TO DIRECTION OF WHEELCHAIR TRAVEL.

(10) INSTALL TRANSITION NOSE. (INCIDENTAL TO OTHER PAY ITEMS). DO NOT MARK TRANSITION NOSE.

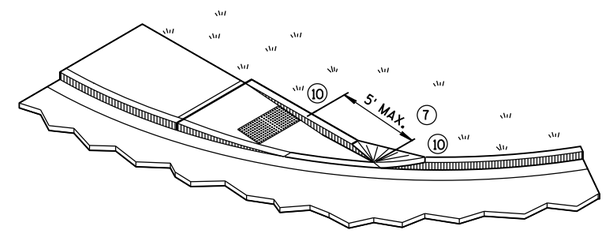

ISOMETRIC VIEW FOR TYPE 4A

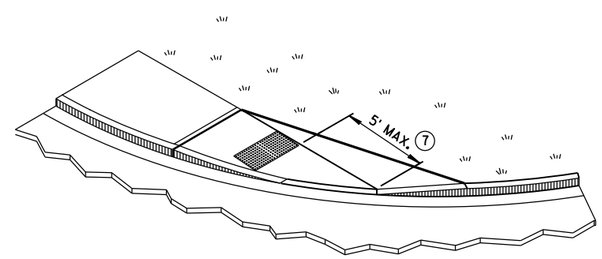

ISOMETRIC VIEW FOR TYPE 4A1

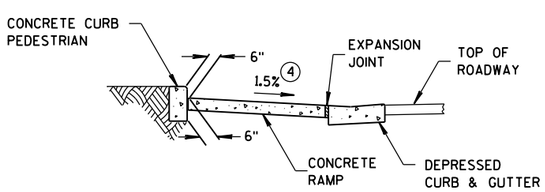

SECTION C-C FOR TYPE 4A

* MAXIMUM 2.0% SLOPE IN ALL DIRECTIONS IN FRONT OF GRADE BREAK

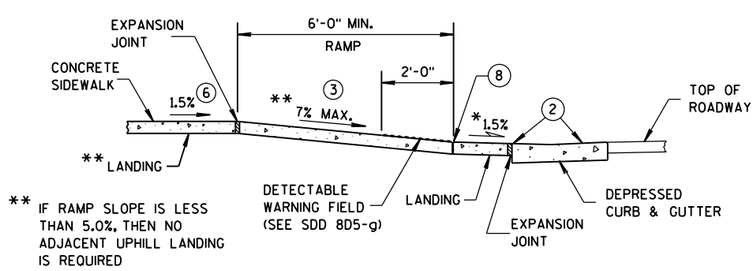

** IF RAMP SLOPE IS LESS THAN 5.0%, THEN NO ADJACENT UPHILL LANDING IS REQUIRED

SECTION B-B FOR TYPE 4A

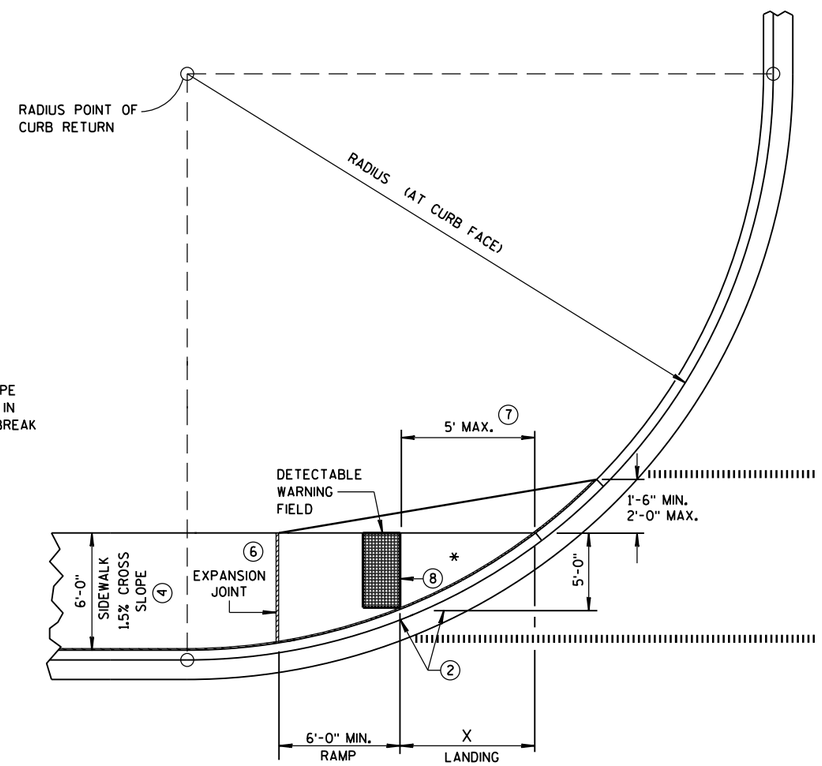

CURB RAMP TYPE 4A1
PLAN VIEW

LEGEND

½" EXPANSION JOINT-SIDEWALK

CONTRACTION JOINT FIELD LOCATED

PAVEMENT MARKING CROSSWALK (WHITE)

CURB RAMPS
TYPES 4A AND 4A1

STATE OF WISCONSIN
DEPARTMENT OF TRANSPO

6

S.D.D. 8 D 5-19c

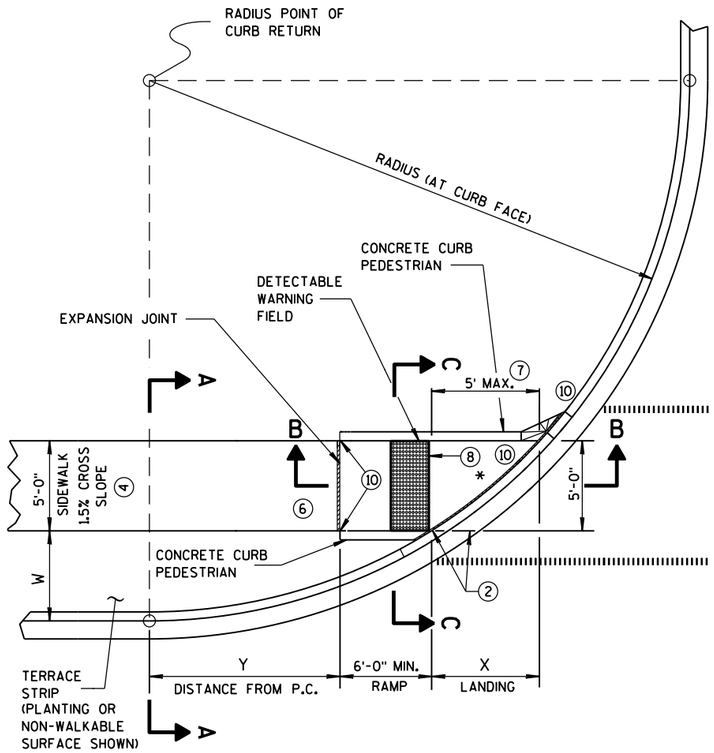

CURB RAMP TYPE 4B
PLAN VIEW

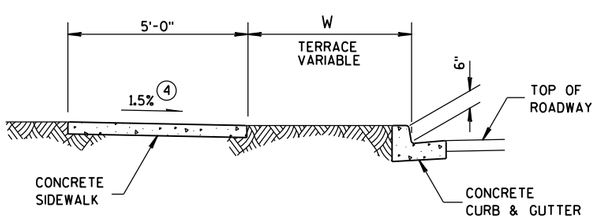

SECTION A-A FOR TYPE 4B

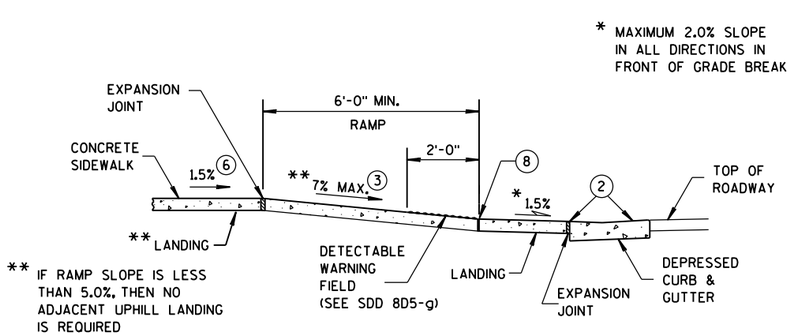

SECTION B-B FOR TYPE 4B

RADIUS (AT CURB FACE)	W = 3' - 0"		W = 4' - 0"		W = 5' - 0"		W = 6' - 0"		W = 7' - 0"		W = 8' - 0"		W = 9' - 0"		W = 10' - 0"	
	X	Y	X	Y	X	Y	X	Y	X	Y	X	Y	X	Y	X	Y
10 FEET	2'-10¼"	0'-5"	2'-1"	1'-4½"	1'-5"	2'-1"	0'-10"	2'-7½"	0'-3¼"	3'-0¼"						
15 FEET	4'-6¾"	2'-1¾"	3'-9"	3'-5¼"	3'-1¼"	4'-6"	2'-6¾"	5'-4½"	2'-1"	6'-1"	1'-8"	6'-8½"	1'-3¼"	7'-2½"	0'-10¾"	7'-7¼"
20 FEET	5'-9¾"	3'-6½"	4'-11½"	5'-1¾"	4'-3¼"	6'-5½"	3'-8¾"	7'-7"	3'-3"	8'-6½"	2'-10"	9'-4½"	2'-5½"	10'-1¼"	2'-1¼"	10'-9"
30 FEET			6'-9¼"	7'-11¼"	6'-0¼"	9'-8"	5'-5"	11'-1¾"	4'-10¾"	12'-5¾"	4'-5½"	13'-7¾"	4'-0¾"	14'-8½"	3'-8½"	15'-8¼"
40 FEET									6'-1¾"	15'-8½"	5'-8"	17'-2"	5'-3"	18'-5¾"	4'-10¾"	19'-8¼"
50 FEET															5'-10¼"	23'-2"

INTERMEDIATE RADII CAN BE INTERPOLATED
DIMENSION "Y" IS CALCULATED BASED ON 6'-0" RAMP LENGTH
DIMENSION "X" IS CALCULATED BASED ON 5'-0" SIDEWALK WIDTH

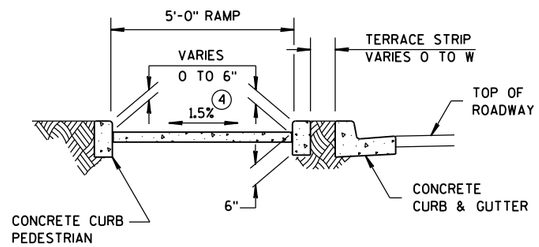

SECTION C-C FOR TYPE 4B

GENERAL NOTES

AVOID PLACING DRAINAGE STRUCTURES, JUNCTION BOXES OR OTHER OBSTRUCTIONS IN FRONT OF RAMP ACCESS AREAS.

DETECTABLE WARNING FIELDS THAT ARE INSTALLED AS A GROUP OR SIDE BY SIDE, SHALL BE FROM THE SAME MANUFACTURER.

(2) GRADE CHANGE BETWEEN GUTTER FLAG SLOPE AND THE CURB RAMP SLOPE SHALL NOT EXCEED 11%. MAXIMUM GUTTER FLAG SLOPE IS 4%. PROVIDE LONGITUDINAL DRAINAGE AROUND CURB AND AWAY FROM CURB RAMP. NO VERTICAL LIPS OR DISCONTINUITIES GREATER THAN ¼-INCH ARE ALLOWED. SLOPE OF CURB HEAD OPENING SHALL MATCH THE RAMP SLOPE, MINIMALLY 1.5% AND NOT TO EXCEED 7%. WHEN ADJACENT TO 1.5% LANDING, CONSTRUCT CURB HEAD OPENING AT 1.5% IN THE DIRECTION OF PEDESTRIAN TRAVEL.

(3) ABSOLUTE MAXIMUM 12H:1V (8.33%) CURB RAMP SLOPE IS ALLOWABLE WITH FLATTENED GUTTER FLAG SLOPE AND NOT TO EXCEED 11% GRADE CHANGE.

(4) ±0.5% CONSTRUCTION TOLERANCE IN SIDEWALK CROSS SLOPE. THE SIDEWALK CROSS SLOPE SHALL NOT EXCEED 2% WITHOUT PRIOR APPROVAL FROM THE ENGINEER.

(6) PROVIDE A LEVEL LANDING (MAXIMUM 2% SLOPE) IN ANY DIRECTION OF PEDESTRIAN TRAVEL. STANDARD LANDING SIZE IS 5 FEET X 5 FEET.

(7) WHEN THIS GRADE BREAK DISTANCE EXCEEDS 5 FEET, USE RADIAL DETECTABLE WARNING FIELD PER SDD 8D5-f.

(8) PROVIDE GRADE BREAK PERPENDICULAR TO DIRECTION OF WHEELCHAIR TRAVEL.

(10) INSTALL TRANSITION NOSE. (INCIDENTAL TO OTHER PAY ITEMS). DO NOT MARK TRANSITION NOSE.

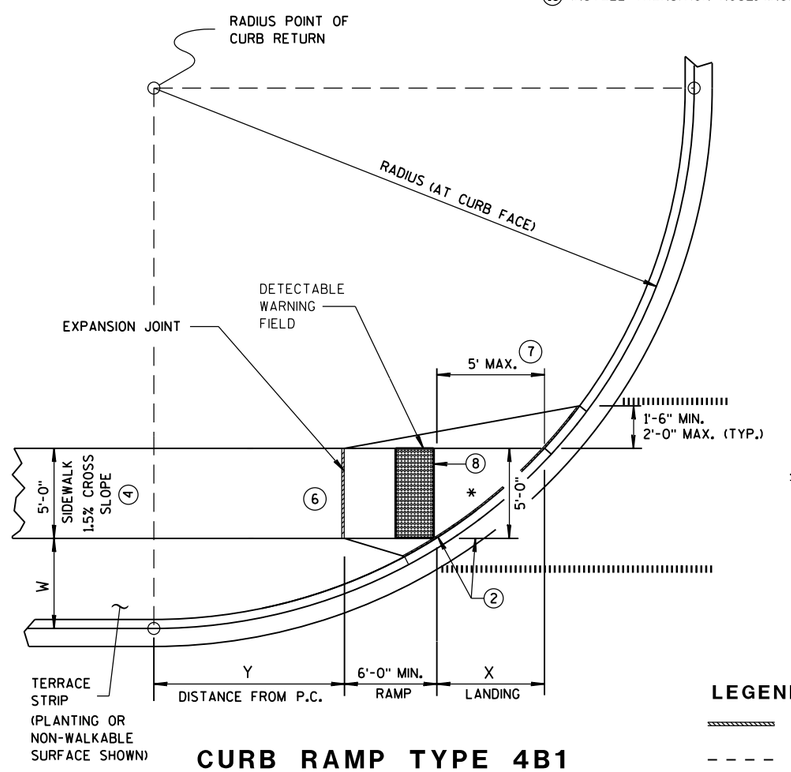

CURB RAMP TYPE 4B1
PLAN VIEW

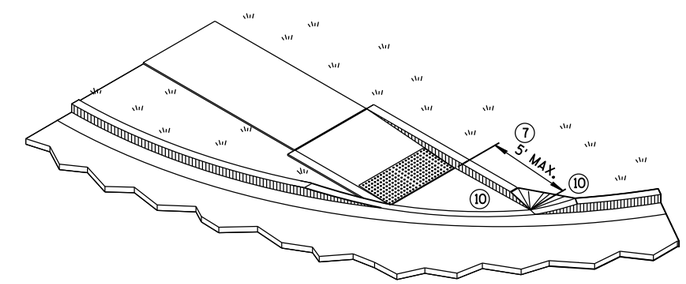

ISOMETRIC VIEW FOR TYPE 4B

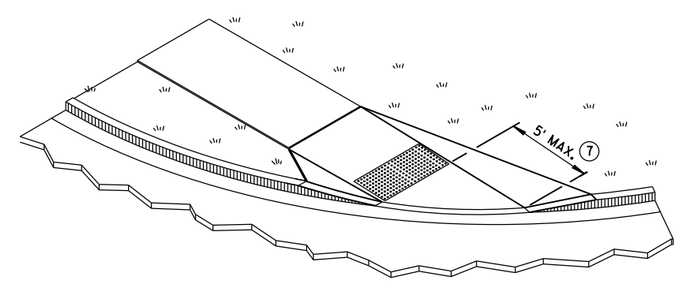

ISOMETRIC VIEW FOR TYPE 4B1

LEGEND

- ½" EXPANSION JOINT-SIDEWALK
- CONTRACTION JOINT FIELD LOCATED
- PAVEMENT MARKING CROSSWALK (WHITE)

CURB RAMPS
TYPE 4B AND 4B1

STATE OF WISCONSIN
DEPARTMENT OF TRANSPOR

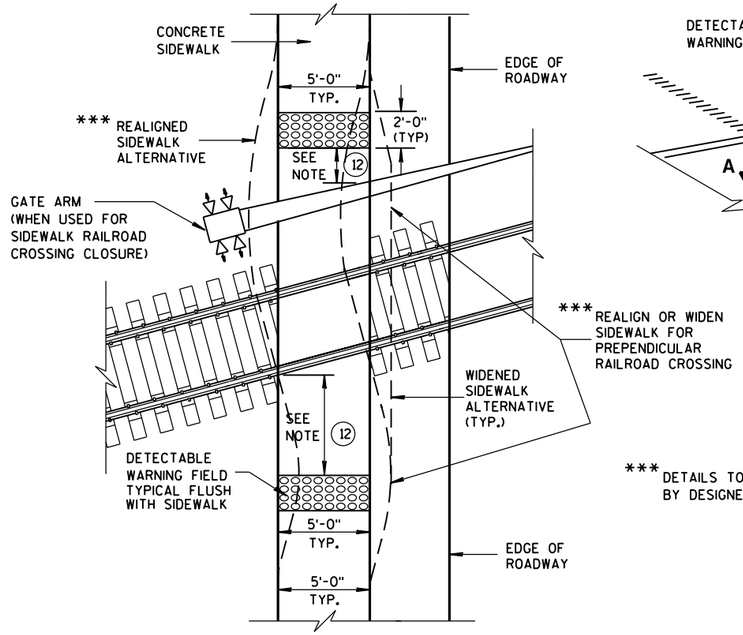

TYPE 8
DETECTABLE WARNINGS AT RAILROAD CROSSING

*** DETAILS TO BE DETERMINED BY DESIGNER

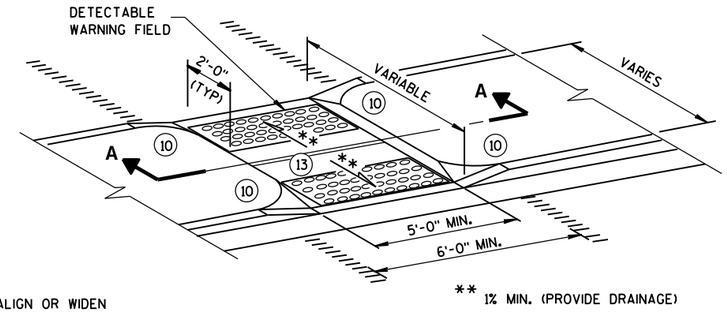

MEDIAN ISLAND
NON-ELEVATED PEDESTRIAN CROSSING
TYPE 5

GENERAL NOTES

AVOID PLACING DRAINAGE STRUCTURES, JUNCTION BOXES OR OTHER OBSTRUCTIONS IN FRONT OF RAMP ACCESS AREAS.

SIDEWALK CROSS SLOPE SHALL NOT EXCEED 2%.

DETECTABLE WARNING FIELDS THAT ARE INSTALLED AS A GROUP OR SIDE BY SIDE, SHALL BE FROM THE SAME MANUFACTURER.

(2) GRADE CHANGE BETWEEN GUTTER FLAG SLOPE AND THE CURB RAMP SLOPE SHALL NOT EXCEED 11%. MAXIMUM GUTTER FLAG SLOPE IS 4%. PROVIDE LONGITUDINAL DRAINAGE AROUND CURB AND AWAY FROM CURB RAMP. NO VERTICAL LIPS OR DISCONTINUITIES GREATER THAN 1/4-INCH ARE ALLOWED. SLOPE OF CURB HEAD OPENING SHALL MATCH THE RAMP SLOPE, MINIMALLY 1.5% AND NOT TO EXCEED 7%. WHEN ADJACENT TO 1.5% LANDING, CONSTRUCT CURB HEAD OPENING AT 1.5% IN THE DIRECTION OF PEDESTRIAN TRAVEL.

(3) ABSOLUTE MAXIMUM 12H:1V (8.33%) CURB RAMP SLOPE IS ALLOWABLE WITH FLATTENED GUTTER FLAG SLOPE AND NOT TO EXCEED 11% GRADE CHANGE.

(4) ±0.5% CONSTRUCTION TOLERANCE IN SIDEWALK CROSS SLOPE. THE SIDEWALK CROSS SLOPE SHALL NOT EXCEED 2% WITHOUT PRIOR APPROVAL FROM THE ENGINEER.

(6) PROVIDE A LEVEL LANDING (MAXIMUM 2% SLOPE) IN ANY DIRECTION OF PEDESTRIAN TRAVEL. STANDARD LANDING SIZE IS 5 FEET X 5 FEET.

(10) INSTALL TRANSITION NOSE. (INCIDENTAL TO OTHER PAY ITEMS). DO NOT MARK TRANSITION NOSE.

(11) SLOPE SIDEWALK TOWARD LANDING AS SHOWN WHERE THERE IS NO TERRACE OR WHERE THE TERRACE WIDTH IS LESS THAN 6 FEET WIDE.

(12) THE EDGE OF THE DETECTABLE WARNING FIELD NEAREST TO A RAILROAD CROSSING SHALL BE 1.5 FEET ± 0.1' FROM THE FACE OF THE GATE ARM IF THE GATE ARM EXTENDS ACROSS THE SIDEWALK. WHERE THERE IS NO PEDESTRIAN GATE, THE EDGE OF THE DETECTABLE WARNING FIELD NEAREST TO THE RAILROAD CROSSING SHALL BE 15 FEET FROM THE NEAREST RAIL.

(13) DO NOT INSTALL DETECTABLE WARNING FIELDS AT THE EDGES OF STREET-LEVEL PEDESTRIAN REFUGE ISLANDS IF A MINIMUM 2-FOOT CONCRETE SURFACE WITHOUT DETECTABLE WARNINGS (MEASURED IN THE DIRECTION OF PEDESTRIAN TRAVEL) CANNOT BE ACHIEVED.

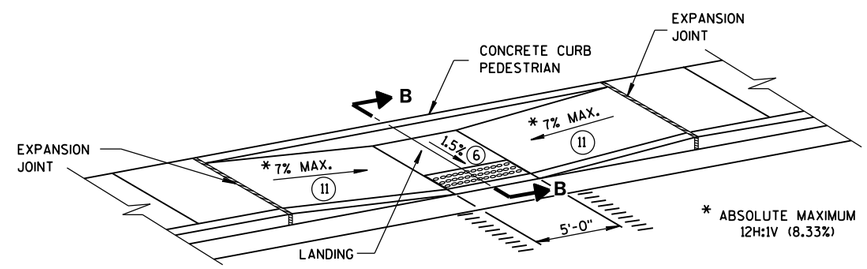

MID-BLOCK CROSSING
TYPE 7A

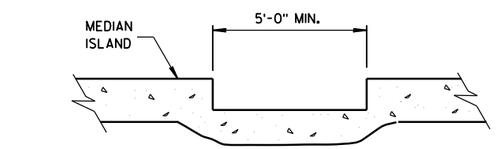

SECTION A-A

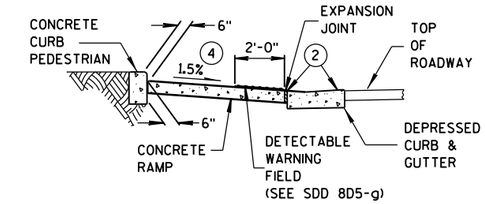

SECTION B-B

REFER TO GENERAL NOTES (2) AND (3) FOR ALL ISLAND CURB RAMPS

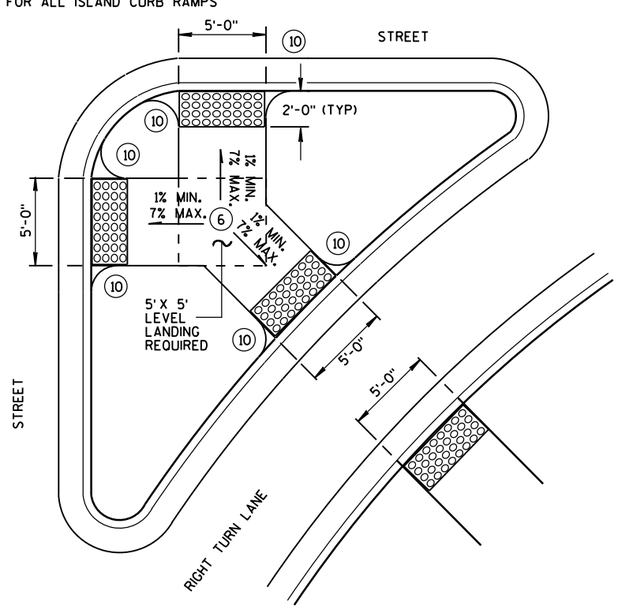

TYPE 6
DETECTABLE WARNING AT ISLANDS

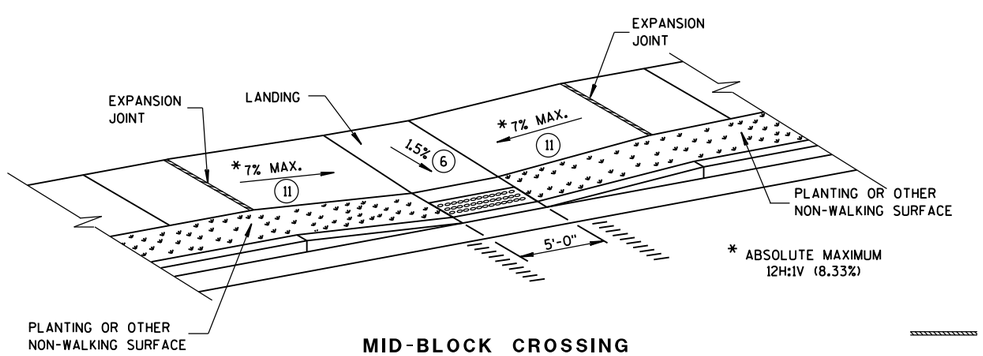

MID-BLOCK CROSSING
TYPE 7B

NOTE: THESE PARALLEL AND PARALLEL/PERPENDICULAR CURB RAMPS MAY BE USED AT INTERSECTIONS AND MID BLOCK LOCATIONS.

LEGEND

- ½" EXPANSION JOINT-SIDEWALK
- CONTRACTION JOINT FIELD LOCATED
- PAVEMENT MARKING CROSSWALK (WHITE)

CURB RAMPS
TYPES 5, 6, 7A, 7B & 8

STATE OF WISCONSIN
DEPARTMENT OF TRANSPOI

6

S.D.D. 8 D 5-19e

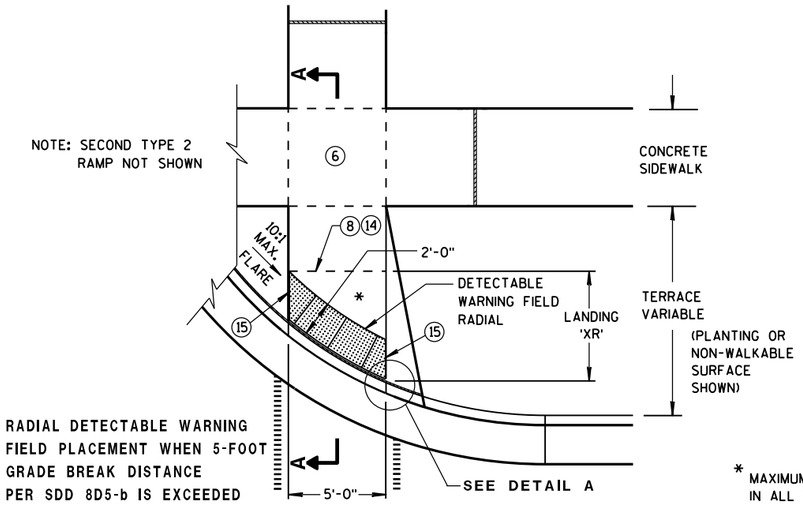

TYPE 2 RAMP
PLAN VIEW
(GRADE BREAK DISTANCE GREATER THAN 5 FEET)

(ON LINE WITH SIDEWALK)

* MAXIMUM 2.0% SLOPE IN ALL DIRECTIONS IN FRONT OF GRADE BREAK

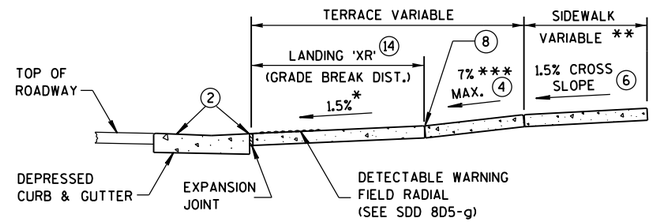

** WIDTH SHOWN ELSEWHERE IN THE PLANS

*** ABSOLUTE MAXIMUM 12H:1V (8.33%)

SECTION A-A

LEGEND

- ½" EXPANSION JOINT-SIDEWALK
- CONTRACTION JOINT FIELD LOCATED
- PAVEMENT MARKING CROSSWALK (WHITE)

GENERAL NOTES

AVOID PLACING DRAINAGE STRUCTURES, JUNCTION BOXES OR OTHER OBSTRUCTIONS IN FRONT OF RAMP ACCESS AREAS.

DETECTABLE WARNING FIELDS (DWFs) THAT ARE INSTALLED AS A GROUP OR SIDE BY SIDE, SHALL BE FROM THE SAME MANUFACTURER.

APPLY RADIAL DETECTABLE WARNING PLACEMENT SIMILARLY FOR TYPE 4A AND 4A1 CURB RAMPS AND SIMILARLY FOR TYPE 4B AND 4B1 CURB RAMPS. TYPE 4A AND 4B CURB RAMPS ARE NOT SHOWN.

REFER TO SDD 8D5-g FOR ADDITIONAL RADIAL PLATE REQUIREMENTS.

FIELD CUTS AT INTERMEDIATE JOINTS WITHIN THE RADIAL DETECTABLE WARNING FIELD ARE PROHIBITED.

DETERMINE FINAL RADIAL WARNING FIELD CONFIGURATION AND ITS INDIVIDUAL PLATE LOCATIONS. PERFORM PRE-LAYOUT PRIOR TO PLACEMENT IN PLASTIC CONCRETE. FOLLOW MANUFACTURER'S PRODUCT LIST AND INSTALLATION RECOMMENDATIONS.

(2) GRADE CHANGE BETWEEN GUTTER FLAG SLOPE AND THE CURB RAMP SLOPE SHALL NOT EXCEED 11%. MAXIMUM GUTTER FLAG SLOPE IS 4%. PROVIDE LONGITUDINAL DRAINAGE AROUND CURB AND AWAY FROM CURB RAMP. NO VERTICAL LIPS OR DISCONTINUITIES GREATER THAN ¼-INCH ARE ALLOWED. SLOPE OF CURB HEAD OPENING SHALL MATCH THE RAMP SLOPE, MINIMALLY 1.5% AND NOT TO EXCEED 7%. WHEN ADJACENT TO 1.5% LANDING, CONSTRUCT CURB HEAD OPENING AT 1.5% IN THE DIRECTION OF PEDESTRIAN TRAVEL.

(3) ABSOLUTE MAXIMUM 12H:1V (8.33%) CURB RAMP SLOPE IS ALLOWABLE WITH FLATTENED GUTTER FLAG SLOPE AND NOT TO EXCEED 11% GRADE CHANGE.

(4) ±0.5% CONSTRUCTION TOLERANCE IN SIDEWALK CROSS SLOPE. THE SIDEWALK CROSS SLOPE SHALL NOT EXCEED 2% WITHOUT PRIOR APPROVAL FROM THE ENGINEER.

(6) PROVIDE A LEVEL LANDING (MAXIMUM 2% SLOPE) IN ANY DIRECTION OF PEDESTRIAN TRAVEL. STANDARD LANDING SIZE IS 5 FEET X 5 FEET.

(8) PROVIDE GRADE BREAK PERPENDICULAR TO DIRECTION OF WHEELCHAIR TRAVEL.

(14) CONSULT ENGINEER IF GRADE BREAK LOCATION (END OF LANDING DIMENSION 'XR') REQUIRES FIELD ADJUSTMENT WHEN ESTABLISHING FINAL RADIAL DETECTABLE WARNING FIELD LOCATION.

(15) FIELD SAW CUTS ALONG RADIAL DETECTABLE WARNING PLATES WILL BE NECESSARY TO MATCH EACH CURB RAMP EDGE. AVOID CUTTING THROUGH DOMES WHENEVER POSSIBLE. MAKE FIELD CUTS TRUE TO LINE AND WITHIN 1/8" DEVIATION. SMOOTH EDGES OF FIELD CUT PLATES.

(16) USE 1'X 2' RECTANGULAR END PLATE AT END OF TYPE 4A1 RAMP AND PROVIDE MINIMUM 2'-0" DETECTABLE WARNING FIELD COVERAGE (IN DIRECTION OF PEDESTRIAN TRAVEL) ALONG THE ENTIRE CURB RAMP WIDTH.

(17) A MAXIMUM 3-INCH CONCRETE BORDER WIDTH IS ALLOWABLE IN FRONT OF RADIAL DETECTABLE WARNING FIELD FOR CONSTRUCTABILITY PURPOSES. CONCRETE BORDER WIDTH MAY VARY UP TO 1 INCH.

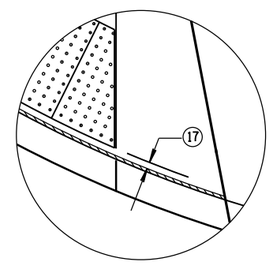

DETAIL A

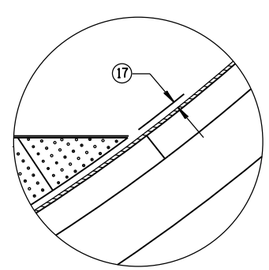

DETAIL B

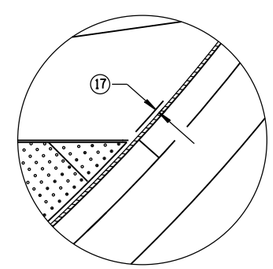

DETAIL C

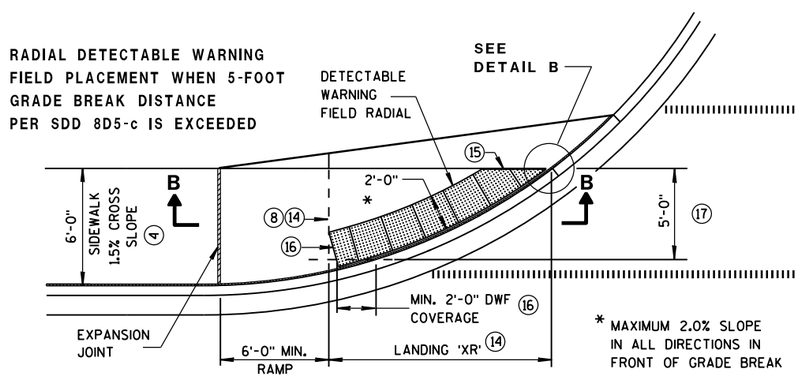

* MAXIMUM 2.0% SLOPE IN ALL DIRECTIONS IN FRONT OF GRADE BREAK

CURB RAMP TYPE 4A1
PLAN VIEW
(GRADE BREAK DISTANCE GREATER THAN 5 FEET)

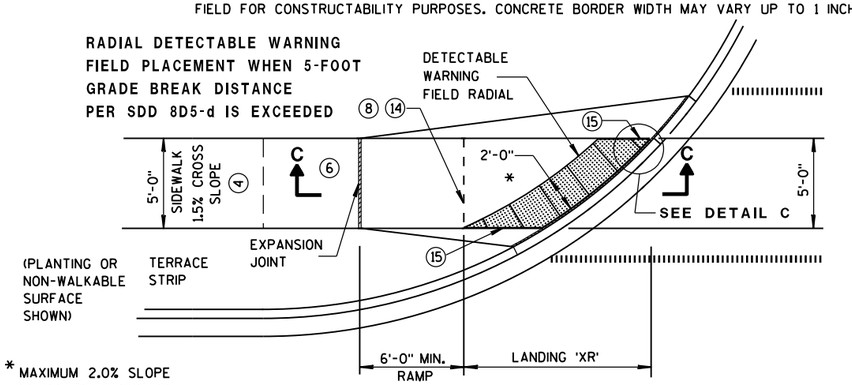

* MAXIMUM 2.0% SLOPE IN ALL DIRECTIONS IN FRONT OF GRADE BREAK

CURB RAMP TYPE 4B1
PLAN VIEW
(GRADE BREAK DISTANCE GREATER THAN 5 FEET)

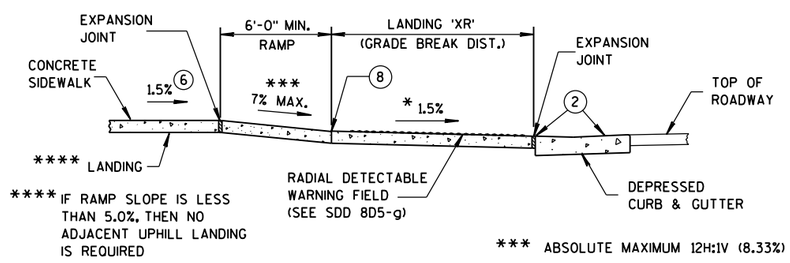

**** IF RAMP SLOPE IS LESS THAN 5.0%, THEN NO ADJACENT UPHILL LANDING IS REQUIRED

*** ABSOLUTE MAXIMUM 12H:1V (8.33%)

SECTION B-B FOR TYPE 4A1

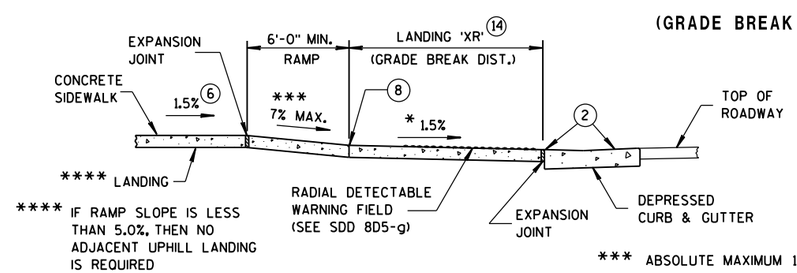

**** IF RAMP SLOPE IS LESS THAN 5.0%, THEN NO ADJACENT UPHILL LANDING IS REQUIRED

*** ABSOLUTE MAXIMUM 12H:1V (8.33%)

SECTION C-C FOR TYPE 4B1

CURB RAMPS
RADIAL DETECTABLE WARNING FIELD APPLICATIONS

STATE OF WISCONSIN
DEPARTMENT OF TRANSPOR

	MIN.	MAX.
A	1.6"	2.4"
B	0.65"	1.5"
C	*	*
D	0.9"	1.4"

* THE C DIMENSION IS 50% TO 65% OF THE D DIMENSION.

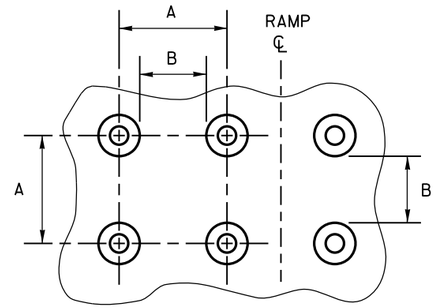

PLAN VIEW

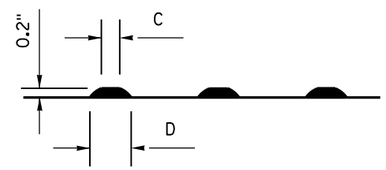

ELEVATION VIEW

TRUNCATED DOMES

DETECTABLE WARNING PATTERN DETAIL

GENERAL NOTES

DETECTABLE WARNING FIELDS THAT ARE INSTALLED AS A GROUP OR SIDE BY SIDE, SHALL BE FROM THE SAME MANUFACTURER.

PLACE ALL DETECTABLE WARNING FIELD SYSTEMS IN ACCORDANCE TO THE MANUFACTURER'S RECOMMENDATION.

FIELD CUTS AT INTERMEDIATE JOINTS WITHIN THE RADIAL DETECTABLE WARNING FIELD ARE PROHIBITED.

DETERMINE FINAL RADIAL WARNING FIELD CONFIGURATION AND ITS INDIVIDUAL PLATE LOCATIONS. PERFORM PRE-LAYOUT PRIOR TO PLACEMENT IN PLASTIC CONCRETE. FOLLOW MANUFACTURER'S PRODUCT LIST AND INSTALLATION RECOMMENDATIONS.

FOR RADIAL DETECTABLE WARNING FIELD APPLICATIONS WHERE STANDARD RADIAL PLATES ARE NOT AVAILABLE AT AN INTERSECTION CURB RADIUS, A COMBINATION OF SQUARE OR RECTANGULAR PLATES AND RADIAL PLATES MAY BE USED TO FORM RADIAL CONFIGURATION. RADIAL WEDGES IN COMBINATION WITH SQUARE PANELS ARE ALSO ACCEPTABLE. FOLLOW MANUFACTURER'S RECOMMENDATIONS.

REFER TO CONTRACT AND STANDARD SPECIFICATIONS FOR FIELD CUTTING REQUIREMENTS.

DO NOT EMBED IN CONCRETE ANY FIELD-CUT PLATES WITH CUT EDGES SHORTER THAN 6 INCHES. CONSULT WITH MANUFACTURER FOR RE-DRILLING AND ANCHORING REQUIREMENTS OF FIELD-CUT PLATES.

(15) FIELD SAW CUTS ALONG RADIAL DETECTABLE WARNING PLATES WILL BE NECESSARY TO MATCH EACH CURB RAMP EDGE. AVOID CUTTING THROUGH DOMES WHENEVER POSSIBLE. MAKE FIELD CUTS TRUE TO LINE AND WITHIN 1/8" DEVIATION. SMOOTH EDGES OF FIELD CUT PLATES.

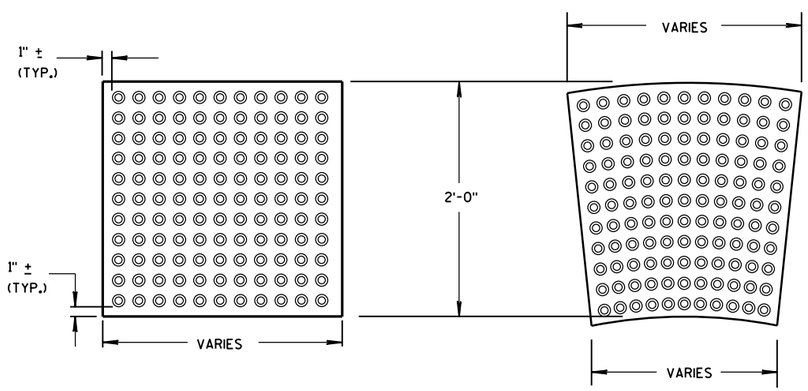

RECTANGULAR PLATES

RADIAL PLATES

DETECTABLE WARNING FIELDS (TYPICAL)

PLAN VIEW

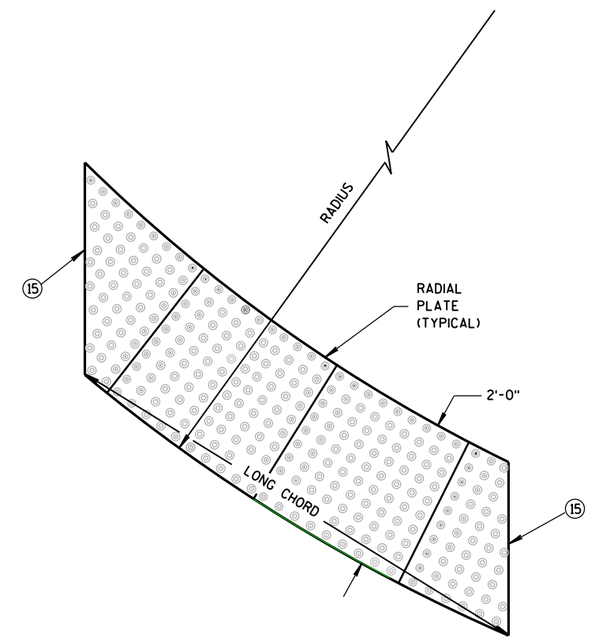

RADIAL DETECTABLE WARNING FIELD ATTRIBUTES

CURB RAMPS
RECTANGULAR AND RADIAL
DETECTABLE WARNING PLATES

STATE OF WISCONSIN
DEPARTMENT OF TRANSPORTATION

APPROVED
June, 2017 — DATE
/S/ Rodney Taylor — ROADWAY STANDARDS UNIT SUPERV
ENT
FHWA

6

S.D.D. 8 D 5-19g

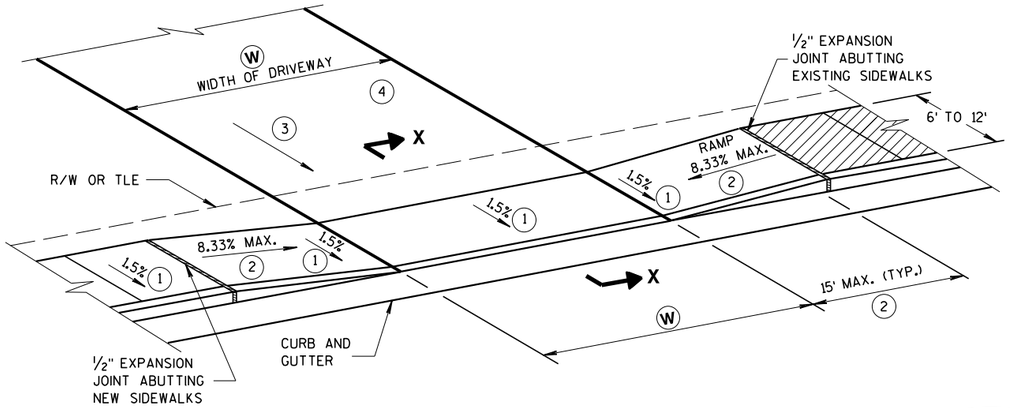

TYPE X

SIDEWALK ABUTS CURB & GUTTER
TERRACE VARIES 0 TO 3 FEET

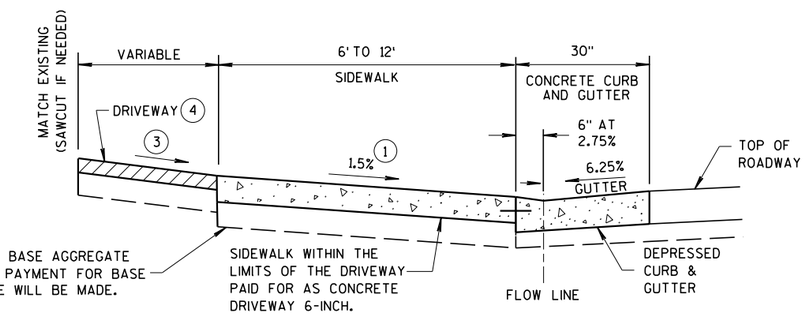

SECTION X-X

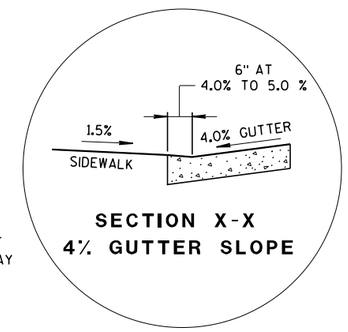

SECTION X-X
4% GUTTER SLOPE

W: 12' MIN. - 24' MAX. RESIDENTIAL AND NON-COMMERCIAL (PE & FE)
16' MIN. - 35' MAX. COMMERCIAL (CE)

GENERAL NOTES

PROVIDE CONSTRUCTION JOINTS ALONG THE CENTER OF THE CONCRETE FOR DRIVEWAYS UNDER 20 FEET IN WIDTH AND AT THE THIRD POINTS OVER 20 FEET IN WIDTH.

(W) IS SHOWN ON PLAN AND PROFILE SHEETS.

OFFSETS, ELEVATIONS, AND PERCENT GRADE ARE SHOWN ON THE CROSS SECTIONS.

(1) CONSTRUCTION TOLERANCE OF 0.5% ± FOR SIDEWALK CROSS SLOPE. THE SIDEWALK CROSS SLOPE SHALL NOT EXCEED 2%.

(2) THE SIDEWALK RAMP MAXIMUM RUNNING SLOPE SHALL NOT REQUIRE THE RAMP LENGTH TO EXCEED 15 FEET TO AVOID CHASING THE SLOPE INDEFINITELY WHEN CONNECTING TO STEEP GRADES. WHEN APPLYING THE 15 FOOT MAXIMUM LENGTH, THE RUNNING SLOPE OF THE SIDEWALK SHALL BE AS FLAT AS FEASIBLE AND NOT EXCEED THE LONGITUDINAL GRADE OF THE ROADWAY. SLOPE SIDEWALK RAMP TOWARD APRON AS SHOWN WHERE THERE IS NO TERRACE OR WHERE THE TERRACE WIDTH IS LESS THAN 6 FEET WIDE.

(3) DRIVEWAY SLOPES: DESIRABLE MAXIMUM
- 10.5% UP AWAY FROM SIDEWALK (SAG)
- 8.5% DOWN AWAY FROM SIDEWALK (CREST)
- ABSOLUTE MAXIMUM 15% FOR BOTH CREST AND SAG

(4) DRIVEWAY TYPES
- 6-INCH CONCRETE DRIVEWAY PAVEMENT OVER 6-INCH BASE AGGREGATE
- 2-INCH TO 3-INCH ASPHALTIC SURFACE OVER 6-INCH BASE AGGREGATE
- 6-INCH BASE AGGREGATE (MAY BE INCREASED FOR CLAY SUBGRADES)

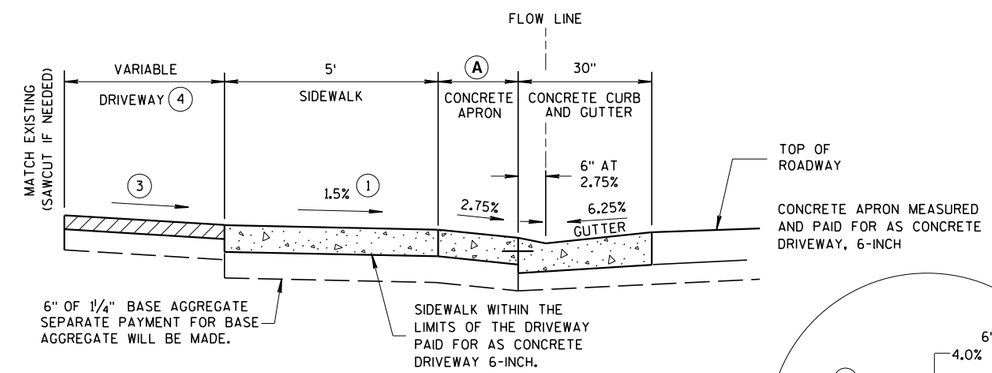

NOTE: SIDEWALK MAY BE DEPRESSED IN DRIVEWAY AREAS

SECTION Y-Y

DRIVEWAY DETAIL
WITH CONCRETE CURB & GUTTER
(URBAN AND SUBURBAN)

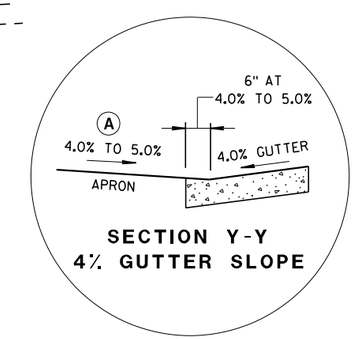

SECTION Y-Y
4% GUTTER SLOPE

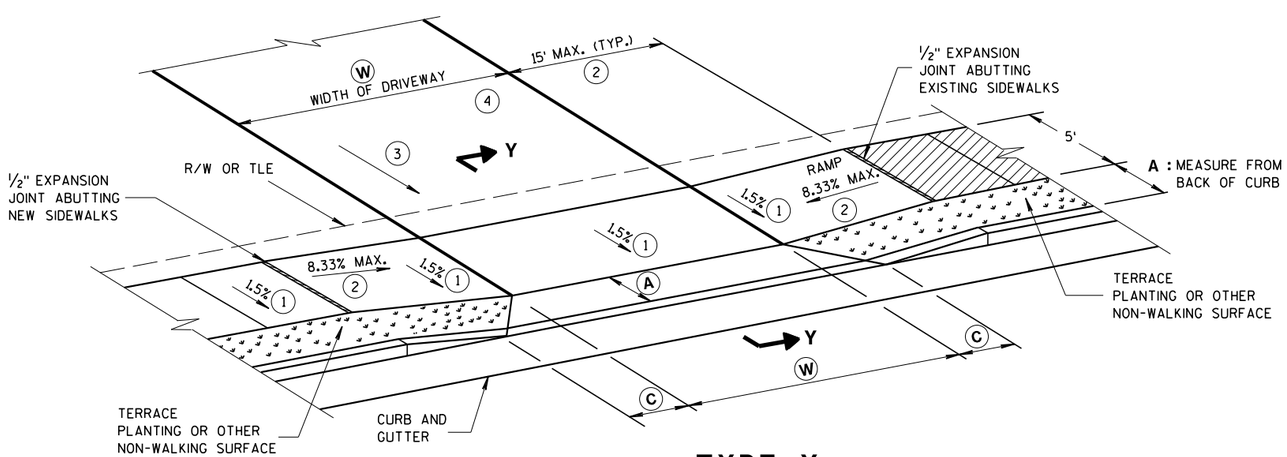

TYPE Y

SIDEWALK WITH NARROWER TERRACE
TERRACE VARIES 4 TO 6 FEET

TABLE Y

A FEET	C FEET
3.5'	2.0'
4.5'	3.0'
5.5'	3.5'

NOT TO SCALE

DRIVEWAY AND SIDEWALK RAMPS
TYPES X & Y

STATE OF WISCONSIN
DEPARTMENT OF TRANSPORTATION

APPROVED
March 2018 — DATE
/S/ Rodney Taylor — ROADWAY STANDARDS UNIT SUPERVISOR
FHWA

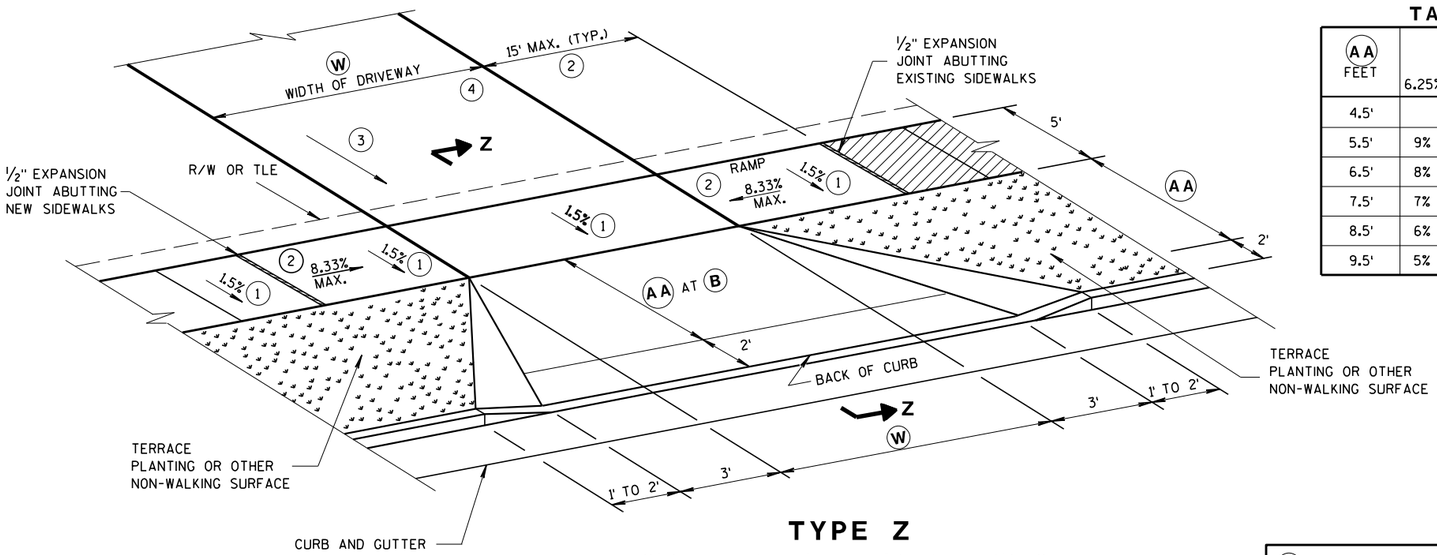

TYPE Z

SIDEWALK WITH WIDER TERRACE

TERRACE VARIES 7 TO 12 FEET

TABLE Z

AA FEET	B % 6.25% GUTTER	B % 4% GUTTER
4.5'	11.5%	9% TO 11.5%
5.5'	9% TO 11.5%	8% TO 11.5%
6.5'	8% TO 11.5%	6% TO 11.5%
7.5'	7% TO 11.5%	6% TO 11.5%
8.5'	6% TO 11.5%	5% TO 11.5%
9.5'	5% TO 11.5%	4% TO 11.5%

W: 12' MIN. - 24' MAX. RESIDENTIAL AND NON-COMMERCIAL (PE & FE)

16' MIN. - 35' MAX. COMMERCIAL (CE)

GENERAL NOTES

PROVIDE CONSTRUCTION JOINTS ALONG THE CENTER OF THE CONCRETE FOR DRIVEWAYS UNDER 20 FEET IN WIDTH AND AT THE THIRD POINTS OVER 20 FEET IN WIDTH.

W IS SHOWN ON PLAN AND PROFILE SHEETS.

OFFSETS, ELEVATIONS, AND PERCENT GRADE ARE SHOWN ON THE CROSS SECTIONS.

1. CONSTRUCTION TOLERANCE OF 0.5% ± FOR SIDEWALK CROSS SLOPE. THE SIDEWALK CROSS SLOPE SHALL NOT EXCEED 2%.

2. THE SIDEWALK RAMP MAXIMUM RUNNING SLOPE SHALL NOT REQUIRE THE RAMP LENGTH TO EXCEED 15 FEET TO AVOID CHASING THE SLOPE INDEFINITELY WHEN CONNECTING TO STEEP GRADES. WHEN APPLYING THE 15 FOOT MAXIMUM LENGTH, THE RUNNING SLOPE OF THE SIDEWALK SHALL BE AS FLAT AS FEASIBLE AND NOT EXCEED THE LONGITUDINAL GRADE OF THE ROADWAY.

3. DRIVEWAY SLOPES: DESIRABLE MAXIMUM
   - 10.5% UP AWAY FROM SIDEWALK (SAG)
   - 8.5% DOWN AWAY FROM SIDEWALK (CREST)
   - ABSOLUTE MAXIMUM 15% FOR BOTH CREST AND SAG

4. DRIVEWAY TYPES
   - 6-INCH CONCRETE DRIVEWAY PAVEMENT OVER 6-INCH BASE AGGREGATE
   - 2-INCH TO 3-INCH ASPHALTIC SURFACE OVER 6-INCH BASE AGGREGATE
   - 6-INCH BASE AGGREGATE (MAY BE INCREASED FOR CLAY SUBGRADES)

6

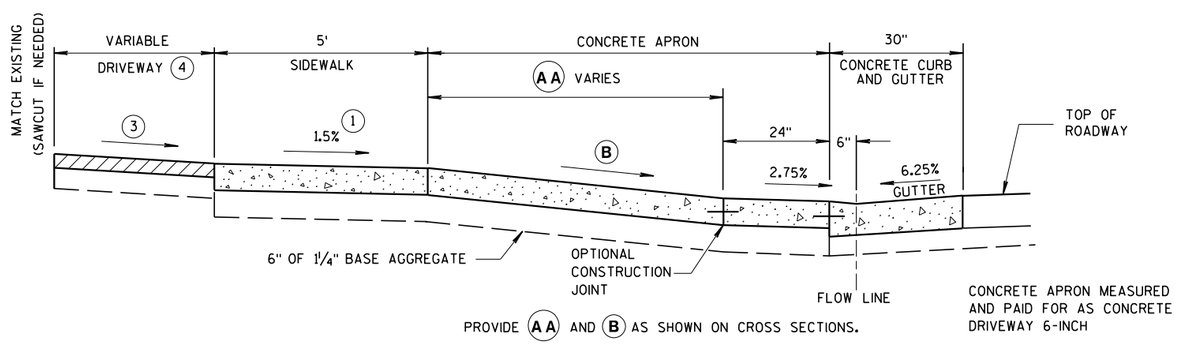

6.25% GUTTER SLOPE

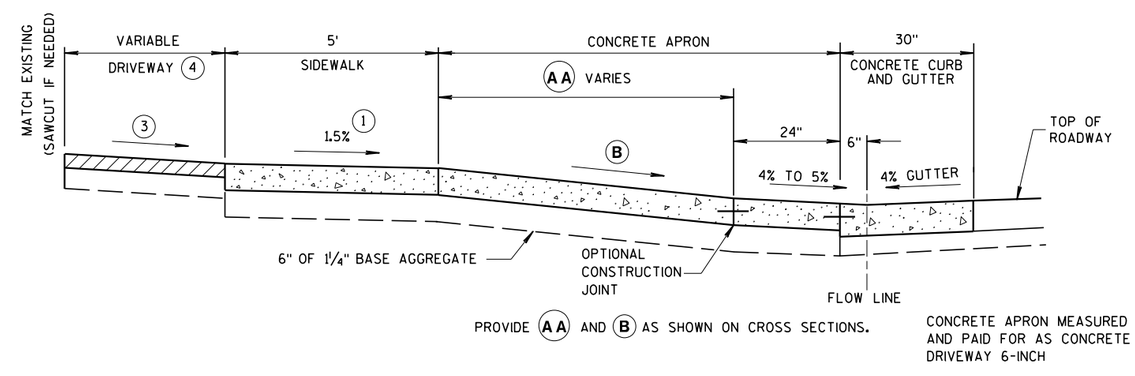

4% GUTTER SLOPE

NOTE: SIDEWALK MAY BE DEPRESSED IN DRIVEWAY AREAS FOR **B** VALUES NOT SHOWN IN TABLE Z.

SIDEWALK WITHIN THE LIMITS OF THE DRIVEWAY PAID FOR AS CONCRETE DRIVEWAY 6-INCH.

SEPARATE PAYMENT FOR BASE AGGREGATE WILL BE MADE.

SECTION Z-Z

DRIVEWAY DETAIL WITH CONCRETE CURB & GUTTER

(URBAN AND SUBURBAN)

NOT TO SCALE

DRIVEWAY AND SIDEWALK RAMPS TYPE Z

STATE OF WISCONSIN
DEPARTMENT OF TRANSPORTATION

APPROVED
March 2018 — DATE
/S/ Rodney Taylor — ROADWAY STANDARDS DEVELOPMENT UNIT SUPERVISOR
FHWA

S.D.D. 8 D 19-2

S.D.D. 8 D 19-2

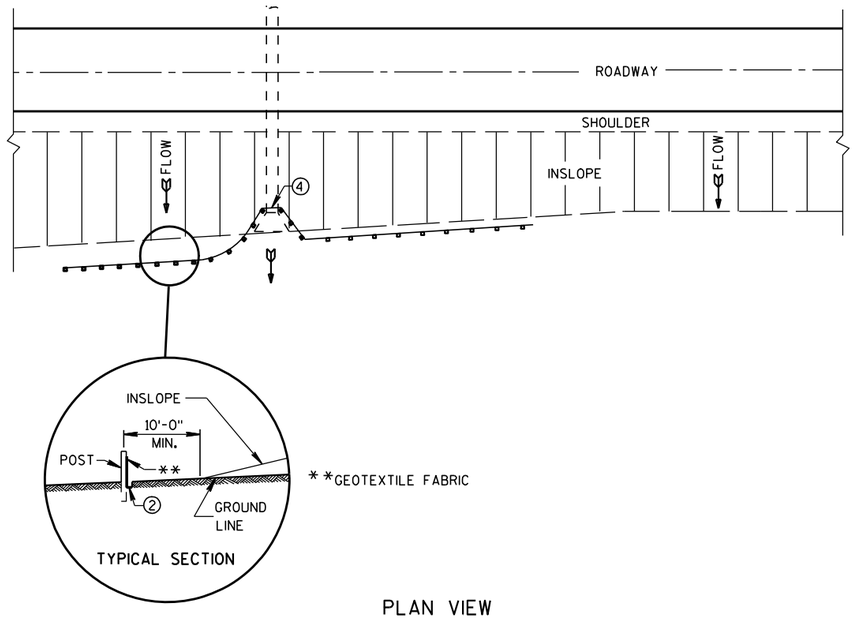

PLAN VIEW

TYPICAL APPLICATION OF SILT FENCE

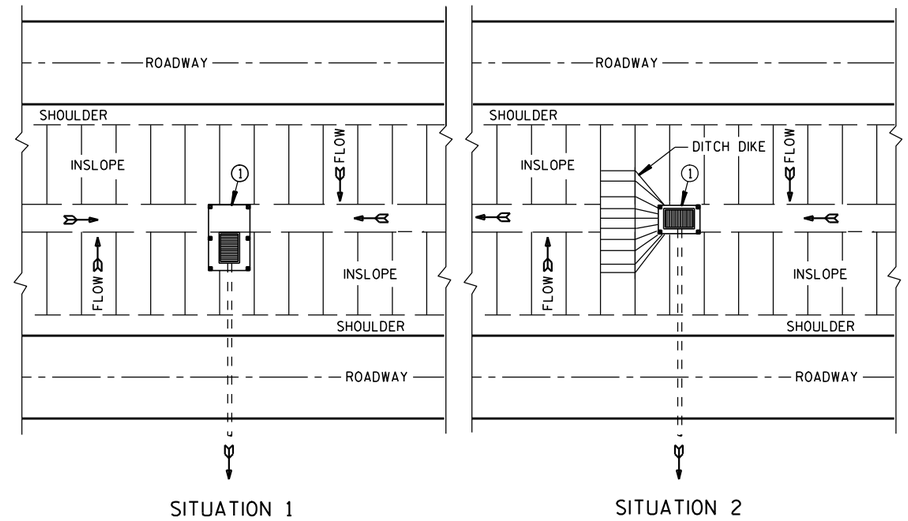

PLAN VIEW

SILT FENCE AT MEDIAN SURFACE DRAINS

GENERAL NOTES

DETAILS OF CONSTRUCTION NOT SHOWN ON THIS DRAWING SHALL CONFORM TO THE PERTINENT REQUIREMENTS OF THE STANDARD SPECIFICATIONS AND APPLICABLE SPECIAL PROVISIONS.

① HORIZONTAL BRACE REQUIRED WITH 2" X 4" WOODEN FRAME OR EQUIVALENT AT TOP OF POSTS.

② FOR MANUAL INSTALLATIONS THE TRENCH SHALL BE A MINIMUM OF 4" WIDE & 6" DEEP TO BURY AND ANCHOR THE GEOTEXTILE FABRIC. FOLD MATERIAL TO FIT TRENCH AND BACKFILL & COMPACT TRENCH WITH EXCAVATED SOIL.

③ WOOD POSTS SHALL BE A MINIMUM SIZE OF 1⅛" X 1⅛" OF OAK OR HICKORY.

④ SILT FENCE TO EXTEND ACROSS THE TOP OF THE PIPE.

⑤ CONSTRUCT SILT FENCE FROM A CONTINUOUS ROLL IF POSSIBLE BY CUTTING LENGTHS TO AVOID JOINTS. IF A JOINT IS NECESSARY USE ONE OF THE FOLLOWING TWO METHODS; A) OVERLAP THE END POSTS AND TWIST, OR ROTATE, AT LEAST 180 DEGREES. B) HOOK THE END OF EACH SILT FENCE LENGTH.

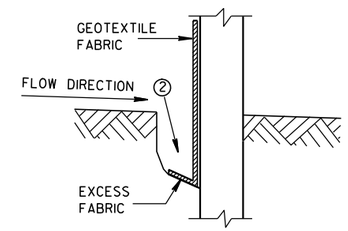

TRENCH DETAIL

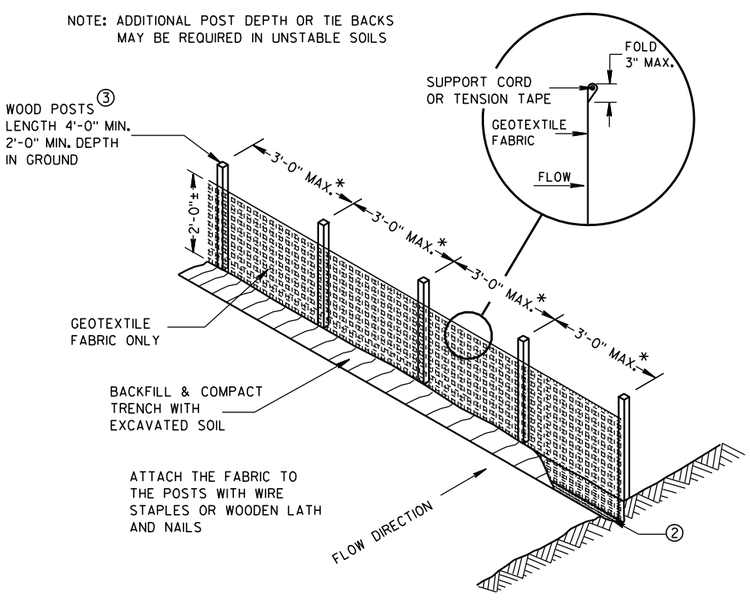

*NOTE: 8'-0" POST SPACING ALLOWED IF A WOVEN GEOTEXTILE FABRIC IS USED.

SILT FENCE

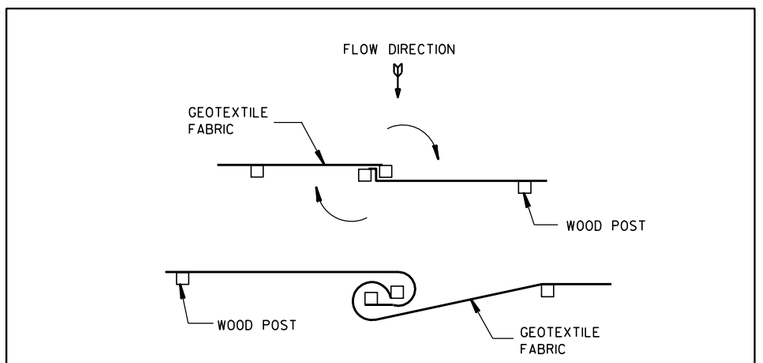

TWIST METHOD

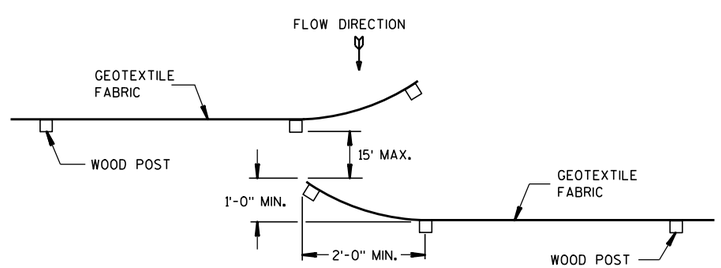

HOOK METHOD

JOINING TWO LENGTHS OF SILT FENCE ⑤

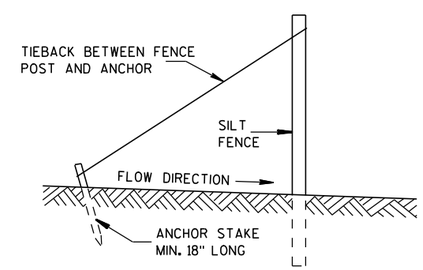

SILT FENCE TIE BACK

(WHEN REQUIRED BY THE ENGINEER)

SILT FENCE
STATE OF WISCONSIN DEPARTMENT OF TRANSPORTATION
APPROVED 4-29-05 DATE — /S/ Beth Cann[illegible] CHIEF ROADWAY DEVELOP[illegible]NEER FHWA

6

6

S.D.D. 8 E 9-6

S.D.D. 8 E 9-6

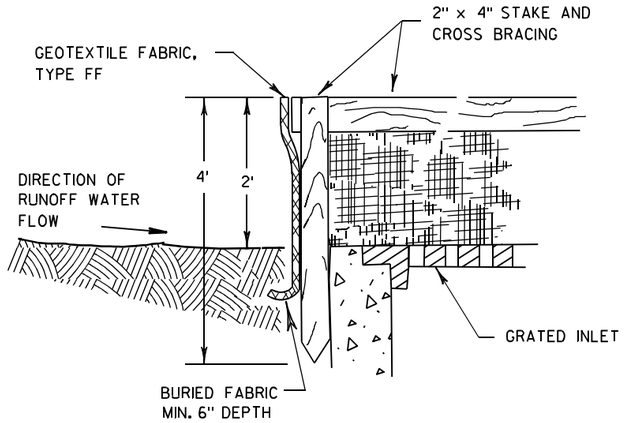

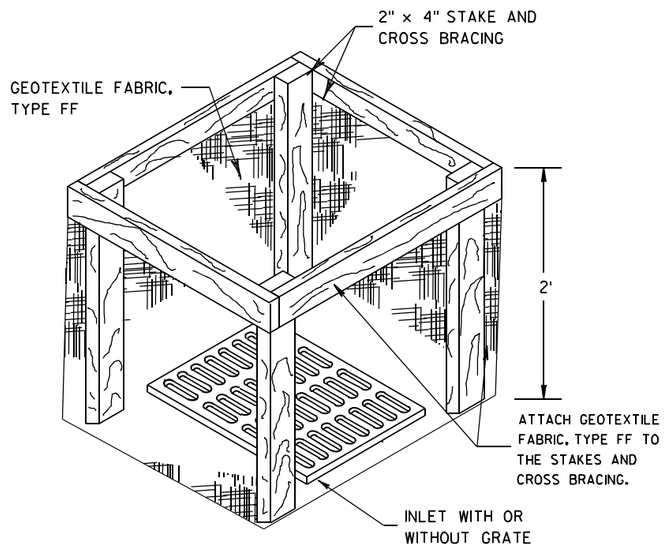

INLET PROTECTION, TYPE A

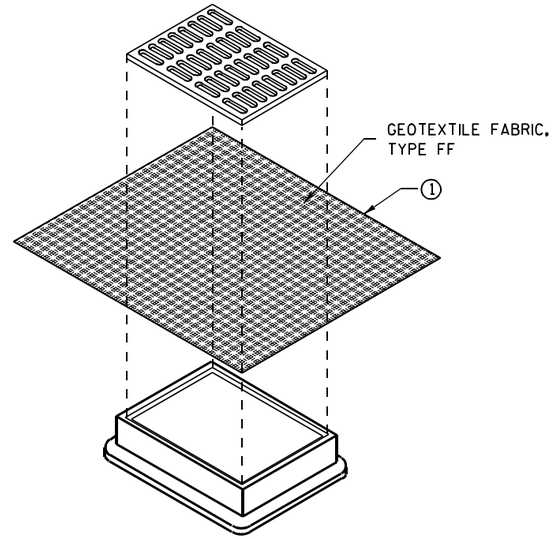

INLET PROTECTION, TYPE B (WITHOUT CURB BOX)

(CAN BE INSTALLED IN ANY INLET WITHOUT A CURB BOX)

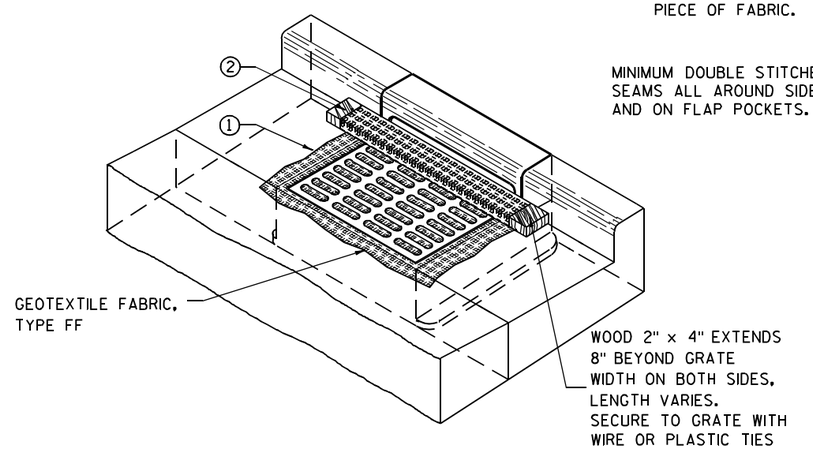

INLET PROTECTION, TYPE C (WITH CURB BOX)

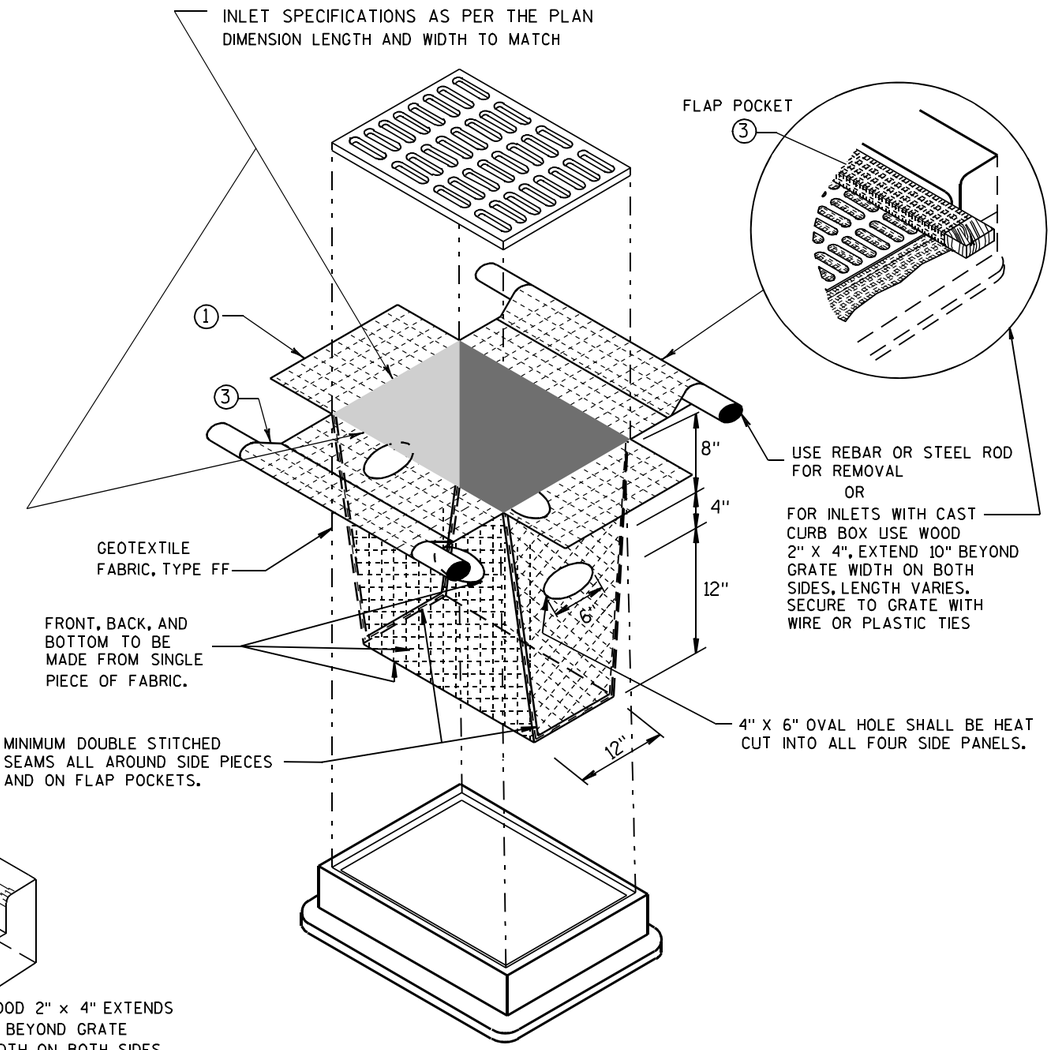

INLET PROTECTION, TYPE D

(CAN BE INSTALLED IN ANY INLET TYPE WITH OR WITHOUT A CURB BOX AS PER NOTE 2)

GENERAL NOTES

INLET PROTECTION DEVICES SHALL BE MAINTAINED OR REPLACED AT THE DIRECTION OF THE ENGINEER.

MANUFACTURED ALTERNATIVES APPROVED AND LISTED ON THE DEPARTMENT'S EROSION CONTROL PRODUCT ACCEPTABILITY LIST MAY BE SUBSTITUTED.

WHEN REMOVING OR MAINTAINING INLET PROTECTION, CARE SHALL BE TAKEN SO THAT THE SEDIMENT TRAPPED ON THE GEOTEXTILE FABRIC DOES NOT FALL INTO THE INLET. ANY MATERIAL FALLING INTO THE INLET SHALL BE REMOVED IMMEDIATELY.

1 FINISHED SIZE, INCLUDING FLAP POCKETS WHERE REQUIRED, SHALL EXTEND A MINIMUM OF 10" AROUND THE PERIMETER TO FACILITATE MAINTENANCE OR REMOVAL.

2 FOR INLET PROTECTION, TYPE C (WITH CURB BOX), AN ADDITIONAL 18" OF FABRIC IS WRAPPED AROUND THE WOOD AND SECURED WITH STAPLES. THE WOOD SHALL NOT BLOCK THE ENTIRE HEIGHT OF THE CURB BOX OPENING.

3 FLAP POCKETS SHALL BE LARGE ENOUGH TO ACCEPT WOOD 2X4.

INSTALLATION NOTES

TYPE B & C

TRIM EXCESS FABRIC IN THE FLOW LINE TO WITHIN 3" OF THE GRATE.

THE CONTRACTOR SHALL DEMONSTRATE A METHOD OF MAINTENANCE, USING A SEWN FLAP, HAND HOLDS OR OTHER METHOD TO PREVENT ACCUMULATED SEDIMENT FROM ENTERING THE INLET.

TYPE D

DO NOT INSTALL INLET PROTECTION TYPE D IN INLETS SHALLOWER THAN 30", MEASURED FROM THE BOTTOM OF THE INLET TO THE TOP OF THE GRATE.

TRIM EXCESS FABRIC IN THE FLOW LINE TO WITHIN 3" OF THE GRATE.

THE INSTALLED BAG SHALL HAVE A MINIMUM SIDE CLEARANCE, BETWEEN THE INLET WALLS AND THE BAG, MEASURED AT THE BOTTOM OF THE OVERFLOW HOLES, OF 3". WHERE NECESSARY THE CONTRACTOR SHALL CINCH THE BAG, USING PLASTIC ZIP TIES, TO ACHIEVE THE 3" CLEARANCE. THE TIES SHALL BE PLACED AT A MAXIMUM OF 4" FROM THE BOTTOM OF THE BAG.

INLET PROTECTION TYPE A, B, C, AND D

STATE OF WISCONSIN
DEPARTMENT OF TRANSPORTATION

APPROVED
10/16/02 — DATE
/S/ Beth Cannestra — CHIEF ROADWAY DEVELOPMENT ENGINEER
FHWA

6

S.D.D. 8 E 10-2

GENERAL NOTES

DETAILS OF CONSTRUCTION, MATERIALS AND WORKMANSHIP NOT SHOWN ON THIS DRAWING SHALL CONFORM TO THE PERTINENT REQUIREMENTS OF THE STANDARD SPECIFICATIONS AND THE APPLICABLE SPECIAL PROVISIONS.

TRACKING PAD SHALL BE INSPECTED DAILY. DEFICIENT AREAS SHALL BE REPAIRED OR REPLACED IMMEDIATELY.

TRACKING PAD TO BE REMOVED AFTER CONSTRUCTION IS COMPLETED.

TRACKING PAD SHALL BE THE FULL WIDTH OF THE EGRESS POINT.

SURFACE WATER MUST BE PREVENTED FROM PASSING THROUGH THE TRACKING PAD. FLOWS SHALL BE DIVERTED AWAY, AROUND OR CONVEYED UNDER THE TRACKING PAD.

CULVERT PIPE OR OTHER BMP USED TO DIVERT WATER AWAY, AROUND OR UNDER THE TRACKING PAD SHALL BE DESIGNED TO CONVEY THE 2 YEAR - 24 HOUR EVENT.

THE COST OF ADDITIONAL BMP TO DIVERT WATER ARE INCIDENTAL TO THE TRACKING PAD BID ITEM.

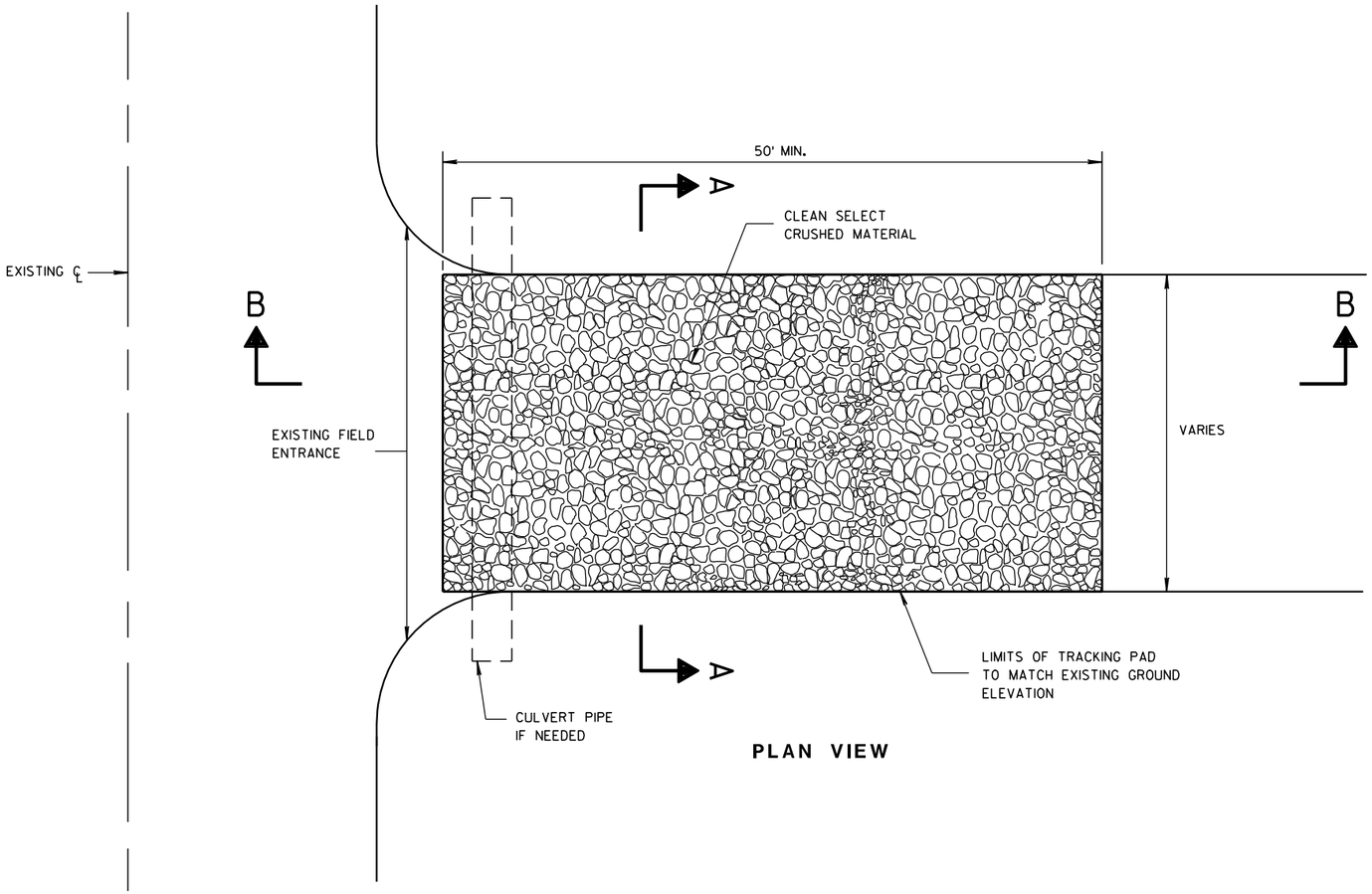

PLAN VIEW

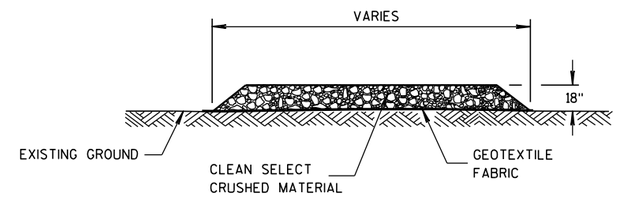

SECTION A-A

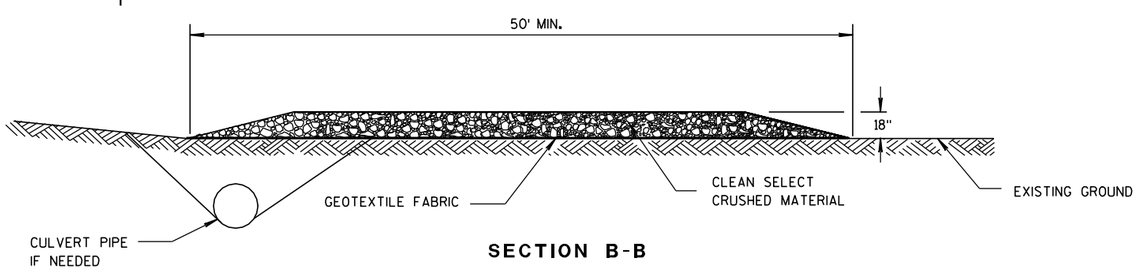

SECTION B-B

TRACKING PAD

6

6

S.D.D. 8 E 14-1

S.D.D. 8 E 14-1

TRACKING PAD

STATE OF WISCONSIN
DEPARTMENT OF TRANSPORTATION

APPROVED

3/24/2011	/S/ Jerry H. Zona	
DATE	ROADWAY STANDARDS ENGINEER	ENT

FHWA

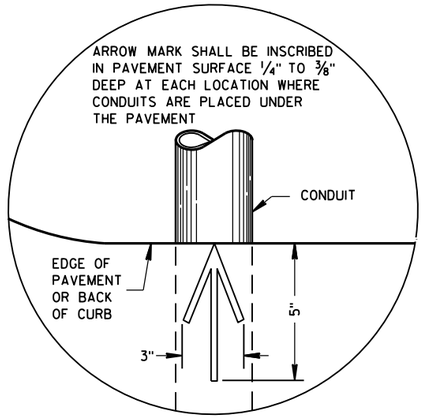

PLAN VIEW

ARROW MARK

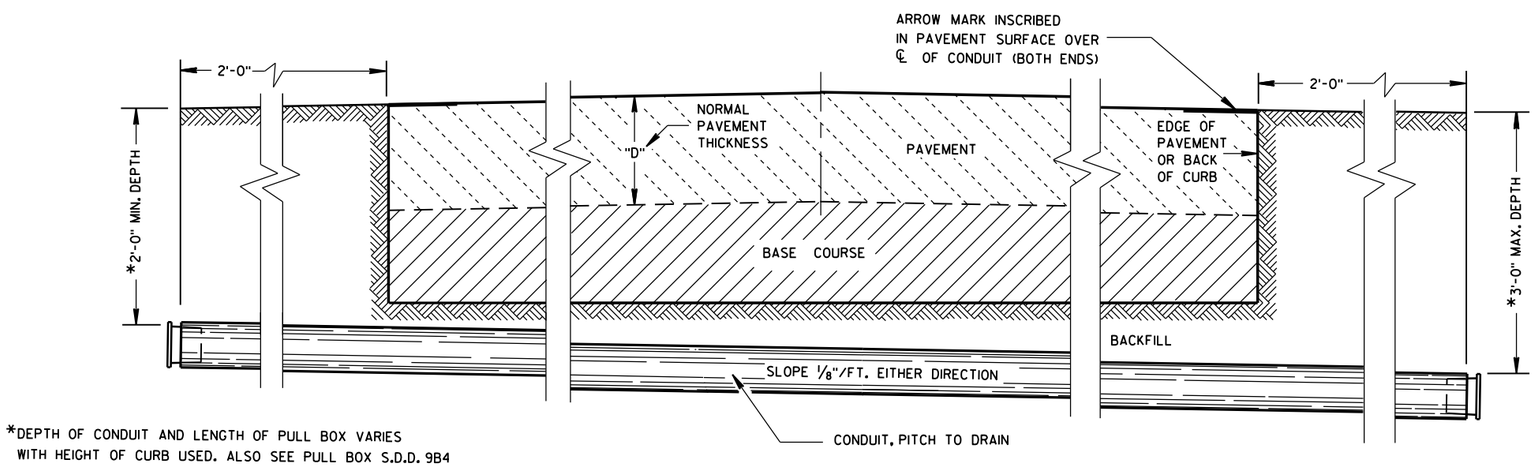

*DEPTH OF CONDUIT AND LENGTH OF PULL BOX VARIES WITH HEIGHT OF CURB USED. ALSO SEE PULL BOX S.D.D. 9B4

SIDE ELEVATION

DETAIL FOR CONDUIT UNDER PAVED HIGHWAYS

GENERAL NOTES

DETAILS OF CONSTRUCTION, MATERIALS AND WORKMANSHIP NOT SHOWN ON THIS DRAWING SHALL CONFORM TO THE PERTINENT REQUIREMENTS OF THE CONTRACT.

METALLIC (STANDARD SPECIFICATION 652.2.2) OR NONMETALLIC (STANDARD SPECIFICATION 652.2.3) CONDUIT SHALL BE FURNISHED AND PLACED AS SHOWN.

DEPTH OF CONDUIT INSTALLED BELOW THE TRAVELED WAY SHALL BE 24 INCHES MINIMUM AND 36 INCHES MAXIMUM.

DEPTH OF CONDUIT INSTALLED THAT IS NOT BELOW THE TRAVELED WAY SHALL BE 18 INCHES MINIMUM AND 36 INCHES MAXIMUM.

ANY EXCEPTION TO THE MAXIMUM DEPTH SHALL BE ONLY WITH THE WRITTEN APPROVAL OF THE ENGINEER.

THE TRENCH SHALL NOT BE BACKFILLED PRIOR TO INSPECTION OF THE CONDUIT.

ALL METALLIC CONDUIT RACEWAY ENDS SHALL BE REAMED AND THREADED.

ALL METALLIC CONDUIT IN WHICH WIRE OR CABLE IS TO BE INSTALLED SHALL BE BUSHED WITH APPROVED THREADED BUSHINGS BEFORE INSTALLATION OF THE WIRE OR CABLE.

ALL METALLIC CONDUITS IN WHICH WIRE OR CABLE IS NOT TO BE INSTALLED SHALL BE CAPPED WITH THREADED PROTECTIVE CAPS, AS APPROVED BY THE ENGINEER.

ALL NONMETALLIC CONDUIT SHALL BE CAPPED OR PLUGGED IMMEDIATELY AFTER INSTALLATION AND SHALL REMAIN CAPPED OR PLUGGED UNTIL WIRE/CABLES ARE INSTALLED.

NONMETALLIC CONDUITS IN WHICH WIRE OR CABLE IS NOT BEING INSTALLED SHALL REMAIN CAPPED OR PLUGGED.

BENDING OF PVC ELECTRICAL CONDUIT SHALL BE ACCOMPLISHED BY USING A BLANKET OR EMERSION TYPE TANK DESIGNED FOR THE PURPOSE OF BENDING PVC ELECTRICAL CONDUIT.

ALL CUT ENDS SHALL BE TRIMMED INSIDE AND OUTSIDE TO REMOVE ALL ROUGH EDGES ON NONMETALLIC CONDUIT. (SEE NEC 347.5)

WHEN REQUIRED TO CONNECT NONMETALLIC CONDUIT TO METALLIC CONDUIT, ONLY U.L. LISTED ADAPTER FITTINGS SHALL BE USED.

PRIOR TO CONDUIT ACCEPTANCE, CONDUIT CAPS OR PLUGS SHALL BE REMOVED, AND THE CAPS, PLUGS AND CONDUIT ENDS SHALL BE THOROUGHLY CLEANED AND THEN THE CAPS OR PLUGS REINSTALLED TO ENSURE THAT THE CAPS OR PLUGS CAN BE EASILY REMOVED IN THE FUTURE.

ALL CONDUIT BEING FURNISHED AND INSTALLED SHALL HAVE THE U.L. LABEL FIRMLY ATTACHED.

CONDUIT RUNS SHALL BE THE SAME SIZE OF CONDUIT FROM ONE END TO THE OTHER (FROM PULL BOX TO PULL BOX-OR-JUNCTION BOX TO JUNCTION BOX-OR-BASE TO BASE, ETC.).

TRACER WIRE SHALL BE INSTALLED AS STATED IN THE STANDARD SPECIFICATION, ITEM 652.3.1.1.

ALL CONDUIT RUNS SHALL BE STRAIGHT (WITHOUT BENDS) FROM PULL BOX TO PULL BOX, PULL BOX TO BASE AND BASE TO BASE AS SHOWN ON THE PLANS.

CONDUIT	
STATE OF WISCONSIN DEPARTMENT OF TRANSPORTATION	
APPROVED March, 2017 DATE	/S/ Ahmet Demirbilek STATE ELECTRICAL
FHWA	

6

S.D.D. 9 B 2-10

TABLE OF NOMINAL DIMENSIONS AND WEIGHTS

DIMENSION IN INCHES		NON-CONDUCTIVE PULL BOX	
BOX DIAMETER ** (INSIDE)	A	24	24
BOX OVERALL OUTSIDE DIAMETER	B	27	27
BOX LENGTH	C	36	42
FRAME OPENING	D	22 1/2	22 1/2
WEIGHT IN POUNDS *			
COVER		50	50
BOX ONLY		75	85

* THE ACTUAL WEIGHT OF THE COVER OR BOX ONLY MAY VARY NOT TO EXCEED 100 LBS INDIVIDUALLY.

** DIAMETER VARIES FROM TOP TO BOTTOM WITH THE DIAMETER LARGER AT THE BOTTOM TO PREVENT FROST HEAVE

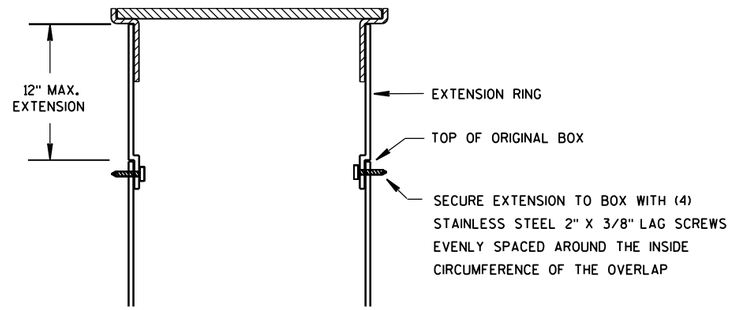

BOX EXTENSION

INSTALLED IN SOD OR CRUSHED AGGREGATE

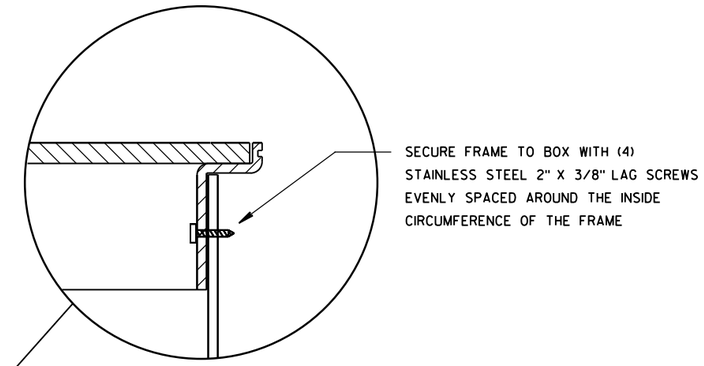

INSTALLED IN SIDEWALK

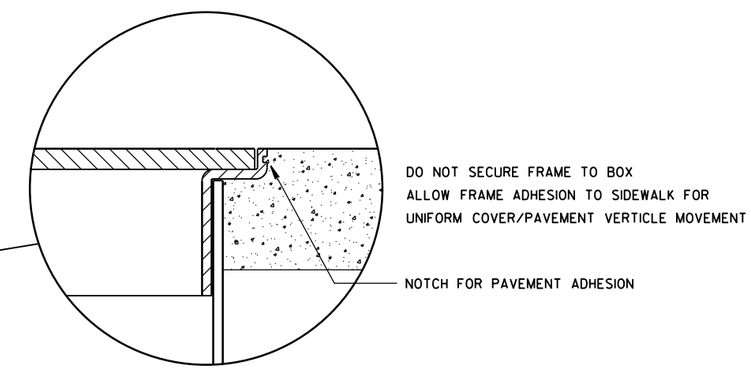

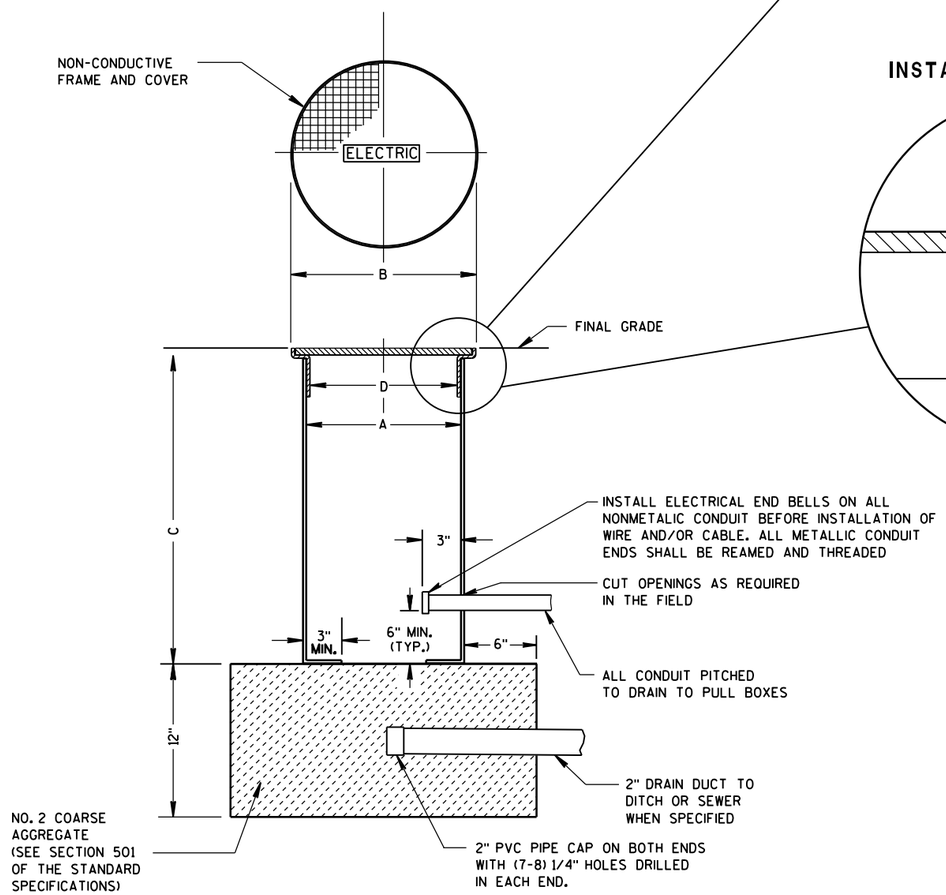

NON-CONDUCTIVE PULL BOX

GENERAL NOTES

DETAILS OF CONSTRUCTION, MATERIALS AND WORKMANSHIP NOT SHOWN ON THIS DRAWING SHALL CONFORM TO THE PERTINENT REQUIREMENTS OF THE CONTRACT.

ALL BOXES, FRAMES AND COVERS SHALL BE SUITABLE FOR TIER 15 LOADING AS SPECIFIED IN ANSI/SCTE 77.

PROVIDE AN OPENING FOR TOOL ASSISTED COVER REMOVAL NOT LARGE ENOUGH TO PERMIT PASSAGE OF A SPHERE MORE THAN 1/2" DIAMETER

ENSURE COVER SURFACE IS SKID RESISTANT WITH A COEFFICIENT OF FRICTION OF AT LEAST 0.5 AND VERTICAL SURFACE DICONTINUITIES LESS THAN 1/4".

COVER SHALL BE MAGNETICALLY LOCATABLE.

BOXES AND EXTENSIONS ARE TRIMMABLE FOR CUSTOM LENGTHS. TRIMMED PIECES SHALL MAINTAIN A UNIFORM LENGTH.

ENTRANCE HOLES INTO PULL BOXES SHALL BE CUT WITH A CIRCULAR HOLE SAW OR HYDRAULIC CONDUIT PUNCH. HOLE SIZE SHALL BE THE OUTSIDE DIAMETER OF THE CONDUIT THAT IS TO FIT IN THE OPENING PLUS NO MORE THAN 1/4".

THE CONTRACTOR SHALL NOT INSTALL WIRE IN ANY PULL BOX UNTIL ITS INSTALLATION HAS BEEN INSPECTED AND ACCEPTED BY THE ENGINEER.

ALL METALLIC CONDUIT IN WHICH WIRE AND/OR CABLE IS TO BE INSTALLED, SHALL BE BUSHED BEFORE INSTALLATION OF THE WIRE AND/OR CABLE.

ENTIRE BOX MUST BE CONSTRUCTED OF NON-CONDUCTIVE MATERIALS WITH THE EXCEPTION OF STAINLESS STEEL FASTENERS AND MAGNETIC LOCATABLE DEVICE.

WHEN A PULL BOX IS INSTALLED IN CRUSHED AGGREGATE SHOULDERS, PLACE IT 2-3 INCHES BELOW GRADE AND COVER IT WITH 2-3 INCHES OF CRUSHED AGGREGATE

LABEL ON COVER SHALL READ "ELECTRIC" FOR SIGNAL AND LIGHTING SYSTEMS, "WISDOT ITS" FOR COMMUNICATIONS AND ITS EQUIPMENT SYSTEMS.

PULL BOX
NON-CONDUCTIVE

STATE OF WISCONSIN
DEPARTMENT OF TRANSPORTATION

APPROVED
May 2017 — DATE
/S/ Ahmet Demirbilek — STATE ELECTRICAL
FHWA

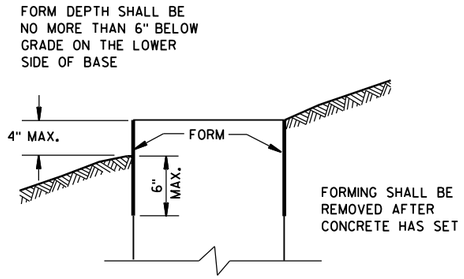

FORMING DETAIL

QUANTITY REQUIREMENTS	CONCRETE BASE TYPE		
	1	2	5 & 6
APPROX. CUBIC YARDS OF CONCRETE	0.40	0.57	0.40
LBS. OF HOOP BAR STEEL	NONE	23	16
LBS. OF VERTICAL BAR STEEL	NONE	60	18

GENERAL NOTES

DETAILS OF CONSTRUCTION, MATERIALS AND WORKMANSHIP NOT SHOWN ON THIS DRAWING SHALL CONFORM TO THE PERTINENT REQUIREMENTS OF THE CONTRACT.

BASES SHALL BE EXCAVATED BY USE OF A CIRCULAR AUGER.

TOP SURFACES OF CONCRETE BASES SHALL BE TROWEL FINISHED SMOOTH AND LEVEL.

CONDUIT SIZES AND LOCATIONS SHALL BE AS SHOWN ON THE PLANS.

THE FINAL OR TERMINATING CONCRETE BASE IN A CONDUIT RUN SHALL HAVE A 6" EXIT STUB INSTALLED FOR FUTURE CABLING USE. THE EXIT STUB SHALL BE SIZED AS USED THROUGHOUT THE CONDUIT RUN AS SHOWN AT THE ENTRANCE OF THE BASE.

MINIMUM BENDING RADIUS OF CONDUIT IS EQUAL TO 6 X THE DIAMETER.

CONDUIT HEIGHT ABOVE CONCRETE BASES SHALL BE 1 INCH. ALL METALLIC CONDUIT ENDS SHALL BE REAMED AND THREADED.

ALL CONDUIT ENDS AT THE TOP OF CONCRETE BASES SHALL BE CAPPED IF METALLIC OR PLUGGED IF NONMETALLIC IMMEDIATELY AFTER PLACEMENT AND BEFORE CONCRETE IS POURED. CONDUITS IN WHICH WIRE OR CABLE IS NOT INSTALLED SHALL REMAIN CAPPED OR PLUGGED.

GENERAL NOTES (CONTINUED)

BELL ENDS SHALL BE INSTALLED ON ALL PVC CONDUIT EXPOSED AT THE TOP OF CONCRETE BASES BEFORE INSTALLATION OF CABLE OR WIRE.

ENDS OF CONDUIT INSTALLED BELOW GRADE FOR FUTURE USE SHALL BE CAPPED IF METALLIC OR PLUGGED IF NONMETALLIC.

WHEN REQUIRED TO CONNECT NONMETALLIC CONDUIT TO METALLIC CONDUIT, ONLY ADAPTER FITTINGS, U.L. LISTED FOR ELECTRICAL USE, SHALL BE USED.

IF A BASE REQUIRES A DEEP FORM BECAUSE OF LOOSE DIRT OR FILL, THE FORM SHALL BE REMOVED BEFORE BACKFILLING AROUND THE BASE. BACKFILL SHALL BE TAMPED TIGHT AGAINST THE BARE CONCRETE BASE IN LAYERS OF 1 FOOT OR LESS.

A NO. 4 AWG, STRANDED COPPER EQUIPMENT GROUNDING CONDUCTOR SHALL BE EXOTHERMICALLY WELDED TO THE EQUIPMENT GROUNDING ELECTRODE (GROUND ROD) FOR TYPE 1, TYPE 2, TYPE 5, AND TYPE 6 BASES.

THE EQUIPMENT GROUNDING CONDUCTOR SHALL BE FURNISHED AND INSTALLED TO ENTER THE BASE OF THE TYPE 2 AND TYPE 5 BASES THROUGH A 1 INCH CONDUIT INSTALLED FOR GROUNDING PURPOSES, LEAVING A 4 FOOT COIL OF WIRE ABOVE THE CONCRETE BASE. THE EQUIPMENT GROUNDING CONDUCTOR SHALL BE NEATLY COILED AND THE COILS TIED TOGETHER.

ANCHOR RODS SHALL BE THREADED 12" IN LENGTH ON EACH END OF THE ROD. ANCHOR RODS SHALL BE MANUFACTURED IN ACCORDANCE WITH SECTION 654.2.1 OF THE STANDARD SPECIFICATIONS.

WASHERS AND LOCK WASHERS ARE REQUIRED ON ALL ANCHOR RODS.

WHEN ANCHOR RODS USING THE ALTERNATE "L" BEND ARE FURNISHED, THE 4" "L" BEND SHALL BE IN ADDITION TO THE SPECIFIED ANCHOR ROD BAR LENGTH. THE "L" BEND END SHALL NOT BE THREADED.

ANCHOR RODS SHALL BE INSTALLED WITH MISALIGNMENTS OF LESS THAN 1:40 FROM VERTICAL.

WELDING OF THE ANCHOR RODS TO THE CAGE IS UNACCEPTABLE. TIE WIRES SHALL BE USED.

BAR STEEL REINFORCEMENT SHALL BE COATED WITH POWDERED EPOXY RESIN IN ACCORDANCE WITH SECTION 505 OF THE STANDARD SPECIFICATIONS (LATEST EDITION).

(1) THE MINIMUM DEPTH OF CONDUIT EXITING THE CONCRETE BASE AND INSTALLED BELOW THE TRAVELED WAY SHALL BE 24 INCHES. THE MINIMUM DEPTH OF CONDUIT EXITING THE CONCRETE BASE THAT IS NOT INSTALLED BELOW THE TRAVELED WAY SHALL BE 18 INCHES. THE MAXIMUM DEPTH OF ALL CONDUIT SHALL BE 36 INCHES EXCEPT WITH WRITTEN APPROVAL BY THE ENGINEER.

(2) (4) 1" DIA. X 3'-6" ANCHOR RODS.

(3) (4) 1" DIA. X 5'-0" ANCHOR RODS.

(4) (6) NO. 6 X 6'-8" BAR STEEL REINFORCEMENT.

(5) (7) NO. 4 X 5'-1" BAR STEEL REINFORCEMENT @ 1'-0" C-C.

(6) (4) 1" DIA. X 3'-6" ANCHOR RODS.

(7) (6) NO.4 X 4'-8" BAR STEEL REINFORCEMENT.

(8) (5) NO. 4 X 5'-1" BAR STEEL REINFORCEMENT @ 1'-0" C-C.

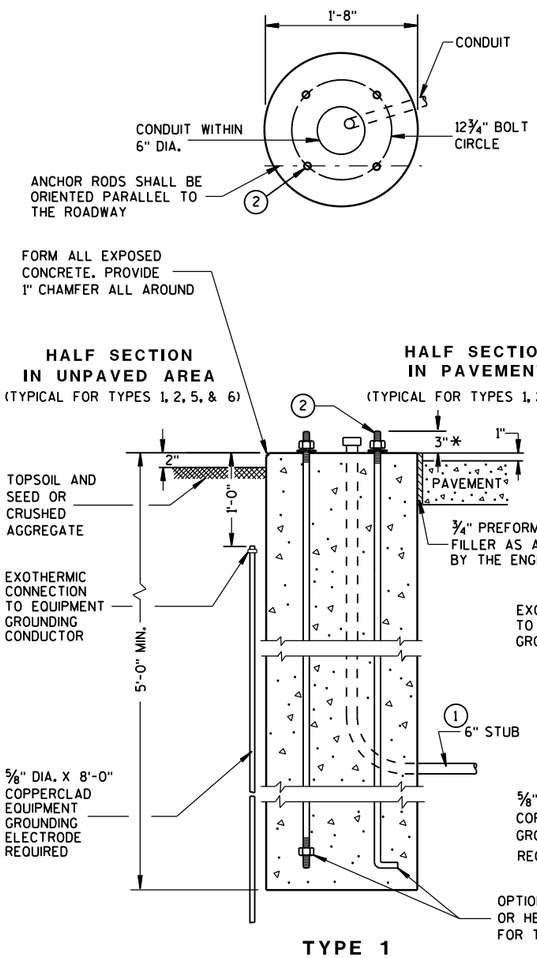

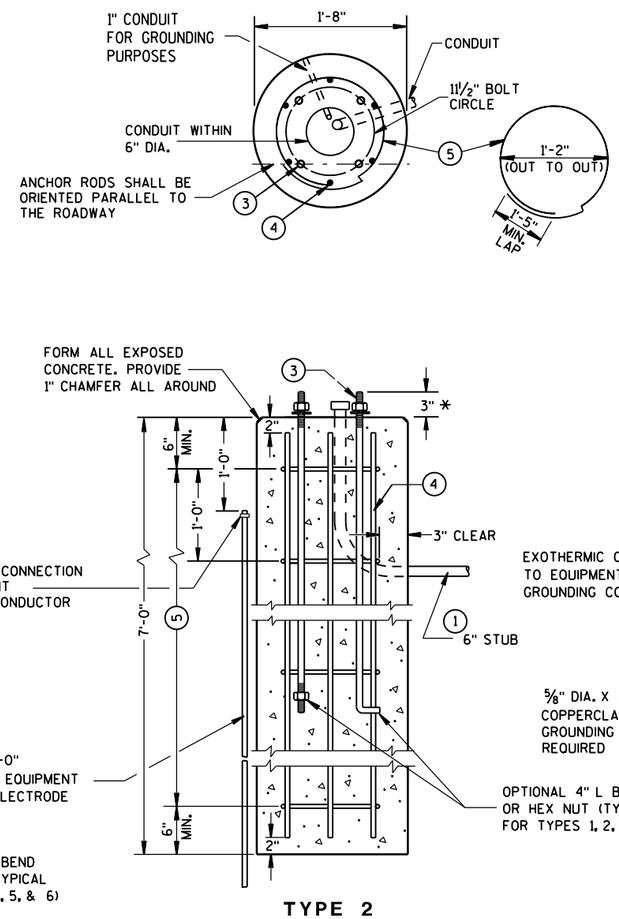

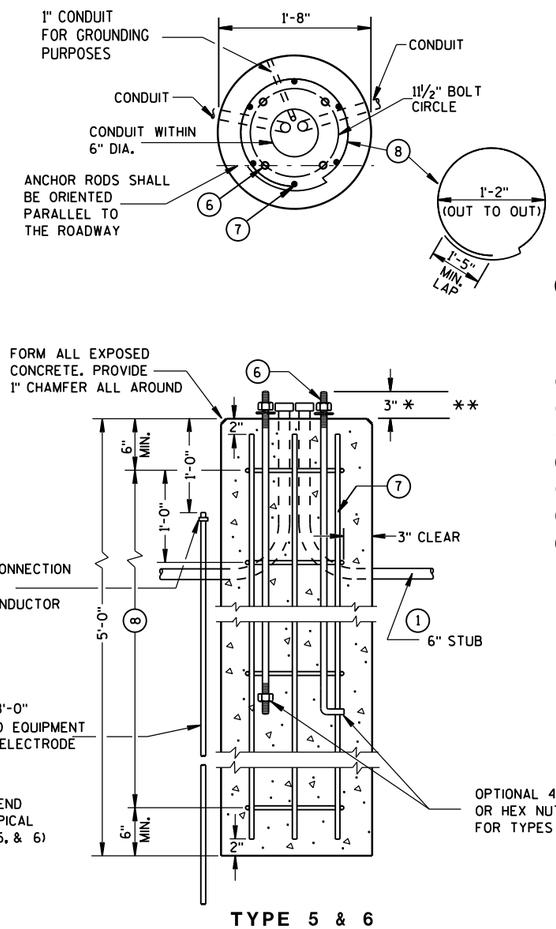

CONCRETE BASES

* ANY ANCHOR ROD PROJECTION SHORTER THAN 2¾" OR LONGER THAN 3¼" SHALL REQUIRE THE BASE TO BE REMOVED AND REPLACED AT THE CONTRACTORS EXPENSE.

** FOR NONBREAKAWAY INSTALLATIONS, 4½" ± ANCHOR ROD PROJECTION WITH THE USE OF LEVELING NUTS. RODENT SCREEN REQUIRED.

CONCRETE BASES, TYPES 1, 2, 5, & 6

STATE OF WISCONSIN
DEPARTMENT OF TRANSPORTATION

APPROVED
Sept. 2014 — DATE
/S/ Ahmet Demirbilek — STATE ELECTRICAL
FHWA

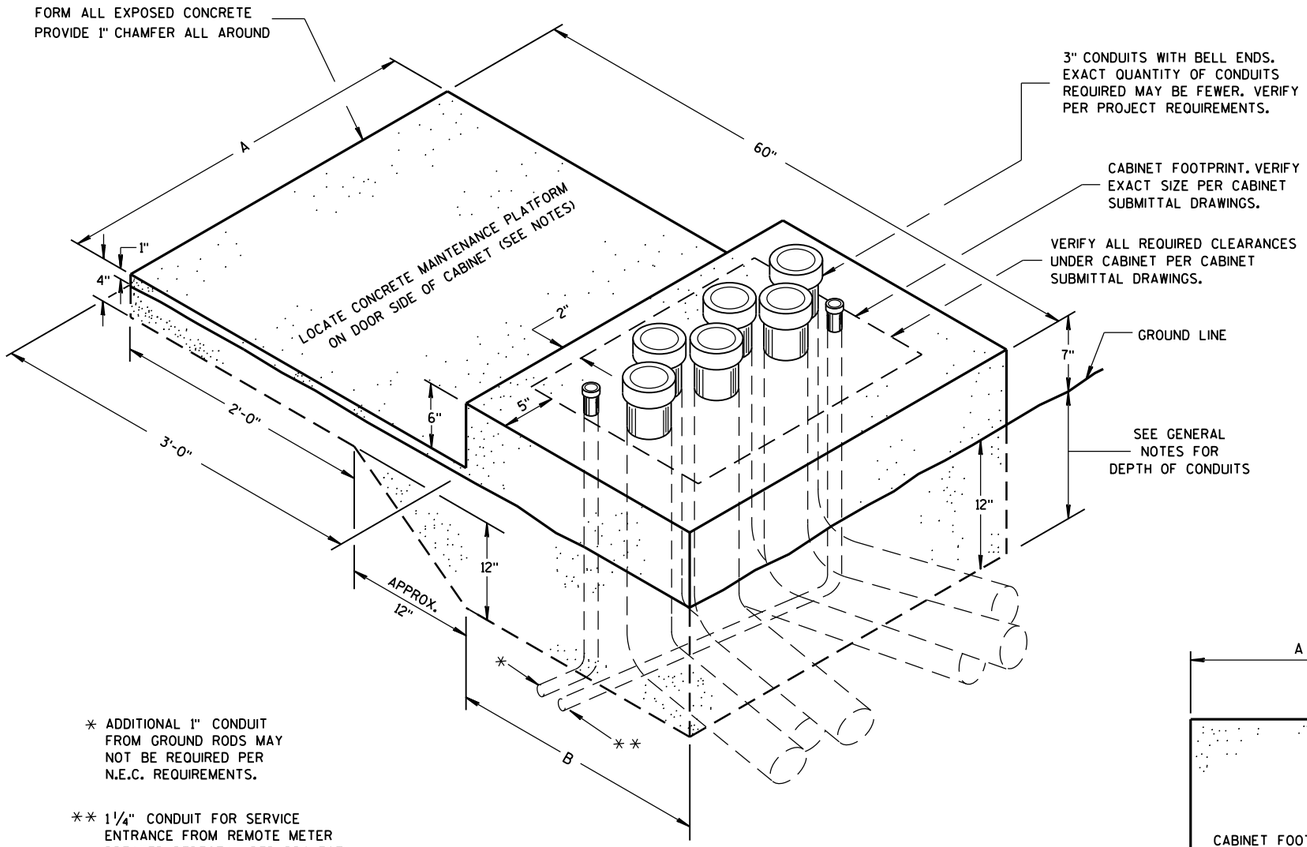

* ADDITIONAL 1" CONDUIT FROM GROUND RODS MAY NOT BE REQUIRED PER N.E.C. REQUIREMENTS.

** 1¼" CONDUIT FOR SERVICE ENTRANCE FROM REMOTE METER BREAKER PEDESTAL PER PROJECT REQUIREMENTS. VERIFY LOCATION OF CONDUIT DEPENDENT UPON LOCATION OF INCOMING FEEDER AND FOR EASE OF CONNECTION TO LOAD CENTER.

ISOMETRIC VIEW

CONCRETE CONTROL CABINET BASE, TYPE L

(C.Y. CONCRETE = APPROX. 0.4)

CONCRETE BASE TYPE	CABINET WIDTH	DIMENSIONS		MAXIMUM 3" CONDUITS
		A	B	
L24	24"	34"	24"	4
L30	30"	40"	24"	6

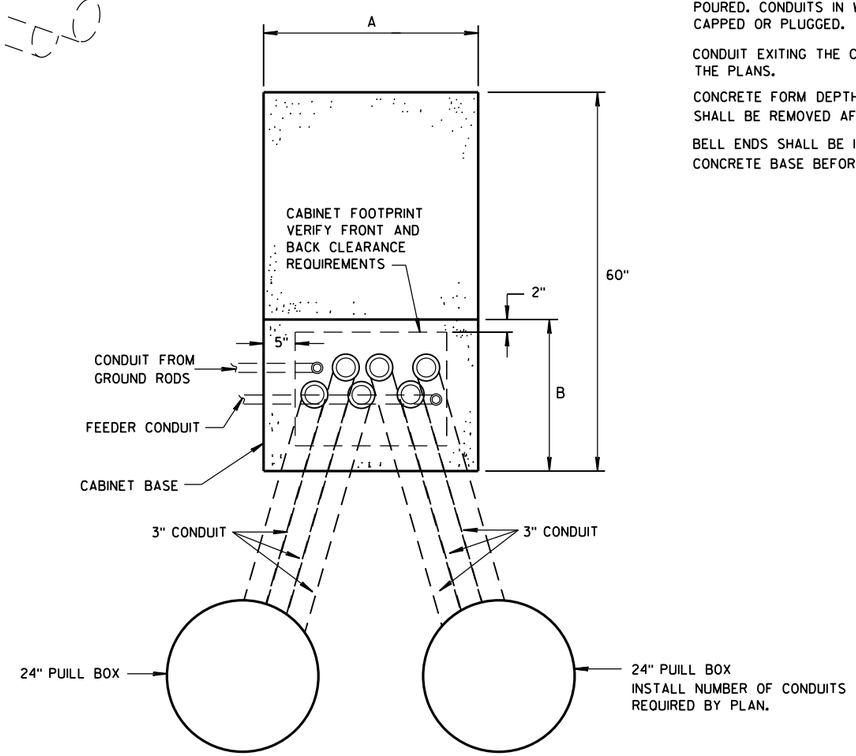

PLAN VIEW

CONCRETE CONTROL CABINET BASE, TYPE L

GENERAL NOTES

DETAILS OF CONSTRUCTION, MATERIALS AND WORKMANSHIP NOT SHOWN ON THIS DRAWING SHALL CONFORM TO THE PERTINENT REQUIREMENTS OF THE CONTRACT.

INSTALL FOUR STAINLESS STEEL APPROVED CONCRETE MASONRY ANCHORS TO ANCHOR THE CABINET BASES. THE ANCHORS SHALL BE LOCATED AS DIRECTED BY THE ENGINEER TO PROPERLY ANCHOR THE CONTROL CABINET TO THE BASE.

WHEN REQUIRED TO CONNECT NONMETALLIC CONDUIT TO METALLIC CONDUIT, ONLY ADAPTER FITTINGS, U.L. LISTED FOR ELECTRICAL USE, SHALL BE USED.

CONDUIT HEIGHT ABOVE THE CONCRETE BASE SHALL BE 1 INCH.

DEPTH OF CONDUIT INSTALLED BELOW THE TRAVELED WAY SHALL BE 24 INCHES MINIMUM AND 36 INCHES MAXIMUM.

DEPTH OF CONDUIT INSTALLED THAT IS NOT BELOW THE TRAVELED WAY SHALL BE 18 INCHES MINIMUM AND 36 INCHES MAXIMUM.

ANY EXCEPTION TO THE MAXIMUM DEPTH SHALL BE ONLY WITH THE WRITTEN APPROVAL OF THE ENGINEER.

CONTROL CABINET BASE TOP SURFACE SHALL BE TROWEL FINISHED SMOOTH AND LEVEL.

MAINTENANCE PLATFORM SHALL BE FLOAT OR BROOM FINISHED AND BE LEVEL.

MAINTENANCE PLATFORMS ARE NOT REQUIRED WHEN THE SURROUNDING AREA IS PAVED.

MINIMUM BENDING RADIUS OF CONDUIT = 6 X THE DIAMETER.

ALL METALLIC CONDUIT ENDS SHALL BE REAMED AND THREADED.

CAP ALL BELOW GRADE METALLIC CONDUIT ENDS IN WHICH WIRE OR CABLE IS NOT BEING INSTALLED.

PLUG ALL BELOW GRADE NONMETALLIC CONDUIT ENDS IN WHICH WIRE OR CABLE IS NOT BEING INSTALLED.

ALL CONDUIT ENDS AT THE TOP OF CONCRETE BASES SHALL BE CAPPED IF METALLIC OR PLUGGED IF NONMETALLIC IMMEDIATELY AFTER PLACEMENT AND BEFORE CONCRETE IS POURED. CONDUITS IN WHICH WIRE OR CABLE IS NOT BEING INSTALLED SHALL REMAIN CAPPED OR PLUGGED.

CONDUIT EXITING THE CONCRETE BASE SHALL TERMINATE IN PULL BOXES AS SHOWN ON THE PLANS.

CONCRETE FORM DEPTH BELOW FINISHED GRADE SHALL BE 6" MAXIMUM. CONCRETE FORMS SHALL BE REMOVED AFTER CONCRETE HAS SET.

BELL ENDS SHALL BE INSTALLED ON ALL PVC CONDUIT EXPOSED AT THE TOP OF THE CONCRETE BASE BEFORE INSTALLATION OF CABLE OR WIRE.

CONCRETE CONTROL
CABINET BASE, TYPE L

STATE OF WISCONSIN
DEPARTMENT OF TRANSPORTATION

APPROVED
Nov. 2014 — DATE
/S/ Thomas Gonring — STATE LIGHTING ENGINE
FHWA — WYS

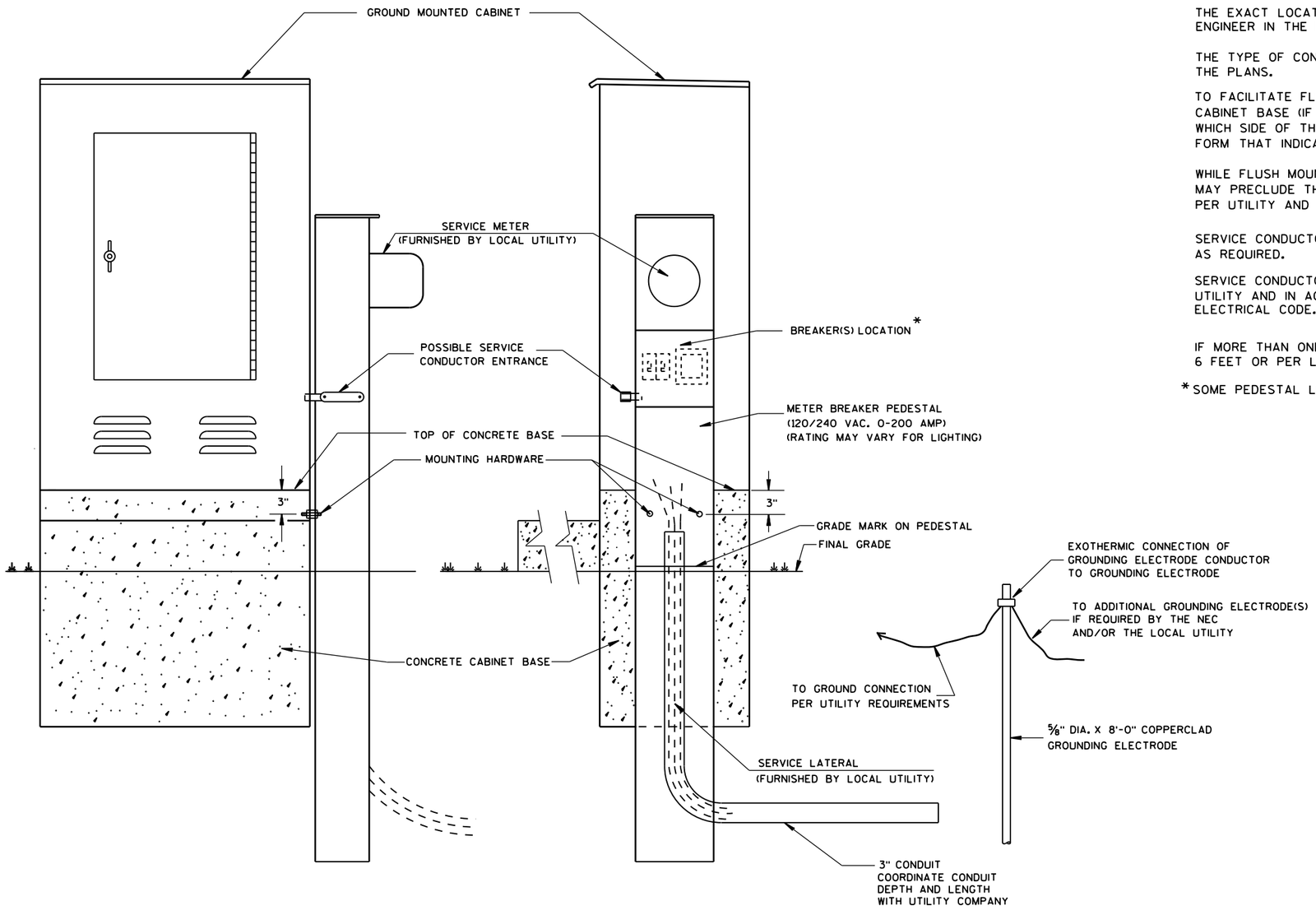

TYPICAL CABINET SERVICE INSTALLATION

GENERAL NOTES

DETAILS OF CONSTRUCTION, MATERIALS AND WORKMANSHIP NOT SHOWN ON THIS DRAWING SHALL CONFORM TO THE PERTINENT REQUIREMENTS OF THE CONTRACT.

THE EXACT LOCATION OF THE METER BREAKER PEDESTAL SHALL BE DETERMINED BY THE ENGINEER IN THE FIELD.

THE TYPE OF CONCRETE CABINET BASE TO BE INSTALLED SHALL BE AS CALLED FOR IN THE PLANS.

TO FACILITATE FLUSH MOUNTING OF THE METER BREAKER PEDESTAL AGAINST THE SIDE OF THE CABINET BASE (IF FLUSH MOUNTING POSSIBLE. CONFER WITH THE LOCAL UTILITY TO DETERMINE WHICH SIDE OF THE CONCRETE BASE THE ELECTRICAL SERVICE LATERAL WILL APPROACH. THEN FORM THAT INDICATED SIDE FOR FULL SIDE DEPTH.

WHILE FLUSH MOUNTING IS THE MOST DESIRABLE MOUNTING CONFIGURATION UTILITY REQUIREMENTS MAY PRECLUDE THIS OPTION. CONTRACTOR MUST PROVIDE UTILITY APPROVED PEDESTAL AND INSTALL PER UTILITY AND MANUFACTURERS REQUIREMENTS.

SERVICE CONDUCTOR ENTRANCES SHALL BE RIGID METALLIC CONDUIT, NIPPLES AND/OR CONDULETS AS REQUIRED.

SERVICE CONDUCTOR ENTRANCES SHALL BE SIZED AND LOCATED AS REQUIRED BY THE LOCAL UTILITY AND IN ACCORDANCE WITH APPROPRIATE ARTICLES OF THE LATEST ACCEPTED NATIONAL ELECTRICAL CODE.

IF MORE THAN ONE GROUNDING ELECTRODE IS REQUIRED, THE DISTANCE APART SHALL BE 6 FEET OR PER LOCAL UTILITY REGULATIONS.

* SOME PEDESTAL LIGHTING PLANS SHOW MAIN LUGS ONLY.

6

6

CABINET SERVICE INSTALLATION (METER BREAKER PEDESTAL)	
STATE OF WISCONSIN DEPARTMENT OF TRANSPORTATION	
APPROVED Sept. 2014 DATE	/S/ Ahmet Demirbilek STATE ELECTRICAL
FHWA	

S.D.D. 9 D 1-5

S.D.D. 9 D 1-5

GENERAL NOTES

DETAILS OF CONSTRUCTION, MATERIALS AND WORKMANSHIP NOT SHOWN ON THIS DRAWING SHALL CONFORM TO THE PERTINENT REQUIREMENTS OF THE STANDARD SPECIFICATIONS AND APPLICABLE SPECIAL PROVISIONS.

ALL INTERNAL ELECTRICAL COMPONENTS WILL BE PRE-WIRED BY THE CABINET FABRICATOR.

ALL CONDUIT ENTRIES SHALL BE SEALED WITH AN APPROPRIATE DUCT SEALING COMPOUND.

ORIENT PHOTOCELL AWAY FROM AMBIENT LIGHT SOURCES AND ONCOMING TRAFFIC HEADLIGHTS.

THE CONTRACTOR SHALL TOUCH UP ANY DAMAGE TO THE ANODIZED FINISH CAUSED BY THE INSTALLATION PROCESS. COLOR MATCH PAINT SHALL BE USED.

A COMPLETE LIGHTING OR ELECTRICAL PLAN SHALL BE SECURELY PLACED IN THE DOCUMENT HOLDER ATTACHED TO THE DOOR.

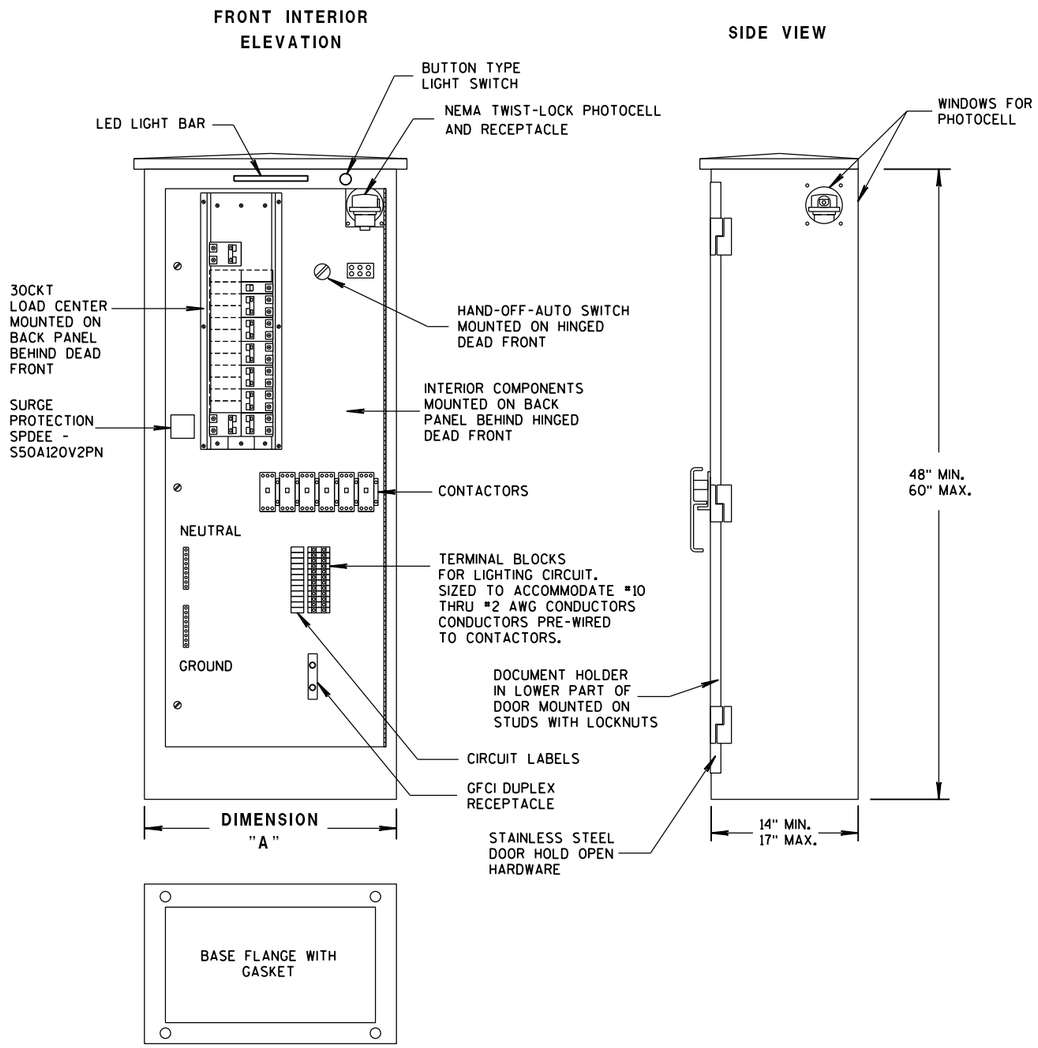

TABLE OF DIMENSIONS (INCHES)

CONCRETE BASE TYPE	CABINET WIDTH	DIMENSION "A"
L24	24"	24"
L30	30"	30"

LIGHTING CONTROL CABINET

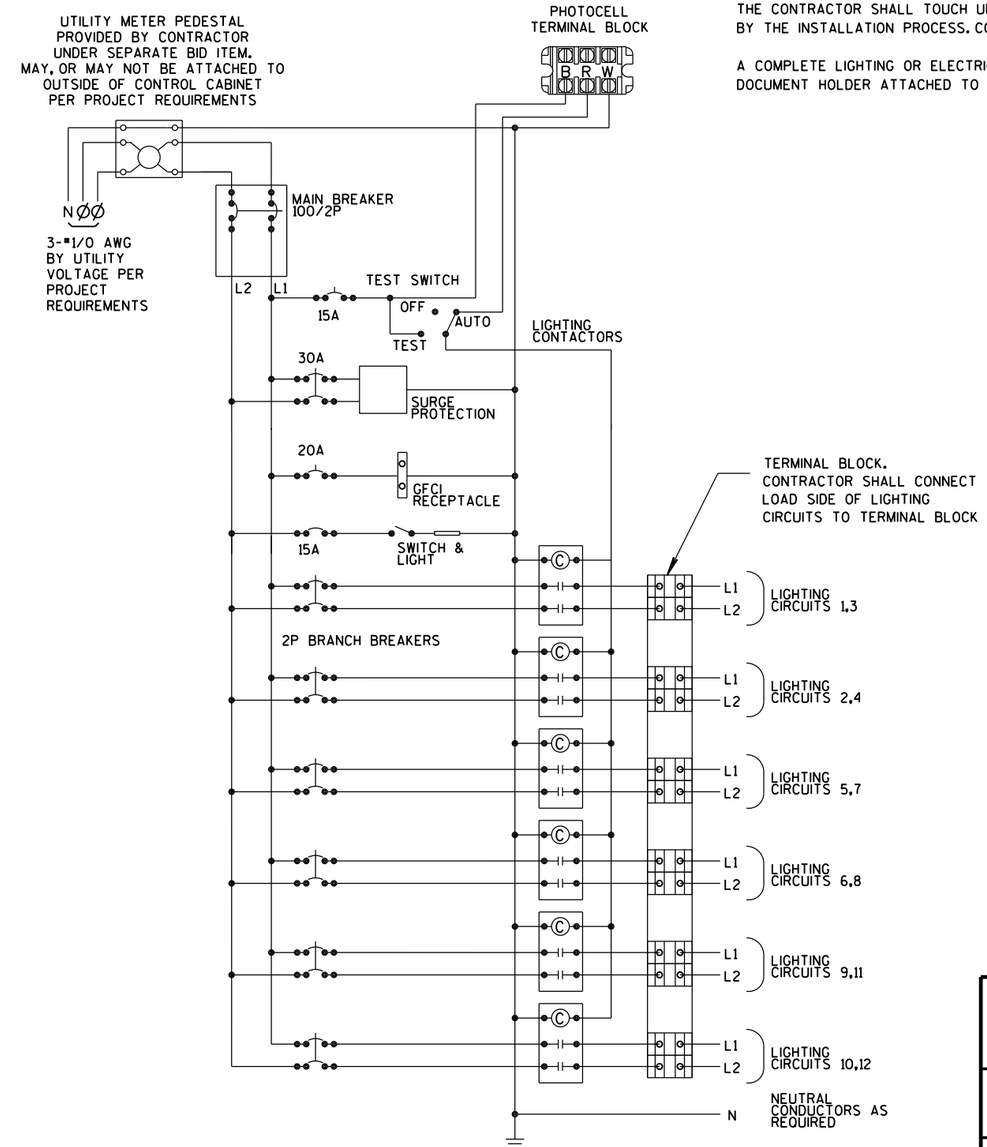

CONTROL CABINET SCHEMATIC

LIGHTING CONTROL CABINET 120/240 VOLT

STATE OF WISCONSIN
DEPARTMENT OF TRANSPORTATION

APPROVED
Sept. 2014 — DATE
/S/ Thomas Gonring — STATE LIGHTING ENGINEER
NYS.
FHWA

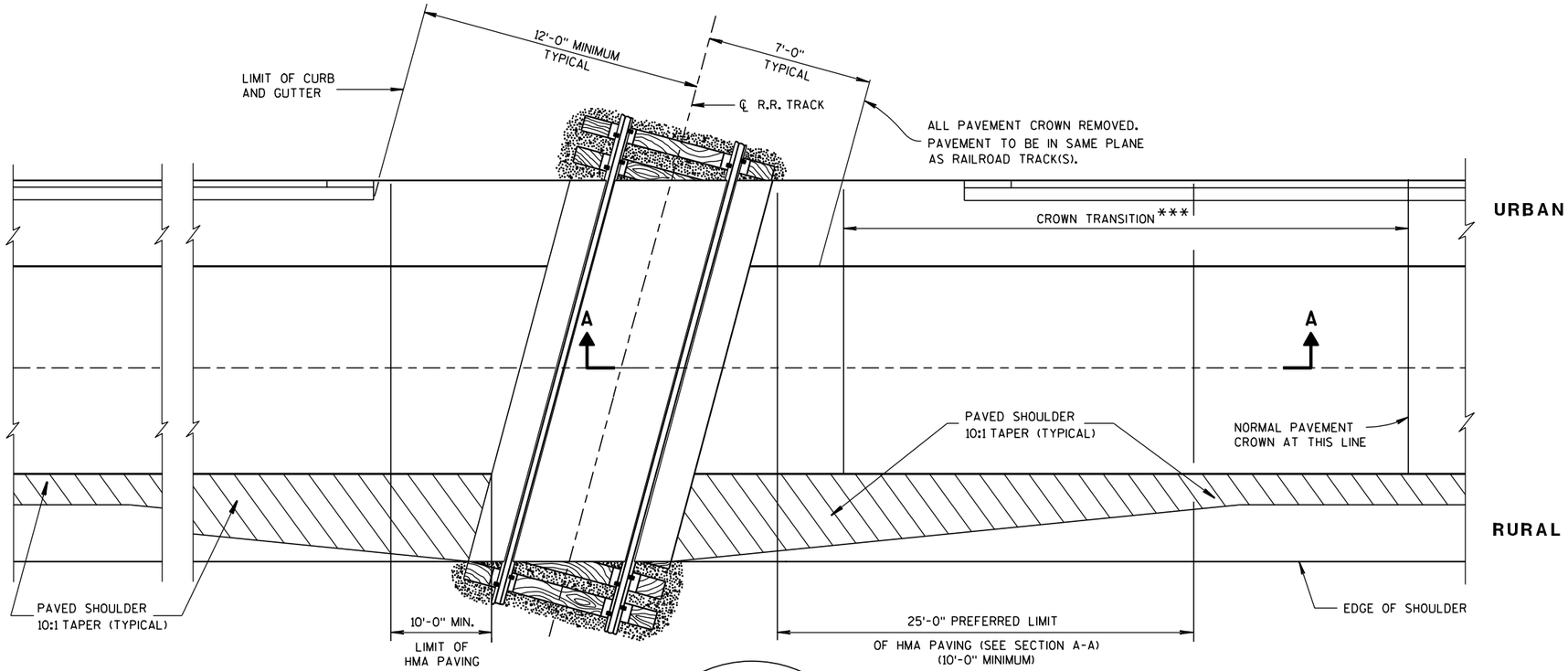

GENERAL NOTES

DETAILS OF CONSTRUCTION, MATERIALS AND WORKMANSHIP NOT SHOWN ON THIS DRAWING SHALL CONFORM TO THE PERTINENT REQUIREMENTS OF THE STANDARD SPECIFICATIONS AND THE APPLICABLE SPECIAL PROVISIONS.

TIMBER, CONCRETE OR RUBBER CROSSING SURFACE MATERIAL, RAILS, TIES, BALLAST, GEOTEXTILE FABRIC AND CROSSING DRAINAGE SYSTEM BY OTHERS UNLESS OTHERWISE PROVIDED.

HMA PAVEMENT APPROACHES AND HMA PAVEMET CROSSING SURFACES TO BE PLACED BY CONTRACTOR UNLESS OTHERWISE PROVIDED.

HMA FLANGEWAY AND FIELD FILLERS TO BE PLACED AND THOROUGHLY HAND COMPACTED BY THE CONTRACTOR WHEN NOT PROVIDED BY OTHERS. SEE DETAIL B. HMA FILLERS NOT REQUIRED WHEN RUBBER FILLERS ARE PROVIDED.

HMA PAVEMENT SHALL BE ROLLED PARALLEL TO THE TRACK.

** CROSSING SURFACE MAY BE TIMBER, RUBBER, CONCRETE, HMA PAVEMENT OR A COMBINATION OF SUCH MATERIALS.

*** CROWN TRANSITION LENGTH SHOWN ELSEWHERE IN THE PLAN.

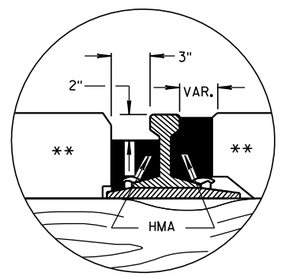

DETAIL B

HMA FLANGEWAY AND FIELD FILLERS

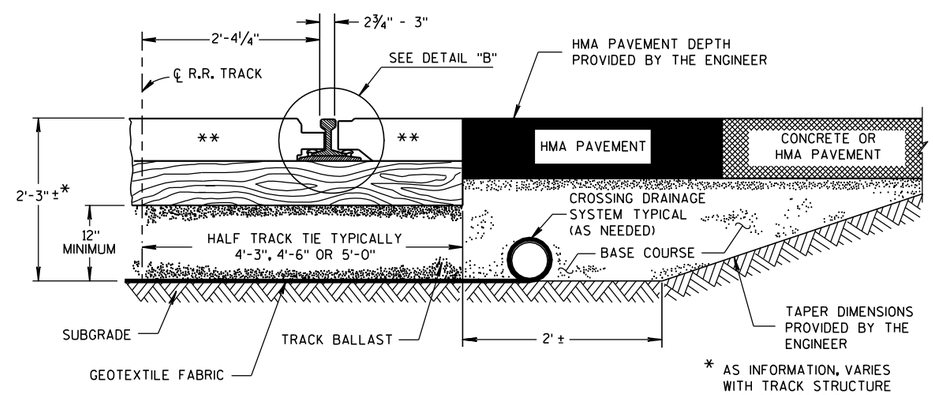

* AS INFORMATION, VARIES WITH TRACK STRUCTURE AND SOIL CONDITIONS

TYPICAL HALF SECTION

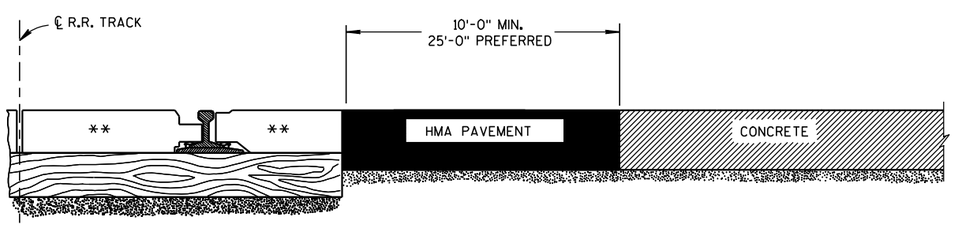

SECTION A-A

CONCRETE PAVEMENT APPROACH

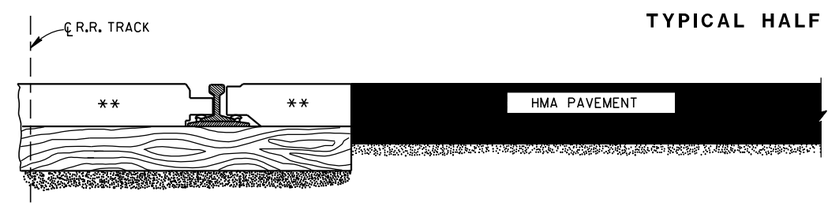

SECTION A-A

HMA PAVEMENT APPROACH

EXAMPLES OF PAVEMENT APPROACHES

PAVEMENT DETAILS FOR RAILROAD APPROACH

STATE OF WISCONSIN
DEPARTMENT OF TRANSPORTATION

APPROVED
8-28-09 /S/ Ronald E. Adams
DATE CHIEF, RAILROADS & HAF SECTION
FHWA

6

6

S.D.D. 13 B 1-10

S.D.D. 13 B 1-10

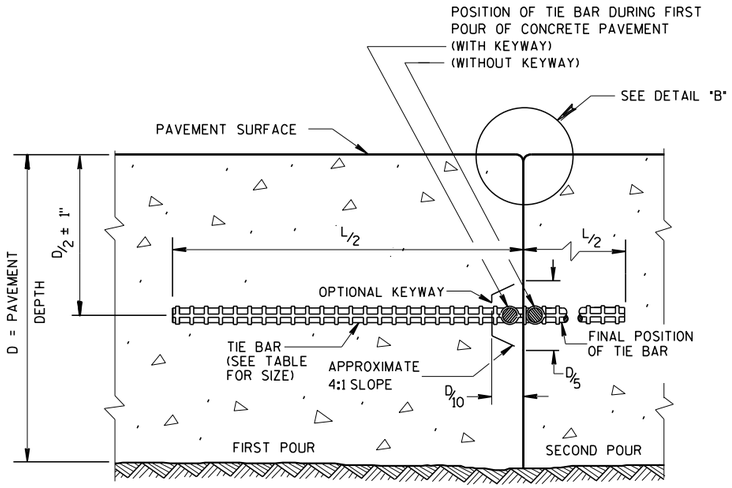

CONSTRUCTION JOINT

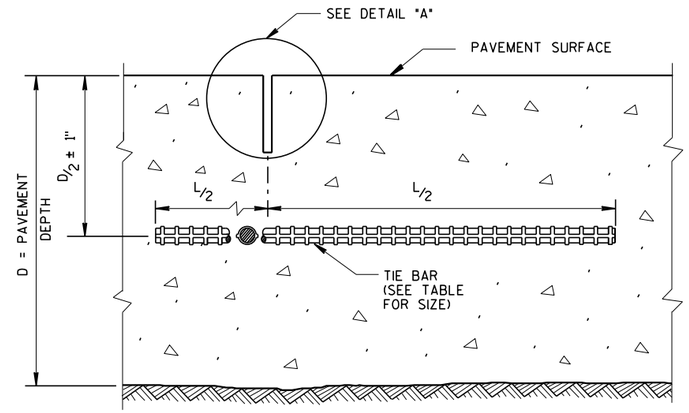

SAWED JOINT

GENERAL NOTES

CREATE A LONGITUDINAL JOINT FOR PAVEMENT WIDTHS GREATER THAN 15 FEET.

CORRELATE LONGITUDINAL JOINTS WITH LANE LINES WHEN POSSIBLE.

1. ANCHOR TIE BARS INTO DRILLED HOLES WITH AN EPOXY.
2. PAVEMENT THAT WAS IN PLACE PRIOR TO THE CONTRACT.

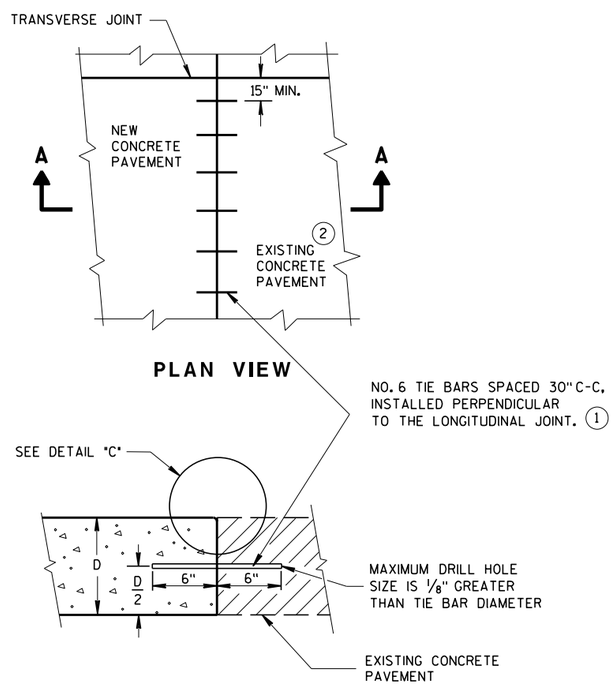

PLAN VIEW

SECTION A-A

LONGITUDINAL CONSTRUCTION JOINT TIE BARS ANCHORED INTO EXISTING PAVEMENT

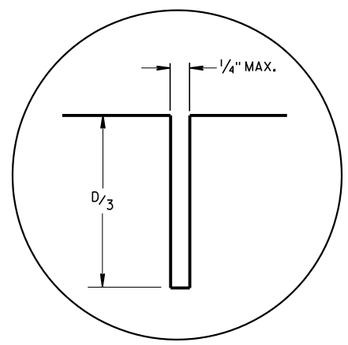

DETAIL "A"

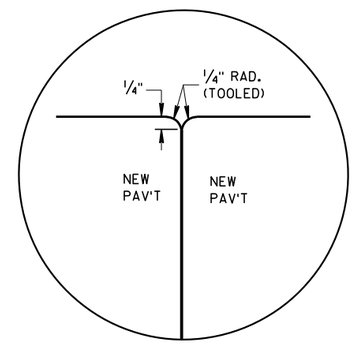

DETAIL "B"

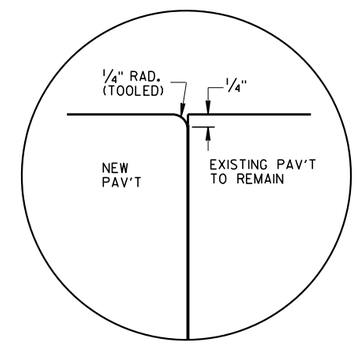

DETAIL "C"

TIE BAR TABLE

PAVEMENT DEPTH (D)	TIE BAR SIZE	TIE BAR LENGTH (L)	MAX. TIE BAR SPACING
< 10 1/2"	NO. 4	30"	36"
≥ 10 1/2"	NO. 5	36"	36"
	NO. 4 *	30"	24" **

* SUBSTITUTE BENT BARS AT LONGITUDINAL JOINTS WHEN EQUIPMENT LIMITATIONS DURING CONSTRUCTION WARRANT (e.g. AUXILIARY LANES OR TURN LANES)

** CONFORM TO 15" MINUMUM SPACING FROM TRANSVERSE JOINTS; SPACING BETWEEN TIE BARS WILL BE 30" AT TRANSVERSE JOINTS.

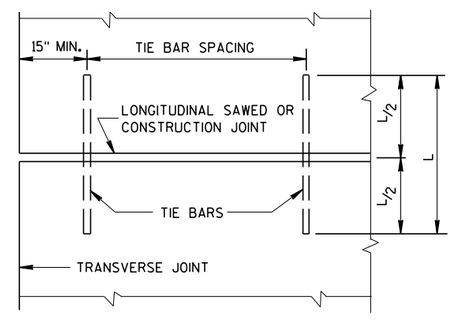

PLAN VIEW

SHOWING LOCATION OF TIE BARS

CONCRETE PAVEMENT LONGITUDINAL JOINTS AND TIES

STATE OF WISCONSIN
DEPARTMENT OF TRANSPORTATION

APPROVED

March 2018 — DATE

/S/ Peter Kerr — PAVEMENT SUPE

FHWA

6

S.D.D. 13 C 1-19

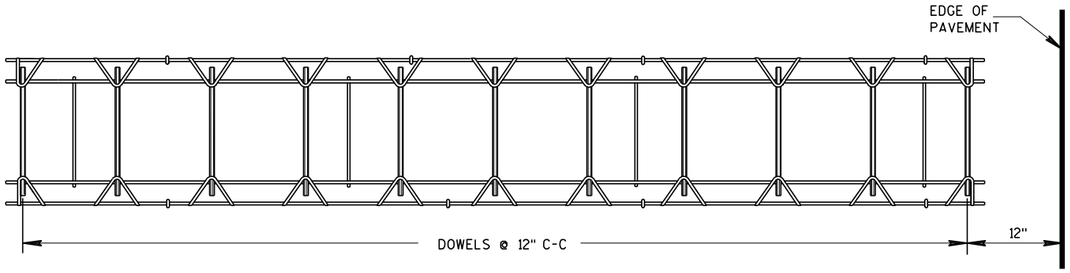

PLAN VIEW

SIDE VIEW

CONTRACTION JOINT DOWEL ASSEMBLY 1

PAVEMENT DEPTH, DOWEL BAR SIZE AND JOINT SPACING TABLE

PAVEMENT DEPTH (D)	DOWEL BAR DIAMETER	CONTRACTION JOINT SPACING
5 1/2", 6", 6 1/2"	NONE	12'
7", 7 1/2"	1"	14'
8", 8 1/2"	1 1/4"	15'
9", 9 1/2"	1 1/4"	15'
10" & ABOVE	1 1/2"	15'

GENERAL NOTES

CONTRACTION JOINTS

CONSTRUCT TRANSVERSE CONTRACTION JOINTS NORMAL TO THE CENTERLINE. SHOW THE LOCATION OF CONTRACTION JOINTS THROUGH INTERSECTIONS ON THE PLANS OR AS DIRECTED BY THE ENGINEER.

INSTALL DOWEL BARS PARALLEL TO THE PAVEMENT CENTERLINE AND PAVEMENT SURFACE.

FOR PAVEMENT SLABS OF VARYING WIDTHS, LOCATE THE OUTER MOST DOWEL BAR SO THAT THE CENTER OF THE BAR IS A MINIMUM OF 6 INCHES AND A MAXIMUM OF 18 INCHES FROM THE LONGITUDINAL JOINT AND THE FREE EDGE OF PAVEMENT.

CONSTRUCTION JOINTS

LOCATE CONSTRUCTION JOINTS A MINIMUM OF 6 FEET FROM THE NEAREST CONTRACTION JOINT AND ALIGN PARALLEL TO CONTRACTION JOINTS.

1. OBTAIN THE ENGINEER'S APPROVAL FOR THE USE OF ALTERNATIVE DESIGNS OF THE DOWEL ASSEMBLY. USE MECHANICAL DOWEL BAR INSERTERS OR DOWEL ASSEMBLIES WHEN CONSTRUCTING CONTRACTION JOINTS.
2. SECURE BASKETS WITH ANCHORS TO HOLD DOWEL BARS IN THE CORRECT POSITION AND ALIGNMENT. TYPE, LOCATION, NUMBER AND LENGTH OF ANCHORS ARE DEPENDENT UPON FIELD CONDITIONS.
3. FORM OR SAW CONSTRUCTION JOINTS. PROVIDE A 1/4-INCH RADIUS AT FORMED JOINTS.
4. PROVIDE A SMOOTH VERTICAL FACE FOR THE ENTIRE DEPTH OF THE PAVEMENT WHEN FORMING CONSTRUCTION JOINTS.
5. INSTALL DOWEL BARS AT CONSTRUCTION JOINTS BY FORMING OR DRILLING. INSTALL FORMED DOWEL BARS 12 INCHES C-C AND 12 INCHES FROM PAVEMENT EDGE. REMOVE EXCESS CONCRETE FROM THE FREE END OF THE DOWEL BAR IF DOWEL BARS ARE FORMED THROUGH A HEADER BOARD. INSTALL DRILLED DOWEL BARS ACCORDING TO *DRILLED DOWEL BAR CONSTRUCTION JOINT* DETAIL.
6. APPLY A THIN UNIFORM COATING OF SURFACE TREATMENT TO THE FREE END OF DOWEL BARS TO PREVENT BONDING.
7. ANCHOR DOWEL BARS INTO DRILLED HOLES WITH AN EPOXY. MAXIMUM DRILLED HOLE SIZE IS 1/8-INCH GREATER THAN DOWEL BAR DIAMETER, 9 INCHES IN LENGTH.

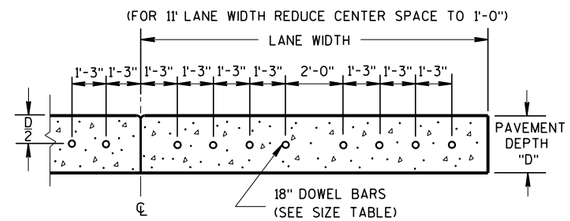

DRILLED DOWEL BAR CONSTRUCTION JOINT 7

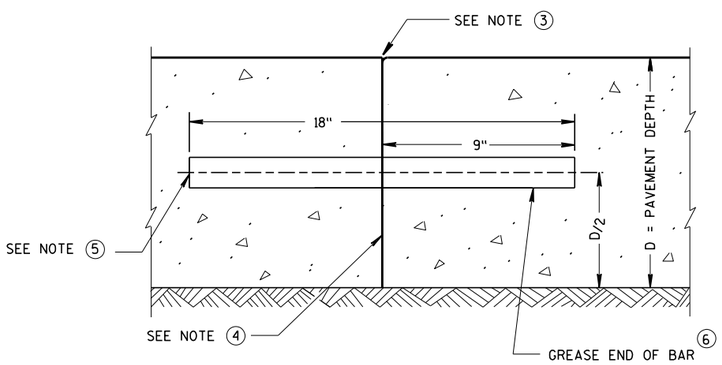

TRANSVERSE CONSTRUCTION JOINT

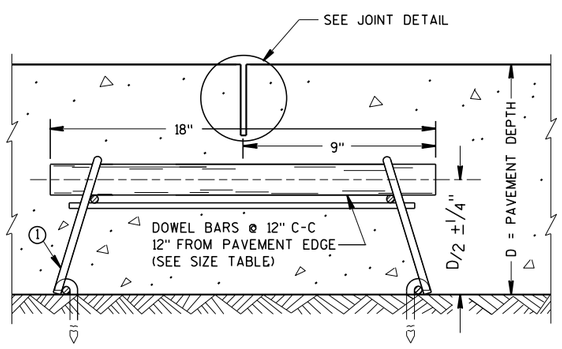

DOWELED CONTRACTION JOINT

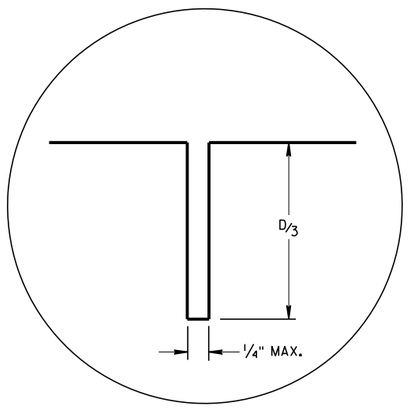

JOINT DETAIL

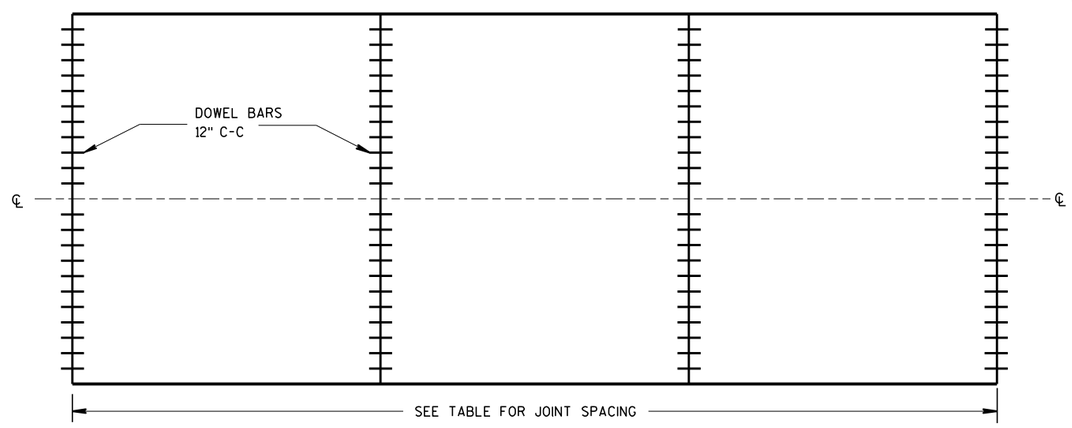

CONTRACTION JOINT LOCATIONS

URBAN DOWELED CONCRETE PAVEMENT

STATE OF WISCONSIN
DEPARTMENT OF TRANSPORTATION

APPROVED
March 2018 — DATE
/S/ Peter Kemp P.E. — PAVEMENT SUP
FHWA

6

S.D.D. 13 C 13-9

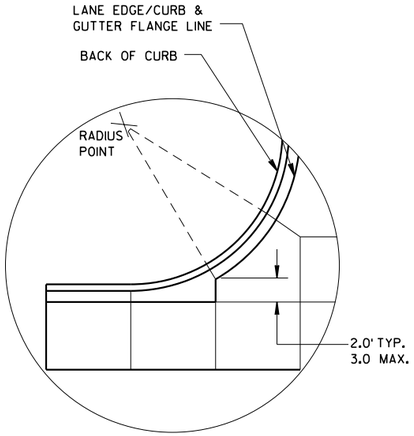

DETAIL "A"

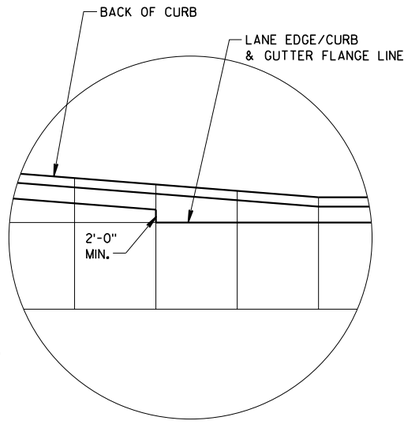

DETAIL "B"

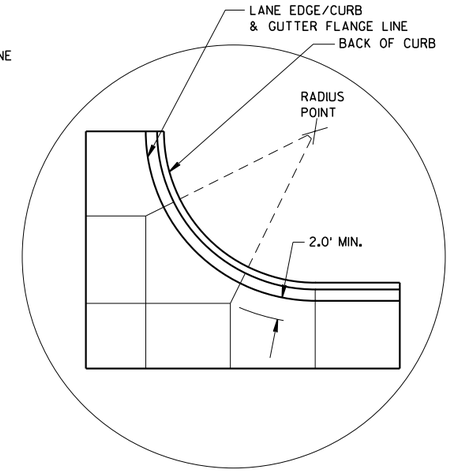

DETAIL "C"

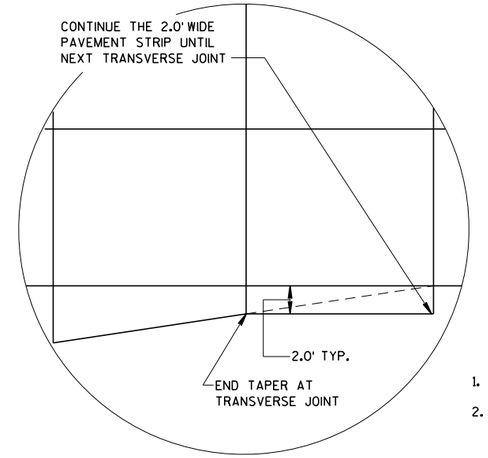

DETAIL "D"

GENERAL NOTES

THE PRIMARY ROADWAY CONTROLS THE TRANSVERSE JOINT PATTERN.

ALIGN NEW JOINTS WITH EXISTING JOINTS OR CRACKS.

CONSTRUCT TRANSVERSE JOINTS PERPENDICULAR TO THE ROADWAY.

ADJUST TRANSVERSE JOINTS TO ALIGN WITH UTILITY FIXTURES (E.G. MANHOLES AND INLETS) IN THE PAVEMENT STRUCTURE WHEN POSSIBLE. WATER VALVES DO NOT REQUIRE JOINT ADJUSTMENT.

AVOID SLABS LESS THAN 2 FEET WIDE OR GREATER THAN 15 FEET WIDE.

SEE TABLE FOR TRANSVERSE JOINT SPACING. JOINT SPACING SPECIFIED IS MAXIMUM AND ACTUAL SPACING CAN BE ADJUSTED TO ACCOMMODATE INTERSECTIONS.

AVOID ANGLES LESS THAN 60° BY DOGLEGGING JOINTS THROUGH CURVE RADIUS POINTS. USE 90° ANGLES WHEN POSSIBLE.

CORRELATE LONGITUDINAL JOINTS WITH LANE LINES WHEN POSSIBLE.

1. PROVIDE TRANSVERSE JOINTS AT ALL PAVEMENT WIDTH CHANGES.
2. CONSTRUCT DOWELED EXPANSION JOINT ON THE SIDE ROAD OF AN INTERSECTION IF THE SIDE ROAD IS CONCRETE PAVEMENT AND GREATER THAN 300 FEET IN LENGTH. ALIGN EXPANSION JOINT WITH EDGE OF RADIUS.
3. THE ENGINEER MAY APPROVE SLIGHT VARIATIONS FROM THESE JOINTING DETAILS.

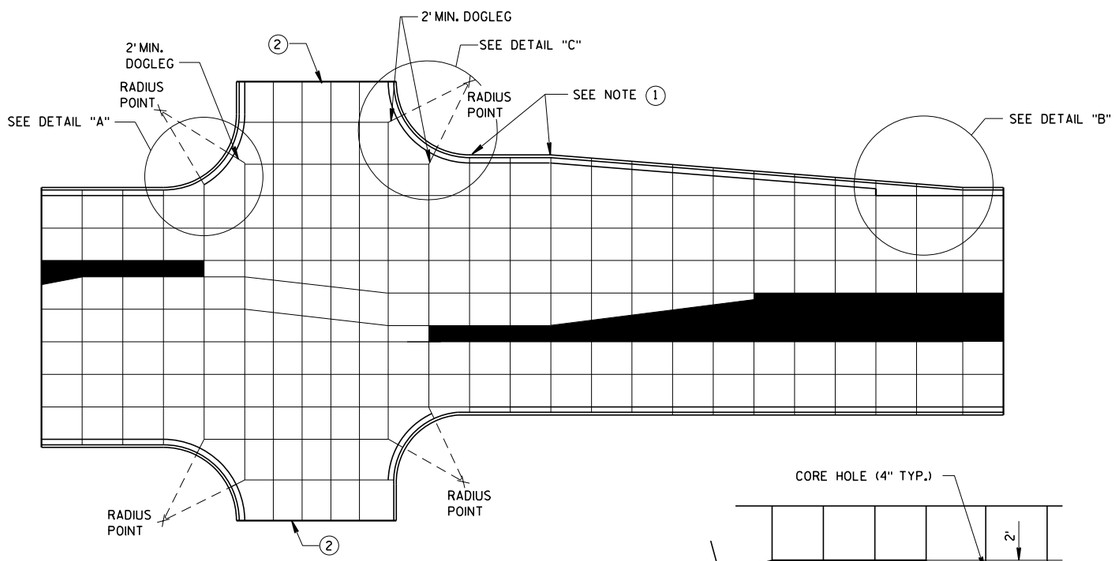

STANDARD INTERSECTION

PAVEMENT DEPTH AND JOINT SPACING TABLE

PAVEMENT DEPTH (D)	CONTRACTION JOINT SPACING
6", 6½"	12'
7", 7½"	14'
8" & ABOVE	15'

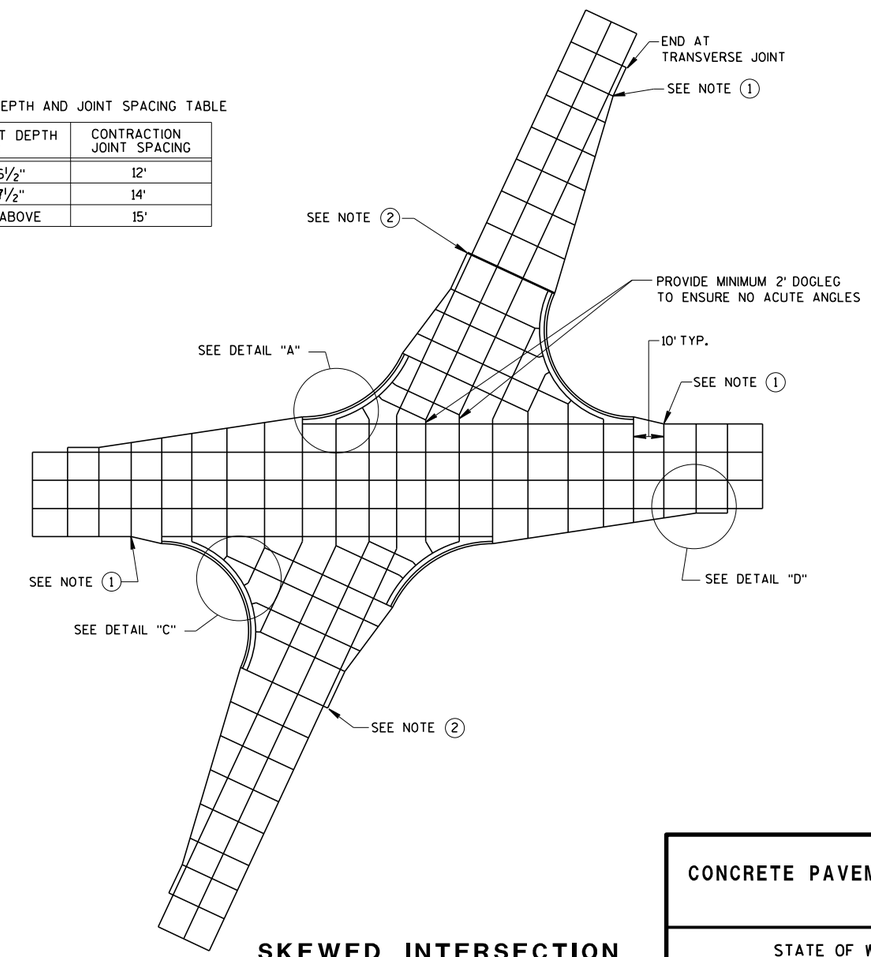

SKEWED INTERSECTION

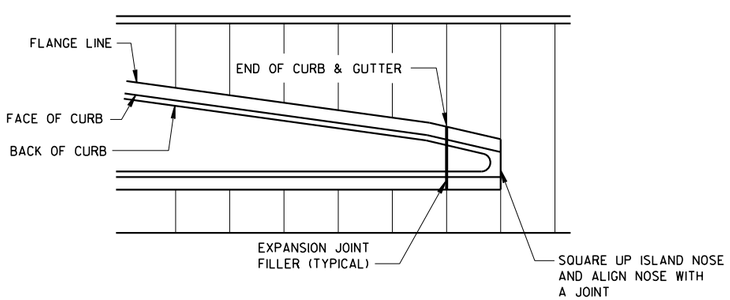

APPROACH TO MEDIAN

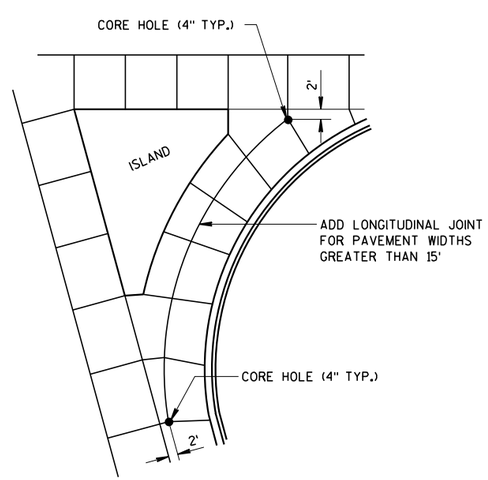

LARGE RIGHT TURN

CONCRETE PAVEMENT JOINTING

STATE OF WISCONSIN
DEPARTMENT OF TRANSPORTATION

6

S.D.D. 13 C 18-6a

LEGEND

POTENTIAL DOWELED EXPANSION JOINT

DOWELED JOINT

TIED JOINT

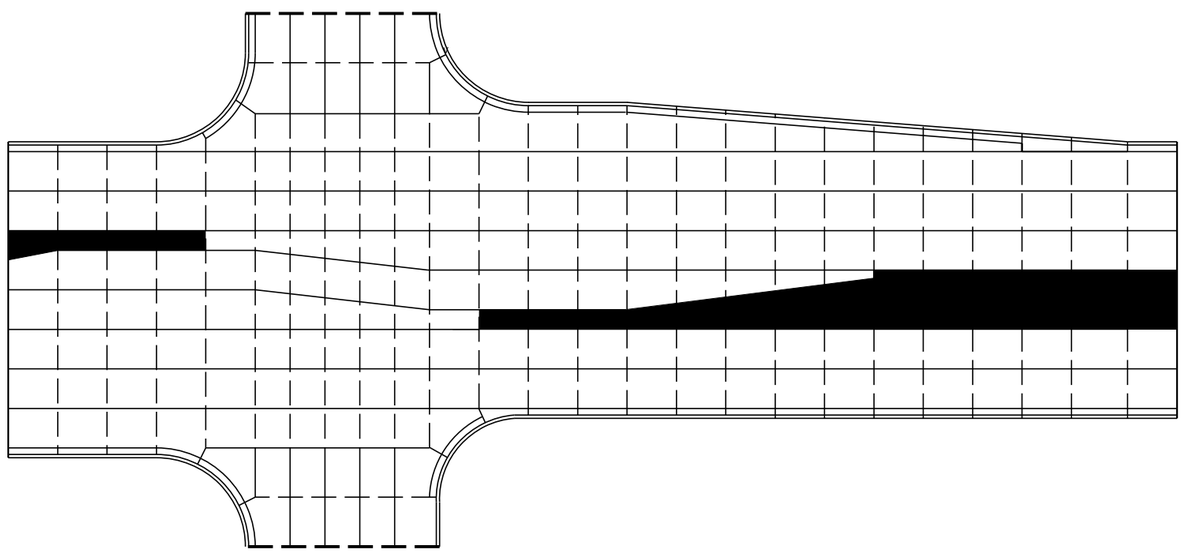

STANDARD INTERSECTION

GENERAL NOTES

USE AN EXPANSION JOINT FILLER MEETING THE REQUIREMENTS OF STANDARD SPECIFICATION 415.

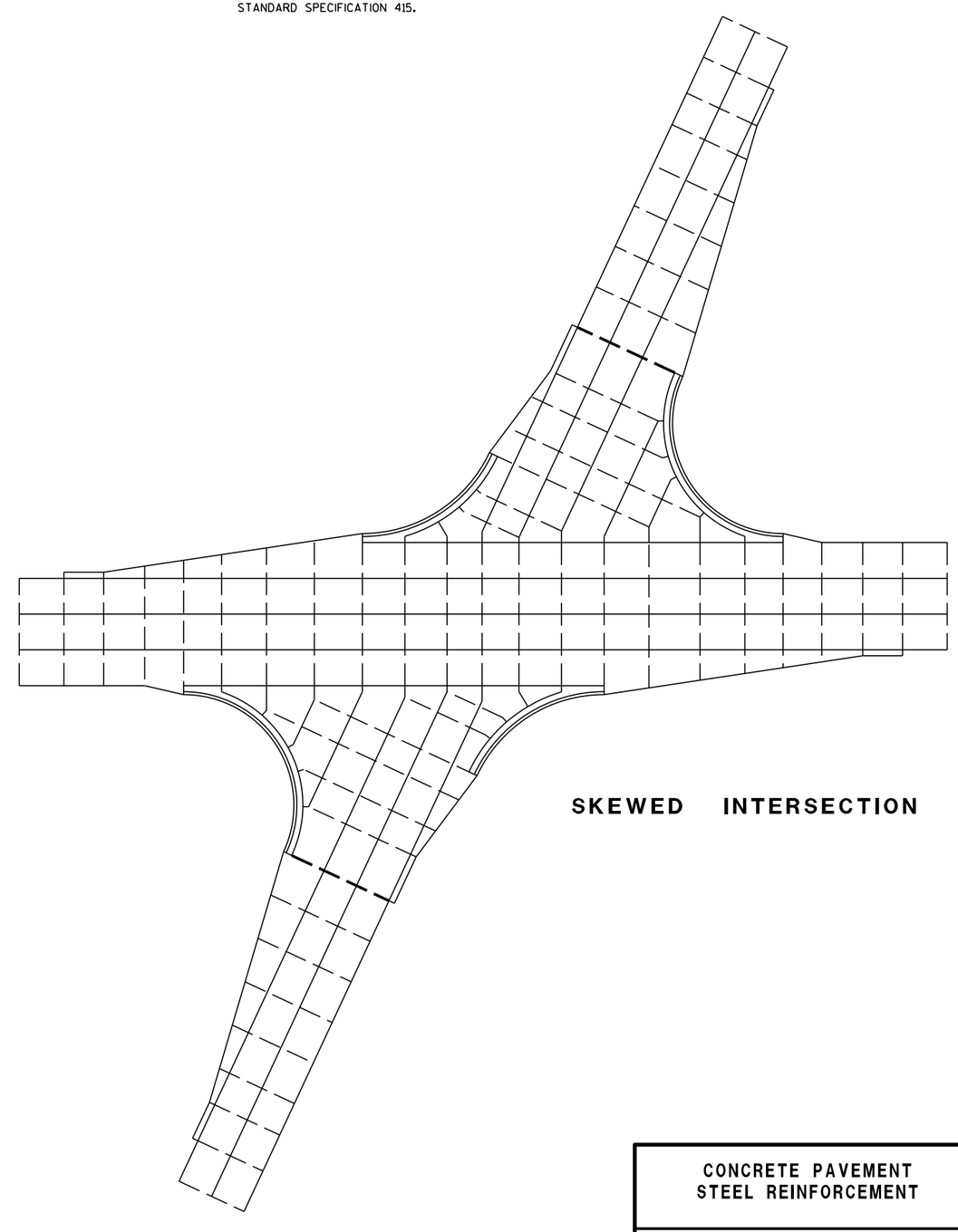

SKEWED INTERSECTION

CONCRETE PAVEMENT
STEEL REINFORCEMENT

STATE OF WISCONSIN
DEPARTMENT OF TRANSPORTATION

6

S.D.D. 13 C 18-6b

6

S.D.D. 13 C 18-6b

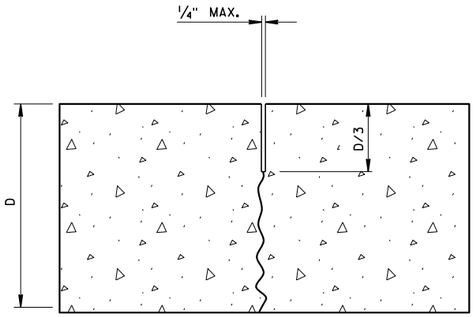

UNDOWELED-TRANSVERSE

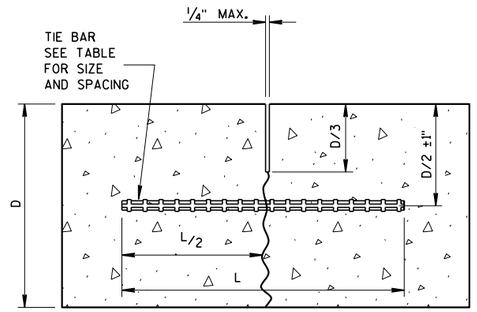

TIED LONGITUDINAL

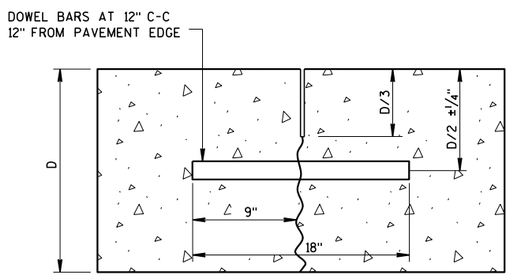

DOWELED-TRANSVERSE

CONTRACTION JOINTS

SEE NOTE (2)

TIE BAR TABLE

PAVEMENT DEPTH (D)	TIE BAR SIZE	TIE BAR LENGTH (L)	MAX. TIE BAR SPACING
< 10 1/2"	NO. 4	30"	36"
≥ 10 1/2"	NO. 5	36"	36"
	NO. 4 *	30"	24" **

* SUBSTITUTE BENT BARS AT LONGITUDINAL JOINTS WHEN EQUIPMENT LIMITATIONS DURING CONSTRUCTION WARRANT (e.g. AUXILIARY LANES OR TURN LANES)

** CONFORM TO 15" MINUMUM SPACING FROM TRANSVERSE JOINTS; SPACING BETWEEN TIE BARS WILL BE 30" AT TRANSVERSE JOINTS.

GENERAL NOTES

1. USE DOWELED EXPANSION JOINTS ON SIDE ROADS AT INTERSECTIONS (TO ISOLATE THE SIDE ROAD FROM THE THROUGH STREET) IF THE SIDE ROAD IS CONCRETE PAVEMENT AND GREATER THAN 300 FEET IN LENGTH.
2. SPACE CONTRACTION JOINTS IN ACCORDANCE WITH 13C4, 13C11 OR 13C13.
3. LOCATE CONSTRUCTION JOINTS A MINIMUM OF 6 FEET FROM THE NEAREST CONTRACTION JOINT AND ALIGN PARALLEL TO CONTRACTION JOINTS.
4. CONSTRUCTION JOINTS CAN BE FORMED OR SAWED.
5. IF JOINT IS FORMED, PROVIDE A 1/4-INCH RADIUS.
6. ANCHOR TIE BARS INTO DRILLED HOLES WITH AN EPOXY.

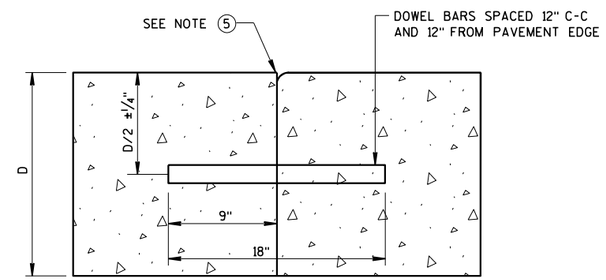

DOWELED TRANSVERSE (3)

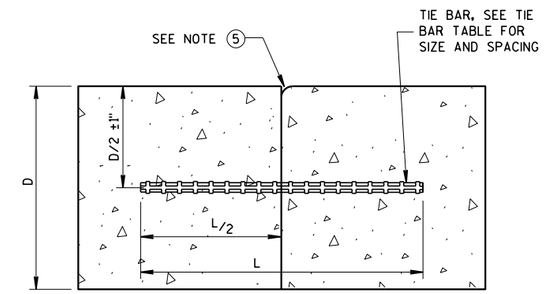

TIED LONGITUDINAL

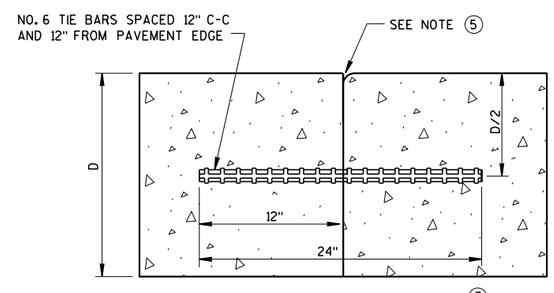

TIED TRANSVERSE (3)

(FOR USE ON NON-DOWELED PAVEMENTS ONLY)

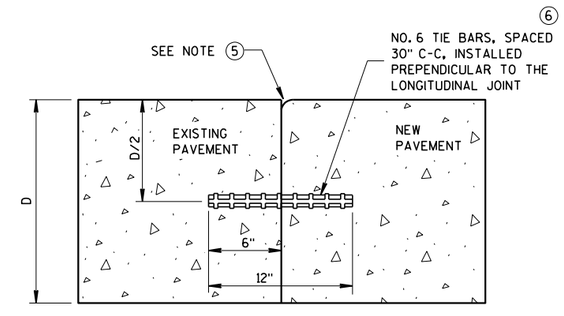

TIED LONGITUDINAL TO EXISTING

CONSTRUCTION JOINTS

SEE NOTE (4)

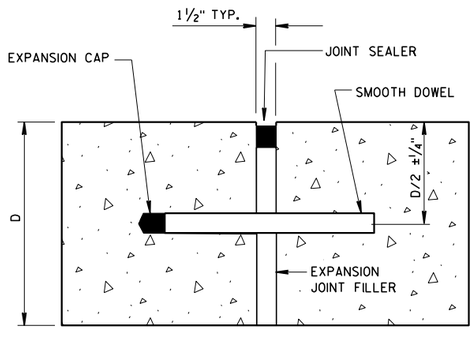

DOWELED-TRANSVERSE

SEE NOTE (1)

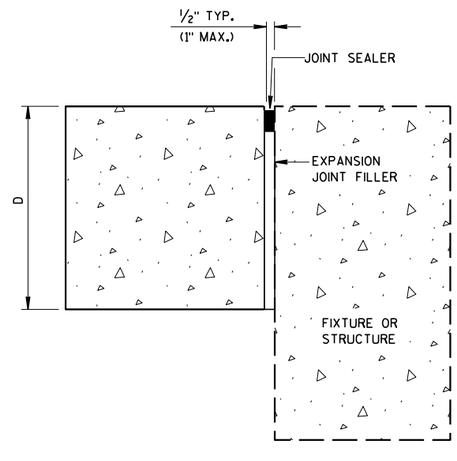

UNTIED-LONGITUDINAL

EXPANSION JOINTS

CONCRETE PAVEMENT
JOINT TYPES

STATE OF WISCONSIN
DEPARTMENT OF TRANSPORTATION

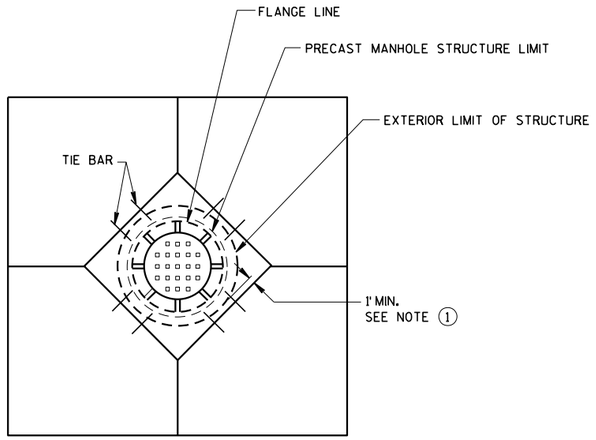

DIAGONAL MANHOLE BOXOUT FOR CONSTRUCTION JOINTS

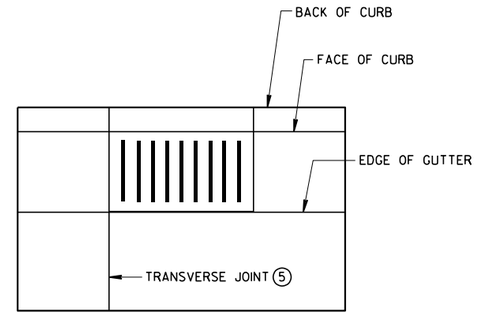

INLET WITH TRANSVERSE JOINT

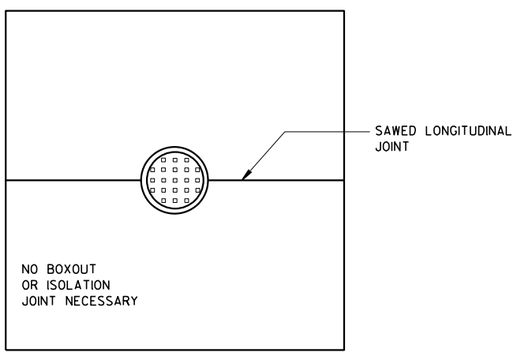

MANHOLE WITH LONGITUDINAL JOINT

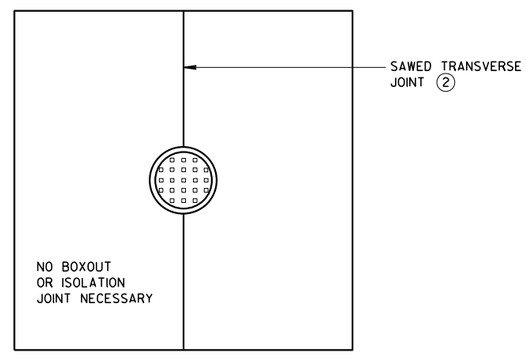

MANHOLE WITH TRANSVERSE JOINT

GENERAL NOTES

1. USE BOXOUTS WHEN UTILITY STRUCTURE IS IN THE PATH OF CONSTRUCTION JOINTS. PROVIDE A 1-FOOT MINIMUM CLEARANCE BETWEEN THE EXTERIOR LIMIT OF THE STRUCTURE TO THE DIAMOND BOXOUT.
2. ADJUST TRANSVERSE JOINT TO INTERSECT MANHOLE IF POSSIBLE.
3. IF DISTANCE BETWEEN THE LONGITUDINAL JOINT AND THE EDGE OF MANHOLE IS 2 FEET OR LESS, DIVERT THE LONGITUDIAL JOINT AT A 2:1 TAPER RATE TO THE CENTER OF THE MANHOLE. IF THE DISTANCE IS GREATER THAN 2 FEET, DO NOT DIVERT THE JOINT AND SAW AS NORMAL. PLACE REBAR REINFORCEMENT AROUND THE MANHOLE.
4. IF DISTANCE FROM THE EDGE OF THE MANHOLE TO THE NEAREST TRANSVERSE JOINT IS 4 FEET OR LESS, REDIRECT JOINT TO INTERSECT THE CENTER OF THE MANHOLE. IF DISTANCE IS GREATER THAN 4 FEET, DO NOT DIVERT THE JOINT AND SAW AS NORMAL. PLACE REBAR REINFORCEMENT AROUND THE MANHOLE.
5. ALIGN TRANSVERSE JOINT WITH ONE EDGE OF INLET WHEN PRACTICAL.

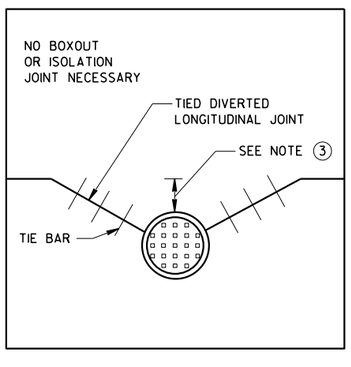

MANHOLE WITH DIVERTED LONGITUDINAL CONTRACTION JOINT

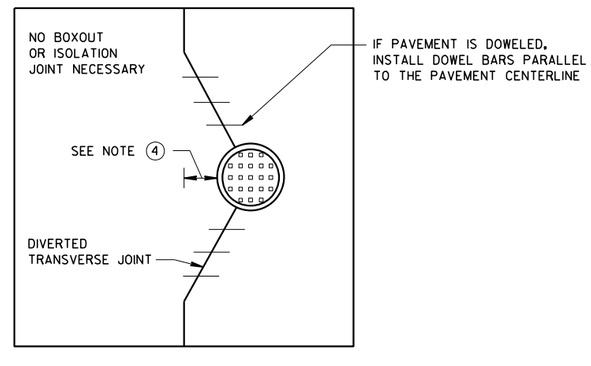

MANHOLE WITH DIVERTED TRANSVERSE CONTRACTION JOINT

CONCRETE PAVEMENT JOINTING AT UTILITY FIXTURES

STATE OF WISCONSIN
DEPARTMENT OF TRANSPORTATION

APPROVED
March 2018 — /S/ Peter K[illegible]
DATE — PAVEMENT SUP[illegible]
FHWA

6

S.D.D. 13 C 18-6d

1. WOOD OR STEEL POSTS (w6X9 OR w6X8.5) MAY BE USED. DO NOT INTERMIX WOOD AND STEEL POSTS. INSTALL STEEL POSTS WITH HOLES ON APPROACHING TRAFFIC SIDE.
2. USE WOOD OR APPROVED PLASTIC BLOCKOUTS. WOOD BLOCKOUTS MAY BE CONSTRUCTED OUT OF TWO OR MORE WOOD BLOCKOUTS. SEE ALTERNATE WOOD BLOCKOUT DETAIL. DIMENSIONS OF APPROVED PLASTIC BLOCKOUTS MAY VARY.
3. IF ROCK IS ENCOUNTERED DURING EXCAVATION, PROVIDE A HOLE 12 INCHES IN DIAMETER EXTENDING 20 INCHES DEEP INTO THE ROCK. PLACE APPROXIMATELY 2 1/2" INCHES OF GRANULAR MATERIAL IN THE BOTTOM OF THE HOLE. CUT THE POSTS THE TO LENGTH AMD INSTALL. BACKFILL WITH EXCAVATED MATERIAL AND COMPACT. BACKFILL IS TO BE FREE OF LARGE ROCKS.
4. WHEN THE DISTANCE FROM BACK OF POST TO SHOULDER HINGE POINT IS LESS THAN 2 FEET INSTALL LONGER POST AT HALF POST SPACING (K).
5. FOR NEW MGS INSTALLATION TOP OF W-BEAM RAIL TOLERANCE IS ±1". FOR EXISTING MGS INSTALLATION TOP OF W-BEAM IS BETWEEN 27 ¾" TO 32".
6. WHEN USING STEEL POST AND WOOD BLOCKOUTS INSTALL FOUR 16D GALVANIZED NAILS. INSTALL NAILS AT THE BACK CORNERS OF THE BLOCK AND BEND THE NAILS OVER THE FLANGE OF THE STEEL POST.
7. TOTAL POST LENGTH FOR TYPE K IS 7' - 0".
   TOTAL POST LENGTH FOR OTHER MGS TYPES IS 6' - 0".

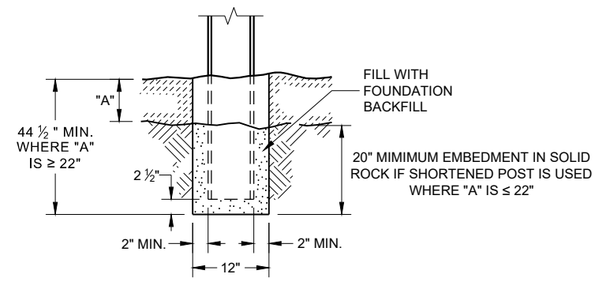

END VIEW
SETTING STEEL OR WOOD POST IN ROCK (3)

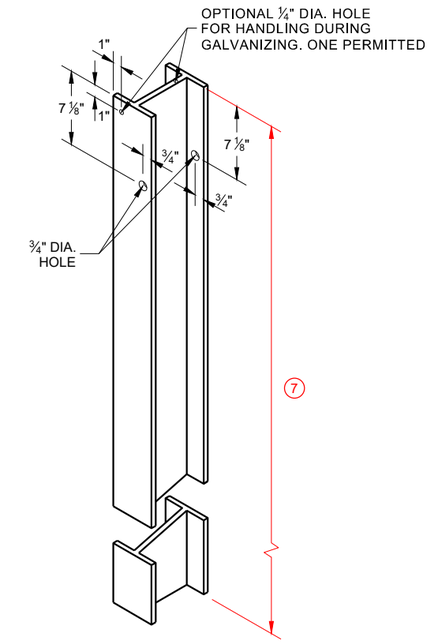

STEEL POST & HOLE PUNCHING DETAIL (W 6 X 9) (1)

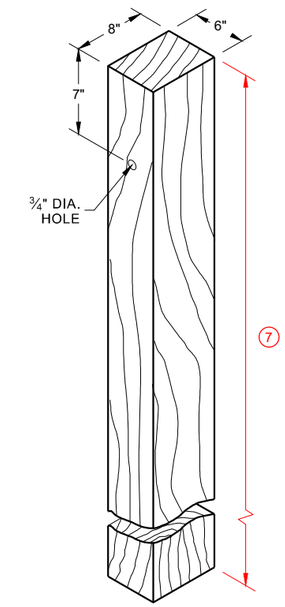

WOOD POST (6" X 8") NOMINAL (1)

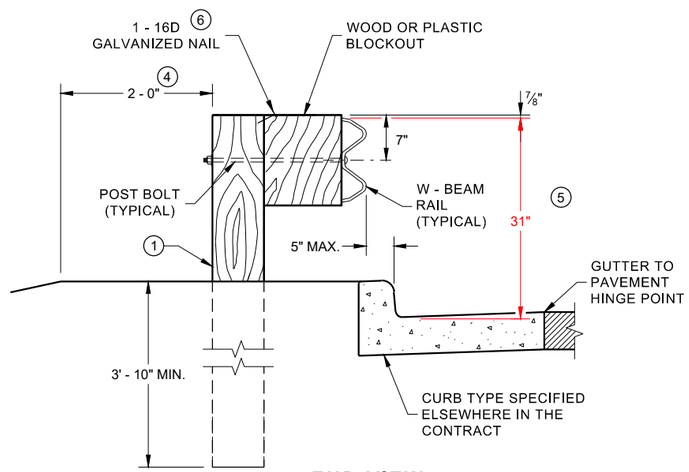

END VIEW
LOCATED ALONG A CURBED ROADWAY

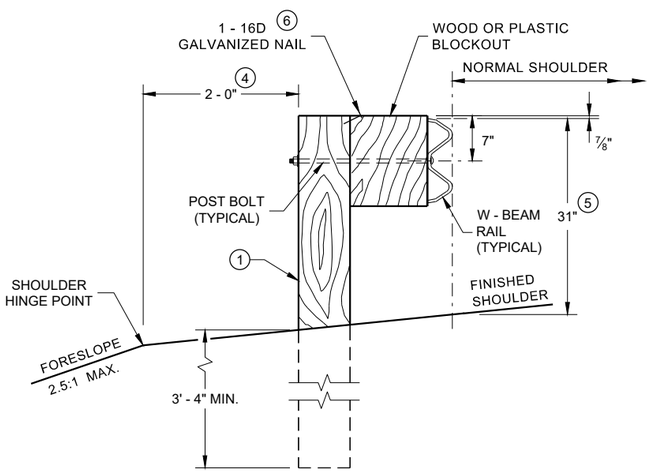

END VIEW
LOCATED ALONG A ROADWAY SHOULDER STANDARD INSTALLATION

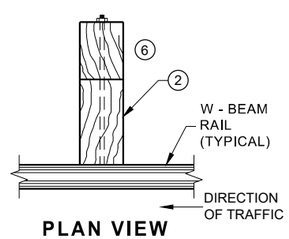

PLAN VIEW
WOOD POST, BLOCKOUT & BEAM

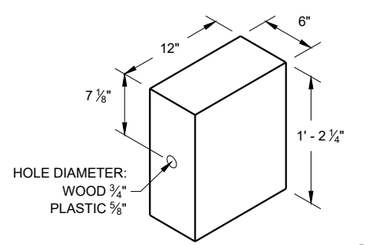

WOOD OR PLASTIC BLOCKOUT (2)

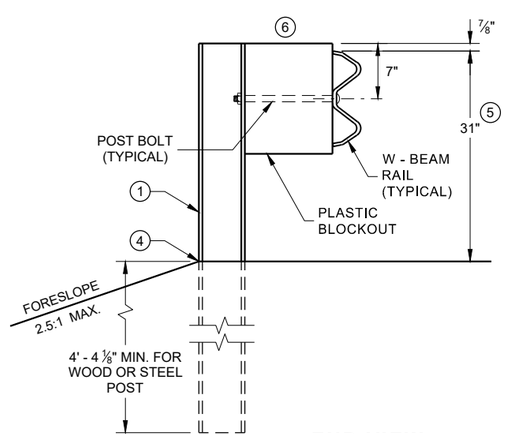

END VIEW
MGS LONGER POST AT HALFPOST SPACING W BEAM (K)

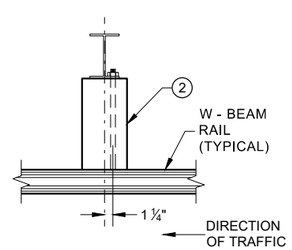

PLAN VIEW
STEEL POST, PLASTIC BLOCKOUT & BEAM

MIDWEST GUARDRAIL SYSTEM (MGS) GUARDRAIL

STATE OF WISCONSIN
DEPARTMENT OF TRANSPORTA

6

SDD 14B42 - 06a
SDD 14B42 - 06a

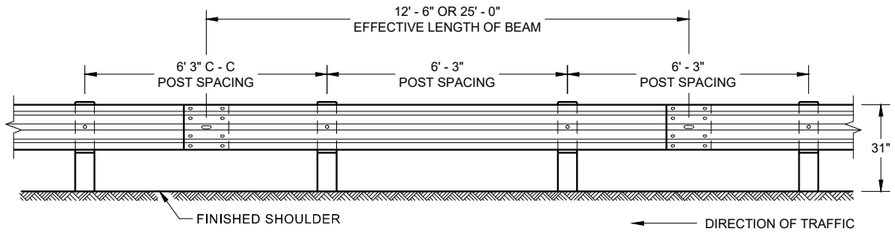

FRONT VIEW
POST SPACING STANDARD INSTALLATION

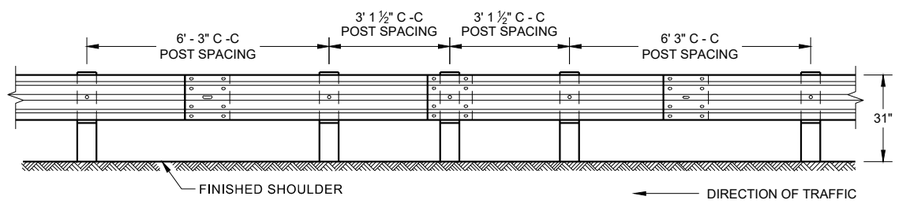

FRONT VIEW
HALF POST SPACING (HS) AND HALF POST SPACING WITH LONGER POSTS (K)

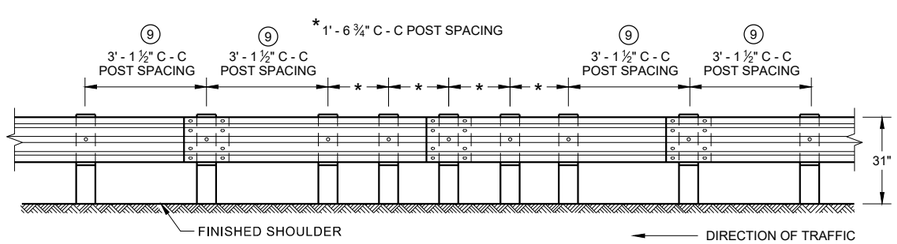

FRONT VIEW
QUARTER POST SPACING (QS)

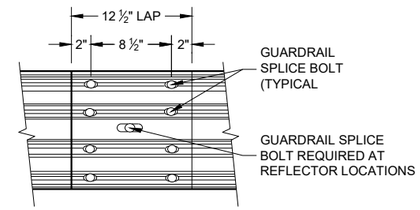

FRONT VIEW
MID-SPAN BEAM SPLICE

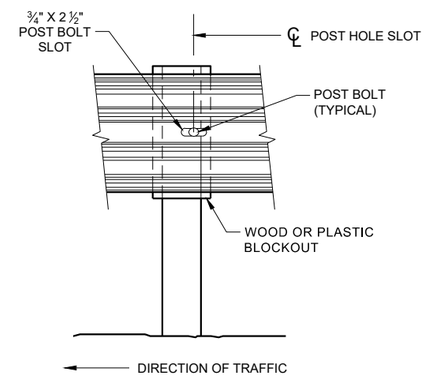

FRONT VIEW AT STEEL POST

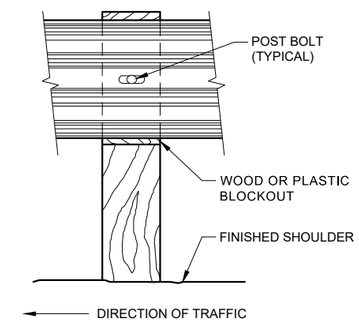

FRONT VIEW AT WOOD POST

GENERAL NOTES

8 DO NOT INSTALL REFLECTORS ON THE FIRST 50 FEET OF THE APPROACH END OF THE ENERGY ABSORBING TERMINAL. RAIL SPLICE LOCATIONS ARE THE ONLY ACCEPTABLE LOCATIONS FOR REFLECTORS.

9 25 FEET OF HALF POST SPACING IS REQUIRED ON APPROACH AND DEPARTURE ENDS OF QUARTER POST SPACING.

POST BOLTS ARE A ⅝" DIAMETER ASTM A307 GUARDRAIL BOLT. A POST BOLT REQUIRES ⅝" DIAMETER A563A DOUBLE RECESSED (DR) HEAVY HEX NUT AND ⅝" DIAMETER F844 FLAT WASHER. POST BOLTS MAY BE LONGER IF MULTIPLE BLOCKOUTS ARE BEING USED.

GUARD RAIL SPLICE BOLTS ARE A ⅝" DIAMETER ASTM A307 GUARDRAIL HEAD BOLT. A GUARDRAIL SPLICE BOLT REQUIRES ⅝" DIAMETER A563A DOUBLE RECESSED (DR) HEAVY HEX NUT.

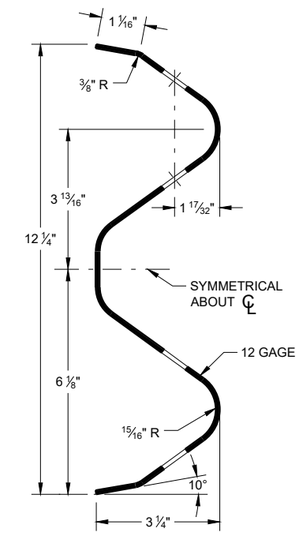

SECTION THRU W-BEAM RAIL

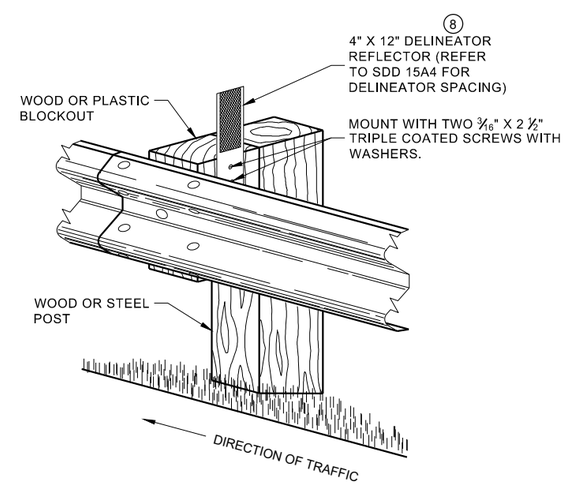

ONE SIDED REFLECTOR DETAIL AND TYPICAL INSTALLATION

MIDWEST GUARDRAIL SYSTEM (MGS) GUARDRAIL

STATE OF WISCONSIN
DEPARTMENT OF TRANSPORTAT

6

SDD 14B42 - 06b

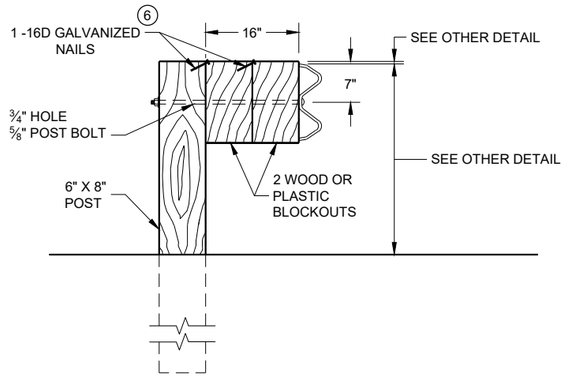

DETAIL FOR 16" BLOCKOUT DEPTH

IT IS ACCEPTABLE TO USE BLOCKOUTS UP TO 16" DEEP TO INCREASE THE POST OFFSET TO AVOID UNDERGROUND OBSTACLES. THERE IS NO LIMIT TO THE NUMBER OF POSTS THAT CAN HAVE ADDITIONAL BLOCKOUTS UP TO 16" DEEP.

NOTE:

1. ALL FILLETS SHALL HAVE A MINIMUM RADIUS OF 3/16".
2. IF THE BOLT EXTENDS MORE THAN ¼" FROM THE NUT THE BOLT SHOULD BE TRIMMED BACK.

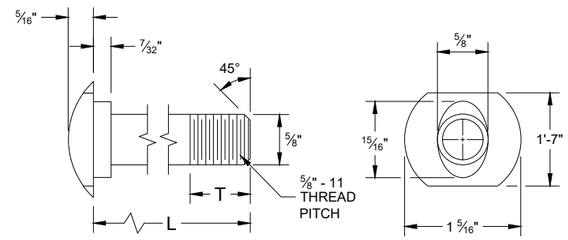

POST BOLT TABLE

L	T (MIN.)
1 ¼"	1 ⅛"
2"	1 ¾"
10"	4"
14"	4 1/16"
18"	4"
21"	4 1/16"
25"	4"

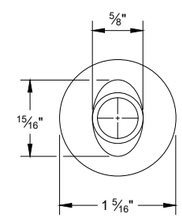

ALTERNATE BOLT HEAD

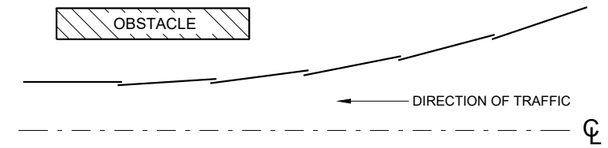

PLAN VIEW
BEAM LAPPING DETAIL

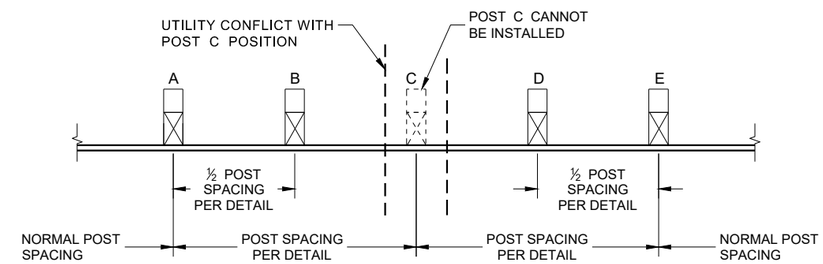

POST DRIVING FOR CONTINUOUS UNDERGROUND OBSTRUCTION

6

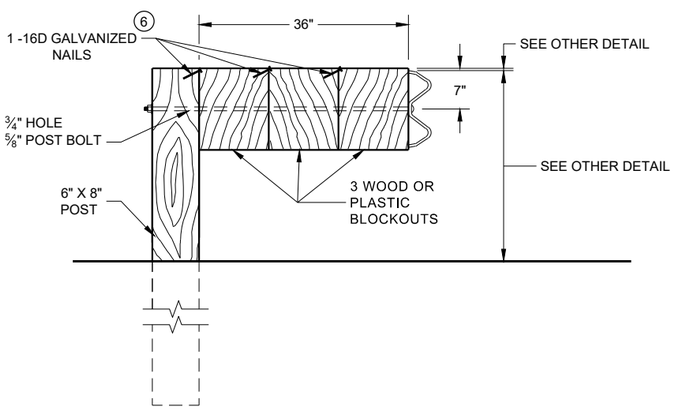

DETAIL FOR 36" BLOCKOUT DEPTH

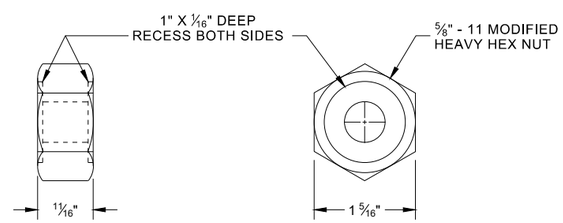

POST BOLT, SPLICE BOLT AND RECESS NUT

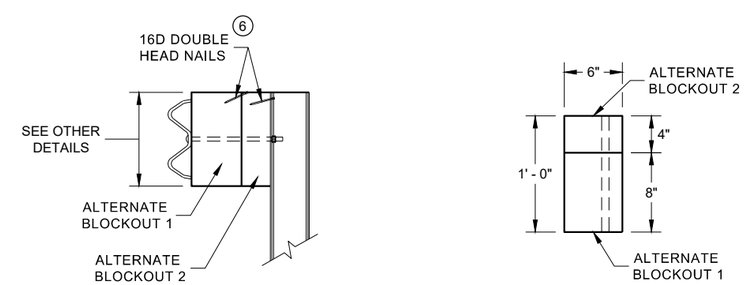

SIDE VIEW

PLAN VIEW

ALTERNATE WOOD BLOCKOUT DETAIL

NOTES: UNDER SPECIAL CIRCUMSTANCES, SUCH AS AVOIDING OBSTACLES THAT ARE NOT RELOCATED, IT IS ACCEPTABLE TO INSTALL ADDITIONAL BLOCKOUTS TO OBTAIN UP TO 36" DEPTH FOR ONE OR TWO POSTS IN A SECTION OF GUARDRAIL.

DO NOT USE 16" OR 36" BLOCKOUTS IF IT CAUSES THE POST TO BE DRIVEN BEYOND SHOULDER HINGE POINT OR CAUSES A FIXED OBJECT TO BE WITHIN THE DEFLECTION DISTANCE OF THE BARRIER.

(6) WHEN USING STEEL POST AD WOOD BLOCKOUTS, INSTALL FOUR 16D GALVANIZED NAILS. INSTALL NAILS AT THE BACK CORNERS OF THE BLOCK AND BEND THE NAILS OVER THE FLANGE OF THE STEEL POST.

MIDWEST GUARDRAIL SYSTEM (MGS) GUARDRAIL

STATE OF WISCONSIN
DEPARTMENT OF TRANSPORTA

SDD 14B42 - 06c

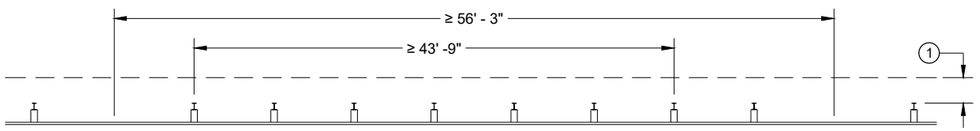

MISSING POST IN NORMAL BEAM GUARD RUN

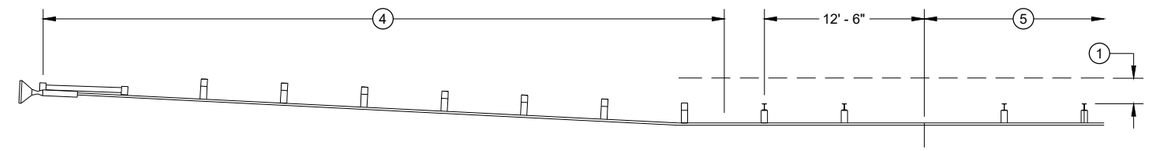

MISSING POST IN NORMAL BEAM GUARD RUN NEAR EAT

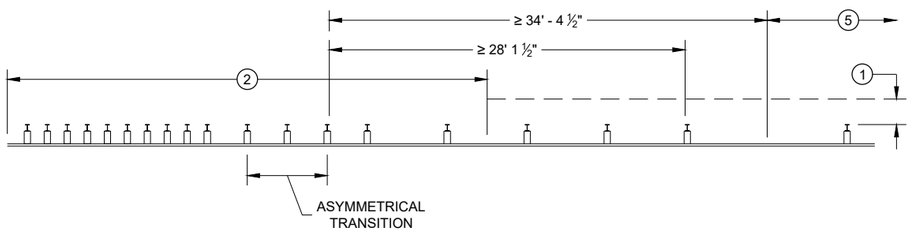

MISSING POST NEAR APPROACH THRIE BEAM TRANSITION

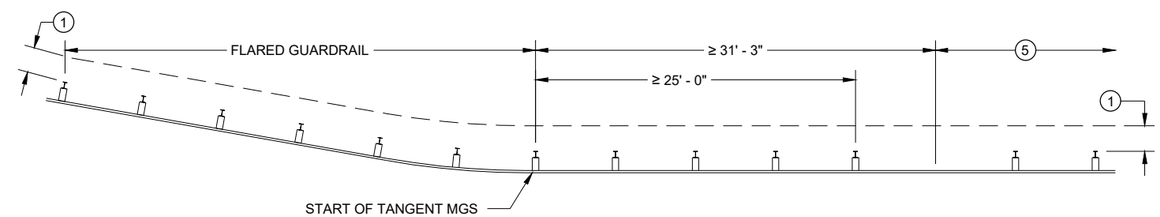

MISSING POST IN NORMAL BEAM GUARD RUN NEAR FLARED BEAM GUARD

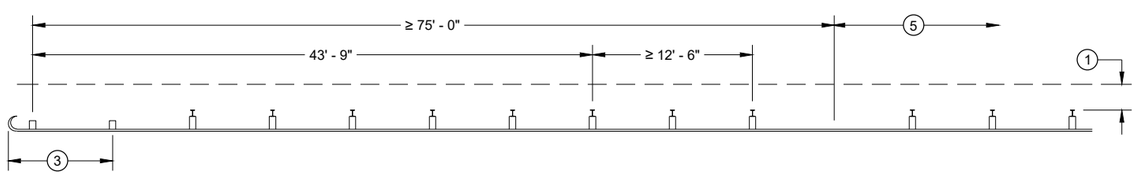

MISSING POST IN NORMAL BEAM GUARD RUN NEAR TYPE 2 TERMINAL

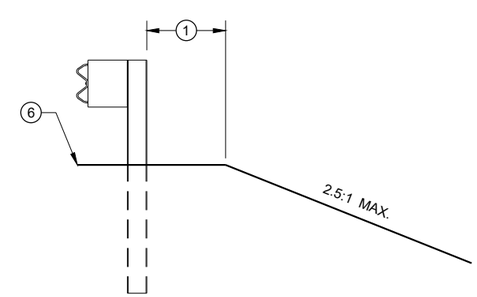

CROSS SECTION VIEW

1. MINIMUM OF 2 FEET OF GRADING BEHIND POST.
2. SEE SDD 14B45 FOR MORE DETAILS.
3. SEE SDD 14B47 FOR MORE DETAILS.
4. SEE SDD 14B44 FOR MORE DETAILS.
5. SEE MISSING POST IN NORMAL BEAM GUARD RUN FOR DISTANCE TO NEXT MISSING POST AND AREA FOR WELL DRAINED, COMPACTED SOILS.
6. SEE PLAN FOR SHOULDER DESIGN.

MIDWEST GUARDRAIL SYSTEM (MGS) GUARDRAIL

STATE OF WISCONSIN
DEPARTMENT OF TRANSPORTATION

APPROVED
7/2018 — DATE
/S/ Rodney Taylor — ROADWAY STANDARDS DEVE UNIT SUPERVISOR
FHWA

6

SDD 14B42 - 06d

GENERAL NOTES

(A) THE SLOPE IN THE AREA BOUNDED BY THE GRADELINE, THE HINGE POINT LINE (HPL) AND THE CLEAR ZONE LIMITS (CZL) SHALL BE 4:1 OR FLATTER.

(B) AFTER FINAL ASSEMBLY, RECHECK CABLE TO BE SURE IT IS TAUT AND HAS NOT RELAXED

(C) DIFFERENT MANUFACTURERS REQUIRE DIFFERENT PERFORATED W - BEAM RAIL END PANELS. SEE MANUFACTURER'S INFORMATION.

(D) ATTACH ALUMINUM SHEET TO E.A.T. HEAD USING 4 STAINLESS STEEL SELF - TAPPING SCREWS. ONE SCREW PER CORNER.

(E) HARDWARE MAY VARY BETWEEN MANUFACTURER. SEE MANUFACTURER'S DRAWING FOR INFORMATION.

DIMENSIONS MAY VARY, MANUFACTURER'S INFORMATION.

SEE SDD 14B42 FOR MORE INFORMATION.

* DO NOT ATTACH BLOCKOUTS TO POST 1 AND 2.

DO NOT INSTALL REFLECTORS ON THE FIRST 50 FEET OF THE APPROACH END OF THE ENERGY ABSORBING TERMINAL.

SEE MANUFACTURER'S DRAWING FOR SPLICE LOCATION, HARDWARE DIMENSIONS AND INSTALLATION INSTRUCTIONS.

THE CENTER OF THE UPPER 3 ½" DIAMETER HOLE ON POST NUMBER 3 THROUGH POST 9 IS TO BE FLUSH WITH THE GROUND LINE UP TO A MAXIMUM OF 2" ABOVE GROUND LINE. WOOD BLOCKS ON POSTS NUMBERED 3 THROUGH 9 MAY BE ADJUSTED UP TO 3" ABOVE THE TOP OF POST.

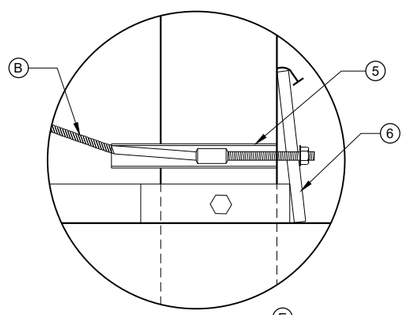

DETAIL "A" (E)

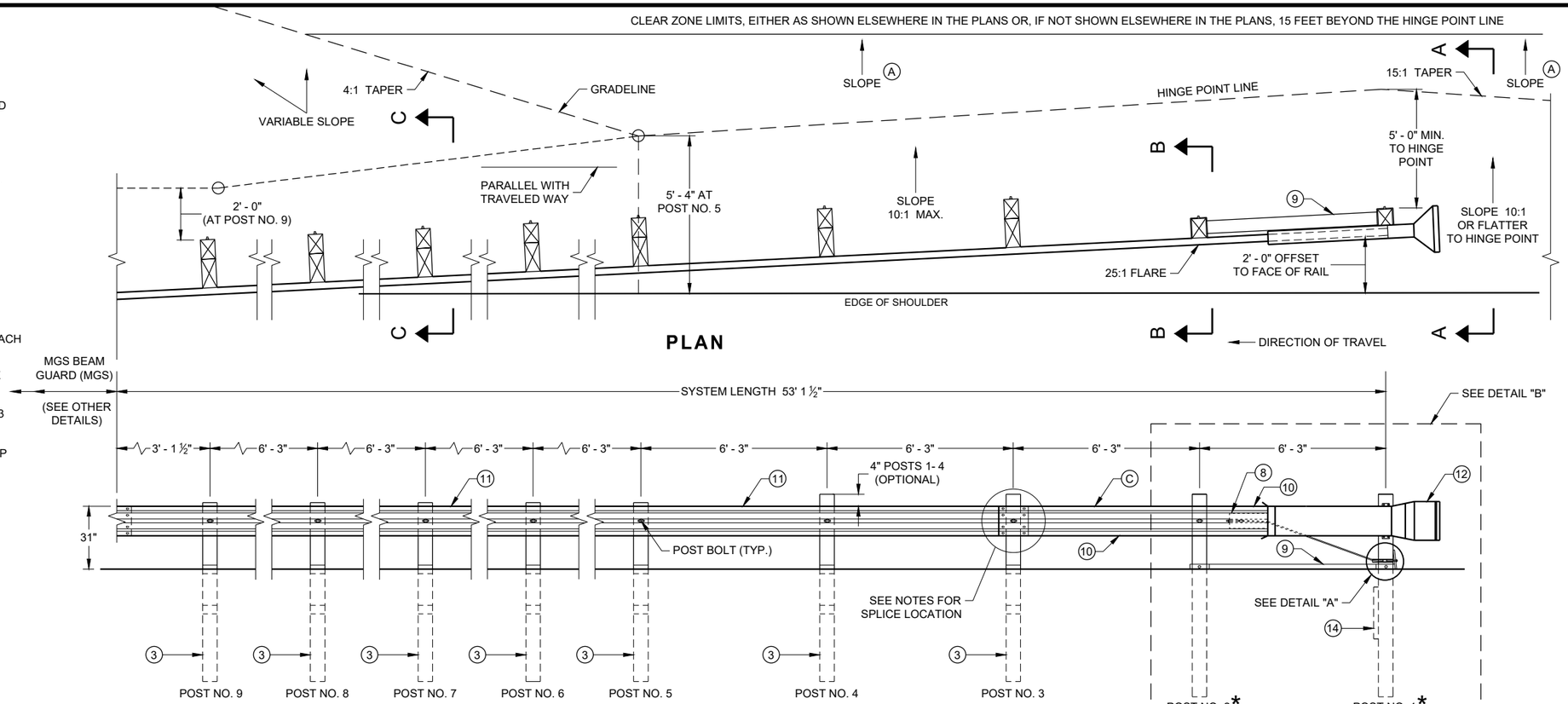

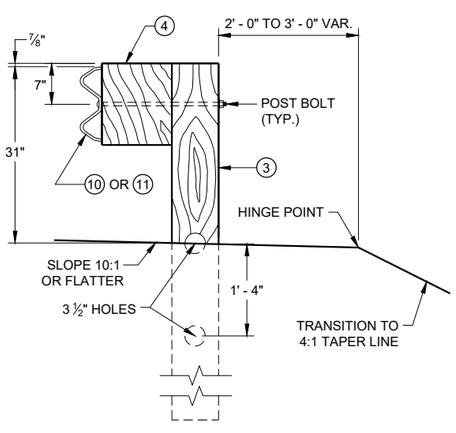

SECTION C - C
TYPICAL AT POST NOS. 3 - 9

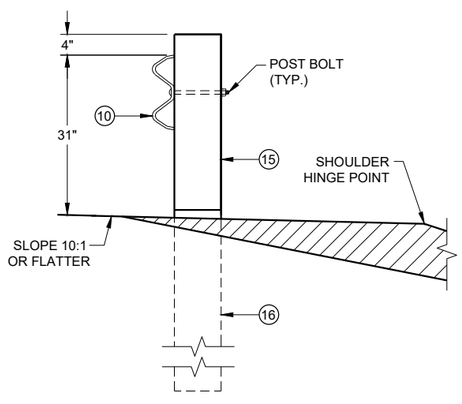

SECTION B - B
TYPICAL AT POST NO. 2*

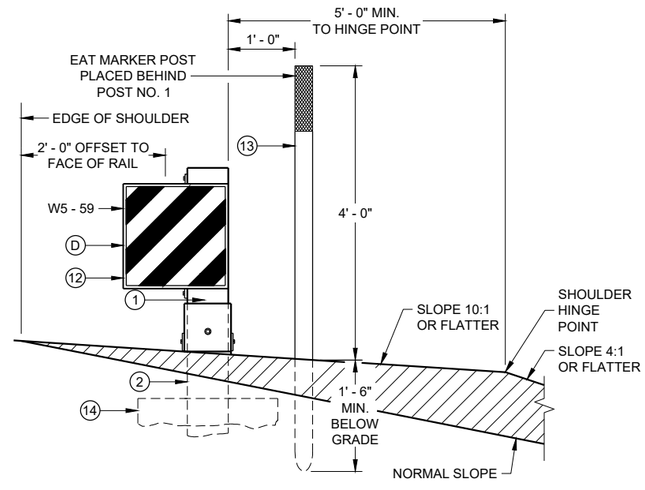

SECTION A - A
TYPICAL AT POST NO. 1*

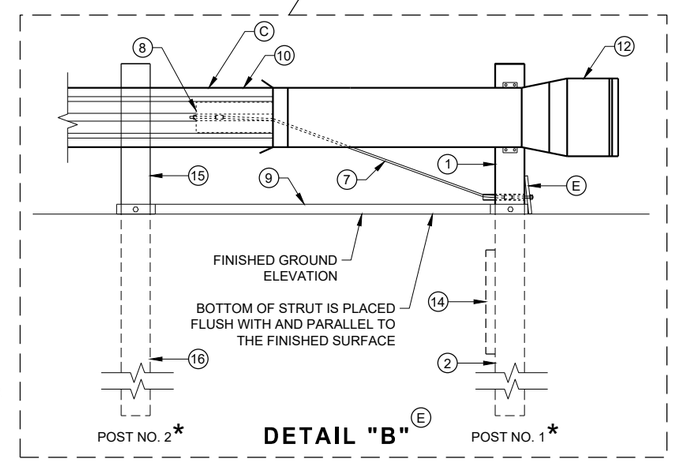

DETAIL "B" (E)

MIDWEST GUARDRAIL SYSTEM ENERGY ABSORBING TERMINAL (MGS)

STATE OF WISCONSIN
DEPARTMENT OF TRANSPORTATION

6

6

SDD 14B44 - 04a

SDD 14B44 - 04a

BILL OF MATERIALS

PART NO.	DESCRIPTION MATERIALS PROVIDED BY MGS EAT MANUFACTURER. SEE MANUGACTURER'S DETAILS FOR MORE INFORMATION.
1	UPPER POST NO. 1 6" X 6" TUBE
2	LOWER POST NO. 1
3	WOOD CRT
4	WOOD BLOCKOUT
5	PIPE SLEEVE
6	BEARING PLATE
7	BCT CABLE ASSEMBLY
8	ANCHOR CABLE BOX
9	GROUND STRUT
10	PERFORATED W-BEAM RAIL END PANEL, 12'-6" LONG.
11	STANDARD W-BEAM RAIL. MULTIPLE SECTIONS REQUIRED. SECTIONS VARY IN LENGTH.
12	IMPACT HEAD
13	EAT MARKER POST - YELLOW (SEE APPROVED PRODUCTS LIST)
14	SOIL PLATE
15	UPPER POST NO. 2
16	LOWER POST NO. 2

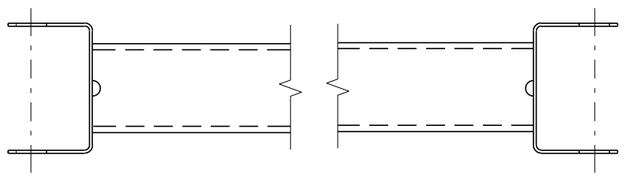

GENERIC GROUND STRUT 9 E

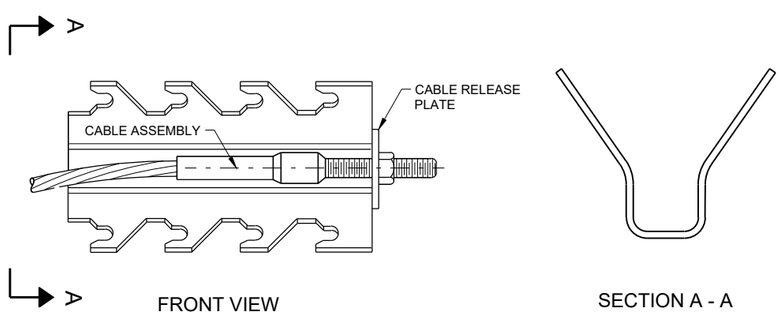

GENERIC ANCHOR CABLE BOX 9 E

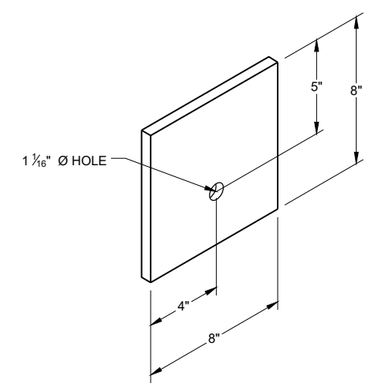

BEARING PLATE 6 E

6

6

SDD 14B45 - 04b

SDD 14B45 - 04b

MIDWEST GUARDRAIL SYSTEM ENERGY ABSORBING TERMINAL (MGS)

STATE OF WISCONSIN
DEPARTMENT OF TRANSPORTAT

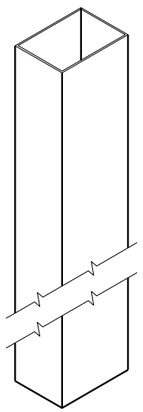

UPPER POST NO. 1 (1) (E)

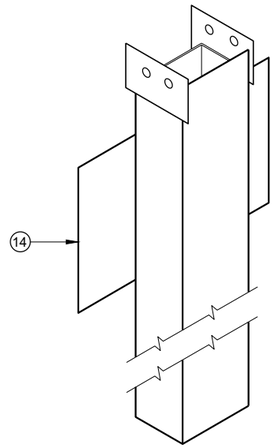

LOWER POST NO. 1 (2) (E)

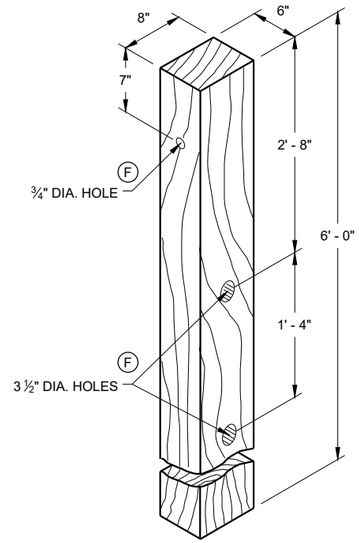

WOOD CRT POST (3) (E)
POSTS NUMBER 3-9

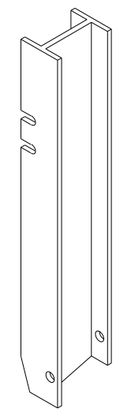

UPPER POST NO. 2 (15) (E)

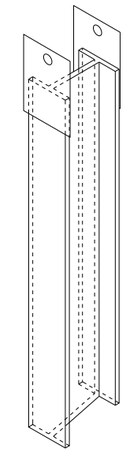

LOWER POST NO. 2 (16) (E)

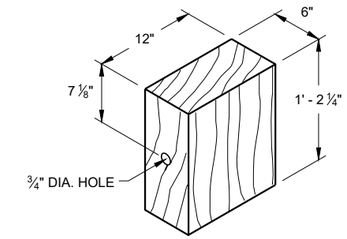

WOOD BLOCKOUT (4)
REQ'D. AT ALL POSTS EXCEPT POST NO'S 1 & 2

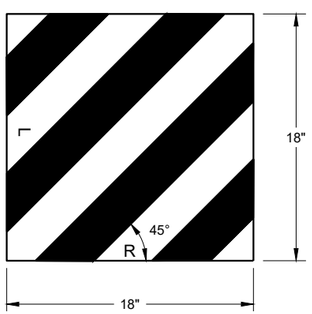

W5 - 59

REFLECTIVE SHEETING DETAIL (E)

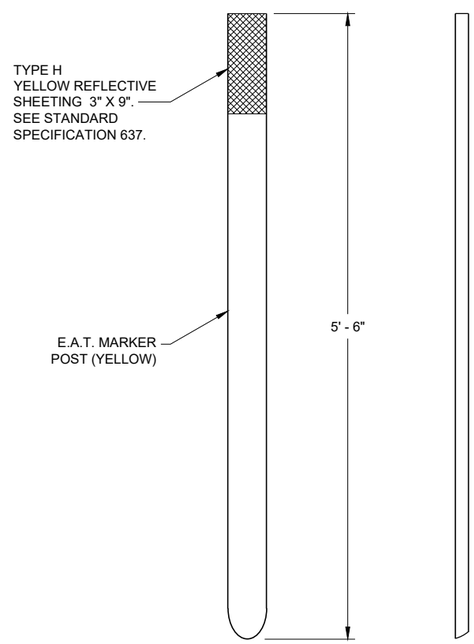

FRONT VIEW SIDE VIEW

E.A.T. MARKER POST (13)

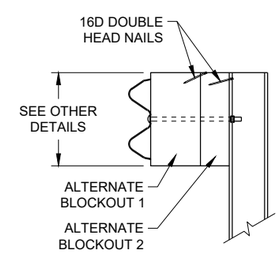

SIDE VIEW

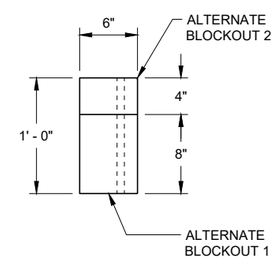

TOP VIEW

ALTERNATE WOOD BLOCKOUT DETAIL

MIDWEST GUARDRAIL SYSTEM ENERGY ABSORBING TERMINAL (MGS)

STATE OF WISCONSIN
DEPARTMENT OF TRANSPORTATION

APPROVED
7/2018 — DATE
/S/ Rodney Taylor — ROADWAY STANDARDS DEVE UNIT SUPERVISOR
FHWA

6

6

SDD 14B44 - 04c

SDD 14B44 - 04c

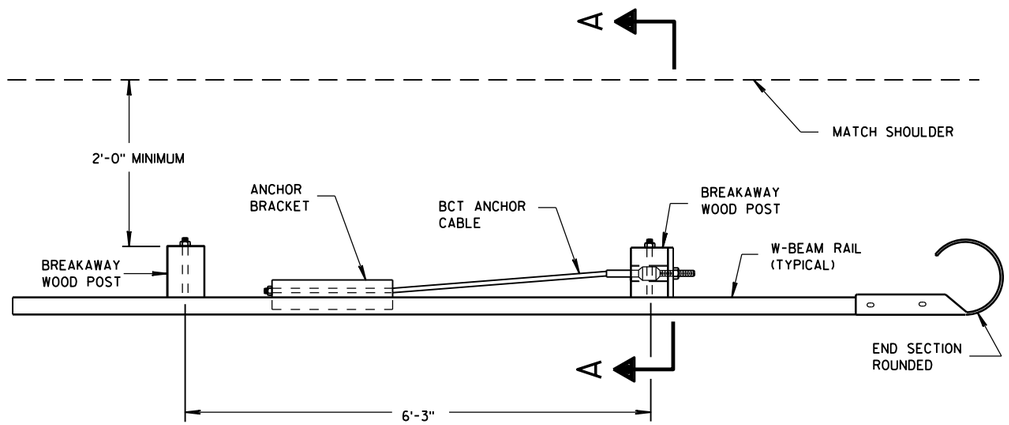

PLAN VIEW

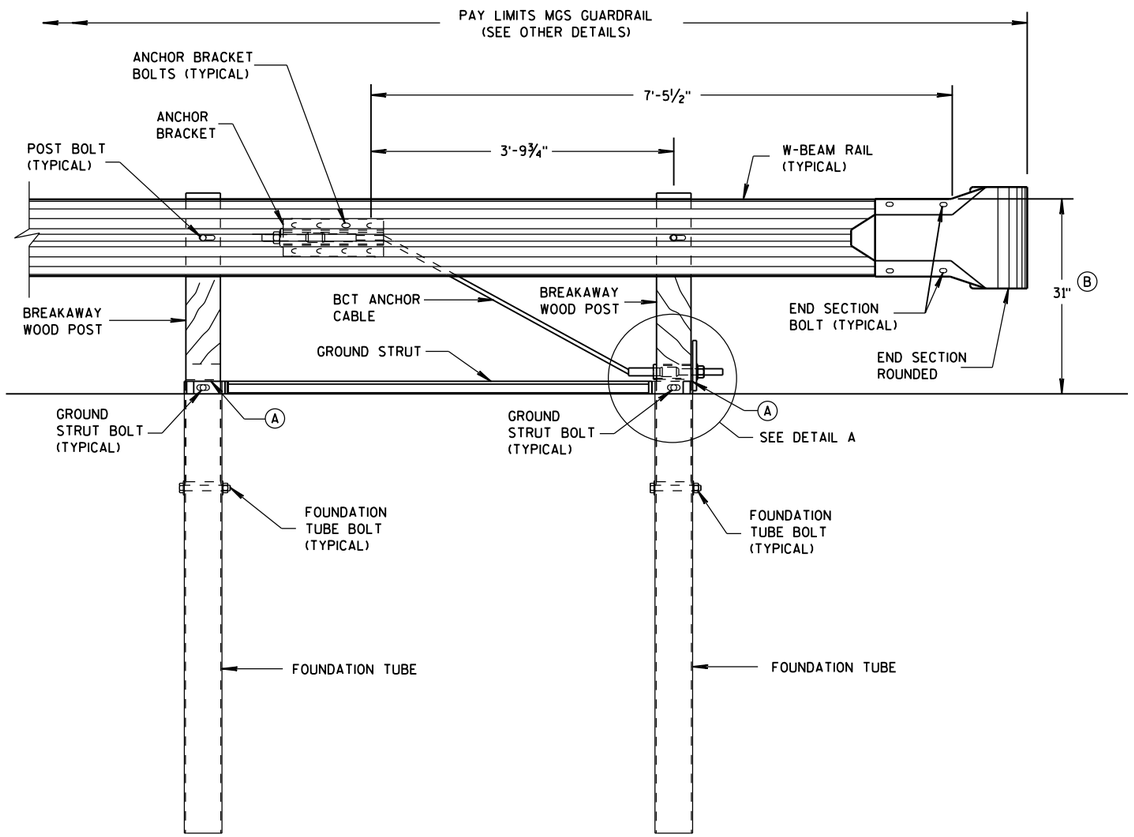

FRONT VIEW

END RAIL DETAIL

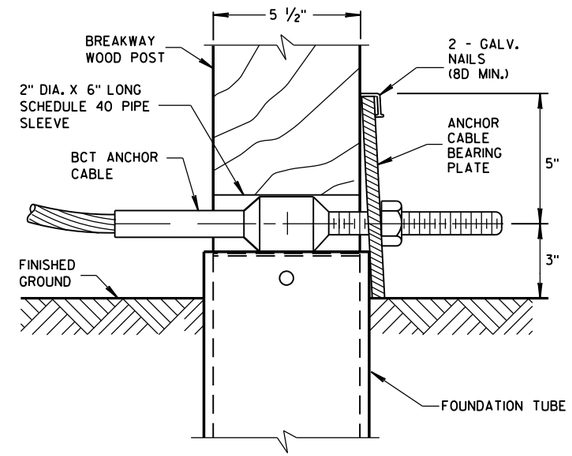

DETAIL A

POST NO. 1
GROUNG STRUT NOT SHOWN FOR CLARITY.

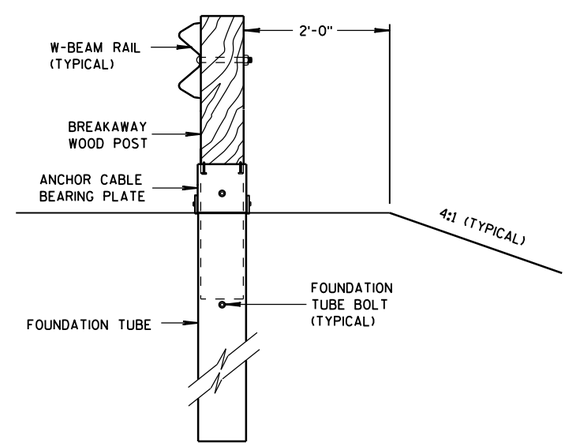

SECTION A-A

GENERAL NOTES

SEE SDD 14 B 42 FOR MORE INFORMATION.

END SECTION BOLTS AND NUTS HAVE THE SAME MATERIAL REQUIREMENTS AS SPLICE BOLTS.

FOUNDATION TUBE BOLTS ARE ⅞" DIAMETER ASTM A307 HEX HEAD BOLT. FOUNDATION TUBE BOLTS REQUIRE ASTM A563 A NUT AND TWO ASTM F844 ⅞" DIAMETER FLAT WASHERS. INSTALL ONE WASHER UNDER BOLT HEAD AND ONE WASHER UNDER NUT.

ANCHOR BRACKET AND GROUND STRUT BOLTS ARE A ⅝" DIAMETER ASTM A307 HEX HEAD BOLT. ANCHOR BRACKET BOLTS REQUIRE ASTM A563 A NUT AND TWO ASTM F844 ⅝" DIAMETER FLAT WASHERS. INSTALL ONE WASHER UNDER BOLT HEAD AND ONE WASHER UNDER NUT.

W-BEAM END SECTION ROUNDED HAS THE SAME MATERIAL PROPERTIES AS STANDARD STEEL RAIL.

(A) TOP OF FOUNDATION TUBE SHALL BE NO MORE THAN 3" ABOVE FINISHED GROUND.

(B) FOR NEW CONSTRUCTION TOP OF RAIL IS 31" ± 1".
FOR EXISTING INSTALLATIONS TOP OF RAIL IS BETWEEN 27¾" TO 32" ± 1".

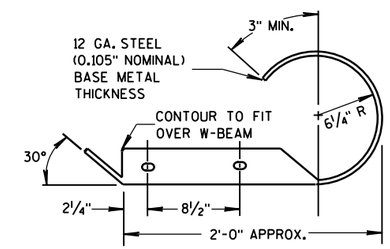

PLAN VIEW

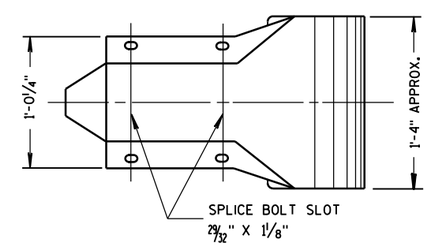

FRONT VIEW

W BEAM END SECTION ROUNDED

MIDWEST GUARDRAIL SYSTEM (MGS) TYPE 2 TERMINAL

STATE OF WISCONSIN
DEPARTMENT OF TRANSPO

6

S.D.D. 14 B 47-2a

GENERAL NOTES

BCT ANCHOR CABLE IS A ¾" DIAMETER 6X19 IWRC IPS GALVANIZED WIRE ROPE. THE SWAGED FITTINGS AND STUD ARE REQUIRED. END FITTING SHALL BE MACHINED FROM HOT-ROLLED CARBON STEEL CONFORMING TO ASTM A576 GRADE 1035 AND GALVANIZED ACCORDING TO ASTM A123. TREADED STUD SHALL CONFORM TO ASTM A325 OR SAE GRADE 5. MINIMUM BREAKING STRENGTH OF WIRE ROPE IS 43,000 LB. WIRE ROPE IS TO BE TAUT.

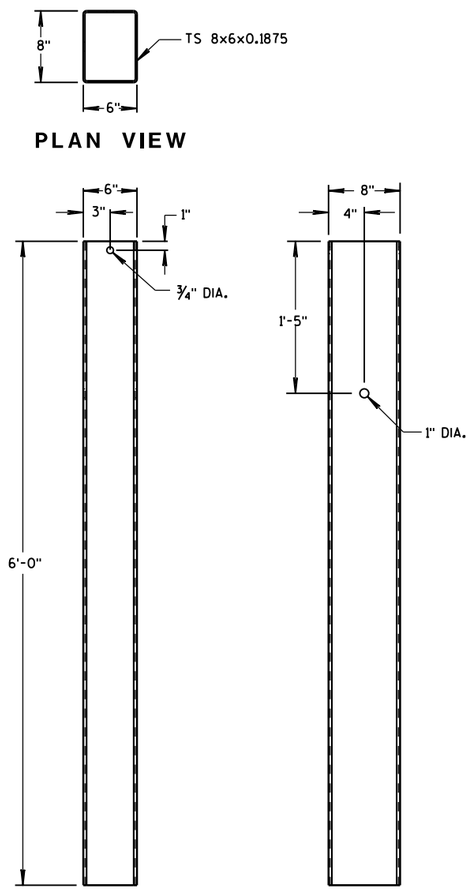

FOUNDATION TUBE

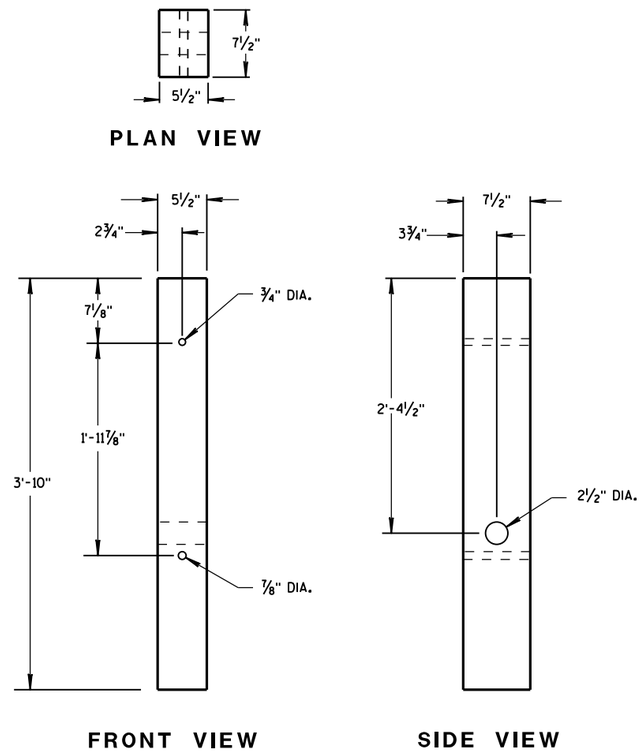

BREAKAWAY WOOD POST

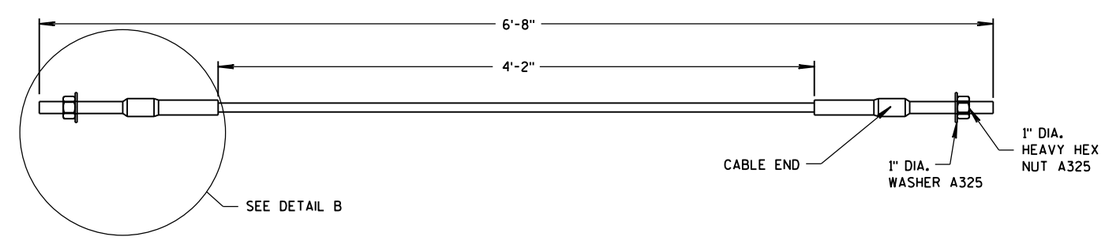

BCT ANCHOR CABLE

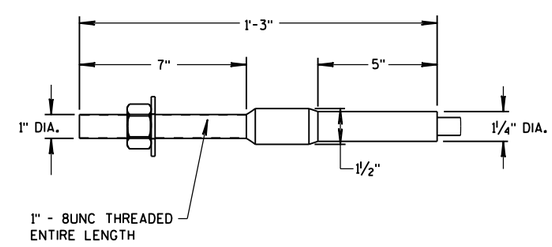

DETAIL B

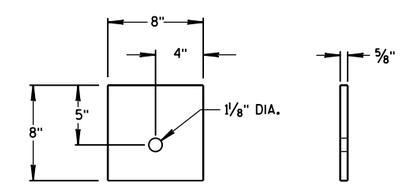

ANCHOR CABLE BEARING PLATE

MIDWEST GUARDRAIL SYSTEM (MGS) TYPE 2 TERMINAL

STATE OF WISCONSIN
DEPARTMENT OF TRANSPO

6

S.D.D. 14 B 47-2b

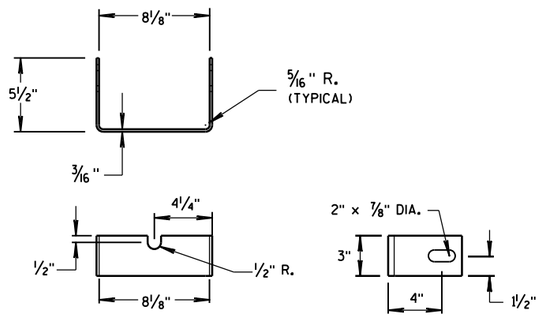

YOKE DETAIL

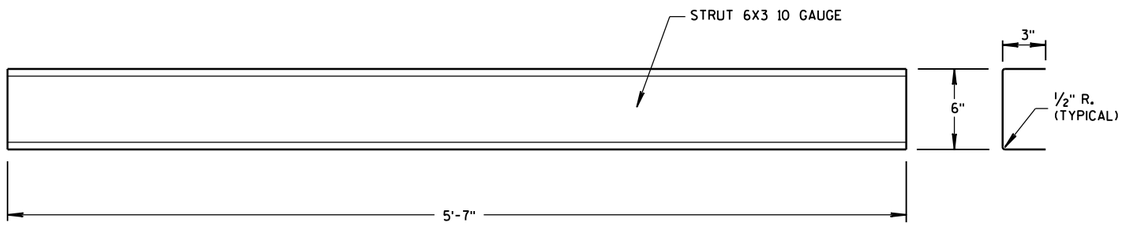

STRUT DETAIL

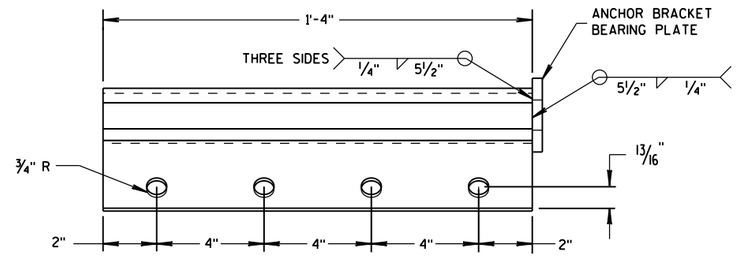

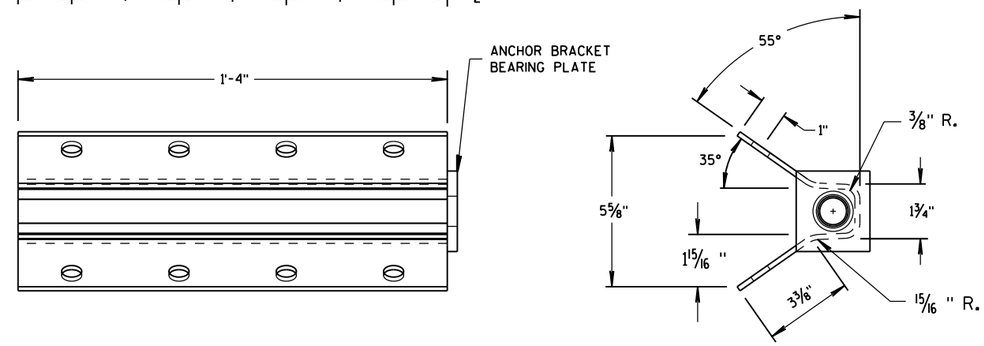

ANCHOR BRACKET

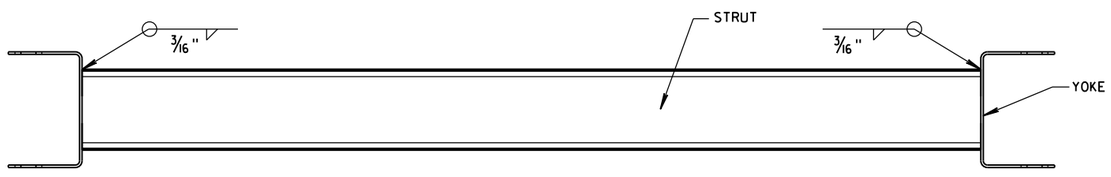

PLAN VIEW

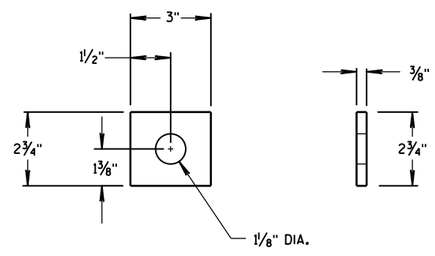

ANCHOR BRACKET
BEARING PLATE

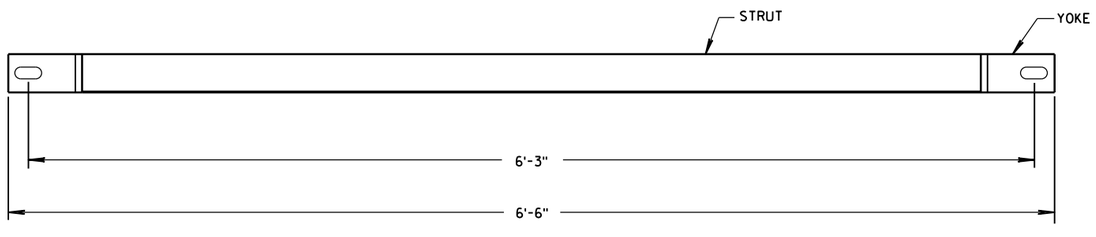

FRONT VIEW

GROUND STRUT DETAIL

6

6

S.D.D. 14 B 47-2c

S.D.D. 14 B 47-2c

MIDWEST GUARDRAIL
SYSTEM (MGS) TYPE 2 TERMINAL

STATE OF WISCONSIN
DEPARTMENT OF TRANSPORTATION

APPROVED

June 2014 — DATE

/S/ Jerry H. Zogg — ROADWAY STANDARDS ENGINEER

FHWA

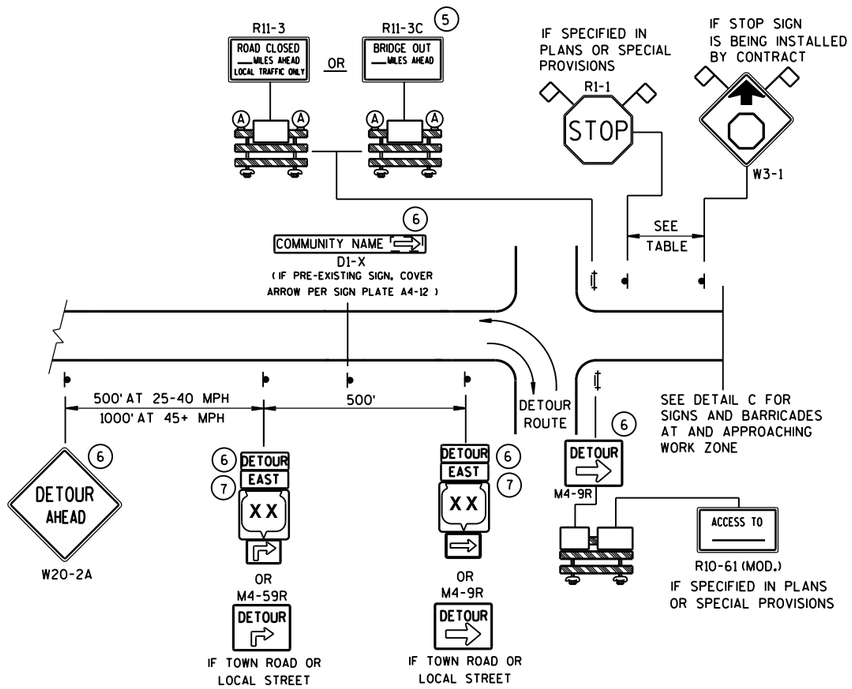

DETAIL A
MAINLINE CLOSURE WITH POSTED DETOUR
WORK ZONE GREATER THAN ½ MILE FROM DETOUR ROUTE (1000 FEET IF URBAN)

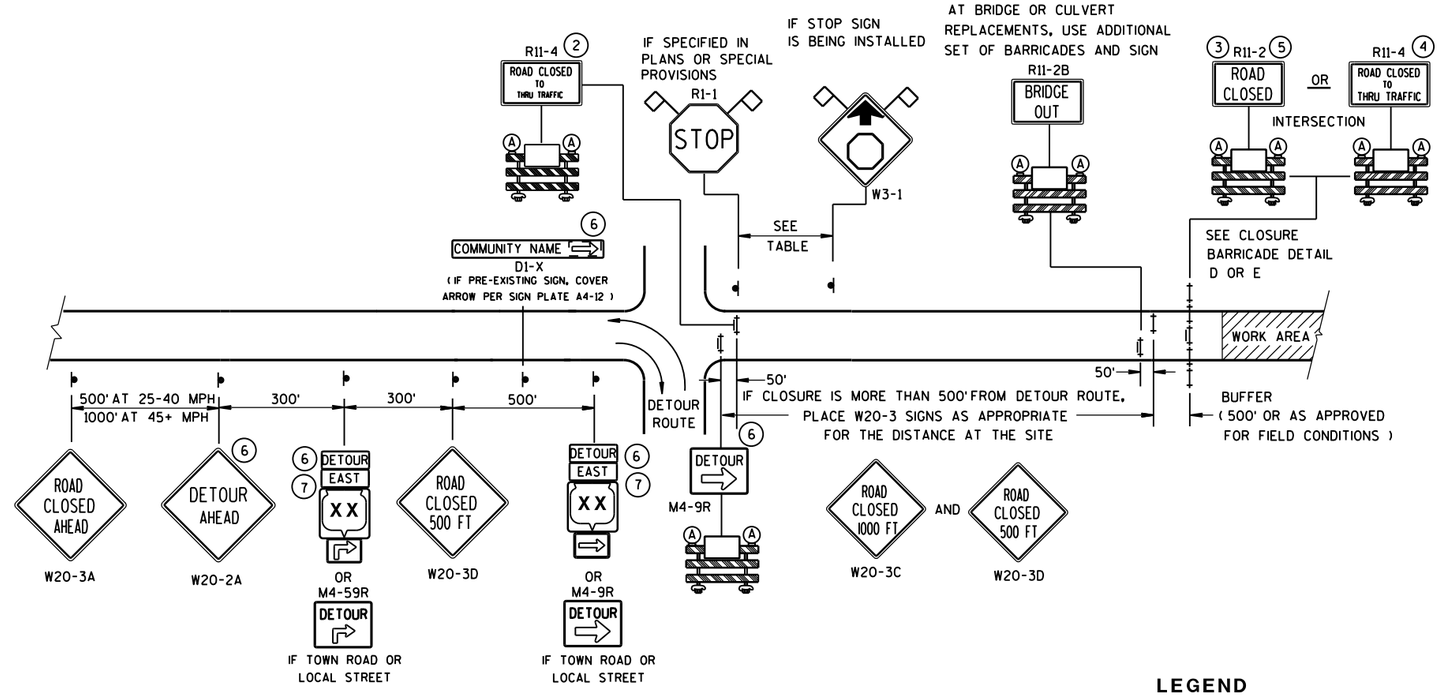

DETAIL B
MAINLINE CLOSURE WITH POSTED DETOUR
WORK ZONE LESS THAN ½ MILE FROM DETOUR ROUTE (1000 FEET IF URBAN)

LEGEND

- SIGN ON PERMANENT SUPPORT
- TYPE III BARRICADE
- TYPE III BARRICADE WITH ATTACHED SIGN
- (A) TYPE "A" WARNING LIGHT (FLASHING)
- WORK AREA
- DETOUR / EAST — M4-8 / M3-X
- XX — M1-4; XX COUNTY XX — M1-5A; XX — M1-6
- M05-1 OR M06-1
- FLAGS, 16" X 16" MIN., (ORANGE)

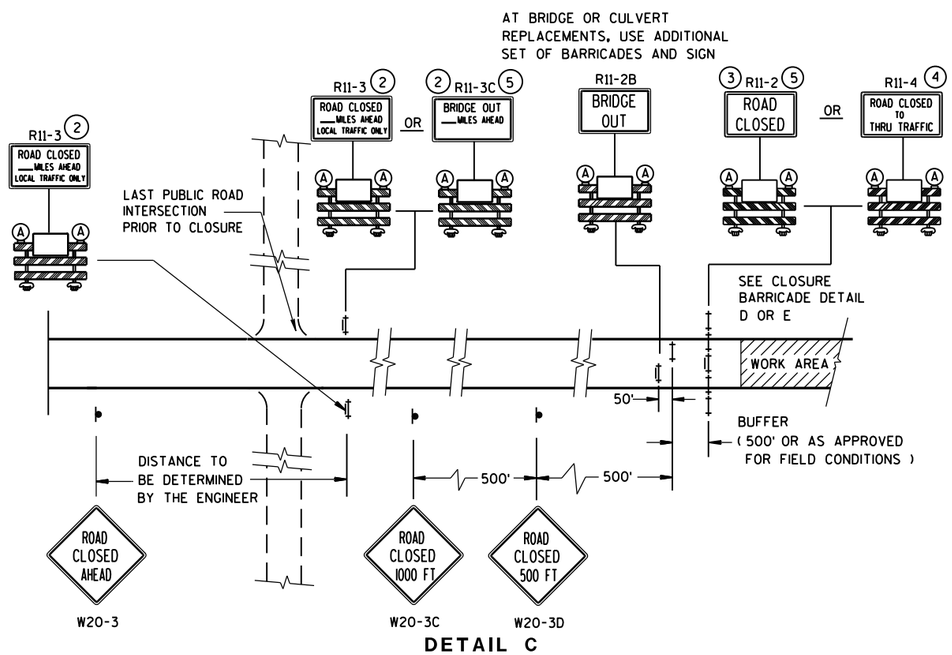

DETAIL C
MAINLINE CLOSURE, NO POSTED DETOUR

SPEED LIMIT (MPH)	"STOP AHEAD" ADVANCE WARNING DISTANCE (FT)
25	200
30	200
35	350
40	350
45	500
50	550
55	750

SEE SDD 15C2-SHEET "**b**" FOR GENERAL NOTES AND FOOTNOTES (1) THROUGH (7)

BARRICADES AND SIGNS FOR MAINLINE CLOSURES

STATE OF WISCONSIN
DEPARTMENT OF TRANSPORTATION

Sept. 2015 — DATE
/S/ Peter Amakobe Atepe — STATEWIDE WORK ZONE TRAFFIC SAFETY ENGINEER
FHWA

6

6

S.D.D. 15 C 2-6a

S.D.D. 15 C 2-6a

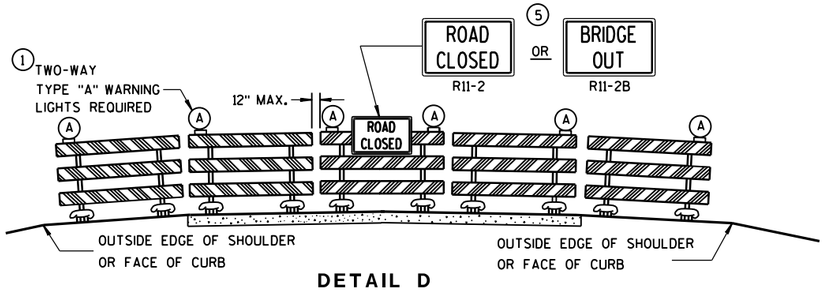

DETAIL D

ROAD CLOSURE BARRICADE DETAIL

APPROACH VIEW

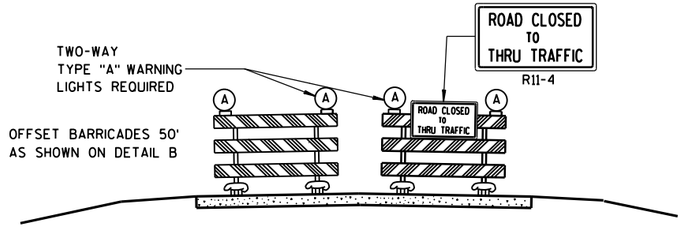

DETAIL E

LANE CLOSURE BARRICADE DETAIL

APPROACH VIEW

SEE SDD 15C2-SHEET "**a**" FOR LEGEND

GENERAL NOTES

THE EXACT NUMBER, LOCATION, AND SPACING OF ALL SIGNS AND BARRICADES SHALL BE ADJUSTED TO FIT FIELD CONDITIONS AS APPROVED BY THE ENGINEER.

ANY SIGNS TEMPORARY OR EXISTING, WHICH CONFLICT WITH TRAFFIC CONTROL "IN USE" SHALL BE REMOVED OR COVERED AS NEEDED AND AS APPROVED BY THE ENGINEER.

THE SPACING BETWEEN TRAFFIC CONTROL SIGNS SHOULD BE ADJUSTED TO NOT CONFLICT WITH AND SHOULD PROVIDE A DESIRABLE MINIMUM OF 200 FEET CLEARANCE TO EXISTING SIGNS THAT WILL REMAIN IN PLACE.

BARRICADES THAT MUST BE MOVED FOR A WORK OPERATION SHALL BE IMMEDIATELY RE-ESTABLISHED UPON COMPLETION OF THE OPERATION OR, FOR CONTINUING OPERATIONS, AT THE END OF EACH WORKING DAY.

SIGNS THAT WILL BE IN PLACE LESS THAN 7 CONTINUOUS DAYS AND NIGHTS MAY BE MOUNTED ON PORTABLE SUPPORTS.

ALL TYPE III BARRICADES SHALL HAVE RAILS REFLECTORIZED ON BOTH FACES. STRIPES SHALL BE PROPERLY SLOPED DOWN TOWARD THE TRAFFIC SIDE OR AS SHOWN IN THE ROAD CLOSURE BARRICADE DETAIL D FOR FULL ROAD CLOSURES.

TYPE "A" LOW-INTENSITY FLASHING WARNING LIGHTS SHALL BE VISIBLE ON BOTH SIDES OF THE BARRICADE.

THE R11-2, R11-3, M4-9, R11-4 AND R10-61 SIGNS PLACED ON BARRICADES SHALL COVER NO MORE THAN THE TOP RAIL. THE SIGNS SHALL NOT COVER ANY PORTION OF THE MIDDLE OR BOTTOM RAILS.

"WO AND "MO" SIGNS ARE THE SAME AS "W" AND "M" SIGNS EXCEPT THE BACKGROUND IS ORANGE.

ALL SIGNS SHALL BE 48" X 48" UNLESS OTHERWISE NOTED BELOW:

R11-2 SHALL BE 48" X 30".
R11-3, R11-4 AND R10-61 SHALL BE 60" X 30".
M4-9 SHALL BE 30" X 24".
M3-X SHALL BE 24" X 12". (36" X 18" IF NEEDED TO MATCH EXISTING SIGNS.)
M4-8 SHALL BE 24" X 12". (30" X 15" IF NEEDED TO MATCH EXISTING SIGNS.)
M1-4, M1-5A, AND M1-6 SHALL BE 24" X 24". (36" X 36" IF NEEDED TO MATCH EXISTING SIGNS.)
M05-1 AND M06-1 SHALL BE 21" X 21". (30" X 30" IF NEEDED TO MATCH EXISTING SIGNS.)
D1-X SHALL BE AS SHOWN ON SPECIFIC PROJECT SIGNING DETAIL SHEETS.
R1-1 SHALL BE 36" X 36".

1. TWO WARNING LIGHTS SHALL BE PROVIDED ON THE CENTER BARRICADE AND A MINIMUM OF ONE WARNING LIGHT SHALL BE PROVIDED ON EACH OF THE OTHER BARRICADES WITHIN THE ROADWAY LIMITS. SPACING OF THE WARNING LIGHTS SHALL BE UNIFORM TO THE EDGE OF ROADWAY AS SHOWN (APPROX. 8-FOOT LIGHT SPACING).
2. THESE SIGNS AND BARRICADES ARE NOT REQUIRED IF ROAD CLOSURE BEGINS AT INTERSECTION.
3. FOR ROAD CLOSURE WITHOUT LOCAL ACCESS TO PROJECT, SEE ROAD CLOSURE BARRICADE DETAIL D.
4. FOR ROAD CLOSURE WITH LOCAL ACCESS TO PROJECT, SEE LANE CLOSURE BARRICADE DETAIL E.
5. FOR BRIDGE OR CULVERT REPLACEMENTS, SUBSTITUTE "BRIDGE OUT" INSTEAD OF "ROAD CLOSED" ON R11-2 AND R11-3 SIGNS.
6. INSTALL DETOUR AND COMMUNITY GUIDE SIGNS AND ARROWS ONLY IF SPECIFIED IN THE CONTRACT. IF THERE ARE EXISTING ROUTE MARKER ASSEMBLIES THAT WILL REMAIN IN PLACE, ADJUST THE LOCATION OF THE DETOUR ROUTE SIGNS TO CORRESPOND WITH THE EXISTING ASSEMBLIES. MODIFY EXISTING SIGNS WHERE POSSIBLE. SEE SPECIFIC PROJECT DETOUR SIGNING DETAIL SHEETS. IF DETOUR SIGNS ARE BEING INSTALLED BY OTHERS, PLACE THE CONTRACTED TRAFFIC CONTROL SIGNS TO ALLOW FOR PLACEMENT OF ALL WARNING, DETOUR AND GUIDE SIGNS AS SHOWN.
7. "EAST" CARDINAL DIRECTION MARKERS AND RIGHT TURN ARROWS ARE SHOWN. USE OTHER CARDINAL DIRECTIONS AND ARROWS AS APPROPRIATE.

BARRICADES AND SIGNS FOR MAINLINE CLOSURES

STATE OF WISCONSIN
DEPARTMENT OF TRANSPORTATION

Sept. 2015 — DATE
/S/ Peter Amakobe Atepe — STATEWIDE WORK ZONE TRAFFIC SAFETY ENGINEER
FHWA

6

S.D.D. 15 C 2-6b

THIS DRAWING PROVIDES GENERAL GUIDANCE ON TYPICAL DETOUR SIGN LAYOUT AND SPACING. SEE PROJECT DETOUR SIGNING SHEETS FOR SPECIFIC DETAILS FOR EACH PROJECT.

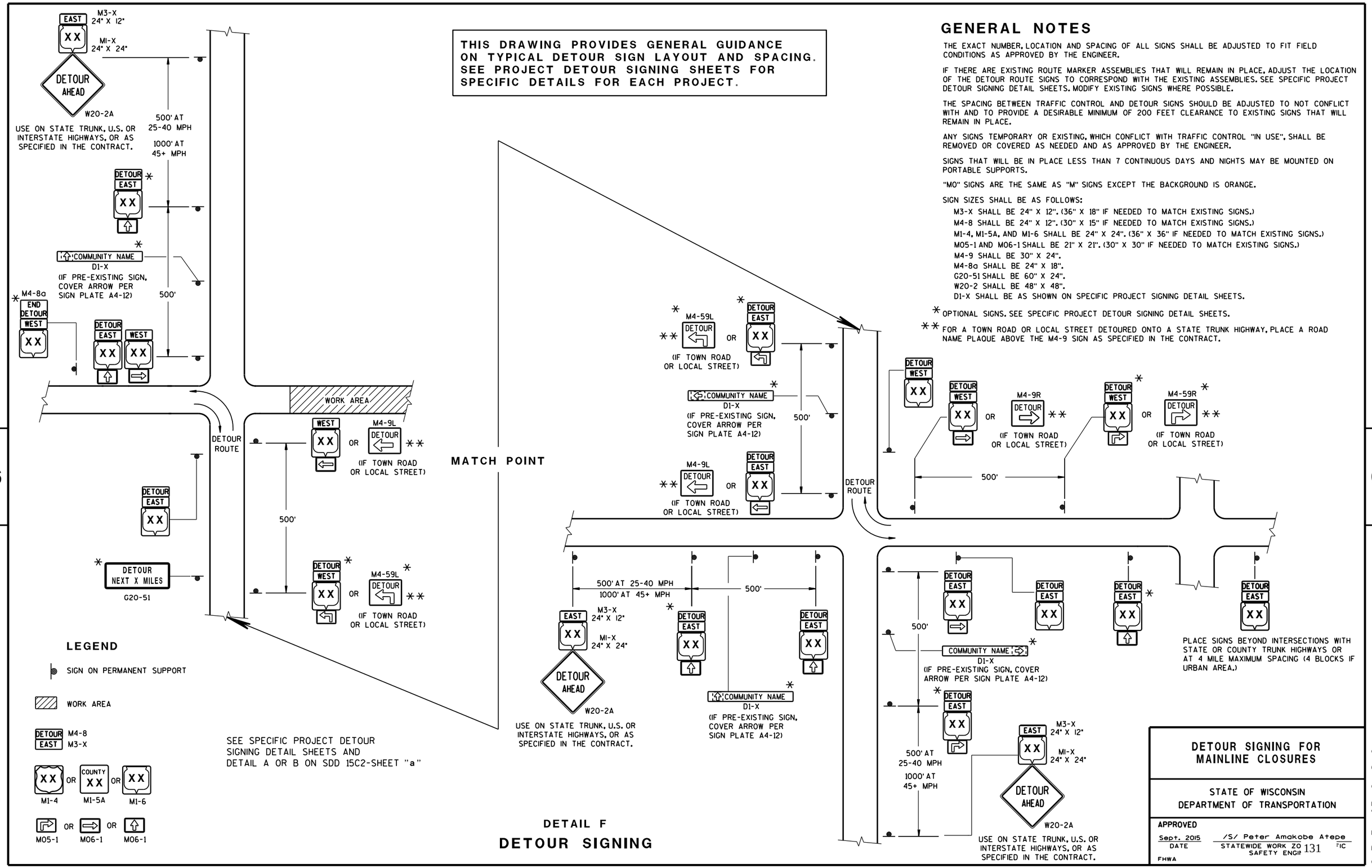

DETAIL F

DETOUR SIGNING

GENERAL NOTES

THE EXACT NUMBER, LOCATION AND SPACING OF ALL SIGNS SHALL BE ADJUSTED TO FIT FIELD CONDITIONS AS APPROVED BY THE ENGINEER.

IF THERE ARE EXISTING ROUTE MARKER ASSEMBLIES THAT WILL REMAIN IN PLACE, ADJUST THE LOCATION OF THE DETOUR ROUTE SIGNS TO CORRESPOND WITH THE EXISTING ASSEMBLIES. SEE SPECIFIC PROJECT DETOUR SIGNING DETAIL SHEETS. MODIFY EXISTING SIGNS WHERE POSSIBLE.

THE SPACING BETWEEN TRAFFIC CONTROL AND DETOUR SIGNS SHOULD BE ADJUSTED TO NOT CONFLICT WITH AND TO PROVIDE A DESIRABLE MINIMUM OF 200 FEET CLEARANCE TO EXISTING SIGNS THAT WILL REMAIN IN PLACE.

ANY SIGNS TEMPORARY OR EXISTING, WHICH CONFLICT WITH TRAFFIC CONTROL "IN USE", SHALL BE REMOVED OR COVERED AS NEEDED AND AS APPROVED BY THE ENGINEER.

SIGNS THAT WILL BE IN PLACE LESS THAN 7 CONTINUOUS DAYS AND NIGHTS MAY BE MOUNTED ON PORTABLE SUPPORTS.

"MO" SIGNS ARE THE SAME AS "M" SIGNS EXCEPT THE BACKGROUND IS ORANGE.

SIGN SIZES SHALL BE AS FOLLOWS:

- M3-X SHALL BE 24" X 12". (36" X 18" IF NEEDED TO MATCH EXISTING SIGNS.)
- M4-8 SHALL BE 24" X 12". (30" X 15" IF NEEDED TO MATCH EXISTING SIGNS.)
- M1-4, M1-5A, AND M1-6 SHALL BE 24" X 24". (36" X 36" IF NEEDED TO MATCH EXISTING SIGNS.)
- M05-1 AND M06-1 SHALL BE 21" X 21". (30" X 30" IF NEEDED TO MATCH EXISTING SIGNS.)
- M4-9 SHALL BE 30" X 24".
- M4-8a SHALL BE 24" X 18".
- G20-51 SHALL BE 60" X 24".
- W20-2 SHALL BE 48" X 48".
- D1-X SHALL BE AS SHOWN ON SPECIFIC PROJECT SIGNING DETAIL SHEETS.

* OPTIONAL SIGNS. SEE SPECIFIC PROJECT DETOUR SIGNING DETAIL SHEETS.

** FOR A TOWN ROAD OR LOCAL STREET DETOURED ONTO A STATE TRUNK HIGHWAY, PLACE A ROAD NAME PLAQUE ABOVE THE M4-9 SIGN AS SPECIFIED IN THE CONTRACT.

DETOUR SIGNING FOR MAINLINE CLOSURES

STATE OF WISCONSIN
DEPARTMENT OF TRANSPORTATION

APPROVED
Sept. 2015 — DATE
/S/ Peter Amakobe Atepe — STATEWIDE WORK ZONE TRAFFIC SAFETY ENGINEER
FHWA

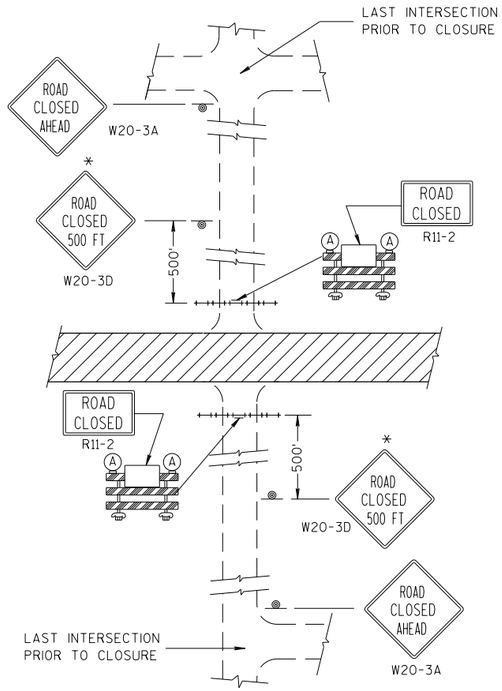

DETAIL 1

(NO ACCESS TO PROJECT)

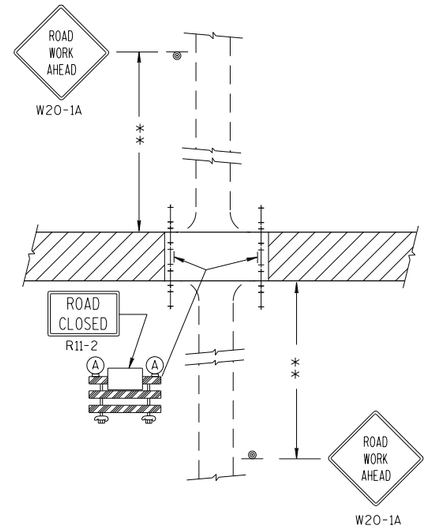

DETAIL 2

(PUBLIC CROSS-TRAFFIC MAINTAINED.
NO ACCESS TO PROJECT).

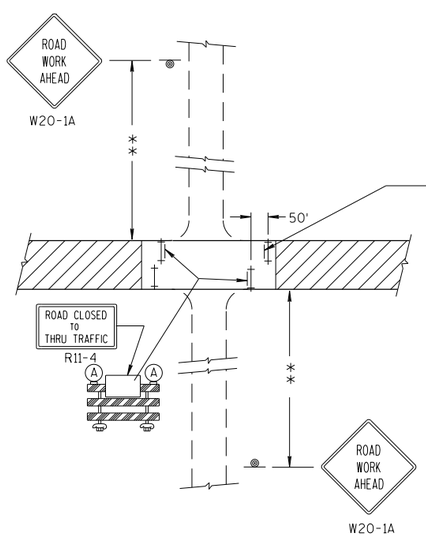

DETAIL 3

(PUBLIC CROSS-TRAFFIC MAINTAINED. CONTRACTOR,
LOCAL BUSINESS AND RESIDENT ACCESS).

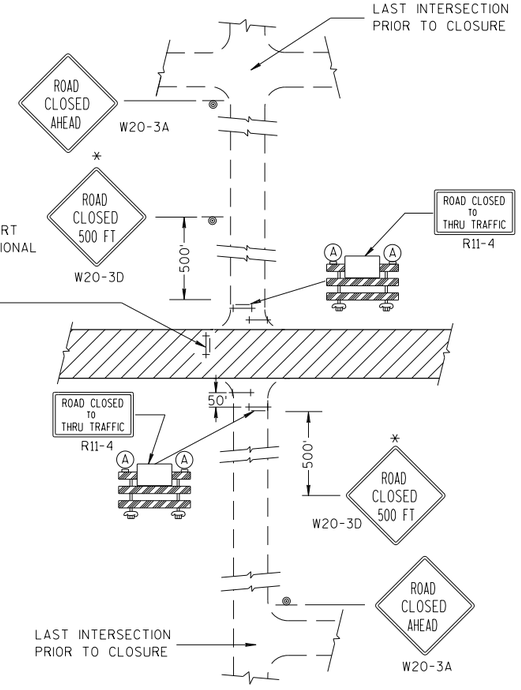

DETAIL 4

(CONTRACTOR, LOCAL BUSINESS AND
RESIDENT ACCESS TO PROJECT)

GENERAL NOTES

THE EXACT NUMBER, LOCATION, AND SPACING OF ALL SIGNS AND BARRICADES SHALL BE ADJUSTED TO FIT FIELD CONDITIONS AS APPROVED BY THE ENGINEER.

ANY SIGNS TEMPORARY OR EXISTING, WHICH CONFLICT WITH TRAFFIC CONTROL "IN USE" SHALL BE REMOVED OR COVERED AS NEEDED AND AS APPROVED BY THE ENGINEER.

THE SPACING BETWEEN TRAFFIC CONTROL SIGNS SHOULD BE ADJUSTED TO NOT CONFLICT WITH AND SHOULD PROVIDE A DESIRABLE MINIMUM OF 200 FEET CLEARANCE TO EXISTING SIGNS THAT WILL REMAIN IN PLACE.

IF A "STOP" SIGN MUST BE REMOVED FOR A WORK OPERATION, A TEMPORARY "STOP" SIGN SHALL BE PLACED PRIOR TO THE SIGN REMOVAL, OR A FLAGGER SHALL BE PROVIDED UNTIL THE SIGN IS RE-ESTABLISHED.

BARRICADES THAT MUST BE MOVED FOR A WORK OPERATION SHALL BE IMMEDIATELY RE-ESTABLISHED UPON COMPLETION OF THE OPERATION OR, FOR CONTINUING OPERATIONS, AT THE END OF EACH WORKING DAY.

SIGNS THAT WILL BE IN PLACE LESS THAN 7 CONTINUOUS DAYS AND NIGHTS MAY BE MOUNTED ON PORTABLE SUPPORTS.

ALL TYPE III BARRICADES SHALL HAVE RAILS REFLECTORIZED ON BOTH FACES. STRIPES SHALL BE PROPERLY SLOPED DOWN TOWARD THE TRAFFIC SIDE OR AS SHOWN IN THE ROAD CLOSURE BARRICADE DETAIL D FOR FULL ROAD CLOSURES.

TYPE "A" LOW-INTENSITY FLASHING WARNING LIGHTS SHALL BE VISIBLE ON BOTH SIDES OF THE BARRICADE.

THE R11-2, R11-3 AND R11-4 SIGNS PLACED ON BARRICADES SHALL COVER NO MORE THAN THE TOP RAIL. THE SIGNS SHALL NOT COVER ANY PORTION OF THE MIDDLE OR BOTTOM RAILS.

ALL SIGNS SHALL BE 48" X 48" UNLESS OTHERWISE NOTED BELOW:
R11-2 SHALL BE 48" X 30".
R11-4 AND R11-3 SHALL BE 60" X 30".

*OMIT THE "ROAD CLOSED 500 FT." SIGN IF THE LAST INTERSECTION IS 500 FT. OR LESS FROM THE WORK ZONE.

**500' MAX. OR AT LAST INTERSECTION WHICHEVER IS CLOSER.

LEGEND

- SIGN ON PERMANENT SUPPORT
- TYPE III BARRICADE
- TYPE III BARRICADE WITH ATTACHED SIGN
- (A) TYPE "A" WARNING LIGHT (FLASHING)
- WORK AREA

BARRICADES AND SIGNS FOR SIDEROAD CLOSURES

STATE OF WISCONSIN
DEPARTMENT OF TRANSPORTATION

APPROVED
7/2018 — DATE
/S/ Andrew Heidtke — WORK ZONE ENGI
FHWA

GENERAL NOTES

DETAILS OF INSTALLATION, MATERIALS AND WORKMANSHIP NOT SHOWN ON THIS DRAWING SHALL CONFORM TO THE PERTINENT REQUIREMENTS OF THE STANDARD SPECIFICATIONS AND APPLICABLE SPECIAL PROVISIONS.

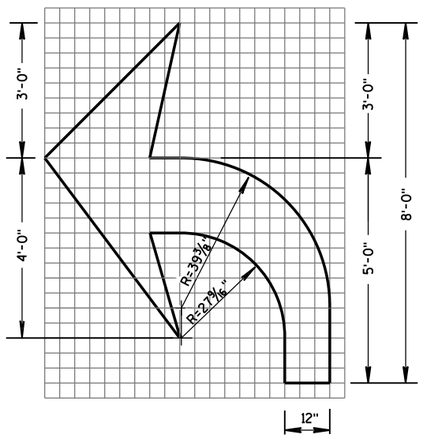

TYPE 2

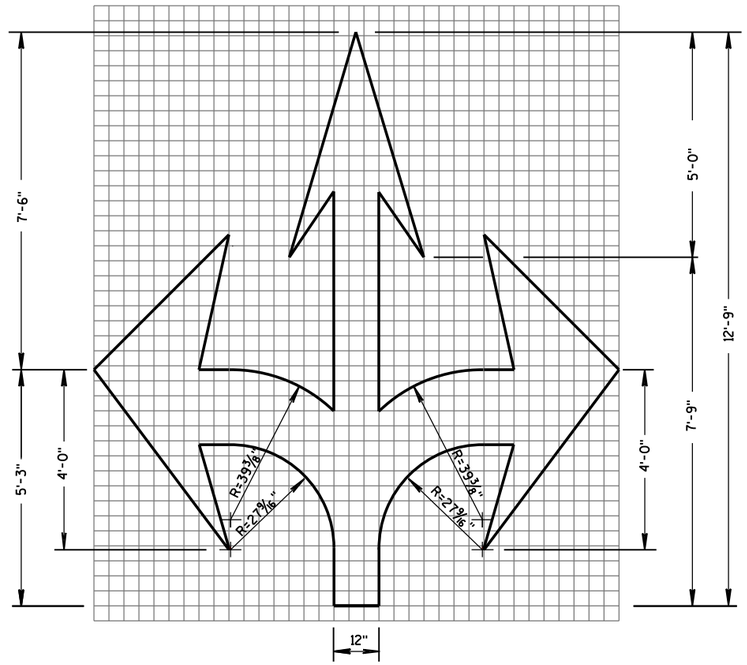

TYPE 6

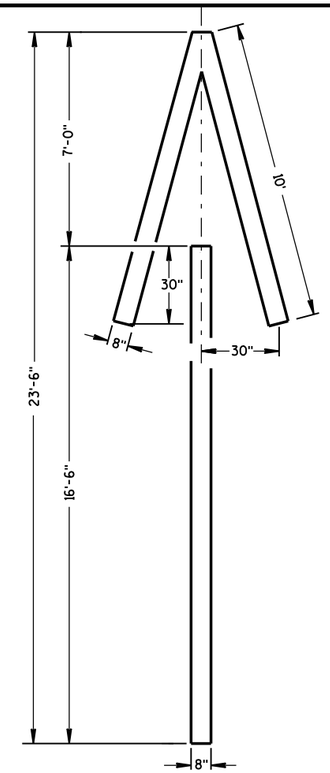

TYPE 4

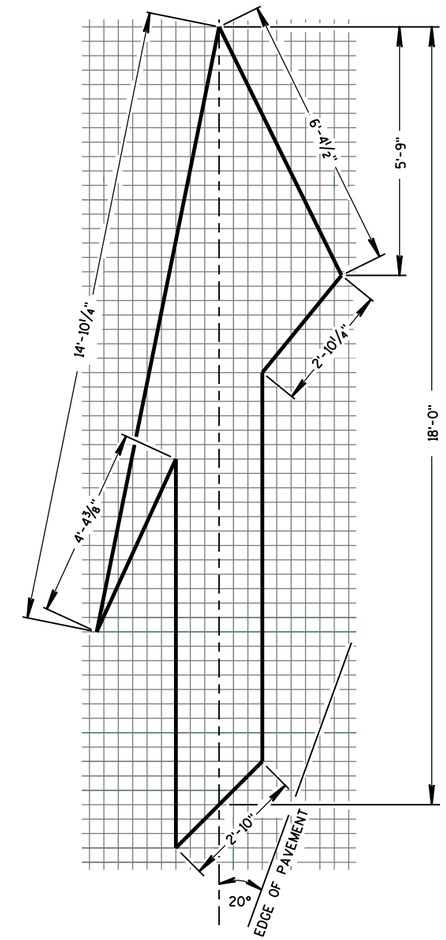

TYPE 5 LANE DROP ARROW

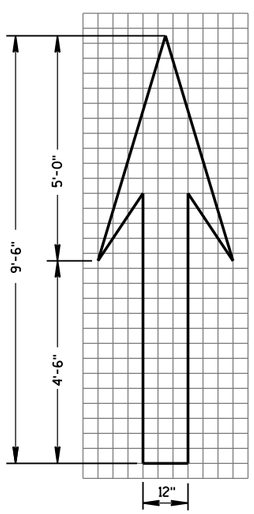

TYPE 1

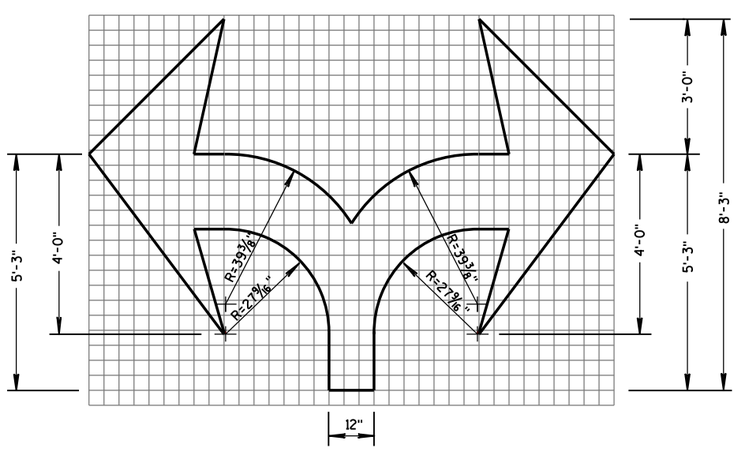

TYPE 7

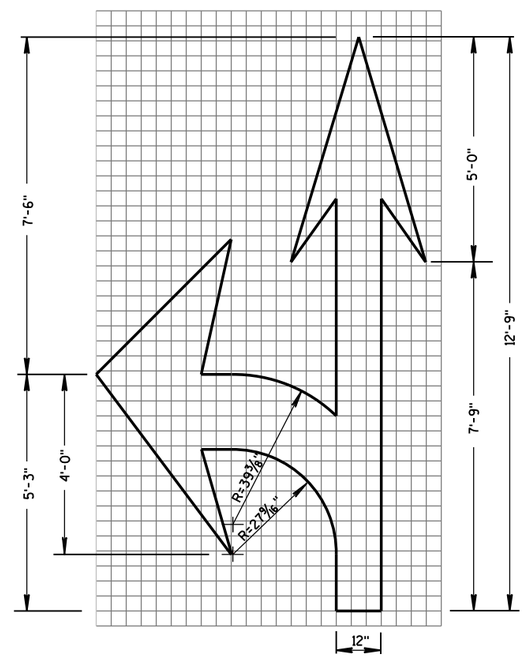

TYPE 3

PAVEMENT MARKING ARROWS

STATE OF WISCONSIN
DEPARTMENT OF TRANSPORTATION

APPROVED
June 2017 — DATE
/S/ Matthew R. Rauch — STATE SIGNING AND MAR[illegible]NEER
FHWA

6

S.D.D. 15 C 7-14c

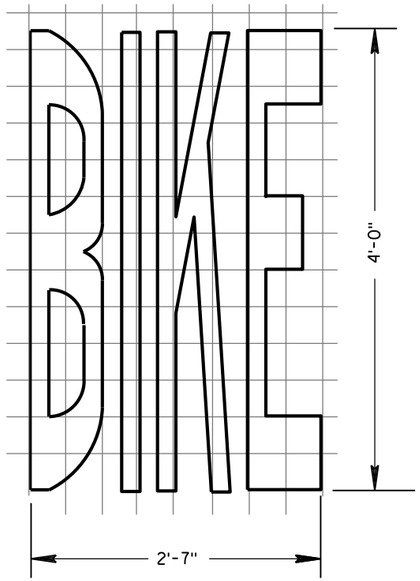

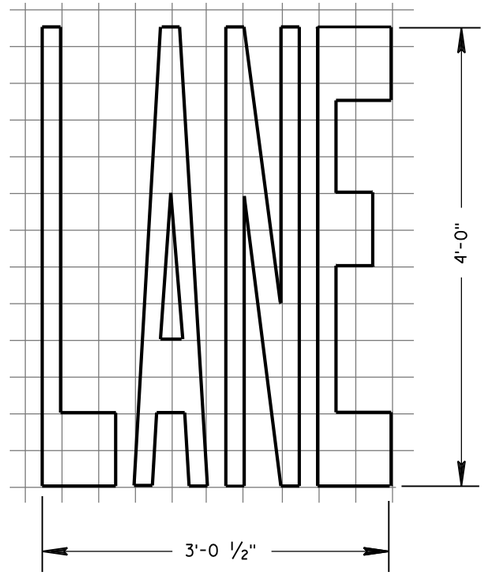

BIKE LANE WORDS

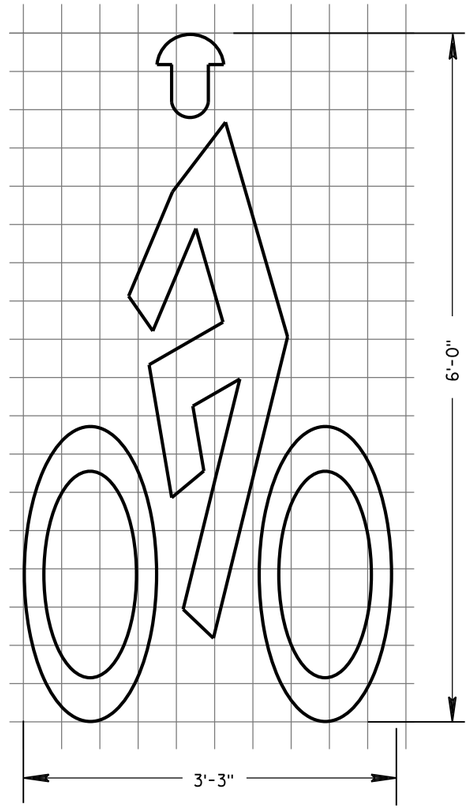

BIKE LANE SYMBOL

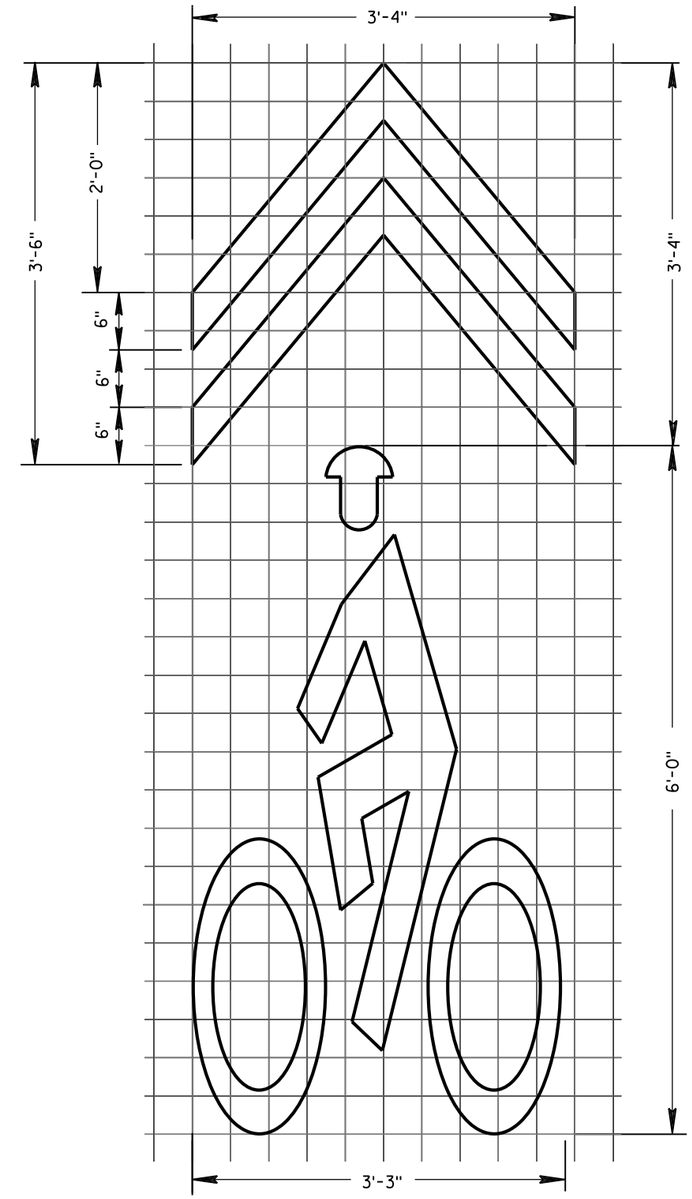

BIKE SYMBOL FOR SHARED LANE

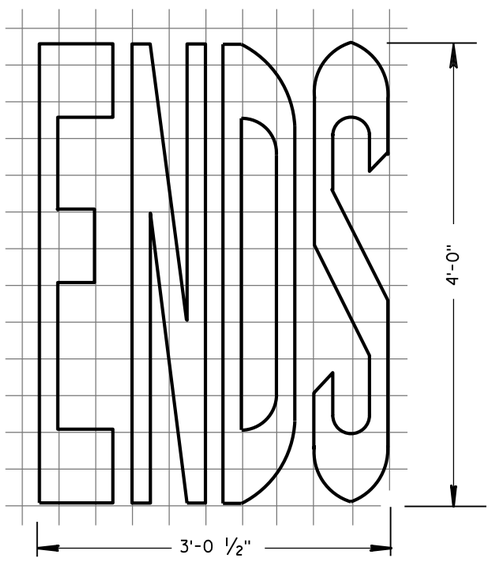

BIKE LANE WORDS

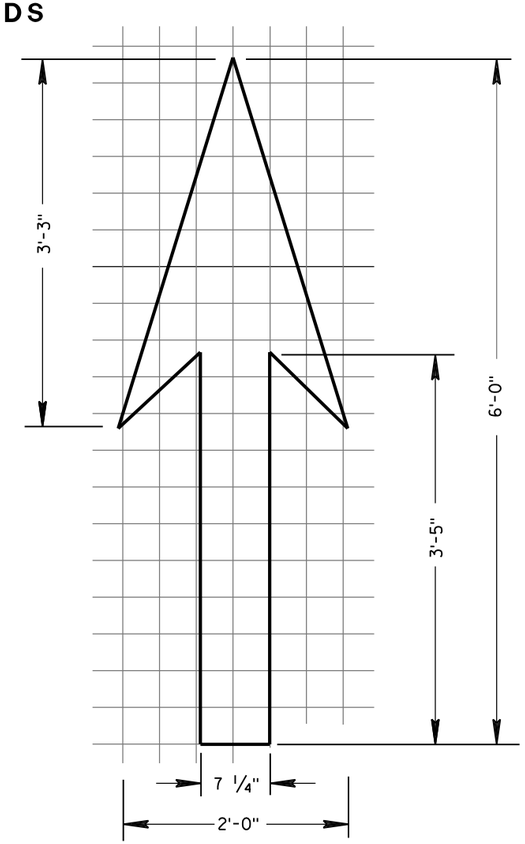

BIKE LANE ARROW

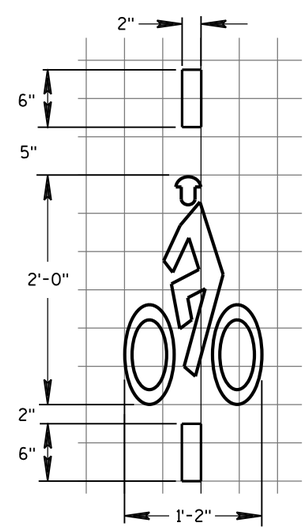

BICYCLE DETECTOR PAVEMENT MARKING

GENERAL NOTES

DETAILS OF INSTALLATION, MATERIALS AND WORKMANSHIP NOT SHOWN ON THIS DRAWING SHALL CONFORM TO THE PERTINENT REQUIREMENTS OF THE STANDARD SPECIFICATIONS AND APPLICABLE SPECIAL PROVISIONS.

PAVEMENT MARKING FOR BIKE LANES

STATE OF WISCONSIN
DEPARTMENT OF TRANSPORTATION

APPROVED
June 2017 — DATE
/S/ Matthew R. Rauch — STATE SIGNING AND MARKING ENGINEER
FHWA

6

6

S.D.D. 15 C 7-14e

S.D.D. 15 C 7-14e

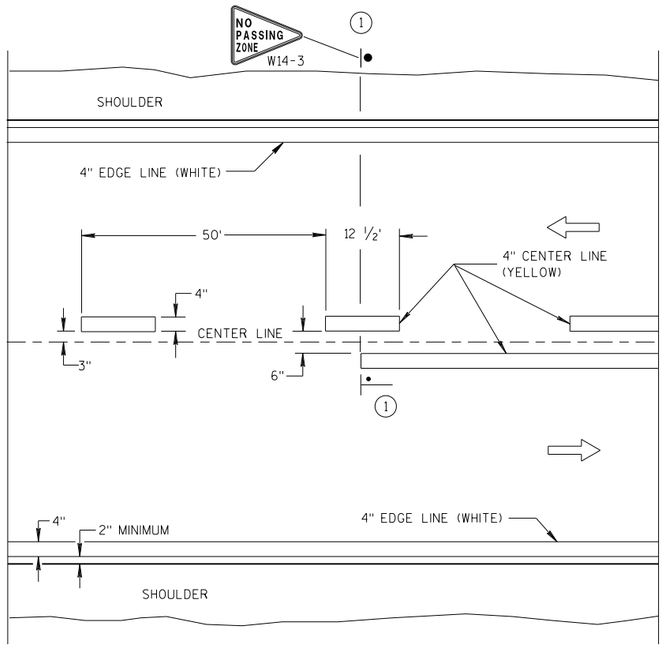

TWO WAY TRAFFIC

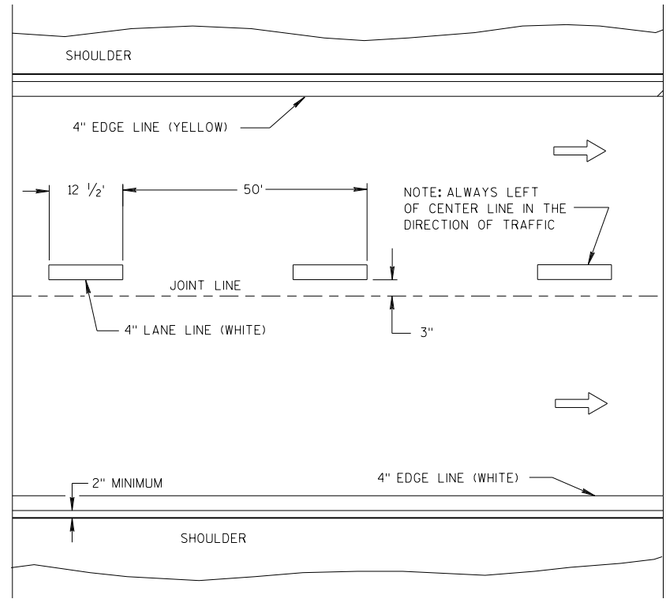

ONE WAY TRAFFIC

PERMANENT PAVEMENT MARKING

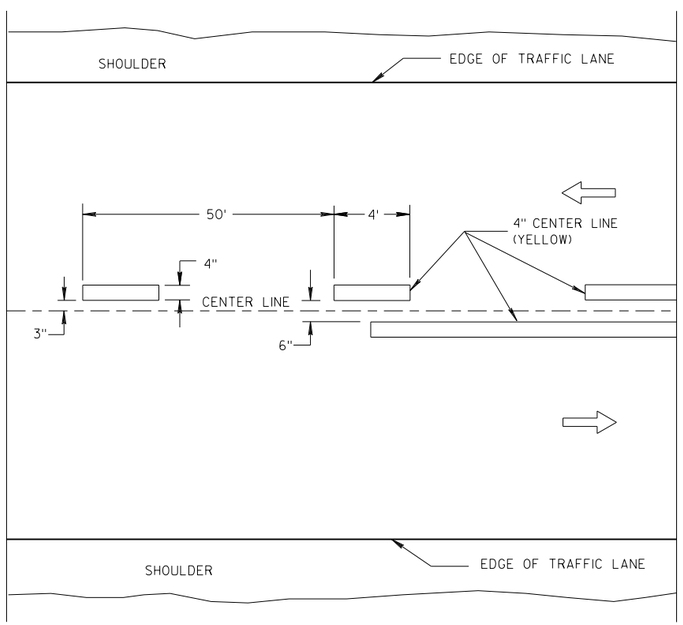

TWO WAY TRAFFIC

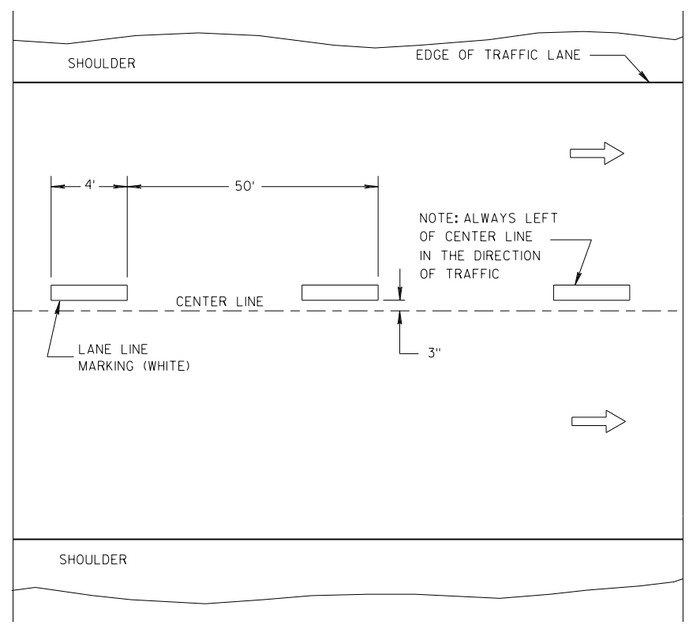

ONE WAY TRAFFIC

TEMPORARY PAVEMENT MARKING

GENERAL NOTES

DETAILS OF CONSTRUCTION NOT SHOWN ON THIS DRAWING SHALL CONFORM TO STANDARD SPECIFICATIONS AND SPECIAL PROVISIONS.

(1) LOCATE THE NO PASSING ZONE W14-3 SIGN WITHIN 50 FEET OF THE "T" MARKING.

NOTE

ARROW SYMBOL (⇨) SHOWS DIRECTION OF TRAVEL

LEGEND

"T" MARKING

POST MOUNTED SIGN

LONGITUDINAL MARKING (MAINLINE)

STATE OF WISCONSIN
DEPARTMENT OF TRANSPORTATION

APPROVED
7/2018 — DATE
/S/ Matthew R. Rauch — STATE SIGNING AND MAR INEER
FHWA

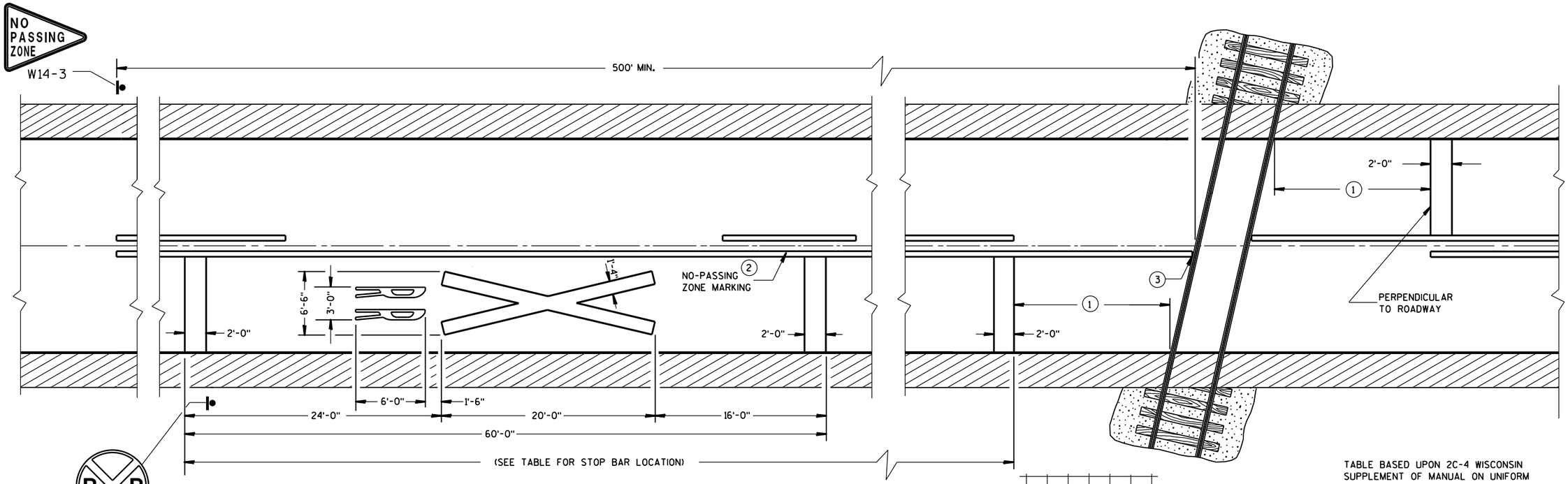

PAVEMENT MARKING

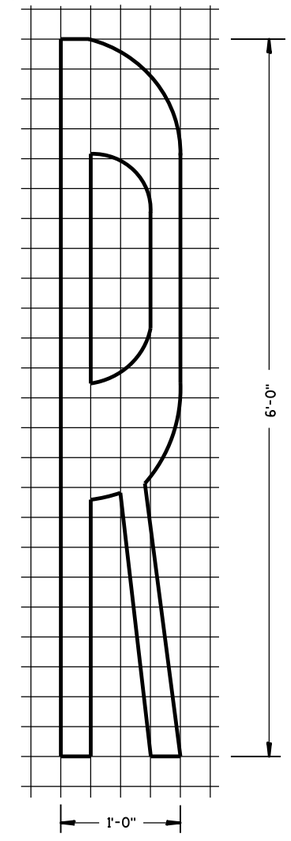

TABLE BASED UPON 2C-4 WISCONSIN SUPPLEMENT OF MANUAL ON UNIFORM TRAFFIC CONTROL DEVICES.

Posted Speed (M.P.H.)	Dimension Range (Feet)
25	150*- 250
30	200*- 300
35	250*- 450
40	300*- 500
45	400*- 650
50	550*- 800
55	750*- 1000
60	1000*- 1250
65	1000*- 1250

* THE MINIMUM DISTANCES IN THE TABLE ARE DESIRABLE AND SHOULD BE USED. THE DISTANCES MAY BE INCREASED UP TO THE MAXIMUM TO ALLOW FOR FIELD CONDITIONS SUCH AS THE CLOSE PROXIMITY OF DRIVEWAYS, BRIDGES, SIDEROADS OR OTHER FEATURES THAT WOULD PROHIBIT THE MINIMUM DISTANCES FROM BEING USED.

GENERAL NOTES

DETAILS OF CONSTRUCTION, MATERIALS, AND WORKMANSHIP NOT SHOWN ON THIS DRAWING SHALL CONFORM TO THE PERTINENT REQUIREMENTS OF THE STANDARD SPECIFICATIONS AND THE APPLICABLE SPECIAL PROVISIONS.

ON MULTI-LANE ROADS THE TRANSVERSE BANDS SHOULD EXTEND ACROSS ALL APPROACH LANES, AND INDIVIDUAL R X R SYMBOLS SHOULD BE USED IN EACH APPROACH LANE.

CENTER OR LANE LINES AND NO-PASSING ZONE MARKINGS SHOWN ON THIS DRAWING ARE REQUIRED AND PAID FOR UNDER OTHER ITEMS IN THE CONTRACT.

RETRACE EXISTING SYMBOL WHERE EXISTING SYMBOLS ARE PLACED.

1. MINIMUM 8' FROM ANY RAILROAD WARNING DEVICES (SIGNALS, GATES, ETC.) OR 25' FROM THE NEAREST RAIL, WHICHEVER DISTANCE IS GREATER.
2. 500' MINIMUM. MARKING LIMITS MAY BE EXTENDED AS DIRECTED BY THE ENGINEER TO MEET ADJACENT NO-PASSING ZONE MARKINGS.
3. FOR MULTIPLE TRACK CROSSINGS, THE BARRIER LINE SHALL EXTEND TO THE NEAR RAIL OF THE FURTHEST TRACK IN THE DIRECTION OF HIGHWAY TRAVEL.

SIGNING AND PAVEMENT MARKING DETAILS FOR RAILROAD-HIGHWAY GRADE CROSSINGS

STATE OF WISCONSIN
DEPARTMENT OF TRANSPORTATION

APPROVED
Sept., 2017 — DATE
/S/ Matthew R. Rauch — STATE SIGNING AND MAI[illegible] [illegible]GINEER
FHWA

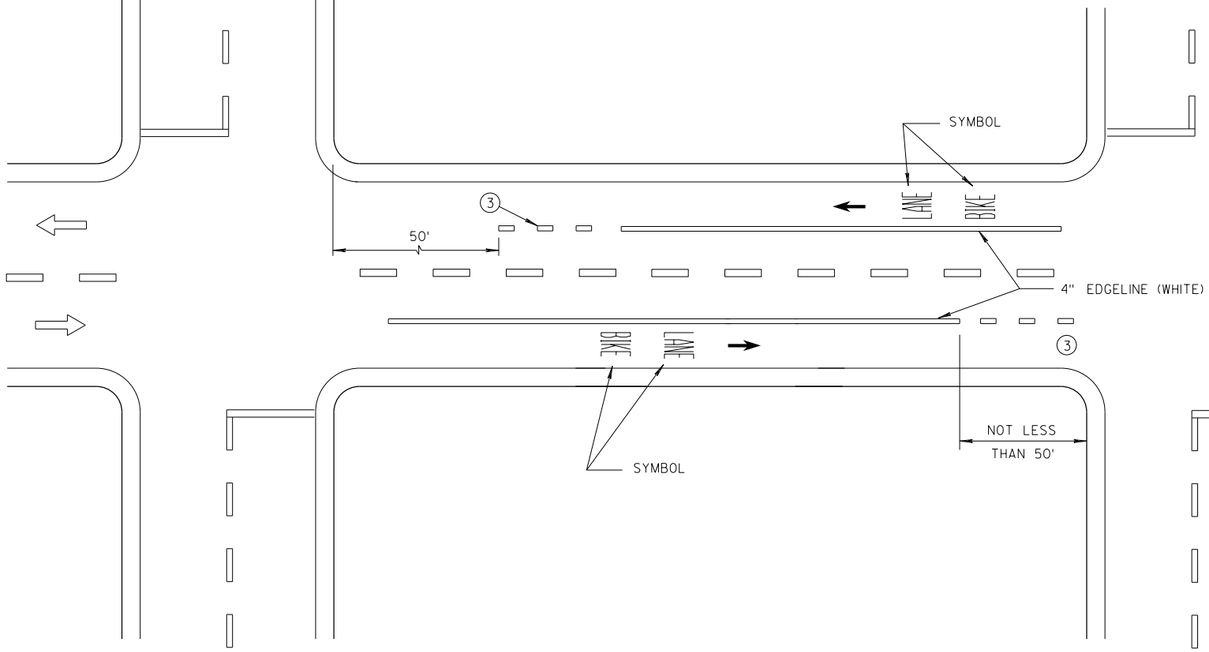

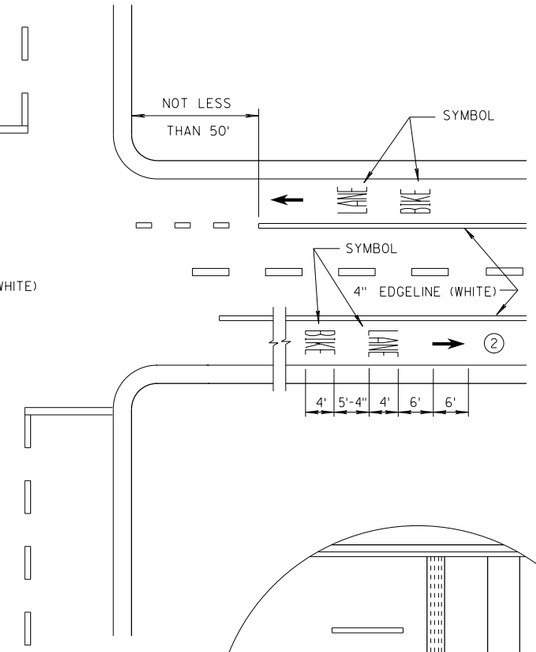

DESIGNATED BICYCLE LANE
NO PARKING

GENERAL NOTES

1. DETAILS OF CONSTRUCTION NOT SHOWN ON THIS DRAWING SHALL CONFORM TO STANDARD SPECIFICATIONS AND SPECIAL PROVISIONS.
2. MINIMUM OF ONE PER BLOCK. MAXIMUM OF 250 FEET.
3. DOTTED LINES (3' LINE, 9' GAP) SHOULD BE USED 50 FEET TO 200 FEET IN ADVANCE OF AN INTERSECTION WHERE THERE IS NO RIGHT TURN ONLY LANE AND THERE IS HEAVY RIGHT TURN TRAFFIC OR THERE IS A NEAR-SIDE BUS STOP. AT OTHER INTERSECTIONS WHERE RIGHT TURN TRAFFIC IS LIGHT TO MODERATE, A SOLID LINE CAN BE USED UP TO THE INTERSECTION.
4. IF SIGNED AND/OR MARKED AS A BICYCLE FACILITY INCLUDE SECOND LINE OF LINE-SPACE MARKING, OTHERWISE DO NOT.
5. BIKE ACCOMODATION IS TYPICALLY 5 FEET WIDE AND A MINIMUM OF 4 FEET FROM A LONGITUDINAL JOINT. USE 5 FEET AT 45 MPH.
6. OMIT THESE MARKINGS FOR WIDER TURN LANE APPLICATIONS (MINIMUM OF 15 FEET WIDE TURN LANE).
7. REFER TO CONTRACT PLANS FOR LANE WIDTH.

DIRECTION OF TRAVEL

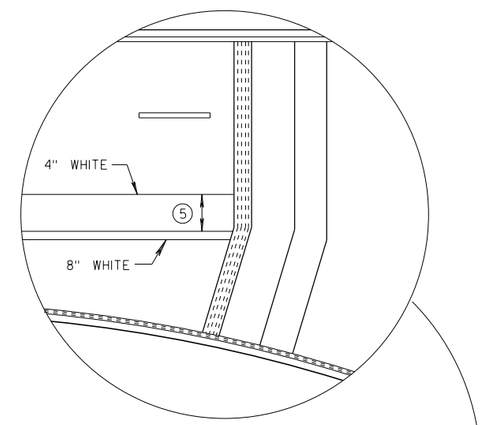

4 LANE DIVIDED WITHOUT ISLAND

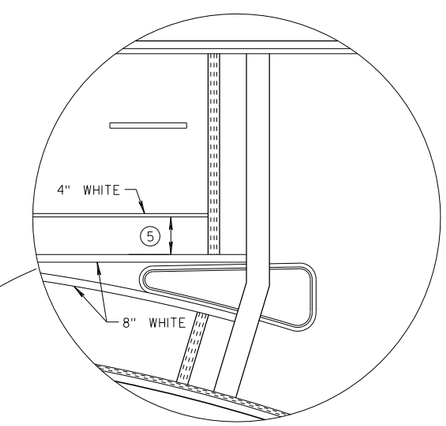

4 LANE DIVIDED WITH ISLAND

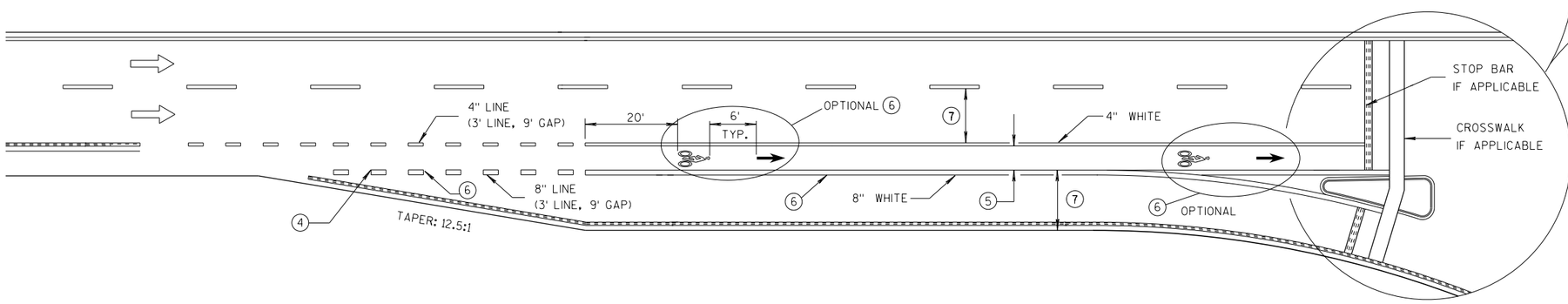

BIKE LANE - FOR 2-LANE ROADWAYS AND 4-LANE DIVIDED ROADWAYS
(4-LANE DIVIDED WITH RIGHT TURN LANE SHOWN)

BICYCLE LANE MARKING

STATE OF WISCONSIN
DEPARTMENT OF TRANSPORTATION

APPROVED
7/2018 — DATE
/S/ Matthew R. Rauch — STATE SIGNING AND MAR ... NEER
FHWA

6

S.D.D. 15 C 29-6a

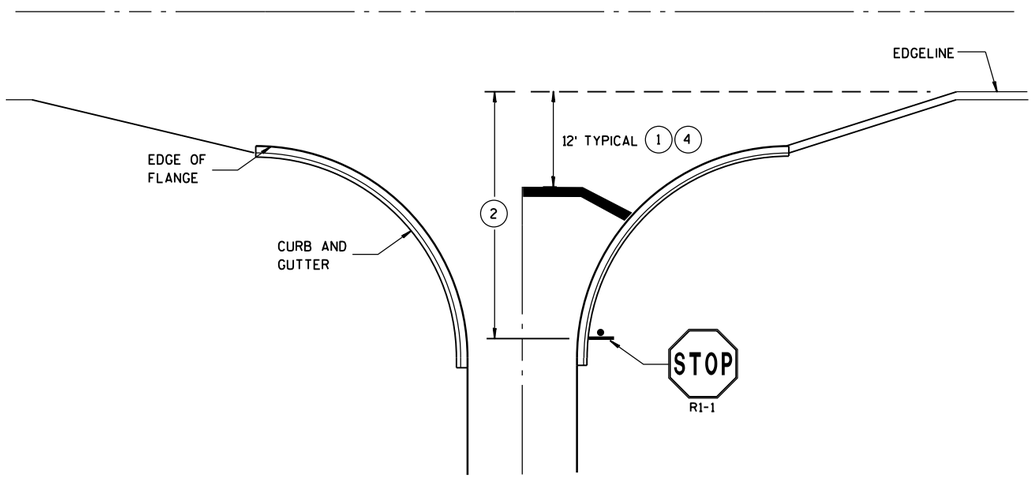

TYPICAL STOP LINE PAVEMENT MARKING WITH CURB AND GUTTER

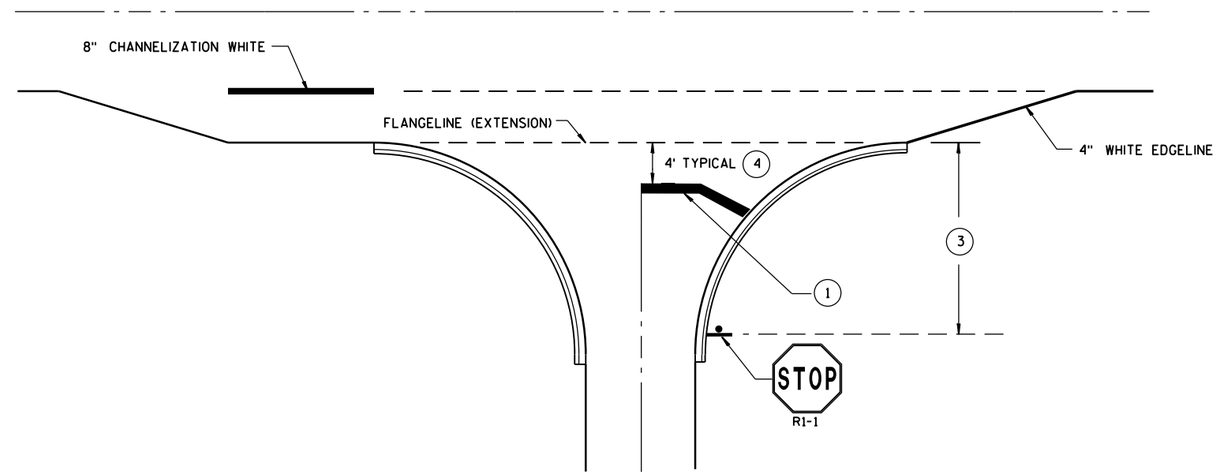

TYPICAL STOP LINE PAVEMENT MARKING FOR SIDEROADS WITH RIGHT TURN LANE

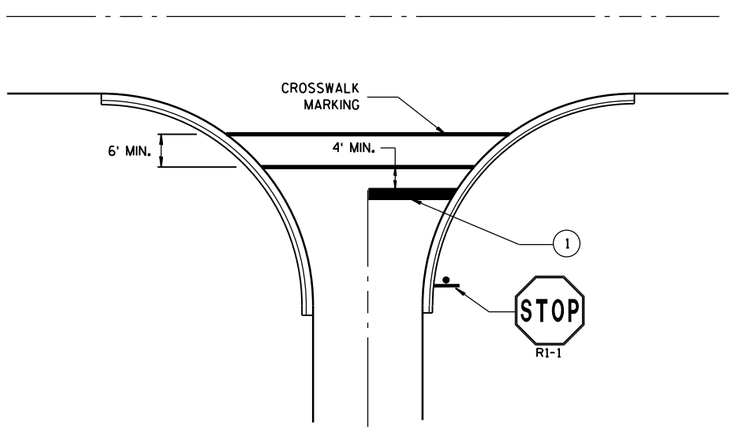

TYPICAL STOP LINE PAVEMENT MARKING FOR SIDEROADS WITH CROSSWALK MARKING

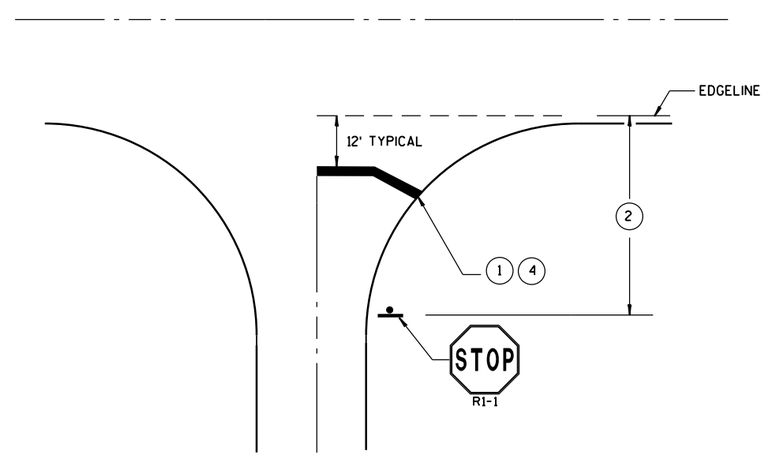

TYPICAL STOP LINE PAVEMENT MARKING WITHOUT CURB AND GUTTER

GENERAL NOTES

STOP SIGN SHALL BE PLACED A MINIMUM OF 6 FEET TO A MAXIMUM OF 50 FEET FROM THE EDGELINE LOCATION.

1. 18-INCH STOP LINES MAY BE DELETED OR ADDED BY THE PROJECT ENGINEER BASED ON VISIBILITY AND SIGHT LINES.
2. IF STOP SIGN IS LESS THAN OR EQUAL TO 40 FEET FROM THE EDGELINE THAN NO STOP LINE IS REQUIRED.
3. IF STOP SIGN IS LESS THAN OR EQUAL TO 30 FEET FROM THE FLANGELINE EXTENSION THAN NO STOP LINE IS REQUIRED.
4. MOVE CLOSER TO EDGE OF TRAVEL LANE AS NEEDED FOR VISIBILITY AND SIGHT LINES. (NO CLOSER THAN 4 FEET).

STOP LINE AND CROSSWALK PAVEMENT MARKING

STATE OF WISCONSIN
DEPARTMENT OF TRANSPORTATION

APPROVED

Sept., 2017	/S/ Matthew R. Rauch
DATE	STATE SIGNING AND MAR[illegible]NEER

FHWA

6

S.D.D. 15 C 33-3

URBAN AREA

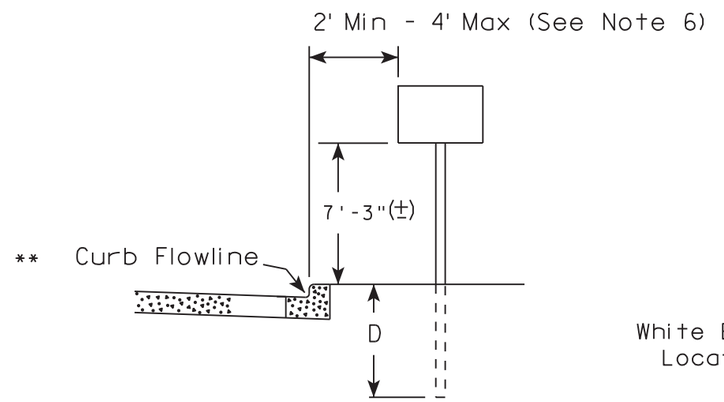

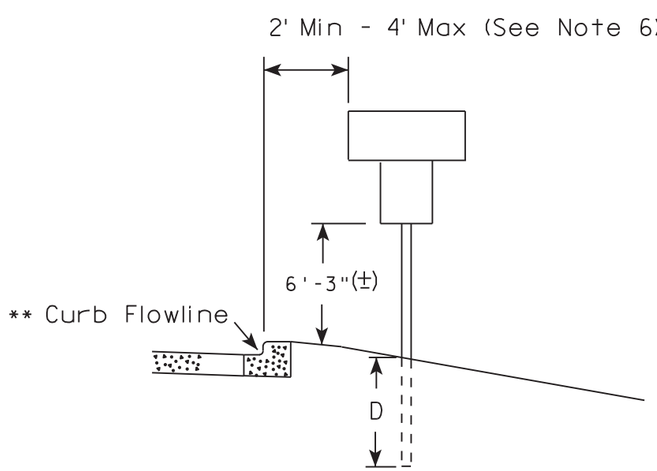

RURAL AREA (See Note 2)

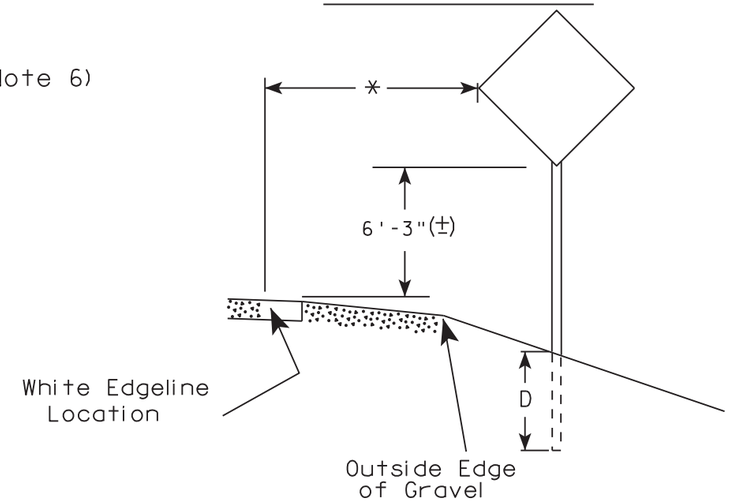

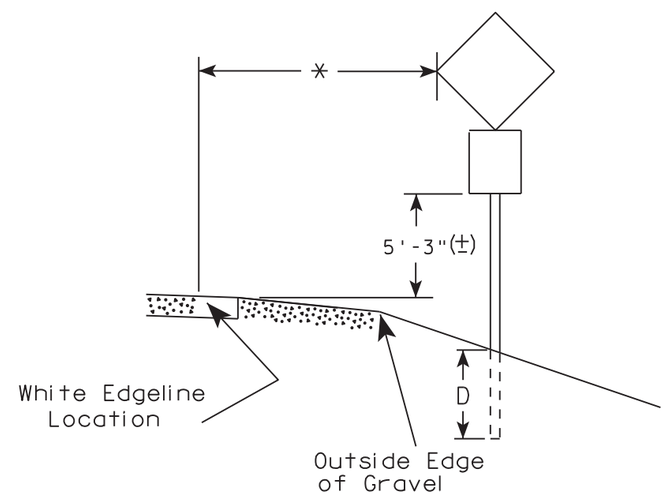

** The existence of curb and gutter does not in itself mandate the vertical clearance illustrated. That height is typically measured where there is sidewalk adjacent to the roadway or parking is permitted. In the absence of sidewalk vertical clearance is measured from the top of the curb. Offset of signs is measured from the flow line.

* 6 feet from edge of a paved shoulder or 12 feet from the edge of pavement (edge line location) or 2 feet from outside edge of gravel, whichever is greater unless directed by project engineer.

GENERAL NOTES

1. Signs wider than 4 feet or 20 sq.ft or larger, shall be mounted on multiple posts. Refer to plate A4-4.
2. If signs are mounted on barrier wall, see A4-10 sign plate.
3. For expressways and freeways, mounting height is 7'- 3" (±) or 6'-3" (±) depending upon existence of a sub-sign.
4. J-Assemblies are considered to be one sign for mounting height.
5. Minimum mounting height for signs mounted on traffic signal poles is 5'- 3" (±).
6. Offset distance shall be consistent with existing signs or consistent throughout length of project.
7. The (±) tolerance for mounting height is 3 inches.
8. Folding signs shall be mounted at a height of 5'-3" (±) or as directd by the Engineer.
9. The Double Arrow sign (W12-1) shall be mounted at a height of 2'-3" (±). The Chevron sign (W1-8), Roundabout Chevron panel (R6-4B), Enhanced Reference Markers, Clearance Markers (W5-52), Mile Markers (D10 series), In Road Object Markers (W5-54) & End of Road Markers (W5-56) shall be mounted at a height of 4'-3" (±).

POST EMBEDMENT DEPTH

Area of Sign Installation (Sq. Ft.)	D (Min)
20 or Less	4'
Greater than 20	5'

TYPICAL INSTALLATION OF PERMANENT TYPE II SIGNS ON SINGLE POSTS

WISCONSIN DEPT OF TRANSPORTATION

APPROVED Matthew R Rauch for State Traffic Engineer

DATE 8/21/17 PLATE NO. A4-3.21

7

7

PROJECT NO:	HWY:	COUNTY:		SHEET NO: 139	E

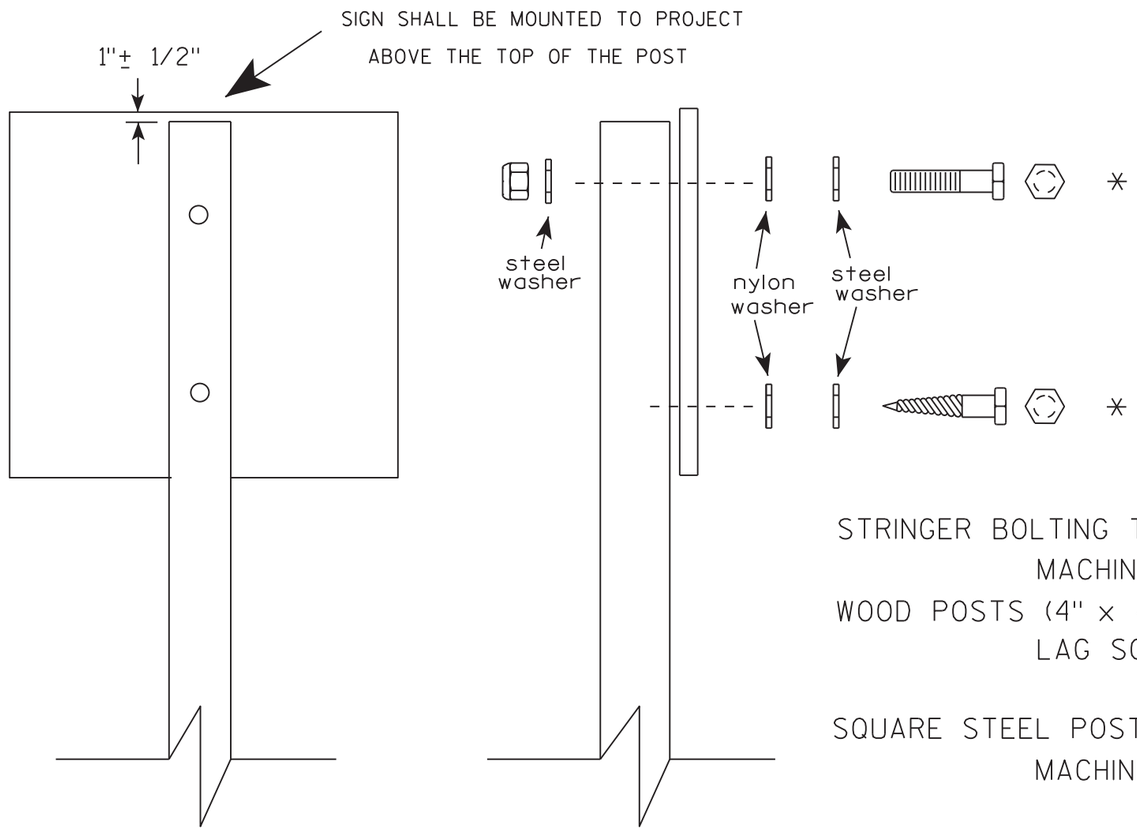

Nuts, bolts and lags used for mounting signs shall have hexagonal heads and shall be either :

a. Hot dip galvanized in accordance with ASTM Designation: A 153, Class D, or SC 3

b. Electro-galvanized in accordance with ASTM Designation : B 633, TYPE III, SC 3.

Threads on bolts and nuts shall be manufactured with sufficient allowance for the cadmium plate or galvanized coating to permit the nuts to run freely on the bolts.

STRINGER BOLTING TO ALUMINUM SIGNS (SEE SIGN PLATE A4-18)

MACHINE BOLTS - 5/16" X 1-3/4" Length w/ lock nuts

WOOD POSTS (4" x 4" or 4" x 6")

LAG SCREWS - 3/8" X 3" (NO STRINGERS ON BACK OF SIGN)

3/8" X 4" (STRINGERS ON BACK OF SIGN)

SQUARE STEEL POSTS (2" x 2")

MACHINE BOLTS - 3/8" X 3-1/4" Length w/ nuts (NO STRINGER ON BACK OF SIGN)

3/8" X 5" Length w/ nuts (STRINGERS ON BACK OF SIGN)

RIVETS - 9/32 " (6605-9-6) BULB-TITE, TRI-FOLD, ALUMINUM BODY/MANDREL

O.D. FLANGE .720-.765 INCH, GRIP RANGE .042-.375 INCH

WASHERS (ALL POSTS) -

1-1/4" O.D. X 3/8" I.D. X 1/16" STEEL

1-1/4" O.D. X 3/8" I.D. X .080 NYLON

* Two different fastening systems are shown for illustration purposes. On any individual sign, either one or the other system shall be used. Actual number of fasteners per sign varies with the sign area, but normally there are two. For a single post installation, all signs greater than 9 sq. ft. require the use of 3 fasteners.

ATTACHMENT OF SIGNS TO POSTS

WISCONSIN DEPT OF TRANSPORTATION

APPROVED Matthew R Rauch for State Traffic Engineer

DATE 8/11/16 PLATE NO. A4-8.8

PROJECT NO: SHEET NO: E

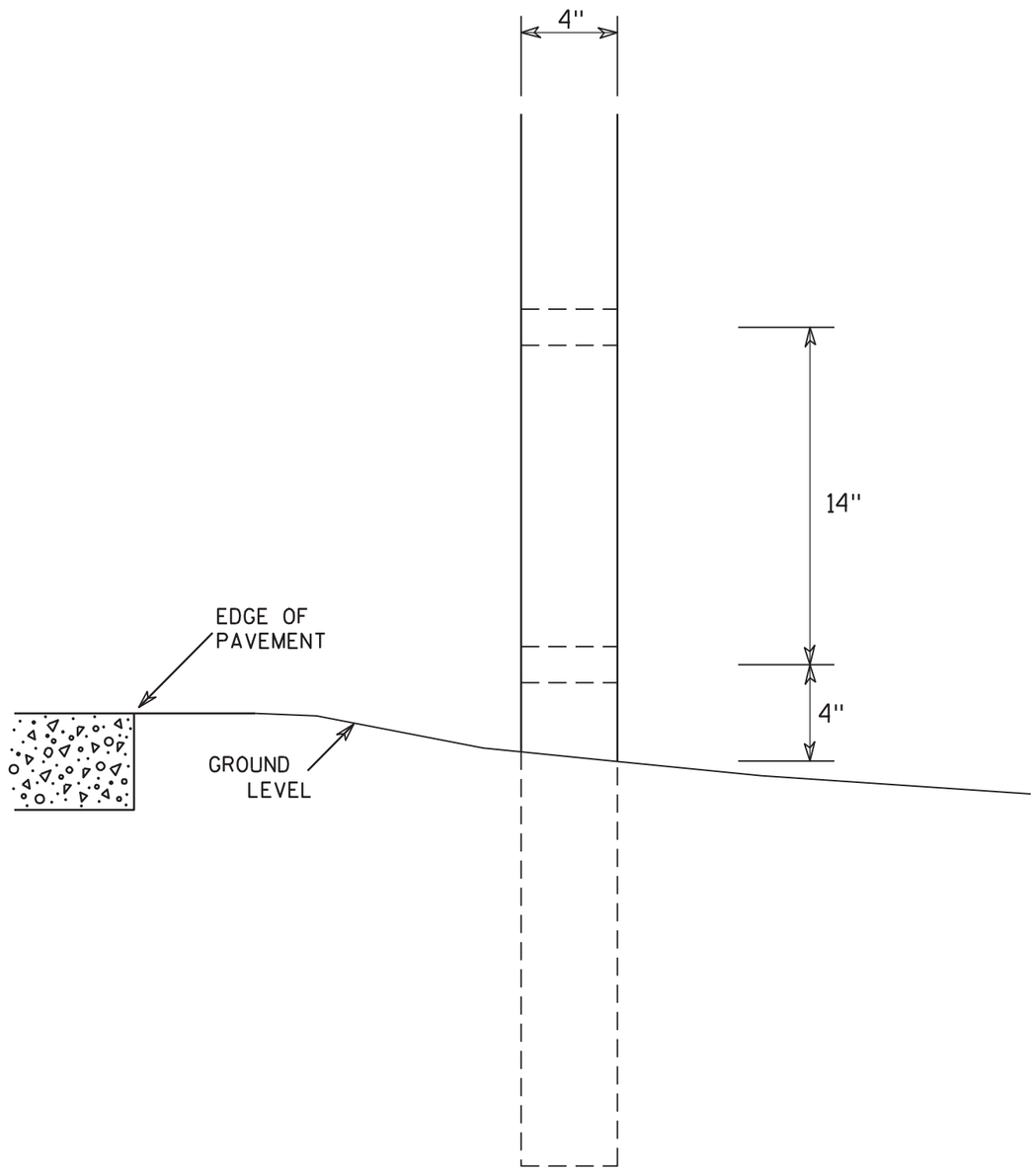

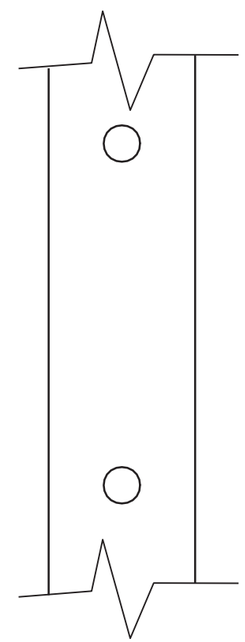

SIDE VIEW

GENERAL NOTES

1. All 4 x 6 Wood Posts shall be modified by having two 1½" diameter holes drilled perpendicular to the roadway centerline.

7

7

4 X 6 WOOD POST MODIFICATIONS

WISCONSIN DEPT OF TRANSPORTATION

APPROVED Chester J Spang for State Traffic Engineer

DATE 3/27/97 PLATE NO. A4-11.2

PROJECT NO:	HWY:	COUNTY:		SHEET NO: 141	E

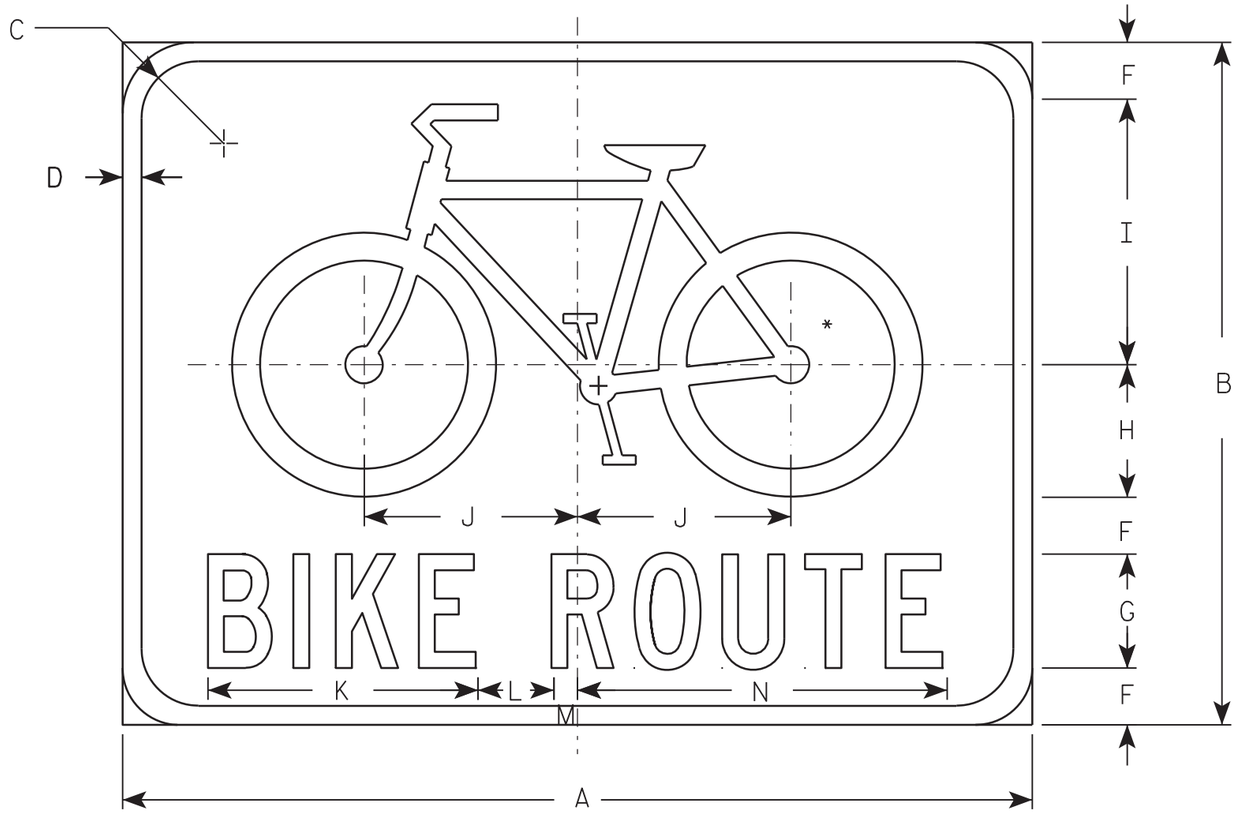

D11-1

NOTES

1. Sign is Type II - Type H Reflective - reference WIS DOT Standard Specification for HIGHWAY and STRUCTURE CONSTRUCTION latest edition.
2. Color:
   Background - GREEN
   Message - WHITE
3. Message Series - C
4. Corners may be square or rounded when base material is plywood but borders shall be rounded as shown. When base material is metal, the corners and borders shall be rounded.

* See W11-1 for symbol design

Metric equivalent for this sign is:

SIZE	
1	
2	600 mm X 450 mm
3	750 mm X 600 mm
4	
5	

SIZE	A	B	C	D	E	F	G	H	I	J	K	L	M	N	O	P	Q	R	S	T	U	V	W	X	Y	Z	Area sq. ft.	Area m2
1																												
2	24	18	1 1/2	1/2		1 1/2	3	3 1/2	7	5 5/8	7 1/8	2	5/8	9 3/4													3.0	0.27
3	30	24	1 1/4	5/8		2	4	4 3/4	9 1/4	7 1/2	9 1/2	2 5/8	7/8	13													5.0	0.45
4																												
5																												

STANDARD SIGN
D11-1

WISCONSIN DEPT OF TRANSPORTATION

APPROVED Matthew R Rauch
for State Traffic Engineer

DATE 3/24/04 PLATE NO. D11-1.1

PROJECT NO:

SHEET NO: 142 E

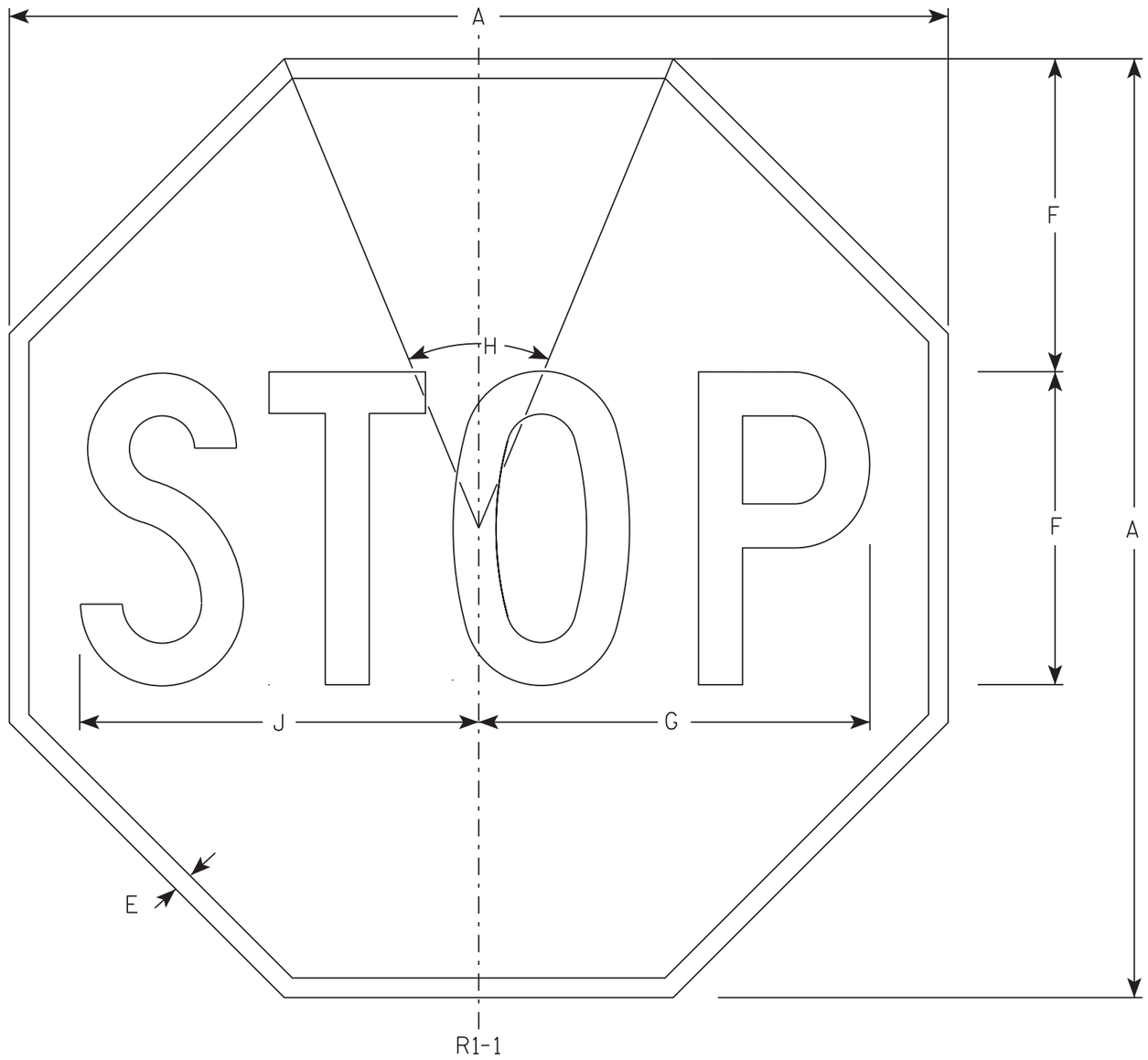

NOTES

1. Sign is Type II - Type H Reflective - reference WIS DOT Standard Specification for HIGHWAY and STRUCTURE CONSTRUCTION latest edition.
2. Color:
   Background - Red
   Message - White
3. Message Series - C

SIZE	A	B	C	D	E	F	G	H	I	J	K	L	M	N	O	P	Q	R	S	T	U	V	W	X	Y	Z	Area sq. ft.
1	30				5/8	10	12 1/2	45°		12 3/4																	5.18
2S	30				5/8	10	12 1/2	45°		12 3/4																	5.18
2M	36				3/4	12	15	45°		15 3/8																	7.46
3	36				3/4	12	15	45°		15 3/8																	7.46
4	48				1	16	20	45°		20 1/2																	13.25
5	48				1	16	20	45°		20 1/2																	13.25
6	18				3/8	6	7 3/4	45°		7 3/4																	1.86
7	12				1/4	4	5	45°		5 1/8																	0.78

STANDARD SIGN
R1-1

WISCONSIN DEPT OF TRANSPORTATION

APPROVED Matthew R Rauch
for State Traffic Engineer

DATE 11/12/15 PLATE NO. R1-1.13

PROJECT NO: | HWY: | COUNTY: | SHEET NO: 143 | E

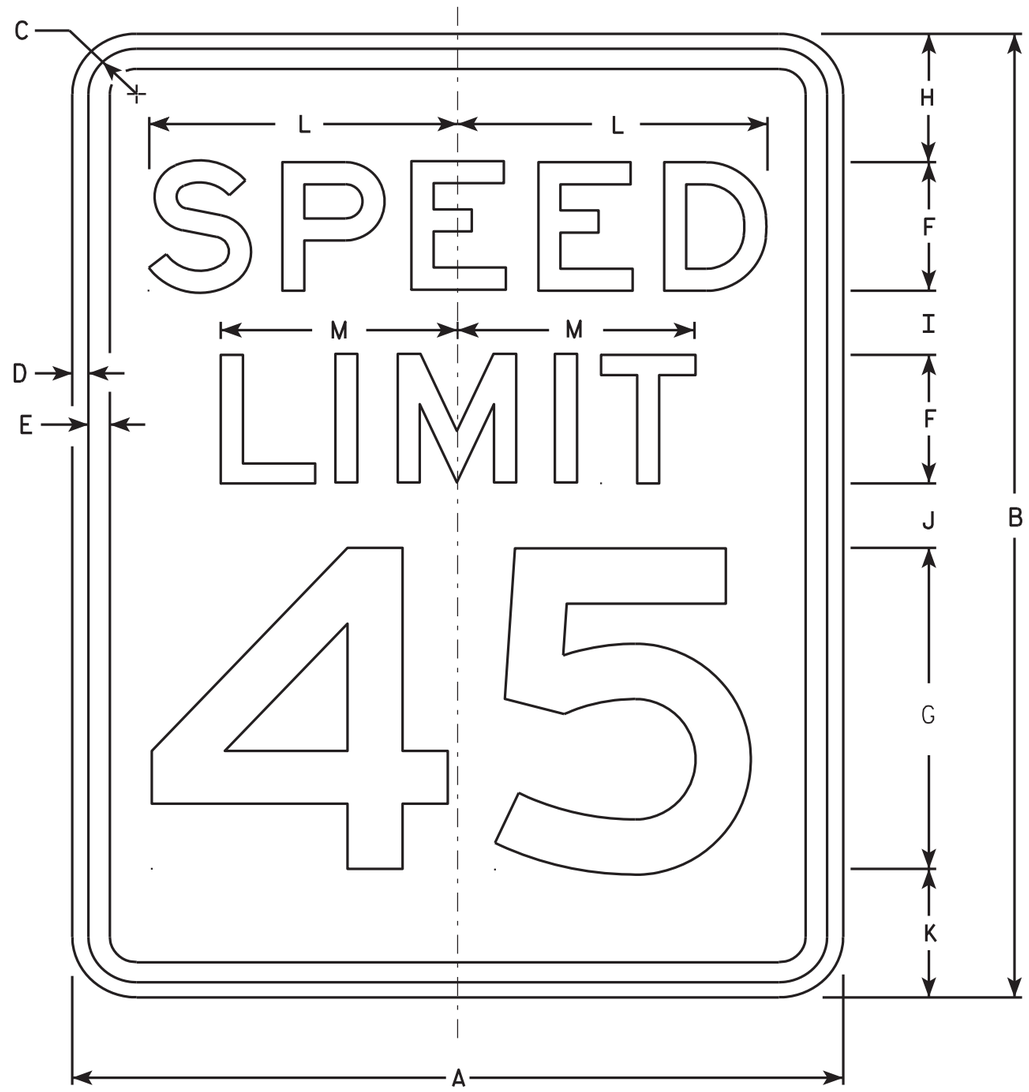

R2-1

NOTES

1. Sign is Type II - Type H Reflective - reference WIS DOT Standard Specification for HIGHWAY and STRUCTURE CONSTRUCTION latest edition.
2. Color:
   Background - White
   Message - Black
3. Message Series - E
4. Corners may be square or rounded when base material is plywood but borders shall be rounded as shown. When base material is metal, the corners and borders shall be rounded.
5. Substitute appropriate numerals and optically adjust spacing to achieve proper balance.

SIZE	A	B	C	D	E	F	G	H	I	J	K	L	M	N	O	P	Q	R	S	T	U	V	W	X	Y	Z	Area sq. ft.
1	18	24	1 1/8	3/8	1/2	3	8	3	2	2	3	7 1/4	5 1/2														3.0
2S	24	30	1 1/8	3/8	1/2	4	10	3	2 1/4	3 3/8	3 3/8	9 5/8	7 3/8														5.0
2M	30	36	1 3/8	1/2	5/8	5	12	5	2 1/2	2 1/2	4	12	9 1/4														7.5
3	36	48	1 3/8	1/2	5/8	6	14	6	5	5	6	14 3/8	11														12.0
4	36	48	1 3/8	1/2	5/8	6	14	6	5	5	6	14 3/8	11														12.0
5	48	60	2 1/4	3/4	1	8	20	6	4 1/2	6 3/4	6 3/4	19 1/4	14 5/8														20.0

STANDARD SIGN
R2-1

WISCONSIN DEPT OF TRANSPORTATION

APPROVED Matthew R Rauch
for State Traffic Engineer

DATE 5/26/10 PLATE NO. R2-1.13

PROJECT NO: | HWY: | COUNTY: | SHEET NO: 144 | E

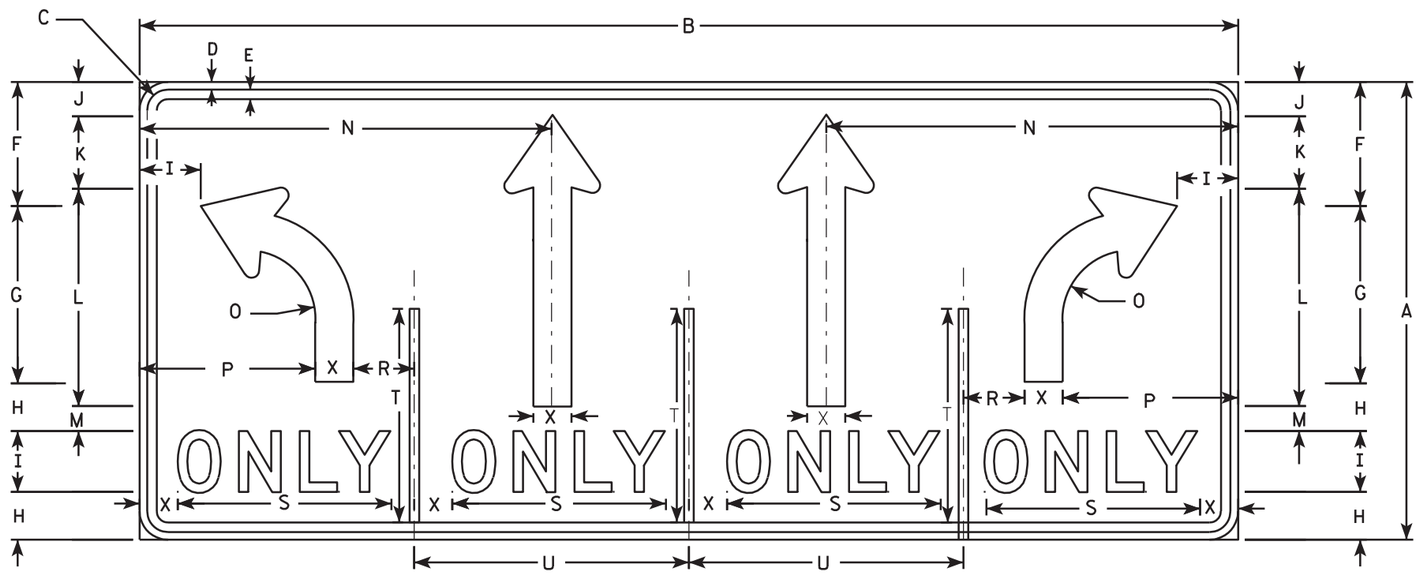

R3-8V

NOTES

1. Sign is Type II - Type H Reflective - reference WIS DOT Standard Specification for HIGHWAY and STRUCTURE CONSTRUCTION latest edition.
2. Color:
   Background - WHITE
   Message - BLACK
3. Message Series - D
4. Corners may be square or rounded when base material is plywood but borders shall be rounded as shown. When base material is metal, the corners and borders shall be rounded.

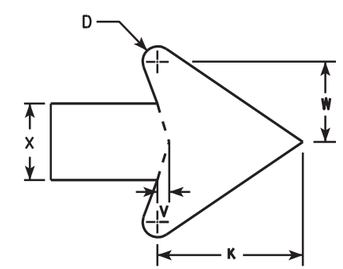

ARROW DETAIL

SIZE	A	B	C	D	E	F	G	H	I	J	K	L	M	N	O	P	Q	R	S	T	U	V	W	X	Y	Z	Area sq. ft.
1																											
2S	30	72	1 3/8	1/2	5/8	8 1/8	11 5/8	3 1/8	4	2 1/4	4 3/4	14 1/4	1 5/8	27	4 1/2	11 1/2		4	14	14	18	3/8	2 5/8	2 1/2			15.0
2M	30	72	1 3/8	1/2	5/8	8 1/8	11 5/8	3 1/8	4	2 1/4	4 3/4	14 1/4	1 5/8	27	4 1/2	11 1/2		4	14	14	18	3/8	2 5/8	2 1/2			15.0
3																											
4	48	108	2 1/4	3/4	1	14 3/8	17 1/4	5 3/8	6	5 3/8	7 1/8	21 1/2	3	40 1/2	7 1/4	17 1/4		6	20 5/8	22 3/8	27	5/8	4	3 3/4			36.0
5	48	108	2 1/4	3/4	1	14 3/8	17 1/4	5 3/8	6	5 3/8	7 1/8	21 1/2	3	40 1/2	7 1/4	17 1/4		6	20 5/8	22 3/8	27	5/8	4	3 3/4			36.0

STANDARD SIGN
R3-8V

WISCONSIN DEPT OF TRANSPORTATION

APPROVED Matthew R Rauch
for State Traffic Engineer

DATE 2/18/11 PLATE NO. R3-8V.3

PROJECT NO:

SHEET NO: 145 E

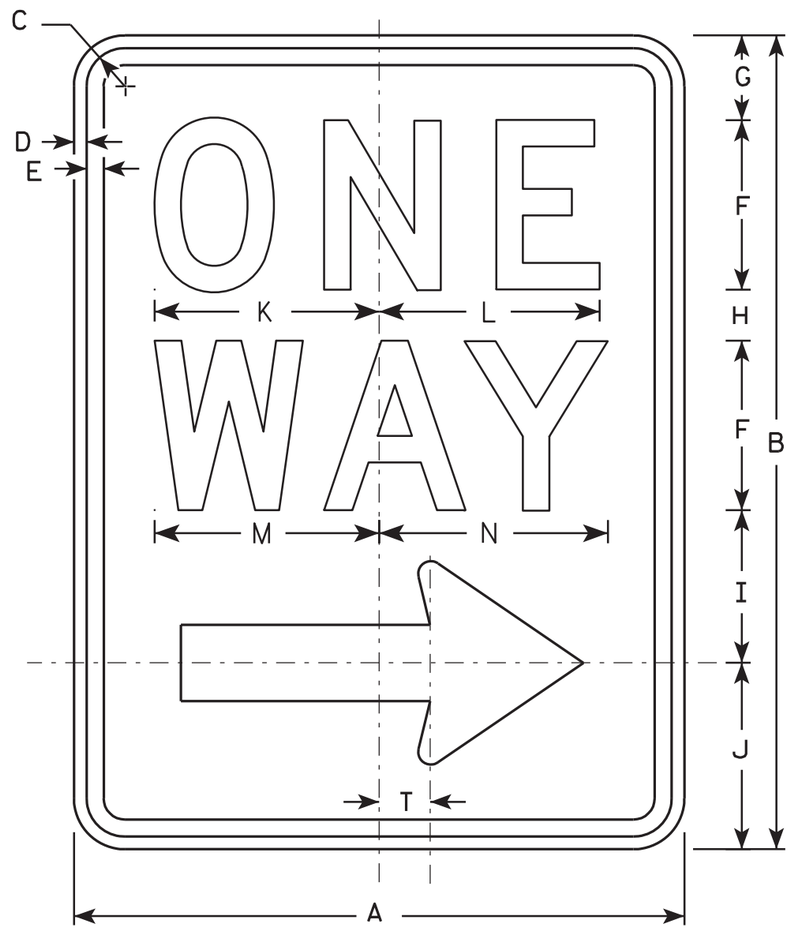

R6-2R

NOTES

1. Sign is Type II - Type H Reflective - reference WIS DOT Standard Specification for HIGHWAY and STRUCTURE CONSTRUCTION latest edition.
2. Color:
   Background - White
   Message - Black
3. Message Series - D
4. Corners may be square or rounded when base material is plywood but borders shall be rounded as shown. When base material is metal, the corners and borders shall be rounded.
5. R6-2L same as R6-2R except arrow points to the left.

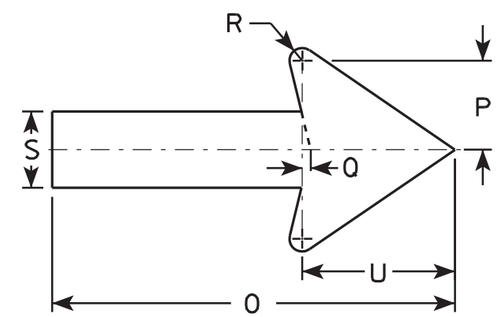

SIZE	A	B	C	D	E	F	G	H	I	J	K	L	M	N	O	P	Q	R	S	T	U	V	W	X	Y	Z
1	18	24	1 1/8	3/8	1/2	5	2 1/2	1 1/2	4 1/2	5 1/2	6 5/8	6 1/2	6 5/8	6 3/4	11 7/8	2 5/8	1/4	3/8	2 1/4	1 1/2	4 1/2					
2S	24	30	1 1/8	3/8	1/2	6	3	2 1/2	5 1/2	7	8 1/8	8 1/8	8 1/2	8 5/8	16	3 1/2	3/8	1/2	3	2	6					
2M	30	36	1 3/8	1/2	5/8	8	2 1/2	2 5/8	6 7/8	8	10 1/2	10 1/2	11 1/4	11 1/4	20	4 3/8	1/2	5/8	3 3/4	2 1/2	7 1/2					
3	36	48	1 7/8	1/2	5/8	10	5 1/4	3 1/4	9	10 1/2	12 3/4	12 3/4	13 1/4	13 1/2	24	5 5/8	1/2	3/4	4 3/4	3	9					
4	36	48	1 7/8	1/2	5/8	10	5 1/4	3 1/4	9	10 1/2	12 3/4	12 3/4	13 1/4	13 1/2	24	5 5/8	1/2	3/4	4 3/4	3	9					
5																										

STANDARD SIGN
R6-2 R&L

WISCONSIN DEPT OF TRANSPORTATION

APPROVED Matthew R Rauch
for State Traffic Engineer

DATE 11/2/10 PLATE NO. R6-2.8

PROJECT NO:	HWY:	COUNTY:		SHEET NO: 146	E

R7-51

NOTES

1. Sign is Type II - Type H Reflective - reference WIS DOT Standard Specification for HIGHWAY and STRUCTURE CONSTRUCTION latest edition.
2. Color:
   Background - White
   Message - Red
3. Message Series - See Note 6
4. Corners may be square or rounded when base material is plywood but borders shall be rounded as shown. When base material is metal, the corners and borders shall be rounded.
5. R7-51D (double arrow)
   R7-51R (right arrow)
   R7-51L (left arrow)
6. Lines 1, 3 and 4 are Series C.
   Line 2 is Series B.

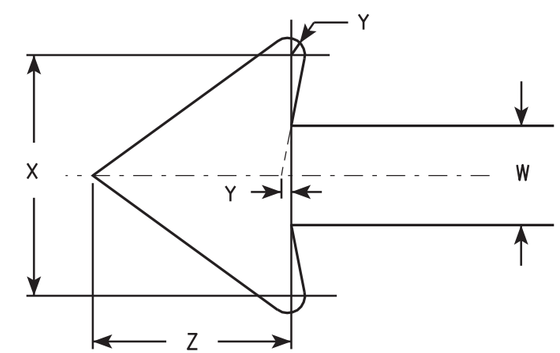

ARROW DETAIL

SIZE	A	B	C	D	E	F	G	H	I	J	K	L	M	N	O	P	Q	R	S	T	U	V	W	X	Y	Z	Area sq. ft.
1	12	18	1 1/8	3/8	3/8	3	1 7/8	2	7/8	5/8	1 1/2	2 1/2	2	2	4 7/8	4 7/8	4 7/8	5/8	1 3/4	2 1/2	4 3/8	3 7/8	3/4	1 3/4	1/8	1 1/2	1.5
2S	18	24	1 1/8	3/8	1/2	4	2 1/2	2 1/2	1 1/4	1	2	3 1/4	2 3/4	2 5/8	7 1/8	7	5 3/4	1 1/8	1 1/2	3 1/8	5 1/2	5 7/8	1 1/8	2 5/8	1/4	2 1/4	3.0
2M	24	30	1 1/8	3/8	1/2	5	3	3	2	1 1/4	2 1/2	4	3 1/4	3 3/8	9 1/4	9 1/4	7 1/8	1 1/4	2	3 3/4	6 1/2	7 3/4	1 1/2	3 1/2	1/4	3	5.0
3	24	30	1 1/8	3/8	1/2	5	3	3	2	1 1/4	2 1/2	4	3 1/4	3 3/8	9 1/4	9 1/4	7 1/8	1 1/4	2	3 3/4	6 1/2	7 3/4	1 1/2	3 1/2	1/4	3	5.0
4																											
5																											

STANDARD SIGN
R7-51

WISCONSIN DEPT OF TRANSPORTATION

APPROVED Matthew R Rauch
for State Traffic Engineer

DATE 3/31/2011 PLATE NO. R7-51.6

PROJECT NO:	HWY:	COUNTY:			SHEET NO: 147	E

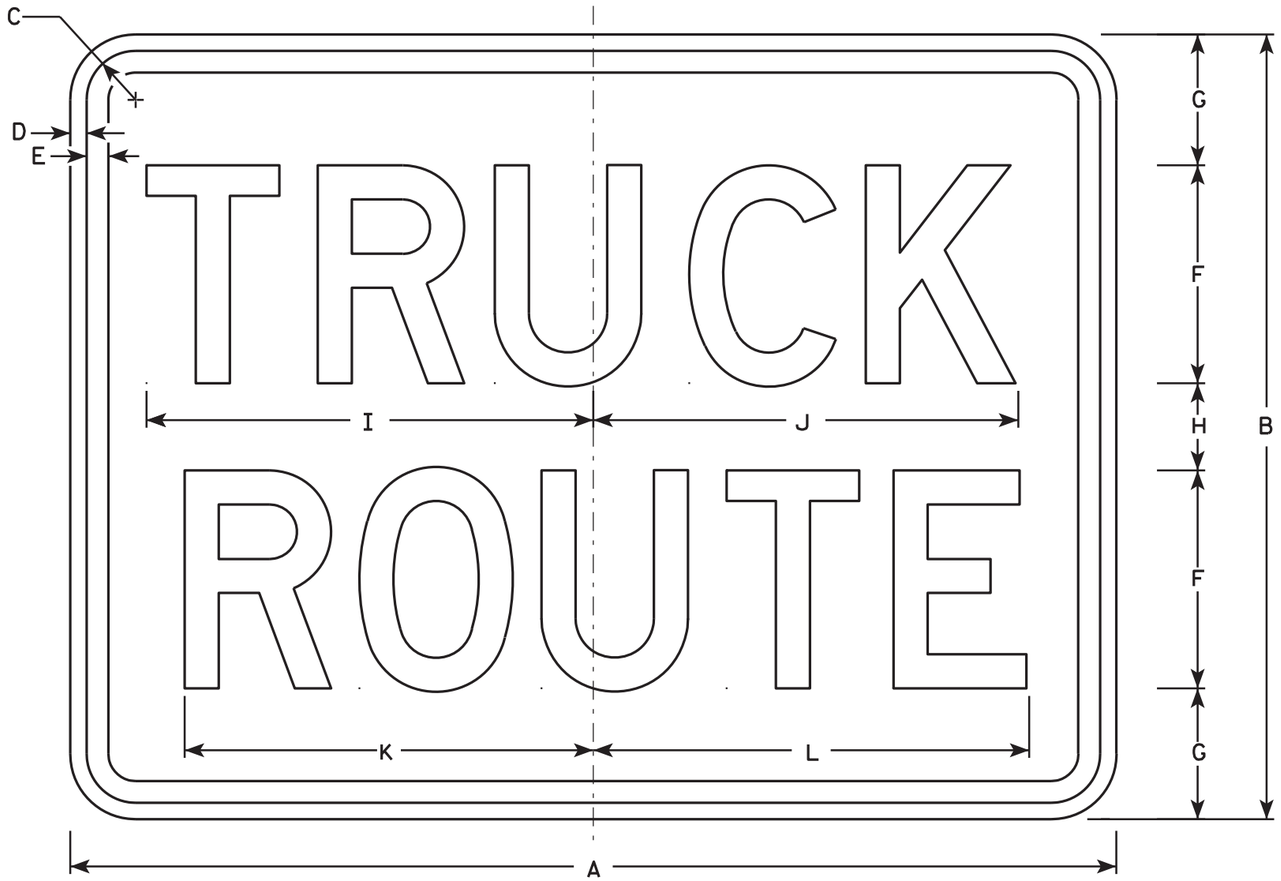

R14-1

NOTES

1. Sign is Type II - Type H Reflective - reference WIS DOT Standard Specification for HIGHWAY and STRUCTURE CONSTRUCTION latest edition.
2. Color:
   Background - White
   Message - Black
3. Message Series - D
4. Corners may be square or rounded when base material is plywood but borders shall be rounded as shown. When base material is metal, the corners and borders shall be rounded.

SIZE	A	B	C	D	E	F	G	H	I	J	K	L	M	N	O	P	Q	R	S	T	U	V	W	X	Y	Z	Area sq. ft.
1																											
2	24	18	1 1/8	3/8	1/2	5	3	2	10 1/4	9 3/4	9 3/8	10															3.0
2	24	18	1 1/8	3/8	1/2	5	3	2	10 1/4	9 3/4	9 3/8	10															3.0
3	30	24	1 1/8	3/8	1/2	6	4	4	12 1/4	11 3/4	11 1/4	12															5.0
4																											
5																											

STANDARD SIGN
R14-1

WISCONSIN DEPT OF TRANSPORTATION

APPROVED Matthew R Rauch
for State Traffic Engineer

DATE 4/1/11 PLATE NO. R14-1.6

PROJECT NO: | HWY: | COUNTY: | SHEET NO: 148 | E

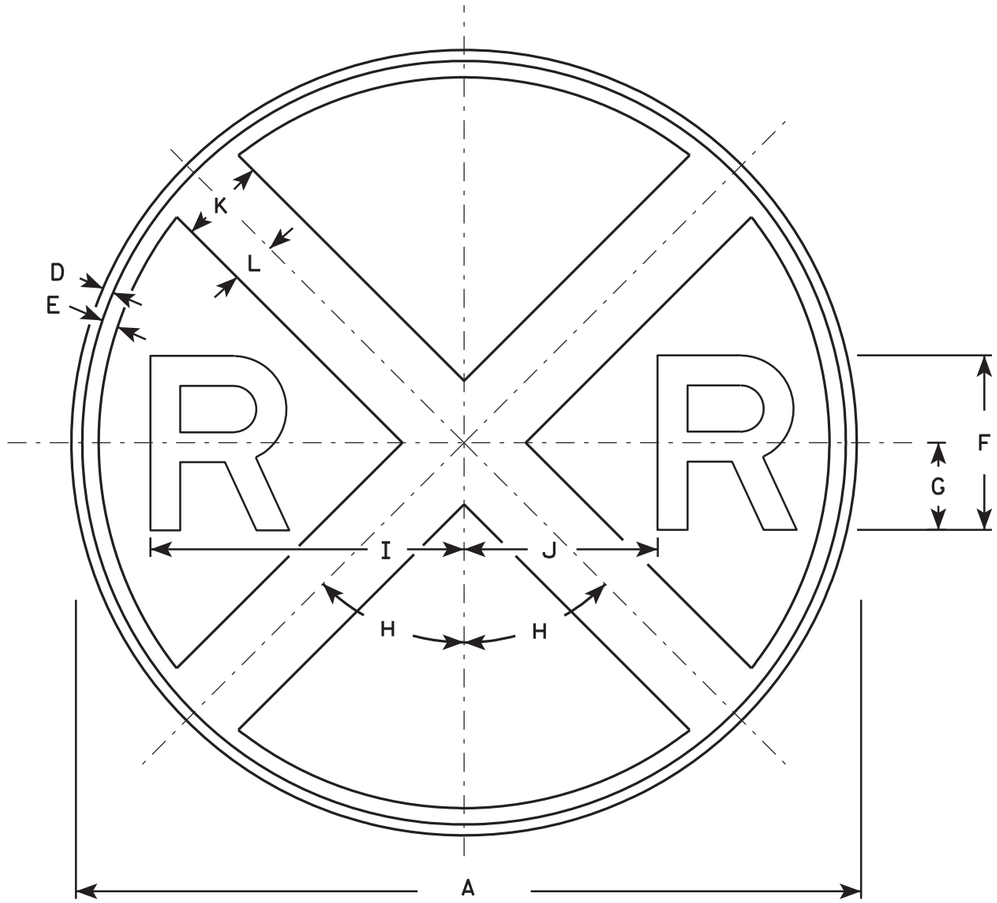

W10-1

NOTES

1. Sign is Type II - Type F Reflective - reference WIS DOT Standard Specification for HIGHWAY and STRUCTURE CONSTRUCTION latest edition.
2. Color:
   Background - Yellow
   Message - Black
3. Message Series - E

SIZE	A	B	C	D	E	F	G	H	I	J	K	L	M	N	O	P	Q	R	S	T	U	V	W	X	Y	Z	Area sq. ft.
1	30			3/8	5/8	7	3 1/2	45°	12 3/8	7 1/8	3	1 1/2															4.91
2S	36			5/8	3/4	8	4	45°	14 3/8	8 5/8	4	2															7.07
2M	36			5/8	3/4	8	4	45°	14 3/8	8 5/8	4	2															7.07
3																											
4	48			3/4	1 1/4	10	5	45°	18 3/8	11 5/8	5	2 1/2															12.57
5																											

STANDARD SIGN
W10-1

WISCONSIN DEPT OF TRANSPORTATION

APPROVED Matthew R Rauch for State Traffic Engineer
DATE 3/13/13 PLATE NO. W10-1.8

PROJECT NO: | HWY: | COUNTY: | SHEET NO: 149 | E

STATE PROJECT NUMBER
6999-18-73

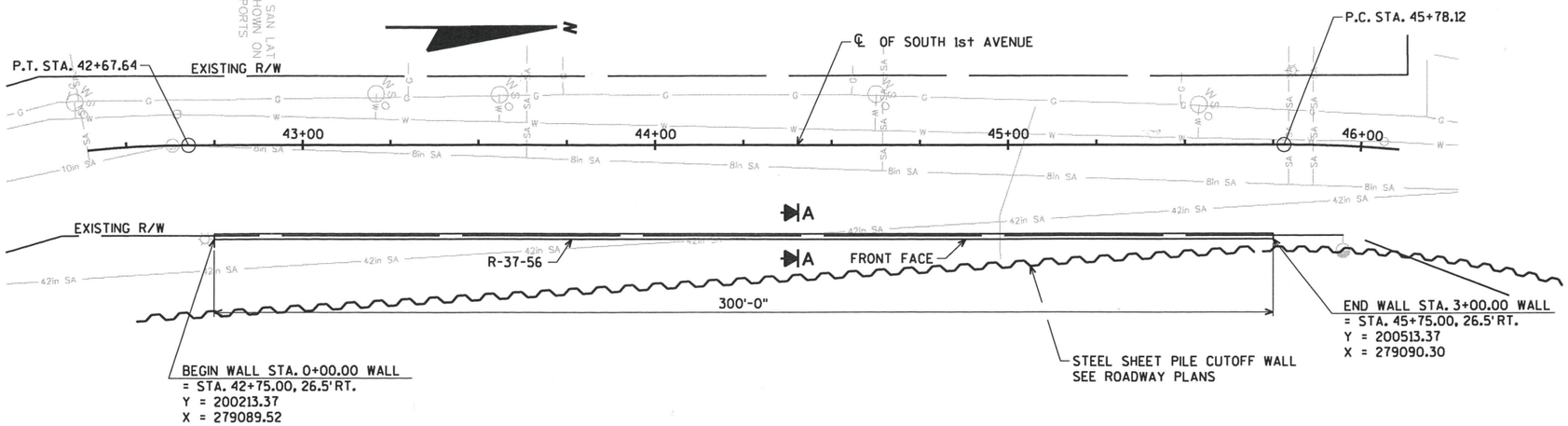

PLAN

(MSE MODULAR BLOCK RETAINING WALL)
ALL DIMENSIONS ARE MEASURED ALONG FRONT FACE

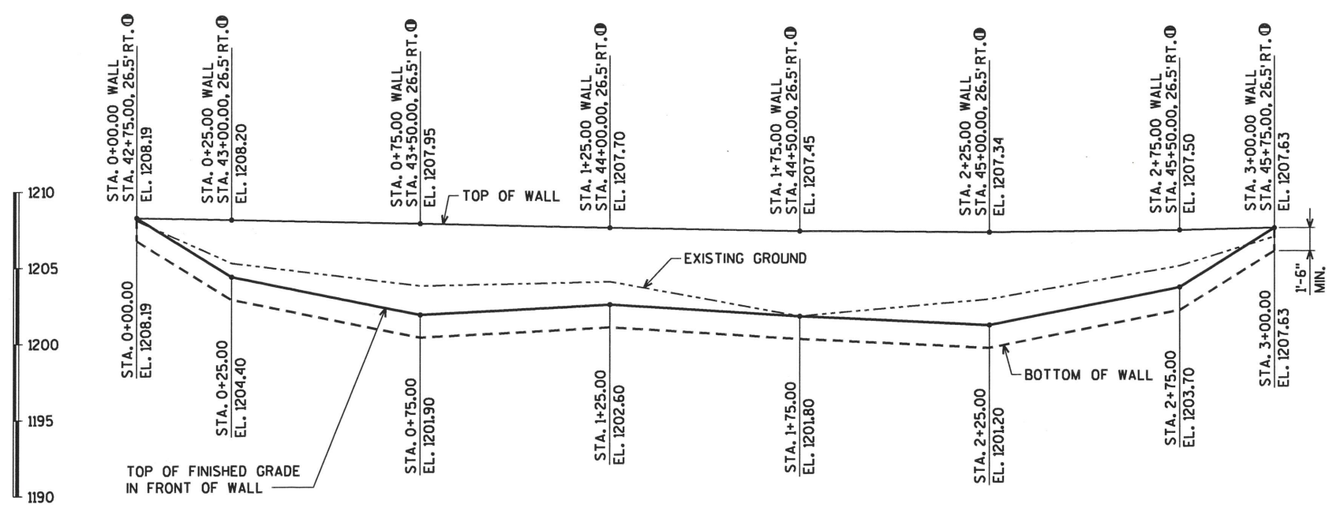

ELEVATION

(LOOKING AT FRONT FACE OF WALL)

⊖ STATION ALONG SOUTH 1st AVENUE

LIST OF DRAWINGS

1. GENERAL PLAN
2. DETAILS
3. SUBSURFACE EXPLORATION

GENERAL NOTES

DRAWINGS SHALL NOT BE SCALED.

THE PLAN QUANTITY FOR THE BID ITEM "WALL MODULAR BLOCK MECHANICALLY STABILIZED EARTH" IS BASED ON A WALL HEIGHT MEASURED FROM THE TOP OF WALL TO A CONSTANT DEPTH OF 1'-6" BELOW FINISHED GRADE.

DESIGN DATA

THE CONTRACTOR SHALL PROVIDE COMPLETE DESIGN PLANS, DETAILS, SPECIFICATIONS AND SHOP DRAWINGS FOR THE RETAINING WALLS IN ACCORDANCE WITH THE SPECIAL PROVISIONS. THE RETAINING WALL MANUFACTURER SHALL PROVIDE TECHNICAL ASSISTANCE TO THE CONTRACTOR DURING CONSTRUCTION. THE COST OF FURNISHING THESE ITEMS SHALL BE INCLUDED IN THE BID ITEM "WALL MODULAR BLOCK MECHANICALLY STABILIZED EARTH".

PLANS, ELEVATIONS AND DETAILS SHOWN ON THESE DRAWINGS ARE INTENDED TO INDICATE WALL LOCATIONS, LENGTHS, HEIGHTS AND DETAILS COMMON TO THE WALL SYSTEM SELECTED. THE CONTRACTOR SHALL VERIFY THAT THE WALL SYSTEM SELECTED WILL CONFORM TO THE REQUIRED ALIGNMENTS AND DETAILS.

THE RETAINING WALL IS TO BE DESIGNED USING THE ELEVATIONS GIVEN ON THIS SHEET.

DESIGN FOR RETAINING WALL TO PROVIDE FOR FINISHED GRADE SLOPED BEHIND WALL AS SHOWN.

DESIGN RETAINING WALL FOR A LIVE LOAD SURCHARGE OF 240 psf.

THE MAXIMUM VALUE OF ANGLE OF INTERNAL FRICTION OF WALL BACKFILL MATERIAL IN THE REINFORCED ZONE SHALL BE ASSUMED TO BE 30° WITHOUT CERTIFIED TEST VALUES.

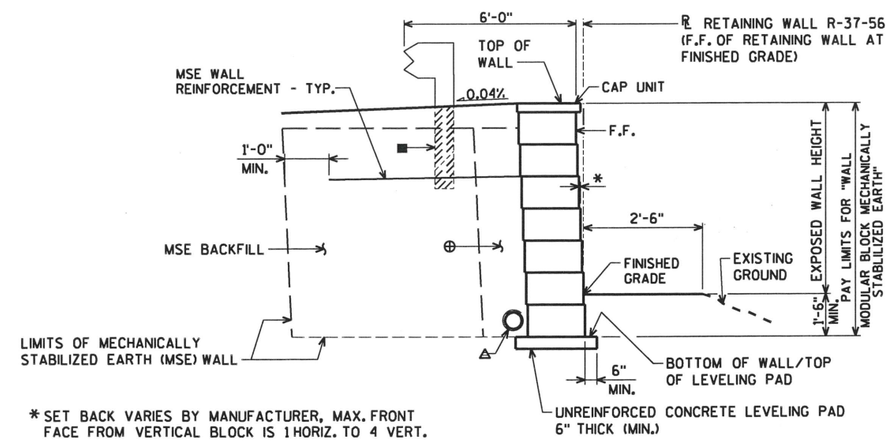

SECTION A-A

* SET BACK VARIES BY MANUFACTURER, MAX. FRONT FACE FROM VERTICAL BLOCK IS 1 HORIZ. TO 4 VERT.

■ CUT HOLES IN GEOGRIDS FOR PLACEMENT OF GUARDRAIL POSTS. DRIVE POSTS THRU HOLES.

△ PIPE UNDERDRAIN WRAPPED 6-INCH. SLOPE 0.5% MIN. TO SUITABLE DRAINAGE. ATTACH RODENT SHIELD AT ENDS OF PIPE UNDERDRAIN AS DETAILED ON SHEET 2.

⊕ WALL BACKFILL, COURSE AGGREGATE NO. 1 B.F. WALL (1'-0" MIN.) WITHIN WALL REINFORCING ZONE.

WISCONSIN
DANIEL N. SYDOW
E-38363
WI
PROFESSIONAL ENGINEER
8/30/2018

BRIDGE OFFICE CONTACT:
WILLIAM DREHER
(608)-266-8489

CONSULTANT CONTACT:
DAN SYDOW
(715)-834-3161

NO.	DATE	REVISION	BY

ORIGINAL PLANS PREPARED BY
AYRES ASSOCIATES
3433 Oakwood Hills Parkway
Eau Claire, WI 54701
www.AyresAssociates.com

STATE OF WISCONSIN
DEPARTMENT OF TRANSPORTATION

ACCEPTED William C. Dreher SDR 11/27/18
CHIEF STRUCTURES DESIGN ENGINEER DATE

STRUCTURE R-37-56

RETAINING WALL ALONG SOUTH 1ST AVENUE

COUNTY MARATHON | ~~TOWN~~/CITY/~~VILLAGE~~ WAUSAU

DESIGN SPEC.
AASHTO LRFD BRIDGE DESIGN SPECIFICATIONS

DESIGNED BY	JWZ	DESIGN CK'D.	ZSS	DRAWN BY	JWZ	PLANS CK'D.	DNS

GENERAL PLAN

SHEET 150 3

DATE:
DATE:
DATE:
CHECKED BY:
BACK CHECKED BY:
CORRECTED BY:

$PRFNAME$
V:±Structures-EC±41-0723.00 - Marathon Co, Wausau, 1st Ave Walls±Structure±410723 gp.dgn

8

8

4/24/2018 PENTABLE:BBegu.pbd,util.tbl LD DATE:

STATE PROJECT NUMBER

6999-18-73

GEOMETRY TABLE

WALL STATION	ROADWAY STATION	OFFSET TO F.F. WALL (FT)	TOP OF WALL ELEV.	FINISHED GRADE ELEV.
0+00.00	42+75.00	26.50	1208.19	1208.19
0+25.00	43+00.00	26.50	1208.20	1204.40
0+75.00	43+50.00	26.50	1207.95	1201.90
1+25.00	44+00.00	26.50	1207.70	1202.60
1+75.00	44+50.00	26.50	1207.45	1201.80
2+25.00	45+00.00	26.50	1207.34	1201.20
2+75.00	45+50.00	26.50	1207.50	1203.70
3+00.00	45+75.00	26.50	1207.63	1207.63

WALL EXTERNAL & OVERALL STABILITY EVALUATION

DIMENSIONS	EVALUATED LOCATION		
WALL HEIGHT (FEET)	5.30	6.60	7.64
EXPOSED WALL HEIGHT (FEET)	3.75	5.05	6.09
MINIMUM LENGTH OF REINFORCEMENT (FEET) ■	15	15	15
WALL STATION	0+25.00	1+25.00	2+25.00
BORING USED	8-16	3-16	4-16
CAPACITY TO DEMAND RATIO (CDR)			
SLIDING (CDR > 1.0)	2.2	1.9	1.8
ECCENTRICITY (CDR > 1.0)	14.6	10.6	8.5
OVERALL STABILITY (CDR > 1.0) ☆	1.3	1.5	1.5
BEARING RESISTANCE (CDR > 1.0)	8.6	7.0	6.0
FACTORED BEARING RESISTANCE (PSF)	10,000	10,000	10,000

■ THE LENGTHS PROVIDED IN THE TABLE ARE THE MINIMUM REQUIRED REINFORCEMENT LENGTH BASED UPON THE MINIMUM DESCRIBED IN THE WALL SYSTEM SPECIAL PROVISIONS OR EXTERNAL AND OVERALL STABILITY AT THE DESIGNATED LOCATIONS. THESE DESIGNATED LOCATIONS REPRESENT TYPICAL AND CRITICAL WALL LOCATIONS, BUT SHALL NOT BE CONSIDERED ALL INCLUSIVE. THE CONTRACTOR DESIGN LENGTHS SHALL MEET OR EXCEED THE MINIMUM VALUES REPRESENTED IN THE TABLE AT THESE DESIGNATED LOCATIONS.

☆ THE LENGTHS PROVIDED IN THE TABLE ARE THE MINIMUM REQUIRED REINFORCEMENT LENGTHS BASED ON OVERALL STABILITY PERFORMED BY THE WALL DESIGNER. COMPOUND STABILITY IS THE CONTRACTORS RESPONSIBILITY.

ASSUMED SOIL PARAMETERS OF FILL MATERIAL

SOIL DESCRIPTION	TOTAL UNIT WEIGHT (PCF)	FRICTION ANGLE (DEGREES)	COHESION (PCF)
GRANULAR BACKFILL (REINFORCING ZONE OR BACKFILL)*	120	30	0

*DESIGN WALL FOR THESE VALUES

TOTAL ESTIMATED QUANTITIES

612.0406	PIPE UNDERDRAIN WRAPPED 6-INCH	310 LF
SPV.0165	WALL MODULAR BLOCK MECHANICALLY STABILIZED EARTH STRUCTURE R-37-56	1,870 SF

SOIL PARAMETERS

BORING LOCATION		SOIL DESCRIPTION	BOTTOM ELEVATION (FT)	TOTAL UNIT WEIGHT (PCF)	FRICTION ANGLE (DEGREES)	COHESION (PCF)
BORING #8-16	STA. 43+00.0± @ 16' RT. OF ℄	NEW GRANULAR BACKFILL ⊗	1203.8	120	30	0
		SAND	1191.8	115	34	0
		SAND	1188.3	120	38	0
		SAND	1182.8	115	34	0
		SAND	1175.3	115	35	0
		SILTY SAND	1166.3	120	40	0
		SILTY CLAYEY GRAVEL	1158.8	135	42	0
BORING LOCATION		SOIL DESCRIPTION	BOTTOM ELEVATION (FT)	TOTAL UNIT WEIGHT (PCF)	FRICTION ANGLE (DEGREES)	COHESION (PCF)
BORING #3-16	STA. 44+00.0± 16' RT. OF ℄	NEW GRANULAR BACKFILL ⊗	1202.0	120	30	0
		SAND	1194.5	116	34	0
		SAND	1174.5	115	32	0
		SAND WITH SILT	1168.0	120	36	0
BORING LOCATION		SOIL DESCRIPTION	BOTTOM ELEVATION (FT)	TOTAL UNIT WEIGHT (PCF)	FRICTION ANGLE (DEGREES)	COHESION (PCF)
BORING #4-16	STA. 45+00.0± 16' RT. OF ℄	NEW GRANULAR BACKFILL ⊗	1194.2	120	30	0
		SAND WITH SILT	1191.2	116	34	0
		SAND WITH SILT	1173.7	115	32	0
		SILTY SAND	1167.2	120	36	0

⊗ SEE ROADWAY PLANS FOR AREAS THAT REQUIRE EXCAVATION BELOW SUBGRADE AND GRANULAR BACKFILL.

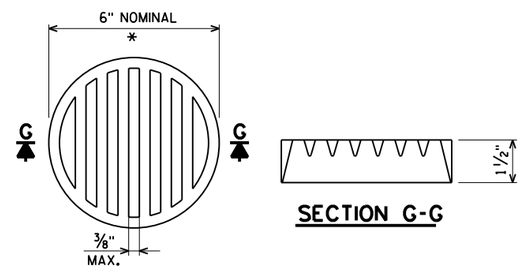

SECTION G-G

* DIMENSIONS ARE APPROXIMATE. THE GRATE IS SIZED TO FIT INTO A PIPE COUPLING. ORIENT SO SLOTS ARE VERTICAL.

THE RODENT SHIELD, PIPE COUPLING AND SCREWS SHALL BE CONSIDERED INCIDENTAL TO THE BID ITEM "PIPE UNDERDRAIN WRAPPED 6-INCH".

THE RODENT SHIELD SHALL BE PVC GRATE SIMILAR TO THIS DETAIL. THE GRATE IS COMMERCIALLY AVAILABLE AS A FLOOR STRAINER. A PIPE COUPLING IS REQUIRED FOR THE ATTACHMENT OF THIS SCREEN TO THE EXPOSED END OF THE PIPE UNDERDRAIN. THE SHIELD SHALL BE FASTENED TO THE PIPE COUPLING WITH TWO OR MORE NO. 10 x 1-INCH SHEET METAL SCREWS.

RODENT SHIELD DETAIL

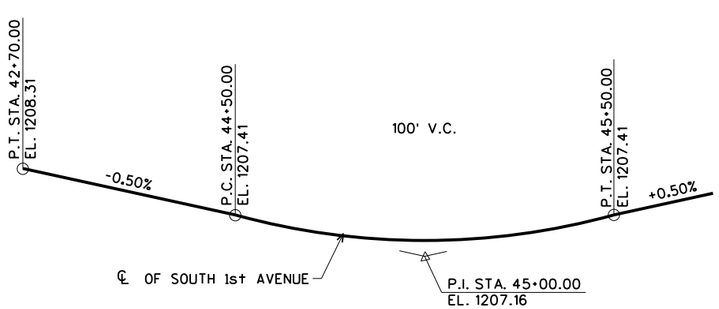

PROFILE GRADE LINE

(SOUTH 1st AVENUE)

NO.	DATE	REVISION	BY

STATE OF WISCONSIN
DEPARTMENT OF TRANSPORTATION

STRUCTURE R-37-56

DRAWN BY JWZ | PLANS CK'D. DNS

DETAILS

SHEET 2 OF 3

ORIGINAL PLANS PREPARED BY
AYRES ASSOCIATES
3433 Oakwood Hills Parkway
Eau Claire, WI 54701
www.AyresAssociates.com

$PRFNAME$
V:±Structures-EC±41-0723.00 - Marathon Co, Wausau, 1st Ave Walls±Structure±410723 gp.dgn

8

8

BORING #	DATE COMPLETED	NORTHING (Y)	EASTING (X)
8-16	1/24/17	200238.80	279079.64
3-16	4/27/16	200338.80	279079.90
4-16	4/27/16	200438.80	279080.17
BORINGS COMPLETED BY: RIVER VALLEY TESTING CORP.			
REPORT COMPLETED BY: RIVER VALLEY TESTING CORP.			
ALL COORDINATES REFERENCED TO WCCS NAD 83(91) MARATHON COUNTY			

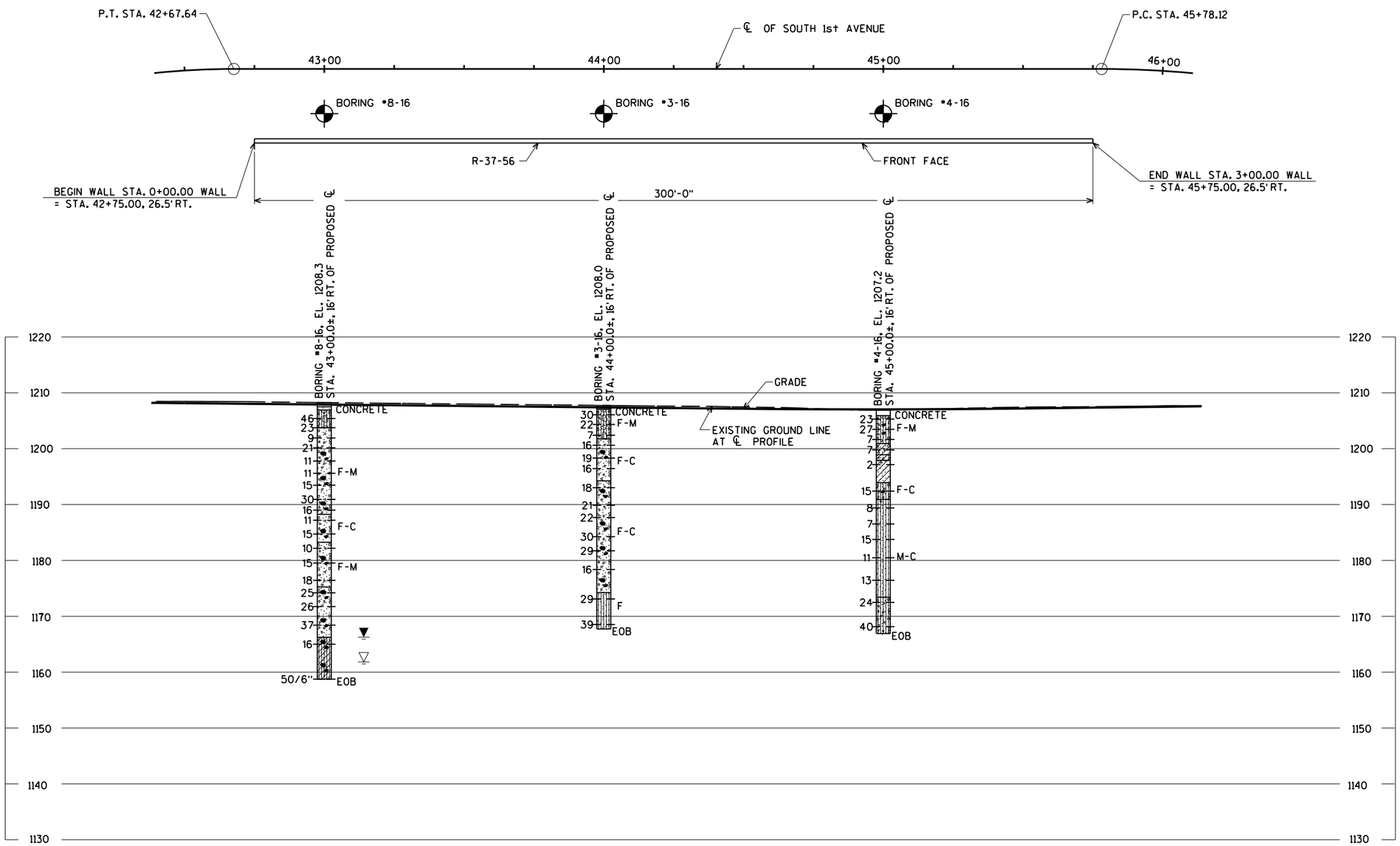

STATE PROJECT NUMBER

6999-18-73

MATERIAL SYMBOLS

ASPHALT, TOPSOIL, PEAT, CONCRETE, FILL, GRAVEL, SAND, CLAY, SILT, BOULDERS OR COBBLES, LIMESTONE, BEDROCK (UNKNOWN), SHALE, SANDSTONE, IGNEOUS/ META

LEGEND OF BORING

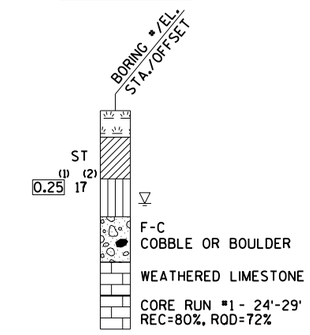

(1) UNCONFINED STRENGTH, AS DETERMINED BY A POCKET PENETROMETER (TSF)

(2) UNLESS OTHERWISE, SPECIFIED THE SPT 'N' VALUE IS BASED ON AASHTO T-206, STANDARD PENETRATION TEST. THE SPT 'N' VALUE PRESENTED HAS NOT BEEN CORRECTED FOR OVERBURDEN PRESSURE OR HAMMER EFFICIENCY.

GROUND WATER ELEVATION

- AT TIME OF DRILLING
- END OF DRILLING
- AFTER DRILLING

ABBREVIATIONS

F-FINE M-MEDIUM C-COARSE ST-SHELBY TUBE

SUBSURFACE EXPLORATION FOR FOUNDATION DESIGN AND BIDDERS INFORMATION

BORINGS WERE COMPLETED AT POINTS APPROXIMATELY AS INDICATED ON THIS DRAWING TO OBTAIN INFORMATION CONCERNING THE CHARACTER OF SUBSURFACE MATERIALS FOUND AT THE SITE. BECAUSE THE INVESTIGATED DEPTHS ARE LIMITED AND THE AREA OF THE BORINGS IS VERY SMALL IN RELATION TO THE ENTIRE SITE, THE WISCONSIN DEPARTMENT OF TRANSPORTATION DOES NOT WARRANT SIMILAR SUBSURFACE CONDITIONS BELOW, BETWEEN, OR BEYOND THESE BORINGS. VARIATIONS IN SOIL CONDITIONS SHOULD BE EXPECTED AND FLUCTUATIONS IN GROUNDWATER LEVELS MAY OCCUR.

NO.	DATE	REVISION	BY

STATE OF WISCONSIN
DEPARTMENT OF TRANSPORTATION

STRUCTURE R-37-56

DRAWN BY JWZ | PLANS CK'D. DNS

SUBSURFACE EXPLORATION

SHEET 3 OF 3

8

$PRFNAME$
V:±Structures-EC±41-0723.00 - Marathon Co, Wausau, 1st Ave Walls±Structure±410723 soil.dgn

EARTHWORK DATA - SOUTH 1ST AVENUE

STATION	AREA (SF) Cut	AREA (SF) Fill	AREA (SF) EBS	Incremental Vol (CY) Cut	Incremental Vol (CY) Fill	Incremental Vol (CY) EBS	Cumulative Vol (CY) Expanded Cut 1.00	Cumulative Vol (CY) Expanded Fill 1.25	Mass Ordinate
21+05	74.82	0.15	0.00	0	0	0	0	0	0
21+25	78.31	0.10	0.00	57	0	0	57	0	24
21+50	89.27	0.00	0.00	78	0	0	134	0	69
21+75	77.09	0.12	0.00	77	0	0	211	0	114
22+00	98.44	0.24	0.00	81	0	0	293	0	162
22+25	101.01	0.25	0.00	92	0	0	385	1	222
22+50	82.72	0.17	0.00	85	0	0	470	1	274
22+75	81.88	0.10	0.00	76	0	0	546	1	317
23+00	99.59	0.00	0.00	84	0	0	630	1	369
23+25	81.86	0.25	0.00	84	0	0	714	1	420
23+50	76.55	0.61	0.00	73	0	0	788	2	461
23+75	74.56	0.42	0.00	70	0	0	858	2	497
24+00	71.28	0.37	0.00	68	0	0	925	3	532
24+25	85.18	0.02	0.00	72	0	0	997	3	572
24+50	73.20	0.18	0.00	73	0	0	1,071	3	612
24+75	88.06	0.14	0.00	75	0	0	1,145	3	654
25+00	68.91	0.26	0.00	73	0	0	1,218	4	694
25+25	65.82	0.82	0.00	62	0	0	1,280	4	723
25+50	63.12	1.07	0.00	60	1	0	1,340	5	750
25+75	60.14	1.67	0.00	57	1	0	1,397	7	772
26+00	59.04	1.84	0.00	55	2	0	1,452	9	793
26+25	53.78	0.00	0.00	52	1	0	1,505	10	812
26+50	116.64	0.00	0.00	79	0	0	1,584	10	858
26+75	37.59	0.00	0.00	71	0	0	1,655	10	897
27+00	58.30	1.12	0.00	44	1	0	1,699	11	908
27+25	64.12	0.29	0.00	57	1	0	1,756	12	932
27+50	71.09	0.10	0.00	63	0	0	1,819	12	961
27+75	90.57	0.00	0.00	75	0	0	1,893	12	1,004
28+00	93.10	0.01	0.00	85	0	0	1,978	12	1,056
28+25	75.27	0.06	0.00	78	0	0	2,056	12	1,102
28+50	71.85	0.12	0.00	68	0	0	2,125	12	1,137
28+75	67.24	1.52	0.00	64	1	0	2,189	13	1,168
29+00	62.62	1.86	0.00	60	2	0	2,249	15	1,194
29+25	69.04	0.09	0.00	61	1	0	2,310	16	1,221
29+50	58.56	2.68	0.00	59	1	0	2,369	18	1,246
29+75	56.95	2.14	0.00	53	2	0	2,423	20	1,264
30+00	53.21	1.94	0.00	51	2	0	2,474	23	1,280
30+25	50.11	3.92	0.00	48	3	0	2,521	26	1,292
30+50	44.52	4.08	0.00	44	4	0	2,565	31	1,299
30+75	40.22	6.63	0.00	39	5	0	2,604	37	1,299
31+00	39.86	6.12	0.00	37	6	0	2,642	44	1,297
31+25	40.13	7.36	0.00	37	6	0	2,679	52	1,293
31+50	42.19	9.31	0.00	38	8	0	2,717	62	1,289
31+75	44.32	8.53	0.00	40	8	0	2,757	72	1,286
32+00	47.20	7.59	0.00	42	7	0	2,799	81	1,287
32+25	52.29	5.44	0.00	46	6	0	2,845	89	1,293
32+50	55.41	4.77	0.00	50	5	0	2,895	95	1,304

EARTHWORK DATA - SOUTH 1ST AVENUE

STATION	AREA (SF) Cut	AREA (SF) Fill	AREA (SF) EBS	Incremental Vol (CY) Cut	Incremental Vol (CY) Fill	Incremental Vol (CY) EBS	Cumulative Vol (CY) Expanded Cut 1.00	Cumulative Vol (CY) Expanded Fill 1.25	Mass Ordinate
32+75	80.46	3.40	0.00	63	4	0	2,958	100	1,330
33+00	81.09	0.00	0.00	75	2	0	3,033	102	1,370
33+25	152.05	0.00	0.00	108	0	0	3,141	102	1,446
33+50	65.29	0.32	0.00	101	0	0	3,241	102	1,514
33+75	66.66	0.23	0.00	61	0	0	3,302	102	1,542
34+00	65.71	1.42	0.00	61	1	0	3,364	103	1,570
34+25	62.19	2.07	0.00	59	2	0	3,423	105	1,594
34+50	65.91	0.49	0.00	59	1	0	3,482	107	1,620
34+75	45.75	5.29	0.00	52	3	0	3,534	110	1,636
35+00	52.55	9.26	0.00	46	7	0	3,579	118	1,640
35+25	49.99	5.86	0.00	47	7	0	3,627	127	1,646
35+50	37.00	14.44	0.00	40	9	0	3,667	139	1,642
35+75	19.56	27.14	0.00	26	19	0	3,693	163	1,612
36+00	17.65	20.88	0.00	17	22	0	3,711	191	1,569
36+25	19.83	18.32	0.00	17	18	0	3,728	213	1,531
36+50	24.67	18.00	0.00	21	17	0	3,748	234	1,498
36+75	28.43	11.96	0.00	25	14	0	3,773	252	1,473
37+00	56.33	0.00	0.00	39	6	0	3,812	259	1,473
37+25	55.56	4.06	0.00	52	2	0	3,864	261	1,490
37+50	69.62	1.08	0.00	58	2	0	3,922	264	1,512
37+75	98.96	0.00	0.00	78	1	0	4,000	265	1,557
38+00	67.97	0.41	0.00	77	0	0	4,077	265	1,602
38+25	87.71	0.00	0.00	72	0	0	4,149	265	1,641
38+50	81.24	0.10	0.00	78	0	0	4,228	265	1,686
38+75	91.98	0.00	0.00	80	0	0	4,308	265	1,734
39+00	100.82	0.00	0.00	89	0	0	4,397	265	1,791
39+25	103.59	0.00	0.00	95	0	0	4,492	265	1,853
39+50	83.24	0.00	0.00	86	0	0	4,578	265	1,907
39+75	292.81	0.00	0.00	174	0	0	4,752	265	2,049
40+00	60.13	136.65	0.00	163	63	0	4,916	344	2,100
40+25	62.48	230.14	0.00	57	170	0	4,973	557	1,912
40+50	56.30	237.44	0.00	55	216	0	5,027	827	1,664
40+75	55.87	329.42	0.00	52	262	0	5,079	1,155	1,356
41+00	54.92	308.27	0.00	51	295	0	5,131	1,524	1,005
41+25	74.07	242.54	0.00	60	255	0	5,190	1,843	714
41+50	54.62	178.41	0.00	60	195	0	5,250	2,087	497
41+75	78.06	1.42	0.00	61	83	0	5,311	2,191	422
42+00	68.95	0.00	0.00	68	1	0	5,379	2,191	457
42+25	56.28	1.02	0.00	58	0	0	5,437	2,192	482
42+50	69.68	0.00	0.00	58	0	0	5,496	2,193	507
42+75	71.65	0.02	345.56	65	0	160	5,561	2,193	700
43+00	55.14	8.57	458.13	59	4	372	5,620	2,198	1,093
43+25	54.03	10.64	456.19	51	9	423	5,670	2,209	1,523
43+50	55.51	11.50	494.71	51	10	440	5,721	2,222	1,969
43+75	55.08	12.81	544.17	51	11	481	5,772	2,236	2,454
44+00	54.57	10.25	605.55	51	11	532	5,823	2,249	2,992
44+25	55.21	10.27	620.67	51	10	568	5,874	2,261	3,566

EARTHWORK DATA - SOUTH 1ST AVENUE

STATION	AREA (SF) Cut	AREA (SF) Fill	AREA (SF) EBS	Incremental Vol (CY) Cut	Incremental Vol (CY) Fill	Incremental Vol (CY) EBS	Cumulative Vol (CY) Expanded Cut 1.00	Cumulative Vol (CY) Expanded Fill 1.25	Cumulative Vol (CY) Mass Ordinate
44+50	54.03	10.51	624.92	51	10	577	5,925	2,273	4,148
44+75	48.20	11.92	627.14	47	10	580	5,972	2,286	4,730
45+00	65.54	10.60	607.08	53	10	571	6,025	2,299	5,309
45+25	54.26	5.37	637.27	55	7	576	6,080	2,308	5,898
45+50	61.61	4.14	505.27	54	4	529	6,134	2,314	6,443
45+75	60.90	0.78	359.73	57	2	400	6,190	2,316	6,865
46+00	61.57	0.00	327.48	57	0	318	6,247	2,317	7,207
46+25	76.83	1.51	327.20	64	1	303	6,311	2,318	7,540
46+50	40.57	2.59	0.00	54	2	151	6,365	2,320	7,711
46+75	49.67	1.20	0.00	42	2	0	6,407	2,322	7,718
47+00	45.23	1.38	0.00	44	1	0	6,451	2,324	7,728
47+25	50.50	5.17	0.00	44	3	0	6,496	2,328	7,736
47+50	35.24	4.59	0.00	40	5	0	6,535	2,333	7,738
47+75	37.95	2.06	0.00	34	3	0	6,569	2,337	7,735
48+00	57.71	0.11	0.00	44	1	0	6,613	2,338	7,746
48+25	71.21	0.00	0.00	60	0	0	6,673	2,338	7,773
48+50	66.35	0.00	0.00	64	0	0	6,737	2,338	7,804
48+75	91.37	0.00	0.00	73	0	0	6,810	2,338	7,845
49+00	68.99	0.00	0.00	74	0	0	6,884	2,338	7,886
49+25	66.92	0.00	0.00	63	0	0	6,947	2,338	7,917
49+50	68.35	0.00	0.00	63	0	0	7,010	2,338	7,947
49+75	71.63	0.00	0.00	65	0	0	7,074	2,338	7,979
50+00	68.72	0.00	0.00	65	0	0	7,139	2,338	8,012
50+25	64.64	0.00	0.00	62	0	0	7,201	2,338	8,041
50+50	80.72	0.00	0.00	67	0	0	7,268	2,338	8,076
50+75	57.37	0.01	0.00	64	0	0	7,332	2,338	8,107
51+00	52.94	0.68	0.00	51	0	0	7,383	2,339	8,125
51+25	52.48	0.81	0.00	49	1	0	7,432	2,340	8,141
51+50	103.92	0.09	0.00	72	0	0	7,505	2,340	8,180
51+75	54.23	0.00	0.00	73	0	0	7,578	2,340	8,221
52+00	50.02	0.31	0.00	48	0	0	7,626	2,340	8,236
52+25	49.26	0.71	0.00	46	0	0	7,672	2,341	8,249
52+50	50.81	0.44	0.00	46	1	0	7,718	2,342	8,262
52+75	54.35	0.26	0.00	49	0	0	7,767	2,342	8,278
53+00	56.12	1.74	0.00	51	1	0	7,818	2,343	8,295
53+25	58.78	0.93	0.00	53	1	0	7,871	2,345	8,315
53+50	68.41	0.00	0.00	59	0	0	7,930	2,345	8,340
53+75	69.66	0.00	0.00	64	0	0	7,994	2,345	8,372
54+00	68.22	0.00	0.00	64	0	0	8,058	2,345	8,403
54+25	61.34	0.00	0.00	60	0	0	8,118	2,345	8,431
54+50	57.78	0.00	0.00	55	0	0	8,173	2,345	8,453
54+75	53.76	1.05	0.00	52	0	0	8,225	2,346	8,472
55+00	51.42	0.97	0.00	49	1	0	8,273	2,347	8,487
55+25	50.43	1.99	0.00	47	1	0	8,321	2,349	8,500
55+50	60.01	1.12	0.00	51	1	0	8,372	2,351	8,517
55+75	47.17	1.79	0.00	50	1	0	8,421	2,352	8,532
56+00	54.98	1.94	0.00	47	2	0	8,469	2,354	8,545

EARTHWORK DATA - SOUTH 1ST AVENUE

STATION	AREA (SF) Cut	AREA (SF) Fill	AREA (SF) EBS	Incremental Vol (CY) Cut	Incremental Vol (CY) Fill	Incremental Vol (CY) EBS	Cumulative Vol (CY) Expanded Cut 1.00	Cumulative Vol (CY) Expanded Fill 1.25	Cumulative Vol (CY) Mass Ordinate
56+25	45.14	1.03	0.00	46	1	0	8,515	2,356	8,557
56+50	47.43	1.12	0.00	43	1	0	8,558	2,357	8,566
56+75	52.85	0.81	0.00	46	1	0	8,604	2,359	8,579
57+00	53.07	1.57	0.00	49	1	0	8,653	2,360	8,594
57+25	66.97	0.09	0.00	56	1	0	8,709	2,361	8,616
57+50	68.44	0.18	0.00	63	0	0	8,772	2,361	8,646
57+75	68.77	0.78	0.00	64	0	0	8,835	2,362	8,676
58+00	70.15	0.66	0.00	64	1	0	8,899	2,362	8,707
58+25	72.40	0.66	0.00	66	1	0	8,965	2,363	8,740
58+50	73.37	1.11	0.00	67	1	0	9,033	2,364	8,774
58+75	72.54	1.45	0.00	68	1	0	9,100	2,366	8,807
59+00	74.88	1.00	0.00	68	1	0	9,169	2,367	8,842
59+25	77.54	1.02	0.00	71	1	0	9,239	2,368	8,879
59+50	75.41	0.90	0.00	71	1	0	9,310	2,369	8,916
59+75	73.82	1.51	0.00	69	1	0	9,379	2,371	8,951
60+00	75.68	1.43	0.00	69	1	0	9,448	2,373	8,986
60+25	95.57	0.00	0.00	79	1	0	9,528	2,373	9,032
60+50	95.85	0.04	0.00	89	0	0	9,616	2,373	9,088
60+75	79.34	0.00	0.00	81	0	0	9,697	2,373	9,137
61+00	75.11	0.07	0.00	72	0	0	9,769	2,373	9,176
61+25	87.61	0.00	0.00	75	0	0	9,844	2,373	9,218
61+50	72.48	0.22	0.00	74	0	0	9,918	2,374	9,260
61+59	73.59	0.21	0.00	24	0	0	9,943	2,374	9,252

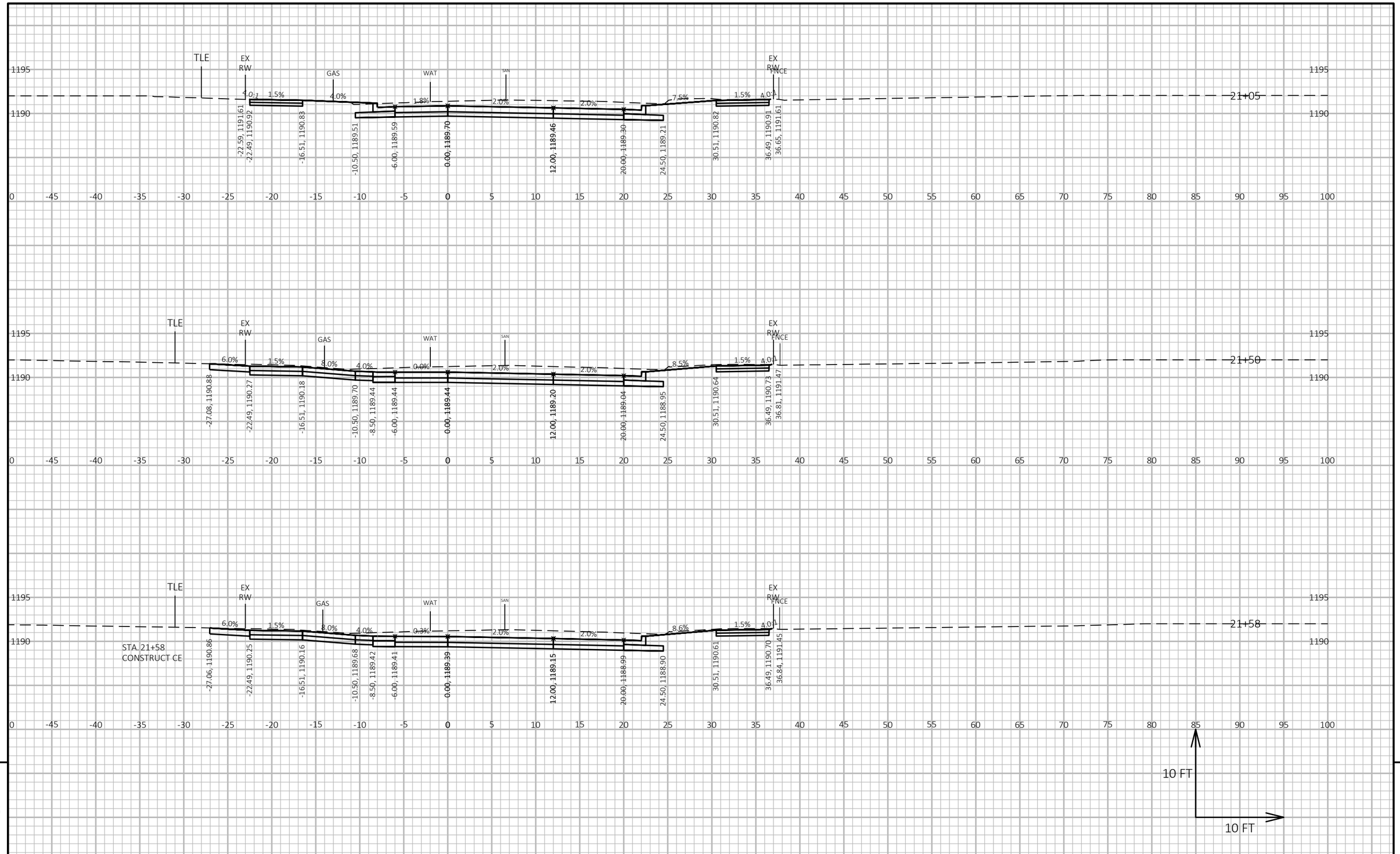

9

9

PROJECT NO: 6999-18-73	HWY: SOUTH 1ST AVENUE	COUNTY: MARATHON	CROSS SECTIONS: SOUTH 1ST AVENUE	SHEET 155	E

FILE NAME : V:\TRANS-EC\410723 WAUSAU 1ST AVE\C3D\DESIGN\CORRIDORS\CORRIDOR-SOUTH1STAVE.DWG
LAYOUT NAME - 01
PLOT DATE : 10/16/2018 8:28 AM
PLOT BY : WOOLEVER, NATHAN
PLOT NAME :
PLOT SCALE : 1 IN:10 FT HORZ. / 1 IN:10 FT VERT.

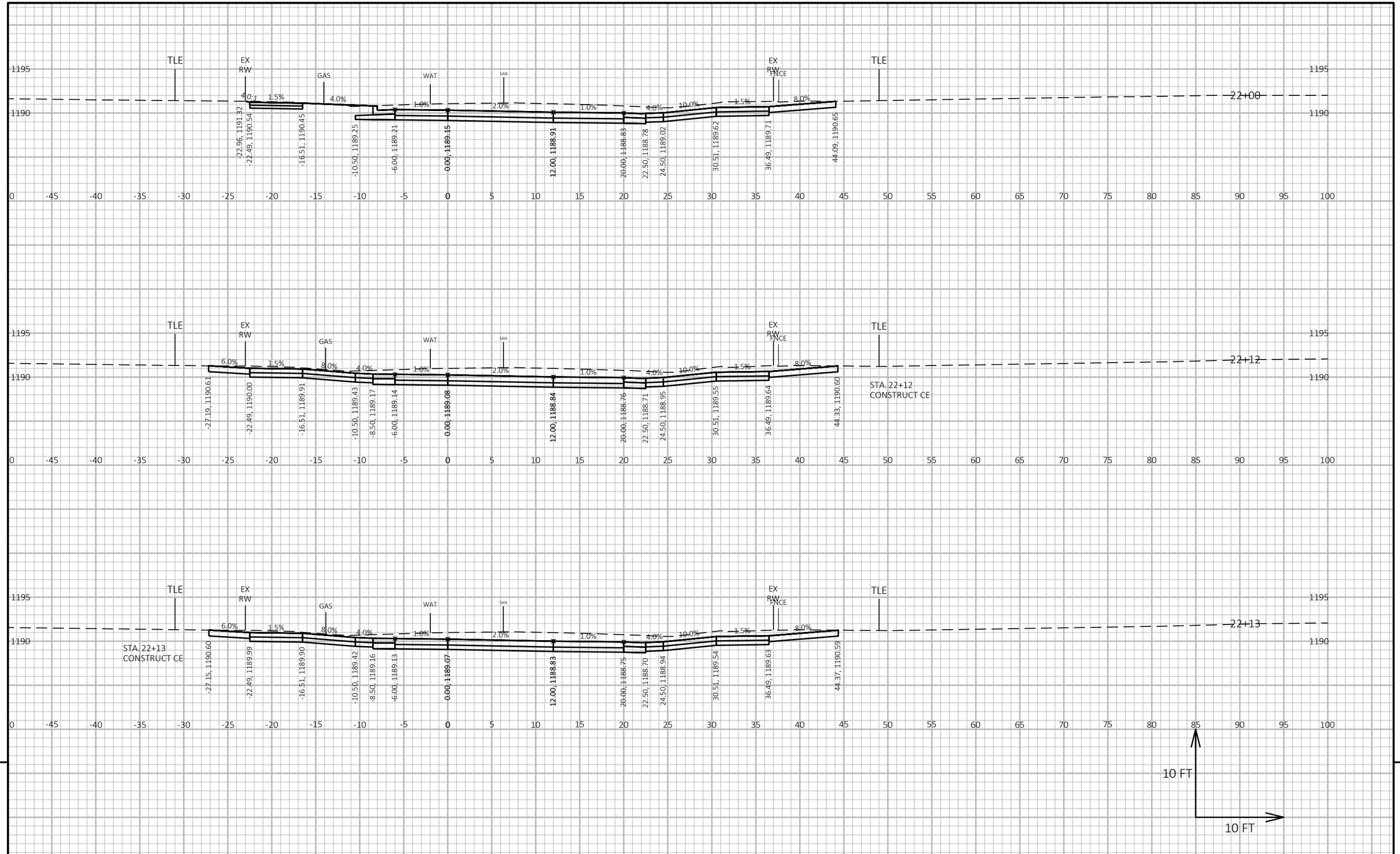

9

9

PROJECT NO: 6999-18-73	HWY: SOUTH 1ST AVENUE	COUNTY: MARATHON	CROSS SECTIONS: SOUTH 1ST AVENUE	SHEET 156	E

FILE NAME : V:\TRANS-EC\410723 WAUSAU 1ST AVE\C3D\DESIGN\CORRIDORS\CORRIDOR-SOUTH1STAVE.DWG
LAYOUT NAME - 02
PLOT DATE : 10/16/2018 8:28 AM
PLOT BY : WOOLEVER, NATHAN
PLOT NAME :
PLOT SCALE : 1 IN:10 FT HORZ. / 1 IN:10 FT VERT.
WISDOT/CADDS SHEET 49

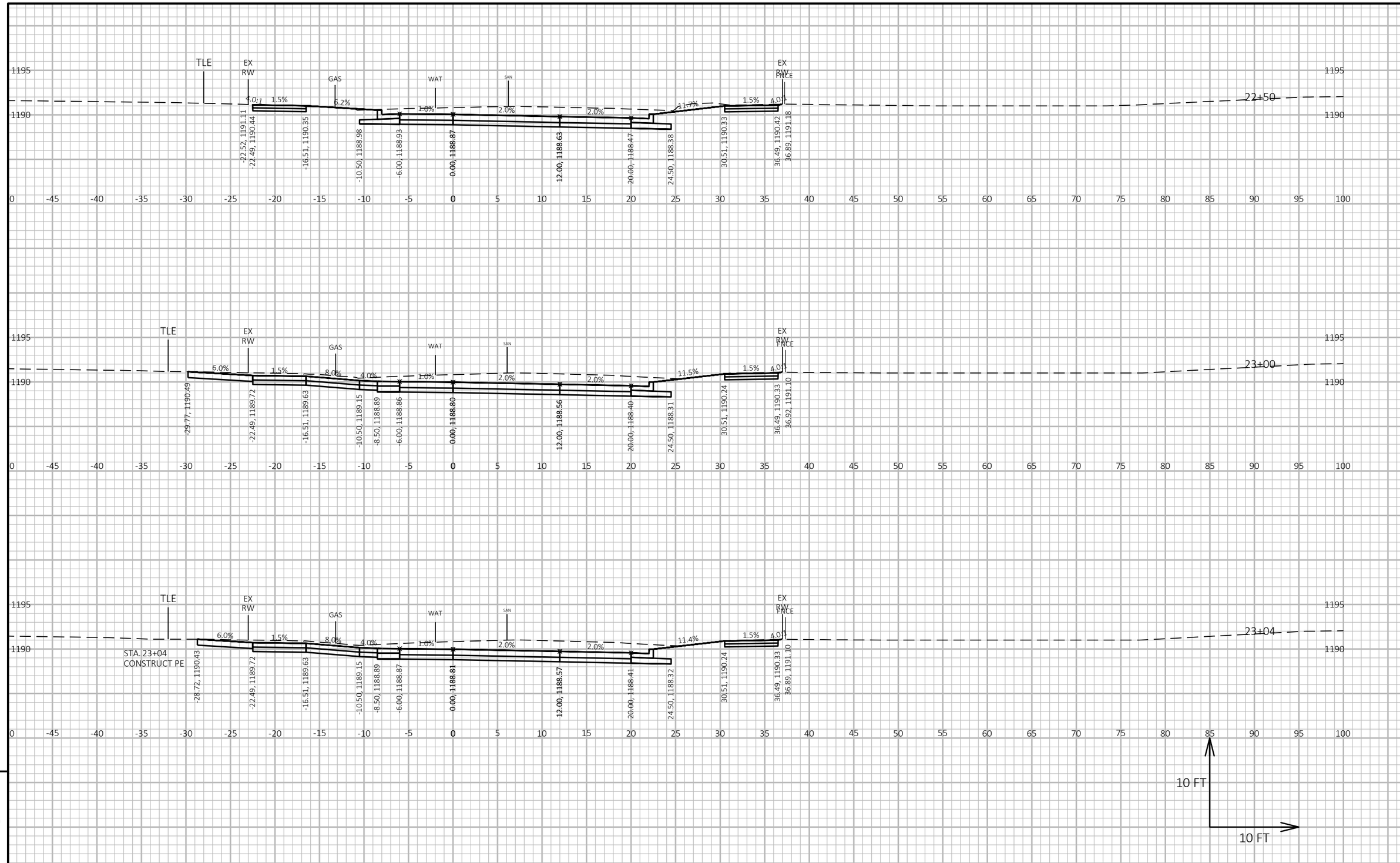

9

9

PROJECT NO: 6999-18-73	HWY: SOUTH 1ST AVENUE	COUNTY: MARATHON	CROSS SECTIONS: SOUTH 1ST AVENUE	SHEET 157	E

FILE NAME : V:\TRANS-EC\410723 WAUSAU 1ST AVE\C3D\DESIGN\CORRIDORS\CORRIDOR-SOUTH1STAVE.DWG
LAYOUT NAME - 03
PLOT DATE : 10/16/2018 8:28 AM
PLOT BY : WOOLEVER, NATHAN
PLOT NAME :
PLOT SCALE : 1 IN:10 FT HORZ. / 1 IN:10 FT VERT.
WISDOT/CADDS SHEET 49

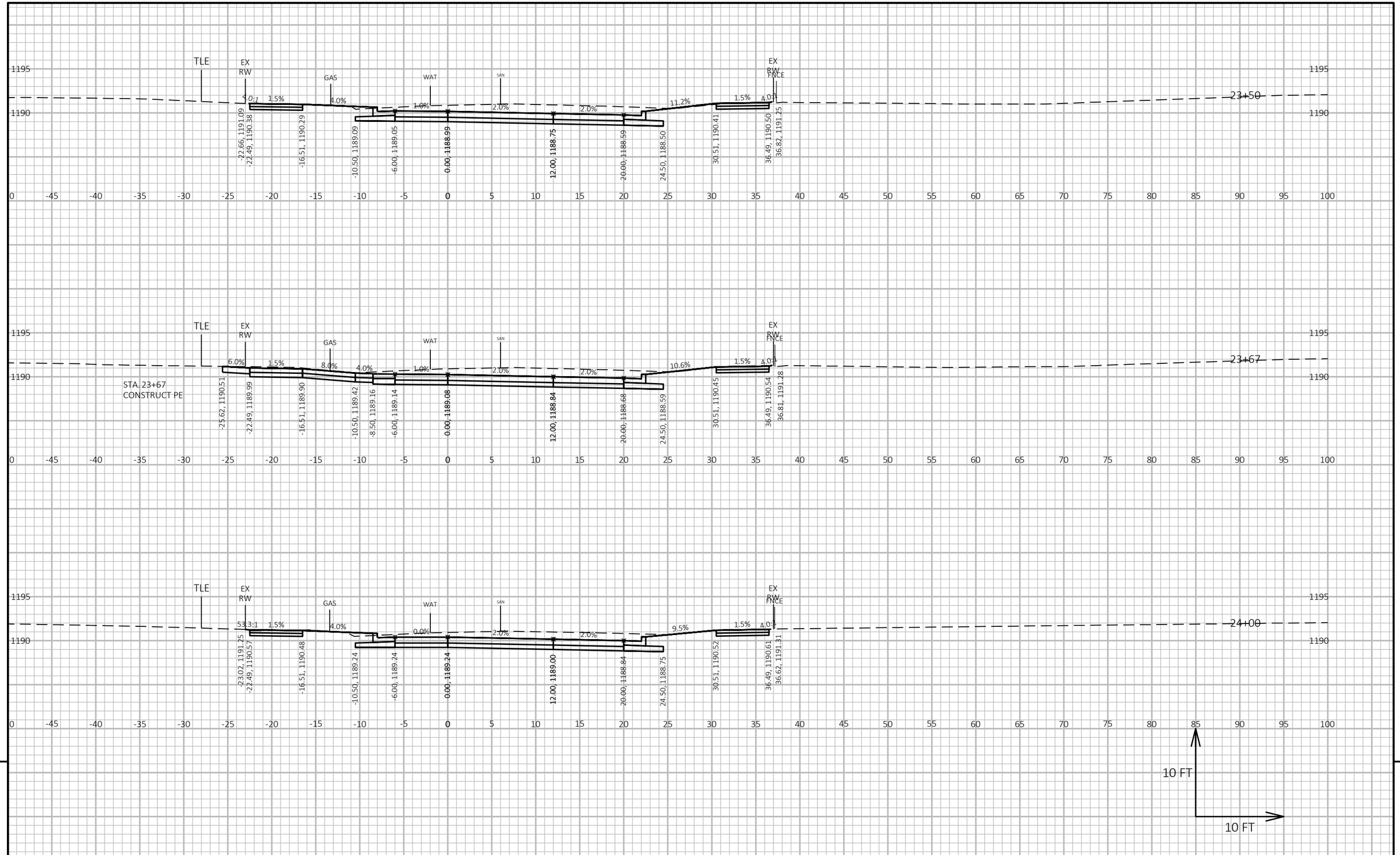

9

9

PROJECT NO: 6999-18-73	HWY: SOUTH 1ST AVENUE	COUNTY: MARATHON	CROSS SECTIONS: SOUTH 1ST AVENUE	SHEET 158	E

FILE NAME : V:\TRANS-EC\410723 WAUSAU 1ST AVE\C3D\DESIGN\CORRIDORS\CORRIDOR-SOUTH1STAVE.DWG
LAYOUT NAME - 04
PLOT DATE : 10/16/2018 8:28 AM
PLOT BY : WOOLEVER, NATHAN
PLOT NAME :
PLOT SCALE : 1 IN:10 FT HORZ. / 1 IN:10 FT VERT.
WISDOT/CADDS SHEET 49

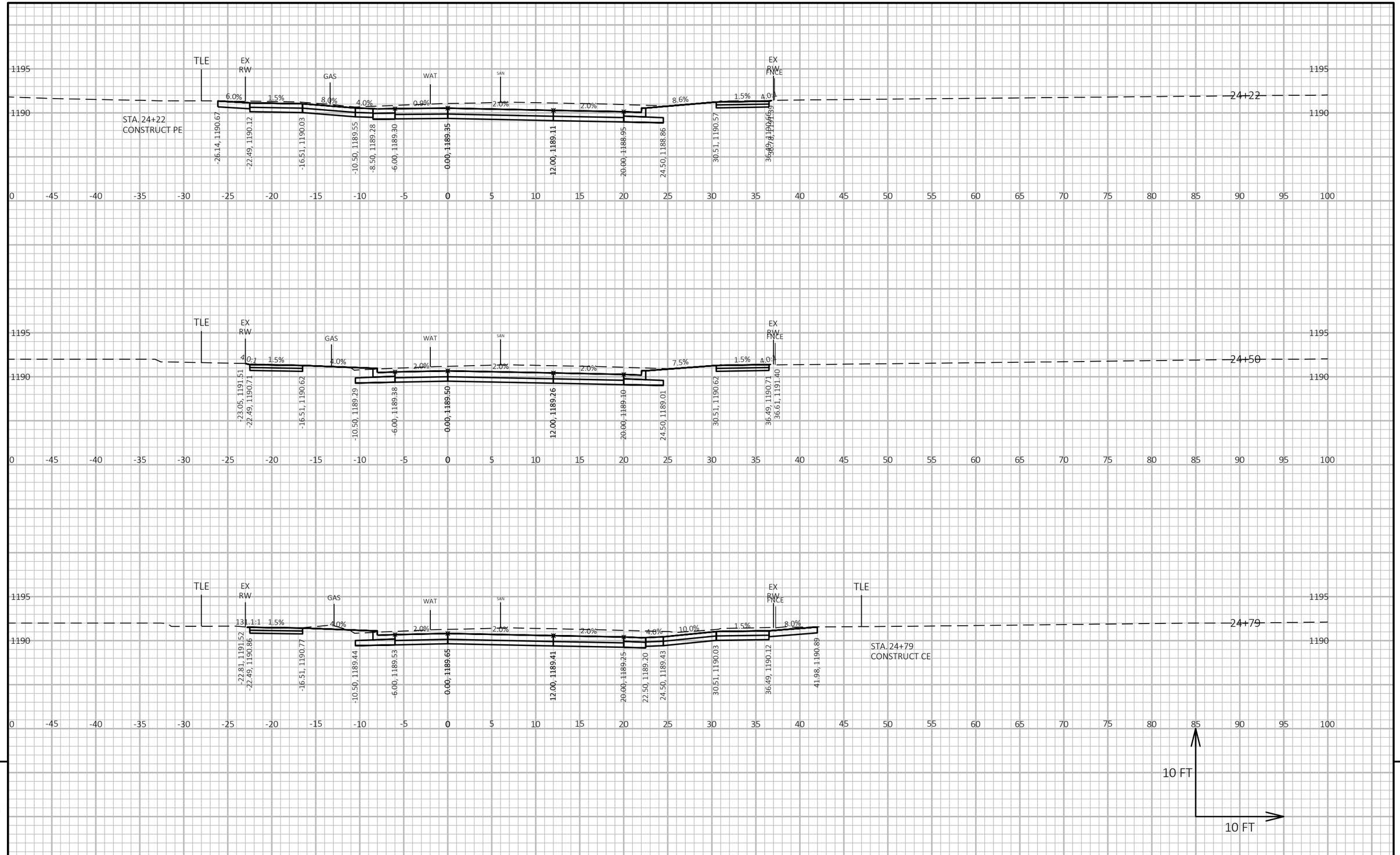

9

9

PROJECT NO: 6999-18-73	HWY: SOUTH 1ST AVENUE	COUNTY: MARATHON	CROSS SECTIONS: SOUTH 1ST AVENUE	SHEET 159	E

FILE NAME : V:\TRANS-EC\410723 WAUSAU 1ST AVE\C3D\DESIGN\CORRIDORS\CORRIDOR-SOUTH1STAVE.DWG
LAYOUT NAME - 05
PLOT DATE : 10/16/2018 8:28 AM
PLOT BY : WOOLEVER, NATHAN
PLOT NAME :
PLOT SCALE : 1 IN:10 FT HORZ. / 1 IN:10 FT VERT.
WISDOT/CADDS SHEET 49

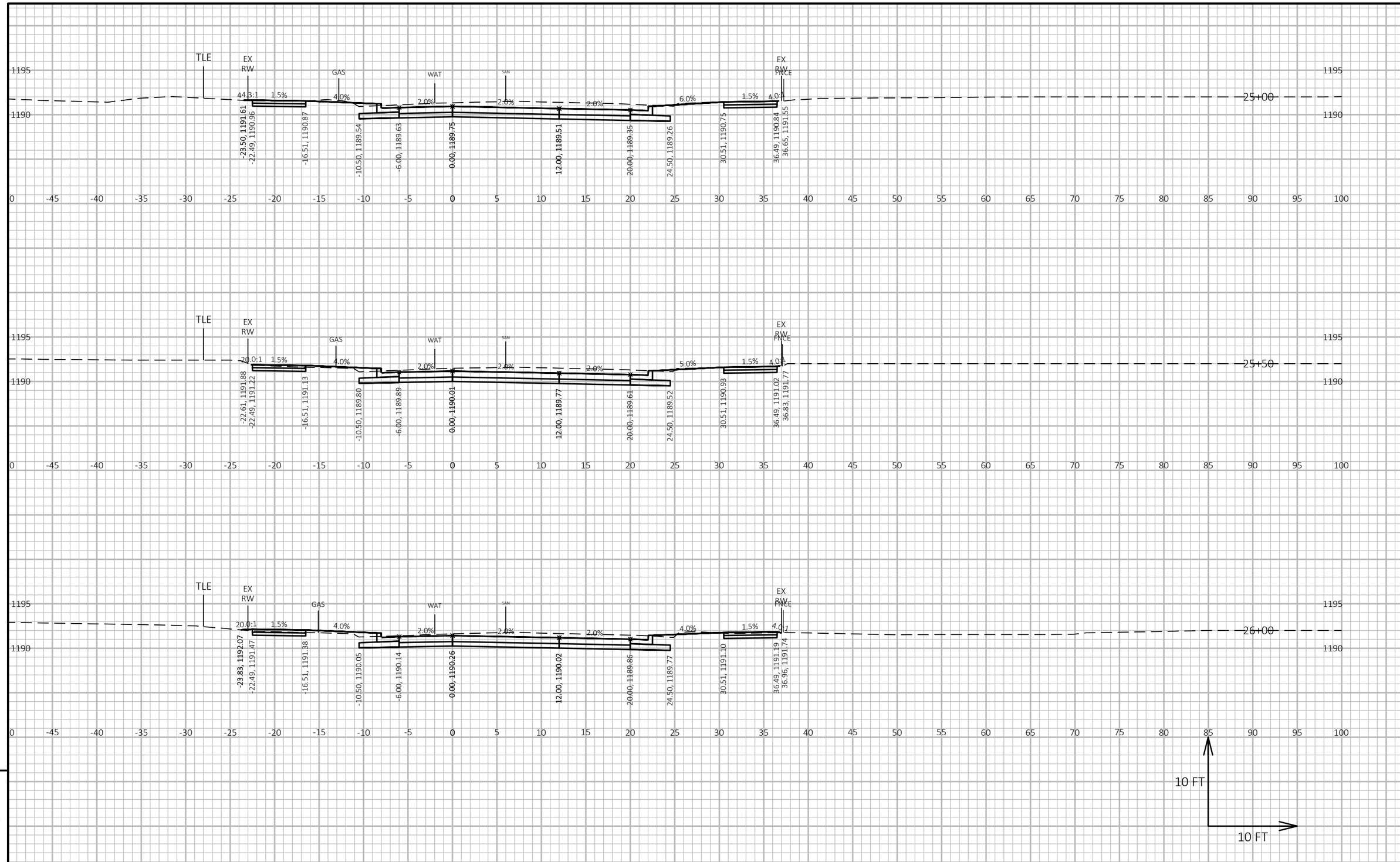

9

9

PROJECT NO: 6999-18-73	HWY: SOUTH 1ST AVENUE	COUNTY: MARATHON	CROSS SECTIONS: SOUTH 1ST AVENUE	SHEET 160	E

FILE NAME : V:\TRANS-EC\410723 WAUSAU 1ST AVE\C3D\DESIGN\CORRIDORS\CORRIDOR-SOUTH1STAVE.DWG
LAYOUT NAME - 06
PLOT DATE : 10/16/2018 8:29 AM
PLOT BY : WOOLEVER, NATHAN
PLOT NAME :
PLOT SCALE : 1 IN:10 FT HORZ. / 1 IN:10 FT VERT.

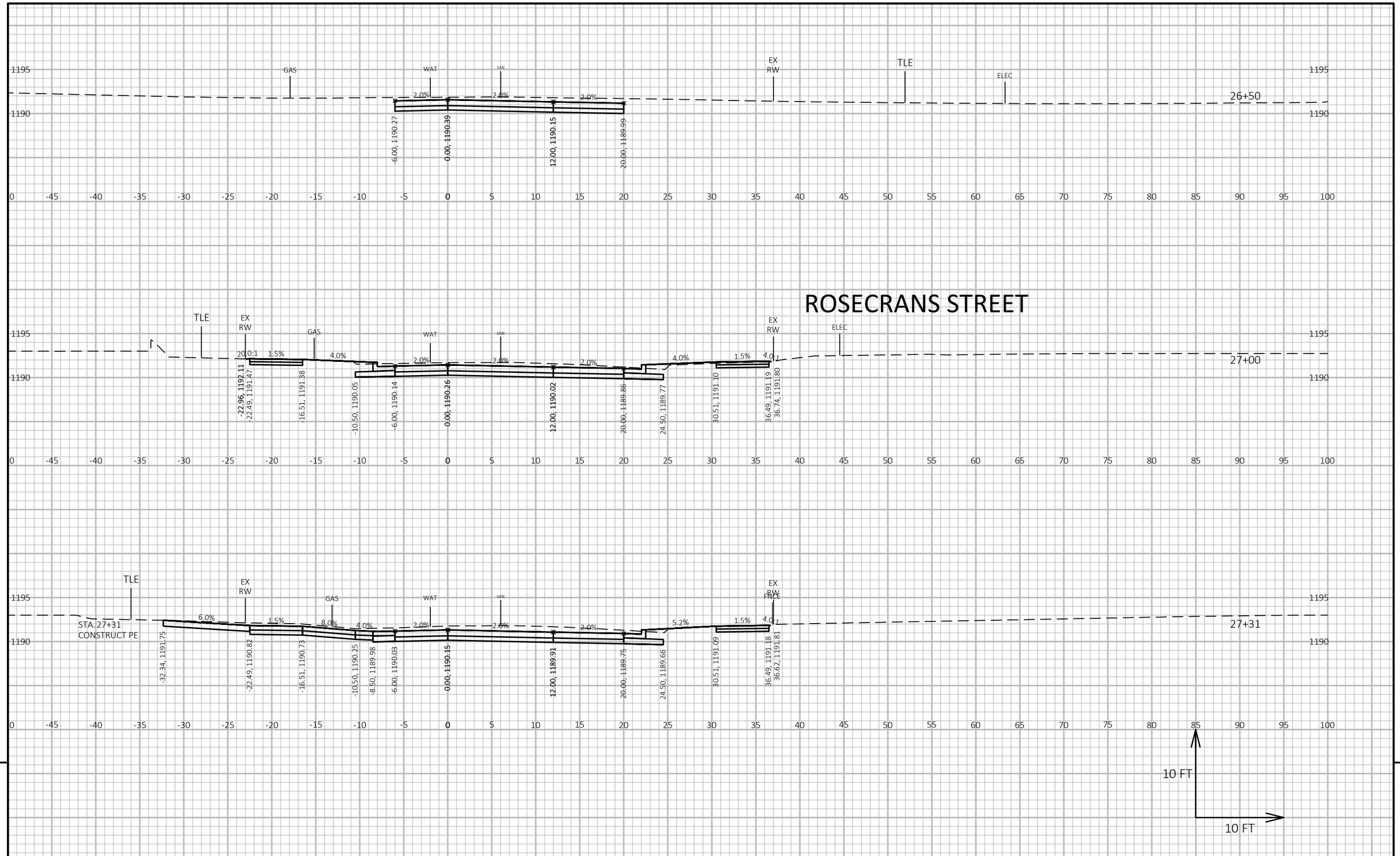

9

9

PROJECT NO: 6999-18-73	HWY: SOUTH 1ST AVENUE	COUNTY: MARATHON	CROSS SECTIONS: SOUTH 1ST AVENUE	SHEET 161	E

FILE NAME : V:\TRANS-EC\410723 WAUSAU 1ST AVE\C3D\DESIGN\CORRIDORS\CORRIDOR-SOUTH1STAVE.DWG
LAYOUT NAME - 07
PLOT DATE : 10/16/2018 8:29 AM
PLOT BY : WOOLEVER, NATHAN
PLOT NAME :
PLOT SCALE : 1 IN:10 FT HORZ. / 1 IN:10 FT VERT.
WISDOT/CADDS SHEET 49

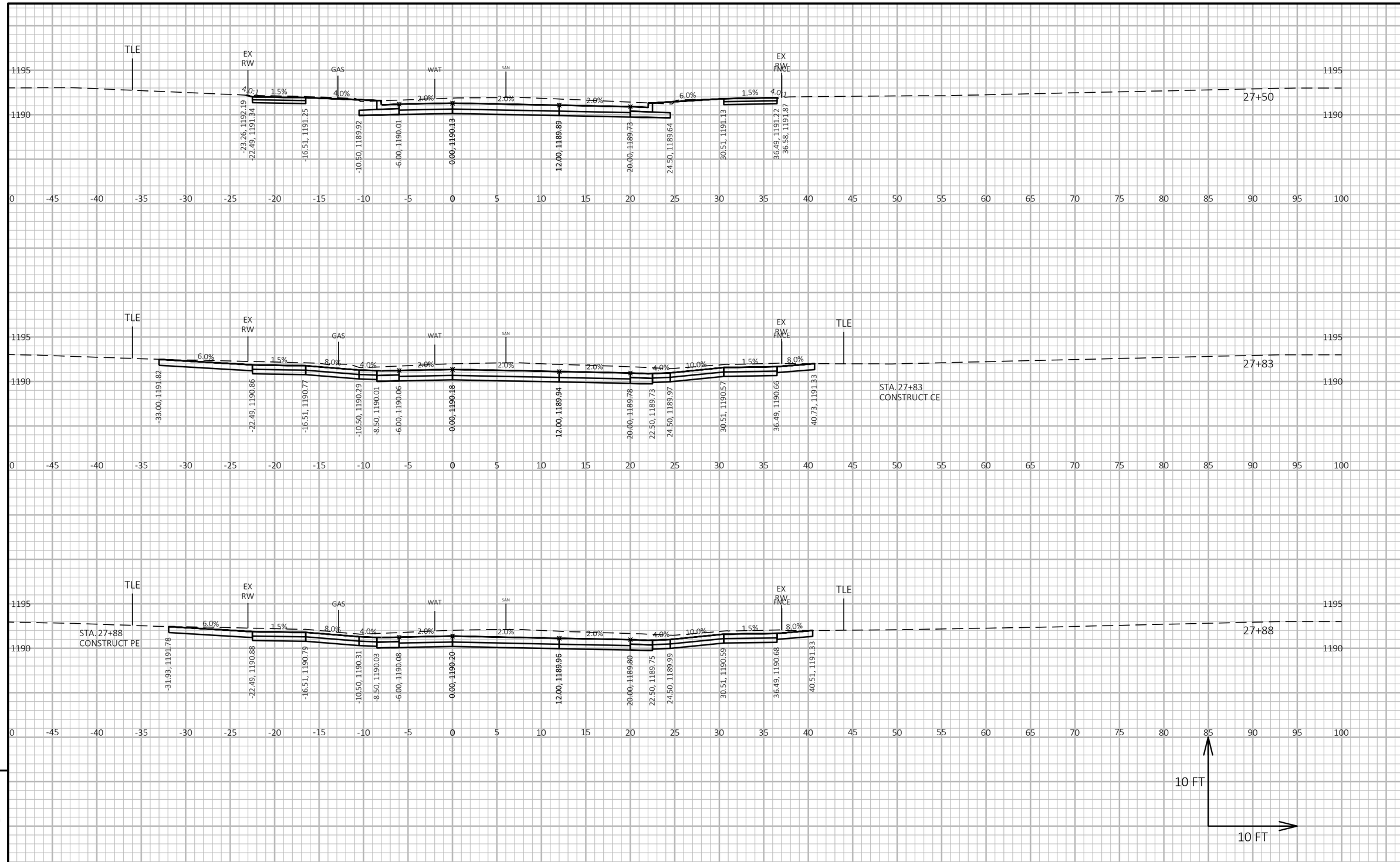

9

9

PROJECT NO: 6999-18-73	HWY: SOUTH 1ST AVENUE	COUNTY: MARATHON	CROSS SECTIONS: SOUTH 1ST AVENUE	SHEET 162	E

FILE NAME : V:\TRANS-EC\410723 WAUSAU 1ST AVE\C3D\DESIGN\CORRIDORS\CORRIDOR-SOUTH1STAVE.DWG
LAYOUT NAME - 08
PLOT DATE : 10/16/2018 8:29 AM
PLOT BY : WOOLEVER, NATHAN
PLOT NAME :
PLOT SCALE : 1 IN:10 FT HORZ. / 1 IN:10 FT VERT.
WISDOT/CADDS SHEET 49

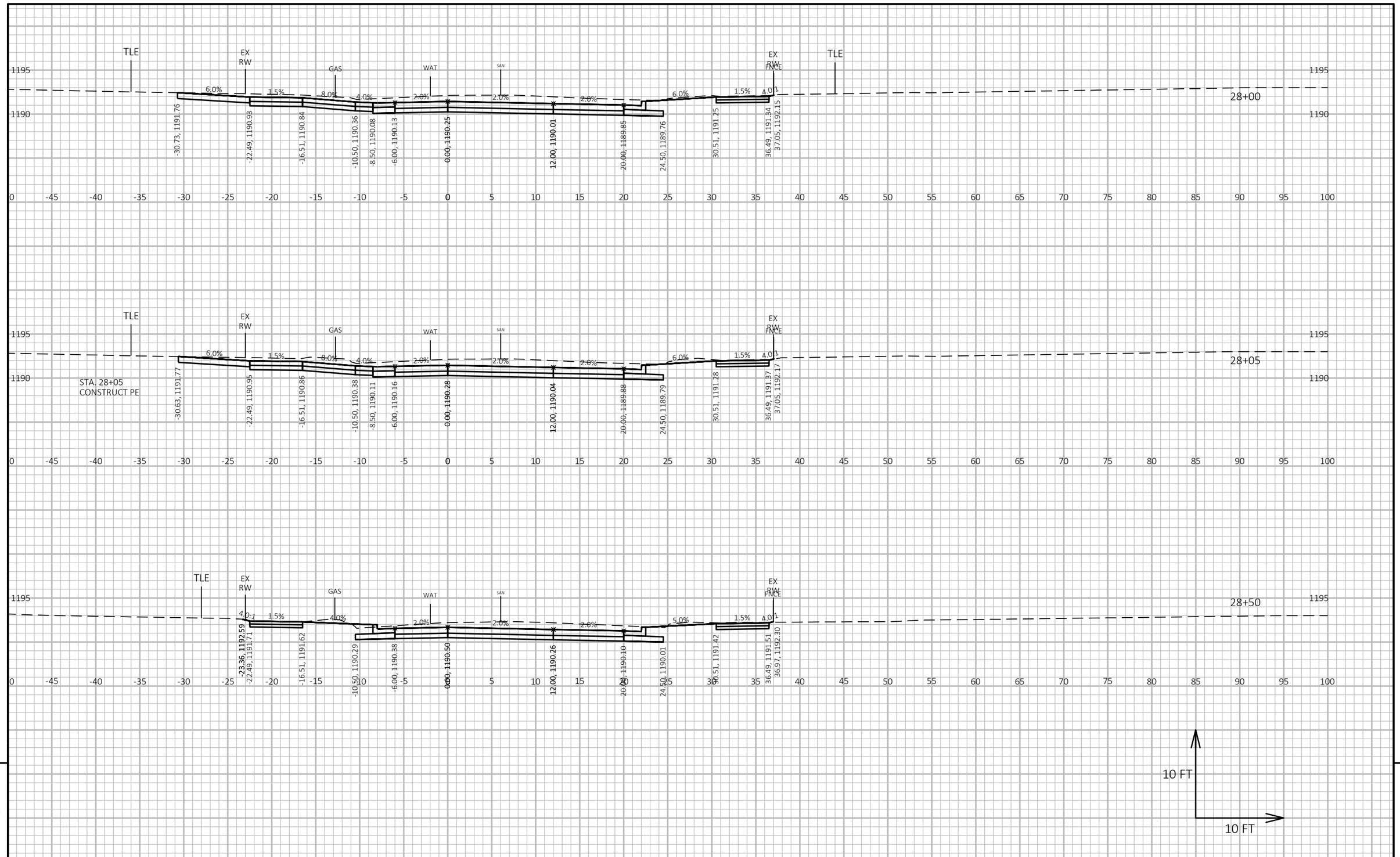

9

9

PROJECT NO: 6999-18-73	HWY: SOUTH 1ST AVENUE	COUNTY: MARATHON	CROSS SECTIONS: SOUTH 1ST AVENUE	SHEET 163	E

FILE NAME : V:\TRANS-EC\410723 WAUSAU 1ST AVE\C3D\DESIGN\CORRIDORS\CORRIDOR-SOUTH1STAVE.DWG
LAYOUT NAME - 09
PLOT DATE : 10/16/2018 8:29 AM
PLOT BY : WOOLEVER, NATHAN
PLOT NAME :
PLOT SCALE : 1 IN:10 FT HORZ. / 1 IN:10 FT VERT.
WISDOT/CADDS SHEET 49

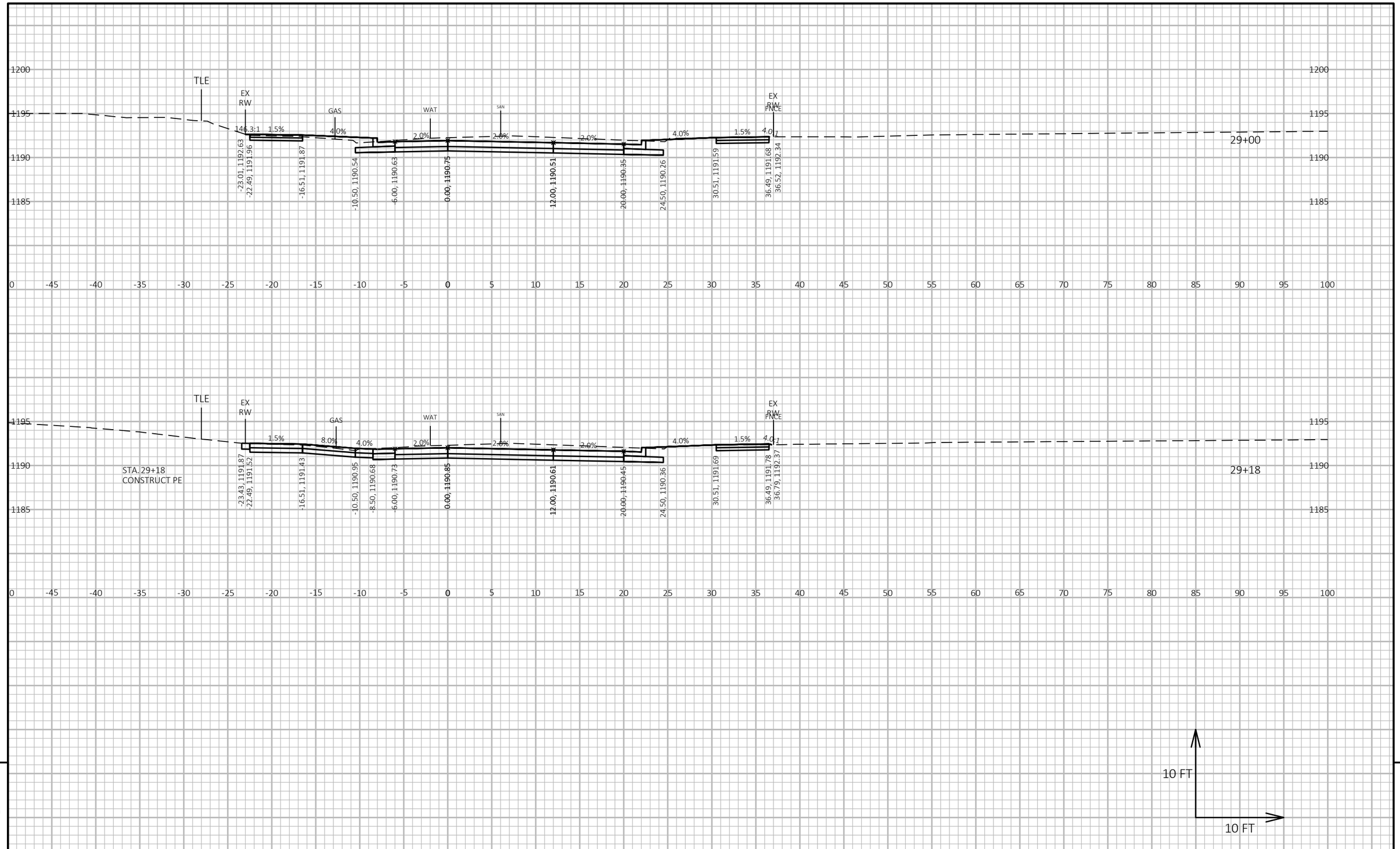

9

9

PROJECT NO: 6999-18-73	HWY: SOUTH 1ST AVENUE	COUNTY: MARATHON	CROSS SECTIONS: SOUTH 1ST AVENUE	SHEET 164	E

FILE NAME : V:\TRANS-EC\410723 WAUSAU 1ST AVE\C3D\DESIGN\CORRIDORS\CORRIDOR-SOUTH1STAVE.DWG
LAYOUT NAME - 10
PLOT DATE : 10/16/2018 8:29 AM
PLOT BY : WOOLEVER, NATHAN
PLOT NAME :
PLOT SCALE : 1 IN:10 FT HORZ. / 1 IN:10 FT VERT.
WISDOT/CADDS SHEET 49

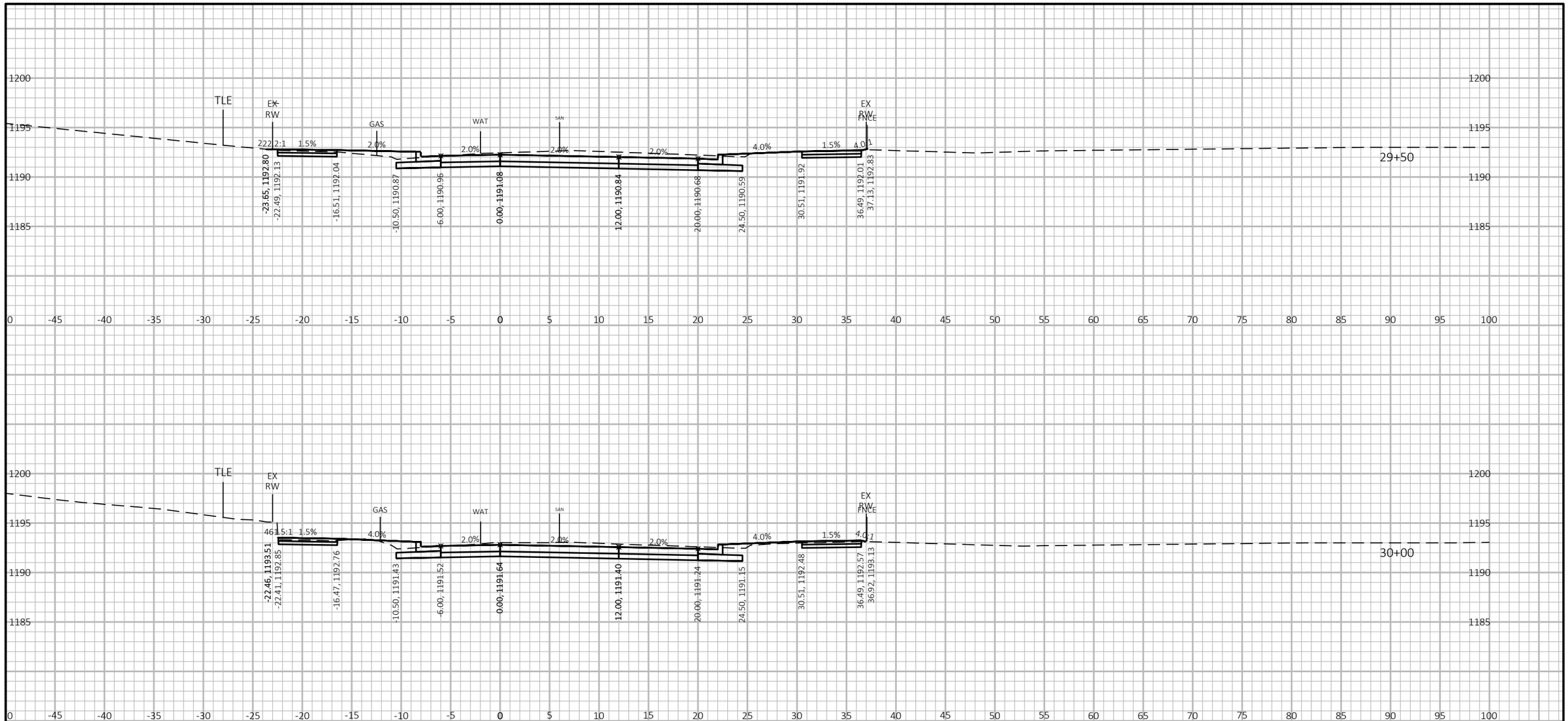

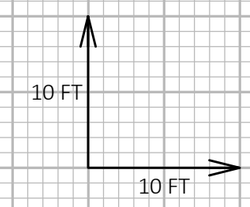

9 9

PROJECT NO: 6999-18-73	HWY: SOUTH 1ST AVENUE	COUNTY: MARATHON	CROSS SECTIONS: SOUTH 1ST AVENUE	SHEET 165	E

FILE NAME : V:\TRANS-EC\410723 WAUSAU 1ST AVE\C3D\DESIGN\CORRIDORS\CORRIDOR-SOUTH1STAVE.DWG
LAYOUT NAME - 11
PLOT DATE : 10/16/2018 8:29 AM PLOT BY : WOOLEVER, NATHAN PLOT NAME : PLOT SCALE : 1 IN:10 FT HORZ. / 1 IN:10 FT VERT.

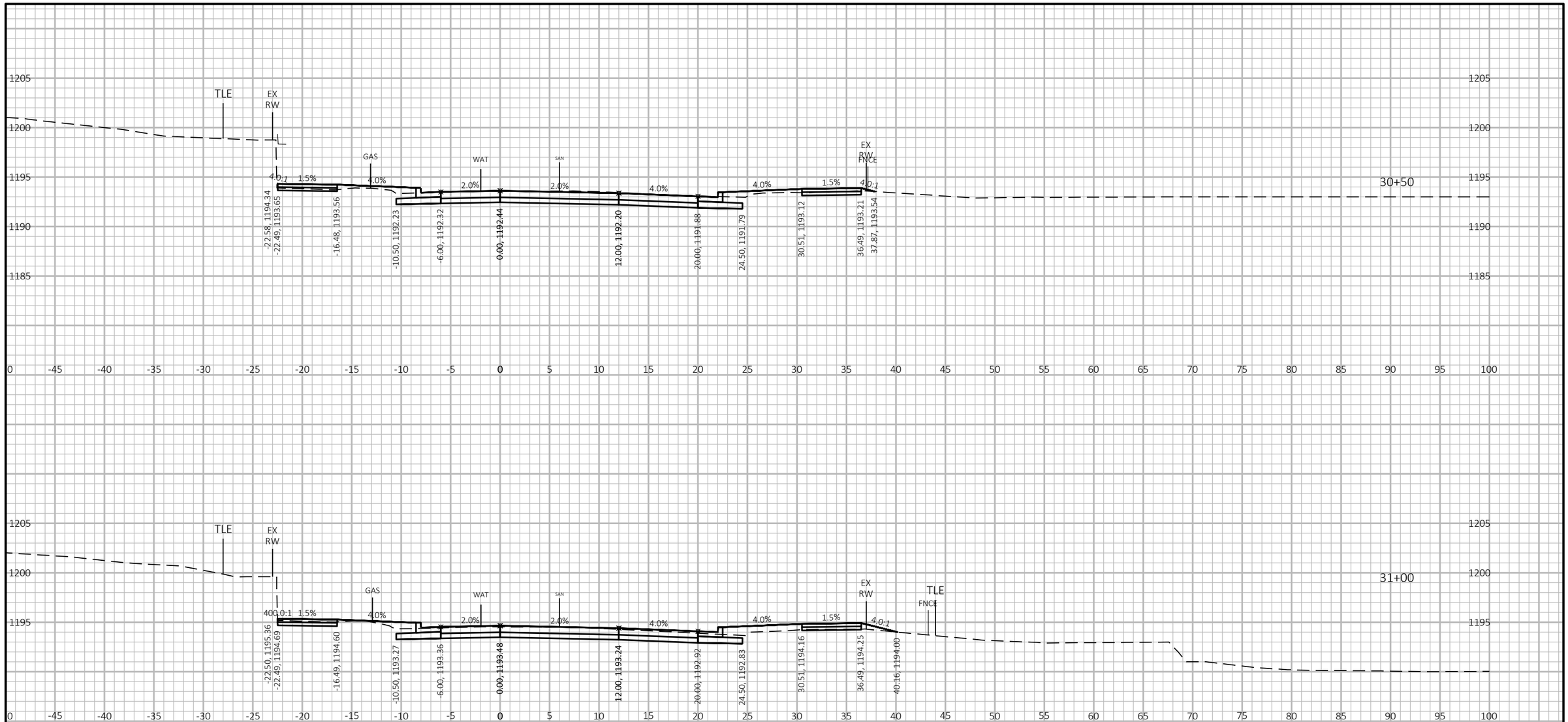

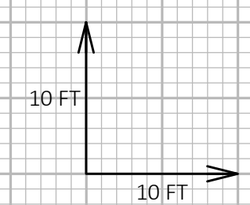

9

9

PROJECT NO: 6999-18-73	HWY: SOUTH 1ST AVENUE	COUNTY: MARATHON	CROSS SECTIONS: SOUTH 1ST AVENUE	SHEET 166	E

FILE NAME : V:\TRANS-EC\410723 WAUSAU 1ST AVE\C3D\DESIGN\CORRIDORS\CORRIDOR-SOUTH1STAVE.DWG
LAYOUT NAME - 12
PLOT DATE : 10/16/2018 8:30 AM
PLOT BY : WOOLEVER, NATHAN
PLOT NAME :
PLOT SCALE : 1 IN:10 FT HORZ. / 1 IN:10 FT VERT.
WISDOT/CADDS SHEET 49

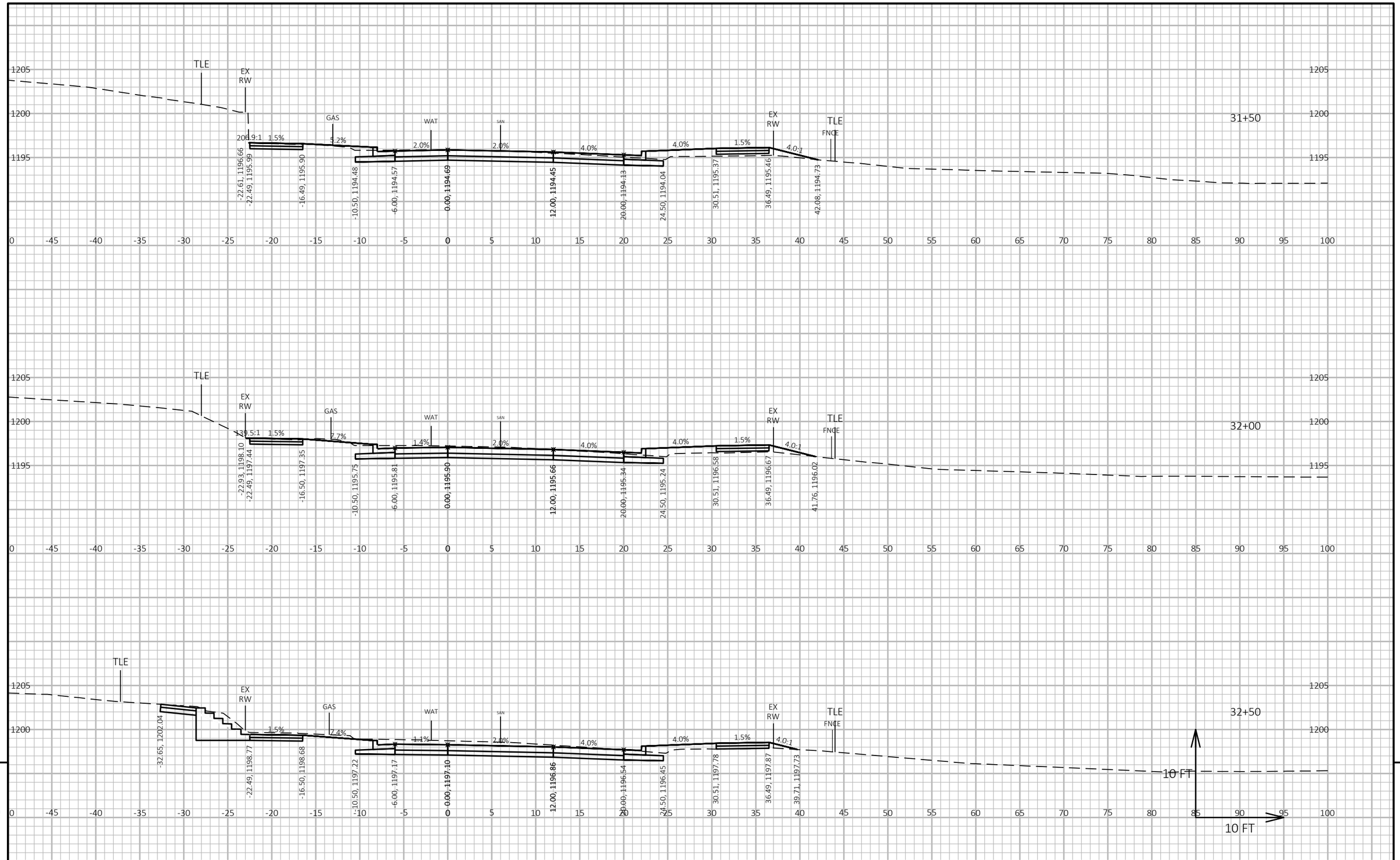

PROJECT NO: 6999-18-73	HWY: SOUTH 1ST AVENUE	COUNTY: MARATHON	CROSS SECTIONS: SOUTH 1ST AVENUE	SHEET 167	E

FILE NAME : V:\TRANS-EC\410723 WAUSAU 1ST AVE\C3D\DESIGN\CORRIDORS\CORRIDOR-SOUTH1STAVE.DWG
LAYOUT NAME - 13
PLOT DATE : 10/16/2018 8:30 AM
PLOT BY : WOOLEVER, NATHAN
PLOT NAME :
PLOT SCALE : 1 IN:10 FT HORZ. / 1 IN:10 FT VERT.

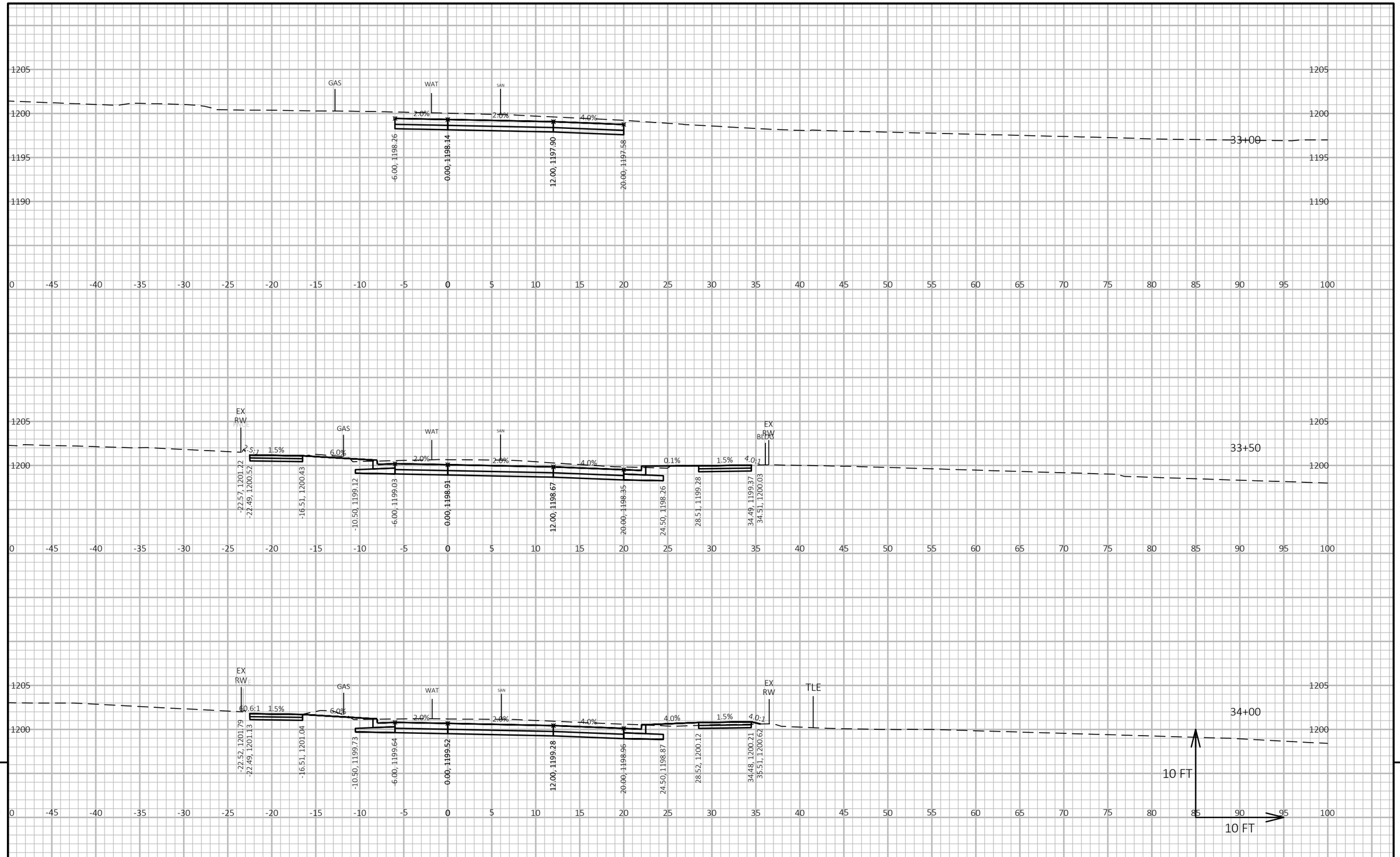

9

9

PROJECT NO: 6999-18-73	HWY: SOUTH 1ST AVENUE	COUNTY: MARATHON	CROSS SECTIONS: SOUTH 1ST AVENUE	SHEET 168	E

FILE NAME : V:\TRANS-EC\410723 WAUSAU 1ST AVE\C3D\DESIGN\CORRIDORS\CORRIDOR-SOUTH1STAVE.DWG
LAYOUT NAME - 14
PLOT DATE : 10/16/2018 8:30 AM
PLOT BY : WOOLEVER, NATHAN
PLOT NAME :
PLOT SCALE : 1 IN:10 FT HORZ. / 1 IN:10 FT VERT.
WISDOT/CADDS SHEET 49

SHERMAN STREET

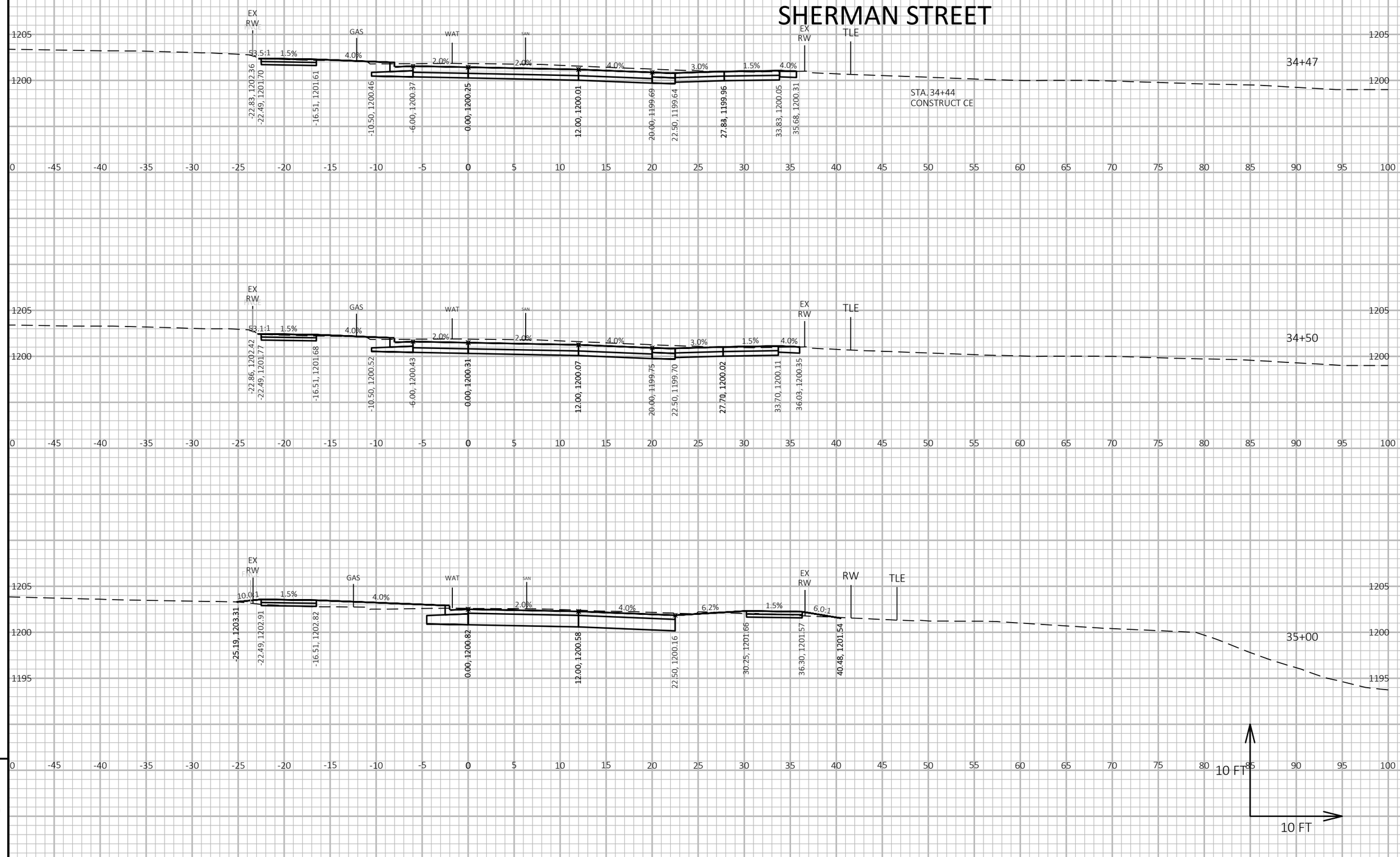

PROJECT NO: 6999-18-73	HWY: SOUTH 1ST AVENUE	COUNTY: MARATHON	CROSS SECTIONS: SOUTH 1ST AVENUE	SHEET 169	E

FILE NAME : V:\TRANS-EC\410723 WAUSAU 1ST AVE\C3D\DESIGN\CORRIDORS\CORRIDOR-SOUTH1STAVE.DWG
LAYOUT NAME - 15
PLOT DATE : 10/16/2018 8:30 AM
PLOT BY : WOOLEVER, NATHAN
PLOT NAME :
PLOT SCALE : 1 IN:10 FT HORZ. / 1 IN:10 FT VERT.
WISDOT/CADDS SHEET 49

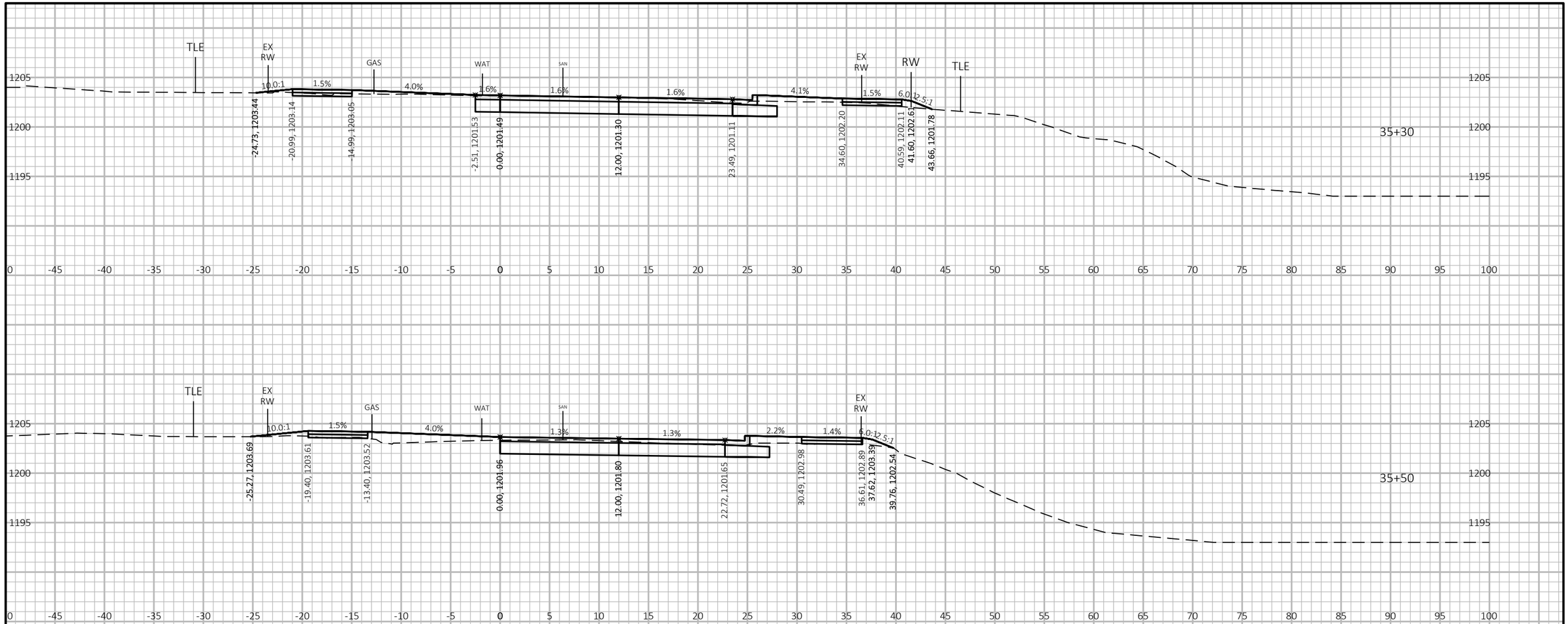

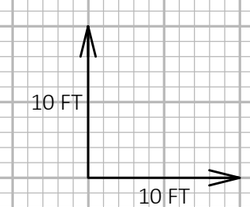

9

9

PROJECT NO: 6999-18-73	HWY: SOUTH 1ST AVENUE	COUNTY: MARATHON	CROSS SECTIONS: SOUTH 1ST AVENUE	SHEET 170	E

FILE NAME : V:\TRANS-EC\410723 WAUSAU 1ST AVE\C3D\DESIGN\CORRIDORS\CORRIDOR-SOUTH1STAVE.DWG
LAYOUT NAME - 16
PLOT DATE : 10/16/2018 8:30 AM
PLOT BY : WOOLEVER, NATHAN
PLOT NAME :
PLOT SCALE : 1 IN:10 FT HORZ. / 1 IN:10 FT VERT.
WISDOT/CADDS SHEET 49

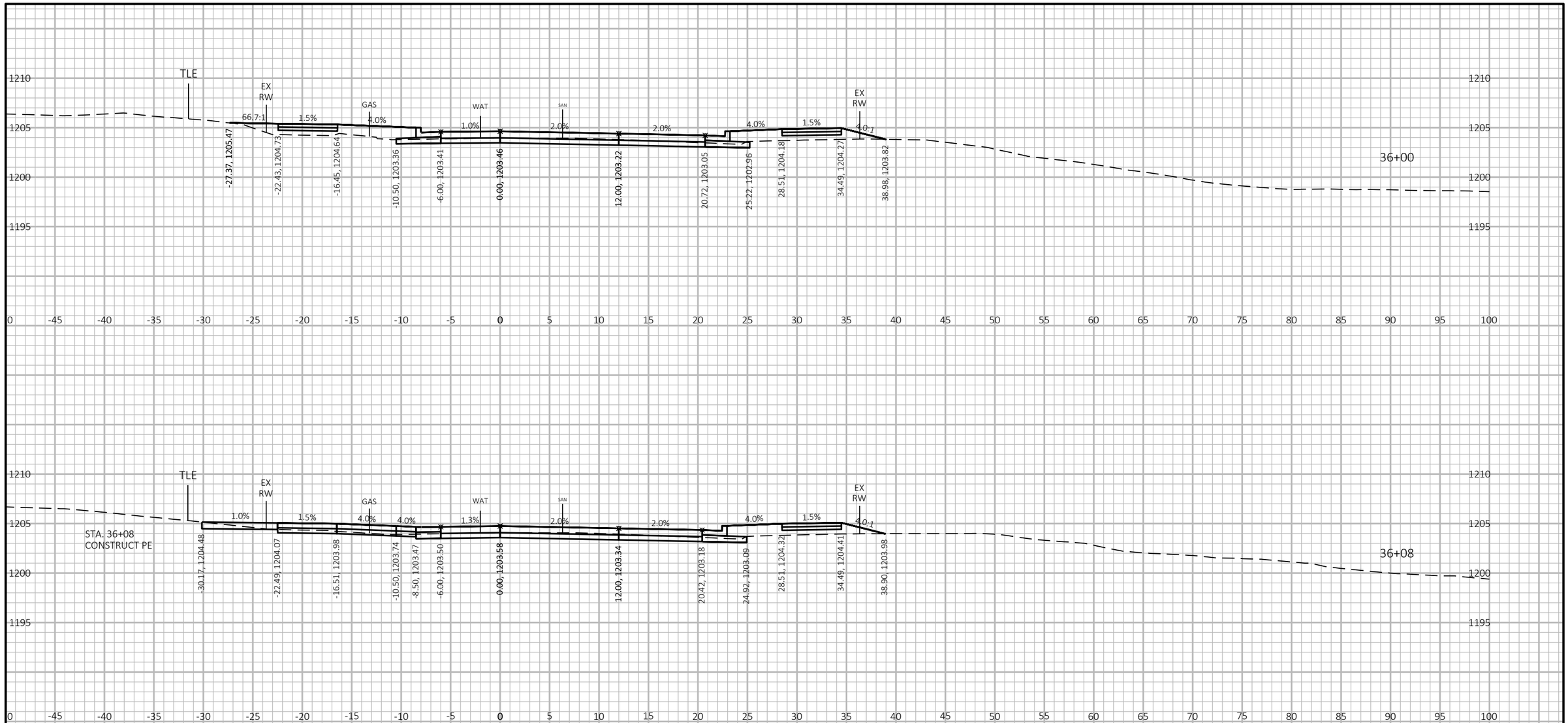

9

9

PROJECT NO: 6999-18-73	HWY: SOUTH 1ST AVENUE	COUNTY: MARATHON	CROSS SECTIONS: SOUTH 1ST AVENUE	SHEET 171	E

FILE NAME : V:\TRANS-EC\410723 WAUSAU 1ST AVE\C3D\DESIGN\CORRIDORS\CORRIDOR-SOUTH1STAVE.DWG
LAYOUT NAME - 17
PLOT DATE : 10/16/2018 8:30 AM
PLOT BY : WOOLEVER, NATHAN
PLOT NAME :
PLOT SCALE : 1 IN:10 FT HORZ. / 1 IN:10 FT VERT.
WISDOT/CADDS SHEET 49

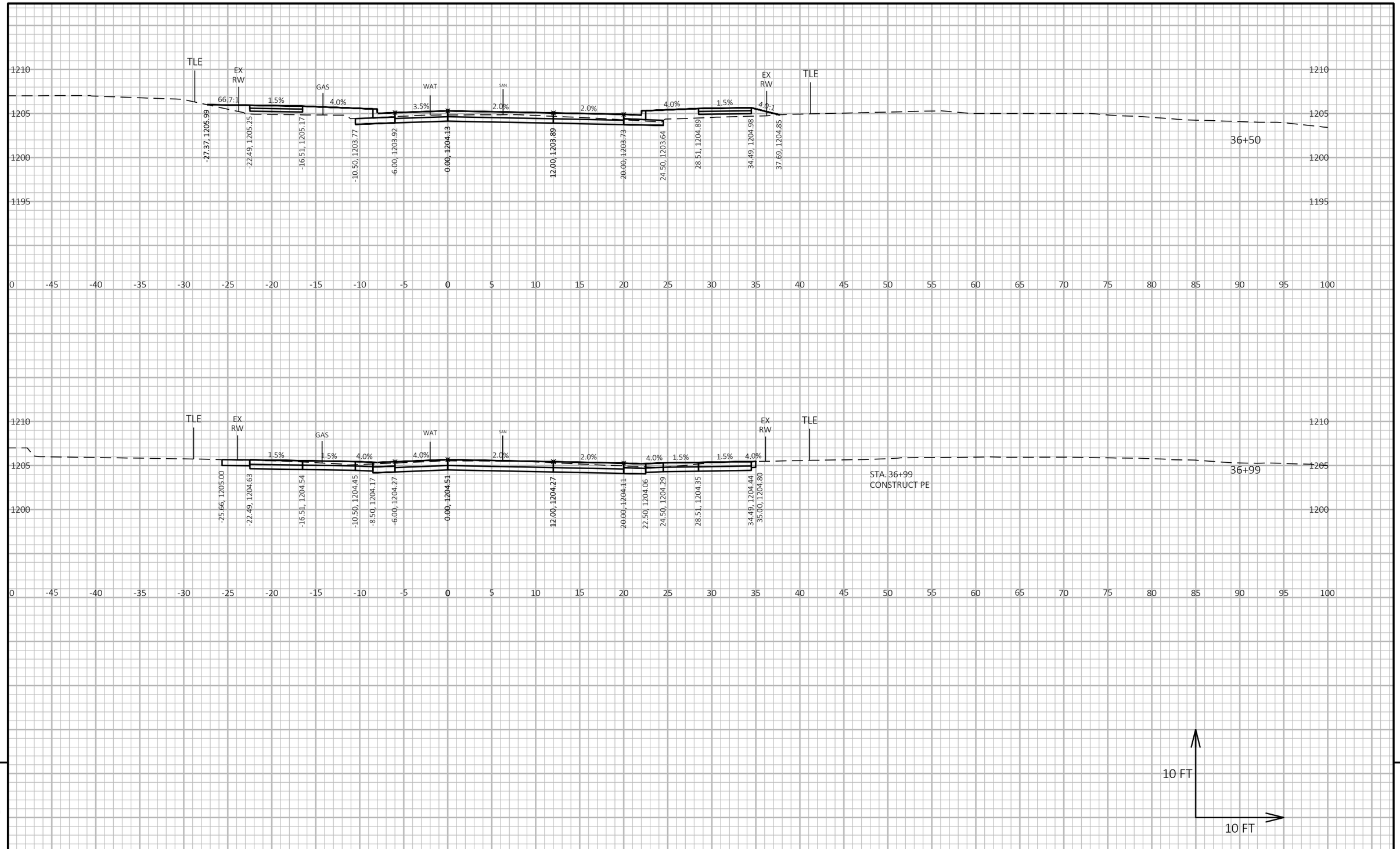

9

9

PROJECT NO: 6999-18-73	HWY: SOUTH 1ST AVENUE	COUNTY: MARATHON	CROSS SECTIONS: SOUTH 1ST AVENUE	SHEET 172	E

FILE NAME : V:\TRANS-EC\410723 WAUSAU 1ST AVE\C3D\DESIGN\CORRIDORS\CORRIDOR-SOUTH1STAVE.DWG
LAYOUT NAME - 18
PLOT DATE : 10/16/2018 8:31 AM
PLOT BY : WOOLEVER, NATHAN
PLOT NAME :
PLOT SCALE : 1 IN:10 FT HORZ. / 1 IN:10 FT VERT.
WISDOT/CADDS SHEET 49

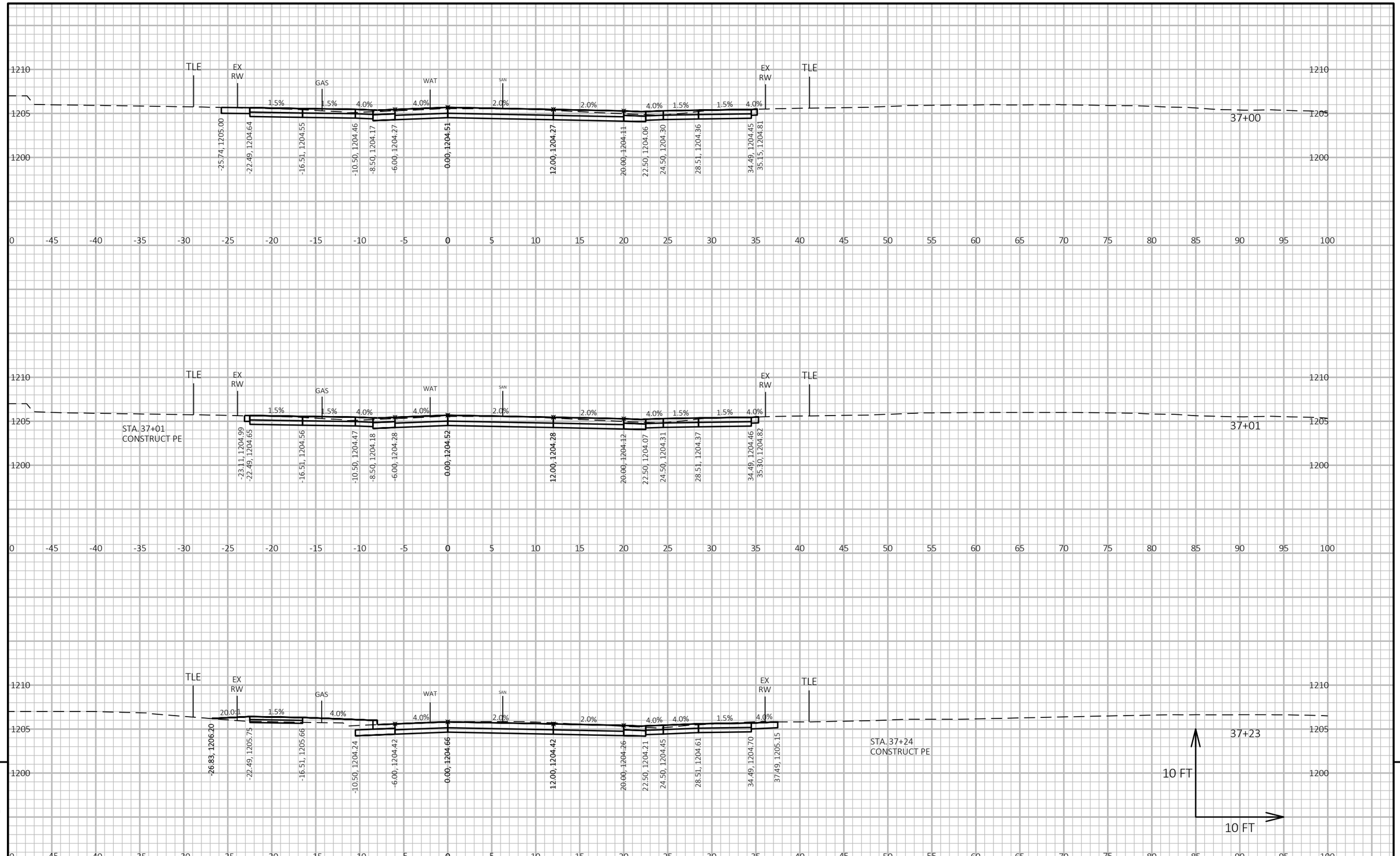

9

PROJECT NO: 6999-18-73	HWY: SOUTH 1ST AVENUE	COUNTY: MARATHON	CROSS SECTIONS: SOUTH 1ST AVENUE	SHEET 173	E

FILE NAME : V:\TRANS-EC\410723 WAUSAU 1ST AVE\C3D\DESIGN\CORRIDORS\CORRIDOR-SOUTH1STAVE.DWG
LAYOUT NAME - 19
PLOT DATE : 10/16/2018 8:31 AM
PLOT BY : WOOLEVER, NATHAN
PLOT NAME :
PLOT SCALE : 1 IN:10 FT HORZ. / 1 IN:10 FT VERT.
WISDOT/CADDS SHEET 49

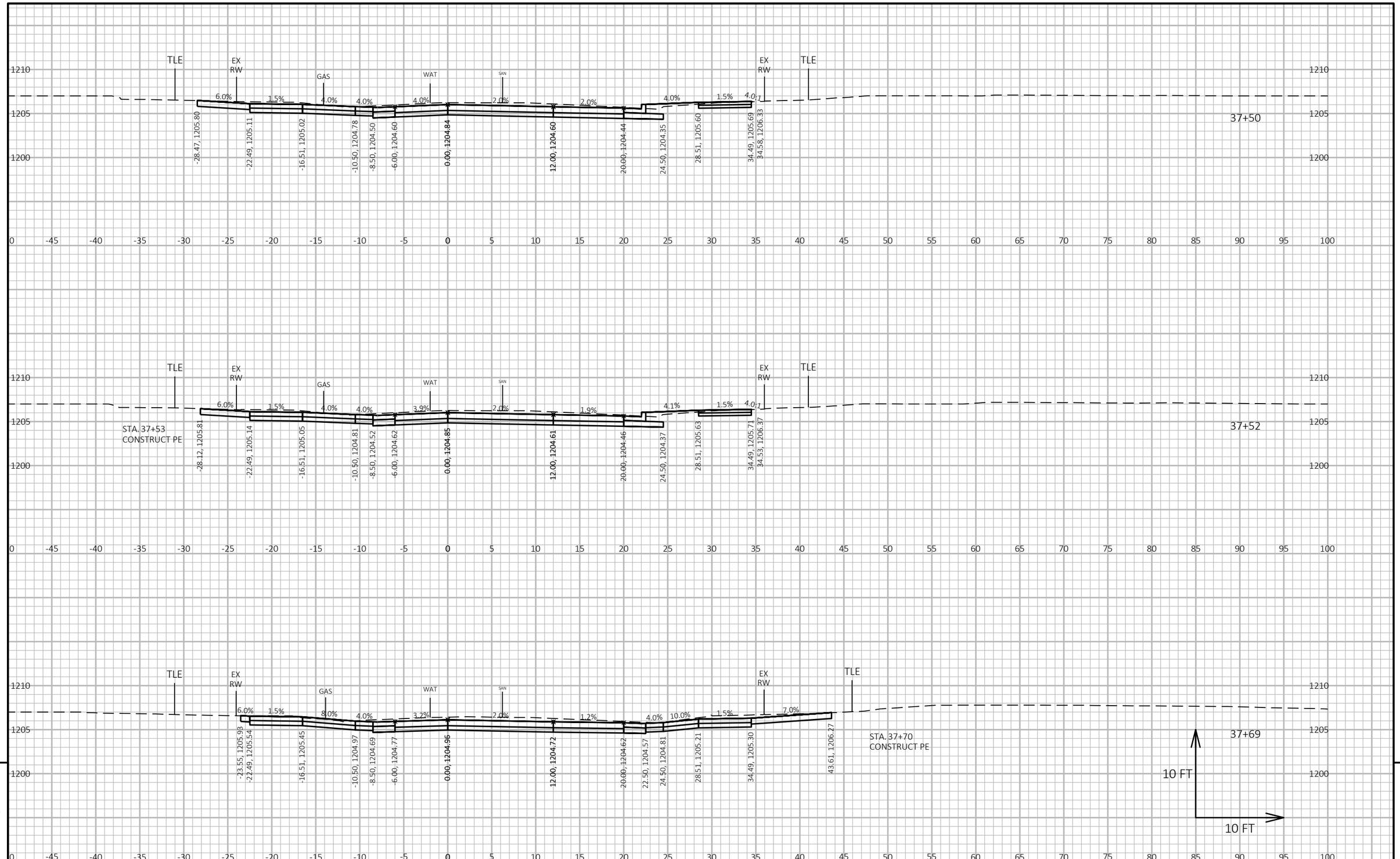

9

9

PROJECT NO: 6999-18-73	HWY: SOUTH 1ST AVENUE	COUNTY: MARATHON	CROSS SECTIONS: SOUTH 1ST AVENUE	SHEET 174	E

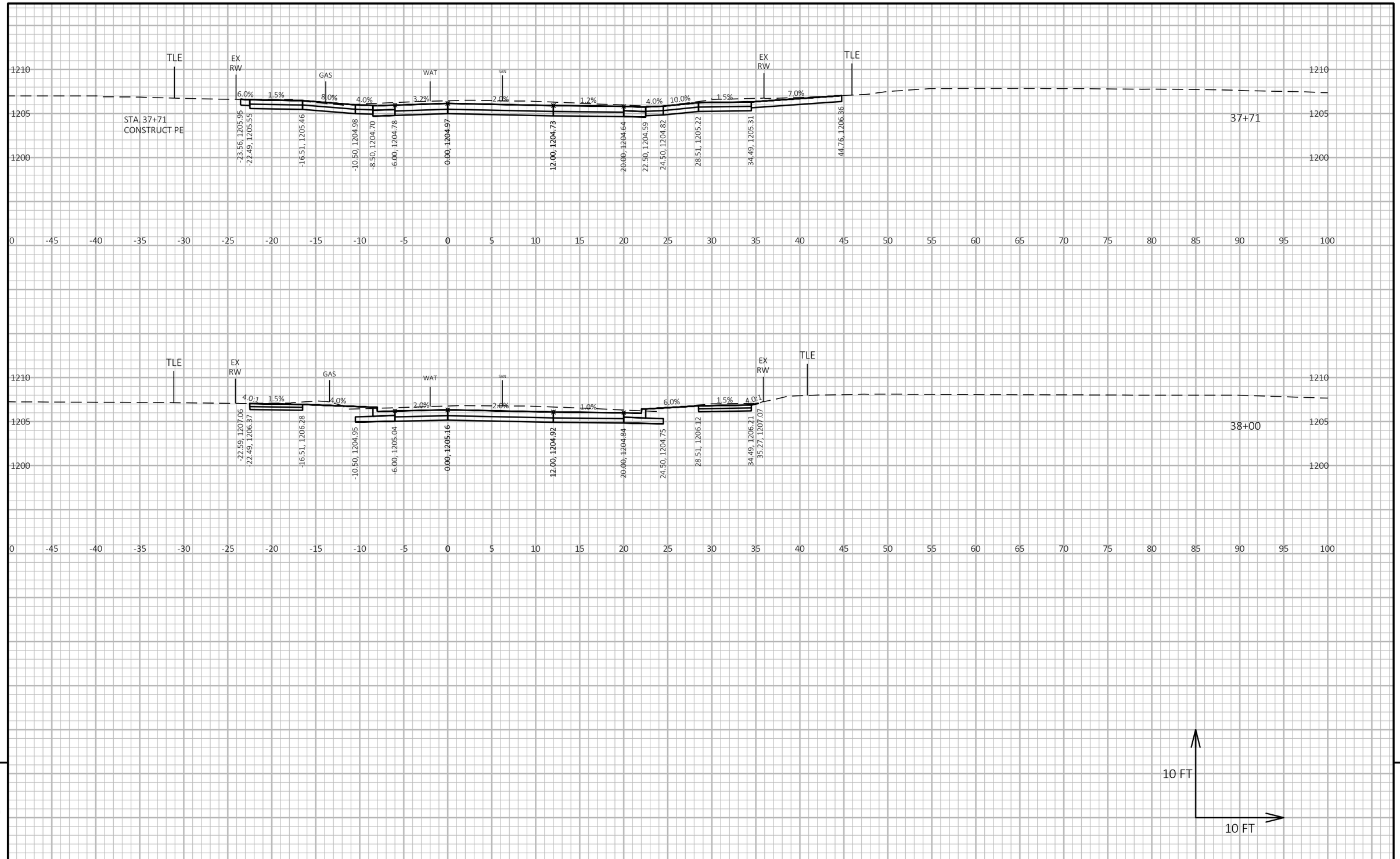

9

9

PROJECT NO: 6999-18-73	HWY: SOUTH 1ST AVENUE	COUNTY: MARATHON	CROSS SECTIONS: SOUTH 1ST AVENUE	SHEET 175	E

FILE NAME : V:\TRANS-EC\410723 WAUSAU 1ST AVE\C3D\DESIGN\CORRIDORS\CORRIDOR-SOUTH1STAVE.DWG
LAYOUT NAME - 21
PLOT DATE : 10/16/2018 8:31 AM
PLOT BY : WOOLEVER, NATHAN
PLOT NAME :
PLOT SCALE : 1 IN:10 FT HORZ. / 1 IN:10 FT VERT.
WISDOT/CADDS SHEET 49

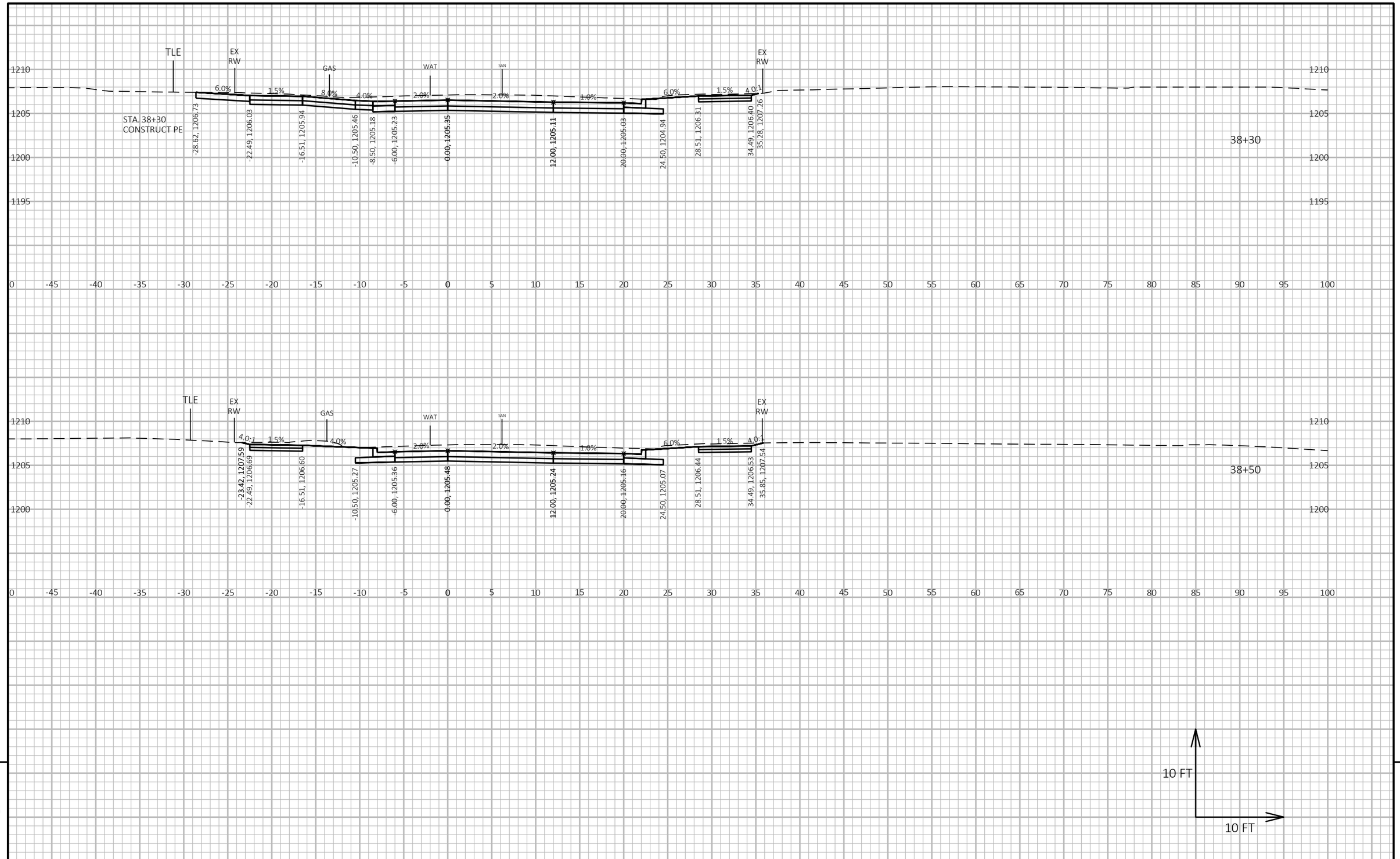

9

9

PROJECT NO: 6999-18-73	HWY: SOUTH 1ST AVENUE	COUNTY: MARATHON	CROSS SECTIONS: SOUTH 1ST AVENUE	SHEET 176	E

FILE NAME : V:\TRANS-EC\410723 WAUSAU 1ST AVE\C3D\DESIGN\CORRIDORS\CORRIDOR-SOUTH1STAVE.DWG
LAYOUT NAME - 22

PLOT DATE : 10/16/2018 8:31 AM PLOT BY : WOOLEVER, NATHAN PLOT NAME : PLOT SCALE : 1 IN:10 FT HORZ. / 1 IN:10 FT VERT.

WISDOT/CADDS SHEET 49

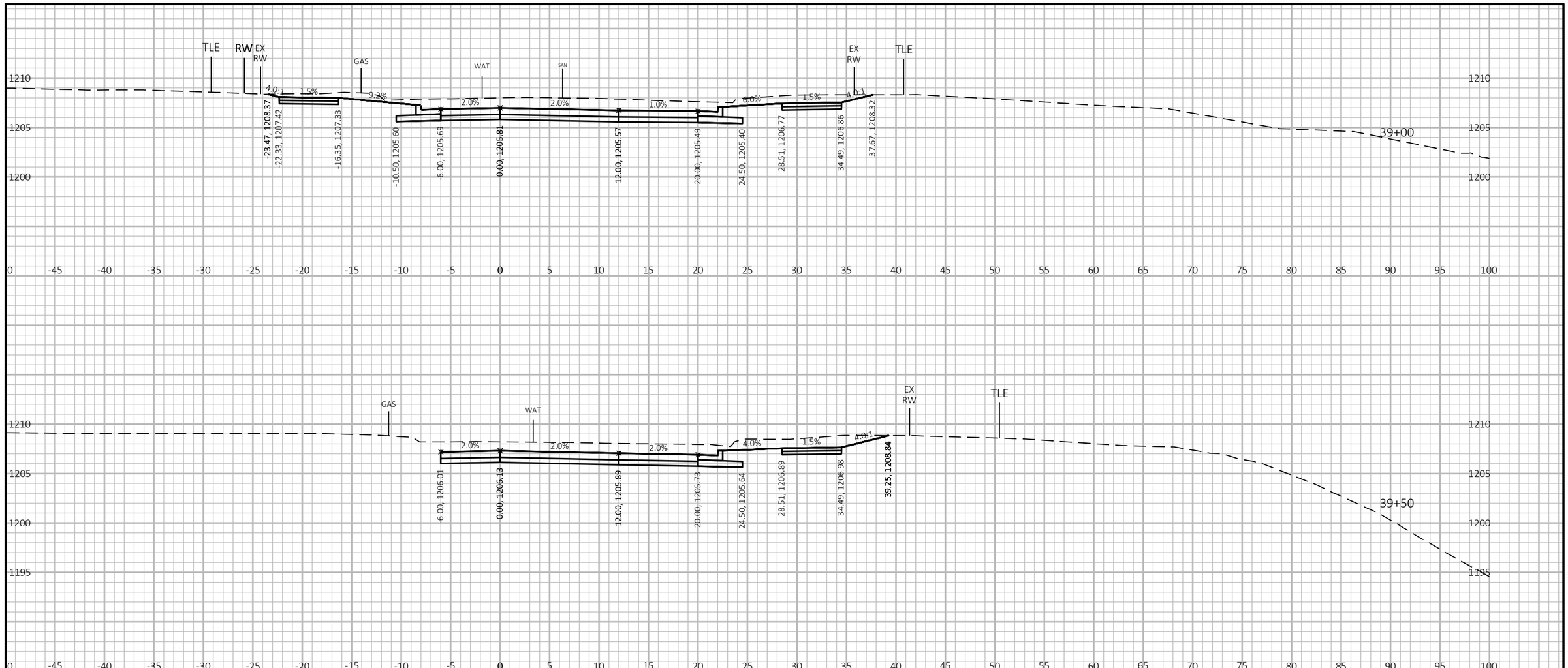

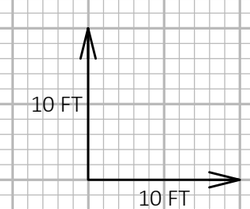

9

9

PROJECT NO: 6999-18-73	HWY: SOUTH 1ST AVENUE	COUNTY: MARATHON	CROSS SECTIONS: SOUTH 1ST AVENUE	SHEET 177	E

FILE NAME : V:\TRANS-EC\410723 WAUSAU 1ST AVE\C3D\DESIGN\CORRIDORS\CORRIDOR-SOUTH1STAVE.DWG
LAYOUT NAME - 23

PLOT DATE : 10/16/2018 8:31 AM PLOT BY : WOOLEVER, NATHAN PLOT NAME : PLOT SCALE : 1 IN:10 FT HORZ. / 1 IN:10 FT VERT.

WISDOT/CADDS SHEET 49

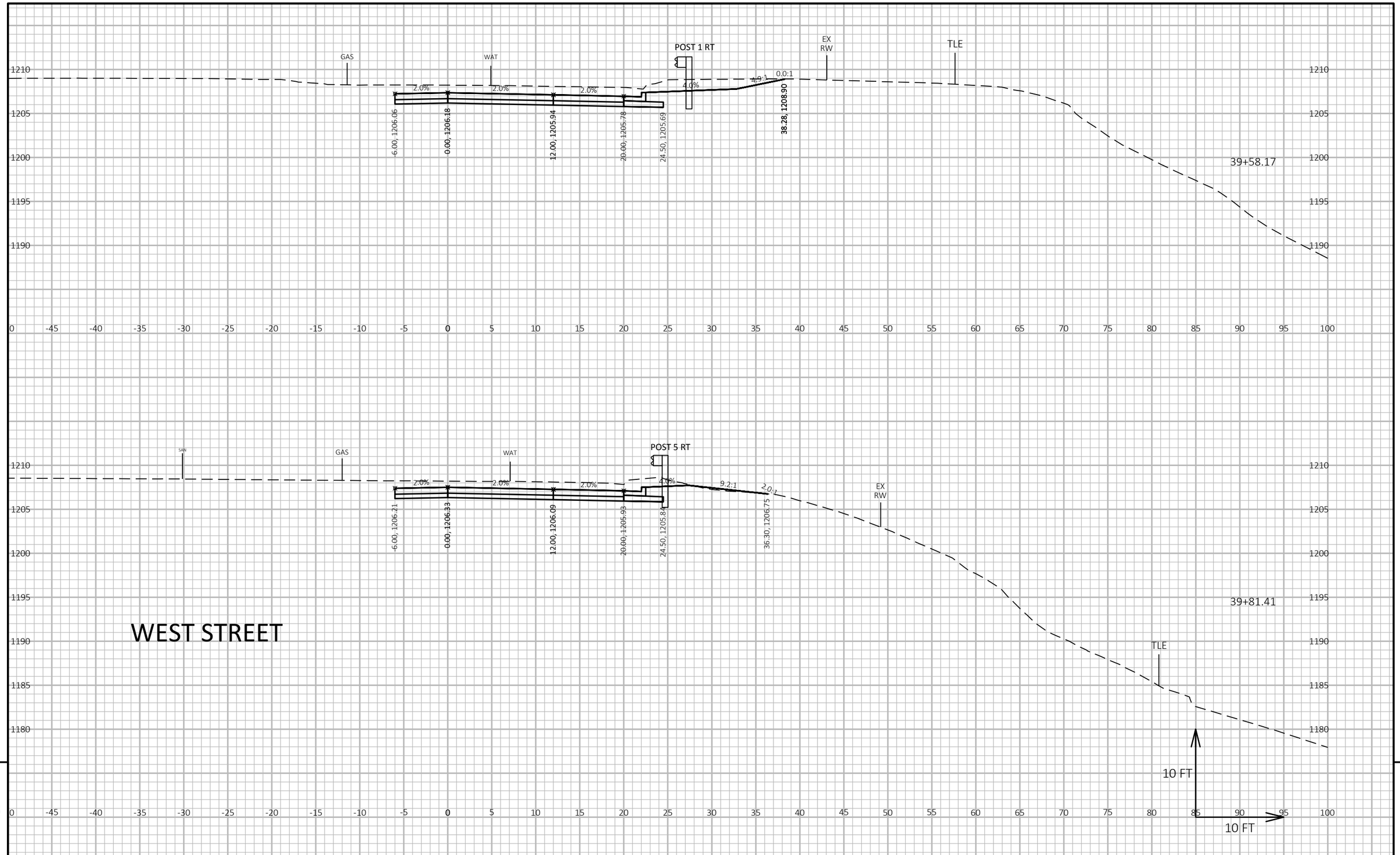

PROJECT NO: 6999-18-73	HWY: SOUTH 1ST AVENUE	COUNTY: MARATHON	CROSS SECTIONS: SOUTH 1ST AVENUE	SHEET 178	E

FILE NAME : V:\TRANS-EC\410723 WAUSAU 1ST AVE\C3D\DESIGN\CORRIDORS\CORRIDOR-SOUTH1STAVE.DWG
LAYOUT NAME - 24
PLOT DATE : 10/16/2018 8:31 AM
PLOT BY : WOOLEVER, NATHAN
PLOT NAME :
PLOT SCALE : 1 IN:10 FT HORZ. / 1 IN:10 FT VERT.
WISDOT/CADDS SHEET 49

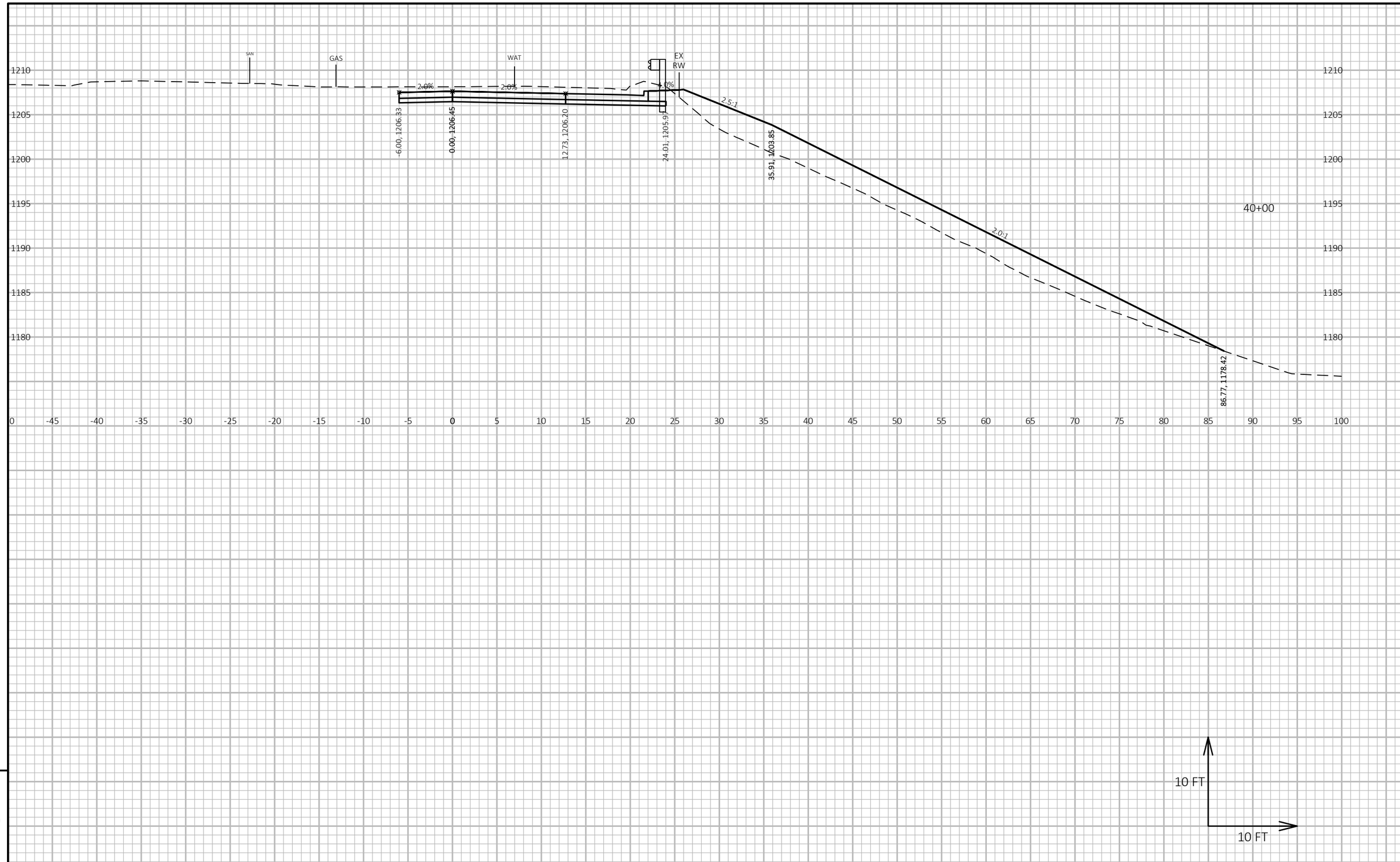

9

9

PROJECT NO: 6999-18-73	HWY: SOUTH 1ST AVENUE	COUNTY: MARATHON	CROSS SECTIONS: SOUTH 1ST AVENUE	SHEET 179	E

FILE NAME : V:\TRANS-EC\410723 WAUSAU 1ST AVE\C3D\DESIGN\CORRIDORS\CORRIDOR-SOUTH1STAVE.DWG
LAYOUT NAME - 25

PLOT DATE : 10/16/2018 8:32 AM PLOT BY : WOOLEVER, NATHAN PLOT NAME : PLOT SCALE : 1 IN:10 FT HORZ. / 1 IN:10 FT VERT.

WISDOT/CADDS SHEET 49

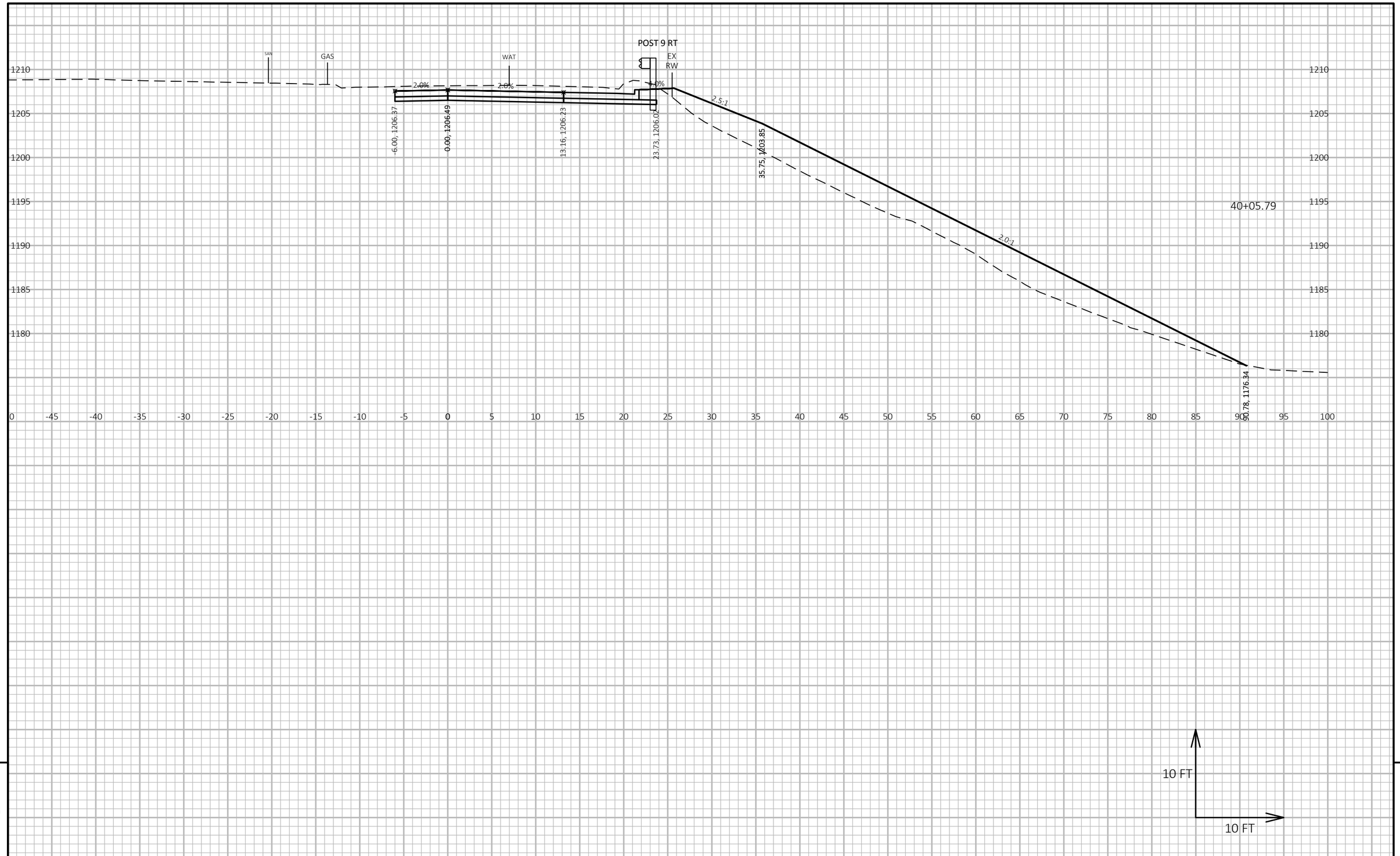

9

9

PROJECT NO: 6999-18-73	HWY: SOUTH 1ST AVENUE	COUNTY: MARATHON	CROSS SECTIONS: SOUTH 1ST AVENUE	SHEET 180	E

FILE NAME : V:\TRANS-EC\410723 WAUSAU 1ST AVE\C3D\DESIGN\CORRIDORS\CORRIDOR-SOUTH1STAVE.DWG
LAYOUT NAME - 26

PLOT DATE : 10/16/2018 8:32 AM PLOT BY : WOOLEVER, NATHAN PLOT NAME : PLOT SCALE : 1 IN:10 FT HORZ. / 1 IN:10 FT VERT.

WISDOT/CADDS SHEET 49

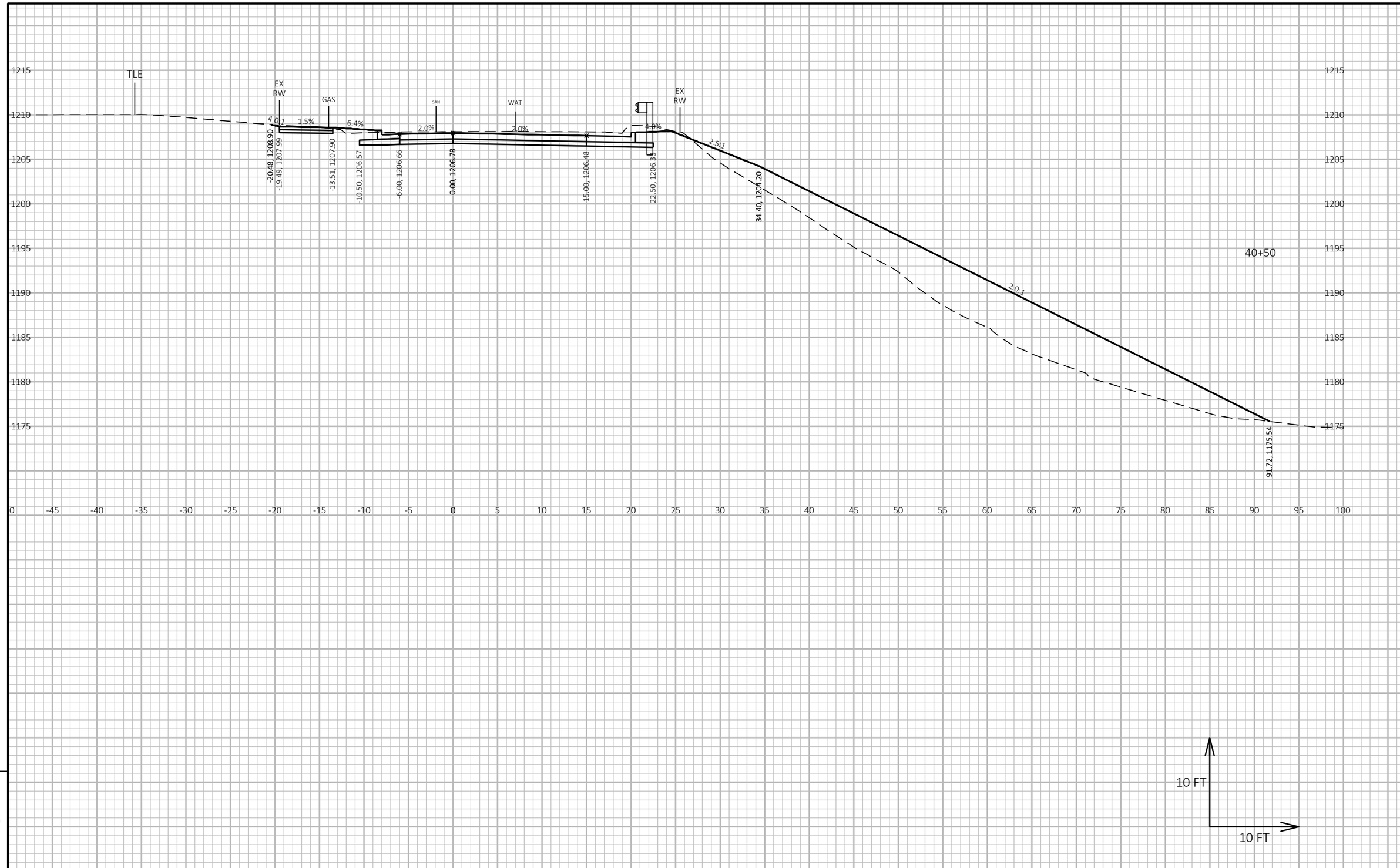

9

9

PROJECT NO: 6999-18-73	HWY: SOUTH 1ST AVENUE	COUNTY: MARATHON	CROSS SECTIONS: SOUTH 1ST AVENUE	SHEET 181	E

FILE NAME : V:\TRANS-EC\410723 WAUSAU 1ST AVE\C3D\DESIGN\CORRIDORS\CORRIDOR-SOUTH1STAVE.DWG
LAYOUT NAME - 27
PLOT DATE : 10/16/2018 8:32 AM PLOT BY : WOOLEVER, NATHAN PLOT NAME : PLOT SCALE : 1 IN:10 FT HORZ. / 1 IN:10 FT VERT.

WISDOT/CADDS SHEET 49

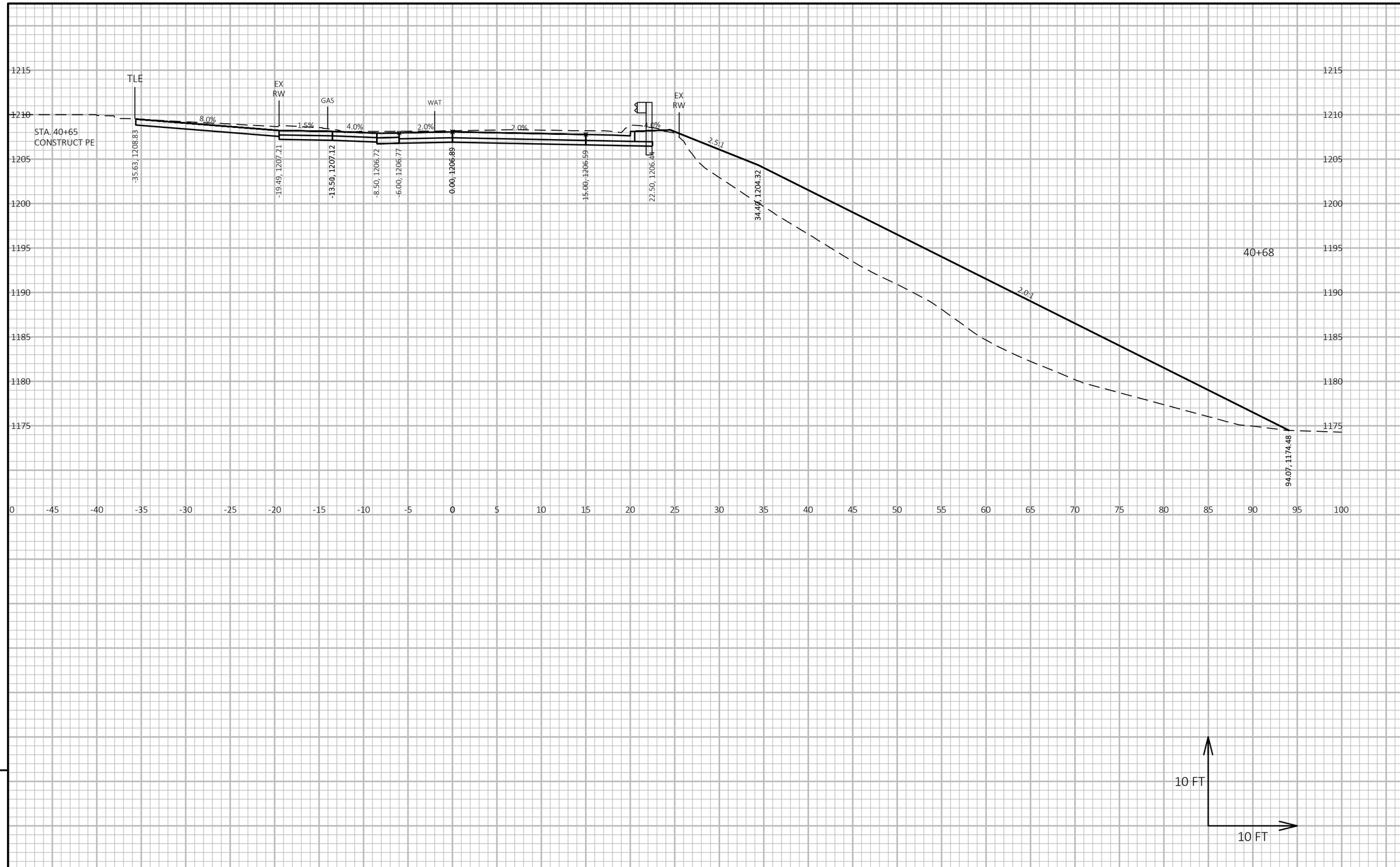

9

9

PROJECT NO: 6999-18-73	HWY: SOUTH 1ST AVENUE	COUNTY: MARATHON	CROSS SECTIONS: SOUTH 1ST AVENUE	SHEET 182	E

FILE NAME : V:\TRANS-EC\410723 WAUSAU 1ST AVE\C3D\DESIGN\CORRIDORS\CORRIDOR-SOUTH1STAVE.DWG
LAYOUT NAME - 28

PLOT DATE : 10/16/2018 8:32 AM PLOT BY : WOOLEVER, NATHAN PLOT NAME : **PLOT SCALE :** 1 IN:10 FT HORZ. / 1 IN:10 FT VERT.

WISDOT/CADDS SHEET 49

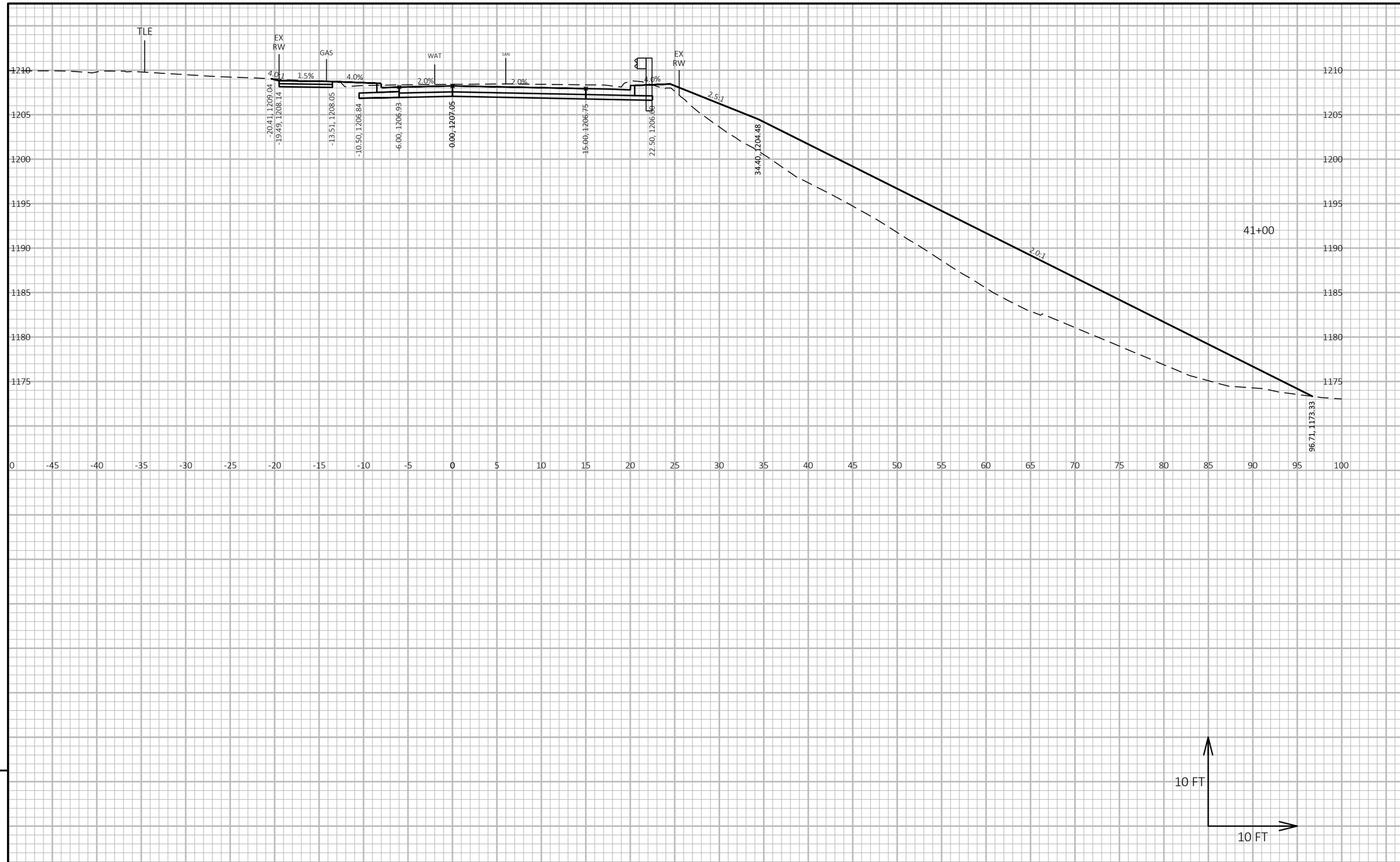

9

9

PROJECT NO: 6999-18-73	HWY: SOUTH 1ST AVENUE	COUNTY: MARATHON	CROSS SECTIONS: SOUTH 1ST AVENUE	SHEET 183	E

FILE NAME : V:\TRANS-EC\410723 WAUSAU 1ST AVE\C3D\DESIGN\CORRIDORS\CORRIDOR-SOUTH1STAVE.DWG
LAYOUT NAME - 29

PLOT DATE : 10/16/2018 8:32 AM PLOT BY : WOOLEVER, NATHAN PLOT NAME : PLOT SCALE : 1 IN:10 FT HORZ. / 1 IN:10 FT VERT.

WISDOT/CADDS SHEET 49

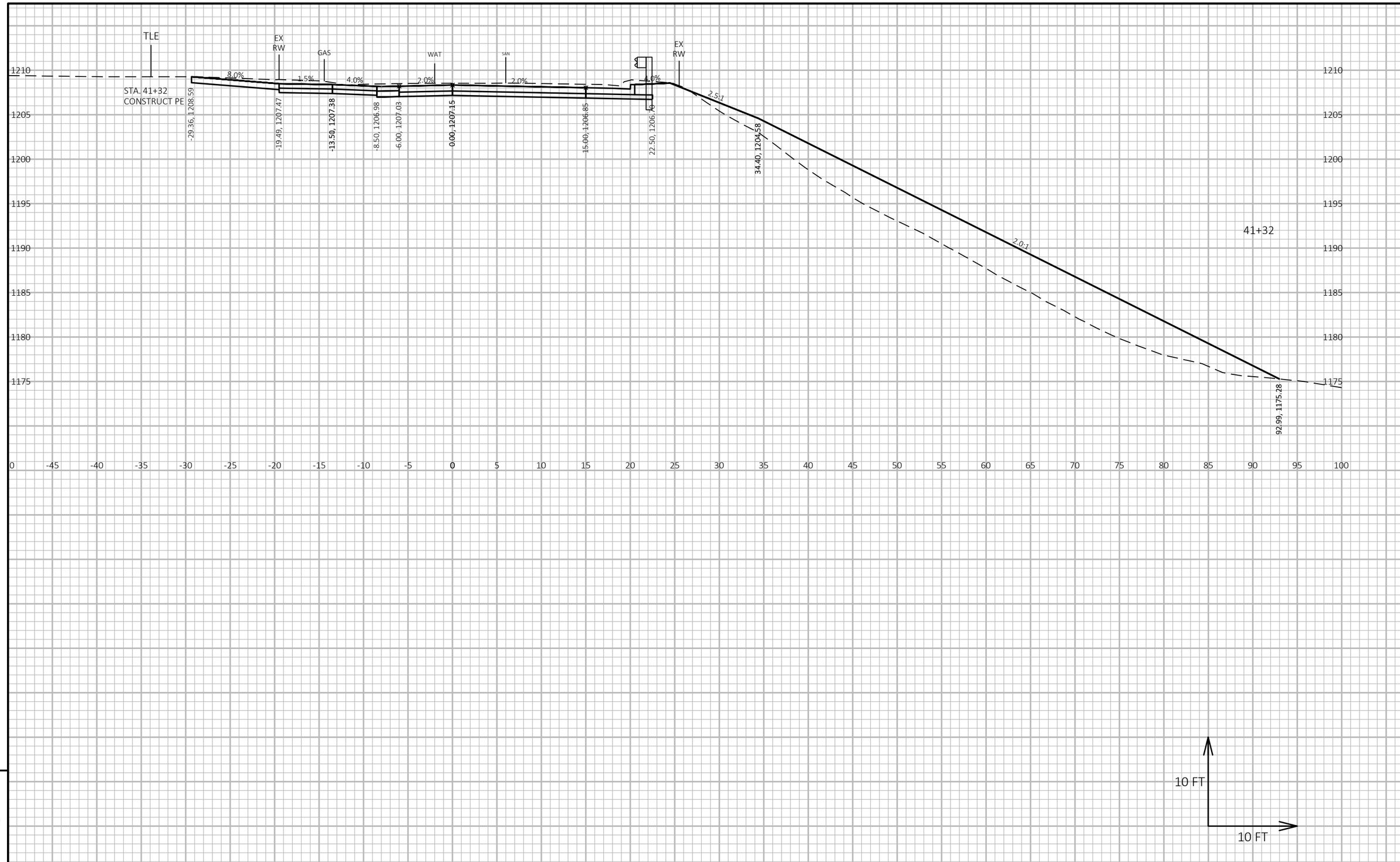

9

9

PROJECT NO: 6999-18-73	HWY: SOUTH 1ST AVENUE	COUNTY: MARATHON	CROSS SECTIONS: SOUTH 1ST AVENUE	SHEET 184	E

FILE NAME : V:\TRANS-EC\410723 WAUSAU 1ST AVE\C3D\DESIGN\CORRIDORS\CORRIDOR-SOUTH1STAVE.DWG
LAYOUT NAME - 30
PLOT DATE : 10/16/2018 8:32 AM
PLOT BY : WOOLEVER, NATHAN
PLOT NAME :
PLOT SCALE : 1 IN:10 FT HORZ. / 1 IN:10 FT VERT.
WISDOT/CADDS SHEET 49

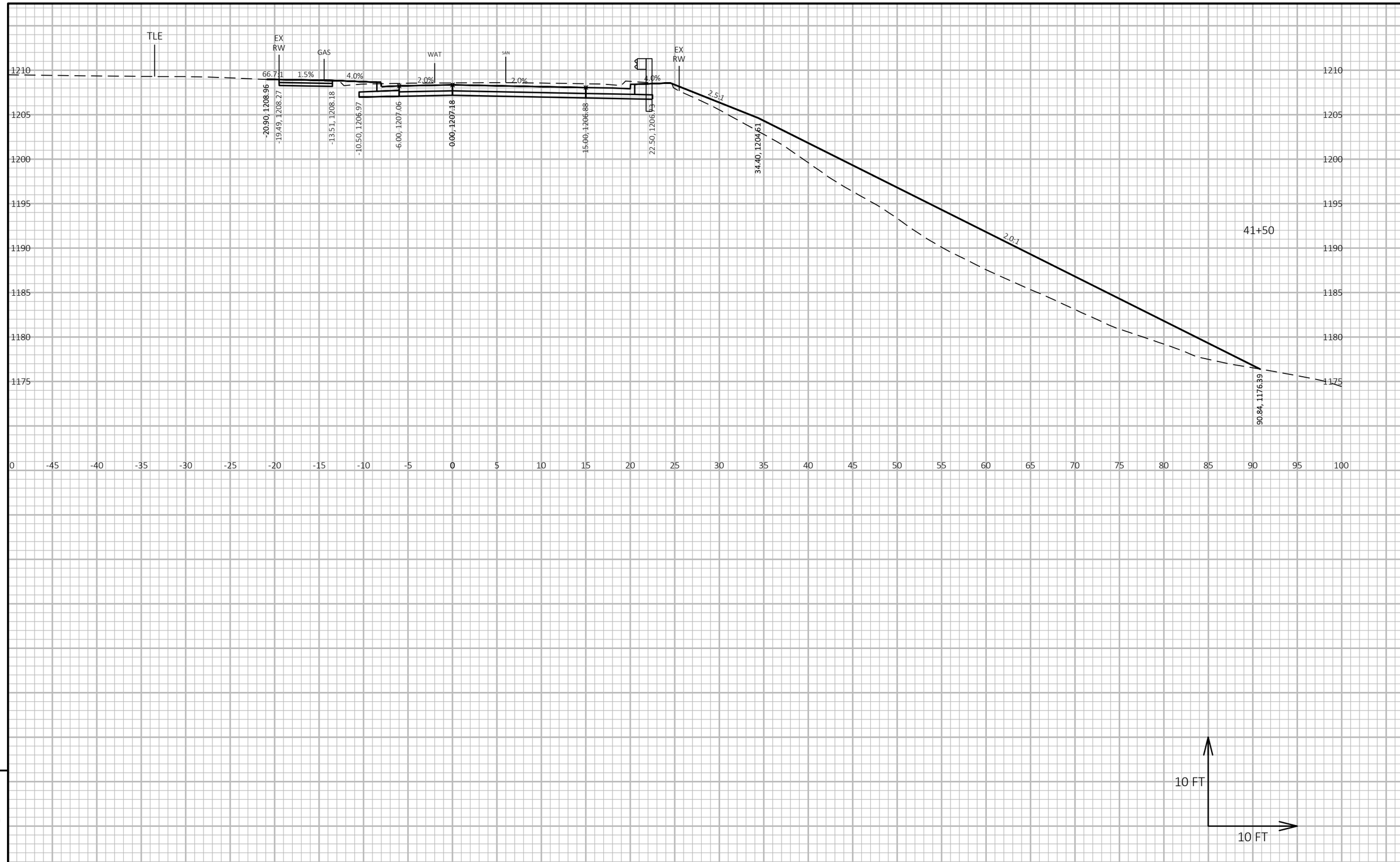

9

9

PROJECT NO: 6999-18-73	HWY: SOUTH 1ST AVENUE	COUNTY: MARATHON	CROSS SECTIONS: SOUTH 1ST AVENUE	SHEET 185	E

FILE NAME : V:\TRANS-EC\410723 WAUSAU 1ST AVE\C3D\DESIGN\CORRIDORS\CORRIDOR-SOUTH1STAVE.DWG
LAYOUT NAME - 31

PLOT DATE : 10/16/2018 8:33 AM PLOT BY : WOOLEVER, NATHAN PLOT NAME : PLOT SCALE : 1 IN:10 FT HORZ. / 1 IN:10 FT VERT.

WISDOT/CADDS SHEET 49

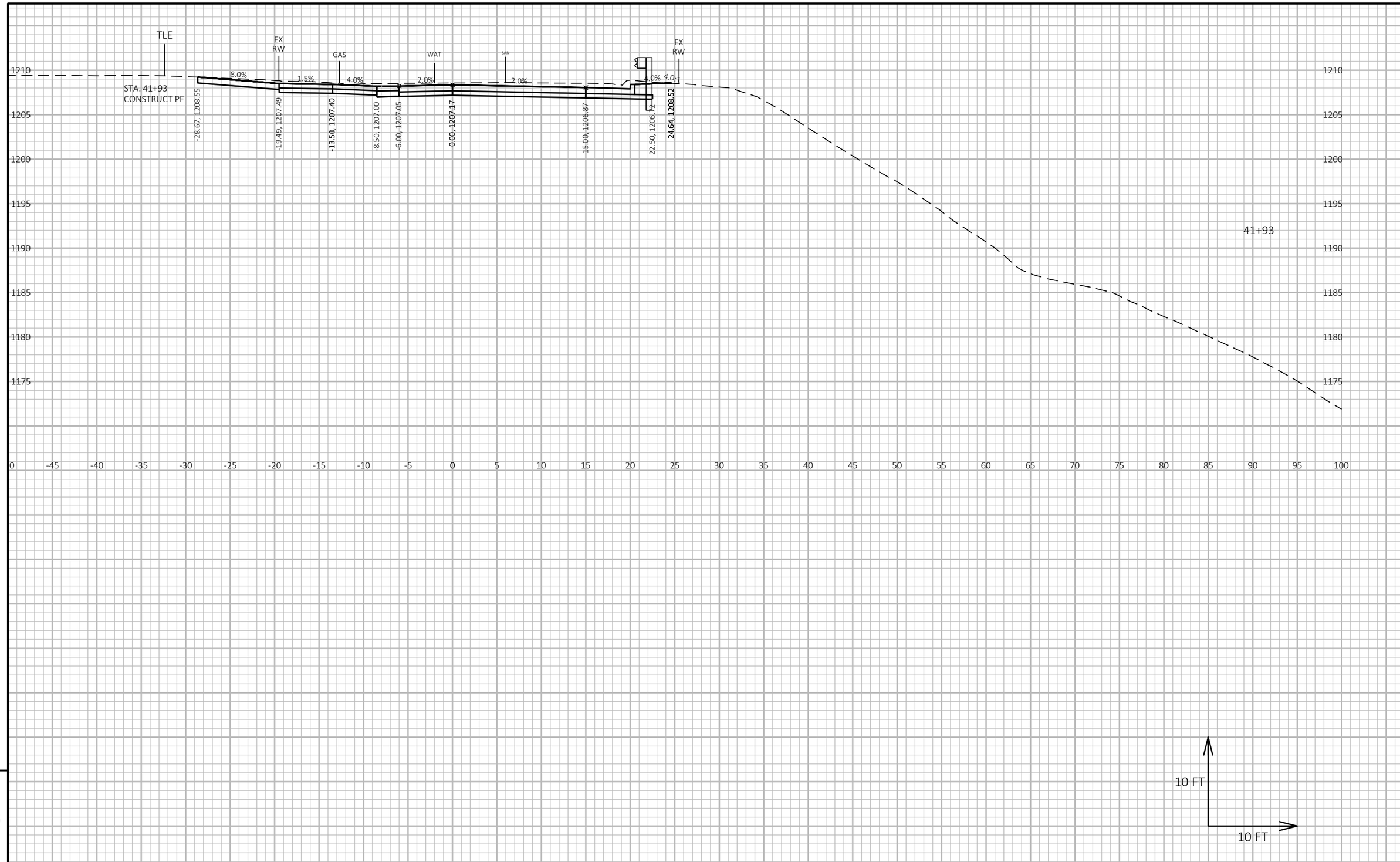

9

9

PROJECT NO: 6999-18-73	HWY: SOUTH 1ST AVENUE	COUNTY: MARATHON	CROSS SECTIONS: SOUTH 1ST AVENUE	SHEET 186	E

FILE NAME : V:\TRANS-EC\410723 WAUSAU 1ST AVE\C3D\DESIGN\CORRIDORS\CORRIDOR-SOUTH1STAVE.DWG
LAYOUT NAME - 32

PLOT DATE : 10/16/2018 8:33 AM PLOT BY : WOOLEVER, NATHAN PLOT NAME : PLOT SCALE : 1 IN:10 FT HORZ. / 1 IN:10 FT VERT.

WISDOT/CADDS SHEET 49

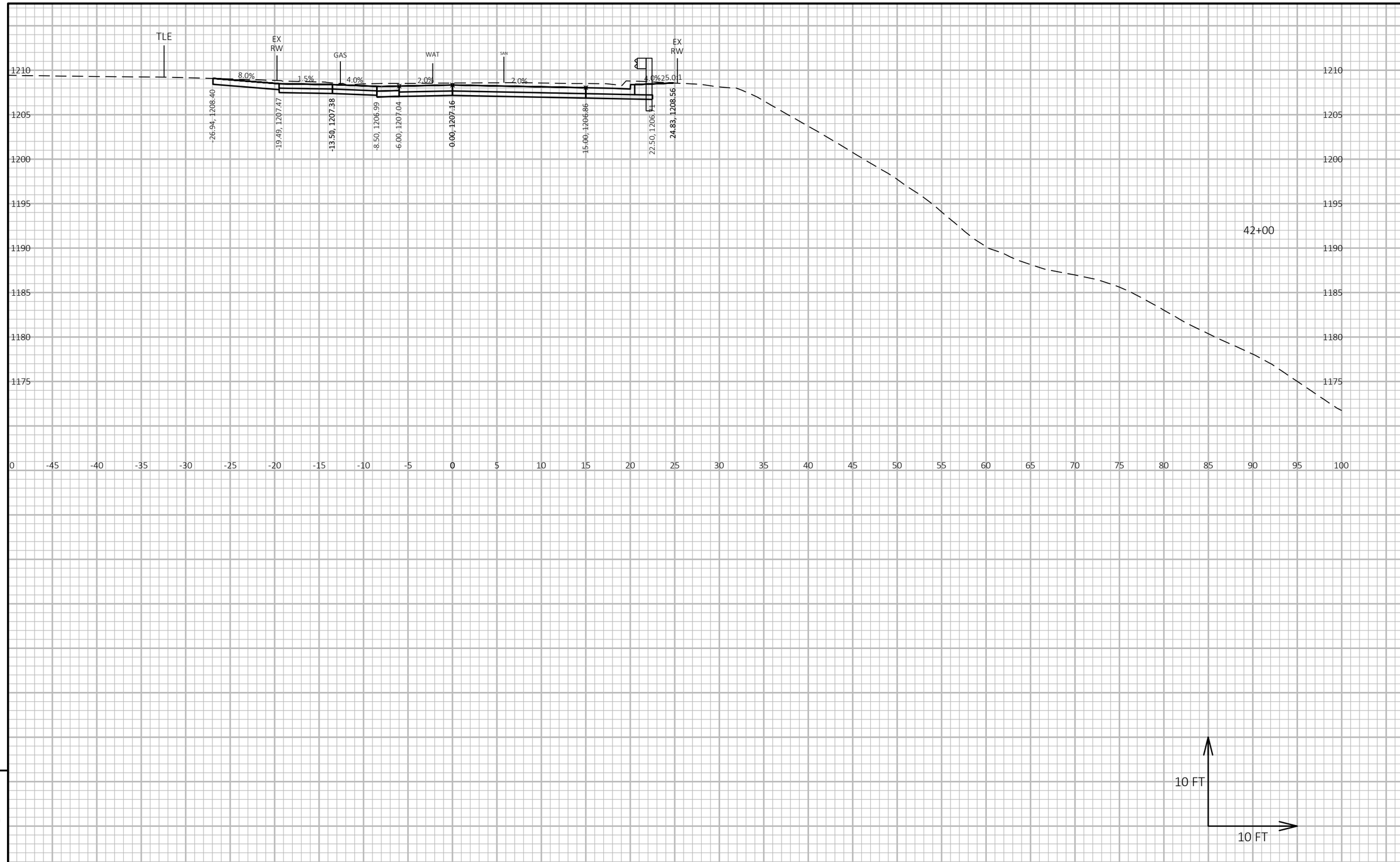

9

9

PROJECT NO: 6999-18-73	HWY: SOUTH 1ST AVENUE	COUNTY: MARATHON	CROSS SECTIONS: SOUTH 1ST AVENUE	SHEET 187	E

FILE NAME : V:\TRANS-EC\410723 WAUSAU 1ST AVE\C3D\DESIGN\CORRIDORS\CORRIDOR-SOUTH1STAVE.DWG
LAYOUT NAME - 33
PLOT DATE : 10/16/2018 8:33 AM
PLOT BY : WOOLEVER, NATHAN
PLOT NAME :
PLOT SCALE : 1 IN:10 FT HORZ. / 1 IN:10 FT VERT.
WISDOT/CADDS SHEET 49

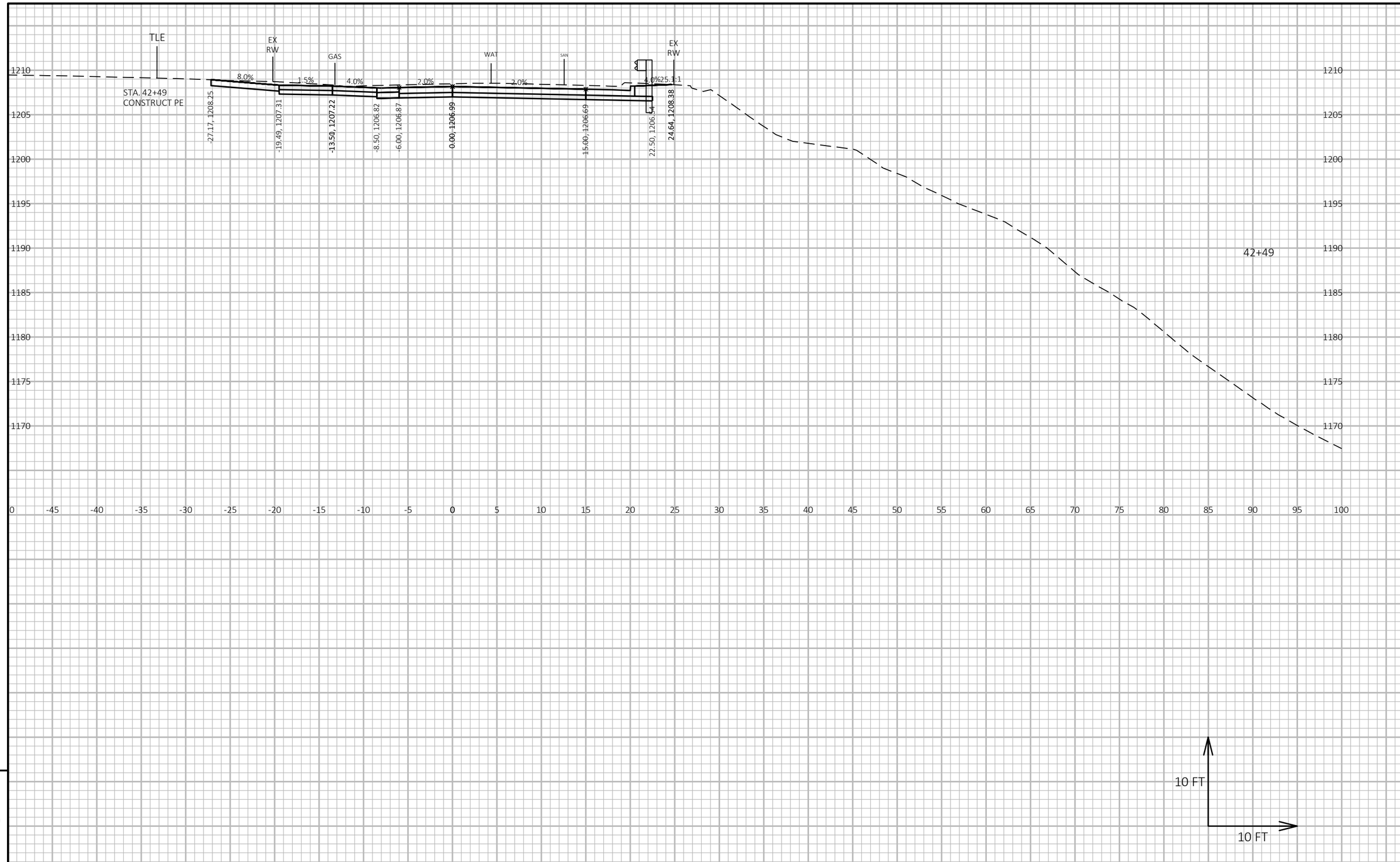

9

9

PROJECT NO: 6999-18-73	HWY: SOUTH 1ST AVENUE	COUNTY: MARATHON	CROSS SECTIONS: SOUTH 1ST AVENUE	SHEET 188	E

FILE NAME : V:\TRANS-EC\410723 WAUSAU 1ST AVE\C3D\DESIGN\CORRIDORS\CORRIDOR-SOUTH1STAVE.DWG
LAYOUT NAME - 34
PLOT DATE : 10/16/2018 8:33 AM PLOT BY : WOOLEVER, NATHAN PLOT NAME : PLOT SCALE : 1 IN:10 FT HORZ. / 1 IN:10 FT VERT.

WISDOT/CADDS SHEET 49

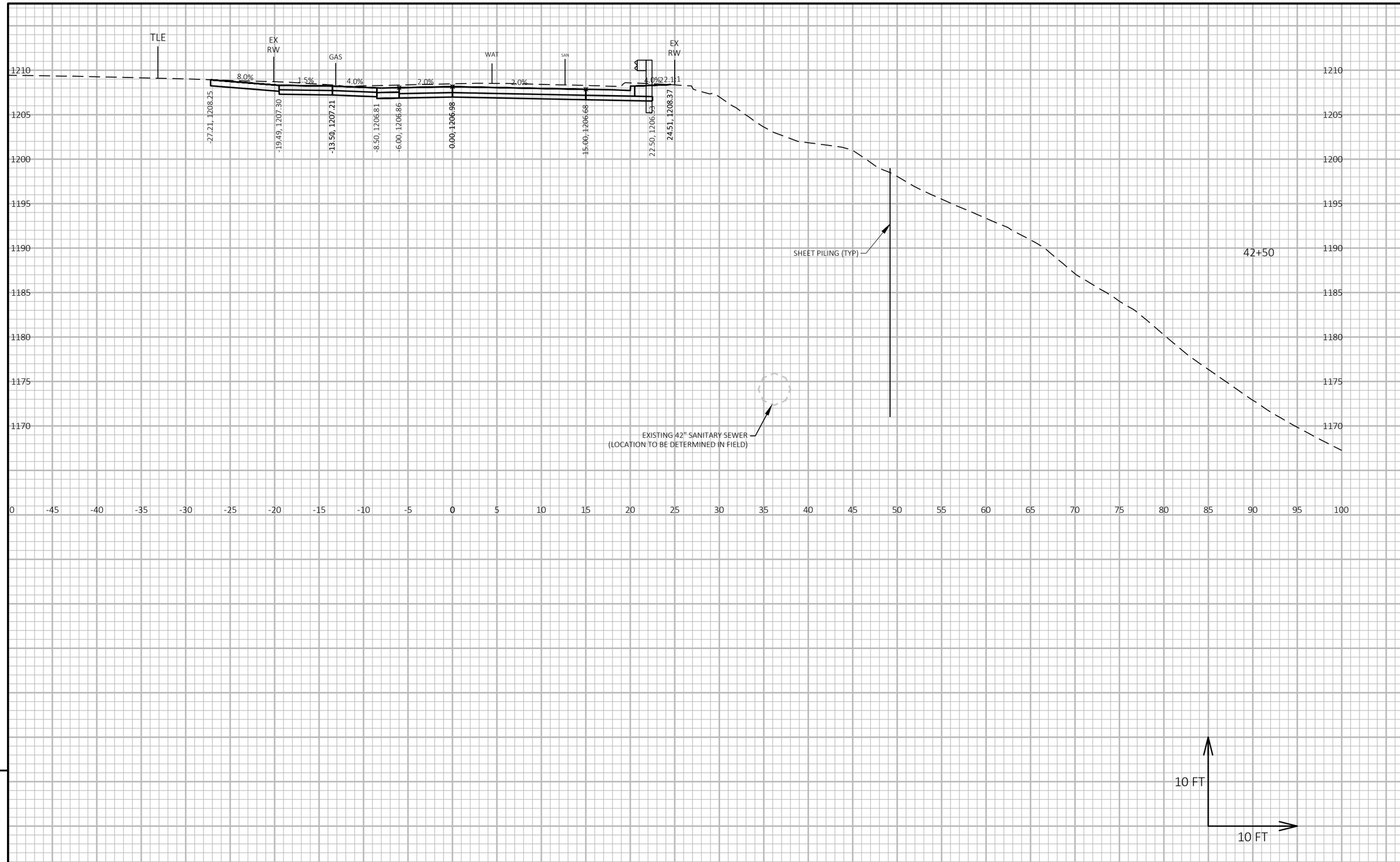

9

9

PROJECT NO: 6999-18-73	HWY: SOUTH 1ST AVENUE	COUNTY: MARATHON	CROSS SECTIONS: SOUTH 1ST AVENUE	SHEET 189	E

FILE NAME : V:\TRANS-EC\410723 WAUSAU 1ST AVE\C3D\DESIGN\CORRIDORS\CORRIDOR-SOUTH1STAVE.DWG
LAYOUT NAME - 35
PLOT DATE : 10/16/2018 8:33 AM PLOT BY : WOOLEVER, NATHAN PLOT NAME : PLOT SCALE : 1 IN:10 FT HORZ. / 1 IN:10 FT VERT.

WISDOT/CADDS SHEET 49

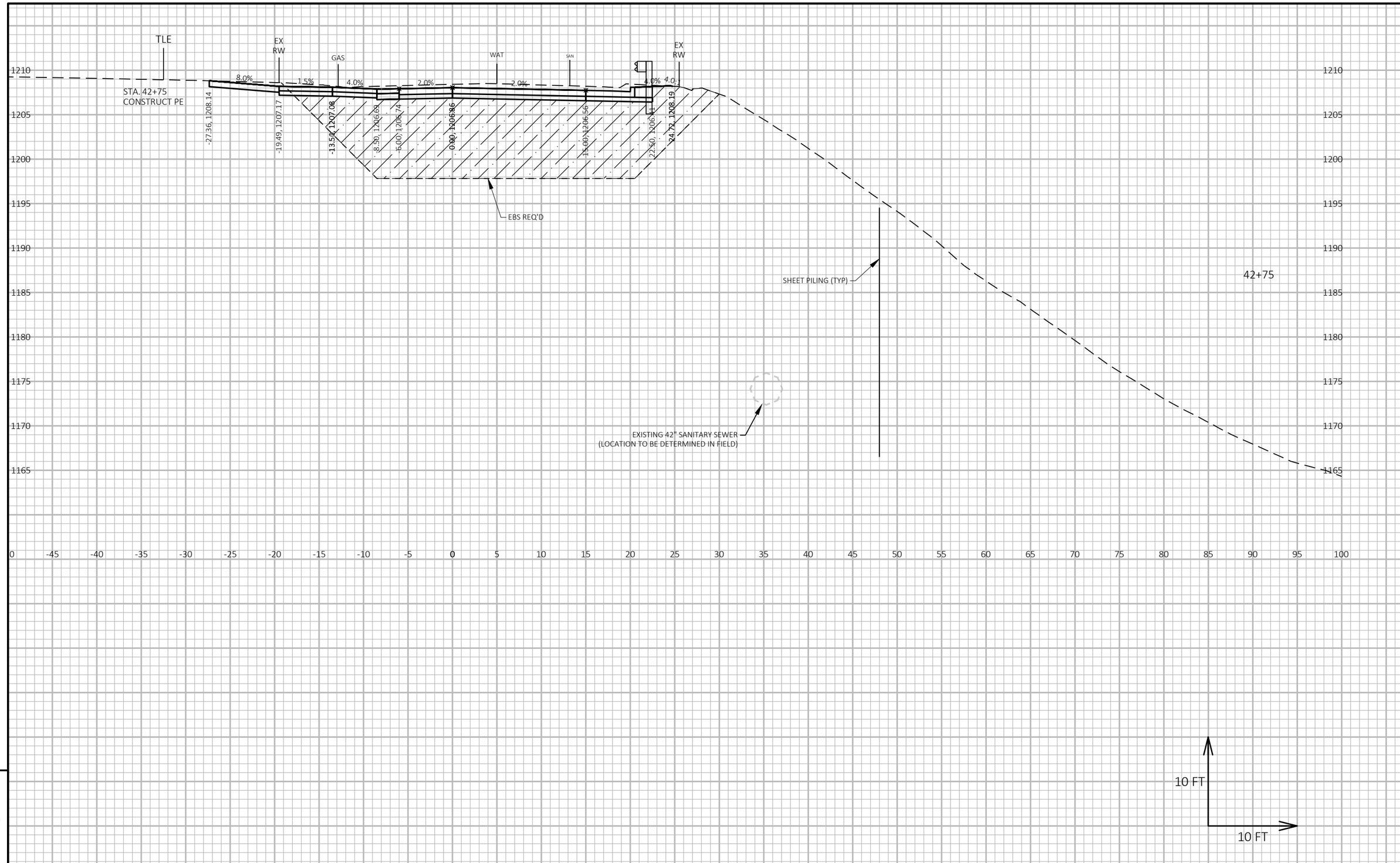

9

9

PROJECT NO: 6999-18-73	HWY: SOUTH 1ST AVENUE	COUNTY: MARATHON	CROSS SECTIONS: SOUTH 1ST AVENUE	SHEET 190	E

FILE NAME : V:\TRANS-EC\410723 WAUSAU 1ST AVE\C3D\DESIGN\CORRIDORS\CORRIDOR-SOUTH1STAVE.DWG
LAYOUT NAME - 36

PLOT DATE : 10/16/2018 8:33 AM PLOT BY : WOOLEVER, NATHAN PLOT NAME : PLOT SCALE : 1 IN:10 FT HORZ. / 1 IN:10 FT VERT.

WISDOT/CADDS SHEET 49

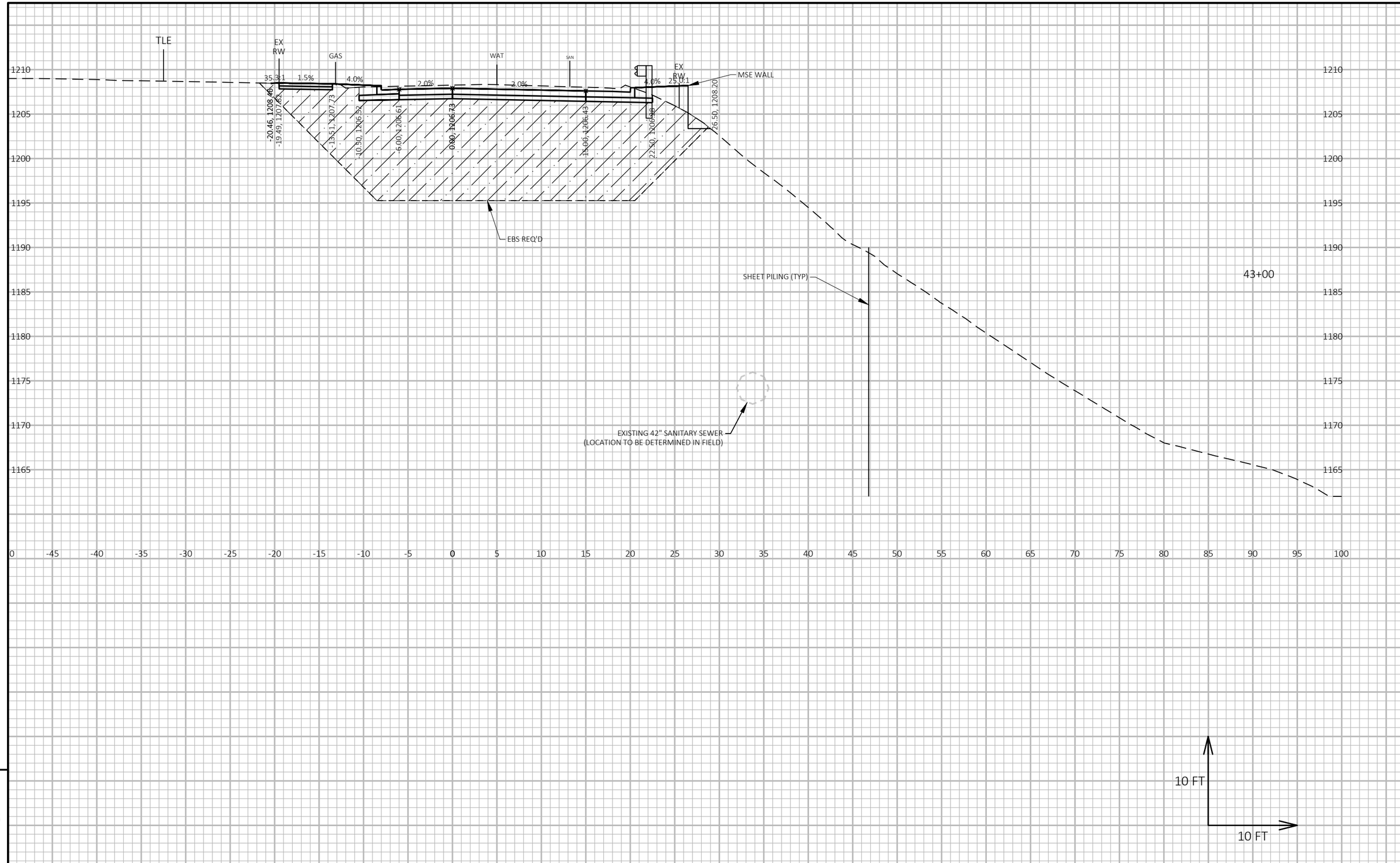

9

9

PROJECT NO: 6999-18-73	HWY: SOUTH 1ST AVENUE	COUNTY: MARATHON	CROSS SECTIONS: SOUTH 1ST AVENUE	SHEET 191	E

FILE NAME : V:\TRANS-EC\410723 WAUSAU 1ST AVE\C3D\DESIGN\CORRIDORS\CORRIDOR-SOUTH1STAVE.DWG
LAYOUT NAME - 37

PLOT DATE : 10/16/2018 8:34 AM PLOT BY : WOOLEVER, NATHAN PLOT NAME : PLOT SCALE : 1 IN:10 FT HORZ. / 1 IN:10 FT VERT.

WISDOT/CADDS SHEET 49

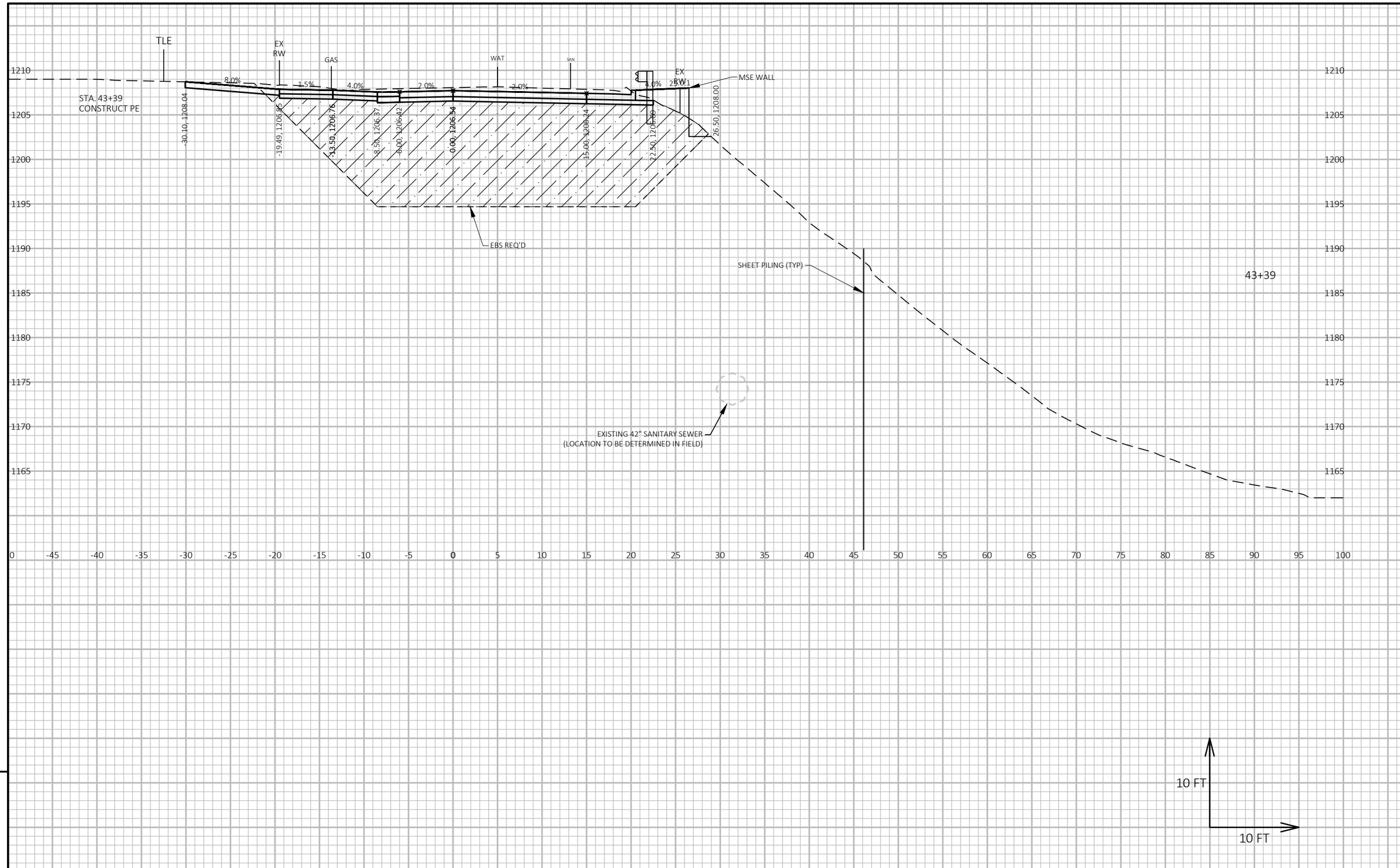

9

9

PROJECT NO: 6999-18-73	HWY: SOUTH 1ST AVENUE	COUNTY: MARATHON	CROSS SECTIONS: SOUTH 1ST AVENUE	SHEET 192	E

FILE NAME : V:\TRANS-EC\410723 WAUSAU 1ST AVE\C3D\DESIGN\CORRIDORS\CORRIDOR-SOUTH1STAVE.DWG
LAYOUT NAME - 38
PLOT DATE : 10/16/2018 8:34 AM PLOT BY : WOOLEVER, NATHAN PLOT NAME : PLOT SCALE : 1 IN:10 FT HORZ. / 1 IN:10 FT VERT.
WISDOT/CADDS SHEET 49

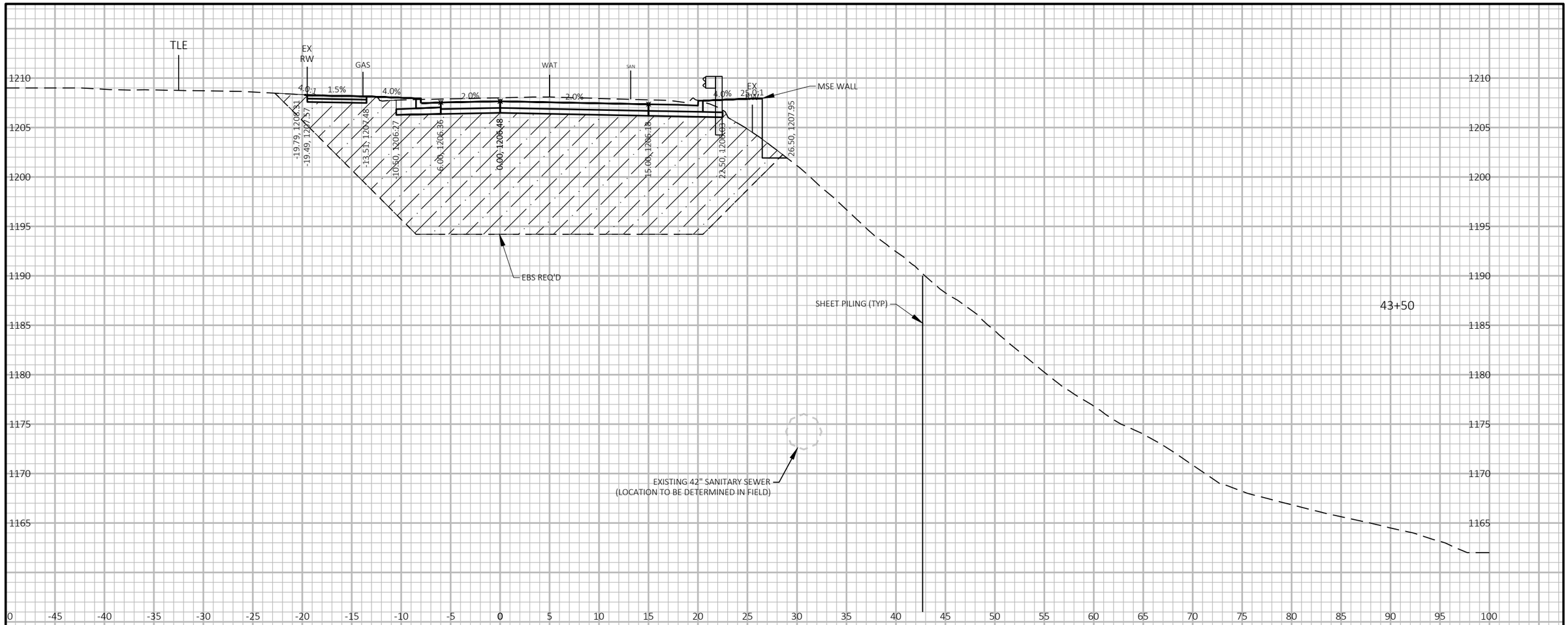

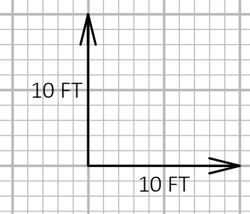

9

9

PROJECT NO: 6999-18-73	HWY: SOUTH 1ST AVENUE	COUNTY: MARATHON	CROSS SECTIONS: SOUTH 1ST AVENUE	SHEET 193	E

FILE NAME : V:\TRANS-EC\410723 WAUSAU 1ST AVE\C3D\DESIGN\CORRIDORS\CORRIDOR-SOUTH1STAVE.DWG
LAYOUT NAME - 39
PLOT DATE : 10/16/2018 8:34 AM
PLOT BY : WOOLEVER, NATHAN
PLOT NAME :
PLOT SCALE : 1 IN:10 FT HORZ. / 1 IN:10 FT VERT.
WISDOT/CADDS SHEET 49

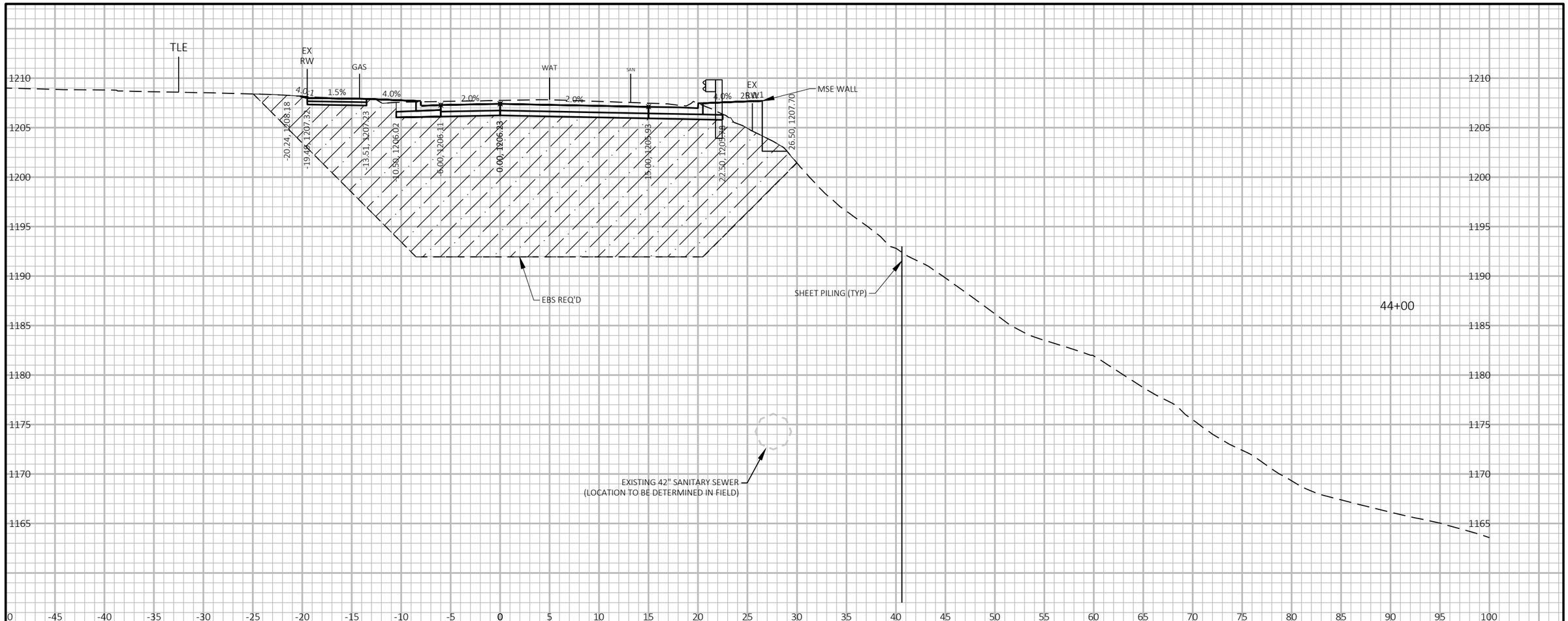

9

9

PROJECT NO: 6999-18-73	HWY: SOUTH 1ST AVENUE	COUNTY: MARATHON	CROSS SECTIONS: SOUTH 1ST AVENUE	SHEET 194	E

FILE NAME : V:\TRANS-EC\410723 WAUSAU 1ST AVE\C3D\DESIGN\CORRIDORS\CORRIDOR-SOUTH1STAVE.DWG
LAYOUT NAME - 40
PLOT DATE : 10/16/2018 8:34 AM
PLOT BY : WOOLEVER, NATHAN
PLOT NAME :
PLOT SCALE : 1 IN:10 FT HORZ. / 1 IN:10 FT VERT.
WISDOT/CADDS SHEET 49

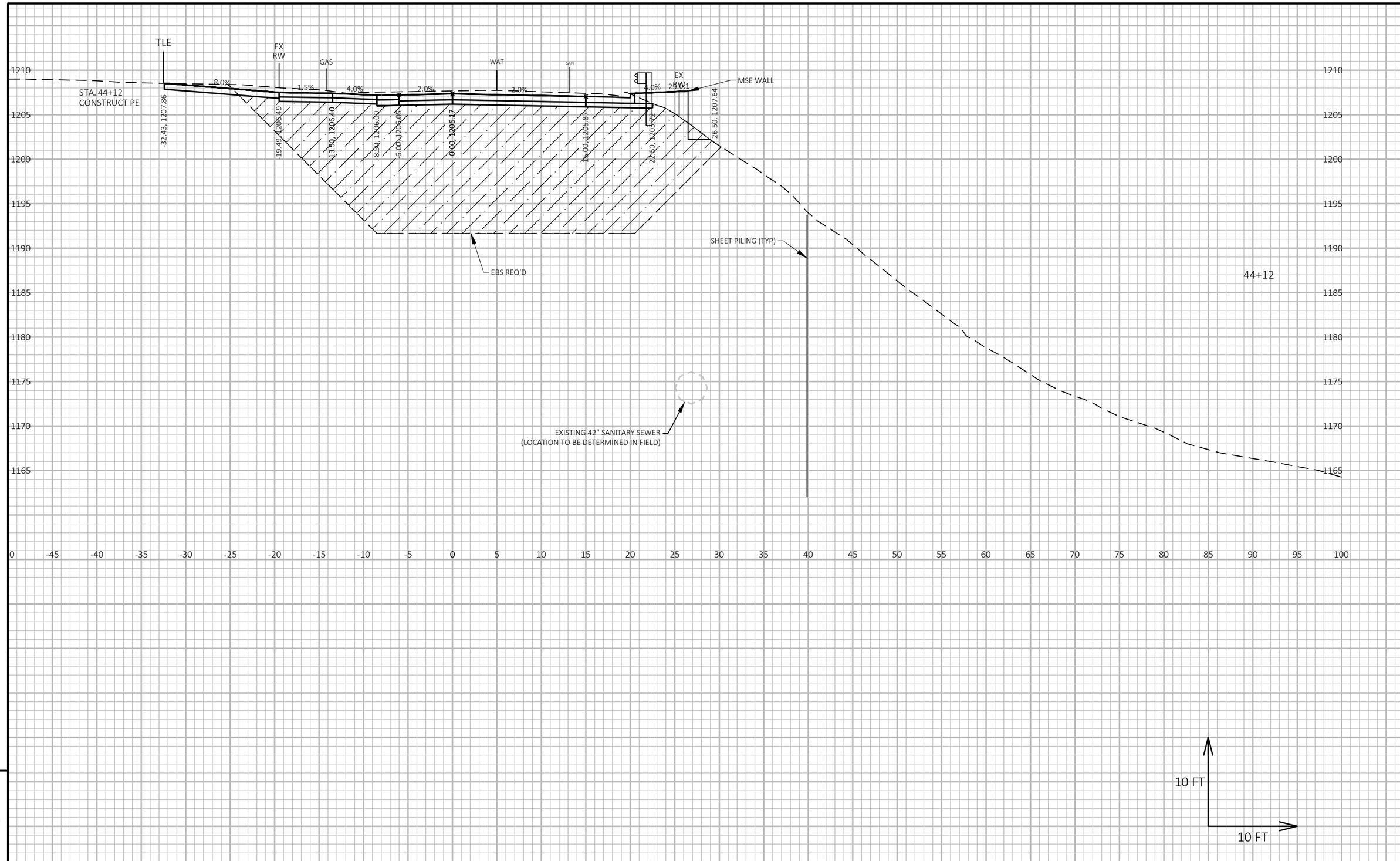

9

9

PROJECT NO: 6999-18-73	HWY: SOUTH 1ST AVENUE	COUNTY: MARATHON	CROSS SECTIONS: SOUTH 1ST AVENUE	SHEET 195	E

FILE NAME : V:\TRANS-EC\410723 WAUSAU 1ST AVE\C3D\DESIGN\CORRIDORS\CORRIDOR-SOUTH1STAVE.DWG
LAYOUT NAME - 41

PLOT DATE : 10/16/2018 8:34 AM PLOT BY : WOOLEVER, NATHAN PLOT NAME : PLOT SCALE : 1 IN:10 FT HORZ. / 1 IN:10 FT VERT.

WISDOT/CADDS SHEET 49

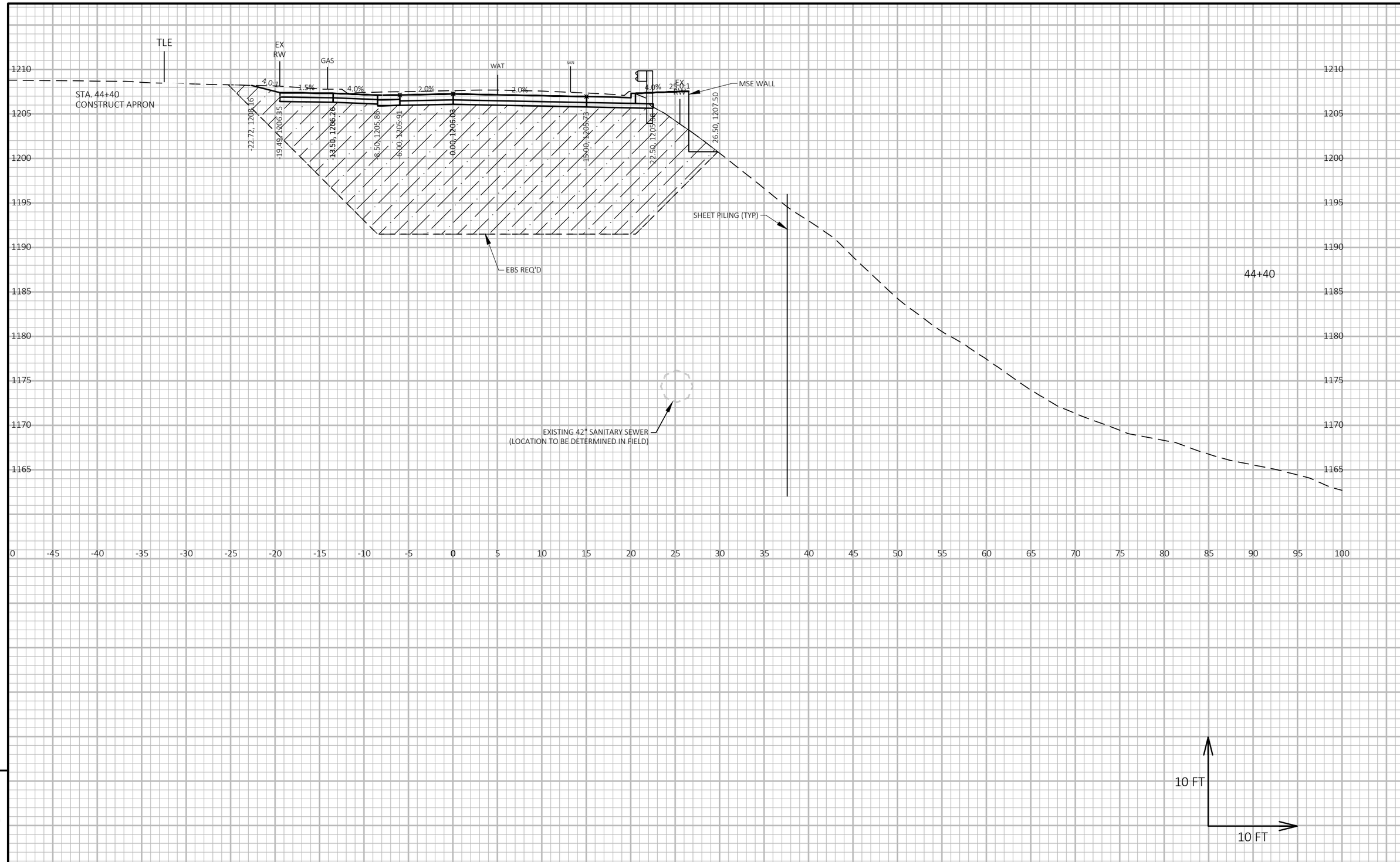

9

9

PROJECT NO: 6999-18-73	HWY: SOUTH 1ST AVENUE	COUNTY: MARATHON	CROSS SECTIONS: SOUTH 1ST AVENUE	SHEET 196	E

FILE NAME : V:\TRANS-EC\410723 WAUSAU 1ST AVE\C3D\DESIGN\CORRIDORS\CORRIDOR-SOUTH1STAVE.DWG
LAYOUT NAME - 41A
PLOT DATE : 10/25/2018 3:40 PM
PLOT BY : WOOLEVER, NATHAN
PLOT NAME :
PLOT SCALE : 1 IN:10 FT HORZ. / 1 IN:10 FT VERT.
WISDOT/CADDS SHEET 49

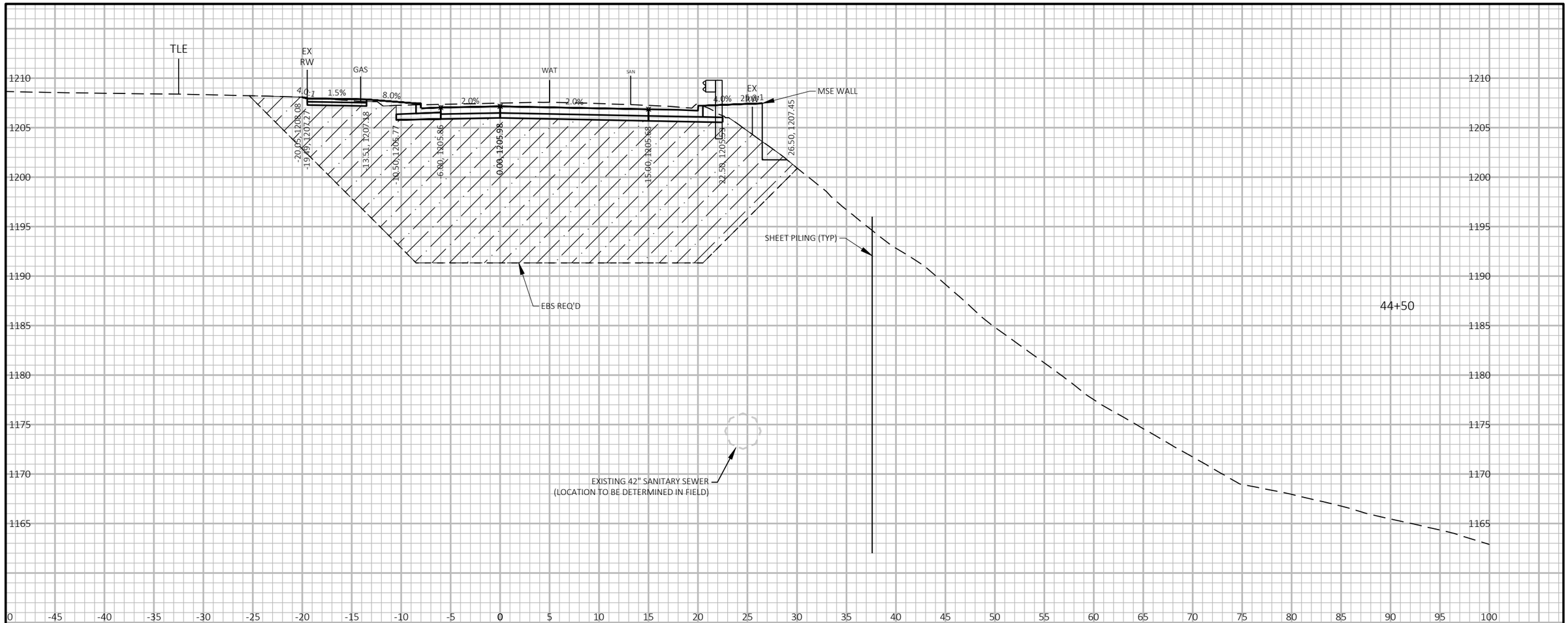

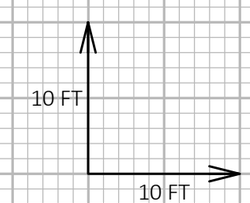

9

9

PROJECT NO: 6999-18-73	HWY: SOUTH 1ST AVENUE	COUNTY: MARATHON	CROSS SECTIONS: SOUTH 1ST AVENUE	SHEET 197	E

FILE NAME : V:\TRANS-EC\410723 WAUSAU 1ST AVE\C3D\DESIGN\CORRIDORS\CORRIDOR-SOUTH1STAVE.DWG
LAYOUT NAME - 42
PLOT DATE : 10/16/2018 8:34 AM
PLOT BY : WOOLEVER, NATHAN
PLOT NAME :
PLOT SCALE : 1 IN:10 FT HORZ. / 1 IN:10 FT VERT.
WISDOT/CADDS SHEET 49

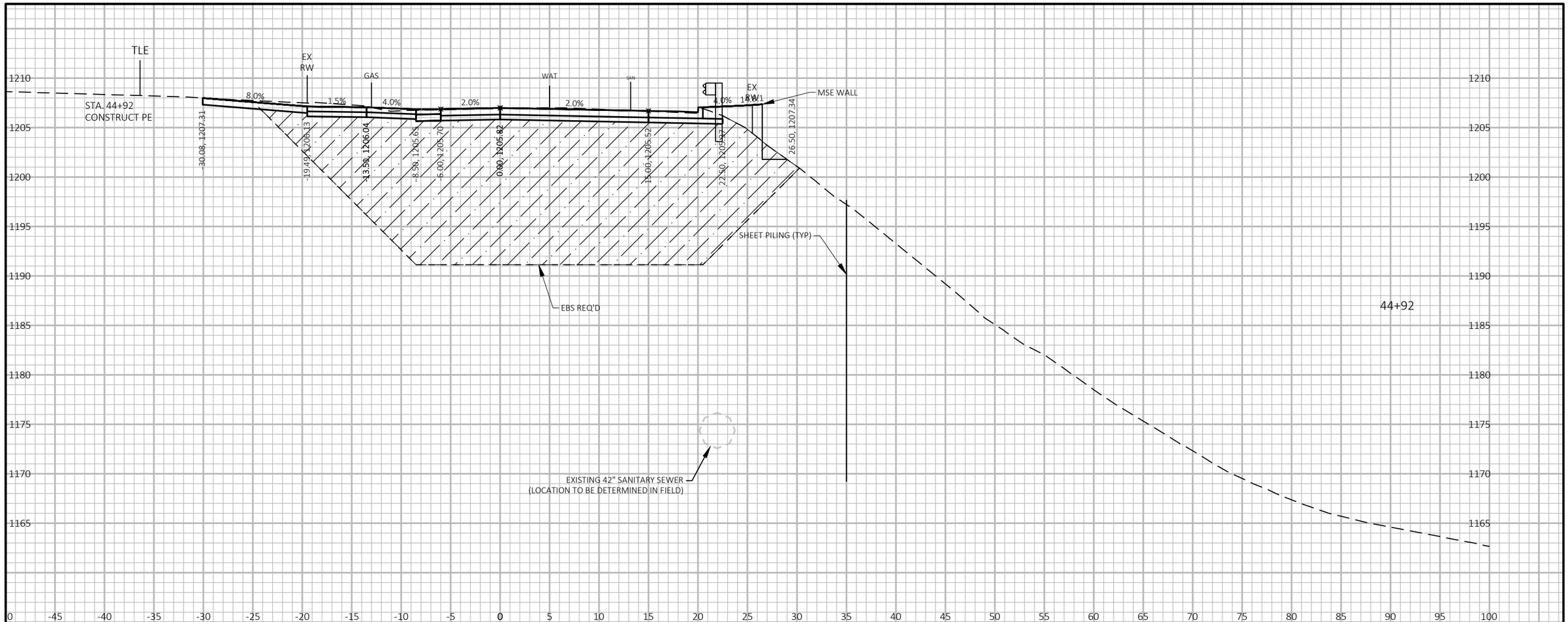

9

9

PROJECT NO: 6999-18-73	HWY: SOUTH 1ST AVENUE	COUNTY: MARATHON	CROSS SECTIONS: SOUTH 1ST AVENUE	SHEET 198	E

FILE NAME : V:\TRANS-EC\410723 WAUSAU 1ST AVE\C3D\DESIGN\CORRIDORS\CORRIDOR-SOUTH1STAVE.DWG
LAYOUT NAME - 43
PLOT DATE : 10/16/2018 8:35 AM
PLOT BY : WOOLEVER, NATHAN
PLOT NAME :
PLOT SCALE : 1 IN:10 FT HORZ. / 1 IN:10 FT VERT.
WISDOT/CADDS SHEET 49

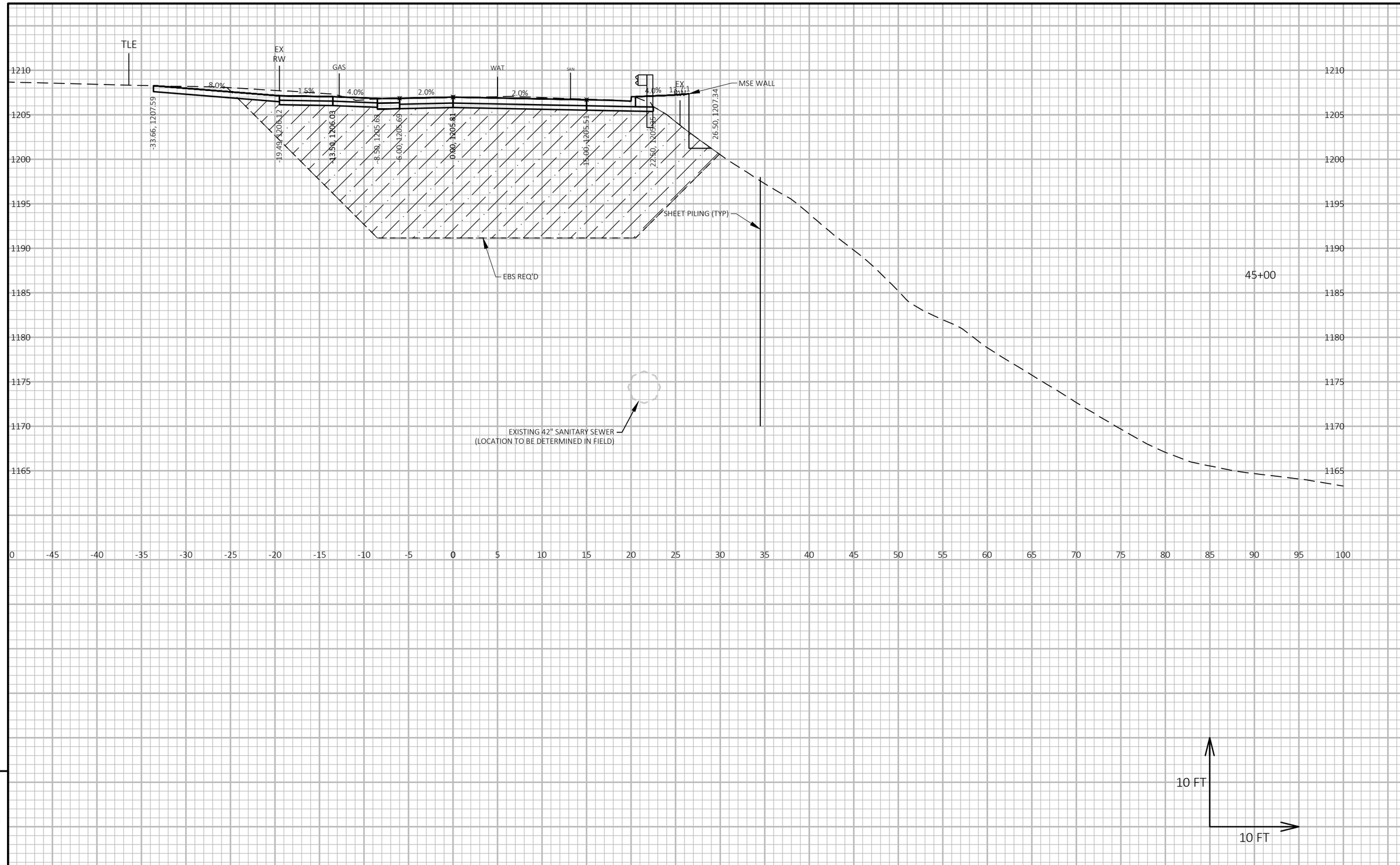

9

9

PROJECT NO: 6999-18-73	HWY: SOUTH 1ST AVENUE	COUNTY: MARATHON	CROSS SECTIONS: SOUTH 1ST AVENUE	SHEET 199	E

FILE NAME : V:\TRANS-EC\410723 WAUSAU 1ST AVE\C3D\DESIGN\CORRIDORS\CORRIDOR-SOUTH1STAVE.DWG
LAYOUT NAME - 44
PLOT DATE : 10/16/2018 8:35 AM
PLOT BY : WOOLEVER, NATHAN
PLOT NAME :
PLOT SCALE : 1 IN:10 FT HORZ. / 1 IN:10 FT VERT.
WISDOT/CADDS SHEET 49

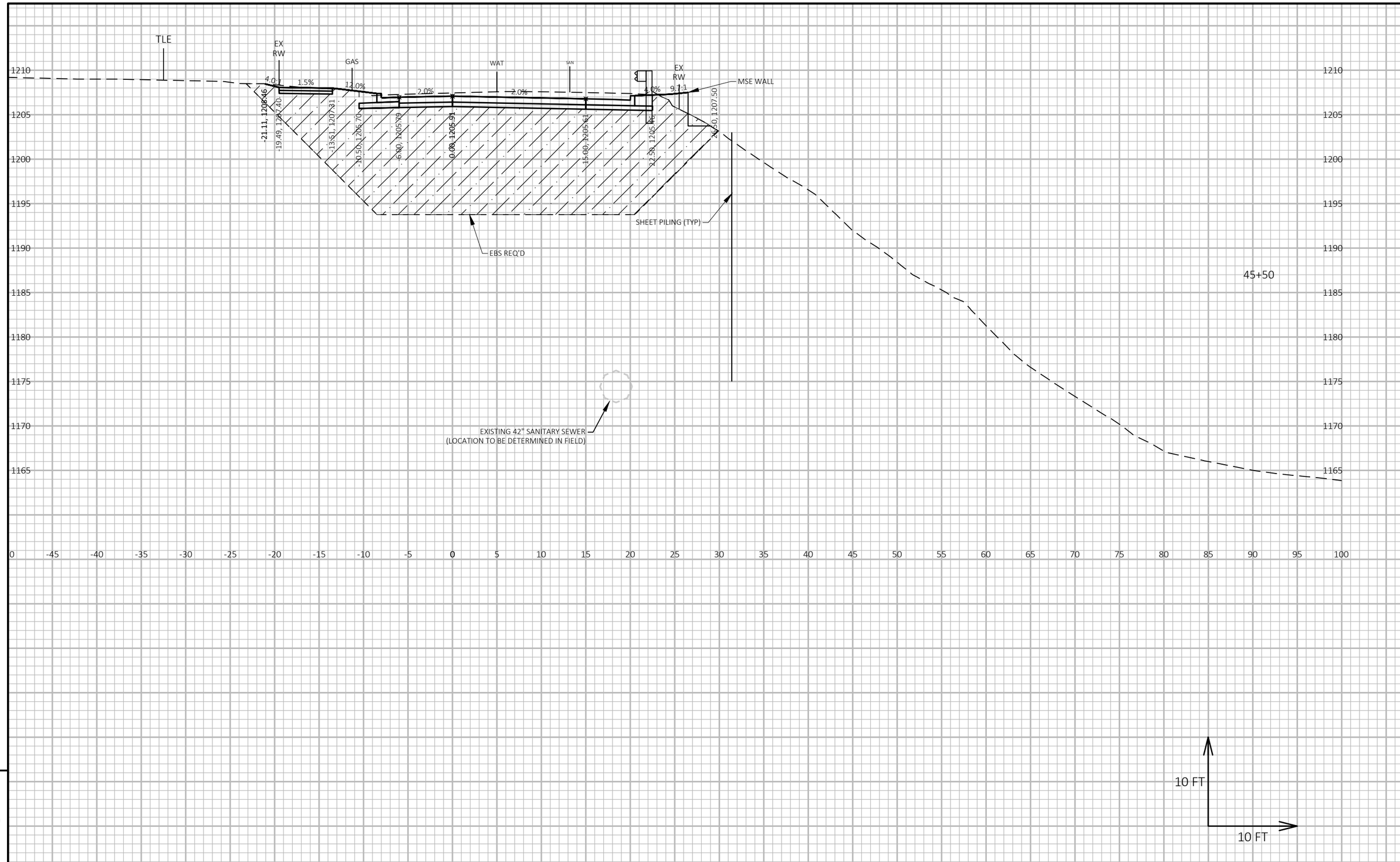

9

9

PROJECT NO: 6999-18-73	HWY: SOUTH 1ST AVENUE	COUNTY: MARATHON	CROSS SECTIONS: SOUTH 1ST AVENUE	SHEET 200	E

FILE NAME : V:\TRANS-EC\410723 WAUSAU 1ST AVE\C3D\DESIGN\CORRIDORS\CORRIDOR-SOUTH1STAVE.DWG
LAYOUT NAME - 45
PLOT DATE : 10/16/2018 8:35 AM PLOT BY : WOOLEVER, NATHAN PLOT NAME : PLOT SCALE : 1 IN:10 FT HORZ. / 1 IN:10 FT VERT.

WISDOT/CADDS SHEET 49

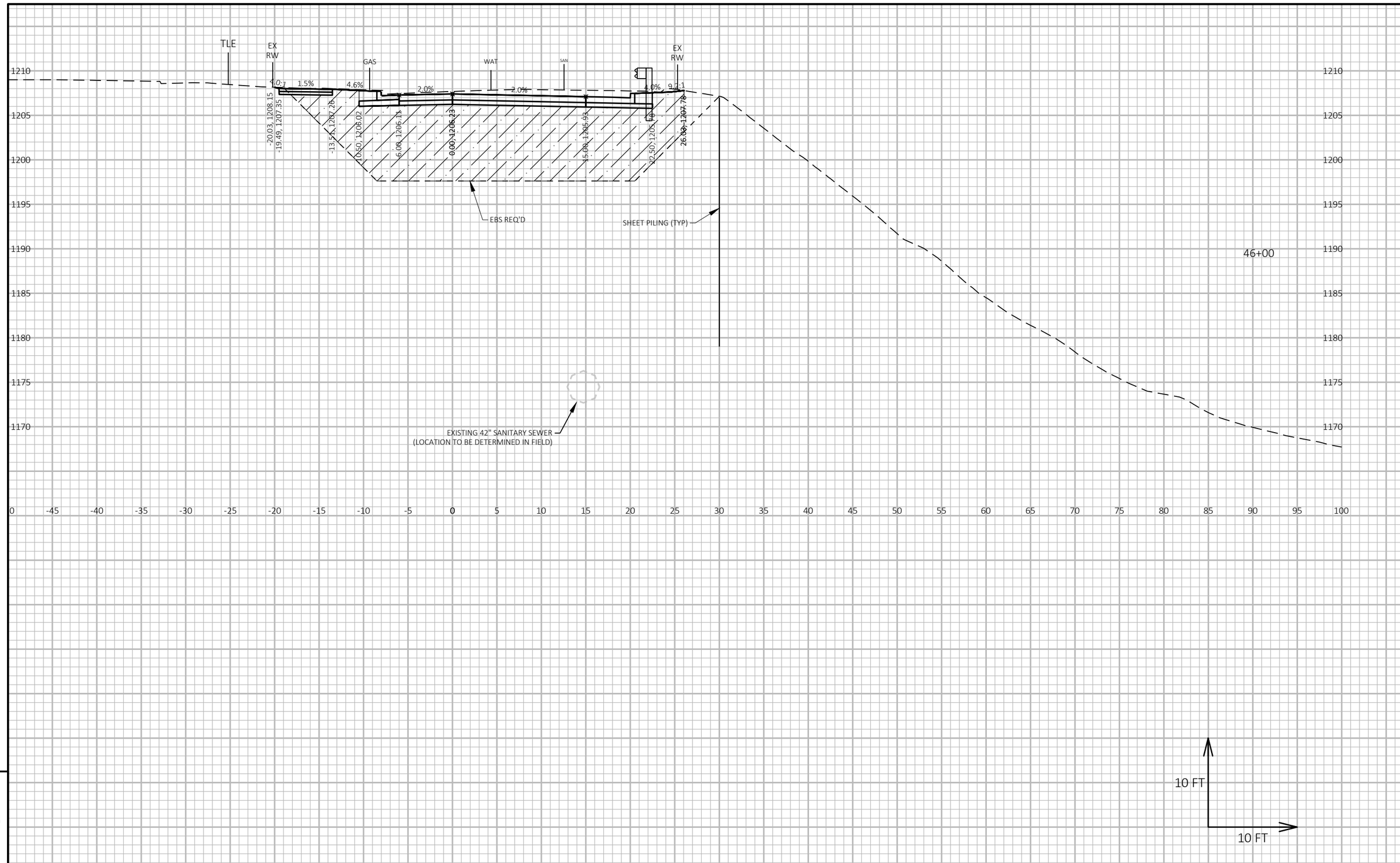

PROJECT NO: 6999-18-73	HWY: SOUTH 1ST AVENUE	COUNTY: MARATHON	CROSS SECTIONS: SOUTH 1ST AVENUE	SHEET 201	E

FILE NAME : V:\TRANS-EC\410723 WAUSAU 1ST AVE\C3D\DESIGN\CORRIDORS\CORRIDOR-SOUTH1STAVE.DWG
LAYOUT NAME - 46
PLOT DATE : 10/16/2018 8:35 AM PLOT BY : WOOLEVER, NATHAN PLOT NAME : PLOT SCALE : 1 IN:10 FT HORZ. / 1 IN:10 FT VERT.
WISDOT/CADDS SHEET 49

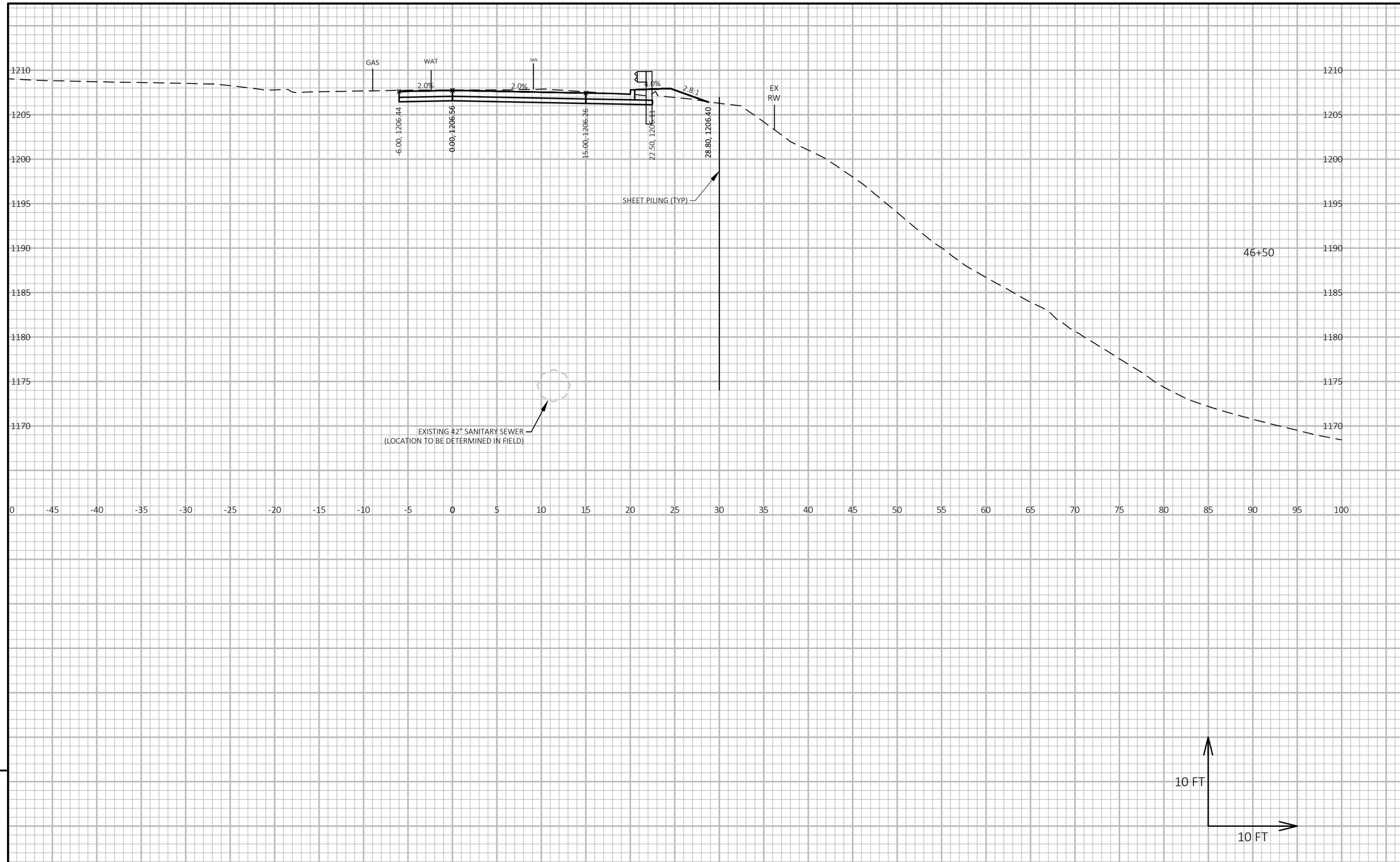

9

9

PROJECT NO: 6999-18-73	HWY: SOUTH 1ST AVENUE	COUNTY: MARATHON	CROSS SECTIONS: SOUTH 1ST AVENUE	SHEET 202	E

FILE NAME : V:\TRANS-EC\410723 WAUSAU 1ST AVE\C3D\DESIGN\CORRIDORS\CORRIDOR-SOUTH1STAVE.DWG
LAYOUT NAME - 47
PLOT DATE : 10/16/2018 8:35 AM
PLOT BY : WOOLEVER, NATHAN
PLOT NAME :
PLOT SCALE : 1 IN:10 FT HORZ. / 1 IN:10 FT VERT.
WISDOT/CADDS SHEET 49

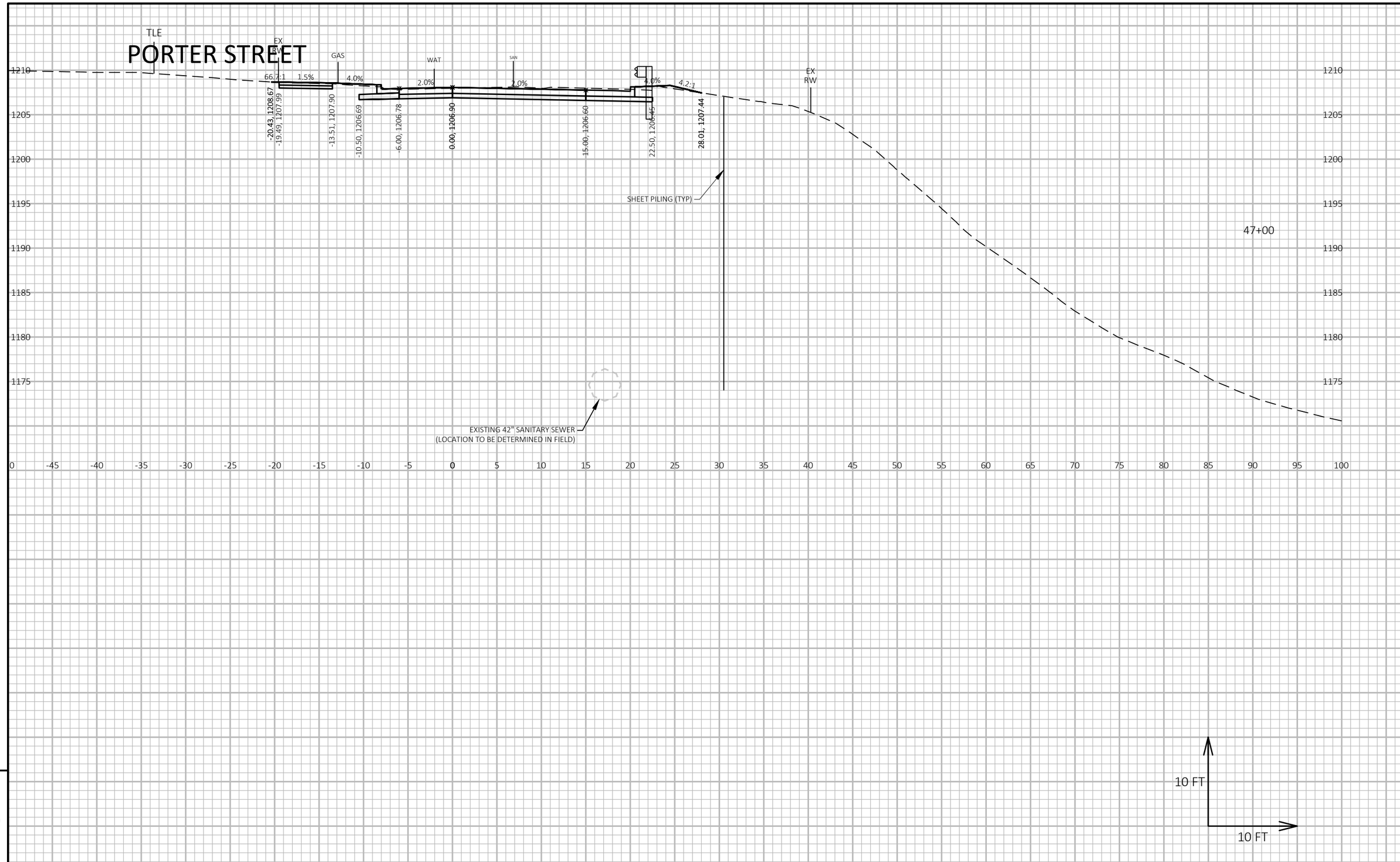

9

9

PROJECT NO: 6999-18-73	HWY: SOUTH 1ST AVENUE	COUNTY: MARATHON	CROSS SECTIONS: SOUTH 1ST AVENUE	SHEET 203	E

FILE NAME : V:\TRANS-EC\410723 WAUSAU 1ST AVE\C3D\DESIGN\CORRIDORS\CORRIDOR-SOUTH1STAVE.DWG
LAYOUT NAME - 48
PLOT DATE : 10/16/2018 8:35 AM PLOT BY : WOOLEVER, NATHAN PLOT NAME : PLOT SCALE : 1 IN:10 FT HORZ. / 1 IN:10 FT VERT.

WISDOT/CADDS SHEET 49

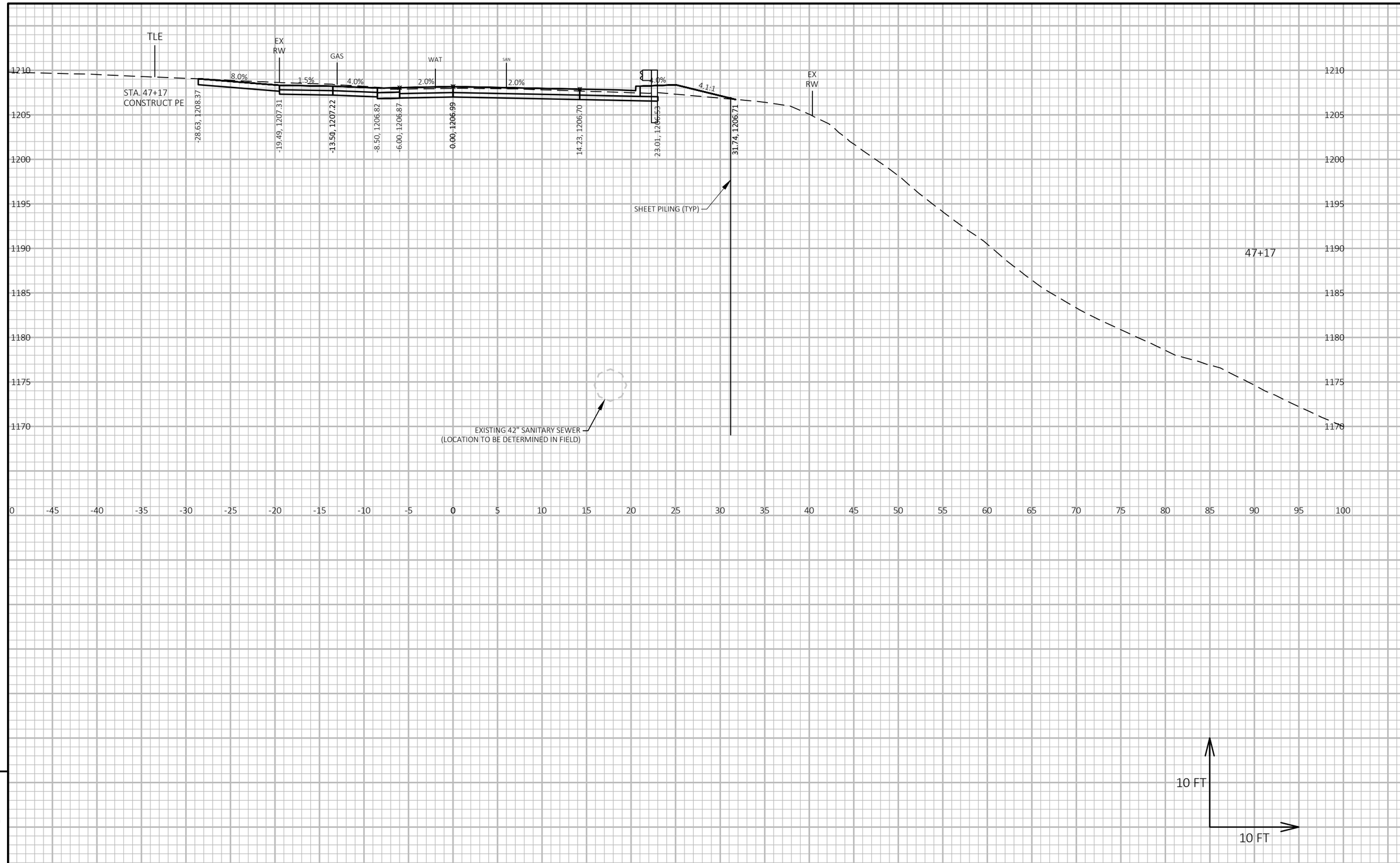

9

9

PROJECT NO: 6999-18-73	HWY: SOUTH 1ST AVENUE	COUNTY: MARATHON	CROSS SECTIONS: SOUTH 1ST AVENUE	SHEET 204	E

FILE NAME : V:\TRANS-EC\410723 WAUSAU 1ST AVE\C3D\DESIGN\CORRIDORS\CORRIDOR-SOUTH1STAVE.DWG
LAYOUT NAME - 49

PLOT DATE : 10/16/2018 8:36 AM PLOT BY : WOOLEVER, NATHAN PLOT NAME : PLOT SCALE : 1 IN:10 FT HORZ. / 1 IN:10 FT VERT.

WISDOT/CADDS SHEET 49

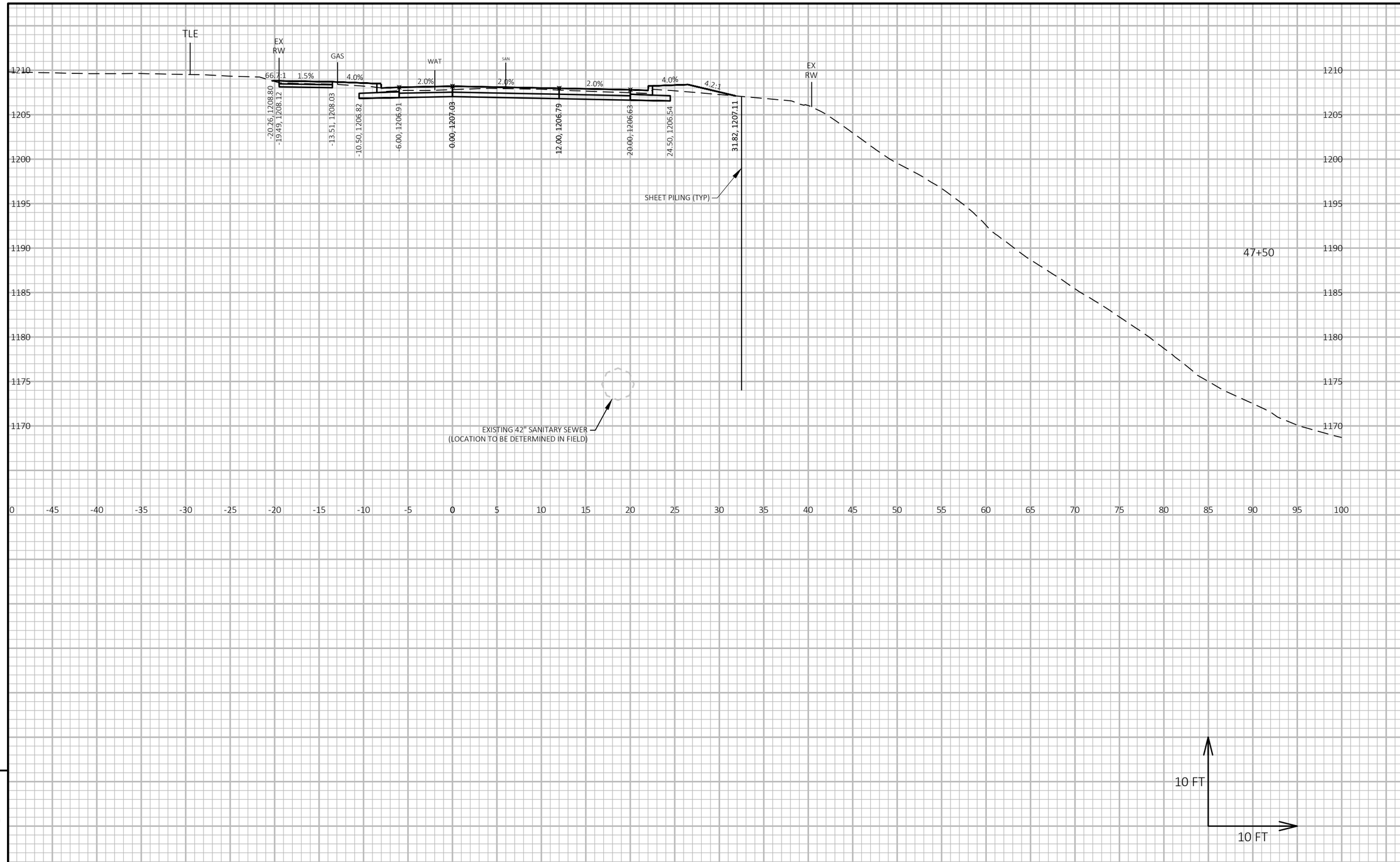

9

9

PROJECT NO: 6999-18-73	HWY: SOUTH 1ST AVENUE	COUNTY: MARATHON	CROSS SECTIONS: SOUTH 1ST AVENUE	SHEET 205	E

FILE NAME : V:\TRANS-EC\410723 WAUSAU 1ST AVE\C3D\DESIGN\CORRIDORS\CORRIDOR-SOUTH1STAVE.DWG
LAYOUT NAME - 50
PLOT DATE : 10/16/2018 8:36 AM PLOT BY : WOOLEVER, NATHAN PLOT NAME : PLOT SCALE : 1 IN:10 FT HORZ. / 1 IN:10 FT VERT.
WISDOT/CADDS SHEET 49

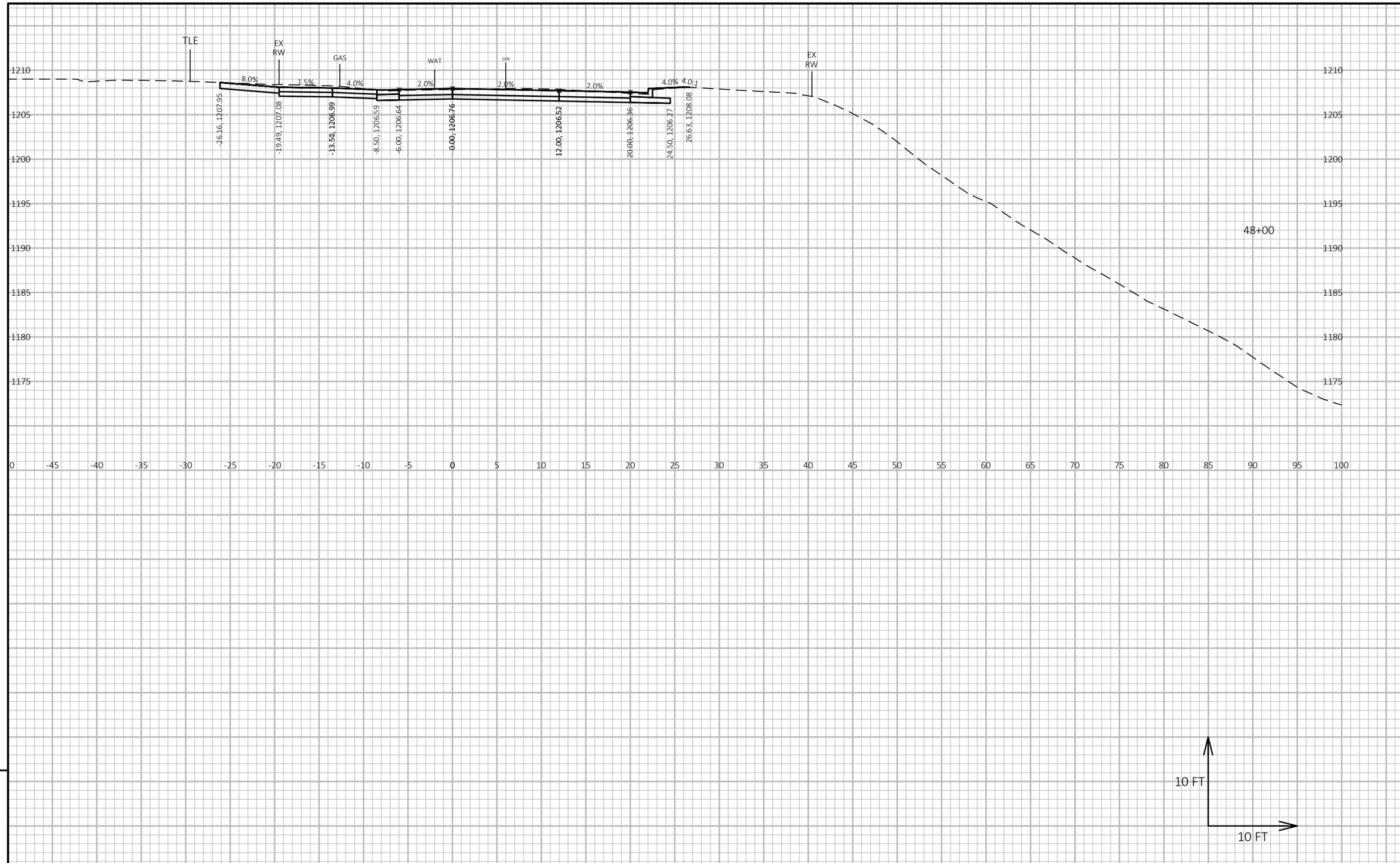

9

9

PROJECT NO: 6999-18-73	HWY: SOUTH 1ST AVENUE	COUNTY: MARATHON	CROSS SECTIONS: SOUTH 1ST AVENUE	SHEET 206	E

FILE NAME : V:\TRANS-EC\410723 WAUSAU 1ST AVE\C3D\DESIGN\CORRIDORS\CORRIDOR-SOUTH1STAVE.DWG
LAYOUT NAME - 51
PLOT DATE : 10/16/2018 8:36 AM
PLOT BY : WOOLEVER, NATHAN
PLOT NAME :
PLOT SCALE : 1 IN:10 FT HORZ. / 1 IN:10 FT VERT.
WISDOT/CADDS SHEET 49

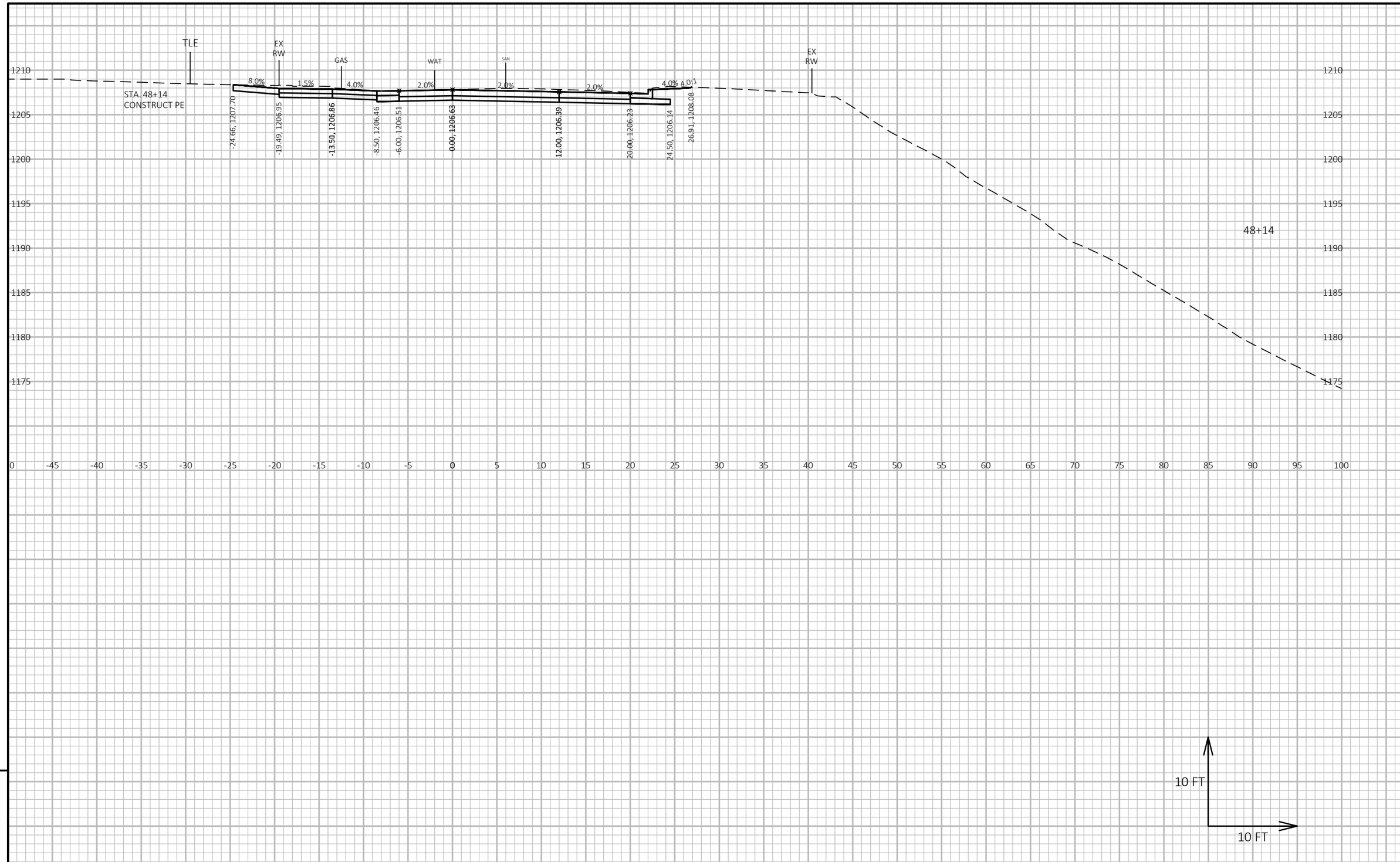

9

9

PROJECT NO: 6999-18-73	HWY: SOUTH 1ST AVENUE	COUNTY: MARATHON	CROSS SECTIONS: SOUTH 1ST AVENUE	SHEET 207	E

FILE NAME : V:\TRANS-EC\410723 WAUSAU 1ST AVE\C3D\DESIGN\CORRIDORS\CORRIDOR-SOUTH1STAVE.DWG
LAYOUT NAME - 52
PLOT DATE : 10/16/2018 8:36 AM
PLOT BY : WOOLEVER, NATHAN
PLOT NAME :
PLOT SCALE : 1 IN:10 FT HORZ. / 1 IN:10 FT VERT.
WISDOT/CADDS SHEET 49

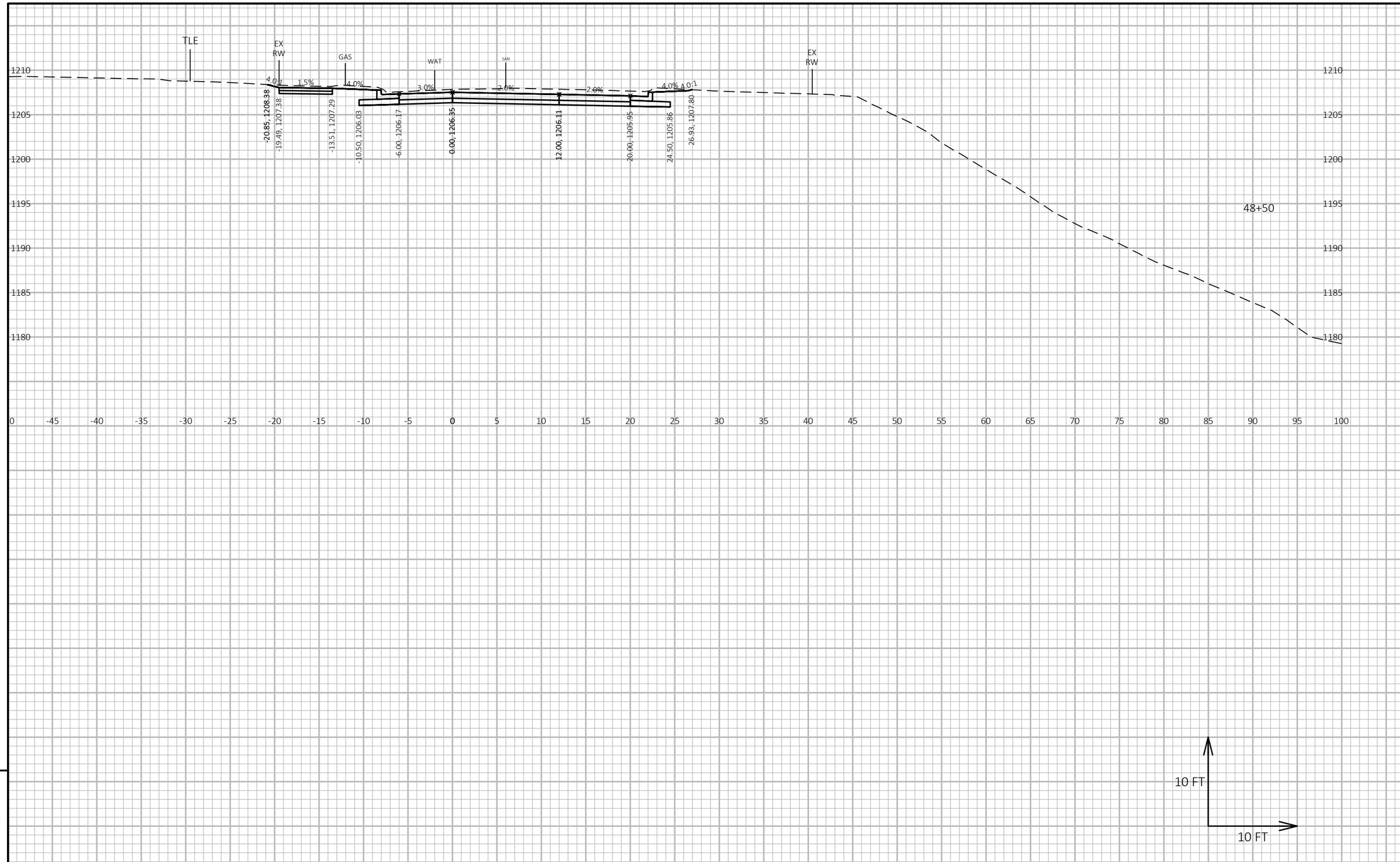

9

9

PROJECT NO: 6999-18-73	HWY: SOUTH 1ST AVENUE	COUNTY: MARATHON	CROSS SECTIONS: SOUTH 1ST AVENUE	SHEET 208	E

FILE NAME : V:\TRANS-EC\410723 WAUSAU 1ST AVE\C3D\DESIGN\CORRIDORS\CORRIDOR-SOUTH1STAVE.DWG
LAYOUT NAME - 53

PLOT DATE : 10/16/2018 8:36 AM PLOT BY : WOOLEVER, NATHAN PLOT NAME : PLOT SCALE : 1 IN:10 FT HORZ. / 1 IN:10 FT VERT.

WISDOT/CADDS SHEET 49

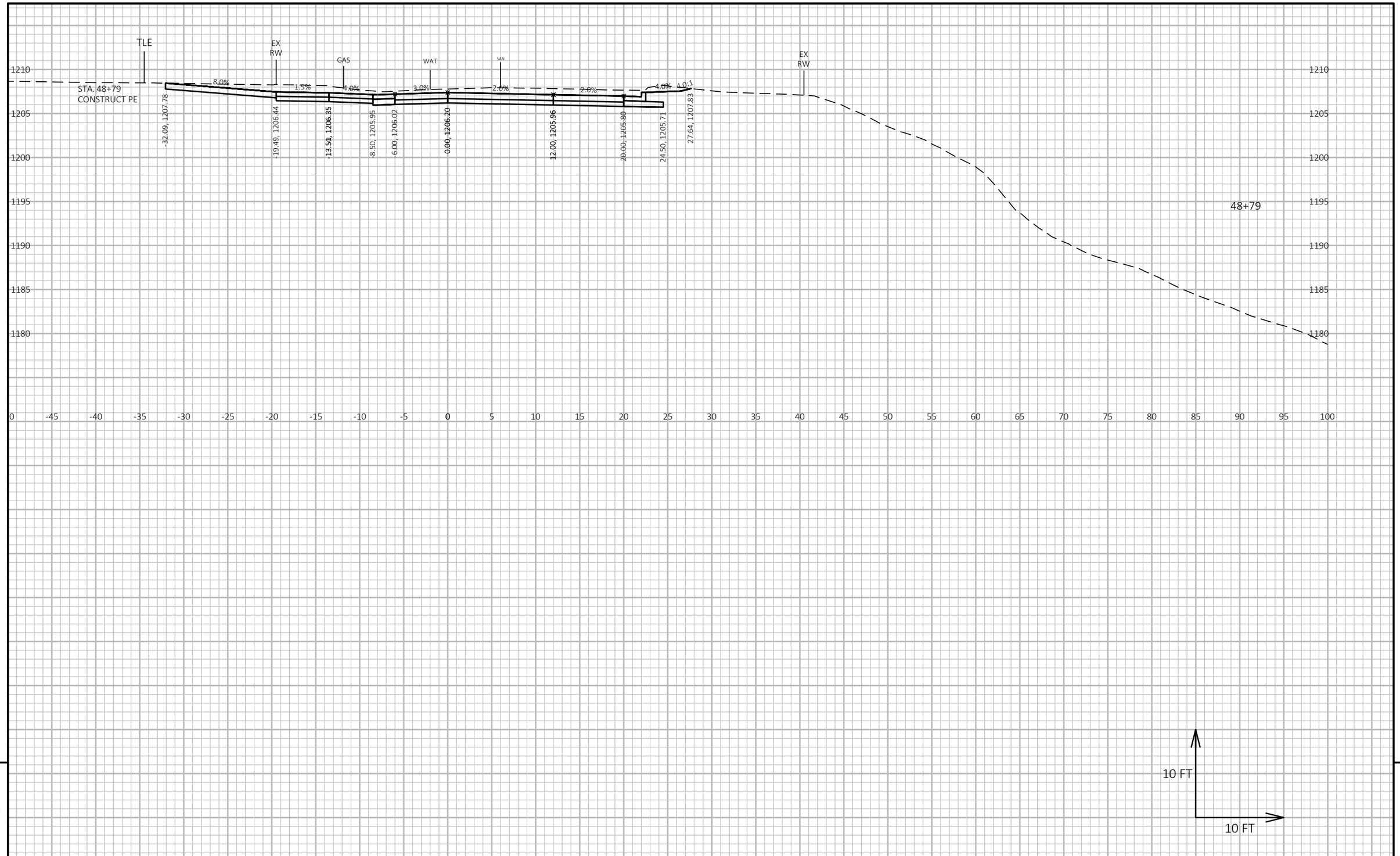

9

9

PROJECT NO: 6999-18-73	HWY: SOUTH 1ST AVENUE	COUNTY: MARATHON	CROSS SECTIONS: SOUTH 1ST AVENUE	SHEET 209	E

FILE NAME : V:\TRANS-EC\410723 WAUSAU 1ST AVE\C3D\DESIGN\CORRIDORS\CORRIDOR-SOUTH1STAVE.DWG
LAYOUT NAME - 54
PLOT DATE : 10/16/2018 8:36 AM
PLOT BY : WOOLEVER, NATHAN
PLOT NAME :
PLOT SCALE : 1 IN:10 FT HORZ. / 1 IN:10 FT VERT.
WISDOT/CADDS SHEET 49

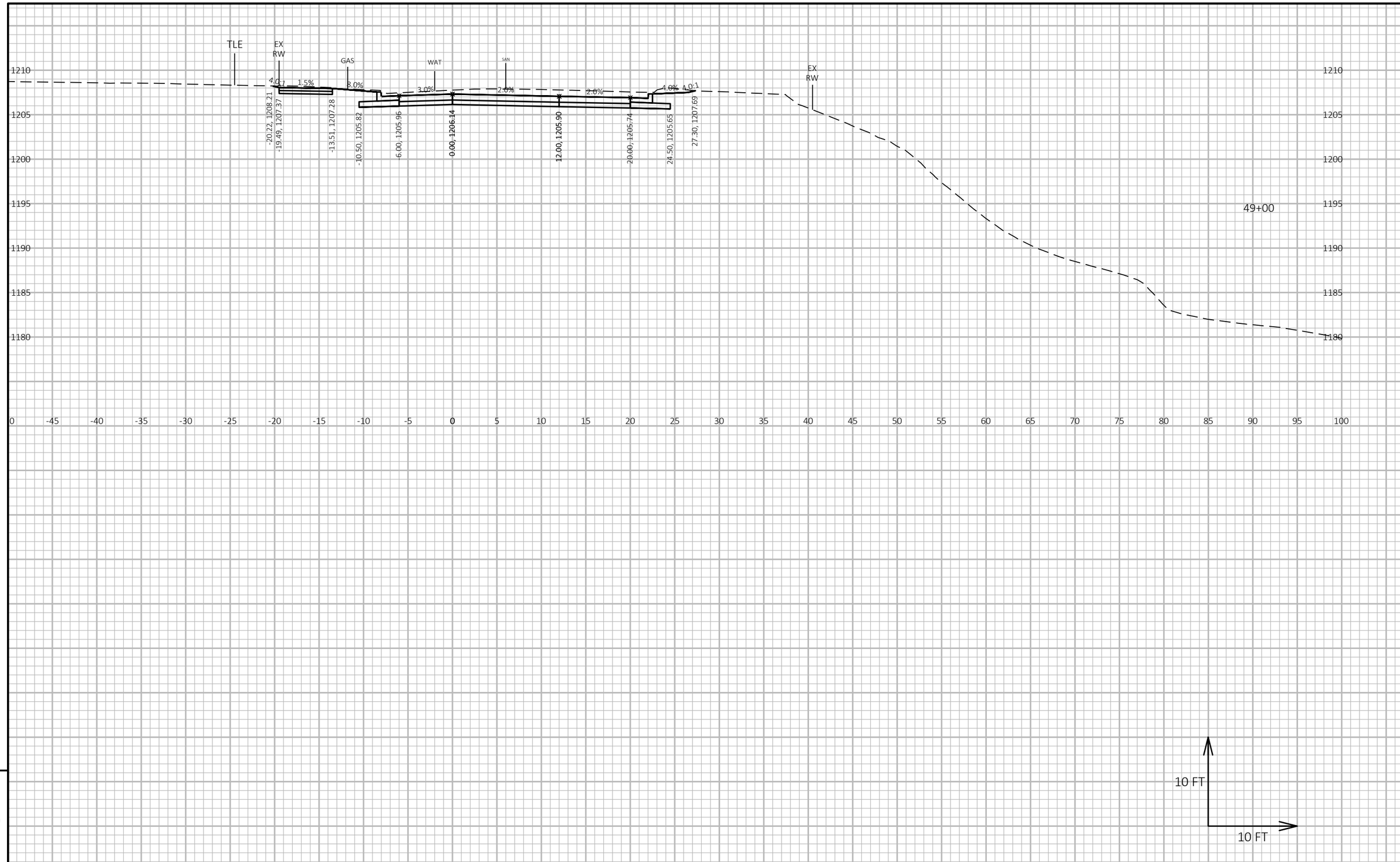

9

9

PROJECT NO: 6999-18-73	HWY: SOUTH 1ST AVENUE	COUNTY: MARATHON	CROSS SECTIONS: SOUTH 1ST AVENUE	SHEET 210	E

FILE NAME : V:\TRANS-EC\410723 WAUSAU 1ST AVE\C3D\DESIGN\CORRIDORS\CORRIDOR-SOUTH1STAVE.DWG
LAYOUT NAME - 55

PLOT DATE : 10/16/2018 8:37 AM PLOT BY : WOOLEVER, NATHAN PLOT NAME : PLOT SCALE : 1 IN:10 FT HORZ. / 1 IN:10 FT VERT.

WISDOT/CADDS SHEET 49

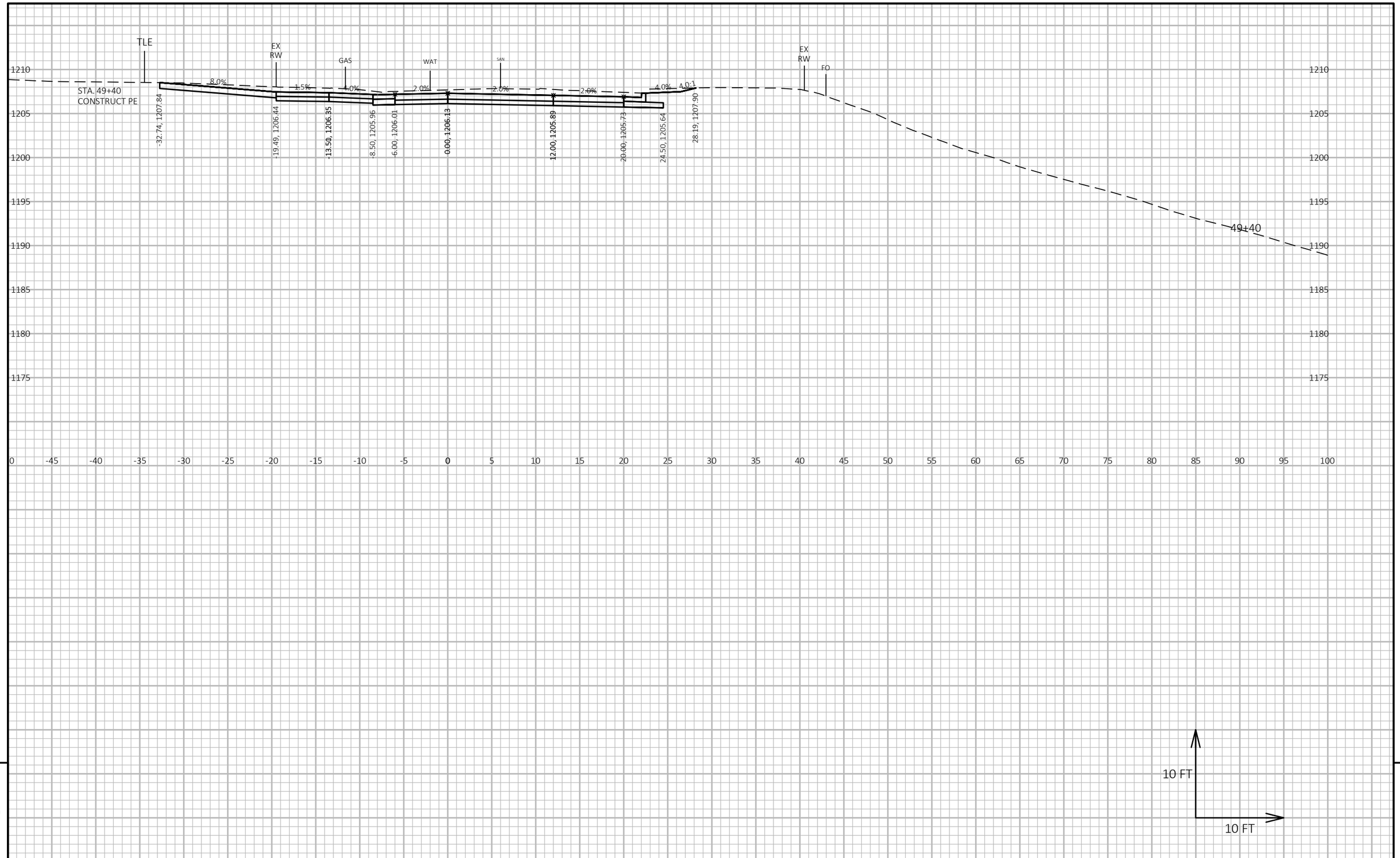

9

9

PROJECT NO: 6999-18-73	HWY: SOUTH 1ST AVENUE	COUNTY: MARATHON	CROSS SECTIONS: SOUTH 1ST AVENUE	SHEET 211	E

FILE NAME : V:\TRANS-EC\410723 WAUSAU 1ST AVE\C3D\DESIGN\CORRIDORS\CORRIDOR-SOUTH1STAVE.DWG
LAYOUT NAME - 56

PLOT DATE : 10/16/2018 8:37 AM PLOT BY : WOOLEVER, NATHAN PLOT NAME : PLOT SCALE : 1 IN:10 FT HORZ. / 1 IN:10 FT VERT.

WISDOT/CADDS SHEET 49

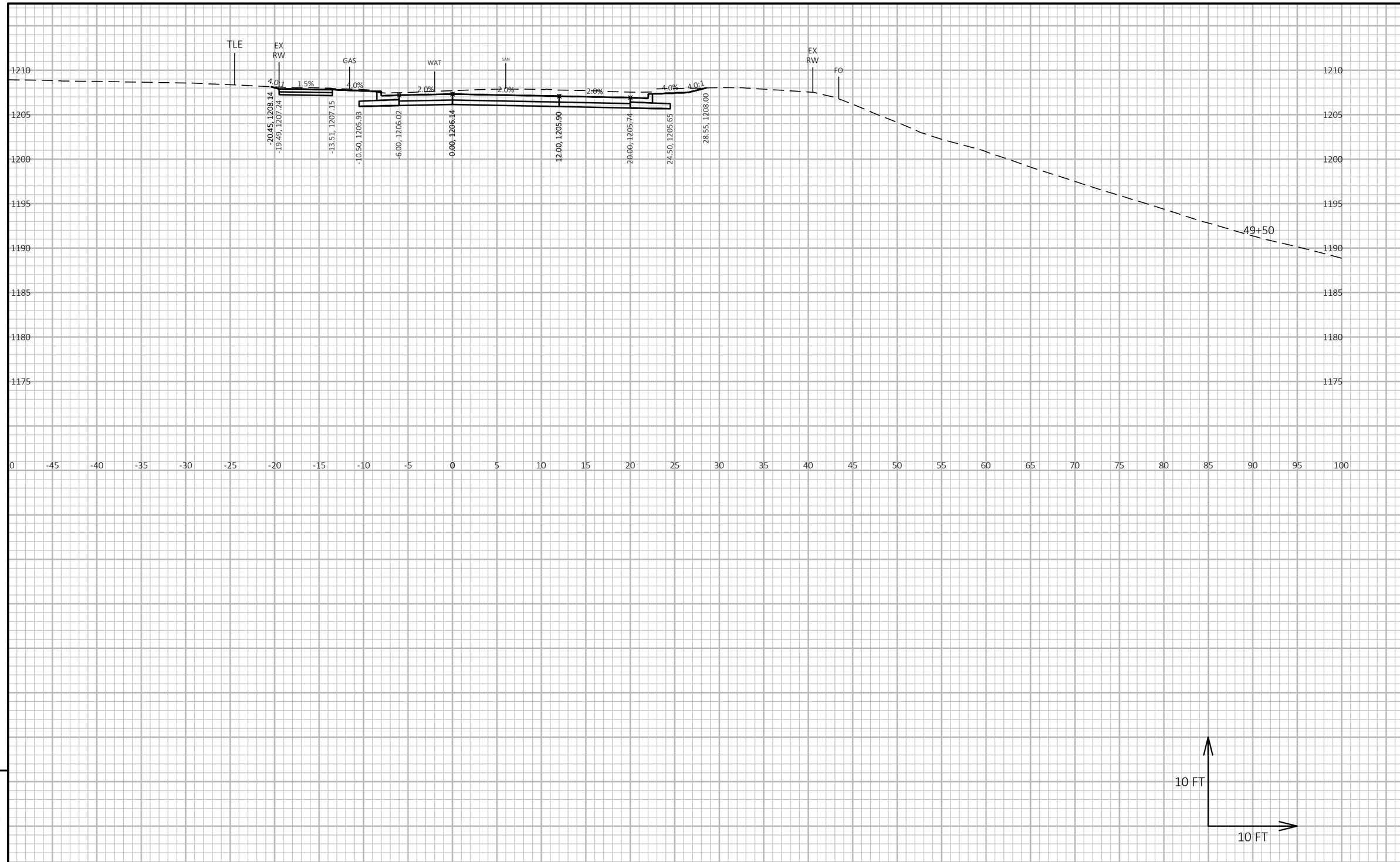

9

9

PROJECT NO: 6999-18-73	HWY: SOUTH 1ST AVENUE	COUNTY: MARATHON	CROSS SECTIONS: SOUTH 1ST AVENUE	SHEET 212	E

FILE NAME : V:\TRANS-EC\410723 WAUSAU 1ST AVE\C3D\DESIGN\CORRIDORS\CORRIDOR-SOUTH1STAVE.DWG
LAYOUT NAME - 57
PLOT DATE : 10/16/2018 8:37 AM
PLOT BY : WOOLEVER, NATHAN
PLOT NAME :
PLOT SCALE : 1 IN:10 FT HORZ. / 1 IN:10 FT VERT.
WISDOT/CADDS SHEET 49

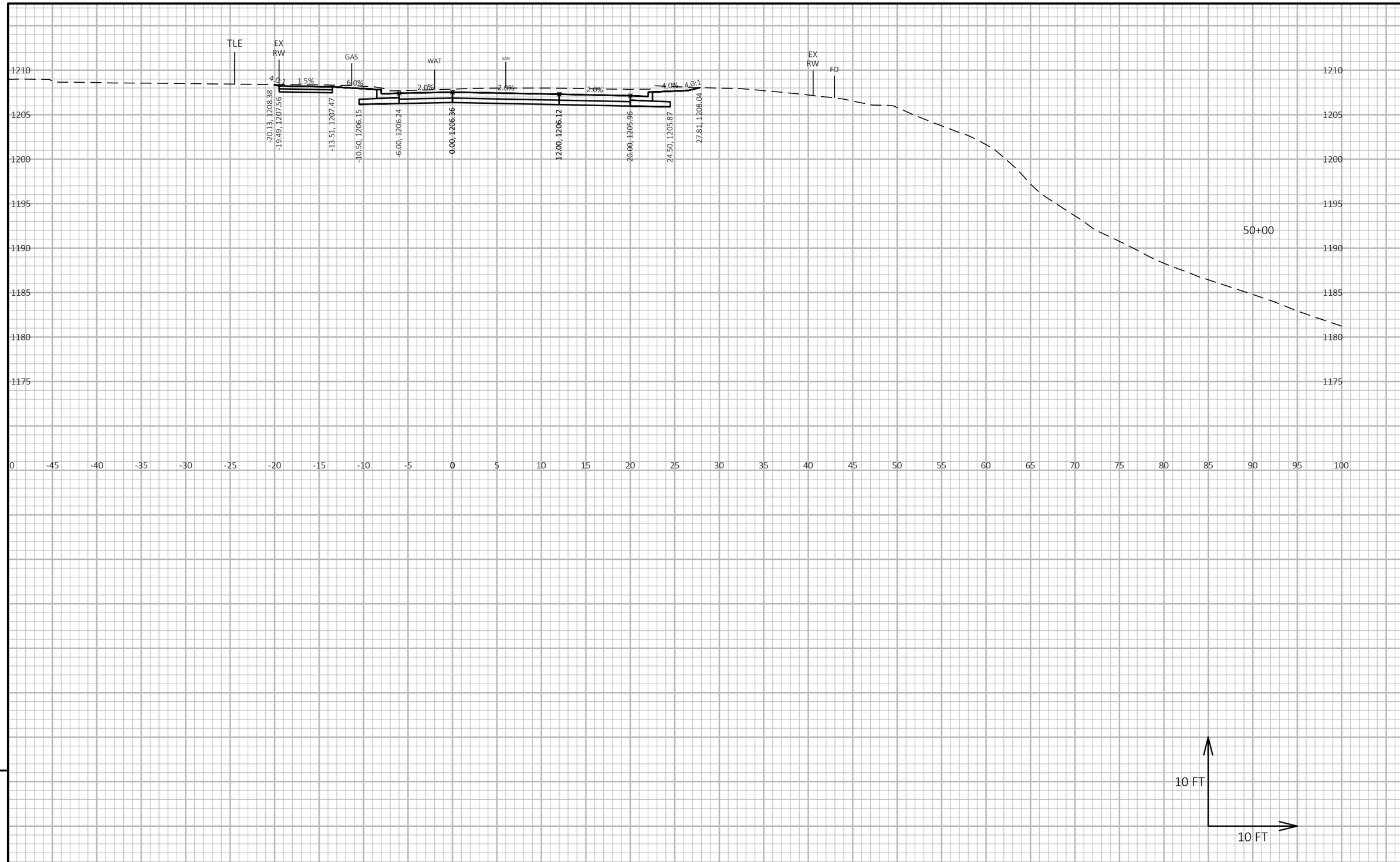

9

9

PROJECT NO: 6999-18-73	HWY: SOUTH 1ST AVENUE	COUNTY: MARATHON	CROSS SECTIONS: SOUTH 1ST AVENUE	SHEET 213	E

FILE NAME : V:\TRANS-EC\410723 WAUSAU 1ST AVE\C3D\DESIGN\CORRIDORS\CORRIDOR-SOUTH1STAVE.DWG
LAYOUT NAME - 58
PLOT DATE : 10/16/2018 8:37 AM
PLOT BY : WOOLEVER, NATHAN
PLOT NAME :
PLOT SCALE : 1 IN:10 FT HORZ. / 1 IN:10 FT VERT.
WISDOT/CADDS SHEET 49

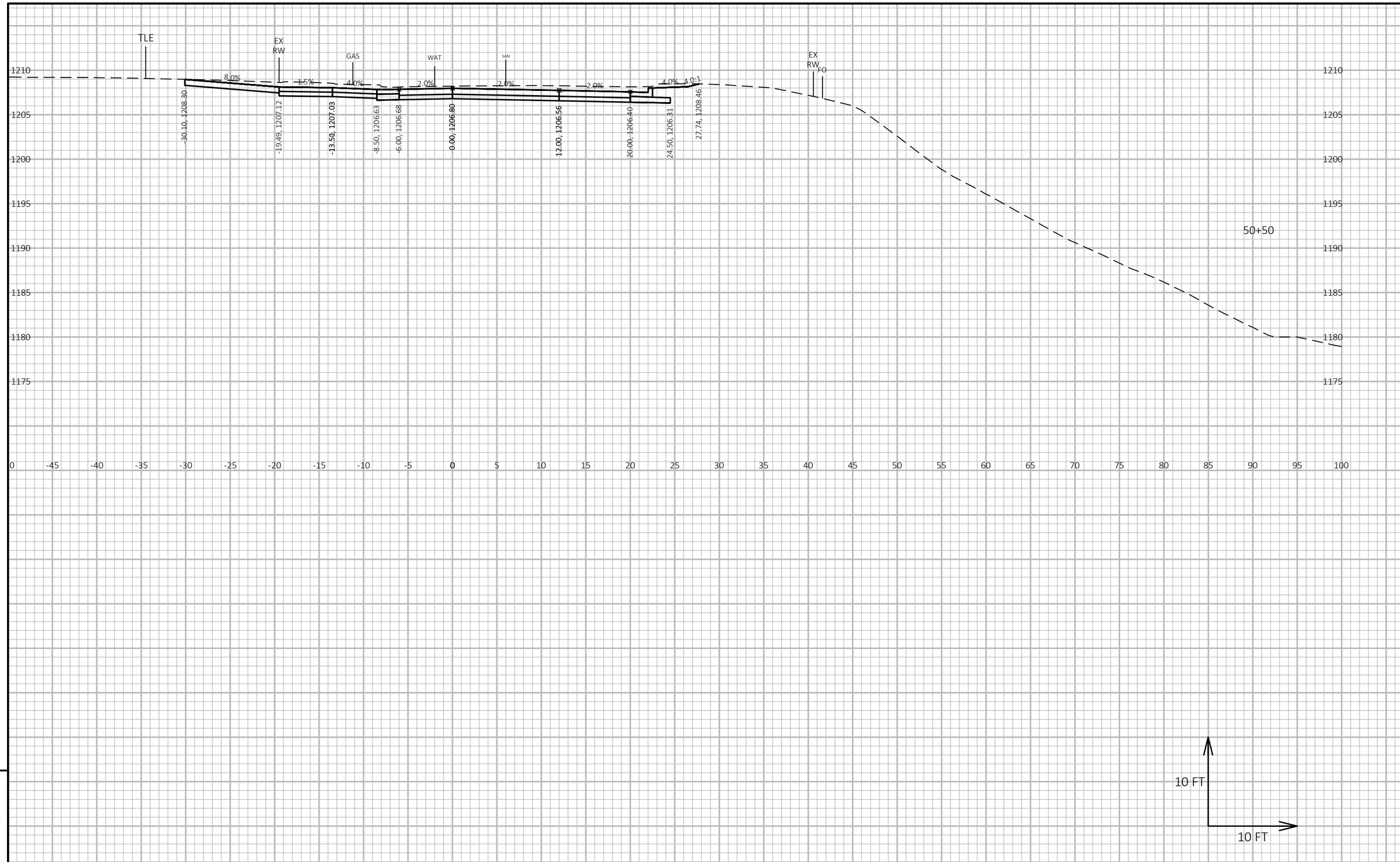

9

9

PROJECT NO: 6999-18-73	HWY: SOUTH 1ST AVENUE	COUNTY: MARATHON	CROSS SECTIONS: SOUTH 1ST AVENUE	SHEET 214	E

FILE NAME : V:\TRANS-EC\410723 WAUSAU 1ST AVE\C3D\DESIGN\CORRIDORS\CORRIDOR-SOUTH1STAVE.DWG
LAYOUT NAME - 59

PLOT DATE : 10/16/2018 8:37 AM PLOT BY : WOOLEVER, NATHAN PLOT NAME : PLOT SCALE : 1 IN:10 FT HORZ. / 1 IN:10 FT VERT.

WISDOT/CADDS SHEET 49

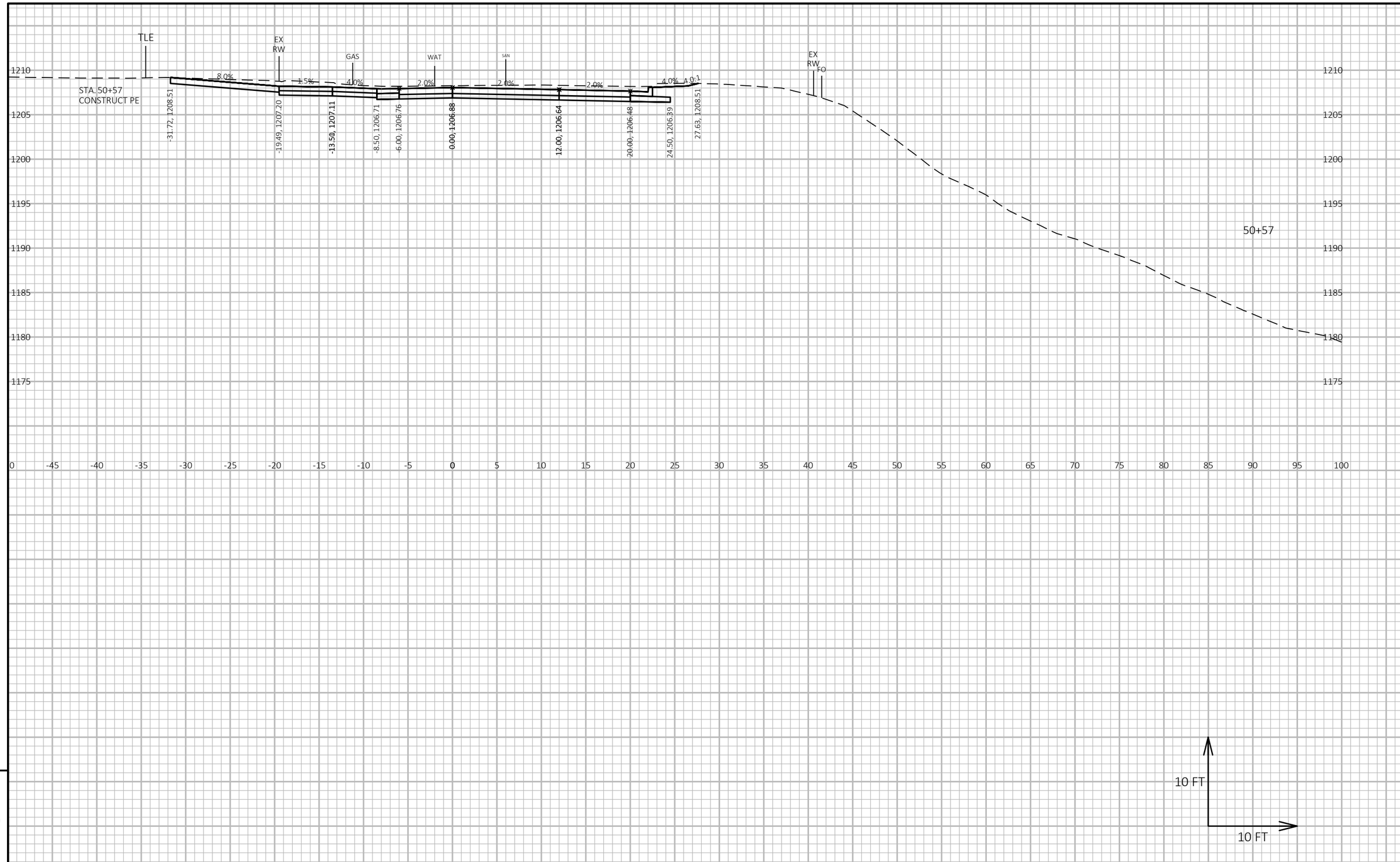

9

9

PROJECT NO: 6999-18-73	HWY: SOUTH 1ST AVENUE	COUNTY: MARATHON	CROSS SECTIONS: SOUTH 1ST AVENUE	SHEET 215	E

FILE NAME : V:\TRANS-EC\410723 WAUSAU 1ST AVE\C3D\DESIGN\CORRIDORS\CORRIDOR-SOUTH1STAVE.DWG
LAYOUT NAME - 60
PLOT DATE : 10/16/2018 8:37 AM
PLOT BY : WOOLEVER, NATHAN
PLOT NAME :
PLOT SCALE : 1 IN:10 FT HORZ. / 1 IN:10 FT VERT.
WISDOT/CADDS SHEET 49

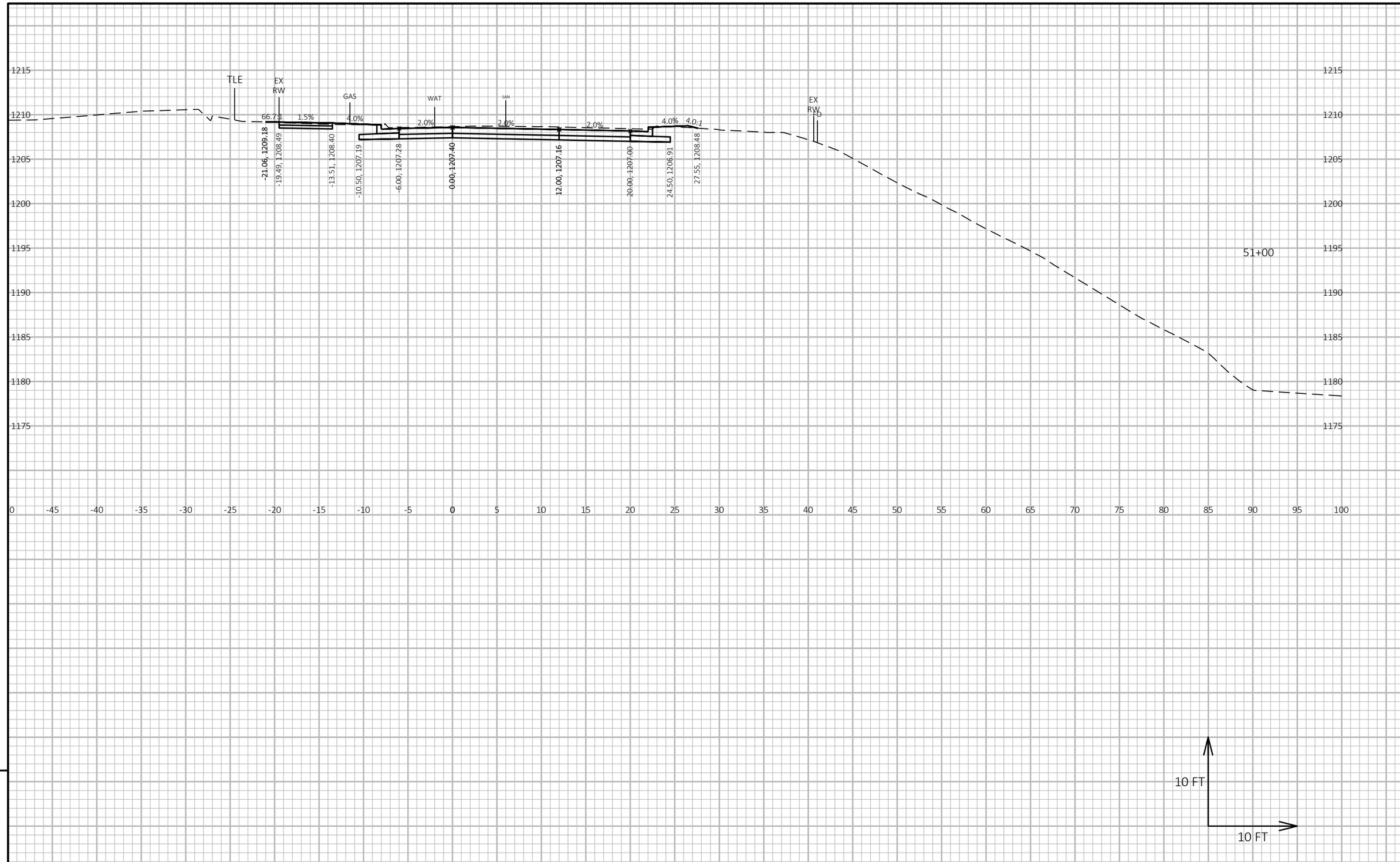

9

9

PROJECT NO: 6999-18-73	HWY: SOUTH 1ST AVENUE	COUNTY: MARATHON	CROSS SECTIONS: SOUTH 1ST AVENUE	SHEET 216	E

FILE NAME : V:\TRANS-EC\410723 WAUSAU 1ST AVE\C3D\DESIGN\CORRIDORS\CORRIDOR-SOUTH1STAVE.DWG
LAYOUT NAME - 61

PLOT DATE : 10/16/2018 8:38 AM PLOT BY : WOOLEVER, NATHAN PLOT NAME : PLOT SCALE : 1 IN:10 FT HORZ. / 1 IN:10 FT VERT.

WISDOT/CADDS SHEET 49

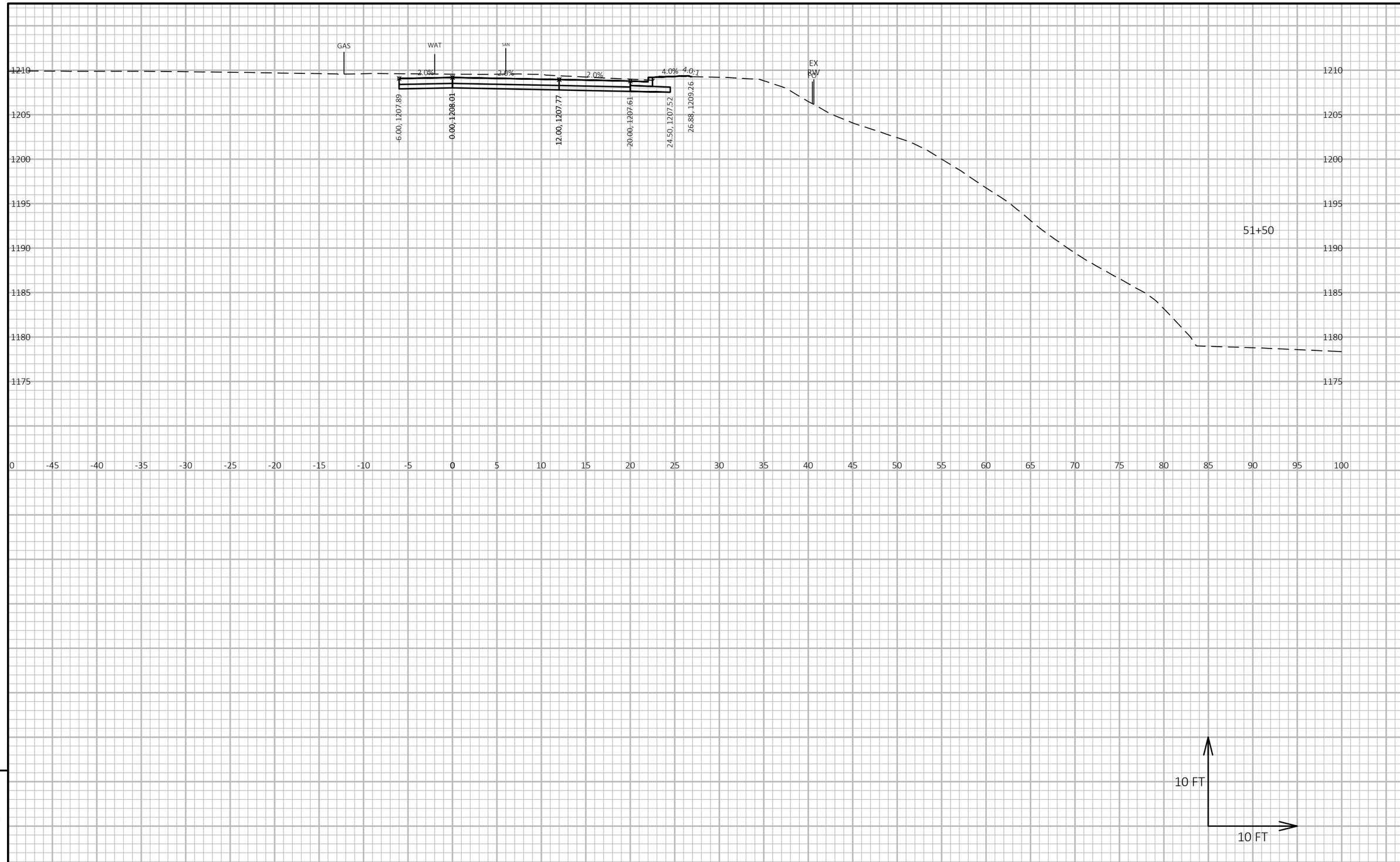

9

9

PROJECT NO: 6999-18-73	HWY: SOUTH 1ST AVENUE	COUNTY: MARATHON	CROSS SECTIONS: SOUTH 1ST AVENUE	SHEET 217	E

FILE NAME : V:\TRANS-EC\410723 WAUSAU 1ST AVE\C3D\DESIGN\CORRIDORS\CORRIDOR-SOUTH1STAVE.DWG
LAYOUT NAME - 62

PLOT DATE : 10/16/2018 8:38 AM PLOT BY : WOOLEVER, NATHAN PLOT NAME : PLOT SCALE : 1 IN:10 FT HORZ. / 1 IN:10 FT VERT.

WISDOT/CADDS SHEET 49

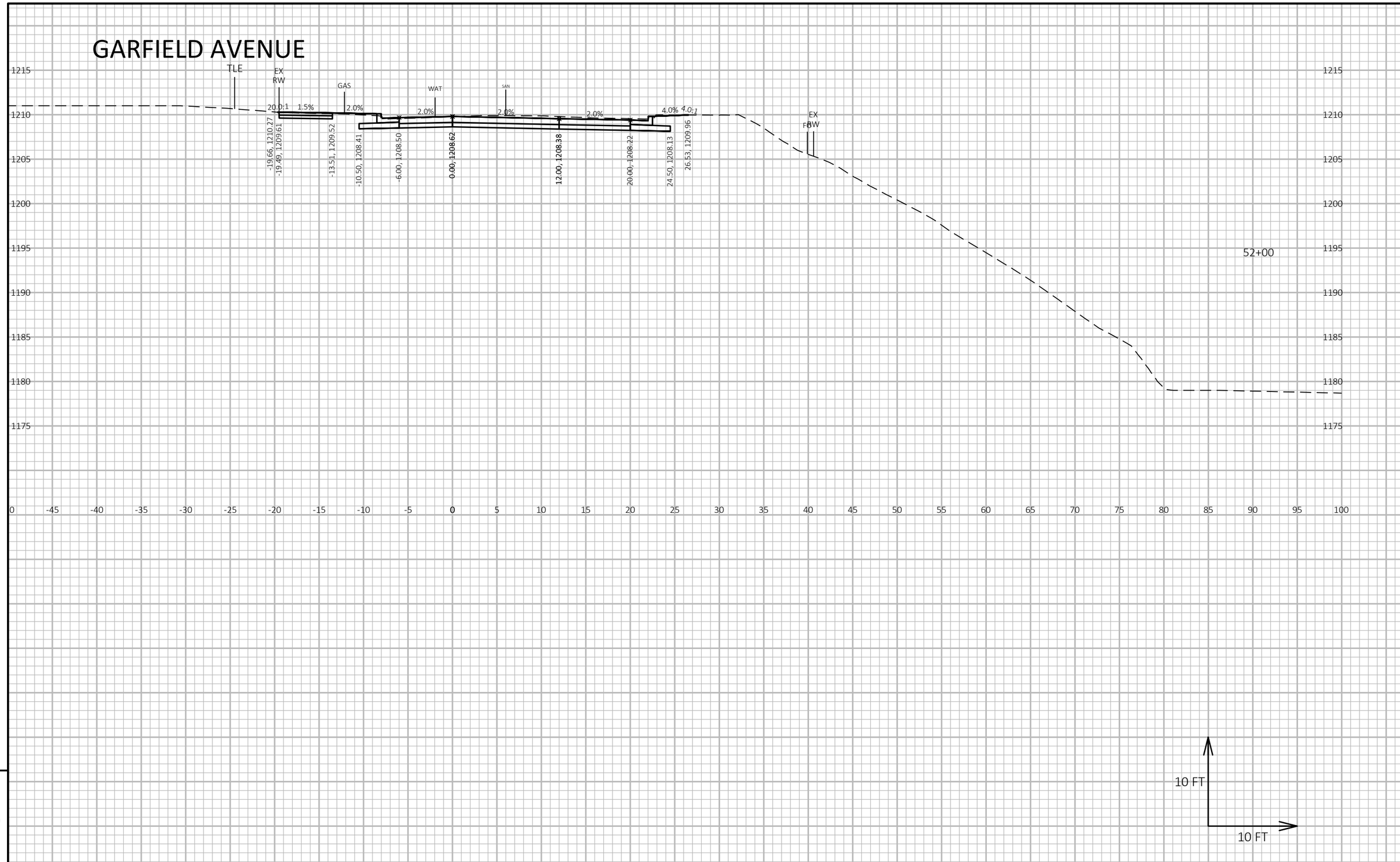

9

9

PROJECT NO: 6999-18-73	HWY: SOUTH 1ST AVENUE	COUNTY: MARATHON	CROSS SECTIONS: SOUTH 1ST AVENUE	SHEET 218	E

FILE NAME : V:\TRANS-EC\410723 WAUSAU 1ST AVE\C3D\DESIGN\CORRIDORS\CORRIDOR-SOUTH1STAVE.DWG
LAYOUT NAME - 63
PLOT DATE : 10/16/2018 8:38 AM PLOT BY : WOOLEVER, NATHAN PLOT NAME : PLOT SCALE : 1 IN:10 FT HORZ. / 1 IN:10 FT VERT.
WISDOT/CADDS SHEET 49

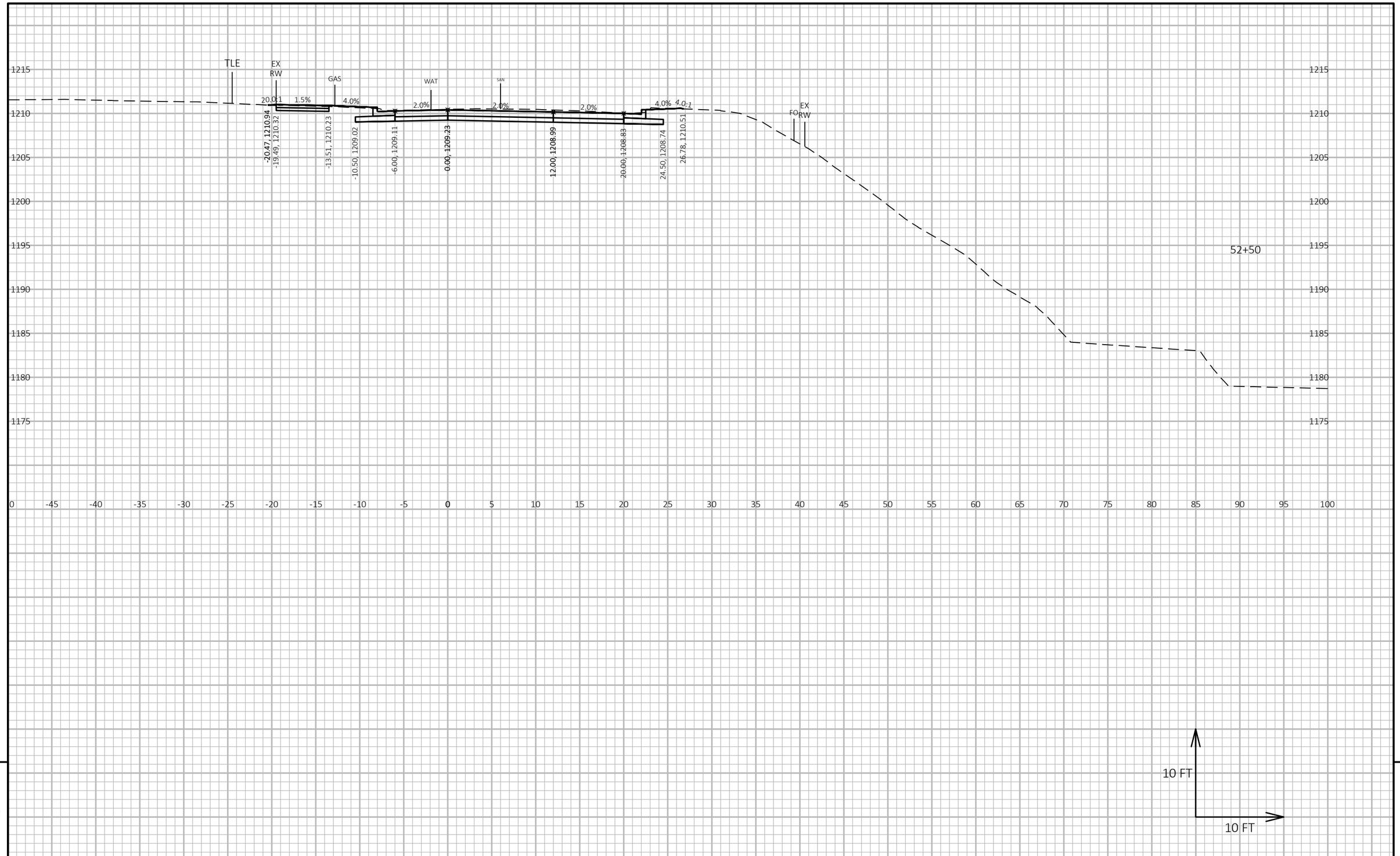

9

9

PROJECT NO: 6999-18-73	HWY: SOUTH 1ST AVENUE	COUNTY: MARATHON	CROSS SECTIONS: SOUTH 1ST AVENUE	SHEET 219	E

FILE NAME : V:\TRANS-EC\410723 WAUSAU 1ST AVE\C3D\DESIGN\CORRIDORS\CORRIDOR-SOUTH1STAVE.DWG
LAYOUT NAME - 64

PLOT DATE : 10/16/2018 8:38 AM PLOT BY : WOOLEVER, NATHAN PLOT NAME : PLOT SCALE : 1 IN:10 FT HORZ. / 1 IN:10 FT VERT.

WISDOT/CADDS SHEET 49

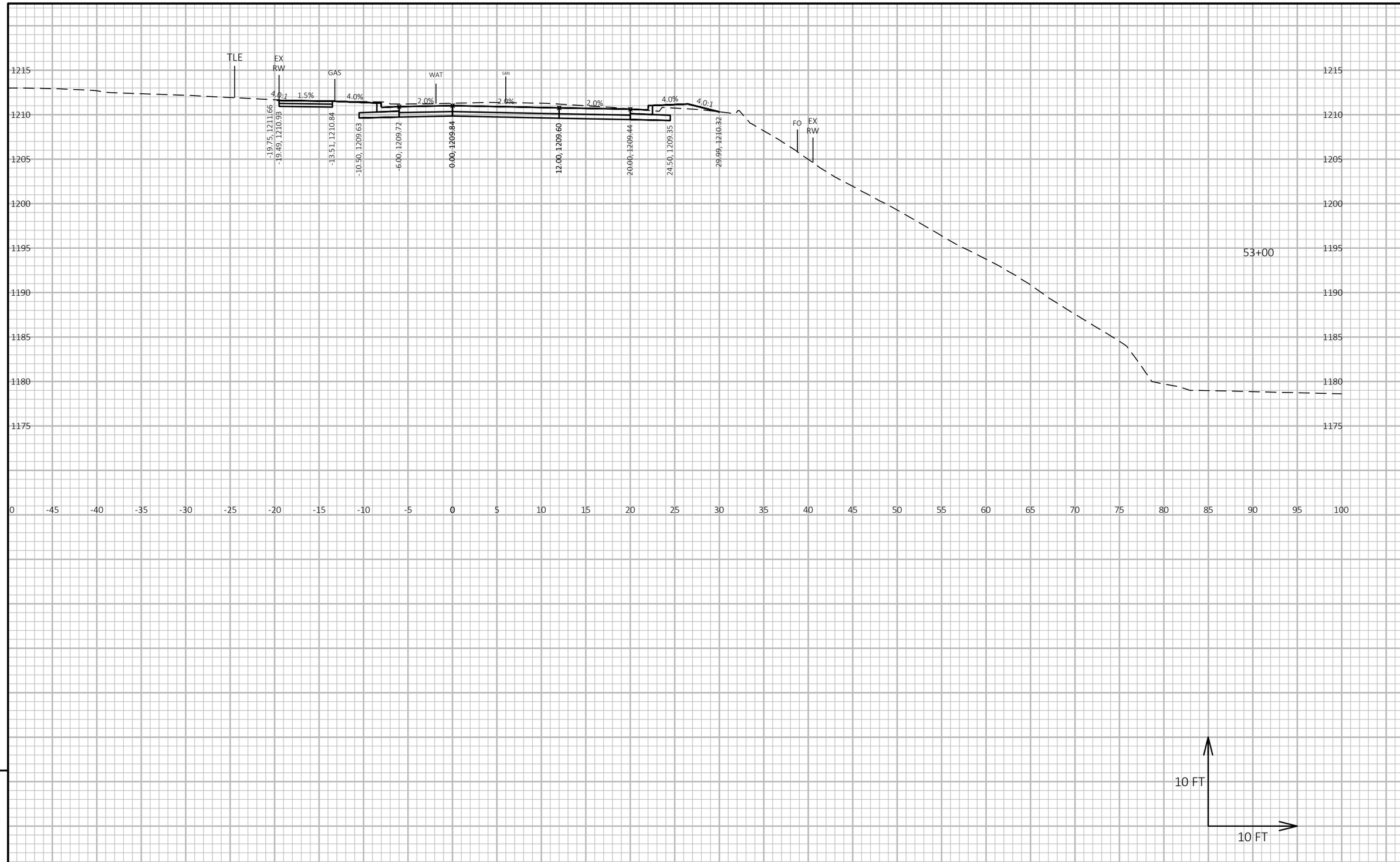

9

9

PROJECT NO: 6999-18-73	HWY: SOUTH 1ST AVENUE	COUNTY: MARATHON	CROSS SECTIONS: SOUTH 1ST AVENUE	SHEET 220	E

FILE NAME : V:\TRANS-EC\410723 WAUSAU 1ST AVE\C3D\DESIGN\CORRIDORS\CORRIDOR-SOUTH1STAVE.DWG
LAYOUT NAME - 65

PLOT DATE : 10/16/2018 8:38 AM PLOT BY : WOOLEVER, NATHAN PLOT NAME : PLOT SCALE : 1 IN:10 FT HORZ. / 1 IN:10 FT VERT.

WISDOT/CADDS SHEET 49

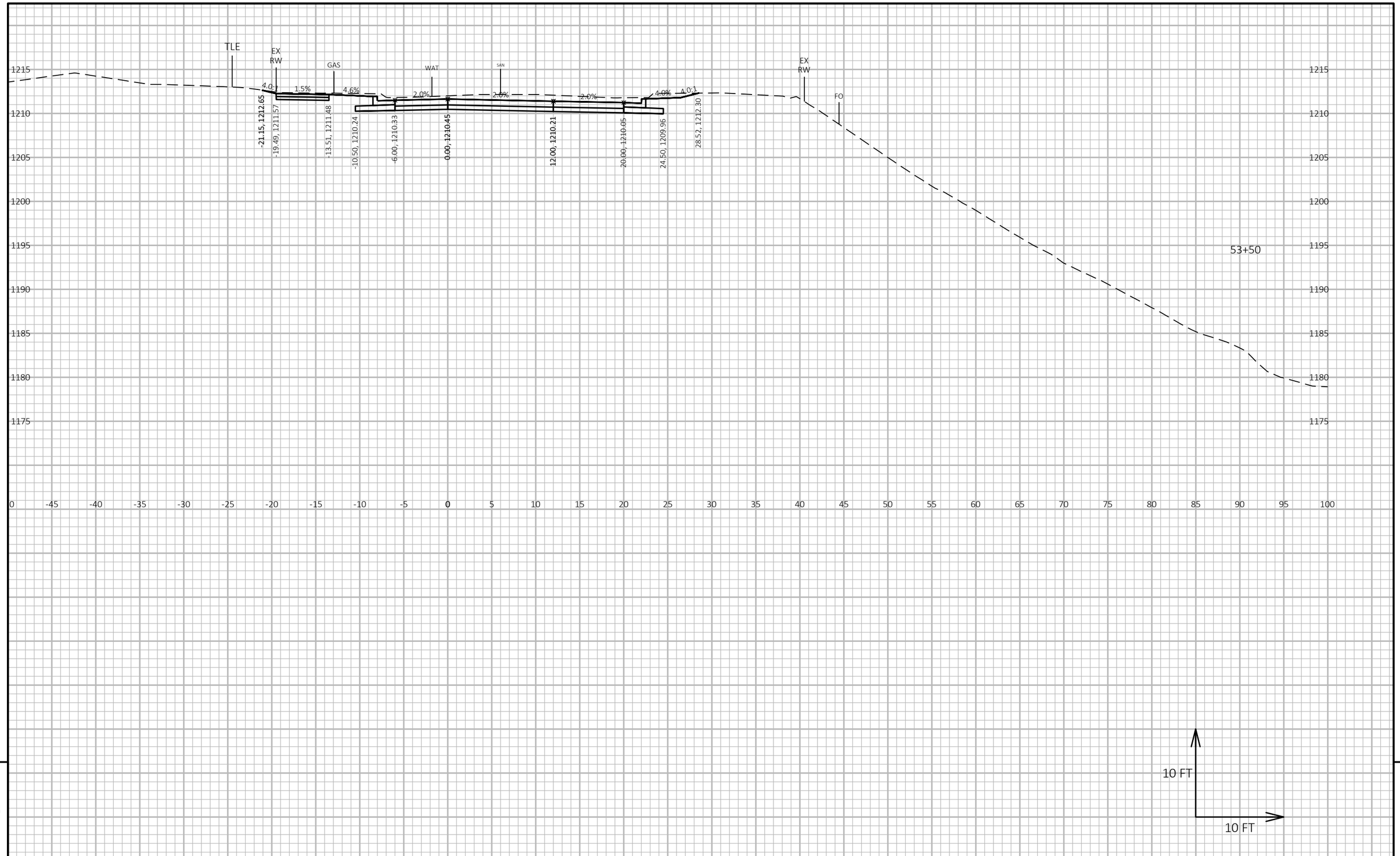

9

9

PROJECT NO: 6999-18-73	HWY: SOUTH 1ST AVENUE	COUNTY: MARATHON	CROSS SECTIONS: SOUTH 1ST AVENUE	SHEET 221	E

FILE NAME : V:\TRANS-EC\410723 WAUSAU 1ST AVE\C3D\DESIGN\CORRIDORS\CORRIDOR-SOUTH1STAVE.DWG
LAYOUT NAME - 66

PLOT DATE : 10/16/2018 8:39 AM PLOT BY : WOOLEVER, NATHAN PLOT NAME : PLOT SCALE : 1 IN:10 FT HORZ. / 1 IN:10 FT VERT.

WISDOT/CADDS SHEET 49

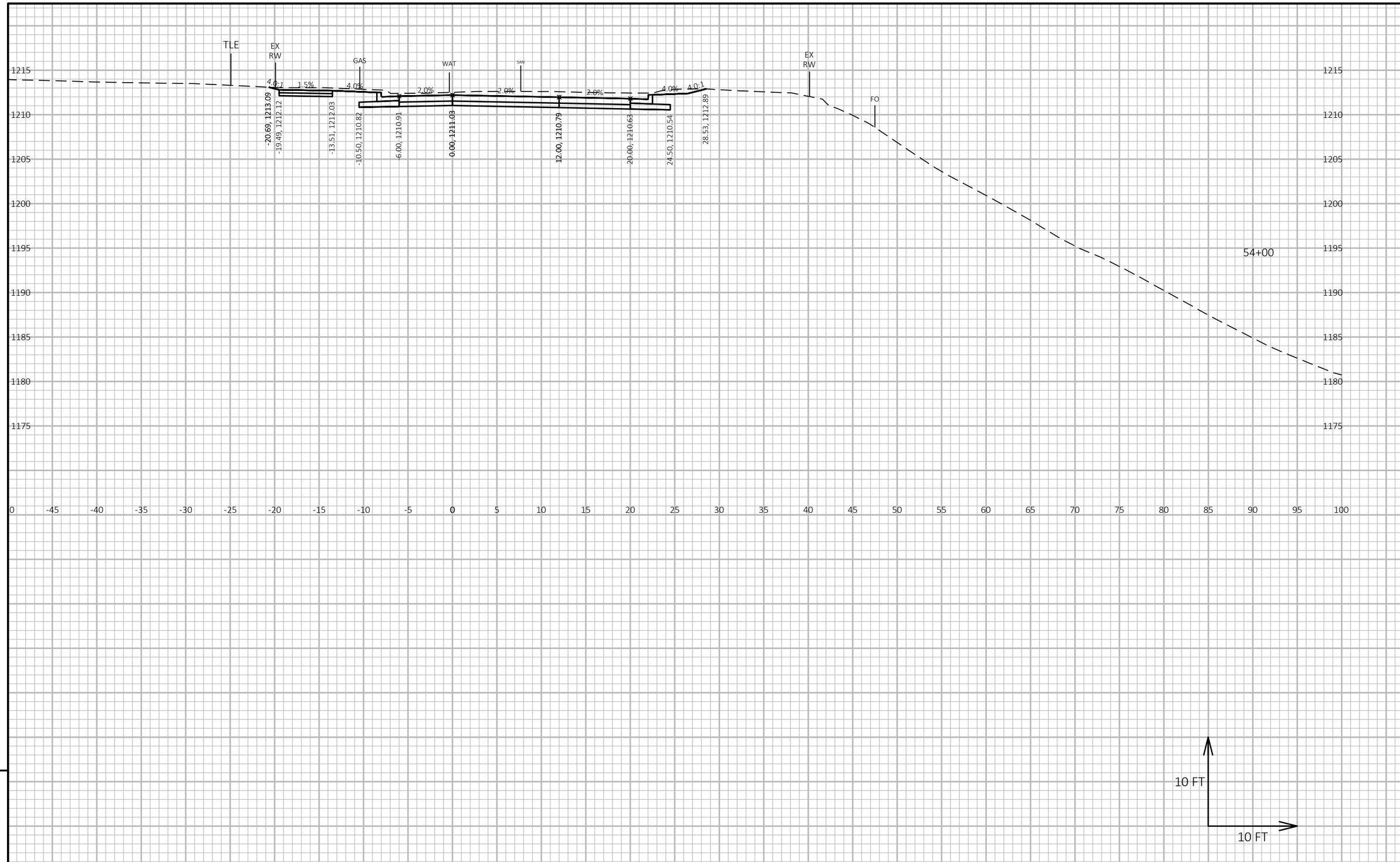

9

9

PROJECT NO: 6999-18-73	HWY: SOUTH 1ST AVENUE	COUNTY: MARATHON	CROSS SECTIONS: SOUTH 1ST AVENUE	SHEET 222	E

FILE NAME : V:\TRANS-EC\410723 WAUSAU 1ST AVE\C3D\DESIGN\CORRIDORS\CORRIDOR-SOUTH1STAVE.DWG
LAYOUT NAME - 67
PLOT DATE : 10/16/2018 8:39 AM
PLOT BY : WOOLEVER, NATHAN
PLOT NAME :
PLOT SCALE : 1 IN:10 FT HORZ. / 1 IN:10 FT VERT.
WISDOT/CADDS SHEET 49

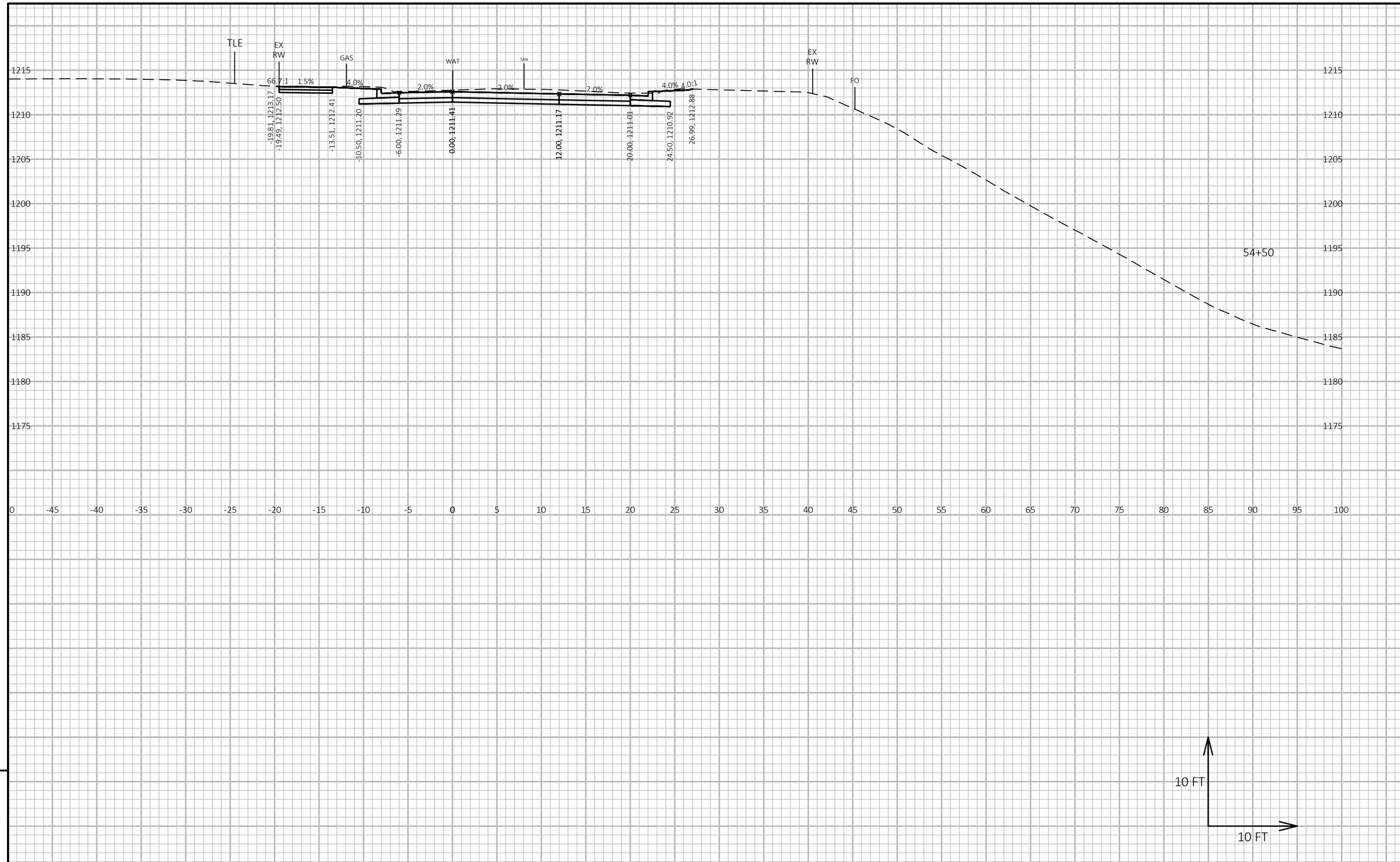

9

9

PROJECT NO: 6999-18-73	HWY: SOUTH 1ST AVENUE	COUNTY: MARATHON	CROSS SECTIONS: SOUTH 1ST AVENUE	SHEET 223	E

FILE NAME : V:\TRANS-EC\410723 WAUSAU 1ST AVE\C3D\DESIGN\CORRIDORS\CORRIDOR-SOUTH1STAVE.DWG
LAYOUT NAME - 68
PLOT DATE : 10/16/2018 8:39 AM
PLOT BY : WOOLEVER, NATHAN
PLOT NAME :
PLOT SCALE : 1 IN:10 FT HORZ. / 1 IN:10 FT VERT.
WISDOT/CADDS SHEET 49

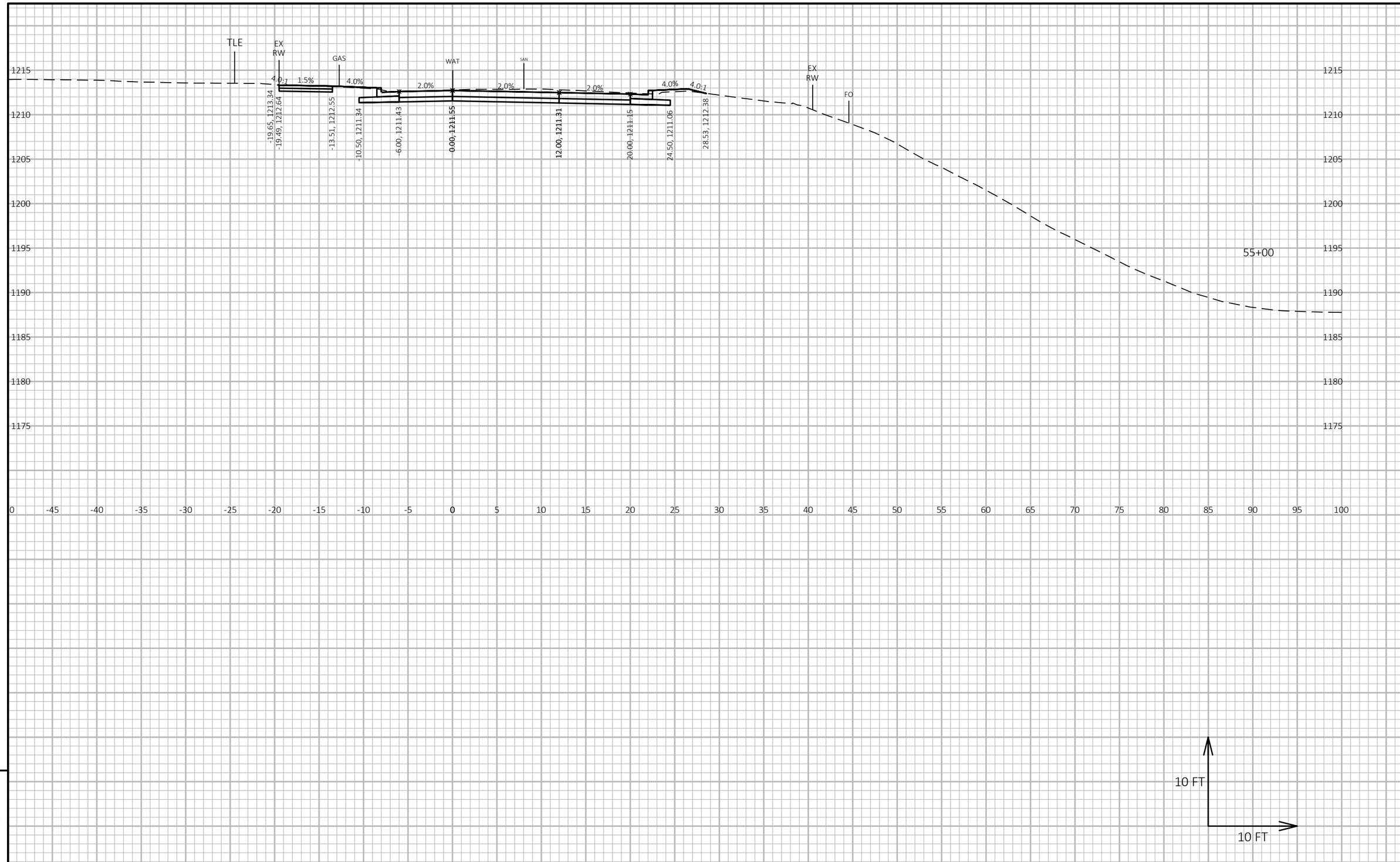

9

9

PROJECT NO: 6999-18-73	HWY: SOUTH 1ST AVENUE	COUNTY: MARATHON	CROSS SECTIONS: SOUTH 1ST AVENUE	SHEET 224	E

FILE NAME : V:\TRANS-EC\410723 WAUSAU 1ST AVE\C3D\DESIGN\CORRIDORS\CORRIDOR-SOUTH1STAVE.DWG
LAYOUT NAME - 69

PLOT DATE : 10/16/2018 8:39 AM PLOT BY : WOOLEVER, NATHAN PLOT NAME : PLOT SCALE : 1 IN:10 FT HORZ. / 1 IN:10 FT VERT.

WISDOT/CADDS SHEET 49

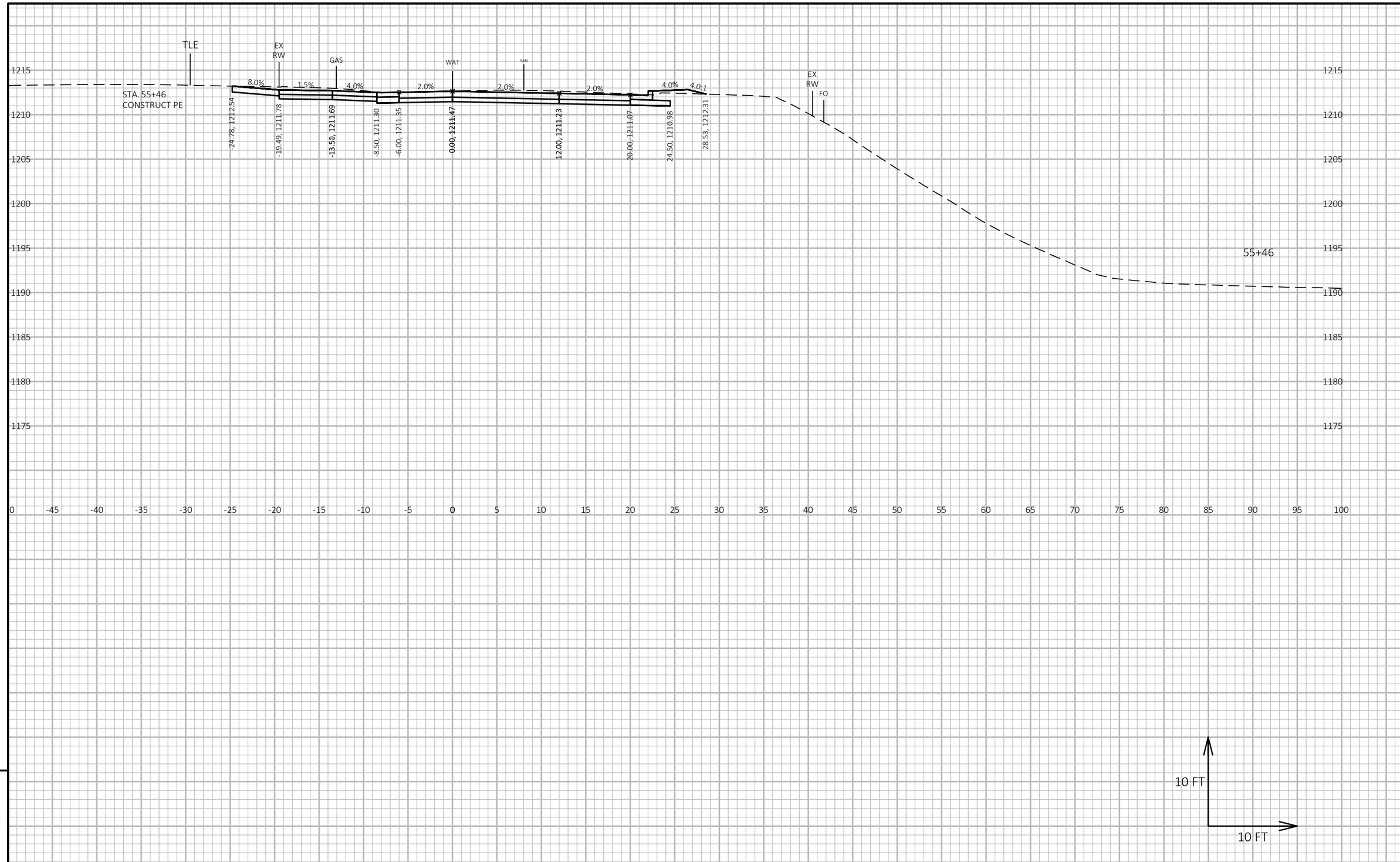

9

9

PROJECT NO: 6999-18-73	HWY: SOUTH 1ST AVENUE	COUNTY: MARATHON	CROSS SECTIONS: SOUTH 1ST AVENUE	SHEET 225	E

FILE NAME : V:\TRANS-EC\410723 WAUSAU 1ST AVE\C3D\DESIGN\CORRIDORS\CORRIDOR-SOUTH1STAVE.DWG
LAYOUT NAME - 70

PLOT DATE : 10/16/2018 8:39 AM PLOT BY : WOOLEVER, NATHAN PLOT NAME : PLOT SCALE : 1 IN:10 FT HORZ. / 1 IN:10 FT VERT.

WISDOT/CADDS SHEET 49

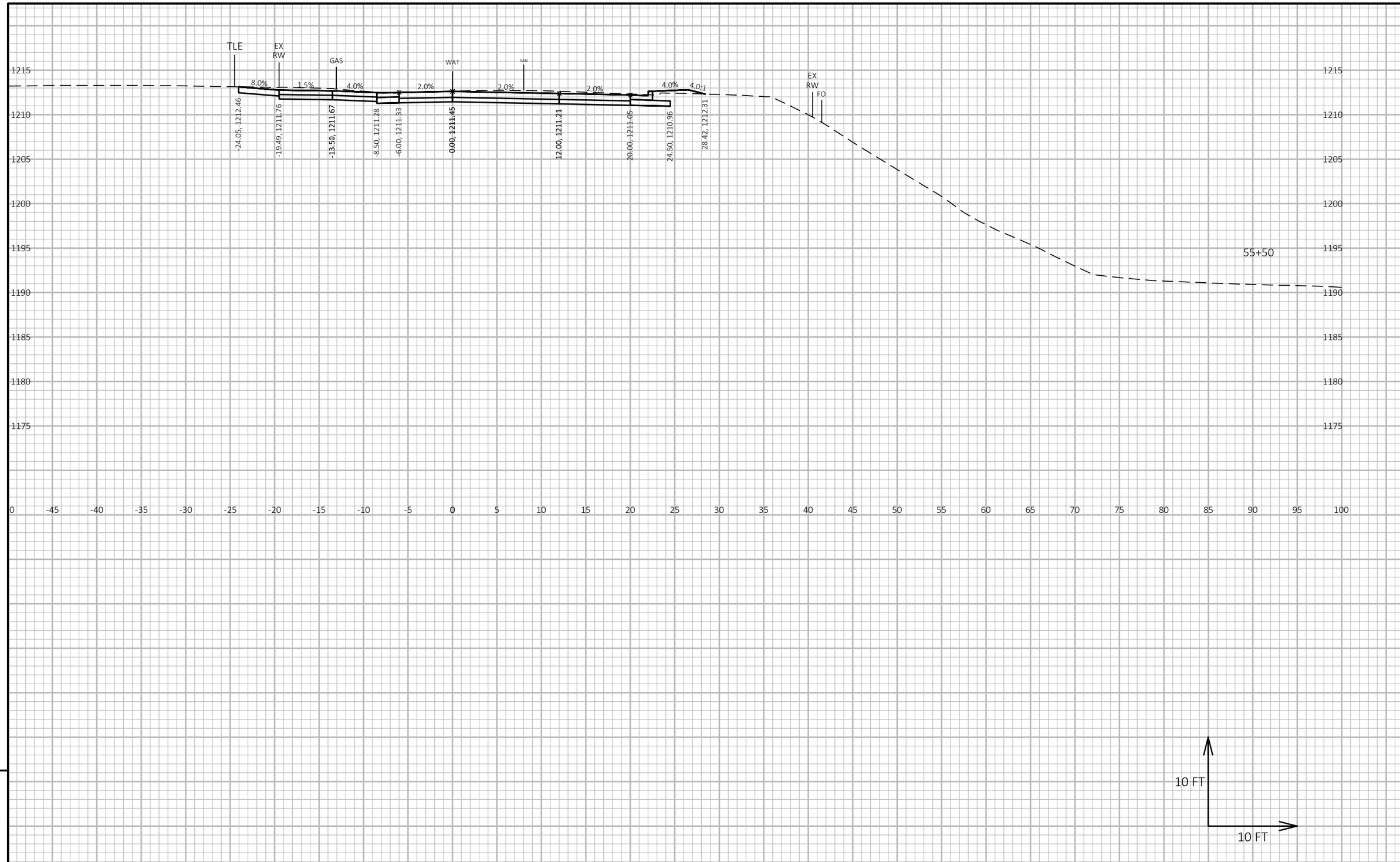

9

9

PROJECT NO: 6999-18-73	HWY: SOUTH 1ST AVENUE	COUNTY: MARATHON	CROSS SECTIONS: SOUTH 1ST AVENUE	SHEET 226	E

FILE NAME : V:\TRANS-EC\410723 WAUSAU 1ST AVE\C3D\DESIGN\CORRIDORS\CORRIDOR-SOUTH1STAVE.DWG
LAYOUT NAME - 71

PLOT DATE : 10/16/2018 8:39 AM PLOT BY : WOOLEVER, NATHAN PLOT NAME : PLOT SCALE : 1 IN:10 FT HORZ. / 1 IN:10 FT VERT.

WISDOT/CADDS SHEET 49

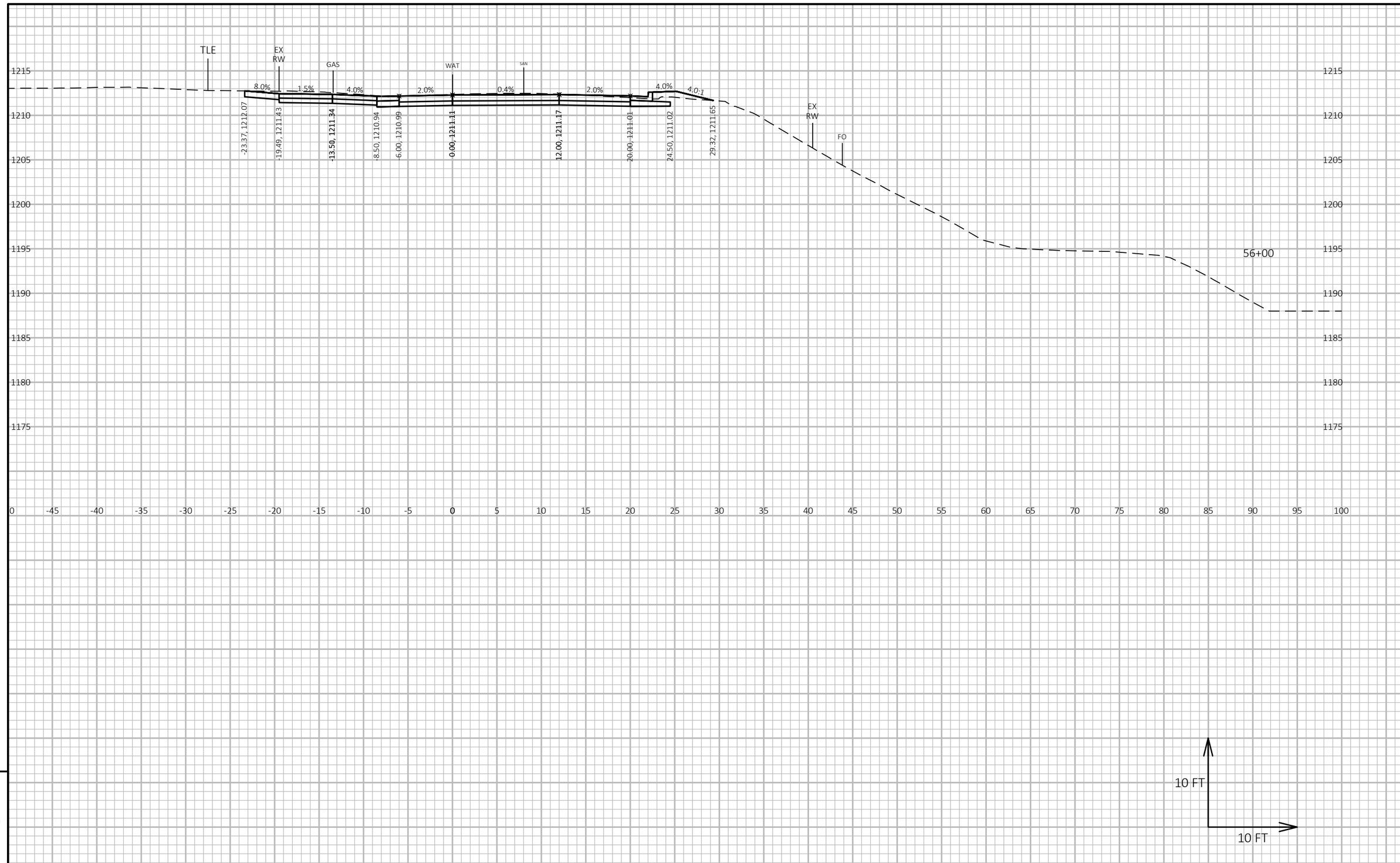

9

9

PROJECT NO: 6999-18-73	HWY: SOUTH 1ST AVENUE	COUNTY: MARATHON	CROSS SECTIONS: SOUTH 1ST AVENUE	SHEET 227	E

FILE NAME : V:\TRANS-EC\410723 WAUSAU 1ST AVE\C3D\DESIGN\CORRIDORS\CORRIDOR-SOUTH1STAVE.DWG
LAYOUT NAME - 72

PLOT DATE : 10/16/2018 8:40 AM PLOT BY : WOOLEVER, NATHAN PLOT NAME : PLOT SCALE : 1 IN:10 FT HORZ. / 1 IN:10 FT VERT.

WISDOT/CADDS SHEET 49

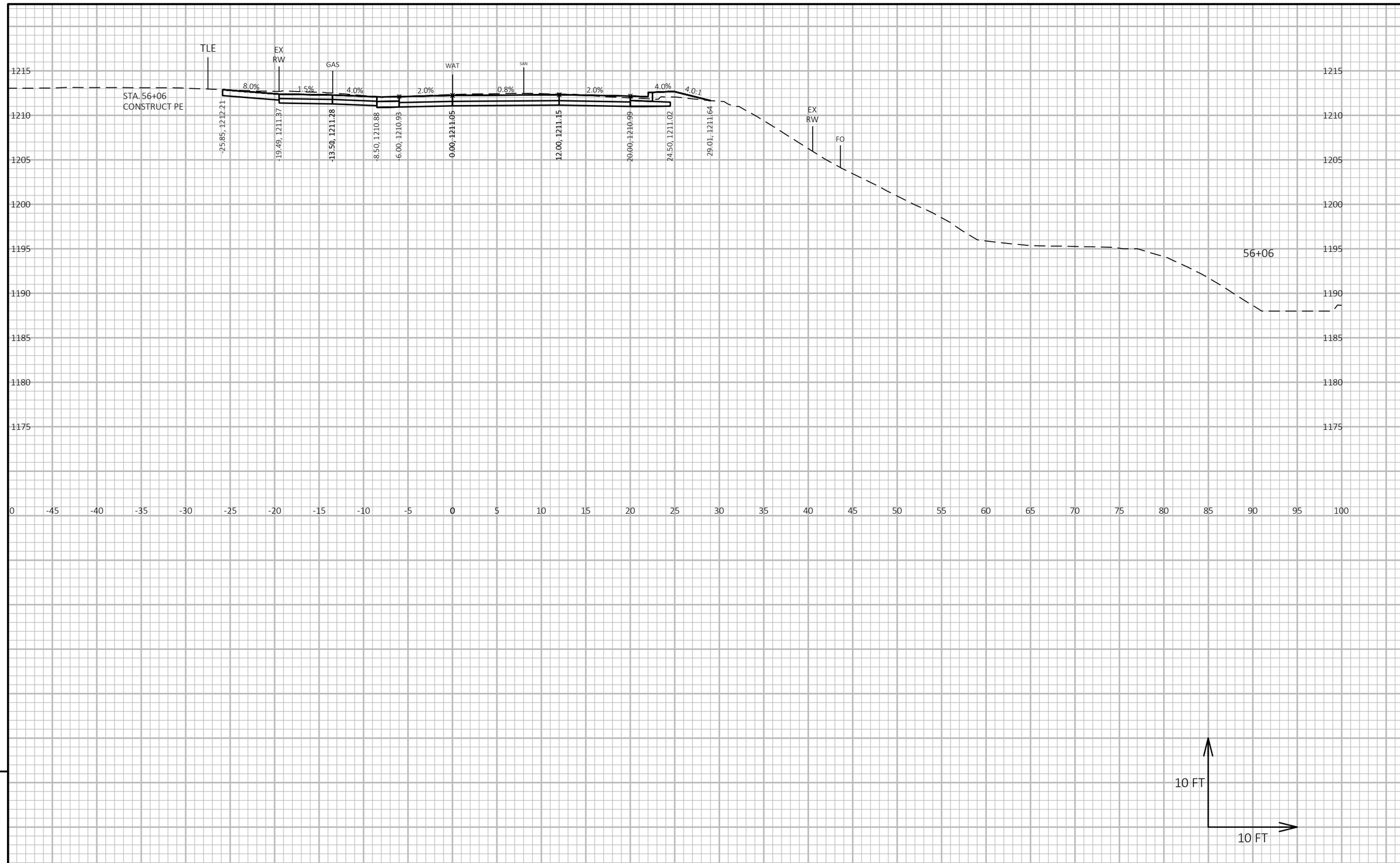

9

9

PROJECT NO: 6999-18-73	HWY: SOUTH 1ST AVENUE	COUNTY: MARATHON	CROSS SECTIONS: SOUTH 1ST AVENUE	SHEET 228	E

FILE NAME : V:\TRANS-EC\410723 WAUSAU 1ST AVE\C3D\DESIGN\CORRIDORS\CORRIDOR-SOUTH1STAVE.DWG
LAYOUT NAME - 73
PLOT DATE : 10/16/2018 8:40 AM
PLOT BY : WOOLEVER, NATHAN
PLOT NAME :
PLOT SCALE : 1 IN:10 FT HORZ. / 1 IN:10 FT VERT.
WISDOT/CADDS SHEET 49

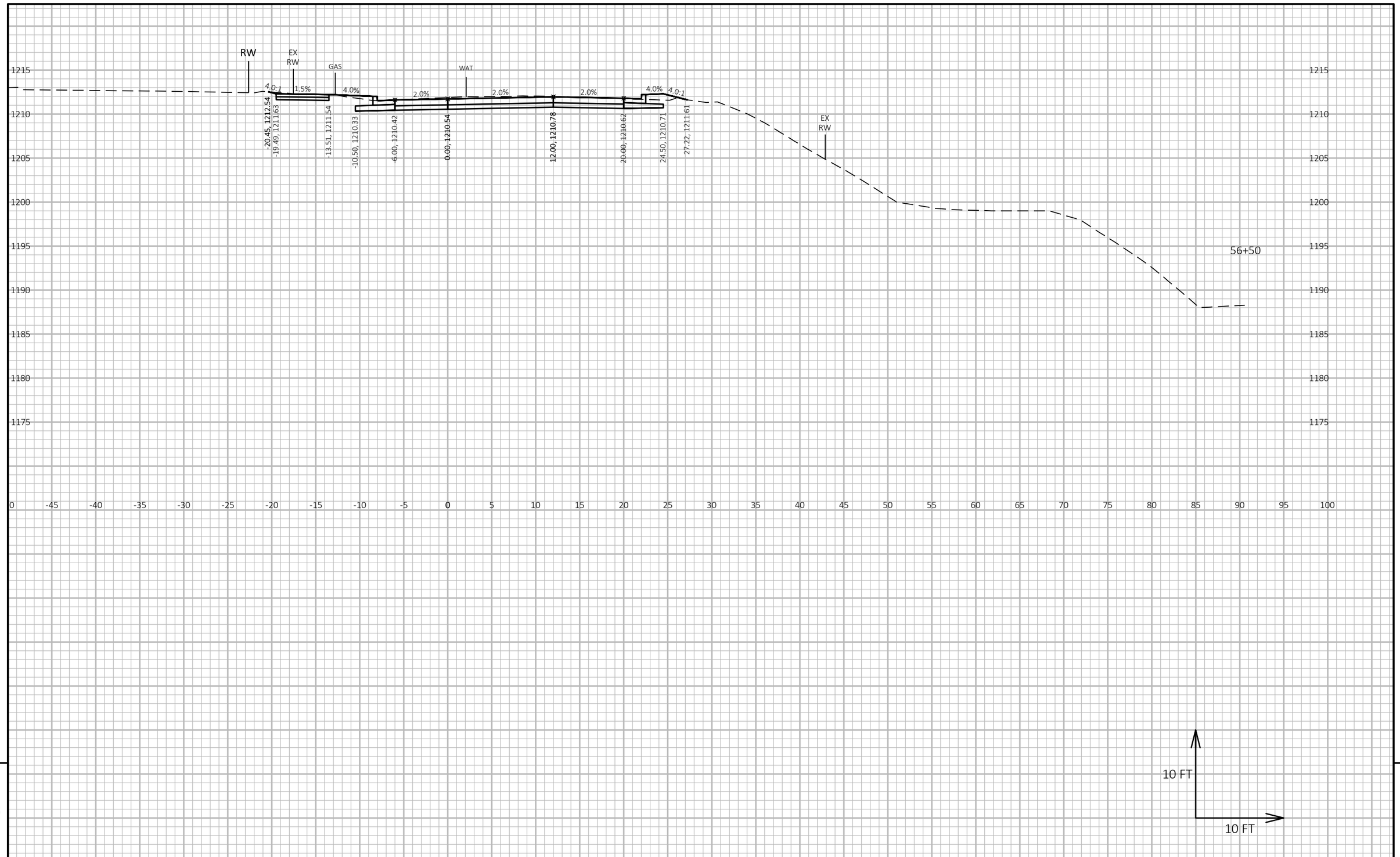

9

9

PROJECT NO: 6999-18-73	HWY: SOUTH 1ST AVENUE	COUNTY: MARATHON	CROSS SECTIONS: SOUTH 1ST AVENUE	SHEET 229	E

FILE NAME : V:\TRANS-EC\410723 WAUSAU 1ST AVE\C3D\DESIGN\CORRIDORS\CORRIDOR-SOUTH1STAVE.DWG
LAYOUT NAME - 74

PLOT DATE : 10/16/2018 8:40 AM PLOT BY : WOOLEVER, NATHAN PLOT NAME : PLOT SCALE : 1 IN:10 FT HORZ. / 1 IN:10 FT VERT.

WISDOT/CADDS SHEET 49

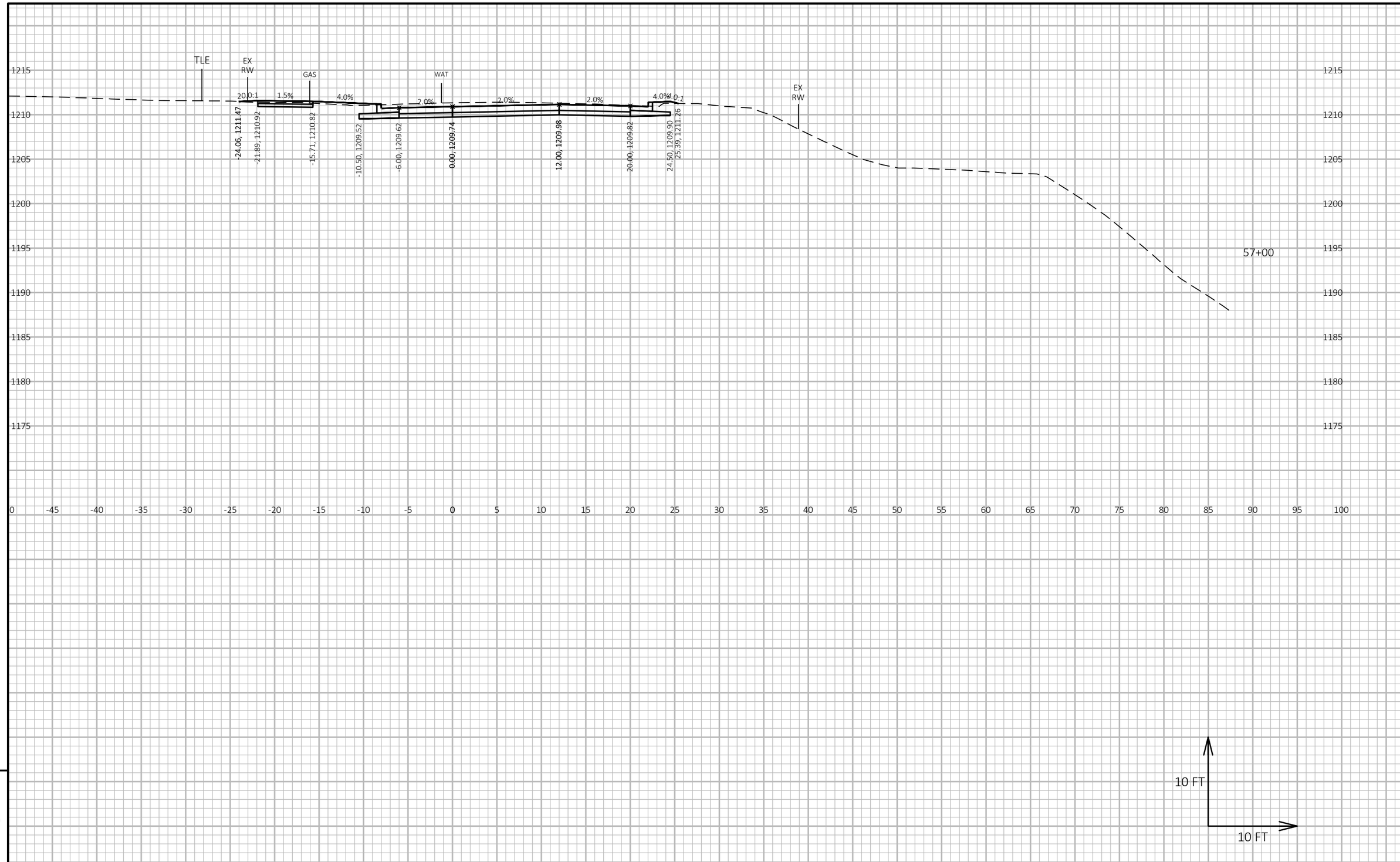

9

9

PROJECT NO: 6999-18-73	HWY: SOUTH 1ST AVENUE	COUNTY: MARATHON	CROSS SECTIONS: SOUTH 1ST AVENUE	SHEET 230	E

FILE NAME : V:\TRANS-EC\410723 WAUSAU 1ST AVE\C3D\DESIGN\CORRIDORS\CORRIDOR-SOUTH1STAVE.DWG
LAYOUT NAME - 75
PLOT DATE : 10/16/2018 8:40 AM
PLOT BY : WOOLEVER, NATHAN
PLOT NAME :
PLOT SCALE : 1 IN:10 FT HORZ. / 1 IN:10 FT VERT.
WISDOT/CADDS SHEET 49

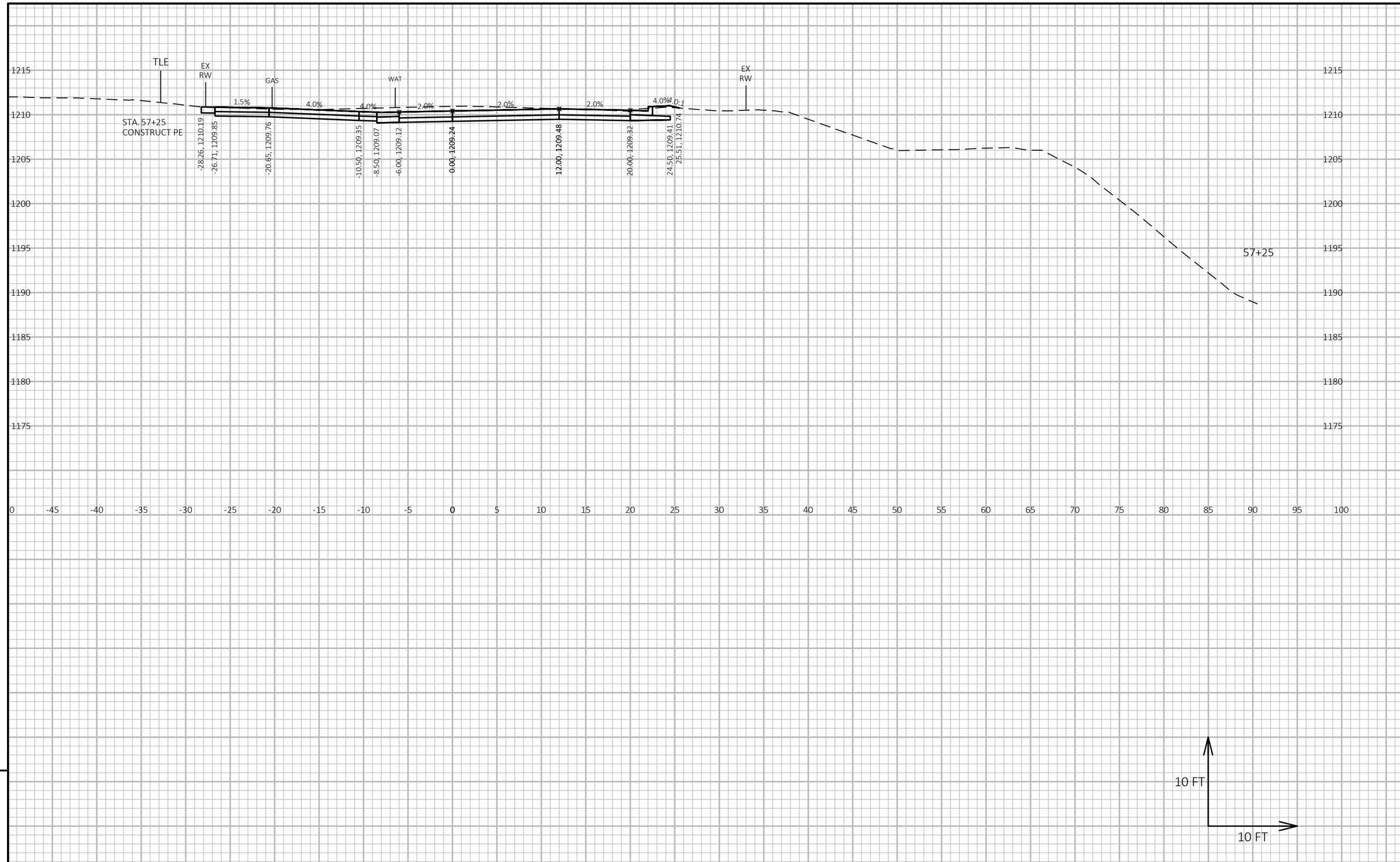

9

9

PROJECT NO: 6999-18-73	HWY: SOUTH 1ST AVENUE	COUNTY: MARATHON	CROSS SECTIONS: SOUTH 1ST AVENUE	SHEET 231	E

FILE NAME : V:\TRANS-EC\410723 WAUSAU 1ST AVE\C3D\DESIGN\CORRIDORS\CORRIDOR-SOUTH1STAVE.DWG
LAYOUT NAME - 76
PLOT DATE : 10/16/2018 8:40 AM
PLOT BY : WOOLEVER, NATHAN
PLOT NAME :
PLOT SCALE : 1 IN:10 FT HORZ. / 1 IN:10 FT VERT.
WISDOT/CADDS SHEET 49

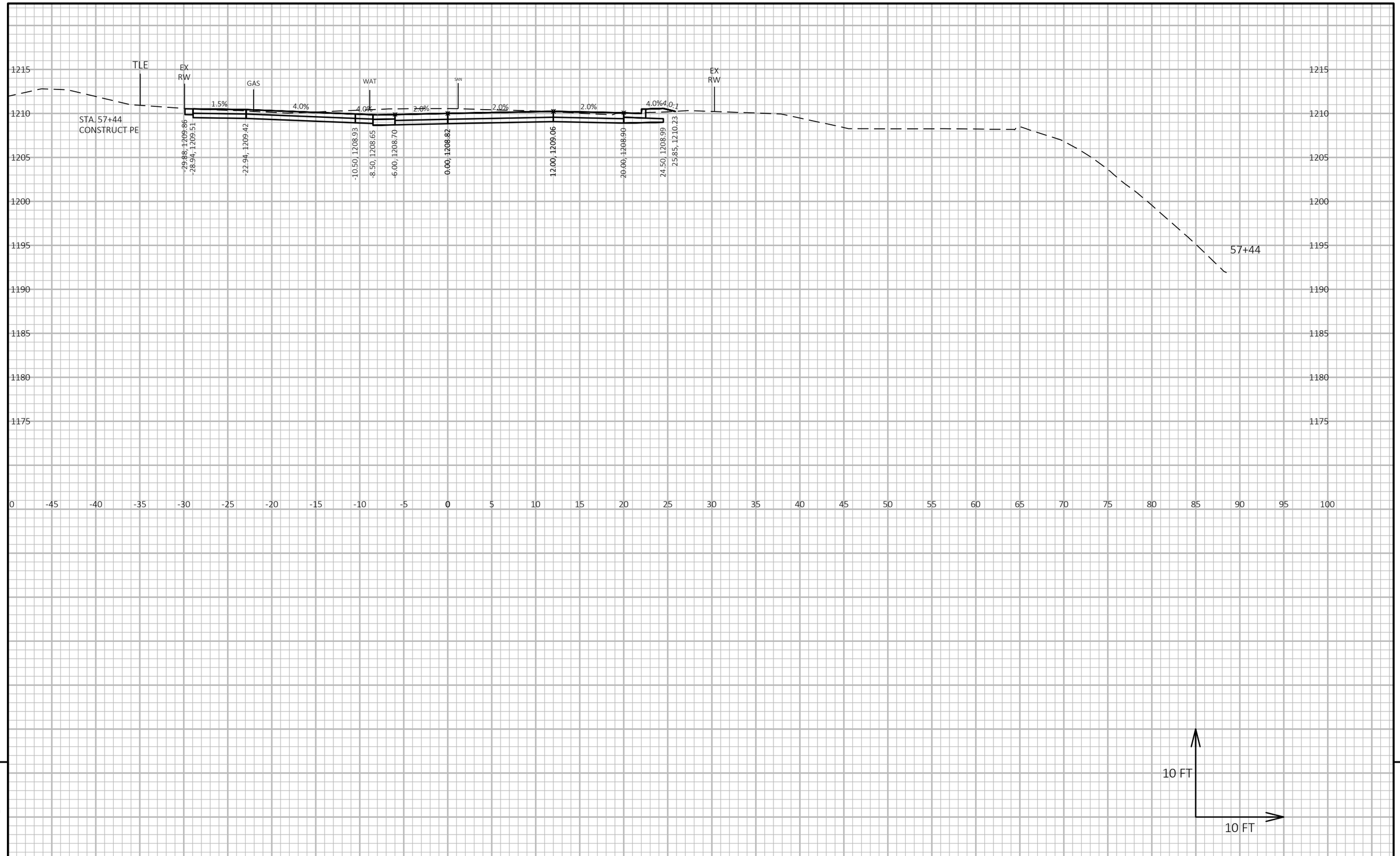

9

9

PROJECT NO: 6999-18-73	HWY: SOUTH 1ST AVENUE	COUNTY: MARATHON	CROSS SECTIONS: SOUTH 1ST AVENUE	SHEET 232	E

FILE NAME : V:\TRANS-EC\410723 WAUSAU 1ST AVE\C3D\DESIGN\CORRIDORS\CORRIDOR-SOUTH1STAVE.DWG
LAYOUT NAME - 77
PLOT DATE : 10/16/2018 8:40 AM
PLOT BY : WOOLEVER, NATHAN
PLOT NAME :
PLOT SCALE : 1 IN:10 FT HORZ. / 1 IN:10 FT VERT.
WISDOT/CADDS SHEET 49

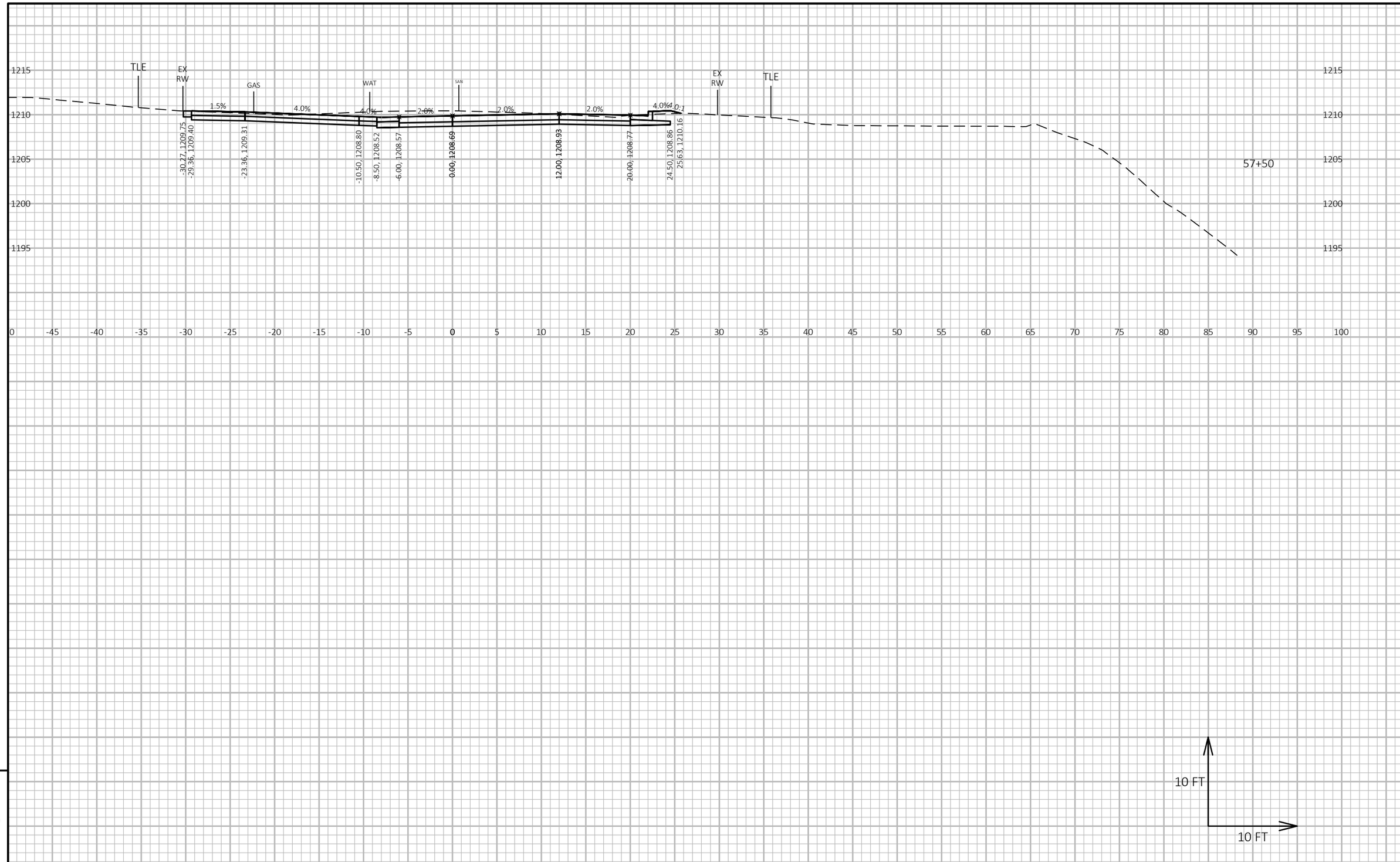

9

9

PROJECT NO: 6999-18-73	HWY: SOUTH 1ST AVENUE	COUNTY: MARATHON	CROSS SECTIONS: SOUTH 1ST AVENUE	SHEET 233	E

FILE NAME : V:\TRANS-EC\410723 WAUSAU 1ST AVE\C3D\DESIGN\CORRIDORS\CORRIDOR-SOUTH1STAVE.DWG
LAYOUT NAME - 78

PLOT DATE : 10/16/2018 8:41 AM PLOT BY : WOOLEVER, NATHAN PLOT NAME : PLOT SCALE : 1 IN:10 FT HORZ. / 1 IN:10 FT VERT.

WISDOT/CADDS SHEET 49

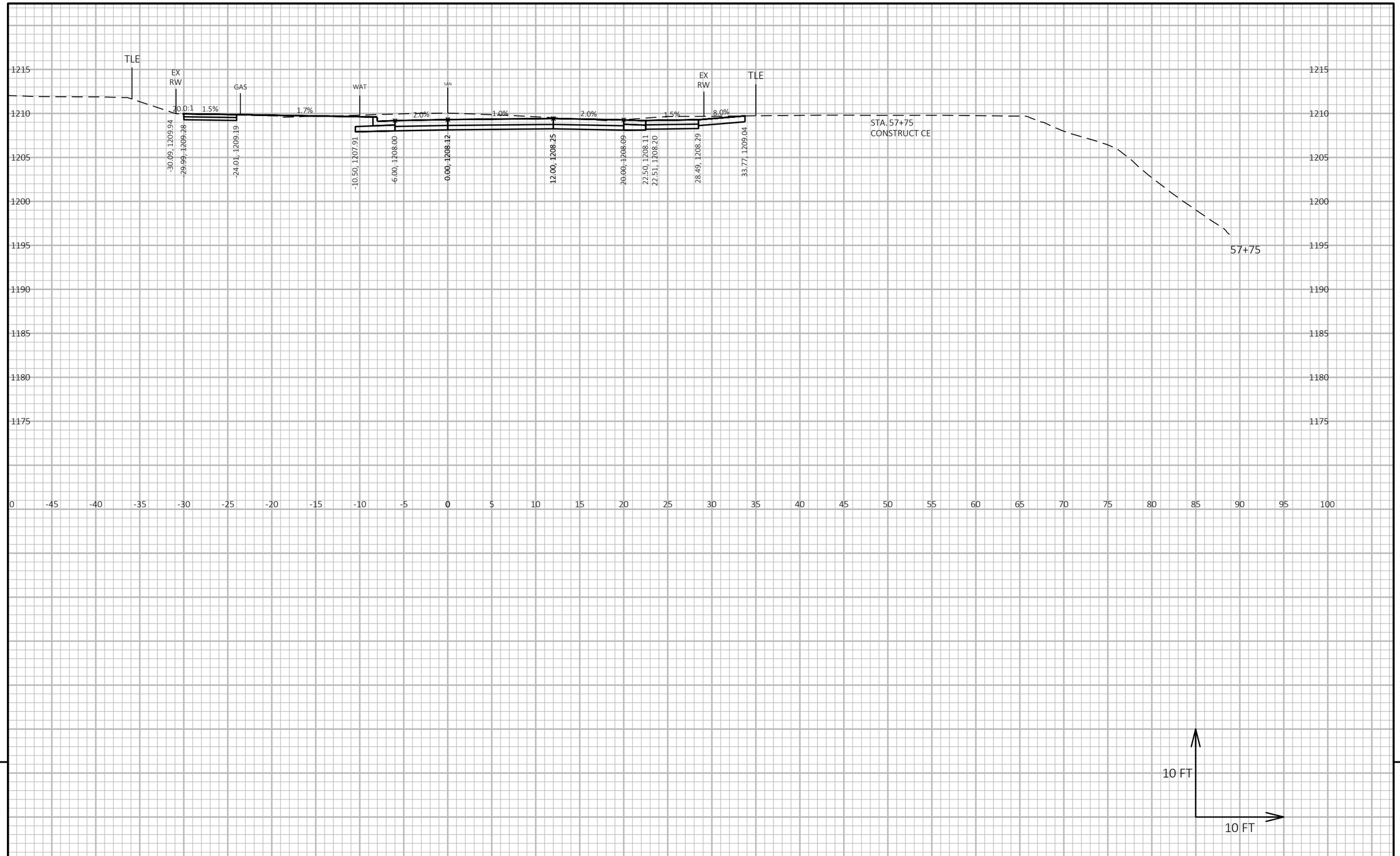

9

9

PROJECT NO: 6999-18-73	HWY: SOUTH 1ST AVENUE	COUNTY: MARATHON	CROSS SECTIONS: SOUTH 1ST AVENUE	SHEET 234	E

FILE NAME : V:\TRANS-EC\410723 WAUSAU 1ST AVE\C3D\DESIGN\CORRIDORS\CORRIDOR-SOUTH1STAVE.DWG
LAYOUT NAME - 79
PLOT DATE : 10/16/2018 8:41 AM
PLOT BY : WOOLEVER, NATHAN
PLOT NAME :
PLOT SCALE : 1 IN:10 FT HORZ. / 1 IN:10 FT VERT.
WISDOT/CADDS SHEET 49

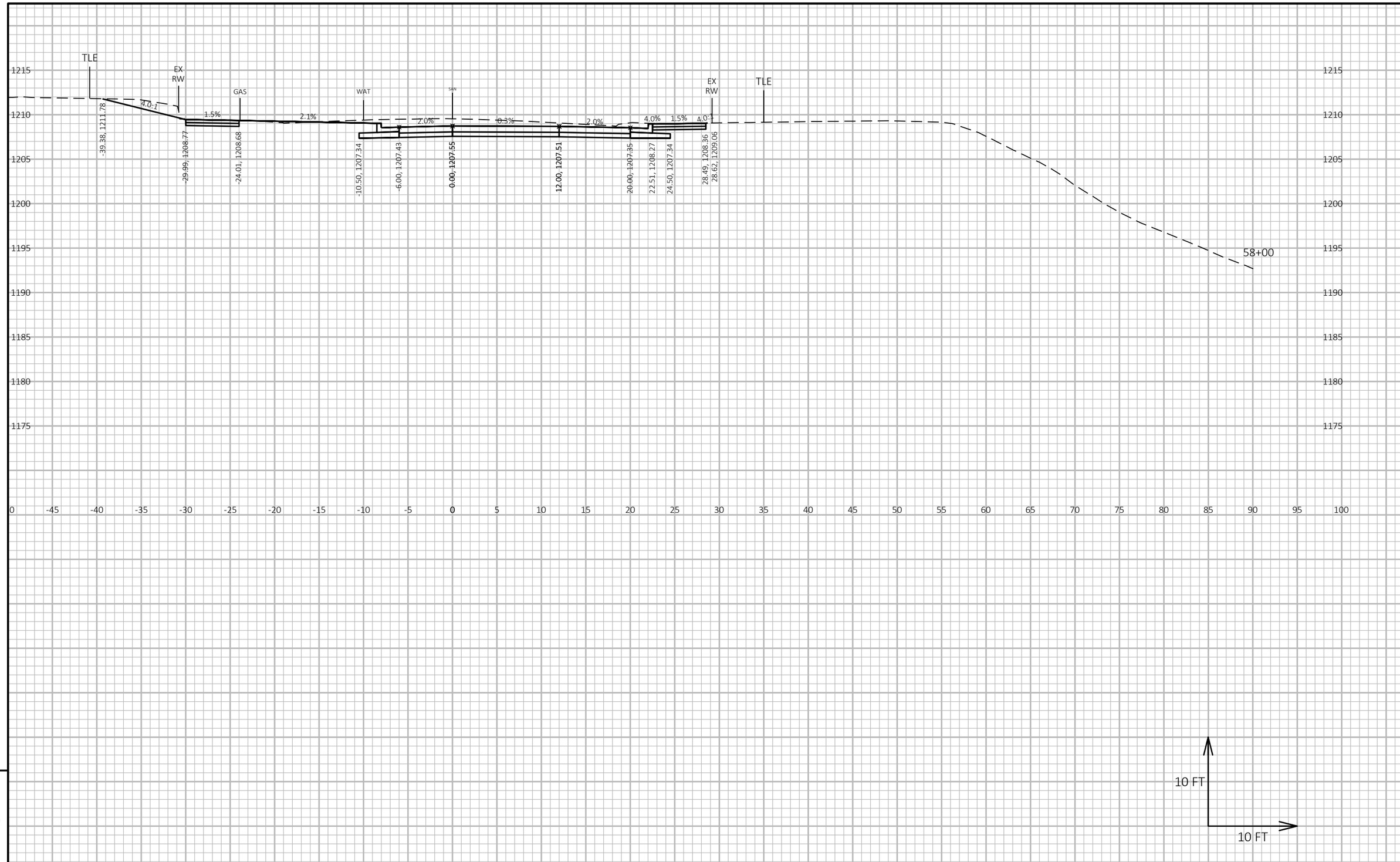

9

9

PROJECT NO: 6999-18-73	HWY: SOUTH 1ST AVENUE	COUNTY: MARATHON	CROSS SECTIONS: SOUTH 1ST AVENUE	SHEET 235	E

FILE NAME : V:\TRANS-EC\410723 WAUSAU 1ST AVE\C3D\DESIGN\CORRIDORS\CORRIDOR-SOUTH1STAVE.DWG
LAYOUT NAME - 80

PLOT DATE : 10/16/2018 8:41 AM PLOT BY : WOOLEVER, NATHAN PLOT NAME : PLOT SCALE : 1 IN:10 FT HORZ. / 1 IN:10 FT VERT.

WISDOT/CADDS SHEET 49

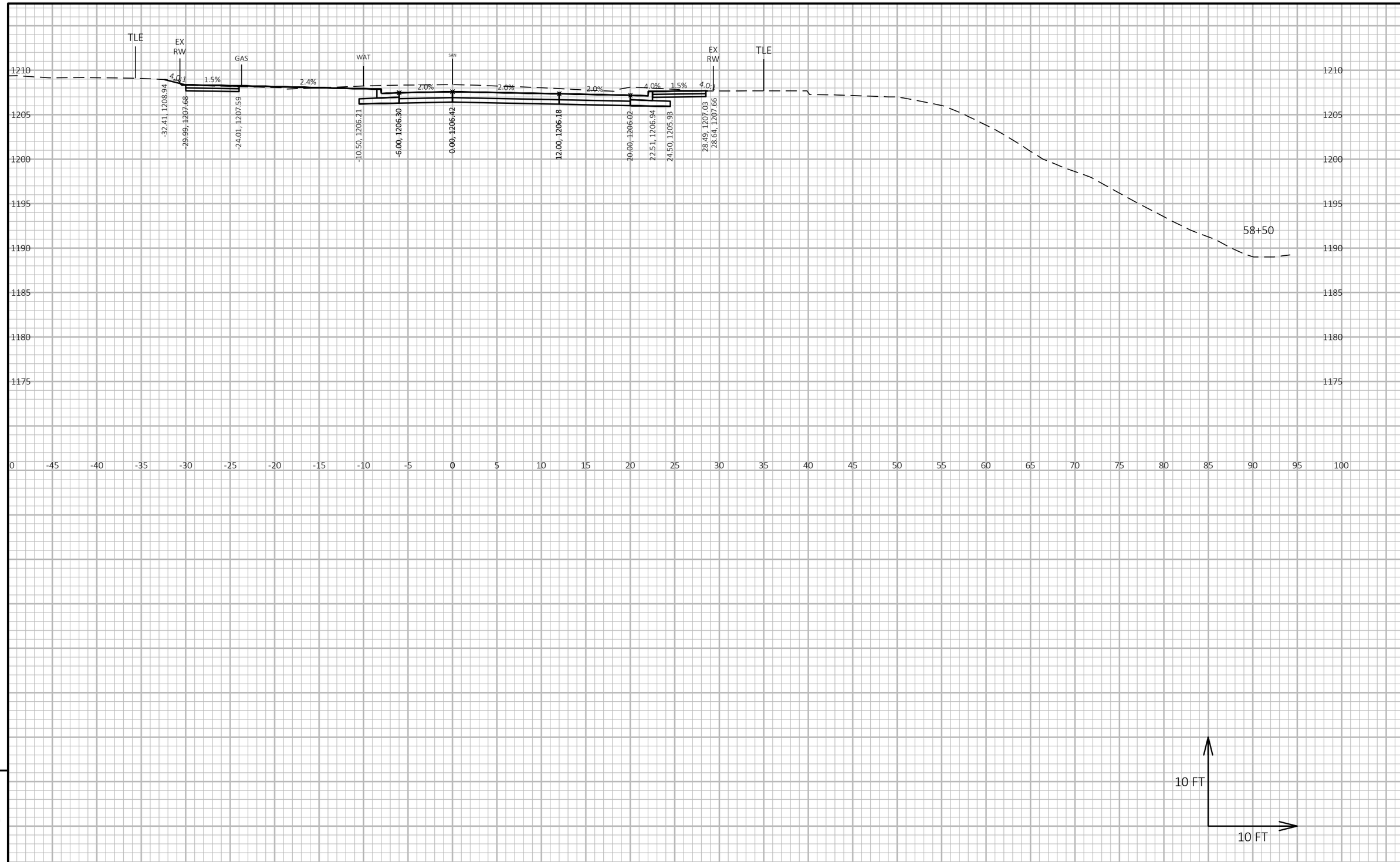

9

9

PROJECT NO: 6999-18-73	HWY: SOUTH 1ST AVENUE	COUNTY: MARATHON	CROSS SECTIONS: SOUTH 1ST AVENUE	SHEET 236	E

FILE NAME : V:\TRANS-EC\410723 WAUSAU 1ST AVE\C3D\DESIGN\CORRIDORS\CORRIDOR-SOUTH1STAVE.DWG
LAYOUT NAME - 81

PLOT DATE : 10/16/2018 8:41 AM PLOT BY : WOOLEVER, NATHAN PLOT NAME : PLOT SCALE : 1 IN:10 FT HORZ. / 1 IN:10 FT VERT.

WISDOT/CADDS SHEET 49

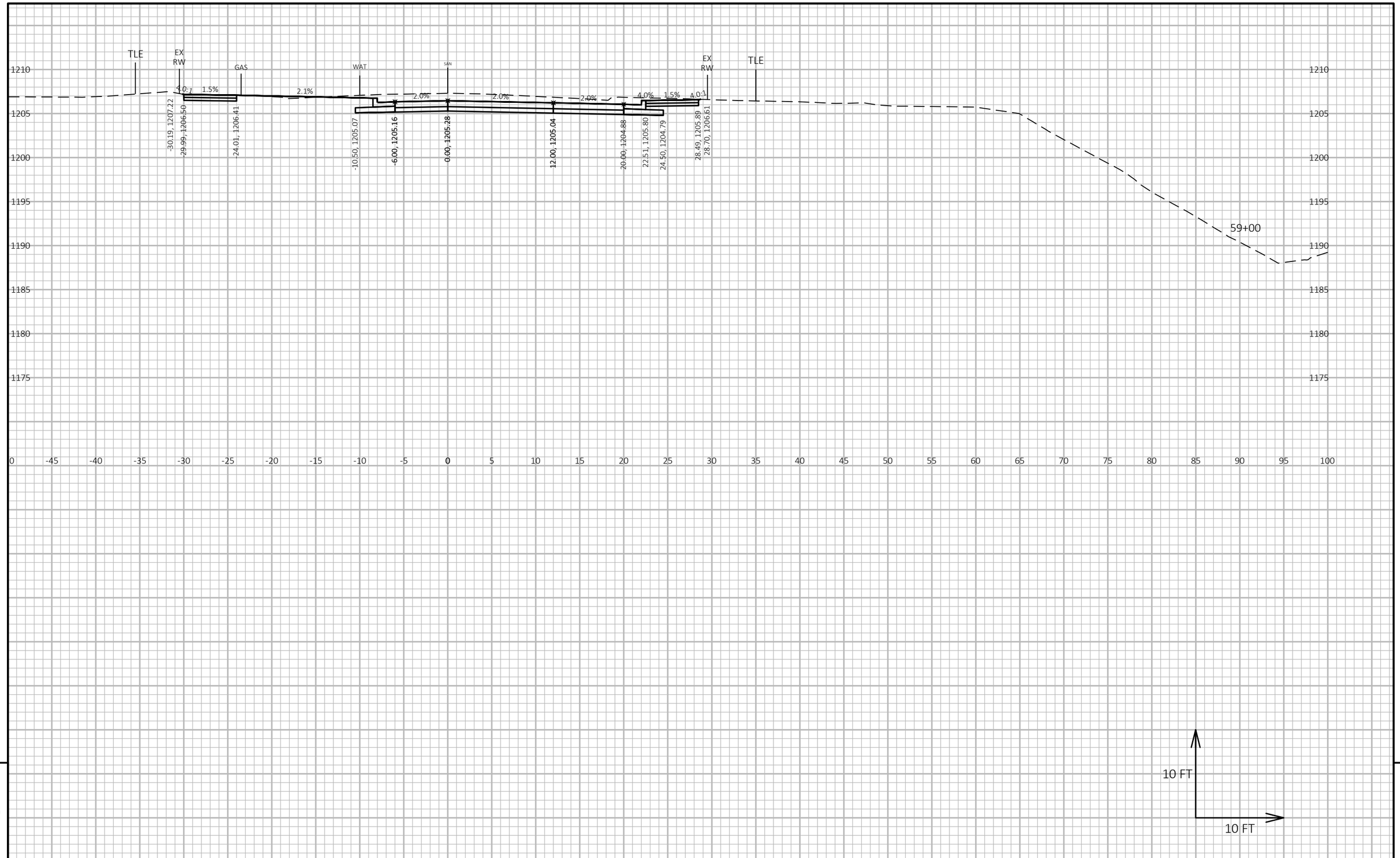

9

9

PROJECT NO: 6999-18-73	HWY: SOUTH 1ST AVENUE	COUNTY: MARATHON	CROSS SECTIONS: SOUTH 1ST AVENUE	SHEET 237	E

FILE NAME : V:\TRANS-EC\410723 WAUSAU 1ST AVE\C3D\DESIGN\CORRIDORS\CORRIDOR-SOUTH1STAVE.DWG
LAYOUT NAME - 82

PLOT DATE : 10/16/2018 8:41 AM PLOT BY : WOOLEVER, NATHAN PLOT NAME : PLOT SCALE : 1 IN:10 FT HORZ. / 1 IN:10 FT VERT.

WISDOT/CADDS SHEET 49

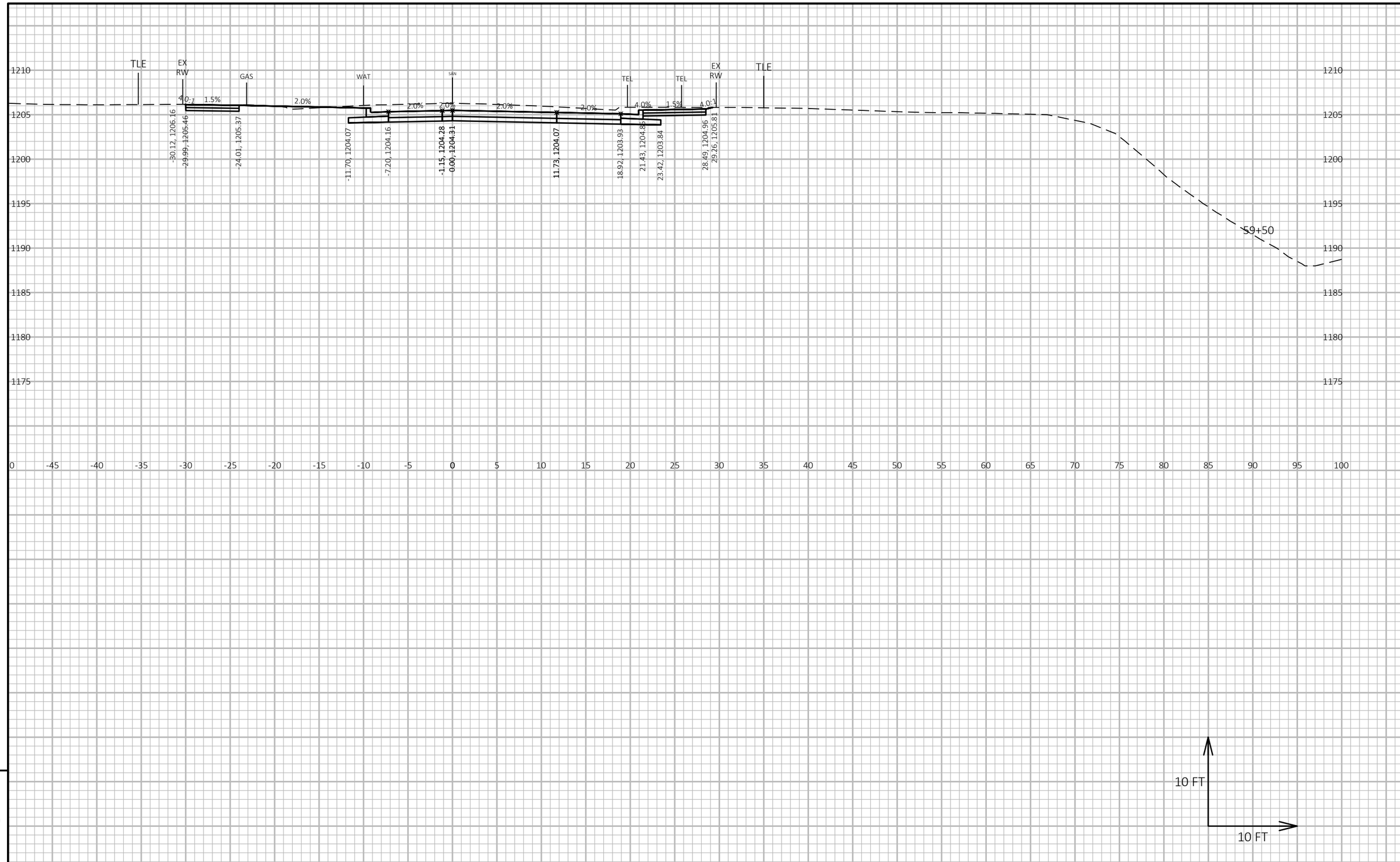

9

9

PROJECT NO: 6999-18-73	HWY: SOUTH 1ST AVENUE	COUNTY: MARATHON	CROSS SECTIONS: SOUTH 1ST AVENUE	SHEET 238	E

FILE NAME : V:\TRANS-EC\410723 WAUSAU 1ST AVE\C3D\DESIGN\CORRIDORS\CORRIDOR-SOUTH1STAVE.DWG
LAYOUT NAME - 83

PLOT DATE : 10/16/2018 8:41 AM PLOT BY : WOOLEVER, NATHAN PLOT NAME : PLOT SCALE : 1 IN:10 FT HORZ. / 1 IN:10 FT VERT.

WISDOT/CADDS SHEET 49

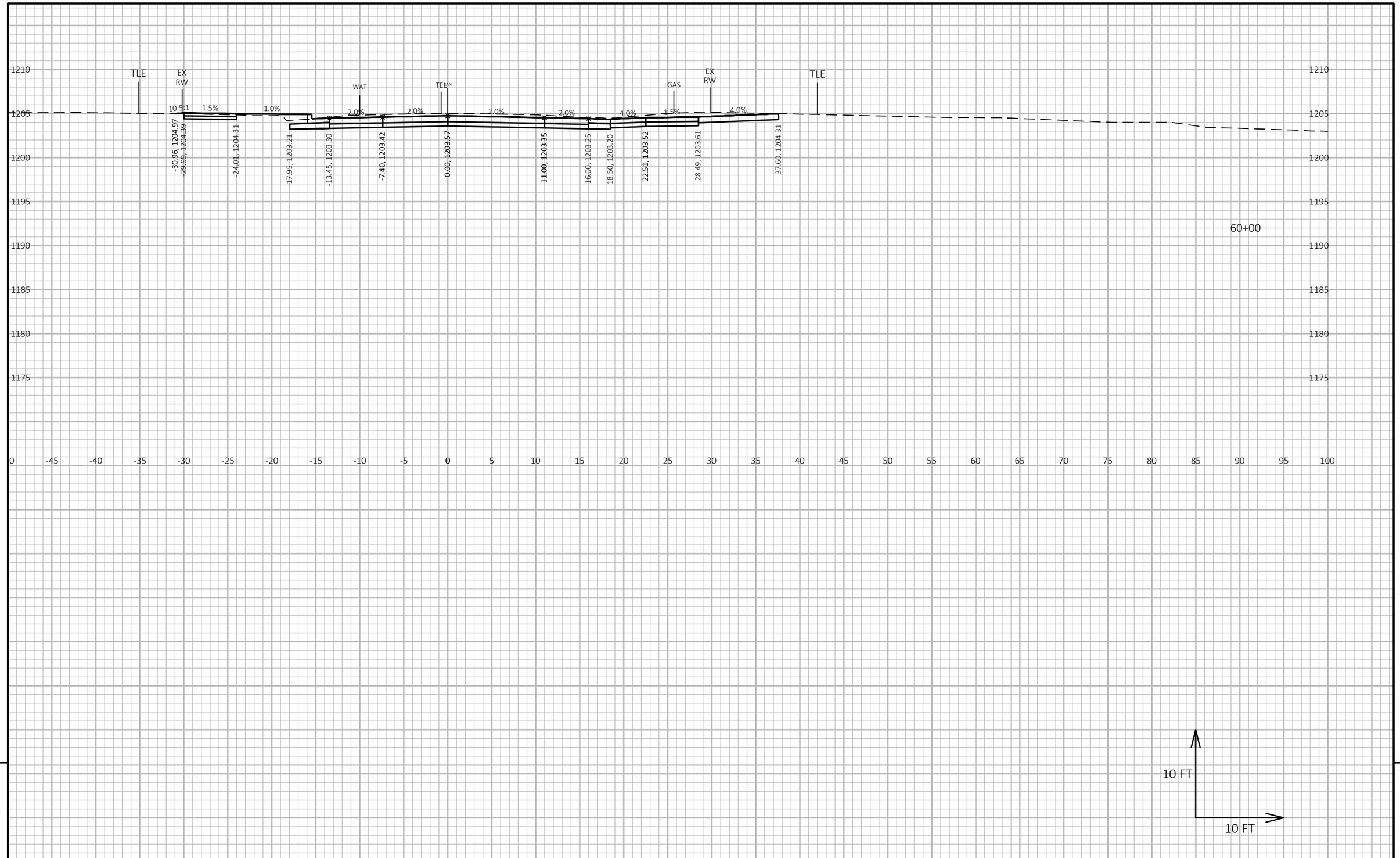

9

9

PROJECT NO: 6999-18-73	HWY: SOUTH 1ST AVENUE	COUNTY: MARATHON	CROSS SECTIONS: SOUTH 1ST AVENUE	SHEET 239	E

FILE NAME : V:\TRANS-EC\410723 WAUSAU 1ST AVE\C3D\DESIGN\CORRIDORS\CORRIDOR-SOUTH1STAVE.DWG
LAYOUT NAME - 84
PLOT DATE : 10/16/2018 8:42 AM
PLOT BY : WOOLEVER, NATHAN
PLOT NAME :
PLOT SCALE : 1 IN:10 FT HORZ. / 1 IN:10 FT VERT.
WISDOT/CADDS SHEET 49

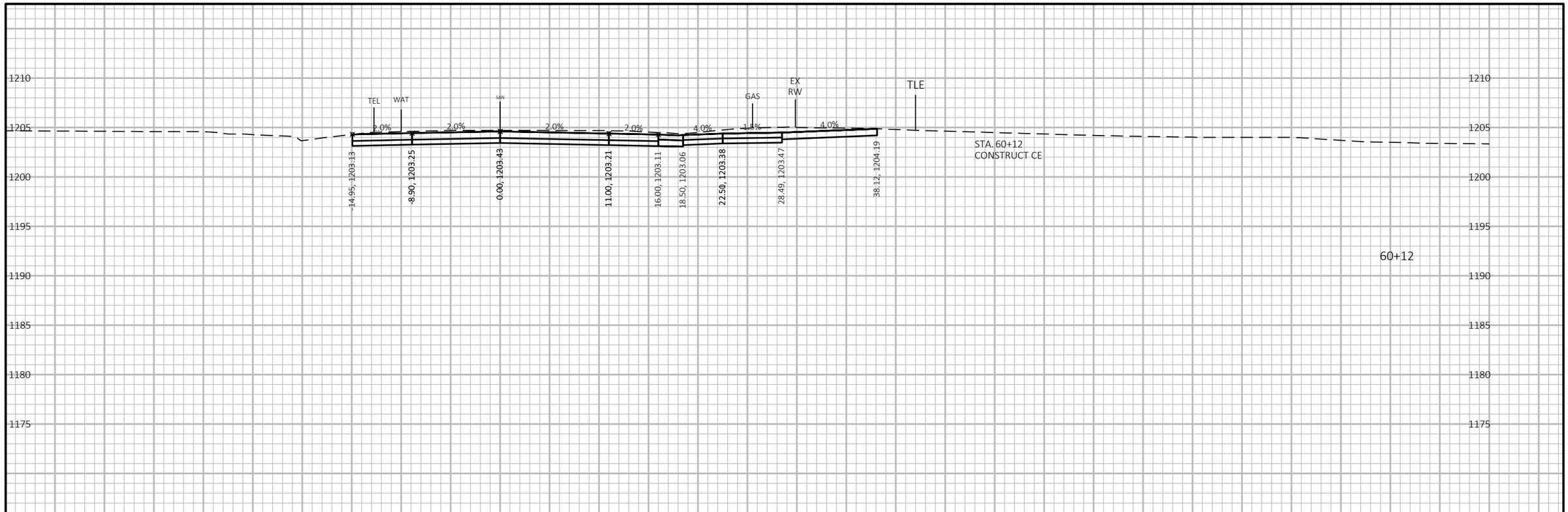

STEWART PLACE

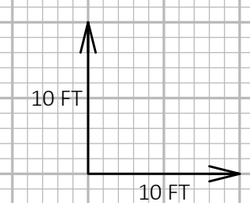

9

9

PROJECT NO: 6999-18-73	HWY: SOUTH 1ST AVENUE	COUNTY: MARATHON	CROSS SECTIONS: SOUTH 1ST AVENUE	SHEET 240	E

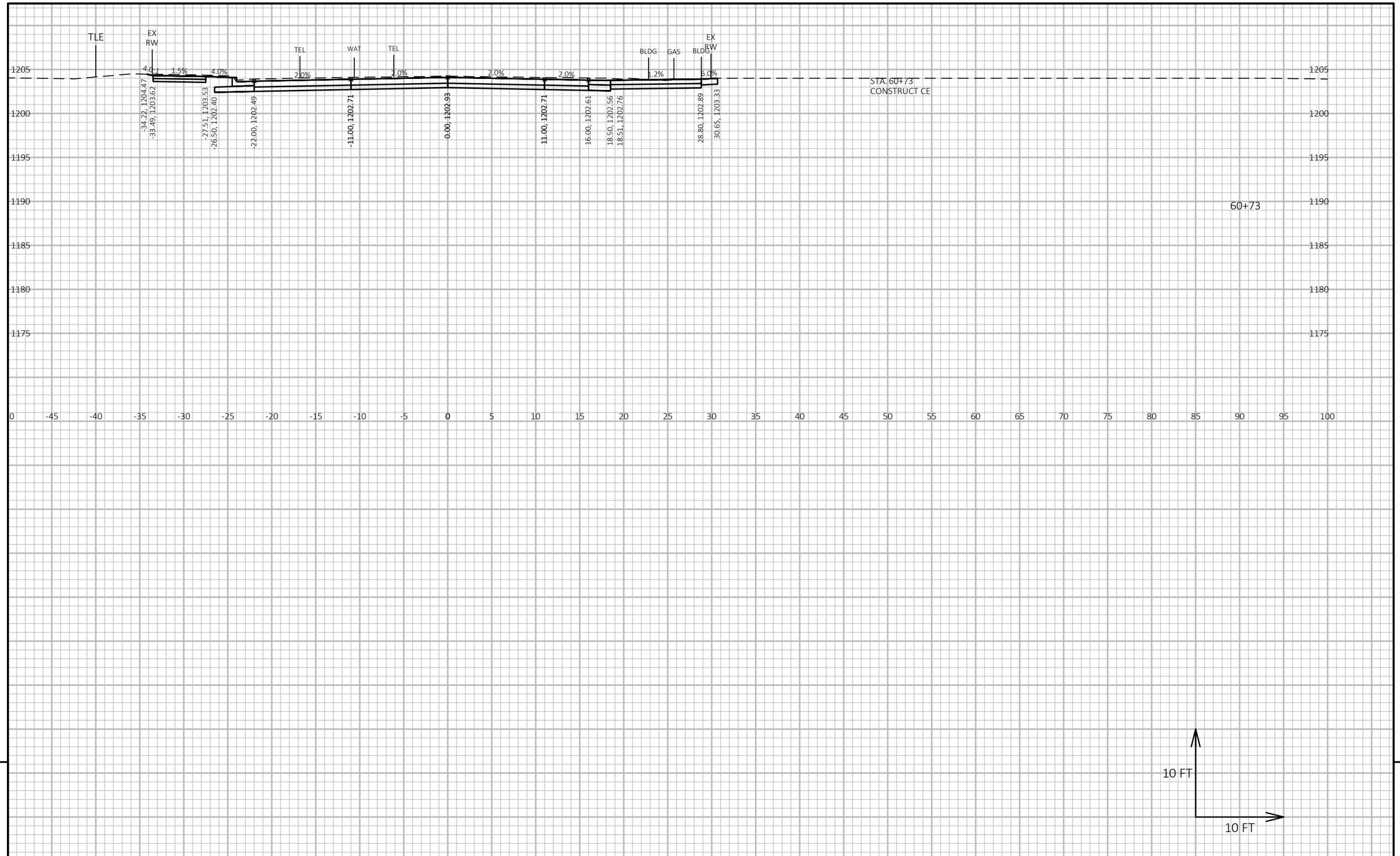

9

9

PROJECT NO: 6999-18-73	HWY: SOUTH 1ST AVENUE	COUNTY: MARATHON	CROSS SECTIONS: SOUTH 1ST AVENUE	SHEET 241	E

FILE NAME : V:\TRANS-EC\410723 WAUSAU 1ST AVE\C3D\DESIGN\CORRIDORS\CORRIDOR-SOUTH1STAVE.DWG
LAYOUT NAME - 86

PLOT DATE : 10/16/2018 8:42 AM PLOT BY : WOOLEVER, NATHAN PLOT NAME : PLOT SCALE : 1 IN:10 FT HORZ. / 1 IN:10 FT VERT.

WISDOT/CADDS SHEET 49

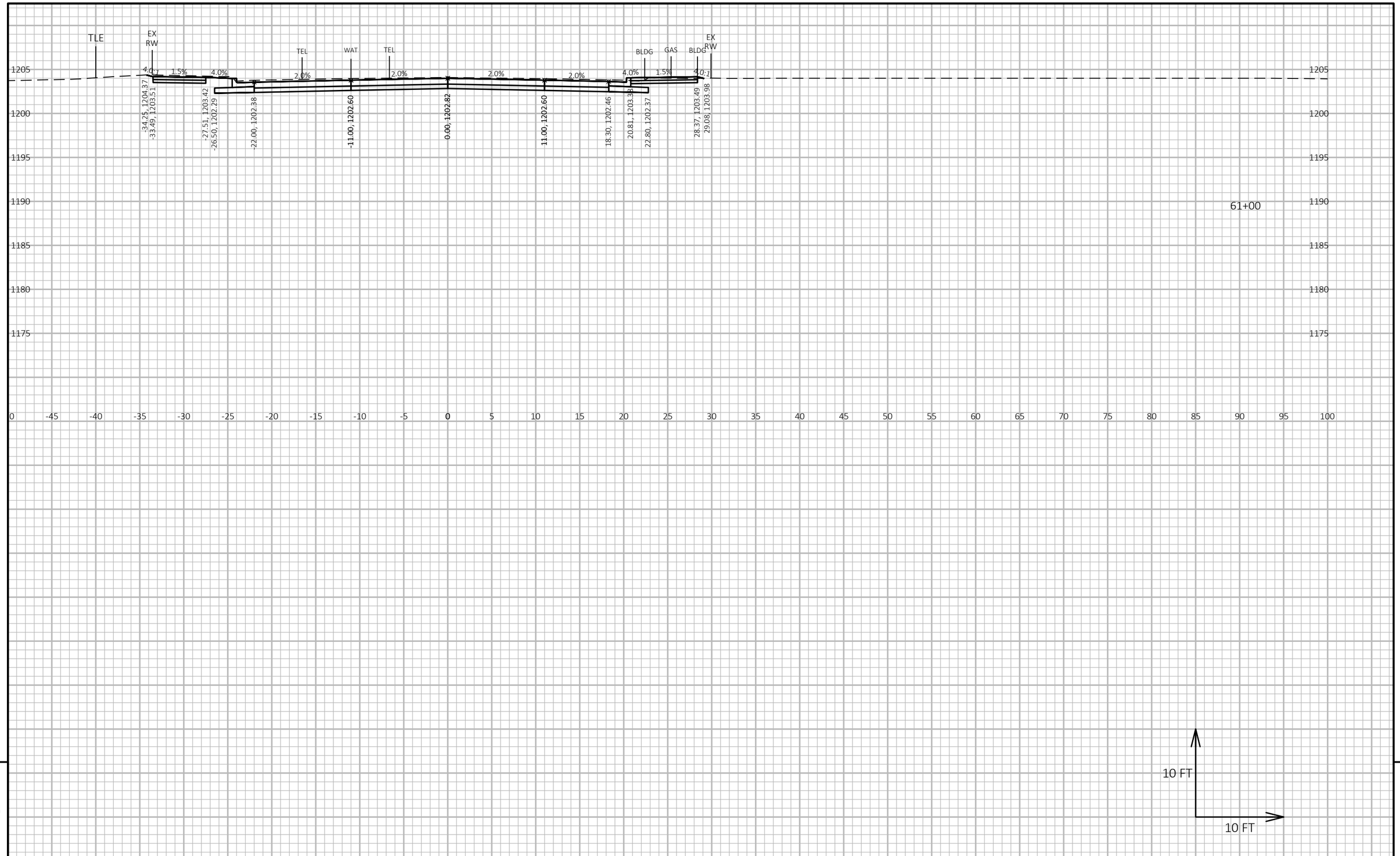

9

9

PROJECT NO: 6999-18-73	HWY: SOUTH 1ST AVENUE	COUNTY: MARATHON	CROSS SECTIONS: SOUTH 1ST AVENUE	SHEET 242	E

FILE NAME : V:\TRANS-EC\410723 WAUSAU 1ST AVE\C3D\DESIGN\CORRIDORS\CORRIDOR-SOUTH1STAVE.DWG
LAYOUT NAME - 87

PLOT DATE : 10/16/2018 8:42 AM PLOT BY : WOOLEVER, NATHAN PLOT NAME : PLOT SCALE : 1 IN:10 FT HORZ. / 1 IN:10 FT VERT.

WISDOT/CADDS SHEET 49

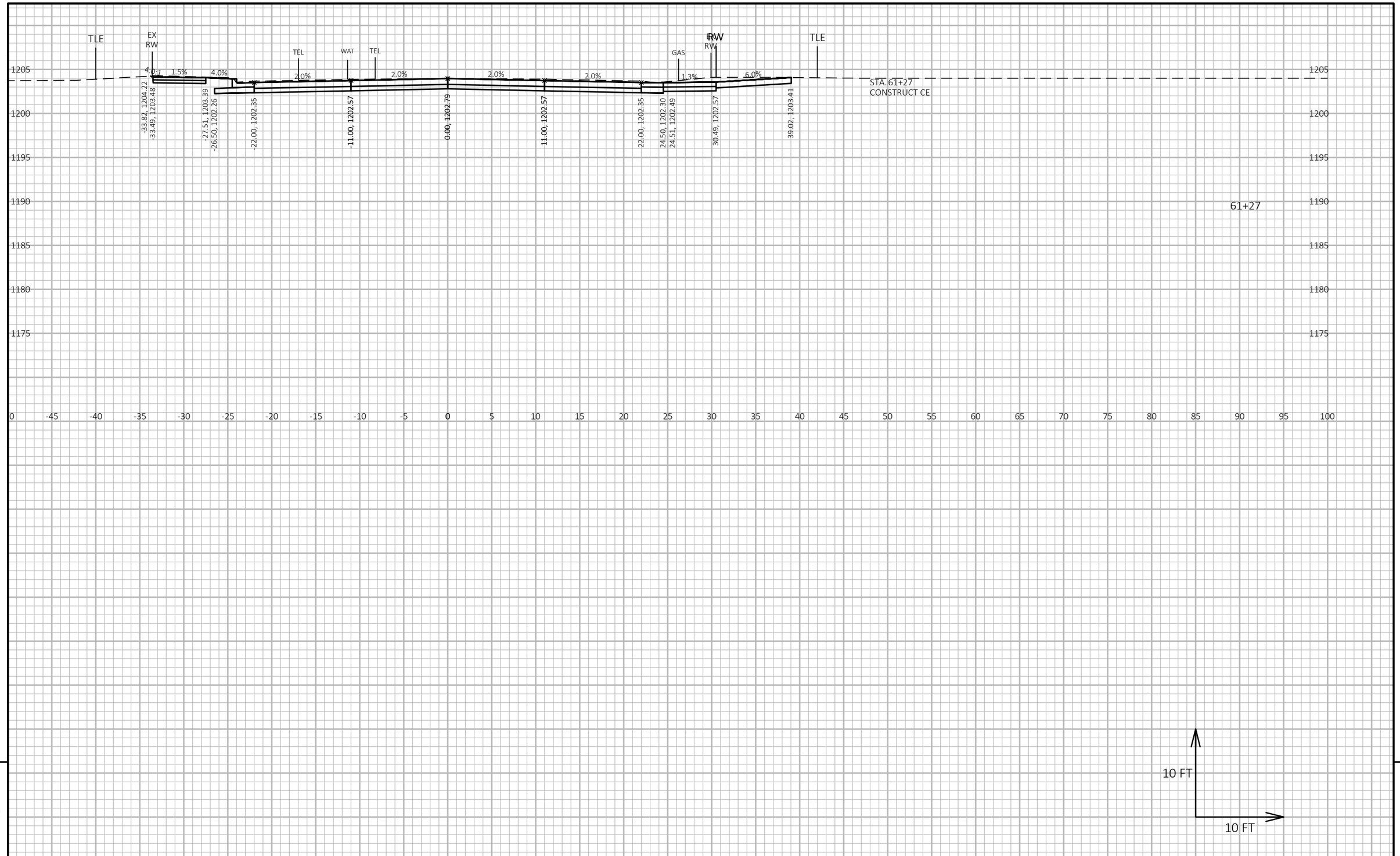

9

9

PROJECT NO: 6999-18-73	HWY: SOUTH 1ST AVENUE	COUNTY: MARATHON	CROSS SECTIONS: SOUTH 1ST AVENUE	SHEET 243	E

FILE NAME : V:\TRANS-EC\410723 WAUSAU 1ST AVE\C3D\DESIGN\CORRIDORS\CORRIDOR-SOUTH1STAVE.DWG
LAYOUT NAME - 88
PLOT DATE : 10/16/2018 8:42 AM
PLOT BY : WOOLEVER, NATHAN
PLOT NAME :
PLOT SCALE : 1 IN:10 FT HORZ. / 1 IN:10 FT VERT.
WISDOT/CADDS SHEET 49

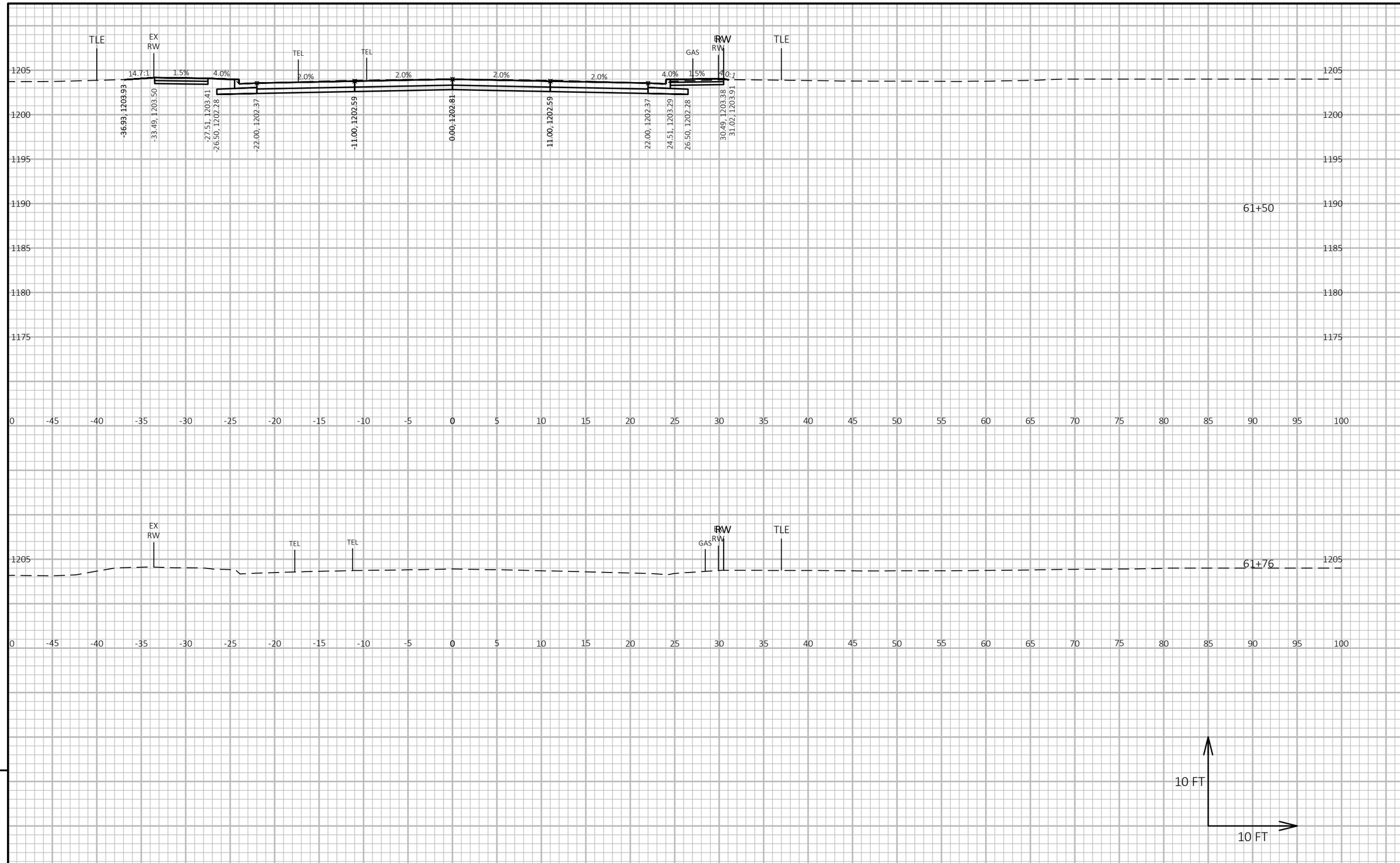

9

9

PROJECT NO: 6999-18-73	HWY: SOUTH 1ST AVENUE	COUNTY: MARATHON	CROSS SECTIONS: SOUTH 1ST AVENUE	SHEET 244	E

FILE NAME : V:\TRANS-EC\410723 WAUSAU 1ST AVE\C3D\DESIGN\CORRIDORS\CORRIDOR-SOUTH1STAVE.DWG
LAYOUT NAME - 89
PLOT DATE : 10/16/2018 8:42 AM
PLOT BY : WOOLEVER, NATHAN
PLOT NAME :
PLOT SCALE : 1 IN:10 FT HORZ. / 1 IN:10 FT VERT.
WISDOT/CADDS SHEET 49

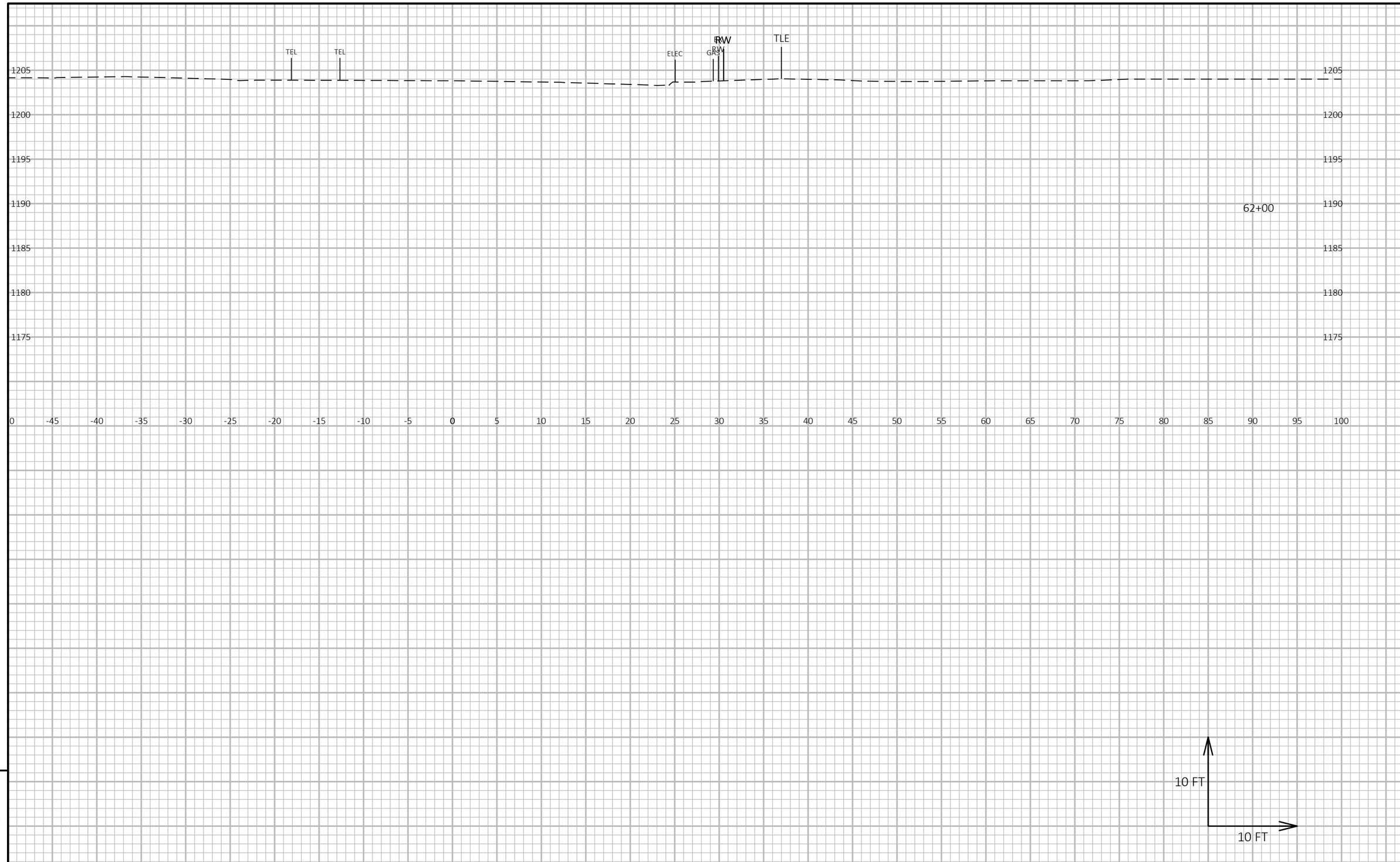

9

9

PROJECT NO: 6999-18-73	HWY: SOUTH 1ST AVENUE	COUNTY: MARATHON	CROSS SECTIONS: SOUTH 1ST AVENUE	SHEET 245	E

FILE NAME : V:\TRANS-EC\410723 WAUSAU 1ST AVE\C3D\DESIGN\CORRIDORS\CORRIDOR-SOUTH1STAVE.DWG
LAYOUT NAME - 90

PLOT DATE : 10/16/2018 8:43 AM PLOT BY : WOOLEVER, NATHAN PLOT NAME : PLOT SCALE : 1 IN:10 FT HORZ. / 1 IN:10 FT VERT.

WISDOT/CADDS SHEET 49

Wisconsin Department of Transportation

Dedicated people creating transportation solutions through innovation and exceptional service.

http://www.dot.wisconsin.gov