WKE

APRIL 2019

ORDER OF SHEETS

TOTAL SHEETS = 172

PROJECT ID: 1060-40-97

WITH: N/A

COUNTY: MILWAUKEE

12

STATE OF WISCONSIN
DEPARTMENT OF TRANSPORTATION

PLAN OF PROPOSED IMPROVEMENT

STATE PROJECT	FEDERAL PROJECT	
	PROJECT	CONTRACT
1060-40-97	WISC 2019220	1

ZOO IC, Greenfield Ave., STH 59

92nd Street TO 84th Street

STH 059
MILWAUKEE

STATE PROJECT NUMBER
1060-40-97

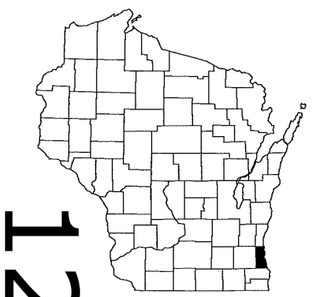

N

DESIGN DESIGNATION

A.A.D.T.	(2016)	=	24,100
A.A.D.T.	(2035)	=	24,300
D.H.V.	(2035)	=	2,100
D.D.		=	48% EB/52% WB
T.		=	4%
DESIGN SPEED		=	35 MPH
ESALS		=	N/A

CONVENTIONAL SYMBOLS

PLAN

CORPORATE LIMITS
PROPERTY LINE
LOT LINE
LIMITED HIGHWAY EASEMENT
EXISTING RIGHT OF WAY
PROPOSED OR NEW R/W LINE
SLOPE INTERCEPT
REFERENCE LINE (300'EB')
EXISTING CULVERT
PROPOSED CULVERT (Box or Pipe)
COMBUSTIBLE FLUIDS (CAUTION)
MARSH AREA
WOODED OR SHRUB AREA

PROFILE

GRADE LINE
ORIGINAL GROUND
MARSH OR ROCK PROFILE (To be noted as such) (ROCK)
SPECIAL DITCH (LABEL)
GRADE ELEVATION (95.36)
CULVERT (Profile View)

UTILITIES

ELECTRIC — E —
FIBER OPTIC — FO —
GAS — G —
SANITARY SEWER — SAN —
STORM SEWER — SS —
TELEPHONE — T —
WATER — W —
UTILITY PEDESTAL
POWER POLE
TELEPHONE POLE

BEGIN PROJECT 1060-40-97
STA 541+98.00G
X = 574564.52
Y = 291539.88

END PROJECT 1060-40-97
STA 566+66.00G

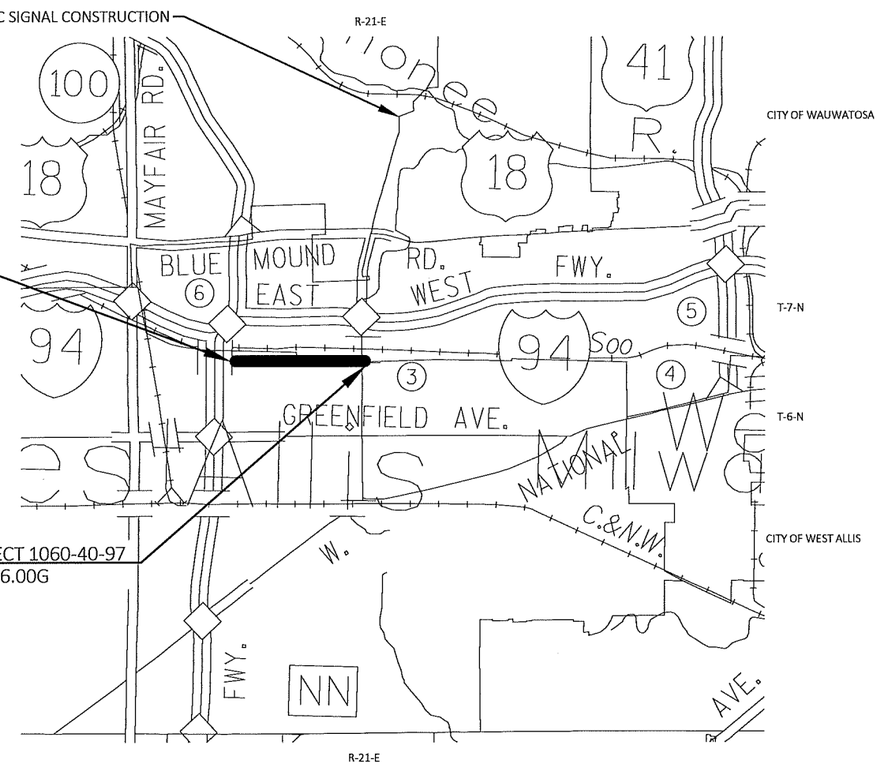

LAYOUT

SCALE 0 — 1 MI

TOTAL NET LENGTH OF CENTERLINE = 0.467 MI.

HORIZONTAL POSITIONS SHOWN ON THIS PLAN ARE WISCONSIN COORDINATE REFERENCE SYSTEM (WISCRS), MILWAUKEE COUNTY, NAD83 (2007), IN U.S. SURVEY FEET. POSITIONS SHOWN ARE GRID COORDINATES, GRID BEARINGS, AND GRID DISTANCES. GRID DISTANCES ARE THE SAME AS GROUND DISTANCES. ELEVATIONS ARE REFERENCED TO NAVD 88 (2007). GPS DERIVED ELEVATIONS ARE BASED ON GEOID 12A.

FORWARD 45

ORIGINAL PLANS PREPARED BY
MILWAUKEE, WISCONSIN

WISCONSIN JULIE A. FERGUSON 42129-6 WAUWATOSA, WI PROFESSIONAL ENGINEER

1/29/19 (Date) (Signature)

STATE OF WISCONSIN
DEPARTMENT OF TRANSPORTATION

PREPARED BY

Surveyor	
Designer	FORWARD 45
Project Manager	CHRIS HAGER, P.E.
Regional Examiner	
Regional Supervisor	WILLIAM S. MOHR, P.E.

APPROVED FOR THE DEPARTMENT

DATE: 1/29/19 (Signature)

E

UTILITY CONTACTS

AT&T WISCONSIN
JAY BULANEK
2005 PEWAUKEE ROAD
WAUKESHA, WI 53188
PHONE: (262) 896-7669
CELL: (414) 491-2855
jb5175@att.com

CHARTER COMMUNICATIONS
PETE KRUZELA
1320 N. MARTIN LUTHER KING JR. DRIVE
MILWAUKEE, WI 53212
PHONE: (414) 908-1339
CELL: (414) 688-5376
pete.kruzela@charter.com
wis.engineering@charter.com

WAUWATOSA, CITY OF - LIGHTING
RANDY MICHELZ
11100 W. WALNUT ROAD
WAUWATOSA, WI 53226
PHONE: (414) 471-8423
rmichelz@wauwatosa.net

WAUWATOSA, CITY OF - SEWER
CHRIS BENNETT
7725 W. NORTH AVENUE
WAUWATOSA, WI 53213
PHONE: 414-479-8935
cbennett@wauwatosa.net

WAUWATOSA WATER UTILITY
ADAM FLORIN
WATER SUPERINTENDENT
7725 W. NORTH AVENUE
WAUWATOSA, WI 53213
PHONE: 414-471-8480 ext 5915
aflorin@wauwatosa.net

WE ENERGIES - ELECTRIC
SEND ALL CORRESPONDENCE TO:
NICOLE SMULLEN
333 W. EVERETT STREET - A299
MILWAUKEE, WI 53203
PHONE: (414) 221-5617
CELL: (414) 460-7190
Nicole.Smullen@we-energies.com

CONSTRUCTION FIELD CONTACT:
ALEX DANTINNE
500 S. 116TH STREET
WEST ALLIS, WI 53214
PHONE: 920-621-6903
alex.dantinne@we-energies.com

WE ENERGIES - GAS
SEND ALL CORRESPONDENCE TO:
NICOLE SMULLEN
333 W. EVERETT STREET - A299
MILWAUKEE, WI 53203
PHONE: (414) 221-5617
CELL: (414) 460-7190
Nicole.Smullen@we-energies.com

CONSTRUCTION FIELD CONTACT:
NATE ZILLES
500 S. 116TH STREET
WEST ALLIS, WI 53214
PHONE: 414-944-5664
CELL: 414-651-6693
nate.zilles@we-energies.com

WEST ALLIS, CITY OF – LIGHTING\SIGNALS
DAVE YOUNG
7525 W. GREENFIELD AVENUE
WEST ALLIS, WI 53214
PHONE: 414-302-8808
CELL: 414-477-0964
dyoung@westalliswi.gov

WEST ALLIS, CITY OF – SEWER & WATER
ROB HUTTER
7525 W. GREENFIELD AVENUE
WEST ALLIS, WI 53214
PHONE: 414-302-8373
CELL: 414-587-1699
rhutter@westalliswi.gov

STATE AGENCIES

WISCONSIN DEPARTMENT OF TRANSPORTATION
JEFF BOHEN – ENVIRONMENTAL
141 NW BARSTOW STREET
WAUKESHA, WI 53187-0798
PHONE: (262) 548-3907
jeff.bohen@dot.wi.gov

WISCONSIN DEPARTMENT OF TRANSPORTATION
BRENDA RUENGER – REGIONAL ENVIRONMENTAL COORDINATOR
141 NW BARSTOW STREET
WAUKESHA, WI 53187-0798
PHONE: (262) 548-6709
brenda.ruenger@dot.wi.gov

WISCONSIN DEPARTMENT OF NATURAL RESOURCES
KRISTINA BETZOLD
DNR SERVICE CENTER
2300 N. MARTIN LUTHER KING JR.
MILWAUKEE, WI 53212
PHONE: (414) 507-4946
kristina.betzold@wisconsin.gov

WISCONSIN DEPARTMENT OF TRANSPORTATION
GREG BERRY, PE
CONSTRUCTION UTILITY COORDINATING ENGINEER
141 NW BARSTOW STREET
WAUKESHA, WI 53187-0798
CELL: (414) 750-7828
gregory.berry@dot.wi.gov

WISCONSIN DEPARTMENT OF TRANSPORTATION
CHRIS HAGER, PE
PROJECT MANAGER
141 NW BARSTOW STREET
WAUKESHA, WI 53187-0798
PHONE: (414) 750-1487
christopher.hager@dot.wi.gov

TO OBTAIN LOCATION OF PARTICIPANTS' UNDERGROUND FACILITIES BEFORE YOU DIG IN WISCONSIN

WIS. STATUTE 182.0175 (1974) REQUIRES MIN. OF 3 WORK DAYS NOTICE BEFORE YOU EXCAVATE.

DIGGERS HOTLINE

Dial 811 or (800) 242-8511

www.DiggersHotline.com

2

OTHER AGENCIES

MILWAUKEE COUNTY TRANSIT SYSTEM
MELANIE FLYNN
1942 N. 17TH STREET
MILWAUKEE, WI 53205
PHONE: (414) 343-1764
mflynn@mcts.org

MILWAUKEE COUNTY - DPW
GREG HEISEL, HIGHWAY MAINTENANCE MANAGER
10190 W. WATERTOWN PLANK ROAD
MILWAUKEE, WI 53226
PHONE: (414) 257-6566
gheisel@milwcnty.com

MILWAUKEE METROPOLITAN SEWERAGE DISTRICT
MICKI KLAPPA-SULLIVAN, PE
MANAGER OF ENGINEERING PLANNING
260 W SEEBOTH STREET
MILWAUKEE, WI 53204
PHONE: (414) 225-2178
mklappasullivan@mmsd.com

SOUTHEASTERN WISCONSIN REGIONAL PLANNING COMMISSION
ROB MERRY
W239 N1812 ROCKWOOD DRIVE
P.O. BOX 1607
WAUKESHA, WI 53187-1607
PHONE: (262) 953-4289
CELL: (920) 912-1036
rmerry@sewrpc.org

WAUWATOSA, CITY OF – CITY ENGINEER
WILLIAM WEHRLEY
7725 W NORTH AVENUE
WAUWATOSA, WI 53213
(414) 479-8929
wwehrley@wauwatosa.net

WEST ALLIS, CITY OF
MIKE LEWIS, CITY ENGINEER / DIRECTOR OF PUBLIC WORKS
725 W. GREENFIELD AVENUE
WEST ALLIS, WI 53214
PHONE: (414) 302-8372
mlewis@westalliswi.gov

CONSTRUCT HMA PAVEMENT WITH THE FOLLOWING LAYERS:

	PAVEMENT TYPE	TOTAL LAYER PAVEMENT THICKNESS	LAYERS	NOMINAL MAXIMUM SIZE GRADATION
A	4 MT 58-28 S	2"	2" UPPER LAYER	12.5 MM

ORDER OF SECTION 2 DETAIL SHEETS

GENERAL NOTES
PROJECT OVERVIEW
TYPICAL SECTIONS
CONSTRUCTION DETAILS
REMOVAL PLAN
PLAN DETAILS
EROSION CONTROL
STORM SEWER
SANITARY SEWER
EXISTING UTILITY PLAN
PERMANENT SIGNING
TRAFFIC SIGNAL PLAN
PAVEMENT MARKING
TRAFFIC CONTROL
STAGE CONSTRUCTION
ALIGNMENT LAYOUT

GENERAL NOTES

NO TREES OR SHRUBS SHALL BE REMOVED WITHOUT APPROVAL OF THE ENGINEER.

THE LOCATIONS OF EXISTING AND PROPOSED UTILITY INSTALLATIONS AS SHOWN ON THE PLANS ARE APPROXIMATE. THERE MAY BE OTHER UTILITY INSTALLATIONS WITHIN THE PROJECT AREA THAT ARE NOT SHOWN.

NOTIFY DIGGERS HOTLINE AND AFFECTED UTILITIES PRIOR TO THE START OF WORK. ANY LOCAL MUNICIPAL UTILITY WHICH IS NOT A MEMBER OF THE DIGGERS HOTLINE MUST BE CONTACTED SEPARATELY BY CONTRACTOR.

WHEN THE QUANTITY OF HMA PAVEMENT OR BASE AGGREGATE IS MEASURED FOR PAYMENT BY THE TON, THE DEPTH OR THICKNESS OF THE LAYER SHOWN ON THE PLAN IS APPROXIMATE AND THE ACTUAL THICKNESS WILL DEPEND ON THE DISTRIBUTION OF THE MATERIAL AS DIRECTED BY THE ENGINEER.

REMOVAL OF EROSION CONTROL DEVICES IS INCLUDED IN THE COST OF THEIR RESPECTIVE BID ITEMS.

RE-TOPSOIL OF GRADED AREAS, AS DESIGNATED BY THE ENGINEER, IMMEDIATELY AFTER GRADING IS COMPLETED WITHIN THOSE AREAS. SOD AND FERTILIZE TOP-SOILED AREAS, AS DESIGNATED BY THE ENGINEER, WITHIN FIVE (5) CALENDAR DAYS AFTER PLACEMENT OF TOPSOIL. IF GRADED AREAS ARE LEFT EXPOSED FOR MORE THAN (14) CALENDAR DAYS, SEED THOSE AREAS WITH TEMPORARY SEED AND MULCH.

EROSION CONTROL BMPS ARE AT SUGGESTED LOCATIONS. THE ACTUAL LOCATIONS WILL BE DETERMINED BY THE CONTRACTOR'S ECIP AND BY THE ENGINEER. EROSION CONTROL BMPS SHALL BE MAINTAINED UNTIL PERMANENT VEGETATION IS ESTABLISHED OR UNTIL THE ENGINEER DETERMINES THAT THE BMP IS NO LONGER REQUIRED.

THE EXACT NUMBER, LOCATION, AND SPACING OF ALLTRAFFIC CONTROL SIGNS AND DEVICES SHALL BE ADJUSTED TO FIT FIELD CONDITIONS AS DIRECTED BY THE ENGINEER. ALL TRAFFIC CONTROL DEVICES AND SETUPS SHALL BE COMPLIANT WITH THE MUTCD.

CONTRACTOR MUST CONTACT THE PROJECT ENGINEER AND THE SOUTHEASTERN WISCONSIN REGIONAL PLANNING COMMISSION (SEWRPC) (JOHN WASHBURN) AT LEAST TWO WEEKS PRIOR TO WORK NEAR ANY PUBLIC SURVEY MONUMENT

STANDARD ABBREVIATIONS

AEW	APRON END WALL
AGG	AGGREGATE
ASPH	ASPHALTIC
BAD	BASE AGGREGATE DENSE
BM	BENCH MARK
C&G	CURB AND GUTTER
C/L	CENTER OR CONSTRUCTION LINE
CMCP	CULVERT PIPE CORRUGATED METAL
CONC	CONCRETE
CP	CULVERT PIPE
CPRC	CULVERT PIPE REINFORCED CONCRETE
CSD	CONCRETE SURFACE DRAIN
CY	CUBIC YARD
D	DEGREE OF CURVE
Δ	DELTA
DISCH	DISCHARGE
EB	EASTBOUND
ENB	EXISTING NOISE BARRIER
FE	FIELD ENTRANCE
FL	FLOW LINE
HMA	HOT MIX ASPHALT
INV	INVERT
L	LENGTH OF CURVE
LHF	LEFT HAND FORWARD
LP	LOW POINT
LT	LEFT
MIN	MINIMUM
M/L	MATCHLINE
NB	NORTHBOUND
NC	NORMAL CROWN
PAVT	PAVEMENT
PC	POINT OF CURVE
PCC	POINT OF COMPOUND CURVE
PE	PRIVATE ENTRANCE
PI	POINT OF INTERSECTION
PGL	PROFILE GRADE LINE
PLE	PERMANENT LIMITED EASEMENT
PNB	PROPOSED NOISE BARRIER
PRC	POINT OF REVERSE CURVE
PT	POINT OF TANGENT
R	RADIUS OF CURVE
R/L	REFERENCE LINE
R/W	RIGHT OF WAY
RC	REVERSE CROWN
RCAEW	APRON ENDWALL FOR CULVERT PIPE REINFORCED CONCRETE
REQD	REQUIRED
RHF	RIGHT HAND FORWARD
RO	RUN OFF LENGTH
RRSP	RAILROAD SPIKE
RT	RIGHT
SALV	SALVAGED
SAPBC	SALVAGED ASPHALTIC PAVEMENT BASE COARSE
SB	SOUTHBOUND
SDD	STANDARD DETAIL DRAWING
SE	SUPER ELEVATION
SF	SQUARE FOOT
SSPRC	STORM SEWER PIPE REINFORCED CONCRETE
STA	STATION
SY	SQUARE YARD
T	TANGENT LENGTH
TLE	TEMPORARY LIMITED EASEMENT
VCL	VERTICAL CURVE LENGTH
VPC	POINT OF VERTICAL CURVE
VPI	POINT OF VERTICAL INTERSECTION
VPT	POINT OF VERTICAL TANGENT
WB	WESTBOUND

2

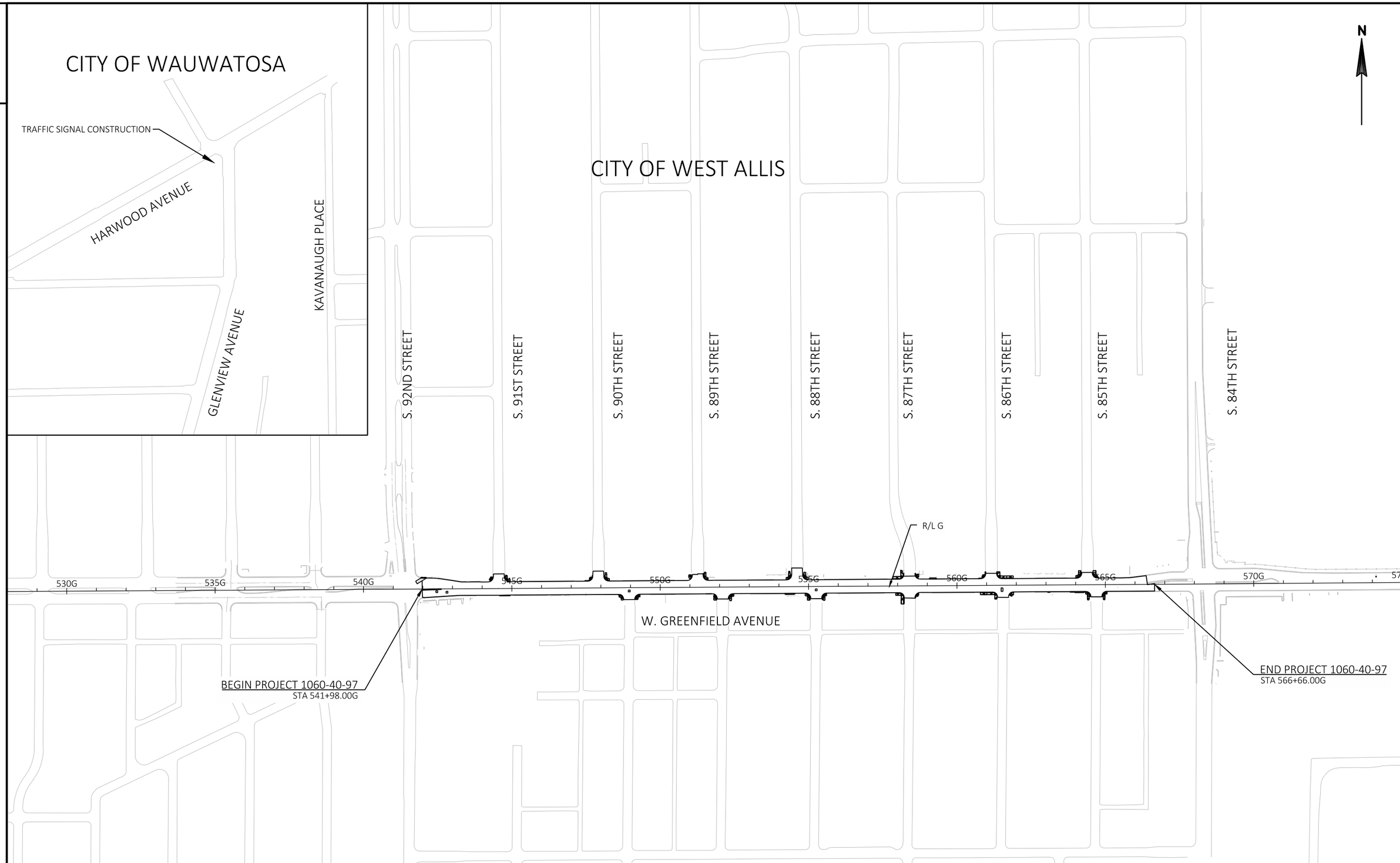

PROJECT NO: 1060-40-97	HWY: STH 59	COUNTY: MILWAUKEE	PROJECT OVERVIEW	SHEET 4	E

FILE NAME : W:\CADD\FINAL\10604097_GO\SHEETSPLAN\020201_PO.DWG
LAYOUT NAME - 01
PLOT DATE : 1/29/2019 4:01 AM
PLOT BY : SCHARLAU, DAVID A
PLOT NAME : 020201_po01
PLOT SCALE : 1 IN:300FT
WISDOT/CADDS SHEET 42

2

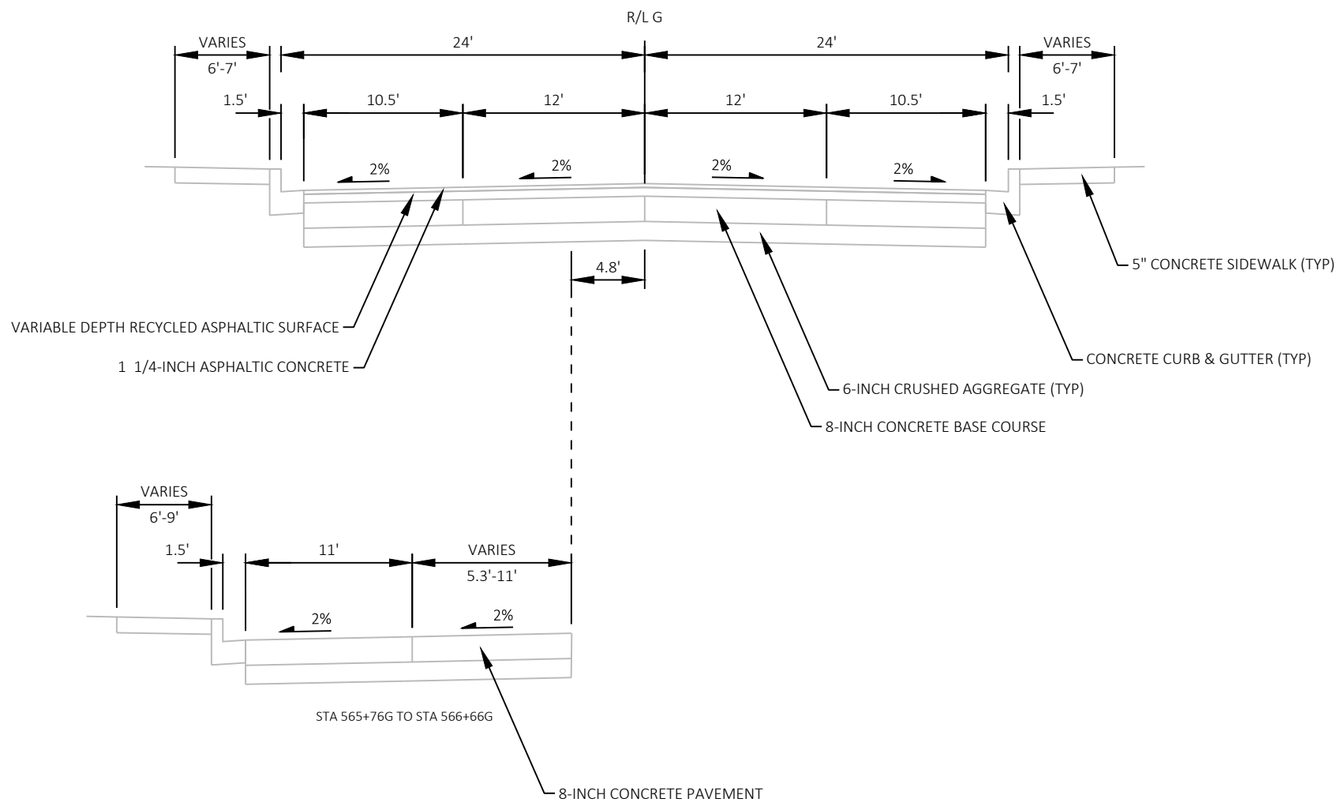

TYPICAL EXISTING SECTION
W. GREENFIELD AVENUE

STA 541+98G TO STA 566+66G

PROJECT NO: 1060-40-97	HWY: STH 59	COUNTY: MILWAUKEE	TYPICAL SECTIONS	SHEET 5	E

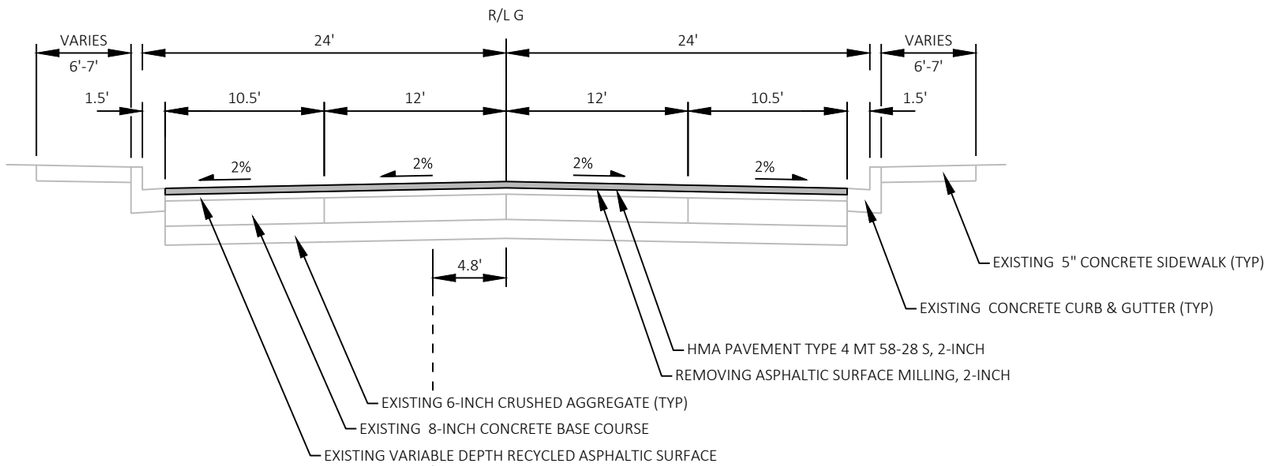

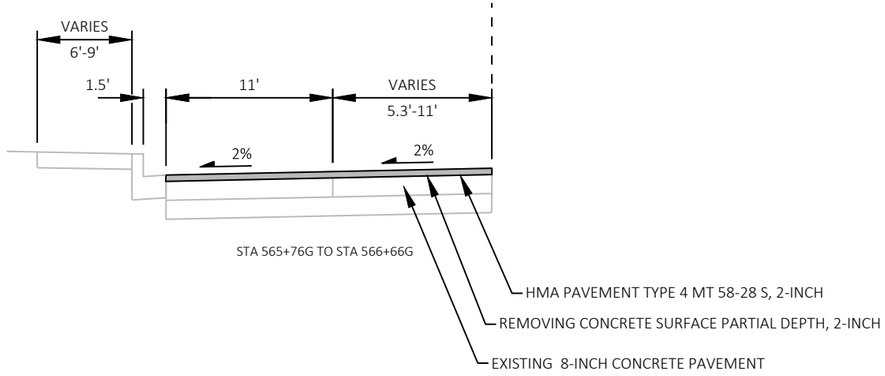

TYPICAL FINISHED SECTION
W. GREENFIELD AVENUE

STA 541+98G TO STA 566+66G

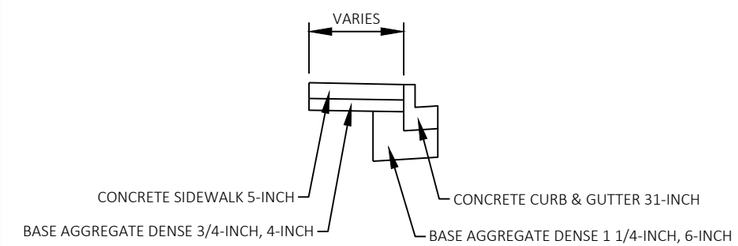

TYPICAL FINISHED SECTION
SIDEWALK REPLACEMENT

NOTE

*ELEVATION IS AT FACE OF CURB.
FLOWLINE IS ALONG THE FLANGE LINE.

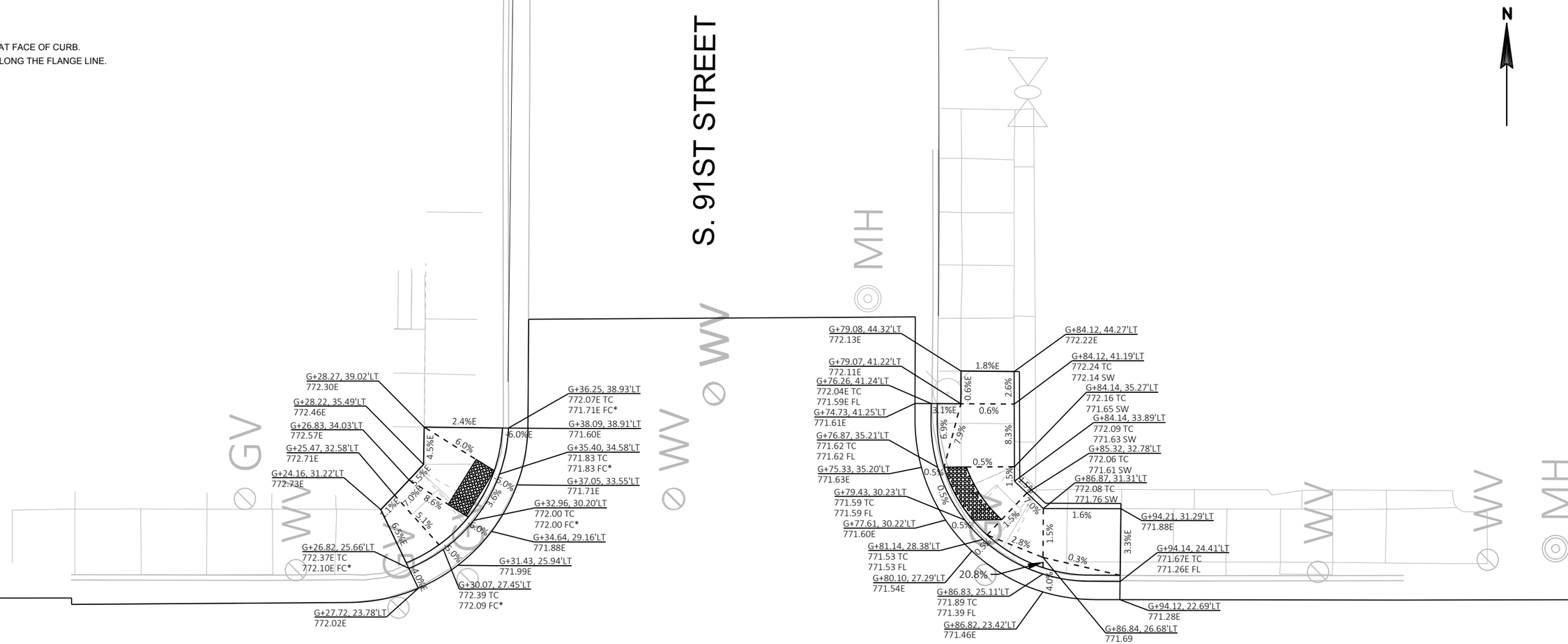

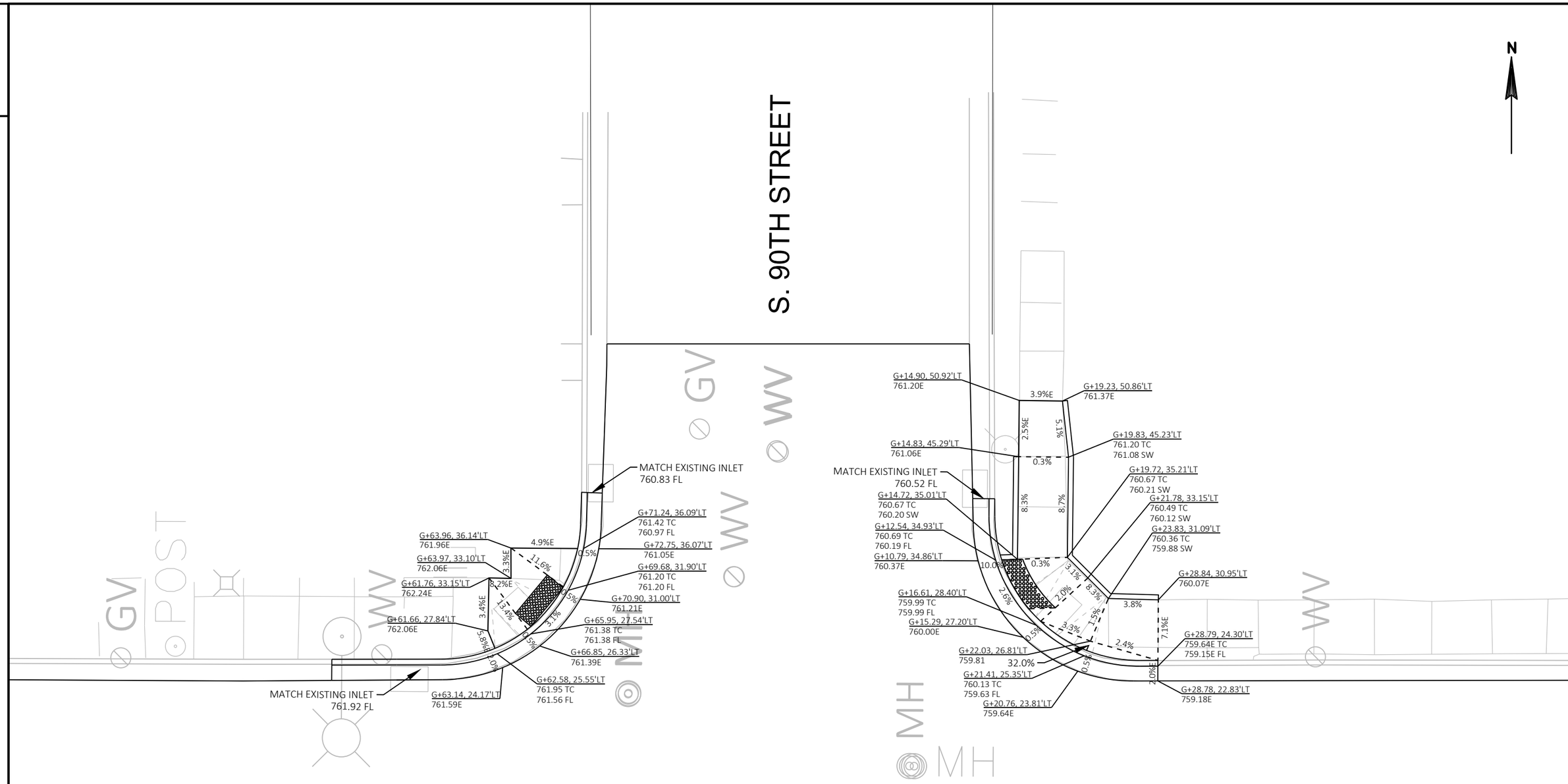

PROJECT NO: 1060-40-97	HWY: STH 59	COUNTY: MILWAUKEE	CONSTRUCTION DETAILS	SHEET 8	E

FILE NAME : W:\CADD\FINAL\10604097_GO\SHEETSPLAN\021001_CD.DWG
LAYOUT NAME - 02
PLOT DATE : 1/29/2019 4:05 PM
PLOT BY : SCHARLAU, DAVID A
PLOT NAME :
PLOT SCALE : 1 IN:10 FT
WISDOT/CADDS SHEET 42

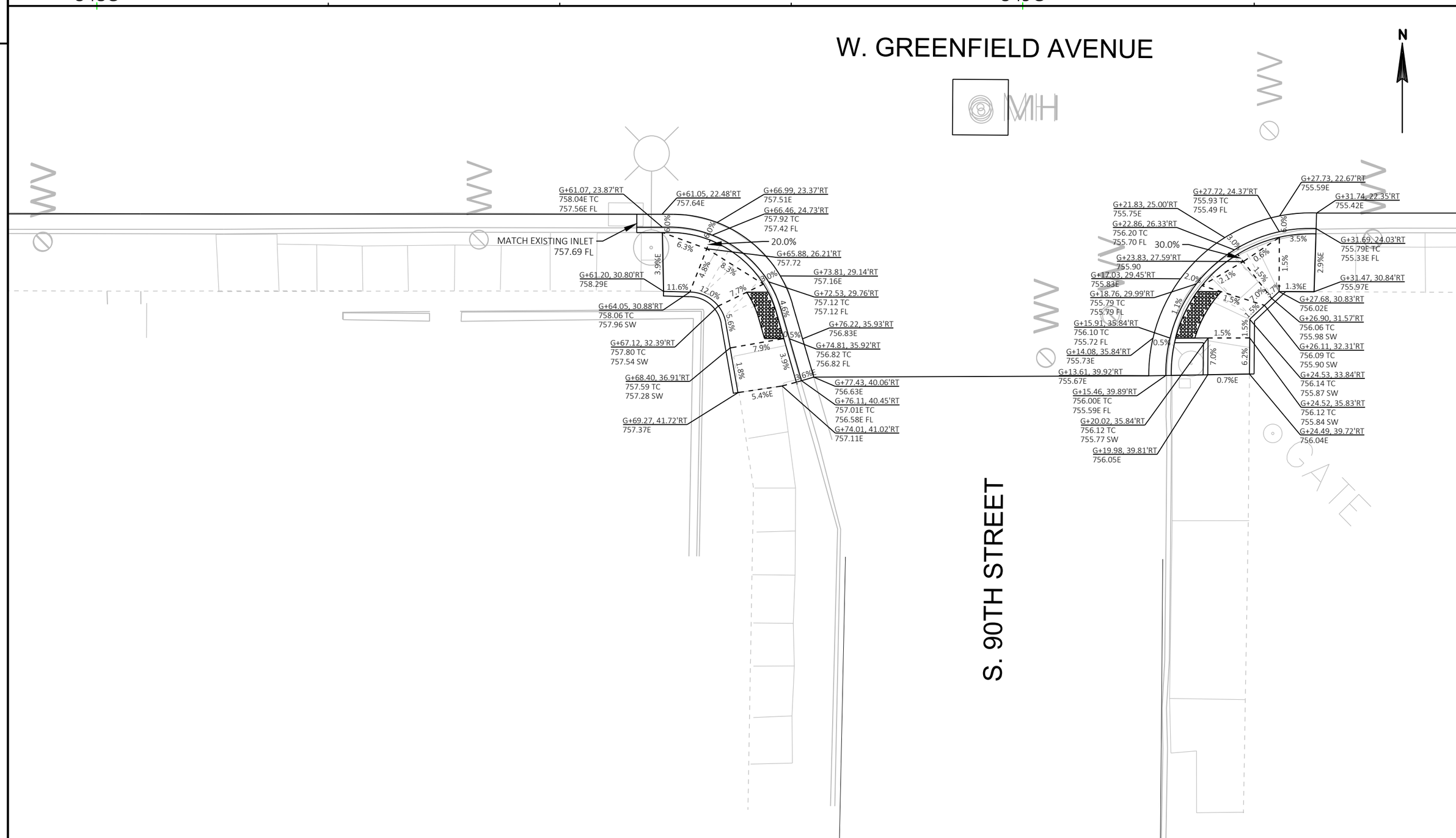

PROJECT NO: 1060-40-97	HWY: STH 59	COUNTY: MILWAUKEE	CONSTRUCTION DETAILS	SHEET 9	E

2

NOTE

*ELEVATION IS AT FACE OF CURB.
FLOWLINE IS ALONG THE FLANGE LINE.

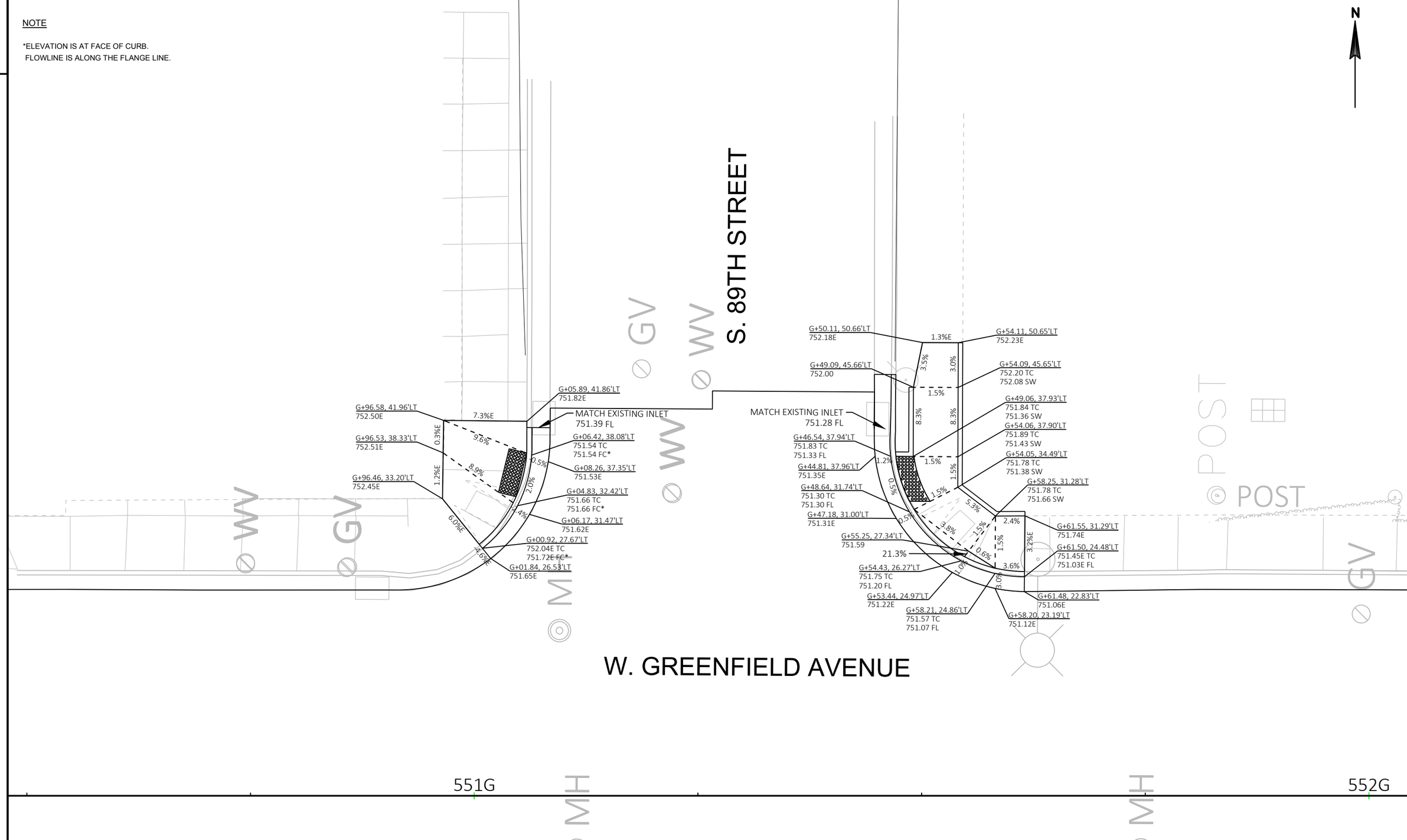

2

PROJECT NO: 1060-40-97	HWY: STH 59	COUNTY: MILWAUKEE	CONSTRUCTION DETAILS	SHEET 10	E

FILE NAME : W:\CADD\FINAL\10604097_GO\SHEETSPLAN\021001_CD.DWG
LAYOUT NAME - 04
PLOT DATE : 1/29/2019 4:05 PM
PLOT BY : SCHARLAU, DAVID A
PLOT NAME :
PLOT SCALE : 1 IN:10 FT

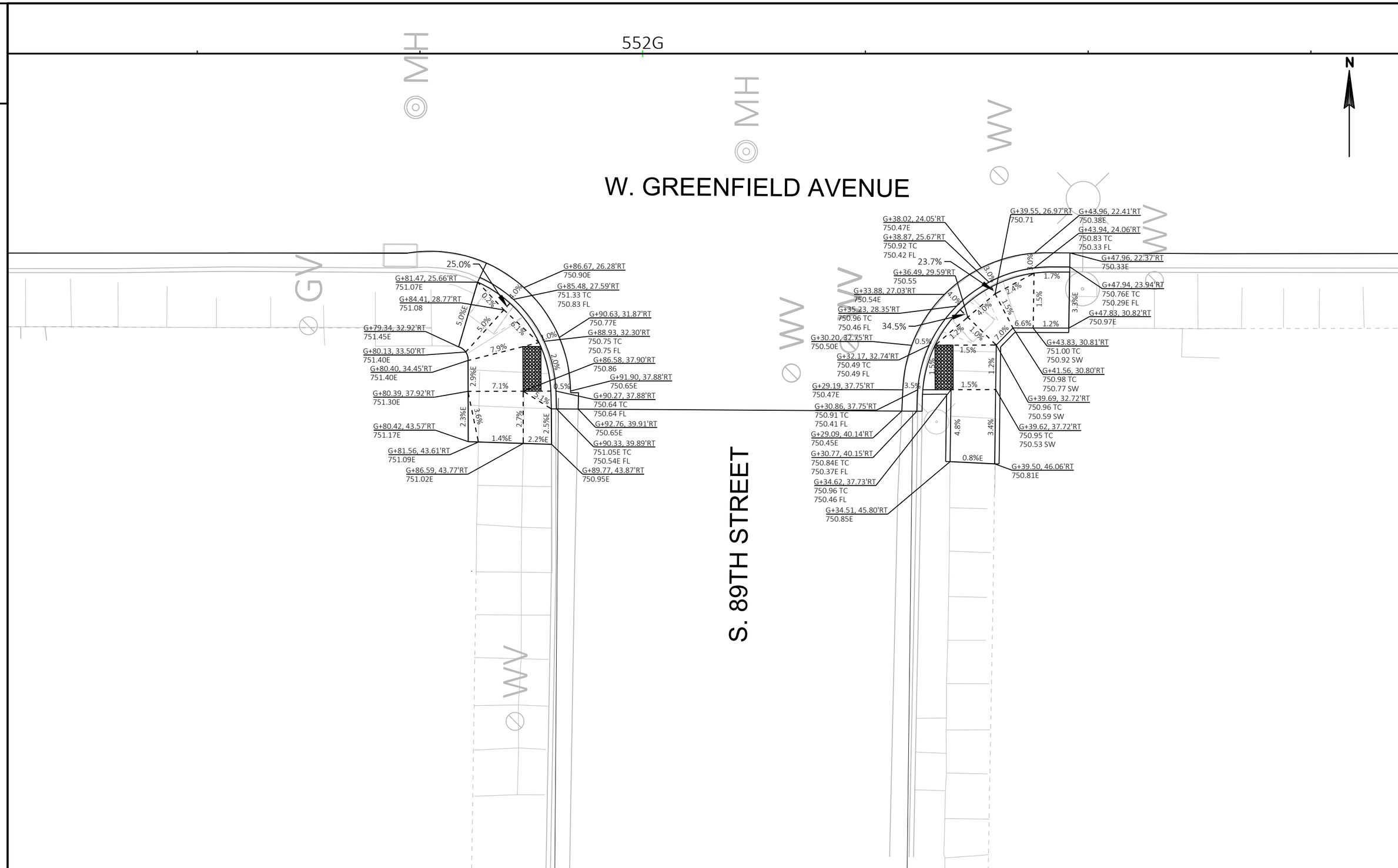

PROJECT NO: 1060-40-97	HWY: STH 59	COUNTY: MILWAUKEE	CONSTRUCTION DETAILS	SHEET 11	E

FILE NAME : W:\CADD\FINAL\10604097_GO\SHEETSPLAN\021001_CD.DWG
LAYOUT NAME - 05
PLOT DATE : 1/29/2019 4:05 PM
PLOT BY : SCHARLAU, DAVID A
PLOT NAME :
PLOT SCALE : 1 IN:10 FT
WISDOT/CADDS SHEET 42

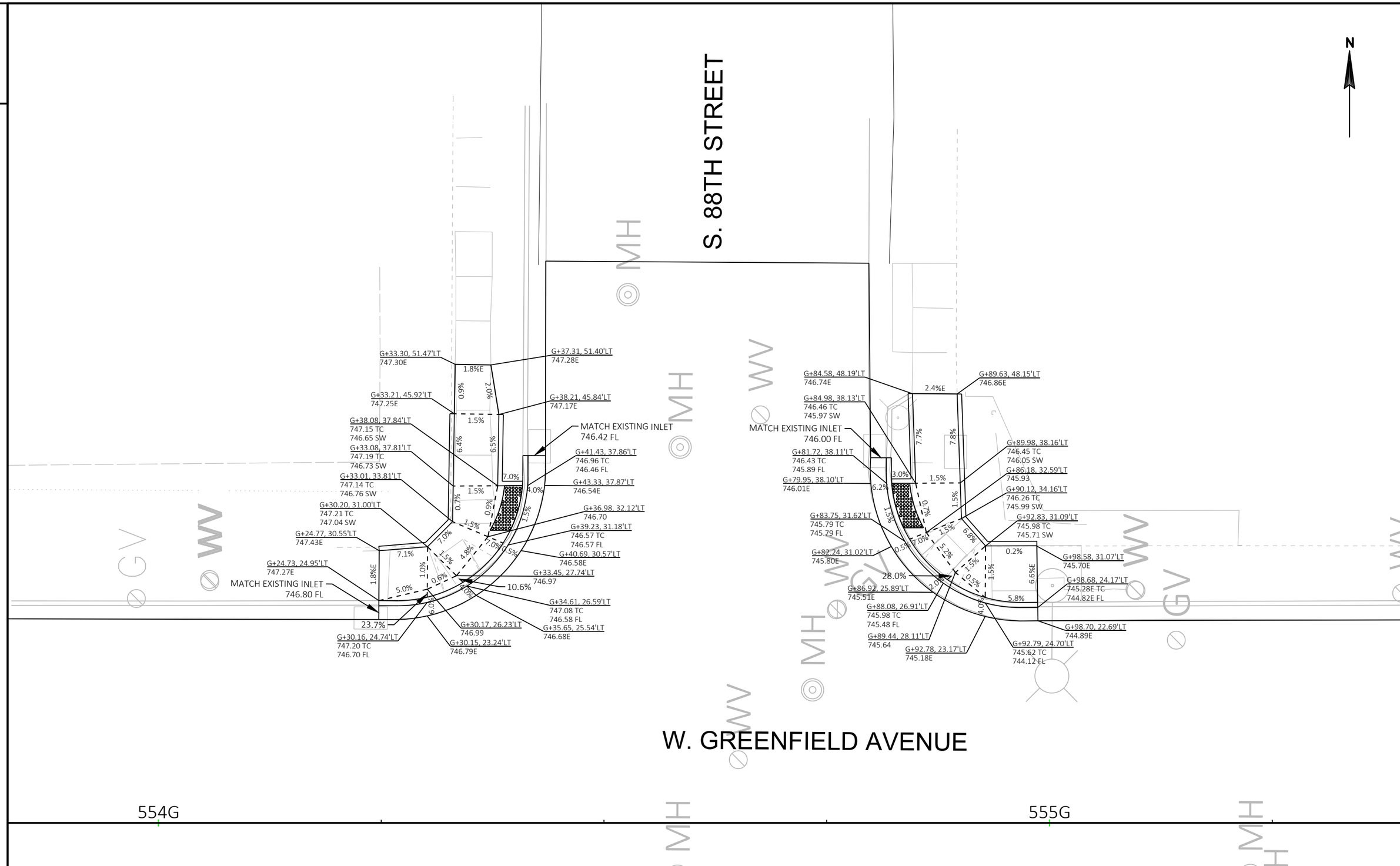
N
S. 88TH STREET
W. GREENFIELD AVENUE
554G
555G
G+33.30, 51.47'LT
747.30E
1.8%E
0.9%
2.0%
G+37.31, 51.40'LT
747.28E
G+33.21, 45.92'LT
747.25E
G+38.21, 45.84'LT
747.17E
1.5%
G+38.08, 37.84'LT
747.15 TC
746.65 SW
6.4%
6.5%
MATCH EXISTING INLET
746.42 FL
G+33.08, 37.81'LT
747.19 TC
746.73 SW
G+41.43, 37.86'LT
746.96 TC
746.46 FL
G+33.01, 33.81'LT
747.14 TC
746.76 SW
7.0%
4.0%
G+43.33, 37.87'LT
746.54E
1.5%
0.7%
0.9%
1.5%
G+30.20, 31.00'LT
747.21 TC
747.04 SW
G+36.98, 32.12'LT
746.70
G+39.23, 31.18'LT
746.57 TC
746.57 FL
G+24.77, 30.55'LT
747.43E
7.0%
7.0%
7.1%
4.8%
G+40.69, 30.57'LT
746.58E
G+24.73, 24.95'LT
747.27E
1.8%E
1.0%
G+33.45, 27.74'LT
746.97
MATCH EXISTING INLET
746.80 FL
5.0%
0.6%
10.6%
6.0%
G+34.61, 26.59'LT
747.08 TC
746.58 FL
23.7%
G+30.17, 26.23'LT
746.99
G+35.65, 25.54'LT
746.68E
G+30.16, 24.74'LT
747.20 TC
746.70 FL
G+30.15, 23.24'LT
746.79E
G+84.58, 48.19'LT
746.74E
2.4%E
G+89.63, 48.15'LT
746.86E
G+84.98, 38.13'LT
746.46 TC
745.97 SW
MATCH EXISTING INLET
746.00 FL
7.7%
7.8%
G+89.98, 38.16'LT
746.45 TC
746.05 SW
G+81.72, 38.11'LT
746.43 TC
745.89 FL
G+86.18, 32.59'LT
745.93
G+79.95, 38.10'LT
746.01E
3.0%
1.5%
6.2%
G+90.12, 34.16'LT
746.26 TC
745.99 SW
1.5%
0.7%
G+83.75, 31.62'LT
745.79 TC
745.79 FL
G+92.83, 31.09'LT
745.98 TC
745.71 SW
1.5%
7.0%
6.8%
0.5%
1.5%
G+82.24, 31.02'LT
745.80E
0.2%
G+98.58, 31.07'LT
745.70E
28.0%
1.5%
6.6%E
G+98.68, 24.17'LT
745.28E TC
744.82E FL
G+86.92, 25.89'LT
745.51E
2.0%
0.5%
5.8%
G+88.08, 26.91'LT
745.98 TC
745.48 FL
4.0%
G+98.70, 22.69'LT
744.89E
G+89.44, 28.11'LT
745.64
G+92.78, 23.17'LT
745.18E
G+92.79, 24.70'LT
745.62 TC
744.12 FL

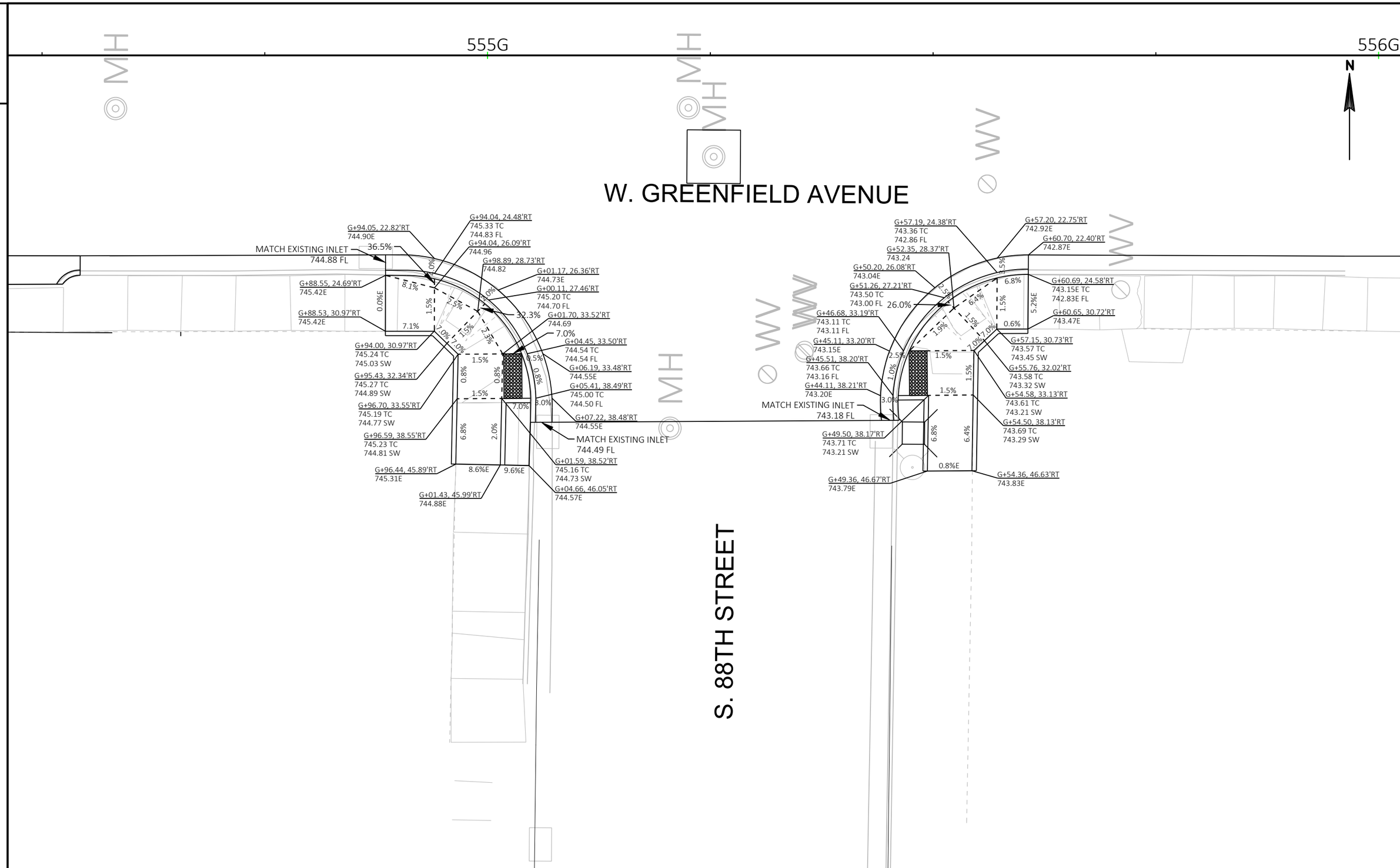

PROJECT NO: 1060-40-97	HWY: STH 59	COUNTY: MILWAUKEE	CONSTRUCTION DETAILS	SHEET 13	E

FILE NAME : W:\CADD\FINAL\10604097_GO\SHEETSPLAN\021001_CD.DWG
LAYOUT NAME - 07
PLOT DATE : 1/29/2019 4:06 PM
PLOT BY : SCHARLAU, DAVID A
PLOT NAME :
PLOT SCALE : 1 IN:10 FT
WISDOT/CADDS SHEET 42

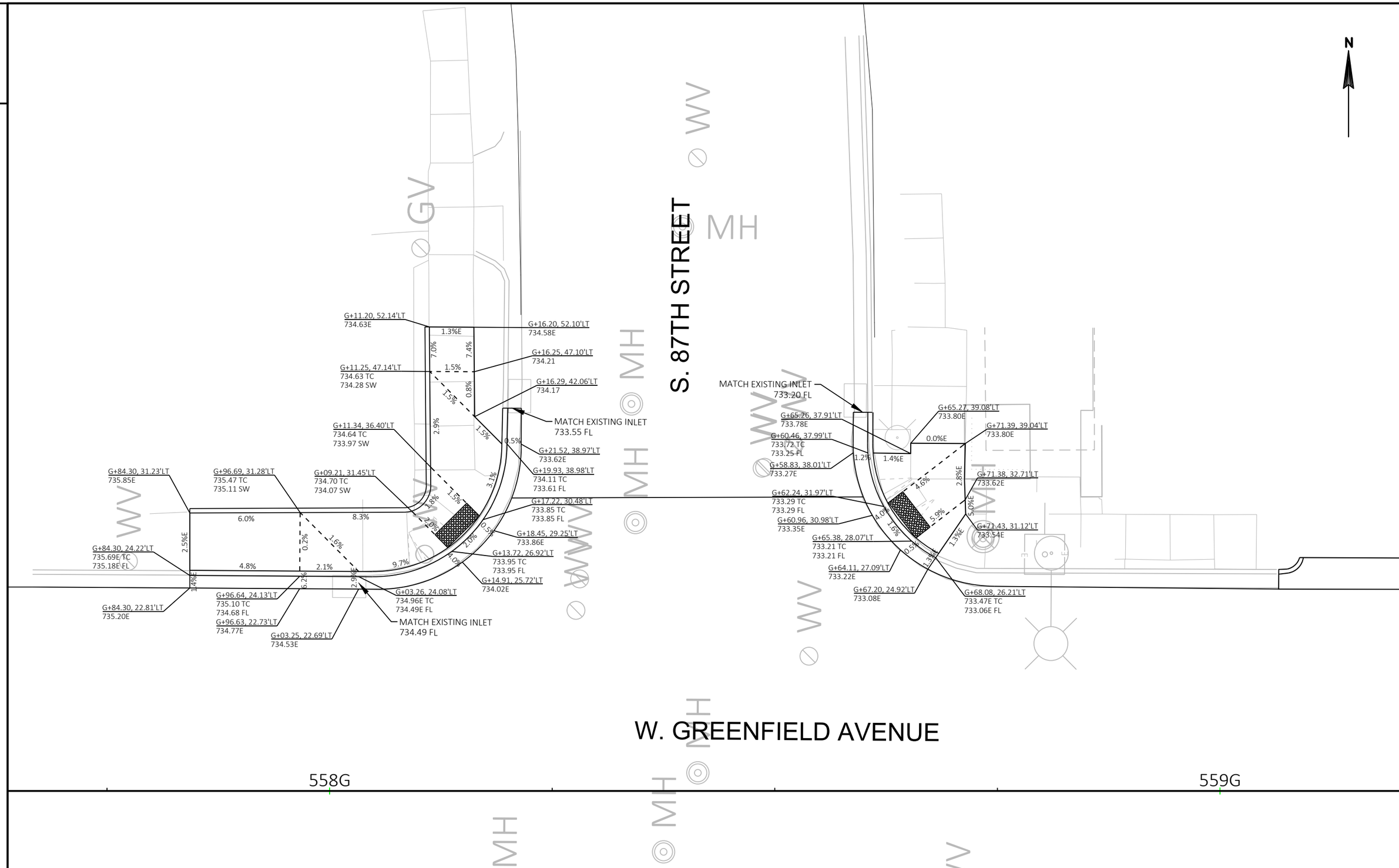
N
S. 87TH STREET
W. GREENFIELD AVENUE
558G
559G
G+11.20, 52.14'LT
734.63E
G+16.20, 52.10'LT
734.58E
G+16.25, 47.10'LT
734.21
G+11.25, 47.14'LT
734.63 TC
734.28 SW
G+16.29, 42.06'LT
734.17
MATCH EXISTING INLET
733.55 FL
G+11.34, 36.40'LT
734.64 TC
733.97 SW
G+21.52, 38.97'LT
733.62E
G+19.93, 38.98'LT
734.11 TC
733.61 FL
G+84.30, 31.23'LT
735.85E
G+96.69, 31.28'LT
735.47 TC
735.11 SW
G+09.21, 31.45'LT
734.70 TC
734.07 SW
G+17.22, 30.48'LT
733.85 TC
733.85 FL
G+18.45, 29.25'LT
733.86E
G+13.72, 26.92'LT
733.95 TC
733.95 FL
G+14.91, 25.72'LT
734.02E
G+84.30, 24.22'LT
735.69E TC
735.18E FL
G+03.26, 24.08'LT
734.96E TC
734.49E FL
G+84.30, 22.81'LT
735.20E
G+96.64, 24.13'LT
735.10 TC
734.68 FL
G+96.63, 22.73'LT
734.77E
G+03.25, 22.69'LT
734.53E
MATCH EXISTING INLET
734.49 FL
MATCH EXISTING INLET
733.20 FL
G+65.26, 37.91'LT
733.78E
G+65.27, 39.08'LT
733.80E
G+71.39, 39.04'LT
733.80E
G+60.46, 37.99'LT
733.72 TC
733.25 FL
G+58.83, 38.01'LT
733.27E
G+71.38, 32.71'LT
733.62E
G+62.24, 31.97'LT
733.29 TC
733.29 FL
G+60.96, 30.98'LT
733.35E
G+71.43, 31.12'LT
733.54E
G+65.38, 28.07'LT
733.21 TC
733.21 FL
G+64.11, 27.09'LT
733.22E
G+67.20, 24.92'LT
733.08E
G+68.08, 26.21'LT
733.47E TC
733.06E FL
GV
MH
WV

W. GREENFIELD AVENUE

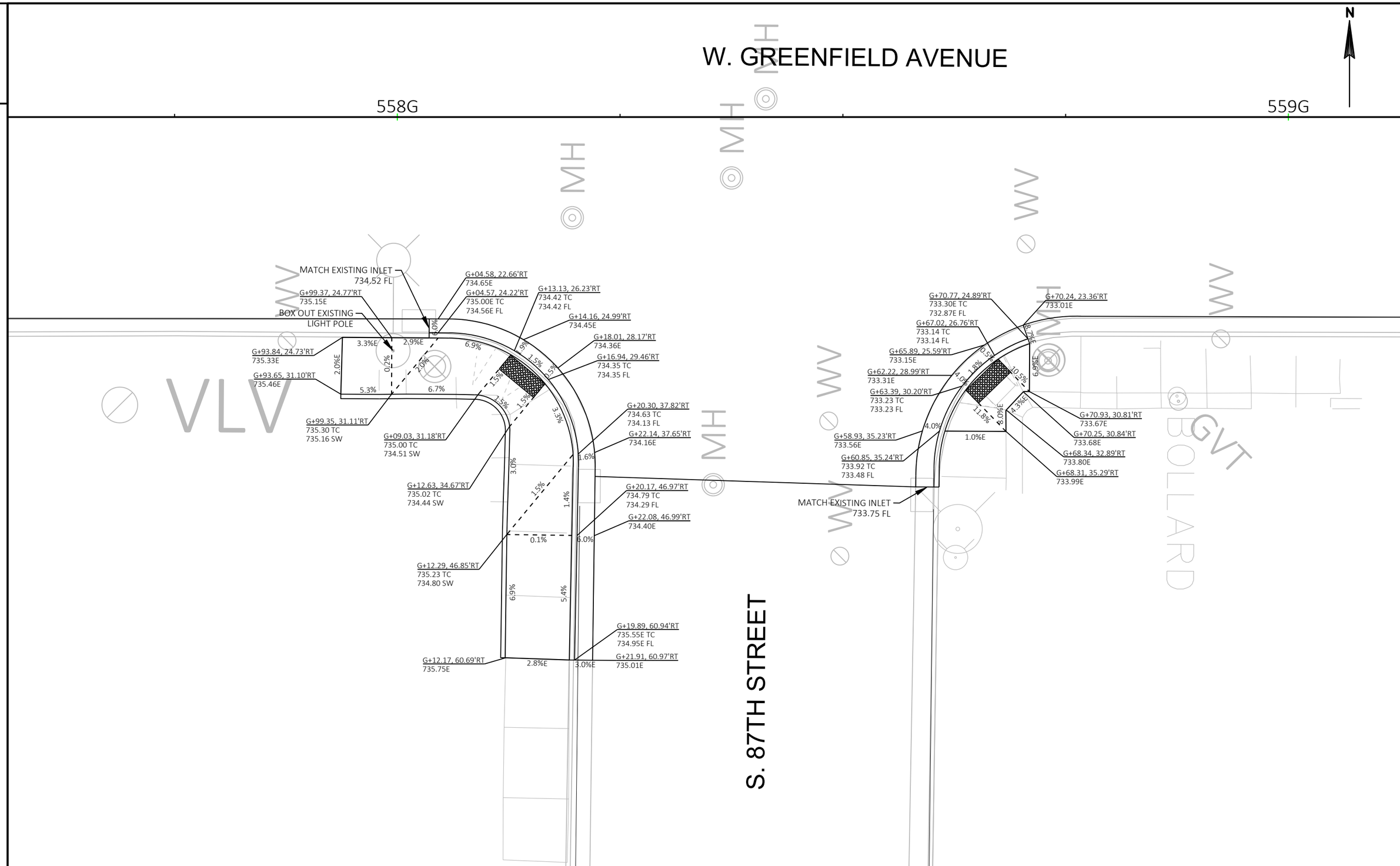

PROJECT NO: 1060-40-97	HWY: STH 59	COUNTY: MILWAUKEE	CONSTRUCTION DETAILS	SHEET 15	E

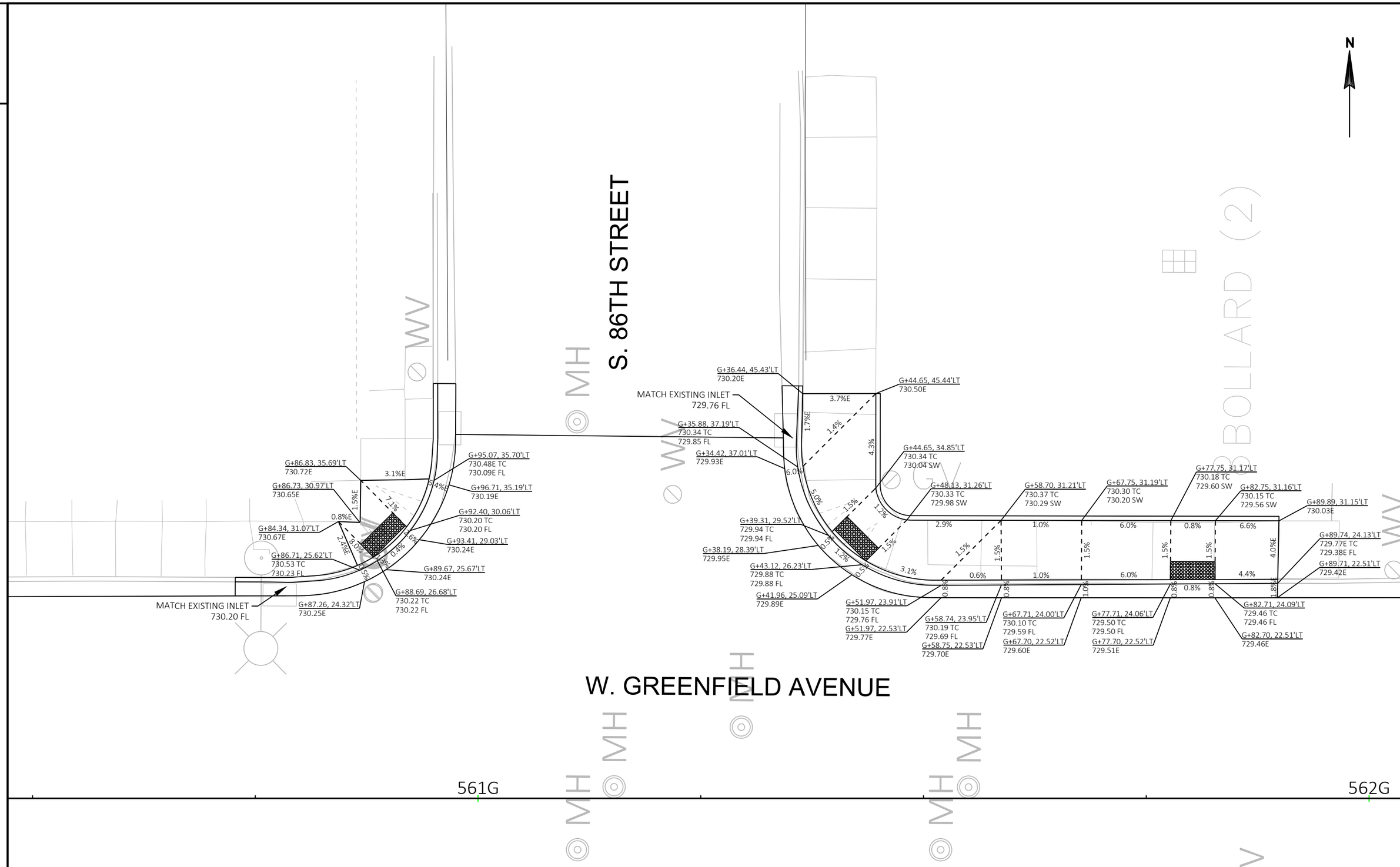

PROJECT NO: 1060-40-97	HWY: STH 59	COUNTY: MILWAUKEE	CONSTRUCTION DETAILS	SHEET 16	E

FILE NAME : W:\CADD\FINAL\10604097_GO\SHEETSPLAN\021001_CD.DWG
LAYOUT NAME - 10
PLOT DATE : 1/29/2019 4:06 PM
PLOT BY : SCHARLAU, DAVID A
PLOT NAME :
PLOT SCALE : 1 IN:10 FT
WISDOT/CADDS SHEET 42

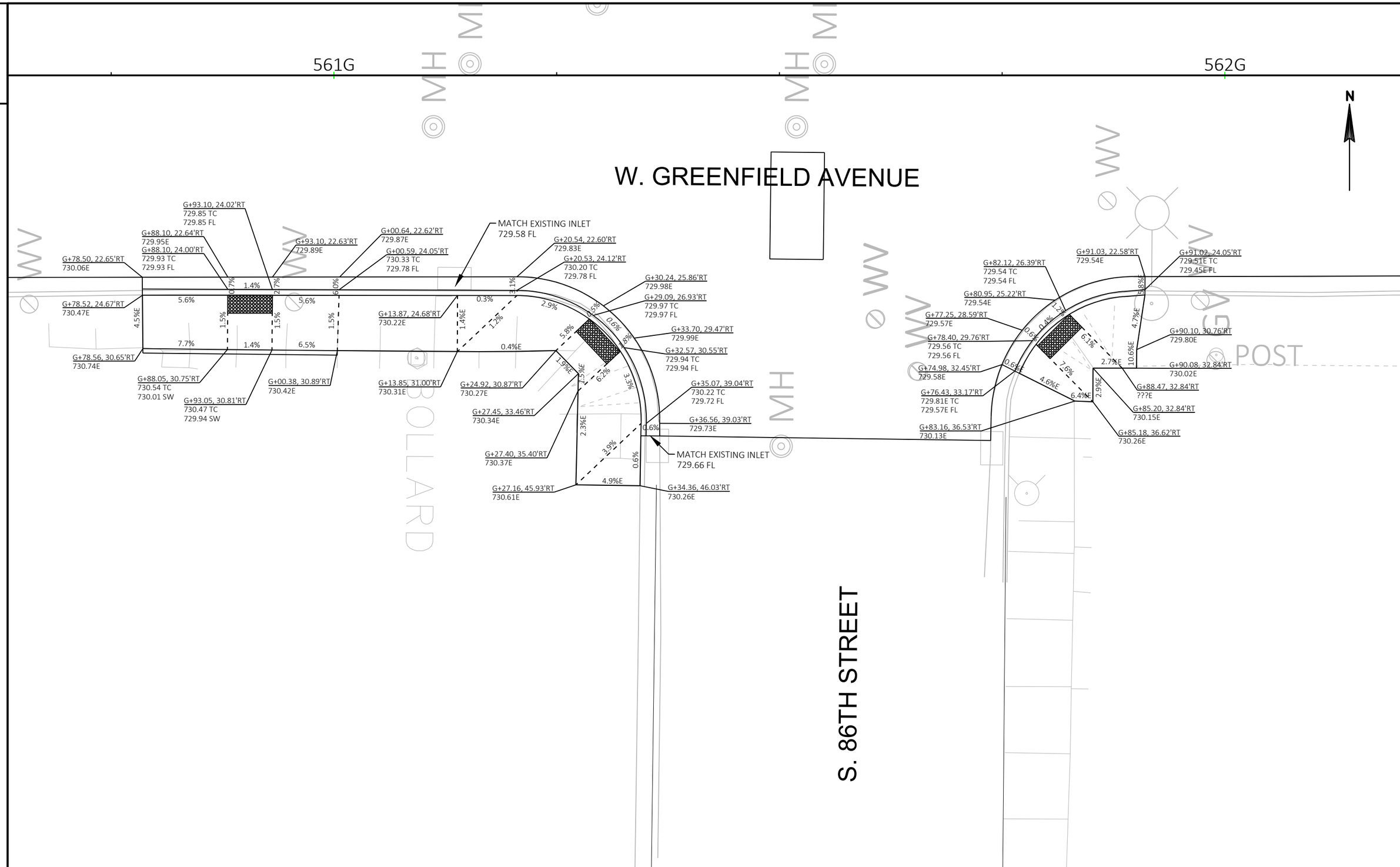

PROJECT NO: 1060-40-97	HWY: STH 59	COUNTY: MILWAUKEE	CONSTRUCTION DETAILS	SHEET 17	E

FILE NAME : W:\CADD\FINAL\10604097_GO\SHEETSPLAN\021001_CD.DWG
LAYOUT NAME - 11
PLOT DATE : 1/29/2019 4:06 PM
PLOT BY : SCHARLAU, DAVID A
PLOT NAME :
PLOT SCALE : 1 IN:10 FT
WISDOT/CADDS SHEET 42

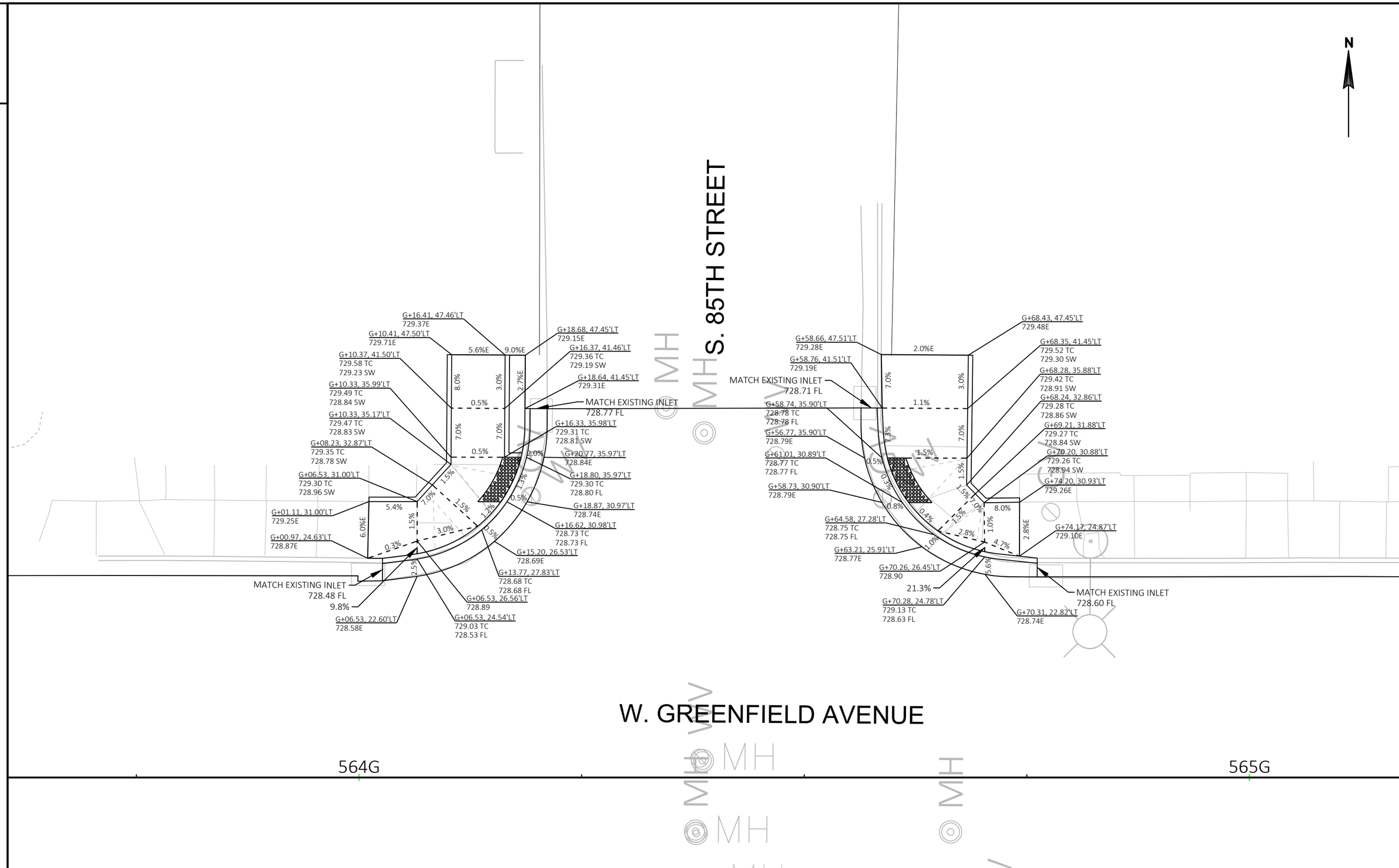

PROJECT NO: 1060-40-97	HWY: STH 59	COUNTY: MILWAUKEE	CONSTRUCTION DETAILS	SHEET 18	E

FILE NAME : W:\CADD\FINAL\10604097_GO\SHEETSPLAN\021001_CD.DWG
LAYOUT NAME - 12
PLOT DATE : 1/29/2019 4:06 PM
PLOT BY : SCHARLAU, DAVID A
PLOT NAME :
PLOT SCALE : 1 IN:10 FT
WISDOT/CADDS SHEET 42

W. GREENFIELD AVENUE

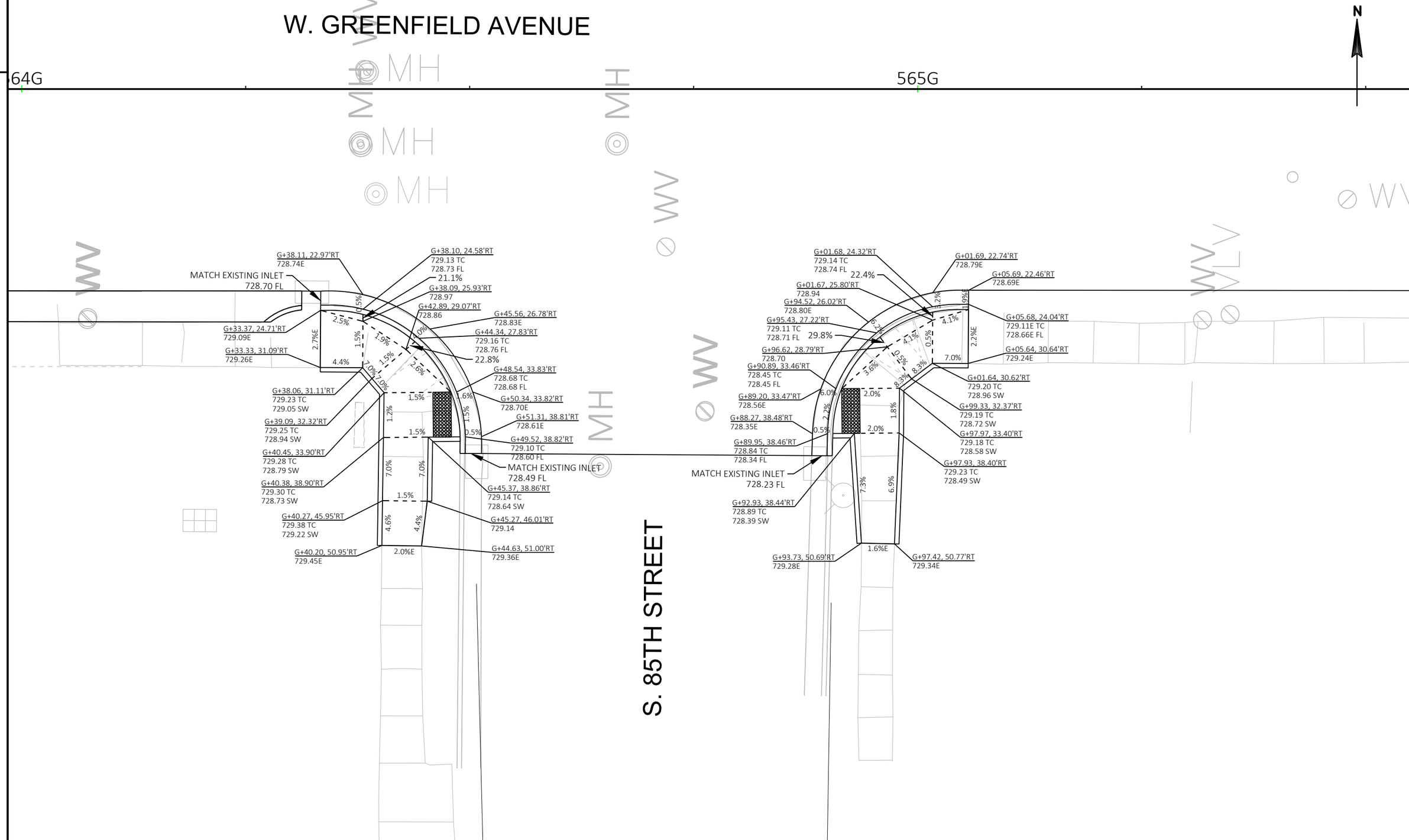

PROJECT NO: 1060-40-97	HWY: STH 59	COUNTY: MILWAUKEE	CONSTRUCTION DETAILS	SHEET 19	E

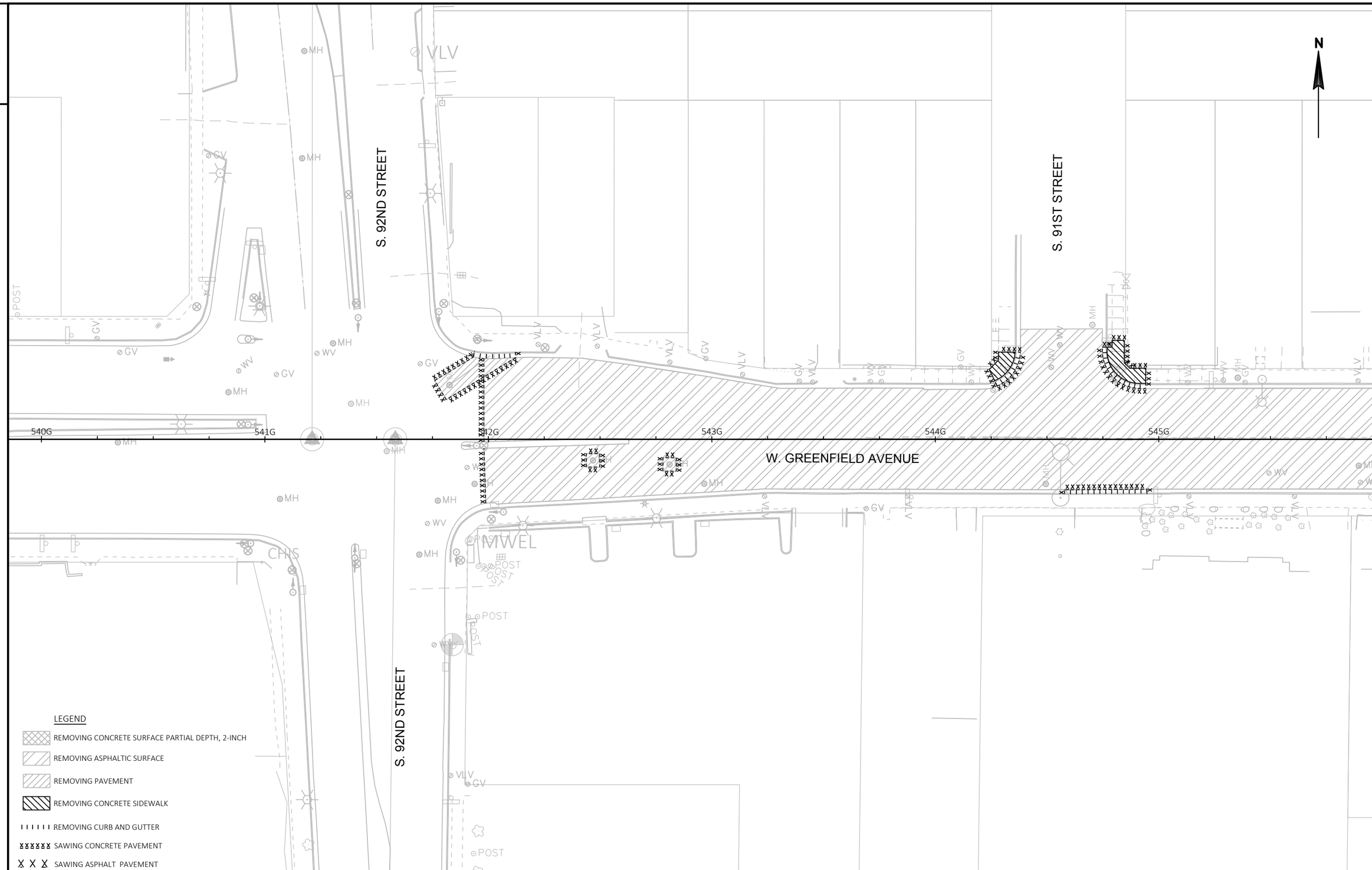

PROJECT NO: 1060-40-97	HWY: STH 59	COUNTY: MILWAUKEE	REMOVAL PLANS	SHEET 20	E

FILE NAME : W:\CADD\FINAL\10604097_GO\SHEETSPLAN\021101_RM.DWG
LAYOUT NAME - 01
PLOT DATE : 1/29/2019 12:46 PM
PLOT BY : GIBSON MURPHY, NICOL
PLOT NAME :
PLOT SCALE : 1 IN:40 FT
WISDOT/CADDS SHEET 42

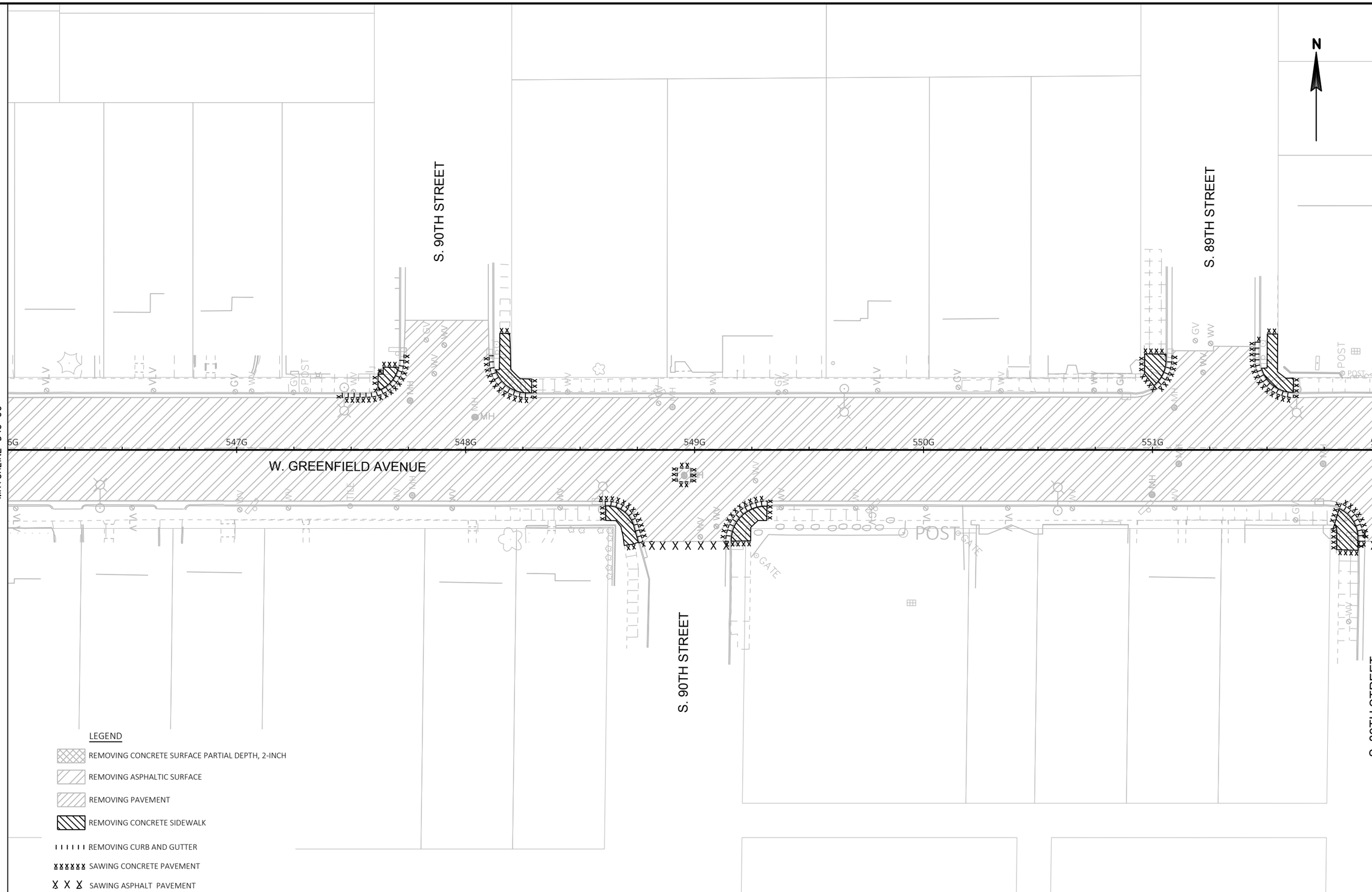

2

PROJECT NO: 1060-40-97	HWY: STH 59	COUNTY: MILWAUKEE	REMOVAL PLANS	SHEET 21	E

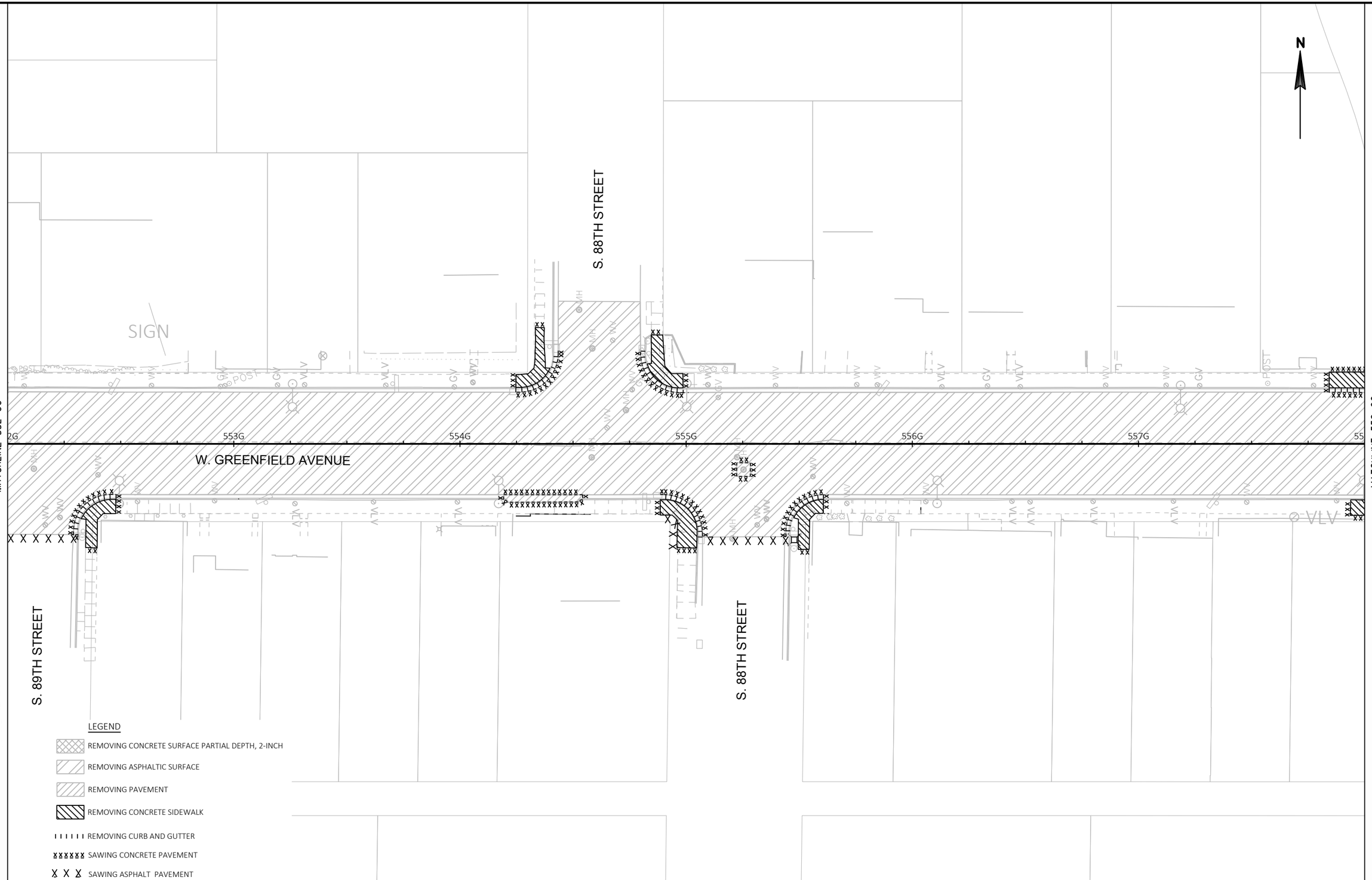
N
S. 88TH STREET
SIGN
POST
MATCHLINE 552+00
MATCHLINE 558+00
553G
554G
555G
556G
557G
W. GREENFIELD AVENUE
S. 89TH STREET
S. 88TH STREET
LEGEND
REMOVING CONCRETE SURFACE PARTIAL DEPTH, 2-INCH
REMOVING ASPHALTIC SURFACE
REMOVING PAVEMENT
REMOVING CONCRETE SIDEWALK
REMOVING CURB AND GUTTER
SAWING CONCRETE PAVEMENT
SAWING ASPHALT PAVEMENT

2

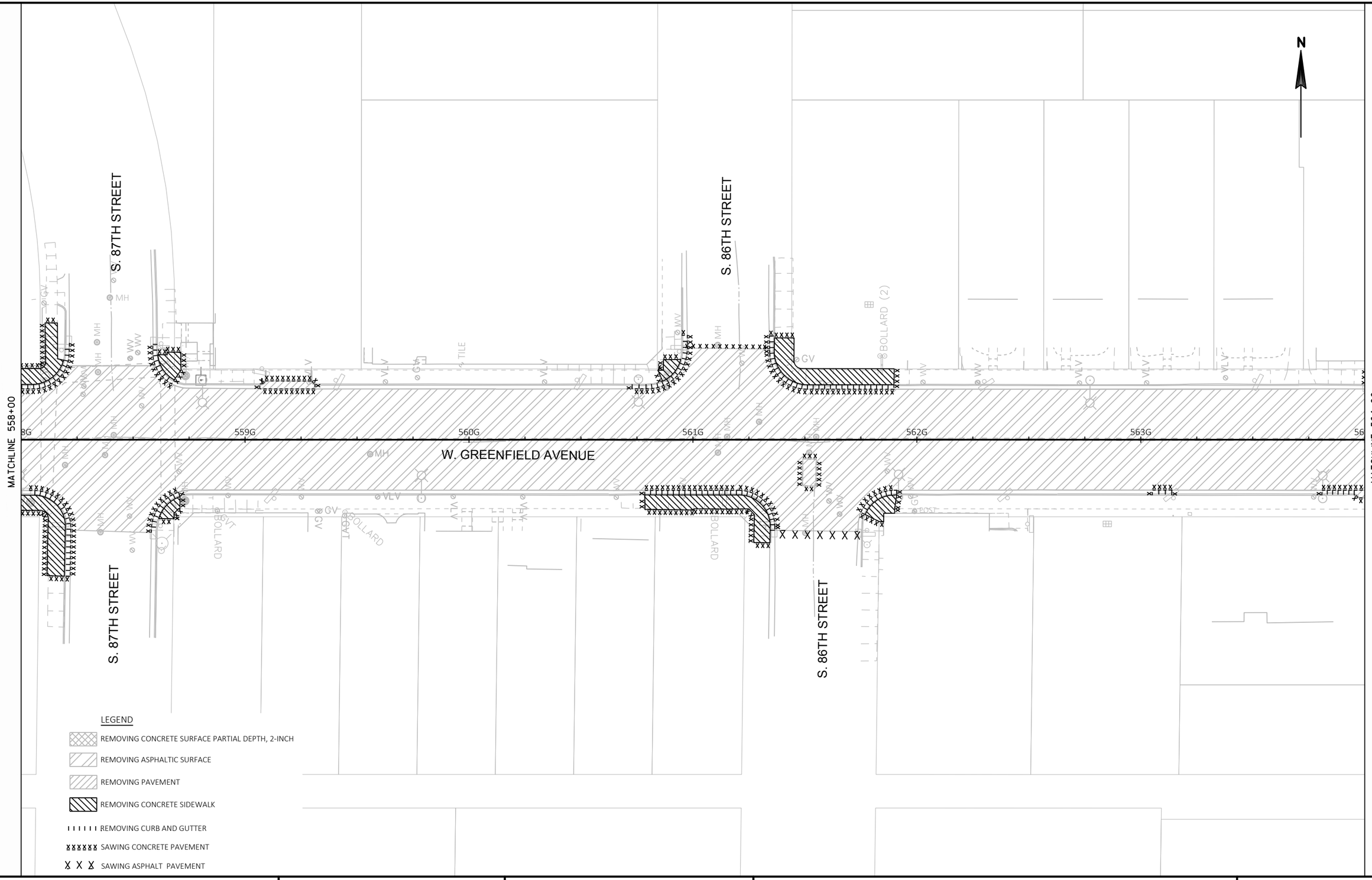

2

PROJECT NO: 1060-40-97	HWY: STH 59	COUNTY: MILWAUKEE	REMOVAL PLANS	SHEET 23	E

FILE NAME : W:\CADD\FINAL\10604097_GO\SHEETSPLAN\021101_RM.DWG
LAYOUT NAME - 04
PLOT DATE : 1/29/2019 4:04 AM
PLOT BY : SCHARLAU, DAVID A
PLOT NAME :
PLOT SCALE : 1 IN:40 FT
WISDOT/CADDS SHEET 42

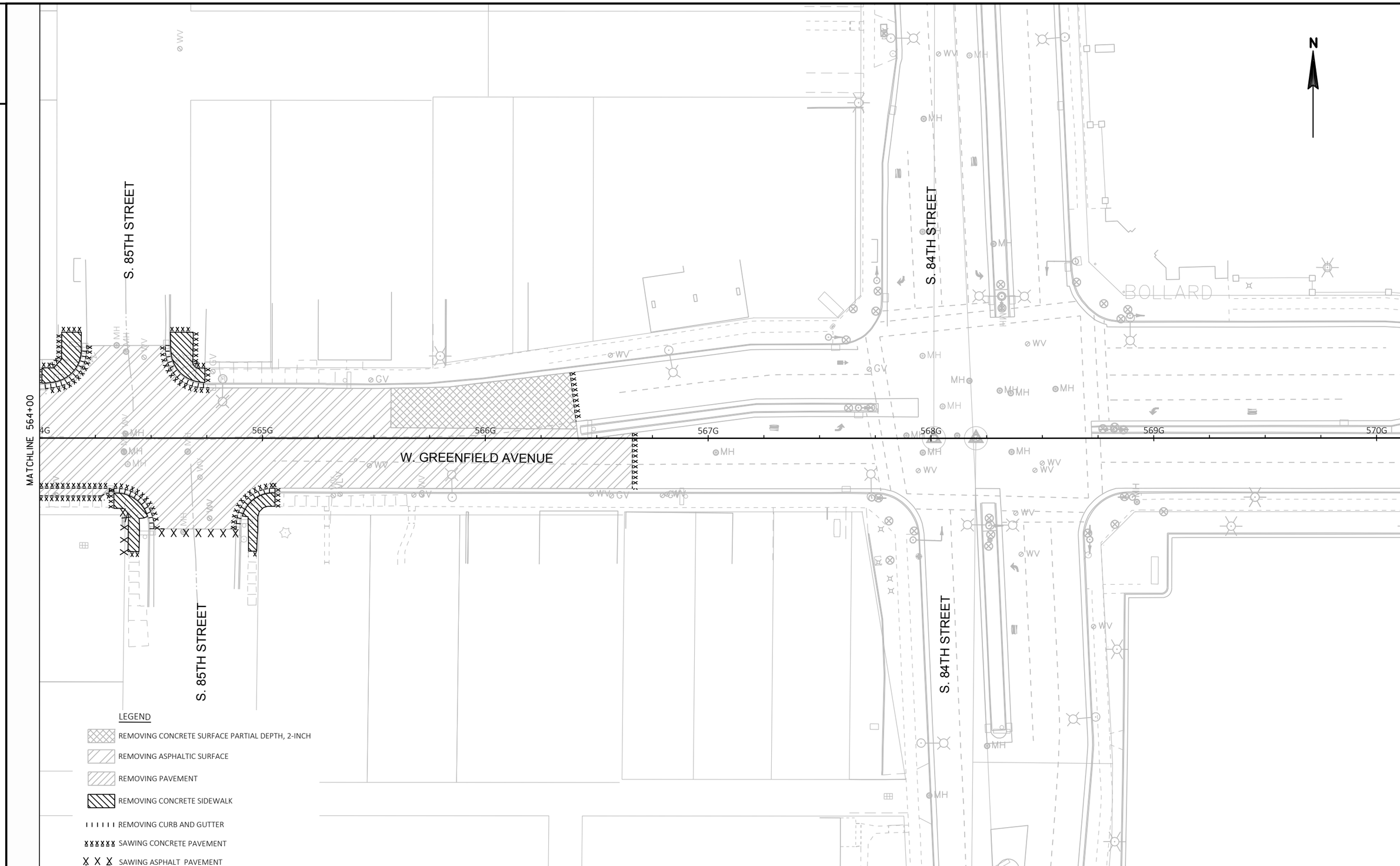
N
S. 85TH STREET
S. 84TH STREET
BOLLARD
W. GREENFIELD AVENUE
MATCHLINE 564+00
4G
565G
566G
567G
568G
569G
570G
WV
MH
GV
LEGEND
REMOVING CONCRETE SURFACE PARTIAL DEPTH, 2-INCH
REMOVING ASPHALTIC SURFACE
REMOVING PAVEMENT
REMOVING CONCRETE SIDEWALK
REMOVING CURB AND GUTTER
SAWING CONCRETE PAVEMENT
SAWING ASPHALT PAVEMENT

2

S. 92ND STREET

S. 91ST STREET

W. GREENFIELD AVENUE

EXISTING BUS STOP

CG16

+93.31
36.83' LT

+12.21
36.54' LT

+75.96
26.30' LT

+81.15
17.75' LT

+98.00
27.96' LT

+62.71
0.21' LT

+62.84
1.96' RT

+98.00
1.15' RT

+98.00
4.01' RT

+98.77
28.63' RT

BASE PATCHING CONCRETE SHES

EXISTING BUS STOP

EXISTING BUS STOP

MATCH EXISTING
CONCRETE PAVEMENT

+74.73
41.25' LT

+38.09
38.80' LT

CG22

CM07

CM07

DRILLED
TIE BARS

+27.72
23.78' LT

CG16

CG03

CG16

+94.12
22.69' LT

DRILLED TIE BARS

+57.85
22.61' RT

+94.68
22.29' RT

DRIVEWAY ENTRANCE CURB

A

A

540G

541G

542G

543G

544G

545G

MATCHLINE 546+00

N

2

LEGEND

CG02	CURB RAMP TYPE 1A
CG03	CURB RAMP TYPE 2
CG09	CURB RAMP TYPE 7A
CG16	CONCRETE CURB AND GUTTER 31-INCH
CG22	CONCRETE CURB PEDESTRIAN
CM07	CONCRETE SIDEWALK 5-INCH
DR01	CONCRETE DRIVEWAY 6-INCH
A	HMA PAVEMENT 4 MT 58-28 S, 2-INCH

NOTE
SEE CONSTRUCTION DETAILS FOR ADDITIONAL INFORMATION ON CURB RAMP LAYOUT, ELEVATIONS, AND GUTTER SLOPE TRANSITIONS.

PROJECT NO: 1060-40-97	HWY: STH 59	COUNTY: MILWAUKEE	PLAN DETAILS	SHEET 25	E

2

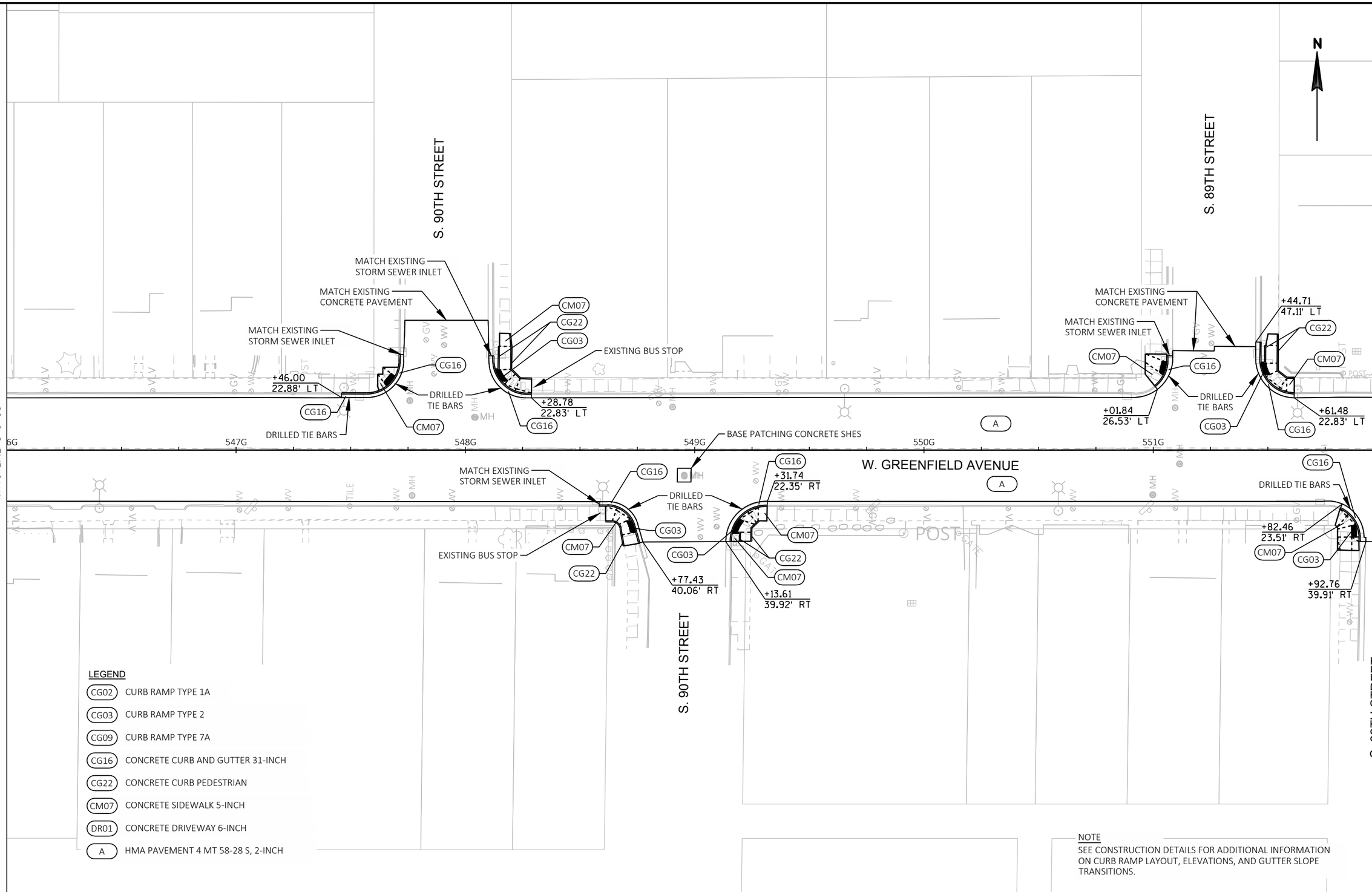

LEGEND

CG02	CURB RAMP TYPE 1A
CG03	CURB RAMP TYPE 2
CG09	CURB RAMP TYPE 7A
CG16	CONCRETE CURB AND GUTTER 31-INCH
CG22	CONCRETE CURB PEDESTRIAN
CM07	CONCRETE SIDEWALK 5-INCH
DR01	CONCRETE DRIVEWAY 6-INCH
A	HMA PAVEMENT 4 MT 58-28 S, 2-INCH

NOTE

SEE CONSTRUCTION DETAILS FOR ADDITIONAL INFORMATION ON CURB RAMP LAYOUT, ELEVATIONS, AND GUTTER SLOPE TRANSITIONS.

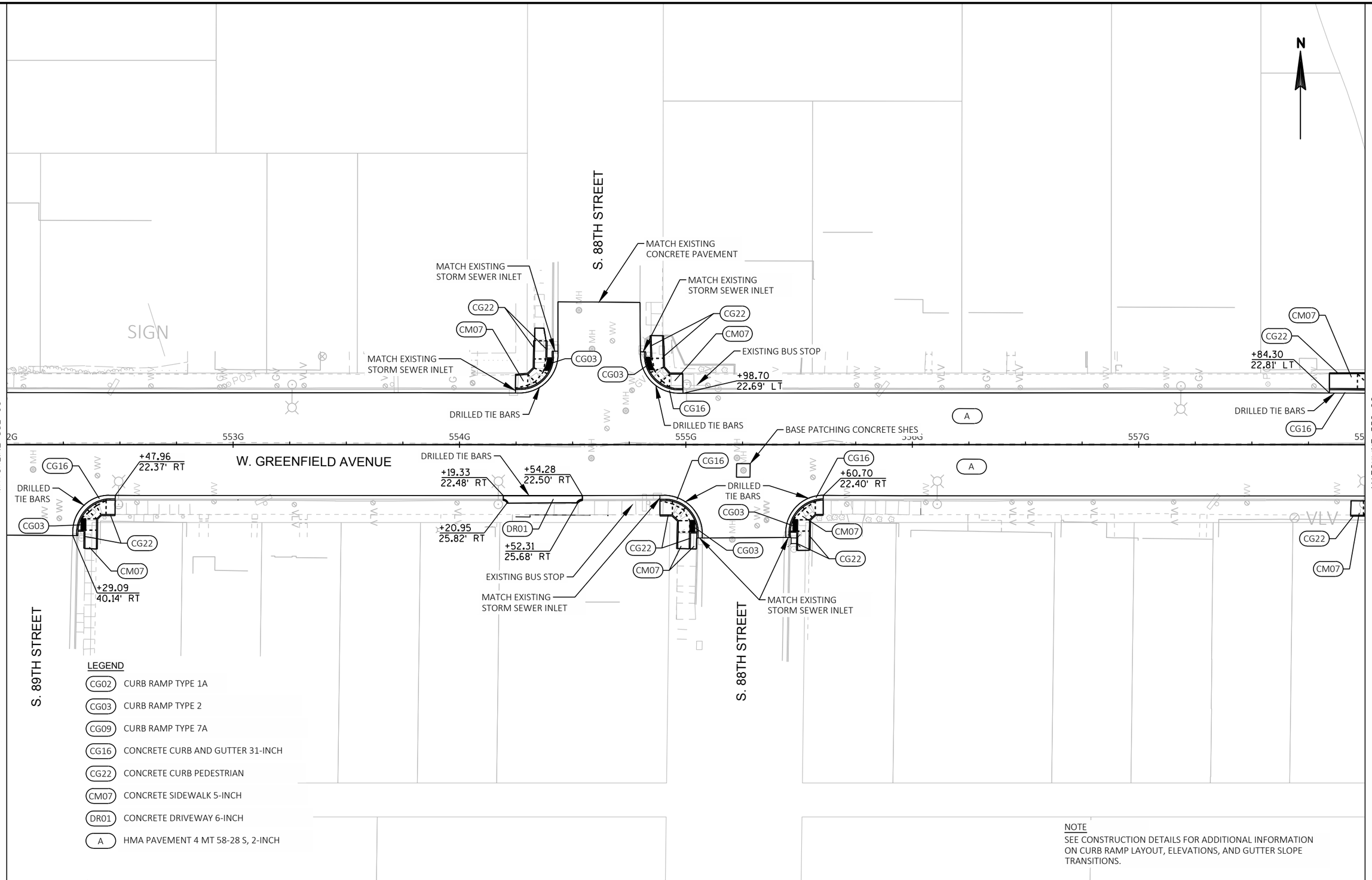

LEGEND

CG02	CURB RAMP TYPE 1A
CG03	CURB RAMP TYPE 2
CG09	CURB RAMP TYPE 7A
CG16	CONCRETE CURB AND GUTTER 31-INCH
CG22	CONCRETE CURB PEDESTRIAN
CM07	CONCRETE SIDEWALK 5-INCH
DR01	CONCRETE DRIVEWAY 6-INCH
A	HMA PAVEMENT 4 MT 58-28 S, 2-INCH

NOTE
SEE CONSTRUCTION DETAILS FOR ADDITIONAL INFORMATION ON CURB RAMP LAYOUT, ELEVATIONS, AND GUTTER SLOPE TRANSITIONS.

2

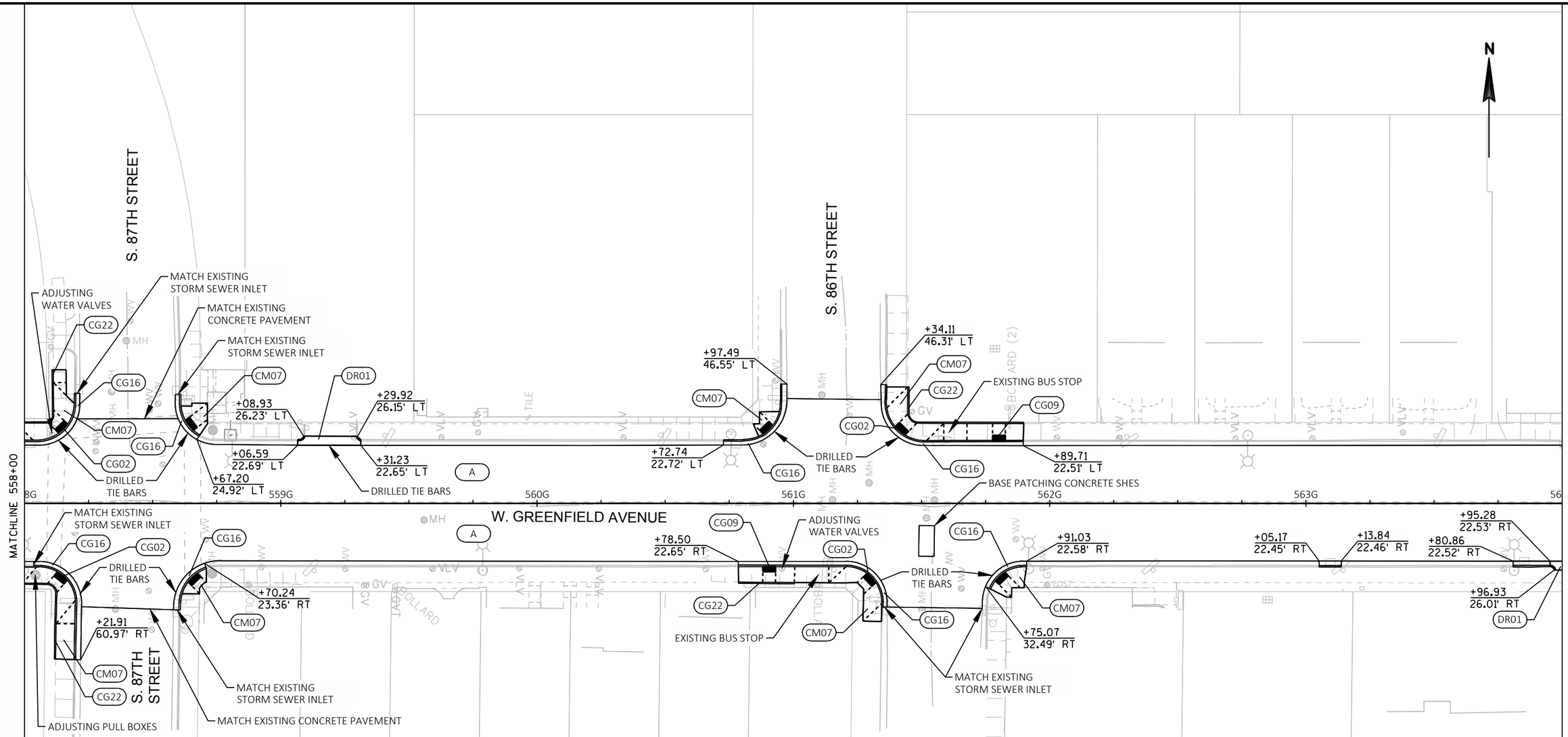

LEGEND

CG02	CURB RAMP TYPE 1A
CG03	CURB RAMP TYPE 2
CG09	CURB RAMP TYPE 7A
CG16	CONCRETE CURB AND GUTTER 31-INCH
CG22	CONCRETE CURB PEDESTRIAN
CM07	CONCRETE SIDEWALK 5-INCH
DR01	CONCRETE DRIVEWAY 6-INCH
A	HMA PAVEMENT 4 MT 58-28 S, 2-INCH

NOTE
SEE CONSTRUCTION DETAILS FOR ADDITIONAL INFORMATION ON CURB RAMP LAYOUT, ELEVATIONS, AND GUTTER SLOPE TRANSITIONS.

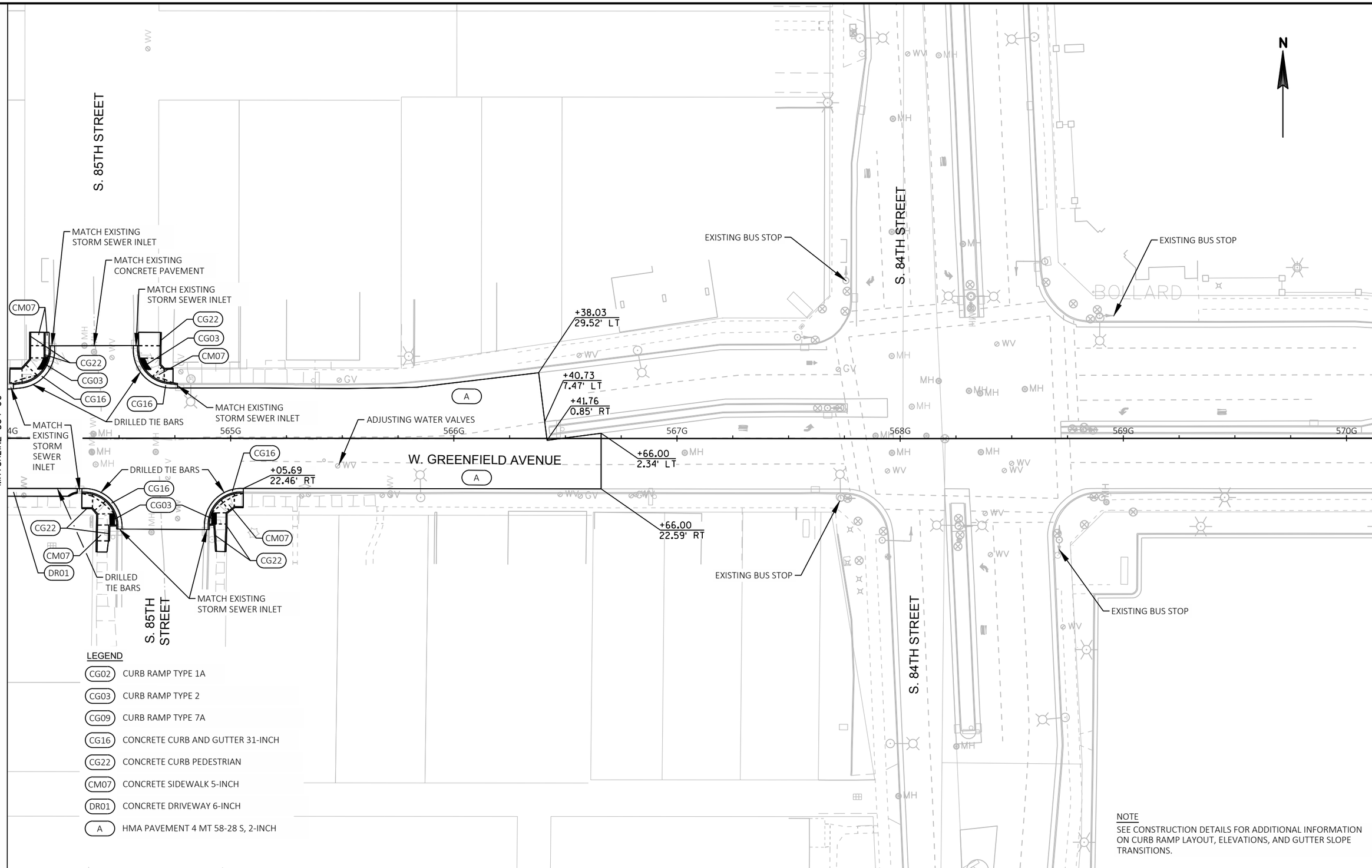

LEGEND

CG02	CURB RAMP TYPE 1A
CG03	CURB RAMP TYPE 2
CG09	CURB RAMP TYPE 7A
CG16	CONCRETE CURB AND GUTTER 31-INCH
CG22	CONCRETE CURB PEDESTRIAN
CM07	CONCRETE SIDEWALK 5-INCH
DR01	CONCRETE DRIVEWAY 6-INCH
A	HMA PAVEMENT 4 MT 58-28 S, 2-INCH

NOTE

SEE CONSTRUCTION DETAILS FOR ADDITIONAL INFORMATION ON CURB RAMP LAYOUT, ELEVATIONS, AND GUTTER SLOPE TRANSITIONS.

2

S. 92ND STREET

S. 91ST STREET

W. GREENFIELD AVENUE

540G 541G 542G 543G 544G 545G

MATCHLINE 546+00

LEGEND

B INLET PROTECTION TYPE B

C INLET PROTECTION TYPE C

PROJECT NO: 1060-40-97	HWY: STH 59	COUNTY: MILWAUKEE	EROSION CONTROL	SHEET 30	E

FILE NAME : W:\CADD\FINAL\10604097_GO\SHEETSPLAN\022001_EC.DWG
LAYOUT NAME - 01

PLOT DATE : 1/29/2019 4:05 AM PLOT BY : SCHARLAU, DAVID A PLOT NAME : PLOT SCALE : 1 IN:40 FT

WISDOT/CADDS SHEET 42

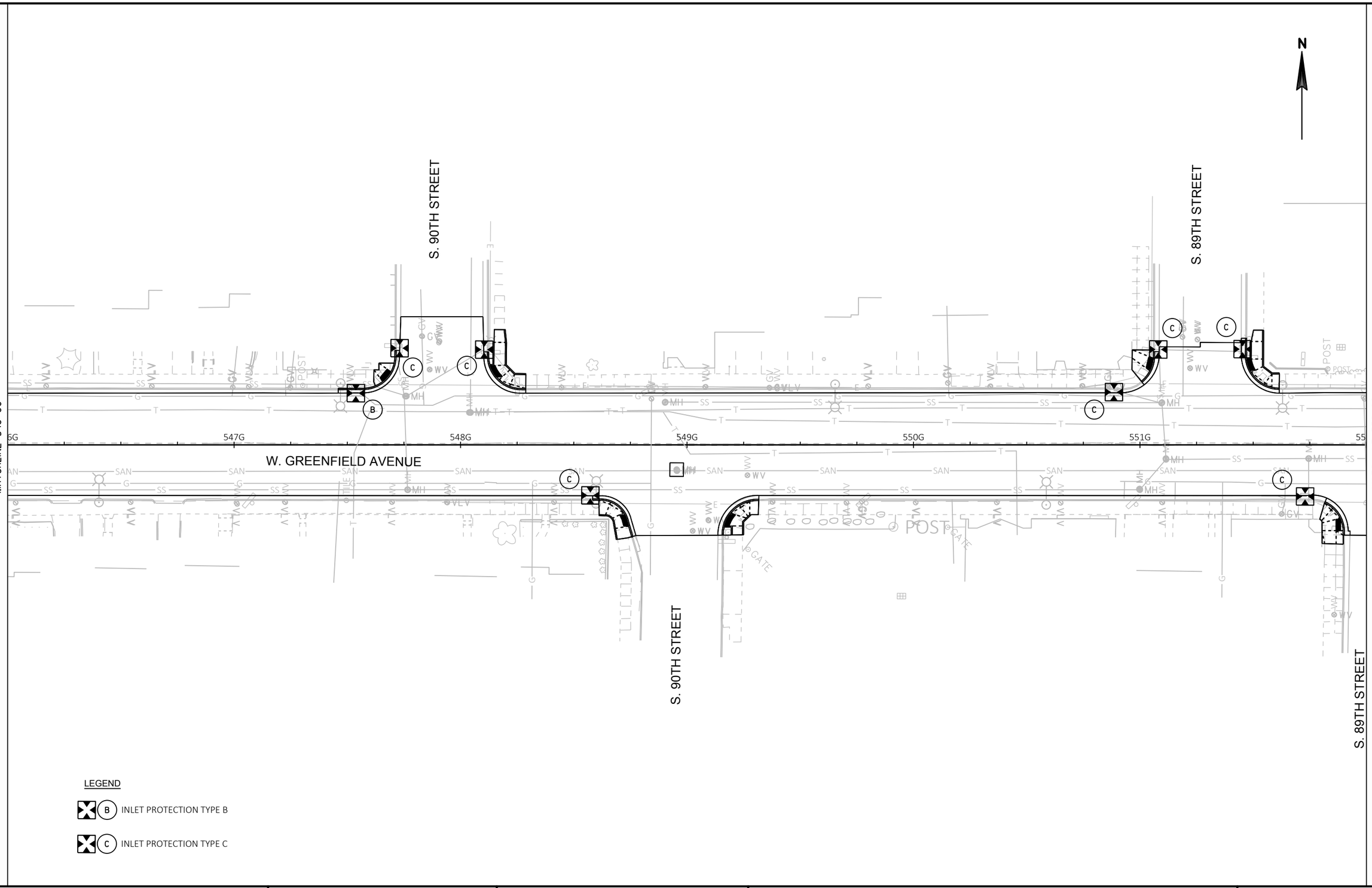

PROJECT NO: 1060-40-97	HWY: STH 59	COUNTY: MILWAUKEE	EROSION CONTROL	SHEET 31	E

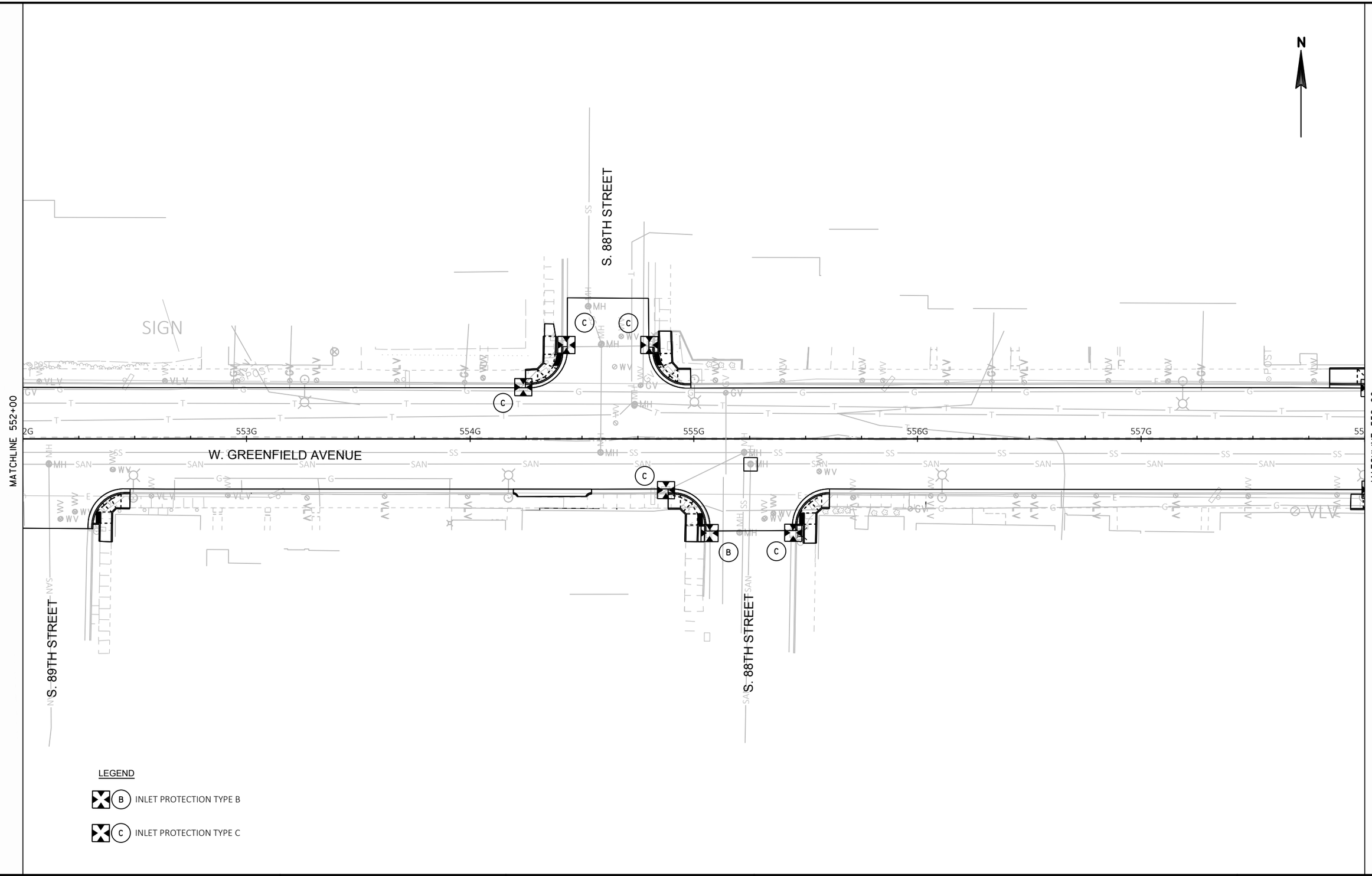

PROJECT NO: 1060-40-97	HWY: STH 59	COUNTY: MILWAUKEE	EROSION CONTROL	SHEET 32	E

2

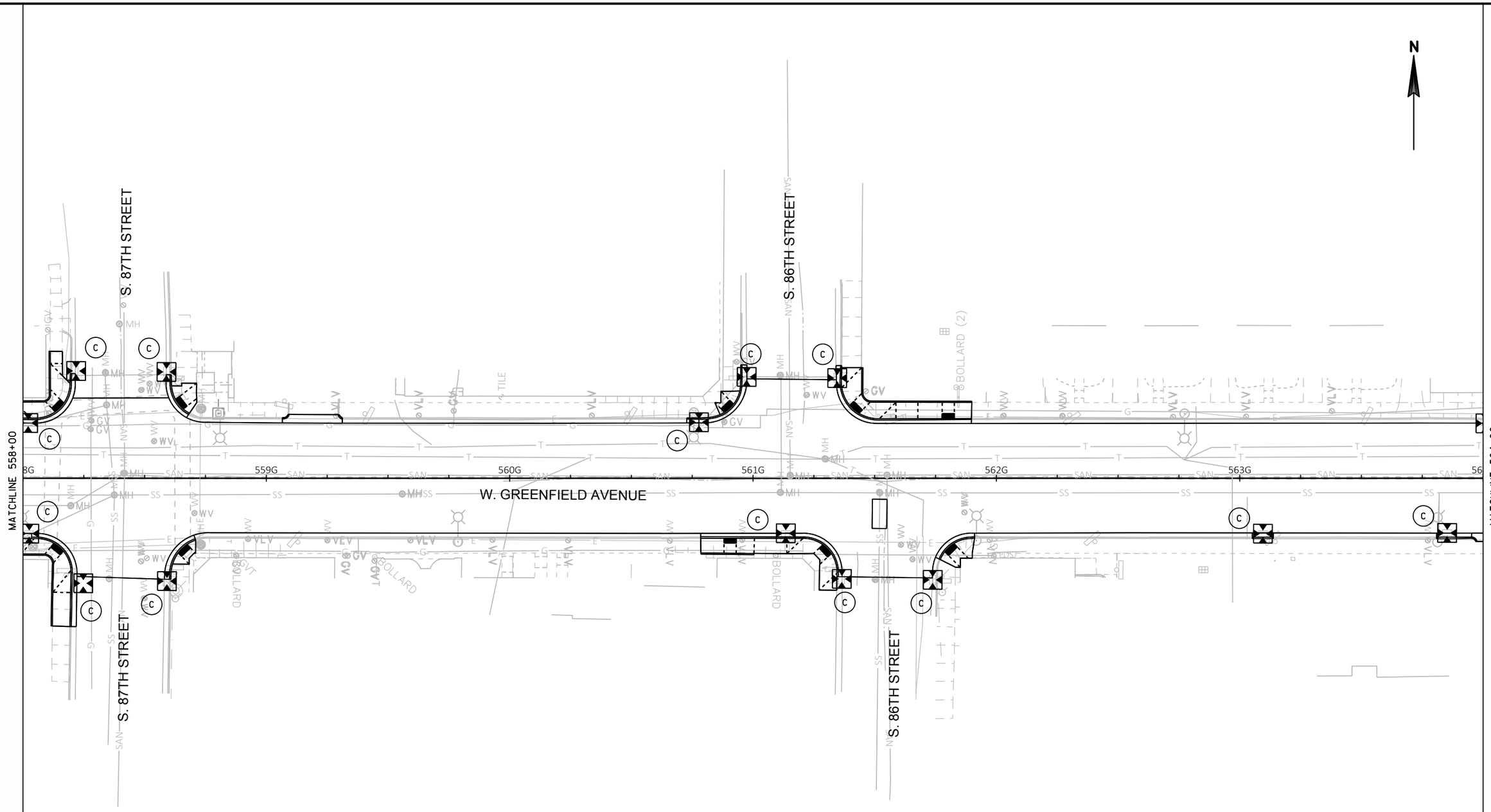

LEGEND

B INLET PROTECTION TYPE B

C INLET PROTECTION TYPE C

2

PROJECT NO: 1060-40-97	HWY: STH 59	COUNTY: MILWAUKEE	EROSION CONTROL	SHEET 33	E

FILE NAME : W:\CADD\FINAL\10604097_GO\SHEETSPLAN\022001_EC.DWG
LAYOUT NAME - 04
PLOT DATE : 1/29/2019 4:06 AM
PLOT BY : SCHARLAU, DAVID A
PLOT NAME :
PLOT SCALE : 1 IN:40 FT

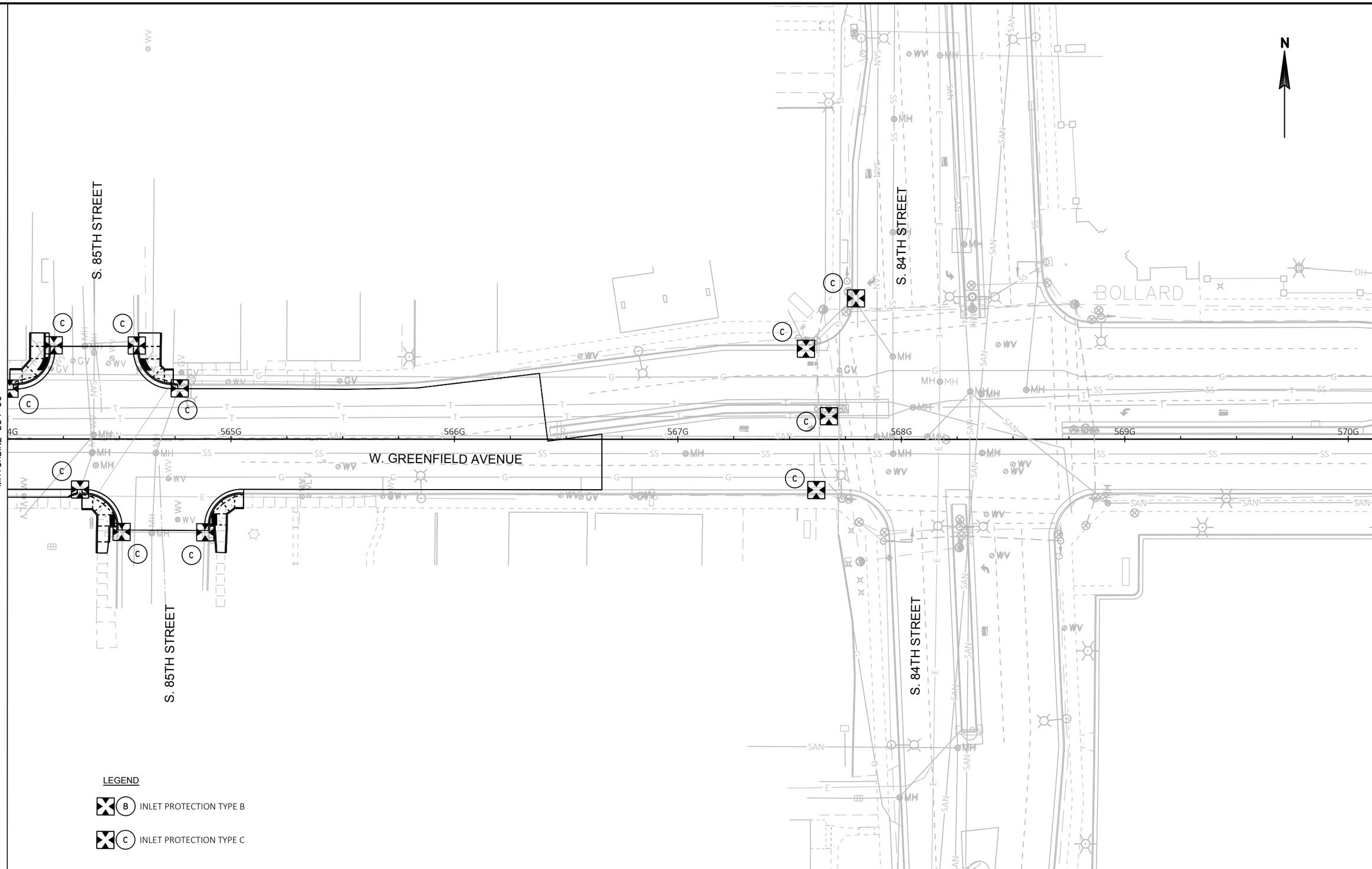
N
S. 85TH STREET
S. 84TH STREET
BOLLARD
W. GREENFIELD AVENUE
MATCHLINE 564+00
565G
566G
567G
568G
569G
570G
LEGEND
B INLET PROTECTION TYPE B
C INLET PROTECTION TYPE C

2

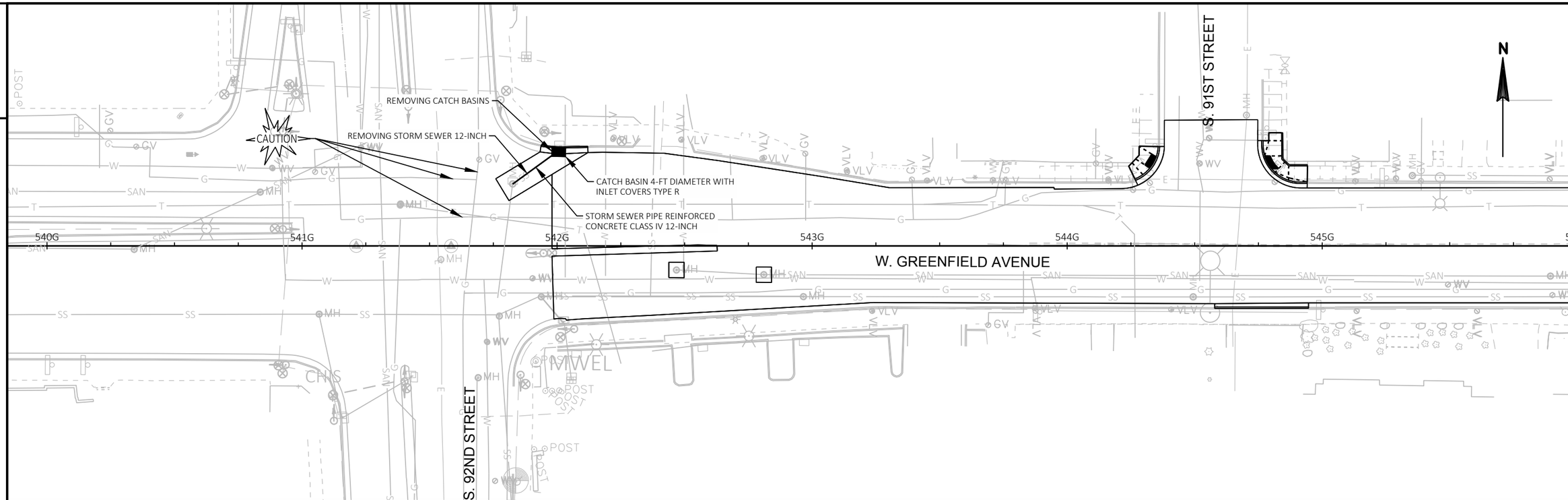

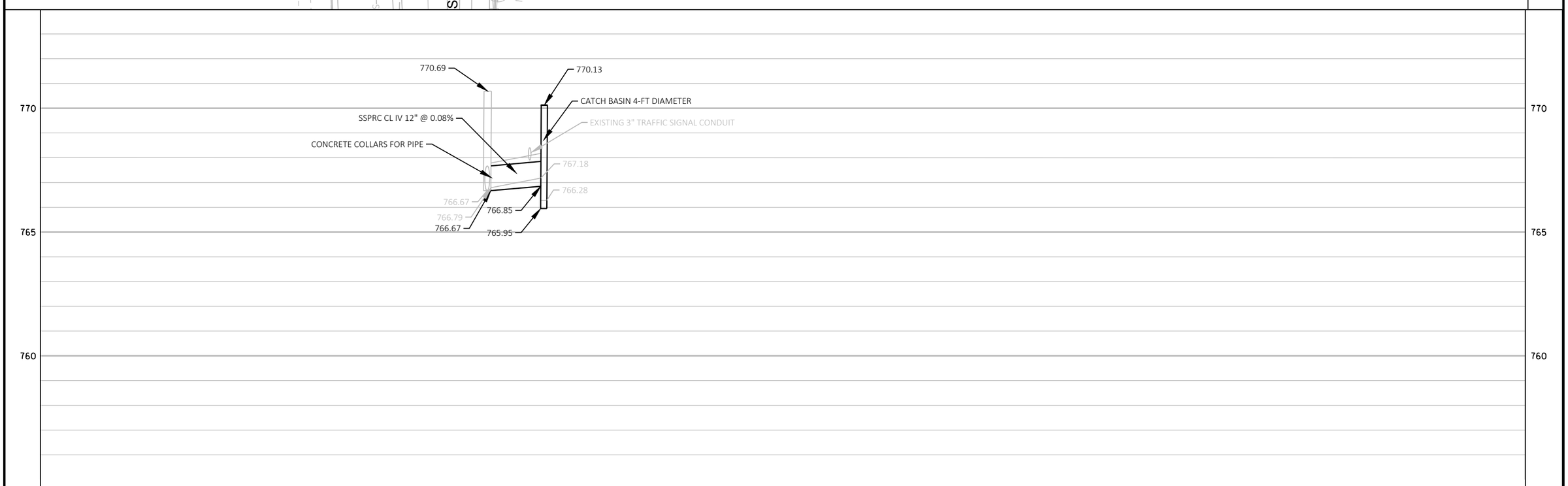

PROJECT NO: 1060-40-97	HWY: STH 59	COUNTY: MILWAUKEE	STORM SEWER	SHEET 35	E

FILE NAME : W:\CADD\FINAL\10604097_GO\SHEETSPLAN\022501_SS.DWG
LAYOUT NAME - 01
PLOT DATE : 1/29/2019 3:01 PM
PLOT BY : GIBSON MURPHY, NICOL
PLOT NAME :
PLOT SCALE : 1 IN:40 FT
WISDOT/CADDS SHEET 42

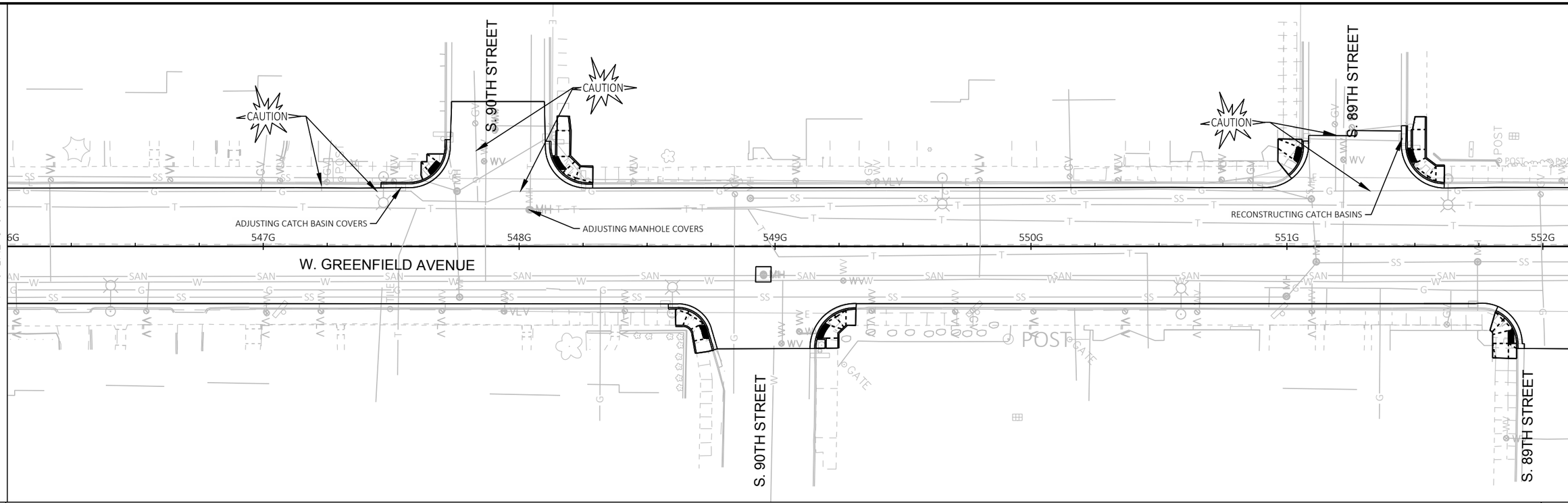

NO PROFILE THIS SHEET

PROJECT NO: 1060-40-97	HWY: STH 59	COUNTY: MILWAUKEE	STORM SEWER	SHEET 36	E

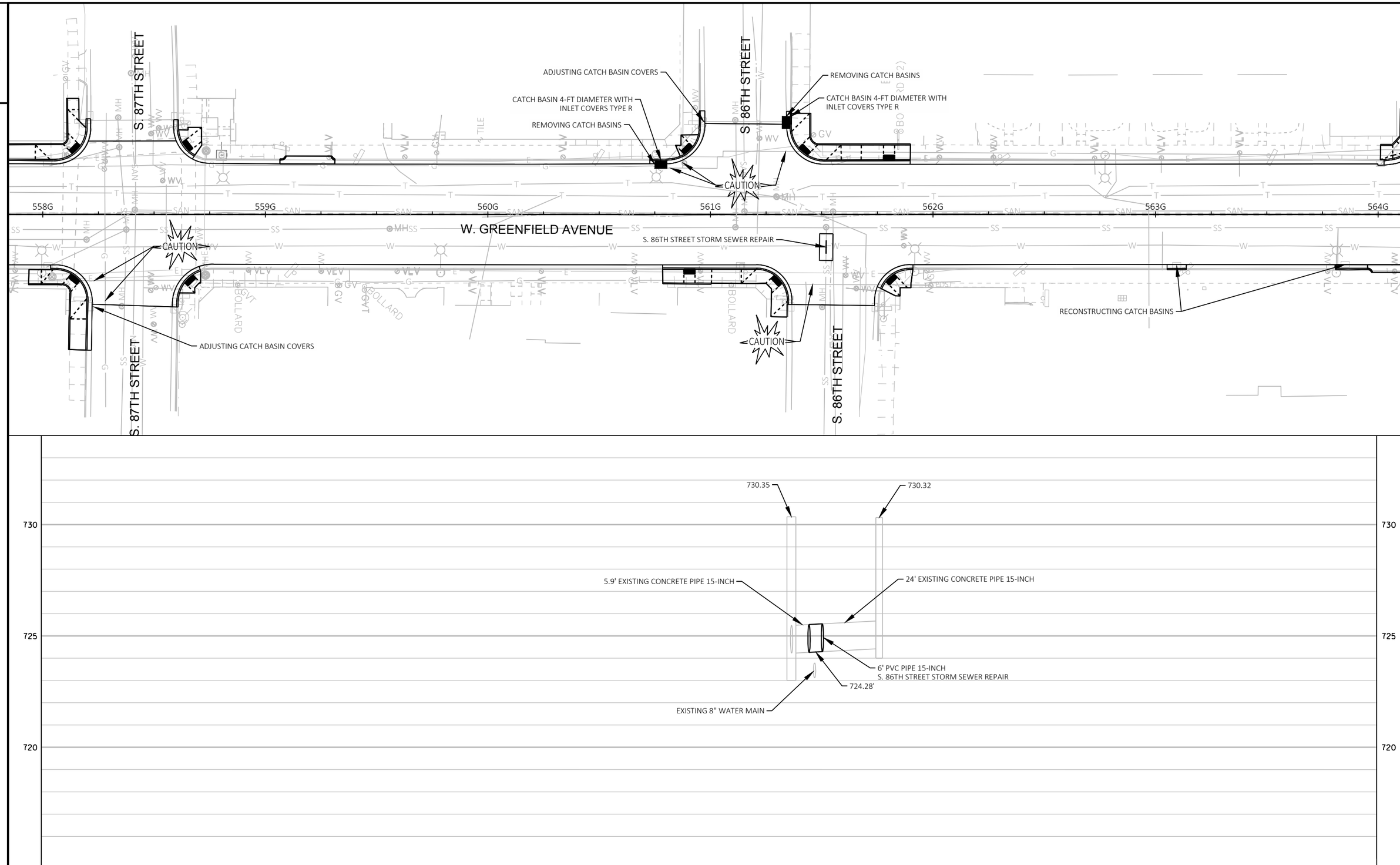

PROJECT NO: 1060-40-97	HWY: STH 59	COUNTY: MILWAUKEE	STORM SEWER	SHEET 37	E

FILE NAME : W:\CADD\FINAL\10604097_GO\SHEETSPLAN\022501_SS.DWG
LAYOUT NAME - 03
PLOT DATE : 1/29/2019 3:01 PM
PLOT BY : GIBSON MURPHY, NICOL
PLOT NAME :
PLOT SCALE : 1 IN:40 FT
WISDOT/CADDS SHEET 42

2

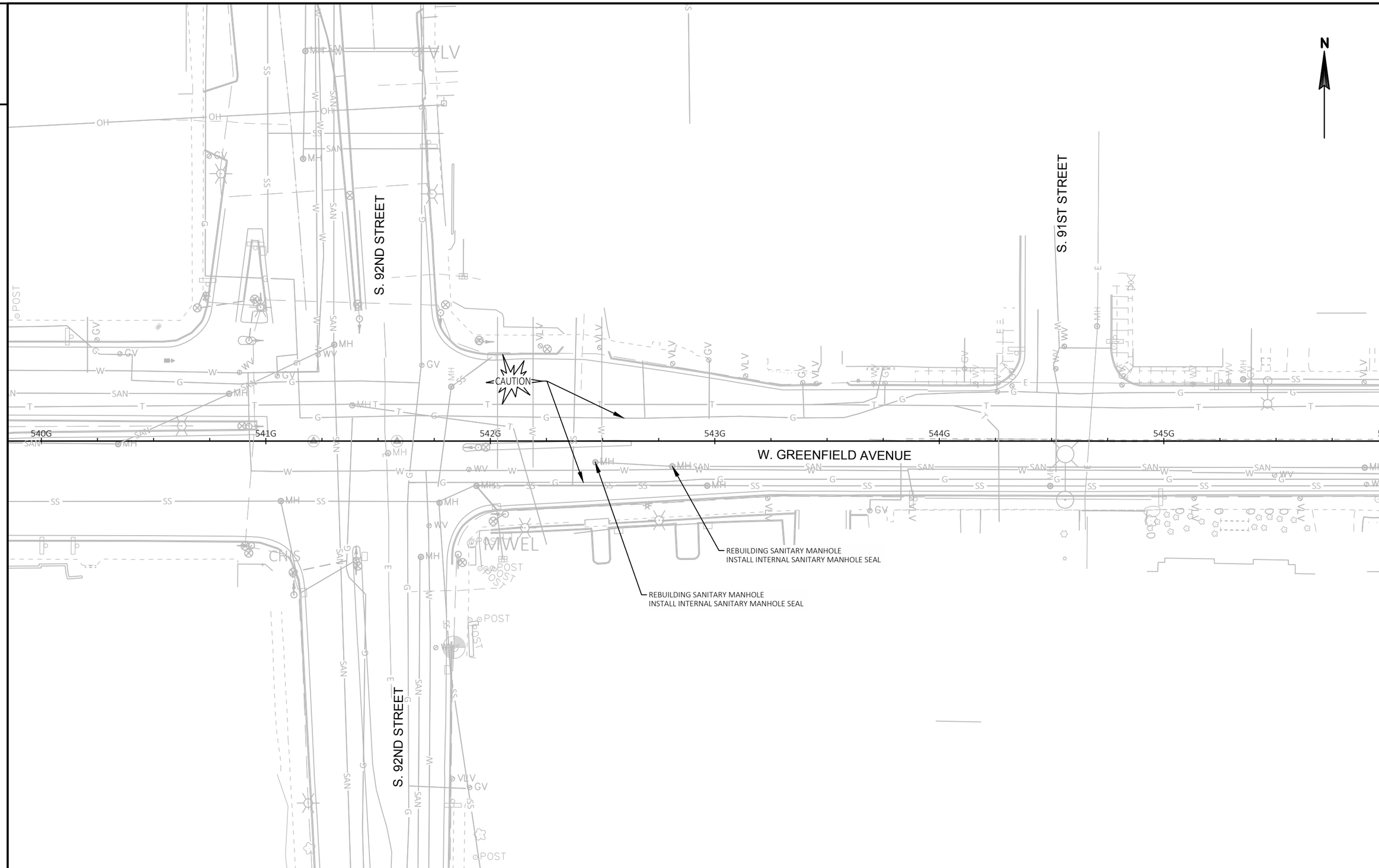

2

PROJECT NO: 1060-40-97	HWY: STH 59	COUNTY: MILWAUKEE	SANITARY SEWER	SHEET 38	E

FILE NAME : W:\CADD\FINAL\10604097_GO\SHEETSPLAN\022701_SN.DWG
LAYOUT NAME - 01
PLOT DATE : 1/29/2019 4:08 AM
PLOT BY : SCHARLAU, DAVID A
PLOT NAME :
PLOT SCALE : 1 IN:40 FT

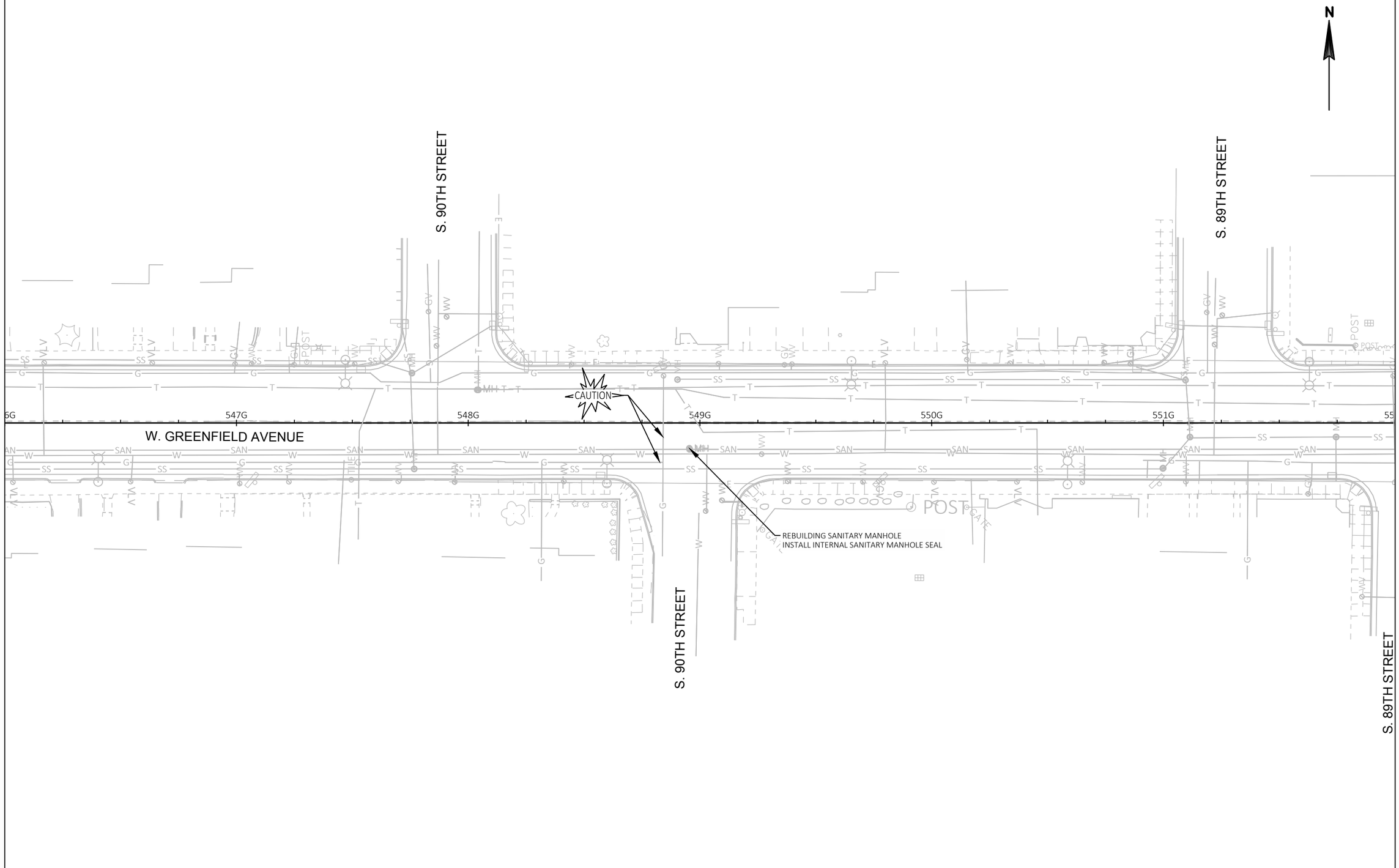

PROJECT NO: 1060-40-97	HWY: STH 59	COUNTY: MILWAUKEE	SANITARY SEWER	SHEET 39	E

FILE NAME : W:\CADD\FINAL\10604097_GO\SHEETSPLAN\022701_SN.DWG
LAYOUT NAME - 02
PLOT DATE : 1/29/2019 4:08 AM
PLOT BY : SCHARLAU, DAVID A
PLOT NAME :
PLOT SCALE : 1 IN:40 FT
WISDOT/CADDS SHEET 42

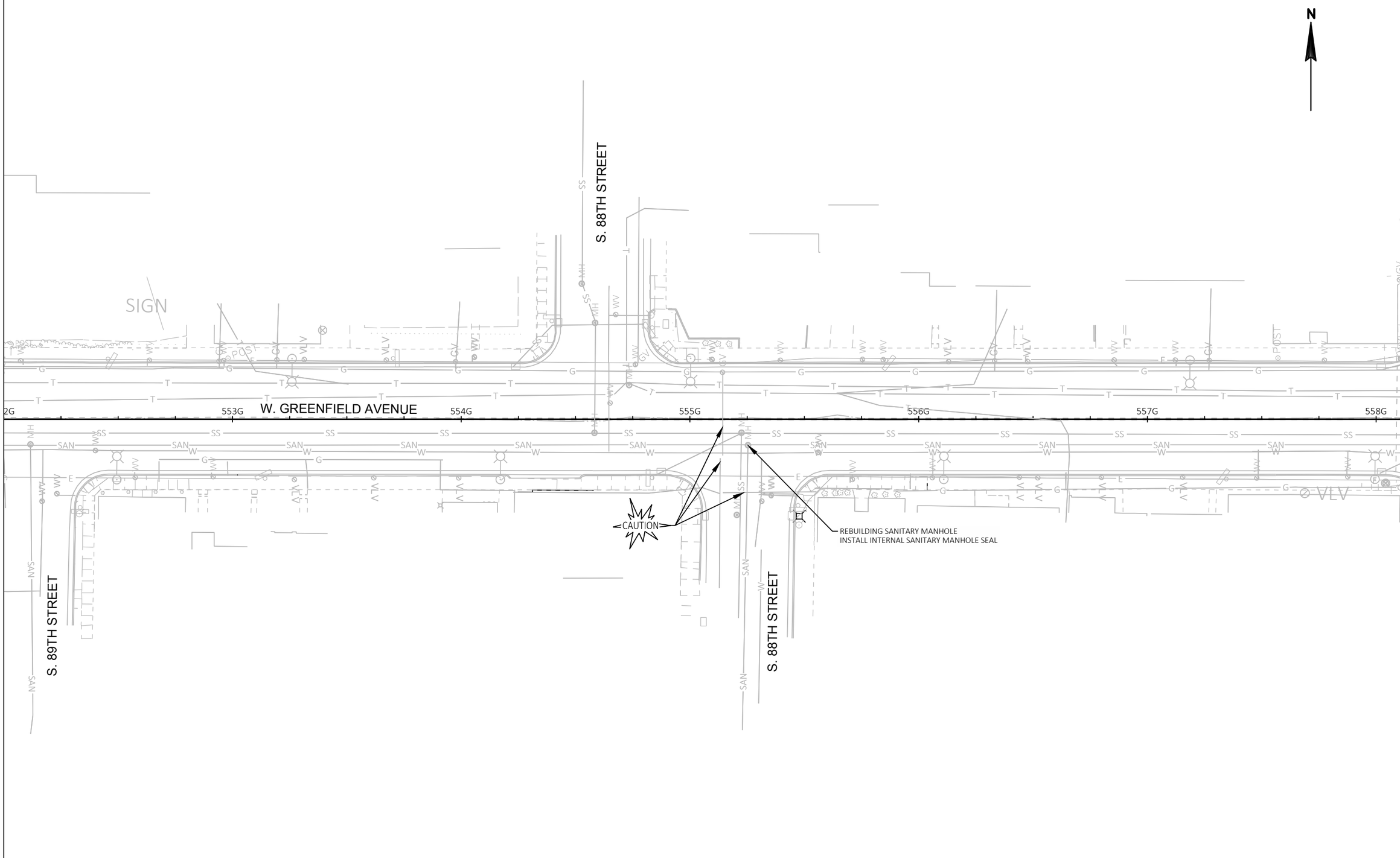

2

PROJECT NO: 1060-40-97	HWY: STH 59	COUNTY: MILWAUKEE	SANITARY SEWER	SHEET 40	E

FILE NAME : W:\CADD\FINAL\10604097_GO\SHEETSPLAN\022701_SN.DWG
LAYOUT NAME - 03
PLOT DATE : 1/29/2019 2:33 PM
PLOT BY : SCHARLAU, DAVID A
PLOT NAME :
PLOT SCALE : 1 IN:40 FT
WISDOT/CADDS SHEET 42

2

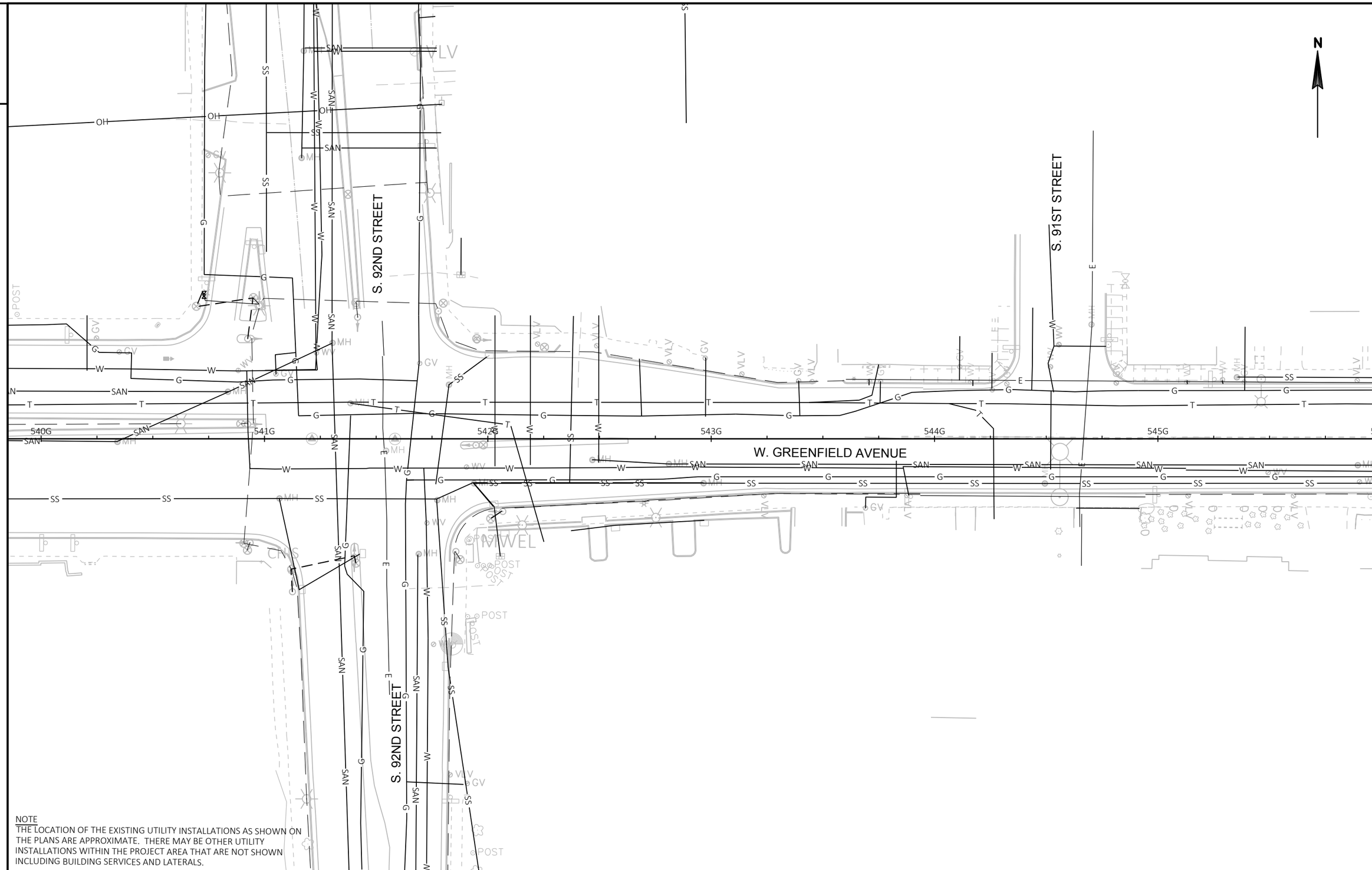

NOTE
THE LOCATION OF THE EXISTING UTILITY INSTALLATIONS AS SHOWN ON THE PLANS ARE APPROXIMATE. THERE MAY BE OTHER UTILITY INSTALLATIONS WITHIN THE PROJECT AREA THAT ARE NOT SHOWN INCLUDING BUILDING SERVICES AND LATERALS.

2

PROJECT NO: 1060-40-97	HWY: STH 59	COUNTY: MILWAUKEE	EXISTING UTILITY PLANS	SHEET 41	E

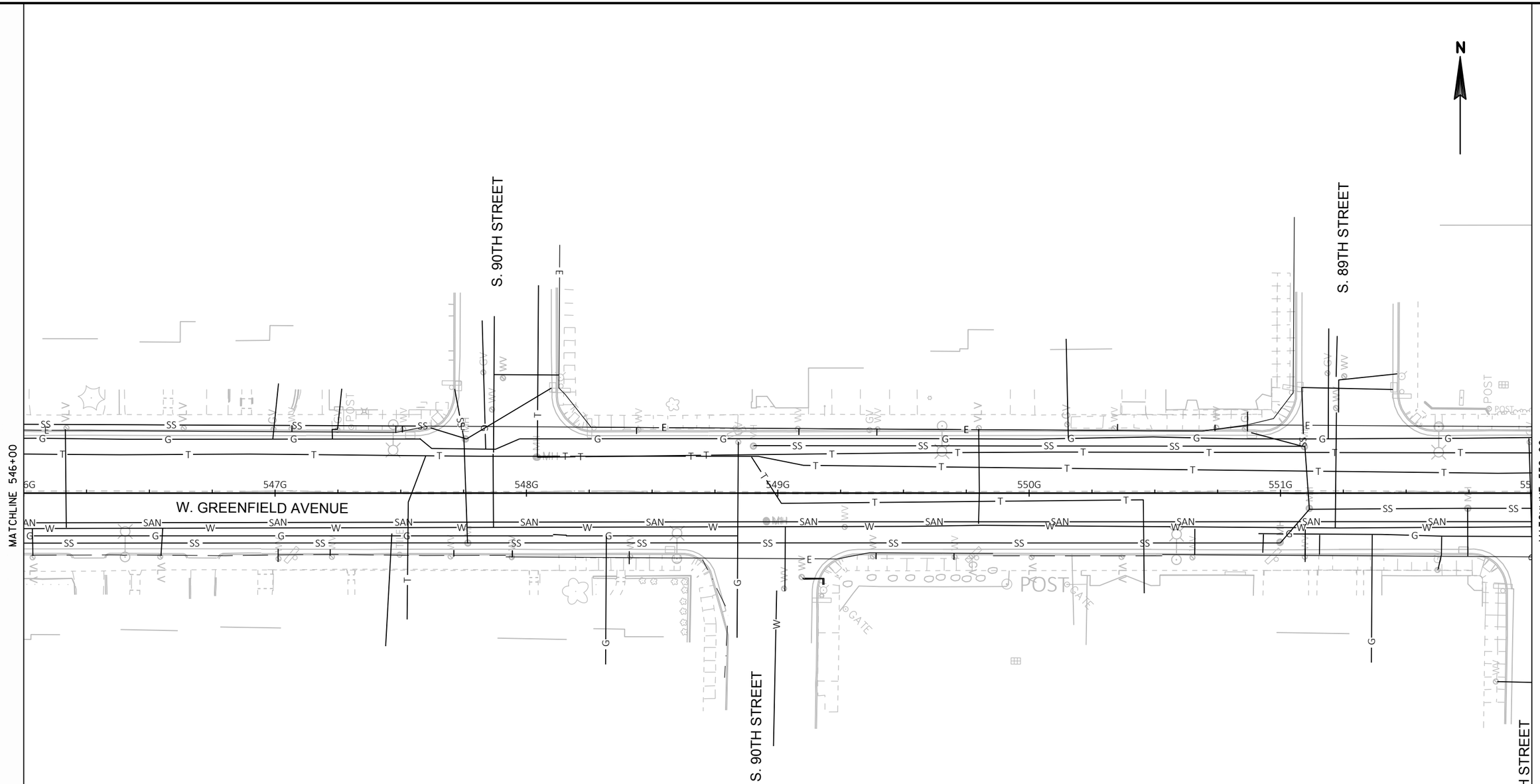

NOTE
THE LOCATION OF THE EXISTING UTILITY INSTALLATIONS AS SHOWN ON THE PLANS ARE APPROXIMATE. THERE MAY BE OTHER UTILITY INSTALLATIONS WITHIN THE PROJECT AREA THAT ARE NOT SHOWN INCLUDING BUILDING SERVICES AND LATERALS.

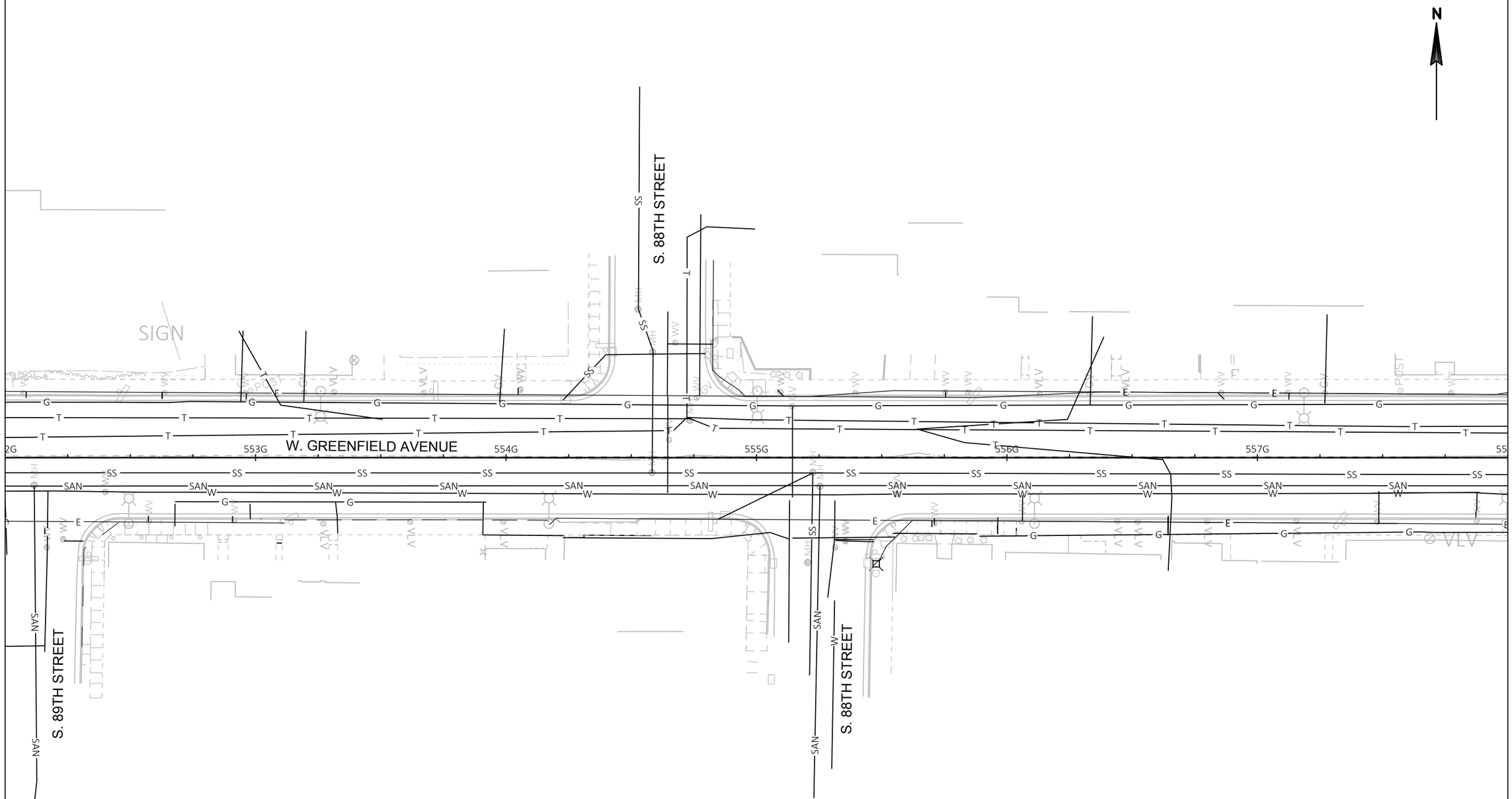

NOTE
THE LOCATION OF THE EXISTING UTILITY INSTALLATIONS AS SHOWN ON THE PLANS ARE APPROXIMATE. THERE MAY BE OTHER UTILITY INSTALLATIONS WITHIN THE PROJECT AREA THAT ARE NOT SHOWN INCLUDING BUILDING SERVICES AND LATERALS.

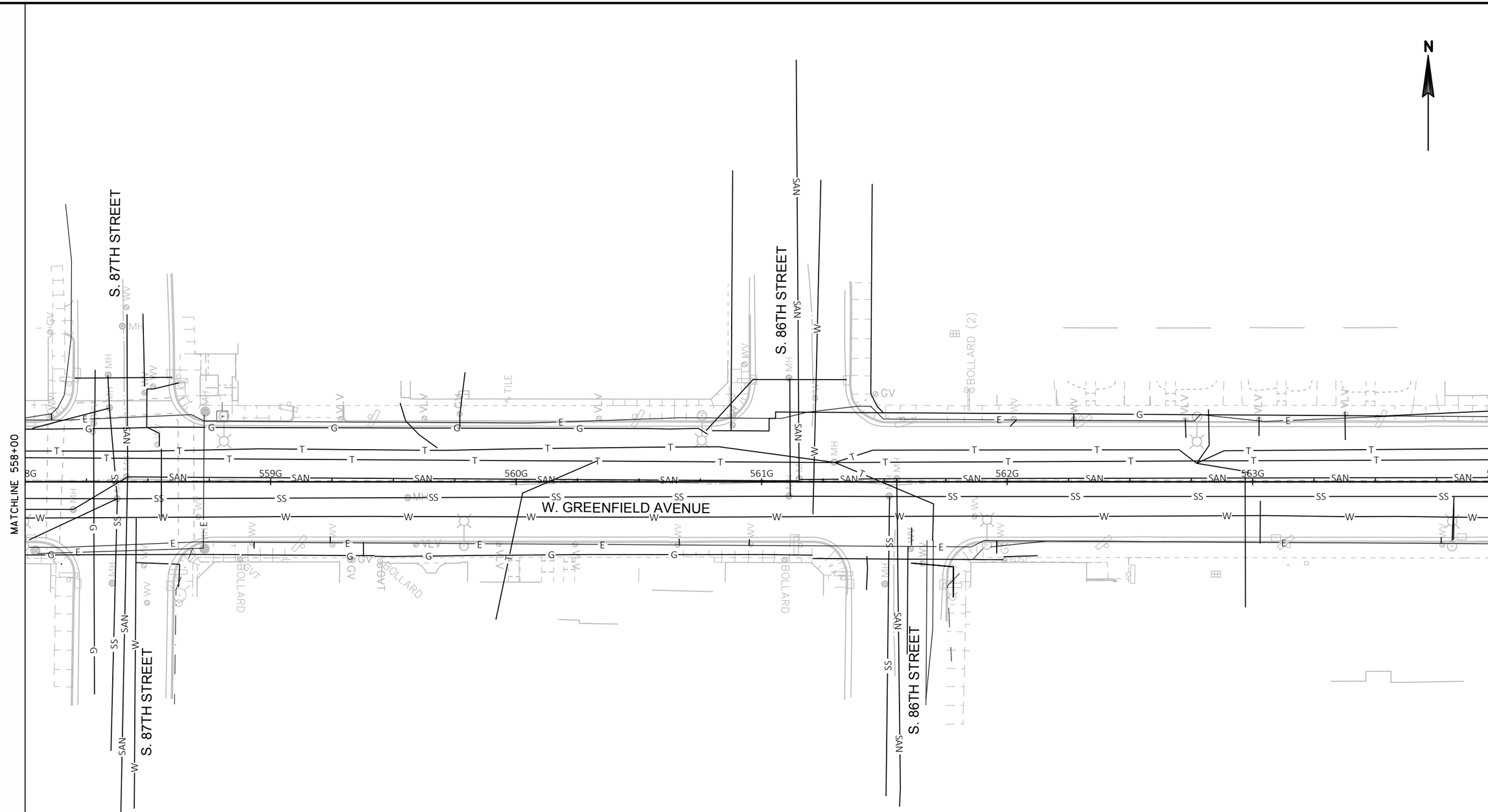

NOTE
THE LOCATION OF THE EXISTING UTILITY INSTALLATIONS AS SHOWN ON THE PLANS ARE APPROXIMATE. THERE MAY BE OTHER UTILITY INSTALLATIONS WITHIN THE PROJECT AREA THAT ARE NOT SHOWN INCLUDING BUILDING SERVICES AND LATERALS.

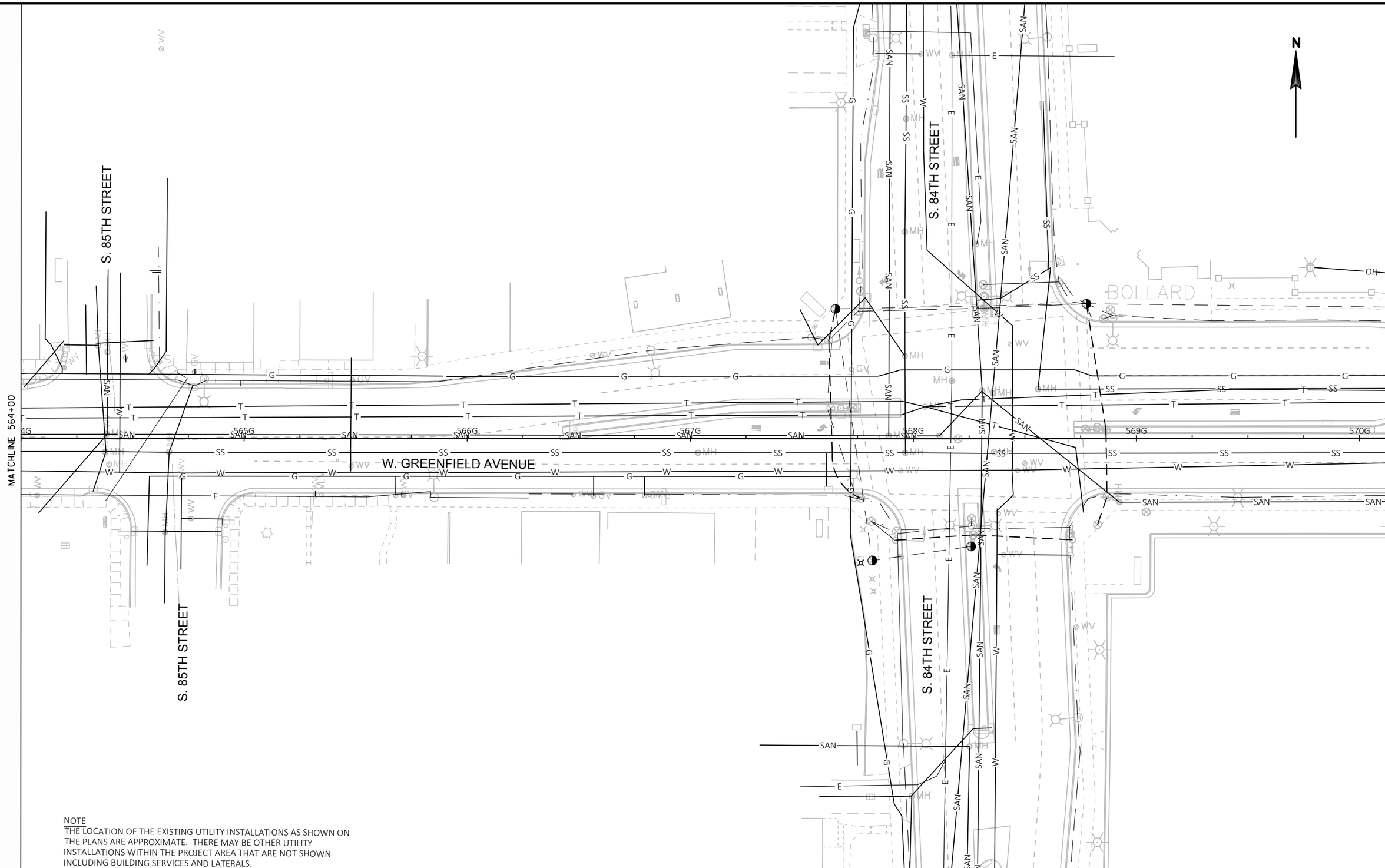

NOTE
THE LOCATION OF THE EXISTING UTILITY INSTALLATIONS AS SHOWN ON THE PLANS ARE APPROXIMATE. THERE MAY BE OTHER UTILITY INSTALLATIONS WITHIN THE PROJECT AREA THAT ARE NOT SHOWN INCLUDING BUILDING SERVICES AND LATERALS.

2

LEGEND

- EXISTING SIGN MOUNTED ON POST(S)
- EXISTING SIGN MOUNTED ON BRIDGE OR SIGN BRIDGE
- PROPOSED SIGN MOUNTED ON POST(S)
- PROPOSED SIGN MOUNTED ON BRIDGE OR SIGN BRIDGE
- VMS VARIABLE MESSAGE SIGN
- EXISTING LIGHT OR SIGNAL POLE
- SIGN BRIDGE
- CANTILEVER SIGN BRIDGE
- (XXX) DENOTES SIGN NUMBER
- (X) INDICATES SIGN SIZE

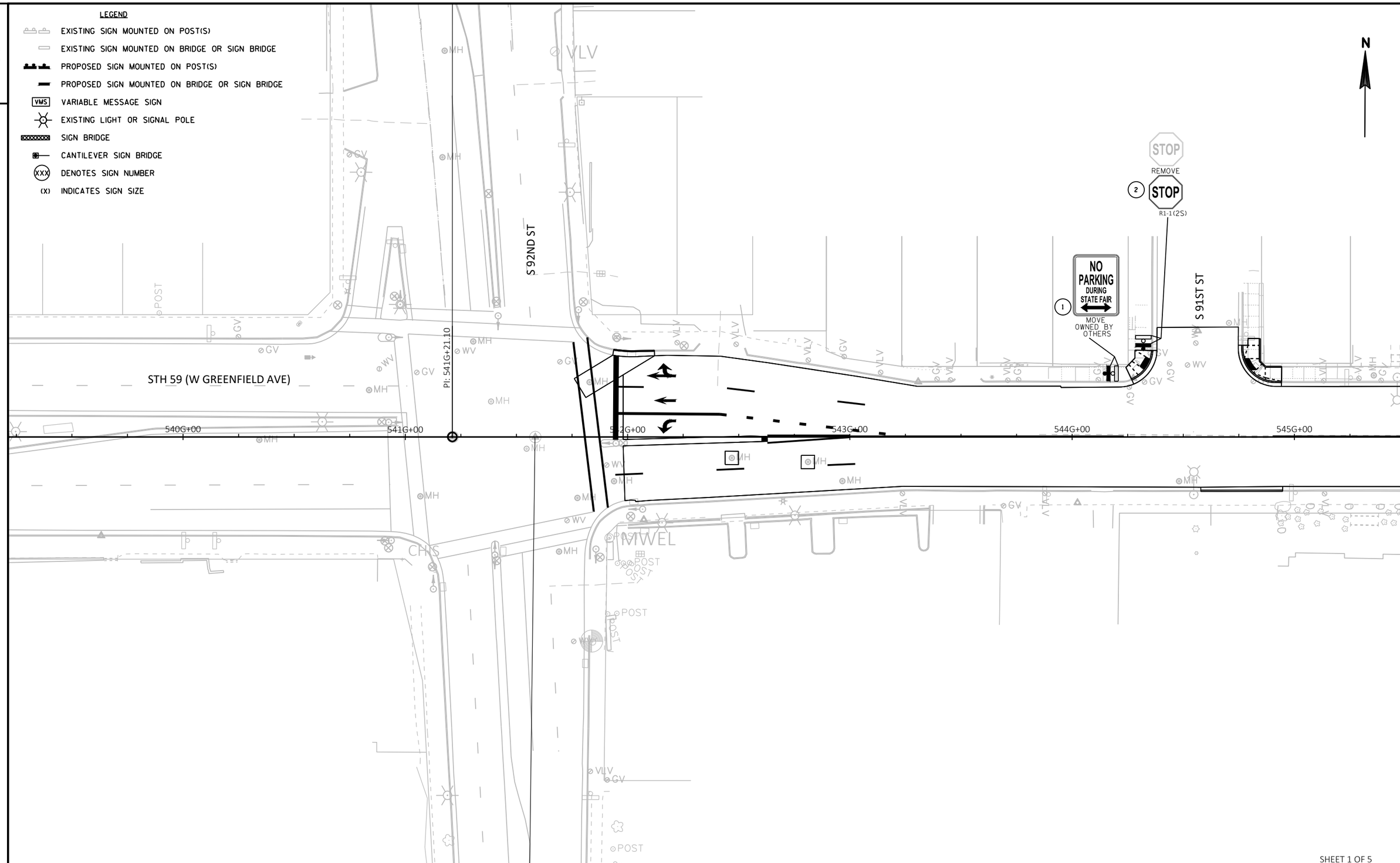

2

SHEET 1 OF 5

PROJECT NO: 1060-40-97	HWY: STH 59	COUNTY: MILWAUKEE	PERMANENT SIGNING	SHEET 46	E

FILE NAME : N:\PDS\C3D\CAD\10604097\SIGN\023201_PS_16.DWG
LAYOUT NAME - 023202_ps
PLOT DATE : 1/24/2019 8:05 AM
PLOT BY : WAGNER, SCOTT H
PLOT NAME :
PLOT SCALE : 1 IN:40 FT
WISDOT/CADDS SHEET 42

2

LEGEND

- EXISTING SIGN MOUNTED ON POST(S)
- EXISTING SIGN MOUNTED ON BRIDGE OR SIGN BRIDGE
- PROPOSED SIGN MOUNTED ON POST(S)
- PROPOSED SIGN MOUNTED ON BRIDGE OR SIGN BRIDGE
- VMS VARIABLE MESSAGE SIGN
- EXISTING LIGHT OR SIGNAL POLE
- SIGN BRIDGE
- CANTILEVER SIGN BRIDGE
- (XXX) DENOTES SIGN NUMBER
- (X) INDICATES SIGN SIZE

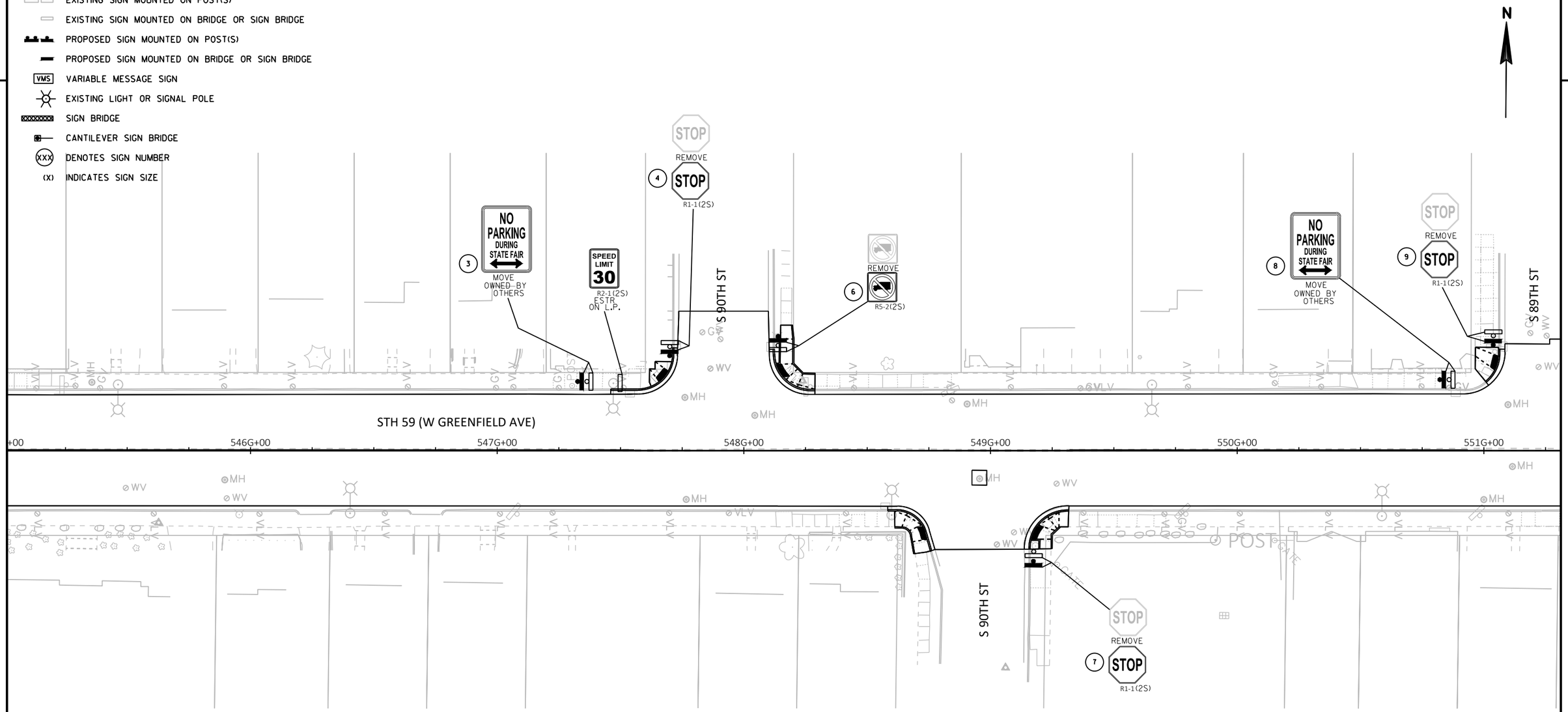

SHEET 2 OF 5

PROJECT NO: 1060-40-97	HWY: STH 59	COUNTY: MILWAUKEE	PERMANENT SIGNING	SHEET 47	E

FILE NAME : N:\PDS\C3D\CAD\10604097\SIGN\023201_PS_16.DWG
LAYOUT NAME - 023203_ps
PLOT DATE : 1/24/2019 8:06 AM PLOT BY : WAGNER, SCOTT H PLOT NAME : PLOT SCALE : 1 IN:40 FT

2

LEGEND

- EXISTING SIGN MOUNTED ON POST(S)
- EXISTING SIGN MOUNTED ON BRIDGE OR SIGN BRIDGE
- PROPOSED SIGN MOUNTED ON POST(S)
- PROPOSED SIGN MOUNTED ON BRIDGE OR SIGN BRIDGE
- VMS VARIABLE MESSAGE SIGN
- EXISTING LIGHT OR SIGNAL POLE
- SIGN BRIDGE
- CANTILEVER SIGN BRIDGE
- (XXX) DENOTES SIGN NUMBER
- (X) INDICATES SIGN SIZE

N

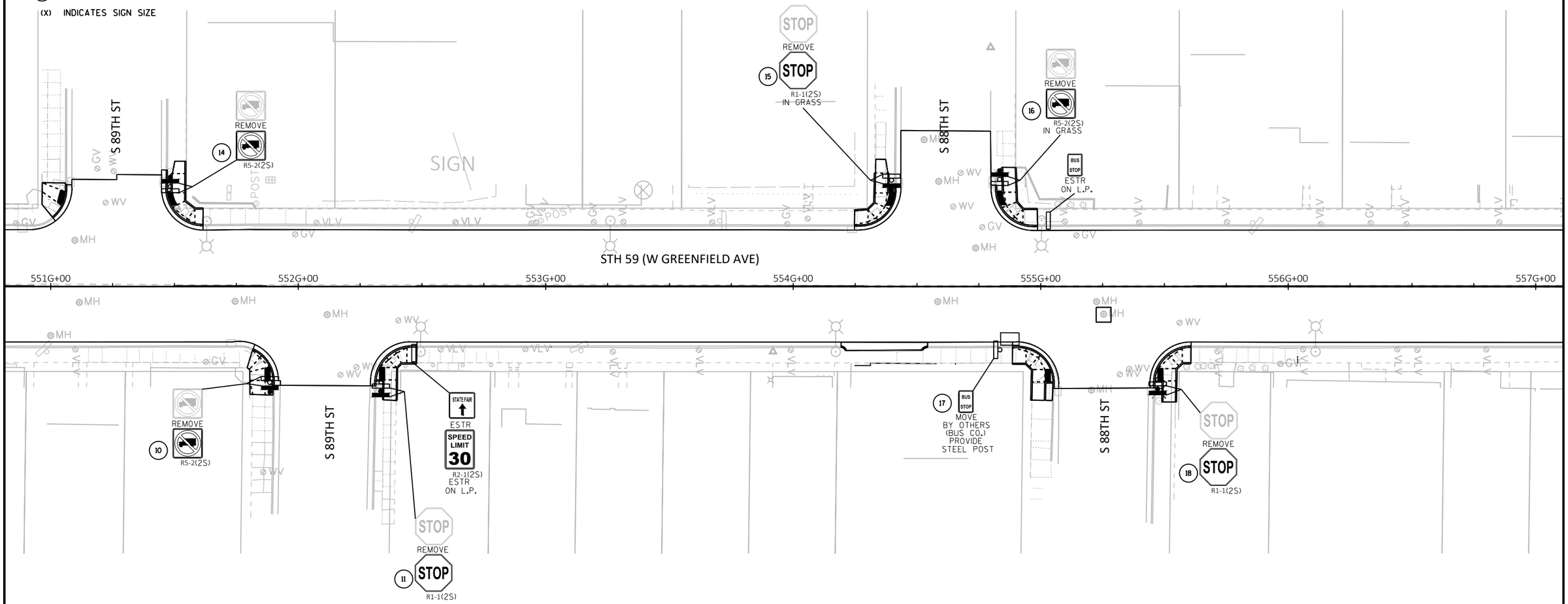

SHEET 3 OF 5

PROJECT NO: 1060-40-97	HWY: STH 59	COUNTY: MILWAUKEE	PERMANENT SIGNING	SHEET 48	E

FILE NAME : N:\PDS\C3D\CAD\10604097\SIGN\023201_PS_16.DWG
LAYOUT NAME - 023204_ps
PLOT DATE : 1/24/2019 8:06 AM PLOT BY : WAGNER, SCOTT H PLOT NAME : PLOT SCALE : 1 IN:40 FT

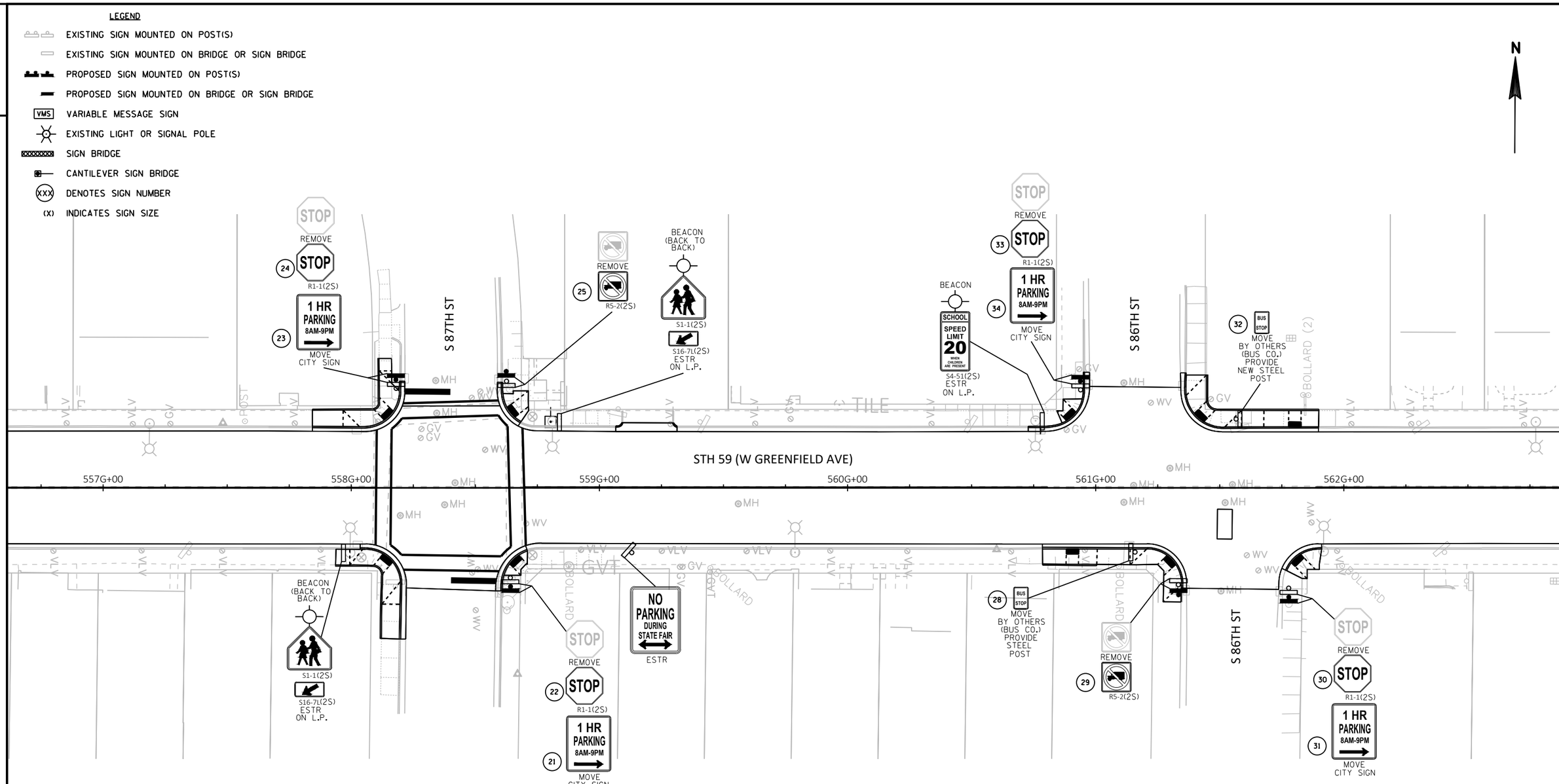

PROJECT NO: 1060-40-97	HWY: STH 59	COUNTY: MILWAUKEE	PERMANENT SIGNING	SHEET 49	E

FILE NAME : N:\PDS\C3D\CAD\10604097\SIGN\023201_PS_16.DWG
LAYOUT NAME - 023205_ps
PLOT DATE : 1/24/2019 8:06 AM PLOT BY : WAGNER, SCOTT H PLOT NAME : PLOT SCALE : 1 IN:40 FT

2

LEGEND

- EXISTING SIGN MOUNTED ON POST(S)
- EXISTING SIGN MOUNTED ON BRIDGE OR SIGN BRIDGE
- PROPOSED SIGN MOUNTED ON POST(S)
- PROPOSED SIGN MOUNTED ON BRIDGE OR SIGN BRIDGE
- VMS VARIABLE MESSAGE SIGN
- EXISTING LIGHT OR SIGNAL POLE
- SIGN BRIDGE
- CANTILEVER SIGN BRIDGE
- (XXX) DENOTES SIGN NUMBER
- (X) INDICATES SIGN SIZE

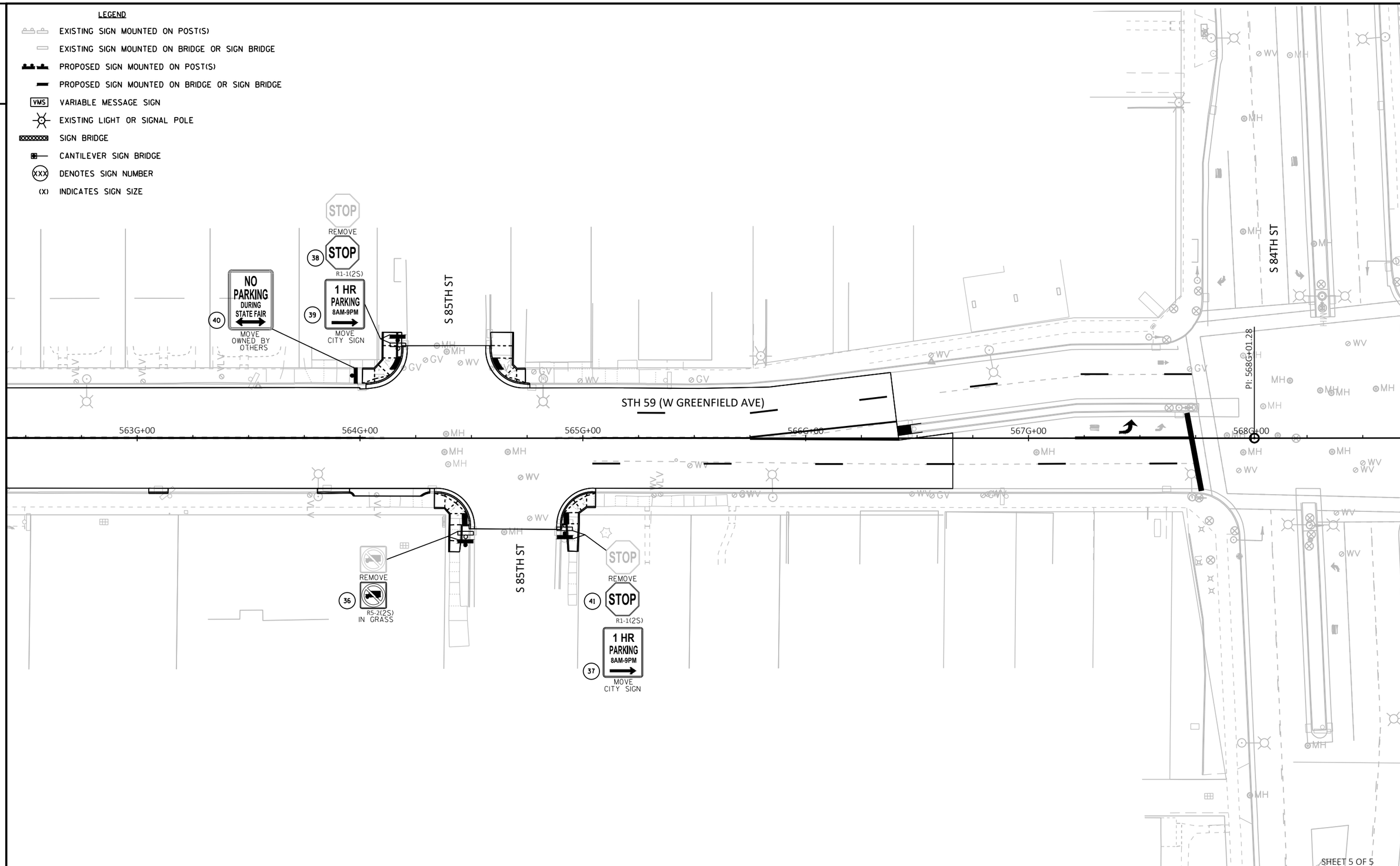

2

SHEET 5 OF 5

PROJECT NO: 1060-40-97	HWY: STH 59	COUNTY: MILWAUKEE	PERMANENT SIGNING	SHEET 50	E

FILE NAME : N:\PDS\C3D\CAD\10604097\SIGN\023201_PS_16.DWG
LAYOUT NAME - 023206_ps
PLOT DATE : 1/24/2019 8:06 AM PLOT BY : WAGNER, SCOTT H PLOT NAME : PLOT SCALE : 1 IN:40 FT

WISDOT/CADDS SHEET 42

PROJECT NO:1060-40-97	HWY:STH 181	COUNTY:MILWAUKEE	TRAFFIC SIGNAL PROJECT OVERVIEW	SHEET	E

FILE NAME : W:\Cadd\Final\10604097_GO\SheetsPlan\024001_sp_po.dgn PLOT DATE : 28-JAN-2019 23:14 PLOT BY : MSCD1S PLOT NAME : 024001_sp_po PLOT SCALE : 1000:1

WISDOT/CADLIS SHEET 42

LEGEND

- NONMETALLIC CONDUIT 2", UNLESS OTHERWISE NOTED
- SIGNAL HEAD, TRAFFIC SIGNAL STANDARD, PEDESTAL BASE
- (XX) SIGNAL HEAD, TRAFFIC SIGNAL POLE, TRANSFORMER BASE
- LUMINAIRE, TRAFFIC POLE, TRANSFORMER BASE
- LUMINAIRE UNDER PERMIT TO LOCAL MUNICIPALITY
- LOOP DETECTOR CONDUIT 1" NONMETALLIC
- LOOP DETECTOR IN 1" NONMETALLIC CONDUIT
- PULL BOX, 24" X 36"
- PEDESTRIAN HEAD
- CONTROL CABINET
- TRAFFIC SIGNAL HEAD
- SIGNAL HEAD NUMBER
- WALK/DON'T WALK INDICATOR 16" (COUNTDOWN TIMER)

LEGEND (CON'T)

- (R) RED CIRCULAR INDICATOR
- (Y) YELLOW CIRCULAR INDICATOR
- (G) GREEN CIRCULAR INDICATOR
- YELLOW ARROW
- GREEN ARROW

NOTE: GRAYSHADE REPRESENTS EXISTING TO REMAIN. BOLD REPRESENTS EXISTING TO BE REMOVED.

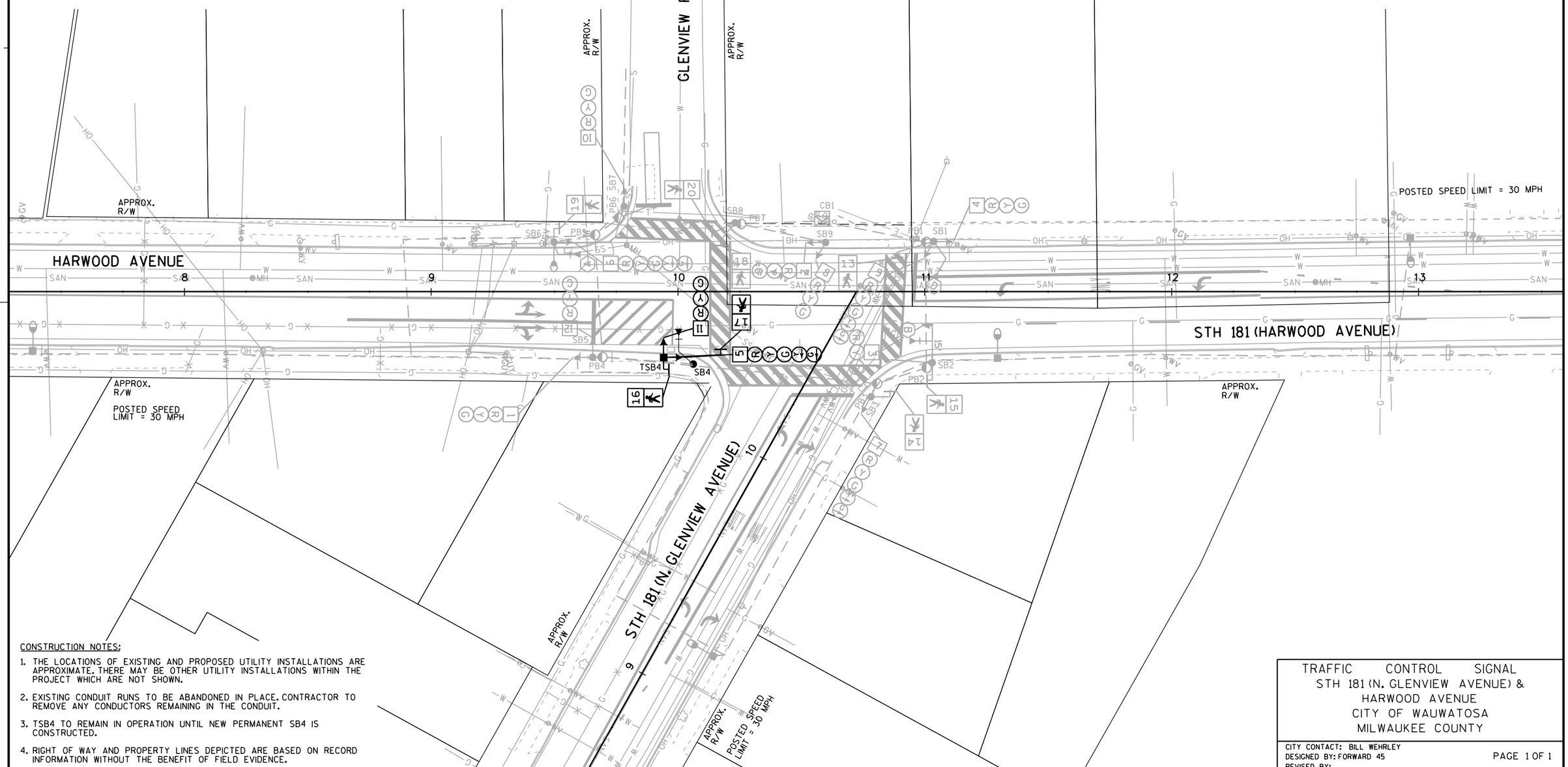

CONSTRUCTION NOTES:

1. THE LOCATIONS OF EXISTING AND PROPOSED UTILITY INSTALLATIONS ARE APPROXIMATE. THERE MAY BE OTHER UTILITY INSTALLATIONS WITHIN THE PROJECT WHICH ARE NOT SHOWN.
2. EXISTING CONDUIT RUNS TO BE ABANDONED IN PLACE. CONTRACTOR TO REMOVE ANY CONDUCTORS REMAINING IN THE CONDUIT.
3. TSB4 TO REMAIN IN OPERATION UNTIL NEW PERMANENT SB4 IS CONSTRUCTED.
4. RIGHT OF WAY AND PROPERTY LINES DEPICTED ARE BASED ON RECORD INFORMATION WITHOUT THE BENEFIT OF FIELD EVIDENCE.

TRAFFIC CONTROL SIGNAL
STH 181 (N. GLENVIEW AVENUE) &
HARWOOD AVENUE
CITY OF WAUWATOSA
MILWAUKEE COUNTY

CITY CONTACT: BILL WEHRLEY
DESIGNED BY: FORWARD 45
REVISED BY:

PAGE 1 OF 1

PROJECT NO: 1060-40-97	HWY: STH 181	COUNTY: MILWAUKEE	TRAFFIC SIGNAL REMOVAL PLAN	SHEET	E

FILE NAME : W:\Cadd\Final\10604097_GO\SheetsPlan\024011_sp.dgn PLOT DATE : 28-JAN-2019 23:16 PLOT BY : MSCD1S PLOT NAME : 024011_sp PLOT SCALE : 40:1

LEGEND

- NONMETALLIC CONDUIT 2", UNLESS OTHERWISE NOTED
- SIGNAL HEAD, TRAFFIC SIGNAL STANDARD, PEDESTAL BASE
- (XX) SIGNAL HEAD, TRAFFIC SIGNAL POLE, TRANSFORMER BASE
- LUMINAIRE, TRAFFIC POLE, TRANSFORMER BASE
- LUMINAIRE UNDER PERMIT TO LOCAL MUNICIPALITY
- LOOP DETECTOR CONDUIT 1" NONMETALLIC
- LOOP DETECTOR IN 1" NONMETALLIC CONDUIT
- PULL BOX, 24" X 36"
- PEDESTRIAN HEAD
- CONTROL CABINET
- TRAFFIC SIGNAL HEAD
- SIGNAL HEAD NUMBER
- WALK/DON'T WALK INDICATOR 16" (COUNTDOWN TIMER)

LEGEND (CON'T)

- (R) RED CIRCULAR INDICATOR
- (Y) YELLOW CIRCULAR INDICATOR
- (G) GREEN CIRCULAR INDICATOR
- YELLOW ARROW
- GREEN ARROW

NOTE: GRAYSHADE REPRESENTS EXISTING.

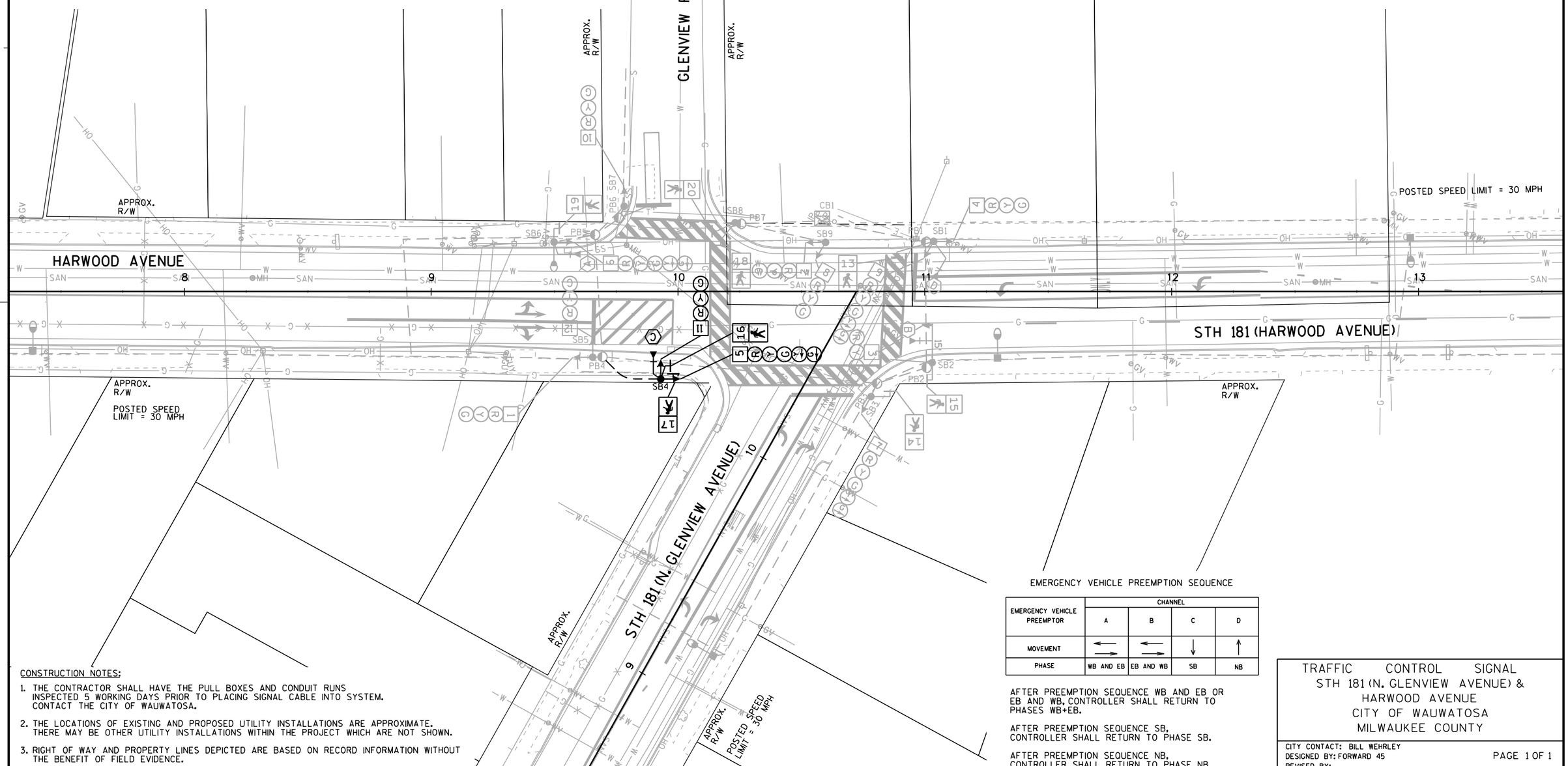

CONSTRUCTION NOTES:

1. THE CONTRACTOR SHALL HAVE THE PULL BOXES AND CONDUIT RUNS INSPECTED 5 WORKING DAYS PRIOR TO PLACING SIGNAL CABLE INTO SYSTEM. CONTACT THE CITY OF WAUWATOSA.
2. THE LOCATIONS OF EXISTING AND PROPOSED UTILITY INSTALLATIONS ARE APPROXIMATE. THERE MAY BE OTHER UTILITY INSTALLATIONS WITHIN THE PROJECT WHICH ARE NOT SHOWN.
3. RIGHT OF WAY AND PROPERTY LINES DEPICTED ARE BASED ON RECORD INFORMATION WITHOUT THE BENEFIT OF FIELD EVIDENCE.

EMERGENCY VEHICLE PREEMPTION SEQUENCE

EMERGENCY VEHICLE PREEMPTOR	CHANNEL A	CHANNEL B	CHANNEL C	CHANNEL D
MOVEMENT	← →	← →	↓	↑
PHASE	WB AND EB	EB AND WB	SB	NB

AFTER PREEMPTION SEQUENCE WB AND EB OR EB AND WB, CONTROLLER SHALL RETURN TO PHASES WB+EB.

AFTER PREEMPTION SEQUENCE SB, CONTROLLER SHALL RETURN TO PHASE SB.

AFTER PREEMPTION SEQUENCE NB, CONTROLLER SHALL RETURN TO PHASE NB.

TRAFFIC CONTROL SIGNAL
STH 181 (N. GLENVIEW AVENUE) &
HARWOOD AVENUE
CITY OF WAUWATOSA
MILWAUKEE COUNTY

CITY CONTACT: BILL WEHRLEY
DESIGNED BY: FORWARD 45
REVISED BY:

PAGE 1 OF 1

PROJECT NO: 1060-40-97	HWY: STH 181	COUNTY: MILWAUKEE	TRAFFIC SIGNAL PLAN	SHEET	E

FILE NAME : W:\Cadd\Final\10604097_GO\SheetsPlan\024015_sp.dgn PLOT DATE : 28-JAN-2019 23:17 PLOT BY : MSCD1S PLOT NAME : 024015_sp PLOT SCALE : 40:1

WISDOT/CADDS SHEET 42

STH 181 & HARWOOD AVENUE

2

PROJECT ID:	1060-40-97
INTERSECTION:	STH 181 & HARWOOD AVENUE

SIGNAL WIRE	BLK-BLACK	RED-RED	GRN-GREEN
COLOR CODING	WHT-WHITE	BLU-BLUE	ORG-ORANGE

FROM	TO	NO. OF CONDUCTORS	HEAD NO.	RED	YELLOW	GREEN	<RED>	<YELLOW>	<GREEN>	FLASHING <YELLOW>	D/WALK	WALK	PED BUTTON	OTHER
CB1	SB4	15	5	RED/BLK	ORG/BLK	GRN/BLK		BLK/WHT	GRN/WHT					
			11	RED	ORG	GRN								
			16								BLK	BLU		
			17								WHT/BLK	BLU/BLK		

NOTES: USE WHITE CONDUCTOR IN THE SIGNAL CABLE AS THE GROUNDED CONDUCTOR FOR ALL TRAFFIC SIGNAL INDICATIONS.
ENSURE THE GROUNDED CONDUCTOR IN THE FEEDER CABLE AND THE POLE CABLES ARE BOTH 18" LONGER THAN THE UNGROUNDED CONDUCTORS.

EQUIPMENT GROUNDING CONDUCTOR 10 AWG GRN XLP *	
FROM	TO
SB3	SB4
SB4	SB5

EMERGENCY VEHICLE PREEMPTION	
FROM	TO
CB1	SB4 (HEAD C)

*RE-INSTALL EXISTING EQUIPMENT GROUNDING CONDUCTORS TO RE-ESTABLISH THE COMPLETE GROUNDING FROM BASE TO BASE WHERE THE EXISTING CIRCUIT IS DISTURBED BY CONSTRUCTION. REUSE EXISTING WIRING WHERE POSSIBLE. CHART SHOWN FOR INFORMATION ONLY.

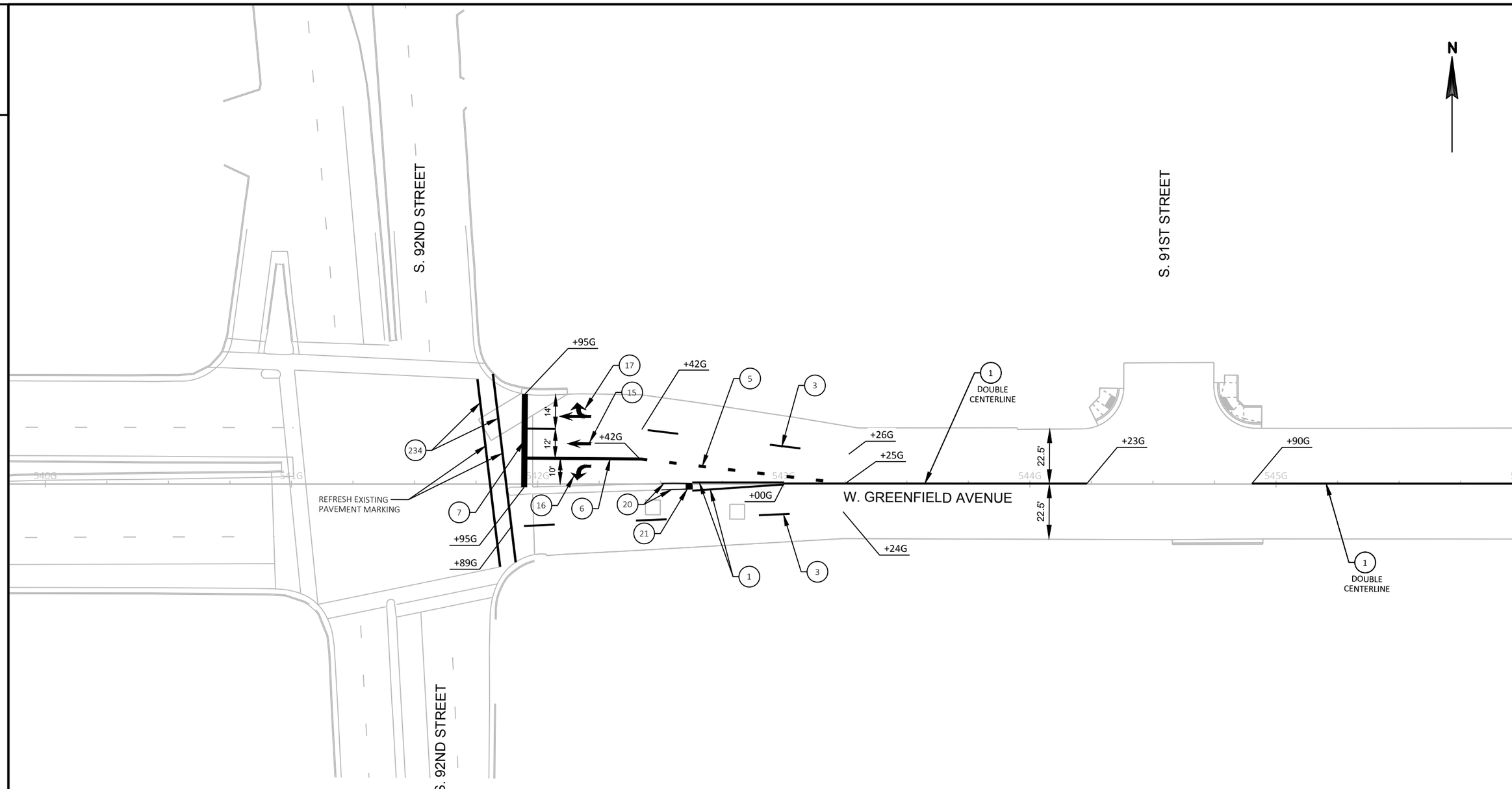

LEGEND

1 MARKING LINE EPOXY 4-INCH (YELLOW)	16 MARKING ARROWS EPOXY (TYPE 2) (WHITE)
3 MARKING LINE EPOXY 4-INCH (DASHED WHITE) (12.5 FT LINE 37.5 FT SKIP)	17 MARKING ARROWS EPOXY (TYPE 3) (WHITE)
5 MARKING LINE EPOXY 8-INCH (DOT PATTERN WHITE) (3 FT LINE 9 FT SKIP)	20 MARKING CURB EPOXY (YELLOW)
6 MARKING LINE EPOXY 8-INCH (WHITE)	21 MARKING ISLAND NOSE EPOXY (YELLOW)
7 MARKING STOP LINE EPOXY 18-INCH (WHITE)	234 MARKING CROSSWALK EPOXY TRANSVERSE LINE 6-INCH (WHITE)
15 MARKING ARROWS EPOXY (TYPE 1) (WHITE)	

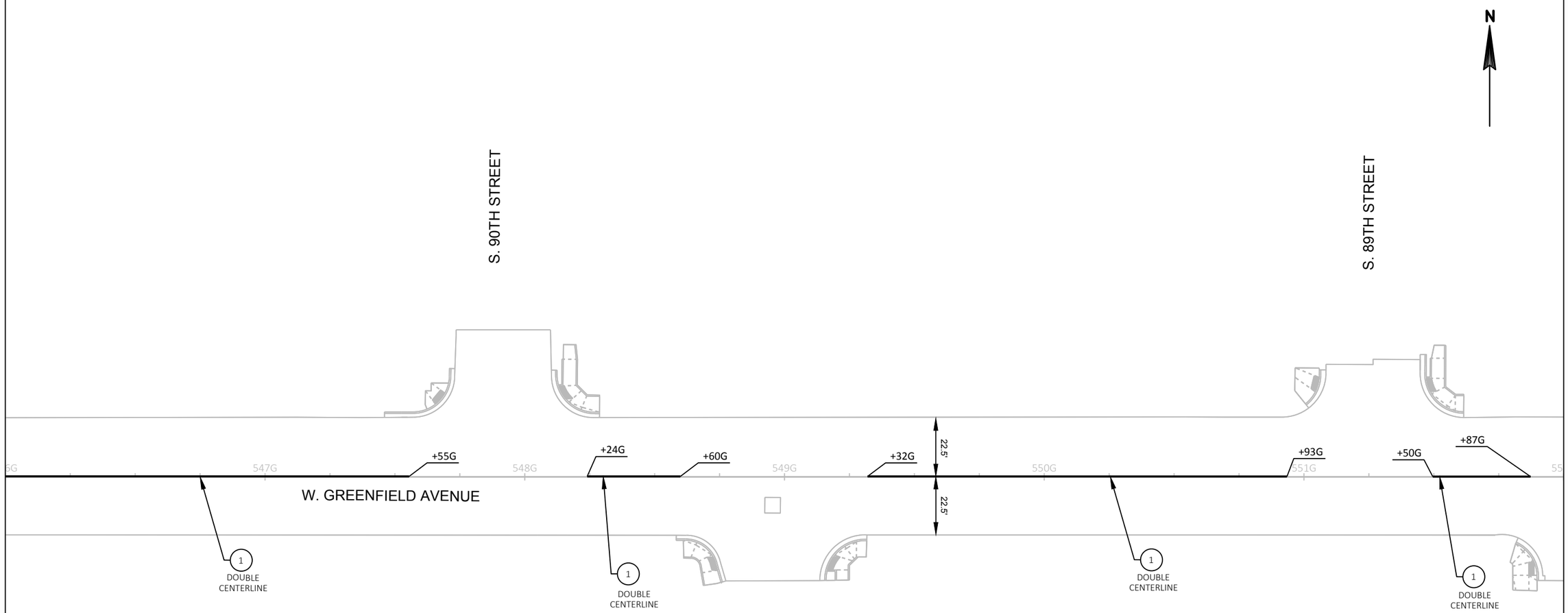

LEGEND

1 MARKING LINE EPOXY 4-INCH (YELLOW)

3 MARKING LINE EPOXY 4-INCH (DASHED WHITE) (12.5 FT LINE 37.5 FT SKIP)

5 MARKING LINE EPOXY 8-INCH (DOT PATTERN WHITE) (3 FT LINE 9 FT SKIP)

6 MARKING LINE EPOXY 8-INCH (WHITE)

7 MARKING STOP LINE EPOXY 18-INCH (WHITE)

15 MARKING ARROWS EPOXY (TYPE 1) (WHITE)

16 MARKING ARROWS EPOXY (TYPE 2) (WHITE)

17 MARKING ARROWS EPOXY (TYPE 3) (WHITE)

20 MARKING CURB EPOXY (YELLOW)

21 MARKING ISLAND NOSE EPOXY (YELLOW)

234 MARKING CROSSWALK EPOXY TRANSVERSE LINE 6-INCH (WHITE)

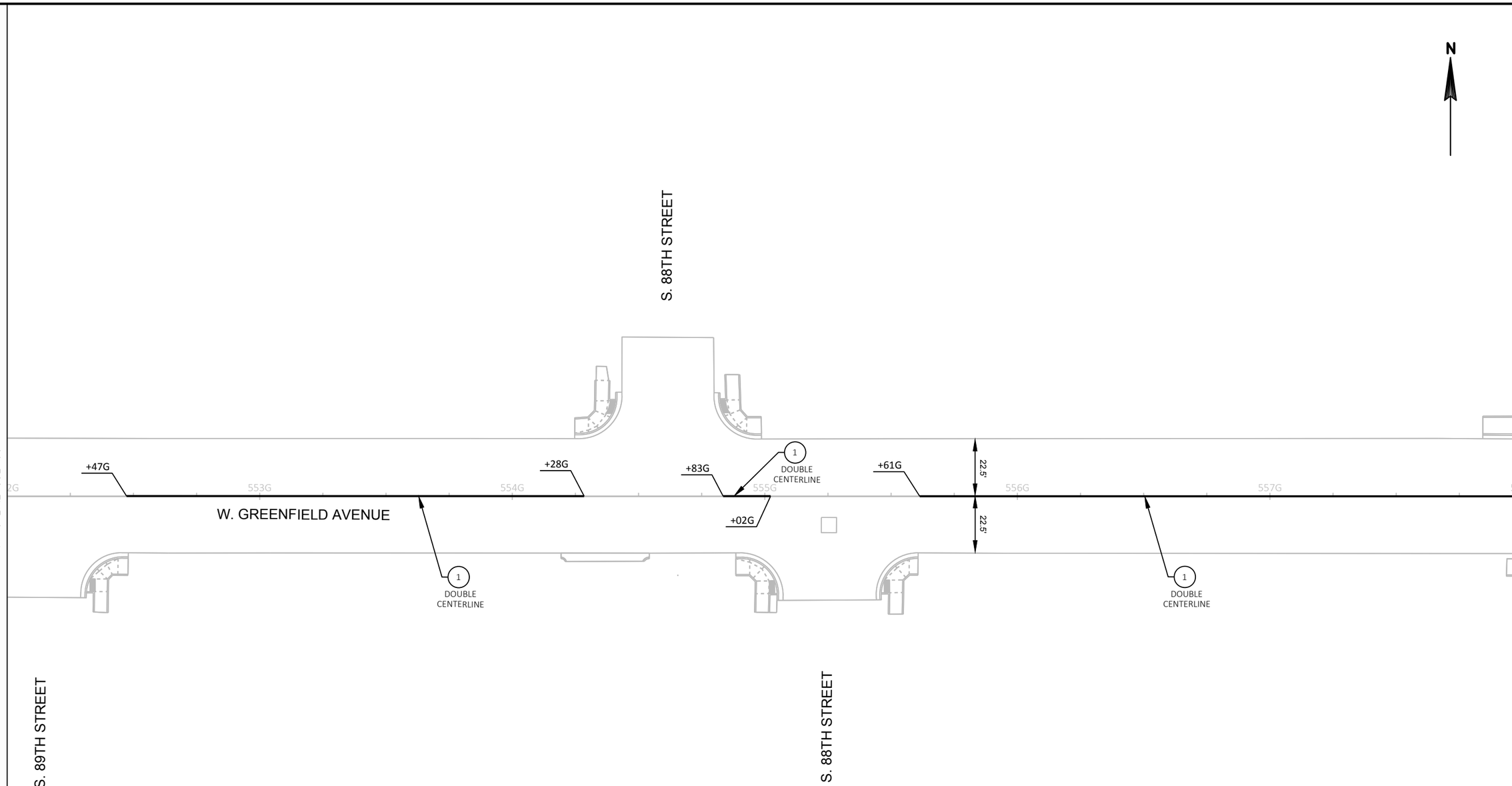

LEGEND

1	MARKING LINE EPOXY 4-INCH (YELLOW)
3	MARKING LINE EPOXY 4-INCH (DASHED WHITE) (12.5 FT LINE 37.5 FT SKIP)
5	MARKING LINE EPOXY 8-INCH (DOT PATTERN WHITE) (3 FT LINE 9 FT SKIP)
6	MARKING LINE EPOXY 8-INCH (WHITE)
7	MARKING STOP LINE EPOXY 18-INCH (WHITE)
15	MARKING ARROWS EPOXY (TYPE 1) (WHITE)
16	MARKING ARROWS EPOXY (TYPE 2) (WHITE)
17	MARKING ARROWS EPOXY (TYPE 3) (WHITE)
20	MARKING CURB EPOXY (YELLOW)
21	MARKING ISLAND NOSE EPOXY (YELLOW)
234	MARKING CROSSWALK EPOXY TRANSVERSE LINE 6-INCH (WHITE)

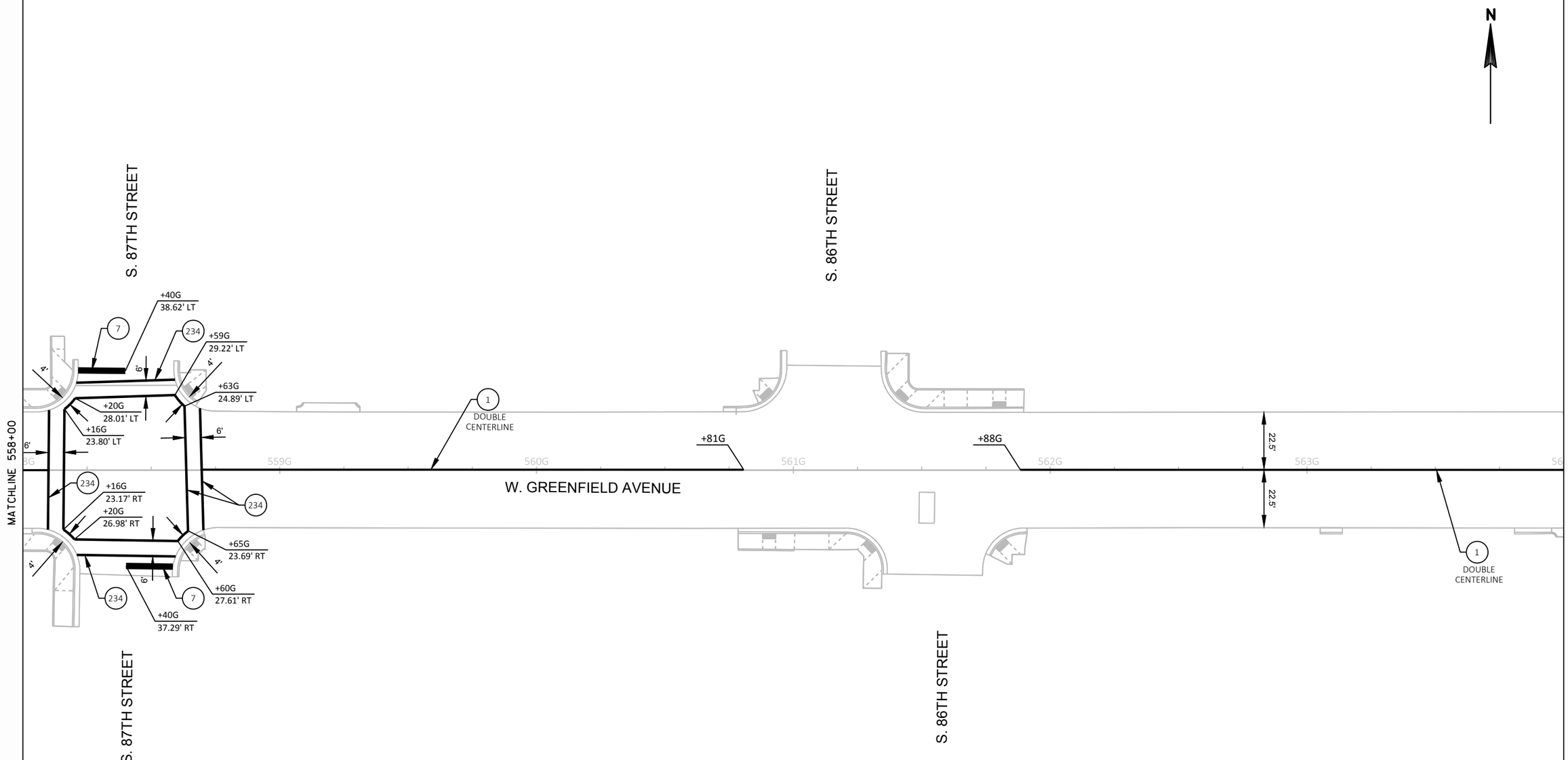

LEGEND

1	MARKING LINE EPOXY 4-INCH (YELLOW)
3	MARKING LINE EPOXY 4-INCH (DASHED WHITE) (12.5 FT LINE 37.5 FT SKIP)
5	MARKING LINE EPOXY 8-INCH (DOT PATTERN WHITE) (3 FT LINE 9 FT SKIP)
6	MARKING LINE EPOXY 8-INCH (WHITE)
7	MARKING STOP LINE EPOXY 18-INCH (WHITE)
15	MARKING ARROWS EPOXY (TYPE 1) (WHITE)
16	MARKING ARROWS EPOXY (TYPE 2) (WHITE)
17	MARKING ARROWS EPOXY (TYPE 3) (WHITE)
20	MARKING CURB EPOXY (YELLOW)
21	MARKING ISLAND NOSE EPOXY (YELLOW)
234	MARKING CROSSWALK EPOXY TRANSVERSE LINE 6-INCH (WHITE)

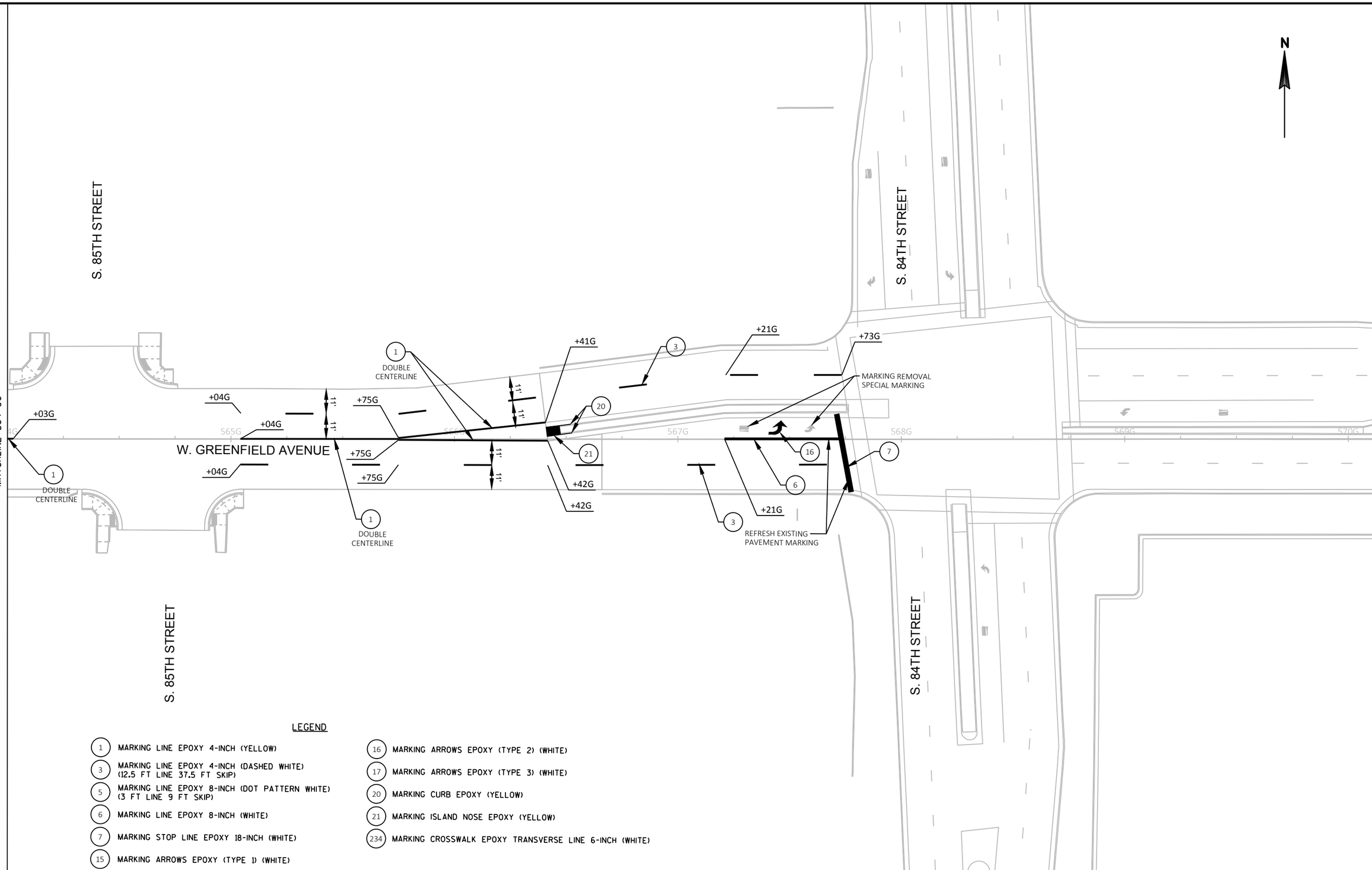

LEGEND

1	MARKING LINE EPOXY 4-INCH (YELLOW)
3	MARKING LINE EPOXY 4-INCH (DASHED WHITE) (12.5 FT LINE 37.5 FT SKIP)
5	MARKING LINE EPOXY 8-INCH (DOT PATTERN WHITE) (3 FT LINE 9 FT SKIP)
6	MARKING LINE EPOXY 8-INCH (WHITE)
7	MARKING STOP LINE EPOXY 18-INCH (WHITE)
15	MARKING ARROWS EPOXY (TYPE 1) (WHITE)
16	MARKING ARROWS EPOXY (TYPE 2) (WHITE)
17	MARKING ARROWS EPOXY (TYPE 3) (WHITE)
20	MARKING CURB EPOXY (YELLOW)
21	MARKING ISLAND NOSE EPOXY (YELLOW)
234	MARKING CROSSWALK EPOXY TRANSVERSE LINE 6-INCH (WHITE)

PROJECT NO: 1060-40-97	HWY: STH 59	COUNTY: MILWAUKEE	PAVEMENT MARKING	SHEET 59	E

2

GENERAL NOTES FOR TRAFFIC CONTROL

1) THE EXACT NUMBER, LOCATION, AND SPACING OF ALL SIGNS AND DEVICES SHALL BE ADJUSTED TO FIT FIELD CONDITIONS AS DIRECTED BY THE ENGINEER.

2) A FLAGGER MAY BE REQUIRED WHERE CONSTRUCTION VEHICLES ENTER OR LEAVE WORK AREAS IF WARRANTED BY CONDITIONS OR AS DIRECTED BY THE ENGINEER. FLAGGING IS NOT PERMITTED ON FREEWAY LANES.

3) ALL SIGNS ARE 48" X 48" UNLESS OTHERWISE NOTED.

4) "WO" SIGNS ARE THE SAME AS "W" SIGNS EXCEPT THE BACKGROUND IS ORANGE.

5) FOR NIGHTTIME OPERATION ALL DRUMS IN TAPERS SHALL HAVE A TYPE C STEADY BURN WARNING LIGHT.

6) ALL TYPE III BARRICADES SHALL BE 8' WIDE, UNLESS OTHERWISE NOTED, AND EQUIPPED WITH TWO TYPE "A" (LOW INTENSITY FLASHING) LIGHTS.

7) WORK AREAS SHOWN MAY NOT ILLUSTRATE ALL REMOVALS. SEE REMOVAL SHEETS FOR ADDITIONAL INFORMATION.

8) TRAFFIC CONTROL DRUM SPACING SHALL BE 50' UNLESS OTHERWISE NOTED.

9) 16" X 16" ORANGE FLAGS SHALL BE INCIDENTAL TO TRAFFIC CONTROL SIGN BID ITEM.

TRAFFIC CONTROL LEGEND

- TRAFFIC CONTROL BARRICADE TYPE III WITH LIGHTS TYPE A
- TRAFFIC CONTROL BARRICADE TYPE III WITH LIGHT(S) TYPE A AND ATTACHED SIGN
- SIGN ON PERMANENT SUPPORT
- SIGN ON TEMPORARY SUPPORT
- TRAFFIC CONTROL ARROW BOARD
- TRAFFIC CONTROL DRUM WITH LIGHT TYPE C
- TRAFFIC CONTROL DRUM
- TRAFFIC FLOW ARROW
- WORK ZONE THIS STAGE

TEMPORARY PAVEMENT MARKING LEGEND

(45) TEMPORARY MARKING LINE REMOVABLE TAPE 4-INCH (YELLOW)

TEMPORARY TYPICAL SECTIONS (NTS)

STAGE 1 & 2C

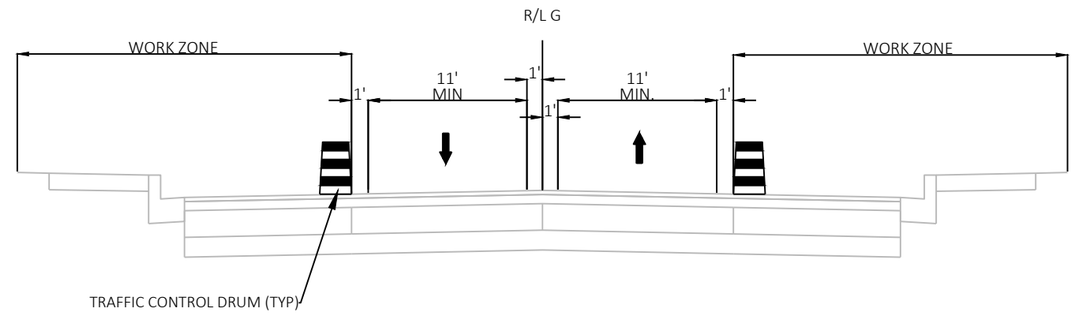

STAGE 2A

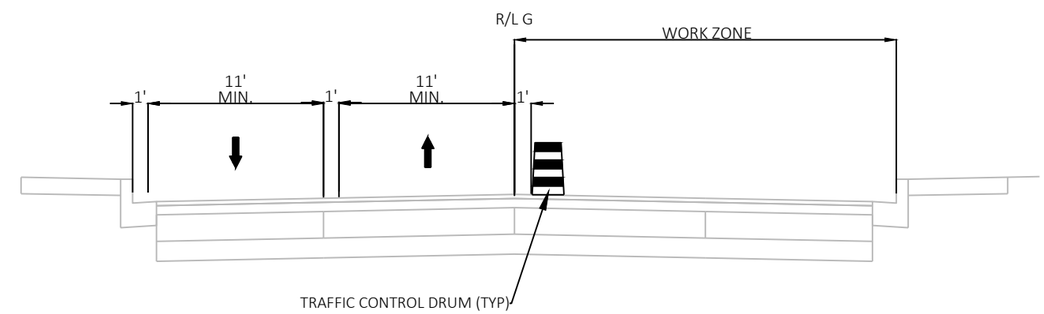

STAGE 2B

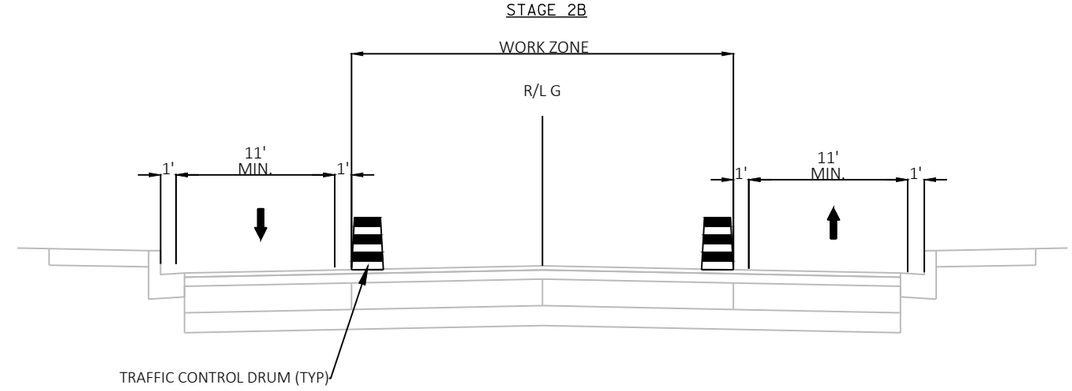

2

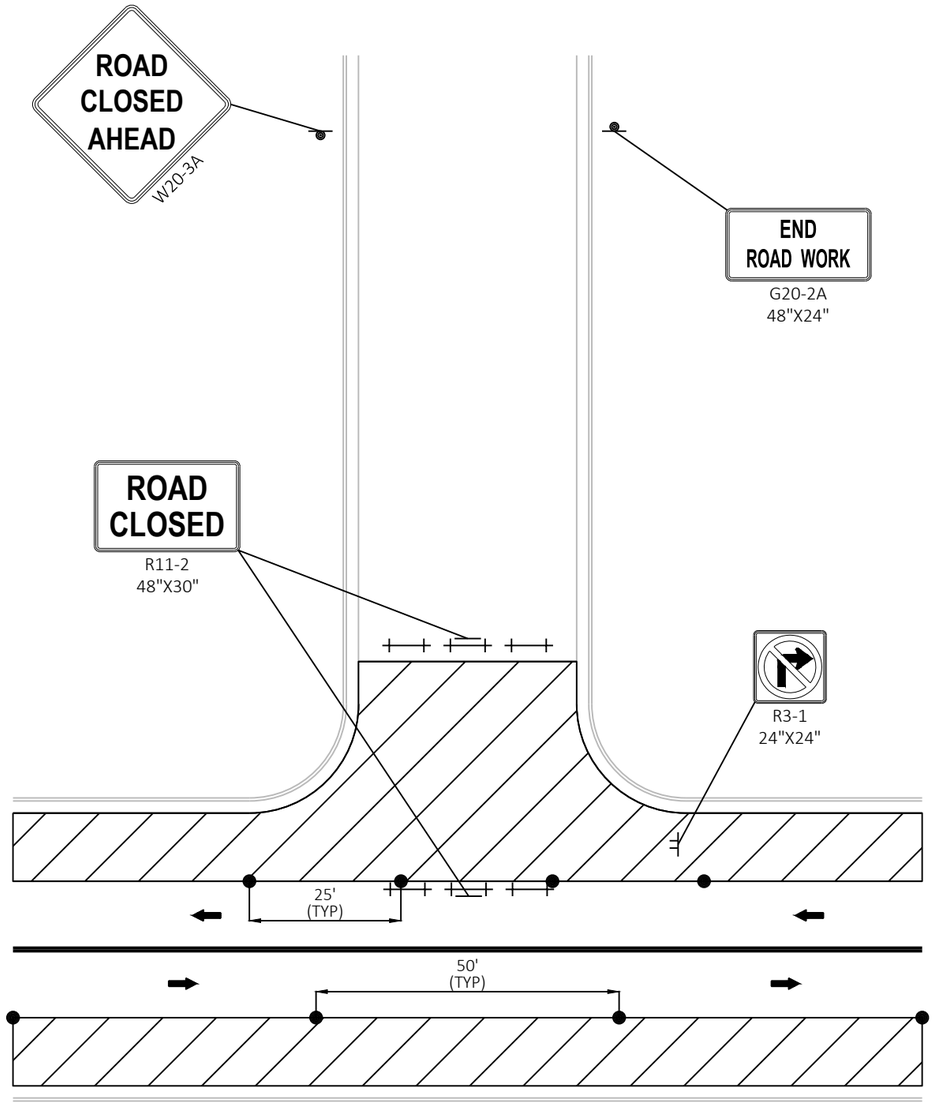

TYPICAL CLOSURE OF SIDE ROAD
*SEE STAGING PLANS FOR PROPOSED
AT EACH SIDE ROAD

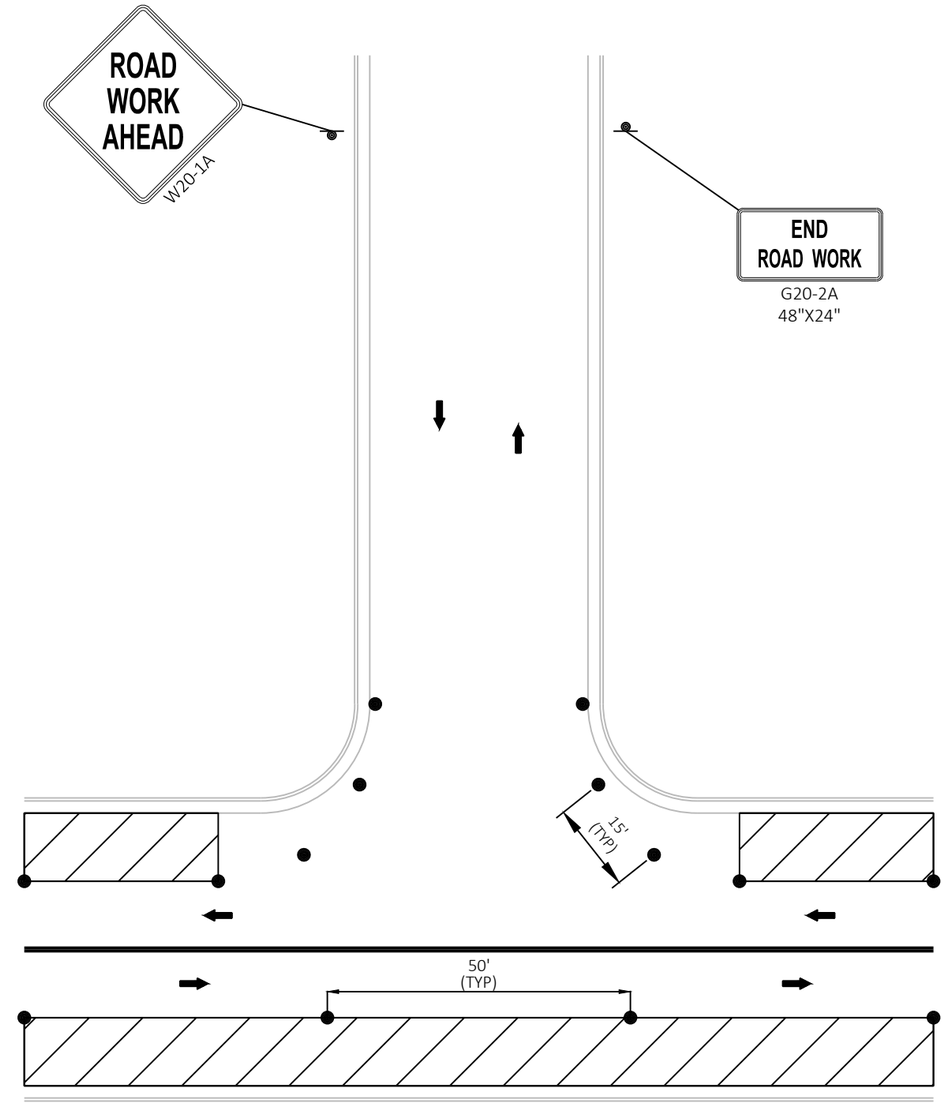

TYPICAL OPEN SIDE ROAD
*OPEN SIDE ROADS TO TRAFFIC WHEN WORK
IS NOT IN PROGRESS AT THAT LOCATION

STAGE 2C TRAFFIC CONTROL AT SIDE ROADS

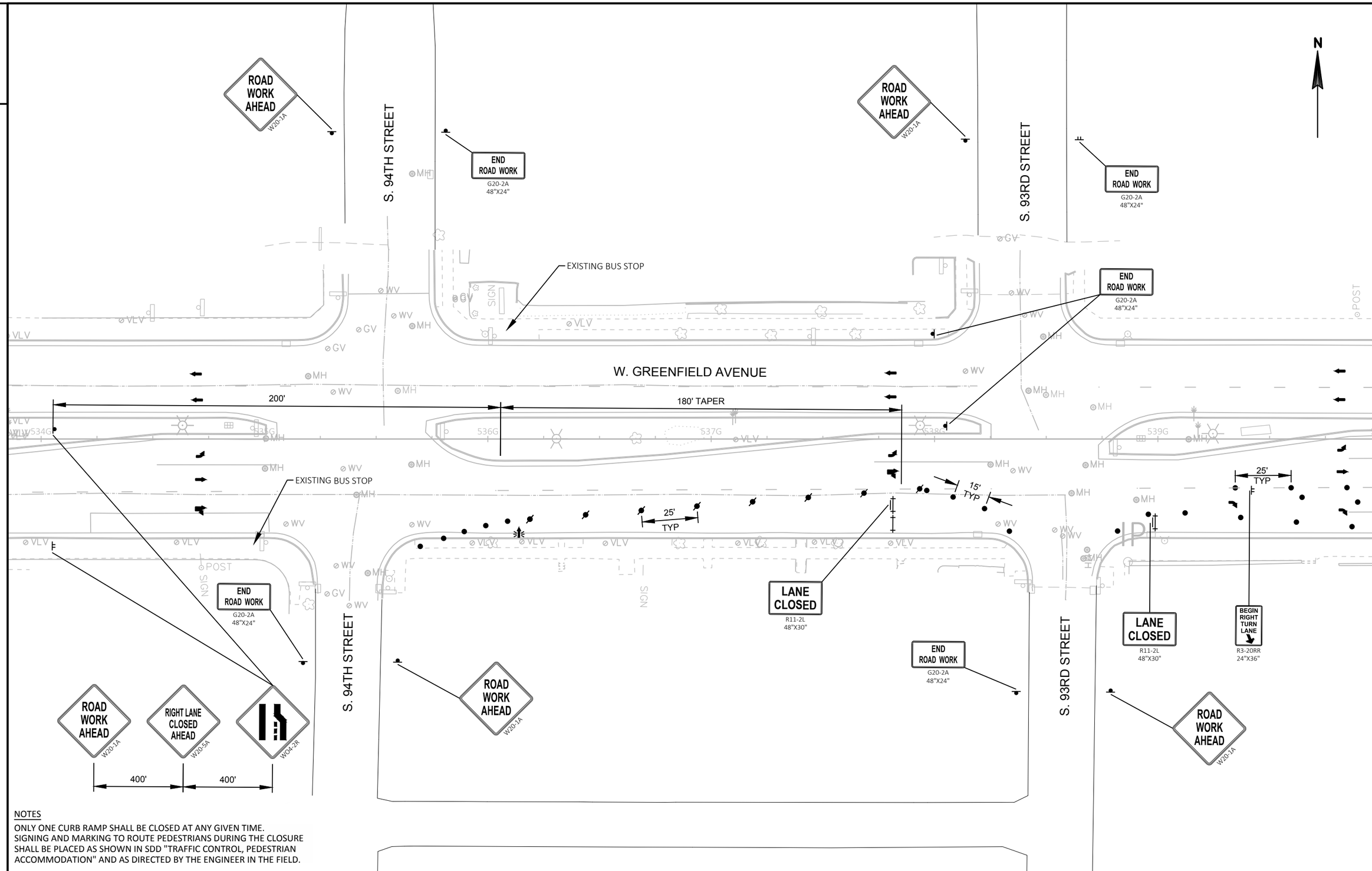

NOTES

ONLY ONE CURB RAMP SHALL BE CLOSED AT ANY GIVEN TIME.
SIGNING AND MARKING TO ROUTE PEDESTRIANS DURING THE CLOSURE SHALL BE PLACED AS SHOWN IN SDD "TRAFFIC CONTROL, PEDESTRIAN ACCOMMODATION" AND AS DIRECTED BY THE ENGINEER IN THE FIELD.

PROJECT NO: 1060-40-97	HWY: STH 59	COUNTY: MILWAUKEE	STAGE 1 CONSTRUCTION	SHEET 62	E

2

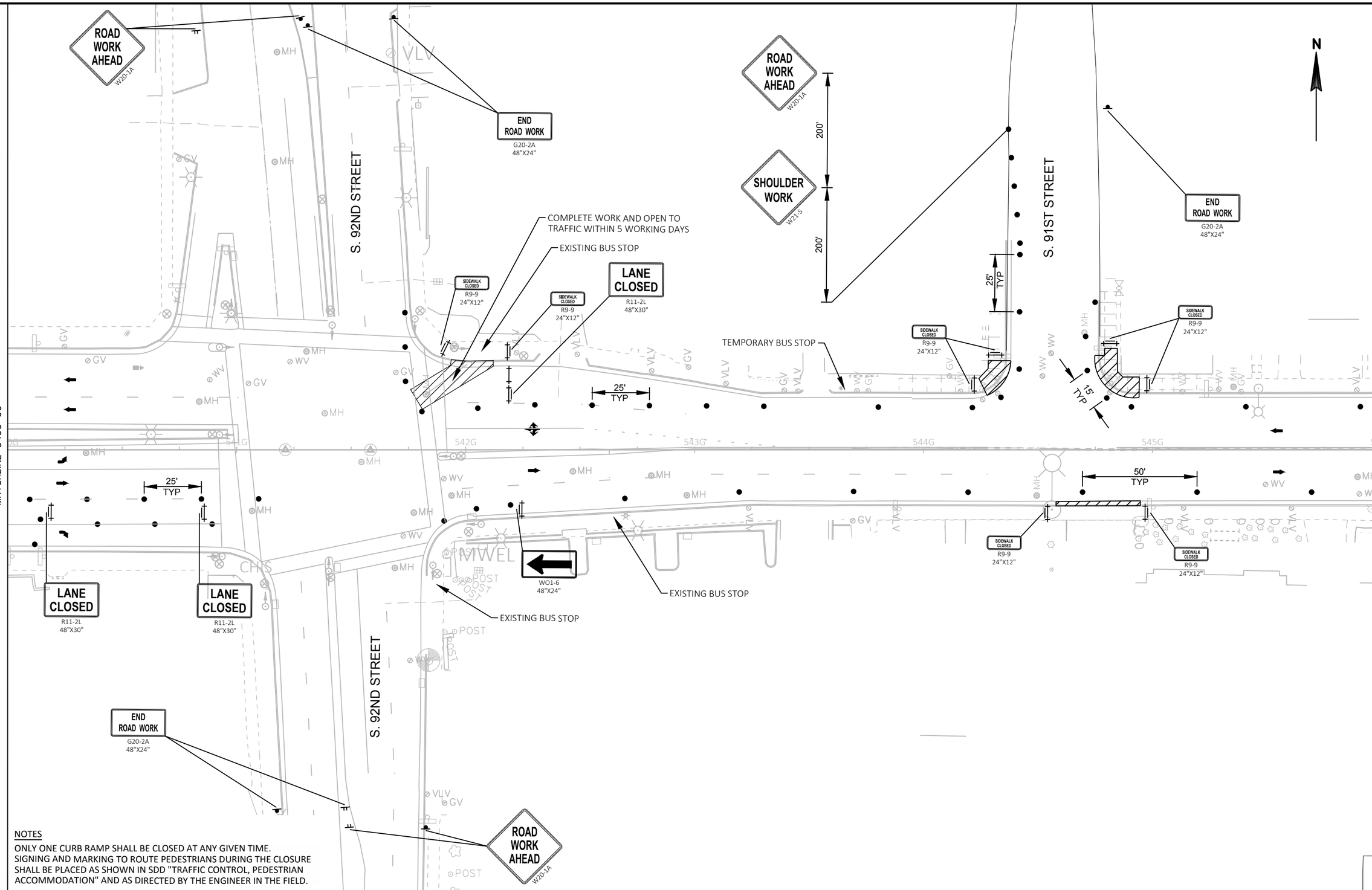

NOTES

ONLY ONE CURB RAMP SHALL BE CLOSED AT ANY GIVEN TIME.
SIGNING AND MARKING TO ROUTE PEDESTRIANS DURING THE CLOSURE SHALL BE PLACED AS SHOWN IN SDD "TRAFFIC CONTROL, PEDESTRIAN ACCOMMODATION" AND AS DIRECTED BY THE ENGINEER IN THE FIELD.

2

PROJECT NO: 1060-40-97	HWY: STH 59	COUNTY: MILWAUKEE	STAGE 1 CONSTRUCTION	SHEET 63	E

FILE NAME : W:\CADD\FINAL\10604097_GO\SHEETSPLAN\026101_S1.DWG
LAYOUT NAME - 03
PLOT DATE : 2/11/2019 4:20 PM
PLOT BY : FERGUSON, JULIE
PLOT NAME :
PLOT SCALE : 1 IN:40 FT

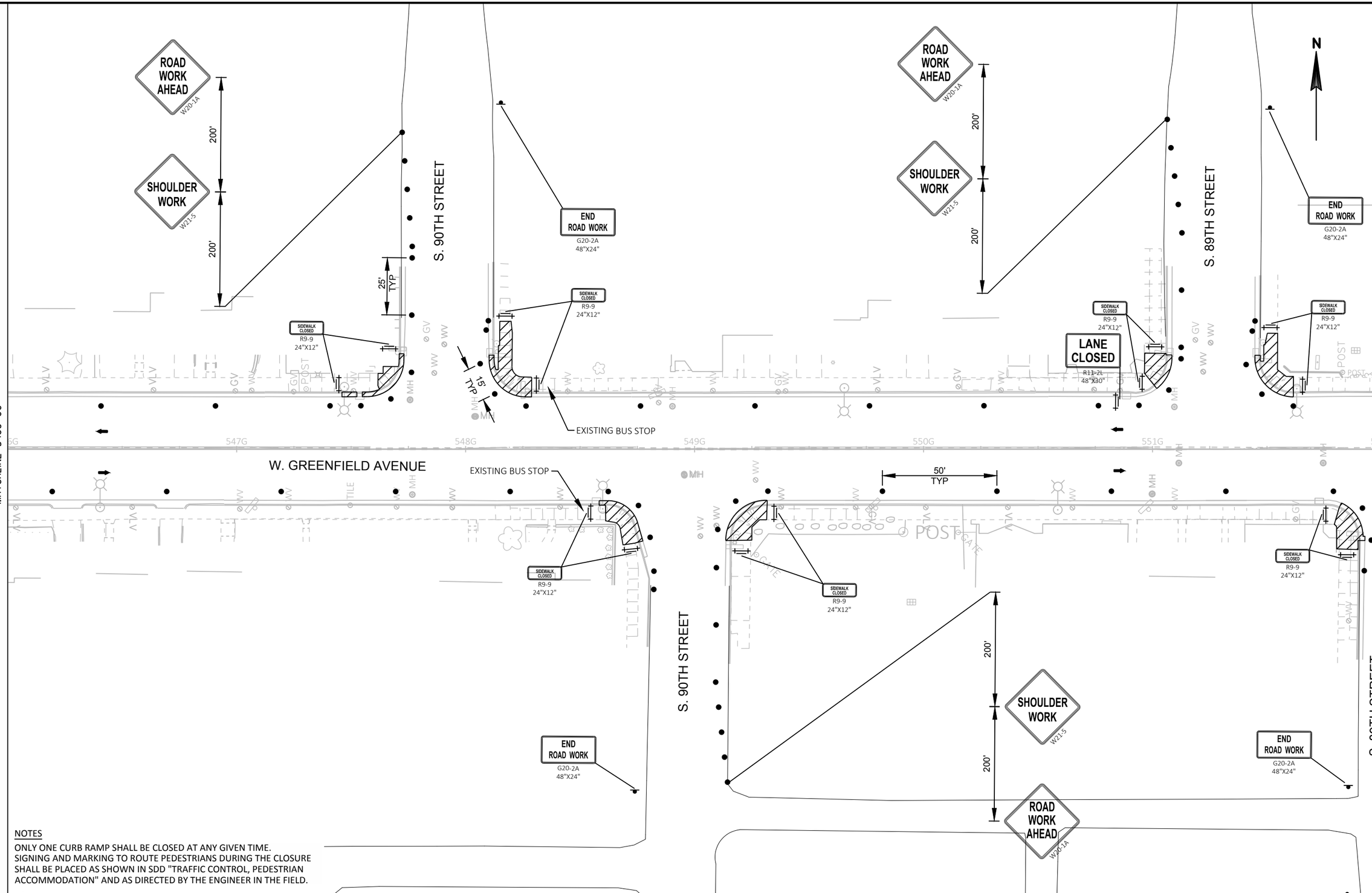

NOTES

ONLY ONE CURB RAMP SHALL BE CLOSED AT ANY GIVEN TIME.
SIGNING AND MARKING TO ROUTE PEDESTRIANS DURING THE CLOSURE SHALL BE PLACED AS SHOWN IN SDD "TRAFFIC CONTROL, PEDESTRIAN ACCOMMODATION" AND AS DIRECTED BY THE ENGINEER IN THE FIELD.

PROJECT NO: 1060-40-97	HWY: STH 59	COUNTY: MILWAUKEE	STAGE 1 CONSTRUCTION	SHEET 64	E

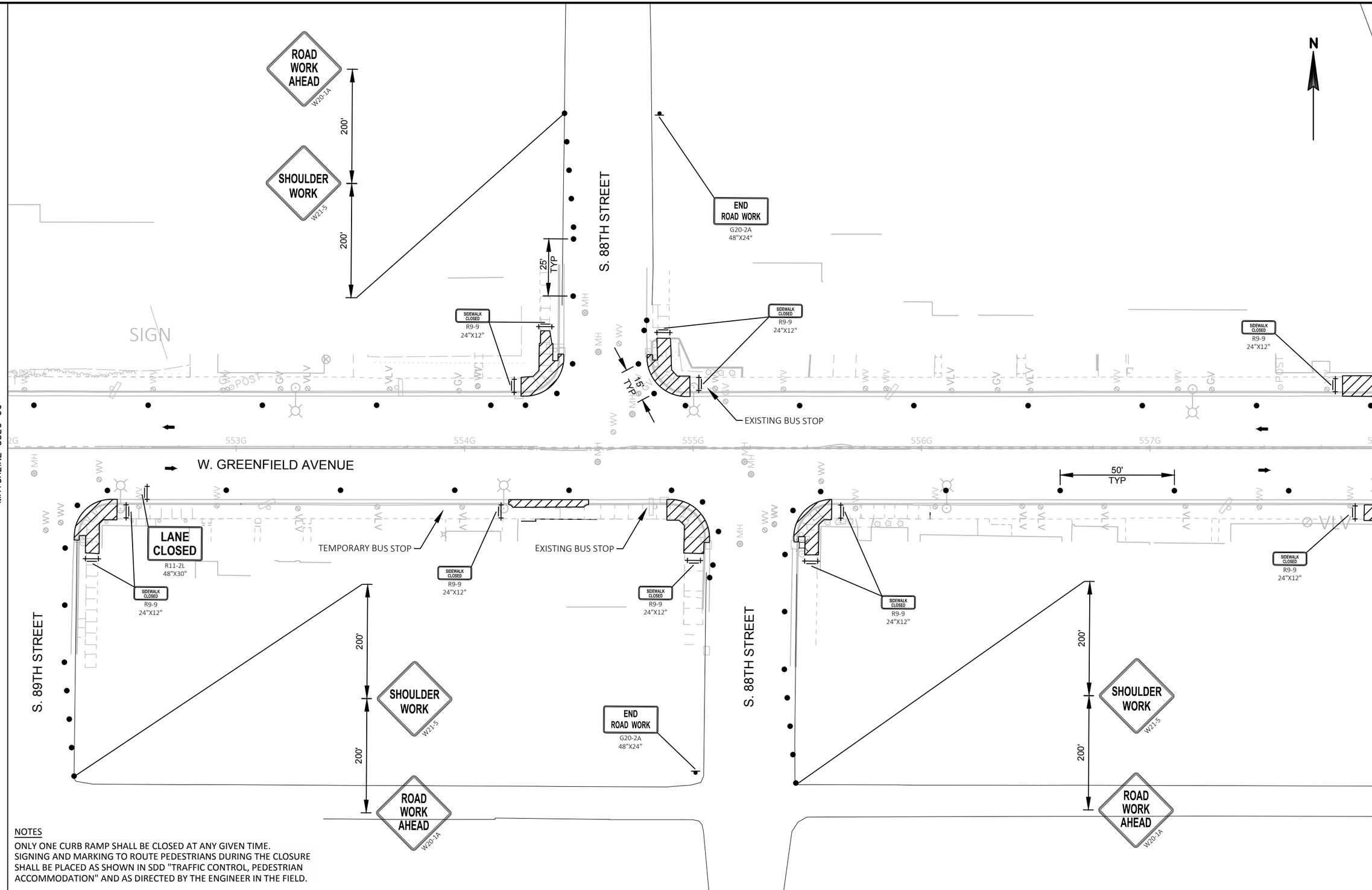

NOTES

ONLY ONE CURB RAMP SHALL BE CLOSED AT ANY GIVEN TIME.
SIGNING AND MARKING TO ROUTE PEDESTRIANS DURING THE CLOSURE SHALL BE PLACED AS SHOWN IN SDD "TRAFFIC CONTROL, PEDESTRIAN ACCOMMODATION" AND AS DIRECTED BY THE ENGINEER IN THE FIELD.

2

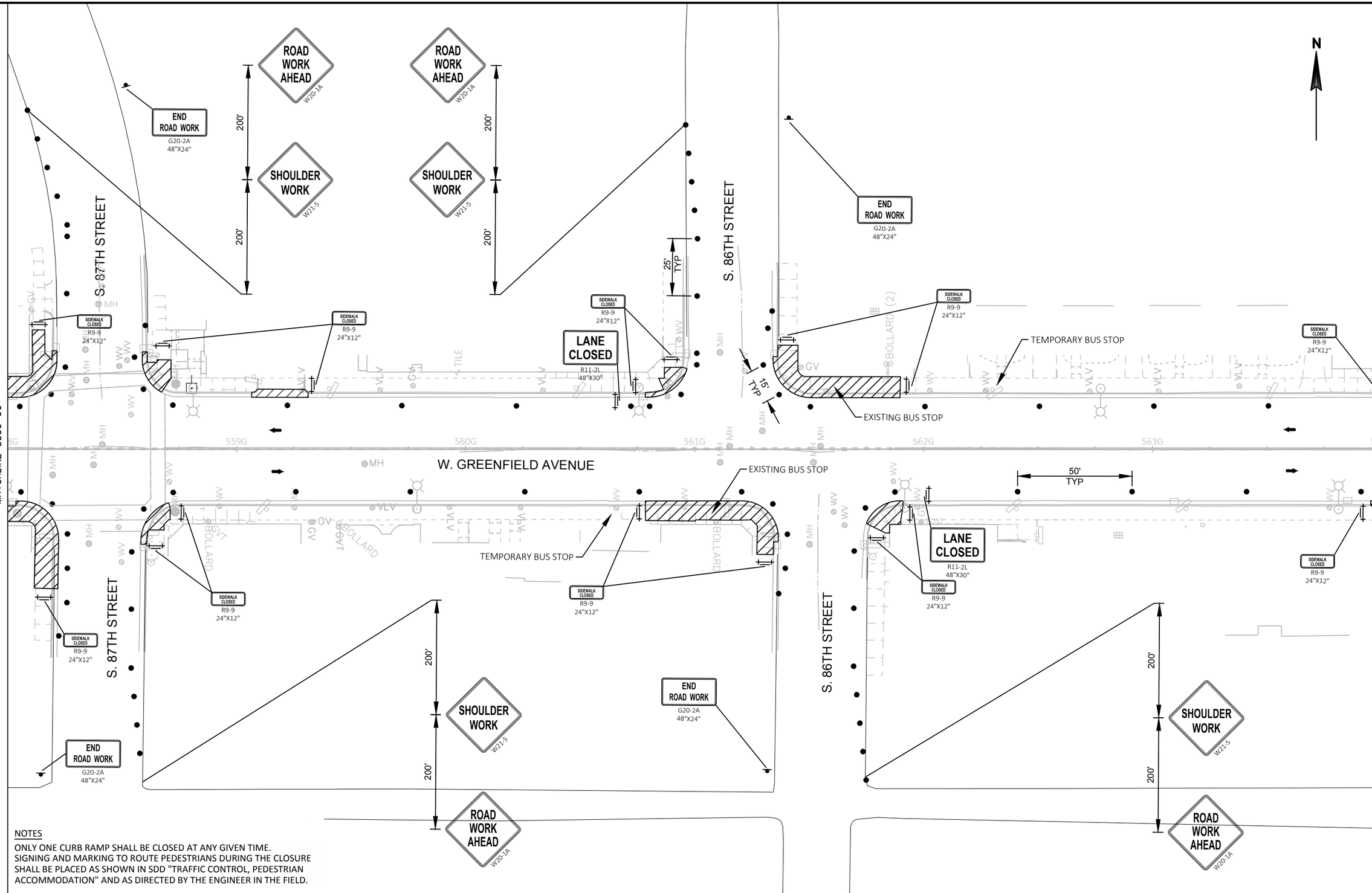

NOTES

ONLY ONE CURB RAMP SHALL BE CLOSED AT ANY GIVEN TIME.
SIGNING AND MARKING TO ROUTE PEDESTRIANS DURING THE CLOSURE SHALL BE PLACED AS SHOWN IN SDD "TRAFFIC CONTROL, PEDESTRIAN ACCOMMODATION" AND AS DIRECTED BY THE ENGINEER IN THE FIELD.

PROJECT NO: 1060-40-97	HWY: STH 59	COUNTY: MILWAUKEE	STAGE 1 CONSTRUCTION	SHEET 66	E

FILE NAME : W:\CADD\FINAL\10604097_GO\SHEETSPLAN\026101_S1.DWG
LAYOUT NAME - 06
PLOT DATE : 1/29/2019 4:10 AM PLOT BY : SCHARLAU, DAVID A PLOT NAME : PLOT SCALE : 1 IN:40 FT

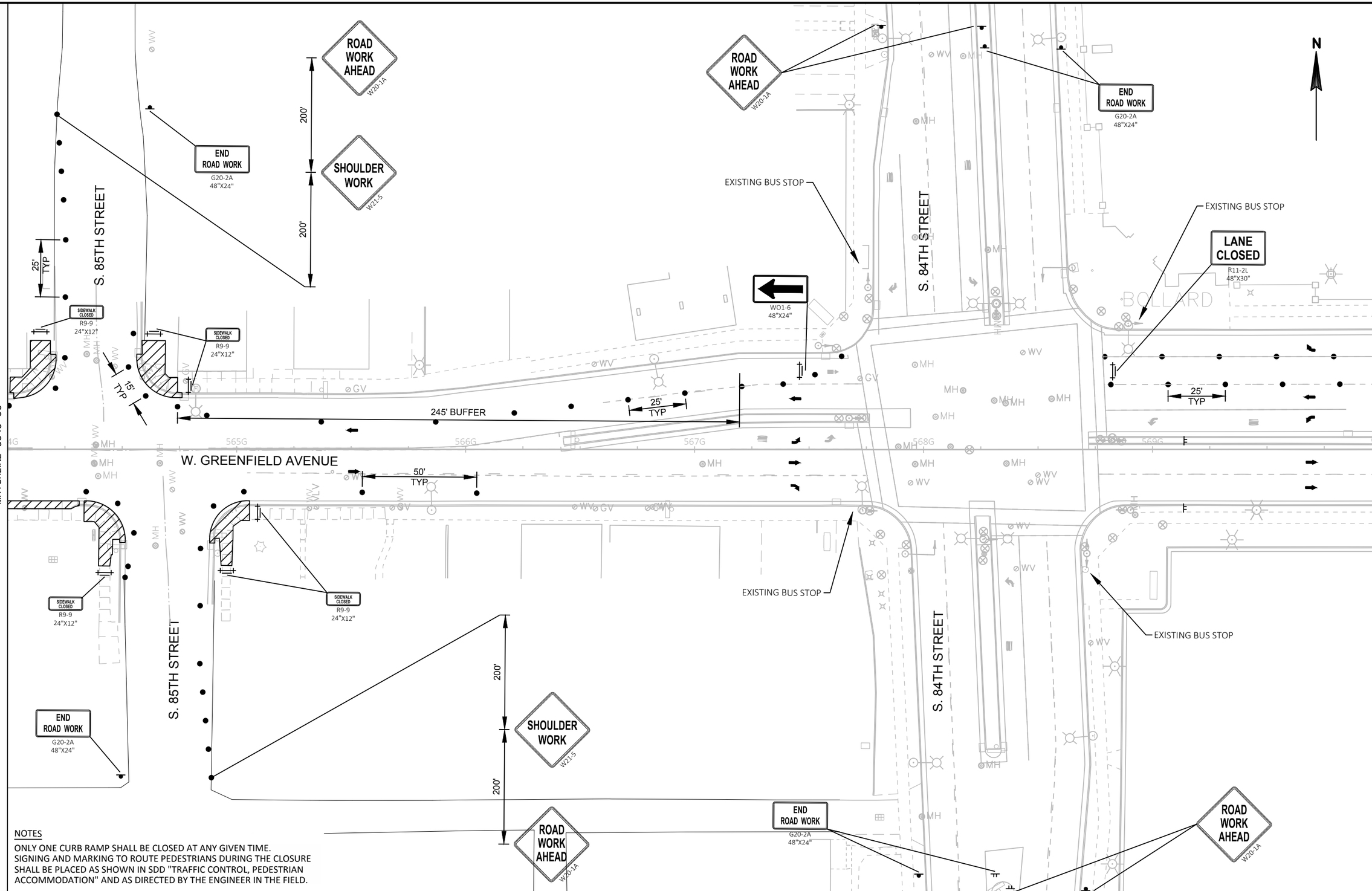

NOTES

ONLY ONE CURB RAMP SHALL BE CLOSED AT ANY GIVEN TIME. SIGNING AND MARKING TO ROUTE PEDESTRIANS DURING THE CLOSURE SHALL BE PLACED AS SHOWN IN SDD "TRAFFIC CONTROL, PEDESTRIAN ACCOMMODATION" AND AS DIRECTED BY THE ENGINEER IN THE FIELD.

PROJECT NO: 1060-40-97	HWY: STH 59	COUNTY: MILWAUKEE	STAGE 1 CONSTRUCTION	SHEET 67	E

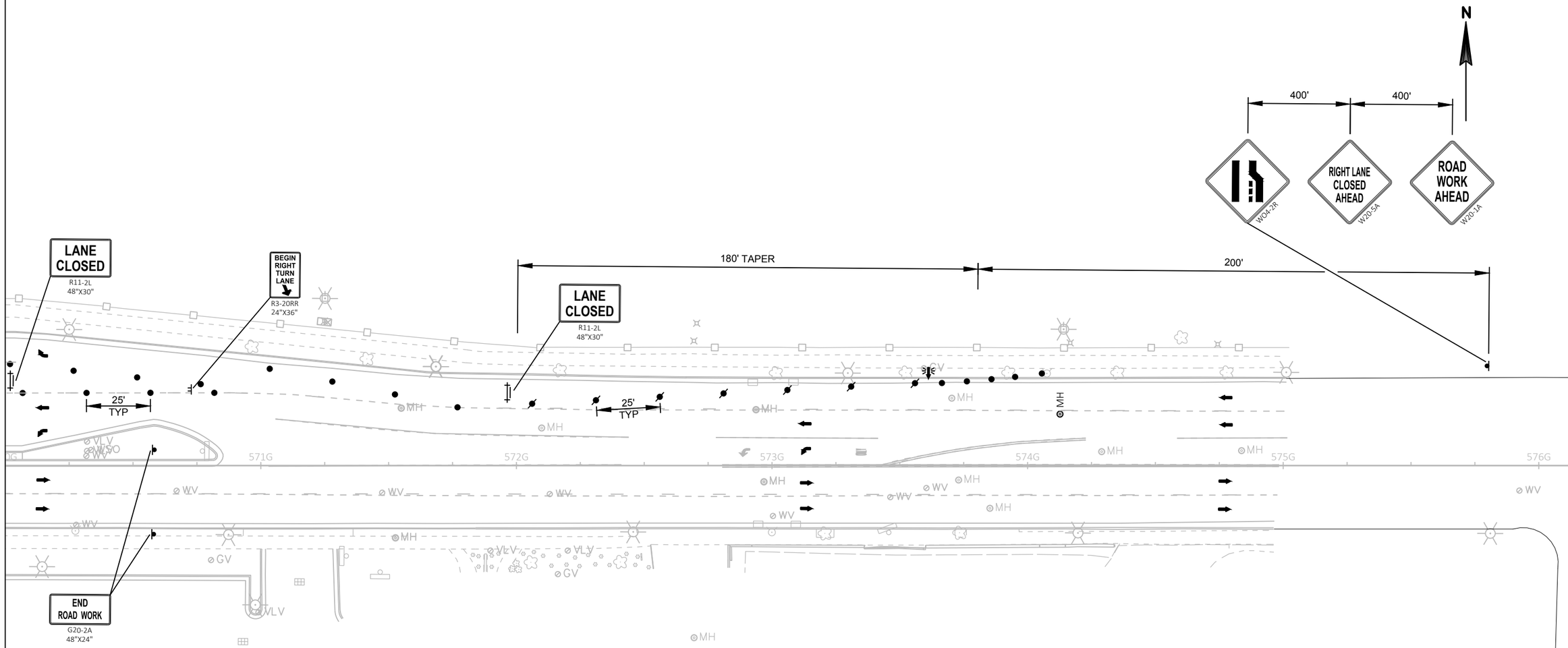

NOTES

ONLY ONE CURB RAMP SHALL BE CLOSED AT ANY GIVEN TIME.
SIGNING AND MARKING TO ROUTE PEDESTRIANS DURING THE CLOSURE SHALL BE PLACED AS SHOWN IN SDD "TRAFFIC CONTROL, PEDESTRIAN ACCOMMODATION" AND AS DIRECTED BY THE ENGINEER IN THE FIELD.

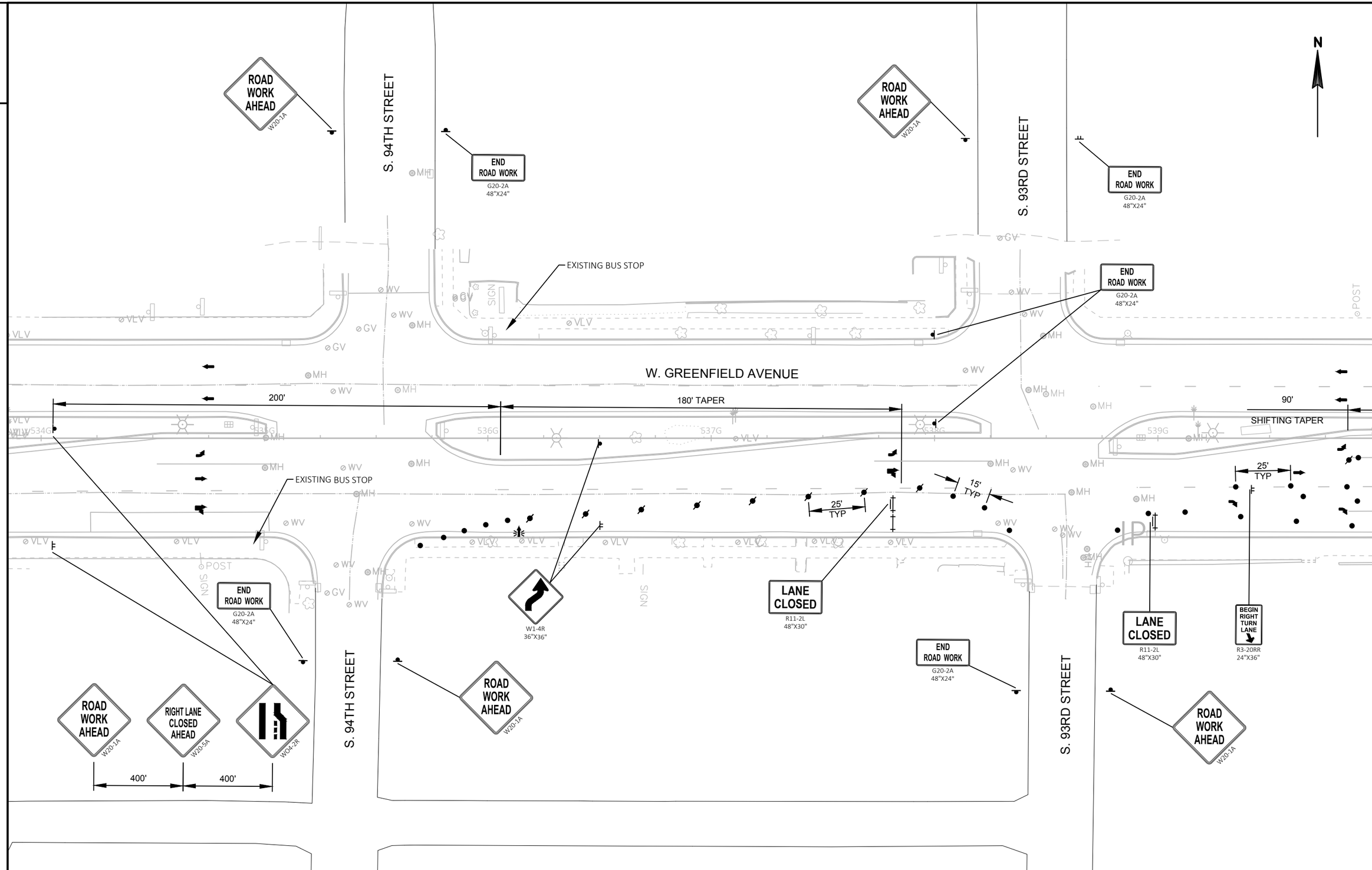
N
ROAD WORK AHEAD
W20-1A
S. 94TH STREET
END ROAD WORK
G20-2A
48"X24"
EXISTING BUS STOP
SIGN
W. GREENFIELD AVENUE
200'
180' TAPER
90'
SHIFTING TAPER
25' TYP
15' TYP
S. 93RD STREET
LANE CLOSED
R11-2L
48"X30"
W1-4R
36"X36"
BEGIN RIGHT TURN LANE
R3-20RR
24"X36"
RIGHT LANE CLOSED AHEAD
W20-5A
W04-2R
400'
MATCHLINE 540G+00
POST
MH
WV
GV
VLV
536G
537G
539G

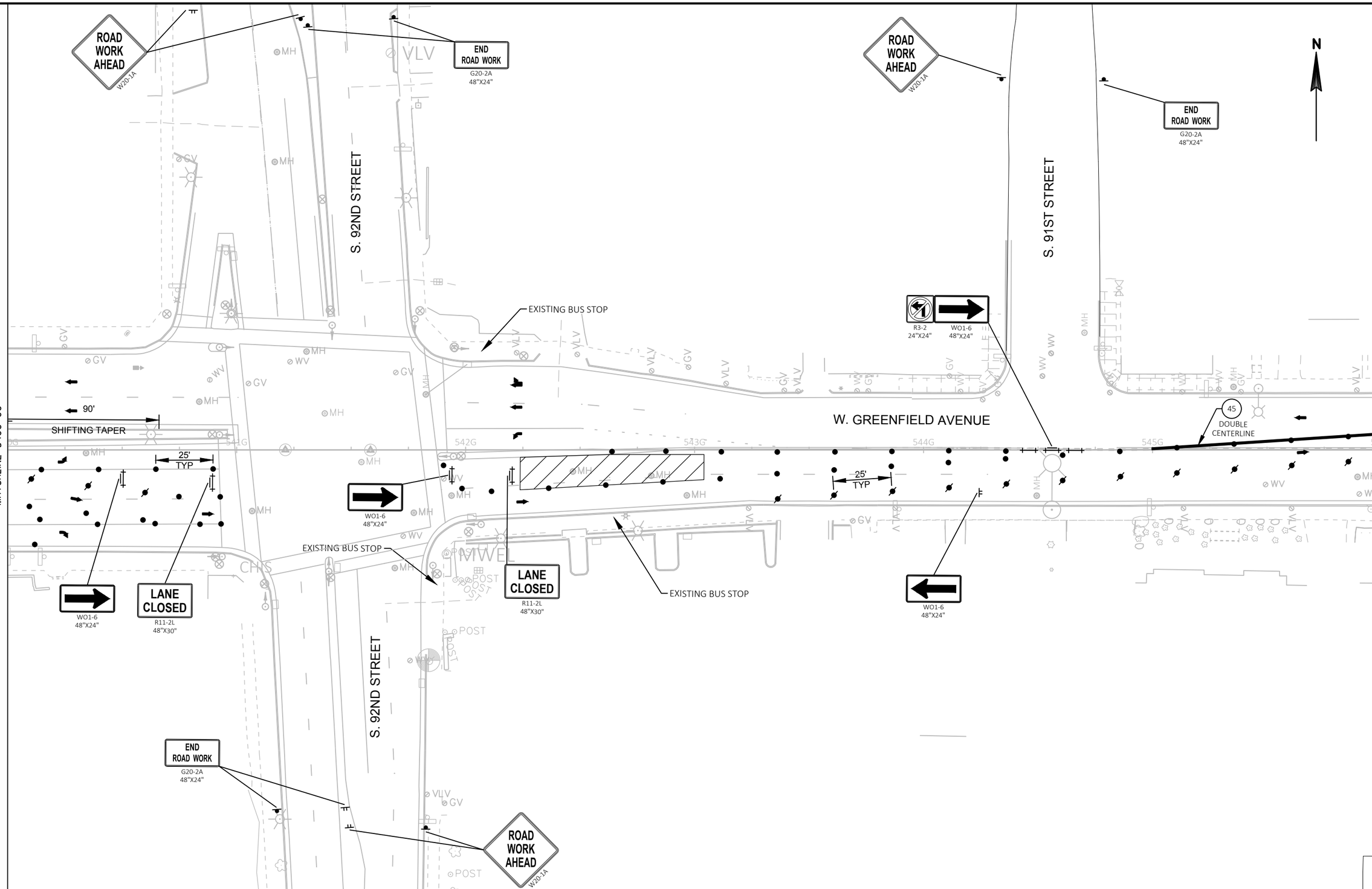

PROJECT NO: 1060-40-97	HWY: STH 59	COUNTY: MILWAUKEE	STAGE 2A CONSTRUCTION	SHEET 70	E

FILE NAME : W:\CADD\FINAL\10604097_GO\SHEETSPLAN\026201_S2A.DWG
LAYOUT NAME - 03
PLOT DATE : 2/11/2019 4:25 PM
PLOT BY : FERGUSON, JULIE
PLOT NAME :
PLOT SCALE : 1 IN:40 FT
WISDOT/CADDS SHEET 42

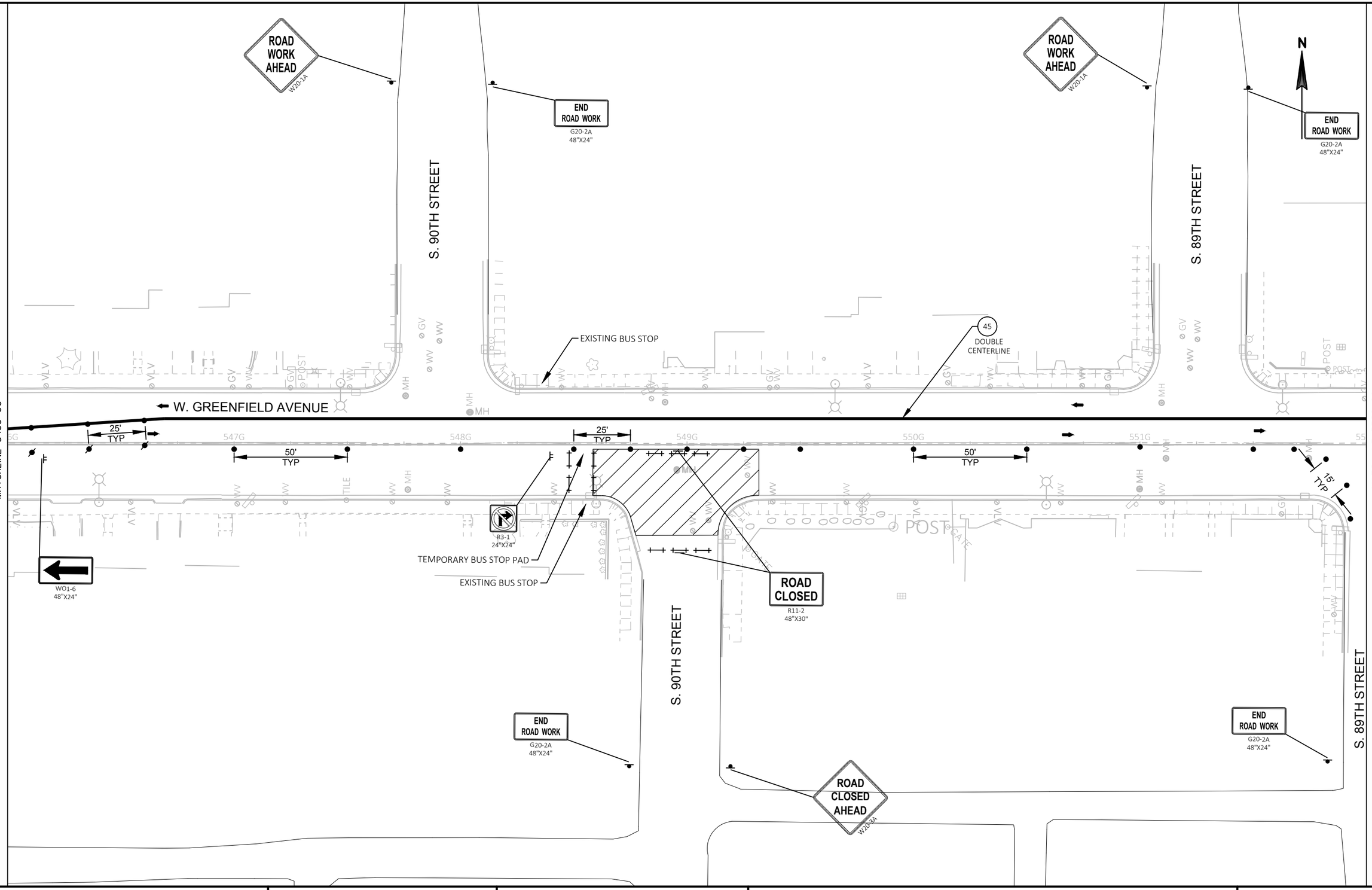

PROJECT NO: 1060-40-97	HWY: STH 59	COUNTY: MILWAUKEE	STAGE 2A CONSTRUCTION	SHEET 71	E

FILE NAME : W:\CADD\FINAL\10604097_GO\SHEETSPLAN\026201_S2A.DWG
LAYOUT NAME - 04
PLOT DATE : 2/11/2019 4:25 PM
PLOT BY : FERGUSON, JULIE
PLOT NAME :
PLOT SCALE : 1 IN:40 FT

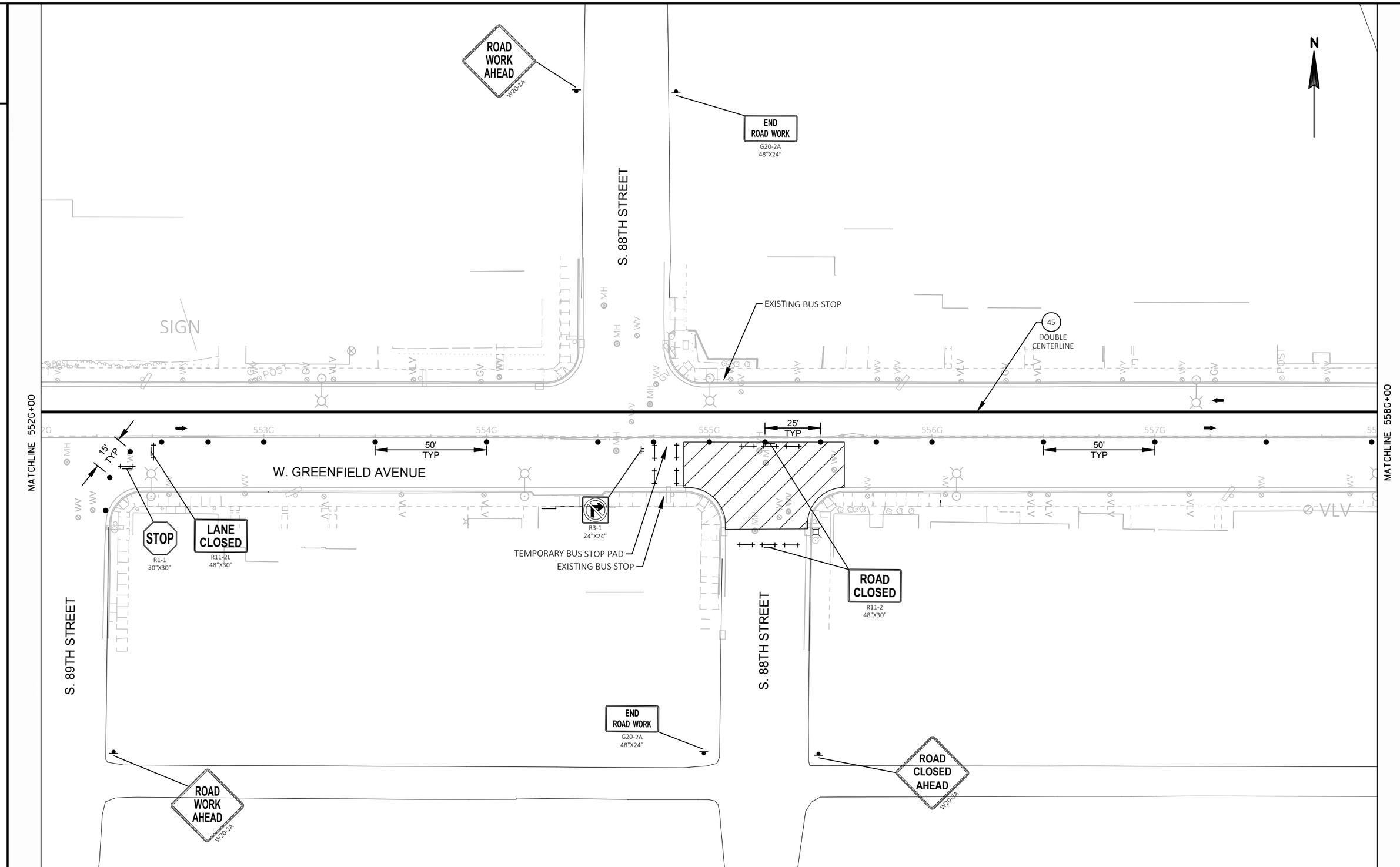

PROJECT NO: 1060-40-97	HWY: STH 59	COUNTY: MILWAUKEE	STAGE 2A CONSTRUCTION	SHEET 72	E

FILE NAME : W:\CADD\FINAL\10604097_GO\SHEETSPLAN\026201_S2A.DWG
LAYOUT NAME - 05
PLOT DATE : 2/11/2019 4:25 PM
PLOT BY : FERGUSON, JULIE
PLOT NAME :
PLOT SCALE : 1 IN:40 FT

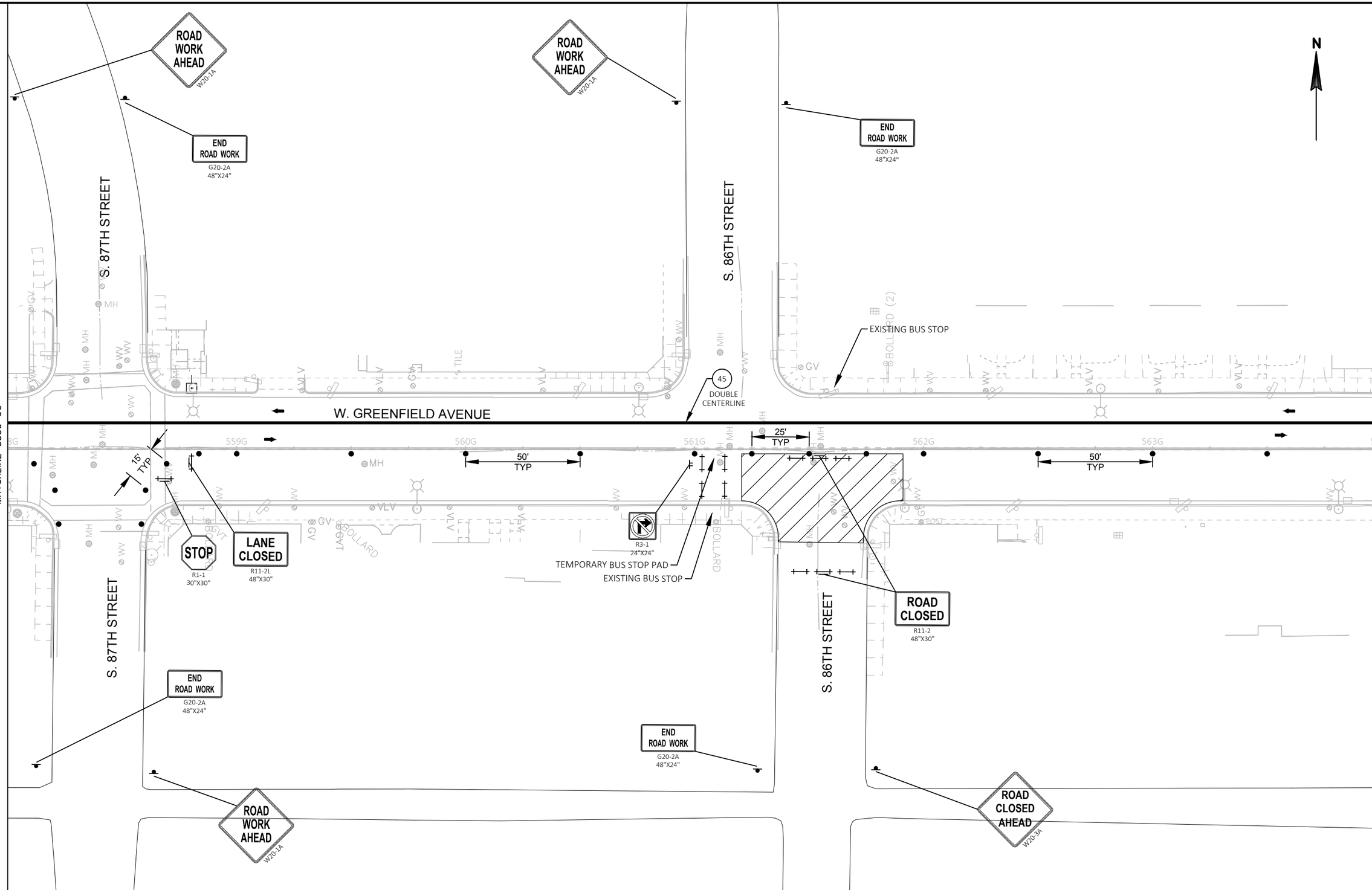
ROAD WORK AHEAD
W20-1A
END ROAD WORK
G20-2A
48"X24"
S. 87TH STREET
S. 86TH STREET
N
EXISTING BUS STOP
BOLLARD (2)
45
DOUBLE CENTERLINE
W. GREENFIELD AVENUE
MATCHLINE 558G+00
MATCHLINE 564G+00
559G
560G
561G
562G
563G
15' TYP
50' TYP
25' TYP
STOP
R1-1
30"X30"
LANE CLOSED
R11-2L
48"X30"
R3-1
24"X24"
TEMPORARY BUS STOP PAD
EXISTING BUS STOP
ROAD CLOSED
R11-2
48"X30"
ROAD CLOSED AHEAD
W20-3A

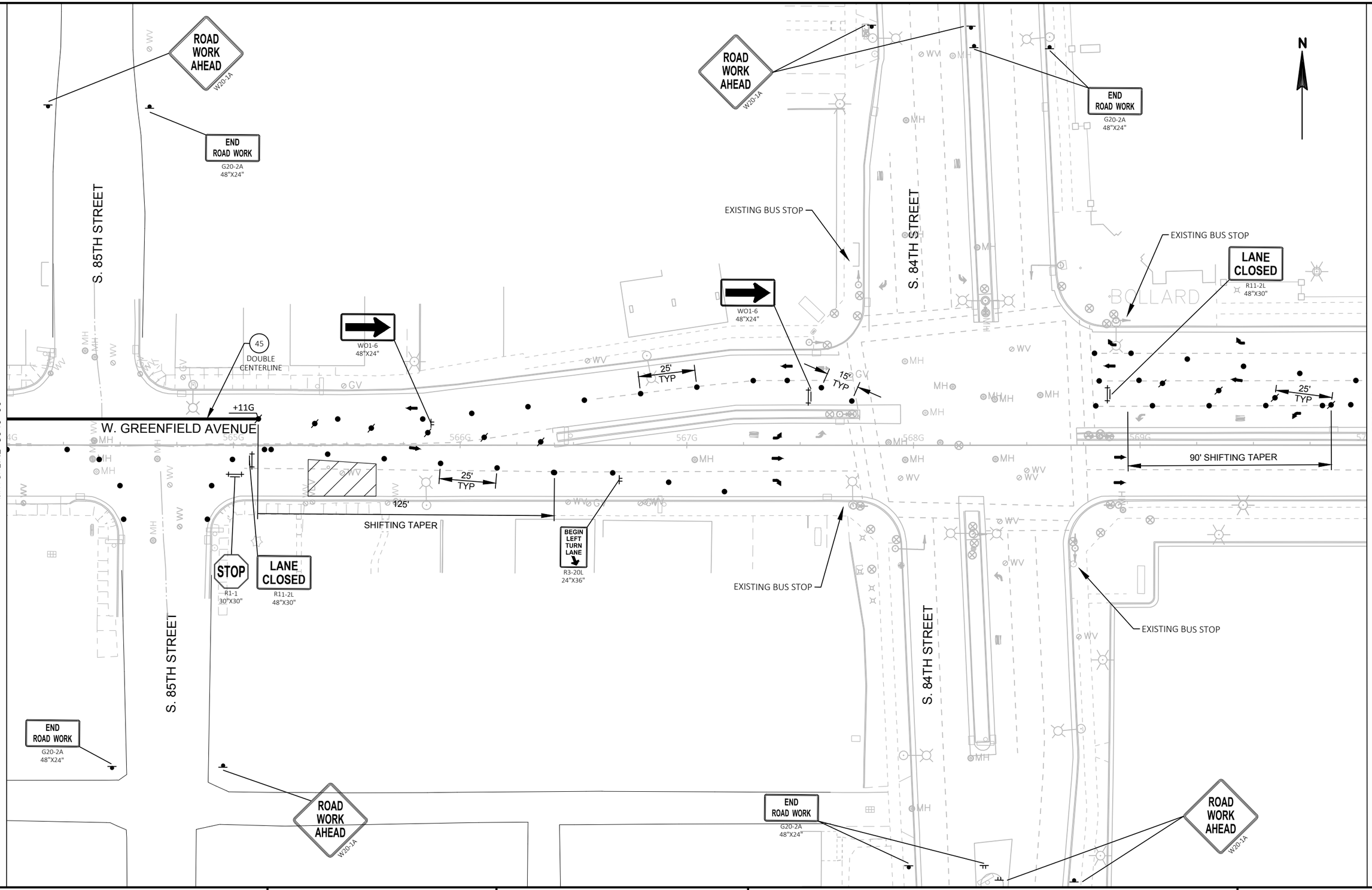

PROJECT NO: 1060-40-97	HWY: STH 59	COUNTY: MILWAUKEE	STAGE 2A CONSTRUCTION	SHEET 74	E

FILE NAME : W:\CADD\FINAL\10604097_GO\SHEETSPLAN\026201_S2A.DWG
LAYOUT NAME - 07
PLOT DATE : 1/29/2019 5:24 PM
PLOT BY : GIBSON MURPHY, NICOL
PLOT NAME :
PLOT SCALE : 1 IN:40 FT
WISDOT/CADDS SHEET 42

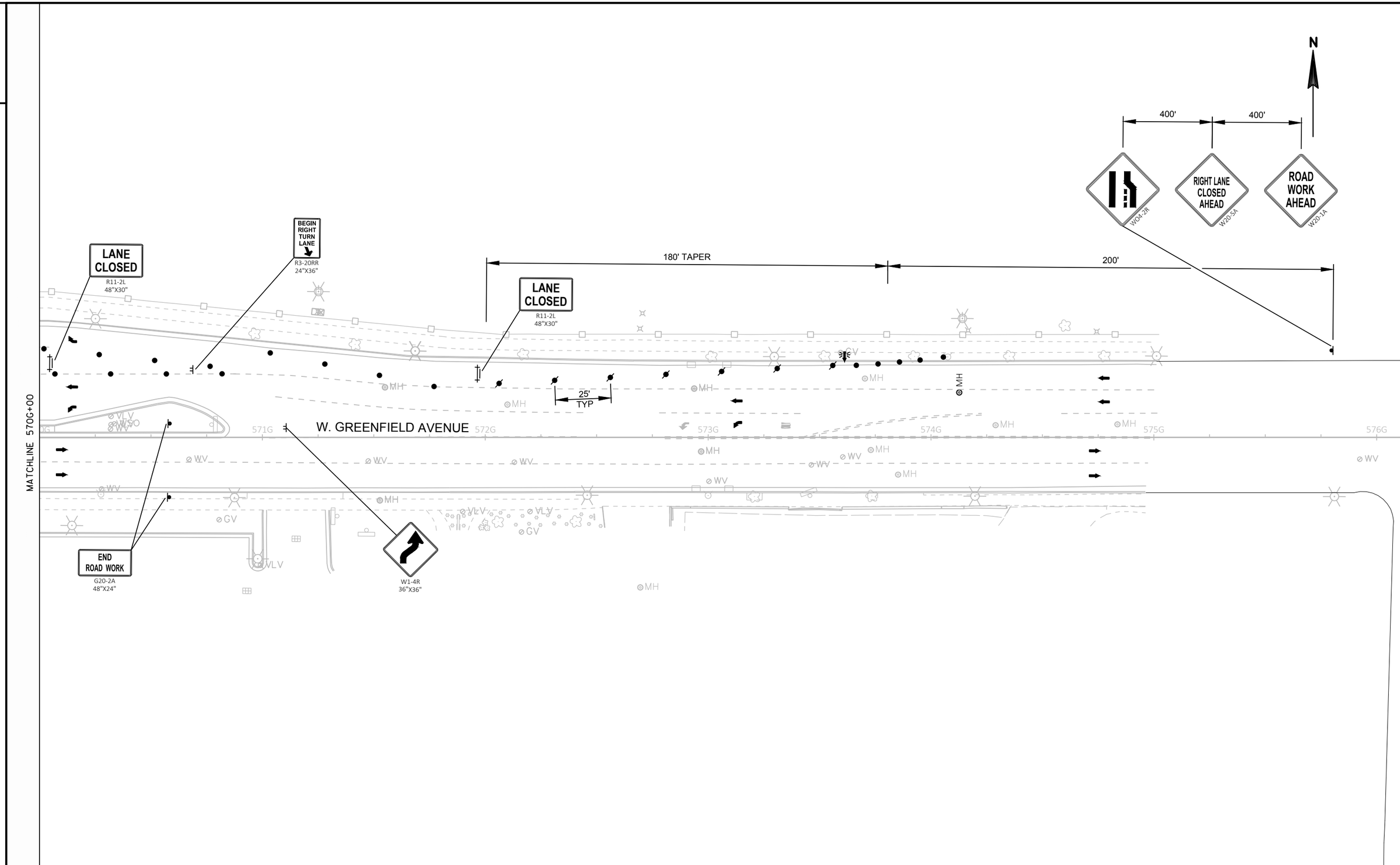
N
400'
400'
W04-2R
RIGHT LANE CLOSED AHEAD
W20-5A
ROAD WORK AHEAD
W20-1A
LANE CLOSED
R11-2L
48"X30"
BEGIN RIGHT TURN LANE
R3-20RR
24"X36"
180' TAPER
200'
LANE CLOSED
R11-2L
48"X30"
25'
TYP
MATCHLINE 570G+00
W. GREENFIELD AVENUE
571G
572G
573G
574G
575G
576G
END ROAD WORK
G20-2A
48"X24"
W1-4R
36"X36"
MH
WV
VLV
GV

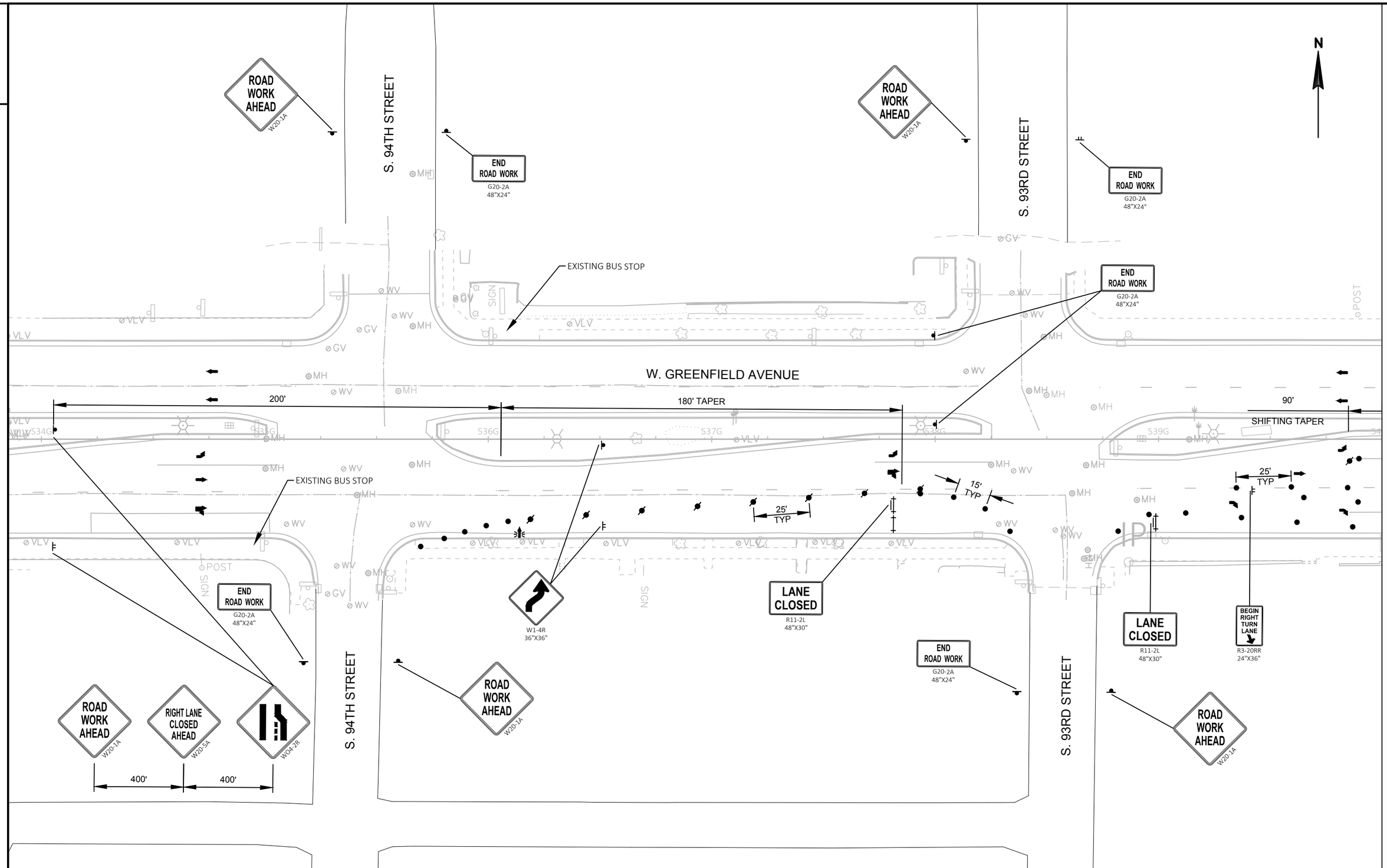

PROJECT NO: 1060-40-97	HWY: STH 59	COUNTY: MILWAUKEE	STAGE 2B CONSTRUCTION	SHEET 76	E

FILE NAME : W:\CADD\FINAL\10604097_GO\SHEETSPLAN\026202_S2B.DWG
LAYOUT NAME - 02
PLOT DATE : 1/29/2019 10:41 AM
PLOT BY : SCHARLAU, DAVID A
PLOT NAME :
PLOT SCALE : 1 IN:40 FT
WISDOT/CADDS SHEET 42

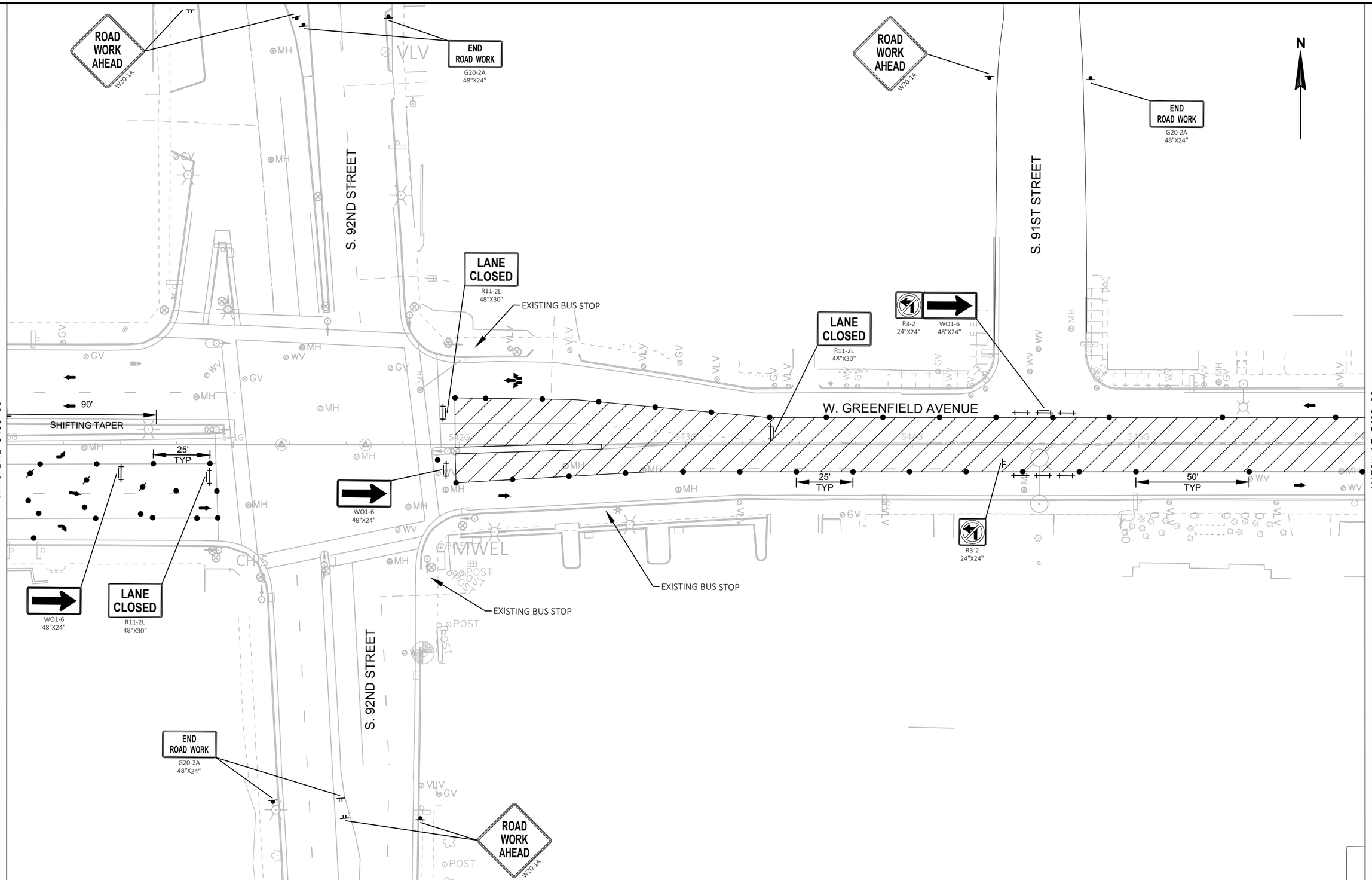
ROAD WORK AHEAD
W20-1A
END ROAD WORK
G20-2A
48"X24"
ROAD WORK AHEAD
W20-1A
END ROAD WORK
G20-2A
48"X24"
N
S. 92ND STREET
S. 91ST STREET
LANE CLOSED
R11-2L
48"X30"
EXISTING BUS STOP
LANE CLOSED
R11-2L
48"X30"
R3-2
24"X24"
WO1-6
48"X24"
W. GREENFIELD AVENUE
MATCHLINE 540G+00
MATCHLINE 546G+00
90'
SHIFTING TAPER
25'
TYP
25'
TYP
50'
TYP
WO1-6
48"X24"
R3-2
24"X24"
EXISTING BUS STOP
EXISTING BUS STOP
WO1-6
48"X24"
LANE CLOSED
R11-2L
48"X30"
S. 92ND STREET
END ROAD WORK
G20-2A
48"X24"
ROAD WORK AHEAD
W20-1A

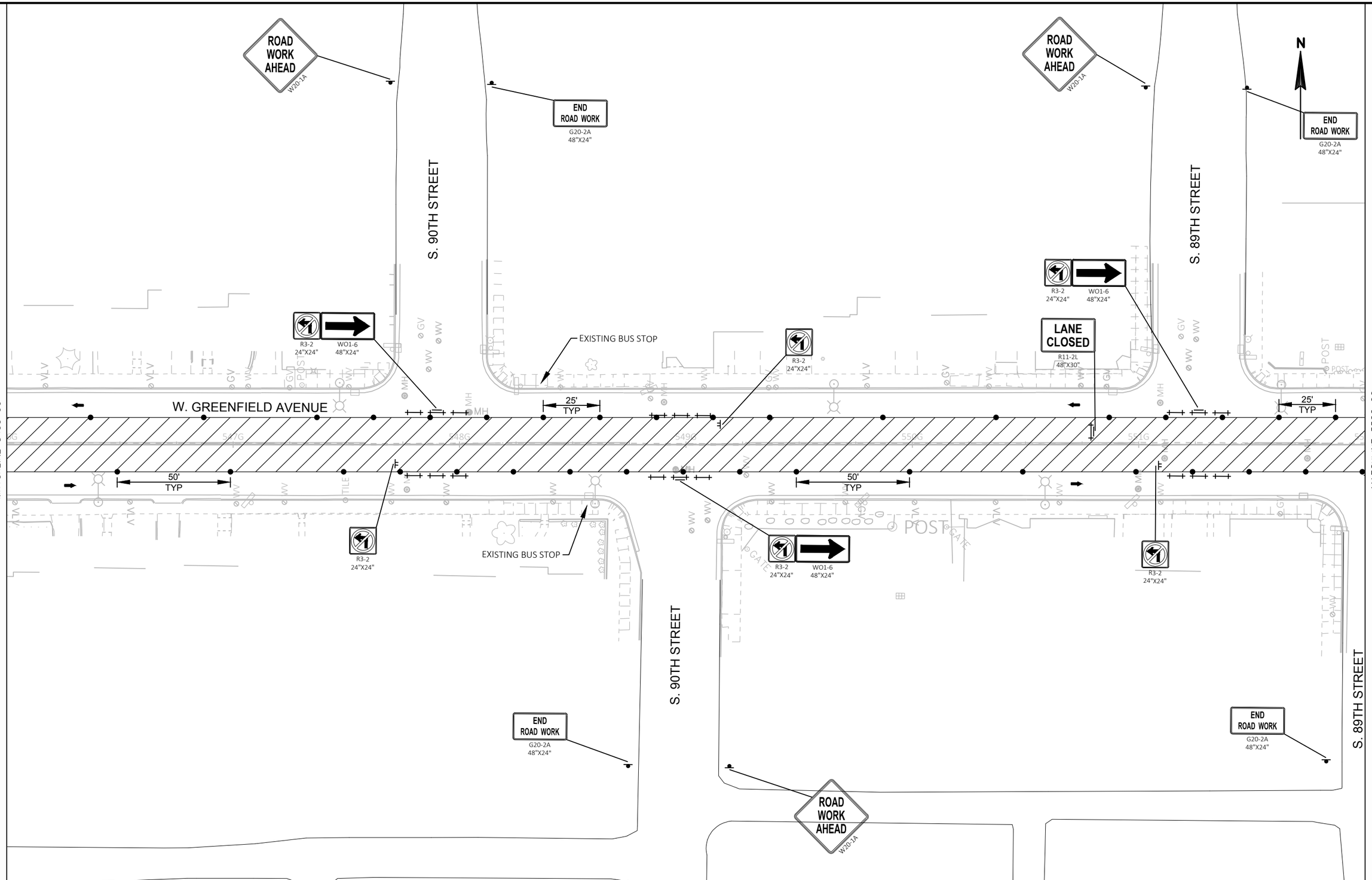

PROJECT NO: 1060-40-97	HWY: STH 59	COUNTY: MILWAUKEE	STAGE 2B CONSTRUCTION	SHEET 78	E

FILE NAME : W:\CADD\FINAL\10604097_GO\SHEETSPLAN\026202_S2B.DWG
LAYOUT NAME - 04
PLOT DATE : 1/29/2019 10:41 AM
PLOT BY : SCHARLAU, DAVID A
PLOT NAME :
PLOT SCALE : 1 IN:40 FT
WISDOT/CADDS SHEET 42

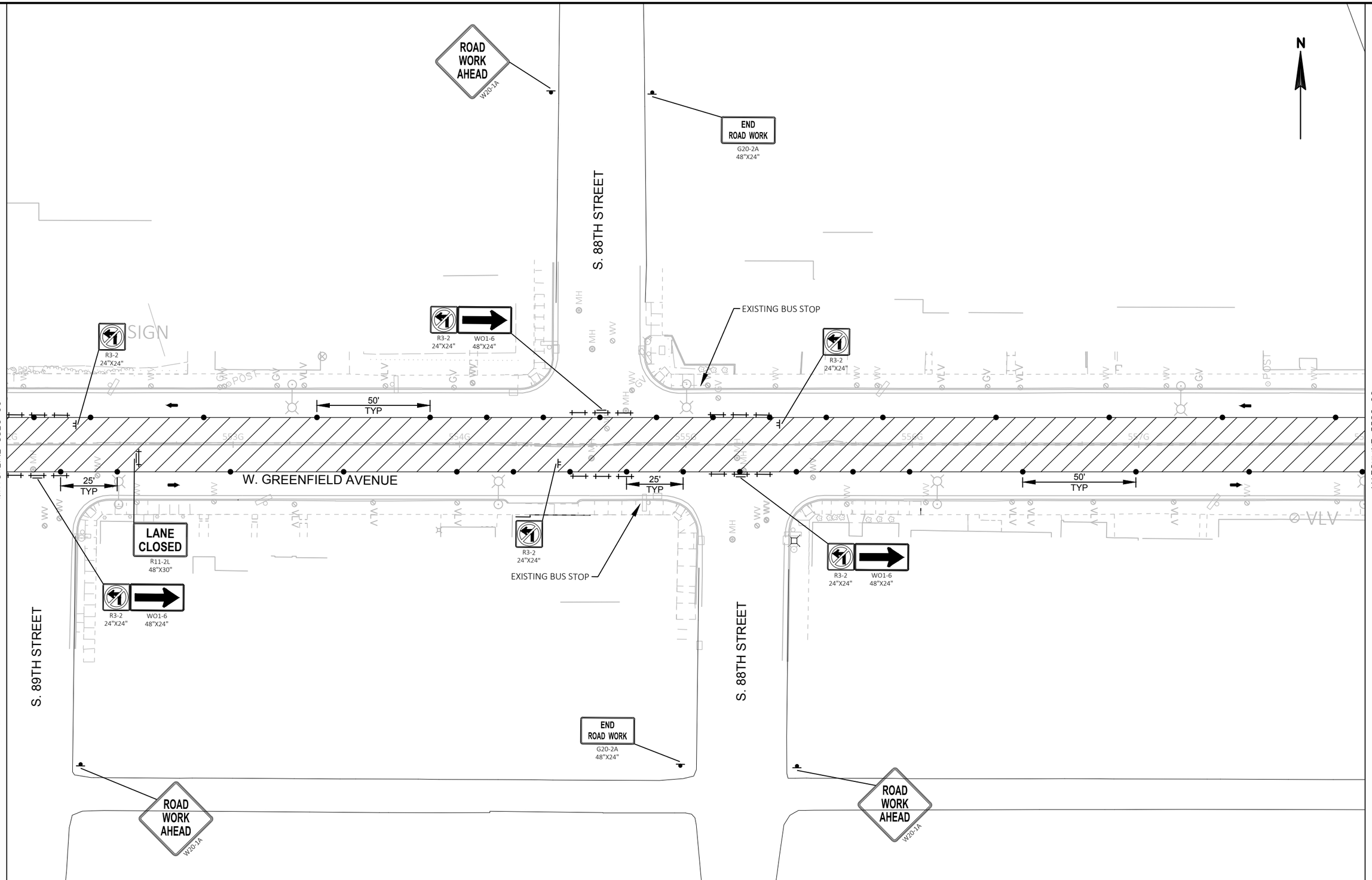

PROJECT NO: 1060-40-97	HWY: STH 59	COUNTY: MILWAUKEE	STAGE 2B CONSTRUCTION	SHEET 79	E

ROAD WORK AHEAD
W20-1A

END ROAD WORK
G20-2A
48"X24"

S. 87TH STREET

R3-2
24"X24"

WO1-6
48"X24"

LANE CLOSED
R11-2L
48"X30"

S. 86TH STREET

EXISTING BUS STOP

N

W. GREENFIELD AVENUE

25' TYP

50' TYP

MATCHLINE 558G+00

MATCHLINE 564G+00

PROJECT NO: 1060-40-97	HWY: STH 59	COUNTY: MILWAUKEE	STAGE 2B CONSTRUCTION	SHEET 80	E

FILE NAME : W:\CADD\FINAL\10604097_GO\SHEETSPLAN\026202_S2B.DWG
LAYOUT NAME - 06

PLOT DATE : 1/29/2019 10:42 AM PLOT BY : SCHARLAU, DAVID A PLOT NAME : PLOT SCALE : 1 IN:40 FT

WISDOT/CADDS SHEET 42

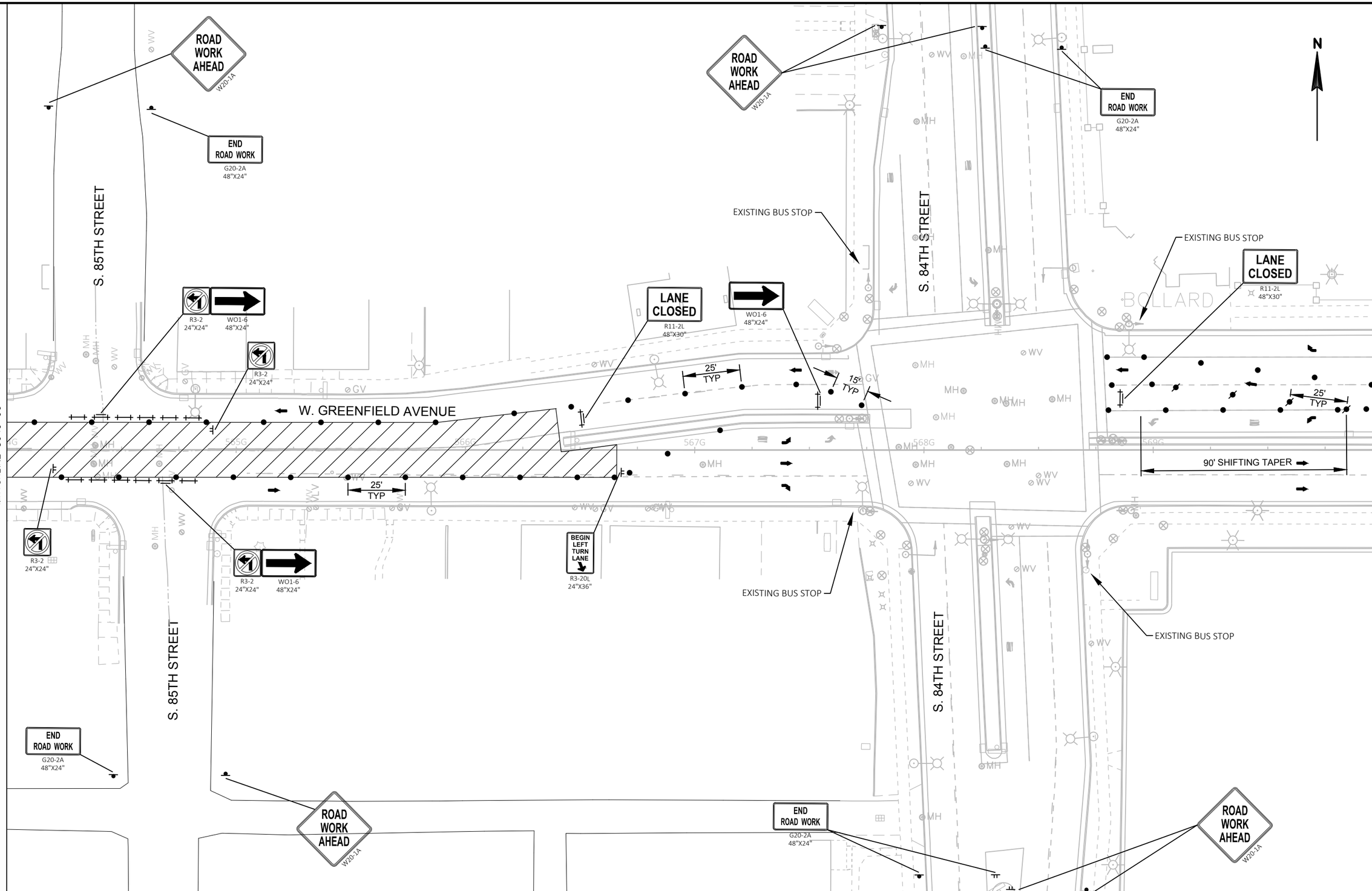
ROAD WORK AHEAD
W20-1A
END ROAD WORK
G20-2A
48"X24"
S. 85TH STREET
S. 84TH STREET
W. GREENFIELD AVENUE
EXISTING BUS STOP
LANE CLOSED
R11-2L
48"X30"
R3-2
24"X24"
WO1-6
48"X24"
25' TYP
15' TYP
90' SHIFTING TAPER
BEGIN LEFT TURN LANE
R3-20L
24"X36"
BOLLARD
MATCHLINE 564G+00
MATCHLINE 570G+00
N

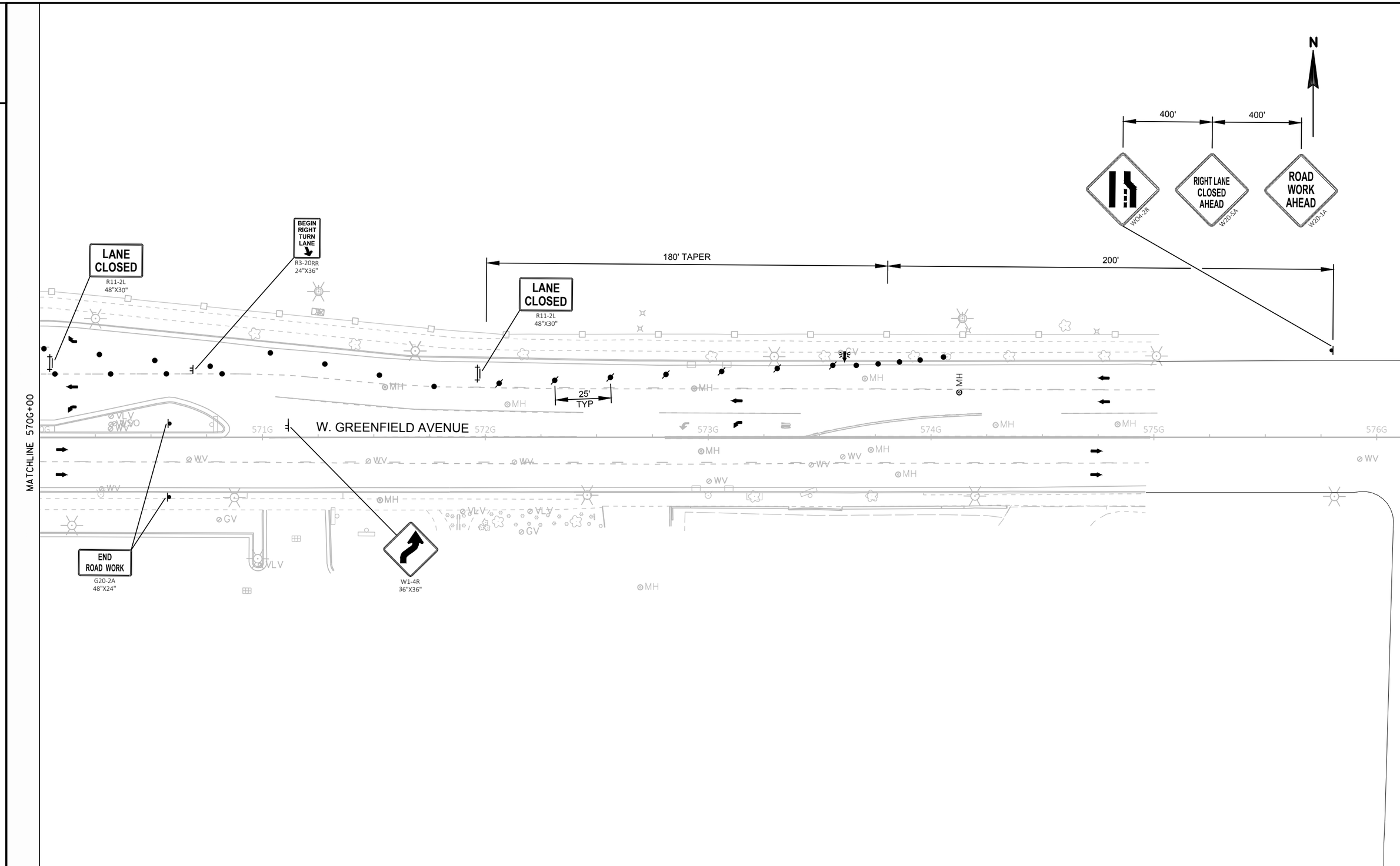
N
400'
400'
W104-2R
RIGHT LANE CLOSED AHEAD
W20-5A
ROAD WORK AHEAD
W20-1A
180' TAPER
200'
LANE CLOSED
R11-2L
48"X30"
BEGIN RIGHT TURN LANE
R3-20RR
24"X36"
LANE CLOSED
R11-2L
48"X30"
25'
TYP
MATCHLINE 570G+00
W. GREENFIELD AVENUE
571G
572G
573G
574G
575G
576G
END ROAD WORK
G20-2A
48"X24"
W1-4R
36"X36"
MH
WV
GV
VLV

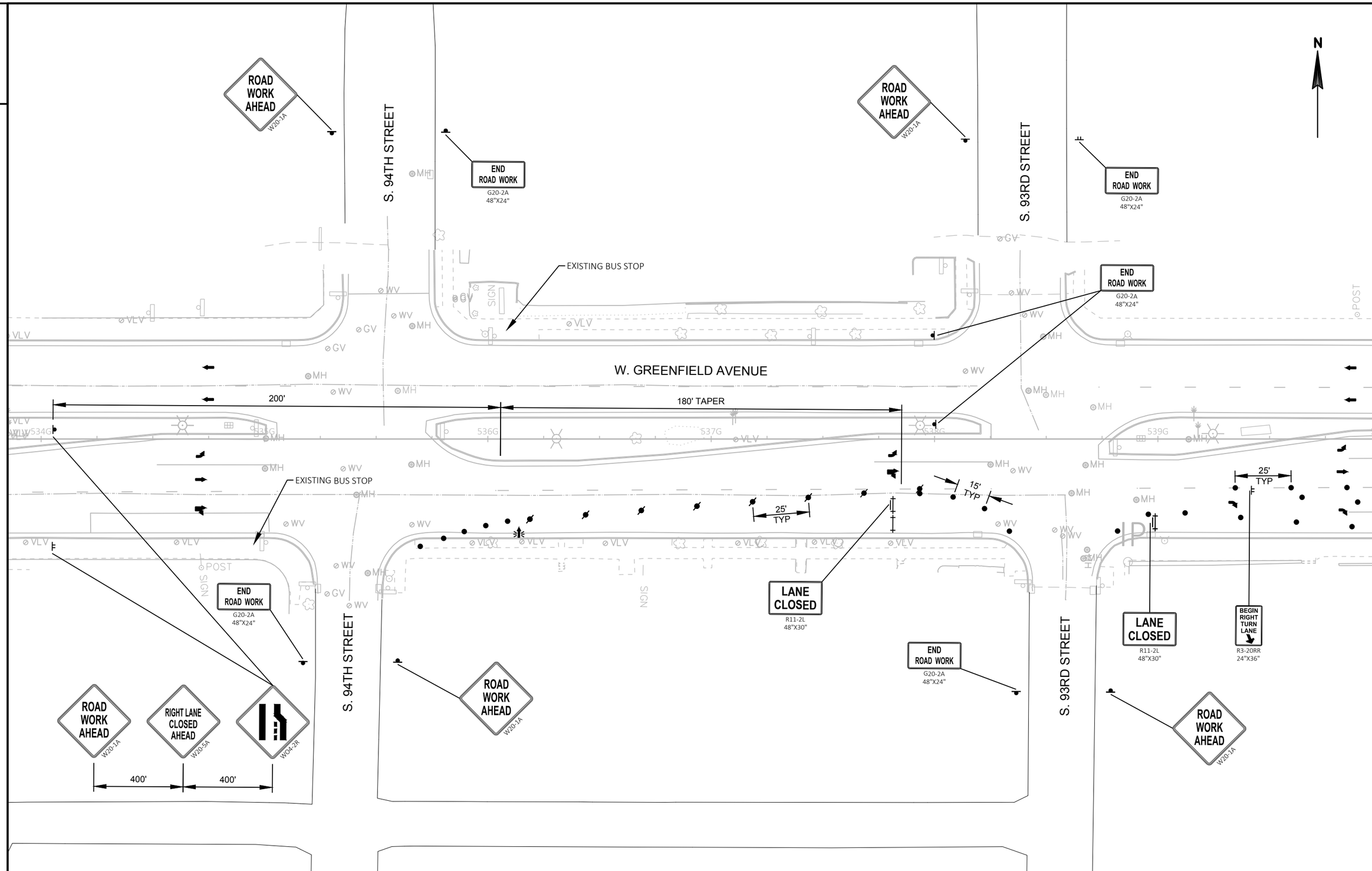

PROJECT NO: 1060-40-97	HWY: STH 59	COUNTY: MILWAUKEE	STAGE 2C CONSTRUCTION	SHEET 83	E

FILE NAME : W:\CADD\FINAL\10604097_GO\SHEETSPLAN\026203_S2C.DWG
LAYOUT NAME - 02
PLOT DATE : 1/29/2019 9:42 AM
PLOT BY : SCHARLAU, DAVID A
PLOT NAME :
PLOT SCALE : 1 IN:40 FT
WISDOT/CADDS SHEET 42

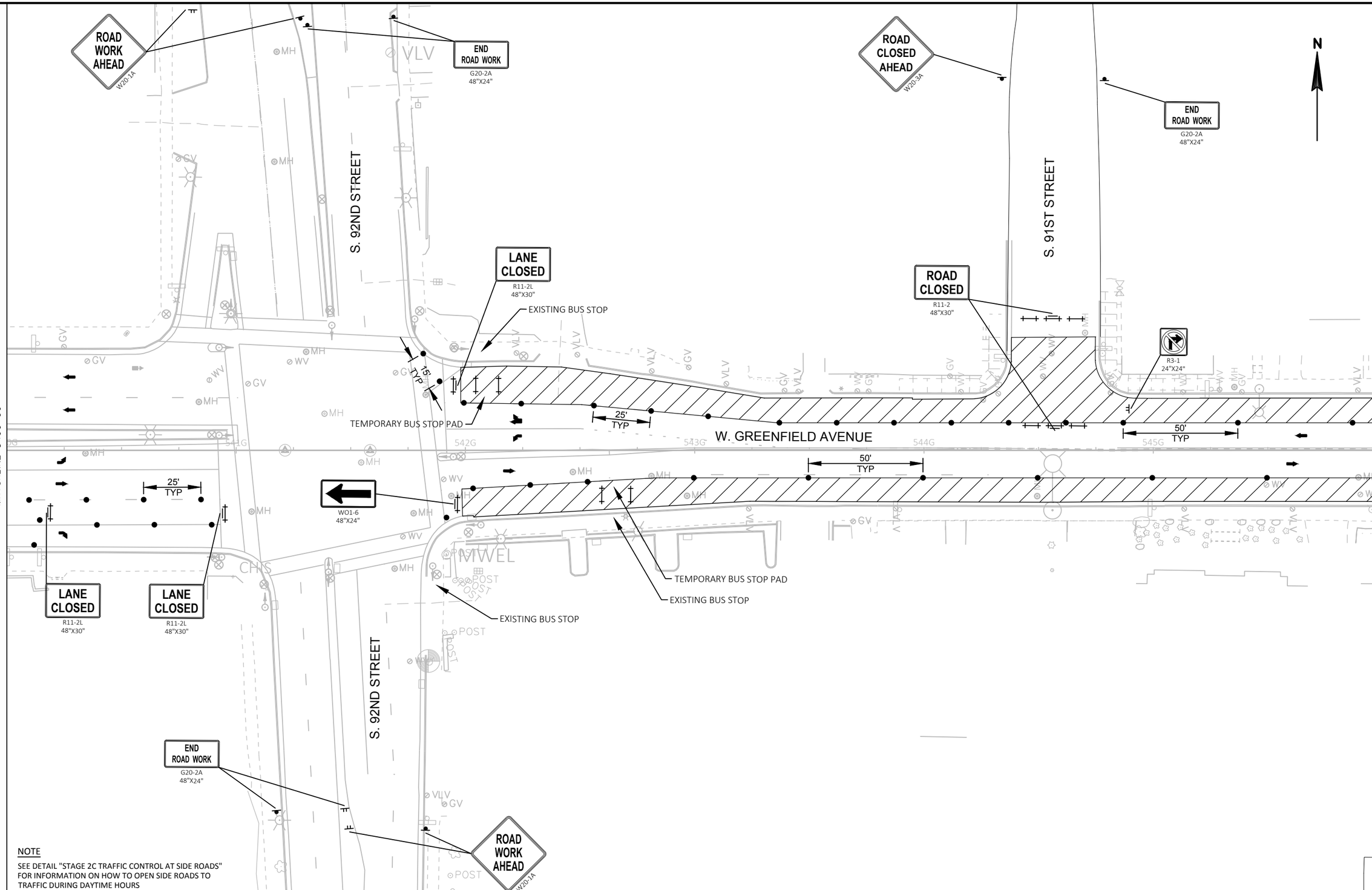

NOTE

SEE DETAIL "STAGE 2C TRAFFIC CONTROL AT SIDE ROADS" FOR INFORMATION ON HOW TO OPEN SIDE ROADS TO TRAFFIC DURING DAYTIME HOURS

PROJECT NO: 1060-40-97	HWY: STH 59	COUNTY: MILWAUKEE	STAGE 2C CONSTRUCTION	SHEET 84	E

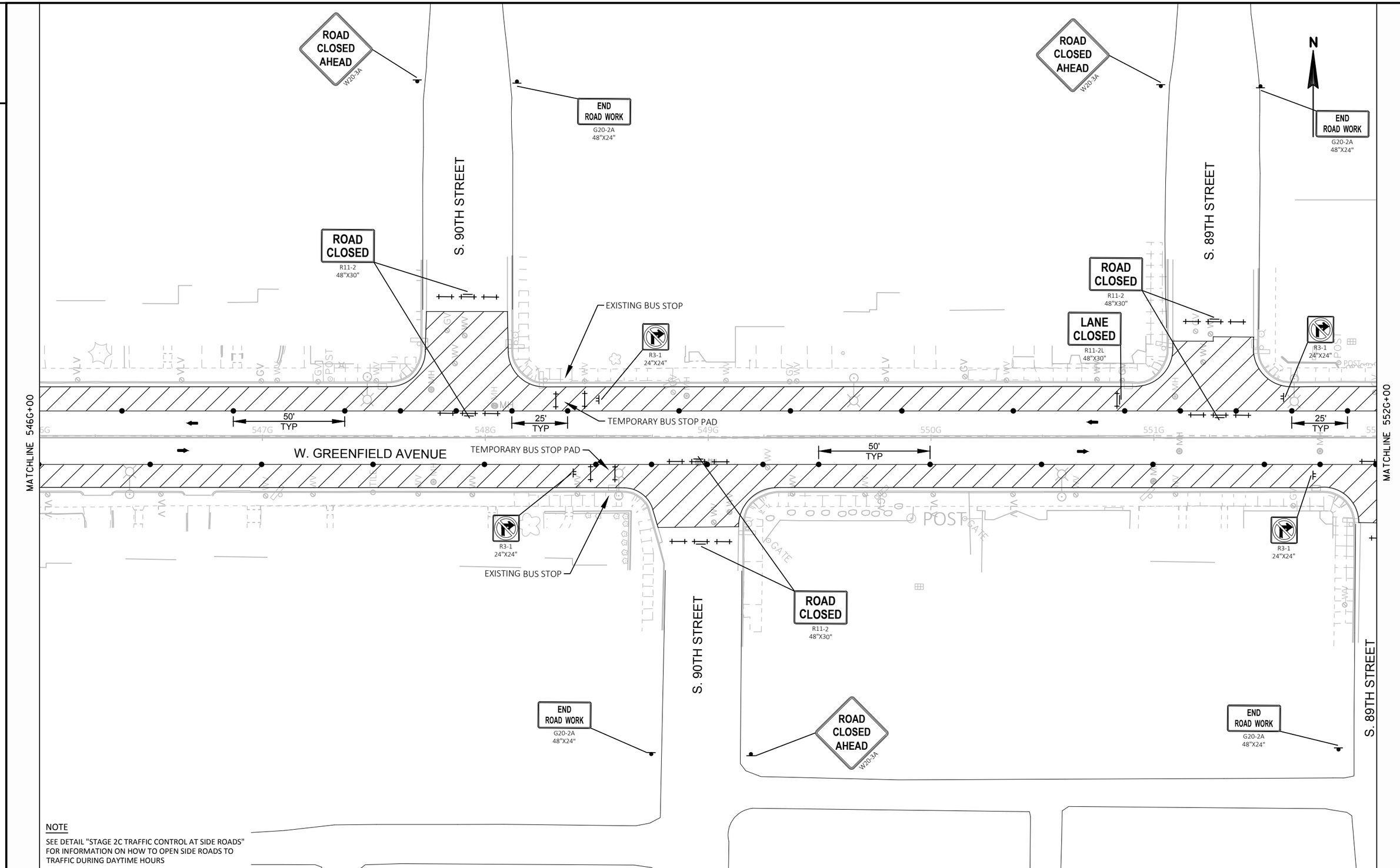

PROJECT NO: 1060-40-97	HWY: STH 59	COUNTY: MILWAUKEE	STAGE 2C CONSTRUCTION	SHEET 85	E

FILE NAME : W:\CADD\FINAL\10604097_GO\SHEETSPLAN\026203_S2C.DWG
LAYOUT NAME - 04
PLOT DATE : 1/29/2019 1:38 PM
PLOT BY : SCHARLAU, DAVID A
PLOT NAME :
PLOT SCALE : 1 IN:40 FT

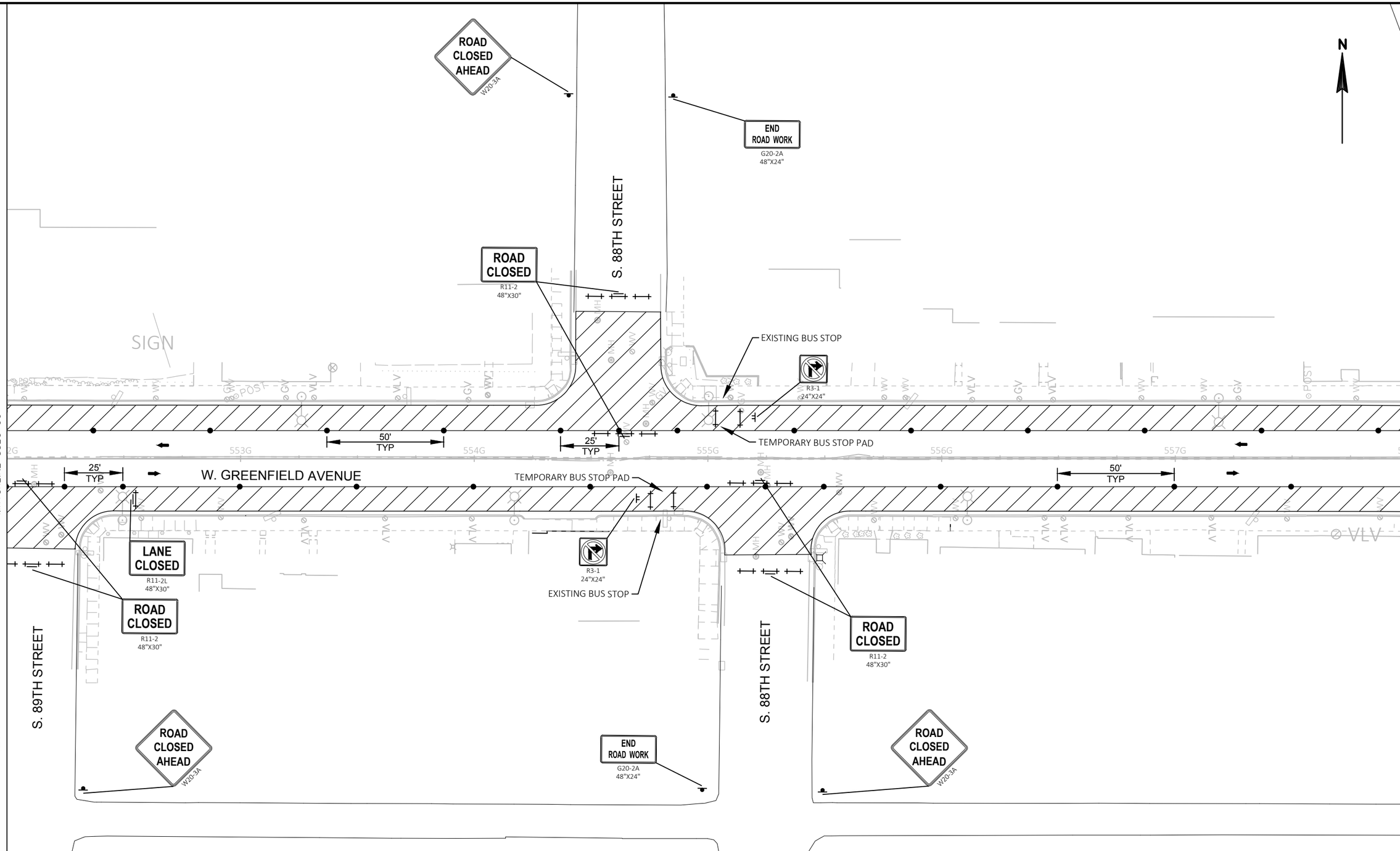

NOTE

SEE DETAIL "STAGE 2C TRAFFIC CONTROL AT SIDE ROADS" FOR INFORMATION ON HOW TO OPEN SIDE ROADS TO TRAFFIC DURING DAYTIME HOURS

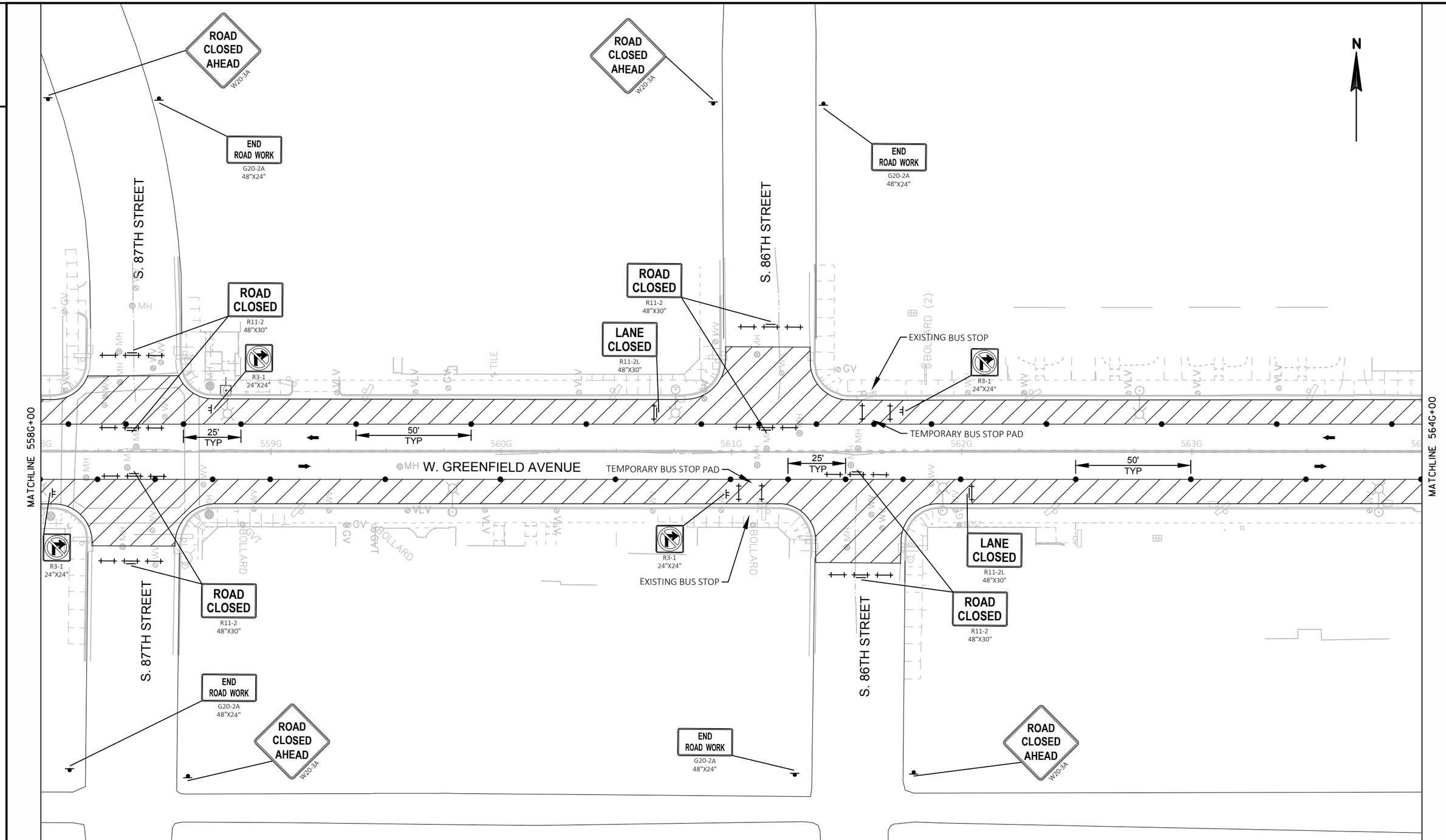

NOTE

SEE DETAIL "STAGE 2C TRAFFIC CONTROL AT SIDE ROADS" FOR INFORMATION ON HOW TO OPEN SIDE ROADS TO TRAFFIC DURING DAYTIME HOURS

PROJECT NO: 1060-40-97	HWY: STH 59	COUNTY: MILWAUKEE	STAGE 2C CONSTRUCTION	SHEET 87	E

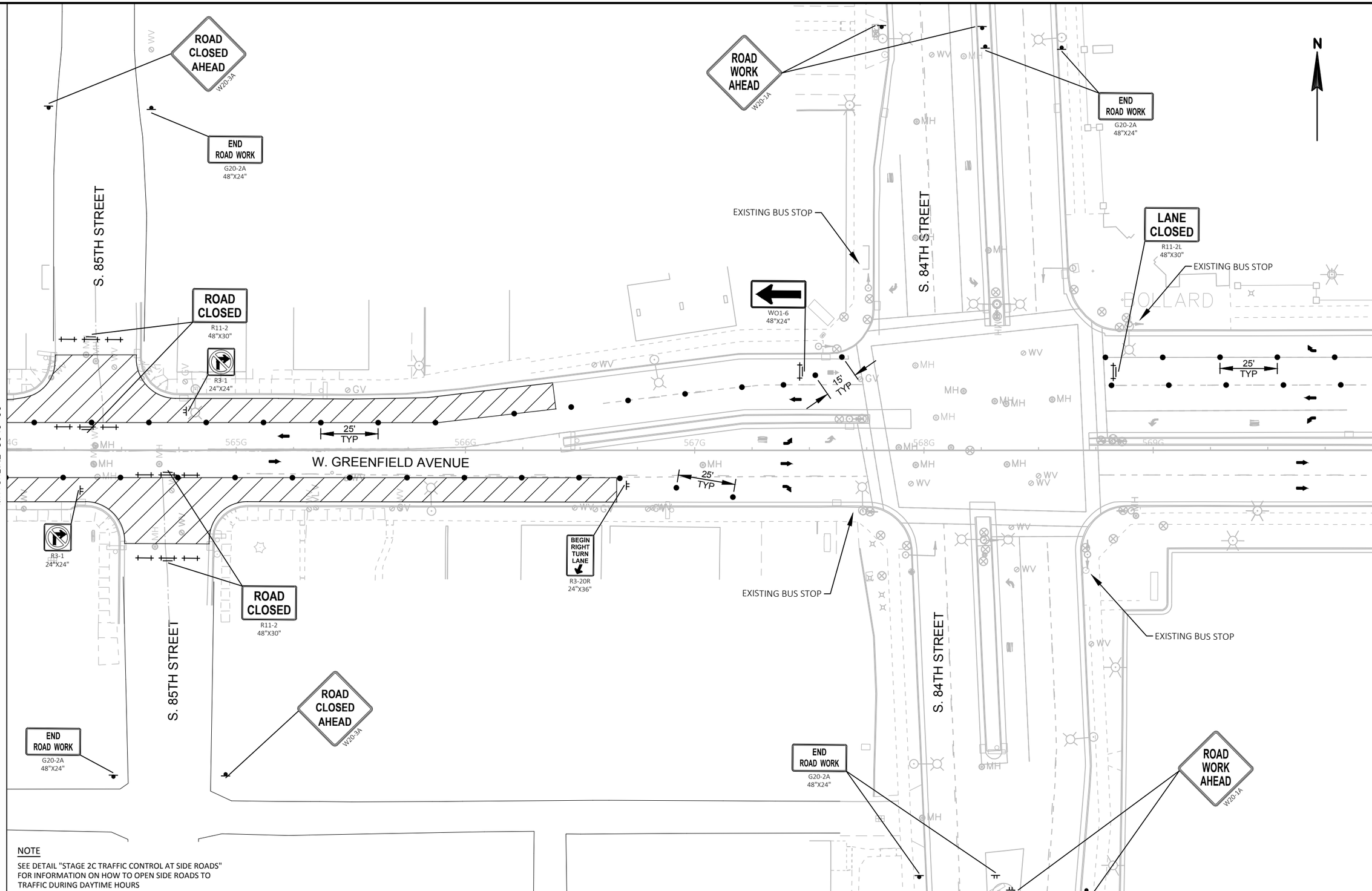

NOTE

SEE DETAIL "STAGE 2C TRAFFIC CONTROL AT SIDE ROADS" FOR INFORMATION ON HOW TO OPEN SIDE ROADS TO TRAFFIC DURING DAYTIME HOURS

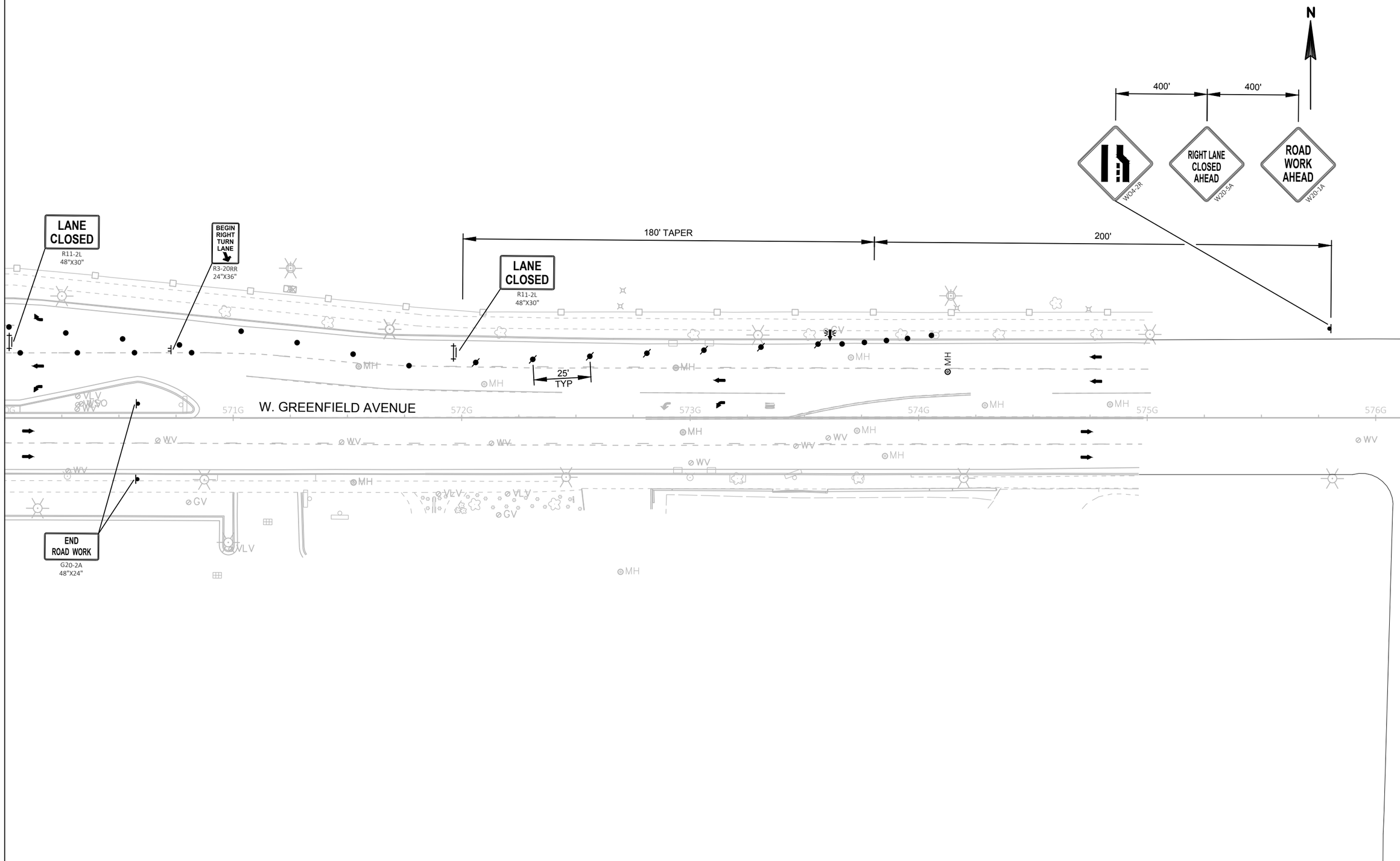

PROJECT NO: 1060-40-97	HWY: STH 59	COUNTY: MILWAUKEE	STAGE 2C CONSTRUCTION	SHEET 89	E

FILE NAME : W:\CADD\FINAL\10604097_GO\SHEETSPLAN\026203_S2C.DWG
LAYOUT NAME - 08
PLOT DATE : 1/29/2019 9:42 AM
PLOT BY : SCHARLAU, DAVID A
PLOT NAME :
PLOT SCALE : 1 IN:40 FT
WISDOT/CADDS SHEET 42

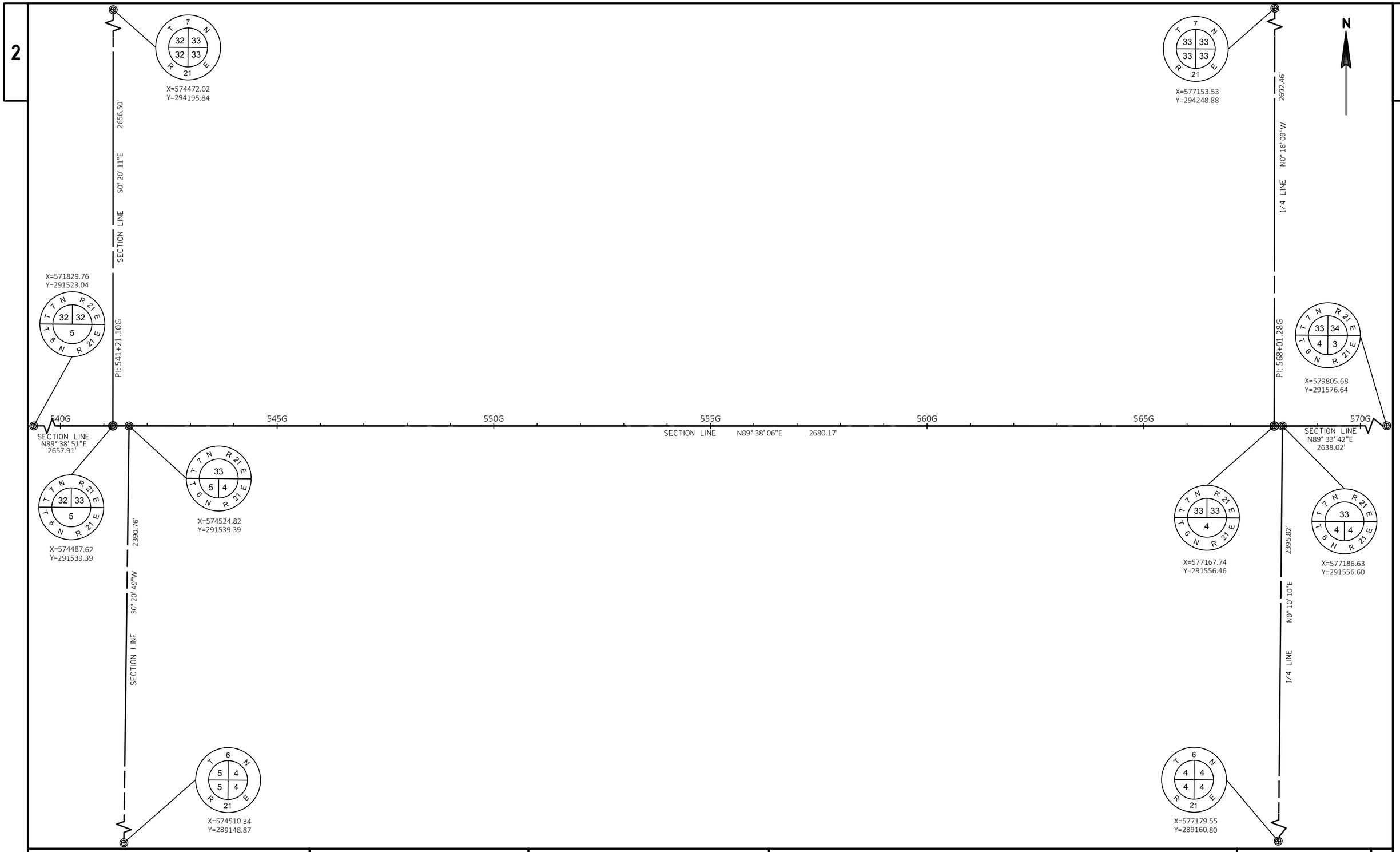

PROJECT NO: 1060-40-97	HWY: STH 59	COUNTY: MILWAUKEE	ALIGNMENT LAYOUT	SHEET 90	E

FILE NAME : W:\CADD\FINAL\10604097_GO\SHEETSPLAN\027201_AD.DWG
LAYOUT NAME - 01
PLOT DATE : 1/29/2019 4:14 AM
PLOT BY : SCHARLAU, DAVID A
PLOT NAME :
PLOT SCALE : 1 IN:200 FT
WISDOT/CADDS SHEET 42

2

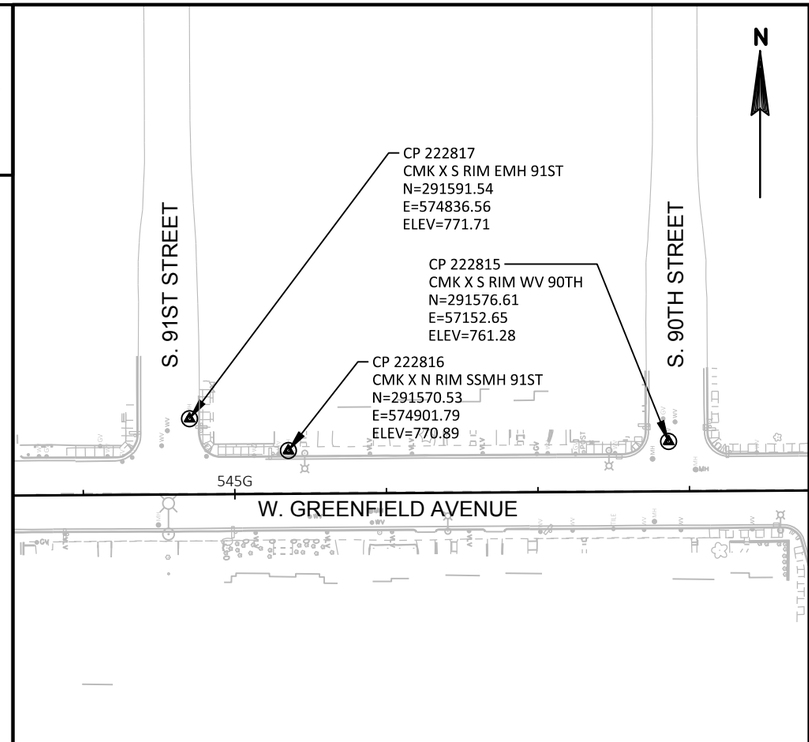

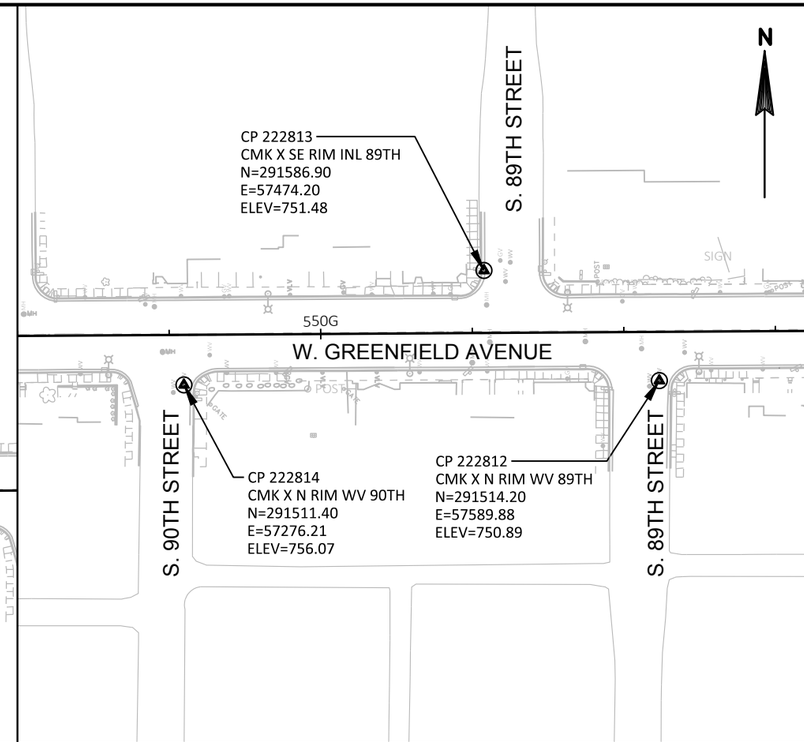

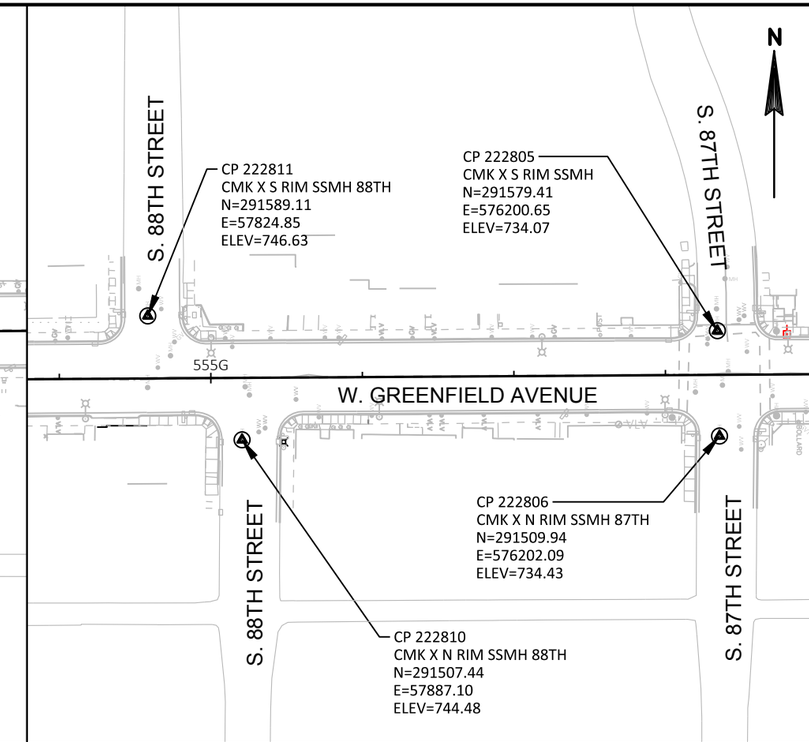

2

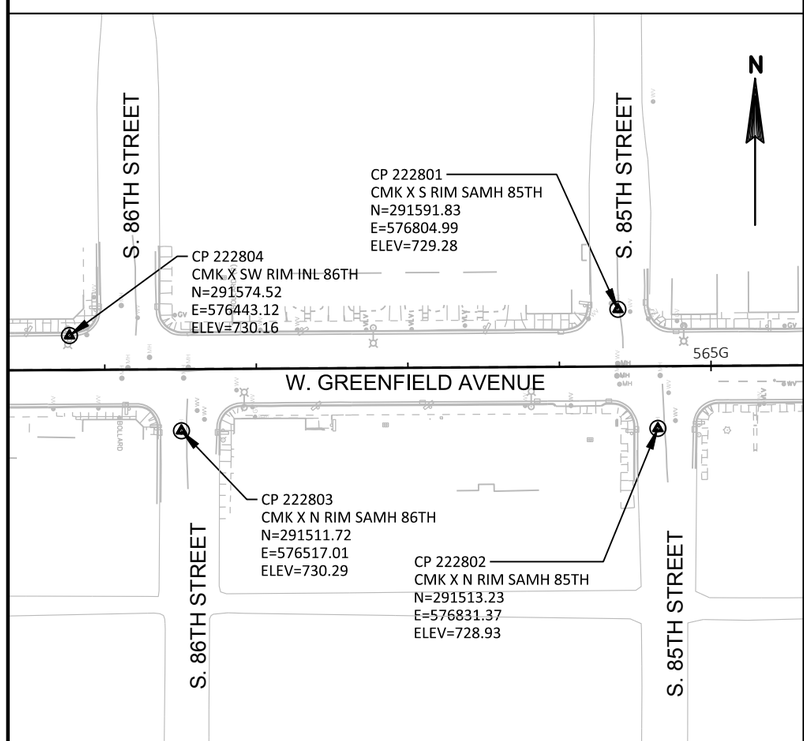

PROJECT NO: 1060-40-97	HWY: STH 59	COUNTY: MILWAUKEE	ALIGNMENT LAYOUT - SURVEY CONTROL	SHEET 91	E

Estimate Of Quantities

1060-40-97

Line	Item	Item Description	Unit	Total	Qty
0002	204.0100	Removing Pavement	SY	92.000	92.000
0004	204.0109.S	Removing Concrete Surface Partial Depth	SF	1,696.000	1,696.000
0006	204.0120	Removing Asphaltic Surface Milling	SY	13,630.000	13,630.000
0008	204.0150	Removing Curb & Gutter	LF	871.000	871.000
0010	204.0155	Removing Concrete Sidewalk	SY	517.000	517.000
0012	204.0195	Removing Concrete Bases	EACH	1.000	1.000
0014	204.0215	Removing Catch Basins	EACH	3.000	3.000
0016	204.0245	Removing Storm Sewer (size) 0001. 12-Inch	LF	23.000	23.000
0018	211.0100	Prepare Foundation for Asphaltic Paving (project) 0001. 1060-40-97	LS	1.000	1.000
0020	213.0100	Finishing Roadway (project) 0001. 1060-40-97	EACH	1.000	1.000
0022	305.0110	Base Aggregate Dense 3/4-Inch	TON	124.000	124.000
0024	305.0120	Base Aggregate Dense 1 1/4-Inch	TON	156.000	156.000
0026	320.0345	Concrete Base HES 8-Inch	SY	31.000	31.000
0028	390.0403	Base Patching Concrete Shes	SY	724.000	724.000
0030	416.0160	Concrete Driveway 6-Inch	SY	37.000	37.000
0032	416.0610	Drilled Tie Bars	EACH	430.000	430.000
0034	416.0620	Drilled Dowel Bars	EACH	160.000	160.000
0036	455.0605	Tack Coat	GAL	969.000	969.000
0038	460.2000	Incentive Density HMA Pavement	DOL	990.000	990.000
0040	460.6224	HMA Pavement 4 MT 58-28 S	TON	1,525.000	1,525.000
0042	465.0110	Asphaltic Surface Patching	TON	17.000	17.000
0044	520.8000	Concrete Collars for Pipe	EACH	1.000	1.000
0046	601.0331	Concrete Curb & Gutter 31-Inch	LF	871.000	871.000
0048	601.0600	Concrete Curb Pedestrian	LF	608.000	608.000
0050	602.0410	Concrete Sidewalk 5-Inch	SF	4,536.000	4,536.000
0052	602.0505	Curb Ramp Detectable Warning Field Yellow	SF	166.000	166.000
0054	602.0605	Curb Ramp Detectable Warning Field Radial Yellow	SF	102.000	102.000
0056	608.0412	Storm Sewer Pipe Reinforced Concrete Class IV 12-Inch	LF	23.000	23.000
0058	611.0410	Reconstructing Catch Basins	EACH	3.000	3.000
0060	611.0420	Reconstructing Manholes	EACH	1.000	1.000
0062	611.0648	Inlet Covers Type R	EACH	3.000	3.000
0064	611.1004	Catch Basins 4-FT Diameter	EACH	3.000	3.000
0066	611.8105	Adjusting Catch Basin Covers	EACH	3.000	3.000
0068	611.8110	Adjusting Manhole Covers	EACH	1.000	1.000
0070	611.8120.S	Cover Plates Temporary	EACH	6.000	6.000
0072	618.0100	Maintenance And Repair of Haul Roads (project) 0001. 1060-40-97	EACH	1.000	1.000
0074	619.1000	Mobilization	EACH	1.000	1.000

1060-40-97

Line	Item	Item Description	Unit	Total	Qty
0076	625.0500	Salvaged Topsoil	SY	30.000	30.000
0078	627.0200	Mulching	SY	10.000	10.000
0080	628.1905	Mobilizations Erosion Control	EACH	1.000	1.000
0082	628.1910	Mobilizations Emergency Erosion Control	EACH	1.000	1.000
0084	628.7010	Inlet Protection Type B	EACH	3.000	3.000
0086	628.7015	Inlet Protection Type C	EACH	55.000	55.000
0088	629.0210	Fertilizer Type B	CWT	0.100	0.100
0090	630.0200	Seeding Temporary	LB	1.000	1.000
0092	631.0300	Sod Water	MGAL	0.700	0.700
0094	631.1000	Sod Lawn	SY	30.000	30.000
0096	634.0818	Posts Tubular Steel 2x2-Inch X 18-FT	EACH	27.000	27.000
0098	637.2210	Signs Type II Reflective H	SF	95.340	95.340
0100	638.2102	Moving Signs Type II	EACH	10.000	10.000
0102	638.2602	Removing Signs Type II	EACH	20.000	20.000
0104	638.3000	Removing Small Sign Supports	EACH	24.000	24.000
0106	643.0300	Traffic Control Drums	DAY	18,959.000	18,959.000
0108	643.0410	Traffic Control Barricades Type II	DAY	150.000	150.000
0110	643.0420	Traffic Control Barricades Type III	DAY	5,074.000	5,074.000
0112	643.0705	Traffic Control Warning Lights Type A	DAY	8,181.000	8,181.000
0114	643.0715	Traffic Control Warning Lights Type C	DAY	1,183.000	1,183.000
0116	643.0800	Traffic Control Arrow Boards	DAY	129.000	129.000
0118	643.0900	Traffic Control Signs	DAY	8,720.000	8,720.000
0120	643.1050	Traffic Control Signs PCMS	DAY	40.000	40.000
0122	643.5000	Traffic Control	EACH	1.000	1.000
0124	644.1410.S	Temporary Pedestrian Surface Asphalt	SF	1,000.000	1,000.000
0126	644.1601.S	Temporary Curb Ramp	EACH	33.000	33.000
0128	644.1810.S	Temporary Pedestrian Barricade	LF	200.000	200.000
0130	646.1020	Marking Line Epoxy 4-Inch	LF	3,678.000	3,678.000
0132	646.3020	Marking Line Epoxy 8-Inch	LF	120.000	120.000
0134	646.5020	Marking Arrow Epoxy	EACH	4.000	4.000
0136	646.6120	Marking Stop Line Epoxy 18-Inch	LF	110.000	110.000
0138	646.7420	Marking Crosswalk Epoxy Transverse Line 6-Inch	LF	523.000	523.000
0140	646.8120	Marking Curb Epoxy	LF	30.000	30.000
0142	646.8220	Marking Island Nose Epoxy	EACH	2.000	2.000
0144	646.9300	Marking Removal Special Marking	EACH	2.000	2.000
0146	649.0150	Temporary Marking Line Removable Tape 4-Inch	LF	5,800.000	5,800.000
0148	649.0250	Temporary Marking Line Removable Tape 8-Inch	LF	945.000	945.000
0150	652.0225	Conduit Rigid Nonmetallic Schedule 40 2-Inch	LF	27.000	27.000
0152	653.0900	Adjusting Pull Boxes	EACH	1.000	1.000
0154	654.0101	Concrete Bases Type 1	EACH	1.000	1.000

1060-40-97

Line	Item	Item Description	Unit	Total	Qty
0156	655.0230	Cable Traffic Signal 5-14 AWG	LF	49.000	49.000
0158	655.0240	Cable Traffic Signal 7-14 AWG	LF	23.000	23.000
0160	655.0270	Cable Traffic Signal 15-14 AWG	LF	247.000	247.000
0162	655.0515	Electrical Wire Traffic Signals 10 AWG	LF	240.000	240.000
0164	655.0900	Traffic Signal EVP Detector Cable	LF	272.000	272.000
0166	657.0100	Pedestal Bases	EACH	1.000	1.000
0168	657.0425	Traffic Signal Standards Aluminum 15-FT	EACH	1.000	1.000
0170	658.0173	Traffic Signal Face 3S 12-Inch	EACH	1.000	1.000
0172	658.0175	Traffic Signal Face 5S 12-Inch	EACH	1.000	1.000
0174	658.0416	Pedestrian Signal Face 16-Inch	EACH	2.000	2.000
0176	658.5069	Signal Mounting Hardware (location) 3101. STH 181 & Harwood Avenue	LS	1.000	1.000
0178	690.0150	Sawing Asphalt	LF	266.000	266.000
0180	690.0250	Sawing Concrete	LF	2,241.000	2,241.000
0182	740.0440	Incentive IRI Ride	DOL	1,860.000	1,860.000
0184	ASP.1T0A	On-the-Job Training Apprentice at $5.00/HR	HRS	400.000	400.000
0186	ASP.1T0G	On-the-Job Training Graduate at $5.00/HR	HRS	450.000	450.000
0188	SPV.0035	Special 0001. Backfill Slurry	CY	32.000	32.000
0190	SPV.0060	Special 0001. Traffic Control Local Road Lane Closures	EACH	65.000	65.000
0192	SPV.0060	Special 0002. Adjusting Water Valves	EACH	3.000	3.000
0194	SPV.0060	Special 3101. EVP Detector Type I	EACH	1.000	1.000
0196	SPV.0060	Special 3102. EVP Confirmation Light Assembly Type I	EACH	1.000	1.000
0198	SPV.0060	Special 7001. Install Internal Sanitary Manhole Seal	EACH	4.000	4.000
0200	SPV.0075	Special 0001. Pavement Cleanup 1060-40-97	HRS	150.000	150.000
0202	SPV.0090	Special 3101. Cable Type UF 2-14 AWG	LF	272.000	272.000
0204	SPV.0105	Special 0001. Survey Project 1060-40-97	LS	1.000	1.000
0206	SPV.0105	Special 0002. S. 86th Street Storm Sewer Repair	LS	1.000	1.000
0208	SPV.0105	Special 3101. Remove Traffic Signals STH 181 & Harwood Avenue	LS	1.000	1.000
0210	SPV.0200	Special 7001. Rebuilding Sanitary Manhole	VF	9.000	9.000

3

REMOVING PAVEMENT

CATEGORY	STAGE	ROADWAY	STATION	TO	STATION	204.0100 REMOVING PAVEMENT SY	204.0109.S REMOVING CONCRETE SURFACE PARTIAL DEPTH SF	204.0120 REMOVING ASPHALTIC SURFACE MILLING SY
1000	1	W. GREENFIELD AVENUE						
			541G+76	-	542G+12	31	--	--
			554G+19	-	554G+54	13	--	--
			559G+07	-	559G+31	10	--	--
			563G+95	-	564G+31	14	--	--
		STAGE 1 SUBTOTALS				68	--	--
1000	2A	W. GREENFIELD AVENUE						
			542G+44	-	542G+50	4	--	--
			542G+78	-	542G+84	4	--	--
			548G+92	-	548G+98	4	--	--
			555G+22	-	555G+28	4	--	--
			561G+49	-	561G+55	8	--	--
		STAGE 2A SUBTOTALS				24	--	--
1000	2B	W. GREENFIELD AVENUE						
			541G+98	-	566G+66	--	786	6,574
		STAGE 2B SUBTOTALS				--	786	6,574
1000	2C	W. GREENFIELD AVENUE						
			541G+98	-	566G+66	--	910	7,056
		STAGE 2C SUBTOTALS				--	910	7,056
		TOTALS				92	1,696	13,630

3

REMOVING CURB & GUTTER

CATEGORY	STAGE	ROADWAY	STATION	TO	STATION	OFFSET	204.0150 REMOVING CURB & GUTTER LF	REMARKS
1000	1	W. GREENFIELD AVENUE						
			541G+76	-	542G+12	LT	18	INLET REPLACEMENT
			544G+24	-	544G+94	LT	45	CURB RAMP REPLACEMENT
			544G+58	-	544G+95	RT	37	DRIVEWAY REPAIR
			547G+46	-	548G+29	LT	60	CURB RAMP REPLACEMENT; ADJUSTING CATCH BASIN COVERS
			548G+58	-	549G+32	RT	59	CURB RAMP REPLACEMENT
			550G+96	-	551G+61	LT	40	CURB RAMP REPLACEMENT; RECONSTRUCTING CATCH BASINS
			551G+79	-	552G+48	RT	45	CURB RAMP REPLACEMENT
			554G+25	-	554G+99	LT	54	CURB RAMP REPLACEMENT
			554G+89	-	555G+61	RT	54	CURB RAMP REPLACEMENT
			557G+84	-	558G+71	LT	67	CURB RAMP REPLACEMENT
			557G+94	-	558G+71	RT	68	CURB RAMP REPLACEMENT
			560G+78	-	561G+90	LT	109	CURB RAMP REPLACEMENT
			560G+79	-	561G+91	RT	85	CURB RAMP REPLACEMENT
			563G+05	-	563G+14	RT	9	CATCH BASIN RECONSTRUCTION
			563G+81	-	563G+95	RT	14	CATCH BASIN RECONSTRUCTION
			564G+01	-	564G+76	LT	55	CURB RAMP REPLACEMENT; ADJUSTING CATCH BASIN COVERS; INLET REPLACEMENT
			564G+33	-	565G+06	RT	52	CURB RAMP REPLACEMENT
		STAGE 1 SUBTOTAL					871	
		TOTAL					871	

3

REMOVING CONCRETE SIDEWALK

CATEGORY	STAGE	ROADWAY	STATION	TO	STATION	OFFSET	204.0155 REMOVING CONCRETE SIDEWALK SY
1000	1	W. GREENFIELD AVENUE					
			544G+24	-	544G+94	LT	28
			547G+46	-	548G+29	LT	25
			548G+58	-	549G+32	RT	28
			550G+96	-	551G+61	LT	28
			551G+79	-	552G+48	RT	32
			554G+25	-	554G+99	LT	37
			554G+89	-	555G+61	RT	38
			557G+84	-	558G+71	LT	47
			557G+94	-	558G+71	RT	47
			560G+78	-	561G+90	LT	58
			560G+79	-	561G+91	RT	59
			564G+01	-	564G+76	LT	49
			564G+33	-	565G+06	RT	37
		GLENVIEW AVENUE & HARWOOD AVENUE					4
		STAGE 1 SUBTOTAL					517
		TOTAL					517

SAW CUTTING ITEMS

CATEGORY	STAGE	ROADWAY	STATION	TO	STATION	OFFSET	690.0150 SAWING ASPHALT LF	690.0250 SAWING CONCRETE LF	REMARKS
1000	1	W. GREENFIELD AVENUE							
			541G+76	-	542G+12	LT	--	72	INLET REPLACEMENT
			544G+24	-	544G+94	LT	--	120	CURB RAMP REPLACEMENT
			544G+58	-	544G+95	RT	--	41	DRIVEWAY REPAIR
			547G+46	-	548G+29	LT	--	102	CURB RAMP REPLACEMENT; ADJUSTING CATCH BASIN COVERS
			548G+58	-	549G+32	RT	--	90	CURB RAMP REPLACEMENT
			550G+96	-	551G+61	LT	--	88	CURB RAMP REPLACEMENT; RECONSTRUCTING CATCH BASINS
			551G+79	-	552G+48	RT	--	103	CURB RAMP REPLACEMENT
			554G+19	-	554G+54	RT	--	75	DRIVEWAY REPAIR
			554G+25	-	554G+99	LT	--	83	CURB RAMP REPLACEMENT
			554G+89	-	555G+61	RT	21	87	CURB RAMP REPLACEMENT
			557G+84	-	558G+71	LT	--	159	CURB RAMP REPLACEMENT
			557G+94	-	558G+71	RT	--	157	CURB RAMP REPLACEMENT

(CONTINUED ON NEXT SHEET)

3

SAW CUTTING ITEMS (CONTINUED)

CATEGORY	STAGE	ROADWAY	STATION	TO	STATION	OFFSET	690.0150 SAWING ASPHALT LF	690.0250 SAWING CONCRETE LF	REMARKS
1000	1		559G+07	-	559G+31	LT	--	55	DRIVEWAY REPAIR
			560G+78	-	561G+90	LT	--	216	CURB RAMP REPLACEMENT
			560G+79	-	561G+91	RT	--	190	CURB RAMP REPLACEMENT
			563G+05	-	563G+14	RT	--	13	CATCH BASIN RECONSTRUCTION
			563G+81	-	563G+95	RT	--	17	CATCH BASIN RECONSTRUCTION
			563G+95	-	564G+31	RT	--	75	DRIVEWAY REPAIR
			564G+01	-	564G+76	LT	--	162	CURB RAMP REPLACEMENT; ADJUSTING CATCH BASIN COVERS; INLET REPLACEMENT
			564G+33	-	565G+06	RT	25	84	CURB RAMP REPLACEMENT
		GLENVIEW AVENUE & HARWOOD AVENUE					--	10	
		STAGE 1 SUBTOTALS					46	1,999	
1000	2A	W. GREENFIELD AVENUE							
			542G+44	-	542G+50	RT	--	24	REBUILDING SANITARY MANHOLE
			542G+78	-	542G+84	RT	--	24	REBUILDING SANITARY MANHOLE
			548G+92	-	548G+98	RT	--	24	REBUILDING SANITARY MANHOLE
			555G+22	-	555G+28	RT	--	24	REBUILDING SANITARY MANHOLE
			561G+49	-	561G+55	RT	--	36	STORM SEWER REPAIR
		STAGE 2A SUBTOTALS					--	132	
1000	2B	W. GREENFIELD AVENUE							
			541G+98	-	541G+99	LT/RT	--	35	STH 59 WEST MATCH POINT
			566G+40	-	566G+41	LT	--	11	STH 59 EAST MATCH POINT
			566G+66	-	566G+66	RT	--	14	STH 59 EAST MATCH POINT
		STAGE 2B SUBTOTALS					--	60	
1000	2C	W. GREENFIELD AVENUE							
			541G+98	-	541G+98	LT	--	16	STH 59 WEST MATCH POINT
			541G+98	-	541G+99	RT	--	12	STH 59 WEST MATCH POINT
			548G+77	-	549G+14	RT	36	--	S. 90TH STREET SOUTH MATCH POINT
			551G+93	-	552G+29	RT	36	--	S. 89TH STREET SOUTH MATCH POINT
			555G+07	-	555G+44	RT	37	--	S. 88TH STREET SOUTH MATCH POINT
			560G+97	-	561G+34	LT	37	--	S. 86TH STREET NORTH MATCH POINT
			561G+37	-	561G+74	RT	37	--	S. 86TH STREET SOUTH MATCH POINT
			564G+51	-	564G+88	RT	37	--	S. 85TH STREET SOUTH MATCH POINT
			566G+38	-	566G+40	LT	--	11	STH 59 EAST MATCH POINT
			566G+66	-	566G+66	RT	--	11	STH 59 EAST MATCH POINT
		STAGE 2C SUBTOTALS					220	50	
		TOTALS					266	2,241	

3

3

BASE AGGREGATE ITEMS

CATEGORY	STAGE	ROADWAY	STATION	TO	STATION	OFFSET	305.0110 BASE AGGREGATE DENSE 3/4-INCH TON	305.0120 BASE AGGREGATE DENSE 1 1/4-INCH TON
1000	1	W. GREENFIELD AVENUE						
			541G+76	-	542G+12	LT	--	4
			544G+24	-	544G+94	LT	7	7
			544G+58	-	544G+95	RT	--	6
			547G+46	-	548G+29	LT	6	9
			548G+58	-	549G+32	RT	7	9
			550G+96	-	551G+61	LT	7	6
			551G+79	-	552G+48	RT	8	7
			554G+19	-	554G+54	RT	--	5
			554G+25	-	554G+99	LT	9	8
			554G+89	-	555G+61	RT	9	8
			557G+84	-	558G+71	LT	11	10
			557G+94	-	558G+71	RT	11	11
			559G+07	-	559G+31	LT	--	4
			560G+78	-	561G+90	LT	13	17
			560G+79	-	561G+91	RT	14	13
			563G+05	-	563G+14	RT	--	2
			563G+81	-	563G+95	RT	--	3
			563G+95	-	564G+31	RT	--	5
			564G+01	-	564G+76	LT	11	9
			564G+33	-	565G+06	RT	10	8
1000	1	GLENVIEW AVENUE & HARWOOD AVENUE					1	--
		STAGE 1 SUBTOTALS					124	151
1000	2A	W. GREENFIELD AVENUE						
			542G+44	-	542G+50	RT	--	1
			542G+78	-	542G+84	RT	--	1
			548G+92	-	548G+98	RT	--	1
			555G+22	-	555G+28	RT	--	1
			561G+49	-	561G+55	RT	--	1
		STAGE 2A SUBTOTALS					--	5
		TOTALS					124	156

PREPARE FOUNDATION FOR ASPHALTIC PAVING

CATEGORY	STAGE	LOCATION	211.0100.0001 PREPARE FOUNDATION FOR ASPHALTIC PAVING 1060-40-97 LS
1000	ALL	PROJECT	1
		TOTAL	1

ASPHALTIC SURFACE PATCHING

CATEGORY	STAGE	LOCATION	465.0110 ASPHALTIC SURFACE PATCHING TON	NOTES:
1000	ALL	UNDISTRIBUTED		
			15	RAMPING AT SAWCUTS
			2	ASPHALT REPAIRS
		TOTAL	17	

ASPHALTIC PAVEMENT ITEMS

CATEGORY	STAGE	ROADWAY	STATION	TO	STATION	455.0605 TACK COAT GAL	460.6224 HMA PAVEMENT 4 MT 58-28 S TON
1000	1	W. GREENFIELD AVENUE					
			541G+76	-	542G+12	2	4
		STAGE 2A SUBTOTALS				2	4
1000	2B	W. GREENFIELD AVENUE					
			541G+98	-	566G+66	466	733
		STAGE 2B SUBTOTALS				466	733
1000	2C	W. GREENFIELD AVENUE					
			541G+98	-	566G+66	501	788
		STAGE 2C SUBTOTALS				501	788
		TOTALS				969	1,525

3

3

CONCRETE ITEMS

CATEGORY	STAGE	ROADWAY	STATION	TO	STATION	OFFSET	320.0345 CONCRETE BASE HES 8-INCH SY	390.0403** BASE PATCHING CONCRETE SHES SY	416.0160 CONCRETE DRIVEWAY 6-INCH SY	416.0610 DRILLED TIE BARS EACH	416.0620 DRILLED DOWEL BARS EACH	601.0331 CONCRETE CURB & GUTTER 31-INCH LF	601.0600 CONCRETE CURB PEDESTRIAN LF	602.0410 CONCRETE SIDEWALK 5-INCH SF	602.0505 CURB RAMP DETECTABLE WARNING FIELD YELLOW SF	602.0605 CURB RAMP DETECTABLE WARNING FIELD RADIAL YELLOW SF
1000	1	W. GREENFIELD AVENUE														
			541G+76	-	542G+12	LT	31	--	--	10	--	18	--	--	--	--
			544G+24	-	544G+94	LT	--	--	--	23	--	45	21	241	10	12
			544G+58	-	544G+95	RT	--	--	--	17	--	37	--	--	--	--
			547G+46	-	548G+29	LT	--	--	--	24	--	60	39	227	10	12
			548G+58	-	549G+32	RT	--	--	--	26	--	59	34	243	--	22
			550G+96	-	551G+61	LT	--	--	--	18	--	40	35	262	10	11
			551G+79	-	552G+48	RT	--	--	--	23	--	45	33	298	12	--
			554G+19	-	554G+54	RT	--	--	13	16	--	--	--	--	--	--
			554G+25	-	554G+99	LT	--	--	--	20	--	54	70	345	--	22
			554G+89	-	555G+61	RT	--	--	--	20	--	54	67	334	12	--
			557G+84	-	558G+71	LT	--	--	--	27	--	67	47	410	12	--
			557G+94	-	558G+71	RT	--	--	--	27	--	68	48	393	20	--
			559G+07	-	559G+31	LT	--	--	10	13	--	--	--	--	--	--
			560G+78	-	561G+90	LT	--	--	--	39	--	109	58	486	30	--
			560G+79	-	561G+91	RT	--	--	--	33	--	85	22	513	30	--
			563G+05	-	563G+14	RT	--	--	--	7	--	9	--	--	--	--
			563G+81	-	563G+95	RT	--	--	--	9	--	14	--	--	--	--
			563G+95	-	564G+31	RT	--	--	14	14	--	--	--	--	--	--
			564G+01	-	564G+76	LT	--	--	--	19	--	55	57	405	--	23
			564G+33	-	565G+06	RT	--	--	--	20	--	52	77	349	20	--
1000	1	GLENVIEW AVENUE & HARWOOD AVENUE					--	--	--	--	--	--	--	30	--	--
		STAGE 1 SUBTOTALS					31	--	37	405	--	871	608	4,536	166	102
1000	2A	W. GREENFIELD AVENUE														
			542G+44	-	542G+50	RT	--	4	--	5	10	--	--	--	--	--
			542G+78	-	542G+84	RT	--	4	--	5	10	--	--	--	--	--
			548G+92	-	548G+98	RT	--	4	--	5	10	--	--	--	--	--
			555G+22	-	555G+28	RT	--	4	--	5	10	--	--	--	--	--
			561G+49	-	561G+55	RT	--	8	--	5	20	--	--	--	--	--
		STAGE 2A SUBTOTALS					--	24	--	25	60	--	--	--	--	--
		UNDISTRIBUTED					--	700	--	--	100	--	--	--	--	--
		TOTALS					31	724	37	430	160	871	608	4,536	166	102

**UNDISTRIBUTED BASE PATCHING CONCRETE SHES QUANTITY IS ESTIMATED AS 5% OF THE PROPOSED MILLED AND OVERLAID AREA

3

ADJUSTING STORM SEWER STRUCTURES

CATEGORY	STAGE	ROADWAY	STATION	OFFSET	611.0410 RECONSTRUCTING CATCH BASINS EACH	611.0420 RECONSTRUCTING MANHOLES EACH	611.8105 ADJUSTING CATCH BASIN COVERS EACH	611.8110 ADJUSTING MANHOLE COVERS EACH
1000	1	W. GREENFIELD AVENUE						
			547G+54	23.0' LT	--	--	1	--
			551G+45	42.1' LT	1	--	--	--
			558G+20	41.5' RT	--	--	1	--
			560G+97	41.6' LT	--	--	1	--
			563G+10	22.8' RT	1	--	--	--
			563G+85	22.4' RT	1	--	--	--
		STAGE 1 SUBTOTALS			3	--	3	--
1000	2C	W. GREENFIELD AVENUE						
			548G+04	14.3' LT	--	--	--	1
		STAGE 2C SUBTOTALS			--	--	--	1
		UNDISTRIBUTED			--	1	--	--
		TOTALS			3	1	3	1

3

STORM SEWER REPAIR

CATEGORY	STAGE	ROADWAY	STATION	OFFSET	204.0215 REMOVING CATCH BASINS EACH	204.0245.0001 REMOVING STORM SEWER 12-INCH LF	520.8000 CONCRETE COLLARS FOR PIPE EACH	608.0412 STORM SEWER PIPE REINFORCED CONCRETE CLASS IV 12-INCH LF	611.0648 INLET COVERS TYPE R EACH	611.1004 CATCH BASIN 4-FT DIAMETER EACH	SPV.0035.0001 BACKFILL SLURRY CY	SPV.0105.0002 S. 86TH STREET STORM SEWER REPAIR LS
1000	1	W. GREENFIELD AVENUE										
			542G+00	LT	1	23	1	23	1	1	32	--
			560G+78	LT	1	--	--	--	1	1	--	--
			561G+34	LT	1	--	--	--	1	1	--	--
		STAGE 1 SUBTOTALS			3	23	1	23	3	3	32	--
1000	2A	W. GREENFIELD AVENUE										
			561G+52	11.6' RT - 17.6' RT	--	--	--	--	--	--	--	1
		STAGE 2A SUBTOTALS			--	--	--	--	--	--	--	1
		TOTALS			3	23	1	23	3	3	32	1

3

COVER PLATES TEMPORARY

CATEGORY	STAGE	ROADWAY	STATION	OFFSET	611.8120.S COVER PLATES TEMPORARY EACH
1000	2A	W. GREENFIELD AVENUE			
			542G+47	9.4' RT	1
			542G+81	11.3' RT	1
			548G+95	10.9' RT	1
			555G+25	11.4' RT	1
			561G+52	14.6' RT	2
		STAGE 2A SUBTOTALS			6
		TOTALS			6

SANITARY SEWER ITEMS

CATEGORY	STAGE	ROADWAY	STATION	OFFSET	SPV.0060.7001 INSTALL INTERNAL SANITARY MANHOLE SEAL EACH	SPV.0200.7001 REBUILDING SANITARY MANHOLE VF
7017	2A	W. GREENFIELD AVENUE				
			542G+47	9.4' RT	1	2.0
			542G+81	11.3' RT	1	2.5
			548G+95	10.9' RT	1	2.0
			555G+25	11.4' RT	1	2.5
		STAGE 2A SUBTOTALS				9.0
		TOTALS			4	9.0

3

ADJUSTING MISCELLANEOUS STRUCTURES

CATEGORY	STAGE	ROADWAY	STATION	OFFSET	653.0900 ADJUSTING PULL BOXES EACH	SPV.0060.0002 ADJUSTING WATER VALVES EACH
1000	1	W. GREENFIELD AVENUE				
			558G+11	26.6' LT	--	1
			558G+04	28.0' RT	1	--
			560G+95	25.4' RT	--	1
		STAGE 1 SUBTOTALS			1	2
1000	2A	W. GREENFIELD AVENUE				
			565G+48	12.3' RT	--	1
		STAGE 2A SUBTOTALS			--	1
		UNDISTRIBUTED			--	--
		TOTALS			1	3

3

FINISHING ROADWAY PROJECT

CATEGORY	STAGE	LOCATION	213.0100.0001 FINISHING ROADWAY PROJECT 1060-40-97 EACH
1000	ALL	PROJECT	1
		TOTAL	1

MAINTENANCE AND REPAIR OF HAUL ROADS

CATEGORY	STAGE	LOCATION	618.0100.0001 MAINTENANCE AND REPAIR OF HAUL ROADS 1060-40-97 EACH
1000	ALL	PROJECT	1
		TOTAL	1

3

MOBILIZATION

CATEGORY	STAGE	LOCATION	619.1000 MOBILIZATION EACH
1000	ALL	PROJECT	1
		TOTAL	1

PAVEMENT CLEANUP

CATEGORY	STAGE	LOCATION	SPV.0075.0001 PAVEMENT CLEANUP 1060-40-97 HRS
1000	ALL	PROJECT	150
		TOTAL	150

SURVEY PROJECT

CATEGORY	STAGE	LOCATION	SPV.0105.0001 SURVEY PROJECT 1060-40-97 LS
1000	ALL	PROJECT	1
		TOTAL	1

3

EROSION CONTROL ITEMS

CATEGORY	STAGE	ROADWAY	STATION	TO	STATION	628.1905 MOBILIZATION EROSION CONTROL EACH	628.1910 MOBILIZATION EMERGENCY EROSION CONTROL EACH	628.7010 INLET PROTECTION TYPE B EACH	628.7015 INLET PROTECTION TYPE C EACH
1000	1	W. GREENFIELD AVENUE							
			542G+00	-	568G+00	--	--	2	39
		STAGE 1 SUBTOTALS				--	--	2	39
		UNDISTRIBUTED				1	1	1	16
		TOTALS				1	1	3	55

RESTORATION ITEMS

CATEGORY	STAGE	ROADWAY	625.0500 SALVAGED TOPSOIL SY	627.0200 MULCHING SY	629.0210 FERTILIZER TYPE B CWT	630.0200 SEEDING TEMPORARY LB	631.0300 SOD WATER MGAL	631.1000 SOD LAWN SY
1000	ALL	UNDISTRIBUTED	30	10	0.1	1	0.7	30
		TOTALS	30	10	0.1	1	0.7	30

3

PAVEMENT MARKING ITEMS

CATEGORY	ROADWAY	YELLOW LF	646.1020 MARKING LINE EPOXY 4-INCH 12.5' LINE 37.5' SKIP WHITE LF	WHITE LF	646.3020 MARKING LINE EPOXY 8-INCH 3' LINE 9' SKIP WHITE LF	TYPE 1 WHITE EACH	646.5020 MARKING ARROW EPOXY TYPE 2 WHITE EACH	TYPE 3 WHITE EACH	646.6120 MARKING STOP LINE EPOXY 18-INCH WHITE LF	646.7420 MARKING CROSSWALK EPOXY TRANSVERSE LINE 6-INCH WHITE LF	646.8120 MARKING CURB EPOXY YELLOW LF	646.8220 MARKING ISLAND NOSE EPOXY YELLOW EACH	646.9300 MARKING REMOVAL SPECIAL MARKING EACH
1000	W. GREENFIELD AVENUE	3,476	202	99	21	1	2	1	110	523	30	2	2
	SUBTOTALS	3,476	202	99	21	1	2	1	110	523	30	2	2
	TOTALS		3,678		120		4		110	523	30	2	2

3

TEMPORARY PEDESTRIAN ACCOMMODATION ITEMS

CATEGORY	STAGE	LOCATION	643.0410 TRAFFIC CONTROL BARRICADES TYPE II DAY	643.0705* TRAFFIC CONTROL WARNING LIGHTS TYPE A DAY	643.0900* TRAFFIC CONTROL SIGNS DAY	644.1410.S TEMPORARY PEDESTRIAN SURFACE ASPHALT SF	644.1601.S* TEMPORARY CURB RAMP EACH	644.1810.S TEMPORARY PEDESTRIAN BARRICADE LF
1000	1	UNDISTRIBUTED	150	150	150	1,000	20	200
		TOTALS	150	150	150	1,000	20	200

* ADDITIONAL QUANTITIES SHOWN ELSEWHERE

TRAFFIC CONTROL CLOSURE ITEMS

CATEGORY	STAGE	LOCATION	SPV.0060.0001 TRAFFIC CONTROL LOCAL ROAD LANE CLOSURES EACH
1000	2A	PROJECT	15
1000	2C	PROJECT	50
		TOTAL	65

3

TRAFFIC CONTROL ITEMS

CATEGORY	ROADWAY	STAGE DURATION DAYS	643.0300 TRAFFIC CONTROL DRUMS EACH**	DAYS	643.0420 TRAFFIC CONTROL BARRICADES TYPE III EACH**	DAYS	643.0705* TRAFFIC CONTROL WARNING LIGHTS TYPE A EACH**	DAYS	643.0715 TRAFFIC CONTROL WARNING LIGHTS TYPE C EACH**	DAYS	643.0800 TRAFFIC CONTROL ARROW BOARDS EACH*	DAYS	643.0900* TRAFFIC CONTROL SIGNS EACH**	DAYS	643.1050 TRAFFIC CONTROL SIGNS PCMS EACH**	DAY	643.5000 TRAFFIC CONTROL EACH	644.1601.S* TEMPORARY CURB RAMP EACH
1000	STAGE 1	36																
	W. GREENFIELD AVENUE		346	12,456	72	2,592	88	3,168	16	576	2	72	146	5,256	--	--	--	--
	STAGE 1 SUBTOTALS			12,456		2,592		3,168		576		72		5,256		--	--	--
1000	STAGE 2A	5																
	W. GREENFIELD AVENUE		173	865	50	250	100	500	28	140	2	10	95	475	--	--	--	4
	STAGE 2A SUBTOTALS			865		250		500		140		10		475		--	--	4
1000	STAGE 2B	10																
	W. GREENFIELD AVENUE		255	2,550	90	900	180	1,800	24	240	2	20	124	1,240	--	--	--	--
	STAGE 2B SUBTOTALS			2,550		900		1,800		240		20		1,240		--	--	--
1000	STAGE 2C	10																
	W. GREENFIELD AVENUE		217	2,170	109	1,090	218	2,180	16	160	2	20	119	1,190	--	--	--	8
	STAGE 2C SUBTOTALS			2,170		1,090		2,180		160		20		1,190		--	--	8
	UNDISTRIBUTED			903		242		383		56		7		409		40	1	1
	TOTALS			18,944		5,074		8,031		1,172		129		8,570		40	1	13

* ADDITIONAL QUANTITIES SHOWN ELSEWHERE
** FOR INFORMATION ONLY

TRAFFIC CONTROL PAVEMENT MARKING

CATEGORY	STAGE	ROADWAY	649.0150 TEMPORARY MARKING LINE REMOVABLE TAPE 4-INCH YELLOW LF	649.0250 TEMPORARY MARKING LINE REMOVABLE TAPE 8-INCH WHITE LF	649.0250 TEMPORARY MARKING LINE REMOVABLE TAPE 8-INCH 3 FT LINE 9 FT SKIP WHITE LF
1000	2A	W. GREENFIELD AVENUE	2,500	250	25
		STAGE 2A SUBTOTALS	2,500	250	25
1000	2B	W. GREENFIELD AVENUE	3,300	250	20
		STAGE 2B SUBTOTALS	3,300	250	20
1000	2C	W. GREENFIELD AVENUE	--	400	--
		STAGE 2C SUBTOTALS	--	400	--
		SUBTOTALS	5,800	900	45
		TOTALS	5,800	945	

TYPE II PERMANENT SIGNING - Category 1000 STH 59

SIGN NO.	SIGN CODE	SIGN MESSAGE	TYPE II SIGN SIZE W [IN.]	x x	H [IN.]	637.2210 SIGNS TYPE II REFLC H [SF]	638.2602 REM SIGNS TYPE II [EA]	638.3000 REM SMALL SIGN SUP [EA]	638.2102 MOVE SIGNS TYPE II [EA]	634.0818 POSTS TUBULAR STEEL 2 X 2 INCH X 18- FT EACH	MOUNT ON SAME POST AS SIGN #	REMARKS
1	NONE	NO PARKING DURING STATE FAIR						1	1	1		SIGN OWNED BY OTHERS
2	R1-1(2S)		30	X	30	5.180	1	1		1		
3	NONE	NO PARKING DURING STATE FAIR						1	1	1		
4	R1-1(2S)		30	X	30	5.180	1	1		1		
5	NOT USED											
6	R5-2(2S)		24	X	24	4.000	1	1		1		
7	R1-1(2S)		30	X	30	5.180	1	1		1		
8	NONE	NO PARKING DURING STATE FAIR						1	1	1		
9	R1-1(2S)		30	X	30	5.180	1	1		1		
10	R5-2(2S)		24	X	24	4.000	1	1		1		
11	R1-1(2S)		30	X	30	5.180	1	1		1		
12	NOT USED											
13	NOT USED											
14	R5-2(2S)		24	x	24	4.000	1	1		1		
15	R1-1(2S)		30	X	30	5.180	1	1		1		
16	R5-2(2S)		24	X	24	4.000	1	1		1		
17	NONE	BUS STOP								1		MOVE BY OTHERS - BUS COMPANY - PROVIDE STEEL POST
18	R1-1(2S)		30	X	30	5.180	1	1		1		
19	NOT USED											
20	NOT USED											
21	NONE	1 HOUR PARKING 8 AM TO 9 PM							1		22	CITY SIGN - MOVE. MOUNT UNDER STOP SIGN 90 DEGREES TO STOP SIGN
22	R1-1(2S)		30	X	30	5.180	1	1		1		
23	NONE	1 HOUR PARKING 8 AM TO 9 PM							1		24	CITY SIGN - MOVE. MOUNT UNDER STOP SIGN 90 DEGREES TO STOP SIGN
24	R1-1(2S)		30	X	30	5.180	1	1		1		
25	R5-2(2S)		24	X	24	4.000	1	1		1		
26	NOT USED											
27	NOT USED											
28	NONE	BUS STOP								1		MOVE BY OTHERS - BUS COMPANY - PROVIDE STEEL POST
29	R5-2(2S)		24	X	24	4.000	1	1		1		
30	R1-1(2S)		30	X	30	5.180	1	1		1		

SHEET 1 OF 2

3

SIGN NO.	SIGN CODE	SIGN MESSAGE	TYPE II SIGN SIZE W [IN.] x	H [IN.]	637.2210 SIGNS TYPE II REFLC H [SF]	638.2602 REM SIGNS TYPE II [EA]	638.3000 REM SMALL SIGN SUP [EA]	638.2102 MOVE SIGNS TYPE II [EA]	634.0818 POSTS TUBULAR STEEL 2 X 2 INCH X 18- FT EACH	MOUNT ON SAME POST AS SIGN #	REMARKS
31	NONE	1 HOUR PARKING						1		30	CITY SIGN - MOVE. MOUNT UNDER STOP SIGN 90 DEGREES TO STOP SIGN
		8 AM TO 9 PM									
32	NONE	BUS STOP							1		MOVE BY OTHERS - BUS COMPANY - PROVIDE STEEL POST
33	R1-1(2S)		30	X 30	5.180	1	1		1		
34	NONE	1 HOUR PARKING						1		33	CITY SIGN - MOVE. MOUNT UNDER STOP SIGN 90 DEGREES TO STOP SIGN
		8 AM TO 9 PM									
35	NOT USED										
36	R5-2(2S)		24	X 24	4.000	1	1		1		
37	NONE	1 HOUR PARKING						1		41	CITY SIGN - MOVE. MOUNT UNDER STOP SIGN 90 DEGREES TO STOP SIGN
		8 AM TO 9 PM									
38	R1-1(2S)		30	X 30	5.180	1	1		1		
39	NONE	1 HOUR PARKING						1		38	CITY SIGN - MOVE. MOUNT UNDER STOP SIGN 90 DEGREES TO STOP SIGN
		8 AM TO 9 PM									
40	NONE	NO PARKING STATE FAIR					1	1	1		SIGN OWENED BY OTHERS
41	R1-1(2S)		30	X 30	5.180	1	1		1		
TOTALS					95.340	20	24	10	27		

SHEET 2 OF 2

STH 181 & HARWOOD AVENUE

ALL ITEMS ARE CATEGORY 1500 UNLESS OTHERWISE NOTED

REMOVING CONCRETE BASES

EXISTING BASE NO.	204.0195 REMOVING CONCRETE BASES EACH
SB4	1
TOTAL	1

CONCRETE BASES

BASE NO.	NORTHING	EASTING	654.0101 CONCRETE BASES TYPE 1 EACH
SB4	302,709.9	578,392.6	1
		TOTALS	1

***FINAL LOCATION TO BE DETERMINED BY THE ENGINEER IN THE FIELD

CONDUIT

FROM	TO	652.0225 CONDUIT RIGID NONMETALLIC SCHEDULE 40 2-INCH LF
PB4	SB4	27
	TOTAL	27

3

UNDERGROUND TRAFFIC SIGNAL CABLE NO. 14

FROM	TO	655.0270 CABLE TRAFFIC SIGNAL 15-14 AWG LF
CB1	SB4	247
	TOTALS	247

ELECTRICAL WIRE TRAFFIC SIGNALS 10 AWG

FROM	TO	655.0515 ELECTRICAL WIRE TRAFFIC SIGNALS 10 AWG LF
SB3	SB4	185
SB4	SB5	55
	TOTAL	240

ABOVE GROUND TRAFFIC SIGNAL CABLE NO. 14

FROM	TO	655.0230 CABLE TRAFFIC SIGNAL 5-14 AWG LF	655.0240 CABLE TRAFFIC SIGNAL 7-14 AWG LF
SB4	HEAD 5	--	23
SB4	HEAD 11	19	--
SB4	HEAD 16	15	--
SB4	HEAD 17	15	--
	TOTALS	49	23

TRAFFIC SIGNAL EVP DETECTOR CABLE

FROM	TO	655.0900 TRAFFIC SIGNAL EVP DETECTOR CABLE LF	SPV.0090.3101 CABLE TYPE UF 2-14 AWG LF
CB1	SB4 (HEAD C)	272	272
	TOTAL	272	272

3

CAST BASES AND POLES

SIGNAL BASE NO.	657.0100 PEDESTAL BASES EACH	657.0425 TRAFFIC SIGNAL STANDARDS ALUMINUM 15-FT EACH
SB4	1	1
TOTALS	1	1

SIGNAL MOUNTING HARDWARE STH 181 & HARWOOD AVENUE

LOCATION	658.5069.3101 SIGNAL MOUNTING HARDWARE LS
STH 181 & HARWOOD AVENUE	1
TOTAL	1

3

TRAFFIC SIGNAL AND PEDESTRIAN FACES

SIGNAL HEAD NO.	SIGNAL BASE NO.	658.0173 TRAFFIC SIGNAL FACE 3S 12-INCH EACH	658.0175 TRAFFIC SIGNAL FACE 5S 12-INCH EACH	658.0416 PEDESTRIAN SIGNAL FACE 16-INCH EACH
5	SB4	1	--	--
11	SB4	--	1	--
16	SB4	--	--	1
17	SB4	--	--	1
	TOTALS	1	1	2

EMERGENCY VEHICLE PREEMPTION

LOCATION	SPV.0060.3101 EVP DETECTOR TYPE I EACH	SPV.0060.3102 EVP CONFIRMATION LIGHT ASSEMBLY TYPE I EACH
SB4	1	1
TOTALS	1	1

REMOVE TRAFFIC SIGNALS STH 181 & HARWOOD AVENUE

LOCATION	SPV.0105.3101 REMOVE TRAFFIC SIGNALS LS
STH 181 & HARWOOD AVENUE	1
TOTAL	1

Standard Detail Drawing List

08A08-02	CATCH BASINS 3-FT, 4-FT, 5-FT AND 6-FT DIAMETER
08D05-19A	CURB RAMPS TYPES 1 AND 1-A
08D05-19B	CURB RAMPS TYPES 2 AND 3
08D05-19C	CURB RAMPS TYPES 4A AND 4A1
08D05-19D	CURB RAMPS TYPE 4B AND 4B1
08D05-19E	CURB RAMPS TYPES 5, 6, 7A, 7B & 8
08D05-19F	CURB RAMPS RADIAL DETECTABLE WARNING FIELD APPLICATIONS
08D05-19G	CURB RAMPS RECTANGULAR AND RADIAL DETECTABLE WARNING PLATES
08D16-10	CONCRETE GUTTER, CURB AND GUTTER AND PAVEMENT TIES
08D17-06	MANHOLES, MANHOLE & INLET COVERS
08E10-02	INLET PROTECTION TYPE A, B, C AND D
09B02-10	CONDUIT
09C02-07	CONCRETE BASES, TYPES 1, 2, 5, & 6
09C03-04	TRANSFORMER/PEDESTAL BASES
09E06-05	TRAFFIC SIGNAL STANDARD POLY BRACKET MOUNTINGS (TYPICAL) 13 FT. OR 15 FT.
13C14-07A	BASE PATCHING CONCRETE
13C14-07B	BASE PATCHING CONCRETE
13C14-07C	BASE PATCHING CONCRETE
13C15-06A	CONCRETE BASE
13C15-06B	CONCRETE BASE
15C03-05	BARRICADES AND SIGNS FOR SIDEROAD CLOSURES
15C05-05	TRAFFIC CONTROL, ADVANCE WARNING SIGNS 40 M.P.H. OR LESS
15C07-14B	PAVEMENT MARKING WORDS
15C07-14C	PAVEMENT MARKING ARROWS
15C08-19A	LONGITUDINAL MARKING (MAINLINE)
15C08-19C	PAVEMENT MARKING (TURN LANES)
15C11-07B	CHANNELIZING DEVICES DRUMS, CONES, BARRICADES AND VERTICAL PANELS
15C18-04	MEDIAN ISLAND MARKING
15C27-03B	PAVEMENT MARKING (ISLANDS)
15C33-03	STOP LINE AND CROSSWALK PAVEMENT MARKING
15D20-04	TRAFFIC CONTROL, SINGLE LANE CLOSURE, NON-FREEWAY/EXPRESSWAY
15D21-06	TRAFFIC CONTROL, INTERSECTION WITHIN SINGLE LANE CLOSURE
15D28-03	TRAFFIC CONTROL, WORK ON SHOULDER OR PARKING LANE, UNDIVIDED ROADWAY
15D30-04A	TRAFFIC CONTROL, PEDESTRIAN ACCOMMODATION
15D30-04B	TRAFFIC CONTROL, TEMPORARY ADA COMPLIANT PEDESTRIAN ACCOMMODATION
15D30-04C	TRAFFIC CONTROL, PEDESTRIAN ACCOMMODATION
15D38-02A	TEMPORARY TRAFFIC CONTROL SIGN MOUNTING
15D38-02B	ATTACHMENT OF SIGNS TO POSTS

6

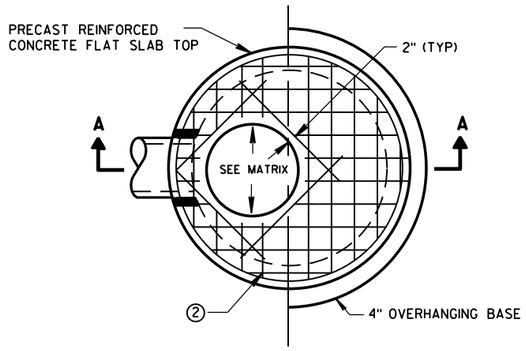

PLAN VIEW CIRCULAR OPENING

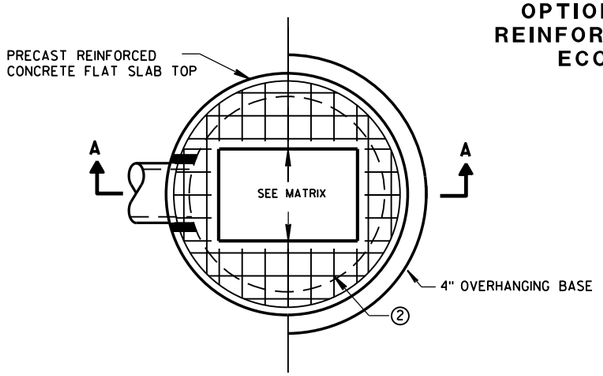

PLAN VIEW RECTANGULAR OPENING

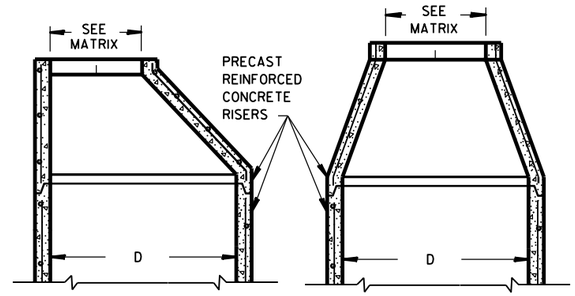

OPTIONAL PRECAST REINFORCED CONCRETE ECCENTRIC TOP

OPTIONAL PRECAST REINFORCED CONCRETE CONCENTRIC TOP

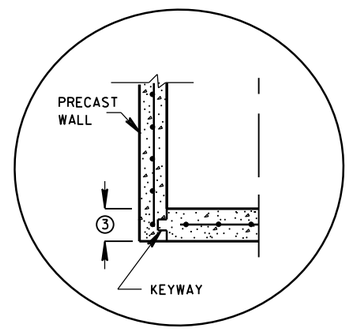

PRECAST REINFORCED CONCRETE WITH INTEGRAL BASE OPTION

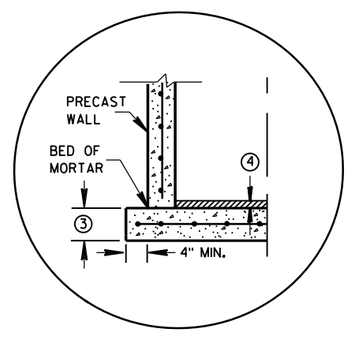

SEPARATE PRECAST REINFORCED CONCRETE BASE OPTION

DETAIL "A"

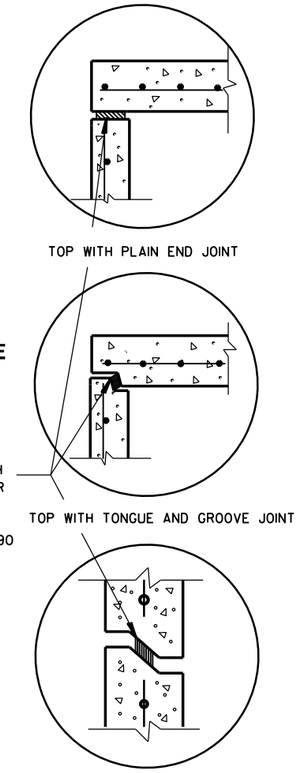

DETAIL "B"

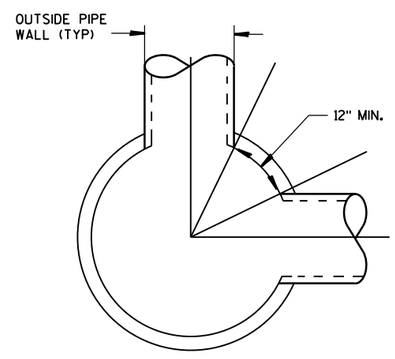

DETAIL "C"

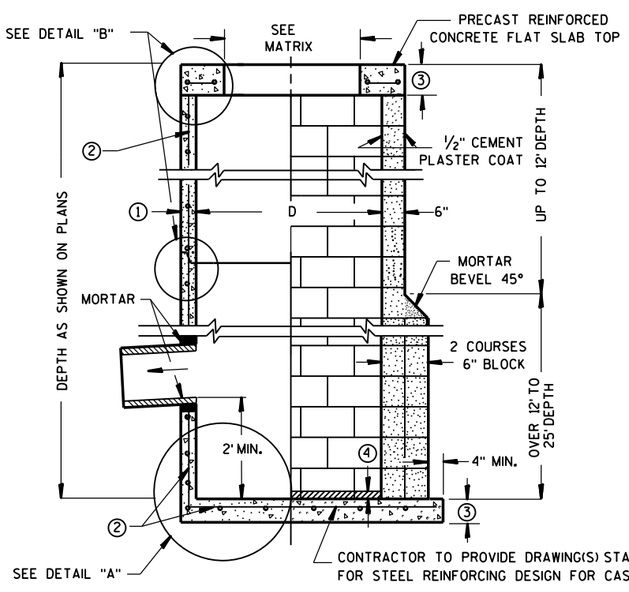

CONTRACTOR TO PROVIDE DRAWING(S) STAMPED BY A PROFESSIONAL ENGINEER FOR STEEL REINFORCING DESIGN FOR CAST-IN-PLACE STRUCTURES

SECTION A-A

PRECAST REINFORCED CONCRETE WITH MONOLITHIC BASE

CONCRETE BLOCK WITH CAST-IN-PLACE OR PRECAST REINFORCED CONCRETE BASE ②

GENERAL NOTES

DETAILS OF CONSTRUCTION, MATERIALS AND WORKMANSHIP NOT SHOWN ON THIS DRAWING SHALL CONFORM TO THE PERTINENT REQUIREMENTS OF THE STANDARD SPECIFICATIONS AND THE APPLICABLE SPECIAL PROVISIONS.

UNLESS OTHERWISE AUTHORIZED IN WRITING BY THE ENGINEER, THE CONTRACTOR SHALL NOT ORDER AND DELIVER PRECAST CATCH BASIN UNITS REQUIRED FOR THE PROJECT UNTIL A LIST OF SIZES IS FURNISHED BY THE ENGINEER.

DETAILED DRAWINGS FOR PROPOSED ALTERNATE DESIGNS FOR UNDERGROUND DRAINAGE STRUCTURES SHALL BE SUBMITTED TO THE ENGINEER FOR APPROVAL PROVIDING THAT SUCH ALTERNATE DESIGNS MAKE PROVISION FOR EQUIVALENT CAPACITY AND STRENGTH.

ALL DRAINAGE STRUCTURES ARE DESIGNATED ON THE PLANS AS "MANHOLES 3X3-L", "CATCH BASINS 4-B", "INLETS 2X3-H", ETC. THE FIRST NUMBERS DESIGNATE THE SIZE OF THE STRUCTURE, AND THE FOLLOWING LETTER DESIGNATES THE TYPE OF COVER TO BE USED TO COMPRISE THE COMPLETE UNIT.

BASES SHALL BE PLACED ON A BED OF MATERIAL AT LEAST 6 INCHES IN DEPTH, WHICH MEETS THE REQUIREMENTS OF FOUNDATION BACKFILL. THIS BEDDING SHALL BE COMPACTED AND PROVIDE UNIFORM SUPPORT FOR THE ENTIRE AREA OF THE BASE.

PRECAST REINFORCED CONCRETE CONE TOPS (ECCENTRIC OR CONCENTRIC) OR PRECAST REINFORCED CONCRETE FLAT SLAB TOPS MAY BE USED ON CONCRETE BLOCK STRUCTURES.

ECCENTRIC CONE TOPS MAY BE USED ON ALL STRUCTURES, AND CONCENTRIC CONE TOPS SHALL BE USED ONLY ON STRUCTURES 5 FEET OR LESS IN DEPTH, UNLESS OTHERWISE DIRECTED BY THE ENGINEER.

STEPS MEETING AASHTO M199 AND THE FOLLOWING REQUIREMENTS SHALL BE INSTALLED IN ALL STRUCTURES OVER 5 FEET IN DEPTH: 16 INCH C-C MAXIMUM SPACING; PROJECT A MINIMUM CLEAR DISTANCE OF 4 INCHES FROM THE WALL AT THE POINT OF EMBEDMENT; MINIMUM LENGTH OF 10 INCHES; MINIMUM WALL EMBEDMENT OF 3 INCHES. FERROUS METAL STEPS NOT PAINTED OR TREATED TO RESIST CORROSION SHALL HAVE A MINIMUM CROSS SECTIONAL DIMENSION OF 1 INCH.

STEPS OF APPROVED POLYPROPYLENE PLASTIC COATED REINFORCEMENT BAR ARE ACCEPTABLE. REINFORCING BAR MUST BE A MINIMUM OF ½ INCH AND MEET THE REQUIREMENTS OF ASTM A615.

CERTIFICATION SHALL BE PROVIDED THAT INSTALLED STEPS WHEN TESTED IN ACCORDANCE WITH SECTION 10 OF AASHTO T280 CAN WITHSTAND A VERTICAL LOAD OF 800 LBS. AND A HORIZONTAL LOAD OF 400 LBS.

ALL BAR STEEL REINFORCEMENT SHALL BE EMBEDDED 2 INCHES CLEAR UNLESS OTHERWISE SHOWN OR NOTED.

ALL PRECAST INLET UNITS SHALL CONFORM TO THE PERTINENT REQUIREMENTS OF AASHTO DESIGNATION M199.

PRECAST REINFORCED RISERS SHALL HAVE A TONGUE AND GROOVE JOINT WITH TONGUE UP OR DOWN.

CONCRETE BLOCK WILL NOT BE PERMITED FOR STRUCTURES GREATER THAN 4 FEET IN DIAMETER.

4" OVERHANGING BASES ARE REQUIRED FOR ALL CONCRETE BLOCK INSTALLATIONS. 4" OVERHANG IS REQUIRED WHEN SEPARATE PRECAST BASE IS PROVIDED. OVERHANG IS NOT REQUIRED ON PRECAST STRUCTURES WITH AN INTEGRAL OR MONOLITHIC BASE.

FOR ADDITIONAL CONFIGURATIONS, MAINTAIN A MINIMUM OF 12 INCHES AS MEASURED FROM THE INSIDE OF THE STRUCTURE WALL BETWEEN THE OUTSIDE PIPE WALLS OF ADJACENT PIPES. SEE DETAIL "C".

① MINIMUM WALL THICKNESS SHALL BE 4 INCHES FOR 3-FT, 5 INCHES FOR 4-FT, 6 INCHES FOR 5-FT AND 7 INCHES FOR 6-FT DIAMETER PRECAST CATCH BASINS.

② FOR PRECAST CATCH BASINS PROVIDE REINFORCING STEEL IN ACCORDANCE TO AASHTO M199.

③ PRECAST FLAT SLAB TOPS AND BASES WITH A DIAMETER OF 48" AND LESS SHALL HAVE A MINIMUM THICKNESS OF 6". PRECAST FLAT SLAB TOPS AND BASES WITH A DIAMETER LARGER THAN 48" SHALL HAVE A MINIMUM THICKNESS OF 8".

④ 1" CONCRETE KEY POURED AFTER INSTALLATION. 2' SUMP MEASURED FROM TOP OF KEY.

CATCH BASIN COVER OPENING MATRIX

CATCH BASIN SIZE	INLET COVER TYPE	ALL A'S	ALL B'S	BW	C	F	ALL H'S	S	T	V	WM	Z
	OPENING SIZE (FT)											
3-FT	2X2	X	X					X		X		
	2 DIA.				X							X
4-FT-6-FT	2X2	X	X					X		X		
	2X2.5			X				X	X	X	X	
	2 DIA.				X							X
	2X3						X					
	2.5X3					X						

PIPE MATRIX

CATCH BASIN SIZE	MAXIMUM INSIDE PIPE DIAMETER FOR TWO PIPES	
	180° SEPARATION (IN)	90° SEPARATION (IN)
3-FT	15	12
4-FT	24	18
5-FT	36	24
6-FT	42	30

CATCH BASINS 3-FT, 4-FT, 5-FT AND 6-FT DIAMETER

CATCH BASINS 3-FT, 4-FT, 5-FT AND 6-FT DIAMETER

STATE OF WISCONSIN
DEPARTMENT OF TRANSPORTATION

APPROVED
Sept., 2016 — DATE
/S/ Rodney Taylor — ROADWAY STANDARDS UNIT SUPERVISOR
FHWA — ENT

6

S.D.D. 8 A 8-2

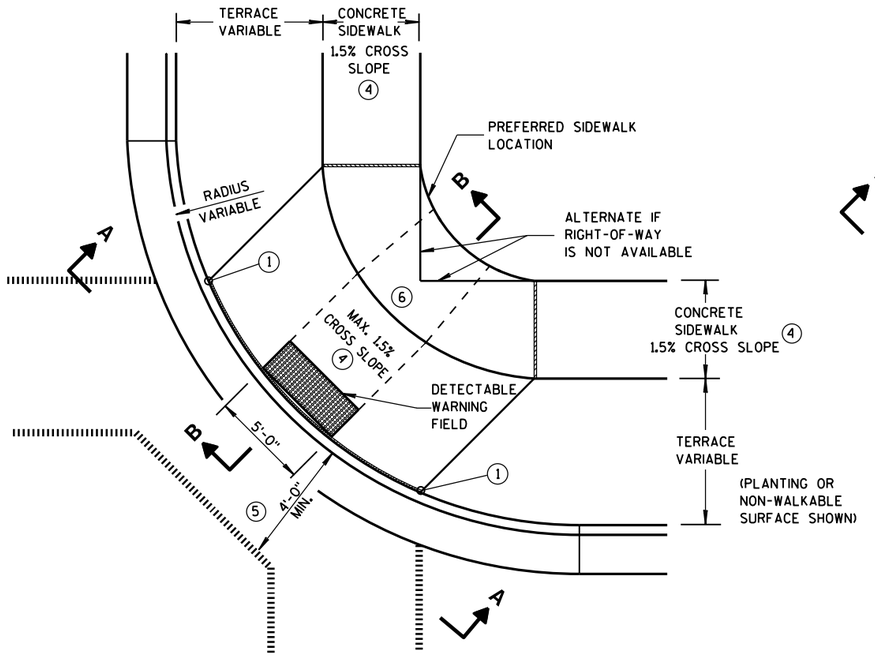

PLAN VIEW

TYPE 1 RAMP

(CENTER OF CORNER RADIUS)

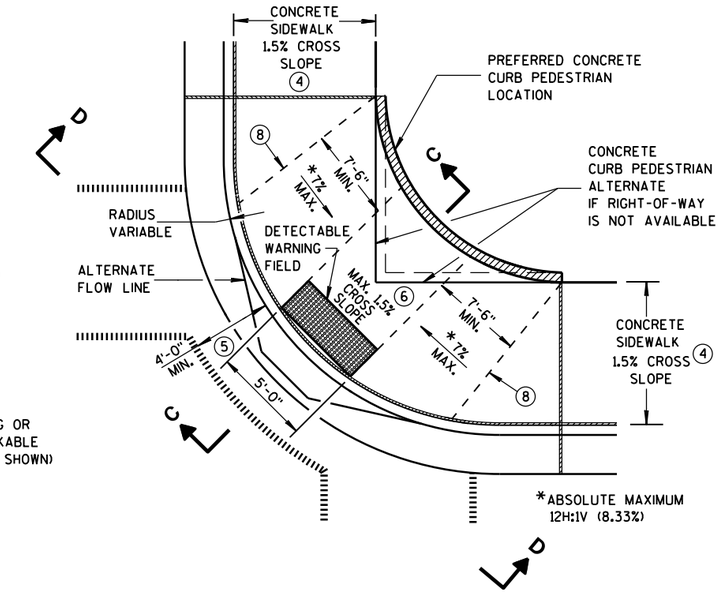

PLAN VIEW

TYPE 1-A RAMP

(NO TERRACE)

GENERAL NOTES

AVOID PLACING DRAINAGE STRUCTURES, JUNCTION BOXES OR OTHER OBSTRUCTIONS IN FRONT OF RAMP ACCESS AREAS.

DETAILS OF CONSTRUCTION, MATERIALS AND WORKMANSHIP NOT SHOWN ON THIS DRAWING SHALL CONFORM TO THE PERTINENT REQUIREMENTS OF THE STANDARD SPECIFICATIONS AND THE APPLICABLE SPECIAL PROVISIONS.

WHEN NECESSARY, THE SIDEWALK ELEVATION MAY BE LOWERED TO MEET THE HIGH POINT ON THE RAMP.

TYPE 1 RAMPS SHALL HAVE A NORMAL SIDEWALK APRON AND CURB ON BOTH SIDES OF RAMP.

DETECTABLE WARNING FIELD SHALL BE MEASURED AND PAID BY THE SQUARE FOOT AS "CURB RAMP DETECTABLE WARNING FIELD". THE CONCRETE PEDESTRIAN CURB, IF NEEDED, SHALL BE MEASURED AND PAID BY THE LINEAL FOOT AS "CONCRETE CURB PEDESTRIAN". CONCRETE SIDEWALK IN THE CURB RAMP AREA SHALL BE MEASURED AND PAID BY THE SQUARE FOOT AS CONCRETE SIDEWALK, INCLUDING THE AREA UNDER THE DETECTABLE WARNING FIELD.

SELECT CURB RAMP DETECTABLE WARNING FIELD MATERIALS AND DEVICES FROM THE DEPARTMENT'S APPROVED MATERIALS LIST. THE COLOR OF THE DETECTABLE WARNING FIELD IS SPECIFIED ELSEWHERE AND IS INCIDENTAL TO THE BID ITEM OF "CURB RAMP DETECTABLE WARNING FIELD".

DETECTABLE WARNING FIELDS THAT ARE INSTALLED AS A GROUP OR SIDE BY SIDE, SHALL BE FROM THE SAME MANUFACTURER.

SURFACE TEXTURE OF THE RAMP SHALL BE OBTAINED BY COARSE BROOMING TRANSVERSE TO THE SLOPE OF THE RAMP.

1. THIS POINT IS AN EXTENSION OF OUTSIDE EDGE OF APPROACHING SIDEWALK WHERE IT MEETS THE BACK OF CONCRETE CURB. POINT LOCATION MAY BE ADJUSTED TO ALIGN WITH BEGINNING OF FULL-HEIGHT CURB IF THIS DISTANCE IS SHORT.
2. GRADE CHANGE BETWEEN GUTTER FLAG SLOPE AND THE CURB RAMP SLOPE SHALL NOT EXCEED 11%. MAXIMUM GUTTER FLAG SLOPE IS 4%. PROVIDE LONGITUDINAL DRAINAGE AROUND CURB AND AWAY FROM CURB RAMP. NO VERTICAL LIPS OR DISCONTINUITIES GREATER THAN 1/4-INCH ARE ALLOWED. SLOPE OF CURB HEAD OPENING SHALL MATCH THE RAMP SLOPE, MINIMALLY 1.5% AND NOT TO EXCEED 7%. WHEN ADJACENT TO 1.5% LANDING, CONSTRUCT CURB HEAD OPENING AT 1.5% IN THE DIRECTION OF PEDESTRIAN TRAVEL.
3. ABSOLUTE MAXIMUM 12H:1V (8.33%) CURB RAMP SLOPE IS ALLOWABLE WITH FLATTENED GUTTER FLAG SLOPE AND NOT TO EXCEED 11% GRADE CHANGE.
4. ±0.5% CONSTRUCTION TOLERANCE IN SIDEWALK CROSS SLOPE. THE SIDEWALK CROSS SLOPE SHALL NOT EXCEED 2% WITHOUT PRIOR APPROVAL FROM THE ENGINEER.
5. PROVIDE A LEVEL LANDING IN THE STREET AND GUTTER AREA. (2% MAXIMUM SLOPE IN ANY DIRECTION). WHEN THE GUTTER SLOPE EXCEEDS 2%, CONSTRUCT THE LEVEL LANDING IN THE STREET AREA.
6. PROVIDE A LEVEL LANDING (MAXIMUM 2% SLOPE) IN ANY DIRECTION OF PEDESTRIAN TRAVEL. STANDARD LANDING SIZE IS 5 FEET X 5 FEET.
8. **PROVIDE GRADE BREAK PERPENDICULAR TO DIRECTION OF WHEELCHAIR TRAVEL.**

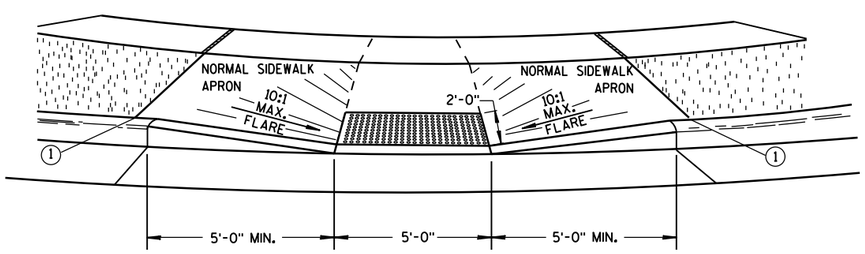

VIEW A-A

** WIDTH SHOWN ELSEWHERE IN THE PLANS

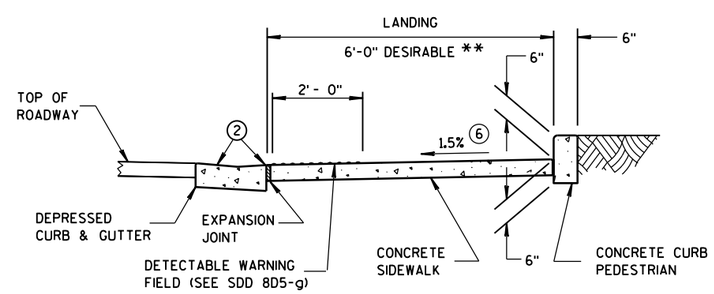

SECTION C-C

LEGEND

- 1/2" EXPANSION JOINT-SIDEWALK
- CONTRACTION JOINT FIELD LOCATED
- PAVEMENT MARKING CROSSWALK (WHITE)
- ALTERNATIVE LAYOUT

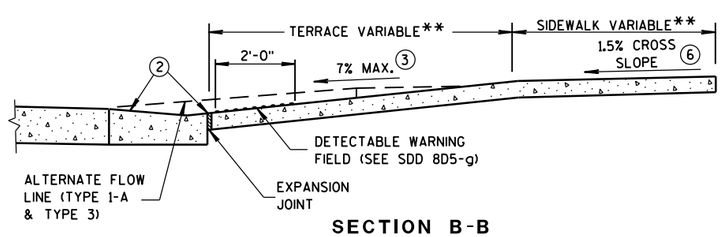

SECTION B-B

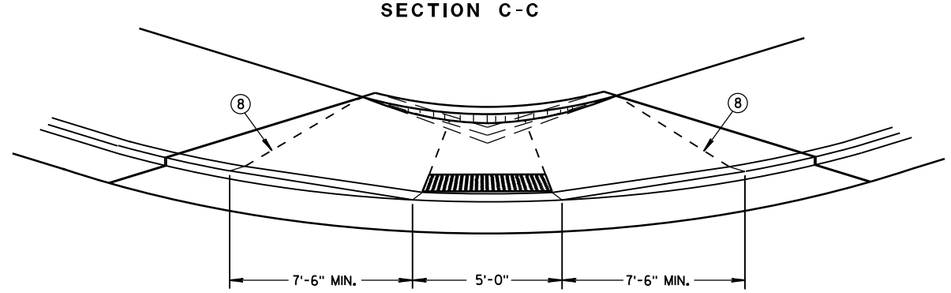

VIEW D-D

CURB RAMPS
TYPES 1 AND 1-A

STATE OF WISCONSIN
DEPARTMENT OF TRANSPORTATION

6

6

S.D.D. 8 D 5-19a

S.D.D. 8 D 5-19a

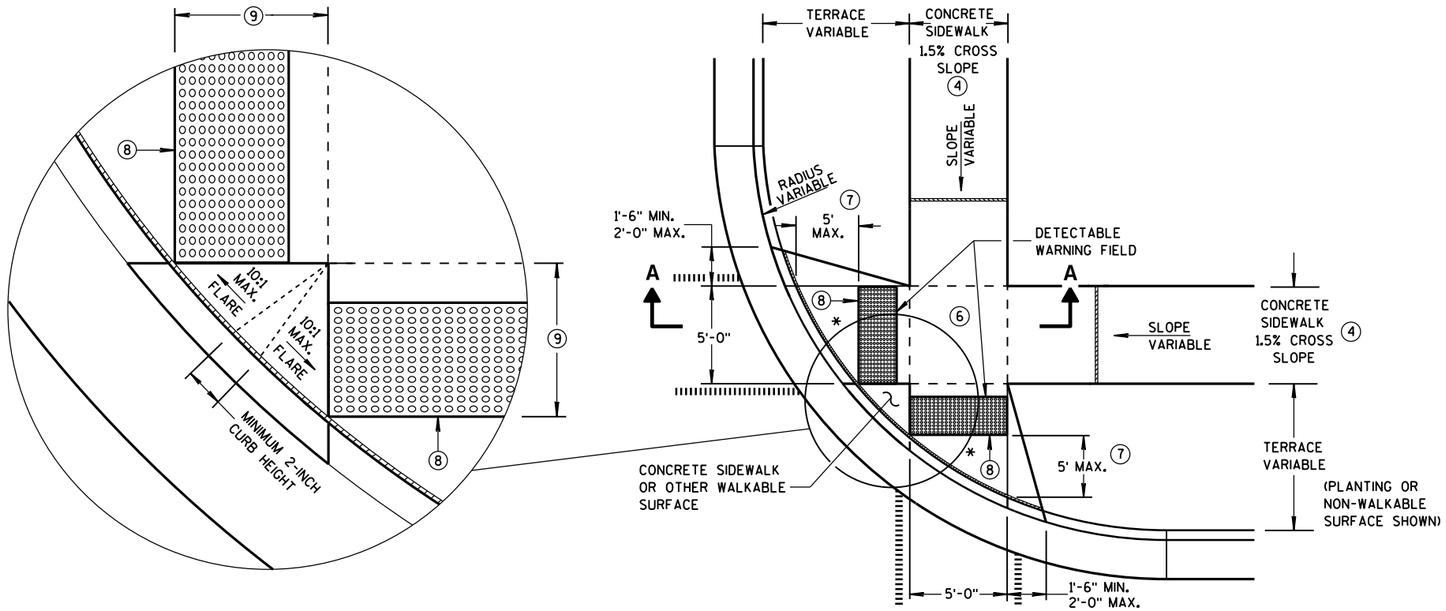

PLAN VIEW
TYPE 2 RAMP
(ON LINE WITH SIDEWALK)

GENERAL NOTES

AVOID PLACING DRAINAGE STRUCTURES, JUNCTION BOXES OR OTHER OBSTRUCTIONS IN FRONT OF RAMP ACCESS AREAS.

DETECTABLE WARNING FIELDS THAT ARE INSTALLED AS A GROUP OR SIDE BY SIDE, SHALL BE FROM THE SAME MANUFACTURER.

(2) GRADE CHANGE BETWEEN GUTTER FLAG SLOPE AND THE CURB RAMP SLOPE SHALL NOT EXCEED 11%. MAXIMUM GUTTER FLAG SLOPE IS 4%. PROVIDE LONGITUDINAL DRAINAGE AROUND CURB AND AWAY FROM CURB RAMP. NO VERTICAL LIPS OR DISCONTINUITIES GREATER THAN 1/4-INCH ARE ALLOWED. SLOPE OF CURB HEAD OPENING SHALL MATCH THE RAMP SLOPE, MINIMALLY 1.5% AND NOT TO EXCEED 7%. WHEN ADJACENT TO 1.5% LANDING, CONSTRUCT CURB HEAD OPENING AT 1.5% IN THE DIRECTION OF PEDESTRIAN TRAVEL.

(3) ABSOLUTE MAXIMUM 12H:1V (8.33%) CURB RAMP SLOPE IS ALLOWABLE WITH FLATTENED GUTTER FLAG SLOPE AND NOT TO EXCEED 11% GRADE CHANGE.

(4) ±0.5% CONSTRUCTION TOLERANCE IN SIDEWALK CROSS SLOPE. THE SIDEWALK CROSS SLOPE SHALL NOT EXCEED 2% WITHOUT PRIOR APPROVAL FROM THE ENGINEER.

(6) PROVIDE A LEVEL LANDING (MAXIMUM 2% SLOPE) IN ANY DIRECTION OF PEDESTRIAN TRAVEL. STANDARD LANDING SIZE IS 5 FEET X 5 FEET.

(7) WHEN THIS GRADE BREAK DISTANCE EXCEEDS 5 FEET, USE RADIAL DETECTABLE WARNING FIELD PER SDD 8D5-f.

(8) PROVIDE GRADE BREAK PERPENDICULAR TO DIRECTION OF WHEELCHAIR TRAVEL.

(9) WHEN THIS DISTANCE IS LESS THAN 6'-0", IT MAY BE DIFFICULT TO ACHIEVE A 7% SLOPE OR FLATTER ALONG THE RAMP. REDUCE CURB HEIGHT IN TRIANGLE AREA TO ACHIEVE 7% SLOPE OR FLATTER ON RAMP. CONSTRUCT 2-INCH MINIMUM CURB HEIGHT BETWEEN 10:1 FLARES.

LEGEND

- 1/2" EXPANSION JOINT-SIDEWALK
- CONTRACTION JOINT FIELD LOCATED
- PAVEMENT MARKING CROSSWALK (WHITE)
- ALTERNATIVE LAYOUT

* MAXIMUM 2.0% SLOPE IN ALL DIRECTIONS IN FRONT OF GRADE BREAK

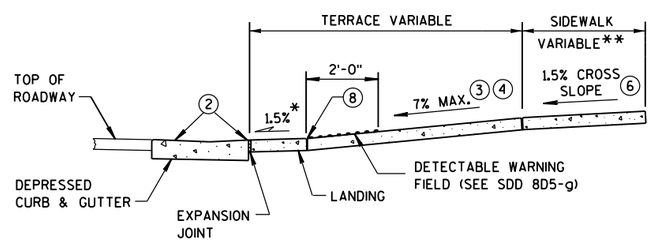

SECTION A-A

** WIDTH SHOWN ELSEWHERE IN THE PLANS

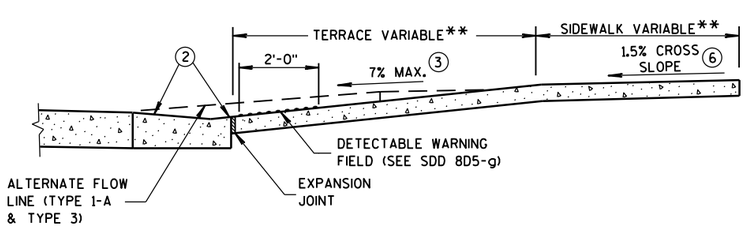

SECTION B-B

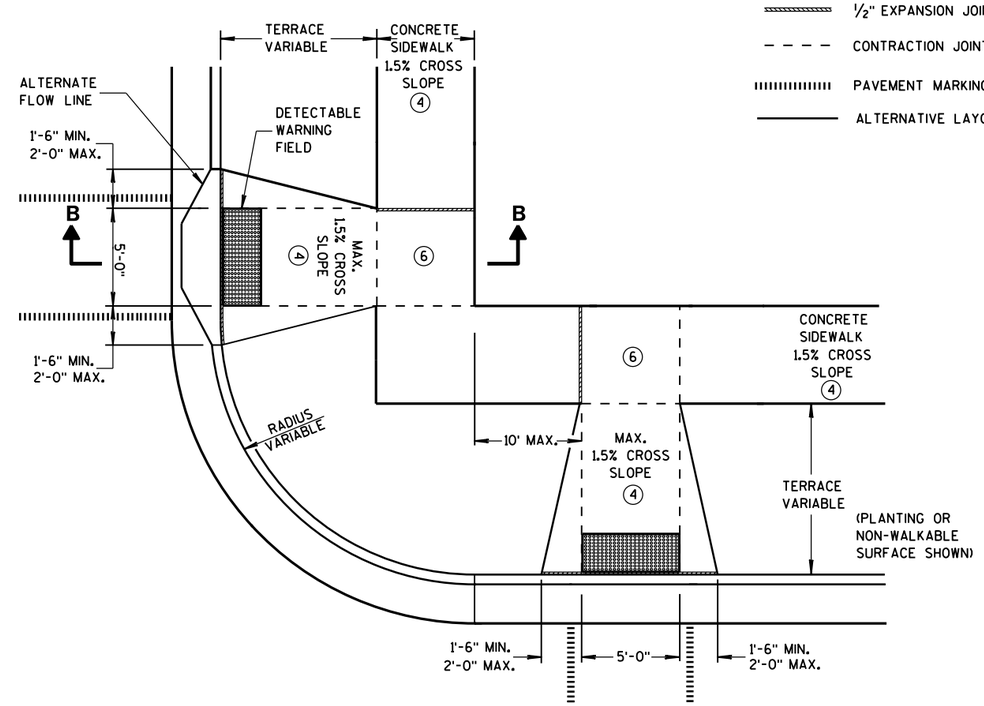

PLAN VIEW
TYPE 3 RAMP
(OUTSIDE OF CROSSWALK AREA)

CURB RAMPS TYPES 2 AND 3

STATE OF WISCONSIN
DEPARTMENT OF TRANSPO

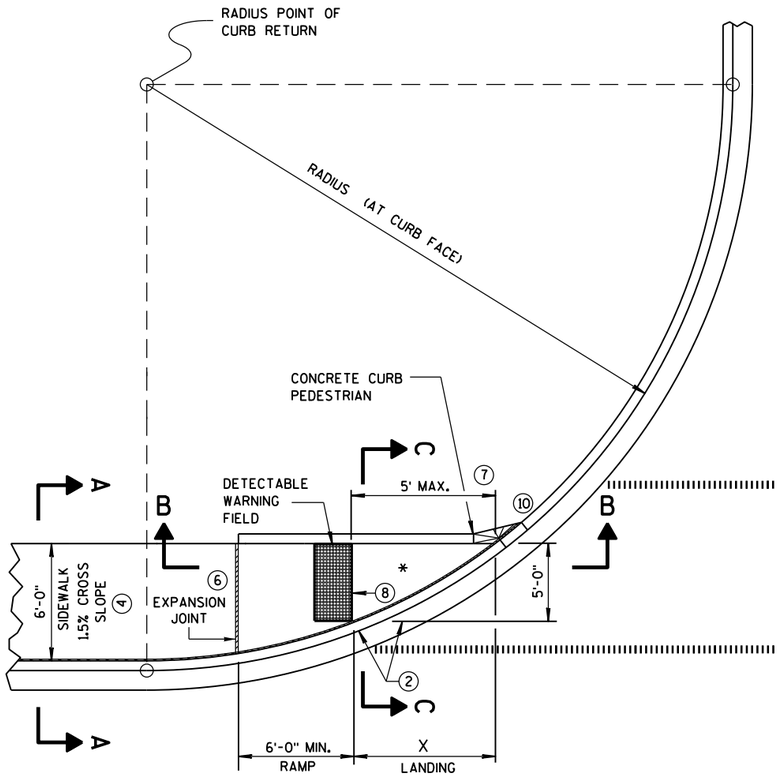

CURB RAMP TYPE 4A
PLAN VIEW

RADIUS (AT CURB FACE)	X
10 FEET	4'-7"
15 FEET	6'-5½"

INTERMEDIATE RADII CAN BE INTERPOLATED

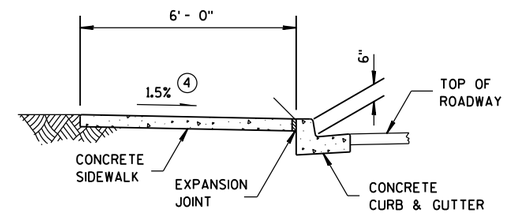

SECTION A-A FOR TYPE 4A

GENERAL NOTES

AVOID PLACING DRAINAGE STRUCTURES, JUNCTION BOXES OR OTHER OBSTRUCTIONS IN FRONT OF RAMP ACCESS AREAS.

DETECTABLE WARNING FIELDS THAT ARE INSTALLED AS A GROUP OR SIDE BY SIDE, SHALL BE FROM THE SAME MANUFACTURER.

(2) GRADE CHANGE BETWEEN GUTTER FLAG SLOPE AND THE CURB RAMP SLOPE SHALL NOT EXCEED 11%. MAXIMUM GUTTER FLAG SLOPE IS 4%. PROVIDE LONGITUDINAL DRAINAGE AROUND CURB AND AWAY FROM CURB RAMP. NO VERTICAL LIPS OR DISCONTINUITIES GREATER THAN ¼-INCH ARE ALLOWED. SLOPE OF CURB HEAD OPENING SHALL MATCH THE RAMP SLOPE, MINIMALLY 1.5% AND NOT TO EXCEED 7%. WHEN ADJACENT TO 1.5% LANDING, CONSTRUCT CURB HEAD OPENING AT 1.5% IN THE DIRECTION OF PEDESTRIAN TRAVEL.

(3) ABSOLUTE MAXIMUM 12H:1V (8.33%) CURB RAMP SLOPE IS ALLOWABLE WITH FLATTENED GUTTER FLAG SLOPE AND NOT TO EXCEED 11% GRADE CHANGE.

(4) ±0.5% CONSTRUCTION TOLERANCE IN SIDEWALK CROSS SLOPE. THE SIDEWALK CROSS SLOPE SHALL NOT EXCEED 2% WITHOUT PRIOR APPROVAL FROM THE ENGINEER.

(6) PROVIDE A LEVEL LANDING (MAXIMUM 2% SLOPE) IN ANY DIRECTION OF PEDESTRIAN TRAVEL. STANDARD LANDING SIZE IS 5 FEET X 5 FEET.

(7) WHEN THIS GRADE BREAK DISTANCE EXCEEDS 5 FEET, USE RADIAL DETECTABLE WARNING FIELD PER SDD 8D5-f.

(8) PROVIDE GRADE BREAK PERPENDICULAR TO DIRECTION OF WHEELCHAIR TRAVEL.

(10) INSTALL TRANSITION NOSE. (INCIDENTAL TO OTHER PAY ITEMS). DO NOT MARK TRANSITION NOSE.

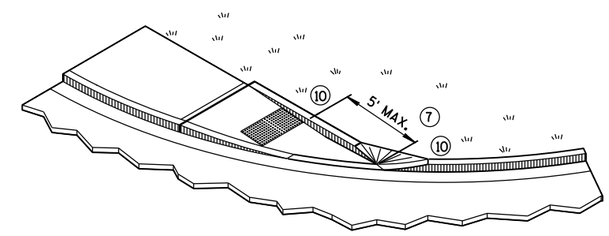

ISOMETRIC VIEW FOR TYPE 4A

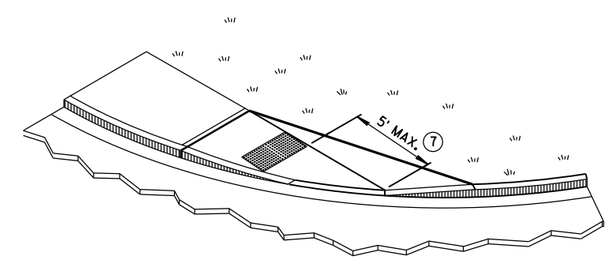

ISOMETRIC VIEW FOR TYPE 4A1

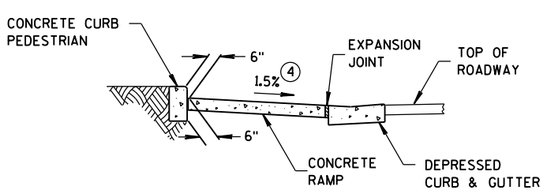

SECTION C-C FOR TYPE 4A

* MAXIMUM 2.0% SLOPE IN ALL DIRECTIONS IN FRONT OF GRADE BREAK

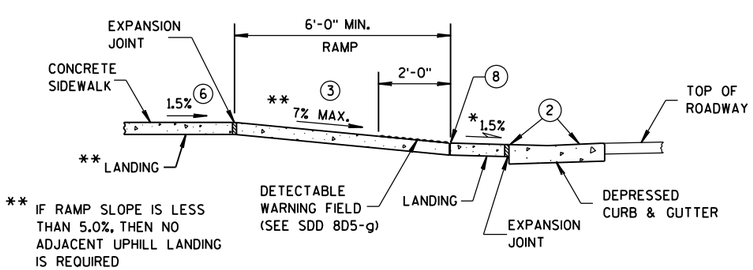

** IF RAMP SLOPE IS LESS THAN 5.0%, THEN NO ADJACENT UPHILL LANDING IS REQUIRED

SECTION B-B FOR TYPE 4A

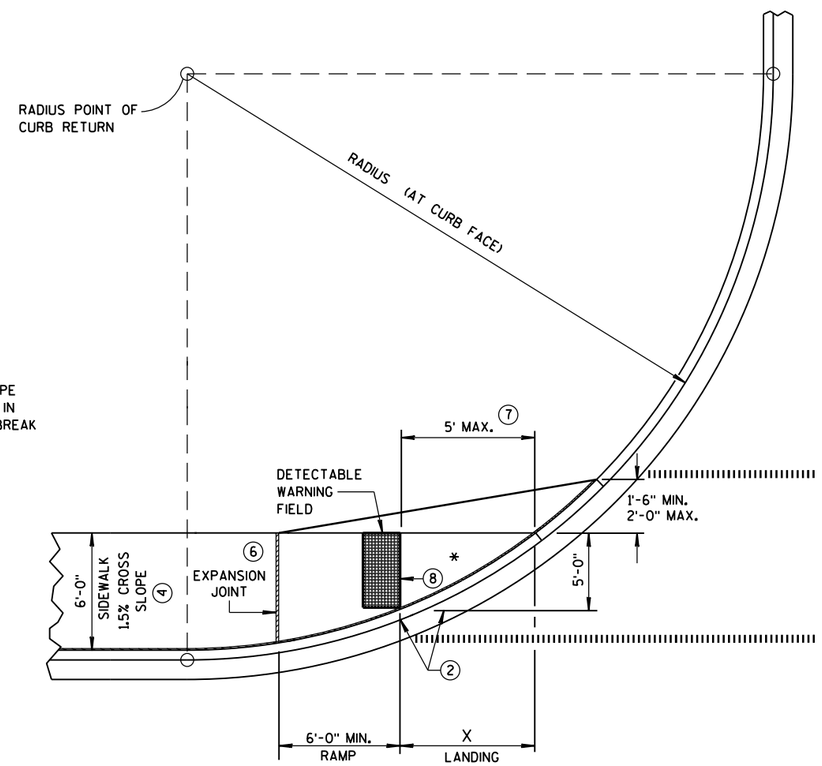

CURB RAMP TYPE 4A1
PLAN VIEW

LEGEND

½" EXPANSION JOINT-SIDEWALK

CONTRACTION JOINT FIELD LOCATED

PAVEMENT MARKING CROSSWALK (WHITE)

CURB RAMPS
TYPES 4A AND 4A1

STATE OF WISCONSIN
DEPARTMENT OF TRANSPO

6

S.D.D. 8 D 5-19c

RADIUS (AT CURB FACE)	W = 3' - 0"		W = 4' - 0"		W = 5' - 0"		W = 6' - 0"		W = 7' - 0"		W = 8' - 0"		W = 9' - 0"		W = 10' - 0"	
	X	Y	X	Y	X	Y	X	Y	X	Y	X	Y	X	Y	X	Y
10 FEET	2'-10¼"	0'-5"	2'-1"	1'-4½"	1'-5"	2'-1"	0'-10"	2'-7½"	0'-3¼"	3'-0¼"						
15 FEET	4'-6¾"	2'-1¾"	3'-9"	3'-5¼"	3'-1¼"	4'-6"	2'-6¾"	5'-4½"	2'-1"	6'-1"	1'-8"	6'-8½"	1'-3¼"	7'-2½"	0'-10¾"	7'-7¼"
20 FEET	5'-9¾"	3'-6½"	4'-11½"	5'-1¾"	4'-3¼"	6'-5½"	3'-8¾"	7'-7"	3'-3"	8'-6½"	2'-10"	9'-4½"	2'-5½"	10'-1¼"	2'-1¼"	10'-9"
30 FEET			6'-9¼"	7'-11¼"	6'-0¼"	9'-8"	5'-5"	11'-1¾"	4'-10¾"	12'-5¾"	4'-5½"	13'-7¾"	4'-0¾"	14'-8½"	3'-8½"	15'-8¼"
40 FEET									6'-1¾"	15'-8½"	5'-8"	17'-2"	5'-3"	18'-5¾"	4'-10¾"	19'-8¼"
50 FEET															5'-10¼"	23'-2"

INTERMEDIATE RADII CAN BE INTERPOLATED
DIMENSION "Y" IS CALCULATED BASED ON 6'-0" RAMP LENGTH
DIMENSION "X" IS CALCULATED BASED ON 5'-0" SIDEWALK WIDTH

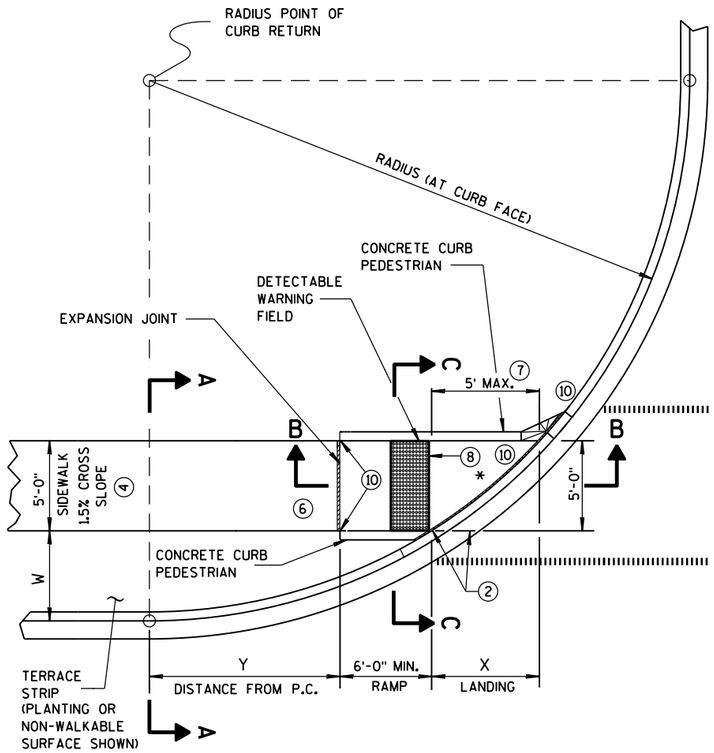

CURB RAMP TYPE 4B
PLAN VIEW

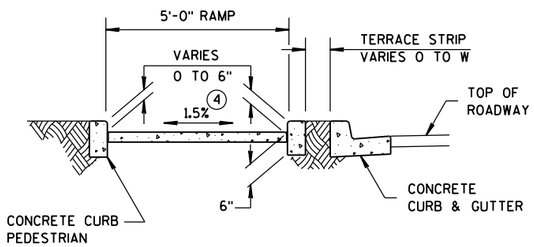

SECTION C-C FOR TYPE 4B

GENERAL NOTES

AVOID PLACING DRAINAGE STRUCTURES, JUNCTION BOXES OR OTHER OBSTRUCTIONS IN FRONT OF RAMP ACCESS AREAS.

DETECTABLE WARNING FIELDS THAT ARE INSTALLED AS A GROUP OR SIDE BY SIDE, SHALL BE FROM THE SAME MANUFACTURER.

(2) GRADE CHANGE BETWEEN GUTTER FLAG SLOPE AND THE CURB RAMP SLOPE SHALL NOT EXCEED 11%. MAXIMUM GUTTER FLAG SLOPE IS 4%. PROVIDE LONGITUDINAL DRAINAGE AROUND CURB AND AWAY FROM CURB RAMP. NO VERTICAL LIPS OR DISCONTINUITIES GREATER THAN ¼-INCH ARE ALLOWED. SLOPE OF CURB HEAD OPENING SHALL MATCH THE RAMP SLOPE, MINIMALLY 1.5% AND NOT TO EXCEED 7%. WHEN ADJACENT TO 1.5% LANDING, CONSTRUCT CURB HEAD OPENING AT 1.5% IN THE DIRECTION OF PEDESTRIAN TRAVEL.

(3) ABSOLUTE MAXIMUM 12H:1V (8.33%) CURB RAMP SLOPE IS ALLOWABLE WITH FLATTENED GUTTER FLAG SLOPE AND NOT TO EXCEED 11% GRADE CHANGE.

(4) ±0.5% CONSTRUCTION TOLERANCE IN SIDEWALK CROSS SLOPE. THE SIDEWALK CROSS SLOPE SHALL NOT EXCEED 2% WITHOUT PRIOR APPROVAL FROM THE ENGINEER.

(6) PROVIDE A LEVEL LANDING (MAXIMUM 2% SLOPE) IN ANY DIRECTION OF PEDESTRIAN TRAVEL. STANDARD LANDING SIZE IS 5 FEET X 5 FEET.

(7) WHEN THIS GRADE BREAK DISTANCE EXCEEDS 5 FEET, USE RADIAL DETECTABLE WARNING FIELD PER SDD 8D5-f.

(8) PROVIDE GRADE BREAK PERPENDICULAR TO DIRECTION OF WHEELCHAIR TRAVEL.

(10) INSTALL TRANSITION NOSE. (INCIDENTAL TO OTHER PAY ITEMS). DO NOT MARK TRANSITION NOSE.

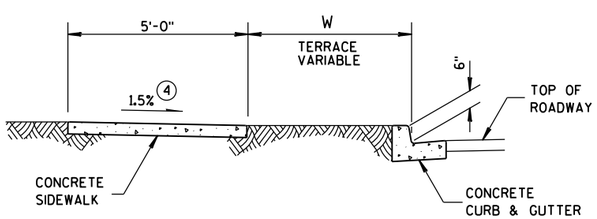

SECTION A-A FOR TYPE 4B

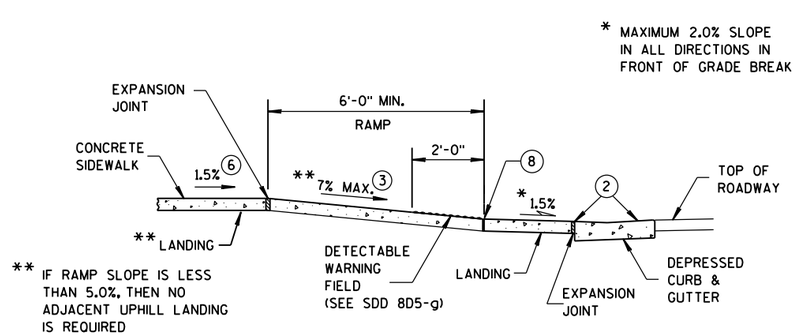

SECTION B-B FOR TYPE 4B

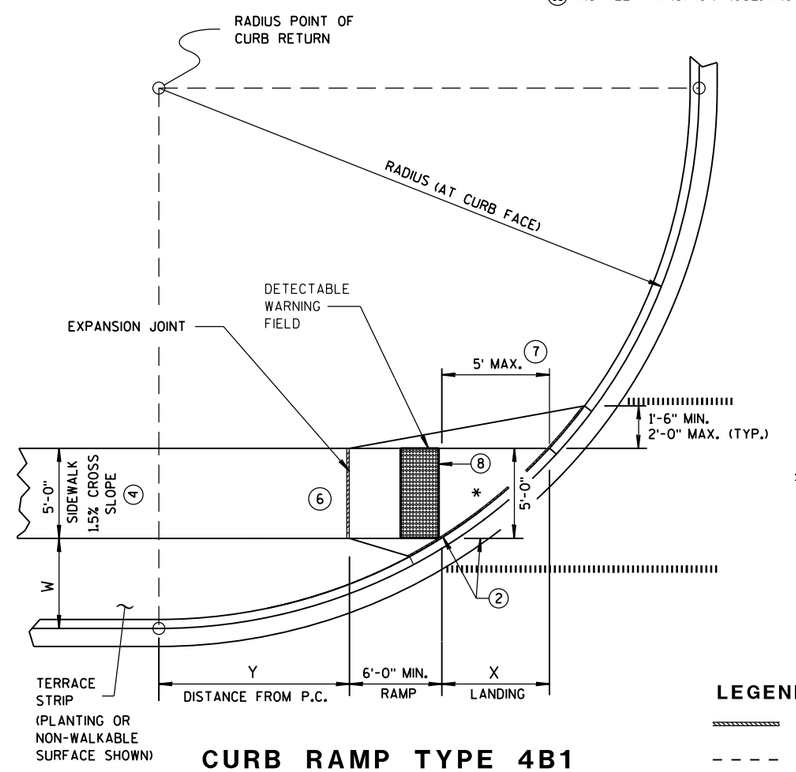

CURB RAMP TYPE 4B1
PLAN VIEW

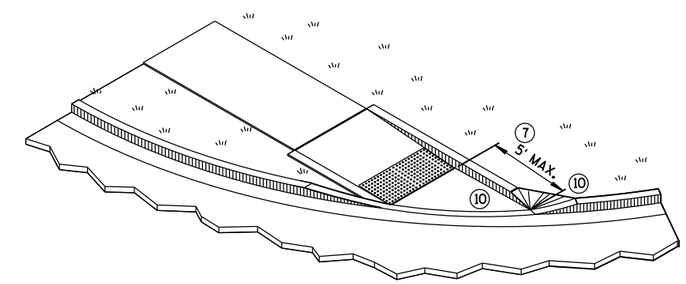

ISOMETRIC VIEW FOR TYPE 4B

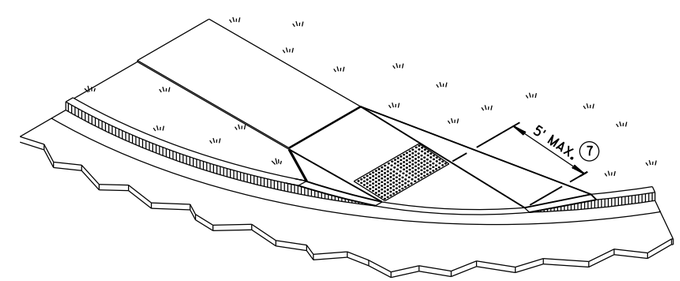

ISOMETRIC VIEW FOR TYPE 4B1

LEGEND

- ½" EXPANSION JOINT-SIDEWALK
- CONTRACTION JOINT FIELD LOCATED
- PAVEMENT MARKING CROSSWALK (WHITE)

CURB RAMPS
TYPE 4B AND 4B1

STATE OF WISCONSIN
DEPARTMENT OF TRANSPO

6

6

S.D.D. 8 D 5-19d

S.D.D. 8 D 5-19d

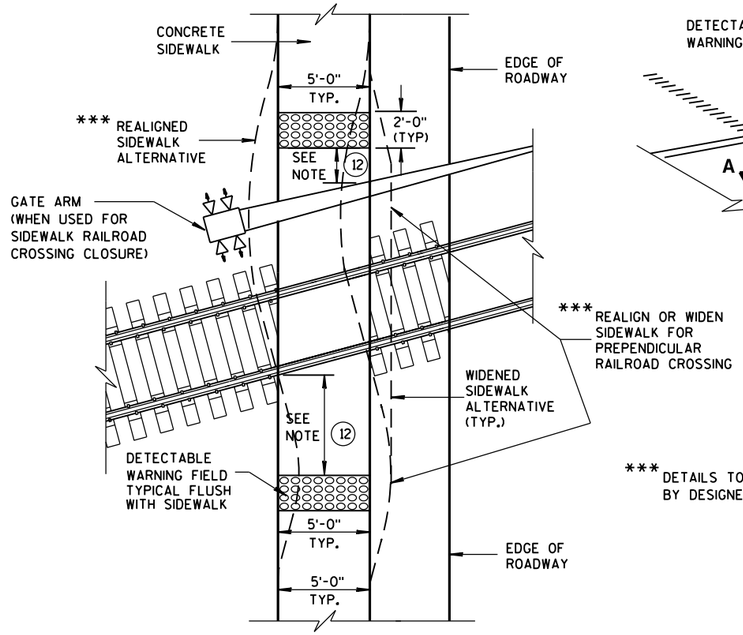

TYPE 8
DETECTABLE WARNINGS AT RAILROAD CROSSING

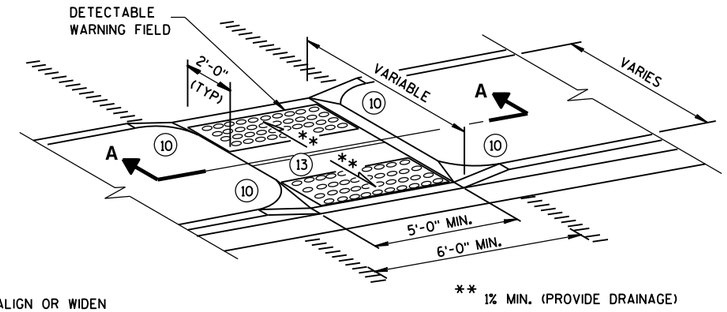

*** DETAILS TO BE DETERMINED BY DESIGNER

MEDIAN ISLAND NON-ELEVATED PEDESTRIAN CROSSING
TYPE 5

GENERAL NOTES

AVOID PLACING DRAINAGE STRUCTURES, JUNCTION BOXES OR OTHER OBSTRUCTIONS IN FRONT OF RAMP ACCESS AREAS.

SIDEWALK CROSS SLOPE SHALL NOT EXCEED 2%.

DETECTABLE WARNING FIELDS THAT ARE INSTALLED AS A GROUP OR SIDE BY SIDE, SHALL BE FROM THE SAME MANUFACTURER.

(2) GRADE CHANGE BETWEEN GUTTER FLAG SLOPE AND THE CURB RAMP SLOPE SHALL NOT EXCEED 11%. MAXIMUM GUTTER FLAG SLOPE IS 4%. PROVIDE LONGITUDINAL DRAINAGE AROUND CURB AND AWAY FROM CURB RAMP. NO VERTICAL LIPS OR DISCONTINUITIES GREATER THAN 1/4-INCH ARE ALLOWED. SLOPE OF CURB HEAD OPENING SHALL MATCH THE RAMP SLOPE, MINIMALLY 1.5% AND NOT TO EXCEED 7%. WHEN ADJACENT TO 1.5% LANDING, CONSTRUCT CURB HEAD OPENING AT 1.5% IN THE DIRECTION OF PEDESTRIAN TRAVEL.

(3) ABSOLUTE MAXIMUM 12H:1V (8.33%) CURB RAMP SLOPE IS ALLOWABLE WITH FLATTENED GUTTER FLAG SLOPE AND NOT TO EXCEED 11% GRADE CHANGE.

(4) ±0.5% CONSTRUCTION TOLERANCE IN SIDEWALK CROSS SLOPE. THE SIDEWALK CROSS SLOPE SHALL NOT EXCEED 2% WITHOUT PRIOR APPROVAL FROM THE ENGINEER.

(6) PROVIDE A LEVEL LANDING (MAXIMUM 2% SLOPE) IN ANY DIRECTION OF PEDESTRIAN TRAVEL. STANDARD LANDING SIZE IS 5 FEET X 5 FEET.

(10) INSTALL TRANSITION NOSE. (INCIDENTAL TO OTHER PAY ITEMS). DO NOT MARK TRANSITION NOSE.

(11) SLOPE SIDEWALK TOWARD LANDING AS SHOWN WHERE THERE IS NO TERRACE OR WHERE THE TERRACE WIDTH IS LESS THAN 6 FEET WIDE.

(12) THE EDGE OF THE DETECTABLE WARNING FIELD NEAREST TO A RAILROAD CROSSING SHALL BE 1.5 FEET ± 0.1' FROM THE FACE OF THE GATE ARM IF THE GATE ARM EXTENDS ACROSS THE SIDEWALK. WHERE THERE IS NO PEDESTRIAN GATE, THE EDGE OF THE DETECTABLE WARNING FIELD NEAREST TO THE RAILROAD CROSSING SHALL BE 15 FEET FROM THE NEAREST RAIL.

(13) DO NOT INSTALL DETECTABLE WARNING FIELDS AT THE EDGES OF STREET-LEVEL PEDESTRIAN REFUGE ISLANDS IF A MINIMUM 2-FOOT CONCRETE SURFACE WITHOUT DETECTABLE WARNINGS (MEASURED IN THE DIRECTION OF PEDESTRIAN TRAVEL) CANNOT BE ACHIEVED.

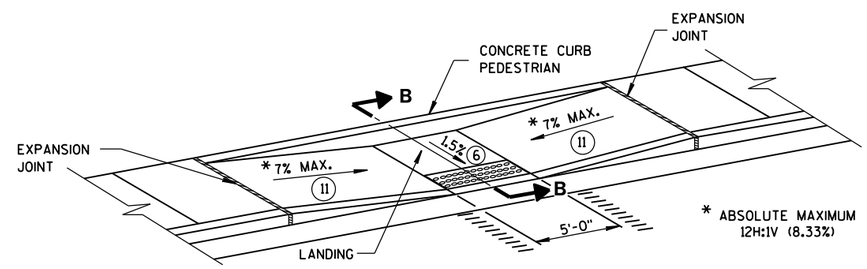

MID-BLOCK CROSSING
TYPE 7A

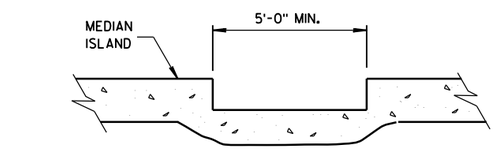

SECTION A-A

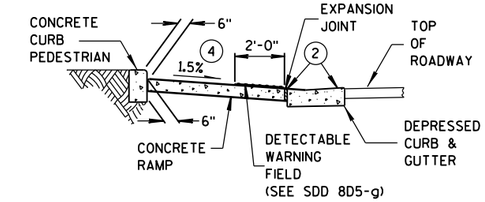

SECTION B-B

REFER TO GENERAL NOTES (2) AND (3) FOR ALL ISLAND CURB RAMPS

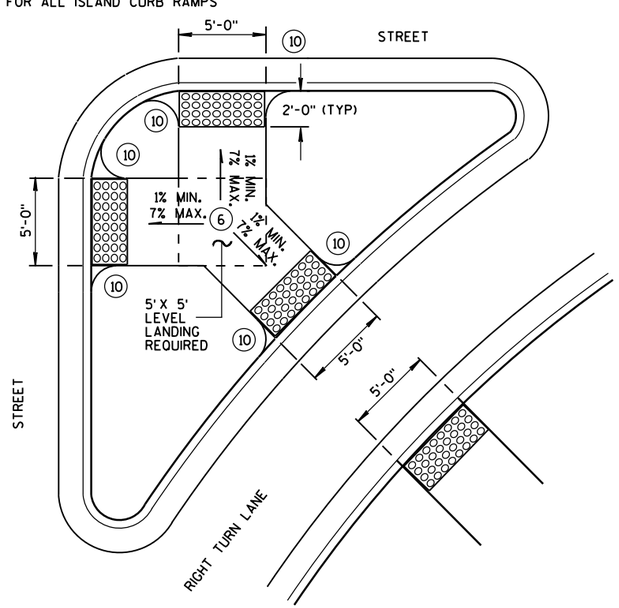

TYPE 6
DETECTABLE WARNING AT ISLANDS

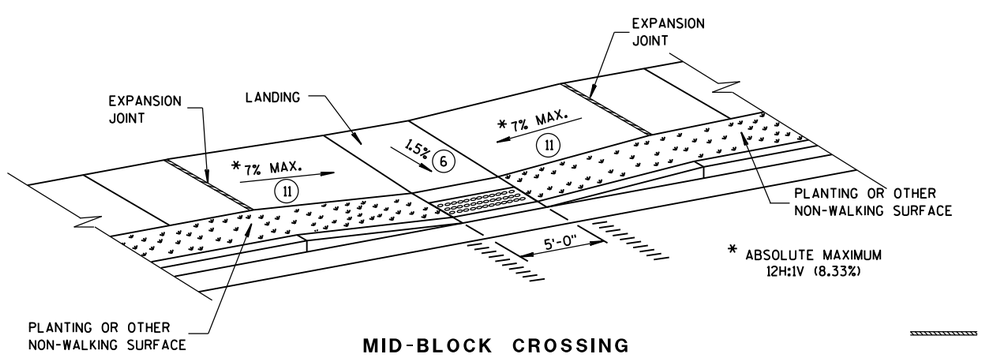

MID-BLOCK CROSSING
TYPE 7B

NOTE: THESE PARALLEL AND PARALLEL/PERPENDICULAR CURB RAMPS MAY BE USED AT INTERSECTIONS AND MID BLOCK LOCATIONS.

LEGEND

- ½" EXPANSION JOINT-SIDEWALK
- CONTRACTION JOINT FIELD LOCATED
- PAVEMENT MARKING CROSSWALK (WHITE)

CURB RAMPS
TYPES 5, 6, 7A, 7B & 8

STATE OF WISCONSIN
DEPARTMENT OF TRANSPOI

6

S.D.D. 8 D 5-19e

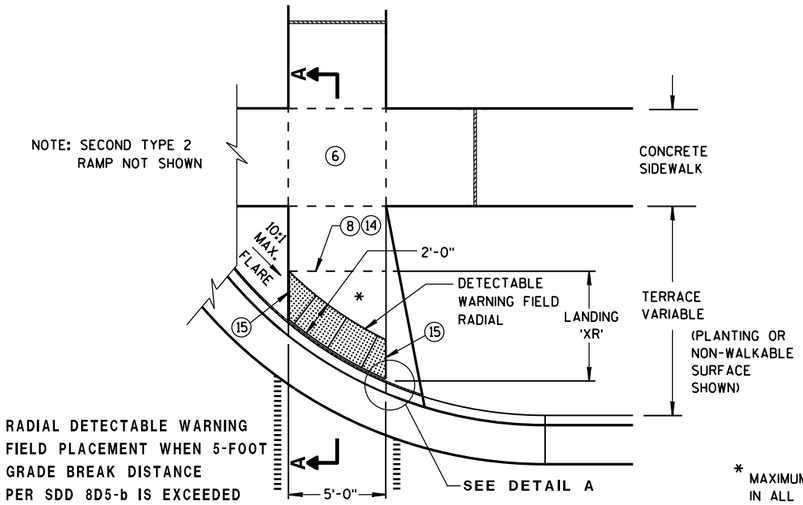

TYPE 2 RAMP
PLAN VIEW
(GRADE BREAK DISTANCE GREATER THAN 5 FEET)

(ON LINE WITH SIDEWALK)

* MAXIMUM 2.0% SLOPE IN ALL DIRECTIONS IN FRONT OF GRADE BREAK

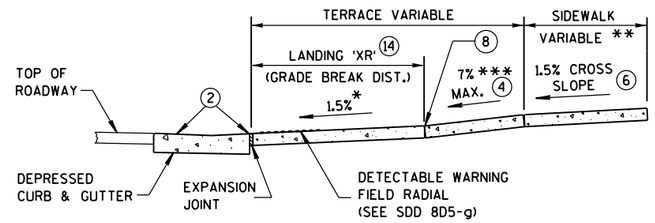

** WIDTH SHOWN ELSEWHERE IN THE PLANS

*** ABSOLUTE MAXIMUM 12H:1V (8.33%)

SECTION A-A

LEGEND

- ½" EXPANSION JOINT-SIDEWALK
- CONTRACTION JOINT FIELD LOCATED
- PAVEMENT MARKING CROSSWALK (WHITE)

GENERAL NOTES

AVOID PLACING DRAINAGE STRUCTURES, JUNCTION BOXES OR OTHER OBSTRUCTIONS IN FRONT OF RAMP ACCESS AREAS.

DETECTABLE WARNING FIELDS (DWFs) THAT ARE INSTALLED AS A GROUP OR SIDE BY SIDE, SHALL BE FROM THE SAME MANUFACTURER.

APPLY RADIAL DETECTABLE WARNING PLACEMENT SIMILARLY FOR TYPE 4A AND 4A1 CURB RAMPS AND SIMILARLY FOR TYPE 4B AND 4B1 CURB RAMPS. TYPE 4A AND 4B CURB RAMPS ARE NOT SHOWN.

REFER TO SDD 8D5-g FOR ADDITIONAL RADIAL PLATE REQUIREMENTS.

FIELD CUTS AT INTERMEDIATE JOINTS WITHIN THE RADIAL DETECTABLE WARNING FIELD ARE PROHIBITED.

DETERMINE FINAL RADIAL WARNING FIELD CONFIGURATION AND ITS INDIVIDUAL PLATE LOCATIONS. PERFORM PRE-LAYOUT PRIOR TO PLACEMENT IN PLASTIC CONCRETE. FOLLOW MANUFACTURER'S PRODUCT LIST AND INSTALLATION RECOMMENDATIONS.

(2) GRADE CHANGE BETWEEN GUTTER FLAG SLOPE AND THE CURB RAMP SLOPE SHALL NOT EXCEED 11%. MAXIMUM GUTTER FLAG SLOPE IS 4%. PROVIDE LONGITUDINAL DRAINAGE AROUND CURB AND AWAY FROM CURB RAMP. NO VERTICAL LIPS OR DISCONTINUITIES GREATER THAN ¼-INCH ARE ALLOWED. SLOPE OF CURB HEAD OPENING SHALL MATCH THE RAMP SLOPE, MINIMALLY 1.5% AND NOT TO EXCEED 7%. WHEN ADJACENT TO 1.5% LANDING, CONSTRUCT CURB HEAD OPENING AT 1.5% IN THE DIRECTION OF PEDESTRIAN TRAVEL.

(3) ABSOLUTE MAXIMUM 12H:1V (8.33%) CURB RAMP SLOPE IS ALLOWABLE WITH FLATTENED GUTTER FLAG SLOPE AND NOT TO EXCEED 11% GRADE CHANGE.

(4) ±0.5% CONSTRUCTION TOLERANCE IN SIDEWALK CROSS SLOPE. THE SIDEWALK CROSS SLOPE SHALL NOT EXCEED 2% WITHOUT PRIOR APPROVAL FROM THE ENGINEER.

(6) PROVIDE A LEVEL LANDING (MAXIMUM 2% SLOPE) IN ANY DIRECTION OF PEDESTRIAN TRAVEL. STANDARD LANDING SIZE IS 5 FEET X 5 FEET.

(8) PROVIDE GRADE BREAK PERPENDICULAR TO DIRECTION OF WHEELCHAIR TRAVEL.

(14) CONSULT ENGINEER IF GRADE BREAK LOCATION (END OF LANDING DIMENSION 'XR') REQUIRES FIELD ADJUSTMENT WHEN ESTABLISHING FINAL RADIAL DETECTABLE WARNING FIELD LOCATION.

(15) FIELD SAW CUTS ALONG RADIAL DETECTABLE WARNING PLATES WILL BE NECESSARY TO MATCH EACH CURB RAMP EDGE. AVOID CUTTING THROUGH DOMES WHENEVER POSSIBLE. MAKE FIELD CUTS TRUE TO LINE AND WITHIN 1/8" DEVIATION. SMOOTH EDGES OF FIELD CUT PLATES.

(16) USE 1'X 2' RECTANGULAR END PLATE AT END OF TYPE 4A1 RAMP AND PROVIDE MINIMUM 2'-0" DETECTABLE WARNING FIELD COVERAGE (IN DIRECTION OF PEDESTRIAN TRAVEL) ALONG THE ENTIRE CURB RAMP WIDTH.

(17) A MAXIMUM 3-INCH CONCRETE BORDER WIDTH IS ALLOWABLE IN FRONT OF RADIAL DETECTABLE WARNING FIELD FOR CONSTRUCTABILITY PURPOSES. CONCRETE BORDER WIDTH MAY VARY UP TO 1 INCH.

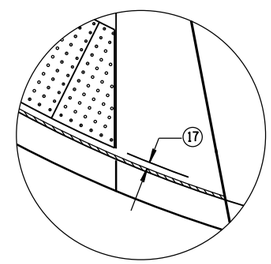

DETAIL A

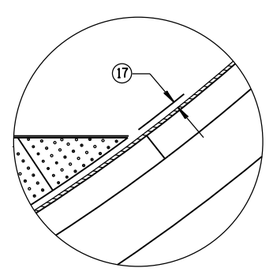

DETAIL B

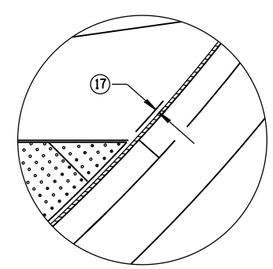

DETAIL C

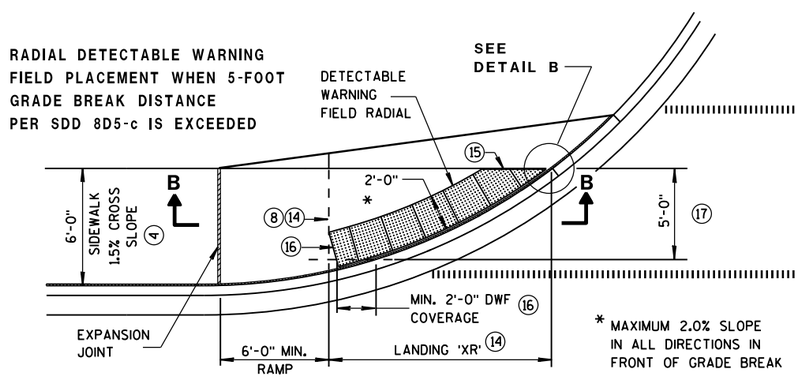

* MAXIMUM 2.0% SLOPE IN ALL DIRECTIONS IN FRONT OF GRADE BREAK

CURB RAMP TYPE 4A1
PLAN VIEW
(GRADE BREAK DISTANCE GREATER THAN 5 FEET)

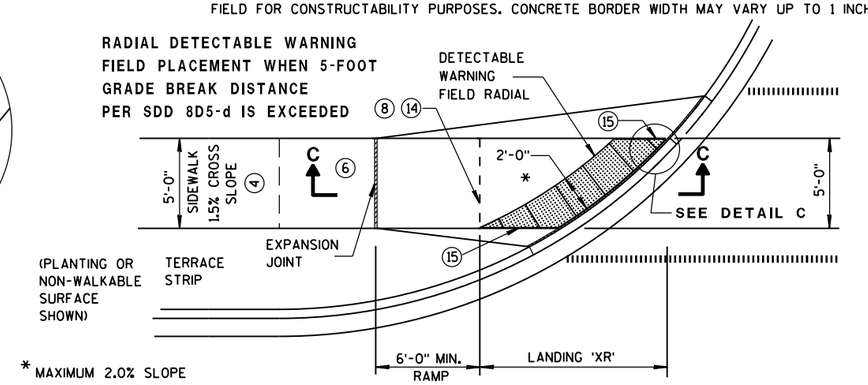

* MAXIMUM 2.0% SLOPE IN ALL DIRECTIONS IN FRONT OF GRADE BREAK

CURB RAMP TYPE 4B1
PLAN VIEW
(GRADE BREAK DISTANCE GREATER THAN 5 FEET)

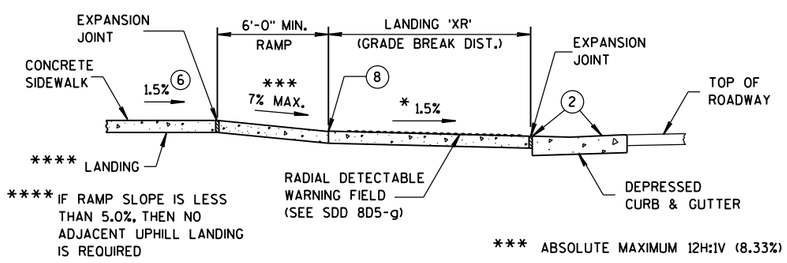

**** IF RAMP SLOPE IS LESS THAN 5.0%, THEN NO ADJACENT UPHILL LANDING IS REQUIRED

*** ABSOLUTE MAXIMUM 12H:1V (8.33%)

SECTION B-B FOR TYPE 4A1

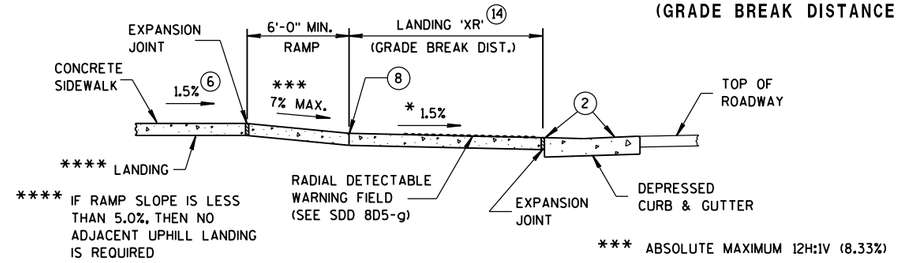

**** IF RAMP SLOPE IS LESS THAN 5.0%, THEN NO ADJACENT UPHILL LANDING IS REQUIRED

*** ABSOLUTE MAXIMUM 12H:1V (8.33%)

SECTION C-C FOR TYPE 4B1

CURB RAMPS
RADIAL DETECTABLE WARNING FIELD APPLICATIONS

STATE OF WISCONSIN
DEPARTMENT OF TRANSPORTATION

6

6

S.D.D. 8 D 5-19f

S.D.D. 8 D 5-19f

	MIN.	MAX.
A	1.6"	2.4"
B	0.65"	1.5"
C	*	*
D	0.9"	1.4"

* THE C DIMENSION IS 50% TO 65% OF THE D DIMENSION.

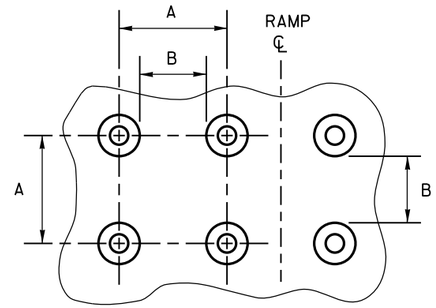

PLAN VIEW

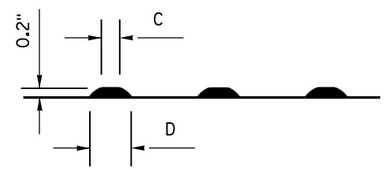

ELEVATION VIEW

TRUNCATED DOMES

DETECTABLE WARNING PATTERN DETAIL

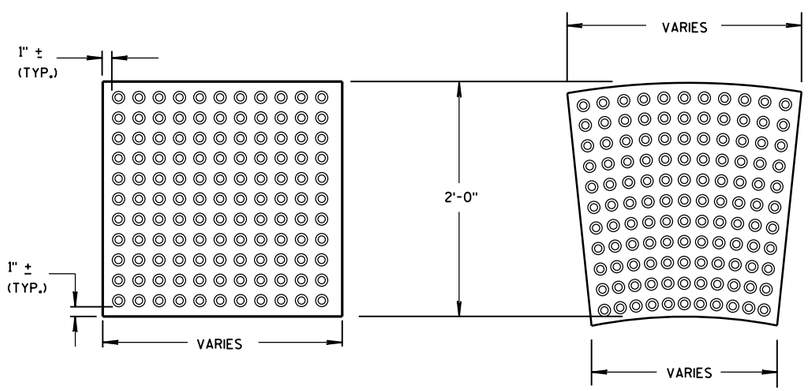

RECTANGULAR PLATES

RADIAL PLATES

DETECTABLE WARNING FIELDS (TYPICAL)

PLAN VIEW

GENERAL NOTES

DETECTABLE WARNING FIELDS THAT ARE INSTALLED AS A GROUP OR SIDE BY SIDE, SHALL BE FROM THE SAME MANUFACTURER.

PLACE ALL DETECTABLE WARNING FIELD SYSTEMS IN ACCORDANCE TO THE MANUFACTURER'S RECOMMENDATION.

FIELD CUTS AT INTERMEDIATE JOINTS WITHIN THE RADIAL DETECTABLE WARNING FIELD ARE PROHIBITED.

DETERMINE FINAL RADIAL WARNING FIELD CONFIGURATION AND ITS INDIVIDUAL PLATE LOCATIONS. PERFORM PRE-LAYOUT PRIOR TO PLACEMENT IN PLASTIC CONCRETE. FOLLOW MANUFACTURER'S PRODUCT LIST AND INSTALLATION RECOMMENDATIONS.

FOR RADIAL DETECTABLE WARNING FIELD APPLICATIONS WHERE STANDARD RADIAL PLATES ARE NOT AVAILABLE AT AN INTERSECTION CURB RADIUS, A COMBINATION OF SQUARE OR RECTANGULAR PLATES AND RADIAL PLATES MAY BE USED TO FORM RADIAL CONFIGURATION. RADIAL WEDGES IN COMBINATION WITH SQUARE PANELS ARE ALSO ACCEPTABLE. FOLLOW MANUFACTURER'S RECOMMENDATIONS.

REFER TO CONTRACT AND STANDARD SPECIFICATIONS FOR FIELD CUTTING REQUIREMENTS.

DO NOT EMBED IN CONCRETE ANY FIELD-CUT PLATES WITH CUT EDGES SHORTER THAN 6 INCHES. CONSULT WITH MANUFACTURER FOR RE-DRILLING AND ANCHORING REQUIREMENTS OF FIELD-CUT PLATES.

(15) FIELD SAW CUTS ALONG RADIAL DETECTABLE WARNING PLATES WILL BE NECESSARY TO MATCH EACH CURB RAMP EDGE. AVOID CUTTING THROUGH DOMES WHENEVER POSSIBLE. MAKE FIELD CUTS TRUE TO LINE AND WITHIN 1/8" DEVIATION. SMOOTH EDGES OF FIELD CUT PLATES.

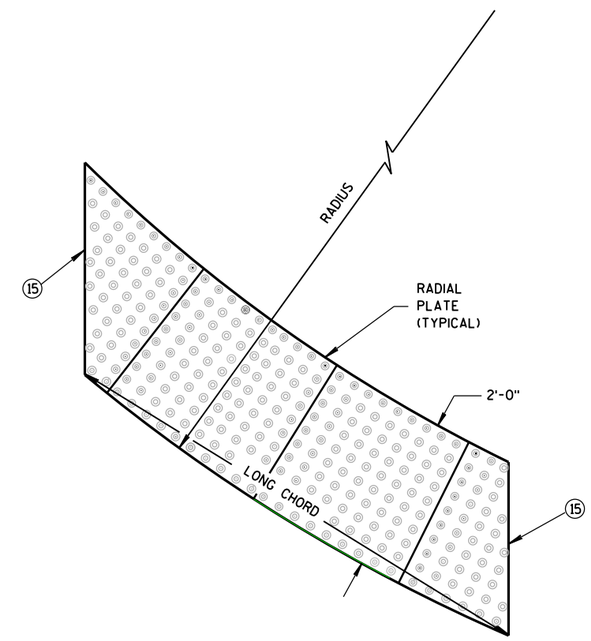

RADIAL DETECTABLE WARNING FIELD ATTRIBUTES

CURB RAMPS
RECTANGULAR AND RADIAL
DETECTABLE WARNING PLATES

STATE OF WISCONSIN
DEPARTMENT OF TRANSPORTATION

APPROVED
June, 2017 — DATE
/S/ Rodney Taylor — ROADWAY STANDARDS UNIT SUPERV
ENT
FHWA

6

S.D.D. 8 D 5-19g

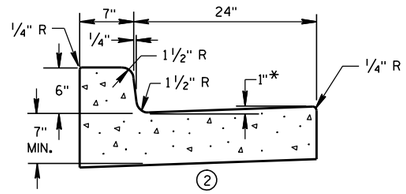

1 CONCRETE CURB & GUTTER 31"

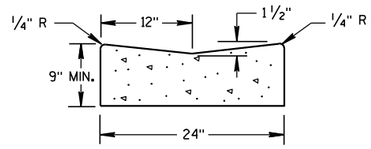

1 CONCRETE GUTTER 24"

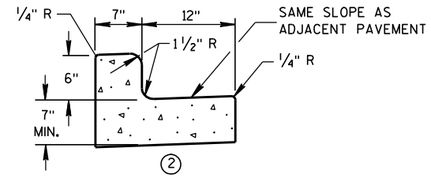

1 CONCRETE CURB & GUTTER 19"

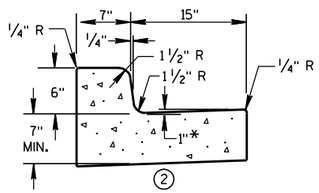

1 CONCRETE CURB & GUTTER 22"

* TO BE MEASURED TO A MAXIMUM OF 3" WHERE DRAINAGE PROBLEMS EXIST.

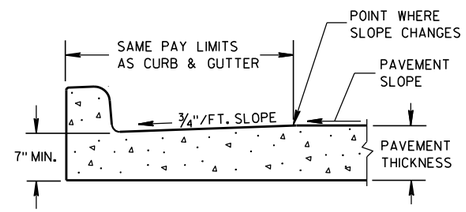

PARTIAL SECTION OF PAVEMENT WITH INTEGRAL CURB & GUTTER

GENERAL NOTES

DETAILS OF CONSTRUCTION, MATERIALS AND WORKMANSHIP NOT SHOWN ON THIS DRAWING SHALL CONFORM TO THE PERTINENT REQUIREMENTS OF THE CONTRACT.

PAVEMENT TIES AND TIE BARS SHALL BE EPOXY COATED IN CONFORMANCE WITH SUBSECTION 505.2.6.2 OF THE STANDARD SPECIFICATIONS.

INTEGRAL CURB & GUTTER SHALL CONFORM TO THE DETAILS SHOWN FOR CONCRETE CURB & GUTTER INCLUDING THE TRANSVERSE GUTTER SLOPE. A LONGITUDINAL CONSTRUCTION JOINT IS NOT REQUIRED WITH INTEGRAL CURB AND GUTTER.

WHERE THE TRANSVERSE JOINTS IN THE PAVEMENT ARE REQUIRED TO BE SEALED, THE JOINTS IN THE INTEGRAL CURB AND GUTTER SHALL BE SEALED TO THE FACE OF CURB WITH THE SAME TYPE OF SEALANT. THE COST OF FURNISHING AND INSTALLING THIS SEALANT SHALL BE INCIDENTAL TO THE ITEM CONCRETE CURB AND GUTTER.

UNLESS OTHERWISE SHOWN ON THE TYPICAL CROSS SECTIONS, THE BASE COURSE AND UNCLASSIFIED EXCAVATION LIMITS ARE 2'-0" BEHIND THE BACK OF CURB.

1 WHEN PLACED ADJACENT TO NEW CONCRETE, TIE BARS ARE REQUIRED FOR CURB AND GUTTER 31", 22", 19" AND CONCRETE GUTTER 24".

2 THE BOTTOM OF CURB AND GUTTER MAY BE CONSTRUCTED EITHER LEVEL OR PARALLEL TO THE SLOPE OF THE SUBGRADE OR BASE COURSE PROVIDED A 7" MIMIMUM GUTTER THICKNESS IS MAINTAINED.

3 WHEN HIGH SIDE CURB SECTION IS REQUIRED, THE LOCATION(S) WILL BE NOTED ON THE PLAN.

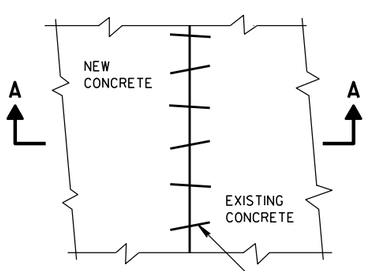

PLAN VIEW

EXISTING AND NEW CONCRETE MAY BE CURB & GUTTER, SURFACE DRAIN, PAVEMENT OR OTHER CONCRETE STRUCTURE.

NO. 6 X 12" DEF. BARS SPACED 3'-0" C-C, INSTALLED ON 6:1 SKEW HORIZONTALLY. DIRECTION OF SKEW ALTERNATING AFTER EVERY ONE OR TWO BARS.

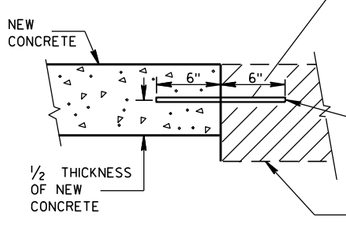

THE HOLE FOR THE BAR SHALL BE DRILLED TO A DEPTH OF 7" AND TO A DIAMETER TO PROVIDE A TIGHT DRIVEN FIT.

SECTION A-A

PAVEMENT TIES

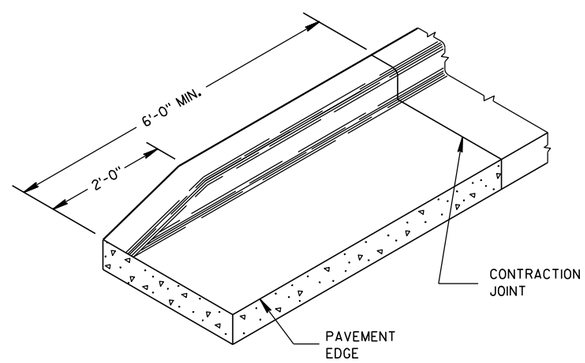

END SECTION CURB & GUTTER

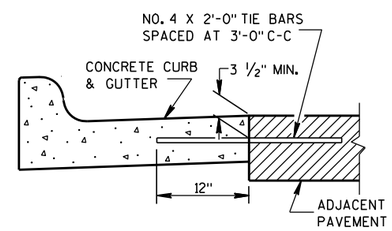

1 TYPICAL TIE BAR LOCATION

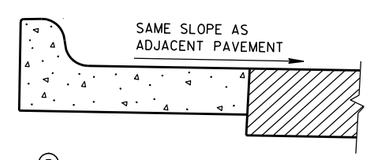

3 HIGH SIDE SECTION

(TYPICAL FOR ALL CURB & GUTTER)

CONCRETE GUTTER, CURB AND GUTTER AND PAVEMENT TIES

(For Optional Use in Milwaukee Co. Only)

STATE OF WISCONSIN
DEPARTMENT OF TRANSPORTATION

APPROVED

11/2/2010 — DATE

/S/ Jerry Zogg — ROADWAY STANDARDS ENGINEER

ENT

FHWA

6

S.D.D. 8 D 16-10

INLET COVERS

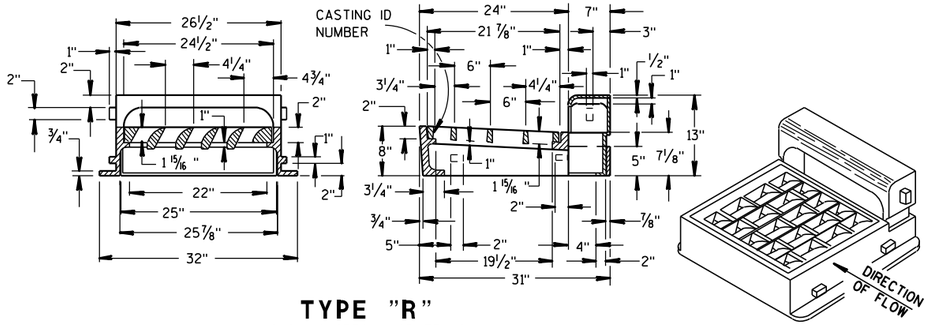

TYPE "R"

SHOWING SPECIAL GRATE NO. 1
(TO BE NOTED AS R-1 IN DRAINAGE TABLE)

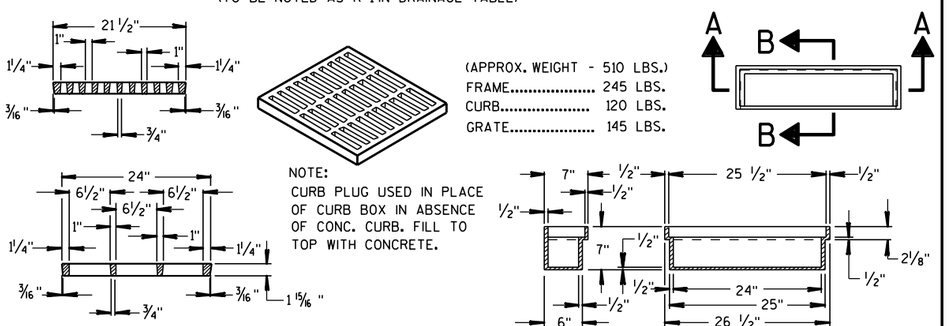

(APPROX. WEIGHT - 510 LBS.)
FRAME..... 245 LBS.
CURB..... 120 LBS.
GRATE..... 145 LBS.

NOTE:
CURB PLUG USED IN PLACE OF CURB BOX IN ABSENCE OF CONC. CURB. FILL TO TOP WITH CONCRETE.

SECTION B-B SECTION A-A

GRATE FOR TYPE "R" INLET COVER

(GRATE..... 150 LBS.)
(TO BE USED UNLESS OTHERWISE NOTED IN DRAINAGE TABLE)

SPECIAL CURB PLUG "P"

(CURB PLUG..... 85 LBS.)
(TO BE NOTED AS R-P IN DRAINAGE TABLE)

'H' = 9" FOR 6" CURB
'H' = 11" FOR 8" CURB
'G' = 13 ¾" FOR 6" CURB
'G' = 15 ¾" FOR 8" CURB

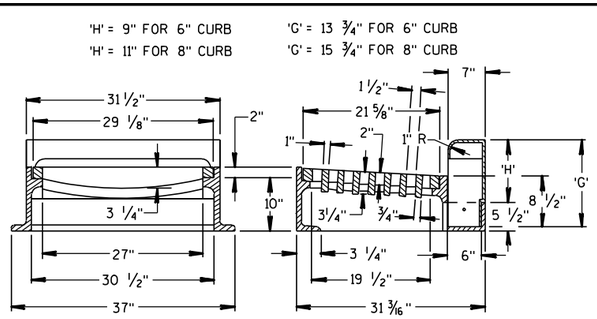

TYPE "W"

(APPROX. WEIGHT - 670 LBS.)
FRAME..... 350 LBS.
CURB BOX..... 135 LBS.
GRATE..... 185 LBS.

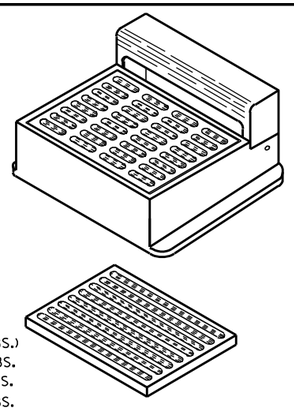

ALTERNATE GRATE
(FOR EXPRESSWAY RAMPS)

TYPES "W" & "X"

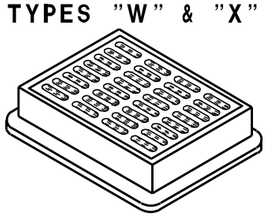

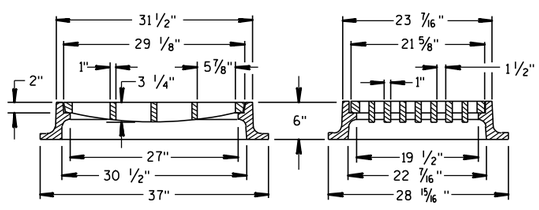

TYPE "X"

(APPROX. WEIGHT - 470 LBS.)

MANHOLE COVER

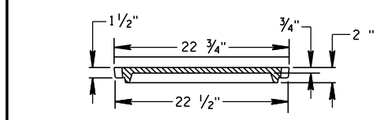

SECTION C-C

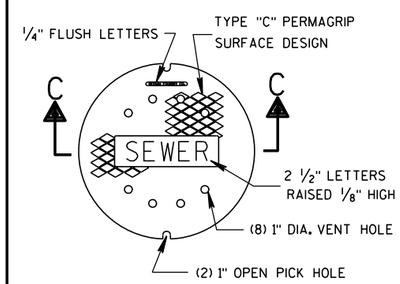

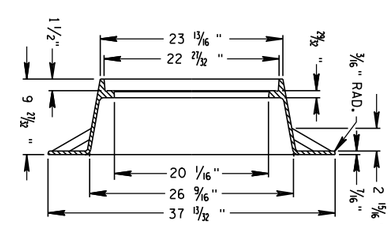

TYPE "Q"

(APPROX. WEIGHT - 290 LBS.)

TABLE OF DIMENSIONS

TYPE	'A'	'B'	'C'
11	3'-6"	2'-8"	12" - 36"*
12	4'-0"	3'-8"	12" - 42"**
13	5'-0"	5'-8"	42" - 48"
14	6'-0"	7'-8"	54" - 60"

* 12" - 21" FOR PRECAST MANHOLES
** 12" - 24" FOR PRECAST MANHOLES

THE FIRST STEP SHALL BE PLACED 16" ABOVE THE BENCH.

MANHOLE

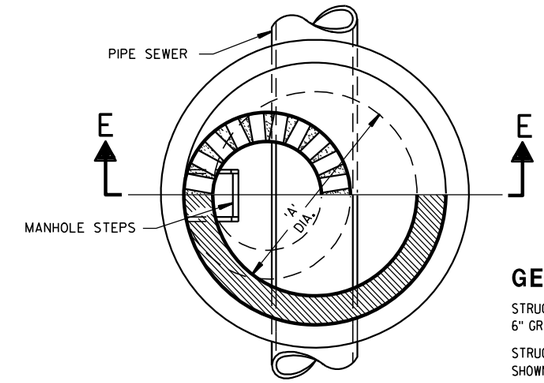

HALF SECTION D-D

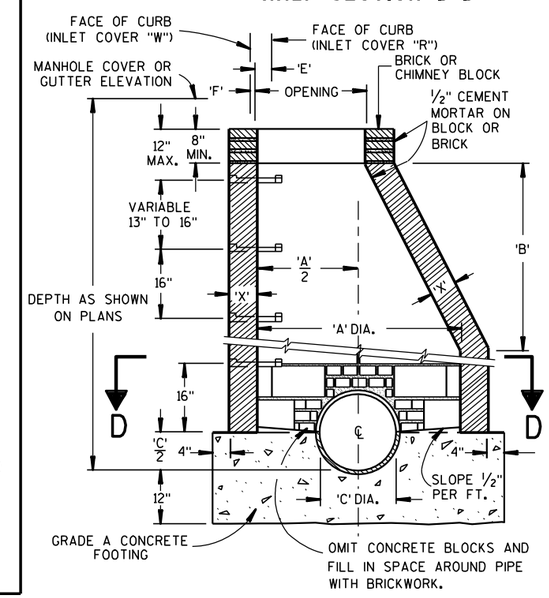

SECTION E-E

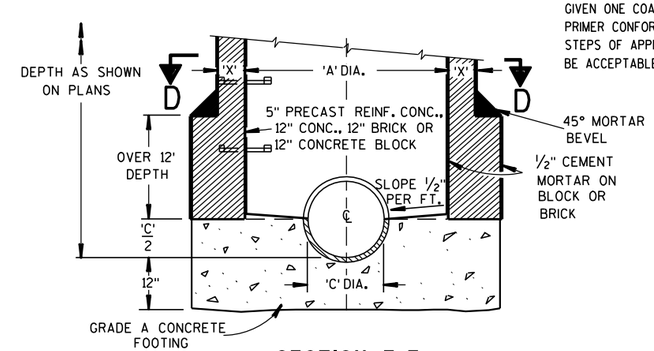

SECTION E-E

TYPES 11, 12, 13 & 14

TABLE OF OPENING DIMENSIONS

COVER				
TYPE	DESCRIPTION	OPENING	'E'	'F'
"O"	ROUND	2'-2" DIA.	—	—
"W"	CURB BOX	1'-8" X 2'-6"	—	1"
"X"	INLET	1'-10" X 2'-6"	—	—
"R"	CURB BOX	2'-0" X 2'-1"	4"	—

GENERAL NOTES

STRUCTURE WALL THICKNESS 'X' TO BE 8" BRICK, 6" CONCRETE BLOCK, 6" GRADE A CONCRETE OR 5" PRECAST REINFORCED CONCRETE.

STRUCTURE FOOTINGS ARE TO BE GRADE A CONCRETE OF THE THICKNESS SHOWN IN THE DETAIL OR 5" PRECAST REINFORCED CONCRETE.

REINFORCEMENT FOR 5" PRECAST REINFORCED CONCRETE SHALL BE 6" X 6" W16 X W16 WELDED SREEL WIRE FABRIC AND SHALL BE EMBEDDED 2" CLEAR.

PRECAST INLET UNITS AND BASES SHALL CONFORM TO THE PERTINENT REQUIREMENTS OF AASHTO DESIGNATION M 199.

PRECAST CONCRETE FLAT SLAB TOPS MAY BE USED ON THE STRUCTURES. THE TOPS SHALL BE INSTALLED ON A BED OF MORTAR.

PRECAST REINFORCED BASES SHALL BE PLACED ON A BED OF MATERIAL AT LEAST 6" IN DEPTH, WHICH MEETS THE REQUIREMENTS FOR GRANULAR BACK-FILL. THIS BEDDING SHALL BE COMPACTED AND PROVIDE UNIFORM SUPPORT FOR THE ENTIRE AREA OF THE BASE.

SET FRAME ELEVATION 0.03 FT. LOWER THAN ELEVATION INDICATED ON THE PLANS.

THE CONTRACTOR MAY FORM AND POUR MONOLITHIC CONCRETE INVERT PROVIDED THE PIPE ENDS ARE EXTENDED INTO THE M.H. AND NOT TERMINATED WITHIN THE M.H. WALLS.

MANHOLE STEPS

STEPS MEETING THE FOLLOWING REQUIREMENTS SHALL BE INSTALLED IN ALL STRUCTURES OVER 5 FEET IN DEPTH; 16 INCH C-C MAX. SPACING; PROJECT A MINIMUM CLEAR DISTANCE OF 4 INCHES FROM THE WALL AT THE POINT OF EMBEDMENT; MINIMUM WALL EMBEDMENT OF 3 INCHES IN PRECAST MANHOLE AND 6 INCHES IN 8 INCH BRICK OR 6 INCH BLOCK MANHOLE; TREAD OF STEP SHALL HAVE A NON-SKID SURFACE AND BE FLANKED BY CLEATS, WITH A MINIMUM OF 10 INCHES CLEAR BETWEEN CLEATS, TO PREVENT FOOT SLIPPING OFF THE EDGE CLEATS SHALL BE A MINIMUM OF ¾ INCH HIGH BY ¾ INCH WIDE HAVING A MINIMUM THICKNESS OF ⅜ INCH. STEPS SHALL BE CAPABLE OF SUPPORTING A CONCENTRATED LOAD OF 300 LBS. FERROUS METAL STEPS NOT PAINTED OR TREATED TO RESIST CORROSION SHALL HAVE A MINIMUM CROSS SECTIONAL DIMENSION OF 1 INCH.

SOLID ALUMINUM STEPS SHALL HAVE A MINIMUM CROSS SECTIONAL DIMENSION OF 0.75 INCH. ALUMINUM SURFACES TO BE EMBEDDED IN CONCRETE SHALL BE GIVEN ONE COAT OF SUITABLE QUALITY PAINT, SUCH AS ZINC CHROMATE PRIMER CONFORMING TO FEDERAL SPECIFICATION TT-P-645 OR EQUIVALENT. STEPS OF APPROVED POLYPROPYLENE PLASTIC COATED REINFORCING BAR WILL BE ACCEPTABLE.

MANHOLES, MANHOLE & INLET COVERS

STATE OF WISCONSIN
DEPARTMENT OF TRANSPORTATION

APPROVED
4/12/2011 — DATE
/S/ Jerry H. Zogg — ROADSIDE STANDARDS ENGINEER
FHWA

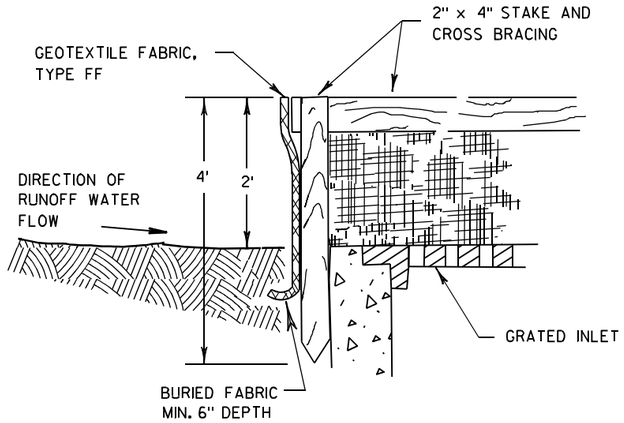

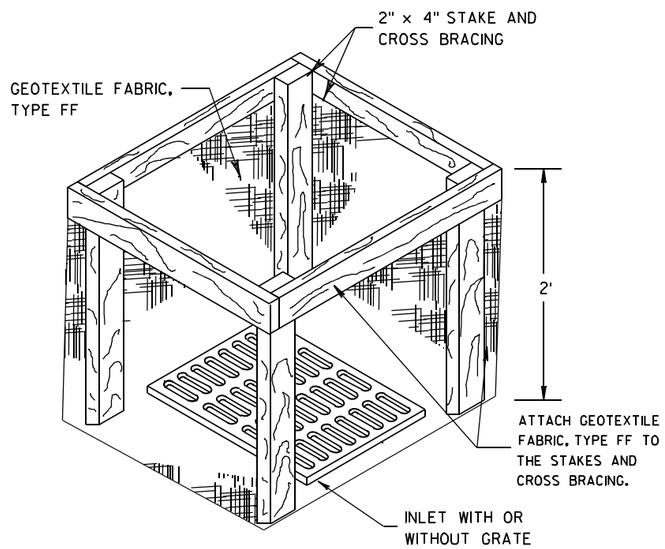

INLET PROTECTION, TYPE A

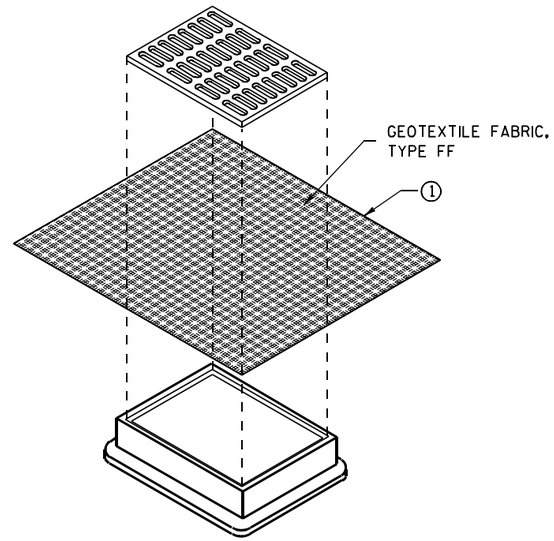

INLET PROTECTION, TYPE B (WITHOUT CURB BOX)

(CAN BE INSTALLED IN ANY INLET WITHOUT A CURB BOX)

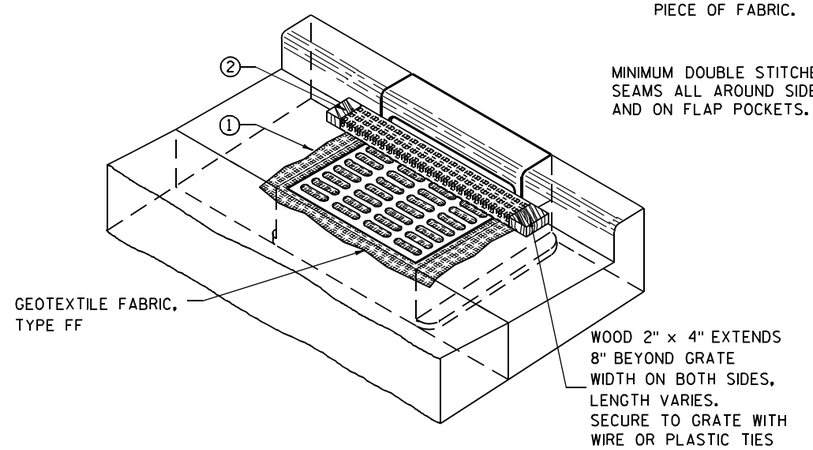

INLET PROTECTION, TYPE C (WITH CURB BOX)

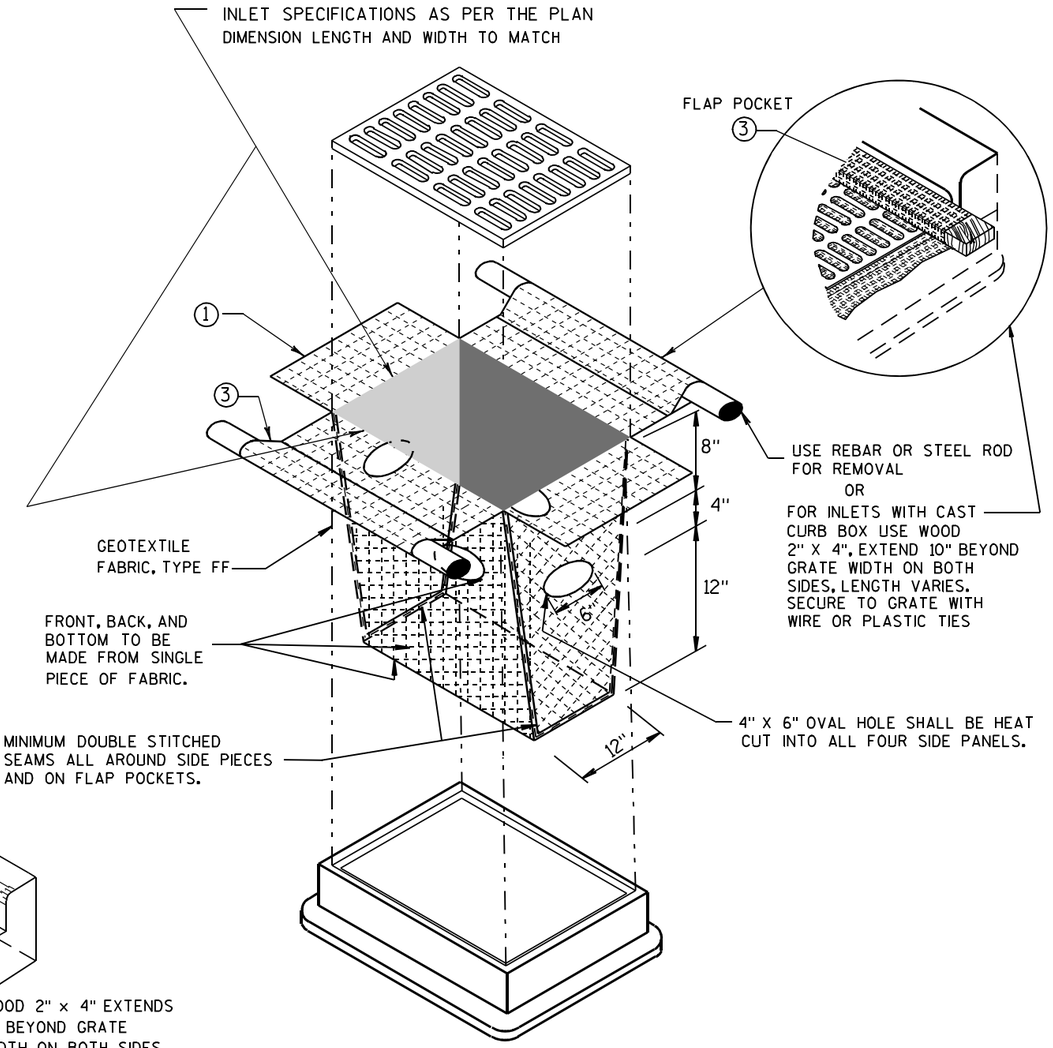

INLET PROTECTION, TYPE D

(CAN BE INSTALLED IN ANY INLET TYPE WITH OR WITHOUT A CURB BOX AS PER NOTE ②)

GENERAL NOTES

INLET PROTECTION DEVICES SHALL BE MAINTAINED OR REPLACED AT THE DIRECTION OF THE ENGINEER.

MANUFACTURED ALTERNATIVES APPROVED AND LISTED ON THE DEPARTMENT'S EROSION CONTROL PRODUCT ACCEPTABILITY LIST MAY BE SUBSTITUTED.

WHEN REMOVING OR MAINTAINING INLET PROTECTION, CARE SHALL BE TAKEN SO THAT THE SEDIMENT TRAPPED ON THE GEOTEXTILE FABRIC DOES NOT FALL INTO THE INLET. ANY MATERIAL FALLING INTO THE INLET SHALL BE REMOVED IMMEDIATELY.

① FINISHED SIZE, INCLUDING FLAP POCKETS WHERE REQUIRED, SHALL EXTEND A MINIMUM OF 10" AROUND THE PERIMETER TO FACILITATE MAINTENANCE OR REMOVAL.

② FOR INLET PROTECTION, TYPE C (WITH CURB BOX), AN ADDITIONAL 18" OF FABRIC IS WRAPPED AROUND THE WOOD AND SECURED WITH STAPLES. THE WOOD SHALL NOT BLOCK THE ENTIRE HEIGHT OF THE CURB BOX OPENING.

③ FLAP POCKETS SHALL BE LARGE ENOUGH TO ACCEPT WOOD 2X4.

INSTALLATION NOTES

TYPE B & C

TRIM EXCESS FABRIC IN THE FLOW LINE TO WITHIN 3" OF THE GRATE.

THE CONTRACTOR SHALL DEMONSTRATE A METHOD OF MAINTENANCE, USING A SEWN FLAP, HAND HOLDS OR OTHER METHOD TO PREVENT ACCUMULATED SEDIMENT FROM ENTERING THE INLET.

TYPE D

DO NOT INSTALL INLET PROTECTION TYPE D IN INLETS SHALLOWER THAN 30", MEASURED FROM THE BOTTOM OF THE INLET TO THE TOP OF THE GRATE.

TRIM EXCESS FABRIC IN THE FLOW LINE TO WITHIN 3" OF THE GRATE.

THE INSTALLED BAG SHALL HAVE A MINIMUM SIDE CLEARANCE, BETWEEN THE INLET WALLS AND THE BAG, MEASURED AT THE BOTTOM OF THE OVERFLOW HOLES, OF 3". WHERE NECESSARY THE CONTRACTOR SHALL CINCH THE BAG, USING PLASTIC ZIP TIES, TO ACHIEVE THE 3" CLEARANCE. THE TIES SHALL BE PLACED AT A MAXIMUM OF 4" FROM THE BOTTOM OF THE BAG.

INLET PROTECTION
TYPE A, B, C, AND D

STATE OF WISCONSIN
DEPARTMENT OF TRANSPORTATION

APPROVED
10/16/02 — DATE
/S/ Beth Cannon — CHIEF ROADWAY DEVELOPMENT ENGINEER
FHWA

6

S.D.D. 8 E 10-2

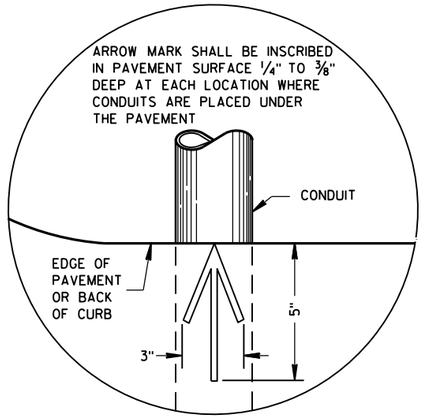

PLAN VIEW

ARROW MARK

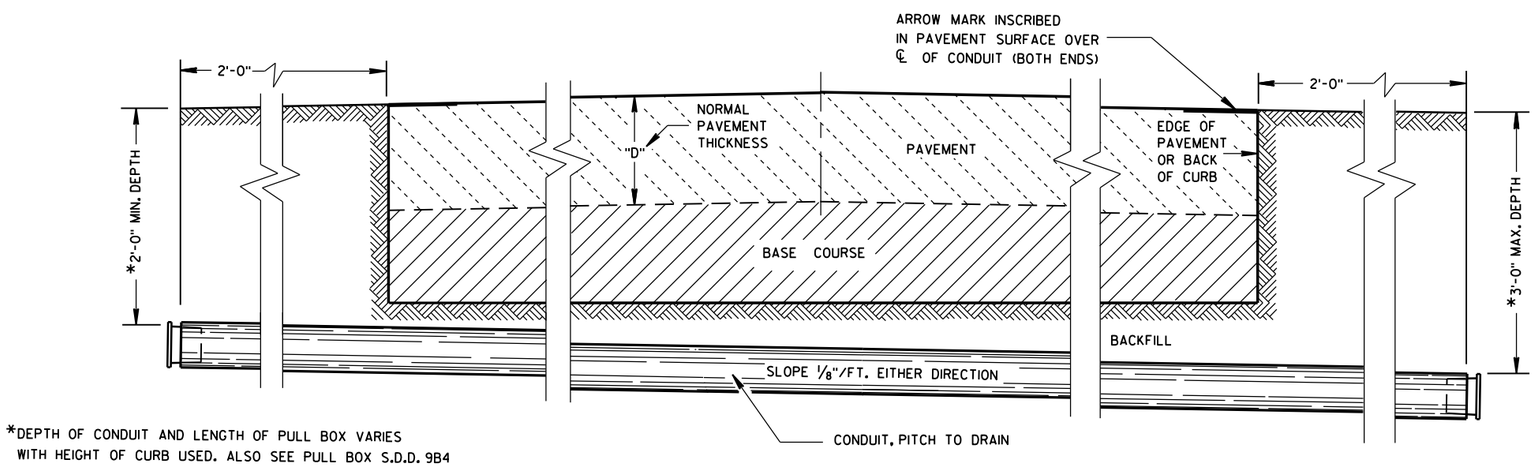

*DEPTH OF CONDUIT AND LENGTH OF PULL BOX VARIES WITH HEIGHT OF CURB USED. ALSO SEE PULL BOX S.D.D. 9B4

SIDE ELEVATION

DETAIL FOR CONDUIT UNDER PAVED HIGHWAYS

GENERAL NOTES

DETAILS OF CONSTRUCTION, MATERIALS AND WORKMANSHIP NOT SHOWN ON THIS DRAWING SHALL CONFORM TO THE PERTINENT REQUIREMENTS OF THE CONTRACT.

METALLIC (STANDARD SPECIFICATION 652.2.2) OR NONMETALLIC (STANDARD SPECIFICATION 652.2.3) CONDUIT SHALL BE FURNISHED AND PLACED AS SHOWN.

DEPTH OF CONDUIT INSTALLED BELOW THE TRAVELED WAY SHALL BE 24 INCHES MINIMUM AND 36 INCHES MAXIMUM.

DEPTH OF CONDUIT INSTALLED THAT IS NOT BELOW THE TRAVELED WAY SHALL BE 18 INCHES MINIMUM AND 36 INCHES MAXIMUM.

ANY EXCEPTION TO THE MAXIMUM DEPTH SHALL BE ONLY WITH THE WRITTEN APPROVAL OF THE ENGINEER.

THE TRENCH SHALL NOT BE BACKFILLED PRIOR TO INSPECTION OF THE CONDUIT.

ALL METALLIC CONDUIT RACEWAY ENDS SHALL BE REAMED AND THREADED.

ALL METALLIC CONDUIT IN WHICH WIRE OR CABLE IS TO BE INSTALLED SHALL BE BUSHED WITH APPROVED THREADED BUSHINGS BEFORE INSTALLATION OF THE WIRE OR CABLE.

ALL METALLIC CONDUITS IN WHICH WIRE OR CABLE IS NOT TO BE INSTALLED SHALL BE CAPPED WITH THREADED PROTECTIVE CAPS, AS APPROVED BY THE ENGINEER.

ALL NONMETALLIC CONDUIT SHALL BE CAPPED OR PLUGGED IMMEDIATELY AFTER INSTALLATION AND SHALL REMAIN CAPPED OR PLUGGED UNTIL WIRE/CABLES ARE INSTALLED.

NONMETALLIC CONDUITS IN WHICH WIRE OR CABLE IS NOT BEING INSTALLED SHALL REMAIN CAPPED OR PLUGGED.

BENDING OF PVC ELECTRICAL CONDUIT SHALL BE ACCOMPLISHED BY USING A BLANKET OR EMERSION TYPE TANK DESIGNED FOR THE PURPOSE OF BENDING PVC ELECTRICAL CONDUIT.

ALL CUT ENDS SHALL BE TRIMMED INSIDE AND OUTSIDE TO REMOVE ALL ROUGH EDGES ON NONMETALLIC CONDUIT. (SEE NEC 347.5)

WHEN REQUIRED TO CONNECT NONMETALLIC CONDUIT TO METALLIC CONDUIT, ONLY U.L. LISTED ADAPTER FITTINGS SHALL BE USED.

PRIOR TO CONDUIT ACCEPTANCE, CONDUIT CAPS OR PLUGS SHALL BE REMOVED, AND THE CAPS, PLUGS AND CONDUIT ENDS SHALL BE THOROUGHLY CLEANED AND THEN THE CAPS OR PLUGS REINSTALLED TO ENSURE THAT THE CAPS OR PLUGS CAN BE EASILY REMOVED IN THE FUTURE.

ALL CONDUIT BEING FURNISHED AND INSTALLED SHALL HAVE THE U.L. LABEL FIRMLY ATTACHED.

CONDUIT RUNS SHALL BE THE SAME SIZE OF CONDUIT FROM ONE END TO THE OTHER (FROM PULL BOX TO PULL BOX-OR-JUNCTION BOX TO JUNCTION BOX-OR-BASE TO BASE, ETC.).

TRACER WIRE SHALL BE INSTALLED AS STATED IN THE STANDARD SPECIFICATION, ITEM 652.3.1.1.

ALL CONDUIT RUNS SHALL BE STRAIGHT (WITHOUT BENDS) FROM PULL BOX TO PULL BOX, PULL BOX TO BASE AND BASE TO BASE AS SHOWN ON THE PLANS.

CONDUIT	
STATE OF WISCONSIN DEPARTMENT OF TRANSPORTATION	
APPROVED March, 2017 DATE	/S/ Ahmet Demirbilek STATE ELECTRICAL
FHWA	

6
S.D.D. 9 B 2-10

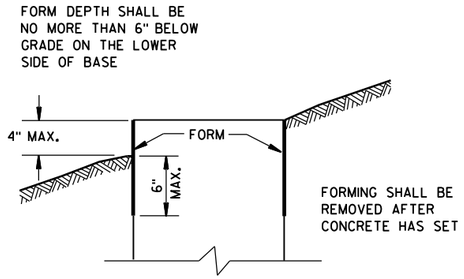

FORMING DETAIL

QUANTITY REQUIREMENTS	CONCRETE BASE TYPE		
	1	2	5 & 6
APPROX. CUBIC YARDS OF CONCRETE	0.40	0.57	0.40
LBS. OF HOOP BAR STEEL	NONE	23	16
LBS. OF VERTICAL BAR STEEL	NONE	60	18

GENERAL NOTES

DETAILS OF CONSTRUCTION, MATERIALS AND WORKMANSHIP NOT SHOWN ON THIS DRAWING SHALL CONFORM TO THE PERTINENT REQUIREMENTS OF THE CONTRACT.

BASES SHALL BE EXCAVATED BY USE OF A CIRCULAR AUGER.

TOP SURFACES OF CONCRETE BASES SHALL BE TROWEL FINISHED SMOOTH AND LEVEL.

CONDUIT SIZES AND LOCATIONS SHALL BE AS SHOWN ON THE PLANS.

THE FINAL OR TERMINATING CONCRETE BASE IN A CONDUIT RUN SHALL HAVE A 6" EXIT STUB INSTALLED FOR FUTURE CABLING USE. THE EXIT STUB SHALL BE SIZED AS USED THROUGHOUT THE CONDUIT RUN AS SHOWN AT THE ENTRANCE OF THE BASE.

MINIMUM BENDING RADIUS OF CONDUIT IS EQUAL TO 6 X THE DIAMETER.

CONDUIT HEIGHT ABOVE CONCRETE BASES SHALL BE 1 INCH. ALL METALLIC CONDUIT ENDS SHALL BE REAMED AND THREADED.

ALL CONDUIT ENDS AT THE TOP OF CONCRETE BASES SHALL BE CAPPED IF METALLIC OR PLUGGED IF NONMETALLIC IMMEDIATELY AFTER PLACEMENT AND BEFORE CONCRETE IS POURED. CONDUITS IN WHICH WIRE OR CABLE IS NOT INSTALLED SHALL REMAIN CAPPED OR PLUGGED.

GENERAL NOTES (CONTINUED)

BELL ENDS SHALL BE INSTALLED ON ALL PVC CONDUIT EXPOSED AT THE TOP OF CONCRETE BASES BEFORE INSTALLATION OF CABLE OR WIRE.

ENDS OF CONDUIT INSTALLED BELOW GRADE FOR FUTURE USE SHALL BE CAPPED IF METALLIC OR PLUGGED IF NONMETALLIC.

WHEN REQUIRED TO CONNECT NONMETALLIC CONDUIT TO METALLIC CONDUIT, ONLY ADAPTER FITTINGS, U.L. LISTED FOR ELECTRICAL USE, SHALL BE USED.

IF A BASE REQUIRES A DEEP FORM BECAUSE OF LOOSE DIRT OR FILL, THE FORM SHALL BE REMOVED BEFORE BACKFILLING AROUND THE BASE. BACKFILL SHALL BE TAMPED TIGHT AGAINST THE BARE CONCRETE BASE IN LAYERS OF 1 FOOT OR LESS.

A NO. 4 AWG, STRANDED COPPER EQUIPMENT GROUNDING CONDUCTOR SHALL BE EXOTHERMICALLY WELDED TO THE EQUIPMENT GROUNDING ELECTRODE (GROUND ROD) FOR TYPE 1, TYPE 2, TYPE 5, AND TYPE 6 BASES.

THE EQUIPMENT GROUNDING CONDUCTOR SHALL BE FURNISHED AND INSTALLED TO ENTER THE BASE OF THE TYPE 2 AND TYPE 5 BASES THROUGH A 1 INCH CONDUIT INSTALLED FOR GROUNDING PURPOSES, LEAVING A 4 FOOT COIL OF WIRE ABOVE THE CONCRETE BASE. THE EQUIPMENT GROUNDING CONDUCTOR SHALL BE NEATLY COILED AND THE COILS TIED TOGETHER.

ANCHOR RODS SHALL BE THREADED 12" IN LENGTH ON EACH END OF THE ROD. ANCHOR RODS SHALL BE MANUFACTURED IN ACCORDANCE WITH SECTION 654.2.1 OF THE STANDARD SPECIFICATIONS.

WASHERS AND LOCK WASHERS ARE REQUIRED ON ALL ANCHOR RODS.

WHEN ANCHOR RODS USING THE ALTERNATE "L" BEND ARE FURNISHED, THE 4" "L" BEND SHALL BE IN ADDITION TO THE SPECIFIED ANCHOR ROD BAR LENGTH. THE "L" BEND END SHALL NOT BE THREADED.

ANCHOR RODS SHALL BE INSTALLED WITH MISALIGNMENTS OF LESS THAN 1:40 FROM VERTICAL.

WELDING OF THE ANCHOR RODS TO THE CAGE IS UNACCEPTABLE. TIE WIRES SHALL BE USED.

BAR STEEL REINFORCEMENT SHALL BE COATED WITH POWDERED EPOXY RESIN IN ACCORDANCE WITH SECTION 505 OF THE STANDARD SPECIFICATIONS (LATEST EDITION).

(1) THE MINIMUM DEPTH OF CONDUIT EXITING THE CONCRETE BASE AND INSTALLED BELOW THE TRAVELED WAY SHALL BE 24 INCHES. THE MINIMUM DEPTH OF CONDUIT EXITING THE CONCRETE BASE THAT IS NOT INSTALLED BELOW THE TRAVELED WAY SHALL BE 18 INCHES. THE MAXIMUM DEPTH OF ALL CONDUIT SHALL BE 36 INCHES EXCEPT WITH WRITTEN APPROVAL BY THE ENGINEER.

(2) (4) 1" DIA. X 3'-6" ANCHOR RODS.

(3) (4) 1" DIA. X 5'-0" ANCHOR RODS.

(4) (6) NO. 6 X 6'-8" BAR STEEL REINFORCEMENT.

(5) (7) NO. 4 X 5'-1" BAR STEEL REINFORCEMENT @ 1'-0" C-C.

(6) (4) 1" DIA. X 3'-6" ANCHOR RODS.

(7) (6) NO.4 X 4'-8" BAR STEEL REINFORCEMENT.

(8) (5) NO. 4 X 5'-1" BAR STEEL REINFORCEMENT @ 1'-0" C-C.

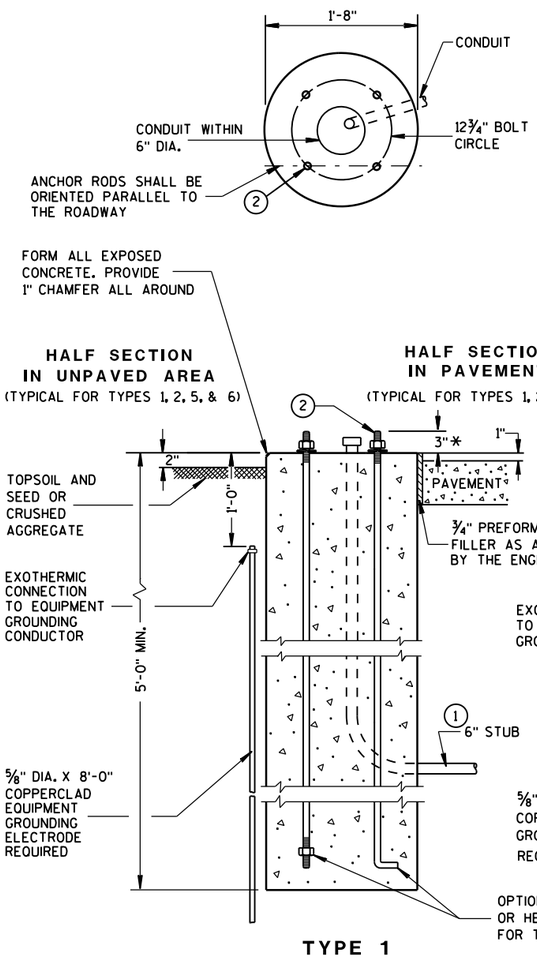

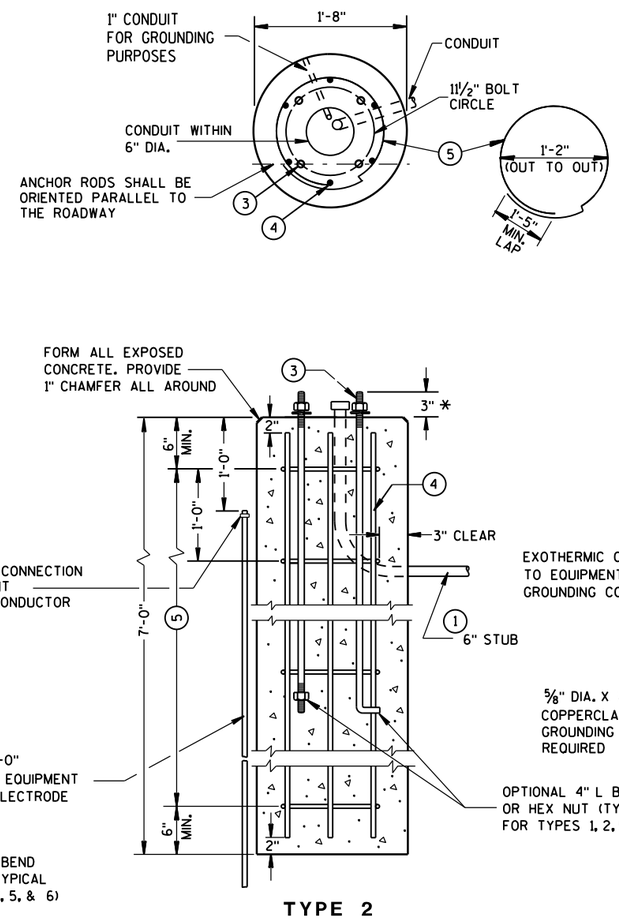

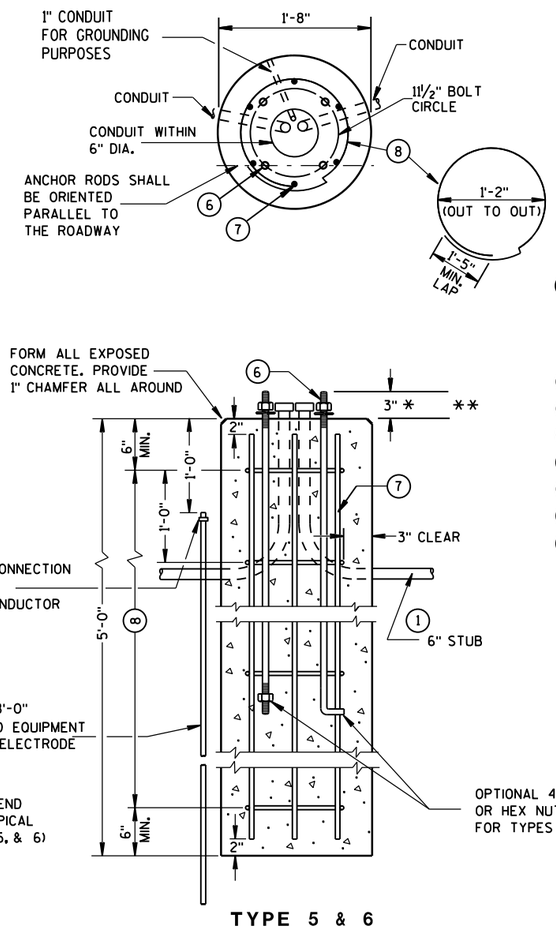

CONCRETE BASES

* ANY ANCHOR ROD PROJECTION SHORTER THAN 2¾" OR LONGER THAN 3¼" SHALL REQUIRE THE BASE TO BE REMOVED AND REPLACED AT THE CONTRACTORS EXPENSE.

** FOR NONBREAKAWAY INSTALLATIONS, 4½" ± ANCHOR ROD PROJECTION WITH THE USE OF LEVELING NUTS. RODENT SCREEN REQUIRED.

CONCRETE BASES, TYPES 1, 2, 5, & 6

STATE OF WISCONSIN
DEPARTMENT OF TRANSPORTATION

APPROVED
Sept. 2014 — DATE
/S/ Ahmet Demirbilek — STATE ELECTRICAL
FHWA

6

S.D.D. 9 C 2-7

GENERAL NOTES

DETAILS OF CONSTRUCTION, MATERIALS AND WORKMANSHIP NOT SHOWN ON THIS DRAWING SHALL CONFORM TO THE PERTINENT REQUIREMENTS OF THE CONTRACT.

FOUR (4) BOLTS SHALL BE FURNISHED WITH EACH TRANSFORMER BASE. BOLTS SHALL BE 1" DIAMETER, 4" IN LENGTH, WITH WASHERS, LOCK WASHERS AND NUTS. BOLTS, NUTS AND WASHERS SHALL BE MANUFACTURED IN ACCORDANCE WITH SECTION 641.2.2 OF THE STANDARD SPECIFICATIONS.

LEVELING SHIMS, IF NEEDED, SHALL BE DESIGNED FOR THE PURPOSE AND USED UNDER CAST BASES WHEN PLUMBING POLES OR STANDARDS DURING INSTALLATION. THE USE OF WASHERS IN LIEU OF PROPER LEVELING SHIMS IS NOT ACCEPTABLE.

SHIM LENGTH SHALL BE LONG ENOUGH TO COMPLETELY COVER THE AREA UNDER THE LENGTH AND WIDTH OF THE BASE MOUNTING FLANGE.

DOUBLE NUTTING IS NOT ACCEPTABLE FOR LEVELING OR MOUNTING PURPOSES.

A NEMA APPROVED, U.L. LISTED, COPPER WITH BRASS OR STAINLESS STEEL SET SCREW, DIRECT BURY RATED, MECHANICAL CONNECTOR (LUG), SIZED TO ACCEPT AWG. #10 TO #4 COPPER STRANDED WIRE SHALL BE FURNISHED AND INSTALLED IN THE PEDESTAL AND TRANSFORMER BASES.

THE MECHANICAL CONNECTOR SHALL BE INSTALLED USING A 1/4" - 20 (TPI) STAINLESS STEEL HEX HEAD BOLT OF SUFFICIENT LENGTH TO FIRMLY ATTACH THE LUG TO THE BASE.

SHOULD THE MANNER OF ATTACHMENT OF THE LUG REQUIRE WASHERS, HEX NUTS, LOCK WASHER - THEY SHALL BE STAINLESS STEEL AS IS THE BOLT. THE MANNER OF ATTACHMENT SHALL NOT BLOCK ACCESSIBILITY TO WIRE PLACEMENT IN THE CONNECTOR.

PEDESTAL BASE COLLAR THREADING SHALL BE TAPERED AND IN ACCORDANCE WITH NATIONAL PIPE THREADING DIMENSIONS.

BASE COLLAR THREADING SHALL EXTEND INTO THE BASE COLLAR WITH SUFFICIENT DEPTH TO ACCEPT THE INSTALLATION OF TRAFFIC SIGNAL STANDARDS TO A DEPTH OF 1 1/2", THEN TIGHTENING TO A POINT OF BEING IMMOVABLE.

THE ACCESS DOOR SHALL BE OF THE SAME MATERIAL AS THE BASE.

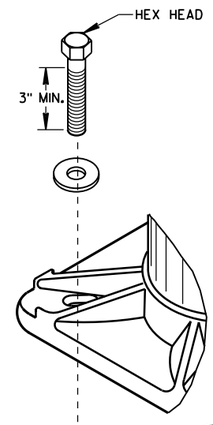

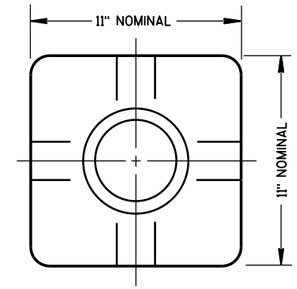

TOP VIEW
(PEDESTAL BASE)

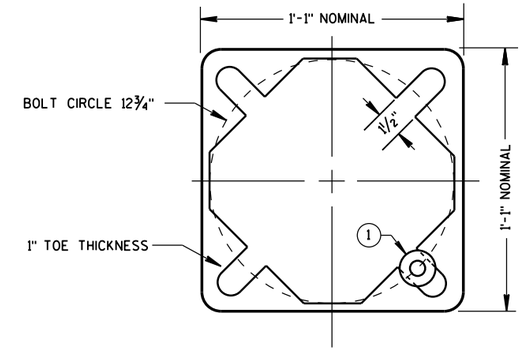

BOTTOM VIEW
(PEDESTAL BASE)

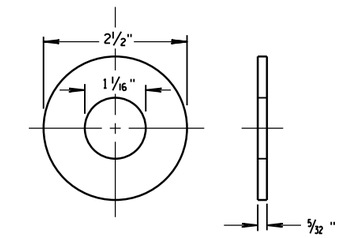

ZINC COATED STEEL WASHER
TO BE PROVIDED BY THE CONTRACTOR

PEDESTAL BASE WASHER (1)

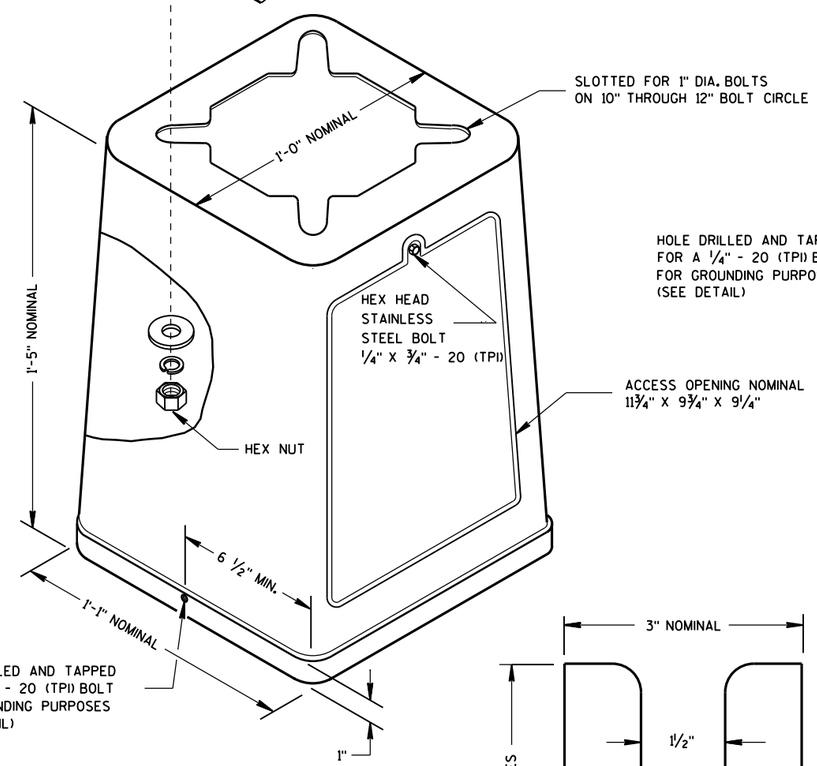

ISOMETRIC VIEW

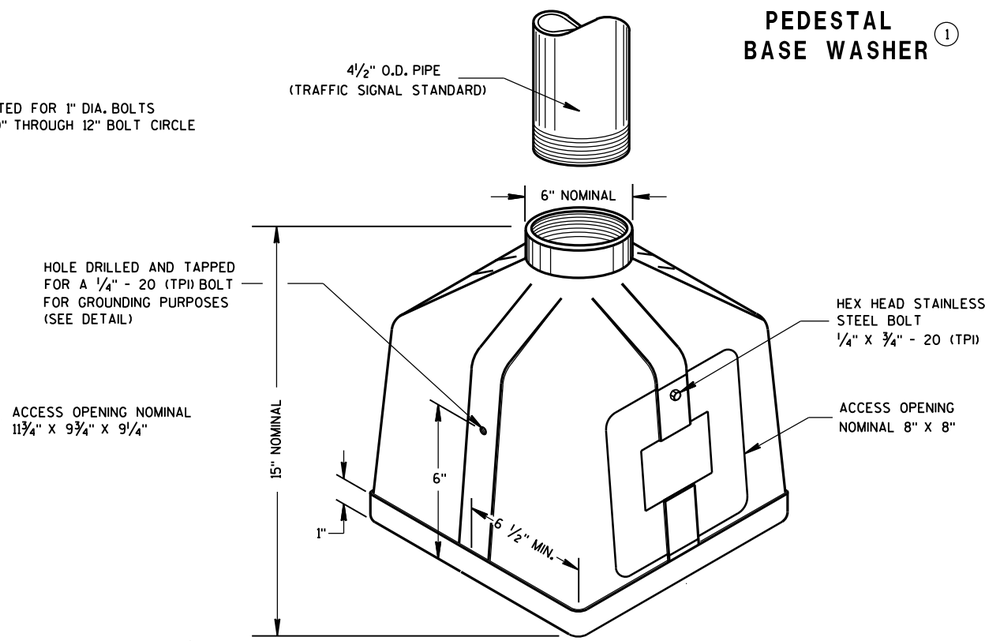

ISOMETRIC VIEW

PEDESTAL BASE

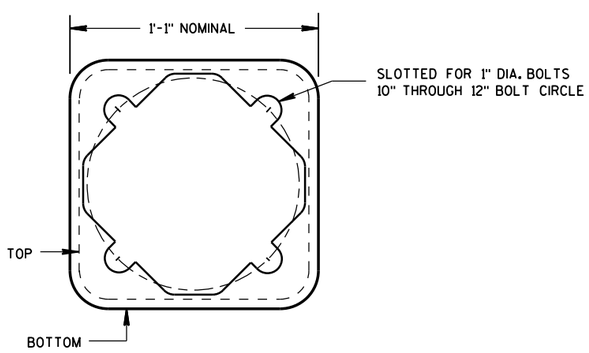

BOTTOM VIEW
(TRANSFORMER BASE)

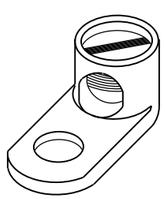

TYPICAL MECHANICAL CONNECTOR LUG

TO BE FURNISHED WITH EACH BASE

TRANSFORMER BASE

INTENDED FOR USE WITH TYPE 2, 3, 4, 5 & 6 POLES

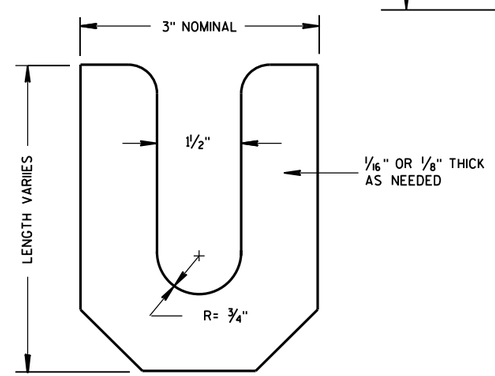

LEVELING SHIM

TRANSFORMER/PEDESTAL BASES	
STATE OF WISCONSIN DEPARTMENT OF TRANSPORTATION	
APPROVED Sept. 2014 DATE	/S/ Ahmet Demirbilek STATE ELECTRICAL
FHWA	

6

6

S.D.D. 9 C 3-4

S.D.D. 9 C 3-4

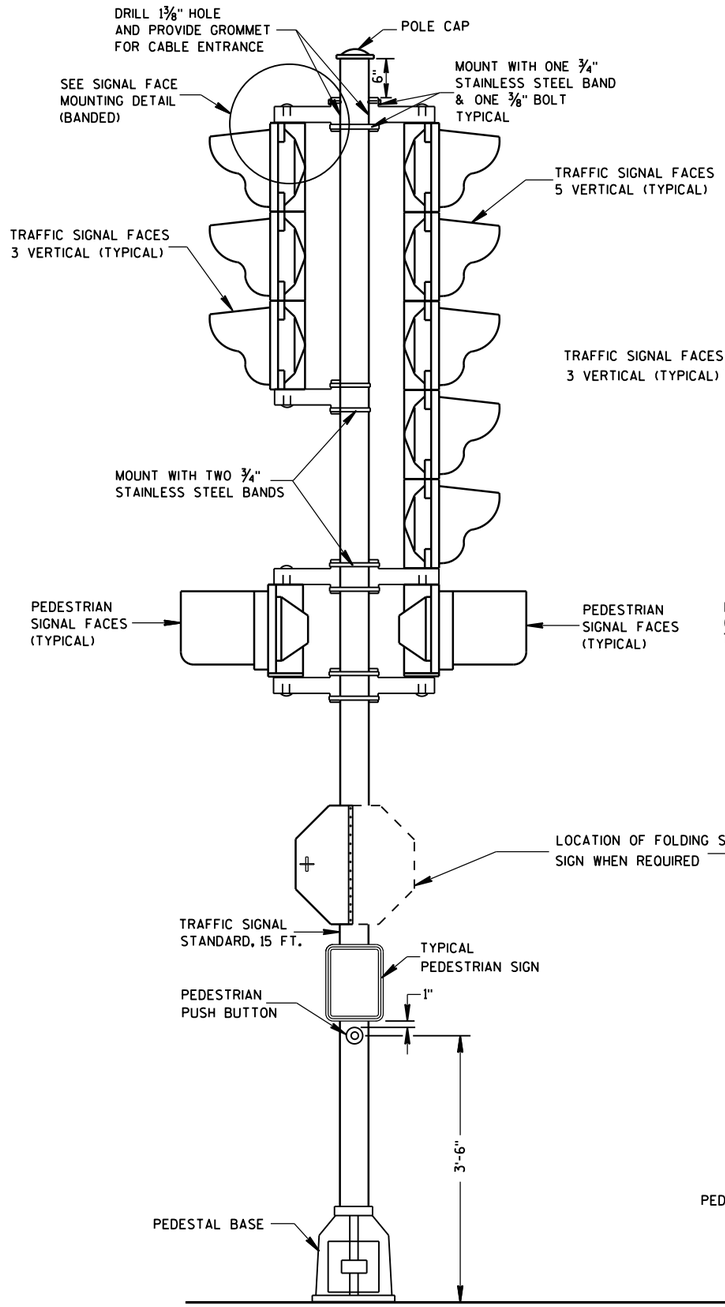

TRAFFIC SIGNAL STANDARD-15 FT.

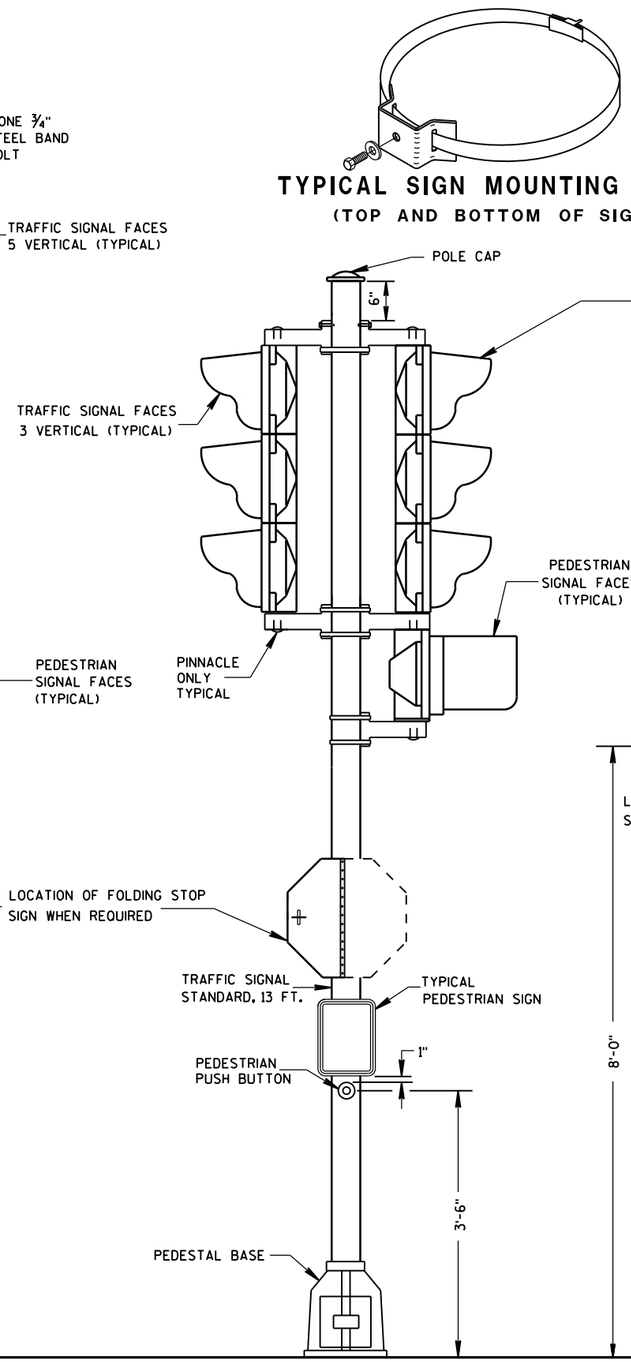

TRAFFIC SIGNAL STANDARD-13 FT.

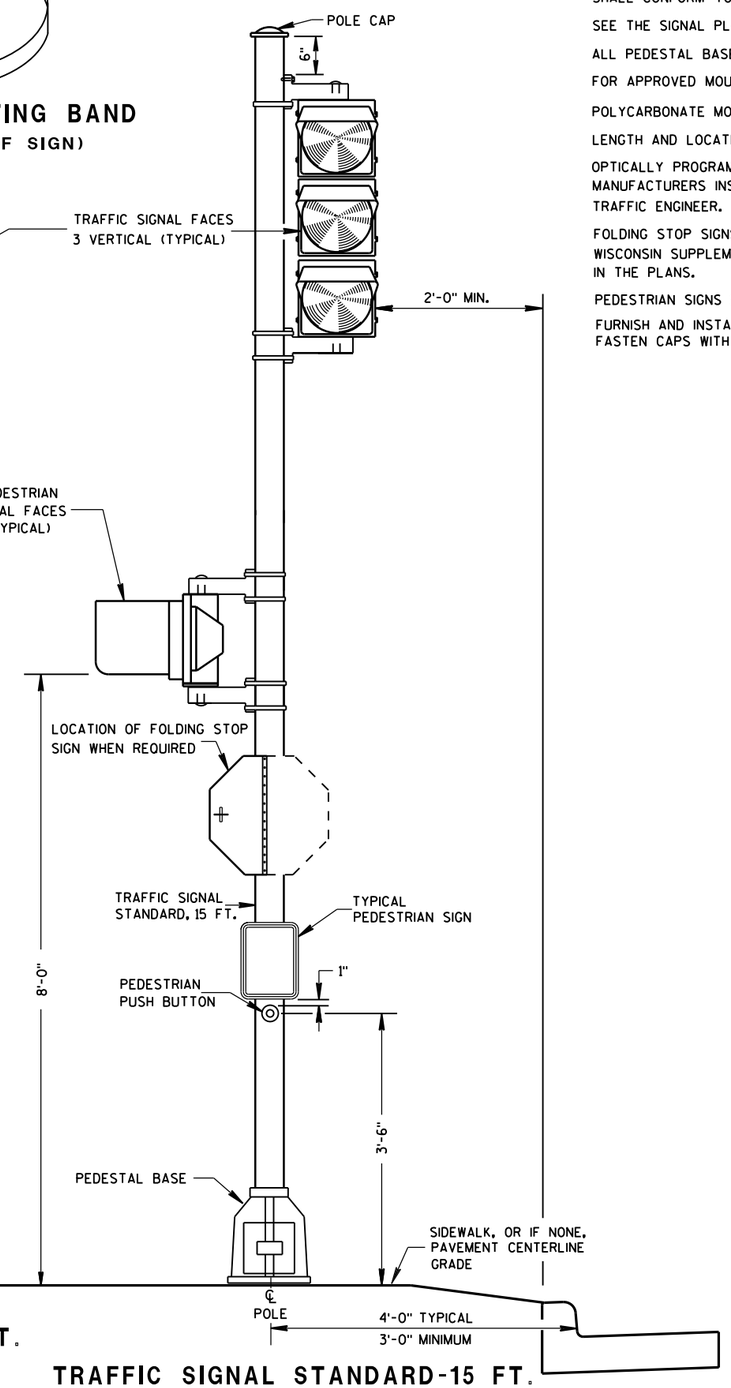

TRAFFIC SIGNAL STANDARD-15 FT.
3M MOUNTING (TYPICAL)

GENERAL NOTES

DETAILS OF CONSTRUCTION, MATERIALS AND WORKMANSHIP NOT SHOWN ON THIS DRAWING SHALL CONFORM TO THE PERTINENT REQUIREMENTS OF THE CONTRACT.

SEE THE SIGNAL PLAN FOR REQUIRED SIGNAL FACE SIZES.

ALL PEDESTAL BASES SHALL BE MOUNTED ON CONCRETE BASE - TYPE 1.

FOR APPROVED MOUNTING HARDWARE, SEE THE CONTRACT SPECIAL PROVISIONS.

POLYCARBONATE MOUNTING BRACKETS SHALL BE USED.

LENGTH AND LOCATION OF TRAFFIC SIGNAL STANDARDS SHALL BE AS SHOWN ON THE PLANS.

OPTICALLY PROGRAMMED SIGNAL FACES SHALL BE MASKED IN ACCORDANCE WITH MANUFACTURERS INSTRUCTIONS, AND UNDER THE DIRECTIONS OF THE REGION TRAFFIC ENGINEER.

FOLDING STOP SIGNS SHALL BE IN ACCORDANCE WITH THE MUTCD AND/OR THE LATEST WISCONSIN SUPPLEMENT. THE SIGNS SHALL BE SIZED AND LOCATED AS CALLED FOR IN IN THE PLANS.

PEDESTRIAN SIGNS SHALL BE AS DESIGNATED IN THE PLANS.

FURNISH AND INSTALL VENTILATED, CAST, METALLIC (ALUMINUM ALLOY) CAPS. FASTEN CAPS WITH ONE (1) ¼" X ¾" - 20 TPI STAINLESS STEEL, HEX HEAD BOLT.

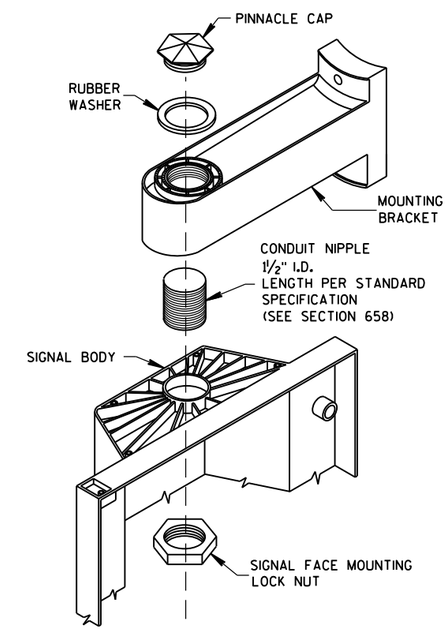

SIGNAL FACE MOUNTING DETAIL
(BANDED)

TRAFFIC SIGNAL STANDARD
POLY BRACKET MOUNTINGS
(TYPICAL) 13 FT. OR 15 FT.

STATE OF WISCONSIN
DEPARTMENT OF TRANSPORTATION

APPROVED
2/28/2013 — DATE
/S/ Ahmet Demirbilek — STATE ELECTRICAL
FHWA

6

S.D.D. 9 E 6-5

GENERAL NOTES

SAW CUT, DRILL, AND LIFT OUT EXISTING CONCRETE PAVEMENT WITHIN THE BOUNDARIES OF CONCRETE REPAIR AREAS. THE CONTRACTOR MAY MAKE ADDITIONAL SAW CUTS INSIDE THE REPAIR LIMITS TO REDUCE WEIGHT AND SIZE OF CONCRETE PIECES.

PROVIDE 6-FOOT MINIMUM DISTANCE FROM BOUNDARIES OF CONCRETE REPAIR AREAS TO ADJACENT TRANSVERSE JOINT OR CRACK.

THE LENGTH OF THE REPAIRS MAY VARY FROM THE DIMENSIONS SHOWN IF THE EXISTING CONCRETE PAVEMENT IS NONDOWELED AND THE PAVEMENT IS TO BE OVERLAID AFTER REPAIRING.

(1) DOWEL BARS MIGHT NOT EXIST.

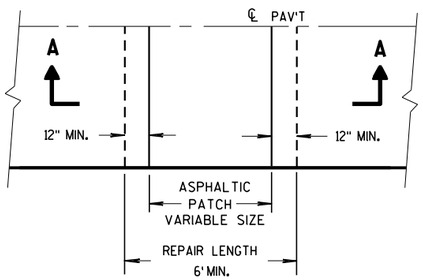

PLAN VIEW

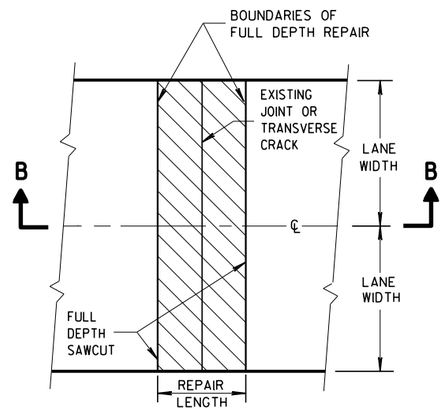

PLAN VIEW
(DOUBLE LANE REPAIR)

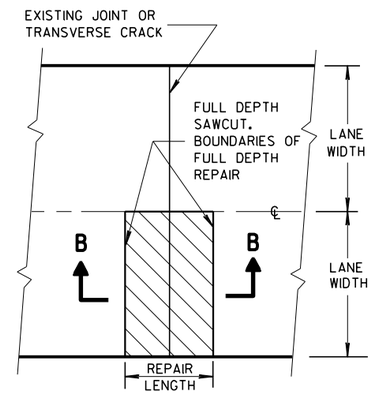

PLAN VIEW
(SINGLE LANE REPAIR)

FULL DEPTH CONCRETE PAVEMENT REMOVAL

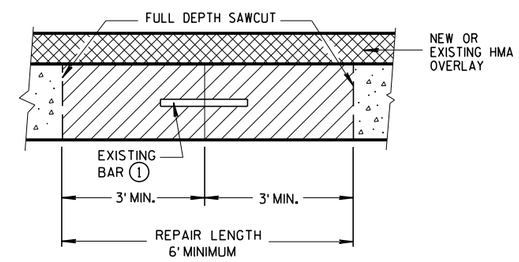

SECTION B-B

CONCRETE REMOVAL

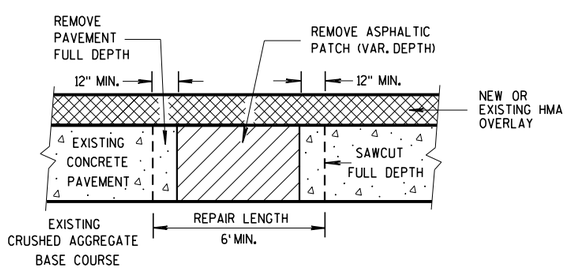

SECTION A-A

HMA PATCH REMOVAL

6

6

S.D.D. 13 C 14-7a

S.D.D. 13 C 14-7a

BASE PATCHING CONCRETE

STATE OF WISCONSIN
DEPARTMENT OF TRANSPORTATION

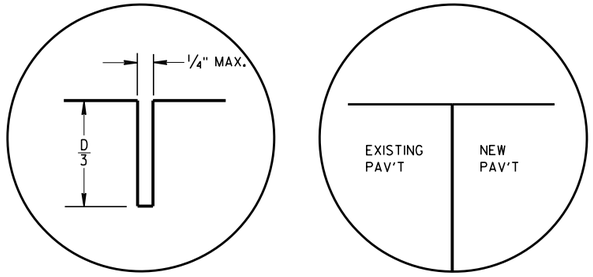

C1 C2

TRANSVERSE JOINTS

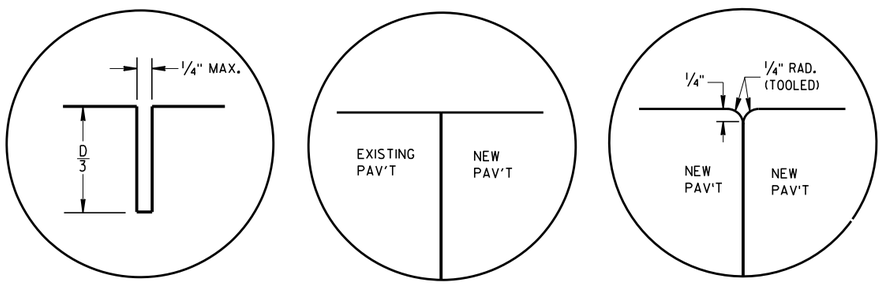

L1 L2 L3

LONGITUDINAL JOINTS

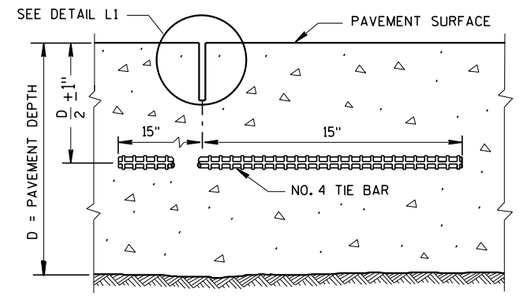

SECTION C-C

SAWED LONGITUDINAL JOINT

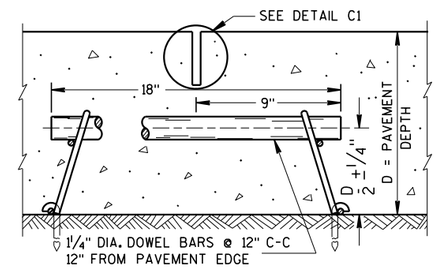

SECTION F-F

CONTRACTION JOINT

GENERAL NOTES

INSTALL DOWEL BARS PARALLEL TO THE PAVEMENT CENTERLINE AND PAVEMENT SURFACE.

CONCRETE BASE PATCHES OF EXISTING NONDOWELED CONCRETE PAVEMENTS DO NOT NEED TO BE DOWELED.

ANCHOR DOWEL BARS AND TIE BARS INTO DRILLED HOLES WITH AN EPOXY.

PROVIDE A MINIMUM DISTANCE OF 15 INCHES FROM AN EXISTING TRANSVERSE JOINT OR THE EDGE OF REPLACEMENT TO THE CENTER OF THE TIE BAR NEAREST THAT JOINT OR EDGE.

(1) APPLY A THIN UNIFORM COATING OF SURFACE TREATMENT TO THE FREE END OF DOWEL BARS TO PREVENT BONDING.

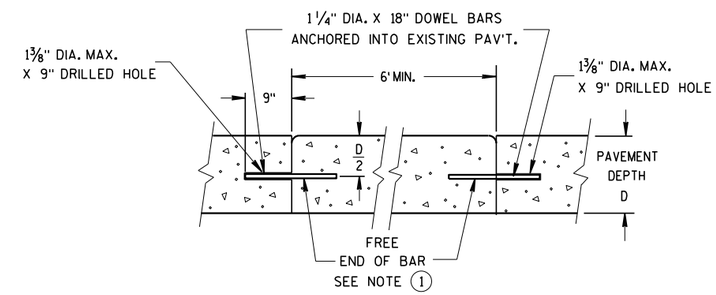

SECTION D-D

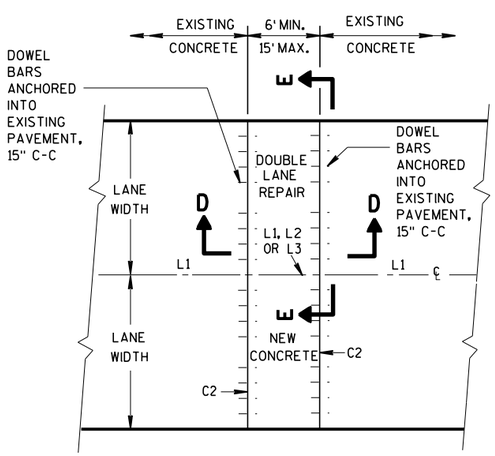

PLAN VIEW

MULTI-LANE CONCRETE BASE PATCH 15' MAXIMUM LENGTH

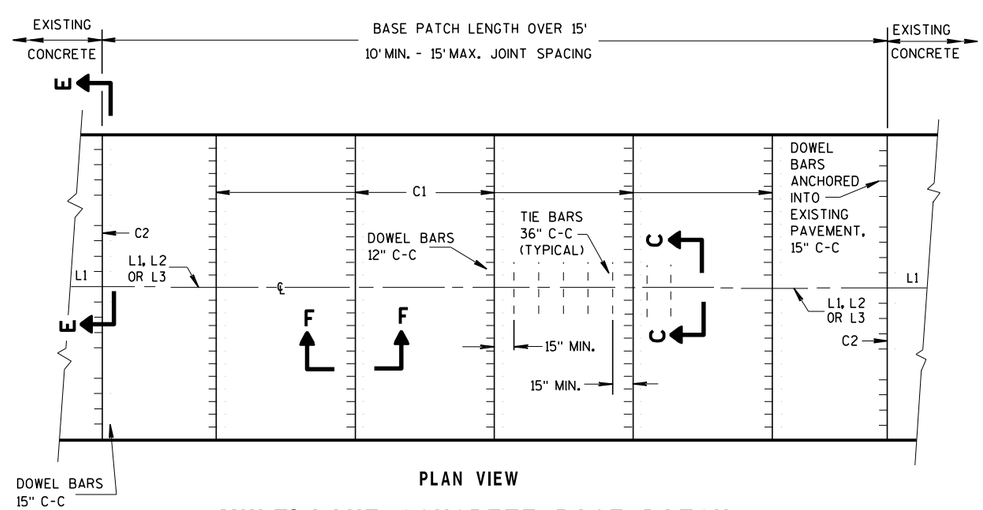

PLAN VIEW

MULTI-LANE CONCRETE BASE PATCH GREATER THAN 15' IN LENGTH

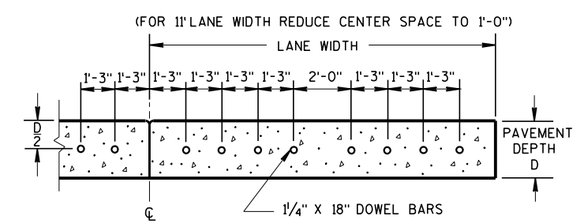

SECTION E-E

SPACING OF DOWEL BARS ANCHORED INTO EXISTING PAVEMENT

BASE PATCHING CONCRETE

STATE OF WISCONSIN
DEPARTMENT OF TRANSPORTATION

6

S.D.D. 13 C 14-7b

GENERAL NOTES

1. USE AN ENGINEER-APPROVED BOND BREAKER (E.G. RELEASE AGENT, CURING COMPOUND) FOR SINGLE LANE BASE PATCHES UP TO 15 FEET IN LENGTH.

2. WITH THE APPROVAL OF THE ENGINEER, FOR SINGLE LANE PAVEMENT REPLACEMENTS LESS THAN 30 FEET IN LENGTH, DRILLED TIE BARS MAY BE INSTALLED ON 6:1 SKEW HORIZONTALLY. DIRECTION OF SKEW ALTERNATING WITH EACH SUCCESSIVE BAR. DRIVE SKEWED TIE BARS TO A DEPTH OF 6 INCHES IN A HOLE OF SUCH A DIAMETER AS TO PROVIDE A TIGHT DRIVEN FIT.

3. ANCHOR TIE BARS INTO DRILLED HOLES WITH AN EPOXY.

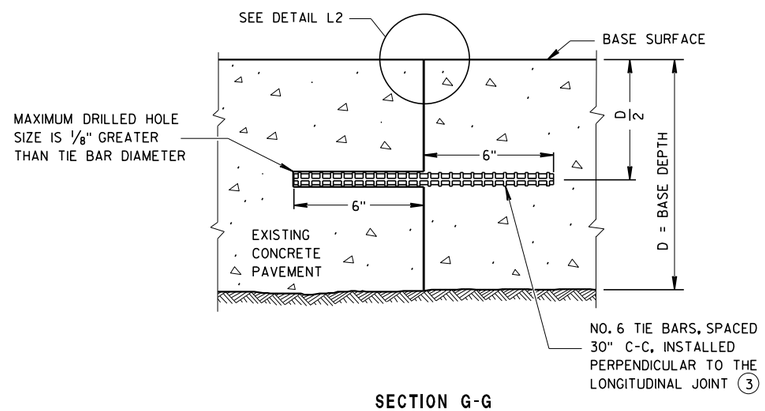

SECTION G-G

TIE BARS ANCHORED INTO EXISTING PAVEMENT

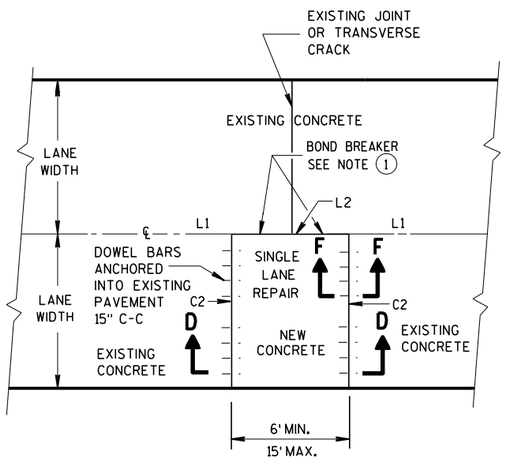

PLAN VIEW

SINGLE LANE CONCRETE BASE PATCH 15' MAXIMUM LENGTH

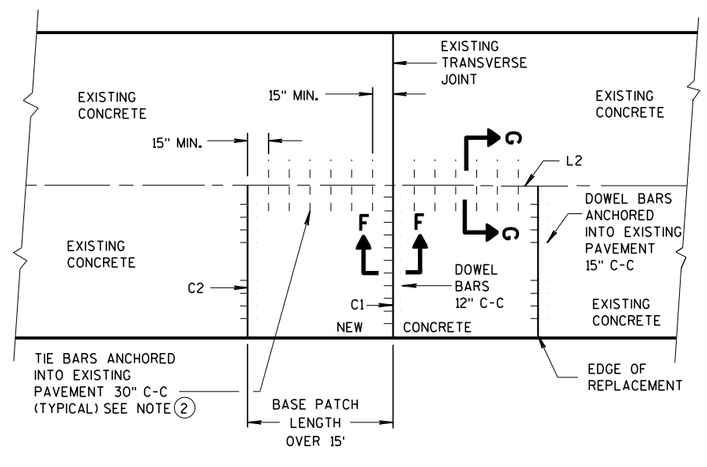

PLAN VIEW

SINGLE LANE CONCRETE BASE PATCH GREATER THAN 15' IN LENGTH

BASE PATCHING CONCRETE

STATE OF WISCONSIN
DEPARTMENT OF TRANSPORTATION

APPROVED
March 2018 — DATE
/S/ Peter Kemp P.E. — PAVEMENT SUPER
FHWA

6

S.D.D. 13 C 14-7c

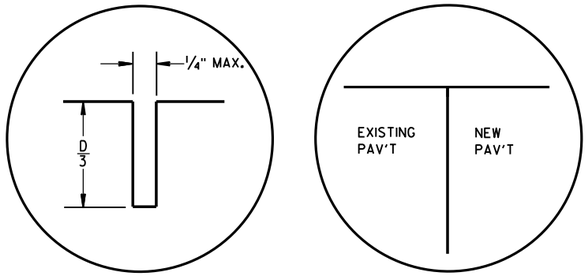

C1 C2

TRANSVERSE JOINTS

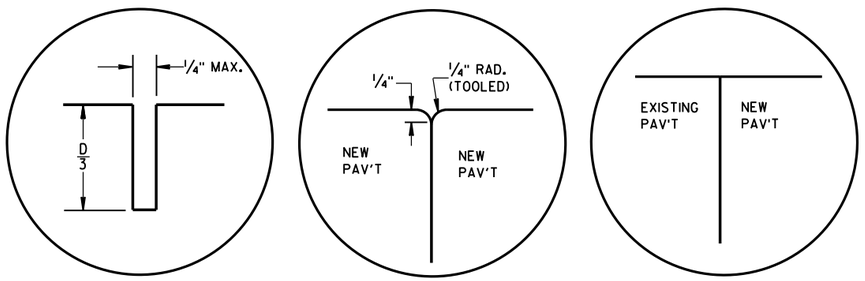

L1 L2 L3

LONGITUDINAL JOINTS

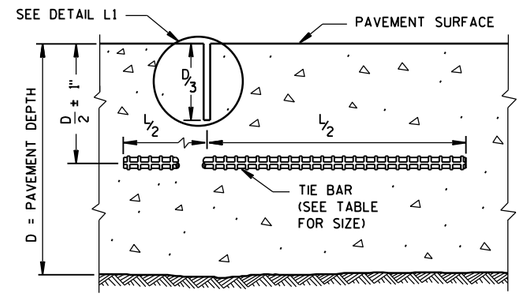

SECTION C-C

SAWED JOINT

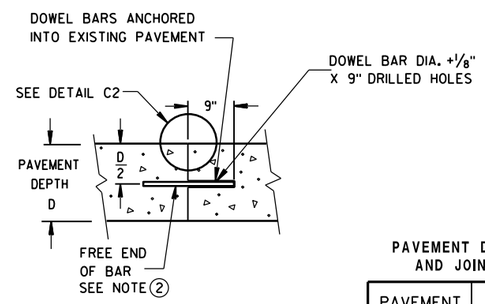

SECTION D-D

GENERAL NOTES

ANCHOR TIE BARS AND DOWEL BARS INTO DRILLED HOLES WITH AN EPOXY.

PROVIDE A MINIMUM DISTANCE OF 15 INCHES FROM AN EXISTING TRANSVERSE JOINT OR THE EDGE OF REPLACEMENT TO THE CENTER OF THE TIE BAR NEAREST THAT JOINT OR EDGE.

1. INSTALL DOWEL BARS PARALLEL TO THE PAVEMENT CENTERLINE AND PAVEMENT SURFACE.
2. APPLY A THIN UNIFORM COATING OF SURFACE TREATMENT TO THE FREE END OF DOWEL BARS TO PREVENT BONDING.

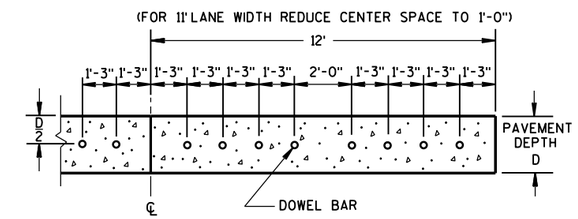

SECTION E-E

SPACING OF DOWEL BARS ANCHORED INTO EXISTING PAVEMENT

PAVEMENT DEPTH, DOWEL BAR SIZE AND JOINT SPACING TABLE

PAVEMENT DEPTH (D)	DOWEL BAR DIAMETER	CONTRACTION JOINT SPACING
5½", 6, 6 ½"	NONE	12'
7, 7 ½"	1"	14'
8, 8 ½"	1¼"	15'
9, 9 ½"	1¼"	15'
10" & ABOVE	1½"	15'

TIE BAR TABLE

PAVEMENT DEPTH (D)	TIE BAR SIZE	TIE BAR LENGTH (L)	MAX. TIE BAR SPACING
< 10 ½"	NO. 4	30"	36"
≥ 10 ½"	NO. 5	36"	36"
	NO. 4*	30"	24"**

* SUBSTITUTE BENT BARS AT LONGITUDINAL JOINTS WHEN EQUIPMENT LIMITATIONS DURING CONSTRUCTION WARRANT (e.g. AUXILIARY LANES OR TURN LANES)

** CONFORM TO 15" MINUMUM SPACING FROM TRANSVERSE JOINTS; SPACING BETWEEN TIE BARS WILL BE 30" AT TRANSVERSE JOINTS.

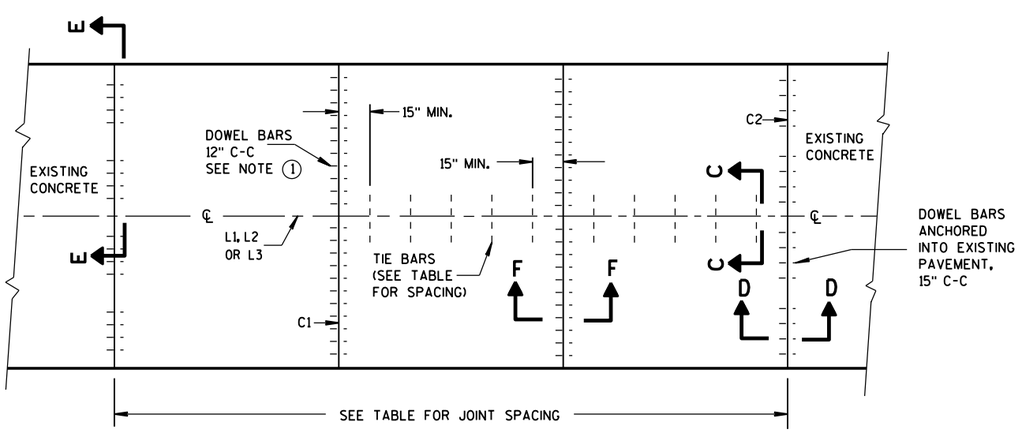

PLAN VIEW

CONCRETE BASE CONTRACTION JOINT LOCATIONS

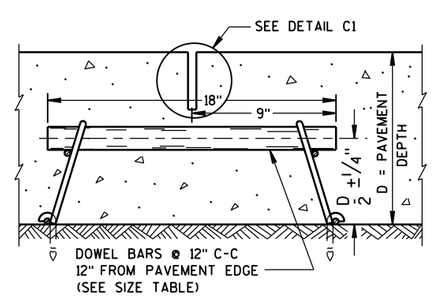

SECTION F-F

CONTRACTION JOINT

CONCRETE BASE

STATE OF WISCONSIN
DEPARTMENT OF TRANSPO

GENERAL NOTES

1. USE AN ENGINEER-APPROVED BOND BREAKER (E.G. RELEASE AGENT, CURING COMPOUND) AT THE LONGITUDINAL JOINT IN LIEU OF TIE BARS FOR SINGLE LANE CONCRETE BASE REPAIRS UP TO 15 FEET IN LENGTH.

2. ANCHOR TIE BARS INTO DRILLED HOLES WITH AN EPOXY.

3. PAVEMENT THAT WAS IN PLACE PRIOR TO THE CONTRACT.

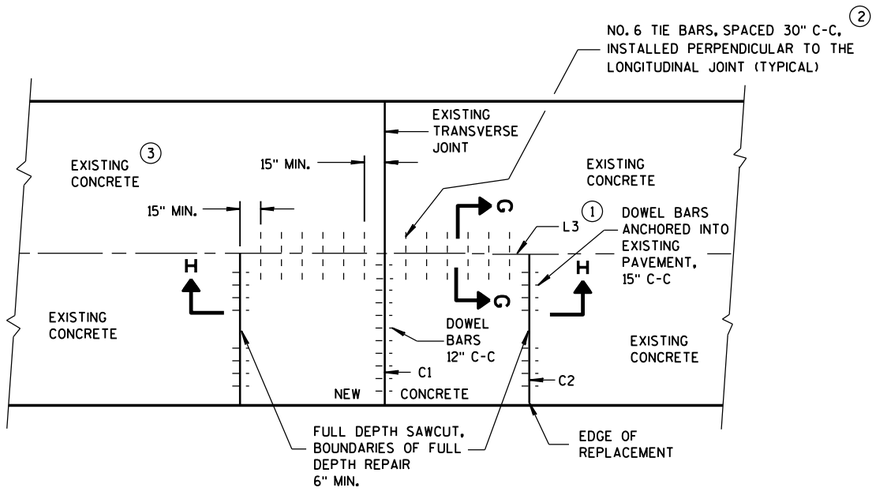

PLAN VIEW

SINGLE LANE CONCRETE BASE REPAIR

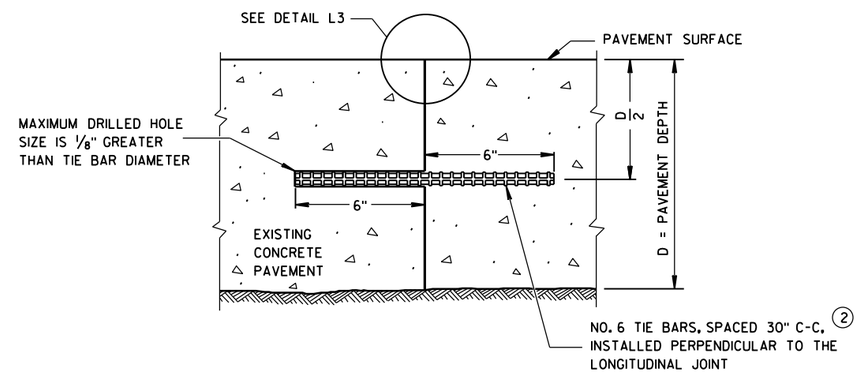

SECTION G-G

TIE BARS ANCHORED INTO EXISTING PAVEMENT

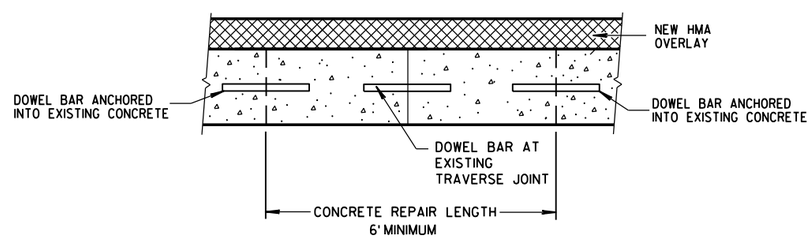

SECTION H-H

CONCRETE BASE

STATE OF WISCONSIN
DEPARTMENT OF TRANSPORTATION

APPROVED
June, 2015 — DATE
/S/ Peter Kemp, P.E. — PAVEMENT SUPEI
FHWA

6

S.D.D. 13 C 15-6b

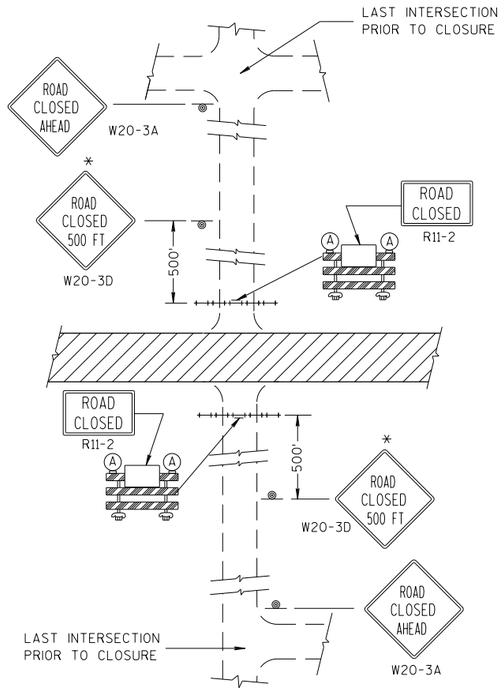

DETAIL 1

(NO ACCESS TO PROJECT)

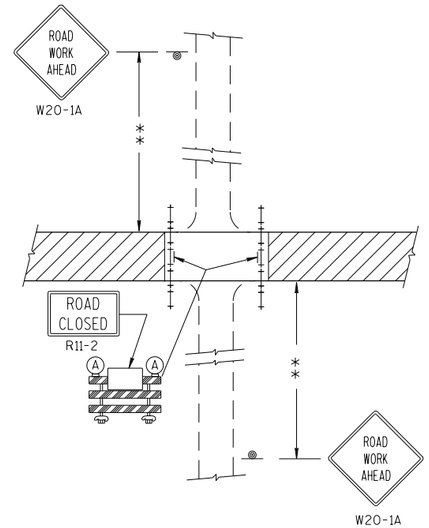

DETAIL 2

(PUBLIC CROSS-TRAFFIC MAINTAINED.
NO ACCESS TO PROJECT).

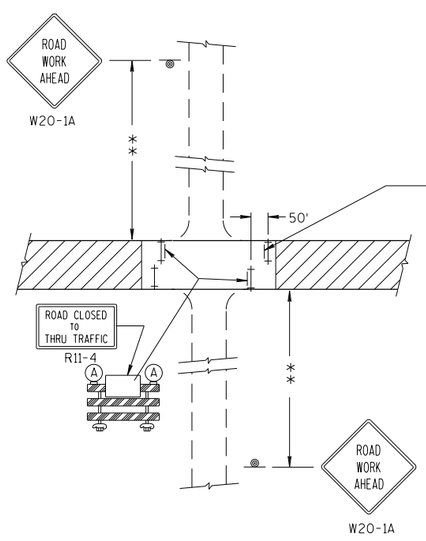

DETAIL 3

(PUBLIC CROSS-TRAFFIC MAINTAINED. CONTRACTOR,
LOCAL BUSINESS AND RESIDENT ACCESS).

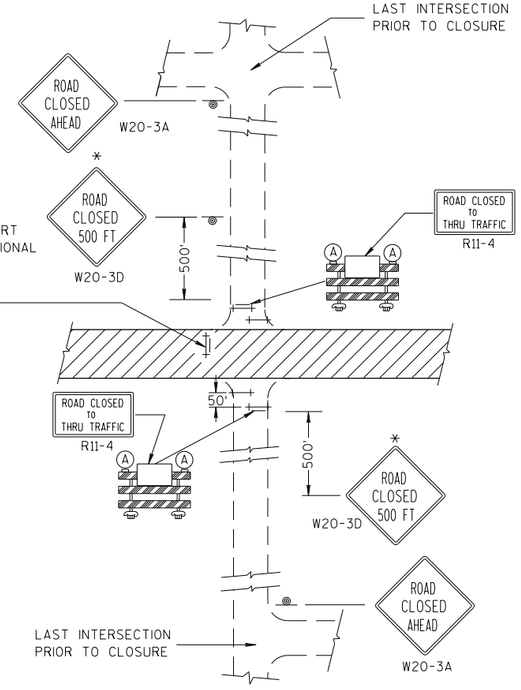

DETAIL 4

(CONTRACTOR, LOCAL BUSINESS AND
RESIDENT ACCESS TO PROJECT)

GENERAL NOTES

THE EXACT NUMBER, LOCATION, AND SPACING OF ALL SIGNS AND BARRICADES SHALL BE ADJUSTED TO FIT FIELD CONDITIONS AS APPROVED BY THE ENGINEER.

ANY SIGNS TEMPORARY OR EXISTING, WHICH CONFLICT WITH TRAFFIC CONTROL "IN USE" SHALL BE REMOVED OR COVERED AS NEEDED AND AS APPROVED BY THE ENGINEER.

THE SPACING BETWEEN TRAFFIC CONTROL SIGNS SHOULD BE ADJUSTED TO NOT CONFLICT WITH AND SHOULD PROVIDE A DESIRABLE MINIMUM OF 200 FEET CLEARANCE TO EXISTING SIGNS THAT WILL REMAIN IN PLACE.

IF A "STOP" SIGN MUST BE REMOVED FOR A WORK OPERATION, A TEMPORARY "STOP" SIGN SHALL BE PLACED PRIOR TO THE SIGN REMOVAL, OR A FLAGGER SHALL BE PROVIDED UNTIL THE SIGN IS RE-ESTABLISHED.

BARRICADES THAT MUST BE MOVED FOR A WORK OPERATION SHALL BE IMMEDIATELY RE-ESTABLISHED UPON COMPLETION OF THE OPERATION OR, FOR CONTINUING OPERATIONS, AT THE END OF EACH WORKING DAY.

SIGNS THAT WILL BE IN PLACE LESS THAN 7 CONTINUOUS DAYS AND NIGHTS MAY BE MOUNTED ON PORTABLE SUPPORTS.

ALL TYPE III BARRICADES SHALL HAVE RAILS REFLECTORIZED ON BOTH FACES. STRIPES SHALL BE PROPERLY SLOPED DOWN TOWARD THE TRAFFIC SIDE OR AS SHOWN IN THE ROAD CLOSURE BARRICADE DETAIL D FOR FULL ROAD CLOSURES.

TYPE "A" LOW-INTENSITY FLASHING WARNING LIGHTS SHALL BE VISIBLE ON BOTH SIDES OF THE BARRICADE.

THE R11-2, R11-3 AND R11-4 SIGNS PLACED ON BARRICADES SHALL COVER NO MORE THAN THE TOP RAIL. THE SIGNS SHALL NOT COVER ANY PORTION OF THE MIDDLE OR BOTTOM RAILS.

ALL SIGNS SHALL BE 48" X 48" UNLESS OTHERWISE NOTED BELOW:
R11-2 SHALL BE 48" X 30".
R11-4 AND R11-3 SHALL BE 60" X 30".

*OMIT THE "ROAD CLOSED 500 FT." SIGN IF THE LAST INTERSECTION IS 500 FT. OR LESS FROM THE WORK ZONE.

**500' MAX. OR AT LAST INTERSECTION WHICHEVER IS CLOSER.

LEGEND

- SIGN ON PERMANENT SUPPORT
- TYPE III BARRICADE
- TYPE III BARRICADE WITH ATTACHED SIGN
- (A) TYPE "A" WARNING LIGHT (FLASHING)
- WORK AREA

BARRICADES AND SIGNS FOR SIDEROAD CLOSURES

STATE OF WISCONSIN
DEPARTMENT OF TRANSPORTATION

APPROVED
7/2018 — DATE
/S/ Andrew Heidtke — WORK ZONE ENGI
FHWA

TYPICAL SIDEROAD APPROACH WARNING SIGN DETAIL

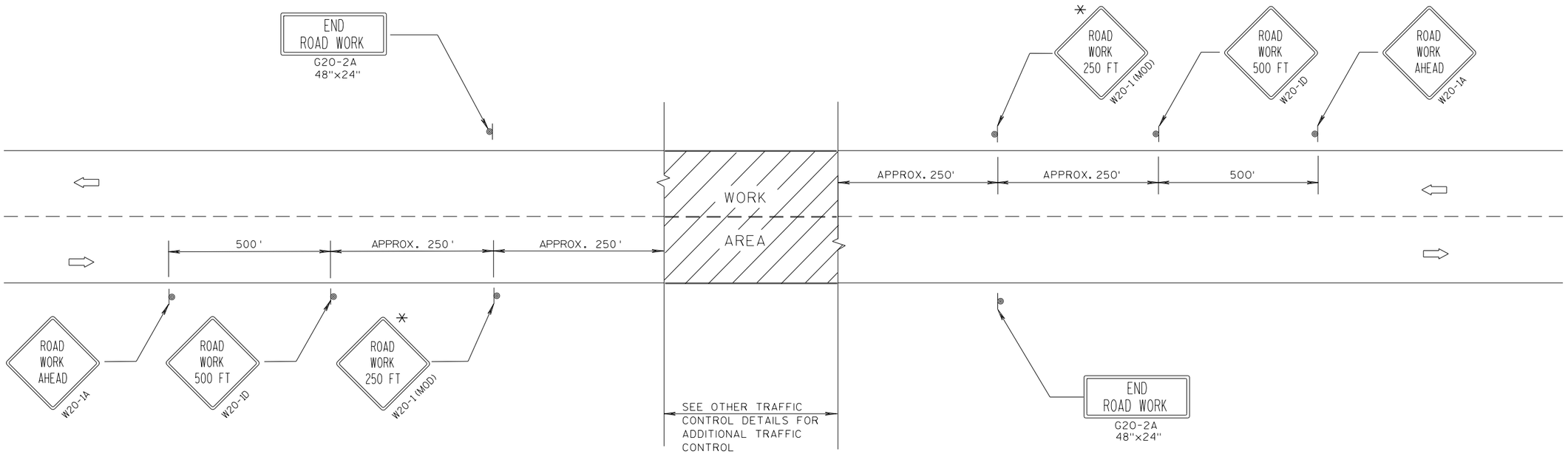

GENERAL NOTES

THE EXACT NUMBER, LOCATION, AND SPACING OF ALL SIGNS AND DEVICES SHALL BE ADJUSTED TO FIT FIELD CONDITIONS.

THE SPACING BETWEEN TRAFFIC CONTROL SIGNS SHOULD BE ADJUSTED TO NOT CONFLICT WITH AND SHOULD PROVIDE A DESIRABLE MINIMUM OF 200 FEET CLEARANCE TO EXISTING SIGNS THAT WILL REMAIN IN PLACE.

ALL SIGNS ARE 48"x48" UNLESS OTHERWISE NOTED. IF NECESSARY DUE TO SPACE CONSTRAINTS, 36"x36" SIGNS MAY BE USED INSTEAD OF 48"x48" SIGNS.

SIGNS THAT WILL BE IN PLACE LESS THAN 7 CONTINUOUS DAYS AND NIGHTS MAY BE MOUNTED ON PORTABLE SUPPORTS.

IF A "STOP" SIGN MUST BE REMOVED FOR A WORK OPERATION, A TEMPORARY "STOP" SIGN SHALL BE PLACED PRIOR TO THE SIGN REMOVAL, OR A FLAGGER SHALL BE PROVIDED UNTIL THE SIGN IS RE-ESTABLISHED.

* THE THIRD W20-1 SIGN IS REQUIRED ONLY IF THERE IS AN INTERSECTION BETWEEN THE "ROAD WORK 500 FT" SIGN AND THE WORK ZONE. ADJUST THE PLACEMENT OF THIS SIGN BASED ON INTERSECTION LOCATION AND OTHER FIELD CONDITIONS.

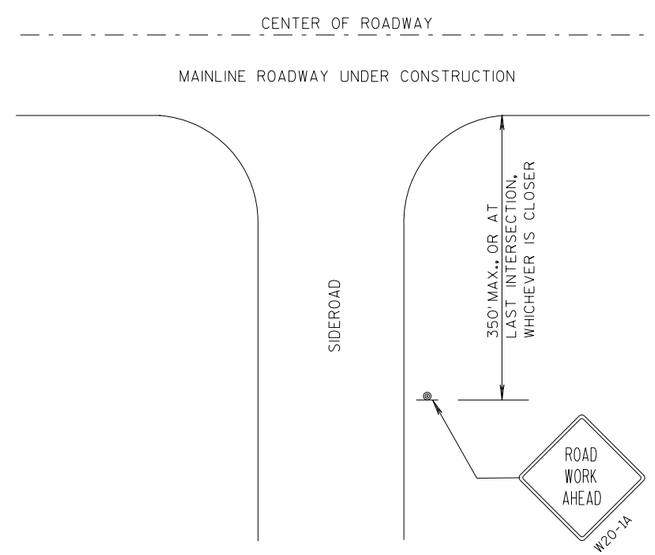

LEGEND

- SIGN ON PERMANENT SUPPORT
- DIRECTION OF TRAFFIC
- WORK AREA

TRAFFIC CONTROL, ADVANCE WARNING SIGNS 40 M.P.H. OR LESS TWO-WAY UNDIVIDED ROAD OPEN TO TRAFFIC

STATE OF WISCONSIN
DEPARTMENT OF TRANSPORTATION

APPROVED
7/2018 — DATE
/S/ Andrew Heldtke — WORK ZONE ENGI
FHWA

6
S.D.D. 15 C 5-5

GENERAL NOTES

DETAILS OF INSTALLATION, MATERIALS AND WORKMANSHIP NOT SHOWN ON THIS DRAWING SHALL CONFORM TO THE PERTINENT REQUIREMENTS OF THE STANDARD SPECIFICATIONS AND APPLICABLE SPECIAL PROVISIONS.

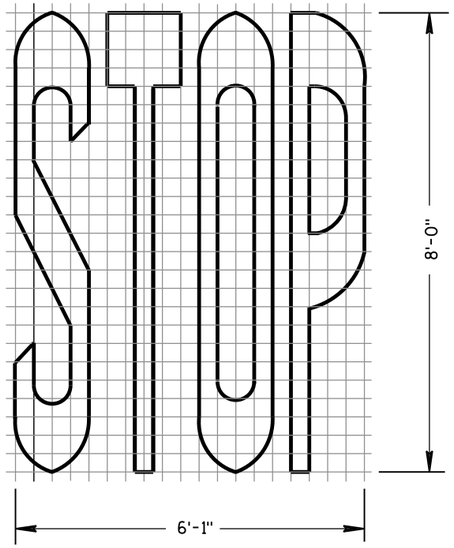

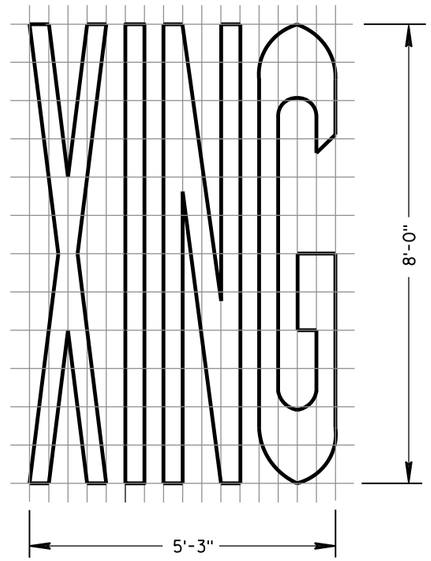

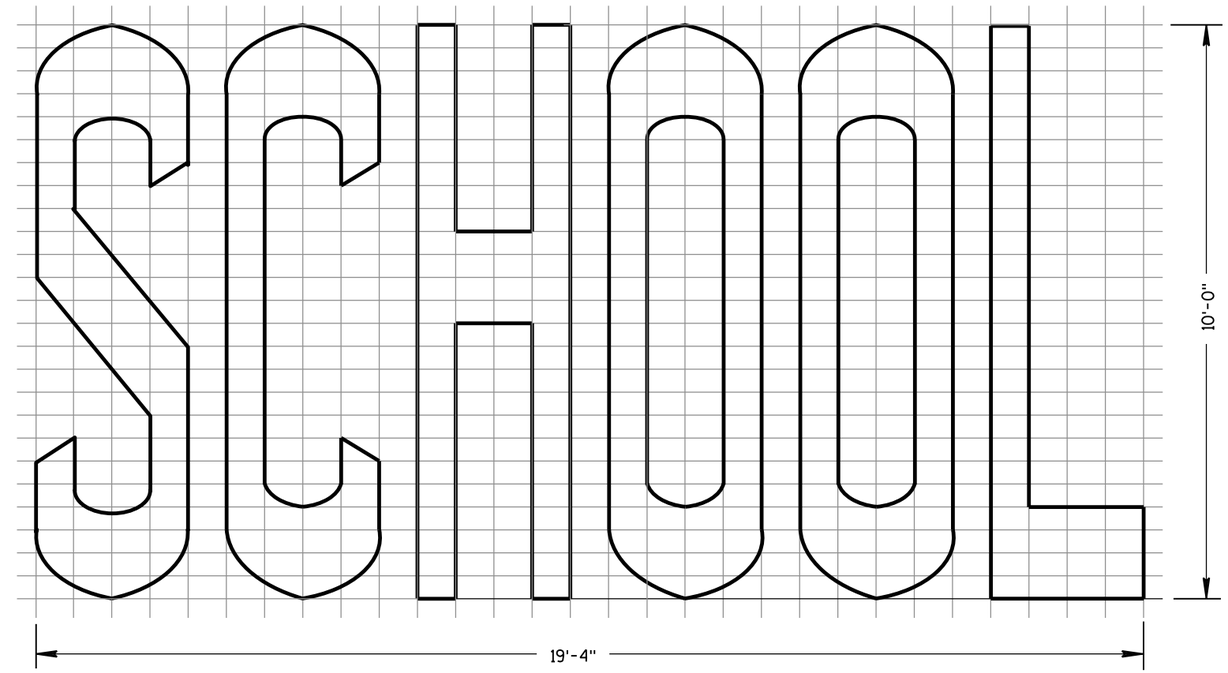

TWO-LANE

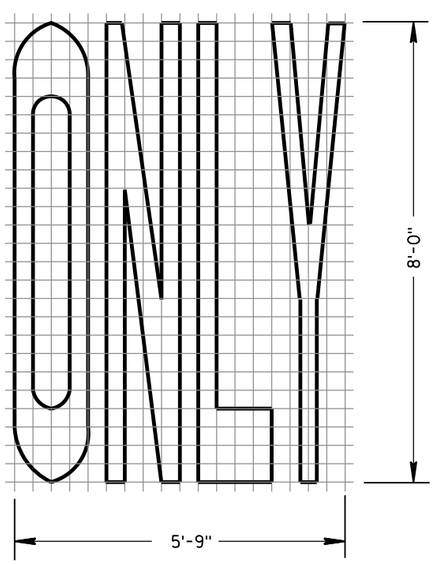

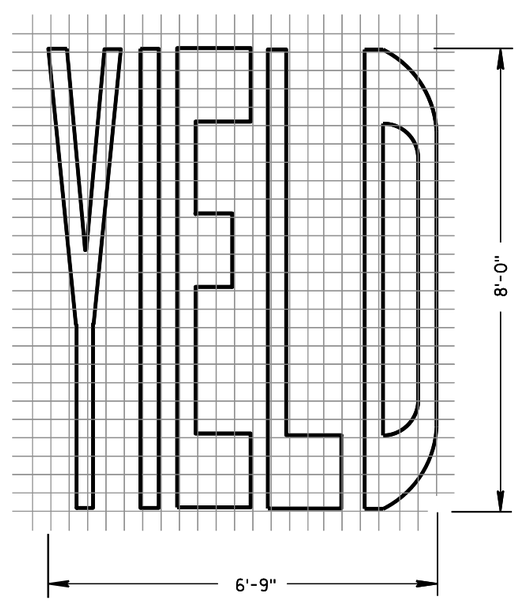

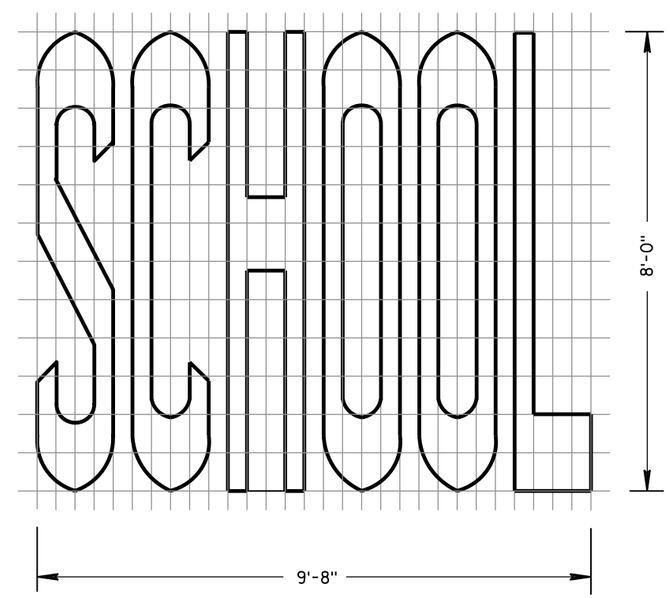

SINGLE-LANE

PAVEMENT MARKING WORDS

STATE OF WISCONSIN
DEPARTMENT OF TRANSPORTATION

APPROVED
June 2017 — DATE
/S/ Matthew R. Rauch — STATE SIGNING AND MARK EER
FHWA

6

6

S.D.D. 15 C 7-14b

S.D.D. 15 C 7-14b

GENERAL NOTES

DETAILS OF INSTALLATION, MATERIALS AND WORKMANSHIP NOT SHOWN ON THIS DRAWING SHALL CONFORM TO THE PERTINENT REQUIREMENTS OF THE STANDARD SPECIFICATIONS AND APPLICABLE SPECIAL PROVISIONS.

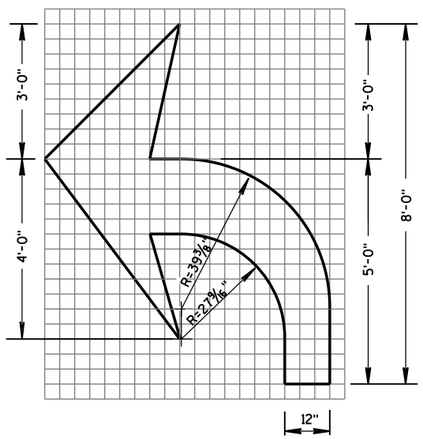

TYPE 2

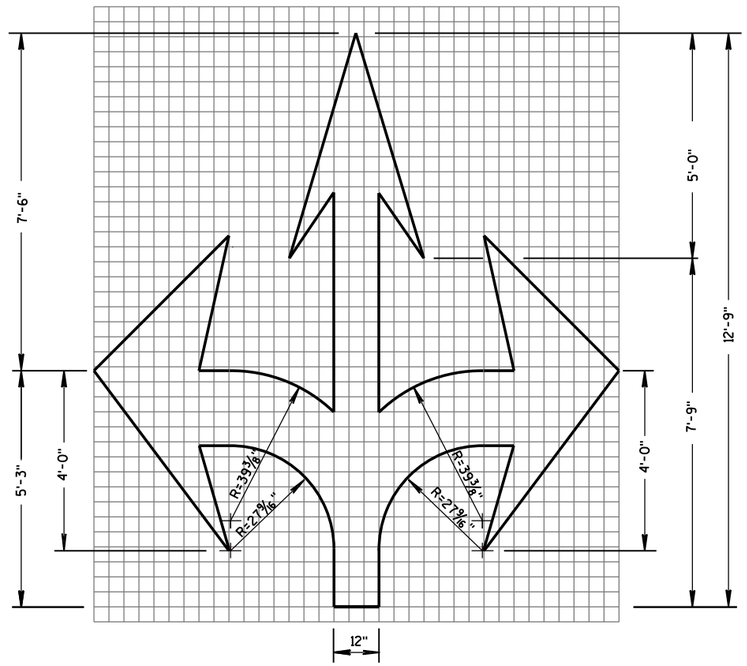

TYPE 6

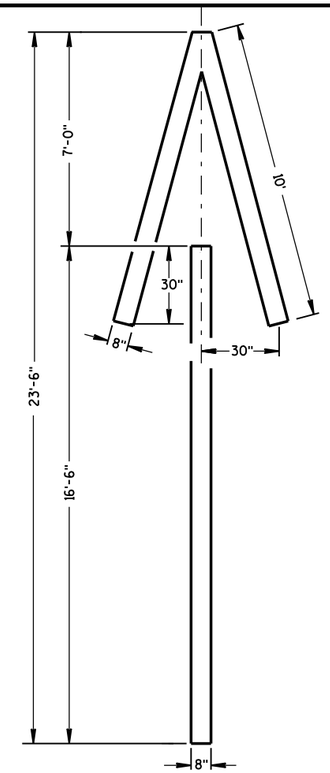

TYPE 4

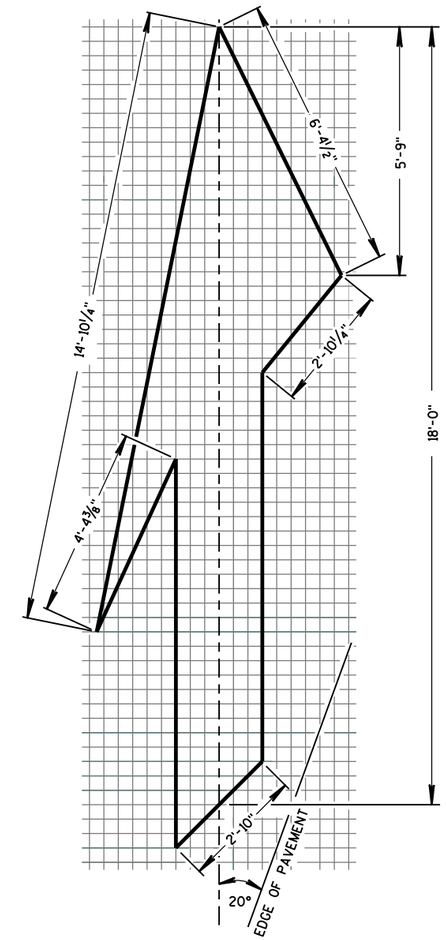

TYPE 5 LANE DROP ARROW

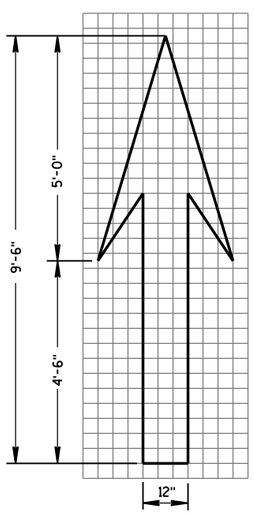

TYPE 1

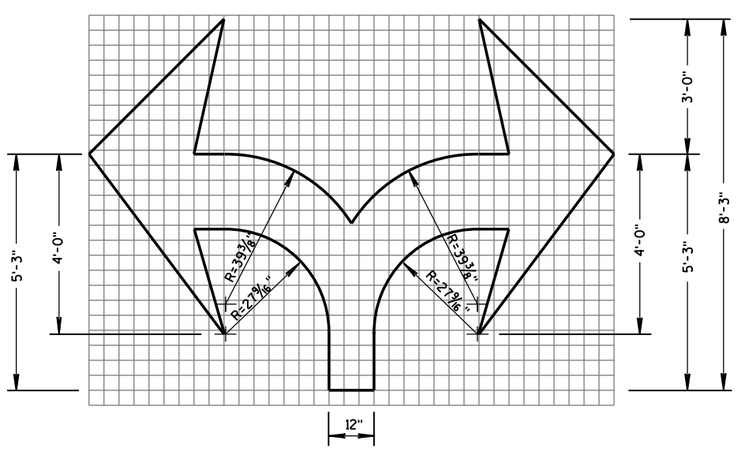

TYPE 7

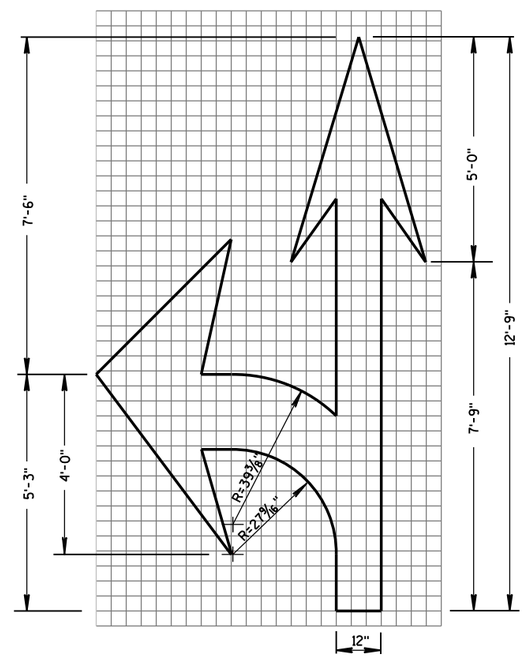

TYPE 3

PAVEMENT MARKING ARROWS

STATE OF WISCONSIN
DEPARTMENT OF TRANSPORTATION

APPROVED
June 2017 — DATE
/S/ Matthew R. Rauch — STATE SIGNING AND MAR[illegible]NEER
FHWA

6

S.D.D. 15 C 7-14c

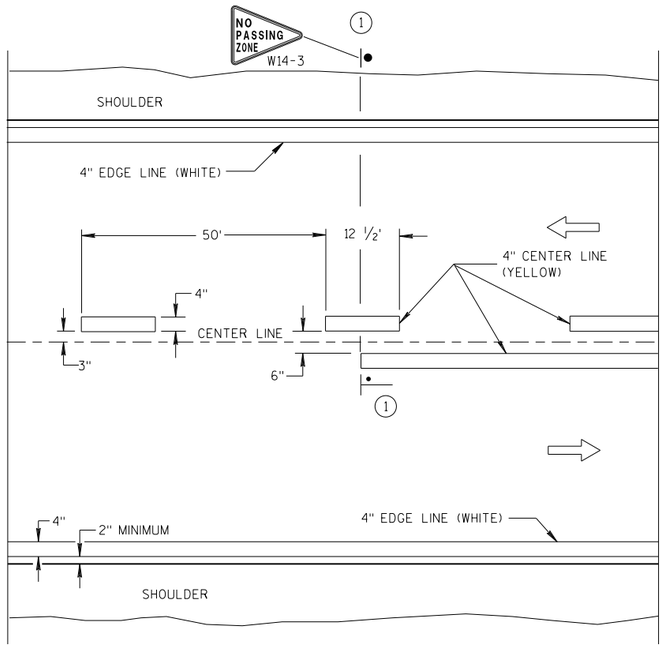

TWO WAY TRAFFIC

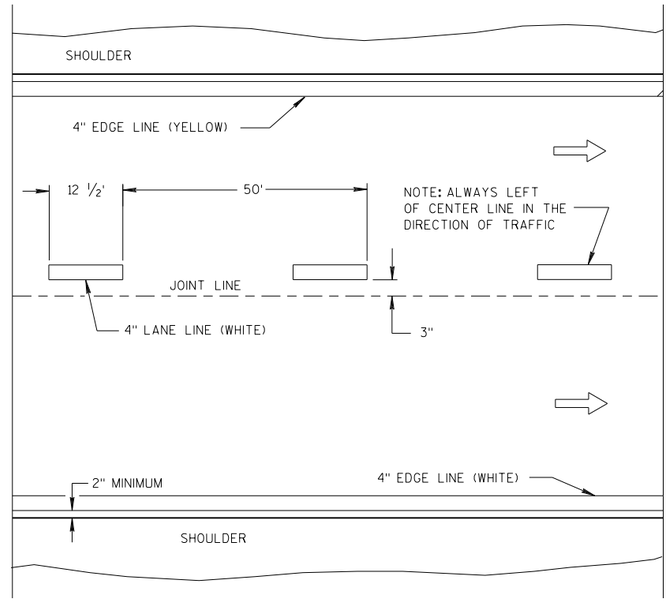

ONE WAY TRAFFIC

PERMANENT PAVEMENT MARKING

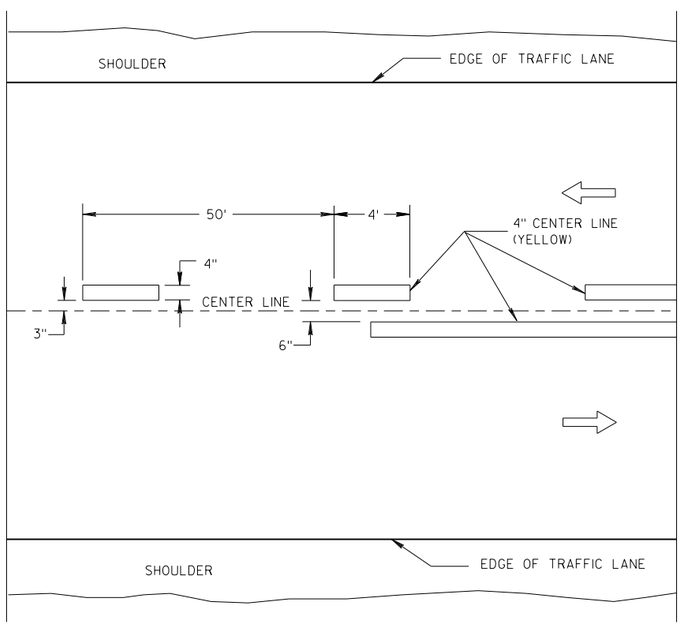

TWO WAY TRAFFIC

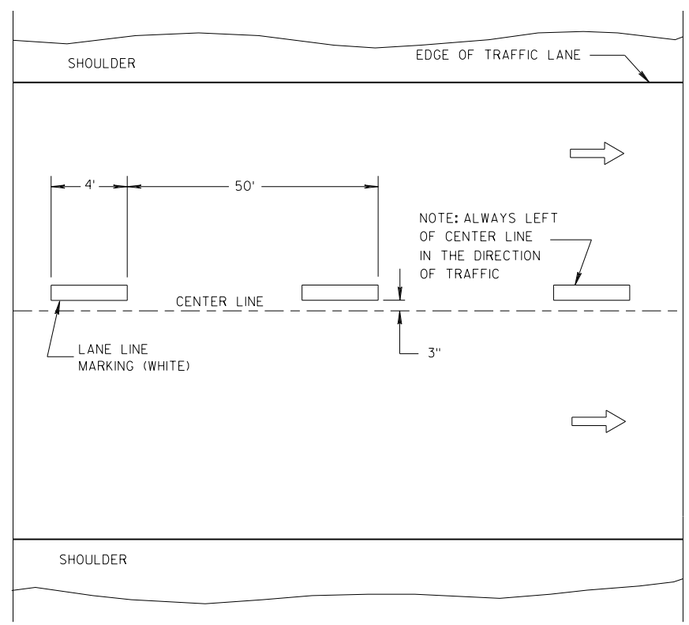

ONE WAY TRAFFIC

TEMPORARY PAVEMENT MARKING

GENERAL NOTES

DETAILS OF CONSTRUCTION NOT SHOWN ON THIS DRAWING SHALL CONFORM TO STANDARD SPECIFICATIONS AND SPECIAL PROVISIONS.

(1) LOCATE THE NO PASSING ZONE W14-3 SIGN WITHIN 50 FEET OF THE "T" MARKING.

NOTE

ARROW SYMBOL (⇨) SHOWS DIRECTION OF TRAVEL

LEGEND

"T" MARKING

POST MOUNTED SIGN

LONGITUDINAL MARKING (MAINLINE)

STATE OF WISCONSIN
DEPARTMENT OF TRANSPORTATION

APPROVED
7/2018 — DATE
/S/ Matthew R. Rauch — STATE SIGNING AND MAR INEER
FHWA

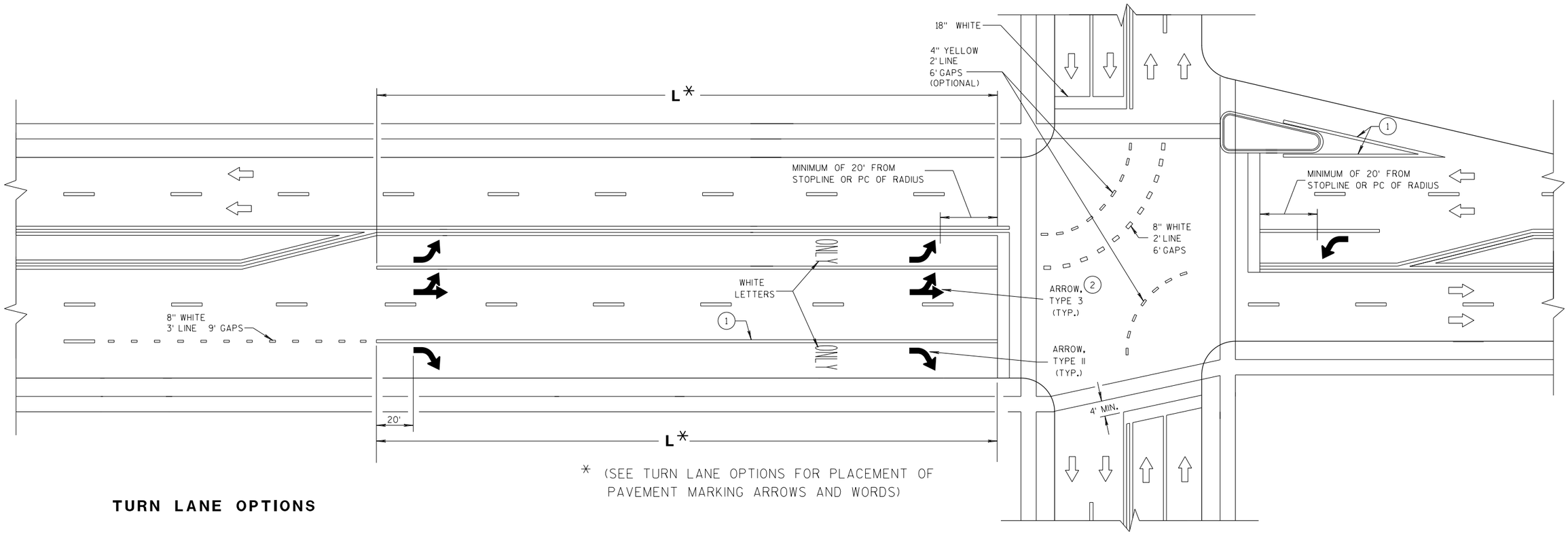

* (SEE TURN LANE OPTIONS FOR PLACEMENT OF PAVEMENT MARKING ARROWS AND WORDS)

TURN LANE OPTIONS

LENGTH OF TURN BAY (**L**) OF 0-47' DOES NOT REQUIRE PAVEMENT MARKING ARROWS OR WORDS

L = 48-87'

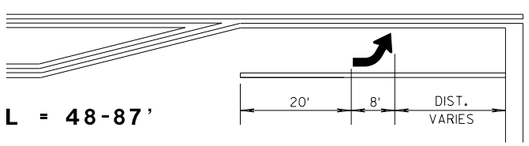

L = 88-166'

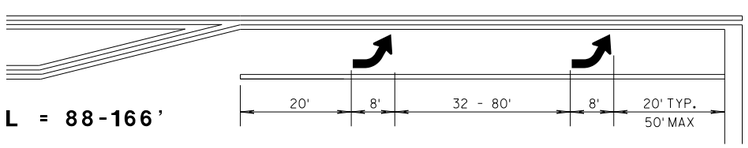

L = >166'

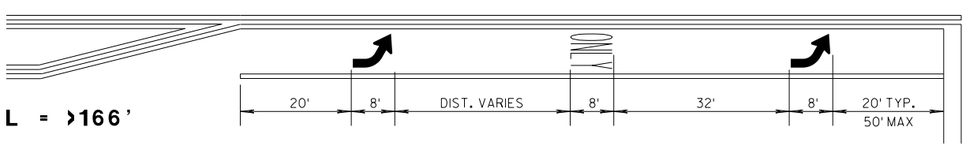

GENERAL NOTES

(1) 8" WHITE

(2) QUANTITY AND LOCATION OF TYPE 3 ARROW ARE THE SAME AS THE TYPE II ARROWS IN THE ADJACENT TURN LANE. FOR TURN LANES WITH A PHYSICAL SEPARATION, THE ARROWS AND ONLY MARKING ARE ELIMINATED.

⇨ DIRECTION OF TRAFFIC

L = LENGTH OF TURN BAY

PAVEMENT MARKING (TURN LANES)

STATE OF WISCONSIN
DEPARTMENT OF TRANSPORT

6

S.D.D. 15 C 8-19c

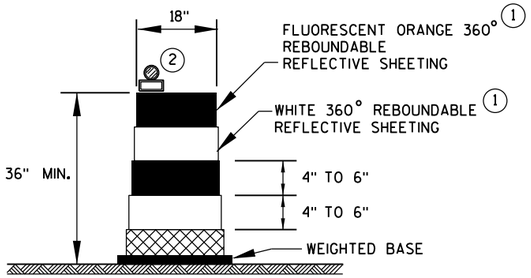

DRUM

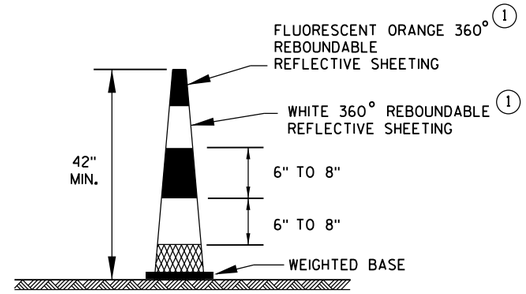

42" CONE

DO NOT USE IN TAPERS
½ SPACING OF DRUMS

GENERAL NOTES

1. REFLECTIVE SHEETING SHALL FOLLOW THE REQUIREMENTS IN THE APPROVED PRODUCTS LISTING FOR SIGN SHEETING.
2. LOCATION OF WARNING LIGHTS WHEN SHOWN ON THE PLAN.

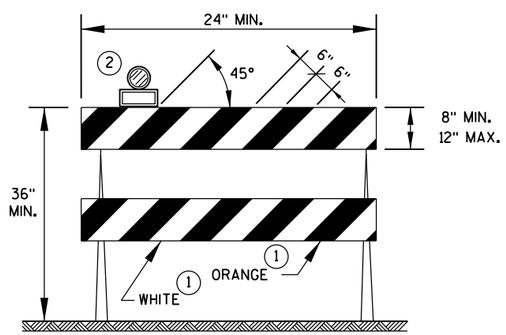

TYPE 2 BARRICADE

FOR RAILS LESS THAN 36" LONG, 4" WIDE STRIPES MAY BE USED. ALL STRIPES SHALL SLOPE DOWNWARD TO THE TRAFFIC SIDE FOR CHANNELIZATION.

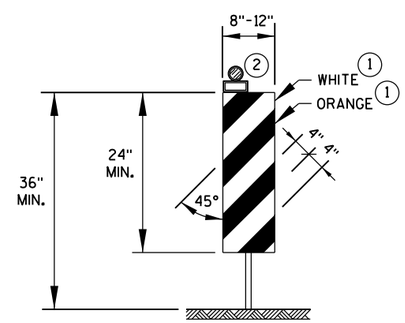

VERTICAL PANEL

THE STRIPES SHALL SLOPE DOWNWARD TO THE TRAFFIC SIDE FOR CHANNELIZATION.

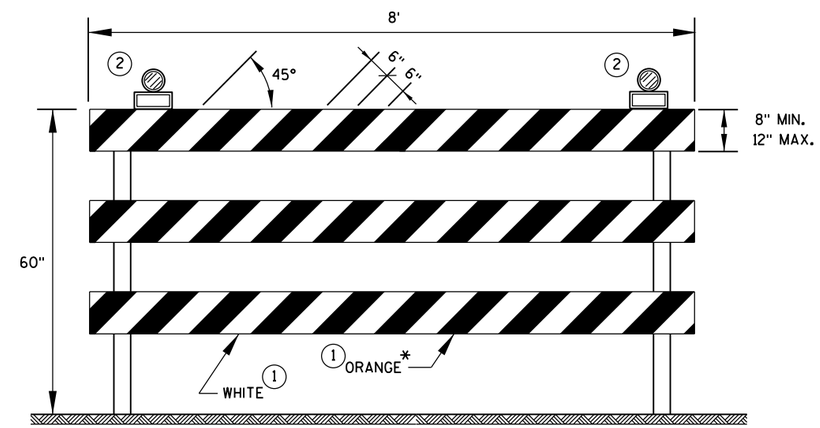

TYPE 3 BARRICADE

IF SIGN MOUNTED, DO NOT COVER MORE THAN 50% OF THE TOP TWO RAILS OR 33% OF THE TOTAL AREA OF THE THREE RAILS.

* IF USED FOR A PERMANENT APPLICATION, USE RED SHEETING.

CHANNELIZING DEVICES DRUMS, CONES, BARRICADES AND VERTICAL PANELS	
STATE OF WISCONSIN DEPARTMENT OF TRANSPORTATION	
APPROVED	
June 2017	/S/ Andrew Heldtke
DATE	WORK ZONE ENG
FHWA	

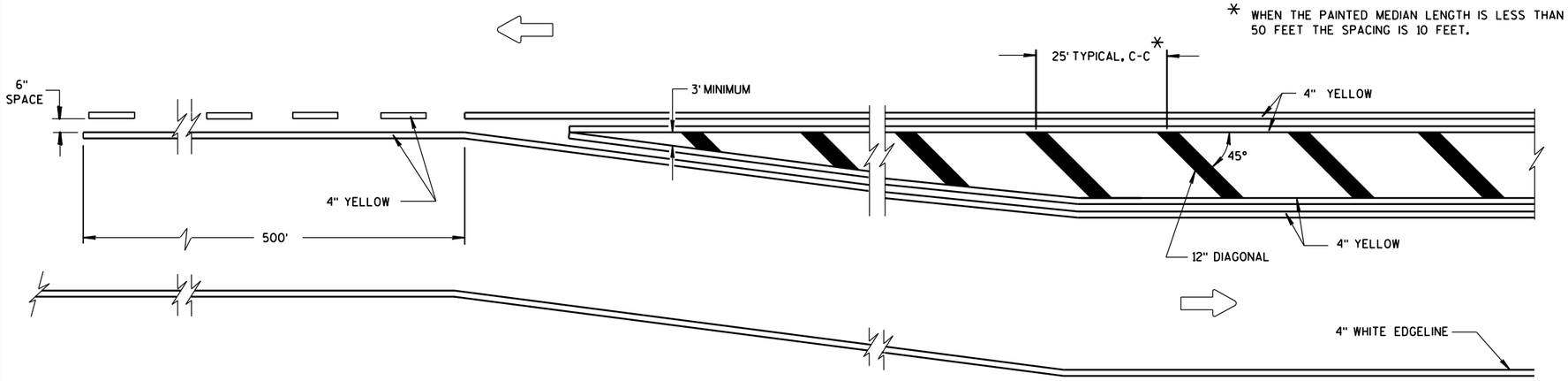

MEDIAN ISLAND DETAIL

GENERAL NOTE

DIAGONALS ARE OPTIONAL WHEN PAINTED ISLAND IS LESS THAN 6 FEET AT WIDEST POINT.

DIRECTION OF TRAVEL

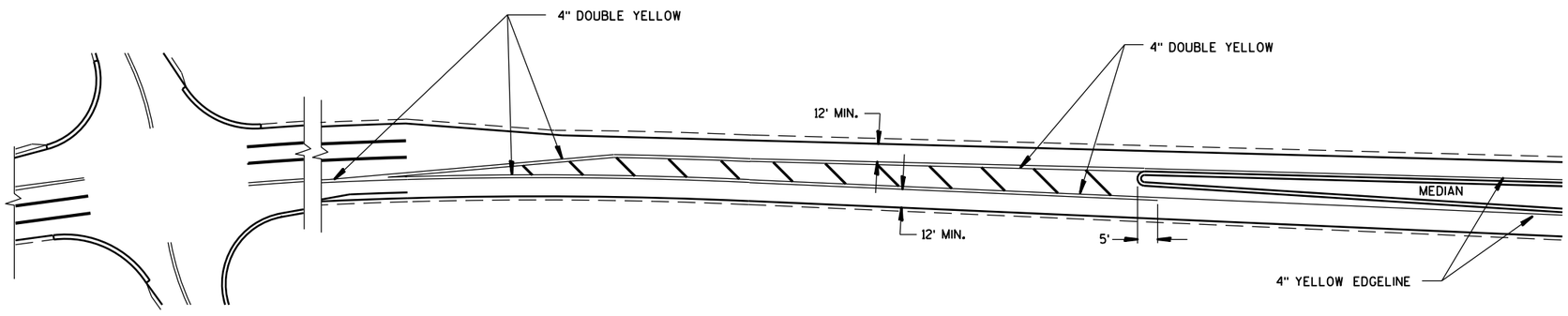

APPROACH MARKINGS FOR OTHER MEDIAN TYPES

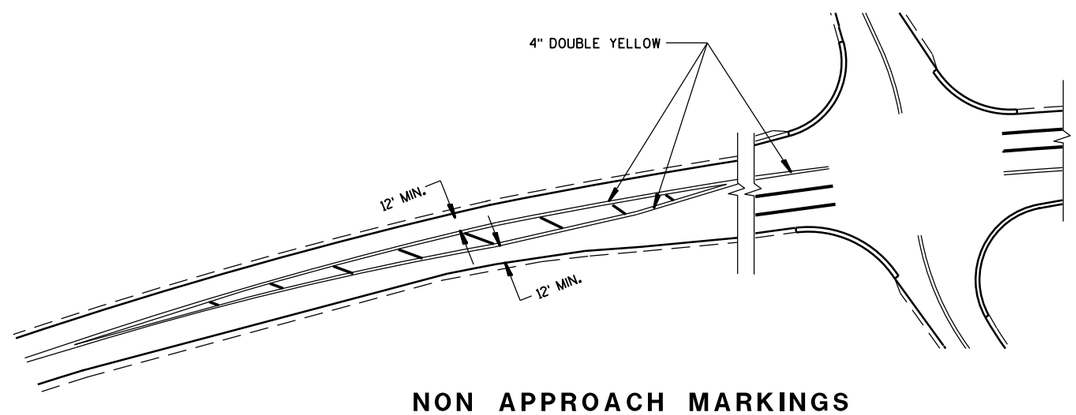

NON APPROACH MARKINGS

MEDIAN ISLAND MARKING

STATE OF WISCONSIN
DEPARTMENT OF TRANSPORTATION

APPROVED
June 2017 /S/ Matthew Rauch
DATE STATE SIGNING AND MARK ER
FHWA

6

S.D.D. 15 C 18-4

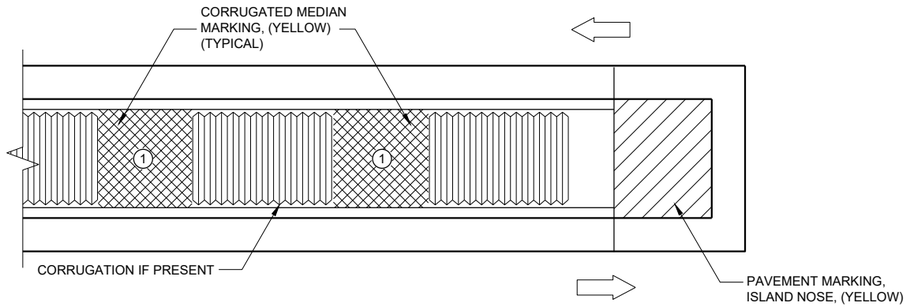

MEDIAN ISLAND WITH SQUARE BLUNT NOSE

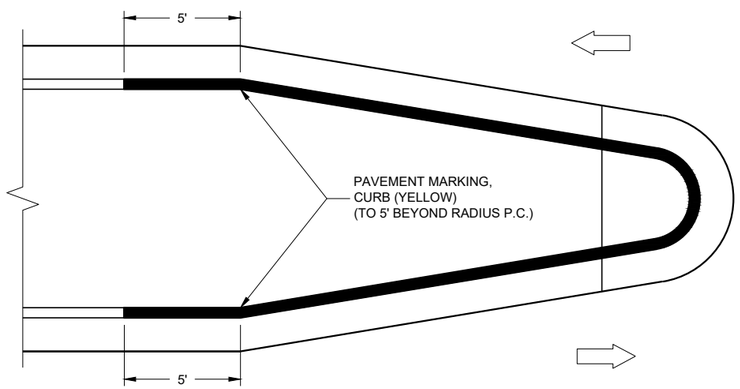

MEDIAN ISLAND WITH ROUND BLUNT NOSE

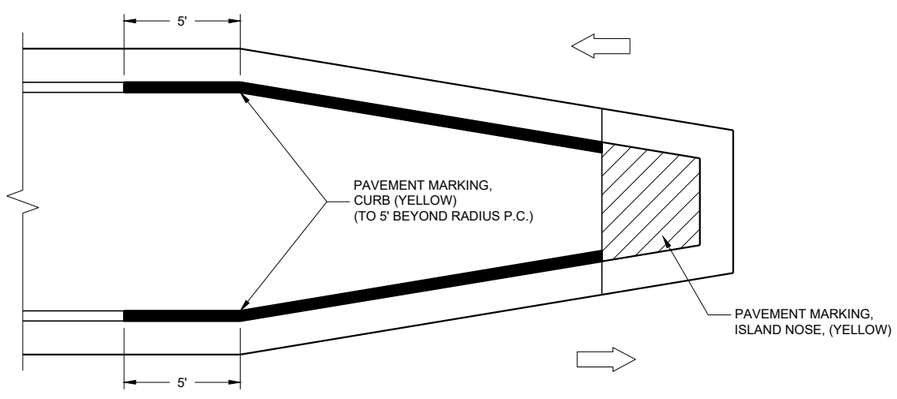

MEDIAN ISLAND WITH SLOPED NOSE

TYPICAL PLACEMENT OF
PAVEMENT MARKING ON MEDIAN ISLANDS

GENERAL NOTES

WHEN CONCRETE CORRUGATED MEDIAN IS CONSTRUCTED TO SEPARATE TRAFFIC OPERATING IN THE OPPOSING DIRECTION, YELLOW PAVEMENT MARKING SHALL BE APPLIED TO THE FLAT PORTION OF THE CONCRETE CORRUGATED MEDIAN. THE ITEM OF PAVEMENT MARKING, CONCRETE CORRUGATED MEDIAN, WILL BE MEASURED IN PLACE AND ACCEPTED IN ACCORDANCE WITH THE CONTRACT AND PAID FOR AT THE CONTRACT UNIT PRICE PER SQUARE FOOT.

ISLAND NOSE MARKING

CURB MARKING

CORRUGATED MEDIAN MARKING

DIRECTION OF TRAVEL

PAVEMENT MARKINGS
(ISLANDS)

STATE OF WISCONSIN
DEPARTMENT OF TRANSPORTATION

APPROVED
7/2018 — DATE
/S/ Matthew R. Rauch — STATE SIGNING AND MAR ENGINEER
FHWA

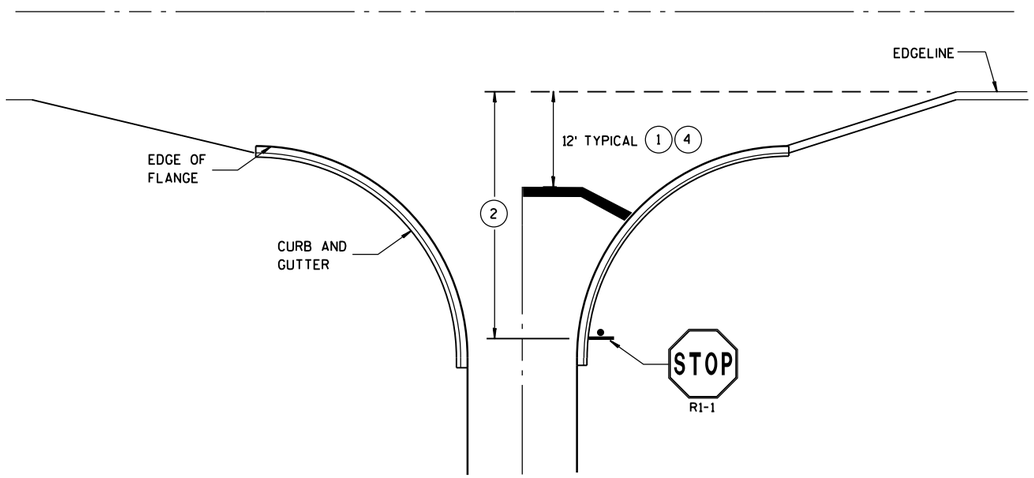

TYPICAL STOP LINE PAVEMENT MARKING
WITH CURB AND GUTTER

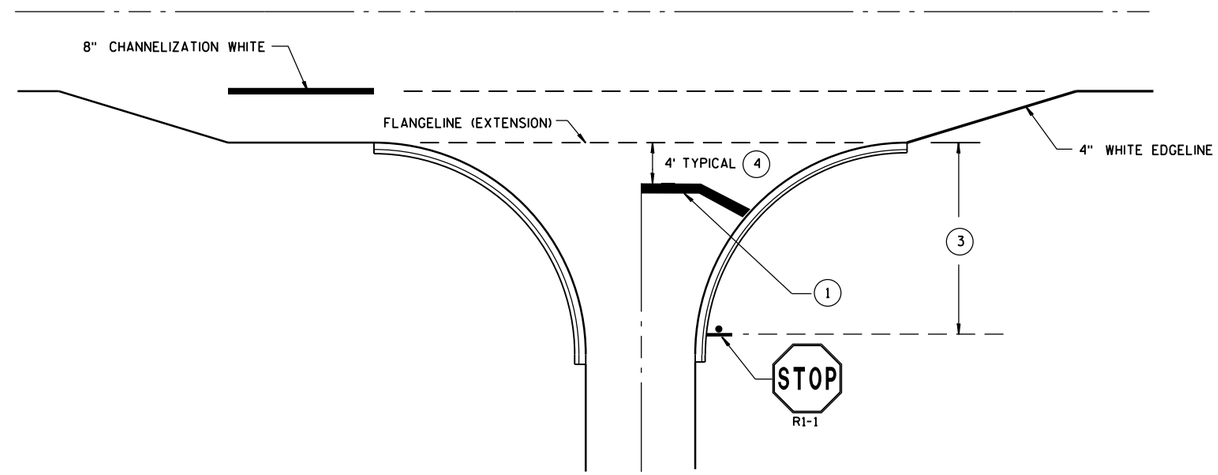

TYPICAL STOP LINE PAVEMENT MARKING
FOR SIDEROADS WITH RIGHT TURN LANE

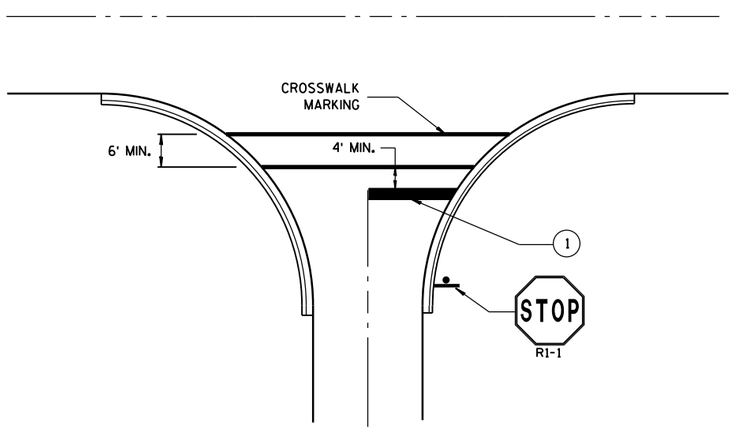

TYPICAL STOP LINE PAVEMENT MARKING
FOR SIDEROADS WITH CROSSWALK MARKING

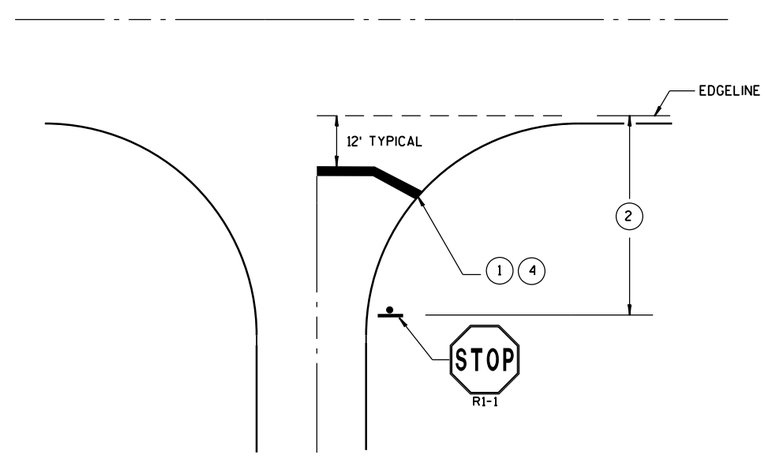

TYPICAL STOP LINE PAVEMENT MARKING
WITHOUT CURB AND GUTTER

GENERAL NOTES

STOP SIGN SHALL BE PLACED A MINIMUM OF 6 FEET TO A MAXIMUM OF 50 FEET FROM THE EDGELINE LOCATION.

1. 18-INCH STOP LINES MAY BE DELETED OR ADDED BY THE PROJECT ENGINEER BASED ON VISIBILITY AND SIGHT LINES.
2. IF STOP SIGN IS LESS THAN OR EQUAL TO 40 FEET FROM THE EDGELINE THAN NO STOP LINE IS REQUIRED.
3. IF STOP SIGN IS LESS THAN OR EQUAL TO 30 FEET FROM THE FLANGELINE EXTENSION THAN NO STOP LINE IS REQUIRED.
4. MOVE CLOSER TO EDGE OF TRAVEL LANE AS NEEDED FOR VISIBILITY AND SIGHT LINES. (NO CLOSER THAN 4 FEET).

STOP LINE AND CROSSWALK PAVEMENT MARKING

STATE OF WISCONSIN
DEPARTMENT OF TRANSPORTATION

APPROVED
Sept., 2017 — DATE
/S/ Matthew R. Rauch — STATE SIGNING AND MAR[illegible]NEER
FHWA

6

S.D.D. 15 C 33-3

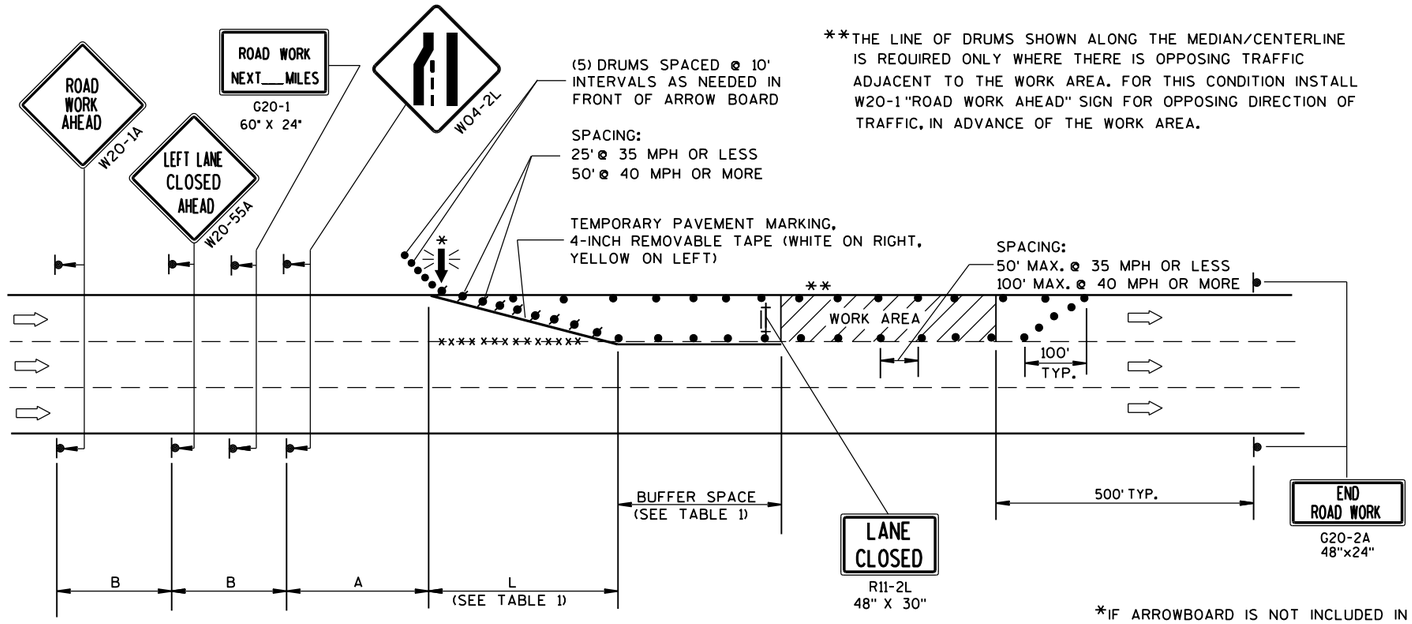

**THE LINE OF DRUMS SHOWN ALONG THE MEDIAN/CENTERLINE IS REQUIRED ONLY WHERE THERE IS OPPOSING TRAFFIC ADJACENT TO THE WORK AREA. FOR THIS CONDITION INSTALL W20-1 "ROAD WORK AHEAD" SIGN FOR OPPOSING DIRECTION OF TRAFFIC, IN ADVANCE OF THE WORK AREA.

B=400' AT 25-30 MPH
700' AT 35-40 MPH
1000' AT 45-55 MPH

A=200' AT 25-30 MPH
350' AT 35-40 MPH
500' AT 45-55 MPH

(PLACE BARRICADE AND SIGN APPROX. EVERY 1000' ACROSS THE CLOSED LANE)

*IF ARROWBOARD IS NOT INCLUDED IN MISCELLANEOUS QUANTITIES, SUBSTITUTE A TYPE III BARRICADE WITH W01-6 SIGN IN THE LANE CLOSURE TAPER.

W01-6
48"x24"

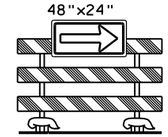

GENERAL NOTES

THIS LANE CLOSURE DETAIL IS TYPICAL FOR CLOSING THE LEFT LANE. FOR A RIGHT LANE CLOSURE, REVERSE THE TRAFFIC CONTROL.

THIS DETAIL MAY BE USED FOR ROADWAYS WITH EITHER TWO OR THREE LANES IN EACH DIRECTION.

THE EXACT NUMBER, LOCATION, AND SPACING OF ALL SIGNS AND DEVICES SHALL BE ADJUSTED TO FIT FIELD CONDITIONS AS APPROVED BY THE ENGINEER.

THE SPACING BETWEEN TRAFFIC CONTROL SIGNS SHOULD BE ADJUSTED TO NOT CONFLICT WITH AND SHOULD PROVIDE A DESIRABLE MINIMUM OF 200 FEET CLEARANCE TO EXISTING SIGNS THAT WILL REMAIN IN PLACE.

ALL SIGNS ARE 48"x48" UNLESS OTHERWISE NOTED. IF NECESSARY DUE TO SPACE CONSTRAINTS IN URBAN AREAS, 36" X 36" SIGNS MAY BE USED IF APPROVED BY DISTRICT TRAFFIC UNIT.

"WO" SIGNS ARE THE SAME AS "W" SIGNS EXCEPT THE BACKGROUND IS ORANGE.

SIGNS THAT WILL BE IN PLACE LESS THAN 7 CONTINUOUS DAYS AND NIGHTS, OR THAT WILL BE PLACED IN A CLOSED LANE, MAY BE MOUNTED ON PORTABLE SUPPORTS.

ANY SIGNS TEMPORARY OR EXISTING, WHICH CONFLICT WITH TRAFFIC CONTROL "IN USE" SHALL BE REMOVED OR COVERED AS NEEDED AND AS APPROVED BY THE ENGINEER.

REMOVE PAVEMENT MARKINGS AND PLACE TEMPORARY PAVEMENT MARKING, REMOVABLE TAPE IF LANE CLOSURE IS TO BE IN PLACE FOR 4 OR MORE CONTINUOUS DAYS AND NIGHTS.

ON UNDIVIDED ROADWAYS, OMIT THE SIGNS SHOWN ON LEFT SIDE OF ROAD.

W20-1A, G20-1 AND G20-2A SIGNS ARE NOT REQUIRED IF THE LANE CLOSURE IS WITHIN A LARGER WORK ZONE WHERE THESE SIGNS ARE ALREADY PRESENT.

OMIT G20-1 SIGNS IF LENGTH OF WORK AREA IS 2 MILES OR LESS.

CONSIDER GEOMETRICS WHEN LOCATING SIGNS AND ARROWBOARDS SO THE APPROACHING DRIVER HAS A CLEAR VIEW OF THE ARROWBOARDS AND LANE CLOSURE DRUMS.

PLACE THE ARROWBOARD AS CLOSE AS POSSIBLE TO THE BEGINNING OF THE LANE CLOSURE TAPER, PREFERABLY ON THE SHOULDER OR TERRACE.

CHANNELIZING DEVICES PLACED ADJACENT TO WORK AREA SHALL BE PULLED BACK FROM THE TRAVEL LANE WHEN WORK IS NOT IN PROGRESS.

BARRICADES IN A CLOSED LANE THAT MUST BE MOVED FOR A WORK OPERATION SHALL BE IMMEDIATELY RE-ESTABLISHED UPON COMPLETION OF THE OPERATION OR, FOR CONTINUING OPERATIONS, AT THE END OF EACH WORKING DAY.

WARNING LIGHTS ARE NOT REQUIRED IF THE LANE CLOSURE IS A DAYTIME ONLY OPERATION.

TABLE 1
TAPER AND BUFFER SPACE
FOR 12' LANE WIDTH

S	L	BUFFER SPACE
25	125'	55'
30	180'	85'
35	245'	120'
40	320'	170'
45	540'	220'
50	600'	280'
55	660'	335'

FOR LANE WIDTH OTHER THAN 12':

L = WS AT 45 MPH OR GREATER

$L = \frac{WS^2}{60}$ AT 40 MPH OR LESS

L = TAPER LENGTH IN FEET

S = NON-CONSTRUCTION SPEED LIMIT (MPH)

W = WIDTH OF LANE CLOSURE

LEGEND

TYPE III BARRICADE WITH ATTACHED SIGN

SIGN ON PERMANENT SUPPORT

TRAFFIC CONTROL DRUM WITH TYPE "C" STEADY BURN LIGHT

TRAFFIC CONTROL DRUM

FLASHING ARROW BOARD

DIRECTION OF TRAFFIC

REMOVING PAVEMENT MARKING (SEE GENERAL NOTES)

WORK AREA

TRAFFIC CONTROL, SINGLE LANE CLOSURE, NON-FREEWAY/EXPRESSWAY

STATE OF WISCONSIN
DEPARTMENT OF TRANSPORTATION

APPROVED
June 2016 — DATE
/S/ Peter Amakobe Atepe — STATEWIDE WORK ZONE SAFETY ENGINEER
FHWA

6

S.D.D. 15 D 20-4

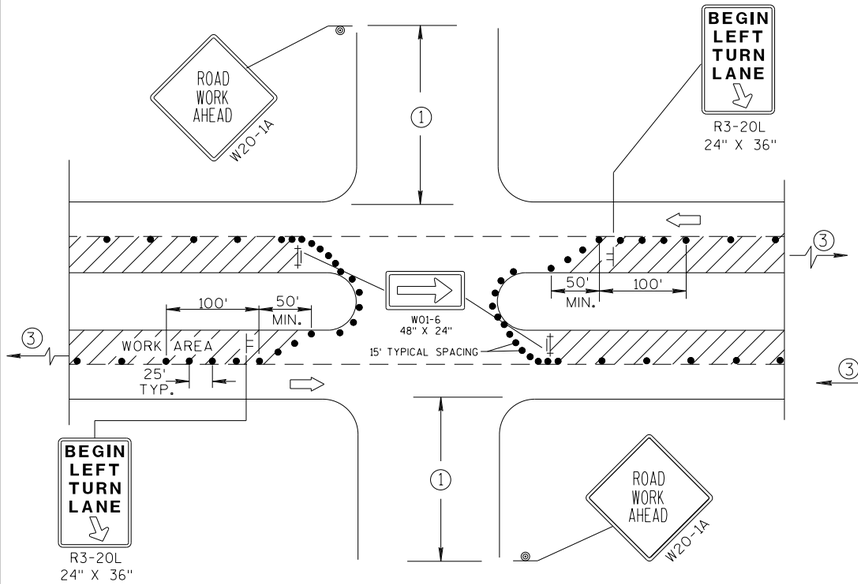

DETAIL A

FOR LEFT LANE CLOSURE AT INTERSECTION OR MEDIAN OPENING

PROVIDE TURN LANES AT INTERSECTIONS WHENEVER STAGING OF WORK ALLOWS. TAPER AND TURN LANE LENGTHS BASED ON FIELD CONDITIONS AS APPROVED BY THE ENGINEER.

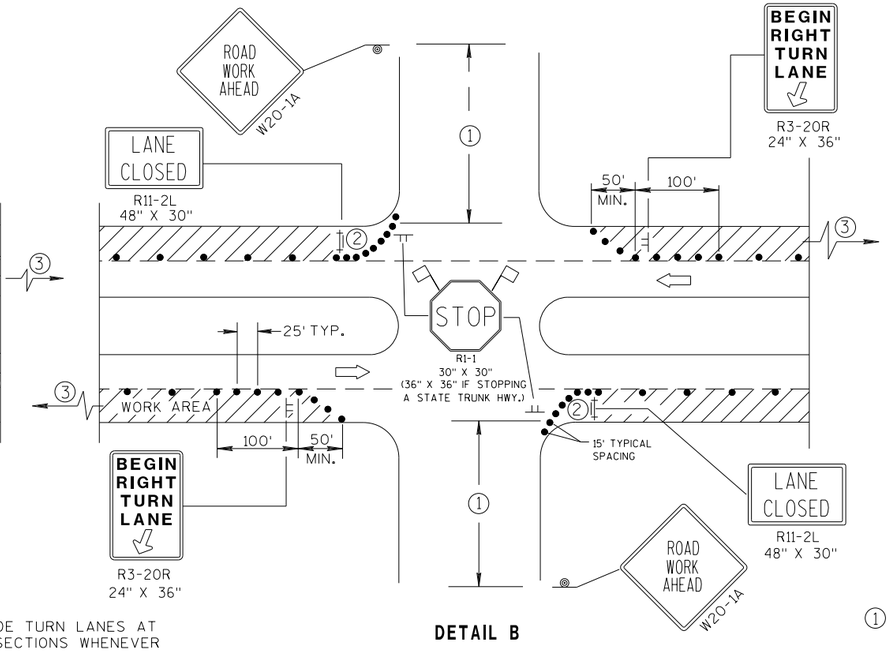

DETAIL B

FOR RIGHT LANE CLOSURE AT INTERSECTION

GENERAL NOTES

THE EXACT NUMBER, LOCATION, AND SPACING OF ALL SIGNS AND DEVICES SHALL BE ADJUSTED TO FIT FIELD CONDITIONS AS APPROVED BY THE ENGINEER.

THE SPACING BETWEEN SIGNS SHOULD BE ADJUSTED TO NOT CONFLICT WITH AND SHOULD PROVIDE A DESIRABLE MINIMUM OF 200 FEET CLEARANCE TO EXISTING SIGNS THAT WILL REMAIN IN PLACE.

ALL SIGNS ARE 48"×48" UNLESS OTHERWISE NOTED. IF NECESSARY DUE TO SPACE CONSTRAINTS IN URBAN AREAS, 36" X 36" SIGNS MAY BE USED IF APPROVED BY DISTRICT TRAFFIC UNIT.

"WO" SIGNS ARE THE SAME AS "W" SIGNS EXCEPT THE BACKGROUND IS ORANGE.

SIGN LAYOUTS SHALL BE IN ACCORDANCE WITH THE FHWA'S MANUAL OF STANDARD HIGHWAY SIGNS OR THE WISCONSIN STANDARD SIGN PLATES.

SIGNS THAT WILL BE IN PLACE LESS THAN 7 CONTINUOUS DAYS AND NIGHTS, OR THAT WILL BE PLACED IN A CLOSED LANE, MAY BE MOUNTED ON PORTABLE SUPPORTS.

ANY SIGNS TEMPORARY OR EXISTING, WHICH CONFLICT WITH TRAFFIC CONTROL "IN USE" SHALL BE REMOVED OR COVERED AS NEEDED AND AS APPROVED BY THE ENGINEER.

CHANNELIZING DEVICES PLACED ADJACENT TO WORK AREA SHALL BE PULLED BACK FROM THE TRAVEL LANE WHEN WORK IS NOT IN PROGRESS.

BARRICADES IN A CLOSED LANE THAT MUST BE MOVED FOR A WORK OPERATION SHALL BE IMMEDIATELY RE-ESTABLISHED UPON COMPLETION OF THE OPERATION OR, FOR CONTINUING OPERATIONS, AT THE END OF EACH WORKING DAY.

(1) 500' TYPICAL OR AT LAST INTERSECTION, WHICHEVER IS CLOSER.
350' IF 35-40 MPH.
200' IF 25-30 MPH.

(2) ALSO USE BARRICADE AND 15-FOOT TYPICAL DRUM SPACING AT COMMERCIAL DRIVEWAYS.

(3) SEE SEPARATE LANE CLOSURE DETAIL FOR ADDITIONAL TRAFFIC CONTROL.

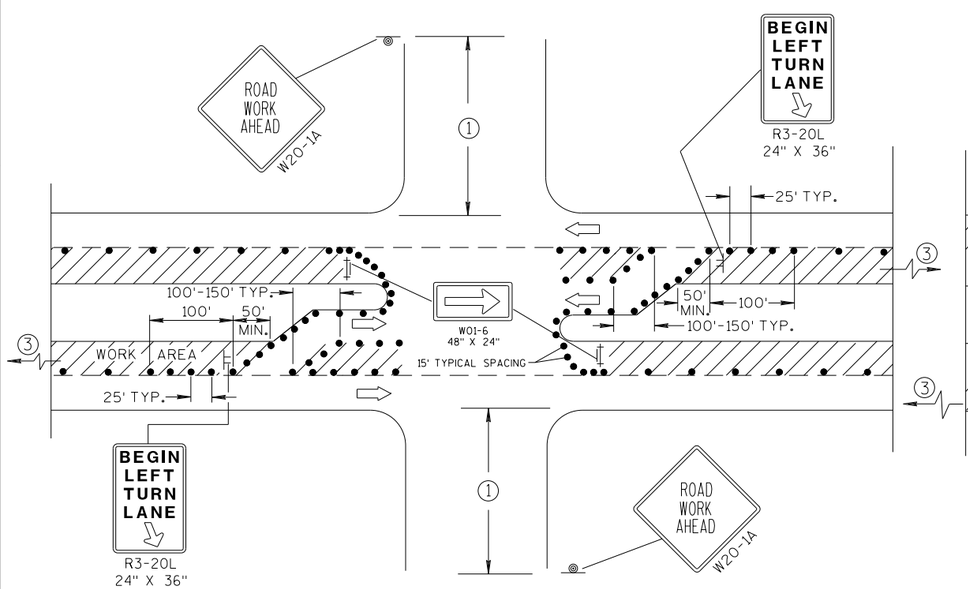

DETAIL C

FOR LEFT LANE CLOSURE AT INTERSECTION OR MEDIAN OPENING (WITH LEFT TURN BAY OPEN)

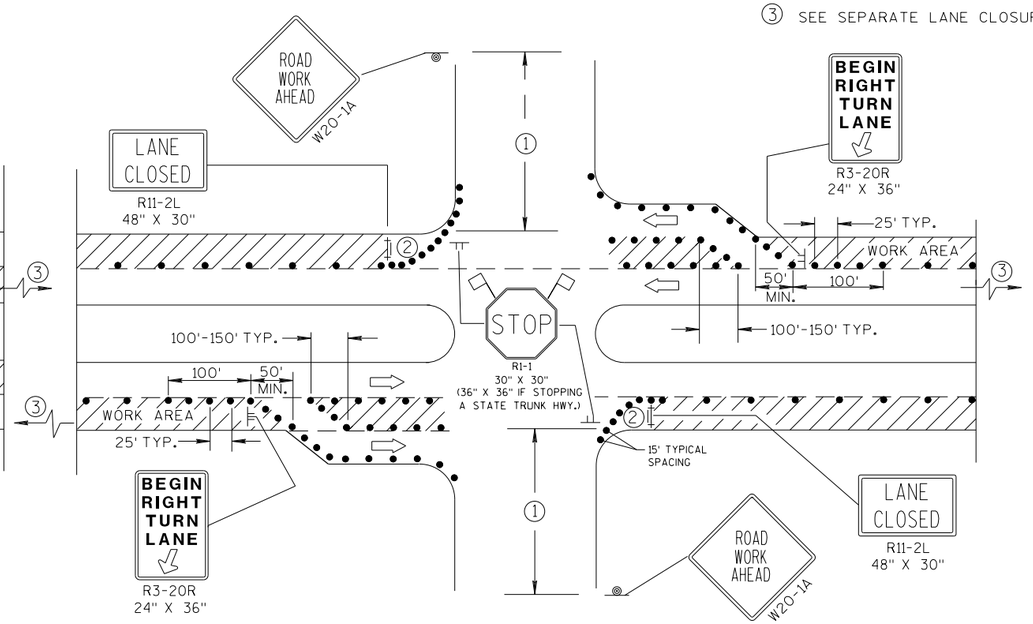

DETAIL D

FOR RIGHT LANE CLOSURE AT INTERSECTION (WITH RIGHT TURN BAY OPEN)

LEGEND

- TRAFFIC CONTROL DRUM
- SIGN ON PERMANENT SUPPORT
- SIGN ON TEMPORARY SUPPORT (5' MIN. MOUNTING HEIGHT)
- TYPE III BARRICADE WITH ATTACHED SIGN AND TYPE "A" WARNING LIGHT (FLASHING)
- DIRECTION OF TRAFFIC
- FLAGS, 16" X 16" MIN., (ORANGE)
- WORK AREA

TRAFFIC CONTROL, INTERSECTION WITHIN SINGLE LANE CLOSURE

STATE OF WISCONSIN
DEPARTMENT OF TRANSPORTATION

APPROVED
7/2018 — DATE
/S/ Andrew Heldtke — WORK ZONE ENG
FHWA

GENERAL NOTES

THE EXACT NUMBER, LOCATION AND SPACING OF ALL SIGNS AND DEVICES SHALL BE ADJUSTED TO FIT FIELD CONDITIONS AS APPROVED BY THE ENGINEER.

ALL SIGNS ARE 48" X 48" UNLESS OTHERWISE NOTED. IF NECESSARY DUE TO SPACE CONSTRAINTS IN URBAN AREAS, 36" X 36" SIGNS MAY BE USED IF APPROVED BY DISTRICT TRAFFIC UNIT.

"WO" SIGNS ARE THE SAME AS "W" SIGNS EXCEPT THE BACKGROUND IS ORANGE.

SIGNS THAT WILL BE IN PLACE LESS THAN 7 CONTINUOUS DAYS AND NIGHTS MAY BE MOUNTED ON PORTABLE SUPPORTS.

ANY SIGNS TEMPORARY OR EXISTING, WHICH CONFLICT WITH TRAFFIC CONTROL "IN USE" SHALL BE REMOVED OR COVERED AS NEEDED AND AS APPROVED BY THE ENGINEER.

W20-1A AND G20-2A SIGNS ARE NOT REQUIRED IF THE WORK AREA IS WITHIN A LARGER WORK ZONE WHERE THESE SIGNS ARE ALREADY PRESENT. G20-2A SIGNS MAY ALSO BE OMITTED IF DURATION OF WORK IS LESS THAN 7 CONTINUOUS DAYS AND NIGHTS.

CHANNELIZING DEVICES PLACED ADJACENT TO THE WORK AREA SHALL BE PULLED BACK FROM THE TRAVEL LANE WHEN WORK IS NOT IN PROGRESS.

TABLE A

S \ W	SHOULDER TAPER LENGTH (FEET) 4	6	8	10	BUFFER SPACE (FEET)
30	20	30	40	50	200
35	30	45	55	70	250
40	40	55	75	90	305
45	60	90	120	150	360
50	70	100	135	170	425
55	75	110	150	185	495

SHOULDER TAPER LENGTH = $\frac{1}{3}L$

W = SHOULDER WIDTH (FEET)
S = NON-CONSTRUCTION SPEED LIMIT (MPH)

TAPER LENGTH

$L = WS$ AT 45 MPH OR GREATER

$L = \frac{WS^2}{60}$ AT 40 MPH OR LESS

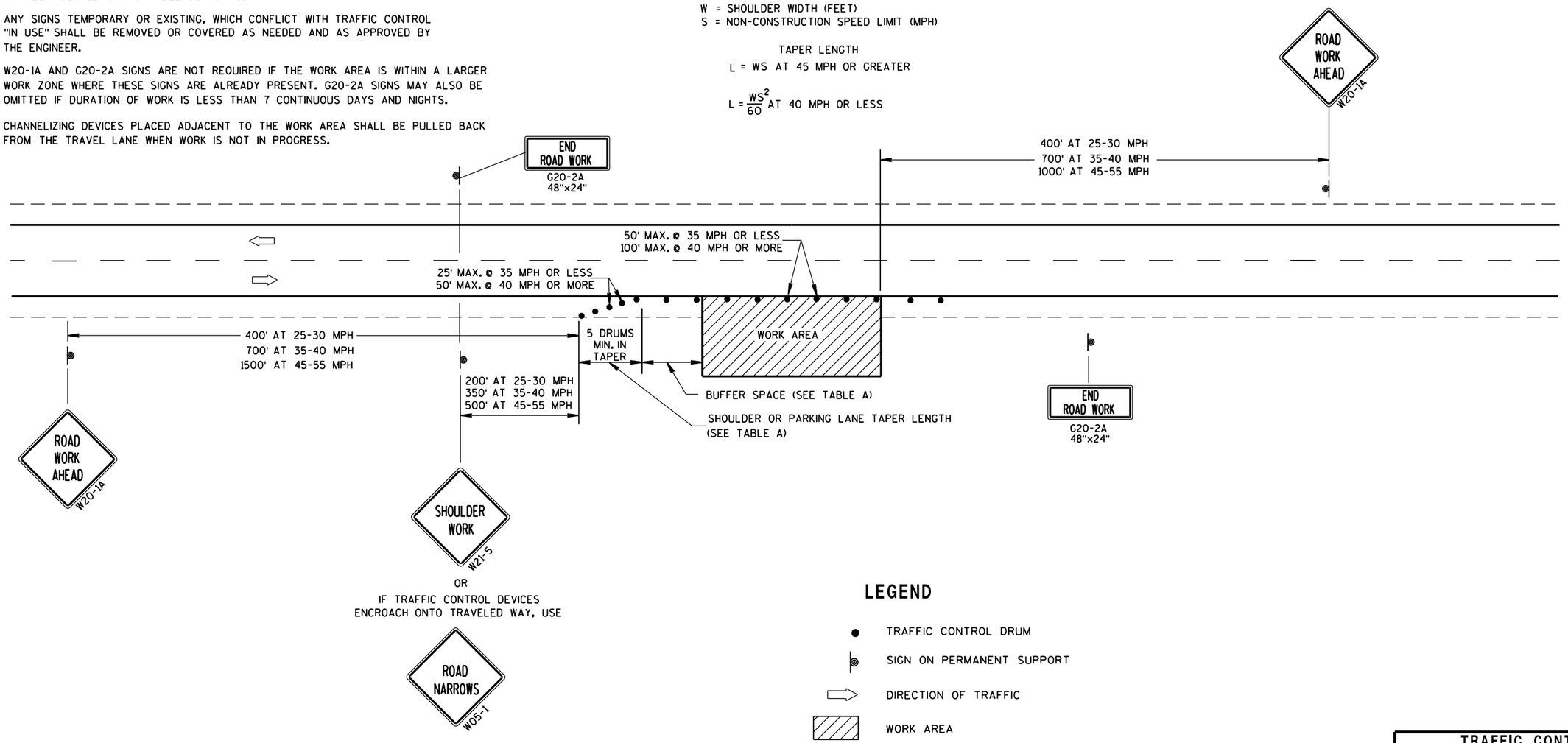

LEGEND

- TRAFFIC CONTROL DRUM
- SIGN ON PERMANENT SUPPORT
- DIRECTION OF TRAFFIC
- WORK AREA

TRAFFIC CONTROL, WORK ON SHOULDER OR PARKING LANE, UNDIVIDED ROADWAY

STATE OF WISCONSIN
DEPARTMENT OF TRANSPORTATION

APPROVED

July 14, 2015 — DATE

/S/ Peter Amakobe Atepe — STATEWIDE WORK ZONE TRAFFIC SAFETY ENGIN

FHWA

6

S.D.D. 15 D 28-3

NOTE: MAY BE USED ON ROADWAY WITH POSTED SPEED OF LESS THAN 40 MPH.

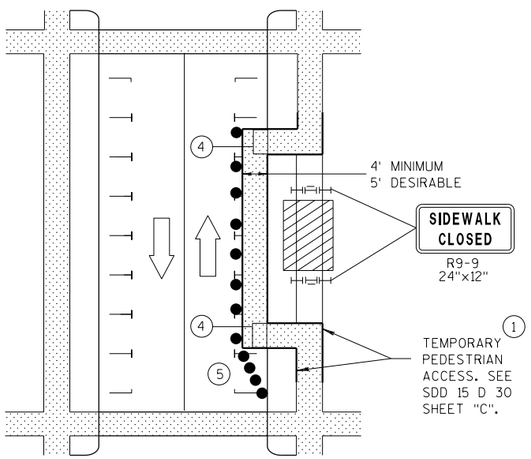

MID-BLOCK SIDEWALK CLOSURE IN PARKING LANE

NOTE: LAYOUT SAME AS ABOVE.

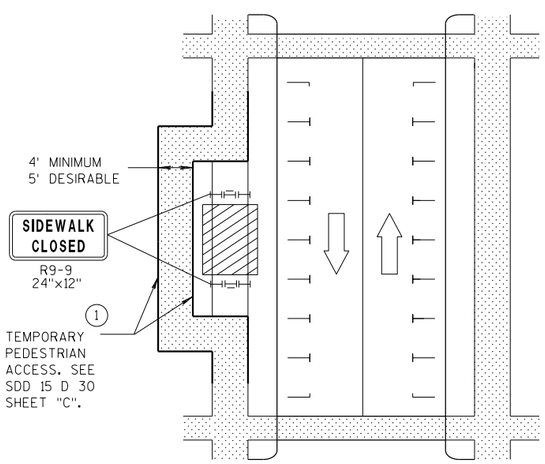

SIDEWALK DIVERSION

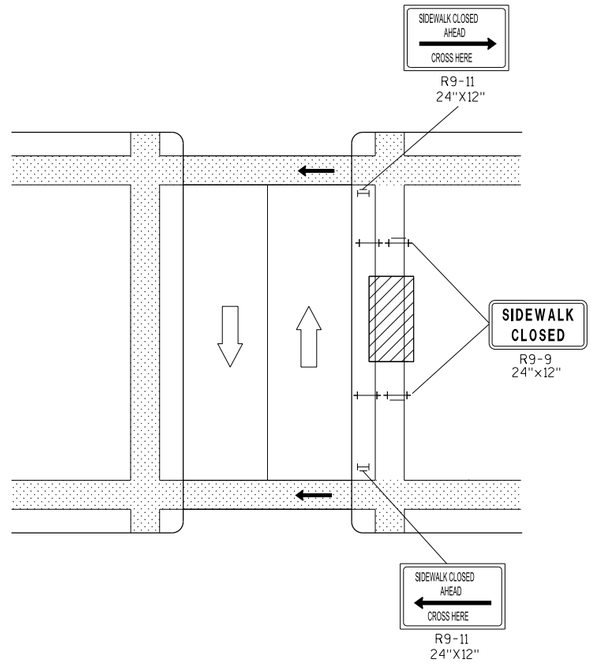

MID-BLOCK SIDEWALK CLOSURE

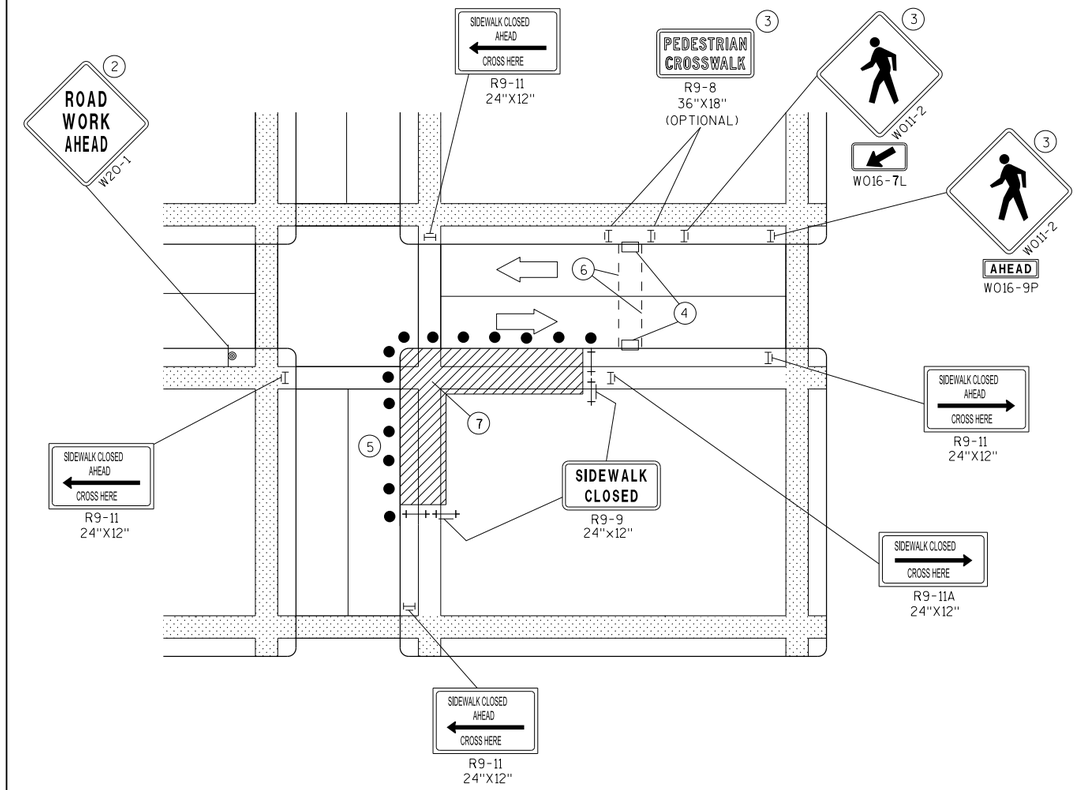

CORNER SIDEWALK CLOSURE WITH TEMPORARY CROSSWALK

GENERAL NOTES

WHEN CLOSING OR RELOCATING CROSSWALKS OR SIDEWALKS, PROVIDE DETECABLE TEMPORARY FACILITIES AND INCLUDE ACCESSIBILITY FEATURES CONSISTENT WITH EXISTING PEDESTRIAN FACILITIES.

TEMPORARY TRAFFIC CONTROL DEVICES FOR PEDESTRIANS ARE SHOWN. OTHER DEVICES MAY BE NECESSARY TO CONTROL VEHICULAR TRAFFIC. STAGE WORK, AS NECESSARY, TO PROVIDE A TEMPORARY PEDESTRIAN ACCESS ROUTE AT ALL TIMES. FOR ROADWAYS WITH NO AVAILABLE DETOURS, MAINTAIN ONE OPEN SIDEWALK AT ALL TIMES.

"WO" SIGN IS THE SAME AS "W" SIGN EXCEPT THE BACKGROUND IS ORANGE.

FOR NIGHTTIME CLOSURE USE TYPE "A" FLASHING WARNING LIGHTS ON BARRICADES, SUPPORTING SIGNS AND CLOSING SIDEWALK. USE TYPE "C" STEADY BURN LIGHTS ON CHANNELIZING DEVICES SEPARATING THE WORK AREA FROM VEHICULAR TRAFFIC.

PEDESTRIAN TRAFFIC SIGNAL DISPLAY CONTROLLING CLOSED CROSSWALK SHALL BE COVERED OR DEACTIVATED.

POST MOUNTED SIGNS LOCATED ADJACENT TO A SIDEWALK SHALL HAVE A 7 FOOT MINIMUM CLEARANCE FROM THE BOTTOM OF THE SIGN TO THE SIDEWALK SURFACE.

ALTERNATE SIDEWALK WORK BETWEEN LEFT AND RIGHT SIDE OF ROADWAY TO MAINTAIN PEDESTRIAN ACCESS.

1. IF SIDEWALK CLOSURE AFFECTS AN ACCESSIBLE AND DETECTABLE FACILITY, MAINTAIN ACCESSIBILITY AND DETECTABILITY ALONG THE ALTERNATE PEDESTRIAN ROUTE.
2. "ROAD WORK AHEAD" SIGNS ARE NOT REQUIRED IF THE SIDEWALK CLOSURE OCCURS WITHIN A LARGER WORK ZONE WHERE ADVANCE WARNING SIGNS ARE ALREADY PRESENT, OR IF THE WORK AREA AND EQUIPMENT ARE MORE THAN 2 FEET BEHIND THE CURB.
3. IF TEMPORARY PEDESTRIAN CROSSWALK IS NOT PROVIDED, OMIT R9-8 AND W011-2 SIGN ASSEMBLIES. IF PROVIDED INCLUDE ON BOTH SIDES OF THE CROSSWALK.
4. TEMPORARY CURB RAMPS. SEE SDD 15 D 30 SHEET "B".
5. DRUMS OR BARRICADES AT 25 FOOT SPACING. STREET PARKING SHALL BE PROHIBITED FOR AT LEAST 50 FEET IN ADVANCE OF THE MID-BLOCK CROSSWALK.
6. TEMPORARY PAVEMENT MARKING FOR CROSSWALK LINES.
7. LIMIT WORK TO ONE QUADRANT AT A TIME TO MINIMIZE PEDESTRIAN DISRUPTION.

LEGEND

- SIGN ON PERMANENT SUPPORT
- UNDER PEDESTRIAN TRAFFIC
- WORK AREA
- PEDESTRIAN CHANNELIZATION DEVICE
- TYPE II BARRICADE WITH/WITHOUT SIGN (ALL WITH ONE WARNING LIGHT, TYPE A, LOW-INTENSITY FLASHING)
- TYPE III BARRICADE WITH/WITHOUT SIGN (ALL WITH ONE WARNING LIGHT, TYPE A, LOW-INTENSITY FLASHING)
- DIRECTION OF TRAFFIC
- TRAFFIC CONTOL DRUM

TRAFFIC CONTROL, PEDESTRIAN ACCOMMODATION

STATE OF WISCONSIN
DEPARTMENT OF TRANSPOR

6

S.D.D. 15 D 30-4a

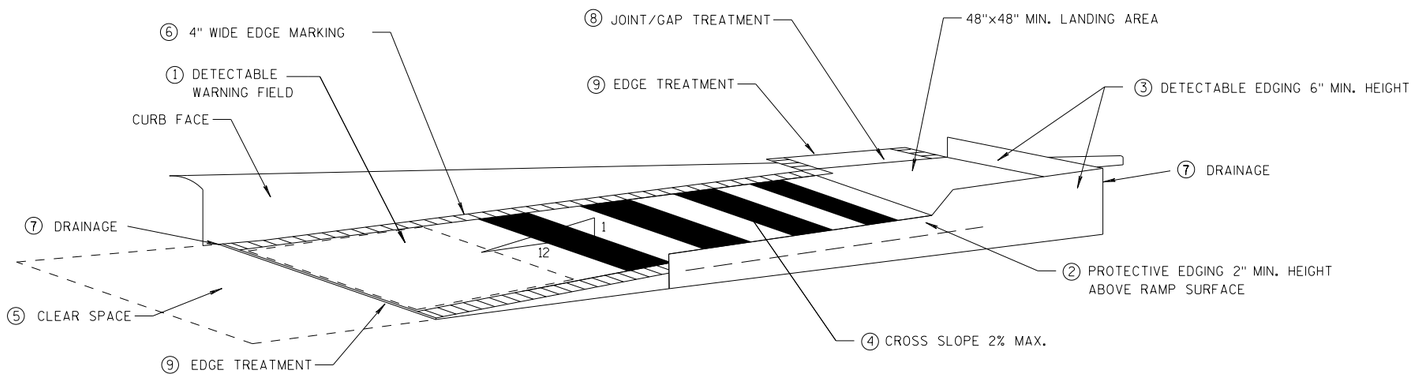

TEMPORARY CURB RAMP PARALLEL TO CURB

GENERAL NOTES

NOTIFY THE BUS COMPANY 7 DAYS IN ADVANCE OF THE BUS STOP RELOCATION.

ALTERNATE SIDEWALK WORK BETWEEN LEFT AND RIGHT SIDE OF ROADWAY TO MAINTAIN PEDESTRIAN ACCESS.

① CURB RAMPS SHALL BE 48" MIN. WIDTH WITH A FIRM, STABLE AND SLIP RESISTANT SURFACE. INSTALL CONTRASTING DETECTABLE WARNING FIELD AT PEDESTRIAN STREET CROSSINGS. REFER TO SDD 8D5 SHEET "E".

② PROTECTIVE EDGING WITH A 2" MIN. HEIGHT SHALL BE INSTALLED WHEN A CURB RAMP OR LANDING PLATFORM HAS A VERTICAL DROP OF 6" OR GREATER OR HAS A SIDE APRON SLOPE STEEPER THAN 1:3 (33%). PROTECTIVE EDGING SHOULD BE CONSIDERED WHEN CURB RAMPS OR LANDING PLATFORMS HAVE A VERTICAL DROP OF 3" OR MORE.

③ DETECTABLE EDGING WITH 6" MIN. HEIGHT AND CONTRASTING COLOR SHALL BE INSTALLED ON ALL CURB RAMP LANDINGS WHERE THE WALKWAY CHANGES DIRECTION (TURNS).

④ CURB RAMPS AND LANDINGS SHALL HAVE A 1:50 (2%) MAX. CROSS-SLOPE.

⑤ CLEAR SPACE OF 48"X48" MIN. SHALL BE PROVIDED ABOVE AND BELOW THE CURB RAMP.

⑥ THE CURB RAMP WALKWAY EDGE SHALL BE MARKED WITH A YELLOW COLOR, 4" WIDE MARKING, UNLESS A CONTRASTING DETECTABLE WARNING FIELD IS PROVIDED.

⑦ DO NOT RESTRICT WATER FLOW IN THE GUTTER SYSTEM.

⑧ LATERAL JOINTS OR GAPS BETWEEN SURFACES SHALL BE LESS THAN 1/2" WIDTH.

⑨ CHANGES BETWEEN SURFACE HEIGHTS SHALL NOT EXCEED 1/2". LATERAL EDGES SHALL BE VERTICAL UP TO 1/4" HIGH, AND BEVELED AT 1:2 BETWEEN 1/4" AND 1/2".

⑩ 5' WIDE MIN. WITH PEDSETRIAN SAFETY FENCE, 10' WIDE MIN. WITHOUT PEDESTRIAN SAFETY FENCE.

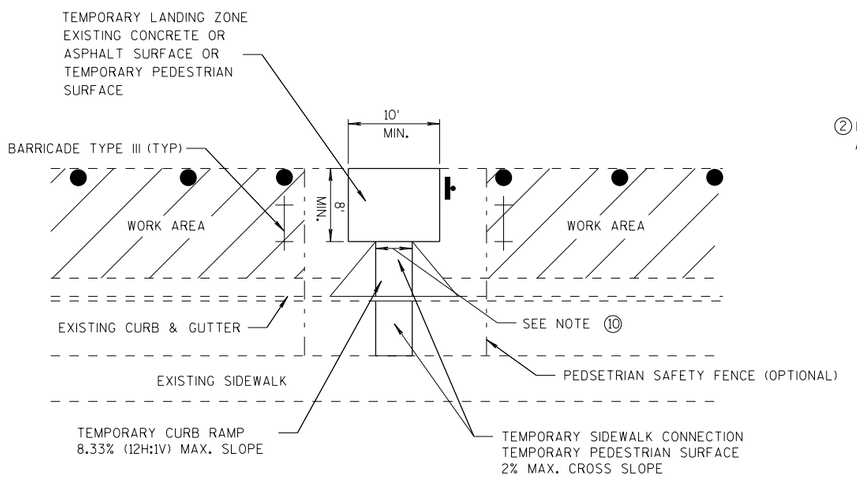

TEMPORARY BUS STOP PAD

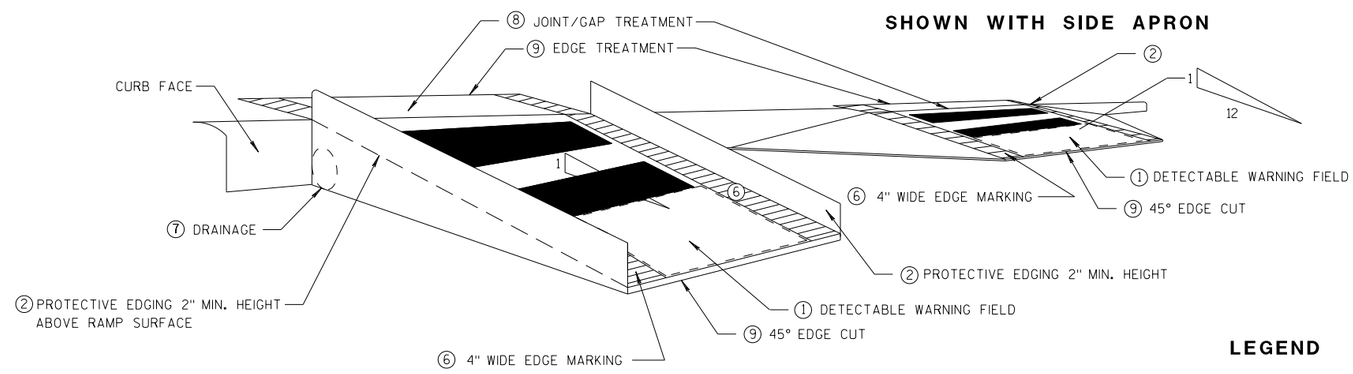

TEMPORARY CURB RAMP PERPENDICULAR TO CURB

LEGEND

WORK AREA

TYPE III BARRICADE

TRAFFIC CONTOL DRUM

TRAFFIC CONTROL, TEMPORARY ADA COMPLIANT PEDESTRIAN ACCOMMODATION

STATE OF WISCONSIN
DEPARTMENT OF TRANSPORTATION

APPROVED

7/2018 — DATE

/S/ Andrew Heldtke — WORK ZONE ENG

FHWA

6

S.D.D. 15 D 30-4b

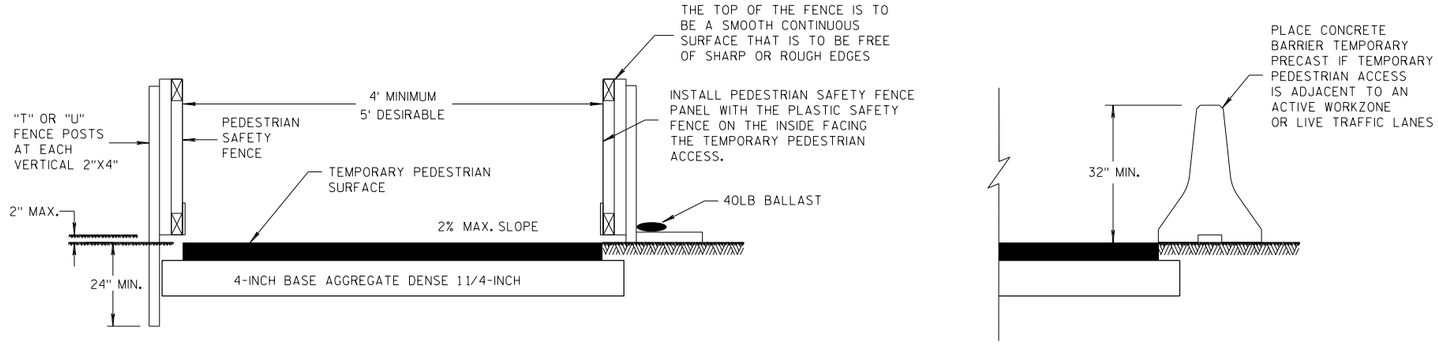

TEMPORARY PEDESTRIAN ACCESS

GENERAL NOTES

(1) INTERCHANGEABLE WITH THE PEDESTRIAN SAFETY FENCE.

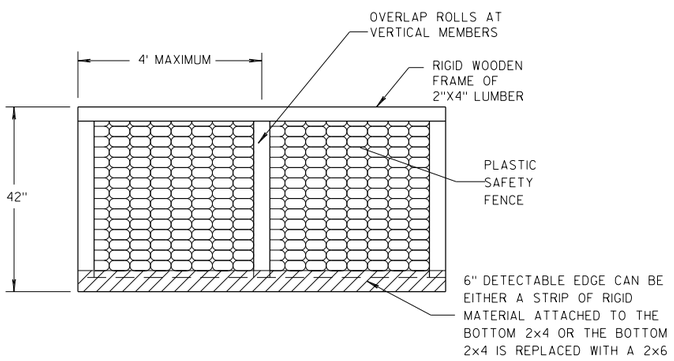

PEDESTRIAN SAFETY FENCE

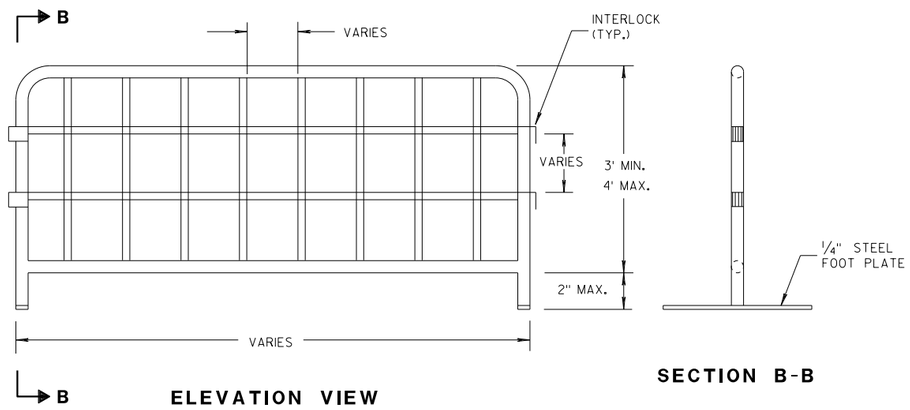

ELEVATION VIEW

SECTION B-B

TEMPORARY PEDESTRIAN STEEL BARRICADE (1)

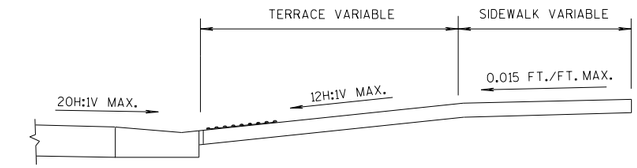

SECTION A-A

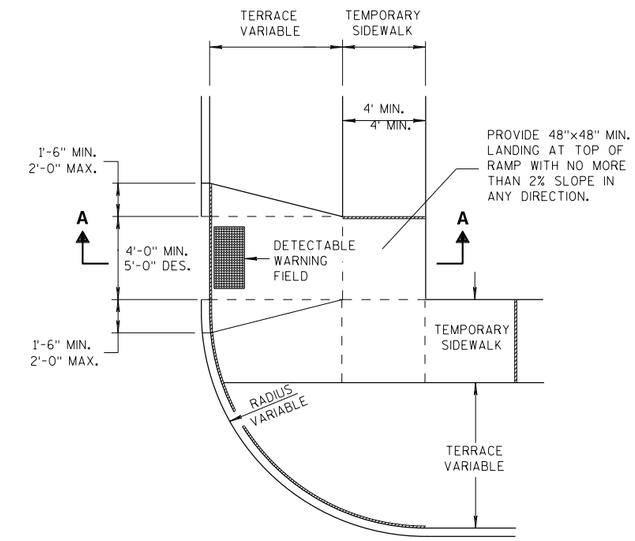

PLAN VIEW

TEMPORARY TYPE 3 RAMP

(OUTSIDE OF CROSSWALK AREA)

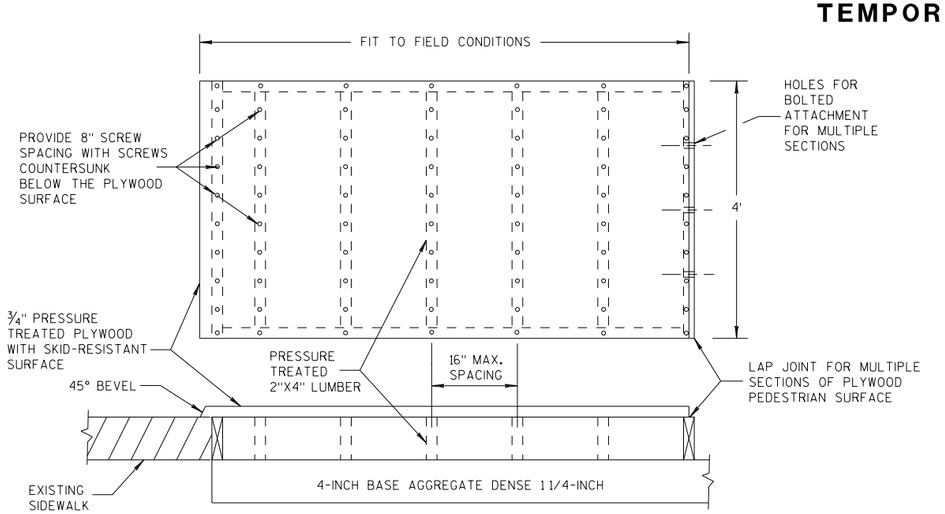

TEMPORARY PEDESTRIAN SURFACE PLYWOOD

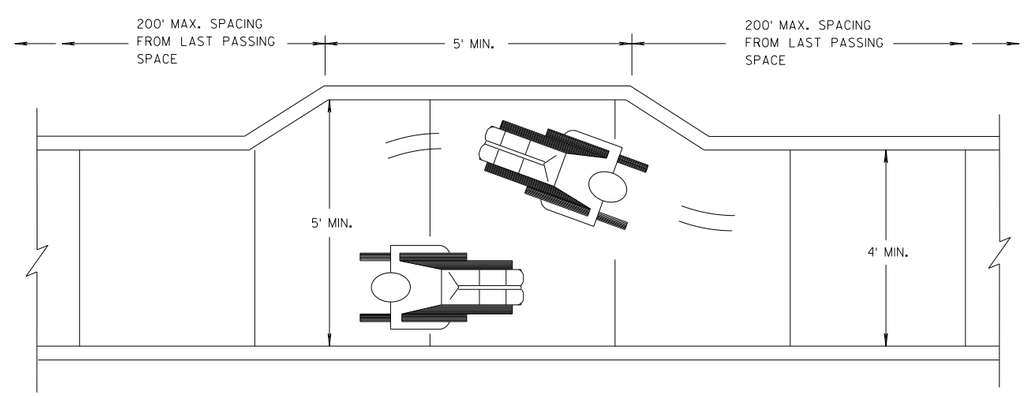

NARROW SIDEWALK PASSING DETAIL

TRAFFIC CONTROL, PEDESTRIAN ACCOMMODATION

STATE OF WISCONSIN
DEPARTMENT OF TRANSPORTATION

APPROVED
7/2018 — DATE
/S/ Andrew Heidtke — WORK ZONE ENG
FHWA

6

S.D.D. 15 D 30-4c

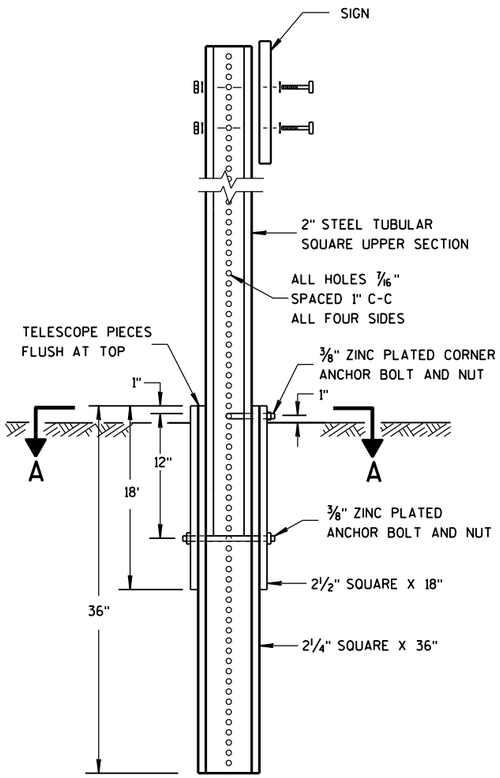

DETAIL OF TUBULAR STEEL SIGN POST

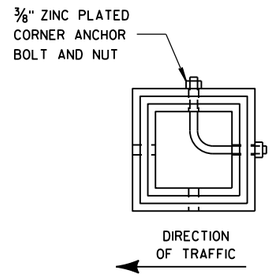

SECTION A-A

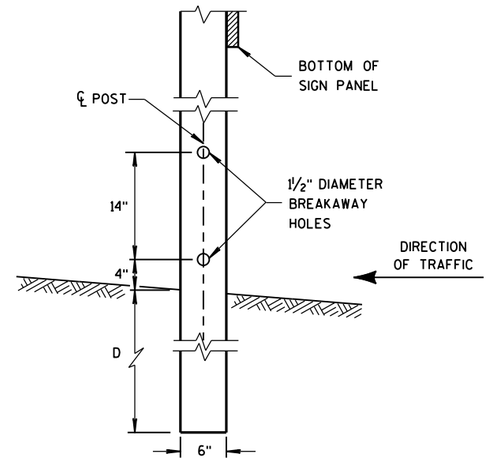

4"x6" WOOD POST MODIFICATION

GENERAL NOTES

1. 6 FEET FROM THE EDGE OF PAVEMENT (EDGE LINE LOCATION) UNLESS OTHERWISE DIRECTED BY THE PROJECT ENGINEER. LATERAL OFFSET SHOULD BE ADJUSTED TO AVOID THE DITCH FLOWLINE.
2. THE EXISTENCE OF CURB AND GUTTER DOES NOT IN ITSELF MANDATE THE VERTICAL CLEARANCE ILLUSTRATED. THAT HEIGHT IS TYPICALLY MEASURED WHERE THERE IS SIDEWALK ADJACENT TO THE ROADWAY OR PARKING IS PERMITTED. IN THE ABSENCE OF SIDEWALK, VERTICAL CLEARANCE IS MEASURED FROM THE TOP OF THE CURB. IF NO SIDEWALK AND NO PARKING, VERTICAL CLEARANCE MAY BE REDUCED TO 5 FOOT MINIMUM. OFFSET OF SIGNS IS MEASURED FROM THE CURB FLOWLINE.
3. FOR SIGNS REQUIRING 4 POSTS, SPACE INTERMEDIATE POSTS EVENLY.

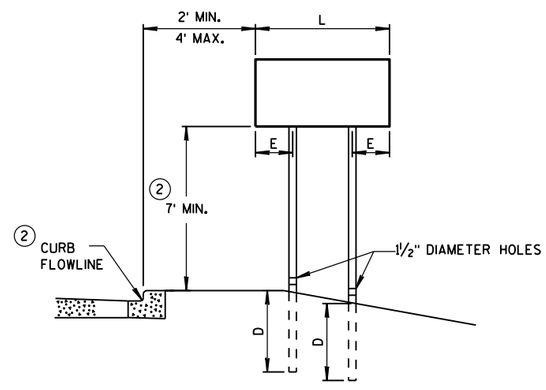

URBAN AREA

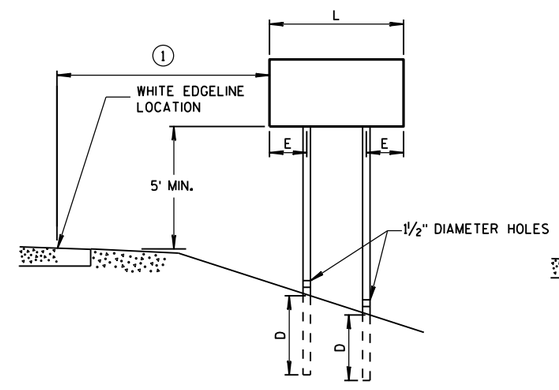

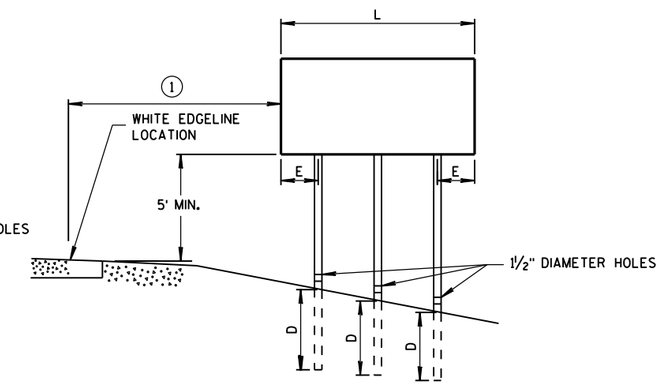

RURAL AREA

POST MOUNTING DETAIL FOR TEMPORARY TRAFFIC CONTROL FIXED MESSAGE SIGNS

TUBULAR STEEL POSTS

AREA OF SIGN INSTALLATION (SQ. FT.)	NUMBER OF REQUIRED TUBULAR STEEL POSTS
9 OR LESS	1
GREATER THAN 9 LESS THAN OR EQUAL TO 18	2
GREATER THAN 18 LESS THAN OR EQUAL TO 27	3

SIGNS WIDER THAN 3 FEET OR LARGER THAN 9 SQ. FT. SHALL BE MOUNTED ON MULTIPLE POSTS (SEE ABOVE TABLE).

SIGNS LARGER THAN 27 SQ. FT. SHALL NOT BE MOUNTED ON TUBULAR STEEL POSTS.

WOOD POST EMBEDMENT DEPTH

AREA OF SIGN INSTALLATION (SQ. FT.)	D (MIN)
20 OR LESS	4'
GREATER THAN 20	5'

4" X 6" WOOD POST

POST SPACING REQUIREMENTS		NUMBER OF WOOD POSTS REQUIRED
L	E	
48" OR LESS AND LESS THAN 20 SQ. FT.	-	1
LESS THAN 60"	12"	2
60" TO 120"	L/5	2
GREATER THAN 120" LESS THAN 168"	12"	3
168" AND GREATER	12"	4

SEE NOTE 3

TEMPORARY TRAFFIC CONTROL SIGN MOUNTING

STATE OF WISCONSIN
DEPARTMENT OF TRANSPO

6

S.D.D. 15 D 38-2a

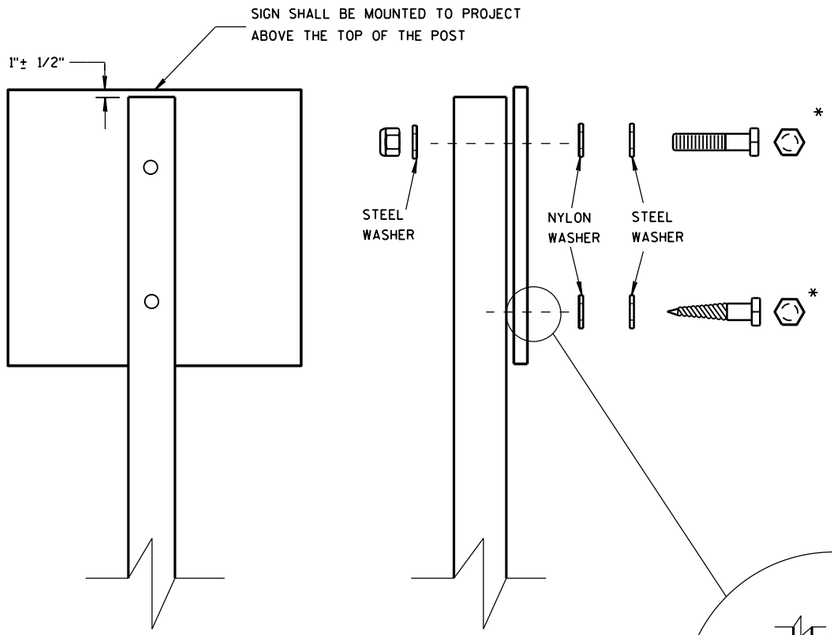

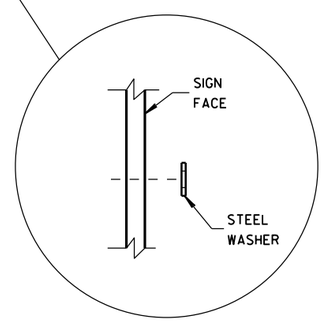

WASHER PLACEMENT WHEN SIGN HAS OTHER THAN TYPE H OR TYPE F FACE

NUTS, BOLTS AND LAGS USED FOR MOUNTING SIGNS SHALL HAVE HEXAGONAL HEADS AND SHALL BE EITHER:

A. HOT DIP GALVANIZED IN ACCORDANCE WITH ASTM DESIGNATION: A 153, CLASS D, OR SC 3

B. ELECTRO-GALVANIZED IN ACCORDANCE WITH ASTM DESIGNATION: B 633, TYPE III, SC 3

THREADS ON BOLTS AND NUTS SHALL BE MANUFACTURED WITH SUFFICIENT ALLOWANCE FOR THE CADMIUM PLATE OR GALVANIZED COATING TO PERMIT THE NUTS TO RUN FREELY ON THE BOLTS.

WOOD POSTS (4" x 4" or 4" x 6")

LAG SCREWS - 3/8" X 3"

MACHINE BOLTS - 5/16" X 6-1/2" OR 7" LENGTH W/ NUTS

SQUARE STEEL POSTS (2" x 2")

MACHINE BOLTS - 3/8" X 3-1/4" LENGTH W/ NUTS

RIVETS - 9/32" (6605-9-6) BULB-TITE, TRI-FOLD, ALUMINUM BODY/MANDREL O.D. FLANGE .720-.765 INCH, GRIP RANGE .042-.375 INCH

WASHERS (ALL POSTS) -

1-1/4" O.D. X 3/8" I.D. X 1/16" STEEL

1-1/4" O.D. X 3/8" I.D. X .080 NYLON FOR ALL TYPE H SIGNS

* TWO DIFFERENT FASTENING SYSTEMS ARE SHOWN FOR ILLUSTRATION PURPOSES. ON ANY INDIVIDUAL SIGN, EITHER ONE OR THE OTHER SYSTEM SHALL BE USED. ACTUAL NUMBER OF FASTENERS PER SIGN VARIES WITH THE SIGN AREA. FOR A SINGLE POST INSTALLATION, ALL SIGNS GREATER THAN 9 SQ. FT. REQUIRE THE USE OF 3 FASTENERS.

6

6

S.D.D. 15 D 38-2b

S.D.D. 15 D 38-2b

ATTACHMENT OF SIGNS TO POSTS

STATE OF WISCONSIN
DEPARTMENT OF TRANSPORTATION

APPROVED

June 2017
DATE

/S/ Andrew Heldtke
WORK ZONE ENG

FHWA

URBAN AREA

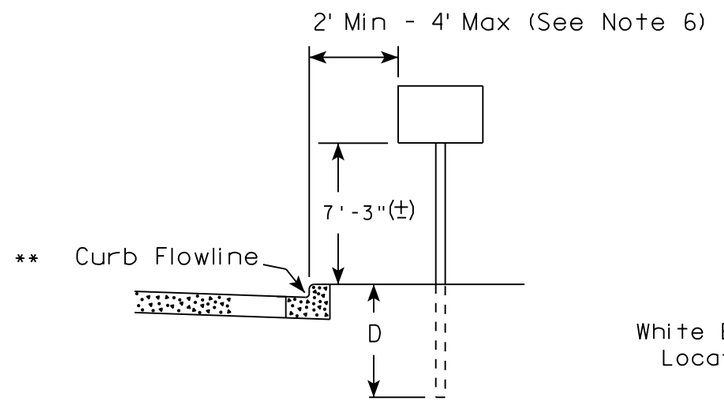

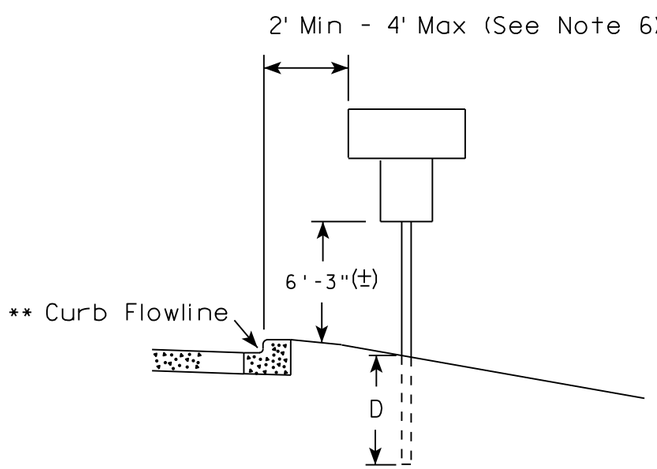

RURAL AREA (See Note 2)

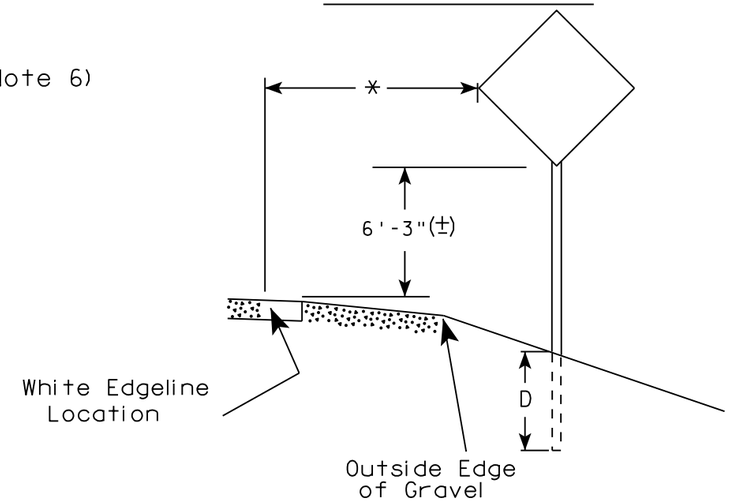

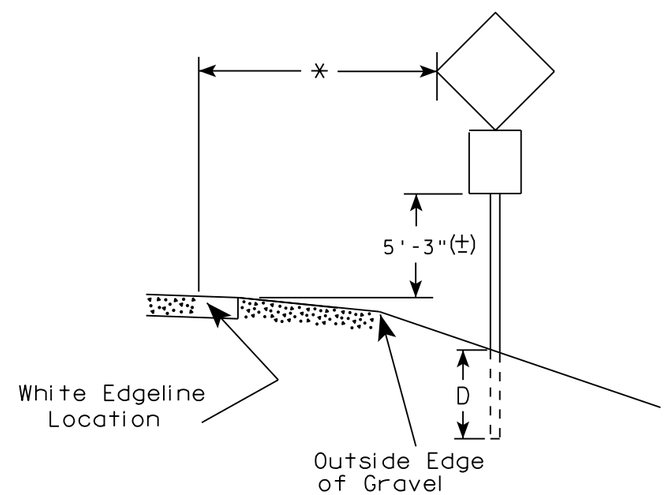

** The existence of curb and gutter does not in itself mandate the vertical clearance illustrated. That height is typically measured where there is sidewalk adjacent to the roadway or parking is permitted. In the absence of sidewalk vertical clearance is measured from the top of the curb. Offset of signs is measured from the flow line.

* 6 feet from edge of a paved shoulder or 12 feet from the edge of pavement (edge line location) or 2 feet from outside edge of gravel, whichever is greater unless directed by project engineer.

POST EMBEDMENT DEPTH

Area of Sign Installation (Sq. Ft.)	D (Min)
20 or Less	4'
Greater than 20	5'

GENERAL NOTES

1. Signs wider than 4 feet or 20 sq.ft or larger, shall be mounted on multiple posts. Refer to plate A4-4.
2. If signs are mounted on barrier wall, see A4-10 sign plate.
3. For expressways and freeways, mounting height is 7'- 3" (±) or 6'-3" (±) depending upon existence of a sub-sign.
4. J-Assemblies are considered to be one sign for mounting height.
5. Minimum mounting height for signs mounted on traffic signal poles is 5'- 3" (±).
6. Offset distance shall be consistent with existing signs or consistent throughout length of project.
7. The (±) tolerance for mounting height is 3 inches.
8. Folding signs shall be mounted at a height of 5'-3" (±) or as directd by the Engineer.
9. The Double Arrow sign (W12-1) shall be mounted at a height of 2'-3" (±). The Chevron sign (W1-8), Roundabout Chevron panel (R6-4B), Enhanced Reference Markers, Clearance Markers (W5-52), Mile Markers (D10 series), In Road Object Markers (W5-54) & End of Road Markers (W5-56) shall be mounted at a height of 4'-3" (±).

TYPICAL INSTALLATION OF PERMANENT TYPE II SIGNS ON SINGLE POSTS

WISCONSIN DEPT OF TRANSPORTATION

APPROVED Matthew R Rauch for State Traffic Engineer

DATE 8/21/17 PLATE NO. A4-3.21

7 7

PROJECT NO:	HWY:	COUNTY:		SHEET NO: 149	E

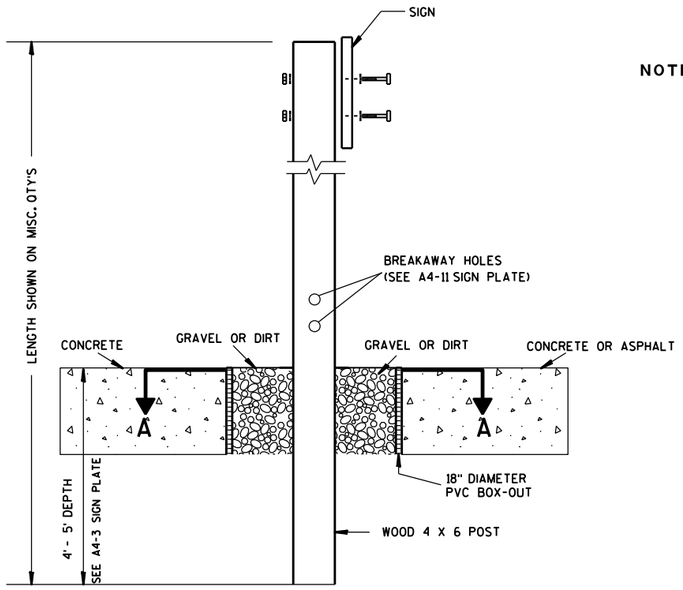

ELEVATION VIEW

DETAIL OF WOOD 4 X 6 SIGN POST IN BOX-OUT

NOTES:
1. ALL MATERIAL TO BE APPROVED BY ENGINEER PRIOR TO INSTALLATION
2. SEE SIGN PLATE A4-8 FOR SIGN HARDWARE REQUIREMENTS
3. 18 INCH X 18 INCH SQUARE BOX-OUTS MAY BE USED FOR INSTALLATIONS IN EXISTING CONCRETE OR ASPHALT LOCATIONS.

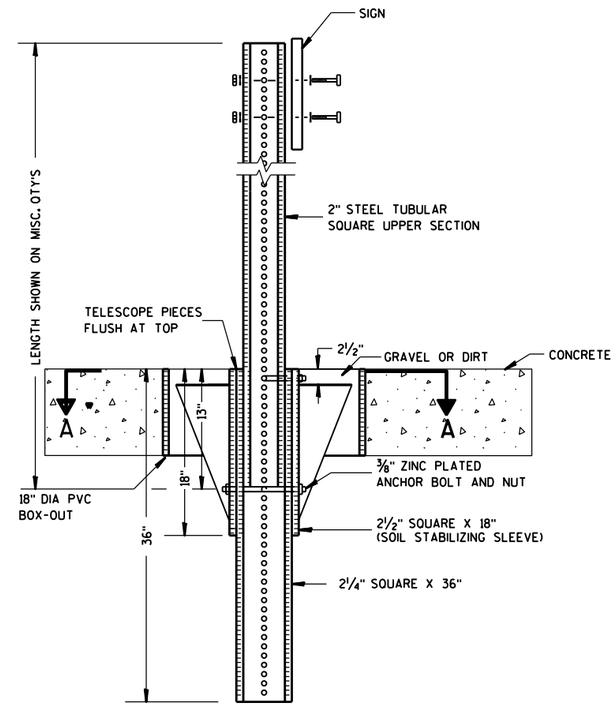

ELEVATION VIEW

DETAIL OF STEEL 2 X 2 SIGN POST IN BOX-OUT

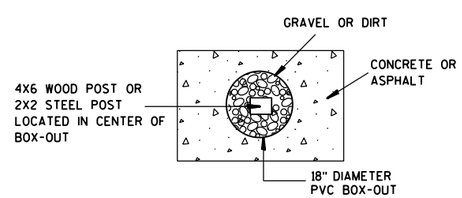

PLAN VIEW

FOR NEW CONCRETE/ASPHALT INSTALLATIONS

SIGN POST
BOX-OUTS
A4-3B

WISCONSIN DEPT OF TRANSPORTATION

APPROVED Matthew R Rauch
for State Traffic Engineer

DATE 1/27/14 PLATE NO. A4-3B.1

PROJECT NO:	HWY:	COUNTY:		SHEET NO:	E

URBAN AREA

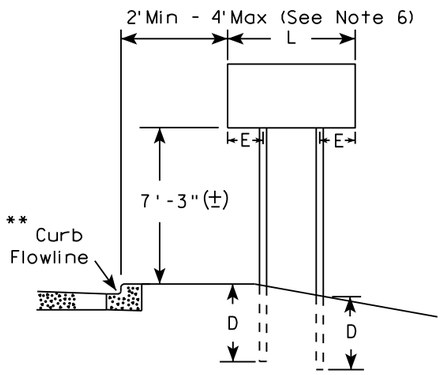

RURAL AREA (See Note 3)

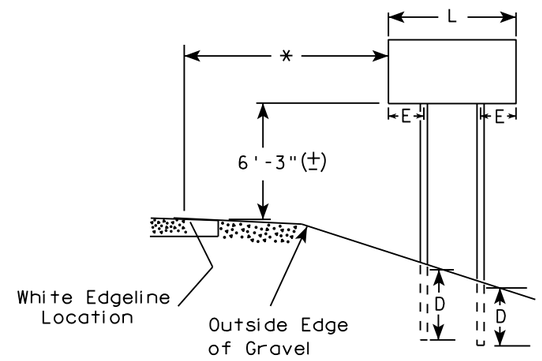

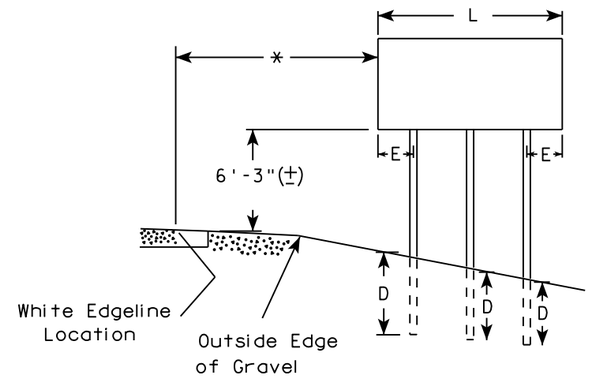

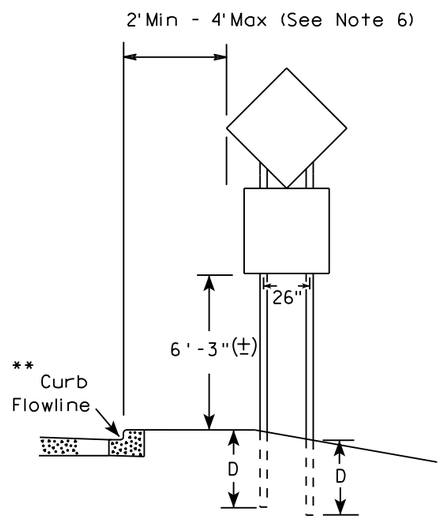

48" DIAMOND WARNING SIGN

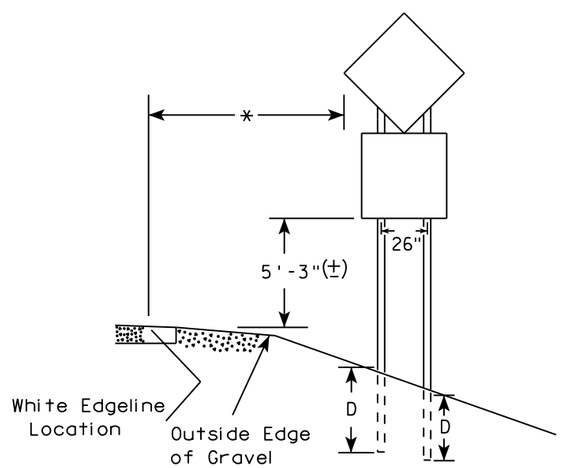

48" DIAMOND WARNING SIGN

SIGN SHAPE OTHER THAN DIAMOND (TWO POSTS REQUIRED)	
L	E
*** Greater than 48" Less than 60"	12"
60" to 108"	L/5

SIGN SHAPE OTHER THAN DIAMOND (THREE POSTS REQUIRED)	
L	E
Greater than 108" to 144"	12"

GENERAL NOTES

1. For 3 or 4 post installations, individual post spacing shall be greater than 3'-6".
2. See tables below for required number of posts.
3. For expressways and freeways, mounting height is 7'-3" (±) or 6'-3" (±) depending upon existence of sub-sign.
4. The (±) tolerance for mounting height is 3 inches.
5. J-Assemblies are considered to be one sign for mounting height.
6. Offset distance shall be consistent with existing signs or consistent throughout length of project.
7. Folding signs shall be mounted at a height of 5'-3" (±) or as directed by the engineer.
8. The Double Arrow sign (W12-1) shall be mounted at a height of 2'-3" (±). The Chevron sign (W1-8), Roundabout Chevron panel (R6-4B), Clearance Markers (W5-52), Mile Markers (D10 series), In Road Object Markers (W5-54) & End of Road Markers (W5-56) shall be mounted at a height of 4"-3" (±).

* 6 feet from edge of a paved shoulder or 12 feet from the edge of pavement (edge line location) or 2 feet from outside edge of gravel, whichever is greater unless directed by project engineer.

** The existence of curb and gutter does not in itself mandate the vertical clearance illustrated. That height is typically measured where there is sidewalk adjacent to the roadway or parking is permitted. In the absence of sidewalk vertical clearance is measured from the top of the curb. Offset of signs is measured from the flow line.

*** See A4-3 sign plate for signs 4' or less in width and less than 20 S.F. in area.

POST EMBEDMENT DEPTH

Area of Sign Installation (Sq. Ft.)	D (Min)
20 or Less	4'
Greater than 20	5'

TYPICAL INSTALLATION OF TYPE II SIGNS ON MULTIPLE POSTS

WISCONSIN DEPT OF TRANSPORTATION

APPROVED Matthew R Rauch
For State Traffic Engineer

DATE 8/21/17 PLATE NO. A4-4.15

7

7

PROJECT NO:	HWY:	COUNTY:		SHEET NO: 151	E

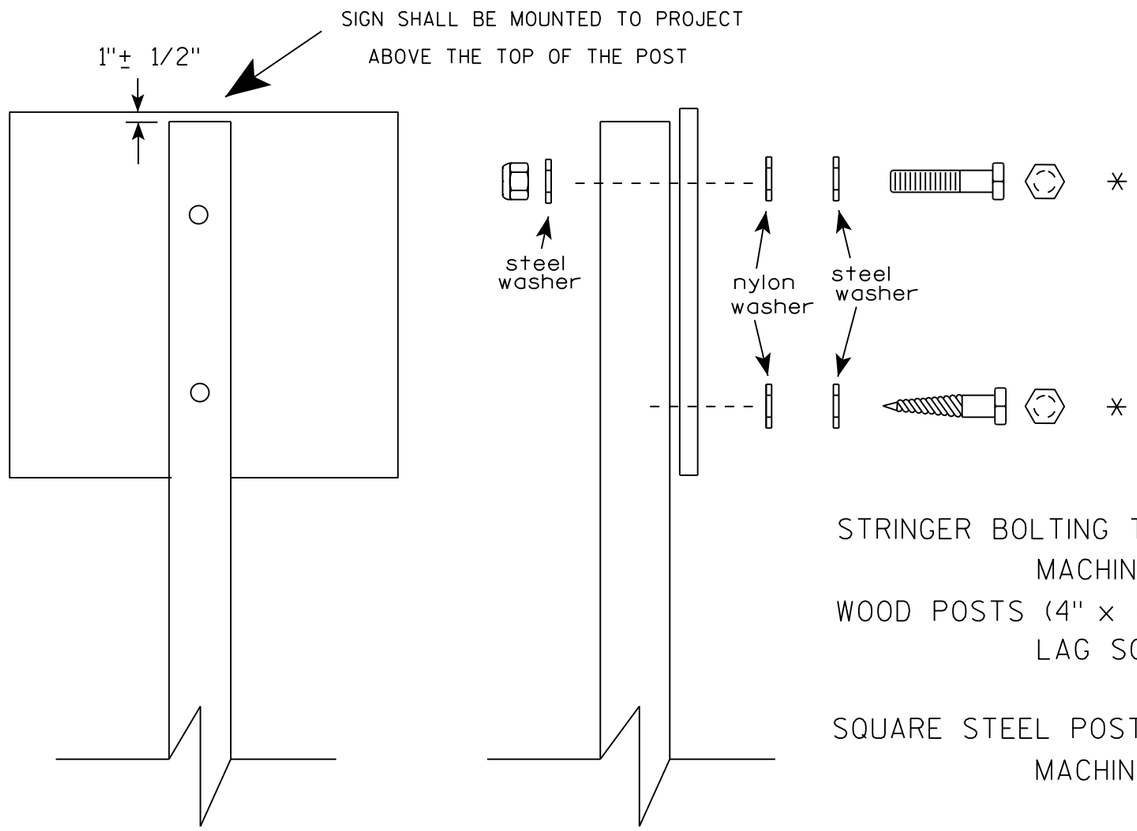

Nuts, bolts and lags used for mounting signs shall have hexagonal heads and shall be either :

a. Hot dip galvanized in accordance with ASTM Designation: A 153, Class D, or SC 3

b. Electro-galvanized in accordance with ASTM Designation : B 633, TYPE III, SC 3.

Threads on bolts and nuts shall be manufactured with sufficient allowance for the cadmium plate or galvanized coating to permit the nuts to run freely on the bolts.

STRINGER BOLTING TO ALUMINUM SIGNS (SEE SIGN PLATE A4-18)

MACHINE BOLTS - 5/16" X 1-3/4" Length w/ lock nuts

WOOD POSTS (4" x 4" or 4" x 6")

LAG SCREWS - 3/8" X 3" (NO STRINGERS ON BACK OF SIGN)

3/8" X 4" (STRINGERS ON BACK OF SIGN)

SQUARE STEEL POSTS (2" x 2")

MACHINE BOLTS - 3/8" X 3-1/4" Length w/ nuts (NO STRINGER ON BACK OF SIGN)

3/8" X 5" Length w/ nuts (STRINGERS ON BACK OF SIGN)

RIVETS - 9/32 " (6605-9-6) BULB-TITE, TRI-FOLD, ALUMINUM BODY/MANDREL

O.D. FLANGE .720-.765 INCH, GRIP RANGE .042-.375 INCH

WASHERS (ALL POSTS) -

1-1/4" O.D. X 3/8" I.D. X 1/16" STEEL

1-1/4" O.D. X 3/8" I.D. X .080 NYLON

* Two different fastening systems are shown for illustration purposes. On any individual sign, either one or the other system shall be used. Actual number of fasteners per sign varies with the sign area, but normally there are two. For a single post installation, all signs greater than 9 sq. ft. require the use of 3 fasteners.

ATTACHMENT OF SIGNS TO POSTS

WISCONSIN DEPT OF TRANSPORTATION

APPROVED Matthew R Rauch
for State Traffic Engineer

DATE 8/11/16 PLATE NO. A4-8.8

PROJECT NO: SHEET NO: E

TELESCOPIC TUBING ANCHORS
TWO PIECE SYSTEM

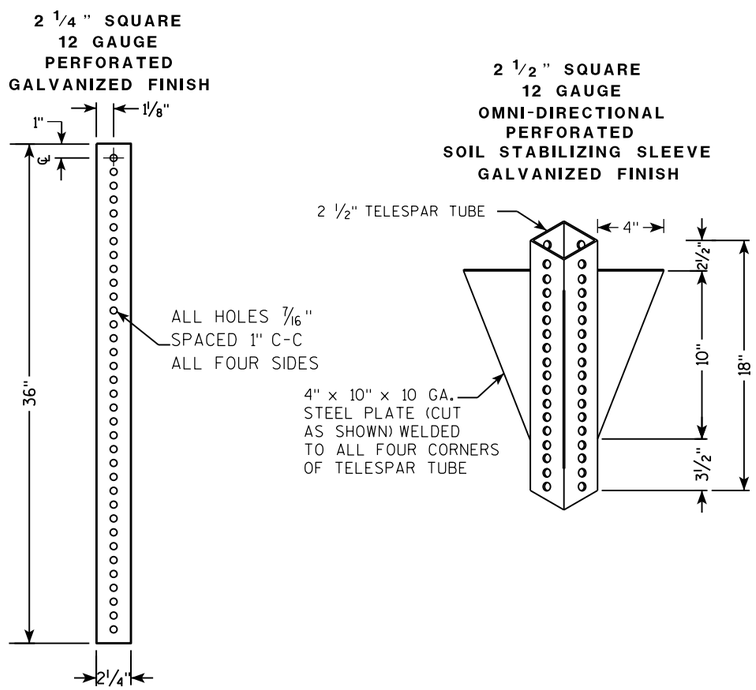

DETAIL OF TUBULAR STEEL SIGN POST
(IN POURED CONCRETE OR ASPHALT)

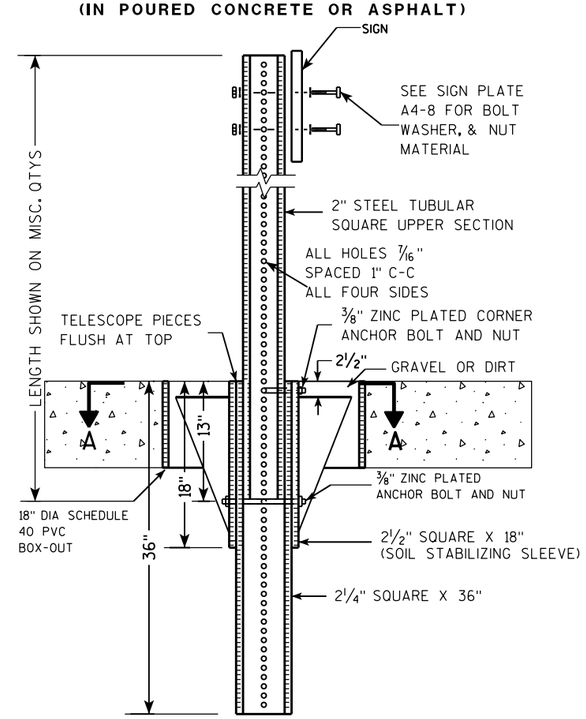

DETAIL OF TUBULAR STEEL SIGN POST
(IN LOCATIONS OTHER THAN POURED CONCRETE OR ASPHALT)

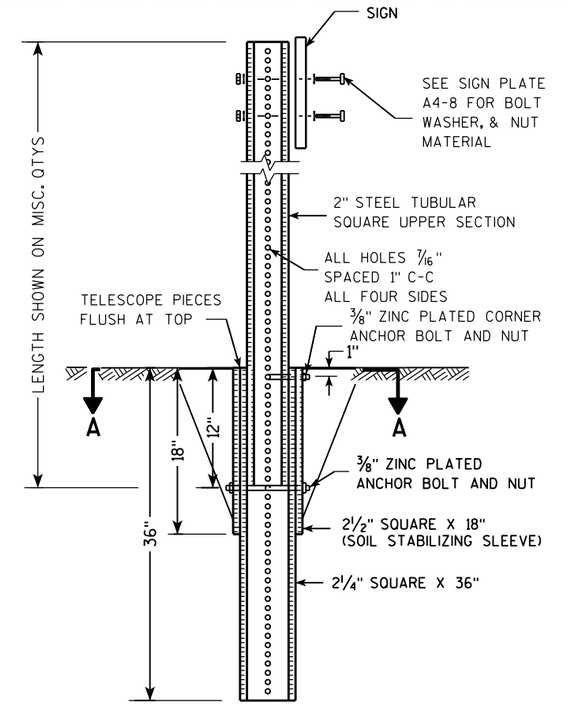

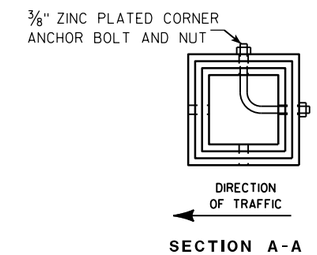

SECTION A-A

Area of Sign Installation (Sq. Ft.)	Number of Required Posts
9 or less	1
Greater than 9 less than or equal to 18	2
Greater than 18 less than or equal to 27	3

Signs wider than 3 feet or larger than 9 sq. ft shall be mounted on multiple posts (see above table).

TUBULAR STEEL
SIGN POST
A4-9

WISCONSIN DEPT OF TRANSPORTATION

APPROVED Matthew R Rauch
for State Traffic Engineer

DATE 2/05/15 PLATE A4-9.9

7

7

PROJECT NO:	HWY:	COUNTY:		SHEET NO:	E

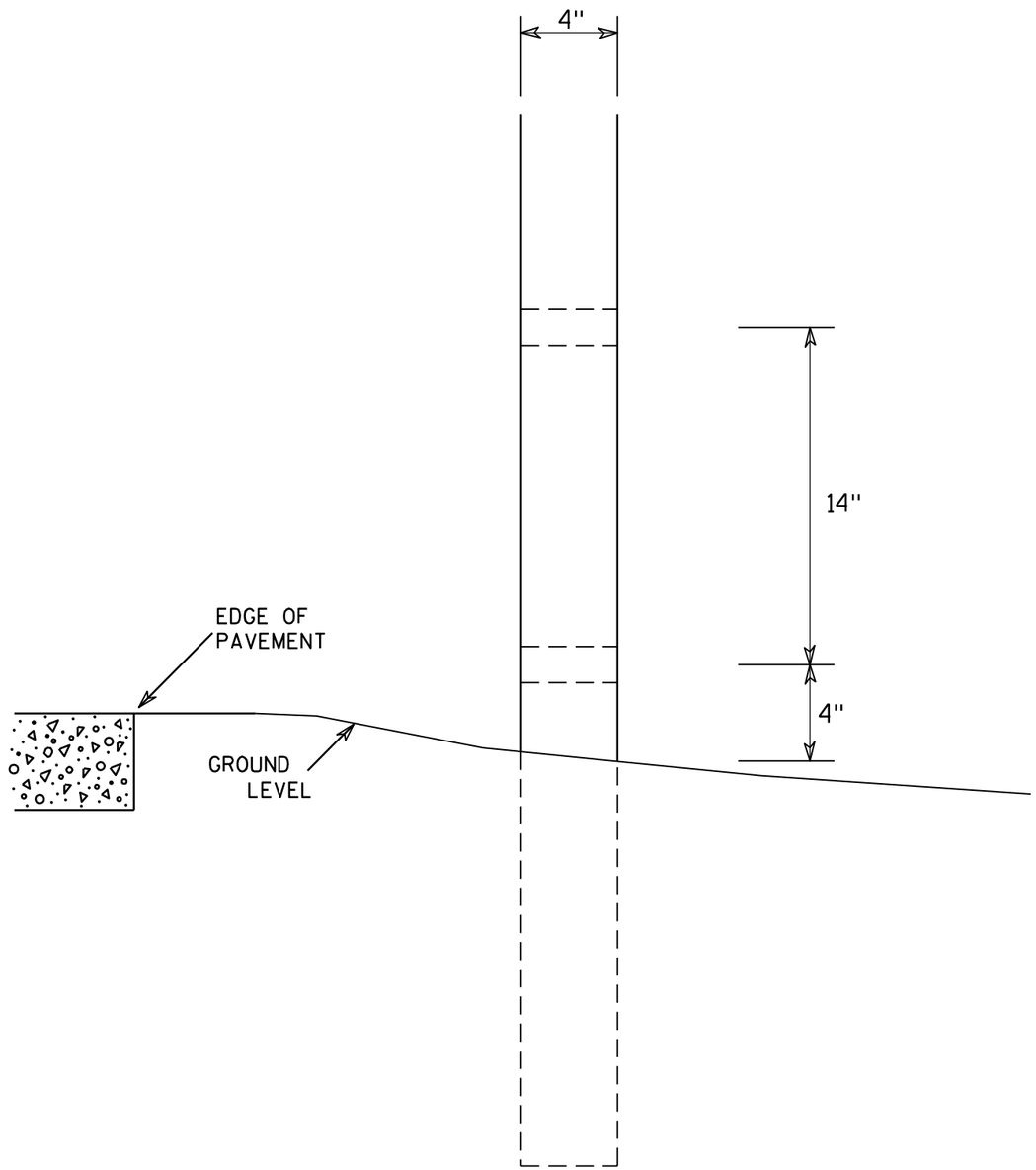

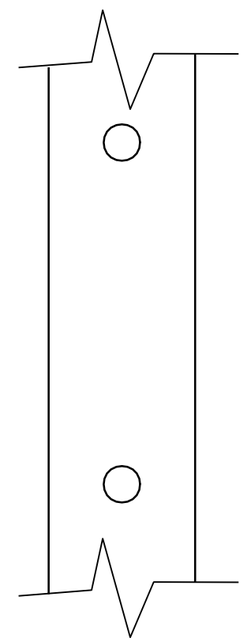

SIDE VIEW

GENERAL NOTES

1. All 4 x 6 Wood Posts shall be modified by having two 1½" diameter holes drilled perpendicular to the roadway centerline.

4 X 6 WOOD POST MODIFICATIONS

WISCONSIN DEPT OF TRANSPORTATION

APPROVED Chester J Spang for State Traffic Engineer

DATE 3/27/97 PLATE NO. A4-11.2

PROJECT NO:	HWY:	COUNTY:		SHEET NO: 154	E

BANDING

SINGLE SIGN

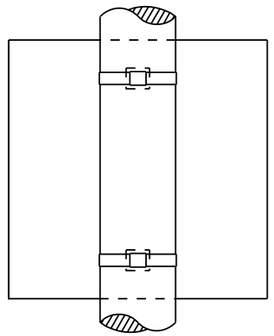

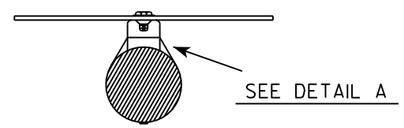

"J" ASSEMBLY

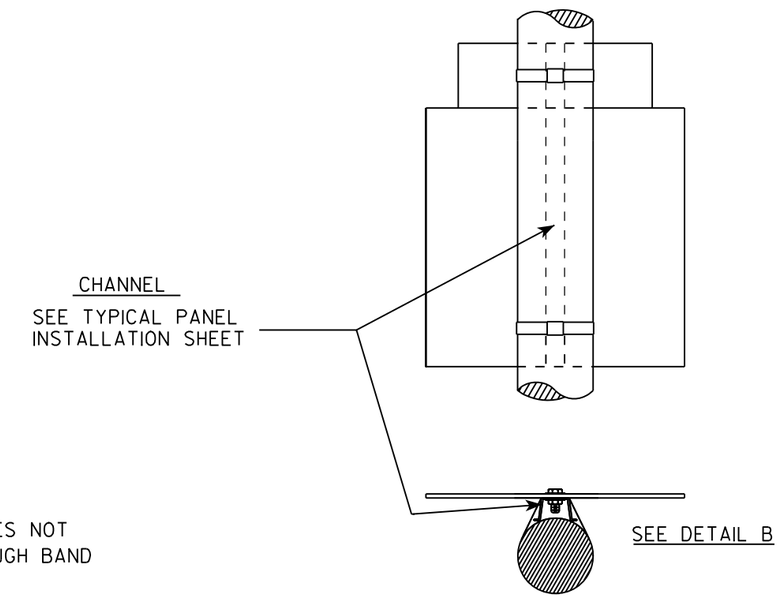

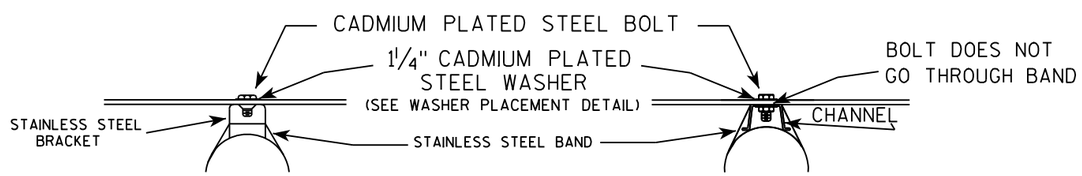

WASHER PLACEMENT

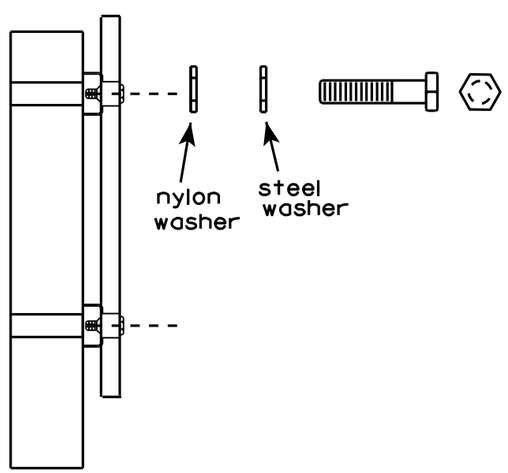

WASHERS (ALL POSTS) -

1-1/4" O.D. X 3/8" I.D. X 1/16" STEEL

1-1/4" O.D. X 3/8" I.D. X .080 NYLON

FOR ALL TYPE H SIGNS

GENERAL NOTES

1. Any sign over 3 feet in width shall use the V-Block banding method. See A5-10 standard plate.
2. Signs 3 feet or greater in height shall have three bracket bands installed. Signs less than 3 feet in height shall have two bracket bands installed.
3. Banding and assembly bracket shall be stainless steel. All bands shall be ¾" in width and 0.025" thickness.

STANDARD SIGN

SIGN BANDING DETAILS

WISCONSIN DEPT OF TRANSPORTATION

APPROVED Matthew R Rauch for State Traffic Engineer

DATE 8/16/13 PLATE NO. A5-9.3

PROJECT NO:	HWY:	COUNTY:		SHEET NO: 155	E

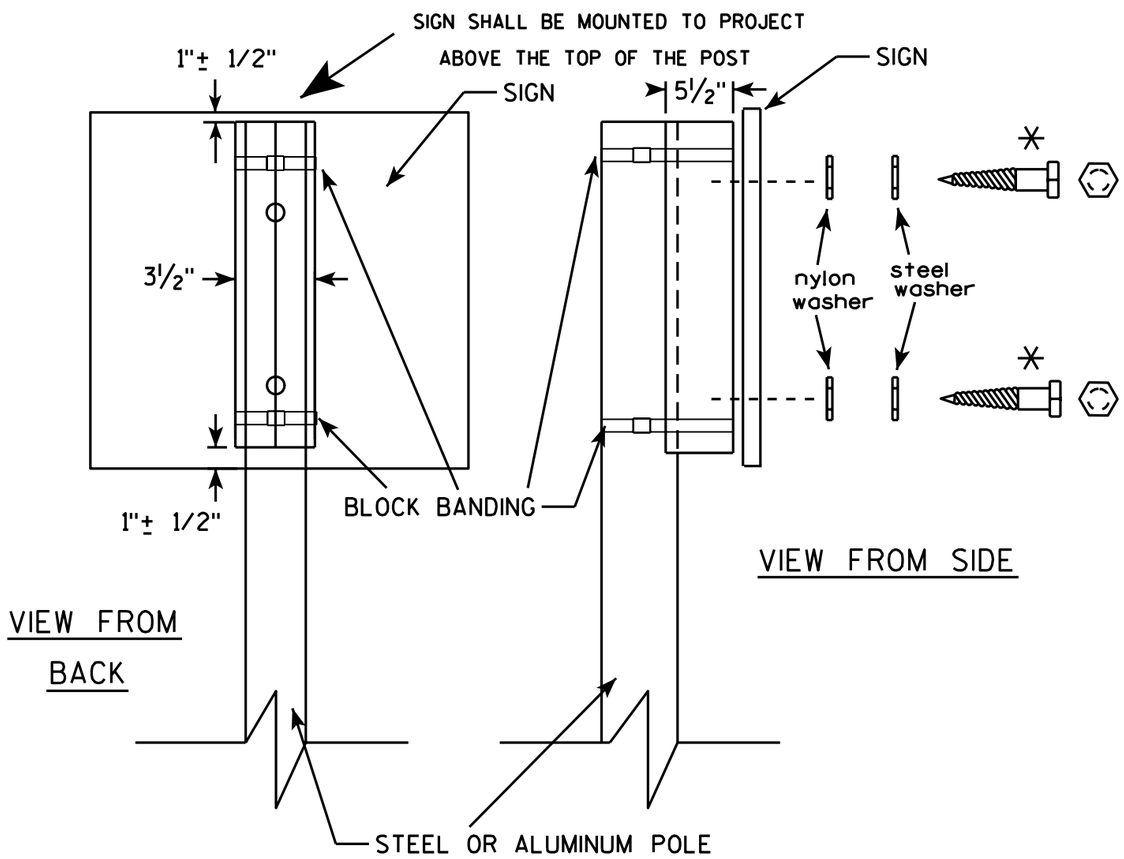

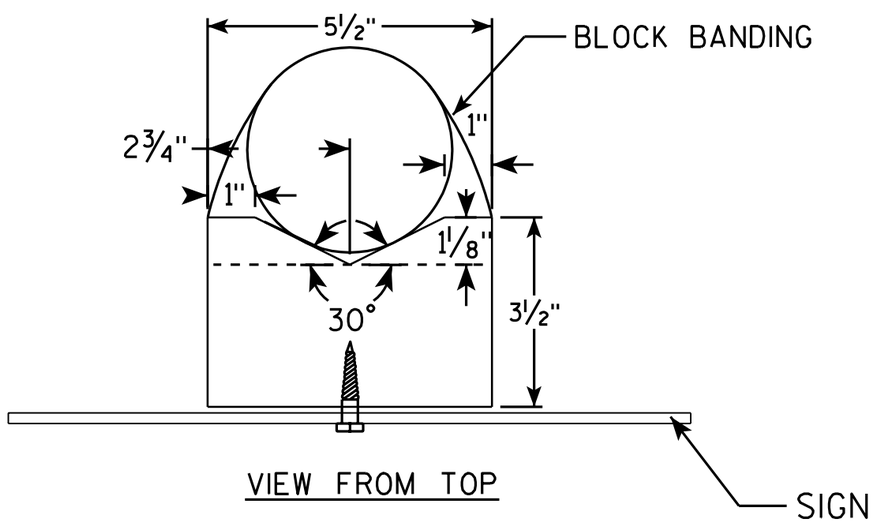

GENERAL NOTES

1. WOOD 4"X6" POST MATERIAL SHALL CONFORM TO 507.2.2 OF THE WisDOT STANDARD SPECIFICATIONS
2. BLOCK BANDING AND CLIPS SHALL BE STAINLESS STEEL, ¾" WIDTH AND 0.025" THICKNESS
3. SIGNS 3' OR GREATER IN HEIGHT SHALL UTILIZE 3 BLOCK BANDS. SIGNS UNDER 3' IN HEIGHT SHALL UTILIZE 2 BLOCK BANDS
4. ACTUAL NUMBER OF FASTENERS PER SIGN VARIES WITH THE SIGN AREA, BUT NORNALLY THERE ARE TWO. FOR SIGNS GREATER THAN 9 S.F. 3 FASTENERS SHALL BE USED.
5. ALL SIGN MOUNTING BOLTS AND WASHERS SHALL BE EITHER:
   a. Hot dip or mechanically galvanized in accordance with ASTM Designation: A 153, Class D, or
   b. Cadmium plated in accordance with ASTM Designation : B 766 TYPE 3, Class 12, or
   c. Electro-galvanized in accordance with ASTM Designation : B 633, TYPE III, SC 3.
6. ALL BOLTS SHALL HAVE HEXAGONAL HEADS.
7. STEEL WASHERS SHALL BE 1¼" O.D. X ⅜" I.D. X 1/16"
8. NYLON WASHERS SHALL BE 1¼" O.D. X ⅜" I.D. X .080 FOR TYPE H OR TYPE F FACE SIGN

✳ LAG BOLTS SHALL BE ⅜" X 2½"

BLOCK BANDING DETAIL
(V-BLOCK OPTION)

WISCONSIN DEPT OF TRANSPORTATION

APPROVED Matthew R Rauch
for State Traffic Engineer

DATE 7/12/07 PLATE NO. A5-10.1

PROJECT NO:				SHEET NO: 156	E

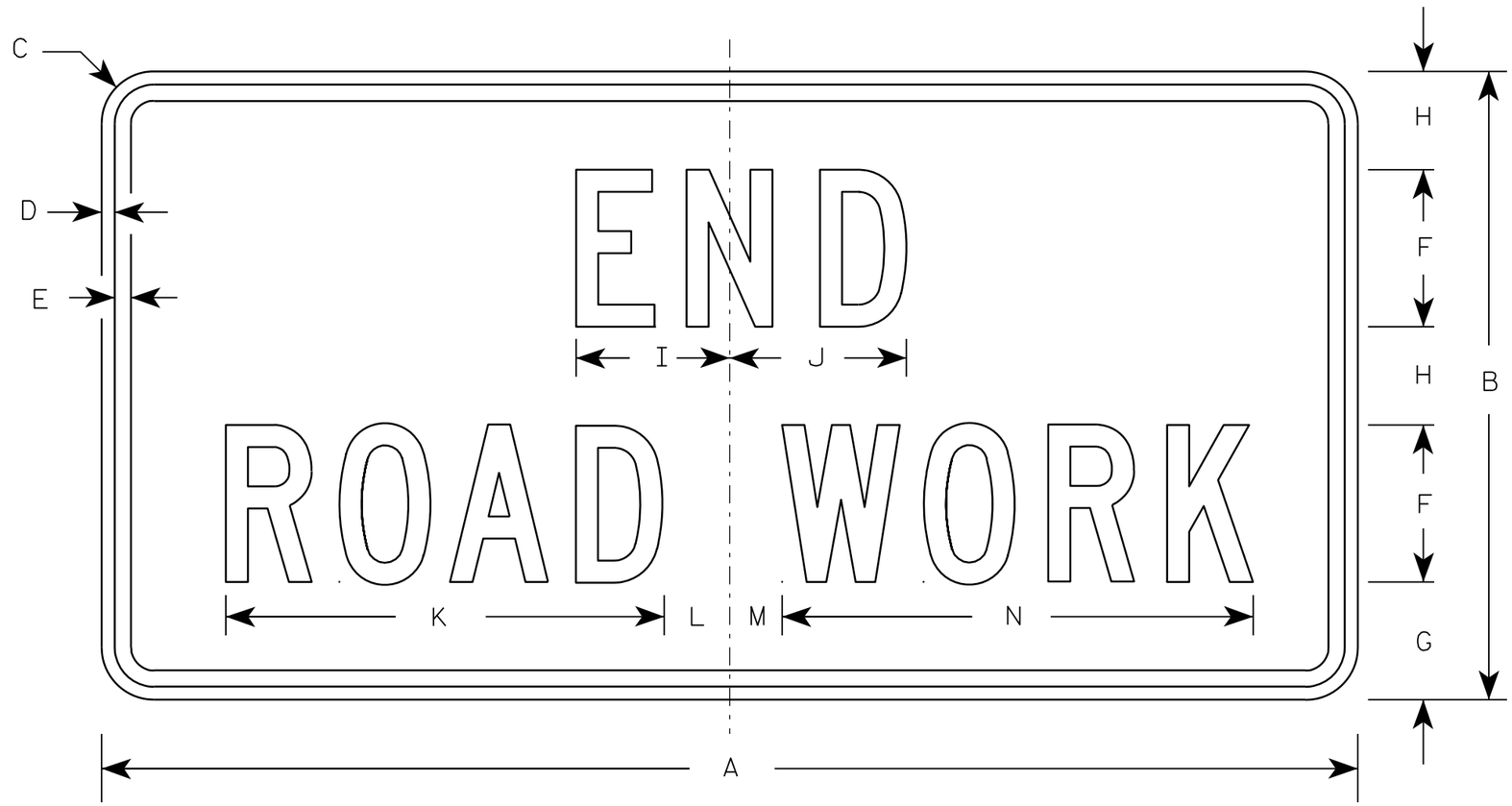

G20-2A

NOTES

1. Sign is Type II - Type F Reflective - reference WIS DOT Standard Specification for HIGHWAY and STRUCTURE CONSTRUCTION latest edition.
2. Color:
   Background - Orange
   Message - Black
3. Message Series - C
4. Corners may be square or rounded when base material is plywood but borders shall be rounded as shown. When base material is metal, the corners and borders shall be rounded.

Metric equivalent for this sign is:

SIZE	
1	900 mm X 450 mm
2	1200 mm X 600 mm
3	1200 mm X 600 mm
4	1200 mm X 600 mm
5	1200 mm X 600 mm

SIZE	A	B	C	D	E	F	G	H	I	J	K	L	M	N	O	P	Q	R	S	T	U	V	W	X	Y	Z	Area sq. ft.	Area m2
1	36	18	1 1/8	3/8	1/2	4	3 3/4	2 1/2	4 1/8	4 1/8	11 1/8	2	1	12 1/8													4.5	0.41
2	48	24	1 1/2	1/2	5/8	6	4 1/2	3 3/4	5 7/8	6 3/4	16 3/4	2 1/2	1 3/4	18 1/2													8.0	0.72
3	48	24	1 1/2	1/2	5/8	6	4 1/2	3 3/4	5 7/8	6 3/4	16 3/4	2 1/2	1 3/4	18 1/2													8.0	0.72
4	48	24	1 1/2	1/2	5/8	6	4 1/2	3 3/4	5 7/8	6 3/4	16 3/4	2 1/2	1 3/4	18 1/2													8.0	0.72
5	48	24	1 1/2	1/2	5/8	6	4 1/2	3 3/4	5 7/8	6 3/4	16 3/4	2 1/2	1 3/4	18 1/2													8.0	0.72

STANDARD SIGN

G20-2A

WISCONSIN DEPT OF TRANSPORTATION

APPROVED Matthew R Rauch
for State Traffic Engineer

DATE 9/30/09 PLATE NO. G20-2A.8

PROJECT NO:	HWY:	COUNTY:		SHEET NO: 157	E

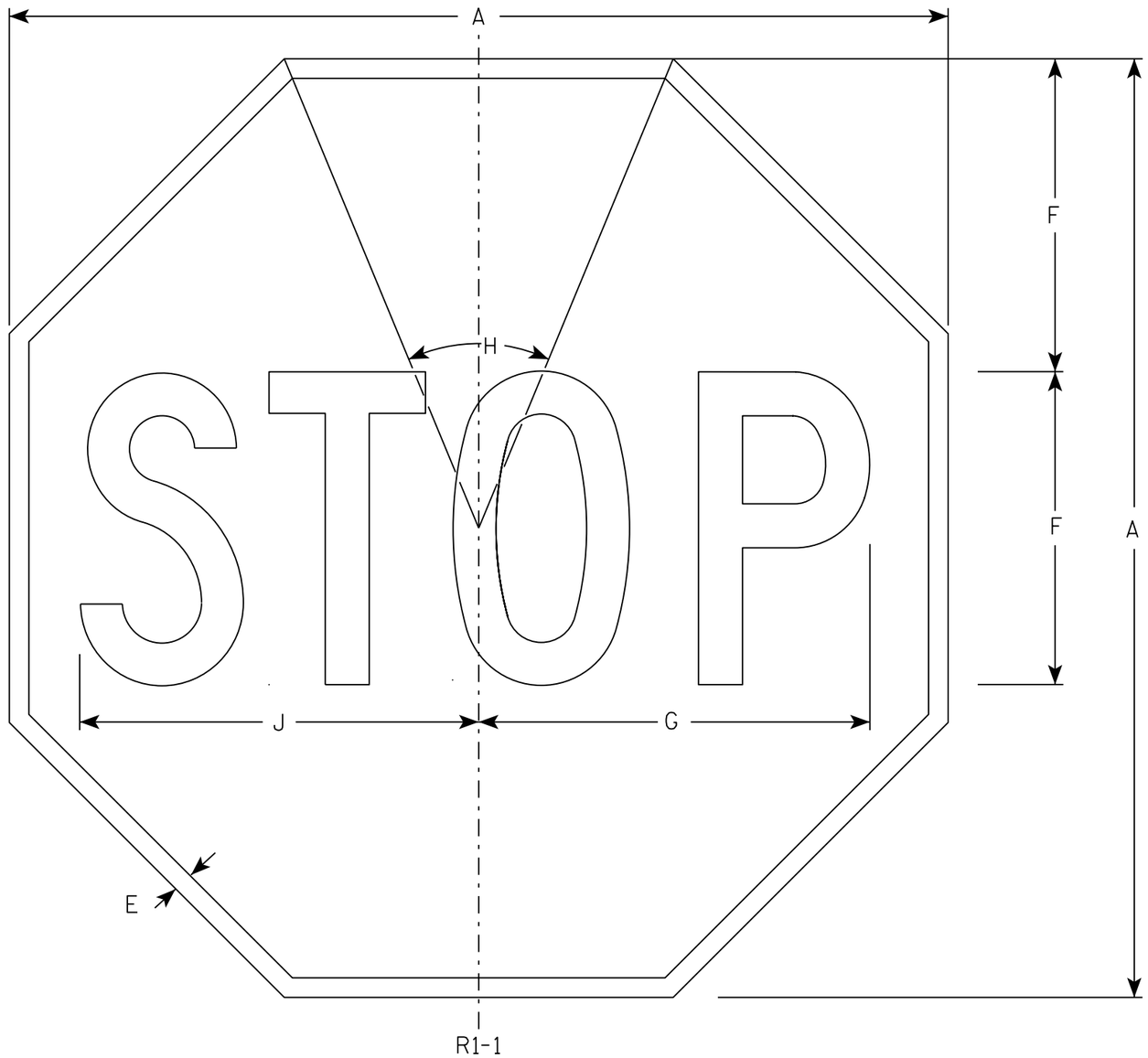

NOTES

1. Sign is Type II - Type H Reflective - reference WIS DOT Standard Specification for HIGHWAY and STRUCTURE CONSTRUCTION latest edition.
2. Color:
   Background - Red
   Message - White
3. Message Series - C

SIZE	A	B	C	D	E	F	G	H	I	J	K	L	M	N	O	P	Q	R	S	T	U	V	W	X	Y	Z	Area sq. ft.
1	30				5/8	10	12 1/2	45°		12 3/4																	5.18
2S	30				5/8	10	12 1/2	45°		12 3/4																	5.18
2M	36				3/4	12	15	45°		15 3/8																	7.46
3	36				3/4	12	15	45°		15 3/8																	7.46
4	48				1	16	20	45°		20 1/2																	13.25
5	48				1	16	20	45°		20 1/2																	13.25
6	18				3/8	6	7 3/4	45°		7 3/4																	1.86
7	12				1/4	4	5	45°		5 1/8																	0.78

STANDARD SIGN
R1-1

WISCONSIN DEPT OF TRANSPORTATION

APPROVED Matthew R Rauch
for State Traffic Engineer

DATE 11/12/15 PLATE NO. R1-1.13

PROJECT NO: | HWY: | COUNTY: | SHEET NO: 158 | E

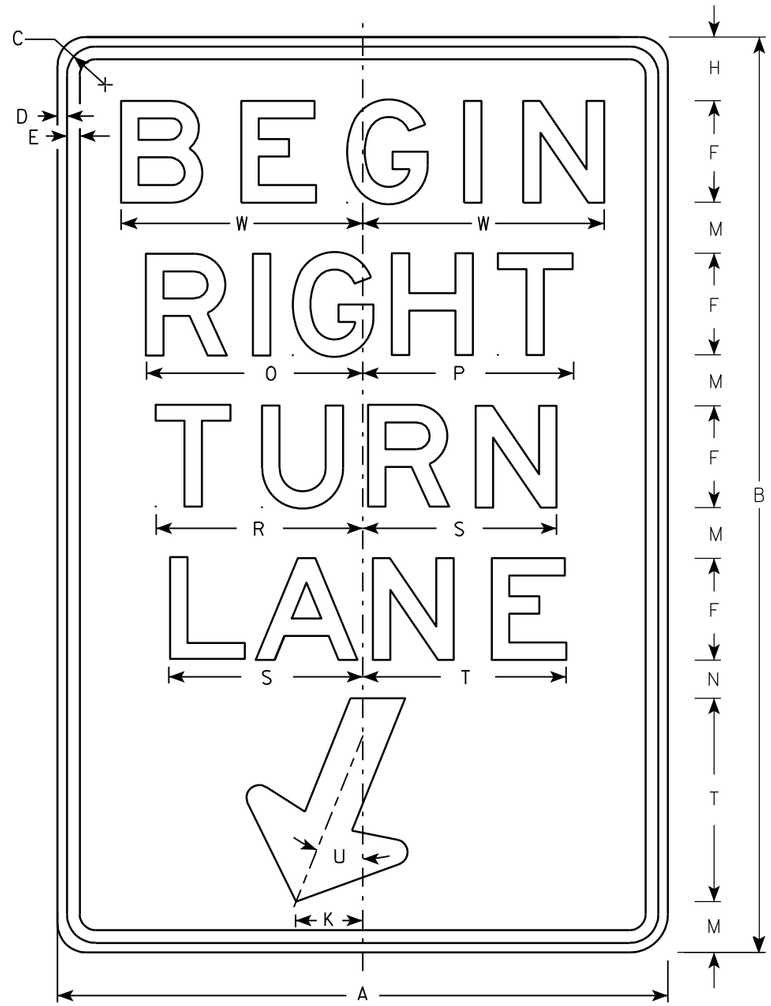

R3-20R

NOTES

1. Sign is Type II - Type H Reflective - reference WIS DOT Standard Specification for HIGHWAY and STRUCTURE CONSTRUCTION latest edition.
2. Color:
   Background - White
   Message - Black
3. Message Series - E
4. Corners may be square or rounded when base material is plywood but borders shall be rounded as shown. When base material is metal, the corners and borders shall be rounded.

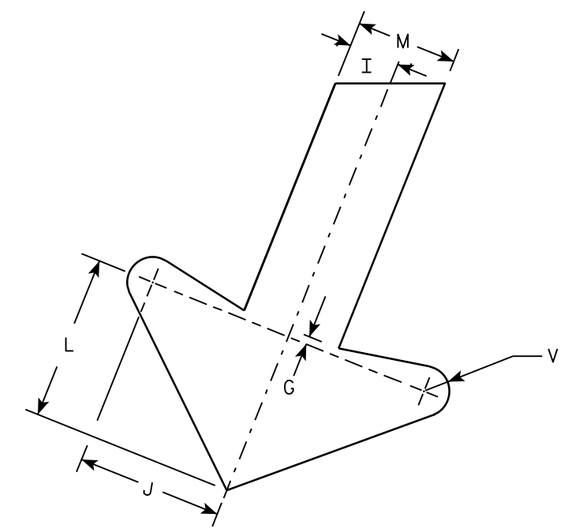

ARROW DETAIL

SIZE	A	B	C	D	E	F	G	H	I	J	K	L	M	N	O	P	Q	R	S	T	U	V	W	X	Y	Z	Area sq. ft.
1																											
2S	24	36	1 1/8	3/8	1/2	4	1/4	2 1/2	1	2 7/8	2 5/8	3 1/4	2	1 1/2	8 1/2	8 1/4		8 1/8	7 5/8	8	22°	1/2	9 1/2				6.0
2M	24	36	1 1/8	3/8	1/2	4	1/4	2 1/2	1	2 7/8	2 5/8	3 1/4	2	1 1/2	8 1/2	8 1/4		8 1/8	7 5/8	8	22°	1/2	9 1/2				6.0
3	36	54	1 3/4	1/2	5/8	6	3/8	3 3/4	1 1/2	4 1/4	4	4 7/8	3	2 1/4	12 3/4	12 1/2		12 1/4	11 1/2	12	22°	3/4	13 1/4				13.5
4																											
5																											

STANDARD SIGN
R3-20R

WISCONSIN DEPT OF TRANSPORTATION

APPROVED Matthew R Rauch
for State Traffic Engineer

DATE 10/18/10 PLATE NO. R3-20R.6

PROJECT NO:	HWY:	COUNTY:		SHEET NO: 159	E

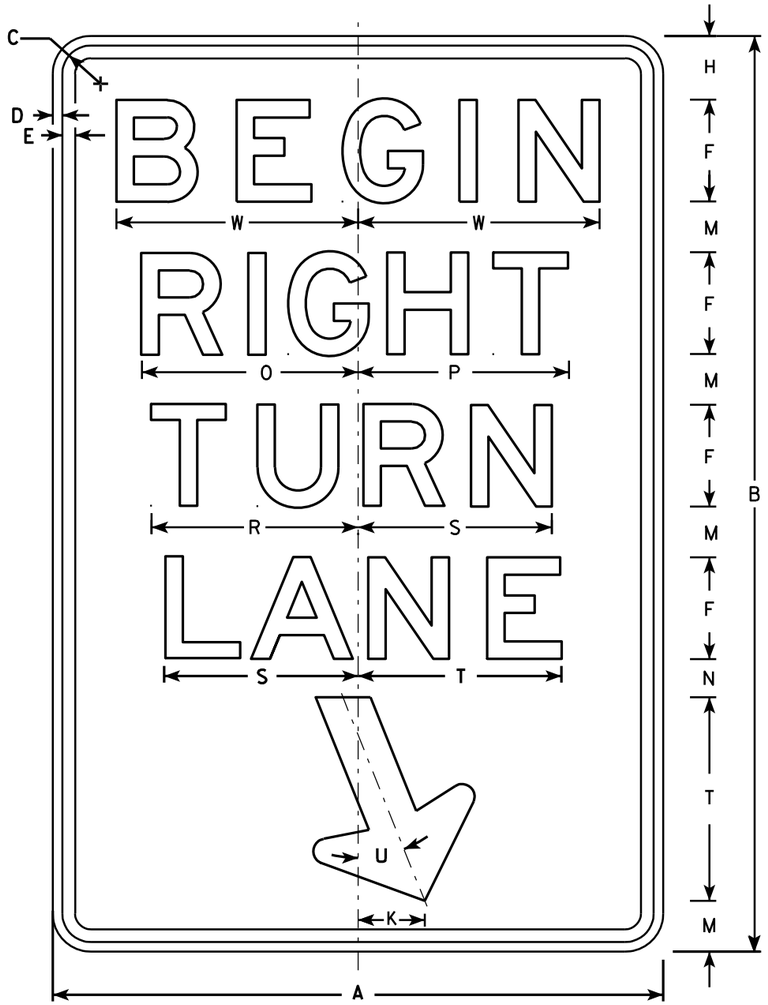

R3-20RR

NOTES

1. Sign is Type II - Type H Reflective - reference WIS DOT Standard Specification for HIGHWAY and STRUCTURE CONSTRUCTION latest edition.
2. Color:
   Background - White
   Message - Black
3. Message Series - E
4. Corners may be square or rounded when base material is plywood but borders shall be rounded as shown. When base material is metal, the corners and borders shall be rounded.

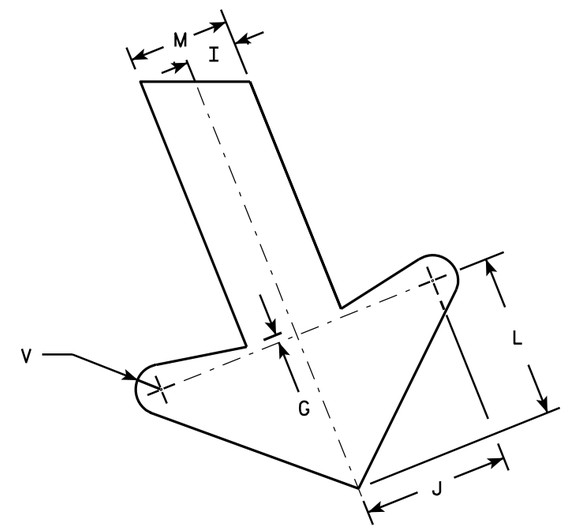

ARROW DETAIL

SIZE	A	B	C	D	E	F	G	H	I	J	K	L	M	N	O	P	Q	R	S	T	U	V	W	X	Y	Z	Area sq. ft.
1																											
2S	24	36	1 1/8	3/8	1/2	4	1/4	2 1/2	1	2 7/8	2 5/8	3 1/4	2	1 1/2	8 1/2	8 1/4		8 1/8	7 5/8	8	22°	1/2	9 1/2				6.0
2M	24	36	1 1/8	3/8	1/2	4	1/4	2 1/2	1	2 7/8	2 5/8	3 1/4	2	1 1/2	8 1/2	8 1/4		8 1/8	7 5/8	8	22°	1/2	9 1/2				6.0
3	36	54	1 3/4	1/2	5/8	6	3/8	3 3/4	1 1/2	4 1/4	4	4 7/8	3	2 1/4	12 3/4	12 1/2		12 1/4	11 1/2	12	22°	3/4	13 1/4				13.5
4																											
5																											

STANDARD SIGN
R3-20RR

WISCONSIN DEPT OF TRANSPORTATION

APPROVED Matthew R Rauch
for State Traffic Engineer

DATE 10/18/10 PLATE NO. R3-20RR.1

PROJECT NO: | HWY: | COUNTY: | SHEET NO: 160 | E

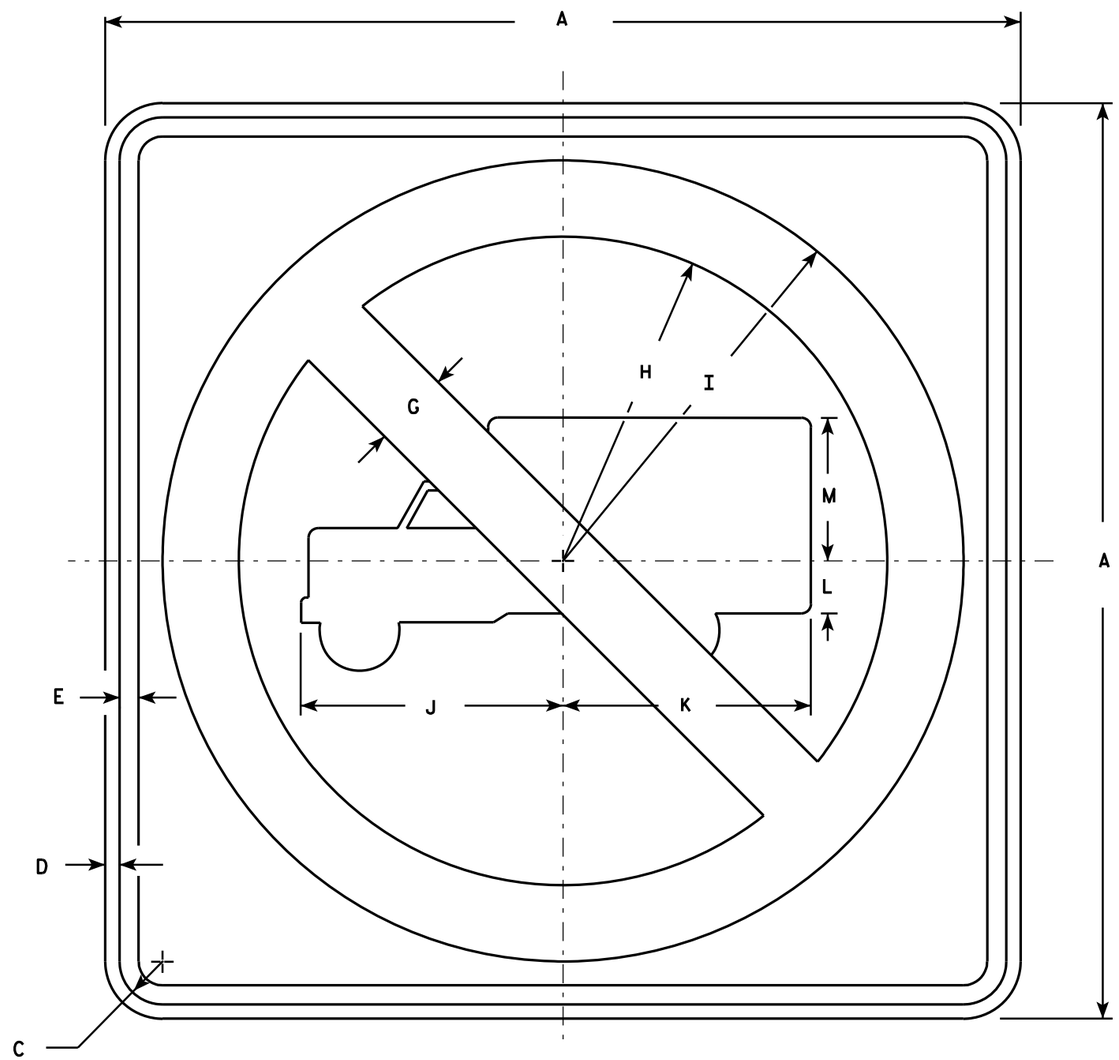

R5-2

NOTES

1. Sign is Type II - Type H Reflective - reference WIS DOT Standard Specification for HIGHWAY and STRUCTURE CONSTRUCTION latest edition.
2. Color:
   Background - White
   Message - See Note 4
3. Corners may be square or rounded when base material is plywood but borders shall be rounded as shown. When base material is metal, the corners and borders shall be rounded.
4. Circle & Diagonal - Reflective red.
   Truck Symbol & Border - Non-reflective black.

SIZE	A	B	C	D	E	F	G	H	I	J	K	L	M	N	O	P	Q	R	S	T	U	V	W	X	Y	Z	Area sq. ft.
1																											
2S	24		1 1/8	3/8	1/2		2	8 1/2	10 1/2	6 7/8	6 1/2	1 3/8	3 3/4														4.0
2M	24		1 1/8	3/8	1/2		2	8 1/2	10 1/2	6 7/8	6 1/2	1 3/8	3 3/4														4.0
3	30		1 3/8	1/2	5/8		2 1/2	10 5/8	13 1/8	8 1/2	8 1/8	1 5/8	4 3/4														6.25
4	36		1 5/8	5/8	3/4		3	12 3/4	15 3/4	10 1/4	9 3/4	2	5 3/4														9.0
5	48		2 1/4	3/4	1		4	17	21	13 5/8	13	2 5/8	7 5/8														16.0

STANDARD SIGN
R5-2

WISCONSIN DEPT OF TRANSPORTATION

APPROVED Matthew R Rauch
for State Traffic Engineer

DATE 3/29/2011 PLATE NO. R5-2.6

PROJECT NO:	HWY:	COUNTY:		SHEET NO: 161	E

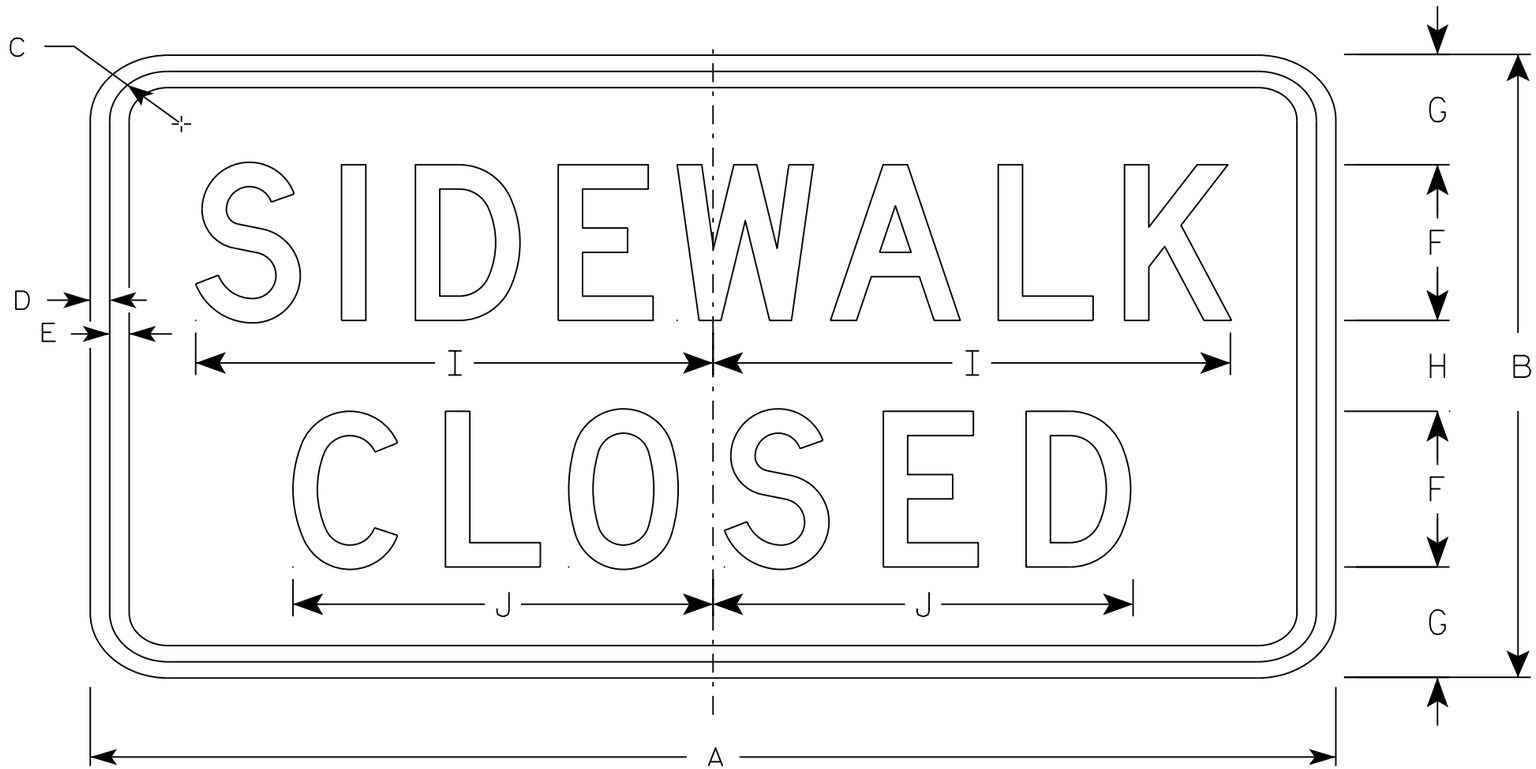

R9-9

NOTES

1. Sign is Type II - Type H Reflective - reference WIS DOT Standard Specification for HIGHWAY and STRUCTURE CONSTRUCTION latest edition.
2. Color:
   Background - White
   Message - Black
3. Message Series - C
4. Corners may be square or rounded when base material is plywood but borders shall be rounded as shown. When base material is metal, the corners and borders shall be rounded.
5. Use Size 2 for Sidewalks. Use Size 3 for Paths and Trails.

SIZE	A	B	C	D	E	F	G	H	I	J	K	L	M	N	O	P	Q	R	S	T	U	V	W	X	Y	Z	Area sq. ft.
1																											
2S	24	12	1 3/4	1/2	1/2	3	2 1/8	1 3/4	10	8 1/8																	2.0
2M	24	12	1 3/4	1/2	1/2	3	2 1/8	1 3/4	10	8 1/8																	2.0
3	30	18	1 3/4	1/2	1/2	4	3 1/2	3	12 1/2	10 1/4																	3.75
4																											
5																											

STANDARD SIGN
R9-9

WISCONSIN DEPT OF TRANSPORTATION

APPROVED Matthew R Rauch
for State Traffic Engineer

DATE 8/11/16 PLATE R9-9.6

PROJECT NO: | HWY: | COUNTY: | SHEET NO: E

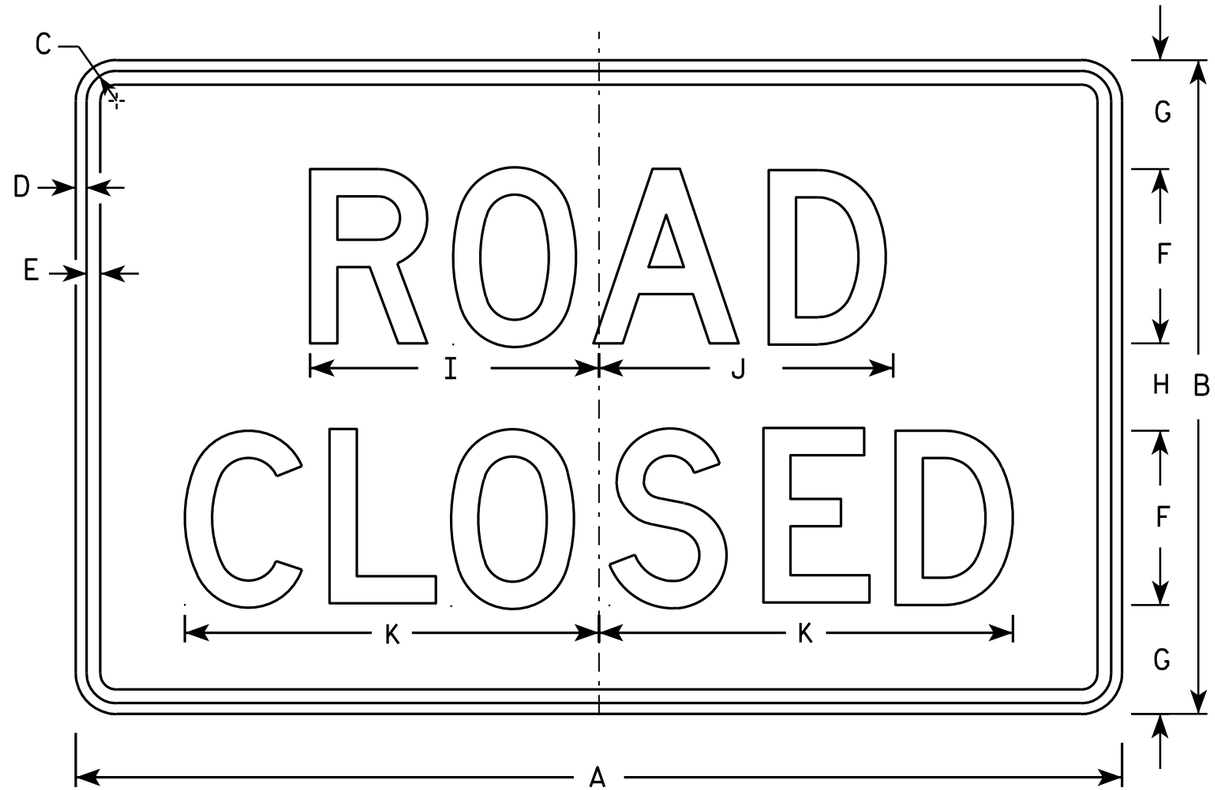

R11-2

NOTES

1. Sign is Type II - Type H Reflective - reference WIS DOT Standard Specification for HIGHWAY and STRUCTURE CONSTRUCTION latest edition.
2. Color:
   Background - White
   Message - Black
3. Message Series - D
4. Corners may be square or rounded when base material is plywood but borders shall be rounded as shown. When base material is metal, the corners and borders shall be rounded.
5. Modify the message as required.

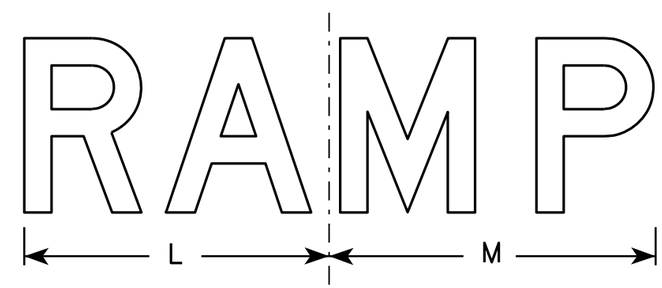

R11-2R

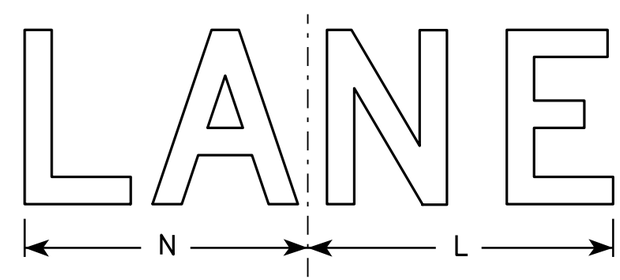

R11-2L

SIZE	A	B	C	D	E	F	G	H	I	J	K	L	M	N	O	P	Q	R	S	T	U	V	W	X	Y	Z	Area sq. ft.
1																											
2S	48	30	1 3/8	1/2	5/8	8	5	4	13 1/4	13 1/2	19	14	15	13													10.0
2M	48	30	1 3/8	1/2	5/8	8	5	4	13 1/4	13 1/2	19	14	15	13													10.0
3	48	30	1 3/8	1/2	5/8	8	5	4	13 1/4	13 1/2	19	14	15	13													10.0
4	48	30	1 3/8	1/2	5/8	8	5	4	13 1/4	13 1/2	19	14	15	13													10.0
5	48	30	1 3/8	1/2	5/8	8	5	4	13 1/4	13 1/2	19	14	15	13													10.0

STANDARD SIGN
R11-2

WISCONSIN DEPT OF TRANSPORTATION

APPROVED Matthew R Rauch
for State Traffic Engineer

DATE 4/1/11 PLATE NO. R11-2.10

PROJECT NO: | HWY: | COUNTY: | SHEET NO: 163 | E

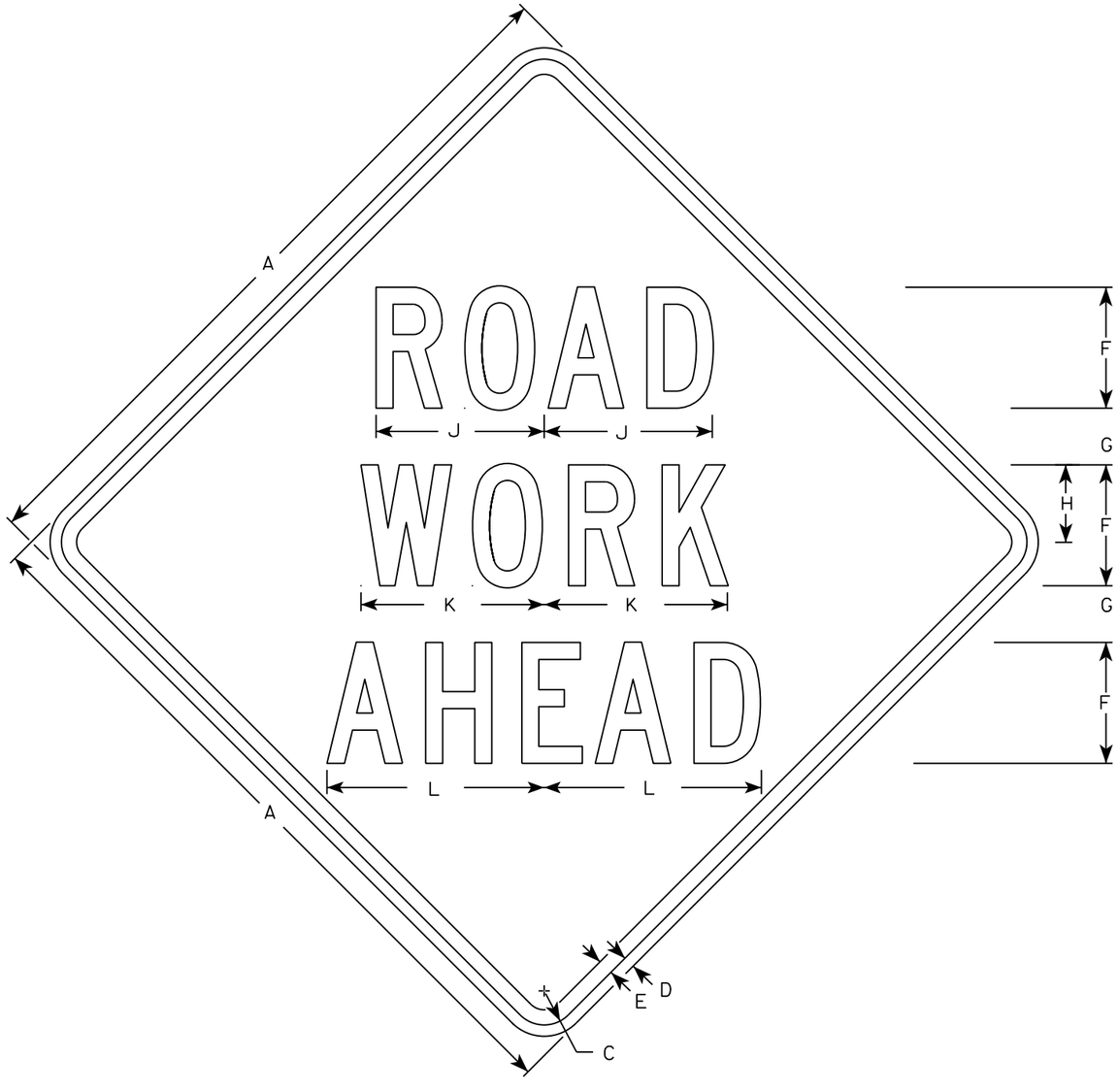

W20-1A

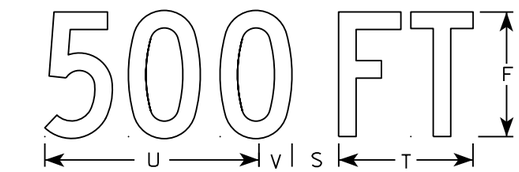

W20-1D

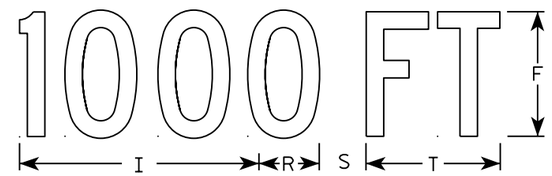

W20-1C

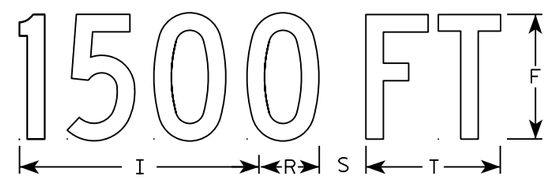

W20-1B

W20-1G

W20-1F

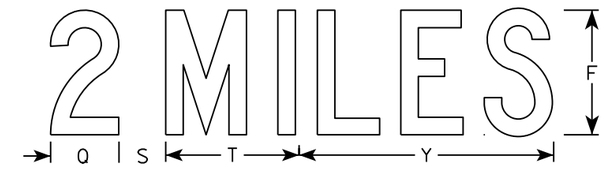

W20-1E

NOTES

1. Sign is Type II - Type F Reflective
2. Color:
   Background - Orange
   Message - Black
3. Message Series - C
4. Corners may be square or rounded when base material is plywood but borders shall be rounded as shown. When base material is metal, the corners and borders shall be rounded.

SIZE	A	B	C	D	E	F	G	H	I	J	K	L	M	N	O	P	Q	R	S	T	U	V	W	X	Y	Z	Area sq. ft.
1	36		1 3/8	1/2	5/8	5	2 5/8	3 1/4	10 1/8	7	7 5/8	8 7/8	1 1/8	4 1/2	3 1/2	9		2 1/2	2 1/4	5 5/8	9	1 3/8	8	1 3/4	10 3/4	6	9.0
2S	48		2 1/4	3/4	1	8	3 3/4	5 1/8	15 3/8	11 1/8	12 1/8	14 3/8	1 5/8	6 7/8	5 3/8	13 7/8	4 3/8	3 7/8	3	8 5/8	13 3/4	2 1/8	11 7/8	2 3/4	16 3/8	9	16.0
2M	48		2 1/4	3/4	1	8	3 3/4	5 1/8	15 3/8	11 1/8	12 1/8	14 3/8	1 5/8	6 7/8	5 3/8	13 7/8	4 3/8	3 7/8	3	8 5/8	13 3/4	2 1/8	11 7/8	2 3/4	16 3/8	9	16.0
3	48		2 1/4	3/4	1	8	3 3/4	5 1/8	15 3/8	11 1/8	12 1/8	14 3/8	1 5/8	6 7/8	5 3/8	13 7/8	4 3/8	3 7/8	3	8 5/8	13 3/4	2 1/8	11 7/8	2 3/4	16 3/8	9	16.0
4	48		2 1/4	3/4	1	8	3 3/4	5 1/8	15 3/8	11 1/8	12 1/8	14 3/8	1 5/8	6 7/8	5 3/8	13 7/8	4 3/8	3 7/8	3	8 5/8	13 3/4	2 1/8	11 7/8	2 3/4	16 3/8	9	16.0
5	48		2 1/4	3/4	1	8	3 3/4	5 1/8	15 3/8	11 1/8	12 1/8	14 3/8	1 5/8	6 7/8	5 3/8	13 7/8	4 3/8	3 7/8	3	8 5/8	13 3/4	2 1/8	11 7/8	2 3/4	16 3/8	9	16.0

STANDARD SIGN
W20-1A, B, C, D, F & G

WISCONSIN DEPT OF TRANSPORTATION

APPROVED Matthew R Rauch
for State Traffic Engineer

DATE 5/07/15 PLATE NO. W20-1.10

PROJECT NO:

SHEET NO: E

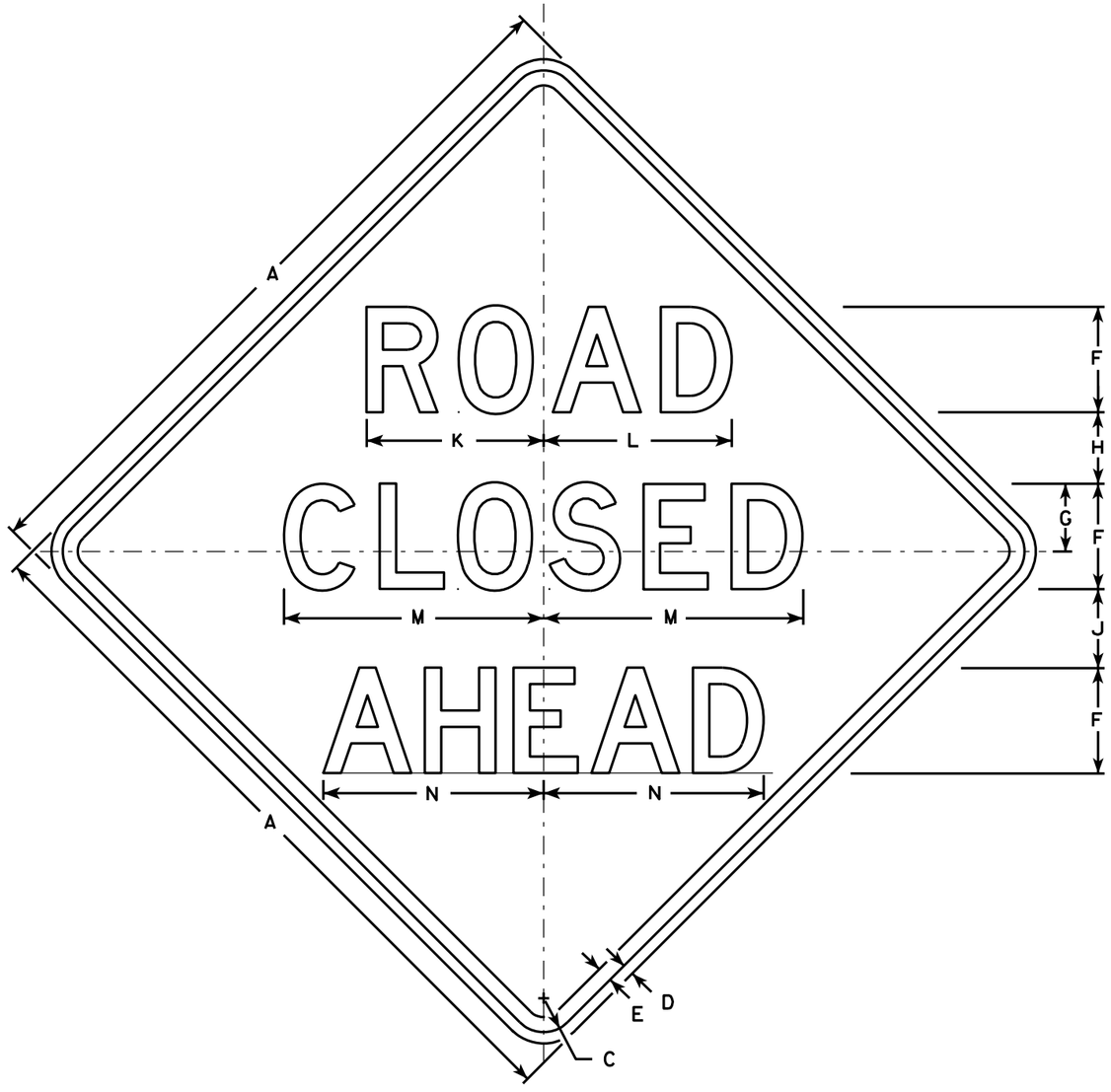

W20-3A

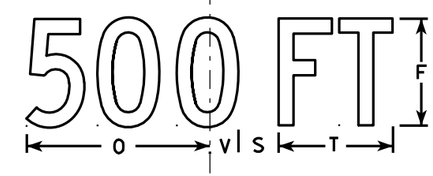

W20-3D

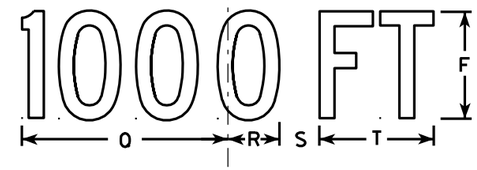

W20-3C

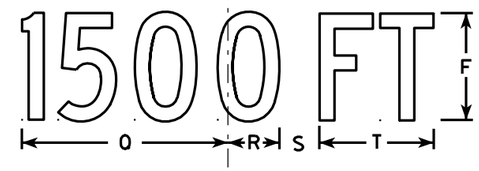

W20-3B

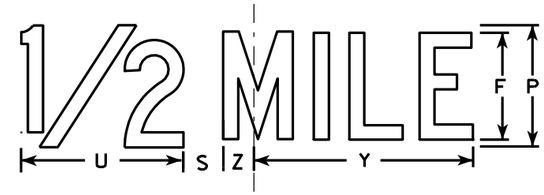

W20-3G

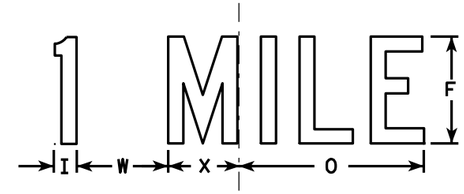

W20-3F

NOTES

1. Sign is Type II - Type F Reflective - reference WIS DOT Standard Specification for HIGHWAY and STRUCTURE CONSTRUCTION latest edition.
2. Color:
   Background - Orange
   Message - Black
3. Message Series - see note 5
4. Corners may be square or rounded when base material is plywood but borders shall be rounded as shown. When base material is metal, the corners and borders shall be rounded.
5. Lines 1 and 2 are Series D.
   Line 3 is Series D for AHEAD and Series C for all other distances.

SIZE	A	B	C	D	E	F	G	H	I	J	K	L	M	N	O	P	Q	R	S	T	U	V	W	X	Y	Z	Area sq. ft.
1	36		1 5/8	5/8	3/4	5	3 3/8	3 1/2	1 1/8	4	8 3/8	8 7/8	12 1/2	11	9	6	10 1/8	2 1/2	1 7/8	5 5/8	8	1 3/8	4 1/2	3 1/2	10 3/4	1 3/4	9.0
2S	48		2 1/4	3/4	1	7	4 1/2	4 3/4	1 1/2	5 1/4	11 3/4	12 1/2	17 1/4	14 5/8	12	8	13 1/2	3 3/8	2 5/8	7 1/2	10 5/8	1 7/8	6	4 5/8	14 3/8	2 3/8	16.0
2M	48		2 1/4	3/4	1	7	4 1/2	4 3/4	1 1/2	5 1/4	11 3/4	12 1/2	17 1/4	14 5/8	12	8	13 1/2	3 3/8	2 5/8	7 1/2	10 5/8	1 7/8	6	4 5/8	14 3/8	2 3/8	16.0
3	48		2 1/4	3/4	1	7	4 1/2	4 3/4	1 1/2	5 1/4	11 3/4	12 1/2	17 1/4	14 5/8	12	8	13 1/2	3 3/8	2 5/8	7 1/2	10 5/8	1 7/8	6	4 5/8	14 3/8	2 3/8	16.0
4	48		2 1/4	3/4	1	7	4 1/2	4 3/4	1 1/2	5 1/4	11 3/4	12 1/2	17 1/4	14 5/8	12	8	13 1/2	3 3/8	2 5/8	7 1/2	10 5/8	1 7/8	6	4 5/8	14 3/8	2 3/8	16.0
5	48		2 1/4	3/4	1	7	4 1/2	4 3/4	1 1/2	5 1/4	11 3/4	12 1/2	17 1/4	14 5/8	12	8	13 1/2	3 3/8	2 5/8	7 1/2	10 5/8	1 7/8	6	4 5/8	14 3/8	2 3/8	16.0

STANDARD SIGN
W20-3A, B, C, D, F & G

WISCONSIN DEPT OF TRANSPORTATION

APPROVED Matthew R Rauch
for State Traffic Engineer
DATE 3/18/11 PLATE NO. W20-3.7

PROJECT NO:	HWY:	COUNTY:		SHEET NO: 165	E

W20-56A

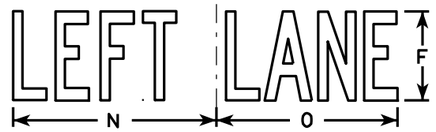

W20-55A

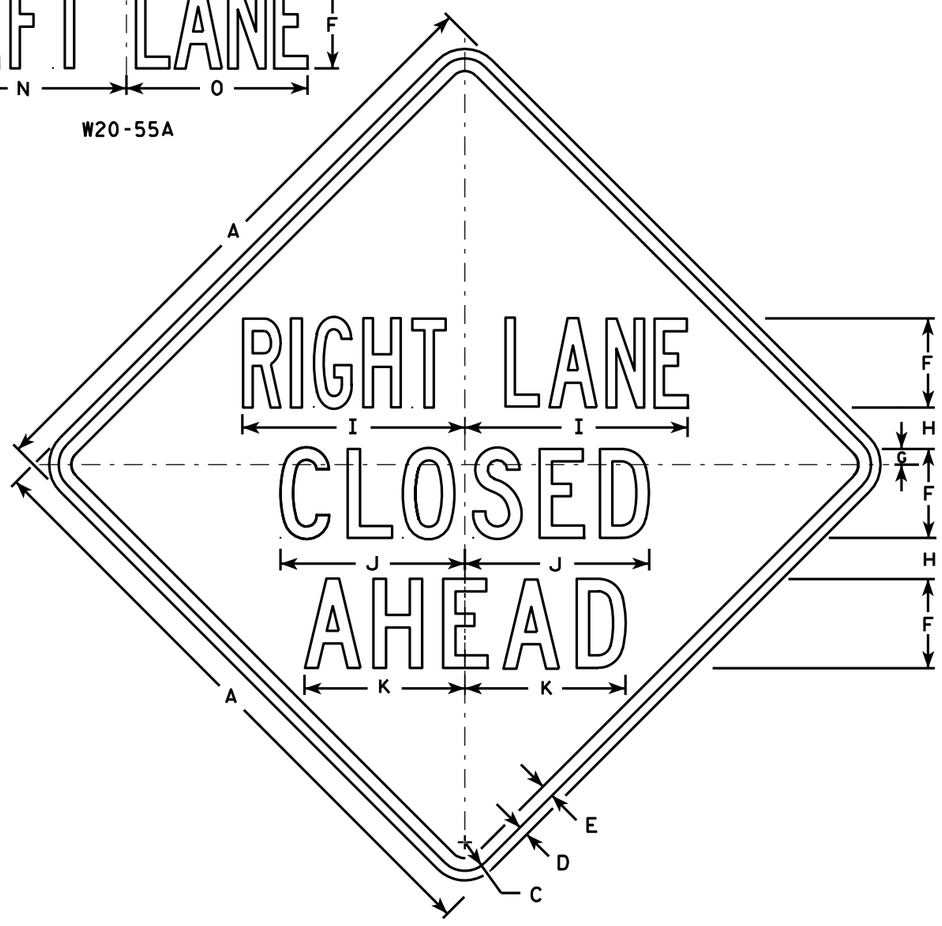

W20-5A

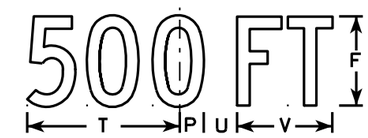

W20-5D

W20-5C

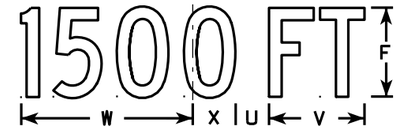

W20-5B

W20-5G

W20-5F

NOTES

1. Sign is Type II - Type F Reflective - reference WIS DOT Standard Specification for HIGHWAY and STRUCTURE CONSTRUCTION latest edition.
2. Color:
   Background - Orange
   Message - Black
3. Message Series - See Note 5
4. Corners may be square or rounded when base material is plywood but borders shall be rounded as shown. When base material is metal, the corners and borders shall be rounded.
5. " ------- LANE" is Series B.
   All other copy is Series C.

SIZE	A	B	C	D	E	F	G	H	I	J	K	L	M	N	O	P	Q	R	S	T	U	V	W	X	Y	Z	Area sq. ft.
1	36	6	1 5/8	5/8	3/4	5	7/8	2 1/2	13 1/8	10 3/4	9 1/2	14 1/4	13 5/8	12	12	1 3/8	1 1/8	4 1/2	3 1/2	9	1 7/8	5 5/8	10 1/8	2 1/2	1 3/4	8	9.0
2S	48	8	2 1/4	3/4	1	7	1 1/4	3 1/4	17 1/2	14 3/8	12 5/8	19	18 3/8	16	14 1/4	1 7/8	1 1/2	6	4 5/8	12	2 5/8	7 1/2	13 1/2	3 3/8	2 3/8	10 5/8	16.0
2M	48	8	2 1/4	3/4	1	7	1 1/4	3 1/4	17 1/2	14 3/8	12 5/8	19	18 3/8	16	14 1/4	1 7/8	1 1/2	6	4 5/8	12	2 5/8	7 1/2	13 1/2	3 3/8	2 3/8	10 5/8	16.0
3	48	8	2 1/4	3/4	1	7	1 1/4	3 1/4	17 1/2	14 3/8	12 5/8	19	18 3/8	16	14 1/4	1 7/8	1 1/2	6	4 5/8	12	2 5/8	7 1/2	13 1/2	3 3/8	2 3/8	10 5/8	16.0
4	48	8	2 1/4	3/4	1	7	1 1/4	3 1/4	17 1/2	14 3/8	12 5/8	19	18 3/8	16	14 1/4	1 7/8	1 1/2	6	4 5/8	12	2 5/8	7 1/2	13 1/2	3 3/8	2 3/8	10 5/8	16.0
5	48	8	2 1/4	3/4	1	7	1 1/4	3 1/4	17 1/2	14 3/8	12 5/8	19	18 3/8	16	14 1/4	1 7/8	1 1/2	6	4 5/8	12	2 5/8	7 1/2	13 1/2	3 3/8	2 3/8	10 5/8	16.0

STANDARD SIGN
W20-5A, B, C, D, F & G

WISCONSIN DEPT OF TRANSPORTATION

APPROVED Matthew R Rauch
for State Traffic Engineer

DATE 3/18/11 PLATE NO. W20-5.11

PROJECT NO:	HWY:	COUNTY:		SHEET NO: 166	E

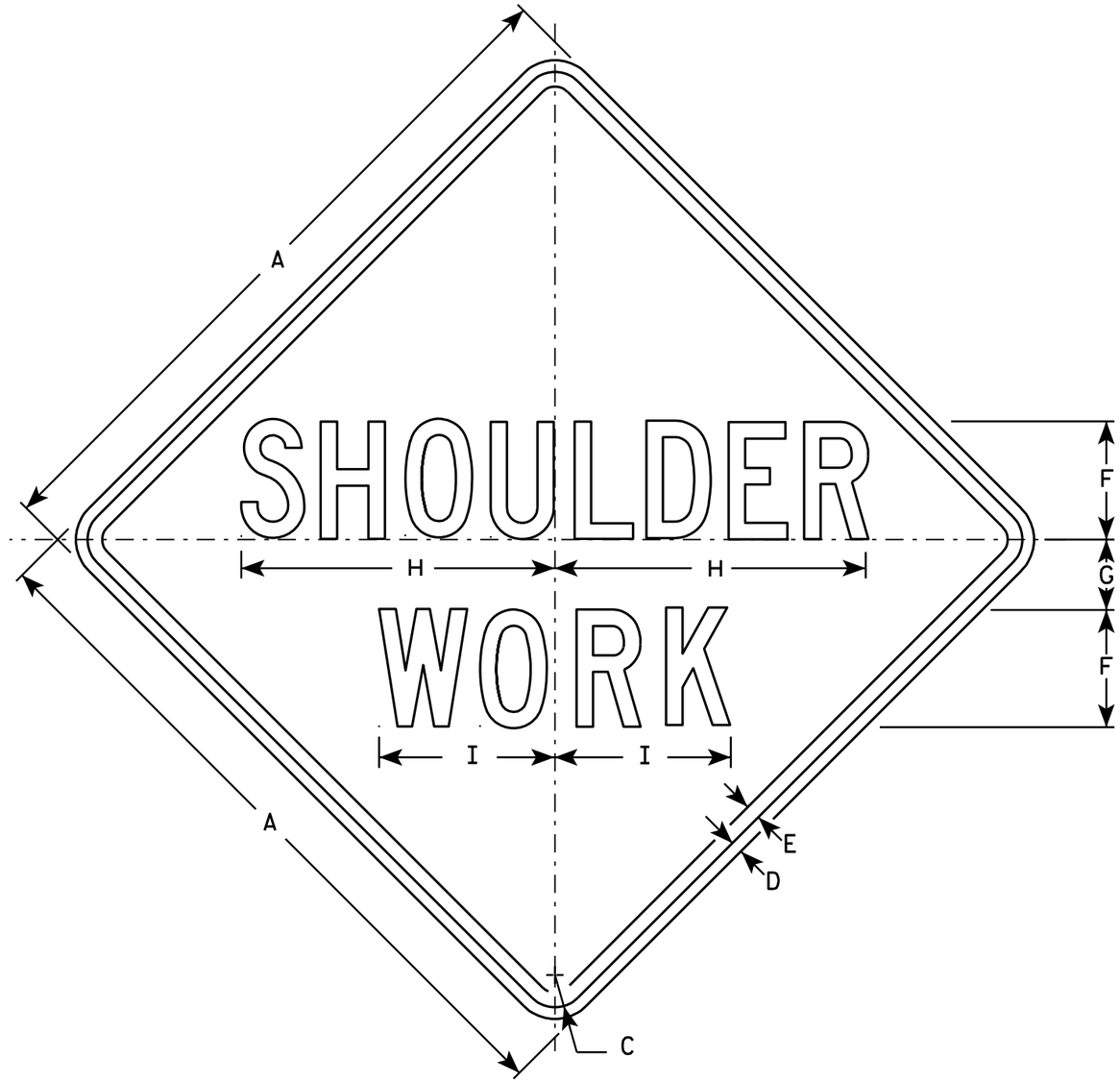

W21-5

NOTES

1. Sign is Type II - Type F Reflective - reference WIS DOT Standard Specification for HIGHWAY and STRUCTURE CONSTRUCTION latest edition.
2. Color:
   Background - Orange
   Message - Black
3. Message Series - C
4. Corners may be square or rounded when base material is plywood but borders shall be rounded as shown. When base material is metal, the corners and borders shall be rounded.

SIZE	A	B	C	D	E	F	G	H	I	J	K	L	M	N	O	P	Q	R	S	T	U	V	W	X	Y	Z	Area sq. ft.
1	24		1 1/8	3/8	1/2	4	2 1/2	10 3/4	6																		4.0
2S	30		1 3/8	1/2	5/8	5	3	13 3/8	7 1/2																		6.25
2M	30		1 3/8	1/2	5/8	5	3	13 3/8	7 1/2																		6.25
3	36		1 5/8	5/8	3/4	6	3 1/2	16	9																		9.0
4	48		2 1/4	3/4	1	8	5	21 3/8	11 1/4																		16.0
5	48		2 1/4	3/4	1	8	5	21 3/8	11 1/4																		16.0

STANDARD SIGN
W21-5

WISCONSIN DEPT OF TRANSPORTATION

APPROVED Matthew R Rauch
for State Traffic Engineer
DATE 3/21/11 PLATE NO. W21-5.5

PROJECT NO:	HWY:	COUNTY:		SHEET NO: 167	E

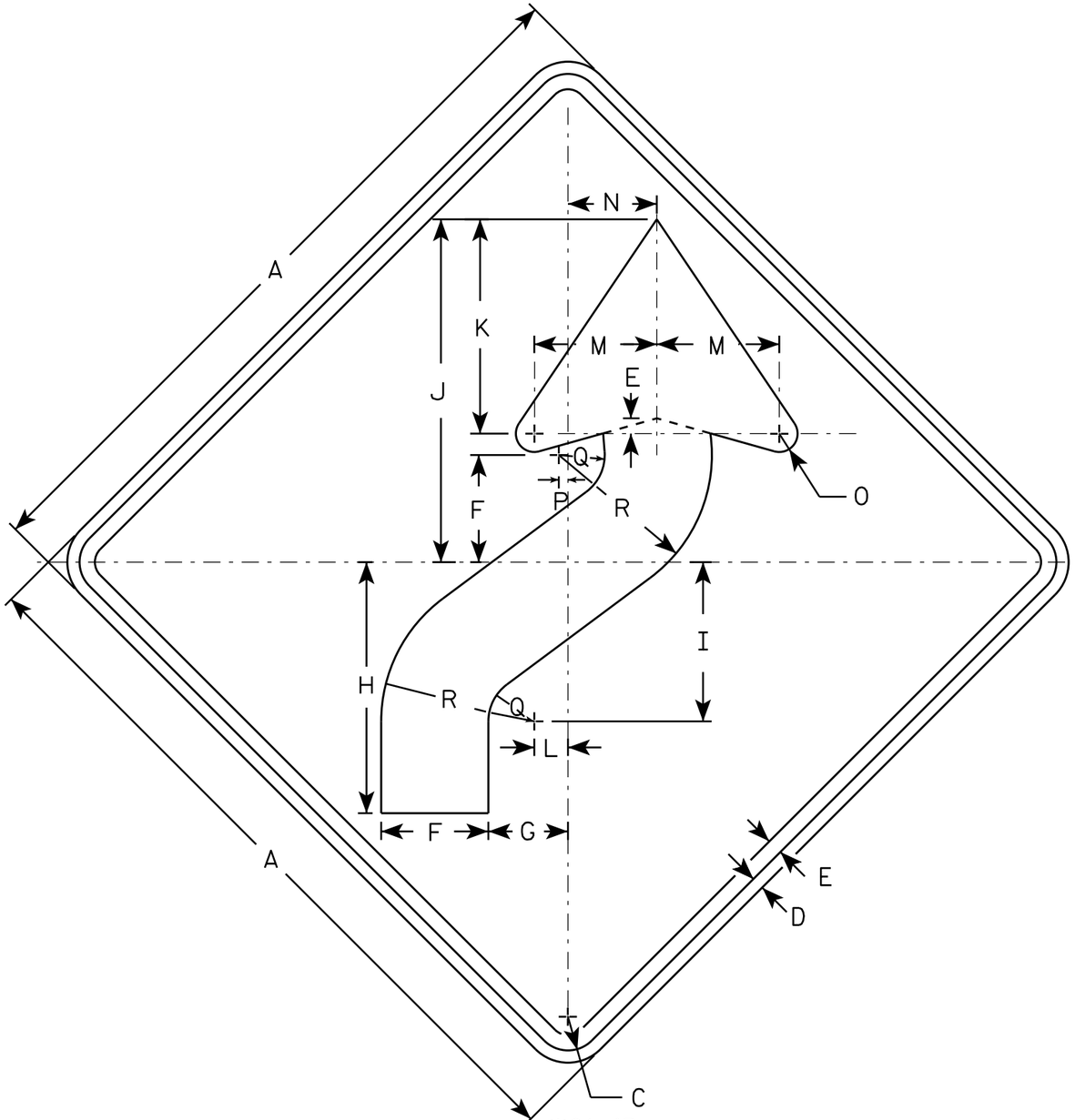

W01-4R

NOTES

1. Sign is Type II - Type F Reflective - reference WIS DOT Standard Specification for HIGHWAY and STRUCTURE CONSTRUCTION latest edition.
2. Color:
   Background - Orange
   Message - Black
3. Corners may be square or rounded when base material is plywood but borders shall be rounded as shown. When base material is metal, the corners and borders shall be rounded.
4. W01-4L is the same as W01-4R except the arrow is reversed along the vertical centerline.

SIZE	A	B	C	D	E	F	G	H	I	J	K	L	M	N	O	P	Q	R	S	T	U	V	W	X	Y	Z	Area sq. ft.
1	36		1 5/8	5/8	3/4	5 1/4	4	12 3/8	7 7/8	16 7/8	10 1/2	1 5/8	6	4 1/2	1	1/2	2 1/4	7 1/2									9.0
2S	48		2 1/4	3/4	1	7	5 1/4	16 1/2	10 1/2	22 1/2	14	2 1/4	8	6	1 1/4	5/8	3	10									16.0
2M	48		2 1/4	3/4	1	7	5 1/4	16 1/2	10 1/2	22 1/2	14	2 1/4	8	6	1 1/4	5/8	3	10									16.0
3	48		2 1/4	3/4	1	7	5 1/4	16 1/2	10 1/2	22 1/2	14	2 1/4	8	6	1 1/4	5/8	3	10									16.0
4	48		2 1/4	3/4	1	7	5 1/4	16 1/2	10 1/2	22 1/2	14	2 1/4	8	6	1 1/4	5/8	3	10									16.0
5	48		2 1/4	3/4	1	7	5 1/4	16 1/2	10 1/2	22 1/2	14	2 1/4	8	6	1 1/4	5/8	3	10									16.0

STANDARD SIGN
W01-4

WISCONSIN DEPT OF TRANSPORTATION

APPROVED Matthew R Rauch
for State Traffic Engineer

DATE 11/18/13 PLATE NO W01-4.1

PROJECT NO:	HWY:	COUNTY:		SHEET NO:	E

NOTES

1. Sign is Type II - Type F Reflective - reference WIS DOT Standard Specification for HIGHWAY and STRUCTURE CONSTRUCTION latest edition.
2. Color:
   Background - Orange
   Message - Black
3. Corners may be square or rounded when base material is plywood but borders shall be rounded as shown. When base material is metal, the corners and borders shall be rounded.

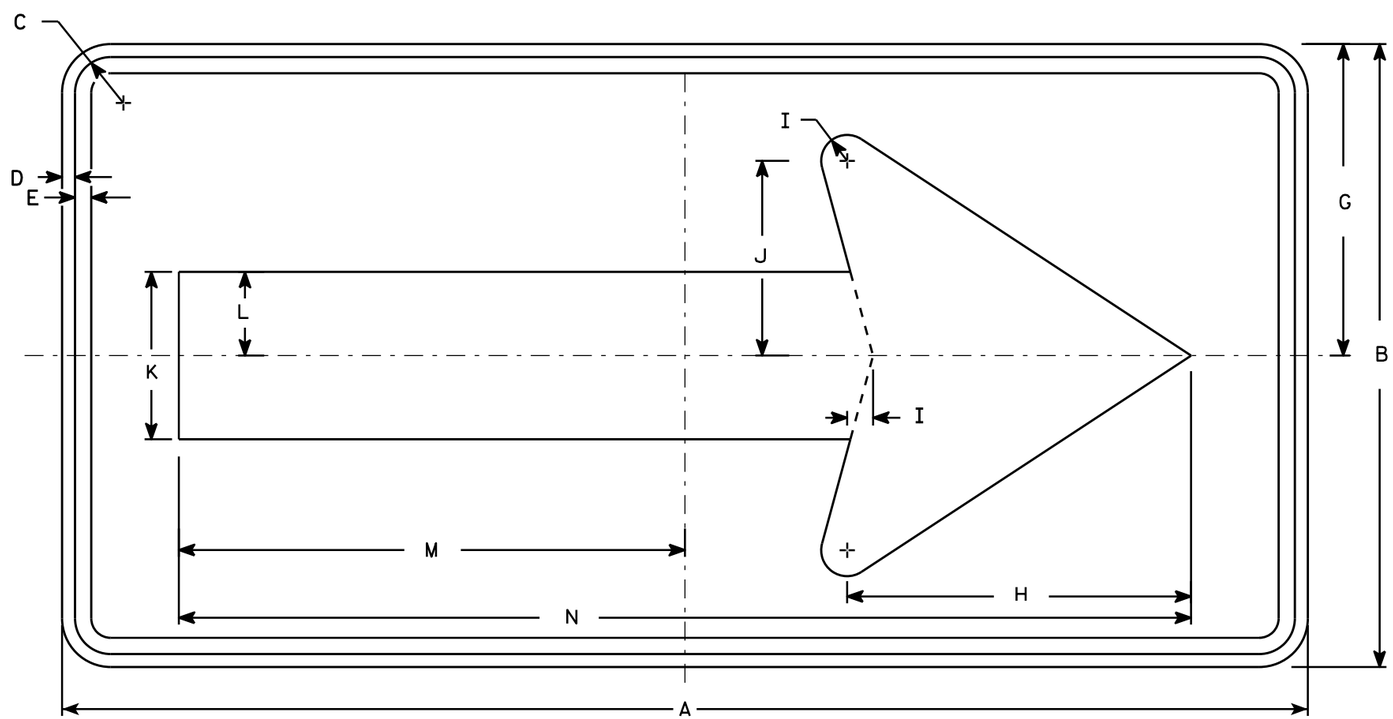

W01-6

SIZE	A	B	C	D	E	F	G	H	I	J	K	L	M	N	O	P	Q	R	S	T	U	V	W	X	Y	Z	Area sq. ft.
1																											
2S	48	24	1 3/8	1/2	5/8		12	13 1/4	1	7 1/2	6 1/2	3 1/4	19 1/2	39													8.0
2M	48	24	1 3/8	1/2	5/8		12	13 1/4	1	7 1/2	6 1/2	3 1/4	19 1/2	39													8.0
3	60	30	1 3/8	1/2	5/8		15	16 1/4	1 1/4	9 1/4	8	4	24 3/8	48 3/4													12.5
4	60	30	1 3/8	1/2	5/8		15	16 1/4	1 1/4	9 1/4	8	4	24 3/8	48 3/4													12.5
5	60	30	1 3/8	1/2	5/8		15	16 1/4	1 1/4	9 1/4	8	4	24 3/8	48 3/4													12.5

STANDARD SIGN
W01-6

WISCONSIN DEPT OF TRANSPORTATION

APPROVED Matthew R Rauch
for State Traffic Engineer

DATE 11/18/13 PLATE NO. W01-6.1

PROJECT NO: | HWY: | COUNTY: | SHEET NO: | E

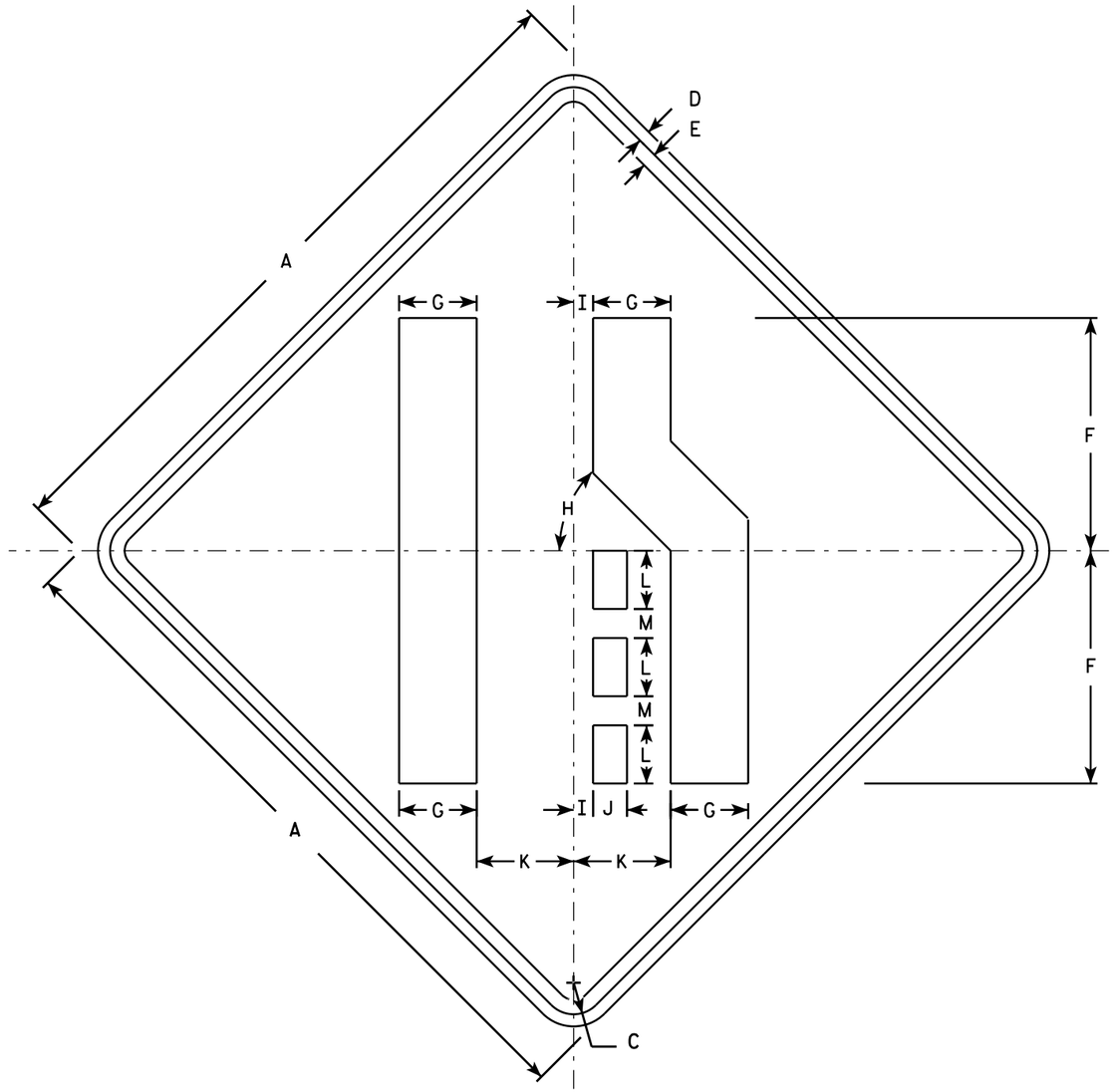

W04-2R

NOTES

1. Sign is Type II - Type F Reflective - reference WIS DOT Standard Specification for HIGHWAY and STRUCTURE CONSTRUCTION latest edition.
2. Color:
   Background - Orange
   Message - Black
3. Corners may be square or rounded when base material is plywood but borders shall be rounded as shown. When base material is metal, the corners and borders shall be rounded.
4. W04-2L is the same as W04-2R except the symbol is reversed along the vertical centerline.

SIZE	A	B	C	D	E	F	G	H	I	J	K	L	M	N	O	P	Q	R	S	T	U	V	W	X	Y	Z	Area sq. ft.
1	36		1 5/8	5/8	3/4	12	4	45°	1	1 3/4	5	3	1 1/2														9.0
2S	48		2 1/4	3/4	1	16	5 3/8	45°	1 1/4	2 3/8	6 3/4	4	2														16.0
2M	48		2 1/4	3/4	1	16	5 3/8	45°	1 1/4	2 3/8	6 3/4	4	2														16.0
3	48		2 1/4	3/4	1	16	5 3/8	45°	1 1/4	2 3/8	6 3/4	4	2														16.0
4	48		2 1/4	3/4	1	16	5 3/8	45°	1 1/4	2 3/8	6 3/4	4	2														16.0
5	48		2 1/4	3/4	1	16	5 3/8	45°	1 1/4	2 3/8	6 3/4	4	2														16.0

STANDARD SIGN
W04-2

WISCONSIN DEPT OF TRANSPORTATION

APPROVED Matthew R Rauch
for State Traffic Engineer

DATE 11/20/13 PLATE W04-2.1

PROJECT NO:

SHEET NO: E

Notes

Wisconsin Department of Transportation

Dedicated people creating transportation solutions through innovation and exceptional service.

http://www.dot.wisconsin.gov