RHI

PROJECT ID: 9333-00-70

WITH: N/A

COUNTY: FOREST

FEBRUARY 2012

ORDER OF SHEETS

TOTAL SHEETS = 114

STATE OF WISCONSIN
DEPARTMENT OF TRANSPORTATION

PLAN OF PROPOSED IMPROVEMENT

ARGONNE-CAVOUR

PESHTIGO RIVER ROAD TO CTH O

CTH G

FOREST COUNTY

STATE PROJECT NUMBER
9333-00-70

STATE PROJECT	FEDERAL PROJECT	
	PROJECT	CONTRACT
9333-00-70	WISC 2019128	1

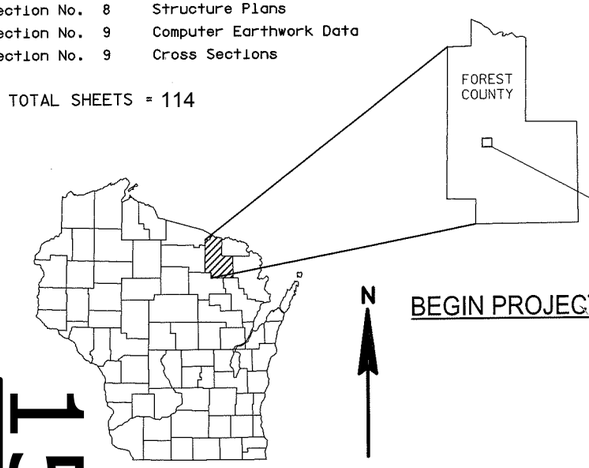

15

N

BEGIN PROJECT 9333-00-70
STA 225+00
Y = 602780.615
X = 847477.540

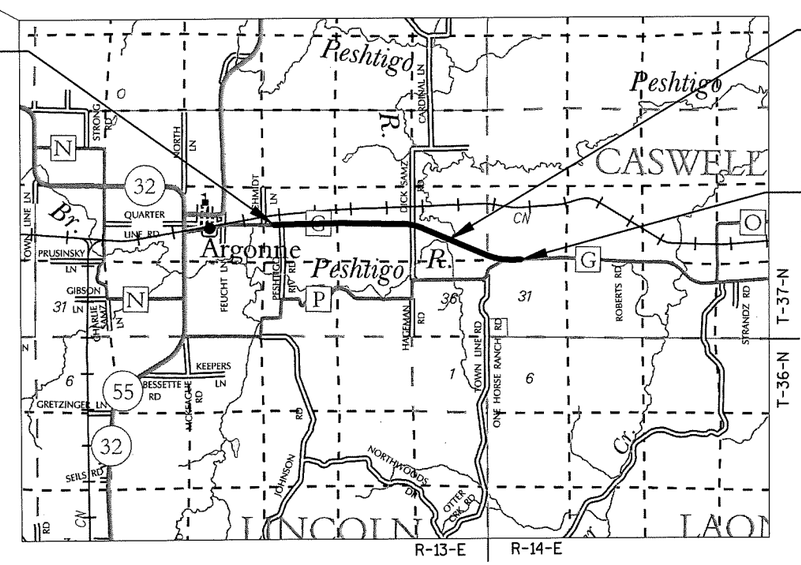

B-21-30

END PROJECT
STA 401+50
Y = 600293.915
X = 864653.118

DESIGN DESIGNATION

A.A.D.T.	(2019)	=	760
A.A.D.T.	(2039)	=	870
D.H.V.		=	18.3
D.D.		=	61/39
T.		=	19.5%
DESIGN SPEED		=	60 MPH
ESALS		=	130,000

CONVENTIONAL SYMBOLS

PLAN
- CORPORATE LIMITS
- PROPERTY LINE
- LOT LINE
- LIMITED HIGHWAY EASEMENT
- EXISTING RIGHT OF WAY
- PROPOSED OR NEW R/W LINE
- SLOPE INTERCEPT
- REFERENCE LINE
- EXISTING CULVERT
- PROPOSED CULVERT (Box or Pipe)
- COMBUSTIBLE FLUIDS — CAUTION
- MARSH AREA
- WOODED OR SHRUB AREA

PROFILE
- GRADE LINE
- ORIGINAL GROUND
- MARSH OR ROCK PROFILE (To be noted as such) — ROCK
- SPECIAL DITCH — LABEL
- GRADE ELEVATION — 95.36
- CULVERT (Profile View)

UTILITIES
- ELECTRIC — E
- FIBER OPTIC — FO
- GAS — G
- SANITARY SEWER — SAN
- STORM SEWER — SS
- TELEPHONE — T
- WATER — W
- UTILITY PEDESTAL
- POWER POLE
- TELEPHONE POLE

LAYOUT
SCALE 0 — 2 MI

TOTAL NET LENGTH OF CENTERLINE = 3.343 MILES

HORIZONTAL POSITIONS SHOWN ON THIS PLAN ARE WISCONSIN COUNTY COORDINATES, FOREST COUNTY, NAD83 (2011), IN U.S. SURVEY FEET. VALUES ARE GRID COORDINATES, GRID BEARINGS, AND GRID DISTANCES. GRID DISTANCES MAY BE USED AS GROUND DISTANCES.

ACCEPTED FOR
COUNTY OF FOREST

7-2-2018 (Date) — Commissioner Bill Anderson (Signature & Title of Official)

ORIGINAL PLAN PREPARED BY

BECHER HOPPE
330 Fourth Street • PO Box 8000
Wausau, WI • 54402-8000
715.845.8000 • Fax 715.845.8008
becherhoppe.com

WISCONSIN PROFESSIONAL ENGINEER
MICHAEL V. KOWAL
E-36685
WAUSAU, WI

7-1-18 (Date) (Signature)

STATE OF WISCONSIN
DEPARTMENT OF TRANSPORTATION

PREPARED BY

Surveyor	BECHER HOPPE
Designer	BECHER HOPPE
Management Consultant	CEDAR CORPORATION

APPROVED FOR THE DEPARTMENT
DATE: 7-27-2018 (Management Consultant Signature)

E

GENERAL NOTES

BEARINGS SHOWN ON THE PLAN ARE TRUE BEARINGS TO THE NEAREST SECOND.

PURSUANT TO CHAPTER 59 OF THE WISCONSIN STATUTES. THE CONTRACTOR SHALL CAREFULLY MAKE A SEARCH FOR EVIDENCE OF A LANDMARK IN ALL AREAS WHERE SUCH A LANDMARK MAY EXIST.

NO TREES OR SHRUBS ARE TO BE REMOVED WITHOUT APPROVAL OF THE ENGINEER.

THE LOCATIONS OF EXISTING AND PROPOSED UTILITY INSTALLATIONS AS SHOWN ON THE PLANS ARE APPROXIMATE. THERE MAY BE OTHER UTILITY INSTALLATIONS WITHIN THE PROJECT AREA THAT ARE NOT SHOWN. THE CONTRACTOR SHALL COORDINATE HIS CONSTRUCTION ACTIVITIES WITH A CALL TO DIGGERS HOTLINE AND/OR A DIRECT CALL TO THE UTILITIES THAT HAVE FACILITIES IN THE AREA. NOT ALL UTILITIES ARE MEMBERS OF DIGGERS HOTLINE.

HMA PAVEMENTS ESTIMATED BY USING 115 LB/SY/IN.

TACK COAT ESTIMATED BY USING AN APPLICATION RATE OF 0.07 GAL/SY.

WETLANDS EXIST IN THE PROJECT AREA AND THE CONTRACTOR SHALL NOT DISTURB OUTSIDE OF THE SLOPE INTERCEPT IN THESE AREAS.

SECTION 2 ORDER

AS-BUILT REFERENCE (YEAR)*

PROJECT: WI 9333-6-70,71 (1970)
PROJECT: WI 9333-7-70 (UNKNOWN)
PROJECT: WI 9333-3-70 (UNKNOWN)

*APPROVAL YEAR (NOT CONSTRUCTION)

UTILITIES

COMMUNICATION
FRONTIER COMMUNICATIONS OF WI LLC
521 4TH ST
WAUSAU, WI 54403
CALVIN KLADE
MOBILE: (715) 573-2110
calvin.klade@ftr.com

COMMUNICATION
CHARTER COMMUNICATIONS
821 LINCOLN ST
RHINELANDER, WI 54501
NAME MARK OLEJNICZAK
PHONE: (715) 420-0301
mark.olejniczak@charter.com

ELECTRIC
WISCONSIN PUBLIC SERVICE CORPORATION
PO BOX 1166
WAUSAU, WI 54402
DON LUTZOW
PHONE: (715) 848-7487
MOBILE: (715) 493-7802
donald.lutzow@wisconsinpublicservice.com

GAS
WISCONSIN PUBLIC SERVICE CORPORATION
2027 NAVAJO ST
RHINELANDER, WI 54501
CHRIS GILMAN
PHONE: (715) 369-7133
MOBILE: (715) 490-4153
CRGilman@wisconsinpublicservice.com

DNR CONTACT

WISCONSIN DEPARTMENT OF NATURAL RESOURCES
107 SUTLIFF AVE
RHINELANDER, WI 54501
JONATHAN SIMONSEN
PHONE: (715) 365-8916
Jonathan.Simsonsen@wisconsin.gov

FOREST COUNTY HIGHWAY DEPARTMENT

FOREST COUNTY HIGHWAY DEPARTMENT
5350 COUNTY HWY W
CRANDON, WI 54520
BILL ANDERSON
PHONE: (715) 478-3516
banderson@co.forest.wi.us

DESIGN CONSULTANT CONTACT

BECHER HOPPE ASSOCIATES, INC.
330 FOURTH ST
PO BOX 8000
WAUSAU, WI 54402-8000
MICHAEL KOWAL, PE
PHONE: (715) 845-0409
mkowal@becherhoppe.com

RUNOFF COEFFICIENT TABLE

	HYDROLOGIC SOIL GROUP											
	A			B			C			D		
	SLOPE RANGE (PERCENT)			SLOPE RANGE (PERCENT)			SLOPE RANGE (PERCENT)			SLOPE RANGE (PERCENT)		
LAND USE:	0-2	2-6	6 & OVER	0-2	2-6	6 & OVER	0-2	2-6	6 & OVER	0-2	2-6	6 & OVER
ROW CROPS	.08 .22	.16 .30	.22 .38	.12 .26	.20 .34	.27 .44	.15 .30	.24 .37	.33 .50	.19 .34	.28 .41	.38 .56
MEDIAN STRIP-TURF	.19 .24	.20 .26	.24 .30	.19 .25	.22 .28	.26 .33	.20 .26	.23 .30	.30 .37	.20 .27	.25 .32	.30 .40
SIDE SLOPE-TURF			.25 .32			.27 .34			.28 .36			.30 .38
PAVEMENT:												
ASPHALT	.70 - .95											
CONCRETE	.80 - .95											
BRICK	.70 - .80											
DRIVES, WALKS	.75 - .85											
ROOFS	.75 - .95											
GRAVEL ROADS, SHOULDERS	.40 - .60											

TOTAL PROJECT AREA = 22.32 ACRES
TOTAL AREA EXPECTED TO BE DISTURBED BY CONSTRUCTION ACTIVITIES = 0.71 ACRES

SOIL BORING LOG

BORING NO.	STATION	OFFSET FROM C/L	ASPHALT DEPTH IN INCHES	UNDERLYING MATERIAL
B-01	241+52.11	2' LT	5"	7" BASE COURSE/SUBBASE
B-02	273+00.00	6' RT	6"	6" BASE COURSE/SUBBASE
B-03	318+85.07	4' RT	6"	8" BASE COURSE/SUBBASE
B-04	336+00.00	8' LT	5"	5" BASE COURSE/SUBBASE
B-05	348+46.51	9' RT	6"	6" BASE COURSE/SUBBASE
B-06	349+58.99	6' LT	5.5"	6" BASE COURSE/SUBBASE
B-07	344+00.00	4' LT	6"	6" BASE COURSE/SUBBASE
B-08	387+25.84	18' RT	0"	10" BASE COURSE/SUBBASE
B-09	101+00.46	6' LT	5.5"	7" BASE COURSE/SUBBASE

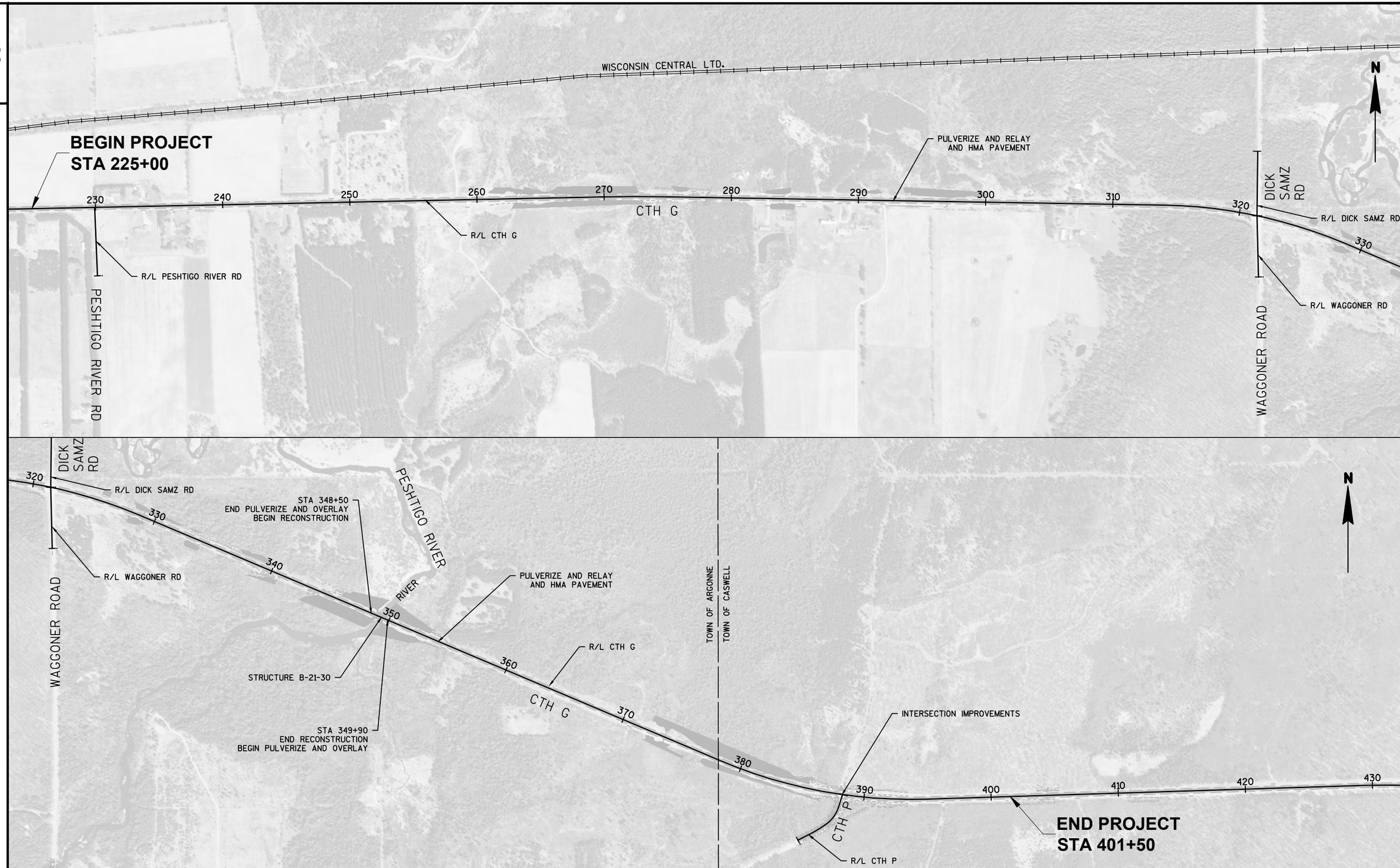

PROJECT NO:9333-00-70	HWY:CTH G	COUNTY:FOREST	PROJECT OVERVIEW	SHEET 3	E

FILE NAME : P:\2015\2015.130 - WISDOT NC CTH G FOREST COUNTY\93330070\SHEETSPLAN\020201-PO.DWG PLOT DATE : 6/10/2010 8:23 AM PLOT BY : MARK W. OIE PLOT NAME : ----------

WISDOT/CADDS SHEET 42

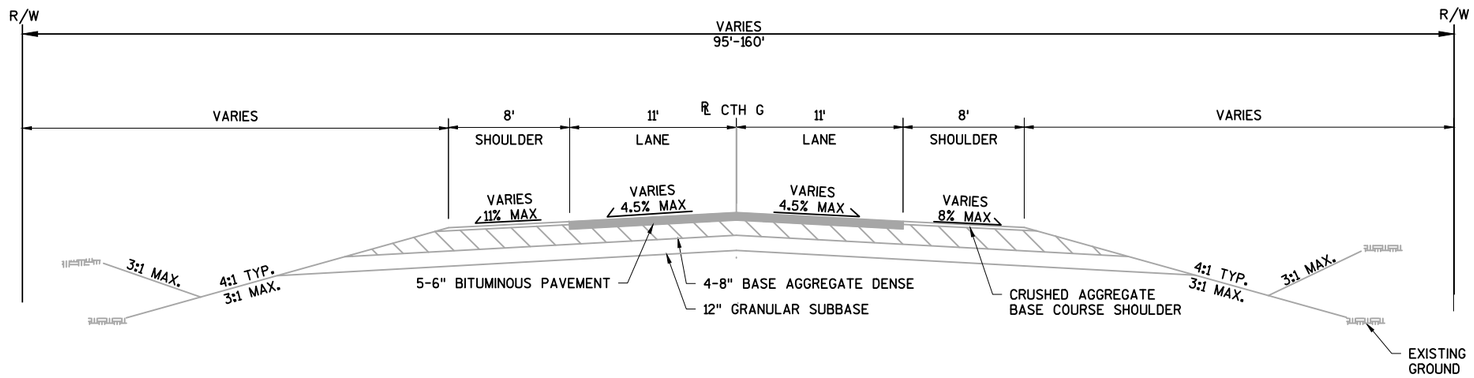

EXISTING TYPICAL SECTION - CTH G

STATION 225+00 – STATION 401+50

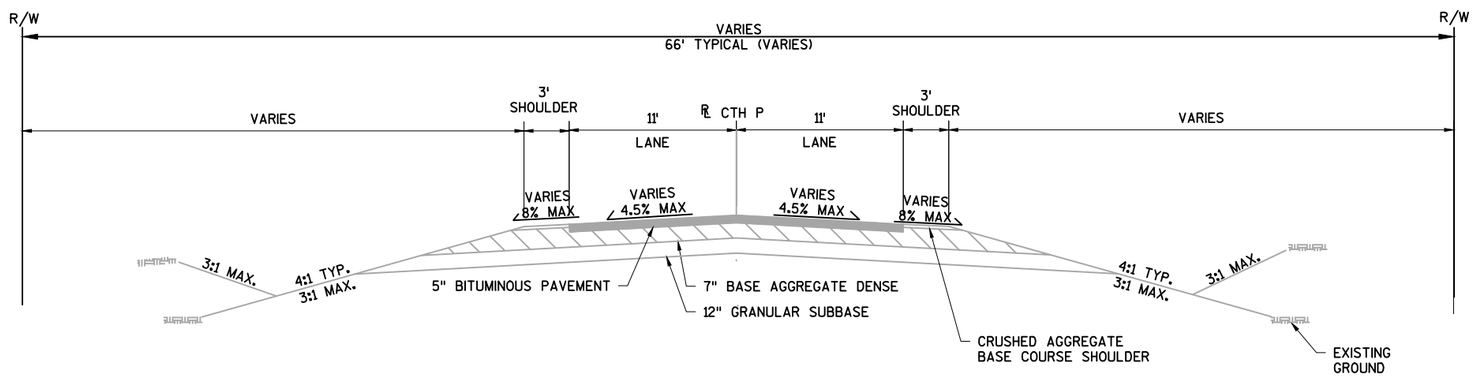

EXISTING TYPICAL SECTION - CTH P

STATION 100+14– STATION 101+43

PROJECT NO:9333-00-70	HWY:CTH G	COUNTY:FOREST	TYPICAL SECTIONS	SHEET 4	E

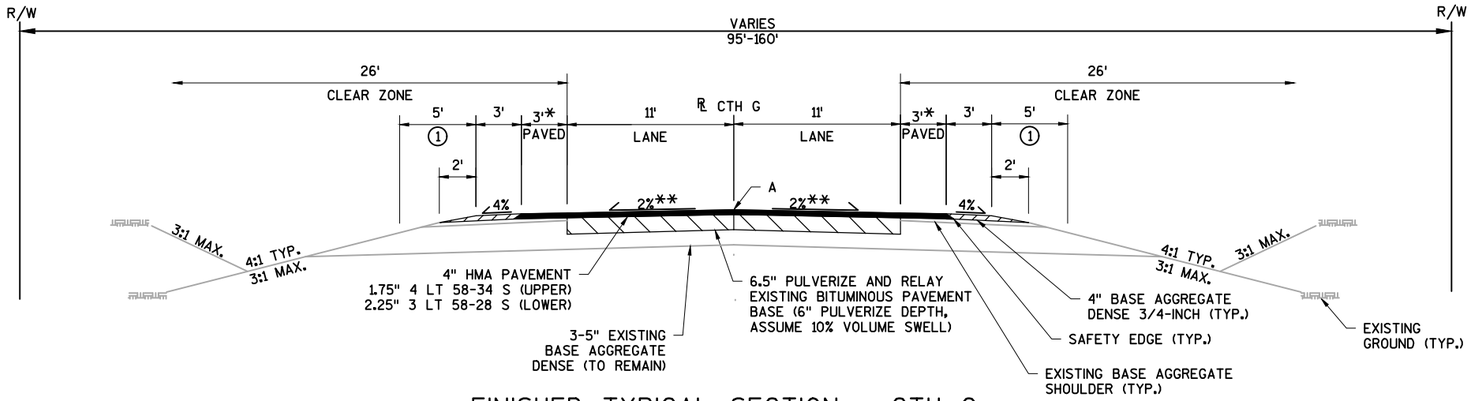

FINISHED TYPICAL SECTION - CTH G

STATION 225+00 – STATION 348+50
STATION 349+90 – STATION 401+50

NOTE A:
PROPOSED ELEVATION 4.5" HIGHER THAN EXISTING.

* LIMITS OF PREPARE FOUNDATION FOR ASPHALTIC SURFACE.

** SEE SUPERELEVATION TABLES.

1 SEEDING MIXTURE NO. 20 & FERTILIZER TYPE B

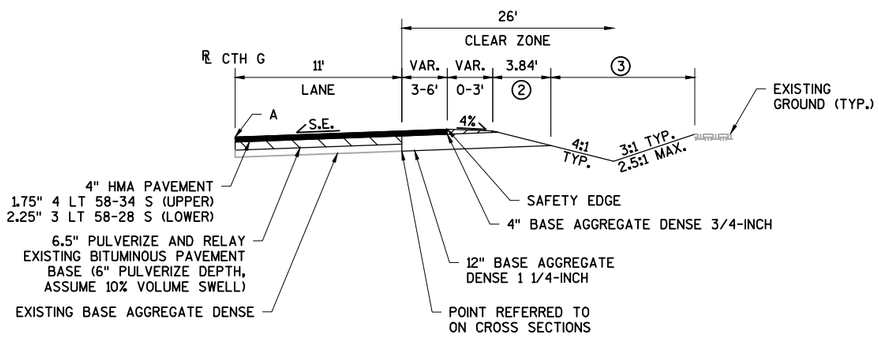

HALF FINISHED TYPICAL SHOULDER TAPER - CTH G

STATION 386+95 – STATION 389+14 RT

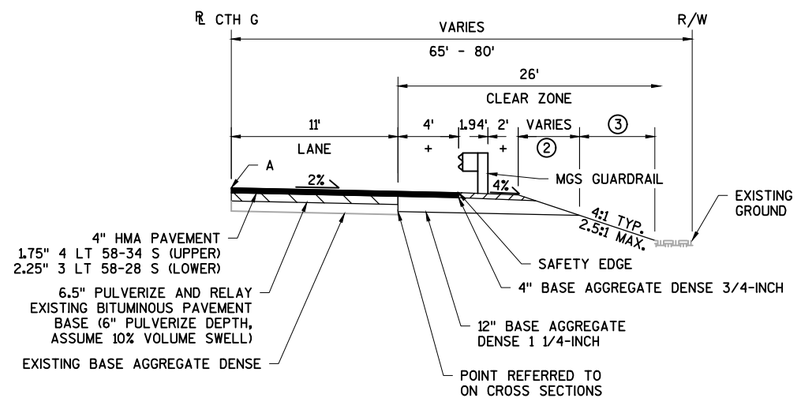

HALF FINISHED TYPICAL BEAMGUARD SECTION - CTH G

STATION 346+03 – STATION 348+50 RT
STATION 346+65 – STATION 348+50 LT
STATION 349+90 – STATION 351+75 RT
STATION 349+90 – STATION 352+25 LT

NOTE A:
PROPOSED ELEVATION 4.5" HIGHER THAN EXISTING.

+ WIDTH VARIES AT EAT LOCATIONS. SEE CROSS SECTIONS.

2 SEEDING MIXTURE NO. 20, FERTILIZER TYPE B, & EROSION MAT OR MULCHING

3 SALVAGED TOPSOIL, EROSION MAT OR MULCHING, FERTILIZER TYPE B, & SEEDING MIXTURE NO. 20

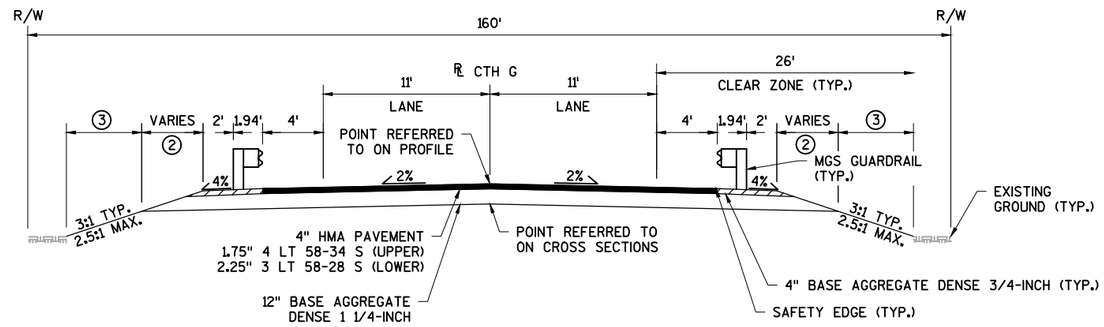

FINISHED TYPICAL SECTION - CTH G

STATION 348+50 – STATION 349+00
STATION 349+40 – STATION 349+90

② SEEDING MIXTURE NO. 20, FERTILIZER TYPE B, & EROSION MAT OR MULCHING

③ SALVAGED TOPSOIL, EROSION MAT OR MULCHING, FERTILIZER TYPE B, & SEEDING MIXTURE NO. 20

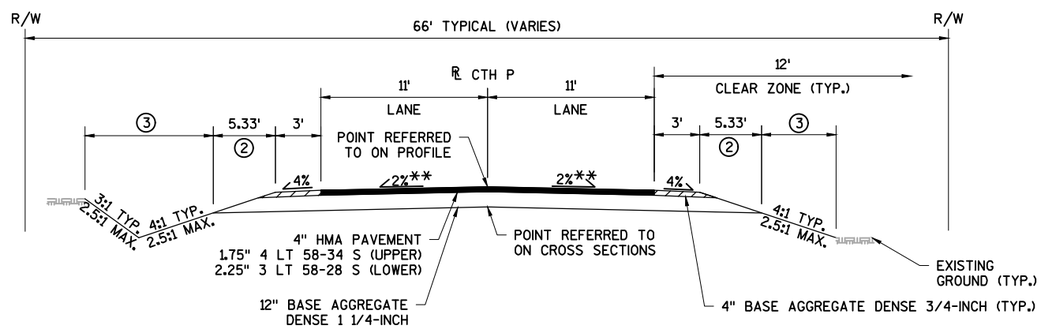

FINISHED TYPICAL SECTION - CTH P

STATION 100+14 – STATION 101+43

** VARIES. SEE CROSS SECTIONS.

② SEEDING MIXTURE NO. 20, FERTILIZER TYPE B, & EROSION MAT OR MULCHING

③ SALVAGED TOPSOIL, EROSION MAT OR MULCHING, FERTILIZER TYPE B, & SEEDING MIXTURE NO. 20

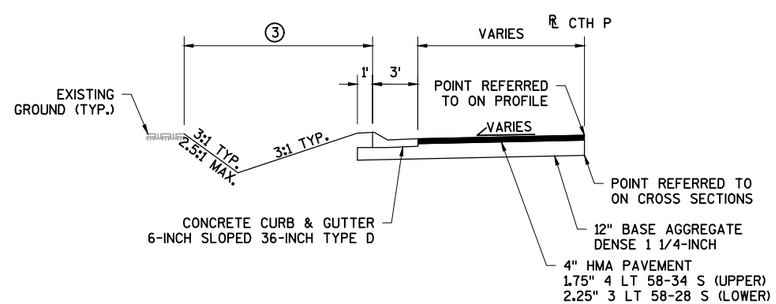

HALF FINISHED CONCRETE CURB & GUTTER SECTION - CTH P

STATION 100+17 – STATION 100+70

③ SALVAGED TOPSOIL, EROSION MAT OR MULCHING, FERTILIZER TYPE B, & SEEDING MIXTURE NO. 20

SUPER ELEVATION TRANSITION EVENT POINTS		RATE			
LOCATION	STATION	LEFT OF CROWN LINE		RIGHT OF CROWN LINE	
		LEFT SHOULDER	LEFT LANE	RIGHT LANE	RIGHT SHOULDER
CURVE 01					
(OUTSIDE CONSTRUCTION LIMITS)					
CURVE 02					
NORMAL CROWN (N.C.)					
CURVE 03					
END NORMAL CROWN	312+82.12	-4.00%	-2.00%	-2.00%	-4.00%
LEVEL CROWN	313+36.12	-4.00%	0.00%	-2.00%	-4.00%
REVERSE CROWN	313+90.12	-4.00%	2.00%	-2.00%	-4.00%
BEGIN FULL SUPER	314+35.12	-4.00%	3.70%	-3.70%	-4.00%
END FULL SUPER	328+31.84	-4.00%	3.70%	-3.70%	-4.00%
REVERSE CROWN	328+76.84	-4.00%	2.00%	-2.00%	-4.00%
LEVEL CROWN	329+30.84	-4.00%	0.00%	-2.00%	-4.00%
BEGIN NORMAL CROWN	329+84.84	-4.00%	-2.00%	-2.00%	-4.00%
CURVE 04					
END NORMAL CROWN	377+18.51	-4.00%	-2.00%	-2.00%	-4.00%
LEVEL CROWN	377+72.51	-4.00%	-2.00%	0.00%	-4.00%
REVERSE CROWN	378+26.51	-4.00%	-2.00%	2.00%	-4.00%
BEGIN FULL SUPER	378+71.51	-4.00%	-3.70%	3.70%	-4.00%
END FULL SUPER	394+50.68	-4.00%	-3.70%	3.70%	-4.00%
REVERSE CROWN	394+95.68	-4.00%	-2.00%	2.00%	-4.00%
LEVEL CROWN	395+49.68	-4.00%	-2.00%	0.00%	-4.00%
BEGIN NORMAL CROWN	396+03.68	-4.00%	-2.00%	-2.00%	-4.00%
CURVE 05 (CTH P)					
LEVEL CROWN	100+50.90	-4.00%	0.00%	-2.00%	-4.00%
REVERSE CROWN	100+84.90	-4.00%	2.00%	-2.00%	-4.00%
LOW SHOULDER MATCH	101+18.90	-4.00%	4.00%	-4.00%	-4.00%
BEGIN FULL SUPER	101+32.90	-4.00%	4.80%	-4.80%	-4.80%
END FULL SUPER	102+44.75	-4.00%	4.80%	-4.80%	-4.80%
LOW SHOULDER MATCH	102+58.75	-4.00%	4.00%	-4.00%	-4.00%
REVERSE CROWN	102+92.75	-4.00%	2.00%	-2.00%	-4.00%
LEVEL CROWN	103+26.75	-4.00%	0.00%	-2.00%	-4.00%
BEGIN NORMAL CROWN	103+60.75	-4.00%	-2.00%	-2.00%	-4.00%
CURVE 06					
(OUTSIDE CONSTRUCTION LIMITS)					

2

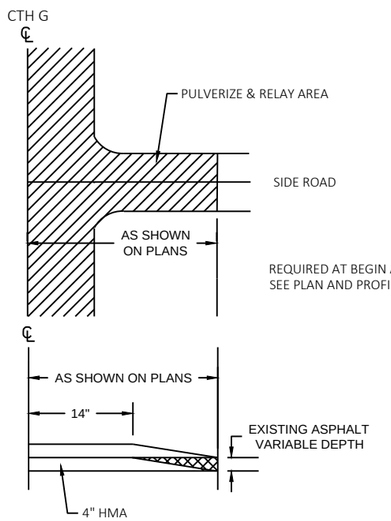

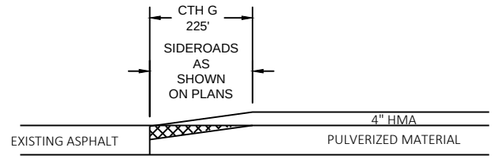

BUTT JOINT

REQUIRED AT BEGIN AND END PAVING LOCATIONS.
SEE PLAN AND PROFILE

PAID FOR AS REMOVING ASPHALTIC SURFACE BUTT JOINTS

REMOVE MATERIAL UNDER ITEM 'REMOVING ASPHALT SURFACE, BUTT JOINTS' MATERIAL SHALL NOT BE REMOVED UNDER THIS ITEM UNTIL 24 HOURS BEFORE SIDEROAD PAVING.

SIDEROAD PAVEMENT DEPTH SHALL MATCH AT MAINLINE PAVEMENT EDGE AND BE TAPERED TO 3" MINIMUM AT JOINT

PAVEMENT TRANSITION

NOT TO SCALE

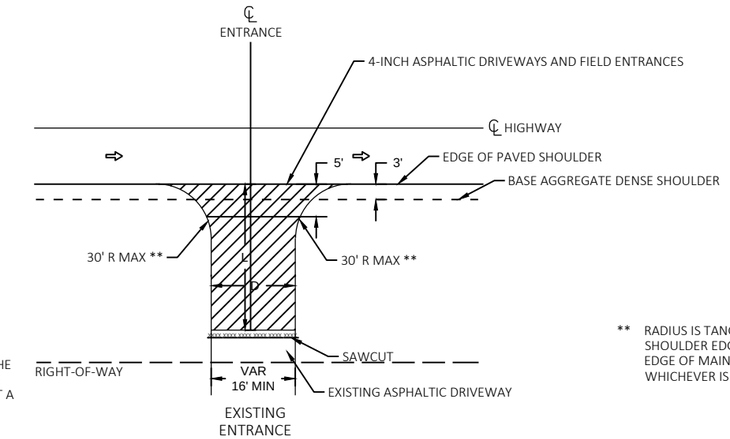

L= VARIABLE, EXACT LENGTH TO BE DETERMINED IN THE FILED BY THE ENGINEER. BLEND BACK ON THE ENTRANCE FAR ENOUGH TO GET A SMOOTH PROFILE.

D= DRIVEWAY WIDTH
D= 20' TYP. (PE'S + FE'S)(16'MIN-24'MAX)

** RADIUS IS TANGENT AT PAVED SHOULDER EDGE OR 5' MAX OFF EDGE OF MAIN LINE PAVEMENT, WHICHEVER IS LESS.

ASPHALTIC DRIVEWAY INTERSECTION DETAIL (PE&FE)

NOT TO SCALE

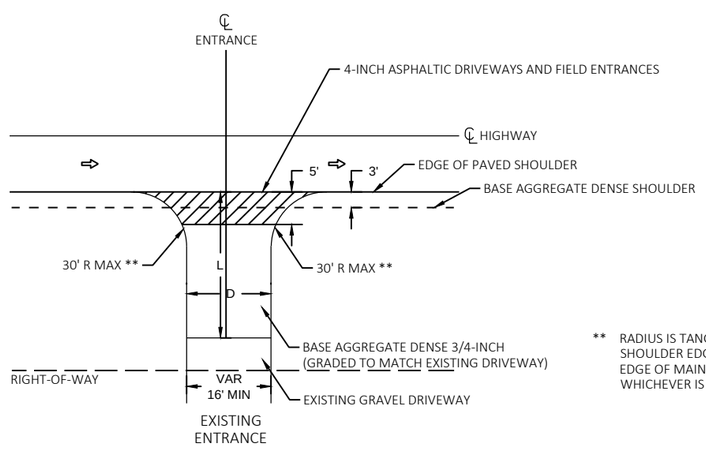

L= VARIABLE, EXACT LENGTH TO BE DETERMINED IN THE FILED BY THE ENGINEER. BLEND BACK ON THE ENTRANCE FAR ENOUGH TO GET A SMOOTH PROFILE.

D= DRIVEWAY WIDTH
D= 20' TYP (PE'S + FE'S)(16'MIN-24'MAX)

** RADIUS IS TANGENT AT PAVED SHOULDER EDGE OR 5' MAX OFF EDGE OF MAIN LINE PAVEMENT, WHICHEVER IS LESS.

GRAVEL DRIVEWAY INTERSECTION DETAIL (PE&FE)

NOT TO SCALE

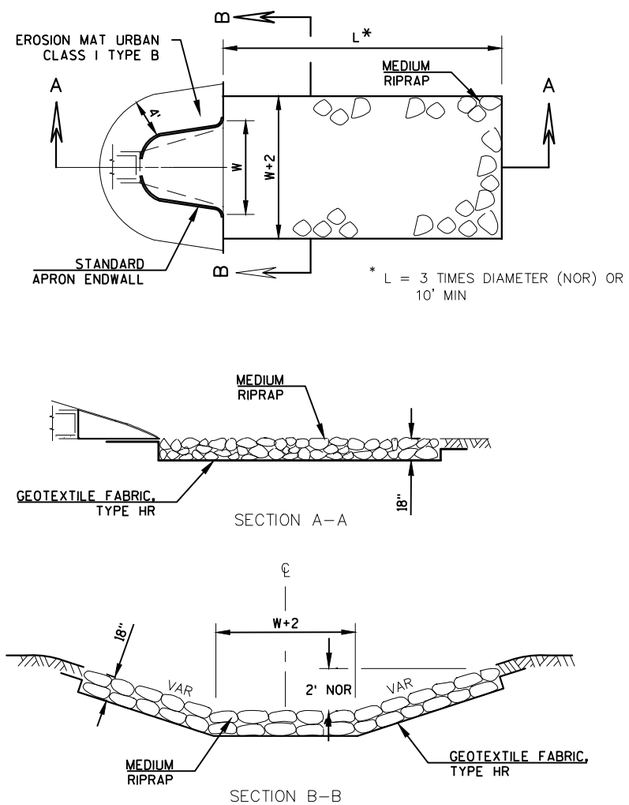

E-MAT, MEDIUM RIPRAP AND GEOTEXTILE FABRIC

DETAIL AT APRON ENDWALLS AT DISCHARGE END

STA. 100+35 RT

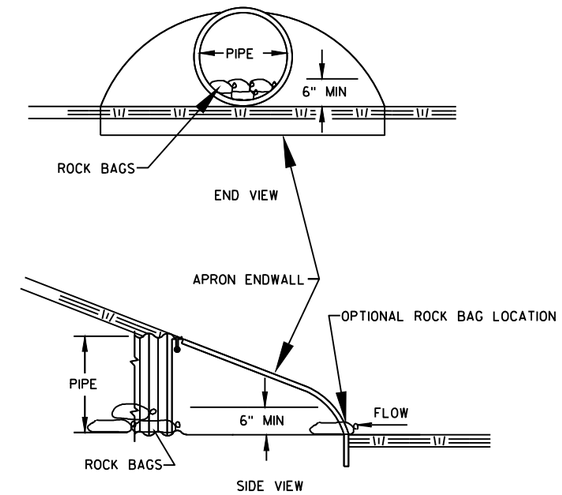

CULVERT PIPE CHECKS

STA. 100+35 LT

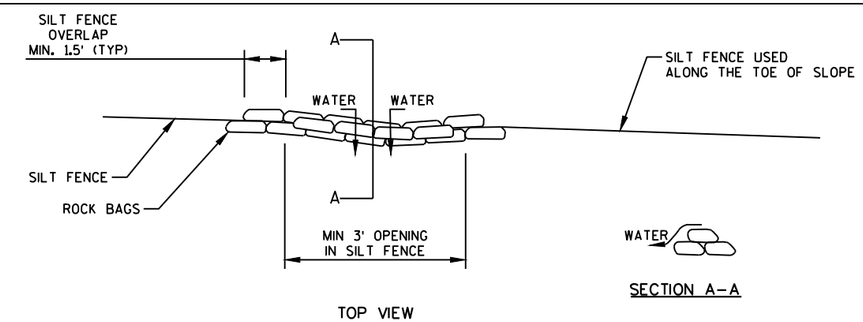

ROCK BAGS USED FOR SILT FENCE RELIEF

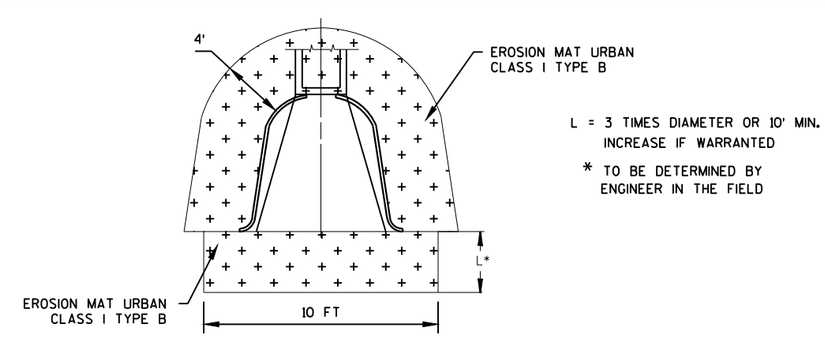

EROSION CONTROL AT PIPE ENDS

STA. 100+35 LT

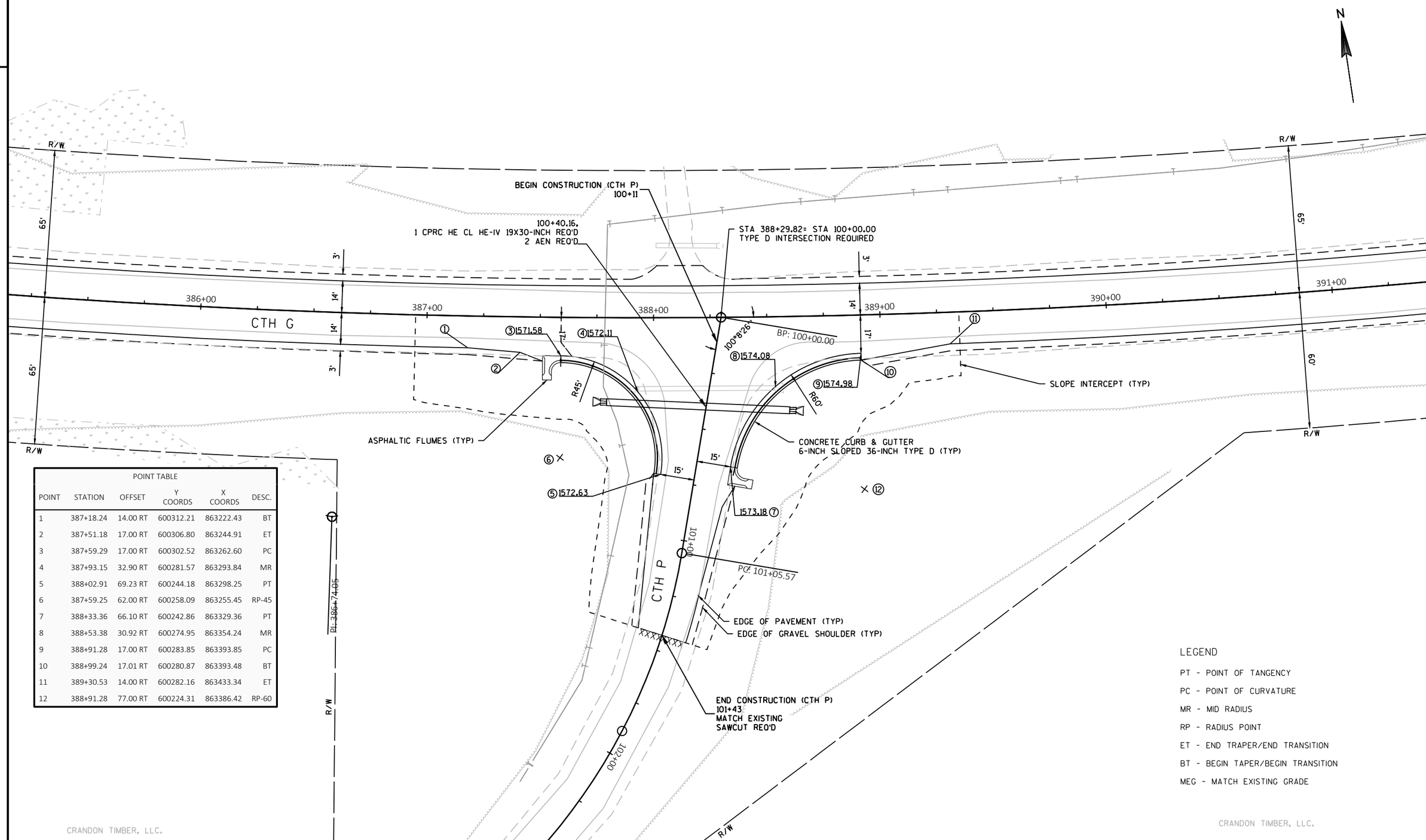

POINT TABLE

POINT	STATION	OFFSET	Y COORDS	X COORDS	DESC.
1	387+18.24	14.00 RT	600312.21	863222.43	BT
2	387+51.18	17.00 RT	600306.80	863244.91	ET
3	387+59.29	17.00 RT	600302.52	863262.60	PC
4	387+93.15	32.90 RT	600281.57	863293.84	MR
5	388+02.91	69.23 RT	600244.18	863298.25	PT
6	387+59.25	62.00 RT	600258.09	863255.45	RP-45
7	388+33.36	66.10 RT	600242.86	863329.36	PT
8	388+53.38	30.92 RT	600274.95	863354.24	MR
9	388+91.28	17.00 RT	600283.85	863393.85	PC
10	388+99.24	17.01 RT	600280.87	863393.48	BT
11	389+30.53	14.00 RT	600282.16	863433.34	ET
12	388+91.28	77.00 RT	600224.31	863386.42	RP-60

CRANDON TIMBER, LLC.

PROJECT NO: 9333-00-70	HWY: CTH G	COUNTY: FOREST	INTERSECTION DETAILS	SHEET 10	E

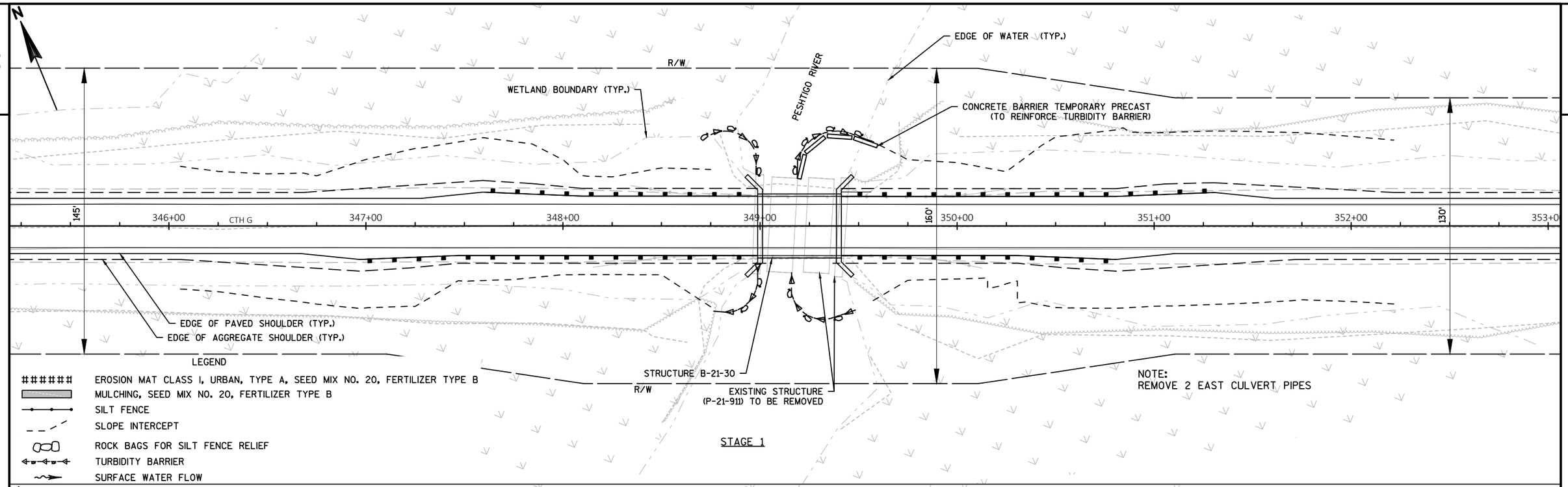

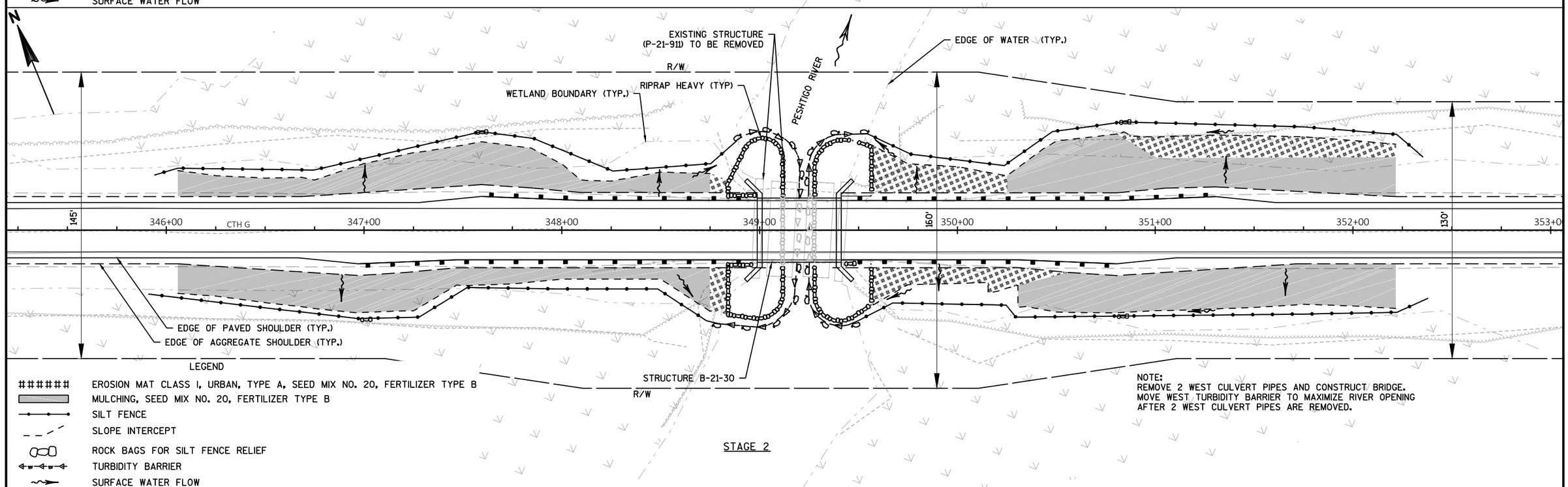

PROJECT NO: 9333-00-70	HWY: CTH G	COUNTY: FOREST	EROSION CONTROL PLAN: PESHTIGO RIVER CROSSING	SHEET 11	E

FILE NAME : P:\2015\2015.130 - WISDOT NC CTH G FOREST COUNTY\93330070\SHEETSPLAN\022001-EC.DWG
LAYOUT NAME - 022001
PLOT DATE : 11/21/2018 9:44 AM
PLOT BY : DANIEL J. GERLING
PLOT NAME :
PLOT SCALE : 1 IN:50 FT
WISDOT/CADDS SHEET 42

2

2

R/W

EDGE OF AGGREGATE SHOULDER (TYP.)

EDGE OF PAVED SHOULDER (TYP.)

385+00 386+00 387+00 388+00 CTH G 389+00 390+00 391+00 392+00

WETLAND BOUNDARY (TYP.)

R/W

SLOPE INTERCEPT (TYP.)

R/W

CTH P

101+00

ASPHALTIC FLUME (TYP.)

N

R/W

R/W

END CONSTRUCTION
101+43

102+00

LEGEND

######	EROSION MAT CLASS I, URBAN, TYPE A, SEED MIX NO. 20, FERTILIZER TYPE B
	MULCHING, SEED MIX NO. 20, FERTILIZER TYPE B
	SILT FENCE
	SLOPE INTERCEPT
	ROCK BAGS FOR SILT FENCE RELIEF
	TURBIDITY BARRIER
	TEMPORARY DITCH CHECK
	CULVERT PIPE DITCH CHECK
	SURFACE WATER FLOW

PROJECT NO: 9333-00-70	HWY: CTH G	COUNTY: FOREST	EROSION CONTROL PLAN: CTH P	SHEET 12	E

FILE NAME : P:\2015\2015.130 - WISDOT NC CTH G FOREST COUNTY\93330070\SHEETSPLAN\022002-EC.DWG
LAYOUT NAME - 022002

PLOT DATE : 7/18/2018 2:41 PM PLOT BY : MARK W. OIE PLOT NAME : PLOT SCALE : 1 IN:50 FT

WISDOT/CADDS SHEET 42

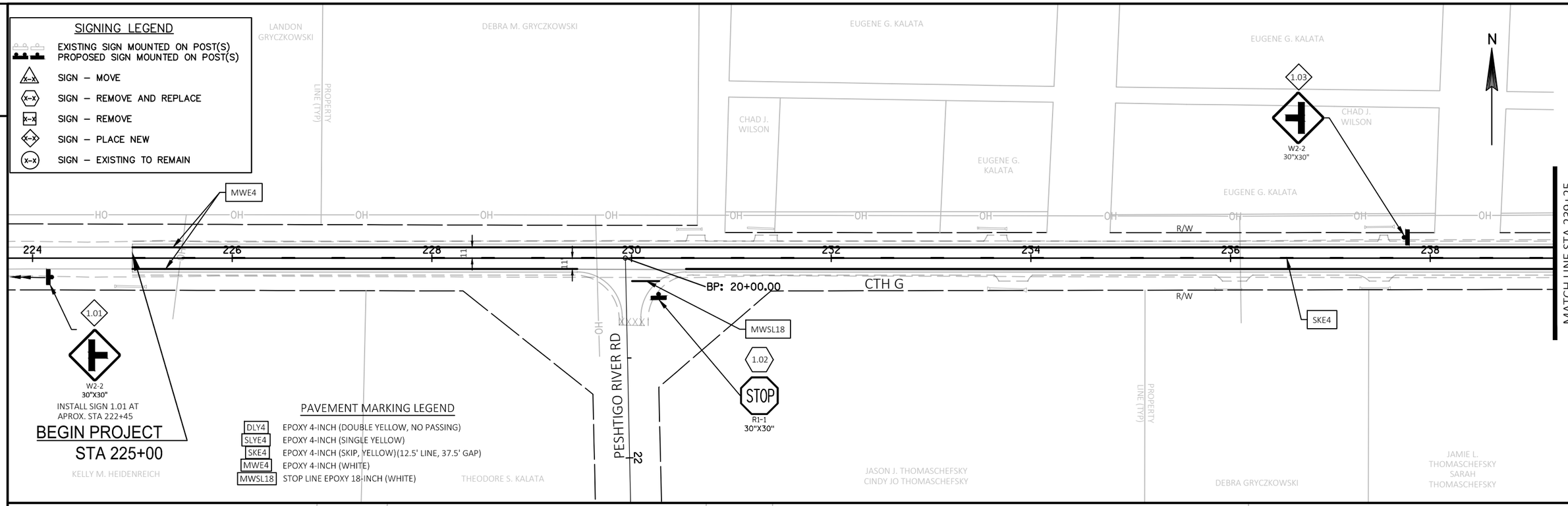

PROJECT NO:9333-00-70	HWY:CTH G	COUNTY:FOREST	PERMANENT SIGNING PLAN & PAVEMENT MARKING	SHEET 13	E

FILE NAME : P:\2015\2015.130 - WISDOT NC CTH G FOREST COUNTY\93330070\SHEETSPLAN\023201-PS.DWG
LAYOUT NAME - 05020 - (22)
PLOT DATE : 7/18/2018 2:44 PM PLOT BY : MARK W. OIE PLOT NAME : PLOT SCALE : **********

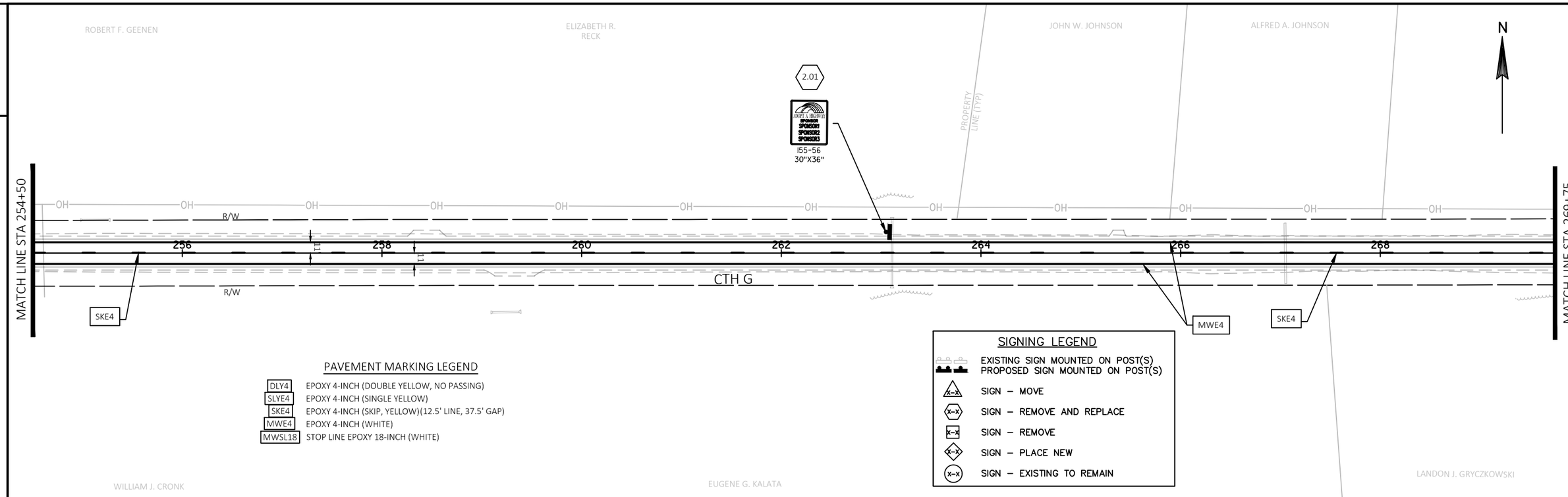

PAVEMENT MARKING LEGEND

DLY4	EPOXY 4-INCH (DOUBLE YELLOW, NO PASSING)
SLYE4	EPOXY 4-INCH (SINGLE YELLOW)
SKE4	EPOXY 4-INCH (SKIP, YELLOW)(12.5' LINE, 37.5' GAP)
MWE4	EPOXY 4-INCH (WHITE)
MWSL18	STOP LINE EPOXY 18-INCH (WHITE)

SIGNING LEGEND

	EXISTING SIGN MOUNTED ON POST(S) PROPOSED SIGN MOUNTED ON POST(S)
X-X	SIGN – MOVE
X-X	SIGN – REMOVE AND REPLACE
X-X	SIGN – REMOVE
X-X	SIGN – PLACE NEW
X-X	SIGN – EXISTING TO REMAIN

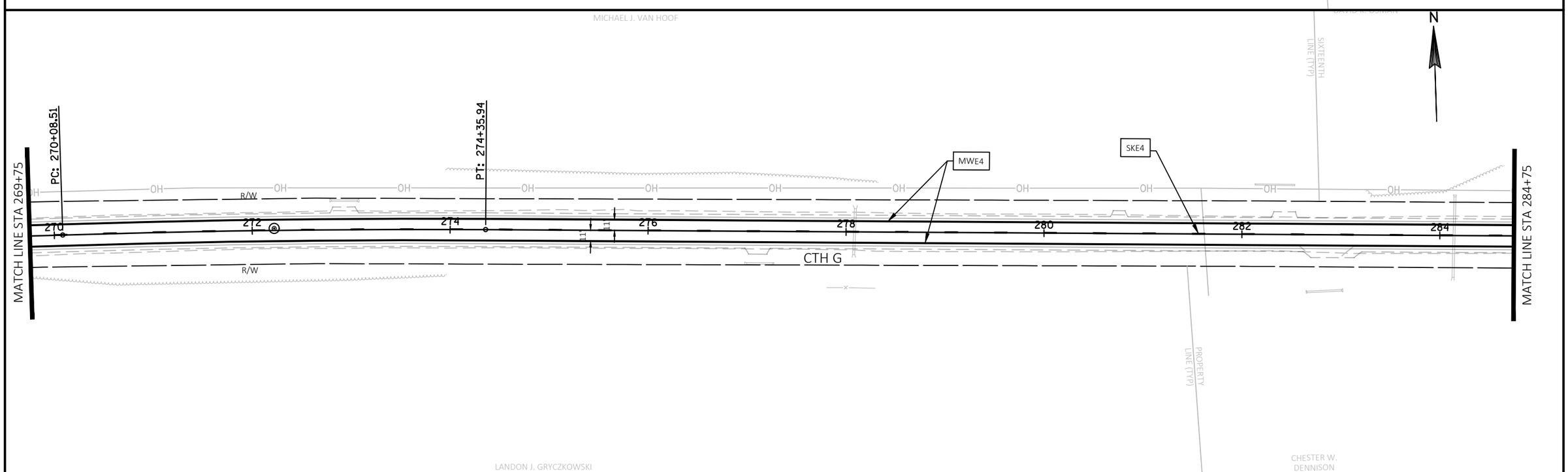

PROJECT NO:9333-00-70	HWY:CTH G	COUNTY:FOREST	PERMANENT SIGNING PLAN & PAVEMENT MARKING	SHEET 14	E

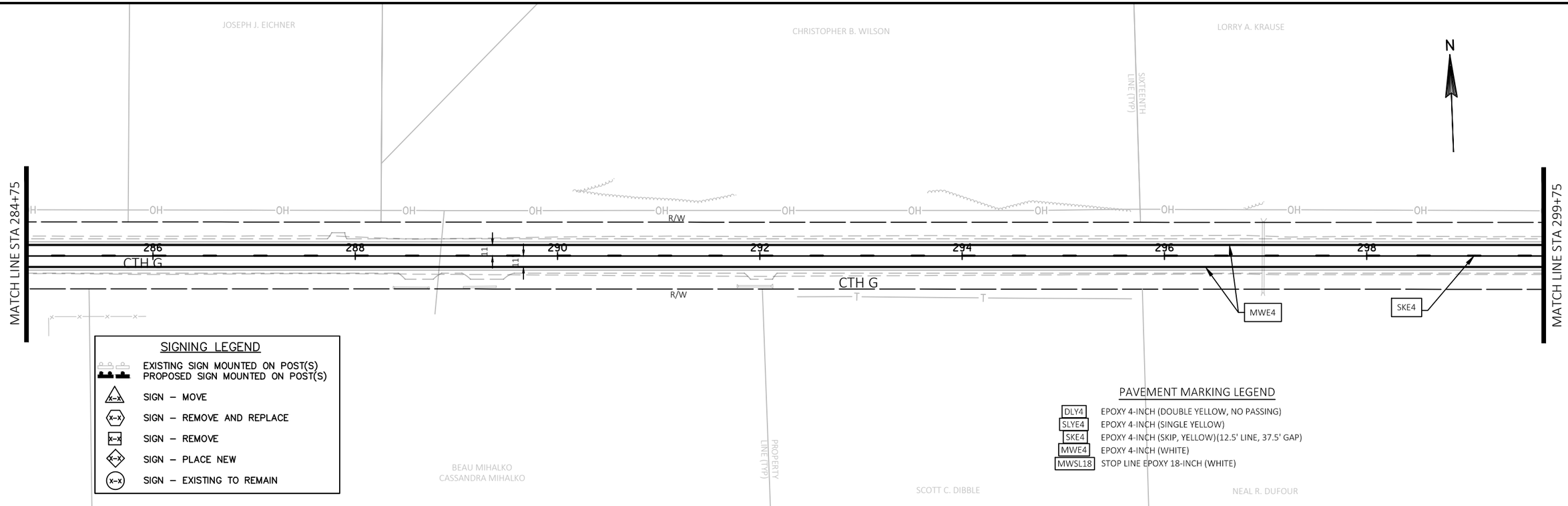
JOSEPH J. EICHNER
CHRISTOPHER B. WILSON
LORRY A. KRAUSE
SIXTEENTH LINE (TYP)
N
MATCH LINE STA 284+75
MATCH LINE STA 299+75
OH
R/W
286
288
290
292
294
296
298
CTH G
MWE4
SKE4
SIGNING LEGEND
EXISTING SIGN MOUNTED ON POST(S)
PROPOSED SIGN MOUNTED ON POST(S)
SIGN – MOVE
SIGN – REMOVE AND REPLACE
SIGN – REMOVE
SIGN – PLACE NEW
SIGN – EXISTING TO REMAIN
PAVEMENT MARKING LEGEND
DLY4 EPOXY 4-INCH (DOUBLE YELLOW, NO PASSING)
SLYE4 EPOXY 4-INCH (SINGLE YELLOW)
SKE4 EPOXY 4-INCH (SKIP, YELLOW)(12.5' LINE, 37.5' GAP)
MWE4 EPOXY 4-INCH (WHITE)
MWSL18 STOP LINE EPOXY 18-INCH (WHITE)
PROPERTY LINE (TYP)
BEAU MIHALKO
CASSANDRA MIHALKO
SCOTT C. DIBBLE
NEAL R. DUFOUR

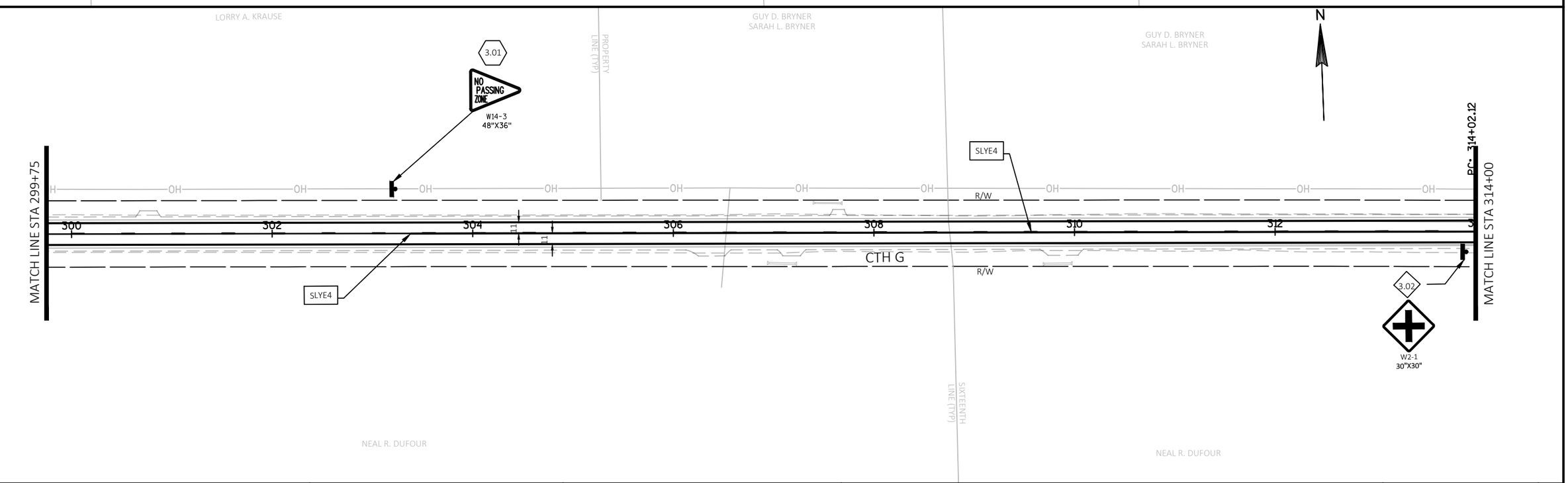
LORRY A. KRAUSE
GUY D. BRYNER
SARAH L. BRYNER
PROPERTY LINE (TYP)
3.01
NO PASSING ZONE
W14-3
48"X36"
N
MATCH LINE STA 299+75
MATCH LINE STA 314+00
PC~ 314+02.12
OH
R/W
300
302
304
306
308
310
312
CTH G
SLYE4
3.02
W2-1
30"X30"
SIXTEENTH LINE (TYP)
NEAL R. DUFOUR

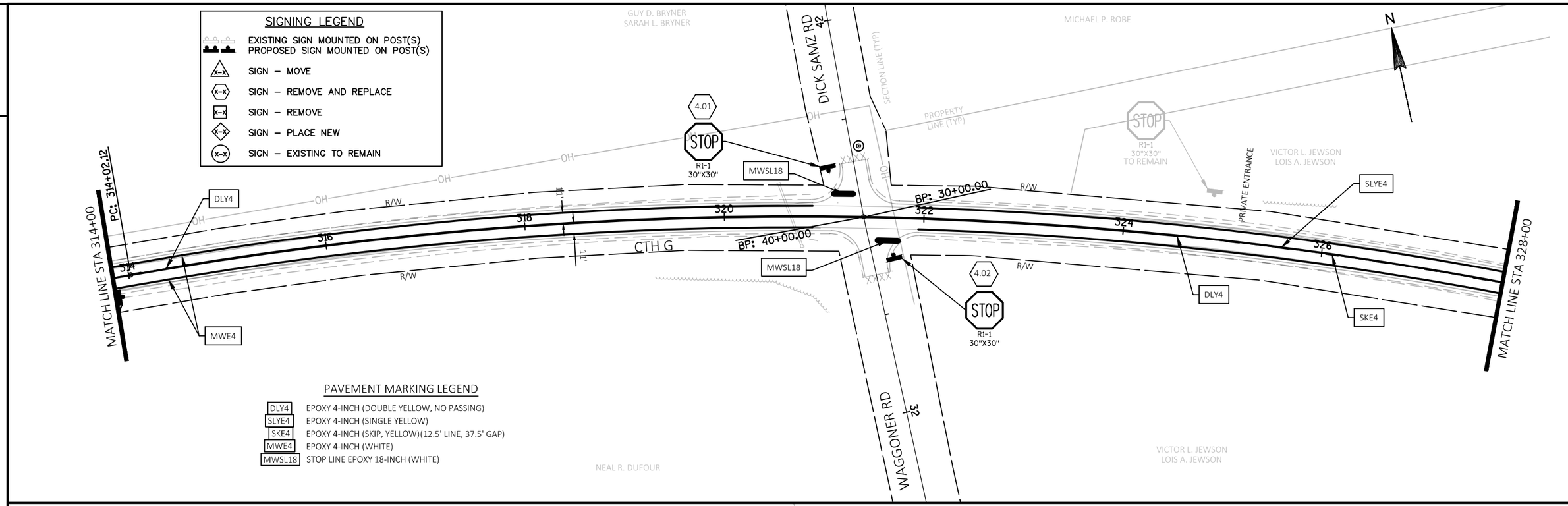

PAVEMENT MARKING LEGEND

DLY4	EPOXY 4-INCH (DOUBLE YELLOW, NO PASSING)
SLYE4	EPOXY 4-INCH (SINGLE YELLOW)
SKE4	EPOXY 4-INCH (SKIP, YELLOW)(12.5' LINE, 37.5' GAP)
MWE4	EPOXY 4-INCH (WHITE)
MWSL18	STOP LINE EPOXY 18-INCH (WHITE)

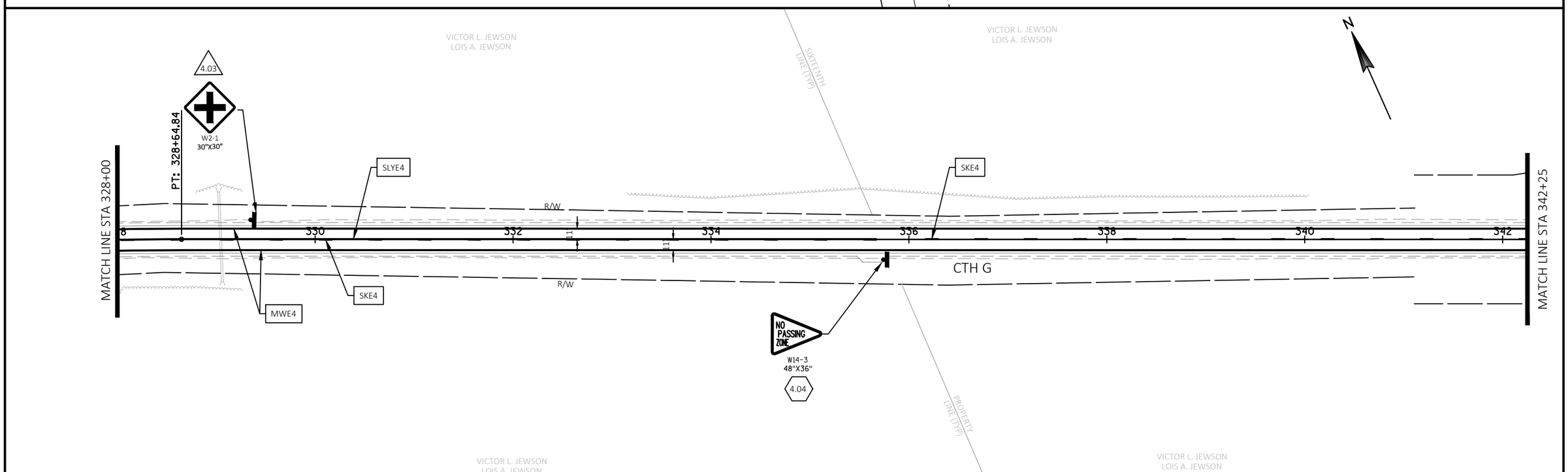

PROJECT NO:9333-00-70	HWY:CTH G	COUNTY:FOREST	PERMANENT SIGNING PLAN & PAVEMENT MARKING	SHEET 16	E

FILE NAME : P:\2015\2015.130 - WISDOT NC CTH G FOREST COUNTY\93330070\SHEETSPLAN\023201-PS.DWG
LAYOUT NAME - 05020 - (22)
PLOT DATE : 7/18/2018 2:45 PM PLOT BY : MARK W. OIE PLOT NAME : PLOT SCALE : **********

SIGNING LEGEND

- EXISTING SIGN MOUNTED ON POST(S)
- PROPOSED SIGN MOUNTED ON POST(S)
- SIGN – MOVE
- SIGN – REMOVE AND REPLACE
- SIGN – REMOVE
- SIGN – PLACE NEW
- SIGN – EXISTING TO REMAIN

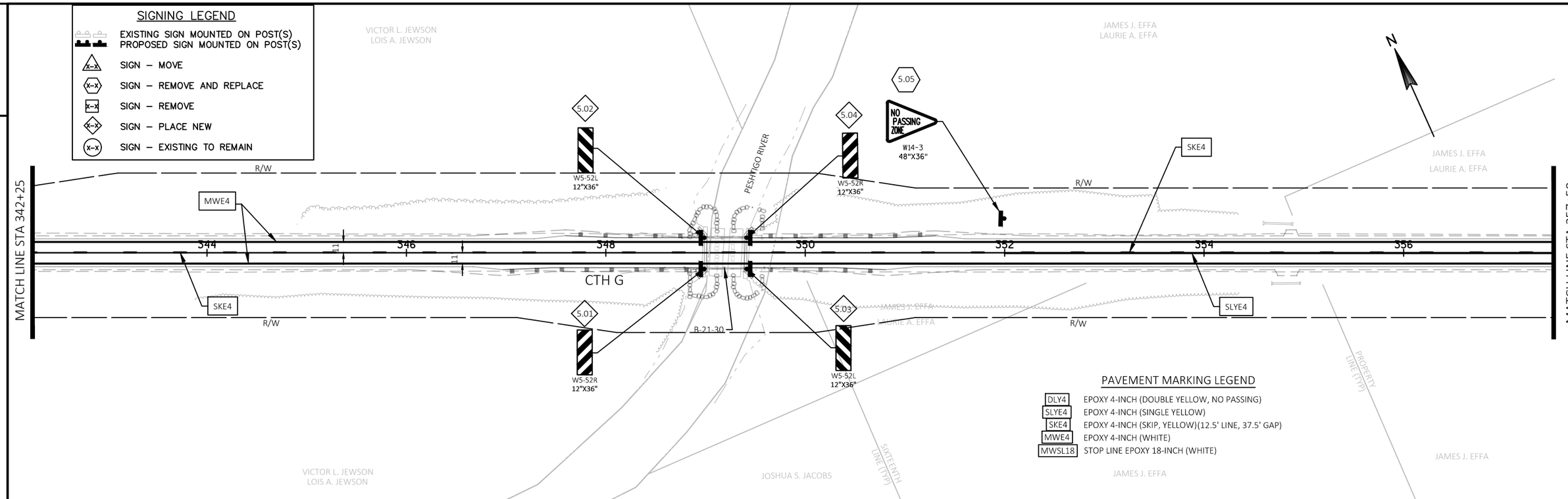

PAVEMENT MARKING LEGEND

DLY4	EPOXY 4-INCH (DOUBLE YELLOW, NO PASSING)
SLYE4	EPOXY 4-INCH (SINGLE YELLOW)
SKE4	EPOXY 4-INCH (SKIP, YELLOW)(12.5' LINE, 37.5' GAP)
MWE4	EPOXY 4-INCH (WHITE)
MWSL18	STOP LINE EPOXY 18-INCH (WHITE)

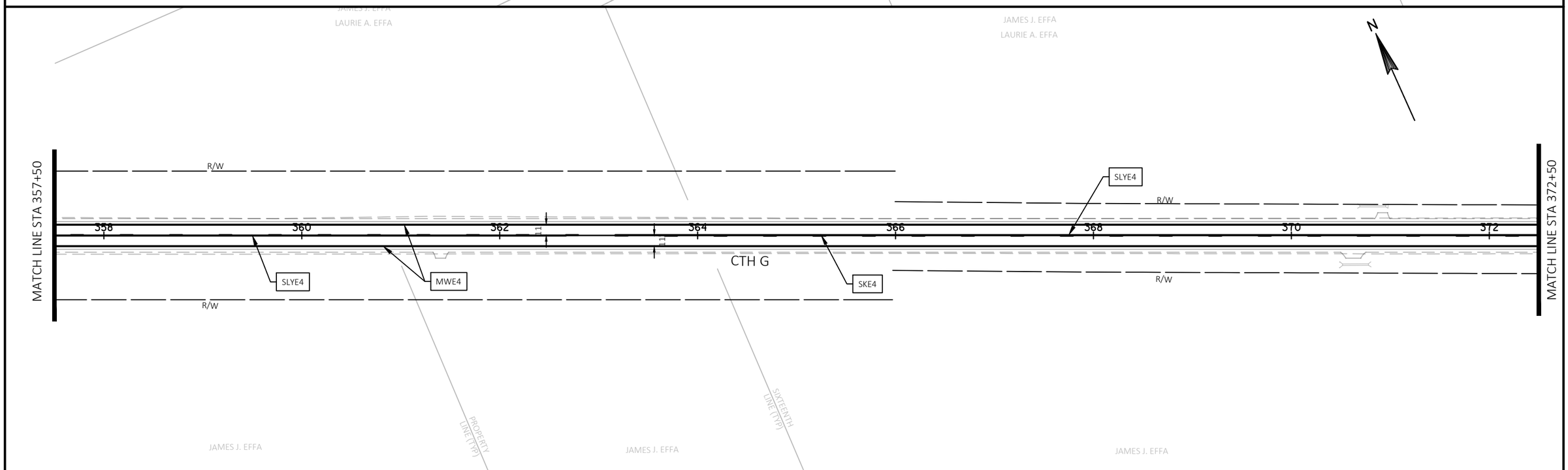

PROJECT NO:9333-00-70	HWY:CTH G	COUNTY:FOREST	PERMANENT SIGNING PLAN & PAVEMENT MARKING	SHEET 17	E

FILE NAME : P:\2015\2015.130 - WISDOT NC CTH G FOREST COUNTY\93330070\SHEETSPLAN\023201-PS.DWG
LAYOUT NAME - 05020 - (22)
PLOT DATE : 7/18/2018 2:46 PM PLOT BY : MARK W. OIE PLOT NAME : PLOT SCALE : **********

SIGNING LEGEND

- EXISTING SIGN MOUNTED ON POST(S)
- PROPOSED SIGN MOUNTED ON POST(S)
- SIGN – MOVE
- SIGN – REMOVE AND REPLACE
- SIGN – REMOVE
- SIGN – PLACE NEW
- SIGN – EXISTING TO REMAIN

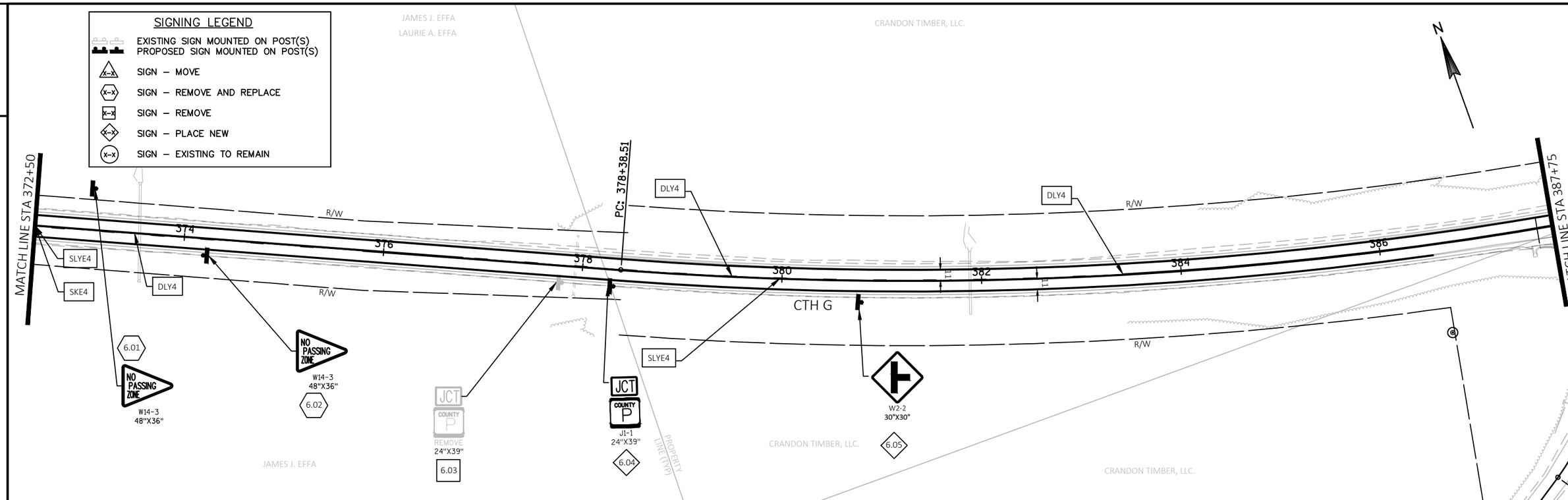

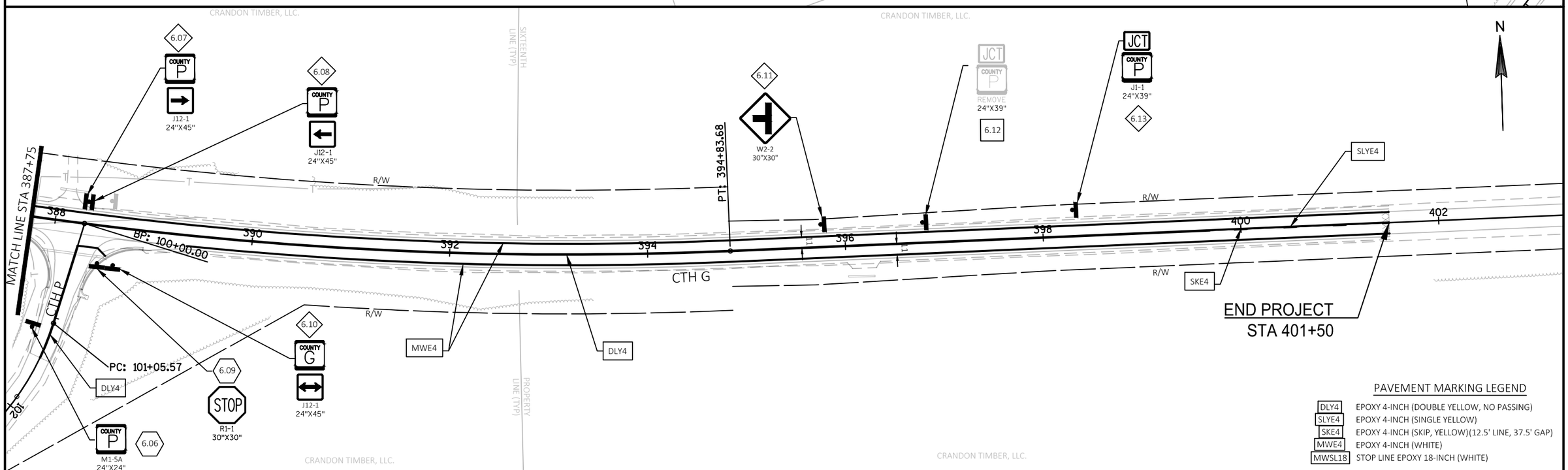

PAVEMENT MARKING LEGEND

DLY4	EPOXY 4-INCH (DOUBLE YELLOW, NO PASSING)
SLYE4	EPOXY 4-INCH (SINGLE YELLOW)
SKE4	EPOXY 4-INCH (SKIP, YELLOW)(12.5' LINE, 37.5' GAP)
MWE4	EPOXY 4-INCH (WHITE)
MWSL18	STOP LINE EPOXY 18-INCH (WHITE)

PROJECT NO:9333-00-70	HWY:CTH G	COUNTY:FOREST	PERMANENT SIGNING PLAN & PAVEMENT MARKING	SHEET 18	E

FILE NAME : P:\2015\2015.130 - WISDOT NC CTH G FOREST COUNTY\93330070\SHEETSPLAN\023201-PS.DWG
LAYOUT NAME - 05020 - (22)
PLOT DATE : 7/18/2018 2:47 PM PLOT BY : MARK W. OIE PLOT NAME : PLOT SCALE : **********

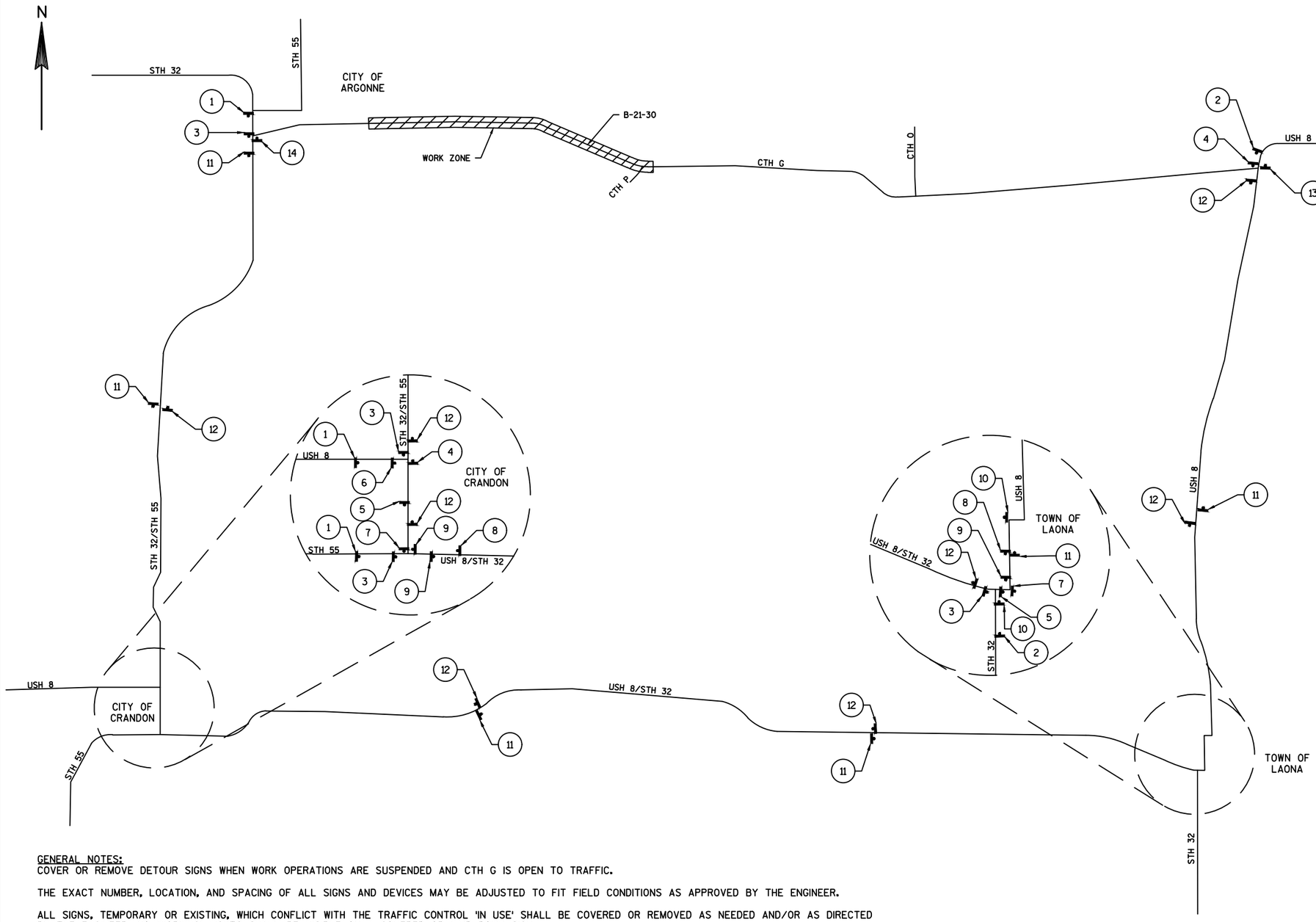

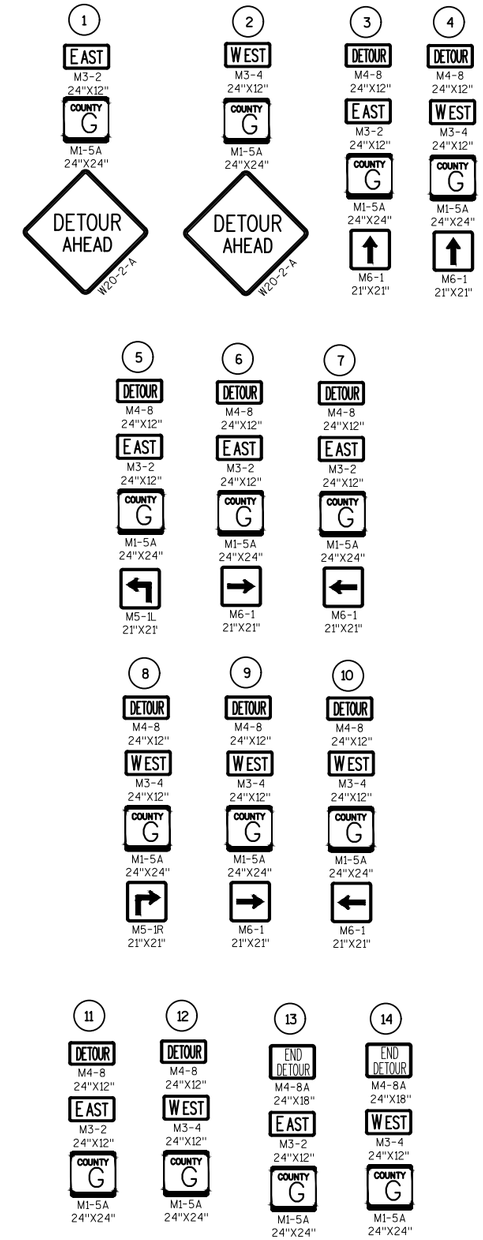

GENERAL NOTES:
COVER OR REMOVE DETOUR SIGNS WHEN WORK OPERATIONS ARE SUSPENDED AND CTH G IS OPEN TO TRAFFIC.

THE EXACT NUMBER, LOCATION, AND SPACING OF ALL SIGNS AND DEVICES MAY BE ADJUSTED TO FIT FIELD CONDITIONS AS APPROVED BY THE ENGINEER.

ALL SIGNS, TEMPORARY OR EXISTING, WHICH CONFLICT WITH THE TRAFFIC CONTROL 'IN USE' SHALL BE COVERED OR REMOVED AS NEEDED AND/OR AS DIRECTED BY THE ENGINEER. NO 'WORKING' LIGHTS SHALL BE VISIBLE ON A COVERED OR LAID DOWN SIGN.

THE SPACING BETWEEN TRAFFIC CONTROL SIGNS SHOULD BE ADJUSTED TO NOT CONFLICT WITH AND SHOULD PROVIDE A DESIRABLE MINIMUM OF 200 FEET CLEARANCE TO EXISTING SIGNS THAT WILL REMAIN IN PLACE.

SEE S.D.D. "BARRICADES AND SIGNS FOR MAINLINE CLOSURES" FOR SIGN SPACING AND BARRICADE PLACEMENT AND FOR DETAILS OF CLOSURE ALONG CTH G.

DRAWING IS NOT TO SCALE.

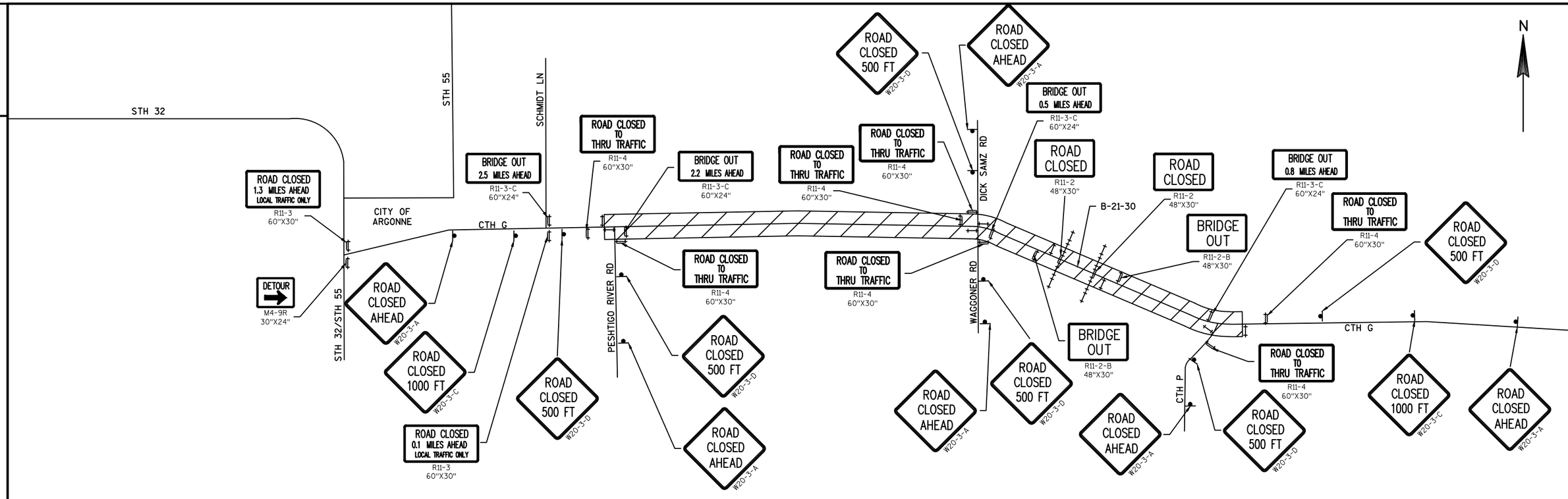

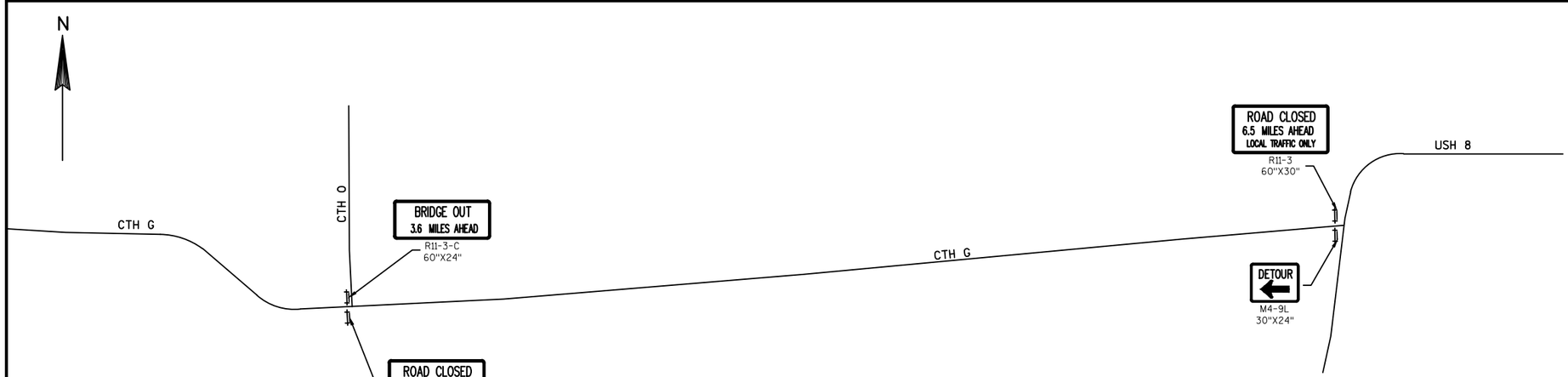

LEGEND

- TYPE III BARRICADE
- TYPE III BARRICADE WTH ATTACHED SIGN
- SIGN ON PERMANENT SUPPORT
- WORK AREA

GENERAL NOTES:

COVER OR REMOVE SIGNS WHEN WORK OPERATIONS ARE SUSPENDED AND CTH G IS OPEN TO TRAFFIC.

THE EXACT NUMBER, LOCATION, AND SPACING OF ALL SIGNS AND DEVICES MAY BE ADJUSTED TO FIT FIELD CONDITIONS AS APPROVED BY THE ENGINEER.

ALL SIGNS, TEMPORARY OR EXISTING, WHICH CONFLICT WITH THE TRAFFIC CONTROL 'IN USE' SHALL BE COVERED OR REMOVED AS NEEDED AND/OR AS DIRECTED BY THE ENGINEER. NO 'WORKING' LIGHTS SHALL BE VISIBLE ON A COVERED OR LAID DOWN SIGN.

THE SPACING BETWEEN TRAFFIC CONTROL SIGNS SHOULD BE ADJUSTED TO NOT CONFLICT WITH AND SHOULD PROVIDE A DESIRABLE MINIMUM OF 200 FEET CLEARANCE TO EXISTING SIGNS THAT WILL REMAIN IN PLACE.

SEE S.D.D. "BARRICADES AND SIGNS FOR MAINLINE CLOSURES" AND "BARRICADES AND SIGNS FOR SIDE ROAD CLOSURES" FOR SIGN SPACING AND BARRICADE PLACEMENT AND FOR DETAILS OF CLOSURE ALONG CTH G.

ALL SIGNS ARE 48"X48" UNLESS OTHERWISE NOTED.

DRAWING IS NOT TO SCALE.

2

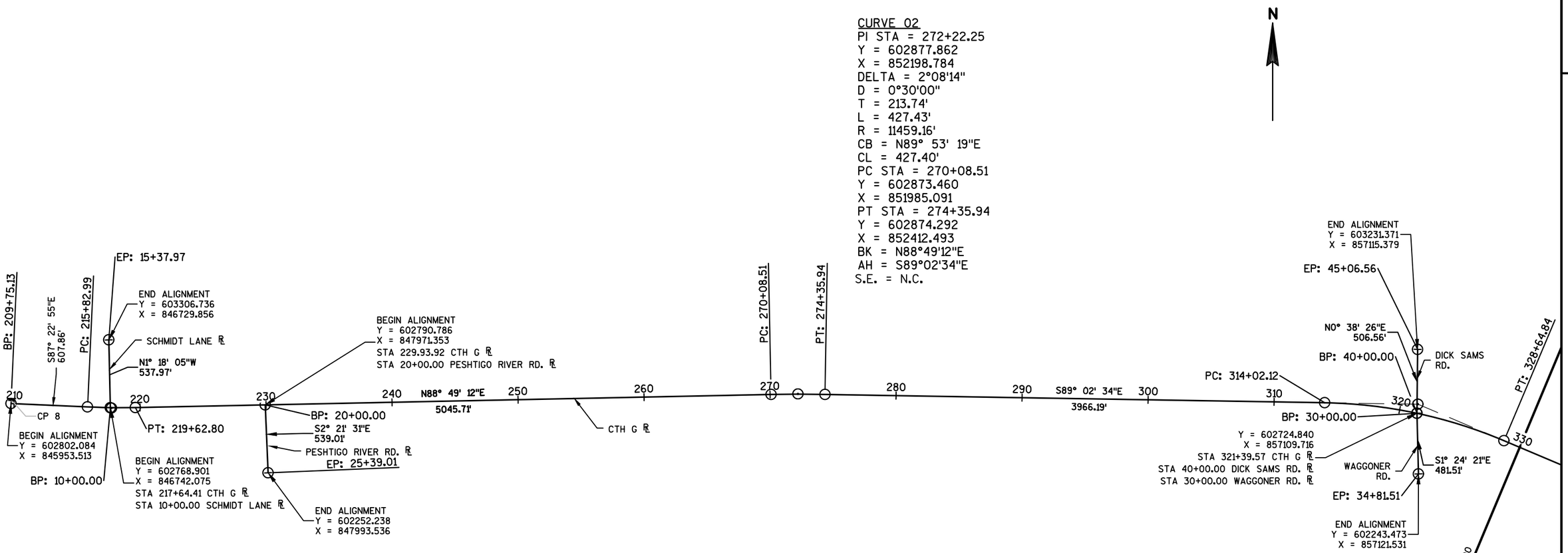

CURVE 02
PI STA = 272+22.25
Y = 602877.862
X = 852198.784
DELTA = 2°08'14"
D = 0°30'00"
T = 213.74'
L = 427.43'
R = 11459.16'
CB = N89° 53' 19"E
CL = 427.40'
PC STA = 270+08.51
Y = 602873.460
X = 851985.091
PT STA = 274+35.94
Y = 602874.292
X = 852412.493
BK = N88°49'12"E
AH = S89°02'34"E
S.E. = N.C.

CURVE 01
PI STA = 217+72.96
Y = 602765.639
X = 846750.516
DELTA = 3°47'53"
D = 1°00'00"
T = 189.98'
L = 379.81'
R = 5729.58'
CB = S89° 16' 51"E
CL = 379.74'
PC STA = 215+82.99
Y = 602774.317
X = 846560.739
PT STA = 219+62.80
Y = 602769.552
X = 846940.451
BK = S87°22'55"E
AH = N88°49'12"E
S.E. = 2.7%

CURVE 03
PI STA = 321+42.55
Y = 602795.670
X = 857118.454
DELTA = 21°56'27"
D = 1°30'00"
T = 740.43'
L = 1462.72'
R = 3819.72'
CB = S78° 04' 21"E
CL = 1453.80'
PC STA = 314+02.12
Y = 602808.039
X = 856378.129
PT STA = 328+64.84
Y = 602507.577
X = 857800.536
BK = S89°02'34"E
AH = S67°06'08"E
S.E. = 3.7%

PROJECT NO:9333-00-70	HWY:CTH G	COUNTY:FOREST	ALIGNMENT DIAGRAM	SHEET 21	E

2

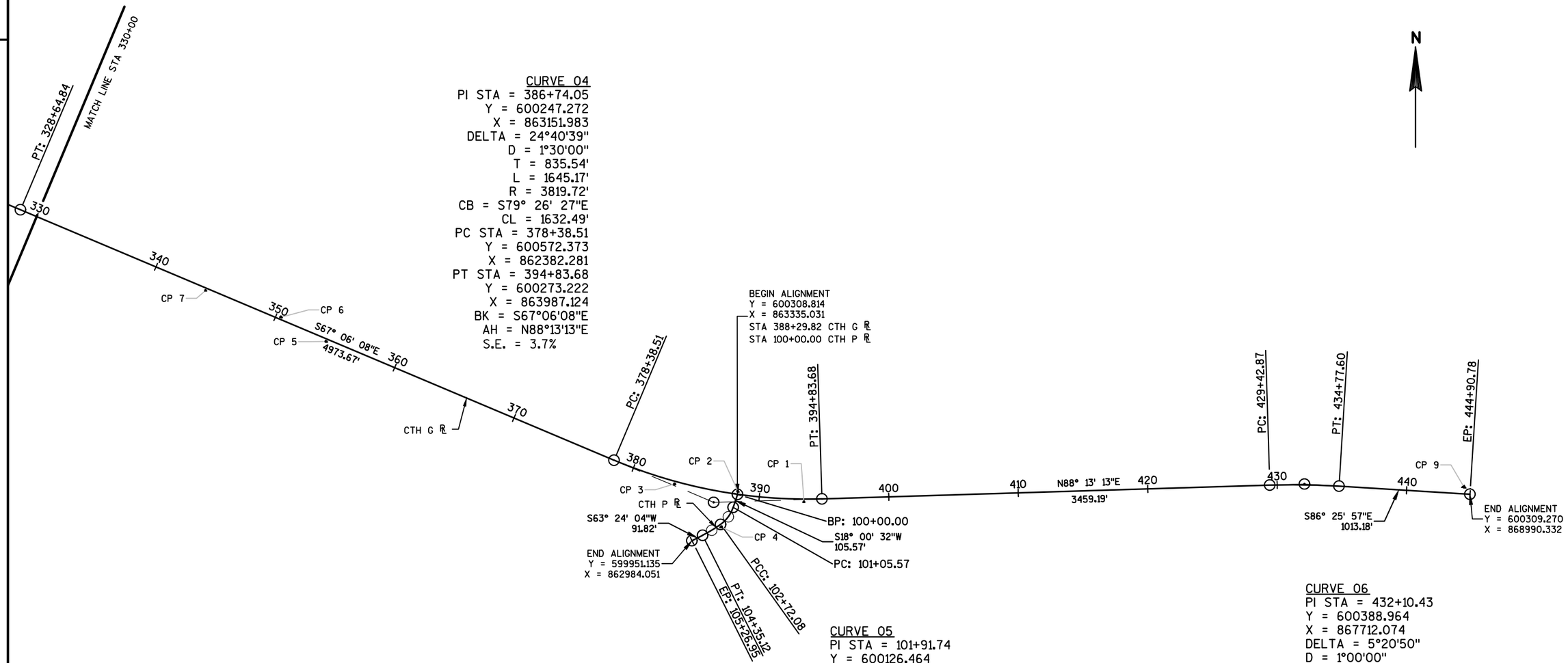

CURVE 04
PI STA = 386+74.05
Y = 600247.272
X = 863151.983
DELTA = 24°40'39"
D = 1°30'00"
T = 835.54'
L = 1645.17'
R = 3819.72'
CB = S79° 26' 27"E
CL = 1632.49'
PC STA = 378+38.51
Y = 600572.373
X = 862382.281
PT STA = 394+83.68
Y = 600273.222
X = 863987.124
BK = S67°06'08"E
AH = N88°13'13"E
S.E. = 3.7%

CURVE 05
PI STA = 101+91.74
Y = 600126.464
X = 863275.751
DELTA = 36°25'29"
D = 21°52'31"
T = 86.18'
L = 166.51'
R = 261.92'
CB = S36° 13' 16"W
CL = 163.72'
PC STA = 101+05.57
Y = 600208.419
X = 863302.393
PT STA = 102+72.08
Y = 600076.339
X = 863205.651
BK = S18°00'32"W
AH = S54°26'01"W
S.E. = 4.0%

CURVE 06
PI STA = 432+10.43
Y = 600388.964
X = 867712.074
DELTA = 5°20'50"
D = 1°00'00"
T = 267.56'
L = 534.73'
R = 5729.58'
CB = S89° 06' 22"E
CL = 534.53'
PC STA = 429+42.87
Y = 600380.654
X = 867444.646
PT STA = 434+77.60
Y = 600372.315
X = 867979.113
BK = N88°13'13"E
AH = S86°25'57"E
S.E. = 2.7%

PROJECT NO:9333-00-70	HWY:CTH G	COUNTY:FOREST	ALIGNMENT DIAGRAM	SHEET 22	E

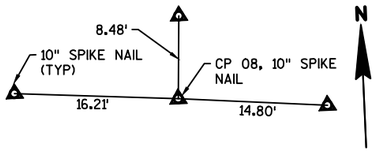

CTH G

210+

CP 08, 10-INCH SPIKE NAIL
STA 209+78.39, 26.45' LT

Y = 602828.359
X = 845957.978

CP 07, 10-INCH SPIKE NAIL
STA 344+23.99, 19.16' RT

Y = 601883.277
X = 859229.365

+00 344+25

CTH G

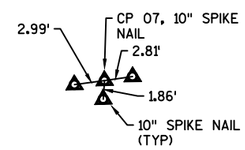

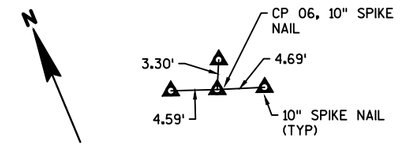

350+25 350+50

CTH G

CP 06, 10-INCH SPIKE NAIL
STA 350+40.05, 17.66' LT

Y = 601676.883
X = 859810.455

CP 05, 10-INCH SPIKE NAIL
STA 354+34.01, 19.23' RT

Y = 601490.226
X = 860159.777

354+25 354+50

CTH G

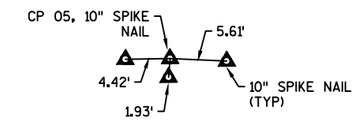

CP 03, 10-INCH SPIKE NAIL
STA 383+40.26, 18.65' RT

Y = 600390.042
X = 862851.023

383+25 383+50

CTH G

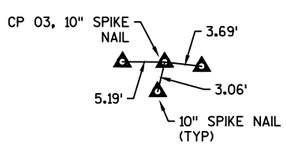

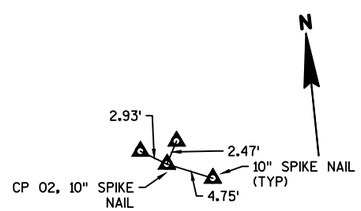

CTH G

388+25 388+5

CP 02, 10-INCH SPIKE NAIL
STA 388+30.12, 23.23' LT

Y = 600331.773
X = 863338.567

CP 01, 10-INCH SPIKE NAIL
STA 393+45.08, 19.79' RT

Y = 600251.642
X = 863848.437

CTH G

393+25 393+50

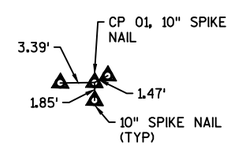

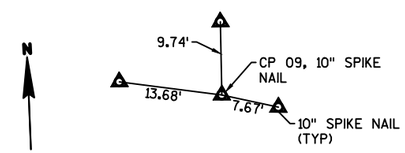

CP 09, 10-INCH SPIKE NAIL
STA 444+42.50, 50.26' LT

Y = 600362.433
X = 868945.265

444+25 444+50

CTH G

Estimate Of Quantities

9333-00-70

Line	Item	Item Description	Unit	Total	Qty
0002	201.0110	Clearing	SY	95.000	95.000
0004	201.0210	Grubbing	SY	95.000	95.000
0006	203.0100	Removing Small Pipe Culverts	EACH	1.000	1.000
0008	203.0500.S	Removing Old Structure Over Waterway (station) 01. Station 349+20	LS	1.000	1.000
0010	204.0115	Removing Asphaltic Surface Butt Joints	SY	1,705.000	1,705.000
0012	204.0165	Removing Guardrail	LF	394.000	394.000
0014	205.0100	Excavation Common	CY	1,016.000	1,016.000
0016	206.1000	Excavation for Structures Bridges (structure) 01. B-21-30	LS	1.000	1.000
0018	208.0100	Borrow	CY	11.000	11.000
0020	210.1500	Backfill Structure Type A	TON	400.000	400.000
0022	211.0100	Prepare Foundation for Asphaltic Paving (project) 01. 9333-00-70	LS	1.000	1.000
0024	213.0100	Finishing Roadway (project) 01. 9333-00-70	EACH	1.000	1.000
0026	305.0110	Base Aggregate Dense 3/4-Inch	TON	3,935.000	3,935.000
0028	305.0120	Base Aggregate Dense 1 1/4-Inch	TON	1,700.000	1,700.000
0030	325.0100	Pulverize and Relay	SY	43,495.000	43,495.000
0032	374.1020.S	QMP Pulverize and Relay Compaction	SY	43,495.000	43,495.000
0034	455.0605	Tack Coat	GAL	5,879.000	5,879.000
0036	460.2000	Incentive Density HMA Pavement	DOL	8,550.000	8,550.000
0038	460.5223	HMA Pavement 3 LT 58-28 S	TON	7,587.000	7,587.000
0040	460.5244	HMA Pavement 4 LT 58-34 S	TON	5,771.000	5,771.000
0042	465.0120	Asphaltic Surface Driveways and Field Entrances	TON	135.000	135.000
0044	465.0315	Asphaltic Flumes	SY	6.000	6.000
0046	502.0100	Concrete Masonry Bridges	CY	162.000	162.000
0048	502.3200	Protective Surface Treatment	SY	180.000	180.000
0050	505.0400	Bar Steel Reinforcement HS Structures	LB	5,000.000	5,000.000
0052	505.0600	Bar Steel Reinforcement HS Coated Structures	LB	20,110.000	20,110.000
0054	513.4061	Railing Tubular Type M 01. B-21-30	LF	90.000	90.000
0056	516.0500	Rubberized Membrane Waterproofing	SY	14.000	14.000
0058	522.2419	Culvert Pipe Reinforced Concrete Horizontal Elliptical Class HE-IV 19x30-Inch	LF	80.000	80.000
0060	522.2619	Apron Endwalls for Culvert Pipe Reinforced Concrete Horizontal Elliptical 19x30-Inch	EACH	2.000	2.000
0062	550.0500	Pile Points	EACH	14.000	14.000
0064	550.1100	Piling Steel HP 10-Inch X 42 Lb	LF	305.000	305.000
0066	601.0557	Concrete Curb & Gutter 6-Inch Sloped 36-Inch Type D	LF	154.000	154.000
0068	603.8000	Concrete Barrier Temporary Precast Delivered	LF	50.000	50.000
0070	603.8125	Concrete Barrier Temporary Precast Installed	LF	50.000	50.000
0072	606.0200	Riprap Medium	CY	3.000	3.000

9333-00-70

Line	Item	Item Description	Unit	Total	Qty
0074	606.0300	Riprap Heavy	CY	315.000	315.000
0076	612.0406	Pipe Underdrain Wrapped 6-Inch	LF	150.000	150.000
0078	614.2300	MGS Guardrail 3	LF	313.000	313.000
0080	614.2500	MGS Thrie Beam Transition	LF	150.000	150.000
0082	614.2610	MGS Guardrail Terminal EAT	EACH	4.000	4.000
0084	618.0100	Maintenance And Repair of Haul Roads (project) 01. 9333-00-70	EACH	1.000	1.000
0086	619.1000	Mobilization	EACH	1.000	1.000
0088	624.0100	Water	MGAL	113.000	113.000
0090	625.0500	Salvaged Topsoil	SY	2,445.000	2,445.000
0092	627.0200	Mulching	SY	2,135.000	2,135.000
0094	628.1504	Silt Fence	LF	1,245.000	1,245.000
0096	628.1520	Silt Fence Maintenance	LF	3,735.000	3,735.000
0098	628.1905	Mobilizations Erosion Control	EACH	4.000	4.000
0100	628.1910	Mobilizations Emergency Erosion Control	EACH	3.000	3.000
0102	628.2008	Erosion Mat Urban Class I Type B	SY	702.000	702.000
0104	628.6005	Turbidity Barriers	SY	617.000	617.000
0106	628.7504	Temporary Ditch Checks	LF	155.000	155.000
0108	628.7555	Culvert Pipe Checks	EACH	5.000	5.000
0110	628.7570	Rock Bags	EACH	70.000	70.000
0112	629.0210	Fertilizer Type B	CWT	14.500	14.500
0114	630.0120	Seeding Mixture No. 20	LB	608.000	608.000
0116	633.5200	Markers Culvert End	EACH	2.000	2.000
0118	634.0614	Posts Wood 4x6-Inch X 14-FT	EACH	4.000	4.000
0120	634.0616	Posts Wood 4x6-Inch X 16-FT	EACH	21.000	21.000
0122	637.2210	Signs Type II Reflective H	SF	67.720	67.720
0124	637.2230	Signs Type II Reflective F	SF	79.500	79.500
0126	638.2602	Removing Signs Type II	EACH	15.000	15.000
0128	638.3000	Removing Small Sign Supports	EACH	13.000	13.000
0130	642.5001	Field Office Type B	EACH	1.000	1.000
0132	643.0300	Traffic Control Drums	DAY	2,300.000	2,300.000
0134	643.0420	Traffic Control Barricades Type III	DAY	3,496.000	3,496.000
0136	643.0900	Traffic Control Signs	DAY	15,732.000	15,732.000
0138	643.1050	Traffic Control Signs PCMS	DAY	14.000	14.000
0140	643.5000	Traffic Control	EACH	1.000	1.000
0142	645.0111	Geotextile Type DF Schedule A	SY	110.000	110.000
0144	645.0120	Geotextile Type HR	SY	651.000	651.000
0146	646.1020	Marking Line Epoxy 4-Inch	LF	49,560.000	49,560.000
0148	646.6120	Marking Stop Line Epoxy 18-Inch	LF	90.000	90.000
0150	648.0100	Locating No-Passing Zones	MI	3.343	3.343

9333-00-70

Line	Item	Item Description	Unit	Total	Qty
0152	650.4500	Construction Staking Subgrade	LF	714.000	714.000
0154	650.5000	Construction Staking Base	LF	714.000	714.000
0156	650.5500	Construction Staking Curb Gutter and Curb & Gutter	LF	154.000	154.000
0158	650.6000	Construction Staking Pipe Culverts	EACH	1.000	1.000
0160	650.6500	Construction Staking Structure Layout (structure) 01. B-21-30	LS	1.000	1.000
0162	650.8000	Construction Staking Resurfacing Reference	LF	17,184.000	17,184.000
0164	650.9910	Construction Staking Supplemental Control (project) 01. 9333-00-70	LS	1.000	1.000
0166	650.9920	Construction Staking Slope Stakes	LF	714.000	714.000
0168	690.0150	Sawing Asphalt	LF	183.000	183.000
0170	715.0502	Incentive Strength Concrete Structures	DOL	972.000	972.000
0172	740.0440	Incentive IRI Ride	DOL	13,370.000	13,370.000
0174	ASP.1T0A	On-the-Job Training Apprentice at $5.00/HR	HRS	1,200.000	1,200.000
0176	ASP.1T0G	On-the-Job Training Graduate at $5.00/HR	HRS	600.000	600.000
0178	SPV.0060	Special 01. Boulders	EACH	10.000	10.000

3

CLEARING & GRUBBING

STATION	TO	STATION	LOCATION	201.0110 CLEARING SY	201.0210 GRUBBING SY
349+45	-	349+75	LT	42	42
350+75	-	351+55	LT	15	15
100+68	-	100+91	LT	10	10
100+75	-	101+43	RT	28	28
			TOTAL	**95**	**95**

204.0115 REMOVING ASPHALTIC SURFACE BUTT JOINTS

STATION	TO	STATION	LOCATION	SY	COMMENT
225+00	-	227+25	LT/RT	550	BEGIN PROJECT
229+94			RT	280	PESHTIGO RIVER RD
321+37			LT	160	DICK SAMZ RD
321+37			RT	165	WAGGONER RD
399+25	-	401+50	LT/RT	550	END OF PROJECT
			TOTAL	**1,705**	

203.0100 REMOVING SMALL PIPE CULVERTS

STATION	LOCATION	EACH	COMMENT
100+32	LT/RT	1	24-INCH CMP
	TOTAL	**1**	

204.0165 REMOVING GUARDRAIL

STATION	TO	STATION	LOCATION	LF
348+15	-	350+13	RT	198
348+34	-	350+30	LT	196
			TOTAL	**394**

EARTHWORK SUMMARY

DIVISION	STATION	TO	STATION	205.0100 EXCAVATION COMMON (1) CUT (2) CY	EBS (3) CY	UNUSABLE PAVEMENT MATERIAL (4) CY	AVAILABLE MATERIAL (5) CY	UNEXPANDED FILL CY	EXPANDED FILL (6) CY	MASS ORDINATE ±(7) CY	208.0100 BORROW CY	COMMENTS:
1	346+06	-	348+99	310	0	28	282	234	269	13		WEST OF STRUCTURE B-21-30
	349+41	-	352+22	252	0	12	240	496	570	-330		EAST OF STRUCTURE B-21-30
	386+95	-	389+14	114	0	0	114	30	35	79		CTH G SHOULDER TAPERS AT CTH P
	100+41	-	101+43	340	0	39	301	64	74	227		CTH P
			TOTALS	**1,016**	**0**	**79**	**937**	**824**	**948**	**-11**	**11**	

TOTAL EXCAVATION COMMON **1,016**

1) EXCAVATION COMMON IS THE SUM OF THE CUT AND EBS EXCAVATION COLUMNS. ITEM NO. 205.0100.
2) UNUSABLE PAVEMENT MATERIAL IS INCLUDED IN CUT.
3) EBS EXCAVATION TO BE BACKFILLED WITH CUT MATERIAL.
4) UNUSABLE PAVEMENT MATERIAL.
5) AVAILABLE MATERIAL = CUT - UNUSABLE PAVEMENT MATERIAL.
6) EXPANDED FILL = UNEXPANDED FILL * EXPANDED FILL FACTOR. EXPANDED FILL FACTOR = 1.15.
7) MASS ORDINATE = (AVAILABLE MATERIAL) - (EXPANDED FILL). PLUS QUANTITY INDICATES AN EXCESS OF MATERIAL WITHIN THE DIVISION. MINUS INDICATES A SHORTAGE OF MATERIAL WITHIN THE DIVISION.

ALL ITEMS AND QUANTITIES ON THIS SHEET ARE CATEGORY 0010 UNLESS OTHERWISE NOTED

3

PULVERIZE AND RELAY

STATION	TO	STATION	LOCATION	325.0100 PULVERIZE AND RELAY SY	374.1020.S QMP PULVERIZE AND RELAY COMPACTION SY	COMMENT
225+00	-	348+50	LT/RT	30,190	30,190	MAINLINE
349+90	-	401+50	LT/RT	12,615	12,615	MAINLINE
20+13	-	20+67	LT/RT	320	320	PESHTIGO RIVER RD
30+06	-	30+59	LT/RT	175	175	WAGGONER RD
40+07	-	40+56	LT/RT	195	195	DICK SAMZ RD
			TOTAL	**43,495**	**43,495**	

HMA PAVEMENT

STATION	TO	STATION	LOCATION	455.0605 TACK COAT GAL	460.5223 HMA PAVEMENT 3 LT 58-28 S LOWER LAYER TON	460.5244 HMA PAVEMENT 4 LT 58-34 S UPPER LAYER TON	465.0120 ASPHALTIC SURFACE DRIVEWAYS AND FIELD ENTRANCES TON	COMMENT
225+00	-	349+00	LT/RT	4,045	5,230	3,980	-	MAINLINE
349+40	-	401+50	LT/RT	1,695	2,200	1,670	-	MAINLINE
20+10	-	20+67	LT/RT	36	36	28	-	PESHTIGO RIVER RD
30+03	-	30+59	LT/RT	21	22	17	-	WAGGONER RD
40+04	-	40+56	LT/RT	22	21	16	-	DICK SAMZ RD
100+14	-	101+43	LT/RT	30	78	60	-	CTH P
	282+90		RT	-	-	-	19	PE
	306+41		RT	-	-	-	16	PE
	DRIVEWAYS		LT/RT	30	-	-	100	AGGREGATE DRIVEWAYS
			TOTALS	**5,879**	**7,587**	**5,771**	**135**	

NOTE: TACK COAT TO BE PLACED ON PULVERIZE AND RELAY MATERIAL PRIOR TO PLACING LOWER LAYER OF HMA PAVEMENT AND BETWEEN LAYERS OF HMA PAVEMENT.

BASE AGGREGATE DENSE

STATION	TO	STATION	LOCATION	305.0110 3/4-INCH TON	305.0120 1 1/4-INCH TON	624.0100 WATER MGAL	COMMENT
225+00	-	401+50	LT/RT	3,820	-	76	MAINLINE SHOULDERS
225+00	-	401+50	LT/RT	25	-	0.5	SIDE ROAD SHOULDERS
225+00	-	401+50	LT/RT	75	-	1.5	DRIVEWAYS
346+03	-	349+00	LT/RT	-	570	11	GUARDRAIL WIDENING & STRUCTURE APPROACH
349+40	-	352+25	LT/RT	-	560	11	GUARDRAIL WIDENING & STRUCTURE APPROACH
100+11	-	101+43	LT/RT	15	570	12	CTH P INTERSECTION
			TOTAL	**3,935**	**1,700**	**113**	

465.0315 ASPHALTIC FLUMES

STATION	LOCATION	SY	COMMENT
100+18	RT	3	CTH P
100+18	LT	3	CTH P
	TOTAL	**6**	

CULVERT PIPE

STATION	LOCATION	CULVERT PIPE THICKNESS INCH	JOINT TIES** EACH	522.2419 CULVERT PIPE REINFORCED CONCRETE HORIZONTAL ELLIPTICAL CLASS HE-IV 19X30-INCH LF	522.2619 APRON ENDWALLS FOR CULVERT PIPE REINFORCED CONCRETE HORIZONTAL ELLIPTICAL 19X30-INCH EACH	606.0200 RIPRAP MEDIUM CY	633.5200 MARKERS CULVERT END EACH	645.0120 GEOTEXTILE TYPE HR SY	650.6000 CONSTRUCTION STAKING PIPE CULVERTS EACH	COMMENT
100+35	LT/RT	3.25	12	80	2	-	2	-	1	CTH P INTERSECTION
100+35	RT	-	-	-	-	3	-	11	-	CTH P INTERSECTION
			TOTALS	**80**	**2**	**3**	**2**	**11**	**1**	

**NOTE: NOT A BID ITEM. FOR INFORMATION ONLY. SEE S.D.D. "JOINT TIES FOR CONCRETE CULVERT PIPES" FOR MORE INFORMATION.

ALL ITEMS AND QUANTITIES ON THIS SHEET ARE CATEGORY 0010 UNLESS OTHERWISE NOTED

3

CONCRETE CURB & GUTTER

STATION	TO	STATION	LOCATION	601.0557 CONCRETE CURB & GUTTER 6-INCH SLOPED 36-INCH TYPE D LF	650.5500 CONSTRUCTION STAKING CURB GUTTER AND CURB & GUTTER LF	COMMENT
100+05	-	100+64	LT	80	80	SE QUAD. OF CTH P INTERSECTION
100+28	-	100+72	RT	74	74	SW QUAD. OF CTH P INTERSECTION
			TOTAL	**154**	**154**	

CONCRETE BARRIER TEMPORARY PRECAST

STATION	TO	STATION	LOCATION	603.8000 DELIVERED LF	603.8125 INSTALLED LF	COMMENT
349+25	-	349+50	LT	50	50	TURBIDITY BARRIER REINFORCEMENT

MGS GUARDRAIL AND TERMINALS

STATION	TO	STATION	LOCATION	614.2300 MGS GUARDRAIL 3 LF	614.2500 MGS THRIE BEAM TRANSITION LF	614.2610 MGS GUARDRAIL TERMINAL EAT EACH
346+96.88	-	347+50.00	RT	-	-	1
347+50.00	-	348+62.50	RT	113	-	-
347+59.38	-	348+12.50	LT	-	-	1
348+12.50	-	348+62.5	LT	50	-	-
348+62.50	-	349+00.00	RT	-	37.5	-
348+62.50	-	349+00.00	LT	-	37.5	-
349+40.00	-	349+77.50	RT	-	37.5	-
349+40.00	-	349+77.50	LT	-	37.5	-
349+77.50	-	350+27.50	RT	50	-	-
349+77.50	-	350+77.50	LT	100	-	-
350+27.50	-	350+80.63	RT	-	-	1
350+77.50	-	351+30.63	LT	-	-	1
			TOTAL	**313**	**150**	**4**

TOPSOIL, FERTILIZER, & SEED

STATION	TO	STATION	LOCATION	625.0500 SALVAGED TOPSOIL SY	627.0200 MULCHING SY	629.0210 FERTILIZER TYPE B CWT	630.0120 SEEDING MIXTURE NO. 20 LB	COMMENT
225+00	-	346+03	LT/RT	-	-	8.5	360	5-FT SHOULDER RE-SEEDING
352+21	-	386+95	RT	-	-	1.2	50	5-FT SHOULDER RE-SEEDING
352+21	-	401+50	LT	-	-	1.7	75	5-FT SHOULDER RE-SEEDING
389+35	-	401+50	RT	-	-	0.4	20	5-FT SHOULDER RE-SEEDING
346+03	-	348+90	RT	280	380	0.3	11	SHOULDER GRADING B-21-30
346+03	-	348+90	LT	290	390	0.3	11	SHOULDER GRADING B-21-30
349+50	-	352+21	RT	410	420	0.3	14	SHOULDER GRADING B-21-30
349+50	-	352+21	LT	575	415	0.4	19	SHOULDER GRADING B-21-30
100+38	-	101+43	RT	395	290	0.3	12	CTH P INTERSECTION
100+38	-	101+43	LT	375	240	0.3	11	CTH P INTERSECTION
UNDISTRIBUTED				120	-	0.8	25	
			TOTALS	**2,445**	**2,135**	**14.5**	**608**	

ALL ITEMS AND QUANTITIES ON THIS SHEET ARE CATEGORY 0010 UNLESS OTHERWISE NOTED

SILT FENCE & SILT FENCE MAINTENANCE

STATION	TO	STATION	LOCATION	628.1504 SILT FENCE LF	628.1520 SILT FENCE MAINTENANCE LF
346+05	-	348+90	LT	305	915
346+05	-	348+80	RT	300	900
349+49	-	352+22	RT	295	885
349+55	-	352+23	LT	295	885
UNDISTRIBUTED				50	150
			TOTALS	**1,245**	**3,735**

3

MOBILIZATIONS EROSION CONTROL & EMERGENCY EROSION CONTROL

LOCATION	628.1905 MOBILIZATIONS EROSION CONTROL EACH	628.1910 MOBILIZATIONS EMERGENCY EROSION CONTROL EACH
PROJECT 9333-00-70	4	3

628.2008 EROSION MAT URBAN CLASS I TYPE B

STATION	TO	STATION	LOCATION	SY	COMMENT
348+75	-	348+85	RT	20	SHOULDER GRADING B-21-30
348+75	-	348+85	LT	7	SHOULDER GRADING B-21-30
349+57	-	350+56	RT	95	SHOULDER GRADING B-21-30
349+57	-	350+25	LT	105	SHOULDER GRADING B-21-30
350+83	-	352+22	LT	145	SHOULDER GRADING B-21-30
100+38	-	101+43	LT	150	CTH P INTERSECTION
100+18	-	101+43	RT	180	CTH P INTERSECTION
			TOTAL	**702**	

628.6005 TURBIDITY BARRIERS

STAGE	LOCATION	SY
1	NW	30
1	SW	41
1	NE	59
1	SE	59
2	WEST	178
2	EAST	160
UNDISTRIBUTED	--	90
	TOTAL	**617**

628.7504 TEMPORARY DITCH CHECKS

STATION	LOCATION	LF
386+94	RT	25
387+15	RT	25
387+59	RT	25
101+43	LT/RT	50
UNDISTRIBUTED		30
	TOTAL	**155**

628.7555 CULVERT PIPE CHECKS

STATION	LOCATION	EACH	COMMENT
100+40	RT	5	19x30-INCH HE CULVERT PIPE

628.7570 ROCK BAGS

STATION	LOCATION	EACH	COMMENT
347+00	RT	10	SILT FENCE RELIEF
347+60	LT	10	SILT FENCE RELIEF
350+83	RT	10	SILT FENCE RELIEF
350+85	LT	10	SILT FENCE RELIEF
UNDISTRIBUTED		30	
	TOTAL	**70**	

3

PERMANENT SIGNING SCHEDULE

STATION	OFFSET	SIGN NO.	CODE NO.	DESCRIPTION	SIZE IN X IN	634.0614 POSTS WOOD 4X6-INCH 14-FT EACH	634.0616 POSTS WOOD 4X6-INCH 16-FT EACH	637.2210 SIGNS TYPE II REFLECTIVE H SF	637.2230 SIGNS TYPE II REFLECTIVE F SF	638.2602 REMOVING SIGNS TYPE II EACH	638.3000 REMOVING SMALL SIGN SUPPORTS EACH
222+45	RT	1.01	W2-2	Side Road (90 Degrees)	30 x 30	-	1	-	6.25	-	-
230+21	RT	1.02	R1-1	Stop	30 x 30	-	1	5.18	-	1	1
237+75	LT	1.03	W2-2	Side Road (90 Degrees)	30 x 30	-	1	-	6.25	-	-
263+05	LT	2.01	I-55-56	Adopt-A-Highway [Sponsor]	30 x 36	-	1	7.50	-	1	1
303+25	LT	3.01	W14-3	No Passing Zone	48 x 36	-	1	-	6.00	1	1
313+90	RT	3.02	W2-1	Cross Road	30 x 30	-	1	-	6.25	-	-
321+04	LT	4.01	R1-1	Stop	30 x 30	-	1	5.18	-	1	1
321+70	RT	4.02	R1-1	Stop	30 x 30	-	1	5.18	-	1	1
329+35	LT	4.03	W2-1	Cross Road	30 x 30	-	1	-	6.25	-	-
335+76	RT	4.04	W14-3	No Passing Zone	48 x 36	-	1	-	6.00	1	1
348+98	LT	5.01	W5-52L	Clearance Striper Down Right	12 x 36	1	-	-	3.00	-	-
348+98	RT	5.02	W5-52R	Clearance Striper Down Left	12 x 36	1	-	-	3.00	-	-
349+42	LT	5.03	W5-52R	Clearance Striper Down Left	12 x 36	1	-	-	3.00	-	-
349+42	RT	5.04	W5-52L	Clearance Striper Down Right	12 x 36	1	-	-	3.00	-	-
352+00	LT	5.05	W14-3	No Passing Zone	48 x 36	-	1	-	6.00	1	1
373+07	LT	6.01	W14-3	No Passing Zone	48 x 36	-	1	-	6.00	1	1
374+20	RT	6.02	W14-3	No Passing Zone	48 x 36	-	1	-	6.00	1	1
377+80	RT	6.03	---	[JCT] / [CTH P]	24 x 39	-	-	-	-	2	1
378+30	RT	6.04	J1-1	[JCT] / [CTH P]	24 x 39	-	1	6.50	-	-	-
380+80	RT	6.05	W2-2	Side Road (90 Degrees)	30 x 30	-	1	-	6.25	-	-
101+15	RT	6.06	M1-5A	County P	24 x 24	-	1	4.00	-	1	1
388+32	LT	6.07	J12-1	[CTH P] / [RA]	24 x 45	-	1	7.50	-	-	-
388+32	LT	6.08	J12-1	[CTH P] / [LA]	24 x 45	-	-	7.50	-	-	-
100+35	LT	6.09	R1-1	Stop	30 x 30	-	1	5.18	-	1	1
100+35	LT	6.10	J12-1	[CTH G] / [DBA]	24 x 45	-	1	7.50	-	-	-
395+75	LT	6.11	W2-2	Side Road (90 Degrees)	30 x 30	-	1	-	6.25	-	-
396+78	LT	6.12	---	[JCT] / [CTH P]	24 x 39	-	-	-	-	2	1
398+30	LT	6.13	J1-1	[JCT] / [CTH P]	24 x 39	-	1	6.50	-	-	-
					TOTALS	**4**	**21**	**67.72**	**79.50**	**15**	**13**

ALL ITEMS AND QUANTITIES ON THIS SHEET ARE CATEGORY 0010 UNLESS OTHERWISE NOTED

3

TRAFFIC CONTROL

LOCATION	643.0300 DRUMS EACH	643.0300 DRUMS DAYS	643.0420 BARRICADES TYPE III EACH	643.0420 BARRICADES TYPE III DAYS	643.0900 SIGNS EACH	643.0900 SIGNS DAYS	643.1050 TRAFFIC CONTROL SIGNS PCMS EACH	643.1050 TRAFFIC CONTROL SIGNS PCMS DAYS	643.5000 TRAFFIC CONTROL EACH
STH 32/CTH G	-	-	2	184	2	184	-	-	-
SCHMIDT LN/CTH G	-	-	2	184	2	184	1	7	-
BEGINNING OF PROJECT	-	-	2	184	4	368	-	-	-
PESHTIGO RIVER RD	-	-	3	276	4	368	-	-	-
DICK SAMZ RD	-	-	3	276	4	368	-	-	-
WAGGONER RD	-	-	3	276	4	368	-	-	-
B-21-30	-	-	14	1288	4	368	-	-	-
CTH P	-	-	3	276	4	368	-	-	-
END OF PROJECT	-	-	2	184	4	368	-	-	-
CTH O/CTH G	-	-	2	184	2	184	1	7	-
USH 8/CTH G	-	-	2	184	2	184	-	-	-
9333-00-70	25	2,300	-	-	-	-	-	-	1
DETOUR	-	-	-	-	135	12,420	-	-	-
TOTAL		**2,300**		**3,496**		**15,732**		**14**	**1**

ASSUMED 92 CALENDAR DAYS (55 WORKING DAYS) FOR PROJECT 9333-00-70 QUANTITES.

MARKING ITEMS

STATION	TO	STATION	LOCATION	646.1020 LINE EPOXY 4-INCH (WHITE) LF	646.1020 LINE EPOXY 4-INCH (YELLOW) LF	646.6120 STOP LINE EPOXY 18-INCH LF	COMMENT
225+00	-	303+38	CL	-	1,960	-	DASHED CENTERLINE
225+00	-	320+89	LT	9,589	-	-	WB EDGELINE
225+00	-	229+46	RT	446	-	-	EB EDGELINE
230+54	-	320+90	RT	9,036	-	-	EB EDGELINE
303+38	-	314+38	CL	-	275	-	WB DASHED CENTERLINE
303+38	-	314+38	CL	-	1,100	-	EB SOLID CENTERLINE
314+38	-	324+54	CL	-	2,032	-	DOUBLE YELLOW CENTERLINE
321+75	-	401+50	LT	7,975	-	-	WB EDGELINE
321+95	-	386+53	RT	6,458	-	-	EB EDGELINE
324+54	-	335+67	CL	-	278	-	EB DASHED CENTERLINE
324+54	-	335+67	CL	-	1,113	-	WB SOLID CENTERLINE
335+67	-	352+00	CL	-	408	-	DASHED CENTERLINE
352+00	-	362+67	CL	-	1,067	-	EB SOLID CENTERLINE
352+00	-	362+67	CL	-	267	-	WB DASHED CENTERLINE
362+67	-	363+17	CL	-	13	-	DASHED CENTERLINE
363+17	-	373+07	CL	-	248	-	EB DASHED CENTERLINE
363+17	-	374+20	CL	-	1,103	-	WB SOLID CENTERLINE
373+07	-	383+42	CL	-	1,035	-	EB SOLID CENTERLINE
374+20	-	383+42	CL	-	231	-	WB DASHED CENTERLINE
383+42	-	399+69	CL	-	3,254	-	DOUBLE YELLOW CENTERLINE
389+35	-	401+50	RT	1,215	-	-	EB EDGELINE
399+69	-	401+50	CL	-	45	-	EB DASHED CENTERLINE
399+69	-	401+50	CL	-	181	-	WB SOLID CENTERLINE
20+23			LT	-	-	28	PESHTIGO RIVER RD
30+25			LT	-	-	19	WAGGONER RD
40+25			LT	-	-	19	DICK SAMZ RD
100+27			LT	-	-	24	CTH P
100+27	-	101+43	CL	-	232	-	DOUBLE YELLOW CENTERLINE - CTH P
			SUBTOTALS	34,719	14,841	90	
			TOTALS	**49,560**		**90**	

ALL ITEMS AND QUANTITIES ON THIS SHEET ARE CATEGORY 0010 UNLESS OTHERWISE NOTED

648.0100 LOCATING NO-PASSING ZONES

LOCATION	MI
PROJECT 9333-00-70	3.343

CONSTRUCTION STAKING

STATION	TO	STATION	LOCATION	650.4500 SUBGRADE LF	650.5000 BASE LF	650.8000 RESURFACING REFERENCE LF	650.9910.01 SUPPLEMENTAL CONTROL 9333-00-70 LS	650.9920 SLOPE STAKES LF
225+00	-	346+03	LT/RT	-	-	12,103	-	-
346+03	-	349+00	LT/RT	297	297	-	-	297
349+40	-	352+25	LT/RT	285	285	-	-	285
352+25	-	401+50	LT/RT	-	-	4,925	-	-
20+13	-	20+67	LT/RT	-	-	54	-	-
30+06	-	30+59	LT/RT	-	-	53	-	-
40+07	-	40+56	LT/RT	-	-	49	-	-
100+11	-	101+43	LT/RT	132	132	-	-	132
PROJECT 9333-00-70				-	-	-	1	-
			TOTAL	**714**	**714**	**17,184**	**1**	**714**

690.0150 SAWING ASPHALT

STATION	LOCATION	LF	COMMENT
225+00	LT/RT	22	PROJECT TERMINI
282+90	RT	24	PE
306+41	RT	26	PE
401+50	LT/RT	22	PROJECT TERMINI
20+67	LT/RT	19	PESHTIGO RIVER RD
30+59	LT/RT	24	WAGGONER RD
40+56	LT/RT	24	DICK SAMZ RD
101+43	LT/RT	22	CTH P
	TOTAL	**183**	

3

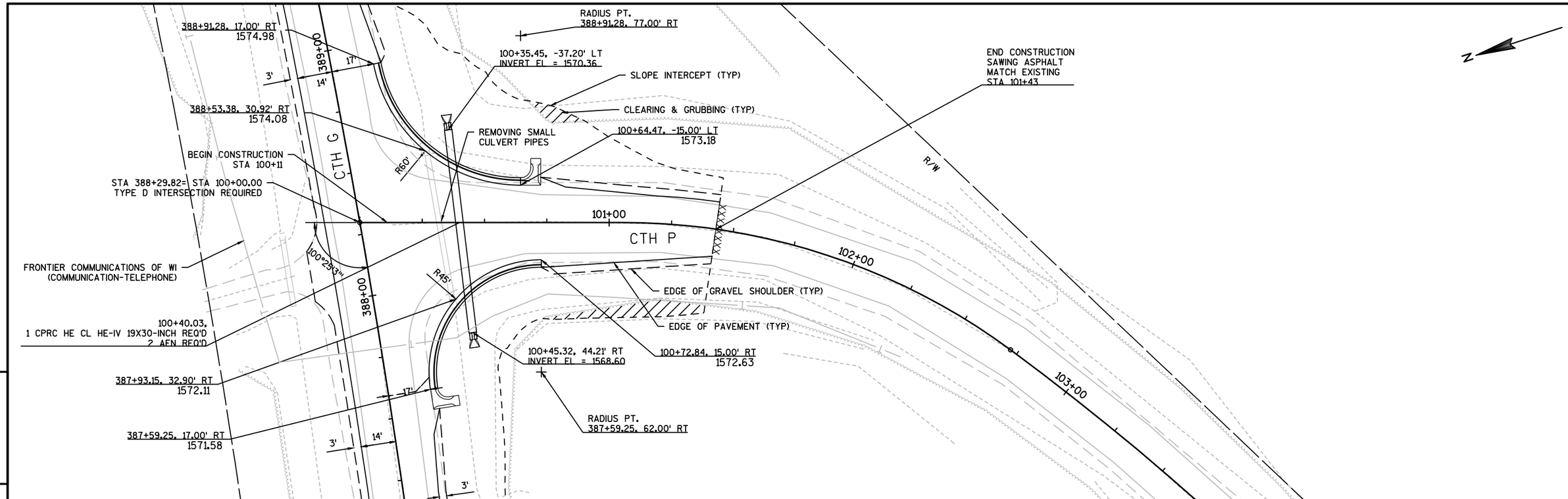

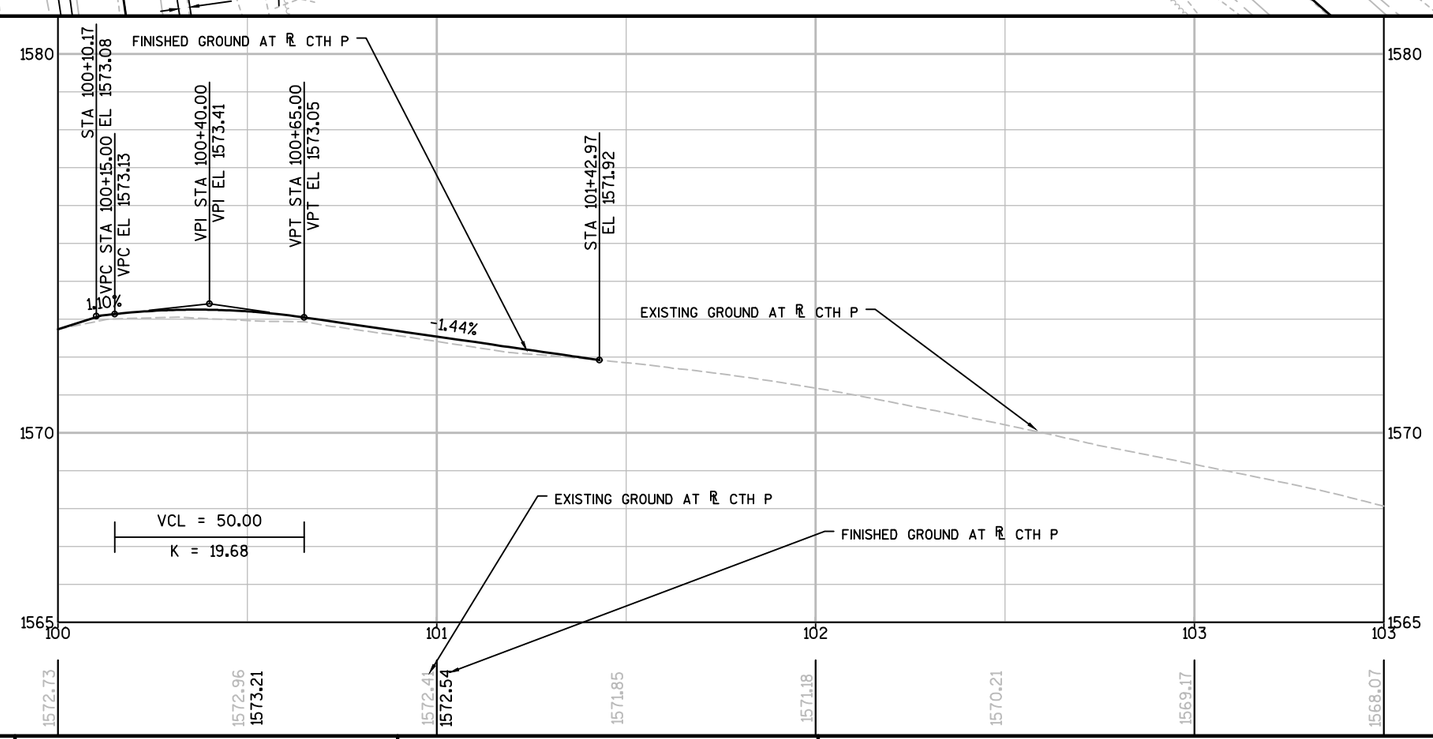

PROJECT NO:9333-00-70	HWY:CTH G	COUNTY:FOREST	PLAN AND PROFILE: CTH P	SHEET 32	E

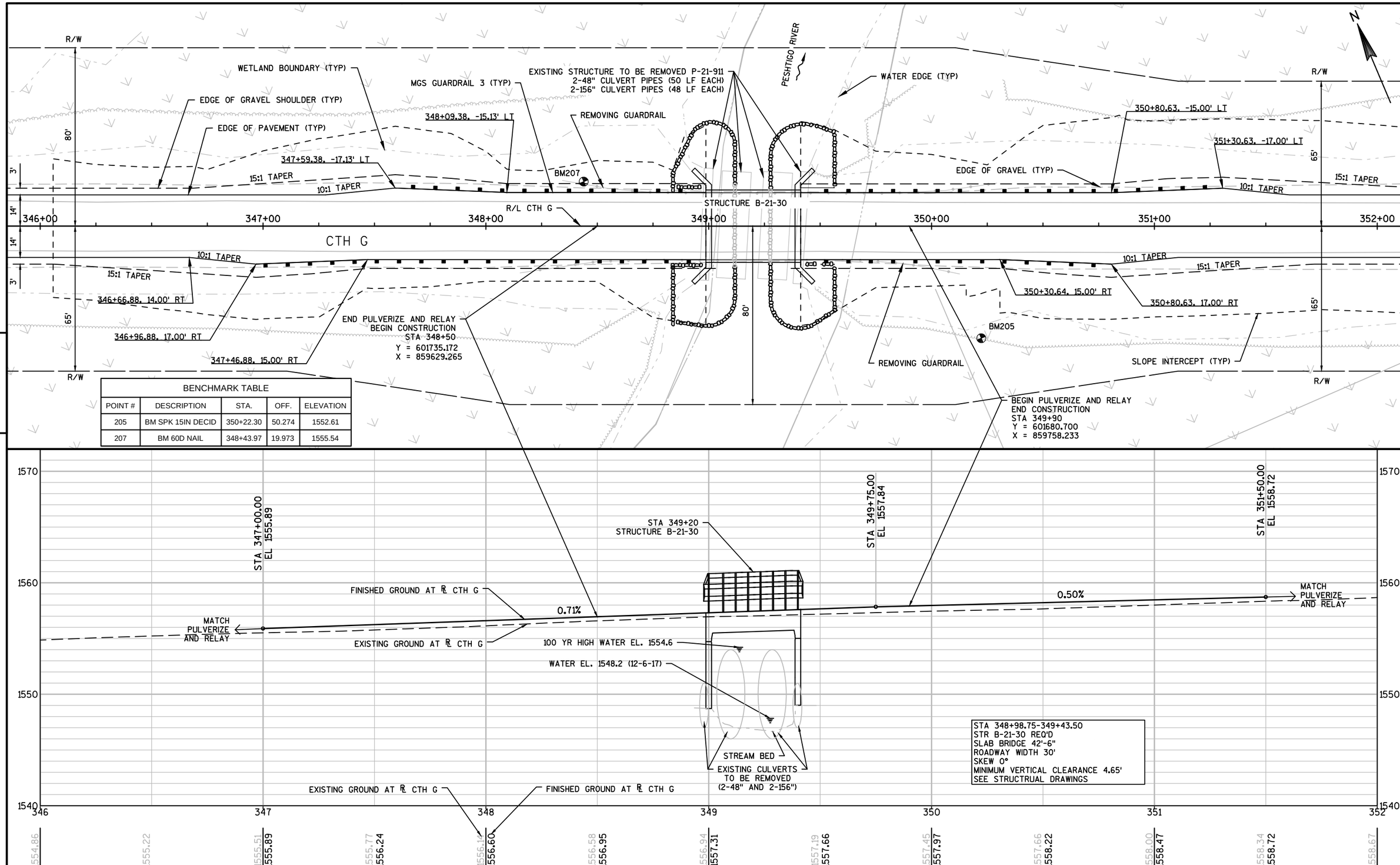

BENCHMARK TABLE

POINT #	DESCRIPTION	STA.	OFF.	ELEVATION
205	BM SPK 15IN DECID	350+22.30	50.274	1552.61
207	BM 60D NAIL	348+43.97	19.973	1555.54

PROJECT NO: 9333-00-70	HWY: CTH G	COUNTY: FOREST	PLAN AND PROFILE: PESHTIGO RIVER CROSSING	SHEET 33	E

FILE NAME : P:\2015\2015.130 - WISDOT NC CTH G FOREST COUNTY\93330070\SHEETSPLAN\050110-PP.DWG
LAYOUT NAME - ****
PLOT DATE : 11/21/2018 11:53 AM PLOT BY : DANIEL J. GERLING PLOT NAME : PLOT SCALE : **********

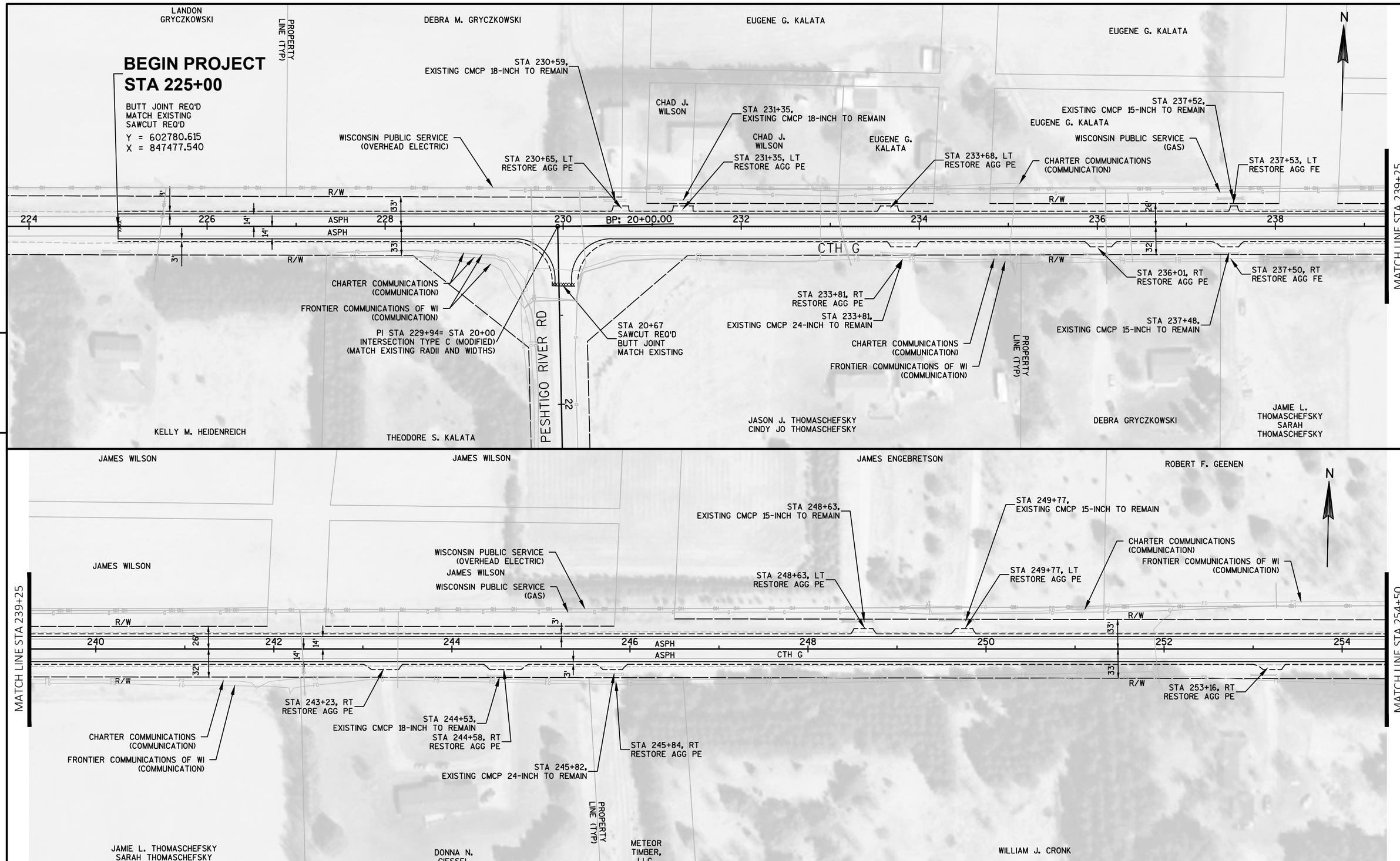

PROJECT NO: 9333-00-70	HWY: CTH G	COUNTY: FOREST	PLAN	SHEET 34	E

FILE NAME : P:\2015\2015.130 - WISDOT NC CTH G FOREST COUNTY\93330070\SHEETSPLAN\050201-PN.DWG
LAYOUT NAME - 05020 - (22)
PLOT DATE : 7/19/2018 8:30 AM PLOT BY : MARK W. OIE PLOT NAME : PLOT SCALE : **********

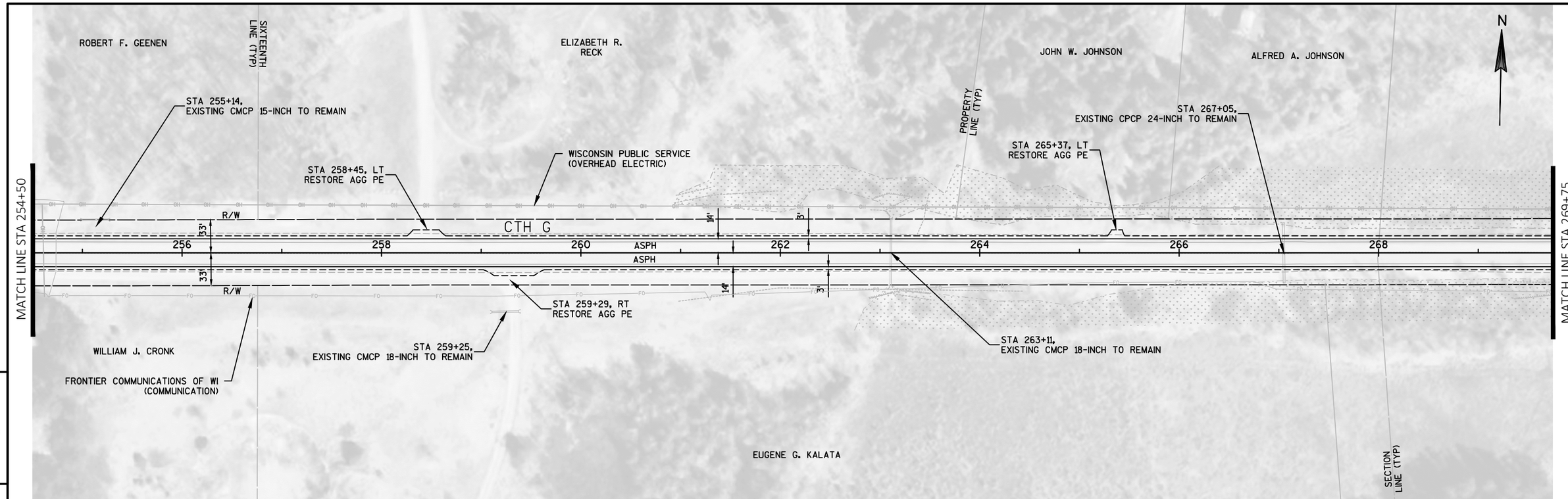

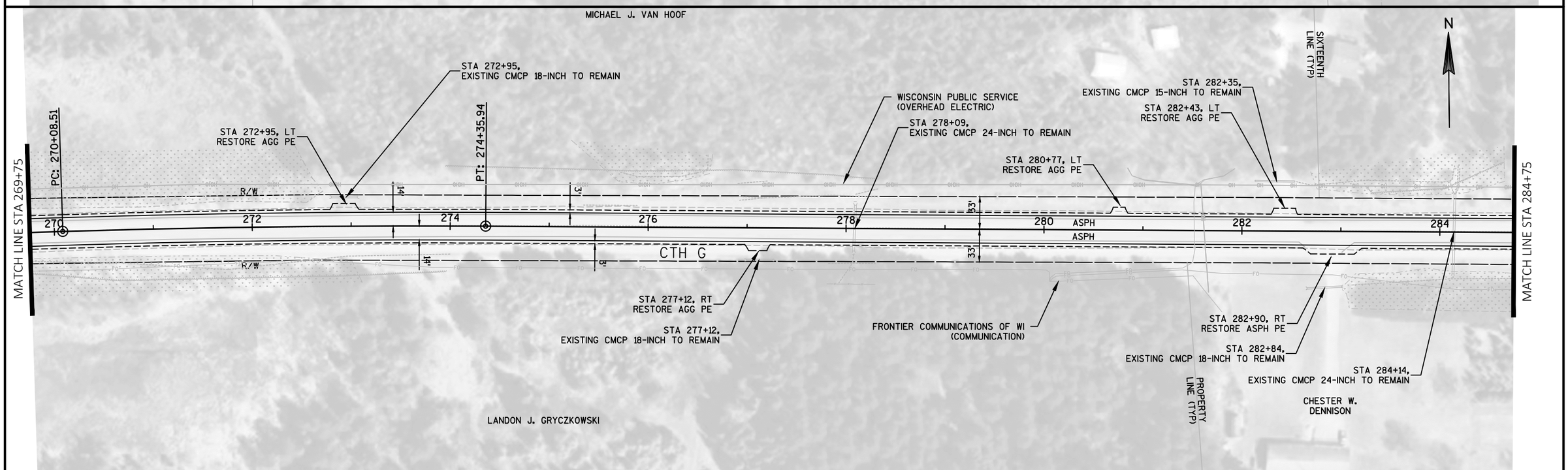

PROJECT NO: 9333-00-70	HWY: CTH G	COUNTY: FOREST	PLAN	SHEET 35	E

FILE NAME : P:\2015\2015.130 - WISDOT NC CTH G FOREST COUNTY\93330070\SHEETSPLAN\050201-PN.DWG
LAYOUT NAME - 05020 - (22)
PLOT DATE : 7/19/2018 8:30 AM PLOT BY : MARK W. OIE PLOT NAME : PLOT SCALE : **********

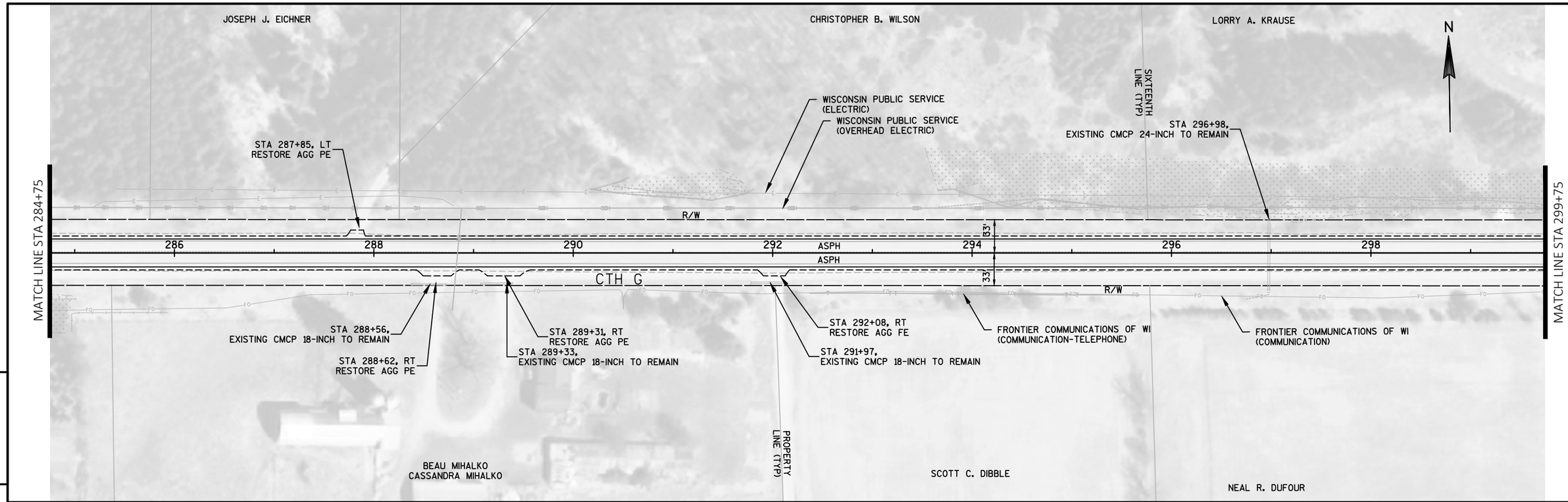

5

5

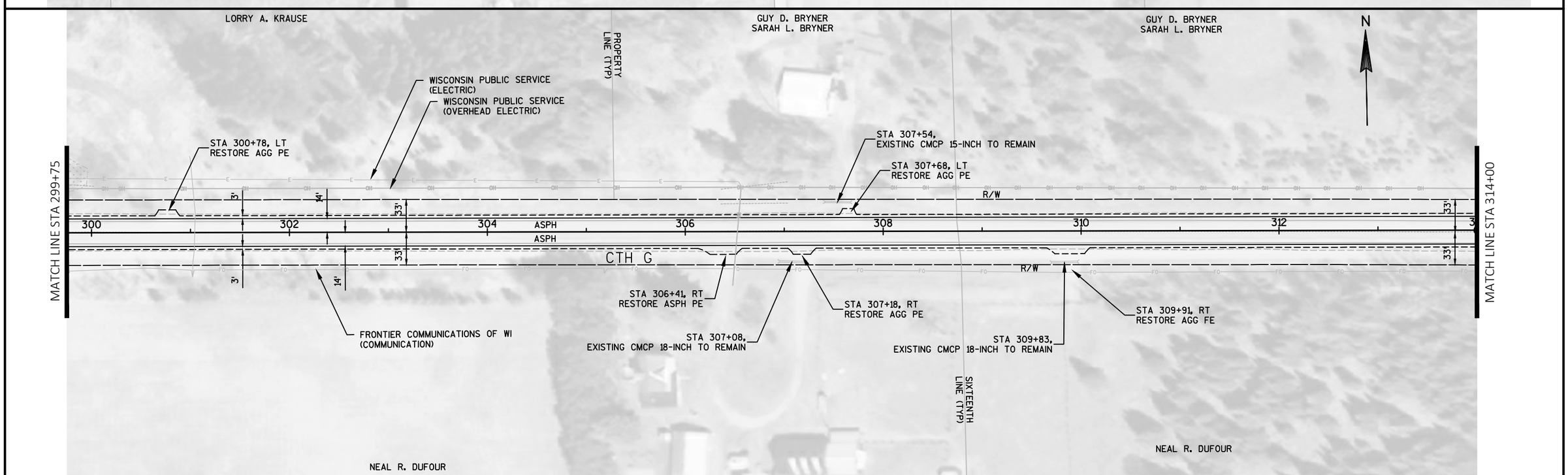

PROJECT NO: 9333-00-70	HWY: CTH G	COUNTY: FOREST	PLAN	SHEET 36	E

FILE NAME : P:\2015\2015.130 - WISDOT NC CTH G FOREST COUNTY\93330070\SHEETSPLAN\050201-PN.DWG
LAYOUT NAME - 05020 - (22)
PLOT DATE : 7/19/2018 8:31 AM PLOT BY : MARK W. OIE PLOT NAME : PLOT SCALE : **********

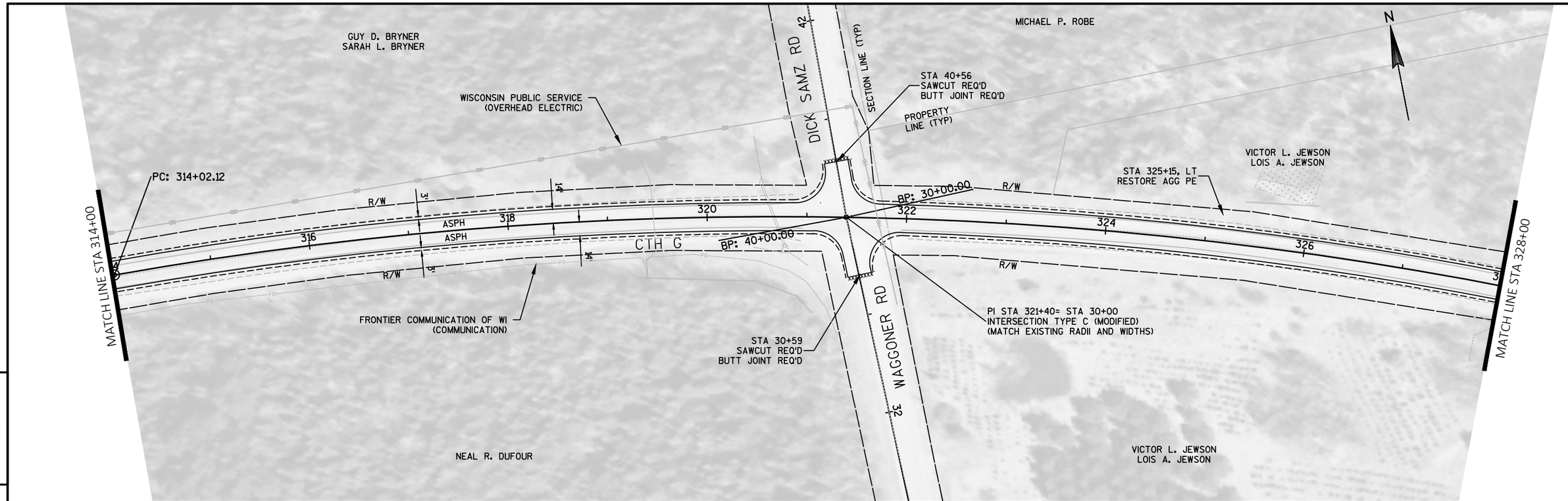

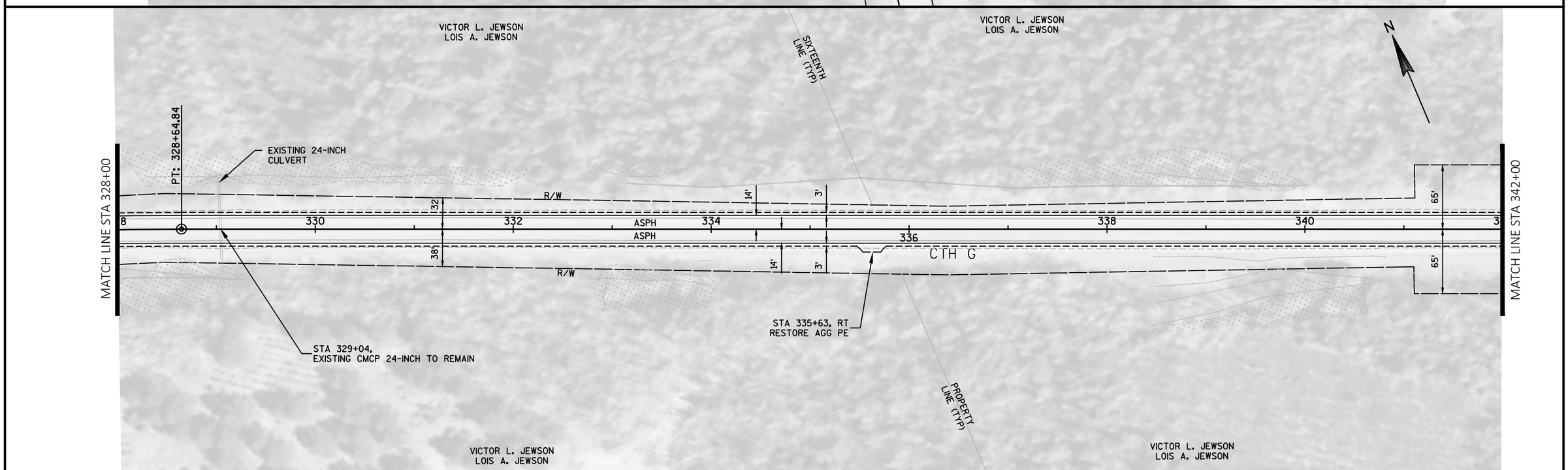

PROJECT NO: 9333-00-70	HWY: CTH G	COUNTY: FOREST	PLAN	SHEET 37	E

FILE NAME : P:\2015\2015.130 - WISDOT NC CTH G FOREST COUNTY\93330070\SHEETSPLAN\050201-PN.DWG
LAYOUT NAME - 05020 - (22)
PLOT DATE : 7/19/2018 8:31 AM PLOT BY : MARK W. OIE PLOT NAME : PLOT SCALE : **********

WISDOT/CADDS SHEET 44

BENCHMARK TABLE		
POINT #	DESCRIPTION	ELEVATION
205	BM SPK 15IN DECID	1552.61
206	BM 60D NAIL 12" BIRCH	1551.57
207	BM 60D NAIL	1555.54

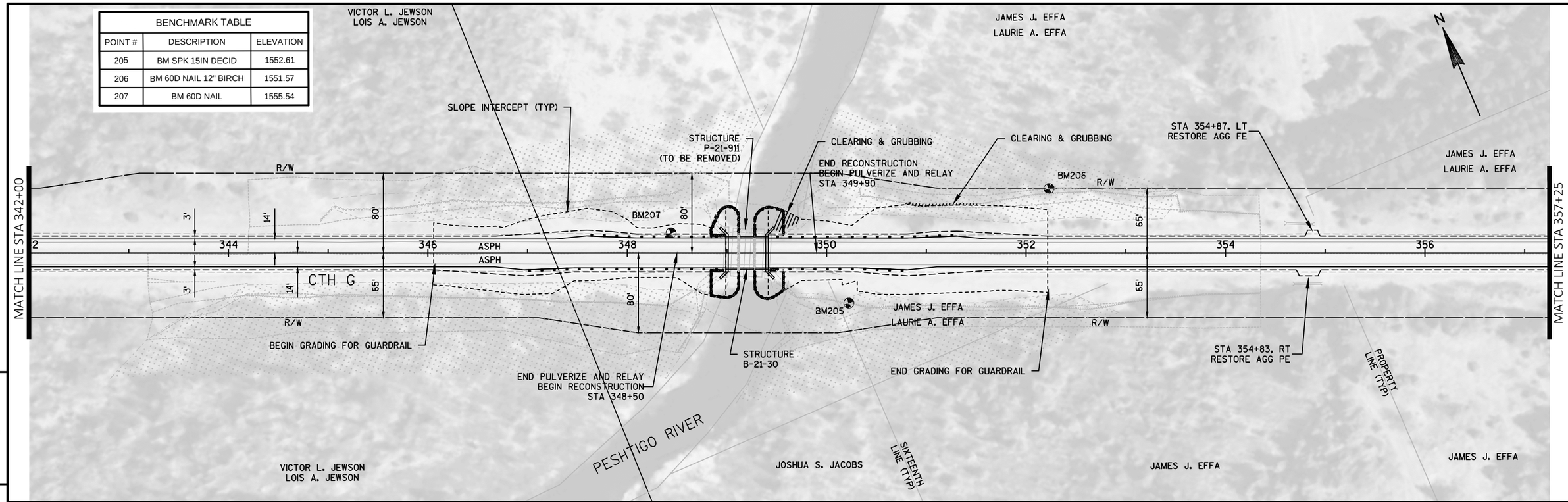

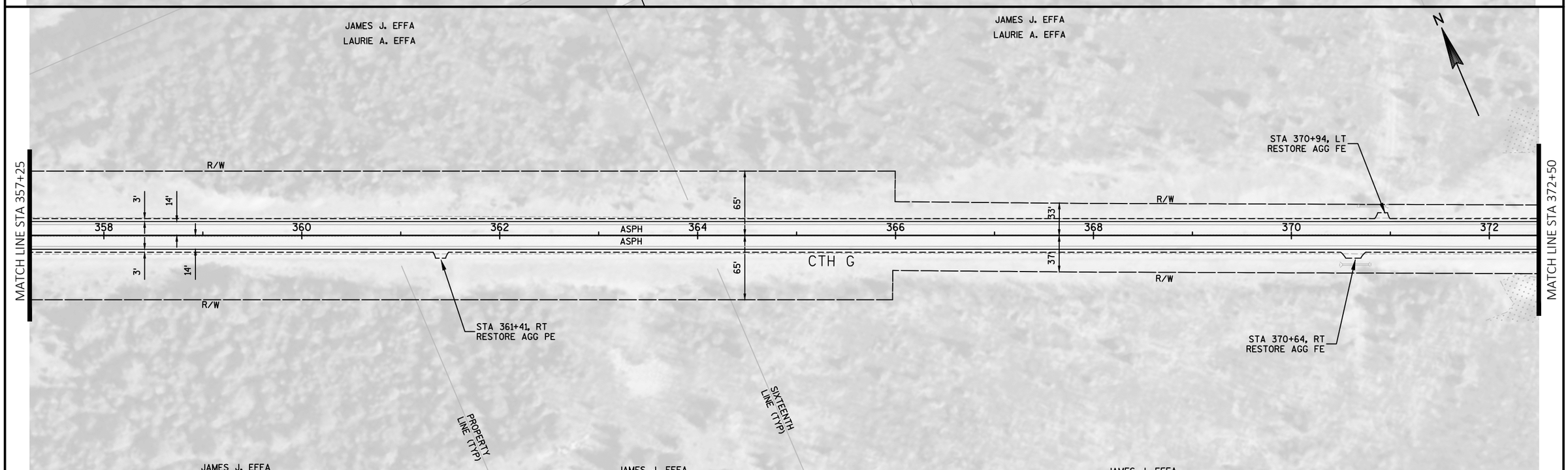

PROJECT NO: 9333-00-70	HWY: CTH G	COUNTY: FOREST	PLAN	SHEET 38	E

FILE NAME : P:\2015\2015.130 - WISDOT NC CTH G FOREST COUNTY\93330070\SHEETSPLAN\050201-PN.DWG
LAYOUT NAME - 05020 - (22)
PLOT DATE : 7/19/2018 8:31 AM PLOT BY : MARK W. OIE PLOT NAME : PLOT SCALE : **********

WISDOT/CADDS SHEET 44

BENCHMARK TABLE		
POINT #	DESCRIPTION	ELEVATION
204	BM SPK IN 10IN BIRCH	1559.32

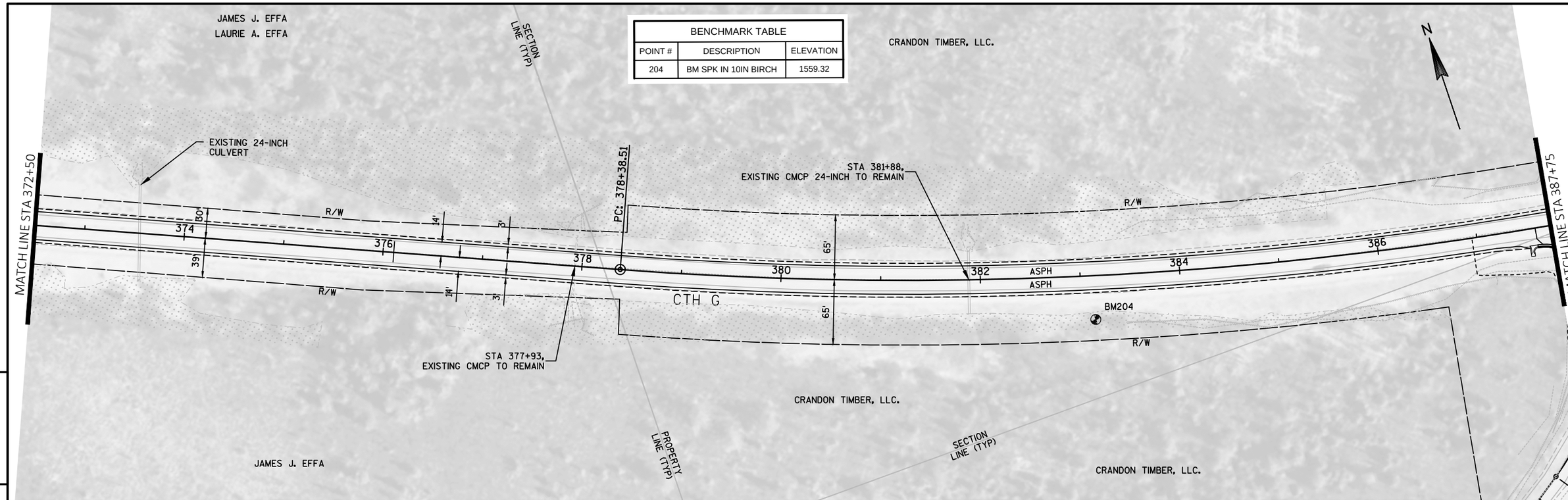

BENCHMARK TABLE		
POINT #	DESCRIPTION	ELEVATION
202	BM 9IN DECID	1595.34
203	BM SPK IN WOOD POST	1577.83

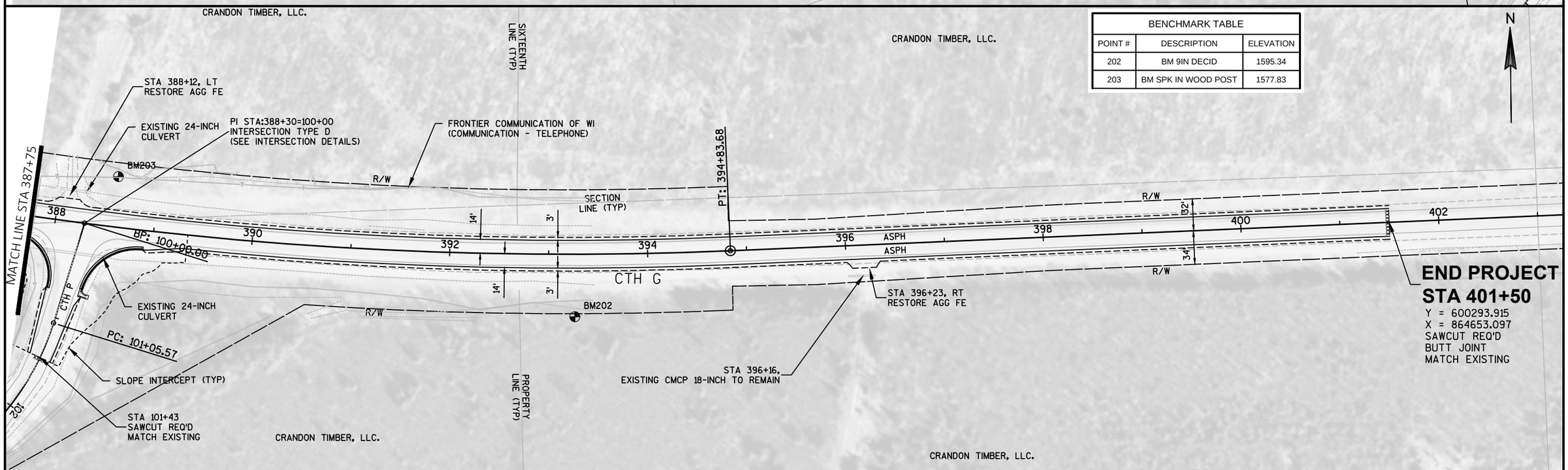

PROJECT NO: 9333-00-70	HWY: CTH G	COUNTY: FOREST	PLAN	SHEET 39	E

FILE NAME : P:\2015\2015.130 - WISDOT NC CTH G FOREST COUNTY\93330070\SHEETSPLAN\050201-PN.DWG
LAYOUT NAME - 05020 - (22)
PLOT DATE : 7/19/2018 8:32 AM PLOT BY : MARK W. OIE PLOT NAME : PLOT SCALE : **********

Standard Detail Drawing List

08D01-20A	CONCRETE CURB & GUTTER
08D01-20B	CONCRETE CURB, TIES AND CURB AND GUTTER APPLICATIONS
08D04-05	CONCRETE SURFACE DRAINS & ASPHALTIC FLUMES
08E08-03	TYPICAL INSTALLATIONS OF EROSION BALES / TEMPORARY DITCH CHECKS
08E09-06	SILT FENCE
08E11-02	TURBIDITY BARRIER
08F02-01	APRON ENDWALLS FOR PIPE ARCH AND ELLIPTICAL PIPE
08F04-07	JOINT TIES FOR CONCRETE PIPE AND CONCRETE COLLAR DETAIL
09A01-13A	AT-GRADE SIDE ROAD INTERSECTION, TYPES "B1", "B2", "C" AND D AND TEE INTERSECTION BYPASS LANE
12A03-10	NAME PLATE (STRUCTURES)
14B29-01	SAFETY EDGE
14B42-05A	MIDWEST GUARDRAIL SYSTEM (MGS) GUARDRAIL
14B42-05B	MIDWEST GUARDRAIL SYSTEM (MGS) GUARDRAIL
14B42-05C	MIDWEST GUARDRAIL SYSTEM (MGS) GUARDRAIL
14B42-05D	MIDWEST GUARDRAIL SYSTEM (MGS) GUARDRAIL
14B44-03A	MIDWEST GUARDRAIL SYSTEM ENERGY ABSORBING TERMINAL (MGS)
14B44-03B	MIDWEST GUARDRAIL SYSTEM ENERGY ABSORBING TERMINAL (MGS)
14B44-03C	MIDWEST GUARDRAIL SYSTEM ENERGY ABSORBING TERMINAL (MGS)
14B45-04A	MIDWEST GUARDRAIL SYSTEM THRIE BEAM TRANSITION (MGS)
14B45-04B	MIDWEST GUARDRAIL SYSTEM THRIE BEAM TRANSITION (MGS)
14B45-04C	MIDWEST GUARDRAIL SYSTEM THRIE BEAM TRANSITION (MGS)
14B45-04H	MIDWEST GUARDRAIL SYSTEM THRIE BEAM TRANSITION (MGS)
15A03-02A	FLEXIBLE MARKER POST FOR CULVERT END
15A03-02B	FLEXIBLE MARKER POST FOR CULVERT END
15C02-06A	BARRICADES AND SIGNS FOR MAINLINE CLOSURES
15C02-06B	BARRICADES AND SIGNS FOR MAINLINE CLOSURES
15C03-04	BARRICADES AND SIGNS FOR SIDEROAD CLOSURES
15C06-09	SIGNING & MARKING FOR TWO LANE BRIDGES
15C08-18A	LONGITUDINAL MARKING (MAINLINE)
15C11-07B	CHANNELIZING DEVICES DRUMS, CONES, BARRICADES AND VERTICAL PANELS
15C33-03	STOP LINE AND CROSSWALK PAVEMENT MARKING
15D38-02A	TEMPORARY TRAFFIC CONTROL SIGN MOUNTING
15D38-02B	ATTACHMENT OF SIGNS TO POSTS

6

6

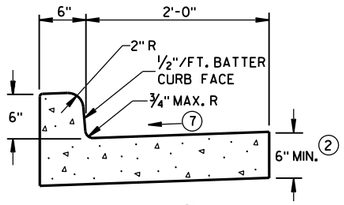

TYPES A[1] & D

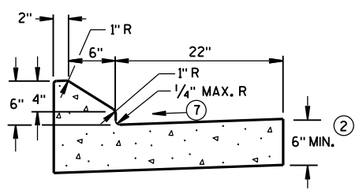

6" SLOPED CURB TYPES G[1] & J

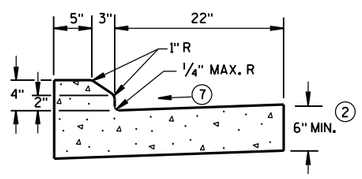

4" SLOPED CURB TYPES G[1] & J

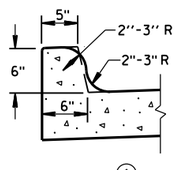

TYPES K[1] & L
(OPTIONAL CURB SHAPE)

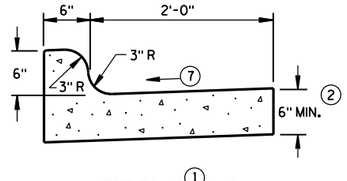

TYPES K[1] & L

CONCRETE CURB & GUTTER 30"

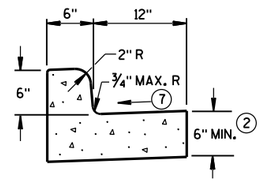

TYPES A[1] & D

CONCRETE CURB & GUTTER 18"

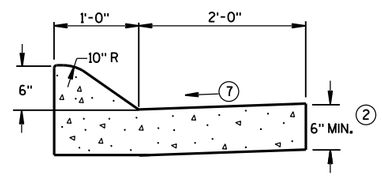

6" SLOPED CURB TYPES A[1] & D

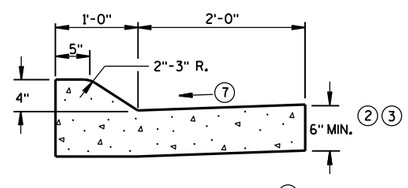

4" SLOPED CURB TYPES A[1] & D

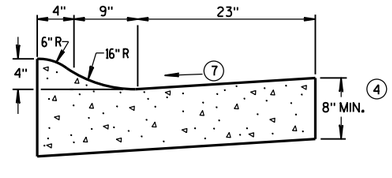

4" SLOPED CURB TYPES R[1] & T[5]

CONCRETE CURB & GUTTER 36"

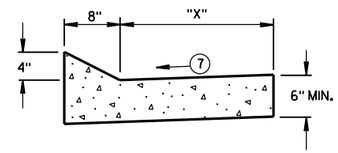

TYPES TBT & TBTT[1]

CONCRETE CURB & GUTTER

TBT & TBTT	"X"
30"	22"
36"	28"

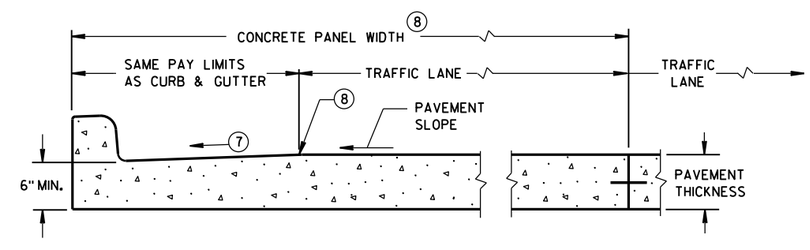

PARTIAL SECTION OF PAVEMENT*
WITH INTEGRAL CURB & GUTTER

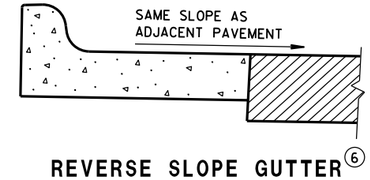

REVERSE SLOPE GUTTER[6]
(TYPICAL FOR ALL CURB & GUTTER TYPES)

GENERAL NOTES

DETAILS OF CONSTRUCTION, MATERIALS AND WORKMANSHIP NOT SHOWN ON THIS DRAWING SHALL CONFORM TO THE PERTINENT REQUIREMENTS OF THE CONTRACT.

PAVEMENT TIES AND TIE BARS SHALL BE EPOXY COATED IN CONFORMANCE WITH SUBSECTION 505.2.6.2 OF THE STANDARD SPECIFICATIONS.

INTEGRAL CURB & GUTTER SHALL CONFORM TO THE DETAILS SHOWN FOR CONCRETE CURB & GUTTER INCLUDING THE TRANSVERSE GUTTER SLOPE.

WHERE THE TRANSVERSE JOINTS IN THE PAVEMENT ARE REQUIRED TO BE SEALED, THE JOINTS IN THE INTEGRAL CURB AND GUTTER SHALL BE SEALED TO THE FACE OF CURB WITH THE SAME TYPE OF SEALANT. THE COST OF FURNISHING AND INSTALLING THIS SEALANT SHALL BE INCIDENTAL TO THE ITEM CONCRETE CURB AND GUTTER.

UNLESS OTHERWISE SHOWN ON THE TYPICAL CROSS SECTIONS, THE BASE AGGREGATE AND COMMON EXCAVATION LIMITS ARE 2'-0" BEHIND THE BACK OF CURBS.

1. TIE BARS ARE REQUIRED FOR CURB AND GUTTER TYPES A, G, K, R AND TBTT.
2. THE BOTTOM OF CURB AND GUTTER MAY BE CONSTRUCTED EITHER LEVEL OR PARALLEL TO THE SLOPE OF THE SUBGRADE OR BASE AGGREGATE PROVIDED A 6" MINIMUM GUTTER THICKNESS IS MAINTAINED.
3. USE 8" MINIMUM GUTTER THICKNESS WHEN USED WITH AN ADJACENT CONCRETE TRUCK APRON PLACED BEHIND BACK OF CURB.
4. THE BOTTOM OF CURB AND GUTTER MAY BE CONSTRUCTED EITHER LEVEL OR PARALLEL TO THE SLOPE OF THE SUBGRADE OR BASE AGGREGATE PROVIDED A 8" MINIMUM GUTTER THICKNESS IS MAINTAINED.
5. THE FACE OF CURB IS 6" FROM THE BACK OF CURB.
6. WHEN REVERSE SLOPE GUTTER IS REQUIRED, THE LOCATION(S) WILL BE SHOWN ELSEWHERE IN THE PLAN.
7. USE 4% GUTTER CROSS SLOPE UNLESS OTHERWISE NOTED IN THE PLANS.
8. INCLUDE LONGITUDINAL JOINT AND TIE BARS ALONG LANE EDGE WHEN CONCRETE PANEL WIDTH EXCEEDS THE MAXIMUM WIDTH PER TABLE BELOW. LONGITUDINAL JOINT(S) ARE NOT ALLOWED WITHIN TRAFFIC LANES AND BIKE LANES. LONGITUDINAL JOINT MAY BE SAWED.

PAVEMENT THICKNESS AND MAXIMUM CONCRETE PANEL WIDTH TABLE

PAVEMENT THICKNESS	MAXIMUM PANEL WIDTH
LESS THAN 10"	12'
10" & ABOVE	15'

* BIKE LANE IS NOT SHOWN.

CONCRETE CURB & GUTTER

STATE OF WISCONSIN
DEPARTMENT OF TRANSPORTATION

GENERAL NOTES

DETAILS OF CONSTRUCTION, MATERIALS AND WORKMANSHIP NOT SHOWN ON THIS DRAWING SHALL CONFORM TO THE PERTINENT REQUIREMENTS OF THE CONTRACT.

PAVEMENT TIES AND TIE BARS SHALL BE EPOXY COATED IN CONFORMANCE WITH SUBSECTION 505.2.6.2 OF THE STANDARD SPECIFICATIONS.

UNLESS OTHERWISE SHOWN ON THE TYPICAL CROSS SECTIONS, THE BASE AGGREGATE AND COMMON EXCAVATION LIMITS ARE 2'-0" BEHIND THE BACK OF CURBS.

(1) TIE BARS ARE REQUIRED FOR CURB AND GUTTER TYPES A, G, K, R AND TBTT.

(2) THE BOTTOM OF CURB AND GUTTER MAY BE CONSTRUCTED EITHER LEVEL OR PARALLEL TO THE SLOPE OF THE SUBGRADE OR BASE AGGREGATE PROVIDED A 6" MINIMUM GUTTER THICKNESS IS MAINTAINED.

(9) REFER TO SDD 8D18 AND SDD 8D19 FOR ADDITIONAL DRIVEWAY ENTRANCE CURB DETAILS.

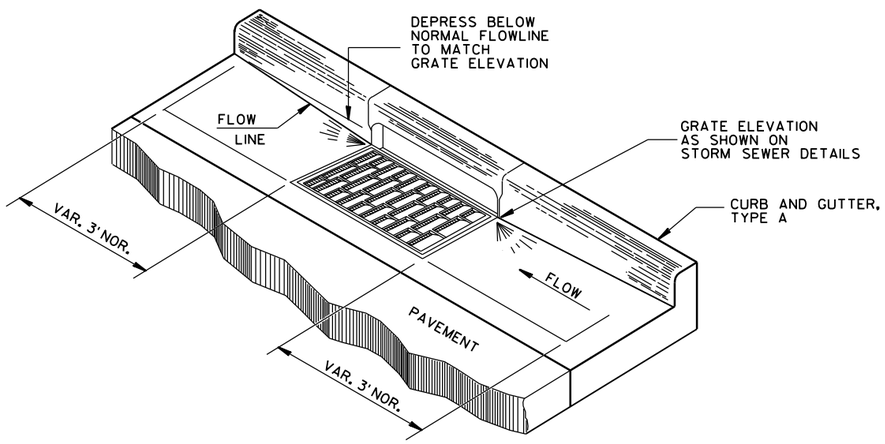

DETAIL OF CURB AND GUTTER AT INLETS

(TYPE H INLET COVER SHOWN)

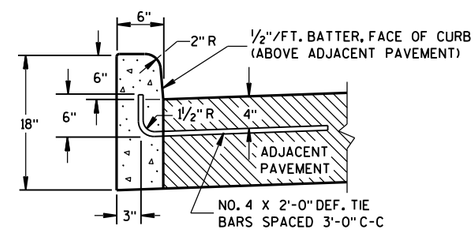

TYPES A(1) & D

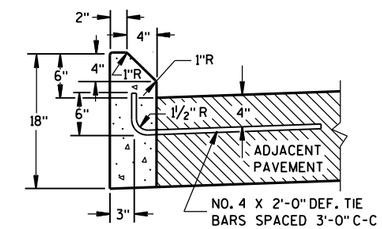

TYPES G(1) & J

CONCRETE CURB

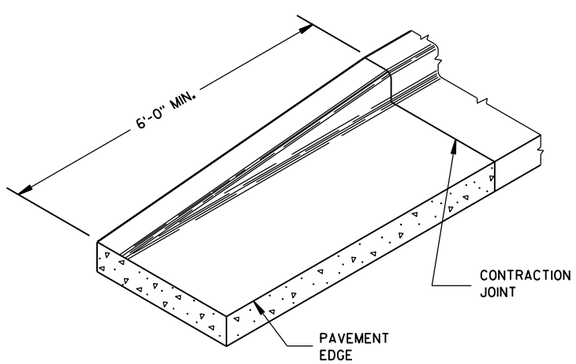

END SECTION CURB & GUTTER

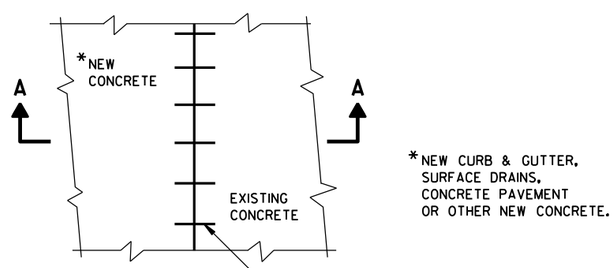

PLAN VIEW

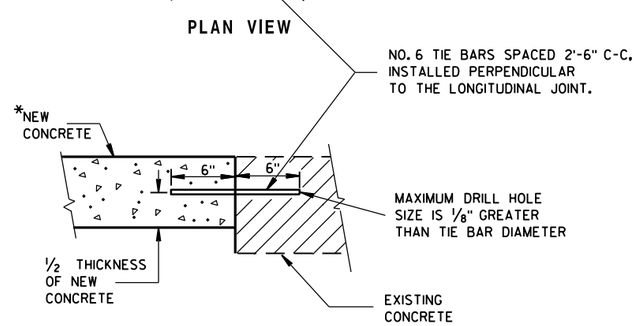

SECTION A-A

TIE BARS DRILLED INTO EXISTING PAVEMENT

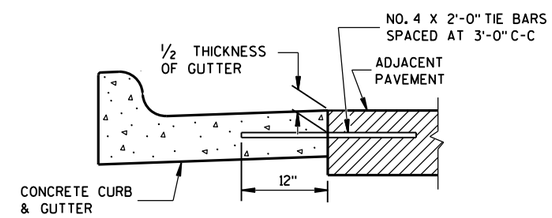

TYPICAL TIE BAR LOCATION (1)

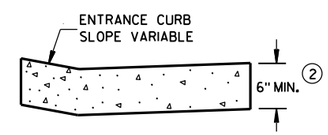

DRIVEWAY ENTRANCE CURB (9)

(WHEN DIRECTED BY THE ENGINEER)

CONCRETE CURB, TIES AND CURB AND GUTTER APPLICATIONS

STATE OF WISCONSIN
DEPARTMENT OF TRANSPORTATION

APPROVED
June, 2017 — DATE
/S/ Rodney Taylor — ROADWAY STANDARDS UNIT SUPERVISOR
ENT
FHWA

GENERAL NOTES

DETAILS OF CONSTRUCTION, MATERIALS AND WORKMANSHIP NOT SHOWN ON THIS DRAWING SHALL CONFORM TO PERTINENT REQUIREMENTS OF THE STANDARD SPECIFICATIONS AND APPLICABLE SPECIAL PROVISIONS.

WELDED STEEL WIRE FABRIC SHALL BE IN ACCORDANCE WITH AASHTO SPECIFICATION M55.

① JOINTS SHALL BE 1/8 TO 1/4 INCH WIDE BY 1 1/2 INCHES DEEP AND SPACED AT UNIFORM INTERVALS OF APPROXIMATELY 4 FEET.

② GEOTEXTILE FABRIC TYPE "R" SHALL UNDERLAY THE FULL LENGTH AND WIDTH OF THE CONCRETE SURFACE DRAIN AND RIPRAP.

③ CONCRETE SURFACE DRAIN WITHOUT CURB AND GUTTER MAY BE USED ON BACKSLOPES WHEN SPECIFIED

ASPHALTIC FLUME

NOTE: TAPER CURB ENDS TO GUTTER IN 1'-0"

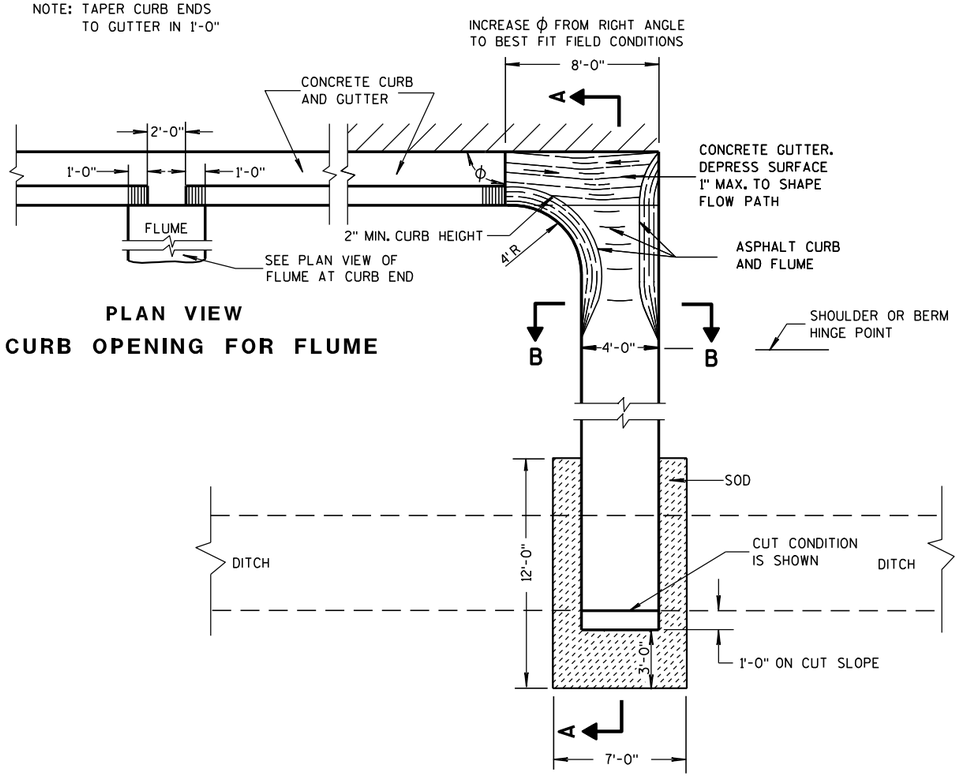

PLAN VIEW
CURB OPENING FOR FLUME

PLAN VIEW
FLUME AT CURB END

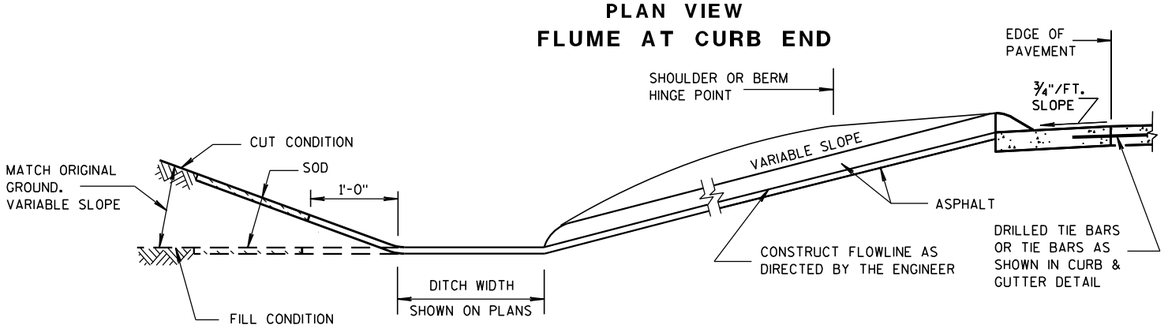

SECTION A-A

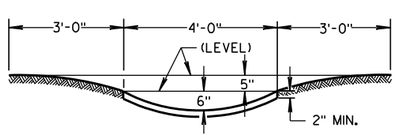

SECTION B-B

③ CONCRETE SURFACE DRAIN

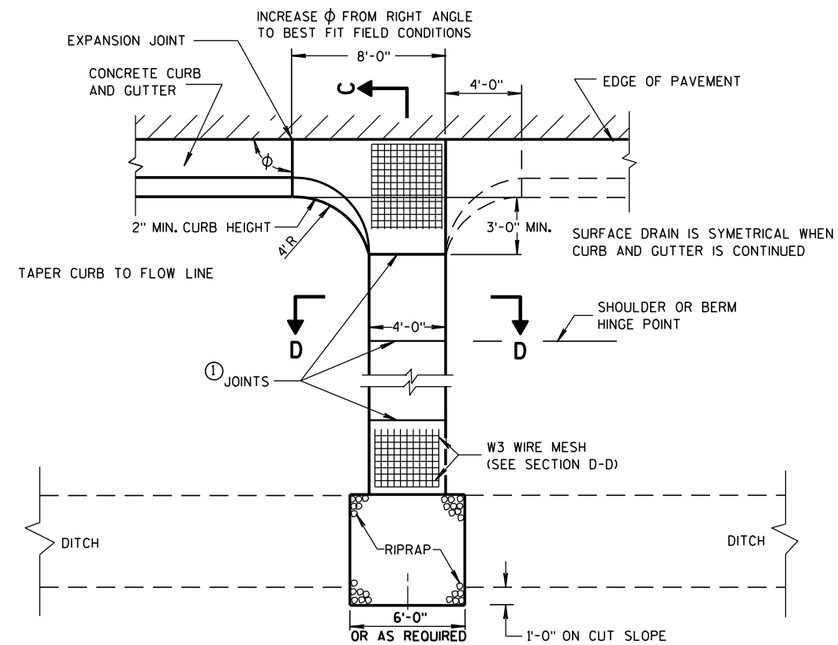

PLAN VIEW

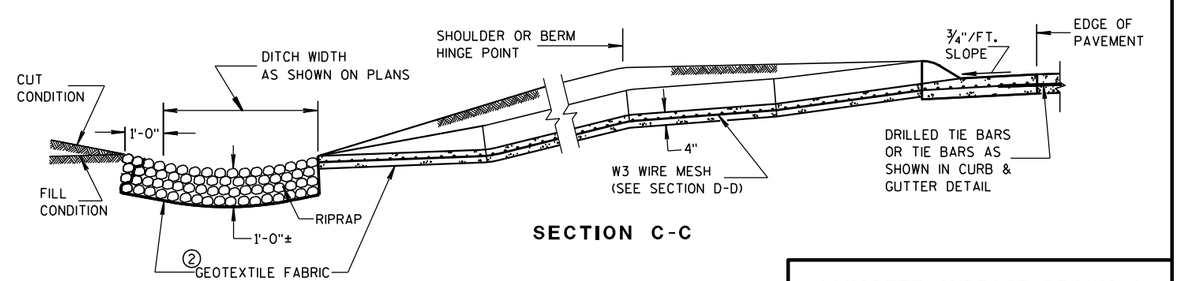

SECTION C-C

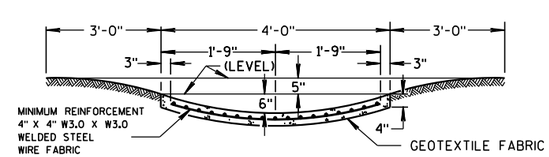

SECTION D-D

CONCRETE SURFACE DRAINS & ASPHALTIC FLUMES	
STATE OF WISCONSIN DEPARTMENT OF TRANSPORTATION	
APPROVED	
9-4-08 DATE	/S/ Jerry H. Zogg ROADWAY STANDARDS ENGINEER
FHWA	MENT

6

S.D.D. 8 D 4-5

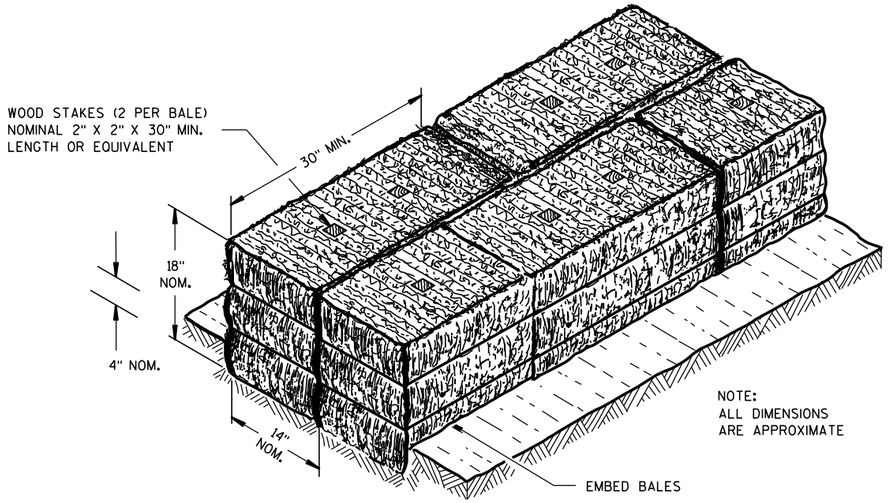

SECTION A-A

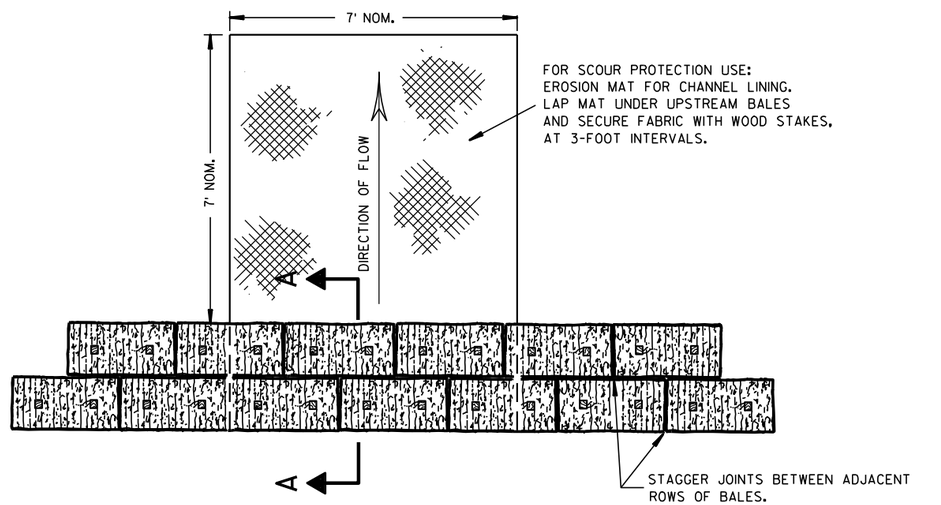

PLAN VIEW

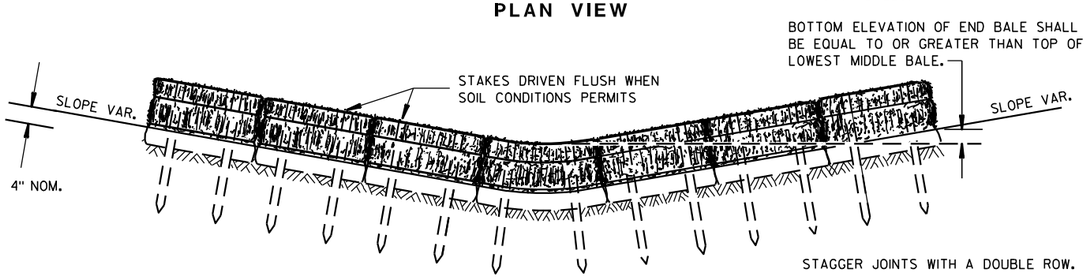

FRONT ELEVATION

TEMPORARY DITCH CHECK USING EROSION BALES ①

GENERAL NOTES

DETAILS OF CONSTRUCTION, MATERIALS AND WORKMANSHIP NOT SHOWN ON THIS DRAWING SHALL CONFORM TO THE PERTINENT REQUIREMENTS OF THE STANDARD SPECIFICATIONS AND THE APPLICABLE SPECIAL PROVISIONS.

① TEMPORARY DITCH CHECKS EITHER EROSION BALES OR MANUFACTURED SHALL BE PAID FOR UNDER THE BID ITEM OF TEMPORARY DITCH CHECK. THE DEPARTMENT WILL NOT PAY FOR TEMPORARY DITCH CHECKS CONSTRUCTED OF A SINGLE ROW OF EROSION BALES.

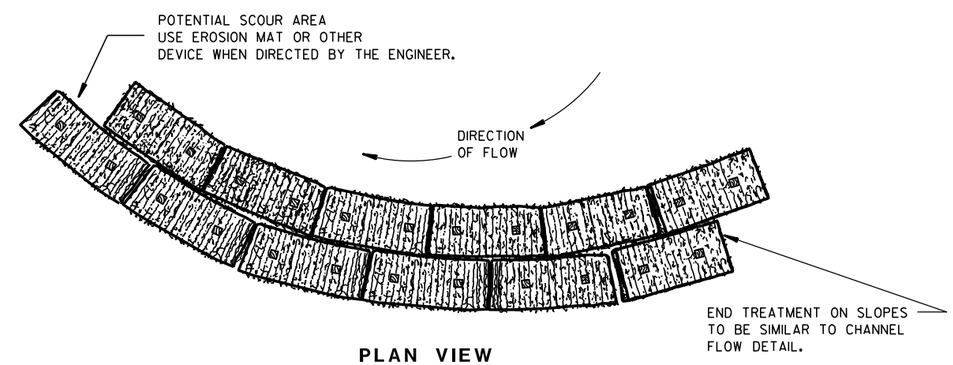

PLAN VIEW

WHEN ALTERING THE DIRECTION OF FLOW

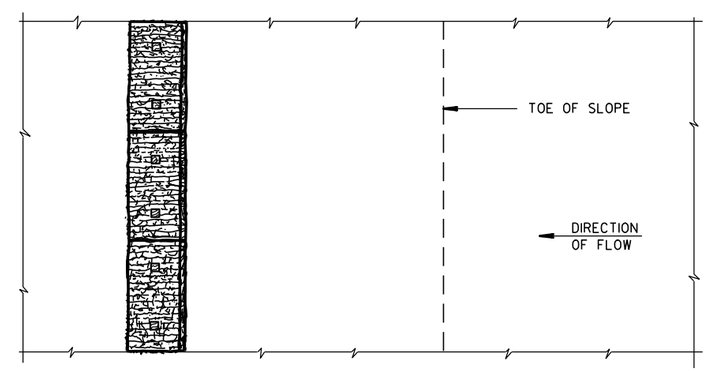

PLAN VIEW

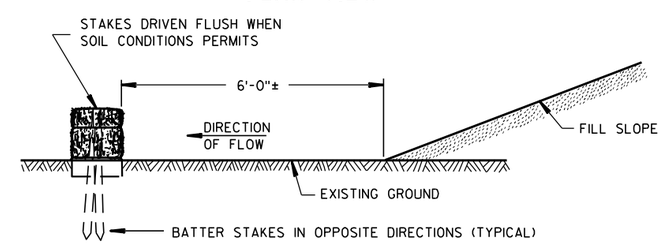

FRONT ELEVATION

WHEN EXISTING GROUND SLOPES AWAY FROM FILL SLOPE

EROSION BALES FOR SHEET FLOW

TYPICAL INSTALLATIONS OF EROSION BALES / TEMPORARY DITCH CHECKS

STATE OF WISCONSIN
DEPARTMENT OF TRANSPORTATION

APPROVED
6/04/02 — DATE
/S/ Beth Cann — CHIEF ROADWAY DEVELOPMENT ENGINEER
FHWA

6

6

S.D.D. 8 E 8-3

S.D.D. 8 E 8-3

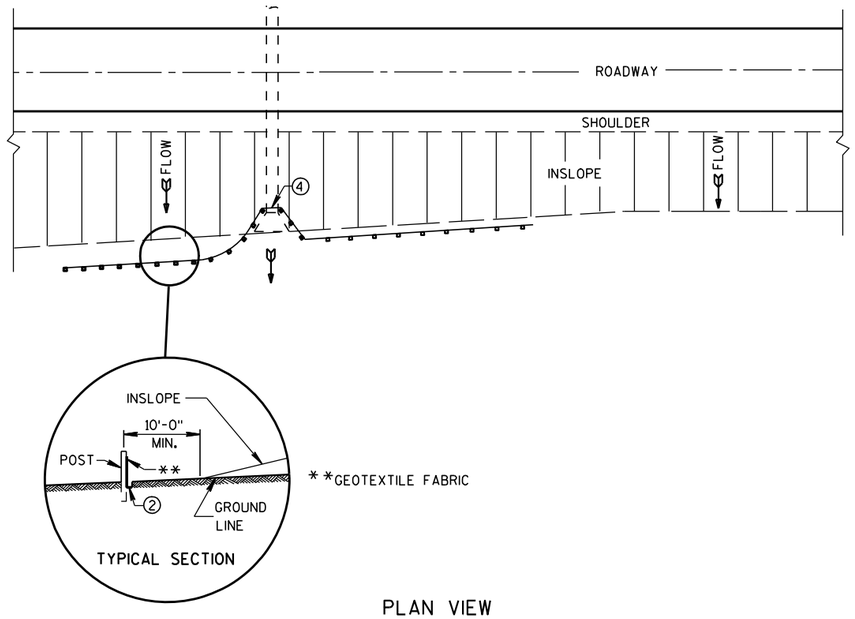

PLAN VIEW

TYPICAL APPLICATION OF SILT FENCE

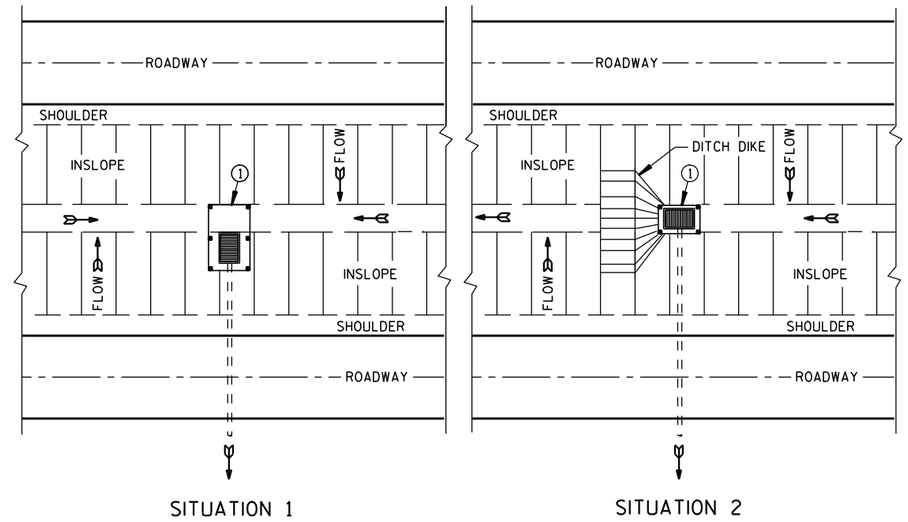

PLAN VIEW

SILT FENCE AT MEDIAN SURFACE DRAINS

GENERAL NOTES

DETAILS OF CONSTRUCTION NOT SHOWN ON THIS DRAWING SHALL CONFORM TO THE PERTINENT REQUIREMENTS OF THE STANDARD SPECIFICATIONS AND APPLICABLE SPECIAL PROVISIONS.

① HORIZONTAL BRACE REQUIRED WITH 2" X 4" WOODEN FRAME OR EQUIVALENT AT TOP OF POSTS.

② FOR MANUAL INSTALLATIONS THE TRENCH SHALL BE A MINIMUM OF 4" WIDE & 6" DEEP TO BURY AND ANCHOR THE GEOTEXTILE FABRIC. FOLD MATERIAL TO FIT TRENCH AND BACKFILL & COMPACT TRENCH WITH EXCAVATED SOIL.

③ WOOD POSTS SHALL BE A MINIMUM SIZE OF 1⅛" X 1⅛" OF OAK OR HICKORY.

④ SILT FENCE TO EXTEND ACROSS THE TOP OF THE PIPE.

⑤ CONSTRUCT SILT FENCE FROM A CONTINUOUS ROLL IF POSSIBLE BY CUTTING LENGTHS TO AVOID JOINTS. IF A JOINT IS NECESSARY USE ONE OF THE FOLLOWING TWO METHODS; A) OVERLAP THE END POSTS AND TWIST, OR ROTATE, AT LEAST 180 DEGREES. B) HOOK THE END OF EACH SILT FENCE LENGTH.

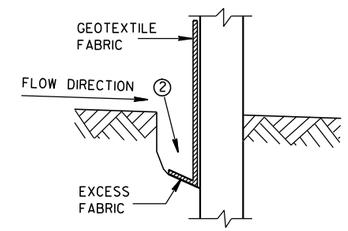

TRENCH DETAIL

NOTE: ADDITIONAL POST DEPTH OR TIE BACKS MAY BE REQUIRED IN UNSTABLE SOILS

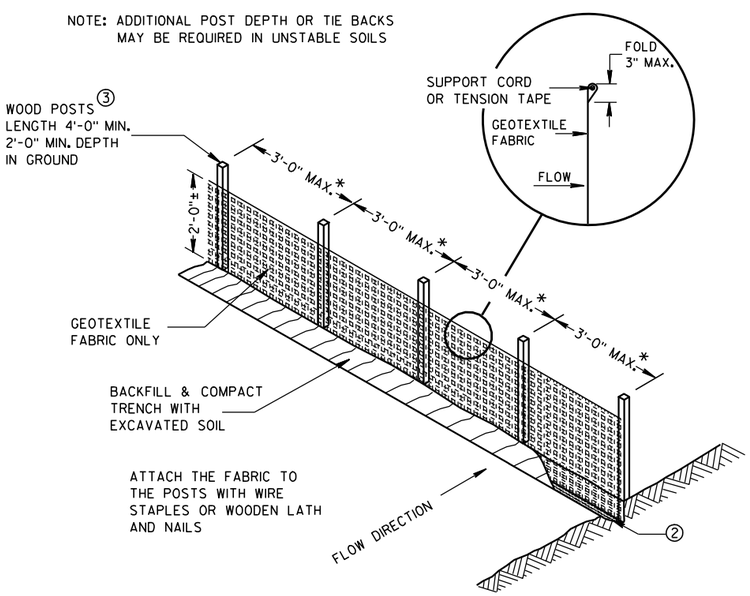

*NOTE: 8'-0" POST SPACING ALLOWED IF A WOVEN GEOTEXTILE FABRIC IS USED.

SILT FENCE

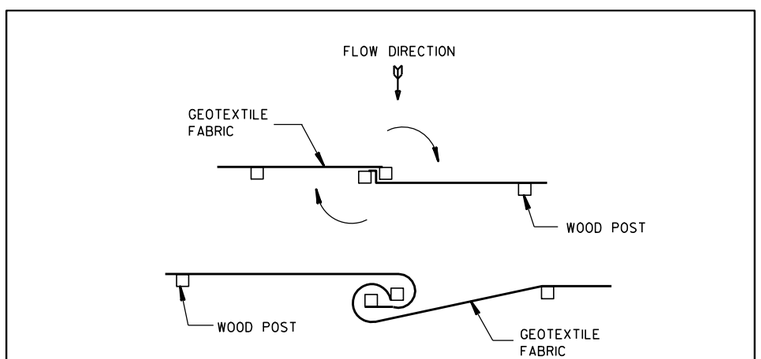

TWIST METHOD

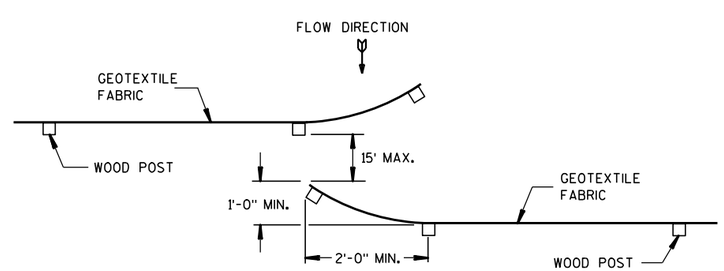

HOOK METHOD

JOINING TWO LENGTHS OF SILT FENCE ⑤

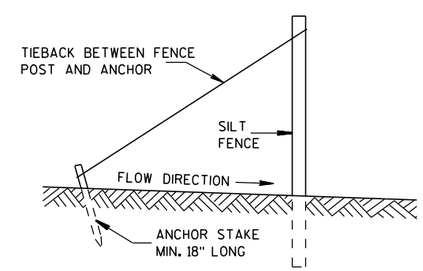

SILT FENCE TIE BACK

(WHEN REQUIRED BY THE ENGINEER)

SILT FENCE
STATE OF WISCONSIN DEPARTMENT OF TRANSPORTATION
APPROVED 4-29-05 /S/ Beth Cann----- DATE CHIEF ROADWAY DEVELOP ENGINEER FHWA

6

6

S.D.D. 8 E 9-6

S.D.D. 8 E 9-6

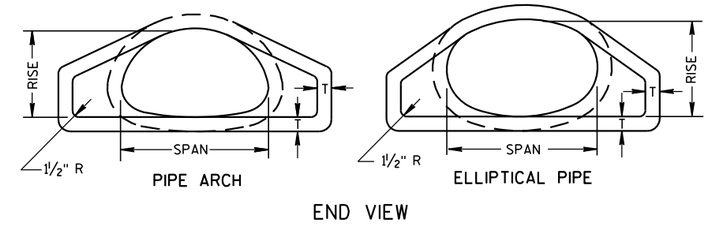

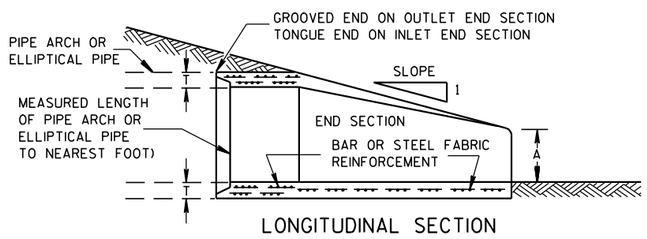

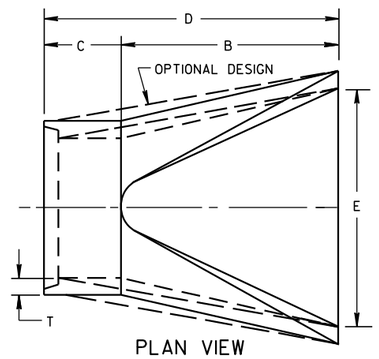

CONCRETE ENDWALLS

2- ⅔" X ½" CORRUGATIONS														
EQUIV. DIA. (Inches)	(Inches)		MIN. THICK. (Inches)		DIMENSIONS (Inches)							APPROX. SLOPE	BODY
	SPAN	RISE	STEEL	ALUM.	A (±1")	B (MAX.)	H (±1")	L (±1½")	L1 ①	L2 ①	W (±2")		
15	17	13	.064	.060	7	9	6	19	14	16	30	2½ to 1	1 Pc.
18	21	15	.064	.060	7	10	6	23	14	19⅜	36	2½ to 1	1 Pc.
21	24	18	.064	.060	8	12	6	28	18	21¾	42	2½ to 1	1 Pc.
24	28	20	.064	.060	9	14	6	32	18	27½	48	2½ to 1	1 Pc.
30	35	24	.079	.075	10	16	6	39	18	37⅝	60	2½ to 1	1 Pc.
36	42	29	.079	.075	12	18	8	46	24	45⅜	75	2½ to 1	1 Pc.
42	49	33	.109	.105	13	21	9	53	24	54¾	85	2½ to 1	2 Pc.
48	57	38	.109	.105	18	26	12	63	24	68	90	2½ to 1	3 Pc.
54	64	43	.109	.105	18	30	12	70	24	72¾	102	2¼ to 1	3 Pc.
60	71	47	.109*	.105*	18	33	12	77	30	82¼	114	2¼ to 1	3 Pc.
66	77	52	.109*	.105*	18	36	12	77	—	—	126	2 to 1	3 Pc.
72	83	57	.109*	.105*	18	39	12	77	—	—	138	2 to 1	3 Pc.

3" X 1" CORRUGATIONS														
EQUIV. DIA. (Inches)	(Inches)		MIN. THICK. (Inches)		DIMENSIONS (Inches)							APPROX. SLOPE	BODY
	SPAN	RISE	STEEL	ALUM.	A (±1")	B (MAX.)	H (±1")	L (±1½")	L1 ①	L2 ①	W (±2")		
48	53	41	.109	.105	18	26	12	63	24	72¾	90	2½ to 1	2 Pc.
54	60	46	.109	.105	18	30	12	70	30	82¼	102	2 to 1	2 Pc.
60	66	51	.109*	.105*	18	33	12	77	—	—	114	1½ to 1	3 Pc.
66	73	55	.109*	.105*	18	36	12	77	—	—	126	1½ to 1	3 Pc.
72	81	59	.109*	.105*	18	39	12	77	—	—	138	2 to 1	3 Pc.
78	87	63	.109*	.105*	22	38	12	77	—	—	148	1½ to 1	3 Pc.
84	95	67	.109*	.105*	22	34	12	77	—	—	162	1½ to 1	3 Pc.
90	103	71	.109*	.105*	22	38	12	77	—	—	174	1½ to 1	3 Pc.
96	112	75	.109*	.105*	24	40	12	77	—	—	174	1½ to 1	3 Pc.

NOTE: ALL SPLICES TO BE LAP RIVETED OR BOLTED.

* EXCEPT CENTER PANEL SEE GENERAL NOTES

REINFORCED CONCRETE PIPE ARCH									
EQUIV. DIA. (Inches)	DIMENSIONS (Inches)								APPROX. SLOPE
	** SPAN	** RISE	T	A	B	C	D	E	
24	29	18	3	8½	39	33	72	48	3 to 1
30	36	22	3½	9½	50	46	96	60	3 to 1
36	44	27	4	11⅛	60	36	96	72	3 to 1
42	51	31	4½	15 13/16	60	36	96	78	3 to 1
48	58	36	5	21	60	36	96	84	3 to 1
54	65	40	5½	25½	60	36	96	90	3 to 1
60	73	45	6	31	60	36	96	96	3 to 1
72	88	54	7	31	60	39	99	120	2 to 1
84	102	62	8	28½	83	19	102	144	2 to 1

REINFORCED CONCRETE ELLIPTICAL PIPE									
EQUIV. DIA. (Inches)	DIMENSIONS (Inches)								APPROX. SLOPE
	** SPAN	** RISE	T	A	B	C	D	E	
24	30	19	3¼	8½	39	33	72	48	3 to 1
30	38	24	3¾	9½	54	18	72	60	3 to 1
36	45	29	4½	11⅛	60	24	84	72	2½ to 1
42	53	34	5	15¾	60	36	96	78	2½ to 1
48	60	38	5½	21	60	36	96	84	2½ to 1
54	68	43	6	25½	60	36	96	90	2½ to 1
60	76	48	6½	30	60	36	96	96	2½ to 1

**NOMINAL SIZE

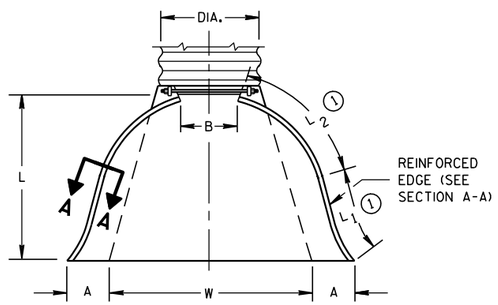

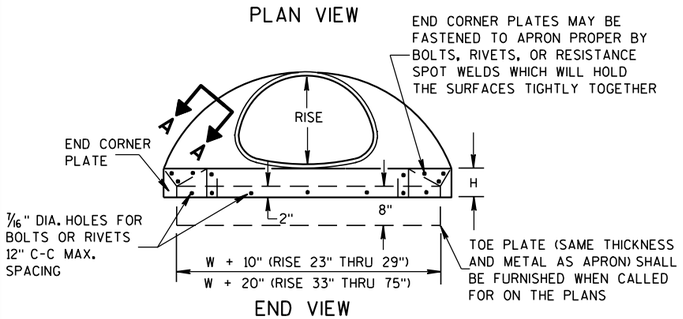

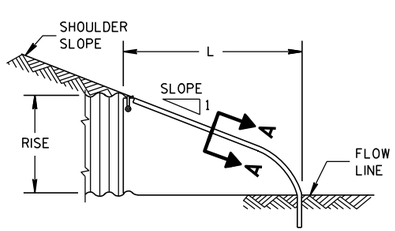

SIDE ELEVATION

METAL ENDWALLS

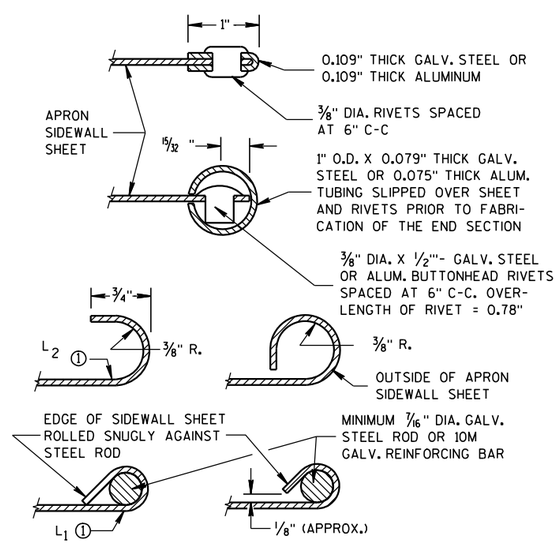

SECTION A-A

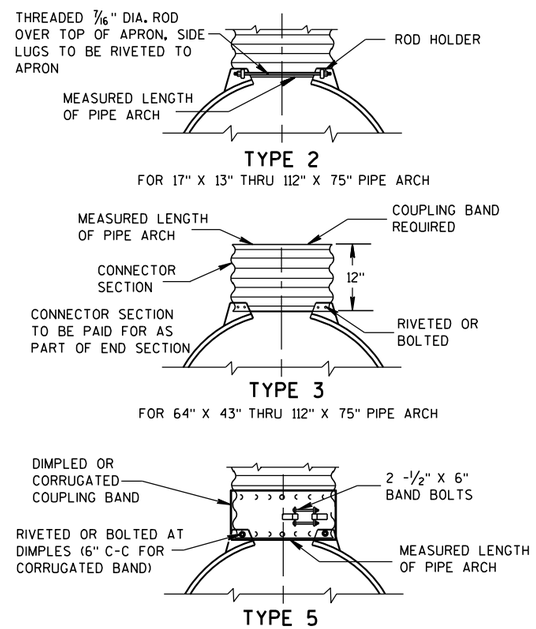

NOTE: DIMPLED BAND FITS OVER OUTSIDE OF ENDWALL, AND CORRUGATED BAND FITS INSIDE ENDWALL.

CONNECTION DETAILS

GENERAL NOTES

DETAILS OF CONSTRUCTION, MATERIALS AND WORKMANSHIP NOT SHOWN ON THIS DRAWING SHALL CONFORM TO THE PERTINENT REQUIREMENTS OF THE STANDARD SPECIFICATIONS AND THE APPLICABLE SPECIAL PROVISIONS.

CONCRETE APRON ENDWALLS MAY NOT BE USED WITH GALVANIZED STEEL OR ALUMINUM CULVERT PIPE OR VISE VERSA. GALVANIZED STEEL OR ALUMINUM APRON ENDWALLS SHALL NORMALLY BE INSTALLED ON CULVERT PIPE OF THE SAME METAL.

ALL THREE PIECE STEEL APRON ENDWALLS FOR 66" X 51" PIPE ARCH AND LARGER SHALL HAVE 0.109" SIDES AND 0.138" CENTER PANELS. ALL THREE PIECE ALUMINUM APRON ENDWALLS FOR 66" X 51" PIPE ARCH AND LARGER SHALL HAVE 0.105" SIDES AND 0.134" CENTER PANELS. THE WIDTH OF CENTER PANELS SHALL BE GREATER THAN 20 PERCENT OF THE PIPE ARCH PERIMETER.

LAP SEAMS SHALL BE TIGHTLY JOINED BY GALVANIZED RIVETS OR BOLTS FOR STEEL UNITS AND ALUMINUM RIVETS AND BOLTS FOR ALUMINUM UNITS. FOR THE 77" X 52" THROUGH 112" X 75" APRON ENDWALL SIZES, THE REINFORCED EDGES AND CENTER PANEL SEAMS SHALL BE FURTHER REINFORCED WITH GALVANIZED STEEL OR ALUMINUM STIFFENER ANGLES. THE ANGLES SHALL BE ATTACHED BY GALVANIZED NUTS AND BOLTS FOR STEEL UNITS AND ALUMINUM NUTS AND BOLTS FOR ALUMINUM UNITS.

WHERE TWO OR MORE PIPES WITH APRON ENDWALLS ARE LAID ADJACENT TO EACH OTHER, THEY SHALL BE SEPARATED BY A DISTANCE SUFFICIENT TO PROVIDE A MINIMUM CLEARANCE OF 6 INCHES BETWEEN APRON ENDWALLS.

① FOR PIPE ARCH SIZES UP TO 73" X 55" A 180° ROLLED EDGE MAY BE USED INSTEAD OF STEEL ROD REINFORCEMENT. SEE SECTION A-A.

APRON ENDWALLS FOR PIPE ARCH AND ELLIPTICAL PIPE

STATE OF WISCONSIN
DEPARTMENT OF TRANSPORTATION

APPROVED
11/30/94 — DATE
/S/ Rory L. Rhinesmith — CHIEF ROADWAY DEVELOPMENT ENGINEER
FHWA

6

S.D.D. 8 F 2-1

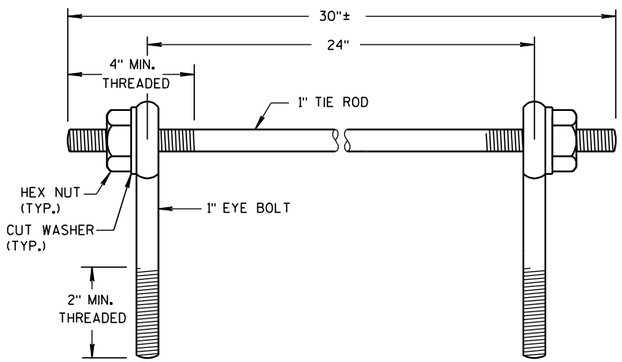

EYE BOLTS AND TIE ROD

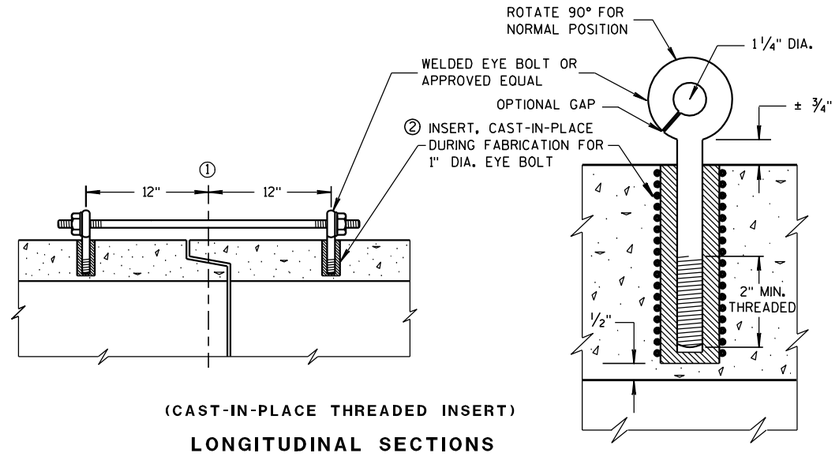

(CAST-IN-PLACE THREADED INSERT)

LONGITUDINAL SECTIONS

EYE BOLT AND TIE ROD ASSEMBLY (ALTERNATE NO. 1)

GENERAL NOTES

DETAILS OF CONSTRUCTION, MATERIALS, AND WORKMANSHIP NOT SHOWN ON THIS DRAWING SHALL CONFORM TO THE PERTINENT REQUIREMENTS OF THE STANDARD SPECIFICATIONS AND APPLICABLE SPECIAL PROVISIONS.

CONCRETE CULVERT AND STORM SEWER PIPE SHALL BE TIED TOGETHER IN THE MANNER ILLUSTRATED BY THIS DETAIL AT LOCATIONS DESIGNATED IN THE STANDARD SPECIFICATIONS AND THE PLAN. THE CONTRACTOR MAY USE EITHER ALTERNATE 1, 2 OR 3 FOR DRAINAGE STRUCTURES. ONLY ALTERNATE 1 AND 3 MAY BE USED FOR CATTLE PASSES, UNLESS OTHERWISE STATED IN THE CONTRACT. THE MATERIALS, FABRICATION AND WORK NECESSARY TO TIE THE PIPE BY THIS DETAIL WILL BE CONSIDERED INCIDENTAL TO THE PIPE AND APRON ENDWALLS IF REQUIRED.

DETAILED DRAWINGS FOR PROPOSED ALTERNATE DESIGNS FOR JOINT TIES SHALL BE SUBMITTED TO THE ENGINEER FOR APPROVAL.

JOINT TIES TO BE HOT-DIP GALVANIZED PER ASTM A 153.

① ℄ OF TONGUE AND GROOVE OR BELL AND SPIGOT JOINTS.

② THE INSIDE OF THE THREADED INSERTS SHALL BE CLEAN TO ALLOW THE INSERTION OF THREADED EYE BOLTS.

③ HOLES SHALL BE CAST-IN-PLACE OR DRILLED 12 INCHES FROM ℄ OF TONGUE AND GROOVE.

④ BOLT PROJECTION INSIDE OF PIPE SHALL NOT EXCEED 2 INCHES.

⑤ OPENING TO BE ROD DIAMETER PLUS 1 INCH.

⑥ LENGTH ADEQUATE TO EXTEND TO WITHIN 1/2 INCH OF THE INNER SURFACE OF THE PIPE.

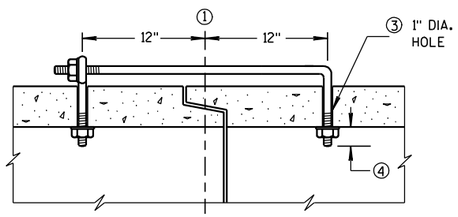

(TONGUE & GROOVE PIPE)

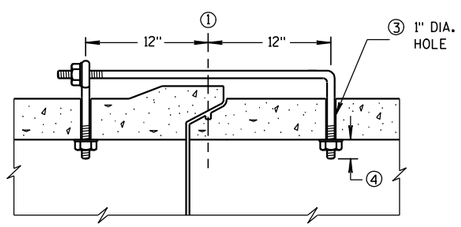

(MODIFIED BELL PIPE)

LONGITUDINAL SECTION

EYE BOLT DIMENSION TABLE

PIPE SIZE	L = LENGTH	
	TONGUE & GROOVE PIPE	MODIFIED BELL PIPE
18" TO 24"	4 1/2"	6 1/4"
30"	5"	7"
36"	5 1/2"	7"
42"	6"	
48"	6 1/2"	
60"	7 1/2"	
66"	8"	

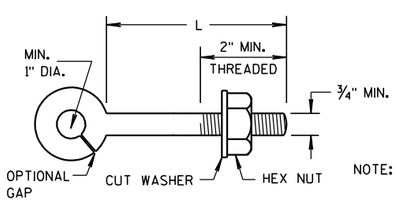

EYE BOLT

NOTE:

NOTE: TWO EYE BOLTS MAY BE USED WITH A 30" LONG THREADED ROD IN LIEU OF THE 90° BENT TIE ROD.

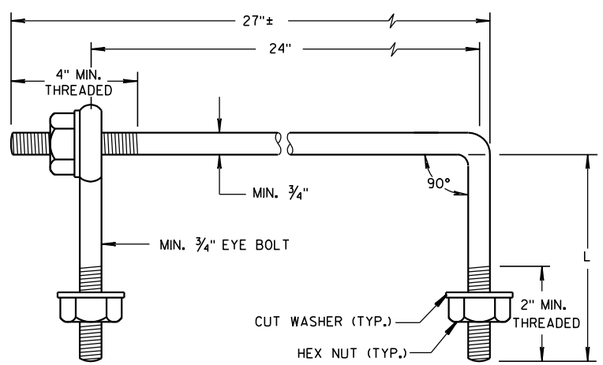

EYE BOLT AND TIE ROD

(JOINT TIES FOR 18" TO 66" DIA. CONCRETE PIPE)

EYE BOLT AND TIE ROD ASSEMBLY (ALTERNATE NO. 2)

ADJUSTABLE TIE ROD TABLE

PIPE DIAMETER	TIE ROD DIAMETER	D	L_1	N
12-60	5/8	5/8	5	1/2
66-84	3/4	3/4	5	1/2
90-108	1	1	7	1 7/16

DIMENSIONS SHOWN ARE IN INCHES

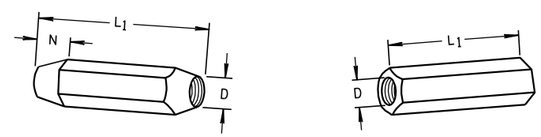

TAPERED PLAIN

RIGHT AND LEFT THREADS

SLEEVE NUTS

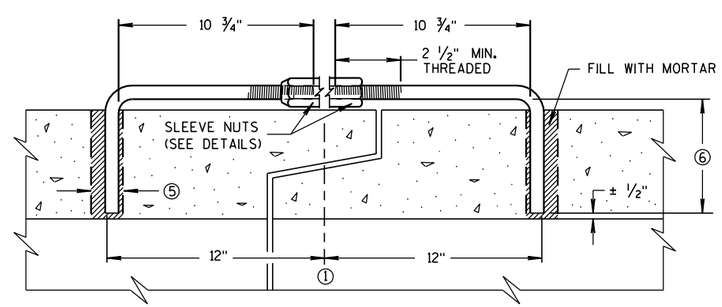

LONGITUDINAL SECTION

(JOINT TIES FOR 12" TO 108" DIA. CONCRETE PIPE)

ADJUSTABLE TIE ROD (ALTERNATE NO. 3)

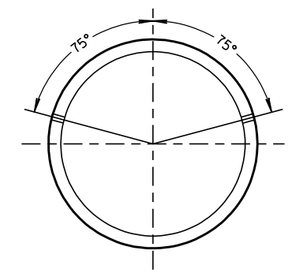

PLACEMENT OF (2) CAST-IN-PLACE INSERTS OR HOLES DURING FABRICATION FOR PIPE SECTIONS REQUIRING TIE RODS

TRANSVERSE SECTION

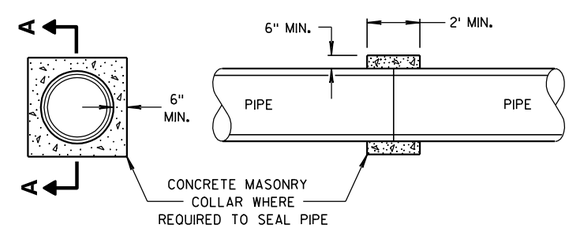

SECTION A-A

CONCRETE COLLAR DETAIL

JOINT TIES FOR CONCRETE PIPE AND CONCRETE COLLAR DETAIL

STATE OF WISCONSIN
DEPARTMENT OF TRANSPORTATION

APPROVED
6/5/2012 /S/ Jerry H. Zogg
DATE ROADWAY STANDARDS DEVELOPMENT ENGINEER
FHWA

6

6

S.D.D. 8 F 4-7

S.D.D. 8 F 4-7

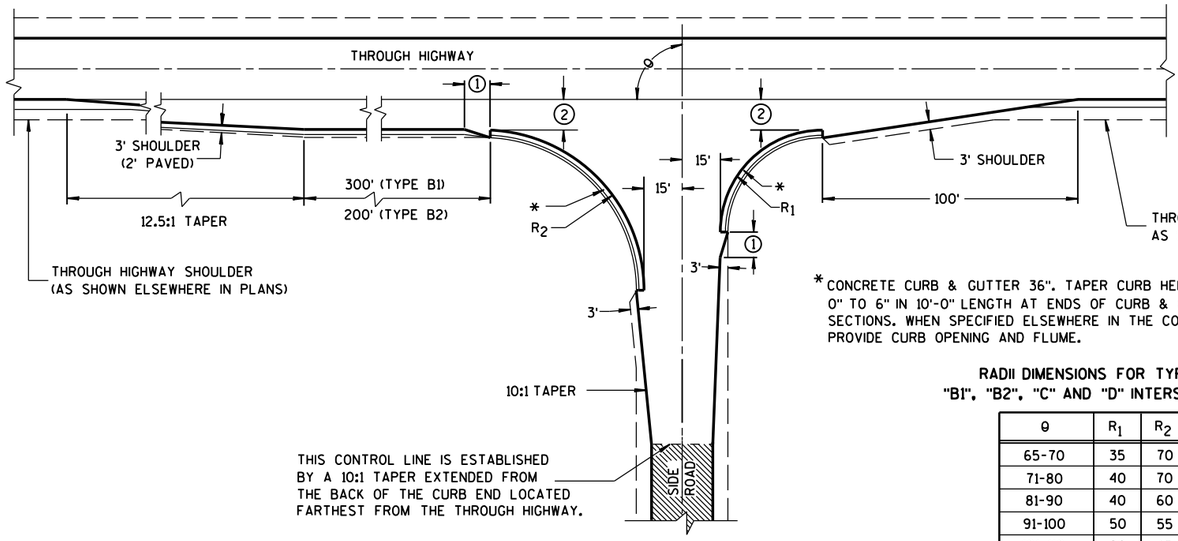

TYPE "B1" AND "B2"

*CONCRETE CURB & GUTTER 36". TAPER CURB HEIGHT 0" TO 6" IN 10'-0" LENGTH AT ENDS OF CURB & GUTTER SECTIONS. WHEN SPECIFIED ELSEWHERE IN THE CONTRACT, PROVIDE CURB OPENING AND FLUME.

RADII DIMENSIONS FOR TYPES "B1", "B2", "C" AND "D" INTERSECTIONS

θ	R_1	R_2
65-70	35	70
71-80	40	70
81-90	40	60
91-100	50	55
101-110	60	45

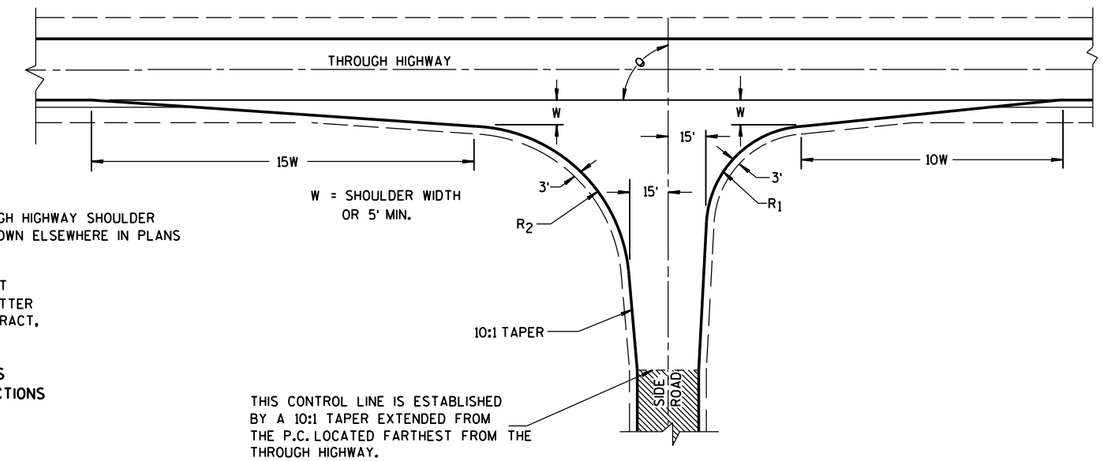

TYPE "C"

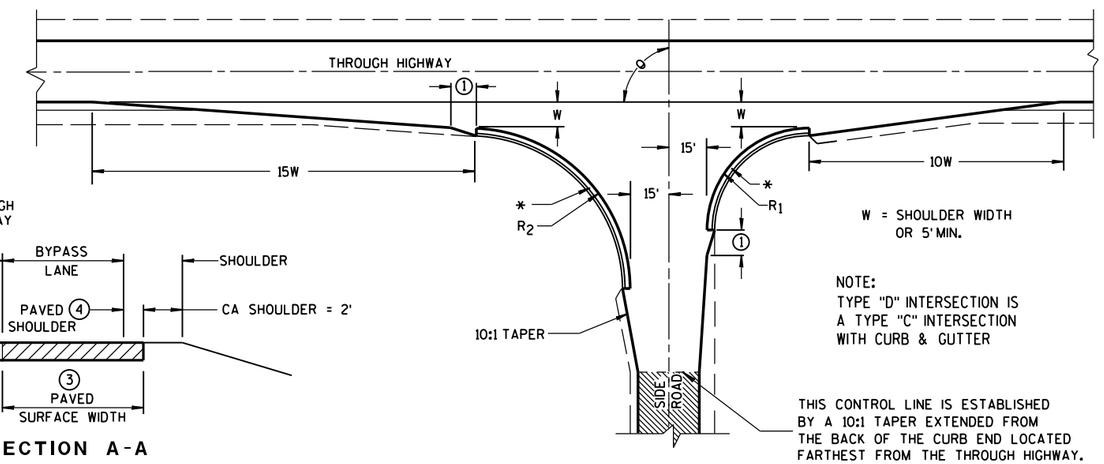

TYPE "D"

GENERAL NOTES

DESIGNS MAY BE USED INTERCHANGEABLY IN COMBINATION OR SEPARATELY FOR ANY ONE COMPLETE INTERSECTION DEPENDING UPON INTERSECTION ANGLE AND SURFACING OF EACH APPROACH ROADWAY.

SIDE ROAD SURFACING NOTE

WHEN THE SIDE ROAD IS NOT PRESENTLY PAVED, PAVEMENT SHALL BE PLACED TO THE LIMITS SHOWN UNLESS OTHERWISE PROVIDED IN THE CONTRACT. WHERE THE CONSTRUCTION LIMITS ARE BEYOND THE PAVING LIMITS, CRUSHED AGGREGATE SURFACING SHALL BE PLACED BETWEEN THE PAVING LIMITS AND CONSTRUCTION LIMITS.

WHEN THE SIDE ROAD IS PRESENTLY PAVED, NEW PAVEMENT SHALL BE PLACED TO THE LIMITS OF DESIGN AS SHOWN AND BEYOND, IF NECESSARY, TO MEET EXISTING PAVEMENT.

WHEN THE SIDE ROAD IS THE CONSTRUCTION PROJECT, THE INTERSECTION SURFACING SHALL BE THE SAME AS FOR THE PROJECT.

EXISTING PAVED SURFACE

BYPASS LANE

(1) 10-FT TYPICAL.

(2) 12-FT** PLUS ADDITIONAL WIDTH FOR BIKE LANE IF SHOWN ELSEWHERE IN THE PLAN.

**10-FT MAY BE USED ON TYPE B2 ON RESURFACING PROJECTS IF SPECIFIED IN THE CONTRACT.

(3) BYPASS LANE PAVED SURFACE WIDTH OUTSIDE OF TRAVEL LANE
-ASPHALT = 12-FT PLUS PAVED SHOULDER WIDTH.
-PC CPNCRETE = 13-FT PLUS PAVED SHOULDER WIDTH.

(4) BYPASS LANE PAVED SHOULDER WIDTH = THE GREATER OF 1-FT OR THE PAVED SHOULDER WIDTH OF THE THROUGH HIGHWAY.

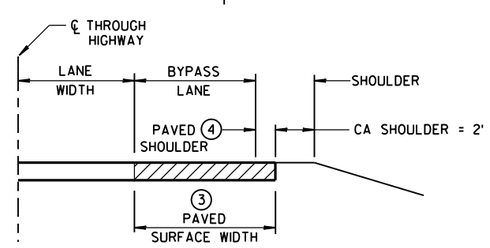

SECTION A-A
(SHOWING BYPASS LANE AND SHOULDER)

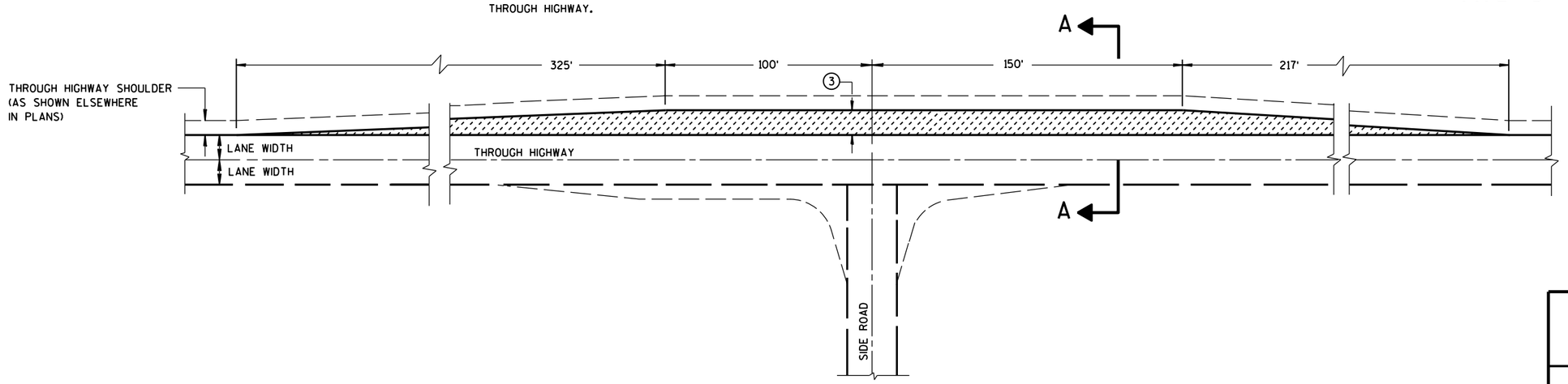

TEE INTERSECTION BYPASS LANE DETAIL

AT-GRADE SIDE ROAD INTERSECTION, TYPES "B1", "B2", "C" AND "D" AND TEE INTERSECTION BYPASS LANE

STATE OF WISCONSIN
DEPARTMENT OF TRANSPO

6

S.D.D. 9 A 1-13a

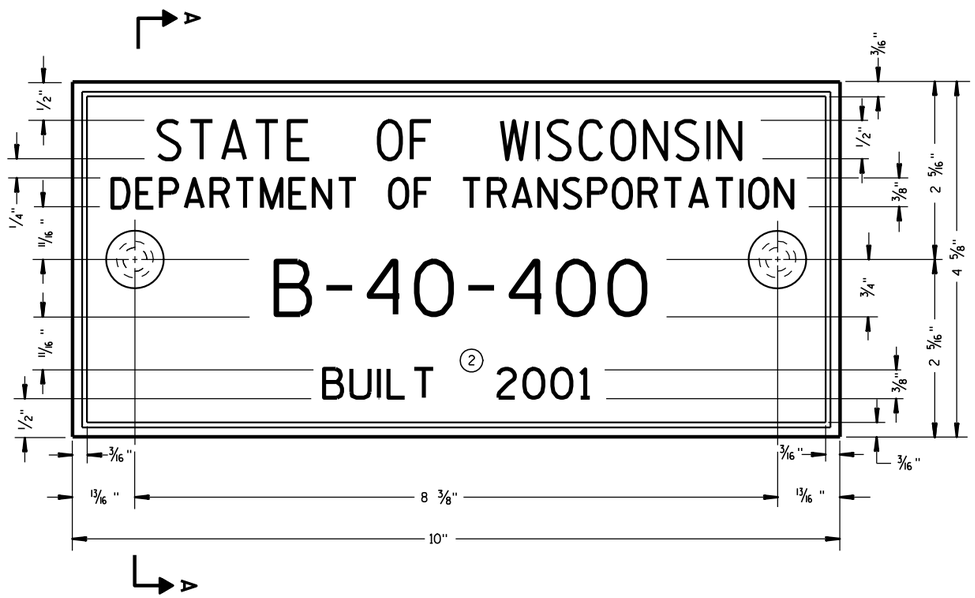

TYPICAL NAME PLATE

(BRIDGES, CULVERTS, AND RETAINING WALLS)

GENERAL NOTES

NAME PLATES TO BE INSTALLED ON BRIDGES, CULVERTS, AND RETAINING WALLS SHALL CONFORM TO THE REQUIREMENTS OF SECTION 502.3.11 OF THE STANDARD SPECIFICATIONS.

THE BRIDGE NUMBER AND YEAR BUILT SHOWN ON THIS DRAWING ARE EXAMPLES ONLY. SEE CONSTRUCTION PLANS FOR INDIVIDUAL NUMBERING AND YEAR BUILT.

① EPOXY RESIN SHALL BE FROM AN APPROVED MANUFACTURER AND USED IN ACCORDANCE WITH MANUFACTURER'S RECOMMENDATIONS.

② REHABILITATION OF AN EXISTING STRUCTURE SHOULD USE THE DATE OF ORIGINAL STRUCTURE CONSTRUCTION.

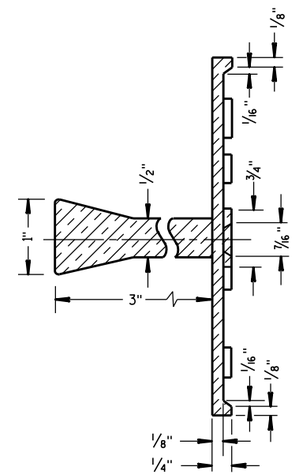

SECTION A-A

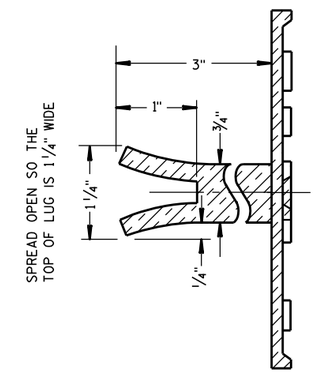

ALTERNATE LUG

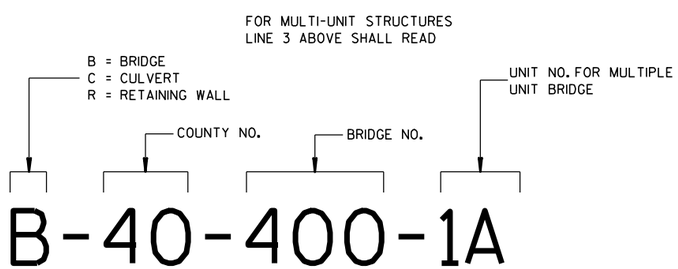

NUMBERING DESIGNATION
MULTI-UNIT STRUCTURES

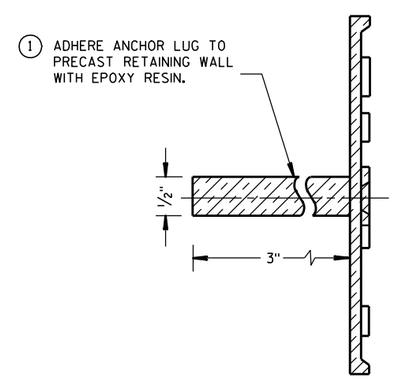

ALTERNATE LUG

(FOR ATTACHMENT TO PRECAST STRUCTURES)

NAME PLATE (STRUCTURES)		
STATE OF WISCONSIN DEPARTMENT OF TRANSPORTATION		
APPROVED		
3/26/10 DATE	/S/ Scot Beck CHIEF STRUCTURAL DEVELOPER	ENGINEER
FHWA		

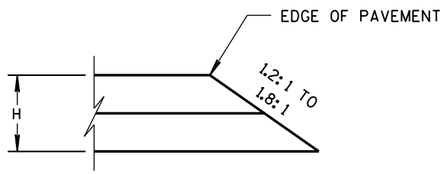

CONSTRUCTED WITH FINAL TWO LAYERS

FOR H 5" OR LESS

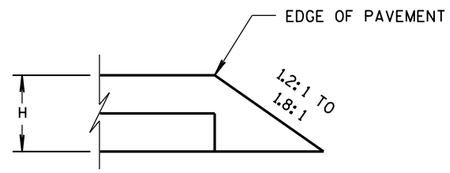

CONSTRUCTED WITH FINAL LAYER

FOR H 5" OR LESS

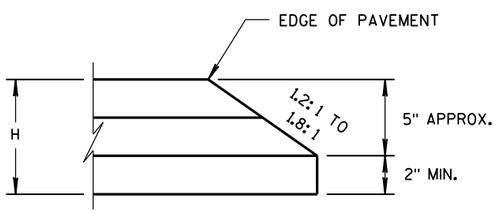

CONSTRUCTED WITH FINAL TWO LAYERS

FOR H GREATER THAN 5"

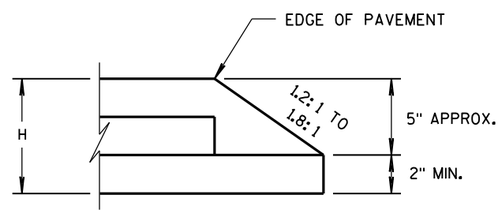

CONSTRUCTED WITH FINAL LAYER

FOR H GREATER THAN 5"

HMA PAVEMENT AND HMA OVERLAYS

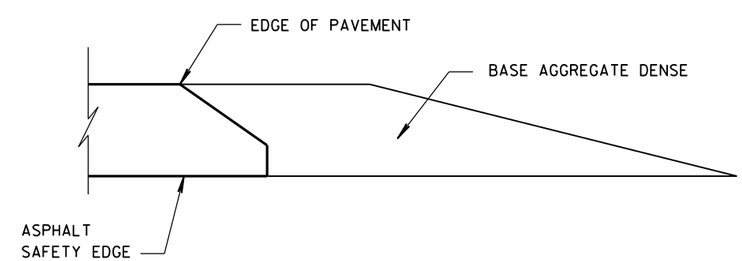

FINISHED SHOULDER AGGREGATE PLACEMENT

6

6

S.D.D. 14 B 29-1

S.D.D. 14 B 29-1

SAFETY EDGE SM

STATE OF WISCONSIN
DEPARTMENT OF TRANSPORTATION

APPROVED

11/30/2012
DATE

/S/ Jerry H. Zogg
ROADWAY STANDARDS DEVELOPMENT ENGINEER

FHWA

1. WOOD OR STEEL POSTS (w6X9 OR w6X8.5) MAY BE USED. DO NOT INTERMIX WOOD AND STEEL POSTS. INSTALL STEEL POSTS WITH HOLES ON APPROACHING TRAFFIC SIDE.

2. USE WOOD OR APPROVED PLASTIC BLOCKOUTS. WOOD BLOCKOUTS MAY BE CONSTRUCTED OUT OF TWO OR MORE WOOD BLOCKOUTS. SEE ALTERNATE WOOD BLOCKOUT DETAIL. DIMENSIONS OF APPROVED PLASTIC BLOCKOUTS MAY VARY.

3. IF ROCK IS ENCOUNTERED DURING EXCAVATION, PROVIDE A HOLE 12 INCHES IN DIAMETER EXTENDING 20 INCHES DEEP INTO THE ROCK. PLACE APPROXIMATELY 2½ INCHES OF GRANULAR MATERIAL IN THE BOTTOM OF THE HOLE. CUT THE POSTS THE TO LENGTH AMD INSTALL. BACKFILL WITH EXCAVATED MATERIAL AND COMPACT. BACKFILL IS TO BE FREE OF LARGE ROCKS.

4. WHEN THE DISTANCE FROM BACK OF POST TO SHOULDER HINGE POINT IS LESS THAN 2 FEET INSTALL LONGER POST AT HALF POST SPACING (K).

5. FOR NEW MGS INSTALLATION TOP OF W-BEAM RAIL TOLERANCE IS ± 1". FOR EXISTING MGS INSTALLATION TOP OF W-BEAM IS BETWEEN 27¾" TO 32".

6. WHEN USING STEEL POST AND WOOD BLOCKOUTS INSTALL FOUR 16D GALVANIZED NAILS. INSTALL NAILS AT THE BACK CORNERS OF THE BLOCK AND BEND THE NAILS OVER THE FLANGE OF THE STEEL POST.

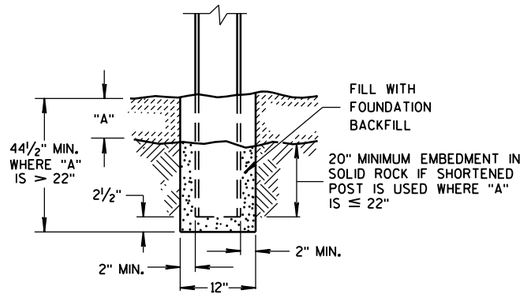

END VIEW
SETTING STEEL OR WOOD POST IN ROCK (3)

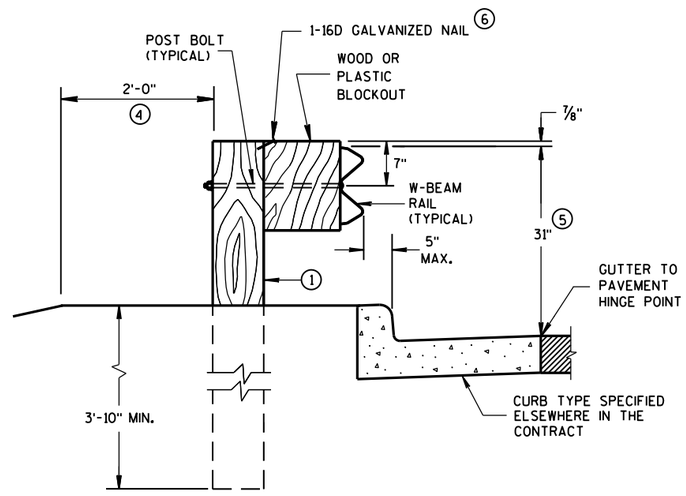

END VIEW
LOCATED ALONG A CURBED ROADWAY

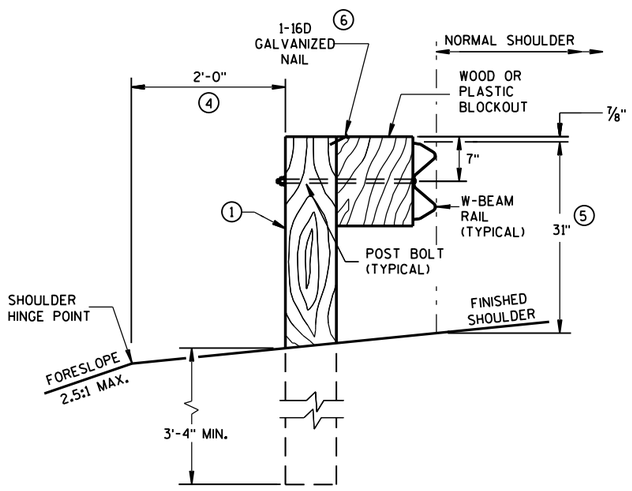

END VIEW
LOCATED ALONG A ROADWAY SHOULDER
STANDARD INSTALLATION

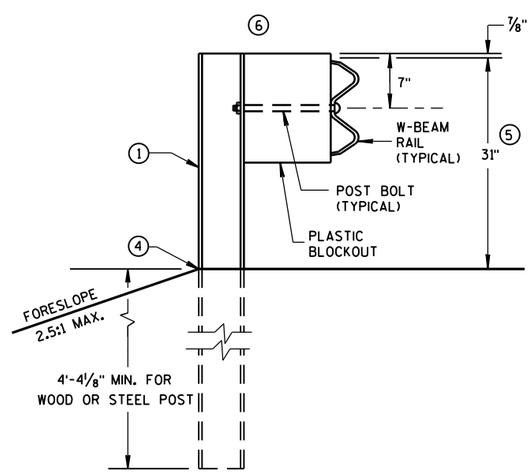

END VIEW
MGS LONGER POST AT HALFPOST SPACING W BEAM (K)

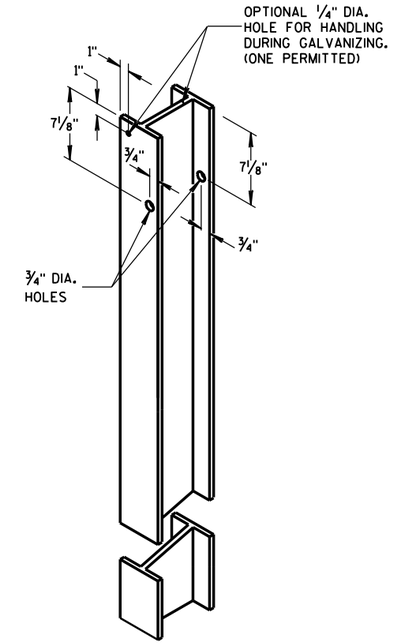

STEEL POST &
HOLE PUNCHING DETAIL
(w6X9) (1)

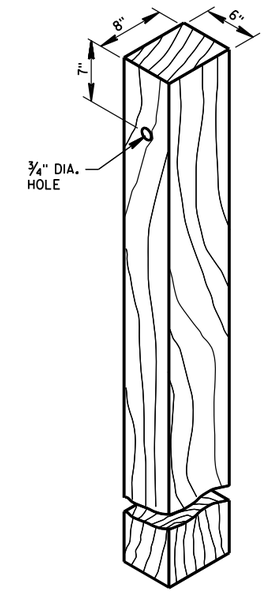

WOOD POST
(6" X 8") NOMINAL (1)

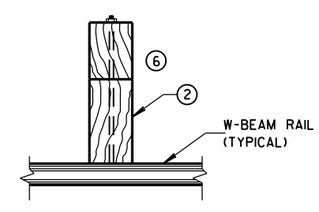

PLAN VIEW
WOOD POST,
BLOCKOUT & BEAM

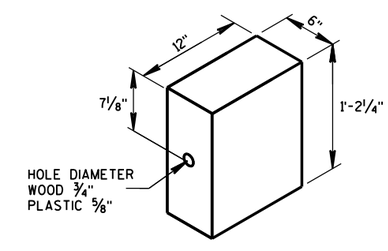

WOOD OR
PLASTIC BLOCKOUT (2)

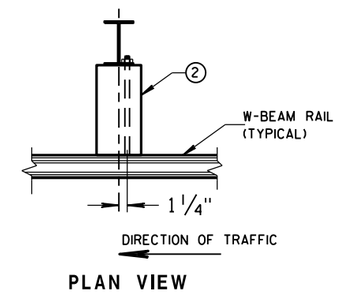

PLAN VIEW
STEEL POST,
PLASTIC BLOCKOUT & BEAM

MIDWEST GUARDRAIL SYSTEM
(MGS) GUARDRAIL

STATE OF WISCONSIN
DEPARTMENT OF TRANSPOI

6
S.D.D. 14 B 42-5a

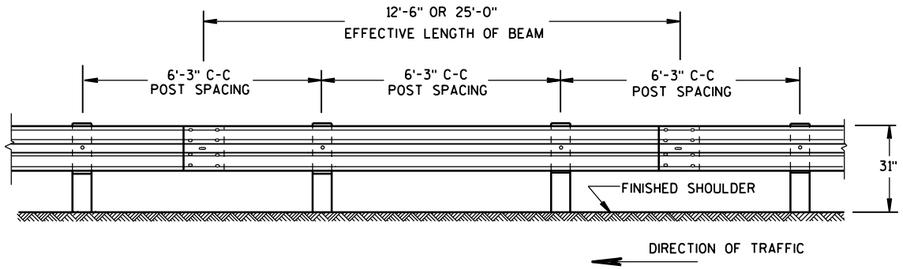

FRONT VIEW

POST SPACING STANDARD INSTALLATION

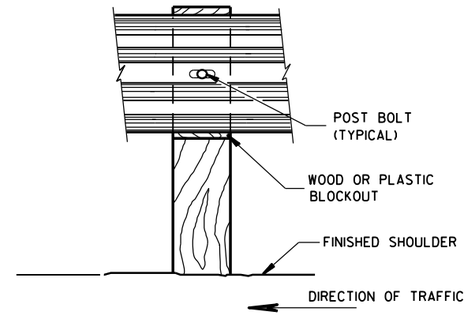

FRONT VIEW AT WOOD POST

GENERAL NOTES

(8) DO NOT INSTALL REFLECTORS ON THE FIRST 50 FEET OF THE APPROACH END OF THE ENERGY ABSORBING TERMINAL. RAIL SPLICE LOCATIONS ARE THE ONLY ACCEPTABLE LOCATIONS FOR REFLECTORS.

(11) 25 FEET OF HALF POST SPACING IS REQUIRED ON APPROACH AND DEPARTURE ENDS OF QUARTER POST SPACING.

POST BOLTS ARE A 5/8" DIAMETER ASTM A307 GUARDRAIL BOLT. A POST BOLT REQUIRES 5/8" DIAMETER A563A DOUBLE RECESSED (DR) HEAVY HEX NUT AND 5/8" DIAMETER F844 FLAT WASHER. POST BOLTS MAY BE LONGER IF MULTIPLE BLOCKOUTS ARE BEING USED.

GUARD RAIL SPLICE BOLTS ARE A 5/8" DIAMETER ASTM A307 GUARDRAIL HEAD BOLT. A GUARDRAIL SPLICE BOLT REQUIRES 5/8" DIAMETER A563A DOUBLE RECESSED (DR) HEAVY HEX NUT.

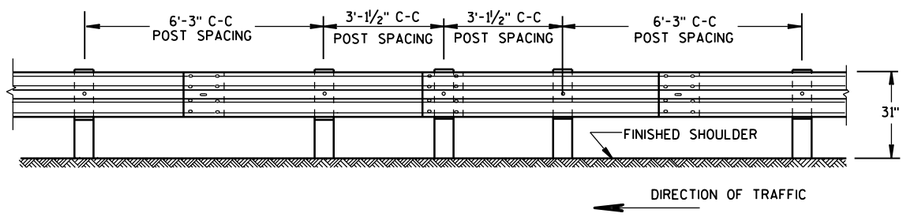

FRONT VIEW

HALF POST SPACING (HS) AND HALF POST SPACING WITH LONGER POSTS (K)

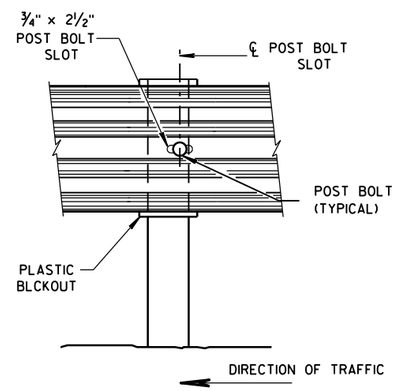

FRONT VIEW AT STEEL POST

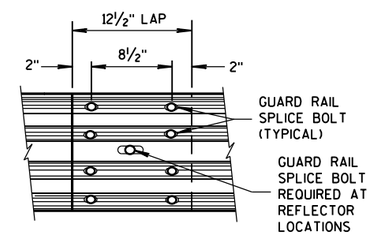

FRONT VIEW

MID-SPAN BEAM SPLICE

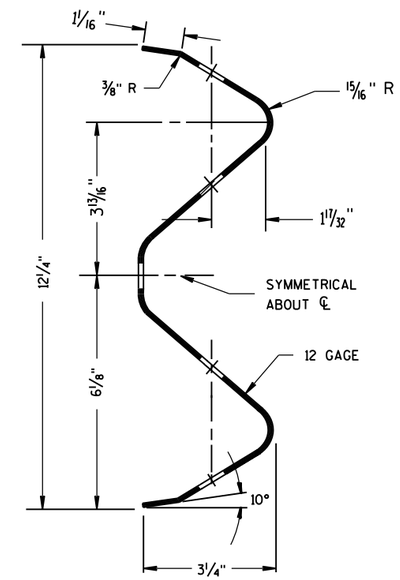

SECTION THRU W-BEAM RAIL

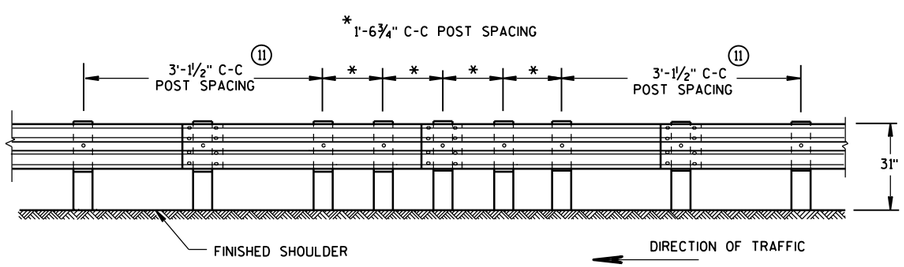

FRONT VIEW

QUARTER POST SPACING (QS)

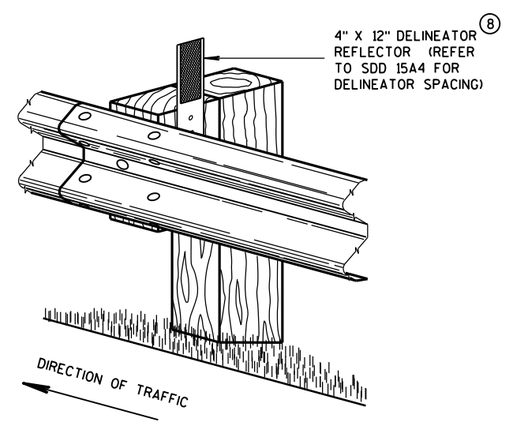

ONE SIDED REFLECTOR DETAIL AND TYPICAL INSTALLATION

MIDWEST GUARDRAIL SYSTEM
(MGS) GUARDRAIL

STATE OF WISCONSIN
DEPARTMENT OF TRANSPO

6

6

S.D.D. 14 B 42-5b

S.D.D. 14 B 42-5b

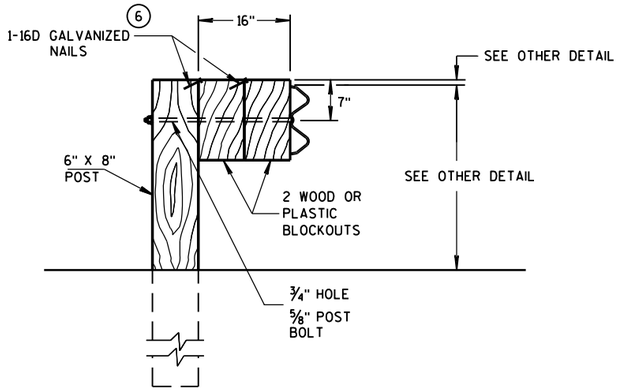

DETAIL FOR 16" BLOCKOUT DEPTH

IT IS ACCEPTABLE TO USE BLOCKOUTS UP TO 16" DEEP TO INCREASE THE POST OFFSET TO AVOID UNDERGROUND OBSTACLES. THERE IS NO LIMIT TO THE NUMBER OF POSTS THAT CAN HAVE ADDITIONAL BLOCKOUTS UP TO 16" DEEP.

NOTE: 1. ALL FILLETS SHALL HAVE A MINIMUM RADIUS OF 1/16".
2. IF THE BOLT EXTENDS MORE THAN 1/4" FROM THE NUT THE BOLT SHOULD BE TRIMMED BACK.

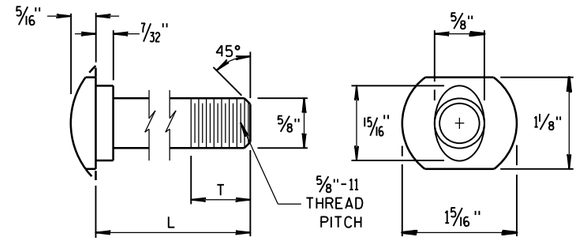

POST BOLT TABLE

L	T (MIN.)
1 1/4"	1 1/8"
2"	1 3/4"
10"	4"
14"	4 1/16"
18"	4"
21"	4 1/16"
25"	4"

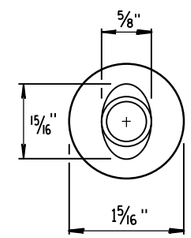

ALTERNATE BOLT HEAD

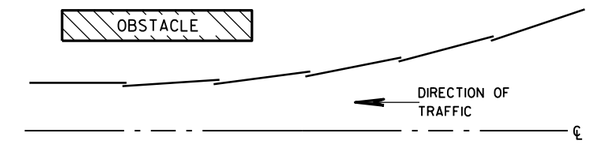

PLAN VIEW

BEAM LAPPING DETAIL

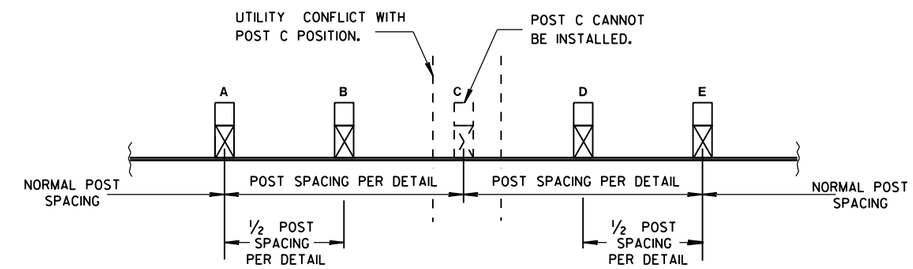

POST DRIVING FOR CONTINUOUS UNDERGROUND OBSTRUCTION

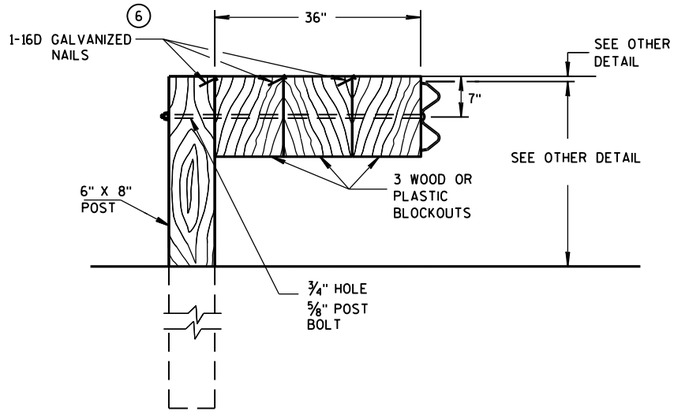

DETAIL FOR 36" BLOCKOUT DEPTH

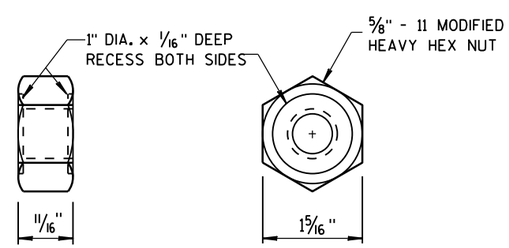

POST BOLT, SPLICE BOLT AND RECESS NUT

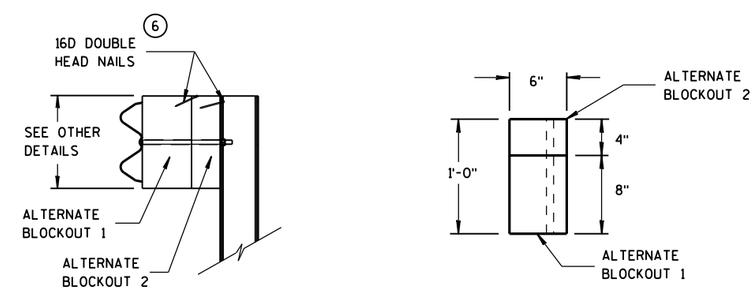

SIDE VIEW TOP VIEW

ALTERNATE WOOD BLOCKOUT DETAIL

NOTES: UNDER SPECIAL CIRCUMSTANCES, SUCH AS AVOIDING OBSTACLES THAT ARE NOT RELOCATED, IT IS ACCEPTABLE TO INSTALL ADDITIONAL BLOCKOUTS TO OBTAIN UP TO 36" DEPTH FOR ONE OR TWO POSTS IN A SECTION OF GUARDRAIL.

DO NOT USE 16" OR 36" BLOCKOUTS IF IT CAUSES THE POST TO BE DRIVEN BEYOND SHOULDER HINGE POINT OR CAUSES A FIXED OBJECT TO BE WITHIN THE DEFLECTION DISTANCE OF THE BARRIER.

MIDWEST GUARDRAIL SYSTEM (MGS) GUARDRAIL

STATE OF WISCONSIN
DEPARTMENT OF TRANSPOR

6

S.D.D. 14 B 42-5c

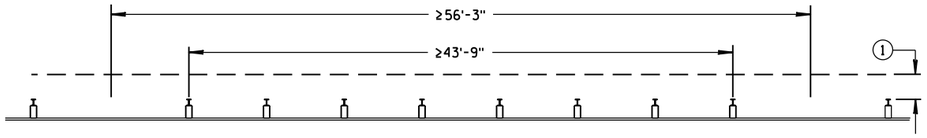

MISSING POST IN NORMAL BEAM GUARD RUN

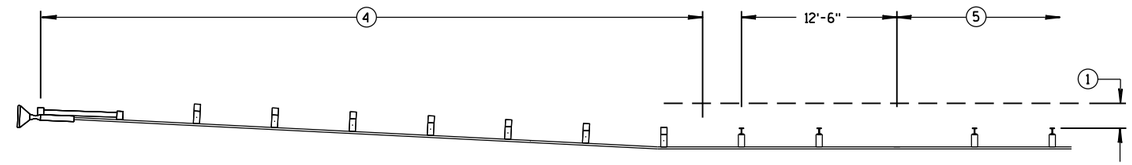

MISSING POST IN NORMAL BEAM GUARD RUN NEAR EAT

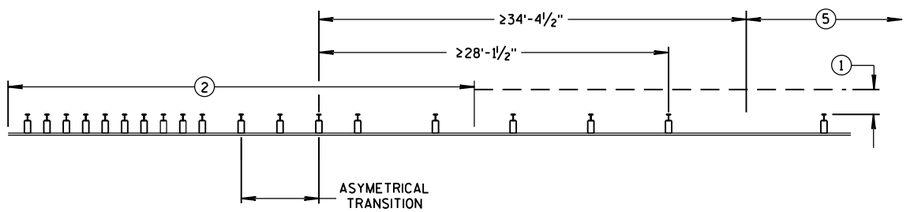

MISSING POST NEAR APPROACH THRIE BEAM TRANSITION

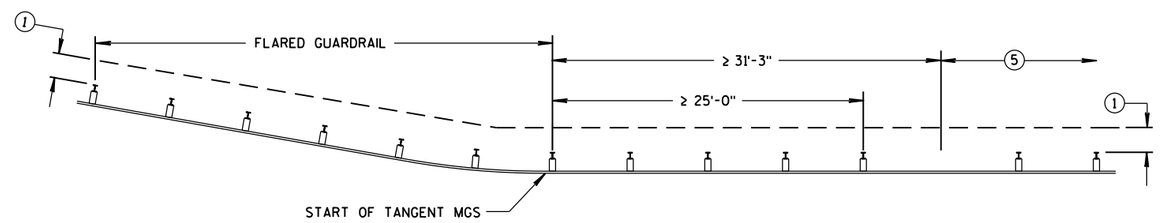

MISSING POST IN NORMAL BEAM GUARD RUN
NEAR FLARED BEAM GUARD

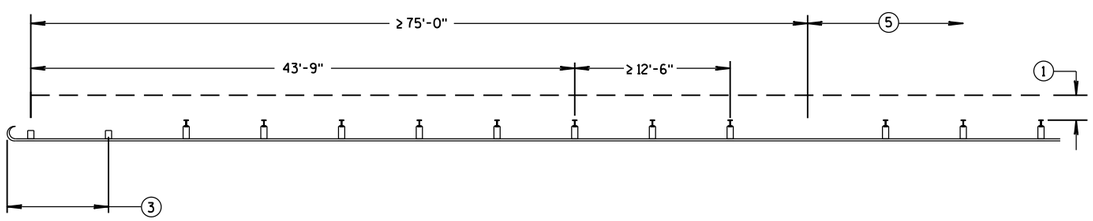

MISSING POST IN NORMAL BEAM GUARD RUN
NEAR TYPE 2 TERMINAL

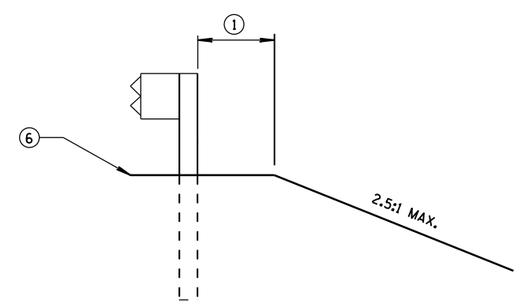

CROSS SECTION VIEW

1. MINIMUM OF 2 FEET OF GRADING BEHIND POST.
2. SEE SDD 14B45 FOR MORE DETAILS.
3. SEE SDD 14B47 FOR MORE DETAILS.
4. SEE SDD 14B44 FOR MORE DETAILS.
5. SEE MISSING POST IN NORMAL BEAM GUARD RUN FOR DISTANCE TO NEXT MISSING POST AND AREA FOR WELL DRAINED, COMPACTED SOILS.
6. SEE PLAN FOR SHOULDER DESIGN.

MIDWEST GUARDRAIL SYSTEM
(MGS) GUARDRAIL

STATE OF WISCONSIN
DEPARTMENT OF TRANSPORTATION

APPROVED
June 2017 — /S/ Rodney Taylor
DATE — ROADWAY STANDARDS DEVELOPMENT UNIT SUPERVISOR
FHWA

6

S.D.D. 14 B 42-5d

GENERAL NOTES

(A) THE SLOPE IN THE AREA BOUNDED BY THE GRADELINE, THE HINGE POINT LINE (HPL), AND THE CLEAR ZONE LIMITS (CZL) SHALL BE 4:1 OR FLATTER.

(B) AFTER FINAL ASSEMBLY, RECHECK CABLE TO BE SURE IT IS TAUT AND HAS NOT RELAXED.

(C) DIFFERENT MANUFACTURES REQUIRE DIFFERENT PERFORATED W-BEAM RAIL END PANELS. SEE MANUFACTURES INFORMATION.

(F) ATTACH ALUMINUM SHEET TO E.A.T. HEAD USING 4 STAINLESS STEEL SELF-TAPPING SCREWS. ONE SCREW PER CORNER.

(H) HARDWARE VARIES BETWEEN DIFFERENT MANUFACTURES. SEE MANUFACTURE'S DRAWING FOR INFORMATION.

SEE SDD 14B42 FOR MORE INFORMATION.

* DO NOT ATTACH BLOCKOUTS TO POSTS 1 AND 2.

DO NOT INSTALL REFLECTORS ON THE FIRST 50 FEET OF THE APPROACH END OF THE ENERGY ABSORBING TERMINAL.

SEE MANUFACTURER'S DRAWING FOR SPLICE LOCATION, HARDWARE DIMENSIONS AND INSTALLATION INSTRUCTIONS.

THE CENTER OF THE UPPER 3½" DIAMETER HOLE ON POST NUMBER 3 THROUGH POST 9 IS TO BE FLUSH WITH THE GROUND LINE UP TO A MAXIMUM OF 2" ABOVE GROUND LINE.

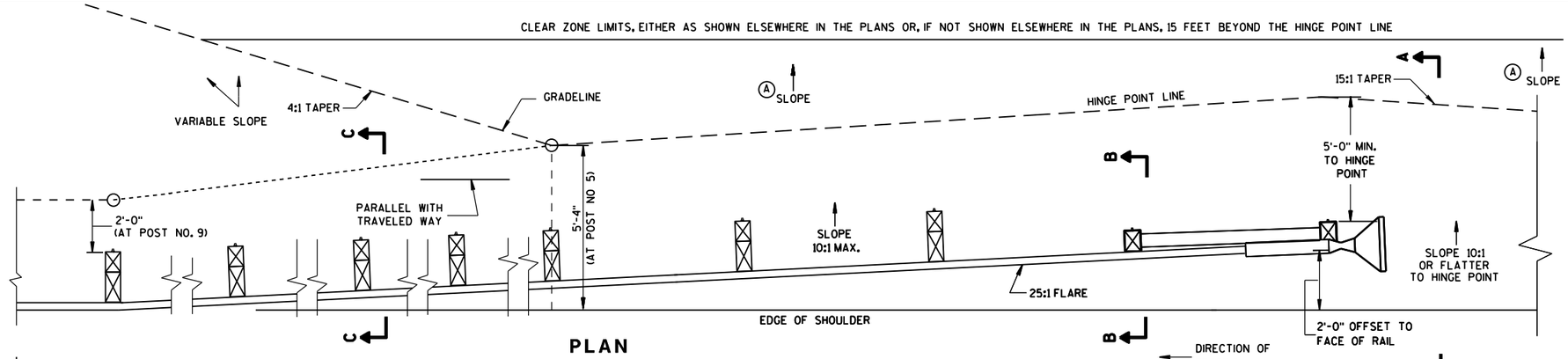

PLAN

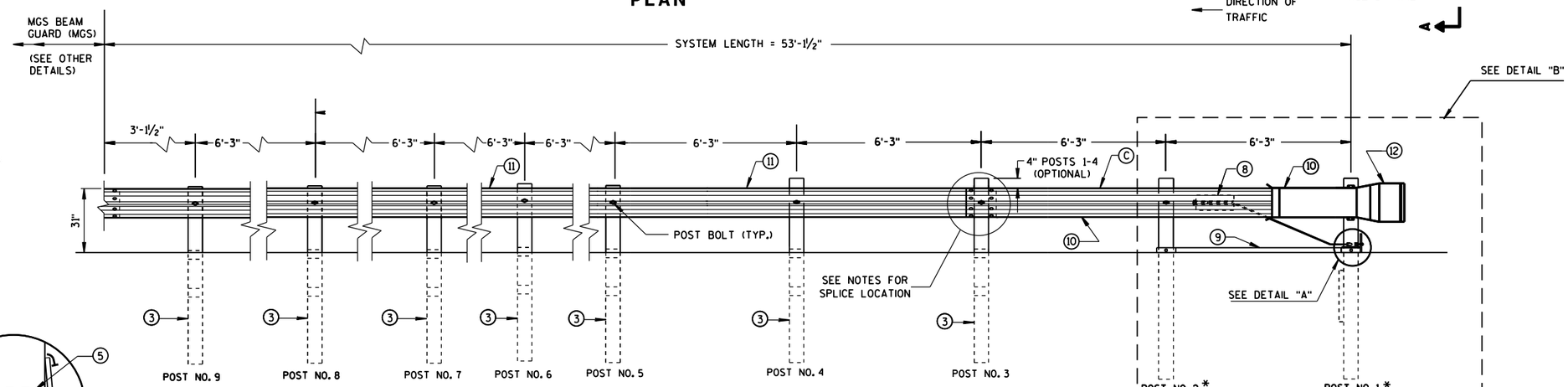

ELEVATION

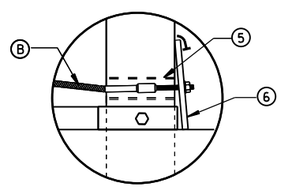

DETAIL "A"

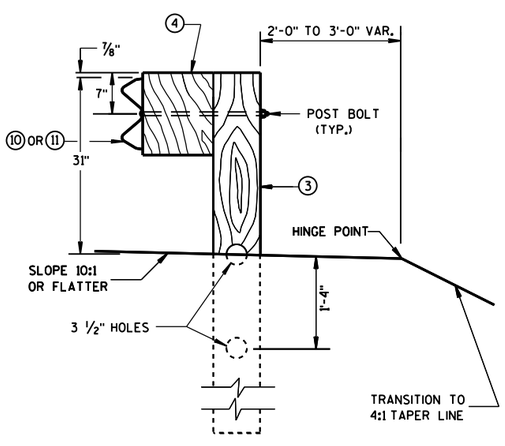

SECTION C-C
TYPICAL AT POST NOS. 3-9

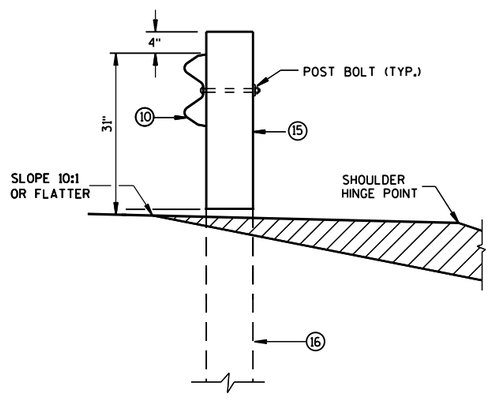

SECTION B-B
TYPICAL AT POST NO. 2*

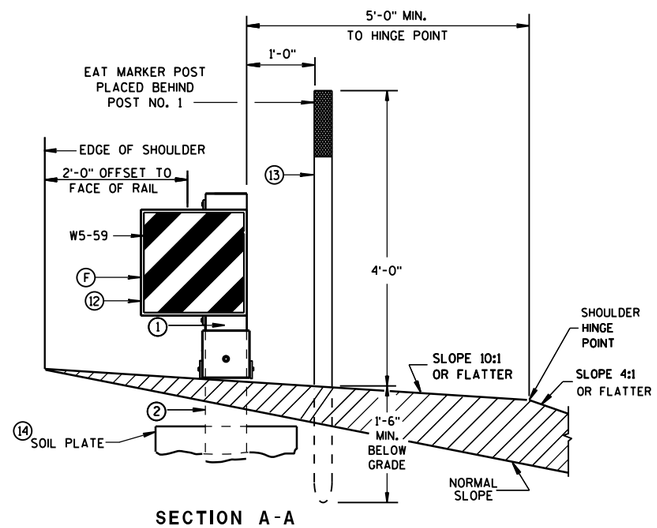

SECTION A-A
TYPICAL AT POST NO. 1*

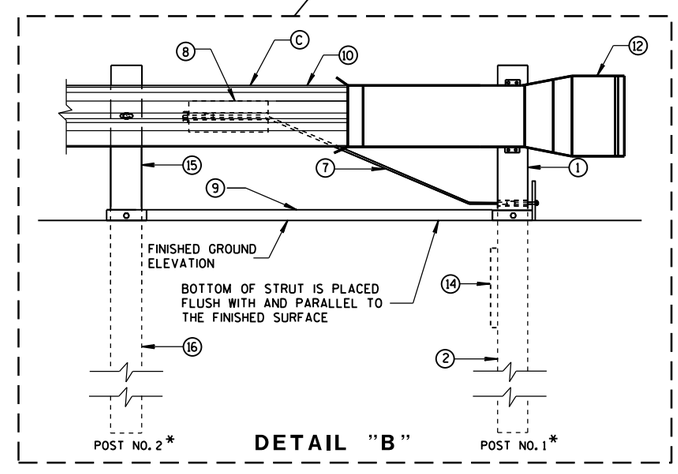

DETAIL "B"

MIDWEST GUARDRAIL SYSTEM ENERGY ABSORBING TERMINAL (MGS)

STATE OF WISCONSIN
DEPARTMENT OF TRANSPORTATION

6

6

S.D.D. 14 B 44-3a

S.D.D. 14 B 44-3a

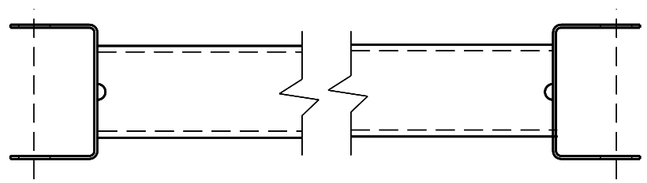

GENERIC GROUND STRUT (9) (H)

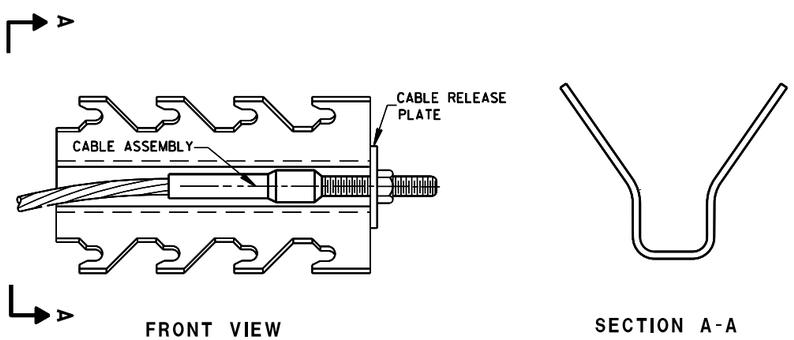

FRONT VIEW

SECTION A-A

GENERIC ANCHOR CABLE BOX (8) (H)

BILL OF MATERIALS

PART NO.	DESCRIPTION MATERIALS PROVIDED BY MGS EAT MANUFACTURER. SEE MANUFACTURER'S DETAILS FOR MORE INFORMATION.
1	UPPER POST NO. 1 6" X 6" TUBE
2	LOWER POST NO. 1
3	WOOD CRT
4	WOOD BLOCKOUT
5	PIPE SLEEVE
6	BEARING PLATE
7	BCT CABLE ASSEMBLY
8	ANCHOR CABLE BOX
9	GROUND STRUT
10	PERFORATED W-BEAM RAIL END PANEL, 12'-6" LONG.
11	STANDARD W-BEAM RAIL. MULTIPLE SECTIONS REQUIRED. SECTIONS VARY IN LENGTH.
12	IMPACT HEAD
13	EAT MARKER POST - YELLOW (SEE APPROVED PRODUCTS LIST)
14	SOIL PLATE
15	UPPER POST NO. 2
16	LOWER POST NO. 2

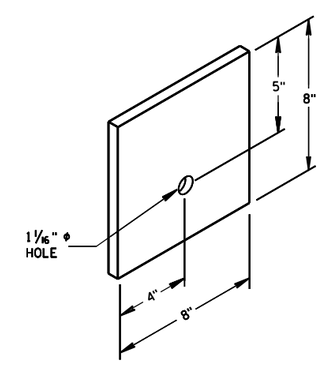

BEARING PLATE (6)

MIDWEST GUARDRAIL SYSTEM
ENERGY ABSORBING TERMINAL
(MGS)

STATE OF WISCONSIN
DEPARTMENT OF TRANSPOR

6

6

S.D.D. 14 B 44-3b

S.D.D. 14 B 44-3b

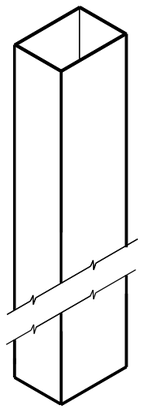

UPPER POST NO. 1 (1)

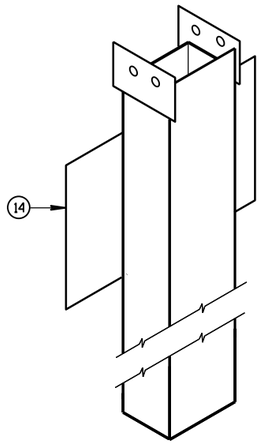

LOWER POST NO. 1 (2)

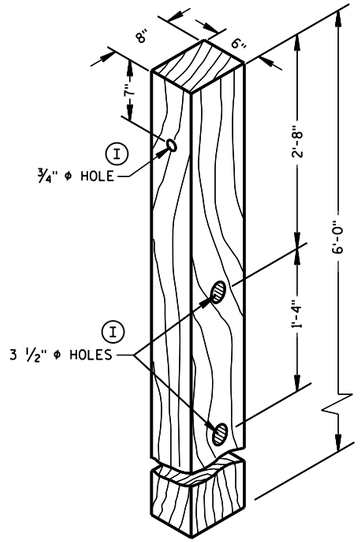

POSTS NUMBER 3-9

WOOD CRT POST (3)

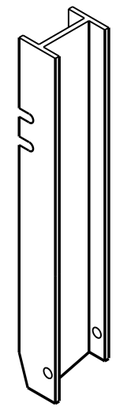

UPPER POST NO. 2 (15)

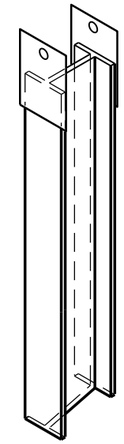

LOWER POST NO. 2 (16)

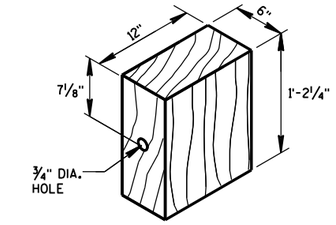

WOOD BLOCKOUT (4)

REQ'D. AT ALL POSTS EXCEPT POST NO'S 1 & 2

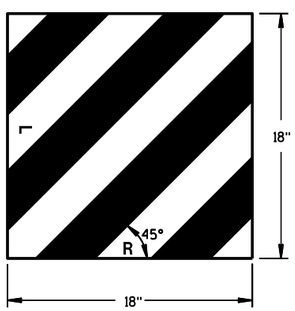

W5-59

REFLECTIVE SHEETING DETAIL (H)

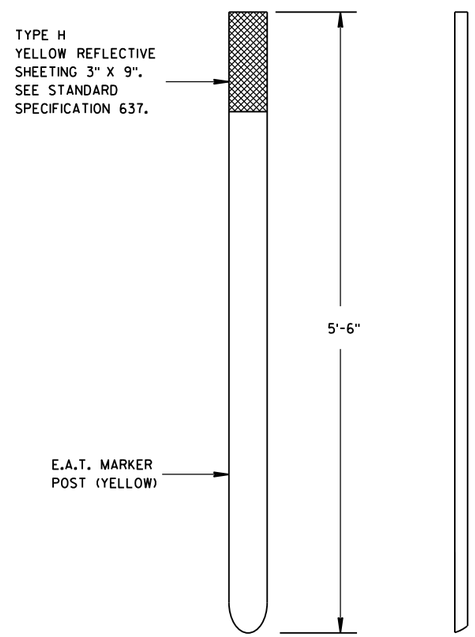

FRONT VIEW SIDE VIEW

E.A.T. MARKER POST (13)

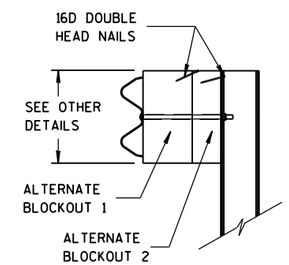

SIDE VIEW

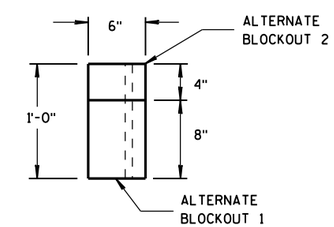

TOP VIEW

ALTERNATE WOOD BLOCKOUT DETAIL

MIDWEST GUARDRAIL SYSTEM ENERGY ABSORBING TERMINAL (MGS)

STATE OF WISCONSIN
DEPARTMENT OF TRANSPORTATION

APPROVED

June 2017 — DATE

/S/ Rodney Taylor — ROADWAY STANDARDS UNIT SUPERVISOR

FHWA

6

6

S.D.D. 14 B 44-3c

S.D.D. 14 B 44-3c

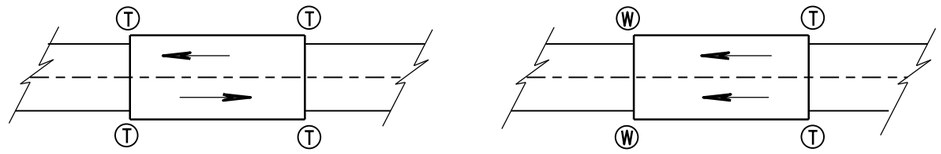

TWO WAY TRAFFIC

ONE WAY TRAFFIC

(T) THRIE BEAM CONNECTION

(W) W-BEAM CONNECTION WHEN REQUIRED

TYPICAL LOCATIONS OF THRIE BEAM AND W-BEAM CONNECTIONS TO BRIDGE

GENERAL NOTES

IF ROCK IS ENCOUNTERED, REMOVE ROCK TO FULL DEPTH OF POST PLUS 2½", AND 12" DIAMETER AROUND POST. SEE 14B42 FOR MORE DETAILS.

TRANSITION USES STEEL POSTS ONLY.

SEE STANDARD DETAIL DRAWING 14 B 42 FOR MORE INFORMATION.

(1) BRIDGE RAILING TYPE "W" DOES NOT REQUIRE A TERMINAL CONNECTOR.

(2) OPTIONAL CURB AND GUTTER OR DRAINAGE FEATURE SEE PLAN FOR INFORMATION.

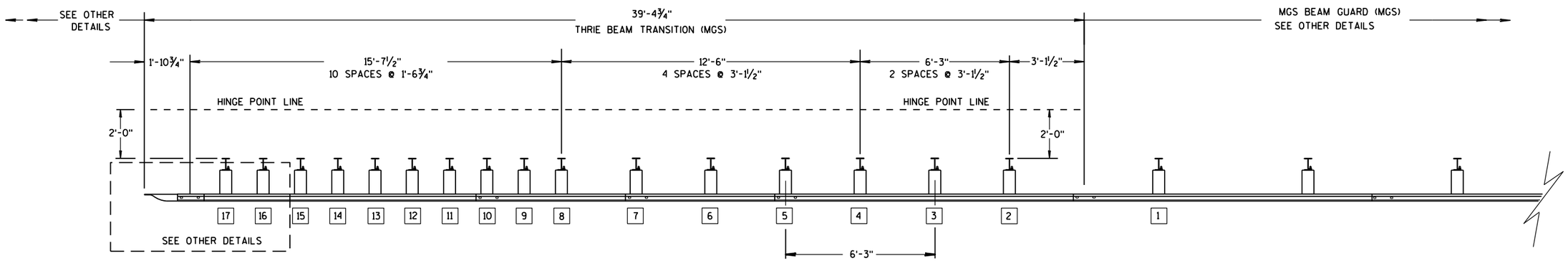

PLAN VIEW

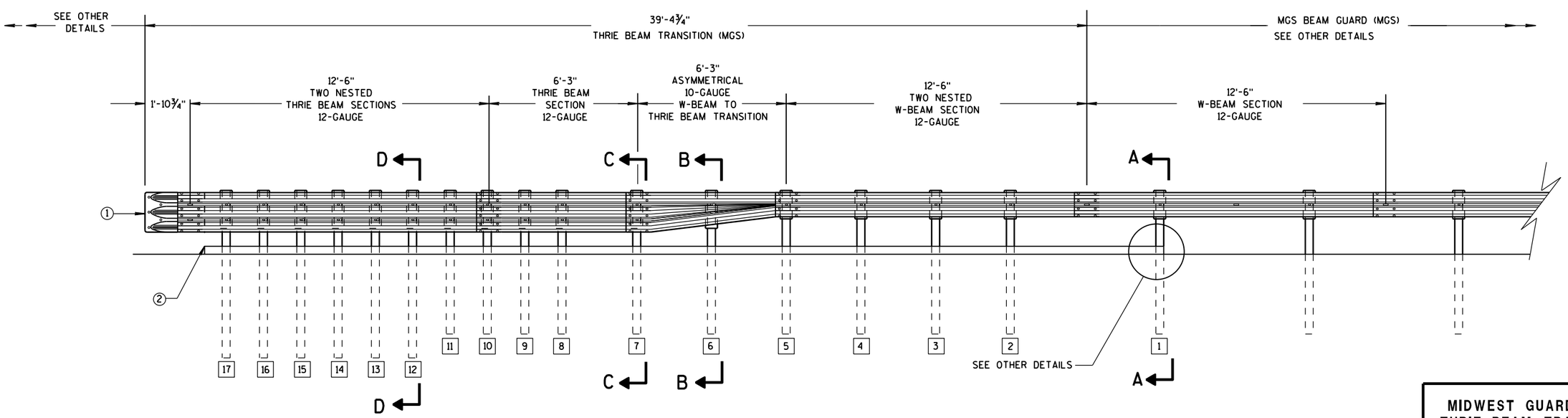

ELEVATION VIEW

MIDWEST GUARDRAIL SYSTEM THRIE BEAM TRANSITION

MIDWEST GUARDRAIL SYSTEM
THRIE BEAM TRANSITION (MGS)

STATE OF WISCONSIN
DEPARTMENT OF TRANSPOR

6

S.D.D. 14 B 45-4a

GENERAL NOTES

(2) OPTIONAL CURB AND GUTTER OR DRAINAGE_FEATURE SEE PLAN FOR INFORMATION.

(3) WHEN USING STEEL POSTS AND WOOD BLOCKOUTS INSTALL FOUR 10D GALVANIZED NAILS. INSTALL NAILS AT THE BACK CORNERS OF THE BLOCK AND BEND THE NAILS OVER THE FLANGE OF THE STEEL POST.

(4) TOLERANCE FOR TOP OF W-BEAM RAIL IS ± 1".

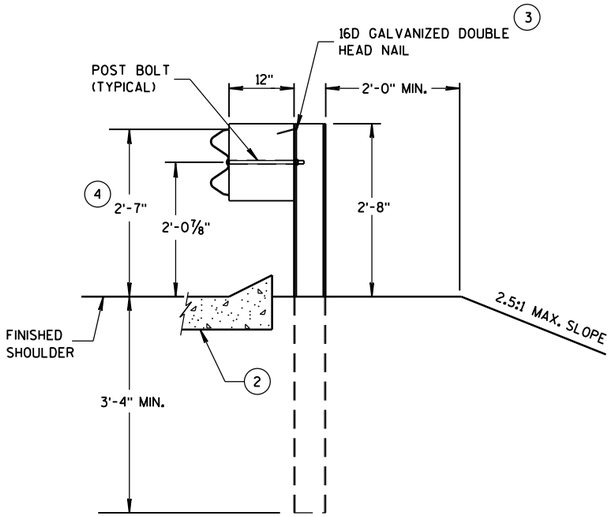

SECTION A-A
POSTS 1-5

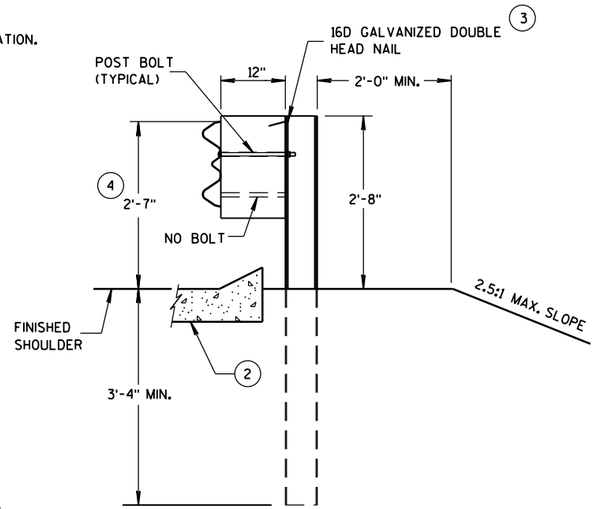

SECTION B-B
POST 6

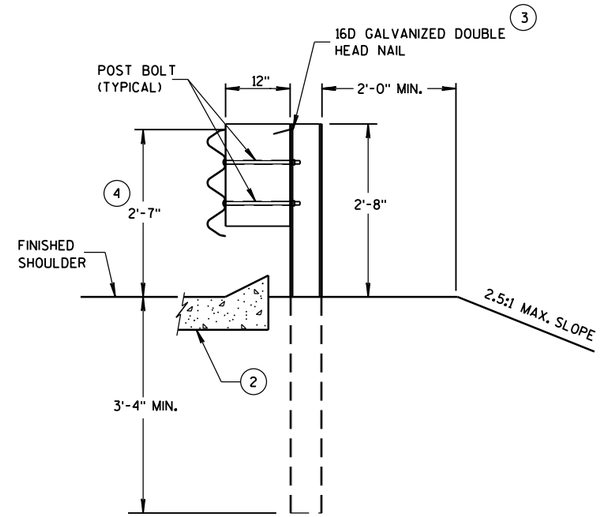

SECTION C-C
POSTS 7-11

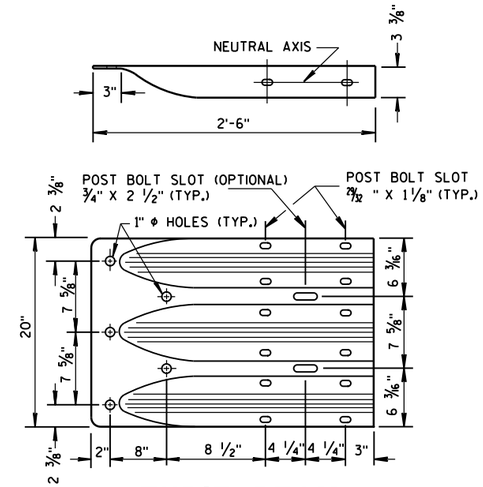

THRIE BEAM
TERMINAL CONNECTOR

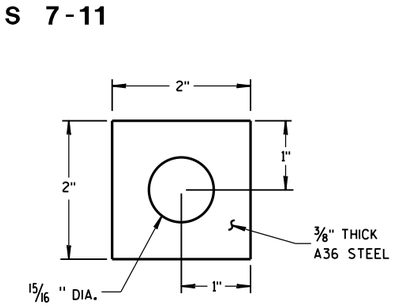

PLATE WASHER DETAIL

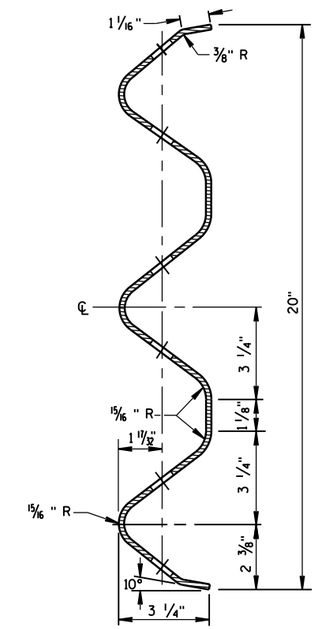

SECTION THRU THRIE
BEAM RAIL ELEMENT

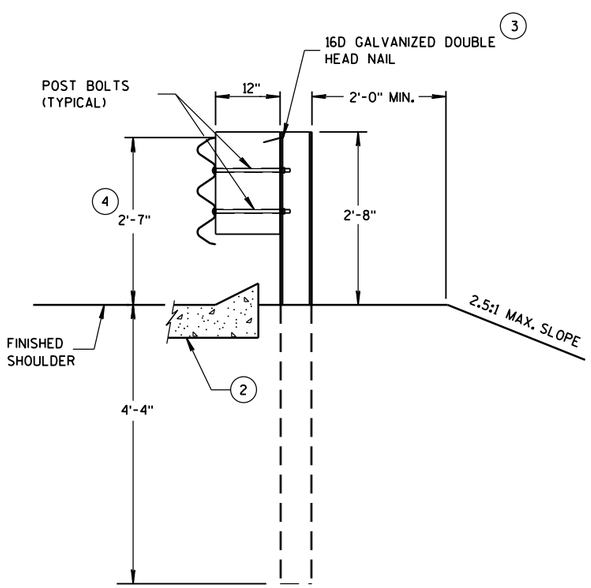

SECTION D-D
POSTS 12-17

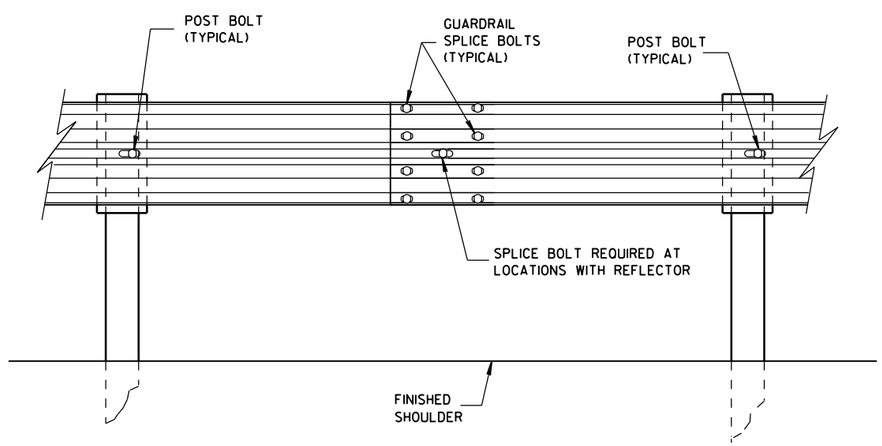

SPLICE DETAIL

MIDWEST GUARDRAIL SYSTEM
THRIE BEAM TRANSITION (MGS)

STATE OF WISCONSIN
DEPARTMENT OF TRANSPO

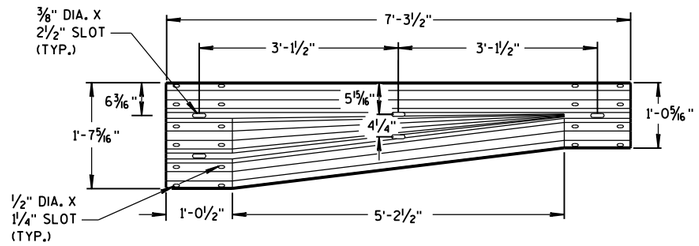

W-BEAM TO THRIE BEAM TRANSITION SECTION

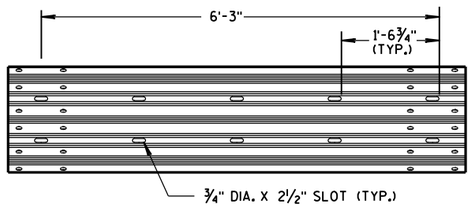

6'-3" THRIE BEAM SECTION

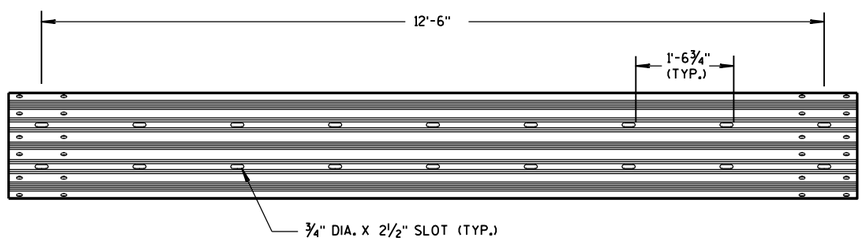

12'-6" THRIE BEAM SECTION

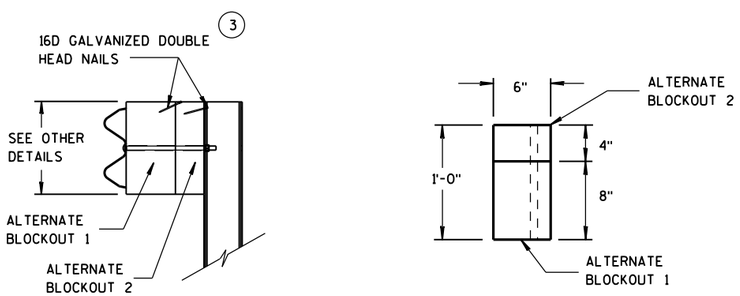

SIDE VIEW TOP VIEW

ALTERNATE WOOD BLOCKOUT DETAIL

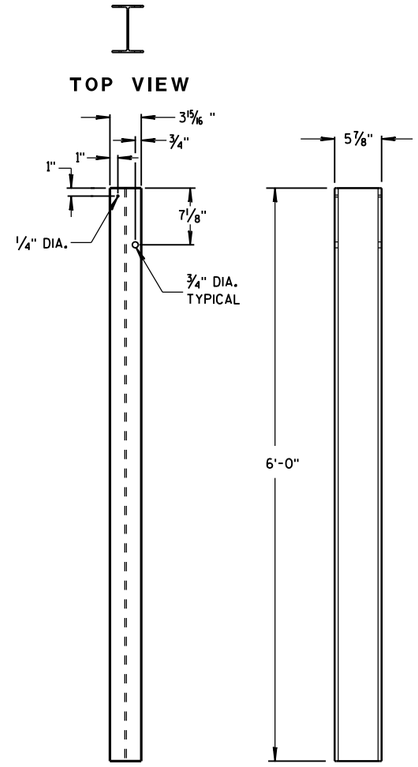

STEEL POSTS 1-5

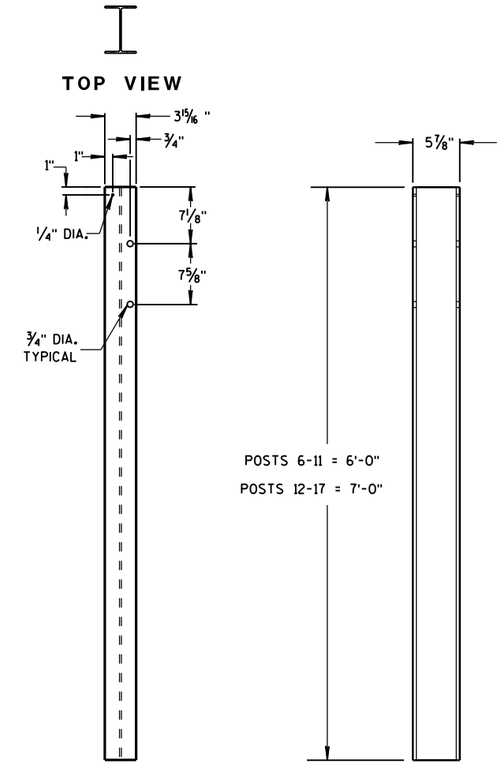

STEEL POSTS 6-17

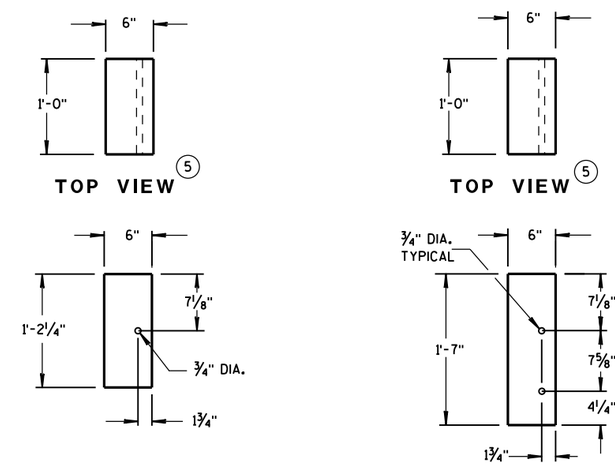

BLOCKOUT POSTS 1-5

BLOCKOUT POSTS 6-17

GENERAL NOTES

STEEL POSTS ARE W6X9 OR W6X8.5.

BOLT HOLES FOR POST ARE ON FRONT AND OF SIDE OF POST.

3 WHEN USING STEEL POSTS AND WOOD BLOCKOUTS INSTALL FOUR 16D GALVANIZED NAILS. INSTALL NAILS AT THE BACK CORNERS OF THE BLOCK AND BEND THE NAILS OVER THE FLANGE OF THE STEEL POST.

5 WOOD BLOCKS MAY BE CONSTRUCTED OUT OF 2 WOOD BLOCKS. SEE ALTERNATE WOOD BLOCK DETAIL.

MIDWEST GUARDRAIL SYSTEM
THRIE BEAM TRANSITION (MGS)

STATE OF WISCONSIN
DEPARTMENT OF TRANSPORTATION

6

6

S.D.D. 14 B 45-4c

S.D.D. 14 B 45-4c

GENERAL NOTES

(4) TOLERANCE FOR TOP OF W-BEAM RAIL IS ± 1".

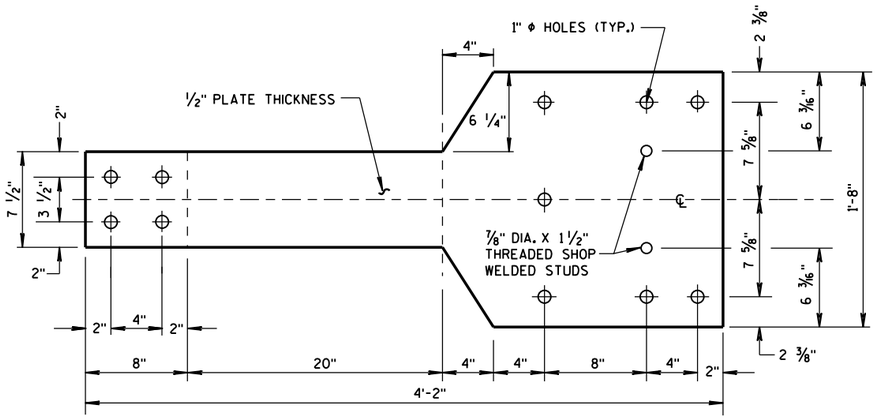

FRONT VIEW

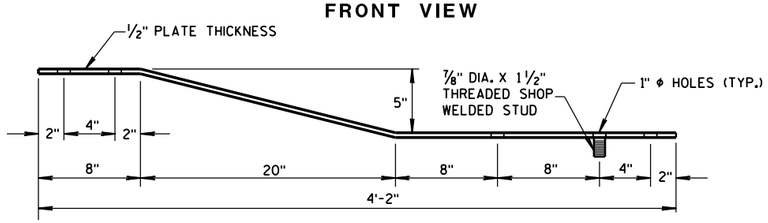

PLAN VIEW

BACK-UP PLATE DETAIL, TYPE "M"

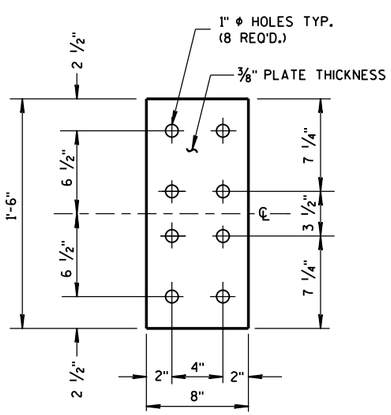

FRONT VIEW

ANCHOR PLATE DETAIL, TYPE "M"

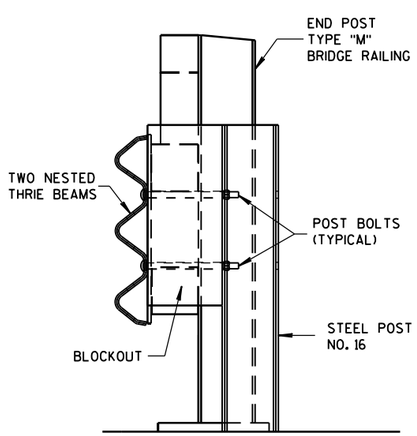

SECTION M-M

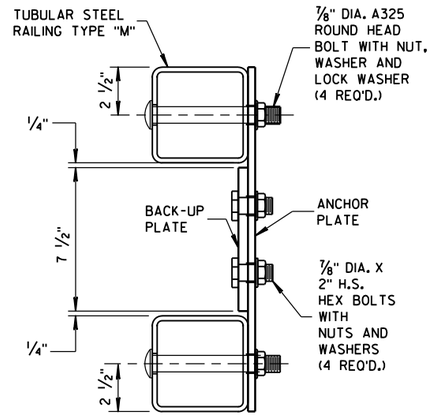

SECTION L-L

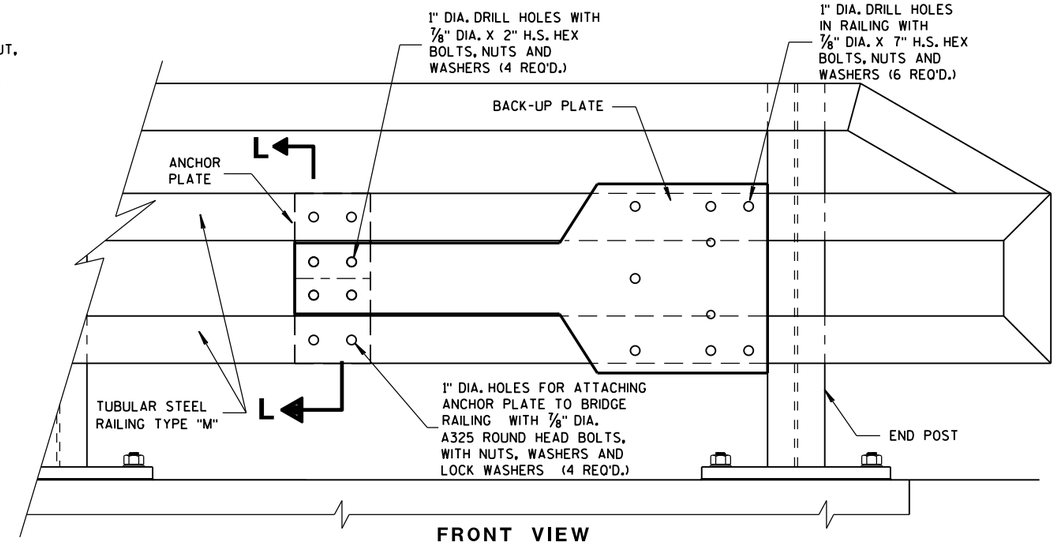

FRONT VIEW

ANCHOR AND BACK-UP PLATE MOUNTING TO BRIDGE RAILING, TYPE "M"

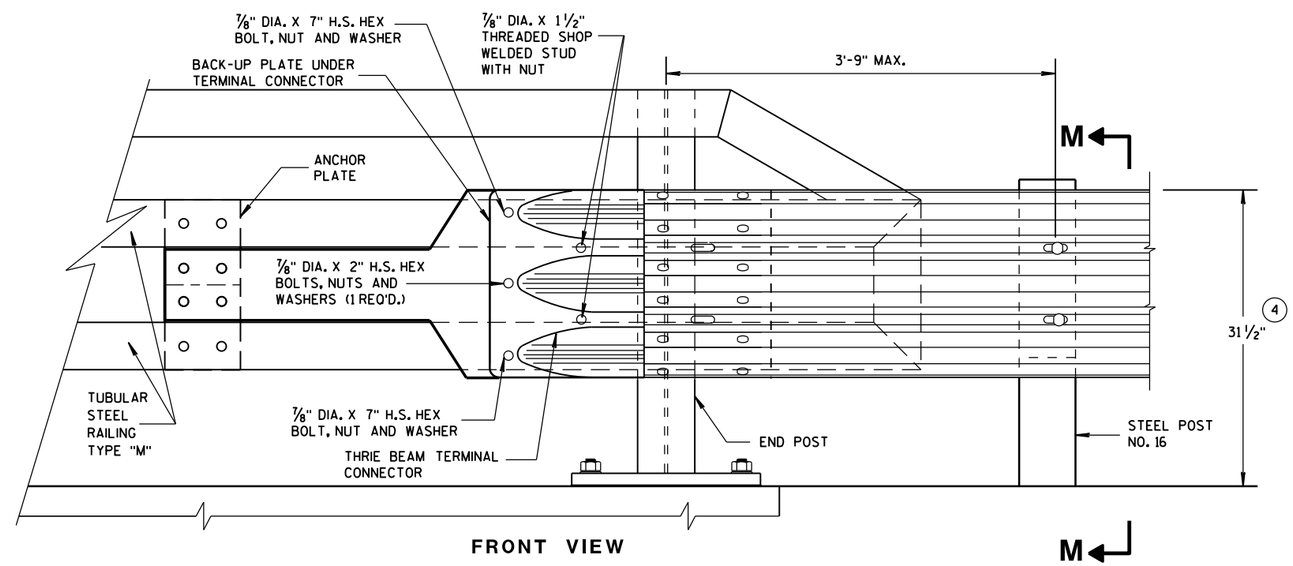

FRONT VIEW

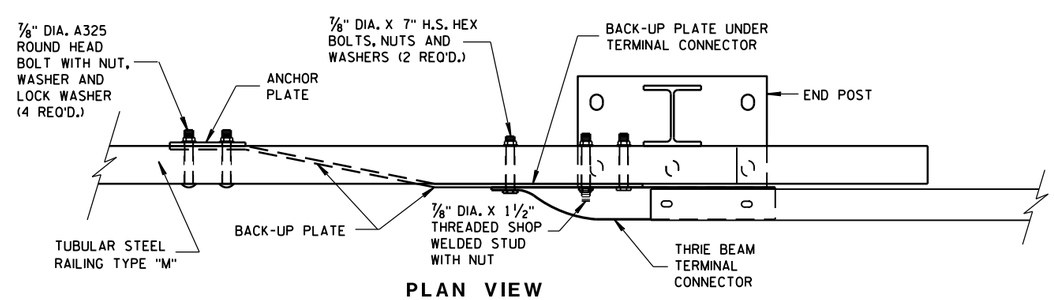

PLAN VIEW

THRIE BEAM CONNECTION TO TUBULAR RAILING, TYPE "M"

MIDWEST GUARDRAIL SYSTEM
THRIE BEAM TRANSITION (MGS)

STATE OF WISCONSIN
DEPARTMENT OF TRANSPORTATION

APPROVED
June, 2015 — DATE
/S/ Jerry H. Zogg — ROADWAY STANDARDS DEVELOPMENT ENGINEER
FHWA

6

S.D.D. 14 B 45-4h

GENERAL NOTES

DETAILS OF CONSTRUCTION, MATERIALS AND WORKMANSHIP NOT SHOWN ON THIS DRAWING SHALL CONFORM TO THE PERTINENT REQUIREMENTS OF THE STANDARD SPECIFICATIONS AND THE APPLICABLE SPECIAL PROVISIONS.

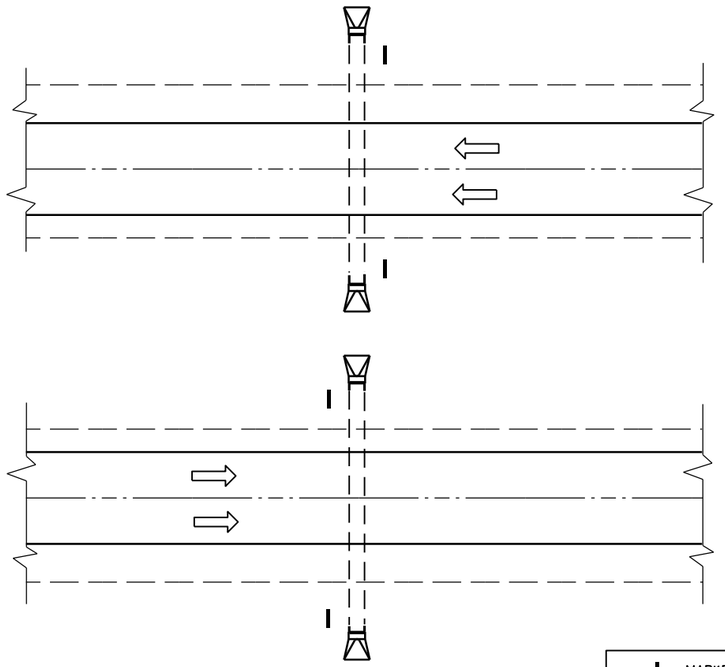

PLAN VIEW

DIVIDED HIGHWAY

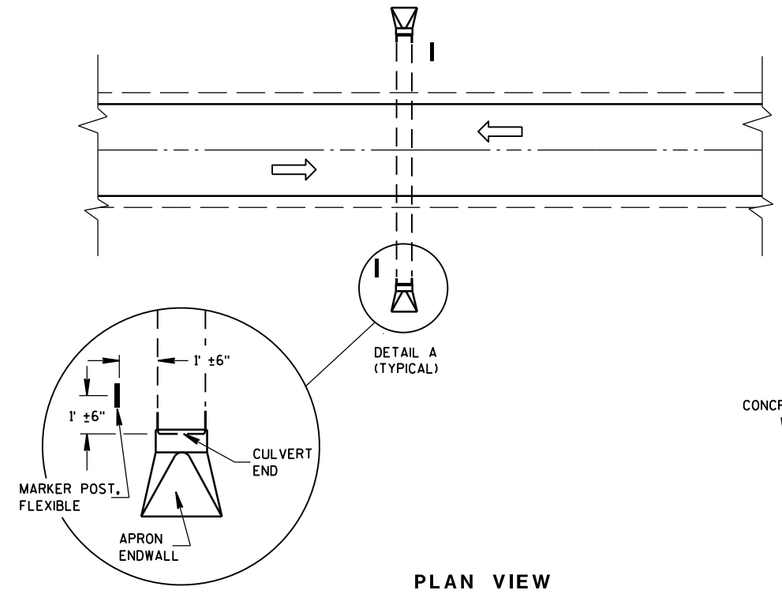

DETAIL A
(TYPICAL)

PLAN VIEW

UNDIVIDED HIGHWAY

MARKER POST, FLEXIBLE

DIRECTION OF TRAFFIC FLOW

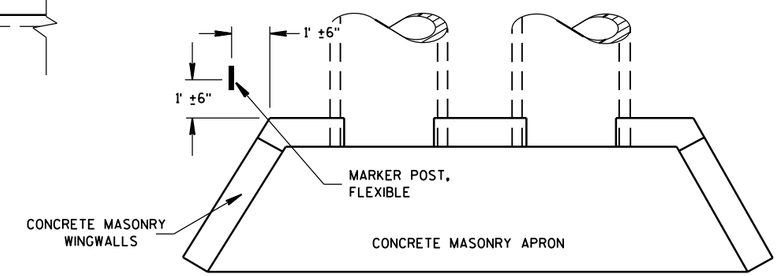

PLAN VIEW

CONCRETE MASONRY ENDWALLS FOR CULVERT PIPE AND PIPE ARCH

FLEXIBLE MARKER POST LOCATION

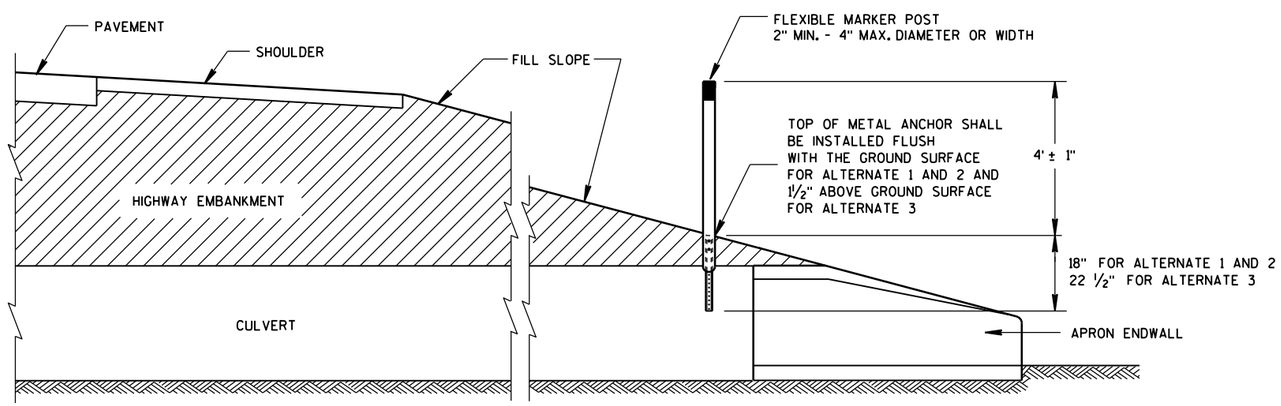

CROSS SECTION

FLEXIBLE MARKER POST

FLEXIBLE MARKER POST FOR CULVERT END

STATE OF WISCONSIN
DEPARTMENT OF TRANSPOR

6

S.D.D. 15 A 3-2a

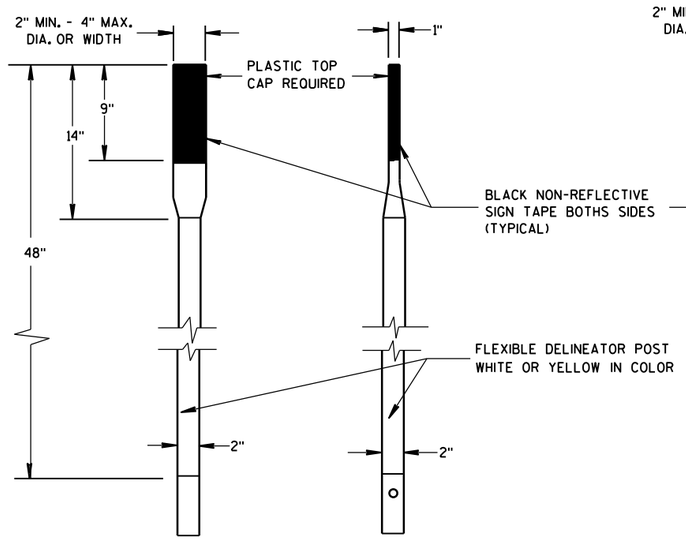

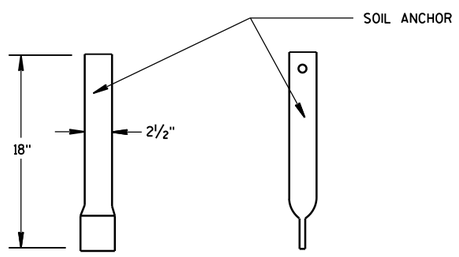

FRONT VIEW SIDE VIEW

ALTERNATE 1

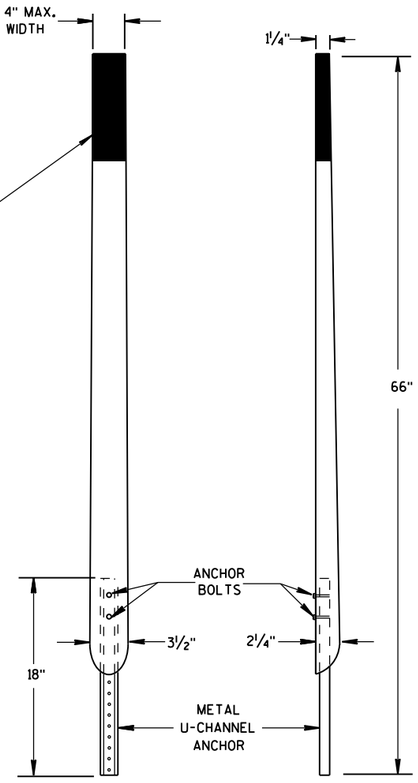

FRONT VIEW SIDE VIEW

ALTERNATE 2

FLEXIBLE MARKER POSTS

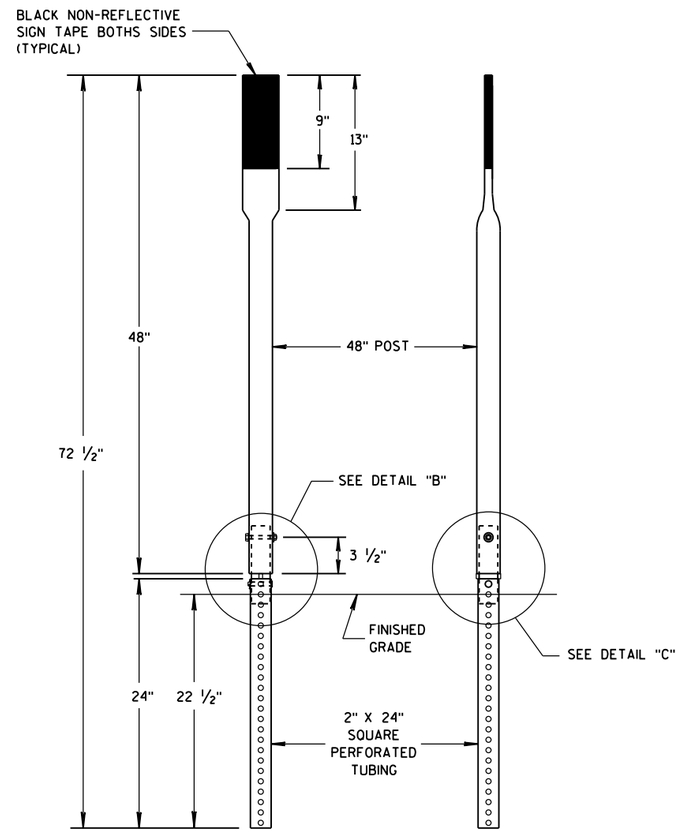

FRONT VIEW SIDE VIEW

ALTERNATE 3

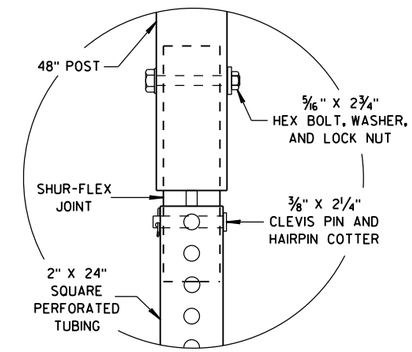

DETAIL B

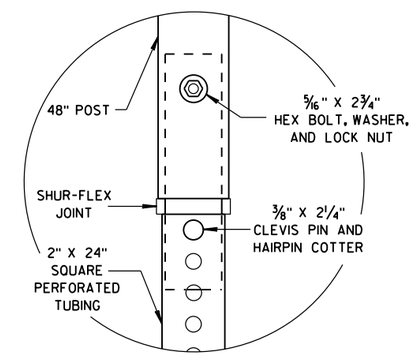

DETAIL C

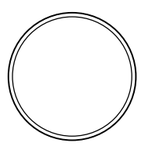

SECTION A-A

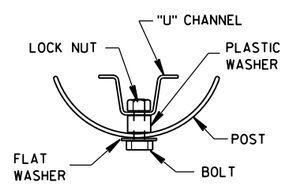

SECTION B-B

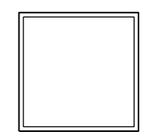

SECTION C-C

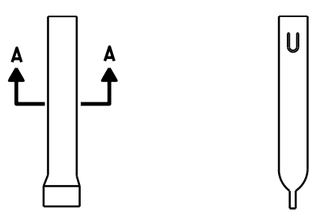

FRONT VIEW SIDE VIEW

ALTERNATE 1

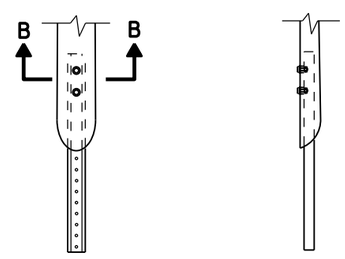

FRONT VIEW SIDE VIEW

ALTERNATE 2

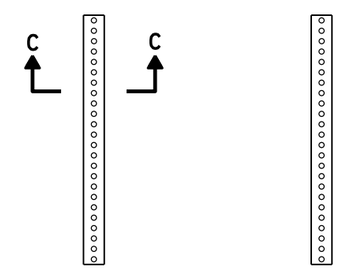

FRONT VIEW SIDE VIEW

ALTERNATE 3

FLEXIBLE MARKER POST ANCHORS

FLEXIBLE MARKER POST
FOR CULVERT END

STATE OF WISCONSIN
DEPARTMENT OF TRANSPORTATION

APPROVED
10/1/2012 /S/ Travis Feltes
DATE STATE TRAFFIC ENGINEER
FHWA

6

6

S.D.D. 15 A 3-2b

S.D.D. 15 A 3-2b

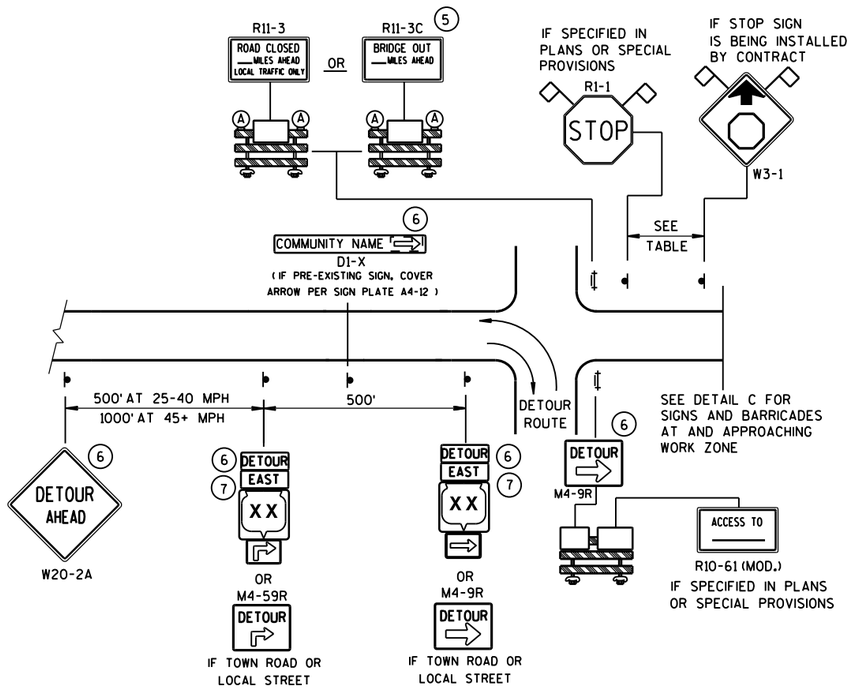

DETAIL A

MAINLINE CLOSURE WITH POSTED DETOUR

WORK ZONE GREATER THAN ½ MILE FROM DETOUR ROUTE (1000 FEET IF URBAN)

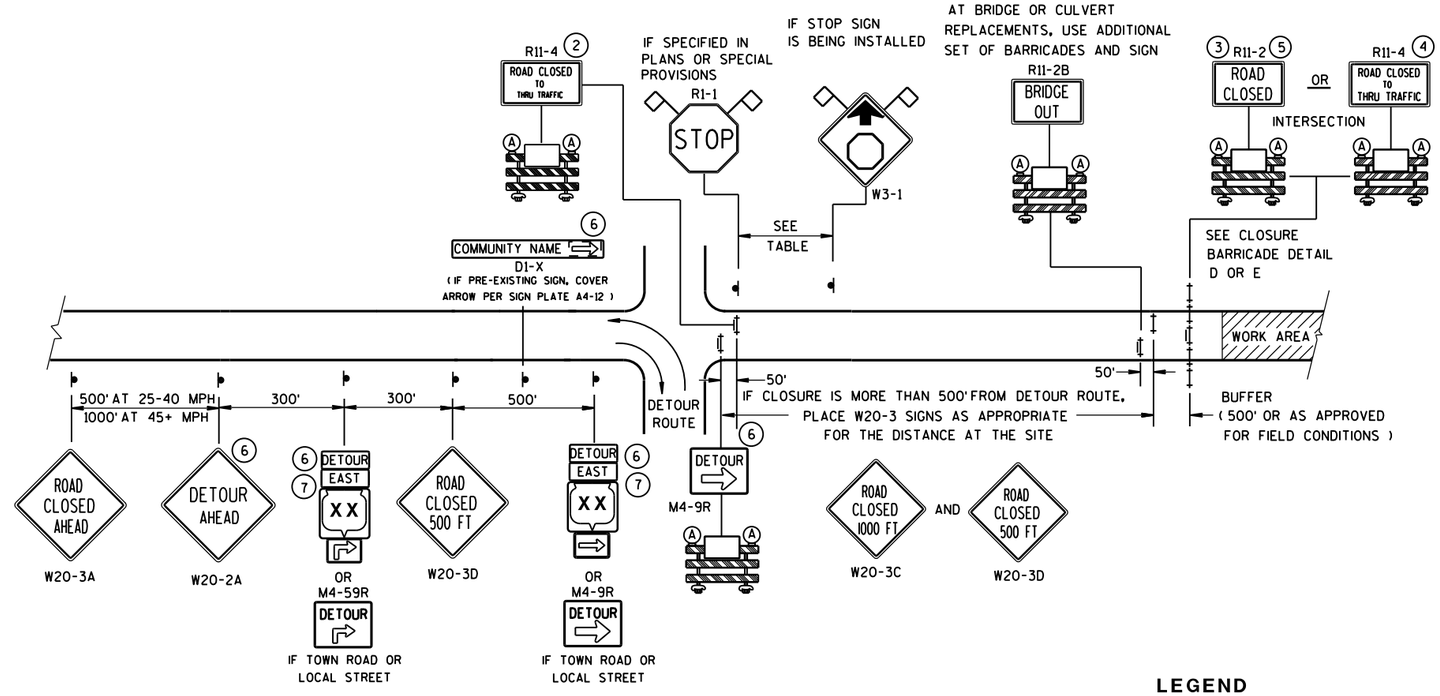

DETAIL B

MAINLINE CLOSURE WITH POSTED DETOUR

WORK ZONE LESS THAN ½ MILE FROM DETOUR ROUTE (1000 FEET IF URBAN)

LEGEND

- SIGN ON PERMANENT SUPPORT
- TYPE III BARRICADE
- TYPE III BARRICADE WITH ATTACHED SIGN
- TYPE "A" WARNING LIGHT (FLASHING)
- WORK AREA
- DETOUR / EAST — M4-8 / M3-X
- XX — M1-4; COUNTY XX — M1-5A; XX — M1-6
- M05-1 OR M06-1
- FLAGS, 16" X 16" MIN., (ORANGE)

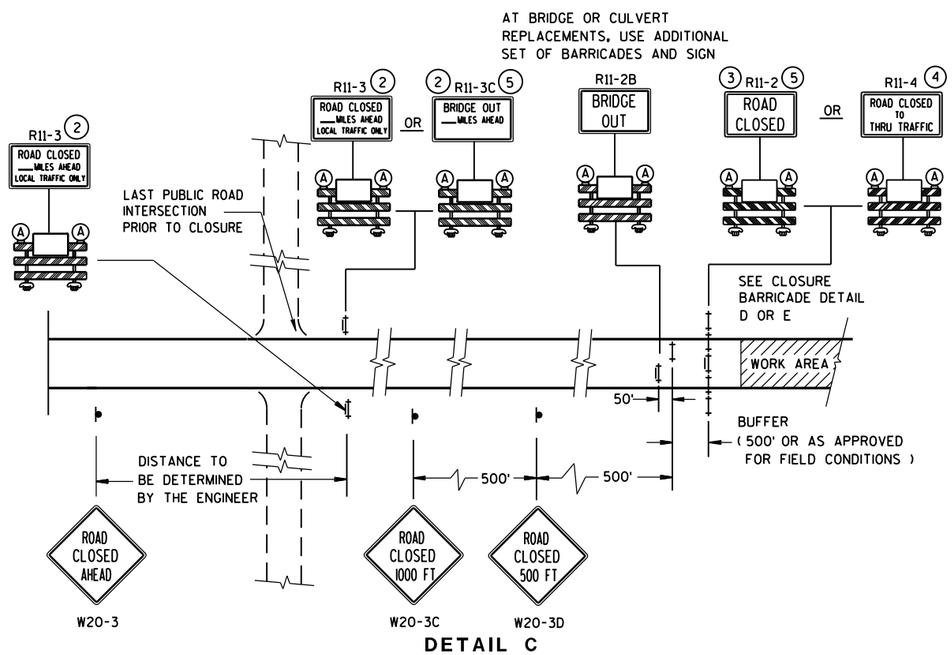

DETAIL C

MAINLINE CLOSURE, NO POSTED DETOUR

SPEED LIMIT (MPH)	"STOP AHEAD" ADVANCE WARNING DISTANCE (FT)
25	200
30	200
35	350
40	350
45	500
50	550
55	750

SEE SDD 15C2-SHEET "**b**" FOR GENERAL NOTES AND FOOTNOTES 1 THROUGH 7

BARRICADES AND SIGNS FOR MAINLINE CLOSURES

STATE OF WISCONSIN
DEPARTMENT OF TRANSPORTATION

Sept. 2015 — DATE
/S/ Peter Amakobe Atepe — STATEWIDE WORK ZONE TRAFFIC SAFETY ENGINEER
FHWA

6

6

S.D.D. 15 C 2-6a

S.D.D. 15 C 2-6a

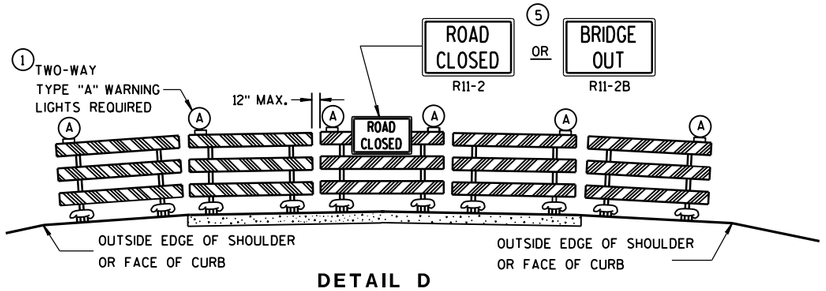

DETAIL D

ROAD CLOSURE BARRICADE DETAIL

APPROACH VIEW

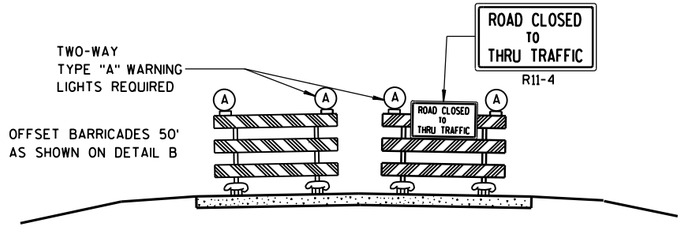

DETAIL E

LANE CLOSURE BARRICADE DETAIL

APPROACH VIEW

SEE SDD 15C2-SHEET "**a**" FOR LEGEND

GENERAL NOTES

THE EXACT NUMBER, LOCATION, AND SPACING OF ALL SIGNS AND BARRICADES SHALL BE ADJUSTED TO FIT FIELD CONDITIONS AS APPROVED BY THE ENGINEER.

ANY SIGNS TEMPORARY OR EXISTING, WHICH CONFLICT WITH TRAFFIC CONTROL "IN USE" SHALL BE REMOVED OR COVERED AS NEEDED AND AS APPROVED BY THE ENGINEER.

THE SPACING BETWEEN TRAFFIC CONTROL SIGNS SHOULD BE ADJUSTED TO NOT CONFLICT WITH AND SHOULD PROVIDE A DESIRABLE MINIMUM OF 200 FEET CLEARANCE TO EXISTING SIGNS THAT WILL REMAIN IN PLACE.

BARRICADES THAT MUST BE MOVED FOR A WORK OPERATION SHALL BE IMMEDIATELY RE-ESTABLISHED UPON COMPLETION OF THE OPERATION OR, FOR CONTINUING OPERATIONS, AT THE END OF EACH WORKING DAY.

SIGNS THAT WILL BE IN PLACE LESS THAN 7 CONTINUOUS DAYS AND NIGHTS MAY BE MOUNTED ON PORTABLE SUPPORTS.

ALL TYPE III BARRICADES SHALL HAVE RAILS REFLECTORIZED ON BOTH FACES. STRIPES SHALL BE PROPERLY SLOPED DOWN TOWARD THE TRAFFIC SIDE OR AS SHOWN IN THE ROAD CLOSURE BARRICADE DETAIL D FOR FULL ROAD CLOSURES.

TYPE "A" LOW-INTENSITY FLASHING WARNING LIGHTS SHALL BE VISIBLE ON BOTH SIDES OF THE BARRICADE.

THE R11-2, R11-3, M4-9, R11-4 AND R10-61 SIGNS PLACED ON BARRICADES SHALL COVER NO MORE THAN THE TOP RAIL. THE SIGNS SHALL NOT COVER ANY PORTION OF THE MIDDLE OR BOTTOM RAILS.

"WO AND "MO" SIGNS ARE THE SAME AS "W" AND "M" SIGNS EXCEPT THE BACKGROUND IS ORANGE.

ALL SIGNS SHALL BE 48" X 48" UNLESS OTHERWISE NOTED BELOW:

R11-2 SHALL BE 48" X 30".
R11-3, R11-4 AND R10-61 SHALL BE 60" X 30".
M4-9 SHALL BE 30" X 24".
M3-X SHALL BE 24" X 12". (36" X 18" IF NEEDED TO MATCH EXISTING SIGNS.)
M4-8 SHALL BE 24" X 12". (30" X 15" IF NEEDED TO MATCH EXISTING SIGNS.)
M1-4, M1-5A, AND M1-6 SHALL BE 24" X 24". (36" X 36" IF NEEDED TO MATCH EXISTING SIGNS.)
M05-1 AND M06-1 SHALL BE 21" X 21". (30" X 30" IF NEEDED TO MATCH EXISTING SIGNS.)
D1-X SHALL BE AS SHOWN ON SPECIFIC PROJECT SIGNING DETAIL SHEETS.
R1-1 SHALL BE 36" X 36".

1. TWO WARNING LIGHTS SHALL BE PROVIDED ON THE CENTER BARRICADE AND A MINIMUM OF ONE WARNING LIGHT SHALL BE PROVIDED ON EACH OF THE OTHER BARRICADES WITHIN THE ROADWAY LIMITS. SPACING OF THE WARNING LIGHTS SHALL BE UNIFORM TO THE EDGE OF ROADWAY AS SHOWN (APPROX. 8-FOOT LIGHT SPACING).
2. THESE SIGNS AND BARRICADES ARE NOT REQUIRED IF ROAD CLOSURE BEGINS AT INTERSECTION.
3. FOR ROAD CLOSURE WITHOUT LOCAL ACCESS TO PROJECT, SEE ROAD CLOSURE BARRICADE DETAIL D.
4. FOR ROAD CLOSURE WITH LOCAL ACCESS TO PROJECT, SEE LANE CLOSURE BARRICADE DETAIL E.
5. FOR BRIDGE OR CULVERT REPLACEMENTS, SUBSTITUTE "BRIDGE OUT" INSTEAD OF "ROAD CLOSED" ON R11-2 AND R11-3 SIGNS.
6. INSTALL DETOUR AND COMMUNITY GUIDE SIGNS AND ARROWS ONLY IF SPECIFIED IN THE CONTRACT. IF THERE ARE EXISTING ROUTE MARKER ASSEMBLIES THAT WILL REMAIN IN PLACE, ADJUST THE LOCATION OF THE DETOUR ROUTE SIGNS TO CORRESPOND WITH THE EXISTING ASSEMBLIES. MODIFY EXISTING SIGNS WHERE POSSIBLE. SEE SPECIFIC PROJECT DETOUR SIGNING DETAIL SHEETS. IF DETOUR SIGNS ARE BEING INSTALLED BY OTHERS, PLACE THE CONTRACTED TRAFFIC CONTROL SIGNS TO ALLOW FOR PLACEMENT OF ALL WARNING, DETOUR AND GUIDE SIGNS AS SHOWN.
7. "EAST" CARDINAL DIRECTION MARKERS AND RIGHT TURN ARROWS ARE SHOWN. USE OTHER CARDINAL DIRECTIONS AND ARROWS AS APPROPRIATE.

BARRICADES AND SIGNS FOR MAINLINE CLOSURES

STATE OF WISCONSIN
DEPARTMENT OF TRANSPORTATION

Sept. 2015 — DATE
/S/ Peter Amakobe Atepe — STATEWIDE WORK ZONE TRAFFIC SAFETY ENGINEER
FHWA

6

S.D.D. 15 C 2-6b

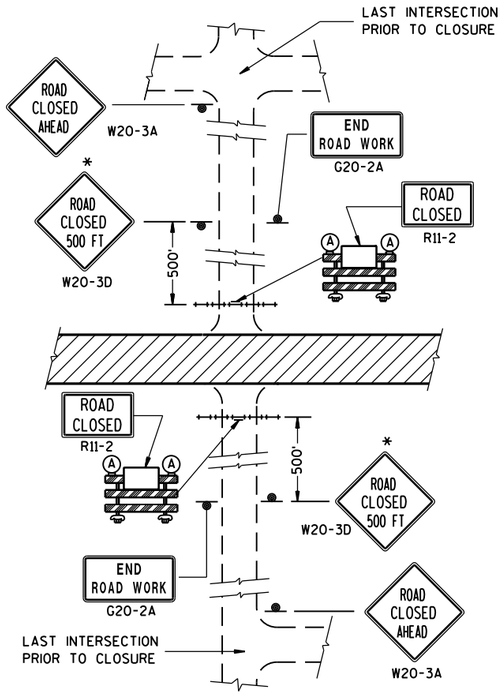

DETAIL 1

(NO ACCESS TO PROJECT)

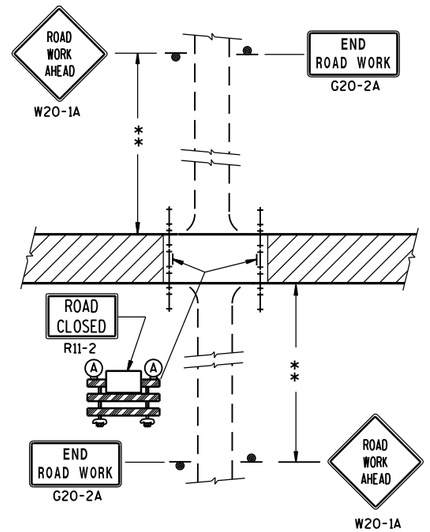

DETAIL 2

(PUBLIC CROSS-TRAFFIC MAINTAINED. NO ACCESS TO PROJECT).

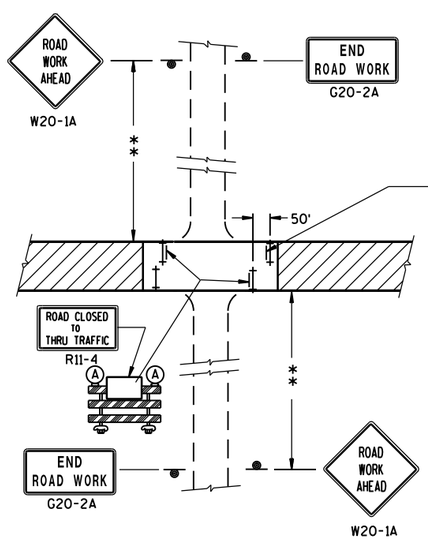

DETAIL 3

(PUBLIC CROSS-TRAFFIC MAINTAINED. CONTRACTOR, LOCAL BUSINESS AND RESIDENT ACCESS).

FOR BRIDGE OR CULVERT REPLACEMENT, USE ADDITIONAL SIGN ON BARRICADE

BRIDGE OUT
XX MILES AHEAD
R11-3C

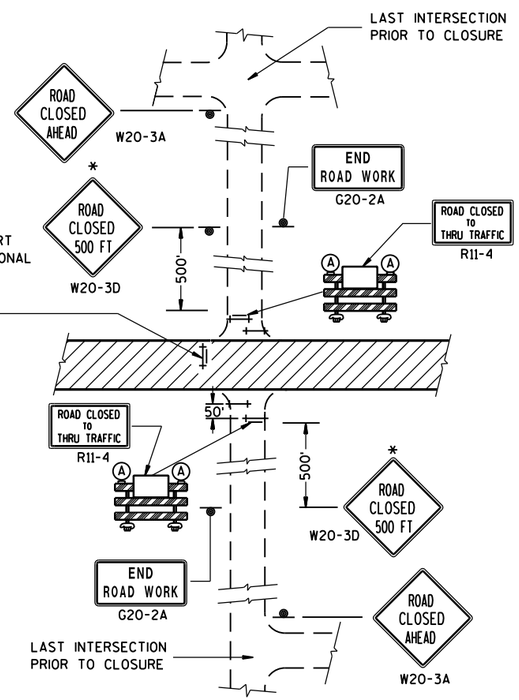

DETAIL 4

(CONTRACTOR, LOCAL BUSINESS AND RESIDENT ACCESS TO PROJECT)

GENERAL NOTES

THE EXACT NUMBER, LOCATION, AND SPACING OF ALL SIGNS AND BARRICADES SHALL BE ADJUSTED TO FIT FIELD CONDITIONS AS APPROVED BY THE ENGINEER.

ANY SIGNS TEMPORARY OR EXISTING, WHICH CONFLICT WITH TRAFFIC CONTROL "IN USE" SHALL BE REMOVED OR COVERED AS NEEDED AND AS APPROVED BY THE ENGINEER.

THE SPACING BETWEEN TRAFFIC CONTROL SIGNS SHOULD BE ADJUSTED TO NOT CONFLICT WITH AND SHOULD PROVIDE A DESIRABLE MINIMUM OF 200 FEET CLEARANCE TO EXISTING SIGNS THAT WILL REMAIN IN PLACE.

IF A "STOP" SIGN MUST BE REMOVED FOR A WORK OPERATION, A TEMPORARY "STOP" SIGN SHALL BE PLACED PRIOR TO THE SIGN REMOVAL, OR A FLAGGER SHALL BE PROVIDED UNTIL THE SIGN IS RE-ESTABLISHED.

BARRICADES THAT MUST BE MOVED FOR A WORK OPERATION SHALL BE IMMEDIATELY RE-ESTABLISHED UPON COMPLETION OF THE OPERATION OR, FOR CONTINUING OPERATIONS, AT THE END OF EACH WORKING DAY.

SIGNS THAT WILL BE IN PLACE LESS THAN 7 CONTINUOUS DAYS AND NIGHTS MAY BE MOUNTED ON PORTABLE SUPPORTS.

ALL TYPE III BARRICADES SHALL HAVE RAILS REFLECTORIZED ON BOTH FACES. STRIPES SHALL BE PROPERLY SLOPED DOWN TOWARD THE TRAFFIC SIDE OR AS SHOWN IN THE ROAD CLOSURE BARRICADE DETAIL D FOR FULL ROAD CLOSURES.

TYPE "A" LOW-INTENSITY FLASHING WARNING LIGHTS SHALL BE VISIBLE ON BOTH SIDES OF THE BARRICADE.

THE R11-2, R11-3 AND R11-4 SIGNS PLACED ON BARRICADES SHALL COVER NO MORE THAN THE TOP RAIL. THE SIGNS SHALL NOT COVER ANY PORTION OF THE MIDDLE OR BOTTOM RAILS.

ALL SIGNS SHALL BE 48" X 48" UNLESS OTHERWISE NOTED BELOW:
R11-2 SHALL BE 48" X 30".
R11-4 AND R11-3 SHALL BE 60" X 30".

*OMIT THE "ROAD CLOSED 500 FT." SIGN IF THE LAST INTERSECTION IS 500 FT. OR LESS FROM THE WORK ZONE.

**500' MAX. OR AT LAST INTERSECTION WHICHEVER IS CLOSER.

LEGEND

- SIGN ON PERMANENT SUPPORT
- TYPE III BARRICADE
- TYPE III BARRICADE WITH ATTACHED SIGN
- (A) TYPE "A" WARNING LIGHT (FLASHING)
- WORK AREA

BARRICADES AND SIGNS FOR SIDEROAD CLOSURES

STATE OF WISCONSIN
DEPARTMENT OF TRANSPORTATION

APPROVED
Sept. 2017 — DATE
/S/ Andrew Heldtke — WORK ZONE ENG
FHWA

6

S.D.D. 15 C 3-4

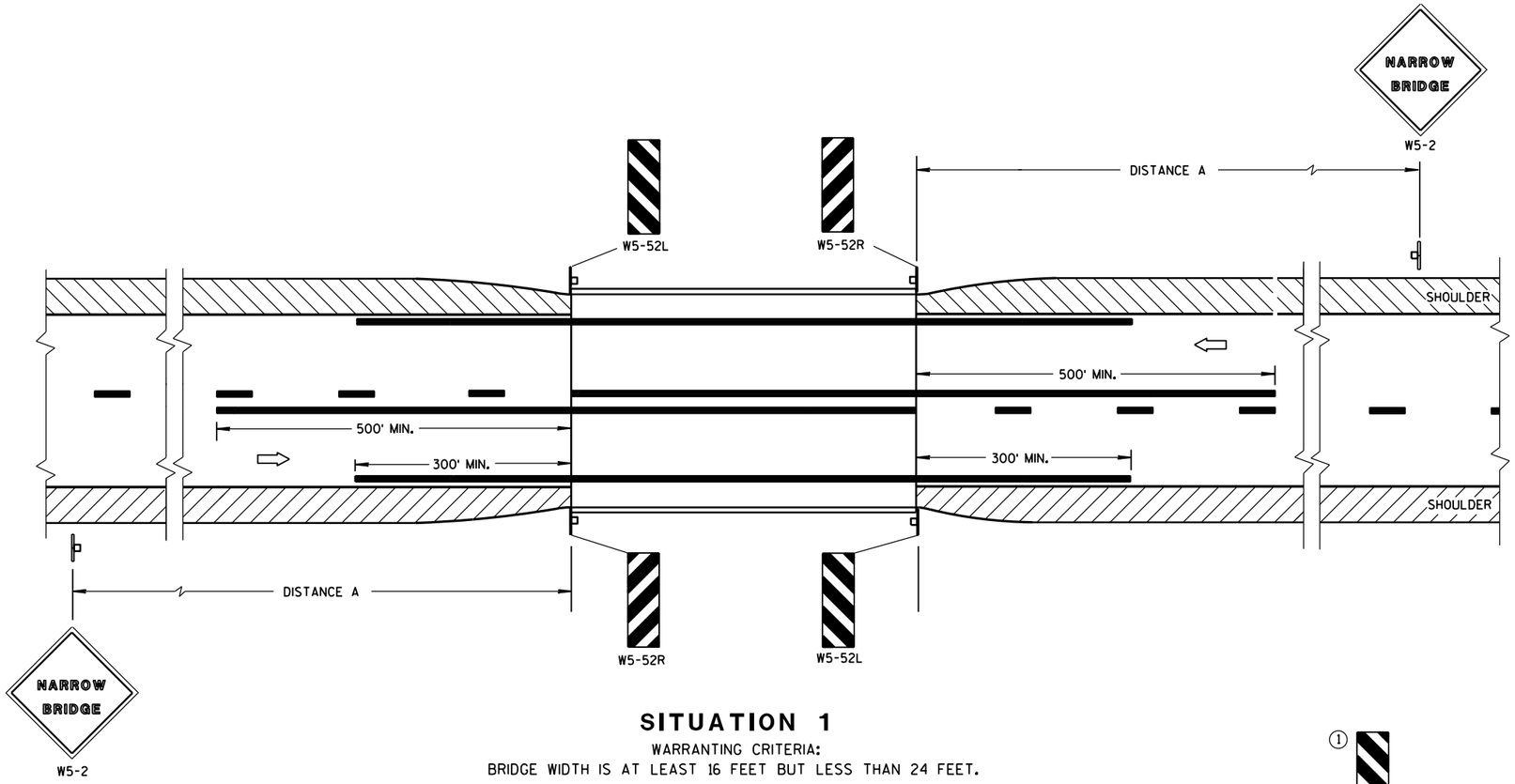

SITUATION 1

WARRANTING CRITERIA:
BRIDGE WIDTH IS AT LEAST 16 FEET BUT LESS THAN 24 FEET.

GENERAL NOTES

DETAILS OF TRAFFIC CONTROL DEVICES AND INSTALLATION NOT SHOWN ON THIS DRAWING SHALL CONFORM TO THE PERTINENT REQUIREMENTS OF THE STANDARD SPECIFICATIONS, THE SPECIAL PROVISIONS, AND THE MANUAL ON UNIFORM TRAFFIC CONTROL DEVICES.

LOCATE W5-52 SIGN POST(S) BEHIND GUARDRAIL WHEN PRESENT.

PLACE THE EDGE OF THE W5-52 SIGN IN LINE WITH FACE OF CURB OR PARAPET.

(1) OMIT ON ONE-WAY TRAVELLED WAYS.

⇨ DIRECTION OF TRAFFIC

DISTANCE TABLE

POSTED OR 85th PERCENTILE SPEED	DISTANCE "A"
25	150'
30	200'
35	250'
40	300'
45	400'
50	550'
55	750'

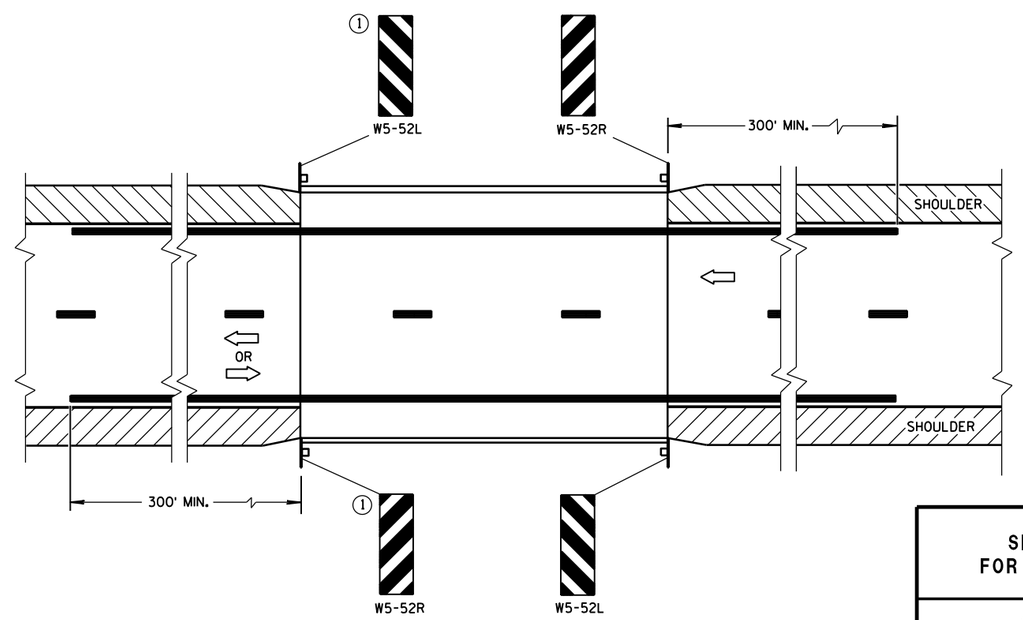

SITUATION 2

WARRANTING CRITERIA:

1. BRIDGE WIDTH IS AT LEAST 24 FEET AND
2. BRIDGE SHOULDER WIDTH IS LESS THAN 6 FEET.

SIGNING & MARKING FOR TWO LANE BRIDGES

STATE OF WISCONSIN
DEPARTMENT OF TRANSPORTATION

APPROVED
June 2017 — DATE
/S/ Matthew R. Rauch — STATE SIGNING AND MAR ... NEER
FHWA

6

S.D.D. 15 C 6-9

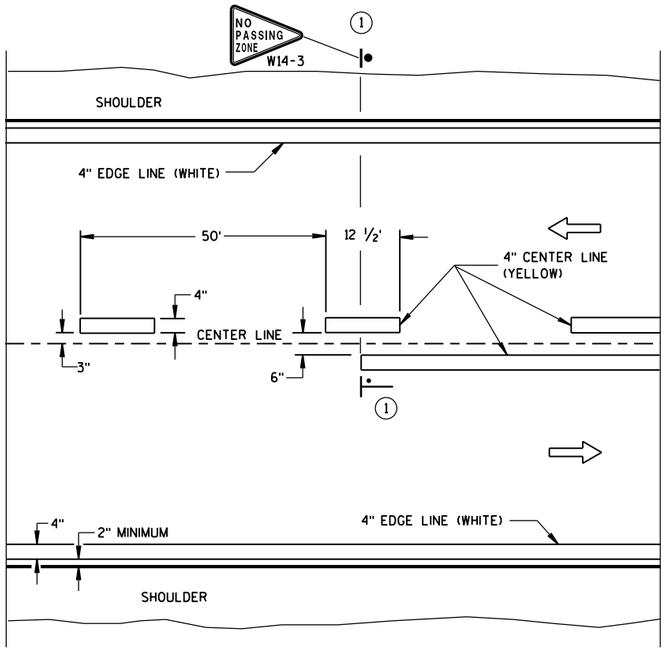

TWO WAY TRAFFIC

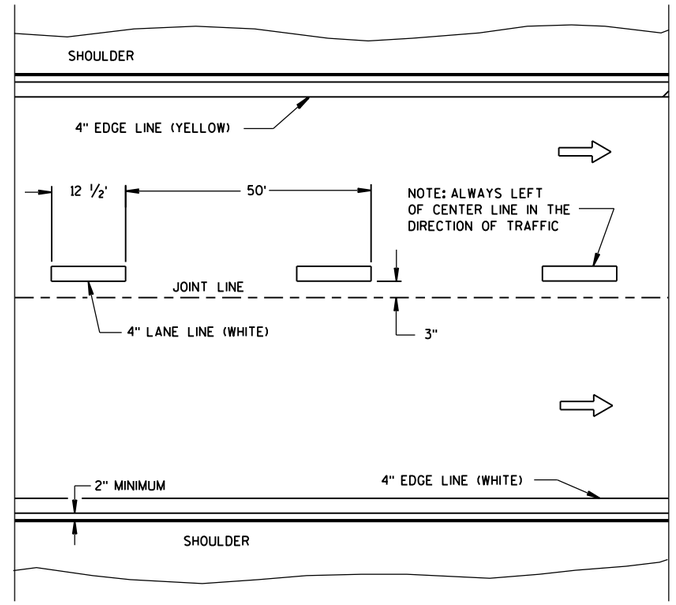

ONE WAY TRAFFIC

PERMANENT PAVEMENT MARKING

GENERAL NOTES

DETAILS OF CONSTRUCTION NOT SHOWN ON THIS DRAWING SHALL CONFORM TO STANDARD SPECIFICATIONS AND SPECIAL PROVISIONS.

(1) LOCATE THE NO PASSING ZONE W14-3 SIGN WITHIN 50 FEET OF THE "T" MARKING.

NOTE

ARROW SYMBOL (⇨) SHOWS DIRECTION OF TRAVEL

LEGEND

"T" MARKING

POST MOUNTED SIGN

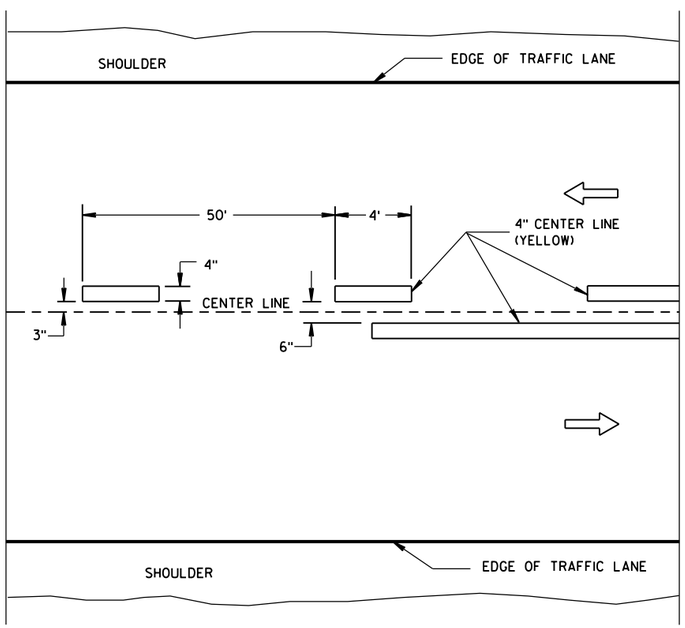

TWO WAY TRAFFIC

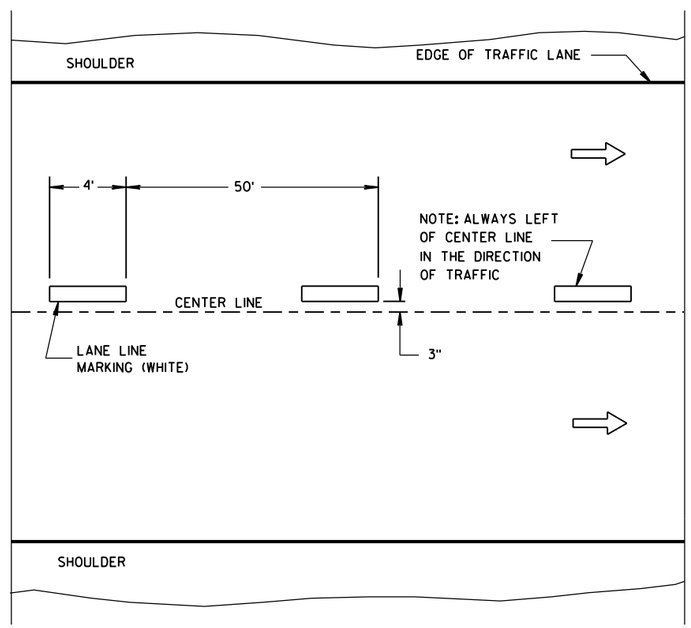

ONE WAY TRAFFIC

TEMPORARY PAVEMENT MARKING

6

6

S.D.D. 15 C 8-18a

S.D.D. 15 C 8-18a

LONGITUDINAL MARKING (MAINLINE)

STATE OF WISCONSIN
DEPARTMENT OF TRANSPORTATION

APPROVED
June 2017 /S/ Matthew R. Rauch
DATE STATE SIGNING AND MAR ENGINEER
FHWA

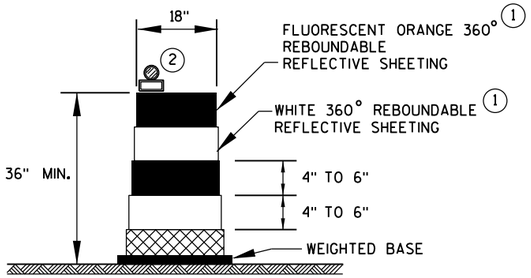

DRUM

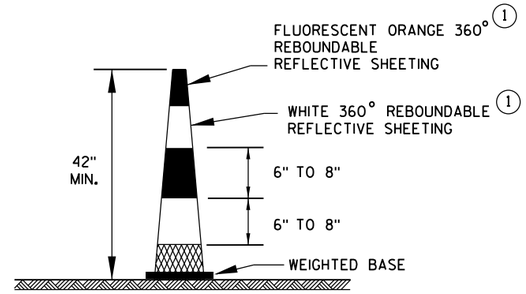

42" CONE

DO NOT USE IN TAPERS
½ SPACING OF DRUMS

GENERAL NOTES

1. REFLECTIVE SHEETING SHALL FOLLOW THE REQUIREMENTS IN THE APPROVED PRODUCTS LISTING FOR SIGN SHEETING.
2. LOCATION OF WARNING LIGHTS WHEN SHOWN ON THE PLAN.

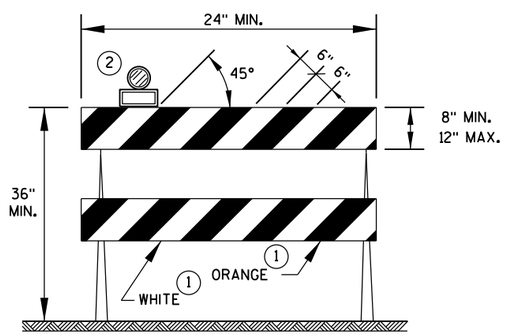

TYPE 2 BARRICADE

FOR RAILS LESS THAN 36" LONG, 4" WIDE STRIPES MAY BE USED. ALL STRIPES SHALL SLOPE DOWNWARD TO THE TRAFFIC SIDE FOR CHANNELIZATION.

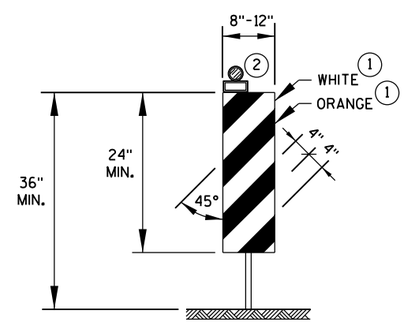

VERTICAL PANEL

THE STRIPES SHALL SLOPE DOWNWARD TO THE TRAFFIC SIDE FOR CHANNELIZATION.

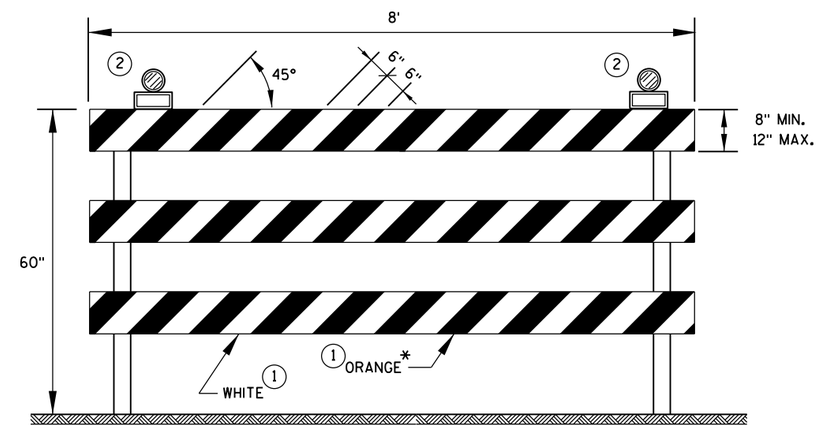

TYPE 3 BARRICADE

IF SIGN MOUNTED, DO NOT COVER MORE THAN 50% OF THE TOP TWO RAILS OR 33% OF THE TOTAL AREA OF THE THREE RAILS.

* IF USED FOR A PERMANENT APPLICATION, USE RED SHEETING.

CHANNELIZING DEVICES DRUMS, CONES, BARRICADES AND VERTICAL PANELS	
STATE OF WISCONSIN DEPARTMENT OF TRANSPORTATION	
APPROVED	
June 2017	/S/ Andrew Heldtke
DATE	WORK ZONE ENG
FHWA	

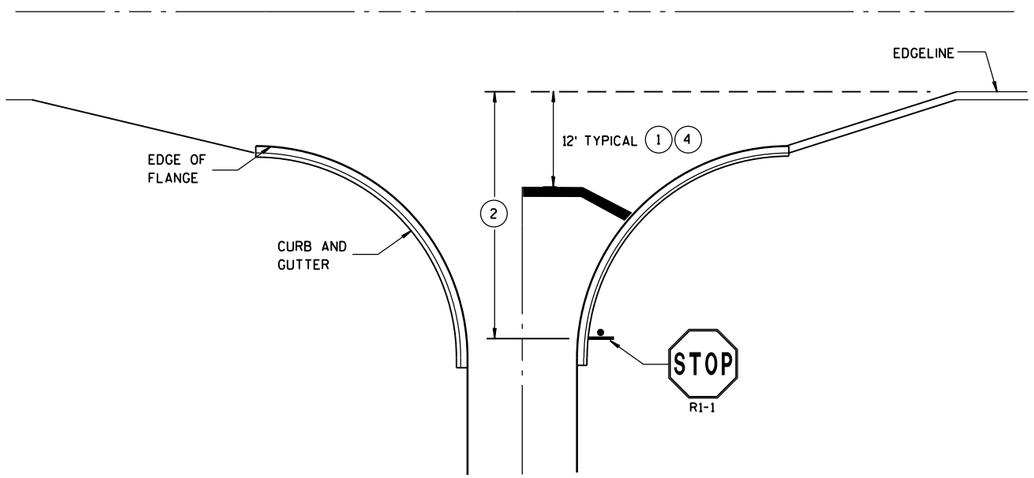

TYPICAL STOP LINE PAVEMENT MARKING
WITH CURB AND GUTTER

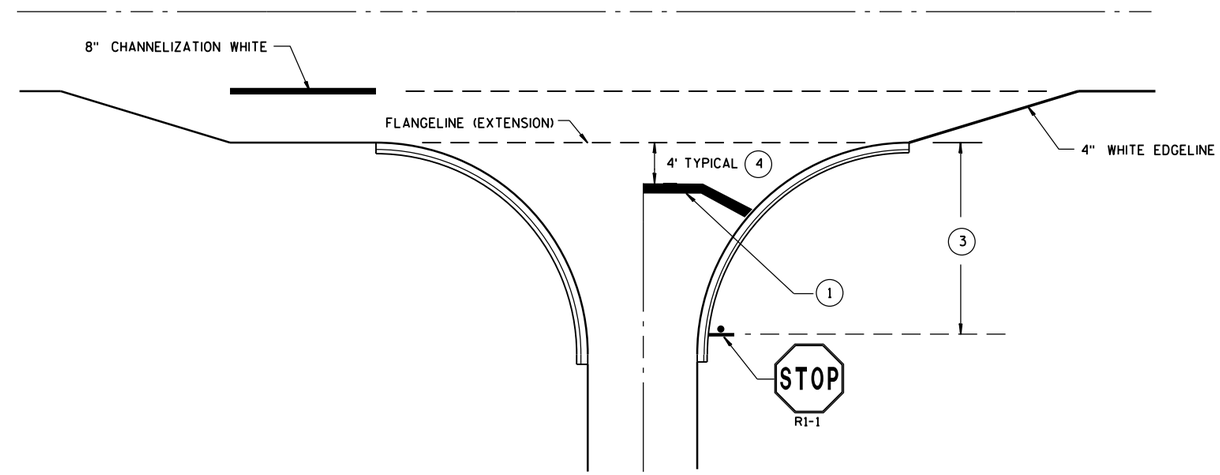

TYPICAL STOP LINE PAVEMENT MARKING
FOR SIDEROADS WITH RIGHT TURN LANE

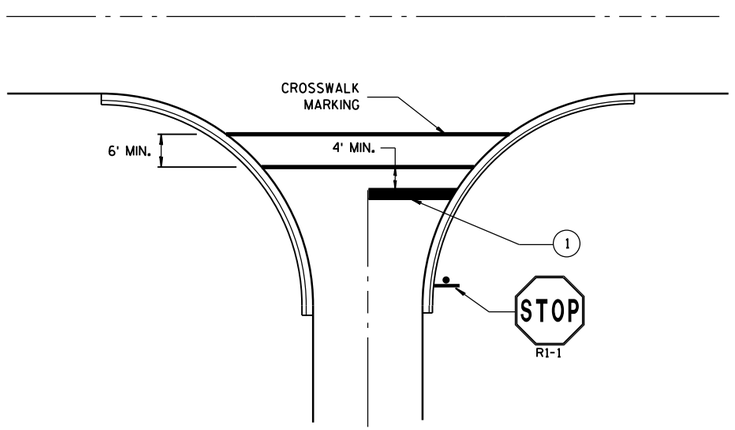

TYPICAL STOP LINE PAVEMENT MARKING
FOR SIDEROADS WITH CROSSWALK MARKING

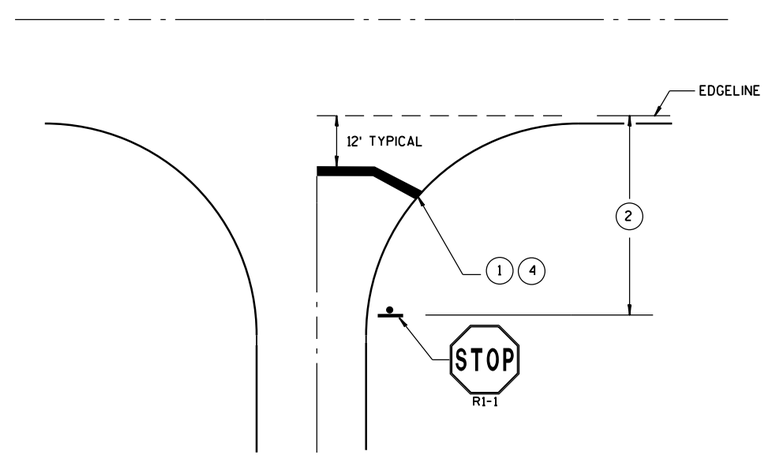

TYPICAL STOP LINE PAVEMENT MARKING
WITHOUT CURB AND GUTTER

GENERAL NOTES

STOP SIGN SHALL BE PLACED A MINIMUM OF 6 FEET TO A MAXIMUM OF 50 FEET FROM THE EDGELINE LOCATION.

1. 18-INCH STOP LINES MAY BE DELETED OR ADDED BY THE PROJECT ENGINEER BASED ON VISIBILITY AND SIGHT LINES.
2. IF STOP SIGN IS LESS THAN OR EQUAL TO 40 FEET FROM THE EDGELINE THAN NO STOP LINE IS REQUIRED.
3. IF STOP SIGN IS LESS THAN OR EQUAL TO 30 FEET FROM THE FLANGELINE EXTENSION THAN NO STOP LINE IS REQUIRED.
4. MOVE CLOSER TO EDGE OF TRAVEL LANE AS NEEDED FOR VISIBILITY AND SIGHT LINES. (NO CLOSER THAN 4 FEET).

STOP LINE AND CROSSWALK PAVEMENT MARKING

STATE OF WISCONSIN
DEPARTMENT OF TRANSPORTATION

APPROVED

Sept., 2017	/S/ Matthew R. Rauch
DATE	STATE SIGNING AND MAR[illegible]NEER

FHWA

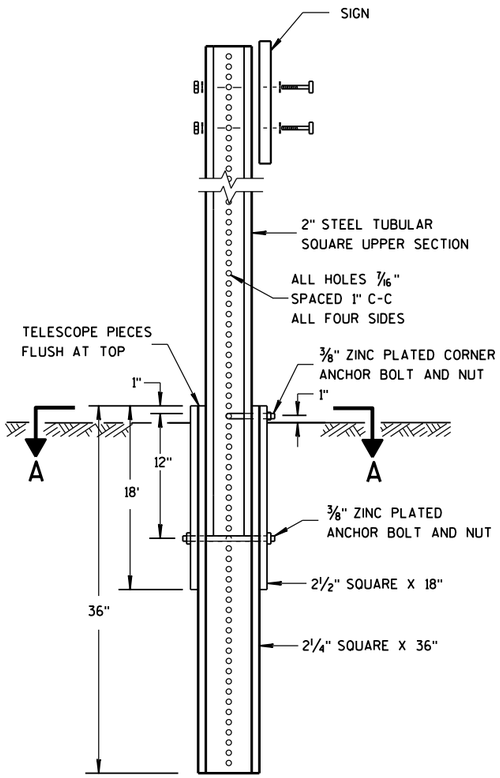

DETAIL OF TUBULAR STEEL SIGN POST

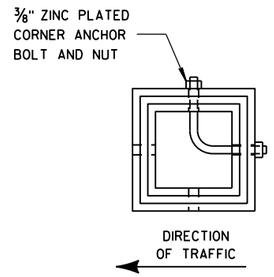

SECTION A-A

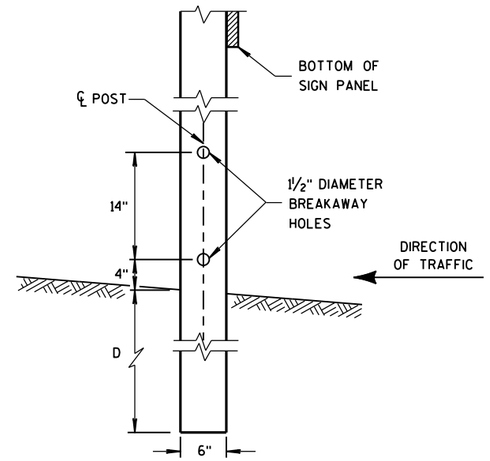

4"x6" WOOD POST MODIFICATION

GENERAL NOTES

1. 6 FEET FROM THE EDGE OF PAVEMENT (EDGE LINE LOCATION) UNLESS OTHERWISE DIRECTED BY THE PROJECT ENGINEER. LATERAL OFFSET SHOULD BE ADJUSTED TO AVOID THE DITCH FLOWLINE.
2. THE EXISTENCE OF CURB AND GUTTER DOES NOT IN ITSELF MANDATE THE VERTICAL CLEARANCE ILLUSTRATED. THAT HEIGHT IS TYPICALLY MEASURED WHERE THERE IS SIDEWALK ADJACENT TO THE ROADWAY OR PARKING IS PERMITTED. IN THE ABSENCE OF SIDEWALK, VERTICAL CLEARANCE IS MEASURED FROM THE TOP OF THE CURB. IF NO SIDEWALK AND NO PARKING, VERTICAL CLEARANCE MAY BE REDUCED TO 5 FOOT MINIMUM. OFFSET OF SIGNS IS MEASURED FROM THE CURB FLOWLINE.
3. FOR SIGNS REQUIRING 4 POSTS, SPACE INTERMEDIATE POSTS EVENLY.

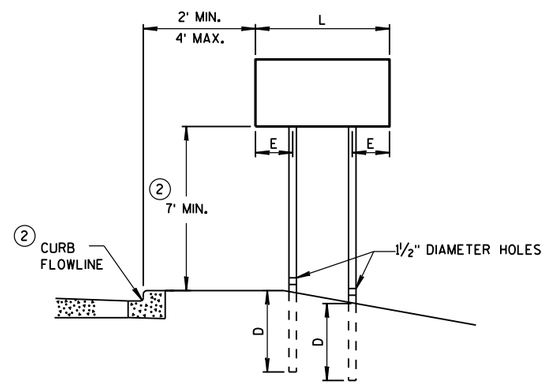

URBAN AREA

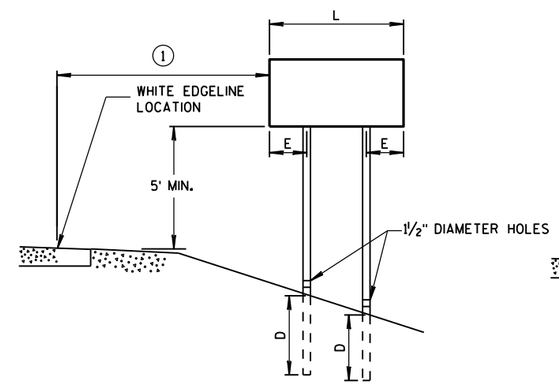

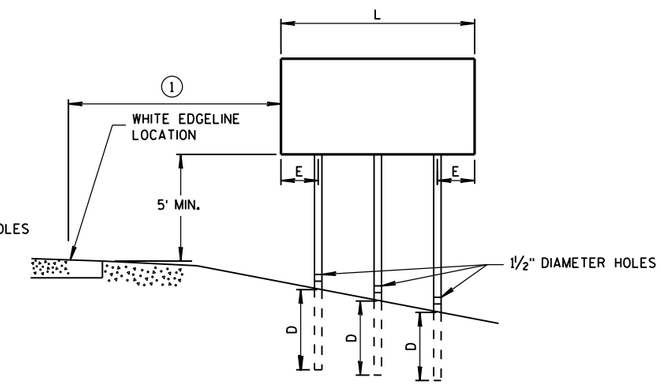

RURAL AREA

POST MOUNTING DETAIL FOR TEMPORARY TRAFFIC CONTROL FIXED MESSAGE SIGNS

TUBULAR STEEL POSTS

AREA OF SIGN INSTALLATION (SQ. FT.)	NUMBER OF REQUIRED TUBULAR STEEL POSTS
9 OR LESS	1
GREATER THAN 9 LESS THAN OR EQUAL TO 18	2
GREATER THAN 18 LESS THAN OR EQUAL TO 27	3

SIGNS WIDER THAN 3 FEET OR LARGER THAN 9 SQ. FT. SHALL BE MOUNTED ON MULTIPLE POSTS (SEE ABOVE TABLE).

SIGNS LARGER THAN 27 SQ. FT. SHALL NOT BE MOUNTED ON TUBULAR STEEL POSTS.

WOOD POST EMBEDMENT DEPTH

AREA OF SIGN INSTALLATION (SQ. FT.)	D (MIN)
20 OR LESS	4'
GREATER THAN 20	5'

4" X 6" WOOD POST

POST SPACING REQUIREMENTS		NUMBER OF WOOD POSTS REQUIRED
L	E	
48" OR LESS AND LESS THAN 20 SQ. FT.	-	1
LESS THAN 60"	12"	2
60" TO 120"	L/5	2
GREATER THAN 120" LESS THAN 168"	12"	3
168" AND GREATER	12"	4

SEE NOTE 3

TEMPORARY TRAFFIC CONTROL SIGN MOUNTING

STATE OF WISCONSIN
DEPARTMENT OF TRANSPO

6

S.D.D. 15 D 38-2a

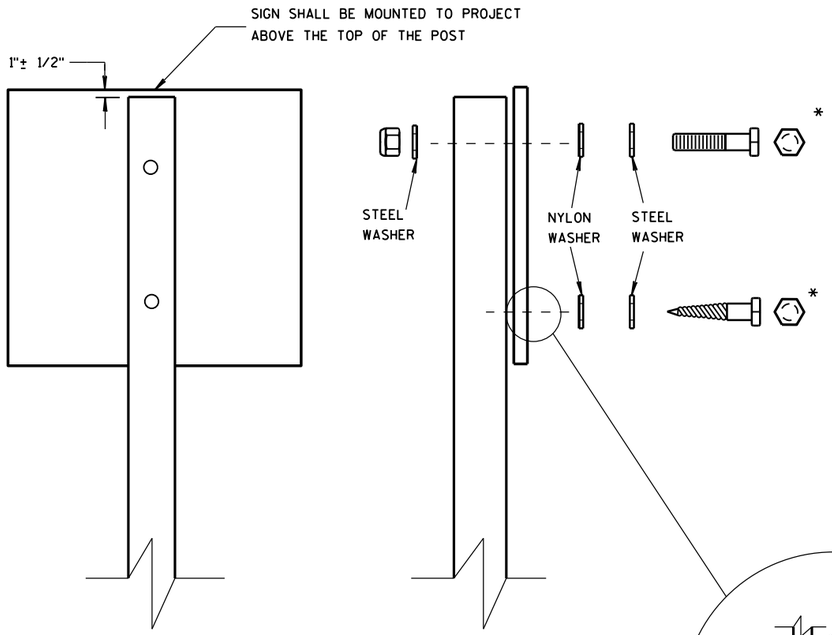

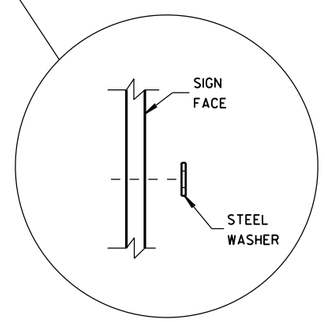

WASHER PLACEMENT WHEN SIGN HAS OTHER THAN TYPE H OR TYPE F FACE

NUTS, BOLTS AND LAGS USED FOR MOUNTING SIGNS SHALL HAVE HEXAGONAL HEADS AND SHALL BE EITHER:

A. HOT DIP GALVANIZED IN ACCORDANCE WITH ASTM DESIGNATION: A 153, CLASS D, OR SC 3

B. ELECTRO-GALVANIZED IN ACCORDANCE WITH ASTM DESIGNATION: B 633, TYPE III, SC 3

THREADS ON BOLTS AND NUTS SHALL BE MANUFACTURED WITH SUFFICIENT ALLOWANCE FOR THE CADMIUM PLATE OR GALVANIZED COATING TO PERMIT THE NUTS TO RUN FREELY ON THE BOLTS.

WOOD POSTS (4" x 4" or 4" x 6")

LAG SCREWS - 3/8" X 3"

MACHINE BOLTS - 5/16" X 6-1/2" OR 7" LENGTH W/ NUTS

SQUARE STEEL POSTS (2" x 2")

MACHINE BOLTS - 3/8" X 3-1/4" LENGTH W/ NUTS

RIVETS - 9/32" (6605-9-6) BULB-TITE, TRI-FOLD, ALUMINUM BODY/MANDREL O.D. FLANGE .720-.765 INCH, GRIP RANGE .042-.375 INCH

WASHERS (ALL POSTS) -

1-1/4" O.D. X 3/8" I.D. X 1/16" STEEL

1-1/4" O.D. X 3/8" I.D. X .080 NYLON FOR ALL TYPE H SIGNS

* TWO DIFFERENT FASTENING SYSTEMS ARE SHOWN FOR ILLUSTRATION PURPOSES. ON ANY INDIVIDUAL SIGN, EITHER ONE OR THE OTHER SYSTEM SHALL BE USED. ACTUAL NUMBER OF FASTENERS PER SIGN VARIES WITH THE SIGN AREA. FOR A SINGLE POST INSTALLATION, ALL SIGNS GREATER THAN 9 SQ. FT. REQUIRE THE USE OF 3 FASTENERS.

6

6

S.D.D. 15 D 38-2b

S.D.D. 15 D 38-2b

ATTACHMENT OF SIGNS TO POSTS

STATE OF WISCONSIN
DEPARTMENT OF TRANSPORTATION

APPROVED

June 2017 — /S/ Andrew Heldtke
DATE — WORK ZONE ENG

FHWA

URBAN AREA

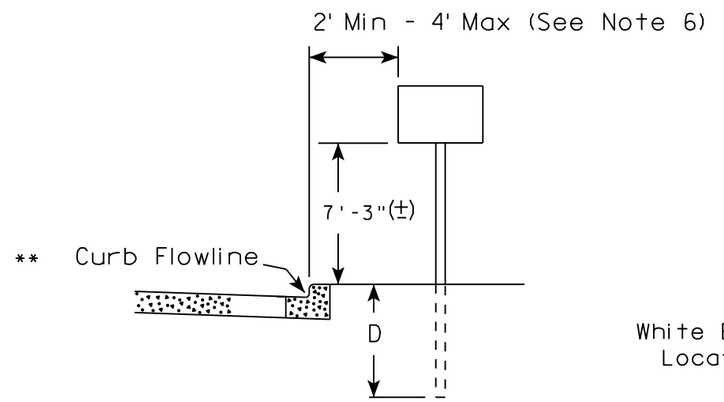

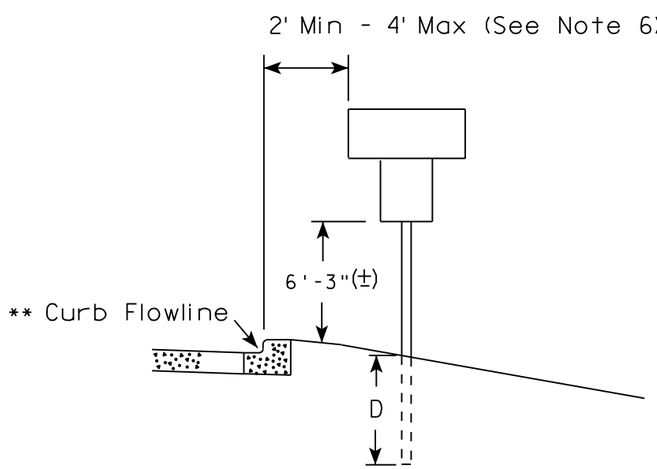

RURAL AREA (See Note 2)

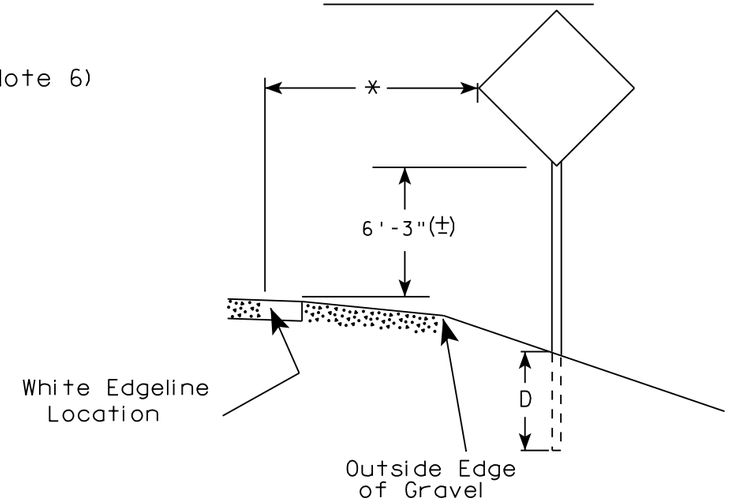

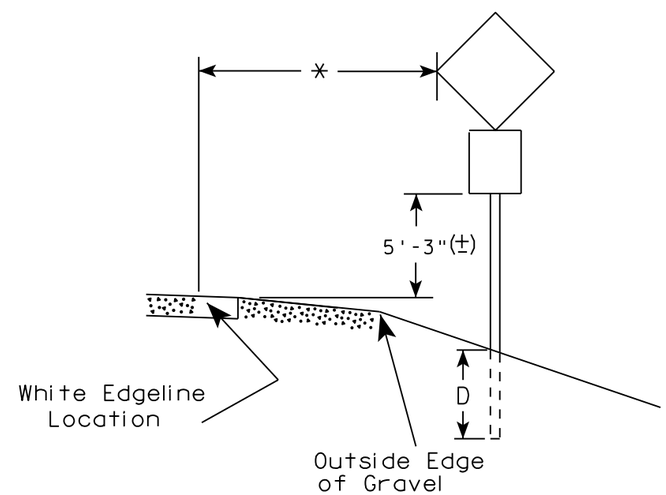

** The existence of curb and gutter does not in itself mandate the vertical clearance illustrated. That height is typically measured where there is sidewalk adjacent to the roadway or parking is permitted. In the absence of sidewalk vertical clearance is measured from the top of the curb. Offset of signs is measured from the flow line.

* 6 feet from edge of a paved shoulder or 12 feet from the edge of pavement (edge line location) or 2 feet from outside edge of gravel, whichever is greater unless directed by project engineer.

GENERAL NOTES

1. Signs wider than 4 feet or 20 sq.ft or larger, shall be mounted on multiple posts. Refer to plate A4-4.
2. If signs are mounted on barrier wall, see A4-10 sign plate.
3. For expressways and freeways, mounting height is 7'- 3" (±) or 6'-3" (±) depending upon existence of a sub-sign.
4. J-Assemblies are considered to be one sign for mounting height.
5. Minimum mounting height for signs mounted on traffic signal poles is 5'- 3" (±).
6. Offset distance shall be consistent with existing signs or consistent throughout length of project.
7. The (±) tolerance for mounting height is 3 inches.
8. Folding signs shall be mounted at a height of 5'-3" (±) or as directd by the Engineer.
9. The Double Arrow sign (W12-1) shall be mounted at a height of 2'-3" (±). The Chevron sign (W1-8), Roundabout Chevron panel (R6-4B), Enhanced Reference Markers, Clearance Markers (W5-52), Mile Markers (D10 series), In Road Object Markers (W5-54) & End of Road Markers (W5-56) shall be mounted at a height of 4'-3" (±).

POST EMBEDMENT DEPTH

Area of Sign Installation (Sq. Ft.)	D (Min)
20 or Less	4'
Greater than 20	5'

TYPICAL INSTALLATION OF PERMANENT TYPE II SIGNS ON SINGLE POSTS

WISCONSIN DEPT OF TRANSPORTATION

APPROVED Matthew R Rauch for State Traffic Engineer

DATE 8/21/17 PLATE NO. A4-3.21

7 7

PROJECT NO:	HWY:	COUNTY:		SHEET NO: 73	E

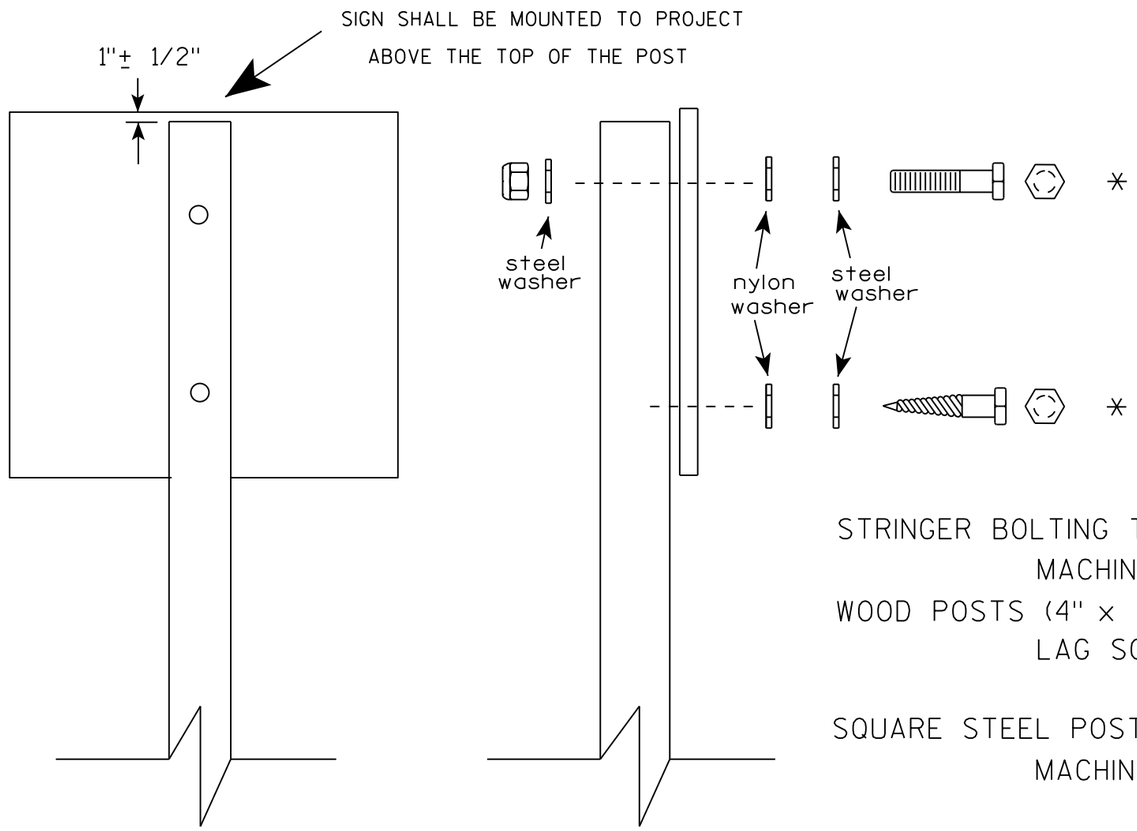

Nuts, bolts and lags used for mounting signs shall have hexagonal heads and shall be either :

a. Hot dip galvanized in accordance with ASTM Designation: A 153, Class D, or SC 3

b. Electro-galvanized in accordance with ASTM Designation : B 633, TYPE III, SC 3.

Threads on bolts and nuts shall be manufactured with sufficient allowance for the cadmium plate or galvanized coating to permit the nuts to run freely on the bolts.

STRINGER BOLTING TO ALUMINUM SIGNS (SEE SIGN PLATE A4-18)

MACHINE BOLTS - 5/16" X 1-3/4" Length w/ lock nuts

WOOD POSTS (4" x 4" or 4" x 6")

LAG SCREWS - 3/8" X 3" (NO STRINGERS ON BACK OF SIGN)

3/8" X 4" (STRINGERS ON BACK OF SIGN)

SQUARE STEEL POSTS (2" x 2")

MACHINE BOLTS - 3/8" X 3-1/4" Length w/ nuts (NO STRINGER ON BACK OF SIGN)

3/8" X 5" Length w/ nuts (STRINGERS ON BACK OF SIGN)

RIVETS - 9/32 " (6605-9-6) BULB-TITE, TRI-FOLD, ALUMINUM BODY/MANDREL

O.D. FLANGE .720-.765 INCH, GRIP RANGE .042-.375 INCH

WASHERS (ALL POSTS) -

1-1/4" O.D. X 3/8" I.D. X 1/16" STEEL

1-1/4" O.D. X 3/8" I.D. X .080 NYLON

* Two different fastening systems are shown for illustration purposes. On any individual sign, either one or the other system shall be used. Actual number of fasteners per sign varies with the sign area, but normally there are two. For a single post installation, all signs greater than 9 sq. ft. require the use of 3 fasteners.

ATTACHMENT OF SIGNS TO POSTS

WISCONSIN DEPT OF TRANSPORTATION

APPROVED Matthew R Rauch
for State Traffic Engineer

DATE 8/11/16 PLATE NO. A4-8.8

PROJECT NO:

SHEET NO: E

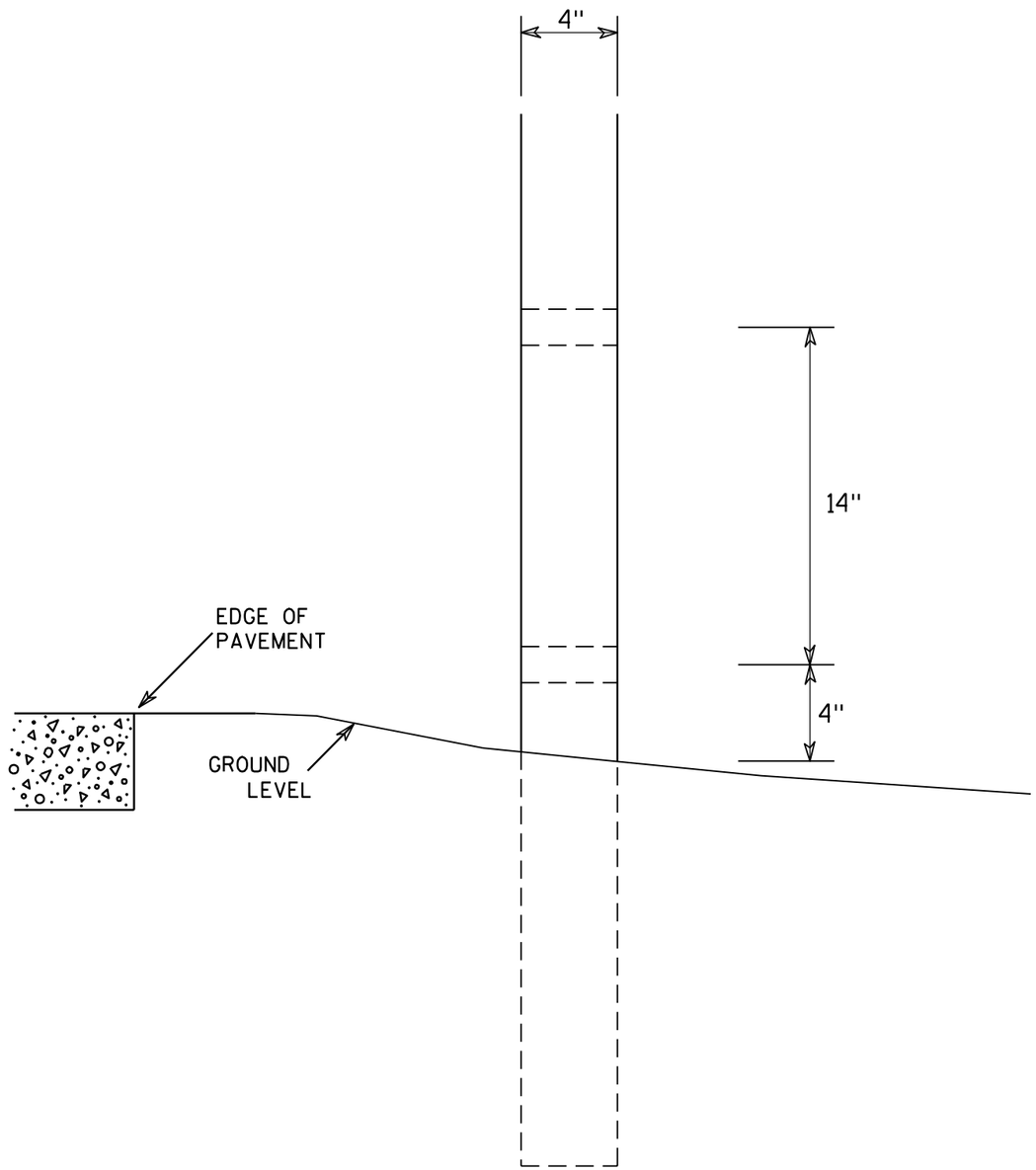

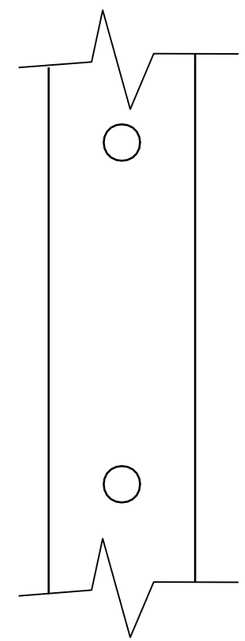

SIDE VIEW

GENERAL NOTES

1. All 4 x 6 Wood Posts shall be modified by having two 1½" diameter holes drilled perpendicular to the roadway centerline.

7

7

4 X 6 WOOD POST MODIFICATIONS

WISCONSIN DEPT OF TRANSPORTATION

APPROVED Chester J Spang for State Traffic Engineer

DATE 3/27/97 PLATE NO. A4-11.2

PROJECT NO:	HWY:	COUNTY:		SHEET NO: 75	E

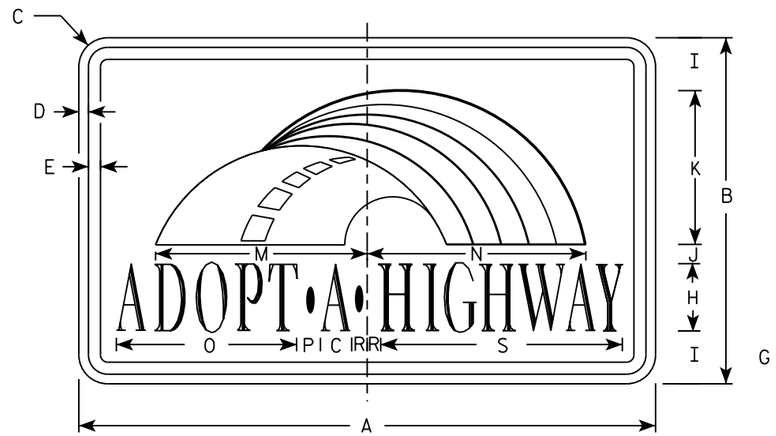

I55-56

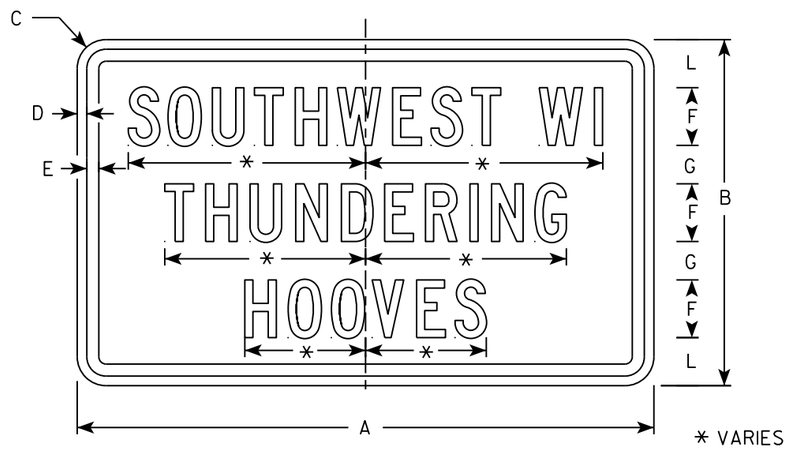

I55-56P

* VARIES

Background Colors of Symbol*

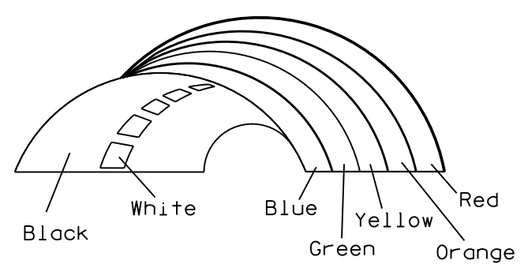

*1/4" Black Border between each color of rainbow and border of rainbow

NOTES

1. Sign is Type II - Type H Reflective
2. Color:
   Background - White
   Message - (See Note 4)
3. Message Series - (See Note 5)
4. Border - Blue
   Adopt a Highway - Red
   All other Text - Blue
5. Adopt a Highway - Dutch 8011L
   All other Text - Series C
6. Contractor shall provide and install a new post bracket in accordance with the I55-56B sign detail.

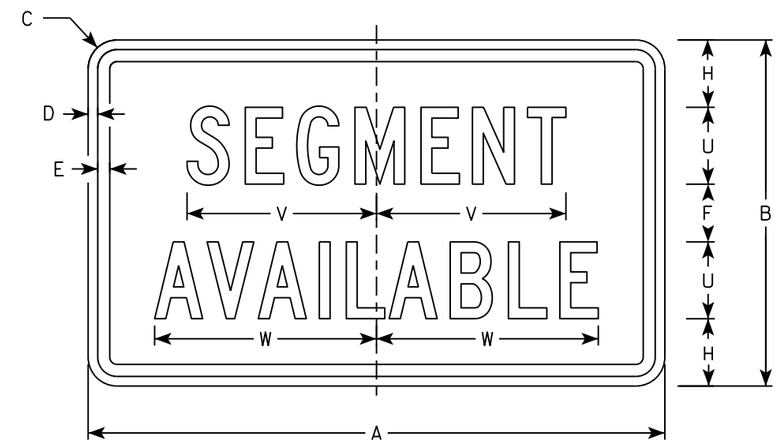

I55-56S

SIZE	A	B	C	D	E	F	G	H	I	J	K	L	M	N	O	P	Q	R	S	T	U	V	W	X	Y	Z	Area sq. ft.
1																											
2	30	18	1 1/2	1/2	5/8	3	2	3 1/2	2 3/4	1	8	2 1/2	11 1/4	11 1/8	9 3/8	1 1/4		3/4	12 5/8	7 1/2	4	9 7/8	11 1/2				3.75
3																											
4																											
5																											

STANDARD SIGN
I55-56

WISCONSIN DEPT OF TRANSPORTATION

APPROVED Matthew R Rauch
for State Traffic Engineer

DATE 2/20/18 PLATE NO. I55-56.4

PROJECT NO: | HWY: | COUNTY: | SHEET NO: 76 | E

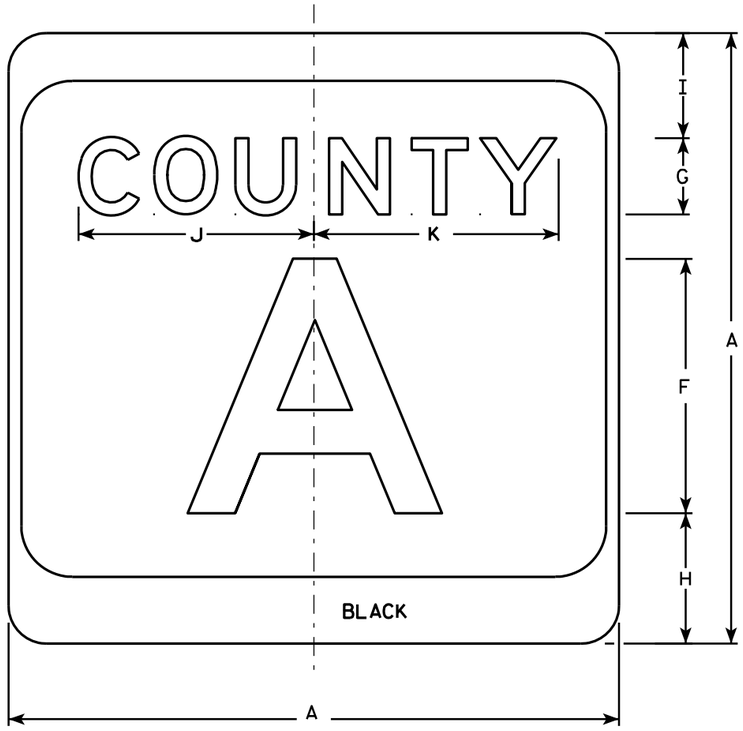

M1-5A

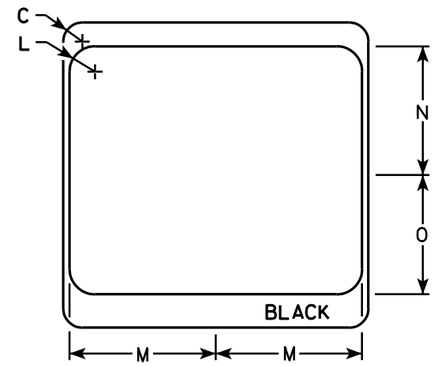

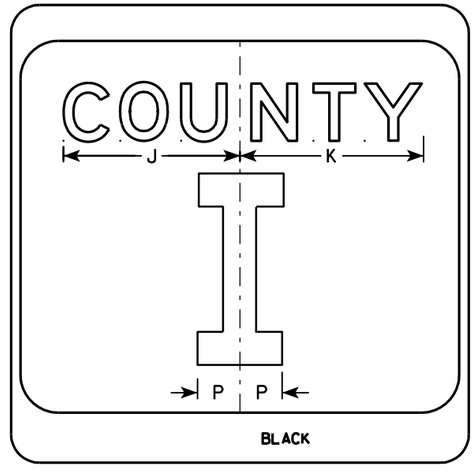

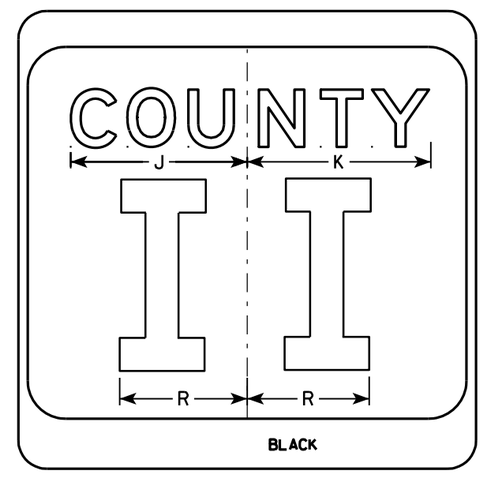

NOTES

1. Sign is Type II - see Note 7 - reference WIS DOT Standard Specification for HIGHWAY and STRUCTURE CONSTRUCTION latest edition.
2. Color:
   Background - White & Black - See Note 7
   Message - Black
3. Message Series - see Note 5
4. Corners may be square or rounded when base material is plywood but borders shall be rounded as shown. When base material is metal, the corners and borders shall be rounded.
5. Message Series E for 1 letter.
   Message Series D for 2 letters unless message is too big then Series C.
   Message Series C for 3 letters unless message is too big then Series B.
6. Substitute appropriate letters & optically center to achieve proper balance.
7. Permanent Signs
   Background - Type H Reflective
   Detour or temporary Signs
   Background - Reflective

SIZE	A	B	C	D	E	F	G	H	I	J	K	L	M	N	O	P	Q	R	S	T	U	V	W	X	Y	Z	Area sq. ft.
1																											
2	24		1 1/2			10	3	5 1/8	4 1/8	9 1/4	9 5/8	2	11 1/2	10 1/8	9 3/8	2 1/4		6 5/8									4.0
3	36		2 1/4			16	4	7 5/8	5 5/8	12 1/4	12 7/8	3	17 1/8	15 1/4	14	3 3/8		10									9.0
4	36		2 1/4			16	4	7 5/8	5 5/8	12 1/4	12 7/8	3	17 1/8	15 1/4	14	3 3/8		10									9.0
5	36		2 1/4			16	4	7 5/8	5 5/8	12 1/4	12 7/8	3	17 1/8	15 1/4	14	3 3/8		10									9.0

CTH MARKER
M1-5A FOR ASSEMBLIES

WISCONSIN DEPT OF TRANSPORTATION

APPROVED Matthew R Rauch
for State Traffic Engineer

DATE 9/27/11 PLATE NO. M1-5A.8

7

7

PROJECT NO: | HWY: | COUNTY: | SHEET NO: 77 | E

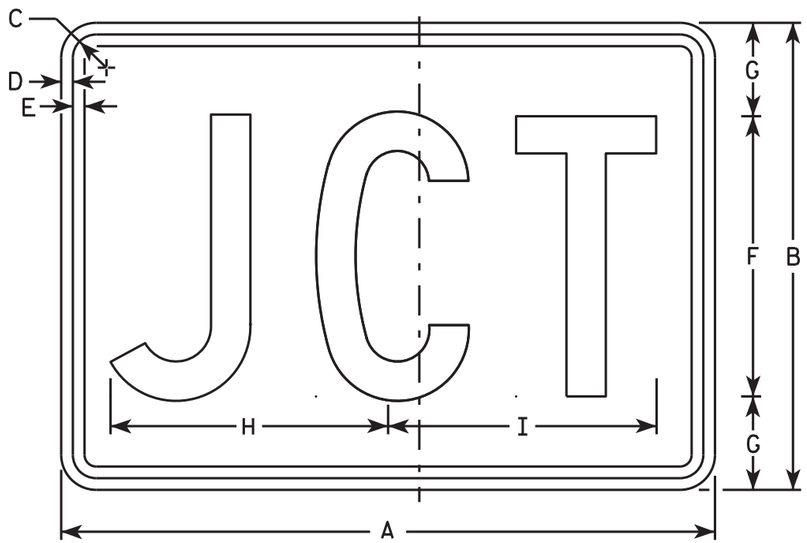

M2-1
MM2-1
MP2-1

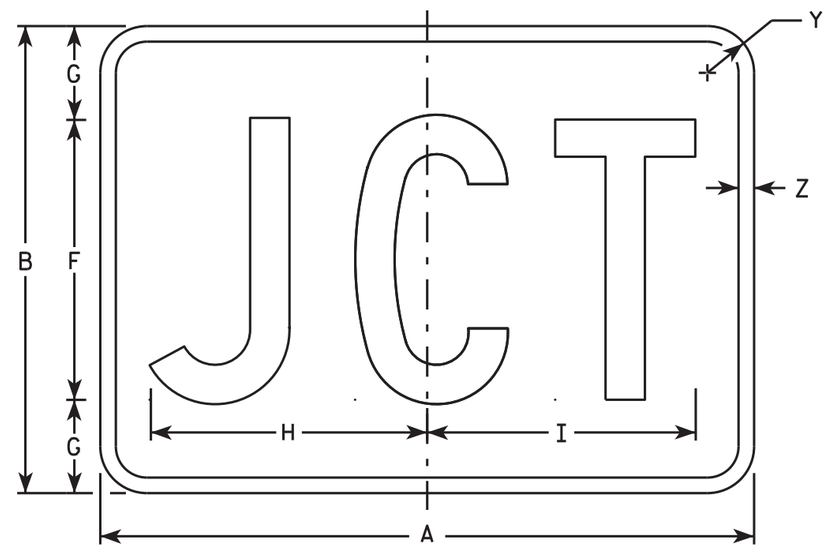

MB2-1
MK2-1
MN2-1
MR2-1

NOTES

1. Sign is Type II - Type H
2. Color:
   Background - See note 5
   Message - See note 5
3. Message Series - C
4. Corners may be square or rounded when base material is plywood but borders shall be rounded as shown. When base material is metal, the corners and borders shall be rounded.
5. M2-1 Background - White
   Message - Black
   MB2-1 Background - Blue
   Message - White
   MK2-1 Background - Green
   Message - White
   MM2-1 Background - White
   Message - Green
   MN2-1 Background - Brown
   Message - White
   MP2-1 Background - White
   Message - Blue
   MR2-1 Background - Brown
   Message - Yellow

SIZE	A	B	C	D	E	F	G	H	I	J	K	L	M	N	O	P	Q	R	S	T	U	V	W	X	Y	Z	Area sq. ft.
1																											
2	21	15	1 1/8	3/8	3/8	9	3	8 7/8	8 5/8																1 1/2	1/2	2.20
3	30	21	1 1/8	3/8	3/8	13	4	12 7/8	12 3/8																1 1/2	1/2	4.40
4	30	21	1 1/8	3/8	3/8	13	4	12 7/8	12 3/8																1 1/2	1/2	4.40
5	30	21	1 1/8	3/8	3/8	13	4	12 7/8	12 3/8																1 1/2	1/2	4.40

STANDARD SIGN
M2-1

WISCONSIN DEPT OF TRANSPORTATION

APPROVED Matthew R Rauch
for State Traffic Engineer

DATE 10/15/15 PLATE NO. M2-1.12

PROJECT NO: | HWY: | COUNTY: | SHEET NO: | E

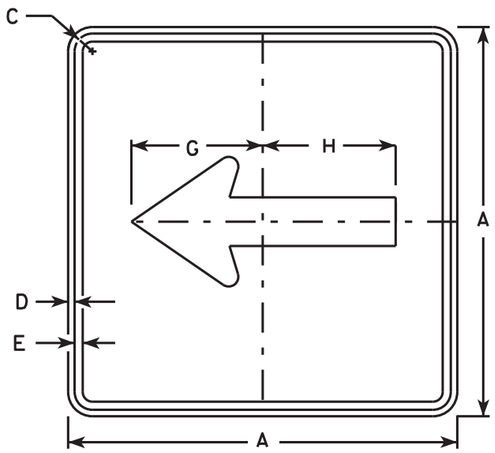

M6-1
MM6-1
MO6-1
MP6-1

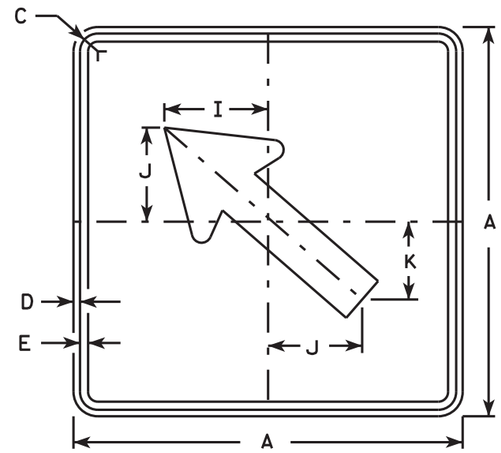

M6-2
MM6-2
MO6-2
MP6-2

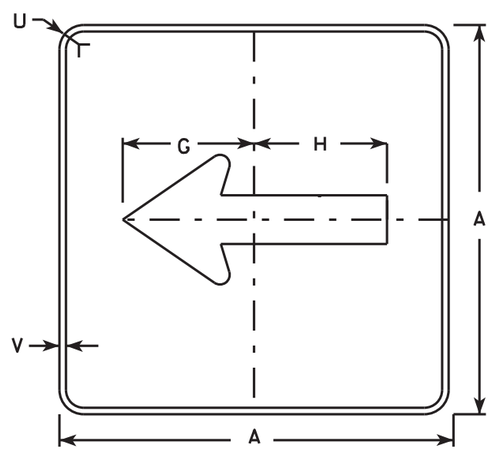

MB6-1
MK6-1
MN6-1
MR6-1

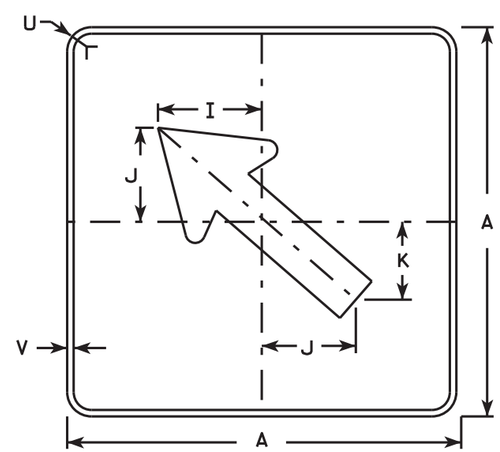

MB6-2
MK6-2
MN6-2
MR6-2

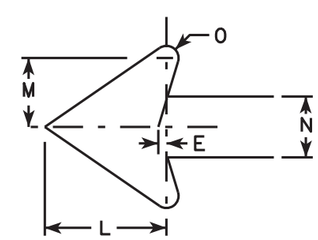

NOTES

1. Signs are Type II - Type H except as Shown
2. Color:
   Background - See note 4
   Message - See note 4
3. Corners may be square or rounded when base material is plywood but borders shall be rounded as shown. When base material is metal, the corners and borders shall be rounded.
4. M6-1 and M6-2 Background - White
   Message - Black
   MB6-1 and MB6-2 Background - Blue
   Message - White
   MK6-1 and MK6-2 Background - Green
   Message - White
   MM6-1 and MM6-2 Background - White
   Message - Green
   MN6-1 and MN6-2 Background - Brown
   Message - White
   MO6-1 and MO6-2 Background - Orange - Type F Reflective
   Message - Black
   MP6-1 and MP6-2 Background - White
   Message - Blue
   MR6-1 and MR6-2 Background - Brown
   Message - Yellow

SIZE	A	B	C	D	E	F	G	H	I	J	K	L	M	N	O	P	Q	R	S	T	U	V	W	X	Y	Z	Area sq. ft.
1																											
2	21		1 1/8	3/8	3/8		7 1/2	7 1/8	5 5/8	5	4 1/4	5 1/4	3	2 5/8	1/2						1 1/2	1/2					3.06
3	30		1 3/8	1/2	5/8		10 3/4	10 1/4	8	7 1/4	6	7 1/2	4 1/4	3 3/4	3/4						1 7/8	1/2					6.25
4	30		1 3/8	1/2	5/8		10 3/4	10 1/4	8	7 1/4	6	7 1/2	4 1/4	3 3/4	3/4						1 7/8	1/2					6.25
5	30		1 3/8	1/2	5/8		10 3/4	10 1/4	8	7 1/4	6	7 1/2	4 1/4	3 3/4	3/4						1 7/8	1/2					6.25

STANDARD SIGN
M6-1 & M6-2
SERIES

WISCONSIN DEPT OF TRANSPORTATION

APPROVED Matthew R Rauch
for State Traffic Engineer

DATE 10/15/15 PLATE NO. M6-1.15

PROJECT NO:	HWY:	COUNTY:		SHEET NO:	E

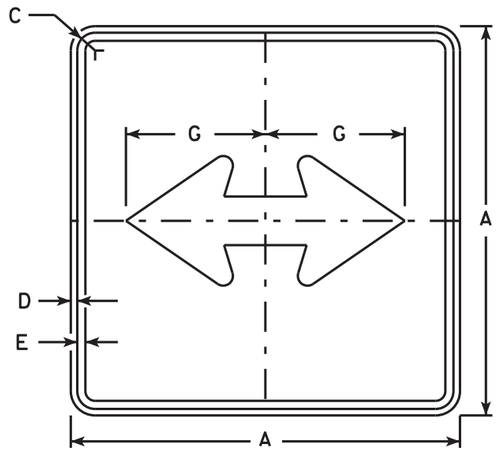

M6-4
MM6-4
MO6-4
MP6-4

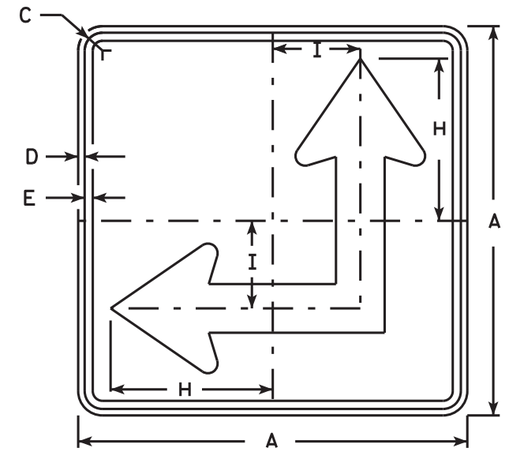

M6-6
MM6-6
MO6-6
MP6-6

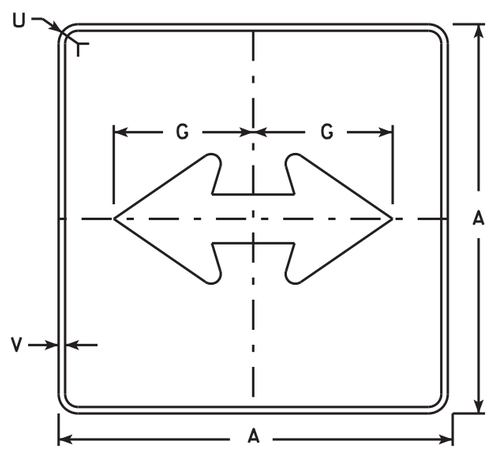

MB6-4
MK6-4
MN6-4
MR6-4

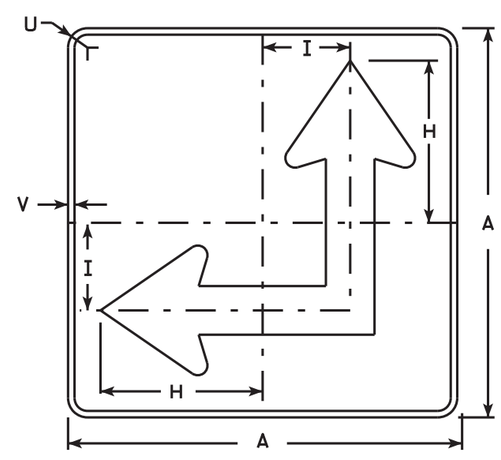

MB6-6
MK6-6
MN6-6
MR6-6

NOTES

1. Signs are Type II - Type H except as Shown
2. Color:
   Background - See Note 4
   Message - See Note 4
3. Corners may be square or rounded when base material is plywood but borders shall be rounded as shown. When base material is metal, the corners and borders shall be rounded.
4. M6-4 and M6-6 Background - White
   Message - Black
   MB6-4 and MB6-6 Background - Blue
   Message - White
   MK6-4 and MK6-6 Background - Green
   Message - White
   MM6-4 and MM6-6 Background - White
   Message - Green
   MN6-4 and MN6-6 Background - Brown
   Message - White
   MO6-4 and MO6-6 Background - Orange - Type F Reflective
   Message - Black
   MP6-4 and MP6-6 Background - White
   Message - Blue
   MR6-4 and MR6-6 Background - Brown
   Message - Yellow
5. M6-6R same as M6-6L except arrow points ahead and right.

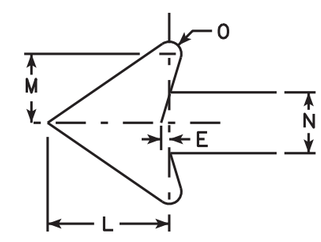

SIZE	A	B	C	D	E	F	G	H	I	J	K	L	M	N	O	P	Q	R	S	T	U	V	W	X	Y	Z	Area sq. ft.
1																											
2	21		1 1/8	3/8	3/8		7 1/2	8 3/4	4 1/4			5 1/4	3	2 5/8	1/2						1 1/2	1/2					3.06
3	30		1 3/8	1/2	5/8		10 3/4	12 1/2	6 3/4			7 1/2	4 1/4	3 3/4	3/4						1 7/8	1/2					6.25
4	30		1 3/8	1/2	5/8		10 3/4	12 1/2	6 3/4			7 1/2	4 1/4	3 3/4	3/4						1 7/8	1/2					6.25
5	30		1 3/8	1/2	5/8		10 3/4	12 1/2	6 3/4			7 1/2	4 1/4	3 3/4	3/4						1 7/8	1/2					6.25

STANDARD SIGN
M6-4 & M6-6
SERIES

WISCONSIN DEPT OF TRANSPORTATION

APPROVED Matthew R Rauch for State Traffic Engineer

DATE 10/15/15 PLATE NO. M6-4.10

PROJECT NO: HWY: COUNTY: SHEET NO: E

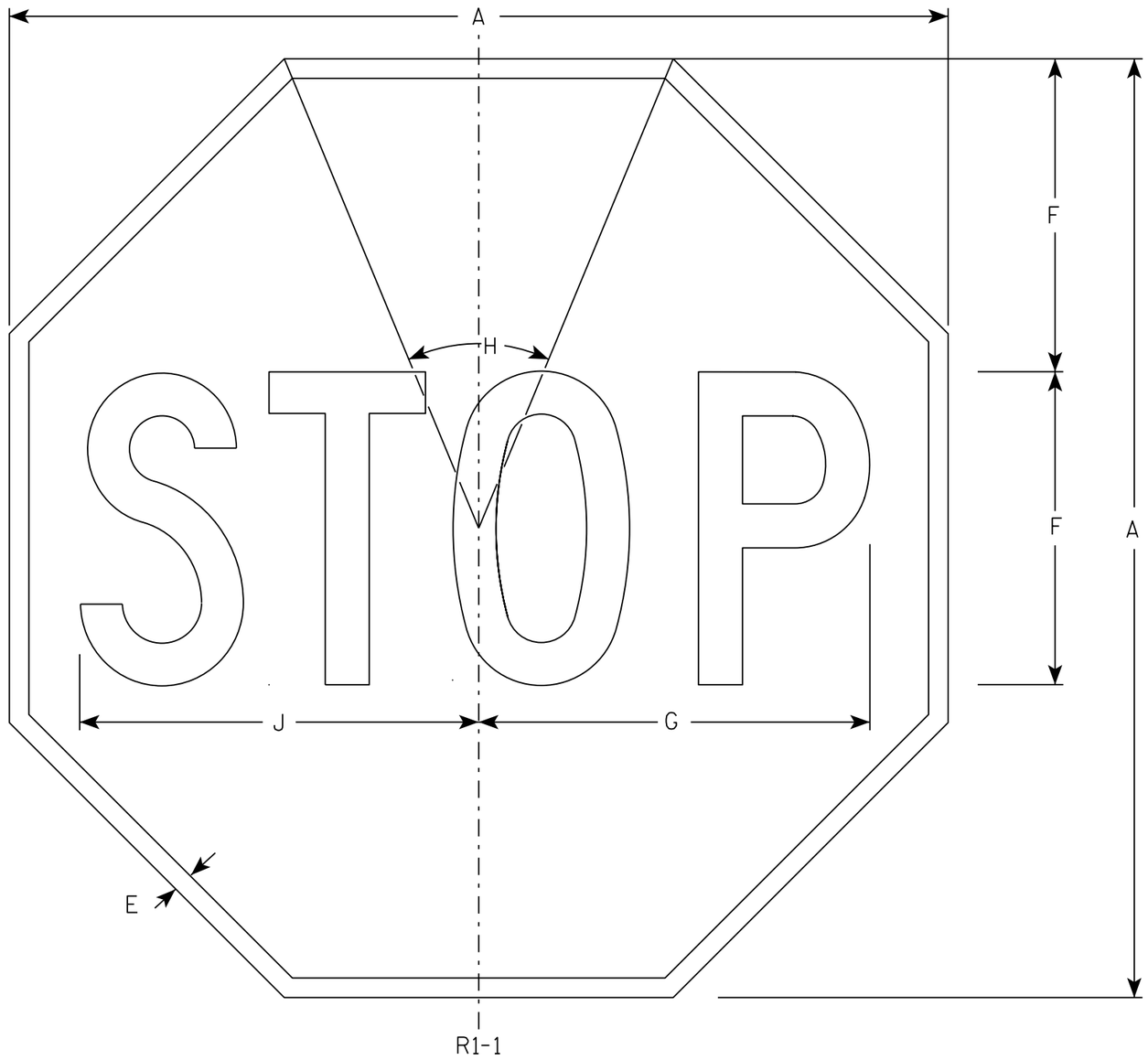

NOTES

1. Sign is Type II - Type H Reflective - reference WIS DOT Standard Specification for HIGHWAY and STRUCTURE CONSTRUCTION latest edition.
2. Color:
   Background - Red
   Message - White
3. Message Series - C

SIZE	A	B	C	D	E	F	G	H	I	J	K	L	M	N	O	P	Q	R	S	T	U	V	W	X	Y	Z	Area sq. ft.
1	30				5/8	10	12 1/2	45°		12 3/4																	5.18
2S	30				5/8	10	12 1/2	45°		12 3/4																	5.18
2M	36				3/4	12	15	45°		15 3/8																	7.46
3	36				3/4	12	15	45°		15 3/8																	7.46
4	48				1	16	20	45°		20 1/2																	13.25
5	48				1	16	20	45°		20 1/2																	13.25
6	18				3/8	6	7 3/4	45°		7 3/4																	1.86
7	12				1/4	4	5	45°		5 1/8																	0.78

STANDARD SIGN
R1-1

WISCONSIN DEPT OF TRANSPORTATION

APPROVED Matthew R Rauch
for State Traffic Engineer

DATE 11/12/15 PLATE NO. R1-1.13

PROJECT NO: | HWY: | COUNTY: | SHEET NO: 81 | E

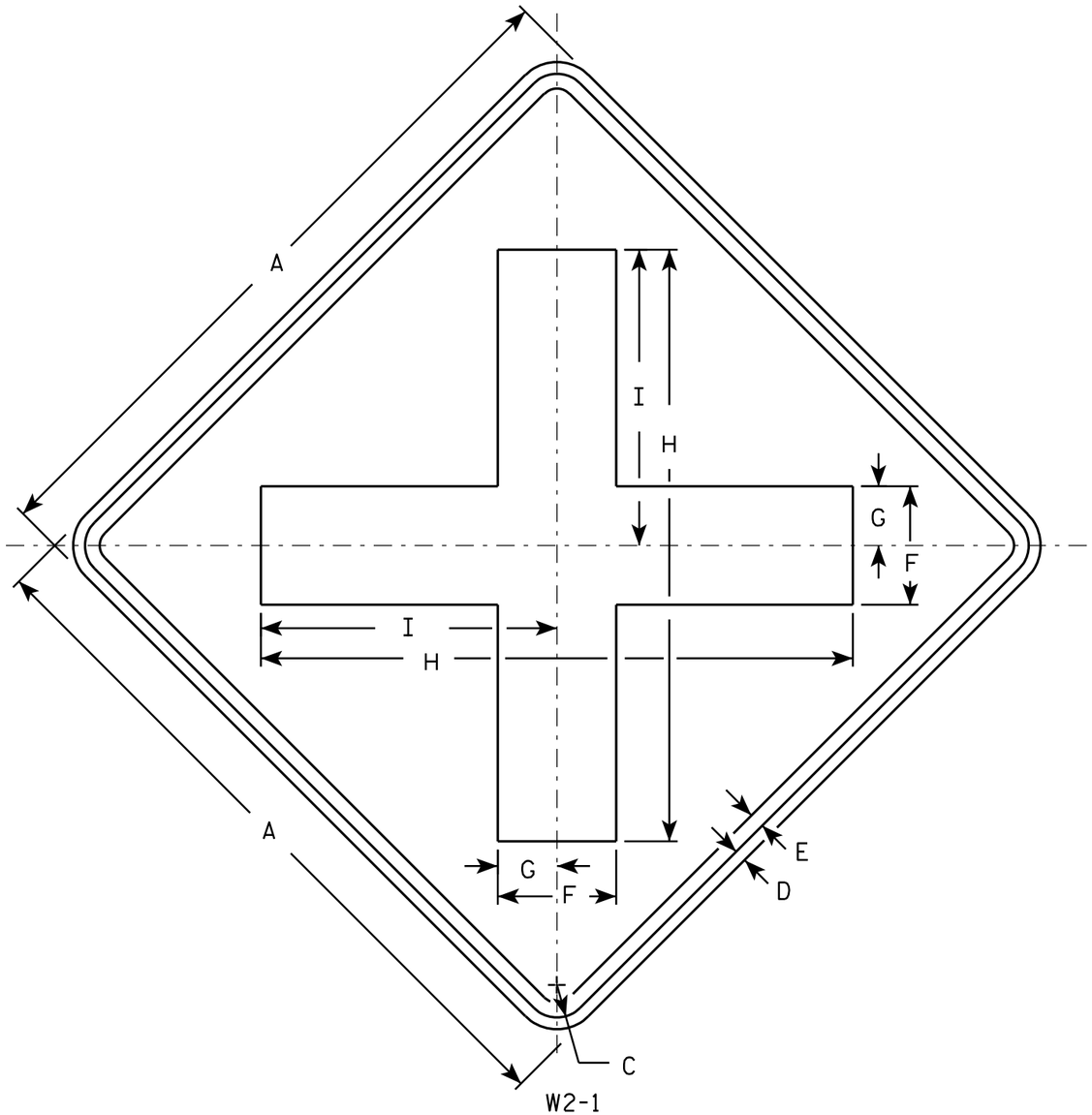

NOTES

1. Sign is Type II - Type F Reflective - reference WIS DOT Standard Specification for HIGHWAY and STRUCTURE CONSTRUCTION latest edition.
2. Color:
   Background - Yellow
   Message - Black
3. Corners may be square or rounded when base material is plywood but borders shall be rounded as shown. When base material is metal, the corners and borders shall be rounded.

SIZE	A	B	C	D	E	F	G	H	I	J	K	L	M	N	O	P	Q	R	S	T	U	V	W	X	Y	Z	Area sq. ft.
1	24		1 1/8	3/8	1/2	4	2	20	10																		4.0
2S	30		1 3/8	1/2	5/8	5	2 1/2	25	12 1/2																		6.25
2M	30		1 3/8	1/2	5/8	5	2 1/2	25	12 1/2																		6.25
3	36		1 5/8	5/8	3/4	6	3	30	15																		9.0
4	48		2 1/4	3/4	1	8	4	40	20																		16.0
5																											

STANDARD SIGN
W2-1

WISCONSIN DEPT OF TRANSPORTATION

APPROVED Matthew R Rauch
for State Traffic Engineer

DATE 5/29/12 PLATE NO. W2-1.9

PROJECT NO:	HWY:	COUNTY:		SHEET NO: 82	E

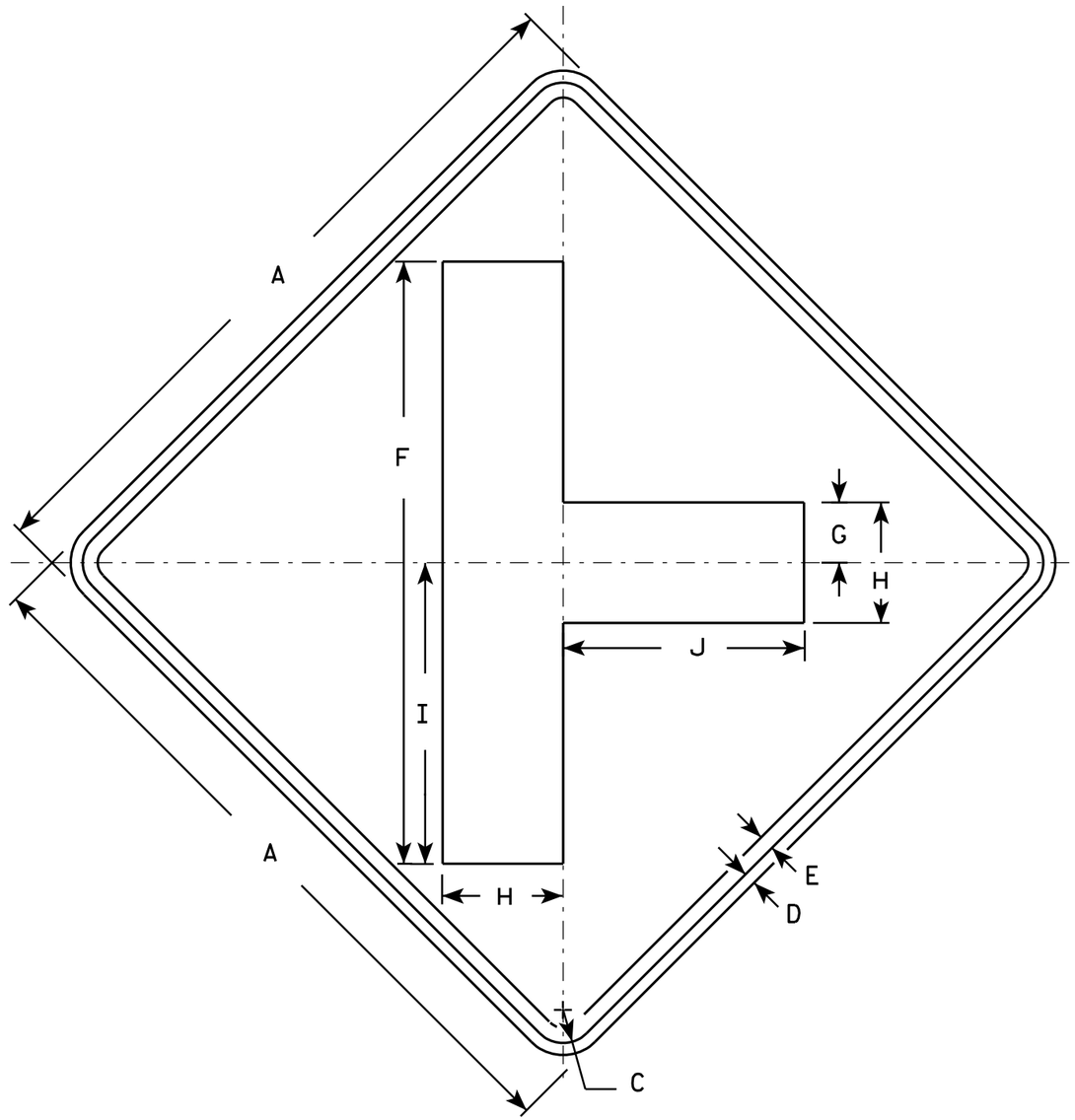

W2-2

NOTES

1. Sign is Type II - Type F Reflective - reference WIS DOT Standard Specification for HIGHWAY and STRUCTURE CONSTRUCTION latest edition.
2. Color:
   Background - Yellow
   Message - Black
3. Corners may be square or rounded when base material is plywood but borders shall be rounded as shown. When base material is metal, the corners and borders shall be rounded.

SIZE	A	B	C	D	E	F	G	H	I	J	K	L	M	N	O	P	Q	R	S	T	U	V	W	X	Y	Z	Area sq. ft.
1	24		1 1/8	3/8	1/2	20	2	4	10	8																	4.0
2S	30		1 3/8	1/2	5/8	25	2 1/2	5	12 1/2	10																	6.25
2M	30		1 3/8	1/2	5/8	25	2 1/2	5	12 1/2	10																	6.25
3	36		1 5/8	5/8	3/4	30	3	6	15	12																	9.0
4	48		2 1/4	3/4	1	40	4	8	20	16																	16.0
5																											

STANDARD SIGN
W2-2

WISCONSIN DEPT OF TRANSPORTATION

APPROVED Matthew R Rauch
for State Traffic Engineer

DATE 5/29/12 PLATE NO. W2-2.6

PROJECT NO:	HWY:	COUNTY:		SHEET NO: 83	E

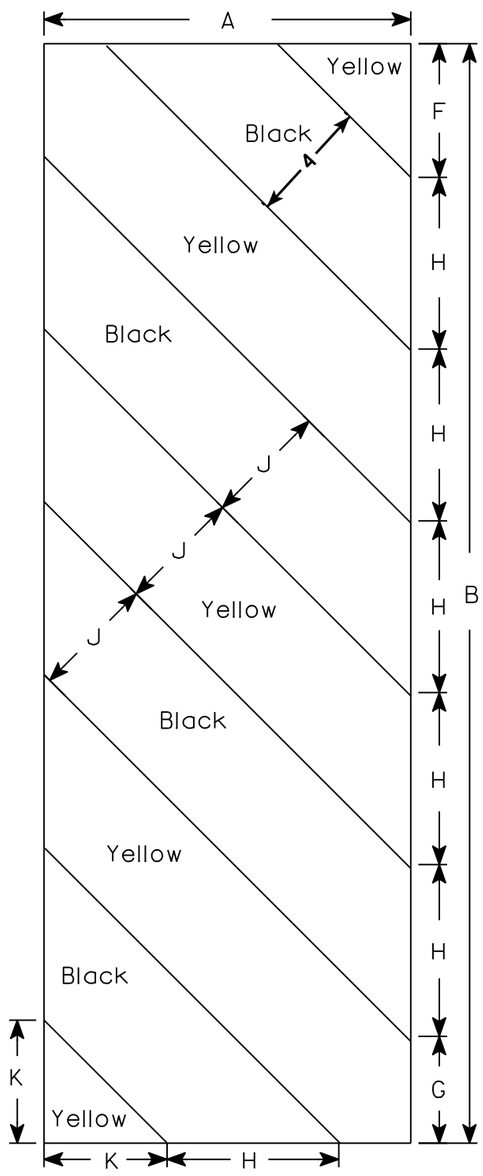

W5-52L

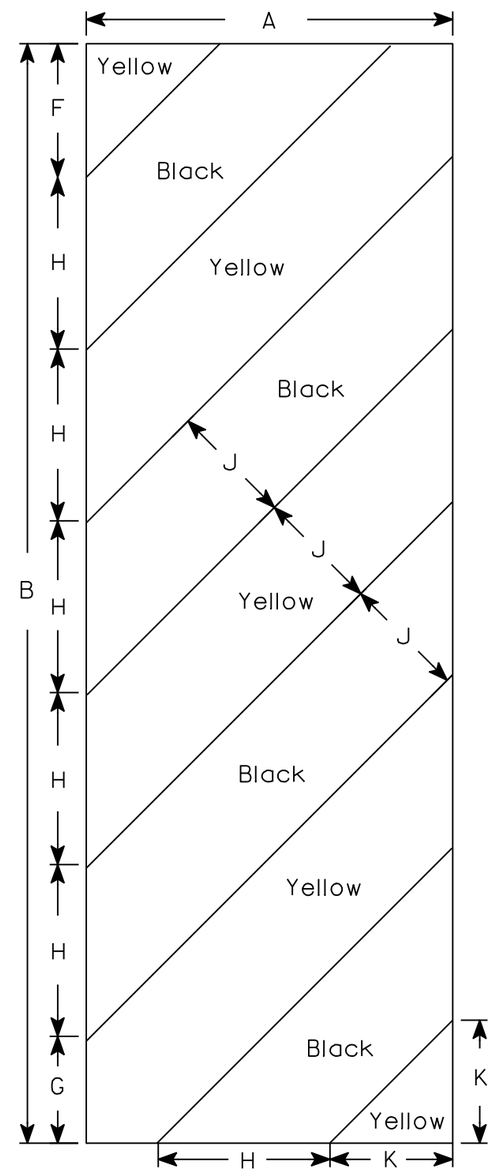

W5-52R

NOTES

1. Sign is Type II - Type F Reflective - reference WIS DOT Standard Specification for HIGHWAY and STRUCTURE CONSTRUCTION latest edition.
2. Color:
   Background - Yellow
   Message - Black
3. Corners may be square or rounded when base material is plywood but borders shall be rounded as shown. When base material is metal, the corners and borders shall be rounded.
4. Alternate colors of stripes as shown.

SIZE	A	B	C	D	E	F	G	H	I	J	K	L	M	N	O	P	Q	R	S	T	U	V	W	X	Y	Z	Area sq. ft.
1																											
2S	12	36				4 3/8	3 1/2	5 5/8	45°	4	4																3.0
2M	12	36				4 3/8	3 1/2	5 5/8	45°	4	4																3.0
3	18	54				6	5 1/2	8 1/2	45°	6	6 9/16																6.75
4																											
5																											

STANDARD SIGN
W5-52L & W5-52R

WISCONSIN DEPT OF TRANSPORTATION

APPROVED Matthew R Rauch
for State Traffic Engineer

DATE 5/29/12 PLATE NO. W5-52.9

PROJECT NO: | HWY: | COUNTY: | SHEET NO: 84 | E

NOTES

1. Sign is Type II- Type F Reflective
2. Color:
   Background - Yellow
   Message - Black
3. Message Series - Lines 1 and 2 are Series D.
   Line 3 is series C.
4. Corners and borders shall be rounded on all base materials for this sign.

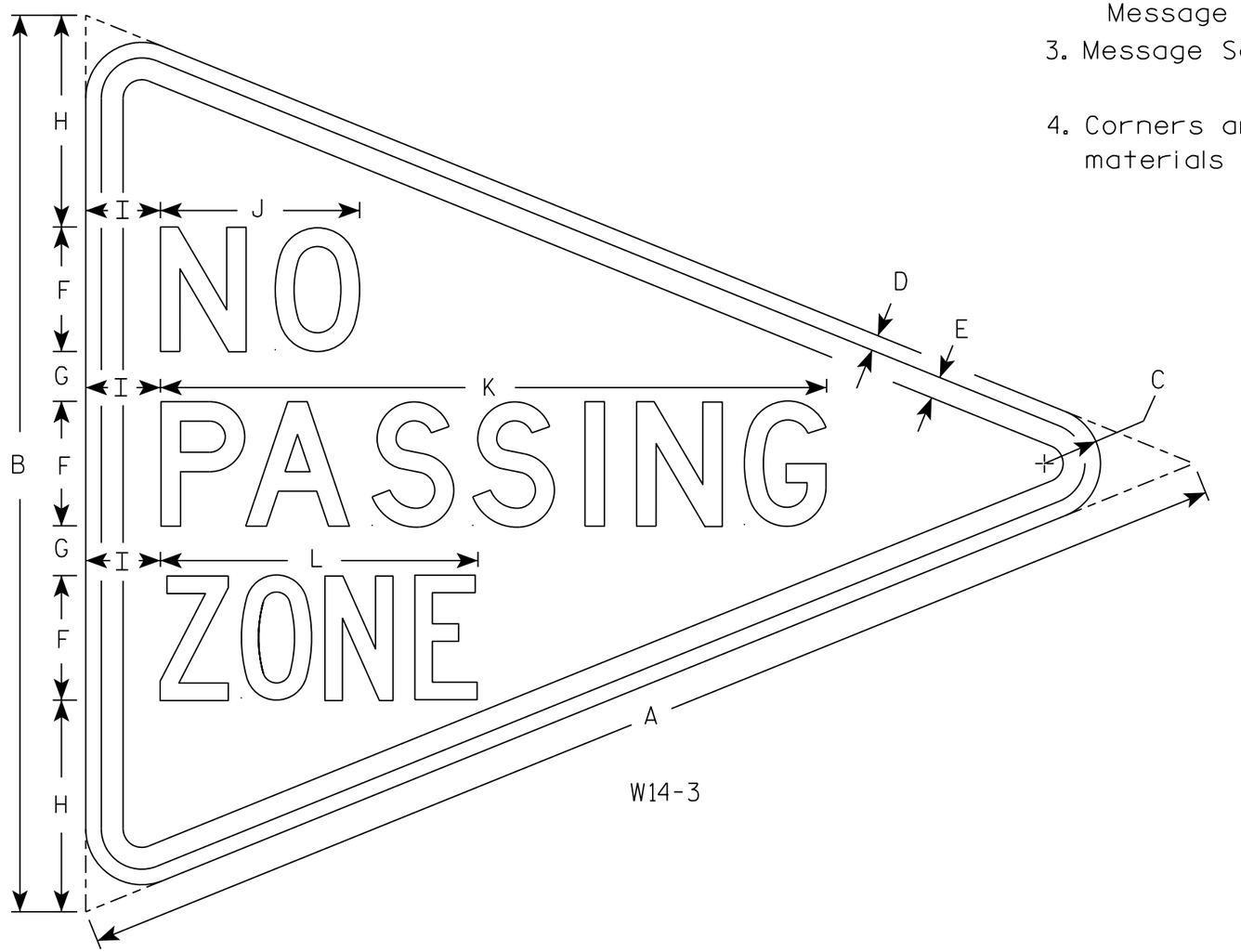

W14-3

SIZE	A	B	C	D	E	F	G	H	I	J	K	L	M	N	O	P	Q	R	S	T	U	V	W	X	Y	Z	Area sq. ft.
1																											
2S	48	36	2 1/4	5/8	7/8	5	2	8 1/2	3	8	26 3/4	12 3/4															5.56
2M																											
3																											
4																											
5																											

STANDARD SIGN
W14-3

WISCONSIN DEPT OF TRANSPORTATION

APPROVED Matthew R Rauch
for State Traffic Engineer
DATE 3/21/17 PLATE NO. W14-3.10

PROJECT NO: | HWY: | COUNTY: | SHEET NO: 85 | E

STATE PROJECT NUMBER

9333-00-70

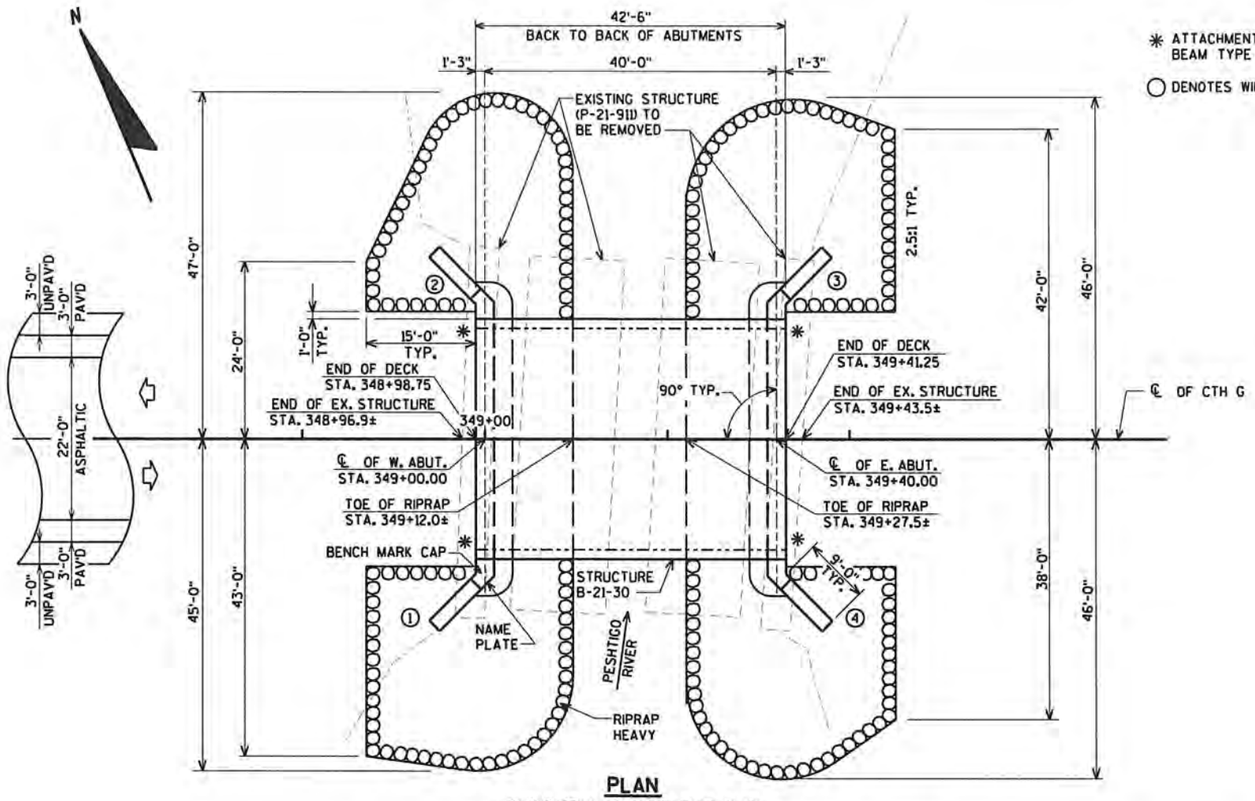

PLAN

SINGLE SPAN CONCRETE FLAT SLAB

✱ ATTACHMENT ASSEMBLY FOR THRIE BEAM TYPE GUARDRAIL.

○ DENOTES WING NUMBER.

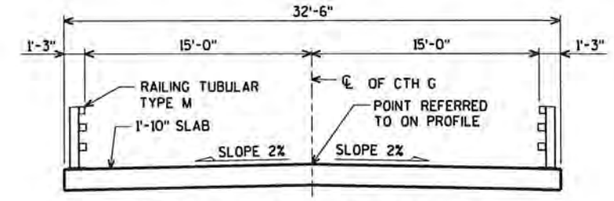

TYPICAL SECTION THRU BRIDGE

DESIGN DATA

LIVE LOAD:

DESIGN LOADING: HL-93
INVENTORY RATING FACTOR: 1.16
OPERATING RATING FACTOR : 1.50
WISCONSIN STANDARD PERMIT VEHICLE (WIS-SPV) = 250 KIPS

STRUCTURE IS DESIGNED FOR A FUTURE WEARING SURFACE OF 20 #/S.F.

MATERIAL PROPERTIES:

CONCRETE MASONRY { SUPERSTRUCTURE ____ $f'c$ = 4,000 p.s.i.
ALL OTHER ____ $f'c$ = 3,500 p.s.i.
HIGH STRENGTH BAR STEEL REINFORCEMENT (GRADE 60) ____ f_y = 60,000 p.s.i.

HYDRAULIC DATA:

100 YEAR FREQUENCY	2 YEAR FREQUENCY
Q_{100} = 900 c.f.s.	Q_2 = 300 c.f.s.
VEL. = 6.0 f.p.s.	VEL. = 3.2 f.p.s.
HW_{100} = EL. 1552.4	HW_2 = EL. 1550.2

WATERWAY AREA = 150 sq. ft.
DRAINAGE AREA = 41.5 sq. mi.
ROADWAY OVERTOPPING = N/A
SCOUR CRITICAL CODE = 8
DATUM = NAVD88 (2012)

FOUNDATION DATA:

WEST ABUTMENT TO BE SUPPORTED ON HP 10 x 42 *STEEL PILING (WITH PILE POINTS) WITH A REQUIRED DRIVING RESISTANCE OF 130 TONS PER PILE. ESTIMATED LENGTH OF 20'-0".

EAST ABUTMENT TO BE SUPPORTED ON HP 10 x 42 *STEEL PILING (WITH PILE POINTS) WITH A REQUIRED DRIVING RESISTANCE OF 130 TONS PER PILE. ESTIMATED LENGTH OF 25'-0".

* THE FACTORED AXIAL RESISTANCE OF PILES IN COMPRESSION USED FOR DESIGN IS THE REQUIRED DRIVING RESISTANCE MULTIPLIED BY A RESISTANCE FACTOR OF 0.5 USING MODIFIED GATES TO DETERMINE DRIVEN PILE CAPACITY.

TRAFFIC DATA:

A.A.D.T. = 760 (2019)
A.A.D.T. = 810 (2039)
R.D.S. = 60 M.P.H.

COST OF EXCAVATION IN THE HATCHED AREAS SHALL BE INCLUDED IN THE CONTRACT LUMP SUM PRICE FOR "EXCAVATION FOR STRUCTURES BRIDGES B-21-30".

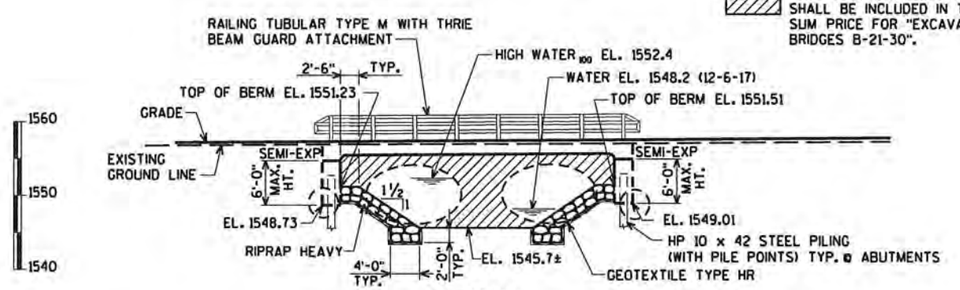

ELEVATION

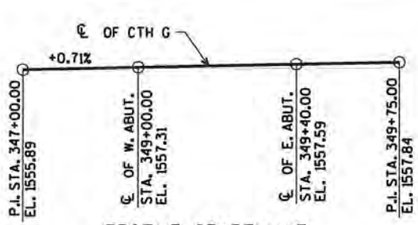

PROFILE GRADE LINE

(CTH G)

BENCH MARK:
SPK 15" DECID TREE
STA. 350+22, 50' RT.
EL. 1552.61

LIST OF DRAWINGS

WISCONSIN CHRISTOPHER B. McMAHON E-29431 EAU CLAIRE WI PROFESSIONAL ENGINEER

7/30/18

BRIDGE OFFICE CONTACT:
WILLIAM DREHER
(608)-266-8489

CONSULTANT CONTACT:
CHRIS MCMAHON
(715)-834-3161

NO.	DATE	REVISION	BY

ORIGINAL PLANS PREPARED BY
AYRES ASSOCIATES
3433 Oakwood Hills Parkway
Eau Claire, WI 54701
www.AyresAssociates.com

STATE OF WISCONSIN
DEPARTMENT OF TRANSPORTATION

ACCEPTED William C. Dreher SDR 08/23/18
CHIEF STRUCTURES DESIGN ENGINEER DATE

STRUCTURE B-21-30

CTH G OVER THE PESHTIGO RIVER

COUNTY FOREST TOWN/~~CITY/VILLAGE~~ ARGONNE

DESIGN SPEC. AASHTO LRFD BRIDGE DESIGN SPECIFICATIONS

DESIGNED BY ZSS | DESIGN CK'D. AEB | DRAWN BY ZSS | PLANS CK'D. CBM

GENERAL PLAN

SHEET 1 OF 11

8

DATE: DATE: DATE:
CHECKED BY: BACK CHECKED BY: CORRECTED BY:

sPRFNAMES
V:\Structures\EC\42-1116.00 - Forest County - CTH G\Structures\Final\421116 gp.dgn

7/30/2018 PENTABLE:BReau_shd_util.tbl I.D. DATE:

STATE PROJECT NUMBER

9333-00-70

TOTAL ESTIMATED QUANTITIES

BID ITEM NUMBER	BID ITEMS	UNIT	W. ABUT.	E. ABUT.	SUPER.	TOTAL
203.0500.S	REMOVING OLD STRUCTURE OVER WATERWAY STATION 349+20	LS	-----	-----	-----	1
206.1000	EXCAVATION FOR STRUCTURES BRIDGES B-21-30	LS	-----	-----	-----	1
210.1500	BACKFILL STRUCTURE TYPE A	TON	200	200	-----	400
502.0100	CONCRETE MASONRY BRIDGES	CY	31	31	100	162
502.3200	PROTECTIVE SURFACE TREATMENT	SY	-----	-----	180	180
505.0400	BAR STEEL REINFORCEMENT HS STRUCTURES	LB	2,500	2,500	-----	5,000
505.0600	BAR STEEL REINFORCEMENT HS COATED STRUCTURES	LB	1,320	1,320	17,470	20,110
513.4061	RAILING TUBULAR TYPE M	LF	-----	-----	90	90
516.0500	RUBBERIZED MEMBRANE WATERPROOFING	SY	7	7	-----	14
550.0500	PILE POINTS	EACH	7	7	-----	14
550.1100	PILING STEEL HP 10-INCH x 42 LB	LF	135	170	-----	305
● 606.0300	RIPRAP HEAVY	CY	155	160	-----	315
612.0406	PIPE UNDERDRAIN WRAPPED 6-INCH	LF	75	75	-----	150
645.0111	GEOTEXTILE TYPE DF SCHEDULE A	SY	55	55	-----	110
645.0120	GEOTEXTILE TYPE HR	SY	315	325	-----	640
▲ SPV.0060.01	BOULDERS	EACH	-----	-----	-----	10
	NON-BID ITEMS					
	FILLER	SIZE	-----	-----	-----	½" & ¾"

▲ DNR COORDINATION REQUIRED FOR PLACEMENT

● FILL VOIDS IN RIPRAP HEAVY WITH BASE AGGREGATE DENSE ¾-INCH TO FULLY FILL ALL VOIDS AND LEAVE, ON AVERAGE, TWO INCHES ABOVE THE LOWEST ROCK POINTS WHERE THEY ABUT EACH OTHER. BASE AGGREGATE DENSE ¾-INCH TO BE INCIDENTAL IN THE WORK ITEM "RIPRAP HEAVY".

GENERAL NOTES

DRAWINGS SHALL NOT BE SCALED.

BAR STEEL REINFORCEMENT SHALL BE EMBEDDED 2" CLEAR UNLESS SHOWN OR NOTED OTHERWISE.

THE FIRST DIGIT OF A THREE DIGIT BAR NO. AND THE FIRST TWO DIGITS OF A FOUR DIGIT BAR NO. SIGNIFIES THE BAR SIZE.

JOINT FILLER SHALL CONFORM TO THE REQUIREMENTS OF A.A.S.H.T.O. DESIGNATION M 153, TYPE I, II OR III OR A.A.S.H.T.O. DESIGNATION M 213.

THE SLOPE OF THE FILL IN FRONT OF THE ABUTMENTS SHALL BE COVERED WITH RIPRAP HEAVY AND GEOTEXTILE TYPE HR TO THE EXTENT SHOWN ON THE GENERAL PLAN SHEET AND IN THE ABUTMENT DETAILS.

SLAB FALSEWORK SHALL BE SUPPORTED ON PILES OR THE SUBSTRUCTURE UNLESS AN ALTERNATIVE METHOD IS APPROVED BY THE ENGINEER.

THE UPPER LIMITS OF "EXCAVATION FOR STRUCTURES BRIDGES B-21-30" SHALL BE THE EXISTING GROUNDLINE.

THE EXISTING STRUCTURE, P-21-911, TO BE REMOVED, CONSISTS OF (4) FOUR CORRUGATED METAL PIPES, (2) TWO 4 FT. DIA. x 50 FT. LONG AND (2) 8 FT. x 13 FT. x 48 FT. LONG WITH A 30 FT. CLEAR ROADWAY WIDTH.

AT THE BACK FACE OF ABUTMENTS, ALL VOLUME WHICH CANNOT BE PLACED BEFORE ABUTMENT CONSTRUCTION AND IS NOT OCCUPIED BY THE NEW STRUCTURE SHALL BE BACKFILLED WITH STRUCTURE TYPE A.

PROTECTIVE SURFACE TREATMENT IS TO BE APPLIED AS SHOWN IN DETAIL ON THIS SHEET.

BEVEL EXPOSED EDGES OF CONCRETE ¾" UNLESS NOTED OTHERWISE.

EXCAVATION BELOW THE ABUTMENT AND ABUTMENT BEDDING MATERIALS REQUIRES ENGINEER APPROVAL. GEOTEXTILE SHALL BE SET AT THE BOTTOM OF EXCAVATION AND EXTEND 2'-0" ABOVE BOTTOM OF ABUTMENT.

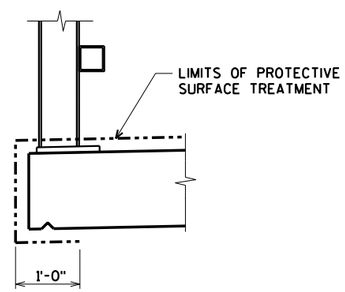

PROTECTIVE SURFACE TREATMENT DETAIL

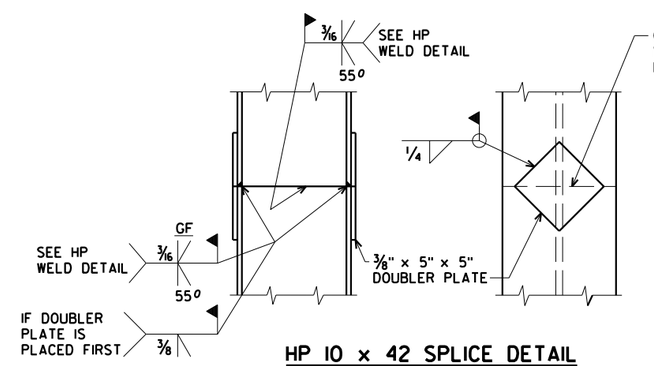

HP 10 x 42 SPLICE DETAIL

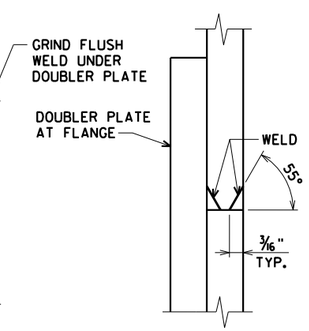

HP WELD DETAIL

FLANGE SHOWN, WEB SIMILAR

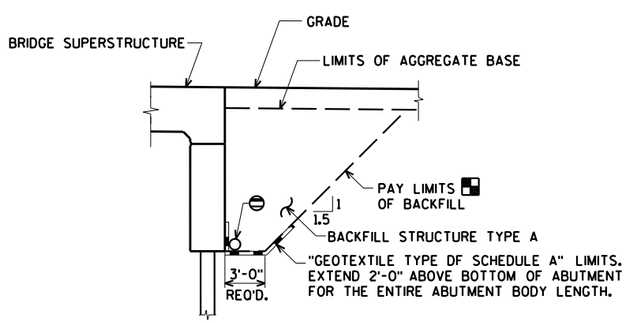

BACKFILL STRUCTURE LIMITS

■ BACKFILL PAY LIMITS. BACKFILL BEYOND BACKFILL PAY LIMITS SHALL BE INCIDENTAL TO EXCAVATION FOR STRUCTURES. LIMITS OF EXCAVATION SHALL BE DETERMINED BY THE CONTRACTOR.

⊖ PIPE UNDERDRAIN WRAPPED 6-INCH. SLOPE 0.5% MIN. TO SUITABLE DRAINAGE. ATTACH RODENT SHIELD AT ENDS OF PIPE UNDERDRAIN AS DETAILED ON SHEET 5.

NOTE: PLACE RIPRAP HEAVY AS SHOWN ON GENERAL PLAN SHEET

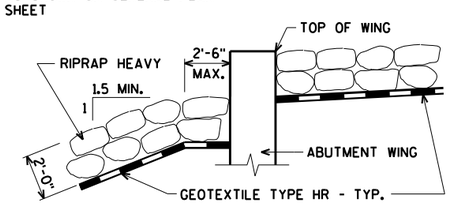

TYPICAL FILL SECTION AT WING TIPS

NO.	DATE	REVISION	BY

STATE OF WISCONSIN
DEPARTMENT OF TRANSPORTATION

STRUCTURE B-21-30

DRAWN BY ZSS | PLANS CK'D. CBM

QUANTITIES AND NOTES

SHEET 2 OF 11

87

ORIGINAL PLANS PREPARED BY
AYRES ASSOCIATES
3433 Oakwood Hills Parkway
Eau Claire, WI 54701
www.AyresAssociates.com

8

8

$PRFNAME$
V:±Structures-EC±42-1116.00 - Forest County - CTH G±Structures±Final±421116 gp.dgn

7/30/2018

PENTABLE:BReau_shd_util.tbl

BORING #	DATE COMPLETED	NORTHING (Y)	EASTING (X)
1A	DECEMBER 15, 2017	601726.20	859671.07
1B	DECEMBER 15, 2017	601730.09	859661.86
2A	DECEMBER 14, 2017	601689.67	859716.43
2B	DECEMBER 14, 2017	601687.73	859721.04
BORINGS COMPLETED BY: AMERICAN ENGINEERING TESTING, INC.			
REPORT COMPLETED BY: AMERICAN ENGINEERING TESTING, INC.			
ALL COORDINATES REFERENCED TO WCCS NAD 83(91) FOREST COUNTY			

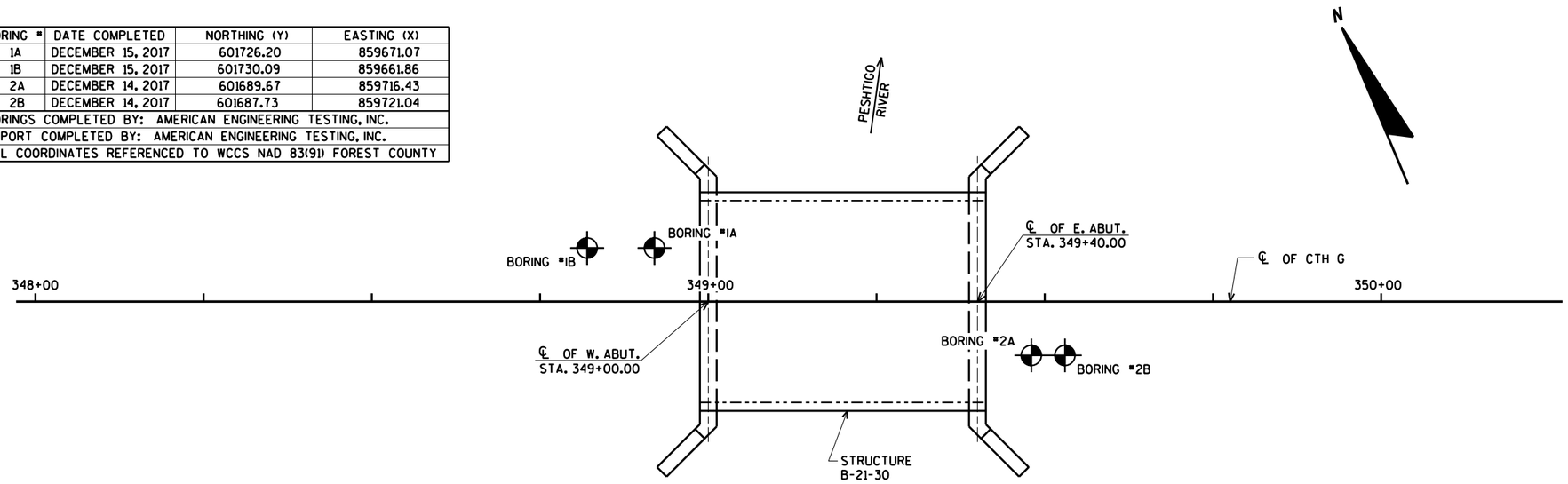

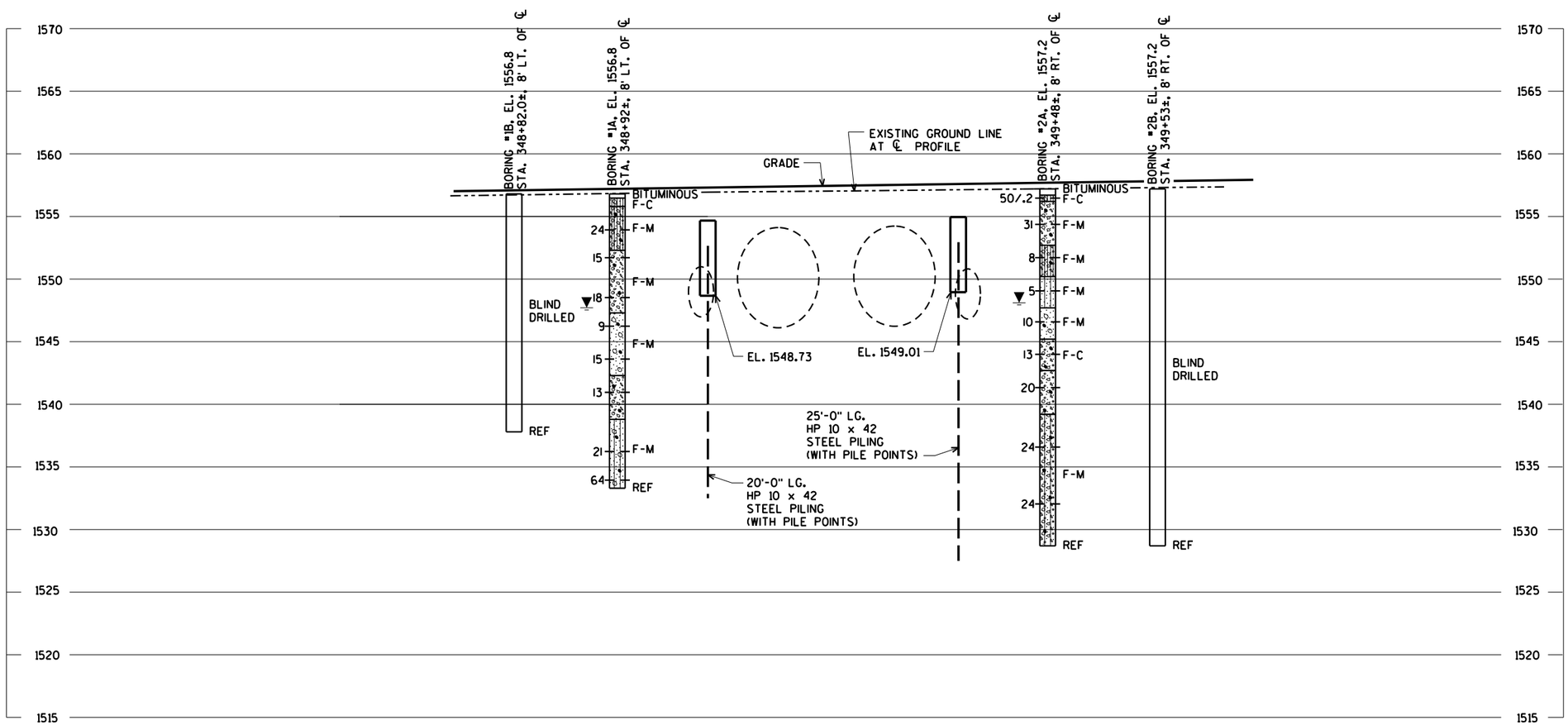

STATE PROJECT NUMBER

9333-00-70

MATERIAL SYMBOLS

ASPHALT, TOPSOIL, PEAT, CONCRETE, FILL, GRAVEL, SAND, CLAY, SILT, BOULDERS OR COBBLES, LIMESTONE, BEDROCK (UNKNOWN), SHALE, SANDSTONE, IGNEOUS/META

LEGEND OF BORING

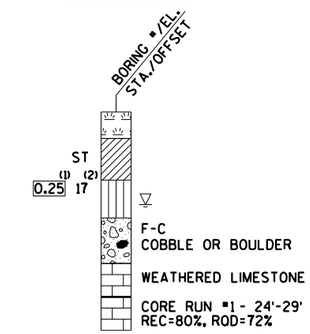

(1) UNCONFINED STRENGTH, AS DETERMINED BY A POCKET PENETROMETER (TSF)

(2) UNLESS OTHERWISE, SPECIFIED THE SPT 'N' VALUE IS BASED ON AASHTO T-206, STANDARD PENETRATION TEST. THE SPT 'N' VALUE PRESENTED HAS NOT BEEN CORRECTED FOR OVERBURDEN PRESSURE OR HAMMER EFFICIENCY.

GROUND WATER ELEVATION

- AT TIME OF DRILLING
- END OF DRILLING
- AFTER DRILLING

ABBREVIATIONS

F-FINE M-MEDIUM C-COARSE ST-SHELBY TUBE

SUBSURFACE EXPLORATION FOR FOUNDATION DESIGN AND BIDDERS INFORMATION

BORINGS WERE COMPLETED AT POINTS APPROXIMATELY AS INDICATED ON THIS DRAWING TO OBTAIN INFORMATION CONCERNING THE CHARACTER OF SUBSURFACE MATERIALS FOUND AT THE SITE. BECAUSE THE INVESTIGATED DEPTHS ARE LIMITED AND THE AREA OF THE BORINGS IS VERY SMALL IN RELATION TO THE ENTIRE SITE, THE WISCONSIN DEPARTMENT OF TRANSPORTATION DOES NOT WARRANT SIMILAR SUBSURFACE CONDITIONS BELOW, BETWEEN, OR BEYOND THESE BORINGS. VARIATIONS IN SOIL CONDITIONS SHOULD BE EXPECTED AND FLUCTUATIONS IN GROUNDWATER LEVELS MAY OCCUR.

NO.	DATE	REVISION	BY

STATE OF WISCONSIN
DEPARTMENT OF TRANSPORTATION

STRUCTURE B-21-30

DRAWN BY CLS | PLANS CK'D. CBM

SUBSURFACE EXPLORATION

SHEET 3 OF 11

88

8

8

$PRFNAME$
U:±42-1116.00 - Forest County - CTH G±Structures±Final±421116 soils.dgn

5/29/2018

PENTABLE:BReau_shd_util.tbl

STATE PROJECT NUMBER

9333-00-70

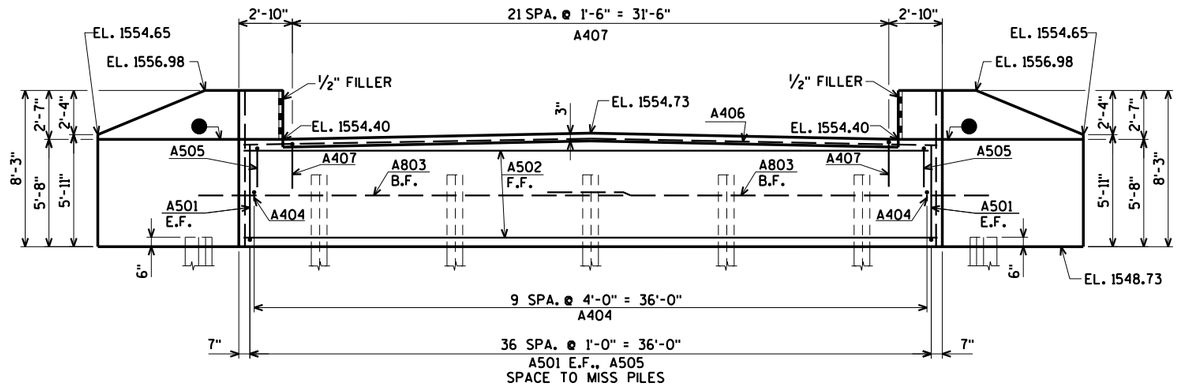

ELEVATION
(LOOKING WEST)

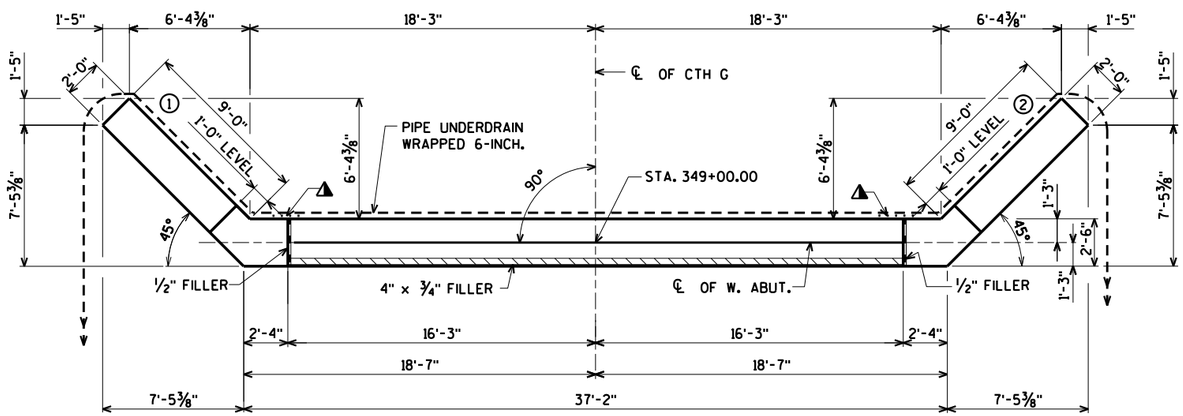

PLAN

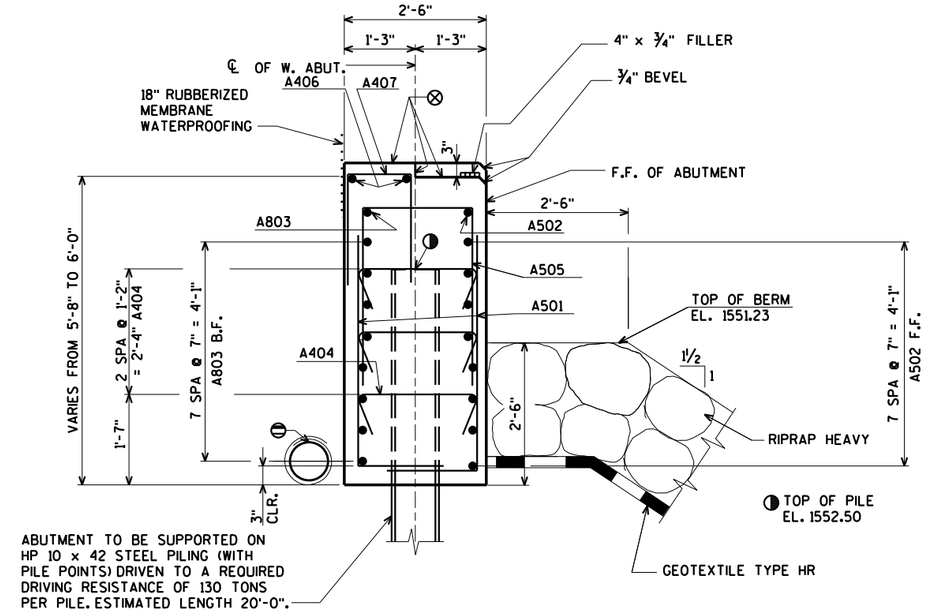

TYPICAL SECTION THRU BODY

NOTE: DO NOT PLACE FILL ABOVE THREE FEET FROM BOTTOM OF ABUTMENT UNTIL SUPERSTRUCTURE IS IN PLACE.

EXCAVATE OR FILL TO BOTTOM OF ABUTMENT BEFORE DRIVING PILES.

⊗ STEEL TROWEL TOP SURFACE OF ABUTMENT. PLACE MULTIPLE LAYERS OF POLYETHYLENE SHEETS OVER ENTIRE ABUTMENT TOP BEFORE PLACING SUPERSTRUCTURE. TOTAL THICKNESS OF SHEETS SHALL BE AT LEAST 0.03".

⊖ PIPE UNDERDRAIN WRAPPED 6-INCH. SLOPE 0.5% MIN. TO SUITABLE DRAINAGE. ATTACH RODENT SHIELD AT ENDS OF PIPE UNDERDRAIN. FOR RODENT SHIELD DETAIL SEE SHEET 5.

● OPT. KEYED CONST. JOINT - FORMED BY A BEVELED 2" x 6".

◭ 18" RUBBERIZED MEMBRANE WATERPROOFING TO EXTEND FROM BRIDGE SEAT TO TOP OF WING.

FOR PILE SPLICE DETAIL SEE SHEET 2.

B.F. DENOTES BACK FACE.

F.F. DENOTES FRONT FACE.

E.F. DENOTES EACH FACE.

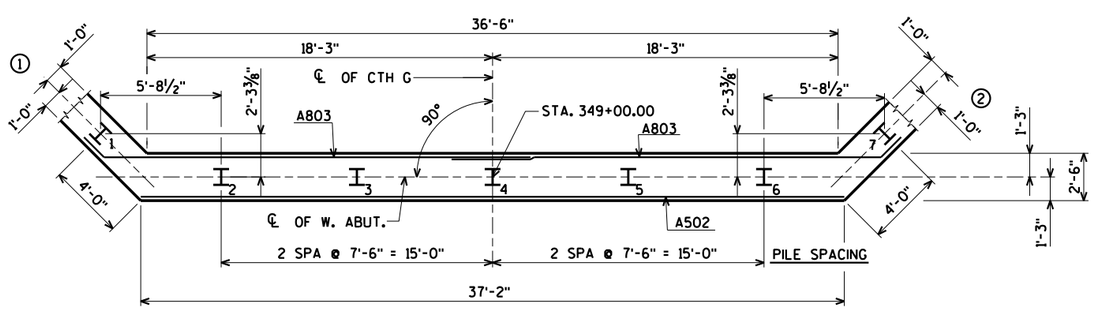

PILE LAYOUT

NO.	DATE	REVISION	BY

STATE OF WISCONSIN
DEPARTMENT OF TRANSPORTATION

STRUCTURE B-21-30

DRAWN BY ZSS | PLANS CK'D. CBM

WEST ABUTMENT

SHEET 4 OF 11

89

ORIGINAL PLANS PREPARED BY
AYRES ASSOCIATES
3433 Oakwood Hills Parkway
Eau Claire, WI 54701
www.AyresAssociates.com

8

8

$PRFNAME$
U:±42-1116.00 - Forest County - CTH G±Structures±Final±421116 wa.DGN

5/29/2018

PENTABLE:BReau_shd_util.tbl

STATE PROJECT NUMBER

9333-00-70

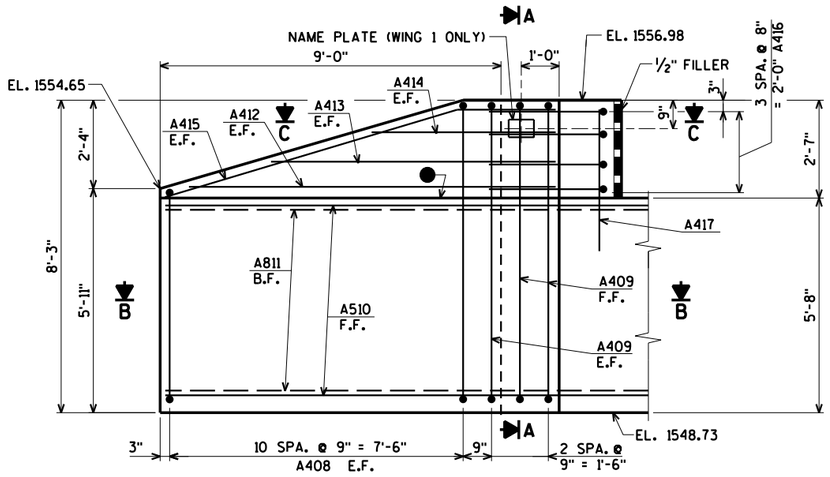

ELEVATION - WING 1

(WING 2 SIMILAR)

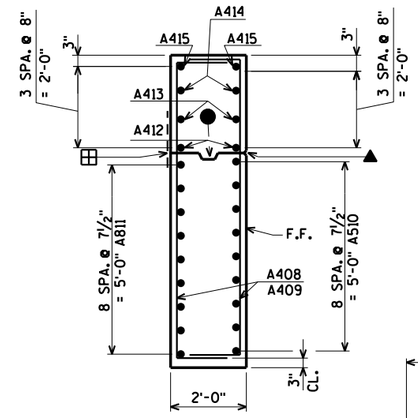

SECTION A

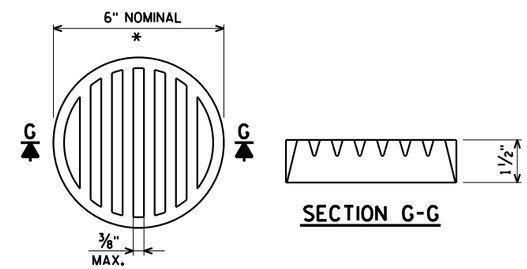

SECTION G-G

* DIMENSIONS ARE APPROXIMATE. THE GRATE IS SIZED TO FIT INTO A PIPE COUPLING. ORIENT SO SLOTS ARE VERTICAL.

THE RODENT SHIELD, PIPE COUPLING AND SCREWS SHALL BE CONSIDERED INCIDENTAL TO THE BID ITEM "PIPE UNDERDRAIN WRAPPED 6-INCH".

THE RODENT SHIELD SHALL BE A PVC GRATE SIMILAR TO THIS DETAIL. THE GRATE IS COMMERCIALLY AVAILABLE AS A FLOOR STRAINER. A PIPE COUPLING IS REQUIRED FOR THE ATTACHMENT OF THIS SHIELD TO THE EXPOSED END OF THE PIPE UNDERDRAIN. THE SHIELD SHALL BE FASTENED TO THE PIPE COUPLING WITH TWO OR MORE NO. 10 x 1-INCH STAINLESS STEEL SHEET METAL SCREWS.

RODENT SHIELD DETAIL

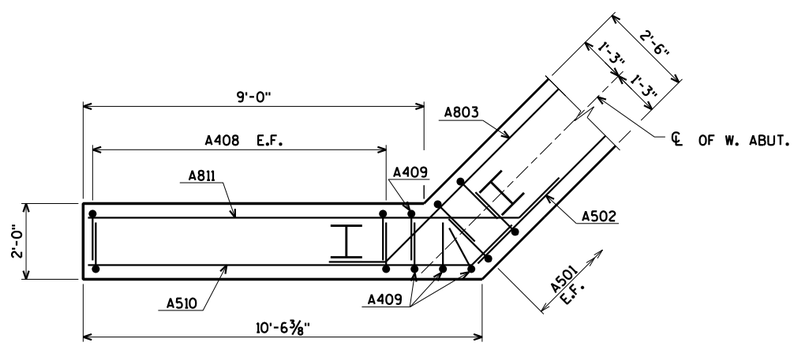

SECTION B

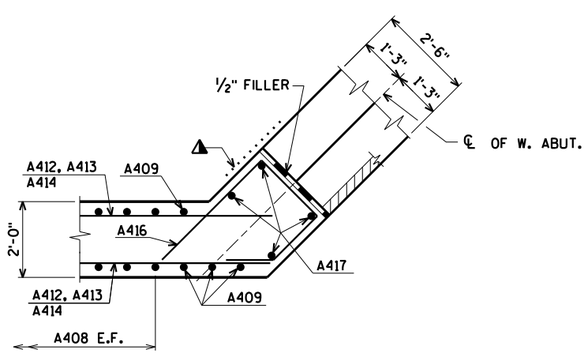

SECTION C

▲ ¾" 'V' GROOVE ON F.F. OF WINGWALL - NOT REQUIRED IF CONST. JT. IS NOT USED.

● OPT. KEYED CONST. JOINT - FORMED BY A BEVELED 2" x 6".

◭ 18" RUBBERIZED MEMBRANE WATERPROOFING TO EXTEND FROM BEAM SEAT TO TOP OF WINGWALL.

⊞ 18" RUBBERIZED MEMBRANE WATERPROOFING IF CONST. JOINT IS USED (COST INCIDENTAL TO BID ITEM "CONCRETE MASONRY BRIDGES").

FOR PILE SPLICE DETAIL SEE SHEET 2.

B.F. DENOTES BACK FACE.

F.F. DENOTES FRONT FACE.

E.F. DENOTES EACH FACE.

NO.	DATE	REVISION	BY

STATE OF WISCONSIN
DEPARTMENT OF TRANSPORTATION

STRUCTURE B-21-30

DRAWN BY ZSS | PLANS CK'D. CBM

WEST ABUTMENT WING DETAILS

SHEET 5 OF 11

90

ORIGINAL PLANS PREPARED BY

AYRES ASSOCIATES
3433 Oakwood Hills Parkway
Eau Claire, WI 54701
www.AyresAssociates.com

8

8

$PRFNAME$
U:±42-1116.00 - Forest County - CTH G±Structures±Final±421116 wa.DGN

5/29/2018

PENTABLE:BReau_shd_util.tbl

STATE PROJECT NUMBER

9333-00-70

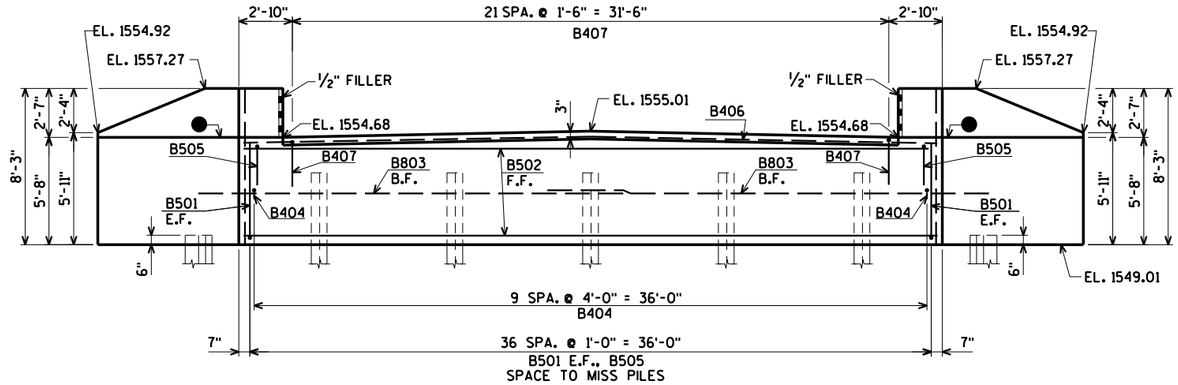

ELEVATION
(LOOKING EAST)

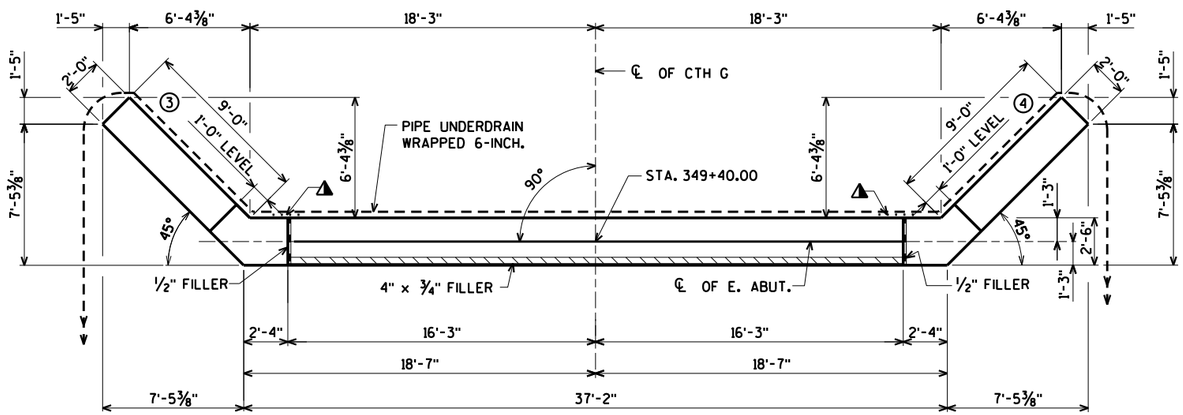

PLAN

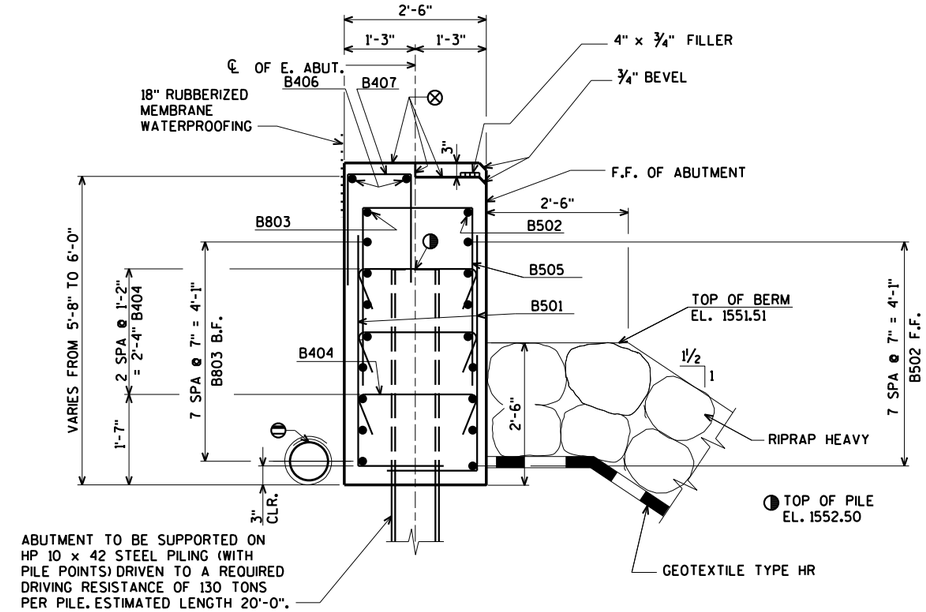

TYPICAL SECTION THRU BODY

NOTE: DO NOT PLACE FILL ABOVE THREE FEET FROM BOTTOM OF ABUTMENT UNTIL SUPERSTRUCTURE IS IN PLACE.

EXCAVATE OR FILL TO BOTTOM OF ABUTMENT BEFORE DRIVING PILES.

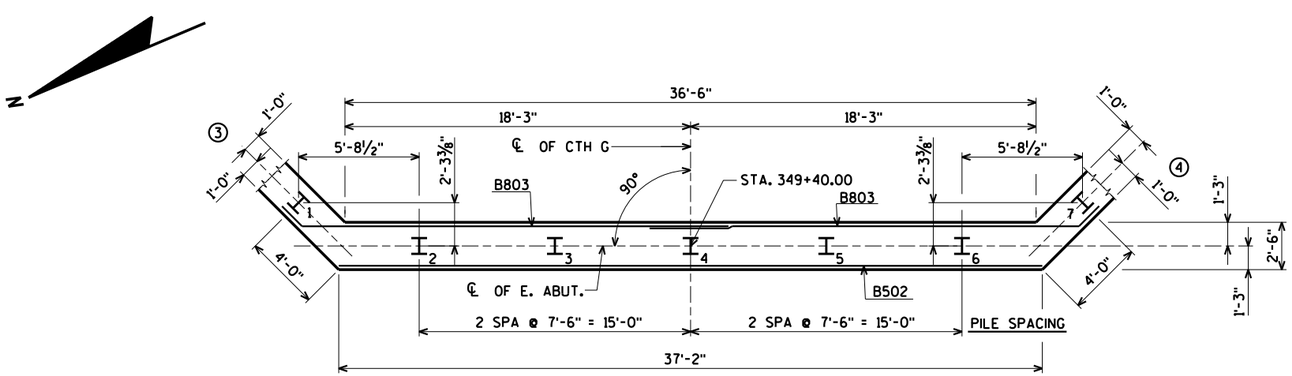

PILE LAYOUT

⊗ STEEL TROWEL TOP SURFACE OF ABUTMENT. PLACE MULTIPLE LAYERS OF POLYETHYLENE SHEETS OVER ENTIRE ABUTMENT TOP BEFORE PLACING SUPERSTRUCTURE. TOTAL THICKNESS OF SHEETS SHALL BE AT LEAST 0.03".

⊖ PIPE UNDERDRAIN WRAPPED 6-INCH. SLOPE 0.5% MIN. TO SUITABLE DRAINAGE. ATTACH RODENT SHIELD AT ENDS OF PIPE UNDERDRAIN. FOR RODENT SHIELD DETAIL SEE SHEET 5.

● OPT. KEYED CONST. JOINT - FORMED BY A BEVELED 2" x 6".

◭ 18" RUBBERIZED MEMBRANE WATERPROOFING TO EXTEND FROM BRIDGE SEAT TO TOP OF WING.

FOR PILE SPLICE DETAIL SEE SHEET 2.

B.F. DENOTES BACK FACE.

F.F. DENOTES FRONT FACE.

E.F. DENOTES EACH FACE.

NO.	DATE	REVISION	BY

STATE OF WISCONSIN
DEPARTMENT OF TRANSPORTATION

STRUCTURE B-21-30

DRAWN BY ZSS | PLANS CK'D. CBM

EAST ABUTMENT

SHEET 6 OF 11

ORIGINAL PLANS PREPARED BY
AYRES ASSOCIATES
3433 Oakwood Hills Parkway
Eau Claire, WI 54701
www.AyresAssociates.com

8

8

STATE PROJECT NUMBER

9333-00-70

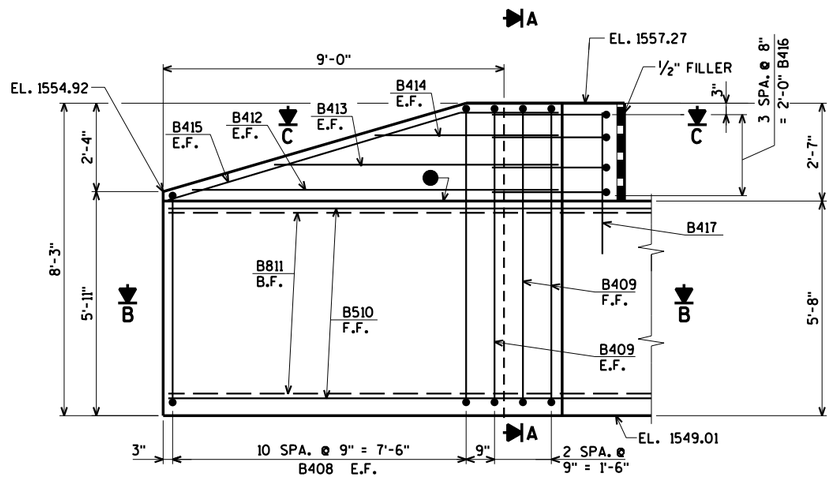

ELEVATION - WING 3

(WING 4 SIMILAR)

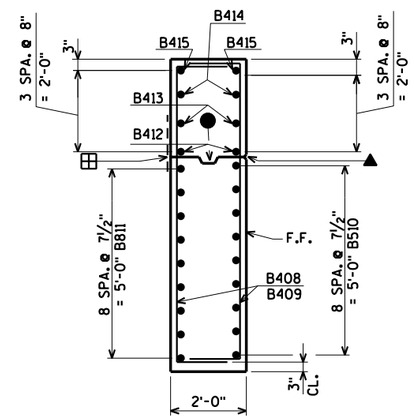

SECTION A

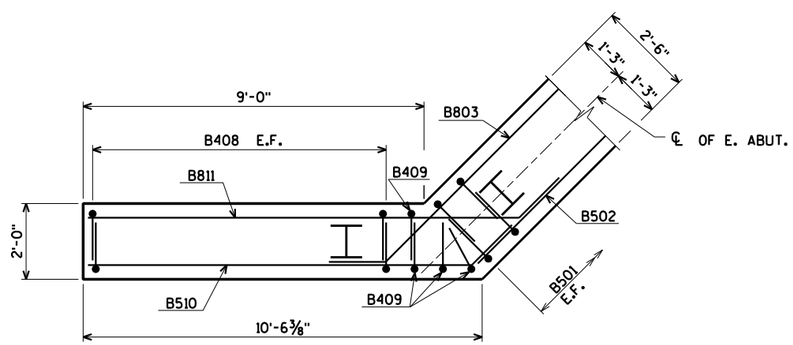

SECTION B

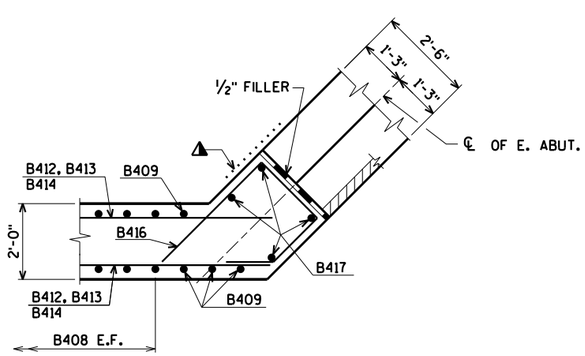

SECTION C

▲ ¾" 'V' GROOVE ON F.F. OF WINGWALL - NOT REQUIRED IF CONST. JT. IS NOT USED.

● OPT. KEYED CONST. JOINT - FORMED BY A BEVELED 2" x 6".

◭ 18" RUBBERIZED MEMBRANE WATERPROOFING TO EXTEND FROM BEAM SEAT TO TOP OF WINGWALL.

⊞ 18" RUBBERIZED MEMBRANE WATERPROOFING IF CONST. JOINT IS USED (COST INCIDENTAL TO BID ITEM "CONCRETE MASONRY BRIDGES").

FOR PILE SPLICE DETAIL SEE SHEET 2.

B.F. DENOTES BACK FACE.

F.F. DENOTES FRONT FACE.

E.F. DENOTES EACH FACE.

NO.	DATE	REVISION	BY

STATE OF WISCONSIN
DEPARTMENT OF TRANSPORTATION

STRUCTURE B-21-30

DRAWN BY ZSS | PLANS CK'D. CBM

EAST ABUTMENT WING DETAILS

SHEET 7 OF 11

92

ORIGINAL PLANS PREPARED BY

AYRES ASSOCIATES
3433 Oakwood Hills Parkway
Eau Claire, WI 54701
www.AyresAssociates.com

8

8

$PRFNAME$
U:±42-1116.00 - Forest County - CTH G±Structures±Final±421116 ea.DGN

5/29/2018

PENTABLE:BReau_shd_util.tbl

STATE PROJECT NUMBER

9333-00-70

BILL OF BARS - WEST ABUTMENT

BAR. NO.	COATED BAR	NO. REQ'D.	LENGTH	BENT BAR	BUNDLED	BAR SERIES	2,500# UNCOATED 1,320# COATED LOCATION
A501		74	6-5	X			BODY VERT. E.F.
A502		9	36-10				BODY HORIZ. F.F.
A803		18	24-6	X			BODY HORIZ. B.F.
A404		30	2-9	X			BODY TIES
A505		37	8-7	X			BODY VERT. TOP
A406		2	36-10				BODY HORIZ. TOP NOTCH
A407		22	3-5	X			BODY VERT. TOP NOTCH
A408	X	44	9-0	X		⊗	WING VERT. E.F.
A409	X	8	10-3	X			WING VERT. E.F.
A510	X	18	11-9	X			WING HORIZ. F.F.
A811	X	18	13-1	X			WING HORIZ. B.F.
A412	X	4	9-5				WING HORIZ. E.F.
A413	X	4	7-2				WING HORIZ. E.F.
A414	X	4	4-10				WING HORIZ. E.F.
A415	X	4	10-6	X			WING DIAG. E.F.
A416	X	8	8-5	X			WING CORNER HORIZ.
A417	X	8	3-9				WING CORNER VERT.

BENDING DIMENSIONS ARE OUT TO OUT OF BARS.

BILL OF BARS - EAST ABUTMENT

BAR. NO.	COATED BAR	NO. REQ'D.	LENGTH	BENT BAR	BUNDLED	BAR SERIES	2,500# UNCOATED 1,320# COATED LOCATION
B501		74	6-5	X			BODY VERT. E.F.
B502		9	36-10				BODY HORIZ. F.F.
B803		18	24-6	X			BODY HORIZ. B.F.
B404		30	2-9	X			BODY TIES
B505		37	8-7	X			BODY VERT. TOP
B406		2	36-10				BODY HORIZ. TOP NOTCH
B407		22	3-5	X			BODY VERT. TOP NOTCH
B408	X	44	9-0	X		⊗	WING VERT. E.F.
B409	X	8	10-3	X			WING VERT. E.F.
B510	X	18	11-9	X			WING HORIZ. F.F.
B811	X	18	13-1	X			WING HORIZ. B.F.
B412	X	4	9-5				WING HORIZ. E.F.
B413	X	4	7-2				WING HORIZ. E.F.
B414	X	4	4-10				WING HORIZ. E.F.
B415	X	4	10-6	X			WING DIAG. E.F.
B416	X	8	8-5	X			WING CORNER HORIZ.
B417	X	8	3-9				WING CORNER VERT.

BENDING DIMENSIONS ARE OUT TO OUT OF BARS.

⊗ LENGTH SHOWN FOR BAR IS AN AVERAGE LENGTH AND SHOULD ONLY BE USED FOR BAR WEIGHT CALCULATIONS. SEE BAR SERIES TABLE FOR ACTUAL LENGTHS.

B.F. DENOTES BACK FACE.

F.F. DENOTES FRONT FACE.

E.F. DENOTES EACH FACE.

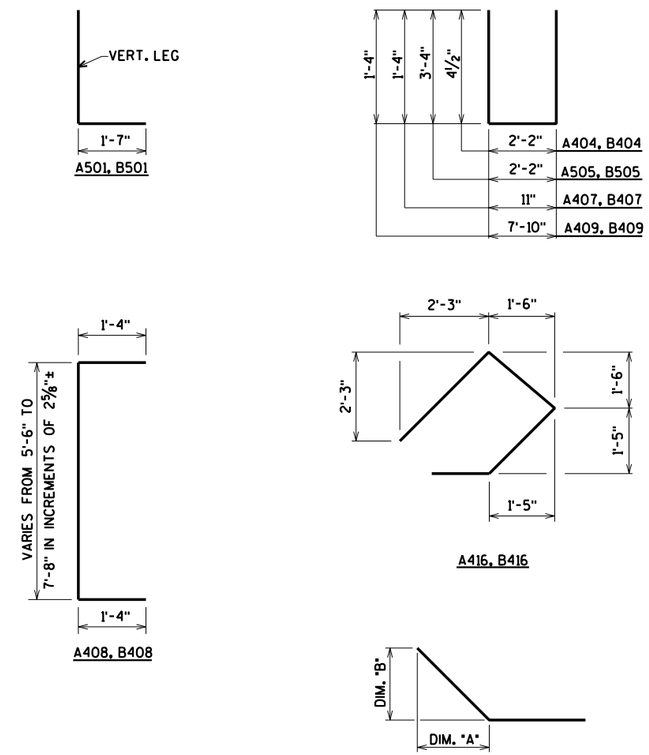

BAR NO.	DIM. "A"	DIM. "B"
A803	1'-0 3/4"	1'-0 3/4"
A510	1'-0 3/4"	1'-0 3/4"
A811	1'-0 3/4"	1'-0 3/4"
A415	8'-0"	2'-4"
B803	1'-0 3/4"	1'-0 3/4"
B510	1'-0 3/4"	1'-0 3/4"
B811	1'-0 3/4"	1'-0 3/4"
B415	8'-0"	2'-4"

BAR SERIES TABLE

BAR MARK	NO REQ'D.	LENGTH
A408	2 SERIES OF 11	7'-11" TO 10'-1"
B408	2 SERIES OF 11	7'-11" TO 10'-1"

BUNDLE AND TAG EACH SERIES SEPARATELY.

8

8

NO.	DATE	REVISION	BY

STATE OF WISCONSIN
DEPARTMENT OF TRANSPORTATION

STRUCTURE B-21-30

DRAWN BY ZSS | PLANS CK'D. CBM

ABUTMENT
BILL OF BARS

SHEET 8 OF 11

93

ORIGINAL PLANS PREPARED BY
AYRES ASSOCIATES
3433 Oakwood Hills Parkway
Eau Claire, WI 54701
www.AyresAssociates.com

STATE PROJECT NUMBER

9333-00-70

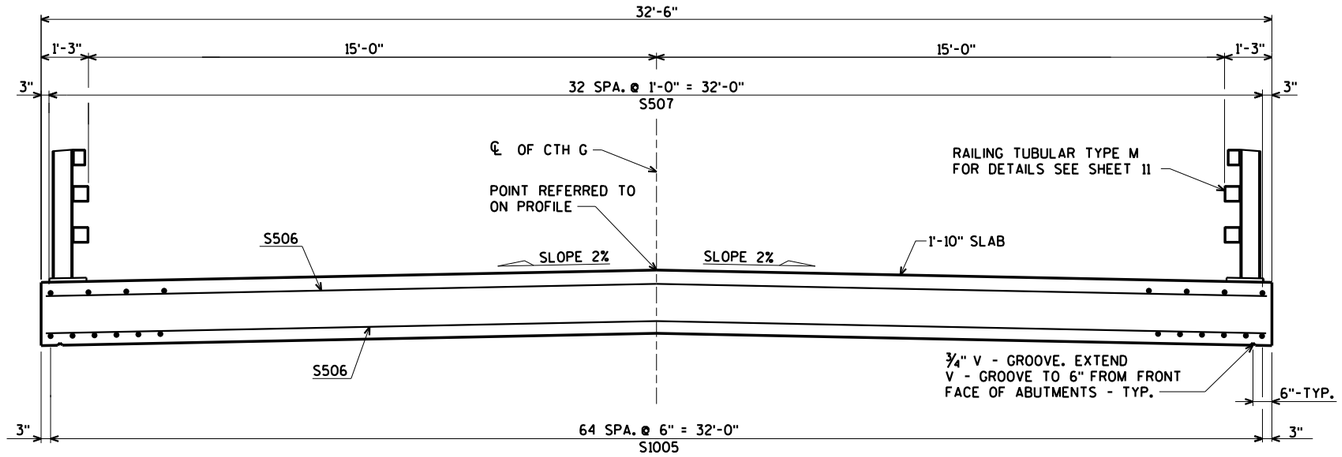

CROSS SECTION THRU BRIDGE

BILL OF BARS

BAR. NO.	COATED BAR	NO. REQ'D.	LENGTH	BENT BAR	BUNDLED	BAR SERIES	17,470# COATED LOCATION
S401	X	66	3-3	X			SLAB VERT. @ ABUT. NOTCH
S402	X	4	32-2				SLAB TRANS. @ ABUT. NOTCH
S503	X	66	5-8	X			SLAB VERT. @ ABUT.
S504	X	66	3-7	X			SLAB VERT. @ ABUT.
S1005	X	65	36-11				SLAB LONG. BOT.
S506	X	103	32-2				SLAB TRANS. BOT. & TOP
S507	X	33	42-2				SLAB LONG. TOP
S608	X	32	12-0	X			SLAB @ RAIL POSTS
S609	X	72	6-0				SLAB @ INT. RAIL POSTS
S610	X	16	6-0	X			SLAB @ EXT. RAIL POSTS

BENDING DIMENSIONS ARE OUT TO OUT OF BARS.

TOP TRANSVERSE BARS IN SLAB SHALL BE SUPPORTED BY INDIVIDUAL BAR CHAIRS AT APPROXIMATELY 3'-0" CENTERS EACH WAY. BOTTOM LONGITUDINAL BARS SHALL BE SUPPORTED BY CONTINUOUS BAR CHAIRS AT APPROXIMATELY 4'-0" CENTERS.

ALL SLAB THICKNESS DIMENSIONS ARE MINIMUM. ANY TOLERANCES NECESSARY TO CORRECT CONSTRUCTION DISCREPANCIES ARE TO BE PLUS (+).

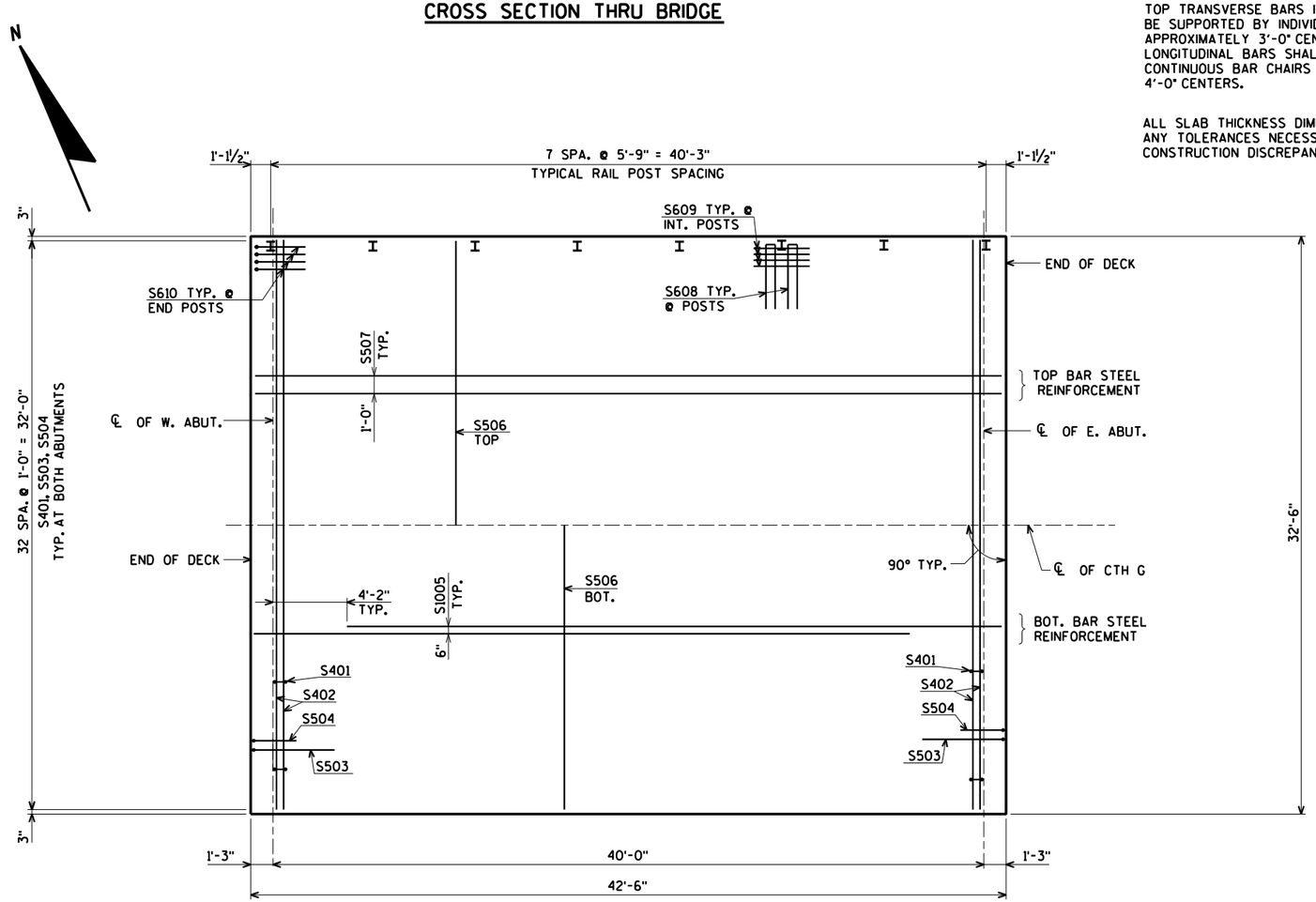

PLAN

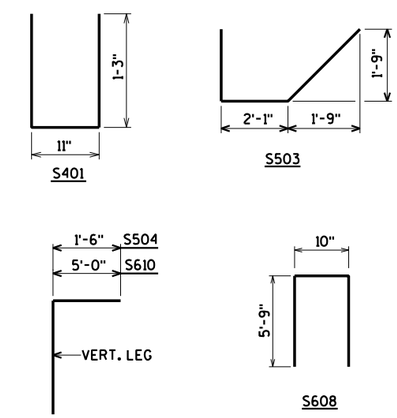

NO.	DATE	REVISION	BY

STATE OF WISCONSIN
DEPARTMENT OF TRANSPORTATION

STRUCTURE B-21-30

DRAWN BY ZSS | PLANS CK'D. CBM

SUPERSTRUCTURE

SHEET 9 OF 11

94

ORIGINAL PLANS PREPARED BY
AYRES ASSOCIATES
3433 Oakwood Hills Parkway
Eau Claire, WI 54701
www.AyresAssociates.com

8

8

$PRFNAME$
U:±42-1116.00 - Forest County - CTH G±Structures±Final±421116 super.DGN

5/29/2018

PENTABLE:BReau_shd_util.tbl

STATE PROJECT NUMBER

9333-00-70

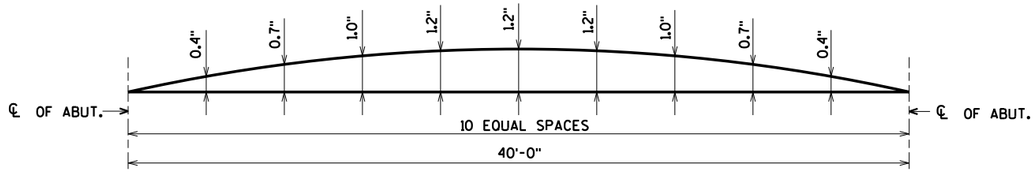

CAMBER DIAGRAM

CAMBER SPANS AS SHOWN TO PROVIDE FOR DEAD LOAD DEFLECTION & FUTURE CREEP. CAMBER DOES NOT INCLUDE ALLOWANCE FOR FORM SETTLEMENT.

PRIOR TO RELEASING SLAB FALSEWORK, TAKE TOP OF SLAB ELEVATIONS AT THE ℄ OF ABUTMENTS, AND AT ½ PT. TO VERIFY CAMBER. TAKE ELEVATIONS ALONG EDGE OF SLAB AND ℄.

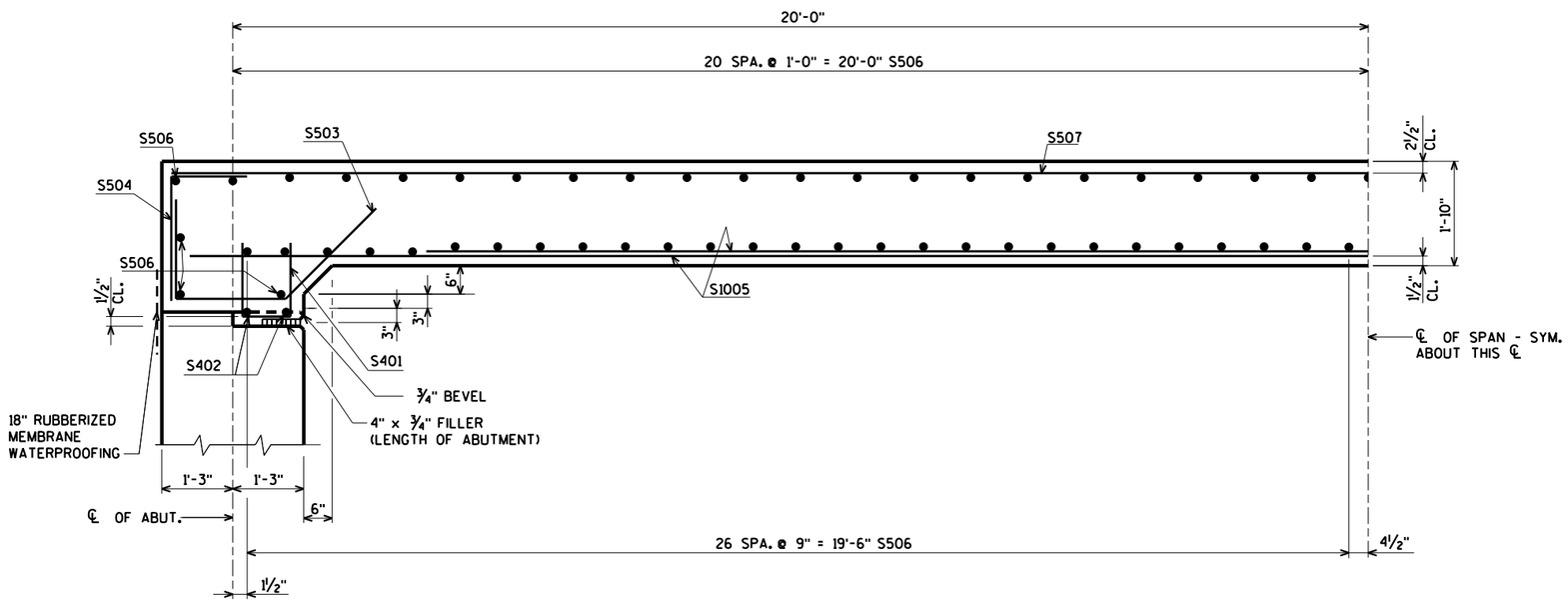

PART LONGITUDINAL SECTION

TOP OF DECK ELEVATIONS

LOCATION	℄ OF W. ABUT.	0.1	0.2	0.3	0.4	0.5	0.6	0.7	0.8	0.9	℄ OF E. ABUT.
N. EDGE OF SLAB	1556.98	1557.01	1557.04	1557.07	1557.10	1557.13	1557.15	1557.18	1557.21	1557.24	1557.27
℄ OF CTH G	1557.31	1557.34	1557.36	1557.39	1557.42	1557.45	1557.48	1557.51	1557.54	1557.56	1557.59
S. EDGE OF SLAB	1556.98	1557.01	1557.04	1557.07	1557.10	1557.13	1557.15	1557.18	1557.21	1557.24	1557.27

ELEVATIONS SHOWN ARE FINISHED DECK AND DO NOT INCLUDE ALLOWANCES OF DEAD LOAD DEFLECTION AND FUTURE CREEP.

NO.	DATE	REVISION	BY

STATE OF WISCONSIN
DEPARTMENT OF TRANSPORTATION

STRUCTURE B-21-30

DRAWN BY ZSS | PLANS CK'D. CBM

SUPERSTRUCTURE DETAILS

SHEET 10 OF 11
95

ORIGINAL PLANS PREPARED BY
AYRES ASSOCIATES
3433 Oakwood Hills Parkway
Eau Claire, WI 54701
www.AyresAssociates.com

8

8

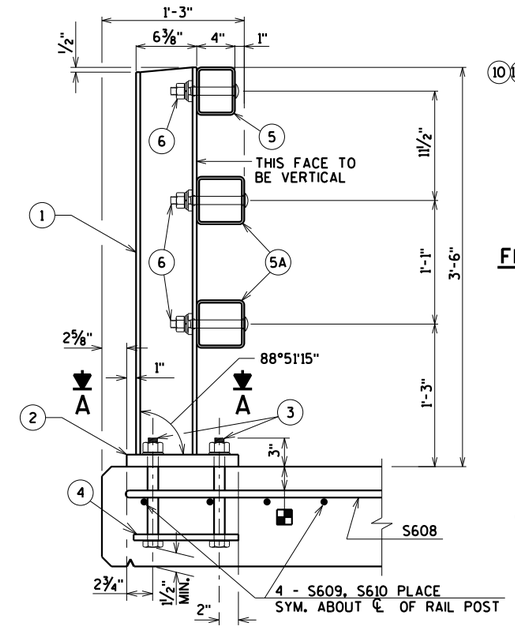

SECTION THRU RAILING ON DECK

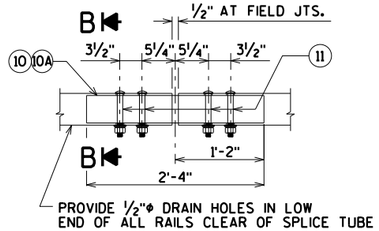

FIELD ERECTION JOINT DETAIL

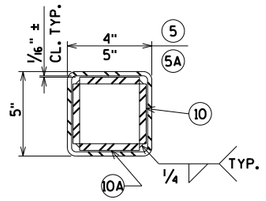

SECTION B

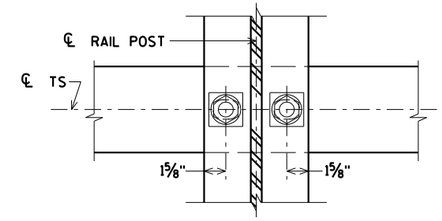

SECTION THRU POST WEB

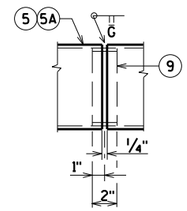

SHOP RAIL SPLICE DETAIL

(LOCATION MUST BE SHOWN ON THE SHOP DRAWINGS)

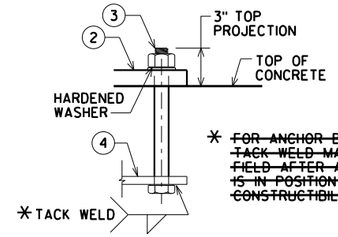

* ~~FOR ANCHOR BOLTS IN WINGS, TACK WELD MAY BE USED IN FIELD AFTER ANCHOR PLATE IS IN POSITION IF REQ'D. FOR CONSTRUCTIBILITY.~~

ANCHOR BOLTS

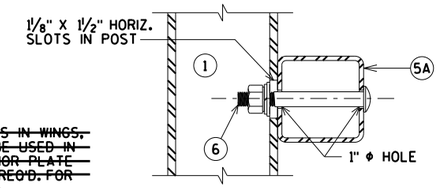

SECTION THRU RAIL

NOTE: CONNECTIONS AT LOWER RAILS SHOWN. CONNECTIONS AT TOP RAIL SIMILAR.

TYPICAL RAIL TO POST CONNECTIONS

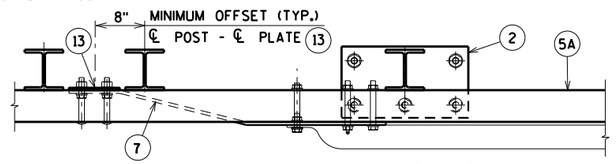

TOP VIEW AT END POST

(THRIE BEAM RAIL ATTACHMENT)

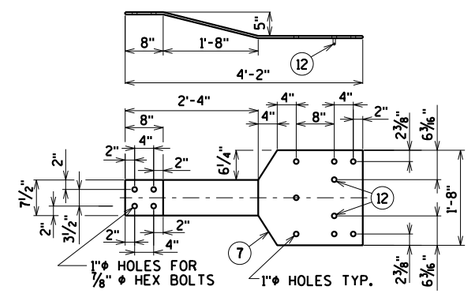

BACK-UP PLATE DETAIL

(AT BEAM GUARD ATTACHMENT)

PLACE BELOW TOP MAT SLAB REINFORCEMENT.

TIE TO TOP MAT OF STEEL.

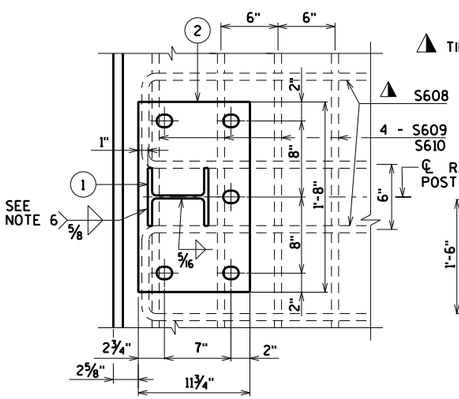

SECTION A

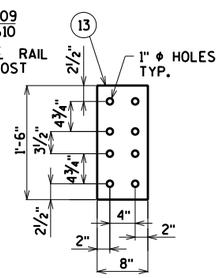

ANCHOR PLATE

(AT BEAM GUARD ATTACHMENT)

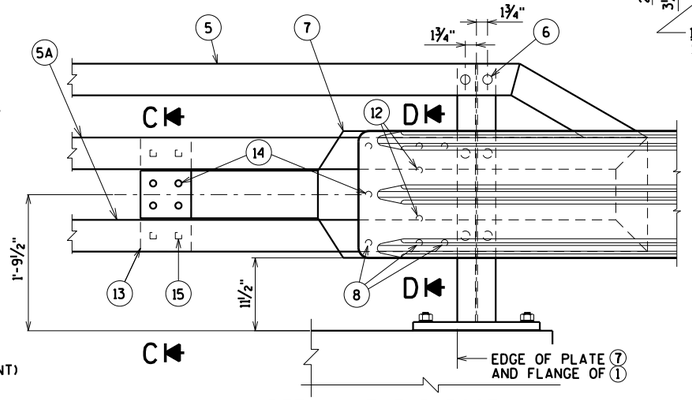

DETAIL AT END POST

(THRIE BEAM RAIL ATTACHMENT)

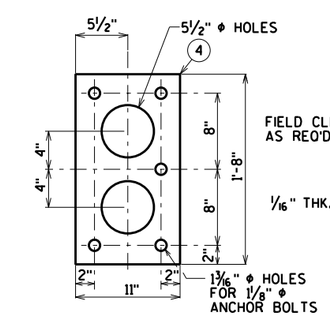

ANCHOR PLATE

(AT RAIL TO DECK CONNECTION)

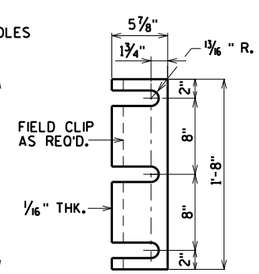

POST SHIM DETAIL

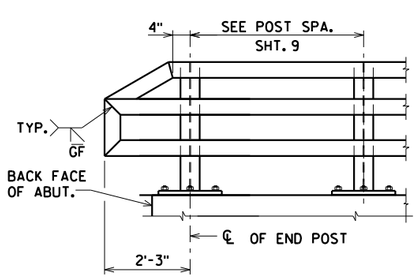

PART ELEVATION OF RAILING

LEGEND

1. W6 x 25 WITH 1 1/8" X 1 1/2" HORIZ. SLOTS ON EACH SIDE OF POST FOR BOLT NO. 6. CUT BOTTOM OF POST TO MATCH CROSS SLOPE OF ROADWAY. PLACE POST VERTICAL. PLACE POSTS NORMAL TO GRADE LINE.
2. PLATE 1 1/4" x 11 3/4" x 1'-8" WITH 1 5/16" X 1 5/8" SLOTTED HOLES FOR ANCHOR BOLTS NO. 3. WELD TO NO. 1 AS SHOWN. SLOTS PARALLEL TO SHORT SIDE OF PLATE.
3. ASTM A449 - 1 1/8" DIA. ANCHOR BOLTS WITH NUT AND HARDENED WASHER (ALL GALVANIZED). 5 REQ'D. PER POST. THREAD 3" AND PLACE NORMAL TO PLATE NO. 2. CHAMFER TOP OF BOLTS BEFORE THREADING. ~~USE 1'-9" LONG IN ABUTMENT WINGS.~~ AT POSTS ON CONCRETE SLAB SUPERSTRUCTURES WHERE THE SLAB THICKNESS IS > 16" USE 1'-3" LONG. ~~USE 10 3/4" LONG AT ALL OTHER LOCATIONS.~~ (AN EQUIVALENT THREADED ROD WITH NUTS AND HARDENED WASHERS MAY BE SUBSTITUTED FOR ANCHOR BOLTS IN WINGS IF REQ'D. FOR CONSTRUCTIBILITY.)
4. 5/8" x 11" x 1'-8" ANCHOR PLATE (GALVANIZED) WITH 1 3/16" DIA. HOLES FOR ANCHOR BOLTS NO. 3
5. TS 5 x 4 x 0.25 STRUCTURAL TUBING. ATTACH TO NO. 1 WITH NO. 6.

5A. TS 5 x 5 x 0.25 STRUCTURAL TUBING. ATTACH TO NO. 1 WITH NO. 6.

6. 7/8" DIA. A325 SLOTTED ROUND HEAD BOLT WITH NUT, 3/16" X 1 5/8" X 1 5/8" WASHER, AND LOCK WASHER (2 REQ'D. AT EACH RAIL TO POST LOCATION.)
7. 1/2" THK. BACK-UP PLATE WITH 2 - 7/8" X 1 1/2" THREADED SHOP WELDED STUDS (NO. 12). BOLT TO RAIL AS SHOWN IN DETAIL. REQUIRED AT THRIE BEAM GUARD RAIL ATTACHMENTS ONLY. PLACE SYMMETRICALLY ABOUT TUBES NO. 5A.
8. 1" DIA. HOLES IN PLATE NO. 7 & TUBES NO. 5A FOR 7/8" DIA. A325 BOLTS WITH HEX NUTS AND WASHERS. 6 HOLES IN TUBES AND PLATE NO. 7.
9. SPLICE SLEEVE FABRICATED FROM 1/4" PLATE. PROVIDE "SLIDING FIT".
10. 3/8" X 3 5/8" X 2'-4" PLATE. 2 PER RAIL. USED IN NO. 5 & 5A.

10A. 3/8" X 2 5/8" X 2'-4" PLATE USED IN NO. 5, 3/8" X 3 5/8" X 2'-4" PLATE USED IN NO. 5A. 2 PER RAIL.

11. 7/8" Φ A325 ROUND HEAD BOLT WITH NUT, WASHER, AND LOCK WASHER. USE 15/16" X 1 1/4" LONGIT. SLOTTED HOLES AT FIELD JOINTS ~~AND 15/16" X 2 1/4" MIN. LONGIT. SLOTTED HOLES AT EXP. JOINTS~~ IN PLATE NO. 10A.
12. 7/8" DIA. X 1 1/2" LONG THREADED SHOP WELDED STUDS (2 REQ'D).
13. 3/8" X 8" X 1'-6" PLATE. BOLT TO RAIL AS SHOWN IN DETAIL. REQ'D. AT THRIE BEAM GUARD RAIL ATTACHMENTS ONLY. PLACE SYM. ABOUT TUBES NO. 5A.
14. 7/8" DIA. X 2" LONG A325 HEX BOLT WITH NUT AND WASHER (5 REQ'D.).
15. 1" Φ HOLES IN TUBES NO. 5A FOR 7/8" DIA. A325 ROUND HEAD BOLT WITH NUT, WASHER AND LOCK WASHER (4 REQ'D.). 4 HOLES IN TUBES.

GENERAL NOTES

1. BID ITEM SHALL BE "RAILING TUBULAR TYPE M B-21-30" WHICH INCLUDES ALL ITEMS SHOWN.
2. RAIL POST AND BASE PLATES SHALL CONFORM TO THE REQUIREMENTS OF ASTM A709 GRADE 50. HOLLOW RAILING STRUCTURAL TUBING SHALL CONFORM TO THE REQUIREMENTS OF ASTM A500 GRADE B OR C WITH A CERTIFIED FY = 50 KSI. ANCHOR PLATES, AND SPLICE TUBE PLATES SHALL CONFORM TO THE REQUIREMENTS OF ASTM A709 GRADE 36.
3. THE NUT SECURING THE POST BASE PLATE TO THE CONCRETE SHALL BE TIGHTENED TO A SNUG FIT AND GIVEN AN ADDITIONAL 1/8 TURN.
4. RAILS SHALL BE CONTINUOUS OVER A MINIMUM OF THREE (3) POSTS WITHOUT SPLICES WHERE POSSIBLE. ~~RAILS SHALL BE SPLICED IN A PANEL OVER EXPANSION JOINTS.~~
5. ENDS OF TUBE SECTIONS SHALL BE SAWED. GRIND SMOOTH EXPOSED EDGES. ALL CUT ENDS SHALL BE TRUE AND SMOOTH.
6. WELD IS THE SAME ON BOTH FLANGES. FLANGE WELD DOES NOT REQUIRE MAGNETIC PARTICLE TESTING.
7. FILL BOLT SLOT OPENINGS IN POST SHIMS AND PLATE NO. 2 AND CAULK AROUND PERIMETER OF PLATE NO. 2 WITH NON-STAINING GRAY NON-BITUMINOUS JOINT SEALER. STEEL POST SHIMS MAY BE USED UNDER POSTS WHERE REQ'D. FOR ALIGNMENT.
8. POST BASE PLATES SHALL BE FLAT WITH ALL SURFACES SMOOTH AND FREE FROM WARP AND ALL EDGES SMOOTH, STRAIGHT AND VERTICAL. ALL PLATE CUTS SHALL BE MACHINE OR MACHINE FLAME CUT.
9. ALL MATERIAL SHALL BE GALVANIZED AFTER FABRICATION. PRIOR TO GALVANIZING, ALL STEEL RAILING POSTS & STEEL TUBING SHALL BE GIVEN A NO. 6 BLAST CLEANING BY S.S.P.C. SPECIFICATIONS.
10. ~~WHEN PAINTING IS REQUIRED, ALL MATERIAL EXCEPT ANCHORAGE DETAIL (NO. 3 & 4) SHALL BE PAINTED OVER GALVANIZING WITH APPROVED TIE COAT AND TOP COAT.~~

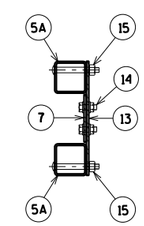

SECTION C

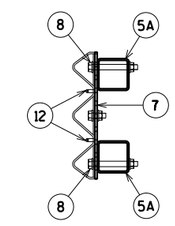

SECTION D

NO.	DATE	REVISION	BY

STATE OF WISCONSIN
DEPARTMENT OF TRANSPORTATION

STRUCTURE B-21-30

DRAWN BY ZSS | PLANS CK'D. CBM

RAILING TUBULAR TYPE M

SHEET 11 OF 11
96

ORIGINAL PLANS PREPARED BY
AYRES ASSOCIATES
3433 Oakwood Hills Parkway
Eau Claire, WI 54701
www.AyresAssociates.com

STATION	DISTANCE	AREA (SF)				INCREMENTAL VOL (CY) (UNADJUSTED)				CUMULATIVE VOL (CY)		MASS ORDINATE NOTE 5
		CUT	UNUSABLE PAVEMENT MATERIAL	FILL	EBS	CUT NOTE 1	UNUSABLE PAVEMENT MATERIAL NOTE 2	FILL NOTE 3	EBS	CUT 1.00 NOTE 1	EXPANDED FILL 1.15 NOTE 4	
346+06	---	29	0	3	0	---	---	---	---	---	---	---
346+68	63	27	0	10	0	64	0	15	0	64	17	47
346+97	29	26	0	15	0	28	0	13	0	93	32	60
347+22	25	24	0	18	0	23	0	15	0	116	50	66
347+47	25	22	0	14	0	21	0	15	0	137	67	70
347+59	13	22	0	16	0	10	0	7	0	147	75	72
347+84	25	23	0	11	0	21	0	12	0	168	89	79
348+00	16	25	0	2	0	14	0	4	0	182	93	88
348+09	9	26	0	0	0	9	0	0	0	190	94	97
348+50	41	40	11	0	0	50	8	0	0	240	94	138
348+99	49	36	11	168	0	69	20	152	0	310	269	13
				COLUMN TOTALS		310	28	234	0			

NOTES:
1) CUT INCLUDES UNUSABLE PAVEMENT MATERIAL
2) UNUSABLE PAVEMENT MATERIAL DOES NOT APPEAR IN THE CROSS SECTIONS
3) FILL DOES NOT INCLUDE UNUSABLE PAVEMENT MATERIAL EXCAVATION VOLUME
4) EXPANDED FILL = UNEXPANDED FILL * EXPANDED FILL FACTOR. EXPANDED FILL FACTOR = 1.15
5) MASS ORDINATE = (CUT - UNUSABLE PAVEMENT MATERIAL) - (FILL * FILL FACTOR)

STATION	DISTANCE	AREA (SF)				INCREMENTAL VOL (CY) (UNADJUSTED)				CUMULATIVE VOL (CY)		MASS ORDINATE NOTE 5
		CUT	UNUSABLE PAVEMENT MATERIAL	FILL	EBS	CUT NOTE 1	UNUSABLE PAVEMENT MATERIAL NOTE 2	FILL NOTE 3	EBS	CUT 1.00 NOTE 1	EXPANDED FILL 1.15 NOTE 4	
349+41	---	30	11	176	0	---	---	---	---	---	---	---
350+00	59	19	0	11	0	54	12	203	0	54	234	-192
350+31	31	20	0	6	0	22	0	10	0	76	245	-181
350+56	25	20	0	37	0	18	0	20	0	95	268	-185
350+81	25	20	0	48	0	18	0	39	0	113	313	-212
351+06	25	22	0	54	0	19	0	47	0	132	368	-248
351+31	25	24	0	57	0	21	0	52	0	153	427	-286
351+70	39	29	0	37	0	38	0	68	0	191	505	-326
352+22	52	35	0	22	0	61	0	57	0	252	570	-330
				COLUMN TOTALS		252	12	496	0			

NOTES:
1) CUT INCLUDES UNUSABLE PAVEMENT MATERIAL
2) UNUSABLE PAVEMENT MATERIAL DOES NOT APPEAR IN THE CROSS SECTIONS
3) FILL DOES NOT INCLUDE UNUSABLE PAVEMENT MATERIAL EXCAVATION VOLUME
4) EXPANDED FILL = UNEXPANDED FILL * EXPANDED FILL FACTOR. EXPANDED FILL FACTOR = 1.15
5) MASS ORDINATE = (CUT - UNUSABLE PAVEMENT MATERIAL) - (FILL * FILL FACTOR)

STATION	DISTANCE	AREA (SF)				INCREMENTAL VOL (CY) (UNADJUSTED)				CUMULATIVE VOL (CY)		MASS ORDINATE NOTE 5
		CUT	UNUSABLE PAVEMENT MATERIAL	FILL	EBS	CUT NOTE 1	UNUSABLE PAVEMENT MATERIAL NOTE 2	FILL NOTE 3	EBS	CUT 1.00 NOTE 1	EXPANDED FILL 1.15 NOTE 4	
386+95	---	18	0	7	0	---	---	---	---	---	---	---
387+42	47	34	0	9	0	45	0	14	0	45	17	28
388+74	---	81	0	15	0	---	---	---	---	---	---	---
389+14	40	14	0	7	0	69	0	16	0	114	35	80
				COLUMN TOTALS		114	0	30	0			

NOTES:
1) CUT INCLUDES UNUSABLE PAVEMENT MATERIAL
2) UNUSABLE PAVEMENT MATERIAL DOES NOT APPEAR IN THE CROSS SECTIONS
3) FILL DOES NOT INCLUDE UNUSABLE PAVEMENT MATERIAL EXCAVATION VOLUME
4) EXPANDED FILL = UNEXPANDED FILL * EXPANDED FILL FACTOR. EXPANDED FILL FACTOR = 1.15
5) MASS ORDINATE = (CUT - UNUSABLE PAVEMENT MATERIAL) - (FILL * FILL FACTOR)

STATION	DISTANCE	AREA (SF)				INCREMENTAL VOL (CY) (UNADJUSTED)				CUMULATIVE VOL (CY)		MASS ORDINATE NOTE 5
		CUT	UNUSABLE PAVEMENT MATERIAL	FILL	EBS	CUT NOTE 1	UNUSABLE PAVEMENT MATERIAL NOTE 2	FILL NOTE 3	EBS	CUT 1.00 NOTE 1	EXPANDED FILL 1.15 NOTE 4	
100+41	---	130	11	72	0	---	---	---	---	---	---	---
100+90	49	86	11	0	0	195	20	64	0	195	74	101
101+38	48	77	11	0	0	146	20	0	0	340	74	227
				COLUMN TOTALS		340	39	64	0			

NOTES:
1) CUT INCLUDES UNUSABLE PAVEMENT MATERIAL
2) UNUSABLE PAVEMENT MATERIAL DOES NOT APPEAR IN THE CROSS SECTIONS
3) FILL DOES NOT INCLUDE UNUSABLE PAVEMENT MATERIAL EXCAVATION VOLUME
4) EXPANDED FILL = UNEXPANDED FILL * EXPANDED FILL FACTOR. EXPANDED FILL FACTOR = 1.15
5) MASS ORDINATE = (CUT - UNUSABLE PAVEMENT MATERIAL) - (FILL * FILL FACTOR)

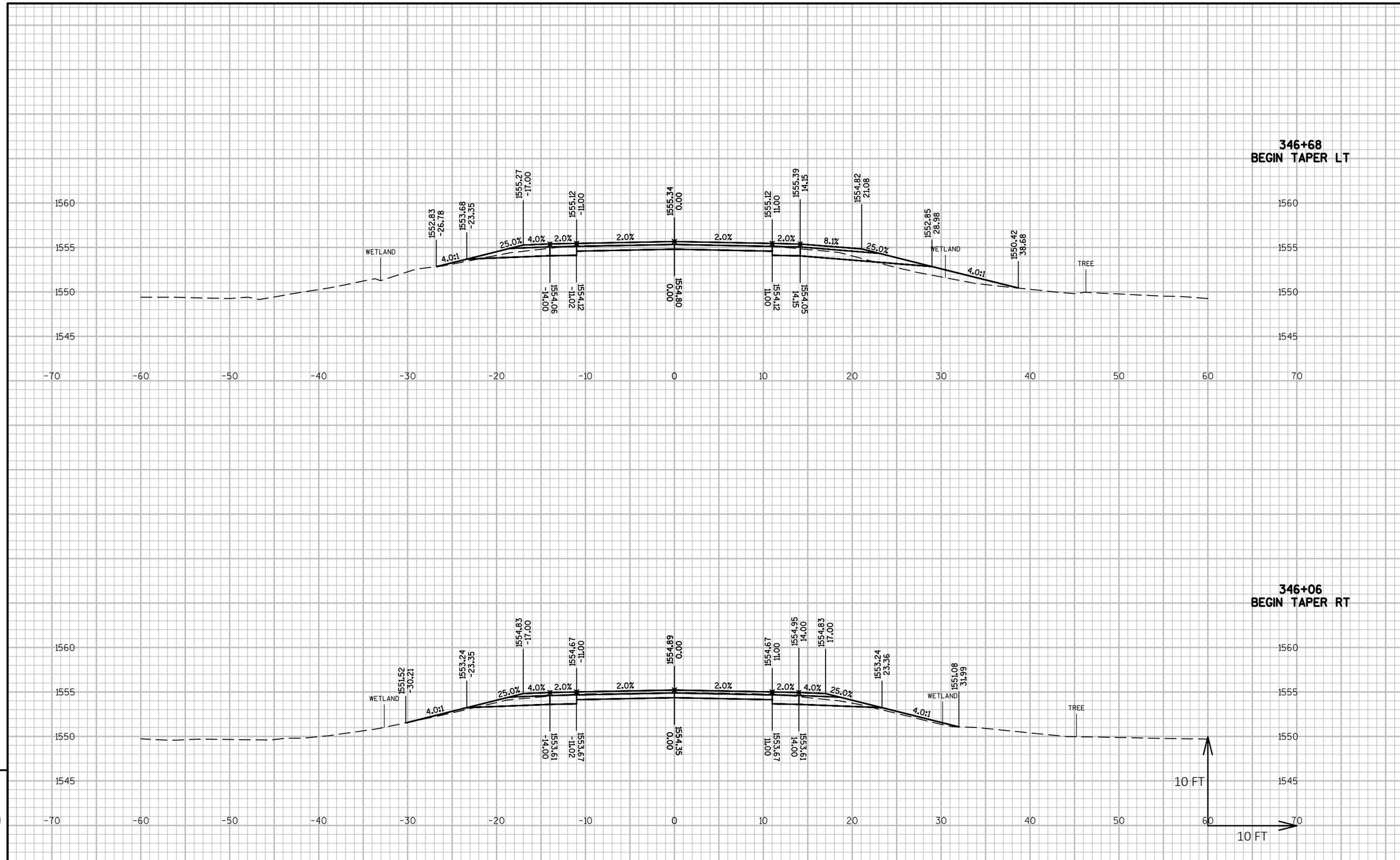

PROJECT NO: 9333-00-70	HWY: CTH G	COUNTY: FOREST	CROSS SECTIONS: CTH G-PESHTIGO RIVER BRIDGE GUARDRAIL	SHEET 99	E

FILE NAME : P:\2015\2015.130 - WISDOT NC CTH G FOREST COUNTY\93330070\SHEETSPLAN\090201-XS.DWG
LAYOUT NAME - 090201
PLOT DATE : 7/18/2018 3:16 PM PLOT BY : MARK W. OIE PLOT NAME :
1 IN:10 FT HORZ. / 1 IN:10 FT VERT.
WISDOT/CADDS SHEET 49

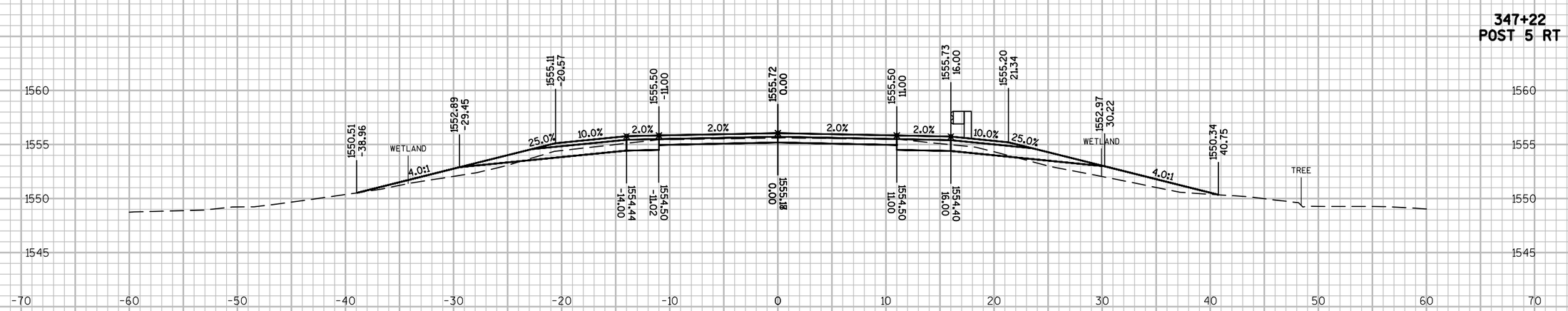

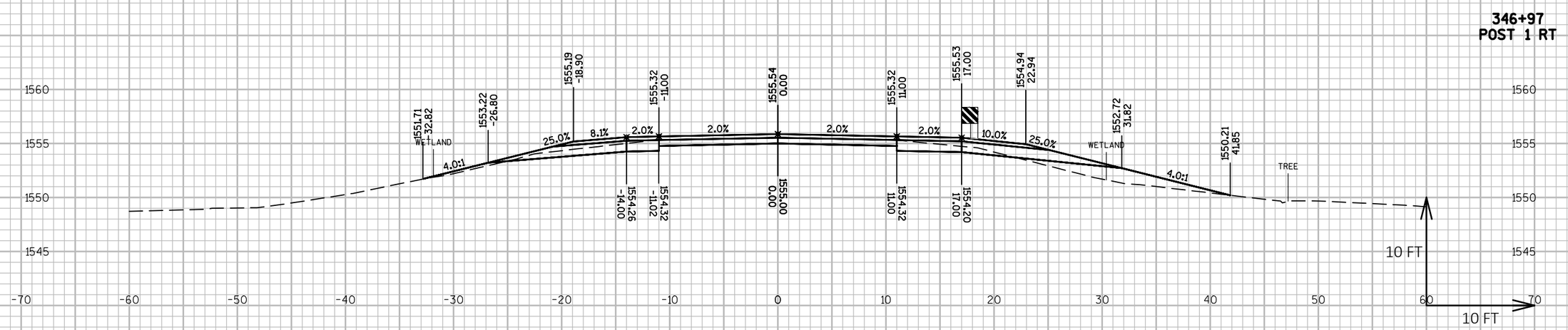

9

9

PROJECT NO: 9333-00-70	HWY: CTH G	COUNTY: FOREST	CROSS SECTIONS: CTH G-PESHTIGO RIVER BRIDGE GUARDRAIL	SHEET	E

FILE NAME : P:\2015\2015.130 - WISDOT NC CTH G FOREST COUNTY\93330070\SHEETSPLAN\090201-XS.DWG
LAYOUT NAME - 090202
PLOT DATE : 7/18/2018 3:16 PM
PLOT BY : MARK W. OIE
PLOT NAME :
1 IN:10 FT HORZ. / 1 IN:10 FT VERT.
WISDOT/CADDS SHEET 49

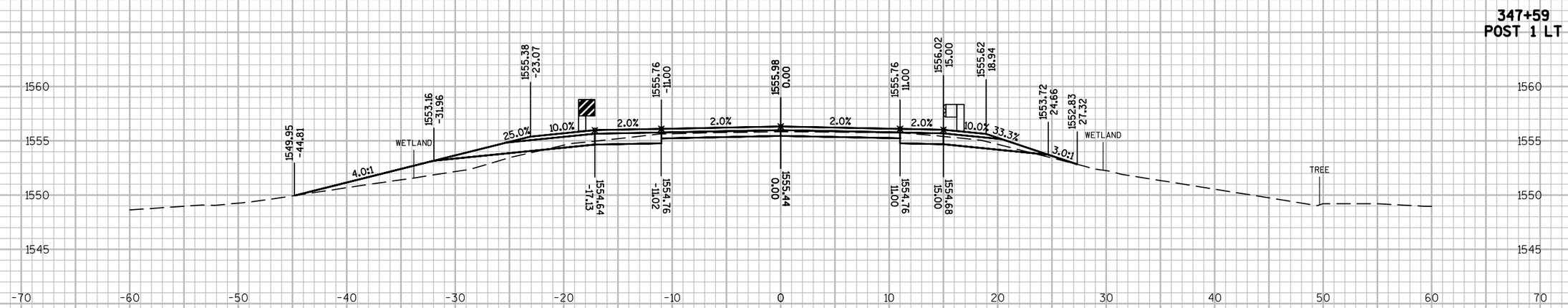

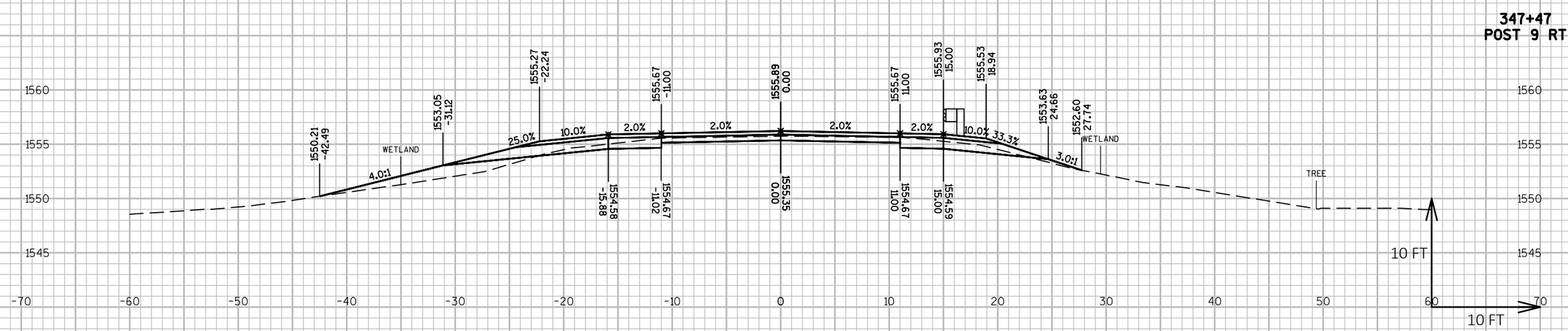

9

9

PROJECT NO: 9333-00-70	HWY: CTH G	COUNTY: FOREST	CROSS SECTIONS: CTH G-PESHTIGO RIVER BRIDGE GUARDRAIL	SHEET	E

FILE NAME : P:\2015\2015.130 - WISDOT NC CTH G FOREST COUNTY\93330070\SHEETSPLAN\090201-XS.DWG
LAYOUT NAME - 090203
PLOT DATE : 7/18/2018 3:16 PM
PLOT BY : MARK W. OIE
PLOT NAME :
1 IN:10 FT HORZ. / 1 IN:10 FT VERT.
WISDOT/CADDS SHEET 49

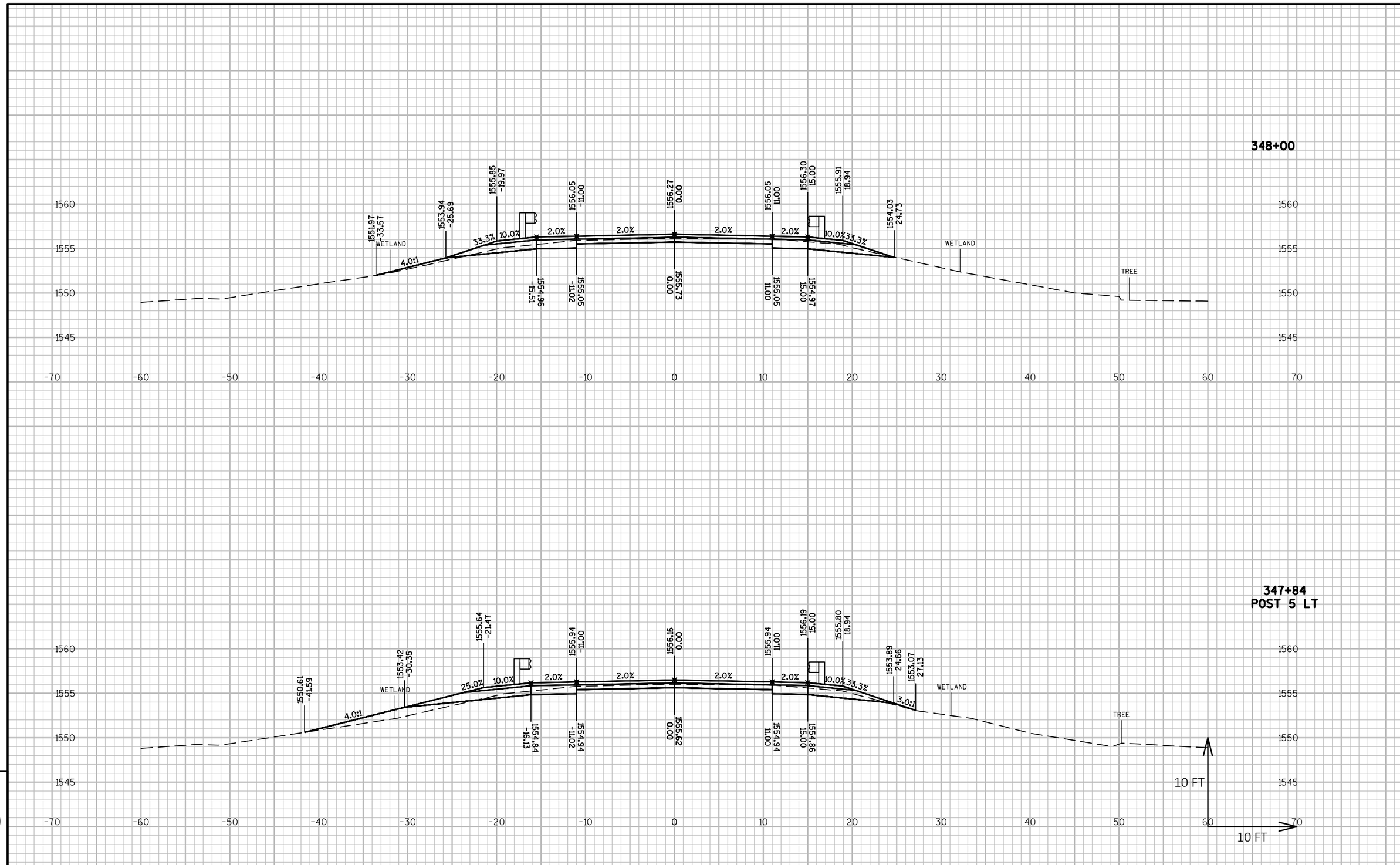

PROJECT NO: 9333-00-70	HWY: CTH G	COUNTY: FOREST	CROSS SECTIONS: CTH G-PESHTIGO RIVER BRIDGE GUARDRAIL	SHEET	E

FILE NAME : P:\2015\2015.130 - WISDOT NC CTH G FOREST COUNTY\93330070\SHEETSPLAN\090201-XS.DWG PLOT DATE : 7/18/2018 3:16 PM PLOT BY : MARK W. OIE PLOT NAME : 1 IN:10 FT HORZ. / 1 IN:10 FT VERT. WISDOT/CADDS SHEET 49

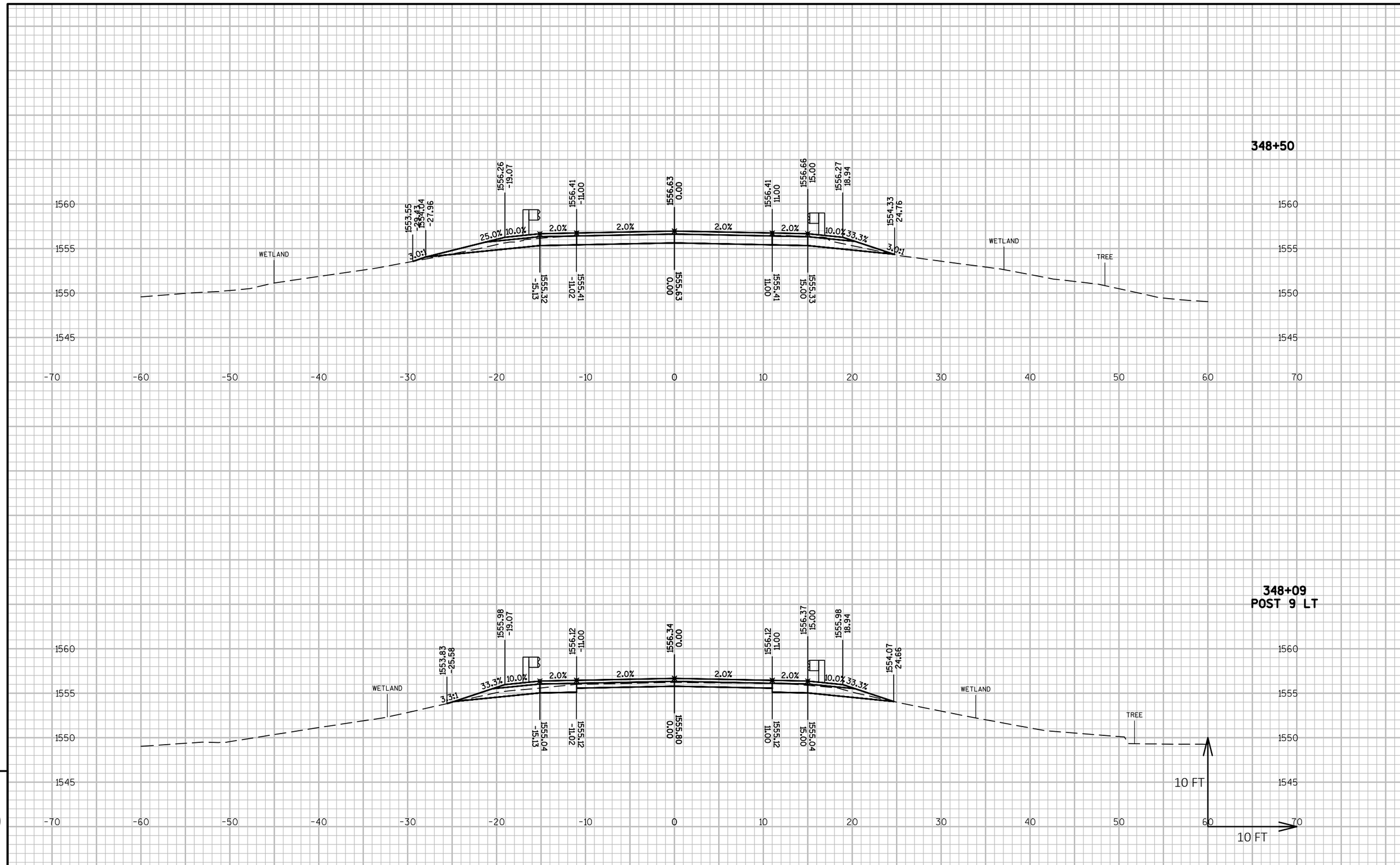

9

9

PROJECT NO: 9333-00-70	HWY: CTH G	COUNTY: FOREST	CROSS SECTIONS: CTH G-PESHTIGO RIVER BRIDGE GUARDRAIL	SHEET	E

FILE NAME : P:\2015\2015.130 - WISDOT NC CTH G FOREST COUNTY\93330070\SHEETSPLAN\090201-XS.DWG
LAYOUT NAME - 090205
PLOT DATE : 7/18/2018 3:16 PM
PLOT BY : MARK W. OIE
PLOT NAME :
1 IN:10 FT HORZ. / 1 IN:10 FT VERT.
WISDOT/CADDS SHEET 49

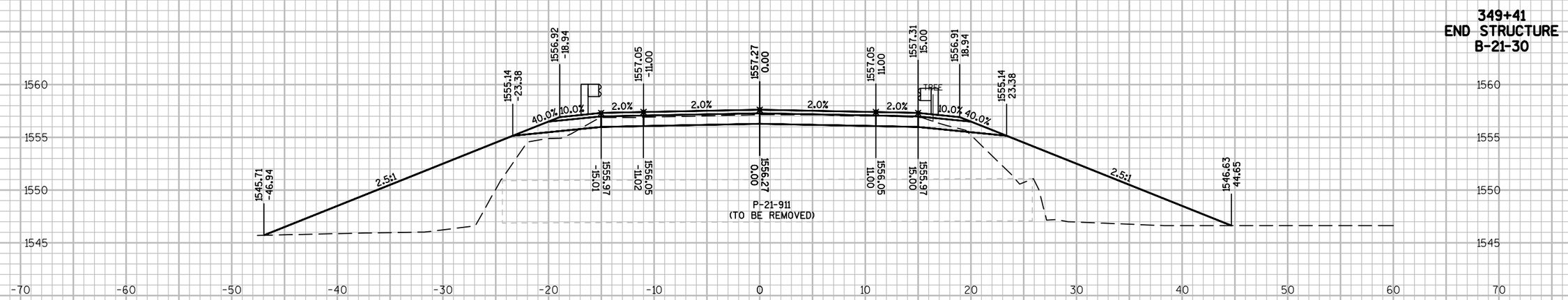

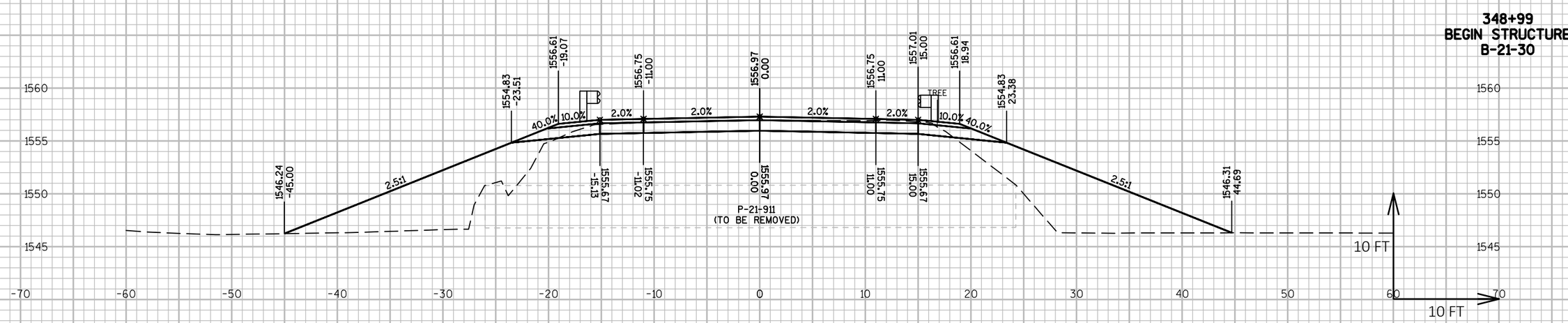

9

9

PROJECT NO: 9333-00-70	HWY: CTH G	COUNTY: FOREST	CROSS SECTIONS: CTH G-PESHTIGO RIVER BRIDGE GUARDRAIL	SHEET	E

FILE NAME : P:\2015\2015.130 - WISDOT NC CTH G FOREST COUNTY\93330070\SHEETSPLAN\090201-XS.DWG
LAYOUT NAME - 090206
PLOT DATE : 7/18/2018 3:16 PM
PLOT BY : MARK W. OIE
PLOT NAME :
PLOT SCALE : 1 IN:10 FT HORZ. / 1 IN:10 FT VERT.
WISDOT/CADDS SHEET 49

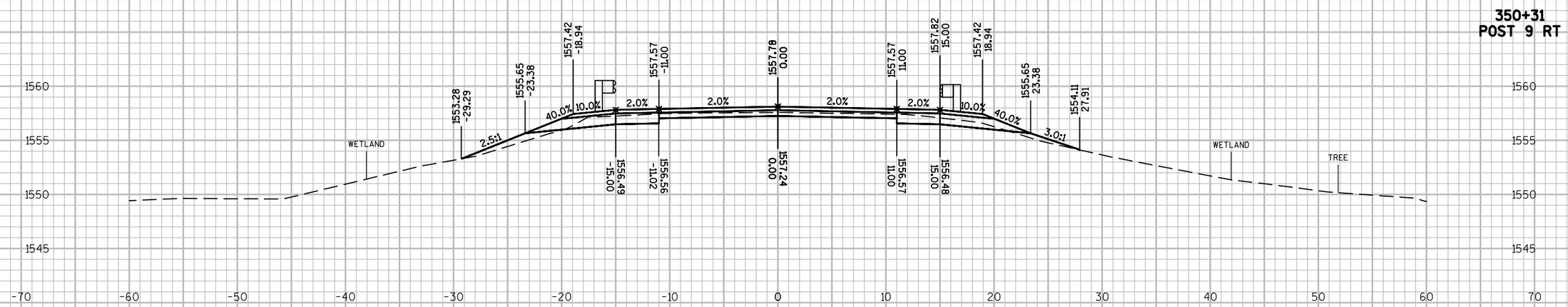

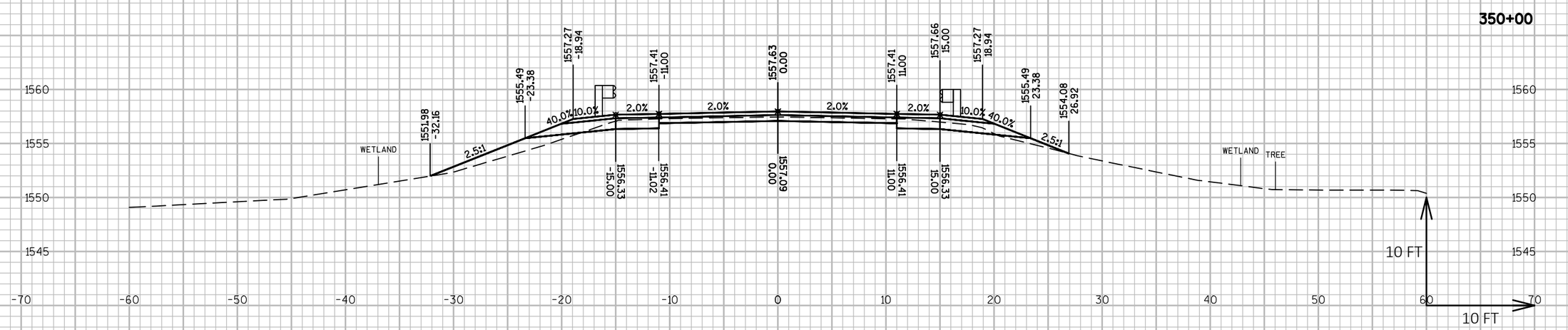

9

9

PROJECT NO: 9333-00-70	HWY: CTH G	COUNTY: FOREST	CROSS SECTIONS: CTH G-PESHTIGO RIVER BRIDGE GUARDRAIL	SHEET	E

FILE NAME : P:\2015\2015.130 - WISDOT NC CTH G FOREST COUNTY\93330070\SHEETSPLAN\090201-XS.DWG
LAYOUT NAME - 090207
PLOT DATE : 7/18/2018 3:16 PM
PLOT BY : MARK W. OIE
PLOT NAME :
1 IN:10 FT HORZ. / 1 IN:10 FT VERT.
WISDOT/CADDS SHEET 49

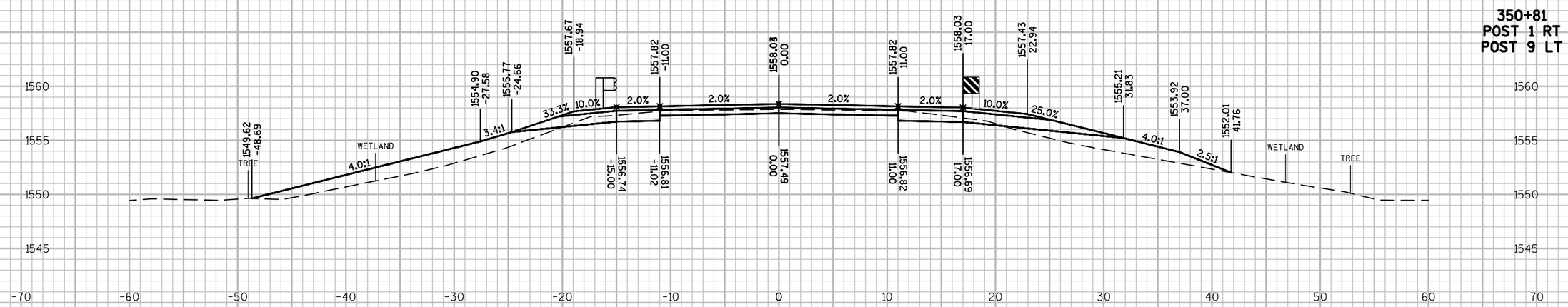

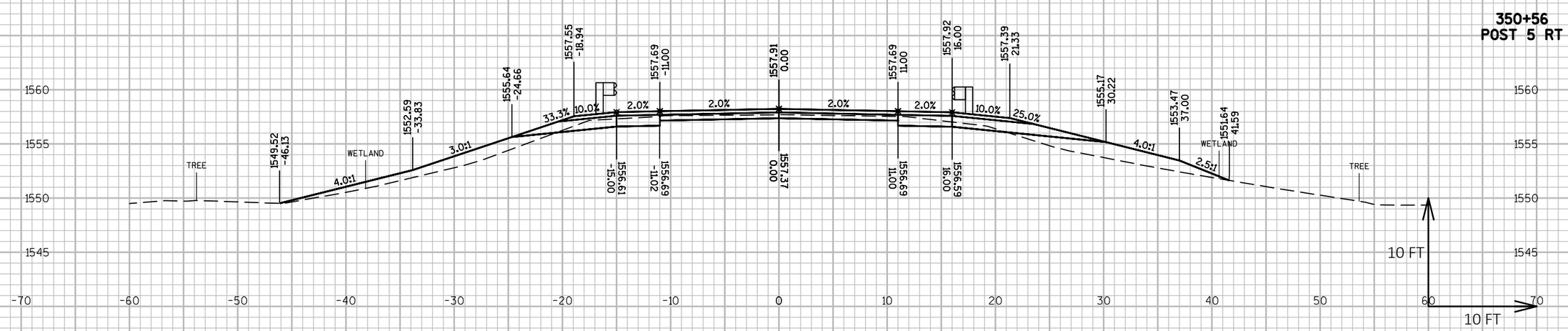

9

9

PROJECT NO: 9333-00-70	HWY: CTH G	COUNTY: FOREST	CROSS SECTIONS: CTH G-PESHTIGO RIVER BRIDGE GUARDRAIL	SHEET	E

FILE NAME : P:\2015\2015.130 - WISDOT NC CTH G FOREST COUNTY\93330070\SHEETSPLAN\090201-XS.DWG
LAYOUT NAME - 090208
PLOT DATE : 7/18/2018 3:16 PM PLOT BY : MARK W. OIE PLOT NAME : PLOT SCALE : 1 IN:10 FT HORZ. / 1 IN:10 FT VERT.

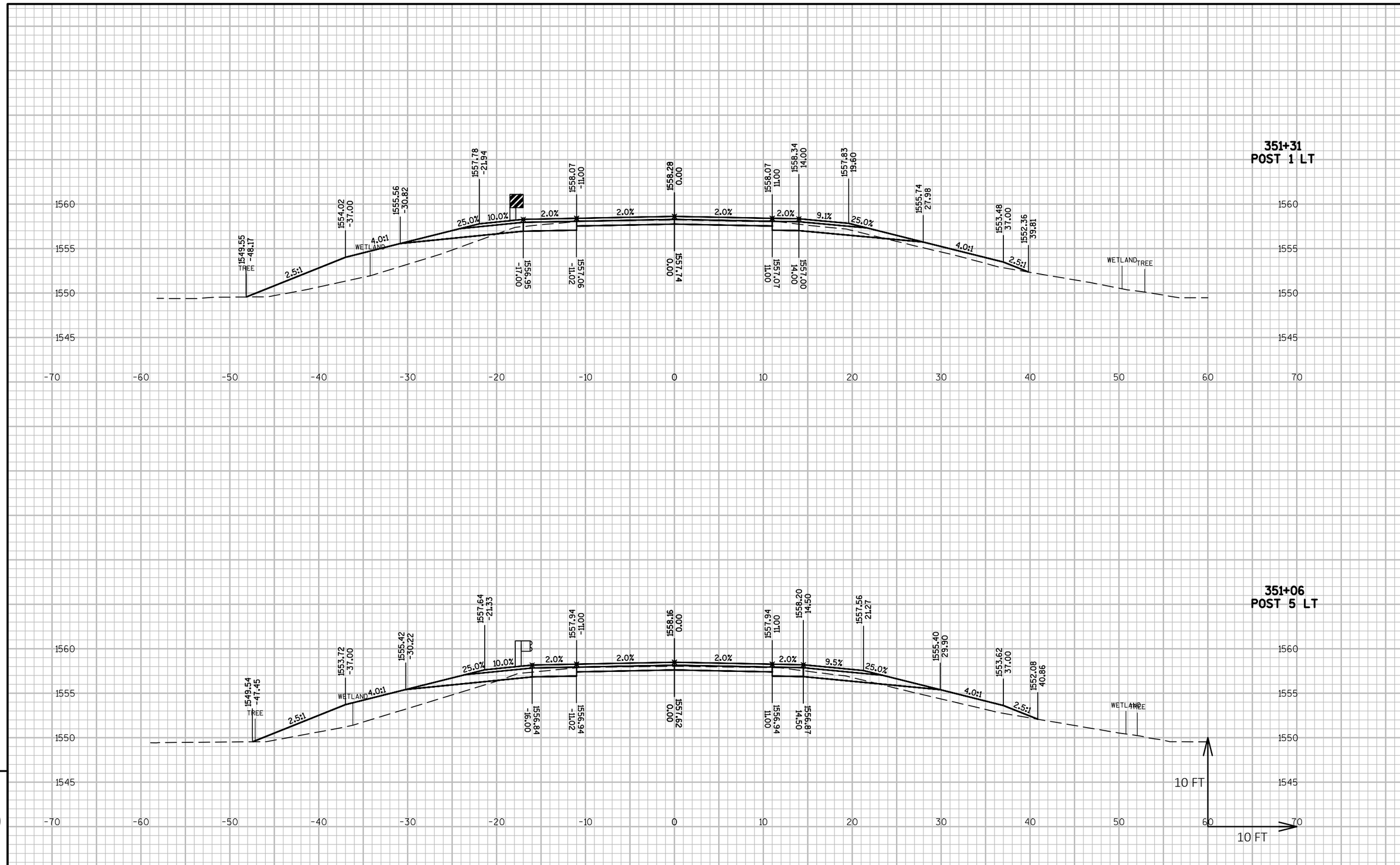

9

9

PROJECT NO: 9333-00-70	HWY: CTH G	COUNTY: FOREST	CROSS SECTIONS: CTH G-PESHTIGO RIVER BRIDGE GUARDRAIL	SHEET	E

FILE NAME : P:\2015\2015.130 - WISDOT NC CTH G FOREST COUNTY\93330070\SHEETSPLAN\090201-XS.DWG
LAYOUT NAME - 090209
PLOT DATE : 7/18/2018 3:16 PM
PLOT BY : MARK W. OIE
PLOT NAME :
PLOT SCALE : 1 IN:10 FT HORZ. / 1 IN:10 FT VERT.
WISDOT/CADDS SHEET 49

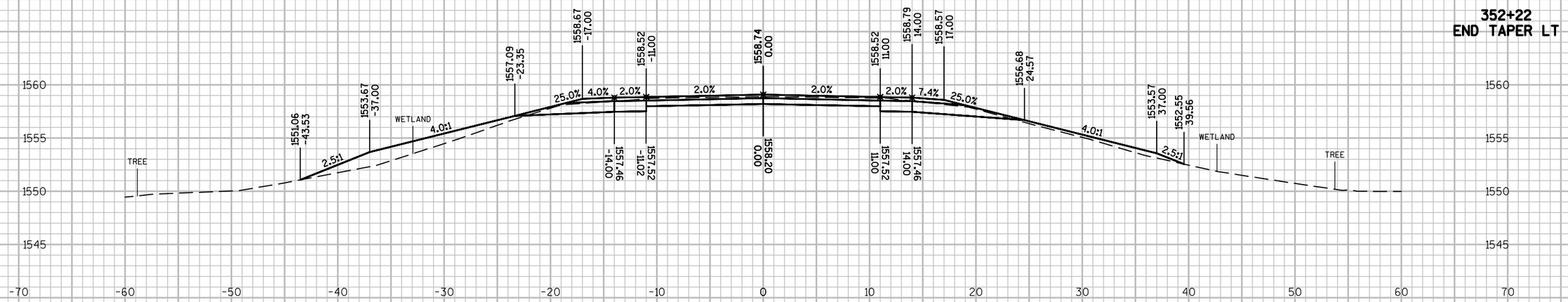

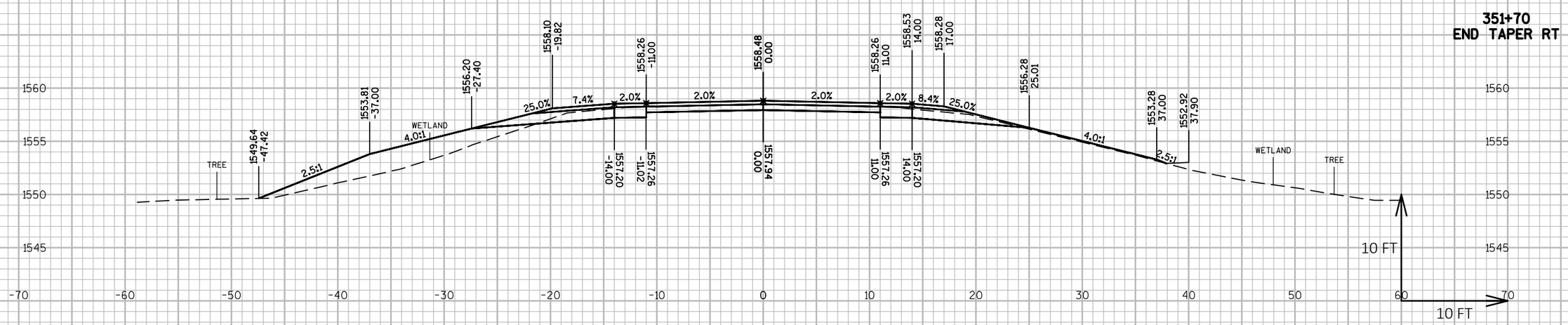

9

9

PROJECT NO: 9333-00-70	HWY: CTH G	COUNTY: FOREST	CROSS SECTIONS: CTH G-PESHTIGO RIVER BRIDGE GUARDRAIL	SHEET	E

FILE NAME : P:\2015\2015.130 - WISDOT NC CTH G FOREST COUNTY\93330070\SHEETSPLAN\090201-XS.DWG
LAYOUT NAME - 090210
PLOT DATE : 7/18/2018 3:16 PM PLOT BY : MARK W. OIE PLOT NAME :
1 IN:10 FT HORZ. / 1 IN:10 FT VERT.
WISDOT/CADDS SHEET 49

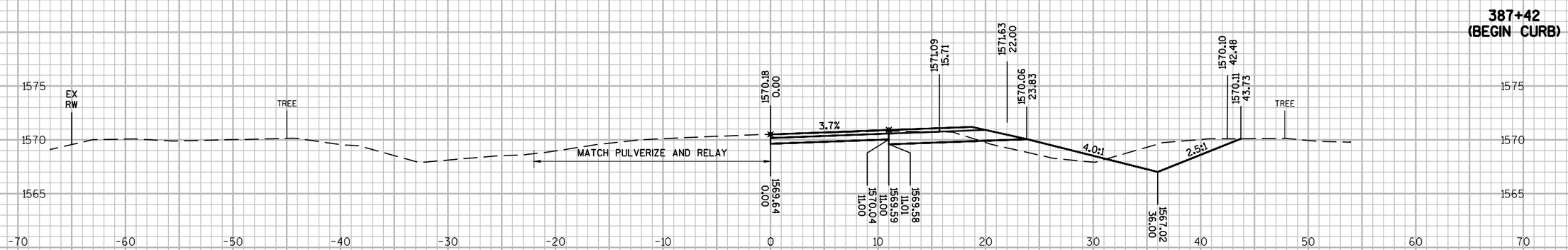

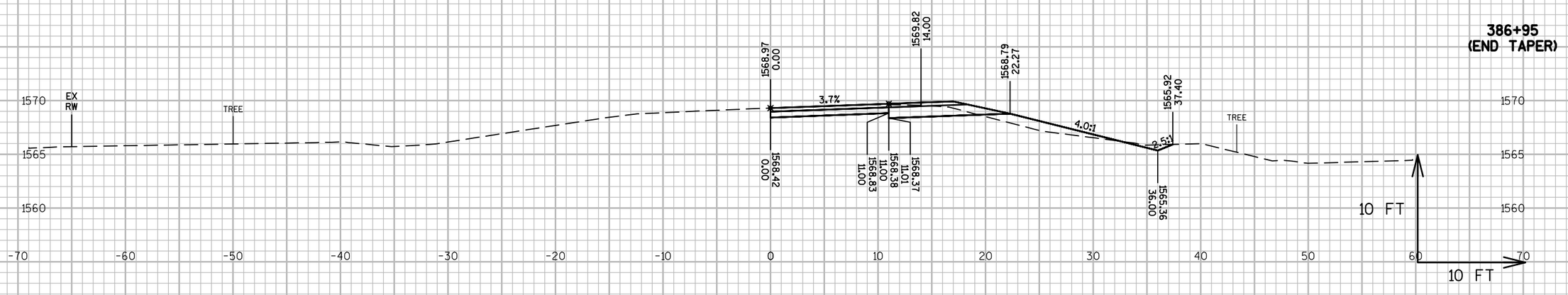

9

9

PROJECT NO: 9333-00-70	HWY: CTH G	COUNTY: FOREST	CROSS SECTIONS: CTH G AT CTH P	SHEET 109	E

FILE NAME : P:\2015\2015.130 - WISDOT NC CTH G FOREST COUNTY\93330070\SHEETSPLAN\090201-XS.DWG
LAYOUT NAME - 090230
PLOT DATE : 7/18/2018 3:16 PM PLOT BY : MARK W. OIE PLOT NAME : PLOT SCALE : 1 IN:10 FT_2

WISDOT/CADDS SHEET 49

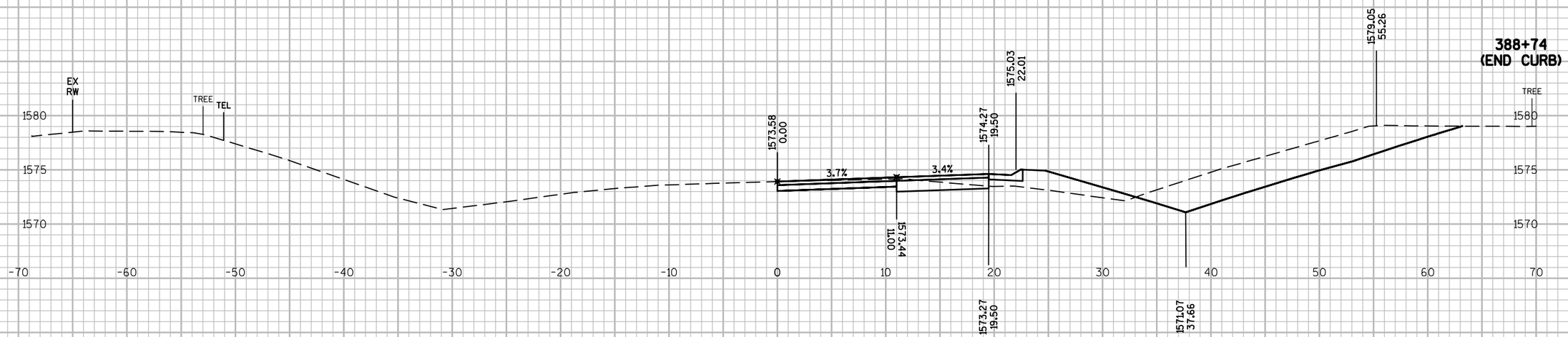

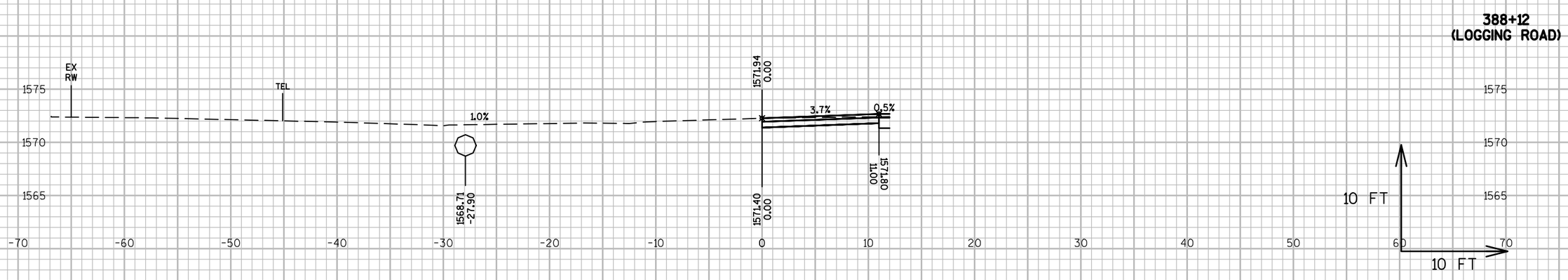

9

9

PROJECT NO: 9333-00-70	HWY: CTH G	COUNTY: FOREST	CROSS SECTIONS: CTH G AT CTH P	SHEET 110	E

FILE NAME : P:\2015\2015.130 - WISDOT NC CTH G FOREST COUNTY\93330070\SHEETSPLAN\090201-XS.DWG
LAYOUT NAME - 090231
PLOT DATE : 7/18/2018 3:16 PM PLOT BY : MARK W. OIE PLOT NAME : PLOT SCALE : 1 IN:10 FT_2

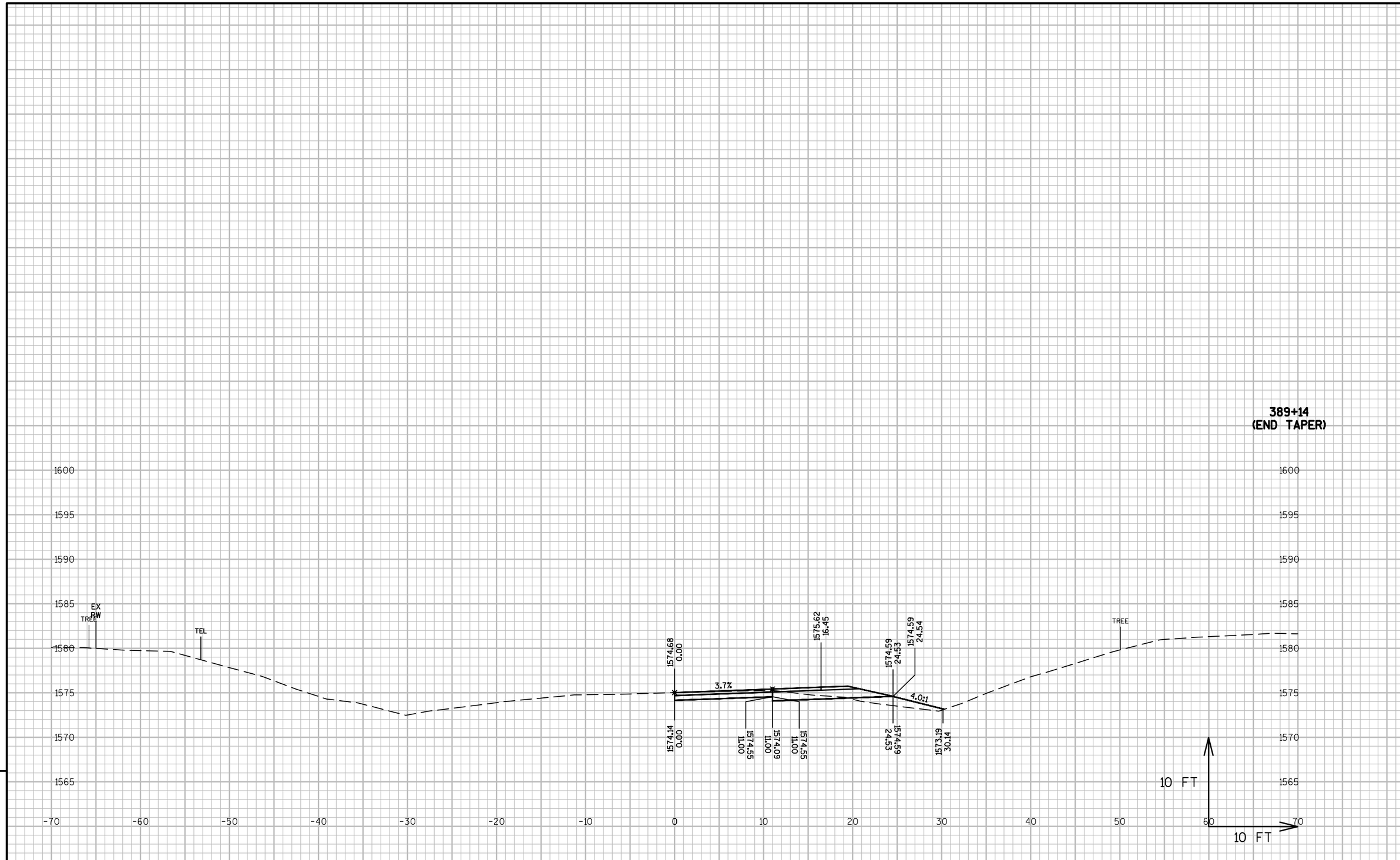

9

9

PROJECT NO: 9333-00-70	HWY: CTH G	COUNTY: FOREST	CROSS SECTIONS: CTH G AT CTH P	SHEET 111	E

FILE NAME : P:\2015\2015.130 - WISDOT NC CTH G FOREST COUNTY\93330070\SHEETSPLAN\090201-XS.DWG
LAYOUT NAME - 090232
PLOT DATE : 7/18/2018 3:16 PM PLOT BY : MARK W. OIE PLOT NAME : PLOT SCALE : 1 IN:10 FT_2

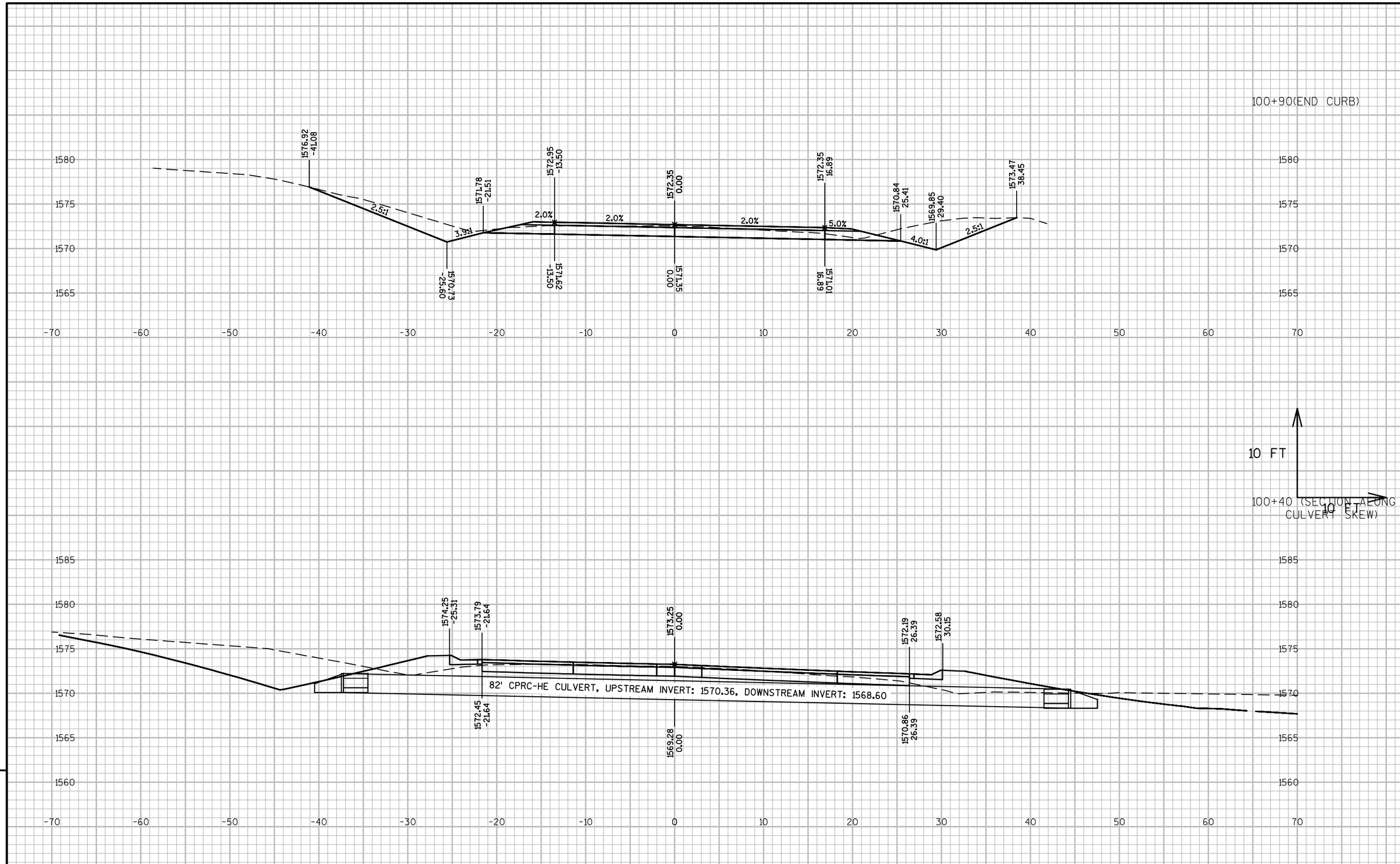

9

9

PROJECT NO: 9333-00-70	HWY: CTH G	COUNTY: FOREST	CROSS SECTIONS: CTH P	SHEET 112	E

FILE NAME : P:\2015\2015.130 - WISDOT NC CTH G FOREST COUNTY\93330070\SHEETSPLAN\090201-XS.DWG
LAYOUT NAME - 090234
PLOT DATE : 7/18/2018 3:17 PM PLOT BY : MARK W. OIE PLOT NAME : PLOT SCALE : 1 IN:10 FT_2

WISDOT/CADDS SHEET 49

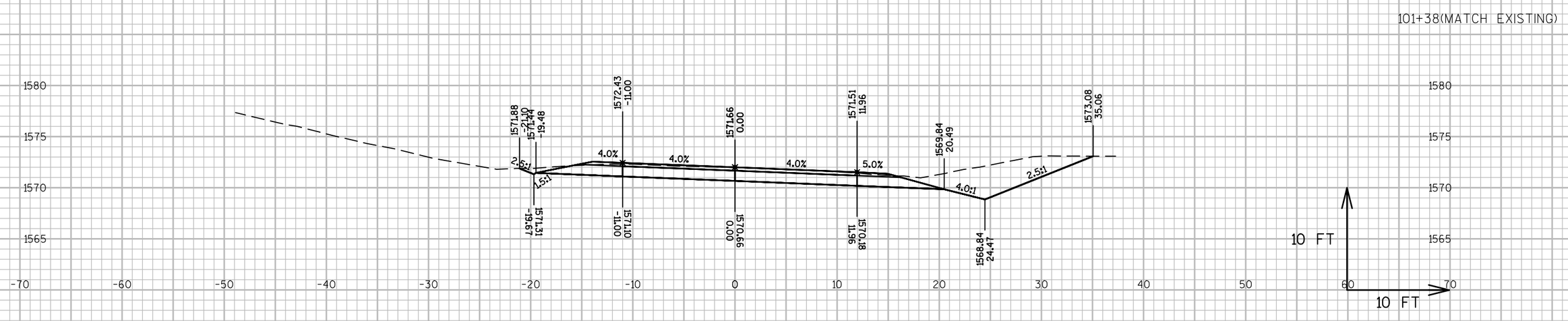

9

9

PROJECT NO: 9333-00-70	HWY: CTH G	COUNTY: FOREST	CROSS SECTIONS: CTH P	SHEET 113	E

FILE NAME : P:\2015\2015.130 - WISDOT NC CTH G FOREST COUNTY\93330070\SHEETSPLAN\090201-XS.DWG
LAYOUT NAME - 090235
PLOT DATE : 7/18/2018 3:17 PM PLOT BY : MARK W. OIE PLOT NAME : PLOT SCALE : 1 IN:10 FT_2

WISDOT/CADDS SHEET 49

Wisconsin Department of Transportation

Dedicated people creating transportation solutions through innovation and exceptional service.

http://www.dot.wisconsin.gov