GRE

NOVEMBER 2018

PROJECT ID: 4854-03-71

WITH: N/A

COUNTY: FOND DU LAC

ORDER OF SHEETS

Section No.	1	Title
Section No.	2	Typical Sections and Details
Section No.	2	Erosion Control
Section No.	3	Estimate of Quantities
Section No.	3	Miscellaneous Quantities
Section No.	4	Right of Way Plat
Section No.	5	Plan and Profile
Section No.	6	Standard Detail Drawings
Section No.	7	Sign Plates
~~Section No.~~	~~8~~	~~Structure Plans~~
Section No.	9	Computer Earthwork Data
Section No.	9	Cross Sections

TOTAL SHEETS = 208

22

DESIGN DESIGNATION CTH G

A.A.D.T.	(2019)	= 1,900
A.A.D.T.	(2039)	= 2150
D.H.V.	(2019)	= 240
D.D.		= 60/40
T.		= 6.4%
DESIGN SPEED		= 30 MPH
ESALS		= 290,000

CONVENTIONAL SYMBOLS

PLAN		PROFILE	
CORPORATE LIMITS		GRADE LINE	
PROPERTY LINE		ORIGINAL GROUND	
LOT LINE		MARSH OR ROCK PROFILE (To be noted as such)	ROCK
LIMITED HIGHWAY EASEMENT		SPECIAL DITCH	LABEL
EXISTING RIGHT OF WAY		GRADE ELEVATION	95.36
PROPOSED OR NEW R/W LINE		CULVERT (Profile View)	
SLOPE INTERCEPT		UTILITIES	
REFERENCE LINE		ELECTRIC	E
EXISTING CULVERT		FIBER OPTIC	FO
PROPOSED CULVERT (Box or Pipe)		GAS	G
COMBUSTIBLE FLUIDS	CAUTION	SANITARY SEWER	SAN
		STORM SEWER	SS
		TELEPHONE	T
MARSH AREA		WATER	W
		UTILITY PEDESTAL	
		POWER POLE	
WOODED OR SHRUB AREA		TELEPHONE POLE	

STATE OF WISCONSIN
DEPARTMENT OF TRANSPORTATION

PLAN OF PROPOSED IMPROVEMENT

V ST CLOUD, CTH G (MAIN ST)

PALM TREE RD - CEDARVIEW DR

CTH G

FOND DU LAC

STATE PROJECT	FEDERAL PROJECT	
	PROJECT	CONTRACT
4854-03-71	WISC 2018444	1

STATE PROJECT NUMBER
4854-03-71

FOND DU LAC CO. | SHEBOYGAN CO.

R-19-E | R-20-E

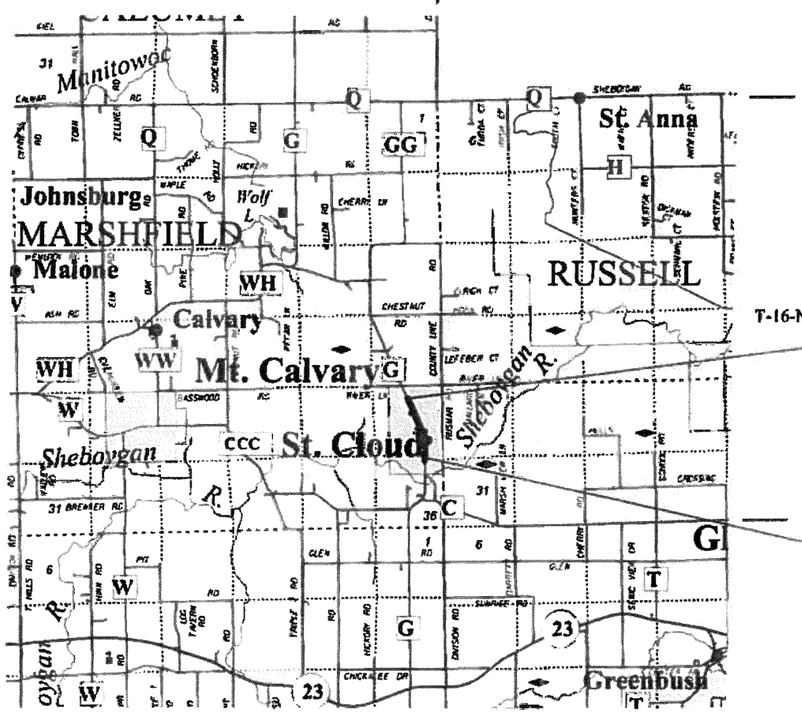

LAYOUT

SCALE 0 2 MILE

TOTAL NET LENGTH OF CENTERLINE = 0.827 MI

COORDINATES ON THIS PLAN ARE REFERENCED TO THE WISCONSIN COUNTY COORDINATE SYSTEM (WISCRS) FOND DU LAC COUNTY, NAD 83 (2010)

ACCEPTED FOR
FOND DU LAC COUNTY

DATE: 4-27-18 (Signature)

HIGHWAY COMMISSIONER
TITLE

ORIGINAL PLANS PREPARED BY

OMNI ASSOCIATES

STATE OF WISCONSIN
DEPARTMENT OF TRANSPORTATION

PREPARED BY

Surveyor: OMNNI ASSOCIATES, INC.

Designer: OMNNI ASSOCIATES, INC.

Management Consultant: JT ENGINEERING

APPROVED FOR THE DEPARTMENT

DATE: 4/23/18

Management Consultant Signature

E

FILE NAME : F:\TR\JOBS\E2143A15\CIVIL 3D 2014\SHEETSPLAN\485403-010101-TI.DWG
LAYOUT NAME - 485403-010101-TI 485403-010101-ti

PLOT DATE : 4/18/2018 1:13 PM

PLOT BY : OMNNI ASSOCIATES - CRAIG KNUTH

WISDOT/CADDS SHEET 10

GENERAL NOTES

LOCATIONS OF EXISTING AND PROPOSED UTILITY FACILITIES AS SHOWN ON THE PLANS ARE APPROXIMATE. THERE MAY BE OTHER UTILITY FACILITIES WITHIN THE PROJECT AREA THAT ARE NOT SHOWN.UTILITY FACILITIES WILL BE RELOCATED AS DESCRIBED IN THE SPECIAL PROVISIONS.

NO TREES OR SHRUBS ARE TO BE REMOVED WITHOUT THE APPROVAL OF THE ENGINEER.

ALL MANHOLE AND INLET OFFSETS ARE GIVEN TO THE CENTER OF THE STRUCTURE.

ALL ENDWALL OFFSETS ARE GIVEN TO THE END OF PIPE.

INLET AND DISCHARGE ELEVATIONS FOR DRAINAGE STRUCTURES AND CULVERT PIPES SHOWN ARE APPROXIMATE AND SHALL BE VERIFIED BY THE ENGINEER IN THE FIELD.

PRIOR TO ORDERING DRAINAGE STRUCTURES, THE CONTRACTOR SHALL VERIFY RELATED DRAINAGE INFORMATION IN THE PLAN WITH THE ENGINEER.

THE EXACT LOCATIONS AND LIMITS OF PRIVATE ENTRANCES, FIELD ENTRANCES AND COMMERCIAL ENTRANCES SHALL BE VERIFIED BY THE ENGINEER IN THE FIELD.

IMMEDIATELY AFTER CONSTRUCTION OF ANY INLET, CONTRACTOR SHALL CONSTRUCT THE EROSION CONTROL PROTECTION IN ACCORDANCE WITH THE DETAILS SHOWN ON THE PLANS TO MINIMIZE SEDIMENTATION IN THE INLET AND STORM SEWER.

WETLAND AREAS ARE SHOWN ON THE PLANS. CONTRACTOR SHALL LIMIT CONSTRUCTION ACTIVITIES TO WORK WITHIN THE SLOPE INTERCEPTS IN THE WETLAND AREAS.

EROSION CONTROL FEATURES AS SHOWN ON THE PLAN SHEETS ARE AT SUGGESTED LOCATIONS. EXACT LOCATION WILL BE DETERMINED BY THE ENGINEER IN THE FIELD

MISCELLANEOUS REMOVAL ITEMS SHALL BE REMOVED TO AN EXISTING JOINT OR SAWCUT AS SHOWN ON THE PLANS

UTILITY REFERENCE LINES ON THE CROSS SECTIONS ARE FOR HORIZONTAL REFERENCE ONLY.

ELEVATIONS SHOWN ON THE PLAN ARE NORTH AMERICAN VERTICAL DATUM OF 1988 =NAVD 88

OTHER CONTACTS

DNR LIAISON	JAY SCHIEFELBEIN DNR NORTHEAST REGIONAL HQ 2984 SHAWANO AVE TELEPHONE: 920-360-3784 EMAIL: JEREMIAH.SCHIEFELBEIN@WI.GOV

DIGGERS HOTLINE
Dial 811 or (800) 242-8511
www.DiggersHotline.com

UTILITIES

ELECTRIC	WE ENERGIES STEVE SCHECHER 500 S 116 ST WEST ALLIS, WI 53202 TELEPHONE: (414) 944-5639
GAS	WISCONSIN PUBLIC SERVICE KEVIN KOLB 933 S. WILDWOOD AVE SHEBOYGAN, WI 53081 TELEPHONE: (920) 451-3733 KCKOLB@WISCONSINPUBLICSERVICE.COM
COMMUNICATIONS	FRONTIER COMMUNICATIONS CORPORATION CALVIN KALDE 1851 N 14TH AVE WAUSAU, WI 54401 TELEPHONE: (715) 847-1525 MOBILE: (715) 573-2110 CHARTER COMMUNICATION TODD HILDEBRANDT 165 KNIGHTS WAY, SUITE 100 FOND DU LAC, WI 54935 TELEPHONE: (920) 263-0428 E-MAIL: TODD.HILDEBRANDT@CHARTER.COM
SANITARY & WATER	VILLAGE OF ST. CLOUD DALE BINK ST CLOUD VILLAGE HALL 1105 MAIN ST ST CLOUD, WI 53079 MOBILE: (920) 960-2442

ORDER OF "SECTION 2" SHEETS

SHEET TITLE
GENERAL NOTES
TYPICAL SECTIONS
CONSTRUCTION DETAILS
INTERSECTION DETAILS
PAVING DETAILS
EROSION CONTROL
STORM SEWER PLAN
PERMANENT SIGNING
PAVEMENT MARKING
TRAFFIC CONTROL AND STAGING

2

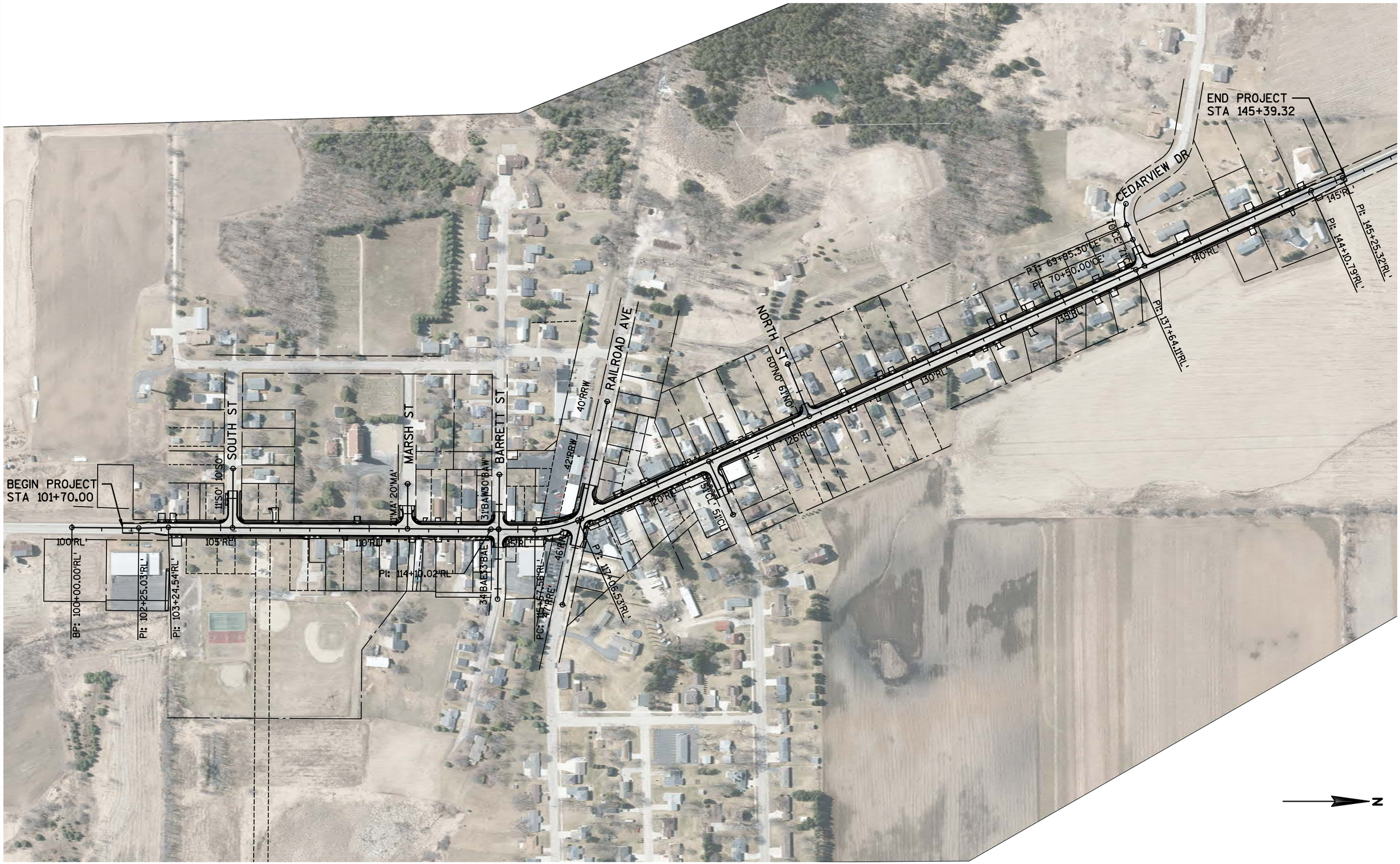

PROJECT NO: 4854-03-71	HWY: CTH G	COUNTY: FOND DU LAC	PROJECT OVERVIEW	SHEET 3	E

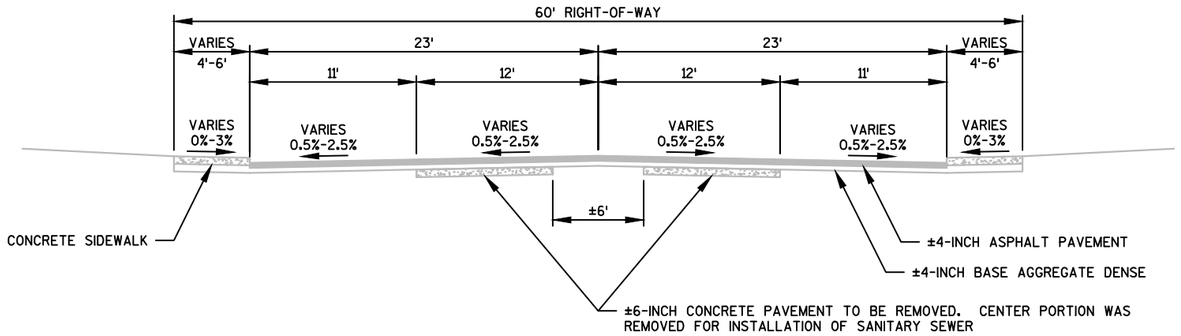

EXISTING TYPICAL SECTION FOR CTH G (MAIN STREET)

STA 102+90 LT TO STA 129+50 LT
STA 108+00 RT TO STA 128+00 RT

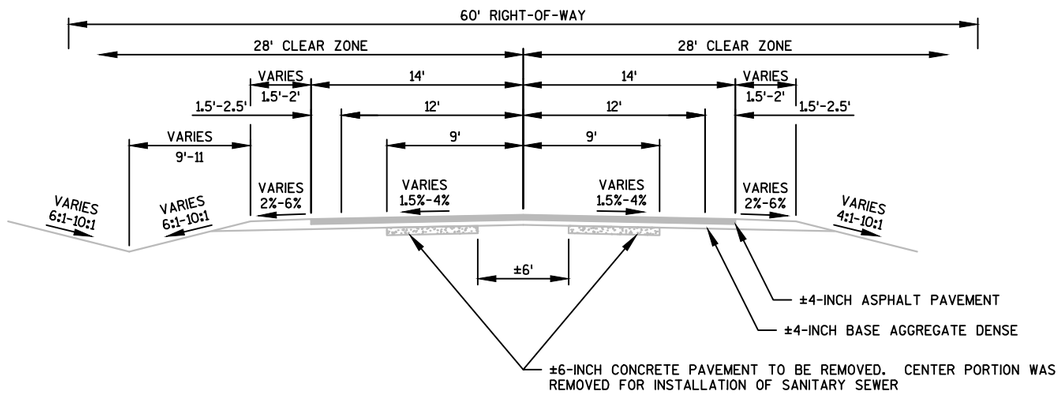

EXISTING TYPICAL SECTION FOR CTH G (MAIN STREET)

STA 101+70 LT TO STA 102+90 LT
STA 101+70 RT TO STA 108+00 RT
STA 128+00 RT TO STA 145+35 RT
STA 129+50 LT TO STA 145+35 LT

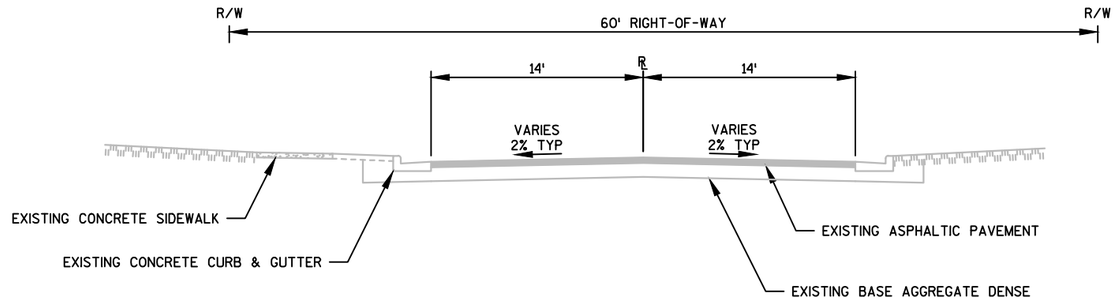

EXISTING TYPICAL SECTION FOR SOUTH STREET

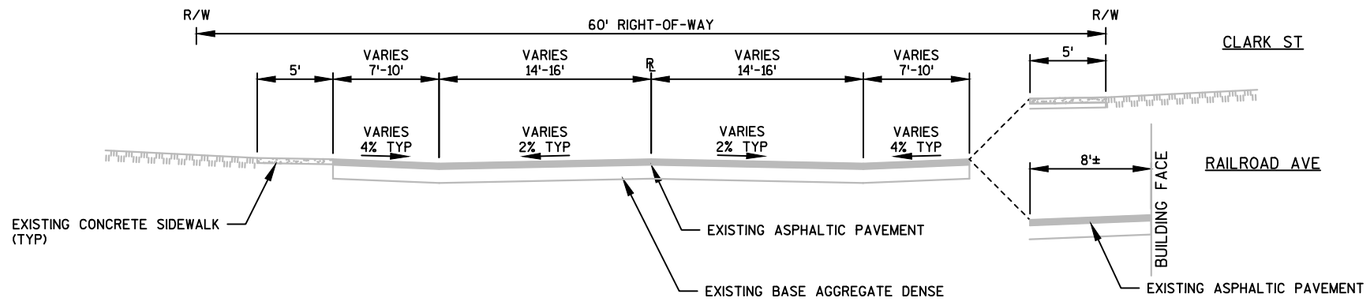

EXISTING TYPICAL SECTION FOR RAILROAD AVENUE & CLARK STREET

PROJECT NO: 4854-03-71	HWY: CTH G	COUNTY: FOND DU LAC	TYPICAL SECTIONS	SHEET 5 E

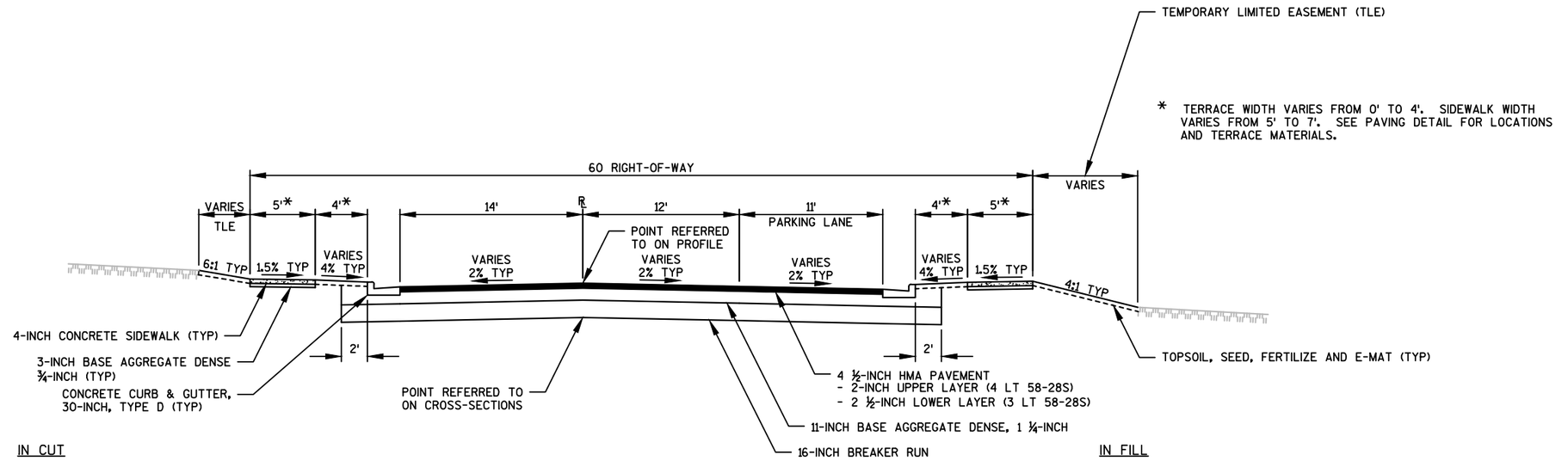

PROPOSED TYPICAL SECTION FOR CTH G (MAIN STREET)

STA 103+25 - STA 144+06 RT
STA 102+66 - STA 144+06 LT

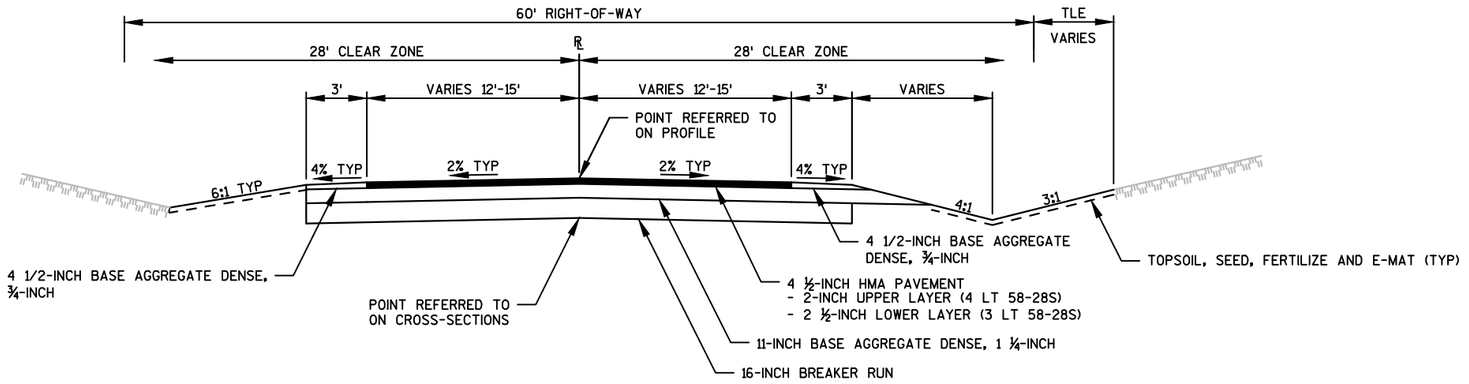

PROPOSED TYPICAL SECTION FOR CTH G (MAIN STREET)

STA 101+70 - STA 102+66 LT
STA 144+06 - STA 145+35
STA 101+70 - STA 103+25 RT

PROJECT NO: 4854-03-71	HWY: CTH G	COUNTY: FOND DU LAC	TYPICAL SECTIONS	SHEET 6 E

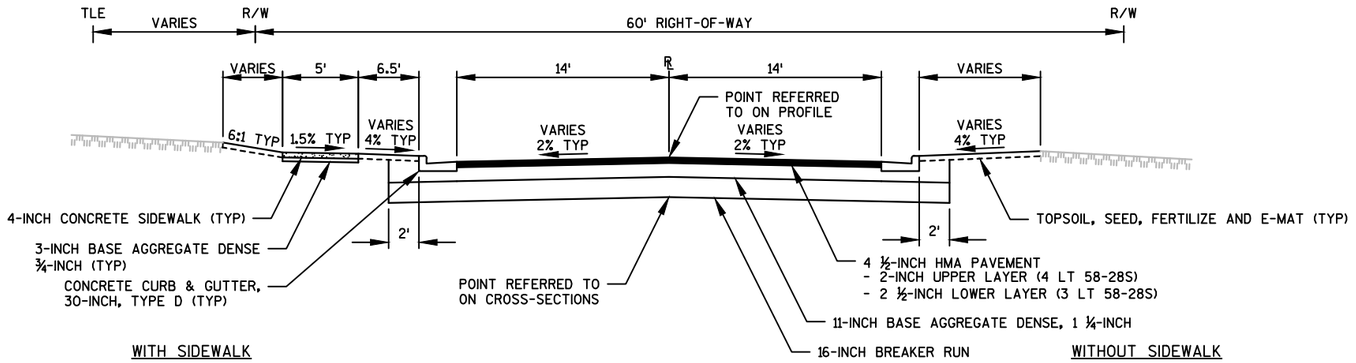

PROPOSED TYPICAL SECTION FOR SOUTH STREET

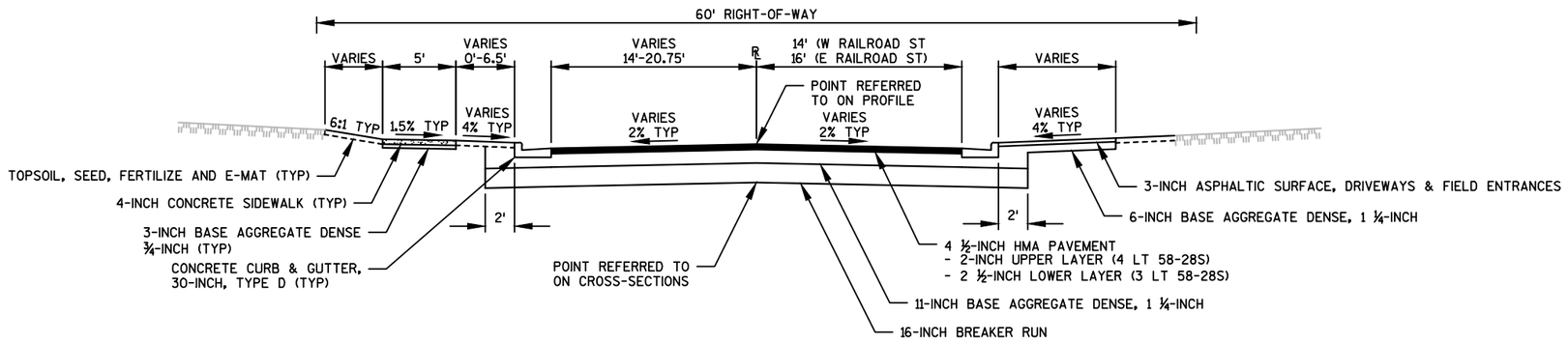

PROPOSED TYPICAL SECTION FOR RAILROAD AVENUE

PROJECT NO: 4854-03-71	HWY: CTH G	COUNTY: FOND DU LAC	TYPICAL SECTIONS	SHEET 7 E

2

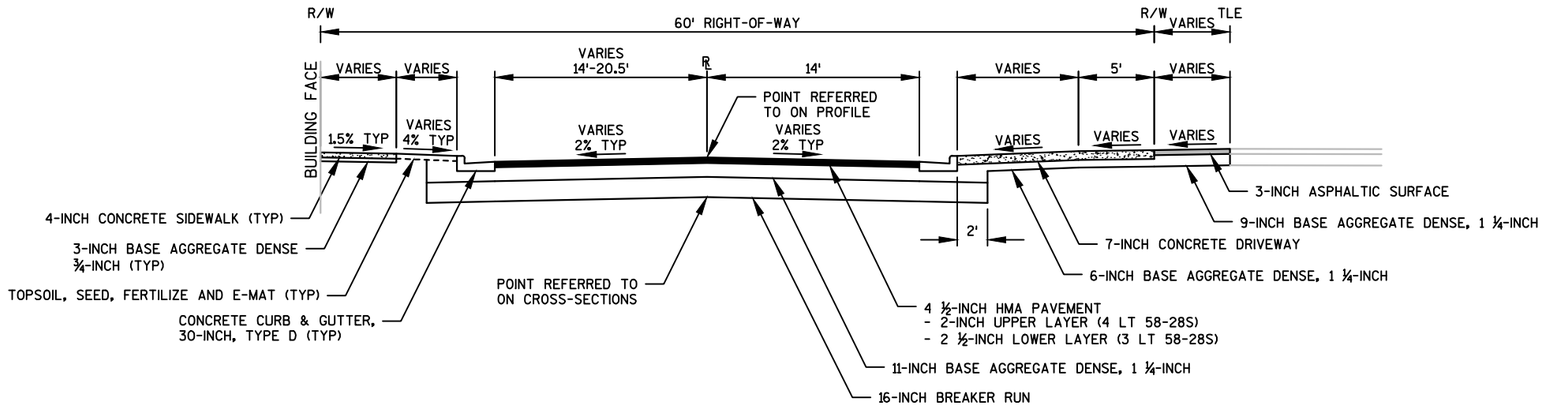

PROPOSED TYPICAL SECTION FOR CLARK STREET

PROJECT NO: 4854-03-71	HWY: CTH G	COUNTY: FOND DU LAC	TYPICAL SECTIONS	SHEET 8 E

2

2

944.79
50'CL'+25

944.91
50'CL'+50

BP: 50+00.00'CL'

944.28
121'RL'+75

944.11

VPI+47.8
944.18

944.34

CLARK STREET

944.21

VPI
943.82

4-INCH CONCRETE
SIDEWALK

+60.75'RL'
43.52' RT
CURB EL. 944.60

+60.73'RL'
34.50' RT
CURB EL. 944.21

+60.76'RL'
48.40' RT
CURB EL. 944.95

SAWCUT AND MATCH EXISTING

EXISTING SIGN BASE PLATE

1.6'

2'

0.5'

1'

2'

2'

EXISTING
CONCRETE
SIDEWALK

943.42
121'RL'+50

943.24

CTH G

+50.00'RL'
34.50' RT
CURB EL. 943.92

+50.00'RL'
48.46' RT

6-INCH CONCRETE CURB

4-INCH CONCRETE SIDEWALK

ASPHALT SURFACE DRIVEWAY

N

PROJECT NO: 4854-03-71	HWY: CTH G	COUNTY: FOND DU LAC	CONSTRUCTION DETAILS: SIDEWALK: CURB AT SIGN BASE	SHEET 9 E

2

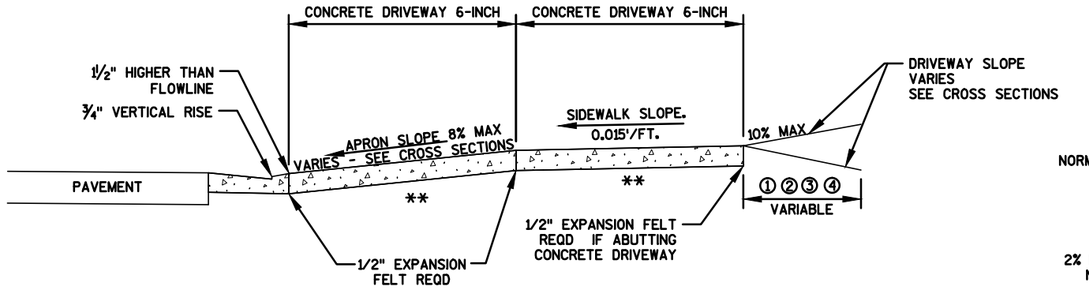

TYPICAL SIDEWALK SECTION

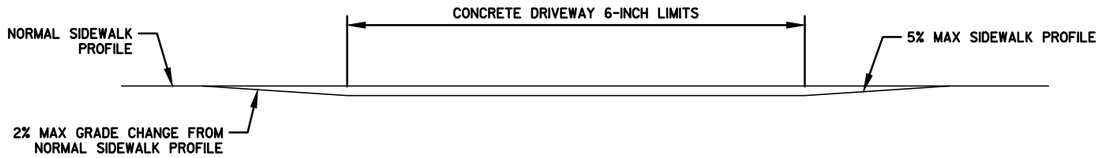

DEPRESSED SIDEWALK PROFILE DETAIL

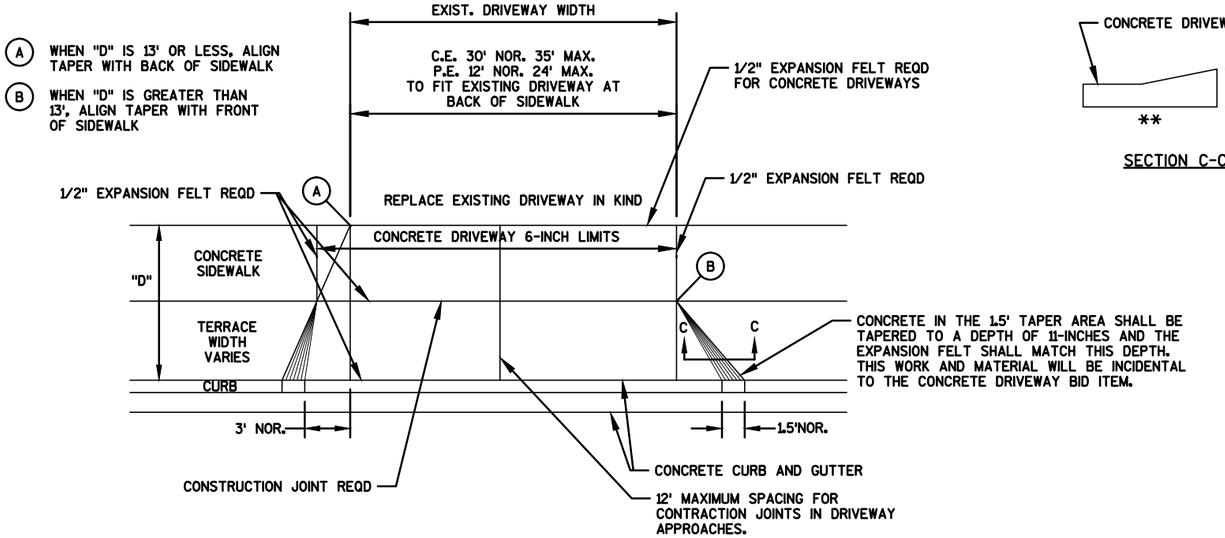

PLAN VIEW

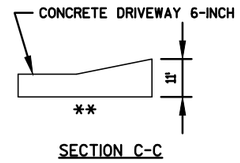

SECTION C-C

① 6" CONCRETE DRIVEWAY OR H.E.S. CONCRETE DRIVEWAY

② 6" BASE AGG. DENSE 1 1/4-INCH

③ RESIDENTAIL - 6" BASE AGG. DENSE 1 1/4-INCH BASE WITH MINIMUM 3" ASPHALTIC SURFACE (OR MATCH EXISTING)

④ COMMERCIAL - MINIMUM 9" BASE AGG. DENSE 1 1/4-INCH BASE WITH MINIMUM 3" ASPHALTIC SURFACE (OR MATCH EXISTING)

** 6" BASE AGG. DENSE 1 1/4-INCH REQD UNDER CONCRETE DRWY

URBAN DRIVEWAY WITH SIDEWALK DETAIL

SOIL PARAMETERS

SOIL DESCRIPTIONS	TOTAL UNIT WEIGHT (PCF)	FRICTION ANGLES (DEGREES)	COLLESION (PCF)
GRANULAR BACKFILL	125	30	0
LEAN CLAY (CL) RETAINED SOIL	120	0	600

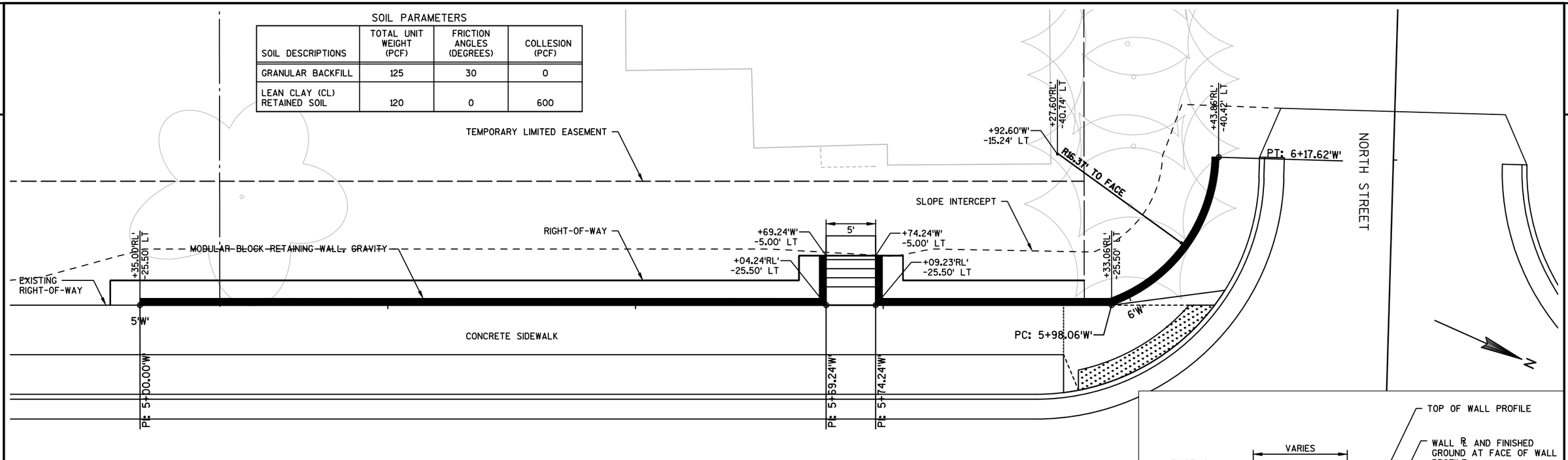

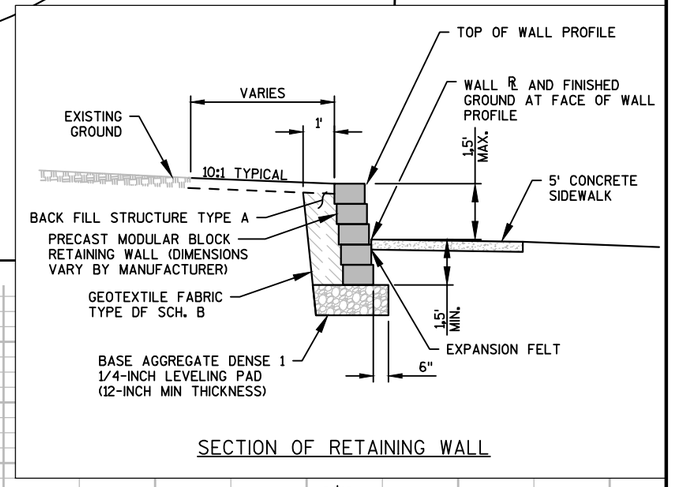

SECTION OF RETAINING WALL

CTH G (MAIN STREET)

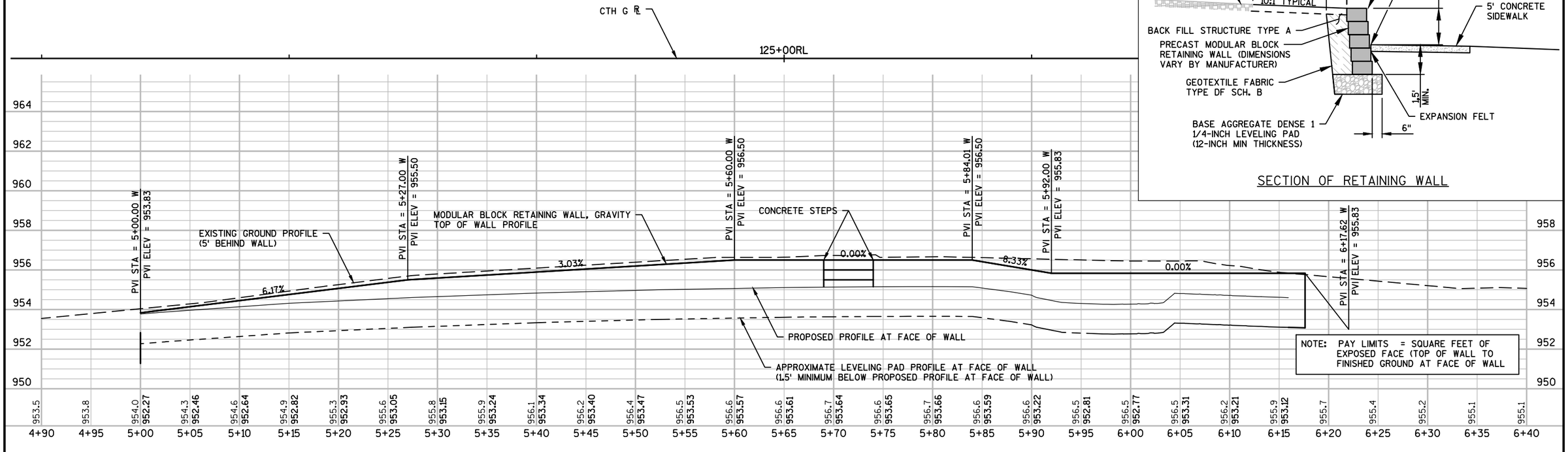

NOTE: PAY LIMITS = SQUARE FEET OF EXPOSED FACE (TOP OF WALL TO FINISHED GROUND AT FACE OF WALL

PROJECT NO: 4854-03-71	HWY: CTH G	COUNTY: FOND DU LAC	CONSTRUCTION DETAILS:	SHEET 11 E

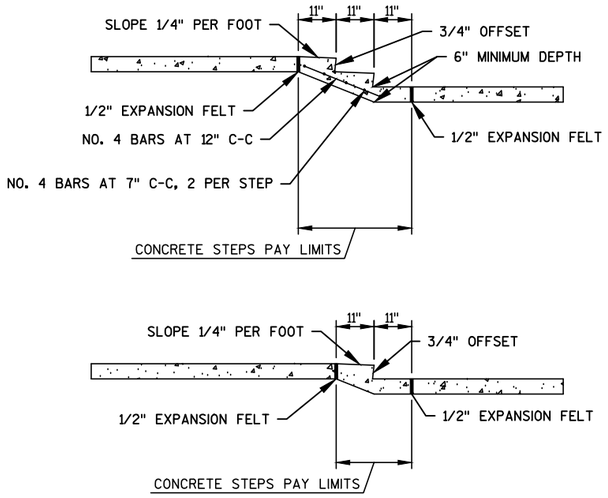

SECTION A-A

NOTE: ALL STEPS SHALL HAVE UNIFORM HEIGHT.
MAX HEIGHT OF ANY STEP SHALL BE 8".
BAR STEEL REINFORCEMENT SHALL BE EMBEDDED 2" CLEAR.

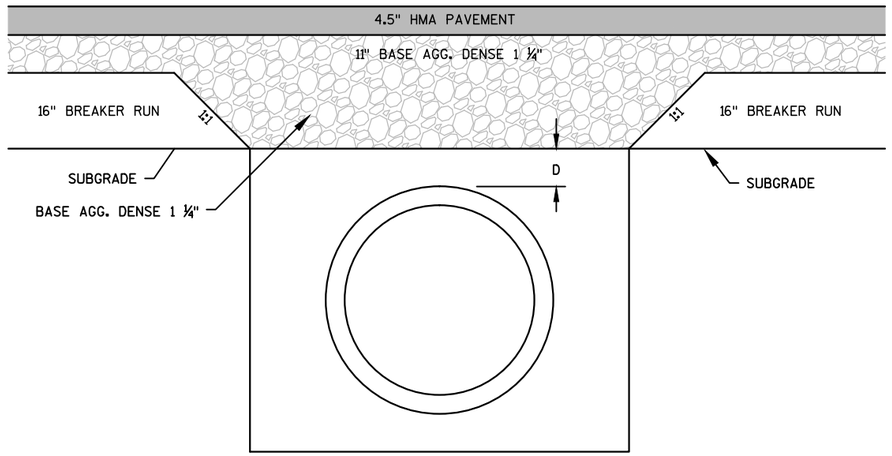

SUBGRADE IMPROVEMENT GRADING AT STORM SEWER WHEN D<6"

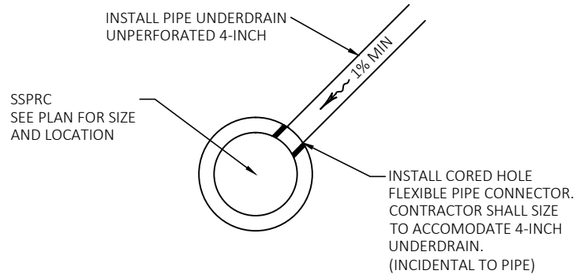

CONNECTION TO CONCRETE PIPE

DETAIL FOR EXTENSION OF UNDERDRAIN OUTFALLS

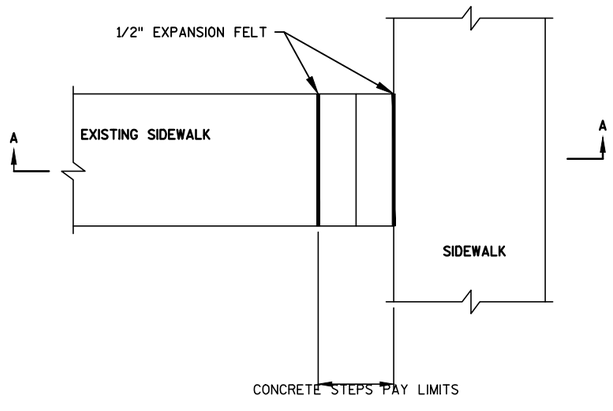

CONCRETE STEPS

STA 125+33 RT - 2 STEPS
STA 125+97 RT - 1 STEP
STA 126+87 RT - 1 STEP

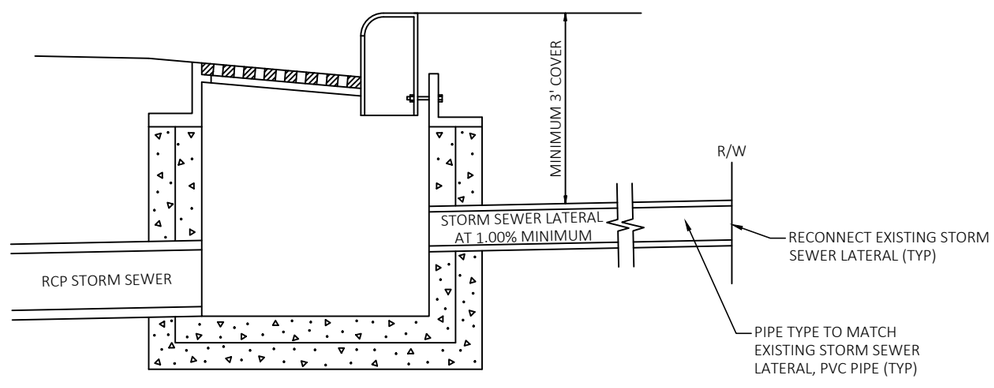

NOTE:
ALL LABOR AND MATERIALS NECESSARY FOR CONNECTION TO STORM SEWER SHALL BE INCIDENTAL TO THE BID ITEM OF RECONNECT STORM SEWER LATERALS.

RECONNECT STORM SEWER LATERAL DETAIL

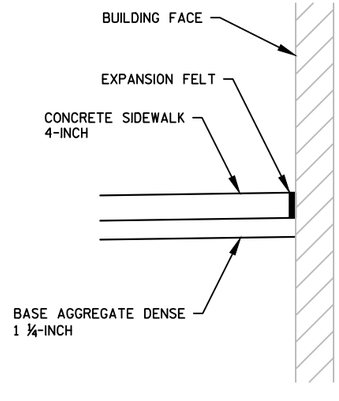

CONCRETE SIDEWALK ADJACENT TO BUILDING

2

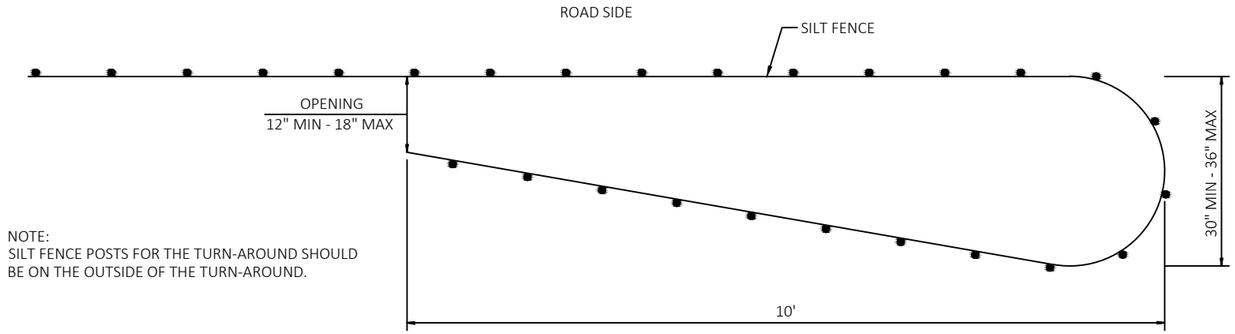

NOTE:
SILT FENCE POSTS FOR THE TURN-AROUND SHOULD BE ON THE OUTSIDE OF THE TURN-AROUND.

PLAN VIEW

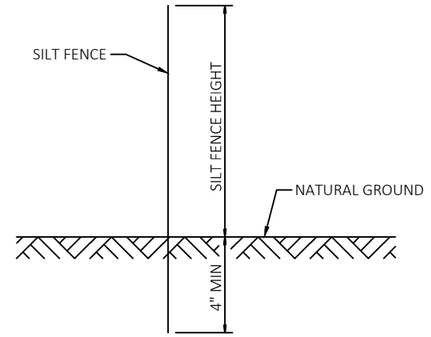

SIDE VIEW

SILT FENCE TURN-AROUND DETAIL

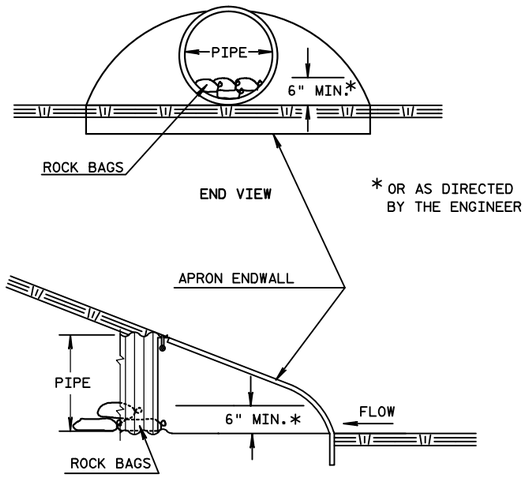

CULVERT PIPE CHECK

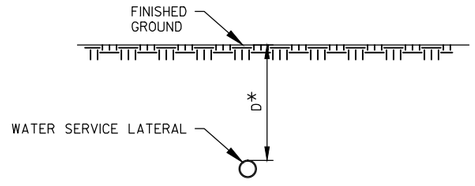

* WHEN D IS LESS THAN 5', PLACE 4-INCHES OF INSULATION BOARD

WATER SERVICE LATERAL INSULATIONN DETAIL

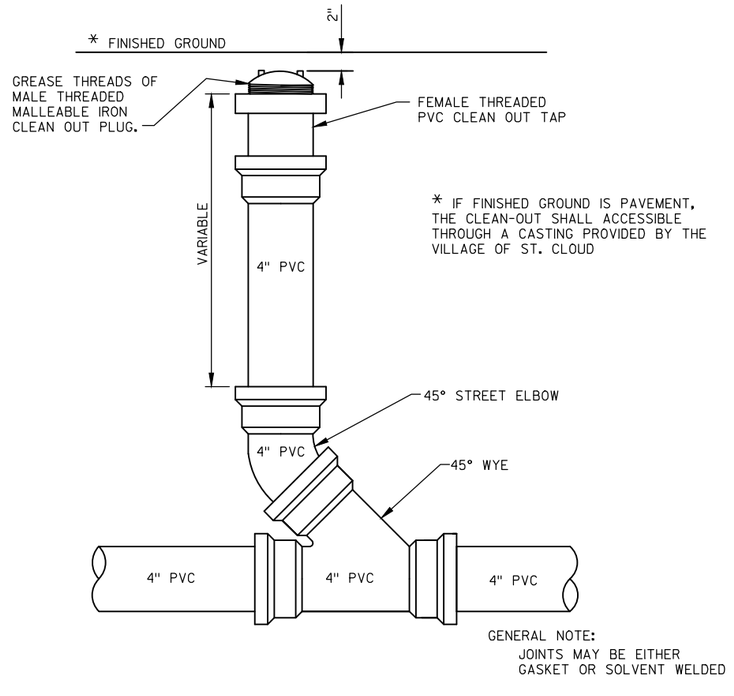

GENERAL NOTE:
JOINTS MAY BE EITHER GASKET OR SOLVENT WELDED

SUMP DRAIN CLEANOUT DETAIL

2

LEGEND:

ASDF	ASPHALTIC SURFACE DRIVEWAYS AND FIELD ENTRANCES
CCP	CONCRETE CURB PEDESTRIAN
CD-6	CONCRETE DRIVEWAY 6-INCH
CD-7	CONCRETE DRIVEWAY 7-INCH
CR-1	CURB RAMP TYPE 1
CR-2	CURB RAMP TYPE 2
CR-3	CURB RAMP TYPE 3
CR-7B	CURB RAMP TYPE 7B
CS-4	CONCRETE SIDEWALK 4-INCH
CS-6	CONCRETE SIDEWALK 6-INCH
WF-NP	CURB RAMP DETECTABLE WARNING FIELD NATURAL PATINA
WF-NP-R	CURB RAMP DETECTABLE WARNING FIELD NATURAL PATINA RADIAL

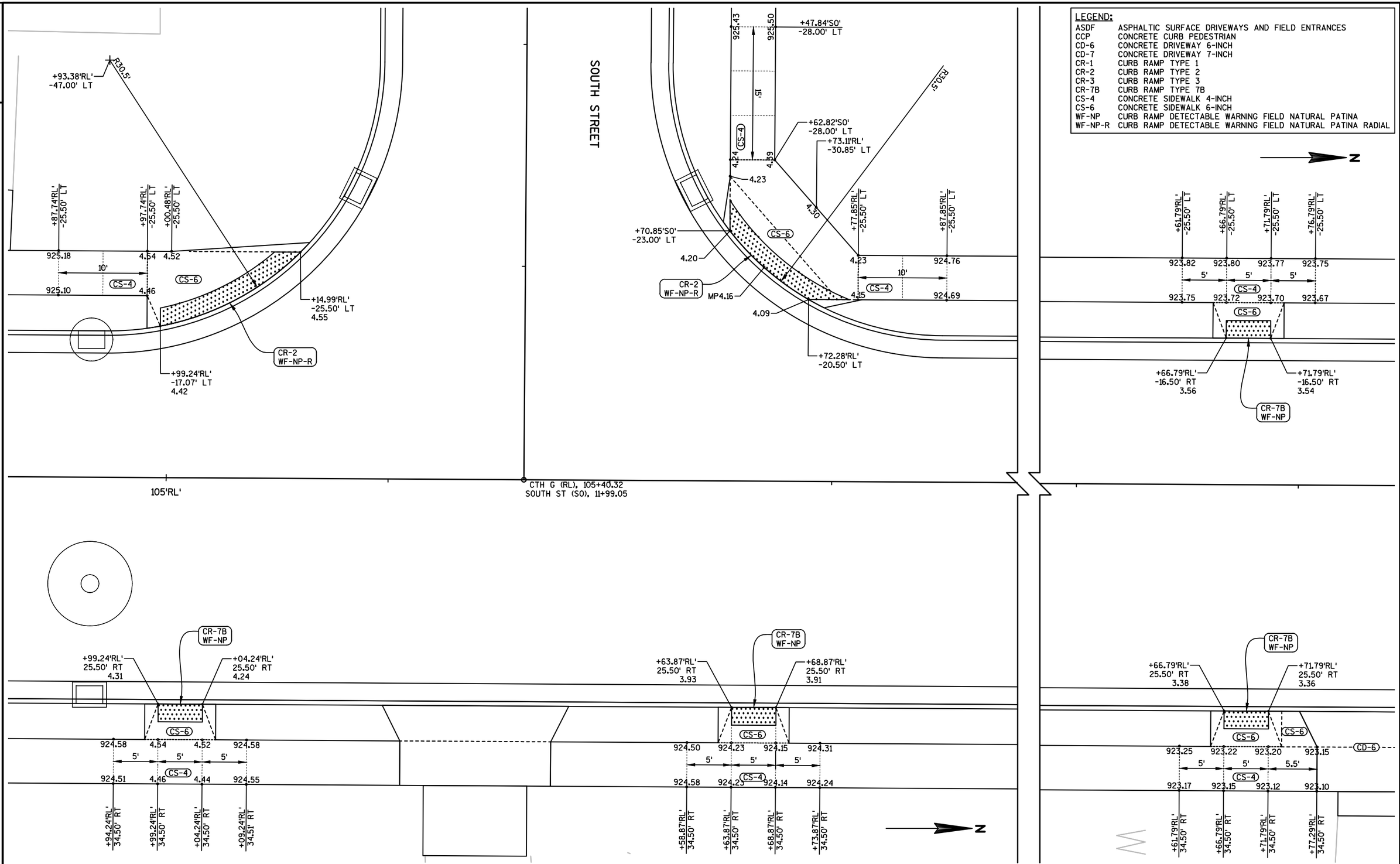

PROJECT NO: 4085-03-00	HWY: CTH G	COUNTY: FOND DU LAC	CURB RAMP DETAIL - SOUTH STREET	SHEET 14	E

2

LEGEND:

ASDF	ASPHALTIC SURFACE DRIVEWAYS AND FIELD ENTRANCES
CCP	CONCRETE CURB PEDESTRIAN
CD-6	CONCRETE DRIVEWAY 6-INCH
CD-7	CONCRETE DRIVEWAY 7-INCH
CR-1	CURB RAMP TYPE 1
CR-2	CURB RAMP TYPE 2
CR-3	CURB RAMP TYPE 3
CR-7B	CURB RAMP TYPE 7B
CS-4	CONCRETE SIDEWALK 4-INCH
CS-6	CONCRETE SIDEWALK 6-INCH
WF-NP	CURB RAMP DETECTABLE WARNING FIELD NATURAL PATINA
WF-NP-R	CURB RAMP DETECTABLE WARNING FIELD NATURAL PATINA RADIAL

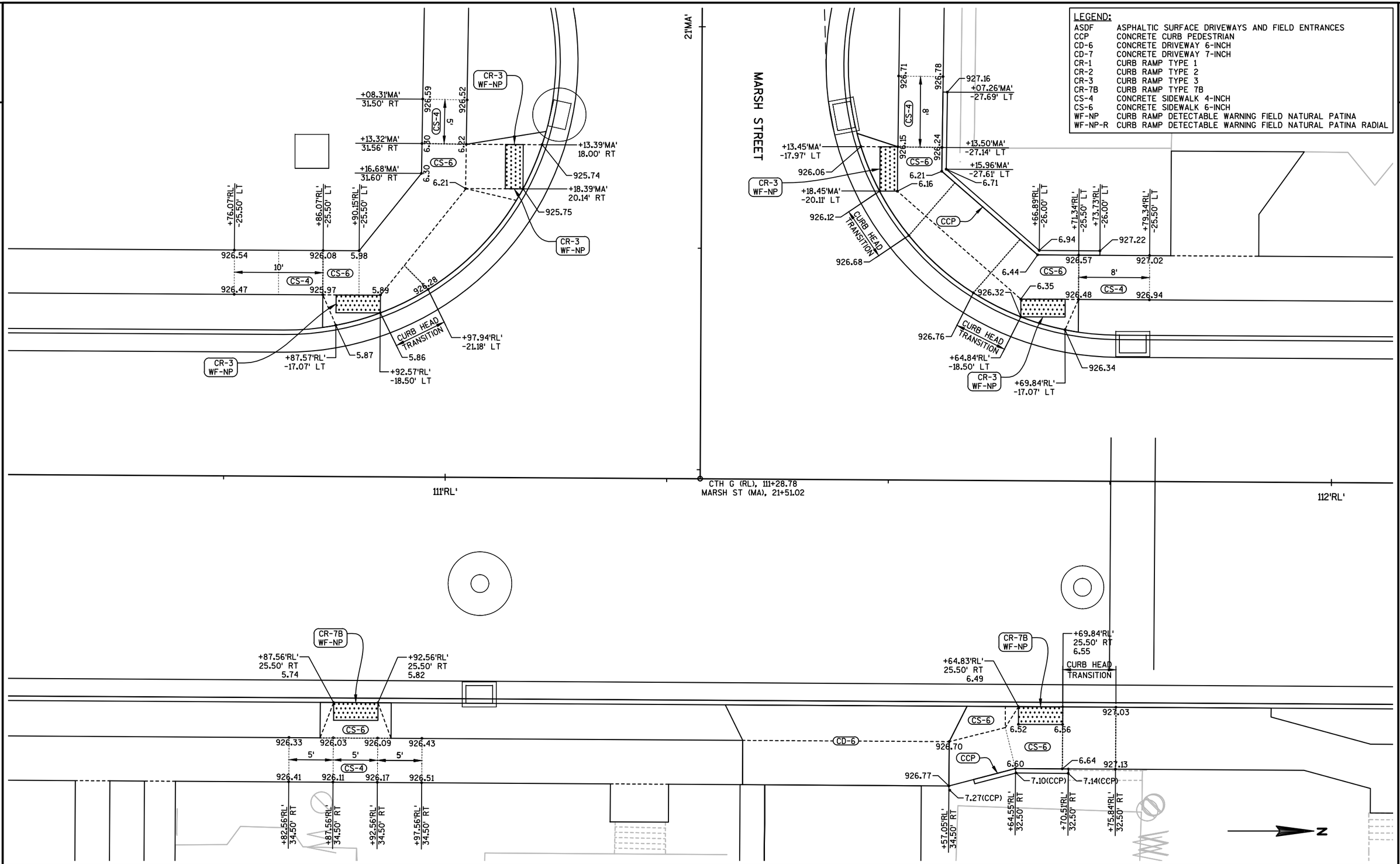

PROJECT NO: 4085-03-00	HWY: CTH G	COUNTY: FOND DU LAC	CURB RAMP DETAIL - MARSH STREET	SHEET 15	E

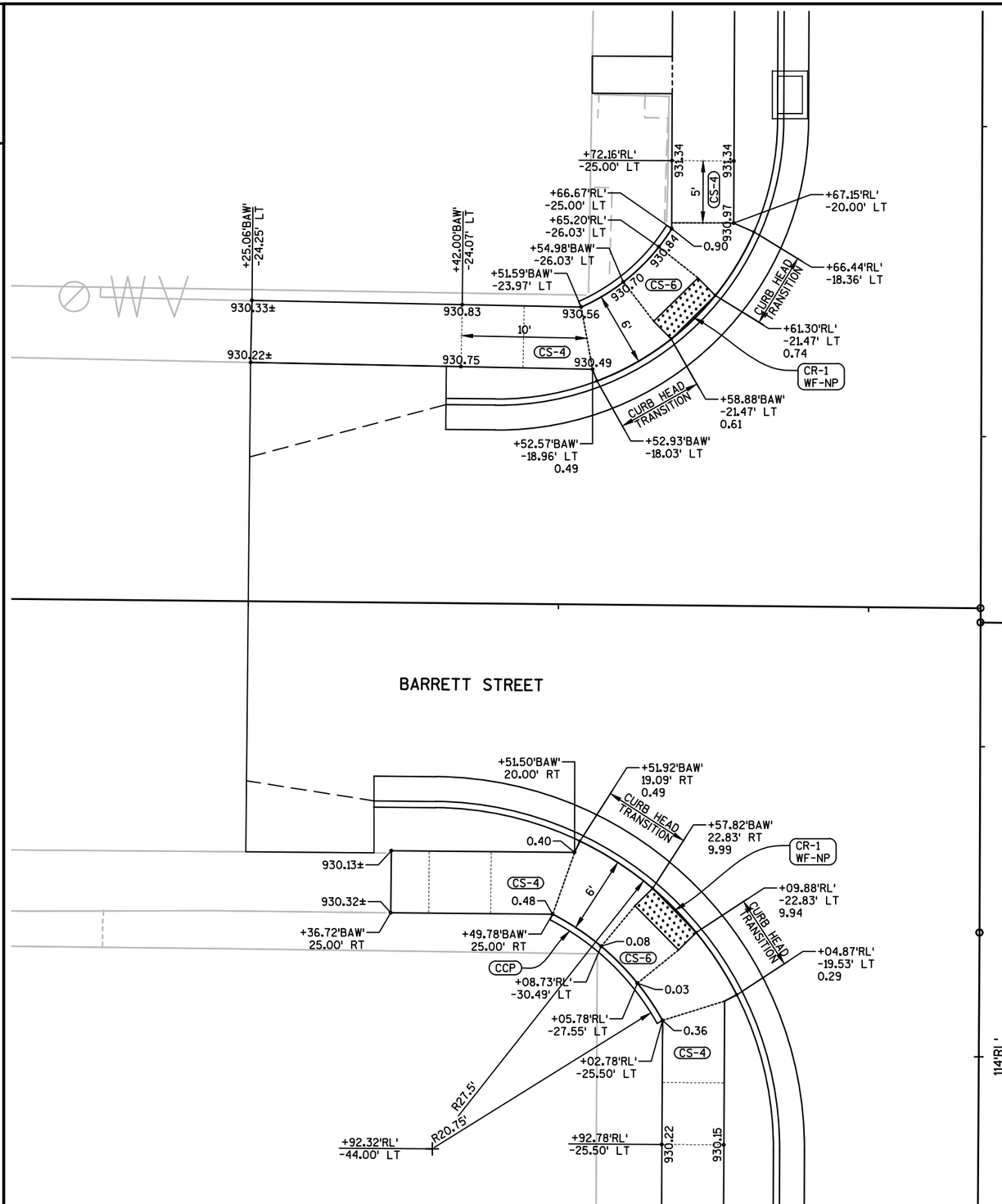

PROJECT NO: 4085-03-00	HWY: CTH G	COUNTY: FOND DU LAC	CURB RAMP DETAIL - BARRETT STREET	SHEET 16	E

2

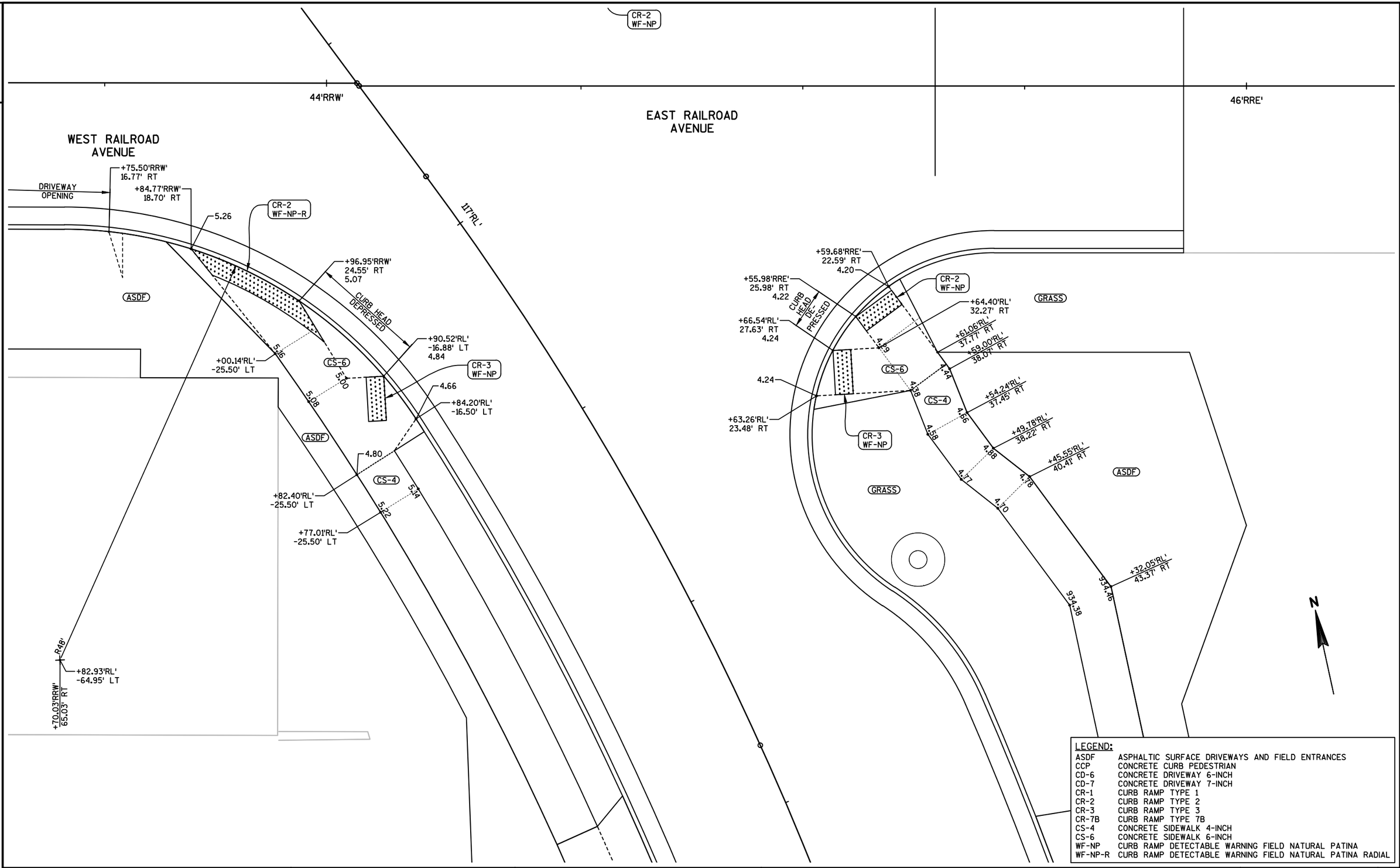

LEGEND:

ASDF	ASPHALTIC SURFACE DRIVEWAYS AND FIELD ENTRANCES
CCP	CONCRETE CURB PEDESTRIAN
CD-6	CONCRETE DRIVEWAY 6-INCH
CD-7	CONCRETE DRIVEWAY 7-INCH
CR-1	CURB RAMP TYPE 1
CR-2	CURB RAMP TYPE 2
CR-3	CURB RAMP TYPE 3
CR-7B	CURB RAMP TYPE 7B
CS-4	CONCRETE SIDEWALK 4-INCH
CS-6	CONCRETE SIDEWALK 6-INCH
WF-NP	CURB RAMP DETECTABLE WARNING FIELD NATURAL PATINA
WF-NP-R	CURB RAMP DETECTABLE WARNING FIELD NATURAL PATINA RADIAL

PROJECT NO: 4085-03-00	HWY: CTH G	COUNTY: FOND DU LAC	CURB RAMP DETAIL - RAILROAD AVENUE	SHEET 17	E

2

LEGEND:

ASDF	ASPHALTIC SURFACE DRIVEWAYS AND FIELD ENTRANCES
CCP	CONCRETE CURB PEDESTRIAN
CD-6	CONCRETE DRIVEWAY 6-INCH
CD-7	CONCRETE DRIVEWAY 7-INCH
CR-1	CURB RAMP TYPE 1
CR-2	CURB RAMP TYPE 2
CR-3	CURB RAMP TYPE 3
CR-7B	CURB RAMP TYPE 7B
CS-4	CONCRETE SIDEWALK 4-INCH
CS-6	CONCRETE SIDEWALK 6-INCH
WF-NP	CURB RAMP DETECTABLE WARNING FIELD NATURAL PATINA
WF-NP-R	CURB RAMP DETECTABLE WARNING FIELD NATURAL PATINA RADIAL

N

118'RL'

CD-7

+01.49'RL'
-30.46' LT
937.48
937.40
GRASS
+98.08'RL'
-34.24' LT
6.80
6.72
+89.88'RL'
-30.33' LT
+95.54'RL'
-39.18' LT
6.72
CS-4
CS-6
6.64
6.46
CR-1
WF-NP
+94.46'RL'
-44.08' LT
936.91
936.84
6.36
+87.59'RL'
-34.77' LT
GRASS

+49.60'RL'
34.50' RT
936.84
936.77
15'
ASDF
GRASS
+30.30'RL'
34.50' RT
+21.11'RRE'
-29.46' LT
+29.85'RRE'
-29.42' LT
+34.60'RL'
29.50' RT
6.06
5.90
5.85
5.80
935.60
+43.93'RL'
19.48' RT
CS-6
CS-6
CS-4
CR-2
WF-NP
5.89
5.82
5'
5.70
5.41
935.52
+38.00'RL'
18.51' RT
+18.69'RRE'
-24.45' LT
GRASS
CS-6
4.93
GRASS
+24.49'RRE'
-16.50' LT
5.08
+30.71'RRE'
-16.50' LT
4.86
CR-2
WF-NP

43'RRW'

44'RRW'

WEST RAILROAD AVENUE

EAST RAILROAD AVENUE

+75.50'RRW'
16.77' RT

PROJECT NO: 4085-03-00	HWY: CTH G	COUNTY: FOND DU LAC	CURB RAMP DETAIL - RAILROAD AVENUE	SHEET 18 E

2

LEGEND:

ASDF	ASPHALTIC SURFACE DRIVEWAYS AND FIELD ENTRANCES
CCP	CONCRETE CURB PEDESTRIAN
CD-6	CONCRETE DRIVEWAY 6-INCH
CD-7	CONCRETE DRIVEWAY 7-INCH
CR-1	CURB RAMP TYPE 1
CR-2	CURB RAMP TYPE 2
CR-3	CURB RAMP TYPE 3
CR-7B	CURB RAMP TYPE 7B
CS-4	CONCRETE SIDEWALK 4-INCH
CS-6	CONCRETE SIDEWALK 6-INCH
WF-NP	CURB RAMP DETECTABLE WARNING FIELD NATURAL PATINA
WF-NP-R	CURB RAMP DETECTABLE WARNING FIELD NATURAL PATINA RADIAL

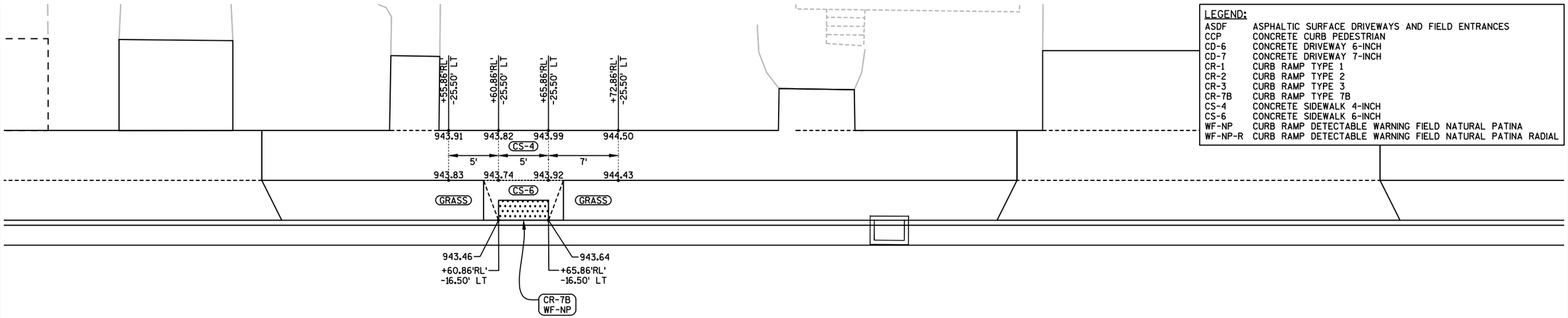

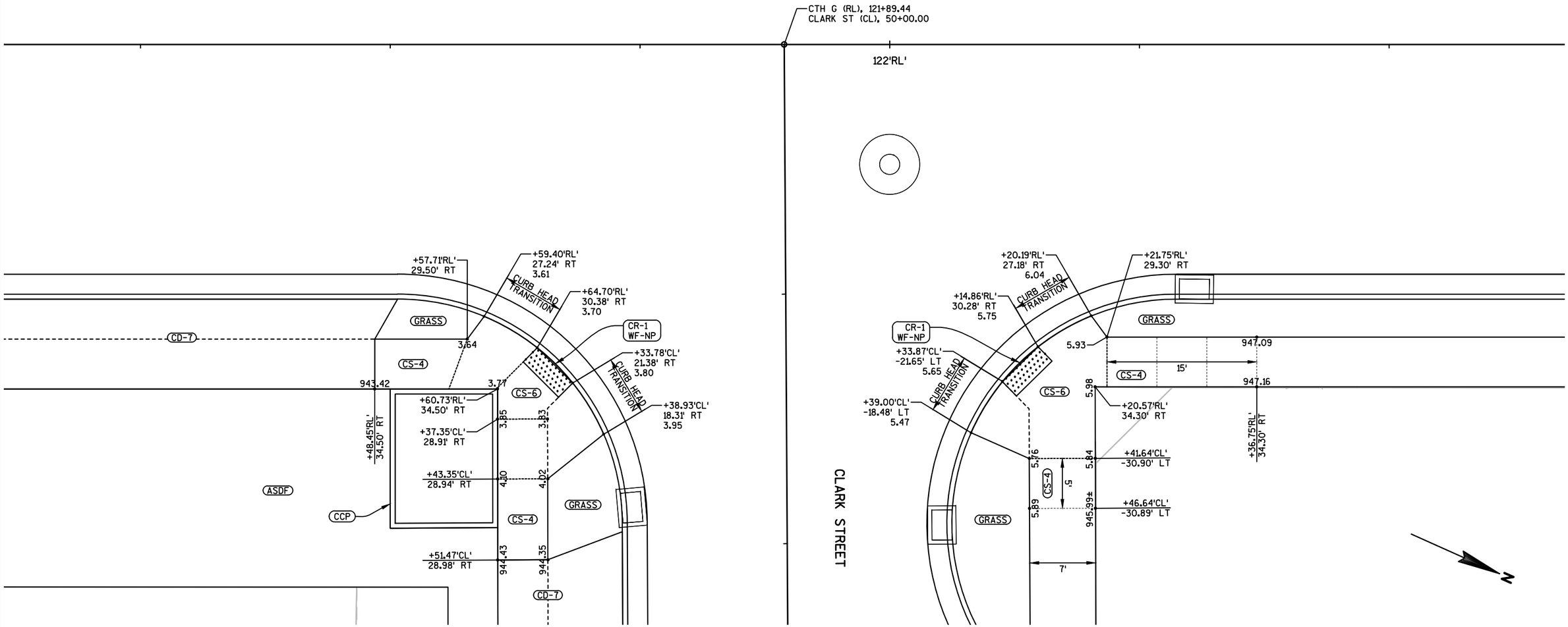

PROJECT NO: 4085-03-00	HWY: CTH G	COUNTY: FOND DU LAC	CURB RAMP DETAIL - CLARK STREET	SHEET 19 E

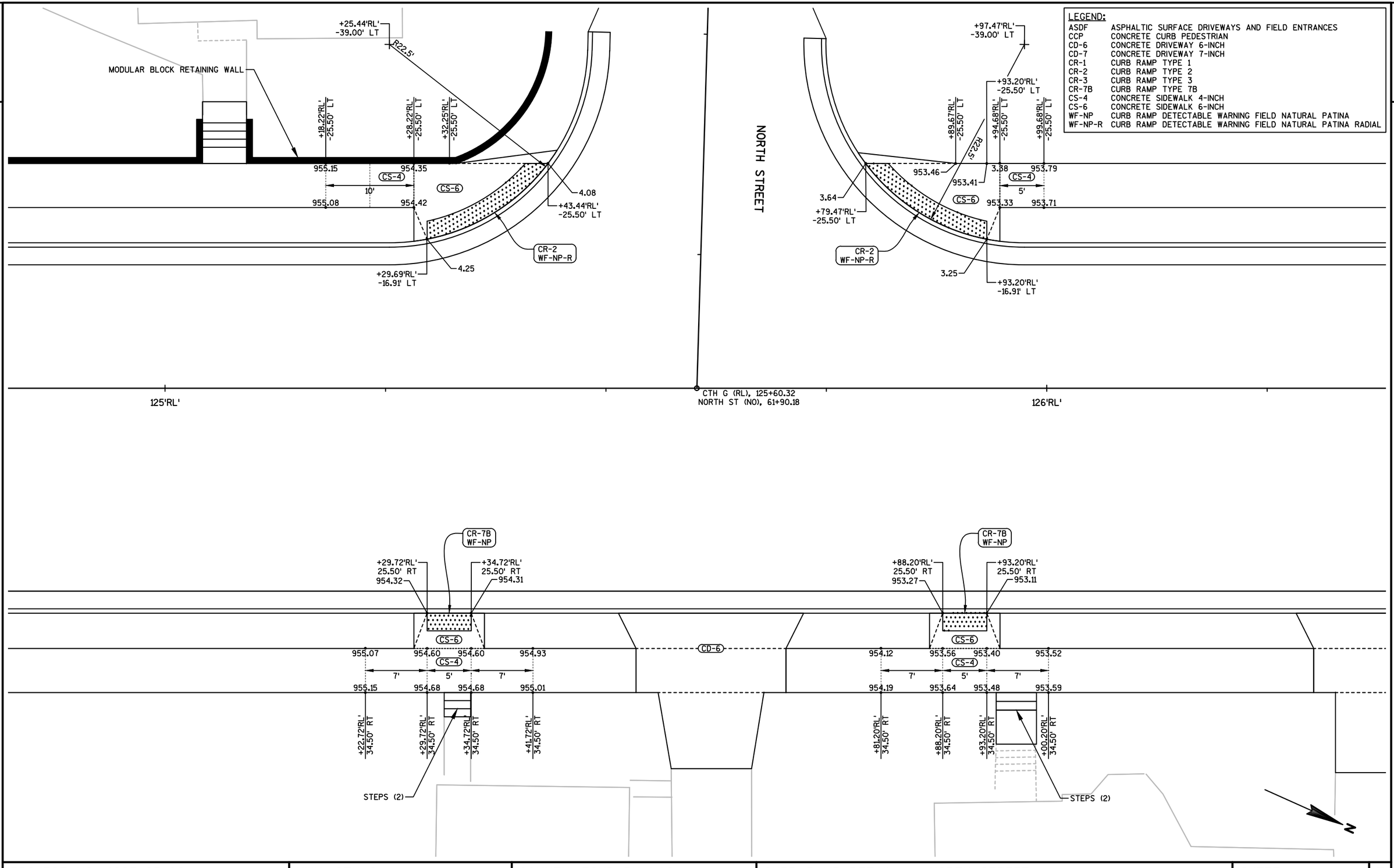

PROJECT NO: 4085-03-00	HWY: CTH G	COUNTY: FOND DU LAC	CURB RAMP DETAIL - NORTH STREET	SHEET 20	E

2

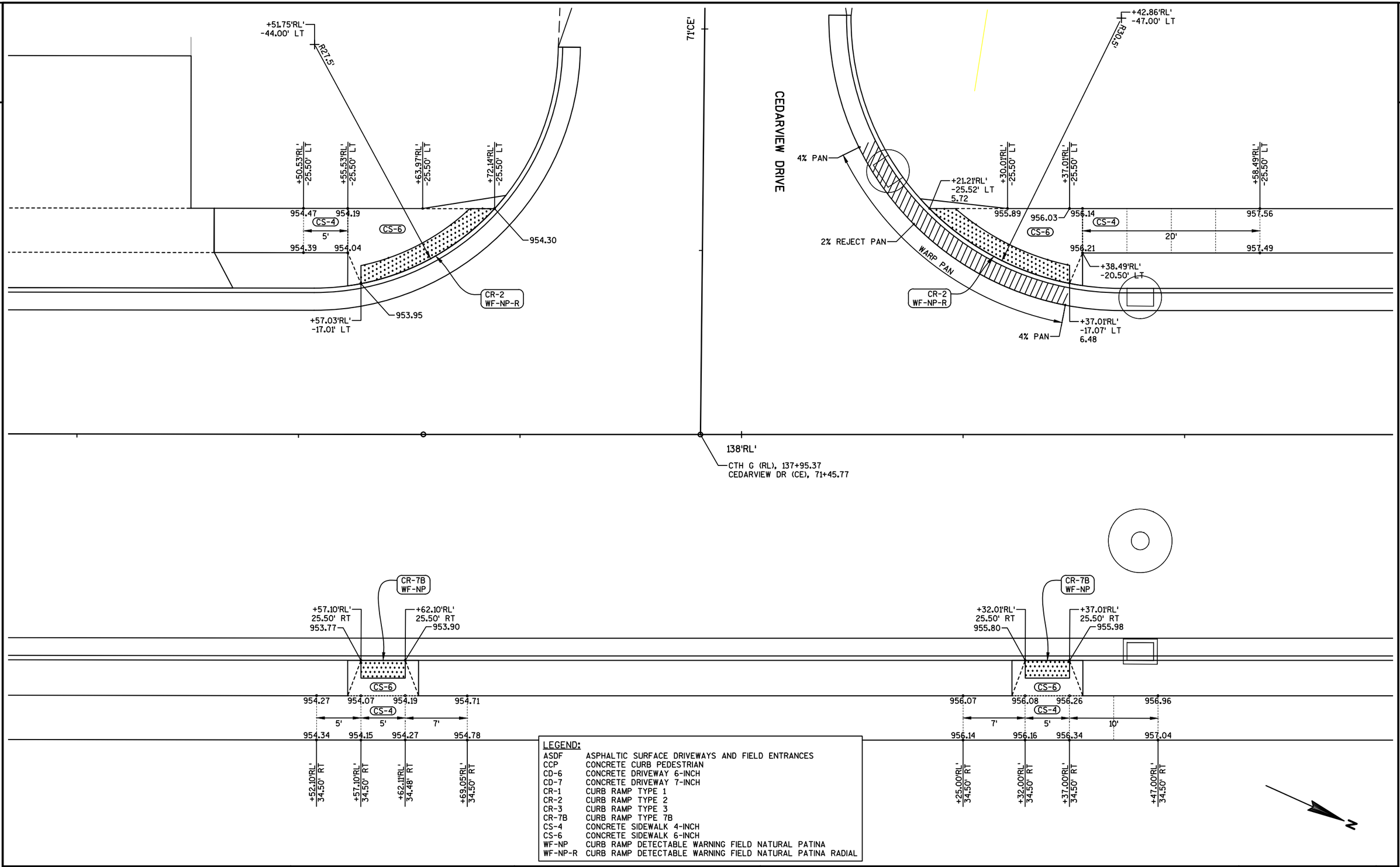

LEGEND:

ASDF	ASPHALTIC SURFACE DRIVEWAYS AND FIELD ENTRANCES
CCP	CONCRETE CURB PEDESTRIAN
CD-6	CONCRETE DRIVEWAY 6-INCH
CD-7	CONCRETE DRIVEWAY 7-INCH
CR-1	CURB RAMP TYPE 1
CR-2	CURB RAMP TYPE 2
CR-3	CURB RAMP TYPE 3
CR-7B	CURB RAMP TYPE 7B
CS-4	CONCRETE SIDEWALK 4-INCH
CS-6	CONCRETE SIDEWALK 6-INCH
WF-NP	CURB RAMP DETECTABLE WARNING FIELD NATURAL PATINA
WF-NP-R	CURB RAMP DETECTABLE WARNING FIELD NATURAL PATINA RADIAL

PROJECT NO: 4085-03-00	HWY: CTH G	COUNTY: FOND DU LAC	CURB RAMP DETAIL - CEDARVIEW DRIVE	SHEET 21 E

2

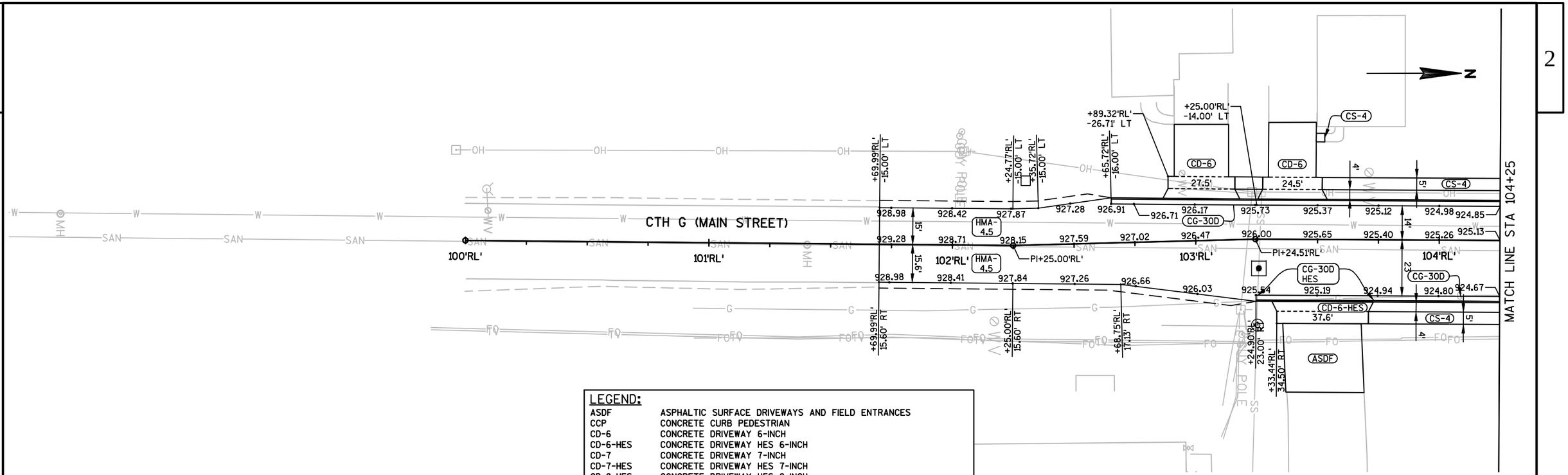

LEGEND:	
ASDF	ASPHALTIC SURFACE DRIVEWAYS AND FIELD ENTRANCES
CCP	CONCRETE CURB PEDESTRIAN
CD-6	CONCRETE DRIVEWAY 6-INCH
CD-6-HES	CONCRETE DRIVEWAY HES 6-INCH
CD-7	CONCRETE DRIVEWAY 7-INCH
CD-7-HES	CONCRETE DRIVEWAY HES 7-INCH
CD-8-HES	CONCRETE DRIVEWAY HES 8-INCH
CG-18D	CONCRETE CURB AND GUTTER 18-INCH TYPE D
CG-30D	CONCRETE CURB AND GUTTER 30-INCH TYPE D
CG-30D-HES	CONCRETE CURB AND GUTTER 30-INCH TYPE D HES
CS-4	CONCRETE SIDEWALK 4-INCH
CS-6	CONCRETE SIDEWALK 6-INCH
HMA-4.5	HMA PAVEMENT 4.5-INCH

NOTE: SIDEWALK SHALL BE CS-4 UNLESS OTHERWISE NOTED

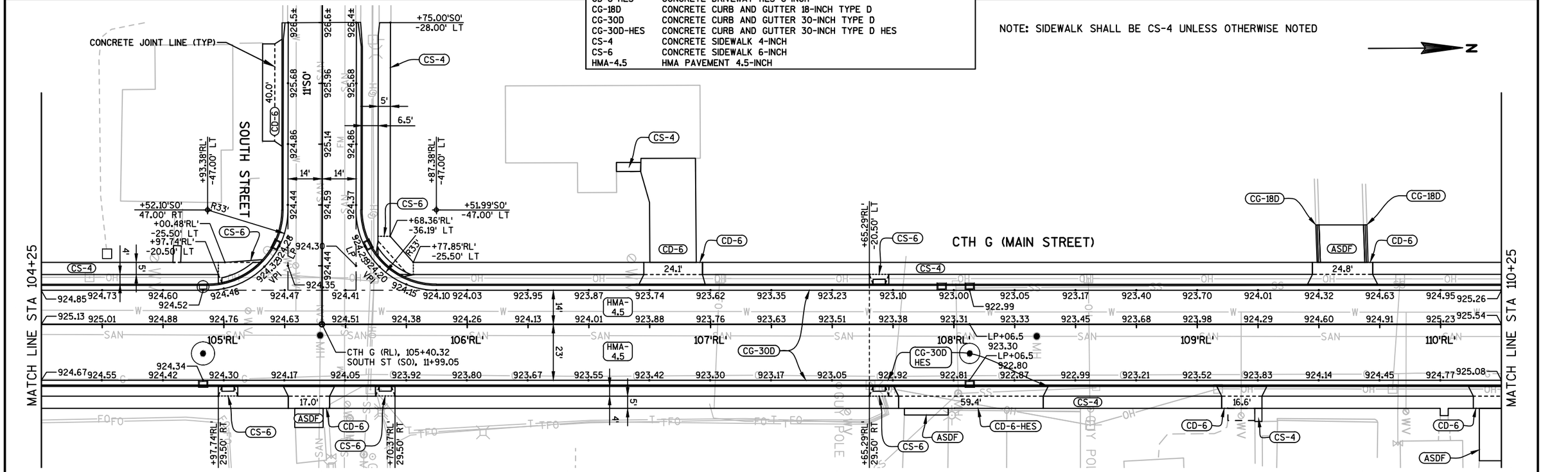

PROJECT NO: 4854-03-71	HWY: CTH G	COUNTY: FOND DU LAC	PAVING DETAIL	SHEET 22	E

2

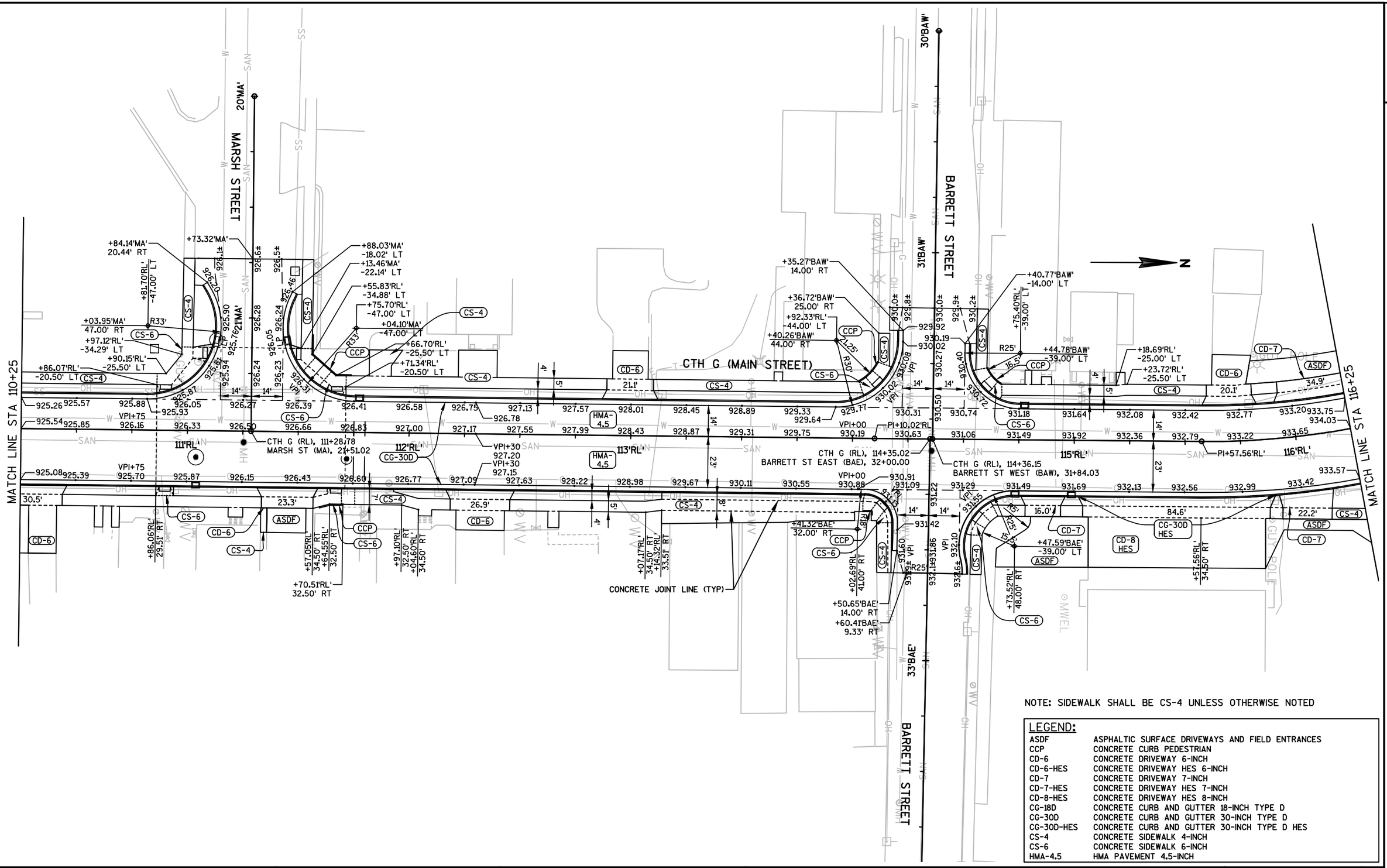

NOTE: SIDEWALK SHALL BE CS-4 UNLESS OTHERWISE NOTED

LEGEND:	
ASDF	ASPHALTIC SURFACE DRIVEWAYS AND FIELD ENTRANCES
CCP	CONCRETE CURB PEDESTRIAN
CD-6	CONCRETE DRIVEWAY 6-INCH
CD-6-HES	CONCRETE DRIVEWAY HES 6-INCH
CD-7	CONCRETE DRIVEWAY 7-INCH
CD-7-HES	CONCRETE DRIVEWAY HES 7-INCH
CD-8-HES	CONCRETE DRIVEWAY HES 8-INCH
CG-18D	CONCRETE CURB AND GUTTER 18-INCH TYPE D
CG-30D	CONCRETE CURB AND GUTTER 30-INCH TYPE D
CG-30D-HES	CONCRETE CURB AND GUTTER 30-INCH TYPE D HES
CS-4	CONCRETE SIDEWALK 4-INCH
CS-6	CONCRETE SIDEWALK 6-INCH
HMA-4.5	HMA PAVEMENT 4.5-INCH

PROJECT NO: 4854-03-71	HWY: CTH G	COUNTY: FOND DU LAC	PAVING DETAIL	SHEET 23	E

2

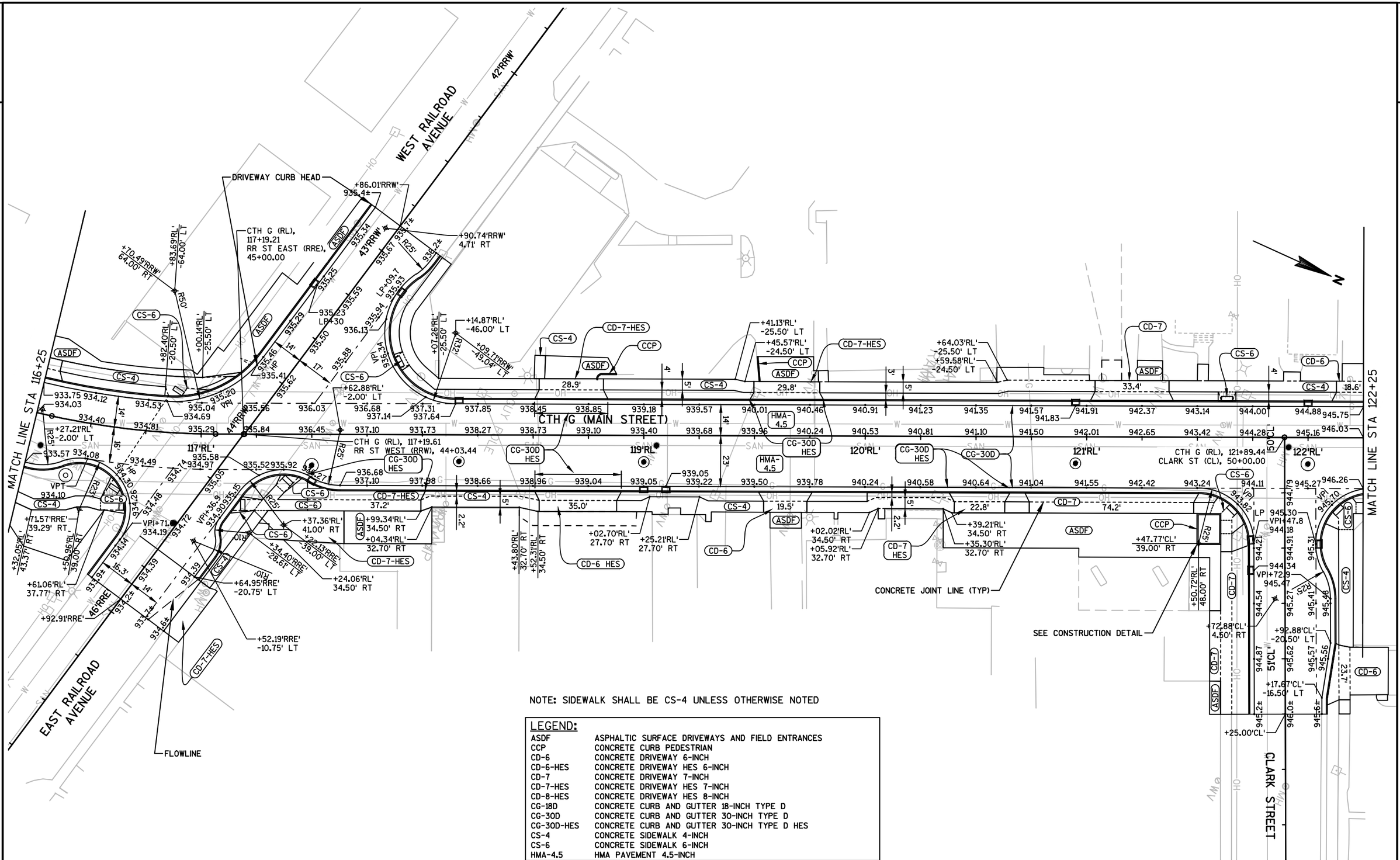

NOTE: SIDEWALK SHALL BE CS-4 UNLESS OTHERWISE NOTED

LEGEND:

ASDF	ASPHALTIC SURFACE DRIVEWAYS AND FIELD ENTRANCES
CCP	CONCRETE CURB PEDESTRIAN
CD-6	CONCRETE DRIVEWAY 6-INCH
CD-6-HES	CONCRETE DRIVEWAY HES 6-INCH
CD-7	CONCRETE DRIVEWAY 7-INCH
CD-7-HES	CONCRETE DRIVEWAY HES 7-INCH
CD-8-HES	CONCRETE DRIVEWAY HES 8-INCH
CG-18D	CONCRETE CURB AND GUTTER 18-INCH TYPE D
CG-30D	CONCRETE CURB AND GUTTER 30-INCH TYPE D
CG-30D-HES	CONCRETE CURB AND GUTTER 30-INCH TYPE D HES
CS-4	CONCRETE SIDEWALK 4-INCH
CS-6	CONCRETE SIDEWALK 6-INCH
HMA-4.5	HMA PAVEMENT 4.5-INCH

PROJECT NO: 4854-03-71	HWY: CTH G	COUNTY: FOND DU LAC	PAVING DETAIL	SHEET 24	E

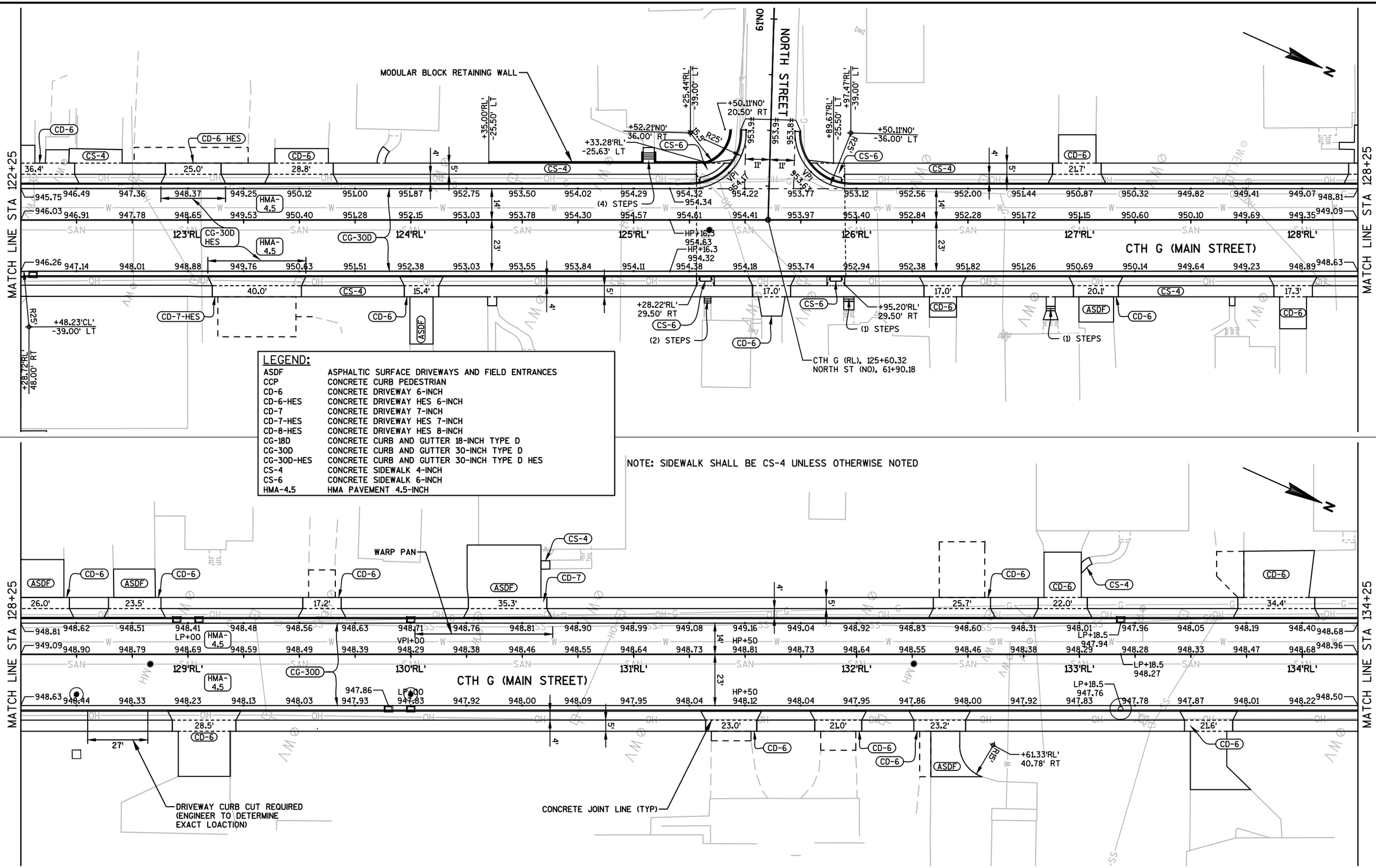

PROJECT NO: 4854-03-71	HWY: CTH G	COUNTY: FOND DU LAC	PAVING DETAIL	SHEET 25 E

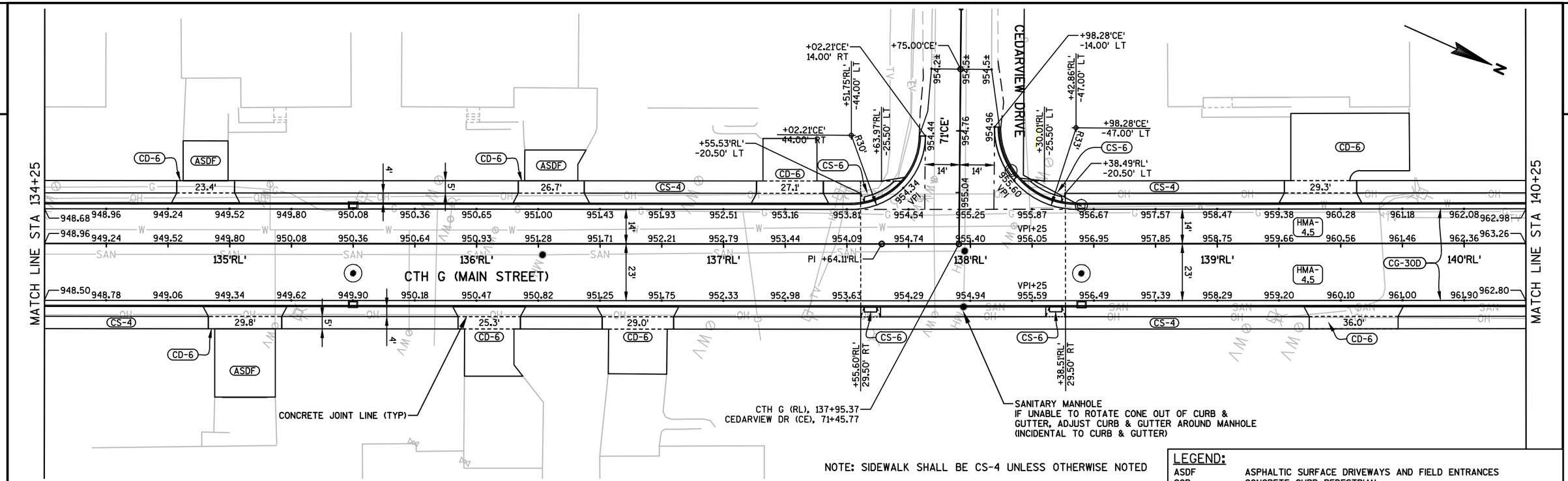

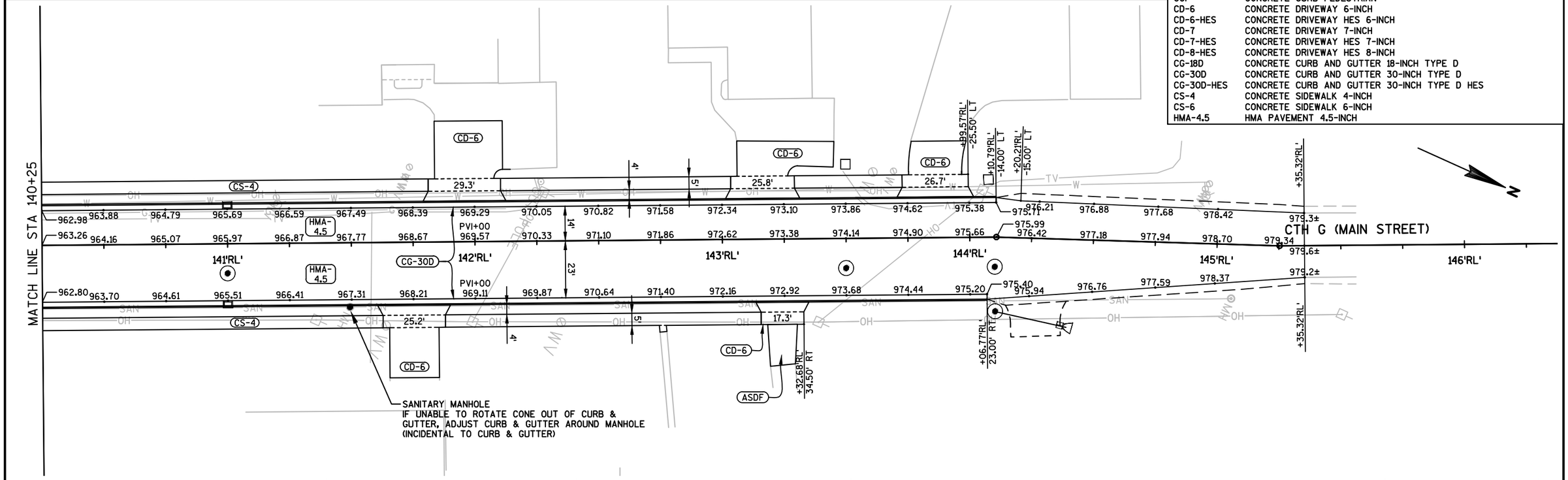

LEGEND:

ASDF	ASPHALTIC SURFACE DRIVEWAYS AND FIELD ENTRANCES
CCP	CONCRETE CURB PEDESTRIAN
CD-6	CONCRETE DRIVEWAY 6-INCH
CD-6-HES	CONCRETE DRIVEWAY HES 6-INCH
CD-7	CONCRETE DRIVEWAY 7-INCH
CD-7-HES	CONCRETE DRIVEWAY HES 7-INCH
CD-8-HES	CONCRETE DRIVEWAY HES 8-INCH
CG-18D	CONCRETE CURB AND GUTTER 18-INCH TYPE D
CG-30D	CONCRETE CURB AND GUTTER 30-INCH TYPE D
CG-30D-HES	CONCRETE CURB AND GUTTER 30-INCH TYPE D HES
CS-4	CONCRETE SIDEWALK 4-INCH
CS-6	CONCRETE SIDEWALK 6-INCH
HMA-4.5	HMA PAVEMENT 4.5-INCH

PROJECT NO: 4854-03-71	HWY: CTH G	COUNTY: FOND DU LAC	PAVING DETAIL	SHEET 26	E

2

CTH G (MAIN STREET)

104'RL'

103'RL'

N

WETLANDS

SIGN

SIGN

FLAG

A

MATCH LINE STA 104+25

102'RL'

103'RL'

104'RL'

CTH G (MAIN STREET)

SILT FENCE
TURNAROUND REQUIRED

LEGEND

- SILT FENCE
- RIP RAP
- SLOPE INTERCEPT
- INLET PROTECTION
- TEMPORARY DITCH CHECK
- CULVERT PIPE CHECK
- SURFACE WATER FLOW
- EROSION MAT, CLASS I, TYPE B

SOUTH STREET

A

C

D

CTH G (MAIN STREET)

MATCH LINE STA 104+25

MATCH LINE STA 110+25

105'RL'

106'RL'

107'RL'

108'RL'

109'RL'

110'RL'

SILT FENCE
TURNAROUND REQUIRED

PLAYGROUND

SWING

BENCH

SILT FENCE
TURNAROUND REQUIRED

PROJECT NO: 4854-03-71	HWY: CTH G	COUNTY: FOND DU LAC	EROSION CONTROL	SHEET	E

FILE NAME : F:\TR\JOBS\E2143A15\CIVIL 3D 2014\SHEETSPLAN\485403-022000-EC.DWG
LAYOUT NAME - ****
485403-022001-ec

PLOT DATE : 7/19/2018 10:52 AM PLOT BY : OMNNI ASSOCIATES - CRAIG KNUTH PLOT SCALE : **********

WISDOT/CADDS SHEET 42

2

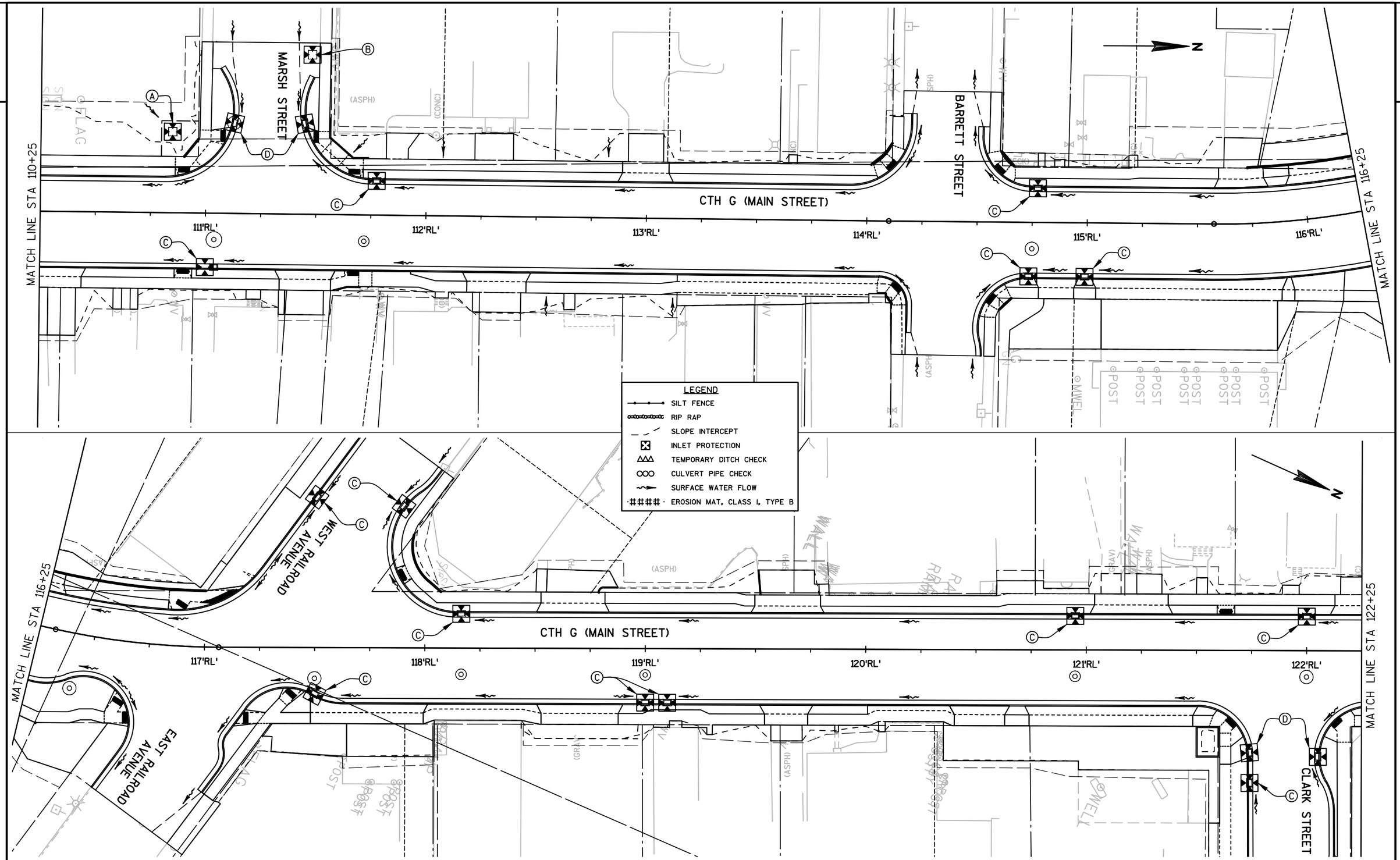

PROJECT NO: 4854-03-71	HWY: CTH G	COUNTY: FOND DU LAC	EROSION CONTROL	SHEET 28	E

2

NORTH STREET

CTH G (MAIN STREET)

MATCH LINE STA 122+25

MATCH LINE STA 128+25

123'RL' 124'RL' 125'RL' 126'RL' 127'RL' 128'RL'

LEGEND

- SILT FENCE
- RIP RAP
- SLOPE INTERCEPT
- INLET PROTECTION
- TEMPORARY DITCH CHECK
- CULVERT PIPE CHECK
- SURFACE WATER FLOW
- EROSION MAT, CLASS I, TYPE B

MATCH LINE STA 128+25

MATCH LINE STA 134+25

CTH G (MAIN STREET)

129'RL' 130'RL' 131'RL' 132'RL' 133'RL' 134'RL'

WETLANDS

PROJECT NO: 4854-03-71	HWY: CTH G	COUNTY: FOND DU LAC	EROSION CONTROL	SHEET 29	E

FILE NAME : F:\TR\JOBS\E2143A15\CIVIL 3D 2014\SHEETSPLAN\485403-022000-EC.DWG
LAYOUT NAME - ****
485403-022003-ec

PLOT DATE : 7/19/2018 10:54 AM PLOT BY : OMNNI ASSOCIATES - CRAIG KNUTH PLOT SCALE : **********

2

LEGEND

- SILT FENCE
- RIP RAP
- SLOPE INTERCEPT
- INLET PROTECTION
- TEMPORARY DITCH CHECK
- CULVERT PIPE CHECK
- SURFACE WATER FLOW
- EROSION MAT, CLASS I, TYPE B

CEDARVIEW DRIVE

CTH G (MAIN STREET)

MATCH LINE STA 134+25

MATCH LINE STA 140+25

135'RL' 136'RL' 137'RL' 138'RL' 139'RL' 140'RL'

MATCH LINE STA 140+25

CTH G (MAIN STREET)

141'RL' 142'RL' 143'RL' 144'RL' 145'RL' 146'RL'

PROJECT NO: 4854-03-71	HWY: CTH G	COUNTY: FOND DU LAC	EROSION CONTROL	SHEET 30	E

2

LEGEND:
CONTAMINATION

STA 102+30.8, 26.4' LT
INLETS MEDIAN 1G-MS
INL 2A

REMOVE 18-IN STORM SEWER

REMOVE INLET

102 LF CPRC CLASS IV 12-INCH

STA 104+52.0, 29.0' LT
INLETS MEDIAN 1G-MS
INL 3E

STA 104+91.5, 15.5' LT
CATCH BASINS 4-H-S
INL 3B

42 LF CPRC CLASS IV 12-INCH

STA 105+21.5, 32.7' LT
CATCH BASINS 2x3-H-S
INL 3C

REMOVE 12-IN STORM SEWER

INL 3D
STA 105+59.3, 32.7' LT
CATCH BASINS 2x3-H-S

REMOVE INLET

28 LF CPRC CLASS IV 18-INCH

38 LF CPRC CLASS IV 12-INCH

REMOVE INLET

REMOVE 12-IN STORM SEWER

102'RL'

103'RL'

104'RL'

165 LF SSPRCHE CLASS HE-III 34x53-INCH

105'RL'

106'RL'

315 LF SSPRCHE CLASS HE-IV 29x45-INCH

107'RL'

MH 2
STA 103+26.0, 12.0' RT
MANHOLES 6x6-J

12 LF CPRC CLASS IV 12-INCH

MH 3
STA 104+91.5, 12.0' RT
MANHOLES 8-J

REMOVE 27-IN STORM SEWER

23 LF SSPRCHE CLASS HE-III 34x53-INCH

REMOVE 12-IN STORM SEWER

REMOVE INLET

REMOVE 18-IN STORM SEWER

INL 2B
STA 103+25.6, 35.3' RT
MANHOLE 4S-C

STA 104+91.5, 24.5' RT
CATCH BASINS 2x3-H
INL 3A

SEALING PIPE

EXISTING WATER MAIN IS INSULATED.
REPAIR OR REPLACE WITH INSULATION
BOARD

PLAYGROUND

MATCH LINE STA 107+60

MH 2
MANHOLES 6x6-J
RIM: 925.75
STR. INV: 915.86
STR. DEPTH: 9.89'
SUMP DEPTH: 0.00'
E 53" INV: 915.86
N 53" INV: 915.86
S 12" INV: 921.64

MH 3
MANHOLES 8-J
RIM: 924.56
STR. INV: 916.40
STR. DEPTH: 8.16'
SUMP DEPTH: 0.00'
S 53" INV: 916.40
N 45" INV: 916.40
E 12" INV: 918.23
W 18" INV: 920.44

925
920
915
910

SSPRCHE CLASS HE-III 34X53-INCH
165 LF @ 0.33%
INV: 915.86 TO 916.40

SSPRCHE CLASS HE-IV 29X45-INCH
315 LF @ 0.39%
INV: 916.40 TO 917.62

PROJECT NO: 4854-03-71	HWY: CTH G	COUNTY: FOND DU LAC	STORM SEWER	SHEET 31	E

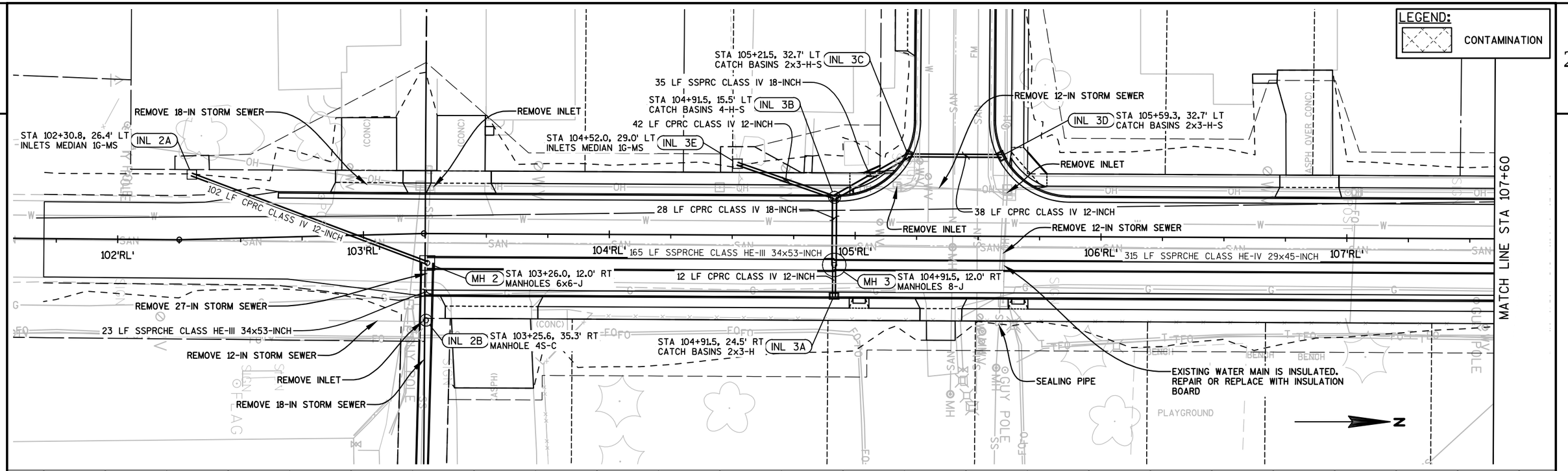

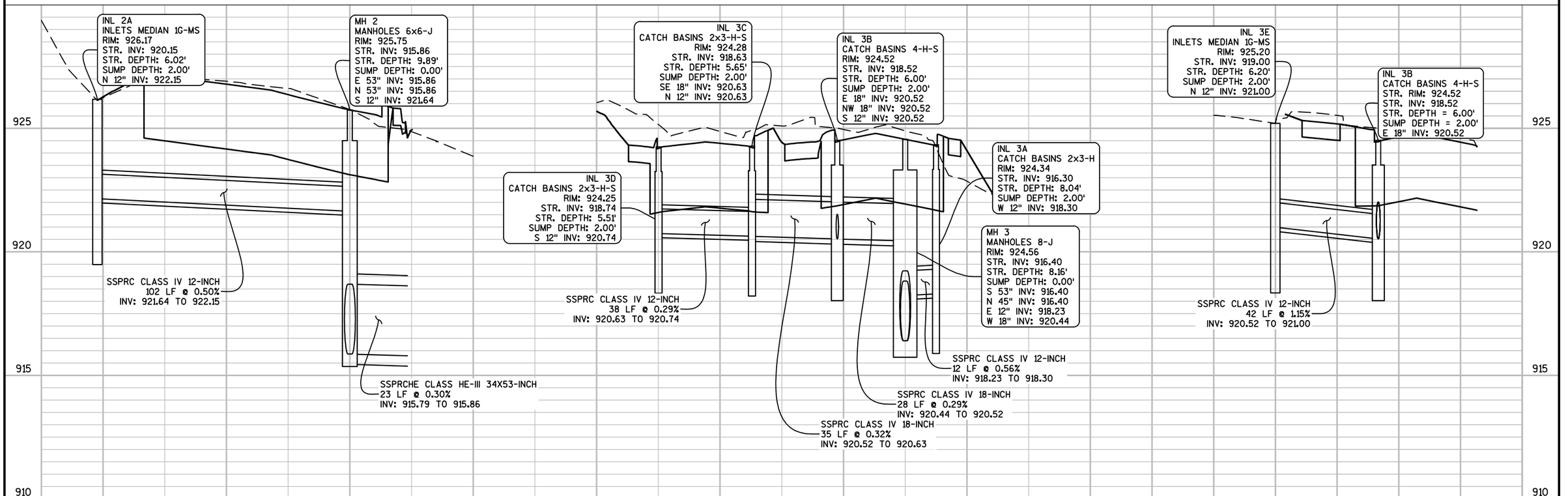

PROJECT NO: 4854-03-71	HWY: CTH G	COUNTY: FOND DU LAC	STORM SEWER	SHEET 32 E

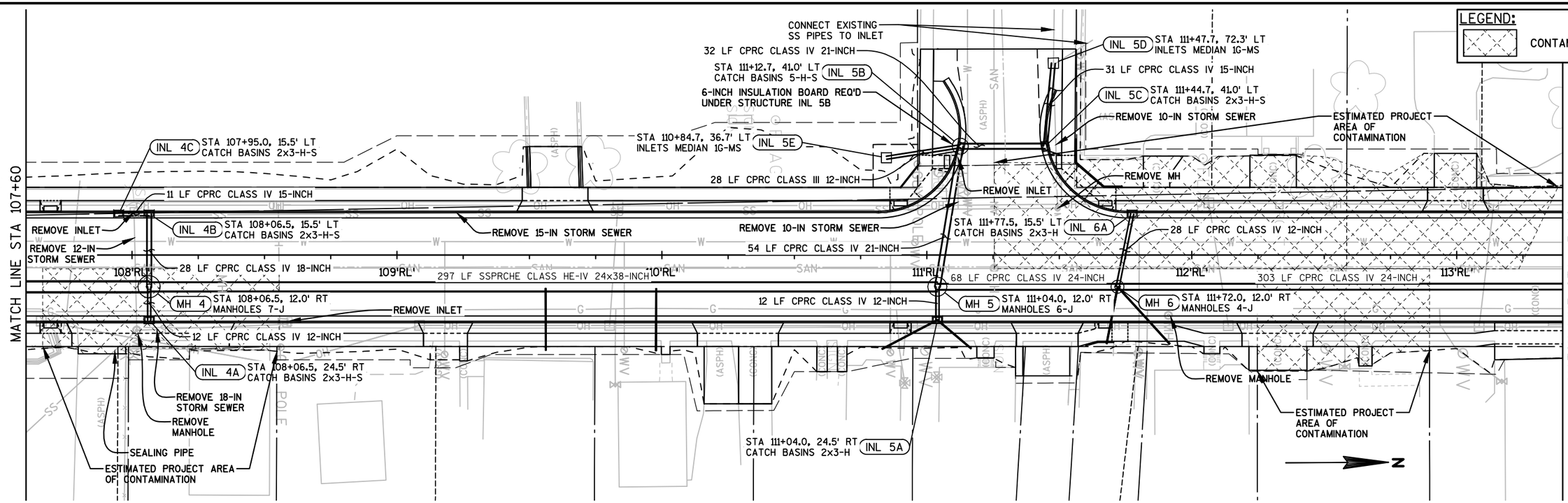

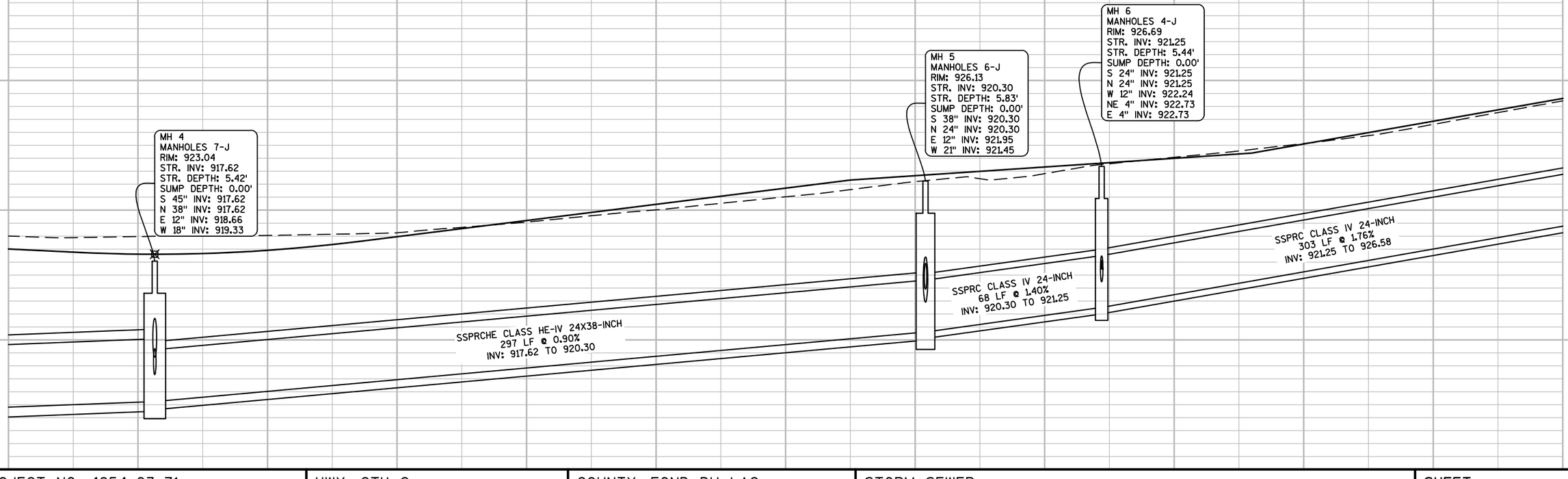

PROJECT NO: 4854-03-71	HWY: CTH G	COUNTY: FOND DU LAC	STORM SEWER	SHEET 33	E

2

LEGEND:
CONTAMINATION

MATCH LINE STA 107+60

MATCH LINE STA 113+40

CONNECT EXISTING SS PIPES TO INLET
32 LF CPRC CLASS IV 21-INCH
STA 111+12.7, 41.0' LT CATCH BASINS 5-H-S (INL 5B)
6-INCH INSULATION BOARD REQ'D UNDER STRUCTURE INL 5B
INL 5D STA 111+47.7, 72.3' LT INLETS MEDIAN 1G-MS
31 LF CPRC CLASS IV 15-INCH
INL 5C STA 111+44.7, 41.0' LT CATCH BASINS 2x3-H-S
REMOVE 10-IN STORM SEWER
ESTIMATED PROJECT AREA OF CONTAMINATION
INL 4C STA 107+95.0, 15.5' LT CATCH BASINS 2x3-H-S
STA 110+84.7, 36.7' LT INLETS MEDIAN 1G-MS (INL 5E)
28 LF CPRC CLASS III 12-INCH
REMOVE MH
REMOVE INLET
11 LF CPRC CLASS IV 15-INCH
REMOVE INLET
INL 4B STA 108+06.5, 15.5' LT CATCH BASINS 2x3-H-S
REMOVE 15-IN STORM SEWER
REMOVE 10-IN STORM SEWER
STA 111+77.5, 15.5' LT CATCH BASINS 2x3-H (INL 6A)
28 LF CPRC CLASS IV 12-INCH
REMOVE 12-IN STORM SEWER
54 LF CPRC CLASS IV 21-INCH
108'RL'
28 LF CPRC CLASS IV 18-INCH
109'RL'
297 LF SSPRCHE CLASS HE-IV 24x38-INCH
110'RL'
111'RL'
68 LF CPRC CLASS IV 24-INCH
112'RL'
303 LF CPRC CLASS IV 24-INCH
113'RL'
MH 4 STA 108+06.5, 12.0' RT MANHOLES 7-J
REMOVE INLET
12 LF CPRC CLASS IV 12-INCH
12 LF CPRC CLASS IV 12-INCH
MH 5 STA 111+04.0, 12.0' RT MANHOLES 6-J
MH 6 STA 111+72.0, 12.0' RT MANHOLES 4-J
INL 4A STA 108+06.5, 24.5' RT CATCH BASINS 2x3-H-S
23 LF 4.0-IN PVC PIPE
SUMP DRAIN CLEANOUT/CONNECT TO EXISTING SUMP DRAIN
SUMP DRAIN CLEANOUT/CONNECT TO EXISTING SUMP DRAIN
REMOVE MANHOLE
29 LF 4.0-IN PVC PIPE
REMOVE 18-IN STORM SEWER
REMOVE MANHOLE
SUMP DRAIN CLEANOUT/CONNECT TO EXISTING SUMP DRAIN
23 LF 4.0-IN PVC PIPE
22 LF 4.0-IN PVC PIPE
24 LF 4.0-IN PVC PIPE
17 LF 4.0-IN PVC PIPE
SEALING PIPE
SUMP DRAIN CLEANOUT/CONNECT TO EXISTING SUMP DRAIN
STA 111+04.0, 24.5' RT CATCH BASINS 2x3-H (INL 5A)
ESTIMATED PROJECT AREA OF CONTAMINATION
SUMP DRAIN CLEANOUT/CONNECT TO EXISTING SUMP DRAIN
N

INL 4B
CATCH BASINS 2x3-H-S
RIM: 922.99
STR. INV: 917.47
STR. DEPTH: 5.52'
SUMP DEPTH: 2.00'
E 18" INV: 919.47
S 15" INV: 919.47

MH 4
MANHOLES 7-J
RIM: 923.04
STR. INV: 917.62
STR. DEPTH: 5.42'
SUMP DEPTH: 0.00'
S 45" INV: 917.62
N 38" INV: 917.62
E 12" INV: 918.66
W 18" INV: 919.33

INL 5B
CATCH BASINS 5-H-S
RIM: 925.76
STR. INV: 921.61
STR. DEPTH: 4.15'
SUMP DEPTH: 0.00'
S 12" INV: 922.11
E 21" INV: 921.62
N 21" INV: 921.61

MH 5
MANHOLES 6-J
RIM: 926.13
STR. INV: 920.30
STR. DEPTH: 5.83'
SUMP DEPTH: 0.00'
S 38" INV: 920.30
N 24" INV: 920.30
E 12" INV: 921.95
W 21" INV: 921.45

INL 5B
CATCH BASINS 5-H-S
RIM: 925.76
STR. INV: 921.61
STR. DEPTH: 4.15'
SUMP DEPTH: 0.00'
S 12" INV: 922.11
E 21" INV: 921.62
N 21" INV: 921.61

INL 5C
CATCH BASINS 2x3-H-S
RIM: 926.05
STR. INV: 919.71
STR. DEPTH: 6.34'
SUMP DEPTH: 2.00'
S 21" INV: 921.71
W 15" INV: 921.71

INL 6A
CATCH BASINS 2x3-H
RIM: 926.43
STR. INV: 920.38
STR. DEPTH: 6.05'
SUMP DEPTH: 2.00'
E 12" INV: 922.38

MH 6
MANHOLES 4-J
RIM: 926.69
STR. INV: 921.25
STR. DEPTH: 5.44'
SUMP DEPTH: 0.00'
S 24" INV: 921.25
N 24" INV: 921.25
W 12" INV: 922.24
NE 4" INV: 922.73
E 4" INV: 922.73

INL 4C
CATCH BASINS 2x3-H-S
RIM: 923.01
STR. INV: 917.53
STR. DEPTH: 5.48'
SUMP DEPTH: 2.00'
N 15" INV: 919.53

INL 4A
CATCH BASINS 2x3-H-S
RIM: 922.80
STR. INV: 916.72
STR. DEPTH: 6.08'
SUMP DEPTH: 2.00'
W 12" INV: 918.72

INL 5A
CATCH BASINS 2x3-H
RIM: 925.92
STR. INV: 920.02
STR. DEPTH: 5.90'
SUMP DEPTH: 2.00'
W 12" INV: 922.02
SE 4" INV: 923.23
NE 4" INV: 923.23

INL 5E
INLETS MEDIAN 1G-MS
RIM: 925.08
STR. INV: 920.21
STR. DEPTH: 4.87'
SUMP DEPTH: 2.00'
N 12" INV: 922.21

INL 5D
INLETS MEDIAN 1G-MS
RIM: 926.56
STR. INV: 919.81
STR. DEPTH: 6.75'
SUMP DEPTH: 2.00'
E 15" INV: 921.81

930
925
920
915

SSPRC CLASS IV 15-INCH
11 LF @ 0.52%
INV: 919.47 TO 919.53

SSPRC CLASS IV 18-INCH
28 LF @ 0.51%
INV: 919.33 TO 919.47

SSPRC CLASS IV 12-INCH
12 LF @ 0.48%
INV: 918.66 TO 918.72

SSPRC CLASS IV 21-INCH
54 LF @ 0.32%
INV: 921.45 TO 921.62

SSPRC CLASS IV 12-INCH
12 LF @ 0.56%
INV: 921.95 TO 922.02

SSPRC CLASS III 12-INCH
28 LF @ 0.35%
INV: 922.11 TO 922.21

SSPRC CLASS IV 21-INCH
32 LF @ 0.31%
INV: 921.61 TO 921.71

SSPRC CLASS IV 15-INCH
31 LF @ 0.32%
INV: 921.71 TO 921.81

CONNECT EXISTING 10" CMP AND 10" PVC STORM SEWER PIPES TO INLET

SSPRC CLASS IV 12-INCH
28 LF @ 0.50%
INV: 922.24 TO 922.38

PROJECT NO: 4854-03-71	HWY: CTH G	COUNTY: FOND DU LAC	STORM SEWER	SHEET 34 E

FILE NAME : F:\TR\JOBS\E2143A15\CIVIL 3D 2014\SHEETSPLAN\485403-022500-SS.DWG
LAYOUT NAME - ****
485403-022504-SS
PLOT DATE : 4/20/2018 9:49 AM
PLOT BY : CRAIG KNUTH
PLOT NAME :
PLOT SCALE : **********
WISDOT/CADDS SHEET 41

2

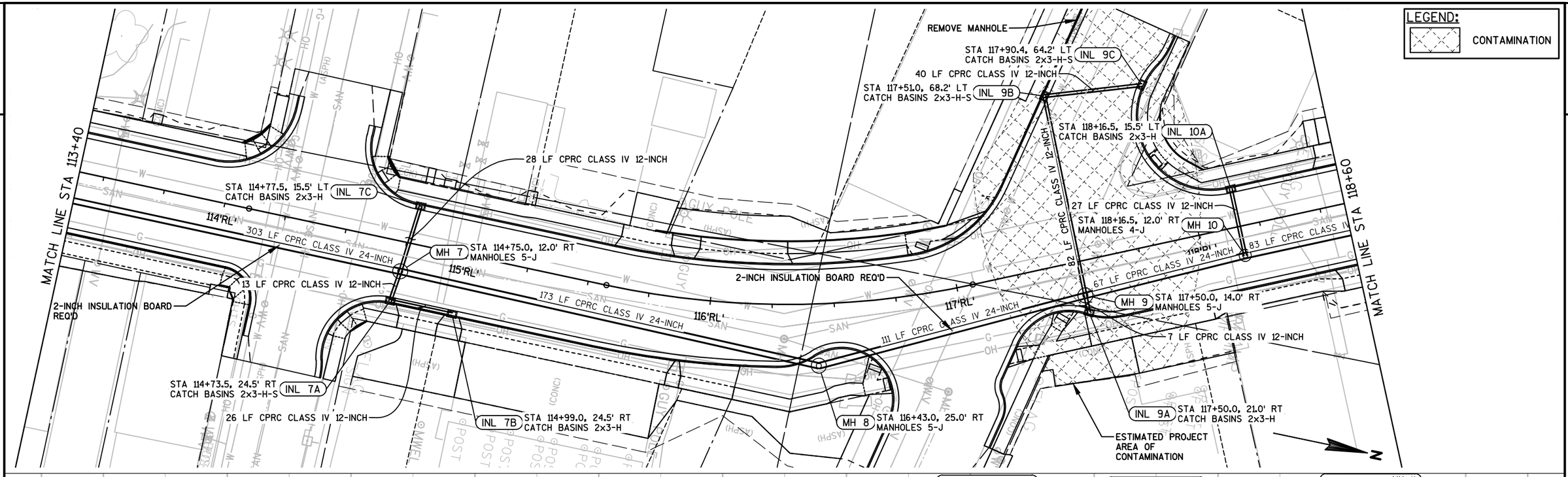

PROJECT NO: 4854-03-71	HWY: CTH G	COUNTY: FOND DU LAC	STORM SEWER	SHEET	E

FILE NAME : F:\TR\JOBS\E2143A15\CIVIL 3D 2014\SHEETSPLAN\485403-022500-SS.DWG
LAYOUT NAME - ****
485403-022505-ss
PLOT DATE : 4/20/2018 9:49 AM PLOT BY : CRAIG KNUTH PLOT NAME : PLOT SCALE : **********
WISDOT/CADDS SHEET 41

2

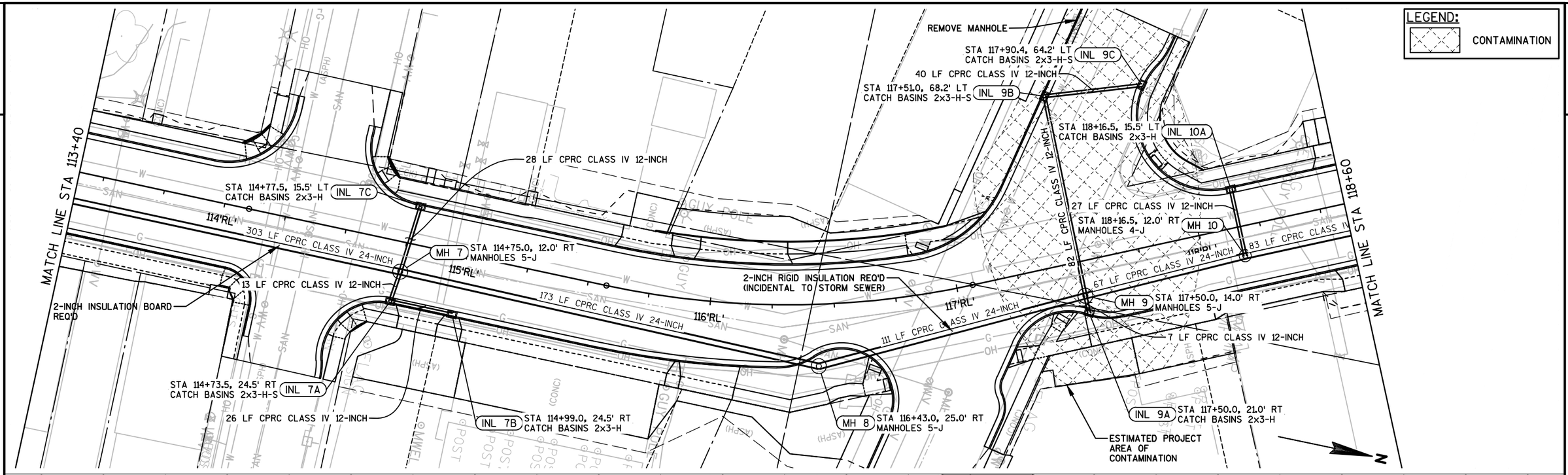

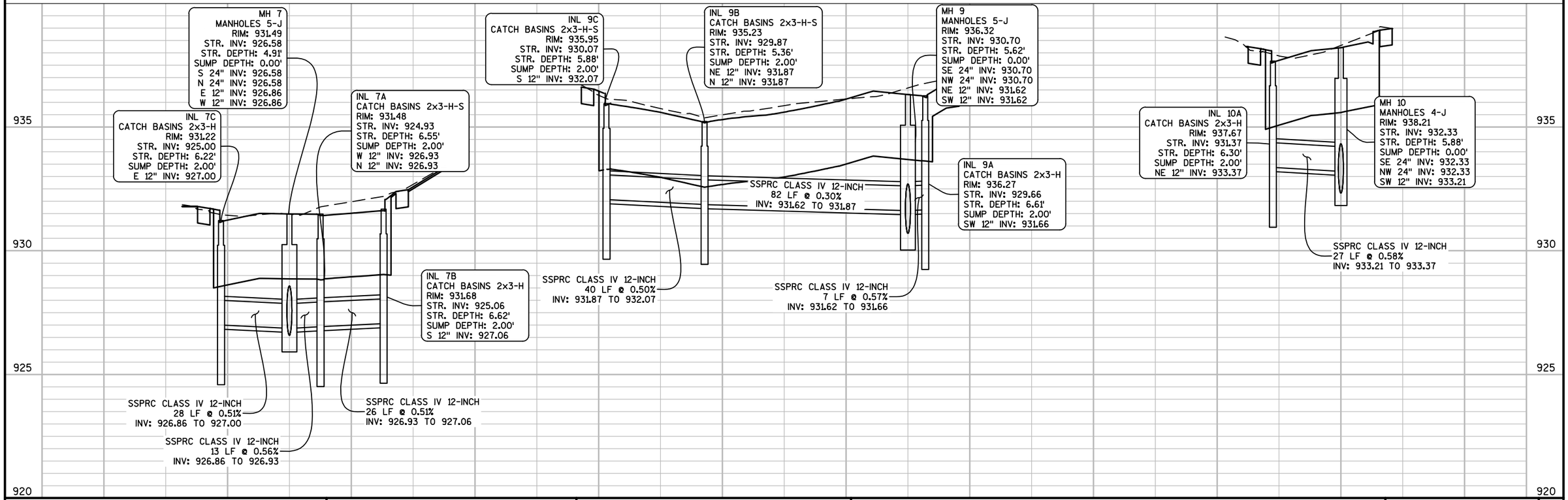

PROJECT NO: 4854-03-71	HWY: CTH G	COUNTY: FOND DU LAC	STORM SEWER	SHEET 36	E

2

LEGEND:
CONTAMINATION

MATCH LINE STA 118+60

INL 13E STA 122+00.0, 15.5' LT CATCH BASINS 2x3-H

27 LF CPRC CLASS IV 12-INCH

INL 12A STA 120+95.0, 15.5' LT CATCH BASINS 2x3-H

27 LF CPRC CLASS III 12-INCH

24-INCH

119'RL' MH 11 STA 119+00.0, 12.0' RT MANHOLES 4-J

120'RL'

195 LF CPRC CLASS IV 24-INCH

121'RL'

105 LF CPRC CLASS IV 24-INCH

122'RL' MH 13 STA 122+00.0, 12.0' RT MANHOLES 5-J

123'RL'

124'RL'

INL 11B STA 119+10.0, 24.5' RT CATCH BASINS 2x3-H

MH 12 STA 120+95.0, 12.0' RT MANHOLES 4-J

33 LF CPRC CLASS IV 12-INCH

13 LF CPRC CLASS IV 12-INCH

STA 121+74.2, 46.4' RT CATCH BASINS 2x3-H

INL 13B

INL 13D STA 122+30.5, 24.5' RT CATCH BASINS 2x3-H

37 LF CPRC CLASS III 12-INCH

10 LF CPRC CLASS IV 12-INCH

INL 11A STA 119+00.0, 24.5' RT CATCH BASINS 2x3-H

14 LF CPRC CLASS III 12-INCH

STA 121+74.3, 60.1' RT CATCH BASINS 2x3-H

INL 13C

INL 13A STA 122+05.2, 48.1' RT CATCH BASINS 2x3-H-S

ESTIMATED PROJECT AREA OF CONTAMINATION

2-INCHES INSULATION BOARD REQD

31 LF CPRC CLASS IV 12-INCH

ESTIMATED PROJECT AREA OF CONTAMINATION

MH 11
MANHOLES 4-J
RIM: 939.22
STR. INV: 934.00
STR. DEPTH: 5.22'
SUMP DEPTH: 0.00'
SE 24" INV: 934.00
NW 24" INV: 934.00
NE 12" INV: 934.00

MH 12
MANHOLES 4-J
RIM: 941.66
STR. INV: 936.15
STR. DEPTH: 5.51'
SUMP DEPTH: 0.00'
SE 24" INV: 936.15
NW 24" INV: 936.15
SW 12" INV: 937.98

MH 13
MANHOLES 5-J
RIM: 945.22
STR. INV: 939.53
STR. DEPTH: 5.69'
SUMP DEPTH: 0.00'
SE 24" INV: 939.53
SW 12" INV: 941.07
NE 12" INV: 939.53
N 12" INV: 939.53

SSPRC CLASS IV 24-INCH
83 LF @ 2.00%
INV: 932.33 TO 934.00

SSPRC CLASS IV 24-INCH
195 LF @ 1.10%
INV: 934.00 TO 936.15

SSPRC CLASS IV 24-INCH
105 LF @ 3.22%
INV: 936.15 TO 939.53

945
940
935
930

PROJECT NO: 4854-03-71	HWY: CTH G	COUNTY: FOND DU LAC	STORM SEWER	SHEET 37	E

2

LEGEND:
CONTAMINATION

MATCH LINE STA 118+60

INL 13E
STA 122+00.0, 15.5' LT
CATCH BASINS 2x3-H

27 LF CPRC CLASS IV 12-INCH

INL 12A
STA 120+95.0, 15.5' LT
CATCH BASINS 2x3-H

27 LF CPRC CLASS III 12-INCH

24-INCH

119'RL'

MH 11
STA 119+00.0, 12.0' RT
MANHOLES 4-J

120'RL'

195 LF CPRC CLASS IV 24-INCH

121'RL'

105 LF CPRC CLASS IV 24-INCH

MH 12
STA 120+95.0, 12.0' RT
MANHOLES 4-J

122'RL'

MH 13
STA 122+00.0, 12.0' RT
MANHOLES 5-J

123'RL'

124'RL'

33 LF CPRC CLASS IV 12-INCH

INL 11B
STA 119+10.0, 24.5' RT
CATCH BASINS 2x3-H

13 LF CPRC CLASS IV 12-INCH

STA 121+74.2, 46.4' RT
CATCH BASINS 2x3-H

INL 13B

INL 13D
STA 122+30.5, 24.5' RT
CATCH BASINS 2x3-H

37 LF CPRC CLASS III 12-INCH

10 LF CPRC CLASS IV 12-INCH

INL 11A
STA 119+00.0, 24.5' RT
CATCH BASINS 2x3-H

14 LF CPRC CLASS III 12-INCH

STA 121+74.3, 60.1' RT
CATCH BASINS 2x3-H

INL 13C

INL 13A
STA 122+05.2, 48.1' RT
CATCH BASINS 2x3-H-S

SUMP DRAIN CLEANOUT/CONNECT
TO EXISTING ROOF DRAIN

ESTIMATED PROJECT
AREA OF
CONTAMINATION

12 LF 4.0-IN PVC PIPE

2-INCH INSULATION BOARD REQ'D

31 LF CPRC CLASS IV 12-INCH

ESTIMATED PROJECT
AREA OF
CONTAMINATION

70 LF 4.0-IN PVC PIPE

SUMP DRAIN CLEANOUT/CONNECT
TO EXISTING ROOF DRAIN

MH 11
MANHOLES 4-J
RIM: 939.22
STR. INV: 934.00
STR. DEPTH: 5.22'
SUMP DEPTH: 0.00'
SE 24" INV: 934.00
NW 24" INV: 934.00
NE 12" INV: 934.00

INL 11A
CATCH BASINS 2x3-H
RIM: 939.05
STR. INV: 932.07
STR. DEPTH: 6.98'
SUMP DEPTH: 2.00'
SW 12" INV: 934.07
NW 12" INV: 934.07
NE 4" INV: 936.11

INL 11B
CATCH BASINS 2x3-H
RIM: 939.05
STR. INV: 932.12
STR. DEPTH: 6.93'
SUMP DEPTH: 2.00'
SE 12" INV: 934.12

SSPRC CLASS IV 12-INCH
13 LF @ 0.56%
INV: 934.00 TO 934.07

SSPRC CLASS IV 12-INCH
10 LF @ 0.50%
INV: 934.07 TO 934.12

INL 12A
CATCH BASINS 2x3-H
RIM: 941.83
STR. INV: 936.12
STR. DEPTH: 5.71'
SUMP DEPTH: 2.00'
NE 12" INV: 938.12

MH 12
MANHOLES 4-J
RIM: 941.66
STR. INV: 936.15
STR. DEPTH: 5.51'
SUMP DEPTH: 0.00'
SE 24" INV: 936.15
NW 24" INV: 936.15
SW 12" INV: 937.98

SSPRC CLASS IV 12-INCH
27 LF @ 0.51%
INV: 937.98 TO 938.12

INL 13E
CATCH BASINS 2x3-H
RIM: 944.88
STR. INV: 939.21
STR. DEPTH: 5.67'
SUMP DEPTH: 2.00'
NE 12" INV: 941.21

SSPRC CLASS III 12-INCH
27 LF @ 0.51%
INV: 941.07 TO 941.21

MH 13
MANHOLES 5-J
RIM: 945.22
STR. INV: 939.53
STR. DEPTH: 5.69'
SUMP DEPTH: 0.00'
SE 24" INV: 939.53
SW 12" INV: 941.07
NE 12" INV: 939.53
N 12" INV: 939.53

SSPRC CLASS III 12-INCH
37 LF @ 0.33%
INV: 939.53 TO 939.65

INL 13A
CATCH BASINS 2x3-H-S
RIM: 945.30
STR. INV: 937.65
STR. DEPTH: 7.65'
SUMP DEPTH: 2.00'
SW 12" INV: 939.65
S 12" INV: 939.65

SSPRC CLASS IV 12-INCH
31 LF @ 0.48%
INV: 939.65 TO 939.80

INL 13B
CATCH BASINS 2x3-H
RIM: 944.15
STR. INV: 937.80
STR. DEPTH: 6.35'
SUMP DEPTH: 2.00'
N 12" INV: 939.80
NE 12" INV: 939.80

INL 13C
CATCH BASINS 2x3-H
STR. RIM: 944.34
STR. INV: 937.87
STR. DEPTH = 6.47'
SUMP DEPTH = 2.00'

SSPRC CLASS III 12-INCH
14 LF @ 0.51%
INV: 939.80 TO 939.87

MH 13
MANHOLES 5-J
RIM: 945.22
STR. INV: 939.53
STR. DEPTH: 5.69'
SUMP DEPTH: 0.00'
SE 24" INV: 939.53
SW 12" INV: 941.07
NE 12" INV: 939.53
N 12" INV: 939.53

SSPRC CLASS IV 24-INCH
105 LF @ 3.22%
INV: 936.15 TO 939.53

INL 13D
CATCH BASINS 2x3-H
RIM: 946.45
STR. INV: 939.50
STR. DEPTH: 6.95'
SUMP DEPTH: 2.00'
S 12" INV: 941.50
N 4" INV: 943.30

SSPRC CLASS IV 12-INCH
33 LF @ 5.98%
INV: 939.53 TO 941.50

945
940
935
930

PROJECT NO: 4854-03-71	HWY: CTH G	COUNTY: FOND DU LAC	STORM SEWER	SHEET 38	E

2

LEGEND:
CONTAMINATION

INL 22D STA 129+05.0, 15.5' LT
CATCH BASINS 2x3-H

INL 22C STA 130+00.0, 15.5' LT
CATCH BASINS 2x3-H-S

10 LF CPRC CLASS IV 12-INCH

REMOVE INLET

REMOVE INLET

REMOVE INLET

REMOVE 10-IN STORM SEWER

REMOVE 15-IN STORM SEWER

STA 133+18.5, 15.5' LT
CATCH BASINS 2x3-H-S
INL 21A

STA 128+95.0, 15.5' LT
CATCH BASINS 2x3-H
INL 22E

95 LF CPRC CLASS IV 15-INCH

REMOVE 10-IN STORM SEWER

33 LF CPRC CLASS IV 15-INCH

REMOVE 10-IN STORM SEWER

REMOVE INLET

40 LF CPRC CLASS IV 12-INCH

128'RL' 129'RL' 130'RL' 131'RL' 132'RL' 133'RL'

STA 128+50.0, 18.0' RT
MANHOLES 5-J
MH 23

MH 22 STA 130+00.0, 18.0' RT
MANHOLES 5-J

STA 133+18.5, 24.5' RT
MANHOLES 8-H-S
MH 21

150 LF SSPRCHE CLASS HE-IV 19x30-INCH

319 LF SSPRCHE CLASS HE-IV 19x30-INCH

INL 22A STA 130+00.0, 24.5' RT
CATCH BASINS 2x3-H-S

STA 128+50.0, 44.9' RT
INLETS MEDIAN 1G-MS
INL 23A

27 LF CPRC CLASS IV 12-INCH

10 LF CPRC CLASS IV 12-INCH

INL 22B STA 129+90.0, 24.5' RT
CATCH BASINS 2x3-H-S

REMOVE 15-IN STORM SEWER

REMOVE INLET

REMOVE 15-IN STORM SEWER

80 LF SSPRCHE CLASS HE-IV 29x45-INCH

MATCH LINE STA 133+50

MH 23
MANHOLES 5-J
RIM: 948.54
STR. INV: 945.03
STR. DEPTH: 3.51'
SUMP DEPTH: 0.00'
NE 12" INV: 945.03
NW 30" INV: 945.03

MH 22
MANHOLES 5-J
RIM: 947.93
STR. INV: 944.58
STR. DEPTH: 3.35'
SUMP DEPTH: 0.00'
SW 15" INV: 944.58
NE 12" INV: 944.58
SE 30" INV: 944.58
NW 30" INV: 944.58

MH 21
MANHOLES 8-H-S
RIM: 947.77
STR. INV: 941.62
STR. DEPTH: 6.15'
SUMP DEPTH: 2.00'
SW 12" INV: 943.89
E 45" INV: 943.62
NW 30" INV: 943.62
SE 30" INV: 943.62

950 945 940 935

SSPRCHE CLASS HE-IV 19X30-INCH
150 LF @ 0.30%
INV: 944.58 TO 945.03

SSPRCHE CLASS HE-IV 19X30-INCH
319 LF @ 0.30%
INV: 943.62 TO 944.58

PROJECT NO: 4854-03-71	HWY: CTH G	COUNTY: FOND DU LAC	STORM SEWER	SHEET 39	E

LEGEND:
CONTAMINATION

MATCH LINE STA 133+50

INL 22C STA 130+00.0, 15.5' LT
CATCH BASINS 2x3-H-S

INL 22D STA 129+05.0, 15.5' LT
CATCH BASINS 2x3-H

REMOVE INLET

REMOVE INLET

REMOVE 10-IN STORM SEWER
REMOVE INLET

REMOVE 15-IN STORM SEWER

STA 133+18.5, 15.5' LT
CATCH BASINS 2x3-H-S
INL 21A

10 LF CPRC CLASS IV 12-INCH

STA 128+95.0, 15.5' LT
CATCH BASINS 2x3-H
INL 22E

95 LF CPRC CLASS IV 15-INCH

REMOVE 10-IN STORM SEWER

33 LF CPRC CLASS IV 15-INCH

REMOVE 10-IN STORM SEWER

REMOVE INLET

40 LF CPRC CLASS IV 12-INCH

128'RL' 129'RL' 130'RL' 131'RL' 132'RL' 133'RL'

STA 128+50.0, 18.0' RT
MANHOLES 5-J
MH 23

MH 22 STA 130+00.0, 18.0' RT
MANHOLES 5-J

STA 133+18.5, 24.5' RT
MANHOLES 8-H-S
MH 21

150 LF SSPRCHE CLASS HE-IV 19x30-INCH

319 LF SSPRCHE CLASS HE-IV 19x30-INCH

INL 22A STA 130+00.0, 24.5' RT
CATCH BASINS 2x3-H-S

STA 128+50.0, 44.9' RT
INLETS MEDIAN 1G-MS
INL 23A

27 LF CPRC CLASS IV 12-INCH

SUMP DRAIN CLEANOUT/CONNECT
TO EXISTING SUMP DRAIN

34 LF 4.0-IN PVC PIPE

10 LF CPRC CLASS IV 12-INCH

INL 22B STA 129+90.0, 24.5' RT
CATCH BASINS 2x3-H-S

REMOVE 15-IN STORM SEWER

REMOVE INLET

REMOVE 15-IN STORM SEWER

80 LF SSPRCHE CLASS HE-IV 29x45-INCH

MH 23
MANHOLES 5-J
RIM: 948.54
STR. INV: 945.03
STR. DEPTH: 3.51'
SUMP DEPTH: 0.00'
NE 12" INV: 945.03
NW 30" INV: 945.03

INL 23A
INLETS MEDIAN 1G-MS
RIM: 947.36
STR. INV: 943.30
STR. DEPTH: 4.06'
SUMP DEPTH: 2.00'
SW 12" INV: 945.30

INL 22E
CATCH BASINS 2x3-H
RIM: 948.43
STR. INV: 943.01
STR. DEPTH: 5.42'
SUMP DEPTH: 2.00'
NW 12" INV: 945.01

INL 22D
CATCH BASINS 2x3-H
RIM: 948.42
STR. INV: 942.97
STR. DEPTH: 5.45'
SUMP DEPTH: 2.00'
NW 15" INV: 944.97
SE 12" INV: 944.97

MH 22
MANHOLES 5-J
RIM: 947.93
STR. INV: 944.58
STR. DEPTH: 3.35'
SUMP DEPTH: 0.00'
SW 15" INV: 944.58
NE 12" INV: 944.58
SE 30" INV: 944.58
NW 30" INV: 944.58

INL 22A
CATCH BASINS 2x3-H-S
RIM: 947.83
STR. INV: 942.60
STR. DEPTH: 5.23'
SUMP DEPTH: 2.00'
SW 12" INV: 944.60
SE 12" INV: 944.60

INL 22B
CATCH BASINS 2x3-H-S
RIM: 947.87
STR. INV: 942.64
STR. DEPTH: 5.23'
SUMP DEPTH: 2.00'
NW 12" INV: 944.64
SE 4" INV: 945.00

INL 22C
CATCH BASINS 2x3-H-S
RIM: 948.71
STR. INV: 942.68
STR. DEPTH: 6.03'
SUMP DEPTH: 2.00'
NE 15" INV: 944.68
SE 15" INV: 944.68

SSPRC CLASS IV 12-INCH
27 LF @ 1.00%
INV: 945.03 TO 945.30

SSPRC CLASS IV 12-INCH
10 LF @ 0.40%
INV: 944.97 TO 945.01

SSPRC CLASS IV 15-INCH
95 LF @ 0.31%
INV: 944.68 TO 944.97

4.0-IN PVC PIPE
34 LF @ 3.06%
INV: 945.00 TO 943.97

SSPRC CLASS IV 12-INCH
10 LF @ 0.40%
INV: 944.60 TO 944.64

SSPRC CLASS IV 12-INCH
7 LF @ 0.31%
INV: 944.58 TO 944.60

SSPRC CLASS IV 15-INCH
33 LF @ 0.30%
INV: 944.58 TO 944.68

950 945 940 935

PROJECT NO: 4854-03-71	HWY: CTH G	COUNTY: FOND DU LAC	STORM SEWER	SHEET 40	E

2

LEGEND:
CONTAMINATION

MATCH LINE STA 133+50

MATCH LINE STA 139+25

REMOVE 12-IN STORM SEWER

REMOVE INLET

REMOVE INLET

STA 135+50.0, 15.5' LT
CATCH BASINS 2x3-H
INL 24B

27 LF CPRC CLASS IV 12-INCH

295 LF CPRC CLASS IV 24-INCH

232 LF SSPRCHE CLASS HE-IV 19x30-INCH

13 LF CPRC CLASS IV 12-INCH

MH 24
STA 135+50.0, 12.0' RT
MANHOLES 6-J

INL 24A
STA 135+50.0, 24.5' RT
CATCH BASINS 2x3-H

STA 138+20.3, 103.8' LT
APRON ENDWALLS FOR CPRC 18-INCH
AEW 25D

74 LF CPRC CLASS IV 18-INCH

32 LF CPRC CLASS IV 18-INCH

6-INCH INSULATION BOARD REQ'D
UNDER STRUCTURE INL 25B

STA 138+16.5, 29.7' LT
CATCH BASINS 4-H
INL 25C

STA 138+45.0, 15.5' LT
INLETS 4-H
INL 25B

28 LF CPRC CLASS IV 18-INCH

255 LF CPRC CLASS IV 24-INCH

4-INCH INSULATION BOARDREQ'D

12 LF CPRC CLASS IV 12-INCH

MH 25
STA 138+45.0, 12.0' RT
MANHOLES 6-J

INL 25A
STA 138+45.0, 24.5' RT
CATCH BASINS 2x3-H

134'RL' 135'RL' 136'RL' 137'RL' 138'RL'

MH 25
MANHOLES 6-J
RIM: 956.53
STR. INV: 951.41
STR. DEPTH: 5.12'
SUMP DEPTH: 0.00'
SW 18" INV: 951.41
NE 12" INV: 951.41
NW 24" INV: 951.41
SE 24" INV: 951.41

MH 24
MANHOLES 6-J
RIM: 950.12
STR. INV: 944.55
STR. DEPTH: 5.57'
SUMP DEPTH: 0.00'
SW 12" INV: 946.51
NE 12" INV: 946.51
NW 24" INV: 944.55
SE 30" INV: 944.55

SSPRC CLASS IV 24-INCH
295 LF @ 2.33%
INV: 944.55 TO 951.41

SSPRCHE CLASS HE-IV 19X30-INCH
232 LF @ 0.40%
INV: 943.62 TO 944.55

955
950
945
940

PROJECT NO: 4854-03-71	HWY: CTH G	COUNTY: FOND DU LAC	STORM SEWER	SHEET 41	E

2

LEGEND:
CONTAMINATION

MATCH LINE STA 133+50

MATCH LINE STA 139+25

REMOVE 12-IN STORM SEWER

REMOVE INLET

REMOVE INLET

STA 135+50.0, 15.5' LT
CATCH BASINS 2x3-H
INL 24B

27 LF CPRC CLASS IV 12-INCH

232 LF SSPRCHE CLASS HE-IV 19x30-INCH

13 LF CPRC CLASS IV 12-INCH

MH 24
STA 135+50.0, 12.0' RT
MANHOLES 6-J

INL 24A
STA 135+50.0, 24.5' RT
CATCH BASINS 2x3-H

295 LF CPRC CLASS IV 24-INCH

STA 138+20.3, 103.8' LT
APRON ENDWALLS FOR CPRC 18-INCH
AEW 25D

74 LF CPRC CLASS IV 18-INCH

32 LF CPRC CLASS IV 18-INCH

6-INCH INSULATION BOARD REQ'D
UNDER STRUCTURE INL 25B

STA 138+16.5, 29.7' LT
CATCH BASINS 4-H
INL 25C

STA 138+45.0, 15.5' LT
INLETS 4-H
INL 25B

28 LF CPRC CLASS IV 18-INCH

4-INCH INSULATION BOARD REQ'D

12 LF CPRC CLASS IV 12-INCH

MH 25
STA 138+45.0, 12.0' RT
MANHOLES 6-J

255 LF CPRC CLASS IV 24-INCH

INL 25A
STA 138+45.0, 24.5' RT
CATCH BASINS 2x3-H

134'RL' 135'RL' 136'RL' 137'RL' 138'RL'

MH 24
MANHOLES 6-J
RIM: 950.12
STR. INV: 944.55
STR. DEPTH: 5.57'
SUMP DEPTH: 0.00'
SW 12" INV: 946.51
NE 12" INV: 946.51
NW 24" INV: 944.55
SE 30" INV: 944.55

INL 24B
CATCH BASINS 2x3-H
RIM: 950.08
STR. INV: 944.65
STR. DEPTH: 5.43'
SUMP DEPTH: 2.00'
NE 12" INV: 946.65

INL 24A
CATCH BASINS 2x3-H
RIM: 949.90
STR. INV: 944.58
STR. DEPTH: 5.32'
SUMP DEPTH: 2.00'
SW 12" INV: 946.58

SSPRC CLASS IV 12-INCH
27 LF @ 0.51%
INV: 946.51 TO 946.65

SSPRC CLASS IV 12-INCH
13 LF @ 0.56%
INV: 946.51 TO 946.58

AEW 25D
APRON ENDWALLS FOR CPRC 18-INCH
E 18" INV: 950.89

INL 25C
CATCH BASINS 4-H
RIM: 955.48
STR. INV: 951.21
STR. DEPTH: 4.27'
SUMP DEPTH: 0.00'
W 18" INV: 951.21
N 18" INV: 951.21

INL 25B
INLETS 4-H
RIM: 956.47
STR. INV: 951.32
STR. DEPTH: 5.15'
SUMP DEPTH: 0.00'
NE 18" INV: 951.32
S 18" INV: 951.32

MH 25
MANHOLES 6-J
RIM: 956.53
STR. INV: 951.41
STR. DEPTH: 5.12'
SUMP DEPTH: 0.00'
SW 18" INV: 951.41
NE 12" INV: 951.41
NW 24" INV: 951.41
SE 24" INV: 951.41

INL 25A
CATCH BASINS 2x3-H
RIM: 956.31
STR. INV: 949.46
STR. DEPTH: 6.85'
SUMP DEPTH: 2.00'
SW 12" INV: 951.46

SSPRC CLASS IV 18-INCH
74 LF @ 0.43%
INV: 950.89 TO 951.21

SSPRC CLASS IV 18-INCH
32 LF @ 0.35%
INV: 951.21 TO 951.32

SSPRC CLASS IV 18-INCH
28 LF @ 0.33%
INV: 951.41 TO 951.32

SSPRC CLASS IV 12-INCH
12 LF @ 0.40%
INV: 951.41 TO 951.46

955 950 945 940

PROJECT NO: 4854-03-71	HWY: CTH G	COUNTY: FOND DU LAC	STORM SEWER	SHEET 42	E

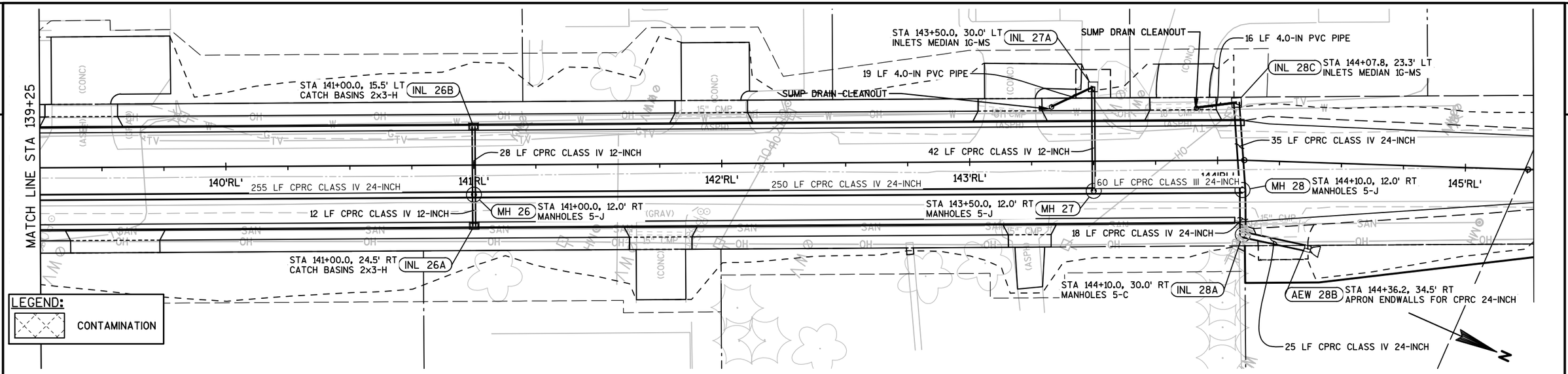

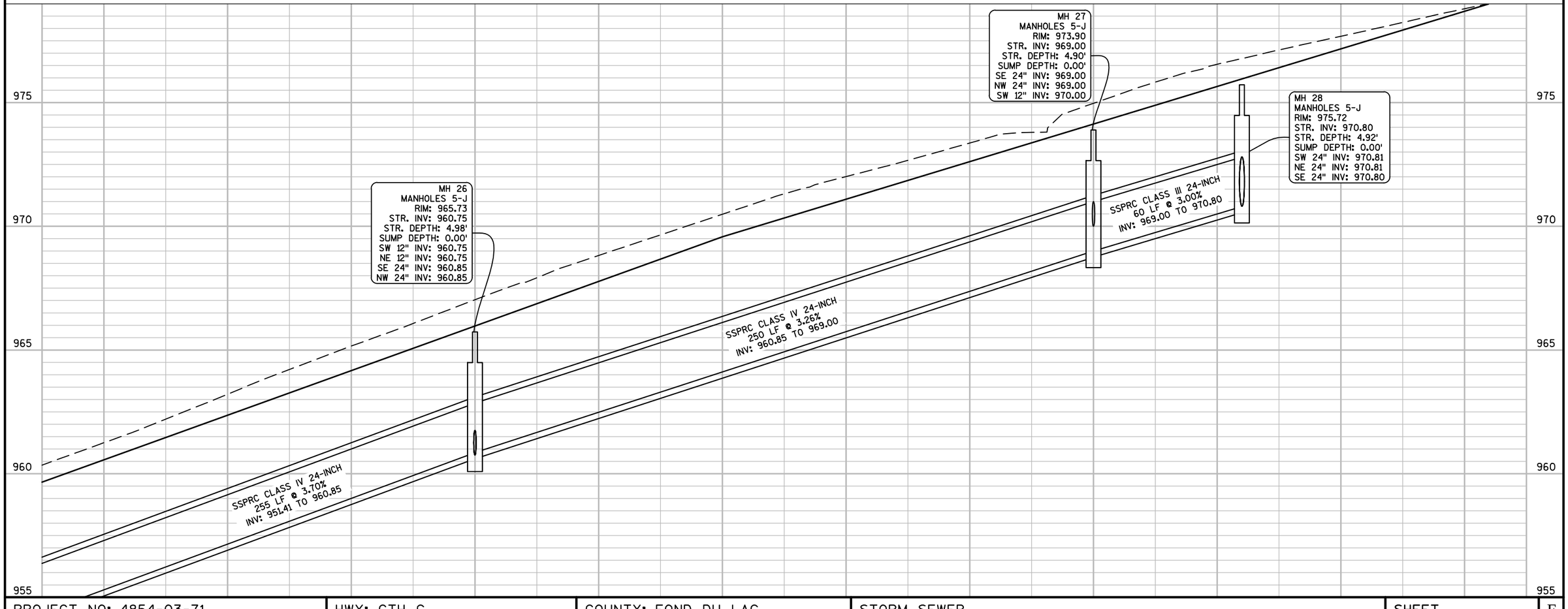

PROJECT NO: 4854-03-71	HWY: CTH G	COUNTY: FOND DU LAC	STORM SEWER	SHEET 43	E

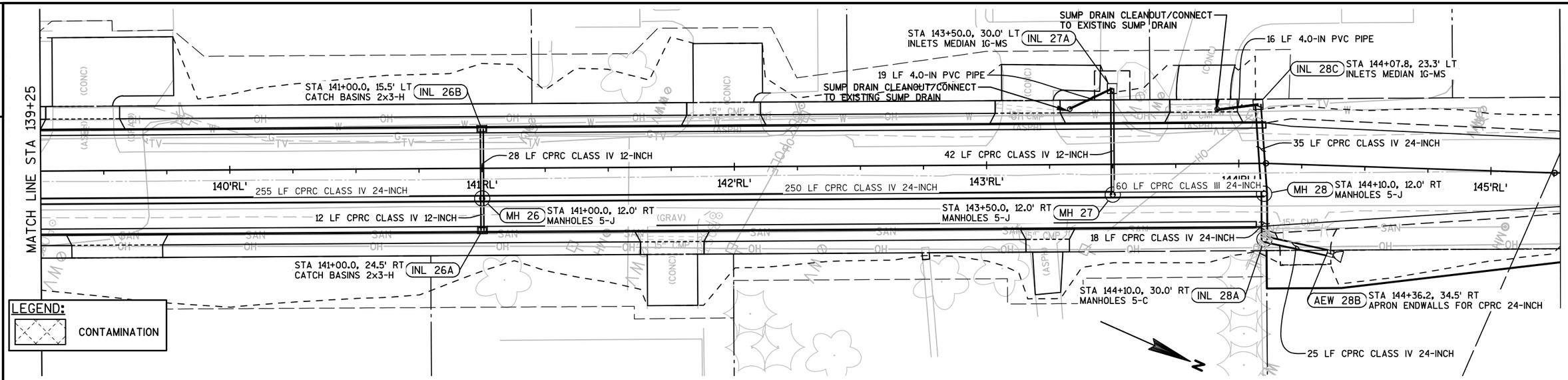

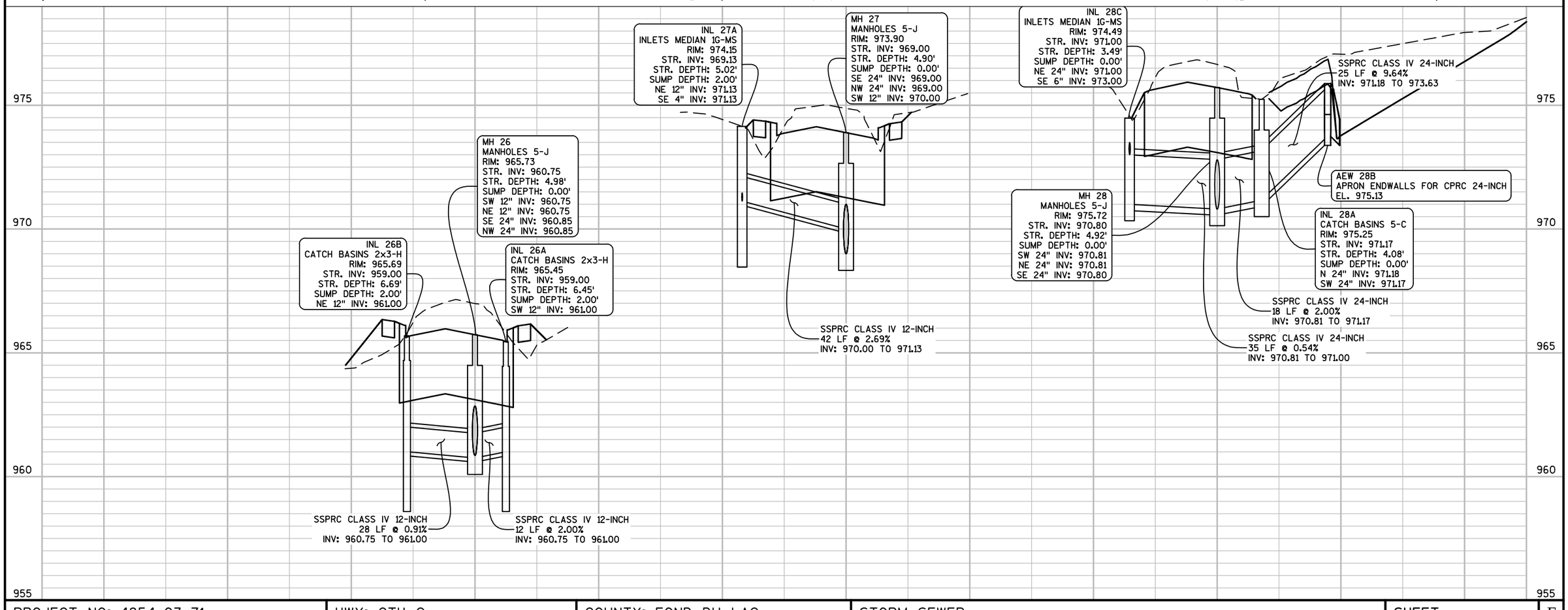

PROJECT NO: 4854-03-71	HWY: CTH G	COUNTY: FOND DU LAC	STORM SEWER	SHEET 44	E

LEGEND:
CONTAMINATION

N

REMOVE INLET

MH 2 STA 103+26.0, 12.0' RT
MANHOLES 6x6-J

INL 2B STA 103+25.6, 35.3' RT
MANHOLE 4S-C

243 LF SSPRCHE CLASS HE-III 34x53-INCH

AEW 1 STA 103+11.7, 277.9' RT
APRON ENDWALLS FOR CPRCHE 34x53-INCH

REMOVE 18-IN STORM SEWER

REMOVE INLET

REMOVE 12-IN STORM SEWER

23 LF SSPRCHE CLASS HE-III 34x53-INCH

REMOVE 27-IN STORM SEWER

REMOVE 18-IN STORM SEWER

102 LF CPRC CLASS IV 12-INCH

104RL

103RL

WETLANDS

POWER POLE

SIGN

FLAG

MH 2
MANHOLES 6x6-J
RIM: 925.75
STR. INV: 915.86
STR. DEPTH: 9.89'
SUMP DEPTH: 0.00'
E 53" INV: 915.86
N 53" INV: 915.86
S 12" INV: 921.64

INL 2B
MANHOLE 4S-C
RIM: 924.54
STR. INV: 915.79
STR. DEPTH: 8.75'
SUMP DEPTH: 0.00'
E 53" INV: 915.79
W 53" INV: 915.79

AEW 1
APRON ENDWALLS FOR CPRCHE 34x53-INCH
INV: 915.79

SSPRCHE CLASS HE-III 34X53-INCH
243 LF @ 0.32%
INV: 915.00 TO 915.79

SSPRCHE CLASS HE-III 34X53-INCH
23 LF @ 0.30%
INV: 915.79 TO 915.86

925
920
915
910

PROJECT NO: 4854-03-71	HWY: CTH G	COUNTY: FOND DU LAC	STORM SEWER	SHEET 45	E

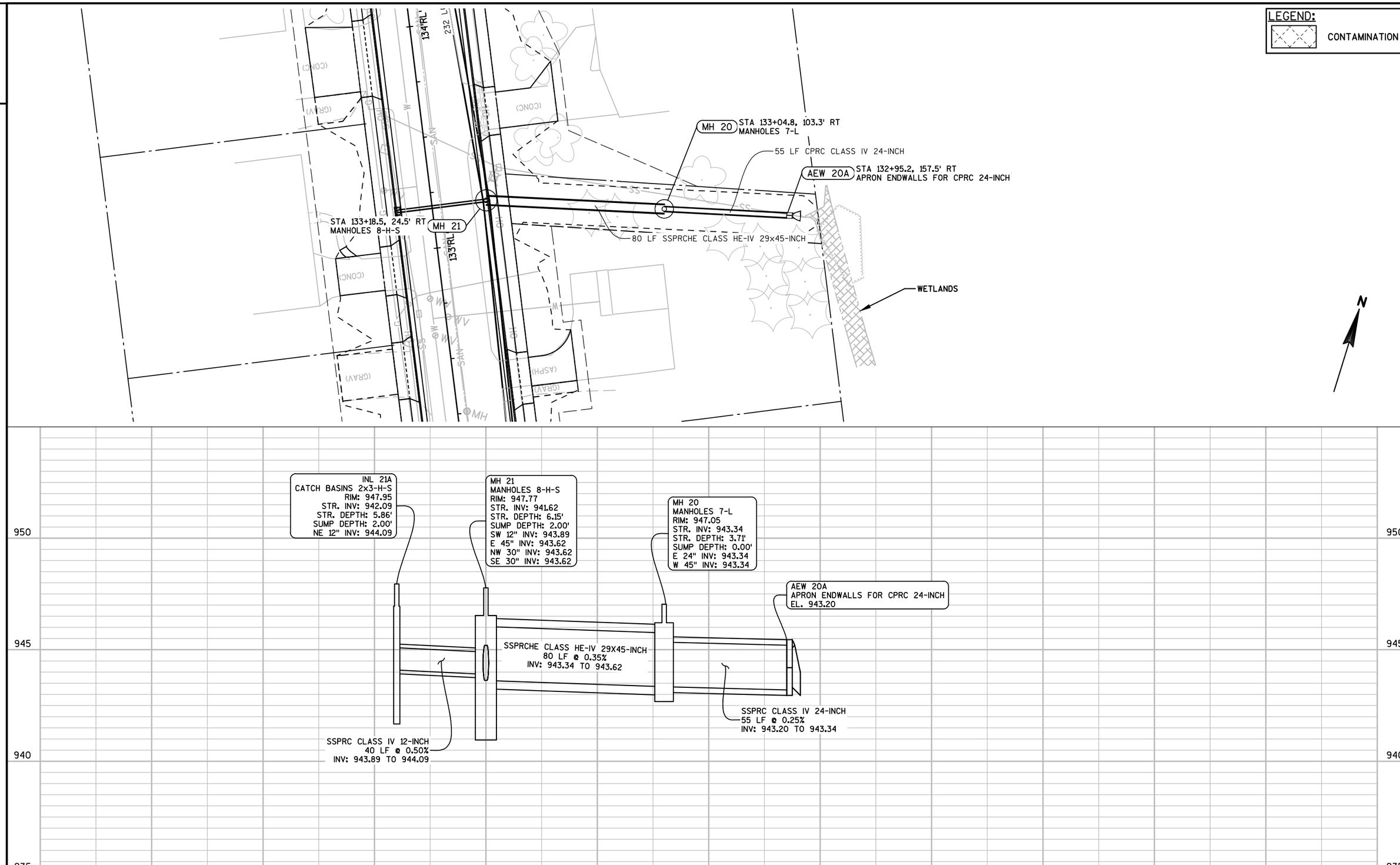

PROJECT NO: 4854-03-71	HWY: CTH G	COUNTY: FOND DU LAC	STORM SEWER	SHEET 46	E

FILE NAME : F:\TR\JOBS\E2143A15\CIVIL 3D 2014\SHEETSPLAN\485403-022500-SS.DWG
LAYOUT NAME - ****
485403-022531-SS
PLOT DATE : 7/19/2018 11:17 AM PLOT BY : CRAIG KNUTH PLOT NAME : PLOT SCALE : **********
WISDOT/CADDS SHEET 41

2

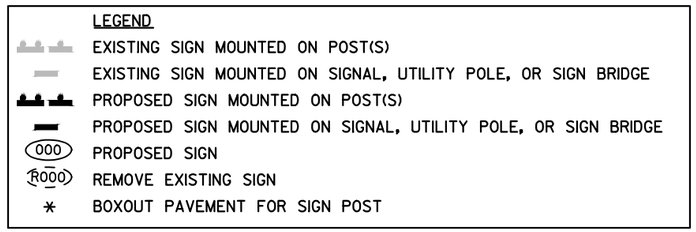

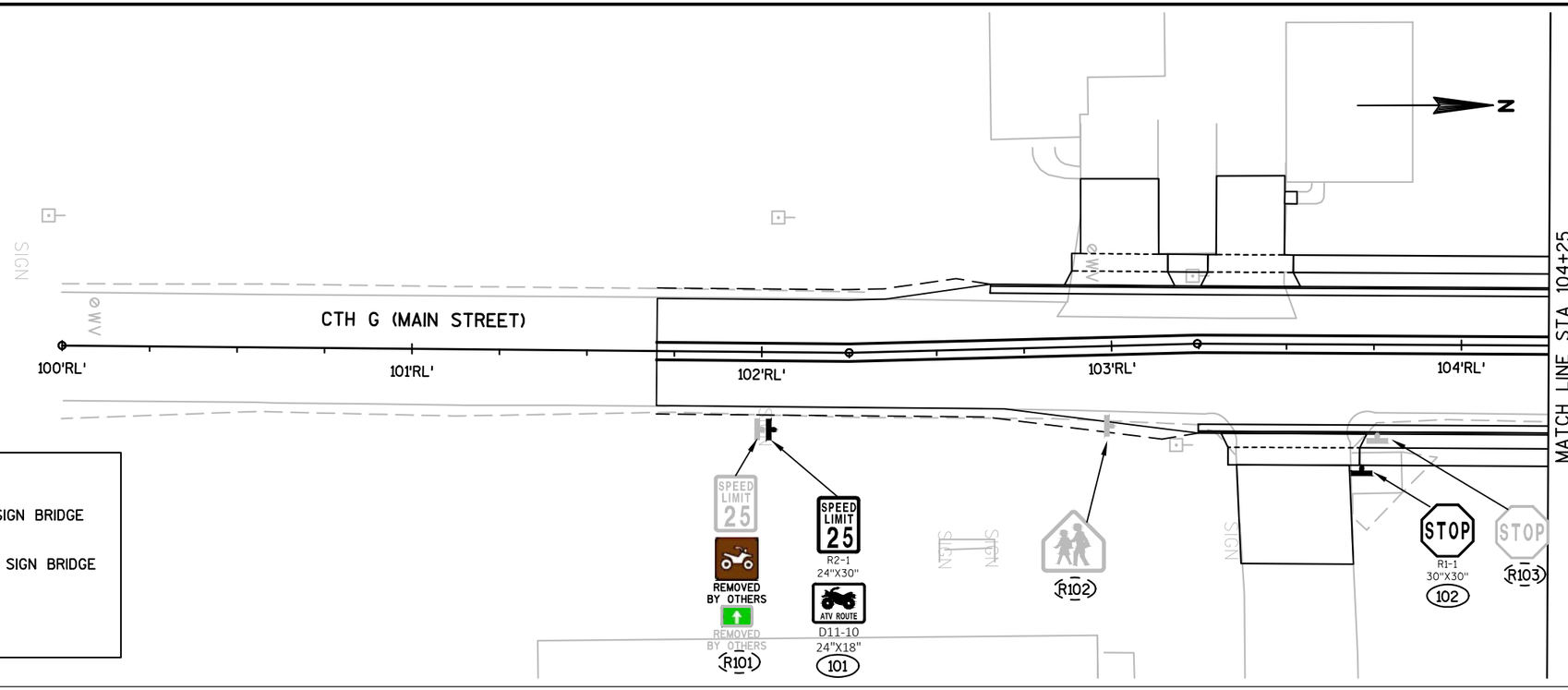

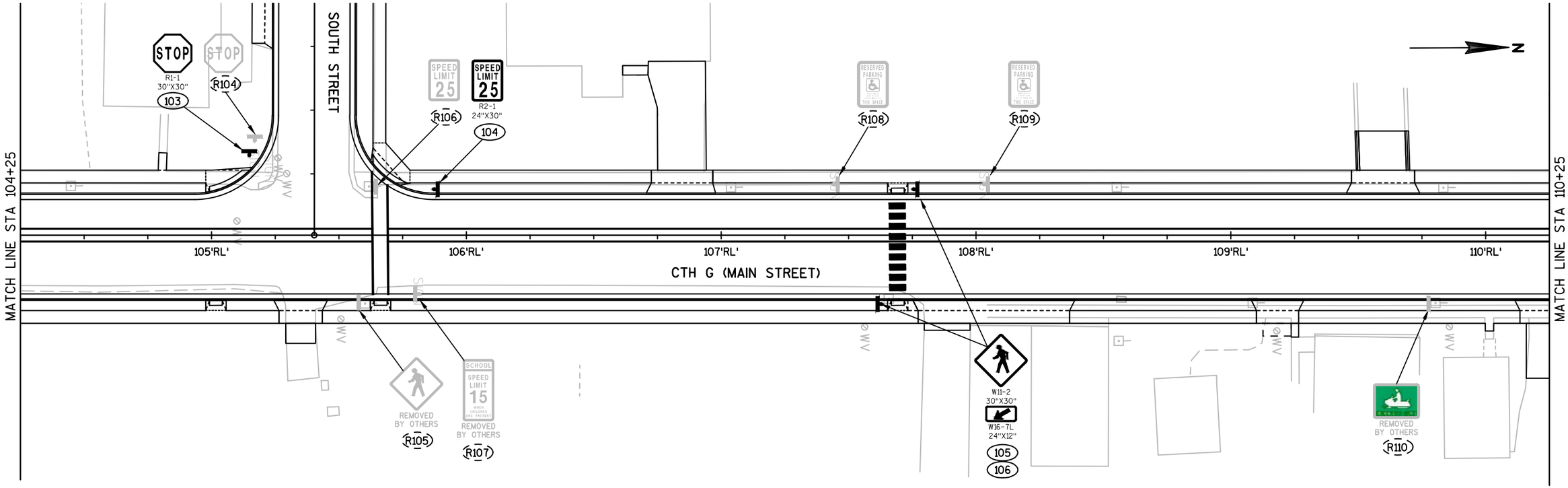

PROJECT NO: 4854-03-71	HWY: CTH G	COUNTY: FOND DU LAC	PERMANENT SIGNING	SHEET 47	E

2

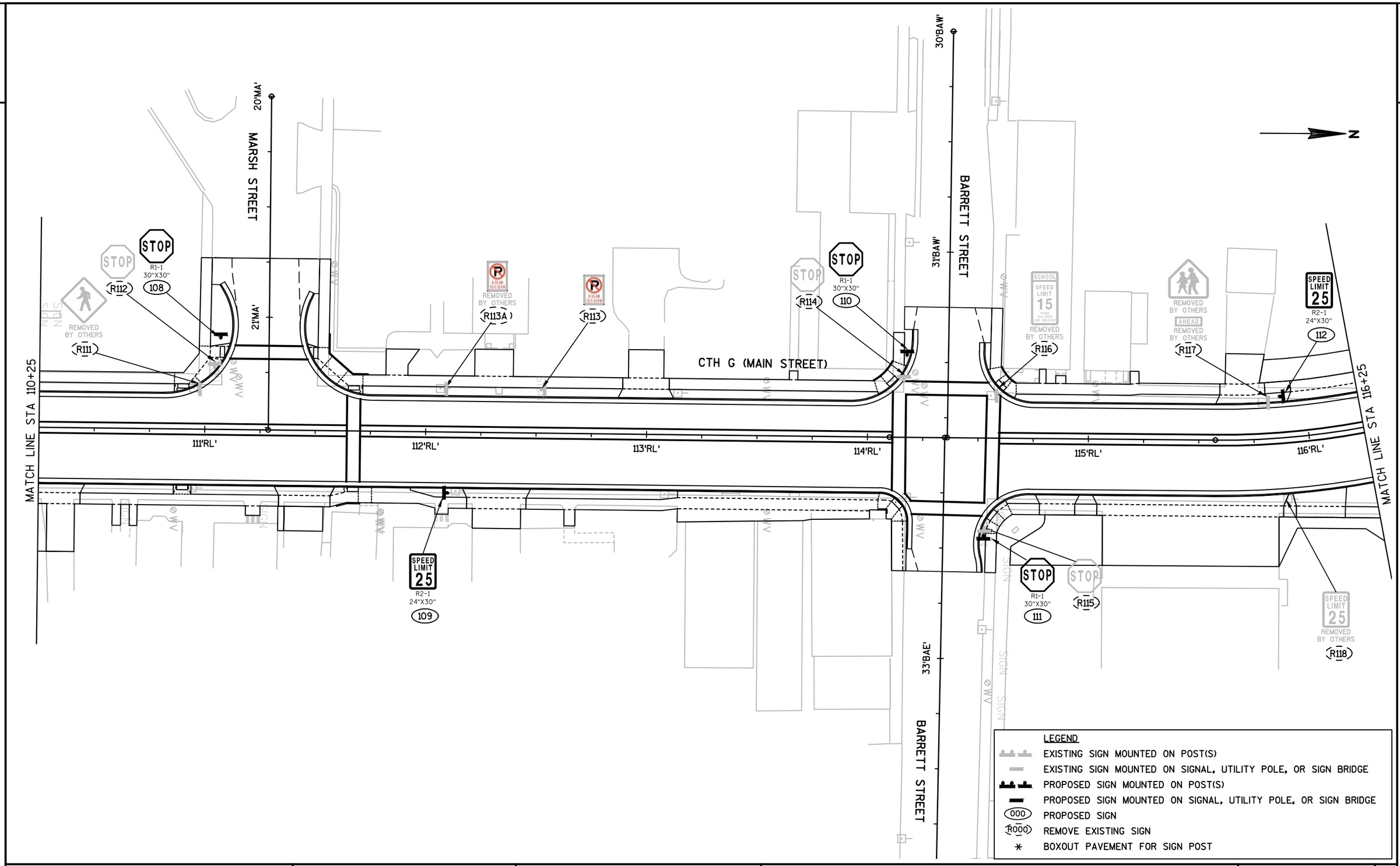

PROJECT NO: 4854-03-71	HWY: CTH G	COUNTY: FOND DU LAC	PERMANENT SIGNING	SHEET 48	E

2

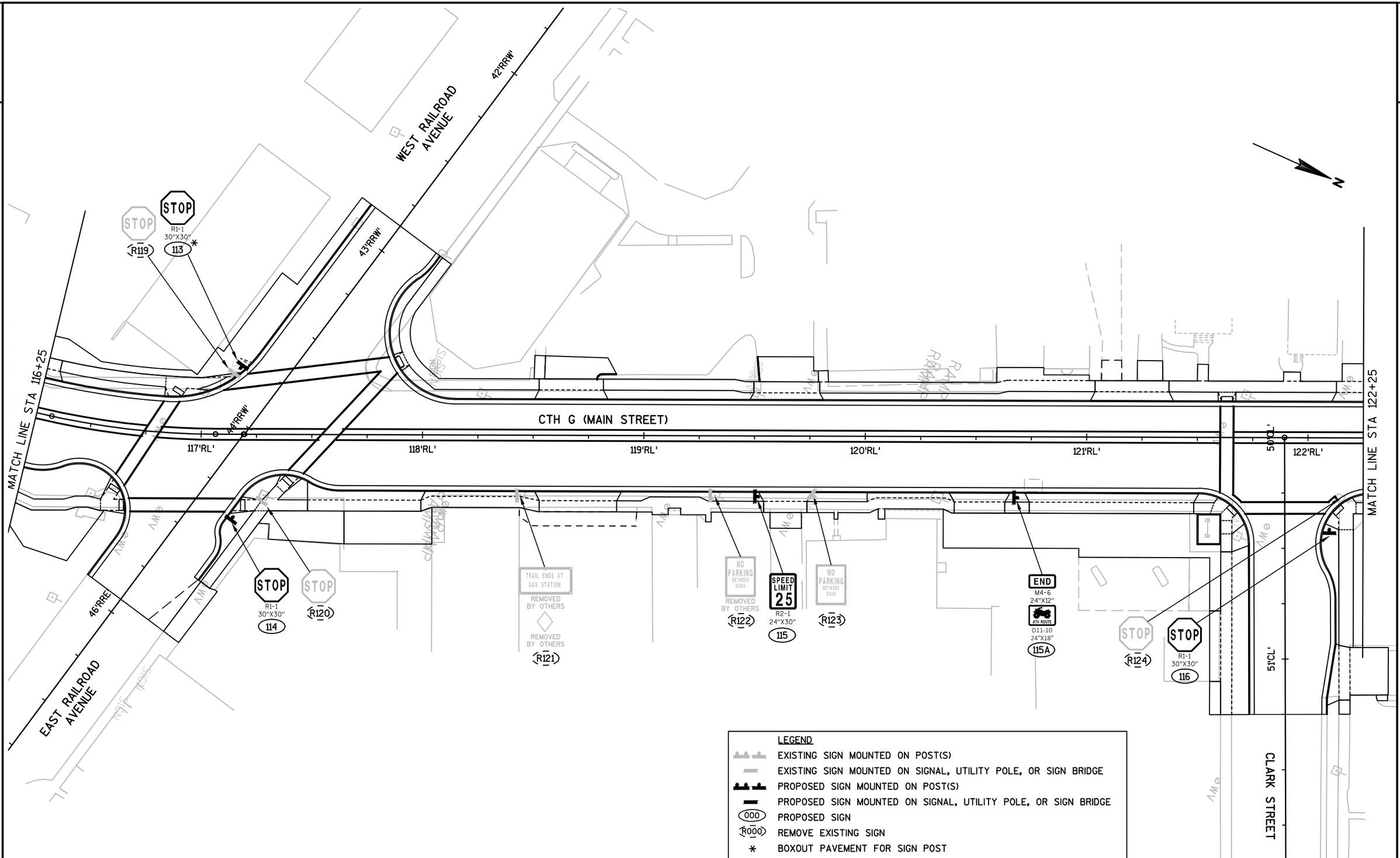

PROJECT NO: 4854-03-71	HWY: CTH G	COUNTY: FOND DU LAC	PERMANENT SIGNING	SHEET 49	E

FILE NAME : F:\TR\JOBS\E2143A15\CIVIL 3D 2014\SHEETSPLAN\485403-023201-PS.DWG
LAYOUT NAME - ****
485403-023203-ps
PLOT DATE : 4/25/2018 10:18 AM PLOT BY : OMNNI ASSOCIATES - CRAIG KNUTH PLOT SCALE : **********
WISDOT/CADDS SHEET 42

2

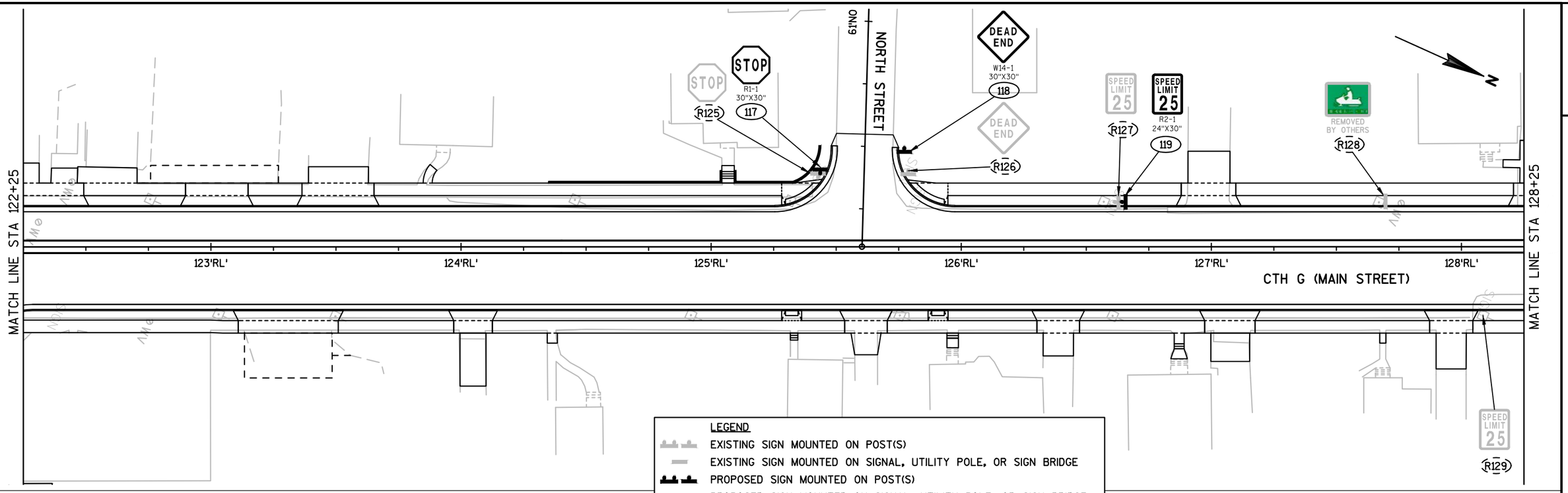

PROJECT NO: 4854-03-71	HWY: CTH G	COUNTY: FOND DU LAC	PERMANENT SIGNING	SHEET 50	E

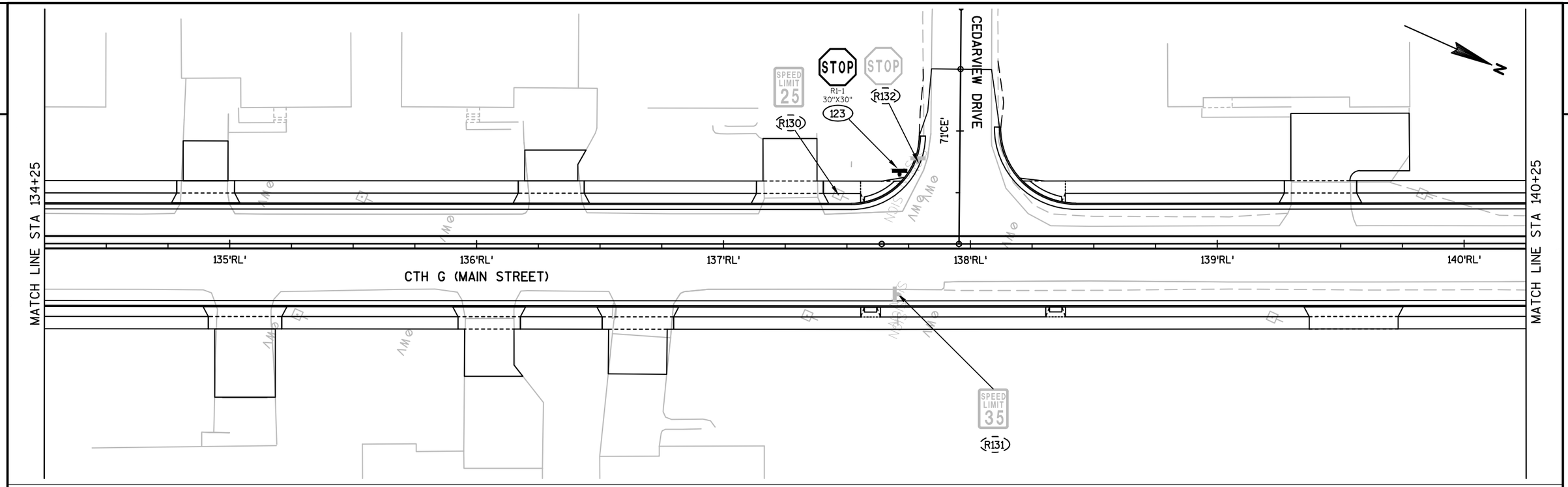

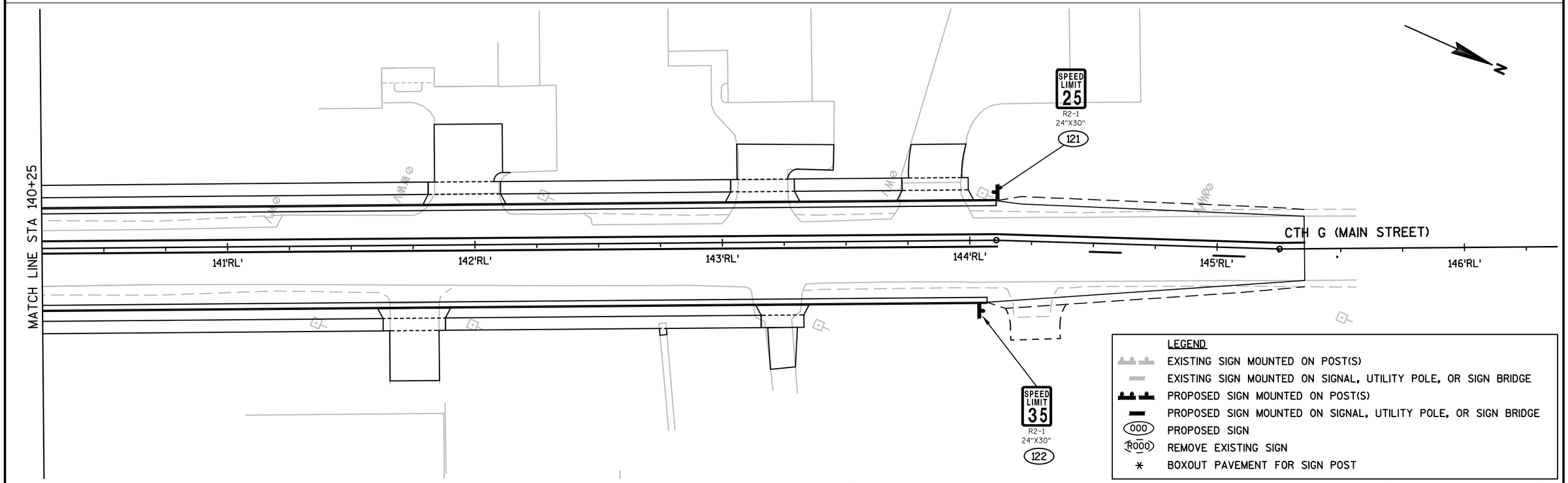

PROJECT NO: 4854-03-71	HWY: CTH G	COUNTY: FOND DU LAC	PERMANENT SIGNING	SHEET 51	E

2

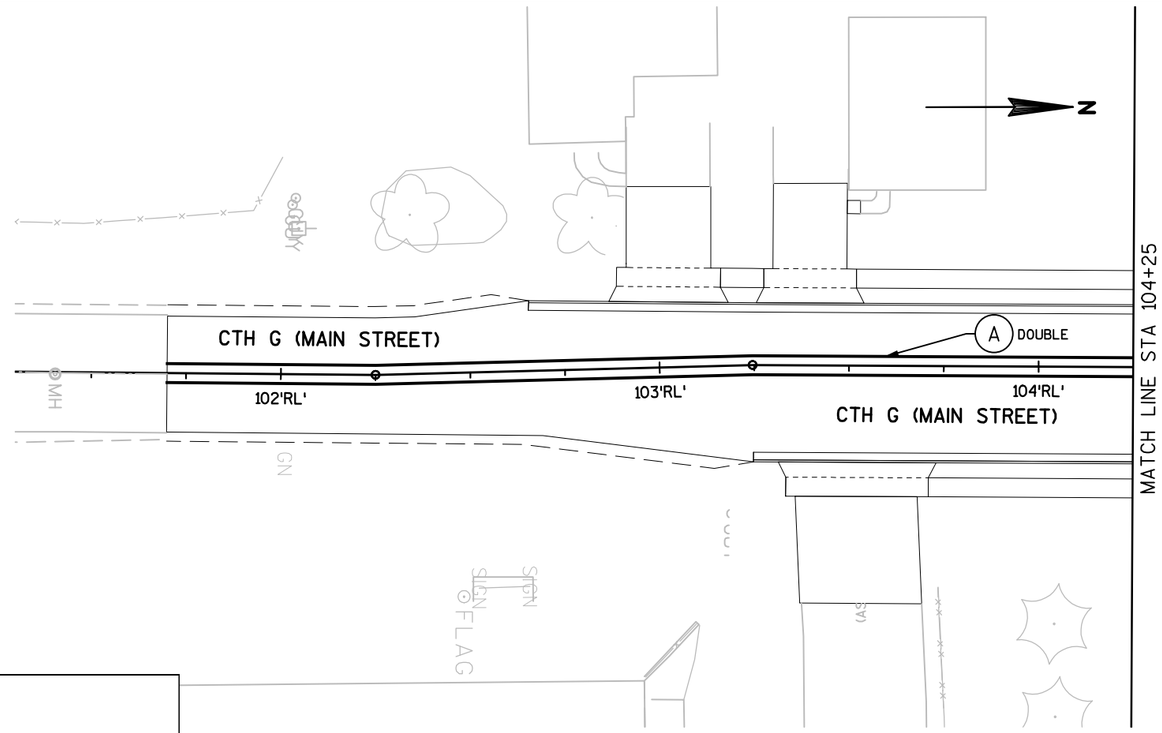

LEGEND

- (A) LINE EPOXY 4-INCH (YELLOW)
- (B) LINE EPOXY 4-INCH 12.5' LINE, 37.5' GAP (YELLOW)
- (C) CROSSWALK EPOXY TRANSVERSE LINE 6-INCH (WHITE)
- (D) CROSSWALK EPOXY LADDER PATTERN 24-INCH (WHITE)

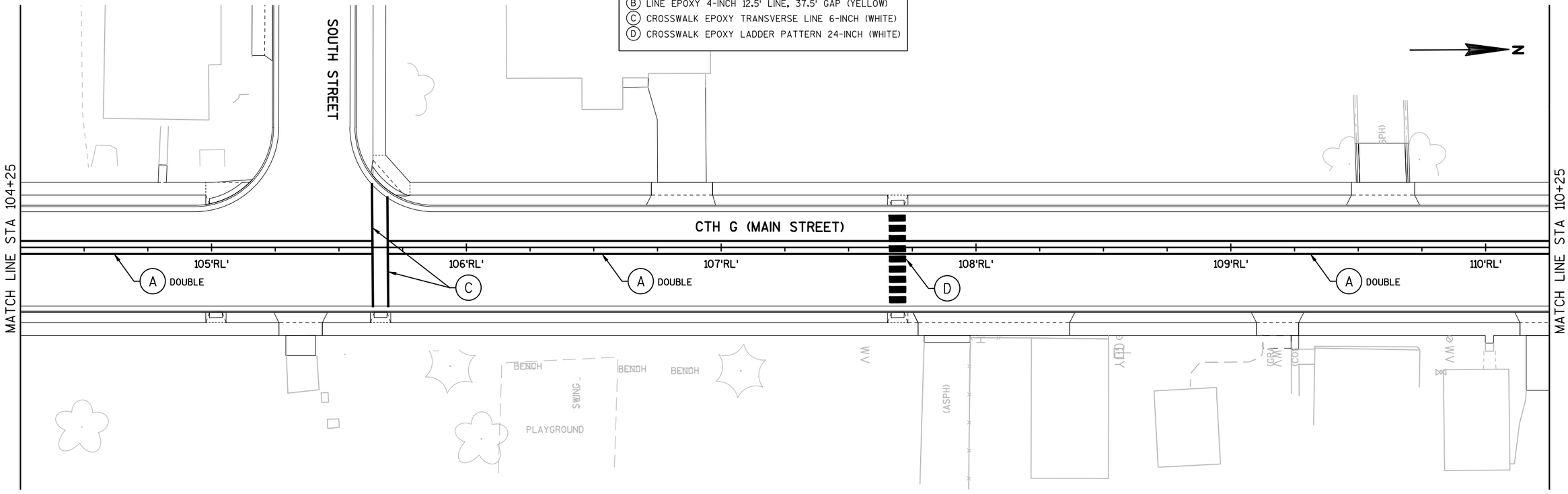

PROJECT NO: 4854-03-71	HWY: CTH G	COUNTY: FOND DU LAC	PAVEMENT MARKING	SHEET 52	E

2

MARSH STREET

BARRETT STREET

CTH G (MAIN STREET)

MATCH LINE STA 110+25

MATCH LINE STA 116+25

A DOUBLE

C

111'RL'

112'RL'

113'RL'

114'RL'

115'RL'

116'RL'

LEGEND

- (A) LINE EPOXY 4-INCH (YELLOW)
- (B) LINE EPOXY 4-INCH 12.5' LINE, 37.5' GAP (YELLOW)
- (C) CROSSWALK EPOXY TRANSVERSE LINE 6-INCH (WHITE)
- (D) CROSSWALK EPOXY LADDER PATTERN 24-INCH (WHITE)

WEST RAILROAD AVENUE

EAST RAILROAD AVENUE

CLARK STREET

MATCH LINE STA 116+25

MATCH LINE STA 122+25

117'RL'

118'RL'

119'RL'

120'RL'

121'RL'

122'RL'

PROJECT NO: 4854-03-71	HWY: CTH G	COUNTY: FOND DU LAC	PAVEMENT MARKING	SHEET 53	E

2

NORTH STREET

MATCH LINE STA 122+25

CTH G (MAIN STREET)

123'RL' 124'RL' 125'RL' 126'RL' 127'RL' 128'RL'

A DOUBLE

MATCH LINE STA 128+25

LEGEND

- (A) LINE EPOXY 4-INCH (YELLOW)
- (B) LINE EPOXY 4-INCH 12.5' LINE, 37.5' GAP (YELLOW)
- (C) CROSSWALK EPOXY TRANSVERSE LINE 6-INCH (WHITE)
- (D) CROSSWALK EPOXY LADDER PATTERN 24-INCH (WHITE)

MATCH LINE STA 128+25

CTH G (MAIN STREET)

129'RL' 130'RL' 131'RL' 132'RL' 133'RL' 134'RL'

A DOUBLE

MATCH LINE STA 134+25

PROJECT NO: 4854-03-71	HWY: CTH G	COUNTY: FOND DU LAC	PAVEMENT MARKING	SHEET 54	E

2

MATCH LINE STA 134+25

CEDARVIEW DRIVE

CTH G (MAIN STREET)

135'RL' 136'RL' 137'RL' 138'RL' 139'RL' 140'RL'

A DOUBLE

MATCH LINE STA 140+25

LEGEND

- (A) LINE EPOXY 4-INCH (YELLOW)
- (B) LINE EPOXY 4-INCH 12.5' LINE, 37.5' GAP (YELLOW)
- (C) CROSSWALK EPOXY TRANSVERSE LINE 6-INCH (WHITE)
- (D) CROSSWALK EPOXY LADDER PATTERN 24-INCH (WHITE)

MATCH LINE STA 140+25

141'RL' 142'RL' 143'RL' 144'RL' 145'RL' 146'RL'

A DOUBLE

STA 144+11.06

A

B

CTH G (MAIN STREET)

PROJECT NO: 4854-03-71	HWY: CTH G	COUNTY: FOND DU LAC	PAVEMENT MARKING	SHEET 55	E

TRAFFIC CONTROL GENERAL NOTES

1. DRAWINGS SHOW TRAFFIC CONTROL FOR A TYPICAL SITUATION. ADDITIONAL TRAFFIC CONTROL DEVICES MAY BE REQUIRED AND/OR LAYOUT DETAILS MODIFIED DEPENDING ON METHODS OR SEQUENCE OF OPERATIONS.

2. ALL TRAFFIC CONTROL SIGNING WILL CONFORM TO PART VI OF THE MANUAL ON UNIFORM TRAFFIC CONTROL DEVICES, 2009 EDITION & THE WISCONSIN SUPPLEMENT DATED MAY 25, 2011.

3. WARNING LIGHTS SHALL NOT BE WORKING ON "COVERED" OR "DOWNED" SIGN OR BARRICADE.

4. DURING HOURS OF DARKNESS, ALL BARRICADES USED TO SHIELD A HAZARD SHALL BE EQUIPPED WITH TYPE "A" LIGHTS.

5. PORTABLE CHANGEABLE MESSAGE SIGNS SHALL BE PLACED APPROXIMATELY 1/2 MILE IN ADVANCE OF THE PROJECT, ONE WEEK IN ADVANCE OF INITIAL ROAD CLOSURE AND AS NEEDED THROUGHOUT THE PROJECT.

6. LAYOUT INFORMATION PROVIDED IS NOT INTENDED TO REPLACE WHAT IS PROVIDED IN APPLICABLE STANDARD DETAIL DRAWINGS.

7. SEE ADDITIONAL TRAFFIC CONTROL DETAIL SHEETS AND STANDARD DETAIL DRAWINGS FOR ADDITIONAL TRAFFIC CONTROL REQUIREMENTS.

4854-03-71 CONSTRUCTION STAGING SUMMARY

NOTES – STAGE 1

MAINTAIN PEDESTRIANS ON WEST SIDE OF CTH G USING EXISTING CONCRETE SIDEWALK AND EXISTING PAVEMENT. MAINTAIN EXISTING SIDEWALK TO STA. 124+00. MAINTAIN PEDESTRIAN MOVEMENTS ALONG CTH G AT ALL TIMES.

PROVIDE PEDESTRIAN SIGNAGE IN ACCORDANCE WITH SDD “TRAFFIC CONTROL, PEDESTRIAN ACCOMMODATION”.

INSTALL TEMPORARY PEDESTRIAN SAFETY FENCE IN LOCATIONS SHOWN AND AS DIRECTED BY THE ENGINEER. ALLOW FOR LOCAL BUSINESS ACCESS.

INSTALL TEMPORARY PEDESTRIAN SURFACE ASPHALT AS NECESSARY TO ACCOMMODATE WORK OPERATIONS.

ONE PEDESTRIAN CROSSING OF CTH G AND ONE PEDESTRIAN CROSSING OF SIDESTREET MUST BE MAINTAINED AT EACH INTERSECTION, EXCEPT WHEN INTERSECTION IS CLOSED. ADJACENT INTERSECTIONS MUST NOT BE CLOSED AT THE SAME TIME.

NOTES – STAGE 2

MAINTAIN PEDESTRIANS ON EAST SIDE OF CTH G USING EXISTING CONCRETE SIDEWALK, EXISTING PAVEMENT, AND NEW CONCRETE SIDEWALK AND PAVEMENT AS AVAILABLE. MAINTAIN PEDESTRIAN MOVEMENTS ALONG CTH G AT ALL TIMES.

PROVIDE PEDESTRIAN SIGNAGE IN ACCORDANCE WITH SDD “TRAFFIC CONTROL, PEDESTRIAN ACCOMMODATION”.

INSTALL TEMPORARY PEDESTRIAN SAFETY FENCE IN LOCATIONS SHOWN AND AS DIRECTED BY THE ENGINEER. ALLOW FOR LOCAL BUSINESS ACCESS.

INSTALL TEMPORARY PEDESTRIAN SURFACE ASPHALT AS NECESSARY TO ACCOMMODATE WORK OPERATIONS.

ONE PEDESTRIAN CROSSING OF CTH G AND ONE PEDESTRIAN CROSSING OF SIDESTREET MUST BE MAINTAINED AT EACH INTERSECTION, EXCEPT WHEN INTERSECTION IS CLOSED. ADJACENT INTERSECTIONS MUST NOT BE CLOSED AT THE SAME TIME.

PORTABLE CHANGEABLE MESSAGE SIGNS

			PRIOR TO CONSTRUCTION		STAGE 1		STAGE 2	
SITE NO	LOCATION	ROADWAY CONDITION/ CONSTRUCTION	PHASE I (2 SEC)	PHASE II (2 SEC)	PHASE I (2 SEC)	PHASE II (2 SEC)	PHASE I (2 SEC)	PHASE II (2 SEC)
PCMS 1	ON NB CTH G	GENERAL	CTH G ROAD WORK	BEGINS XX/XX/XX	(NO MESSAGE)		(NO MESSAGE)	
PCMS 2	ON SB CTH G	GENERAL	CTH G ROAD WORK	BEGINS XX/XX/XX	(NO MESSAGE)		(NO MESSAGE)	

2

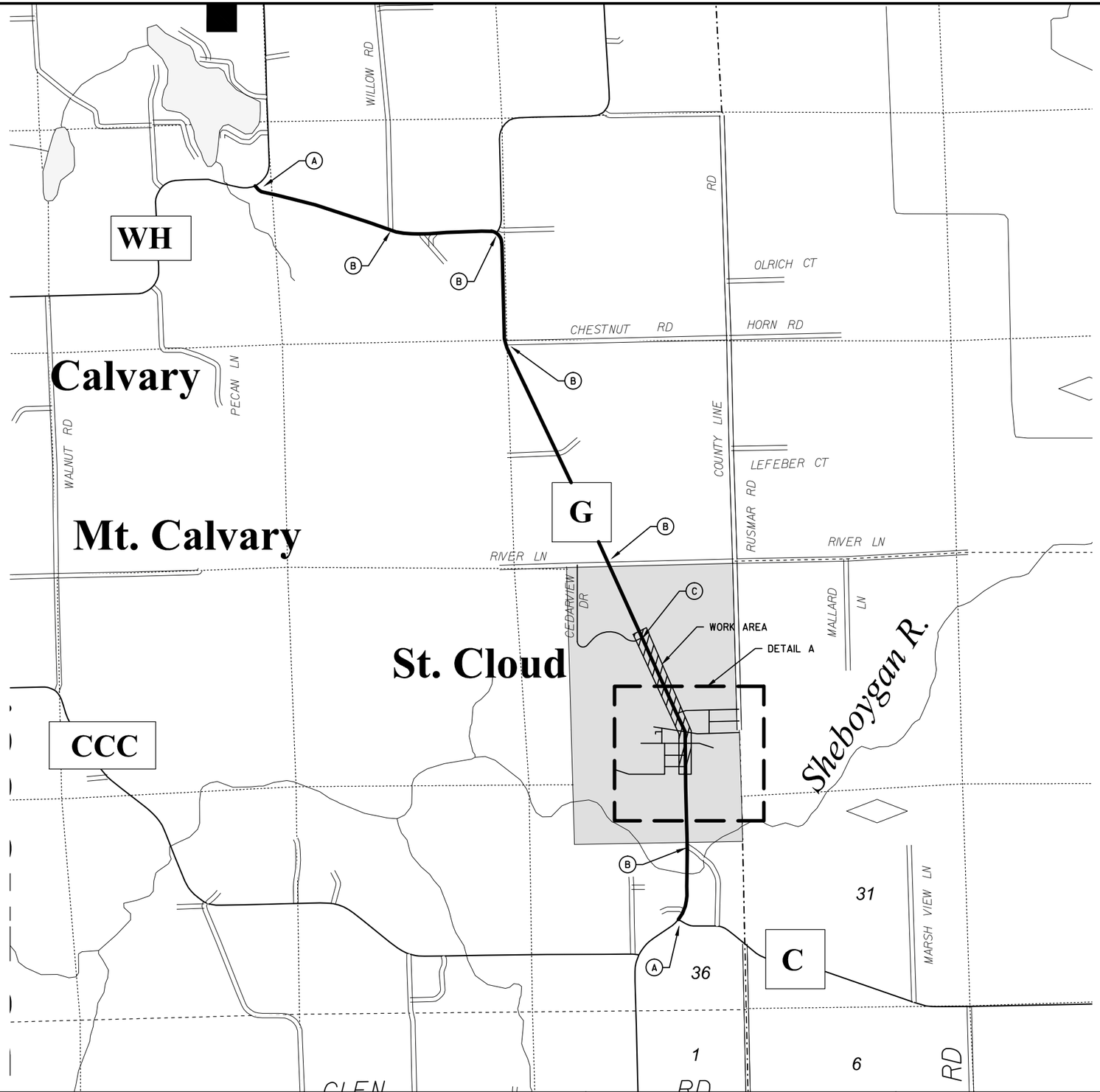

DETAIL A

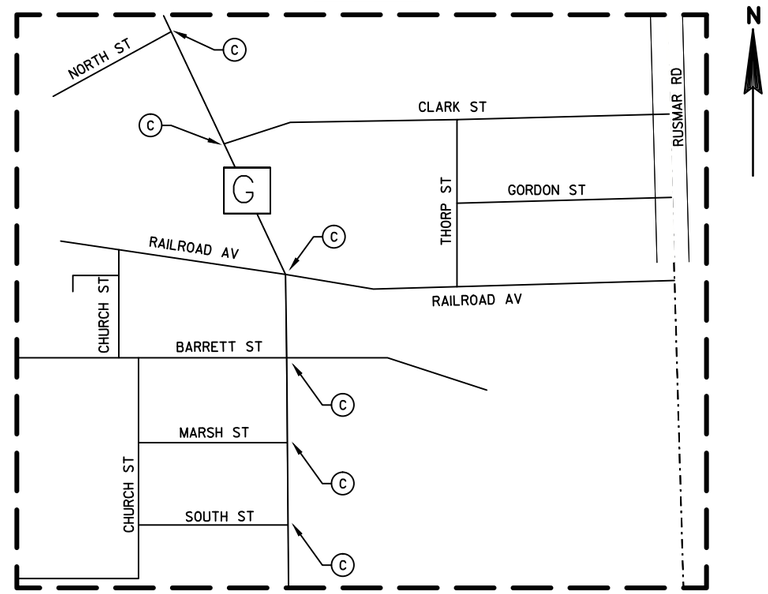

NOTES:

(A) USE SDD "BARRICADES AND SIGNS FOR MAINLINE CLOSURES" DETAILS A AND E

(B) USE SDD "BARRICADES AND SIGNS FOR SIDEROAD CLOSURES" DETAIL 3

(C) USE SDD "BARRICADES AND SIGNS FOR SIDEROAD CLOSURES" DETAIL 4

DETOUR ROUTE CONSISTS OF CTH CCC TO CTH WW TO CTH WH TO CTH G.
DETOUR ROUTE TO BE SIGNED BY FOND DU LAC COUNTY.

LEGEND

WORK AREA

PROJECT NO: 4854-03-71	HWY: CTH G	COUNTY: FOND DU LAC	TRAFFIC CONTROL OVERVIEW	SHEET 57	E

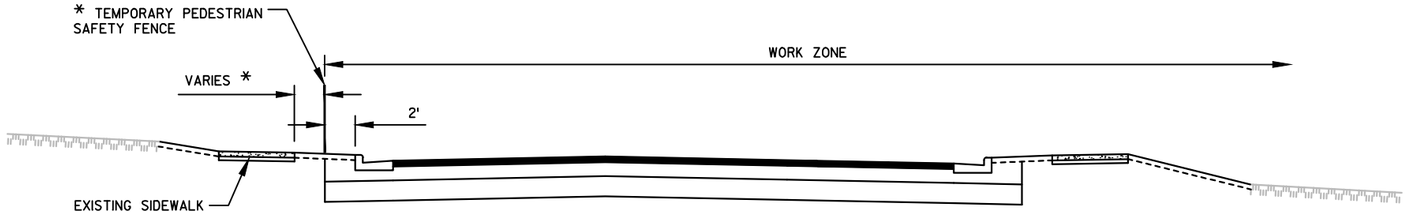

* IF LESS THAN 2' FROM EDGE OF EXCAVATION, INSTALL TEMPORARY PEDESTRIAN SAFETY FENCE. SEE TEMPORARY PEDESTRIAN SAFETY FENCE INSTALLATION DETAIL.

PROPOSED TYPICAL SECTION FOR CTH G
STAGE 1

* IF LESS THAN 2' FROM EDGE OF EXCAVATION, INSTALL TEMPORARY PEDESTRIAN SAFETY FENCE. SEE TEMPORARY PEDESTRIAN SAFETY FENCE INSTALLATION DETAIL.

PROPOSED TYPICAL SECTION FOR CTH G
STAGE 2

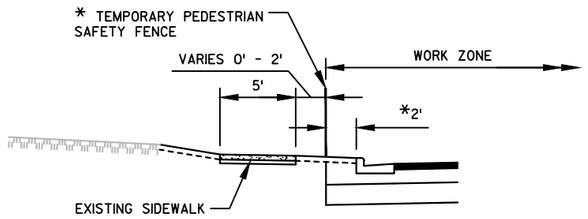

TEMPORARY PEDESTRIAN SAFETY FENCE INSTALLATION DETAIL

PROJECT NO: 4854-03-71	HWY: CTH G	COUNTY: FOND DU LAC	TRAFFIC CONTROL PEDESTRIAN - TYPICAL SECTIONS	SHEET 58	E

2

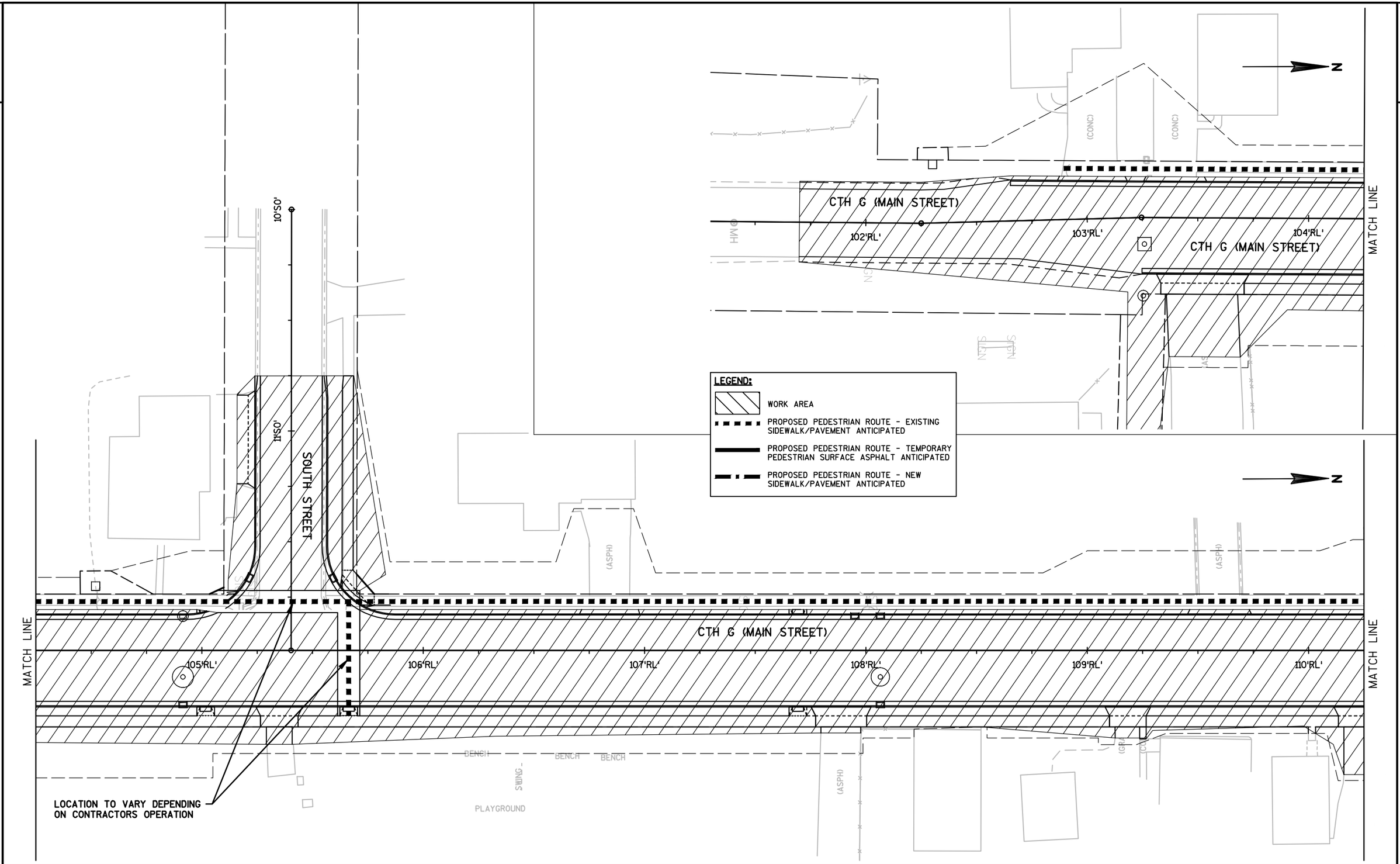

PROJECT NO: 4854-03-71	HWY: CTH G	COUNTY: FOND DU LAC	TRAFFIC CONTROL PEDESTRIAN - STAGE 1	SHEET 59	E

2

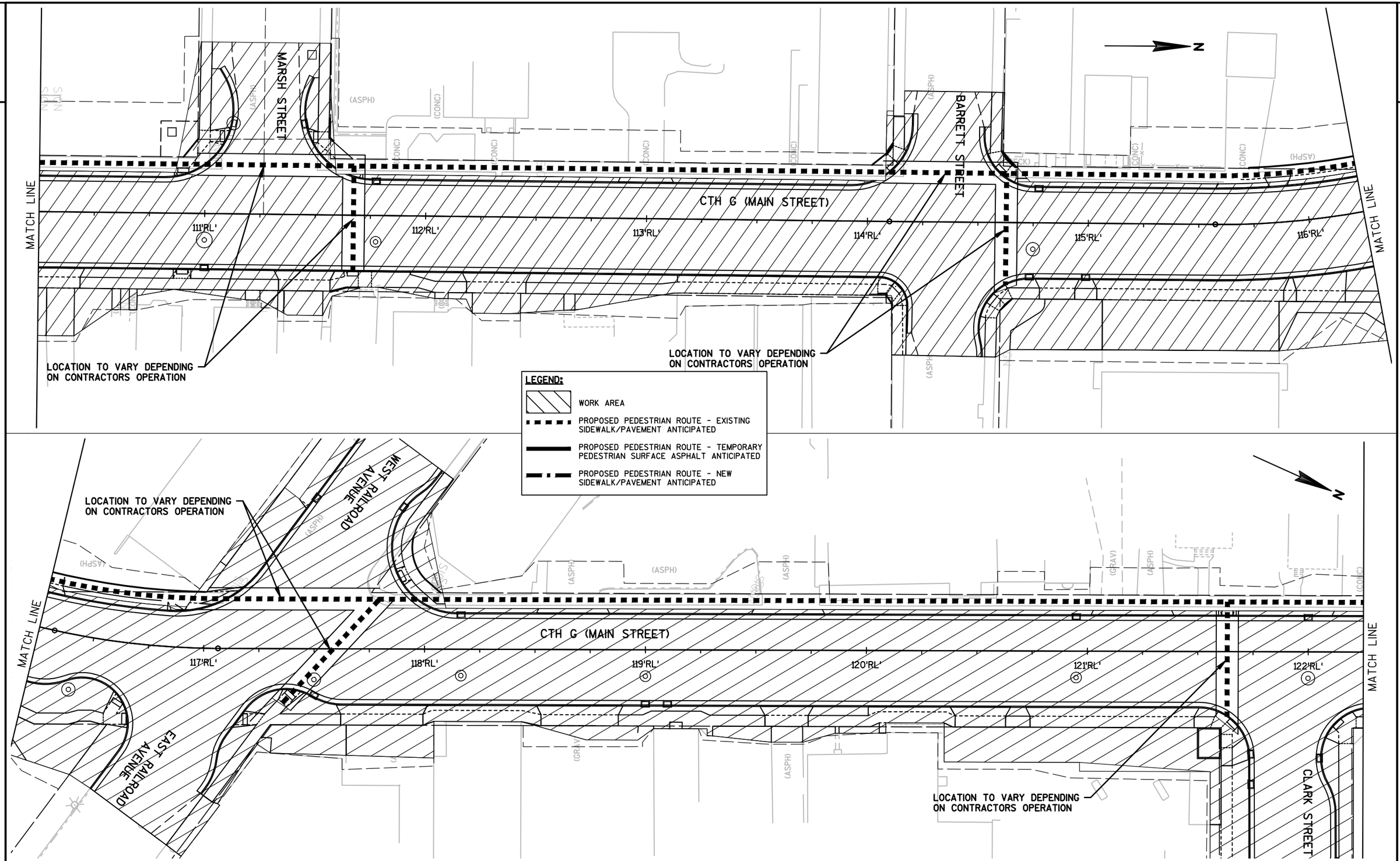

PROJECT NO: 4854-03-71	HWY: CTH G	COUNTY: FOND DU LAC	TRAFFIC CONTROL PEDESTRIAN - STAGE 1	SHEET 60	E

2

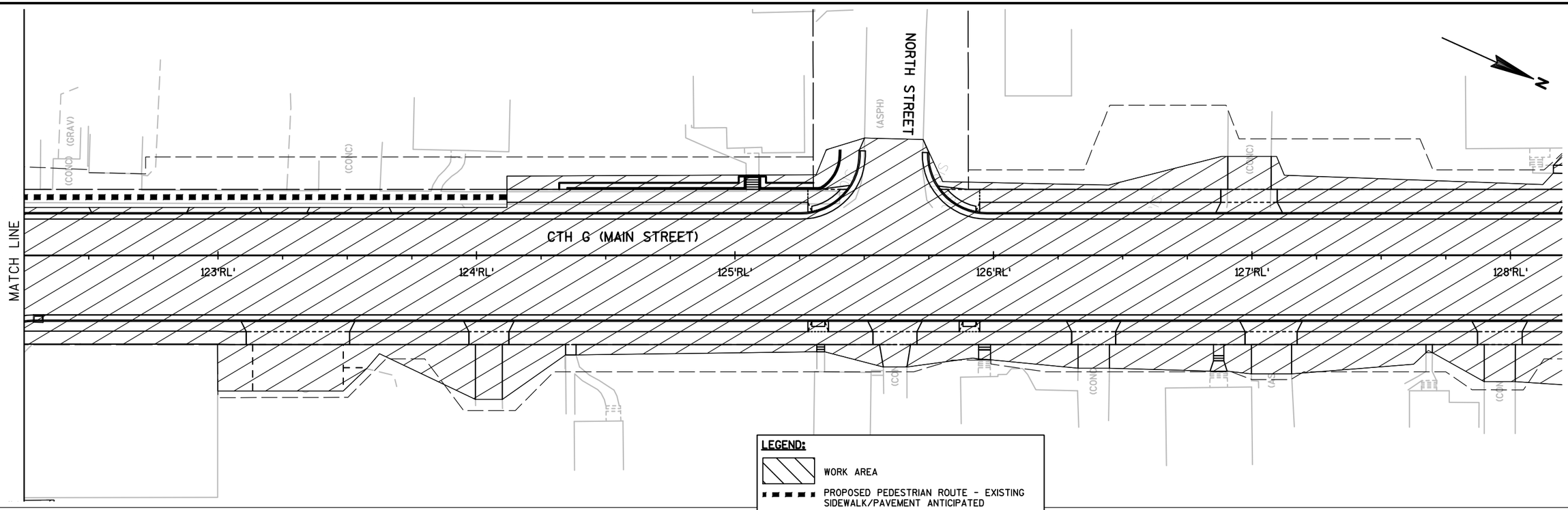

LEGEND:

- WORK AREA
- PROPOSED PEDESTRIAN ROUTE - EXISTING SIDEWALK/PAVEMENT ANTICIPATED
- PROPOSED PEDESTRIAN ROUTE - TEMPORARY PEDESTRIAN SURFACE ASPHALT ANTICIPATED
- PROPOSED PEDESTRIAN ROUTE - NEW SIDEWALK/PAVEMENT ANTICIPATED

2

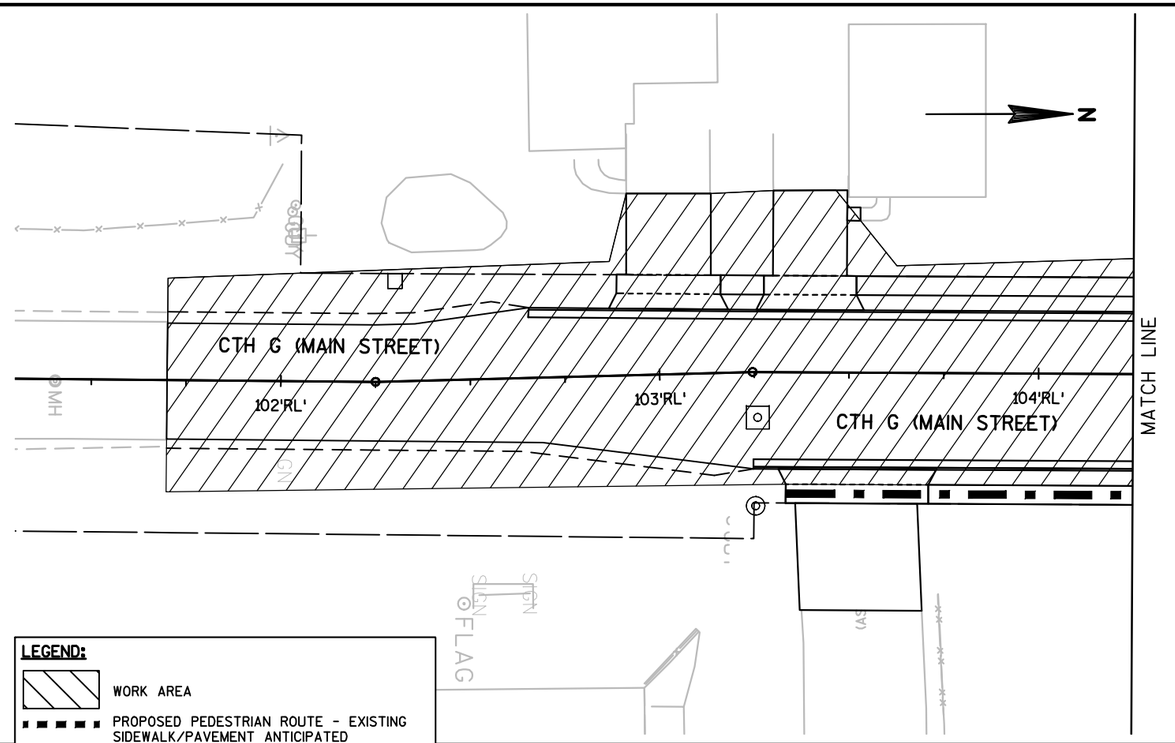

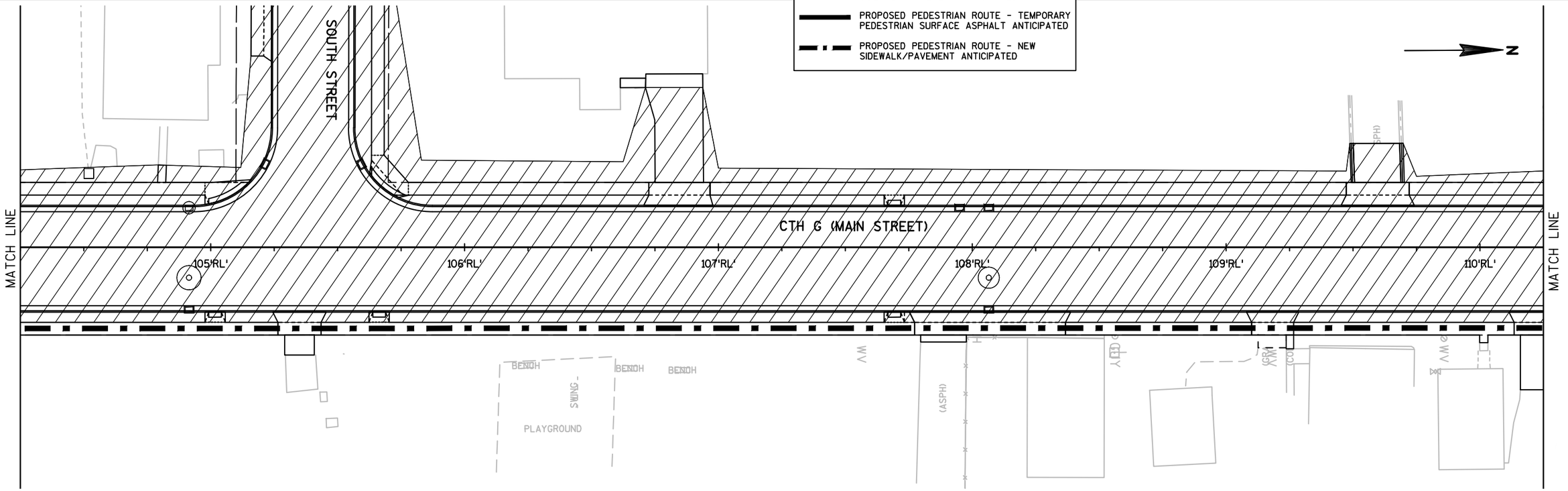

PROJECT NO: 4854-03-71	HWY: CTH G	COUNTY: FOND DU LAC	TRAFFIC CONTROL PEDESTRIAN - STAGE 2	SHEET 62	E

FILE NAME : F:\TR\JOBS\E2143A15\CIVIL 3D 2014\SHEETSPLAN\485403-025004-TC_S2.DWG
LAYOUT NAME - ****
485403-025021-tc_S2

PLOT DATE : 3/19/2018 2:08 PM PLOT BY : OMNNI ASSOCIATES - CRAIG KNUTH PLOT SCALE : **********

2

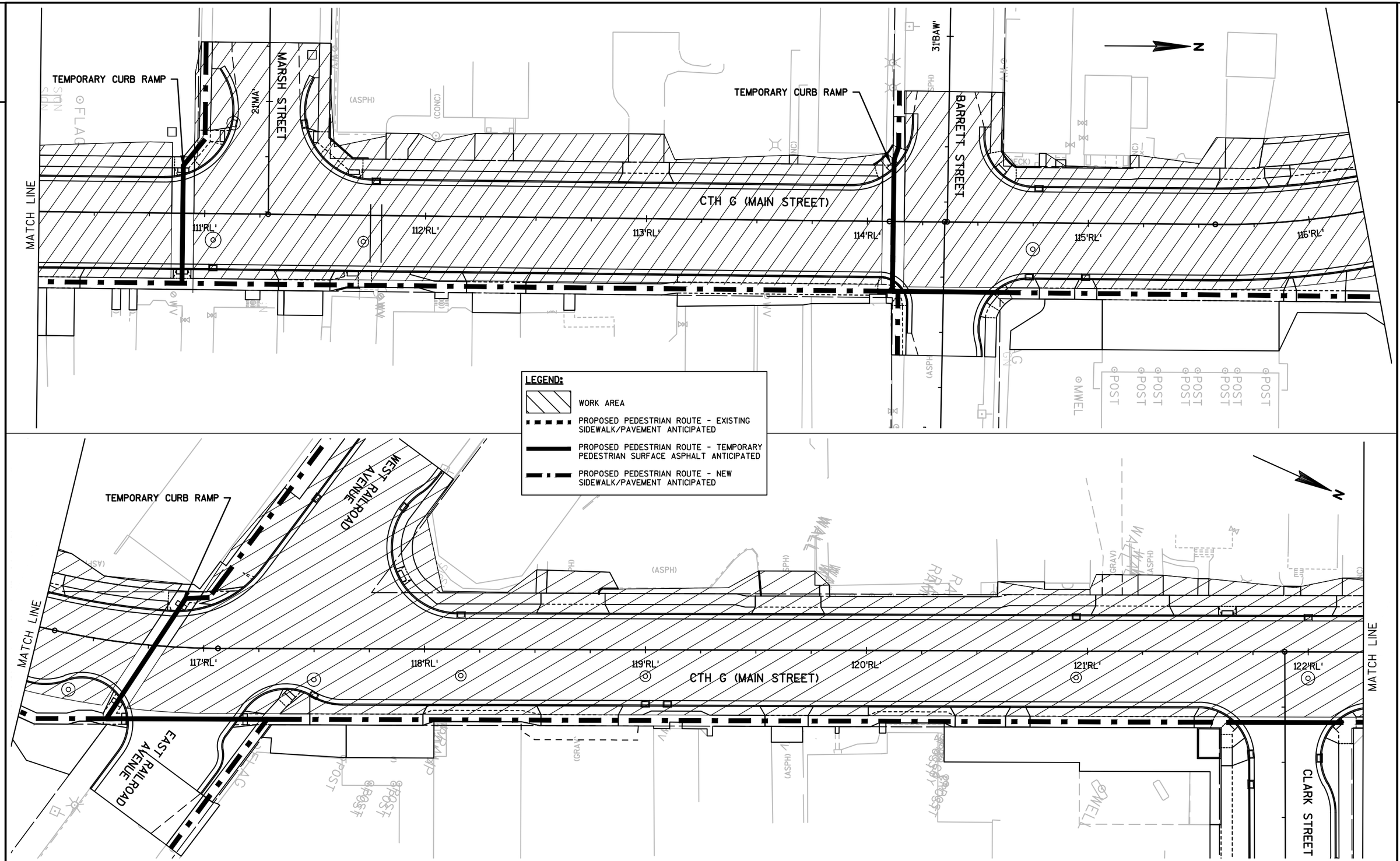

PROJECT NO: 4854-03-71	HWY: CTH G	COUNTY: FOND DU LAC	TRAFFIC CONTROL PEDESTRIAN - STAGE 2	SHEET 63	E

2

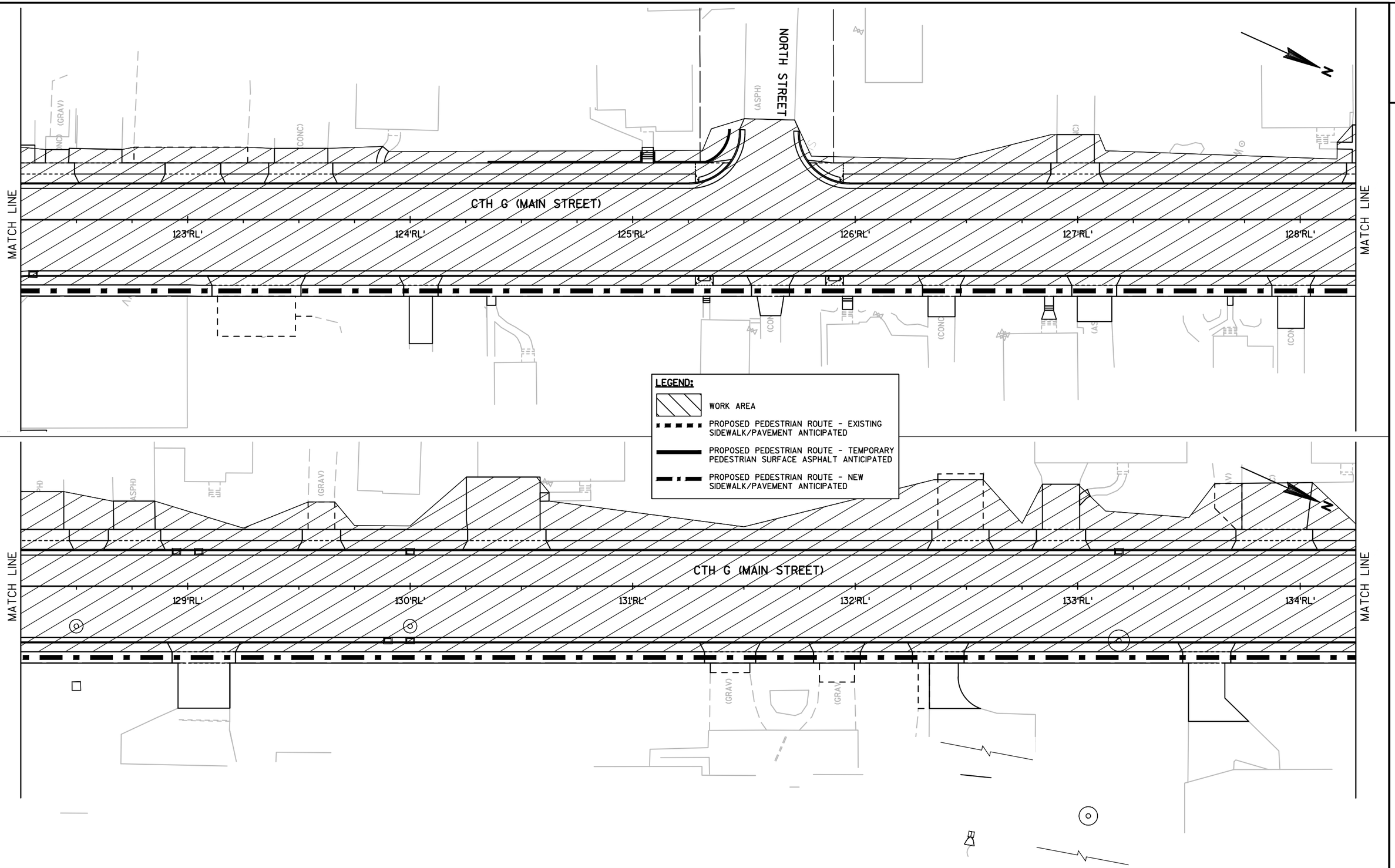

LEGEND:

- WORK AREA
- PROPOSED PEDESTRIAN ROUTE - EXISTING SIDEWALK/PAVEMENT ANTICIPATED
- PROPOSED PEDESTRIAN ROUTE - TEMPORARY PEDESTRIAN SURFACE ASPHALT ANTICIPATED
- PROPOSED PEDESTRIAN ROUTE - NEW SIDEWALK/PAVEMENT ANTICIPATED

PROJECT NO: 4854-03-71	HWY: CTH G	COUNTY: FOND DU LAC	TRAFFIC CONTROL PEDESTRIAN - STAGE 2	SHEET 64	E

FILE NAME : F:\TR\JOBS\E2143A15\CIVIL 3D 2014\SHEETSPLAN\485403-025004-TC_S2.DWG
LAYOUT NAME - ****
485403-025023-tc_S2
PLOT DATE : 3/19/2018 2:08 PM
PLOT BY : OMNNI ASSOCIATES - CRAIG KNUTH
PLOT SCALE : **********
WISDOT/CADDS SHEET 42

2

MATCH LINE

CTH G (MAIN STREET)

CEDARVIEW DRIVE

135'RL' 136'RL' 137'RL' 138'RL' 139'RL' 140'RL'

MATCH LINE

LEGEND:

- WORK AREA
- PROPOSED PEDESTRIAN ROUTE - EXISTING SIDEWALK/PAVEMENT ANTICIPATED
- PROPOSED PEDESTRIAN ROUTE - TEMPORARY PEDESTRIAN SURFACE ASPHALT ANTICIPATED
- PROPOSED PEDESTRIAN ROUTE - NEW SIDEWALK/PAVEMENT ANTICIPATED

MATCH LINE

141'RL' 142'RL' 143'RL' 144'RL' 145'RL' 146'RL'

CTH G (MAIN STREET)

PROJECT NO: 4854-03-71	HWY: CTH G	COUNTY: FOND DU LAC	TRAFFIC CONTROL PEDESTRIAN - STAGE 2	SHEET 65	E

4854-03-71

Line	Item	Item Description	Unit	Total	Qty
0002	201.0205	Grubbing	STA	6.000	6.000
0004	203.0100	Removing Small Pipe Culverts	EACH	14.000	14.000
0006	204.0100	Removing Pavement	SY	9,700.000	9,700.000
0008	204.0150	Removing Curb & Gutter	LF	575.000	575.000
0010	204.0155	Removing Concrete Sidewalk	SY	2,220.000	2,220.000
0012	204.0170	Removing Fence	LF	103.000	103.000
0014	204.0185	Removing Masonry	CY	30.000	30.000
0016	204.0210	Removing Manholes	EACH	3.000	3.000
0018	204.0220	Removing Inlets	EACH	17.000	17.000
0020	204.0245	Removing Storm Sewer (size) 01. 10-Inch	LF	495.000	495.000
0022	204.0245	Removing Storm Sewer (size) 02. 12-Inch	LF	185.000	185.000
0024	204.0245	Removing Storm Sewer (size) 03. 15-Inch	LF	650.000	650.000
0026	204.0245	Removing Storm Sewer (size) 04. 18-Inch	LF	350.000	350.000
0028	204.0245	Removing Storm Sewer (size) 05. 27-Inch	LF	55.000	55.000
0030	204.0280	Sealing Pipes	EACH	2.000	2.000
0032	205.0100	Excavation Common	CY	29,000.000	29,000.000
0034	205.0501.S	Excavation, Hauling, and Disposal of Petroleum Contaminated Soil	TON	1,098.000	1,098.000
0036	213.0100	Finishing Roadway (project) 01. 4854-03-71	EACH	1.000	1.000
0038	305.0110	Base Aggregate Dense 3/4-Inch	TON	1,130.000	1,130.000
0040	305.0120	Base Aggregate Dense 1 1/4-Inch	TON	17,930.000	17,930.000
0042	311.0110	Breaker Run	TON	23,050.000	23,050.000
0044	416.0160	Concrete Driveway 6-Inch	SY	2,304.000	2,304.000
0046	416.0170	Concrete Driveway 7-Inch	SY	355.000	355.000
0048	416.0180	Concrete Driveway 8-Inch	SY	290.000	290.000
0050	416.0260	Concrete Driveway HES 6-Inch	SY	162.000	162.000
0052	416.0270	Concrete Driveway HES 7-Inch	SY	259.000	259.000
0054	440.4410	Incentive IRI Ride	DOL	3,308.000	3,308.000
0056	455.0605	Tack Coat	GAL	1,630.000	1,630.000
0058	460.2000	Incentive Density HMA Pavement	DOL	3,450.000	3,450.000
0060	460.4110.S	Reheating HMA Pavement Longitudinal Joints	LF	8,470.000	8,470.000
0062	460.5223	HMA Pavement 3 LT 58-28 S	TON	2,980.000	2,980.000
0064	460.5224	HMA Pavement 4 LT 58-28 S	TON	2,410.000	2,410.000
0066	465.0120	Asphaltic Surface Driveways and Field Entrances	TON	294.000	294.000
0068	522.1018	Apron Endwalls for Culvert Pipe Reinforced Concrete 18-Inch	EACH	1.000	1.000
0070	522.1024	Apron Endwalls for Culvert Pipe Reinforced Concrete 24-Inch	EACH	2.000	2.000
0072	522.2634	Apron Endwalls for Culvert Pipe Reinforced Concrete Horizontal Elliptical 34x53-Inch	EACH	1.000	1.000
0074	601.0407	Concrete Curb & Gutter 18-Inch Type D	LF	30.000	30.000

4854-03-71

Line	Item	Item Description	Unit	Total	Qty
0076	601.0411	Concrete Curb & Gutter 30-Inch Type D	LF	8,271.000	8,271.000
0078	601.0600	Concrete Curb Pedestrian	LF	142.000	142.000
0080	602.0405	Concrete Sidewalk 4-Inch	SF	32,800.000	32,800.000
0082	602.0415	Concrete Sidewalk 6-Inch	SF	2,850.000	2,850.000
0084	602.0515	Curb Ramp Detectable Warning Field Natural Patina	SF	270.000	270.000
0086	602.0615	Curb Ramp Detectable Warning Field Radial Natural Patina	SF	225.000	225.000
0088	602.1500	Concrete Steps	SF	51.000	51.000
0090	606.0300	Riprap Heavy	CY	14.000	14.000
0092	608.0412	Storm Sewer Pipe Reinforced Concrete Class IV 12-Inch	LF	928.000	928.000
0094	608.0415	Storm Sewer Pipe Reinforced Concrete Class IV 15-Inch	LF	159.000	159.000
0096	608.0418	Storm Sewer Pipe Reinforced Concrete Class IV 18-Inch	LF	225.000	225.000
0098	608.0421	Storm Sewer Pipe Reinforced Concrete Class IV 21-Inch	LF	86.000	86.000
0100	608.0424	Storm Sewer Pipe Reinforced Concrete Class IV 24-Inch	LF	2,098.000	2,098.000
0102	608.2334	Storm Sewer Pipe Reinforced Concrete Horizontal Elliptical Class HE-III 34x53-Inch	LF	431.000	431.000
0104	608.2419	Storm Sewer Pipe Reinforced Concrete Horizontal Elliptical Class HE-IV 19x30-Inch	LF	701.000	701.000
0106	608.2424	Storm Sewer Pipe Reinforced Concrete Horizontal Elliptical Class HE-IV 24x38-Inch	LF	297.000	297.000
0108	608.2429	Storm Sewer Pipe Reinforced Concrete Horizontal Elliptical Class HE-IV 29x45-Inch	LF	395.000	395.000
0110	611.0420	Reconstructing Manholes	EACH	8.000	8.000
0112	611.0530	Manhole Covers Type J	EACH	19.000	19.000
0114	611.0545	Manhole Covers Type L	EACH	1.000	1.000
0116	611.0612	Inlet Covers Type C	EACH	2.000	2.000
0118	611.0624	Inlet Covers Type H	EACH	23.000	23.000
0120	611.0639	Inlet Covers Type H-S	EACH	17.000	17.000
0122	611.0642	Inlet Covers Type MS	EACH	7.000	7.000
0124	611.1004	Catch Basins 4-FT Diameter	EACH	2.000	2.000
0126	611.1005	Catch Basins 5-FT Diameter	EACH	2.000	2.000
0128	611.1230	Catch Basins 2x3-FT	EACH	35.000	35.000
0130	611.2004	Manholes 4-FT Diameter	EACH	4.000	4.000
0132	611.2005	Manholes 5-FT Diameter	EACH	9.000	9.000
0134	611.2006	Manholes 6-FT Diameter	EACH	3.000	3.000
0136	611.2007	Manholes 7-FT Diameter	EACH	2.000	2.000
0138	611.2008	Manholes 8-FT Diameter	EACH	2.000	2.000

4854-03-71

Line	Item	Item Description	Unit	Total	Qty
0140	611.2066	Manholes 6x6-FT	EACH	1.000	1.000
0142	611.2604	Manholes Variable Special 4-FT Diameter	EACH	1.000	1.000
0144	611.3004	Inlets 4-FT Diameter	EACH	1.000	1.000
0146	611.3901	Inlets Median 1 Grate	EACH	7.000	7.000
0148	611.8110	Adjusting Manhole Covers	EACH	9.000	9.000
0150	612.0204	Pipe Underdrain Unperforated 4-Inch	LF	289.000	289.000
0152	618.0100	Maintenance And Repair of Haul Roads (project) 01. 4854-03-71	EACH	1.000	1.000
0154	619.1000	Mobilization	EACH	1.000	1.000
0156	624.0100	Water	MGAL	115.000	115.000
0158	625.0100	Topsoil	SY	9,470.000	9,470.000
0160	628.1504	Silt Fence	LF	1,600.000	1,600.000
0162	628.1520	Silt Fence Maintenance	LF	1,600.000	1,600.000
0164	628.1905	Mobilizations Erosion Control	EACH	5.000	5.000
0166	628.1910	Mobilizations Emergency Erosion Control	EACH	5.000	5.000
0168	628.2004	Erosion Mat Class I Type B	SY	250.000	250.000
0170	628.2006	Erosion Mat Urban Class I Type A	SY	9,220.000	9,220.000
0172	628.7005	Inlet Protection Type A	EACH	15.000	15.000
0174	628.7010	Inlet Protection Type B	EACH	15.000	15.000
0176	628.7015	Inlet Protection Type C	EACH	40.000	40.000
0178	628.7020	Inlet Protection Type D	EACH	17.000	17.000
0180	628.7504	Temporary Ditch Checks	LF	100.000	100.000
0182	628.7555	Culvert Pipe Checks	EACH	25.000	25.000
0184	628.7570	Rock Bags	EACH	20.000	20.000
0186	629.0210	Fertilizer Type B	CWT	6.000	6.000
0188	630.0140	Seeding Mixture No. 40	LB	195.000	195.000
0190	630.0200	Seeding Temporary	LB	149.000	149.000
0192	634.0616	Posts Wood 4x6-Inch X 16-FT	EACH	22.000	22.000
0194	634.0618	Posts Wood 4x6-Inch X 18-FT	EACH	1.000	1.000
0196	637.2210	Signs Type II Reflective H	SF	104.800	104.800
0198	637.2230	Signs Type II Reflective F	SF	26.250	26.250
0200	638.2602	Removing Signs Type II	EACH	24.000	24.000
0202	638.3000	Removing Small Sign Supports	EACH	24.000	24.000
0204	642.5001	Field Office Type B	EACH	1.000	1.000
0206	643.0300	Traffic Control Drums	DAY	7,013.000	7,013.000
0208	643.0410	Traffic Control Barricades Type II	DAY	3,647.000	3,647.000
0210	643.0420	Traffic Control Barricades Type III	DAY	11,220.000	11,220.000
0212	643.0705	Traffic Control Warning Lights Type A	DAY	26,087.000	26,087.000
0214	643.0900	Traffic Control Signs	DAY	18,794.000	18,794.000
0216	643.1050	Traffic Control Signs PCMS	DAY	14.000	14.000

4854-03-71

Line	Item	Item Description	Unit	Total	Qty
0218	643.5000	Traffic Control	EACH	1.000	1.000
0220	644.1410.S	Temporary Pedestrian Surface Asphalt	SF	3,905.000	3,905.000
0222	644.1601.S	Temporary Curb Ramp	EACH	20.000	20.000
0224	644.1616.S	Temporary Pedestrian Safety Fence	LF	1,125.000	1,125.000
0226	645.0120	Geotextile Type HR	SY	40.000	40.000
0228	646.1020	Marking Line Epoxy 4-Inch	LF	8,415.000	8,415.000
0230	646.7420	Marking Crosswalk Epoxy Transverse Line 6-Inch	LF	1,165.000	1,165.000
0232	646.7520	Marking Crosswalk Epoxy Ladder Pattern 24-Inch	LF	54.000	54.000
0234	650.4000	Construction Staking Storm Sewer	EACH	73.000	73.000
0236	650.4500	Construction Staking Subgrade	LF	5,138.000	5,138.000
0238	650.5000	Construction Staking Base	LF	5,138.000	5,138.000
0240	650.5500	Construction Staking Curb Gutter and Curb & Gutter	LF	8,740.000	8,740.000
0242	650.9000	Construction Staking Curb Ramps	EACH	34.000	34.000
0244	650.9910	Construction Staking Supplemental Control (project) 01. 4854-03-00	LS	1.000	1.000
0246	650.9920	Construction Staking Slope Stakes	LF	5,138.000	5,138.000
0248	690.0150	Sawing Asphalt	LF	1,635.000	1,635.000
0250	690.0250	Sawing Concrete	LF	1,185.000	1,185.000
0252	ASP.1T0A	On-the-Job Training Apprentice at $5.00/HR	HRS	2,000.000	2,000.000
0254	ASP.1T0G	On-the-Job Training Graduate at $5.00/HR	HRS	1,320.000	1,320.000
0256	SPV.0060	Special 01. Adjusting Water Valve Box	EACH	33.000	33.000
0258	SPV.0060	Special 02. Adjusting Water Service Curb Stop	EACH	61.000	61.000
0260	SPV.0060	Special 03. Sump Drain Cleanouts	EACH	11.000	11.000
0262	SPV.0090	Special 01. Concrete Curb and Gutter 30-Inch HES Type D	LF	470.000	470.000
0264	SPV.0090	Special 02. Water Service Lateral 1-Inch	LF	150.000	150.000
0266	SPV.0090	Special 03. Water Service Lateral 3/4-Inch	LF	30.000	30.000
0268	SPV.0120	Special 01. Water for Seeded Areas	MGAL	227.000	227.000
0270	SPV.0165	Special 01. Wall Modular Block Gravity Landscape (Sta 124+35)	SF	127.000	127.000
0272	SPV.0165	Special 02. Insulation Board 2-Inch	SF	60.000	60.000
0274	SPV.0165	Special 03. Insulation Board 4-Inch	SF	400.000	400.000
0276	SPV.0165	Special 04. Insulation Board 6-Inch	SF	96.000	96.000

CLEARING AND GRUBBING

STATION	TO	STATION	DIR	ROADWAY	201.0205 GRUBBING STA
CATEGORY 0010					
124+00	-	125+00	RT	CTH G	1
125+00	-	127+00	LT	CTH G	2
129+00	-	131+00	RT	CTH G	2
131+00	-	132+00	LT	CTH G	1
				PROJECT TOTALS	6

REMOVING CURB AND GUTTER

STATION	TO	STATION	DIR	LOCATION	204.0150 REMOVING CURB AND GUTTER LF
CATEGORY 0010					
105+25	-	105+25	LT	CTH G	110
105+55	-	105+55	LT	CTH G	115
109+50	-	109+50	LT	CTH G	16
109+70	-	109+70	LT	CTH G	16
116+60	-	116+70	RT	CTH G	55
122+00	-	122+00	RT	CTH G	8
125+80	-	129+35	CTH G	CTH G	255
				PROJECT TOTALS	575

REMOVING PAVEMENT

STATION	TO	STATION	LOCATION	204.0100 REMOVING PAVEMENT SY
CATEGORY 0010				
101+70	-	117+20	CTH G	2850
117+20	-	145+35	CTH G	4550
101+70	-	117+20	DRIVEWAYS	900
117+21	-	145+36	DRIVEWAYS	1400
			PROJECT TOTALS	9,700

REMOVING MASONRY

STATION	TO	STATION	DIR	ROADWAY	204.0185 REMOVING MASONRY CY	FOR INFORMATION ONLY
CATEGORY 0010						
103+69	-	103+83	RT	CTH G	6	SIGN BASE
112+70	-	114+17	RT	CTH G	24	CONCRETE STEPS AND SIDEWALK
				PROJECT TOTALS	30	

REMOVING SIDEWALK

STATION	TO	STATION	DIR	LOCATION	204.0155 REMOVING SIDEWALK SY
CATEGORY 0010					
101+70	-	117+20	LT	CTH G	780
101+70	-	117+20	RT	CTH G	490
117+20	-	145+35	LT	CTH G	410
117+20	-	145+35	RT	CTH G	540
				PROJECT TOTALS	2,220

REMOVING FENCE

STATION	TO	STATION	LOCATION	204.0170 REMOVING FENCE LF
CATEGORY 0010				
115+24	-	115+60	CTH G	46
119+35	-	119+50	CTH G	15
124+25	-	124+34	CTH G	20
143+52	-	143+63	CTH G	22
			PROJECT TOTALS	103

REMOVING SMALL PIPE CULVERTS

STATION	DIR	ROADWAY	203.0100 REMOVING SMALL CULVERT PIPE EA	FOR INFORMATION ONLY
CATEGORY 0010				
129+00	RT	CTH G	1	15" CMP
133+50	RT	CTH G	1	18" CMP
134+85	LT	CTH G	1	18" CMP
135+00	RT	CTH G	1	18" CSCP
136+00	RT	CTH G	1	18" CMP
136+25	LT	CTH G	1	18" CMP
136+65	RT	CTH G	1	18" CMP
137+25	LT	CTH G	1	18" CMP
141+75	RT	CTH G	1	15" CMP
142+00	LT	CTH G	1	15" CMP
143+20	LT	CTH G	1	18" CMP
143+20	RT	CTH G	1	15" CMP
143+85	LT	CTH G	1	18" CMP
144+25	RT	CTH G	1	15" CMP
			PROJECT TOTALS	14

REMOVING STORM SEWER STRUCTURES

STATION	DIR	ROADWAY	204.0210 REMOVING MANHOLES EA	204.0220 REMOVING INLETS EA	204.0280 SEALING PIPES EA
CATEGORY 0010					
103+25	LT	CTH G	---	1	---
103+25	RT	CTH G	---	1	---
105+20	LT	CTH G	---	1	---
105+65	LT	CTH G	---	1	---
105+65	RT	CTH G	---	---	1
108+00	RT	CTH G	1	---	---
108+00	RT	CTH G	---	---	1
108+05	LT	CTH G	---	1	---
108+55	RT	CTH G	---	1	---
109+80	LT	CTH G	---	1	---
111+10	LT	CTH G	---	1	---
111+50	LT	CTH G	1	---	---
20+75	LT	MARSH ST	---	1	---
111+95	RT	CTH G	1	---	---
129+40	LT	CTH G	---	1	---
130+20	LT	CTH G	---	1	---
131+10	LT	CTH G	---	1	---
131+85	LT	CTH G	---	1	---
132+70	LT	CTH G	---	1	---
133+30	RT	CTH G	---	1	---
133+60	LT	CTH G	---	1	---
134+60	LT	CTH G	---	1	---
		PROJECT TOTALS	3	17	2

REMOVING STORM SEWER

STATION	TO	STATION	DIR	LOCATION	204.0245.01 REMOVING STORM SEWER 10-INCH LF	204.0245.02 REMOVING STORM SEWER 12-INCH LF	204.0245.03 REMOVING STORM SEWER 15-INCH LF	204.0245.04 REMOVING STORM SEWER 18-INCH LF	204.0245.05 REMOVING STORM SEWER 27-INCH LF
CATEGORY 0010									
102+90	-	103+30	LT	CTH G	---	---	---	40	---
102+90	-	103+30	RT	CTH G	---	40	---	---	---
103+30	-	103+30	LT/RT	CTH G	---	---	---	---	55
103+30	-	103+30	RT	CTH G	---	---	---	250	---
105+20	-	105+65	LT	CTH G	---	45	---	---	---
105+65	-	105+65	LT/RT	CTH G	---	55	---	---	---
108+00	-	108+00	LT/RT	CTH G	---	45	---	---	---
108+00	-	108+55	RT	CTH G	---	---	---	60	---
108+00	-	111+50	LT	CTH G	---	---	350	---	---
111+10	-	111+10	LT	CTH G	20	---	---	---	---
111+50	-	111+50	LT	CTH G	55	---	---	---	---
129+50	-	133+60	LT	CTH G	420	---	---	---	---
133+60	-	133+25	LT/RT	CTH G	---	---	60	---	---
133+25	-	133+25	RT	CTH G	---	---	140	---	---
133+60	-	134+60	LT	CTH G	---	---	100	---	---
				PROJECT TOTALS	495	185	650	350	55

CONTAMINATED SOIL

STATION	TO	STATION	DIR	LOCATION	205.0501.S EXCAVATION, HAULING, AND DISPOSAL OF PETROLEUM CONTAMINATED SOIL TON	REMARKS
CATEGORY 0020						
107+65	-	108+55	RT	CTH G	153	STORM SEWER EXCAVATION
107+65	-	108+55	RT	CTH G	315	ROADWAY EXCAVATION
111+25	-	112+58	LT	CTH G	17	STORM SEWER EXCAVATION
111+25	-	112+58	LT	CTH G	340	ROADWAY EXCAVATION
112+25	-	112+90	RT	CTH G	43	STORM SEWER EXCAVATION
112+25	-	112+90	RT	CTH G	---	ROADWAY EXCAVATION
112+58	-	113+25	LT	CTH G	---	STORM SEWER EXCAVATION
112+58	-	113+25	LT	CTH G	---	ROADWAY EXCAVATION
117+00	-	118+00	RT	CTH G	17	STORM SEWER EXCAVATION
117+00	-	118+00	LT/RT	CTH G	---	ROADWAY EXCAVATION
120+35	-	120+95	RT	CTH G	60	STORM SEWER EXCAVATION
120+35	-	120+95	RT	CTH G	153	ROADWAY EXCAVATION
				PROJECT TOTALS	1,098	

BASE AGGREGATE DENSE AND WATER

STATION	TO	STATION	LOCATION	305.0110 BASE AGGREGATE DENSE 3/4-INCH TON	305.0120 BASE AGGREGATE DENSE 1 1/4-INCH TON	311.0110 BREAKER RUN TON	624.0100 WATER MGAL
CATEGORY 0010							
101+70	-	105+40	CTH G	70	1,130	1,640	8
105+40	-	111+29	CTH G	150	1,910	2,760	13
111+29	-	114+35	CTH G	90	970	1,410	6
114+35	-	117+20	CTH G	50	830	1,210	6
117+20	-	121+89	CTH G	90	1,480	2,150	10
121+89	-	125+60	CTH G	80	1,200	1,740	8
125+60	-	137+95	CTH G	250	4,030	5,840	26
137+95	-	145+35	CTH G	160	2,290	3,320	15
10+75	-	11+85	SOUTH ST	20	340	490	2
20+73	-	21+37	MARSH ST	20	230	330	2
31+25	-	31+70	BARRETT ST	10	160	230	1
32+23	-	32+61	BARRETT ST	10	120	170	1
32+23	-	43+86	RAILROAD AV	10	370	530	3
45+20	-	45+93	RAILROAD AV	20	260	370	2
50+23	-	51+25	CLARK ST	20	320	470	2
50+23	-	61+76	NORTH ST	0	90	130	1
70+75	-	71+32	CEDARVIEW DR	0	180	260	1
---	-	---	DRIVEWAYS	80	2,020	0	8
			PROJECT TOTALS	1,130	17,930	23,050	115

3

EARTHWORK SUMMARY

Division	From/To Station	Common Excavation (1) (item # 205.0100)		Salvaged/Unusable Material	Available Material (5)	Unexpanded Fill	Expanded Fill	Mass Ordinate +/- (14)	Waste
Division 1		Cut (2)	EBS Excavation				Factor 1.25		
CTH G	101+70/145+00	27,373	0	0	27,373	829	1,036	26,337	26,337
South St	10+75.49/11+50	326	0	0	326	1	1	325	325
Marsh St	20+75/21+00	110	0	0	110	3	3	106	106
Railroad St West	42+87/43+50	271	0	0	271	0	0	270	270
Railroad St East	45+50/45+92	207	0	0	207	2	3	205	205
Clark St	50+50/51+24.51	419	0	0	419	1	1	418	418
Cedarview Dr	70+00/70+75	2	0	0	2	20	25	-22	0
Hazardous Material	---	0	0	475					
Concrete Pavement	---	0	0	1,600					
Undistributed	---	0	291	0	0	0	0	378	378
Division 1 Subtotal		28,709	291	2,075	26,634	855	1,069	28,018	28,040
Grand Total (CY)		28,709	291	2,075	28,709	855	1,069	28,018	28,040
		Total Common Exc	29,000						

1) Common Excavation is the sum of the Cut and EBS Excavation columns. Item number 205.0100
2) Salvaged/Unsuable Pavement Material is included in Cut.
5) Available Material = Cut - Salvaged/Unusuable Pavement Material
14) The Mass Ordinate + or - Qty calculated for the Division. Plus quantity indicates an excess of material within the Division. Minus indicates a shortage of material within the Division.

CONCRETE DRIVEWAYS

STATION	DIR	LOCATION	416.0160 6-INCH SY	416.0170 7-INCH SY	416.0260 6-INCH HES SY	416.0270 7-INCH HES SY	416.0280 8-INCH HES SY
CATEGORY 0010							
103+04	LT	CTH G	82	---	---	---	---
103+40	LT	CTH G	74	---	---	---	---
103+50	RT	CTH G	---	---	39	---	---
105+35	RT	CTH G	18	---	---	---	---
106+85	LT	CTH G	118	---	---	---	---
108+00	RT	CTH G	---	---	61	---	---
109+19	RT	CTH G	18	---	---	---	---
109+60	LT	CTH G	26	---	---	---	---
110+30	RT	CTH G	62	---	---	---	---
111+45	RT	CTH G	24	---	---	---	---
112+32	RT	CTH G	50	---	---	---	---
113+00	LT	CTH G	45	---	---	---	---
114+85	RT	CTH G	---	17	---	---	---
115+50	RT	CTH G	---	---	---	---	290
115+70	LT	CTH G	46	---	---	---	---
116+00	RT	CTH G	---	31	---	---	---
116+12	LT	CTH G	---	37	---	---	---
117+80	RT	CTH G	---	---	---	110	---
118+65	LT	CTH G	---	---	---	30	---
118+70	RT	CTH G	---	---	36	---	---
119+63	RT	CTH G	21	---	---	---	---
119+65	LT	CTH G	---	---	---	28	---
120+50	RT	CTH G	---	---	---	24	---
121+00	RT	CTH G	---	77	---	---	---
121+20	LT	CTH G	---	34	---	---	---
122+25	LT	CTH G	59	---	---	---	---
123+00	LT	CTH G	---	---	26	---	---
123+30	RT	CTH G	---	---	---	40	---
123+50	LT	CTH G	47	---	---	---	---
124+05	RT	CTH G	17	---	---	---	---
125+60	RT	CTH G	28	---	---	---	---
126+40	RT	CTH G	30	---	---	---	---
127+00	LT	CTH G	47	---	---	---	---

CONCRETE DRIVEWAYS

STATION	DIR	LOCATION	416.0160 6-INCH SY	416.0170 7-INCH SY	416.0260 6-INCH HES SY	416.0270 7-INCH HES SY	416.0280 8-INCH HES SY
CATEGORY 0010							
127+05	RT	CTH G	21	---	---	---	---
128+00	RT	CTH G	38	---	---	---	---
128+30	LT	CTH G	27	---	---	---	---
128+75	LT	CTH G	24	---	---	---	---
129+05	RT	CTH G	82	---	---	---	---
129+60	LT	CTH G	18	---	---	---	---
130+40	LT	CTH G	---	36	---	---	---
131+45	RT	CTH G	24	---	---	---	---
131+90	RT	CTH G	22	---	---	---	---
132+40	RT	CTH G	24	---	---	---	---
132+45	LT	CTH G	27	---	---	---	---
132+95	LT	CTH G	63	---	---	---	---
133+55	RT	CTH G	77	---	---	---	---
133+90	LT	CTH G	107	---	---	---	---
134+90	LT	CTH G	24	---	---	---	---
135+05	RT	CTH G	31	---	---	---	---
136+05	RT	CTH G	70	---	---	---	---
136+30	LT	CTH G	28	---	---	---	---
136+70	RT	CTH G	78	---	---	---	---
137+25	LT	CTH G	70	---	---	---	---
139+40	LT	CTH G	167	---	---	---	---
140+00	RT	CTH G	37	---	---	---	---
141+75	RT	CTH G	71	---	---	---	---
142+00	LT	CTH G	101	---	---	---	---
143+15	LT	CTH G	81	---	---	---	---
143+25	RT	CTH G	18	---	---	---	---
143+85	LT	CTH G	60	---	---	---	---
11+00	RT	SOUTH ST	37	---	---	---	---
45+80	LT	RAILROAD ST	---	---	---	27	---
50+75	RT	CLARK ST	---	123	---	---	---
51+05	LT	CLARK ST	65	---	---	---	---
		PROJECT TOTALS	2,304	355	162	259	290

CONCRETE SIDEWALK

STATION	TO	STATION	LOCATION	602.0405 CONCRETE SIDEWALK 4-INCH SF	602.0415 CONCRETE SIDEWALK 6-INCH SF	602.1500 CONCRETE SIDEWALK STEPS SF
CATEGORY 0010						
101+70	-	105+40	CTH G	1,640	120	---
105+40	-	111+29	CTH G	5,030	520	---
111+29	-	114+35	CTH G	2,830	520	---
114+35	-	117+20	CTH G	1,300	510	---
117+20	-	121+89	CTH G	2,970	550	---
121+89	-	125+60	CTH G	2,710	230	34
125+60	-	137+95	CTH G	9,290	270	17
137+95	-	145+35	CTH G	4,750	130	---
10+75	-	11+85	SOUTH ST	450	---	---
20+73	-	21+37	MARSH ST	410	---	---
31+25	-	31+70	BARRETT ST	210	---	---
32+23	-	32+61	BARRETT ST	250	---	---
42+86	-	43+86	RAILROAD AV	340	---	---
45+20	-	45+93	RAILROAD AV	210	---	---
50+23	-	51+25	CLARK ST	410	---	---
			PROJECT TOTALS	32,800	2,850	51

ASPHALTIC ITEMS

STATION	TO	STATION	DIR	LOCATION	455.0605 TACK COAT GAL	460.5223 HMA PAVEMENT 3 LT 58-28 S TON	460.5224 HMA PAVEMENT 4 LT 58-28 S TON	465.0120 ASPHALTIC SURFACE DRIVEWAYS AND FIELD ENTRANCES TON	460.4110.S REHEATING HMA PAVEMENT LONGITUDINAL JOINTS LF
CATEGORY 0010									
101+70	-	105+40	RL	CTH G	130	210	170	49	610
105+40	-	111+29	RL	CTH G	190	350	280	28	1,178
111+29	-	114+35	RL	CTH G	100	190	150	4	612
114+35	-	117+20	RL	CTH G	100	160	130	55	500
117+20	-	121+89	RL	CTH G	170	280	220	68	908
121+89	-	125+60	RL	CTH G	110	220	180	5	742
125+60	-	137+95	RL	CTH G	380	730	590	60	2,470
137+95	-	145+35	RL	CTH G	220	430	350	4	1,445
10+75	-	11+85	RL	SOUTH ST	30	60	50	0	---
20+73	-	21+37	RL	MARSH ST	30	50	40	0	---
31+25	-	31+70	RL	BARRETT ST	20	30	30	0	---
32+23	-	32+61	RL	BARRETT ST	20	30	20	0	---
42+86	-	43+86	RL	RAILROAD AV	40	70	60	19	---
45+20	-	45+93	RL	RAILROAD AV	30	50	40	0	---
50+23	-	51+25	RL	CLARK ST	30	60	50	2	---
61+45	-	61+76	RL	NORTH ST	10	20	20	0	---
70+75	-	71+32	RL	CEDARVIEW DR	20	40	30	0	---
				PROJECT TOTALS	1,630	2,980	2,410	294	8,470

NOTE: REHEATING LONGITUDINAL JOINTS CALCULATED FOR JOINT DOWN CENTERLINE AND JOINT FOR NB PARKING LANE

CURB RAMP WARNING FIELDS

STATION	TO	STATION	LOCATION	602.0515 CURB RAMP DETECTABLE WARNING FIELD NATURAL PATINA SF	602.0615 CURB RAMP DETECTABLE WARNING FIELD RADIAL NATURAL PATINA SF
CATEGORY 0010					
101+70	-	105+40	CTH G	10	35
105+40	-	111+29	CTH G	60	30
111+29	-	114+35	CTH G	50	---
114+35	-	117+20	CTH G	50	30
117+20	-	121+89	CTH G	50	---
121+89	-	125+60	CTH G	20	30
125+60	-	137+95	CTH G	20	65
137+95	-	145+35	CTH G	10	35
			PROJECT TOTALS	270	225

CURB AND GUTTER

STATION	TO	STATION	LOCATION	601.0407 CONCRETE CURB & GUTTER 18-INCH TYPE D LF	601.0411 CONCRETE CURB & GUTTER 30-INCH TYPE D LF	SPV.0090.01 CONCRETE CURB & GUTTER 30-INCH HES TYPE D LF	601.0600 CONCRETE CURB PEDESTRIAN LF
CATEGORY 0010							
101+70	-	105+40	CTH G	---	400	50	---
105+40	-	111+29	CTH G	30	1,045	65	---
111+29	-	114+35	CTH G	---	510	---	60
114+35	-	117+20	CTH G	---	330	90	10
117+20	-	121+89	CTH G	---	630	190	72
121+89	-	125+60	CTH G	---	606	75	---
125+60	-	137+95	CTH G	---	2,400	---	---
137+95	-	144+10	CTH G	---	1,185	---	---
10+75	-	11+85	SOUTH ST	---	225	---	---
20+73	-	21+37	MARSH ST	---	125	---	---
31+25	-	31+70	BARRETT ST	---	65	---	---
32+23	-	32+61	BARRETT ST	---	75	---	---
42+86	-	43+86	RAILROAD ST	---	195	---	---
45+20	-	45+93	RAILROAD ST	---	125	---	---
50+23	-	51+25	CLARK ST	---	210	---	---
61+45	-	61+90	NORTH ST	---	65	---	---
70+75	-	71+32	CEDARVIEW DR	---	80	---	---
			PROJECT TOTALS	30	8,271	470	142

STORM SEWER PIPE

STRUCTURE FROM	STRUCTURE TO	608.0412 REIN. CONC. CLASS IV 12-INCH LF	608.0415 REIN. CONC. CLASS IV 15-INCH LF	608.0418 REIN. CONC. CLASS IV 18-INCH LF	608.0421 REIN. CONC. CLASS IV 21-INCH LF	608.0424 REIN. CONC. CLASS IV 24-INCH LF	608.2419 REIN. CONC. CLASS HE IV 19X30-INCH LF	608.2424 REIN. CONC. CLASS HE IV 24X38-INCH LF	608.2429 REIN. CONC. CLASS HE IV 29X45-INCH LF	608.2334 REIN. CONC. CLASS HE III 34X53-INCH LF
CATEGORY 0010										
MH 2	AEW 1	---	---	---	---	---	---	---	---	266
INL 2A	MH 2	102	---	---	---	---	---	---	---	---
MH 3	MH 2	---	---	---	---	---	---	---	---	165
INL 3A	MH 3	12	---	---	---	---	---	---	---	---
INL 3B	MH 3	---	---	28	---	---	---	---	---	---
INL 3C	INL 3B	---	---	35	---	---	---	---	---	---
INL 3D	INL 3C	38	---	---	---	---	---	---	---	---
INL 3E	INL 3B	42	---	---	---	---	---	---	---	---
MH 4	MH 3	---	---	---	---	---	---	---	315	---
INL 4A	MH 4	12	---	---	---	---	---	---	---	---
INL 4B	MH 4	---	---	28	---	---	---	---	---	---
INL 4C	INL 4B	11	---	---	---	---	---	---	---	---
MH 5	MH 4	---	---	---	---	---	---	297	---	---
INL 5A	MH 5	12	---	---	---	---	---	---	---	---
INL 5B	MH 5	---	---	---	54	---	---	---	---	---
INL 5C	INL 5B	---	---	---	32	---	---	---	---	---
INL 5D	INL 5C	---	31	---	---	---	---	---	---	---
INL 5E	INL 5B	28	---	---	---	---	---	---	---	---
MH 6	MH 5	---	---	---	---	68	---	---	---	---
INL 6A	MH 6	28	---	---	---	---	---	---	---	---
MH 7	MH 6	---	---	---	---	303	---	---	---	---
INL 7A	MH 7	13	---	---	---	---	---	---	---	---
INL 7B	INL 7A	26	---	---	---	---	---	---	---	---
INL 7C	MH 7	28	---	---	---	---	---	---	---	---
MH 8	MH 7	---	---	---	---	173	---	---	---	---
MH 9	MH 8	---	---	---	---	111	---	---	---	---
INL 9A	MH 9	7	---	---	---	---	---	---	---	---
INL 9B	MH 9	82	---	---	---	---	---	---	---	---
INL 9C	INL 9B	40	---	---	---	---	---	---	---	---
MH 10	MH 9	---	---	---	---	67	---	---	---	---
INL 10A	MH 10	27	---	---	---	---	---	---	---	---
MH 11	MH 10	---	---	---	---	83	---	---	---	---
INL 11A	MH 11	13	---	---	---	---	---	---	---	---
INL 11B	INL 11A	10	---	---	---	---	---	---	---	---
MH 12	MH 11	---	---	---	---	195	---	---	---	---
INL 12A	MH 12	27	---	---	---	---	---	---	---	---
MH 13	MH 12	---	---	---	---	105	---	---	---	---
INL 13A	MH 13	37	---	---	---	---	---	---	---	---
INL 13B	INL 13A	31	---	---	---	---	---	---	---	---
INL 13C	INL 3B	14	---	---	---	---	---	---	---	---
INL 3D	MH 13	33	---	---	---	---	---	---	---	---
INL 13E	MH 13	27	---	---	---	---	---	---	---	---

STORM SEWER PIPE

STRUCTURE FROM	TO	608.0412 REIN. CONC. CLASS IV 12-INCH LF	608.0415 REIN. CONC. CLASS IV 15-INCH LF	608.0418 REIN. CONC. CLASS IV 18-INCH LF	608.0421 REIN. CONC. CLASS IV 21-INCH LF	608.0424 REIN. CONC. CLASS IV 24-INCH LF	608.2419 REIN. CONC. CLASS HE IV 19X30-INCH LF	608.2424 REIN. CONC. CLASS HE IV 24X38-INCH LF	608.2429 REIN. CONC. CLASS HE IV 29X45-INCH LF	608.2334 REIN. CONC. CLASS HE III 34X53-INCH LF
CATEGORY 0010										
MH 21	MH 20	---	---	---	---	---	---	---	80	---
MH 20	AEW 20A	---	---	---	---	55	---	---	---	---
INL 21A	MH 21	40	---	---	---	---	---	---	---	---
MH 22	MH 21	---	---	---	---	---	319	---	---	---
INL 22A	MH 22	7	---	---	---	---	---	---	---	---
INL 22B	INL 22A	10	---	---	---	---	---	---	---	---
INL 22C	MH 22	---	33	---	---	---	---	---	---	---
INL 22D	INL 22C	---	95	---	---	---	---	---	---	---
INL 22E	INL 22D	10	---	---	---	---	---	---	---	---
MH 23	MH 22	---	---	---	---	---	150	---	---	---
INL 23A	MH 23	27	---	---	---	---	---	---	---	---
MH 24	MH 21	---	---	---	---	---	232	---	---	---
INL 24A	MH 24	13	---	---	---	---	---	---	---	---
INL 24B	MH 24	27	---	---	---	---	---	---	---	---
MH 25	MH 24	---	---	---	---	295	---	---	---	---
INL 25A	MH 25	12	---	---	---	---	---	---	---	---
INL 25B	MH 25	---	---	28	---	---	---	---	---	---
INL 25C	INL 24B	---	---	32	---	---	---	---	---	---
AEW 25D	INL 25C	---	---	74	---	---	---	---	---	---
MH 26	MH 25	---	---	---	---	255	---	---	---	---
INL 26A	MH 26	12	---	---	---	---	---	---	---	---
INL 26B	MH 26	28	---	---	---	---	---	---	---	---
MH 27	MH 26	---	---	---	---	250	---	---	---	---
INL 27A	MH 27	42	---	---	---	---	---	---	---	---
MH 28	MH 27	---	---	---	---	60	---	---	---	---
INL 28A	MH 28	---	---	---	---	18	---	---	---	---
AEW 28B	INL 28A	---	---	---	---	25	---	---	---	---
INL 28C	MH 28	---	---	---	---	35	---	---	---	---
	PROJECT TOTALS	928	159	225	86	2,098	701	297	395	431

STORM SEWER STRUCTURES

STRUCT NUM	523.1018 APRON ENDWALLS FOR CPRC 18-INCH EACH	522.1024 APRON ENDWALLS FOR CPRC 24-INCH EACH	523.0534 APRON ENDWALLS FOR CPRC-HE 34X53-INCH EACH	611.0612 INLET COVERS TYPE C EACH	611.0624 INLET COVERS TYPE H EACH	611.0639 INLET COVERS TYPE H-S EACH	611.0642 INLET COVERS TYPE MS EACH	611.1004 CATCH BASINS 4-FT DIA EACH	611.1005 CATCH BASINS 5-FT DIA EACH	611.1230 CATCH BASINS 2 X 3-FT EACH	611.3901 INLETS MEDIAN 1 GRATE EACH	611.0530 MH COVERS TYPE J EACH	611.0545 MANHOLE COVERS TYPE L EACH	611.2604 MH VARIABLE SPECIAL 4-FT DIA EACH	611.2004 MH 4-FT DIA EACH	611.2005 MH 5-FT DIA EACH	611.2006 MH 6-FT DIA EACH	611.2007 MH 7-FT DIA EACH	611.2008 MH 8-FT DIA EACH	611.2066 MH 6X6-FT EACH	611.3004 INLETS 4-FT DIA EACH
CATEGORY 0010																					
AEW 1	---	---	1	---	---	---	---	---	---	---	---	---	---	---	---	---	---	---	---	---	---
MH 2	---	---	---	---	---	---	---	---	---	---	---	1	---	---	---	---	---	---	---	1	---
INL 2A	---	---	---	---	---	---	1	---	---	---	1	---	---	---	---	---	---	---	---	---	---
INL 2B	---	---	---	1	---	---	---	---	---	---	---	---	---	1	---	---	---	---	---	---	---
MH 3	---	---	---	---	---	---	---	---	---	---	---	1	---	---	---	---	---	---	1	---	---
INL 3A	---	---	---	---	1	---	---	---	---	1	---	---	---	---	---	---	---	---	---	---	---
INL 3B	---	---	---	---	---	1	---	1	---	---	---	---	---	---	---	---	---	---	---	---	---
INL 3C	---	---	---	---	---	1	---	---	---	1	---	---	---	---	---	---	---	---	---	---	---
INL 3D	---	---	---	---	---	1	---	---	---	1	---	---	---	---	---	---	---	---	---	---	---
INL 3E	---	---	---	---	---	---	1	---	---	---	1	---	---	---	---	---	---	---	---	---	---
MH 4	---	---	---	---	---	---	---	---	---	---	---	1	---	---	---	---	---	1	---	---	---
INL 4A	---	---	---	---	---	1	---	---	---	1	---	---	---	---	---	---	---	---	---	---	---
INL 4B	---	---	---	---	---	1	---	---	---	1	---	---	---	---	---	---	---	---	---	---	---
INL 4C	---	---	---	---	---	1	---	---	---	1	---	---	---	---	---	---	---	---	---	---	---
MH 5	---	---	---	---	---	---	---	---	---	---	---	1	---	---	---	---	1	---	---	---	---
INL 5A	---	---	---	---	1	---	---	---	---	1	---	---	---	---	---	---	---	---	---	---	---
INL 5B	---	---	---	---	---	1	---	---	1	---	---	---	---	---	---	---	---	---	---	---	---
INL 5C	---	---	---	---	---	1	---	---	---	1	---	---	---	---	---	---	---	---	---	---	---
INL 5D	---	---	---	---	---	---	1	---	---	---	1	---	---	---	---	---	---	---	---	---	---
INL 5E	---	---	---	---	---	---	1	---	---	---	1	---	---	---	---	---	---	---	---	---	---
MH 6	---	---	---	---	---	---	---	---	---	---	---	1	---	---	1	---	---	---	---	---	---
INL 6A	---	---	---	---	1	---	---	---	---	1	---	---	---	---	---	---	---	---	---	---	---
MH 7	---	---	---	---	---	---	---	---	---	---	---	1	---	---	---	1	---	---	---	---	---
INL 7A	---	---	---	---	---	1	---	---	---	1	---	---	---	---	---	---	---	---	---	---	---
INL 7B	---	---	---	---	1	---	---	---	---	1	---	---	---	---	---	---	---	---	---	---	---
INL 7C	---	---	---	---	1	---	---	---	---	1	---	---	---	---	---	---	---	---	---	---	---
MH 8	---	---	---	---	---	---	---	---	---	---	---	1	---	---	---	1	---	---	---	---	---
MH 9	---	---	---	---	---	---	---	---	---	---	---	1	---	---	---	1	---	---	---	---	---
INL 9A	---	---	---	---	1	---	---	---	---	1	---	---	---	---	---	---	---	---	---	---	---
INL 9B	---	---	---	---	---	1	---	---	---	1	---	---	---	---	---	---	---	---	---	---	---
INL 9C	---	---	---	---	---	1	---	---	---	1	---	---	---	---	---	---	---	---	---	---	---
MH 10	---	---	---	---	---	---	---	---	---	---	---	1	---	---	1	---	---	---	---	---	---
INL 10A	---	---	---	---	1	---	---	---	---	1	---	---	---	---	---	---	---	---	---	---	---
MH 11	---	---	---	---	---	---	---	---	---	---	---	1	---	---	1	---	---	---	---	---	---
INL 11A	---	---	---	---	1	---	---	---	---	1	---	---	---	---	---	---	---	---	---	---	---
INL 11B	---	---	---	---	1	---	---	---	---	1	---	---	---	---	---	---	---	---	---	---	---
MH 12	---	---	---	---	---	---	---	---	---	---	---	1	---	---	1	---	---	---	---	---	---
INL 12A	---	---	---	---	1	---	---	---	---	1	---	---	---	---	---	---	---	---	---	---	---
MH 13	---	---	---	---	---	---	---	---	---	---	---	1	---	---	---	1	---	---	---	---	---
INL 13A	---	---	---	---	---	1	---	---	---	1	---	---	---	---	---	---	---	---	---	---	---
INL 13B	---	---	---	---	1	---	---	---	---	1	---	---	---	---	---	---	---	---	---	---	---
INL 13C	---	---	---	---	1	---	---	---	---	1	---	---	---	---	---	---	---	---	---	---	---
INL 13D	---	---	---	---	1	---	---	---	---	1	---	---	---	---	---	---	---	---	---	---	---
INL 13E	---	---	---	---	1	---	---	---	---	1	---	---	---	---	---	---	---	---	---	---	---
SUBTOTALS	0	0	1	1	14	12	4	1	1	24	4	12	0	1	4	4	1	1	1	1	0

STORM SEWER STRUCTURES (CONTINUED)

STRUCT NUM	523.1018 APRON ENDWALLS FOR CPRC 18-INCH EACH	522.1024 APRON ENDWALLS FOR CPRC 24-INCH EACH	523.0534 APRON ENDWALLS FOR CPRC-HE 34X53-INCH EACH	611.0612 INLET COVERS TYPE C EACH	611.0624 INLET COVERS TYPE H EACH	611.0639 INLET COVERS TYPE H-S EACH	611.0642 INLET COVERS TYPE MS EACH	611.1004 CATCH BASINS 4-FT DIA EACH	611.1005 CATCH BASINS 5-FT DIA EACH	611.1230 CATCH BASINS 2 X 3-FT EACH	611.3901 INLETS MEDIAN 1 GRATE EACH	611.0530 MH COVERS TYPE J EACH	611.0545 MANHOLE COVERS TYPE L EACH	611.2604 MH VARIABLE SPECIAL 4-FT DIA EACH	611.2004 MH 4-FT DIA EACH	611.2005 MH 5-FT DIA EACH	611.2006 MH 6-FT DIA EACH	611.2007 MH 7-FT DIA EACH	611.2008 MH 8-FT DIA EACH	611.2066 MH 6X6-FT EACH	611.3004 INLETS 4-FT DIA EACH
CATEGORY 0010																					
AEW 20A	---	1	---	---	---	---	---	---	---	---	---	---	---	---	---	---	---	---	---	---	---
MH 20	---	---	---	---	---	---	---	---	---	---	---	---	1	---	---	---	---	1	---	---	---
MH 21	---	---	---	---	---	1	---	---	---	---	---	---	---	---	---	---	---	---	1	---	---
INL 21A	---	---	---	---	---	1	---	---	---	1	---	---	---	---	---	---	---	---	---	---	---
MH 22	---	---	---	---	---	---	---	---	---	---	---	1	---	---	---	1	---	---	---	---	---
INL 22A	---	---	---	---	---	1	---	---	---	1	---	---	---	---	---	---	---	---	---	---	---
INL 22B	---	---	---	---	---	1	---	---	---	1	---	---	---	---	---	---	---	---	---	---	---
INL 22C	---	---	---	---	---	1	---	---	---	1	---	---	---	---	---	---	---	---	---	---	---
INL 22D	---	---	---	---	1	---	---	---	---	1	---	---	---	---	---	---	---	---	---	---	---
INL 22E	---	---	---	---	1	---	---	---	---	1	---	---	---	---	---	---	---	---	---	---	---
MH 23	---	---	---	---	---	---	---	---	---	---	---	1	---	---	---	1	---	---	---	---	---
INL 23A	---	---	---	---	---	---	1	---	---	---	1	---	---	---	---	---	---	---	---	---	---
MH 24	---	---	---	---	---	---	---	---	---	---	---	1	---	---	---	---	1	---	---	---	---
INL 24A	---	---	---	---	1	---	---	---	---	1	---	---	---	---	---	---	---	---	---	---	---
INL 24B	---	---	---	---	1	---	---	---	---	1	---	---	---	---	---	---	---	---	---	---	---
MH 25	---	---	---	---	---	---	---	---	---	---	---	1	---	---	---	---	1	---	---	---	---
INL 25A	---	---	---	---	1	---	---	---	---	1	---	---	---	---	---	---	---	---	---	---	---
INL 25B	---	---	---	---	1	---	---	---	---	---	---	---	---	---	---	---	---	---	---	---	1
INL 25C	---	---	---	---	1	---	---	1	---	---	---	---	---	---	---	---	---	---	---	---	---
AEW 25D	1	---	---	---	---	---	---	----	---	---	---	---	---	---	---	---	---	---	---	---	---
MH 26	---	---	---	---	---	---	---	---	---	---	---	1	---	---	---	1	---	---	---	---	---
INL 26A	---	---	---	---	1	---	---	---	---	1	---	---	---	---	---	---	---	---	---	---	---
INL 26B	---	---	---	---	1	---	---	---	---	1	---	---	---	---	---	---	---	---	---	---	---
MH 27	---	---	---	---	---	---	---	---	---	---	---	1	---	---	---	1	---	---	---	---	---
INL 27A	---	---	---	---	---	---	1	---	---	---	1	---	---	---	---	---	---	---	---	---	---
MH 28	---	---	---	---	---	---	---	---	---	---	---	1	---	---	---	1	---	---	---	---	---
INL 28A	---	---	---	1	---	---	---	---	1	---	---	---	---	---	---	---	---	---	---	---	---
AEW 28B	---	1	---	---	---	---	---	---	---	---	---	---	---	---	---	---	---	---	---	---	---
INL 28C	---	---	---	---	---	---	1	---	---	---	1	---	---	---	---	---	---	---	---	---	---
SUBTOTALS	1	2	0	1	9	5	3	1	1	11	3	7	1	0	0	5	2	1	1	0	1
TOTALS	1	2	1	2	23	17	7	2	2	35	7	19	1	1	4	9	3	2	2	1	1

NOTE: DRIVEWAY CURB HEAD REQUIRED ON CASTINGS FOR THE FOLLOWING: INL 4A, INL 9A, INL 9B, INL 13C

EROSION CONTROL

STATION	TO	STATION	LOCATION	628.1504 SILT FENCE LF	628.1520 SILT FENCE MAINTENANCE LF	628.1905 MOBILIZATIONS EROSION CONTROL EACH	628.1910 MOBILIZATIONS EMERGENCY EROSION CONTROL EACH	628.7005 INLET PROTECTION TYPE A EACH	628.7010 INLET PROTECTION TYPE B EACH	628.7015 INLET PROTECTION TYPE C EACH	628.7020 INLET PROTECTION TYPE D EACH	628.7504 TEMPORARY DITCH CHECKS LF	628.7555 CULVERT PIPE CHECKS EACH	628.7570 ROCK BAGS EACH
CATEGORY 0010														
101+70	-	105+40	CTH G	400	400	---	---	3	---	2	1	10	---	---
105+40	-	111+29	CTH G	245	245	---	---	1	---	1	5	---	---	---
111+29	-	114+36	CTH G	---	---	---	---	---	1	1	1	---	---	---
114+36	-	117+19	CTH G	---	---	---	---	---	---	4	---	---	---	---
117+19	-	121+89	CTH G	---	---	---	---	---	---	7	1	---	---	---
121+89	-	125+60	CTH G	---	---	---	---	---	---	2	1	---	---	---
125+60	-	137+95	CTH G	170	170	---	---	1	---	3	6	10	---	---
137+95	-	145+35	CTH G	625	625	---	---	3	---	5	---	30	5	---
---	-	---	EXISTING INLETS	---	---	---	---	---	8	7	---	---	---	---
---	-	---	UNDISTRIBUTED	160	160	5	5	7	6	8	2	50	20	20
			PROJECT TOTALS	1,600	1,600	5	5	15	15	40	17	100	25	20

RESTORATION

STATION	TO	STATION	LOCATION	625.0100 TOPSOIL SY	628.2004 EROSION MAT CLASS I TYPE B SY	628.2006 EROSION MAT URBAN CLASS I TYPE A SY	629.0210 FERTILIZER TYPE B CWT	630.0140 SEEDING MIXTURE #40 LB	630.0200 SEEDING TEMPORARY LB	SPV.0120.01 WATER FOR SEEDED AREAS MGAL
CATEGORY 0010										
101+70	-	105+40	CTH G	740	---	740	0.5	20	10	18
105+40	-	111+29	CTH G	1,250	---	1,250	0.8	30	20	30
111+29	-	114+36	CTH G	380	---	380	0.2	7	5	9
114+36	-	117+19	CTH G	210	---	210	0.1	4	3	5
117+19	-	121+89	CTH G	320	---	320	0.2	6	4	8
121+89	-	125+60	CTH G	490	---	490	0.3	9	7	12
125+60	-	137+95	CTH G	2,640	---	2,640	1.7	50	40	63
137+95	-	145+35	CTH G	1,860	200	1,660	1.2	40	30	45
---	-	---	UNDISTRIBUTED	1,580	50	1,530	1.0	30	30	38
			PROJECT TOTALS	9,470	250	9,220	6	195	149	227

RIPRAP

STATION	LOCATION	DIR	606.0300 RIPRAP HEAVY CY	645.0120 GEOTEXTILE FABRIC TYPE HR SY
CATEGORY 0010				
103+10	CTH G	RT	7	20
132+93	CTH G	RT	7	20
	PROJECT TOTALS		14	40

PIPE UNDERDRAIN

STATION	DIR	LOCATION	612.0204 PIPE UNDERDRAIN UNPERFORATED 4-INCH LF
CATEGORY 0020			
109+56	RT	CTH G	23
109+98	RT	CTH G	23
110+83	RT	CTH G	24
111+17	RT	CTH G	17
111+68	RT	CTH G	22
111+92	RT	CTH G	29
119+04	RT	CTH G	12
123+00	RT	CTH G	70
129+60	RT	CTH G	34
143+33	LT	CTH G	19
143+90	LT	CTH G	16
		PROJECT TOTALS	289

3

PERMANENT SIGNS TYPE II AND SIGN SUPPORTS

SIGN NO.	STATION	REFERENCE LINE	FACE DIR.	SIGN CODE	SIGN SIZE	DESCRIPTION	SIGN W X H IN X IN	ASSEMBLY NO.	ASSEMBLY WIDTH IN	ASSEMBLY HEIGHT IN	634.0616 POSTS WOOD 4 X 6-INCH 16 FT EACH	634.0618 POSTS WOOD 4 X 6-INCH 18 FT EACH	637.2210 SIGNS TYPE II REFLECTIVE H SF	637.2230 SIGNS TYPE II REFLECTIVE F SF
CATEGORY 0010														
101	102+00 RT	CTH G	NB	R2-1	2S	SPEED LIMIT	24 X 30			48.00	---	1	5.00	---
		CTH G	NB	D11-10	2	ATV ROUTE	24 X 18				---	---	3.00	---
102	103+75 RT	CTH G	WB	R1-1	2S	STOP	30 X 30				1	---	5.18	---
103	105+20 LT	CTH G	EB	R1-1	2S	STOP	30 X 30				1	---	5.18	---
104	105+90 LT	CTH G	SB	R2-1	2S	SPEED LIMIT	24 X 30				1	---	5.00	---
105	107+60 RT	CTH G	NB	W11-2	2S	PEDESTRIAN CROSSING	30 X 30			48.00	1	---	---	6.25
		CTH G		W16-7L	2S	DIAGONAL ARROW	30 X 18				---	---	---	3.75
106	107+80 LT	CTH G	SB	W11-2	2S	PEDESTRIAN CROSSING	30 X 30			48.00	1	---	---	6.25
		CTH G		W16-7L	2S	DIAGONAL ARROW	30 X 18				---	---	---	3.75
108	111+05 LT	CTH G	EB	R1-1	2S	STOP	30 X 30				1	---	5.18	---
109	112+10 RT	CTH G	NB	R2-1	2S	SPEED LIMIT	24 X 30				1	---	5.00	---
110	114+15 LT	CTH G	EB	R1-1	2S	STOP	30 X 30				1	---	5.18	---
111	114+50 RT	CTH G	WB	R1-1	2S	STOP	30 X 30				1	---	5.18	---
112	115+90 LT	CTH G	SB	R2-1	2S	SPEED LIMIT	24 X 30				1	---	5.00	---
113	117+15 LT	CTH G	EB	R1-1	2S	STOP	30 X 30				1	---	5.18	---
114	117+25 RT	CTH G	WB	R1-1	2S	STOP	30 X 30				1	---	5.18	---
115	119+50 RT	CTH G	NB	R2-1	2S	SPEED LIMIT	24 X 30				1	---	5.00	---
115A	120+70 RT	CTH G	NB	MK4-6	2	END	24 X 12			30.00	1	---	2.00	---
		CTH G	NB	D11-10	2	ATV ROUTE	24 X 18				---	---	3.00	---
116	122+05 RT	CTH G	WB	R1-1	2S	STOP	30 X 30				1	---	5.18	---
117	125+40 LT	CTH G	EB	R1-1	2S	STOP	30 X 30				1	---	5.18	---
118	125+80 LT	CTH G	WB	W14-1	2S	DEAD END	30 X 30				1	---	---	6.25
119	126+60 LT	CTH G	SB	R2-1	2S	SPEED LIMIT	24 X 30				1	---	5.00	---
120	130+75 RT	CTH G	NB	R2-1	2S	SPEED LIMIT	24 X 30				1	---	5.00	---
121	144+10 LT	CTH G	SB	R2-1	2S	SPEED LIMIT	24 X 30				1	---	5.00	---
122	144+05 RT	CTH G	NB	R2-1	2S	SPEED LIMIT	24 X 30				1	---	5.00	---
123	137+75 LT	CTH G	EB	R1-1	2S	STOP	30 X 30				1	---	5.18	---
										TOTALS	22	1	104.80	26.25

REMOVING SIGNS TYPE II AND REMOVING SMALL SIGN SUPPORTS

SIGN NO.	STATION	LOCATION	DESCRIPTION	638.2602 REMOVING SIGNS TYPE II EACH	638.3000 REMOVING SMALL SIGN SUPPORTS EACH	REMARKS
CATEGORY 0010						
R101	102+00 RT	CTH G	SPEED LIMIT	1	1	25 MPH
			ATV	--	--	REMOVED BY OTHERS
			ATV ARROW	--	--	REMOVED BY OTHERS
R102	103+00 RT	CTH G	SCHOOL ZONE	1	1	
R103	103+75 RT	CTH G	STOP	1	1	PARK DRIVEWAY
R104	105+20 LT	CTH G	STOP	1	1	SOUTH ST
R105	105+55 RT	CTH G	PEDESTRIAN CROSSING	--	--	ON POWER POLE, REMOVED BY OTHERS
R106	105+65 LT	CTH G	SPEED LIMIT	1	1	25 MPH
R107	105+80 RT	CTH G	SCHOOL	1	1	
			SPEED LIMIT	--	--	15 MPH WHEN CHILDREN PRESENT
R108	107+45 LT	CTH G	RESERVED PARKING	1	1	
R109	108+05 LT	CTH G	RESERVED PARKING	1	1	
R110	109+75 RT	CTH G	SNOWMOBILE ROUTE	--	--	ON POWER POLE, REMOVED BY OTHERS
R111	111+00 LT	CTH G	PEDESTRIAN CROSSING	--	--	ON POWER POLE, REMOVED BY OTHERS
R112	111+05 LT	CTH G	STOP	1	1	MARSH STREET
R113A	112+10 LT	CTH G	NO PARKING	--	--	ON POWER POLE, REMOVED BY OTHERS
R113	112+50 LT	CTH G	NO PARKING	1	1	
R114	114+15 LT	CTH G	STOP	1	1	BARRETT STREET
R115	114+50 RT	CTH G	STOP	1	1	BARRETT STREET
R116	114+60 LT	CTH G	SCHOOL	--	--	ON POWER POLE, REMOVED BY OTHERS
			SPEED LIMIT	--	--	15 MPH WHEN CHILDREN PRESENT, REMOVED BY OTHERS
R117	115+80 LT	CTH G	PEDESTRIAN CROSSING	--	--	ON POWER POLE, REMOVED BY OTHERS
			AHEAD	--	--	ON POWER POLE, REMOVED BY OTHERS
R118	115+85 RT	CTH G	SPEED LIMIT	1	1	25 MPH
R119	117+20 LT	CTH G	STOP	1	1	W RAILROAD STREET
R120	117+25 RT	CTH G	STOP	1	1	E RAILROAD ST
R121	118+40 RT	CTH G	TRAIL ENDS	--	--	ON POWER POLE, REMOVED BY OTHERS
			TRAIL MARKER	--	--	ON POWER POLE, REMOVED BY OTHERS
R122	119+25 RT	CTH G	NO PARKING BETWEEN SIGNS	--	--	ON POWER POLE, REMOVED BY OTHERS
R123	119+75 RT	CTH G	NO PARKING BETWEEN SIGNS	1	1	
R124	122+10 RT	CTH G	STOP	1	1	CLARK ST
R125	125+45 LT	CTH G	STOP	1	1	NORTH STREET
R126	125+75 LT	CTH G	DEAD END	1	1	NORTH STREET
R127	126+60 LT	CTH G	SPEED LIMIT	1	1	25 MPH
R128	127+70 LT	CTH G	SNOWMOBILE ROUTE	--	--	ON POWER POLE, REMOVED BY OTHERS
R129	128+05 RT	CTH G	SPEED LIMIT	1	1	25 MPH
R130	137+65 LT	CTH G	SPEED LIMIT	1	1	25 MPH
R131	137+65 RT	CTH G	SPEED LIMIT	1	1	35 MPH
R132	137+75 LT	CTH G	STOP	1	1	CEDARVIEW DR
			TOTALS	24	24	

TRAFFIC CONTROL

LOCATION	APPROX. SERVICE PERIOD	643.0300 DRUMS		643.0410 BARRICADES TYPE II		643.0420 BARRICADES TYPE III		643.0705 WARNING LIGHTS TYPE A		643.0900 SIGNS		643.1050 PCMS	
	DAYS	NO.	DAYS	NO.	DAYS	NO.	DAYS	NO.	DAYS	NO.	DAYS	NO.	DAYS
CATEGORY 0010													
CTH G	255	25	6375	2	510	20	5100	42	10710	20	5100	0	0
SOUTH ST	255	0	0	1	255	2	510	5	1275	5	1275	0	0
MARSH ST	255	0	0	2	510	2	510	6	1530	6	1530	0	0
BARRETT ST	255	0	0	4	1020	4	1020	12	3060	12	3060	0	0
RAILROAD AVE	255	0	0	2	510	6	1530	14	3570	10	2550	0	0
CLARK ST	255	0	0	2	510	2	510	6	1530	6	1530	0	0
NORTH ST	255	0	0	0	0	2	510	4	1020	4	1020	0	0
CEDARVIEW DR	255	0	0	0	0	2	510	4	1020	4	1020	0	0
PROJECT SUBTOTAL			6375		3315		10200		23715		17085		0
UNDISTRIBUTED			638		332		1020		2372		1709	2	14
	TOTALS		7,013		3,647		11,220		26,087		18,794		14

TEMPORARY PEDESTRIAN FACILITIES

STAGE	LOCATION	644.1410.S TEMPORARY PEDESTRIAN SURFACE ASPHALT SF	644.1601.S TEMPORARY CURB RAMP EACH	644.1616.S TEMPORARY PEDESTRIAN SAFETY FENCE LF
CATEGORY 0010				
1	SOUTH ST	250	2	--
	MARSH ST	200	2	--
	BARRETT ST	--	2	--
	RAILROAD AVE	550	2	--
	CLARK ST	--	2	--
2	MARSH ST	550	2	--
	BARRETT ST	600	2	--
	RAILROAD AVE	1000	2	--
	CLARK ST	400	2	--
PROJECT SUBTOTAL		3,550	18	0
UNDISTRIBUTED		355	2	1,125
	TOTALS	3,905	20	1,125

PAVEMENT MARKING

STATION	TO	STATION	LOCATION	646.1020 MARKING LINE EPOXY 4-INCH (YELLOW) LF	646.7420 MARKING CROSSWALK EPOXY TRANSVERSE LINE 6-INCH (WHITE) LF	646.7520 MARKING CROSSWALK EPOXY LADDER PATTERN 24-INCH (WHITE) LF
CATEGORY 0010						
101+70	-	105+40	CTH G	740	---	---
105+40	-	111+29	CTH G	1,178	---	---
111+29	-	114+35	CTH G	564	---	---
114+35	-	117+20	CTH G	520	---	---
117+20	-	121+89	CTH G	938	---	---
121+89	-	125+60	CTH G	742	---	---
125+60	-	137+95	CTH G	2,470	---	---
137+95	-	145+35	CTH G	1,263	---	---
---	-	---	CTH G / SOUTH ST	---	90	---
107+70	-	107+70	CTH G	---	---	54
---	-	---	CTH G / MARSH ST	---	141	---
---	-	---	CTH G / BARRETT ST	---	334	---
---	-	---	CTH G / RAILROAD AV	---	435	---
---	-	---	CTH G / CLARK ST	---	165	---
			PROJECT TOTALS	8,415	1,165	54

3

SANITARY MANHOLES

STATION	OFFSET	DIR	LOCATION	611.0420 RECONSTRUCTING MANHOLES EACH	611.8110 ADJUSTING MANHOLE COVERS EACH	REMARKS
CATEGORY 0020						
105+40	5'	RT	CTH G	---	1	
108+34	5'	RT	CTH G	1	---	Remove manhole riser ring, remove top barrel section, build adjusting rings back up to grade (12-5/8" +/-)
111+25	5'	RT	CTH G	---	1	
114+36	5'	RT	CTH G	---	1	
116+30	14'	RT	CTH G	---	1	
119+06	5'	RT	CTH G	---	1	
121+91	5'	RT	CTH G	1	---	Remove manhole riser ring, remove top barrel section, build adjusting rings back up to grade (8-1/8" +/-)
125+34	5'	RT	CTH G	---	1	
128+83	4'	RT	CTH G	1	---	Remove rings to cone, remove top barrel section, build adjusting rings back up to grade (5" +/-)
132+26	4'	RT	CTH G	1	---	Remove rings to cone, remove top barrel section & replace with 2' section, build adjusting rings back up to grade (6-1/2" +/-)
136+27	4'	RT	CTH G	1	---	Remove rings to cone, remove top barrel section, build adjusting rings back up to grade (11-1/8 +/-)
137+98	3'	RT	CTH G	1	---	Remove manhole riser ring, remove cone section & replace with 3' high cone, build adjusting rings back up to grade (7/8" +/-) (Replace casting w 6", if necessary)
137+98	25'	RT	CTH G	1	---	Remove rings to cone, remove top barrel section & replace with 2' section, build adjusting rings back up to grade (6-3/4" +/-). Rotate cone to move casting out of C&G.
141+49	26'	RT	CTH G	1	---	Remove rings to cone, build adjusting rings back up to grade (5" +/-). Rotate cone to move casting out of C&G.
45+51	1'	RT	RAILROAD AV	---	1	
124+99	5'	LT	CTH G	---	1	
145+05	22'	RT	CTH G	---	1	
			PROJECT TOTALS	8	9	

CONSTRUCTION STAKING

STATION	TO	STATION	LOCATION	650.4000 CONSTRUCTION STAKING STORM SEWER EACH	650.4500 CONSTRUCTION STAKING SUBGRADE LF	650.5000 CONSTRUCTION STAKING BASE LF	650.5500 CONSTRUCTION STAKING CURB GUTTER AND CURB & GUTTER LF	650.9000 CONSTRUCTION STAKING CURB RAMPS EACH	650.9910 CONSTRUCTION STAKING SUPPLEMENTAL CONTROL LS	950.9920 CONSTRUCTION STAKING SLOPE STAKES LF
CATEGORY 0010										
101+70	-	105+40	CTH G	---	370	370	450	2	---	370
105+40	-	111+29	CTH G	---	589	589	1,110	7	---	589
111+29	-	114+35	CTH G	---	306	306	510	5	---	306
114+35	-	117+20	CTH G	---	285	285	420	6	---	285
117+20	-	121+89	CTH G	---	469	469	820	5	---	469
121+89	-	125+60	CTH G	---	371	371	680	3	---	371
125+60	-	137+95	CTH G	---	1,235	1,235	2,400	4	---	1,235
137+95	-	145+35	CTH G	---	740	740	1,185	2	---	740
10+75	-	11+99	SOUTH ST	---	124	124	225	---	---	124
20+73	-	21+51	MARSH ST	---	78	78	125	---	---	78
31+25	-	31+84	BARRETT ST	---	59	59	65	---	---	59
32+00	-	32+61	BARRETT ST	---	61	61	75	---	---	61
42+86	-	44+03	RAILROAD AV	---	117	117	195	---	---	117
45+00	-	45+93	RAILROAD AV	---	93	93	125	---	---	93
50+00	-	51+25	CLARK ST	---	125	125	210	---	---	125
61+45	-	61+90	NORTH ST	---	45	45	65	---	---	45
70+75	-	71+46	CEDARVIEW DR	---	71	71	80	---	---	71
---	-	---	CTH G	73	---	---	---	---	1	---
			PROJECT TOTALS	73	5,138	5,138	8,740	34	1	5,138

SAWING ASPHALT

STATION	LOCATION	690.0150 SAWING ASPHALT LF	DESCRIPTION
CATEGORY 0010			
101+70	CTH G	31	MATCH POINT
103+20	RT	268	LOT
103+45	RT	32	DRIVEWAY
10+75	SOUTH ST	33	MATCH POINT
105+35	RT	12	DRIVEWAY
106+80	LT	23	DRIVEWAY
107+79	RT	18	DRIVEWAY
109+60	LT	19	DRIVEWAY
110+22	RT	13	DRIVEWAY
111+39	RT	20	DRIVEWAY
20+73	MARSH ST	49	MATCH POINT
31+25	BARRETT ST	40	MATCH POINT
32+61	BARRETT ST	42	MATCH POINT
114+75	RT	42	DRIVEWAY
116+25	LT	105	LOT
116+25	RT	105	LOT
42+83	RAILROAD AV	45	MATCH POINT
43+25	RAILROAD AV	100	LOT
45+93	RAILROAD AV	43	MATCH POINT
117+85	RT	40	DRIVEWAY
118+55	LT	41	DRIVEWAY
119+65	LT	25	DRIVEWAY
119+65	RT	14	DRIVEWAY
120+36	RT	85	DRIVEWAY
121+25	LT	21	DRIVEWAY
50+75	RT	85	DRIVEWAY
51+24	CLARK ST	45	MATCH POINT
124+00	RT	10	DRIVEWAY
61+50	NORTH ST	25	MATCH POINT
127+00	RT	16	DRIVEWAY
128+25	LT	21	DRIVEWAY
128+75	LT	19	DRIVEWAY
132+34	RT	23	DRIVEWAY
134+85	LT	18	DRIVEWAY
135+05	RT	24	DRIVEWAY
136+30	LT	25	DRIVEWAY
70+75	CEDARVIEW DR	24	MATCH POINT
143+25	RT	10	DRIVEWAY
145+35	CTH G	26	MATCH POINT
	PROJECT TOTALS	1,635	

SAWING CONCRETE

STATION	LOCATION	690.0250 SAWING CONCRETE LF	DESCRIPTION
CATEGORY 0010			
103+00	LT	22	DRIVEWAY
103+20	RT	12	SIDEWALK
103+40	LT	20	DRIVEWAY
103+55	LT	4	SIDEWALK
104+80	LT	4	SIDEWALK
10+75	SOUTH ST	5	SIDEWALK
10+75	SOUTH ST	5	CURB/GUTTER
11+00	SOUTH ST	40	DRIVEWAY
109+25	RT	4	SIDEWALK
109+60	LT	3	CURB/GUTTER
110+00	RT	4	SIDEWALK
110+35	RT	13	DRIVEWAY
110+60	RT	4	SIDEWALK
110+67	RT	4	SIDEWALK
20+73	MARSH ST	10	SIDEWALK
111+20	RT	7	SIDEWALK
111+75	RT	8	SIDEWALK
111+85	LT	15	SIDEWALK
112+07	RT	6	SIDEWALK
112+25	LT	17	SIDEWALK
112+25	RT	22	DRIVEWAY
112+65	RT	5	SIDEWALK
112+95	LT	16	DRIVEWAY
113+50	RT	90	SIDEWALK
31+25	BARRETT ST	5	SIDEWALK
32+61	BARRETT ST	10	SIDEWALK
114+85	LT	4	SIDEWALK
115+50	RT	80	DRIVEWAY
115+68	LT	17	DRIVEWAY
42+86	RAILROAD AV	5	SIDEWALK
45+75	RAILROAD AV	41	DRIVEWAY
45+92	RAILROAD AV	3	CURB/GUTTER
117+50	RT	35	DRIVEWAY

STATION	LOCATION	690.0250 SAWING CONCRETE LF	DESCRIPTION
118+50	LT	5	SIDEWALK
119+87	RT	3	SIDEWALK
120+00	LT	80	SIDEWALK
120+08	RT	5	SIDEWALK
121+50	LT	5	SIDEWALK
51+00	CLARK ST	30	DRIVEWAY
51+25	CLARK ST	3	CURB/GUTTER
51+25	CLARK ST	5	SIDEWALK
122+20	LT	16	DRIVEWAY
122+40	LT	10	DRIVEWAY
123+50	LT	24	DRIVEWAY
124+35	RT	4	SIDEWALK
125+60	RT	12	DRIVEWAY
126+00	RT	5	SIDEWALK
126+35	RT	20	DRIVEWAY
126+87	RT	7	SIDEWALK
127+00	LT	27	DRIVEWAY
127+75	RT	4	SIDEWALK
127+90	RT	12	DRIVEWAY
129+10	RT	23	DRIVEWAY
130+60	LT	5	SIDEWALK
132+85	LT	22	DRIVEWAY
133+60	RT	27	DRIVEWAY
133+85	LT	32	DRIVEWAY
136+00	RT	24	DRIVEWAY
136+70	RT	24	DRIVEWAY
137+25	LT	22	DRIVEWAY
139+50	LT	50	DRIVEWAY
141+75	RT	20	DRIVEWAY
142+00	LT	52	DRIVEWAY
143+06	LT	46	DRIVEWAY
143+78	LT	22	DRIVEWAY
	PROJECT TOTALS	1,185	

WALL MODULAR BLOCK

STATION	TO	STATION	DIR	LOCATION	SPV.0165.01 WALL MODULAR BLOCK GRAVITY LANDSCAPE (STA 124+35) SF
CATEGORY 0010					
124+35	-	125+04	LT	CTH G	65
125+09	-	125+44	LT	CTH G	62
				PROJECT TOTALS	127

WATER SERVICE LATERALS

STATION	DIR	LOCATION	SPV.0090.02 WATER SERVICE LATERAL 1-INCH LF	SPV.0090.03 WATER SERVICE LATERAL 3/4-INCH LF	SPV.0165.02 INSULATION BOARD 2-INCH SF	SPV.0165.03 INSULATION BOARD 4-INCH SF	SPV.0165.03 INSULATION BOARD 6-INCH SF
CATEGORY 0020							
105+60	RT	CTH G	---	---	12	20	---
109+18	RT	CTH G	10	---	---	20	---
109+85	RT	CTH G	10	---	---	20	---
110+86	RT	CTH G	10	---	---	20	---
110+99	RT	CTH G	10	---	---	20	---
111+13	LT	CTH G	---	---	---	---	57
111+80	RT	CTH G	10	---	---	20	---
112+50	RT	CTH G	10	---	---	20	---
113+03	RT	CTH G	10	---	---	20	---
113+55	RT	CTH G	10	---	---	20	---
114+25	RT	CTH G	---	---	12	---	---
116+90	RT	CTH G	---	---	12	---	---
118+10	RT	CTH G	10	---	---	20	---
119+10	RT	CTH G	10	---	---	20	---
119+66	RT	CTH G	10	---	---	20	---
121+82	RT	CTH G	---	---	12	---	---
132+69	RT	CTH G	10	---	---	20	---
135+18	RT	CTH G	10	---	---	20	---
135+72	RT	CTH G	10	---	---	20	---
136+95	RT	CTH G	10	---	---	20	---
137+85	RT	CTH G	---	---	12	20	---
138+45	LT	CTH G	---	---	---	---	39
139+12	RT	CTH G	---	10	---	20	---
139+33	RT	CTH G	---	10	---	20	---
142+35	RT	CTH G	---	10	---	20	---
		PROJECT TOTALS	150	30	60	400	96

SUMP DRAIN CLEANOUTS

STATION	DIR	ROADWAY	SPV.0060.03 SUMP DRAIN CLEANOUTS EA
CATEGORY 0010			
109+56	RT	CTH G	1
109+98	RT	CTH G	1
110+85	RT	CTH G	1
111+17	RT	CTH G	1
111+68	RT	CTH G	1
111+91	RT	CTH G	1
119+04	RT	CTH G	1
123+00	RT	CTH G	1
129+58	RT	CTH G	1
143+33	LT	CTH G	1
143+91	LT	CTH G	1
		PROJECT TOTALS	11

WATER SERVICES

STATION	OFFSET	DIR	LOCATION	SPV.0060.02 ADJUSTING WATER SERVICE CURB STOP EACH	FOR INFORMATION ONLY WATER CURB STOP COVER CASTING EACH
CATEGORY 0020					
102+95	28'	LT	CTH G	1	1
103+71	28'	LT	CTH G	1	---
104+71	27'	LT	CTH G	1	---
107+56	36'	RT	CTH G	1	---
106+67	27'	LT	CTH G	1	---
109+18	37'	RT	CTH G	1	---
109+85	36'	RT	CTH G	1	---
110+86	37'	RT	CTH G	1	---
110+99	37'	RT	CTH G	1	---
111+80	37'	RT	CTH G	1	---
112+12	26'	LT	CTH G	1	---
112+50	36'	RT	CTH G	1	---
113+03	37'	RT	CTH G	1	---
113+54	25'	LT	CTH G	1	1
113+55	35'	RT	CTH G	1	1
115+03	25'	LT	CTH G	1	1
116+93	27'	LT	CTH G	1	1
117+03	68'	RT	CTH G	1	1
118+00	26'	LT	CTH G	1	1
118+10	31'	RT	CTH G	1	1
119+10	32'	RT	CTH G	1	1
119+66	36'	RT	CTH G	1	1
119+76	29'	LT	CTH G	1	1
121+08	26'	LT	CTH G	1	---
121+35	26'	LT	CTH G	1	---
122+19	26'	LT	CTH G	1	1
122+45	26'	LT	CTH G	1	1
122+75	30'	RT	CTH G	1	1
124+15	26'	LT	CTH G	1	---
124+57	36'	RT	CTH G	1	---
124+89	26'	LT	CTH G	1	---
125+55	34'	RT	CTH G	1	1
125+80	34'	RT	CTH G	1	1
126+31	27'	LT	CTH G	1	---
126+80	34'	RT	CTH G	1	1
127+37	27'	LT	CTH G	1	---
127+75	17'	LT	CTH G	1	---
127+82	35'	RT	CTH G	1	---
129+00	27'	LT	CTH G	1	---
129+48	35'	RT	CTH G	1	---
129+64	27'	LT	CTH G	1	---
130+84	27'	LT	CTH G	1	---
131+03	35'	RT	CTH G	1	---
132+07	27'	LT	CTH G	1	---
133+28	21'	LT	CTH G	1	1
134+16	35'	RT	CTH G	1	---
134+30	23'	LT	CTH G	1	1
135+16	24'	LT	CTH G	1	1
135+18	33'	RT	CTH G	1	1
135+72	36'	RT	CTH G	1	---
135+84	26'	LT	CTH G	1	1
136+90	26'	LT	CTH G	1	1
136+95	33'	RT	CTH G	1	1
138+32	33'	LT	CTH G	1	---
139+12	34'	RT	CTH G	1	1
139+33	34'	RT	CTH G	1	1
141+63	34'	RT	CTH G	1	1
141+72	26'	LT	CTH G	1	---
142+35	33'	RT	CTH G	1	1
143+60	27'	LT	CTH G	1	---
143+70	27'	LT	CTH G	1	---
			PROJECT TOTALS	61	28

WATER VALVES

STATION	OFFSET	DIR	LOCATION	SPV.0060.01 ADJUSTING WATER VALVE BOX EACH	REMARKS
CATEGORY 0020					
105+10	5'	LT	CTH G	1	
105+26	30'	LT	CTH G	1	LOCATION CHANGING WITH HYDRANT RELOCATION
105+29	24'	LT	CTH G	1	
105+51	33'	RT	CTH G	1	
110+95	5'	LT	CTH G	1	
111+12	30'	LT	CTH G	1	LOCATION CHANGING WITH HYDRANT RELOCATION
111+15	24'	LT	CTH G	1	
114+21	29'	LT	CTH G	1	LOCATION CHANGING WITH HYDRANT RELOCATION
114+24	36'	RT	CTH G	1	
114+25	24'	LT	CTH G	1	
116+70	48'	RT	CTH G	1	
116+82	5'	LT	CTH G	1	
116+83	35'	RT	CTH G	1	
117+27	26'	LT	CTH G	1	
117+59	5'	LT	CTH G	1	
121+48	12'	LT	CTH G	1	PROPOSED VALVE LOCATION
121+62	5'	LT	CTH G	1	
121+81	40'	RT	CTH G	1	
122+31	10'	LT	CTH G	1	LOCATION CHANGING WITH HYDRANT RELOCATION
126+00	12'	LT	CTH G	1	PROPOSED VALVE LOCATION
130+30	10'	LT	CTH G	1	LOCATION CHANGING WITH HYDRANT RELOCATION
132+61	5'	LT	CTH G	1	
132+68	1'	RT	CTH G	1	
132+77	5'	LT	CTH G	1	
135+89	10'	LT	CTH G	1	
136+07	5'	LT	CTH G	1	
137+79	18'	LT	CTH G	1	LOCATION CHANGING WITH HYDRANT RELOCATION
137+85	29'	RT	CTH G	1	
137+86	26'	LT	CTH G	1	
138+17	7'	LT	CTH G	1	
141+19	19'	LT	CTH G	1	LOCATION CHANGING WITH HYDRANT RELOCATION
144+94	22'	LT	CTH G	1	LOCATION CHANGING WITH HYDRANT RELOCATION
144+96	24'	LT	CTH G	1	
			PROJECT TOTALS	33	

REVISIONS	R/W PROJECT NUMBER	SHEET NUMBER	TOTAL SHEETS
8-8-2017 11-13-2017 4-06-2018	4854-03-00	4.01	14
	FEDERAL PROJECT NUMBER		

PLAT OF RIGHT-OF-WAY REQUIRED FOR

V ST CLOUD, CTH G (MAIN ST)
PALM TREE RD - CEDARVIEW DR

VILLAGE OF ST. CLOUD — FOND DU LAC COUNTY

CONSTRUCTION PROJECT NUMBER
4854-03-71

Conventional Signs and Abbreviations

- SECTION LINE
- QUARTER LINE
- TOWNSHIP AND RANGE LINE
- PROPOSED OR NEW CENTERLINE
- PROPOSED OR NEW R/W LINE
- EXISTING R/W LINE
- LOT LINE
- P.L. PROPERTY LINE
- COUNTY LIMITS LINE
- SLOPE INTERCEPTS
- EXISTING MONUMENTATION
- FENCE
- SECTION OR QUARTER CORNER
- TELEPHONE
- GAS
- WATER
- ELECTRIC
- FIBER OPTIC
- SANITARY
- STORM SEWER
- NO ACCESS (BY ACQUISITION)
- NO ACCESS (BY STATUTORY AUTHORITY)
- NO ACCESS (BY PREVIOUS PROJECT)
- TEMPORARY LIMITED EASEMENT
- PERMANENT LIMITED EASEMENT
- FEE TITLE
- RIGHT-OF-WAY MONUMENTS SET AT NEWLY ACQUIRED R/W ANGLE POINTS
- (6) PARCEL NUMBER
- (92) UTILITY PARCEL NUMBER
- TLE POINT NUMBER
- R/W POINT NUMBER
- PLE POINT NUMBER
- HE POINT NUMBER

AC	ACRES	R	RADIUS		
△	CENTRAL ANGLE	R.	RANGE		
C/L	CENTERLINE	R/L	REFERENCE LINE		
COR.	CORNER	R/W	RIGHT OF WAY		
CTH	COUNTY TRUNK HIGHWAY	1/4 LINE	QUARTER LINE		
D	DEGREE OF CURVE	1/16 LINE	SIXTEENTH LINE		
E.	EAST	S.	SOUTH		
L	LENGTH OF CURVE	SEC	SECTION		
LC	LONG CHORD	SEC LINE	SECTION LINE		
LCB	LONG CHORD BEARING	STH	STATE TRUNK HIGHWAY		
MI	MILE	SF	SQUARE FEET		
N.	NORTH	STA	STATION		
N.T.S.	NOT TO SCALE	T.	TOWN		
PC	POINT OF CURVATURE	T	TANGENT LENGTH OF CURVE		
PI	POINT OF INTERSECTION	TLE	TEMPORARY LIMITED EASEMENT		
PT	POINT OF TANGENCY	USH	UNITED STATES HIGHWAY		
PLE	PERMANENT LIMITED EASEMENT	W.	WEST		
P/L	PROPERTY LINE				
PC LINE	PRIVATE CLAIM LINE				

	COMPENSABLE	NON-COMPENSABLE
POWER POLE	■	□
TELEPHONE POLE	●	⌀
TELEPHONE PEDESTAL	■	⊠

(FOND DU LAC COUNTY)
BEGIN RELOCATION ORDER
STATION 101+00.00
216.12' SOUTH OF AND 1303.39' WEST OF THE SE CORNER OF SECTION 25, T16N, R19E, VILLAGE OF ST. CLOUD, FOND DU LAC COUNTY WISCONSIN.
Y: 400763.108
X: 891121.712

(FOND DU LAC COUNTY)
END RELOCATION ORDER
STATION 145+50.00
1294.60' SOUTH OF AND 207.65' EAST OF THE NORTH QUARTER OF SECTION 25, T16N, R19E, VILLAGE OF ST. CLOUD, FOND DU LAC COUNTY, WISCONSIN.
Y: 404966.302
X: 889934.453

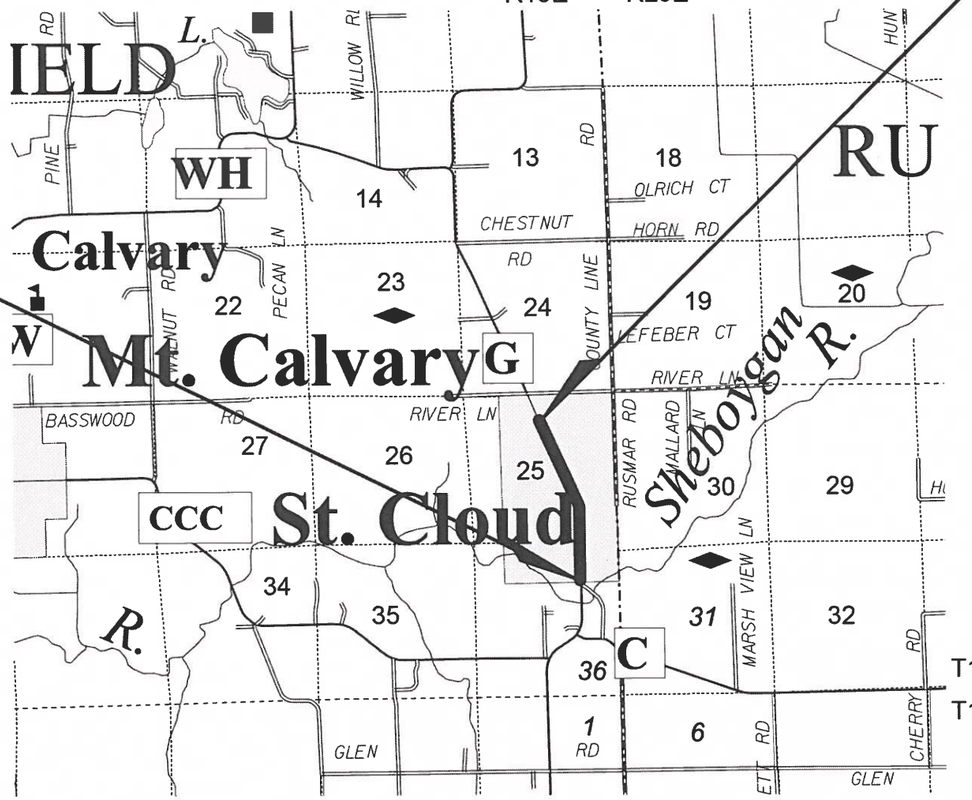

LAYOUT
SCALE 0 — 1 MI — 2 MI

TOTAL NET LENGTH OF CENTERLINE = 0.838 MI.

ACCEPTED FOR
FOND DU LAC COUNTY

3-20-2017 (Date)
Highway Commissioner (Signature & Title of Official)

ORIGINAL PLANS PREPARED BY
OMNNI ASSOCIATES
APPLETON, WISCONSIN

WISCONSIN DAVID A. YURK S-2648 OSHKOSH, WI PROFESSIONAL LAND SURVEYOR

3-14-2017 (Date)
David A. Yurk (Signature)

Notes:

POSITIONS SHOWN ON THIS PLAT ARE WISCONSIN COORDINATE REFERENCE SYSTEM COORDINATES (WISCRS) FOND DU LAC COUNTY, NAD 83 (2011) IN US SURVEY FEET. VALUES SHOWN ARE GRID COORDINATES, GRID BEARINGS, AND GRID DISTANCES. GRID DISTANCES MAY BE USED AS GROUND DISTANCES.

RIGHT OF WAY MONUMENTS ARE TYPE 2 MONUMENTS (TYPICALLY 3/4 X 24" REBAR) AND WILL BE PLACED PRIOR TO THE COMPLETION OF THE PROJECT.

RIGHT OF WAY BOUNDARIES ARE DEFINED WITH COURSES OF THE PERIMETER OF THE HIGHWAY LANDS REFERENCED TO THE U.S. PUBLIC LAND SURVEY OR OTHER SURVEYS OF PUBLIC RECORD.

PROPERTY LINES SHOWN ON THIS PLAT ARE DRAWN FROM DATA DERIVED OF MAPS AND DOCUMENTS OF PUBLIC RECORD AND/ OR EXISTING OCCUPATION LINES. EXCLUDING RIGHT-OF-WAY BOUNDARIES, THIS PLAT MAY NOT BE A TRUE REPRESENTATION OF EXISTING PROPERTY LINES AND SHOULD NOT BE USED AS A SUBSTITUTE FOR AN ACCURATE FIELD SURVEY.

DIMENSIONS FOR THE NEW RIGHT-OF-WAY IS MEASURED ALONG AND PERPENDICULAR TO THE NEW REFERENCE LINES.

A TEMPORARY LIMITED EASEMENT (TLE) IS A RIGHT FOR CONSTRUCTION PURPOSES, AS DEFINED HEREIN, INCLUDING THE RIGHT TO OPERATE NECESSARY EQUIPMENT THEREON AND THE RIGHT OF INGRESS AND EGRESS, AS LONG AS REQUIRED FOR SUCH PUBLIC PURPOSE, INCLUDING THE RIGHT TO PRESERVE, PROTECT, REMOVE, OR PLANT THEREON ANY VEGETATION THAT THE HIGHWAY AUTHORITIES MAY DEEM NECESSARY OR DESIRABLE. ALL TLE'S EXPIRE AT THE COMPLETION OF THE CONSTRUCTION PROJECT FOR WHICH THIS INSTRUMENT IS GIVEN.

A PERMANENT EASEMENT (PLE) IS A RIGHT FOR CONSTRUCTION AND MAINTENANCE PURPOSES, AS DEFINED HEREIN, INCLUDING THE RIGHT TO OPERATE THE NECESSARY EQUIPMENT THEREON AND THE RIGHT OF INGRESS AND EGRESS AS LONG AS REQUIRED FOR SUCH PUBLIC PURPOSE, INCLUDING THE RIGHT TO PRESERVE, PROTECT, REMOVE OR PLANT THEREON ANY VEGETATION THAT THE HIGHWAY AUTHORITIES MAY DEEM NECESSARY OR DESIRABLE, BUT WITHOUT PREJUDICE TO THE OWNER'S RIGHT TO MAKE OR CONSTRUCT IMPROVEMENTS ON SAID LANDS OR TO FLATTEN THE SLOPES, PROVIDING SAID ACTIVITIES WILL NOT IMPAIR OR OTHERWISE ADVERSELY AFFECT THE HIGHWAY FACILITIES.

A HIGHWAY EASEMENT (HE) IS AN EASEMENT FOR HIGHWAY PURPOSES, AS LONG AS SO USED, INCLUDING THE RIGHT TO PRESERVE, PROTECT, REMOVE OR PLANT THEREON ANY VEGETATION THAT THE HIGHWAY AUTHORITIES MAY DEEM NECESSARY OR DESIRABLE.

CTH G (MAIN ST) RIGHT-OF-WAY DEFINED FROM THE ORIGINAL PLAT OF ST. CLOUD (1869), PLAT OF ST. CLOUD (1872), 1936 SURVEY #19 (1936) AND FROM FOND DU LAC COUNTY, CSM'S 1356, 1357, 4179, 5262, 5730, 6353, 6878, 6886, 7083, AND 7134.

FOND DU LAC COUNTY

LEVELS ON • 01,02,03,04,05,06,07,08,09,10,11,12,13,14,15,16,17,18,19,20,21,22,23,24,25,26,27,28,29,30,31,32,33,34,35,36,37,38,39,40,41,42,43,44,45,46,47,48,49,50,51,52,53,54,55,56,57,58,59,60,61,62,63

FILE NAME : F:\TR\JOBS\E1887A09\Civil 3D 2012\RW\E1887TLPLT.DWG — PLOT DATE: $DATE$ $TIME$ — ORG DATE __/__/2000 — PLOT SCALE :_____ ORIGINATOR : OMNNI ASSOCIATES — PLOT SCALE :_____

WISDOT/CADDS SHEET 50C

SCHEDULE OF LANDS & INTERESTS REQUIRED

OWNERS NAMES ARE SHOWN FOR REFERENCE PURPOSES ONLY AND ARE SUBJECT TO CHANGE PRIOR TO THE TRANSFER OF LAND INTEREST TO THE COUNTY OF FOND DU LAC.

PARCEL NUMBER	PLAT SHEET NUMBER	OWNER	INT. REQD.	AREA ACRES REQUIRED NEW	EXISTING	TOTAL	TLE Area	PLE Area	HE Area
1	4.06	ST CLOUD ATHLETIC CLUB INC	PLE	----	----	----	----	2378 SQ FT	----
2	4.06	FRANCIS W. DITTER & DONNA MAE DITTER	TLE PLE	----	----	----	1862 SQ FT	78 SQ FT	----
3	4.06	ST CLOUD AREA CIVIC CENTER	PLE	----	----	----	----	486 SQ FT	----
6	4.06	KRISTIN M. SCHNEIDER F/K/A KRISTIN M. PETHAN	TLE	----	----	----	1537 SQ FT	----	----
7	4.06	HARRY C. FANNIN A/K/A/ HARRY CLAYTON FANNIN & KAREN A. FANNIN A/K/A KAREN ANN FANNIN	FEE TLE PLE	10 SQ FT	----	10 SQ FT	884 SQ FT	244 SQ FT	----
8	4.06 4.07 4.08 4.11	VILLAGE OF ST CLOUD	FEE TLE PLE	14 SQ FT	----	14 SQ FT	11844 SQ FT	2119 SQ FT	----
9	4.06	LORI L. SCHUELLER	FEE TLE	35 SQ FT	----	35 SQ FT	3805 SQ FT	----	----
11	4.06 4.07	ST. ISIDORE CONGREGATION	FEE TLE PLE	26 SQ FT	----	26 SQ FT	5747 SQ FT	246 SQ FT	----
12	4.06 4.07 4.08	FELDNER CHEVROLET INC.	FEE TLE	343 SQ FT	----	343 SQ FT	4061 SQ FT	----	----
13	4.07	CHRISTOPHER THOMAS	TLE	----	----	----	581 SQ FT	----	----
14	4.07	MIKEY B. DOHERTY & JORJA J. DOHERTY	TLE	----	----	----	685 SQ FT	----	----
16	4.07	TERRANCE J. BUTZ & BETH L. BUTZ AND THEIR SUCCESSORS, AS TRUSTEES OF THE BUTZ REVOCABLE TRUST DATED FEBUARY 1, 2005 AS AMENDED	TLE	----	----	----	585 SQ FT	----	----
17	4.07	DELPHINE BUTZ	TLE	----	----	----	302 SQ FT	----	----
18	4.07	JOSEPH W. NEWTON & KELLY J. NEWTON	TLE	----	----	----	275 SQ FT	----	----
19	4.07	MAXWELL J. FRANZEN & SARA R. FRANZEN	TLE	----	----	----	68 SQ FT	----	----
21	4.07	DANIEL W. BUTZ	TLE	----	----	----	156 SQ FT	----	----
22	4.07	POSTAL BUILDING AND LEASING COMPANY	TLE HE	----	----	----	1847 SQ FT	----	45 SQ FT
23	4.07	GREGORY L. FUHRMAN	TLE	----	----	----	665 SQ FT	----	----
24	4.07	JOSHUA J. SIPPEL	TLE	----	----	----	1077 SQ FT	----	----
26	4.07	COREY D. WEBER	TLE	----	----	----	422 SQ FT	----	----
27	4.07	MATTHEW S. ROTH & ANGELA M. ROTH	TLE	----	----	----	90 SQ FT	----	----
28	4.07	GWW, LLC VENDOR LAND CONTRACT JOSHUA J. SIPPLE & PAM M. SIPPEL PURCHASER	FEE TLE	3 SQ FT	----	3 SQ FT	112 SQ FT	----	----
29	4.07	WILLARD J. DAUN, DOUGLAS J. DAUN, DANIEL J. DAUN, DONALD A. DAUN, DEBORAH A. WEBER AND DIANE FOWNES A/K/A DIANE WINKLER	FEE TLE	39 SQ FT	----	39 SQ FT	293 SQ FT	----	----
31	4.07	JACS RENTALS, LLC	FEE TLE	16 SQ FT	----	16 SQ FT	162 SQ FT	----	----
32	4.07 4.08	LISA A. KROENERS	FEE TLE	3 SQ FT	----	3 SQ FT	1270 SQ FT	----	----
33	4.08	HOMETOWN BANK	FEE TLE	316 SQ FT	----	316 SQ FT	1433 SQ FT	----	----
34	4.08	B. KIBLER INVESTMENTS LLC	TLE	----	----	----	606 SQ FT	----	----
36	4.08	STEVEN M. PREDER & CAROL A. PREDER	TLE	----	----	----	391 SQ FT	----	----
37	4.08	DAVID J. PANKO & BRENDA L. PANKO	TLE	----	----	----	409 SQ FT	----	----
38	4.08	KRAIG M. HELLMAN & SUSAN A. POLLARD	TLE	----	----	----	1102 SQ FT	----	----
39	4.08	LEFEBER & EIRINF, INC. VENDOR, LAND CONTRACT TO THE ESTATE OF JOHANN A. RINGEISEN	TLE	----	----	----	292 SQ FT	----	----
41	4.08	WEBER FAMILY STATION, LLC	TLE	----	----	----	2343 SQ FT	----	----
42	4.08	WARREN W. ZIECH	TLE	----	----	----	562 SQ FT	----	----
43	4.08 4.09	NEAL G. BIRSCHBACH	TLE	----	----	----	473 SQ FT	----	----
44	4.09	LAWRENCE A. FANNIN & BARBARA J. FANNIN	TLE	----	----	----	259 SQ FT	----	----
46	4.09	JEFFREY K. MUELLER & SANDRA M. BUTZ	TLE	----	----	----	651 SQ FT	----	----

4

REVISION DATE: 8-8-17, 11-13-17 NC, 4-06-18

DATE: 3-14-17

HWY: CTH G

COUNTY: FOND DU LAC

STATE R/W PROJECT : NUMBER 4854-03-00

CONSTRUCTION PROJECT NUMBER: 4854-03-71

PLAT SHEET NO: 4.02

PS&E SHEET NO: 88

E

F:\TR\JOBS\E2103A14\Survey\Survey Data\Lands Interest

ORIGINATOR: OMNNI ASSOCIATES

ORIG. DATE: 9-8-14

REV. DATE:

PRINT DATE: April 11, 2018

SCHEDULE OF LANDS & INTERESTS REQUIRED

OWNERS NAMES ARE SHOWN FOR REFERENCE PURPOSES ONLY AND ARE SUBJECT TO CHANGE PRIOR TO THE TRANSFER OF LAND INTEREST TO THE COUNTY OF FOND DU LAC.

PARCEL NUMBER	PLAT SHEET NUMBER	OWNER	INT. REQD.	AREA ACRES REQUIRED NEW	EXISTING	TOTAL	TLE Area	PLE Area	HE Area
47	4.09 4.10	PAUL A. STEPHANIE & VIRGINIA STEPHANIE	TLE	----	----	----	5028 SQ FT	----	----
48	4.09	PETER WAGNER	FEE TLE	28 SQ FT	----	28 SQ FT	1276 SQ FT	----	----
49	4.09	TERRANCE H. SIPPEL & GALE E. SIPPEL	TLE	----	----	----	1750 SQ FT	----	----
51	4.09	JONATHAN S. PAWLYK	FEE TLE	244 SQ FT	----	244 SQ FT	847 SQ FT	----	----
52	4.09	DAVID PETRIE	TLE	----	----	----	512 SQ FT	----	----
53	4.09	CHAD M. WEBER & SHARON C. WEBER	TLE	----	----	----	789 SQ FT	----	----
54	4.09	TONY J. SOLAMITA & EMILY K. SOLAMITA	TLE	----	----	----	1815 SQ FT	----	----
56	4.09	NATHANIEL SIPPEL	TLE	----	----	----	986 SQ FT	----	----
57	4.09	JOHN G. SCHMITZ	TLE	----	----	----	1647 SQ FT	----	----
58	4.09	RYAN K. GEBHART & JENNIFER A. GEBHART	TLE	----	----	----	1020 SQ FT	----	----
59	4.09	SHIRLEY K. HORN	TLE	----	----	----	1183 SQ FT	----	----
61	4.09 4.10	JAY A. GANTNER & LISA B. GANTNER	TLE	----	----	----	1579 SQ FT	----	----
62	4.10	DONNA M. DAUN	TLE	----	----	----	869 SQ FT	----	----
63	4.09 4.10	JOSEPH T. AUSLOOS	TLE PLE	----	----	----	5196 SQ FT	240 SQ FT	----
64	4.10	PETER W. GOESER & CHRITINE M. GOESER	TLE	----	----	----	1508 SQ FT	----	----
66	4.10	JOSEPH C. PAGEL	TLE	----	----	----	3481 SQ FT	----	----
67	4.10	THOMAS N. TABERT & TINA D. TABBERT	TLE PLE	----	----	----	3739 SQ FT	3070 SQ FT	----
68	4.10	DAVID B. MELVIN	TLE	----	----	----	3579 SQ FT	----	----
69	4.10	BRIAN H. TABBERT & KAREN A. TABBERT	TLE	----	----	----	1898 SQ FT	----	----
71	4.10	GENE A. MUELLER & LORAINE H. MUELLER	TLE	----	----	----	1083 SQ FT	----	----
72	4.10	MATTHEW R. FRITZ	TLE	----	----	----	1955 SQ FT	----	----
73	4.10 4.11	JEFFREY J. GOEBEL & BEVERLY A. GOEBEL	TLE	----	----	----	1146 SQ FT	----	----
74	4.10 4.11	JOSEPH MATTHEW WOOLDRIDGE	TLE	----	----	----	1772 SQ FT	----	----
76	4.11	TROY M. JOHNSON & CYNTHIA A. WINKLER	TLE	----	----	----	9022 SQ FT	----	----
77	4.11	THOMAS H. SCHOENBORN & MARY M. SCHOENBORN	TLE	----	----	----	1240 SQ FT	----	----
78	4.11	MICHAEL J. FELDNER & JILL M. MUELLER	TLE	----	----	----	6985 SQ FT	----	----
79	4.11 4.12	FREDRICK R. SCHWENCK & KRISTINE L. PAGEL	FEE	1340 SQ FT	----	1340 SQ FT	----	----	----
81	4.11	MICHAEL D. MCCOY & NICOLE A. MCCOY	TLE	----	----	----	2652 SQ FT	----	----
82	4.11	DONNA ENTRINGER & ZENO ENTRINGER REVOCABLE LIVING TRUST	TLE	----	----	----	2769 SQ FT	----	----
83	4.11 4.12	RYAN C. ACHTER & ELIZABETH K. OCONNOR	TLE	----	----	----	2520 SQ FT	----	----
84	4.11 4.12	ANDREW H. HORN & ROSEANNE R. HORN	TLE PLE	----	----	----	1956 SQ FT	161 SQ FT	----
86	4.12	TAMMY J. MANN	TLE	----	----	----	1082 SQ FT	----	----
200	4.06 4.08 4.11	FRONTIER	RELEASE OF RIGHTS	----	----	----	----	----	----
201	4.06 4.10	VILLAGE OF ST CLOUD	RELEASE OF RIGHTS	----	----	----	----	----	----
202	4.08	WE ENERGIES - ELECTRIC	RELEASE OF RIGHTS	----	----	----	----	----	----

4

REVISION DATE: 8-8-17, 11-13-17, 4-06-18 NC	DATE: 3-14-17		HWY: CTH G	STATE R/W PROJECT NUMBER: 4854-03-00	PLAT SHEET NO: 4.03
			COUNTY: FOND DU LAC	CONSTRUCTION PROJECT NUMBER: 4584-03-71	PS&E SHEET NO: 89 E

VILLAGE

OF

ST. CLOUD

NW-NE SEC - 36

NE-NE SEC - 36

SW-SE SEC - 25

SE-SE SEC - 25

NW-SE SEC - 26

NE-SE SEC - 25

SEC LINE

SOUTH ST

MARSH ST

W BARRETT ST

E BARRETT ST

NORTH ST

CLARK ST

W RAILROAD AVE

E RAILROAD AVE

CTH "G" (MAIN ST)

1/16 LINE

P/L

4

REVISION DATE 8-8-2017 NC 11-13-2017 NC 4-06-2018 NC	DATE 3-14-2017	SCALE, FEET 0 50 100	HWY: CTH G
	GRID FACTOR N/A		COUNTY: FOND DU LAC

STATE R/W PROJECT NUMBER 4854-03-00	PLAT SHEET 4.04
CONSTRUCTION PROJECT NUMBER 4854-03-71	PS&E SHEET --90 E

FILE NAME : 48540300-RW-CTH G.DWG
LAYOUT NAME - 4.04

PLOT DATE : 4/11/2018 7:13 AM PLOT BY : DAVE A. YURK PLOT NAME : PLOT SCALE : **********

WISDOT/CADDS SHEET 75

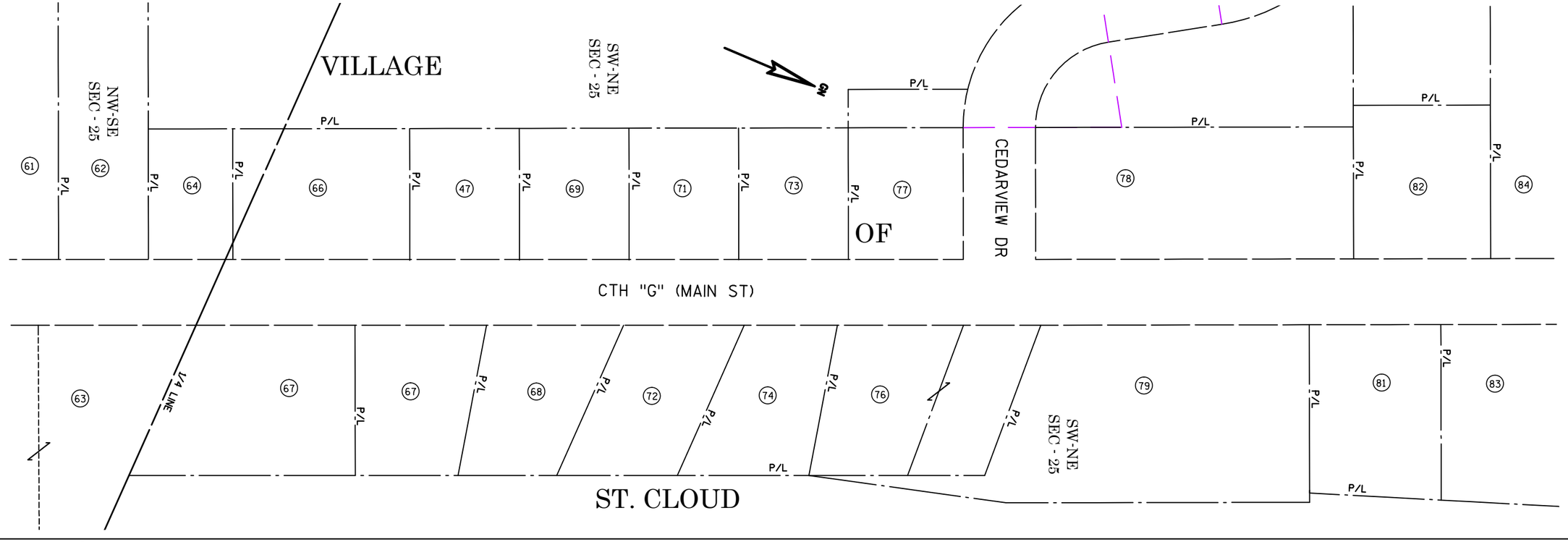

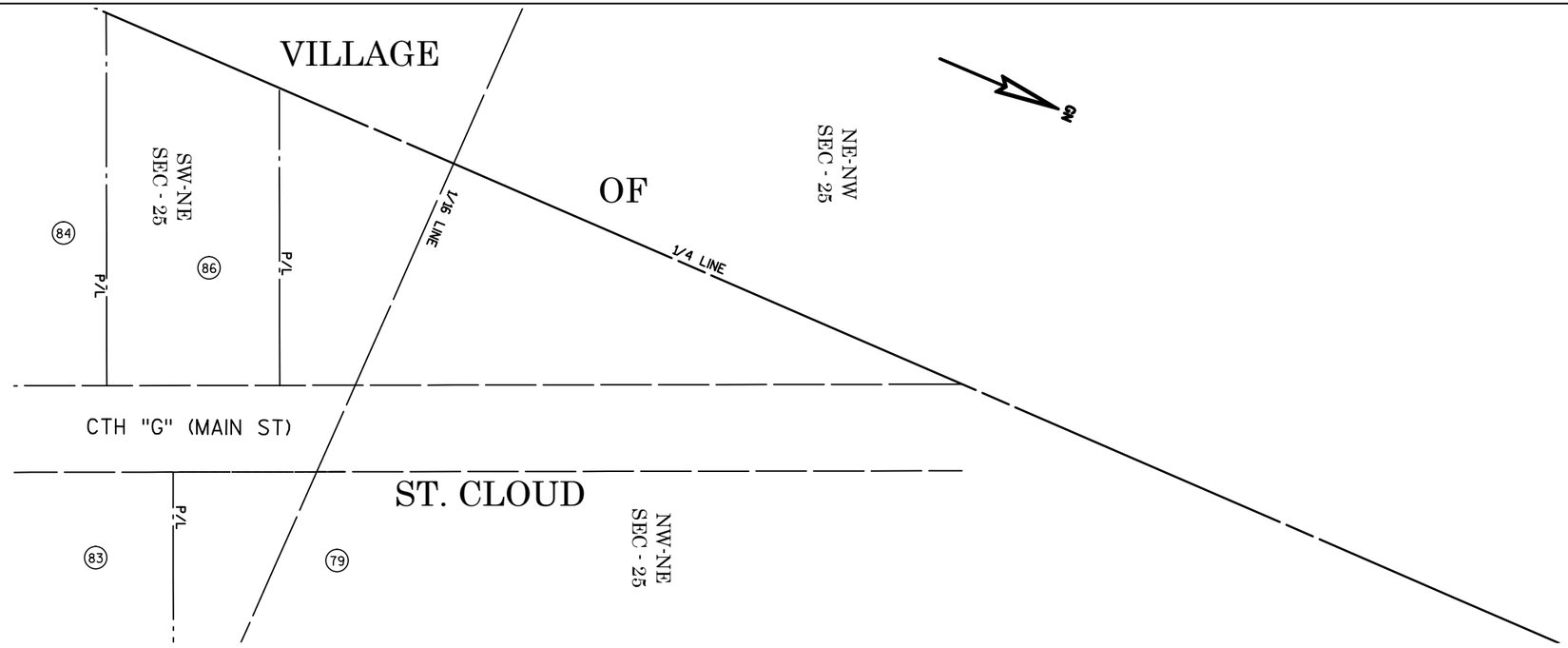

REVISION DATE	8-8-2017	11-13-2017 NC	4-06-2018 NC

DATE 3-14-2017	SCALE, FEET 0 50 100	HWY: CTH G	STATE R/W PROJECT NUMBER 4854-03-00	PLAT SHEET 4.05	
GRID FACTOR N/A		COUNTY: FOND DU LAC	CONSTRUCTION PROJECT NUMBER 4854-03-71	PS&E SHEET --91	E

FILE NAME : 48540300-RW-CTH G.DWG
LAYOUT NAME - 4.05

PLOT DATE : 4/11/2018 7:15 AM PLOT BY : DAVE A. YURK PLOT NAME : PLOT SCALE : **********

WISDOT/CADDS SHEET 75

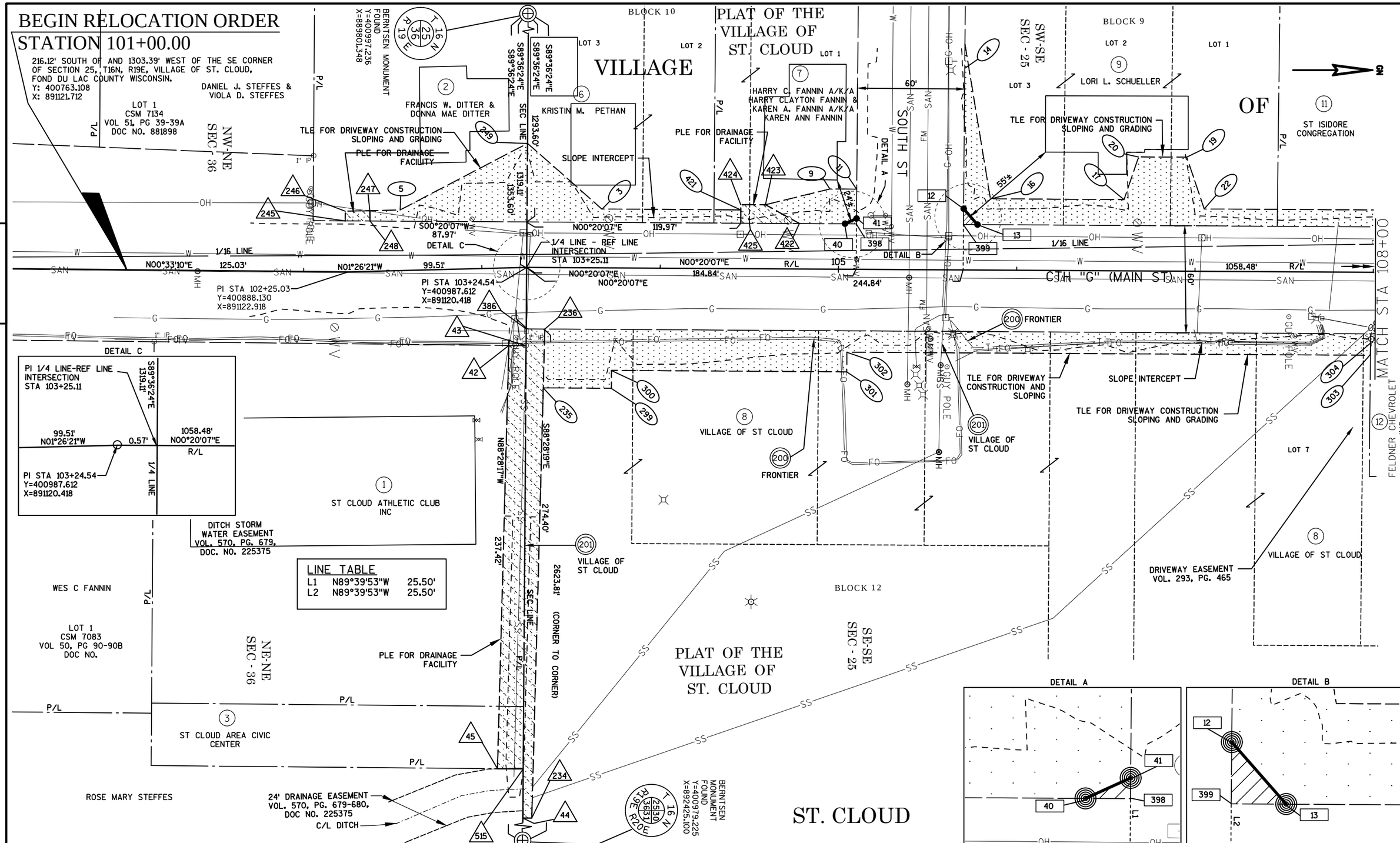

REVISION DATE	8-8-2017 NC	11-13-2017 NC	4-06-2018

DATE 3-14-2017

GRID FACTOR N/A

SCALE, FEET 0 25 50

HWY: CTH G

COUNTY: FOND DU LAC

STATE R/W PROJECT NUMBER 4854-03-00

CONSTRUCTION PROJECT NUMBER 4854-03-71

PLAT SHEET 4.06

PS&E SHEET --92

E

FILE NAME : 48540300-RW-CTH G.DWG
LAYOUT NAME - 4.06

PLOT DATE : 4/11/2018 7:16 AM PLOT BY : DAVE A. YURK PLOT NAME : PLOT SCALE : ==========

WISDOT/CADDS SHEET 75

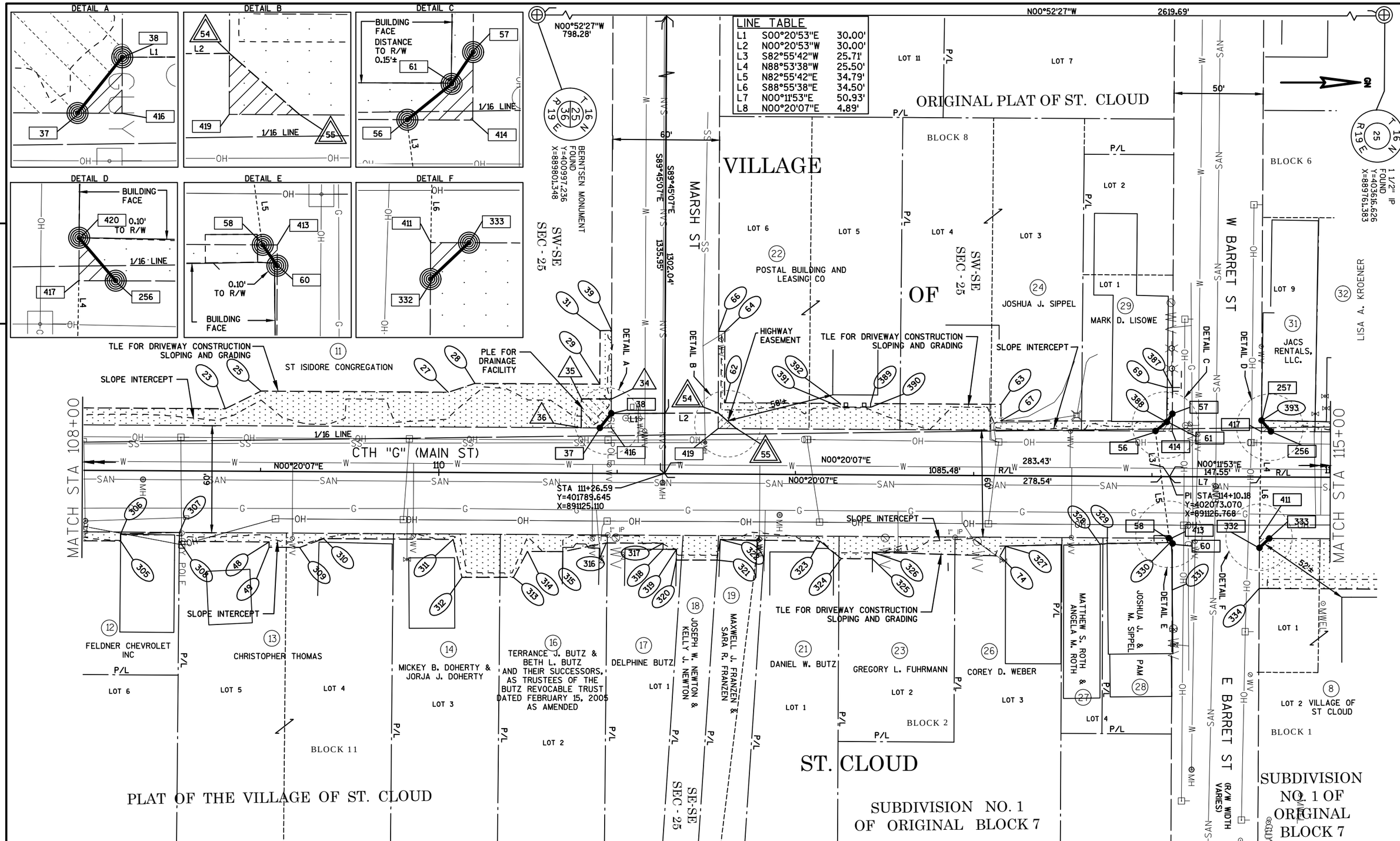

REVISION DATE	8-8-2017 NC	11-13-2017 NC	4-06-2018 NC

DATE 3-14-2017

GRID FACTOR N/A

SCALE, FEET 0 25 50

HWY: CTH G

COUNTY: FOND DU LAC

STATE R/W PROJECT NUMBER 4854-03-00

CONSTRUCTION PROJECT NUMBER 4854-03-71

PLAT SHEET 4.07

PS&E SHEET --93

E

FILE NAME : 48540300-RW-CTH G.DWG
LAYOUT NAME - 4.07

PLOT DATE : 4/11/2018 7:18 AM PLOT BY : DAVE A. YURK PLOT NAME : PLOT SCALE : ==========

WISDOT/CADDS SHEET 75

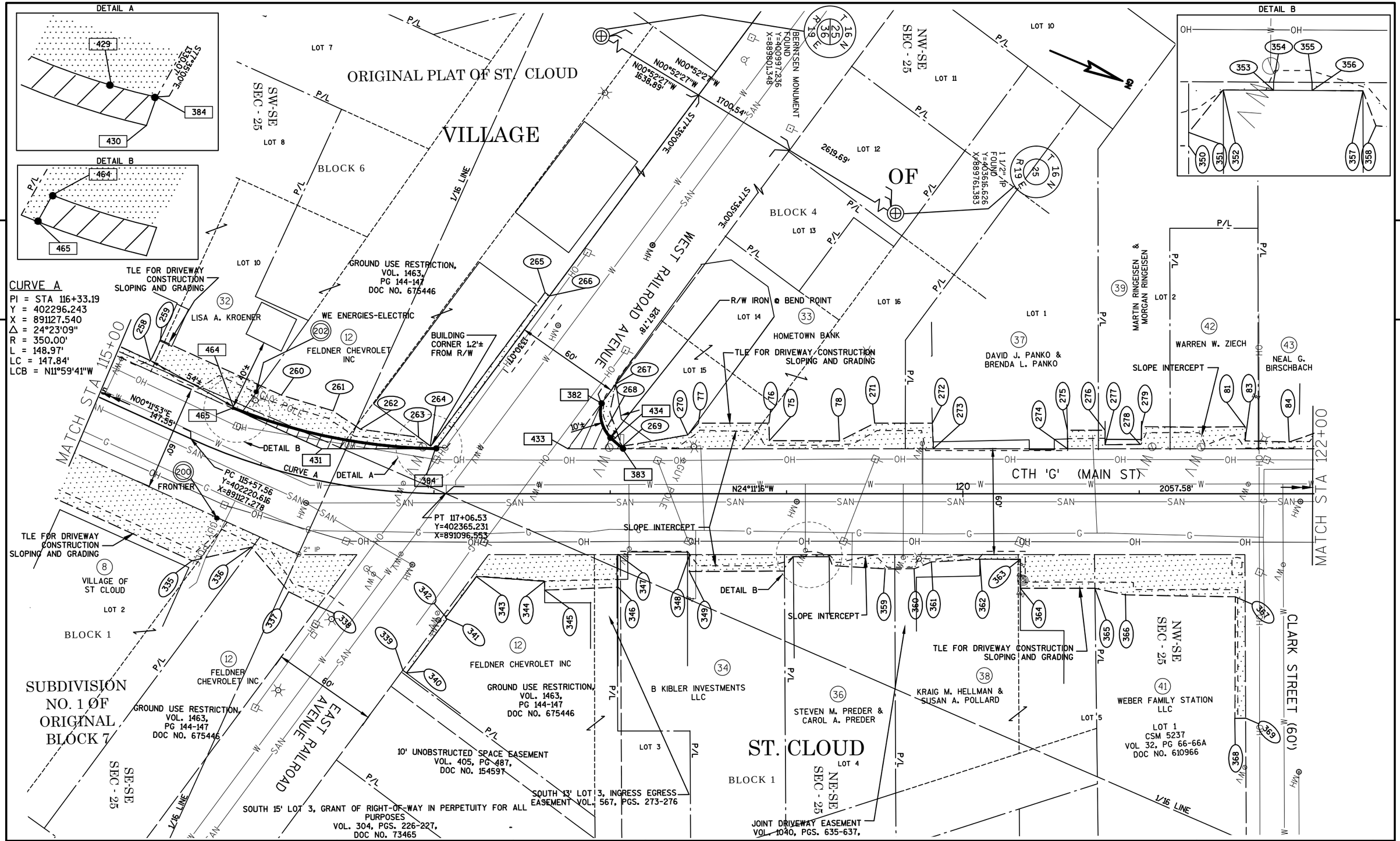

REVISION DATE	8-8-2017 NC	11-13-2017 NC	4-06-2018 NC	DATE 3-14-2017	SCALE, FEET 0 25 50	HWY: CTH G	STATE R/W PROJECT NUMBER 4854-03-00	PLAT SHEET 4.08	
				GRID FACTOR N/A		COUNTY: FOND DU LAC	CONSTRUCTION PROJECT NUMBER 4854-03-71	PS&E SHEET --94	E

FILE NAME : 48540300-RW-CTH G.DWG
LAYOUT NAME - 4.08
PLOT DATE : 4/11/2018 7:19 AM PLOT BY : DAVE A. YURK PLOT NAME : PLOT SCALE : ==========
WISDOT/CADDS SHEET 75

BLOCK 4

LOT 2

LOT 3

LOT 4

VILLAGE

NW-SE SEC - 25

NORTH STREET

60'

ORIGINAL PLAT ST. CLOUD

LOT 1

OF

LOT 2

BLOCK 3

1 1/2" IP FOUND Y=403616.626 X=889761.383

T 16 N R 19 E 25

P/L

43 NEAL G. BIRSCHBACH

44 LAWRENCE A. FANNIN & BARBARA J. FANNIN

47 PAUL A. STEPHANIE & VIRGINIA STEPHANIE

48 PETER WAGNER

51 JONATHAN S. PAWLYK

54 TONY J. & SOLAMITA & EMILY K. SOLAMITA

57 JOHN C. SCHMITZ

59 SHIRLEY K. HORN

61 JAY A. GANTNER & LISA B. GANTNER

TLE FOR DRIVEWAY CONSTRUCTION SLOPING AND GRADING

SLOPE INTERCEPT

TLE FOR DRIVEWAY CONSTRUCTION SLOPING AND GRADING

23'±

8'±

N24°11'16"W

S24°11'16"E

560.72'

2057.58'

CTH 'G' (MAIN ST)

60'

60'

MATCH STA 122+00

MATCH STA 129+00

S89°54'56"W

2639.44'

S89°54'56"W

1894.80'

S89°54'56"W

1823.07'

L1

TLE FROM R/W TO BUILDING FACE

47 PAUL A. STEPHANIE & VIRGINIA STEPHANIE

CLARK STREET (60')

46 JEFFREY K. MUELLER & SANDRA M. BUTZ

LOT 1

47 PAUL A. STEPHANIE & VIRGINIA STEPHANIE

49 TERRANCE H. SIPPEL & GALE E. SIPPEL

LOT 2

ST. CLOUD

LOT 3

52 DAVID PETRIE

NW-SE SEC - 25

53 CHAD M. WEBER & SHARON C. WEBER

LOT 4

TLE FOR GRADING

56 NATHANIEL SIPPEL

LOT 5

PLE FOR DRAINAGE FACILITY

58 RYAN K. GEBHART & JENNIFER A. GEBHART

LOT 6

BLOCK 2

63 JOSEPH T. AUSLOOS

LOT 7

P.K. NAIL FOUND Y=403620.522 X=892400.825

T 16 N R 19 E R 20 E 25 30

LINE TABLE

L1	S24°11'16"E	206.76'

REVISION DATE	8-8-2017 NC	11-13-2017	4-06-2018 NC

DATE 3-14-2017

GRID FACTOR N/A

SCALE, FEET 0 25 50

HWY: CTH G

COUNTY: FOND DU LAC

STATE R/W PROJECT NUMBER 4854-03-00

CONSTRUCTION PROJECT NUMBER 4854-03-71

PLAT SHEET 4.09

PS&E SHEET --95

FILE NAME : 48540300-RW-CTH G.DWG
LAYOUT NAME - 4.09

PLOT DATE : 4/11/2018 7:59 AM PLOT BY : DAVE A. YURK PLOT NAME : PLOT SCALE : **********

WISDOT/CADDS SHEET 75

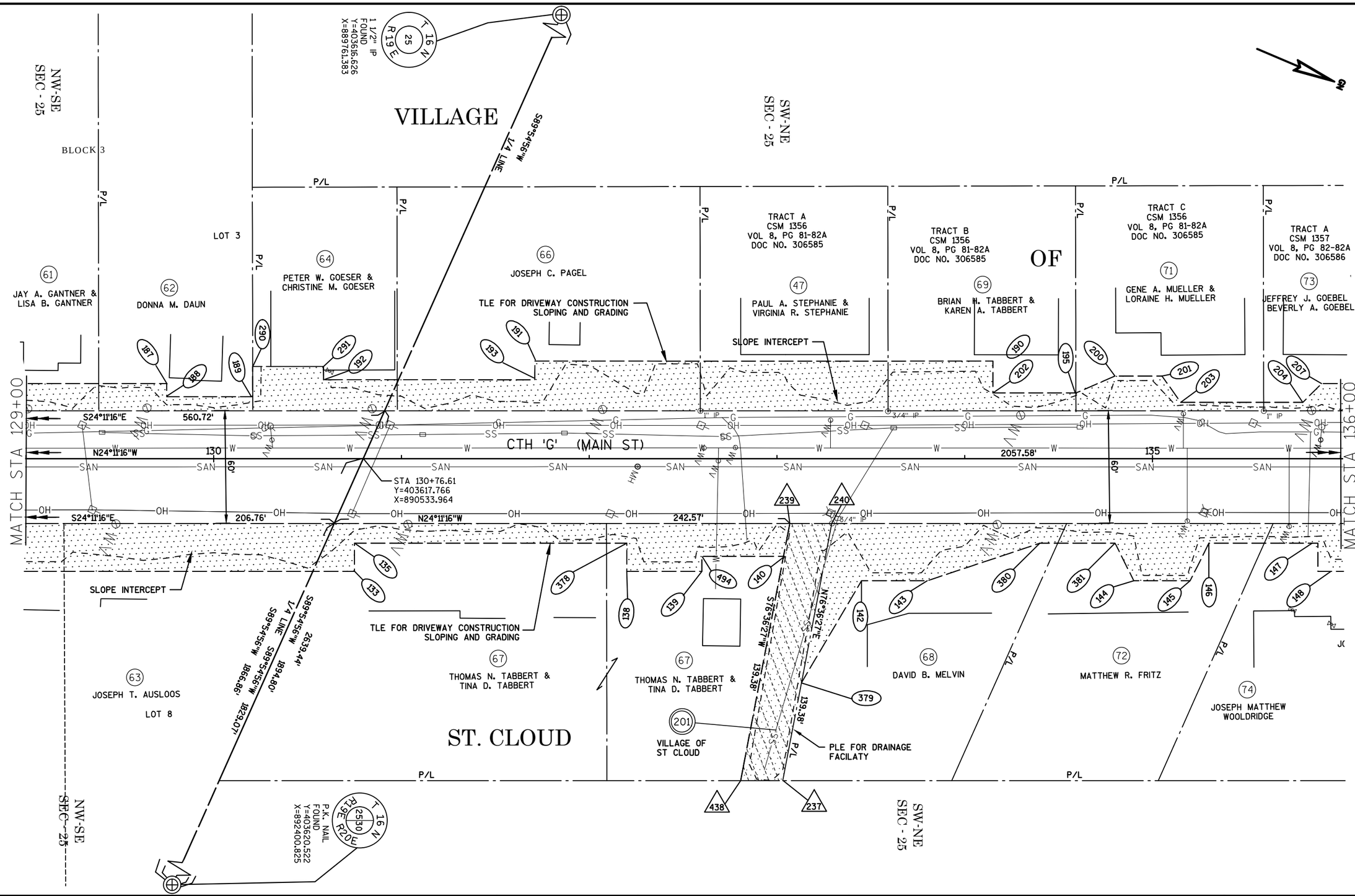

REVISION DATE	8-8-2017 NC	11-13-2017	4-06-2018 NC

DATE 3-14-2017	SCALE. FEET 0 25 50	HWY: CTH G	STATE R/W PROJECT NUMBER 4854-03-00	PLAT SHEET 4.10	
GRID FACTOR N/A		COUNTY: FOND DU LAC	CONSTRUCTION PROJECT NUMBER 4854-03-71	PS&E SHEET --96	E

FILE NAME : 48540300-RW-CTH G.DWG
LAYOUT NAME - 4.10

PLOT DATE : 4/11/2018 7:42 AM PLOT BY : DAVE A. YURK PLOT NAME : PLOT SCALE : **********

VILLAGE OF ST. CLOUD

SW-NE SEC - 25

P/L

TRACT A
CSM 1357
VOL 8, PG 82-82A
DOC NO. 306586

(73) JEFFREY J. GOEBEL & BEVERLY A. GOEBEL

TRACT B
CSM 1357
VOL 8, PG 82-82A
DOC NO. 306586

(77) THOMAS H. SCHOENBORN & MARY M. SCHOENBORN

66'

CEDARVIEW DRIVE

LOT 1
CSM 5880
VOL 38, PG 60-60A
DOC NO. 688971

(78) MICHAEL J. FELDNER, & JILL M. MUELLER

LOT 1
CSM 4179
VOL 23, PG 98-98A
DOC NO. 507687

LOT 1
CSM 5267
VOL 32, PG 96-96A
DOC NO. 614440

(82) DONNA ENTRINGER & ZENO ENTRINGER, REV LIVING TRUST

LOT 1
CSM 5730
VOL 37, PG 12-12A
DOC NO. 674995

(84) ANDREW H. HORN & ROSEANNE R. HORN

7' WIDE ADDITIONAL TLE ADDED FOR SLOPING
1-31-18
719 SQ FT

TLE FOR DRIVEWAY CONSTRUCTION SLOPING AND GRADING

SLOPE INTERCEPT

MATCH STA 136+00

MATCH STA 143+00

N24°11'16"W 2057.58'

N24°16'57"W 140 CTH 'G' (MAIN ST) 646.68'

PI STA 137+64.09
Y=404242.169
X=890253.507

(200) FRONTIER

60'

(74) JOSEPH MATTHEW WOOLDRIDGE

(76) TROY M. JOHNSON & CYNTHIA A. WINKLER

LOT 1
CSM 8252
VOL 62, PG 65-65B
DOC NO. 1092169

(76) TROY M. JOHNSON & CYNTHIA A. WINKLER

EASEMENT BADGER PUBLIC SERVICE COMPANY
VOL 226 OF MTGS, PG 574

(81) MICHAEL D. MCCOY & NICOLE A. MCCOY

LOT 1
CSM 6878
VOL 48, PG 75-75A
DOC NO. 848898

(83) RYAN C. ACHTER & ELIZABETH K. OCONNOR

LOT 1
CSM 6353
VOL 43, PG 52-52A
DOC NO. 753267

REVISION DATE 8-8-2017	11-13-2017 NC	4-06-2018 NC	
DATE 3-14-2017	SCALE, FEET 0 25 50	HWY: CTH G	STATE R/W PROJECT NUMBER 4854-03-00
GRID FACTOR N/A		COUNTY: FOND DU LAC	CONSTRUCTION PROJECT NUMBER 4854-03-71

PLAT SHEET 4.11
PS&E SHEET --97

FILE NAME : 48540300-RW-CTH G.DWG
LAYOUT NAME - 4.11

PLOT DATE : 4/11/2018 7:43 AM PLOT BY : DAVE A. YURK PLOT NAME : PLOT SCALE : **********

4

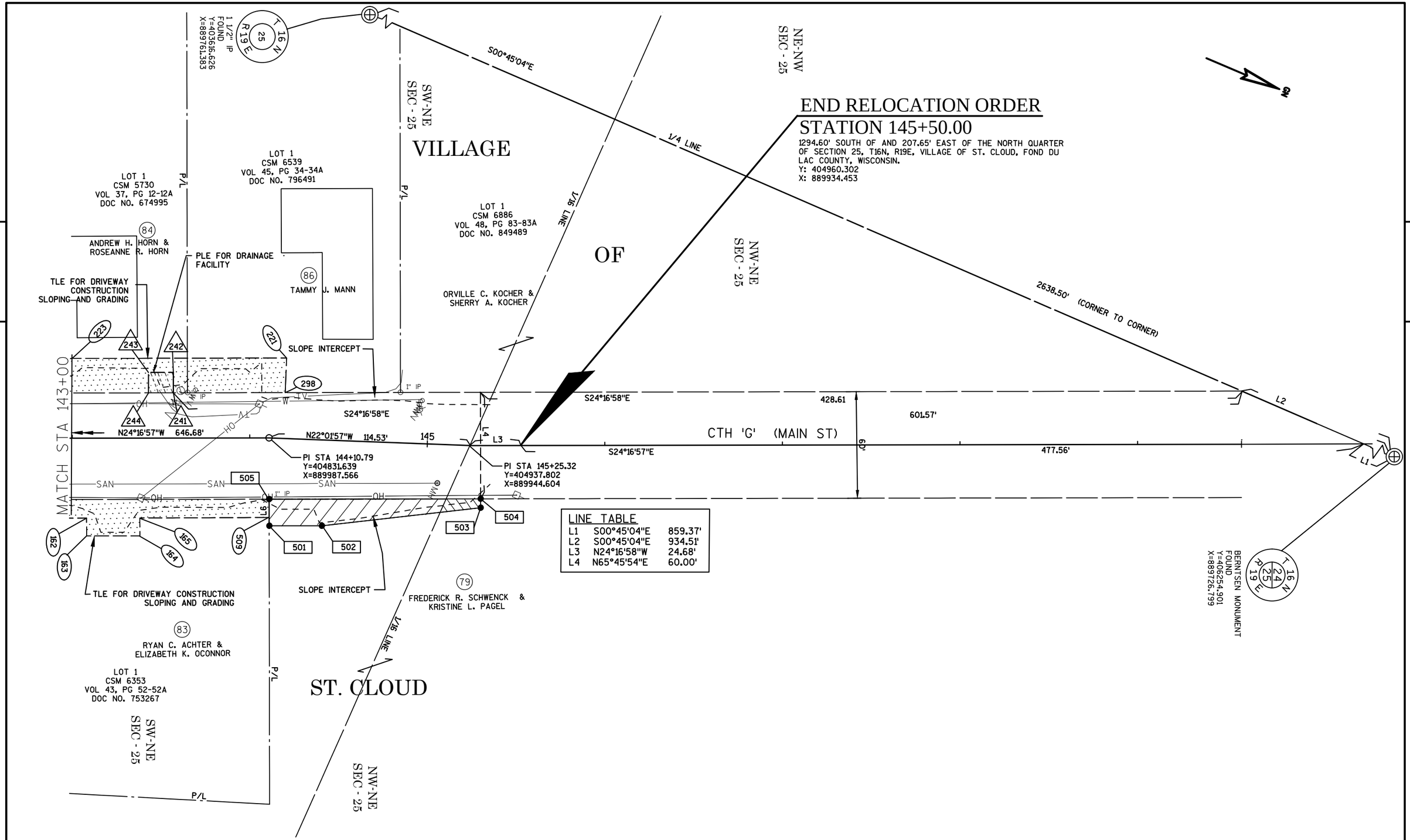

REVISION DATE	8-8-2017	11-13-2017 NC	4-06-2018 NC	DATE 3-14-2017	SCALE, FEET 0 25 50	HWY: CTH G	STATE R/W PROJECT NUMBER 4854-03-00	PLAT SHEET 4.12	
				GRID FACTOR N/A		COUNTY: FOND DU LAC	CONSTRUCTION PROJECT NUMBER 4854-03-71	PS&E SHEET --98	E

FILE NAME : 48540300-RW-CTH G.DWG
LAYOUT NAME - 4.12

PLOT DATE : 4/11/2018 7:44 AM PLOT BY : DAVE A. YURK PLOT NAME : PLOT SCALE : **********

WISDOT/CADDS SHEET 75

LINE TABLE - SHEET 4.06 R/W

FROM-TO	DIRECTION	LENGTH
398-40	S00°20'07"W	6.48'
40-41	N24°20'32"W	7.14'
41-398	S89°30'57"E	2.98'
399-12	N89°30'57"W	8.88'
12-13	N48°45'36"E	11.87'
13-399	S00°20'07"W	7.90'

LINE TABLE - SHEET 4.06 PLE

FROM-TO	DIRECTION	LENGTH
386-236	N00°20'07"E	10.44'
234-44	S00°23'36"W	5.00'
44-515	N89°36'24"W	27.56'
515-45	S00°31'14"W	14.44'
42-43	N00°36'59"E	9.75'
43-386	N89°36'24"W	9.40'
425-424	S90°00'00"W	10.38'
424-423	N00°00'00"W	13.83'
423-422	N29°03'24"E	21.76'
422-425	S00°20'07"W	32.86'
248-247	S88°33'39"W	5.77'
247-246	S01°04'31"E	13.82'
246-245	S89°26'50"E	5.43'
245-248	N00°20'07"E	14.01'

LINE TABLE - SHEET 4.07 R/W

FROM-TO	DIRECTION	LENGTH
38-416	S89°45'07"E	8.06'
416-37	S00°20'07"W	6.40'
37-38	N51°15'16"W	10.28'
56-61	N38°53'04"W	8.21'
61-57	N55°56'53"W	5.53'
57-414	S89°41'11"E	9.80'
414-56	S00°20'07"W	9.44'
417-420	N89°41'11"W	6.15'
420-256	N49°32'15"E	8.12'
256-417	S00°11'53"W	5.30'
58-413	N00°20'07"E	2.10'
413-60	S89°42'05"E	3.00'
60-58	S55°21'04"W	3.66'
411-333	N00°11'53"E	5.50'
333-332	S43°27'33"E	7.62'
332-411	N89°42'05"W	5.26'

LINE TABLE - SHEET 4.07 PLE

FROM-TO	DIRECTION	LENGTH
37-36	S00°20'07"W	10.41'
36-35	N89°39'53"W	16.18'
35-34	N00°14'53"E	16.78'
34-38	S89°45'07"E	8.15'
38-37	S51°15'16"E	10.28'

LINE TABLE - SHEET 4.08 R/W

FROM-TO	DIRECTION	LENGTH
384-430	S77°35'00"E	0.18'
430-431	S24°11'16"E	64.78'
431-465	S00°11'53"W	55.25'
465-464	N77°35'00"W	0.35'
429-384	N31°56'08"W	0.70'
434-383	N16°32'20"E	7.61'
383-433	S24°11'16"E	31.33'
433-382	N77°35'00"W	32.08'

LINE CURVE TABLE - SHEET 4.08 R/W

FROM-TO	RADIUS	LENGTH	LC	LCB
464-429	324.50'	117.24'	116.60'	N12°47'27"W
382-434	20.50'	22.94'	21.76'	N48°35'42"E

LINE TABLE - SHEET 4.09 R/W

FROM-TO	DIRECTION	LENGTH
439-282	S24°11'16"E	98.30'
282-283	S65°48'44"W	2.50'
283-284	N24°11'16"W	69.50'
284-285	S65°48'44"W	2.50'
285-286	N24°11'16"W	10.50'
286-287	N65°48'44"E	2.50'
287-288	N24°11'16"W	18.30'
288-439	N65°43'22"E	2.50'

LINE TABLE - SHEET 4.09 PLE

FROM-TO	DIRECTION	LENGTH
440-441	N65°48'44"E	17.30'
441-442	S24°11'16"E	13.87'
442-443	S65°48'44"W	17.30'
443-440	N24°11'16"W	13.87'

LINE TABLE - SHEET 4.10 PLE

FROM-TO	DIRECTION	LENGTH
239-240	N24°11'16"W	22.40'
237-438	S24°11'16"E	22.40'

LINE TABLE - SHEET 4.12 PLE

FROM-TO	DIRECTION	LENGTH
241-244	S24°16'58"E	14.00'
244-243	S65°43'03"W	11.50'
243-242	N24°16'58"W	14.00'
242-241	N65°43'03"E	11.50'
298-296	S24°16'58"E	19.02'
296-297	S65°43'03"W	4.50'
297-218	N23°14'11"W	19.19'
218-298	N67°59'51"E	4.15'

LINE TABLE - SHEET 4.07 HE

FROM-TO	DIRECTION	LENGTH
54-55	N41°07'31"E	13.43'
55-419	S00°20'07"W	10.15'
419-54	N89°45'07"W	8.77'

LINE TABLE - SHEET 4.12 R/W

FROM-TO	DIRECTION	LENGTH
504-503	N65°45'54"E	5.00'
503-502	S30°40'14"E	89.90'
502-501	S24°16'58"E	29.78'
501-505	S65°43'02"W	15.00'
505-504	N24°16'58"W	119.13'

SHEET 4.06

POINT	STATION	OFFSET	DESCRIPTION	Y	X
12	105+69.98	34.38 LT	R/W	401233.245	891087.478
13	105+77.85	25.50 LT	R/W	401241.067	891096.401
40	105+03.48	25.50 LT	R/W	401166.695	891095.966
41	105+09.96	28.48 LT	R/W	401173.196	891093.024
42	103+13.96	43.55 RT	PLE	400978.132	891164.218
43	103+23.71	43.90 RT	PLE	400987.880	891164.323
44	103+15.23	308.69 RT	PLE	400986.061	891429.250
45	103+01.68	280.65 RT	PLE	400971.807	891401.553
234	103+29.80	308.84 RT	PLE	400991.065	891429.283
236	103+35.52	34.50 RT	PLE	400998.383	891154.982
245	102+23.00	28.57 LT	PLE	400886.378	891094.326
246	102+23.00	34.00 LT	PLE	400886.431	891088.900
247	102+38.00	33.96 LT	PLE	400900.246	891088.640
248	102+38.00	28.19 LT	PLE	400900.390	891094.408
386	103+25.07	34.50 RT	PLE	400987.944	891154.921
515	103+16.12	281.14 RT	PLE	400986.250	891401.685

SHEET 4.07

POINT	STATION	OFFSET	DESCRIPTION	Y	X
34	110+96.52	41.71 LT	PLE	401759.826	891083.227
35	110+79.74	41.68 LT	PLE	401743.045	891083.154
36	110+79.74	25.50 LT	PLE	401742.95	891099.336
37	110+90.15	25.50 LT	R/W	401753.357	891099.397
38	110+96.54	33.56 LT	R/W	401759.791	891091.38
54	111+56.54	34.27 LT	R/W	401819.793	891091.015
55	111+66.70	25.50 LT	R/W	401829.906	891099.845
56	114+01.81	25.50 LT	R/W	402065.017	891101.22
57	114+11.33	35.28 LT	R/W	402074.5	891091.49
58	114+09.61	34.50 RT	R/W	402072.465	891161.265
60	114+11.62	37.50 RT	R/W	402074.547	891164.277
61	114+08.17	30.69 LT	R/W	402071.406	891096.067
256	114+66.61	25.50 LT	R/W	402129.753	891101.466
332	114+60.39	39.76 RT	R/W	402123.305	891166.702
333	114+65.90	34.50 RT	R/W	402128.836	891161.461
411	114+60.40	34.50 RT	R/W	402123.333	891161.442
413	114+11.63	34.50 RT	R/W	402074.563	891161.277
414	114+11.32	25.50 LT	R/W	402074.456	891101.276
416	110+96.55	25.50 LT	R/W	401759.756	891099.435
417	114+61.32	25.50 LT	R/W	402124.456	891101.447
419	111+56.55	25.50 LT	R/W	401819.755	891099.786

SHEET 4.08

POINT	STATION	OFFSET	DESCRIPTION	Y	X
382	117+95.05	51.25 LT	R/W	402424.984	891013.532
383	118+07.26	25.50 LT	R/W	402446.670	891032.020
384	117+00.88	25.61 LT	R/W	402349.947	891075.301
429	117+00.14	25.50 LT	R/W	402349.354	891075.671
430	117+00.76	25.46 LT	R/W	402349.908	891075.482
431	116+32.05	18.01 LT	R/W	402290.822	891102.021
433	117+75.93	25.50 LT	R/W	402418.087	891044.858
434	118+01.49	30.46 LT	R/W	402439.376	891029.854
464	115+73.69	25.50 LT	R/W	402235.646	891101.486
465	115+73.59	25.16 LT	R/W	402235.571	891101.831

SHEET 4.09

POINT	STATION	OFFSET	DESCRIPTION	Y	X
282	124+32.00	25.50 LT	R/W	403016.563	890776.046
283	124+32.00	28.00 LT	R/W	403015.539	890773.766
284	125+01.50	28.00 LT	R/W	403078.937	890745.290
285	125+01.50	30.50 LT	R/W	403077.913	890743.009
286	125+12.00	30.50 LT	R/W	403087.491	890738.707
287	125+12.00	28.00 LT	R/W	403088.516	890740.988
288	125+30.30	28.00 LT	R/W	403105.207	890733.490
439	125+30.30	25.50 LT	R/W	403106.235	890735.769
440	128+57.41	34.50 RT	PLE	403429.212	890656.475
441	128+57.41	51.80 RT	PLE	403436.301	890672.258
442	128+43.55	51.80 RT	PLE	403423.652	890677.940
443	128+43.55	34.50 RT	PLE	403416.562	890662.157

SHEET 4.10

POINT	STATION	OFFSET	DESCRIPTION	Y	X
237	133+02.72	171.41 RT	PLE	403891.522	890598.913
239	133+06.74	34.50 RT	PLE	403839.095	890472.372
240	133+29.17	34.50 RT	PLE	403859.555	890463.182
438	132+80.67	171.41 RT	PLE	403871.408	890607.947

SHEET 4.12

POINT	STATION	OFFSET	DESCRIPTION	Y	X
241	143+57.00	25.50 LT	PLE	404772.121	889986.440
242	143+57.00	37.00 LT	PLE	404767.393	889975.960
243	143+43.00	37.00 LT	PLE	404754.631	889981.717
244	143+43.00	25.50 LT	PLE	404759.359	889992.197
501	144+12.73	49.46 RT	R/W	404852.000	890032.690
502	144+42.49	48.29 RT	R/W	404879.140	890020.440
503	145+30.00	35.00 RT	R/W	404956.470	889974.580
504	145+30.00	30.00 RT	R/W	404954.41	889970.02
505	144+12.14	34.47 RT	R/W	404845.83	890019.01

REVISION DATE	8-8-2017	11-13-2017 NC	4-06-2018

DATE 3-14-2017

GRID FACTOR N/A

SCALE, FEET 0 NA

HWY: CTH G

COUNTY: FOND DU LAC

STATE R/W PROJECT NUMBER 4854-03-00

CONSTRUCTION PROJECT NUMBER 4854-03-71

PLAT SHEET 4.13

PS&E SHEET --99

E

FILE NAME : 48540300-RW-CTH G.DWG
LAYOUT NAME - 4.13

PLOT DATE : 4/11/2018 7:45 AM PLOT BY : DAVE A. YURK PLOT NAME : PLOT SCALE : **********

WISDOT/CADDS SHEET 75

SHEET 4.06 (TLE)

POINT	STATION	OFFSET
3	103+67.26	33.00 LT
5	102+55.00	34.00 LT
9	104+95.00	45.00 LT
11	105+10.00	45.00 LT
14	105+70.22	126.74 LT
16	105+85.00	40.00 LT
17	106+60.00	40.00 LT
19	106+95.00	64.00 LT
20	106+68.00	64.00 LT
22	107+05.00	35.00 LT
235	103+34.83	67.50 RT
249	103+25.18	69.57 LT
299	103+73.00	67.50 RT
300	103+73.00	57.50 RT
301	105+05.00	57.50 RT
302	105+05.00	46.50 RT
303	107+98.67	46.50 RT
304	107+98.69	39.50 RT
421	104+45.06	32.98 LT

SHEET 4.07 (TLE)

POINT	STATION	OFFSET
23	108+80.00	35.00 LT
25	109+00.00	45.00 LT
27	110+05.00	45.00 LT
28	110+20.00	50.00 LT
29	110+90.00	50.00 LT
31	110+90.00	80.00 LT
39	110+96.47	80.20 LT
48	109+05.00	39.54 RT
49	109+05.02	42.50 RT
62	111+60.00	40.00 LT
63	113+15.00	40.00 LT
64	111+60.00	80.00 LT
66	111+56.47	80.00 LT
67	113+15.00	30.75 LT
69	114+08.28	50.01 LT
74	113+15.00	45.00 RT
305	108+21.72	39.50 RT
306	108+21.69	35.51 RT
307	108+54.71	34.50 RT
308	108+54.69	39.50 RT
309	109+22.15	42.55 RT
310	109+35.58	37.49 RT
311	110+08.25	37.50 RT
312	110+13.27	58.77 RT
313	110+42.25	58.61 RT
314	110+50.00	44.00 RT
315	110+69.75	44.00 RT
316	110+94.15	39.00 RT
317	111+26.00	39.00 RT
318	111+26.00	42.40 RT
319	111+33.45	42.41 RT
320	111+33.45	48.37 RT
321	111+56.36	48.22 RT
322	111+58.08	36.73 RT
323	112+14.01	37.28 RT
324	112+26.00	47.00 RT
325	112+43.46	47.00 RT
326	112+43.42	43.33 RT
327	113+18.06	39.48 RT
328	113+71.22	38.28 RT
329	113+75.08	37.64 RT
330	114+11.22	37.10 RT
331	114+11.58	63.43 RT
334	114+60.35	62.48 RT
387	114+11.36	49.99 LT
388	114+08.12	30.79 LT
389	112+42.00	40.00 LT
390	112+42.00	38.00 LT
391	112+25.00	38.00 LT
392	112+25.00	40.00 LT
393	114+61.32	31.66 LT

SHEET 4.08 (TLE)

POINT	STATION	OFFSET
75	118+90.22	30.09 LT
76	118+90.00	40.00 LT
77	118+50.00	40.00 LT
78	119+30.00	30.00 LT
81	121+60.00	38.00 LT
83	121+60.00	30.00 LT
84	121+85.00	29.32 LT
258	115+18.69	30.86 LT
259	115+18.79	43.98 LT
260	115+99.27	41.54 LT
261	116+33.92	40.35 LT
262	116+53.11	32.87 LT
263	116+89.80	31.67 LT
264	116+97.51	26.81 LT
265	117+63.02	114.04 LT
266	117+65.55	112.16 LT
267	118+03.18	62.19 LT
268	117+99.78	46.17 LT
269	118+06.65	26.92 LT
270	118+43.95	33.30 LT
271	119+50.00	40.00 LT
272	119+82.64	40.00 LT
273	119+83.20	25.50 LT
274	120+59.37	25.50 LT
275	120+59.24	36.00 LT
276	120+80.60	36.00 LT
277	120+80.56	27.77 LT
278	121+00.99	28.03 LT
279	121+01.24	38.00 LT
335	115+82.42	63.74 RT
336	116+08.03	45.79 RT
337	116+31.09	65.18 RT
338	116+46.25	70.07 RT
339	116+87.77	100.72 RT
340	116+89.46	102.17 RT
341	117+07.51	71.02 RT
342	117+06.58	70.33 RT
343	117+24.23	46.85 RT
344	117+62.83	49.68 RT
345	117+62.84	54.65 RT
346	118+04.35	52.96 RT
347	118+04.34	34.50 RT
348	118+44.76	34.50 RT
349	118+44.81	44.07 RT
350	118+98.81	43.83 RT
351	118+98.80	41.87 RT
352	119+03.80	35.66 RT
353	119+11.11	35.67 RT
354	119+11.11	34.50 RT
355	119+16.71	34.50 RT
356	119+16.71	35.68 RT
357	119+24.12	35.69 RT
358	119+26.03	40.77 RT
359	119+55.86	42.58 RT
360	119+72.33	42.52 RT
361	119+82.07	38.69 RT

SHEET 4.08 (TLE) - CONTINUED

POINT	STATION	OFFSET
362	120+09.55	37.09 RT
363	120+32.53	37.18 RT
364	120+32.51	53.58 RT
365	120+74.79	53.57 RT
366	120+92.20	57.36 RT
367	121+54.45	58.44 RT
368	121+54.20	127.31 RT
369	121+60.31	127.27 RT

SHEET 4.09 (TLE)

POINT	STATION	OFFSET
86	122+02.00	35.25 LT
92	122+72.00	31.50 LT
95	122+72.00	38.00 LT
98	123+00.00	55.00 RT
99	123+50.00	55.00 RT
100	123+65.00	40.00 RT
101	123+80.00	40.00 RT
103	123+95.00	60.00 RT
105	124+15.00	60.00 RT
106	124+30.00	45.00 RT
108	125+99.00	40.50 RT
109	125+84.00	40.50 RT
110	125+99.00	42.00 RT
111	126+20.07	45.00 RT
112	126+30.00	45.00 RT
114	126+75.00	45.00 RT
115	127+15.00	48.00 RT
120	127+20.00	45.00 RT
121	127+75.00	45.00 RT
123	127+85.00	52.00 RT
124	128+05.00	52.00 RT
125	128+13.00	40.00 RT
126	128+27.00	40.00 RT
127	128+37.00	50.00 RT
130	128+95.00	60.00 RT
169	126+35.00	33.00 LT
170	125+90.29	33.01 LT
172	126+90.00	58.00 LT
173	126+45.00	58.00 LT
175	126+95.00	45.00 LT
176	127+65.00	45.00 LT
177	127+70.00	33.00 LT
178	128+13.00	33.00 LT
180	128+25.00	50.00 LT
184	128+70.00	50.00 LT
186	129+00.00	40.00 LT
280	122+50.00	33.11 LT
281	122+50.00	31.98 LT
289	125+30.28	38.01 LT
370	122+20.31	127.80 RT
371	122+36.55	115.97 RT
372	122+36.55	94.62 RT
373	122+20.70	94.70 RT
374	122+99.86	34.50 RT
375	125+69.16	45.00 RT
376	126+92.00	45.00 RT
377	127+00.00	48.00 RT
499	122+45.20	116.10 RT
500	122+45.31	128.10 RT
510	122+20.57	34.50 RT

SHEET 4.10 (TLE)

POINT	STATION	OFFSET
133	130+75.00	60.00 RT
135	130+75.00	45.00 RT
138	132+20.00	60.00 RT
139	132+60.00	60.00 RT
140	133+03.44	52.00 RT
142	133+45.00	65.00 RT
143	133+80.00	65.00 RT
144	134+90.00	65.00 RT
145	135+20.00	65.00 RT
146	135+30.00	45.00 RT
147	135+88.00	45.00 RT
148	135+88.00	60.00 RT
187	129+75.00	40.00 LT
188	129+75.00	33.00 LT
189	130+20.77	33.00 LT
190	134+15.00	52.00 LT
191	131+71.00	52.00 LT
193	131+71.00	42.00 LT
195	134+59.16	35.00 LT
200	134+80.00	44.00 LT
201	135+05.00	44.00 LT
202	134+15.00	35.00 LT
203	135+15.00	30.00 LT
204	135+80.00	30.00 LT
207	135+90.00	40.00 LT
290	130+20.75	49.08 LT
291	130+58.42	49.08 LT
378	132+20.00	45.00 RT
379	133+13.02	119.24 RT
380	134+40.00	45.00 RT
381	134+80.00	45.00 RT
494	139+60.00	52.00 RT

SHEET 4.11 (TLE)

POINT	STATION	OFFSET
149	136+80.00	60.00 RT
154	141+99.40	60.00 RT
155	136+80.00	55.00 RT
158	141+60.00	55.00 RT
159	141+60.00	60.00 RT
161	142+99.40	45.00 RT
162	143+08.00	45.00 RT
208	136+45.08	40.00 LT
209	136+55.00	35.00 LT
210	137+07.00	35.00 LT
213	137+15.00	45.00 LT
214	137+40.00	45.00 LT
215	137+50.00	30.00 LT
216	137+63.96	30.00 LT
223	143+00.00	45.00 LT
225	142+25.00	35.00 LT
226	142+15.00	55.00 LT
228	141+70.00	55.00 LT
230	141+60.00	45.00 LT
231	139+90.00	45.00 LT
232	138+30.01	43.00 LT
233	139+10.00	43.00 LT
292	139+29.81	59.27 LT
293	139+53.65	59.36 LT
294	139+53.78	55.26 LT
295	139+77.75	55.43 LT
512	138+30.01	145.77 LT
513	138+37.01	145.77 LT
514	138+37.01	43.00 LT

SHEET 4.12 (TLE)

POINT	STATION	OFFSET
162	143+08.00	45.00 RT
163	143+08.00	55.00 RT
164	143+35.00	55.00 RT
165	143+40.00	45.00 RT
221	144+19.00	45.38 RT
223	143+00.00	45.00 RT
298	144+19.00	25.85 RT
509	144+12.54	45.00 RT

4

4

REVISION DATE 8-8-2017 11-13-2017 4-06-2018 NC

DATE 3-14-2017

SCALE: FEET 0 NA

GRID FACTOR N/A

HWY: CTH G

COUNTY: FOND DU LAC

STATE R/W PROJECT NUMBER 4854-03-00

CONSTRUCTION PROJECT NUMBER 4854-03-71

PLAT SHEET 4.14

PS&E SHEET --100

E

FILE NAME : 48540300-RW-CTH G.DWG
LAYOUT NAME - 4.14

PLOT DATE : 4/11/2018 7:46 AM PLOT BY : DAVE A. YURK PLOT NAME : PLOT SCALE : **********

WISDOT/CADDS SHEET 75

BENCH MARKS			
NO.	STATION	DESCRIPTION	ELEV.
1	100+00, 37' LT	60D NAIL IN POWER POLE 70-27046	931.84

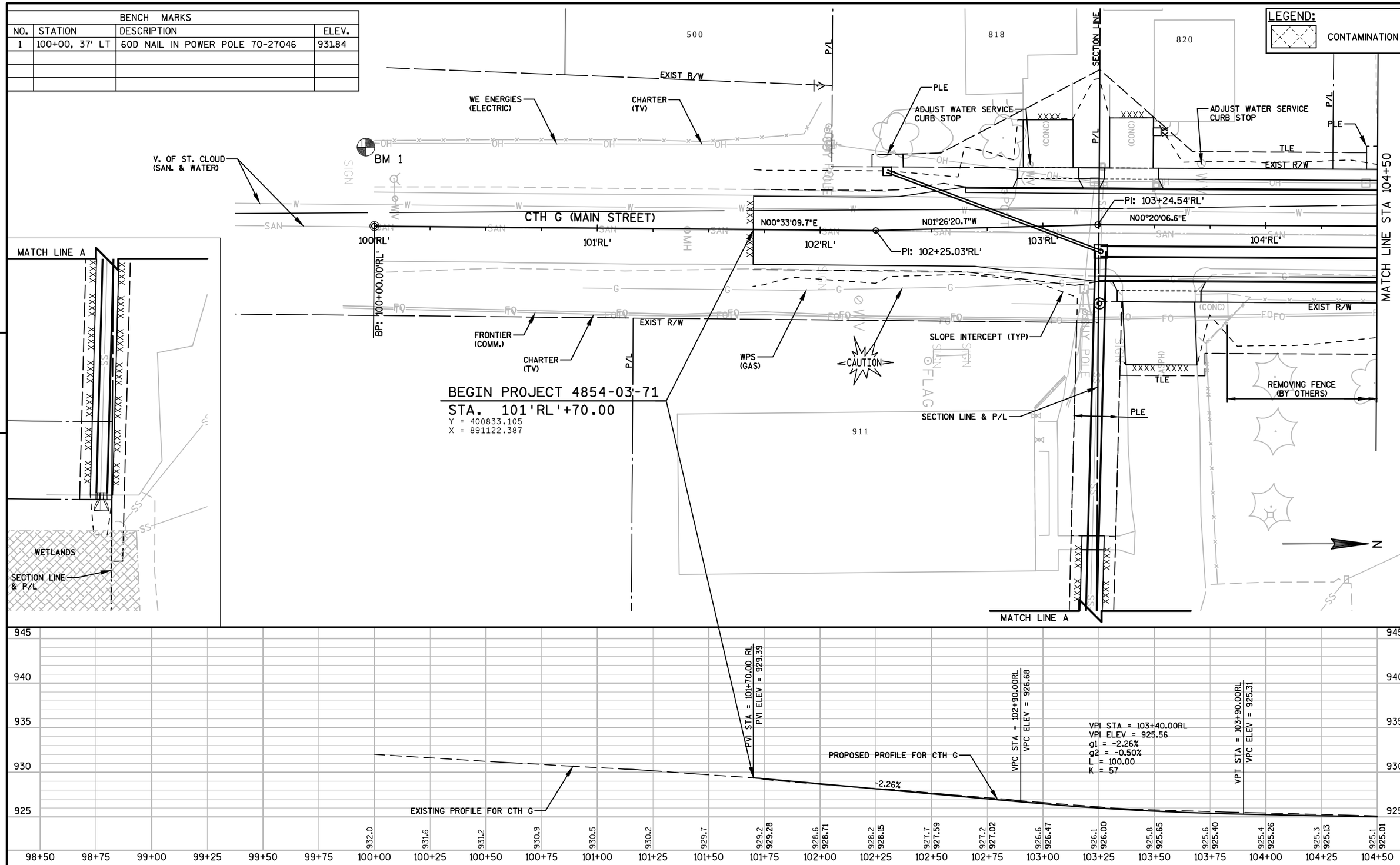

PROJECT NO: 4854-03-71	HWY: CTH G	COUNTY: FOND DU LAC	PLAN AND PROFILE: CTH G (MAIN STREET)	SHEET 101	E

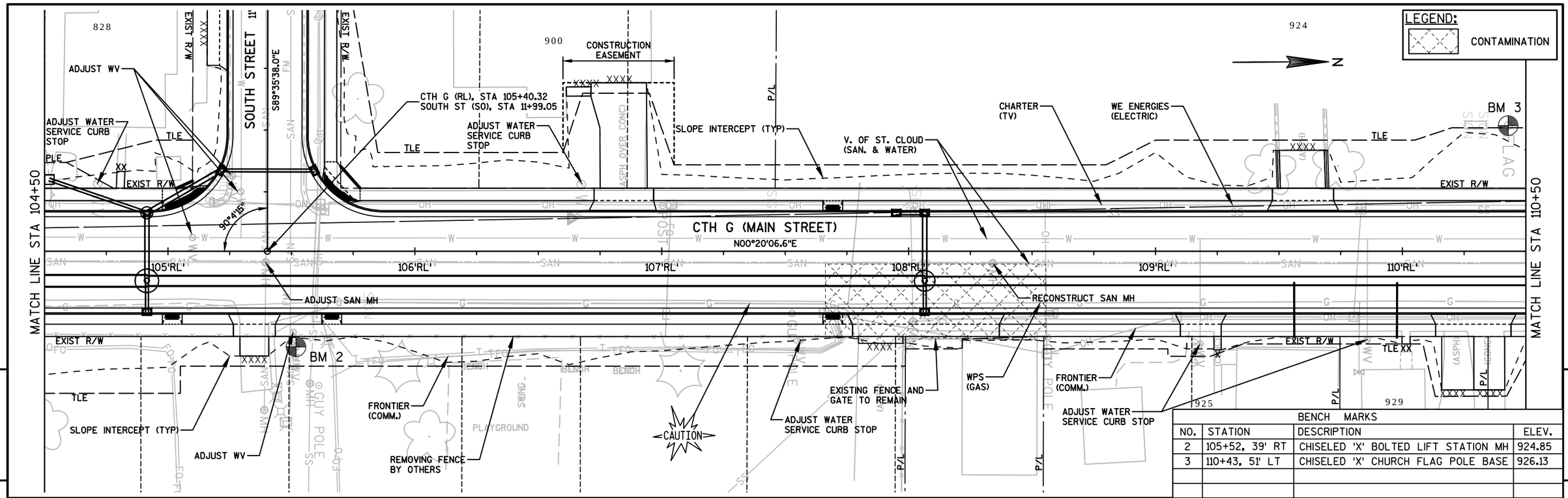

BENCH MARKS			
NO.	STATION	DESCRIPTION	ELEV.
2	105+52, 39' RT	CHISELED 'X' BOLTED LIFT STATION MH	924.85
3	110+43, 51' LT	CHISELED 'X' CHURCH FLAG POLE BASE	926.13

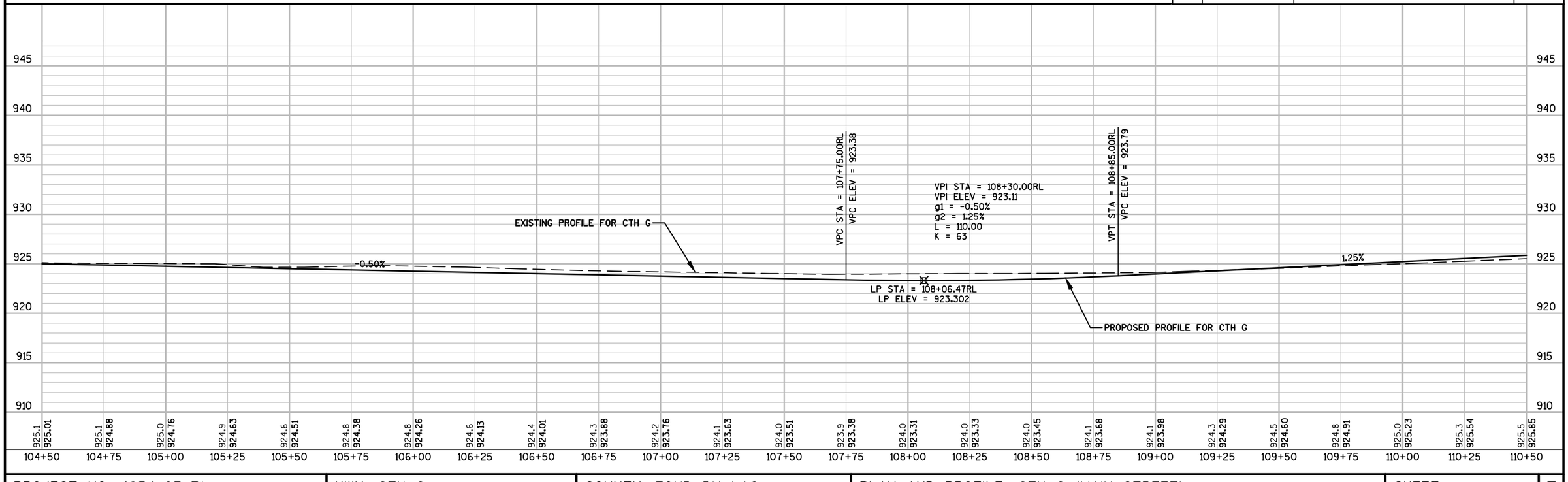

PROJECT NO: 4854-03-71	HWY: CTH G	COUNTY: FOND DU LAC	PLAN AND PROFILE: CTH G (MAIN STREET)	SHEET 102	E

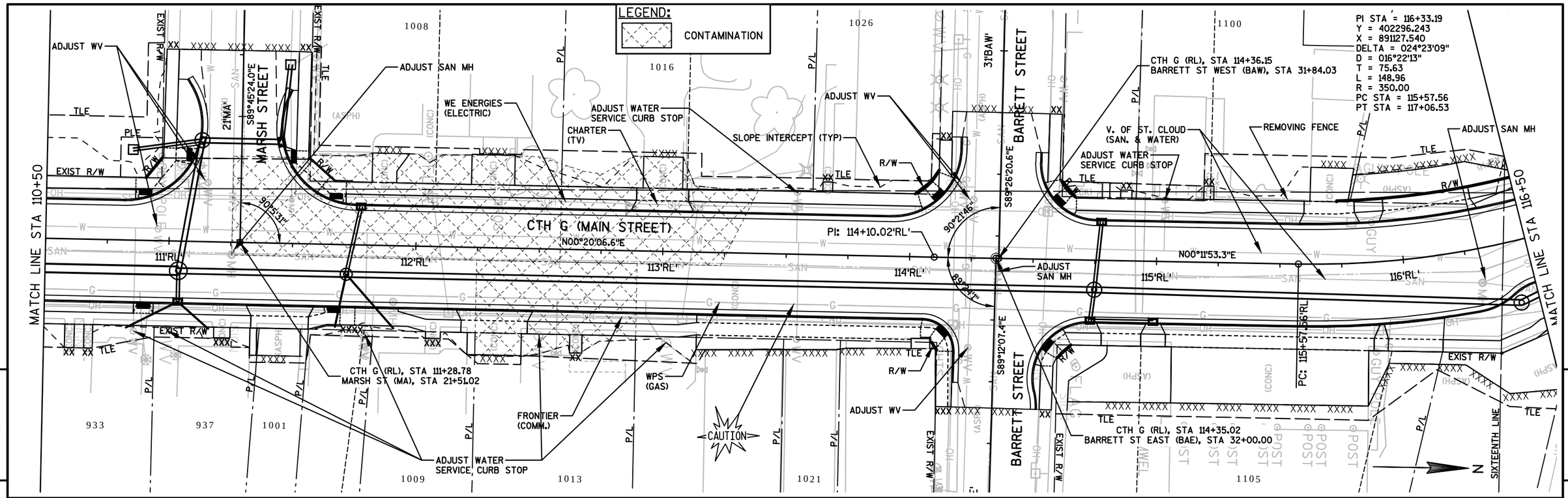

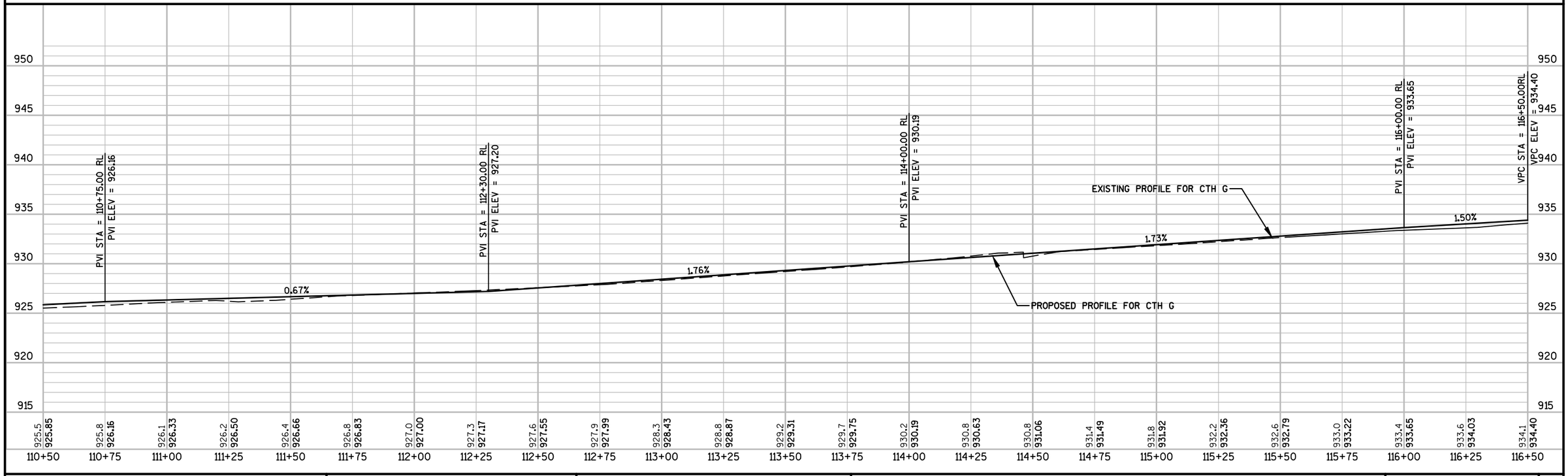

PROJECT NO: 4854-03-71	HWY: CTH G	COUNTY: FOND DU LAC	PLAN AND PROFILE: CTH G (MAIN STREET)	SHEET 103	E

BENCH MARKS			
NO.	STATION	DESCRIPTION	ELEV.
5	121+55, 45' RT	CHISELED 'X', NE BOLT, E LEG BP SIGN	945.22

LEGEND:
CONTAMINATION

PI STA = 116+33.19
Y = 402296.243
X = 891127.540
DELTA = 024°23'09"
D = 016°22'13"
T = 75.63
L = 148.96
R = 350.00
PC STA = 115+57.56
PT STA = 117+06.53

MATCH LINE STA 116+50
MATCH LINE STA 122+50
SIXTEENTH LINE
W RAILROAD AVENUE
E RAILROAD AVENUE
CLARK STREET
CTH G (MAIN STREET)
CTH G (RL), STA 117+19.61
RAILROAD ST WEST (RRW), STA 44+03.44
CTH G (RL), STA 117+19.21
RAILROAD ST EAST (RRE), STA 45+00.00
CTH G (RL), STA 121+89.44
CLARK ST (CL), STA 50+00.00
N24°11'15.9"W
S77°35'00.5"E
S77°38'39.3"E
53°33'45"
53°27'23"
90°20'13"
N65°28'31.2"E
43'RRW
44'RRW
46'RRW
EXIST R/W
R/W
TLE
EXIST R/W
ADJUST WATER SERVICE CURB STOP
ADJUST WV
ADJUST SAN MH
CHARTER (TV)
V. OF ST. CLOUD (SAN. & WATER)
WE ENERGIES (ELECTRIC)
WPS (GAS)
FRONTIER (COMM.)
SLOPE INTERCEPT (TYP)
CAUTION
RECONSTRUCT SAN MH
BM 5
117'RL'
118'RL'
119'RL'
120'RL'
121'RL'
122'RL'
1200
1201
1205
1213
1301
1302-1306
1305
1312
1313
1401

VPC STA = 116+50.00RL
VPC ELEV = 934.40
VPI STA = 117+00.00RL
VPI ELEV = 935.15
g1 = 1.50%
g2 = 2.60%
L = 100.00
K = 91
VPT STA = 117+50.00RL
VPC ELEV = 936.45
VPC STA = 117+80.00RL
VPC ELEV = 937.23
VPI STA = 118+35.00RL
VPI ELEV = 938.66
g1 = 2.60%
g2 = 1.13%
L = 110.00
K = 75
VPT STA = 118+90.00RL
VPC ELEV = 939.28
VPC STA = 120+40.00RL
VPC ELEV = 940.98
VPI STA = 121+00.00RL
VPI ELEV = 941.66
g1 = 1.13%
g2 = 3.50%
L = 120.00
K = 51
VPT STA = 121+60.00RL
VPC ELEV = 943.76
2.60%
1.13%
EXISTING PROFILE FOR CTH G
PROPOSED PROFILE FOR CTH G

960 955 950 945 940 935 930 925

934.1	934.6	935.2	935.7	936.2	936.9	937.5	938.1	938.7	939.0	939.4	939.6	939.9	940.3	940.7	941.2	941.6	942.1	942.8	943.5	944.3	945.0	945.7	946.6	947.4
934.40	934.81	935.29	935.84	936.45	937.10	937.73	938.27	938.73	939.10	939.40	939.68	939.96	940.24	940.53	940.81	941.10	941.50	942.01	942.65	943.42	944.28	945.16	946.03	946.91

116+50 116+75 117+00 117+25 117+50 117+75 118+00 118+25 118+50 118+75 119+00 119+25 119+50 119+75 120+00 120+25 120+50 120+75 121+00 121+25 121+50 121+75 122+00 122+25 122+50

PROJECT NO: 4854-03-71	HWY: CTH G	COUNTY: FOND DU LAC	PLAN AND PROFILE: CTH G (MAIN STREET)	SHEET 104	E

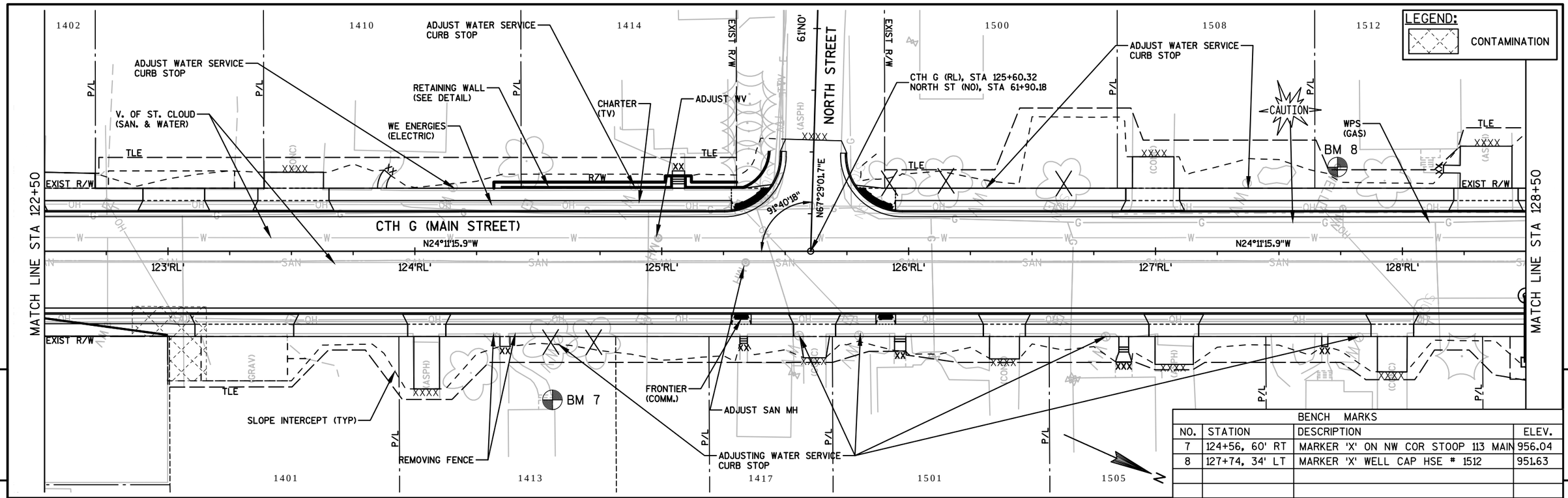

BENCH MARKS			
NO.	STATION	DESCRIPTION	ELEV.
7	124+56, 60' RT	MARKER 'X' ON NW COR STOOP 113 MAIN	956.04
8	127+74, 34' LT	MARKER 'X' WELL CAP HSE # 1512	951.63

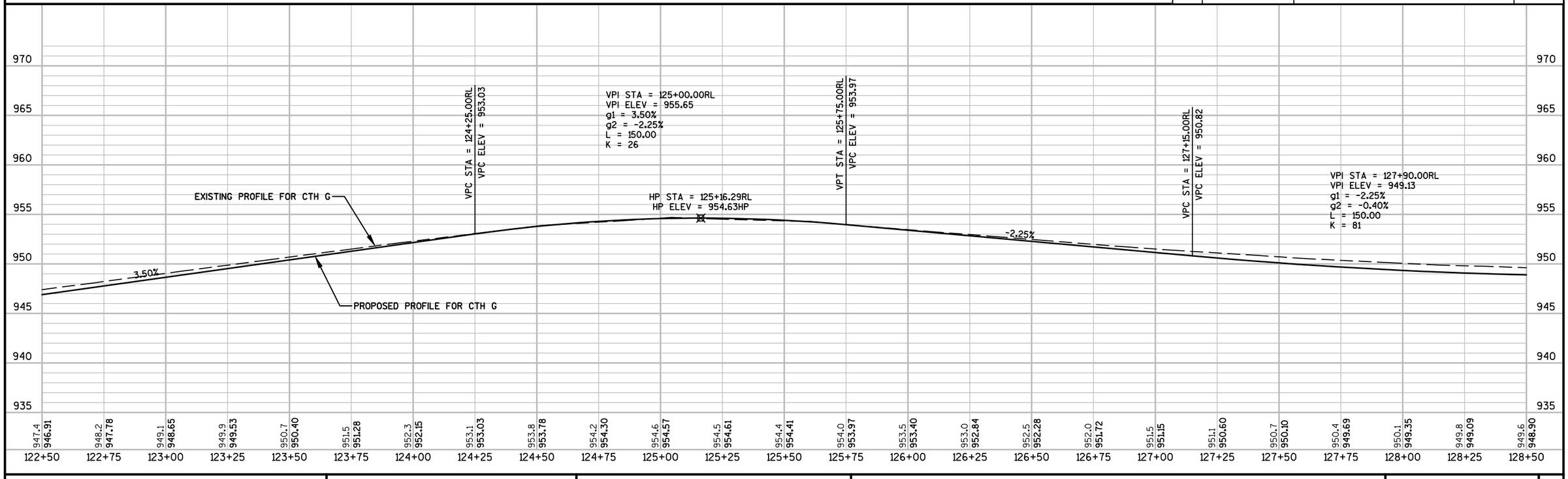

PROJECT NO: 4854-03-71	HWY: CTH G	COUNTY: FOND DU LAC	PLAN AND PROFILE: CTH G (MAIN STREET)	SHEET 105	E

BENCH MARKS			
NO.	STATION	DESCRIPTION	ELEV.
9	132+76, 75' RT	MARKER 'X' N DOOR PUMP STATION	951.19

1516 1520 1524 1528 1534

RECONSTRUCT SAN MH
ADJUST WATER SERVICE CURB STOP
ADJUST WV
CHARTER (TV)
WE ENERGIES (ELECTRIC)
V. OF ST. CLOUD (SAN. & WATER)
RECONSTRUCT SAN MH
ADJUST WATER SERVICE CURB STOP
CAUTION
ADJUST WV
WPS (GAS)
ADJUST WATER SERVICE CURB STOP
TLE
EXIST R/W
MATCH LINE STA 128+50
MATCH LINE STA 134+50
CTH G (MAIN STREET)
N24°11'15.9"W
129'RL' 130'RL' 131'RL' 132'RL' 133'RL' 134'RL'
REMOVE EXISTING 15-IN CMP
FRONTIER (COMM.)
SLOPE INTERCEPT (TYP)
BM 9
REMOVE EXISTING 18-IN CMP
ADJUST WATER SERVICE CURB STOP
1521 1525 1533 1537
WETLANDS
LEGEND: CONTAMINATION

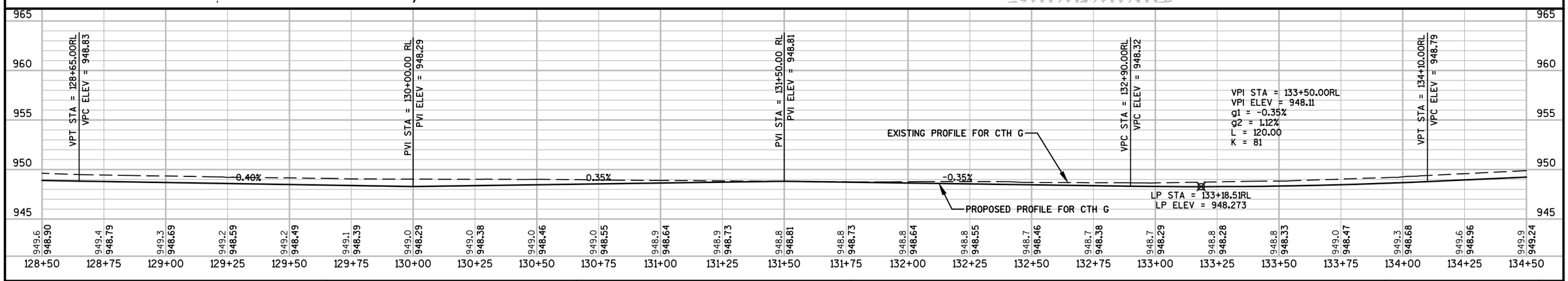

PROJECT NO: 4854-03-71	HWY: CTH G	COUNTY: FOND DU LAC	PLAN AND PROFILE: CTH G (MAIN STREET)	SHEET 106	E

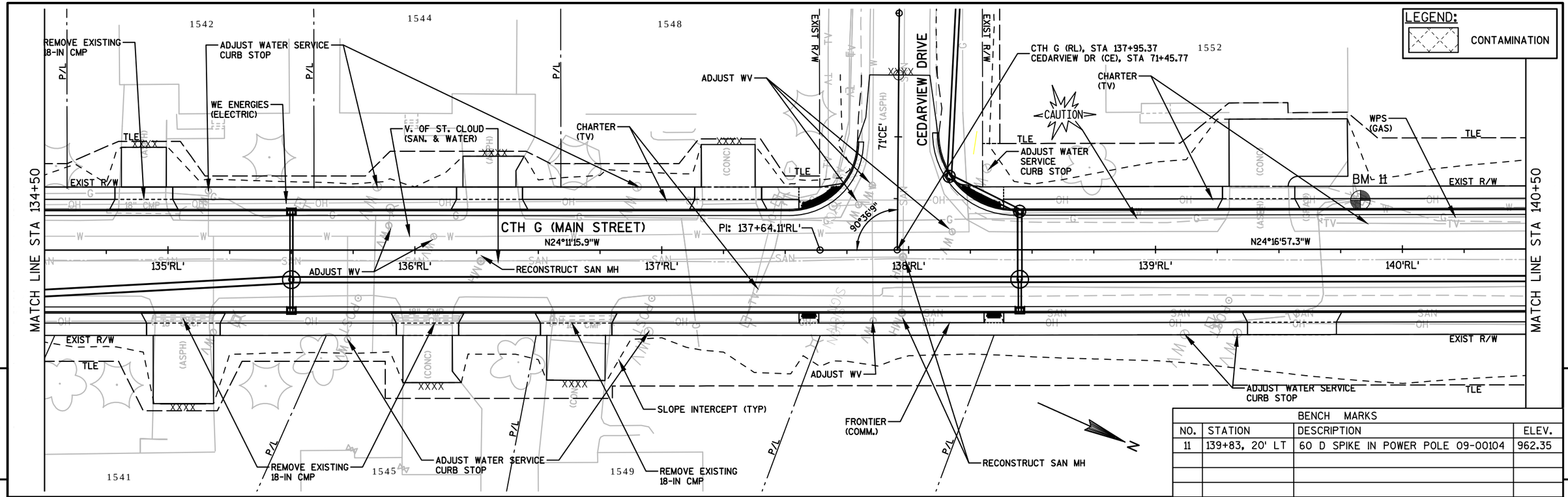

BENCH MARKS			
NO.	STATION	DESCRIPTION	ELEV.
11	139+83, 20' LT	60 D SPIKE IN POWER POLE 09-00104	962.35

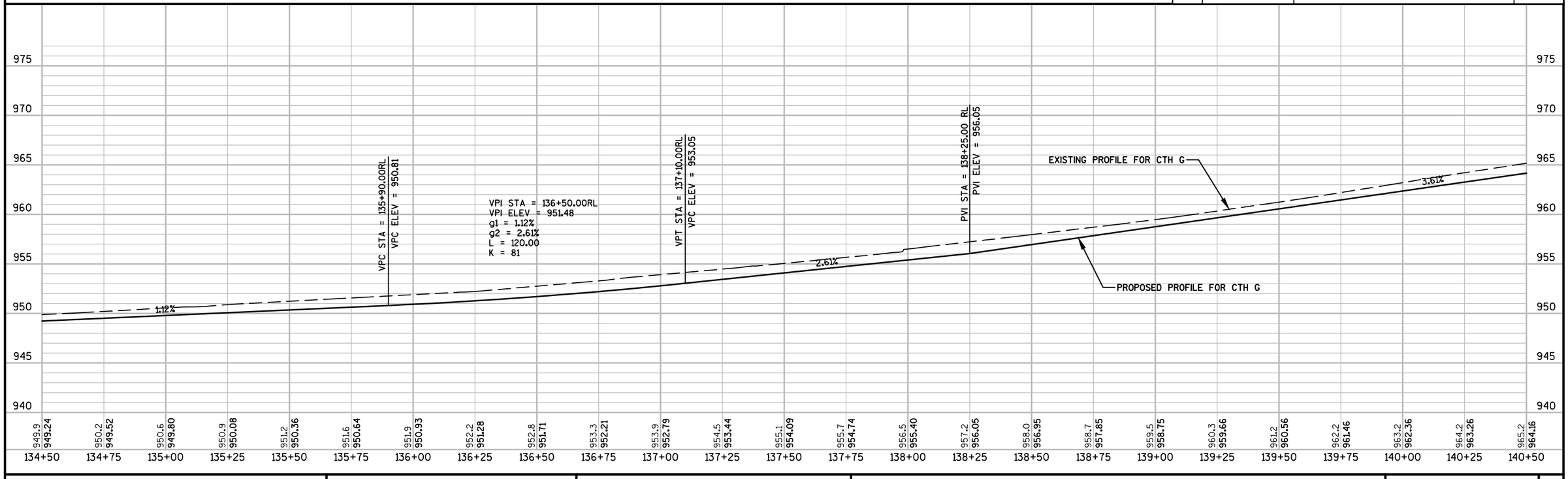

PROJECT NO: 4854-03-71	HWY: CTH G	COUNTY: FOND DU LAC	PLAN AND PROFILE: CTH G (MAIN STREET)	SHEET 107	E

BENCH MARKS			
NO.	STATION	DESCRIPTION	ELEV.
12	143+39, 34' RT	60 D SPIKE IN POWER POLE * 100-23	975.05

MATCH LINE STA 140+50

ADJUST WV
CAUTION
CHARTER (TV)
WPS (GAS)
RECONSTRUCT SAN MH
V. OF ST. CLOUD (SAN. & WATER)
REMOVE EXISTING 15-IN CMP
ADJUST WATER SERVICE CURB STOP
WE ENERGIES (ELECTRIC)
REMOVE EXISTING 18-IN CMP
FRONTIER (COMM.)
BM 12
TLE
PLE
EXIST R/W
P/L
N24°16'57.3"W
N22°01'57.3"W
N24°16'58.3"W
PI: 144+10.79'RL'
PI: 145+25.32'RL'
141'RL'
142'RL'
143'RL'
144'RL'
145'RL'
146'RL'
1559
1562
1566
1570
1601
R/W
SLOPE INTERCEPT (TYP)
SIXTEENTH LINE
CTH G (MAIN STREET)
END PROJECT 4854-03-71
STA. 145'RL'+35.32

LEGEND:
CONTAMINATION

PVI STA = 142+00.00 RL
PVI ELEV = 969.57
PVI STA = 145+10.87 RL
PVI ELEV = 979.03
PVI STA = 145+35.32 RL
PVI ELEV = 979.56
EXISTING PROFILE FOR CTH G
PROPOSED PROFILE FOR CTH G
PROFILE FOR SPECIAL RIGHT DITCH
3.04%
2.16%
3.56%

995 990 985 980 975 970 965 960

965.2 964.16 | 966.1 965.07 | 967.0 965.97 | 967.9 966.87 | 968.8 967.77 | 969.7 968.67 | 970.5 969.57 | 971.3 970.33 | 972.0 971.10 | 972.7 971.86 | 973.4 972.62 | 973.8 973.38 | 975.0 974.14 | 975.8 974.90 | 976.6 975.66 | 977.1 976.42 | 977.7 977.18 | 978.2 977.94 | 978.8 978.70 | 979.3 979.34 | 979.9

140+50 140+75 141+00 141+25 141+50 141+75 142+00 142+25 142+50 142+75 143+00 143+25 143+50 143+75 144+00 144+25 144+50 144+75 145+00 145+25 145+50 145+75 146+00 146+25 146+50

PROJECT NO: 4854-03-71	HWY: CTH G	COUNTY: FOND DU LAC	PLAN AND PROFILE: CTH G (MAIN STREET)	SHEET 108	E

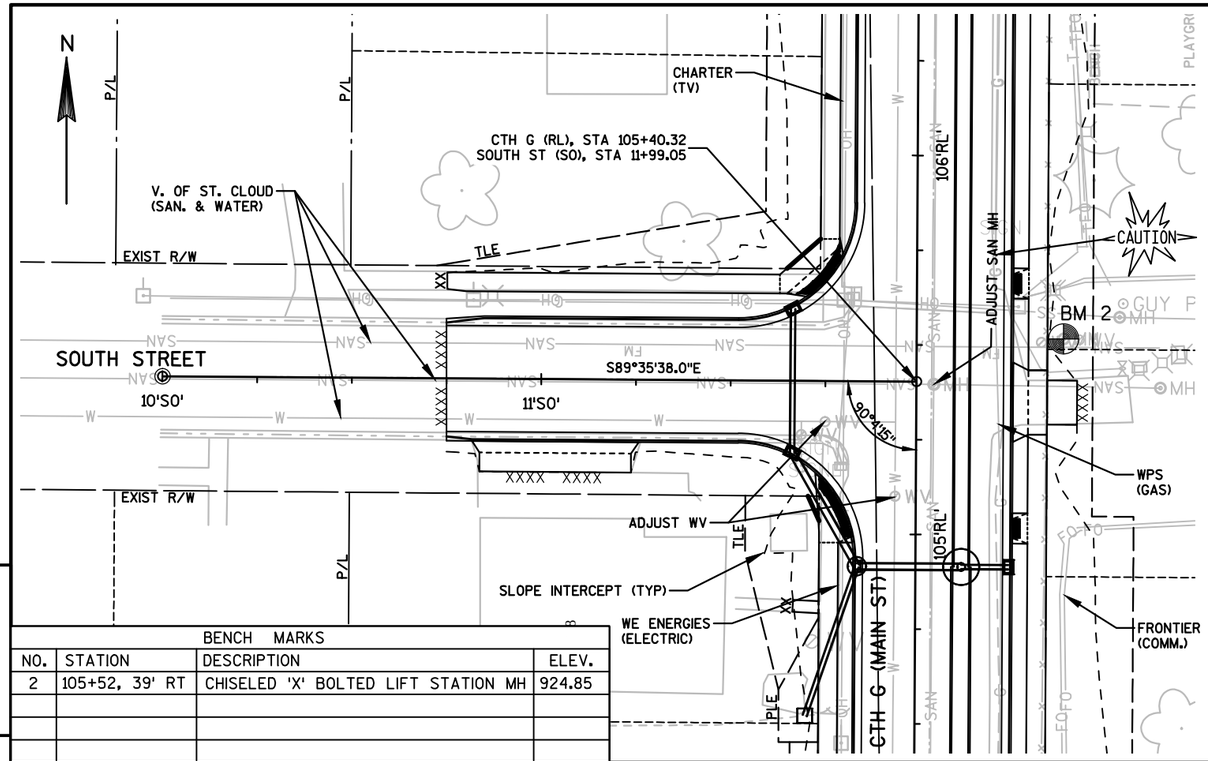

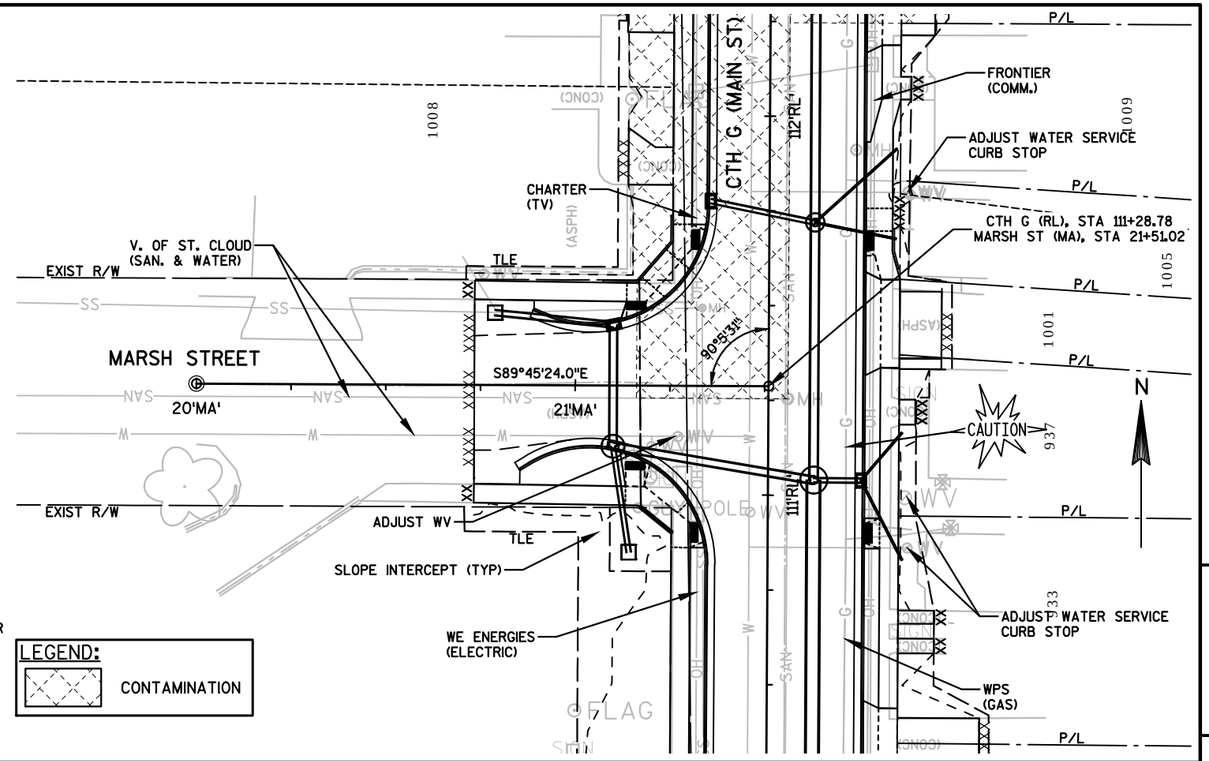

BENCH MARKS			
NO.	STATION	DESCRIPTION	ELEV.
2	105+52, 39' RT	CHISELED 'X' BOLTED LIFT STATION MH	924.85

LEGEND:
CONTAMINATION

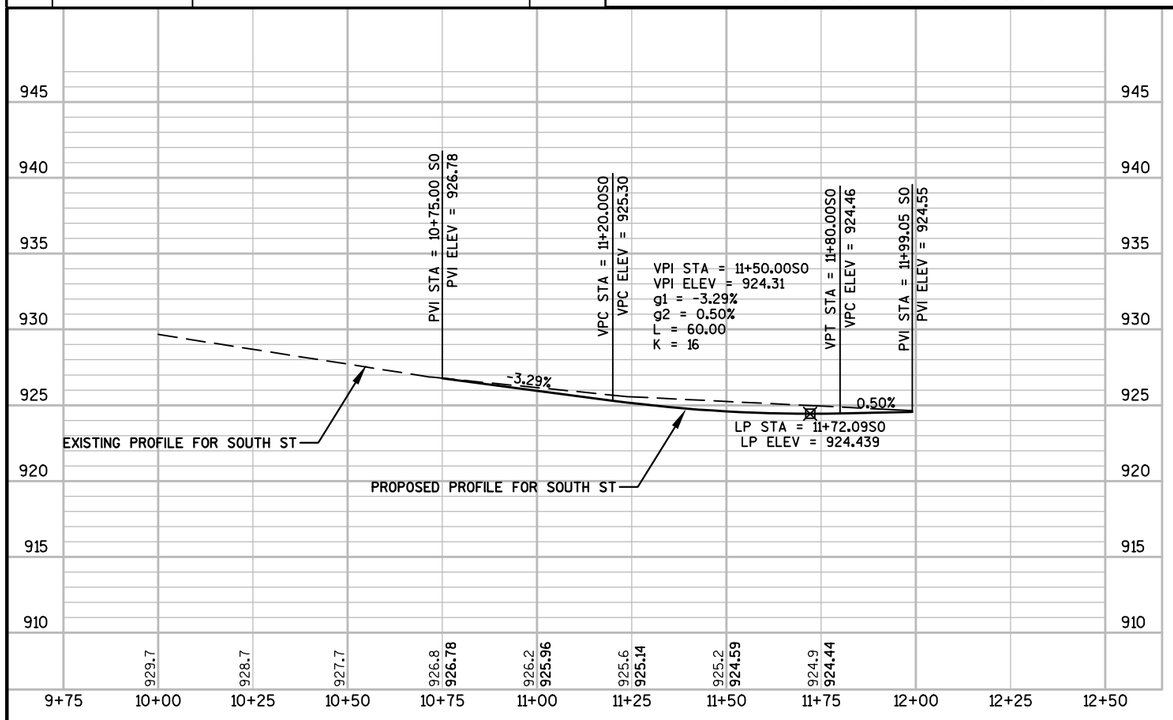

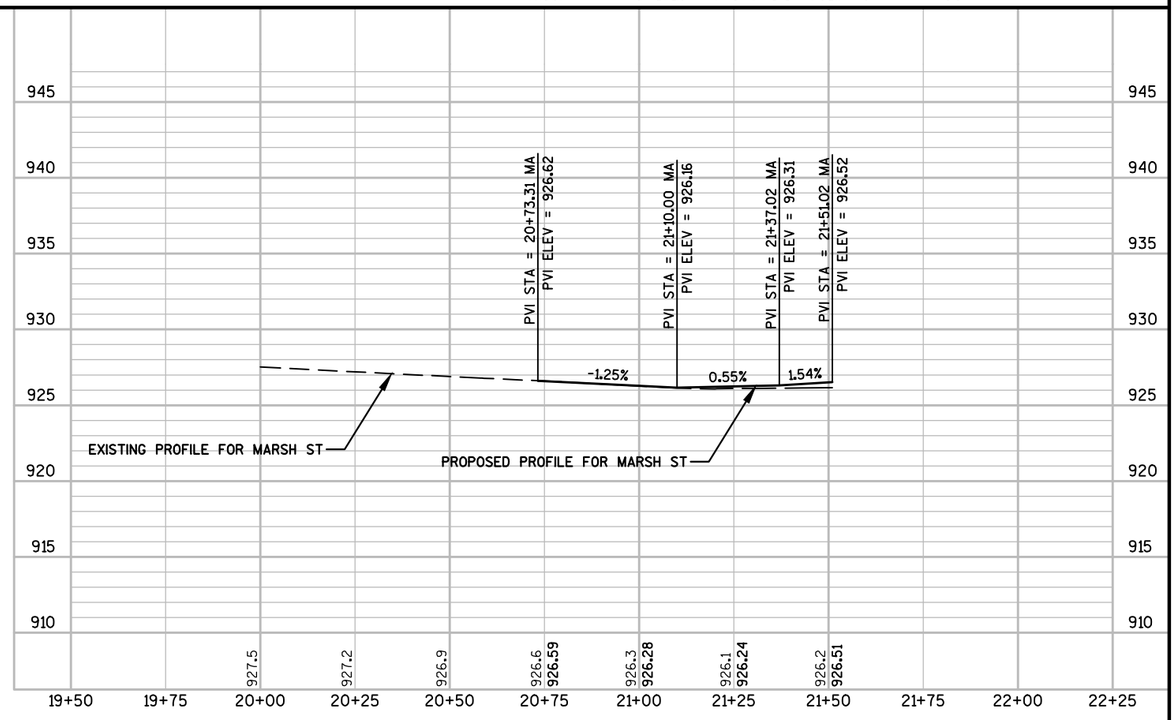

PROJECT NO: 4854-03-17	HWY: CTH G	COUNTY: FOND DU LAC	PLAN AND PROFILE: SOUTH ST / MARSH ST	SHEET 109 E

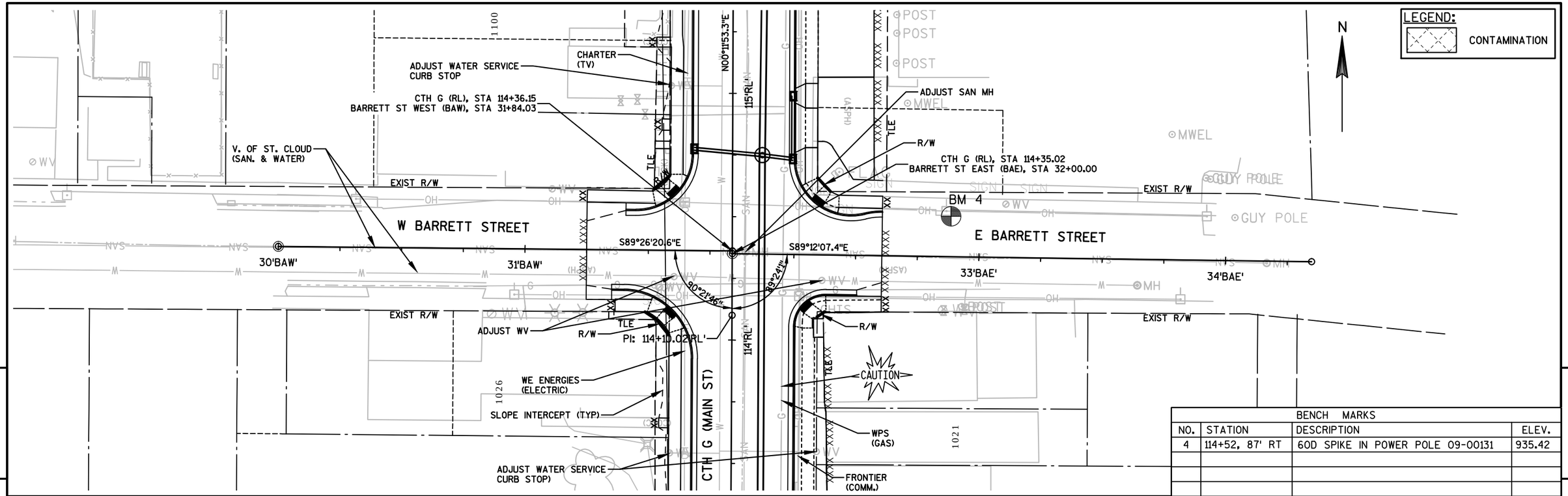

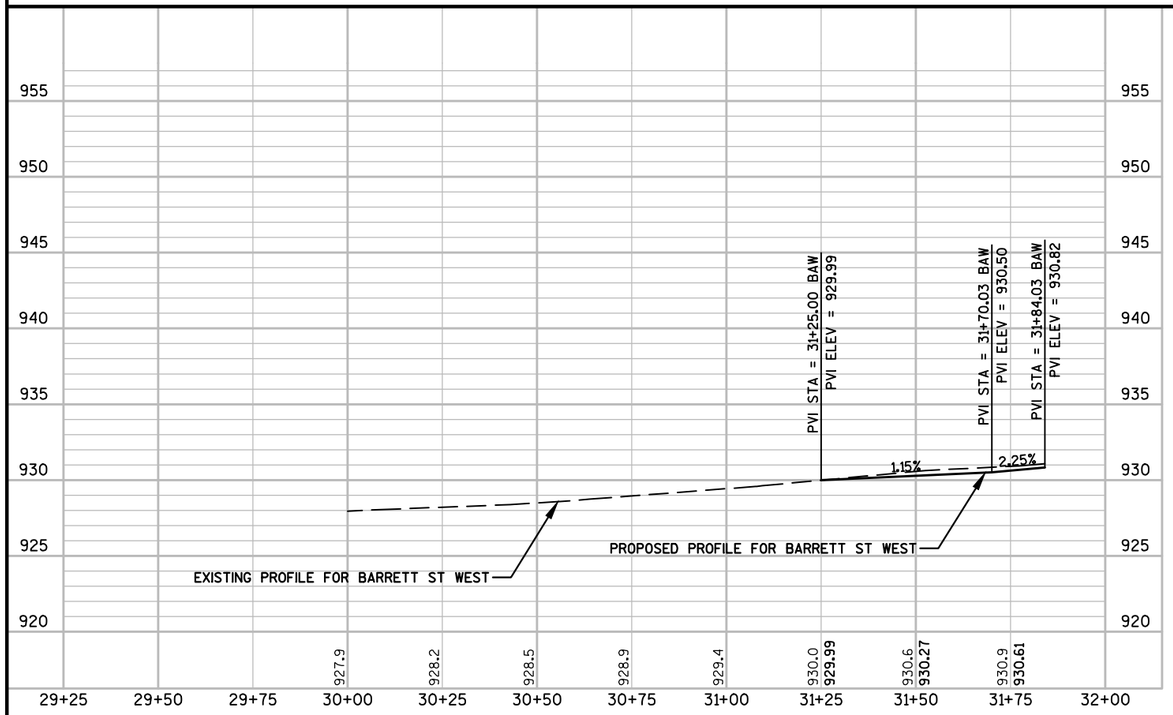

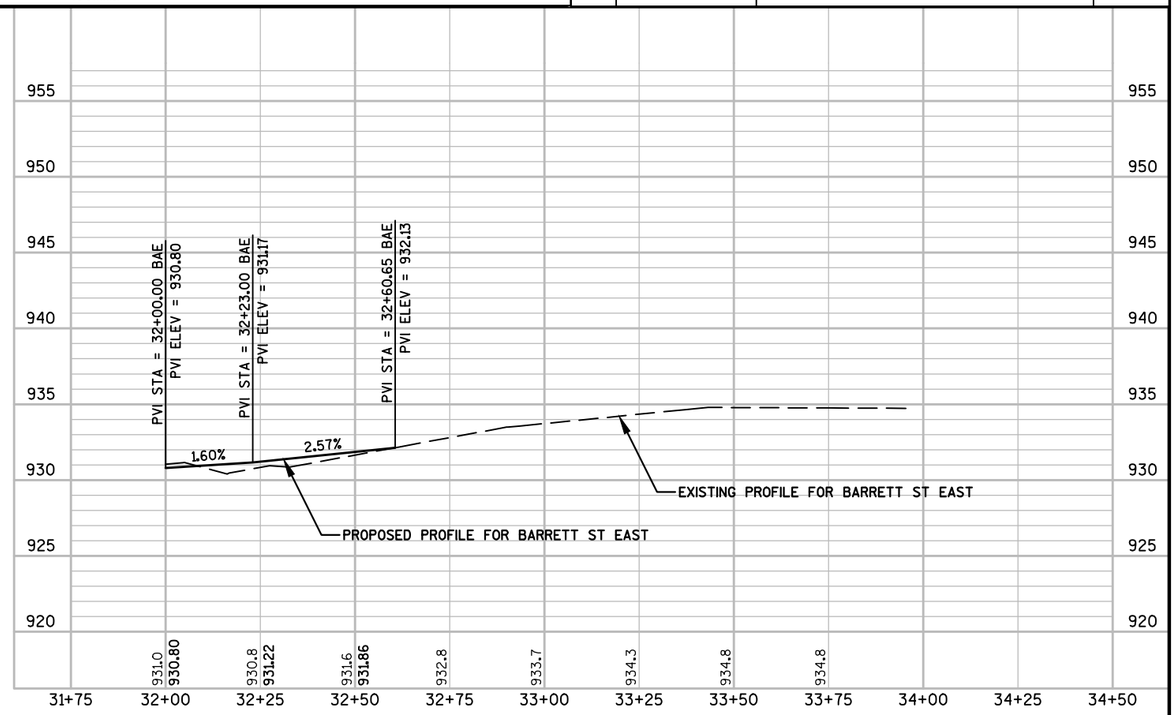

PROJECT NO: 4854-03-71	HWY: CTH G	COUNTY: FOND DU LAC	PLAN AND PROFILE: BARRETT STREET	SHEET 110 E

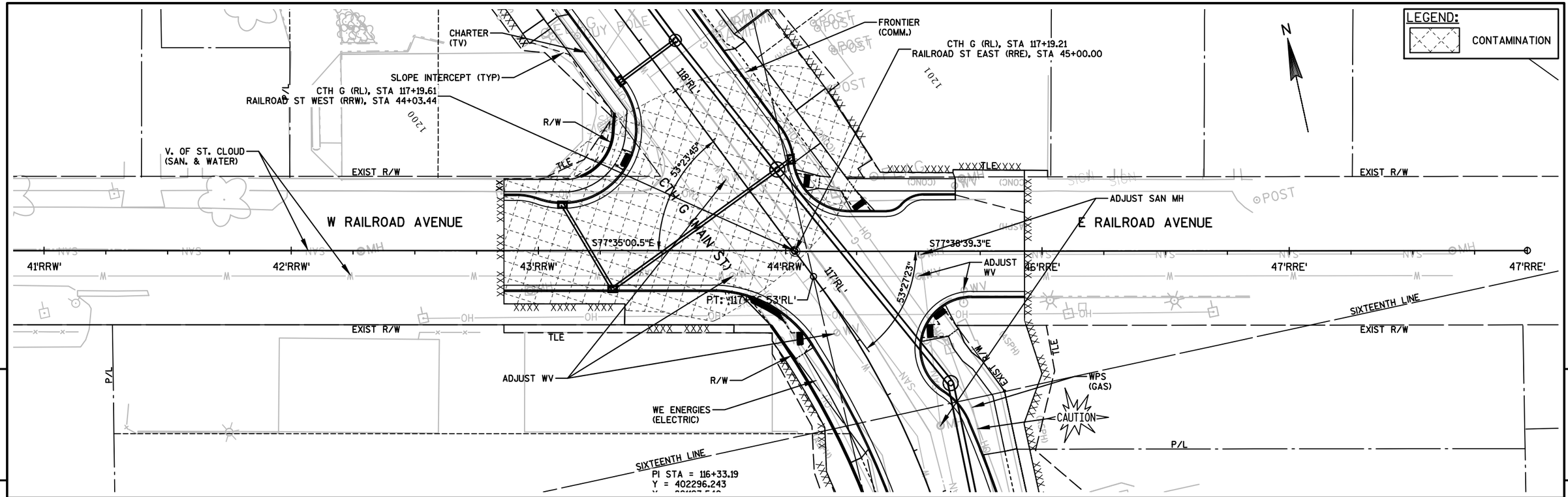

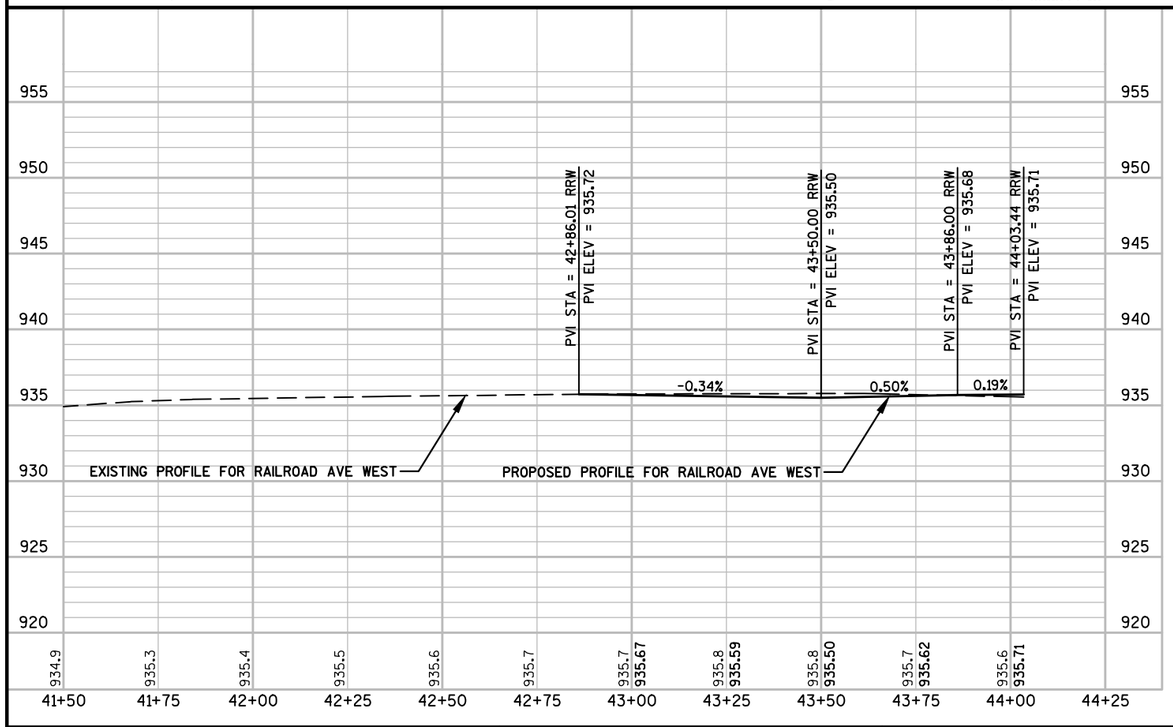

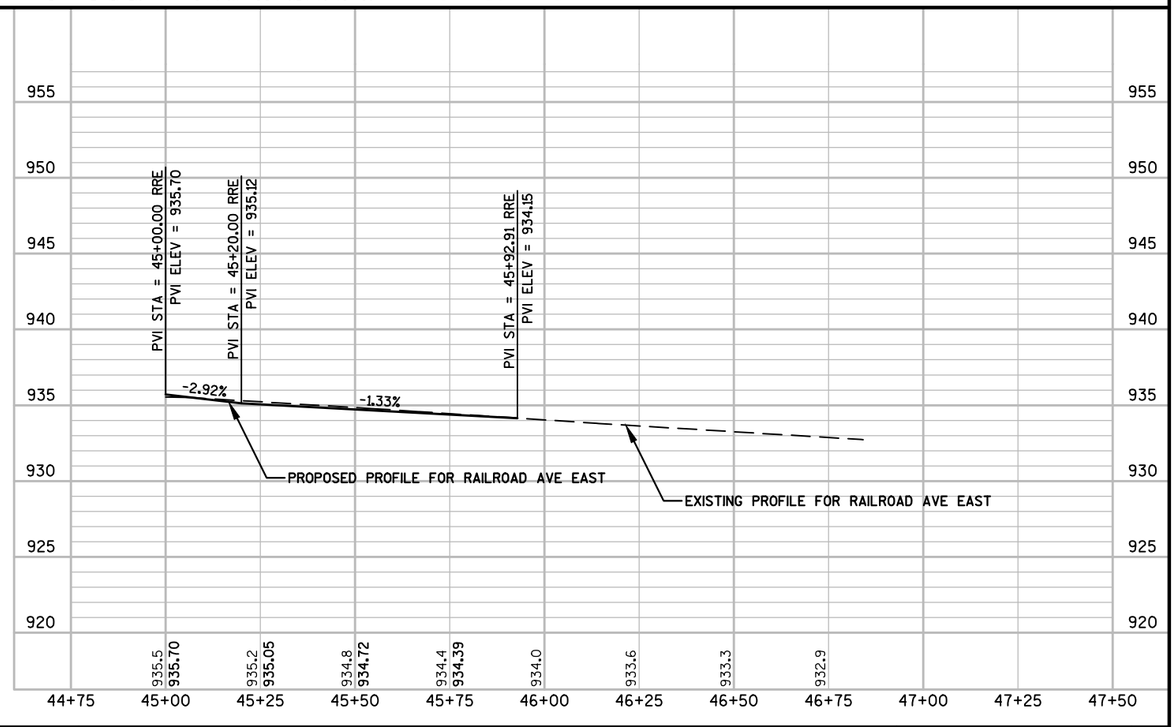

PROJECT NO: 4854-03-71	HWY: CTH G	COUNTY: FOND DU LAC	PLAN AND PROFILE: RAILROAD AVENUE	SHEET 111 E

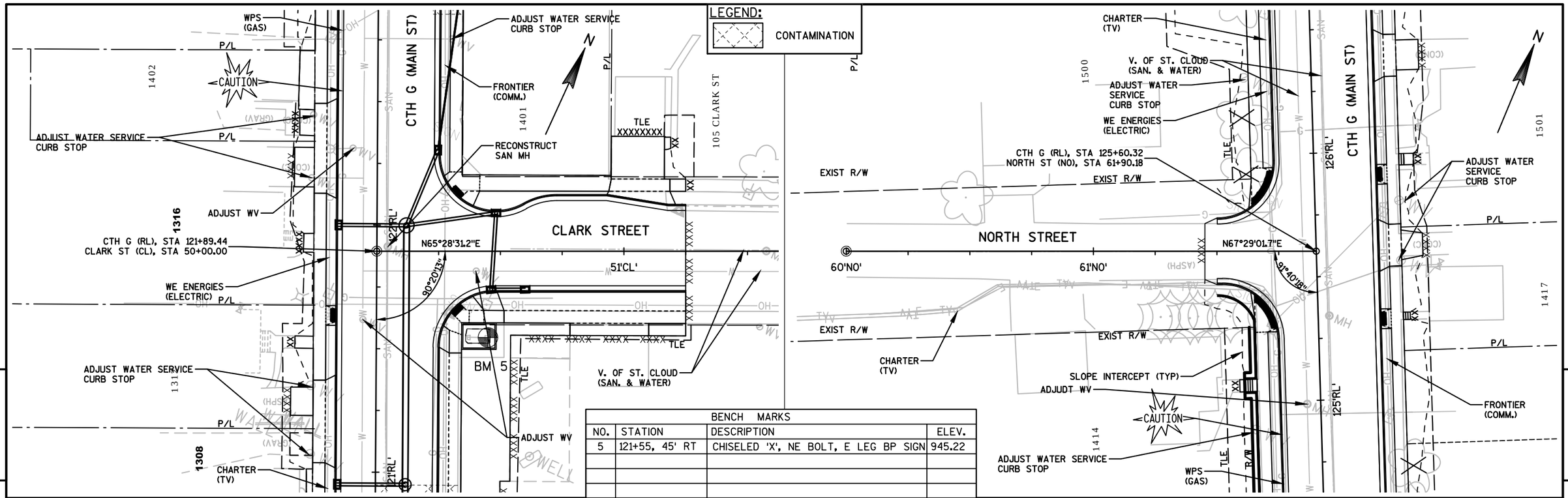

BENCH MARKS			
NO.	STATION	DESCRIPTION	ELEV.
5	121+55, 45' RT	CHISELED 'X', NE BOLT, E LEG BP SIGN	945.22

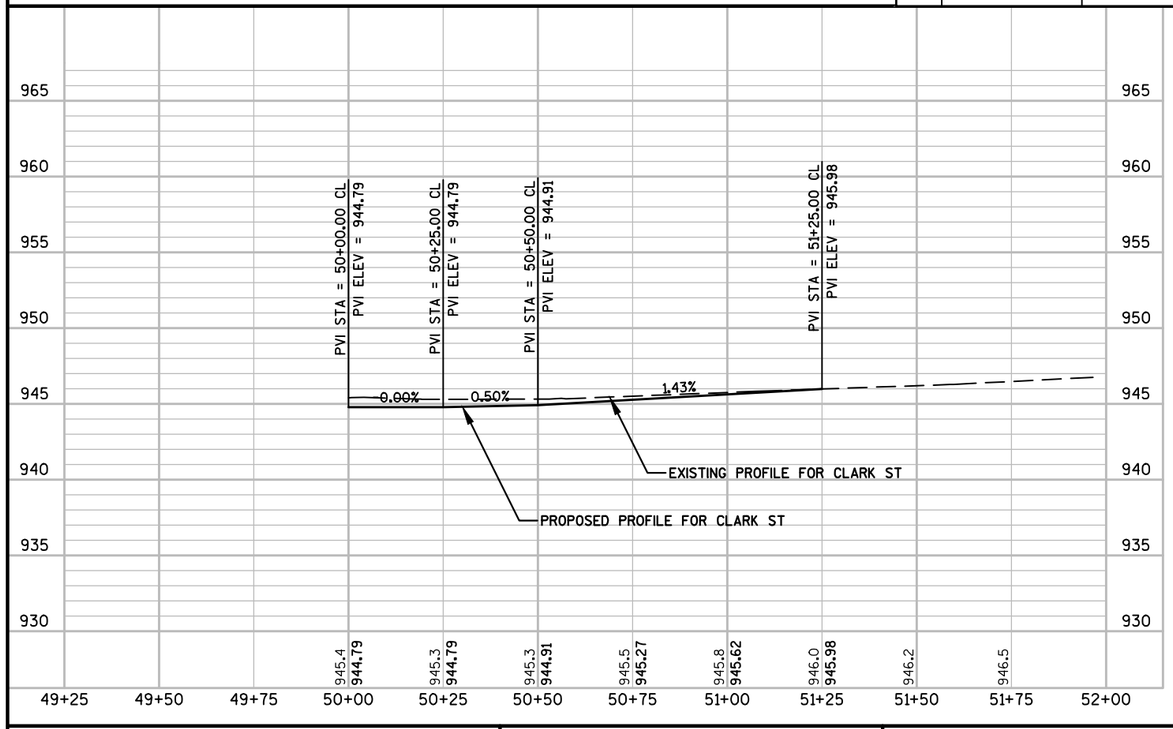

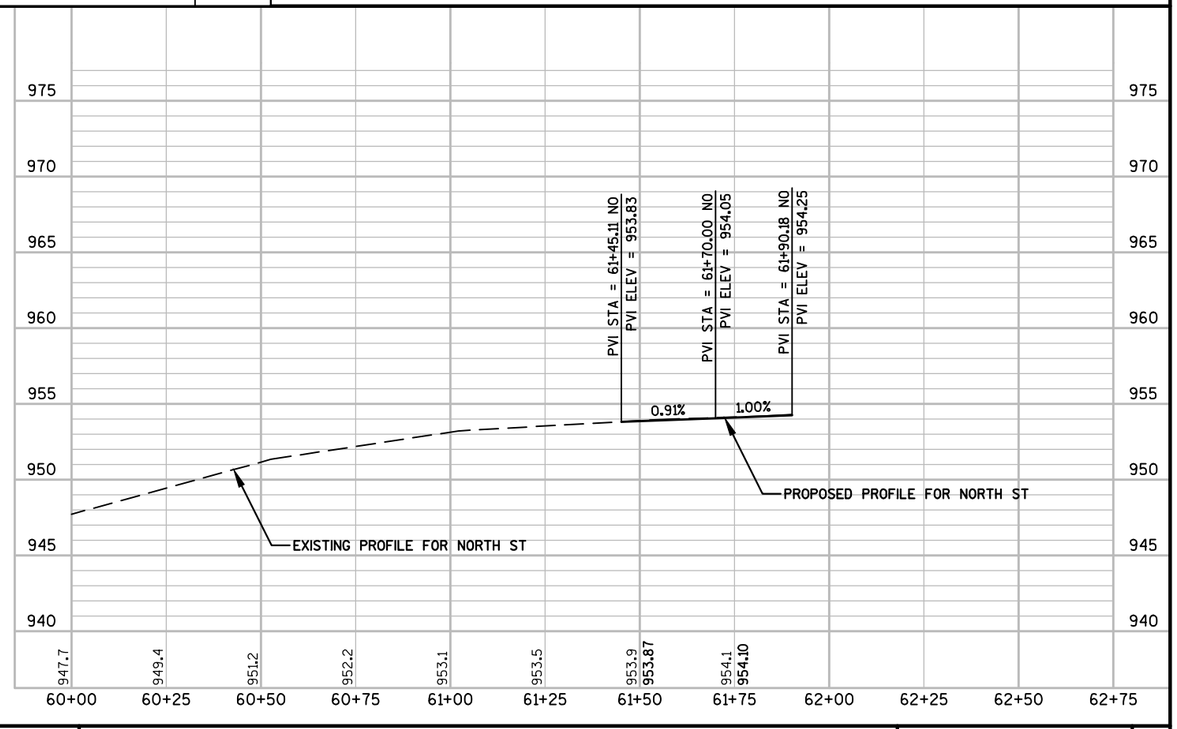

PROJECT NO: 4854-03-71	HWY: CTH G	COUNTY: FOND DU LAC	PLAN AND PROFILE: CLARK STREET/ NORTH STREET	SHEET 112 E

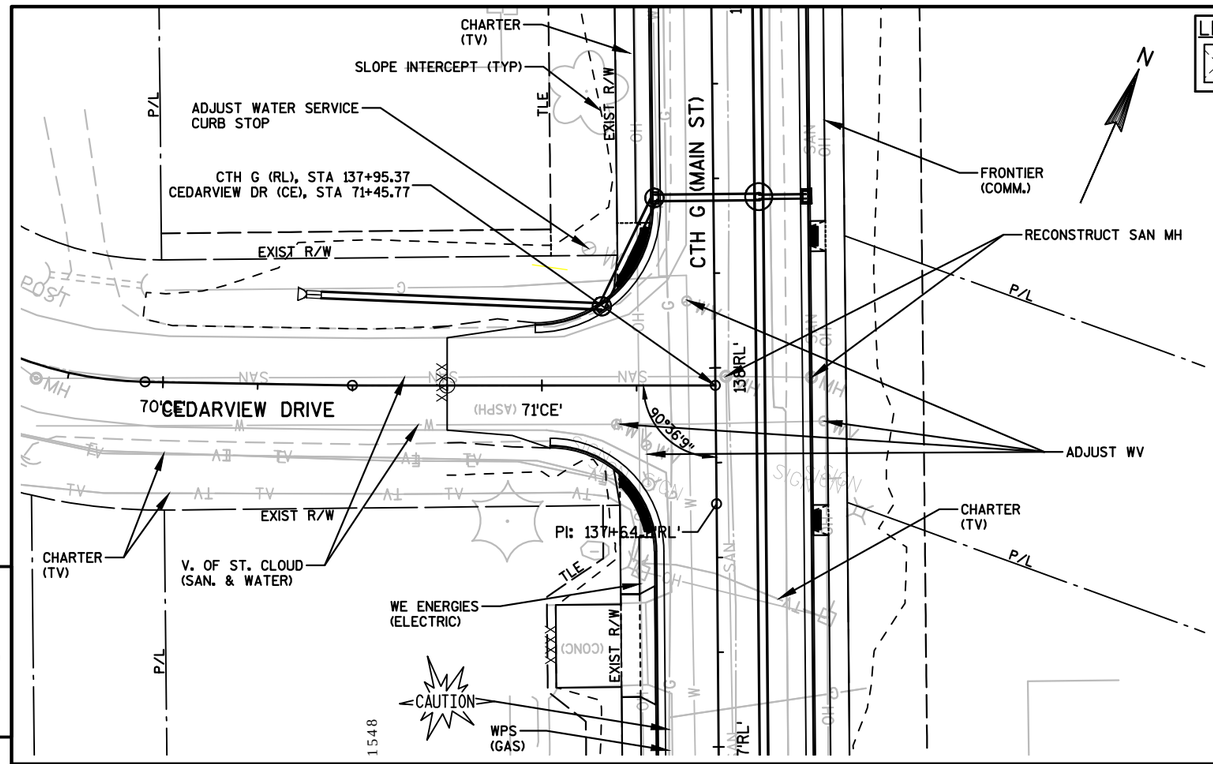

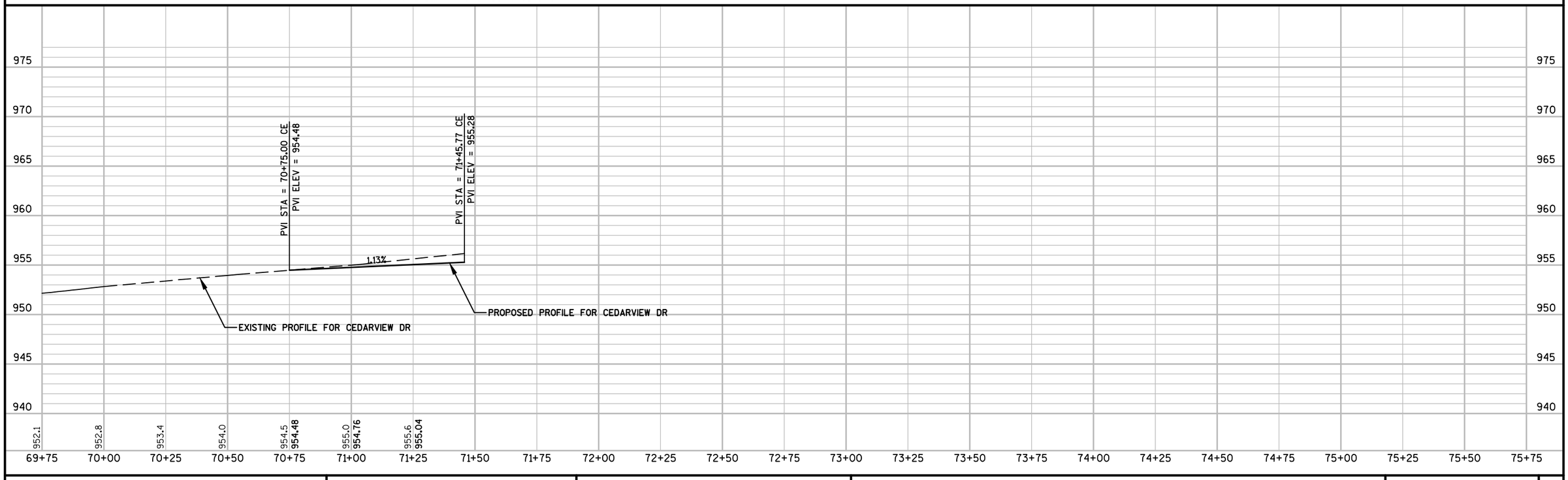

PROJECT NO: 4854-03-71	HWY: CTH G	COUNTY: FOND DU LAC	PLAN AND PROFILE: CEDARVIEW DRIVE	SHEET 113	E

Standard Detail Drawing List

08A05-19A	INLET COVERS TYPE A, H, A-S, H-S & Z
08A05-19B	INLET COVERS TYPE B, B-A, C, MS, MS-A, & WM
08A05-19C	INLET COVERS TYPE F, HM, HM-S, S, T, V, HM-GJ, & HM-GJ-S
08A08-02	CATCH BASINS 3-FT, 4-FT, 5-FT AND 6-FT DIAMETER
08A09-02	CATCH BASINS 2X3-FT AND 2.5X3-FT
08B09-02	MANHOLES 3-FT, 4-FT, 5-FT, 6-FT, 7-FT AND 8-FT DIAMETER
08B10-02	MANHOLES 3X3-FT, 4X4-FT, 5X5-FT AND 6X6-FT
08C06-02	INLETS 3-FT AND 4-FT DIAMETER
08C07-02	INLETS 2X2-FT, 2X2.5-FT, 2X3-FT AND 2.5X3-FT
08C08-02	INLETS MEDIAN 1 AND 2 GRATE
08D01-20A	CONCRETE CURB & GUTTER
08D01-20B	CONCRETE CURB, TIES AND CURB AND GUTTER APPLICATIONS
08D05-19A	CURB RAMPS TYPES 1 AND 1-A
08D05-19B	CURB RAMPS TYPES 2 AND 3
08D05-19C	CURB RAMPS TYPES 4A AND 4A1
08D05-19D	CURB RAMPS TYPE 4B AND 4B1
08D05-19E	CURB RAMPS TYPES 5, 6, 7A, 7B & 8
08D05-19F	CURB RAMPS RADIAL DETECTABLE WARNING FIELD APPLICATIONS
08D05-19G	CURB RAMPS RECTANGULAR AND RADIAL DETECTABLE WARNING PLATES
08D18-01	DRIVEWAY AND SIDEWALK RAMPS TYPES X & Y
08D19-01	DRIVEWAY AND SIDEWALK RAMPS TYPE Z
08E08-03	TYPICAL INSTALLATIONS OF EROSION BALES / TEMPORARY DITCH CHECKS
08E09-06	SILT FENCE
08E10-02	INLET PROTECTION TYPE A, B, C AND D
08F01-11	APRON ENDWALLS FOR CULVERT PIPE
08F02-01	APRON ENDWALLS FOR PIPE ARCH AND ELLIPTICAL PIPE
08F04-07	JOINT TIES FOR CONCRETE PIPE AND CONCRETE COLLAR DETAIL
15C02-06A	BARRICADES AND SIGNS FOR MAINLINE CLOSURES
15C02-06B	BARRICADES AND SIGNS FOR MAINLINE CLOSURES
15C03-04	BARRICADES AND SIGNS FOR SIDEROAD CLOSURES
15C08-18A	LONGITUDINAL MARKING (MAINLINE)
15C33-03	STOP LINE AND CROSSWALK PAVEMENT MARKING
15D30-03A	TRAFFIC CONTROL, PEDESTRIAN ACCOMMODATION
15D30-03B	TRAFFIC CONTROL, TEMPORARY ADA COMPLIANT PEDESTRIAN ACCOMMODATION
15D30-03C	TRAFFIC CONTROL, PEDESTRIAN ACCOMMODATION
15D38-02A	TEMPORARY TRAFFIC CONTROL SIGN MOUNTING
15D38-02B	ATTACHMENT OF SIGNS TO POSTS

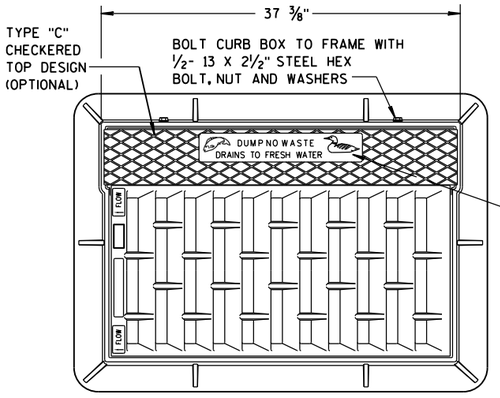

NOTE:
GRATE IS REVERSIBLE.

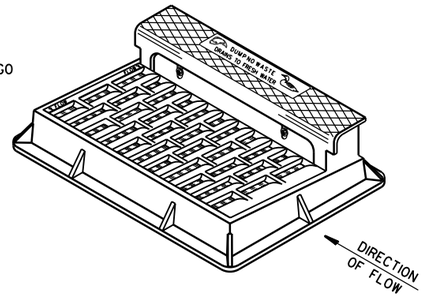

NOTE: CURB BOX HEIGHT ADJUSTABLE 6" TO 9"

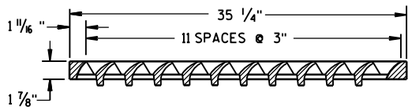

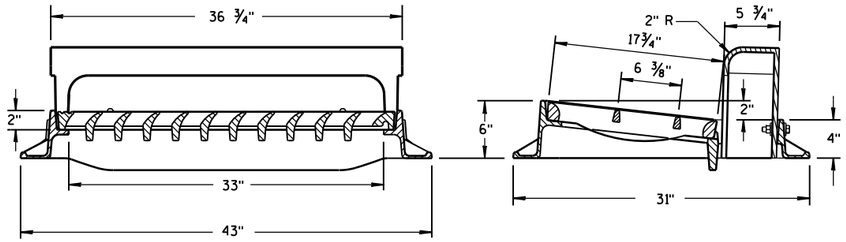

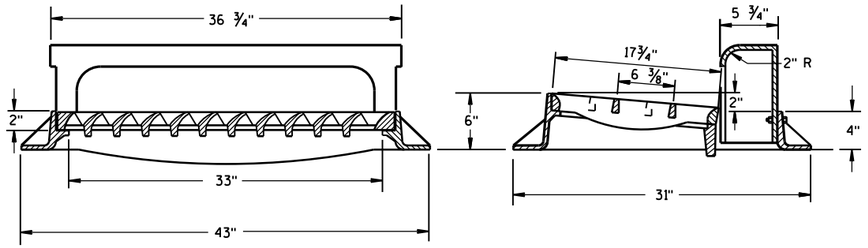

TYPE "H"

NOTE: EITHER CASTING IS ACCEPTABLE

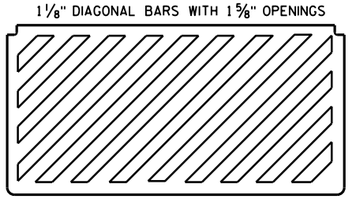

SPECIAL GRATE FOR TYPE "H" COVER

(MEASURES 35 1/4" X 17 3/4" X 2")

(NOTED AS TYPE H-S ON DRAINAGE TABLE)

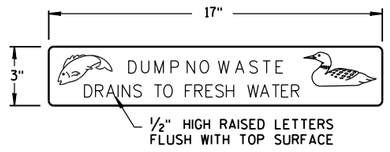

LOGO DETAIL

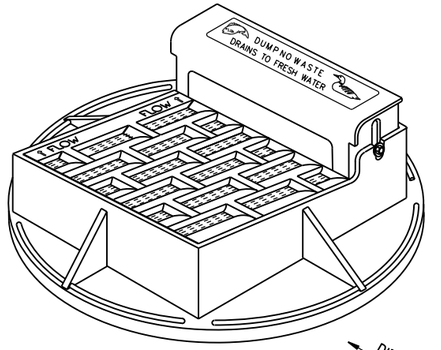

NOTE: CURB BOX ADJUSTABLE 4" TO 9"

NOTE:
GRATE IS REVERSIBLE.

GENERAL NOTES

DETAILS OF CONSTRUCTION, MATERIALS AND WORKMANSHIP NOT SHOWN ON THIS DRAWING SHALL CONFORM TO THE PERTINENT REQUIREMENTS OF THE STANDARD SPECIFICATIONS AND THE APPLICABLE SPECIAL PROVISIONS.

DETAIL DRAWINGS FOR PROPOSED ALTERNATE DESIGNS FOR CATCH BASIN, MANHOLE AND INLET COVERS SHALL BE SUBMITTED TO THE ENGINEER FOR APPROVAL PROVIDING THAT SUCH ALTERNATE DESIGNS MAKE PROVISION FOR EQUIVALENT CAPACITY AND STRENGTH.

ROUND FRAMES AND COVERS SHALL HAVE CONTINUOUSLY MACHINED BEARING SURFACES TO PREVENT ROCKING AND RATTLING.

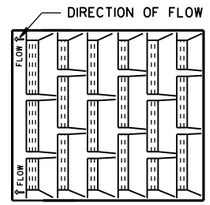

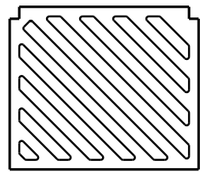

SPECIAL GRATE FOR TYPE "A" COVER

(MEASURES 19 3/4" X 17" X 1 7/8")

(NOTED AS TYPE A-S ON DRAINAGE TABLE)

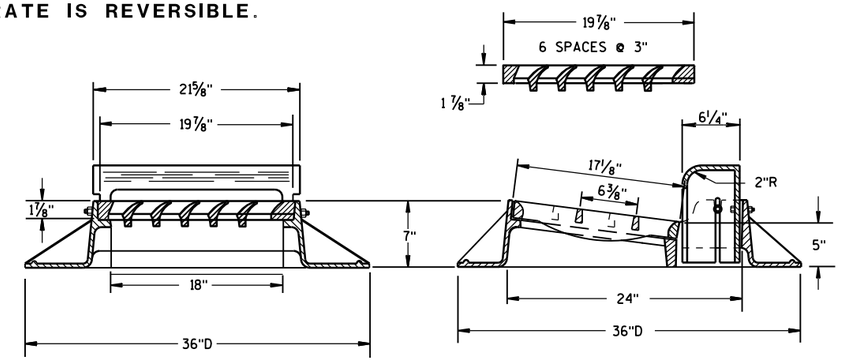

TYPE "A"

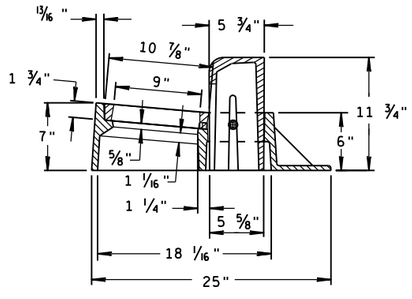

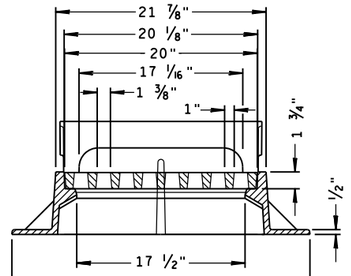

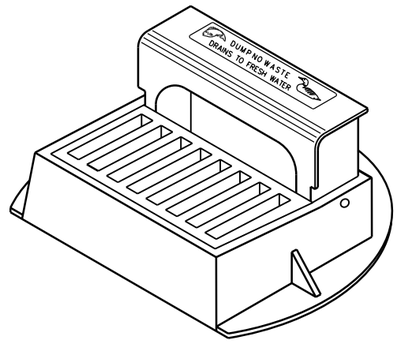

TYPE "Z"

INLET COVERS
TYPE A, H, A-S, H-S & Z

STATE OF WISCONSIN
DEPARTMENT OF TRANSPORTATION

APPROVED
11-27-13 — DATE
/S/ Jerry H. Zogg — ROADWAY STANDARDS ENGINEER
FHWA

6

S.D.D. 8 A 5-19a

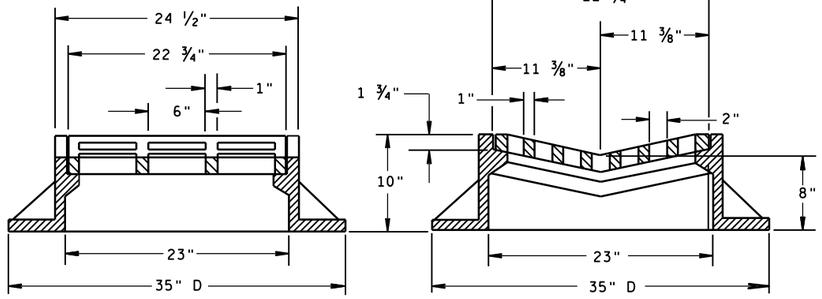

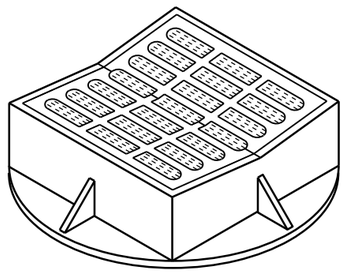

TYPE "B"

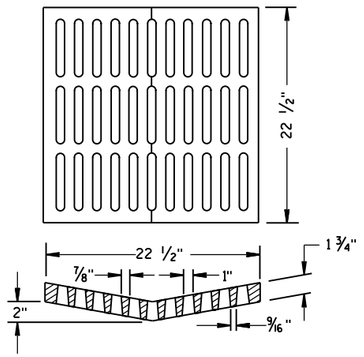

ALTERNATIVE GRATE FOR TYPE "B" COVER

USE WHERE PEDESTRIAN OR BICYCLE TRAFFIC IS POSSIBLE.
NOTED AS TYPE B-A ON THE DRAINAGE TABLE

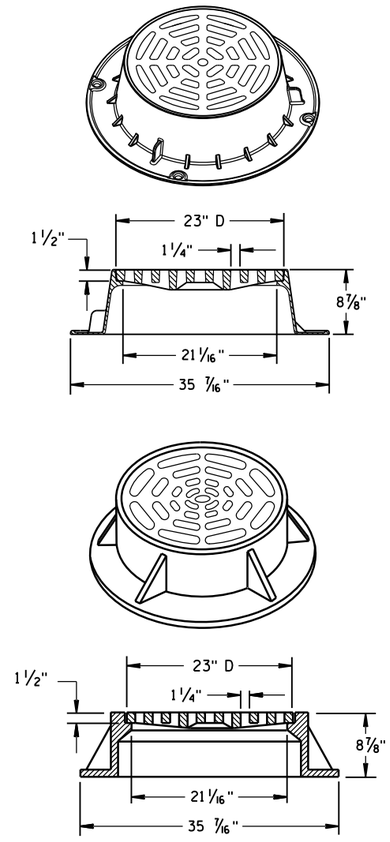

TYPE "C"

NOTE: EITHER CASTING IS ACCEPTABLE

GENERAL NOTES

DETAILS OF CONSTRUCTION, MATERIALS AND WORKMANSHIP NOT SHOWN ON THIS DRAWING SHALL CONFORM TO THE PERTINENT REQUIREMENTS OF THE STANDARD SPECIFICATIONS AND THE APPLICABLE SPECIAL PROVISIONS.

DETAIL DRAWINGS FOR PROPOSED ALTERNATE DESIGNS FOR CATCH BASIN, MANHOLE AND INLET COVERS SHALL BE SUBMITTED TO THE ENGINEER FOR APPROVAL PROVIDING THAT SUCH ALTERNATE DESIGNS MAKE PROVISION FOR EQUIVALENT CAPACITY AND STRENGTH.

ROUND FRAMES AND COVERS SHALL HAVE CONTINUOUSLY MACHINED BEARING SURFACES TO PREVENT ROCKING AND RATTLING.

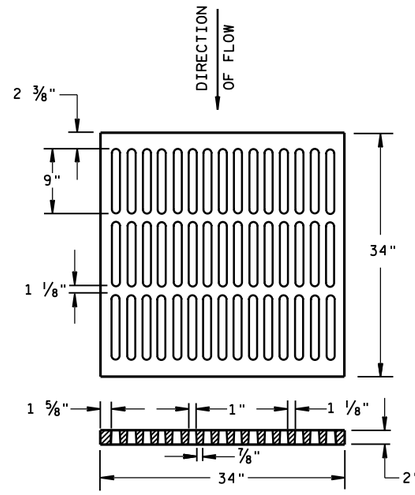

ALTERNATIVE TYPE "MS"

USE WHERE PEDESTRIAN OR BICYCLE TRAFFIC IS PERMITTED
NOTED AS TYPE MS-A ON THE DRAINAGE TABLE

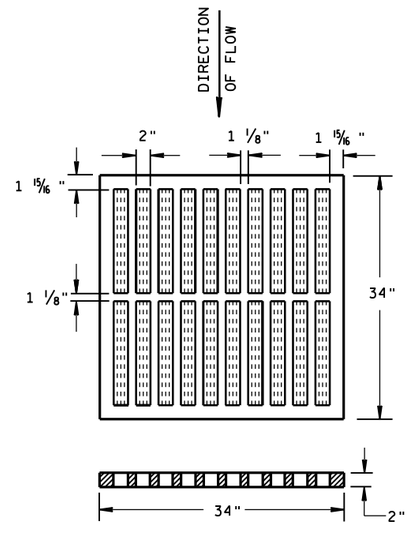

TYPE "MS"

USE ON FREEWAYS AND EXPRESSWAYS
NOTED AS TYPE MS ON DRAINAGE TABLE

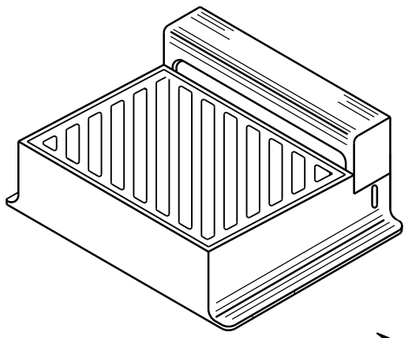

DIAGONAL SLOTS, SHALL BE ORIENTED TO THE DIRECTION OF FLOW AS ILLUSTRATED. GRATES ARE MANUFACTURED TO BE REVERSIBLE.

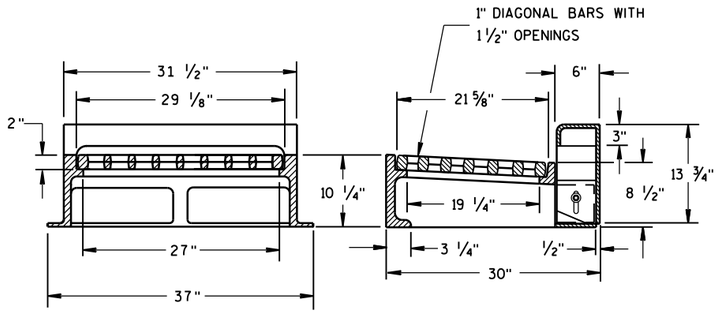

NOTE: CURB BOX HEIGHT ADJUSTABLE 6" TO 9"

TYPE "WM"

INLET COVERS
TYPE B, B-A, C, MS, MS-A, & WM

STATE OF WISCONSIN
DEPARTMENT OF TRANSPORTATION

APPROVED
11/27/2013 — DATE
/S/ Jerry H. Zogg — ROADWAY STANDARDS DEVELOPMENT ENGINEER
FHWA

6

S.D.D. 8 A 5-19b

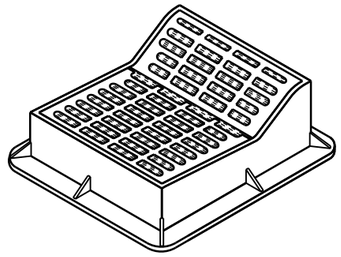

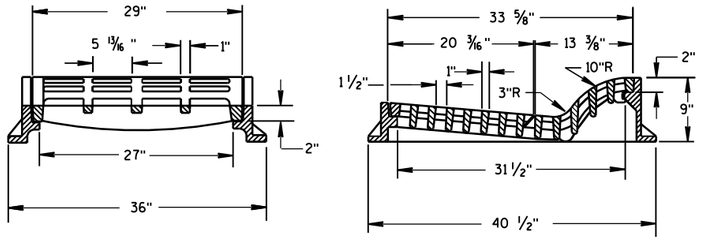

TYPE "F"

USE WITH TYPES A & D CONCRETE CURB & GUTTER, 36 INCH.

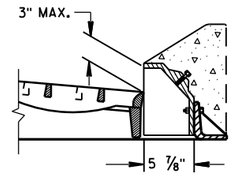

ALTERNATIVE CURB BOX FOR TYPE "HM" COVER

USE WITH TYPES G & J CONCRETE CURB & GUTTER, 30 INCH
NOTED AS TYPE HM-GJ ON DRAINAGE TABLE

NOTE:
SPECIAL GRATE FOR THE
TYPE "H" COVER MAY ALSO BE
USED FOR THE TYPE "HM-GJ" COVER
NOTED AS TYPE HM-GJ-S ON DRAINAGE TABLE

GENERAL NOTES

DETAILS OF CONSTRUCTION, MATERIALS AND WORKMANSHIP NOT SHOWN ON THIS DRAWING SHALL CONFORM TO THE PERTINENT REQUIREMENTS OF THE STANDARD SPECIFICATIONS AND THE APPLICABLE SPECIAL PROVISIONS.

DETAIL DRAWINGS FOR PROPOSED ALTERNATE DESIGNS FOR INLET COVERS SHALL BE SUBMITTED TO THE ENGINEER FOR APPROVAL PROVIDING THAT SUCH ALTERNATE DESIGNS MAKE PROVISION FOR EQUIVALENT CAPACITY AND STRENGTH.

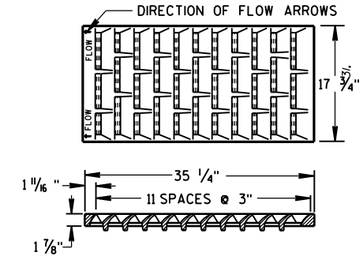

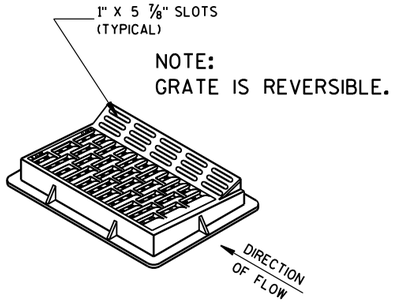

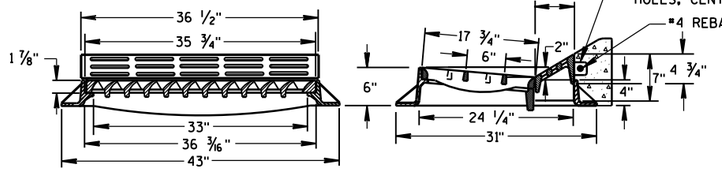

TYPE "HM"

USE WITH TYPES A & D CONCRETE CURB & GUTTER, 36 INCH.

NOTE:
SPECIAL GRATE FOR THE
TYPE "H" COVER MAY ALSO BE
USED FOR THE TYPE "HM" COVER
NOTED AS TYPE HM-S ON DRAINAGE TABLE

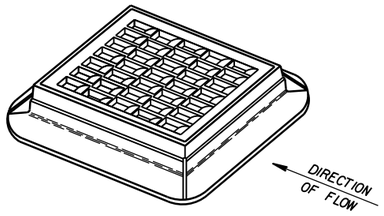

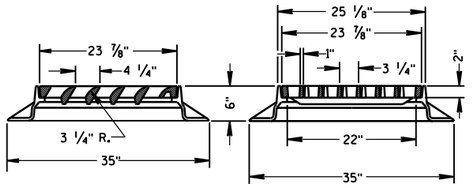

TYPE "S"

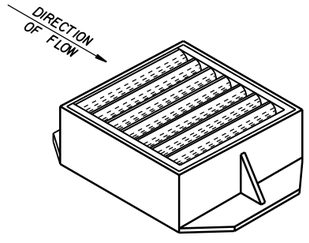

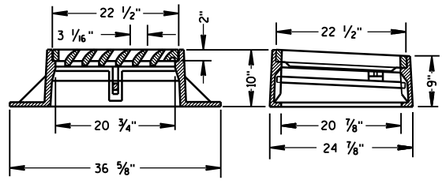

TYPE "V"

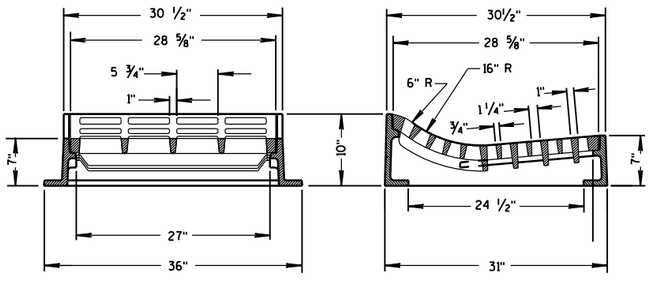

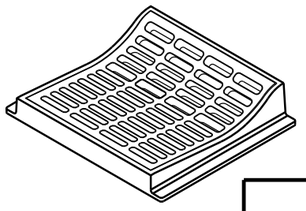

TYPE "T"

USE WITH TYPES R & T CONCRETE CURB & GUTTER, 36 INCH.

INLET COVERS
TYPE F, HM, HM-S, S, T, V, HM-GJ, & HM-GJ-S

STATE OF WISCONSIN
DEPARTMENT OF TRANSPORTATION

APPROVED
11/27/2013
DATE

/S/ Jerry H. Zogg
ROADWAY STANDARDS ENGINEER

FHWA

6

S.D.D. 8 A 5-19c

6

S.D.D. 8 A 5-19c

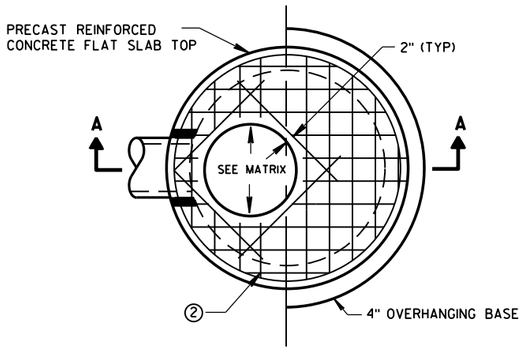

PLAN VIEW CIRCULAR OPENING

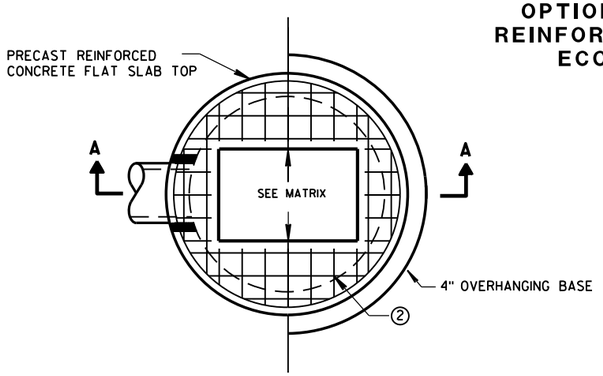

PLAN VIEW RECTANGULAR OPENING

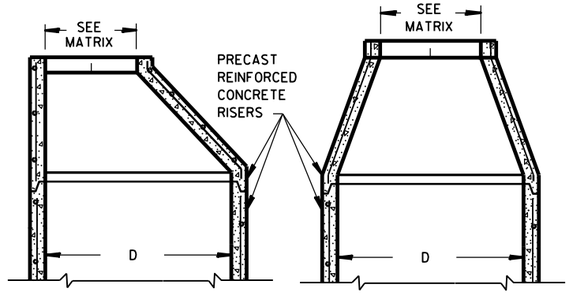

OPTIONAL PRECAST REINFORCED CONCRETE ECCENTRIC TOP

OPTIONAL PRECAST REINFORCED CONCRETE CONCENTRIC TOP

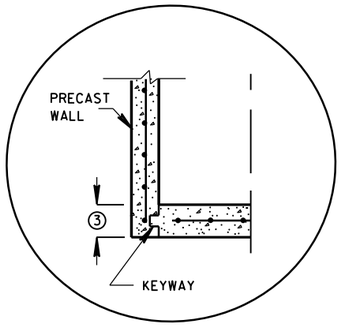

PRECAST REINFORCED CONCRETE WITH INTEGRAL BASE OPTION

SEPARATE PRECAST REINFORCED CONCRETE BASE OPTION

DETAIL "A"

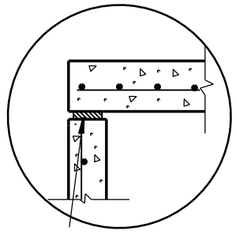

TOP WITH PLAIN END JOINT

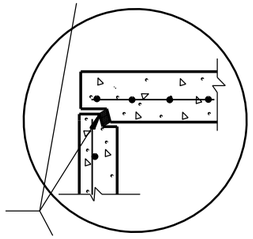

JOINTS TO BE SEALED WITH A BUTYL RUBBER SEAL PER SEALANT MANUFACTURERS RECOMMENDATIONS CONFORMING TO ASTM C 990 (TYP)

TOP WITH TONGUE AND GROOVE JOINT

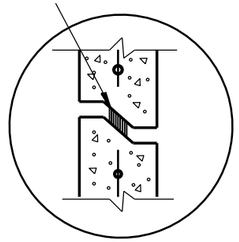

RISER WITH TONGUE AND GROOVE JOINT

DETAIL "B"

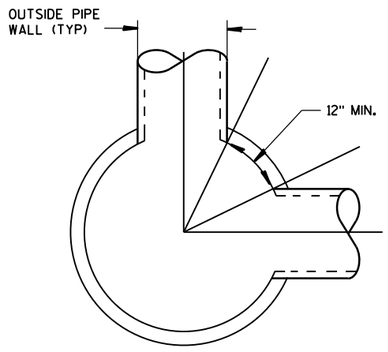

DETAIL "C"

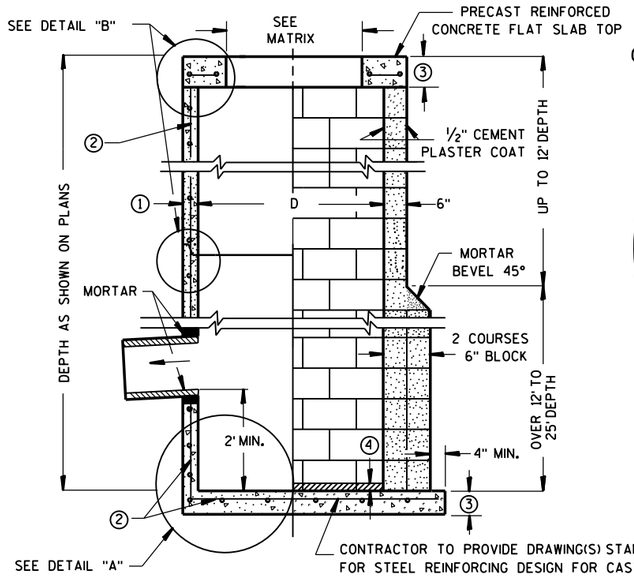

CONTRACTOR TO PROVIDE DRAWING(S) STAMPED BY A PROFESSIONAL ENGINEER FOR STEEL REINFORCING DESIGN FOR CAST-IN-PLACE STRUCTURES

SECTION A-A

PRECAST REINFORCED CONCRETE WITH MONOLITHIC BASE

CONCRETE BLOCK WITH CAST-IN-PLACE OR PRECAST REINFORCED CONCRETE BASE ②

GENERAL NOTES

DETAILS OF CONSTRUCTION, MATERIALS AND WORKMANSHIP NOT SHOWN ON THIS DRAWING SHALL CONFORM TO THE PERTINENT REQUIREMENTS OF THE STANDARD SPECIFICATIONS AND THE APPLICABLE SPECIAL PROVISIONS.

UNLESS OTHERWISE AUTHORIZED IN WRITING BY THE ENGINEER, THE CONTRACTOR SHALL NOT ORDER AND DELIVER PRECAST CATCH BASIN UNITS REQUIRED FOR THE PROJECT UNTIL A LIST OF SIZES IS FURNISHED BY THE ENGINEER.

DETAILED DRAWINGS FOR PROPOSED ALTERNATE DESIGNS FOR UNDERGROUND DRAINAGE STRUCTURES SHALL BE SUBMITTED TO THE ENGINEER FOR APPROVAL PROVIDING THAT SUCH ALTERNATE DESIGNS MAKE PROVISION FOR EQUIVALENT CAPACITY AND STRENGTH.

ALL DRAINAGE STRUCTURES ARE DESIGNATED ON THE PLANS AS "MANHOLES 3X3-L", "CATCH BASINS 4-B", "INLETS 2X3-H", ETC. THE FIRST NUMBERS DESIGNATE THE SIZE OF THE STRUCTURE, AND THE FOLLOWING LETTER DESIGNATES THE TYPE OF COVER TO BE USED TO COMPRISE THE COMPLETE UNIT.

BASES SHALL BE PLACED ON A BED OF MATERIAL AT LEAST 6 INCHES IN DEPTH, WHICH MEETS THE REQUIREMENTS OF FOUNDATION BACKFILL. THIS BEDDING SHALL BE COMPACTED AND PROVIDE UNIFORM SUPPORT FOR THE ENTIRE AREA OF THE BASE.

PRECAST REINFORCED CONCRETE CONE TOPS (ECCENTRIC OR CONCENTRIC) OR PRECAST REINFORCED CONCRETE FLAT SLAB TOPS MAY BE USED ON CONCRETE BLOCK STRUCTURES.

ECCENTRIC CONE TOPS MAY BE USED ON ALL STRUCTURES, AND CONCENTRIC CONE TOPS SHALL BE USED ONLY ON STRUCTURES 5 FEET OR LESS IN DEPTH, UNLESS OTHERWISE DIRECTED BY THE ENGINEER.

STEPS MEETING AASHTO M199 AND THE FOLLOWING REQUIREMENTS SHALL BE INSTALLED IN ALL STRUCTURES OVER 5 FEET IN DEPTH: 16 INCH C-C MAXIMUM SPACING; PROJECT A MINIMUM CLEAR DISTANCE OF 4 INCHES FROM THE WALL AT THE POINT OF EMBEDMENT; MINIMUM LENGTH OF 10 INCHES; MINIMUM WALL EMBEDMENT OF 3 INCHES. FERROUS METAL STEPS NOT PAINTED OR TREATED TO RESIST CORROSION SHALL HAVE A MINIMUM CROSS SECTIONAL DIMENSION OF 1 INCH.

STEPS OF APPROVED POLYPROPYLENE PLASTIC COATED REINFORCEMENT BAR ARE ACCEPTABLE. REINFORCING BAR MUST BE A MINIMUM OF ½ INCH AND MEET THE REQUIREMENTS OF ASTM A615.

CERTIFICATION SHALL BE PROVIDED THAT INSTALLED STEPS WHEN TESTED IN ACCORDANCE WITH SECTION 10 OF AASHTO T280 CAN WITHSTAND A VERTICAL LOAD OF 800 LBS. AND A HORIZONTAL LOAD OF 400 LBS.

ALL BAR STEEL REINFORCEMENT SHALL BE EMBEDDED 2 INCHES CLEAR UNLESS OTHERWISE SHOWN OR NOTED.

ALL PRECAST INLET UNITS SHALL CONFORM TO THE PERTINENT REQUIREMENTS OF AASHTO DESIGNATION M199.

PRECAST REINFORCED RISERS SHALL HAVE A TONGUE AND GROOVE JOINT WITH TONGUE UP OR DOWN.

CONCRETE BLOCK WILL NOT BE PERMITED FOR STRUCTURES GREATER THAN 4 FEET IN DIAMETER.

4" OVERHANGING BASES ARE REQUIRED FOR ALL CONCRETE BLOCK INSTALLATIONS. 4" OVERHANG IS REQUIRED WHEN SEPARATE PRECAST BASE IS PROVIDED. OVERHANG IS NOT REQUIRED ON PRECAST STRUCTURES WITH AN INTEGRAL OR MONOLITHIC BASE.

FOR ADDITIONAL CONFIGURATIONS, MAINTAIN A MINIMUM OF 12 INCHES AS MEASURED FROM THE INSIDE OF THE STRUCTURE WALL BETWEEN THE OUTSIDE PIPE WALLS OF ADJACENT PIPES. SEE DETAIL "C".

① MINIMUM WALL THICKNESS SHALL BE 4 INCHES FOR 3-FT, 5 INCHES FOR 4-FT, 6 INCHES FOR 5-FT AND 7 INCHES FOR 6-FT DIAMETER PRECAST CATCH BASINS.

② FOR PRECAST CATCH BASINS PROVIDE REINFORCING STEEL IN ACCORDANCE TO AASHTO M199.

③ PRECAST FLAT SLAB TOPS AND BASES WITH A DIAMETER OF 48" AND LESS SHALL HAVE A MINIMUM THICKNESS OF 6". PRECAST FLAT SLAB TOPS AND BASES WITH A DIAMETER LARGER THAN 48" SHALL HAVE A MINIMUM THICKNESS OF 8".

④ 1" CONCRETE KEY POURED AFTER INSTALLATION. 2' SUMP MEASURED FROM TOP OF KEY.

CATCH BASIN COVER OPENING MATRIX

CATCH BASIN SIZE	INLET COVER TYPE	ALL A'S	ALL B'S	BW	C	F	ALL H'S	S	T	V	WM	Z
	OPENING SIZE (FT)											
3-FT	2X2	X	X					X		X		
	2 DIA.				X							X
4-FT-6-FT	2X2	X	X					X		X		
	2X2.5			X				X	X	X	X	
	2 DIA.				X							X
	2X3						X					
	2.5X3					X						

PIPE MATRIX

CATCH BASIN SIZE	MAXIMUM INSIDE PIPE DIAMETER FOR TWO PIPES	
	180° SEPARATION (IN)	90° SEPARATION (IN)
3-FT	15	12
4-FT	24	18
5-FT	36	24
6-FT	42	30

CATCH BASINS 3-FT, 4-FT, 5-FT AND 6-FT DIAMETER

STATE OF WISCONSIN
DEPARTMENT OF TRANSPORTATION

APPROVED
Sept., 2016
DATE
/S/ Rodney Taylor
ROADWAY STANDARDS UNIT SUPERVISOR
FHWA

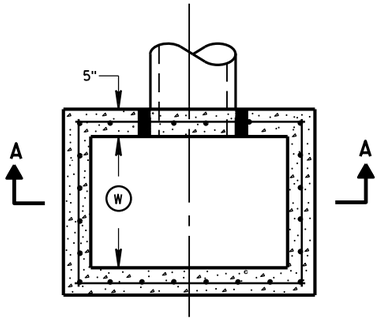

PLAN VIEW

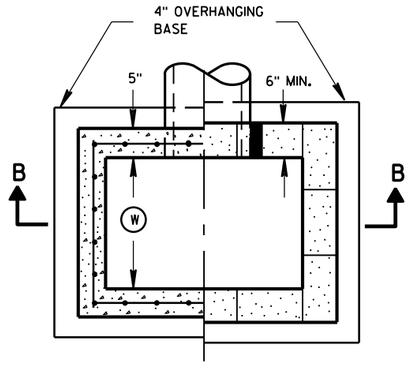

PLAN VIEW

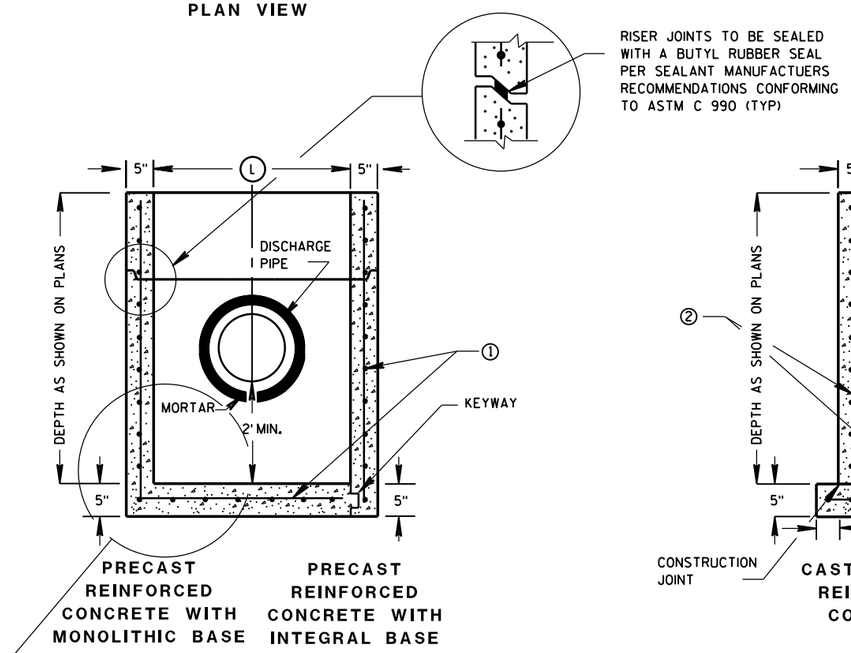

SECTION A-A

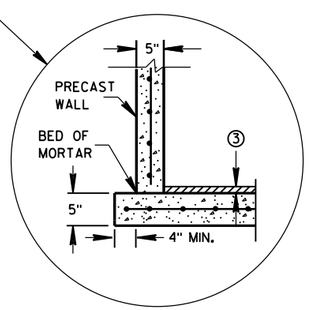

SEPARATE PRECAST REINFORCED CONCRETE BASE OPTION

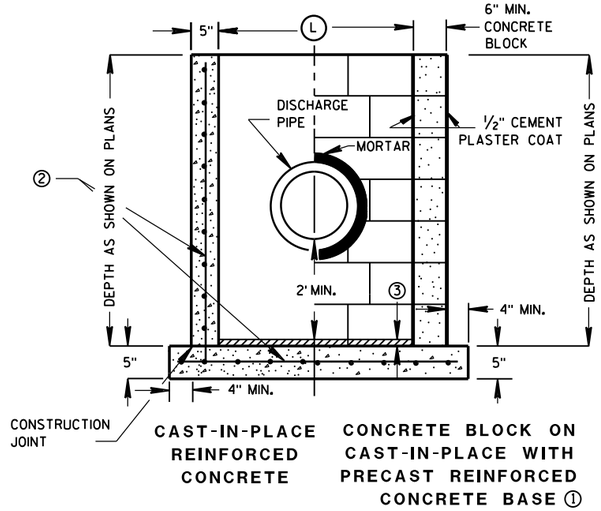

SECTION B-B

GENERAL NOTES

DETAILS OF CONSTRUCTION, MATERIALS AND WORKMANSHIP NOT SHOWN ON THIS DRAWING SHALL CONFORM TO THE PERTINENT REQUIREMENTS OF THE STANDARD SPECIFICATIONS AND THE APPLICABLE SPECIAL PROVISIONS.

UNLESS OTHERWISE AUTHORIZED IN WRITING BY THE ENGINEER, THE CONTRACTOR SHALL NOT ORDER AND DELIVER PRECAST CATCH BASIN UNITS REQUIRED FOR THE PROJECT UNTIL A LIST OF SIZES IS FURNISHED BY THE ENGINEER.

DETAILED DRAWINGS FOR PROPOSED ALTERNATE DESIGNS FOR UNDERGROUND DRAINAGE STRUCTURES SHALL BE SUBMITTED TO THE ENGINEER FOR APPROVAL PROVIDING THAT SUCH ALTERNATE DESIGNS MAKE PROVISION FOR EQUIVALENT CAPACITY AND STRENGTH.

ALL PRECAST CATCH BASIN UNITS SHALL CONFORM TO THE PERTINENT REQUIREMENTS OF ASTM C 913.

ALL DRAINAGE STRUCTURES ARE DESIGNATED ON THE PLANS AS "MANHOLES 3X3-L", "CATCH BASINS 4-B", "INLETS 2X3-H", ETC. THE FIRST NUMBERS DESIGNATES THE SIZE OF THE STRUCTURE, AND THE FOLLOWING LETTER DESIGNATES THE TYPE OF COVER TO BE USED TO COMPRISE THE COMPLETE UNIT.

BASES SHALL BE PLACED ON A BED OF MATERIAL AT LEAST 6 INCHES IN DEPTH, WHICH MEETS THE REQUIREMENTS OF FOUNDATION BACKFILL. THIS BEDDING SHALL BE COMPACTED AND PROVIDE UNIFORM SUPPORT FOR THE ENTIRE AREA OF THE BASE.

ALL BAR STEEL REINFORCEMENT SHALL BE EMBEDDED 2 INCHES CLEAR UNLESS OTHERWISE SHOWN OR NOTED.

PRECAST REINFORCED RISERS SHALL HAVE A TONGUE AND GROOVE JOINT WITH TONGUE UP OR DOWN.

4" OVERHANGING BASES ARE REQUIRED FOR CAST-IN-PLACE REINFORCED CONCRETE AND CONCRETE BLOCK INSTALLATIONS.
4" OVERHANG IS REQUIRED WHEN SEPARATE PRECAST BASE IS PROVIDED.
OVERHANG IS NOT REQUIRED ON PRECAST STRUCTURES WITH AN INTEGRAL OR MONOLITHIC BASE.

MAXIMUM INSIDE PIPE DIAMETER DETERMINED BY 3" CLEARANCE ON EACH SIDE OF THE OUTSIDE WALL OF THE PIPE. SEE DETAIL "A". ASSUMES PIPE ENTERS PERPENDICULAR TO THE STRUCTURE.

① FOR PRECAST CATCH BASINS PROVIDE REINFORCING STEEL IN ACCORDANCE TO ASTM C 913.

② CONTRACTOR TO PROVIDE DRAWING(S) STAMPED BY A PROFESSIONAL ENGINEER FOR STEEL REINFORCING DESIGN FOR CAST-IN-PLACE STRUCTURES.

③ 1" CONCRETE KEY POURED AFTER INSTALLATION. 2' SUMP MEASURED FROM TOP OF KEY.

CATCH BASIN COVER MATRIX

CATCH BASIN SIZE		INLET COVER TYPE	F	ALL H'S
	WIDTH (W) (FT)	LENGTH (L) (FT)		
2X3-FT	2	3		X
2.5X3-FT	2.5	3	X	

PIPE MATRIX

CATCH BASIN SIZE	MAXIMUM INSIDE PIPE DIAMETER FOR TWO PIPES	
	WIDTH (IN)	LENGTH (IN)
2X3-FT	12	24
2.5X3-FT	18	24

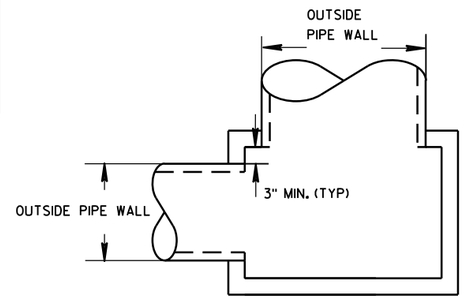

DETAIL "A"

CATCH BASINS 2X3-FT AND 2.5X3-FT

CATCH BASINS 2X3-FT AND 2.5X3-FT

STATE OF WISCONSIN
DEPARTMENT OF TRANSPORTATION

APPROVED
Sept., 2016 — DATE
/S/ Rodney Taylor — ROADWAY STANDARDS UNIT SUPERVISOR
FHWA

6

S.D.D. 8 A 9-2

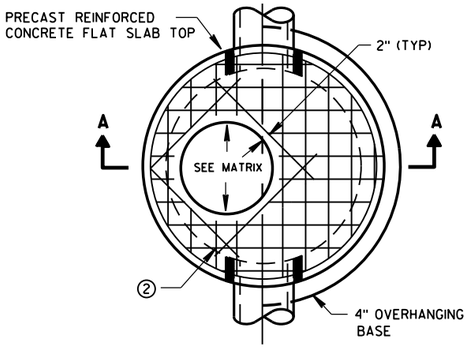

PLAN VIEW CIRCULAR OPENING

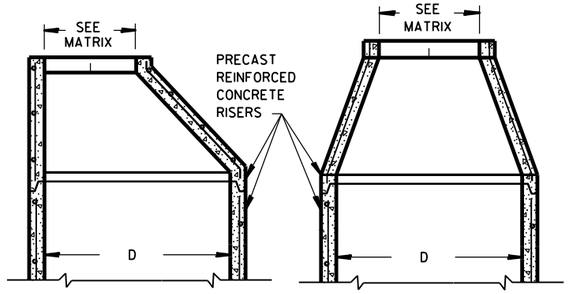

OPTIONAL PRECAST REINFORCED CONCRETE ECCENTRIC TOP

OPTIONAL PRECAST REINFORCED CONCRETE CONCENTRIC TOP

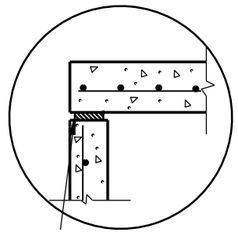

TOP WITH PLAIN END JOINT

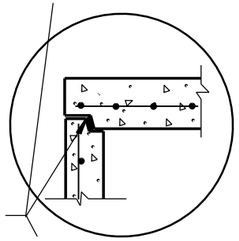

JOINTS TO BE SEALED WITH A BUTYL RUBBER SEAL PER SEALANT MANUFACTURERS RECOMMENDATIONS CONFORMING TO ASTM C990 (TYP)

TOP WITH TONGUE AND GROOVE JOINT

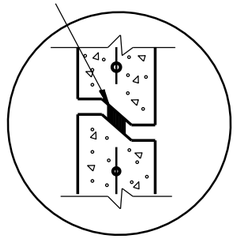

RISER WITH TONGUE AND GROOVE JOINT

DETAIL "B"

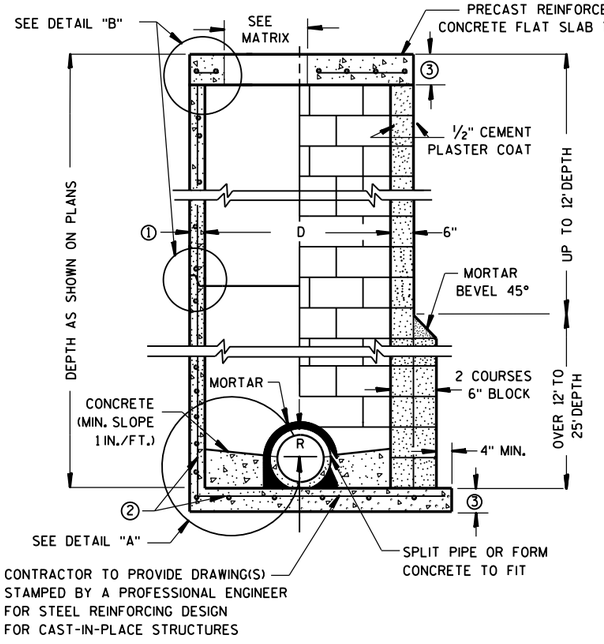

PRECAST REINFORCED CONCRETE WITH MONOLITHIC BASE

CONCRETE BLOCK WITH CAST-IN-PLACE OR PRECAST REINFORCED CONCRETE BASE ②

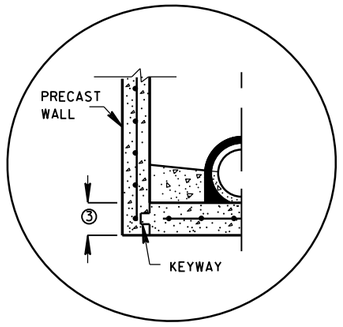

PRECAST REINFORCED CONCRETE WITH INTEGRAL BASE OPTION

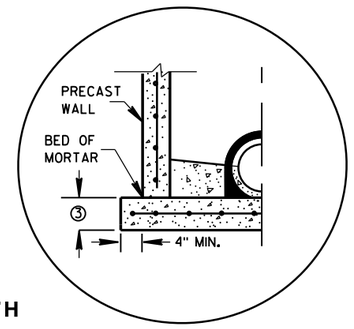

SEPARATE PRECAST REINFORCED CONCRETE BASE OPTION

DETAIL "A"

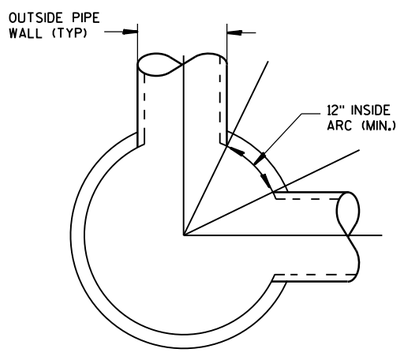

DETAIL "C"

GENERAL NOTES

DETAILS OF CONSTRUCTION, MATERIALS AND WORKMANSHIP NOT SHOWN ON THIS DRAWING SHALL CONFORM TO THE PERTINENT REQUIREMENTS OF THE STANDARD SPECIFICATIONS AND THE APPLICABLE SPECIAL PROVISIONS.

UNLESS OTHERWISE AUTHORIZED IN WRITING BY THE ENGINEER, THE CONTRACTOR SHALL NOT ORDER AND DELIVER PRECAST MANHOLE UNITS REQUIRED FOR THE PROJECT UNTIL A LIST OF SIZES IS FURNISHED BY THE ENGINEER.

DETAILED DRAWINGS FOR PROPOSED ALTERNATE DESIGNS FOR UNDERGROUND DRAINAGE STRUCTURES SHALL BE SUBMITTED TO THE ENGINEER FOR APPROVAL PROVIDING THAT SUCH ALTERNATE DESIGNS MAKE PROVISION FOR EQUIVALENT CAPACITY AND STRENGTH.

ALL DRAINAGE STRUCTURES ARE DESIGNATED ON THE PLANS AS "MANHOLES 3X3-L", "CATCH BASINS 4-B", "INLETS 2X3-H", ETC. THE FIRST NUMBERS DESIGNATE THE SIZE OF THE STRUCTURE, AND THE FOLLOWING LETTER DESIGNATES THE TYPE OF COVER TO BE USED TO COMPRISE THE COMPLETE UNIT.

BASES SHALL BE PLACED ON A BED OF MATERIAL AT LEAST 6 INCHES IN DEPTH, WHICH MEETS THE REQUIREMENTS OF FOUNDATION BACKFILL. THIS BEDDING SHALL BE COMPACTED AND PROVIDE UNIFORM SUPPORT FOR THE ENTIRE AREA OF THE BASE.

PRECAST REINFORCED CONE TOPS (ECCENTRIC OR CONCENTRIC) OR PRECAST REINFORCED FLAT SLAB TOPS MAY BE USED ON CONCRETE BLOCK STRUCTURES.

ECCENTRIC CONE TOPS MAY BE USED ON ALL STRUCTURES, AND CONCENTRIC CONE TOPS SHALL BE USED ONLY ON STRUCTURES 5 FEET OR LESS IN DEPTH, UNLESS OTHERWISE DIRECTED BY THE ENGINEER.

STEPS MEETING AASHTO M199 AND THE FOLLOWING REQUIREMENTS SHALL BE INSTALLED IN ALL STRUCTURES OVER 5 FEET IN DEPTH: 16 INCH C-C MAXIMUM SPACING; PROJECT A MINIMUM CLEAR DISTANCE OF 4 INCHES FROM THE WALL AT THE POINT OF EMBEDMENT; MINIMUM LENGTH OF 10 INCHES; MINIMUM WALL EMBEDMENT OF 3 INCHES. FERROUS METAL STEPS NOT PAINTED OR TREATED TO RESIST CORROSION SHALL HAVE A MINIMUM CROSS SECTIONAL DIMENSION OF 1 INCH.

STEPS OF APPROVED POLYPROPYLENE PLASTIC COATED REINFORCEMENT BAR ARE ACCEPTABLE. REINFORCING BAR MUST BE A MINIMUM OF ½" AND MEET THE REQUIREMENTS OF ASTM A615.

CERTIFICATION SHALL BE PROVIDED THAT INSTALLED STEPS WHEN TESTED IN ACCORDANCE WITH SECTION 10 OF AASHTO T280 CAN WITHSTAND A VERTICAL LOAD OF 800 LBS. AND A HORIZONTAL LOAD OF 400 LBS.

ALL BAR STEEL REINFORCEMENT SHALL BE EMBEDDED 2 INCHES CLEAR UNLESS OTHERWISE SHOWN OR NOTED.

CONCRETE BLOCK WILL NOT BE PERMITED FOR STRUCTURES GREATER THAN 4 FEET IN DIAMETER.

PRECAST REINFORCED RISERS SHALL HAVE A TONGUE AND GROOVE JOINT WITH TONGUE UP OR DOWN.

ALL PRECAST MANHOLE UNITS SHALL CONFORM TO THE PERTINENT REQUIREMENTS OF AASHTO DESIGNATION M 199.

4" OVERHANGING BASES ARE REQUIRED FOR ALL CONCRETE BLOCK INSTALLATIONS. 4" OVERHANG IS REQUIRED WHEN SEPARATE PRECAST BASE IS PROVIDED. OVERHANG IS NOT REQUIRED ON PRECAST STRUCTURES WITH AN INTEGRAL OR MONOLITHIC BASE.

FOR ADDITIONAL CONFIGURATIONS, MAINTAIN A MINIMUM OF 12 INCHES AS MEASURED FROM THE INSIDE OF THE STRUCTURE WALL BETWEEN THE OUTSIDE PIPE WALLS OF ADJACENT PIPES. SEE DETAIL "C".

① MINIMUM WALL THICKNESS SHALL BE 4 INCHES FOR 3-FT, 5 INCHES FOR 4-FT, 6 INCHES FOR 5-FT, 7 INCHES FOR 6-FT, 8 INCHES FOR 7-FT AND 9 INCHES FOR 8-FT DIAMETER PRECAST MANHOLES.

② FOR PRECAST MANHOLES PROVIDE REINFORCING STEEL IN ACCORDANCE TO AASHTO M199.

③ PRECAST FLAT SLAB TOPS AND BASES WITH A DIAMETER OF 48" AND LESS SHALL HAVE A MINIMUM THICKNESS OF 6". PRECAST FLAT SLAB TOPS AND BASES WITH A DIAMETER LARGER THAN 48" SHALL HAVE A MINIMUM THICKNESS OF 8".

MANHOLE COVER OPENING MATRIX

MANHOLE COVER TYPE	C	ALL J'S	K	L	M
OPENING SIZE (FT)					
2 DIA.	X	X		X	
3 DIA.			X		X

PIPE MATRIX

MANHOLE SIZE	MAXIMUM INSIDE PIPE DIAMETER FOR TWO PIPES	
	180° SEPARATION (IN)	90° SEPARATION (IN)
3-FT	15	12
4-FT	24	18
5-FT	36	24
6-FT	42	36
7-FT	48	36
8-FT	60	42

MANHOLES 3-FT, 4-FT, 5-FT, 6-FT, 7-FT AND 8-FT DIAMETER

STATE OF WISCONSIN
DEPARTMENT OF TRANSPORTATION

APPROVED

Sept., 2016
DATE

/S/ Rodney Taylor
ROADWAY STANDARDS DEVELOPMENT
UNIT SUPERV

FHWA

6
S.D.D. 8 B 9-2

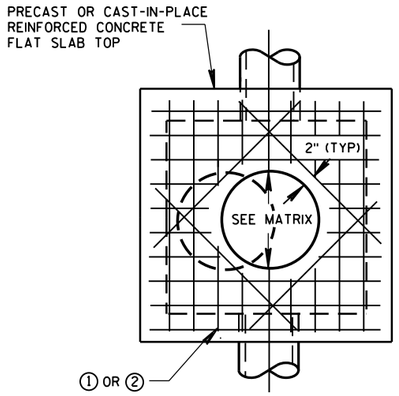

PLAN VIEW
CIRCULAR OPENING

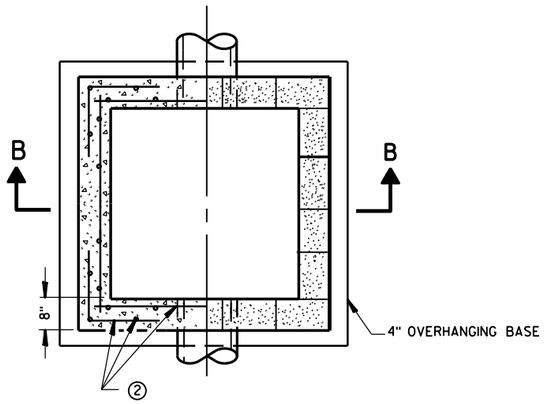

SECTION A-A
PLAN VIEW

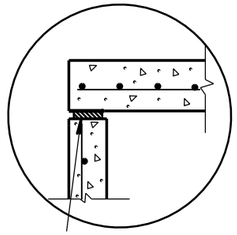

TOP WITH PLAIN END JOINT

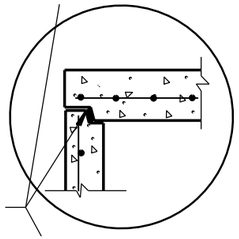

TOP WITH TONGUE AND GROOVE JOINT

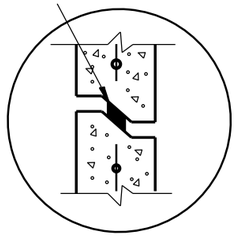

RISER WITH TONGUE AND GROOVE JOINT

DETAIL "B"

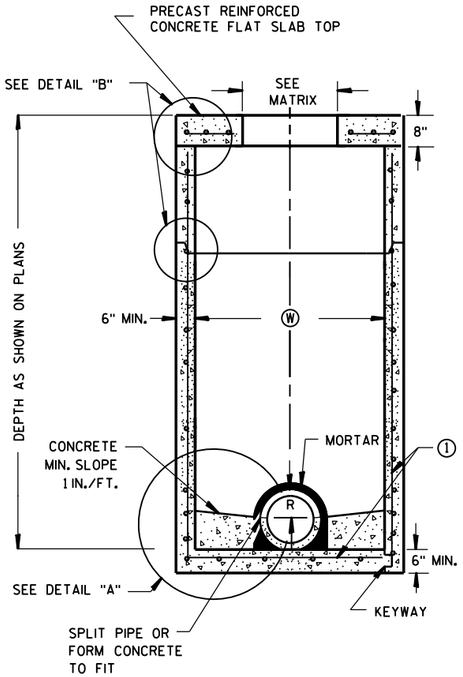

PRECAST REINFORCED CONCRETE WITH MONOLITHIC BASE

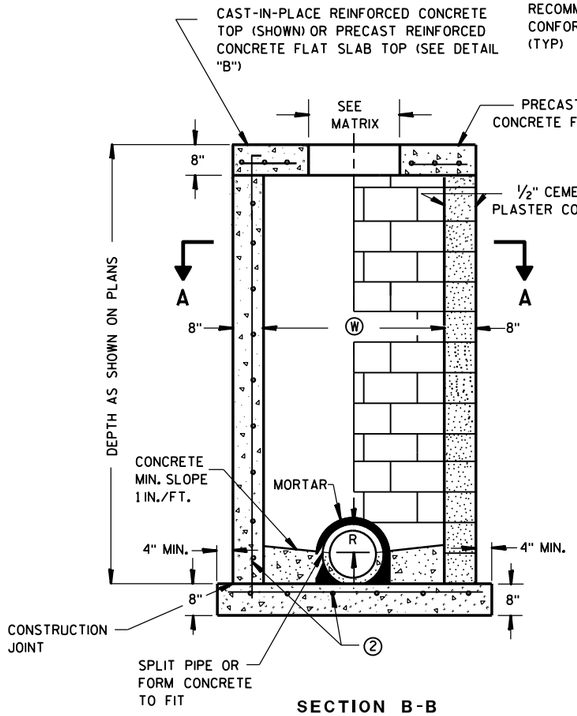

SECTION B-B

PRECAST REINFORCED CONCRETE WITH INTEGRAL BASE

CAST-IN-PLACE REINFORCED CONCRETE

CONCRETE BLOCK WITH CAST-IN-PLACE OR PRECAST REINFORCED CONCRETE BASE

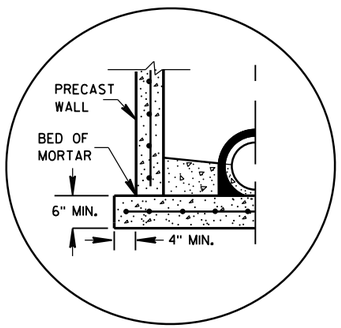

SEPARATE PRECAST REINFORCED CONCRETE BASE OPTION

DETAIL "A"

GENERAL NOTES

DETAILS OF CONSTRUCTION, MATERIALS AND WORKMANSHIP NOT SHOWN ON THIS DRAWING SHALL CONFORM TO THE PERTINENT REQUIREMENTS OF THE STANDARD SPECIFICATIONS AND THE APPLICABLE SPECIAL PROVISIONS.

UNLESS OTHERWISE AUTHORIZED IN WRITING BY THE ENGINEER, THE CONTRACTOR SHALL NOT ORDER AND DELIVER PRECAST MANHOLE UNITS REQUIRED FOR THE PROJECT UNTIL A LIST OF SIZES IS FURNISHED BY THE ENGINEER.

DETAILED DRAWINGS FOR PROPOSED ALTERNATE DESIGNS FOR UNDERGROUND DRAINAGE STRUCTURES SHALL BE SUBMITTED TO THE ENGINEER FOR APPROVAL PROVIDING THAT SUCH ALTERNATE DESIGNS MAKE PROVISION FOR EQUIVALENT CAPACITY AND STRENGTH.

ALL DRAINAGE STRUCTURES ARE DESIGNATED ON THE PLANS AS "MANHOLES 3X3-L", "CATCH BASINS 4-B", "INLETS 2X3-H", ETC. THE FIRST NUMBERS DESIGNATE THE SIZE OF THE STRUCTURE, AND THE FOLLOWING LETTER DESIGNATES THE TYPE OF COVER TO BE USED TO COMPRISE THE COMPLETE UNIT.

BASES SHALL BE PLACED ON A BED OF MATERIAL AT LEAST 6 INCHES IN DEPTH, WHICH MEETS THE REQUIREMENTS OF FOUNDATION BACKFILL. THIS BEDDING SHALL BE COMPACTED AND PROVIDE UNIFORM SUPPORT FOR THE ENTIRE AREA OF THE BASE.

PRECAST REINFORCED FLAT SLAB TOPS MAY BE USED ON CONCRETE BLOCK STRUCTURES.

STEPS MEETING AASHTO M199 AND THE FOLLOWING REQUIREMENTS SHALL BE INSTALLED IN ALL STRUCTURES OVER 5 FEET IN DEPTH: 16 INCH C-C MAXIMUM SPACING; PROJECT A MINIMUM CLEAR DISTANCE OF 4 INCHES FROM THE WALL AT THE POINT OF EMBEDMENT; MINIMUM LENGTH OF 10 INCHES; MINIMUM WALL EMBEDMENT OF 3 INCHES. FERROUS METAL STEPS NOT PAINTED OR TREATED TO RESIST CORROSION SHALL HAVE A MINIMUM CROSS SECTIONAL DIMENSION OF 1 INCH.

STEPS OF APPROVED POLYPROPYLENE PLASTIC COATED REINFORCEMENT BAR ARE ACCEPTABLE. REINFORCING BAR MUST BE A MINIMUM OF ½ INCH AND MEET THE REQUIREMENTS OF ASTM A615.

CERTIFICATION SHALL BE PROVIDED THAT INSTALLED STEPS WHEN TESTED IN ACCORDANCE WITH SECTION 10 OF AASHTO T280 CAN WITHSTAND A VERTICAL LOAD OF 800 LBS. AND A HORIZONTAL LOAD OF 400 LBS.

ALL BAR STEEL REINFORCEMENT SHALL BE EMBEDDED 2 INCHES CLEAR UNLESS OTHERWISE SHOWN OR NOTED.

CONCRETE BLOCK WILL NOT BE PERMITED FOR STRUCTURES GREATER THAN 4 FEET IN WIDTH.

PRECAST REINFORCED RISERS SHALL HAVE A TONGUE AND GROOVE JOINT WITH TONGUE UP OR DOWN.

ALL PRECAST MANHOLE UNITS SHALL CONFORM TO THE PERTINENT REQUIREMENTS OF ASTM C 913.

4" OVERHANGING BASES ARE REQUIRED FOR ALL CONCRETE BLOCK INSTALLATIONS. 4" OVERHANG IS REQUIRED WHEN SEPARATE PRECAST BASE IS PROVIDED. OVERHANG IS NOT REQUIRED ON PRECAST STRUCTURES WITH AN INTEGRAL OR MONOLITHIC BASE.

MAXIMUM PIPE DIAMETER DETERMINED BY 3 INCH CLEARANCE ON EACH SIDE OF THE OUTSIDE WALL OF THE PIPE. SEE DETAIL "C". ASSUMES PIPE ENTERS PERPENDICULAR TO THE STRUCTURE.

① FOR PRECAST MANHOLES PROVIDE REINFORCING STEEL IN ACCORDANCE TO ASTM C 913.

② CONTRACTOR TO PROVIDE DRAWING(S) STAMPED BY A PROFESSIONAL ENGINEER FOR STEEL REINFORCING DESIGN FOR CAST-IN-PLACE STRUCTURES.

MANHOLE COVER OPENING MATRIX

MANHOLE COVER TYPE	C	ALL J'S	K	L	M
OPENING SIZE (FT)					
2 DIA.	X	X		X	
3 DIA.			X		X

PIPE MATRIX

MANHOLE SIZE	MAXIMUM INSIDE PIPE DIAMETER	
	WIDTH (W) (IN)	LENGTH (L) (IN)
3X3-FT	24	24
4X4-FT	30	30
5X5-FT	42	42
6X6-FT	54	54

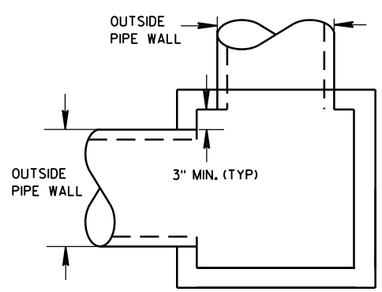

DETAIL "C"

SQUARE MANHOLES W/ FLAT TOP

MANHOLES 3X3-FT, 4X4-FT, 5X5-FT AND 6X6-FT

MANHOLES 3X3-FT, 4X4-FT 5X5-FT AND 6X6-FT

STATE OF WISCONSIN
DEPARTMENT OF TRANSPORTATION

APPROVED
Sept., 2016
DATE
FHWA

/S/ Rodney Taylor
ROADWAY STANDARDS DEVELOPMENT
UNIT SUPERV

6

S.D.D. 8 B 10-2

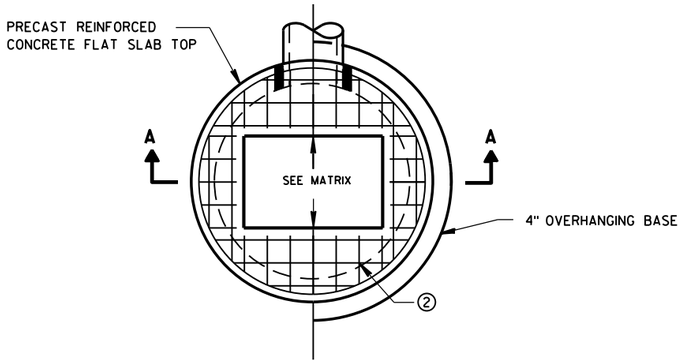

PLAN VIEW RECTANGULAR OPENING

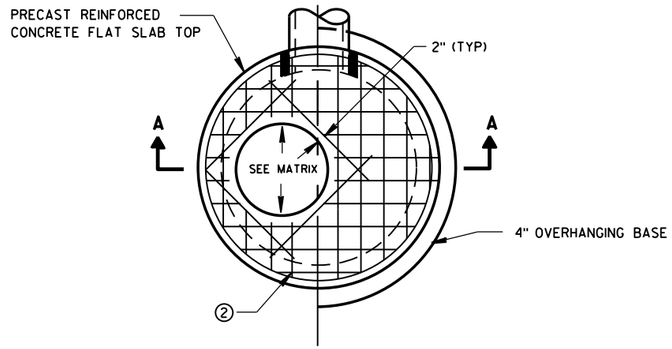

PLAN VIEW CIRCULAR OPENING

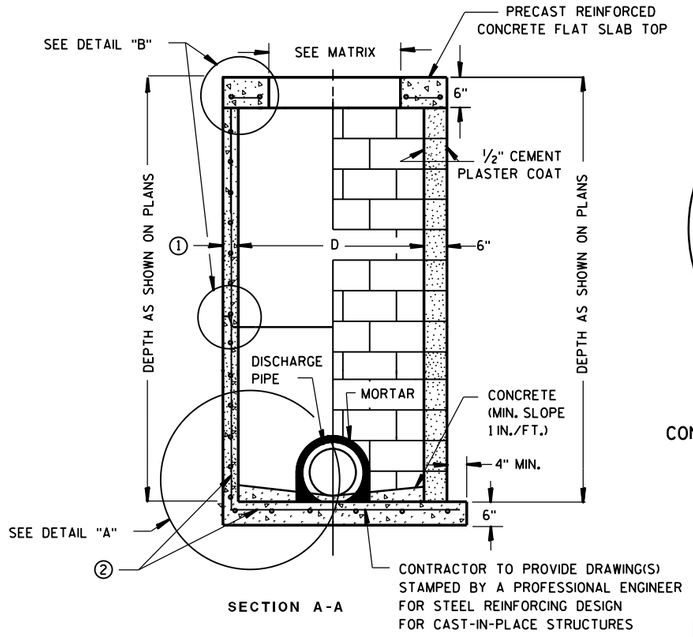

SECTION A-A

PRECAST REINFORCED CONCRETE WITH MONOLITHIC BASE

CONCRETE BLOCK WITH CAST-IN-PLACE OR PRECAST REINFORCED CONCRETE BASE ②

CIRCULAR INLETS W/ FLAT TOP

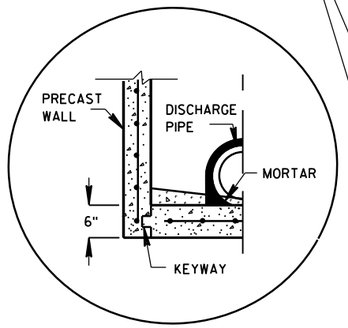

PRECAST REINFORCED CONCRETE WITH INTEGRAL BASE OPTION

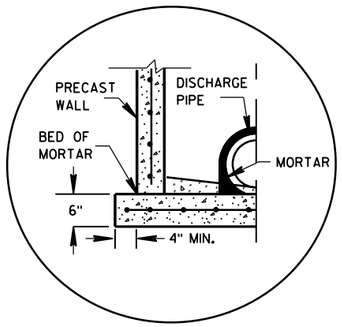

SEPARATE PRECAST REINFORCED CONCRETE BASE OPTION

DETAIL "A"

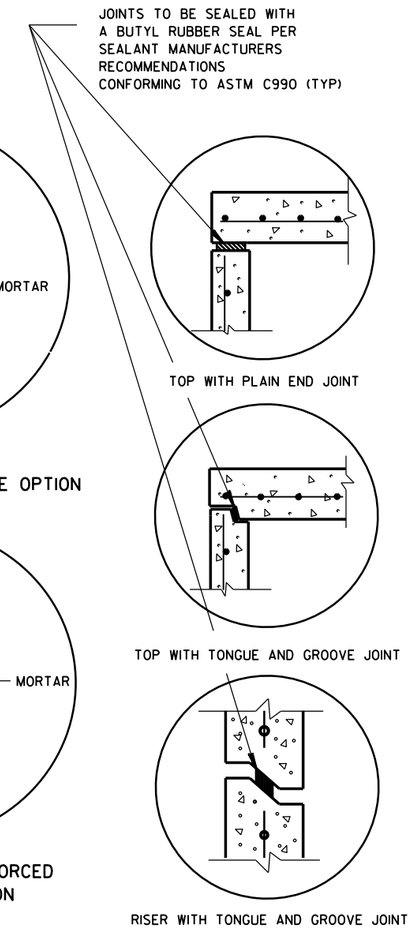

DETAIL "B"

GENERAL NOTES

DETAILS OF CONSTRUCTION, MATERIALS AND WORKMANSHIP NOT SHOWN ON THIS DRAWING SHALL CONFORM TO THE PERTINENT REQUIREMENTS OF THE STANDARD SPECIFICATIONS AND THE APPLICABLE SPECIAL PROVISIONS.

UNLESS OTHERWISE AUTHORIZED IN WRITING BY THE ENGINEER, THE CONTRACTOR SHALL NOT ORDER AND DELIVER PRECAST INLET UNITS REQUIRED FOR THE PROJECT UNTIL A LIST OF SIZES IS FURNISHED BY THE ENGINEER.

DETAILED DRAWINGS FOR PROPOSED ALTERNATE DESIGNS FOR UNDERGROUND DRAINAGE STRUCTURES SHALL BE SUBMITTED TO THE ENGINEER FOR APPROVAL PROVIDING THAT SUCH ALTERNATE DESIGNS MAKE PROVISION FOR EQUIVALENT CAPACITY AND STRENGTH.

ALL DRAINAGE STRUCTURES ARE DESIGNATED ON THE PLANS AS "MANHOLES 3X3-L", "CATCH BASINS 4-B", "INLETS 2X3-H", ETC. THE FIRST NUMBERS DESIGNATE THE SIZE OF THE STRUCTURE, AND THE FOLLOWING LETTER DESIGNATES THE TYPE OF COVER TO BE USED TO COMPRISE THE COMPLETE UNIT.

BASES SHALL BE PLACED ON A BED OF MATERIAL AT LEAST 6 INCHES IN DEPTH, WHICH MEETS THE REQUIREMENTS OF FOUNDATION BACKFILL. THIS BEDDING SHALL BE COMPACTED AND PROVIDE UNIFORM SUPPORT FOR THE ENTIRE AREA OF THE BASE.

ALL BAR STEEL REINFORCEMENT SHALL BE EMBEDDED 2 INCHES CLEAR UNLESS OTHERWISE SHOWN OR NOTED.

ALL PRECAST INLET UNITS SHALL CONFORM TO THE PERTINENT REQUIREMENTS OF AASHTO DESIGNATION M199.

PRECAST REINFORCED RISERS SHALL HAVE A TONGUE AND GROOVE JOINT WITH TONGUE UP OR DOWN.

4" OVERHANGING BASES ARE REQUIRED FOR ALL CONCRETE BLOCK INSTALLATIONS. 4" OVERHANG IS REQUIRED WHEN SEPARATE PRECAST BASE IS PROVIDED. OVERHANG IS NOT REQUIRED ON PRECAST STRUCTURES WITH AN INTEGRAL OR MONOLITHIC BASE.

FOR ADDITIONAL CONFIGURATIONS, MAINTAIN A MINIMUM OF 12 INCHES AS MEASURED FROM THE INSIDE OF THE STRUCTURE WALL BETWEEN THE OUTSIDE PIPE WALLS OF ADJACENT PIPES. SEE DETAIL "C".

① MINIMUM WALL THICKNESS SHALL BE 4-IN FOR 3-FT DIAMETER AND 5-IN FOR 4-FT DIAMETER PRECAST INLETS.

② FOR PRECAST CATCH BASINS PROVIDE REINFORCING STEEL IN ACCORDANCE TO AASHTO M199.

INLET COVER OPENING MATRIX

	INLET COVER TYPE	ALL A'S	ALL B'S	BW	C	F	ALL H'S	S	T	V	WM	Z
INLET SIZE	OPENING SIZE (FT)											
3-FT	2 DIA.				X							X
	2X2	X	X					X		X		
4-FT	2 DIA.				X							X
	2X2	X	X					X		X		
	2X2.5			X				X	X	X	X	
	2X3						X					
	2.5X3					X						

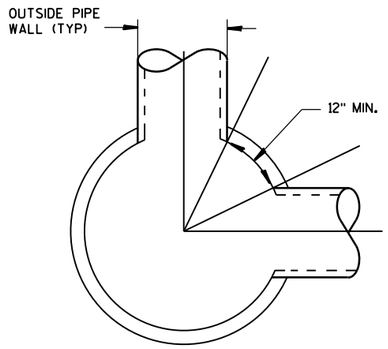

DETAIL "C"

PIPE MATRIX

INLET SIZE	MAXIMUM INSIDE PIPE DIAMETER FOR TWO PIPES	
	180° SEPARATION (IN)	90° SEPARATION (IN)
3-FT	15	12
4-FT	24	18

INLETS 3-FT AND 4-FT DIAMETER

STATE OF WISCONSIN
DEPARTMENT OF TRANSPORTATION

APPROVED
Sept., 2016 — /S/ Rodney Taylor
DATE — ROADWAY STANDARDS | UNIT SUPERVI ENT
FHWA

6

S.D.D. 8 C 6-2

6

S.D.D. 8 C 6-2

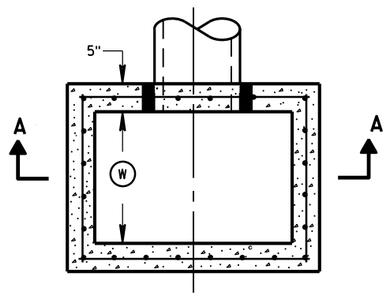

PLAN VIEW

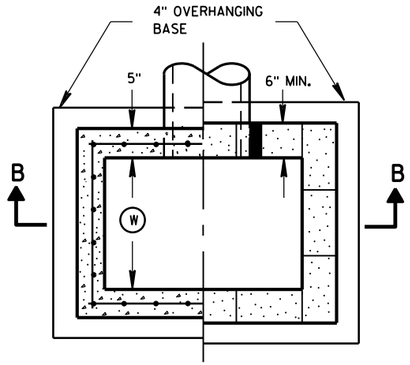

PLAN VIEW

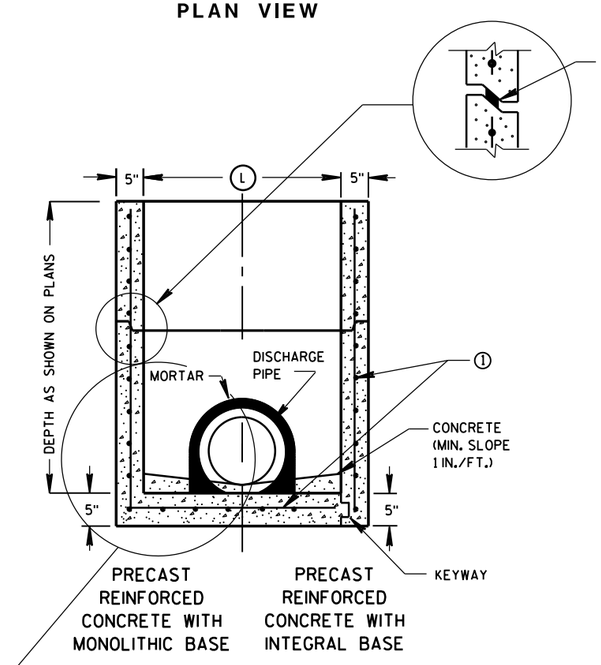

SECTION A-A

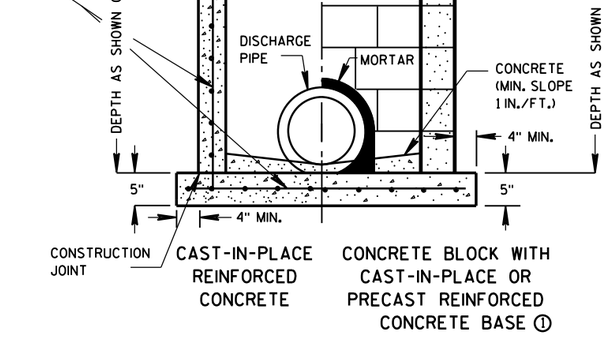

SECTION B-B

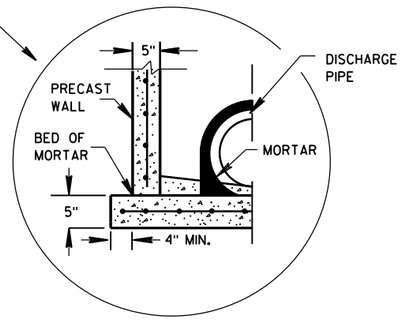

SEPARATE PRECAST REINFORCED CONCRETE BASE OPTION

GENERAL NOTES

DETAILS OF CONSTRUCTION, MATERIALS AND WORKMANSHIP NOT SHOWN ON THIS DRAWING SHALL CONFORM TO THE PERTINENT REQUIREMENTS OF THE STANDARD SPECIFICATIONS AND THE APPLICABLE SPECIAL PROVISIONS.

UNLESS OTHERWISE AUTHORIZED IN WRITING BY THE ENGINEER, THE CONTRACTOR SHALL NOT ORDER AND DELIVER PRECAST INLET UNITS REQUIRED FOR THE PROJECT UNTIL A LIST OF SIZES IS FURNISHED BY THE ENGINEER.

DETAILED DRAWINGS FOR PROPOSED ALTERNATE DESIGNS FOR UNDERGROUND DRAINAGE STRUCTURES SHALL BE SUBMITTED TO THE ENGINEER FOR APPROVAL PROVIDING THAT SUCH ALTERNATE DESIGNS MAKE PROVISION FOR EQUIVALENT CAPACITY AND STRENGTH.

ALL PRECAST INLET UNITS SHALL CONFORM TO THE PERTINENT REQUIREMENTS OF ASTM C 913.

ALL DRAINAGE STRUCTURES ARE DESIGNATED ON THE PLANS AS "MANHOLES 3X3-L", "CATCH BASINS 4-B", "INLETS 2X3-H", ETC. THE FIRST NUMBERS DESIGNATES THE SIZE OF THE STRUCTURE, AND THE FOLLOWING LETTER DESIGNATES THE TYPE OF COVER TO BE USED TO COMPRISE THE COMPLETE UNIT.

BASES SHALL BE PLACED ON A BED OF MATERIAL AT LEAST 6 INCHES IN DEPTH, WHICH MEETS THE REQUIREMENTS OF FOUNDATION BACKFILL. THIS BEDDING SHALL BE COMPACTED AND PROVIDE UNIFORM SUPPORT FOR THE ENTIRE AREA OF THE BASE.

ALL BAR STEEL REINFORCEMENT SHALL BE EMBEDDED 2 INCHES CLEAR UNLESS OTHERWISE SHOWN OR NOTED.

PRECAST REINFORCED RISERS SHALL HAVE A TONGUE AND GROOVE JOINT WITH TONGUE UP OR DOWN.

4" OVERHANGING BASES ARE REQUIRED FOR CAST-IN-PLACE REINFORCED CONCRETE AND CONCRETE BLOCK INSTALLATIONS.
4" OVERHANG IS REQUIRED WHEN SEPARATE PRECAST BASE IS PROVIDED.
OVERHANG IS NOT REQUIRED ON PRECAST STRUCTURES WITH AN INTEGRAL OR MONOLITHIC BASE.

MAXIMUM INSIDE PIPE DIAMETER DETERMINED BY 3 INCH CLEARANCE ON EACH SIDE OF THE OUTSIDE WALL OF THE PIPE. SEE DETAIL "A". ASSUMES PIPE ENTERS PERPENDICULAR TO THE STRUCTURE.

① FOR PRECAST INLETS PROVIDE REINFORCING STEEL IN ACCORDANCE TO ASTM C 913.

② CONTRACTOR TO PROVIDE DRAWING(S) STAMPED BY A PROFESSIONAL ENGINEER FOR STEEL REINFORCING DESIGN FOR CAST-IN-PLACE STRUCTURES.

INLET COVER MATRIX

INLET SIZE		INLET COVER TYPE	ALL A'S	ALL B'S	BW	F	ALL H'S	S	T	V	WM
	WIDTH (W) (FT)	LENGTH (L) (FT)									
2X2-FT	2	2	X	X				X		X	
2X2.5-FT	2	2.5			X			X	X	X	X
2X3-FT	2	3					X				
2.5X3-FT	2.5	3				X					

PIPE MATRIX

INLET SIZE	MAXIMUM INSIDE PIPE DIAMETER	
	WIDTH (IN)	LENGTH (IN)
2X2-FT	12	12
2X2.5-FT	12	18
2X3-FT	12	24
2.5X3-FT	18	24

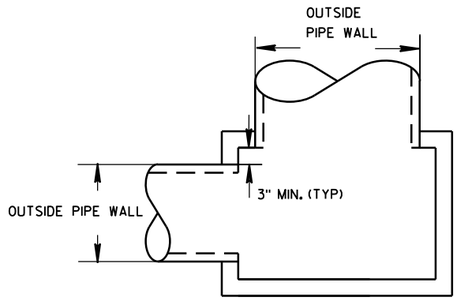

DETAIL "A"

INLETS 2X2-FT, 2X2.5-FT, 2X3-FT AND 2.5X3-FT

STATE OF WISCONSIN
DEPARTMENT OF TRANSPORTATION

APPROVED
Sept., 2016
DATE
/S/ Rodney Taylor
ROADWAY STANDARDS D IT
UNIT SUPERVIS
FHWA

INLETS 2X2-FT, 2X2.5-FT, 2X3-FT AND 2.5X3-FT

6

S.D.D. 8 C 7-2

6

S.D.D. 8 C 7-2

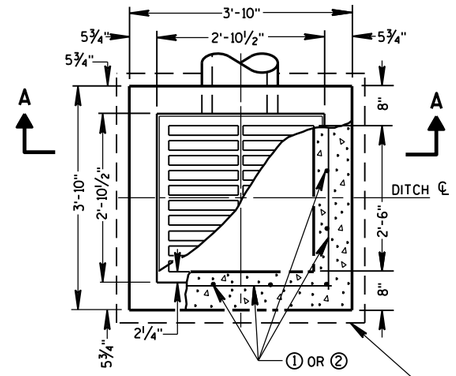

PLAN VIEW

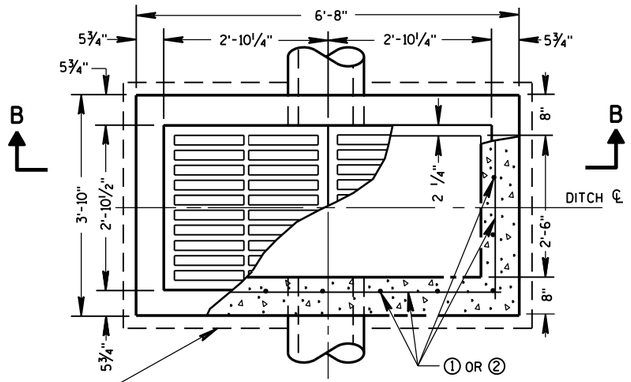

PLAN VIEW

4" OVERHANGING BASE ON REINFORCED CAST-IN-PLACE CONCRETE INLETS

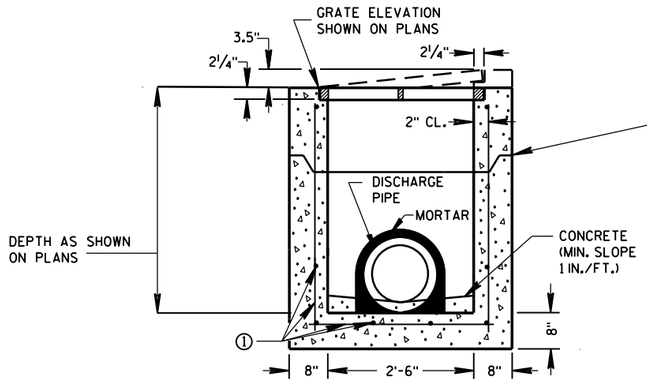

PRECAST REINFORCED CONCRETE SECTION A-A

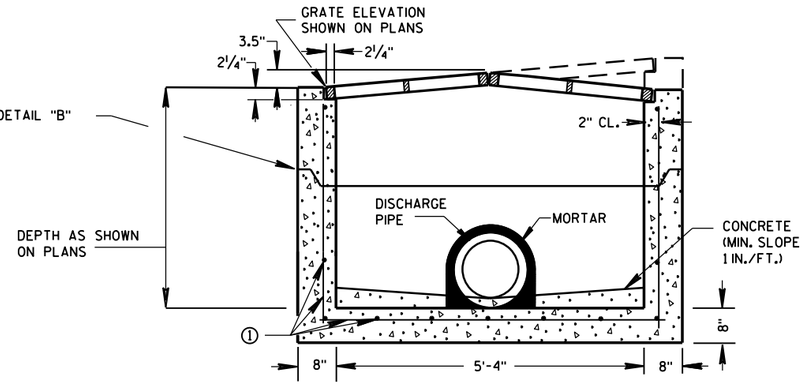

PRECAST REINFORCED CONCRETE SECTION B-B

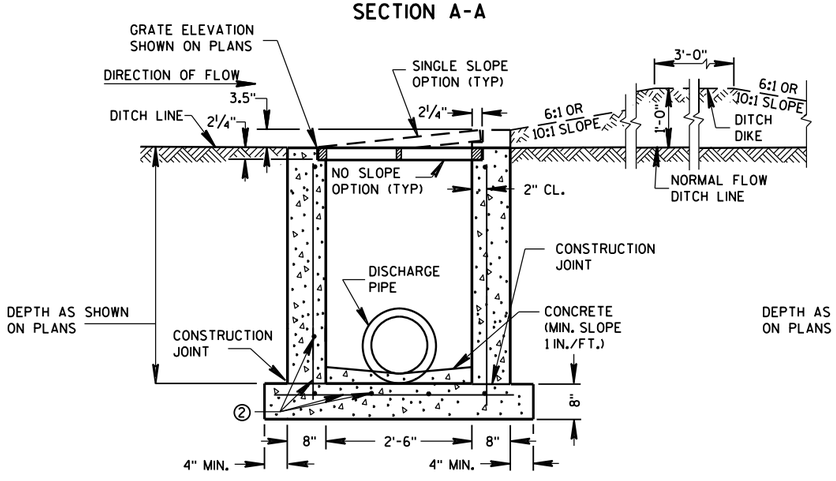

REINFORCED CAST-IN-PLACE CONCRETE SECTION A-A

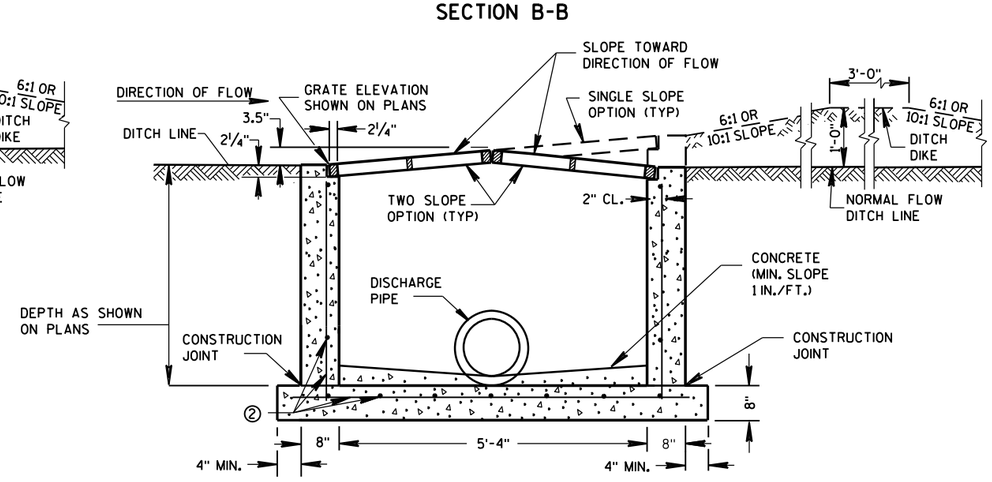

REINFORCED CAST-IN-PLACE CONCRETE SECTION B-B

INLETS MEDIAN 1 GRATE

INLETS MEDIAN 2 GRATE

GENERAL NOTES

DETAILS OF CONSTRUCTION, MATERIALS AND WORKMANSHIP NOT SHOWN ON THIS DRAWING SHALL CONFORM TO THE PERTINENT REQUIREMENTS OF THE STANDARD SPECIFICATIONS AND THE APPLICABLE SPECIAL PROVISIONS.

UNLESS OTHERWISE AUTHORIZED IN WRITING BY THE ENGINEER, THE CONTRACTOR SHALL NOT ORDER AND DELIVER PRECAST INLET UNITS REQUIRED FOR THE PROJECT UNTIL A LIST OF SIZES IS FURNISHED BY THE ENGINEER.

DETAILED DRAWINGS FOR PROPOSED ALTERNATE DESIGNS FOR INLETS WHICH MAY INCLUDE PRECAST REINFORCED CONCRETE INLETS, SHALL BE SUBMITTED TO THE ENGINEER FOR APPROVAL PROVIDING THAT SUCH ALTERNATE DESIGNS MAKE PROVISION FOR EQUIVALENT CAPACITY AND STRENGTH.

ALL MEDIAN INLETS ARE DESIGNATED ON THE PLANS AS "INLETS, 1G-MS", ETC. THE FIRST NUMBER AND LETTER DESIGNATE THE TYPE OF STRUCTURE, AND THE FOLLOWING LETTERS DESIGNATE THE TYPE OF COVER TO BE USED TO COMPRISE THE COMPLETE UNIT.

BASES SHALL BE PLACED ON A BED OF MATERIAL AT LEAST 6 INCHES IN DEPTH, WHICH MEETS THE REQUIREMENTS OF FOUNDATION BACKFILL. THIS BEDDING SHALL BE COMPACTED AND PROVIDE UNIFORM SUPPORT FOR THE ENTIRE AREA OF THE BASE.

ALL BAR STEEL REINFORCEMENT SHALL BE EMBEDDED 2 INCHES CLEAR UNLESS OTHERWISE SHOWN OR NOTED.

PRECAST REINFORCED RISERS SHALL HAVE A TONGUE AND GROOVE JOINT WITH TONGUE UP OR DOWN.

ALL PRECAST INLET UNITS SHALL CONFORM TO THE PERTINENT REQUIREMENTS OF ASTM C 913.

MAXIMUM INSIDE PIPE DIAMETER DETERMINED BY 3" CLEARANCE ON EACH SIDE OF THE OUTSIDE WALL OF THE PIPE. SEE DETAIL "A". ASSUMES PIPE ENTERS PERPENDICULAR TO THE STRUCTURE.

① FOR PRECAST INLETS PROVIDE REINFORCING STEEL IN ACCORDANCE TO ASTM C 913.

② CONTRACTOR TO PROVIDE DRAWING(S) STAMPED BY A PROFESSIONAL ENGINEER FOR STEEL REINFORCING DESIGN FOR CAST-IN-PLACE STRUCTURES.

PIPE MATRIX

	MAXIMUM INSIDE PIPE DIAMETER	
INLET SIZE	WIDTH (IN)	LENGTH (IN)
1 GRATE	18	18
2 GRATE	18	42

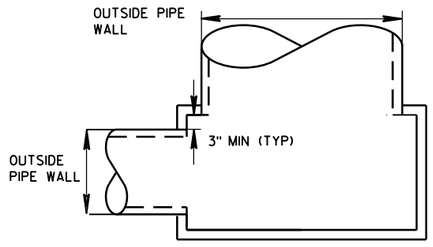

DETAIL "A"

JOINTS TO BE SEALED WITH A BUTYL RUBBER SEAL PER SEALANT MANUFACTURERS RECOMMENDATIONS CONFORMING TO ASTM C 990 (TYP)

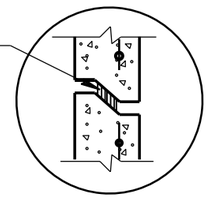

DETAIL "B"

INLETS MEDIAN 1 AND 2 GRATE

STATE OF WISCONSIN
DEPARTMENT OF TRANSPORTATION

APPROVED
Sept., 2016 — DATE
/S/ Rodney Taylor — ROADWAY STANDARDS UNIT SUPERVI ENT
FHWA

6
S.D.D. 8 C 8-2

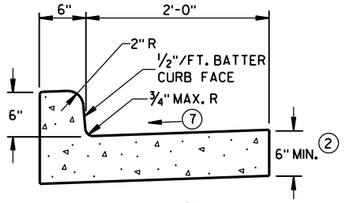

TYPES A (1) & D

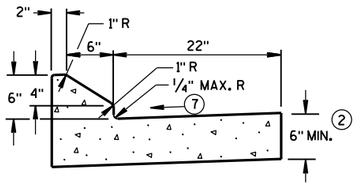

6" SLOPED CURB TYPES G (1) & J

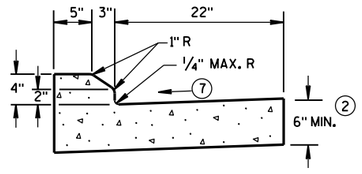

4" SLOPED CURB TYPES G (1) & J

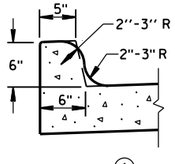

TYPES K (1) & L
(OPTIONAL CURB SHAPE)

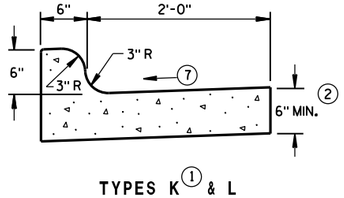

TYPES K (1) & L

CONCRETE CURB & GUTTER 30"

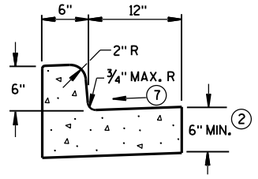

TYPES A (1) & D

CONCRETE CURB & GUTTER 18"

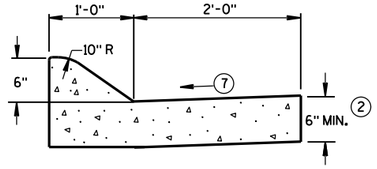

6" SLOPED CURB TYPES A (1) & D

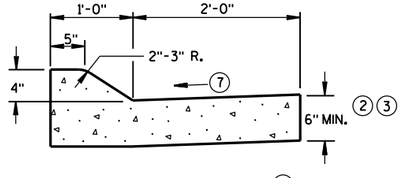

4" SLOPED CURB TYPES A (1) & D

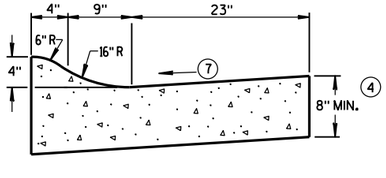

4" SLOPED CURB TYPES R (1) & T (5)

CONCRETE CURB & GUTTER 36"

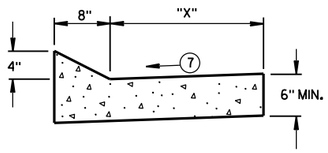

TYPES TBT & TBTT (1)

CONCRETE CURB & GUTTER

TBT & TBTT	"X"
30"	22"
36"	28"

GENERAL NOTES

DETAILS OF CONSTRUCTION, MATERIALS AND WORKMANSHIP NOT SHOWN ON THIS DRAWING SHALL CONFORM TO THE PERTINENT REQUIREMENTS OF THE CONTRACT.

PAVEMENT TIES AND TIE BARS SHALL BE EPOXY COATED IN CONFORMANCE WITH SUBSECTION 505.2.6.2 OF THE STANDARD SPECIFICATIONS.

INTEGRAL CURB & GUTTER SHALL CONFORM TO THE DETAILS SHOWN FOR CONCRETE CURB & GUTTER INCLUDING THE TRANSVERSE GUTTER SLOPE.

WHERE THE TRANSVERSE JOINTS IN THE PAVEMENT ARE REQUIRED TO BE SEALED, THE JOINTS IN THE INTEGRAL CURB AND GUTTER SHALL BE SEALED TO THE FACE OF CURB WITH THE SAME TYPE OF SEALANT. THE COST OF FURNISHING AND INSTALLING THIS SEALANT SHALL BE INCIDENTAL TO THE ITEM CONCRETE CURB AND GUTTER.

UNLESS OTHERWISE SHOWN ON THE TYPICAL CROSS SECTIONS, THE BASE AGGREGATE AND COMMON EXCAVATION LIMITS ARE 2'-0" BEHIND THE BACK OF CURBS.

(1) TIE BARS ARE REQUIRED FOR CURB AND GUTTER TYPES A, G, K, R AND TBTT.

(2) THE BOTTOM OF CURB AND GUTTER MAY BE CONSTRUCTED EITHER LEVEL OR PARALLEL TO THE SLOPE OF THE SUBGRADE OR BASE AGGREGATE PROVIDED A 6" MINIMUM GUTTER THICKNESS IS MAINTAINED.

(3) USE 8" MINIMUM GUTTER THICKNESS WHEN USED WITH AN ADJACENT CONCRETE TRUCK APRON PLACED BEHIND BACK OF CURB.

(4) THE BOTTOM OF CURB AND GUTTER MAY BE CONSTRUCTED EITHER LEVEL OR PARALLEL TO THE SLOPE OF THE SUBGRADE OR BASE AGGREGATE PROVIDED A 8" MINIMUM GUTTER THICKNESS IS MAINTAINED.

(5) THE FACE OF CURB IS 6" FROM THE BACK OF CURB.

(6) WHEN REVERSE SLOPE GUTTER IS REQUIRED, THE LOCATION(S) WILL BE SHOWN ELSEWHERE IN THE PLAN.

(7) USE 4% GUTTER CROSS SLOPE UNLESS OTHERWISE NOTED IN THE PLANS.

(8) INCLUDE LONGITUDINAL JOINT AND TIE BARS ALONG LANE EDGE WHEN CONCRETE PANEL WIDTH EXCEEDS THE MAXIMUM WIDTH PER TABLE BELOW. LONGITUDINAL JOINT(S) ARE NOT ALLOWED WITHIN TRAFFIC LANES AND BIKE LANES. LONGITUDINAL JOINT MAY BE SAWED.

PAVEMENT THICKNESS AND MAXIMUM CONCRETE PANEL WIDTH TABLE

PAVEMENT THICKNESS	MAXIMUM PANEL WIDTH
LESS THAN 10"	12'
10" & ABOVE	15'

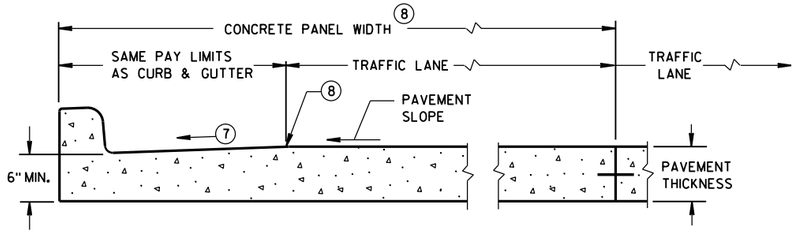

PARTIAL SECTION OF PAVEMENT * WITH INTEGRAL CURB & GUTTER

* BIKE LANE IS NOT SHOWN.

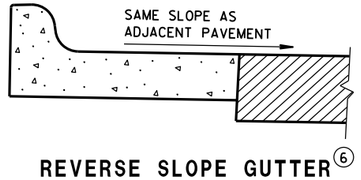

REVERSE SLOPE GUTTER (6)
(TYPICAL FOR ALL CURB & GUTTER TYPES)

CONCRETE CURB & GUTTER

STATE OF WISCONSIN
DEPARTMENT OF TRANSPO...

6

S.D.D. 8 D 1-20a

6

S.D.D. 8 D 1-20a

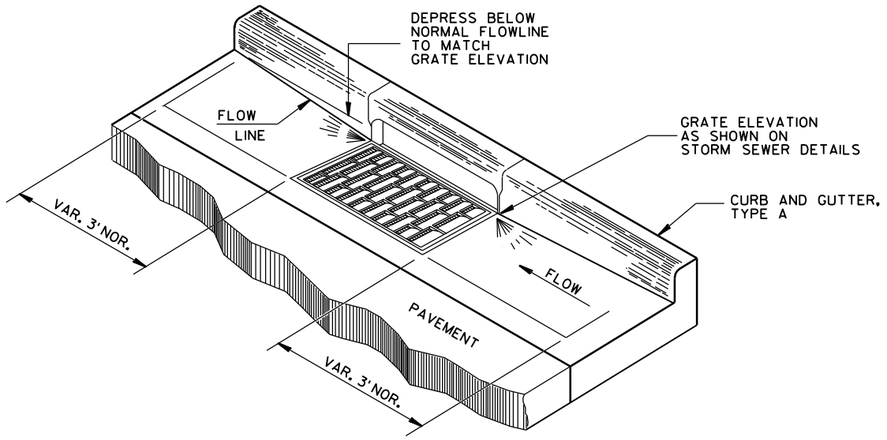

DETAIL OF CURB AND GUTTER AT INLETS

(TYPE H INLET COVER SHOWN)

GENERAL NOTES

DETAILS OF CONSTRUCTION, MATERIALS AND WORKMANSHIP NOT SHOWN ON THIS DRAWING SHALL CONFORM TO THE PERTINENT REQUIREMENTS OF THE CONTRACT.

PAVEMENT TIES AND TIE BARS SHALL BE EPOXY COATED IN CONFORMANCE WITH SUBSECTION 505.2.6.2 OF THE STANDARD SPECIFICATIONS.

UNLESS OTHERWISE SHOWN ON THE TYPICAL CROSS SECTIONS, THE BASE AGGREGATE AND COMMON EXCAVATION LIMITS ARE 2'-0" BEHIND THE BACK OF CURBS.

(1) TIE BARS ARE REQUIRED FOR CURB AND GUTTER TYPES A, G, K, R AND TBTT.

(2) THE BOTTOM OF CURB AND GUTTER MAY BE CONSTRUCTED EITHER LEVEL OR PARALLEL TO THE SLOPE OF THE SUBGRADE OR BASE AGGREGATE PROVIDED A 6" MINIMUM GUTTER THICKNESS IS MAINTAINED.

(9) REFER TO SDD 8D18 AND SDD 8D19 FOR ADDITIONAL DRIVEWAY ENTRANCE CURB DETAILS.

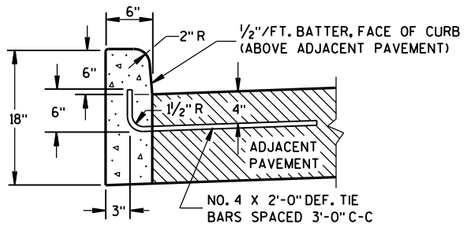

TYPES A(1) & D

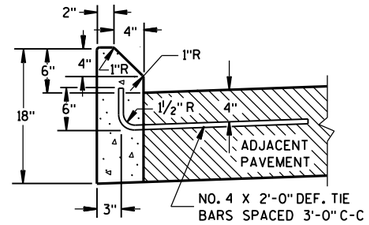

TYPES G(1) & J

CONCRETE CURB

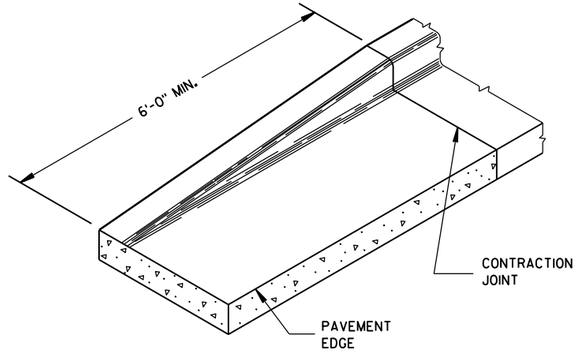

END SECTION CURB & GUTTER

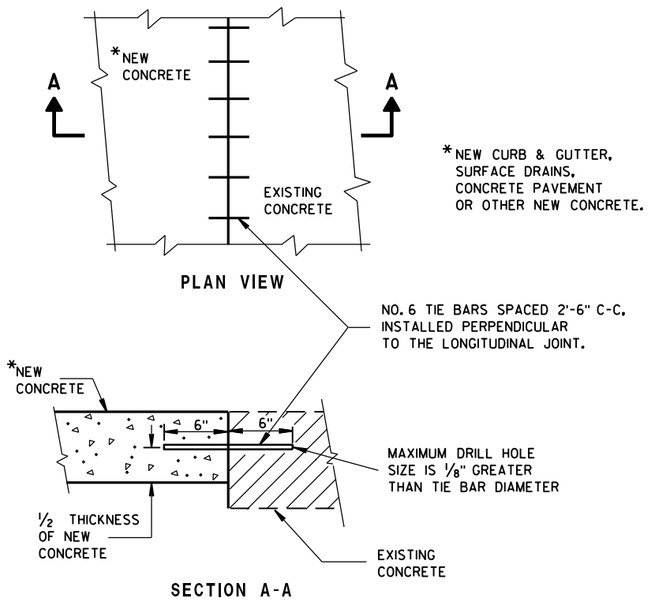

PLAN VIEW

SECTION A-A

TIE BARS DRILLED INTO EXISTING PAVEMENT

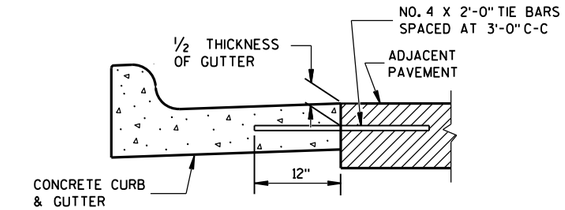

TYPICAL TIE BAR LOCATION (1)

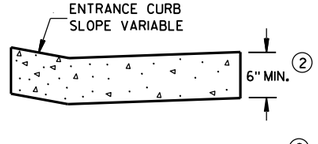

DRIVEWAY ENTRANCE CURB (9)

(WHEN DIRECTED BY THE ENGINEER)

CONCRETE CURB, TIES AND CURB AND GUTTER APPLICATIONS

STATE OF WISCONSIN
DEPARTMENT OF TRANSPORTATION

APPROVED
June, 2017 — DATE
/S/ Rodney Taylor
ROADWAY STANDARDS UNIT SUPERVISOR
FHWA

6

S.D.D. 8 D 1-20b

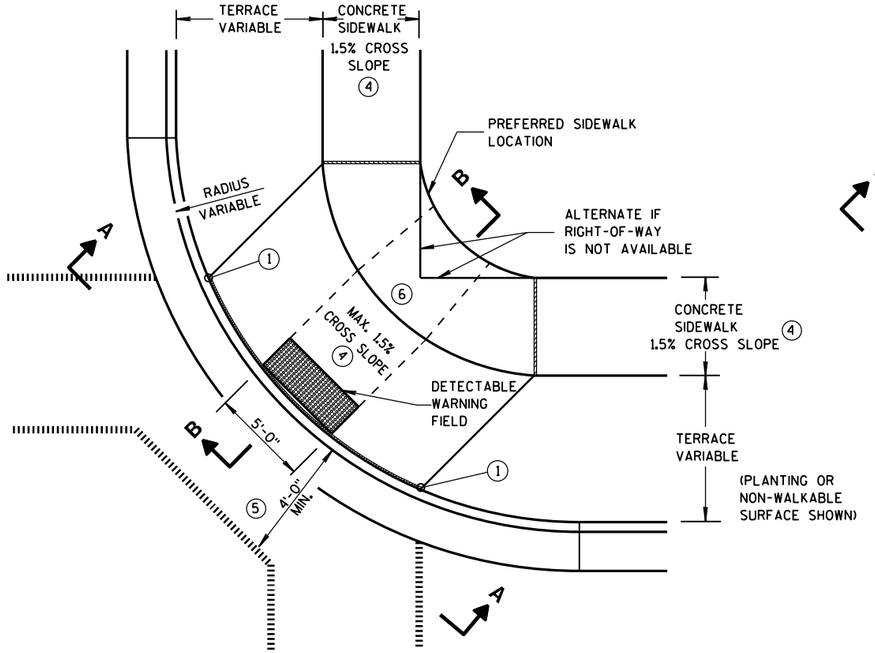

PLAN VIEW

TYPE 1 RAMP

(CENTER OF CORNER RADIUS)

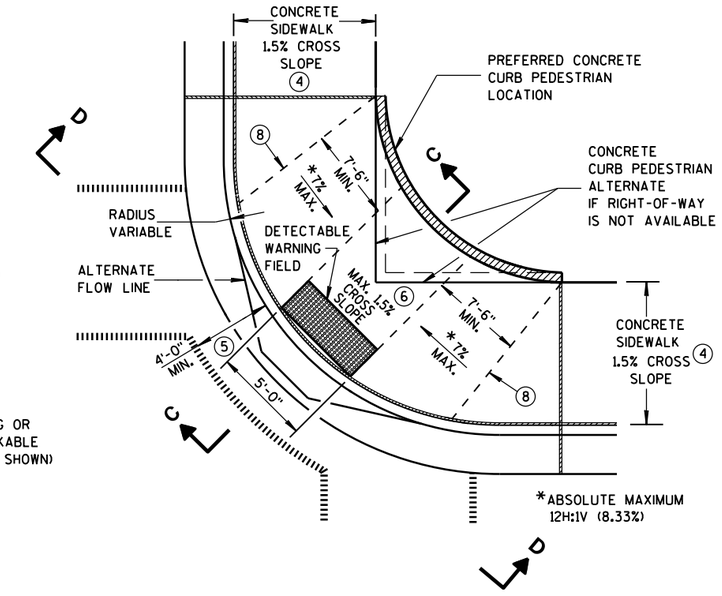

PLAN VIEW

TYPE 1-A RAMP

(NO TERRACE)

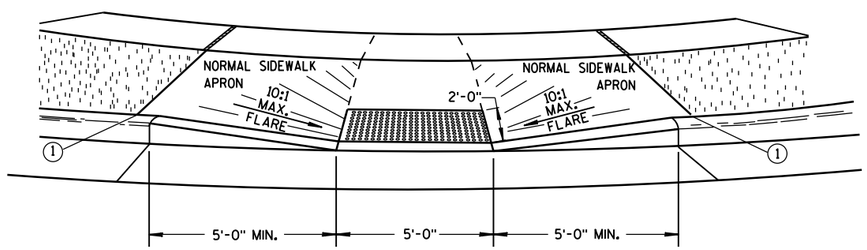

VIEW A-A

** WIDTH SHOWN ELSEWHERE IN THE PLANS

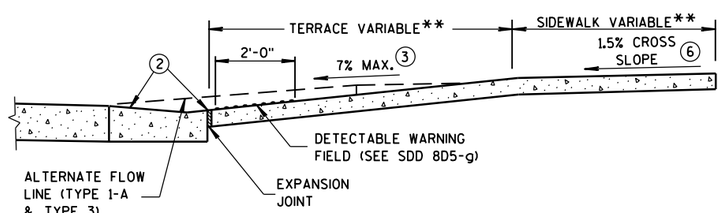

SECTION B-B

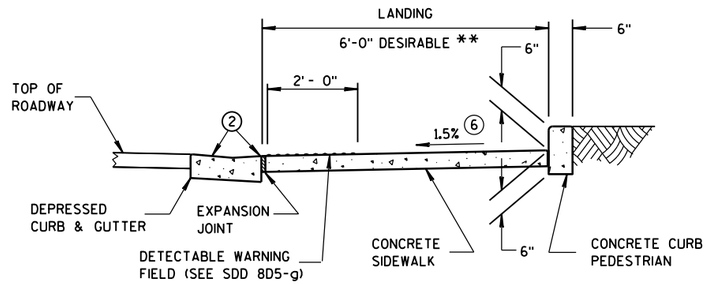

SECTION C-C

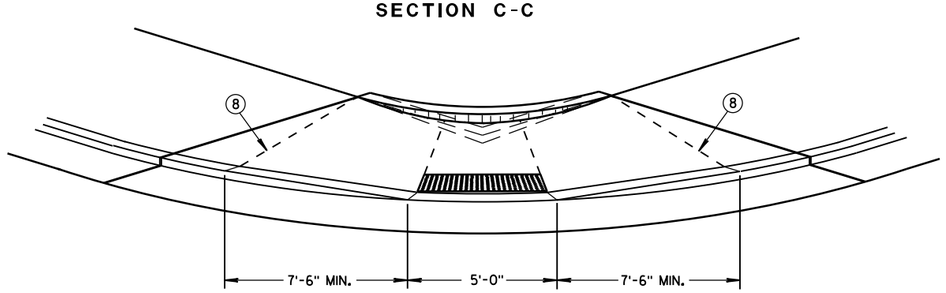

VIEW D-D

GENERAL NOTES

AVOID PLACING DRAINAGE STRUCTURES, JUNCTION BOXES OR OTHER OBSTRUCTIONS IN FRONT OF RAMP ACCESS AREAS.

DETAILS OF CONSTRUCTION, MATERIALS AND WORKMANSHIP NOT SHOWN ON THIS DRAWING SHALL CONFORM TO THE PERTINENT REQUIREMENTS OF THE STANDARD SPECIFICATIONS AND THE APPLICABLE SPECIAL PROVISIONS.

WHEN NECESSARY, THE SIDEWALK ELEVATION MAY BE LOWERED TO MEET THE HIGH POINT ON THE RAMP.

TYPE 1 RAMPS SHALL HAVE A NORMAL SIDEWALK APRON AND CURB ON BOTH SIDES OF RAMP.

DETECTABLE WARNING FIELD SHALL BE MEASURED AND PAID BY THE SQUARE FOOT AS "CURB RAMP DETECTABLE WARNING FIELD". THE CONCRETE PEDESTRIAN CURB, IF NEEDED, SHALL BE MEASURED AND PAID BY THE LINEAL FOOT AS "CONCRETE CURB PEDESTRIAN". CONCRETE SIDEWALK IN THE CURB RAMP AREA SHALL BE MEASURED AND PAID BY THE SQUARE FOOT AS CONCRETE SIDEWALK, INCLUDING THE AREA UNDER THE DETECTABLE WARNING FIELD.

SELECT CURB RAMP DETECTABLE WARNING FIELD MATERIALS AND DEVICES FROM THE DEPARTMENT'S APPROVED MATERIALS LIST. THE COLOR OF THE DETECTABLE WARNING FIELD IS SPECIFIED ELSEWHERE AND IS INCIDENTAL TO THE BID ITEM OF "CURB RAMP DETECTABLE WARNING FIELD".

DETECTABLE WARNING FIELDS THAT ARE INSTALLED AS A GROUP OR SIDE BY SIDE, SHALL BE FROM THE SAME MANUFACTURER.

SURFACE TEXTURE OF THE RAMP SHALL BE OBTAINED BY COARSE BROOMING TRANSVERSE TO THE SLOPE OF THE RAMP.

(1) THIS POINT IS AN EXTENSION OF OUTSIDE EDGE OF APPROACHING SIDEWALK WHERE IT MEETS THE BACK OF CONCRETE CURB. POINT LOCATION MAY BE ADJUSTED TO ALIGN WITH BEGINNING OF FULL-HEIGHT CURB IF THIS DISTANCE IS SHORT.

(2) GRADE CHANGE BETWEEN GUTTER FLAG SLOPE AND THE CURB RAMP SLOPE SHALL NOT EXCEED 11%. MAXIMUM GUTTER FLAG SLOPE IS 4%. PROVIDE LONGITUDINAL DRAINAGE AROUND CURB AND AWAY FROM CURB RAMP. NO VERTICAL LIPS OR DISCONTINUITIES GREATER THAN 1/4-INCH ARE ALLOWED. SLOPE OF CURB HEAD OPENING SHALL MATCH THE RAMP SLOPE, MINIMALLY 1.5% AND NOT TO EXCEED 7%. WHEN ADJACENT TO 1.5% LANDING, CONSTRUCT CURB HEAD OPENING AT 1.5% IN THE DIRECTION OF PEDESTRIAN TRAVEL.

(3) ABSOLUTE MAXIMUM 12H:1V (8.33%) CURB RAMP SLOPE IS ALLOWABLE WITH FLATTENED GUTTER FLAG SLOPE AND NOT TO EXCEED 11% GRADE CHANGE.

(4) ±0.5% CONSTRUCTION TOLERANCE IN SIDEWALK CROSS SLOPE. THE SIDEWALK CROSS SLOPE SHALL NOT EXCEED 2% WITHOUT PRIOR APPROVAL FROM THE ENGINEER.

(5) PROVIDE A LEVEL LANDING IN THE STREET AND GUTTER AREA. (2% MAXIMUM SLOPE IN ANY DIRECTION). WHEN THE GUTTER SLOPE EXCEEDS 2%, CONSTRUCT THE LEVEL LANDING IN THE STREET AREA.

(6) PROVIDE A LEVEL LANDING (MAXIMUM 2% SLOPE) IN ANY DIRECTION OF PEDESTRIAN TRAVEL. STANDARD LANDING SIZE IS 5 FEET X 5 FEET.

(8) PROVIDE GRADE BREAK PERPENDICULAR TO DIRECTION OF WHEELCHAIR TRAVEL.

LEGEND

- 1/2" EXPANSION JOINT-SIDEWALK
- CONTRACTION JOINT FIELD LOCATED
- PAVEMENT MARKING CROSSWALK (WHITE)
- ALTERNATIVE LAYOUT

CURB RAMPS TYPES 1 AND 1-A

STATE OF WISCONSIN
DEPARTMENT OF TRANSPOI

6

S.D.D. 8 D 5-19a

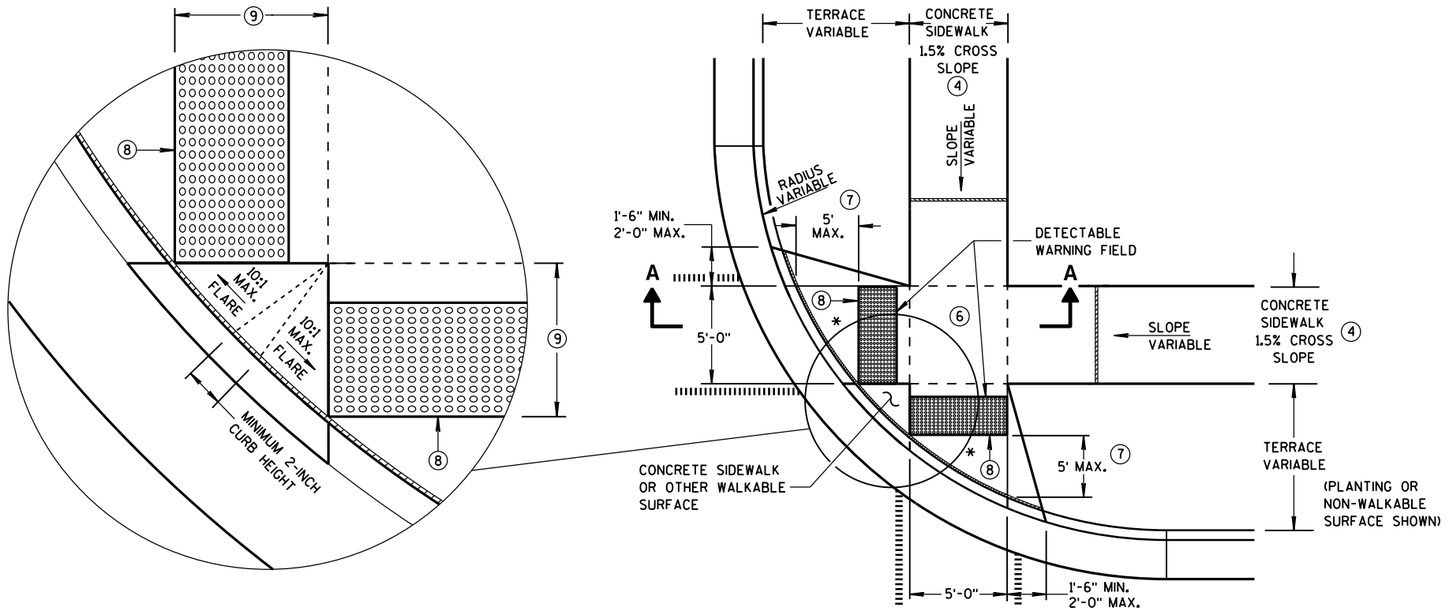

PLAN VIEW
TYPE 2 RAMP
(ON LINE WITH SIDEWALK)

* MAXIMUM 2.0% SLOPE IN ALL DIRECTIONS IN FRONT OF GRADE BREAK

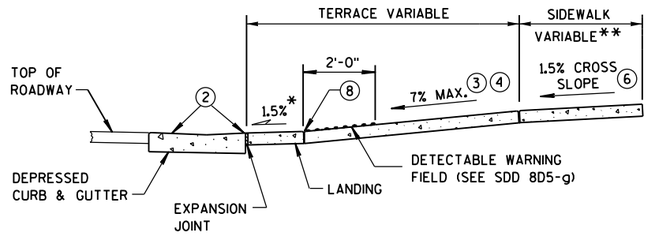

SECTION A-A

** WIDTH SHOWN ELSEWHERE IN THE PLANS

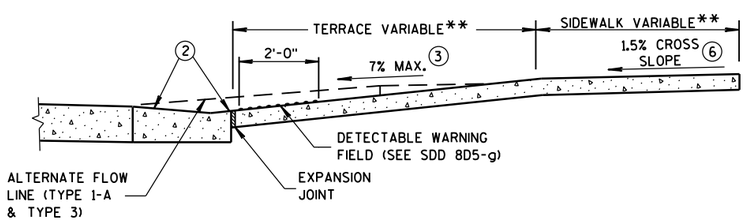

SECTION B-B

GENERAL NOTES

AVOID PLACING DRAINAGE STRUCTURES, JUNCTION BOXES OR OTHER OBSTRUCTIONS IN FRONT OF RAMP ACCESS AREAS.

DETECTABLE WARNING FIELDS THAT ARE INSTALLED AS A GROUP OR SIDE BY SIDE, SHALL BE FROM THE SAME MANUFACTURER.

(2) GRADE CHANGE BETWEEN GUTTER FLAG SLOPE AND THE CURB RAMP SLOPE SHALL NOT EXCEED 11%. MAXIMUM GUTTER FLAG SLOPE IS 4%. PROVIDE LONGITUDINAL DRAINAGE AROUND CURB AND AWAY FROM CURB RAMP. NO VERTICAL LIPS OR DISCONTINUITIES GREATER THAN 1/4-INCH ARE ALLOWED. SLOPE OF CURB HEAD OPENING SHALL MATCH THE RAMP SLOPE, MINIMALLY 1.5% AND NOT TO EXCEED 7%. WHEN ADJACENT TO 1.5% LANDING, CONSTRUCT CURB HEAD OPENING AT 1.5% IN THE DIRECTION OF PEDESTRIAN TRAVEL.

(3) ABSOLUTE MAXIMUM 12H:1V (8.33%) CURB RAMP SLOPE IS ALLOWABLE WITH FLATTENED GUTTER FLAG SLOPE AND NOT TO EXCEED 11% GRADE CHANGE.

(4) ±0.5% CONSTRUCTION TOLERANCE IN SIDEWALK CROSS SLOPE. THE SIDEWALK CROSS SLOPE SHALL NOT EXCEED 2% WITHOUT PRIOR APPROVAL FROM THE ENGINEER.

(6) PROVIDE A LEVEL LANDING (MAXIMUM 2% SLOPE) IN ANY DIRECTION OF PEDESTRIAN TRAVEL. STANDARD LANDING SIZE IS 5 FEET X 5 FEET.

(7) WHEN THIS GRADE BREAK DISTANCE EXCEEDS 5 FEET, USE RADIAL DETECTABLE WARNING FIELD PER SDD 8D5-f.

(8) PROVIDE GRADE BREAK PERPENDICULAR TO DIRECTION OF WHEELCHAIR TRAVEL.

(9) WHEN THIS DISTANCE IS LESS THAN 6'-0", IT MAY BE DIFFICULT TO ACHIEVE A 7% SLOPE OR FLATTER ALONG THE RAMP. REDUCE CURB HEIGHT IN TRIANGLE AREA TO ACHIEVE 7% SLOPE OR FLATTER ON RAMP. CONSTRUCT 2-INCH MINIMUM CURB HEIGHT BETWEEN 10:1 FLARES.

LEGEND

- ½" EXPANSION JOINT-SIDEWALK
- CONTRACTION JOINT FIELD LOCATED
- PAVEMENT MARKING CROSSWALK (WHITE)
- ALTERNATIVE LAYOUT

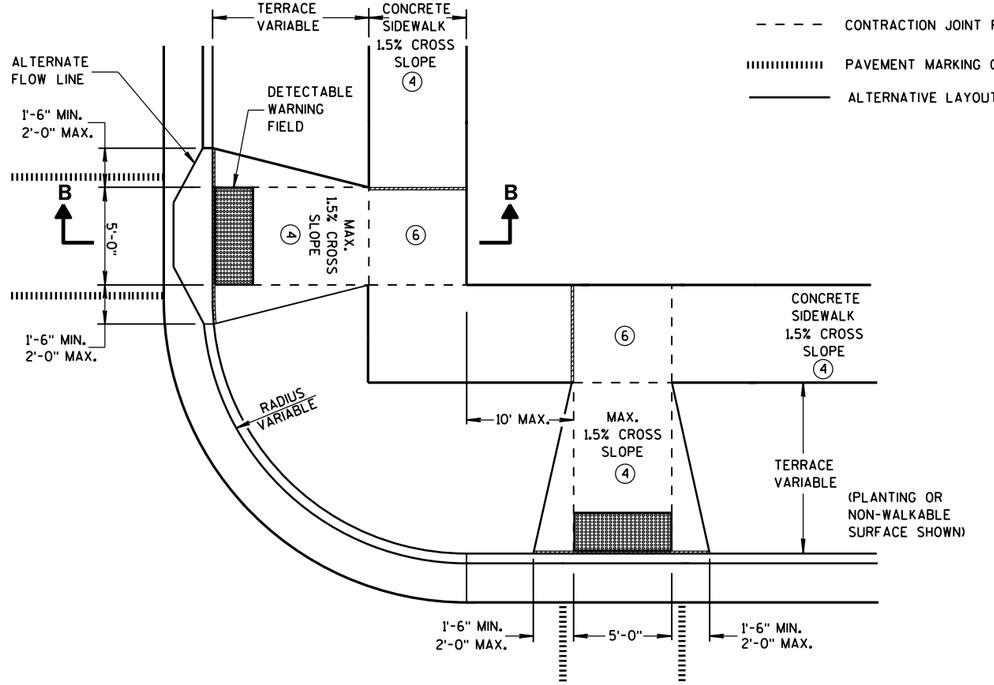

PLAN VIEW
TYPE 3 RAMP
(OUTSIDE OF CROSSWALK AREA)

CURB RAMPS TYPES 2 AND 3

STATE OF WISCONSIN
DEPARTMENT OF TRANSPO

6

S.D.D. 8 D 5-19b

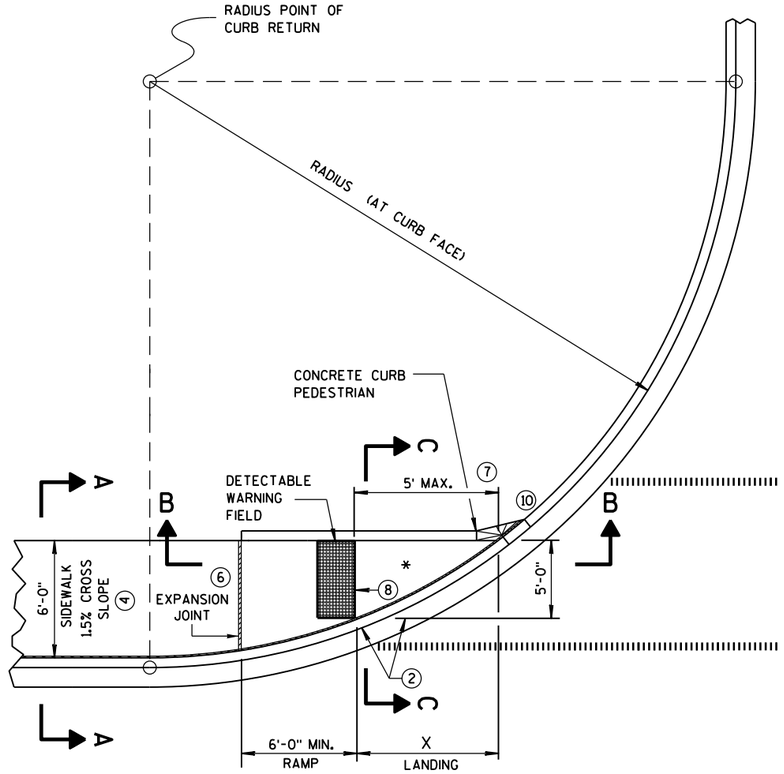

CURB RAMP TYPE 4A
PLAN VIEW

RADIUS (AT CURB FACE)	X
10 FEET	4'-7"
15 FEET	6'-5½"

INTERMEDIATE RADII CAN BE INTERPOLATED

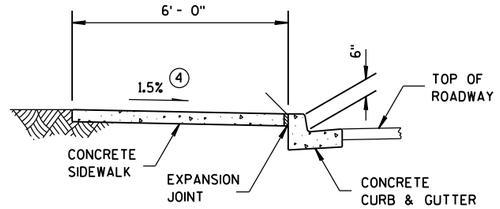

SECTION A-A FOR TYPE 4A

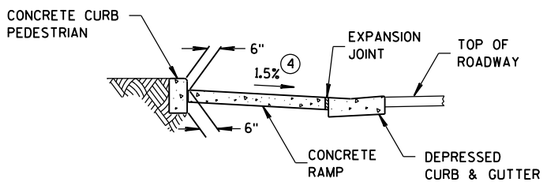

SECTION C-C FOR TYPE 4A

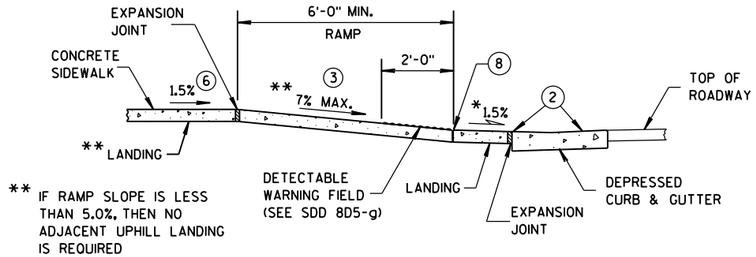

** IF RAMP SLOPE IS LESS THAN 5.0%, THEN NO ADJACENT UPHILL LANDING IS REQUIRED

SECTION B-B FOR TYPE 4A

* MAXIMUM 2.0% SLOPE IN ALL DIRECTIONS IN FRONT OF GRADE BREAK

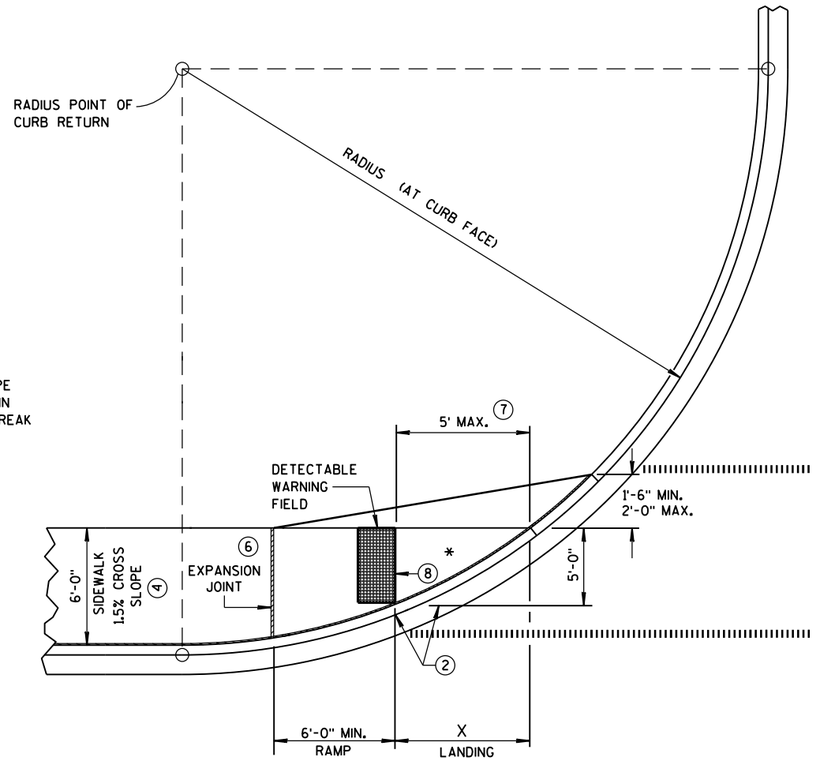

CURB RAMP TYPE 4A1
PLAN VIEW

GENERAL NOTES

AVOID PLACING DRAINAGE STRUCTURES, JUNCTION BOXES OR OTHER OBSTRUCTIONS IN FRONT OF RAMP ACCESS AREAS.

DETECTABLE WARNING FIELDS THAT ARE INSTALLED AS A GROUP OR SIDE BY SIDE, SHALL BE FROM THE SAME MANUFACTURER.

(2) GRADE CHANGE BETWEEN GUTTER FLAG SLOPE AND THE CURB RAMP SLOPE SHALL NOT EXCEED 11%. MAXIMUM GUTTER FLAG SLOPE IS 4%. PROVIDE LONGITUDINAL DRAINAGE AROUND CURB AND AWAY FROM CURB RAMP. NO VERTICAL LIPS OR DISCONTINUITIES GREATER THAN ¼-INCH ARE ALLOWED. SLOPE OF CURB HEAD OPENING SHALL MATCH THE RAMP SLOPE, MINIMALLY 1.5% AND NOT TO EXCEED 7%. WHEN ADJACENT TO 1.5% LANDING, CONSTRUCT CURB HEAD OPENING AT 1.5% IN THE DIRECTION OF PEDESTRIAN TRAVEL.

(3) ABSOLUTE MAXIMUM 12H:1V (8.33%) CURB RAMP SLOPE IS ALLOWABLE WITH FLATTENED GUTTER FLAG SLOPE AND NOT TO EXCEED 11% GRADE CHANGE.

(4) ±0.5% CONSTRUCTION TOLERANCE IN SIDEWALK CROSS SLOPE. THE SIDEWALK CROSS SLOPE SHALL NOT EXCEED 2% WITHOUT PRIOR APPROVAL FROM THE ENGINEER.

(6) PROVIDE A LEVEL LANDING (MAXIMUM 2% SLOPE) IN ANY DIRECTION OF PEDESTRIAN TRAVEL. STANDARD LANDING SIZE IS 5 FEET X 5 FEET.

(7) WHEN THIS GRADE BREAK DISTANCE EXCEEDS 5 FEET, USE RADIAL DETECTABLE WARNING FIELD PER SDD 8D5-f.

(8) PROVIDE GRADE BREAK PERPENDICULAR TO DIRECTION OF WHEELCHAIR TRAVEL.

(10) INSTALL TRANSITION NOSE. (INCIDENTAL TO OTHER PAY ITEMS). DO NOT MARK TRANSITION NOSE.

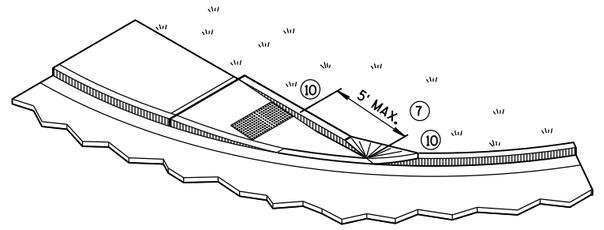

ISOMETRIC VIEW FOR TYPE 4A

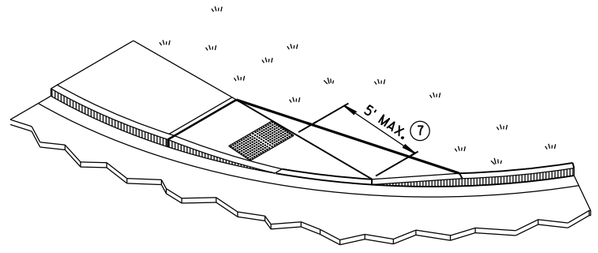

ISOMETRIC VIEW FOR TYPE 4A1

LEGEND

½" EXPANSION JOINT-SIDEWALK

CONTRACTION JOINT FIELD LOCATED

PAVEMENT MARKING CROSSWALK (WHITE)

CURB RAMPS TYPES 4A AND 4A1

STATE OF WISCONSIN
DEPARTMENT OF TRANSPOI

S.D.D. 8 D 5-19c

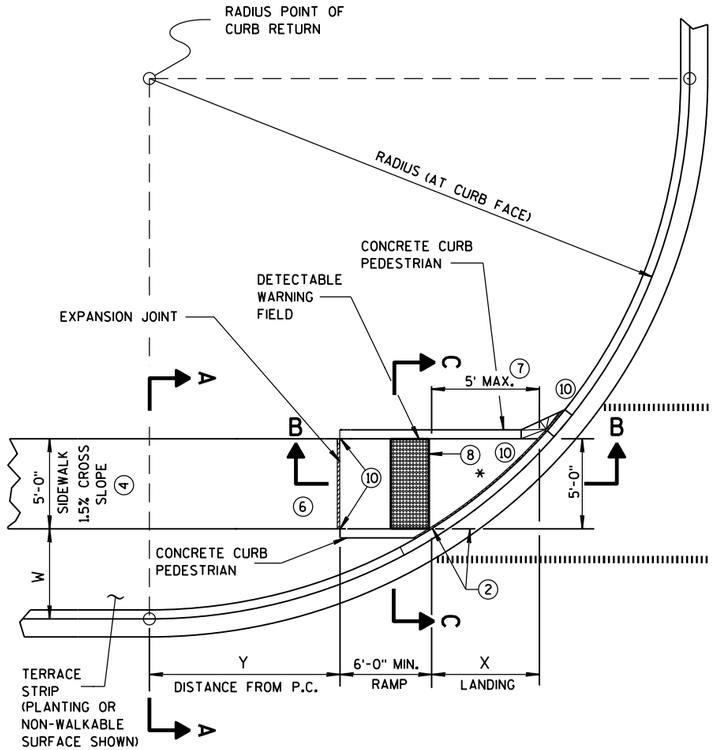

CURB RAMP TYPE 4B
PLAN VIEW

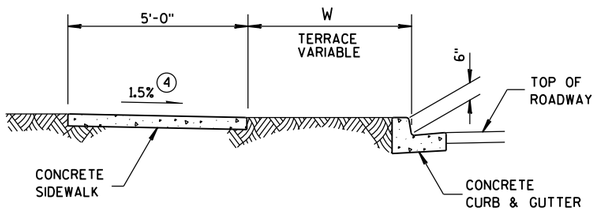

SECTION A-A FOR TYPE 4B

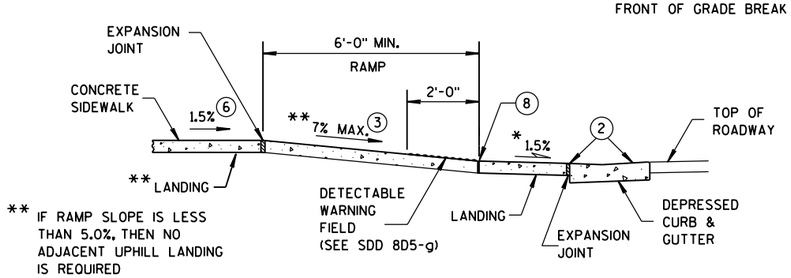

* MAXIMUM 2.0% SLOPE IN ALL DIRECTIONS IN FRONT OF GRADE BREAK

** IF RAMP SLOPE IS LESS THAN 5.0%, THEN NO ADJACENT UPHILL LANDING IS REQUIRED

SECTION B-B FOR TYPE 4B

RADIUS (AT CURB FACE)	W = 3'-0"		W = 4'-0"		W = 5'-0"		W = 6'-0"		W = 7'-0"		W = 8'-0"		W = 9'-0"		W = 10'-0"	
	X	Y	X	Y	X	Y	X	Y	X	Y	X	Y	X	Y	X	Y
10 FEET	2'-10¼"	0'-5"	2'-1"	1'-4½"	1'-5"	2'-1"	0'-10"	2'-7½"	0'-3¼"	3'-0¼"						
15 FEET	4'-6¾"	2'-1¾"	3'-9"	3'-5¼"	3'-1¼"	4'-6"	2'-6¾"	5'-4½"	2'-1"	6'-1"	1'-8"	6'-8½"	1'-3¼"	7'-2½"	0'-10¾"	7'-7¼"
20 FEET	5'-9¾"	3'-6½"	4'-11½"	5'-1¾"	4'-3¼"	6'-5½"	3'-8¾"	7'-7"	3'-3"	8'-6½"	2'-10"	9'-4½"	2'-5½"	10'-1¼"	2'-1¼"	10'-9"
30 FEET			6'-9¼"	7'-11¼"	6'-0¼"	9'-8"	5'-5"	11'-1¾"	4'-10¾"	12'-5¾"	4'-5½"	13'-7¾"	4'-0¾"	14'-8½"	3'-8½"	15'-8¼"
40 FEET									6'-1¾"	15'-8½"	5'-8"	17'-2"	5'-3"	18'-5¾"	4'-10¾"	19'-8¼"
50 FEET															5'-10¼"	23'-2"

INTERMEDIATE RADII CAN BE INTERPOLATED
DIMENSION "Y" IS CALCULATED BASED ON 6'-0" RAMP LENGTH
DIMENSION "X" IS CALCULATED BASED ON 5'-0" SIDEWALK WIDTH

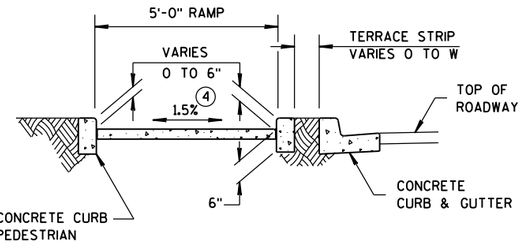

SECTION C-C FOR TYPE 4B

GENERAL NOTES

AVOID PLACING DRAINAGE STRUCTURES, JUNCTION BOXES OR OTHER OBSTRUCTIONS IN FRONT OF RAMP ACCESS AREAS.

DETECTABLE WARNING FIELDS THAT ARE INSTALLED AS A GROUP OR SIDE BY SIDE, SHALL BE FROM THE SAME MANUFACTURER.

(2) GRADE CHANGE BETWEEN GUTTER FLAG SLOPE AND THE CURB RAMP SLOPE SHALL NOT EXCEED 11%. MAXIMUM GUTTER FLAG SLOPE IS 4%. PROVIDE LONGITUDINAL DRAINAGE AROUND CURB AND AWAY FROM CURB RAMP. NO VERTICAL LIPS OR DISCONTINUITIES GREATER THAN ¼-INCH ARE ALLOWED. SLOPE OF CURB HEAD OPENING SHALL MATCH THE RAMP SLOPE, MINIMALLY 1.5% AND NOT TO EXCEED 7%. WHEN ADJACENT TO 1.5% LANDING, CONSTRUCT CURB HEAD OPENING AT 1.5% IN THE DIRECTION OF PEDESTRIAN TRAVEL.

(3) ABSOLUTE MAXIMUM 12H:1V (8.33%) CURB RAMP SLOPE IS ALLOWABLE WITH FLATTENED GUTTER FLAG SLOPE AND NOT TO EXCEED 11% GRADE CHANGE.

(4) ±0.5% CONSTRUCTION TOLERANCE IN SIDEWALK CROSS SLOPE. THE SIDEWALK CROSS SLOPE SHALL NOT EXCEED 2% WITHOUT PRIOR APPROVAL FROM THE ENGINEER.

(6) PROVIDE A LEVEL LANDING (MAXIMUM 2% SLOPE) IN ANY DIRECTION OF PEDESTRIAN TRAVEL. STANDARD LANDING SIZE IS 5 FEET X 5 FEET.

(7) WHEN THIS GRADE BREAK DISTANCE EXCEEDS 5 FEET, USE RADIAL DETECTABLE WARNING FIELD PER SDD 8D5-f.

(8) PROVIDE GRADE BREAK PERPENDICULAR TO DIRECTION OF WHEELCHAIR TRAVEL.

(10) INSTALL TRANSITION NOSE. (INCIDENTAL TO OTHER PAY ITEMS). DO NOT MARK TRANSITION NOSE.

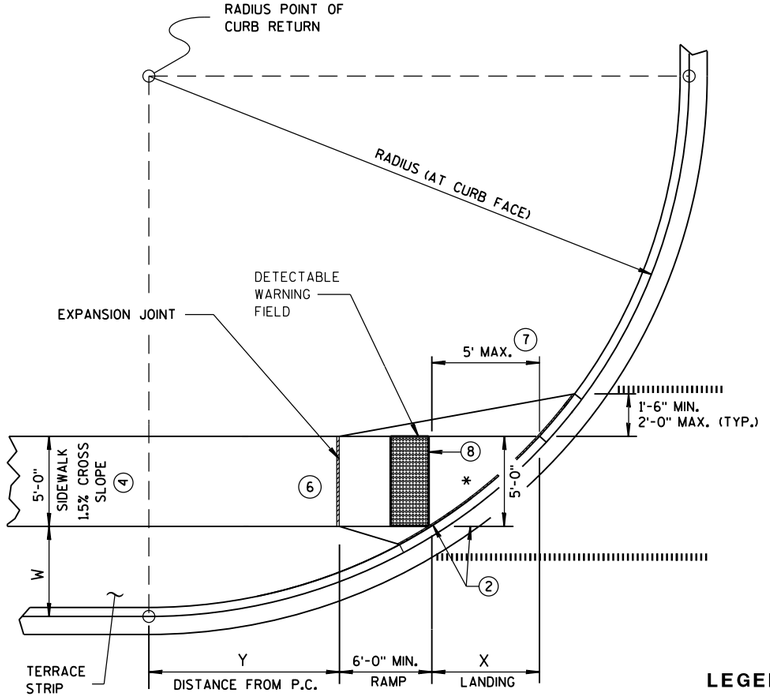

CURB RAMP TYPE 4B1
PLAN VIEW

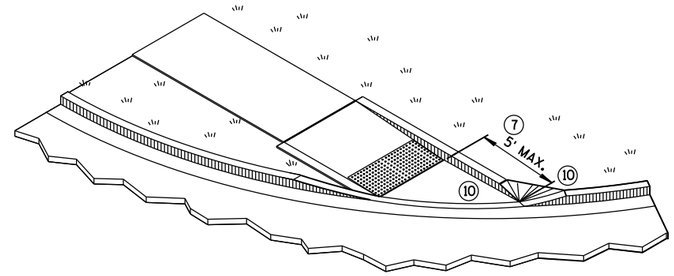

ISOMETRIC VIEW FOR TYPE 4B

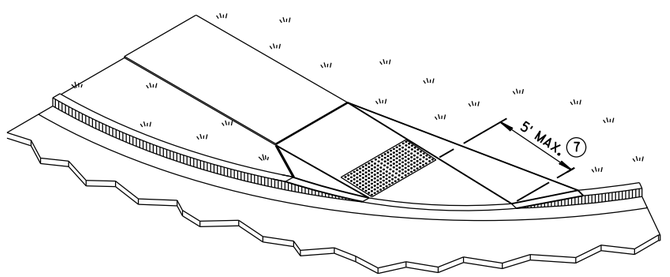

ISOMETRIC VIEW FOR TYPE 4B1

LEGEND

½" EXPANSION JOINT-SIDEWALK

CONTRACTION JOINT FIELD LOCATED

PAVEMENT MARKING CROSSWALK (WHITE)

CURB RAMPS TYPE 4B AND 4B1

STATE OF WISCONSIN
DEPARTMENT OF TRANSPOR

6

S.D.D. 8 D 5-19d

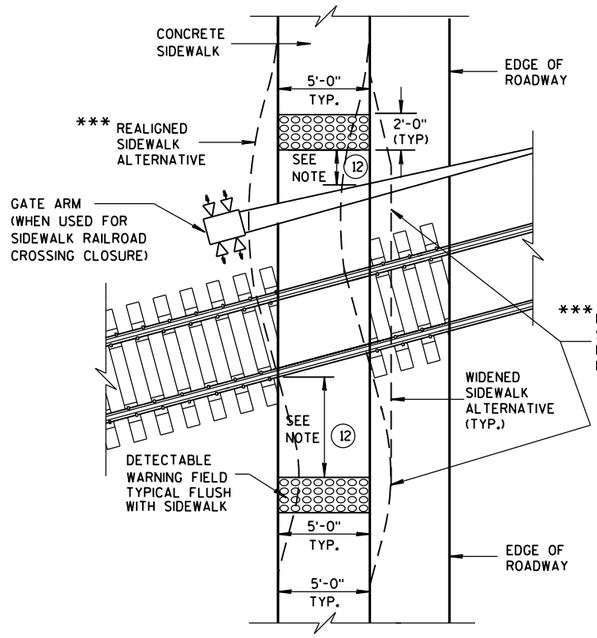

TYPE 8
DETECTABLE WARNINGS AT RAILROAD CROSSING

*** DETAILS TO BE DETERMINED BY DESIGNER

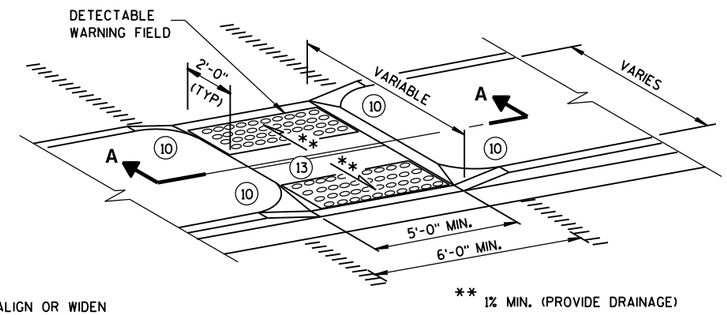

** 1% MIN. (PROVIDE DRAINAGE)

MEDIAN ISLAND
NON-ELEVATED PEDESTRIAN CROSSING
TYPE 5

GENERAL NOTES

AVOID PLACING DRAINAGE STRUCTURES, JUNCTION BOXES OR OTHER OBSTRUCTIONS IN FRONT OF RAMP ACCESS AREAS.

SIDEWALK CROSS SLOPE SHALL NOT EXCEED 2%.

DETECTABLE WARNING FIELDS THAT ARE INSTALLED AS A GROUP OR SIDE BY SIDE, SHALL BE FROM THE SAME MANUFACTURER.

(2) GRADE CHANGE BETWEEN GUTTER FLAG SLOPE AND THE CURB RAMP SLOPE SHALL NOT EXCEED 11%. MAXIMUM GUTTER FLAG SLOPE IS 4%. PROVIDE LONGITUDINAL DRAINAGE AROUND CURB AND AWAY FROM CURB RAMP. NO VERTICAL LIPS OR DISCONTINUITIES GREATER THAN 1/4-INCH ARE ALLOWED. SLOPE OF CURB HEAD OPENING SHALL MATCH THE RAMP SLOPE, MINIMALLY 1.5% AND NOT TO EXCEED 7%. WHEN ADJACENT TO 1.5% LANDING, CONSTRUCT CURB HEAD OPENING AT 1.5% IN THE DIRECTION OF PEDESTRIAN TRAVEL.

(3) ABSOLUTE MAXIMUM 12H:1V (8.33%) CURB RAMP SLOPE IS ALLOWABLE WITH FLATTENED GUTTER FLAG SLOPE AND NOT TO EXCEED 11% GRADE CHANGE.

(4) ±0.5% CONSTRUCTION TOLERANCE IN SIDEWALK CROSS SLOPE. THE SIDEWALK CROSS SLOPE SHALL NOT EXCEED 2% WITHOUT PRIOR APPROVAL FROM THE ENGINEER.

(6) PROVIDE A LEVEL LANDING (MAXIMUM 2% SLOPE) IN ANY DIRECTION OF PEDESTRIAN TRAVEL. STANDARD LANDING SIZE IS 5 FEET X 5 FEET.

(10) INSTALL TRANSITION NOSE. (INCIDENTAL TO OTHER PAY ITEMS). DO NOT MARK TRANSITION NOSE.

(11) SLOPE SIDEWALK TOWARD LANDING AS SHOWN WHERE THERE IS NO TERRACE OR WHERE THE TERRACE WIDTH IS LESS THAN 6 FEET WIDE.

(12) THE EDGE OF THE DETECTABLE WARNING FIELD NEAREST TO A RAILROAD CROSSING SHALL BE 1.5 FEET ± 0.1' FROM THE FACE OF THE GATE ARM IF THE GATE ARM EXTENDS ACROSS THE SIDEWALK. WHERE THERE IS NO PEDESTRIAN GATE, THE EDGE OF THE DETECTABLE WARNING FIELD NEAREST TO THE RAILROAD CROSSING SHALL BE 15 FEET FROM THE NEAREST RAIL.

(13) DO NOT INSTALL DETECTABLE WARNING FIELDS AT THE EDGES OF STREET-LEVEL PEDESTRIAN REFUGE ISLANDS IF A MINIMUM 2-FOOT CONCRETE SURFACE WITHOUT DETECTABLE WARNINGS (MEASURED IN THE DIRECTION OF PEDESTRIAN TRAVEL) CANNOT BE ACHIEVED.

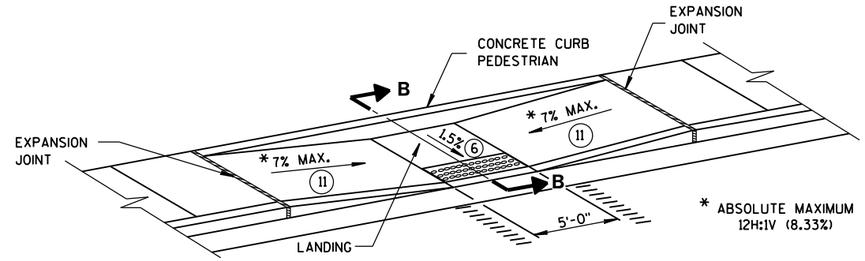

MID-BLOCK CROSSING
TYPE 7A

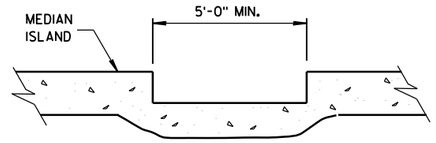

SECTION A-A

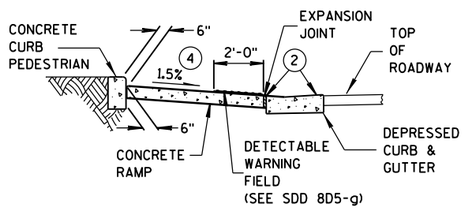

SECTION B-B

REFER TO GENERAL NOTES (2) AND (3) FOR ALL ISLAND CURB RAMPS

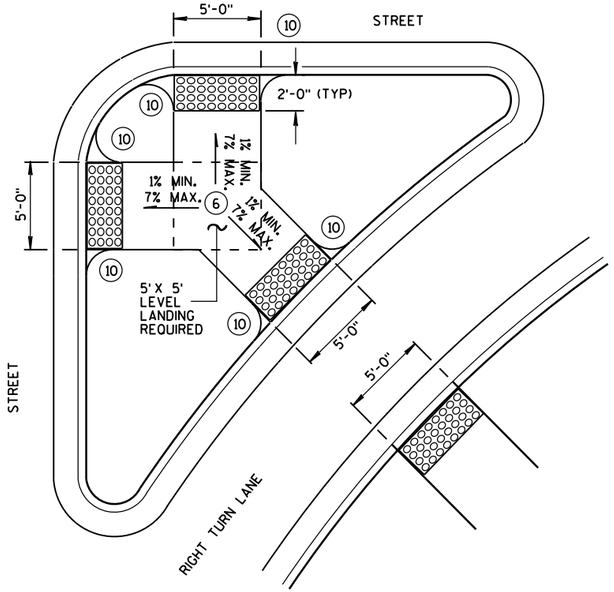

TYPE 6
DETECTABLE WARNING AT ISLANDS

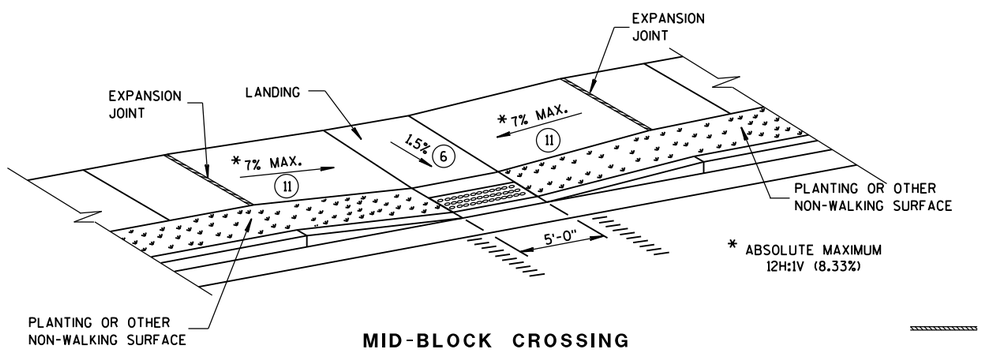

MID-BLOCK CROSSING
TYPE 7B

NOTE: THESE PARALLEL AND PARALLEL/PERPENDICULAR CURB RAMPS MAY BE USED AT INTERSECTIONS AND MID BLOCK LOCATIONS.

LEGEND

- ½" EXPANSION JOINT-SIDEWALK
- CONTRACTION JOINT FIELD LOCATED
- PAVEMENT MARKING CROSSWALK (WHITE)

CURB RAMPS
TYPES 5, 6, 7A, 7B & 8

STATE OF WISCONSIN
DEPARTMENT OF TRANSPOR

6

S.D.D. 8 D 5-19e
S.D.D. 8 D 5-19e

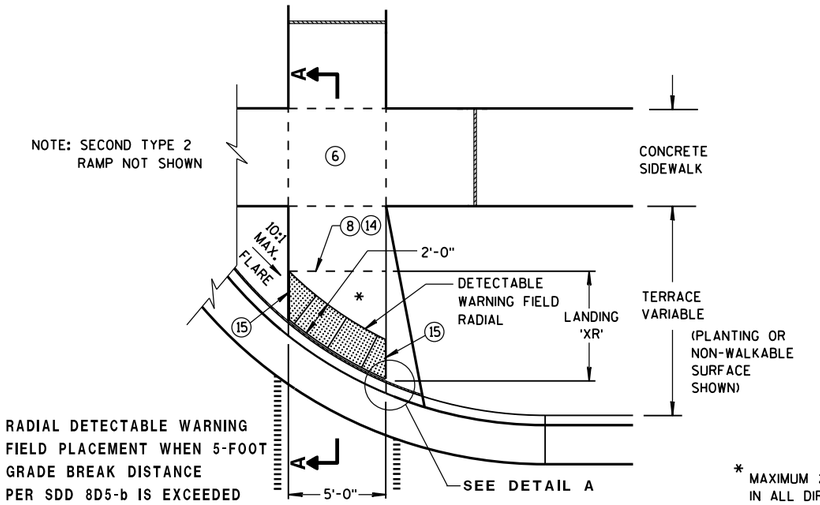

TYPE 2 RAMP
PLAN VIEW
(GRADE BREAK DISTANCE GREATER THAN 5 FEET)
(ON LINE WITH SIDEWALK)

* MAXIMUM 2.0% SLOPE IN ALL DIRECTIONS IN FRONT OF GRADE BREAK

LEGEND

- ½" EXPANSION JOINT-SIDEWALK
- CONTRACTION JOINT FIELD LOCATED
- PAVEMENT MARKING CROSSWALK (WHITE)

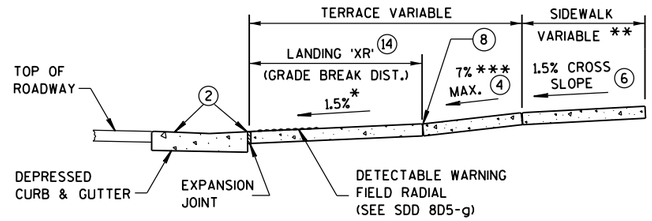

** WIDTH SHOWN ELSEWHERE IN THE PLANS

*** ABSOLUTE MAXIMUM 12H:1V (8.33%)

SECTION A-A

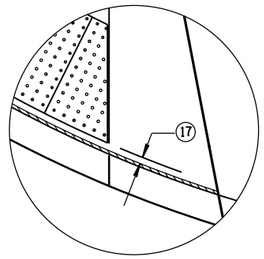

DETAIL A

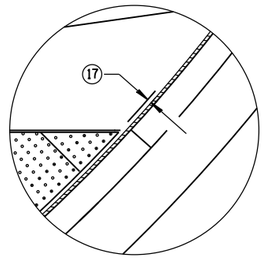

DETAIL C

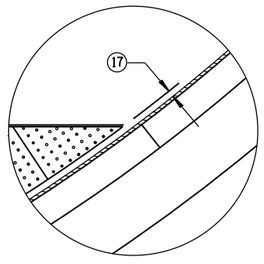

DETAIL B

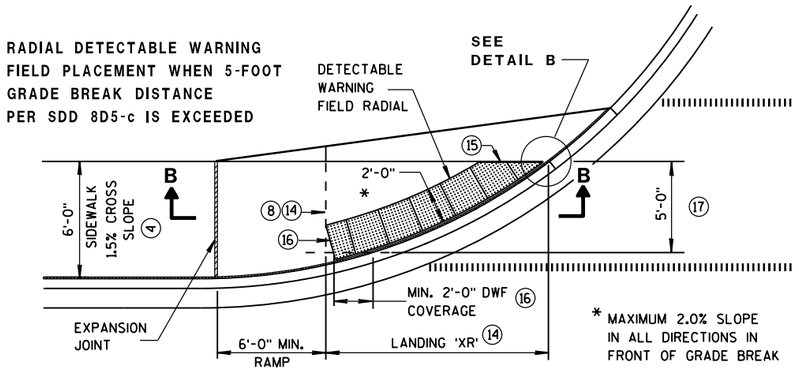

* MAXIMUM 2.0% SLOPE IN ALL DIRECTIONS IN FRONT OF GRADE BREAK

CURB RAMP TYPE 4A1
PLAN VIEW
(GRADE BREAK DISTANCE GREATER THAN 5 FEET)

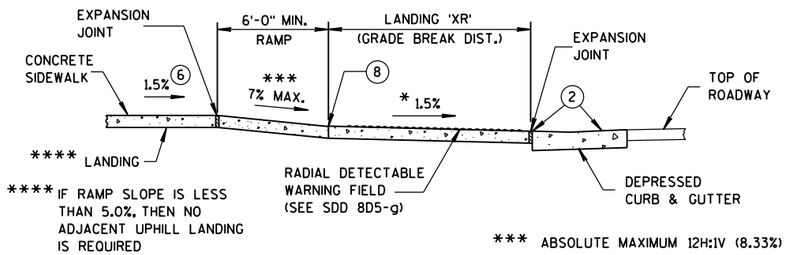

**** IF RAMP SLOPE IS LESS THAN 5.0%, THEN NO ADJACENT UPHILL LANDING IS REQUIRED

*** ABSOLUTE MAXIMUM 12H:1V (8.33%)

SECTION B-B FOR TYPE 4A1

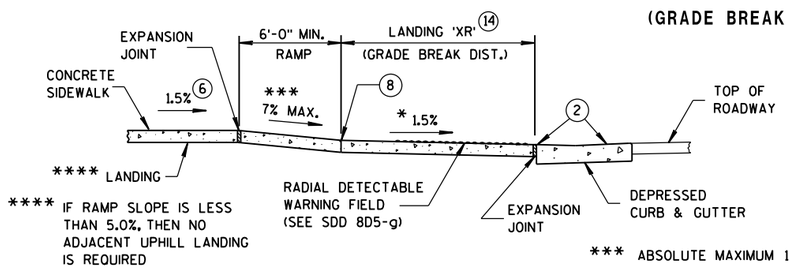

**** IF RAMP SLOPE IS LESS THAN 5.0%, THEN NO ADJACENT UPHILL LANDING IS REQUIRED

*** ABSOLUTE MAXIMUM 12H:1V (8.33%)

SECTION C-C FOR TYPE 4B1

GENERAL NOTES

AVOID PLACING DRAINAGE STRUCTURES, JUNCTION BOXES OR OTHER OBSTRUCTIONS IN FRONT OF RAMP ACCESS AREAS.

DETECTABLE WARNING FIELDS (DWFs) THAT ARE INSTALLED AS A GROUP OR SIDE BY SIDE, SHALL BE FROM THE SAME MANUFACTURER.

APPLY RADIAL DETECTABLE WARNING PLACEMENT SIMILARLY FOR TYPE 4A AND 4A1 CURB RAMPS AND SIMILARLY FOR TYPE 4B AND 4B1 CURB RAMPS. TYPE 4A AND 4B CURB RAMPS ARE NOT SHOWN.

REFER TO SDD 8D5-g FOR ADDITIONAL RADIAL PLATE REQUIREMENTS.

FIELD CUTS AT INTERMEDIATE JOINTS WITHIN THE RADIAL DETECTABLE WARNING FIELD ARE PROHIBITED.

DETERMINE FINAL RADIAL WARNING FIELD CONFIGURATION AND ITS INDIVIDUAL PLATE LOCATIONS. PERFORM PRE-LAYOUT PRIOR TO PLACEMENT IN PLASTIC CONCRETE. FOLLOW MANUFACTURER'S PRODUCT LIST AND INSTALLATION RECOMMENDATIONS.

(2) GRADE CHANGE BETWEEN GUTTER FLAG SLOPE AND THE CURB RAMP SLOPE SHALL NOT EXCEED 11%. MAXIMUM GUTTER FLAG SLOPE IS 4%. PROVIDE LONGITUDINAL DRAINAGE AROUND CURB AND AWAY FROM CURB RAMP. NO VERTICAL LIPS OR DISCONTINUITIES GREATER THAN ¼-INCH ARE ALLOWED. SLOPE OF CURB HEAD OPENING SHALL MATCH THE RAMP SLOPE, MINIMALLY 1.5% AND NOT TO EXCEED 7%. WHEN ADJACENT TO 1.5% LANDING, CONSTRUCT CURB HEAD OPENING AT 1.5% IN THE DIRECTION OF PEDESTRIAN TRAVEL.

(3) ABSOLUTE MAXIMUM 12H:1V (8.33%) CURB RAMP SLOPE IS ALLOWABLE WITH FLATTENED GUTTER FLAG SLOPE AND NOT TO EXCEED 11% GRADE CHANGE.

(4) ±0.5% CONSTRUCTION TOLERANCE IN SIDEWALK CROSS SLOPE. THE SIDEWALK CROSS SLOPE SHALL NOT EXCEED 2% WITHOUT PRIOR APPROVAL FROM THE ENGINEER.

(6) PROVIDE A LEVEL LANDING (MAXIMUM 2% SLOPE) IN ANY DIRECTION OF PEDESTRIAN TRAVEL. STANDARD LANDING SIZE IS 5 FEET X 5 FEET.

(8) PROVIDE GRADE BREAK PERPENDICULAR TO DIRECTION OF WHEELCHAIR TRAVEL.

(14) CONSULT ENGINEER IF GRADE BREAK LOCATION (END OF LANDING DIMENSION 'XR') REQUIRES FIELD ADJUSTMENT WHEN ESTABLISHING FINAL RADIAL DETECTABLE WARNING FIELD LOCATION.

(15) FIELD SAW CUTS ALONG RADIAL DETECTABLE WARNING PLATES WILL BE NECESSARY TO MATCH EACH CURB RAMP EDGE. AVOID CUTTING THROUGH DOMES WHENEVER POSSIBLE. MAKE FIELD CUTS TRUE TO LINE AND WITHIN 1/8" DEVIATION. SMOOTH EDGES OF FIELD CUT PLATES.

(16) USE 1'X 2' RECTANGULAR END PLATE AT END OF TYPE 4A1 RAMP AND PROVIDE MINIMUM 2'-0" DETECTABLE WARNING FIELD COVERAGE (IN DIRECTION OF PEDESTRIAN TRAVEL) ALONG THE ENTIRE CURB RAMP WIDTH.

(17) A MAXIMUM 3-INCH CONCRETE BORDER WIDTH IS ALLOWABLE IN FRONT OF RADIAL DETECTABLE WARNING FIELD FOR CONSTRUCTABILITY PURPOSES. CONCRETE BORDER WIDTH MAY VARY UP TO 1 INCH.

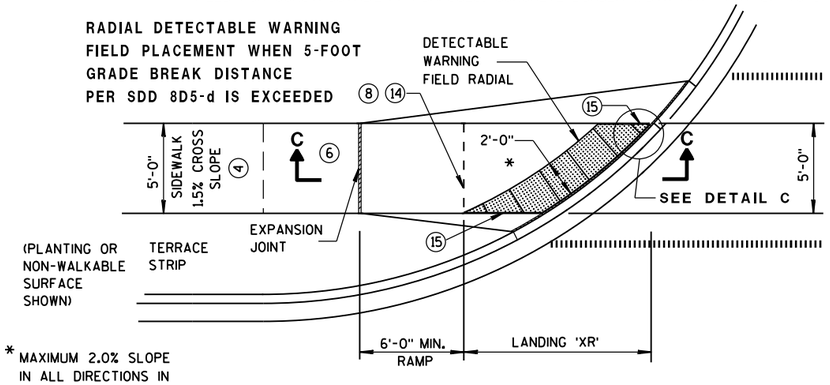

* MAXIMUM 2.0% SLOPE IN ALL DIRECTIONS IN FRONT OF GRADE BREAK

CURB RAMP TYPE 4B1
PLAN VIEW
(GRADE BREAK DISTANCE GREATER THAN 5 FEET)

CURB RAMPS
RADIAL DETECTABLE WARNING FIELD APPLICATIONS

STATE OF WISCONSIN
DEPARTMENT OF TRANSPOR

6

S.D.D. 8 D 5-19f
S.D.D. 8 D 5-19f

	MIN.	MAX.
A	1.6"	2.4"
B	0.65"	1.5"
C	*	*
D	0.9"	1.4"

* THE C DIMENSION IS 50% TO 65% OF THE D DIMENSION.

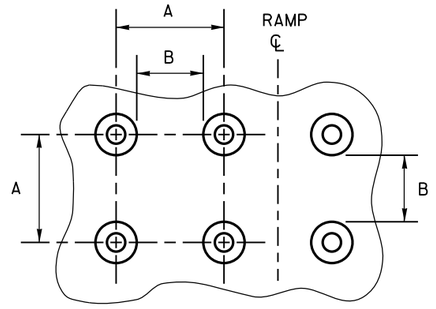

PLAN VIEW

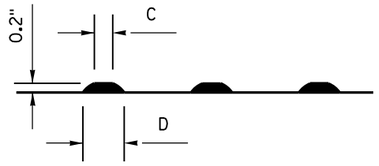

ELEVATION VIEW

TRUNCATED DOMES

DETECTABLE WARNING PATTERN DETAIL

GENERAL NOTES

DETECTABLE WARNING FIELDS THAT ARE INSTALLED AS A GROUP OR SIDE BY SIDE, SHALL BE FROM THE SAME MANUFACTURER.

PLACE ALL DETECTABLE WARNING FIELD SYSTEMS IN ACCORDANCE TO THE MANUFACTURER'S RECOMMENDATION.

FIELD CUTS AT INTERMEDIATE JOINTS WITHIN THE RADIAL DETECTABLE WARNING FIELD ARE PROHIBITED.

DETERMINE FINAL RADIAL WARNING FIELD CONFIGURATION AND ITS INDIVIDUAL PLATE LOCATIONS. PERFORM PRE-LAYOUT PRIOR TO PLACEMENT IN PLASTIC CONCRETE. FOLLOW MANUFACTURER'S PRODUCT LIST AND INSTALLATION RECOMMENDATIONS.

FOR RADIAL DETECTABLE WARNING FIELD APPLICATIONS WHERE STANDARD RADIAL PLATES ARE NOT AVAILABLE AT AN INTERSECTION CURB RADIUS, A COMBINATION OF SQUARE OR RECTANGULAR PLATES AND RADIAL PLATES MAY BE USED TO FORM RADIAL CONFIGURATION. RADIAL WEDGES IN COMBINATION WITH SQUARE PANELS ARE ALSO ACCEPTABLE. FOLLOW MANUFACTURER'S RECOMMENDATIONS.

REFER TO CONTRACT AND STANDARD SPECIFICATIONS FOR FIELD CUTTING REQUIREMENTS.

DO NOT EMBED IN CONCRETE ANY FIELD-CUT PLATES WITH CUT EDGES SHORTER THAN 6 INCHES. CONSULT WITH MANUFACTURER FOR RE-DRILLING AND ANCHORING REQUIREMENTS OF FIELD-CUT PLATES.

⑮ FIELD SAW CUTS ALONG RADIAL DETECTABLE WARNING PLATES WILL BE NECESSARY TO MATCH EACH CURB RAMP EDGE. AVOID CUTTING THROUGH DOMES WHENEVER POSSIBLE. MAKE FIELD CUTS TRUE TO LINE AND WITHIN 1/8" DEVIATION. SMOOTH EDGES OF FIELD CUT PLATES.

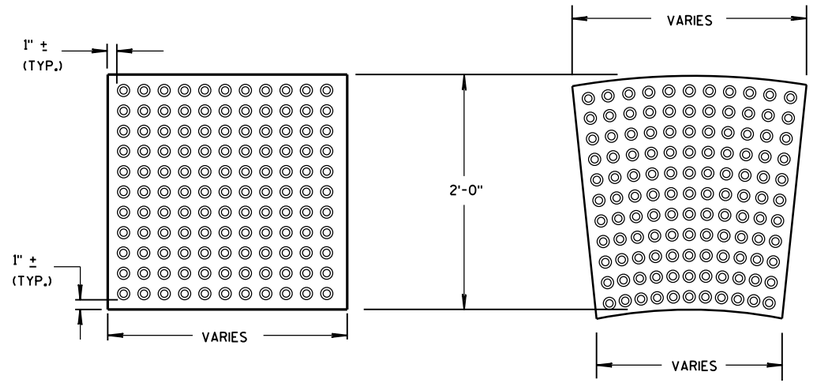

RECTANGULAR PLATES

RADIAL PLATES

DETECTABLE WARNING FIELDS (TYPICAL)

PLAN VIEW

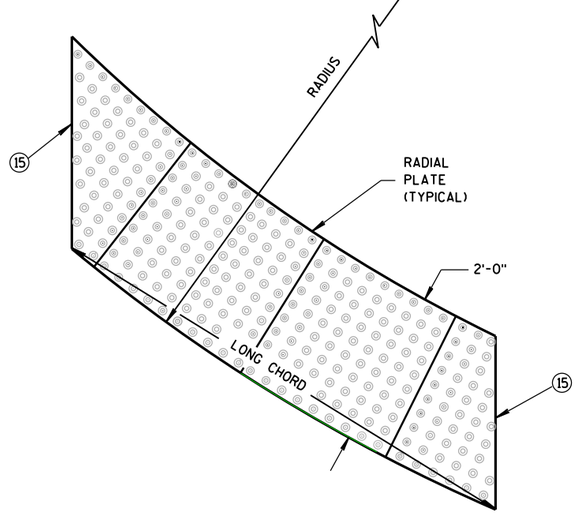

RADIAL DETECTABLE WARNING FIELD ATTRIBUTES

CURB RAMPS
RECTANGULAR AND RADIAL
DETECTABLE WARNING PLATES

STATE OF WISCONSIN
DEPARTMENT OF TRANSPORTATION

APPROVED
June, 2017 — DATE
/S/ Rodney Taylor — ROADWAY STANDARDS UNIT SUPERV
ENT
FHWA

6

S.D.D. 8 D 5-19g

6

S.D.D. 8 D 5-19g

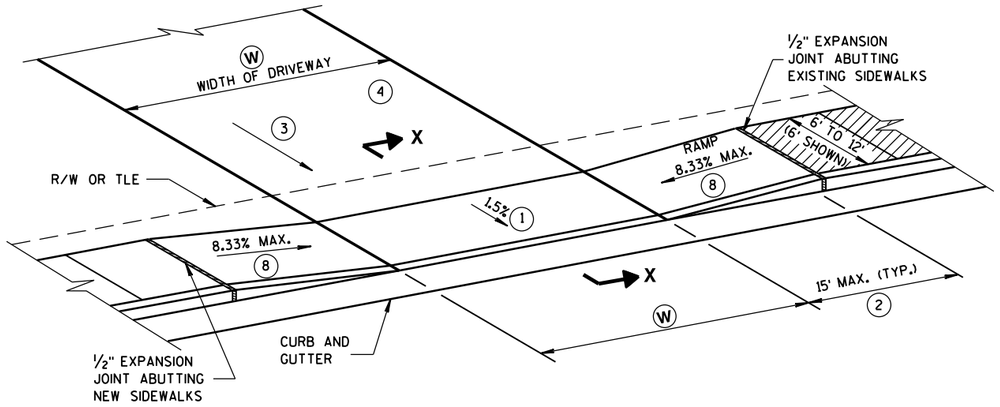

TYPE X
SIDEWALK ABUTS CURB & GUTTER
TERRACE VARIES 0 TO 3 FEET

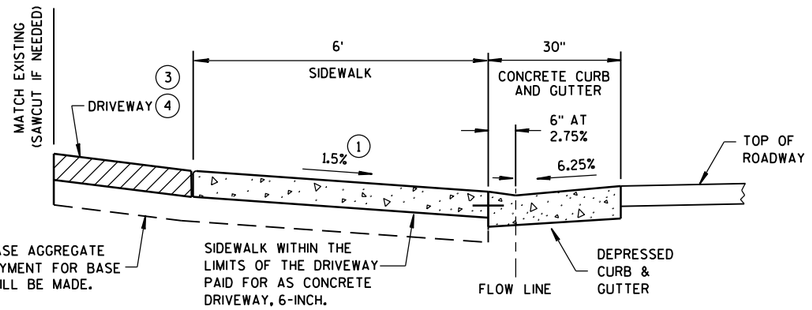

SECTION X-X

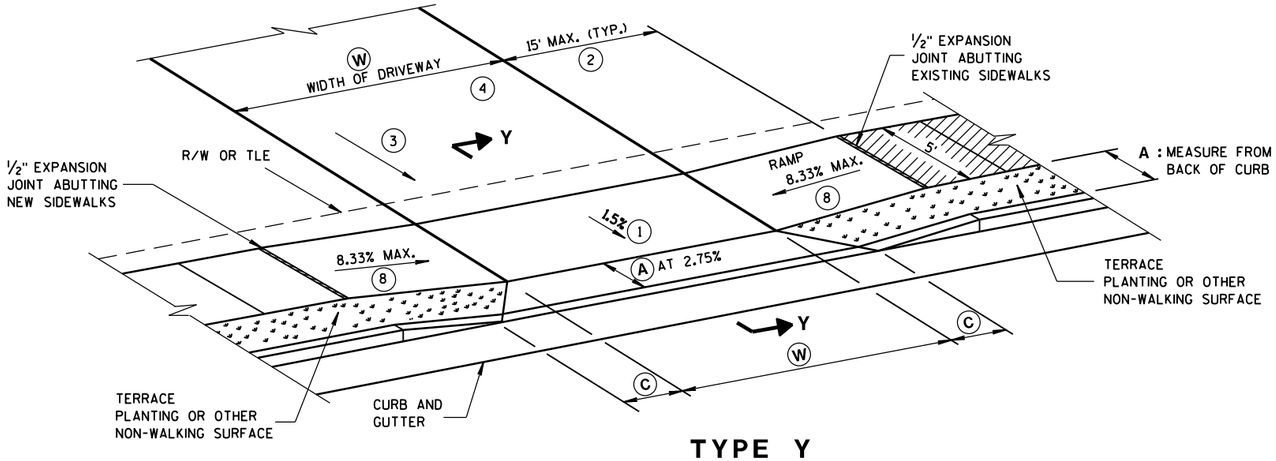

TYPE Y
SIDEWALK WITH NARROWER TERRACE
TERRACE VARIES 4 TO 6 FEET

W: 12' MIN. - 24' MAX. RESIDENTIAL AND NON-COMMERCIAL (PE & FE)
16' MIN. - 35' MAX. COMMERCIAL (CE)

GENERAL NOTES

1. CONSTRUCTION TOLERANCE OF 0.5% ± FOR SIDEWALK CROSS SLOPE. THE SIDEWALK CROSS SLOPE SHALL NOT EXCEED 2%.
2. THE SIDEWALK RAMP MAXIMUM RUNNING SLOPE SHALL NOT REQUIRE THE RAMP LENGTH TO EXCEED 15 FEET TO AVOID CHASING THE SLOPE INDEFINITELY WHEN CONNECTING TO STEEP GRADES. WHEN APPLYING THE 15 FOOT MAXIMUM LENGTH, THE RUNNING SLOPE OF THE SIDEWALK SHALL BE AS FLAT AS FEASIBLE AND NOT EXCEED THE LONGITUDINAL GRADE OF THE ROADWAY.
3. DRIVEWAY SLOPES: DESIRABLE MAXIMUM
   - 10.5% UP AWAY FROM SIDEWALK (SAG)
   - 8.5% DOWN AWAY FROM SIDEWALK (CREST)
   - ABSOLUTE MAXIMUM 15% FOR BOTH CREST AND SAG
4. DRIVEWAY TYPES
   - 6-INCH CONCRETE DRIVEWAY PAVEMENT OVER 6-INCH BASE AGGREGATE
   - 2-INCH TO 3-INCH ASPHALTIC SURFACE OVER 6-INCH BASE AGGREGATE
   - 6-INCH BASE AGGREGATE (MAY BE INCREASED FOR CLAY SUBGRADES)
5. PROVIDE CONSTRUCTION JOINTS ALONG THE CENTER OF THE CONCRETE FOR DRIVEWAYS UNDER 20 FEET IN WIDTH AND AT THE THIRD POINTS OVER 20 FEET IN WIDTH.
6. (W) IS SHOWN ON PLAN AND PROFILE SHEETS.
7. OFFSETS, ELEVATIONS, AND PERCENT GRADE ARE SHOWN ON THE CROSS SECTIONS.
8. SLOPE SIDEWALK RAMP TOWARD APRON AS SHOWN WHERE THERE IS NO TERRACE OR WHERE THE TERRACE WIDTH IS LESS THAN 6 FEET WIDE.

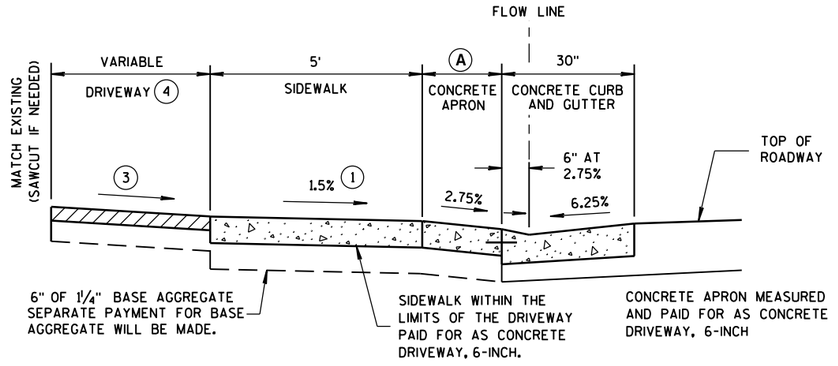

NOTE: SIDEWALK MAY BE DEPRESSED IN DRIVEWAY AREAS

SECTION Y-Y

DRIVEWAY DETAIL
WITH CONCRETE CURB & GUTTER
(URBAN AND SUBURBAN)

TABLE Y

(A) FEET	(C) FEET
3.5'	2.0'
4.5'	3.0'
5.5'	3.5'

NOT TO SCALE

DRIVEWAY AND SIDEWALK RAMPS
TYPES X & Y

STATE OF WISCONSIN
DEPARTMENT OF TRANSPORTATION

APPROVED
December, 2016 — /S/ Rodney Taylor
DATE — ROADWAY STANDARDS UNIT SUPERV
FHWA

6

S.D.D. 8 D 18-1

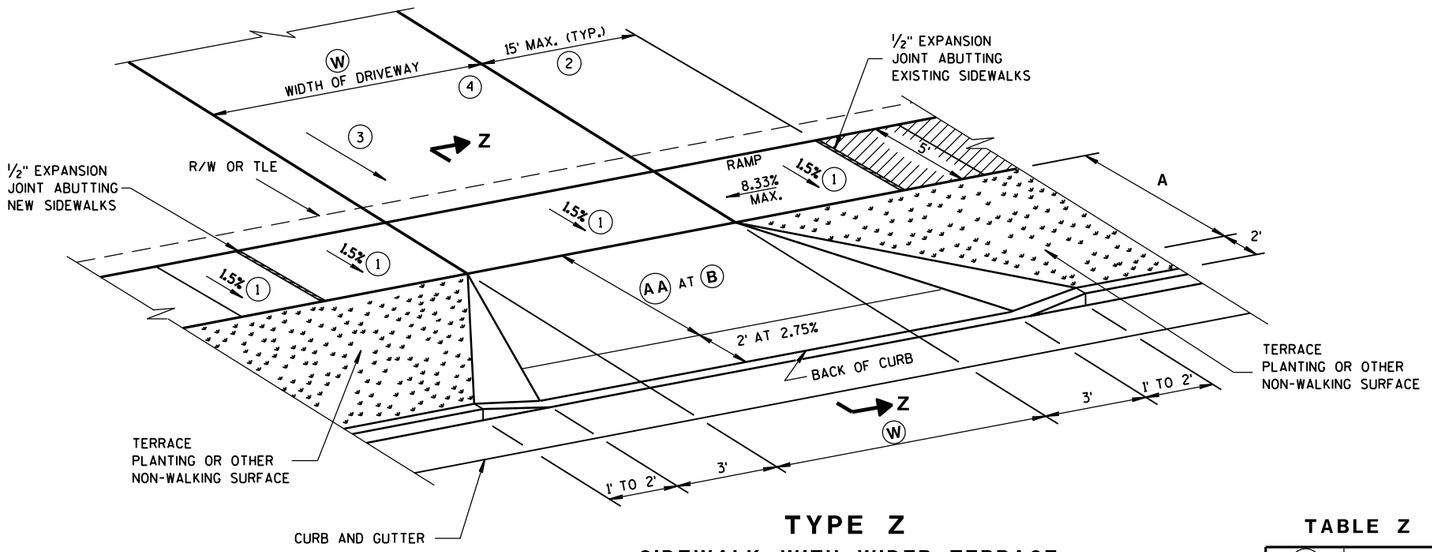

TYPE Z

SIDEWALK WITH WIDER TERRACE
TERRACE VARIES 7 TO 12 FEET

TABLE Z

AA FEET	B %
4.5'	11.5%
5.5'	9-11.5%
6.5'	8-11.5%
7.5'	7-11.5%
8.5'	6-11.5%
9.5'	5-11.5%

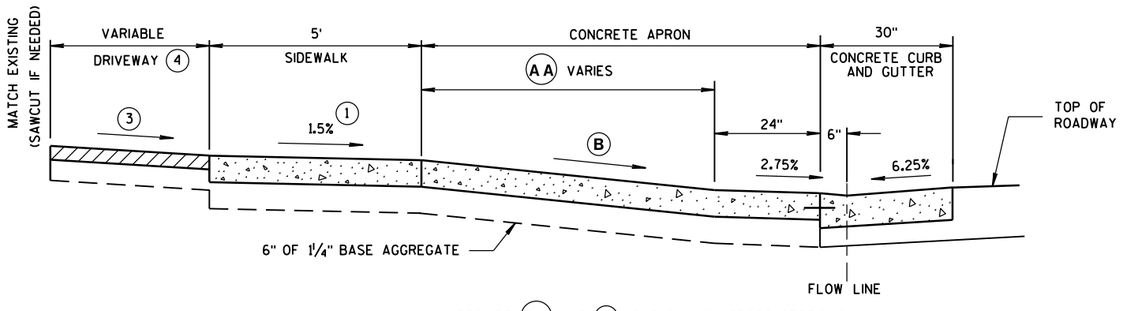

PROVIDE (AA) AND (B) AS SHOWN ON CROSS SECTIONS.

NOTE: SIDEWALK MAY BE DEPRESSED IN DRIVEWAY AREAS FOR **B** VALUES NOT SHOWN IN TABLE Z.

SIDEWALK WITHIN THE LIMITS OF THE DRIVEWAY PAID FOR AS CONCRETE DRIVEWAY, 6-INCH.

SEPARATE PAYMENT FOR BASE AGGREGATE WILL BE MADE.

CONCRETE APRON MEASURED AND PAID FOR AS CONCRETE DRIVEWAY, 6-INCH

SECTION Z-Z

DRIVEWAY DETAIL WITH CONCRETE CURB & GUTTER

(URBAN AND SUBURBAN)

(W): 12' MIN. - 24' MAX. RESIDENTIAL AND NON-COMMERCIAL (PE & FE)
16' MIN. - 35' MAX. COMMERCIAL (CE)

GENERAL NOTES

1. CONSTRUCTION TOLERANCE OF 0.5% ± FOR SIDEWALK CROSS SLOPE. THE SIDEWALK CROSS SLOPE SHALL NOT EXCEED 2%.

2. THE SIDEWALK RAMP MAXIMUM RUNNING SLOPE SHALL NOT REQUIRE THE RAMP LENGTH TO EXCEED 15 FEET TO AVOID CHASING THE SLOPE INDEFINITELY WHEN CONNECTING TO STEEP GRADES. WHEN APPLYING THE 15 FOOT MAXIMUM LENGTH, THE RUNNING SLOPE OF THE SIDEWALK SHALL BE AS FLAT AS FEASIBLE AND NOT EXCEED THE LONGITUDINAL GRADE OF THE ROADWAY.

3. DRIVEWAY SLOPES: DESIRABLE MAXIMUM
   10.5% UP AWAY FROM SIDEWALK (SAG)
   8.5% DOWN AWAY FROM SIDEWALK (CREST)
   ABSOLUTE MAXIMUM 15% FOR BOTH CREST AND SAG

4. DRIVEWAY TYPES
   - 6-INCH CONCRETE DRIVEWAY PAVEMENT OVER 6-INCH BASE AGGREGATE
   - 2-INCH TO 3-INCH ASPHALTIC SURFACE OVER 6-INCH BASE AGGREGATE
   - 6-INCH BASE AGGREGATE (MAY BE INCREASED FOR CLAY SUBGRADES)

5. PROVIDE CONSTRUCTION JOINTS ALONG THE CENTER OF THE CONCRETE FOR DRIVEWAYS UNDER 20 FEET IN WIDTH AND AT THE THIRD POINTS OVER 20 FEET IN WIDTH.

6. (W) IS SHOWN ON PLAN AND PROFILE SHEETS.

7. OFFSETS, ELEVATIONS, AND PERCENT GRADE ARE SHOWN ON THE CROSS SECTIONS.

NOT TO SCALE

DRIVEWAY AND SIDEWALK RAMPS TYPE Z

STATE OF WISCONSIN
DEPARTMENT OF TRANSPORTATION

APPROVED
December, 2016 /S/ Rodney Taylor
DATE ROADWAY STANDARDS UNIT SUPERV
FHWA

6

S.D.D. 8 D 19-1

6

S.D.D. 8 D 19-1

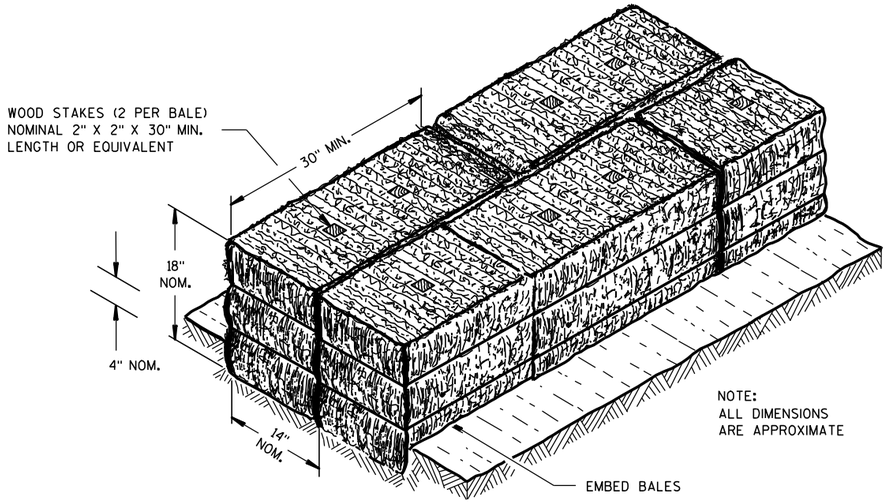

SECTION A-A

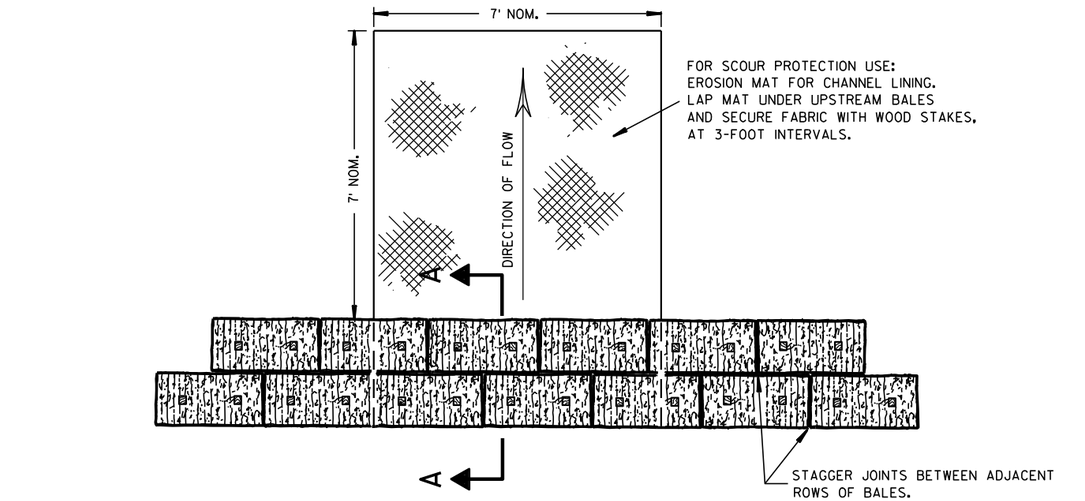

PLAN VIEW

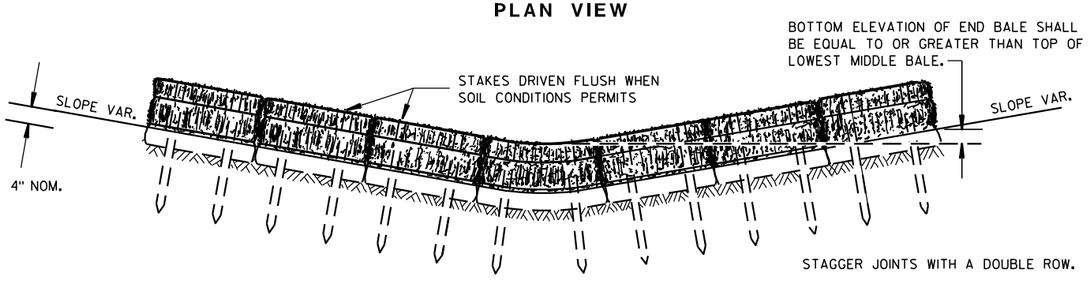

FRONT ELEVATION

TEMPORARY DITCH CHECK USING EROSION BALES ①

GENERAL NOTES

DETAILS OF CONSTRUCTION, MATERIALS AND WORKMANSHIP NOT SHOWN ON THIS DRAWING SHALL CONFORM TO THE PERTINENT REQUIREMENTS OF THE STANDARD SPECIFICATIONS AND THE APPLICABLE SPECIAL PROVISIONS.

① TEMPORARY DITCH CHECKS EITHER EROSION BALES OR MANUFACTURED SHALL BE PAID FOR UNDER THE BID ITEM OF TEMPORARY DITCH CHECK. THE DEPARTMENT WILL NOT PAY FOR TEMPORARY DITCH CHECKS CONSTRUCTED OF A SINGLE ROW OF EROSION BALES.

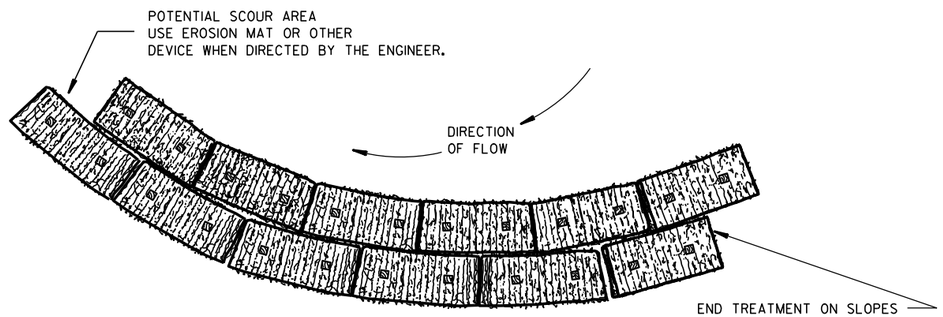

PLAN VIEW

WHEN ALTERING THE DIRECTION OF FLOW

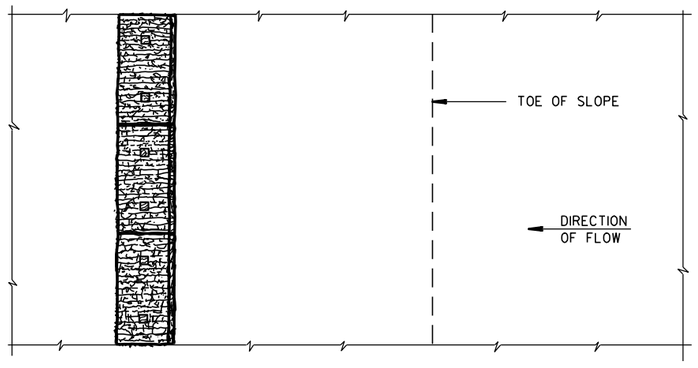

PLAN VIEW

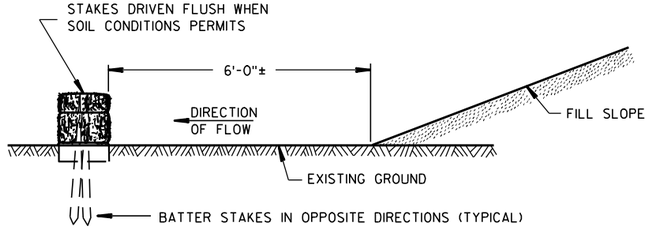

FRONT ELEVATION

WHEN EXISTING GROUND SLOPES AWAY FROM FILL SLOPE

EROSION BALES FOR SHEET FLOW

TYPICAL INSTALLATIONS OF EROSION BALES / TEMPORARY DITCH CHECKS

STATE OF WISCONSIN
DEPARTMENT OF TRANSPORTATION

APPROVED
6/04/02 DATE
/S/ Beth Cannestra
CHIEF ROADWAY DEVELOPMENT ENGINEER
FHWA

6
S.D.D. 8 E 8-3

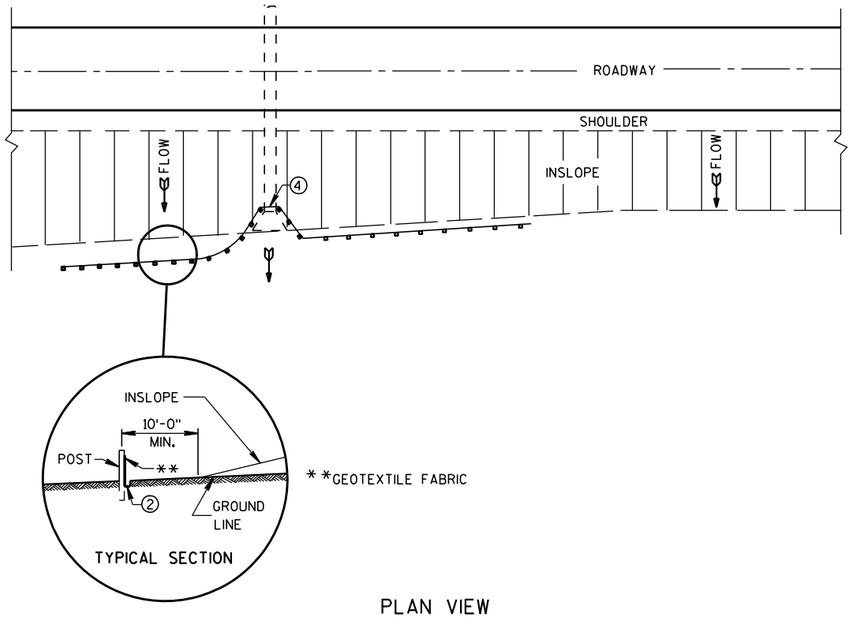

PLAN VIEW

TYPICAL APPLICATION OF SILT FENCE

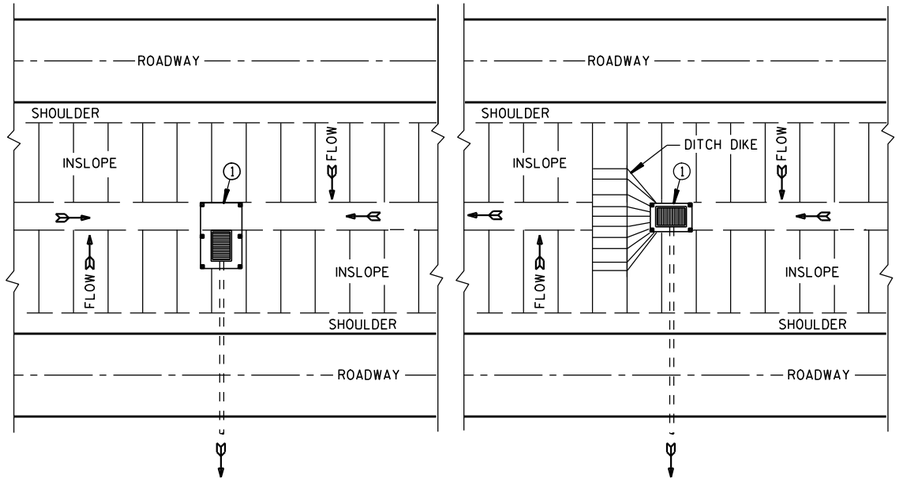

PLAN VIEW

SILT FENCE AT MEDIAN SURFACE DRAINS

GENERAL NOTES

DETAILS OF CONSTRUCTION NOT SHOWN ON THIS DRAWING SHALL CONFORM TO THE PERTINENT REQUIREMENTS OF THE STANDARD SPECIFICATIONS AND APPLICABLE SPECIAL PROVISIONS.

① HORIZONTAL BRACE REQUIRED WITH 2" X 4" WOODEN FRAME OR EQUIVALENT AT TOP OF POSTS.

② FOR MANUAL INSTALLATIONS THE TRENCH SHALL BE A MINIMUM OF 4" WIDE & 6" DEEP TO BURY AND ANCHOR THE GEOTEXTILE FABRIC. FOLD MATERIAL TO FIT TRENCH AND BACKFILL & COMPACT TRENCH WITH EXCAVATED SOIL.

③ WOOD POSTS SHALL BE A MINIMUM SIZE OF 1⅛" X 1⅛" OF OAK OR HICKORY.

④ SILT FENCE TO EXTEND ACROSS THE TOP OF THE PIPE.

⑤ CONSTRUCT SILT FENCE FROM A CONTINUOUS ROLL IF POSSIBLE BY CUTTING LENGTHS TO AVOID JOINTS. IF A JOINT IS NECESSARY USE ONE OF THE FOLLOWING TWO METHODS; A) OVERLAP THE END POSTS AND TWIST, OR ROTATE, AT LEAST 180 DEGREES, B) HOOK THE END OF EACH SILT FENCE LENGTH.

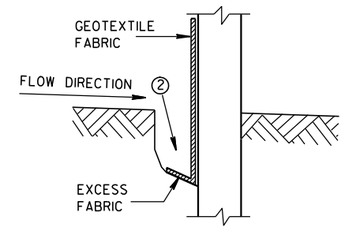

TRENCH DETAIL

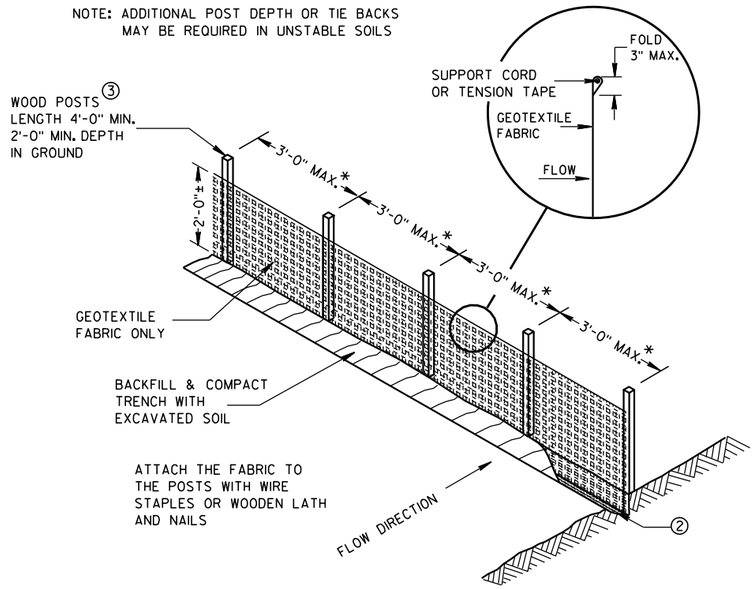

SILT FENCE

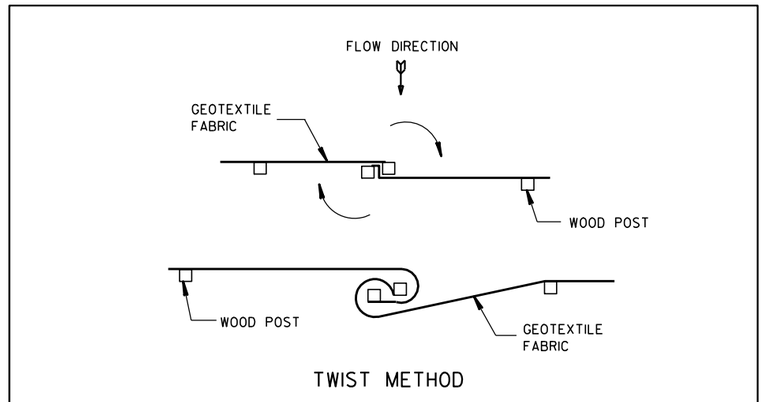

JOINING TWO LENGTHS OF SILT FENCE ⑤

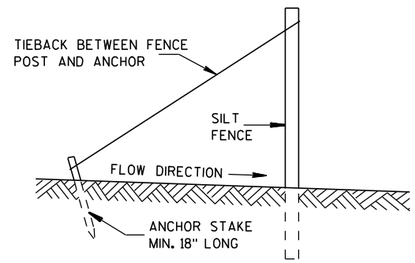

SILT FENCE TIE BACK

(WHEN REQUIRED BY THE ENGINEER)

SILT FENCE

STATE OF WISCONSIN
DEPARTMENT OF TRANSPORTATION

APPROVED
4-29-05 DATE
/S/ Beth Cannestra
CHIEF ROADWAY DEVELOPMENT ENGINEER
FHWA

6

S.D.D. 8 E 9-6

6

S.D.D. 8 E 9-6

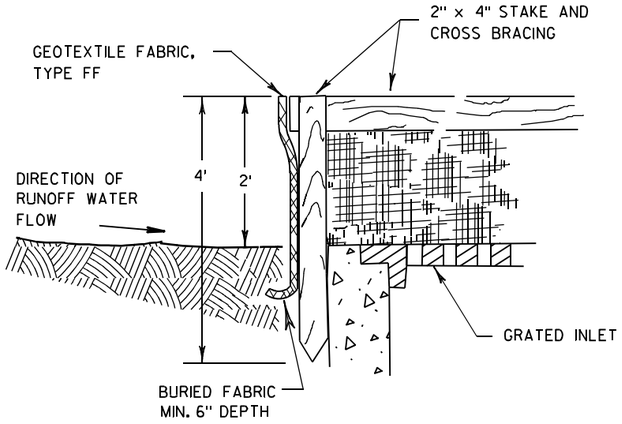

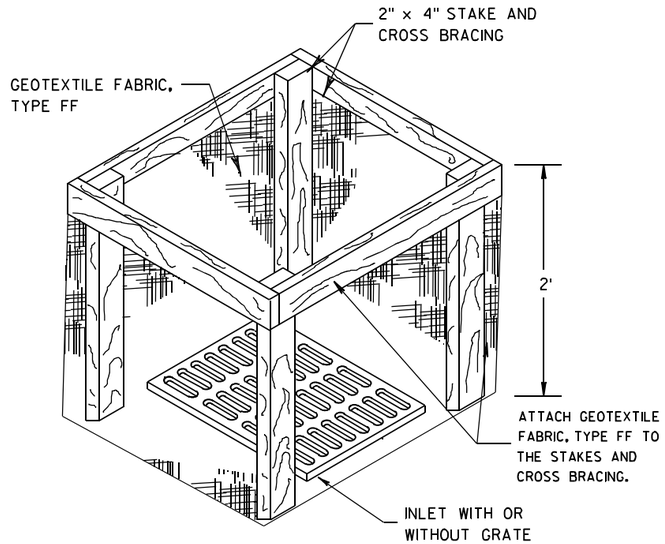

INLET PROTECTION, TYPE A

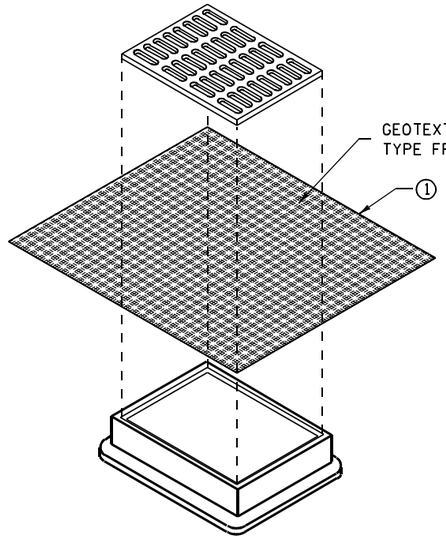

INLET PROTECTION, TYPE B
(WITHOUT CURB BOX)

(CAN BE INSTALLED IN ANY INLET WITHOUT A CURB BOX)

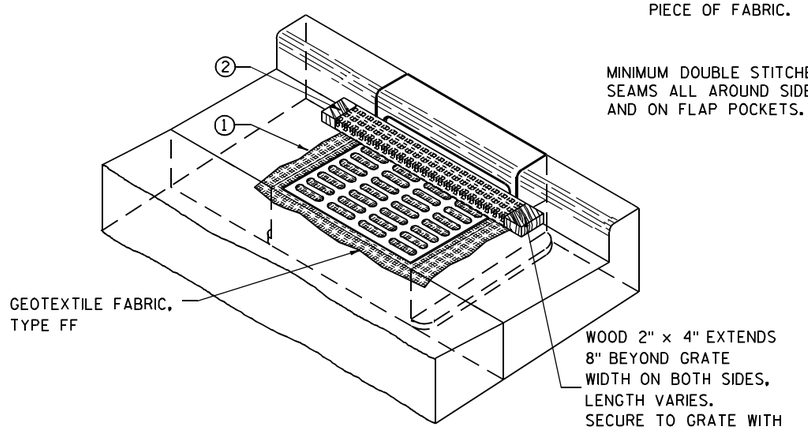

INLET PROTECTION, TYPE C (WITH CURB BOX)

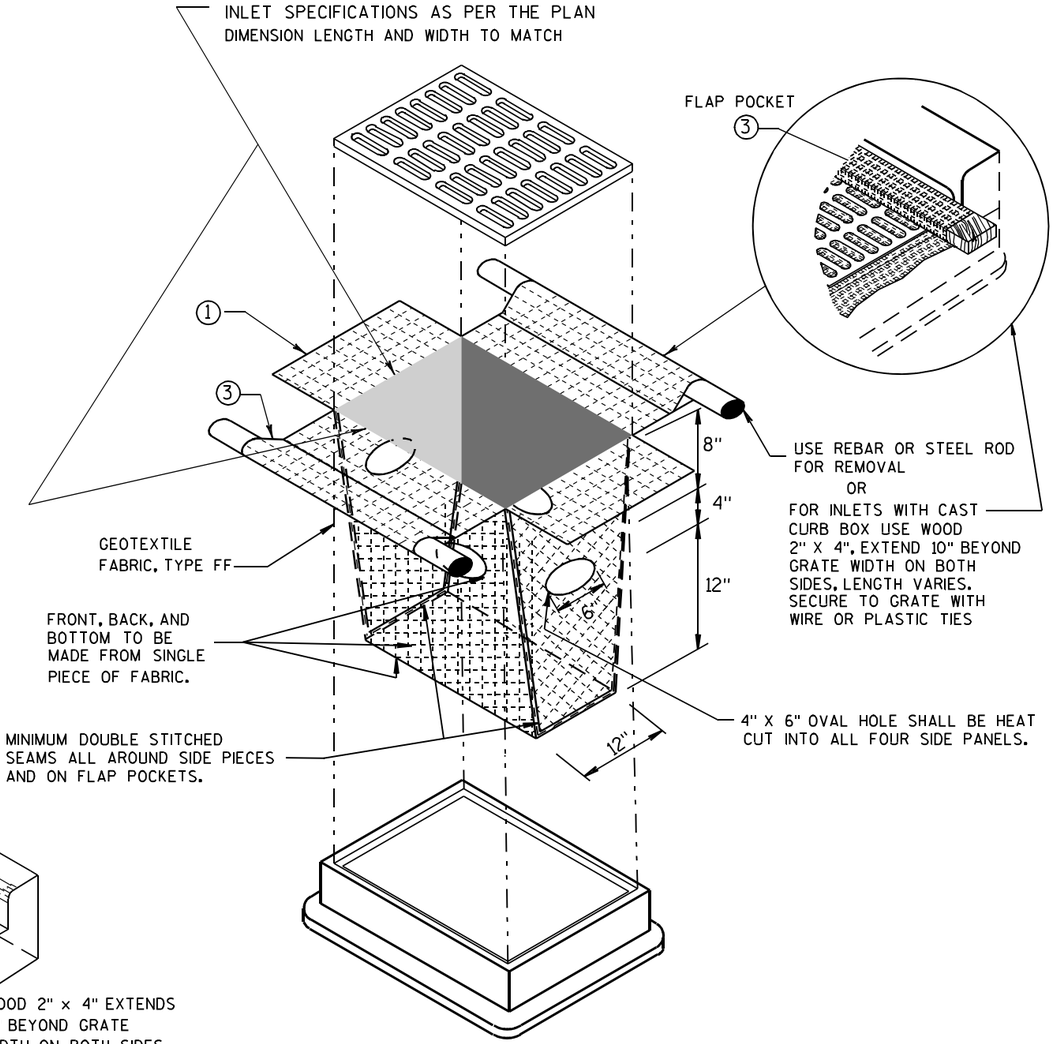

INLET PROTECTION, TYPE D

(CAN BE INSTALLED IN ANY INLET TYPE WITH
OR WITHOUT A CURB BOX AS PER NOTE ②)

GENERAL NOTES

INLET PROTECTION DEVICES SHALL BE MAINTAINED OR REPLACED AT THE DIRECTION OF THE ENGINEER.

MANUFACTURED ALTERNATIVES APPROVED AND LISTED ON THE DEPARTMENT'S EROSION CONTROL PRODUCT ACCEPTABILITY LIST MAY BE SUBSTITUTED.

WHEN REMOVING OR MAINTAINING INLET PROTECTION, CARE SHALL BE TAKEN SO THAT THE SEDIMENT TRAPPED ON THE GEOTEXTILE FABRIC DOES NOT FALL INTO THE INLET. ANY MATERIAL FALLING INTO THE INLET SHALL BE REMOVED IMMEDIATELY.

① FINISHED SIZE, INCLUDING FLAP POCKETS WHERE REQUIRED, SHALL EXTEND A MINIMUM OF 10" AROUND THE PERIMETER TO FACILITATE MAINTENANCE OR REMOVAL.

② FOR INLET PROTECTION, TYPE C (WITH CURB BOX), AN ADDITIONAL 18" OF FABRIC IS WRAPPED AROUND THE WOOD AND SECURED WITH STAPLES. THE WOOD SHALL NOT BLOCK THE ENTIRE HEIGHT OF THE CURB BOX OPENING.

③ FLAP POCKETS SHALL BE LARGE ENOUGH TO ACCEPT WOOD 2X4.

INSTALLATION NOTES

TYPE B & C

TRIM EXCESS FABRIC IN THE FLOW LINE TO WITHIN 3" OF THE GRATE.

THE CONTRACTOR SHALL DEMONSTRATE A METHOD OF MAINTENANCE, USING A SEWN FLAP, HAND HOLDS OR OTHER METHOD TO PREVENT ACCUMULATED SEDIMENT FROM ENTERING THE INLET.

TYPE D

DO NOT INSTALL INLET PROTECTION TYPE D IN INLETS SHALLOWER THAN 30", MEASURED FROM THE BOTTOM OF THE INLET TO THE TOP OF THE GRATE.

TRIM EXCESS FABRIC IN THE FLOW LINE TO WITHIN 3" OF THE GRATE.

THE INSTALLED BAG SHALL HAVE A MINIMUM SIDE CLEARANCE, BETWEEN THE INLET WALLS AND THE BAG, MEASURED AT THE BOTTOM OF THE OVERFLOW HOLES, OF 3". WHERE NECESSARY THE CONTRACTOR SHALL CINCH THE BAG, USING PLASTIC ZIP TIES, TO ACHIEVE THE 3" CLEARANCE. THE TIES SHALL BE PLACED AT A MAXIMUM OF 4" FROM THE BOTTOM OF THE BAG.

INLET PROTECTION
TYPE A, B, C, AND D

STATE OF WISCONSIN
DEPARTMENT OF TRANSPORTATION

APPROVED

10/16/02
DATE

/S/ Beth Cannestra
CHIEF ROADWAY DEVELOPMENT ENGINEER

FHWA

6

S.D.D. 8 E 10-2

METAL APRON ENDWALLS

PIPE DIA. (IN.)	MIN. THICK. (Inches) STEEL	MIN. THICK. (Inches) ALUM.	DIMENSIONS (Inches) A (±1")	B (MAX.)	H (±1")	L (±1 1/2")	L1 ①	L2 ①	W (±2")	APPROX. SLOPE	BODY
12	.064	.060	6	6	6	21	12	17 1/2	24	2 1/2 to 1	1 Pc.
15	.064	.060	7	8	6	26	14	21 3/4	30	2 1/2 to 1	1 Pc.
18	.064	.060	8	10	6	31	15	28 1/4	36	2 1/2 to 1	1 Pc.
21	.064	.060	9	12	6	36	18	29 5/8	42	2 1/2 to 1	1 Pc.
24	.064	.075	10	13	6	41	18	37 1/4	48	2 1/2 to 1	1 Pc.
30	.079	.075	12	16	8	51	18	52 1/4	60	2 1/2 to 1	1 Pc.
36	.079	.105	14	19	9	60	24	59 3/4	72	2 1/2 to 1	2 Pc.
42	.109	.105	16	22	11	69	24	75 5/8	84	2 1/2 to 1	2 Pc.
48	.109	.105	18	27	12	78	24	81	90	2 1/4 to 1	3 Pc.
54	.109	.105	18	30	12	84	30	85 1/2	102	2 1/4 to 1	3 Pc.
60	.109×	.105×	18	33	12	87	—	—	114	2 to 1	3 Pc.
66	.109×	.105×	18	36	12	87	—	—	120	2 to 1	3 Pc.
72	.109×	.105×	18	39	12	87	—	—	126	2 to 1	3 Pc.
78	.109×	.105×	18	42	12	87	—	—	132	1 1/2 to 1	3 Pc.
84	.109×	.105×	18	45	12	87	—	—	138	1 1/2 to 1	3 Pc.
90	.109×	.105×	18	37	12	87	—	—	144	1 1/2 to 1	3 Pc.
96	.109×	.105×	18	35	12	87	—	—	150	1 1/2 to 1	3 Pc.

× EXCEPT CENTER PANEL SEE GENERAL NOTES

REINFORCED CONCRETE APRON ENDWALLS

PIPE DIA. (IN.)	DIMENSIONS (Inches) T	A	B	C	D	E	G	APPROX. SLOPE
12	2	4	24	48 7/8	72 1/8	24	2	3 to 1
15	2 1/4	6	27	46	73	30	2 1/4	3 to 1
18	2 1/2	9	27	46	73	36	2 1/2	3 to 1
21	2 3/4	9	36	37 1/2	73 1/2	42	2 3/4	3 to 1
24	3	9 1/2	43 1/2	30	73 1/2	48	3	3 to 1
27	3 1/4	10 1/2	49 1/2	24	73 1/2	54	3 1/4	3 to 1
30	3 1/2	12	54	19 3/4	73 1/2	60	3 1/2	3 to 1
36	4	15	63	34 3/4	97 3/4	72	4	3 to 1
42	4 1/2	21	63	35	98	78	4 1/2	3 to 1
48	5	24	72	26	98	84	5	3 to 1
54	5 1/2	27	65	* 33 1/4 - ** 35	* 98 1/4 - ** 100	90	5 1/2	2 2/5 to 1
60	6	* 30 - ** 35	60	39	99	96	5	2 to 1
66	6 1/2	* 24 - ** 30	* 72 - ** 78	* 21 - ** 27	99	102	5 1/2	2 to 1
72	7	* 24 - ** 36	78	21	99	108	6	2 to 1
78	7 1/2	* 24 - ** 36	78	21	99	114	6 1/2	2 to 1
84	8	36	90 1/2	21	111 1/2	120	6 1/2	1 1/2 to 1
90	8 1/2	41	87 1/2	24	111 1/2	132	6 1/2	1 1/2 to 1

*MINIMUM
**MAXIMUM

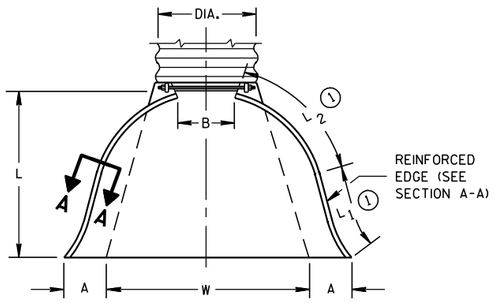

PLAN VIEW

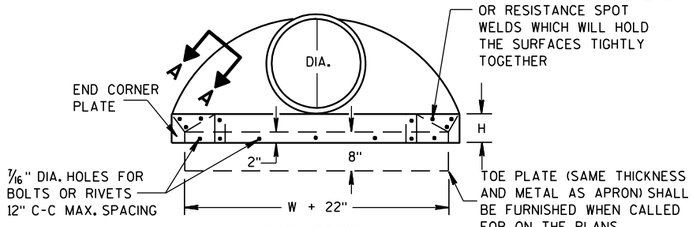

END VIEW

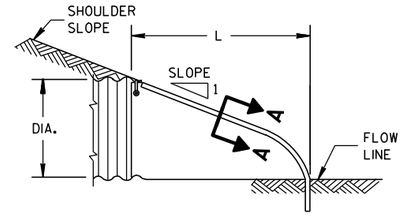

SIDE ELEVATION

METAL ENDWALLS

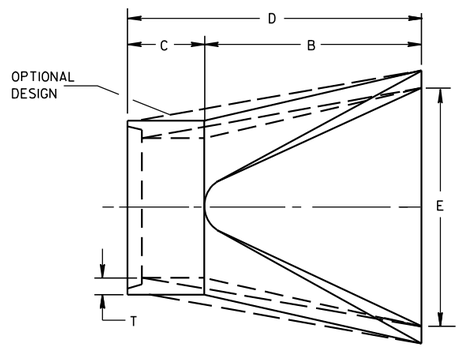

PLAN

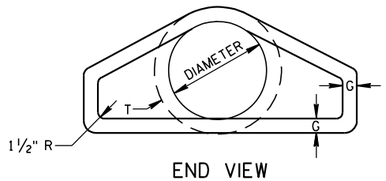

END VIEW

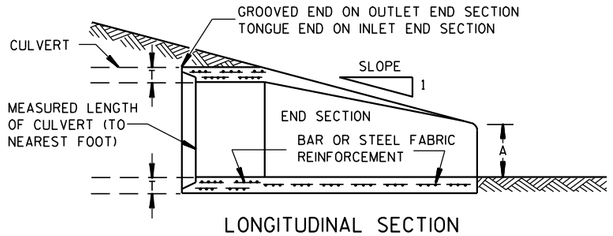

LONGITUDINAL SECTION

CONCRETE ENDWALLS

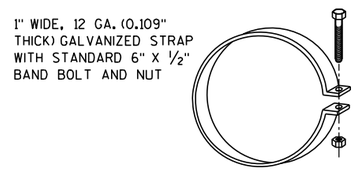

ALTERNATE FOR TYPE 1 CONNECTION

END SECTION CONNECTOR STRAP

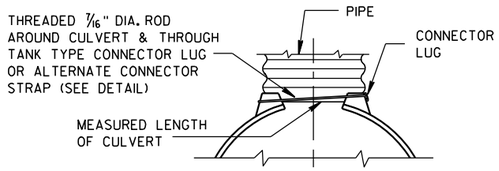

TYPE 1
FOR 12" THRU 24" CORR. PIPE

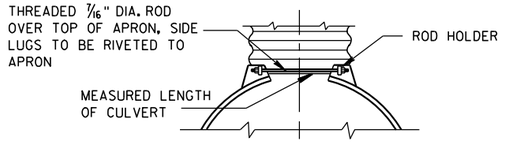

TYPE 2
FOR 30" THRU 96" CORR. PIPE

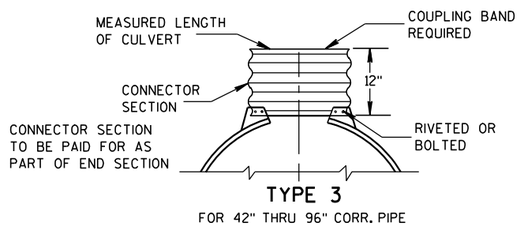

TYPE 3
FOR 42" THRU 96" CORR. PIPE

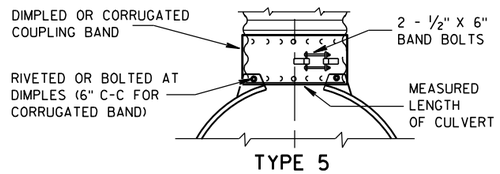

TYPE 5
ALTERNATE FOR:
ALL SIZES CORRUGATED CIRCULAR PIPE

NOTE: DIMPLED BAND FITS OVER OUTSIDE OF ENDWALL. AND CORRUGATED BAND FITS INSIDE ENDWALL. DIMPLED BAND MAY BE USED WITH HELICALLY CORRUGATED PIPE.

FOR CIRCUMFERENTIALLY CORRUGATED PIPE USE ENDWALL CONNECTION DETAILS 1, 2, 3 OR 5 AS APPLICABLE.

FOR HELICALLY CORRUGATED PIPE USE ENDWALL CONNECTION DETAILS 1, 2 OR 5.

FOR HELICALLY CORRUGATED PIPES WITH TWO CIRCUMFERENTIAL CORRUGATIONS AT EACH END USE ENDWALL CONNECTION DETAILS 1, 2 OR 3.

CONNECTION DETAILS

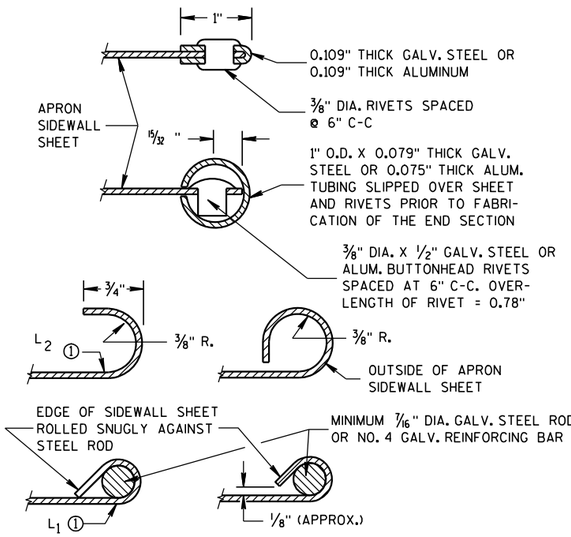

SECTION A-A

GENERAL NOTES

DETAILS OF CONSTRUCTION, MATERIALS AND WORKMANSHIP NOT SHOWN ON THIS DRAWING SHALL CONFORM TO THE PERTINENT REQUIREMENTS OF THE STANDARD SPECIFICATIONS AND THE APPLICABLE SPECIAL PROVISIONS.

CONCRETE CULVERT ENDWALLS MAY NOT BE USED WITH GALVANIZED STEEL OR ALUMINUM CULVERT PIPE OR VISE VERSA. GALVANIZED STEEL OR ALUMINUM ENDWALLS SHALL NORMALLY BE INSTALLED ON CULVERT PIPE OF THE SAME METAL.

ALL THREE PIECE STEEL APRON ENDWALLS FOR 60" DIAMETER PIPE AND LARGER SHALL HAVE 0.109" SIDES AND 0.138" CENTER PANELS. ALL THREE PIECE ALUMINUM APRON ENDWALLS FOR 60" DIAMETER PIPE AND LARGER SHALL HAVE 0.105" SIDES AND 0.134" CENTER PANELS. THE WIDTH OF CENTER PANELS SHALL BE GREATER THAN 20 PERCENT OF THE PIPE PERIMETER.

LAP SEAMS SHALL BE TIGHTLY JOINED BY GALVANIZED RIVETS OR BOLTS FOR STEEL UNITS AND ALUMINUM RIVETS AND BOLTS FOR ALUMINUM UNITS. FOR THE 60" THROUGH 96" DIAMETER APRON ENDWALL SIZES, THE REINFORCED EDGES AND CENTER PANEL SEAMS SHALL BE FURTHER REINFORCED WITH GALVANIZED STEEL OR ALUMINUM STIFFENER ANGLES. THE ANGLES SHALL BE ATTACHED BY GALVANIZED NUTS AND BOLTS FOR STEEL UNITS AND ALUMINUM NUTS AND BOLTS FOR ALUMINUM UNITS.

WHERE TWO OR MORE PIPES WITH APRON ENDWALLS ARE LAID ADJACENT TO EACH OTHER, THEY SHALL BE SEPARATED BY A DISTANCE SUFFICIENT TO PROVIDE A MINIMUM CLEARANCE OF 6 INCHES BETWEEN APRON ENDWALLS.

① FOR PIPE SIZES UP TO 60" DIAMETER, A 180° ROLLED EDGE MAY BE USED INSTEAD OF STEEL ROD REINFORCEMENT. SEE SECTION A-A.

APRON ENDWALLS FOR CULVERT PIPE

STATE OF WISCONSIN
DEPARTMENT OF TRANSPORTATION

APPROVED
11/30/94 DATE
/S/ Rory L. Rhinesmith
CHIEF ROADWAY DEVELOPMENT ENGINEER
FHWA

6
S.D.D. 8 F 1-11

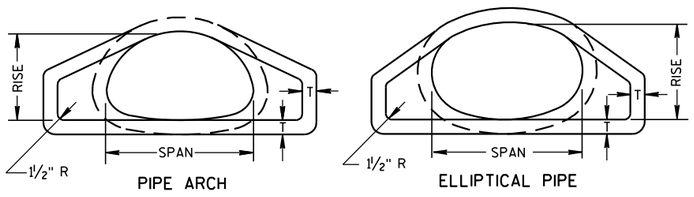

END VIEW

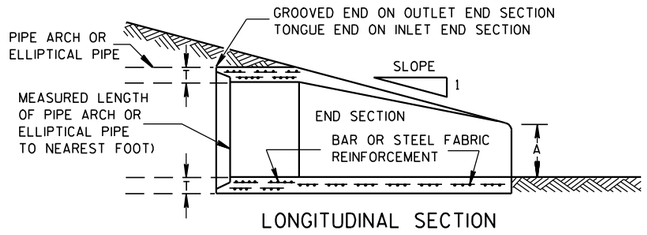

LONGITUDINAL SECTION

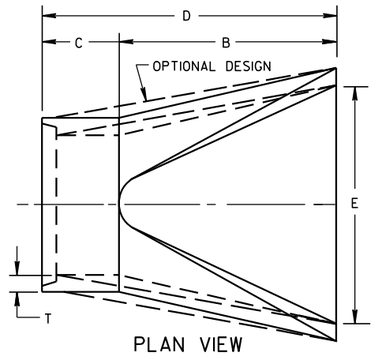

PLAN VIEW

CONCRETE ENDWALLS

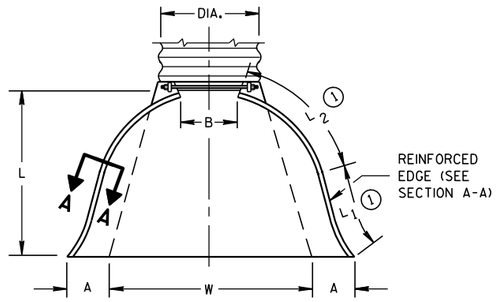

PLAN VIEW

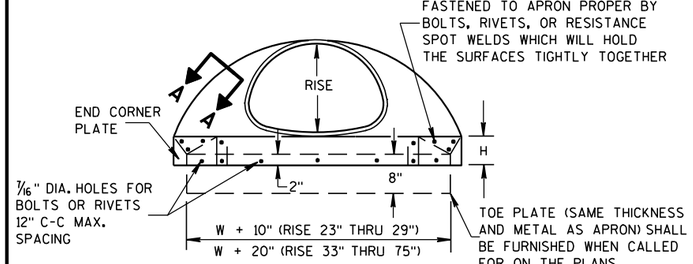

END VIEW

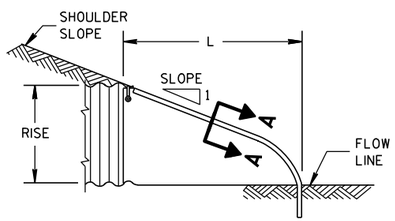

SIDE ELEVATION

METAL ENDWALLS

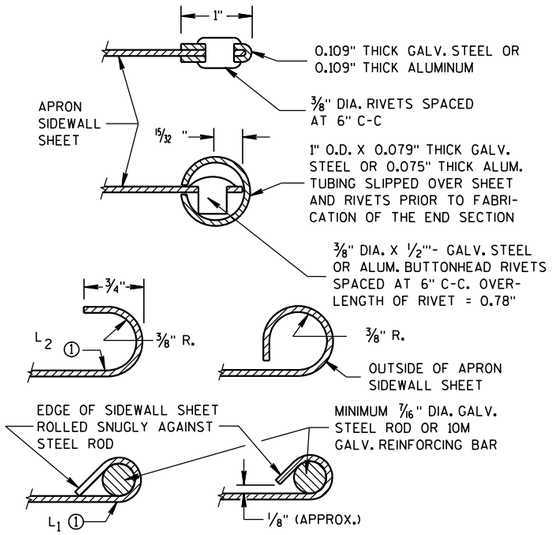

SECTION A-A

2- 2/3" X 1/2" CORRUGATIONS

EQUIV. DIA. (Inches)	(Inches) SPAN	(Inches) RISE	MIN. THICK. (Inches) STEEL	MIN. THICK. (Inches) ALUM.	DIMENSIONS (Inches) A (±1")	B (MAX.)	H (±1")	L (±1 1/2")	L1 ①	L2 ①	W (±2")	APPROX. SLOPE	BODY
15	17	13	.064	.060	7	9	6	19	14	16	30	2½ to 1	1 Pc.
18	21	15	.064	.060	7	10	6	23	14	19⅜	36	2½ to 1	1 Pc.
21	24	18	.064	.060	8	12	6	28	18	21¾	42	2½ to 1	1 Pc.
24	28	20	.064	.060	9	14	6	32	18	27½	48	2½ to 1	1 Pc.
30	35	24	.079	.075	10	16	6	39	18	37⅝	60	2½ to 1	1 Pc.
36	42	29	.079	.075	12	18	8	46	24	45⅜	75	2½ to 1	1 Pc.
42	49	33	.109	.105	13	21	9	53	24	54¾	85	2½ to 1	2 Pc.
48	57	38	.109	.105	18	26	12	63	24	68	90	2½ to 1	3 Pc.
54	64	43	.109	.105	18	30	12	70	24	72¾	102	2¼ to 1	3 Pc.
60	71	47	.109*	.105*	18	33	12	77	30	82¼	114	2¼ to 1	3 Pc.
66	77	52	.109*	.105*	18	36	12	77	—	—	126	2 to 1	3 Pc.
72	83	57	.109*	.105*	18	39	12	77	—	—	138	2 to 1	3 Pc.

3" X 1" CORRUGATIONS

EQUIV. DIA. (Inches)	(Inches) SPAN	(Inches) RISE	MIN. THICK. (Inches) STEEL	MIN. THICK. (Inches) ALUM.	DIMENSIONS (Inches) A (±1")	B (MAX.)	H (±1")	L (±1 1/2")	L1 ①	L2 ①	W (±2")	APPROX. SLOPE	BODY
48	53	41	.109	.105	18	26	12	63	24	72¾	90	2½ to 1	2 Pc.
54	60	46	.109	.105	18	30	12	70	30	82¼	102	2 to 1	2 Pc.
60	66	51	.109*	.105*	18	33	12	77	—	—	114	1½ to 1	3 Pc.
66	73	55	.109*	.105*	18	36	12	77	—	—	126	1½ to 1	3 Pc.
72	81	59	.109*	.105*	18	39	12	77	—	—	138	2 to 1	3 Pc.
78	87	63	.109*	.105*	22	38	12	77	—	—	148	1½ to 1	3 Pc.
84	95	67	.109*	.105*	22	34	12	77	—	—	162	1½ to 1	3 Pc.
90	103	71	.109*	.105*	22	38	12	77	—	—	174	1½ to 1	3 Pc.
96	112	75	.109*	.105*	24	40	12	77	—	—	174	1½ to 1	3 Pc.

NOTE: ALL SPLICES TO BE LAP RIVETED OR BOLTED.

* EXCEPT CENTER PANEL SEE GENERAL NOTES

REINFORCED CONCRETE PIPE ARCH

EQUIV. DIA. (Inches)	DIMENSIONS (Inches) ** SPAN	** RISE	T	A	B	C	D	E	APPROX. SLOPE
24	29	18	3	8½	39	33	72	48	3 to 1
30	36	22	3½	9½	50	46	96	60	3 to 1
36	44	27	4	11⅛	60	36	96	72	3 to 1
42	51	31	4½	15 13/16	60	36	96	78	3 to 1
48	58	36	5	21	60	36	96	84	3 to 1
54	65	40	5½	25½	60	36	96	90	3 to 1
60	73	45	6	31	60	36	96	96	3 to 1
72	88	54	7	31	60	39	99	120	2 to 1
84	102	62	8	28½	83	19	102	144	2 to 1

REINFORCED CONCRETE ELLIPTICAL PIPE

EQUIV. DIA. (Inches)	DIMENSIONS (Inches) ** SPAN	** RISE	T	A	B	C	D	E	APPROX. SLOPE
24	30	19	3¼	8½	39	33	72	48	3 to 1
30	38	24	3¾	9½	54	18	72	60	3 to 1
36	45	29	4½	11⅛	60	24	84	72	2½ to 1
42	53	34	5	15¾	60	36	96	78	2½ to 1
48	60	38	5½	21	60	36	96	84	2½ to 1
54	68	43	6	25½	60	36	96	90	2½ to 1
60	76	48	6½	30	60	36	96	96	2½ to 1

**NOMINAL SIZE

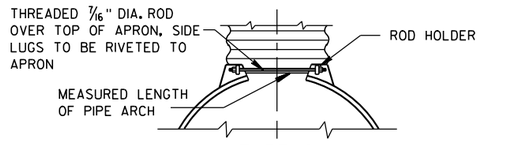

TYPE 2

FOR 17" X 13" THRU 112" X 75" PIPE ARCH

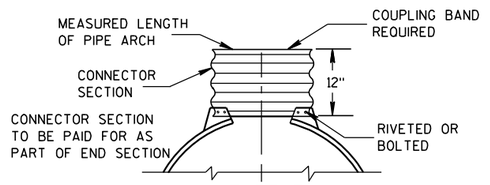

TYPE 3

FOR 64" X 43" THRU 112" X 75" PIPE ARCH

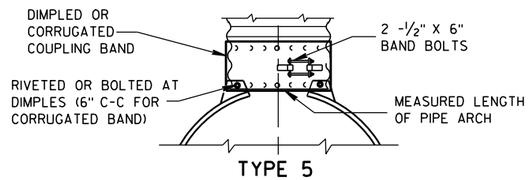

TYPE 5

ALTERNATE FOR:

ALL SIZES CORRUGATED PIPE ARCHES

NOTE: DIMPLED BAND FITS OVER OUTSIDE OF ENDWALL, AND CORRUGATED BAND FITS INSIDE ENDWALL.

CONNECTION DETAILS

GENERAL NOTES

DETAILS OF CONSTRUCTION, MATERIALS AND WORKMANSHIP NOT SHOWN ON THIS DRAWING SHALL CONFORM TO THE PERTINENT REQUIREMENTS OF THE STANDARD SPECIFICATIONS AND THE APPLICABLE SPECIAL PROVISIONS.

CONCRETE APRON ENDWALLS MAY NOT BE USED WITH GALVANIZED STEEL OR ALUMINUM CULVERT PIPE OR VISE VERSA. GALVANIZED STEEL OR ALUMINUM APRON ENDWALLS SHALL NORMALLY BE INSTALLED ON CULVERT PIPE OF THE SAME METAL.

ALL THREE PIECE STEEL APRON ENDWALLS FOR 66" X 51" PIPE ARCH AND LARGER SHALL HAVE 0.109" SIDES AND 0.138" CENTER PANELS. ALL THREE PIECE ALUMINUM APRON ENDWALLS FOR 66" X 51" PIPE ARCH AND LARGER SHALL HAVE 0.105" SIDES AND 0.134" CENTER PANELS. THE WIDTH OF CENTER PANELS SHALL BE GREATER THAN 20 PERCENT OF THE PIPE ARCH PERIMETER.

LAP SEAMS SHALL BE TIGHTLY JOINED BY GALVANIZED RIVETS OR BOLTS FOR STEEL UNITS AND ALUMINUM RIVETS AND BOLTS FOR ALUMINUM UNITS. FOR THE 77" X 52" THROUGH 112" X 75" APRON ENDWALL SIZES, THE REINFORCED EDGES AND CENTER PANEL SEAMS SHALL BE FURTHER REINFORCED WITH GALVANIZED STEEL OR ALUMINUM STIFFENER ANGLES. THE ANGLES SHALL BE ATTACHED BY GALVANIZED NUTS AND BOLTS FOR STEEL UNITS AND ALUMINUM NUTS AND BOLTS FOR ALUMINUM UNITS.

WHERE TWO OR MORE PIPES WITH APRON ENDWALLS ARE LAID ADJACENT TO EACH OTHER, THEY SHALL BE SEPARATED BY A DISTANCE SUFFICIENT TO PROVIDE A MINIMUM CLEARANCE OF 6 INCHES BETWEEN APRON ENDWALLS.

① FOR PIPE ARCH SIZES UP TO 73" X 55" A 180° ROLLED EDGE MAY BE USED INSTEAD OF STEEL ROD REINFORCEMENT. SEE SECTION A-A.

APRON ENDWALLS FOR PIPE ARCH AND ELLIPTICAL PIPE

STATE OF WISCONSIN
DEPARTMENT OF TRANSPORTATION

APPROVED

11/30/94
DATE

/S/ Rory L. Rhinesmith
CHIEF ROADWAY DEVELOPMENT ENGINEER

FHWA

6

S.D.D. 8 F 2-1

6

S.D.D. 8 F 2-1

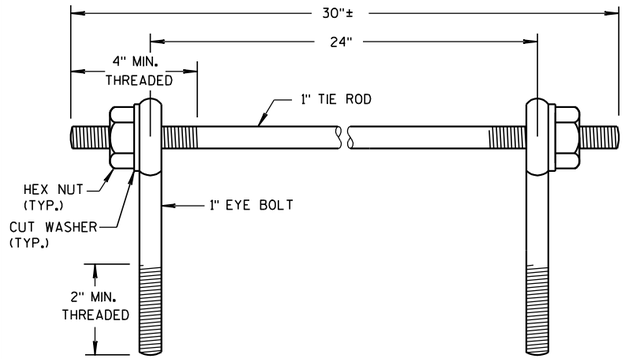

EYE BOLTS AND TIE ROD

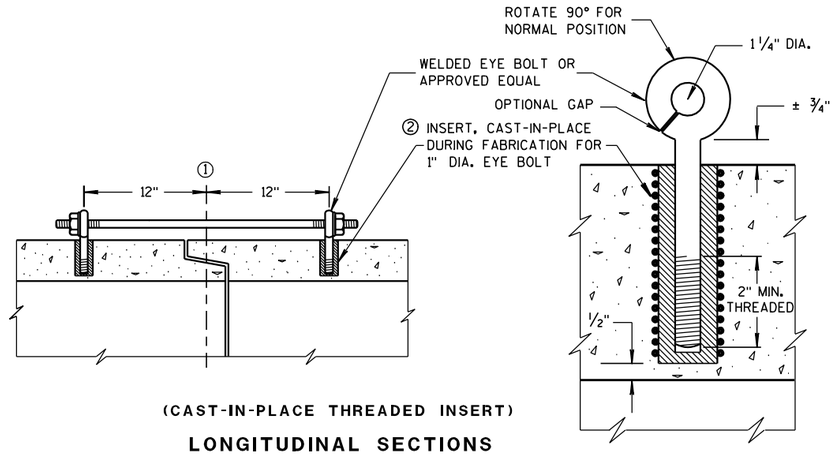

(CAST-IN-PLACE THREADED INSERT)

LONGITUDINAL SECTIONS

EYE BOLT AND TIE ROD ASSEMBLY (ALTERNATE NO. 1)

GENERAL NOTES

DETAILS OF CONSTRUCTION, MATERIALS, AND WORKMANSHIP NOT SHOWN ON THIS DRAWING SHALL CONFORM TO THE PERTINENT REQUIREMENTS OF THE STANDARD SPECIFICATIONS AND APPLICABLE SPECIAL PROVISIONS.

CONCRETE CULVERT AND STORM SEWER PIPE SHALL BE TIED TOGETHER IN THE MANNER ILLUSTRATED BY THIS DETAIL AT LOCATIONS DESIGNATED IN THE STANDARD SPECIFICATIONS AND THE PLAN. THE CONTRACTOR MAY USE EITHER ALTERNATE 1, 2 OR 3 FOR DRAINAGE STRUCTURES. ONLY ALTERNATE 1 AND 3 MAY BE USED FOR CATTLE PASSES, UNLESS OTHERWISE STATED IN THE CONTRACT. THE MATERIALS, FABRICATION AND WORK NECESSARY TO TIE THE PIPE BY THIS DETAIL WILL BE CONSIDERED INCIDENTAL TO THE PIPE AND APRON ENDWALLS IF REQUIRED.

DETAILED DRAWINGS FOR PROPOSED ALTERNATE DESIGNS FOR JOINT TIES SHALL BE SUBMITTED TO THE ENGINEER FOR APPROVAL.

JOINT TIES TO BE HOT-DIP GALVANIZED PER ASTM A 153.

① ℄ OF TONGUE AND GROOVE OR BELL AND SPIGOT JOINTS.

② THE INSIDE OF THE THREADED INSERTS SHALL BE CLEAN TO ALLOW THE INSERTION OF THREADED EYE BOLTS.

③ HOLES SHALL BE CAST-IN-PLACE OR DRILLED 12 INCHES FROM ℄ OF TONGUE AND GROOVE.

④ BOLT PROJECTION INSIDE OF PIPE SHALL NOT EXCEED 2 INCHES.

⑤ OPENING TO BE ROD DIAMETER PLUS 1 INCH.

⑥ LENGTH ADEQUATE TO EXTEND TO WITHIN 1/2 INCH OF THE INNER SURFACE OF THE PIPE.

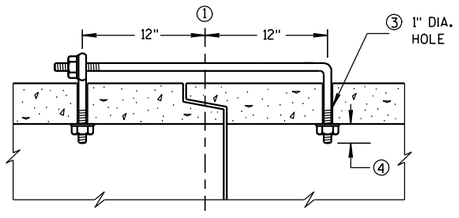

(TONGUE & GROOVE PIPE)

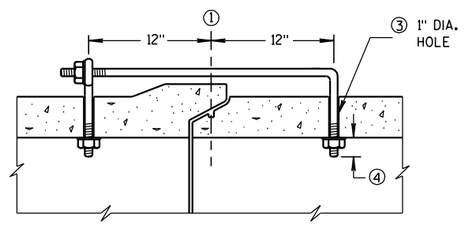

(MODIFIED BELL PIPE)

LONGITUDINAL SECTION

EYE BOLT DIMENSION TABLE

PIPE SIZE	L = LENGTH	
	TONGUE & GROOVE PIPE	MODIFIED BELL PIPE
18" TO 24"	4 1/2"	6 1/4"
30"	5"	7"
36"	5 1/2"	7"
42"	6"	
48"	6 1/2"	
60"	7 1/2"	
66"	8"	

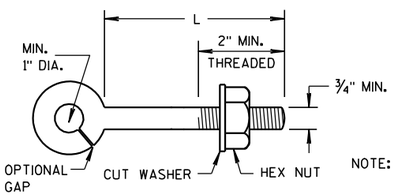

NOTE:

EYE BOLT

NOTE: TWO EYE BOLTS MAY BE USED WITH A 30" LONG THREADED ROD IN LIEU OF THE 90° BENT TIE ROD.

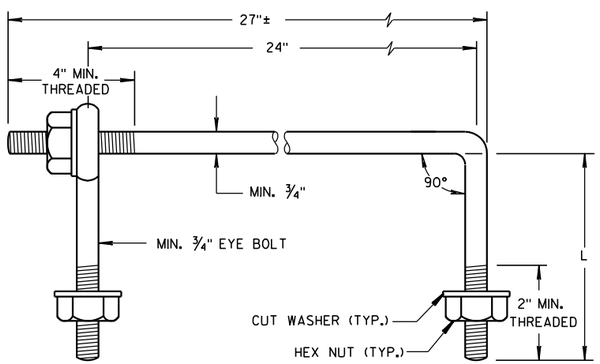

EYE BOLT AND TIE ROD

(JOINT TIES FOR 18" TO 66" DIA. CONCRETE PIPE)

EYE BOLT AND TIE ROD ASSEMBLY (ALTERNATE NO. 2)

ADJUSTABLE TIE ROD TABLE

PIPE DIAMETER	TIE ROD DIAMETER	D	L_1	N
12-60	5/8	5/8	5	1/2
66-84	3/4	3/4	5	1/2
90-108	1	1	7	1 1/16

DIMENSIONS SHOWN ARE IN INCHES

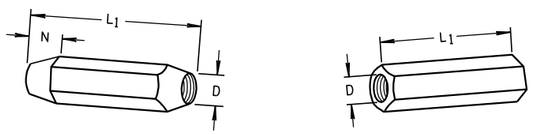

TAPERED PLAIN

RIGHT AND LEFT THREADS

SLEEVE NUTS

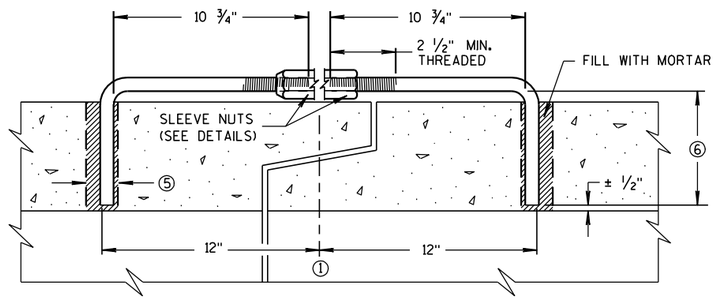

LONGITUDINAL SECTION

(JOINT TIES FOR 12" TO 108" DIA. CONCRETE PIPE)

ADJUSTABLE TIE ROD (ALTERNATE NO. 3)

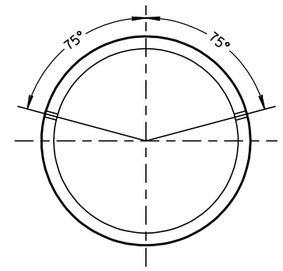

PLACEMENT OF (2) CAST-IN-PLACE INSERTS OR HOLES DURING FABRICATION FOR PIPE SECTIONS REQUIRING TIE RODS

TRANSVERSE SECTION

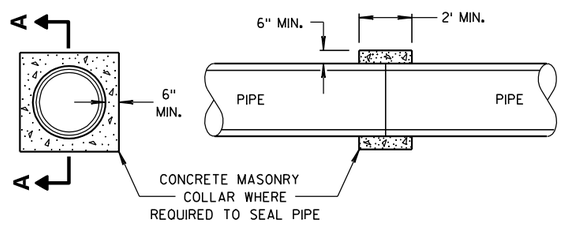

SECTION A-A

CONCRETE COLLAR DETAIL

JOINT TIES FOR CONCRETE PIPE AND CONCRETE COLLAR DETAIL

STATE OF WISCONSIN
DEPARTMENT OF TRANSPORTATION

APPROVED
6/5/2012 — DATE
/S/ Jerry H. Zogg — ROADWAY STANDARDS ENGINEER
141
FHWA

6

S.D.D. 8 F 4-7

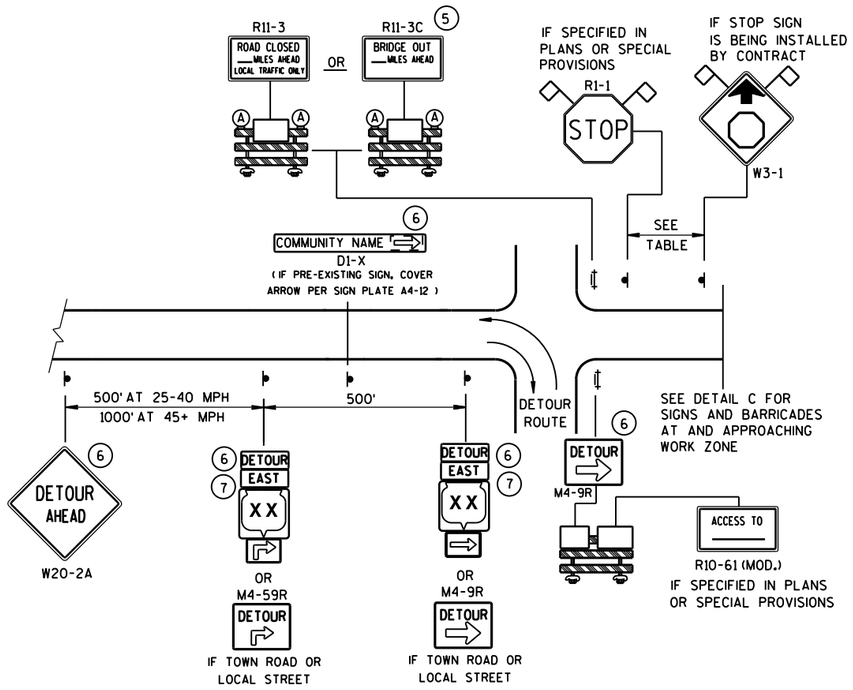

DETAIL A
MAINLINE CLOSURE WITH POSTED DETOUR

WORK ZONE GREATER THAN ½ MILE FROM DETOUR ROUTE (1000 FEET IF URBAN)

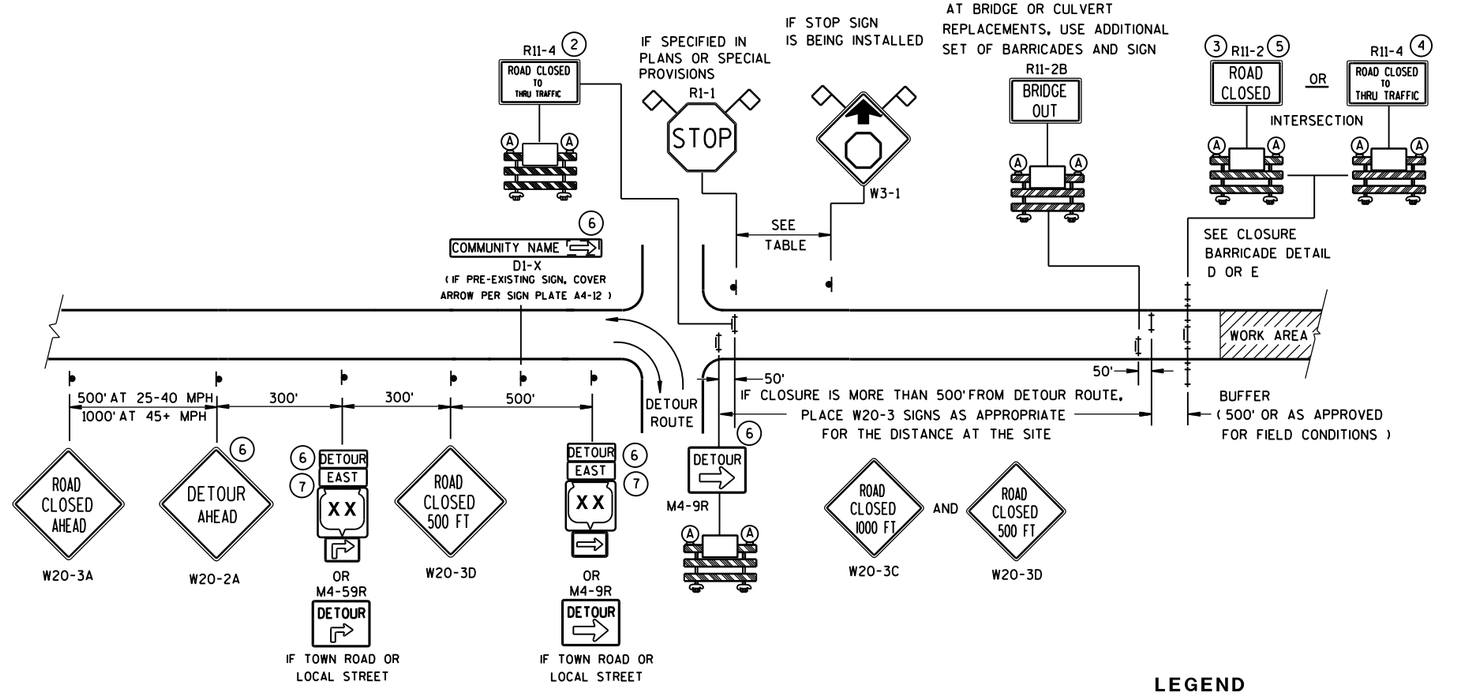

DETAIL B
MAINLINE CLOSURE WITH POSTED DETOUR

WORK ZONE LESS THAN ½ MILE FROM DETOUR ROUTE (1000 FEET IF URBAN)

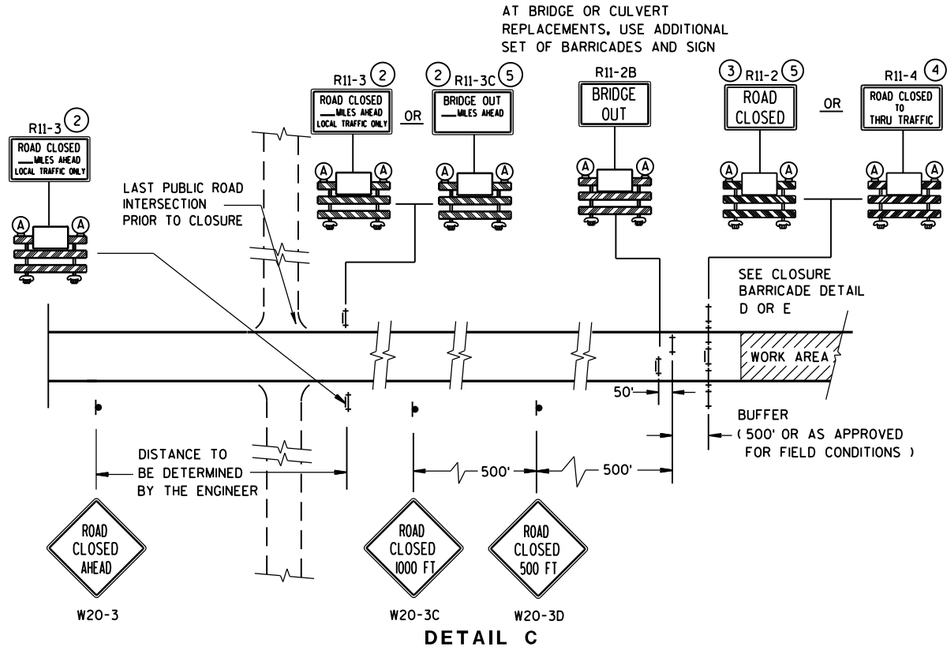

DETAIL C
MAINLINE CLOSURE, NO POSTED DETOUR

SPEED LIMIT (MPH)	"STOP AHEAD" ADVANCE WARNING DISTANCE (FT)
25	200
30	200
35	350
40	350
45	500
50	550
55	750

SEE SDD 15C2-SHEET "**b**"
FOR GENERAL NOTES
AND FOOTNOTES (1) THROUGH (7)

LEGEND

- SIGN ON PERMANENT SUPPORT
- TYPE III BARRICADE
- TYPE III BARRICADE WITH ATTACHED SIGN
- (A) TYPE "A" WARNING LIGHT (FLASHING)
- WORK AREA
- DETOUR / EAST — M4-8 / M3-X
- XX — M1-4; COUNTY XX — M1-5A; XX — M1-6
- M05-1 OR M06-1
- FLAGS, 16" X 16" MIN., (ORANGE)

BARRICADES AND SIGNS FOR MAINLINE CLOSURES

STATE OF WISCONSIN
DEPARTMENT OF TRANSPORTATION

Sept. 2015 — DATE
/S/ Peter Amakobe Atepe
STATEWIDE WORK ZONE TRAFFIC SAFETY ENGINEER
FHWA

S.D.D. 15 C 2-6a

S.D.D. 15 C 2-6a

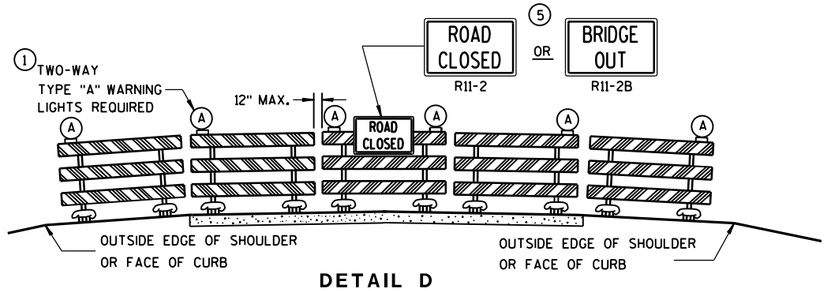

DETAIL D

ROAD CLOSURE BARRICADE DETAIL

APPROACH VIEW

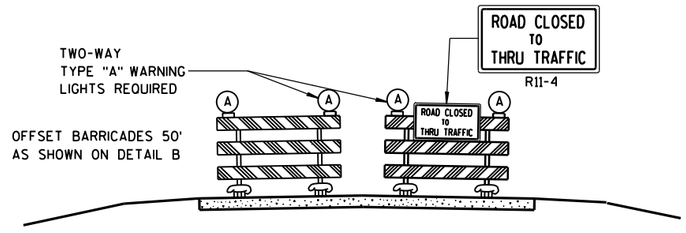

DETAIL E

LANE CLOSURE BARRICADE DETAIL

APPROACH VIEW

SEE SDD 15C2-SHEET "**a**" FOR LEGEND

GENERAL NOTES

THE EXACT NUMBER, LOCATION, AND SPACING OF ALL SIGNS AND BARRICADES SHALL BE ADJUSTED TO FIT FIELD CONDITIONS AS APPROVED BY THE ENGINEER.

ANY SIGNS TEMPORARY OR EXISTING, WHICH CONFLICT WITH TRAFFIC CONTROL "IN USE" SHALL BE REMOVED OR COVERED AS NEEDED AND AS APPROVED BY THE ENGINEER.

THE SPACING BETWEEN TRAFFIC CONTROL SIGNS SHOULD BE ADJUSTED TO NOT CONFLICT WITH AND SHOULD PROVIDE A DESIRABLE MINIMUM OF 200 FEET CLEARANCE TO EXISTING SIGNS THAT WILL REMAIN IN PLACE.

BARRICADES THAT MUST BE MOVED FOR A WORK OPERATION SHALL BE IMMEDIATELY RE-ESTABLISHED UPON COMPLETION OF THE OPERATION OR, FOR CONTINUING OPERATIONS, AT THE END OF EACH WORKING DAY.

SIGNS THAT WILL BE IN PLACE LESS THAN 7 CONTINUOUS DAYS AND NIGHTS MAY BE MOUNTED ON PORTABLE SUPPORTS.

ALL TYPE III BARRICADES SHALL HAVE RAILS REFLECTORIZED ON BOTH FACES. STRIPES SHALL BE PROPERLY SLOPED DOWN TOWARD THE TRAFFIC SIDE OR AS SHOWN IN THE ROAD CLOSURE BARRICADE DETAIL D FOR FULL ROAD CLOSURES.

TYPE "A" LOW-INTENSITY FLASHING WARNING LIGHTS SHALL BE VISIBLE ON BOTH SIDES OF THE BARRICADE.

THE R11-2, R11-3, M4-9, R11-4 AND R10-61 SIGNS PLACED ON BARRICADES SHALL COVER NO MORE THAN THE TOP RAIL. THE SIGNS SHALL NOT COVER ANY PORTION OF THE MIDDLE OR BOTTOM RAILS.

"WO AND "MO" SIGNS ARE THE SAME AS "W" AND "M" SIGNS EXCEPT THE BACKGROUND IS ORANGE.

ALL SIGNS SHALL BE 48" X 48" UNLESS OTHERWISE NOTED BELOW:
- R11-2 SHALL BE 48" X 30".
- R11-3, R11-4 AND R10-61 SHALL BE 60" X 30".
- M4-9 SHALL BE 30" X 24".
- M3-X SHALL BE 24" X 12". (36" X 18" IF NEEDED TO MATCH EXISTING SIGNS.)
- M4-8 SHALL BE 24" X 12". (30" X 15" IF NEEDED TO MATCH EXISTING SIGNS.)
- M1-4, M1-5A, AND M1-6 SHALL BE 24" X 24". (36" X 36" IF NEEDED TO MATCH EXISTING SIGNS.)
- M05-1 AND M06-1 SHALL BE 21" X 21". (30" X 30" IF NEEDED TO MATCH EXISTING SIGNS.)
- D1-X SHALL BE AS SHOWN ON SPECIFIC PROJECT SIGNING DETAIL SHEETS.
- R1-1 SHALL BE 36" X 36".

(1) TWO WARNING LIGHTS SHALL BE PROVIDED ON THE CENTER BARRICADE AND A MINIMUM OF ONE WARNING LIGHT SHALL BE PROVIDED ON EACH OF THE OTHER BARRICADES WITHIN THE ROADWAY LIMITS. SPACING OF THE WARNING LIGHTS SHALL BE UNIFORM TO THE EDGE OF ROADWAY AS SHOWN (APPROX. 8-FOOT LIGHT SPACING).

(2) THESE SIGNS AND BARRICADES ARE NOT REQUIRED IF ROAD CLOSURE BEGINS AT INTERSECTION.

(3) FOR ROAD CLOSURE WITHOUT LOCAL ACCESS TO PROJECT, SEE ROAD CLOSURE BARRICADE DETAIL D.

(4) FOR ROAD CLOSURE WITH LOCAL ACCESS TO PROJECT, SEE LANE CLOSURE BARRICADE DETAIL E.

(5) FOR BRIDGE OR CULVERT REPLACEMENTS, SUBSTITUTE "BRIDGE OUT" INSTEAD OF "ROAD CLOSED" ON R11-2 AND R11-3 SIGNS.

(6) INSTALL DETOUR AND COMMUNITY GUIDE SIGNS AND ARROWS ONLY IF SPECIFIED IN THE CONTRACT. IF THERE ARE EXISTING ROUTE MARKER ASSEMBLIES THAT WILL REMAIN IN PLACE, ADJUST THE LOCATION OF THE DETOUR ROUTE SIGNS TO CORRESPOND WITH THE EXISTING ASSEMBLIES. MODIFY EXISTING SIGNS WHERE POSSIBLE. SEE SPECIFIC PROJECT DETOUR SIGNING DETAIL SHEETS. IF DETOUR SIGNS ARE BEING INSTALLED BY OTHERS, PLACE THE CONTRACTED TRAFFIC CONTROL SIGNS TO ALLOW FOR PLACEMENT OF ALL WARNING, DETOUR AND GUIDE SIGNS AS SHOWN.

(7) "EAST" CARDINAL DIRECTION MARKERS AND RIGHT TURN ARROWS ARE SHOWN. USE OTHER CARDINAL DIRECTIONS AND ARROWS AS APPROPRIATE.

BARRICADES AND SIGNS FOR MAINLINE CLOSURES

STATE OF WISCONSIN
DEPARTMENT OF TRANSPORTATION

Sept. 2015 — DATE

/S/ Peter Amakobe Atepe
STATEWIDE WORK ZO SAFETY ENGI — FIC

FHWA

6

S.D.D. 15 C 2-6b

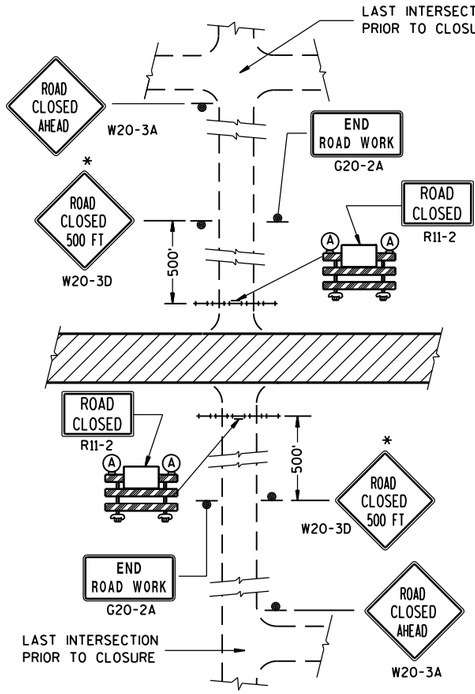

DETAIL 1

(NO ACCESS TO PROJECT)

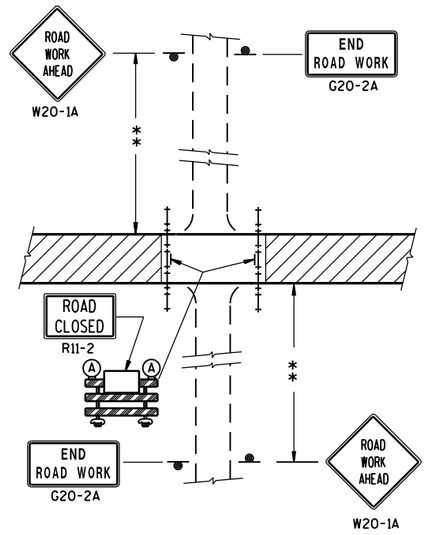

DETAIL 2

(PUBLIC CROSS-TRAFFIC MAINTAINED. NO ACCESS TO PROJECT).

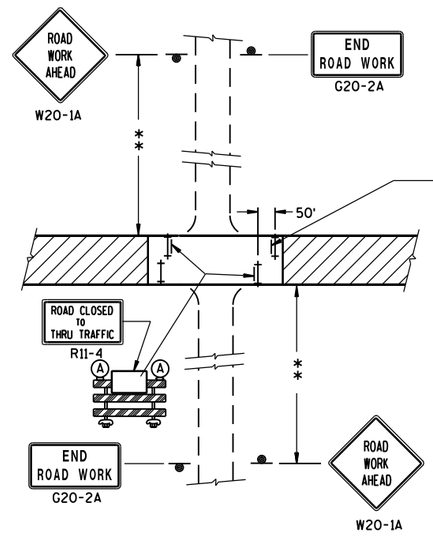

DETAIL 3

(PUBLIC CROSS-TRAFFIC MAINTAINED. CONTRACTOR, LOCAL BUSINESS AND RESIDENT ACCESS).

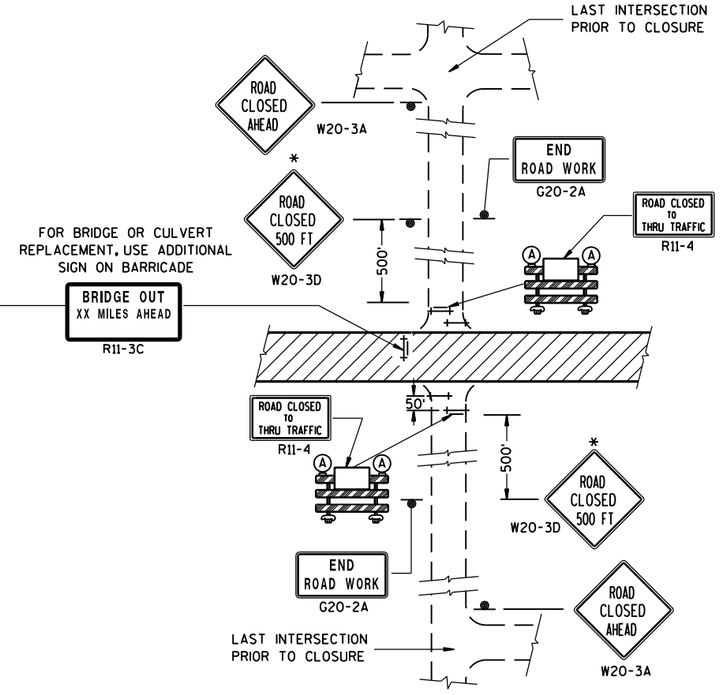

DETAIL 4

(CONTRACTOR, LOCAL BUSINESS AND RESIDENT ACCESS TO PROJECT)

GENERAL NOTES

THE EXACT NUMBER, LOCATION, AND SPACING OF ALL SIGNS AND BARRICADES SHALL BE ADJUSTED TO FIT FIELD CONDITIONS AS APPROVED BY THE ENGINEER.

ANY SIGNS TEMPORARY OR EXISTING, WHICH CONFLICT WITH TRAFFIC CONTROL "IN USE" SHALL BE REMOVED OR COVERED AS NEEDED AND AS APPROVED BY THE ENGINEER.

THE SPACING BETWEEN TRAFFIC CONTROL SIGNS SHOULD BE ADJUSTED TO NOT CONFLICT WITH AND SHOULD PROVIDE A DESIRABLE MINIMUM OF 200 FEET CLEARANCE TO EXISTING SIGNS THAT WILL REMAIN IN PLACE.

IF A "STOP" SIGN MUST BE REMOVED FOR A WORK OPERATION, A TEMPORARY "STOP" SIGN SHALL BE PLACED PRIOR TO THE SIGN REMOVAL, OR A FLAGGER SHALL BE PROVIDED UNTIL THE SIGN IS RE-ESTABLISHED.

BARRICADES THAT MUST BE MOVED FOR A WORK OPERATION SHALL BE IMMEDIATELY RE-ESTABLISHED UPON COMPLETION OF THE OPERATION OR, FOR CONTINUING OPERATIONS, AT THE END OF EACH WORKING DAY.

SIGNS THAT WILL BE IN PLACE LESS THAN 7 CONTINUOUS DAYS AND NIGHTS MAY BE MOUNTED ON PORTABLE SUPPORTS.

ALL TYPE III BARRICADES SHALL HAVE RAILS REFLECTORIZED ON BOTH FACES. STRIPES SHALL BE PROPERLY SLOPED DOWN TOWARD THE TRAFFIC SIDE OR AS SHOWN IN THE ROAD CLOSURE BARRICADE DETAIL D FOR FULL ROAD CLOSURES.

TYPE "A" LOW-INTENSITY FLASHING WARNING LIGHTS SHALL BE VISIBLE ON BOTH SIDES OF THE BARRICADE.

THE R11-2, R11-3 AND R11-4 SIGNS PLACED ON BARRICADES SHALL COVER NO MORE THAN THE TOP RAIL. THE SIGNS SHALL NOT COVER ANY PORTION OF THE MIDDLE OR BOTTOM RAILS.

ALL SIGNS SHALL BE 48" X 48" UNLESS OTHERWISE NOTED BELOW:
R11-2 SHALL BE 48" X 30".
R11-4 AND R11-3 SHALL BE 60" X 30".

*OMIT THE "ROAD CLOSED 500 FT." SIGN IF THE LAST INTERSECTION IS 500 FT. OR LESS FROM THE WORK ZONE.

**500' MAX. OR AT LAST INTERSECTION WHICHEVER IS CLOSER.

LEGEND

- SIGN ON PERMANENT SUPPORT
- TYPE III BARRICADE
- TYPE III BARRICADE WITH ATTACHED SIGN
- (A) TYPE "A" WARNING LIGHT (FLASHING)
- WORK AREA

BARRICADES AND SIGNS FOR SIDEROAD CLOSURES

STATE OF WISCONSIN
DEPARTMENT OF TRANSPORTATION

APPROVED
Sept. 2017 — DATE
/S/ Andrew Heidtke — WORK ZONE ENG
FHWA

6

S.D.D. 15 C 3-4

6

S.D.D. 15 C 3-4

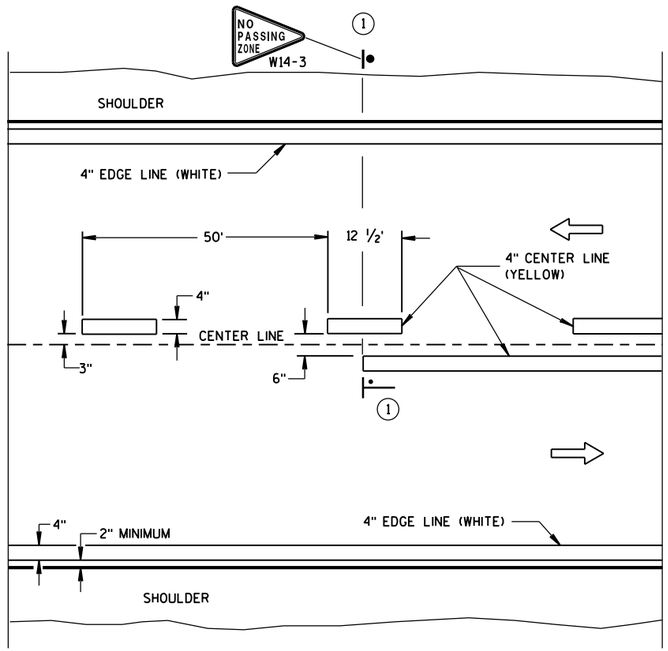

TWO WAY TRAFFIC

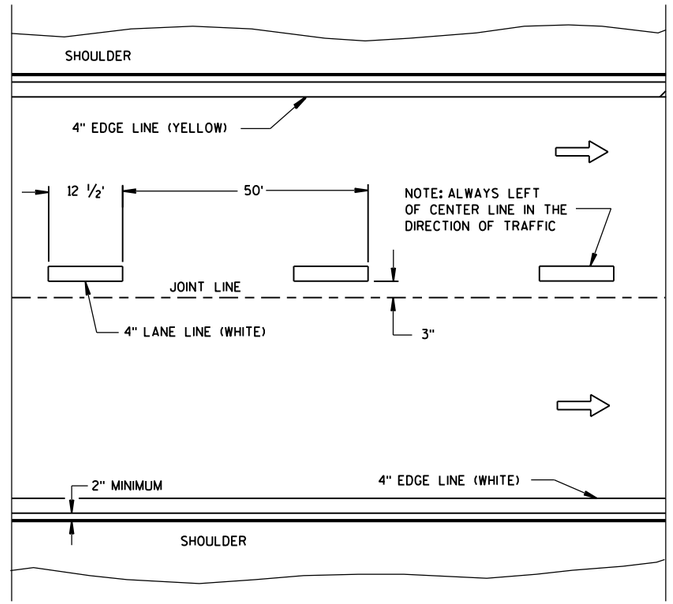

ONE WAY TRAFFIC

PERMANENT PAVEMENT MARKING

GENERAL NOTES

DETAILS OF CONSTRUCTION NOT SHOWN ON THIS DRAWING SHALL CONFORM TO STANDARD SPECIFICATIONS AND SPECIAL PROVISIONS.

(1) LOCATE THE NO PASSING ZONE W14-3 SIGN WITHIN 50 FEET OF THE "T" MARKING.

NOTE

ARROW SYMBOL (⇨) SHOWS DIRECTION OF TRAVEL

LEGEND

"T" MARKING

POST MOUNTED SIGN

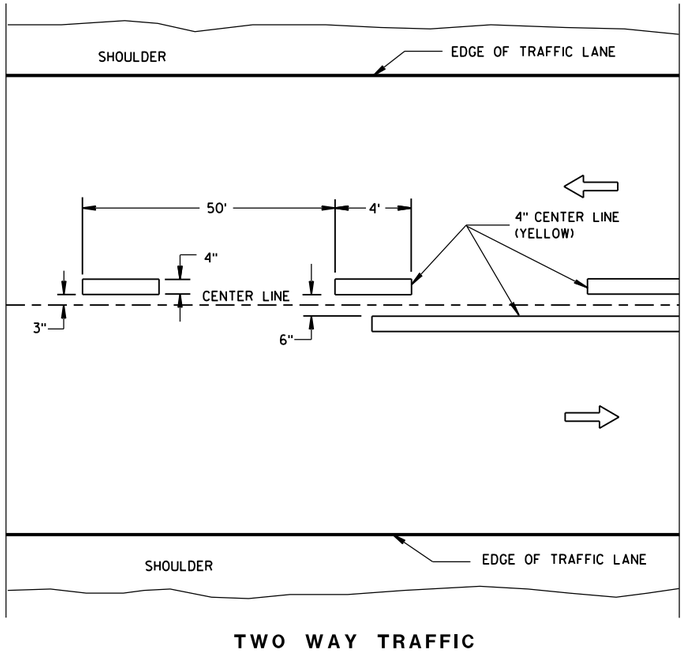

TWO WAY TRAFFIC

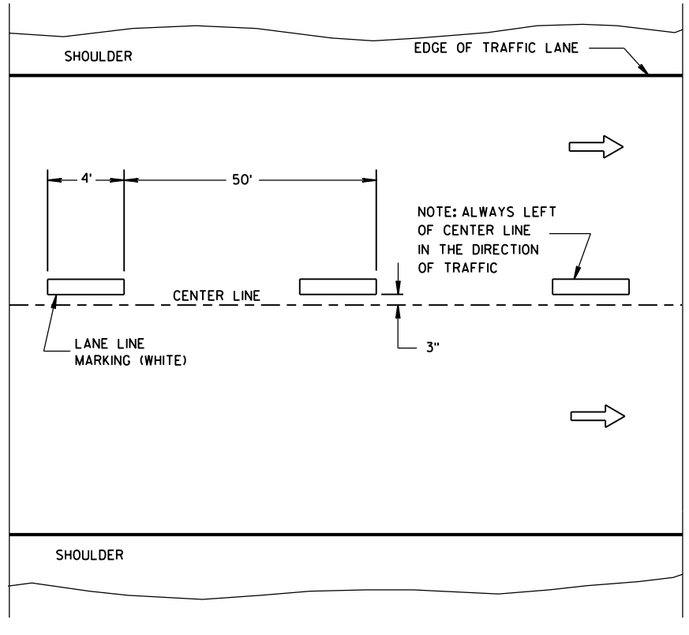

ONE WAY TRAFFIC

TEMPORARY PAVEMENT MARKING

LONGITUDINAL MARKING (MAINLINE)	
STATE OF WISCONSIN DEPARTMENT OF TRANSPORTATION	
APPROVED June 2017 DATE	/S/ Matthew R. Rauch STATE SIGNING AND MAR ENGINEER
FHWA	

6

S.D.D. 15 C 8-18a

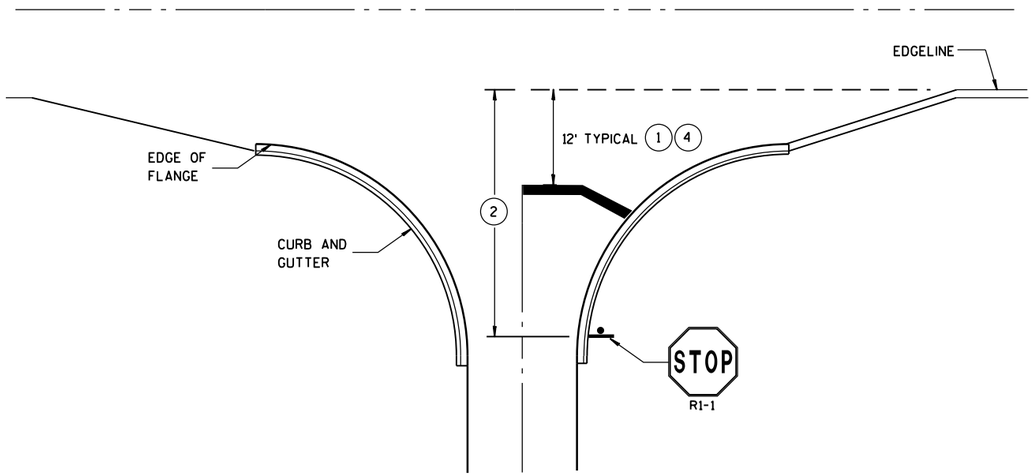

TYPICAL STOP LINE PAVEMENT MARKING WITH CURB AND GUTTER

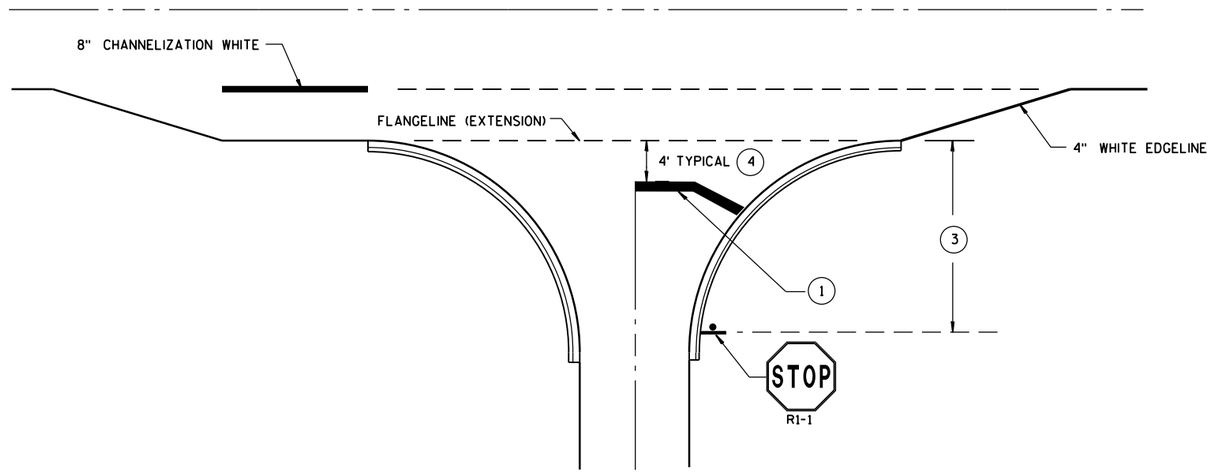

TYPICAL STOP LINE PAVEMENT MARKING FOR SIDEROADS WITH RIGHT TURN LANE

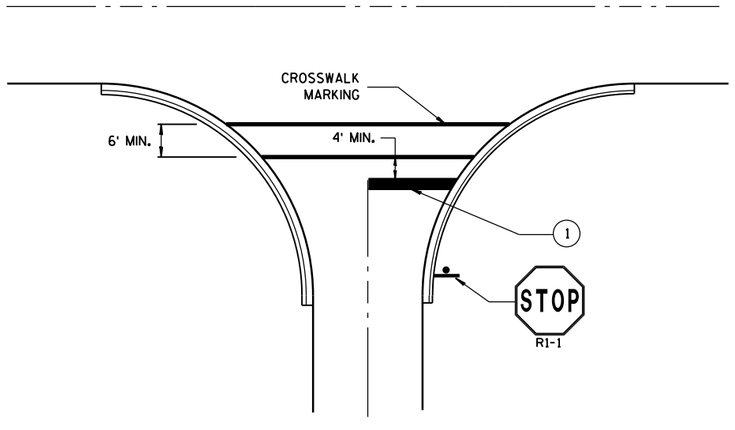

TYPICAL STOP LINE PAVEMENT MARKING FOR SIDEROADS WITH CROSSWALK MARKING

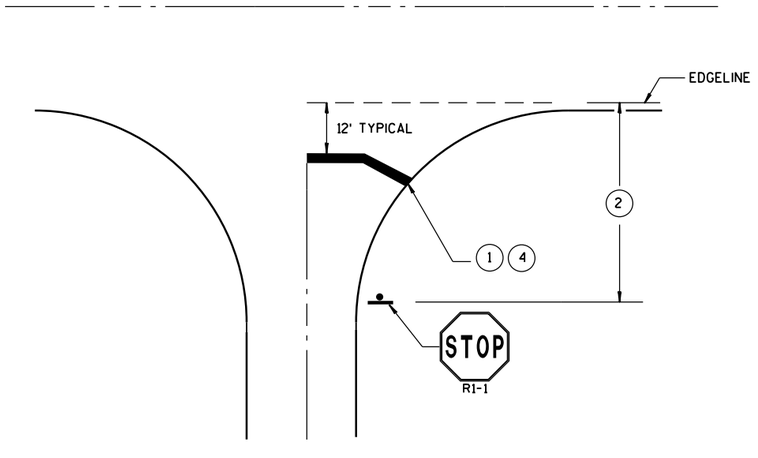

TYPICAL STOP LINE PAVEMENT MARKING WITHOUT CURB AND GUTTER

GENERAL NOTES

STOP SIGN SHALL BE PLACED A MINIMUM OF 6 FEET TO A MAXIMUM OF 50 FEET FROM THE EDGELINE LOCATION.

(1) 18-INCH STOP LINES MAY BE DELETED OR ADDED BY THE PROJECT ENGINEER BASED ON VISIBILITY AND SIGHT LINES.

(2) IF STOP SIGN IS LESS THAN OR EQUAL TO 40 FEET FROM THE EDGELINE THAN NO STOP LINE IS REQUIRED.

(3) IF STOP SIGN IS LESS THAN OR EQUAL TO 30 FEET FROM THE FLANGELINE EXTENSION THAN NO STOP LINE IS REQUIRED.

(4) MOVE CLOSER TO EDGE OF TRAVEL LANE AS NEEDED FOR VISIBILITY AND SIGHT LINES. (NO CLOSER THAN 4 FEET).

STOP LINE AND CROSSWALK PAVEMENT MARKING

STATE OF WISCONSIN
DEPARTMENT OF TRANSPORTATION

APPROVED

Sept., 2017 — DATE

/S/ Matthew R. Rauch — STATE SIGNING AND MAR[illegible]NEER

FHWA

6

S.D.D. 15 C 33-3

NOTE: MAY BE USED ON ROADWAY WITH POSTED SPEED OF LESS THAN 40 MPH.

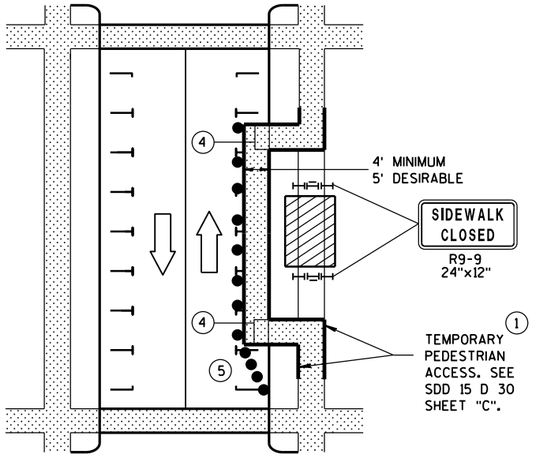

MID-BLOCK SIDEWALK CLOSURE IN PARKING LANE

NOTE: LAYOUT SAME AS ABOVE.

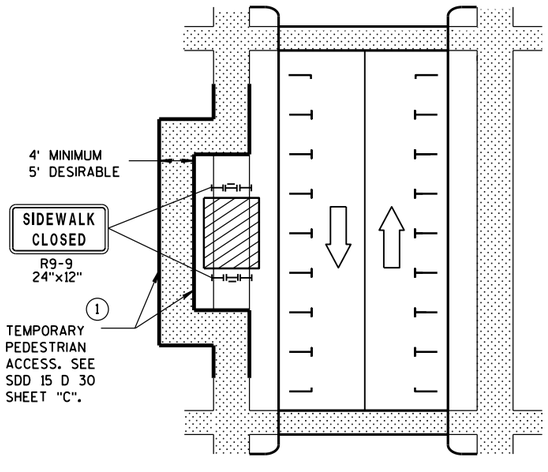

SIDEWALK DIVERSION

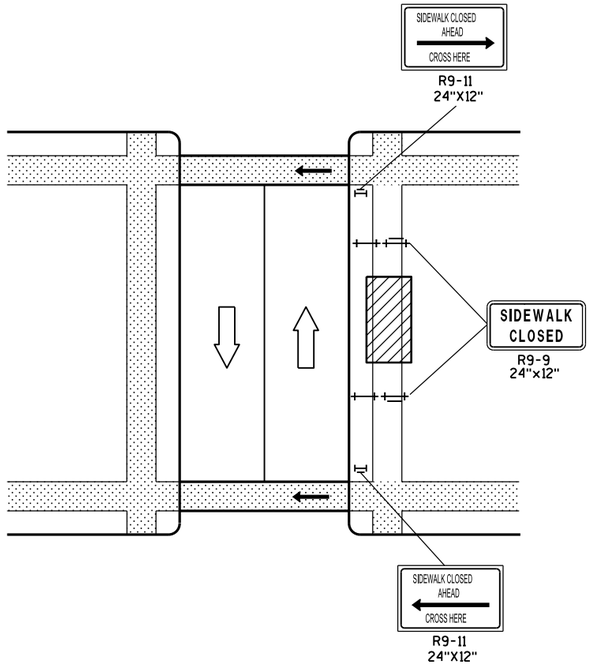

MID-BLOCK SIDEWALK CLOSURE

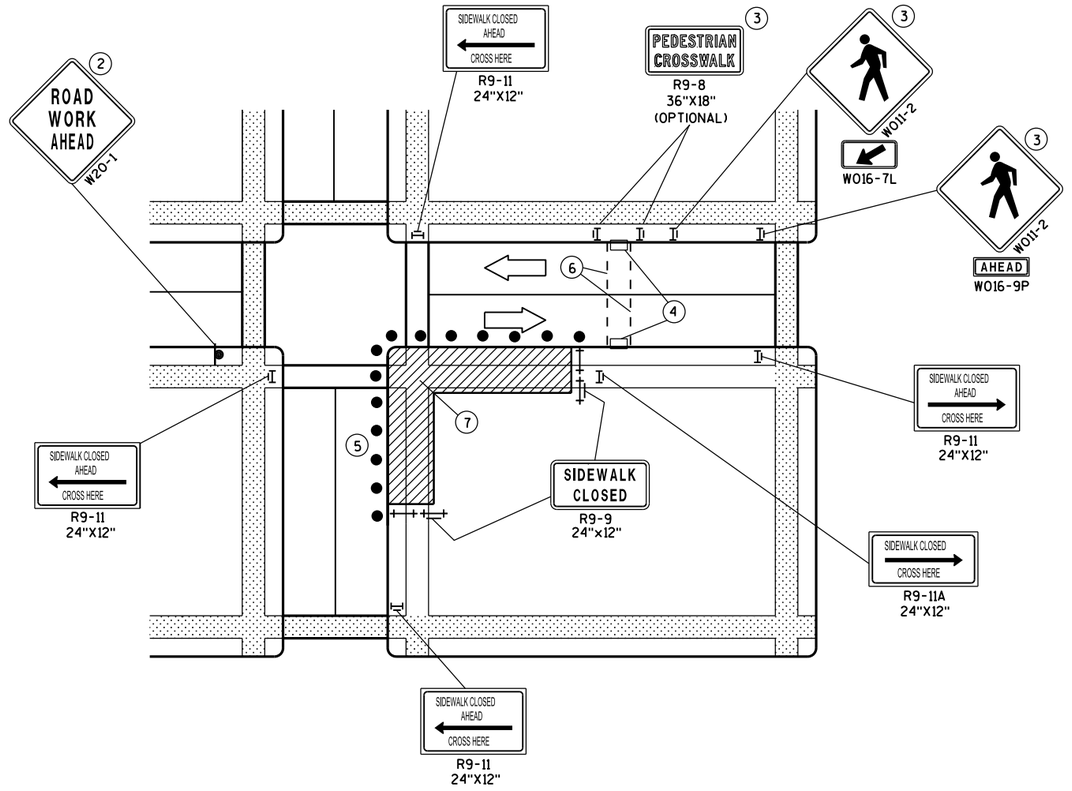

CORNER SIDEWALK CLOSURE WITH TEMPORARY CROSSWALK

GENERAL NOTES

WHEN CLOSING OR RELOCATING CROSSWALKS OR SIDEWALKS, PROVIDE DETECABLE TEMPORARY FACILITIES AND INCLUDE ACCESSIBILITY FEATURES CONSISTENT WITH EXISTING PEDESTRIAN FACILITIES.

TEMPORARY TRAFFIC CONTROL DEVICES FOR PEDESTRIANS ARE SHOWN. OTHER DEVICES MAY BE NECESSARY TO CONTROL VEHICULAR TRAFFIC. STAGE WORK, AS NECESSARY, TO PROVIDE A TEMPORARY PEDESTRIAN ACCESS ROUTE AT ALL TIMES. FOR ROADWAYS WITH NO AVAILABLE DETOURS, MAINTAIN ONE OPEN SIDEWALK AT ALL TIMES.

"WO" SIGN IS THE SAME AS "W" SIGN EXCEPT THE BACKGROUND IS ORANGE.

FOR NIGHTTIME CLOSURE USE TYPE "A" FLASHING WARNING LIGHTS ON BARRICADES, SUPPORTING SIGNS AND CLOSING SIDEWALK. USE TYPE "C" STEADY BURN LIGHTS ON CHANNELIZING DEVICES SEPARATING THE WORK AREA FROM VEHICULAR TRAFFIC.

PEDESTRIAN TRAFFIC SIGNAL DISPLAY CONTROLLING CLOSED CROSSWALK SHALL BE COVERED OR DEACTIVATED.

POST MOUNTED SIGNS LOCATED ADJACENT TO A SIDEWALK SHALL HAVE A 7 FOOT MINIMUM CLEARANCE FROM THE BOTTOM OF THE SIGN TO THE SIDEWALK SURFACE.

ALTERNATE SIDEWALK WORK BETWEEN LEFT AND RIGHT SIDE OF ROADWAY TO MAINTAIN PEDESTRIAN ACCESS.

(1) IF SIDEWALK CLOSURE AFFECTS AN ACCESSIBLE AND DETECTABLE FACILITY, MAINTAIN ACCESSIBILITY AND DETECTABILITY ALONG THE ALTERNATE PEDESTRIAN ROUTE.

(2) "ROAD WORK AHEAD" SIGNS ARE NOT REQUIRED IF THE SIDEWALK CLOSURE OCCURS WITHIN A LARGER WORK ZONE WHERE ADVANCE WARNING SIGNS ARE ALREADY PRESENT, OR IF THE WORK AREA AND EQUIPMENT ARE MORE THAN 2 FEET BEHIND THE CURB.

(3) IF TEMPORARY PEDESTRIAN CROSSWALK IS NOT PROVIDED, OMIT R9-8 AND W011-2 SIGN ASSEMBLIES. IF PROVIDED INCLUDE ON BOTH SIDES OF THE CROSSWALK.

(4) TEMPORARY CURB RAMPS. SEE SDD 15 D 30 SHEET "B".

(5) DRUMS OR BARRICADES AT 25 FOOT SPACING. STREET PARKING SHALL BE PROHIBITED FOR AT LEAST 50 FEET IN ADVANCE OF THE MID-BLOCK CROSSWALK.

(6) TEMPORARY PAVEMENT MARKING FOR CROSSWALK LINES.

(7) LIMIT WORK TO ONE QUADRANT AT A TIME TO MINIMIZE PEDESTRIAN DISRUPTION.

LEGEND

- SIGN ON PERMANENT SUPPORT
- UNDER PEDESTRIAN TRAFFIC
- WORK AREA
- PEDESTRIAN CHANNELIZATION DEVICE
- TYPE II BARRICADE WITH/WITHOUT SIGN (ALL WITH ONE WARNING LIGHT, TYPE A, LOW-INTENSITY FLASHING)
- TYPE III BARRICADE WITH/WITHOUT SIGN (ALL WITH ONE WARNING LIGHT, TYPE A, LOW-INTENSITY FLASHING)
- DIRECTION OF TRAFFIC
- TRAFFIC CONTOL DRUM

TRAFFIC CONTROL, PEDESTRIAN ACCOMMODATION

STATE OF WISCONSIN
DEPARTMENT OF TRANSPOR

6

S.D.D. 15 D 30-3a

6

S.D.D. 15 D 30-3a

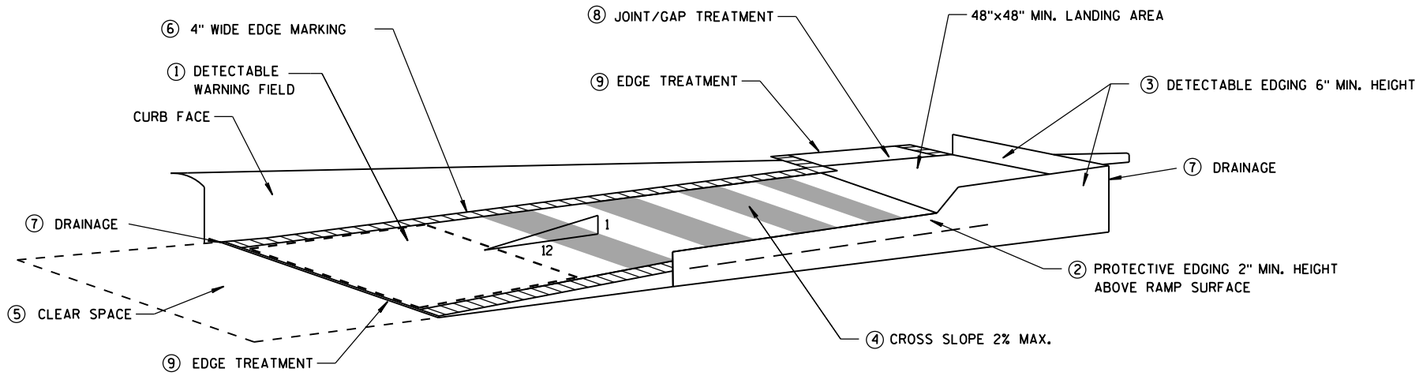

TEMPORARY CURB RAMP PARALLEL TO CURB

GENERAL NOTES

NOTIFY THE BUS COMPANY 7 DAYS IN ADVANCE OF THE BUS STOP RELOCATION.

ALTERNATE SIDEWALK WORK BETWEEN LEFT AND RIGHT SIDE OF ROADWAY TO MAINTAIN PEDESTRIAN ACCESS.

① CURB RAMPS SHALL BE 48" MIN. WIDTH WITH A FIRM, STABLE AND SLIP RESISTANT SURFACE. INSTALL CONTRASTING DETECTABLE WARNING FIELD AT PEDESTRIAN STREET CROSSINGS. REFER TO SDD 8D5 SHEET "E".

② PROTECTIVE EDGING WITH A 2" MIN. HEIGHT SHALL BE INSTALLED WHEN A CURB RAMP OR LANDING PLATFORM HAS A VERTICAL DROP OF 6" OR GREATER OR HAS A SIDE APRON SLOPE STEEPER THAN 1:3 (33%). PROTECTIVE EDGING SHOULD BE CONSIDERED WHEN CURB RAMPS OR LANDING PLATFORMS HAVE A VERTICAL DROP OF 3" OR MORE.

③ DETECTABLE EDGING WITH 6" MIN. HEIGHT AND CONTRASTING COLOR SHALL BE INSTALLED ON ALL CURB RAMP LANDINGS WHERE THE WALKWAY CHANGES DIRECTION (TURNS).

④ CURB RAMPS AND LANDINGS SHALL HAVE A 1:50 (2%) MAX. CROSS-SLOPE.

⑤ CLEAR SPACE OF 48"X48" MIN. SHALL BE PROVIDED ABOVE AND BELOW THE CURB RAMP.

⑥ THE CURB RAMP WALKWAY EDGE SHALL BE MARKED WITH A YELLOW COLOR, 4" WIDE MARKING, UNLESS A CONTRASTING DETECTABLE WARNING FIELD IS PROVIDED.

⑦ DO NOT RESTRICT WATER FLOW IN THE GUTTER SYSTEM.

⑧ LATERAL JOINTS OR GAPS BETWEEN SURFACES SHALL BE LESS THAN 1/2" WIDTH.

⑨ CHANGES BETWEEN SURFACE HEIGHTS SHALL NOT EXCEED 1/2". LATERAL EDGES SHALL BE VERTICAL UP TO 1/4" HIGH, AND BEVELED AT 1:2 BETWEEN 1/4" AND 1/2".

⑩ 5' WIDE MIN. WITH PEDSETRIAN SAFETY FENCE, 10' WIDE MIN. WITHOUT PEDESTRIAN SAFETY FENCE.

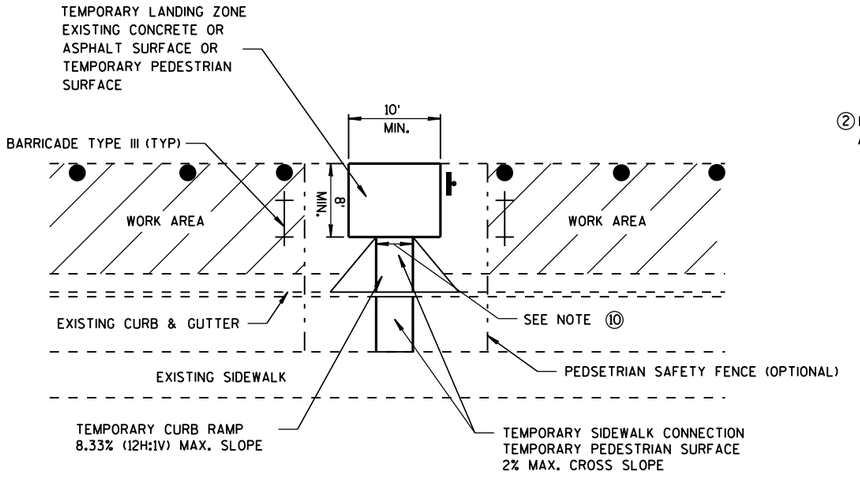

TEMPORARY BUS STOP PAD

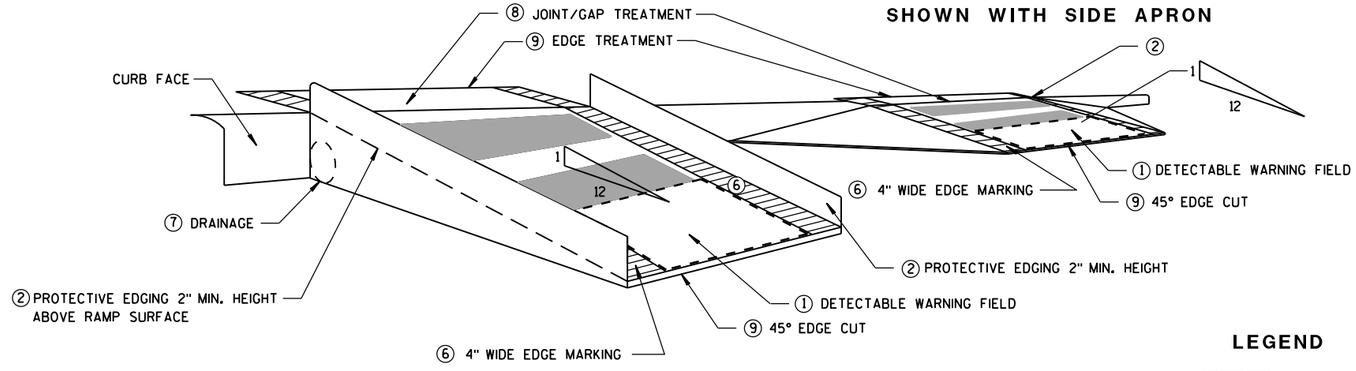

SHOWN WITH PROTECTIVE EDGE

TEMPORARY CURB RAMP PERPENDICULAR TO CURB

LEGEND

WORK AREA

TYPE III BARRICADE

TRAFFIC CONTOL DRUM

TRAFFIC CONTROL, TEMPORARY ADA COMPLIANT PEDESTRIAN ACCOMMODATION

STATE OF WISCONSIN
DEPARTMENT OF TRANSPORTATION

APPROVED

June 2016 — DATE

/S/ Peter Amakobe Atepe — STATEWIDE WORK ZO SAFETY ENGI IC

FHWA

6

S.D.D. 15 D 30-3b

6

S.D.D. 15 D 30-3b

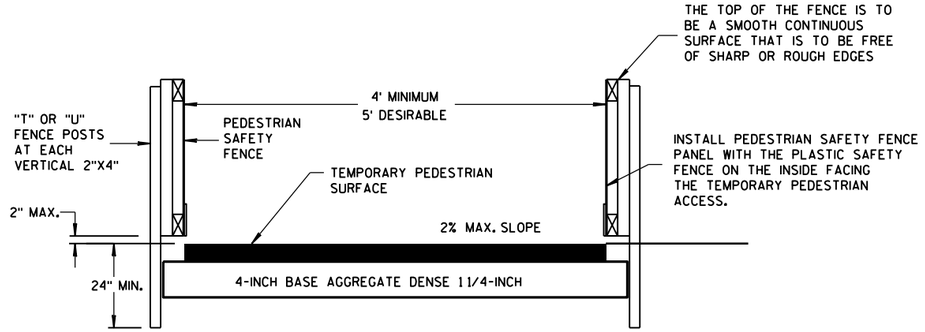

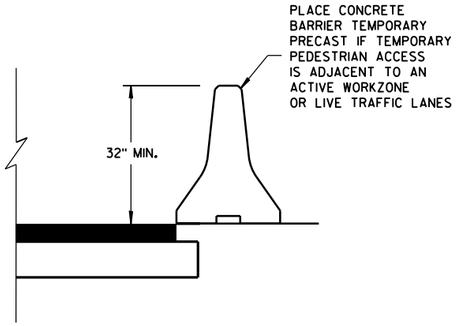

TEMPORARY PEDESTRIAN ACCESS

GENERAL NOTES

(1) INTERCHANGEABLE WITH THE PEDESTRIAN SAFETY FENCE.

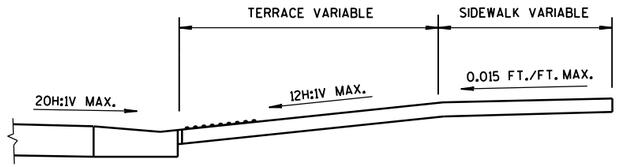

SECTION A-A

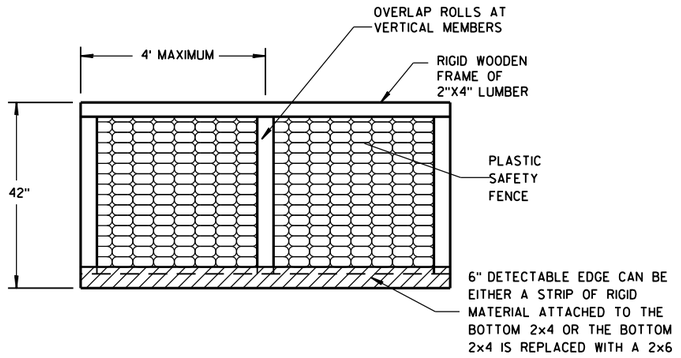

PEDESTRIAN SAFETY FENCE

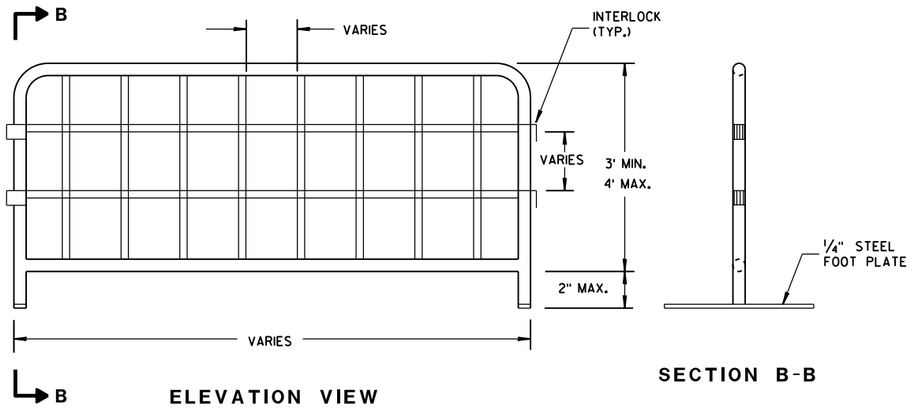

ELEVATION VIEW

SECTION B-B

TEMPORARY PEDESTRIAN STEEL BARRICADE (1)

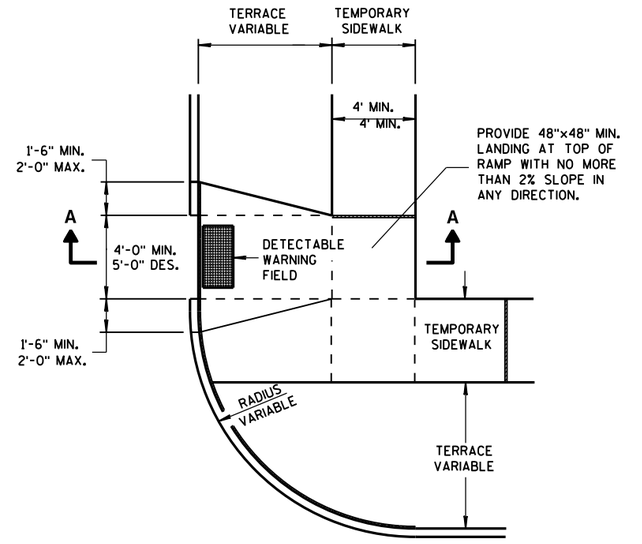

PLAN VIEW

TEMPORARY TYPE 3 RAMP

(OUTSIDE OF CROSSWALK AREA)

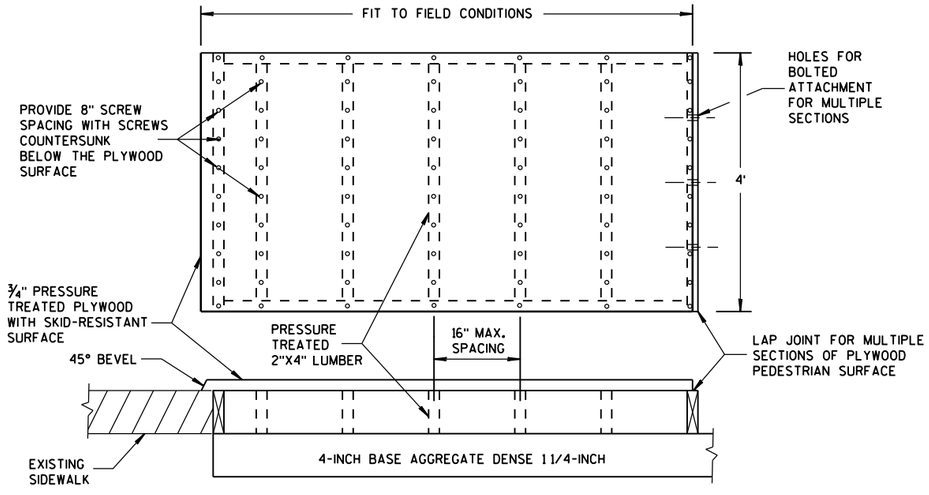

TEMPORARY PEDESTRIAN SURFACE PLYWOOD

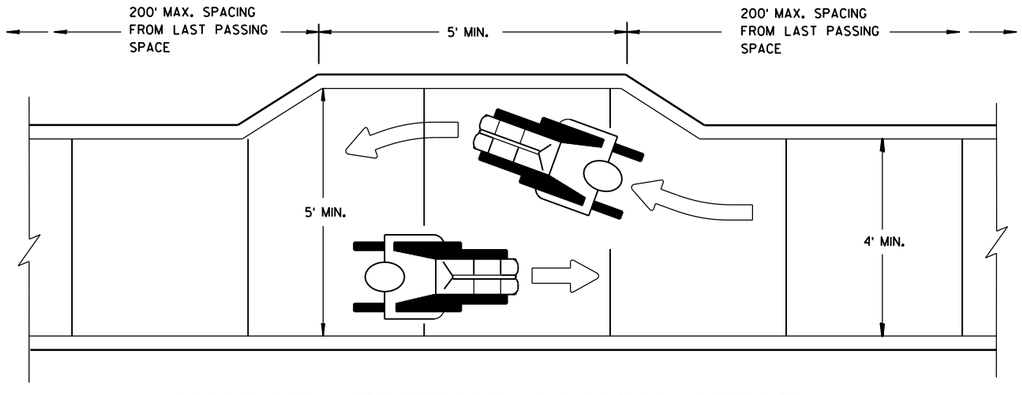

NARROW SIDEWALK PASSING DETAIL

TRAFFIC CONTROL, PEDESTRIAN ACCOMMODATION

STATE OF WISCONSIN
DEPARTMENT OF TRANSPORTATION

APPROVED
June 2016
DATE
/S/ Peter Amakobe Atepe
STATEWIDE WORK ZON SAFETY ENGIN IC
FHWA

6

S.D.D. 15 D 30-3c

6

S.D.D. 15 D 30-3c

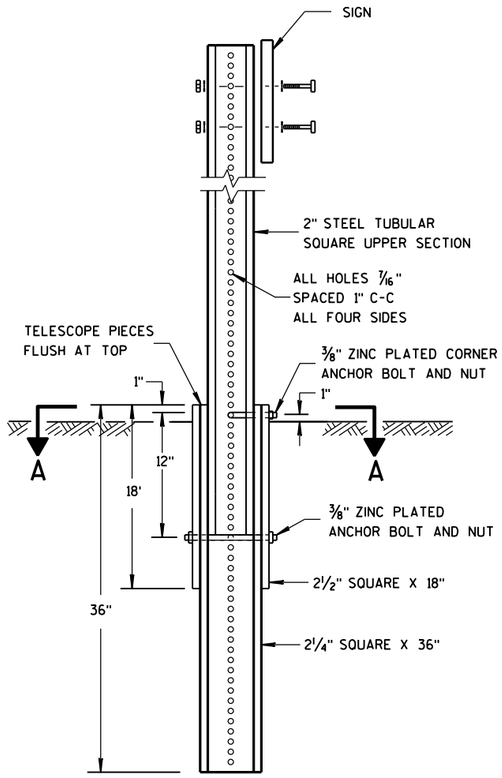

DETAIL OF TUBULAR STEEL SIGN POST

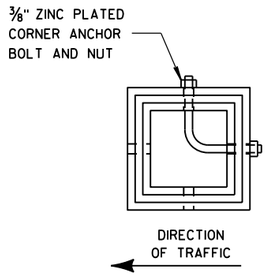

SECTION A-A

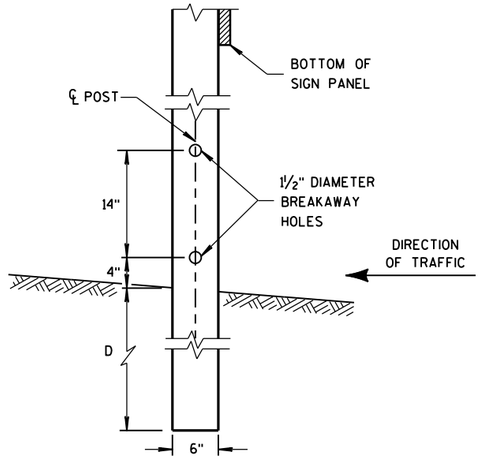

4"x6" WOOD POST MODIFICATION

GENERAL NOTES

1. 6 FEET FROM THE EDGE OF PAVEMENT (EDGE LINE LOCATION) UNLESS OTHERWISE DIRECTED BY THE PROJECT ENGINEER. LATERAL OFFSET SHOULD BE ADJUSTED TO AVOID THE DITCH FLOWLINE.

2. THE EXISTENCE OF CURB AND GUTTER DOES NOT IN ITSELF MANDATE THE VERTICAL CLEARANCE ILLUSTRATED. THAT HEIGHT IS TYPICALLY MEASURED WHERE THERE IS SIDEWALK ADJACENT TO THE ROADWAY OR PARKING IS PERMITTED. IN THE ABSENCE OF SIDEWALK, VERTICAL CLEARANCE IS MEASURED FROM THE TOP OF THE CURB. IF NO SIDEWALK AND NO PARKING, VERTICAL CLEARANCE MAY BE REDUCED TO 5 FOOT MINIMUM. OFFSET OF SIGNS IS MEASURED FROM THE CURB FLOWLINE.

3. FOR SIGNS REQUIRING 4 POSTS, SPACE INTERMEDIATE POSTS EVENLY.

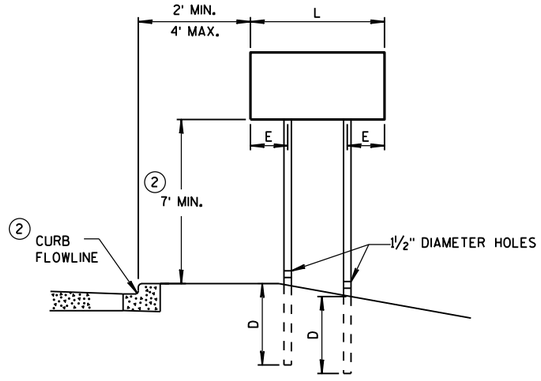

URBAN AREA

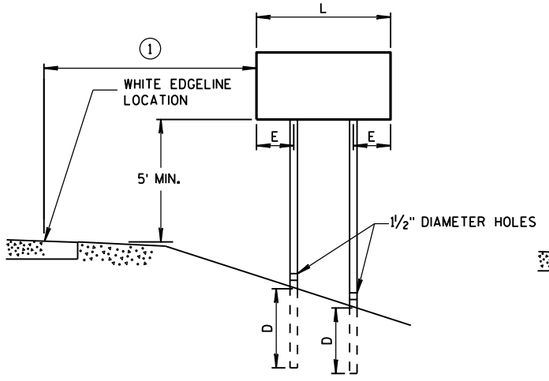

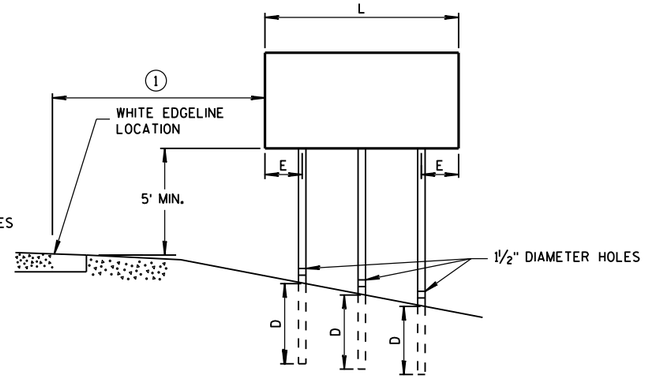

RURAL AREA

POST MOUNTING DETAIL FOR TEMPORARY TRAFFIC CONTROL FIXED MESSAGE SIGNS

TUBULAR STEEL POSTS

AREA OF SIGN INSTALLATION (SQ. FT.)	NUMBER OF REQUIRED TUBULAR STEEL POSTS
9 OR LESS	1
GREATER THAN 9 LESS THAN OR EQUAL TO 18	2
GREATER THAN 18 LESS THAN OR EQUAL TO 27	3

SIGNS WIDER THAN 3 FEET OR LARGER THAN 9 SQ. FT. SHALL BE MOUNTED ON MULTIPLE POSTS (SEE ABOVE TABLE).

SIGNS LARGER THAN 27 SQ. FT. SHALL NOT BE MOUNTED ON TUBULAR STEEL POSTS.

WOOD POST EMBEDMENT DEPTH

AREA OF SIGN INSTALLATION (SQ. FT.)	D (MIN)
20 OR LESS	4'
GREATER THAN 20	5'

4" X 6" WOOD POST

POST SPACING REQUIREMENTS		NUMBER OF WOOD POSTS REQUIRED
L	E	
48" OR LESS AND LESS THAN 20 SQ. FT.	-	1
LESS THAN 60"	12"	2
60" TO 120"	L/5	2
GREATER THAN 120" LESS THAN 168"	12"	3
168" AND GREATER	12"	4

SEE NOTE (3)

TEMPORARY TRAFFIC CONTROL SIGN MOUNTING

STATE OF WISCONSIN
DEPARTMENT OF TRANSPOI

6

S.D.D. 15 D 38-2a

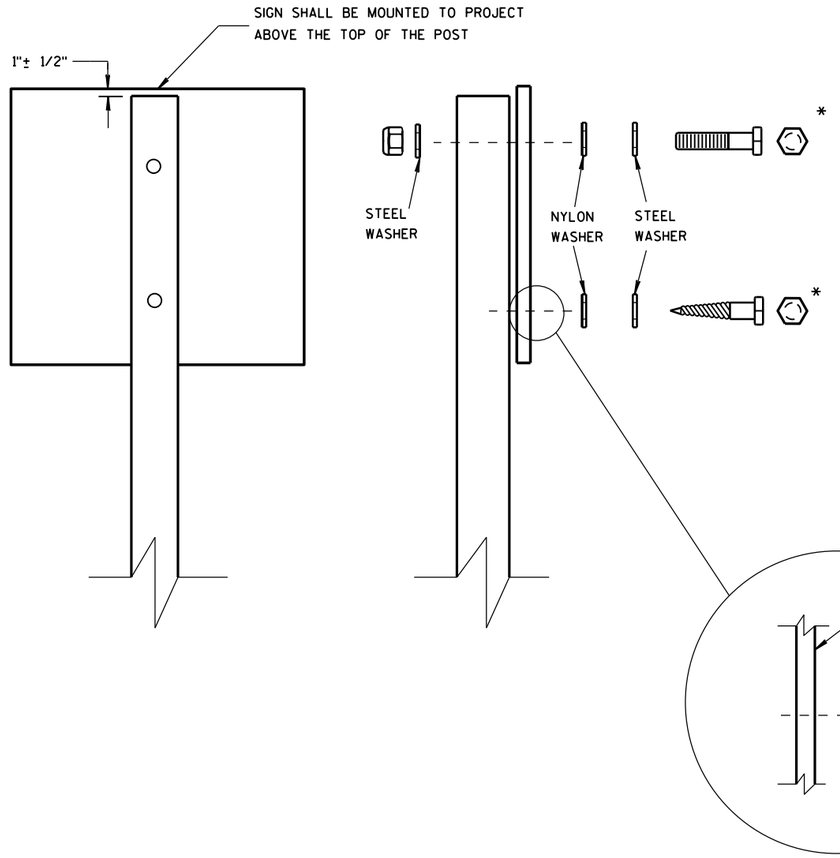

WASHER PLACEMENT WHEN SIGN HAS OTHER THAN TYPE H OR TYPE F FACE

NUTS, BOLTS AND LAGS USED FOR MOUNTING SIGNS SHALL HAVE HEXAGONAL HEADS AND SHALL BE EITHER:

A. HOT DIP GALVANIZED IN ACCORDANCE WITH ASTM DESIGNATION: A 153, CLASS D, OR SC 3

B. ELECTRO-GALVANIZED IN ACCORDANCE WITH ASTM DESIGNATION: B 633, TYPE III, SC 3

THREADS ON BOLTS AND NUTS SHALL BE MANUFACTURED WITH SUFFICIENT ALLOWANCE FOR THE CADMIUM PLATE OR GALVANIZED COATING TO PERMIT THE NUTS TO RUN FREELY ON THE BOLTS.

WOOD POSTS (4" x 4" or 4" x 6")

LAG SCREWS - 3/8" X 3"

MACHINE BOLTS - 5/16" X 6-1/2" OR 7" LENGTH W/ NUTS

SQUARE STEEL POSTS (2" x 2")

MACHINE BOLTS - 3/8" X 3-1/4" LENGTH W/ NUTS

RIVETS - 9/32" (6605-9-6) BULB-TITE, TRI-FOLD, ALUMINUM BODY/MANDREL O.D. FLANGE .720-.765 INCH, GRIP RANGE .042-.375 INCH

WASHERS (ALL POSTS) -

1-1/4" O.D. X 3/8" I.D. X 1/16" STEEL

1-1/4" O.D. X 3/8" I.D. X .080 NYLON FOR ALL TYPE H SIGNS

* TWO DIFFERENT FASTENING SYSTEMS ARE SHOWN FOR ILLUSTRATION PURPOSES. ON ANY INDIVIDUAL SIGN, EITHER ONE OR THE OTHER SYSTEM SHALL BE USED. ACTUAL NUMBER OF FASTENERS PER SIGN VARIES WITH THE SIGN AREA. FOR A SINGLE POST INSTALLATION, ALL SIGNS GREATER THAN 9 SQ. FT. REQUIRE THE USE OF 3 FASTENERS.

6

6

S.D.D. 15 D 38-2b

S.D.D. 15 D 38-2b

ATTACHMENT OF SIGNS TO POSTS

STATE OF WISCONSIN
DEPARTMENT OF TRANSPORTATION

APPROVED

June 2017
DATE

/S/ Andrew Heldtke
WORK ZONE ENG

FHWA

TYPICAL ASSEMBLIES

J1-1

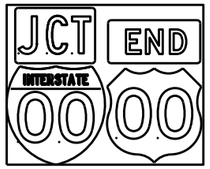

J1-2

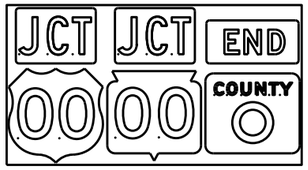

J1-3

J2-1

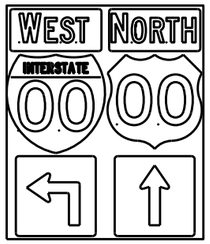

J2-2

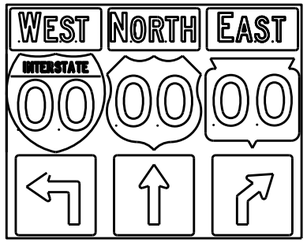

J2-3

JV

(Typical Vertical J-Assembly
See Note 10 and 11)

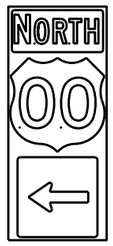

J3-1

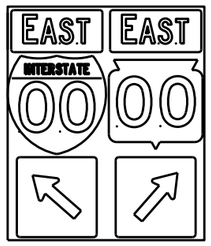

J3-2

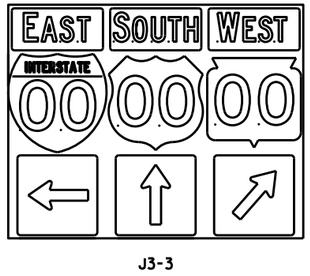

J3-3

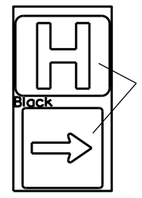

JH-1

J4-1

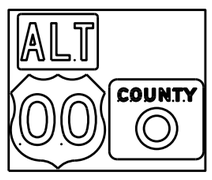

J4-2

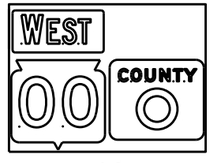

J4-2

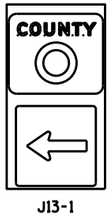

J13-1

J12-1

J32-1

J33-1

J23-1

J22-1

[blue background with interstate]

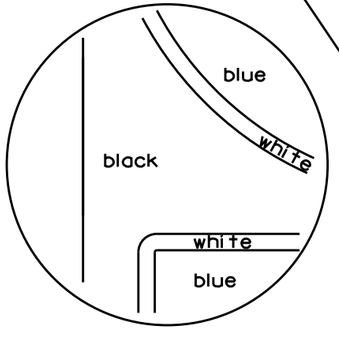

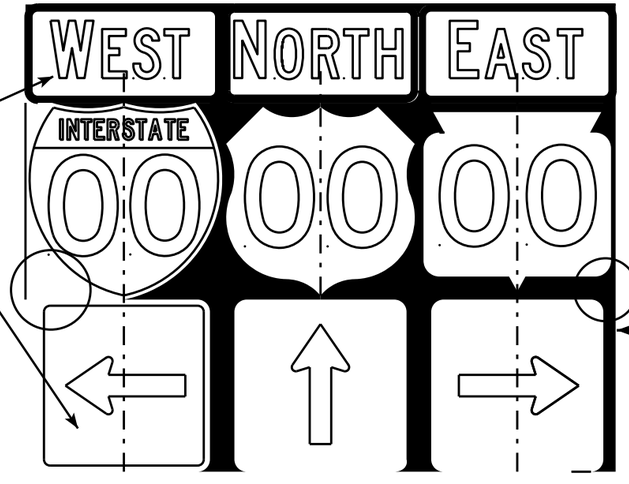

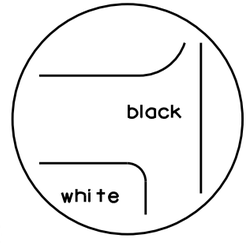

[black background]

NOTES

1. Signs are Type II - Type H Reflective - reference WIS DOT Standard Specification for HIGHWAY and STRUCTURE CONSTRUCTION latest edition.
2. Color:
   Background - Black Non-reflective
   Message - see Note 5
3. Message Series - See Note 5
4. Corners shall be square or rounded if base material is plywood. If base material is metal the corners shall be rounded.
5. The colors and message spacing on each marker shall be according to the applicable route marker panel specifications.
6. Certain marker heads require the component pieces to be the same color. As an example, all the components used with an M1-1 Interstate marker shall be blue.
7. Single panel j-assemblies shall only be used with route marker shields that are same size. If the route marker shields are different size use multiple piece component.
8. Route assemblies that have 24 inch route shields and have dimensions greater than 48 inches (both vertical and horizontal) shall have one horizontal splice between the arrows and route shields. Vertical splices shall not be used on route assemblies with a horizontal dimension of 144 inches or less. The contractor shall not use more than one vertical joint per sign and the joint shall be between route shields.
9. Route assemblies that have 36 inch shields and have dimensions greater than 48 inchs (both vertical and horizontal) shall have two horizontal splices. One horizontal splice shall be between the cardinal direction and route shields and the other horizontal splice shall be between the arrows and route shields. Vertical splices shall not be used on route assemblies with a horizontal dimension of 144 or less. The contractor shall not use more than one vertical joint per sign and the joint shall be between route shields.
10. All Vertical J Assemblies are given a Sign Code of JV
11. For JV Assemblies that have a mixture of Interstate and non Interstate shields, arrows and cardinals shall be white on blue.

ROUTE MARKERS & COMPONENTS
IN TYPICAL ASSEMBLIES

WISCONSIN DEPT OF TRANSPORTATION

APPROVED Matthew R Rauch
for State Traffic Engineer

DATE 2/06/14 PL... A2-1S.8

PROJECT NO: SHEET NO: E

URBAN AREA

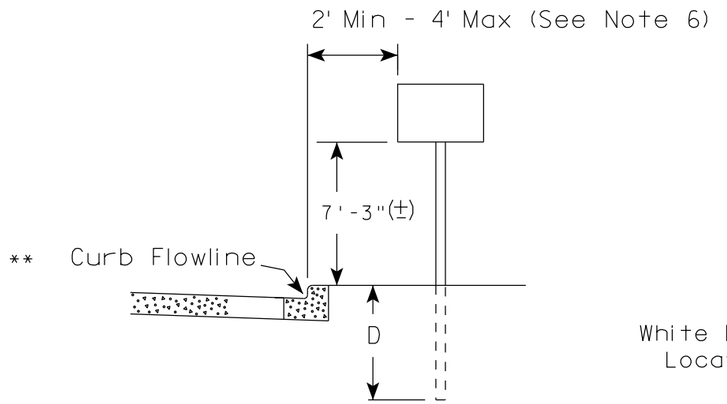

RURAL AREA (See Note 2)

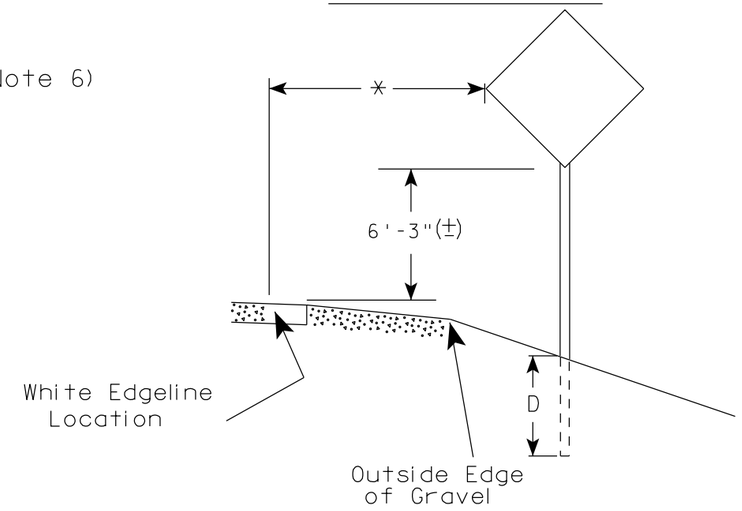

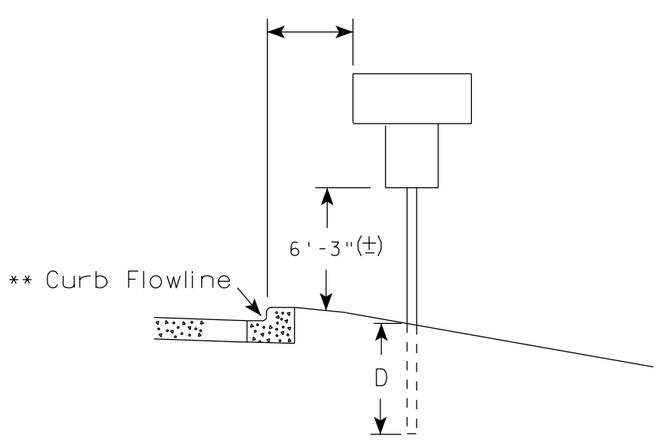

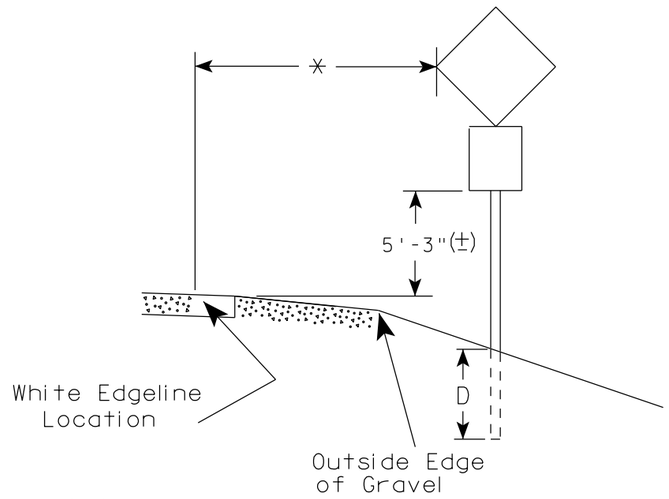

GENERAL NOTES

1. Signs wider than 4 feet or 20 sq.ft or larger, shall be mounted on multiple posts. Refer to plate A4-4.
2. If signs are mounted on barrier wall, see A4-10 sign plate.
3. For expressways and freeways, mounting height is 7'- 3" (±) or 6'-3" (±) depending upon existence of a sub-sign.
4. Minimum mounting height for J assemblies (A2-1S) is 7'-3" (±) or 6'-3" (±) per urban or rural detail respectively.
5. Minimum mounting height for signs mounted on traffic signal poles is 5'- 3" (±).
6. Offset distance shall be consistent with existing signs or consistent throughout length of project.
7. The (±) tolerance for mounting height is 3 inches.
8. Folding signs shall be mounted at a height of 5'-3" (±) or as directd by the Engineer.
9. The Double Arrow sign (W12-1) shall be mounted at a height of 2'-3" (±). The Chevron sign (W1-8), Roundabout Chevron panel (R6-4B), Enhanced Reference Markers, Clearance Markers (W5-52), Mile Markers (D10 series), In Road Object Markers (W5-54) & End of Road Markers (W5-56) shall be mounted at a height of 4'-3" (±).

POST EMBEDMENT DEPTH

Area of Sign Installation (Sq. Ft.)	D (Min)
20 or Less	4'
Greater than 20	5'

** The existence of curb and gutter does not in itself mandate the vertical clearance illustrated. That height is typically measured where there is sidewalk adjacent to the roadway or parking is permitted. In the absence of sidewalk vertical clearance is measured from the top of the curb. Offset of signs is measured from the flow line.

* 6 feet from edge of a paved shoulder or 12 feet from the edge of pavement (edge line location) or 2 feet from outside edge of gravel, whichever is greater unless directed by project engineer.

TYPICAL INSTALLATION OF PERMANENT TYPE II SIGNS ON SINGLE POSTS

WISCONSIN DEPT OF TRANSPORTATION

APPROVED Matthew R Rauch
for State Traffic Engineer

DATE 7/23/15 PLATE NO. A4-3.20

PROJECT NO:	HWY:	COUNTY:		SHEET NO:	E

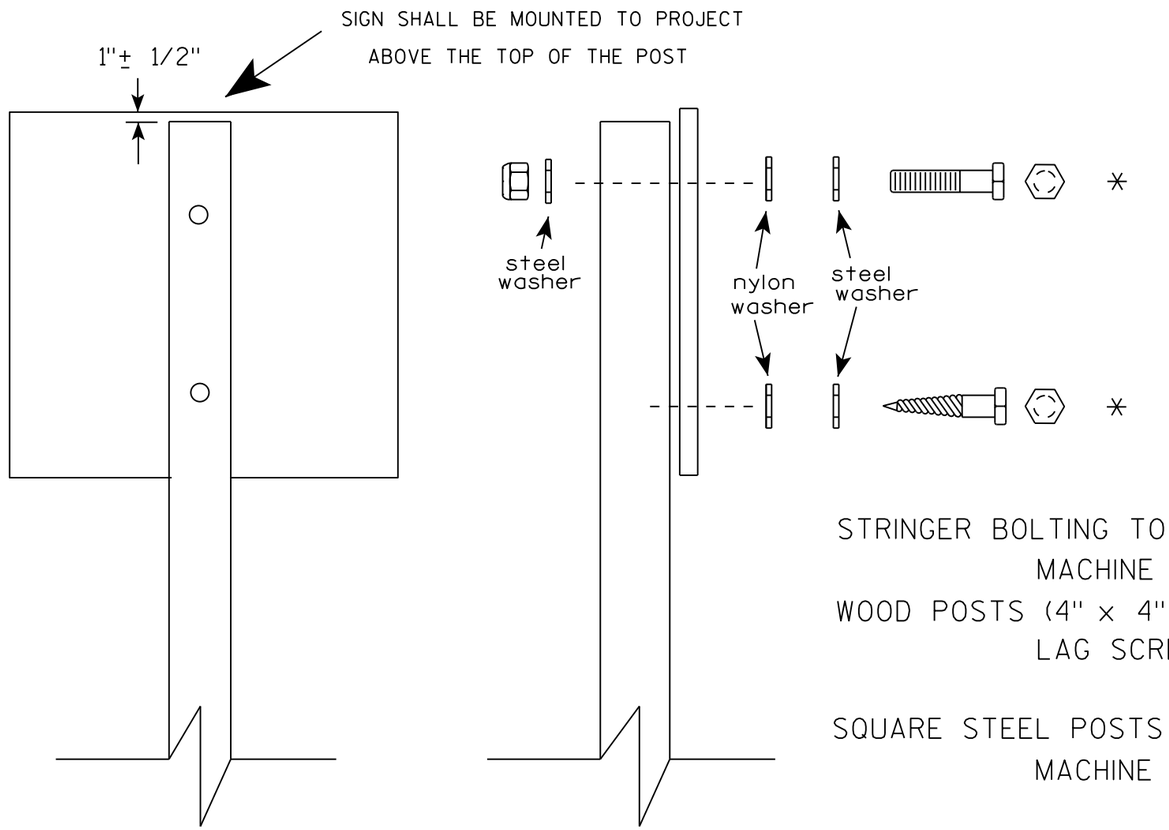

Nuts, bolts and lags used for mounting signs shall have hexagonal heads and shall be either :

a. Hot dip galvanized in accordance with ASTM Designation: A 153, Class D, or SC 3

b. Electro-galvanized in accordance with ASTM Designation : B 633, TYPE III, SC 3.

Threads on bolts and nuts shall be manufactured with sufficient allowance for the cadmium plate or galvanized coating to permit the nuts to run freely on the bolts.

STRINGER BOLTING TO ALUMINUM SIGNS (SEE SIGN PLATE A4-18)

MACHINE BOLTS - 5/16" X 1-3/4" Length w/ lock nuts

WOOD POSTS (4" x 4" or 4" x 6")

LAG SCREWS - 3/8" X 3" (NO STRINGERS ON BACK OF SIGN)

3/8" X 4" (STRINGERS ON BACK OF SIGN)

SQUARE STEEL POSTS (2" x 2")

MACHINE BOLTS - 3/8" X 3-1/4" Length w/ nuts (NO STRINGER ON BACK OF SIGN)

3/8" X 5" Length w/ nuts (STRINGERS ON BACK OF SIGN)

RIVETS - 9/32 " (6605-9-6) BULB-TITE, TRI-FOLD, ALUMINUM BODY/MANDREL O.D. FLANGE .720-.765 INCH, GRIP RANGE .042-.375 INCH

WASHERS (ALL POSTS) -

1-1/4" O.D. X 3/8" I.D. X 1/16" STEEL

1-1/4" O.D. X 3/8" I.D. X .080 NYLON

* Two different fastening systems are shown for illustration purposes. On any individual sign, either one or the other system shall be used. Actual number of fasteners per sign varies with the sign area, but normally there are two. For a single post installation, all signs greater than 9 sq. ft. require the use of 3 fasteners.

ATTACHMENT OF SIGNS TO POSTS

WISCONSIN DEPT OF TRANSPORTATION

APPROVED Matthew R Rauch
For State Traffic Engineer

DATE 8/11/16 PLATE NO. A4-8.8

PROJECT NO:

SHEET NO: E

FILE NAME : C:\CADfiles\Projects\tr_stdplate\A48.DGN PLOT DATE : 11-AUG-2016 11:35 PLOT BY : $$ plotuser $$

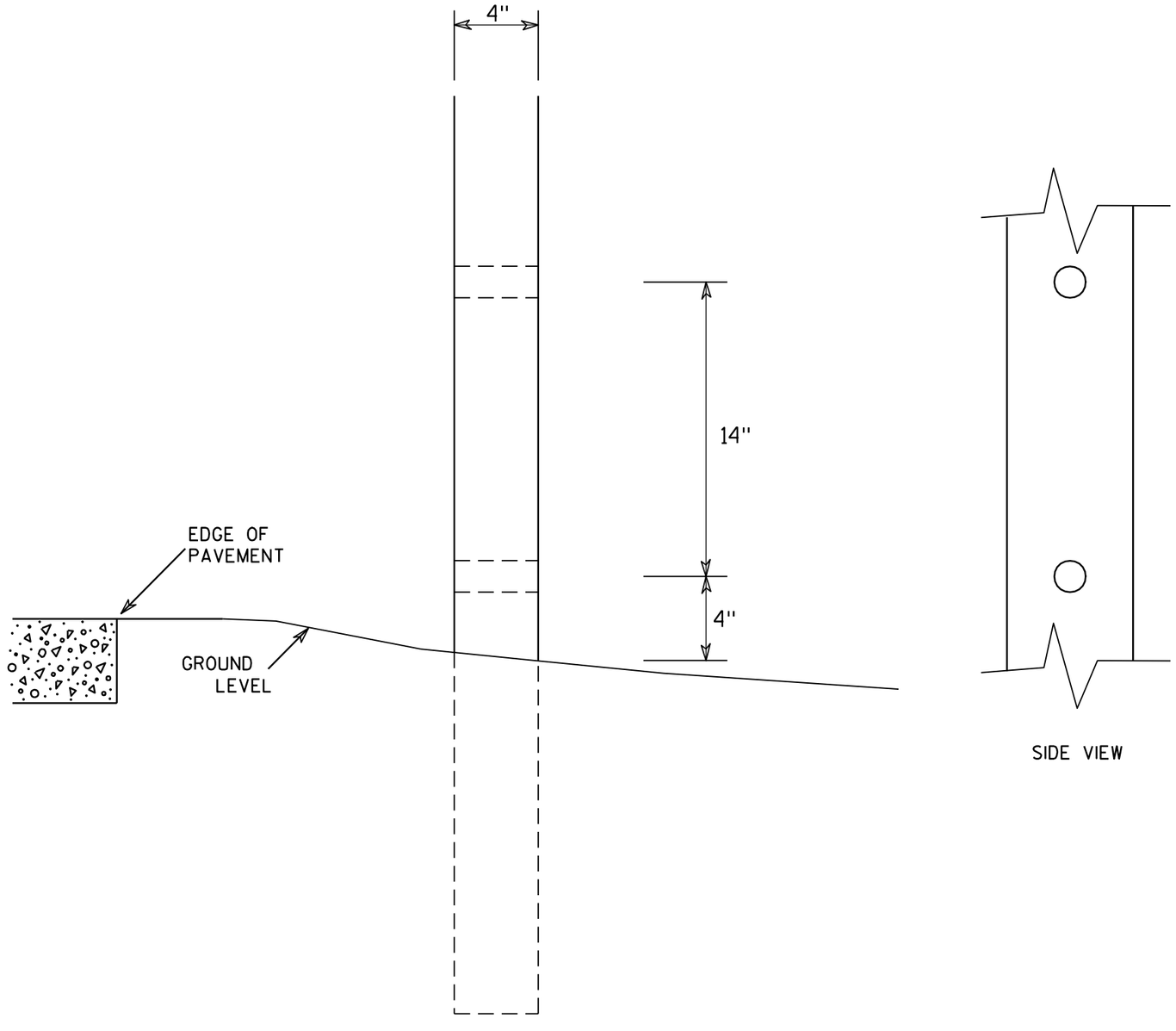

SIDE VIEW

GENERAL NOTES

1. All 4 x 6 Wood Posts shall be modified by having two 1½" diameter holes drilled perpendicular to the roadway centerline.

7

7

4 X 6 WOOD POST MODIFICATIONS

WISCONSIN DEPT OF TRANSPORTATION

APPROVED Chester J Spang for State Traffic Engineer

DATE 3/27/97 PLATE NO. A4-11.2

PROJECT NO:	HWY:	COUNTY:		SHEET NO: 155	E

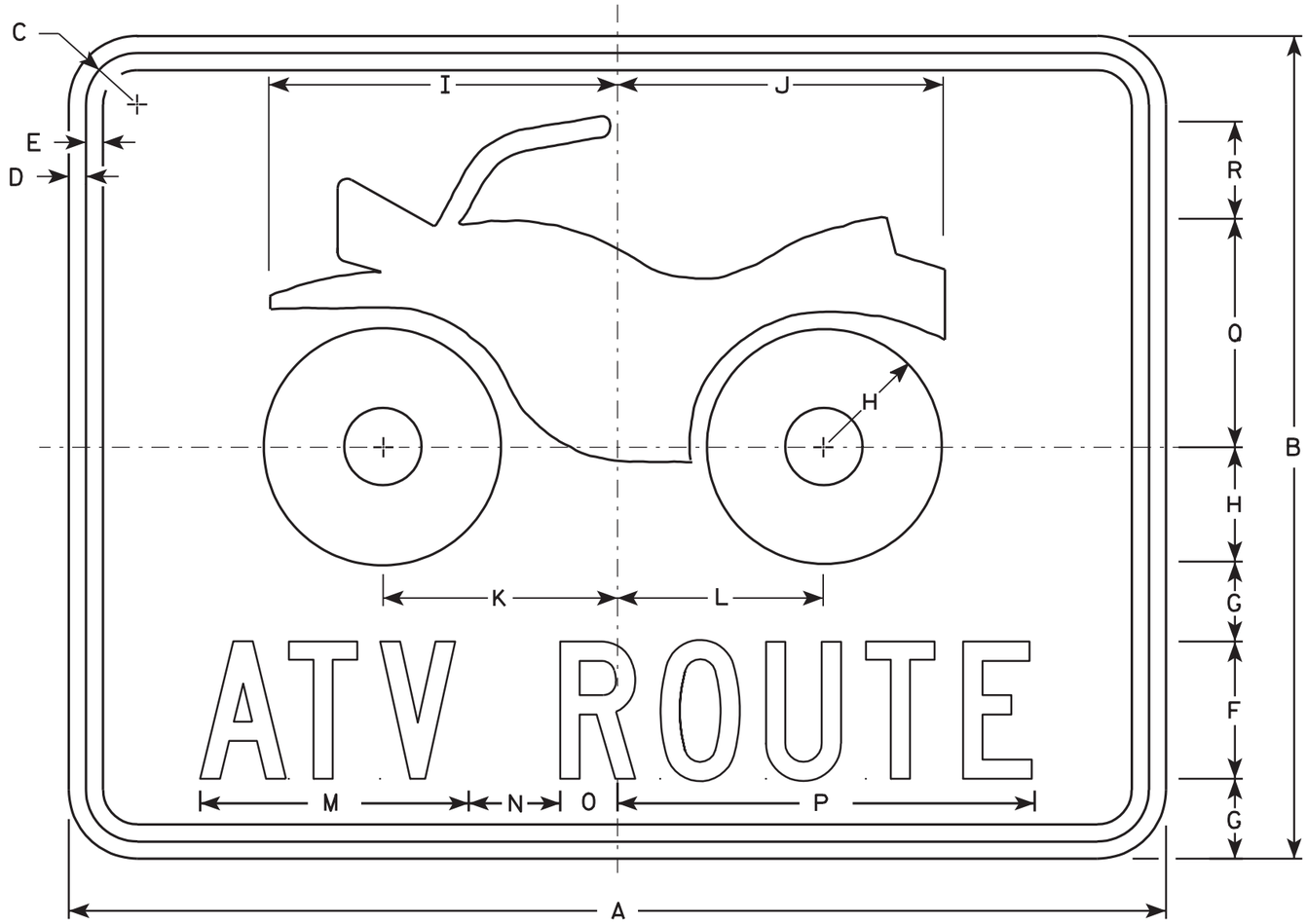

NOTES

1. Sign is Type II - Type H Reflective - reference WIS DOT Standard Specification for HIGHWAY and STRUCTURE CONSTRUCTION latest edition.
2. Color:
   Background - Green
   Message - White - Type H Reflective
3. Message Series - C
4. Corners may be square or rounded when base material is plywood but borders shall be rounded as shown. When base material is metal, the corners and borders shall be rounded.

D11-10

Metric equivalent for this sign is:

SIZE	
1	
2	600 mm X 450 mm
3	
4	
5	

SIZE	A	B	C	D	E	F	G	H	I	J	K	L	M	N	O	P	Q	R	S	T	U	V	W	X	Y	Z	Area sq. ft.	Area m^2
1																												
2	24	18	1 1/8	3/8	3/8	3	1 3/4	2 1/2	7 5/8	7 1/8	5 1/8	5 1/2	5 7/8	2	1 1/4	9 1/8	5	2 1/8									3.0	0.27
3																												
4																												
5																												

STANDARD SIGN
D11-10

WISCONSIN DEPT OF TRANSPORTATION

APPROVED Chesta J Spagg for State Traffic Engineer

DATE 1/16/02 PLATE NO. D11-10.4

PROJECT NO:

SHEET NO: 156 E

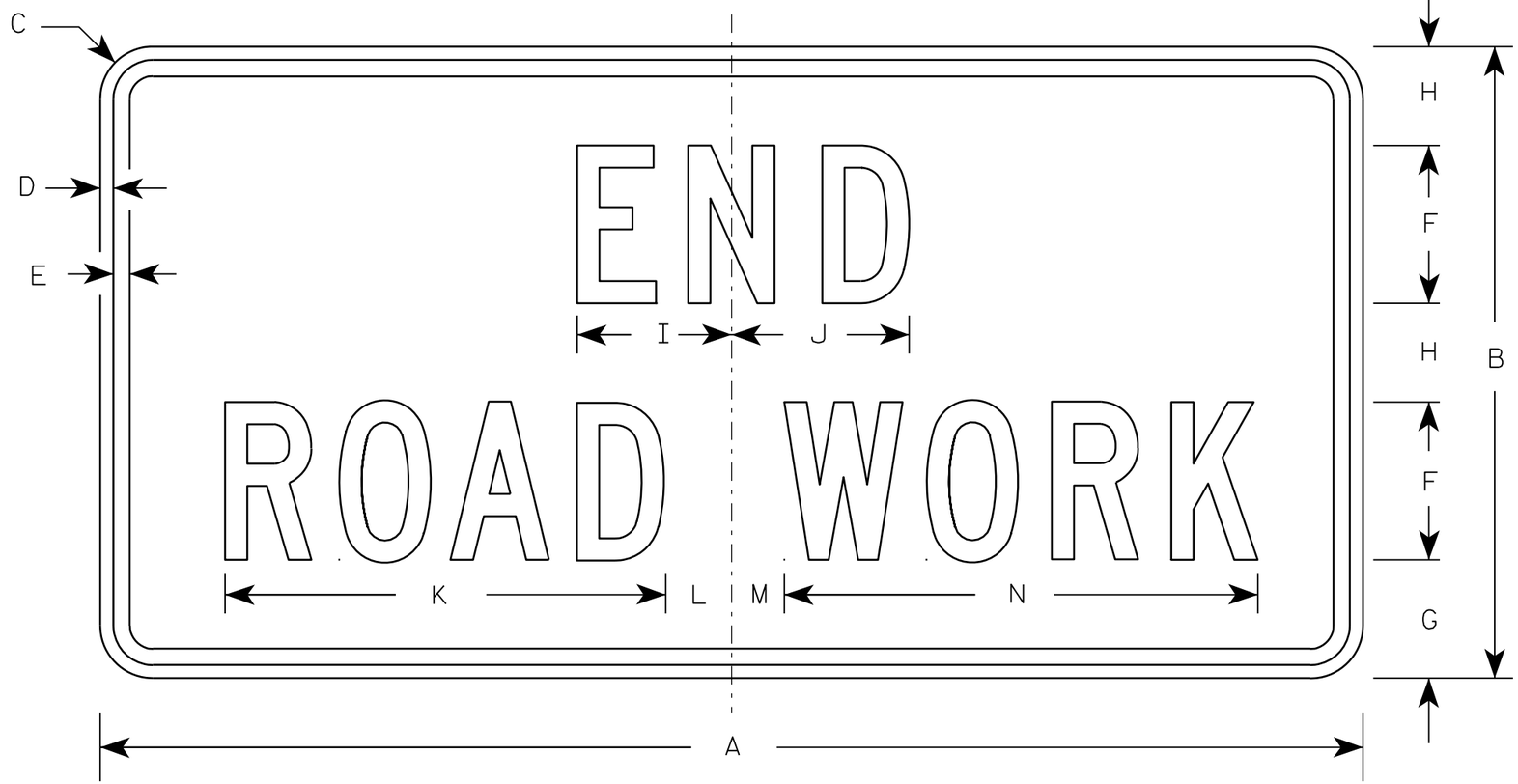

G20-2A

NOTES

1. Sign is Type II - Type F Reflective - reference WIS DOT Standard Specification for HIGHWAY and STRUCTURE CONSTRUCTION latest edition.
2. Color:
   Background - Orange
   Message - Black
3. Message Series - C
4. Corners may be square or rounded when base material is plywood but borders shall be rounded as shown. When base material is metal, the corners and borders shall be rounded.

Metric equivalent for this sign is:

SIZE	
1	900 mm X 450 mm
2	1200 mm X 600 mm
3	1200 mm X 600 mm
4	1200 mm X 600 mm
5	1200 mm X 600 mm

SIZE	A	B	C	D	E	F	G	H	I	J	K	L	M	N	O	P	Q	R	S	T	U	V	W	X	Y	Z	Area sq. ft.	Area m2
1	36	18	1 1/8	3/8	1/2	4	3 3/4	2 1/2	4 1/8	4 1/8	11 1/8	2	1	12 1/8													4.5	0.41
2	48	24	1 1/2	1/2	5/8	6	4 1/2	3 3/4	5 7/8	6 3/4	16 3/4	2 1/2	1 3/4	18 1/2													8.0	0.72
3	48	24	1 1/2	1/2	5/8	6	4 1/2	3 3/4	5 7/8	6 3/4	16 3/4	2 1/2	1 3/4	18 1/2													8.0	0.72
4	48	24	1 1/2	1/2	5/8	6	4 1/2	3 3/4	5 7/8	6 3/4	16 3/4	2 1/2	1 3/4	18 1/2													8.0	0.72
5	48	24	1 1/2	1/2	5/8	6	4 1/2	3 3/4	5 7/8	6 3/4	16 3/4	2 1/2	1 3/4	18 1/2													8.0	0.72

STANDARD SIGN
G20-2A

WISCONSIN DEPT OF TRANSPORTATION

APPROVED Matthew R Rauch
for State Traffic Engineer

DATE 9/30/09 PLATE NO. G20-2A.8

PROJECT NO:	HWY:	COUNTY:		SHEET NO: 157	E

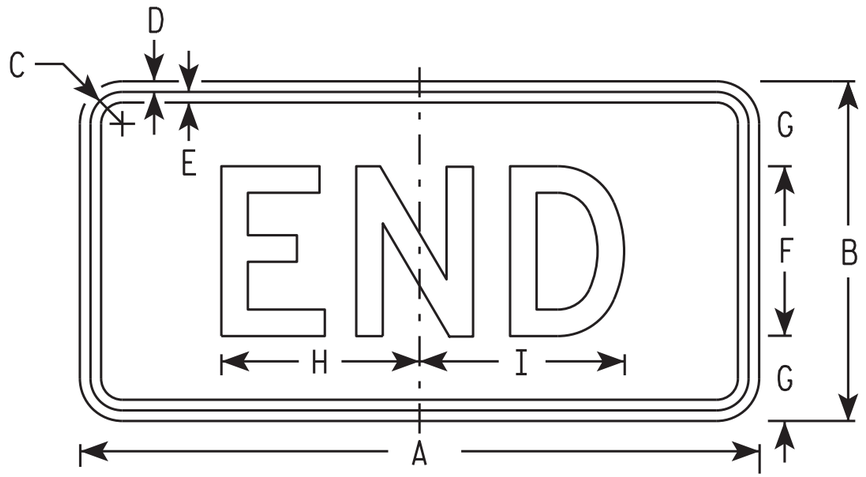

M4-6
MM4-6
MP4-6

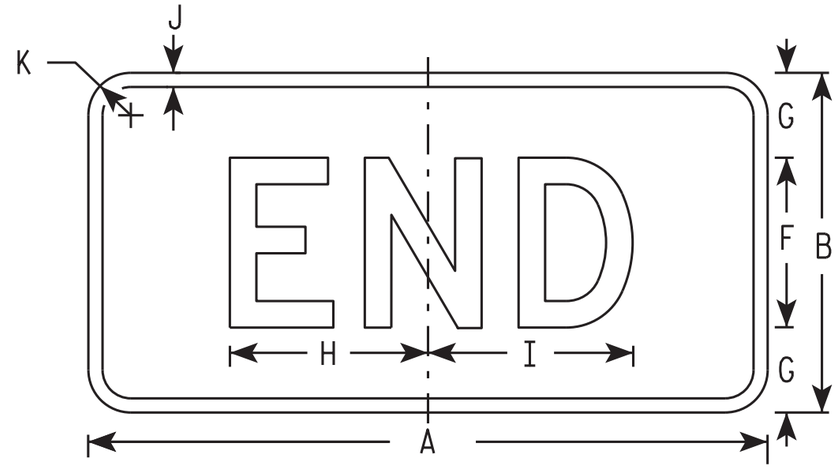

MB4-6
MK4-6
MN4-6
MR4-6

NOTES

1. Sign is Type II - Type H
2. Color:
   Background - See note 5
   Message - See note 5
3. Message Series - D
4. Corners may be square or rounded when base material is plywood but borders shall be rounded as shown. When base material is metal, the corners and borders shall be rounded.
5. M4-6 Background - White
   Message - Black

   MB4-6 Background - Blue
   Message - White

   MK4-6 Background - Green
   Message - White

   MM4-6 Background - White
   Message - Green

   MN4-6 Background - Brown
   Message - White

   MP4-6 Background - White
   Message - Blue

   MR4-6 Background - Brown
   Message - Yellow

SIZE	A	B	C	D	E	F	G	H	I	J	K	L	M	N	O	P	Q	R	S	T	U	V	W	X	Y	Z	Area sq. ft.
1																											
2	24	12	1 1/8	3/8	3/8	6	3	7	7 1/4	1/2	1 1/2																2.00
3	36	18	1 1/8	3/8	1/2	9	4 1/2	12	11 7/8	1/2	1 1/2																4.5
4	36	18	1 1/8	3/8	1/2	9	4 1/2	12	11 7/8	1/2	1 1/2																4.5
5	36	18	1 1/8	3/8	1/2	9	4 1/2	12	11 7/8	1/2	1 1/2																4.5

STANDARD SIGN
M4-6

WISCONSIN DEPT OF TRANSPORTATION

APPROVED Matthew R Rauch
for State Traffic Engineer

DATE 10/15/15 PLATE NO. M4-7.9

PROJECT NO:	HWY:	COUNTY:		SHEET NO. 158	E

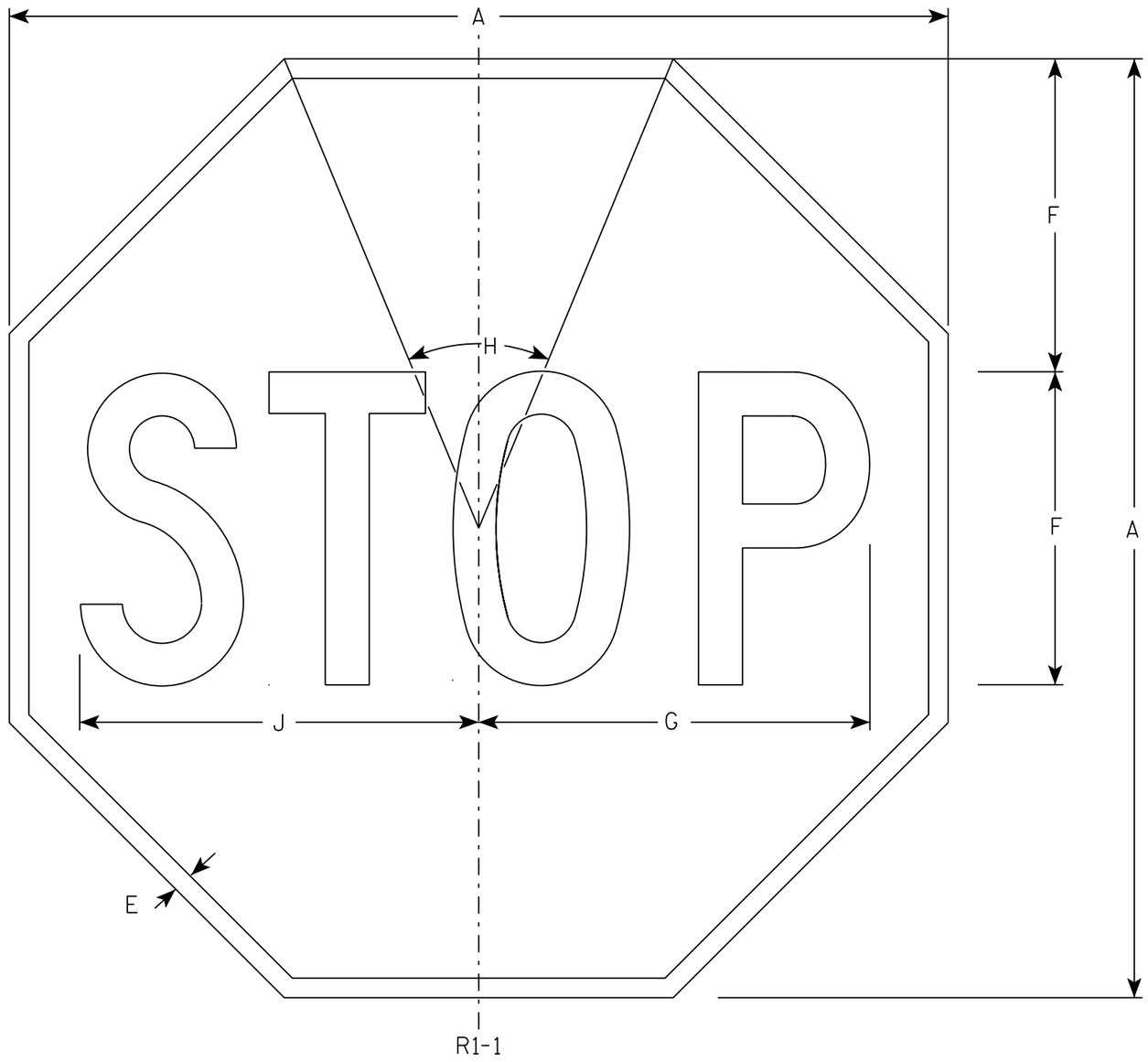

NOTES

1. Sign is Type II - Type H Reflective - reference WIS DOT Standard Specification for HIGHWAY and STRUCTURE CONSTRUCTION latest edition.
2. Color:
   Background - Red
   Message - White
3. Message Series - C

SIZE	A	B	C	D	E	F	G	H	I	J	K	L	M	N	O	P	Q	R	S	T	U	V	W	X	Y	Z	Area sq. ft.
1	30				5/8	10	12 1/2	45°		12 3/4																	5.18
2S	30				5/8	10	12 1/2	45°		12 3/4																	5.18
2M	36				3/4	12	15	45°		15 3/8																	7.46
3	36				3/4	12	15	45°		15 3/8																	7.46
4	48				1	16	20	45°		20 1/2																	13.25
5	48				1	16	20	45°		20 1/2																	13.25
6	18				3/8	6	7 3/4	45°		7 3/4																	1.86
7	12				1/4	4	5	45°		5 1/8																	0.78

STANDARD SIGN
R1-1

WISCONSIN DEPT OF TRANSPORTATION

APPROVED Matthew R Rauch
for State Traffic Engineer

DATE 11/12/15 PLATE NO. R1-1.13

PROJECT NO:	HWY:	COUNTY:		SHEET NO: 159	E

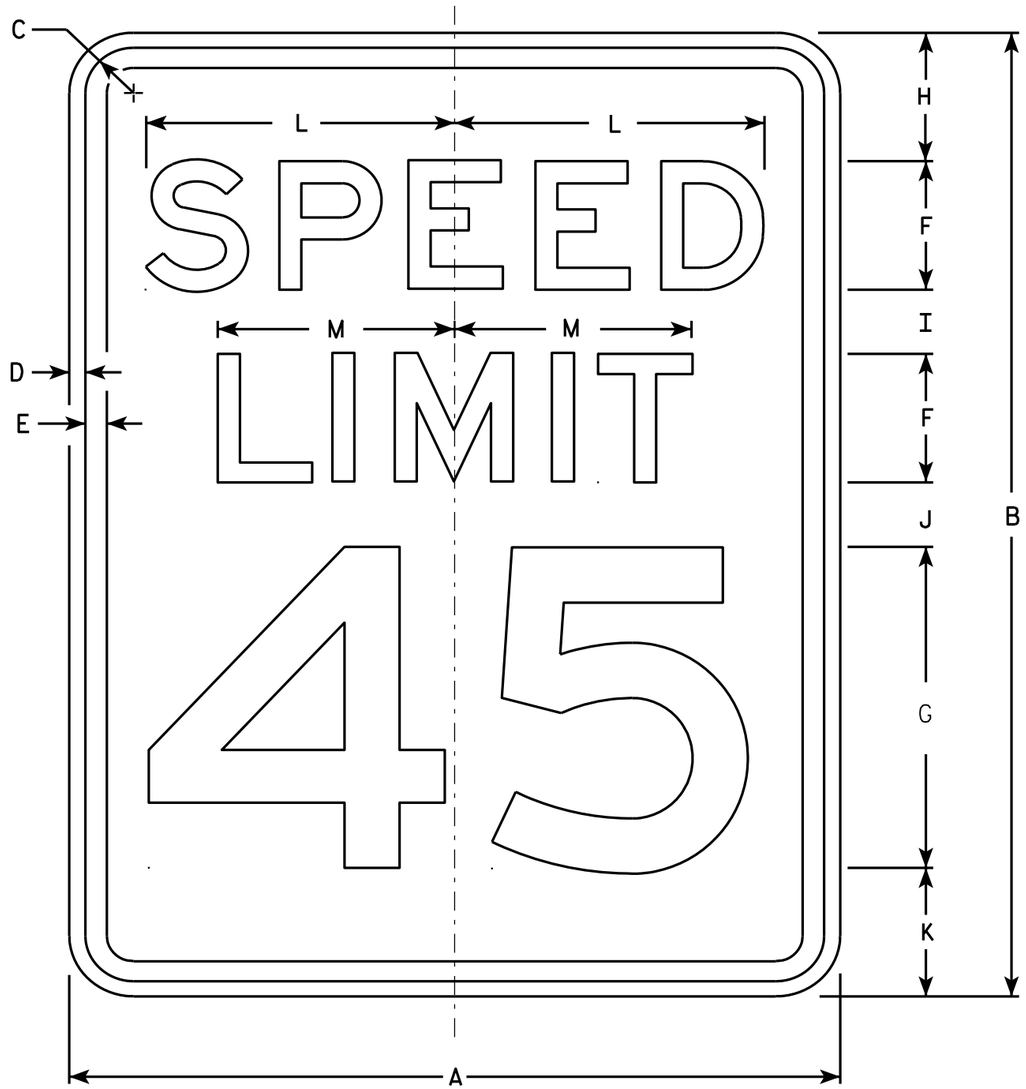

R2-1

NOTES

1. Sign is Type II - Type H Reflective - reference WIS DOT Standard Specification for HIGHWAY and STRUCTURE CONSTRUCTION latest edition.
2. Color:
   Background - White
   Message - Black
3. Message Series - E
4. Corners may be square or rounded when base material is plywood but borders shall be rounded as shown. When base material is metal, the corners and borders shall be rounded.
5. Substitute appropriate numerals and optically adjust spacing to achieve proper balance.

SIZE	A	B	C	D	E	F	G	H	I	J	K	L	M	N	O	P	Q	R	S	T	U	V	W	X	Y	Z	Area sq. ft.
1	18	24	1 1/8	3/8	1/2	3	8	3	2	2	3	7 1/4	5 1/2														3.0
2S	24	30	1 1/8	3/8	1/2	4	10	3	2 1/4	3 3/8	3 3/8	9 5/8	7 3/8														5.0
2M	30	36	1 3/8	1/2	5/8	5	12	5	2 1/2	2 1/2	4	12	9 1/4														7.5
3	36	48	1 3/8	1/2	5/8	6	14	6	5	5	6	14 3/8	11														12.0
4	36	48	1 3/8	1/2	5/8	6	14	6	5	5	6	14 3/8	11														12.0
5	48	60	2 1/4	3/4	1	8	20	6	4 1/2	6 3/4	6 3/4	19 1/4	14 5/8														20.0

STANDARD SIGN
R2-1

WISCONSIN DEPT OF TRANSPORTATION

APPROVED Matthew R Rauch
for State Traffic Engineer

DATE 5/26/10 PLATE NO. R2-1.13

PROJECT NO: | HWY: | COUNTY: | SHEET NO: 160 | E

NOTES

1. Sign is Type II - Type H Reflective
2. Color:
   Background - White
   Message - Black
3. Message Series - C
4. Corners may be square or rounded when base material is plywood but borders shall be rounded as shown. When base material is metal, the corners and borders shall be rounded.
5. Substitute appropriate numerals to nearest quarter mile and optically adjust spacing to achieve proper balance.

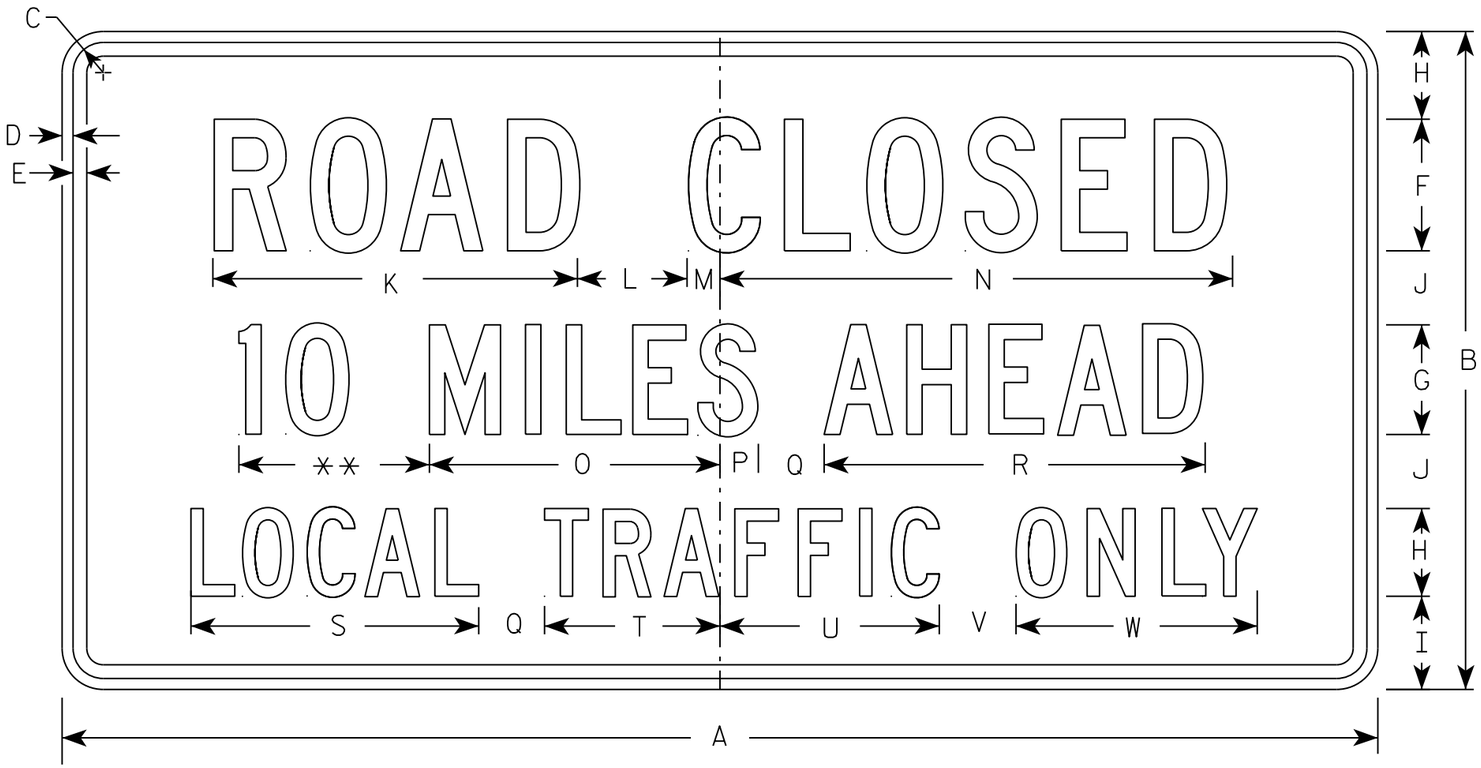

R11-3

** See Note 5

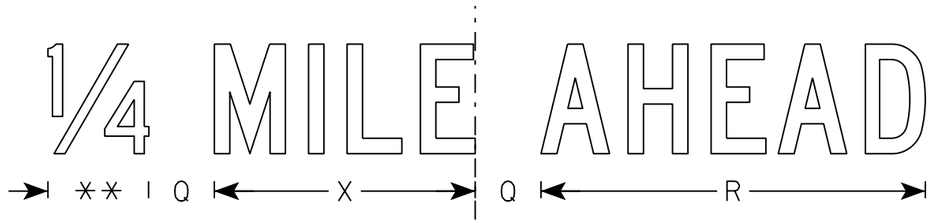

SIZE	A	B	C	D	E	F	G	H	I	J	K	L	M	N	O	P	Q	R	S	T	U	V	W	X	Y	Z	Area sq. ft.
1	36	18	1 3/8	1/2	5/8	4	3	2 1/2	2	2	11 1/8	3	1 1/8	15 1/4	8	1 1/2	2	10 3/4	8 3/8	4 3/4	6 1/2	2	6 3/4	7 1/8			4.5
2S	60	30	1 3/8	1/2	5/8	6	5	4	4 1/4	3 3/8	16 5/8	5	1 1/2	23	13 1/4	1 3/4	3	17 3/8	13 1/8	8	10	3 1/2	11	11 7/8			12.5
2M	60	30	1 3/8	1/2	5/8	6	5	4	4 1/4	3 3/8	16 5/8	5	1 1/2	23	13 1/4	1 3/4	3	17 3/8	13 1/8	8	10	3 1/2	11	11 7/8			12.5
3																											
4																											
5																											

STANDARD SIGN
R11-3

WISCONSIN DEPT OF TRANSPORTATION

APPROVED Matthew R Rauch
for State Traffic Engineer

DATE 3/15/17 PLATE NO. R11-3.8

PROJECT NO: | HWY: | COUNTY: | SHEET NO: 161 | E

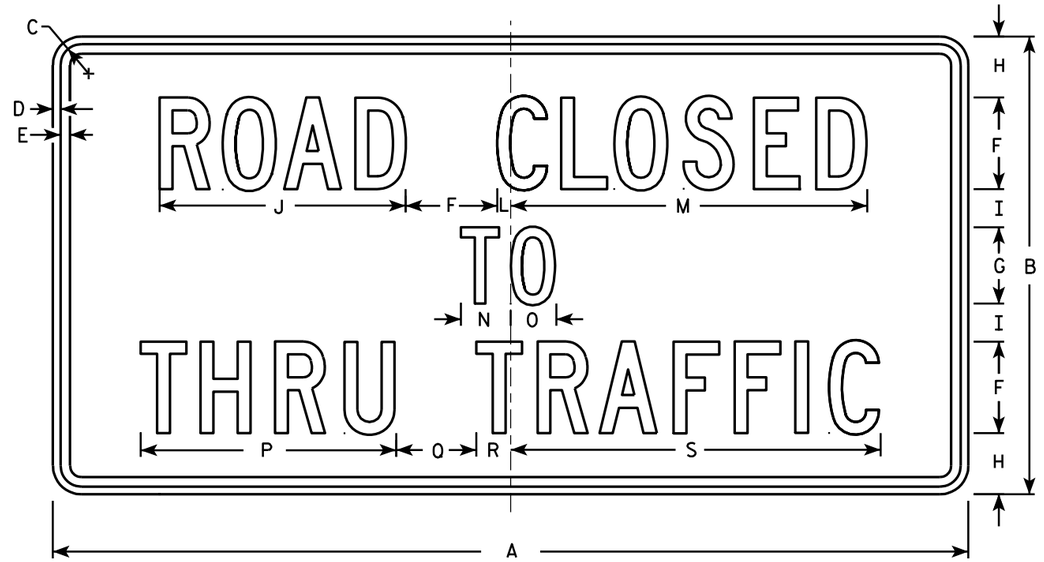

R11-4

NOTES

1. Sign is Type II - Type H Reflective - reference WIS DOT Standard Specification for HIGHWAY and STRUCTURE CONSTRUCTION latest edition.
2. Color:
   Background - White
   Message - Black
3. Message Series - C
4. Corners may be square or rounded when base material is plywood but borders shall be rounded as shown. When base material is metal, the corners and borders shall be rounded.

SIZE	A	B	C	D	E	F	G	H	I	J	K	L	M	N	O	P	Q	R	S	T	U	V	W	X	Y	Z	Area sq. ft.
1																											
2S	60	30	1 3/8	1/2	5/8	6	5	4	2 1/2	16 1/8		7/8	23 3/8	3 1/4	3	16 3/4	5 1/4	2 1/4	24 1/4								12.5
2M	60	30	1 3/8	1/2	5/8	6	5	4	2 1/2	16 1/8		7/8	23 3/8	3 1/4	3	16 3/4	5 1/4	2 1/4	24 1/4								12.5
3																											
4																											
5																											

STANDARD SIGN
R11 - 4

WISCONSIN DEPT OF TRANSPORTATION

APPROVED Matthew R Rauch for State Traffic Engineer

DATE 4/1/11 PLATE NO. R11-4.3

PROJECT NO: | HWY: | COUNTY: | SHEET NO: 162 | E

7

FILE NAME : C:\Users\PROJECTS\tr_stdplate\R114.DGN PLOT DATE : 01-APR-2011 14:11 PLOT BY : mscj9h PLOT NAME : PLOT SCALE : 9.931739:1.000000 WISDOT/CADDS SHEET 42

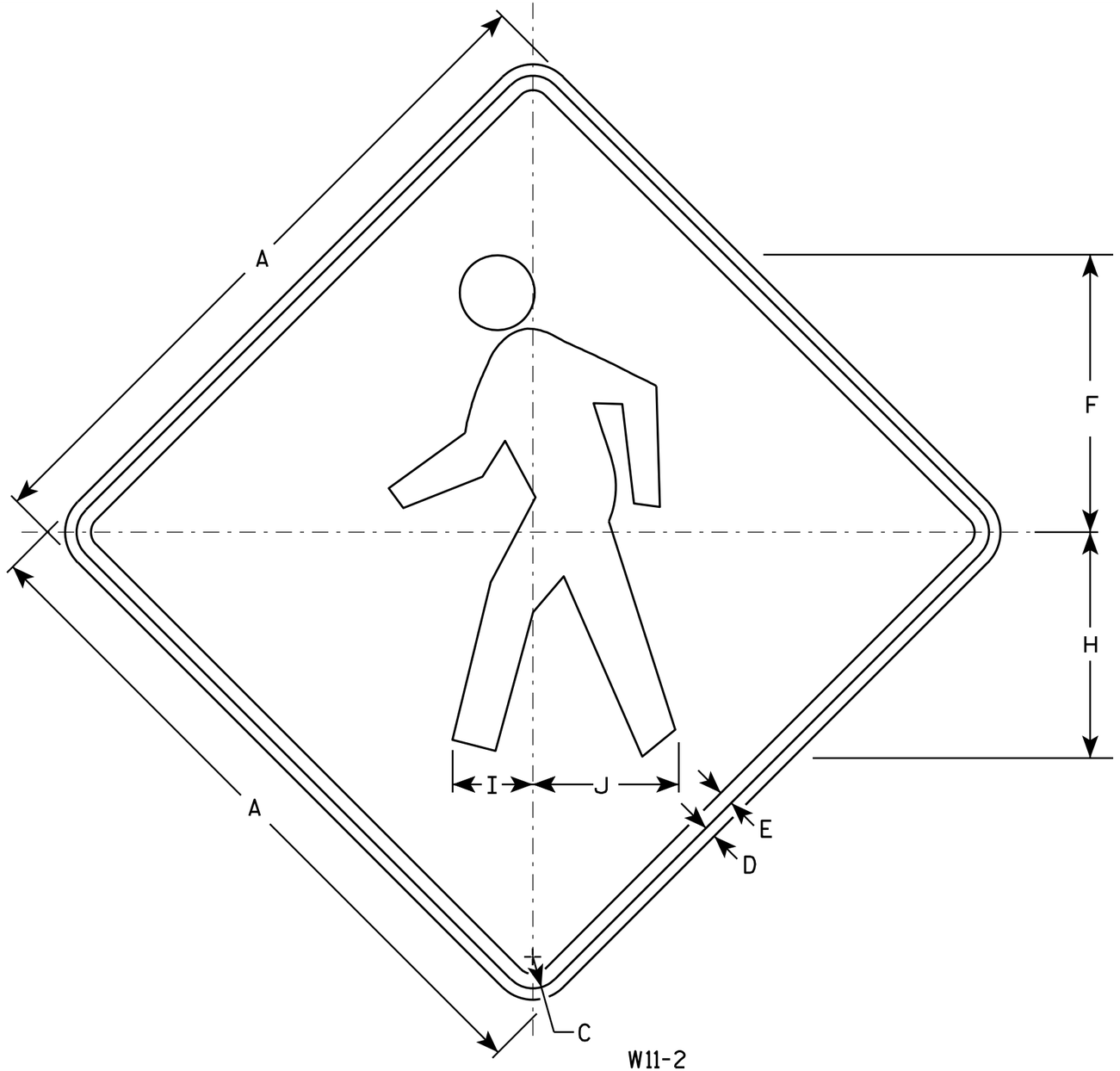

W11-2

NOTES

1. Sign is Type II - Type F Reflective - reference WIS DOT Standard Specification for HIGHWAY and STRUCTURE CONSTRUCTION latest edition.
2. Color:
   Background - Yellow
   Message - Black
3. Corners may be square or rounded when base material is plywood but borders shall be rounded as shown. When base material is metal, the corners and borders shall be rounded.

SIZE	A	B	C	D	E	F	G	H	I	J	K	L	M	N	O	P	Q	R	S	T	U	V	W	X	Y	Z	Area sq. ft.
1	24		1 1/8	3/8	1/2	9 3/4		7 7/8	2 7/8	5 1/8																	4.0
2S	30		1 3/8	1/2	5/8	12 1/8		9 7/8	3 1/2	6 3/8																	6.25
2M	36		1 5/8	5/8	3/4	14 1/2		11 7/8	4 1/4	7 5/8																	9.0
3	36		1 5/8	5/8	3/4	14 1/2		11 7/8	4 1/4	7 5/8																	9.0
4	48		2 1/4	3/4	1	19 3/8		15 3/4	5 5/8	10 1/4																	16.0
5																											

STANDARD SIGN
W11-2

WISCONSIN DEPT OF TRANSPORTATION

APPROVED Matthew R Rauch
for State Traffic Engineer

DATE 6/7/10 PLATE NO. W11-2.7

PROJECT NO:	HWY:	COUNTY:		SHEET NO: 163	E

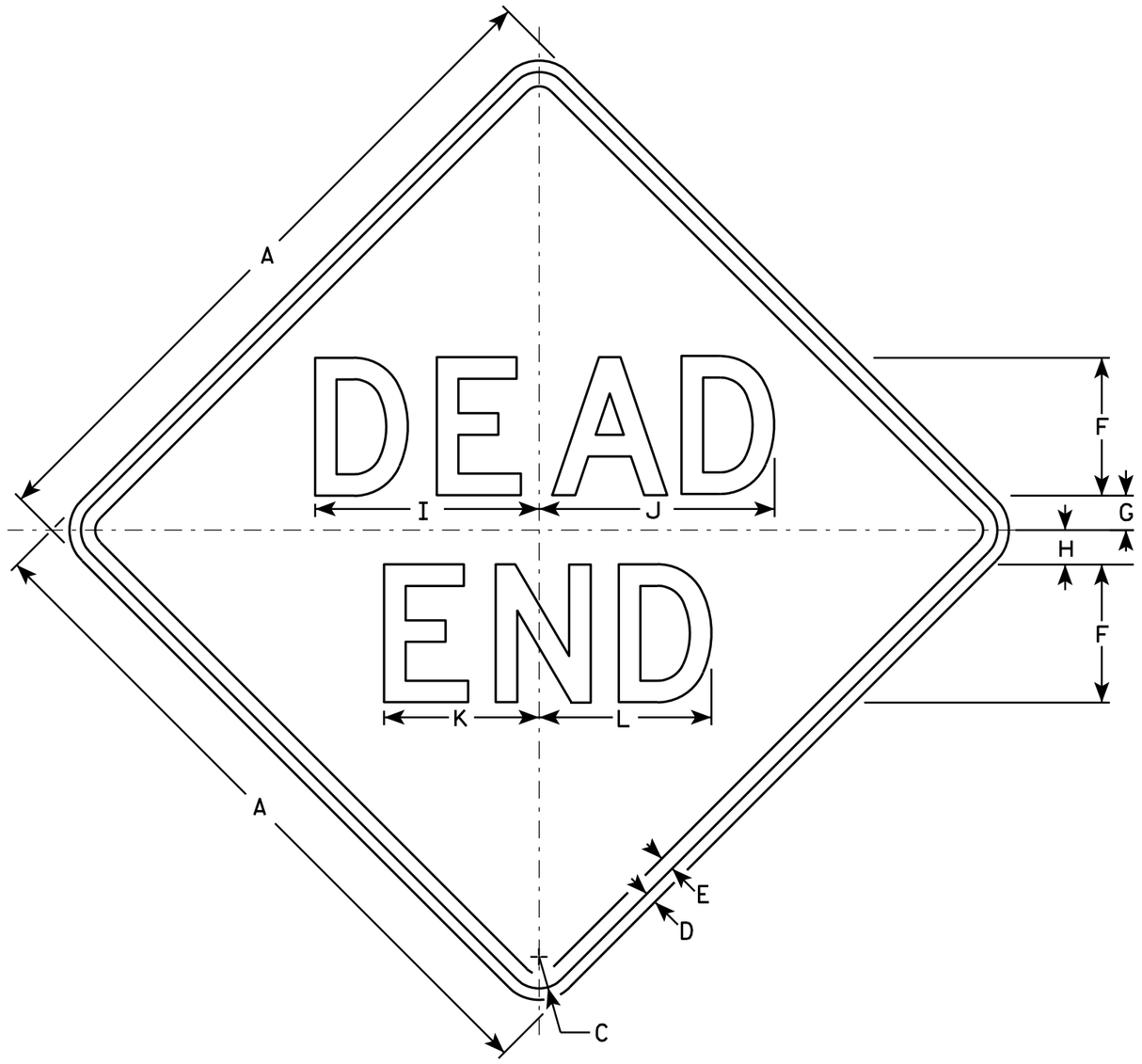

W14-1

NOTES

1. Sign is Type II - Type F Reflective - reference WIS DOT Standard Specification for HIGHWAY and STRUCTURE CONSTRUCTION latest edition.
2. Color:
   Background - Yellow
   Message - Black
3. Message Series - D
4. Corners may be square or rounded when base material is plywood but borders shall be rounded as shown. When base material is metal, the corners and borders shall be rounded.

SIZE	A	B	C	D	E	F	G	H	I	J	K	L	M	N	O	P	Q	R	S	T	U	V	W	X	Y	Z	Area sq. ft.
1	24		1 1/8	3/8	1/2	5	1	2	8 1/4	8 5/8	5 5/8	6 1/4															4.0
2S	30		1 3/8	1/2	5/8	6	1 1/2	2 1/2	9 3/4	10 1/4	6 3/4	7 1/2															6.25
2M	30		1 3/8	1/2	5/8	6	1 1/2	2 1/2	9 3/4	10 1/4	6 3/4	7 1/2															6.25
3	36		1 5/8	5/8	3/4	7	2	3	11 3/8	12	7 7/8	8 3/4															9.0
4																											
5																											

STANDARD SIGN
W14-1

WISCONSIN DEPT OF TRANSPORTATION

APPROVED Matthew R Rauch
for State Traffic Engineer

DATE 3/13/13 PLATE NO. W14-1.7

PROJECT NO:	HWY:	COUNTY:		SHEET NO: 164	E

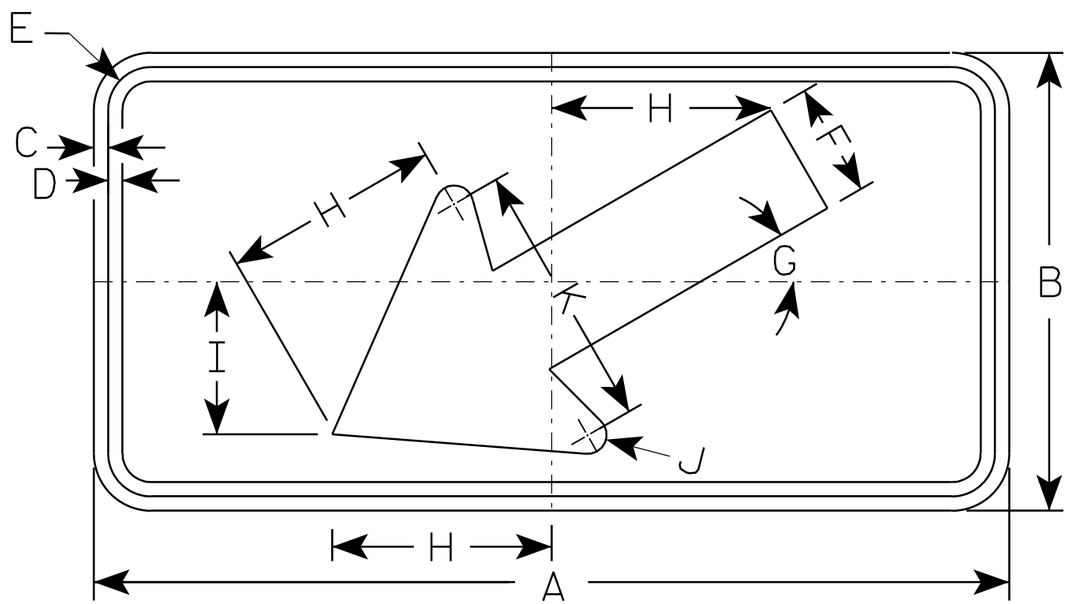

W16-7L

NOTES

1. Sign is Type II - Type F Reflective - reference WIS DOT Standard Specification for HIGHWAY and STRUCTURE CONSTRUCTION latest edition.
2. Color:
   Background - Yellow
   Message - Black
3. Corners may be square or rounded when base material is plywood but borders shall be rounded as shown. When base material is metal, the corners and borders shall be rounded.
4. W16-7R is the same as W16-L except the arrow is reversed along the vertical centerline.

SIZE	A	B	C	D	E	F	G	H	I	J	K	L	M	N	O	P	Q	R	S	T	U	V	W	X	Y	Z	Area sq. ft.
1																											
2S	24	12	3/8	3/8	1 1/8	3	30°	5 3/4	4	1/2	7																2.0
2M	30	18	3/8	1/2	1 1/8	4 1/2	30°	8 1/2	6	5/8	10 1/4																3.75
3	30	18	3/8	1/2	1 1/8	4 1/2	30°	8 1/2	6	5/8	10 1/4																3.75
4																											8
5																											8

STANDARD SIGN
W16-7

WISCONSIN DEPT OF TRANSPORTATION

APPROVED Matthew R Rauch
for State Traffic Engineer

DATE 11/02/10 PLATE NO. W16-7.5

PROJECT NO:	HWY:	COUNTY:		SHEET NO: 165	E

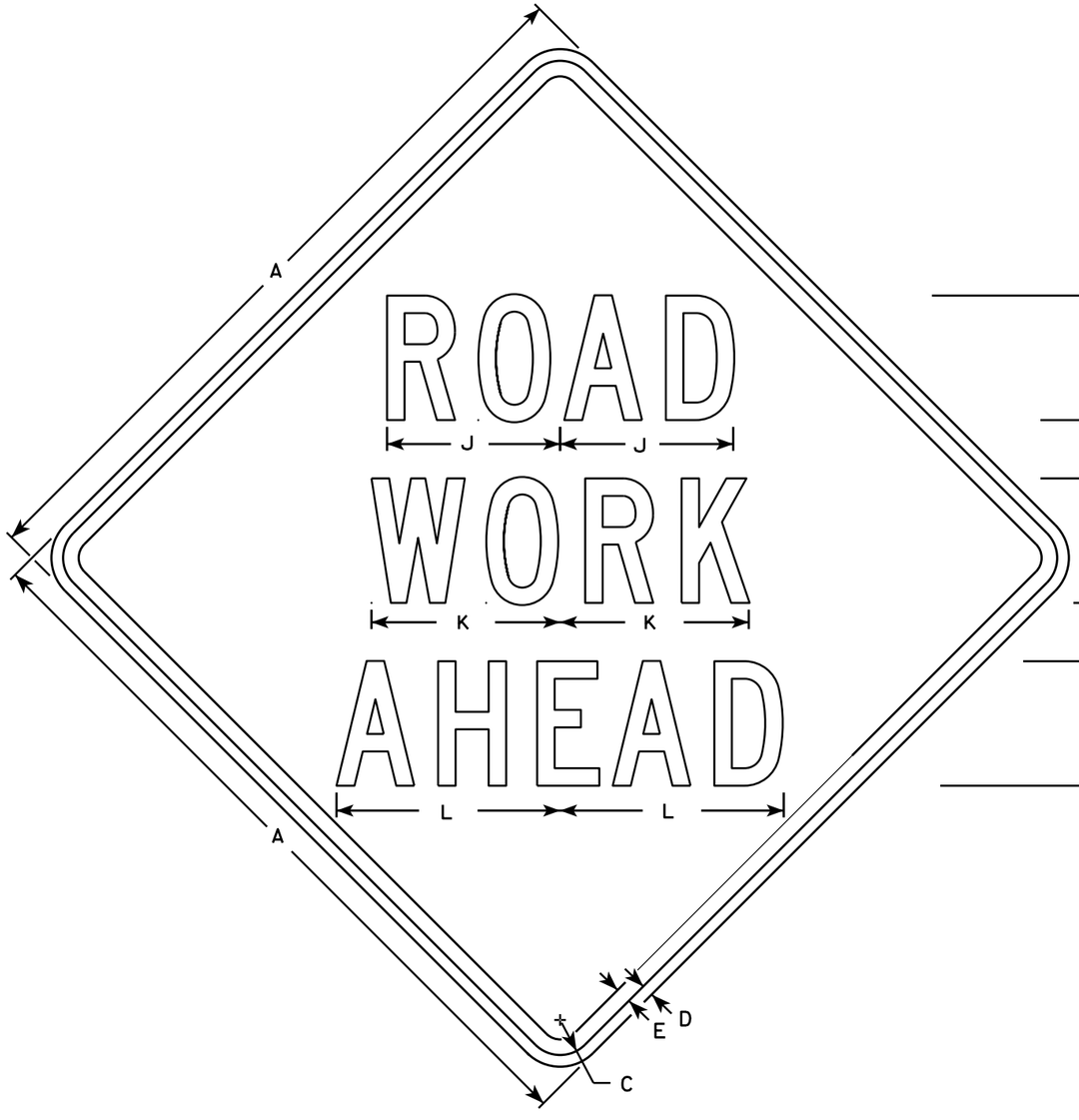

W20-1A

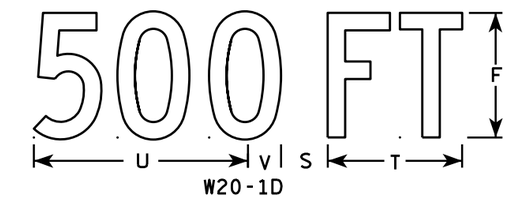

W20-1D

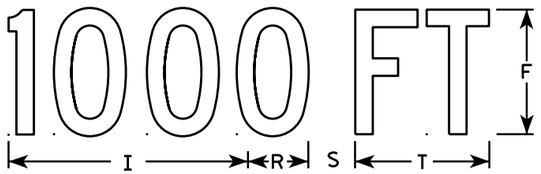

W20-1C

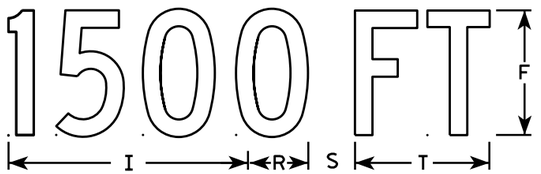

W20-1B

W20-1G

W20-1F

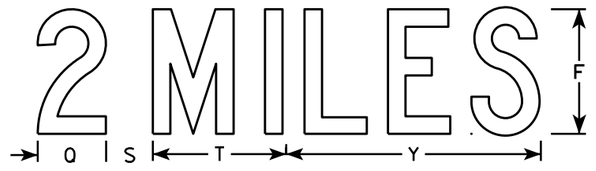

W20-1E

NOTES

1. Sign is Type II - Type F Reflective
2. Color:
   Background - Orange
   Message - Black
3. Message Series - C
4. Corners may be square or rounded when base material is plywood but borders shall be rounded as shown. When base material is metal, the corners and borders shall be rounded.

SIZE	A	B	C	D	E	F	G	H	I	J	K	L	M	N	O	P	Q	R	S	T	U	V	W	X	Y	Z	Area sq. ft.
1	36		1 3/8	1/2	5/8	5	2 5/8	3 1/4	10 1/8	7	7 5/8	8 7/8	1 1/8	4 1/2	3 1/2	9		2 1/2	2 1/4	5 5/8	9	1 3/8	8	1 3/4	10 3/4	6	9.0
2S	48		2 1/4	3/4	1	8	3 3/4	5 1/8	15 3/8	11 1/8	12 1/8	14 3/8	1 5/8	6 7/8	5 3/8	13 7/8	4 3/8	3 7/8	3	8 5/8	13 3/4	2 1/8	11 7/8	2 3/4	16 3/8	9	16.0
2M	48		2 1/4	3/4	1	8	3 3/4	5 1/8	15 3/8	11 1/8	12 1/8	14 3/8	1 5/8	6 7/8	5 3/8	13 7/8	4 3/8	3 7/8	3	8 5/8	13 3/4	2 1/8	11 7/8	2 3/4	16 3/8	9	16.0
3	48		2 1/4	3/4	1	8	3 3/4	5 1/8	15 3/8	11 1/8	12 1/8	14 3/8	1 5/8	6 7/8	5 3/8	13 7/8	4 3/8	3 7/8	3	8 5/8	13 3/4	2 1/8	11 7/8	2 3/4	16 3/8	9	16.0
4	48		2 1/4	3/4	1	8	3 3/4	5 1/8	15 3/8	11 1/8	12 1/8	14 3/8	1 5/8	6 7/8	5 3/8	13 7/8	4 3/8	3 7/8	3	8 5/8	13 3/4	2 1/8	11 7/8	2 3/4	16 3/8	9	16.0
5	48		2 1/4	3/4	1	8	3 3/4	5 1/8	15 3/8	11 1/8	12 1/8	14 3/8	1 5/8	6 7/8	5 3/8	13 7/8	4 3/8	3 7/8	3	8 5/8	13 3/4	2 1/8	11 7/8	2 3/4	16 3/8	9	16.0

STANDARD SIGN
W20-1A, B, C, D, F & G

WISCONSIN DEPT OF TRANSPORTATION

APPROVED

State Traffic Engineer

DATE 5/07/15 PLATE NO. W20-1.10

PROJECT NO: | SHEET NO: E

FILE NAME : C:\CAEFiles\Projects\tr_stdplate\W201.dgn PLOT DATE : 27-MAY-2015 15:58 PLOT BY : mscsja

WISDOT/CADDS SHEET 42

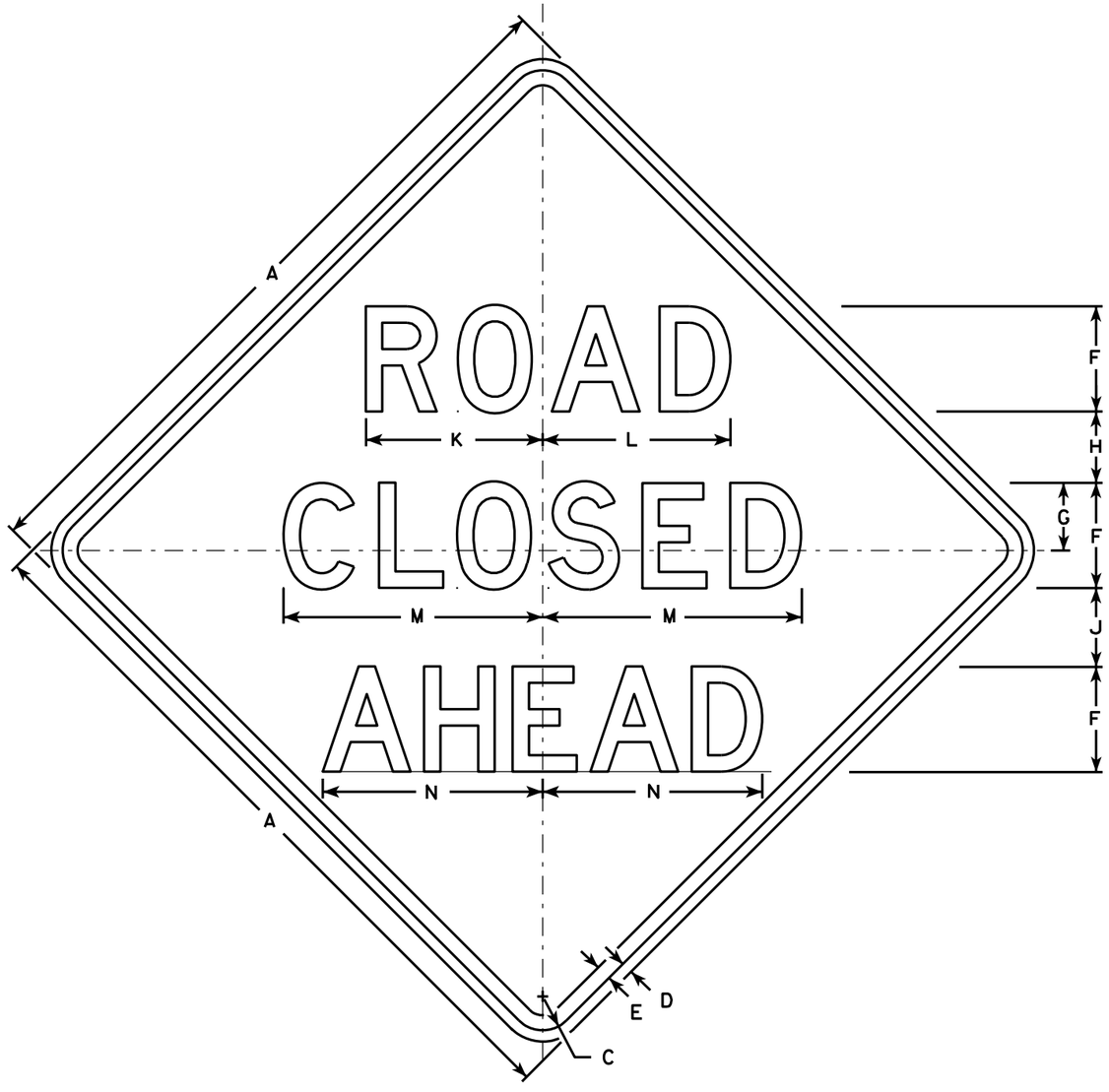

W20-3A

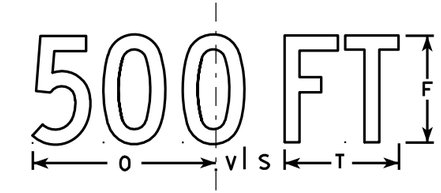

W20-3D

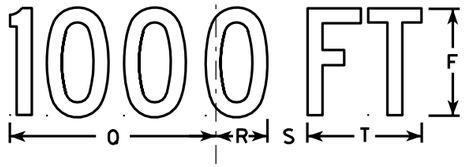

W20-3C

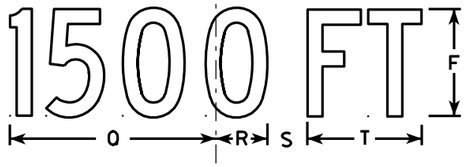

W20-3B

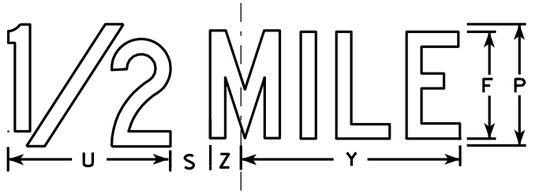

W20-3G

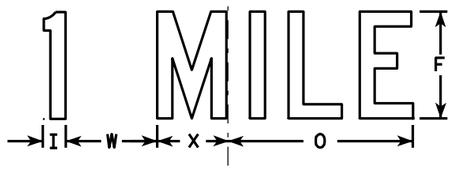

W20-3F

NOTES

1. Sign is Type II - Type F Reflective - reference WIS DOT Standard Specification for HIGHWAY and STRUCTURE CONSTRUCTION latest edition.
2. Color:
   Background - Orange
   Message - Black
3. Message Series - see note 5
4. Corners may be square or rounded when base material is plywood but borders shall be rounded as shown. When base material is metal, the corners and borders shall be rounded.
5. Lines 1 and 2 are Series D.
   Line 3 is Series D for AHEAD and Series C for all other distances.

SIZE	A	B	C	D	E	F	G	H	I	J	K	L	M	N	O	P	Q	R	S	T	U	V	W	X	Y	Z	Area sq. ft.
1	36		1 5/8	5/8	3/4	5	3 3/8	3 1/2	1 1/8	4	8 3/8	8 7/8	12 1/2	11	9	6	10 1/8	2 1/2	1 7/8	5 5/8	8	1 3/8	4 1/2	3 1/2	10 3/4	1 3/4	9.0
2S	48		2 1/4	3/4	1	7	4 1/2	4 3/4	1 1/2	5 1/4	11 3/4	12 1/2	17 1/4	14 5/8	12	8	13 1/2	3 3/8	2 5/8	7 1/2	10 5/8	1 7/8	6	4 5/8	14 3/8	2 3/8	16.0
2M	48		2 1/4	3/4	1	7	4 1/2	4 3/4	1 1/2	5 1/4	11 3/4	12 1/2	17 1/4	14 5/8	12	8	13 1/2	3 3/8	2 5/8	7 1/2	10 5/8	1 7/8	6	4 5/8	14 3/8	2 3/8	16.0
3	48		2 1/4	3/4	1	7	4 1/2	4 3/4	1 1/2	5 1/4	11 3/4	12 1/2	17 1/4	14 5/8	12	8	13 1/2	3 3/8	2 5/8	7 1/2	10 5/8	1 7/8	6	4 5/8	14 3/8	2 3/8	16.0
4	48		2 1/4	3/4	1	7	4 1/2	4 3/4	1 1/2	5 1/4	11 3/4	12 1/2	17 1/4	14 5/8	12	8	13 1/2	3 3/8	2 5/8	7 1/2	10 5/8	1 7/8	6	4 5/8	14 3/8	2 3/8	16.0
5	48		2 1/4	3/4	1	7	4 1/2	4 3/4	1 1/2	5 1/4	11 3/4	12 1/2	17 1/4	14 5/8	12	8	13 1/2	3 3/8	2 5/8	7 1/2	10 5/8	1 7/8	6	4 5/8	14 3/8	2 3/8	16.0

STANDARD SIGN
W20-3A, B, C, D, F & G

WISCONSIN DEPT OF TRANSPORTATION

APPROVED Matthew R Rauch
for State Traffic Engineer

DATE 3/18/11 PLATE NO. W20-3.7

PROJECT NO: | HWY: | COUNTY: | SHEET NO: 167 | E

STATION	Real Station	Distance	AREA (SF) Cut	AREA (SF) Fill	Incremental Vol (CY) (Unadjusted) Cut	Incremental Vol (CY) (Unadjusted) Fill	Cumulative Vol (CY) Cut 1.00	Expanded Fill 1.25	Mass Ordinate
101+70	10170.00	0.00	0.00	0.00	0	0	0	0	0.00
102+00	10200.00	30.00	90.45	2.09	50	1	50	1	48.80
102+50	10250.00	50.00	103.15	1.16	179	3	230	5	224.29
103+00	10300.00	50.00	148.53	0.02	233	1	463	7	455.97
103+50	10350.00	50.00	198.70	0.00	322	0	784	7	777.46
104+00	10400.00	50.00	130.17	34.89	305	32	1,089	47	1,041.59
104+50	10450.00	50.00	132.31	28.20	243	58	1,332	120	1,211.61
105+00	10500.00	50.00	151.12	14.48	262	40	1,594	169	1,424.65
105+40	10540.00	40.00	254.36	0.00	300	11	1,894	183	1,711.60
105+50	10550.00	10.00	233.64	0.02	90	0	1,985	183	1,801.97
106+00	10600.00	50.00	158.52	5.34	363	5	2,348	189	2,158.88
106+50	10650.00	50.00	152.63	4.41	288	9	2,636	200	2,435.69
106+85	10685.00	35.00	215.13	4.50	238	6	2,874	208	2,666.83
107+00	10700.00	15.00	150.82	3.04	102	2	2,976	210	2,765.86
107+50	10750.00	50.00	156.92	0.46	285	3	3,261	214	3,046.75
107+88	10788.00	38.00	175.24	0.00	234	0	3,495	215	3,280.09
108+00	10800.00	12.00	178.44	0.00	79	0	3,573	215	3,358.68
108+50	10850.00	50.00	163.20	0.00	316	0	3,890	215	3,675.02
109+00	10900.00	50.00	137.20	0.97	278	1	4,168	216	3,952.04
109+18	10918.00	18.00	149.20	0.45	95	0	4,263	216	4,046.91
109+50	10950.00	32.00	150.79	0.38	178	0	4,441	217	4,224.07
109+59	10959.00	9.00	151.33	0.39	50	0	4,491	217	4,274.26
110+00	11000.00	41.00	120.70	2.21	207	2	4,698	220	4,478.34
110+22	11022.00	22.00	141.05	2.89	107	2	4,805	222	4,582.38
110+35	11035.00	13.00	151.27	4.00	70	2	4,875	224	4,650.68
110+50	11050.00	15.00	119.59	3.19	75	2	4,950	227	4,723.43
111+00	11100.00	50.00	150.00	0.62	250	4	5,200	231	4,968.65
111+29	11129.00	29.00	197.41	1.72	187	1	5,386	233	5,153.66
111+50	11150.00	21.00	183.43	0.82	148	1	5,534	234	5,300.54
112+00	11200.00	50.00	140.35	0.04	300	1	5,834	235	5,599.34
112+34	11234.00	34.00	155.65	0.00	186	0	6,021	235	5,785.68
112+50	11250.00	16.00	132.28	1.05	85	0	6,106	235	5,870.60
113+00	11300.00	50.00	140.83	0.00	253	1	6,359	237	6,122.27
113+50	11350.00	50.00	119.25	0.23	241	0	6,600	237	6,362.82
114+00	11400.00	50.00	113.15	0.27	215	0	6,815	237	6,577.43
114+35	11435.00	35.00	311.15	0.00	275	0	7,090	238	6,852.22
114+50	11450.00	15.00	319.26	0.00	175	0	7,265	238	7,027.33
114+86	11486.00	36.00	166.18	0.25	324	0	7,589	238	7,350.75
115+00	11500.00	14.00	135.13	0.24	78	0	7,667	238	7,428.70
115+50	11550.00	50.00	166.14	0.00	279	0	7,946	238	7,707.37
115+70	11570.00	20.00	185.06	0.00	130	0	8,076	238	7,837.44
116+00	11600.00	30.00	154.28	0.00	189	0	8,264	238	8,025.97
116+50	11650.00	50.00	104.61	9.30	240	9	8,504	249	8,254.92
116+75	11675.00	25.00	204.12	0.95	143	5	8,647	255	8,391.91
117+00	11700.00	25.00	196.12	0.00	185	0	8,832	256	8,576.66

			AREA (SF)		Incremental Vol (CY) (Unadjusted)		Cumulative Vol (CY)		
STATION	Real Station	Distance	Cut	Fill	Cut	Fill	Cut 1.00	Expanded Fill 1.25	Mass Ordinate
117+25	11725.00	25.00	203.86	0.08	185	0	9,017	256	8,761.79
117+50	11750.00	25.00	299.84	0.00	233	0	9,251	256	8,994.94
117+81	11781.00	31.00	248.65	0.00	315	0	9,565	256	9,309.82
118+00	11800.00	19.00	202.76	0.17	159	0	9,724	256	9,468.57
118+50	11850.00	50.00	128.11	0.91	306	1	10,031	257	9,773.67
118+67	11867.00	17.00	156.68	0.00	90	0	10,120	257	9,862.97
119+00	11900.00	33.00	130.30	1.27	175	1	10,296	258	10,037.38
119+50	11950.00	50.00	133.43	1.17	244	2	10,540	261	10,278.75
119+64	11964.00	14.00	163.96	0.00	77	0	10,617	261	10,355.48
120+00	12000.00	36.00	132.67	1.01	198	1	10,815	262	10,552.39
120+50	12050.00	50.00	184.88	0.18	294	1	11,109	264	10,845.04
121+00	12100.00	50.00	207.44	0.21	363	0	11,472	264	11,207.84
121+11	12111.00	11.00	226.74	0.00	88	0	11,560	264	11,296.23
121+29	12129.00	18.00	227.24	0.00	151	0	11,712	264	11,447.55
121+50	12150.00	21.00	206.30	0.00	169	0	11,880	264	11,616.15
121+90	12190.00	40.00	292.40	1.13	369	1	12,250	265	11,984.52
122+00	12200.00	10.00	214.19	1.87	94	1	12,344	266	12,077.64
122+23	12223.00	23.00	163.89	0.00	161	1	12,505	267	12,237.68
122+41	12241.00	18.00	159.80	0.16	108	0	12,612	267	12,345.50
122+50	12250.00	9.00	147.52	0.45	51	0	12,664	267	12,396.60
123+00	12300.00	50.00	157.22	0.00	282	0	12,946	268	12,678.25
123+31	12331.00	31.00	173.83	1.45	190	1	13,136	269	12,867.25
123+50	12350.00	19.00	184.59	0.00	126	1	13,262	269	12,992.73
124+00	12400.00	50.00	172.39	0.01	331	0	13,593	269	13,323.25
124+50	12450.00	50.00	145.83	0.00	295	0	13,887	269	13,617.88
125+00	12500.00	50.00	163.03	0.00	286	0	14,173	269	13,903.87
125+50	12550.00	50.00	200.71	0.00	337	0	14,510	269	14,240.67
125+62	12562.00	12.00	219.97	0.00	93	0	14,603	269	14,334.15
126+00	12600.00	38.00	144.28	0.03	256	0	14,860	269	14,590.45
126+39	12639.00	39.00	156.75	0.29	217	0	15,077	270	14,807.57
126+50	12650.00	11.00	144.25	4.65	61	1	15,139	271	14,867.63
127+00	12700.00	50.00	198.89	0.00	318	4	15,456	276	15,179.97
127+50	12750.00	50.00	171.48	0.00	343	0	15,799	276	15,522.91
128+00	12800.00	50.00	198.18	0.00	342	0	16,141	276	15,865.19
128+33	12833.00	33.00	194.73	0.53	240	0	16,382	277	16,104.89
128+50	12850.00	17.00	159.36	9.39	111	3	16,493	281	16,212.46
128+75	12875.00	25.00	178.11	5.00	156	7	16,649	289	16,360.37
129+00	12900.00	25.00	181.49	0.00	166	2	16,816	292	16,523.96
129+50	12950.00	50.00	148.23	28.20	305	26	17,121	324	16,796.63
129+60	12960.00	10.00	167.16	29.07	58	11	17,179	338	16,841.78
130+00	13000.00	40.00	142.29	34.67	229	47	17,409	397	17,011.98
130+50	13050.00	50.00	177.46	48.15	296	77	17,705	493	17,212.18
131+00	13100.00	50.00	146.39	1.03	300	46	18,005	549	17,455.14
131+50	13150.00	50.00	138.76	2.85	264	4	18,269	554	17,714.68
131+92	13192.00	42.00	180.11	0.76	248	3	18,517	557	17,959.17

STATION	Real Station	Distance	AREA (SF) Cut	AREA (SF) Fill	Incremental Vol (CY) (Unadjusted) Cut	Incremental Vol (CY) (Unadjusted) Fill	Cumulative Vol (CY) Cut 1.00	Expanded Fill 1.25	Mass Ordinate
132+00	13200.00	8.00	181.30	0.11	54	0	18,570	558	18,012.55
132+37	13237.00	37.00	221.69	0.00	276	0	18,846	558	18,288.58
132+50	13250.00	13.00	187.28	0.00	98	0	18,945	558	18,387.04
132+91	13291.00	41.00	187.41	0.00	284	0	19,229	558	18,671.52
133+00	13300.00	9.00	183.47	0.17	62	0	19,291	558	18,733.30
133+50	13350.00	50.00	203.67	0.40	358	1	19,650	558	19,091.12
133+86	13386.00	36.00	186.93	1.08	260	1	19,910	560	19,350.30
134+00	13400.00	14.00	182.83	1.02	96	1	20,006	560	19,445.48
134+50	13450.00	50.00	149.73	4.27	308	5	20,314	566	19,747.29
134+90	13490.00	40.00	183.24	1.28	247	4	20,560	572	19,988.79
135+00	13500.00	10.00	240.04	0.00	78	0	20,639	572	20,066.88
135+50	13550.00	50.00	163.48	2.34	374	2	21,012	575	20,437.80
136+00	13600.00	50.00	216.38	0.07	352	2	21,364	577	20,786.73
136+30	13630.00	30.00	210.89	0.00	237	0	21,602	577	21,024.06
136+50	13650.00	20.00	191.66	0.00	149	0	21,751	577	21,173.15
136+65	13665.00	15.00	225.27	0.00	116	0	21,866	577	21,288.96
137+00	13700.00	35.00	175.87	1.47	260	1	22,126	579	21,547.77
137+27	13727.00	27.00	203.36	2.00	190	2	22,316	581	21,735.21
137+50	13750.00	23.00	167.71	5.95	158	3	22,474	585	21,889.03
138+00	13800.00	50.00	312.51	10.30	445	15	22,919	604	22,314.86
138+50	13850.00	50.00	167.86	12.01	445	21	23,364	630	22,733.83
139+00	13900.00	50.00	162.91	14.20	306	24	23,670	660	23,009.75
139+50	13950.00	50.00	187.52	22.77	324	34	23,994	703	23,291.43
140+00	14000.00	50.00	154.06	30.93	316	50	24,311	765	23,545.55
140+50	14050.00	50.00	156.30	39.65	287	65	24,598	847	23,751.22
141+00	14100.00	50.00	160.45	24.52	293	59	24,891	921	23,970.23
141+50	14150.00	50.00	170.05	7.58	306	30	25,197	958	24,239.09
141+75	14175.00	25.00	213.63	7.08	178	7	25,375	967	24,408.24
142+00	14200.00	25.00	202.96	3.37	193	5	25,568	973	24,595.07
142+50	14250.00	50.00	158.67	3.54	335	6	25,903	981	24,921.93
143+00	14300.00	50.00	155.77	12.17	291	15	26,194	999	25,194.90
143+24	14324.00	24.00	223.03	0.00	168	5	26,362	1,006	25,356.50
143+50	14350.00	26.00	153.48	7.21	181	3	26,543	1,010	25,533.44
143+86	14386.00	36.00	183.71	1.58	225	6	26,768	1,017	25,750.91
144+00	14400.00	14.00	151.93	9.07	87	3	26,855	1,021	25,834.47
144+32	14432.00	32.00	154.82	1.50	182	6	27,037	1,028	26,008.42
144+50	14450.00	18.00	149.91	1.40	102	1	27,138	1,030	26,108.79
145+00	14500.00	50.00	103.87	4.38	235	5	27,373	1,036	26,337.08
				Totals:	27,373	829			

South Street

STATION	Real Station	Distance	AREA (SF) Cut	AREA (SF) Fill	Incremental Vol (CY) (Unadjusted) Cut	Incremental Vol (CY) (Unadjusted) Fill	Cumulative Vol (CY) Cut 1.00	Expanded Fill 1.25	Mass Ordinate
10+75.49	1075.49	0.00	101.54	0.64	0	0	0	0	0.00
11+00	1100.00	24.51	115.98	0.23	99	0	99	0	98.24
11+50	1150.00	50.00	129.50	0.00	227	0	326	1	325.28
				Totals:	326	1			

Marsh Street

STATION	Real Station	Distance	AREA (SF) Cut	AREA (SF) Fill	Incremental Vol (CY) (Unadjusted) Cut	Incremental Vol (CY) (Unadjusted) Fill	Cumulative Vol (CY) Cut 1.00	Expanded Fill 1.25	Mass Ordinate
20+75	2075.00	0.00	133.32	0.23	0	0	0	0	0.00
21+00	2100.00	25.00	103.20	5.33	110	3	110	3	106.28
				Totals:	110	3			

Railroad Street - West

STATION	Real Station	Distance	AREA (SF) Cut	AREA (SF) Fill	Incremental Vol (CY) (Unadjusted) Cut	Incremental Vol (CY) (Unadjusted) Fill	Cumulative Vol (CY) Cut 1.00	Expanded Fill 1.25	Mass Ordinate
42+87	4287.00	0.00	118.16	0.00	0	0	0	0	0.00
43+00	4300.00	13.00	118.88	0.14	57	0	57	0	57.02
43+25	4325.00	25.00	139.74	0.19	120	0	177	0	176.56
43+50	4350.00	25.00	63.20	0.00	94	0	271	0	270.40
				Totals:	271	0			

Railroad Street - East

STATION	Real Station	Distance	AREA (SF) Cut	AREA (SF) Fill	Incremental Vol (CY) (Unadjusted) Cut	Incremental Vol (CY) (Unadjusted) Fill	Cumulative Vol (CY) Cut 1.00	Cumulative Vol (CY) Expanded Fill 1.25	Mass Ordinate
45+50	4550.00	0.00	132.48	0.00	0	0	0	0	0.00
45+75	4575.00	25.00	136.30	1.76	124	1	124	1	123.42
45+92	4592.00	17.00	127.32	2.10	83	1	207	3	204.89
				Totals:	207	2			

Clark Street

STATION	Real Station	Distance	AREA (SF) Cut	AREA (SF) Fill	Incremental Vol (CY) (Unadjusted) Cut	Incremental Vol (CY) (Unadjusted) Fill	Cumulative Vol (CY) Cut 1.00	Cumulative Vol (CY) Expanded Fill 1.25	Mass Ordinate
50+50	5050.00	0.00	143.99	1.39	0	0	0	0	0.00
50+75	5075.00	25.00	152.29	0.00	137	1	137	1	136.37
51+00	5100.00	25.00	168.33	0.00	148	0	286	1	284.80
51+24.51	5124.51	24.51	125.61	0.03	133	0	419	1	418.20
				Totals:	419	1			

Cedarview Drive

STATION	Real Station	Distance	AREA (SF) Cut	AREA (SF) Fill	Incremental Vol (CY) (Unadjusted) Cut	Incremental Vol (CY) (Unadjusted) Fill	Cumulative Vol (CY) Cut 1.00	Cumulative Vol (CY) Expanded Fill 1.25	Mass Ordinate
70+00	7000.00	0.00	2.52	0.00	0	0	0	0	0.00
70+50	7050.00	50.00	0.00	12.28	2	11	2	14	-11.88
70+75	7075.00	25.00	0.09	5.70	0	8	2	25	-22.25
				Totals:	2	20			

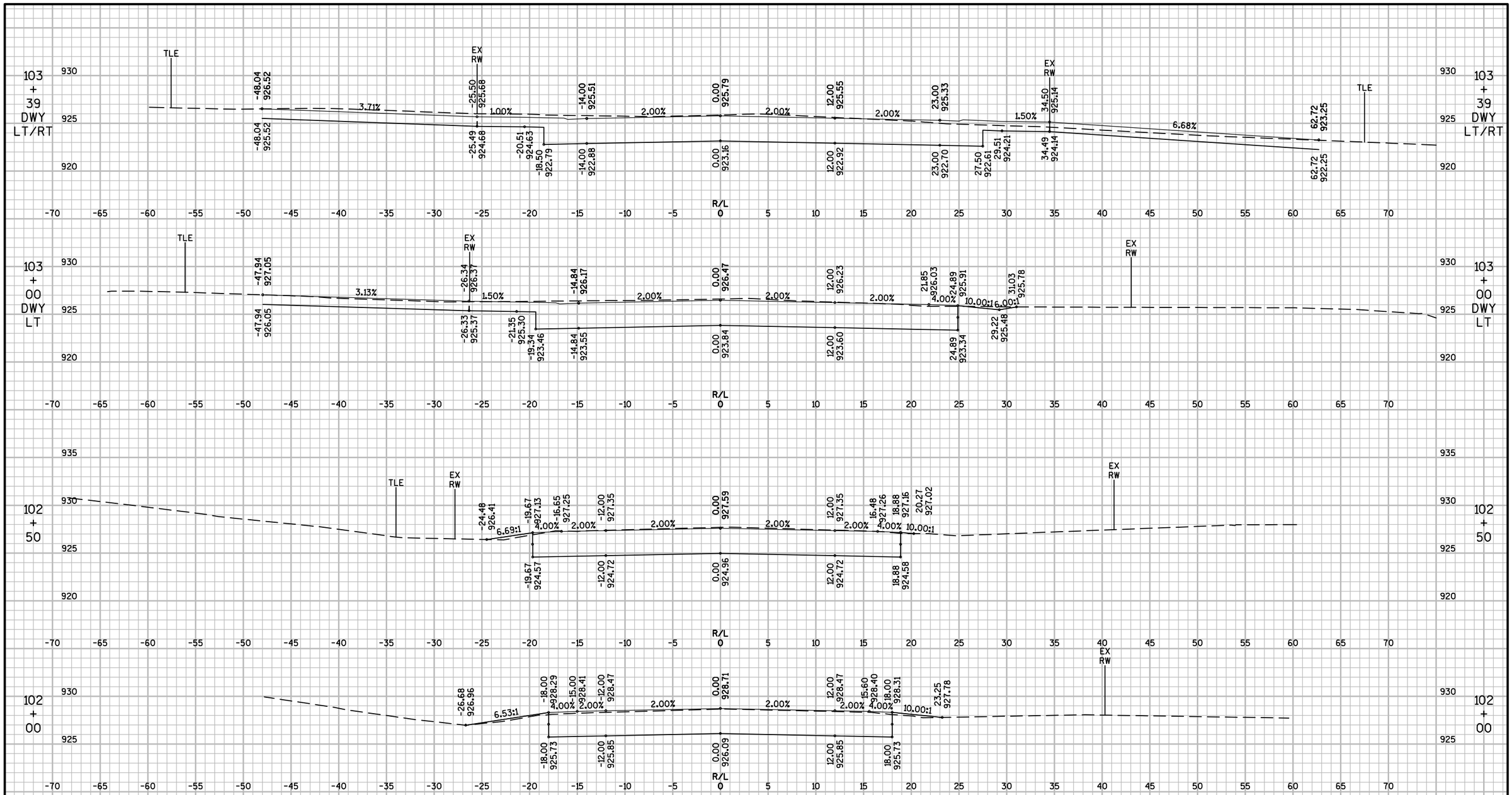

PROJECT NO: 4854-03-71	HWY: CTH G	COUNTY: FOND DU LAC	CROSS SECTIONS: CTH G (MAIN STREET)	SHEET 173	E

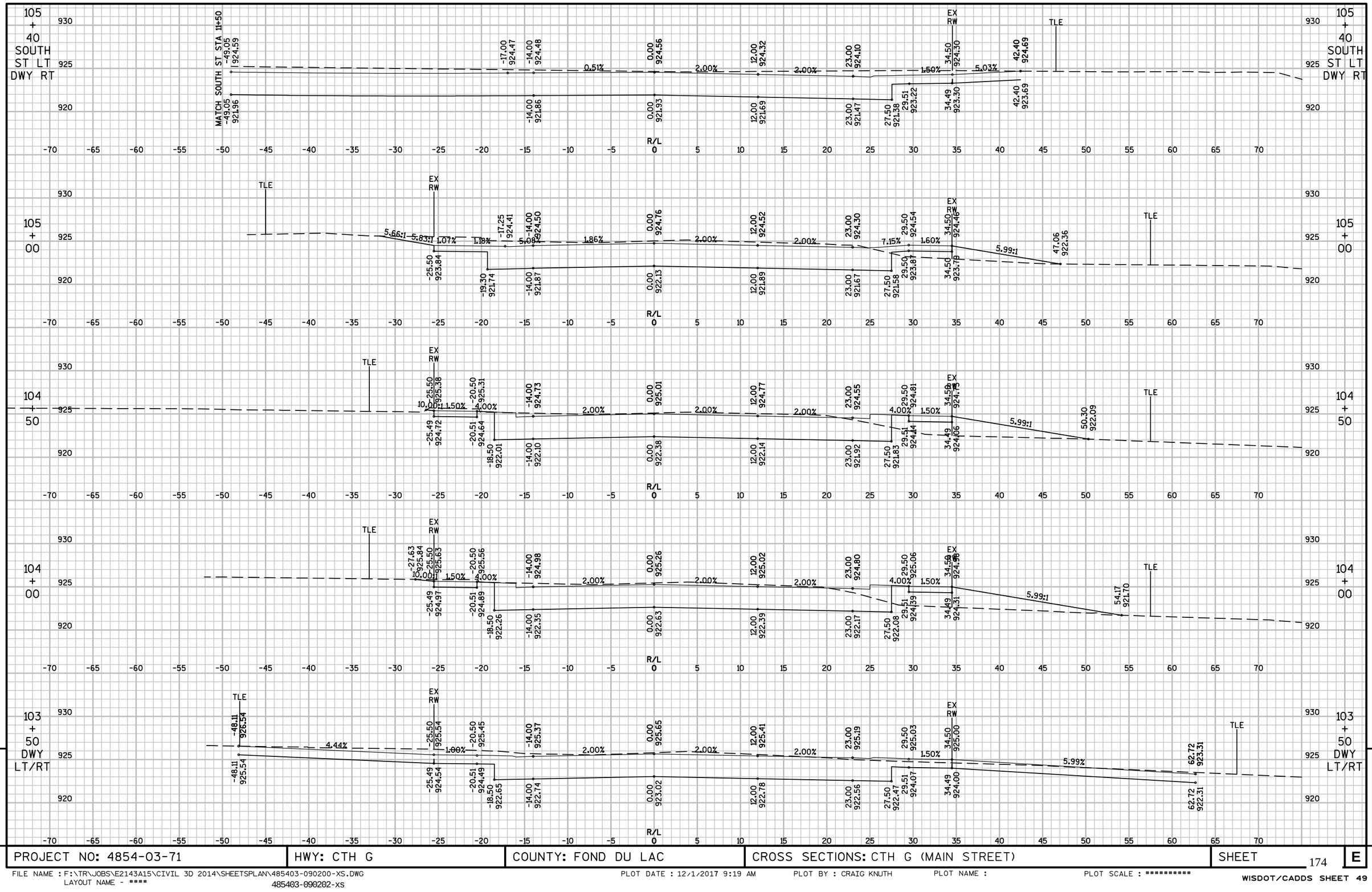

PROJECT NO: 4854-03-71	HWY: CTH G	COUNTY: FOND DU LAC	CROSS SECTIONS: CTH G (MAIN STREET)	SHEET 174	E

FILE NAME : F:\TR\JOBS\E2143A15\CIVIL 3D 2014\SHEETSPLAN\485403-090200-XS.DWG
LAYOUT NAME - ****
485403-090202-XS
PLOT DATE : 12/1/2017 9:19 AM
PLOT BY : CRAIG KNUTH
PLOT NAME :
PLOT SCALE : **********

WISDOT/CADDS SHEET 49

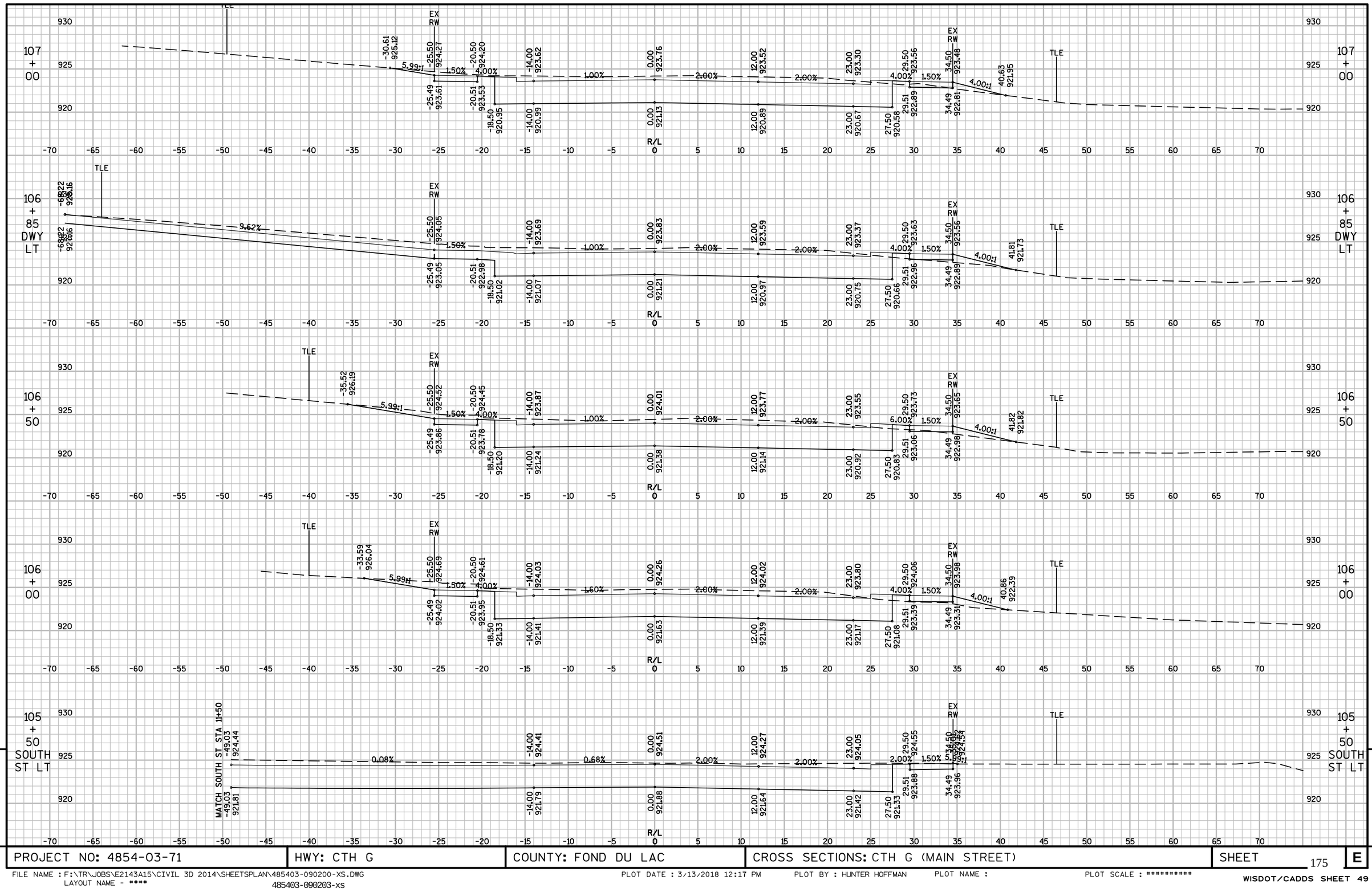

9

PROJECT NO: 4854-03-71	HWY: CTH G	COUNTY: FOND DU LAC	CROSS SECTIONS: CTH G (MAIN STREET)	SHEET 175	E

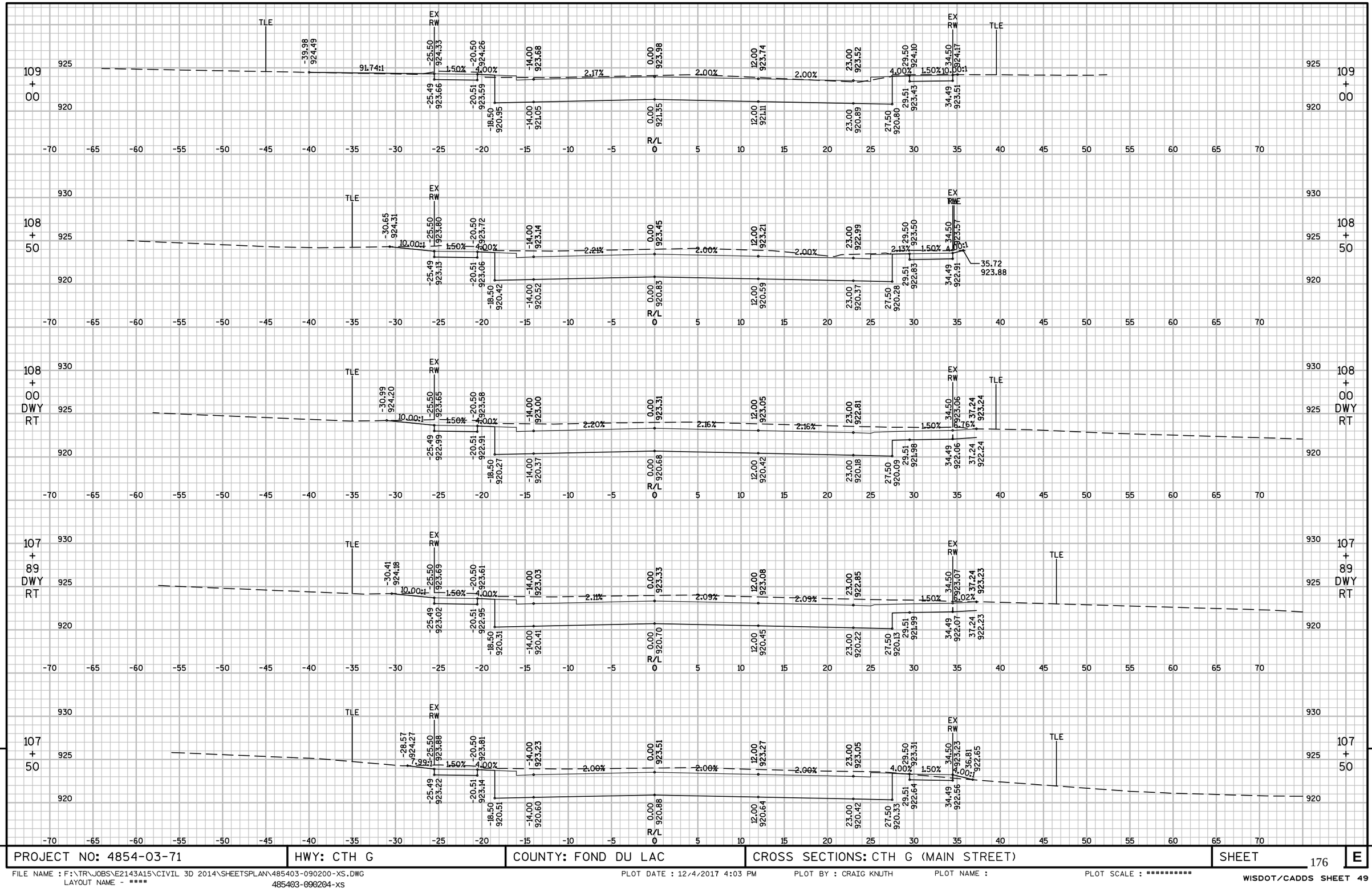

9

9

PROJECT NO: 4854-03-71	HWY: CTH G	COUNTY: FOND DU LAC	CROSS SECTIONS: CTH G (MAIN STREET)	SHEET 176	E

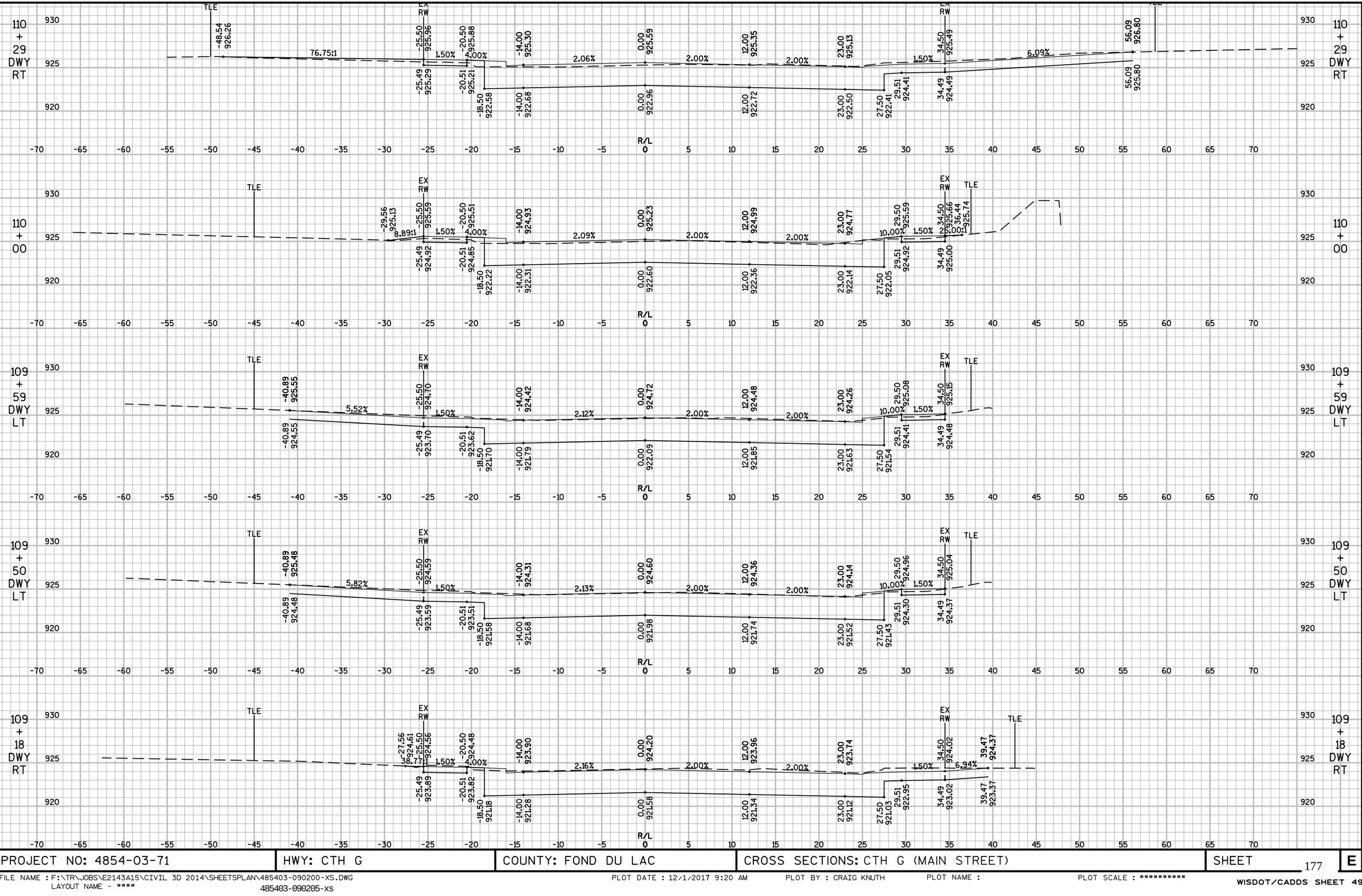

9

9

PROJECT NO: 4854-03-71	HWY: CTH G	COUNTY: FOND DU LAC	CROSS SECTIONS: CTH G (MAIN STREET)	SHEET 177	E

FILE NAME : F:\TR\JOBS\E2143A15\CIVIL 3D 2014\SHEETSPLAN\485403-090200-XS.DWG
LAYOUT NAME - ****
485403-090205-xs

PLOT DATE : 12/1/2017 9:20 AM PLOT BY : CRAIG KNUTH PLOT NAME : PLOT SCALE : **********

WISDOT/CADDS SHEET 49

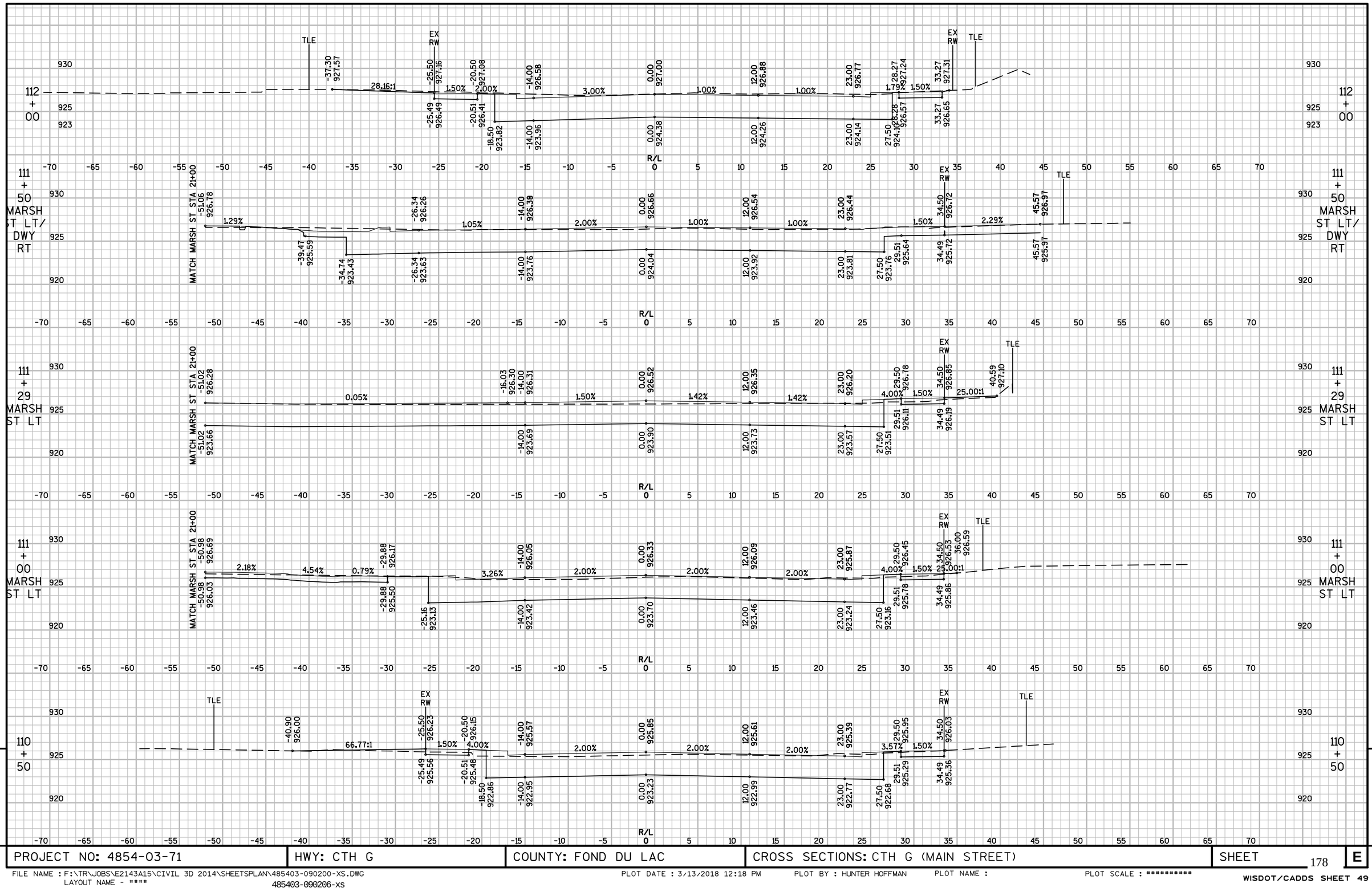

9

PROJECT NO: 4854-03-71	HWY: CTH G	COUNTY: FOND DU LAC	CROSS SECTIONS: CTH G (MAIN STREET)	SHEET	E

FILE NAME : F:\TR\JOBS\E2143A15\CIVIL 3D 2014\SHEETSPLAN\485403-090200-XS.DWG
LAYOUT NAME - ****
485403-090206-XS

PLOT DATE : 3/13/2018 12:18 PM PLOT BY : HUNTER HOFFMAN PLOT NAME : PLOT SCALE : **********

WISDOT/CADDS SHEET 49

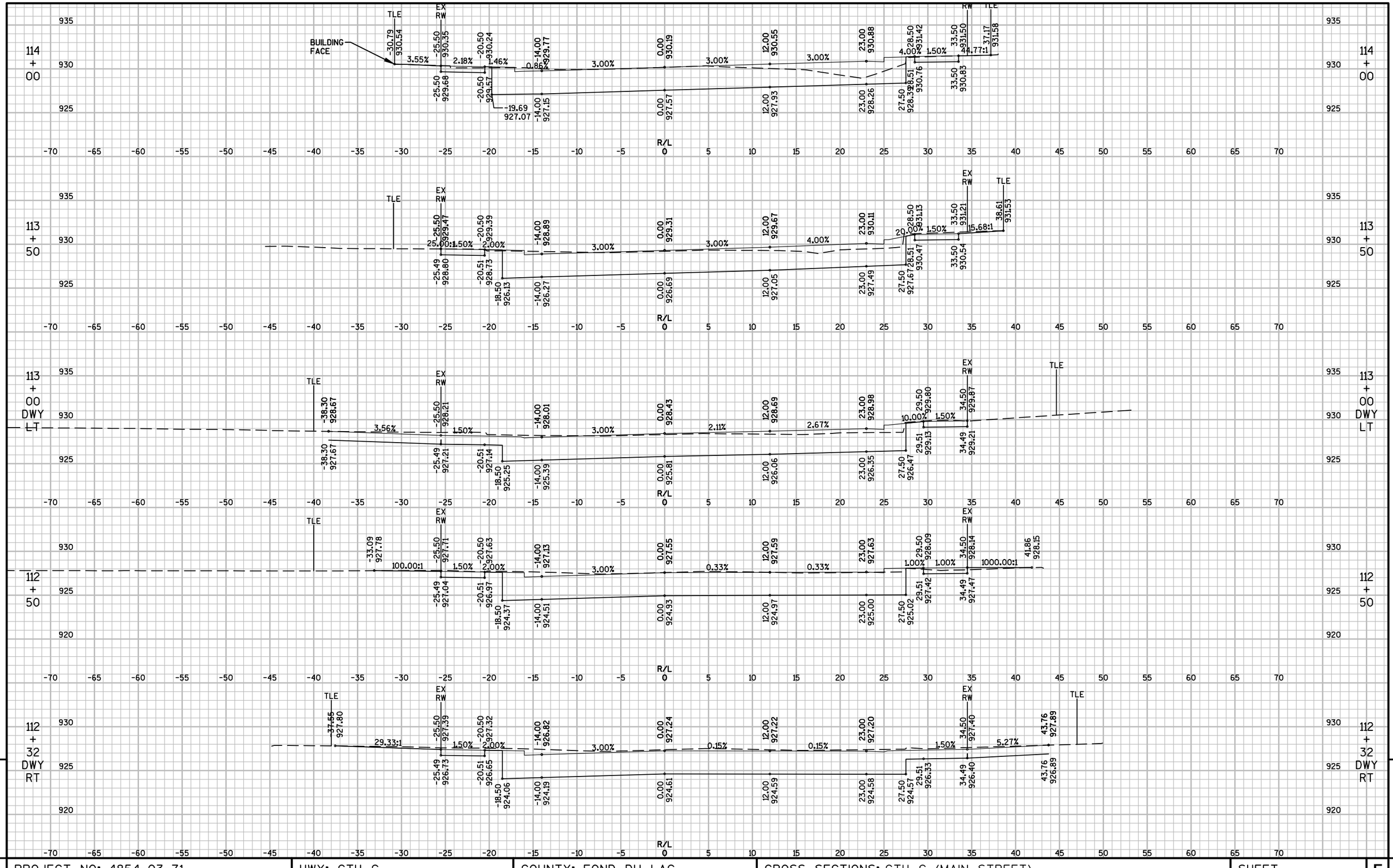

9

PROJECT NO: 4854-03-71	HWY: CTH G	COUNTY: FOND DU LAC	CROSS SECTIONS: CTH G (MAIN STREET)	SHEET 179	E

FILE NAME : F:\TR\JOBS\E2143A15\CIVIL 3D 2014\SHEETSPLAN\485403-090200-XS.DWG
LAYOUT NAME - ****
485403-090207-xs
PLOT DATE : 12/1/2017 9:21 AM
PLOT BY : CRAIG KNUTH
PLOT NAME :
PLOT SCALE : **********
WISDOT/CADDS SHEET 49

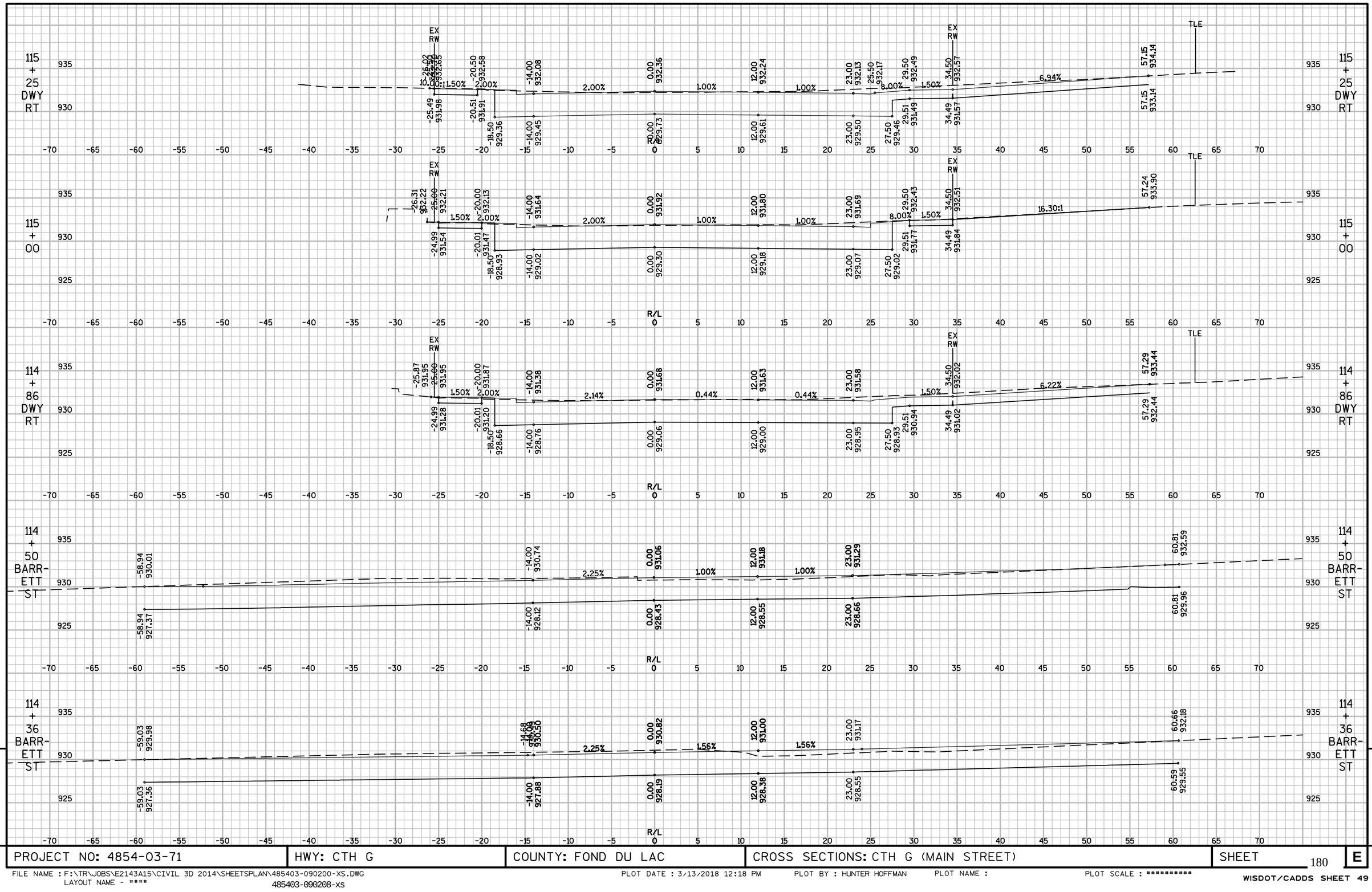

PROJECT NO: 4854-03-71	HWY: CTH G	COUNTY: FOND DU LAC	CROSS SECTIONS: CTH G (MAIN STREET)	SHEET 180 E

FILE NAME : F:\TR\JOBS\E2143A15\CIVIL 3D 2014\SHEETSPLAN\485403-090200-XS.DWG
LAYOUT NAME - ****
485403-090208-xs
PLOT DATE : 3/13/2018 12:18 PM PLOT BY : HUNTER HOFFMAN PLOT NAME : PLOT SCALE : **********

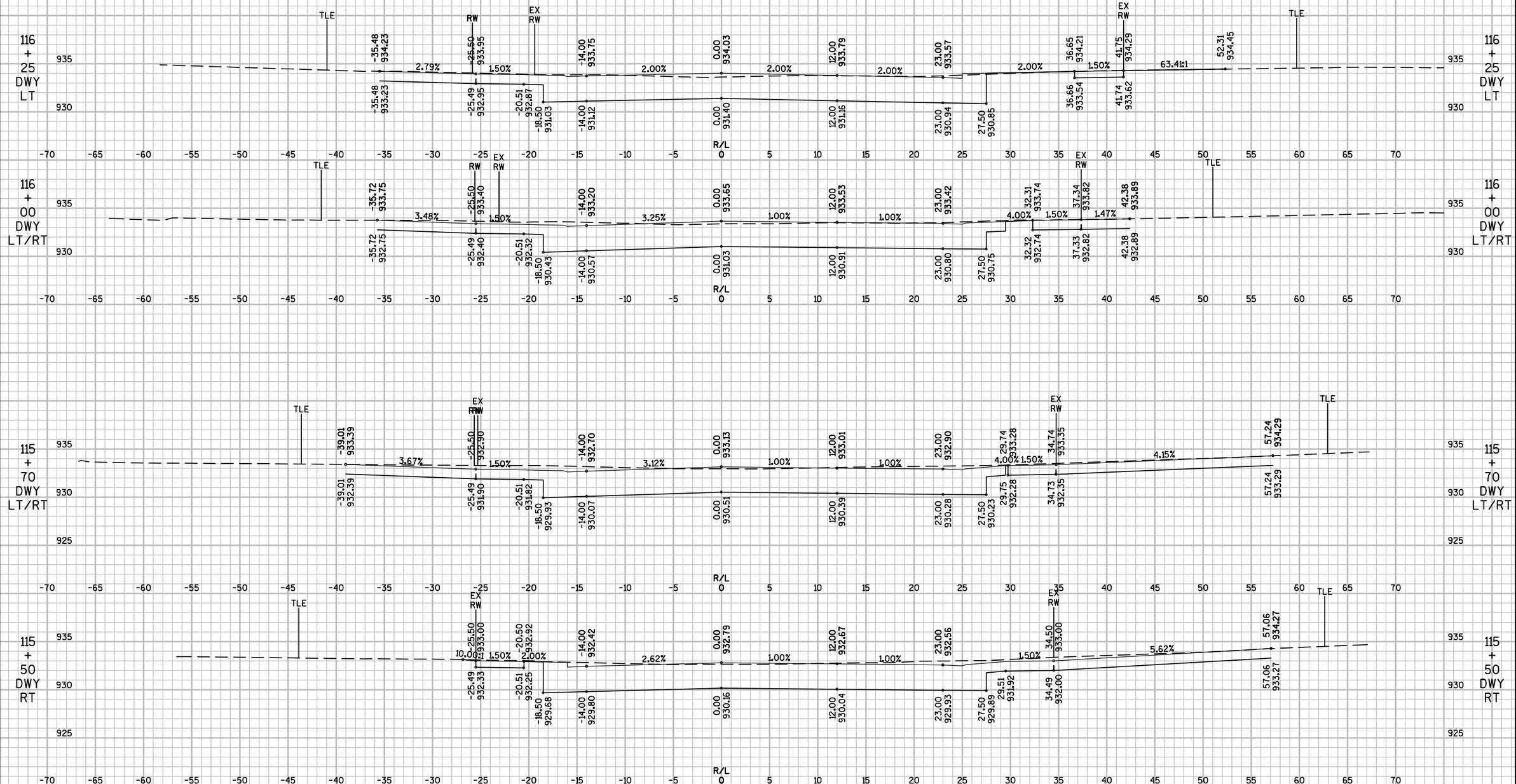

9

9

PROJECT NO: 4854-03-71	HWY: CTH G	COUNTY: FOND DU LAC	CROSS SECTIONS: CTH G (MAIN STREET)	SHEET 181 E

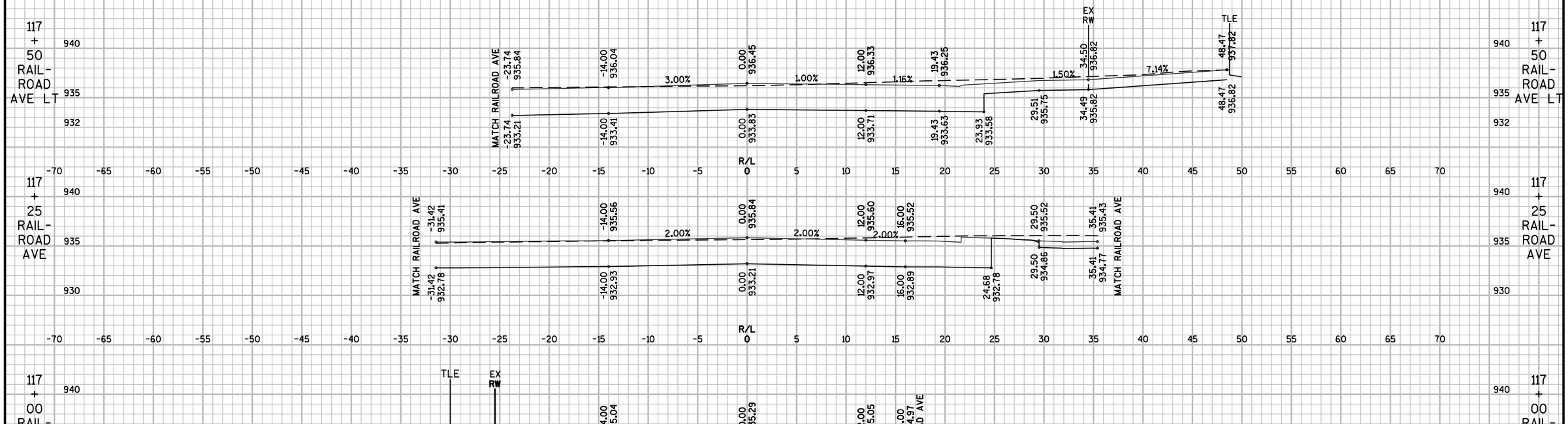

9

PROJECT NO: 4854-03-71	HWY: CTH G	COUNTY: FOND DU LAC	CROSS SECTIONS: CTH G (MAIN STREET)	SHEET 182	E

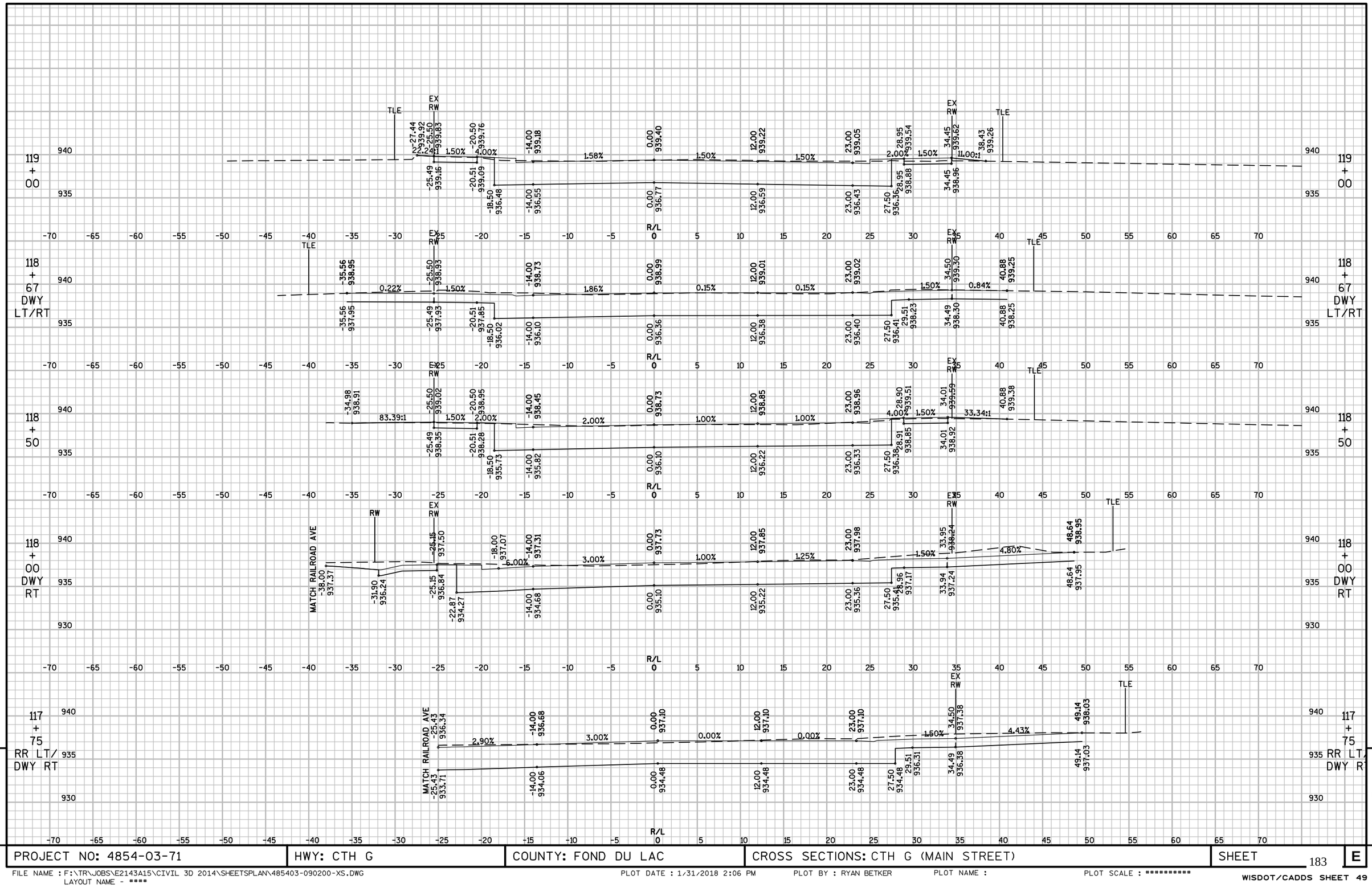
119 + 00
118 + 67 DWY LT/RT
118 + 50
118 + 00 DWY RT
117 + 75 RR LT/ DWY RT
TLE
EX RW
RW
R/L
940
935
930
1.50%
4.00%
1.58%
1.50%
1.50%
2.00%
1.50%
11.00:1
0.22%
1.86%
0.15%
0.15%
0.84%
83.39:1
2.00%
1.00%
1.00%
33.34:1
5.00%
3.00%
1.00%
1.25%
4.80%
MATCH RAILROAD AVE
2.90%
0.00%
4.43%

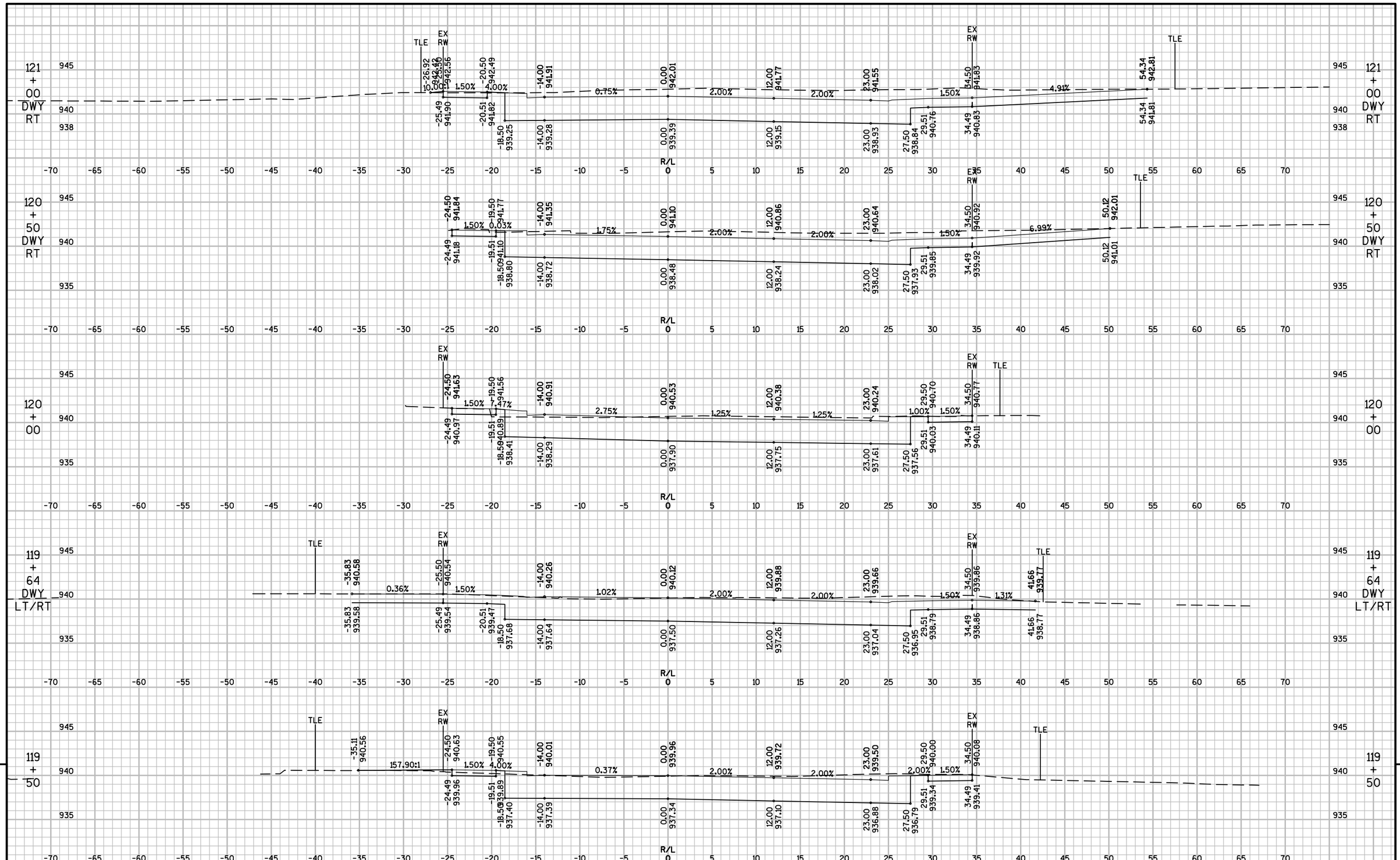
121 + 00 DWY RT
120 + 50 DWY RT
120 + 00
119 + 64 DWY LT/RT
119 + 50
TLE
EX RW
R/L
945
940
938
935
-70 -65 -60 -55 -50 -45 -40 -35 -30 -25 -20 -15 -10 -5 0 5 10 15 20 25 30 35 40 45 50 55 60 65 70
1.50%
4.00%
0.75%
2.00%
1.50%
4.91%
1.75%
6.99%
2.75%
1.25%
1.00%
0.36%
1.02%
1.31%
0.37%
157.90:1

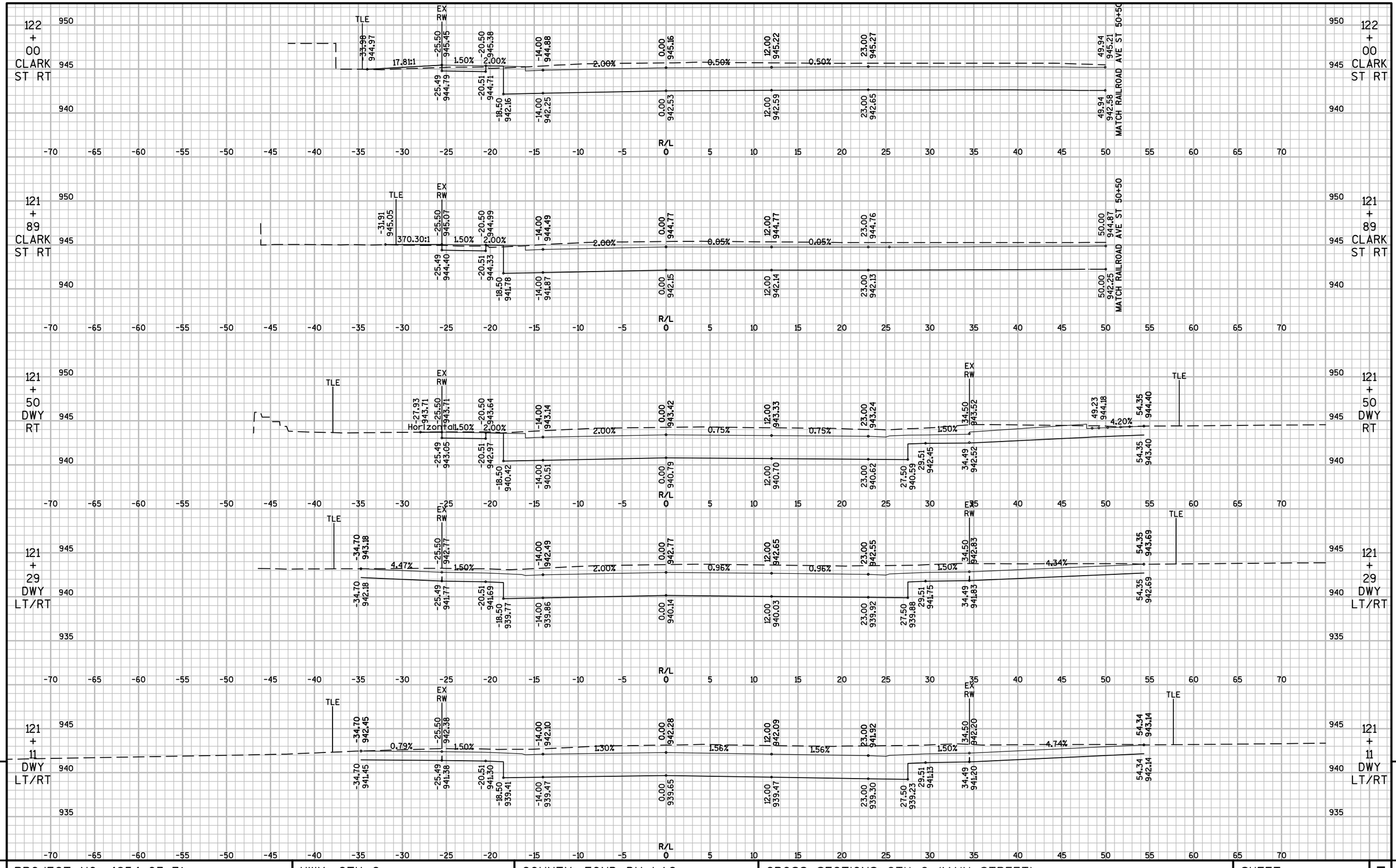

FILE NAME : F:\TR\JOBS\E2143A15\CIVIL 3D 2014\SHEETSPLAN\485403-090200-XS.DWG
LAYOUT NAME - ****
485403-090213-xs
PLOT DATE : 12/1/2017 9:23 AM
PLOT BY : CRAIG KNUTH
PLOT NAME :
PLOT SCALE : **********
WISDOT/CADDS SHEET 49

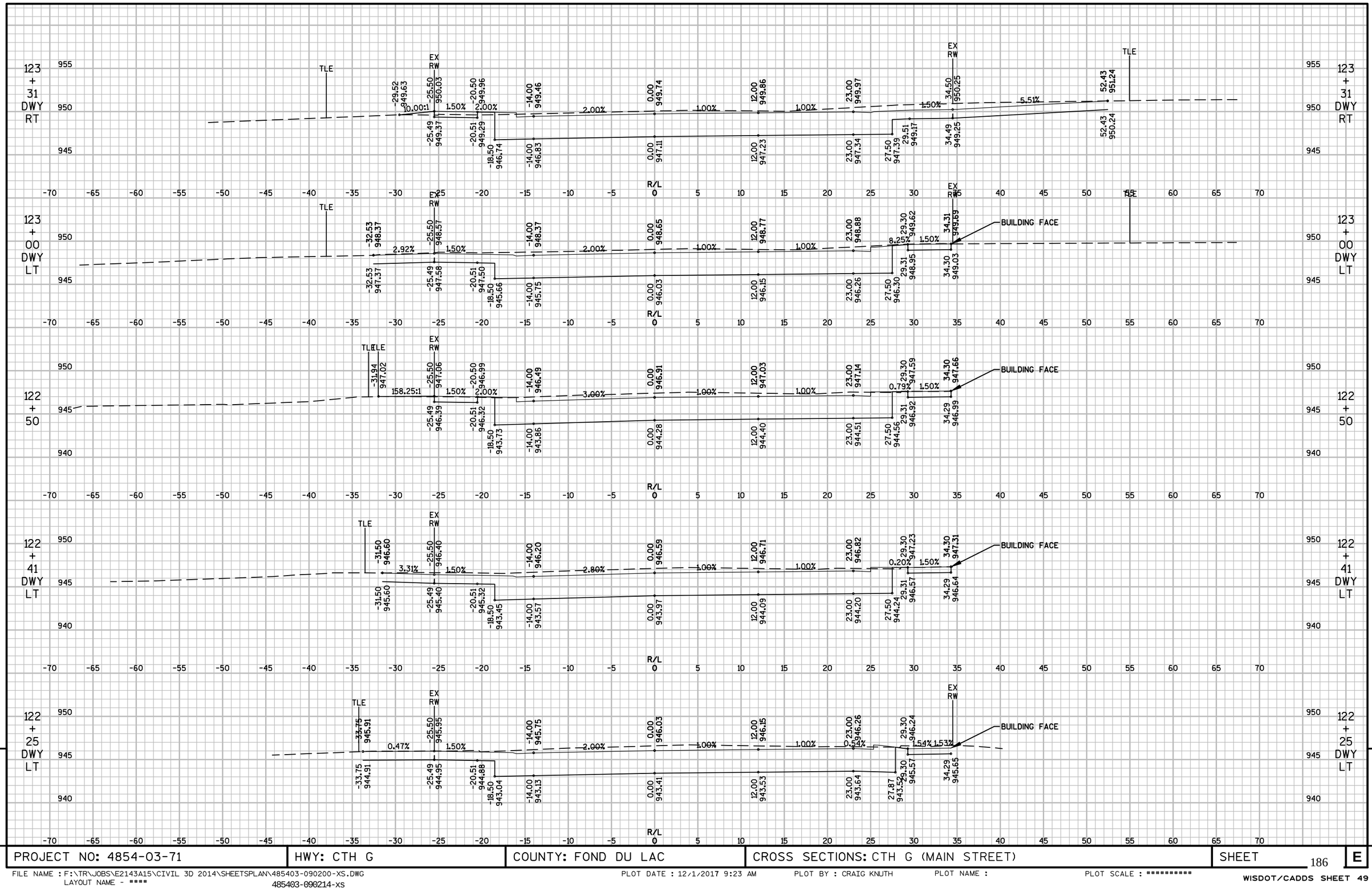

PROJECT NO: 4854-03-71	HWY: CTH G	COUNTY: FOND DU LAC	CROSS SECTIONS: CTH G (MAIN STREET)	SHEET	E

FILE NAME : F:\TR\JOBS\E2143A15\CIVIL 3D 2014\SHEETSPLAN\485403-090200-XS.DWG
LAYOUT NAME - ****
485403-090214-xs
PLOT DATE : 12/1/2017 9:23 AM
PLOT BY : CRAIG KNUTH
PLOT NAME :
PLOT SCALE : **********
WISDOT/CADDS SHEET 49

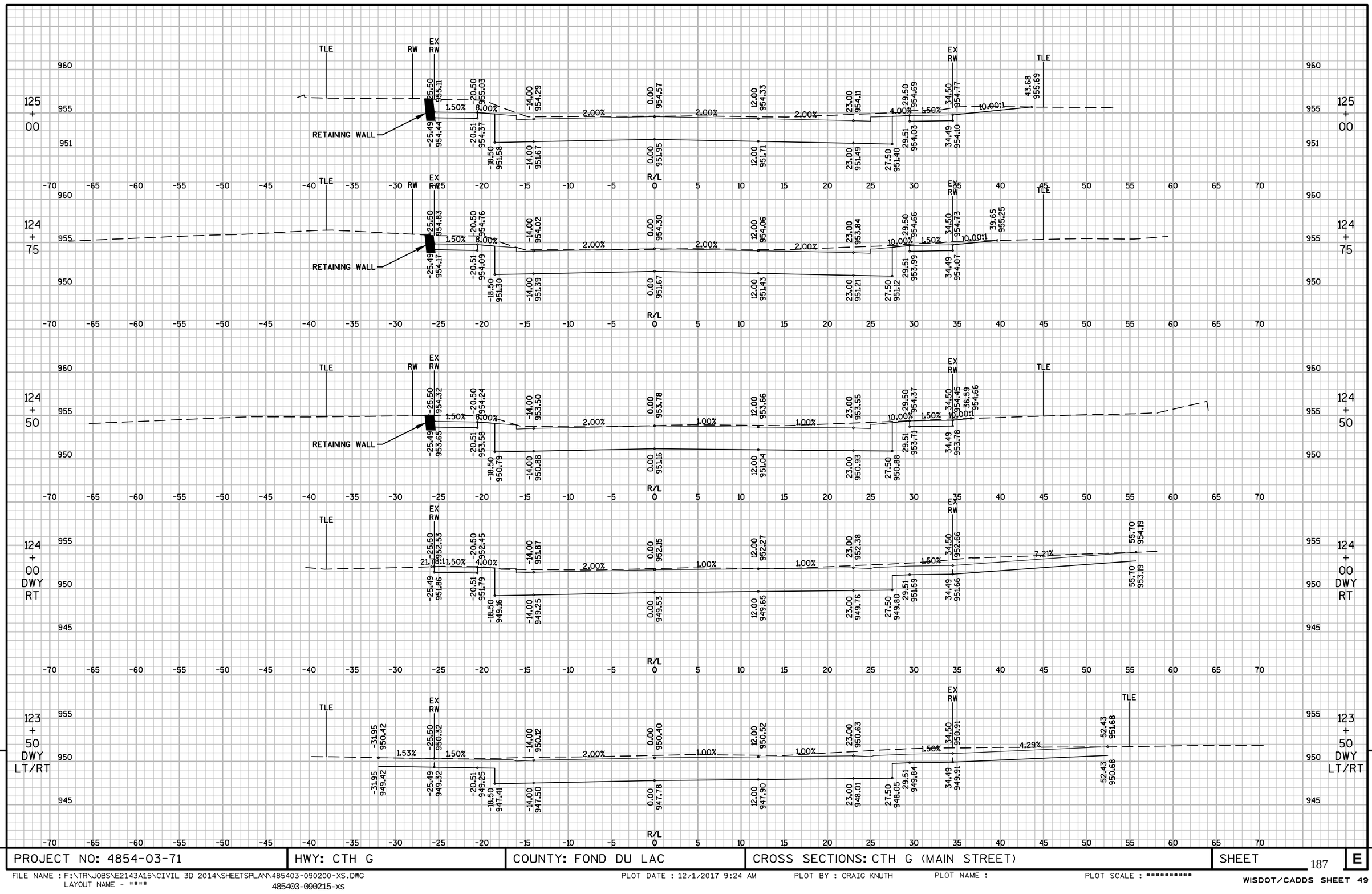

9

9

PROJECT NO: 4854-03-71	HWY: CTH G	COUNTY: FOND DU LAC	CROSS SECTIONS: CTH G (MAIN STREET)	SHEET 187	E

FILE NAME : F:\TR\JOBS\E2143A15\CIVIL 3D 2014\SHEETSPLAN\485403-090200-XS.DWG
LAYOUT NAME - ****
485403-090215-XS
PLOT DATE : 12/1/2017 9:24 AM
PLOT BY : CRAIG KNUTH
PLOT NAME :
PLOT SCALE : **********
WISDOT/CADDS SHEET 49

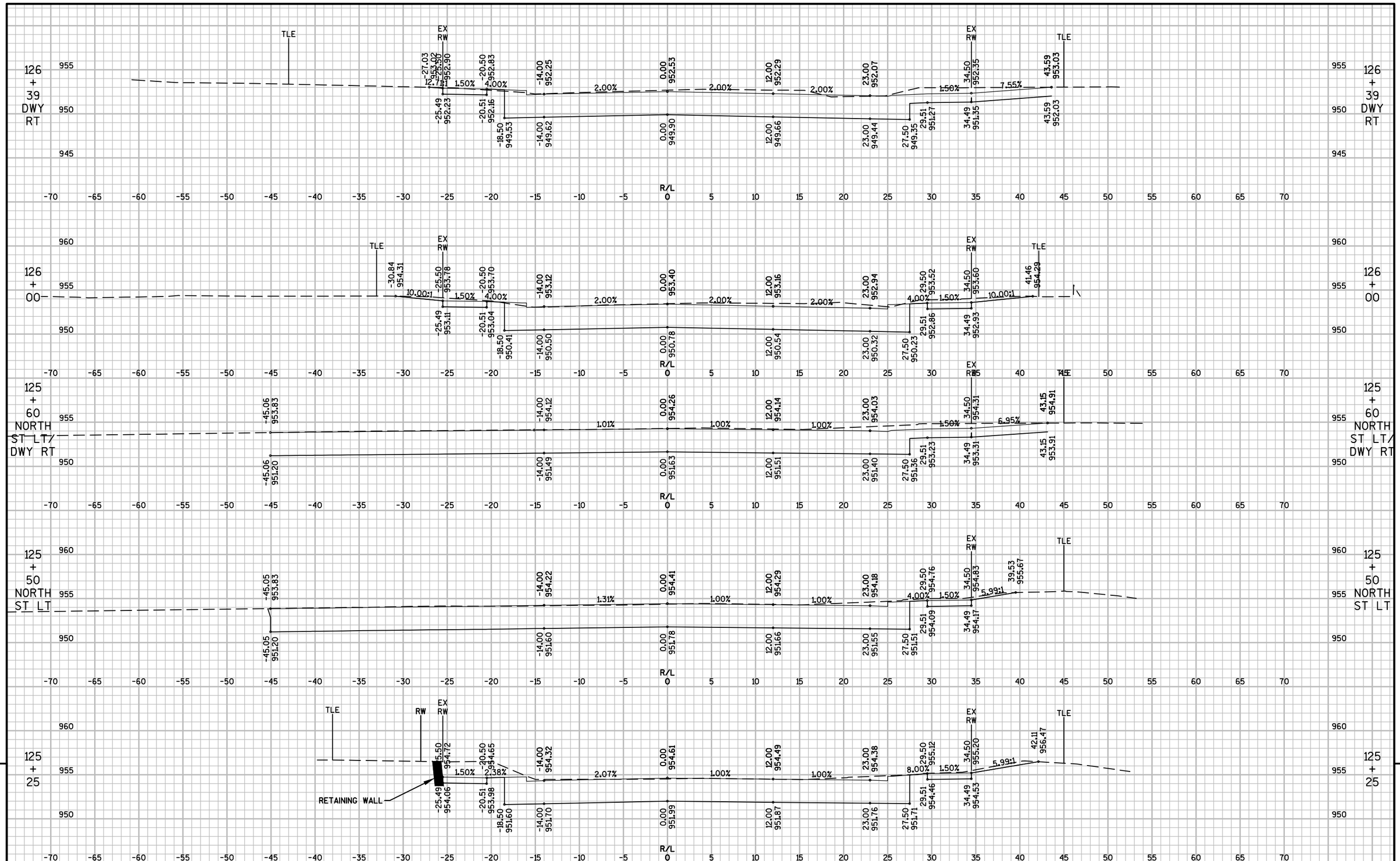

9

PROJECT NO: 4854-03-71	HWY: CTH G	COUNTY: FOND DU LAC	CROSS SECTIONS: CTH G (MAIN STREET)	SHEET 188	E

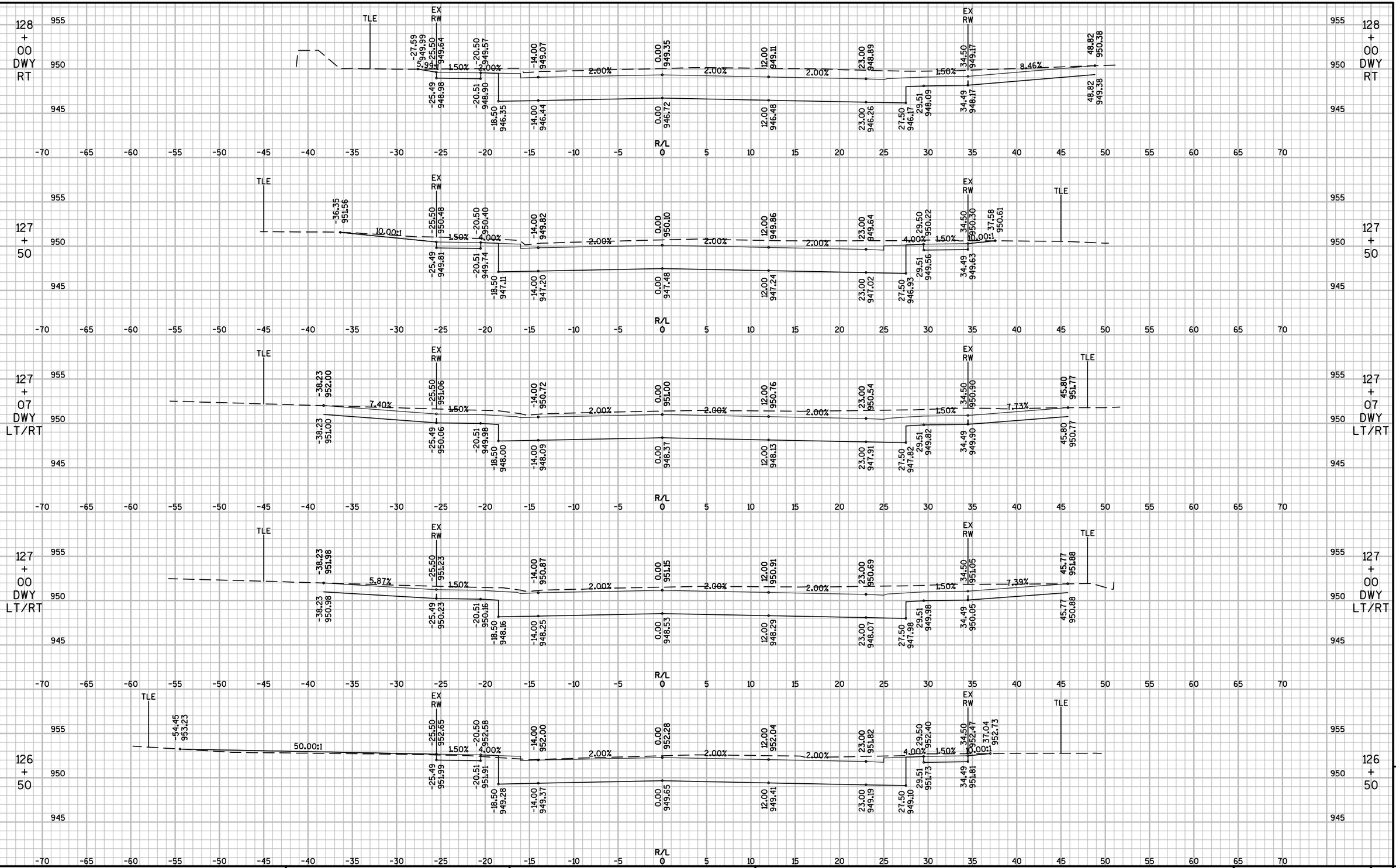

9

9

PROJECT NO: 4854-03-71	HWY: CTH G	COUNTY: FOND DU LAC	CROSS SECTIONS: CTH G (MAIN STREET)	SHEET 189	E

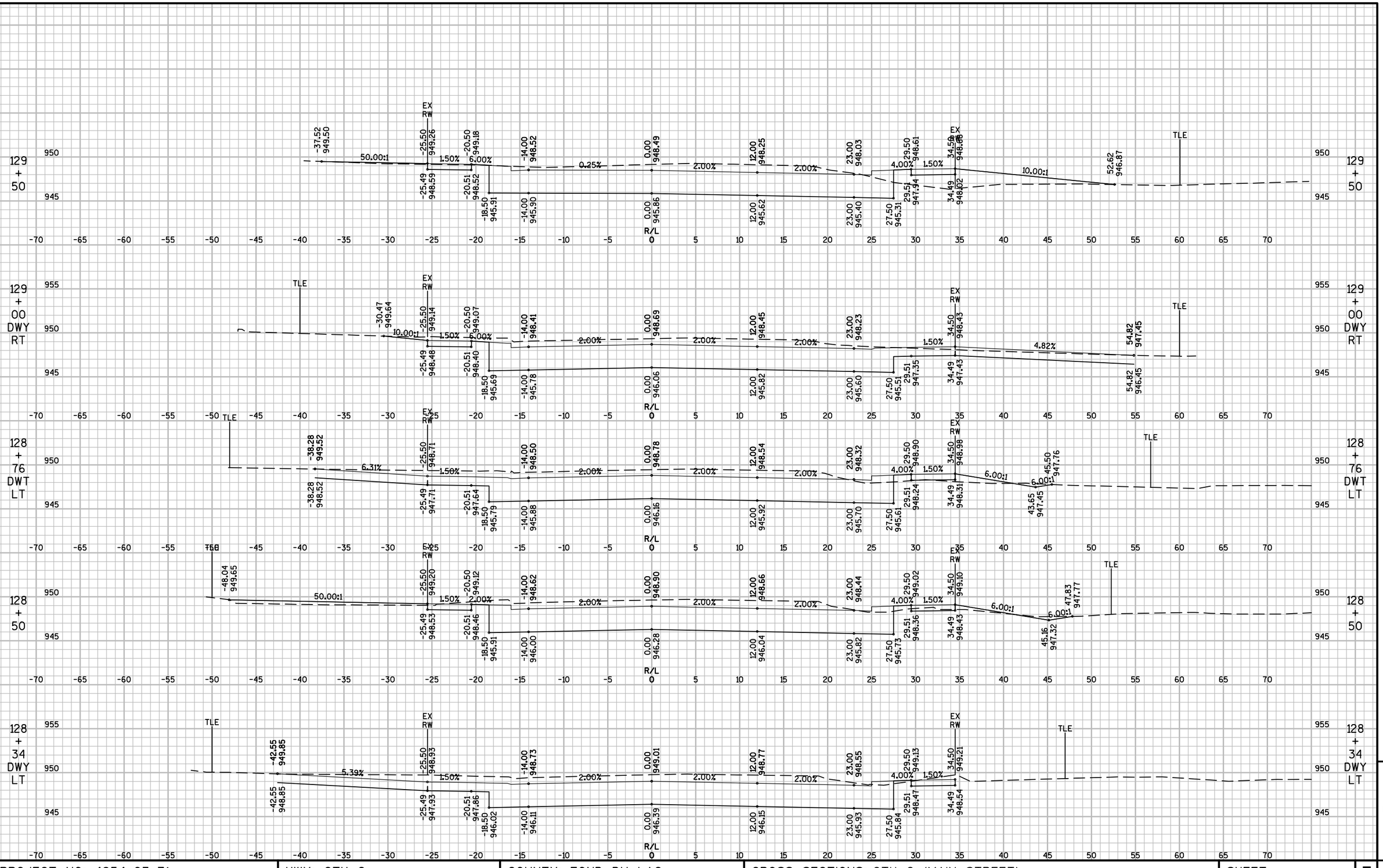

9

9

PROJECT NO: 4854-03-71	HWY: CTH G	COUNTY: FOND DU LAC	CROSS SECTIONS: CTH G (MAIN STREET)	SHEET 190	E

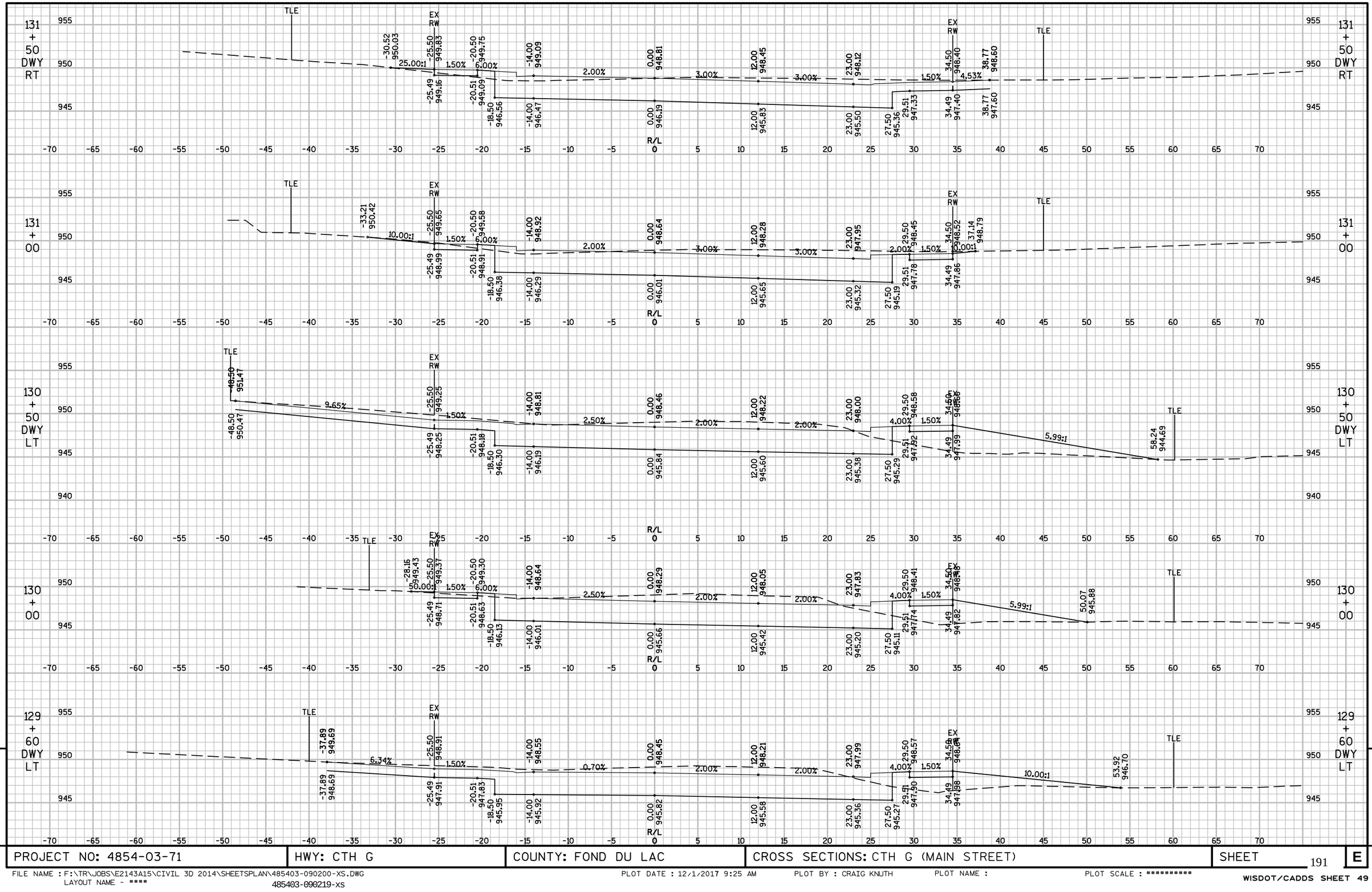

9

PROJECT NO: 4854-03-71	HWY: CTH G	COUNTY: FOND DU LAC	CROSS SECTIONS: CTH G (MAIN STREET)	SHEET 191	E

FILE NAME : F:\TR\JOBS\E2143A15\CIVIL 3D 2014\SHEETSPLAN\485403-090200-XS.DWG
LAYOUT NAME - ****
485403-090219-xs
PLOT DATE : 12/1/2017 9:25 AM PLOT BY : CRAIG KNUTH PLOT NAME : PLOT SCALE : **********

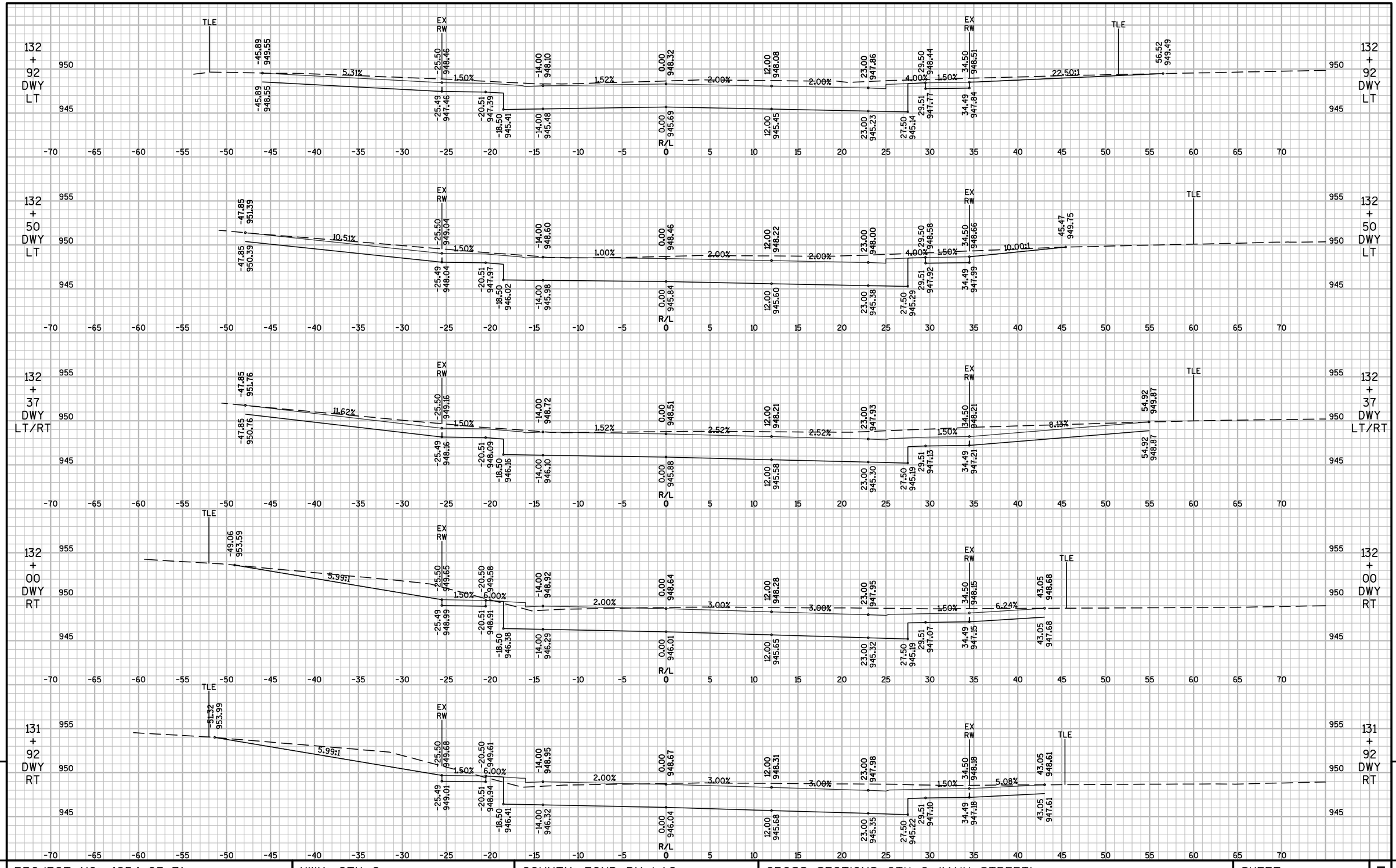

9

9

PROJECT NO: 4854-03-71	HWY: CTH G	COUNTY: FOND DU LAC	CROSS SECTIONS: CTH G (MAIN STREET)	SHEET 192	E

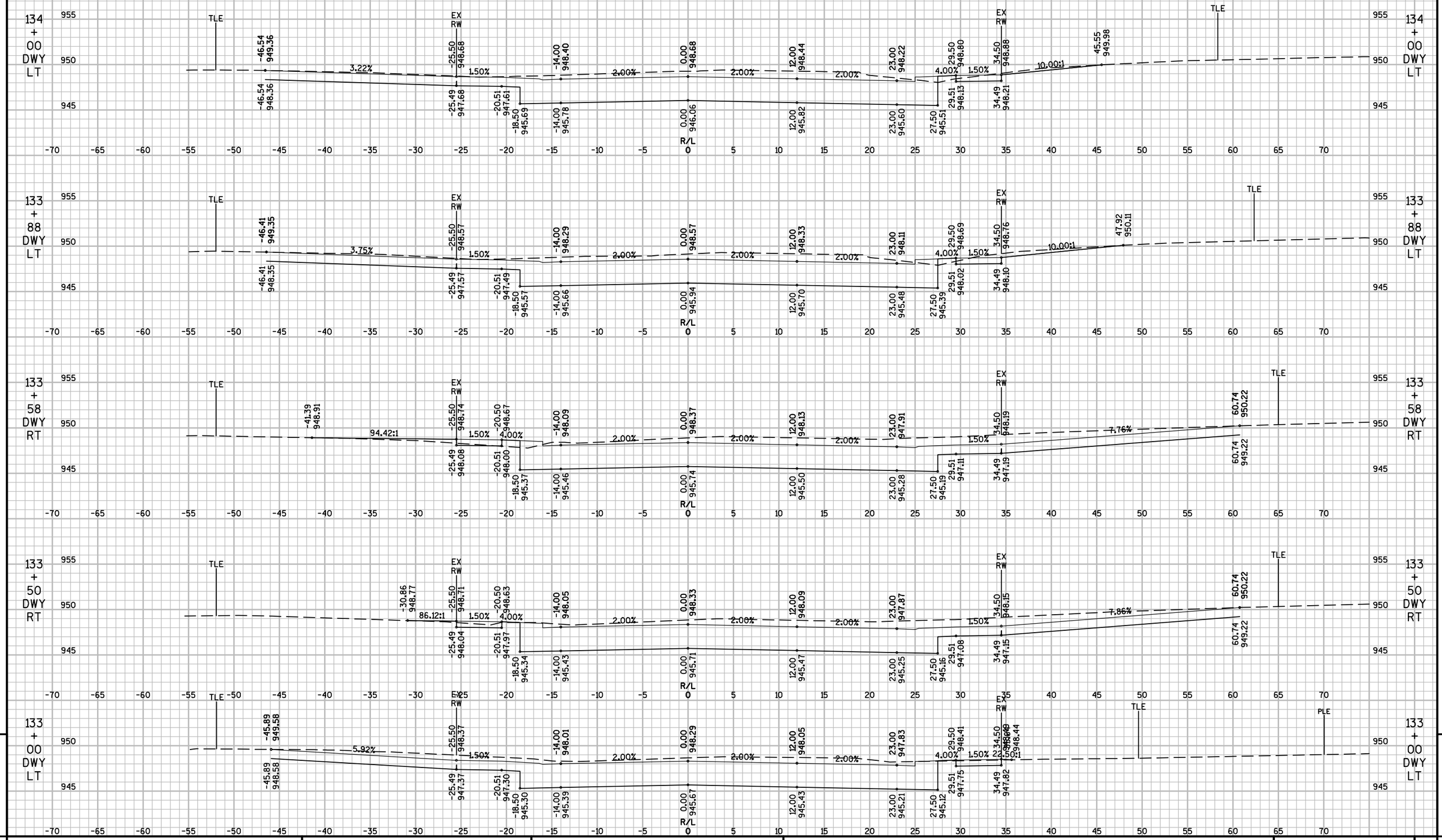

9

PROJECT NO: 4854-03-71	HWY: CTH G	COUNTY: FOND DU LAC	CROSS SECTIONS: CTH G (MAIN STREET)	SHEET 193	E

FILE NAME : F:\TR\JOBS\E2143A15\CIVIL 3D 2014\SHEETSPLAN\485403-090200-XS.DWG
LAYOUT NAME - ****
485403-090221-xs
PLOT DATE : 12/1/2017 9:26 AM PLOT BY : CRAIG KNUTH PLOT NAME : PLOT SCALE : **********

WISDOT/CADDS SHEET 49

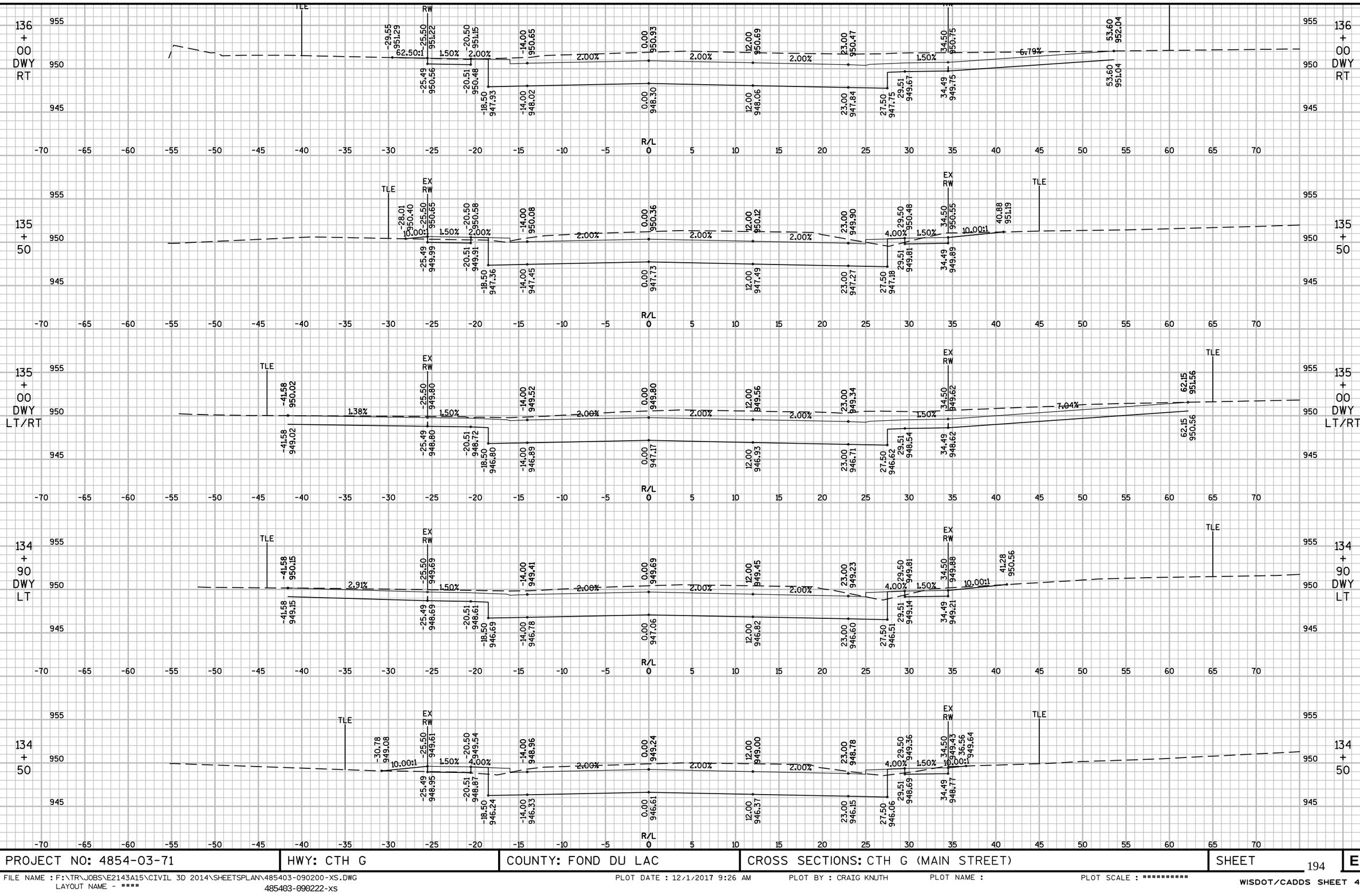

9

9

PROJECT NO: 4854-03-71	HWY: CTH G	COUNTY: FOND DU LAC	CROSS SECTIONS: CTH G (MAIN STREET)	SHEET 194	E

FILE NAME : F:\TR\JOBS\E2143A15\CIVIL 3D 2014\SHEETSPLAN\485403-090200-XS.DWG
LAYOUT NAME - ****
485403-090222-XS
PLOT DATE : 12/1/2017 9:26 AM
PLOT BY : CRAIG KNUTH
PLOT NAME :
PLOT SCALE : **********
WISDOT/CADDS SHEET 49

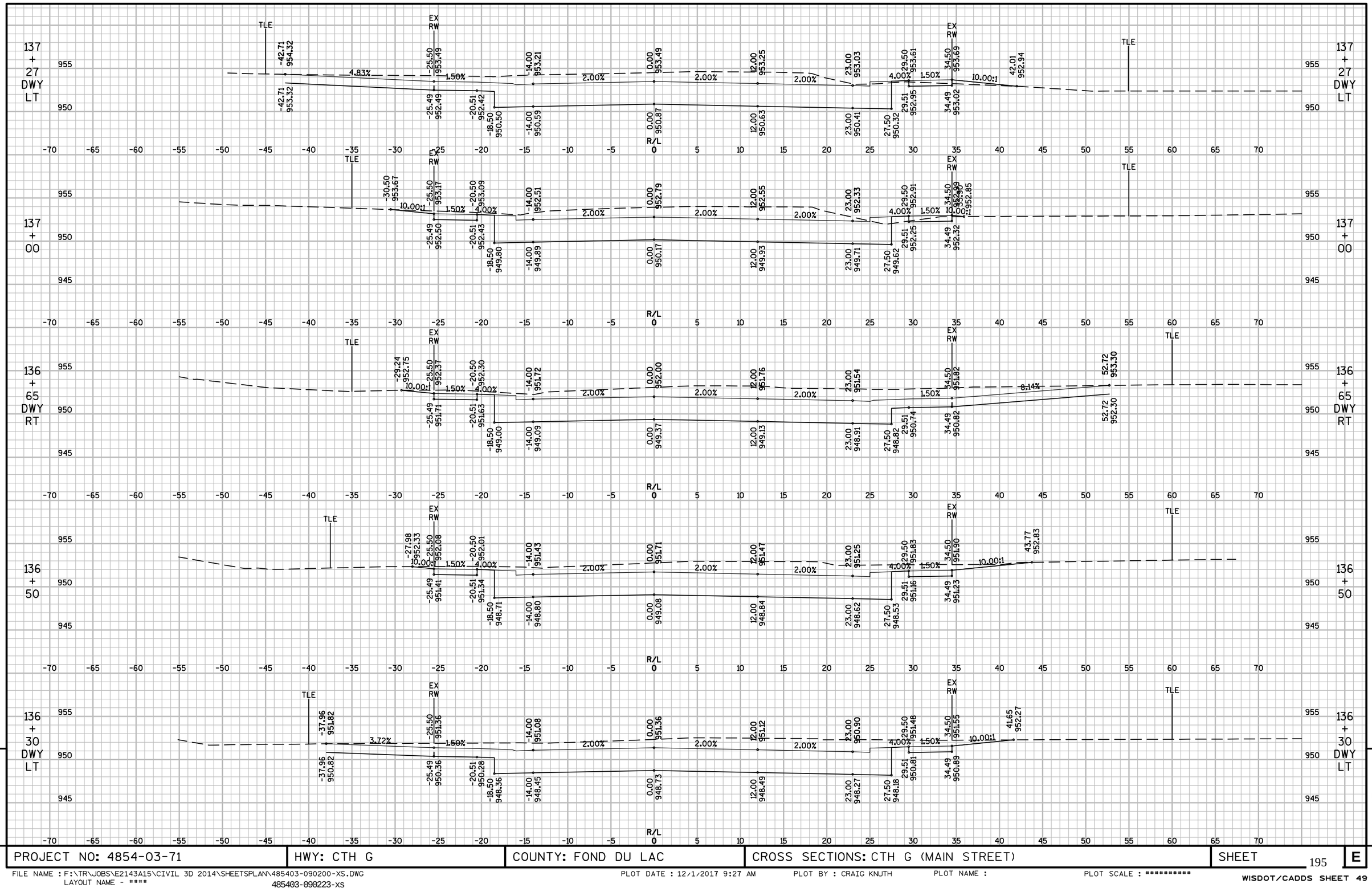

PROJECT NO: 4854-03-71	HWY: CTH G	COUNTY: FOND DU LAC	CROSS SECTIONS: CTH G (MAIN STREET)	SHEET 195	E

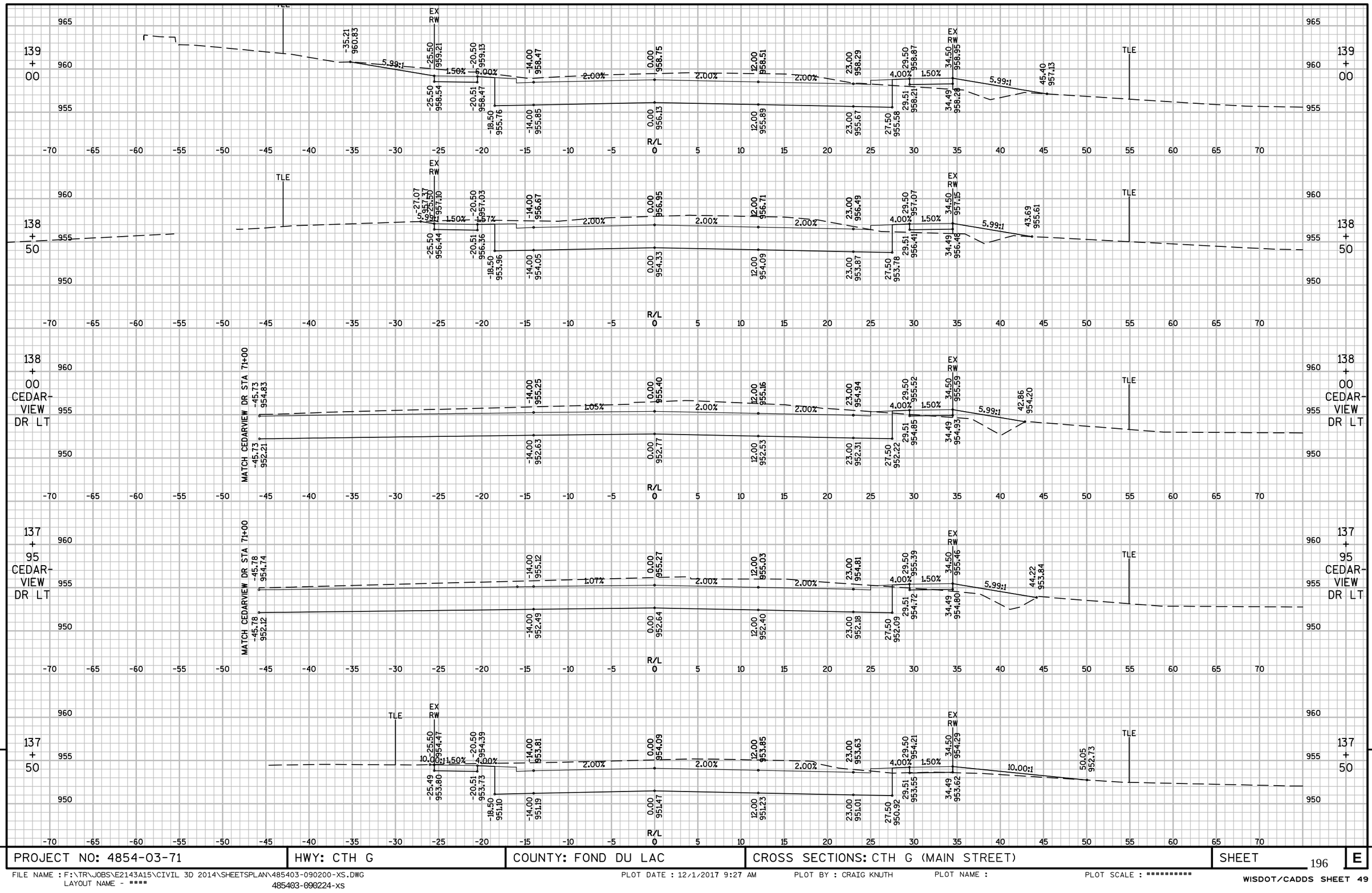

PROJECT NO: 4854-03-71	HWY: CTH G	COUNTY: FOND DU LAC	CROSS SECTIONS: CTH G (MAIN STREET)	SHEET 196 E

FILE NAME : F:\TR\JOBS\E2143A15\CIVIL 3D 2014\SHEETSPLAN\485403-090200-XS.DWG
LAYOUT NAME - ****
485403-090224-xs
PLOT DATE : 12/1/2017 9:27 AM PLOT BY : CRAIG KNUTH PLOT NAME : PLOT SCALE : **********
WISDOT/CADDS SHEET 49

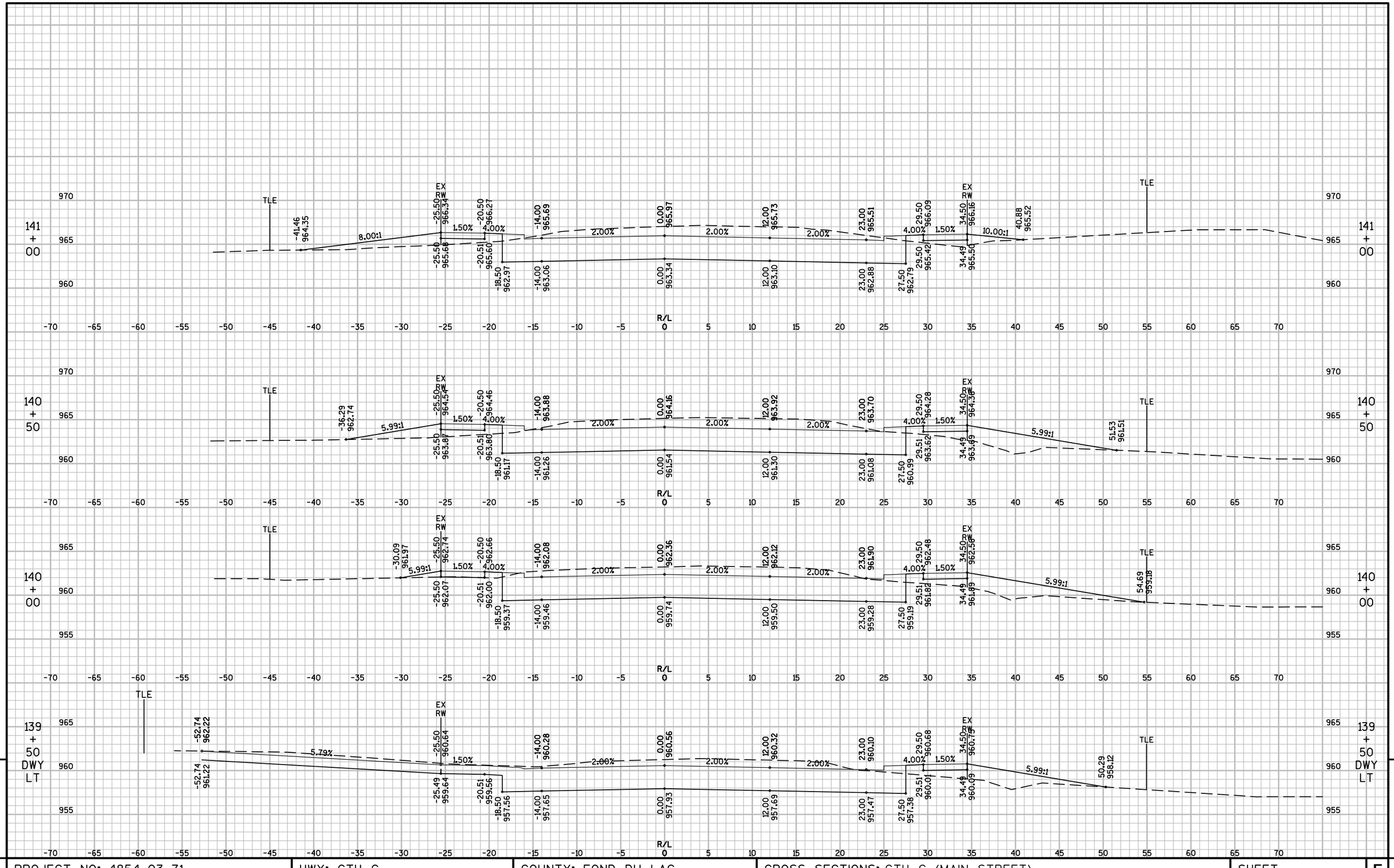

9

PROJECT NO: 4854-03-71	HWY: CTH G	COUNTY: FOND DU LAC	CROSS SECTIONS: CTH G (MAIN STREET)	SHEET 197	E

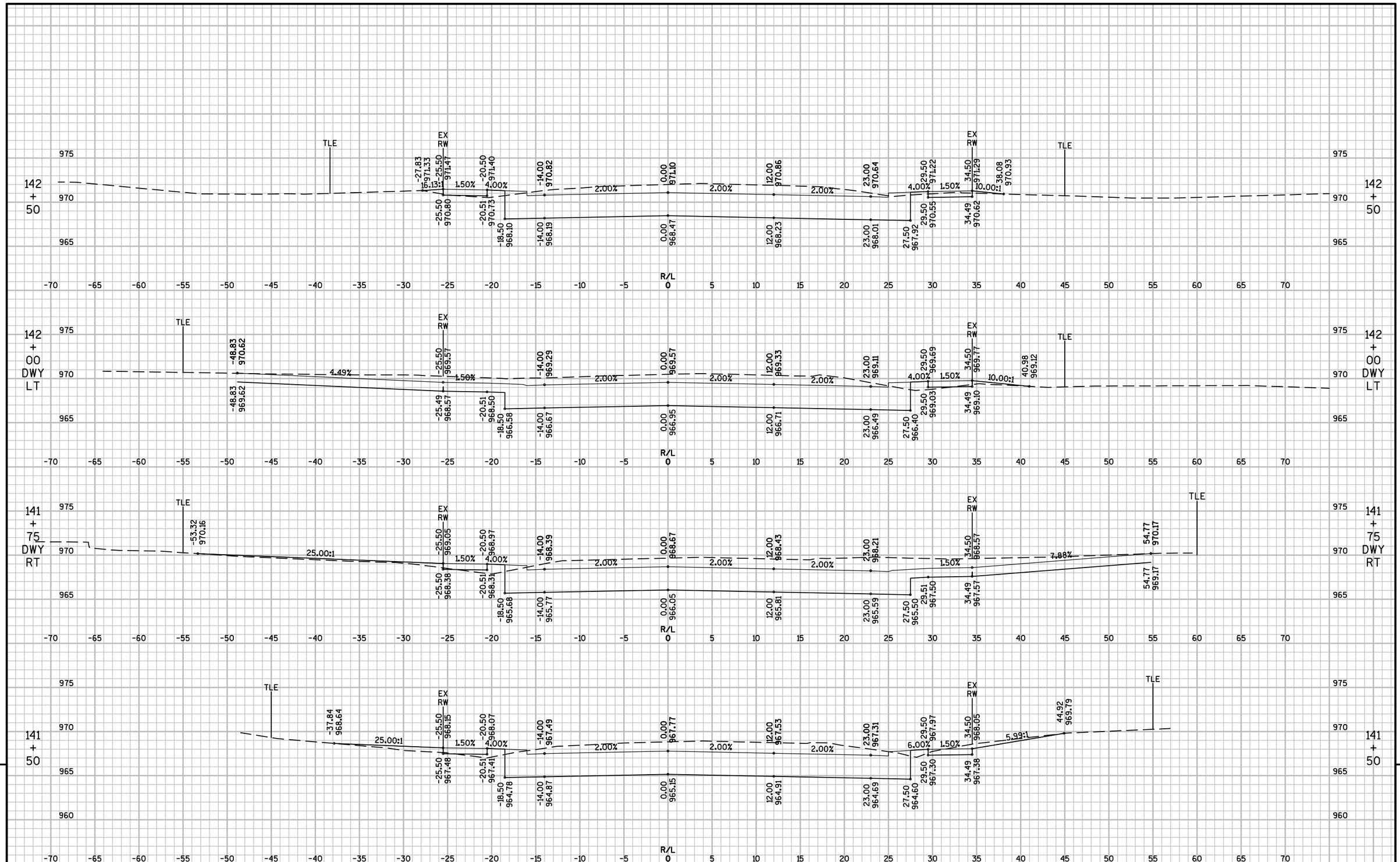

PROJECT NO: 4854-03-71	HWY: CTH G	COUNTY: FOND DU LAC	CROSS SECTIONS: CTH G (MAIN STREET)	SHEET 198 E

FILE NAME : F:\TR\JOBS\E2143A15\CIVIL 3D 2014\SHEETSPLAN\485403-090200-XS.DWG
LAYOUT NAME - ****
485403-090226-XS
PLOT DATE : 12/1/2017 9:28 AM PLOT BY : CRAIG KNUTH PLOT NAME : PLOT SCALE : **********

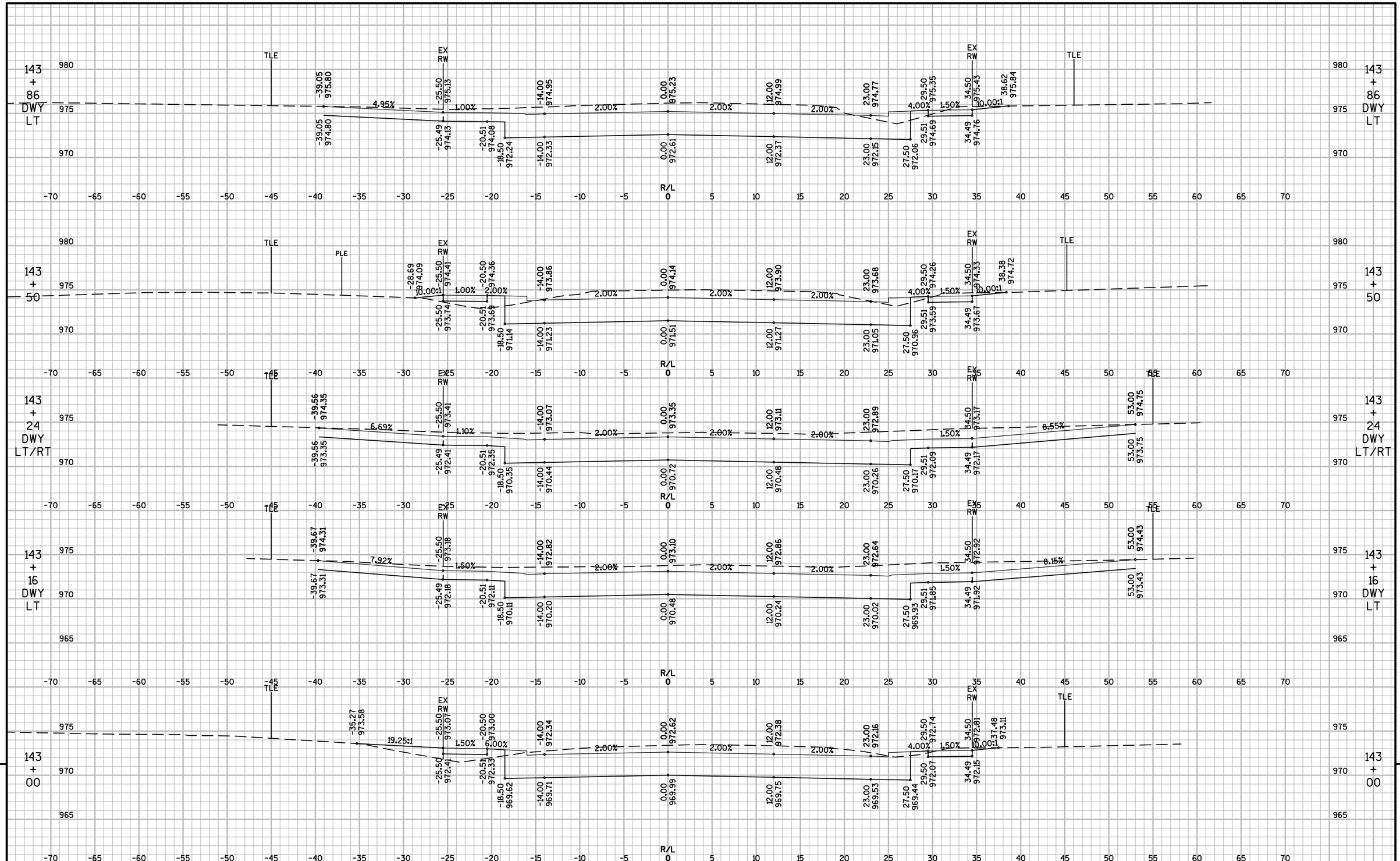

9

9

PROJECT NO: 4854-03-71	HWY: CTH G	COUNTY: FOND DU LAC	CROSS SECTIONS: CTH G (MAIN STREET)	SHEET 199	E

FILE NAME : F:\TR\JOBS\E2143A15\CIVIL 3D 2014\SHEETSPLAN\485403-090200-XS.DWG
LAYOUT NAME - ****
485403-090227-XS

PLOT DATE : 12/1/2017 9:28 AM PLOT BY : CRAIG KNUTH PLOT NAME : PLOT SCALE : **********

WISDOT/CADDS SHEET 49

END ABRUPTLY STA 145+35

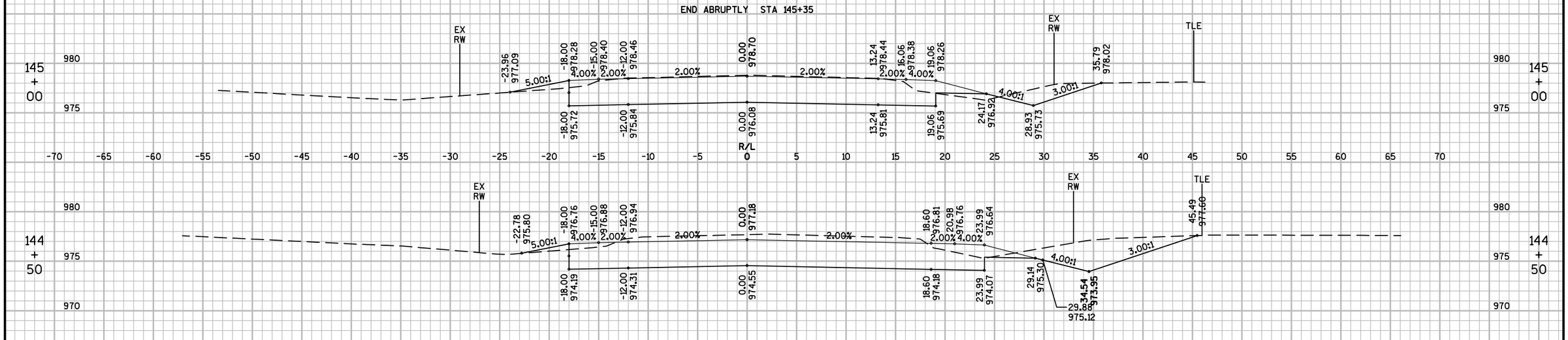

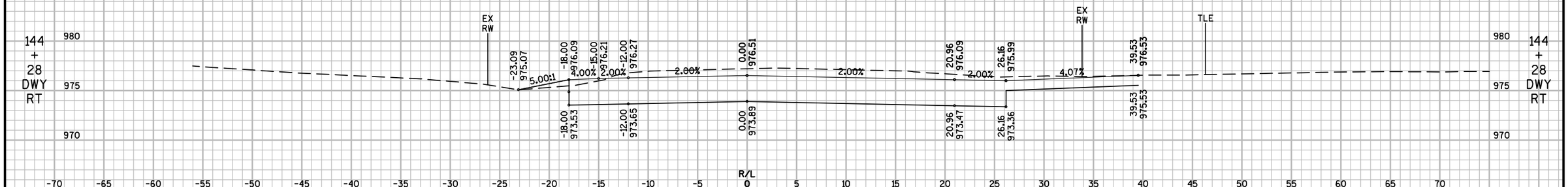

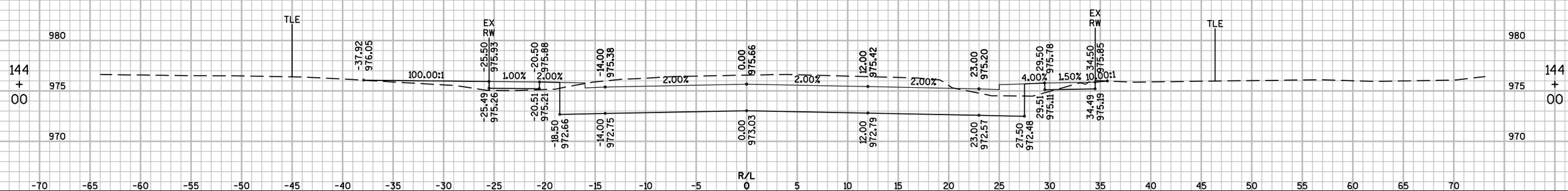

9

9

PROJECT NO: 4854-03-71	HWY: CTH G	COUNTY: FOND DU LAC	CROSS SECTIONS: CTH G (MAIN STREET)	SHEET 200	E

FILE NAME : F:\TR\JOBS\E2143A15\CIVIL 3D 2014\SHEETSPLAN\485403-090200-XS.DWG
LAYOUT NAME - ****
485403-090228-xs

PLOT DATE : 12/1/2017 9:28 AM PLOT BY : CRAIG KNUTH PLOT NAME : PLOT SCALE : **********

WISDOT/CADDS SHEET 49

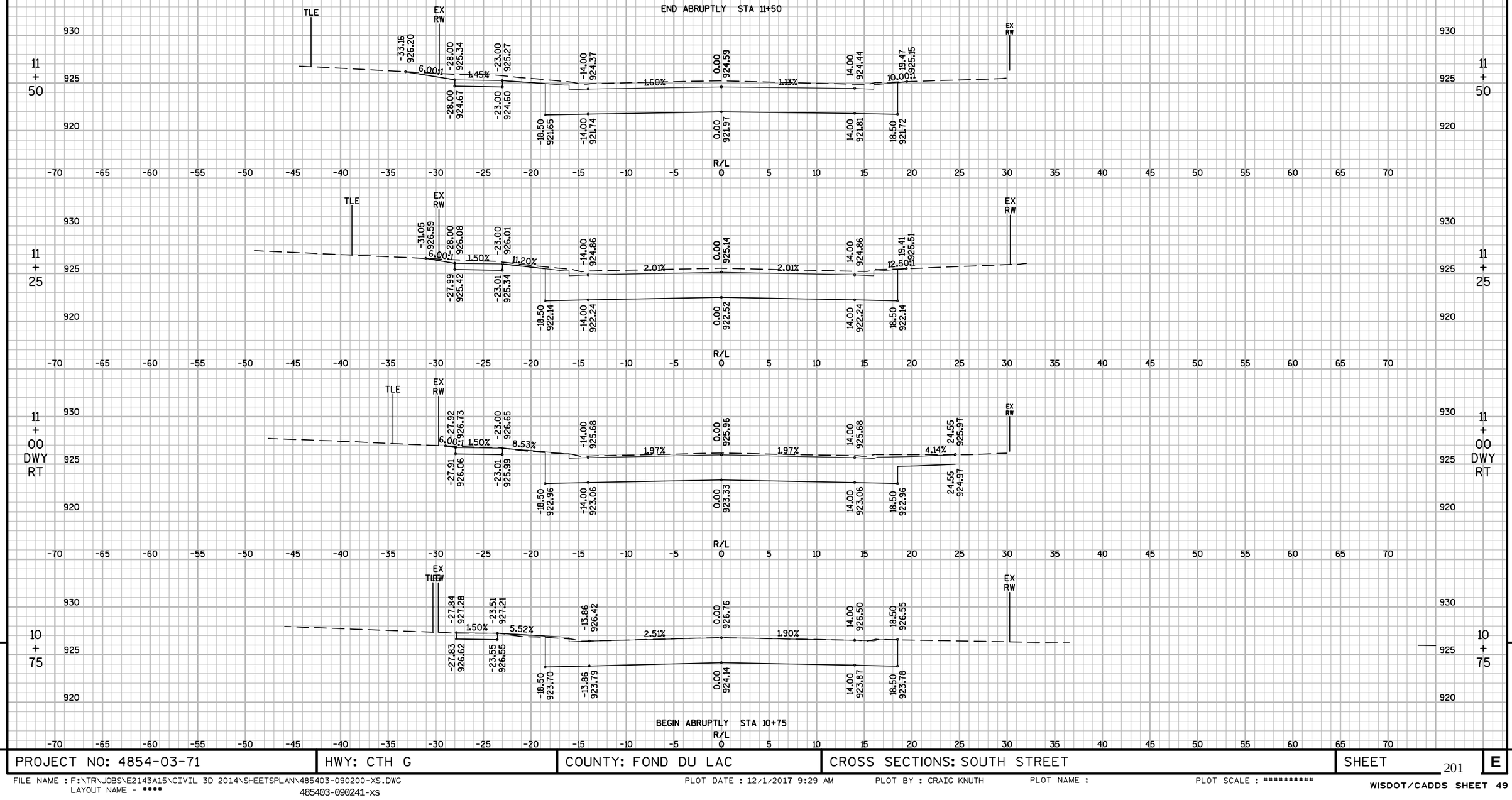

9

PROJECT NO: 4854-03-71	HWY: CTH G	COUNTY: FOND DU LAC	CROSS SECTIONS: SOUTH STREET	SHEET 201	E

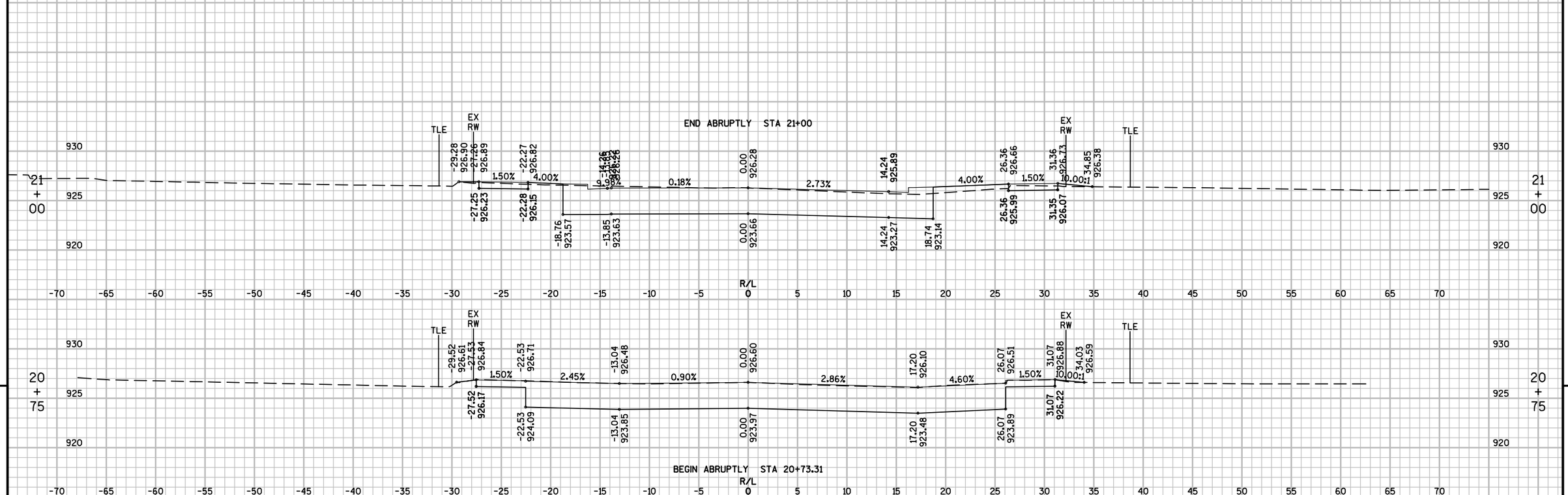

PROJECT NO: 4854-03-71	HWY: CTH G	COUNTY: FOND DU LAC	CROSS SECTIONS: MARSH STREET	SHEET 202 E

FILE NAME : F:\TR\JOBS\E2143A15\CIVIL 3D 2014\SHEETSPLAN\485403-090200-XS.DWG
LAYOUT NAME - ****
485403-090251-XS
PLOT DATE : 12/1/2017 9:29 AM PLOT BY : CRAIG KNUTH PLOT NAME : PLOT SCALE : **********

WISDOT/CADDS SHEET 49

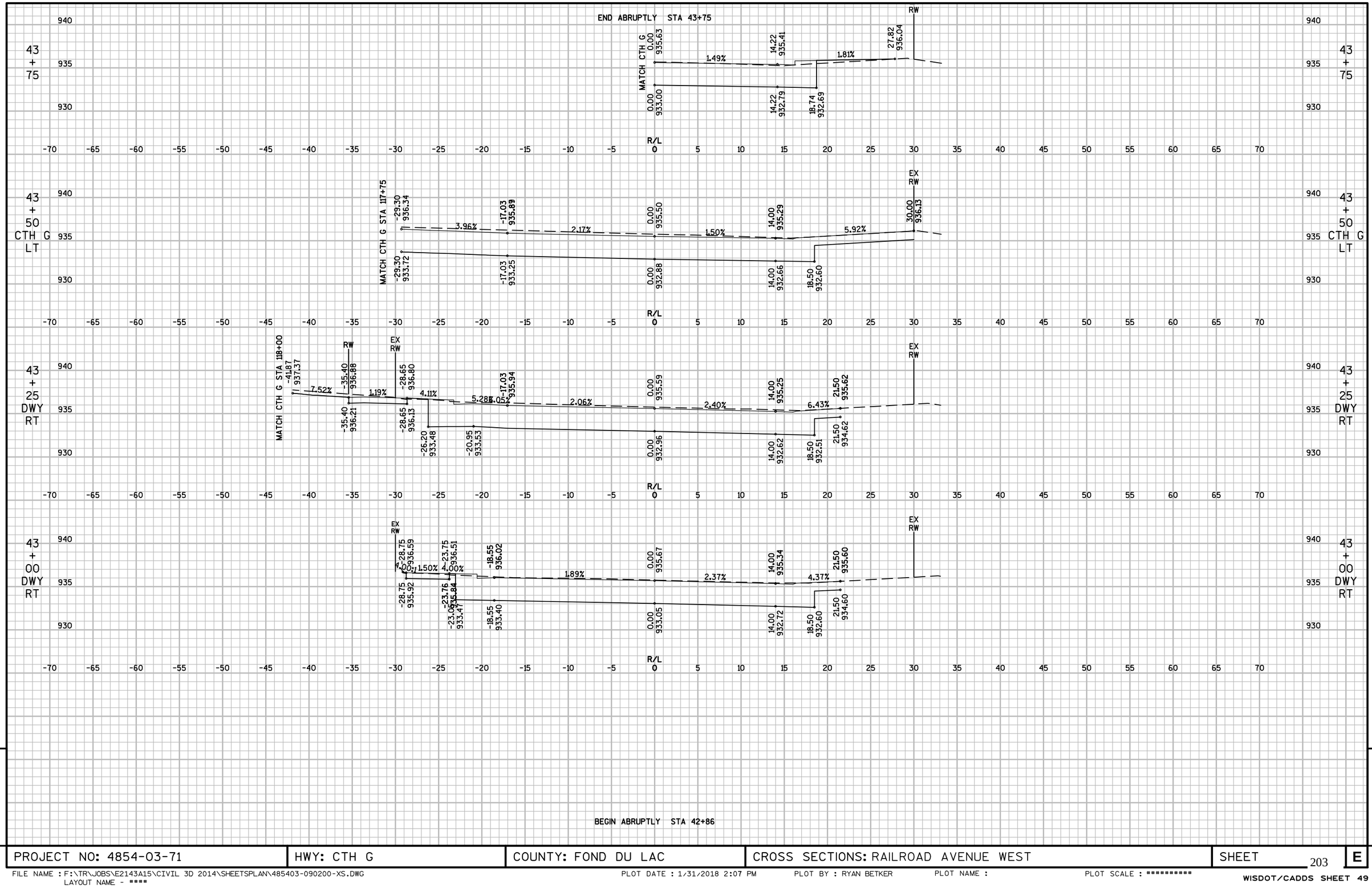

PROJECT NO: 4854-03-71	HWY: CTH G	COUNTY: FOND DU LAC	CROSS SECTIONS: RAILROAD AVENUE WEST	SHEET 203	E

END ABRUPTLY STA 45+92.91

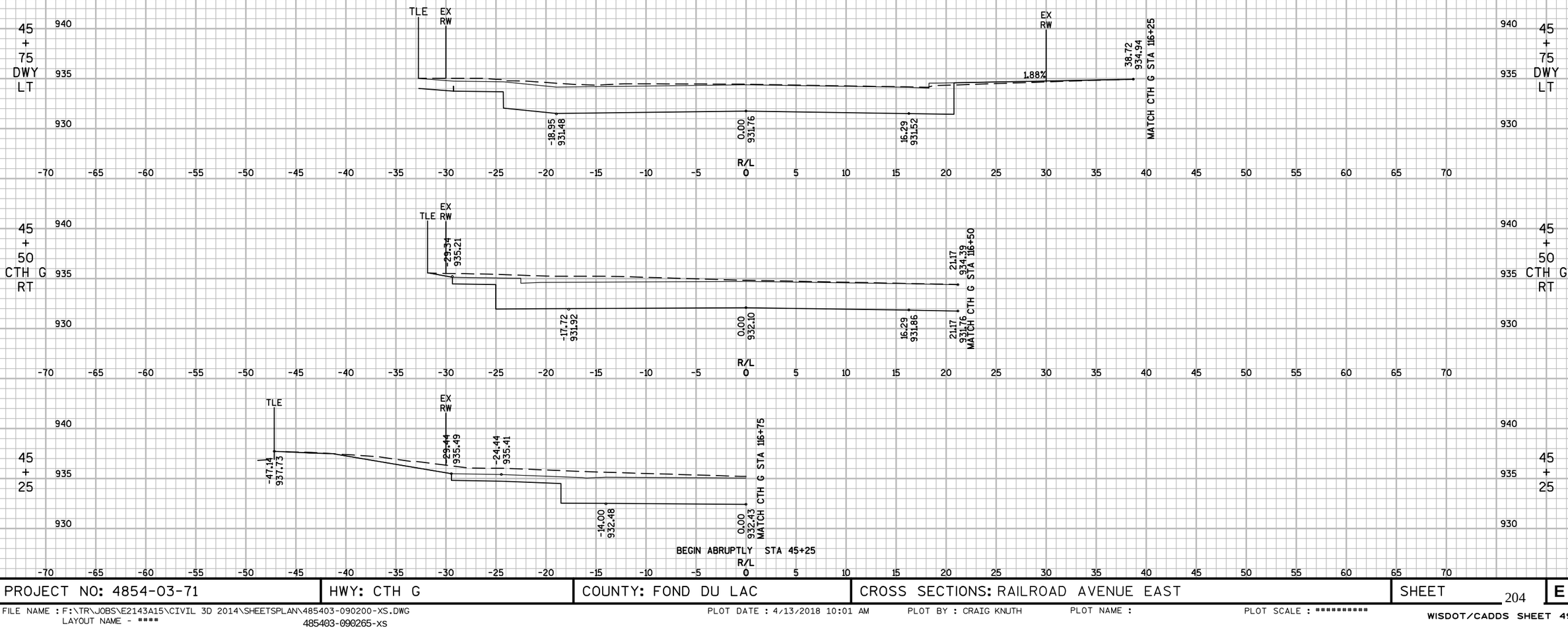

PROJECT NO: 4854-03-71	HWY: CTH G	COUNTY: FOND DU LAC	CROSS SECTIONS: RAILROAD AVENUE EAST	SHEET 204	E

FILE NAME : F:\TR\JOBS\E2143A15\CIVIL 3D 2014\SHEETSPLAN\485403-090200-XS.DWG
LAYOUT NAME - ****
485403-090265-XS

PLOT DATE : 4/13/2018 10:01 AM PLOT BY : CRAIG KNUTH PLOT NAME : PLOT SCALE : **********

WISDOT/CADDS SHEET 49

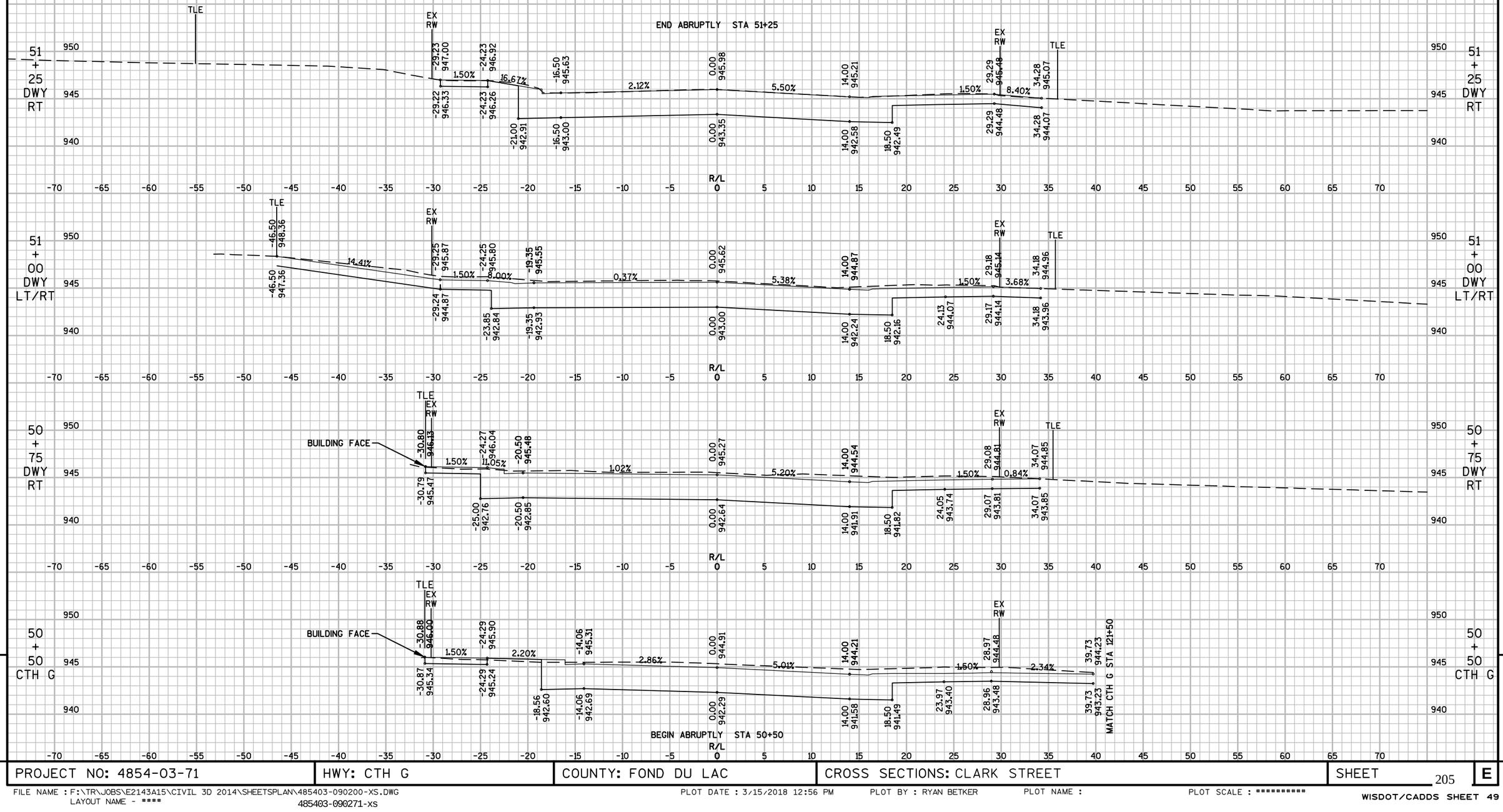

9

9

PROJECT NO: 4854-03-71	HWY: CTH G	COUNTY: FOND DU LAC	CROSS SECTIONS: CLARK STREET	SHEET 205	E

FILE NAME : F:\TR\JOBS\E2143A15\CIVIL 3D 2014\SHEETSPLAN\485403-090200-XS.DWG
LAYOUT NAME - ****
485403-090271-xs

PLOT DATE : 3/15/2018 12:56 PM PLOT BY : RYAN BETKER PLOT NAME : PLOT SCALE : **********

WISDOT/CADDS SHEET 49

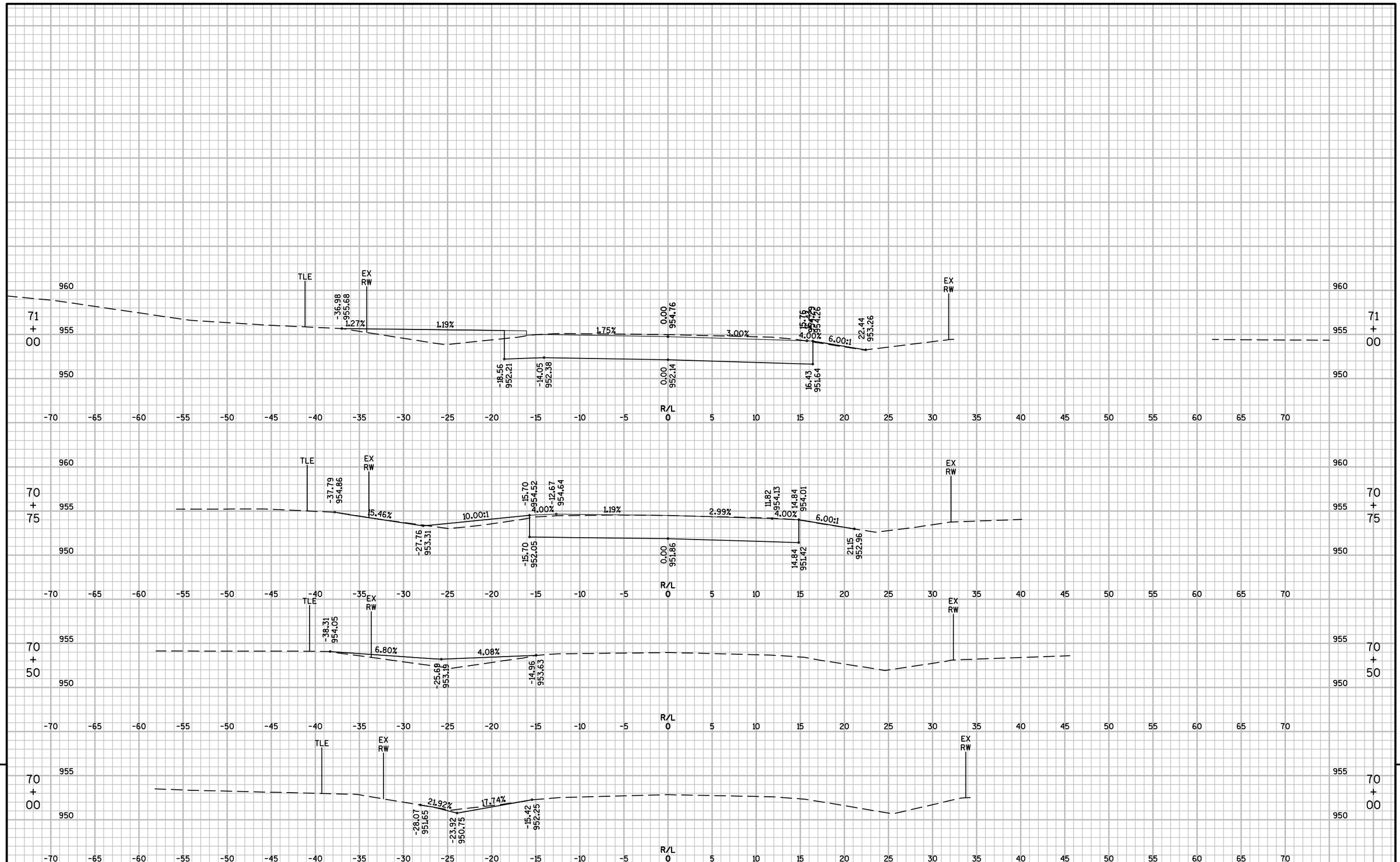

9

PROJECT NO: 4854-03-71	HWY: CTH G	COUNTY: FOND DU LAC	CROSS SECTIONS: CEDARVIEW DRIVE	SHEET 206	E

FILE NAME : F:\TR\JOBS\E2143A15\CIVIL 3D 2014\SHEETSPLAN\485403-090200-XS.DWG
LAYOUT NAME - ****

PLOT DATE : 1/31/2018 8:42 PM PLOT BY : RYAN BETKER PLOT NAME : PLOT SCALE : **********

WISDOT/CADDS SHEET 49

Notes

Wisconsin Department of Transportation

Dedicated people creating transportation solutions
through innovation and exceptional service.

http://www.dot.wisconsin.gov