MAD

PROJECT ID: 5490-00-60

WITH:

COUNTY: DANE

JULY 2018

ORDER OF SHEETS

TOTAL SHEETS = 84

STATE PROJECT	FEDERAL PROJECT	
	PROJECT	CONTRACT
5490-00-60	WISC 2018304	1

STATE OF WISCONSIN
DEPARTMENT OF TRANSPORTATION

PLAN OF PROPOSED IMPROVEMENT

C MADISON, STH 30

FAIR OAKS AVENUE TO THOMPSON DRIVE

STH 30

DANE COUNTY

STATE PROJECT NUMBER

5490-00-60

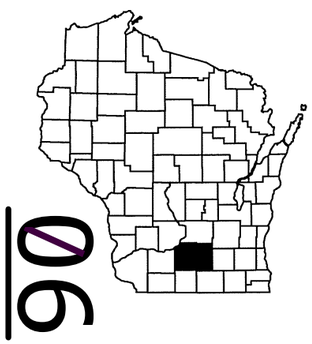

N

DESIGN DESIGNATION

A.A.D.T.	2018	=	42,500
A.A.D.T.	2038	=	54,600
D.H.V.		=	N/A
D.D.		=	N/A
T.		=	N/A
DESIGN SPEED		=	50 MPH
ESALS		=	N/A

BEGIN PROJECT
STA 200+00
X=834,565.99
Y=494,480.81

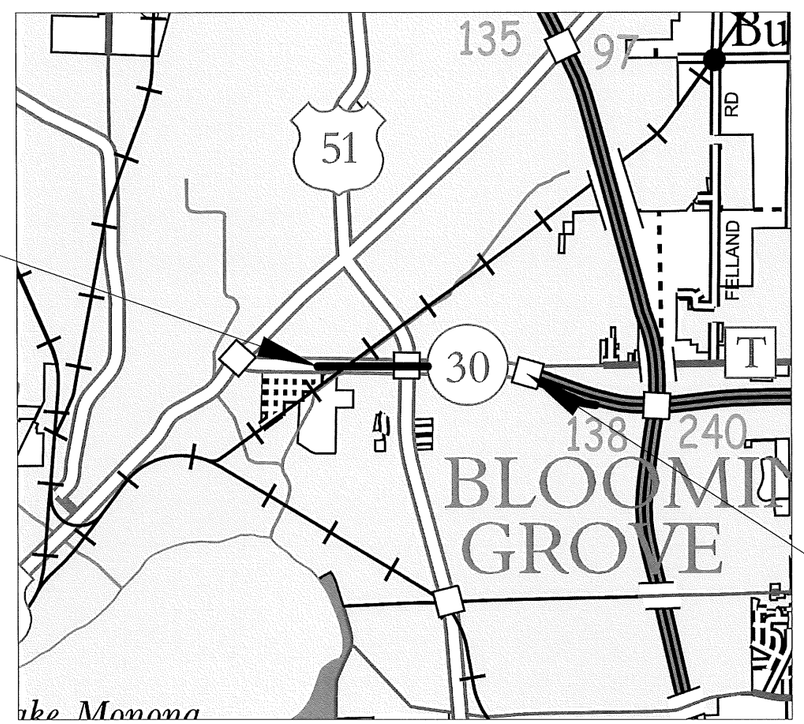

END PROJECT
STA 288+52.33

CONVENTIONAL SYMBOLS

PLAN

CORPORATE LIMITS
PROPERTY LINE
LOT LINE
LIMITED HIGHWAY EASEMENT
EXISTING RIGHT OF WAY
PROPOSED OR NEW R/W LINE
SLOPE INTERCEPT
REFERENCE LINE (300'EB')
EXISTING CULVERT
PROPOSED CULVERT (Box or Pipe)
COMBUSTIBLE FLUIDS (CAUTION)
MARSH AREA
WOODED OR SHRUB AREA

PROFILE

GRADE LINE
ORIGINAL GROUND
MARSH OR ROCK PROFILE (To be noted as such) (ROCK)
SPECIAL DITCH (LABEL)
GRADE ELEVATION (95.36)
CULVERT (Profile View)

UTILITIES

ELECTRIC — E —
FIBER OPTIC — FO —
GAS — G —
SANITARY SEWER — SAN —
STORM SEWER — SS —
TELEPHONE — T —
WATER — W —
UTILITY PEDESTAL
POWER POLE
TELEPHONE POLE

LAYOUT

SCALE 0 — 1 MI.

TOTAL NET LENGTH OF CENTERLINE = 0.000 MI.

HORIZONTAL POSITIONS SHOWN ON THIS PLAN ARE WISCONSIN COUNTY COORDINATES, DANE COUNTY, NAD83 (2011), IN U.S. SURVEY FEET. VALUES ARE GRID COORDINATES, GRID BEARINGS, AND GRID DISTANCES. GRID DISTANCES MAY BE USED AS GROUND DISTANCES.

ELEVATIONS SHOWN ON THIS PLAN ARE REFERENCED TO THE NATIONAL GEODETIC VERTICAL DATUM OF NAVD 88 (2012).

STATE OF WISCONSIN
DEPARTMENT OF TRANSPORTATION

PREPARED BY

Surveyor	
Designer	LORRAINE BETZEL
Project Manager	JIM SIMPSON
Regional Examiner	SW REGION
Regional Supervisor	KURT JOHNSON

APPROVED FOR THE DEPARTMENT

DATE: 01-22-2018 (Signature)

E

GENERAL NOTES

THE LOCATIONS OF EXISTING AND PROPOSED UTILITY INSTALLATIONS AS SHOWN ON THE PLANS ARE APPROXIMATE. THERE MAY BE OTHER UTILITY INSTALLATIONS WITHIN THE PROJECT AREA THAT ARE NOT SHOWN.

COMMON EXCAVATION AND TOPSOIL QUANTITIES ARE BASED ON THE REMOVAL AND REPLACEMENT OF 3" OF MATERIAL.

EXACT EROSION CONTROL DEVICE LOCATIONS WILL BE DETERMINED BY THE ENGINEER. EROSION CONTROL DEVICES SHALL BE PLACED IN SEQUENCE WITH CONSTRUCTION OPERATIONS OR AS DETERMINED BY THE ENGINEER.

INLETS SHALL BE COVERED AS NECESSARY TO PREVENT CONSTRUCTION MATERIAL FROM FALLING INTO THE INLETS.

CONTRACTOR WILL BE RESPONSIBLE FOR RESHAPING AND SEEDING ANY PREVIOUSLY GRASSED AREAS WHICH ARE DISTURBED BY HIS OPERATION OUTSIDE OF THE NORMAL CONSTRUCTION LIMITS.

PRIOR TO PLACEMENT OF THRIE BEAM THE SHOULDERS SHALL BE IN PLACE, SHAPED, AND COMPACTED.

DNR CONTACT

Eric Heggelund
3911 Fish Hatchery Road
Fitchburg, WI 53711
(608) 275-3301
eric.heggelund@wisconsin.gov

WISDOT CONTACT

JIM SIMPSON
WISDOT PROJECT MANAGER
2101 WRIGHT STREET
MADISON, WI 53704
(608) 246-5628
Jim.Simpson@dot.wi.gov

DESIGN CONTACT

LORRAINE BETZEL
DESIGN ENGINEER
2101 WRIGHT STREET
MADISON, WI 53704
(608)246-3279
Lorraine.Betzel@dot.wi.gov

DIGGERS HOTLINE
Dial 811 or (800) 242-8511
www.DiggersHotline.com

LIST OF STANDARD ABBREVIATIONS

ABUT	ABUTMENT	ID	INSIDE DIAMETER	SALV	SALVAGED
AC	ACRE	INV	INVERT	SSS	SANITARY AND STORM SEWER
AADT	ANNUAL AVERAGE DAILY TRAFFIC	IP	IRON PIPE	SAN	SANITARY SEWER
ASPH	ASPHALT	JT	JOINT	SEC	SECTION
AVG	AVERAGE	JCT	JUNCTION	SHLDR	SHOULDER
BL	BASE LINE	LT	LEFT	SW	SIDEWALK
BM	BENCH MARK	L	LENGTH OF CURVE	S	SOUTH
CB	CATCH BASIN	LHF	LEFT HAND FORWARD	SB	SOUTHBOUND
C/L	CENTER LINE	LF	LENEAR FOOT	SP	SPECIAL
CC	CENTER TO CENTER	L	LITER	SPECS	SPECIFICATIONS
CE	COMERCIAL ENTRANCE	LS	LUMP SUM	SQ	SQUARE
CONE	CONCRETE	MH	MANHOLE	SF	SQUARE FEET
CO	COUNTY	MB	MESSAGE BOARD	SY	SQUARE YARD
CTH	COUNTY TRUNK HIGHWAY	MLB	MAILBOX	STD	STANDARD
CY	CUBIC YARD	ML	MATCH LINE	SDD	STANDARD DETAILS DRAWINGS
C&G	CURB AND GUTTER	NC	NORMAL CROWN	STH	STATE TRUNK HIGHWAYS
CULV	CULVERT	N	NORTH	STA	STATION
CPAS	CONCRETE PAVEMENT APPROACH SLAB	Y	NORTH GRD COORDINATE	SS	STORM SEWER
DHV	DESIGN HOUR VOLUME	NB	NORTHBOUND	STR	STRUCTURE OR STRUCTURAL
DIA	DIAMETER	NO	NUMBER	SL	SURVEY LINE
DF	DOUBLE FACED	OD	OUTSIDE DIAMETER	TEL	TELEPHONE
DW	DUAL WALL	PAVT	PAVEMENT	TEMP	TEMPORARY
ELEC	ELECTRIC	PERM	PERMANENT	TLE	TEMPORARY LIMITED EASEMENT
ELEV	ELEVATION	PLE	PERMANENT LIMITED EASEMENT	T	TON
ESALS	EQUIVALENT SINGLE AXLE LOADS	PT	POINT	TC	TOP OF CURB
EXC	EXCAVATION	PCC	PORTLAND CEMENT CONCRETE	T	TRUCKS (PERCENT OF)
EBS	EXCAVATION BELOW SUBGRADE	PCS	PAVED CONCRETE SHOULDER	TYP	TYPICAL
EXIST	EXISTING	PE	PRIVATE ENTRANCE	UG	UNDERGROUND
FE	FIELD ENTRANCE	PROJ	PROJECT	UNDDR	UNDERDRAIN
FF	FACE TO FACE	PL	PROPERTY LINE	USH	UNITED STATES HIGHWAY
FG	FINISHED GRADE	R	RADIUS	VAR	VARIABLE
FL	FLOW LINE	R/L	REFERENCE LINE	VERT	VERTICAL
FT	FOOT	REQD	REQUIRED	W	WATER
HDPE	HIGH DENSITY POLYETHYLENE	RT	RIGHT	WM	WATER MAIN
CWT	HUNDREDWEIGHT	RCAE	REINFORCED CONCRETE APRON ENDWALL	WV	WATER VALVE
HYD	HYDRANT	R/W	RIGHT-OF-WAY	W	WEST
IN DIA	INCH DIAMETER	RD	ROAD	WB	WEST BOUND
INL	INLET	RDWY	ROADWAY	YD	YARD

UTILITY/ MUNICIPALITY	CONTACT/ADDRESS	UTILITY TYPE
AT&T Legacy	Kenneth Nine 110 N. Main St Culver, IN 46511 Work (574) 842-8830 Cell (574) 904-6336 kc1298@att.com	Communication
ATC Management, Inc.	Anthony Marciniak W 234 N Ridgeview Parkway Ct PO Box 47 Waukesha, WI 53187-0047 Work (262) 506-6814 amarciniak@atcllc.com	Electricity-transmission
Charter Communications	Brandon Storm 2701 Daniels St Madison, WI 53718 (608) 274-3822 brandon.storm@charter.com	Communication
City of Madison Engineering	Greg Fries 210 Martin Luther King Jr Blvd, Rm 115 Madison, WI 53703 (608) 266-4751 gfries@cityofmadison.com	Sewer
Kochs Telecommunications Service Inc	Mike Koch P.O. Box 365 Hustiford, WI 53034 Work (920) 349-3839 Cell (414) 791-5528 mlkoch@kochstelecom.com	Communication
Madison Gas and Electric Company	John Wichern 133 S. Blair St Madison, WI 53788 Work (608) 252-1563 Cell (608) 535-7408 jwichern@mge.com	Electricity
Madison Gas and Electric Company	John Wichern 133 S. Blair St Madison, WI 53788 Work (608) 252-1563 Cell (608) 535-7408 jwichern@mge.com	Gas/Petroleum
Madison Metropolitan Sewerage District	Ray Schneider 1610 Moorland Rd Madison, WI 53713 Work (608)222-1202 ext 259 Cell (608) 347-3628 erich@madsewer.org	Sewer
Madison Water Utility 53713-1431	Adam Wiederhoeft 119 E Olin Ave (608)266-9121 awiederhoeft@madisonwater.org	Water Madison, WI
Rogers Telecom	Vickie Moran 4804 N 40th St Sheboygan, WI 53083 (920)395-7125 vmoran@gabes.com	Communication
Windstream KD, LLC	Kevin Parris 1858 Wright St Madison, WI 53704 Work (608) 819-5016 Cell (608) 416-3291 kevin.j.parris@windstream.com	Communication
Wisconsin Department of Transportation	Jeff Madson Ste 300 433 W St Paul Ave Milwaukee, WI 53203-3007 (414)225-3723 jeffrey.madson@dot.wi.gov	Communication

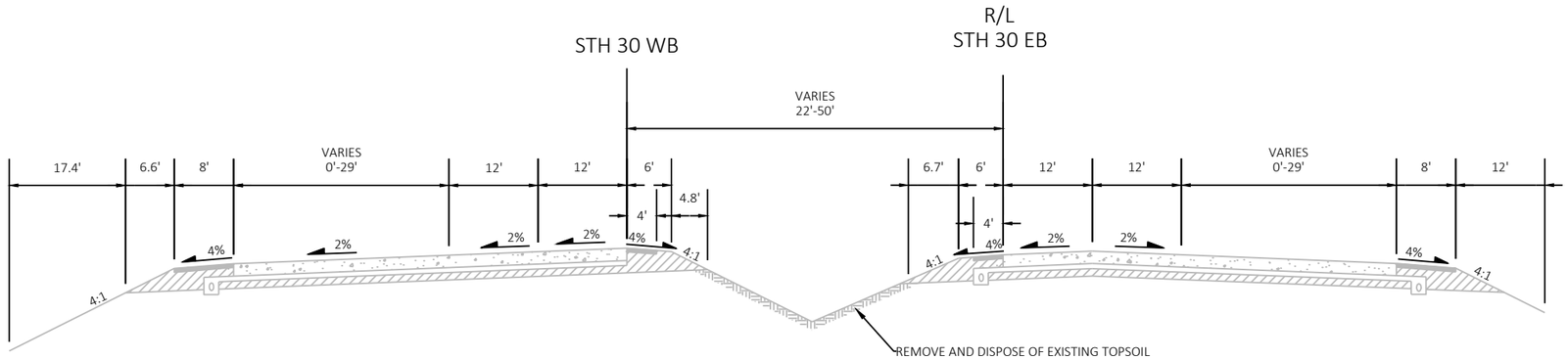

EXISTING TYPICAL SECTION
STH 30

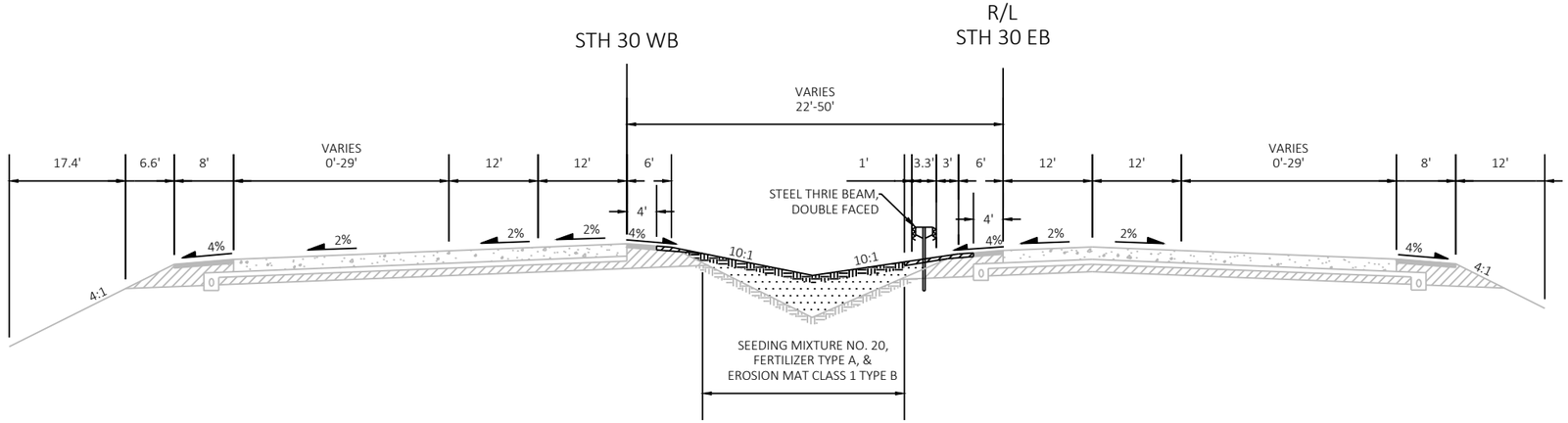

PROPOSED TYPICAL SECTION
STH 30

LEGEND

- EXISTING BASE AGGREGATE DENSE
- EXISTING HMA PAVEMENT
- EXISTING CONCRETE PAVEMENT
- EXISTING TOPSOIL, REMOVE APPROX 3-INCHES
- 3" TOPSOIL
- BASE AGGREGATE DENSE 3/4-INCH
- BORROW

PROJECT NO: 5490-00-60	HWY: STH 30	COUNTY: DANE	TYPICAL SECTIONS	SHEET 3	E

2

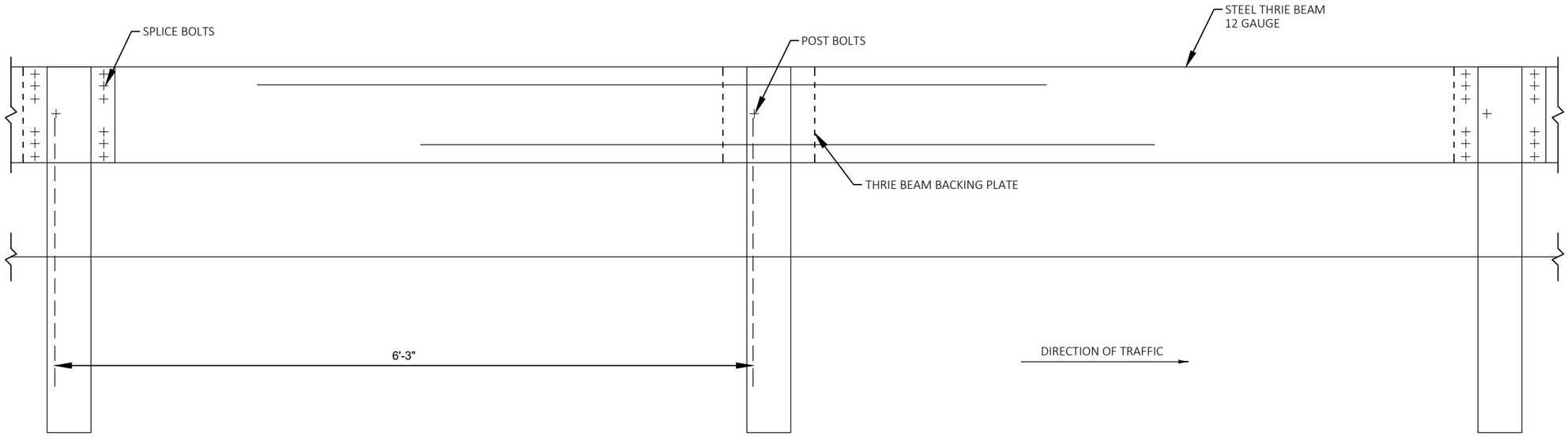

ELEVATION - STEEL THRIE BEAM, DOUBLE AND SINGLE FACED

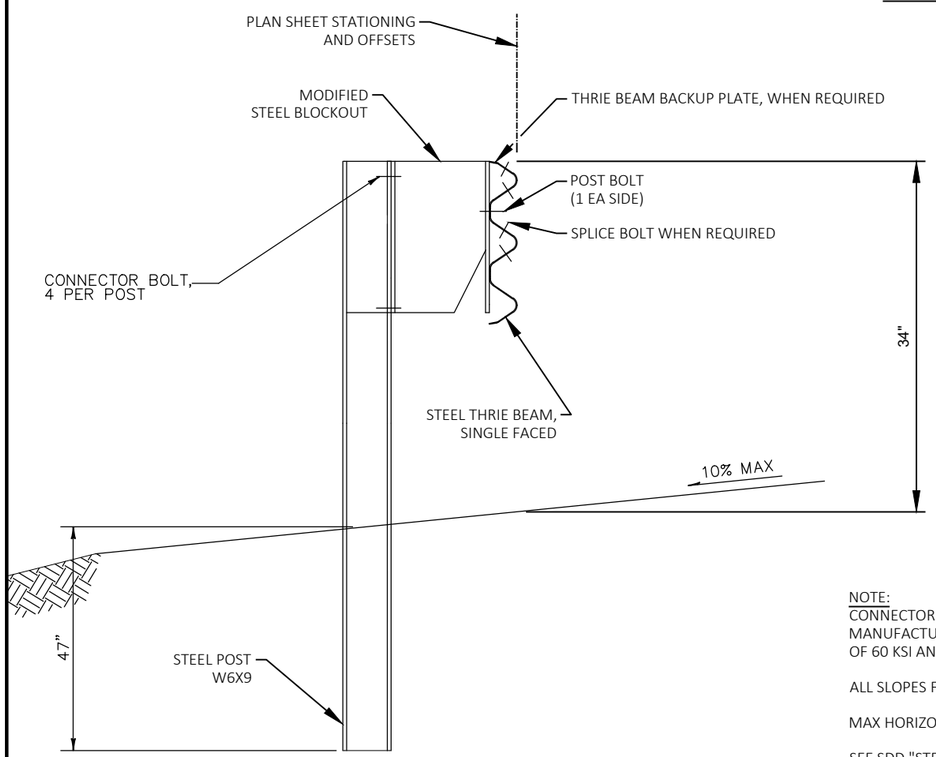

CROSS SECTION (SINGLE FACED)

NOTE:
CONNECTOR BOLT 5/8" DIAMETER BOLT, ASTM A307, NUT ASTM A563, WASHER F844. MANUFACTURE TO REQUIREMENTS OF ANSI B18.2.1 AND HAVE TENSILE STRENGTH OF 60 KSI AND MINIMUM YIELD STRENGTH OF 36 KSI

ALL SLOPES FROM EDGE OF TO FACE OF BARRIER ARE 10:1 OR FLATTER.

MAX HORIZONTAL FLARE IS 30:1, UNLESS NOTED OTHERWISE.

SEE SDD "STEEL PLATE BEAM GUARD, CLASS A", "STEEL THRIE BEAM STRUCTURE APPROACH" AND "STEEL PLATE BEAM GUARD, CLASS A, OVER LOW FILL CULVERTS" FOR MORE INFORMATION

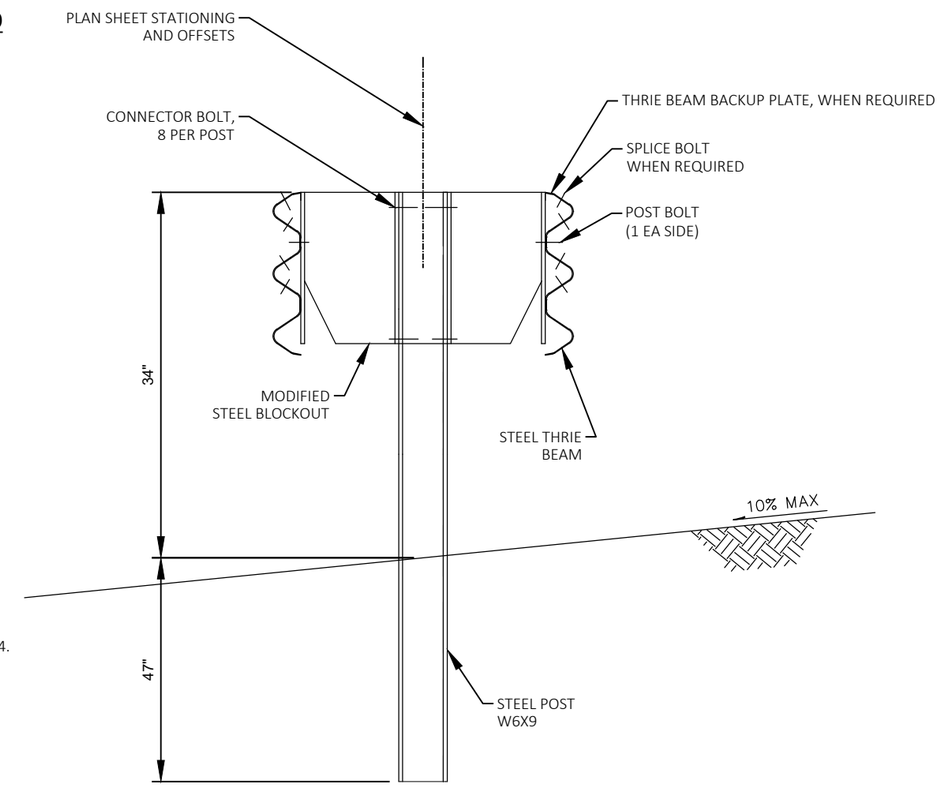

CROSS SECTION (DOUBLE FACED)

2

PROJECT NO: 5490-00-60	HWY: STH 30	COUNTY: DANE	CONSTRUCTION DETAILS (STEEL THRIE BEAM)	SHEET 4	E

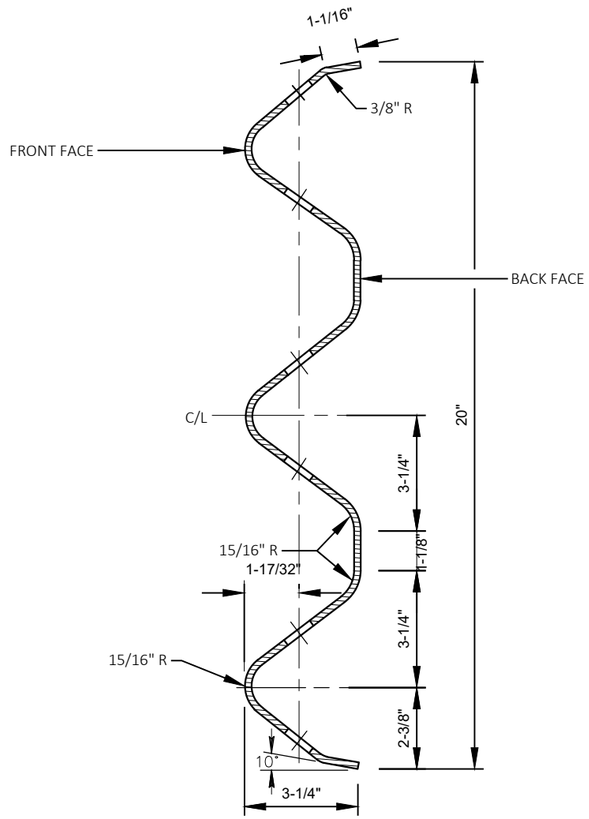

SECTION THRU THRIE BEAM RAIL ELEMENT/BACKING PLATE

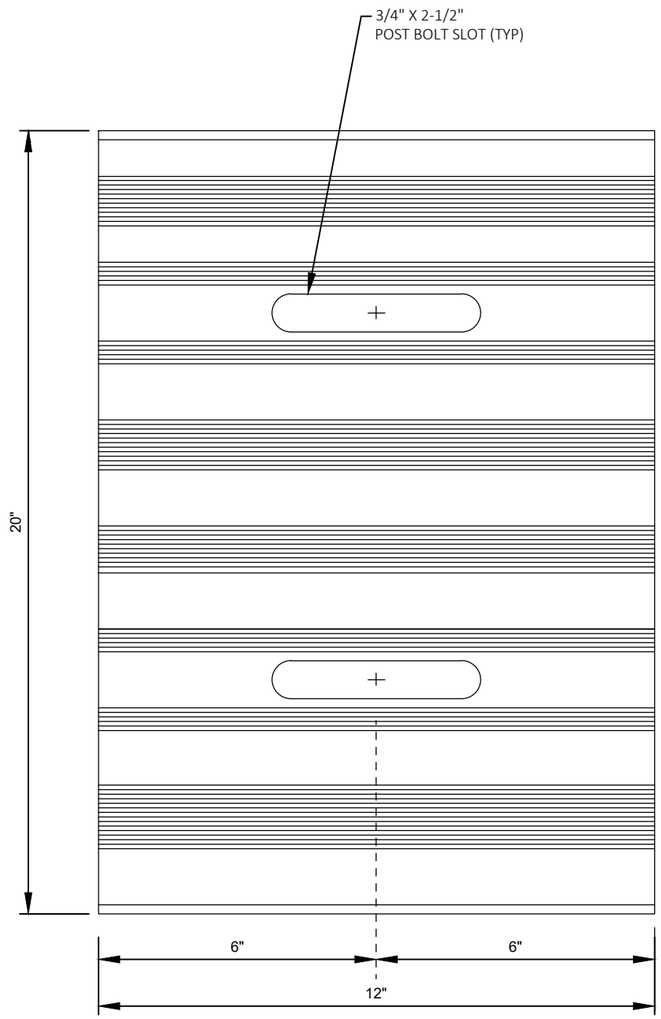

THRIE BEAM BACKING PLATE

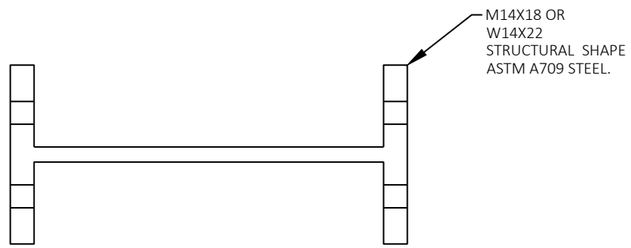

TOP

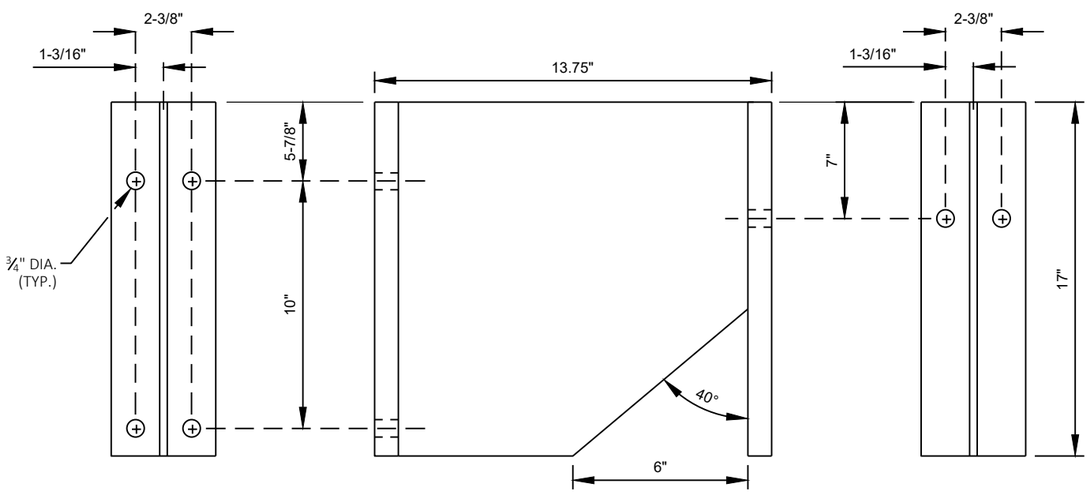

POST FACE **SIDE** **TRAFFIC FACE**

MODIFIED STEEL BLOCKOUT

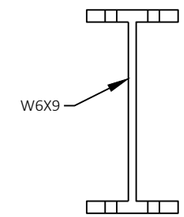

SECTION

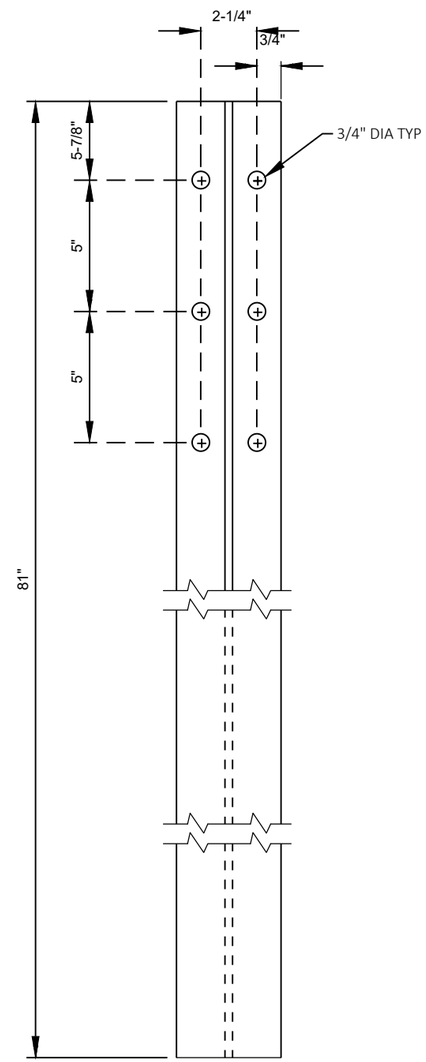

FRONT

STEEL POST

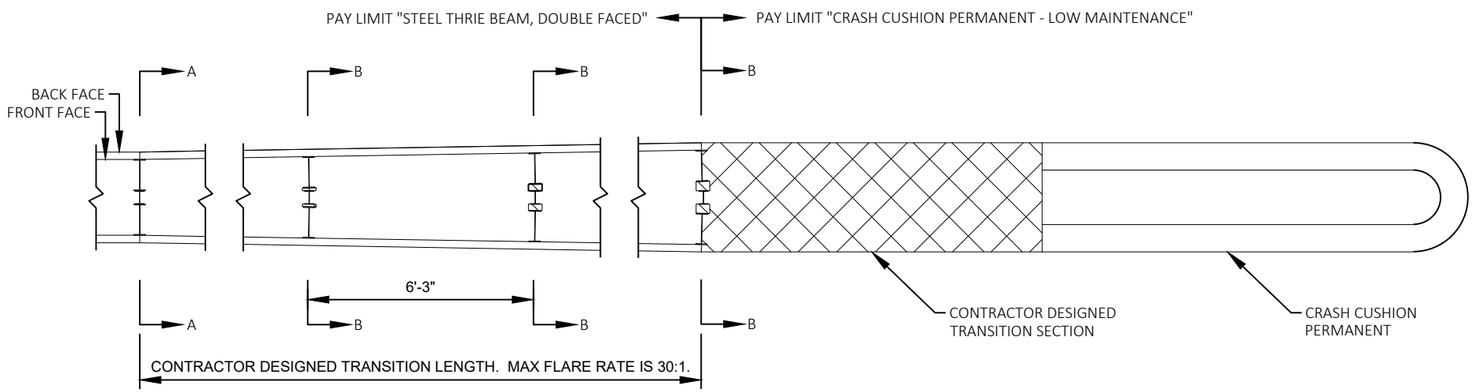

PLAN - STEEL THRIE BEAM, DOUBLE FACED TRANSITION TO CRASH CUSHION PERMANENT

(TRANSITIONS AND CONNECTION TO CONFORM TO CRASH CUSHIONS MANUFACTURES SPECIFICATIONS)

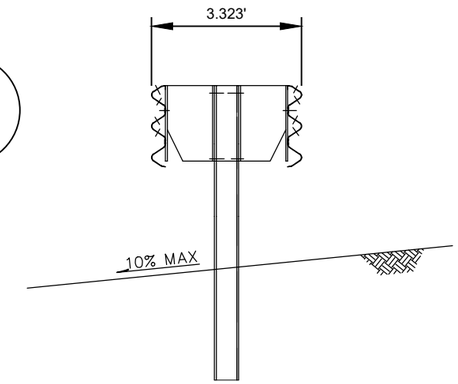

SECTION A-A

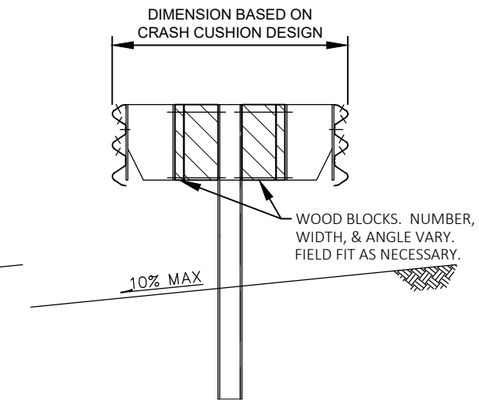

SECTION B-B

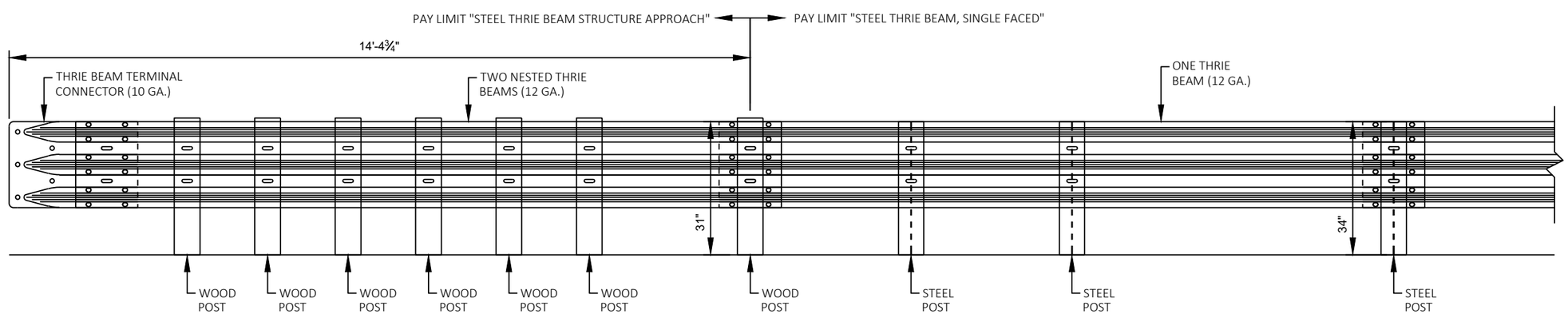

ELEVATION - STEEL THRIE BEAM STRUCTURE APPROACH MODIFICATION

("W" TO THRIE BEAM TRANSITION SECTION OMITTED)

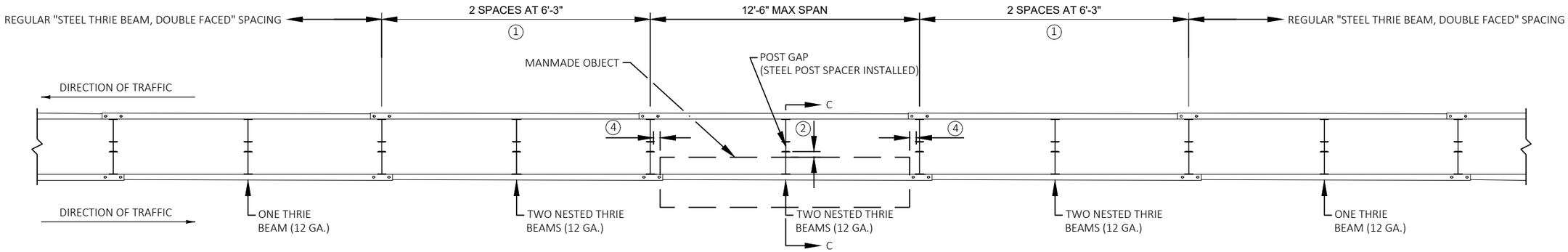

PLAN - STEEL THRIE BEAM, DOUBLE FACED POST GAP

STEEL THRIE BEAM, SINGLE FACED POST GAP SIMILAR
(SINGLE FACED POST GAP DOES NOT REQUIRE STEEL POST SPACER)

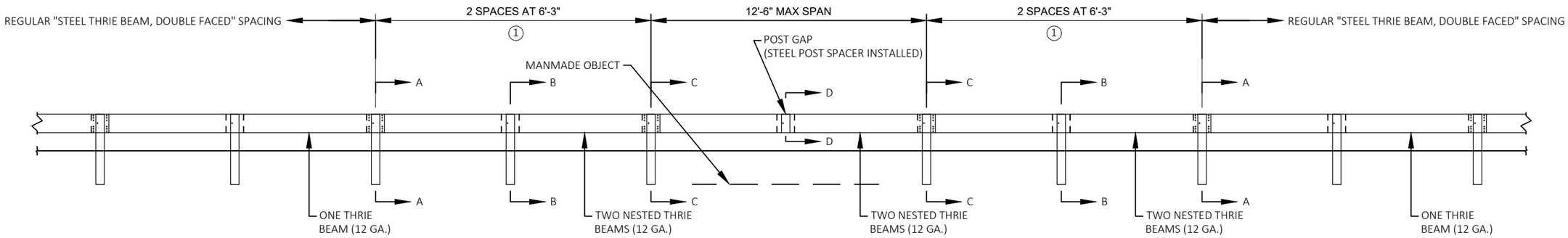

ELEVATION - STEEL THRIE BEAM, DOUBLE FACED POST GAP

STEEL THRIE BEAM, SINGLE FACED POST GAP SIMILAR
(SINGLE FACED POST GAP DOES NOT REQUIRE STEEL POST SPACER)

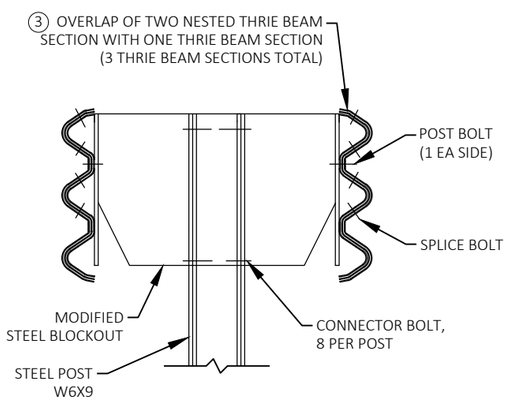

SECTION A-A

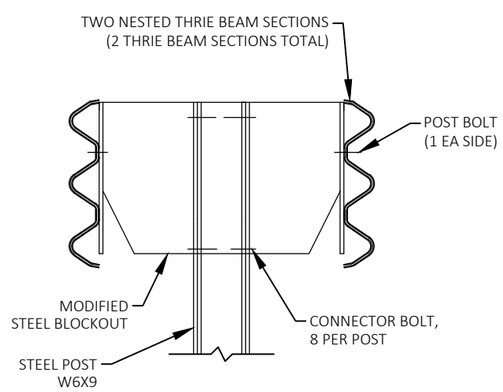

SECTION B-B

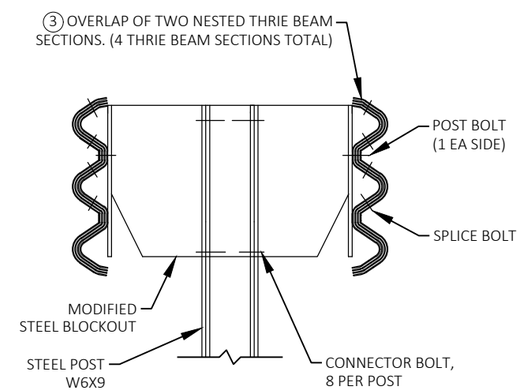

SECTION C-C

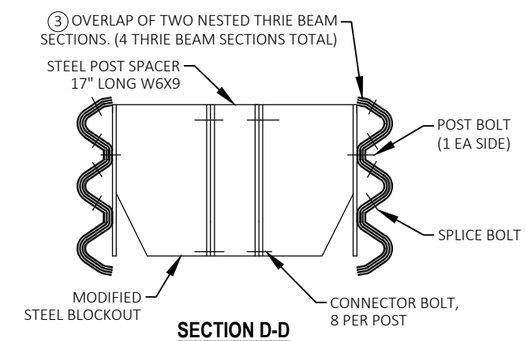

SECTION D-D

1. ONE 12'-6" SECTION OF TWO NESTED THRIE BEAM (12 GA.) REQUIRED ON BOTH SIDES OF POST GAP. POST GAP SHALL NOT FALL WITHIN WITHIN THIS 12'-6" SECTION.
2. POST GAP REQUIRED WHEN DISTANCE FROM EDGE OF POST TO MANMADE OBJECT IS LESS THAN 2'-0".
3. MAINTAIN THE NESTING OF EACH NESTED PAIR OF THRIE BEAM SECTIONS THROUGH SPLICES. ORIENTATE NESTED THRIE BEAM SPLICES IN THE DIRECTION OF TRAFFIC AS THE PLAN VIEW SHOWS. SEE SDD "STEEL PLATE BEAM GUARD, CLASS A" FOR FURTHER DETAIL.
4. POST GAP REQUIRED WHEN DISTANCE FROM EDGE OF POST TO MANMADE OBJECT IS LESS THAN 1'-0".

2

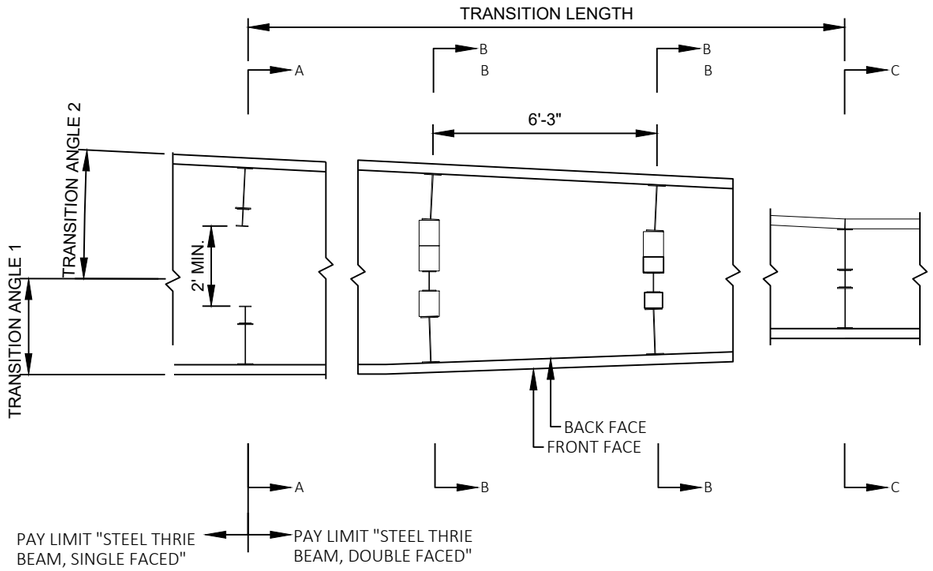

STEEL THRIE BEAM, SINGLE TO DOUBLE FACED TRANSITION

STEEL THRIE BEAM, DOUBLE TO SINGLE FACE TRANSITION DETAILS		
TRANSITION NUMBER SHOWN ON PLAN SHEETS	TRANSITION LENGTH	TRANSITION ANGLE 1 AND 2
1	30'-0"	2.08° AND 2.85°

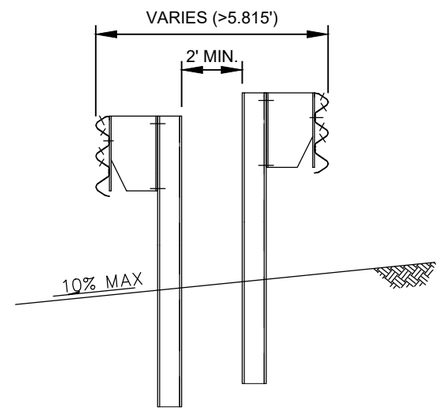

SECTION A-A

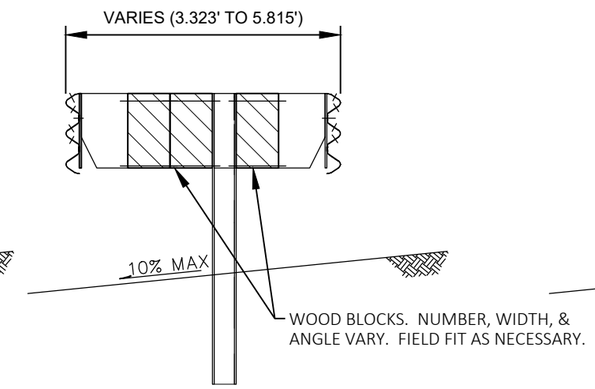

SECTION B-B

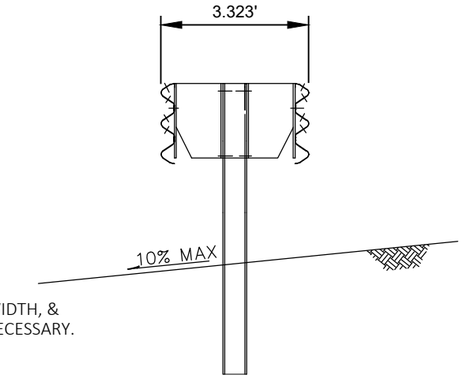

SECTION C-C

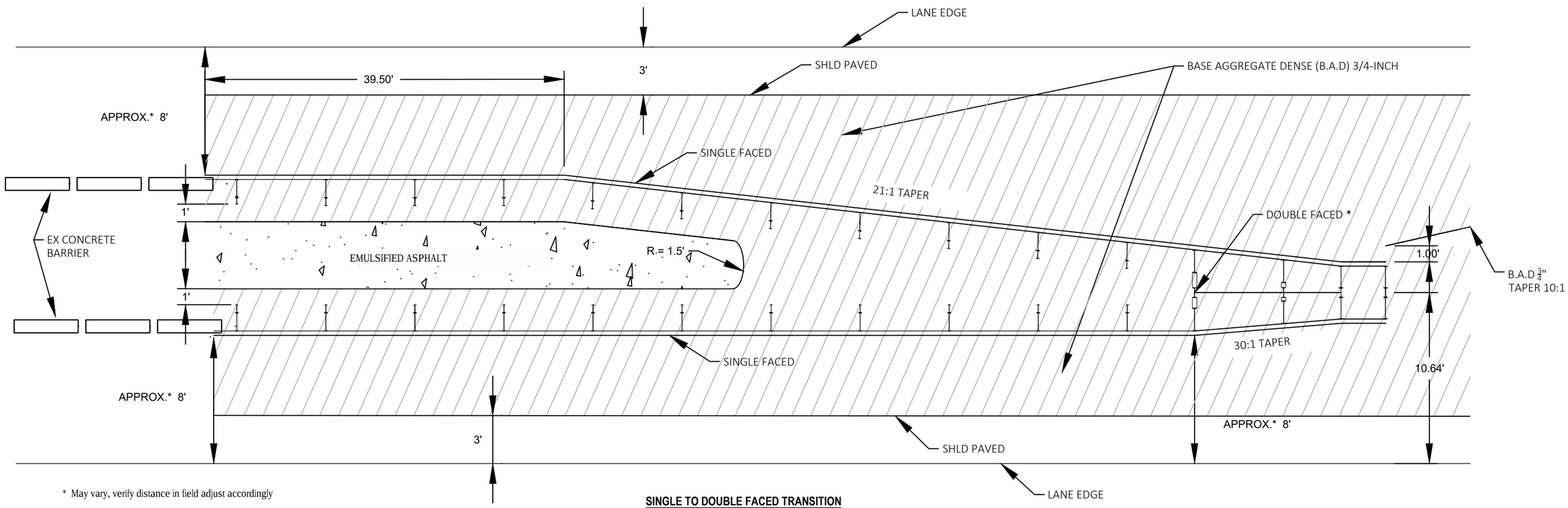

* May vary, verify distance in field adjust accordingly

SINGLE TO DOUBLE FACED TRANSITION
STA 200+00 - 201+58

2

PROJECT NO: 5490-00-60	HWY: STH 30	COUNTY: DANE	CONSTRUCTION DETAILS (STEEL THRIE BEAM)	SHEET 9	E

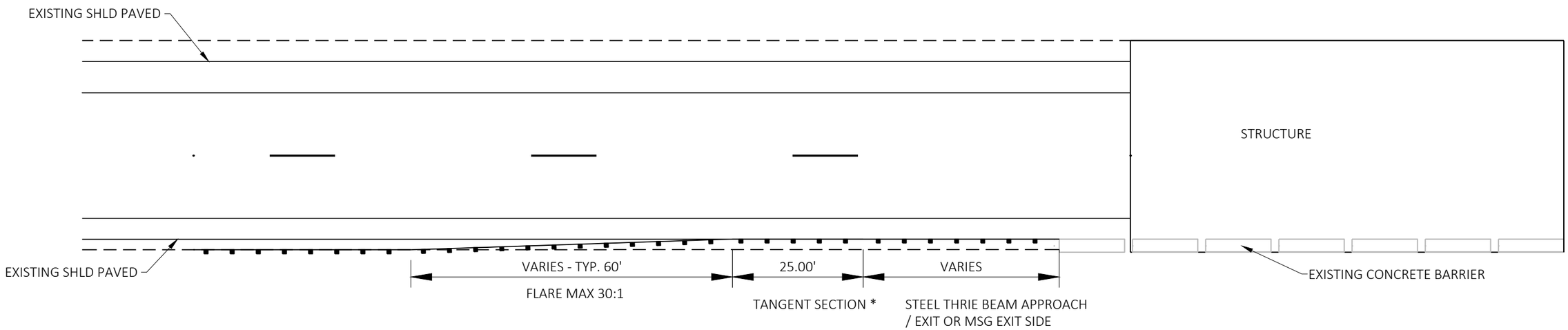

APPROACH AND EXIT SIDE BEAM GUARD TRANSITIONS

* Do not flare thrie beam structure approach section. Install 25 feet of thrie or w beam beyond the approach section. After the 25 feet of tangent section, thrie or w beam may be flared. Max horizontal flare is 30:1. Existing thrie beam and posts may be used with field engineers approval.

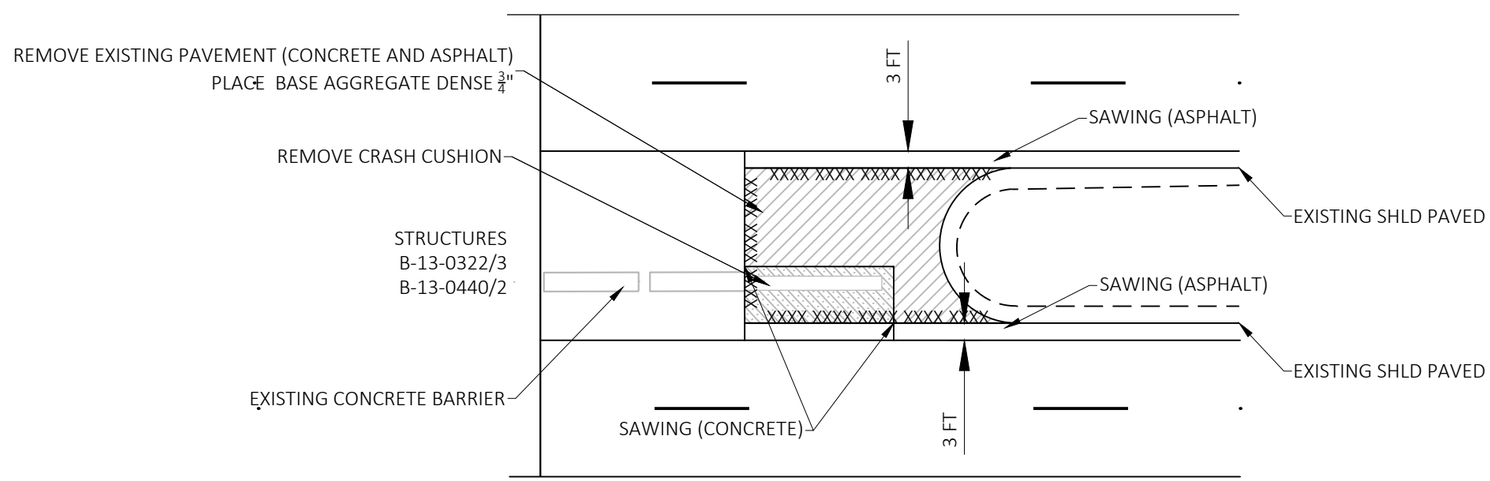

PAVEMENT REMOVAL AT STRUCTURES
229+11 - 229+51
244+75 - 245+25
248+01 - 248+38

CONCRETE

ASPHALT

PROJECT NO: 5490-00-60	HWY: STH 30	COUNTY: DANE	CONSTRUCTION DETAIL	SHEET 10	E

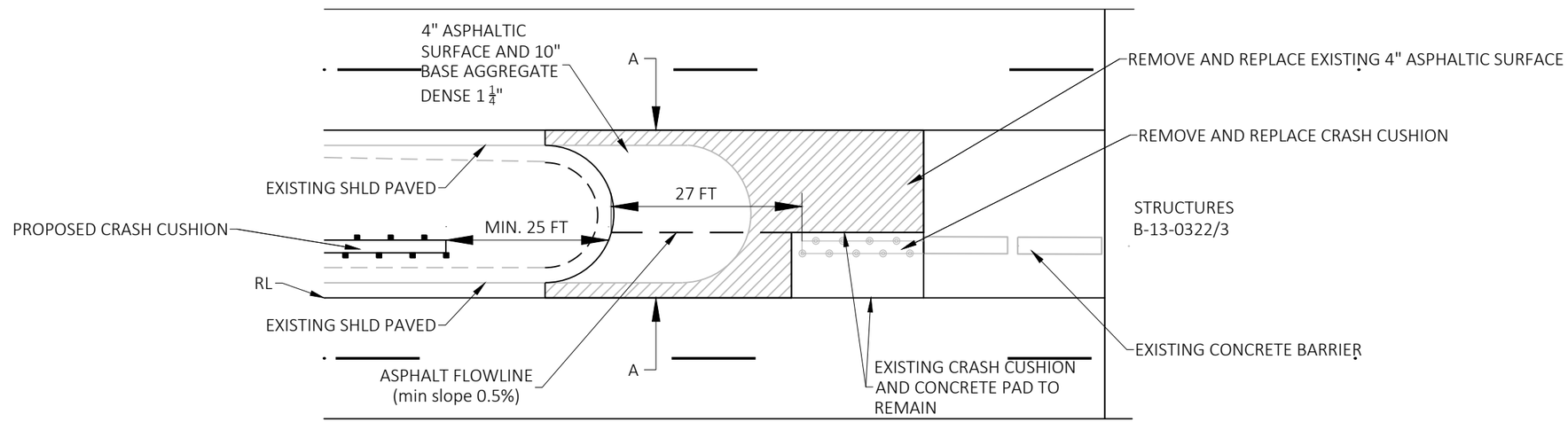

MAINTENANCE CROSSOVERS AT STRUCTURES
223+73 - 224+37

A-A

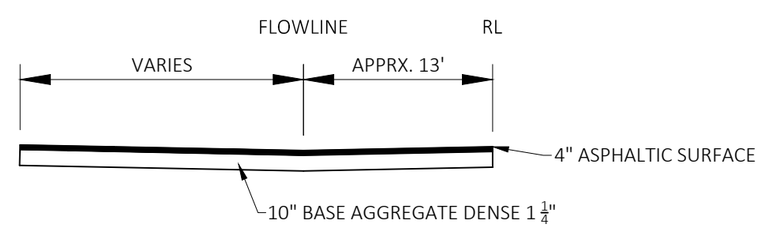

2

① REMOVE PAVEMENT, SEE PAVEMENT REMOVAL AT STRUCTURES CONSTRUCTION DETAIL

* BEAM GUARD APPROACH SECTION, SEE APPROACH AND EXIT SIDE BEAM GUARD TRANSITIONS CONSTRUCTION DETAIL. EXISTING THRIE BEAM APPROACH RAILS and POSTS MAY BE USED WITH FIELD ENGINEERS APPROVAL

SF THRIE BEAM = STEEL THRIE BEAM, SINGLE FACED

DF THRIE BEAM = STEEL THRIE BEAM, DOUBLE FACED

MGS TYPE 2 = MSG GUARDRAIL TERMINAL TYPE 2

SHLD AGG = BASE AGGREGATE DENSE, 3/4"- INCH

2

PROJECT NO: 5490-00-60	HWY: STH 30	COUNTY: DANE	PLAN DETAILS	SHEET 12	E

2

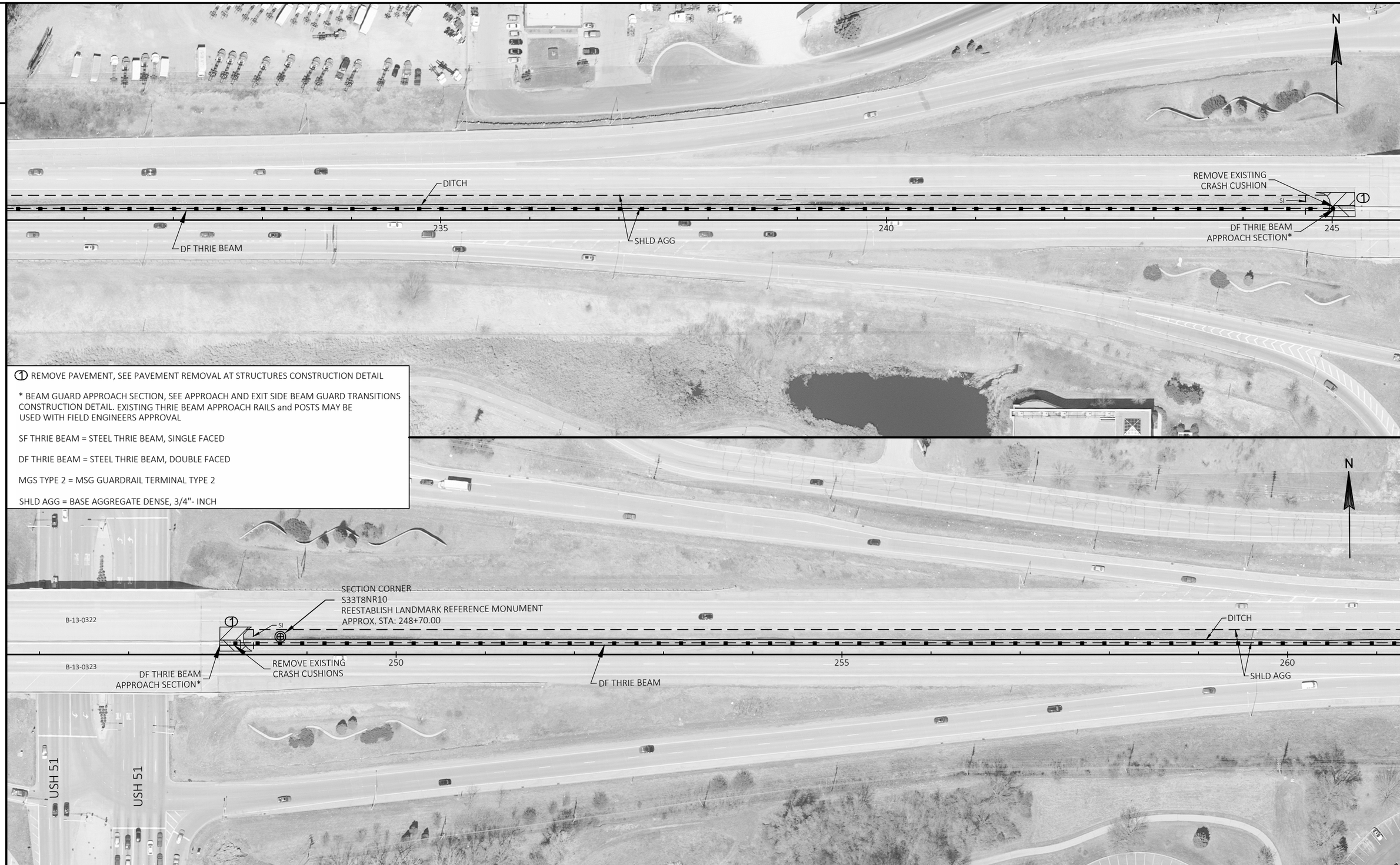

1 REMOVE PAVEMENT, SEE PAVEMENT REMOVAL AT STRUCTURES CONSTRUCTION DETAIL

* BEAM GUARD APPROACH SECTION, SEE APPROACH AND EXIT SIDE BEAM GUARD TRANSITIONS CONSTRUCTION DETAIL. EXISTING THRIE BEAM APPROACH RAILS and POSTS MAY BE USED WITH FIELD ENGINEERS APPROVAL

SF THRIE BEAM = STEEL THRIE BEAM, SINGLE FACED

DF THRIE BEAM = STEEL THRIE BEAM, DOUBLE FACED

MGS TYPE 2 = MSG GUARDRAIL TERMINAL TYPE 2

SHLD AGG = BASE AGGREGATE DENSE, 3/4"- INCH

2

PROJECT NO: 5490-00-60	HWY: STH 30	COUNTY: DANE	PLAN DETAILS	SHEET 13	E

2

1 REMOVE PAVEMENT, SEE PAVEMENT REMOVAL AT STRUCTURES CONSTRUCTION DETAIL

* BEAM GUARD APPROACH SECTION, SEE APPROACH AND EXIT SIDE BEAM GUARD TRANSITIONS CONSTRUCTION DETAIL. EXISTING THRIE BEAM APPROACH RAILS and POSTS MAY BE USED WITH FIELD ENGINEERS APPROVAL

SF THRIE BEAM = STEEL THRIE BEAM, SINGLE FACED

DF THRIE BEAM = STEEL THRIE BEAM, DOUBLE FACED

MGS TYPE 2 = MSG GUARDRAIL TERMINAL TYPE 2

SHLD AGG = BASE AGGREGATE DENSE, 3/4"- INCH

2

PROJECT NO: 5490-00-60	HWY: STH 30	COUNTY: DANE	PLAN DETAILS	SHEET 14	E

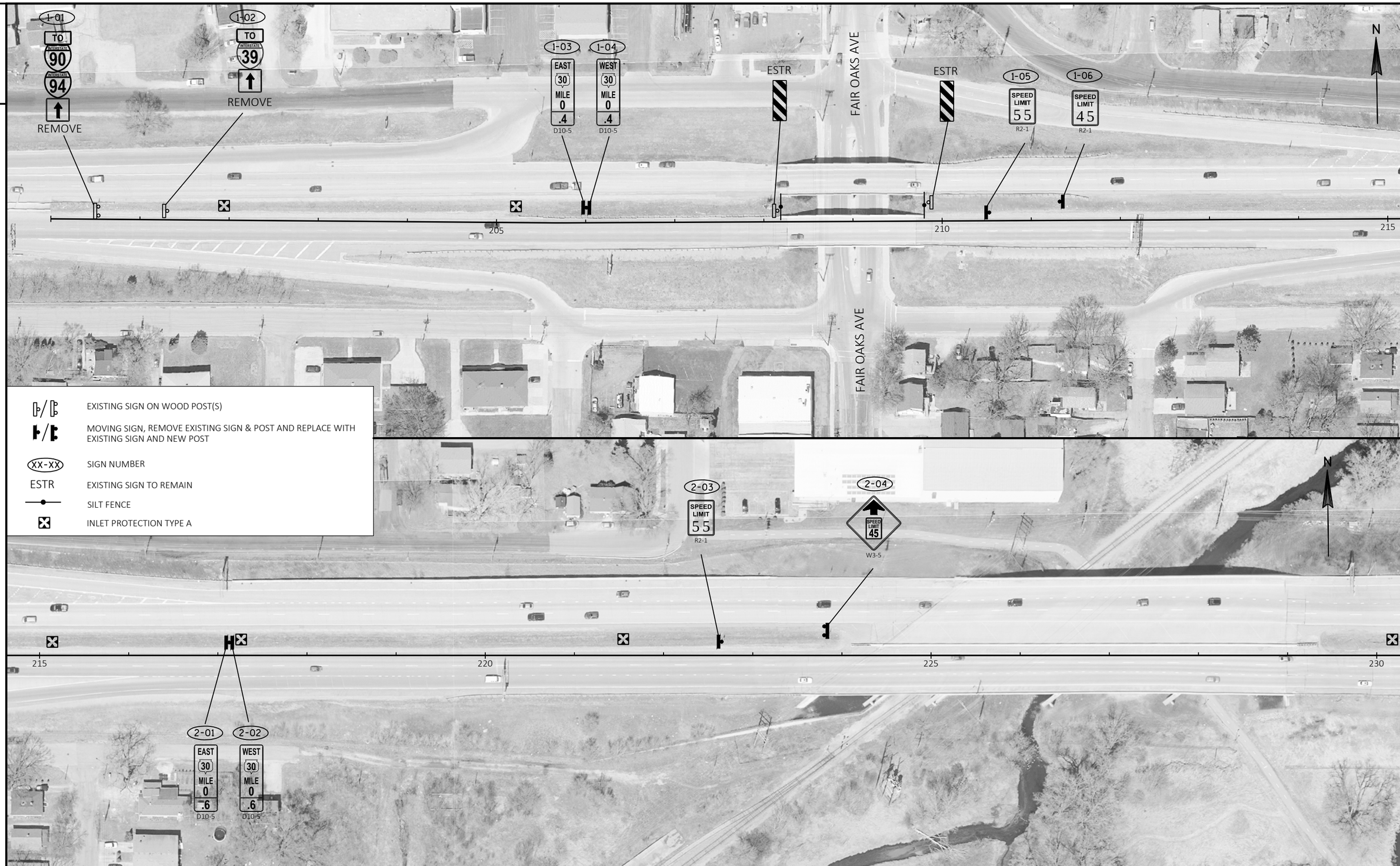

PROJECT NO: 5490-00-60	HWY: STH 30	COUNTY: DANE	PERMANENT SIGNING & EROSION CONTROL	SHEET 15	E

FILE NAME : N:\PDS\C3D\54900030\SHEETSPLAN\023201_PS.DWG
LAYOUT NAME - 023201_ps
PLOT DATE : 1/17/2018 9:08 AM
PLOT BY : ANDERSON, SHAUN M
PLOT NAME :
PLOT SCALE : 1 IN:100 FT
WISDOT/CADDS SHEET 44

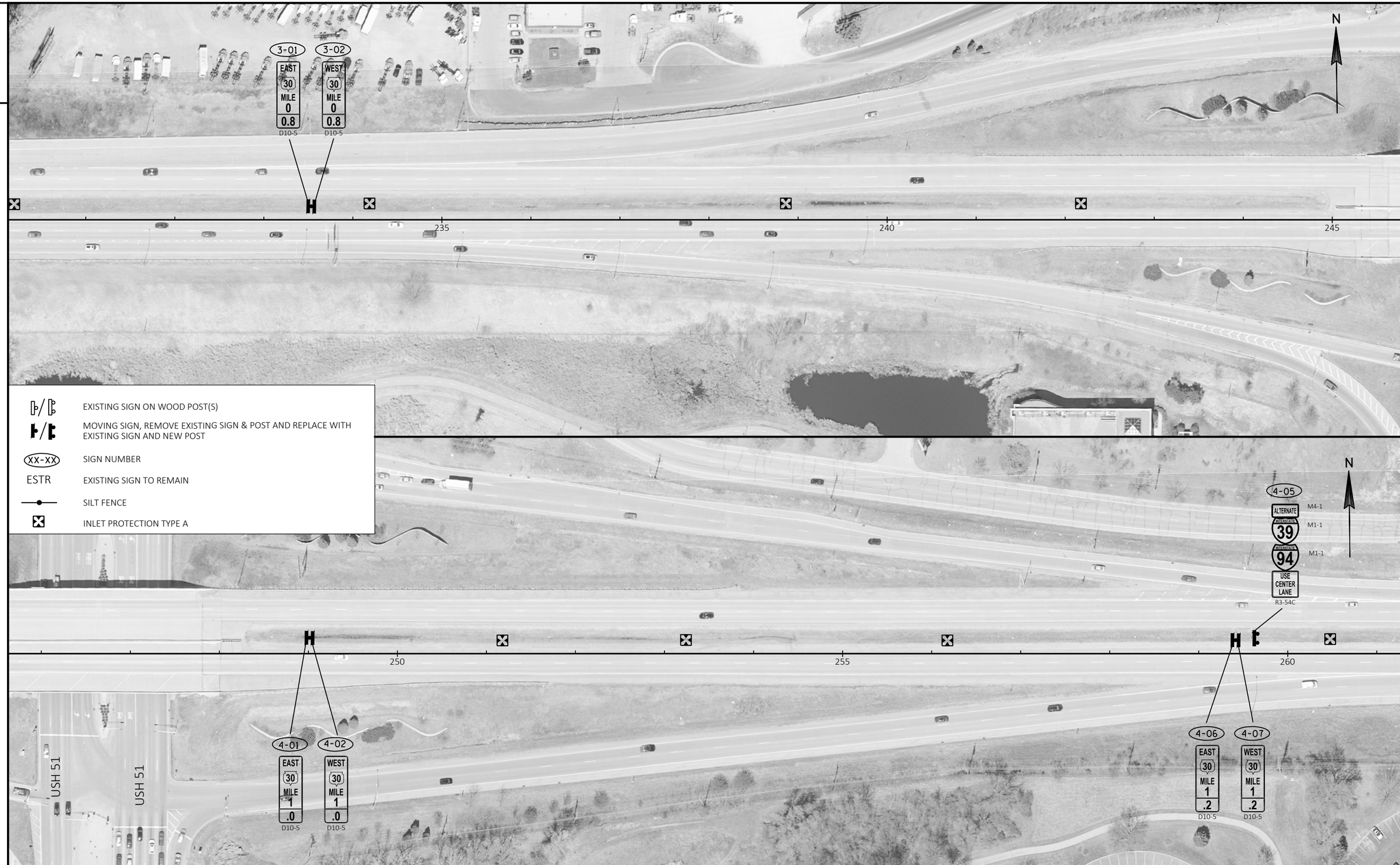

PROJECT NO: 5490-00-60	HWY: STH 30	COUNTY: DANE	PERMANENT SIGNING & EROSION CONTROL	SHEET 16	E

FILE NAME : N:\PDS\C3D\54900030\SHEETSPLAN\023201_PS.DWG
LAYOUT NAME - 023202_ps
PLOT DATE : 1/17/2018 9:08 AM
PLOT BY : ANDERSON, SHAUN M
PLOT NAME :
PLOT SCALE : 1 IN:100 FT

2

EXISTING SIGN ON WOOD POST(S)

MOVING SIGN, REMOVE EXISTING SIGN & POST AND REPLACE WITH EXISTING SIGN AND NEW POST

XX-XX SIGN NUMBER

ESTR EXISTING SIGN TO REMAIN

SILT FENCE

INLET PROTECTION TYPE A

2

PROJECT NO: 5490-00-60	HWY: STH 30	COUNTY: DANE	PERMANENT SIGNING & EROSION CONTROL	SHEET 17	E

FILE NAME : N:\PDS\C3D\54900030\SHEETSPLAN\023201_PS.DWG
LAYOUT NAME - 023203_ps

PLOT DATE : 1/17/2018 9:08 AM PLOT BY : ANDERSON, SHAUN M PLOT NAME : PLOT SCALE : 1 IN:100 FT

WISDOT/CADDS SHEET 44

2

PCMS MESSAGES

7 DAYS PRIOR TO CONSTRUCTION:

PHASE ONE	PHASE TWO
LANE CLOSURES	STARTING XX/XX

CONSTRUCTION:

PHASE ONE	PHASE TWO
TRUCKS EXITING LEFT	DO NOT FOLLOW

FOR TRAFFIC CONTROL DETAILS, SEE S.D.D. 15D12A: TRAFFIC CONTROL, LANE CLOSURE AND S.D.D. 15D27: TRAFFIC CONTROL, SHOULDER CLOSURE ON DIVIDED ROADWAY, SPEEDS GREATER THAN 40 M.P.H.

N

2

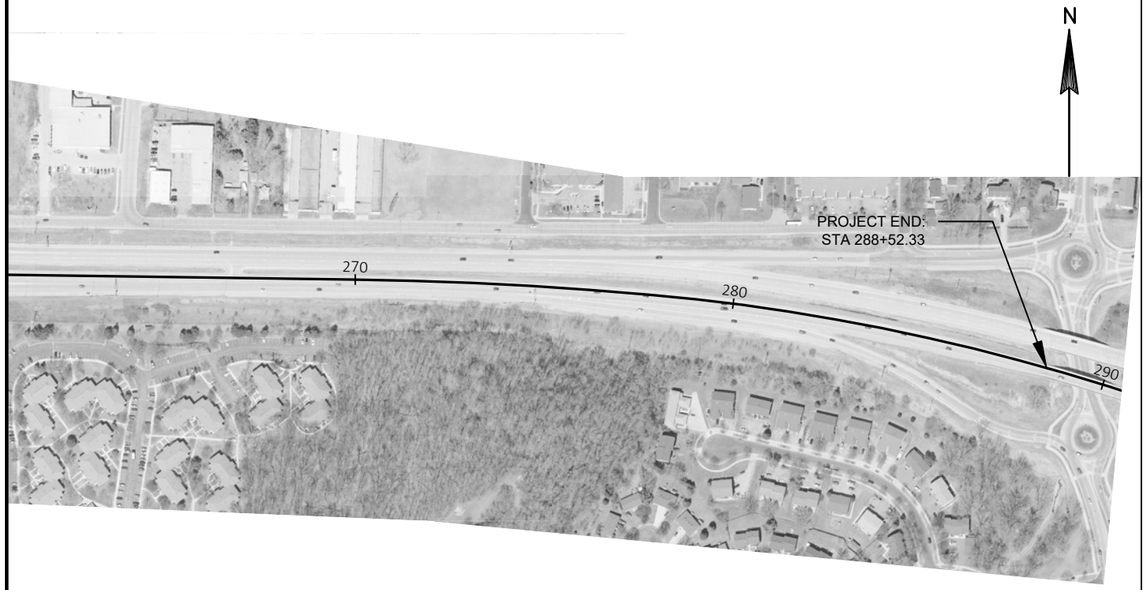

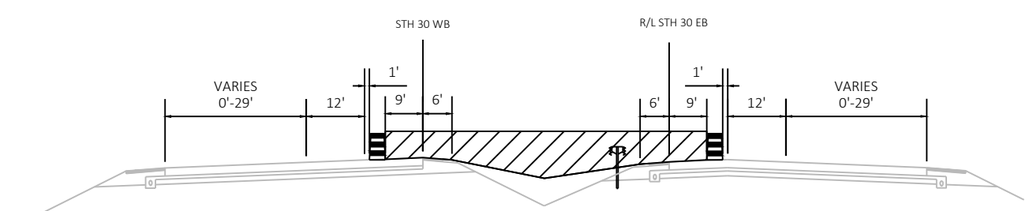

EB & WB LANE CLOSURE
STH 30

FOR HAULING MATERIAL, EXCAVATION, AND GRADING OPERATIONS

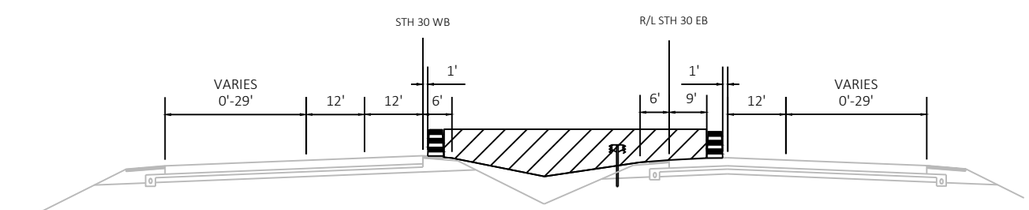

EB LANE CLOSURE WITH WB SHOULDER CLOSURE
STH 30

FOR BARRIER INSTALLATION AND SIGNING OPERATIONS ON EASTBOUND SIDE

*REVERSE FOR LANE CLOSURES NEEDED ON WESTBOUND SIDE

WORK ZONE

DRUM

PROJECT NO: 5490-00-60	HWY: STH 30	COUNTY: DANE	TRAFFIC CONTROL	SHEET 18	E

Estimate Of Quantities

5490-00-60

Line	Item	Item Description	Unit	Total	Qty
0002	204.0100	Removing Pavement	SY	95.000	95.000
0004	204.0110	Removing Asphaltic Surface	SY	308.000	308.000
0006	204.0165	Removing Guardrail	LF	485.000	485.000
0008	204.0220	Removing Inlets	EACH	18.000	18.000
0010	204.0245	Removing Storm Sewer (size) 01. 12,15,18, and 24 Inch	LF	128.000	128.000
0012	204.9060.S	Removing (item description) 01. Crash Cushion	EACH	4.000	4.000
0014	204.9090.S	Removing (item description) 01. Pipe Underdrain Unperforated 15-Inch	LF	24.000	24.000
0016	204.9180.S	Removing (item description) 01. Concrete Surface Drain	SY	12.000	12.000
0018	205.0100	Excavation Common	CY	1,840.000	1,840.000
0020	208.0100	Borrow	CY	4,820.000	4,820.000
0022	211.0500	Prepare Foundation for Base Aggregate	STA	0.500	0.500
0024	213.0100	Finishing Roadway (project) 01. 5490-00-60	EACH	1.000	1.000
0026	305.0110	Base Aggregate Dense 3/4-Inch	TON	1,980.000	1,980.000
0028	305.0120	Base Aggregate Dense 1 1/4-Inch	TON	63.000	63.000
0030	416.0610	Drilled Tie Bars	EACH	6.000	6.000
0032	416.1015	Concrete Surface Drains HES	CY	8.000	8.000
0034	465.0105	Asphaltic Surface	TON	40.000	40.000
0036	606.0100	Riprap Light	CY	2.000	2.000
0038	608.3012	Storm Sewer Pipe Class III-A 12-Inch	LF	24.000	24.000
0040	608.3015	Storm Sewer Pipe Class III-A 15-Inch	LF	8.000	8.000
0042	608.3018	Storm Sewer Pipe Class III-A 18-Inch	LF	88.000	88.000
0044	608.3024	Storm Sewer Pipe Class III-A 24-Inch	LF	16.000	16.000
0046	611.0642	Inlet Covers Type MS	EACH	24.000	24.000
0048	611.3901	Inlets Median 1 Grate	EACH	14.000	14.000
0050	611.3902	Inlets Median 2 Grate	EACH	5.000	5.000
0052	612.0215	Pipe Underdrain Unperforated 15-Inch	LF	24.000	24.000
0054	614.0200	Steel Thrie Beam Structure Approach	LF	28.800	28.800
0056	614.0805	Crash Cushions Permanent Low Maintenance	EACH	3.000	3.000
0058	614.2300	MGS Guardrail 3	LF	330.000	330.000
0060	614.2500	MGS Thrie Beam Transition	LF	20.000	20.000
0062	614.2620	MGS Guardrail Terminal Type 2	EACH	2.000	2.000
0064	619.1000	Mobilization	EACH	1.000	1.000
0066	624.0100	Water	MGAL	28.000	28.000
0068	625.0100	Topsoil	SY	14,180.000	14,180.000
0070	628.1504	Silt Fence	LF	85.000	85.000
0072	628.1905	Mobilizations Erosion Control	EACH	1.000	1.000
0074	628.1910	Mobilizations Emergency Erosion Control	EACH	1.000	1.000
0076	628.2004	Erosion Mat Class I Type B	SY	14,737.000	14,737.000
0078	628.7005	Inlet Protection Type A	EACH	20.000	20.000

5490-00-60

Line	Item	Item Description	Unit	Total	Qty
0080	628.7504	Temporary Ditch Checks	LF	372.000	372.000
0082	629.0205	Fertilizer Type A	CWT	9.300	9.300
0084	630.0120	Seeding Mixture No. 20	LB	398.000	398.000
0086	634.0614	Posts Wood 4x6-Inch X 14-FT	EACH	5.000	5.000
0088	634.0616	Posts Wood 4x6-Inch X 16-FT	EACH	11.000	11.000
0090	634.0618	Posts Wood 4x6-Inch X 18-FT	EACH	2.000	2.000
0092	638.2102	Moving Signs Type II	EACH	16.000	16.000
0094	638.2602	Removing Signs Type II	EACH	2.000	2.000
0096	638.3000	Removing Small Sign Supports	EACH	21.000	21.000
0098	643.0300	Traffic Control Drums	DAY	5,942.000	5,942.000
0100	643.0420	Traffic Control Barricades Type III	DAY	126.000	126.000
0102	643.0705	Traffic Control Warning Lights Type A	DAY	252.000	252.000
0104	643.0715	Traffic Control Warning Lights Type C	DAY	504.000	504.000
0106	643.0800	Traffic Control Arrow Boards	DAY	122.000	122.000
0108	643.0900	Traffic Control Signs	DAY	1,102.000	1,102.000
0110	643.1050	Traffic Control Signs PCMS	DAY	136.000	136.000
0112	643.5000	Traffic Control	EACH	1.000	1.000
0114	645.0130	Geotextile Type R	SY	2.000	2.000
0116	650.4000	Construction Staking Storm Sewer	EACH	19.000	19.000
0118	650.9910	Construction Staking Supplemental Control (project) 01. 5490-00-60	LS	1.000	1.000
0120	650.9920	Construction Staking Slope Stakes	LF	7,252.000	7,252.000
0122	690.0150	Sawing Asphalt	LF	222.000	222.000
0124	690.0250	Sawing Concrete	LF	113.000	113.000
0126	ASP.1T0A	On-the-Job Training Apprentice at $5.00/HR	HRS	325.000	325.000
0128	ASP.1T0G	On-the-Job Training Graduate at $5.00/HR	HRS	250.000	250.000
0130	SPV.0060	Special 02. Reestablish Landmark Reference Monuments	EACH	1.000	1.000
0132	SPV.0090	Special 01. Pipe Underdrain Unperforated 6-Inch	LF	2,763.000	2,763.000
0134	SPV.0090	Special 02. Steel Thrie Beam Single Face	LF	581.000	581.000
0136	SPV.0090	Special 03. Steel Thrie Beam Double Faced	LF	7,277.000	7,277.000
0138	SPV.0090	Special 04. Steel Thrie Beam Structure Approach Double Faced	LF	57.400	57.400
0140	SPV.0180	Special 01. Emulsified Asphalt Median Treatment	SY	32.000	32.000

3

Location	From/To Station	205.0100 Common Excavation (CY) (1),(6) Cut	Unusable Material (2)	Available Material (3)	Unexpanded Fill	Expanded Fill (4) Factor 1.25	Mass Ordinate +/- (5)	208.0100 Borrow (CY) (6)	625.0100 Topsoil (SY)
STH 30 Median	200+10 - 207+84	190	190	0	141	177	-177	180	960
	210+72 - 223+70	320	320	0	504	630	-630	630	2,090
	229+55 - 244+70	380	380	0	1,021	1,276	-1,276	1,280	2,460
	248+40 - 267+15	460	460	0	800	1,000	-1,000	1,000	2,970
	268+00 - 286+50	490	490	0	1,380	1,725	-1,725	1,730	5,700
Grand Total		1,840	1,840	0	3,847	4,808	-4,808	4,820	14,180
	Total Common Exc	1,840							

Notes:

(1) Common Excavation is based the on removal and disposal material plus 3 inches of sod or other perishable or unsuitable materials. Item number 205.0100

(2) Unusable Material is based the on removal and disposal material plus 3 inches of sod or other perishable or unsuitable materials

(3) Available Material = Cut - Unusuable Material

(4) Expanded Fill Factor = 1.25

(5) The Mass Ordinate + or - Qty calculated for the Division. Plus quantity indicates an excess of material within the Division. Minus indicates a shortage of material within the Division.

(6) Items 205.0100 Common Excavation and 208.0100 Borrow are rounded up to the nearest 10 CY.

3

PAVEMENT REMOVAL

CATEGORY	STATION	TO	STATION	LOCATION	204.0100 REMOVING PAVEMENT SY	204.0110 REMOVING ASPHALTIC SURFACE SY	690.0150 SAWING ASPHALT LF	690.0250 SAWING CONCRETE LF
0010	208+05	-	208+17	29' LT	0	8	6	0
0010	223+73	-	224+37	LT	0	120	8	0
0010	229+11	-	229+51	LT	29	65	71	34
0010	244+87	-	245+26	LT	34	60	74	37
0010	248+01	-	248+38	LT	32	55	63	36
0010	288+34			50' LT				6
				TOTAL	95	308	222	113

REMOVING (CONCRETE SURFACE DRAIN)

CATEGORY	STATION	LOCATION	204.9180.S.01 SY
0010	288+30	50' LT	12
		TOTAL	12

3

REMOVING STORM SEWER AND DRAINAGE PIPE

CATEGORY	STATION	LOCATION	204.0220 REMOVING INLETS EACH	204.0245 REMOVING STORM SEWER (SIZE) 12-INCH LF	15-INCH LF	18-INCH LF	24-INCH LF	204.9090.S.01 REMOVING PIPE UNDERDRAIN UNPERFORATED 15-INCH LF
0010	201+94	LT	1	8	-	-	-	-
	205+21	LT	1	8	-	-	-	-
	215+14	LT	1	-	-	8	-	-
	217+26	LT	1	-	-	8	-	-
	221+54	LT	1	-	-	8	-	-
	230+18	LT	1	-	-	8	-	-
	234+18	LT	1	-	-	8	-	-
	238+84	LT	1	-	-	8	-	-
	242+18	LT	1	-	-	-	-	8
	251+17	LT	1	-	-	-	-	8
	253+24	LT	1	-	-	-	-	8
	256+17	LT	1	-	-	8	-	-
	260+48	LT	1	-	-	8	-	-
	263+18	LT	1	-	-	8	-	-
	267+18	LT	1	-	-	8	-	-
	271+15	LT	1	-	-	8		-
	276+35	LT	1	-	-	-	16	-
	285+05	LT	1	-	8	-	-	-
		SUBTOTAL		16	8	88	16	24
		TOTAL	18		128			24

BASE AGGREGATE DENSE

CATEGORY	STATION	TO	STATION	LOCATION	305.0110 BASE AGGREGATE DENSE 3/4-INCH TON	305.0120 BASE AGGREGATE DENSE 1 1/4-INCH TON
0010	200+10	-	207+84	EB	160	
	200+10	-	207+84	WB	90	
	209+92	-	223+96	EB	260	
	209+92	-	223+73	WB	30	
	223+73	-	224+37		0	63
	229+11	-	229+41		50	
	229+41	-	244+70	EB	290	
	229+41	-	244+87	WB	40	
	244+87	-	245+26		50	
	248+01	-	248+38		50	
	248+38	-	266+45	EB	360	
	248+38	-	266+45	WB	40	
	267+15	-	288+03	EB	370	
	267+15	-	288+03	WB	40	
	UNDISTRIBUTED				150	
				TOTAL	1980	63

DRAINAGE STRUCTURES

CATEGORY	STRUCTURE ID	STATION	LOCATION	TOP OF STRUCTURE ELEVATION	BOTTOM OF STRUCTURE ELEVATION	DEPTH	611.0642 INLET COVERS TYPE MS EACH	611.3901 INLETS MEDIAN 1 GRATE EACH	611.3902 INLETS MEDIAN 2 GRATE EACH
0010	101	201+86	LT	864.73	861.69	3.04	1	1	-
	102	201+94	LT	864.76	861.28	3.48	2	-	1
	103	205+21	LT	869.76	866.21	3.55	2	-	1
	104	215+14	LT	866.54	859.62	6.92	2	-	1
	105	217+26	LT	868.58	862.53	6.05	1	1	-
	106	221+54	LT	876.96	870.14	6.82	1	1	-
	107	230+18	LT	876.14	870.86	5.28	1	1	-
	108	234+18	LT	870.96	865.48	5.48	1	1	-
	109	238+84	LT	865.97	860.98	4.99	2	-	1
	110	242+18	LT	870.22	864.98	5.24	1	1	-
	111	251+17	LT	878.76	873.11	5.65	1	1	-
	112	253+24	LT	878.23	872.20	6.03	2	-	1
	113	256+17	LT	880.91	875.72	5.19	1	1	-
	114	260+48	LT	892.85	888.27	4.58	1	1	-
	115	263+18	LT	901.06	897.12	3.94	1	1	-
	116	267+18	LT	912.74	909.22	3.52	1	1	-
	117	271+15	LT	924.40	919.34	5.06	1	1	-
	118	276+35	LT	932.10	927.28	4.82	1	1	-
	119	285+05	LT	933.56	927.26	6.30	1	1	-
						TOTAL	24	14	5

STORM SEWER PIPE

CATEGORY	INLET STRUCTURE	INLET ELEV	OUTLET STRUCTURE	OUTLET ELEV	LOCATION	STORM SEWER PIPE REINFORCED CONCRETE CLASS III 608.3012 12-INCH LF	608.3015 15-INCH LF	608.3018 18-INCH LF	608.3024 24-INCH LF	PIPE UNDERDRAIN UNPERFORATED 612.0215 15-INCH LF	REMARKS
0010	102	861.70	101	861.86	MEDIAN	8	-	-	-	-	
			102	861.45	MEDIAN	8	-	-	-	-	
			103	866.38	MEDIAN	8	-	-	-	-	
			104	859.83	MEDIAN	-	-	8	-	-	
			105	862.74	MEDIAN	-	-	8	-	-	
			106	870.35	MEDIAN	-	-	8	-	-	
			107	871.07	MEDIAN	-	-	8	-	-	
			108	865.69	MEDIAN	-	-	8	-	-	
			109	861.19	MEDIAN	-	-	8	-	-	
			110	865.02	MEDIAN	-	-	-	-	8	
			111	873.15	MEDIAN	-	-	-	-	8	
			112	872.24	MEDIAN	-	-	-	-	8	
			113	875.93	MEDIAN	-	-	8	-	-	
			114	888.48	MEDIAN	-	-	8	-	-	
			115	897.33	MEDIAN	-	-	8	-	-	
			116	909.43	MEDIAN	-	-	8	-	-	
			117	919.55	MEDIAN	-	-	8		-	
	118			927.53	MEDIAN	-	-	-	8	-	FROM APRON ENDWALL WB STH 30
			118	927.53	MEDIAN	-	-	-	8	-	
			119	927.45	MEDIAN	-	8	-	-	-	
					TOTAL	24	8	88	16	24	

3

PIPE UNDERDRAIN 6-INCH

STATION	TO	STATION	UNDERDRAIN PXX		STRUCTURE	INVERT	LOCATION	SPV.0090.01 LF	REMARKS
217+19							MEDIAN	8	LATERAL
217+19	-	217+26	1	-	105	865.70	MEDIAN	7	
217+26	-	219+66	2	-	105	865.70	MEDIAN	240	
219+66							MEDIAN	8	LATERAL
221+54	-	222+14	3	-	106	874.70	MEDIAN	60	
222+14							MEDIAN	8	LATERAL
232+17							MEDIAN	8	LATERAL
232+17	-	234+18	4	-	108	868.10	MEDIAN	201	
233+66							MEDIAN	8	LATERAL
236+18	-	238+86				862.90	MEDIAN		NOT FIELD VERIFIED
238+86	-	241+19	5	-	109	862.90	MEDIAN	232	
241+19							MEDIAN	8	LATERAL
242+18	-	243+68			110	867.00	MEDIAN		NOT FIELD VERIFIED
250+16							MEDIAN	8	LATERAL
250+16	-	251+17	6	-	111	875.20	MEDIAN	101	
253+24			7	-	112	874.90	MEDIAN	8	
253+24	-	255+18	8	-	112	874.90	MEDIAN	194	
255+18							MEDIAN	8	LATERAL
256+17	-	257+67	9	-	113	878.40	MEDIAN	150	
257+67							MEDIAN	8	LATERAL
260+48	-	261+68	10	-	114	890.10	MEDIAN	120	
261+68							MEDIAN	8	LATERAL
263+18			11	-	115	898.80	MEDIAN	8	
263+18	-	265+18			115	898.80	MEDIAN		NOT FIELD VERIFIED
267+18			12	-	116	910.40	MEDIAN	8	
267+18	-	269+05	13	-	116	910.40	MEDIAN	187	
269+05							MEDIAN	8	LATERAL
271+15			14	-	117	922.20	MEDIAN	8	
271+15	-	275+05	15	-	117	922.20	MEDIAN	390	
275+05							MEDIAN	8	LATERAL
276+35	-	277+54	16	-	118	929.70	MEDIAN	119	
277+54							MEDIAN	8	LATERAL
282+59	-	284+95					MEDIAN		NOT FIELD VERIFIED
284+95							MEDIAN	8	LATERAL
284+95	-	285+05	17	-	119	930.40	MEDIAN	10	
287+42							MEDIAN	8	LATERAL
UNDISTRIBUTED								600	
							TOTAL	2763	

3

3

Beam Guard Items

STATION	TO	STATION	LOCATION	204.0165 REMOVING GUARDRAIL LF	204.9060.S.01 REMOVING (CRASH CUSHION) EACH	614.0200 STEEL THRIE BEAM STRUCTURE APPROACH LF	SPV.0090.04 STEEL THRIE BEAM STRUCTURE APPROACH DOUBLE FACED LF	614.0805 CRASH CUSHIONS PERMANENT LOW MAINTENANCE EACH	614.2300 MGS GUARDRAIL 3 LF	614.2500 MGS THRIE BEAM TRANSITION LF	614.2620 MGS GUARDRAIL TERMINAL TYPE 2 EACH	SPV.0090.02 SPECIAL (STEEL THRIE BEAM SINGLE FACE) LF	SPV.0090.03 SPECIAL (STEEL THRIE BEAM DOUBLE FACED) LF
200+00	-	201+34	EB	-	-	-	-	-	-	-	-	135	-
200+00	-	201+34	WB	-	-	-	-	-	-	-	-	136	-
201+34	-	206+65	EB	-	-	-	-	-	-	-	-	-	531
205+25	-	208+17	EB	292	-	-	-	-	-	-	-	-	-
206+43			WB	-	-	-	-	-	-	-	1	-	-
206+53	-	208+08	WB	-	-	-	-	-	165	-	-	-	-
206+65	-	208+05	EB	-	-	-	-	-	-	-	-	140	-
208+08	-	208+18	WB	-	-	-	-	-	-	10	-	-	-
208+05	-	208+19	EB	-	-	14.4	-	-	-	-	-	-	-
209+78	-	209+92	EB	-	-	-	14.4	-					
209+92	-	223+38	EB	-	-	-		1	-	-	-	-	1346
229+10	-	229+24	EB	-	1	-	14.4	-	-	-	-	-	-
229+24	-	245+11	EB	-	-	-	-	-	-	-	-	-	1587
245+11	-	245+25	EB	-	1	-	14.4	-	-	-	-	-	-
248+02	-	248+16	EB	-	1	-	14.4	-	-	-	-	-	-
248+16	-	266+13	EB	-	-	-	-	-	-	-	-	-	1797
266+13				-	-	-	-	1	-	-	-	-	-
267+20				-	-	-	-	1	-	-	-	-	-
267+48	-	286+70	EB	-	-	-	-	-	-	-	-	-	1937
286+59	-	288+52	EB	193	-	-	-	-	-	-	-	-	-
286+61			WB	-	-	-	-	-	-	-	1	-	-
286+61	-	288+26	WB	-	-	-	-	-	165	-	-	-	-
286+70	-	288+40	EB	-	-	-	-	-	-	-	-	170	-
288+26	-	288+36	WB	-	-	-	-	-	-	10	-	-	-
288+40	-	288+54	EB	-	-	14.4	-	-	-	-	-	-	-
	UNDISTRIBUTED												
			TOTAL	485	3	28.8	57.6	3	330	20	2	581	7197

3

3

CONCRETE SURFACE DRAINS FLUME

CATEGORY	STATION	TO	STATION	LOCATION	416.0610 DRILLED TIE BARS EACH	416.1015 CONCRETE SURFACE DRAINS HES CY	606.0100 RIPRAP LIGHT CY	645.0130 GEOTEXTILE TYPE R SY
0010	208+05	-	208+17	29' LT	3	4	1	1
	288+22	-	288+34	50' LT	3	4	1	1
				TOTAL	6	8	2	2

WATER

CATEGORY	STATION	TO	STATION	LOCATION	624.0100 MGAL
0010	200+00	-	207+84	MEDIAN	4
	209+92	-	224+18	MEDIAN	5
	229+24	-	245+11	MEDIAN	6
	248+16	-	266+13	MEDIAN	7
	267+48	-	288+40	MEDIAN	6
				TOTAL	28

3

PREPARE FOUNDATION FOR BASE AGGREGATE

CATEGORY	STATION	TO	STATION	LOCATION	211.0500 STA
0010	223+73	-	224+37	LT	1
				TOTAL	1

ASPHALTIC SURFACE

CATEGORY	STATION	TO	STATION	LOCATION	465.0105 TON	REMARKS
0010	223+73	-	224+37	LT	40	MAINTENANCE CROSS OVER
				TOTAL	40	

SPECIAL (EMULSIFIED ASPHALT MEDIAN TREATMENT)

CATEGORY	STATION	TO	STATION	SPV.0180.01 SY
0010	200+00	-	200+73	32
			TOTAL	32

EROSION CONTROL ITEMS

CATEGORY	STATION	TO	STATION	628.1504 SILT FENCE LF	628.2004 EROSION MAT CLASS I TYPE B SY	628.7005 INLET PROTECTION TYPE A EACH	628.7504 TEMPORARY DITCH CHECKS LF	629.0205 FERTILIZER TYPE A CWT	630.0120 SEEDING MIXTURE NO. 20 LB
0010	200+70	-	207+84	-	957	-	36	0.6	26
	208+20			20	-	-	-	-	-
	209+80			20	-	-	-	-	-
	210+72	-	223+70	-	2090	-	65	1.3	56
	229+55	-	244+70	-	2460	-	76	1.5	66
	248+40	-	267+15	-	2970	-	94	1.9	80
	268+00	-	288+03	-	6260	-	101	3.9	169
	201+86			-	-	1	-	-	-
	201+94			-	-	1	-	-	-
	205+21			-	-	1	-	-	-
	215+14			-	-	1	-	-	-
	217+26			-	-	1	-	-	-
	221+54			-	-	1	-	-	-
	230+18			-	-	1	-	-	-
	234+18			-	-	1	-	-	-
	238+84			-	-	1	-	-	-
	242+18			-	-	1	-	-	-
	251+17			-	-	1	-	-	-
	253+24			-	-	1	-	-	-
	256+17			-	-	1	-	-	-
	260+48			-	-	1	-	-	-
	263+18			-	-	1	-	-	-
	267+18			-	-	1	-	-	-
	271+15			-	-	1	-	-	-
	276+35			-	-	1	-	-	-
	285+05			-	-	1	-	-	-
	288+03			-	-	1	-	-	-
	288+40			45	-	-	-	-	-
			TOTAL	85	14737	20	372	9.3	398

3

PERMANENT SIGNING

CATEGORY	STATION	OFFSET	634.0614 POSTS WOOD 4X6-INCH X 14-FT EACH	634.0616 POSTS WOOD 4X6-INCH X 16-FT EACH	634.0618 POSTS WOOD 4X6-INCH X 18-FT EACH	638.2102 MOVING SIGNS TYPE II EACH	638.2602 REMOVING SIGNS TYPE II EACH	638.3000 REMOVING SMALL SIGN SUPPORTS EACH	REMARKS
0010	200+50	13' LT	-	-	-	-	1	2	TO 90/94
	201+25	14' LT	-	-	-	-	1	1	TO 39
	206+00	15' LT	-	1	-	1	-	1	MILE MARKERS
	210+55	10' LT	1	-	-	1	-	1	SPEED LIMIT 55
	211+34	23' LT	1	-	-	1	-	1	SPEED LIMIT 45
	217+10	14' LT	-	1	-	1	-	1	MILE MARKERS
	222+66	17' LT	1	-	-	1	-	1	SPEED LIMIT 55
	223+87	28' LT	-	2	-	1	-	2	SPEED LIMIT AHEAD 45 (2 posts)
	233+50	15' LT	-	1	-	1	-	1	MILE MARKERS
	249+00	16' LT	-	1	-	1	-	1	MILE MARKERS
	259+40	19' LT	-	1	-	1	-	1	MILE MARKERS
	259+59	18' LT	-	-	2	1	-	2	ALTERNATE 39/94 USE CENTER LANE (2 posts)
	265+74	23' LT	-	1	-	1	-	1	DANE COUNTY AIRPORT
	266+40	19' LT	1	-	-	1	-	1	U TURN PROHIBITED
	270+00	16' LT	-	1	-	1	-	1	MILE MARKERS
	280+00	13' LT	-	1	-	1	-	1	MILE MARKER
	280+00	36' LT	-	1	-	1	-	1	MILE MARKER
	280+99	38' LT	1	-	-	1	-	1	SPEED LIMIT 55
		TOTAL	5	11	2	16	2	21	

TRAFFIC CONTROL ITEMS

CATEGORY	STATION TO	STATION	DAYS	643.0300 TRAFFIC CONTROL DRUMS DRUMS	643.0300 TRAFFIC CONTROL DRUMS DAY	643.0420 TRAFFIC CONTROL BARRICADES TYPE III DAY	643.0705 TRAFFIC CONTROL WARNING LIGHTS TYPE A DAY	643.0715 TRAFFIC CONTROL WARNING LIGHTS TYPE C DAY	643.0800 TRAFFIC CONTROL ARROW BOARDS DAY	643.0900 TRAFFIC CONTROL SIGNS DAY	643.1050 TRAFFIC CONTROL SIGNS PCMS DAY
0010	200+00 -	208+20	8	80	640	11	22	66	16	139	-
	209+70 -	224+80	10	91	910	13	26	78	20	173	-
	228+90 -	245+25	13	96	1248	18	36	108	26	226	-
	248+00 -	266+65	13	98	1274	34	68	102	26	242	-
	267+00 -	288+50	17	110	1870	50	100	150	34	322	-
	PROJECT		68	-	-	-	-	-	-	-	136
				TOTAL	5942	126	252	504	122	1102	136

3

3

CONSTRUCTION STAKING STORM SEWER

CATEGORY	STRUCTURE	STATION	LOCATION	650.4000 EACH
0010	101	201+86	MEDIAN	1
	102	201+94	MEDIAN	1
	103	205+21	MEDIAN	1
	104	215+14	MEDIAN	1
	105	217+26	MEDIAN	1
	106	221+54	MEDIAN	1
	107	230+18	MEDIAN	1
	108	234+18	MEDIAN	1
	109	238+84	MEDIAN	1
	110	242+18	MEDIAN	1
	111	251+17	MEDIAN	1
	112	253+24	MEDIAN	1
	113	256+17	MEDIAN	1
	114	260+48	MEDIAN	1
	115	263+18	MEDIAN	1
	116	267+18	MEDIAN	1
	117	271+15	MEDIAN	1
	118	276+35	MEDIAN	1
	119	285+05	MEDIAN	1
			TOTAL	19

CONSTRUCTION STAKING SLOPE STAKES

CATEGORY	STATION	TO	STATION	LOCATION	650.9920 LF
0010	200+70	-	207+84	MEDIAN	714
	210+72	-	223+70	MEDIAN	1298
	229+55	-	244+70	MEDIAN	1515
	248+40	-	267+15	MEDIAN	1875
	268+00	-	286+50	MEDIAN	1850
				TOTAL	7252

CONSTRUCTION STAKING SUPPLEMENTAL CONTROL (PROJECT)

CATEGORY	PROJECT	650.9910 LS
0010	5490-00-60	1
	TOTAL	1

FINISHING ROADWAY (PROJECT)

CATEGORY	PROJECT	213.0100 EACH
0010	5490-00-60	1
	TOTAL	1

SPECIAL (REESTABLISH LANDMARK REFERENCE MONUMENT)

CATEGORY	STATION	LOCATION	SPV.0060.02 EACH
0010	248+70	20' LT	1
		TOTAL	1

3

5

5

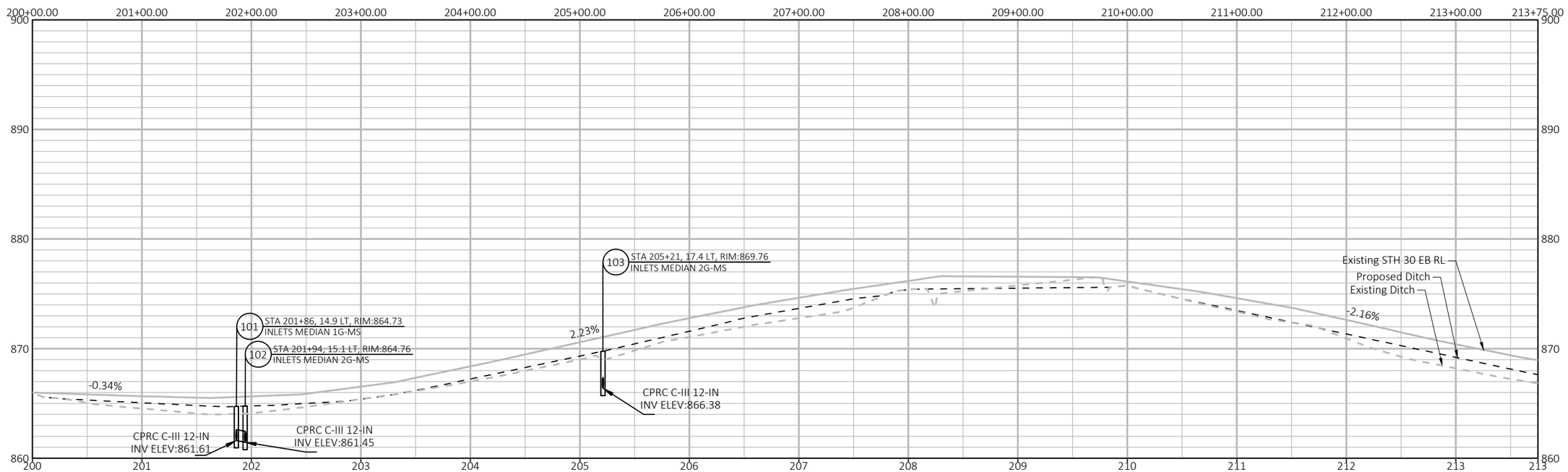

PROJECT NO: 5490-00-60	HWY: STH 30	COUNTY: DANE	PLAN AND PROFILE:	SHEET 30	E

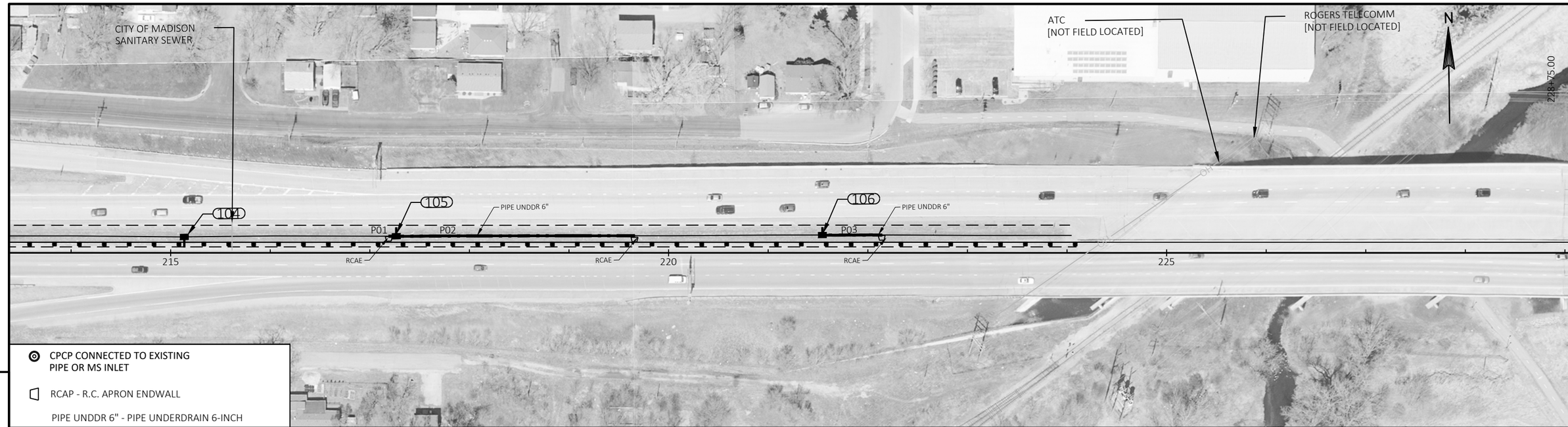

5

5

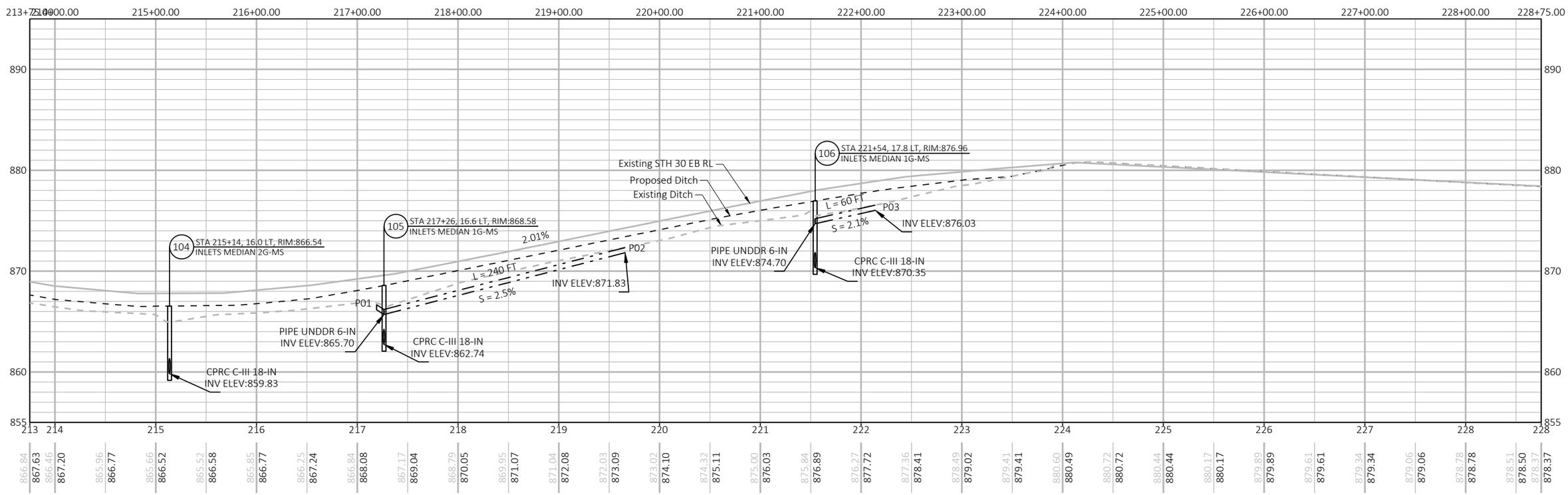

PROJECT NO: 5490-00-60	HWY: STH 30	COUNTY: DANE	PLAN AND PROFILE:	SHEET 31	E

FILE NAME : N:\PDS\C3D\54900030\SHEETSPLAN\050101_PP.DWG
LAYOUT NAME - 050101_02
PLOT DATE : 1/17/2018 8:19 AM
PLOT BY : ANDERSON, SHAUN M
PLOT NAME :
PLOT SCALE : ##########
WISDOT/CADDS SHEET 44

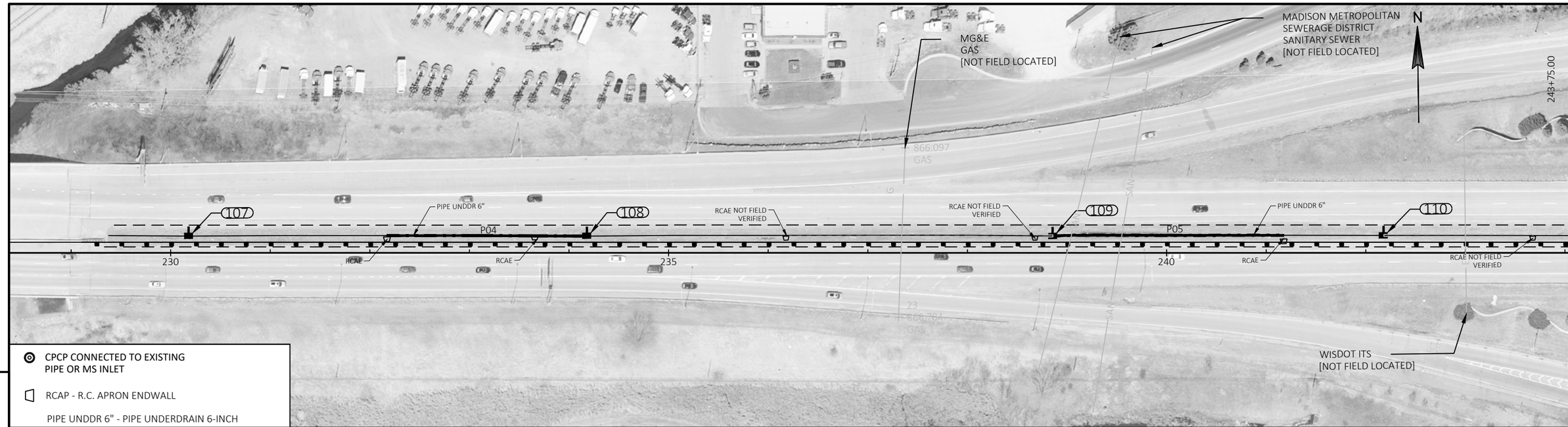

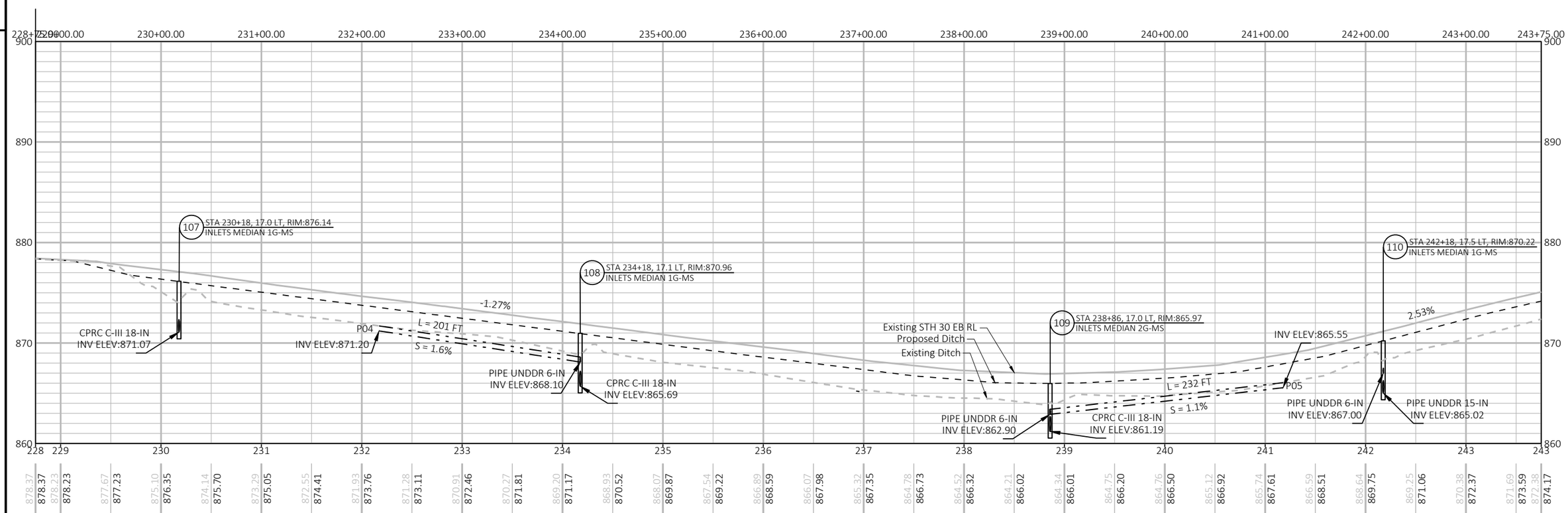

PROJECT NO: 5490-00-60	HWY: STH 30	COUNTY: DANE	PLAN AND PROFILE:	SHEET 32	E

FILE NAME : N:\PDS\C3D\54900030\SHEETSPLAN\050101_PP.DWG
LAYOUT NAME - 050101_03
PLOT DATE : 1/17/2018 8:20 AM
PLOT BY : ANDERSON, SHAUN M
PLOT NAME :
PLOT SCALE : ##########

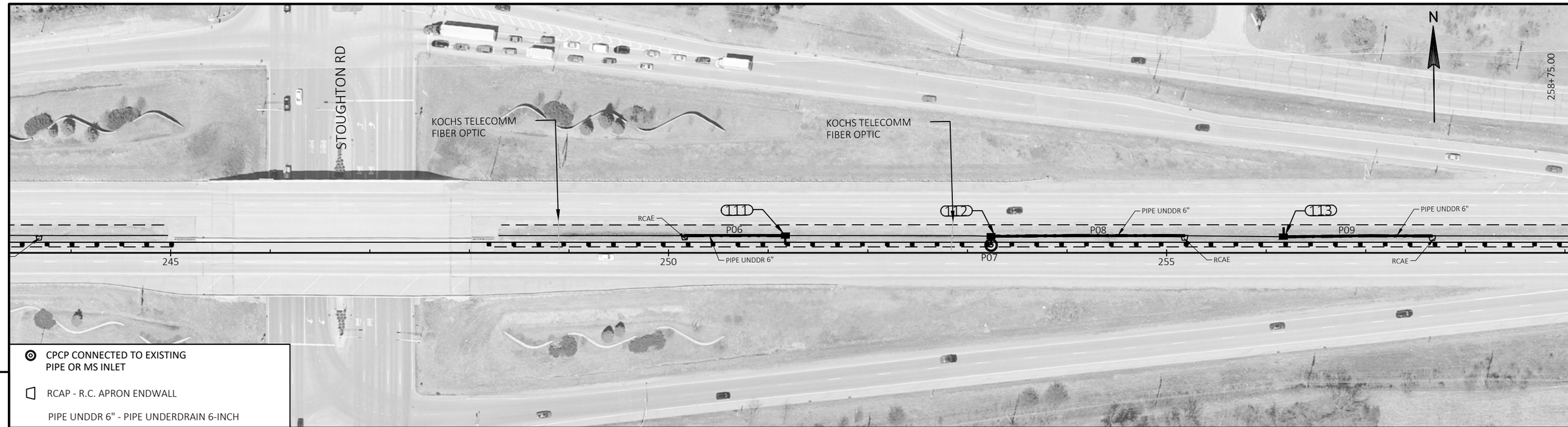

5

5

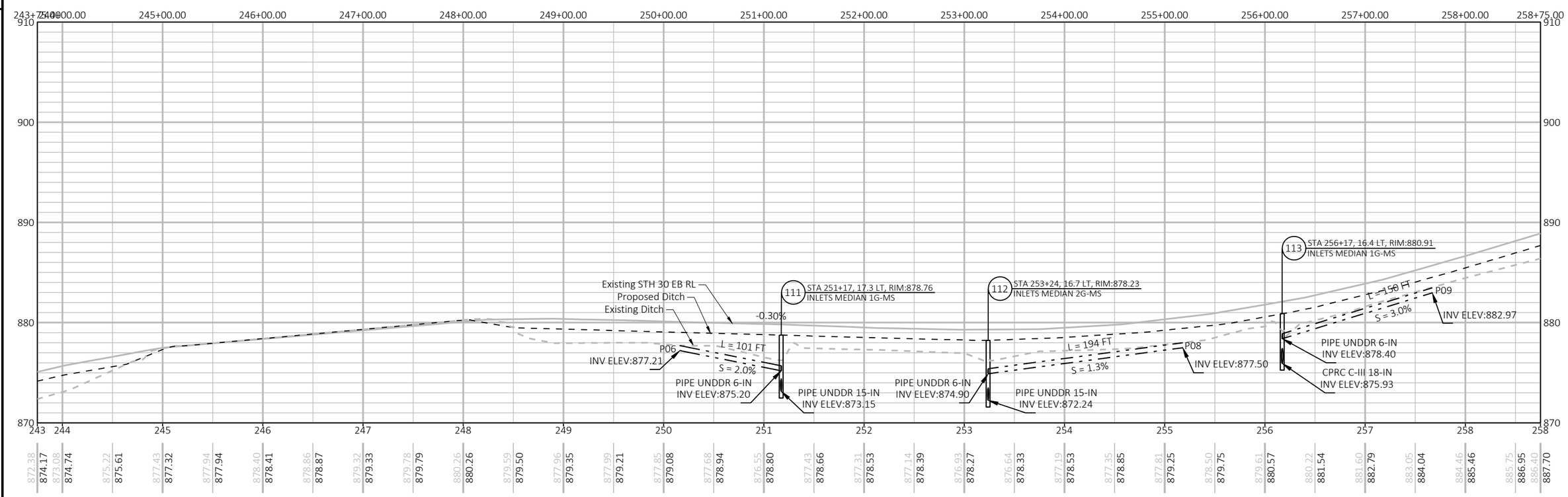

PROJECT NO: 5490-00-60	HWY: STH 30	COUNTY: DANE	PLAN AND PROFILE:	SHEET 33	E

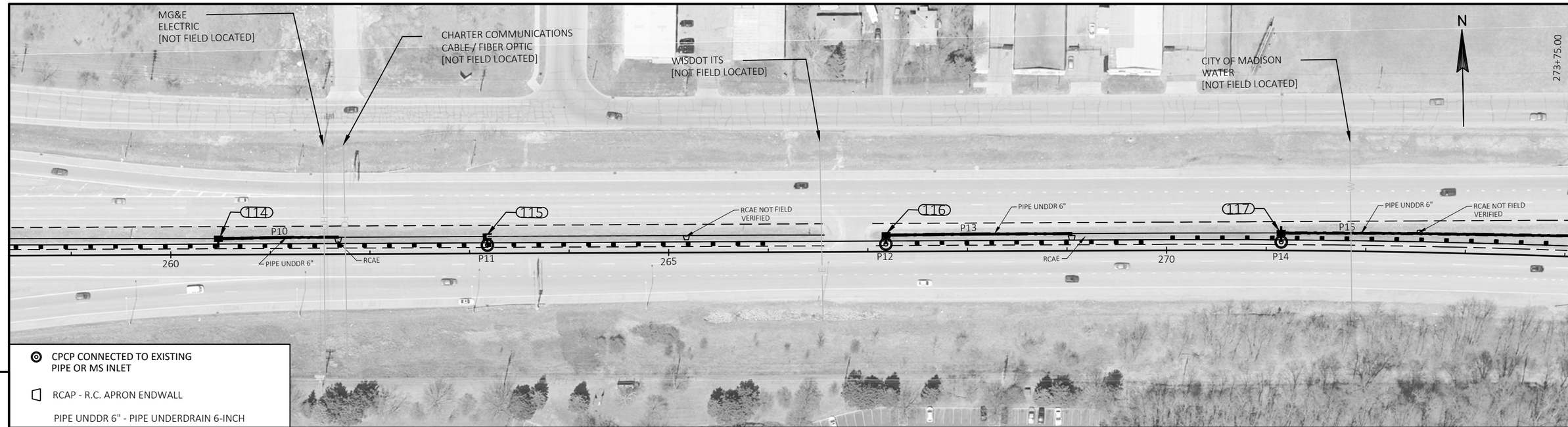

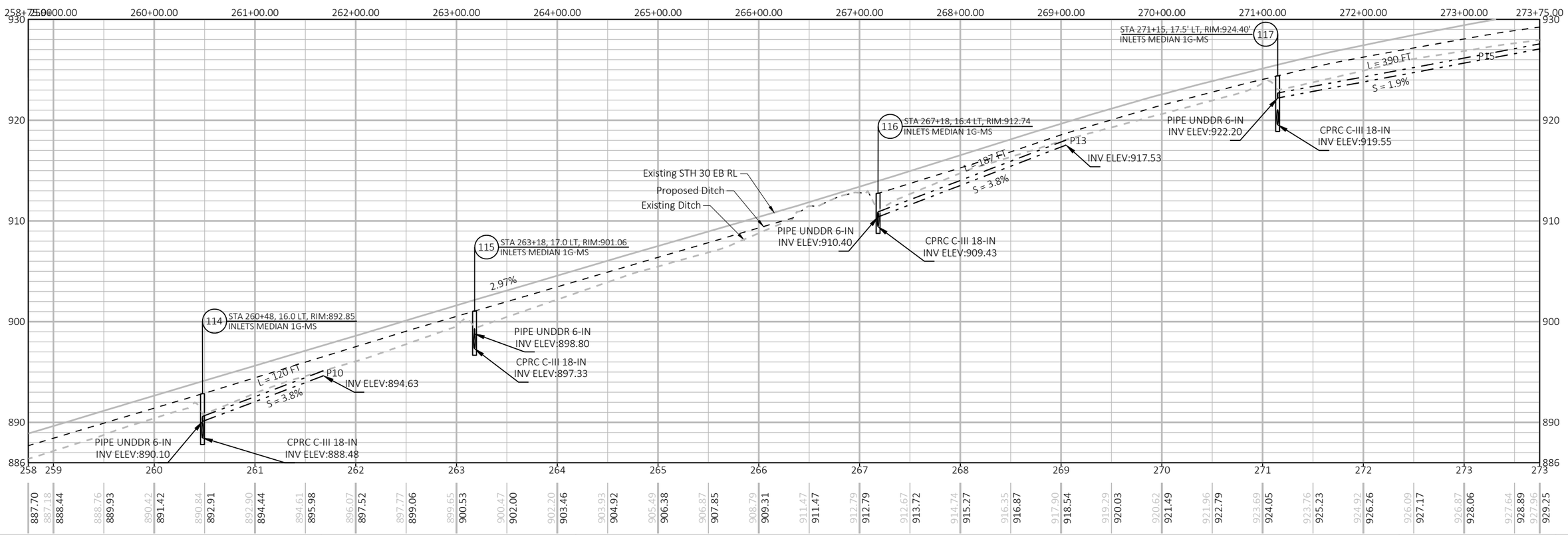

PROJECT NO: 5490-00-60	HWY: STH 30	COUNTY: DANE	PLAN AND PROFILE:	SHEET 34	E

FILE NAME : N:\PDS\C3D\54900030\SHEETSPLAN\050101_PP.DWG
LAYOUT NAME - 050101_05
PLOT DATE : 1/17/2018 8:20 AM
PLOT BY : ANDERSON, SHAUN M
PLOT NAME :
PLOT SCALE : ###########

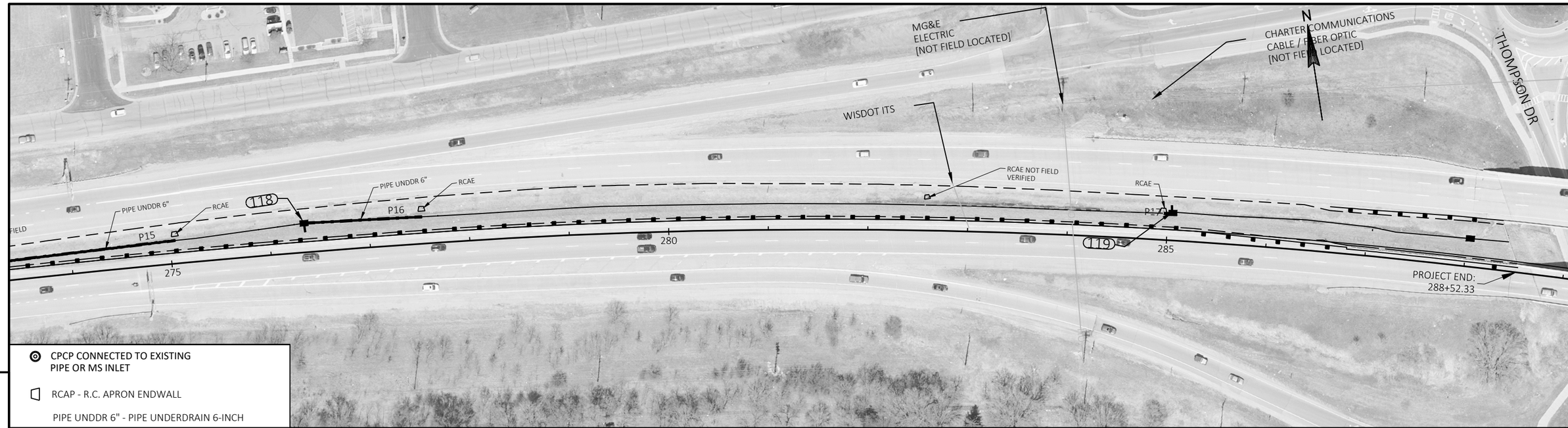

5

5

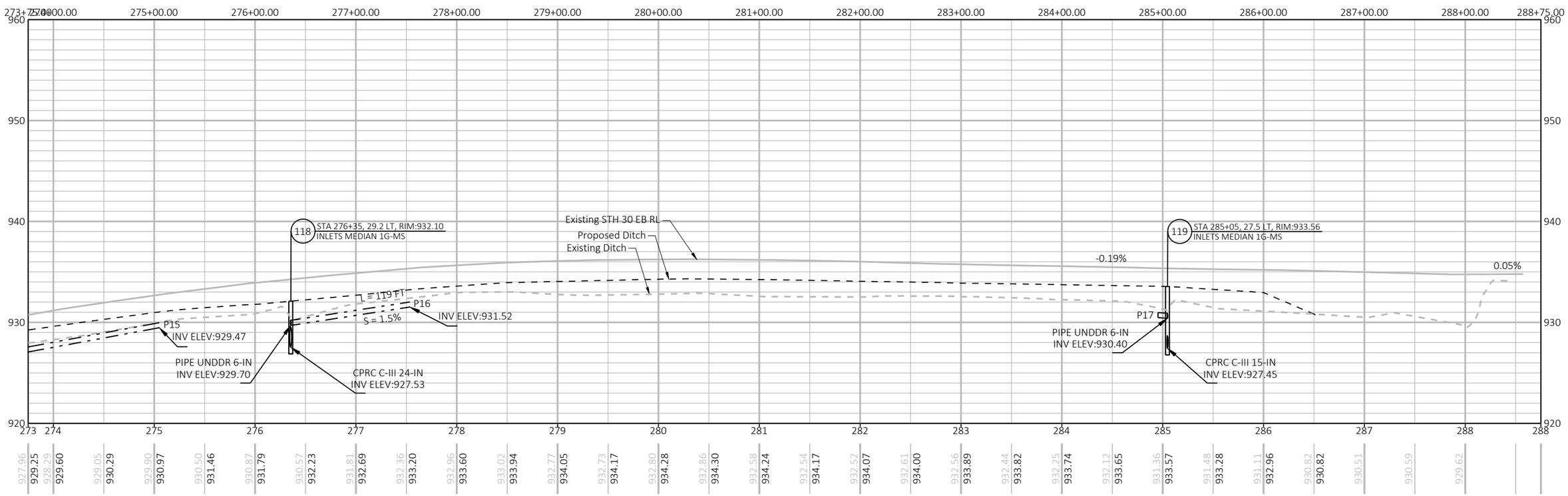

PROJECT NO: 5490-00-60	HWY: STH 30	COUNTY: DANE	PLAN AND PROFILE:	SHEET 35	E

Standard Detail Drawing List

08A05-19B	INLET COVERS TYPE B, B-A, C, MS, MS-A, & WM
08C08-02	INLETS MEDIAN 1 AND 2 GRATE
08D02-06	CONCRETE SURFACE DRAINS FLUME TYPE AT STRUCTURES
08E08-03	TYPICAL INSTALLATIONS OF EROSION BALES / TEMPORARY DITCH CHECKS
08E09-06	SILT FENCE
08E10-02	INLET PROTECTION TYPE A, B, C AND D
14B18-06A	STEEL PLATE BEAM GUARD, CLASS "A" (AT BRIDGES, OBSTACLES AND SIDEROADS/DRIVEWAYS)
14B18-06B	STEEL PLATE BEAM GUARD, CLASS "A" AT MEDIAN APPROACH TO BRIDGES
14B20-11A	STEEL THRIE BEAM STRUCTURE APPROACH
14B20-11B	STEEL THRIE BEAM STRUCTURE APPROACH, CONNECTION TO SQUARE END PARAPETS
14B20-11D	STEEL THRIE BEAM STRUCTURE APPROACH, CONNECTION TO SLOPED END PARAPETS
14B20-11H	STEEL THRIE BEAM STRUCTURE APPROACH, SINGLE SLOPE ATTACHMENT
14B25-01	STEEL PLATE BEAM GUARD, CLASS "A", OVER LOW FILL CULVERTS
14B42-05A	MIDWEST GUARDRAIL SYSTEM (MGS) GUARDRAIL
14B42-05B	MIDWEST GUARDRAIL SYSTEM (MGS) GUARDRAIL
14B42-05C	MIDWEST GUARDRAIL SYSTEM (MGS) GUARDRAIL
14B42-05D	MIDWEST GUARDRAIL SYSTEM (MGS) GUARDRAIL
14B45-04B	MIDWEST GUARDRAIL SYSTEM THRIE BEAM TRANSITION (MGS)
14B45-04C	MIDWEST GUARDRAIL SYSTEM THRIE BEAM TRANSITION (MGS)
14B45-04D	MIDWEST GUARDRAIL SYSTEM THRIE BEAM TRANSITION (MGS)
14B45-04E	MIDWEST GUARDRAIL SYSTEM THRIE BEAM TRANSITION (MGS)
14B45-04F	MIDWEST GUARDRAIL SYSTEM THRIE BEAM TRANSITION (MGS)
14B47-02A	MIDWEST GUARDRAIL SYSTEM (MGS) TYPE 2 TERMINAL
14B47-02B	MIDWEST GUARDRAIL SYSTEM (MGS) TYPE 2 TERMINAL
14B47-02C	MIDWEST GUARDRAIL SYSTEM (MGS) TYPE 2 TERMINAL
15D12-06A	TRAFFIC CONTROL, LANE CLOSURE
15D27-03	TRAFFIC CONTROL, SHOULDER CLOSURE ON DIVIDED ROADWAY, SPEEDS GREATER THAN 40 MPH
15D38-02A	TEMPORARY TRAFFIC CONTROL SIGN MOUNTING
15D38-02B	ATTACHMENT OF SIGNS TO POSTS

6

6

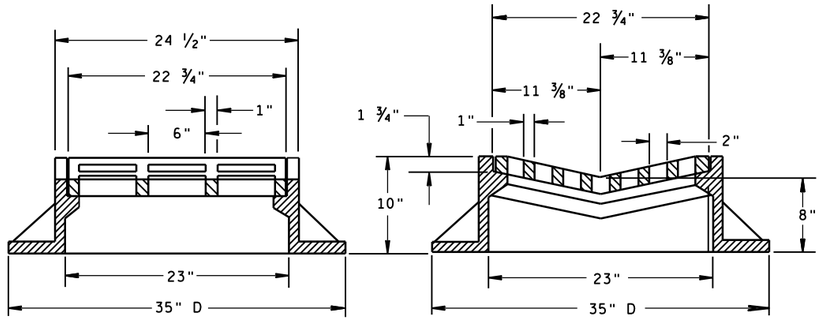

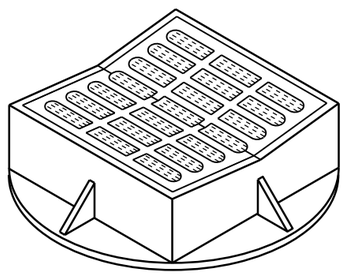

TYPE "B"

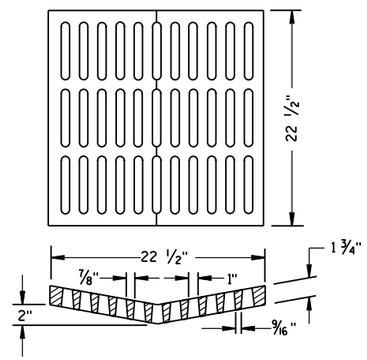

ALTERNATIVE GRATE FOR TYPE "B" COVER

USE WHERE PEDESTRIAN OR BICYCLE TRAFFIC IS POSSIBLE.

NOTED AS TYPE B-A ON THE DRAINAGE TABLE

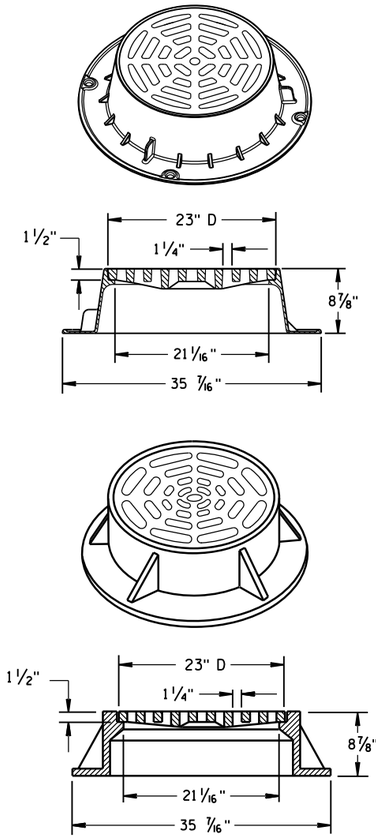

TYPE "C"

NOTE: EITHER CASTING IS ACCEPTABLE

GENERAL NOTES

DETAILS OF CONSTRUCTION, MATERIALS AND WORKMANSHIP NOT SHOWN ON THIS DRAWING SHALL CONFORM TO THE PERTINENT REQUIREMENTS OF THE STANDARD SPECIFICATIONS AND THE APPLICABLE SPECIAL PROVISIONS.

DETAIL DRAWINGS FOR PROPOSED ALTERNATE DESIGNS FOR CATCH BASIN, MANHOLE AND INLET COVERS SHALL BE SUBMITTED TO THE ENGINEER FOR APPROVAL PROVIDING THAT SUCH ALTERNATE DESIGNS MAKE PROVISION FOR EQUIVALENT CAPACITY AND STRENGTH.

ROUND FRAMES AND COVERS SHALL HAVE CONTINUOUSLY MACHINED BEARING SURFACES TO PREVENT ROCKING AND RATTLING.

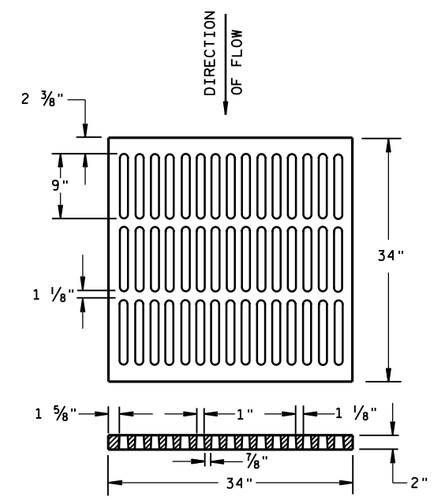

ALTERNATIVE TYPE "MS"

USE WHERE PEDESTRIAN OR BICYCLE TRAFFIC IS PERMITTED

NOTED AS TYPE MS-A ON THE DRAINAGE TABLE

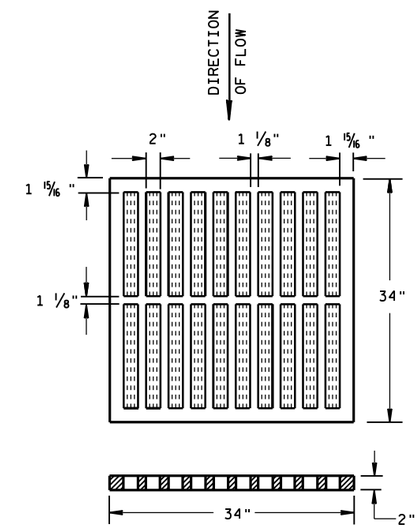

TYPE "MS"

USE ON FREEWAYS AND EXPRESSWAYS

NOTED AS TYPE MS ON DRAINAGE TABLE

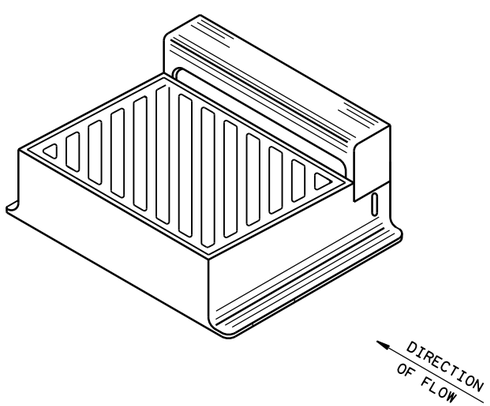

DIAGONAL SLOTS, SHALL BE ORIENTED TO THE DIRECTION OF FLOW AS ILLUSTRATED. GRATES ARE MANUFACTURED TO BE REVERSIBLE.

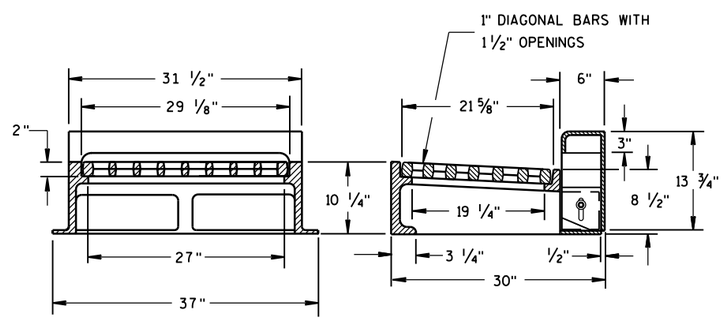

NOTE: CURB BOX HEIGHT ADJUSTABLE 6" TO 9"

TYPE "WM"

6

6

S.D.D. 8 A 5-19b

S.D.D. 8 A 5-19b

INLET COVERS
TYPE B, B-A, C, MS, MS-A, & WM

STATE OF WISCONSIN
DEPARTMENT OF TRANSPORTATION

APPROVED

11/27/2013 — DATE

/S/ Jerry H. Zogg — ROADWAY STANDARDS DEVELOPMENT ENGINEER

FHWA

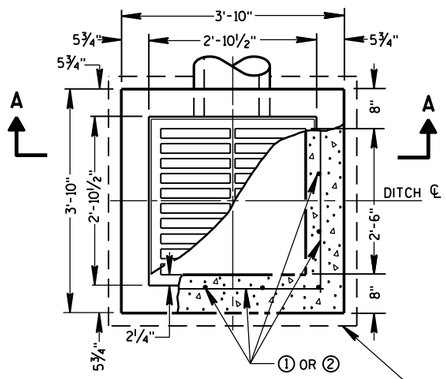

PLAN VIEW

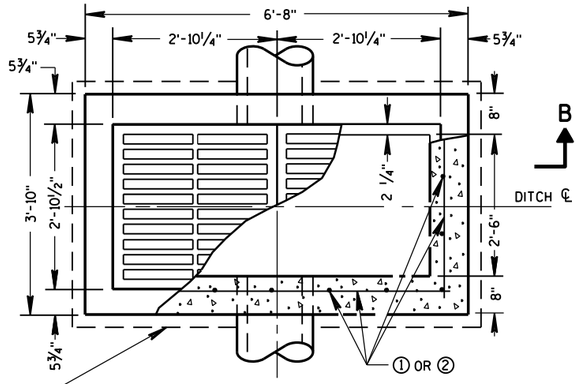

PLAN VIEW

4" OVERHANGING BASE ON REINFORCED CAST-IN-PLACE CONCRETE INLETS

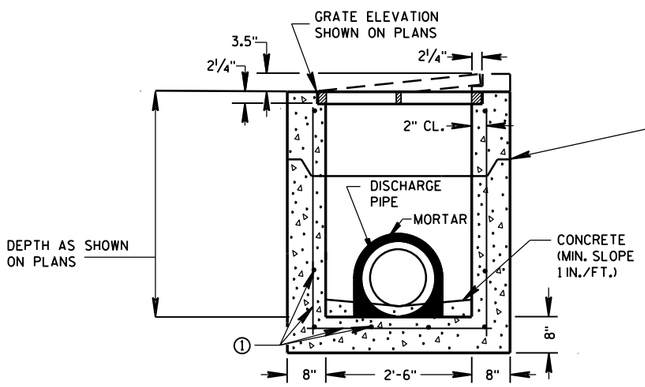

PRECAST REINFORCED CONCRETE SECTION A-A

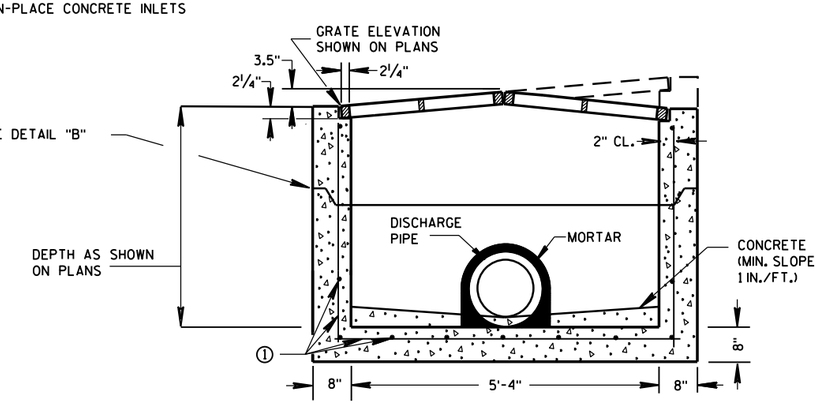

PRECAST REINFORCED CONCRETE SECTION B-B

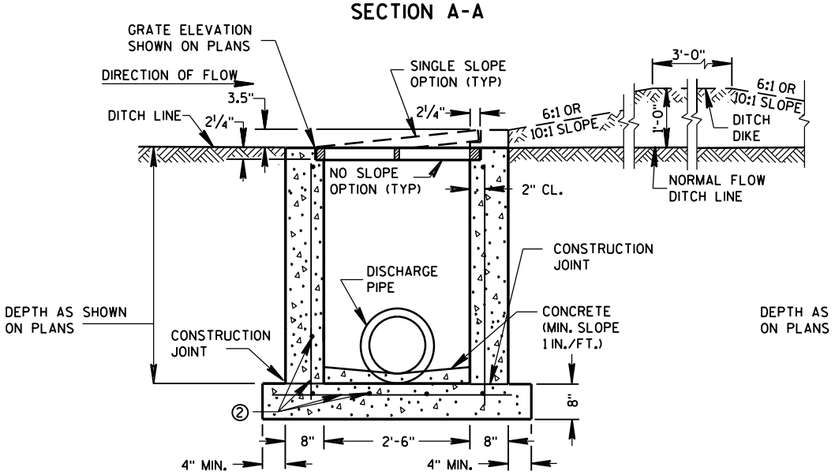

REINFORCED CAST-IN-PLACE CONCRETE SECTION A-A

INLETS MEDIAN 1 GRATE

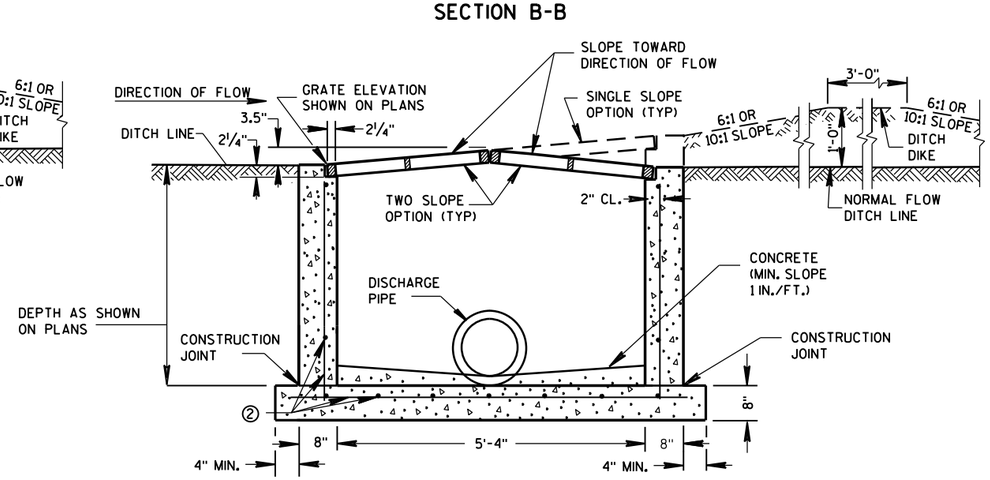

REINFORCED CAST-IN-PLACE CONCRETE SECTION B-B

INLETS MEDIAN 2 GRATE

GENERAL NOTES

DETAILS OF CONSTRUCTION, MATERIALS AND WORKMANSHIP NOT SHOWN ON THIS DRAWING SHALL CONFORM TO THE PERTINENT REQUIREMENTS OF THE STANDARD SPECIFICATIONS AND THE APPLICABLE SPECIAL PROVISIONS.

UNLESS OTHERWISE AUTHORIZED IN WRITING BY THE ENGINEER, THE CONTRACTOR SHALL NOT ORDER AND DELIVER PRECAST INLET UNITS REQUIRED FOR THE PROJECT UNTIL A LIST OF SIZES IS FURNISHED BY THE ENGINEER.

DETAILED DRAWINGS FOR PROPOSED ALTERNATE DESIGNS FOR INLETS WHICH MAY INCLUDE PRECAST REINFORCED CONCRETE INLETS, SHALL BE SUBMITTED TO THE ENGINEER FOR APPROVAL PROVIDING THAT SUCH ALTERNATE DESIGNS MAKE PROVISION FOR EQUIVALENT CAPACITY AND STRENGTH.

ALL MEDIAN INLETS ARE DESIGNATED ON THE PLANS AS "INLETS, 1G-MS", ETC. THE FIRST NUMBER AND LETTER DESIGNATE THE TYPE OF STRUCTURE, AND THE FOLLOWING LETTERS DESIGNATE THE TYPE OF COVER TO BE USED TO COMPRISE THE COMPLETE UNIT.

BASES SHALL BE PLACED ON A BED OF MATERIAL AT LEAST 6 INCHES IN DEPTH, WHICH MEETS THE REQUIREMENTS OF FOUNDATION BACKFILL. THIS BEDDING SHALL BE COMPACTED AND PROVIDE UNIFORM SUPPORT FOR THE ENTIRE AREA OF THE BASE.

ALL BAR STEEL REINFORCEMENT SHALL BE EMBEDDED 2 INCHES CLEAR UNLESS OTHERWISE SHOWN OR NOTED.

PRECAST REINFORCED RISERS SHALL HAVE A TONGUE AND GROOVE JOINT WITH TONGUE UP OR DOWN.

ALL PRECAST INLET UNITS SHALL CONFORM TO THE PERTINENT REQUIREMENTS OF ASTM C 913.

MAXIMUM INSIDE PIPE DIAMETER DETERMINED BY 3" CLEARANCE ON EACH SIDE OF THE OUTSIDE WALL OF THE PIPE. SEE DETAIL "A". ASSUMES PIPE ENTERS PERPENDICULAR TO THE STRUCTURE.

① FOR PRECAST INLETS PROVIDE REINFORCING STEEL IN ACCORDANCE TO ASTM C 913.

② CONTRACTOR TO PROVIDE DRAWING(S) STAMPED BY A PROFESSIONAL ENGINEER FOR STEEL REINFORCING DESIGN FOR CAST-IN-PLACE STRUCTURES.

PIPE MATRIX

	MAXIMUM INSIDE PIPE DIAMETER	
INLET SIZE	WIDTH (IN)	LENGTH (IN)
1 GRATE	18	18
2 GRATE	18	42

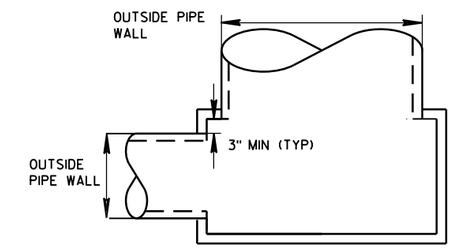

DETAIL "A"

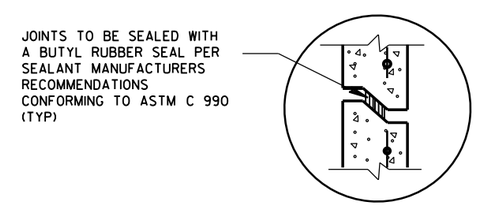

DETAIL "B"

INLETS MEDIAN 1 AND 2 GRATE

STATE OF WISCONSIN
DEPARTMENT OF TRANSPORTATION

APPROVED
Sept., 2016 — DATE
/S/ Rodney Taylor — ROADWAY STANDARDS UNIT SUPERVI
ENT
FHWA

6

S.D.D. 8 C 8-2

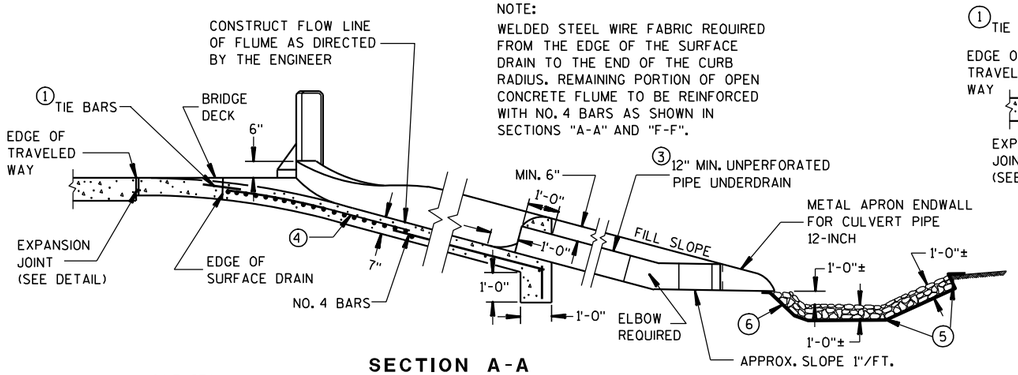

NOTE:
WELDED STEEL WIRE FABRIC REQUIRED FROM THE EDGE OF THE SURFACE DRAIN TO THE END OF THE CURB RADIUS. REMAINING PORTION OF OPEN CONCRETE FLUME TO BE REINFORCED WITH NO. 4 BARS AS SHOWN IN SECTIONS "A-A" AND "F-F".

SECTION A-A

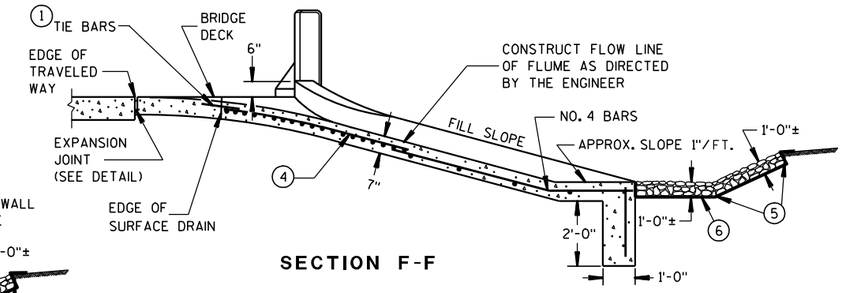

SECTION F-F

GENERAL NOTES

DETAILS OF CONSTRUCTION, MATERIALS, AND WORKMANSHIP NOT SHOWN ON THIS DRAWING SHALL CONFORM TO THE PERTINENT REQUIREMENTS OF THE STANDARD SPECIFICATIONS AND THE APPLICABLE SPECIAL PROVISIONS.

ALL STEEL REINFORCEMENT SHALL BE EMBEDDED 2 INCHES CLEAR UNLESS OTHERWISE SHOWN OR NOTED.

1. NO. 4 X 2'-0" TIE BARS SPACED AT 3'-0" CENTERS TO BE USED ONLY WHEN ADJACENT TO P.C. CONCRETE.
2. NO. 4 X 2'-0" TIE BARS SPACED AT 12" CENTERS TO BE PLACED BY BRIDGE CONTRACTOR, OR DRILLED TIE BARS PLACED AS DIRECTED BY THE ENGINEER.
3. PIPE UNDERDRAIN MAY BE ANY OF THE MATERIALS LISTED IN SECTION 612.2 OF THE STANDARD SPECIFICATIONS EXCEPT DRAIN TILE.
4. MINIMUM REINFORCEMENT SHALL BE 6" X 6" - W4.0 X W4.0 OR NO. 3 BARS LONGITUDINAL AND TRANSVERSE SPACING 12" C-C.
5. LIMITS OF ADDITIONAL RIPRAP WHEN SPECIAL DITCH IS REQUIRED.
6. GEOTEXTILE FABRIC, TYPE 'R'
7. HOT POURED SEALANT UNLESS OTHERWISE SPECIFIED.
8. THIS DIMENSION MAY VARY DEPENDING ON THE SPACING OF POSTS FOR THE STEEL PLATE BEAM GUARD. THE TYPICAL LOCATION FOR THE SURFACE DRAIN IS WHERE THE POST SPACING WIDENS TO 3'-1½".

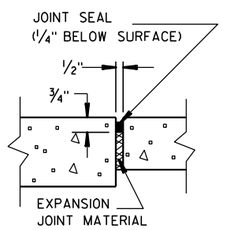

EXPANSION JOINT DETAIL

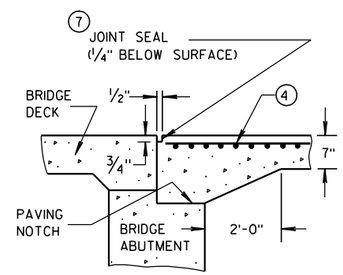

SECTION D-D

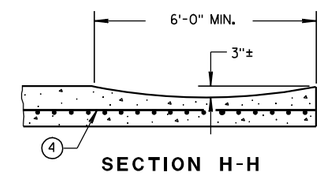

SECTION H-H

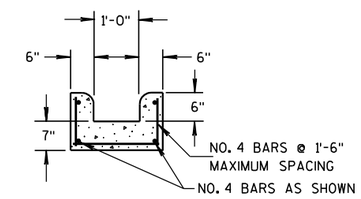

SECTION E-E

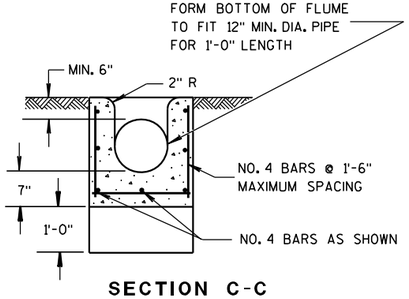

SECTION C-C

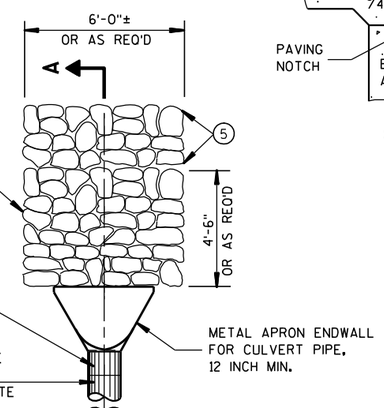

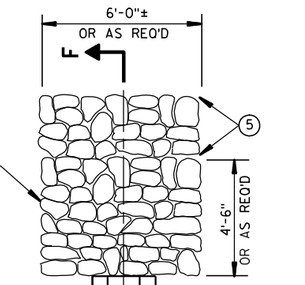

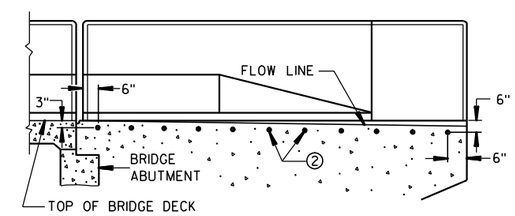

LOCATION OF TIE BARS IN WINGWALL

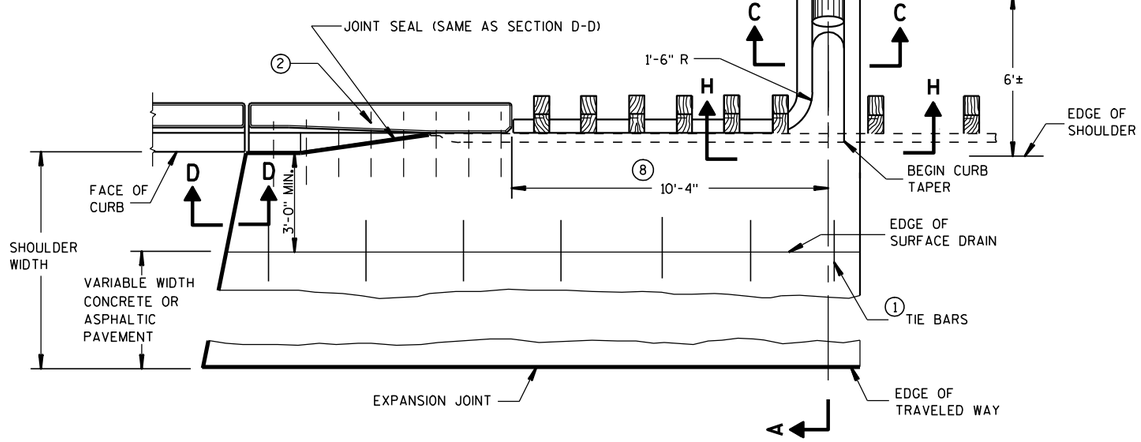

PLAN VIEW
SURFACE DRAIN WITH PIPE
TYPE "A"

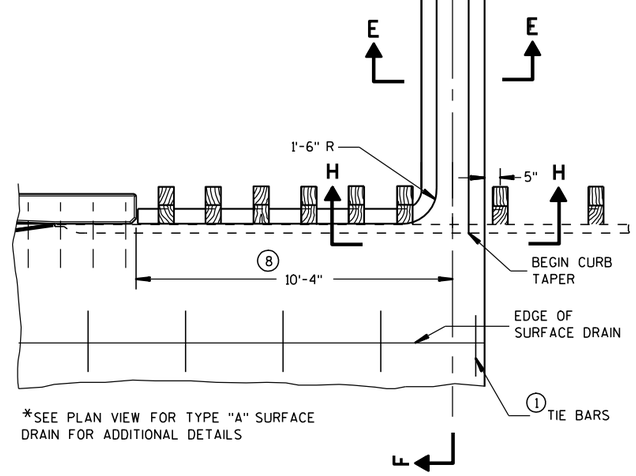

*SEE PLAN VIEW FOR TYPE "A" SURFACE DRAIN FOR ADDITIONAL DETAILS

*PARTIAL PLAN VIEW
SURFACE DRAIN WITHOUT PIPE
TYPE "B"

CONCRETE SURFACE DRAINS
FLUME TYPE
AT STRUCTURES

STATE OF WISCONSIN
DEPARTMENT OF TRANSPORTATION

APPROVED
9/4/08 — DATE
/S/ Jerry H. Zogg — ROADWAY STANDARDS DEVELOPMENT ENGINEER
FHWA

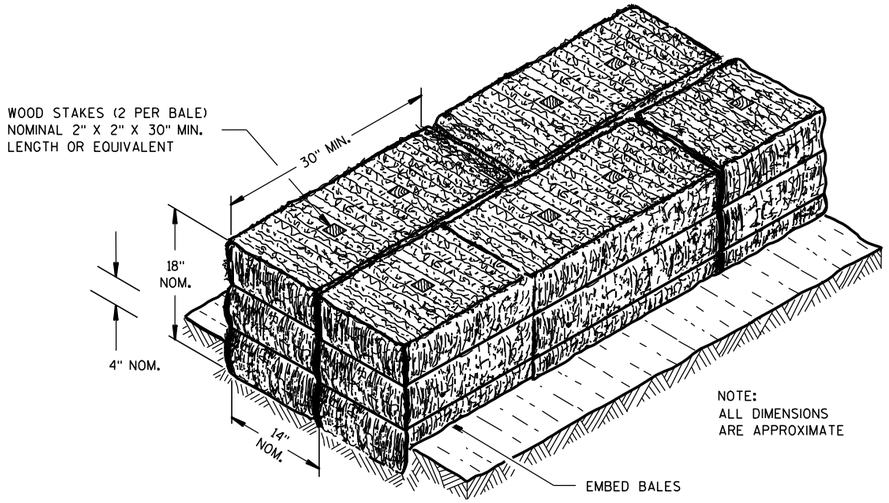

SECTION A-A

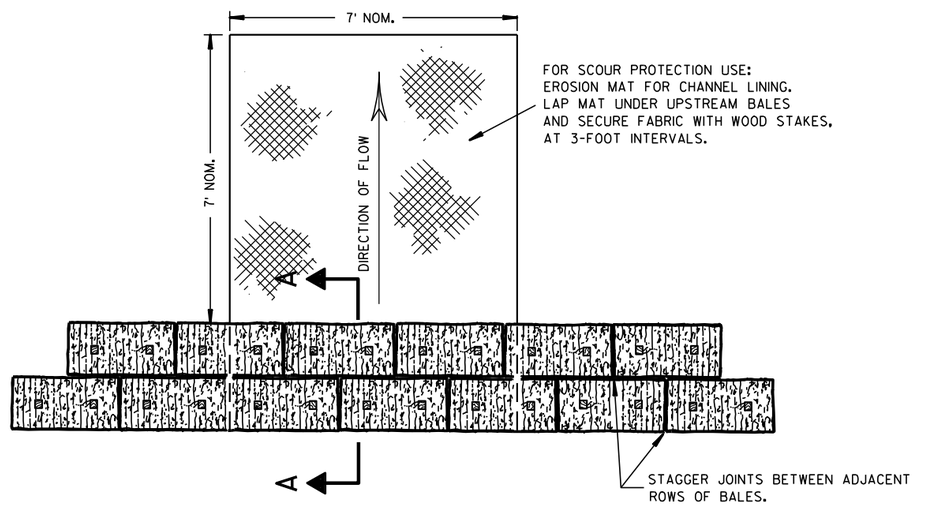

PLAN VIEW

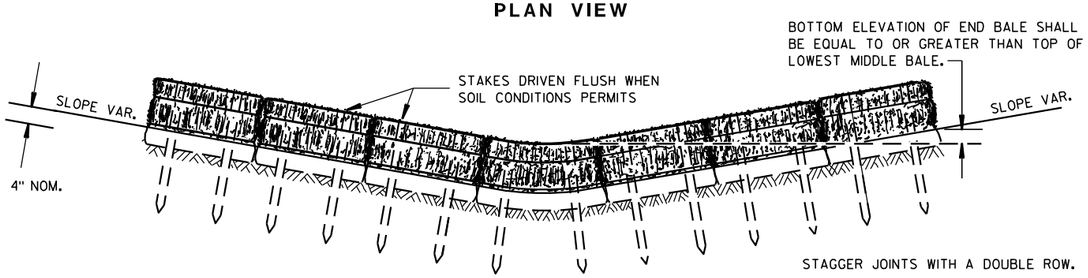

FRONT ELEVATION

TEMPORARY DITCH CHECK USING EROSION BALES ①

GENERAL NOTES

DETAILS OF CONSTRUCTION, MATERIALS AND WORKMANSHIP NOT SHOWN ON THIS DRAWING SHALL CONFORM TO THE PERTINENT REQUIREMENTS OF THE STANDARD SPECIFICATIONS AND THE APPLICABLE SPECIAL PROVISIONS.

① TEMPORARY DITCH CHECKS EITHER EROSION BALES OR MANUFACTURED SHALL BE PAID FOR UNDER THE BID ITEM OF TEMPORARY DITCH CHECK. THE DEPARTMENT WILL NOT PAY FOR TEMPORARY DITCH CHECKS CONSTRUCTED OF A SINGLE ROW OF EROSION BALES.

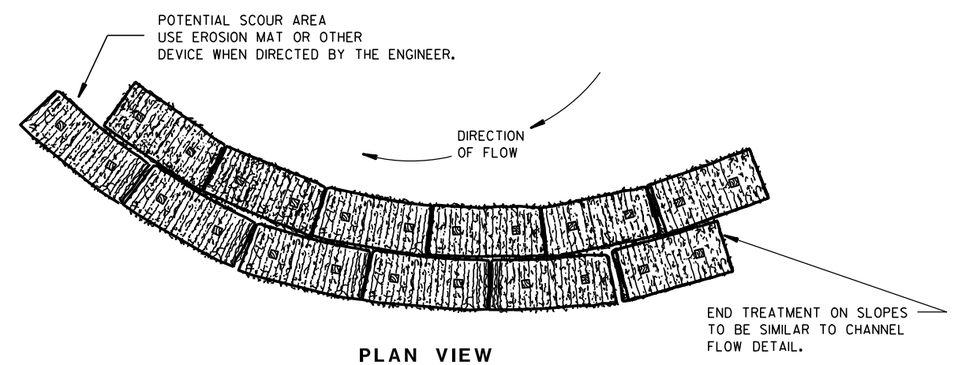

PLAN VIEW

WHEN ALTERING THE DIRECTION OF FLOW

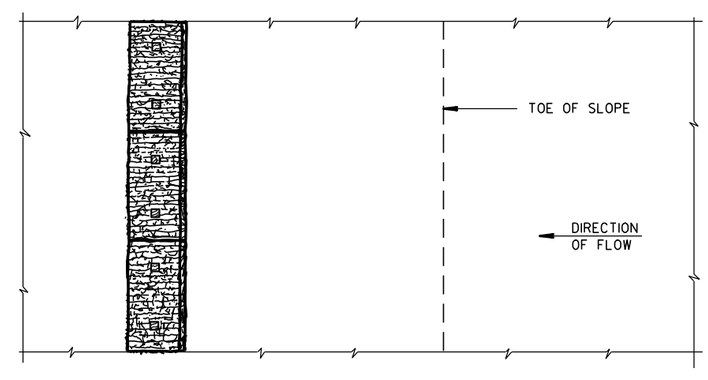

PLAN VIEW

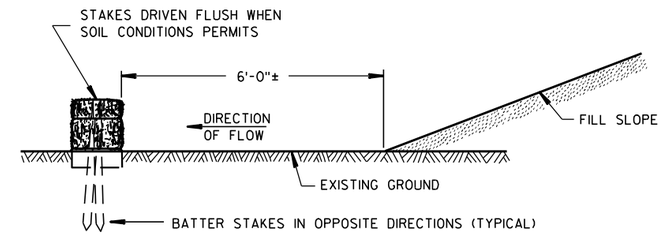

FRONT ELEVATION

WHEN EXISTING GROUND SLOPES AWAY FROM FILL SLOPE

EROSION BALES FOR SHEET FLOW

TYPICAL INSTALLATIONS OF EROSION BALES / TEMPORARY DITCH CHECKS

STATE OF WISCONSIN
DEPARTMENT OF TRANSPORTATION

APPROVED
6/04/02 — DATE
/S/ Beth Cann — CHIEF ROADWAY DEVELOPMENT ENGINEER
FHWA

6

6

S.D.D. 8 E 8-3

S.D.D. 8 E 8-3

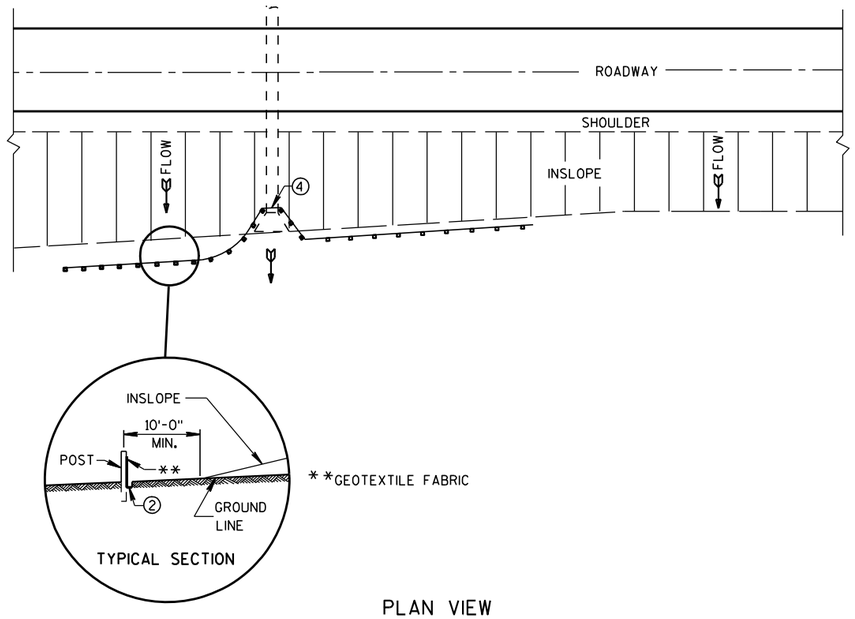

PLAN VIEW

TYPICAL APPLICATION OF SILT FENCE

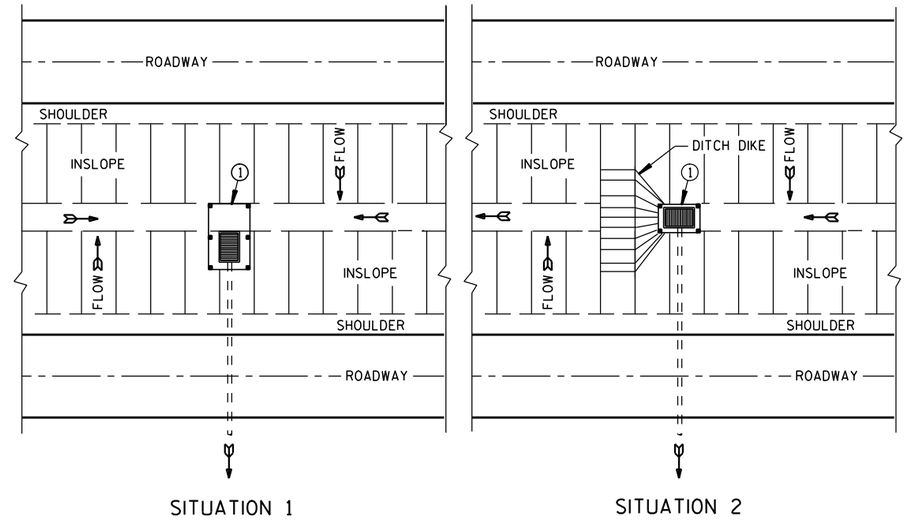

PLAN VIEW

SILT FENCE AT MEDIAN SURFACE DRAINS

GENERAL NOTES

DETAILS OF CONSTRUCTION NOT SHOWN ON THIS DRAWING SHALL CONFORM TO THE PERTINENT REQUIREMENTS OF THE STANDARD SPECIFICATIONS AND APPLICABLE SPECIAL PROVISIONS.

① HORIZONTAL BRACE REQUIRED WITH 2" X 4" WOODEN FRAME OR EQUIVALENT AT TOP OF POSTS.

② FOR MANUAL INSTALLATIONS THE TRENCH SHALL BE A MINIMUM OF 4" WIDE & 6" DEEP TO BURY AND ANCHOR THE GEOTEXTILE FABRIC. FOLD MATERIAL TO FIT TRENCH AND BACKFILL & COMPACT TRENCH WITH EXCAVATED SOIL.

③ WOOD POSTS SHALL BE A MINIMUM SIZE OF 1⅛" X 1⅛" OF OAK OR HICKORY.

④ SILT FENCE TO EXTEND ACROSS THE TOP OF THE PIPE.

⑤ CONSTRUCT SILT FENCE FROM A CONTINUOUS ROLL IF POSSIBLE BY CUTTING LENGTHS TO AVOID JOINTS. IF A JOINT IS NECESSARY USE ONE OF THE FOLLOWING TWO METHODS; A) OVERLAP THE END POSTS AND TWIST, OR ROTATE, AT LEAST 180 DEGREES. B) HOOK THE END OF EACH SILT FENCE LENGTH.

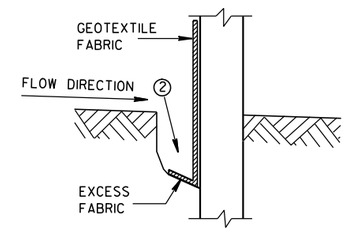

TRENCH DETAIL

NOTE: ADDITIONAL POST DEPTH OR TIE BACKS MAY BE REQUIRED IN UNSTABLE SOILS

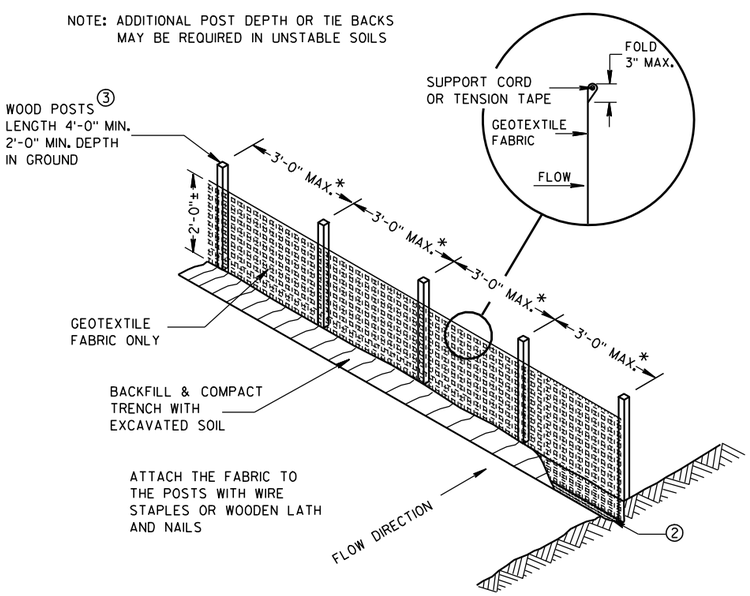

*NOTE: 8'-0" POST SPACING ALLOWED IF A WOVEN GEOTEXTILE FABRIC IS USED.

SILT FENCE

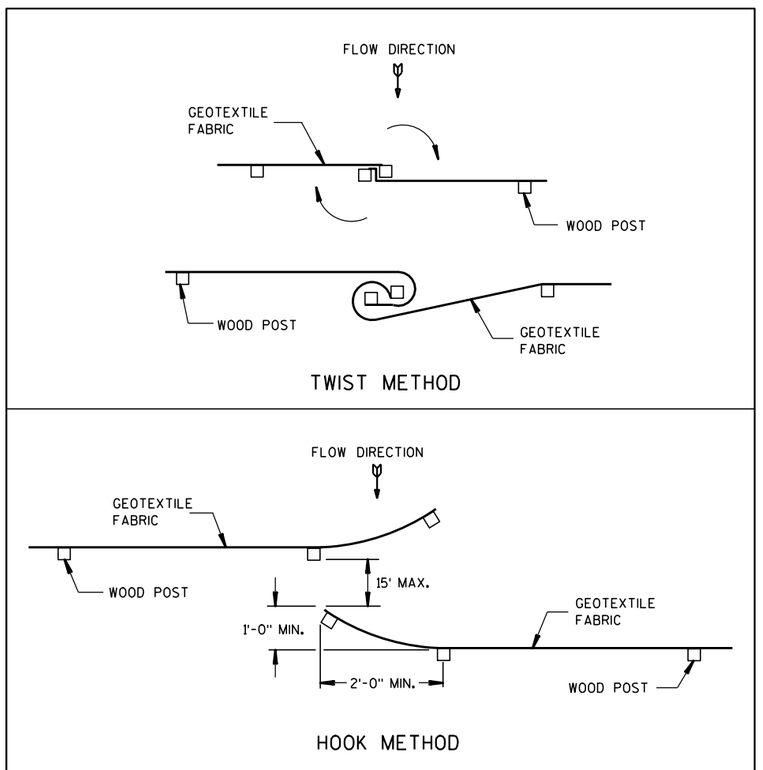

JOINING TWO LENGTHS OF SILT FENCE ⑤

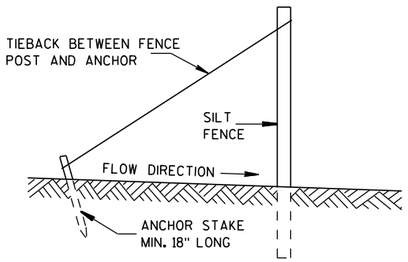

SILT FENCE TIE BACK

(WHEN REQUIRED BY THE ENGINEER)

SILT FENCE
STATE OF WISCONSIN DEPARTMENT OF TRANSPORTATION
APPROVED 4-29-05 /S/ Beth Cann----- DATE CHIEF ROADWAY DEVELOP ENGINEER FHWA

6

6

S.D.D. 8 E 9-6

S.D.D. 8 E 9-6

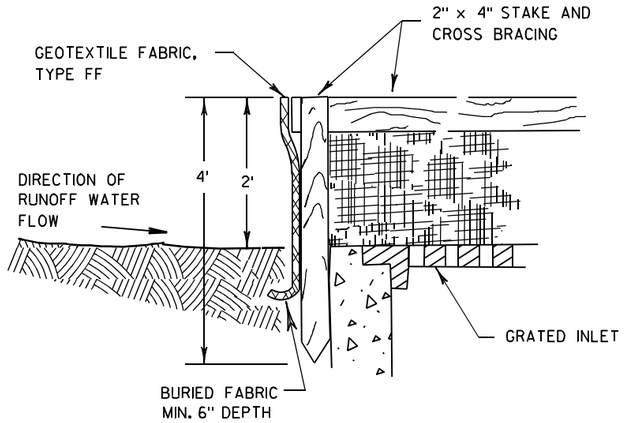

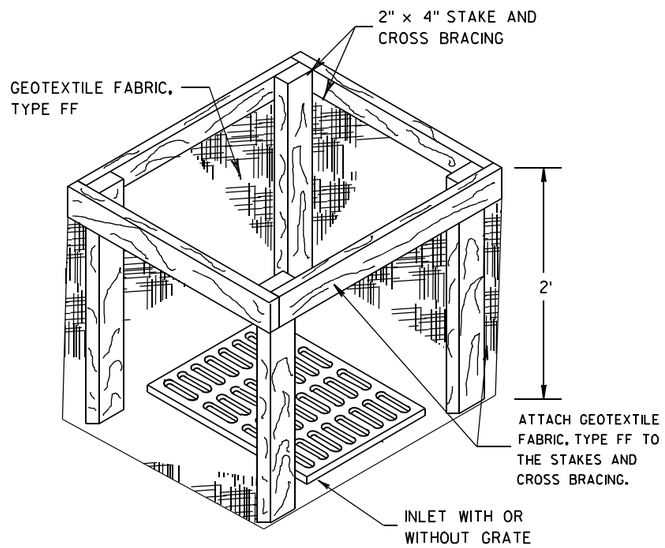

INLET PROTECTION, TYPE A

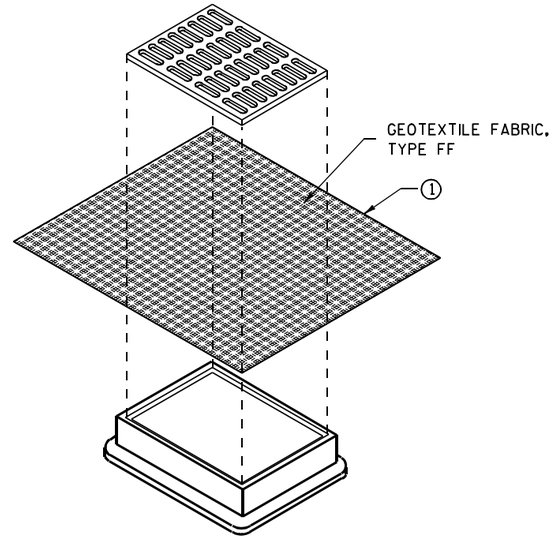

INLET PROTECTION, TYPE B (WITHOUT CURB BOX)

(CAN BE INSTALLED IN ANY INLET WITHOUT A CURB BOX)

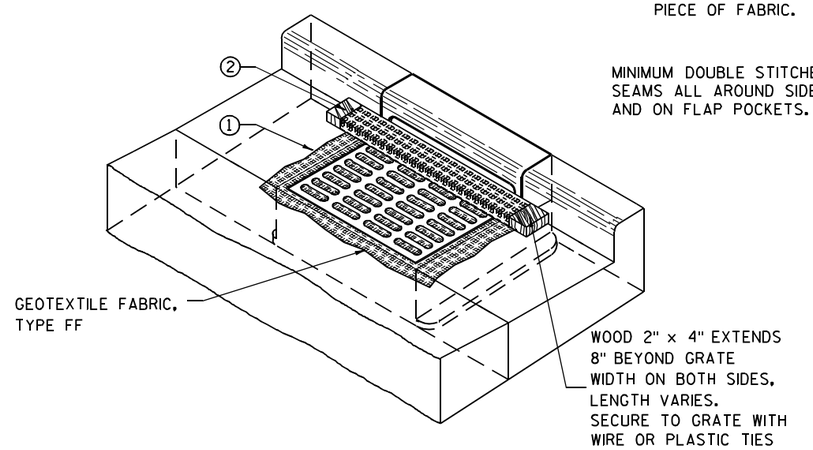

INLET PROTECTION, TYPE C (WITH CURB BOX)

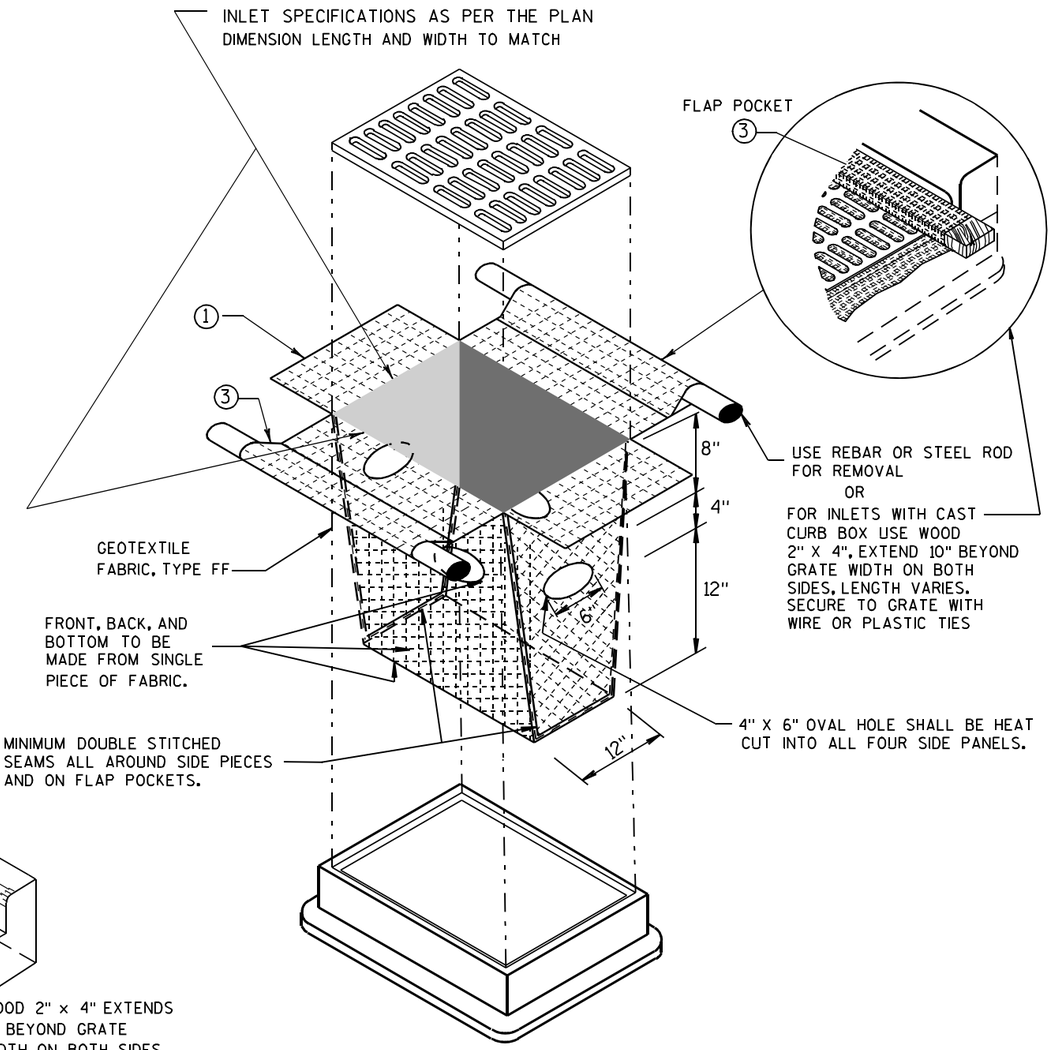

INLET PROTECTION, TYPE D

(CAN BE INSTALLED IN ANY INLET TYPE WITH OR WITHOUT A CURB BOX AS PER NOTE 2)

GENERAL NOTES

INLET PROTECTION DEVICES SHALL BE MAINTAINED OR REPLACED AT THE DIRECTION OF THE ENGINEER.

MANUFACTURED ALTERNATIVES APPROVED AND LISTED ON THE DEPARTMENT'S EROSION CONTROL PRODUCT ACCEPTABILITY LIST MAY BE SUBSTITUTED.

WHEN REMOVING OR MAINTAINING INLET PROTECTION, CARE SHALL BE TAKEN SO THAT THE SEDIMENT TRAPPED ON THE GEOTEXTILE FABRIC DOES NOT FALL INTO THE INLET. ANY MATERIAL FALLING INTO THE INLET SHALL BE REMOVED IMMEDIATELY.

1 FINISHED SIZE, INCLUDING FLAP POCKETS WHERE REQUIRED, SHALL EXTEND A MINIMUM OF 10" AROUND THE PERIMETER TO FACILITATE MAINTENANCE OR REMOVAL.

2 FOR INLET PROTECTION, TYPE C (WITH CURB BOX), AN ADDITIONAL 18" OF FABRIC IS WRAPPED AROUND THE WOOD AND SECURED WITH STAPLES. THE WOOD SHALL NOT BLOCK THE ENTIRE HEIGHT OF THE CURB BOX OPENING.

3 FLAP POCKETS SHALL BE LARGE ENOUGH TO ACCEPT WOOD 2X4.

INSTALLATION NOTES

TYPE B & C

TRIM EXCESS FABRIC IN THE FLOW LINE TO WITHIN 3" OF THE GRATE.

THE CONTRACTOR SHALL DEMONSTRATE A METHOD OF MAINTENANCE, USING A SEWN FLAP, HAND HOLDS OR OTHER METHOD TO PREVENT ACCUMULATED SEDIMENT FROM ENTERING THE INLET.

TYPE D

DO NOT INSTALL INLET PROTECTION TYPE D IN INLETS SHALLOWER THAN 30", MEASURED FROM THE BOTTOM OF THE INLET TO THE TOP OF THE GRATE.

TRIM EXCESS FABRIC IN THE FLOW LINE TO WITHIN 3" OF THE GRATE.

THE INSTALLED BAG SHALL HAVE A MINIMUM SIDE CLEARANCE, BETWEEN THE INLET WALLS AND THE BAG, MEASURED AT THE BOTTOM OF THE OVERFLOW HOLES, OF 3". WHERE NECESSARY THE CONTRACTOR SHALL CINCH THE BAG, USING PLASTIC ZIP TIES, TO ACHIEVE THE 3" CLEARANCE. THE TIES SHALL BE PLACED AT A MAXIMUM OF 4" FROM THE BOTTOM OF THE BAG.

INLET PROTECTION TYPE A, B, C, AND D

STATE OF WISCONSIN
DEPARTMENT OF TRANSPORTATION

APPROVED
10/16/02 — DATE
/S/ Beth Cannestra — CHIEF ROADWAY DEVELOPMENT ENGINEER
FHWA

6

S.D.D. 8 E 10-2

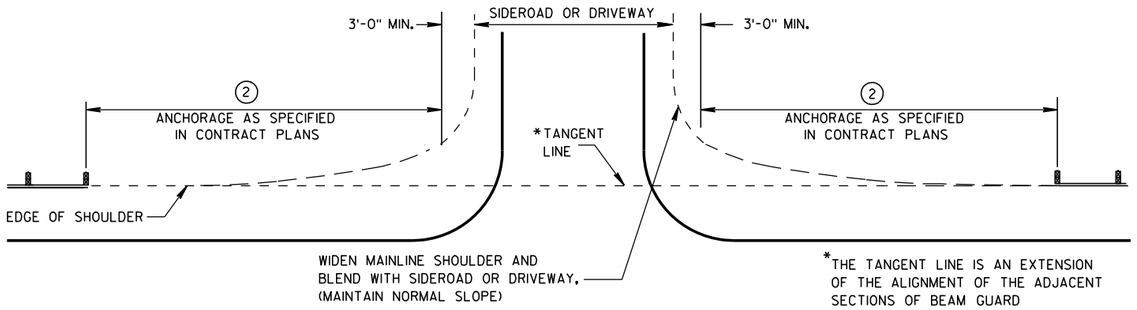

BEAM GUARD AT SIDEROADS OR DRIVEWAYS

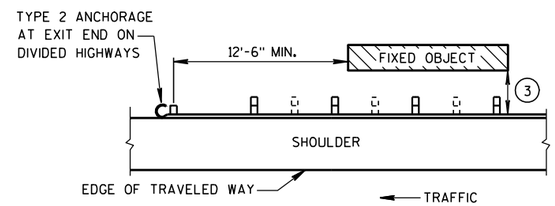

BEAM GUARD AT OBSTACLES EXIT END - ONE WAY TRAFFIC

GENERAL NOTES

DETAILS OF CONSTRUCTION, MATERIALS AND WORKMANSHIP SHALL CONFORM TO THE PERTINENT STANDARD SPECIFICATIONS AND THE APPLICABLE SPECIAL PROVISIONS.

W6 X 9 OR W6 X 8.5 STEEL POSTS WITH NOTCHED PLASTIC BLOCKOUTS ARE ACCEPTABLE ALTERNATIVES FOR 6" X 8" WOOD POSTS WITH WOOD OR PLASTIC BLOCKOUTS. USE APPROVED NOTCHED PLASTIC BLOCKOUTS WITH STEEL POSTS.

THE LOCATIONS AND LENGTHS OF BEAM GUARD ARE SHOWN ELSEWHERE IN THE PLAN.

1. STEEL THRIE BEAM STRUCTURAL APPROACH (STBSA) - SEE CURRENT SDD 14B20.
2. USE AN APPROVED END TREATMENT FOR THE TRAFFIC APPROACH SIDE OF BRIDGE/OBSTACLES. USE TYPE 2 ANCHORAGE ONLY AT THE DOWNSTREAM ENDS OF BEAM GUARD LOCATED ALONG ROADWAYS WITH ONE WAY TRAFFIC.
3.

MINIMUM LATERAL DISTANCE FROM FACE OF BEAM GUARD TO FIXED OBJECT	POST SPACING
3'-6"	3' - 1½"
4'-6"	6' - 3"

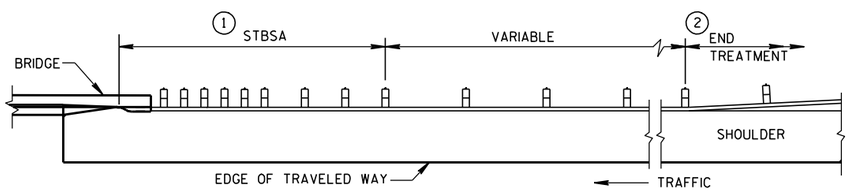

BEAM GUARD AT FULL WIDTH BRIDGES

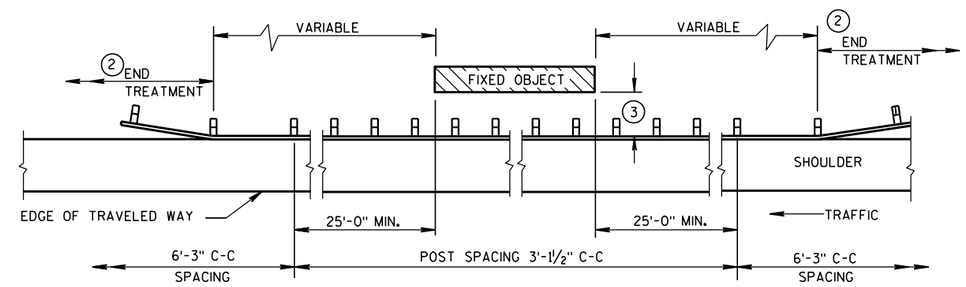

BEAM GUARD AT OBSTACLES - TWO WAY TRAFFIC

(RAIL TO OBSTACLE CLEARANCE 3'-6" TO 4'-6")

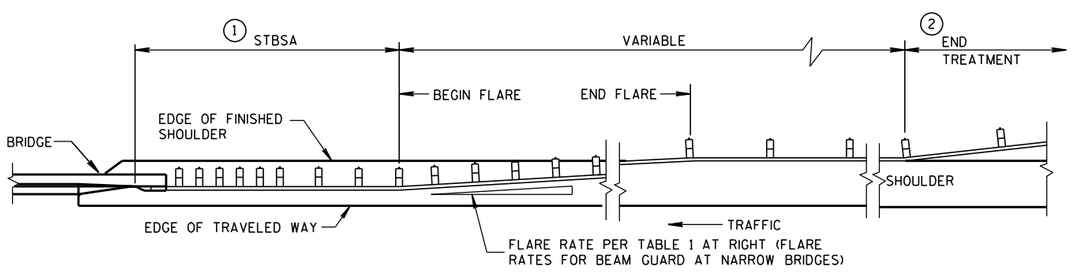

BEAM GUARD AT NARROW BRIDGES

(FLARED TO SHOULDER EDGE, THEN PARALLEL TO ROADWAY)

TABLE 1
FLARE RATES FOR BEAM GUARD AT NARROW BRIDGES

POSTED SPEED (MPH)	FLARE RATE
25	13:1
30	15:1
35	16:1
40	18:1
45	21:1
50	24:1
55	26:1
65	30:1

STEEL PLATE BEAM GUARD CLASS "A" AT BRIDGES, OBSTACLES AND SIDEROADS/DRIVEWAYS

STATE OF WISCONSIN
DEPARTMENT OF TRANSPORTATION

APPROVED
8-21-07 — DATE
/S/ Jerry H. Zogg — ROADWAY STANDARDS DEVELOPMENT ENGINEER
FHWA

GENERAL NOTES

1. STEEL THRIE BEAM STRUCTURAL APPROACH (STBSA) - SEE CURRENT SDD 14B20.
2. LOCATIONS AND LENGTHS OF BEAM GUARD ARE SHOWN ELSEWHERE IN THE PLAN.

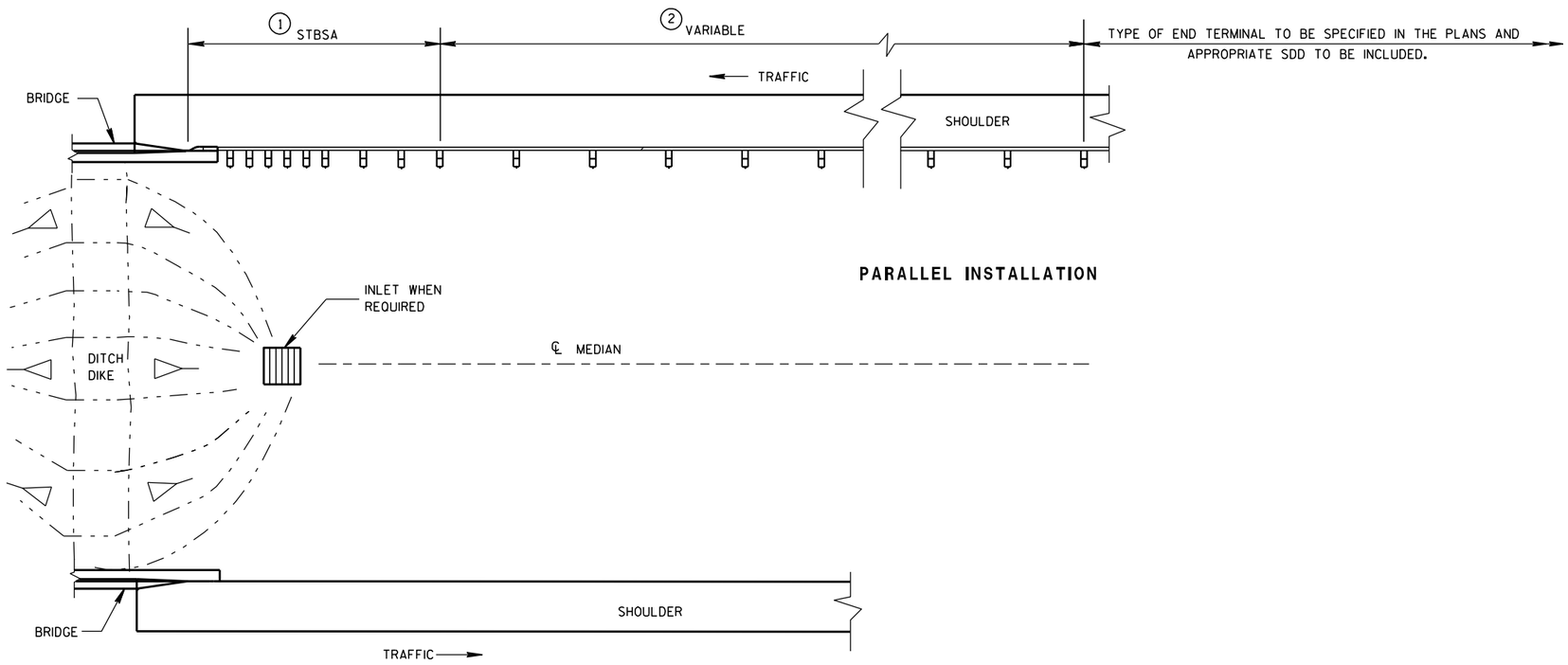

BEAM GUARD AT MEDIAN APPROACH TO BRIDGES

6

6

S.D.D. 14 B 18-6b

S.D.D. 14 B 18-6b

STEEL PLATE BEAM GUARD CLASS "A" AT MEDIAN APPROACH TO BRIDGES

STATE OF WISCONSIN
DEPARTMENT OF TRANSPORTATION

APPROVED

8-21-07 — DATE

/S/ Jerry H. Zogg — ROADWAY STANDARDS DEVELOPMENT ENGINEER

FHWA

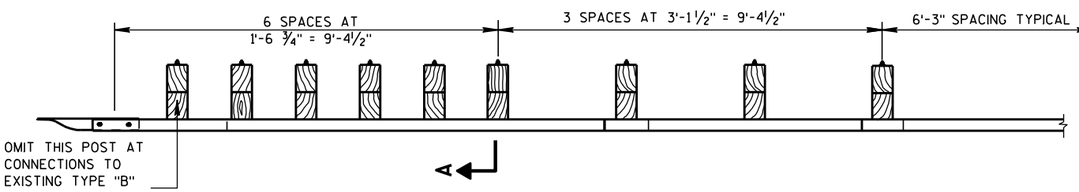

PLAN VIEW

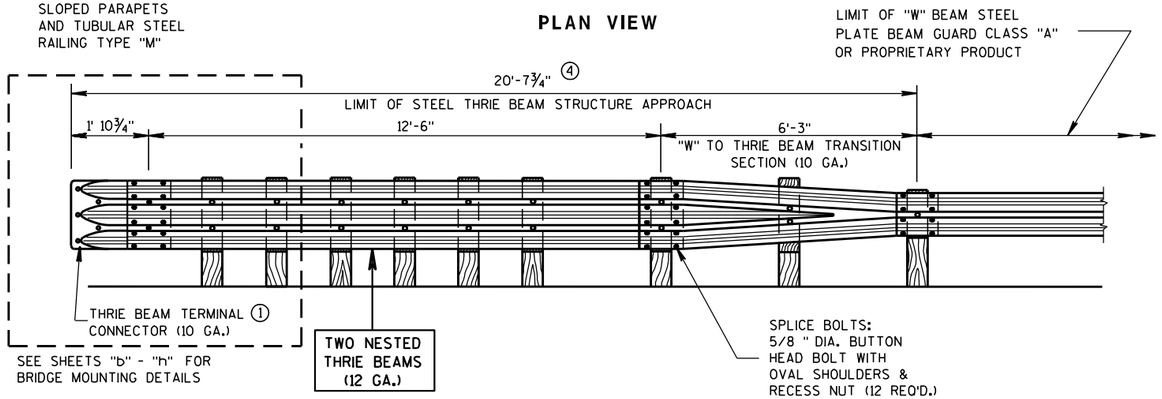

FRONT VIEW

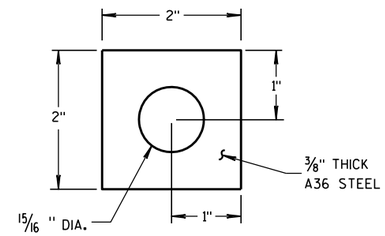

PLATE WASHER DETAIL

GENERAL NOTES

BOLT THE THRIE BEAM TO ALL POSTS AND BLOCKOUTS. DRILL OR PUNCH BOLT HOLES IN THE BEAM IF THE POST SPACING IS LESS THAN 6'-3".

DO NOT USE STEEL POSTS AND NOTCHED PLASTIC BLOCKOUTS IN THE STEEL THRIE BEAM STRUCTURAL APPROACH AND THE TRANSITION SECTION OF STEEL PLATE BEAM GUARD, CLASS "A" INSTALLATIONS.

IF ROCK IS ENCOUNTERED, REMOVE ROCK TO FULL DEPTH OF POST PLUS 2 1/2", AND 12" DIAMETER AROUND POST. SEE 14B15 FOR MORE DETAILS.

① BRIDGE RAILING TYPE "W" DOES NOT REQUIRE A TERMINAL CONNECTOR.

② MINIMUM EMBEDMENT SHALL BE 4'-0". WHERE EXISTING CONDITIONS DO NOT PERMIT THE APPROPRIATE EARTHWORK SHOWN ON THE PLAN TYPICAL SECTIONS OR DETAILS, THE ENGINEER MAY ALLOW THE REDUCTION OR ELIMINATION OF THE 2 FOOT DISTANCE TO THE HINGE POINT. OTHERWISE BUILD AS THE PLAN SHOWS OR AS THE ENGINEER DIRECTS. IF THE 2 FOOT DISTANCE TO THE HINGE POINT IS REDUCED OR ELIMINATED, INCREASE THE POST EMBEDMENT DEPTH TO 4'-6" OR MORE.

③ POST BOLTS ARE 5/8" DIAMETER ASTM A307 BUTTON HEAD BOLT. A POST BOLT REQUIRES A 5/8" DIAMETER A563A DOUBLE RECESSED (DR) HEAVY HEX AND A 5/8" DIAMETER F844 FLAT WASHER. LENGTH OF POST BOLT MAY VARY.

④ ALL WOOD POSTS MUST BE 6" X 8" AND AT LEAST 7'-0" LONG.

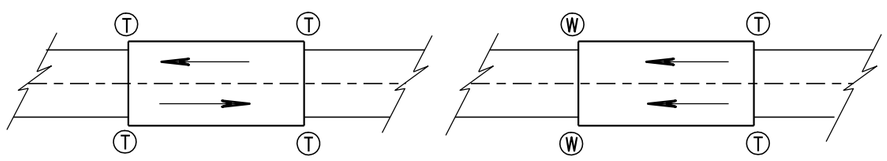

TWO WAY TRAFFIC

ONE WAY TRAFFIC

Ⓣ THRIE BEAM CONNECTION

Ⓦ W-BEAM CONNECTION WHEN REQUIRED

TYPICAL LOCATIONS OF THRIE BEAM AND W-BEAM CONNECTIONS TO BRIDGE

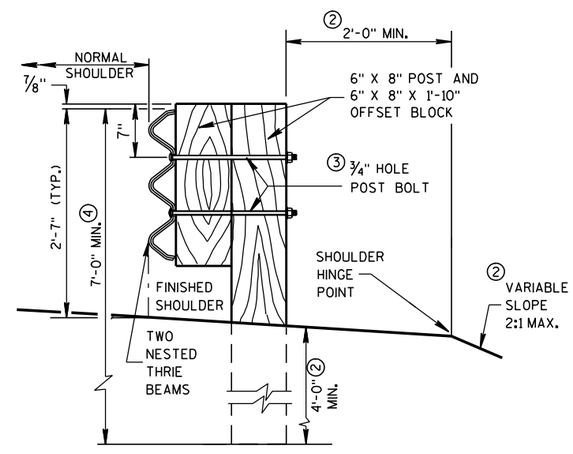

SECTION A-A

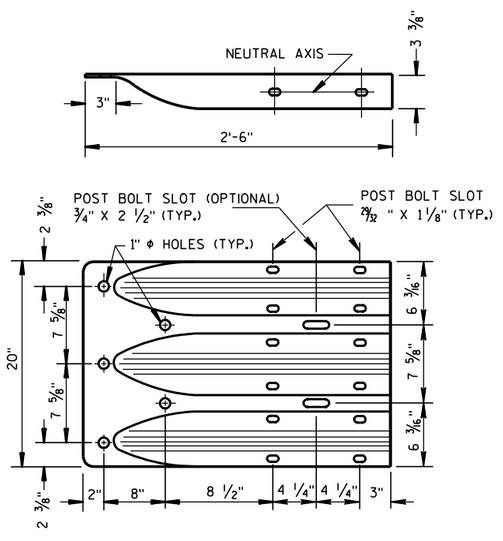

THRIE BEAM TERMINAL CONNECTOR

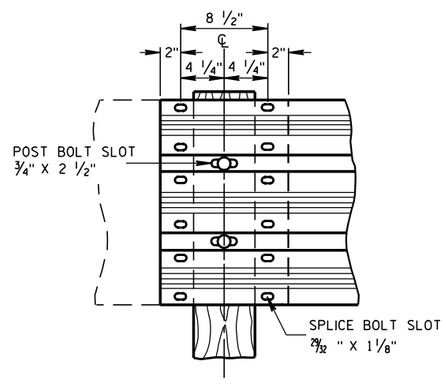

THRIE BEAM SPLICE

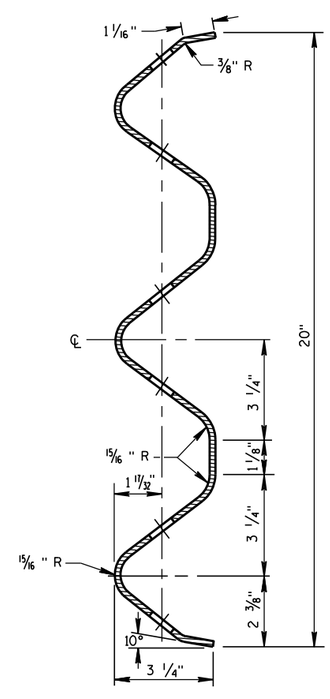

SECTION THRU THRIE BEAM RAIL ELEMENT

STEEL THRIE BEAM STRUCTURE APPROACH

STATE OF WISCONSIN
DEPARTMENT OF TRANSPORTATION

APPROVED

8/31/2012 — DATE

/S/ Jerry H. Zogg — ROADWAY STANDARDS DEVELOPMENT ENGINEER

FHWA

6

6

S.D.D. 14 B 20-11a

S.D.D. 14 B 20-11a

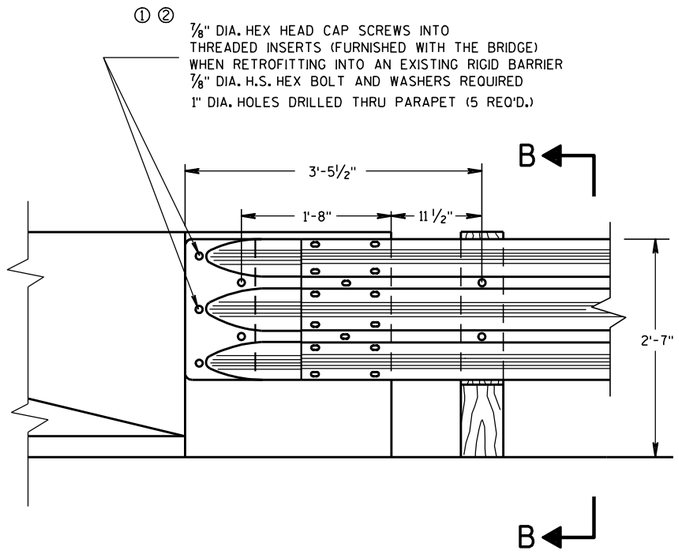

FRONT VIEW

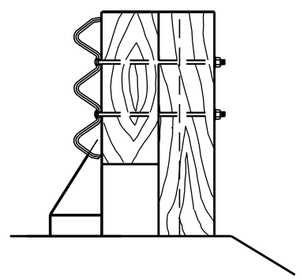

SECTION B-B

THRIE BEAM CONNECTION TO BRIDGE PARAPET WITH SQUARE ENDS

GENERAL NOTES

THESE ARE TYPICAL CONNECTION DETAILS. ADJUST THE POSTION OF CONNECTIONS TO EXISTING BRIDGES TO FIT THE ACTUAL BRIDGE AND SITE DIMENSIONS.

BOLTS, NUTS AND WASHERS SHALL CONFORM TO ASTM A325, A449 AND GALVANIZED PER STANDARD SPECIFICATIONS 614.

① DRILLING BOLT HOLES THROUGH THE PARAPET, BOLTS, NUTS, WASHERS AND REPAIRING DAMAGED CONCRETE ARE INCIDENTAL TO THE CONTRACT.

② BOLTS MAY BE A325 BOLTS OR A449 BOLTS. BOLT LENGTH AND THREADING LENGTH ARE TO ALLOW FOR A TIGHT CONNECTION BETWEEN RIGID BARRIER AND THRIE BEAM CONNECTION PLATE. CONTRACTOR IS TO FIELD VERIFY BOLT LENGTH AND THREAD LENGTH. ONE ROUND WASHER REQUIRED BETWEEN BOLT HEAD AND THRIE BEAM TERMINAL CONNECTOR. BOLTS THAT EXTEND THROUGH THE PARAPET AND OUT THE BACK FACE REQUIRE A HARDENED ROUND STEEL WASHER THAT IS 2" O.D. X ⅝" THICK AND ONE PLATE WASHER. REPAIR ANY DAMAGED CONCRETE FROM BOLT INSTALLATION.

③ THE RECESS FOR A W-BEAM CONNECTION, WHICH EXISTS ON SOME PARAPETS OF THIS TYPE, SHALL BE FILLED WITH A TREATED TIMBER BLOCKOUT. BLOCKOUT SIZE IS 1'-6" X 2'-0" X 3½".

④ W6 X 9 OR W6 X 8.5 STEEL POSTS AND NOTCHED PLASTIC BLOCKOUTS ARE ACCEPTABLE ALTERNATIVES FOR 6" X 8" WOOD POST WITH WOOD OR PLASTIC BLOCKOUTS. USE APPROVED NOTCHED PLASTIC BLOCKOUTS WITH STEEL POSTS.

DO NOT USE STEEL POSTS AND NOTCHED PLASTIC BLOCKOUTS IN THE STEEL THRIE BEAM STRUCTURAL APPROACH AND THE TRANSITION SECTION OF STEEL PLATE BEAM GUARD, CLASS "A" INSTALLATIONS.

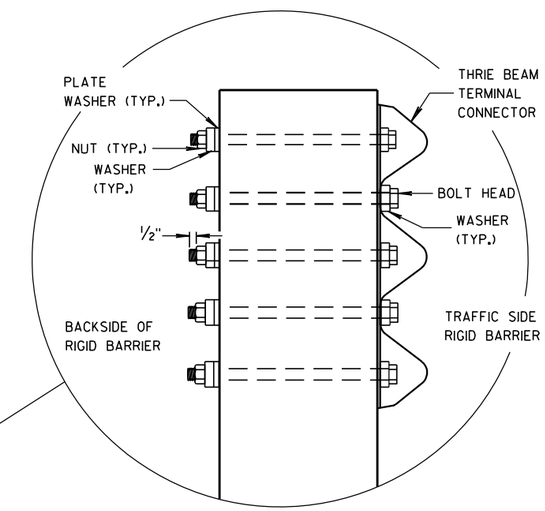

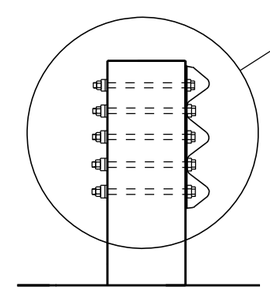

SECTION C-C

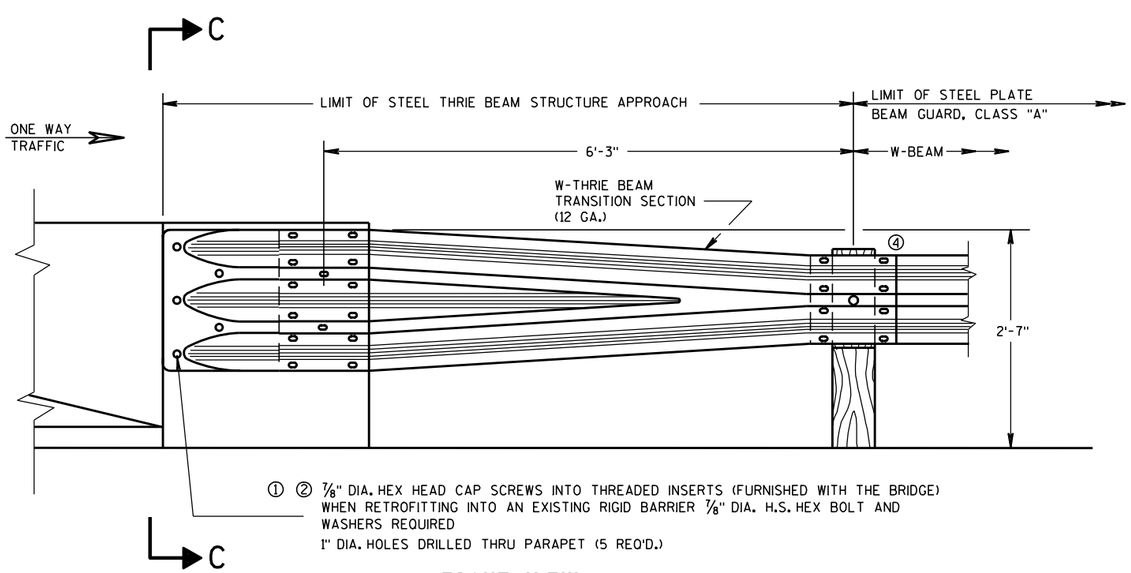

FRONT VIEW

W BEAM TRANSITION AND CONNECTION TO BRIDGE PARAPETS WITH SQUARE ENDS

(USE ONLY ON THE TRAFFIC EXIT END OF ONE WAY BRIDGES)

STEEL THRIE BEAM STRUCTURE APPROACH, CONNECTION TO SQUARE END PARAPETS

STATE OF WISCONSIN
DEPARTMENT OF TRANSPORTATION

APPROVED
8/31/2012 — DATE
/S/ Jerry H. Zogg — ROADWAY STANDARDS DEVELOPMENT ENGINEER
FHWA

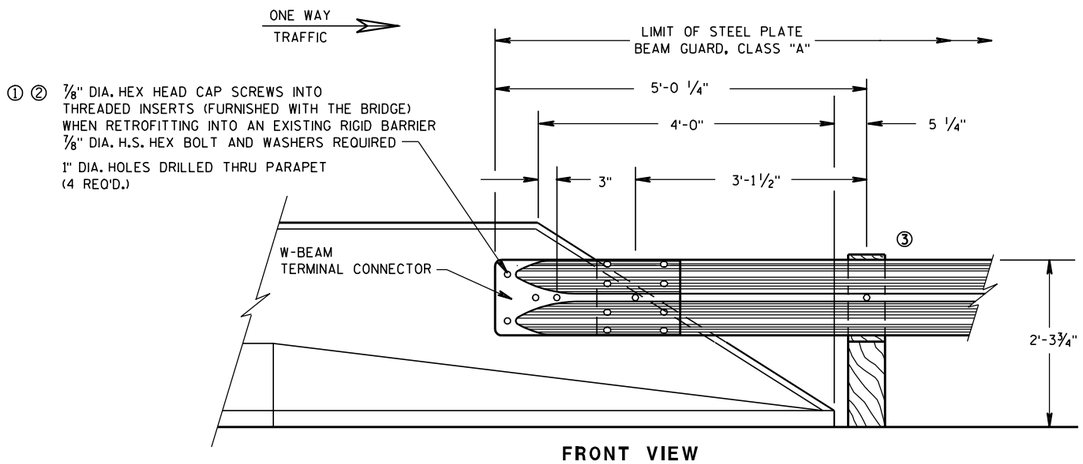

FRONT VIEW

W BEAM CONNECTION TO PARAPETS WITH SLOPED ENDS

(USE ONLY AT TRAFFIC EXIT END OF ONE WAY BRIDGE)

GENERAL NOTES

THESE ARE TYPICAL CONNECTION DETAILS. ADJUST THE POSTION OF CONNECTIONS TO EXISTING BRIDGES TO FIT THE ACTUAL BRIDGE AND SITE DIMENSIONS.

BOLTS, NUTS AND WASHERS SHALL CONFORM TO ASTM A325, A449 AND GALVANIZED PER STANDARD SPECIFICATIONS 614.

① DRILLING BOLT HOLES THROUGH THE PARAPET, BOLTS, NUTS, WASHERS AND REPAIRING DAMAGED CONCRETE ARE INCIDENTAL TO THE CONTRACT.

② BOLTS MAY BE A325 BOLTS OR A449 BOLTS. BOLT LENGTH AND THREADING LENGTH ARE TO ALLOW FOR A TIGHT CONNECTION BETWEEN RIGID BARRIER AND THRIE BEAM CONNECTION PLATE. CONTRACTOR IS TO FIELD VERIFY BOLT LENGTH AND THREAD LENGTH. ONE ROUND WASHER REQUIRED BETWEEN BOLT HEAD AND THRIE BEAM TERMINAL CONNECTOR. BOLTS THAT EXTEND THROUGH THE PARAPET AND OUT THE BACK FACE REQUIRE A HARDENED ROUND STEEL WASHER THAT IS 2" O.D. X ⅝" THICK AND ONE PLATE WASHER. REPAIR ANY DAMAGED CONCRETE FROM BOLT INSTALLATION.

③ W6 X 9 OR W6 X 8.5 STEEL POSTS AND NOTCHED PLASTIC BLOCKOUTS ARE ACCEPTABLE ALTERNATIVES FOR 6" X 8" WOOD POST WITH WOOD OR PLASTIC BLOCKOUTS. USE APPROVED NOTCHED PLASTIC BLOCKOUTS WITH STEEL POSTS.

DO NOT USE STEEL POSTS AND NOTCHED PLASTIC BLOCKOUTS IN THE STEEL THRIE BEAM STRUCTURAL APPROACH AND THE TRANSITION SECTION OF STEEL PLATE BEAM GUARD, CLASS "A" INSTALLATIONS.

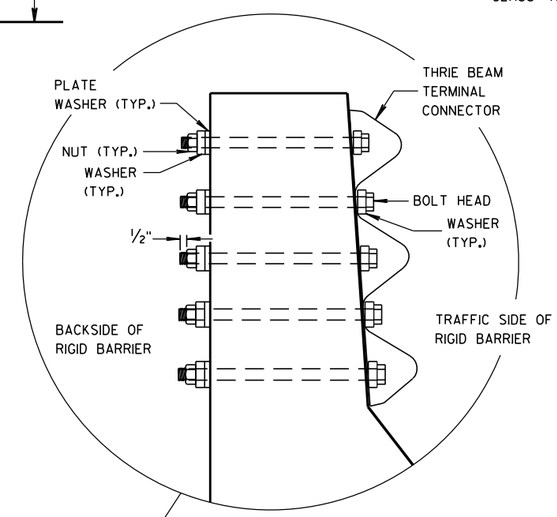

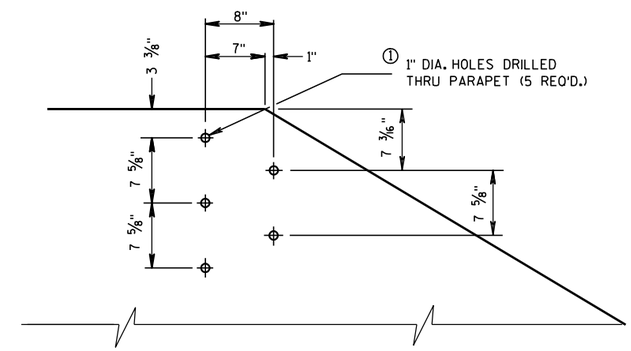

DRILL HOLE LOCATION AND PATTERN FOR THRIE BEAM CONNECTION

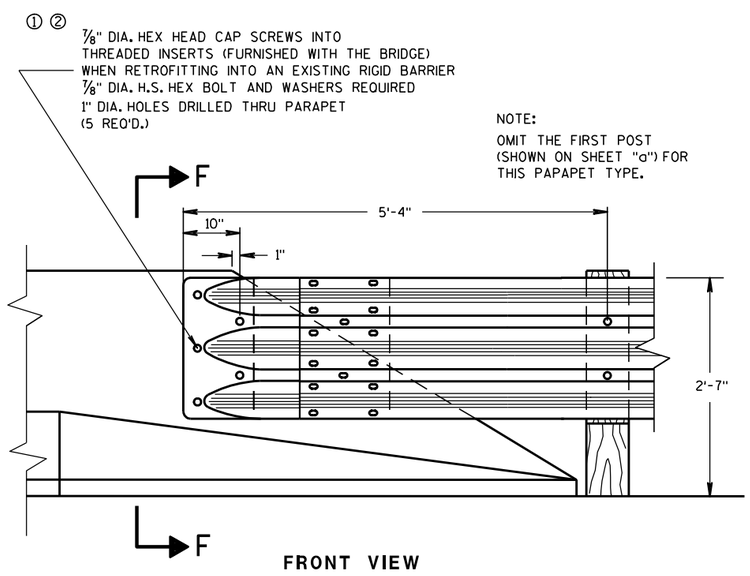

FRONT VIEW

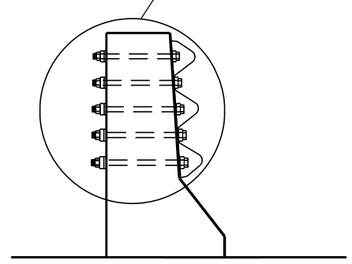

SECTION F-F

THRIE BEAM CONNECTION TO BRIDGE PARAPETS WITH SLOPED ENDS

STEEL THRIE BEAM STRUCTURE APPROACH, CONNECTION TO SLOPED END PARAPETS

STATE OF WISCONSIN
DEPARTMENT OF TRANSPORTATION

APPROVED
8/31/2012 — DATE
/S/ Jerry H. [illegible] — ROADWAY STANDARDS DEVELOPMENT ENGINEER
FHWA

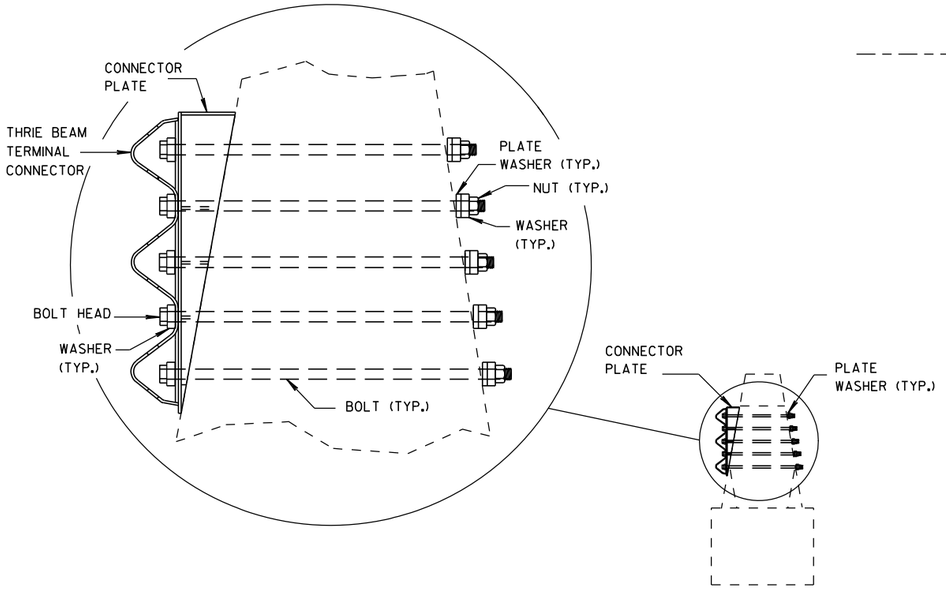

SECTION J-J

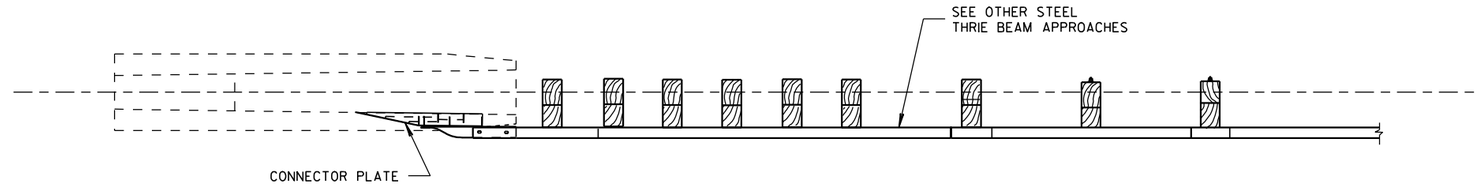

PLAN VIEW

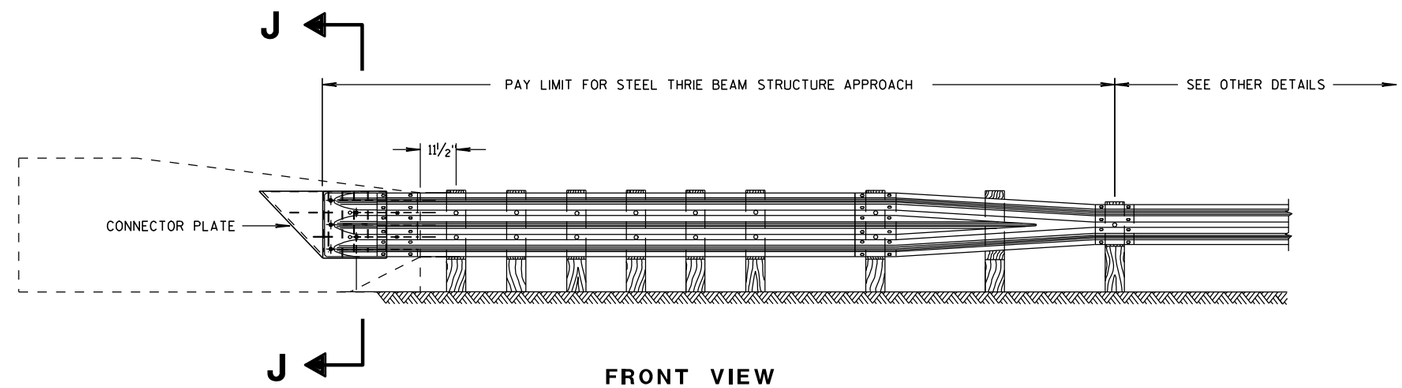

FRONT VIEW

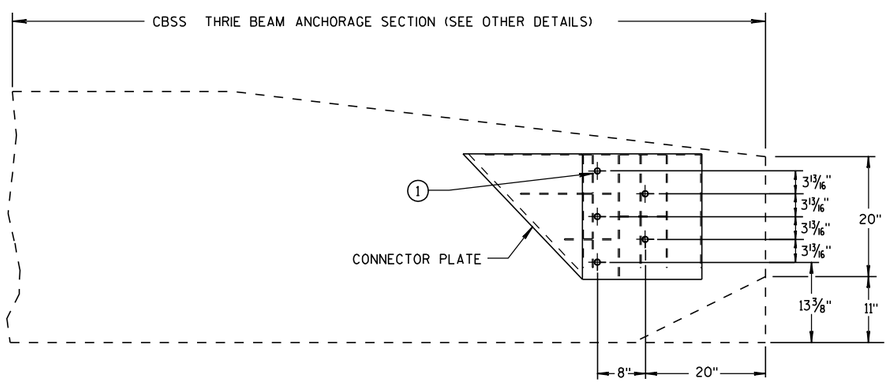

CONNECTOR PLATE LOCATION

GENERAL NOTES

CONSTRUCT PER STANDARD SPECIFICATION 614.

CONNECTOR PLATE, DRILLING HOLES THROUGH PARAPET, BOLTS, NUTS, WASHERS AND REPAIRING DAMAGED CONCRETE ARE INCIDENTAL TO THE CONTRACT.

(1) BOLTS MAY BE A325 BOLTS OR A449 BOLTS. BOLT LENGTH AND THREADING LENGTH ARE TO ALLOW FOR A TIGHT CONNECTION BETWEEN RIGID BARRIER AND THRIE BEAM CONNECTION PLATE. CONTRACTOR IS TO FIELD VERIFY BOLT LENGTH AND THREAD LENGTH. ONE ROUND WASHER REQUIRED BETWEEN BOLT HEAD AND THRIE BEAM TERMINAL CONNECTOR. BOLTS THAT EXTEND THROUGH THE PARAPET AND OUT THE BACK FACE REQUIRE A HARDENED ROUND STEEL WASHER THAT IS 2" O.D. X 5/8" THICK AND ONE PLATE WASHER. REPAIR ANY DAMAGED CONCRETE FROM BOLT INSTALLATION.

STEEL THRIE BEAM STRUCTURE APPROACH

STEEL THRIE BEAM STRUCTURE APPROACH, SINGLE SLOPE ATTACHMENT

STATE OF WISCONSIN
DEPARTMENT OF TRANSPORTATION

APPROVED
8/31/2012 — DATE
/S/ Jerry H. [illegible] — ROADWAY STANDARDS DEVELOPMENT ENGINEER
FHWA

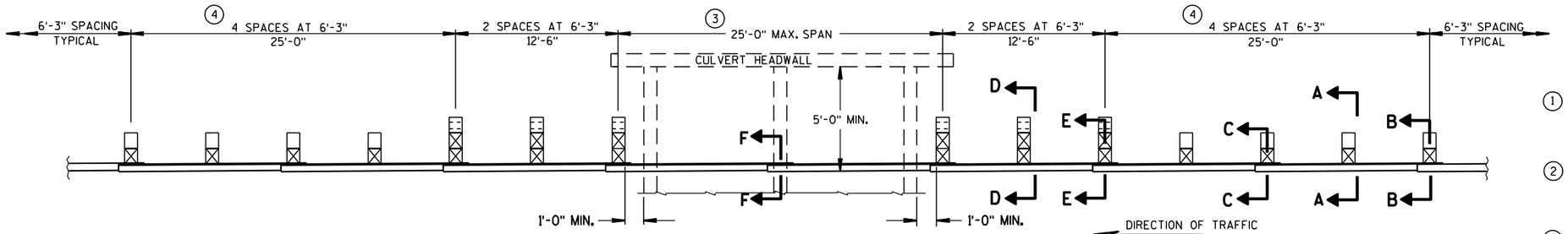

PLAN VIEW

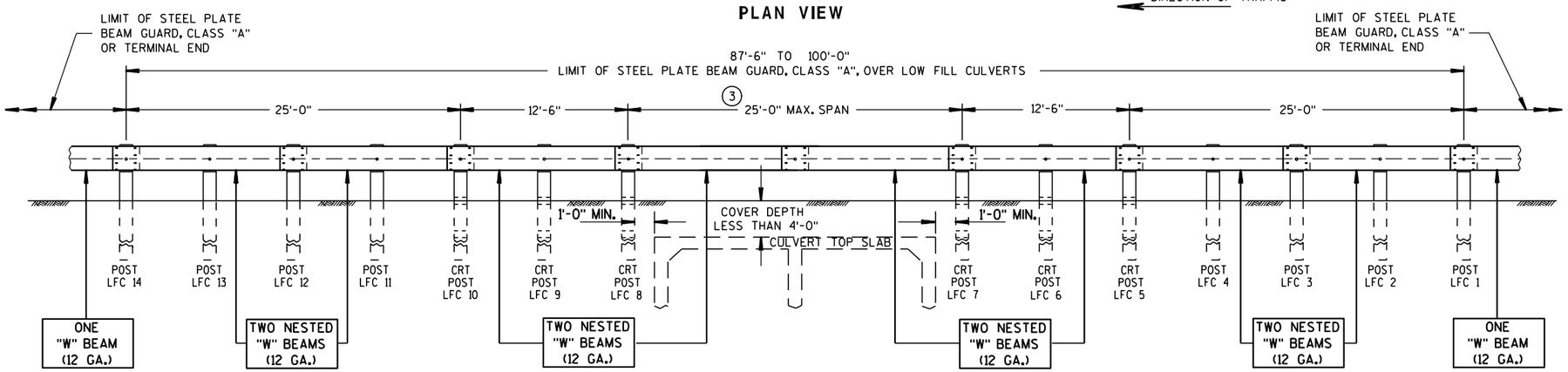

FRONT VIEW

TYPICAL INSTALLATION OF STEEL PLATE BEAM GUARD OVER LOW FILL CULVERTS

GENERAL NOTES

DETAILS OF CONSTRUCTION, MATERIALS AND WORKMANSHIP NOT SHOWN ON THIS DRAWING SHALL CONFORM TO THE PERTINENT REQUIREMENTS OF THE STANDARD SPECIFICATIONS AND THE APPLICABLE SPECIAL PROVISIONS.

1. MAINTAIN THE NESTING OF EACH NESTED PAIR OF "W" BEAM SECTIONS THROUGH SPLICES. ORIENTATE NESTED "W" BEAM SPLICES IN THE DIRECTION OF TRAFFIC AS THE PLAN VIEW SHOWS. SEE S.D.D. 14 B 15 FOR SPLICE INSTALLATION.
2. THE CONTRACTOR MAY USE APPROVED PLASTIC BLOCKOUTS IN LIEU OF WOOD BLOCKOUTS. SEE S.D.D. 14 B 15 FOR TYPICAL BLOCKOUT, SPLICE AND REFLECTOR INSTALLATIONS. USE BOLT SIZES AND LENGTHS AS SHOWN ON THIS DETAIL.
3. PROVIDE 12'-6", 18'-9" AND 25'-0" SPANS ONLY. USE A MAXIMUM OF ONE SPLICE LOCATED ANYWHERE WITHIN THE SPAN SECTION. LOCATE ALL OTHER SPLICES AT BEAM GUARD POSTS.
4. IN THE FIRST AND LAST 25 FOOT SECTIONS (POSTS LFC 1-4 & LFC 11-14), THE CONTRACTOR MAY USE W6 X 9 OR W6 X 8.5 STEEL POSTS WITH NOTCHED PLASTIC BLOCKOUTS OR 6" X 8" WOOD POSTS WITH EITHER WOOD OR PLASTIC BLOCKOUTS. DO NOT MIX STEEL POSTS WITH NOTCHED PLASTIC BLOCKOUTS AND WOOD POSTS WITH EITHER WOOD OR PLASTIC BLOCKOUTS IN THE SAME INSTALLATION.
5. WHERE EXISTING CONDITIONS DO NOT PERMIT THE APPROPRIATE EARTHWORK, THE PLAN TYPICAL SECTIONS OR DETAILS MAY SHOW, OR THE ENGINEER MAY ALLOW, THE REDUCTION OR ELIMINATION OF THE 2 FOOT DISTANCE TO THE HINGE POINT. BUILD AS THE PLAN SHOWS OR ENGINEER DIRECTS. IF THE 2 FOOT DISTANCE TO THE HINGE POINT IS REDUCED OR ELIMINATED, INCREASE THE POST SOIL DEPTH TO 4'-6" OR MORE.

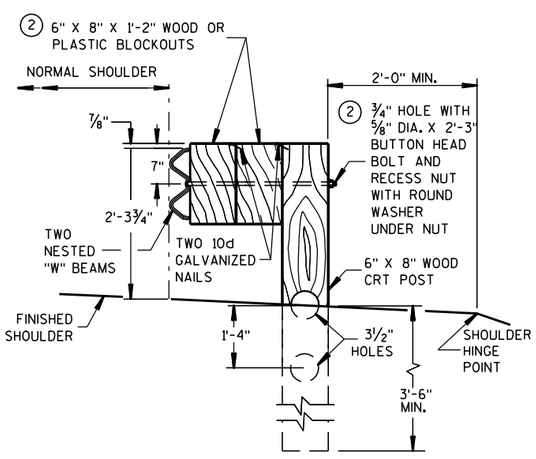

SECTION D-D
TYPICAL CRT POST LFC 6 AND 9

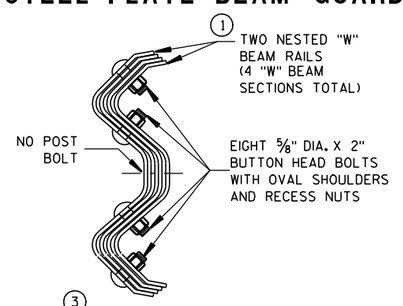

SECTION F-F
BEAM SPLICE IN SPAN OVER CULVERT

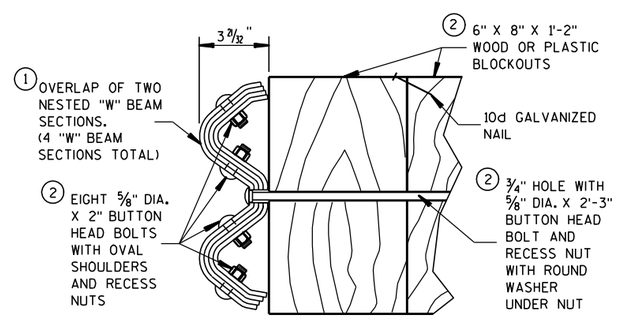

SECTION E-E
TYPICAL CRT POST LFC 5, 7, 8 AND 10

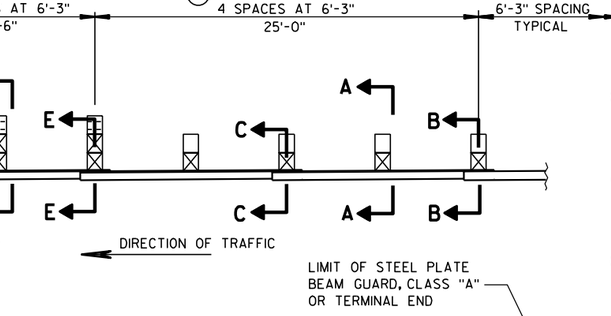

SECTION C-C
TYPICAL AT POSTS LFC 3 AND 12

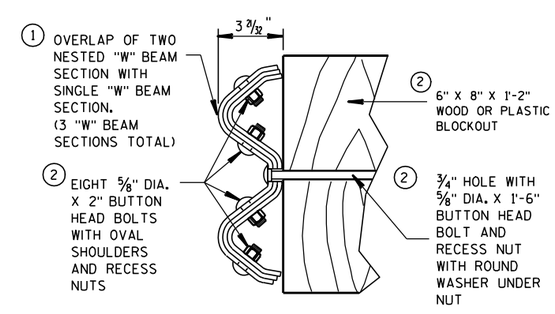

SECTION B-B
TYPICAL AT POSTS LFC 1 AND 14

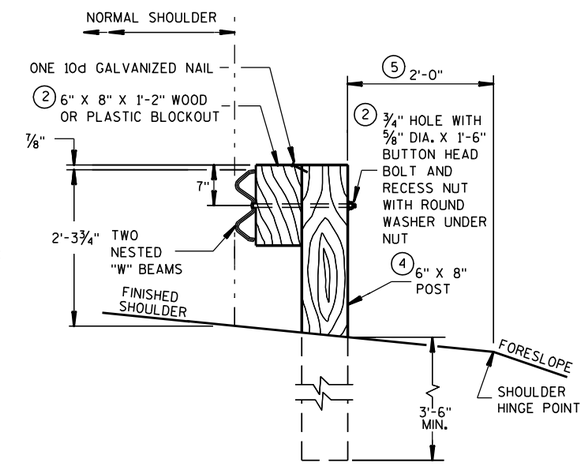

SECTION A-A
TYPICAL AT POST LFC 2,4,11,13

STEEL PLATE BEAM GUARD, CLASS "A", OVER LOW FILL CULVERTS

STATE OF WISCONSIN
DEPARTMENT OF TRANSPORTATION

APPROVED
12/8/00 DATE
/S/ John Have CHIEF ROADWAY DEVELOPMENT ENGINEER
FHWA

1. WOOD OR STEEL POSTS (w6X9 OR w6X8.5) MAY BE USED. DO NOT INTERMIX WOOD AND STEEL POSTS. INSTALL STEEL POSTS WITH HOLES ON APPROACHING TRAFFIC SIDE.

2. USE WOOD OR APPROVED PLASTIC BLOCKOUTS. WOOD BLOCKOUTS MAY BE CONSTRUCTED OUT OF TWO OR MORE WOOD BLOCKOUTS. SEE ALTERNATE WOOD BLOCKOUT DETAIL. DIMENSIONS OF APPROVED PLASTIC BLOCKOUTS MAY VARY.

3. IF ROCK IS ENCOUNTERED DURING EXCAVATION, PROVIDE A HOLE 12 INCHES IN DIAMETER EXTENDING 20 INCHES DEEP INTO THE ROCK. PLACE APPROXIMATELY 2½ INCHES OF GRANULAR MATERIAL IN THE BOTTOM OF THE HOLE. CUT THE POSTS THE TO LENGTH AMD INSTALL. BACKFILL WITH EXCAVATED MATERIAL AND COMPACT. BACKFILL IS TO BE FREE OF LARGE ROCKS.

4. WHEN THE DISTANCE FROM BACK OF POST TO SHOULDER HINGE POINT IS LESS THAN 2 FEET INSTALL LONGER POST AT HALF POST SPACING (K).

5. FOR NEW MGS INSTALLATION TOP OF W-BEAM RAIL TOLERANCE IS ± 1". FOR EXISTING MGS INSTALLATION TOP OF W-BEAM IS BETWEEN 27¾" TO 32".

6. WHEN USING STEEL POST AND WOOD BLOCKOUTS INSTALL FOUR 16D GALVANIZED NAILS. INSTALL NAILS AT THE BACK CORNERS OF THE BLOCK AND BEND THE NAILS OVER THE FLANGE OF THE STEEL POST.

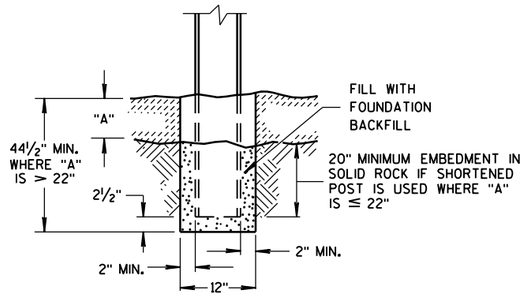

END VIEW
SETTING STEEL OR WOOD POST IN ROCK (3)

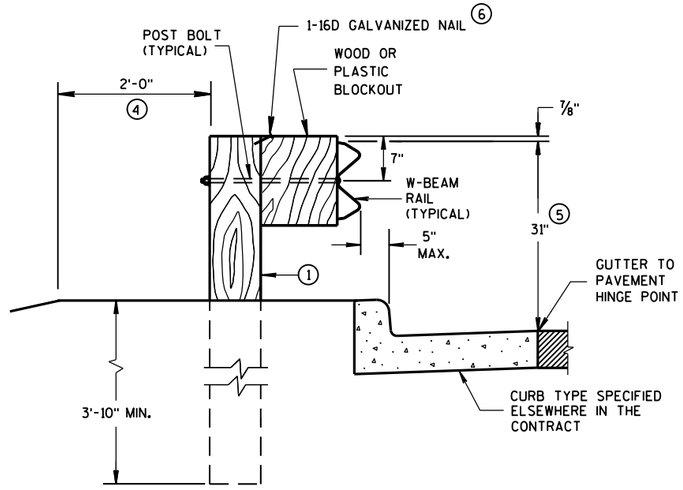

END VIEW
LOCATED ALONG A CURBED ROADWAY

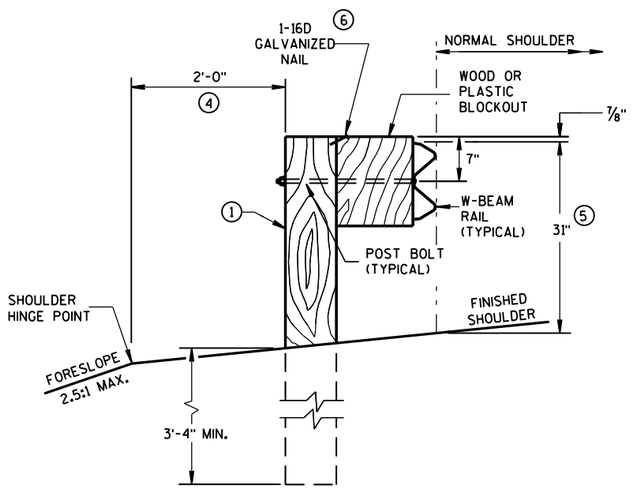

END VIEW
LOCATED ALONG A ROADWAY SHOULDER
STANDARD INSTALLATION

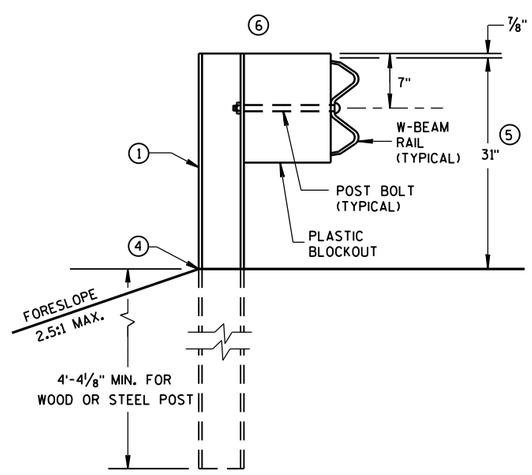

END VIEW
MGS LONGER POST AT HALFPOST SPACING W BEAM (K)

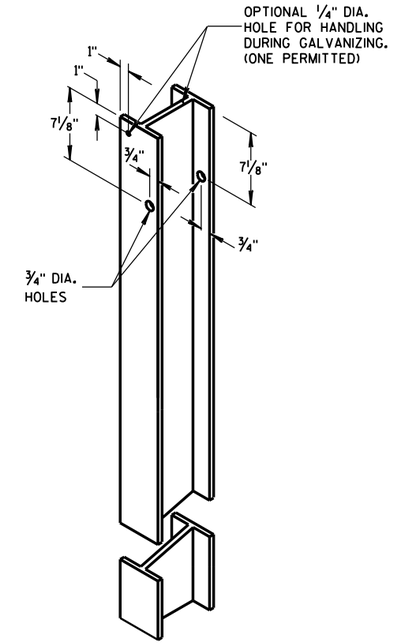

STEEL POST &
HOLE PUNCHING DETAIL
(w6X9) (1)

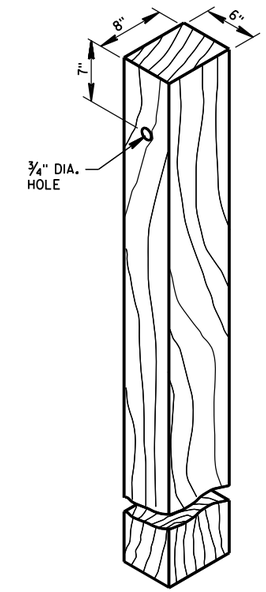

WOOD POST
(6" X 8") NOMINAL (1)

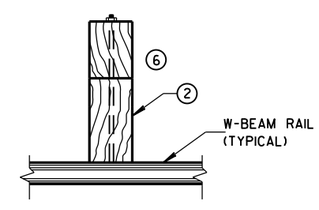

PLAN VIEW
WOOD POST,
BLOCKOUT & BEAM

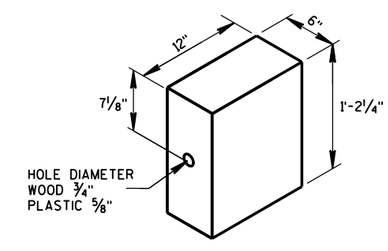

WOOD OR
PLASTIC BLOCKOUT (2)

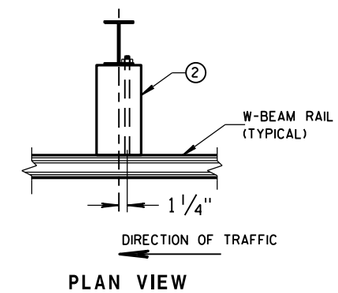

PLAN VIEW
STEEL POST,
PLASTIC BLOCKOUT & BEAM

MIDWEST GUARDRAIL SYSTEM
(MGS) GUARDRAIL

STATE OF WISCONSIN
DEPARTMENT OF TRANSPOI

6

S.D.D. 14 B 42-5a

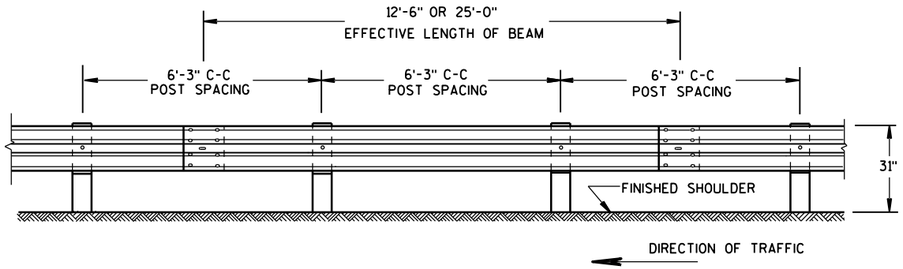

FRONT VIEW

POST SPACING STANDARD INSTALLATION

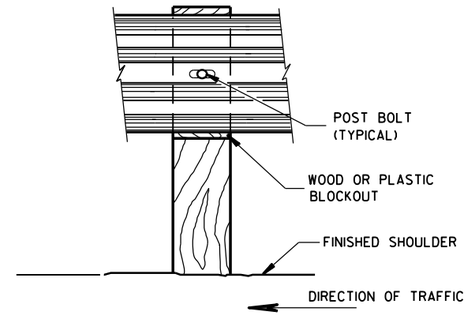

FRONT VIEW AT WOOD POST

GENERAL NOTES

(8) DO NOT INSTALL REFLECTORS ON THE FIRST 50 FEET OF THE APPROACH END OF THE ENERGY ABSORBING TERMINAL. RAIL SPLICE LOCATIONS ARE THE ONLY ACCEPTABLE LOCATIONS FOR REFLECTORS.

(11) 25 FEET OF HALF POST SPACING IS REQUIRED ON APPROACH AND DEPARTURE ENDS OF QUARTER POST SPACING.

POST BOLTS ARE A 5/8" DIAMETER ASTM A307 GUARDRAIL BOLT. A POST BOLT REQUIRES 5/8" DIAMETER A563A DOUBLE RECESSED (DR) HEAVY HEX NUT AND 5/8" DIAMETER F844 FLAT WASHER. POST BOLTS MAY BE LONGER IF MULTIPLE BLOCKOUTS ARE BEING USED.

GUARD RAIL SPLICE BOLTS ARE A 5/8" DIAMETER ASTM A307 GUARDRAIL HEAD BOLT. A GUARDRAIL SPLICE BOLT REQUIRES 5/8" DIAMETER A563A DOUBLE RECESSED (DR) HEAVY HEX NUT.

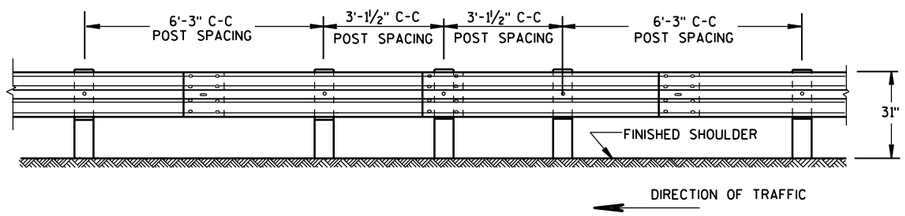

FRONT VIEW

HALF POST SPACING (HS) AND HALF POST SPACING WITH LONGER POSTS (K)

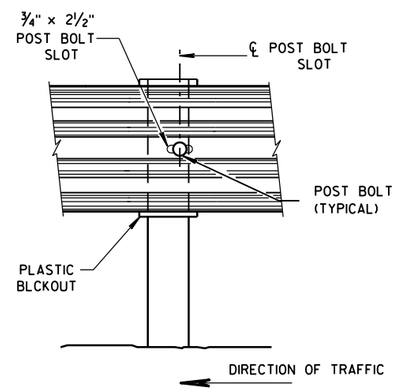

FRONT VIEW AT STEEL POST

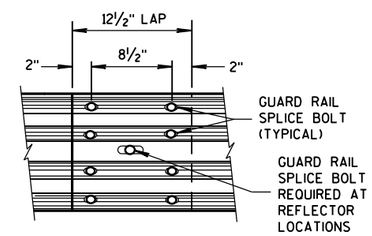

FRONT VIEW

MID-SPAN BEAM SPLICE

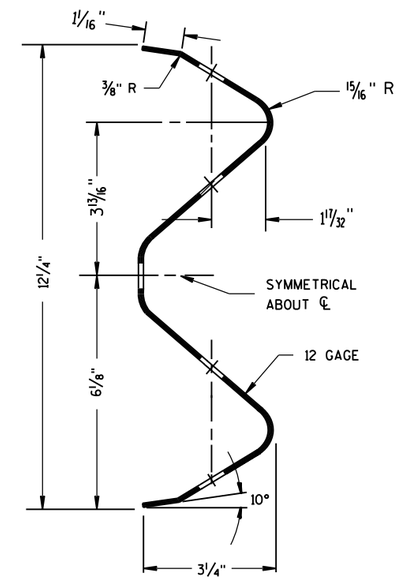

SECTION THRU W-BEAM RAIL

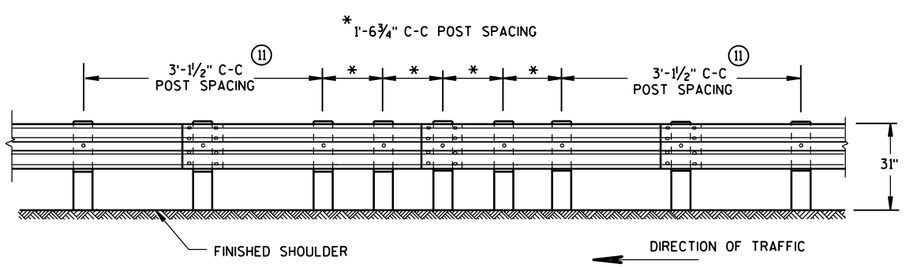

FRONT VIEW

QUARTER POST SPACING (QS)

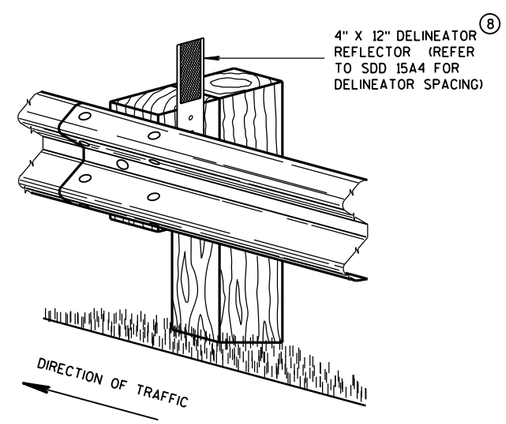

ONE SIDED REFLECTOR DETAIL AND TYPICAL INSTALLATION

MIDWEST GUARDRAIL SYSTEM
(MGS) GUARDRAIL

STATE OF WISCONSIN
DEPARTMENT OF TRANSPO

6

6

S.D.D. 14 B 42-5b

S.D.D. 14 B 42-5b

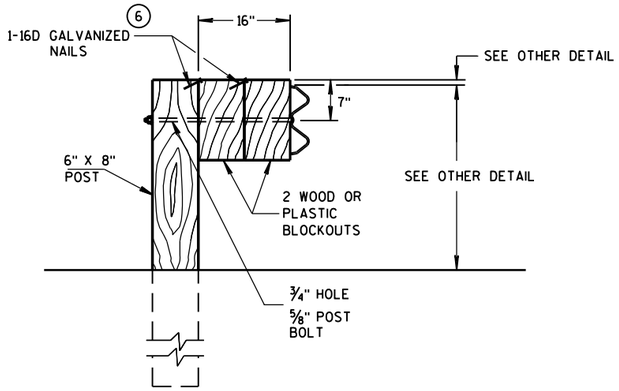

DETAIL FOR 16" BLOCKOUT DEPTH

IT IS ACCEPTABLE TO USE BLOCKOUTS UP TO 16" DEEP TO INCREASE THE POST OFFSET TO AVOID UNDERGROUND OBSTACLES. THERE IS NO LIMIT TO THE NUMBER OF POSTS THAT CAN HAVE ADDITIONAL BLOCKOUTS UP TO 16" DEEP.

NOTE: 1. ALL FILLETS SHALL HAVE A MINIMUM RADIUS OF 1/16".
2. IF THE BOLT EXTENDS MORE THAN 1/4" FROM THE NUT THE BOLT SHOULD BE TRIMMED BACK.

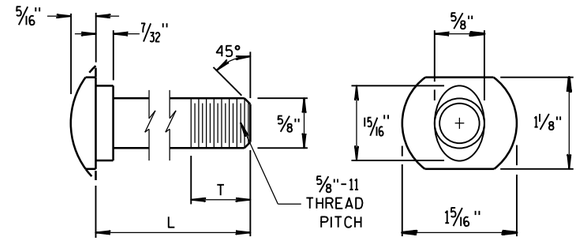

POST BOLT TABLE

L	T (MIN.)
1 1/4"	1 1/8"
2"	1 3/4"
10"	4"
14"	4 1/16"
18"	4"
21"	4 1/16"
25"	4"

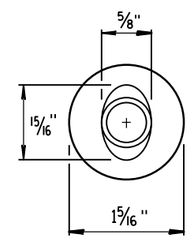

ALTERNATE BOLT HEAD

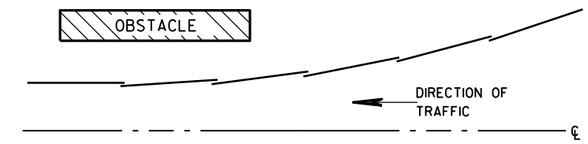

PLAN VIEW

BEAM LAPPING DETAIL

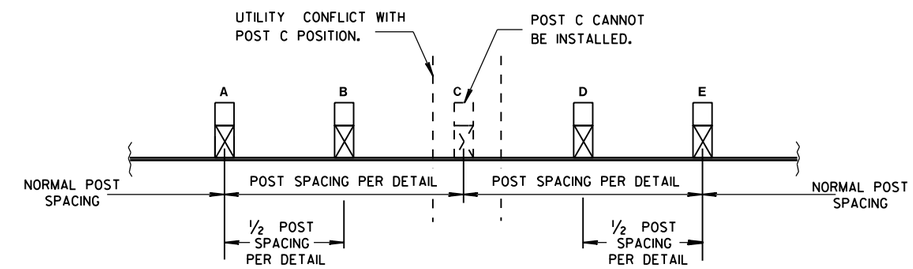

POST DRIVING FOR CONTINUOUS UNDERGROUND OBSTRUCTION

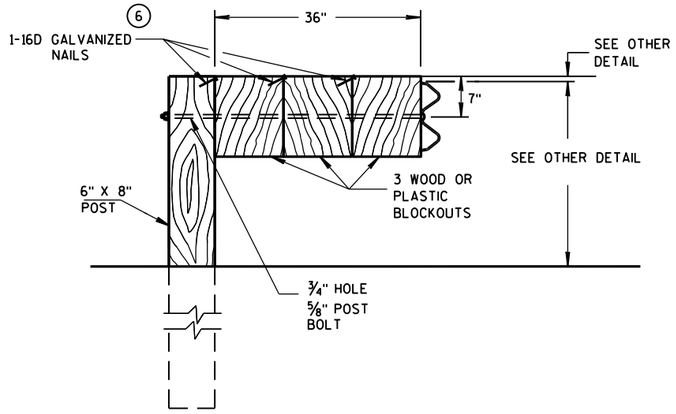

DETAIL FOR 36" BLOCKOUT DEPTH

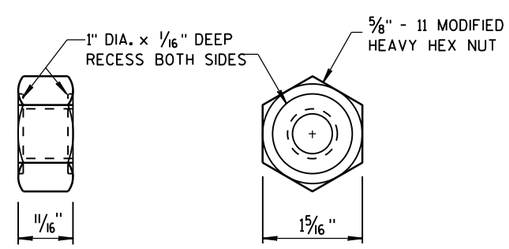

POST BOLT, SPLICE BOLT AND RECESS NUT

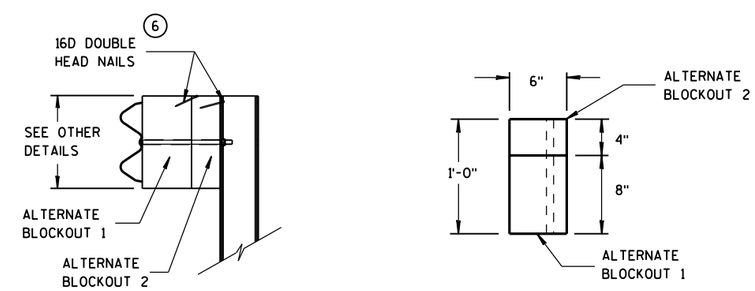

SIDE VIEW TOP VIEW

ALTERNATE WOOD BLOCKOUT DETAIL

NOTES: UNDER SPECIAL CIRCUMSTANCES, SUCH AS AVOIDING OBSTACLES THAT ARE NOT RELOCATED, IT IS ACCEPTABLE TO INSTALL ADDITIONAL BLOCKOUTS TO OBTAIN UP TO 36" DEPTH FOR ONE OR TWO POSTS IN A SECTION OF GUARDRAIL.

DO NOT USE 16" OR 36" BLOCKOUTS IF IT CAUSES THE POST TO BE DRIVEN BEYOND SHOULDER HINGE POINT OR CAUSES A FIXED OBJECT TO BE WITHIN THE DEFLECTION DISTANCE OF THE BARRIER.

MIDWEST GUARDRAIL SYSTEM (MGS) GUARDRAIL

STATE OF WISCONSIN
DEPARTMENT OF TRANSPOR

6

S.D.D. 14 B 42-5c

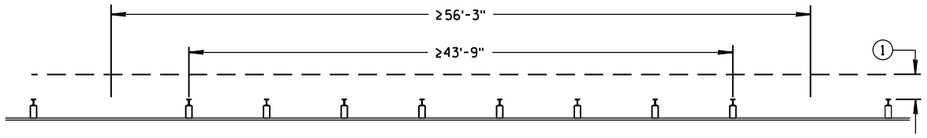

MISSING POST IN NORMAL BEAM GUARD RUN

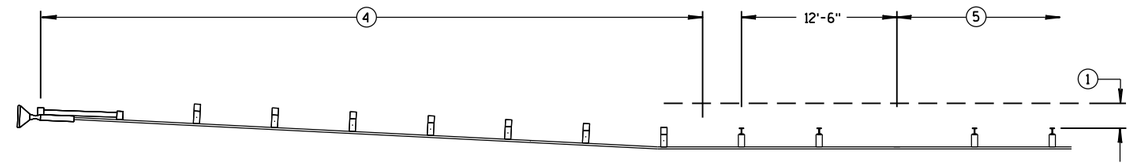

MISSING POST IN NORMAL BEAM GUARD RUN NEAR EAT

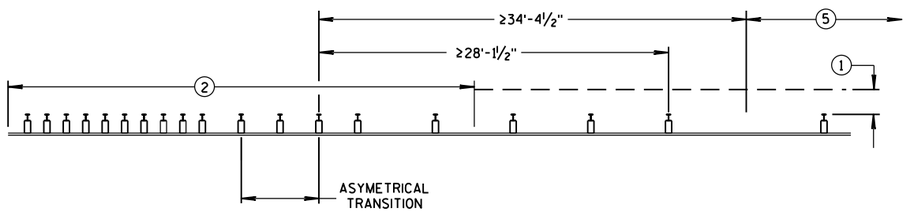

MISSING POST NEAR APPROACH THRIE BEAM TRANSITION

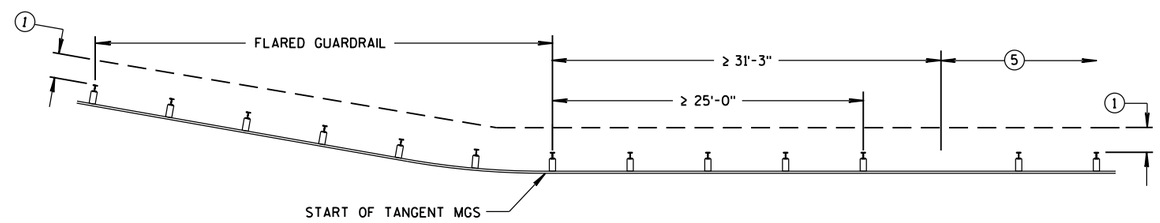

MISSING POST IN NORMAL BEAM GUARD RUN
NEAR FLARED BEAM GUARD

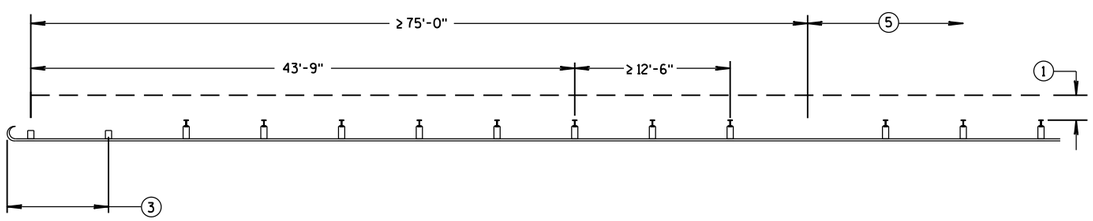

MISSING POST IN NORMAL BEAM GUARD RUN
NEAR TYPE 2 TERMINAL

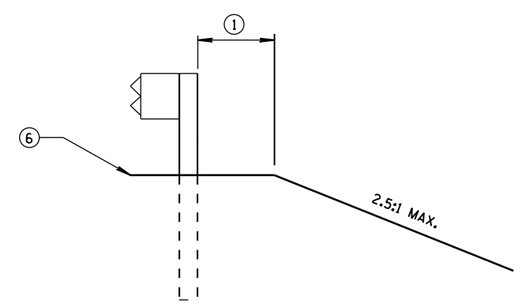

CROSS SECTION VIEW

1. MINIMUM OF 2 FEET OF GRADING BEHIND POST.
2. SEE SDD 14B45 FOR MORE DETAILS.
3. SEE SDD 14B47 FOR MORE DETAILS.
4. SEE SDD 14B44 FOR MORE DETAILS.
5. SEE MISSING POST IN NORMAL BEAM GUARD RUN FOR DISTANCE TO NEXT MISSING POST AND AREA FOR WELL DRAINED, COMPACTED SOILS.
6. SEE PLAN FOR SHOULDER DESIGN.

MIDWEST GUARDRAIL SYSTEM
(MGS) GUARDRAIL

STATE OF WISCONSIN
DEPARTMENT OF TRANSPORTATION

APPROVED
June 2017 — /S/ Rodney Taylor
DATE — ROADWAY STANDARDS DEVELOPMENT UNIT SUPERVISOR
FHWA

6

S.D.D. 14 B 42-5d

GENERAL NOTES

(2) OPTIONAL CURB AND GUTTER OR DRAINAGE_FEATURE SEE PLAN FOR INFORMATION.

(3) WHEN USING STEEL POSTS AND WOOD BLOCKOUTS INSTALL FOUR 10D GALVANIZED NAILS. INSTALL NAILS AT THE BACK CORNERS OF THE BLOCK AND BEND THE NAILS OVER THE FLANGE OF THE STEEL POST.

(4) TOLERANCE FOR TOP OF W-BEAM RAIL IS ± 1".

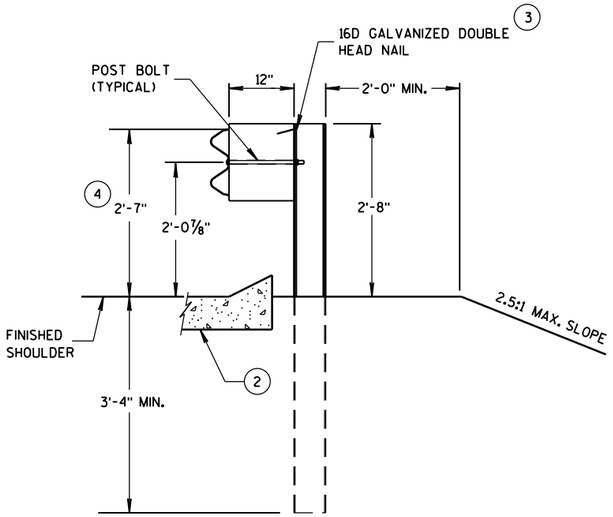

SECTION A-A
POSTS 1-5

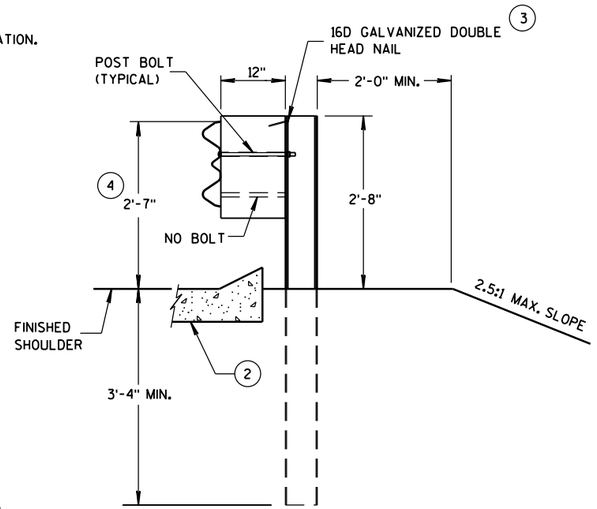

SECTION B-B
POST 6

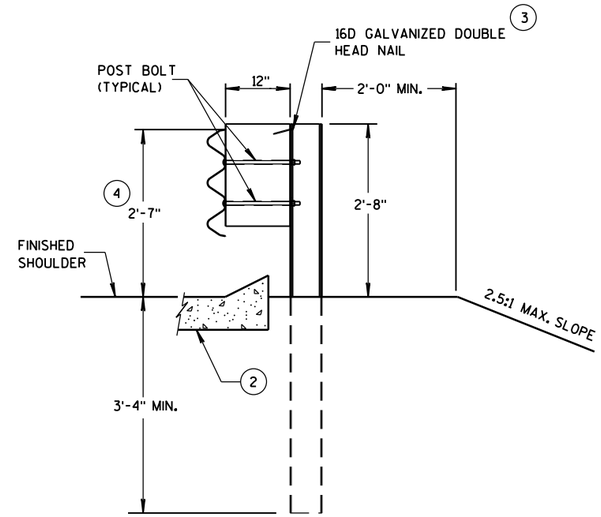

SECTION C-C
POSTS 7-11

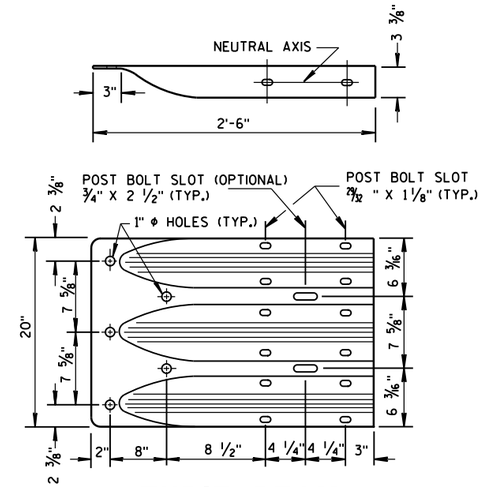

THRIE BEAM
TERMINAL CONNECTOR

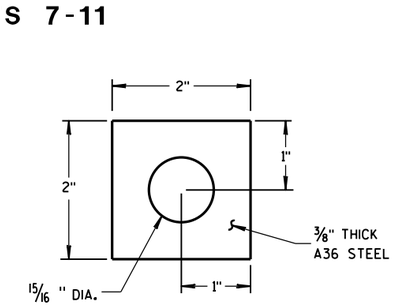

PLATE WASHER DETAIL

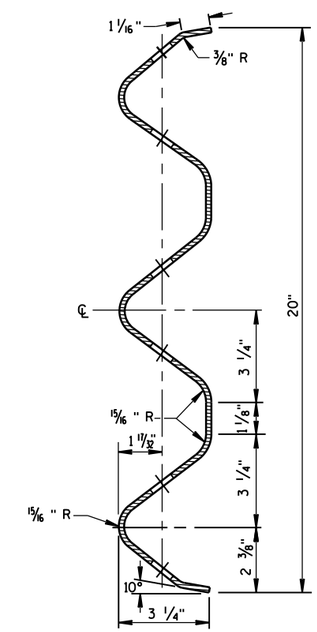

SECTION THRU THRIE
BEAM RAIL ELEMENT

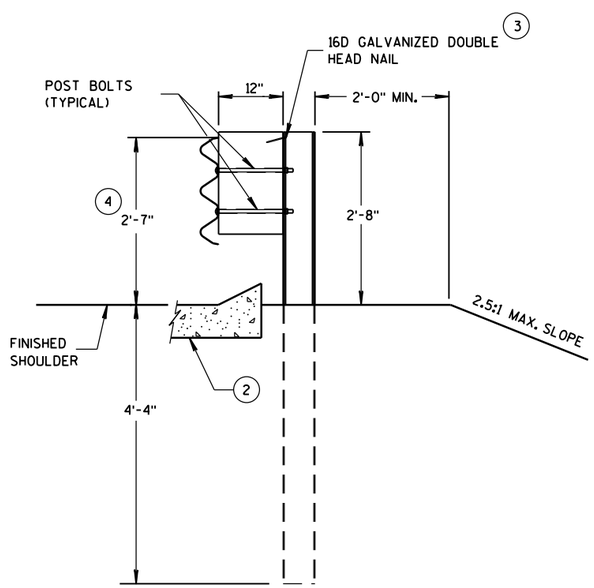

SECTION D-D
POSTS 12-17

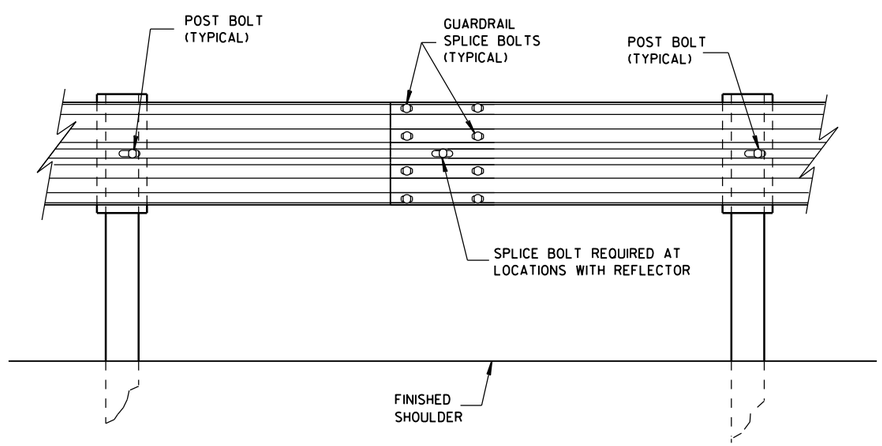

SPLICE DETAIL

MIDWEST GUARDRAIL SYSTEM
THRIE BEAM TRANSITION (MGS)

STATE OF WISCONSIN
DEPARTMENT OF TRANSPO

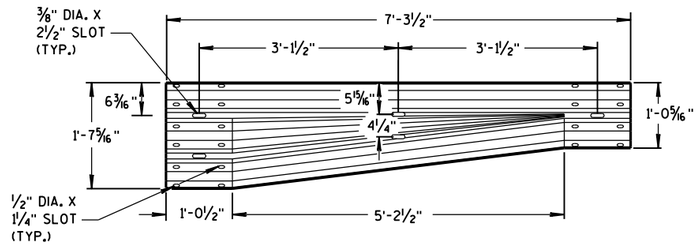

W-BEAM TO THRIE BEAM TRANSITION SECTION

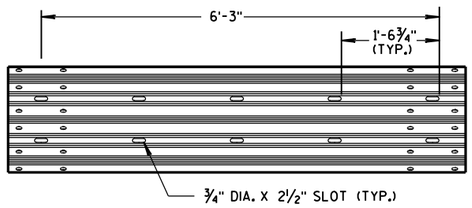

6'-3" THRIE BEAM SECTION

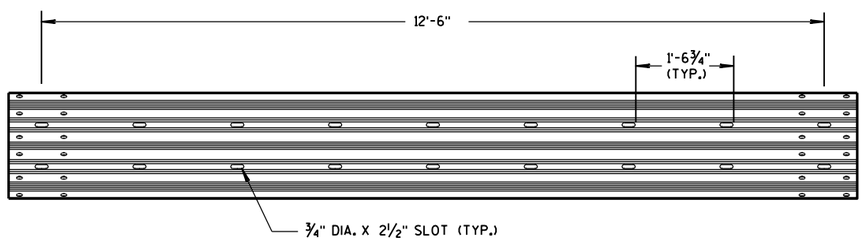

12'-6" THRIE BEAM SECTION

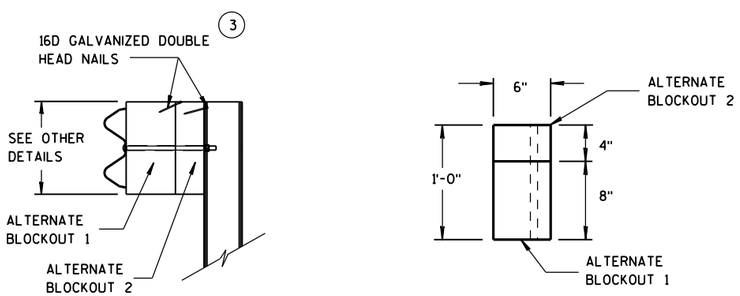

SIDE VIEW TOP VIEW

ALTERNATE WOOD BLOCKOUT DETAIL

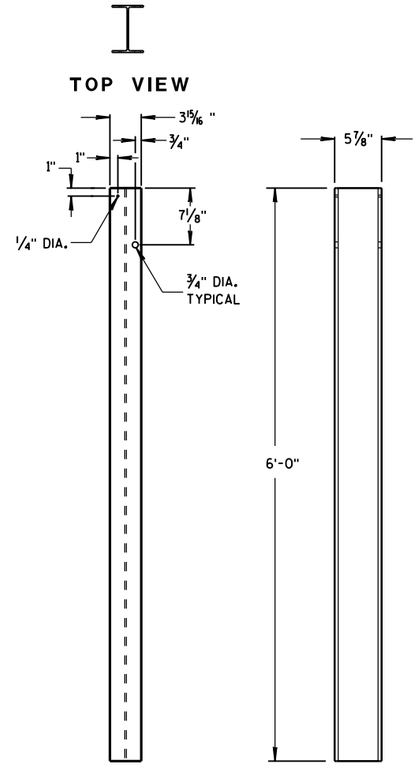

STEEL POSTS 1-5

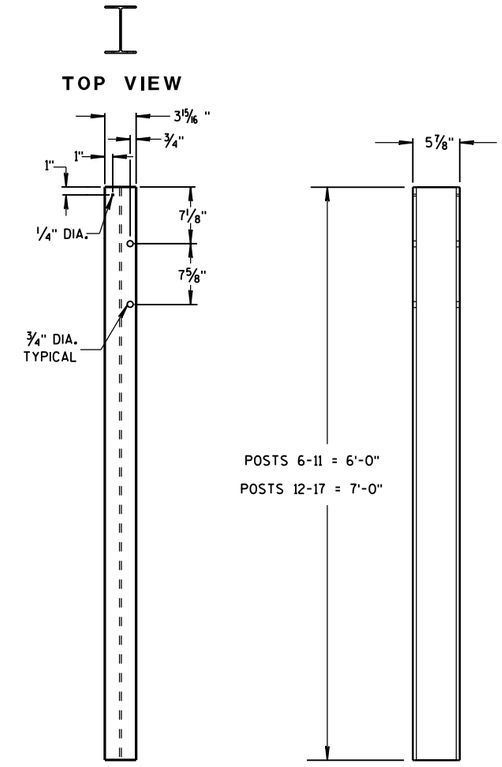

STEEL POSTS 6-17

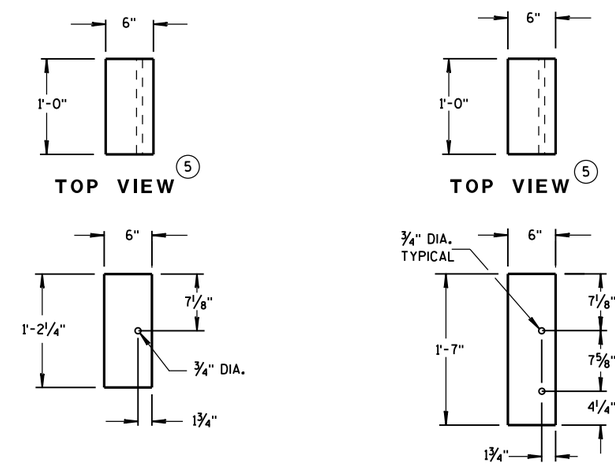

BLOCKOUT POSTS 1-5

BLOCKOUT POSTS 6-17

GENERAL NOTES

STEEL POSTS ARE W6X9 OR W6X8.5.

BOLT HOLES FOR POST ARE ON FRONT AND OF SIDE OF POST.

3 WHEN USING STEEL POSTS AND WOOD BLOCKOUTS INSTALL FOUR 16D GALVANIZED NAILS. INSTALL NAILS AT THE BACK CORNERS OF THE BLOCK AND BEND THE NAILS OVER THE FLANGE OF THE STEEL POST.

5 WOOD BLOCKS MAY BE CONSTRUCTED OUT OF 2 WOOD BLOCKS. SEE ALTERNATE WOOD BLOCK DETAIL.

MIDWEST GUARDRAIL SYSTEM
THRIE BEAM TRANSITION (MGS)

STATE OF WISCONSIN
DEPARTMENT OF TRANSPORTATION

6

6

S.D.D. 14 B 45-4c

S.D.D. 14 B 45-4c

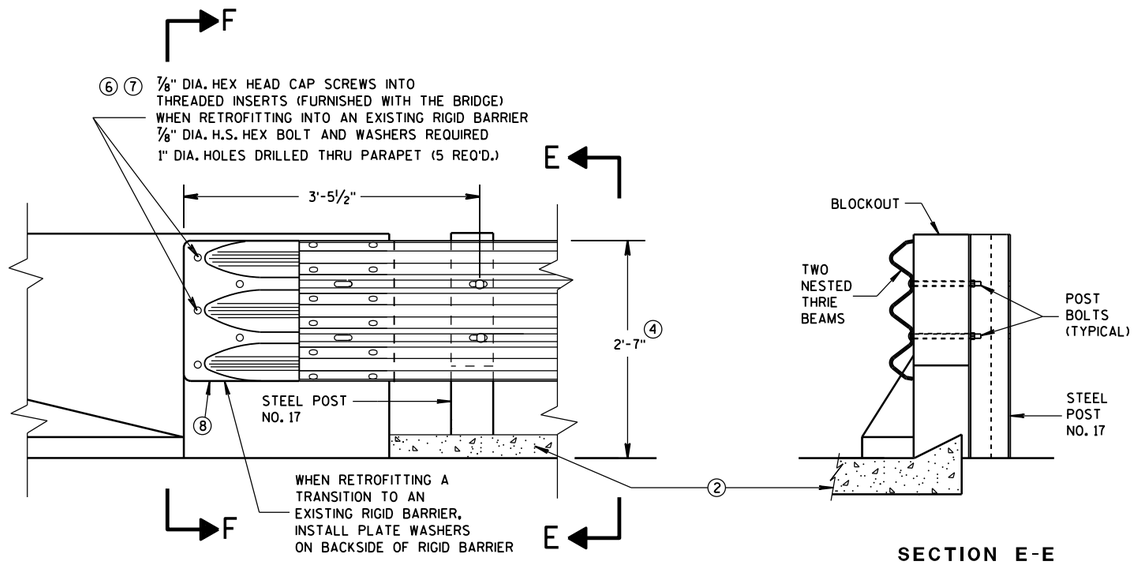

FRONT VIEW

SECTION E-E

THRIE BEAM CONNECTION TO BRIDGE PARAPET WITH SQUARE ENDS

GENERAL NOTES

THESE ARE TYPICAL CONNECTION DETAILS. ADJUST THE POSTION OF CONNECTIONS TO EXISTING BRIDGES TO FIT THE ACTUAL BRIDGE AND SITE DIMENSIONS.

② OPTIONAL CURB AND GUTTER OR DRAINAGE FEATURE SEE PLAN FOR INFORMATION.

④ TOLERANCE FOR TOP OF BEAM IS ± 1".

⑥ DRILLING BOLT HOLES THROUGH THE PARAPET, BOLTS, NUTS, WASHERS AND REPAIRING DAMAGED CONCRETE ARE INCIDENTAL TO THE CONTRACT.

⑦ BOLTS MAY BE A325 BOLTS OR A449 BOLTS. BOLT LENGTH AND THREADING LENGTH ARE TO ALLOW FOR A TIGHT CONNECTION BETWEEN RIGID BARRIER AND THRIE BEAM CONNECTION PLATE. CONTRACTOR IS TO FIELD VERIFY BOLT LENGTH AND THREAD LENGTH. ONE ROUND WASHER REQUIRED BETWEEN BOLT HEAD AND THRIE BEAM CONNECTOR PLATE. BOLTS THAT EXTEND THROUGH THE PARAPET AND OUT THE BACK FACE REQUIRE A HARDENED ROUND STEEL WASHER THAT IS 2" O.D. X 5/8" THICK AND ONE PLATE WASHER. REPAIR ANY DAMAGED CONCRETE FROM BOLT INSTALLATION.

⑧ THE RECESS FOR A W-BEAM CONNECTION, WHICH EXISTS ON SOME PARAPETS OF THIS TYPE, SHALL BE FILLED WITH A TREATED TIMBER BLOCKOUT. BLOCKOUT SIZE IS 1'-6" X 2'-0" X 3 1/2".

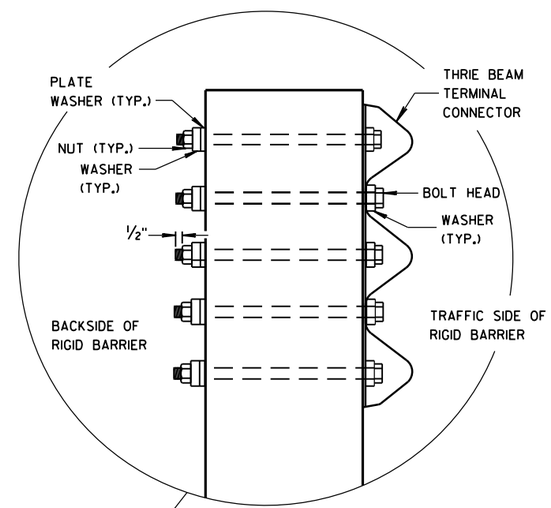

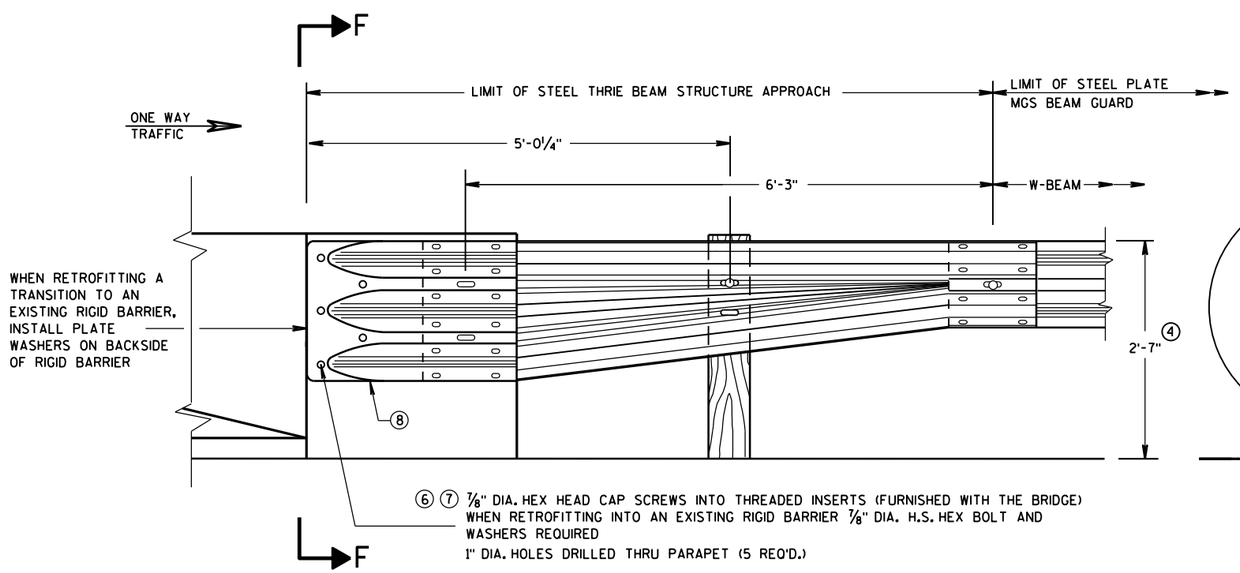

FRONT VIEW

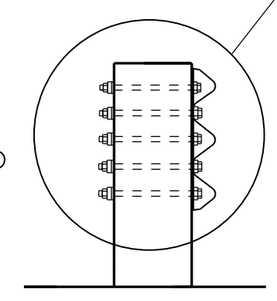

SECTION F-F

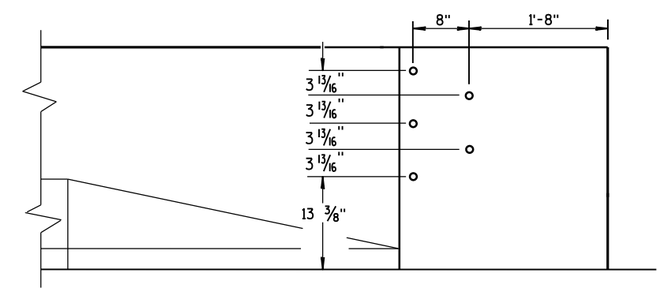

DRILL HOLE LOCATION

W BEAM TRANSITION AND CONNECTION TO BRIDGE PARAPETS WITH SQUARE ENDS

(USE ONLY ON THE TRAFFIC EXIT END OF ONE WAY BRIDGES)

MIDWEST GUARDRAIL SYSTEM
THRIE BEAM TRANSITION (MGS)

STATE OF WISCONSIN
DEPARTMENT OF TRANSPORTATION

APPROVED
June, 2015 — DATE
/S/ Jerry H. Zogg — ROADWAY STANDARDS DEVELOPMENT ENGINEER
FHWA
NT

6

6

S.D.D. 14 B 45-4d

S.D.D. 14 B 45-4d

GENERAL NOTES

THESE ARE TYPICAL CONNECTION DETAILS. ADJUST THE POSTION OF CONNECTIONS TO EXISTING BRIDGES TO FIT THE ACTUAL BRIDGE AND SITE DIMENSIONS.

(2) OPTIONAL CURB AND GUTTER OR DRAINAGE FEATURE SEE PLAN FOR INFORMATION.

(4) TOLERANCE FOR TOP OF BEAM IS ± 1".

(6) DRILLING BOLT HOLES THROUGH THE PARAPET, BOLTS, NUTS, WASHERS AND REPAIRING DAMAGED CONCRETE ARE INCIDENTAL TO THE CONTRACT.

(7) BOLTS MAY BE A325 BOLTS OR A449 BOLTS. BOLT LENGTH AND THREADING LENGTH ARE TO ALLOW FOR A TIGHT CONNECTION BETWEEN RIGID BARRIER AND THRIE BEAM CONNECTION PLATE. CONTRACTOR IS TO FIELD VERIFY BOLT LENGTH AND THREAD LENGTH. ONE ROUND WASHER REQUIRED BETWEEN BOLT HEAD AND THRIE BEAM CONNECTOR PLATE. BOLTS THAT EXTEND THROUGH THE PARAPET AND OUT THE BACK FACE REQUIRE A HARDENED ROUND STEEL WASHER THAT IS 2" O.D. X 5/8" THICK AND ONE PLATE WASHER. REPAIR ANY DAMAGED CONCRETE FROM BOLT INSTALLATION.

(8) THE RECESS FOR A W-BEAM CONNECTION, WHICH EXISTS ON SOME PARAPETS OF THIS TYPE, SHALL BE FILLED WITH A TREATED TIMBER BLOCKOUT. BLOCKOUT SIZE IS 1'-6" X 2'-0" X 3 1/2".

(9) BOLT, NUT AND WASHERS NOT REQUIRED FOR THIS LOCATION WHEN RETROFITTING AN EXISTING PAPAPET AND THE HOLE IS EITHER ABOVE PARAPET OR WITHIN 4 INCHES OF THE EDGE OF PARAPET.

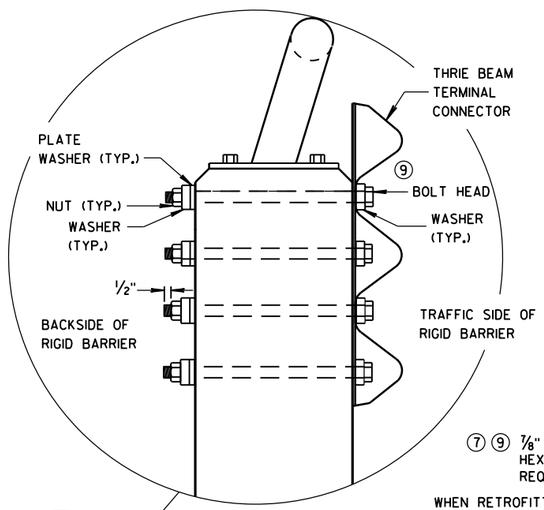

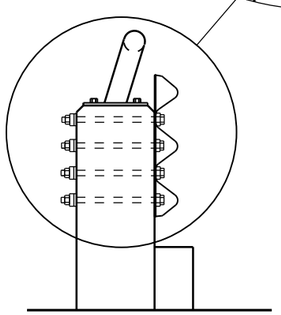

SECTION G-G

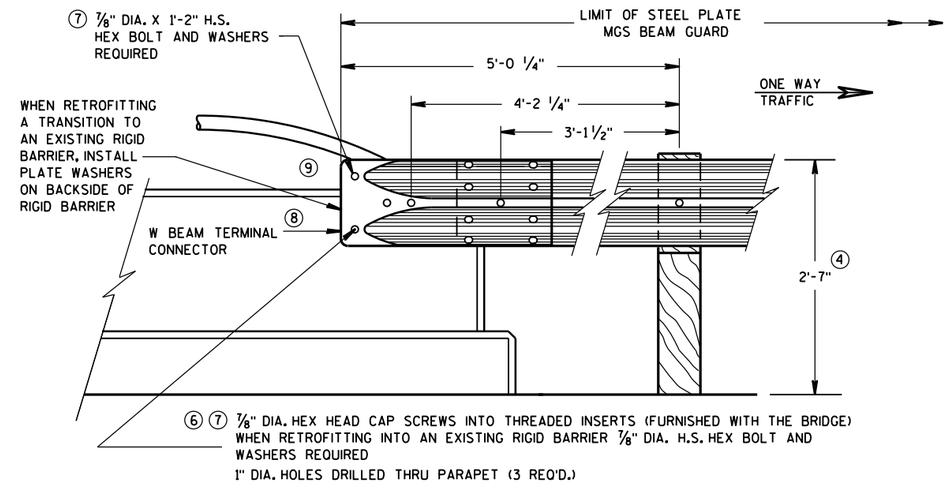

FRONT VIEW

W BEAM CONNECTION TO VERTICAL FACE PARAPET

(USE ONLY ON THE TRAFFIC EXIT END OF ONE WAY BRIDGES)

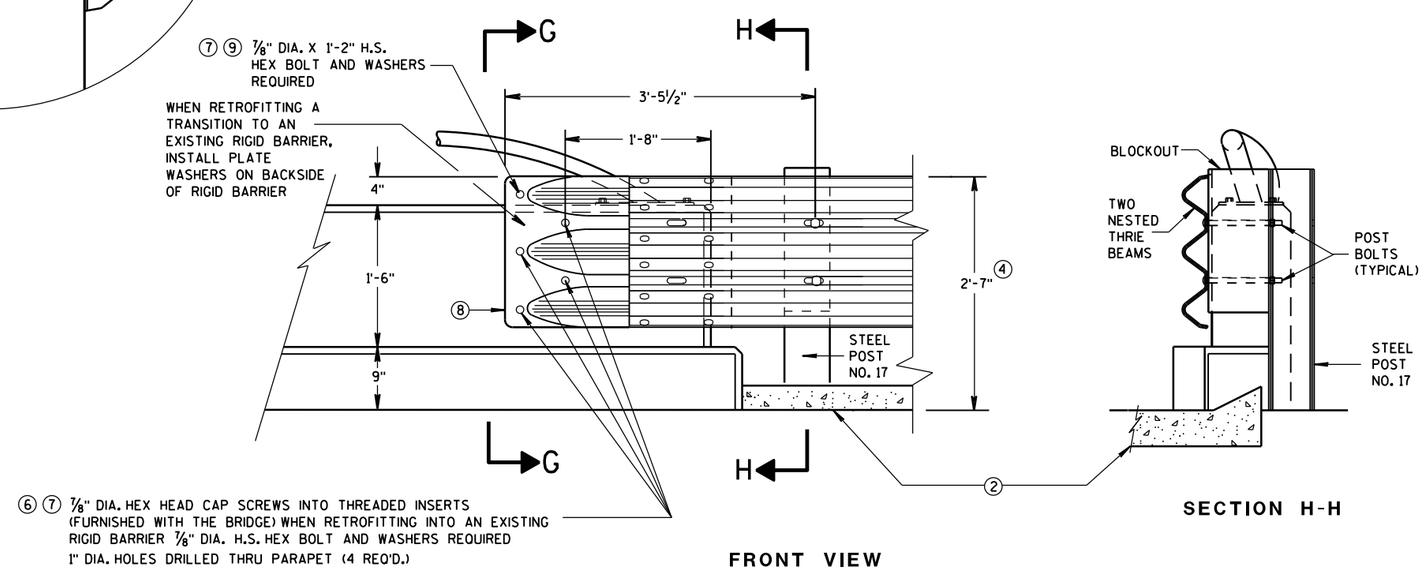

SECTION H-H

FRONT VIEW

THRIE BEAM CONNECTION TO VERTICAL FACED PARAPETS

MIDWEST GUARDRAIL SYSTEM
THRIE BEAM TRANSITION (MGS)

STATE OF WISCONSIN
DEPARTMENT OF TRANSPORTATION

APPROVED
June, 2015 — DATE
/S/ Jerry H. Zogg — ROADWAY STANDARDS DEVELOPMENT ENGINEER
FHWA
NT

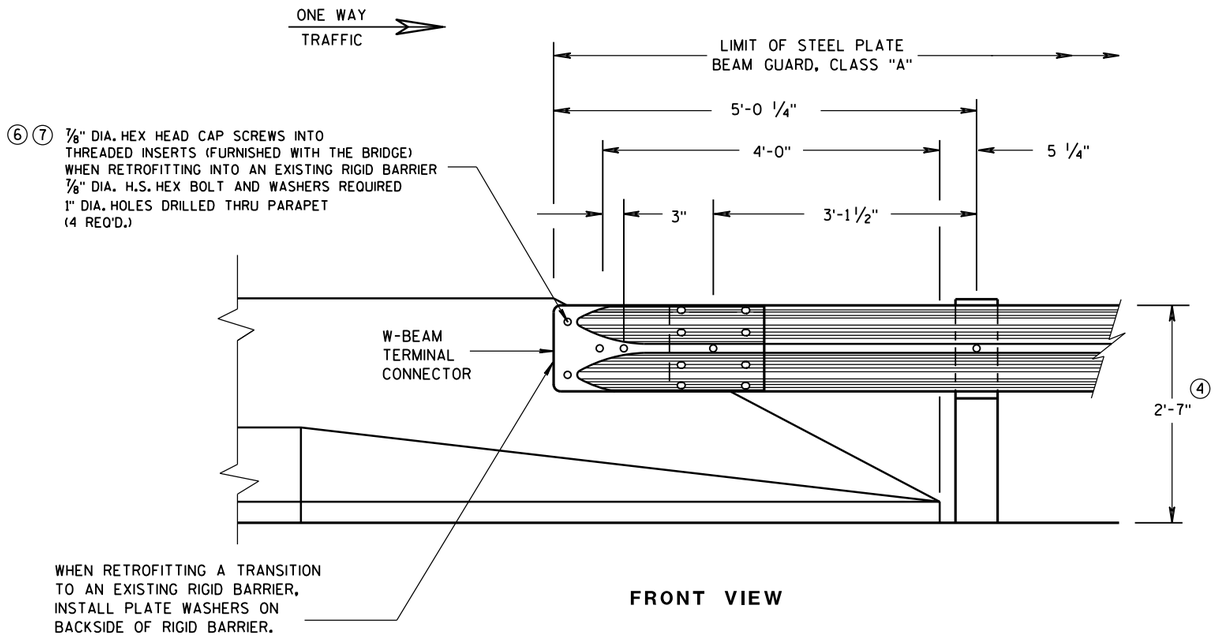

FRONT VIEW

W BEAM CONNECTION TO PARAPETS WITH SLOPED ENDS

(USE ONLY AT TRAFFIC EXIT END OF ONE WAY BRIDGE)

GENERAL NOTES

② OPTIONAL CURB AND GUTTER OR DRAINAGE FEATURE SEE PLAN FOR INFORMATION.

④ TOLERANCE FOR TOP OF BEAM IS ± 1".

⑥ DRILLING BOLT HOLES THROUGH THE PARAPET, BOLTS, NUTS, WASHERS AND REPAIRING DAMAGED CONCRETE ARE INCIDENTAL TO THE CONTRACT.

⑦ BOLTS MAY BE A325 BOLTS OR A449 BOLTS. BOLT LENGTH AND THREADING LENGTH ARE TO ALLOW FOR A TIGHT CONNECTION BETWEEN RIGID BARRIER AND THRIE BEAM CONNECTION PLATE. CONTRACTOR IS TO FIELD VERIFY BOLT LENGTH AND THREAD LENGTH. ONE ROUND WASHER REQUIRED BETWEEN BOLT HEAD AND THRIE BEAM CONNECTOR PLATE. BOLTS THAT EXTEND THROUGH THE PARAPET AND OUT THE BACK FACE REQUIRE A HARDENED ROUND STEEL WASHER THAT IS 2" O.D. X 5/8" THICK AND ONE PLATE WASHER. REPAIR ANY DAMAGED CONCRETE FROM BOLT INSTALLATION.

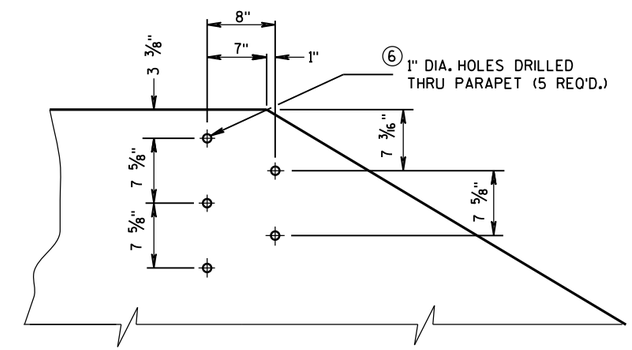

DRILL HOLE LOCATION AND PATTERN
FOR THRIE BEAM CONNECTION

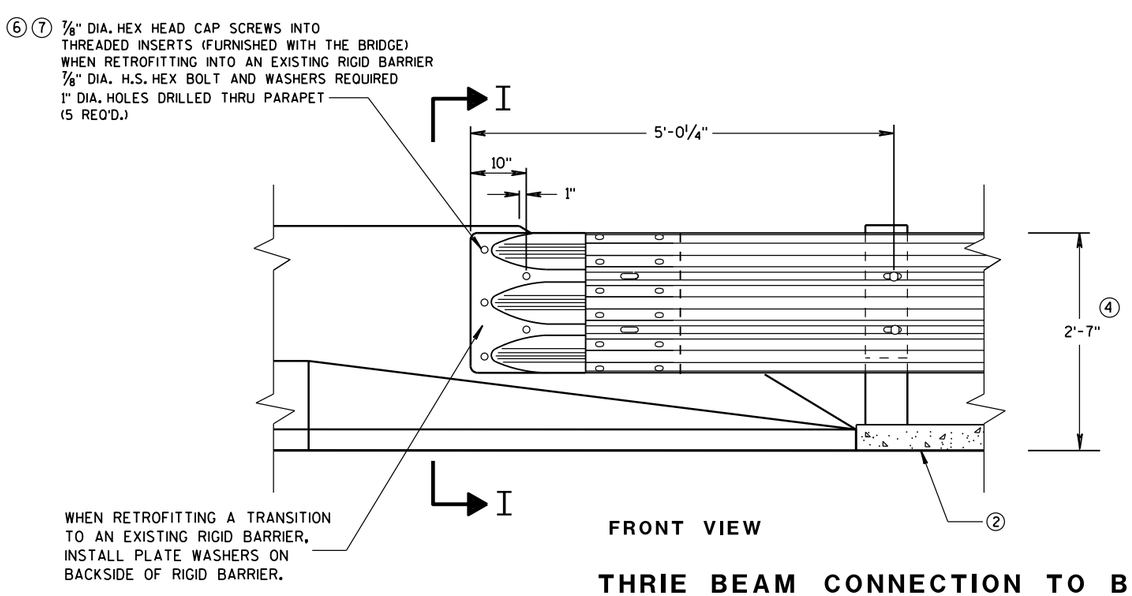

FRONT VIEW

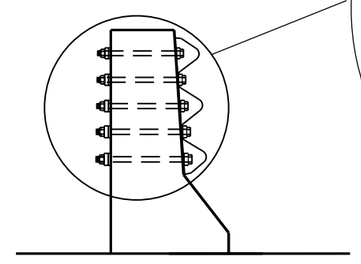

SECTION I-I

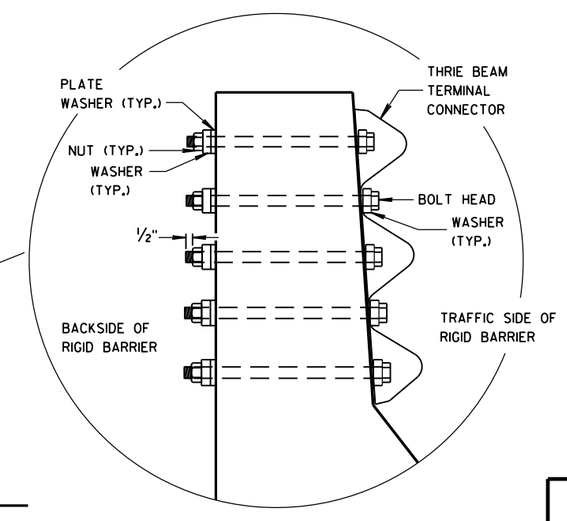

THRIE BEAM CONNECTION TO BRIDGE PARAPETS WITH SLOPED ENDS

MIDWEST GUARDRAIL SYSTEM
THRIE BEAM TRANSITION (MGS)

STATE OF WISCONSIN
DEPARTMENT OF TRANSPORTATION

APPROVED
June, 2015 — DATE
/S/ Jerry H. Zogg — ROADWAY STANDARDS DEVELOPMENT ENGINEER
FHWA

6

6

S.D.D. 14 B 45-4f

S.D.D. 14 B 45-4f

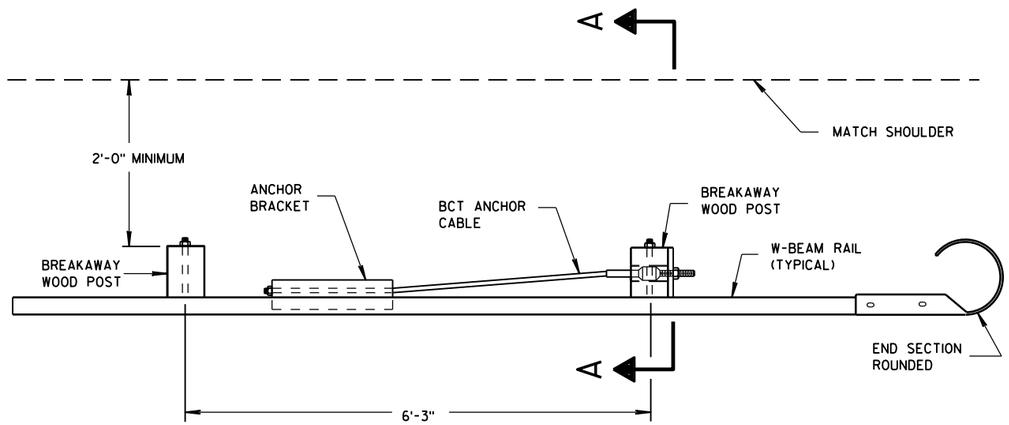

PLAN VIEW

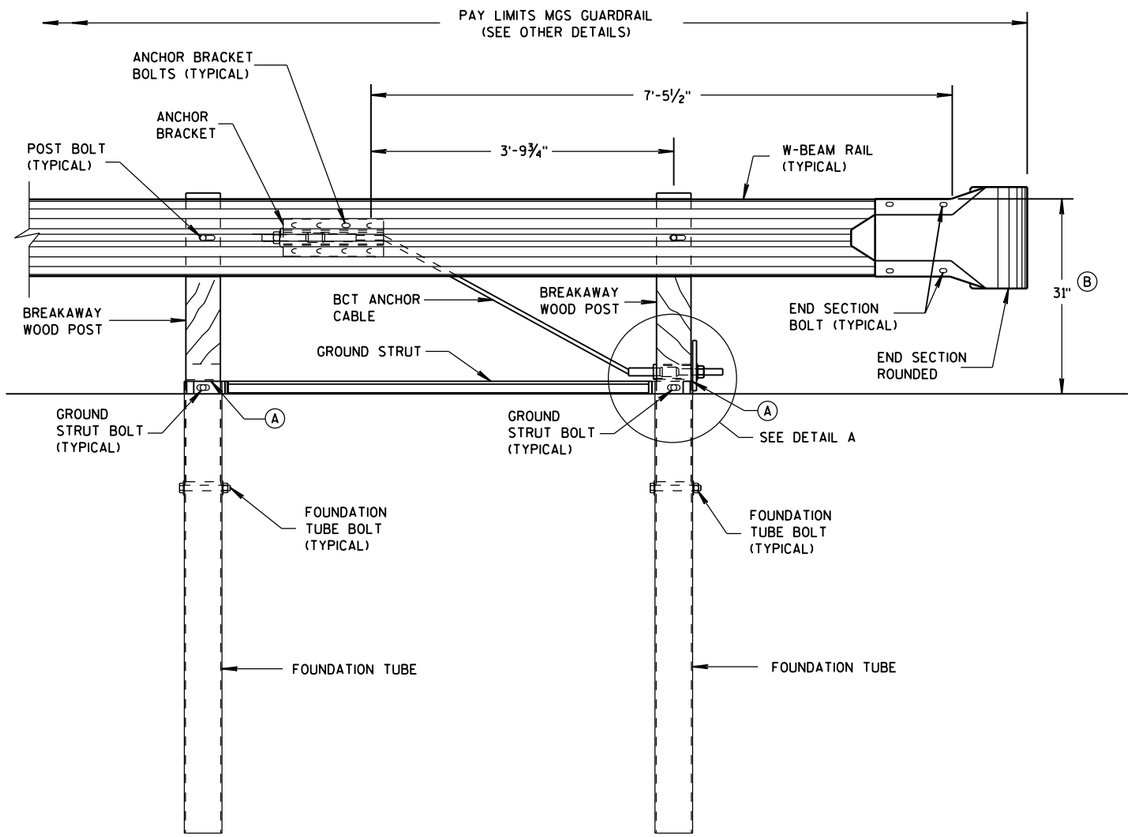

FRONT VIEW

END RAIL DETAIL

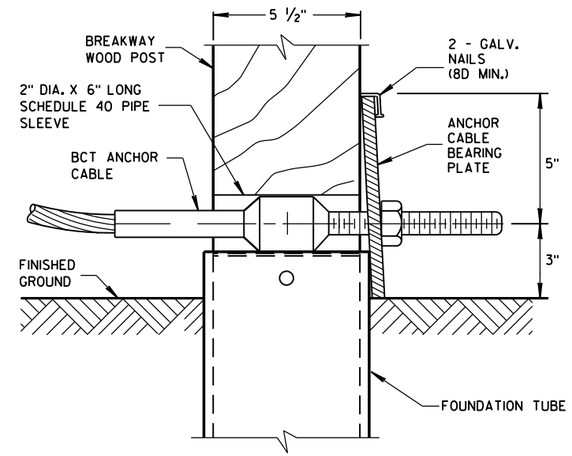

DETAIL A

POST NO. 1
GROUNG STRUT NOT SHOWN FOR CLARITY.

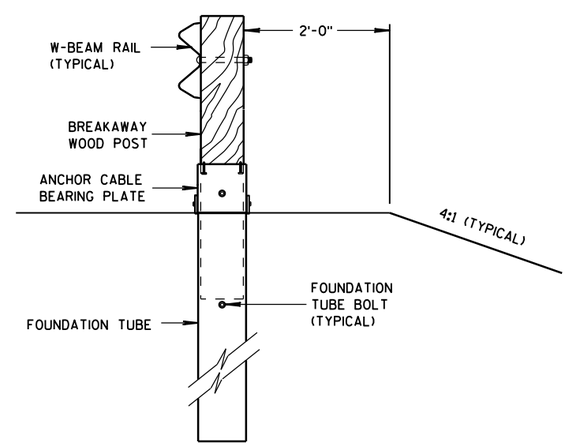

SECTION A-A

GENERAL NOTES

SEE SDD 14 B 42 FOR MORE INFORMATION.

END SECTION BOLTS AND NUTS HAVE THE SAME MATERIAL REQUIREMENTS AS SPLICE BOLTS.

FOUNDATION TUBE BOLTS ARE ⅞" DIAMETER ASTM A307 HEX HEAD BOLT. FOUNDATION TUBE BOLTS REQUIRE ASTM A563 A NUT AND TWO ASTM F844 ⅞" DIAMETER FLAT WASHERS. INSTALL ONE WASHER UNDER BOLT HEAD AND ONE WASHER UNDER NUT.

ANCHOR BRACKET AND GROUND STRUT BOLTS ARE A ⅝" DIAMETER ASTM A307 HEX HEAD BOLT. ANCHOR BRACKET BOLTS REQUIRE ASTM A563 A NUT AND TWO ASTM F844 ⅝" DIAMETER FLAT WASHERS. INSTALL ONE WASHER UNDER BOLT HEAD AND ONE WASHER UNDER NUT.

W-BEAM END SECTION ROUNDED HAS THE SAME MATERIAL PROPERTIES AS STANDARD STEEL RAIL.

(A) TOP OF FOUNDATION TUBE SHALL BE NO MORE THAN 3" ABOVE FINISHED GROUND.

(B) FOR NEW CONSTRUCTION TOP OF RAIL IS 31" ± 1".
FOR EXISTING INSTALLATIONS TOP OF RAIL IS BETWEEN 27¾" TO 32" ± 1".

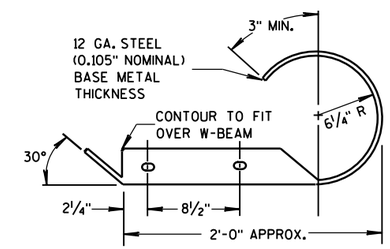

PLAN VIEW

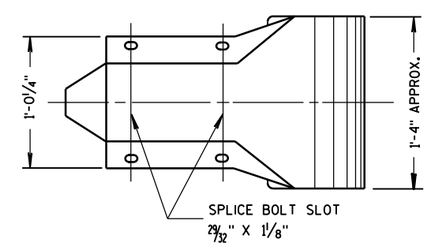

FRONT VIEW

W BEAM END SECTION ROUNDED

MIDWEST GUARDRAIL SYSTEM (MGS) TYPE 2 TERMINAL

STATE OF WISCONSIN
DEPARTMENT OF TRANSPO

6

S.D.D. 14 B 47-2a

GENERAL NOTES

BCT ANCHOR CABLE IS A ¾" DIAMETER 6X19 IWRC IPS GALVANIZED WIRE ROPE. THE SWAGED FITTINGS AND STUD ARE REQUIRED. END FITTING SHALL BE MACHINED FROM HOT-ROLLED CARBON STEEL CONFORMING TO ASTM A576 GRADE 1035 AND GALVANIZED ACCORDING TO ASTM A123. TREADED STUD SHALL CONFORM TO ASTM A325 OR SAE GRADE 5. MINIMUM BREAKING STRENGTH OF WIRE ROPE IS 43,000 LB. WIRE ROPE IS TO BE TAUT.

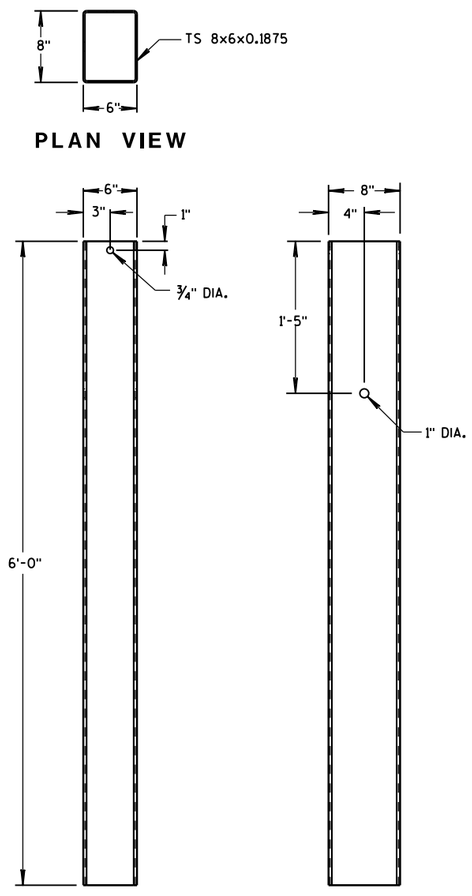

FOUNDATION TUBE

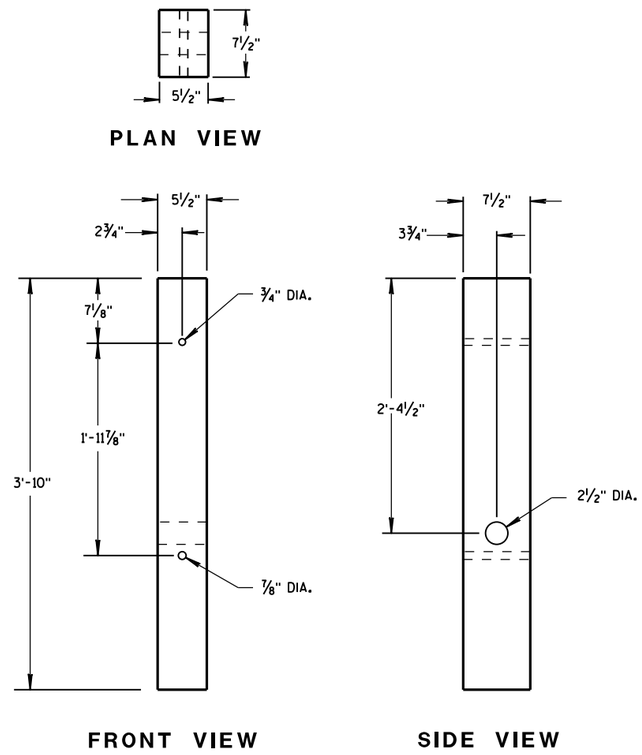

BREAKAWAY WOOD POST

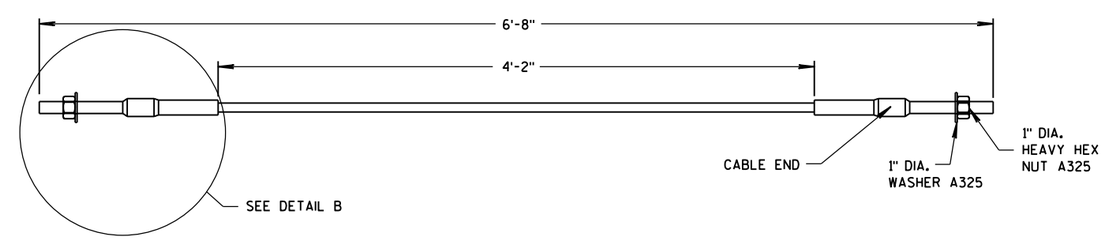

BCT ANCHOR CABLE

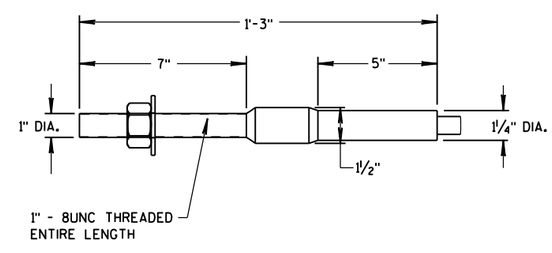

DETAIL B

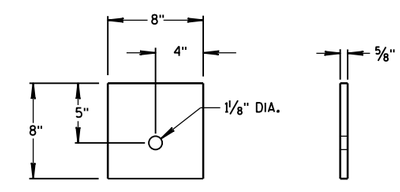

ANCHOR CABLE BEARING PLATE

MIDWEST GUARDRAIL SYSTEM (MGS) TYPE 2 TERMINAL

STATE OF WISCONSIN
DEPARTMENT OF TRANSPO

6

S.D.D. 14 B 47-2b

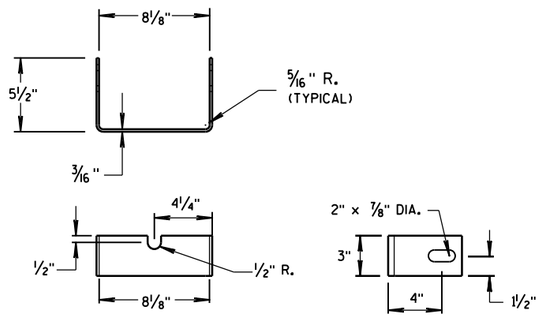

YOKE DETAIL

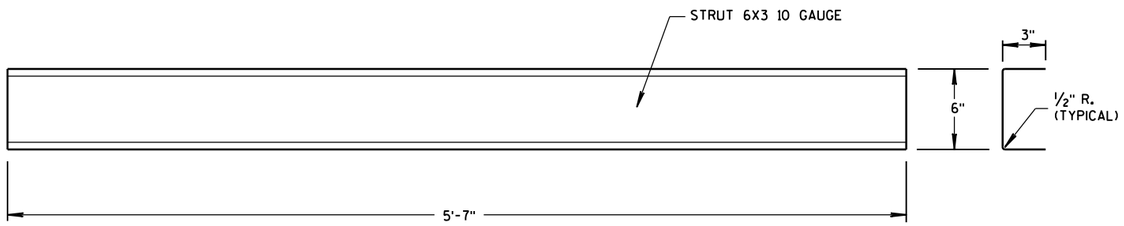

STRUT DETAIL

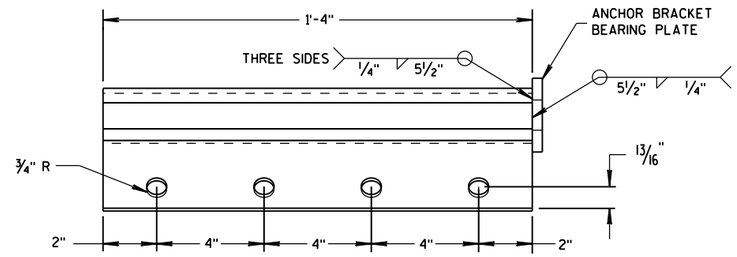

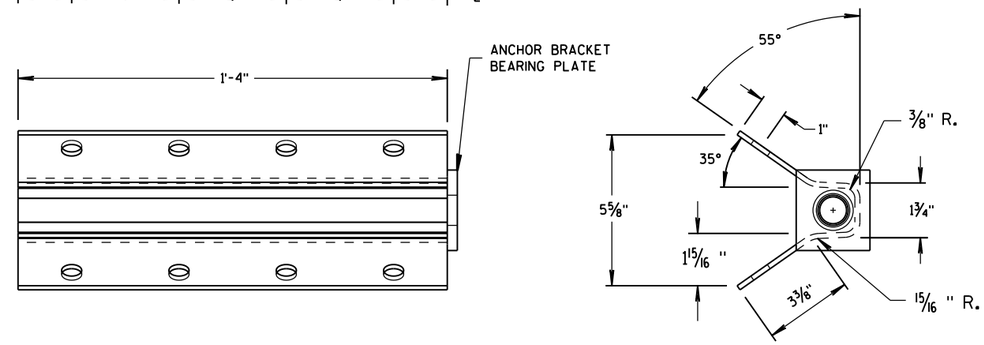

ANCHOR BRACKET

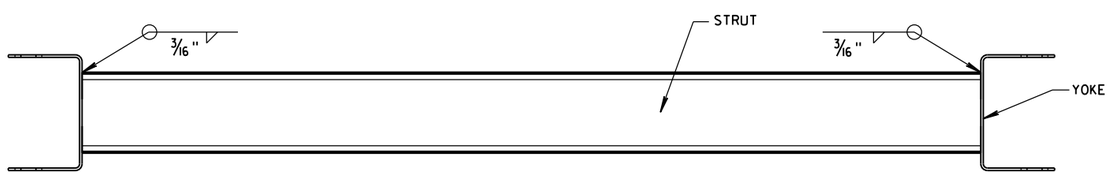

PLAN VIEW

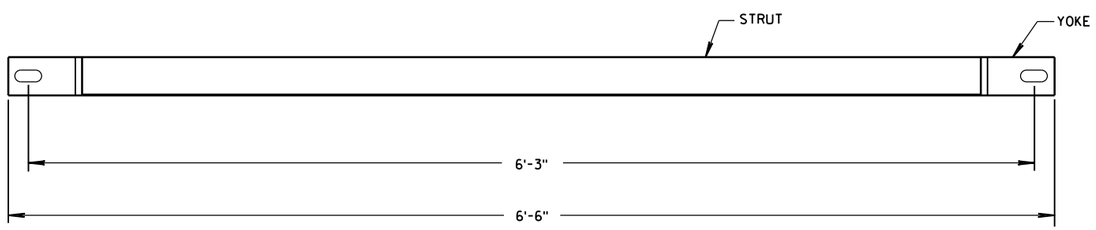

FRONT VIEW

GROUND STRUT DETAIL

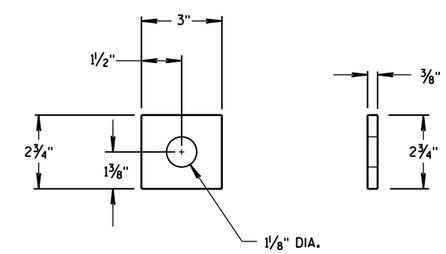

ANCHOR BRACKET
BEARING PLATE

MIDWEST GUARDRAIL SYSTEM (MGS) TYPE 2 TERMINAL
STATE OF WISCONSIN DEPARTMENT OF TRANSPORTATION
APPROVED June 2014 DATE — /S/ Jerry H. Zogg ROADWAY STANDARDS ENGINEER — FHWA

6

6

S.D.D. 14 B 47-2c

S.D.D. 14 B 47-2c

LEGEND

- TYPE III BARRICADE WITH ATTACHED SIGN
- SIGN ON PERMENENT SUPPORT
- TRAFFIC CONTROL DRUM WITH TYPE "C" STEADY BURN LIGHT
- TRAFFIC CONTROL DRUM
- FLASHING ARROW BOARD
- TYPE "A" WARNING LIGHT (FLASHING)
- REMOVING PAVEMENT MARKING
- DIRECTION OF TRAFFIC
- WORK AREA

GENERAL NOTES

THE EXACT NUMBER, LOCATION, AND SPACING OF ALL SIGNS AND DEVICES SHALL BE ADJUSTED TO FIT FIELD CONDITIONS AS APPROVED BY THE ENGINEER.

THE SPACING BETWEEN SIGNS SHOULD BE ADJUSTED TO NOT CONFLICT WITH AND TO PROVIDE A MINIMUM OF 200 FEET, (500 FEET DESIREABLE) DISTANCE TO EXISTING SIGNS.

THIS LANE CLOSURE IS TYPICAL FOR CLOSING RIGHT LANE - REVERSE FOR CLOSING LEFT LANE.

ALL SIGNS ARE 48"×48" UNLESS OTHERWISE NOTED.

"WO" IS THE SAME AS "W" EXCEPT THE BACKGROUND IS ORANGE.

ANY SIGNS TEMPORARY OR EXISTING, WHICH CONFLICT WITH TRAFFIC CONTROL "IN USE" SHALL BE REMOVED OR COVERED AS NEEDED AND AS APPROVED BY THE ENGINEER. NO WARNING LIGHTS SHALL BE WORKING ON "COVERED" OR "DOWNED" SIGNS.

CONSIDER GEOMETRICS WHEN LOCATING SIGNS AND ARROW BOARD SO THE DRIVER HAS A CLEAR VIEW OF THE ARROW BOARD AND LANE CLOSURE DRUMS FOR A MINIMUM 1500 FEET IN FRONT OF DRUMS.

FOR A LANE CLOSURE THAT IS IN PLACE LESS THAN 7 CONTINUOUS DAYS AND NIGHTS, THE ADVANCED WARNING SIGNS MAY BE MOUNTED ON PORTABLE SUPPORTS.

REMOVE PAVEMENT MARKINGS IF LANE CLOSURE IS TO BE IN PLACE FOR LONGER THAN 4 OR MORE DAYS AND NIGHTS.

WARNING LIGHTS ARE NOT REQUIRED IF THE LANE CLOSURE IS A DAYTIME ONLY OPERATION.

IF THE HORIZONTAL ALIGNMENT IS SUCH THAT A CURVE MAY REQUIRE ADDITIONAL DELINEATION, THE DEVICE SPACING MAY BE DECREASED TO 50 FEET.

ADJUSTMENTS IN BUFFER SPACE NEED TO BE INCORPORATED WHEN THE LANE CLOSURE OCCURS NEAR AN INTERCHANGE EXIT OR ENTRANCE RAMP. THE LANE CLOSURE MUST MUST TAKE PLACE FAR ENOUGH IN ADVANCE OF AN EXIT OR ENTRANCE RAMP TO STILL ALLOW FOR ADEQUATE BUFFER SPACE. THE MINIMUM LENGTH OF THE BUFFER SPACE BEFORE AN EXIT RAMP SHOULD BE 1/2 THE LENGTH OF THE TRANSITION AREA. THE ENTRANCE RAMP SHOULD BE FOLLOWED BY THE ORIGINAL BUFFER SPACE LENGTH OF 800 FEET DESIRABLE PRIOR TO ANOTHER TRAFFIC CONTROL CHANGE SUCH AS A CROSSOVER MANEUVER.

* THE LEFT REVERSE CURVE SIGN (WO1-4L) IS ONLY REQUIRED WHEN THIS DETAIL IS USED IN COMBINATION WITH "SINGLE LANE CROSSOVER" DETAIL.

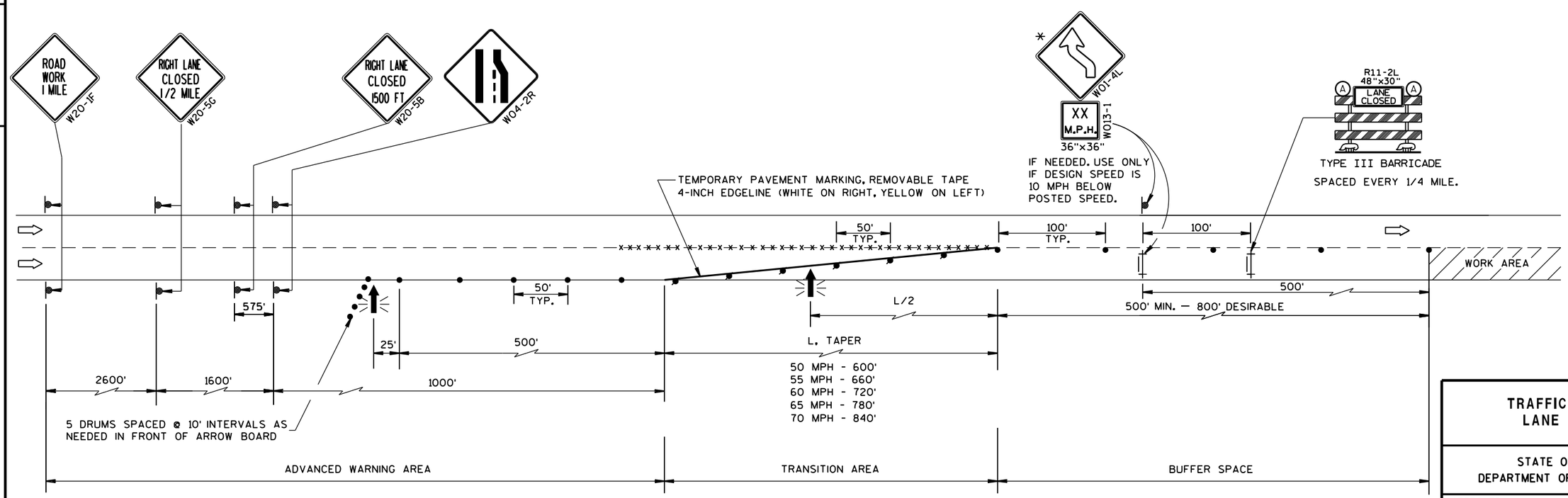

TRAFFIC CONTROL, LANE CLOSURE

STATE OF WISCONSIN
DEPARTMENT OF TRANSPORTATION

APPROVED
March 2016 — DATE
/S/ Peter Amakobe Atepe — STATEWIDE WORK ZONE SAFETY ENGINEER
FHWA

6

S.D.D. 15 D 12-6a

LEGEND

- TRAFFIC CONTROL DRUM
- SIGN ON PERMANENT SUPPORT
- DIRECTION OF TRAFFIC
- FLASHING ARROW BOARD
- WORK AREA

GENERAL NOTES

THIS DETAIL IS TYPICAL FOR CLOSING THE RIGHT SHOULDER. FOR CLOSING THE LEFT SHOULDER, REVERSE THE TRAFFIC CONTROL.

THIS DETAIL MAY BE USED FOR DIVIDED ROADWAYS WITH ANY NUMBER OF TRAVEL LANES.

THE EXACT NUMBER, LOCATION AND SPACING OF ALL SIGNS AND DEVICES SHALL BE ADJUSTED TO FIT FIELD CONDITIONS AS APPROVED BY THE ENGINEER.

ALL SIGNS ARE 48" X 48" UNLESS OTHERWISE NOTED.

SIGN LAYOUTS SHALL BE IN ACCORDANCE WITH THE FHWA'S MANUAL OF STANDARD HIGHWAY SIGNS OR THE WISCONSIN STANDARD SIGN PLATES.

SIGNS THAT WILL BE IN PLACE LESS THAN 7 CONTINUOUS DAYS AND NIGHTS MAY BE MOUNTED ON PORTABLE SUPPORTS.

ANY SIGNS TEMPORARY OR EXISTING, WHICH CONFLICT WITH TRAFFIC CONTROL "IN USE" SHALL BE REMOVED OR COVERED AS NEEDED AND AS APPROVED BY THE ENGINEER.

CHANNELIZING DEVICES PLACED ADJACENT TO THE WORK AREA SHALL BE PULLED BACK FROM THE TRAVEL LANE WHEN WORK IS NOT IN PROGRESS.

WHEN A RAMP INTERSECTS THE FACILITY ON WHICH THE WORK IS BEING PERFORMED, ADDITIONAL TRAFFIC CONTROLS SHALL BE PROVIDED AS SPECIFIED IN THE PLANS AND/OR THE SPECIAL PROVISIONS OR AS APPROVED BY THE ENGINEER.

*FOR SHORT DURATION SHOULDER WORK OF LESS THAN ONE HOUR, THE W21-5a SIGN MAY BE OMITTED.

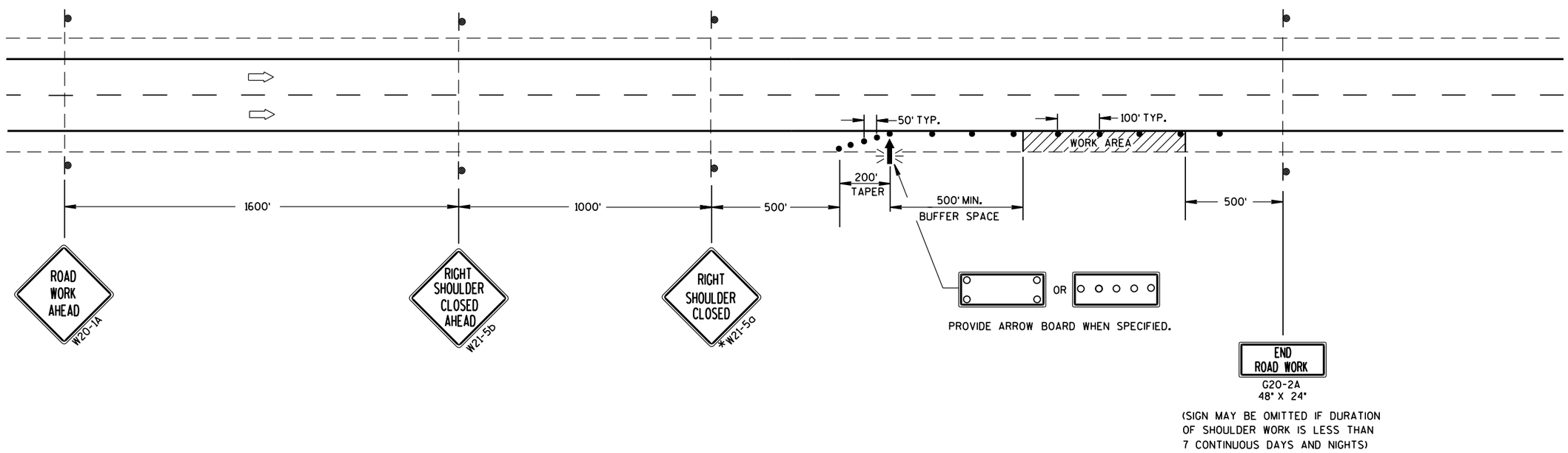

TRAFFIC CONTROL SHOULDER CLOSURE ON DIVIDED ROADWAY, SPEEDS GREATER THAN 40 MPH

STATE OF WISCONSIN
DEPARTMENT OF TRANSPORTATION

APPROVED

June 2016 — DATE

/S/ Peter Amakobe Atepe — STATEWIDE WORK ZONE TRAFFIC SAFETY ENGINEER

FHWA

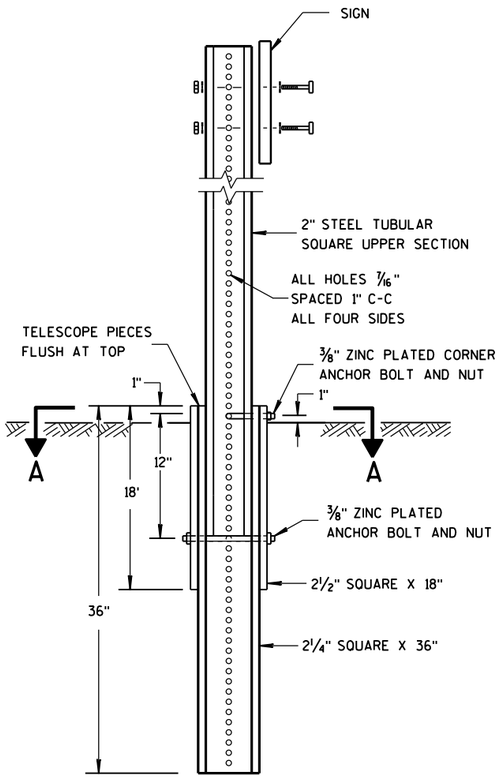

DETAIL OF TUBULAR STEEL SIGN POST

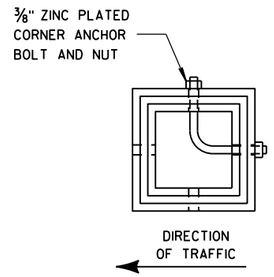

SECTION A-A

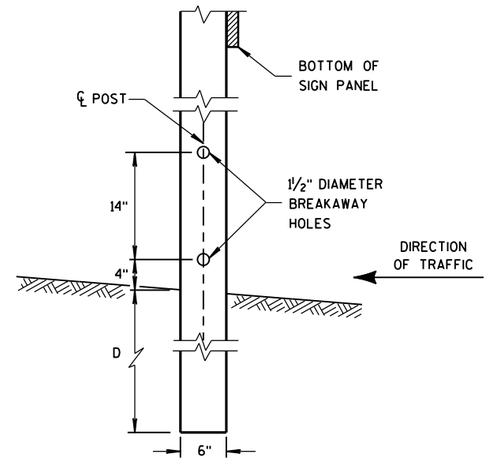

4"x6" WOOD POST MODIFICATION

GENERAL NOTES

1. 6 FEET FROM THE EDGE OF PAVEMENT (EDGE LINE LOCATION) UNLESS OTHERWISE DIRECTED BY THE PROJECT ENGINEER. LATERAL OFFSET SHOULD BE ADJUSTED TO AVOID THE DITCH FLOWLINE.
2. THE EXISTENCE OF CURB AND GUTTER DOES NOT IN ITSELF MANDATE THE VERTICAL CLEARANCE ILLUSTRATED. THAT HEIGHT IS TYPICALLY MEASURED WHERE THERE IS SIDEWALK ADJACENT TO THE ROADWAY OR PARKING IS PERMITTED. IN THE ABSENCE OF SIDEWALK, VERTICAL CLEARANCE IS MEASURED FROM THE TOP OF THE CURB. IF NO SIDEWALK AND NO PARKING, VERTICAL CLEARANCE MAY BE REDUCED TO 5 FOOT MINIMUM. OFFSET OF SIGNS IS MEASURED FROM THE CURB FLOWLINE.
3. FOR SIGNS REQUIRING 4 POSTS, SPACE INTERMEDIATE POSTS EVENLY.

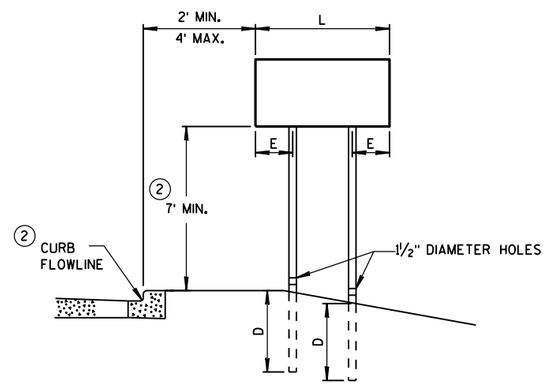

URBAN AREA

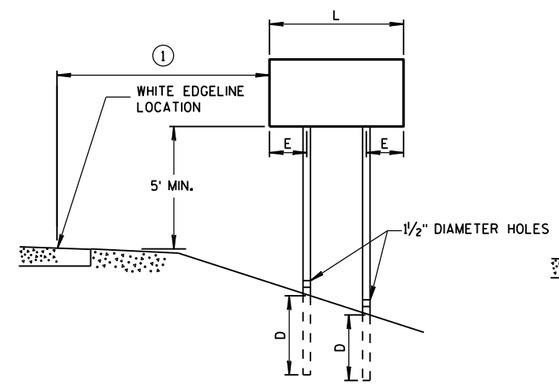

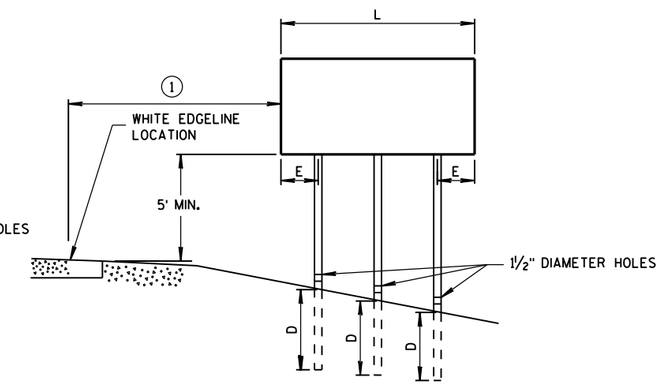

RURAL AREA

POST MOUNTING DETAIL FOR TEMPORARY TRAFFIC CONTROL FIXED MESSAGE SIGNS

TUBULAR STEEL POSTS

AREA OF SIGN INSTALLATION (SQ. FT.)	NUMBER OF REQUIRED TUBULAR STEEL POSTS
9 OR LESS	1
GREATER THAN 9 LESS THAN OR EQUAL TO 18	2
GREATER THAN 18 LESS THAN OR EQUAL TO 27	3

SIGNS WIDER THAN 3 FEET OR LARGER THAN 9 SQ. FT. SHALL BE MOUNTED ON MULTIPLE POSTS (SEE ABOVE TABLE).

SIGNS LARGER THAN 27 SQ. FT. SHALL NOT BE MOUNTED ON TUBULAR STEEL POSTS.

WOOD POST EMBEDMENT DEPTH

AREA OF SIGN INSTALLATION (SQ. FT.)	D (MIN)
20 OR LESS	4'
GREATER THAN 20	5'

4" X 6" WOOD POST

POST SPACING REQUIREMENTS		NUMBER OF WOOD POSTS REQUIRED
L	E	
48" OR LESS AND LESS THAN 20 SQ. FT.	-	1
LESS THAN 60"	12"	2
60" TO 120"	L/5	2
GREATER THAN 120" LESS THAN 168"	12"	3
168" AND GREATER	12"	4

SEE NOTE 3

TEMPORARY TRAFFIC CONTROL SIGN MOUNTING

STATE OF WISCONSIN
DEPARTMENT OF TRANSPO

6

S.D.D. 15 D 38-2a

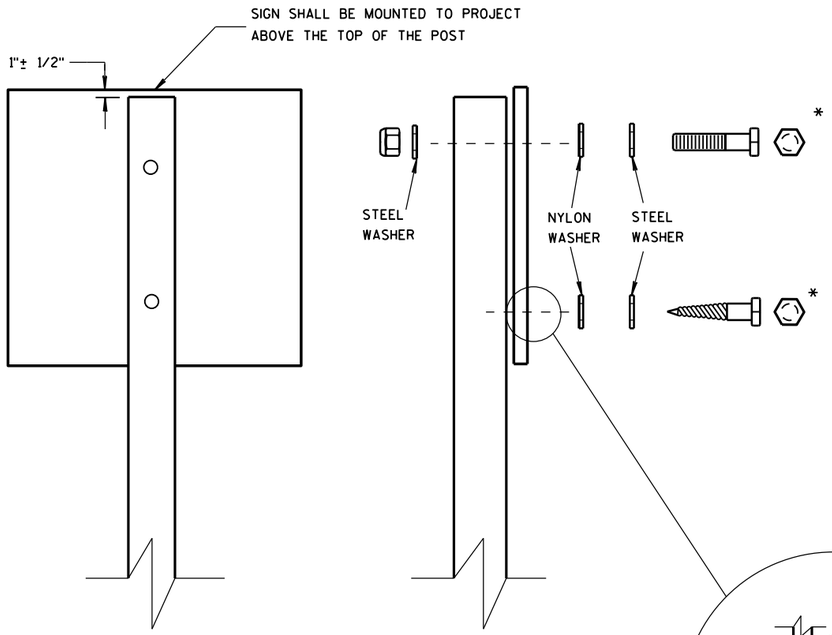

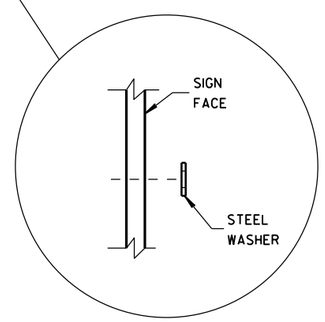

WASHER PLACEMENT WHEN SIGN HAS OTHER THAN TYPE H OR TYPE F FACE

NUTS, BOLTS AND LAGS USED FOR MOUNTING SIGNS SHALL HAVE HEXAGONAL HEADS AND SHALL BE EITHER:

A. HOT DIP GALVANIZED IN ACCORDANCE WITH ASTM DESIGNATION: A 153, CLASS D, OR SC 3

B. ELECTRO-GALVANIZED IN ACCORDANCE WITH ASTM DESIGNATION: B 633, TYPE III, SC 3

THREADS ON BOLTS AND NUTS SHALL BE MANUFACTURED WITH SUFFICIENT ALLOWANCE FOR THE CADMIUM PLATE OR GALVANIZED COATING TO PERMIT THE NUTS TO RUN FREELY ON THE BOLTS.

WOOD POSTS (4" x 4" or 4" x 6")

LAG SCREWS - 3/8" X 3"

MACHINE BOLTS - 5/16" X 6-1/2" OR 7" LENGTH W/ NUTS

SQUARE STEEL POSTS (2" x 2")

MACHINE BOLTS - 3/8" X 3-1/4" LENGTH W/ NUTS

RIVETS - 9/32" (6605-9-6) BULB-TITE, TRI-FOLD, ALUMINUM BODY/MANDREL O.D. FLANGE .720-.765 INCH, GRIP RANGE .042-.375 INCH

WASHERS (ALL POSTS) -

1-1/4" O.D. X 3/8" I.D. X 1/16" STEEL

1-1/4" O.D. X 3/8" I.D. X .080 NYLON FOR ALL TYPE H SIGNS

* TWO DIFFERENT FASTENING SYSTEMS ARE SHOWN FOR ILLUSTRATION PURPOSES. ON ANY INDIVIDUAL SIGN, EITHER ONE OR THE OTHER SYSTEM SHALL BE USED. ACTUAL NUMBER OF FASTENERS PER SIGN VARIES WITH THE SIGN AREA. FOR A SINGLE POST INSTALLATION, ALL SIGNS GREATER THAN 9 SQ. FT. REQUIRE THE USE OF 3 FASTENERS.

6

6

S.D.D. 15 D 38-2b

S.D.D. 15 D 38-2b

ATTACHMENT OF SIGNS TO POSTS

STATE OF WISCONSIN
DEPARTMENT OF TRANSPORTATION

APPROVED

June 2017 — DATE

/S/ Andrew Heldtke — WORK ZONE ENG

FHWA

DIVISIONS	STATION	Real Station	Distance	AREA (SF) Cut	AREA (SF) Unusable Material	AREA (SF) Fill	Incremental Vol (CY) (Unadjusted) Cut Note 1	Incremental Vol (CY) (Unadjusted) Unusable Material Note 2	Incremental Vol (CY) (Unadjusted) Fill Note 3	Cumulative Vol (CY) Cut 1.00 Note 1	Cumulative Vol (CY) Expanded Fill 1.25	Cumulative Vol (CY) Mass Ordinate Note 8
	200+10	20010.00	0.00	4.85	0.00	0.64	0	0	0	0	0	0
	200+37.96	20037.96	27.96	4.97	0.00	0.93	5	0	1	5	1	-1
	200+69.82	20069.82	31.86	5.13	0.00	3.21	6	0	2	11	4	-4
	201+00	20100.00	30.18	5.27	0.00	4.78	6	0	4	17	10	-10
	201+63	20163.00	63.00	5.51	0.00	5.49	13	0	12	29	25	-25
	201+69	20169.00	6.00	5.53	0.00	4.84	1	0	1	31	26	-26
	202+00	20200.00	31.00	5.70	0.00	4.95	6	0	6	37	33	-33
1	203+00	20300.00	100.00	7.83	0.00	0.14	25	0	9	62	45	-45
	204+00	20400.00	100.00	6.84	0.00	3.37	27	0	6	89	53	-53
	205+00	20500.00	100.00	6.63	0.00	4.26	25	0	14	114	71	-71
	205+21	20521.00	21.00	6.73	0.00	7.57	5	0	5	119	76	-76
	206+00	20600.00	79.00	6.86	0.00	7.50	20	0	22	139	104	-104
	206+43	20643.00	43.00	6.87	0.00	9.81	11	0	14	150	121	-121
	207+00	20700.00	57.00	6.77	0.00	10.74	14	0	22	165	148	-148
	207+84	20784.00	84.00	6.78	0.00	3.85	21	0	23	186	177	-177
	210+72	21072.00	0.00	6.61	6.61	1.95	0	0	0	0	0	0
	211+00	21100.00	28.00	6.62	6.62	1.77	7	7	2	7	2	-2
	212+00	21200.00	100.00	6.13	6.13	3.99	24	24	11	30	16	-16
	213+00	21300.00	100.00	6.72	6.72	11.90	24	24	29	54	53	-53
	214+00	21400.00	100.00	6.75	6.75	8.98	25	25	39	79	101	-101
	215+00	21500.00	100.00	6.76	6.76	12.59	25	25	40	104	151	-151
	216+00	21600.00	100.00	6.75	6.75	10.08	25	25	42	129	203	-203
2	217+00	21700.00	100.00	6.73	6.73	16.68	25	25	50	154	265	-265
	218+00	21800.00	100.00	6.68	6.68	14.36	25	25	57	179	337	-337
	219+00	21900.00	100.00	6.65	6.65	11.79	25	25	48	204	398	-398
	220+00	22000.00	100.00	6.77	6.77	11.11	25	25	42	229	451	-451
	221+00	22100.00	100.00	6.69	6.69	11.54	25	25	42	254	503	-503
	222+00	22200.00	100.00	6.66	6.66	14.53	25	25	48	278	563	-563
	223+00	22300.00	100.00	6.71	6.71	7.59	25	25	41	303	615	-615
	223+70	22370.00	70.00	4.27	4.27	2.17	14	14	13	317	630	-630
	229+55	22955.00	0.00	5.98	5.98	1.54	0	0	0	0	0	0
	230+00	23000.00	45.00	6.71	6.71	12.80	11	11	12	11	15	-15
	231+00	23100.00	100.00	6.70	6.70	18.13	25	25	57	35	87	-87
	232+00	23200.00	100.00	6.69	6.69	19.09	25	25	69	60	173	-173
	233+00	23300.00	100.00	6.72	6.72	15.26	25	25	64	85	252	-252
	234+00	23400.00	100.00	6.74	6.74	20.54	25	25	66	110	335	-335
	235+00	23500.00	100.00	6.71	6.71	19.04	25	25	73	135	427	-427
	236+00	23600.00	100.00	6.66	6.66	20.21	25	25	73	160	518	-518
3	237+00	23700.00	100.00	6.64	6.64	21.70	25	25	78	184	615	-615
	238+00	23800.00	100.00	6.66	6.66	18.64	25	25	75	209	708	-708
	239+00	23900.00	100.00	6.66	6.66	17.37	25	25	67	234	791	-791
	240+00	24000.00	100.00	6.72	6.72	17.59	25	25	65	258	872	-872
	241+00	24100.00	100.00	6.78	6.78	19.41	25	25	69	283	958	-958
	242+00	24200.00	100.00	6.77	6.77	19.72	25	25	72	308	1,048	-1,048
	243+00	24300.00	100.00	6.78	6.78	21.99	25	25	77	334	1,145	-1,145
	244+00	24400.00	100.00	6.79	6.79	19.91	25	25	78	359	1,242	-1,242
	244+70	24470.00	70.00	6.77	6.77	1.20	18	18	27	376	1,276	-1,276

9 9

PROJECT NO: 5490-00-60 | HWY: STH 30 | COUNTY: DANE | EARTHWORK DETAILS | SHEET: 66 | E

DIVISIONS	STATION	Real Station	Distance	AREA (SF) Cut	AREA (SF) Unusable Material	AREA (SF) Fill	Incremental Vol (CY) (Unadjusted) Cut Note 1	Incremental Vol (CY) (Unadjusted) Unusable Material Note 2	Incremental Vol (CY) (Unadjusted) Fill Note 3	Cumulative Vol (CY) Cut 1.00 Note 1	Cumulative Vol (CY) Expanded Fill 1.25	Cumulative Vol (CY) Mass Ordinate Note 8
	248+40	24840.00	0.00	6.02	6.02	0.66	0	0	0	0	0	0
	249+00	24900.00	60.00	6.76	6.76	13.17	14	14	15	14	19	-19
	250+00	25000.00	100.00	6.76	6.76	10.91	25	25	45	39	75	-75
	251+00	25100.00	100.00	6.75	6.75	23.41	25	25	64	64	154	-154
	252+00	25200.00	100.00	6.71	6.71	11.33	25	25	64	89	235	-235
	253+00	25300.00	100.00	6.69	6.69	13.49	25	25	46	114	292	-292
	254+00	25400.00	100.00	6.64	6.64	11.33	25	25	46	139	350	-350
	255+00	25500.00	100.00	6.60	6.60	15.16	25	25	49	163	411	-411
	256+00	25600.00	100.00	6.64	6.64	15.34	25	25	56	188	482	-482
	257+00	25700.00	100.00	6.65	6.65	10.90	25	25	49	212	542	-542
4	258+00	25800.00	100.00	6.57	6.57	8.39	24	24	36	237	587	-587
	259+00	25900.00	100.00	6.53	6.53	10.76	24	24	35	261	631	-631
	260+00	26000.00	100.00	6.55	6.55	8.76	24	24	36	285	677	-677
	261+00	26100.00	100.00	6.51	6.51	14.63	24	24	43	309	731	-731
	262+00	26200.00	100.00	6.04	6.04	13.36	23	23	52	333	796	-796
	263+00	26300.00	100.00	6.52	6.52	9.62	23	23	43	356	849	-849
	264+00	26400.00	100.00	6.50	6.50	11.65	24	24	39	380	898	-898
	265+00	26500.00	100.00	6.51	6.51	8.55	24	24	37	404	945	-945
	266+00	26600.00	100.00	6.52	6.52	4.63	24	24	24	428	975	-975
	266+45	26645.00	45.00	6.53	6.53	1.76	11	11	5	439	982	-982
	267+15	26715.00	70.00	6.40	6.40	9.58	17	17	15	456	1,000	-1,000
	268+00	26800.00	0.00	6.53	6.53	4.29	0	0	0	0	0	0
	269+00	26900.00	100.00	6.54	6.54	7.75	24	24	22	24	28	-28
	269+93.62	26993.62	93.62	6.54	6.54	7.43	23	23	26	47	61	-61
	270+00	27000.00	6.38	6.55	6.55	7.53	2	2	2	48	63	-63
	271+00	27100.00	100.00	6.71	6.71	5.22	25	25	24	73	93	-93
	272+00	27200.00	100.00	7.07	7.07	12.77	26	26	33	98	134	-134
	273+00	27300.00	100.00	7.71	7.71	13.22	27	27	48	126	194	-194
	274+00	27400.00	100.00	8.51	8.51	17.46	30	30	57	156	265	-265
	275+00	27500.00	100.00	9.48	9.48	25.23	33	33	79	189	364	-364
	276+00	27600.00	100.00	7.90	7.90	13.59	32	32	72	221	454	-454
	277+00	27700.00	100.00	8.90	8.90	19.12	31	31	61	253	530	-530
5	277+76.6	27776.60	76.60	9.43	9.43	21.51	26	26	58	279	602	-602
	278+00	27800.00	23.40	9.84	9.84	22.44	8	8	19	287	626	-626
	279+00	27900.00	100.00	7.04	7.04	29.39	26	26	97	313	747	-747
	280+00	28000.00	100.00	5.46	5.46	30.41	23	23	111	336	886	-886
	281+00	28100.00	100.00	5.89	5.89	28.41	21	21	109	357	1,022	-1,022
	282+00	28200.00	100.00	6.30	6.30	30.10	23	23	108	380	1,157	-1,157
	283+00	28300.00	100.00	7.10	7.10	28.76	25	25	109	405	1,294	-1,294
	284+00	28400.00	100.00	6.72	6.72	25.03	26	26	100	430	1,418	-1,418
	285+00	28500.00	100.00	6.12	6.12	33.87	24	24	109	454	1,554	-1,554
	285+05	28505.00	5.00	5.90	5.90	32.81	1	1	6	455	1,562	-1,562
	286+00	28600.00	95.00	5.61	5.61	26.14	20	20	104	475	1,692	-1,692
	286+50	28650.00	50.00	4.35	4.35	2.72	9	9	27	484	1,725	-1,725

3/4" Base Aggeragate

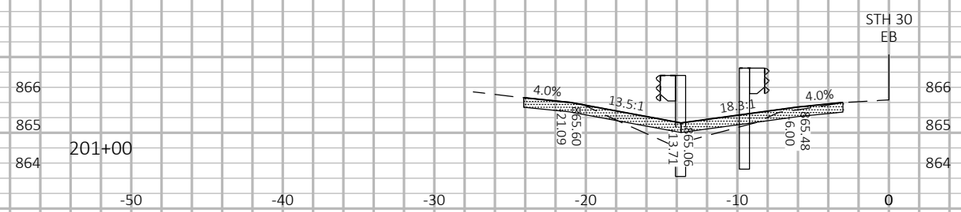

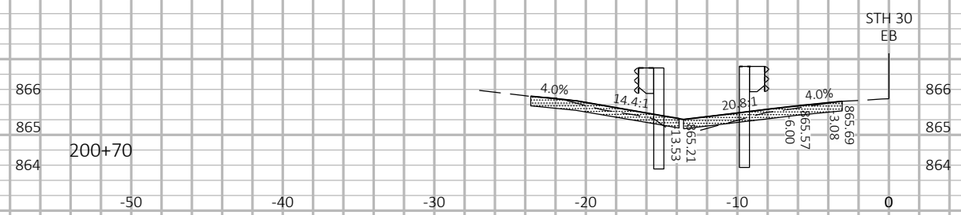

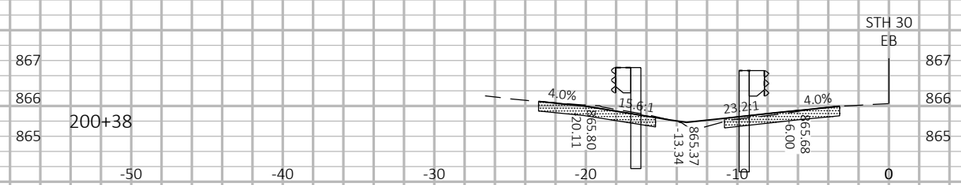

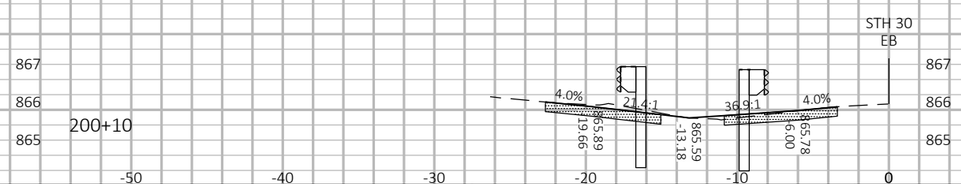

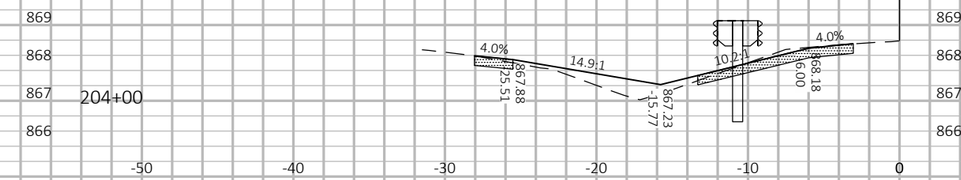

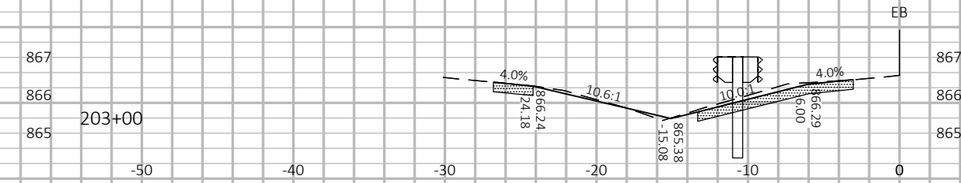

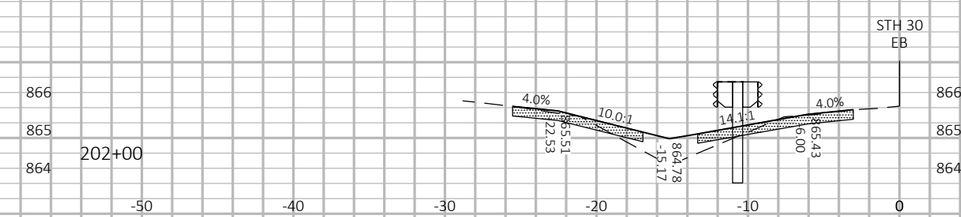

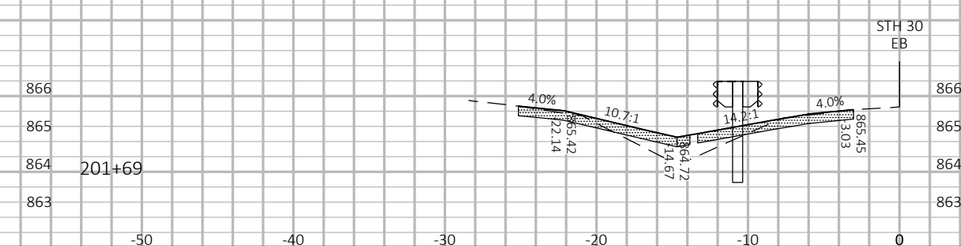

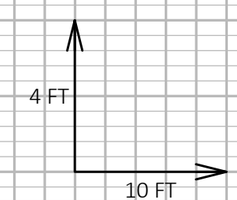

9

9

PROJECT NO: 5490-00-60	HWY: STH 30	COUNTY: DANE	CROSS SECTIONS: STH 30	SHEET 68	E

FILE NAME : N:\PDS\C3D\54900030\SHEETSPLAN\090201-XS.DWG
LAYOUT NAME - 090201
PLOT DATE : 1/16/2018 1:25 PM
PLOT BY : ANDERSON, SHAUN M
PLOT NAME :
PLOT SCALE : 1 IN:10 FT HORZ. / 1 IN:4 FT VERT.
WISDOT/CADDS SHEET 49

3/4" Base Aggeragate

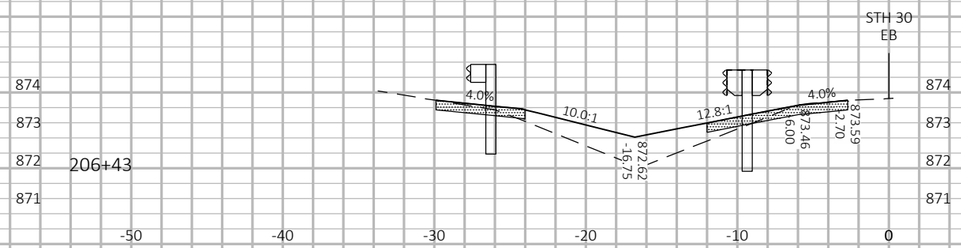

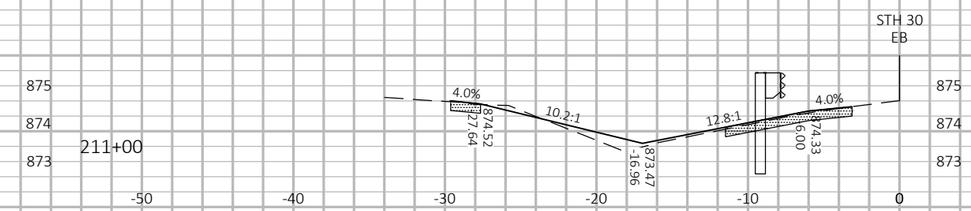

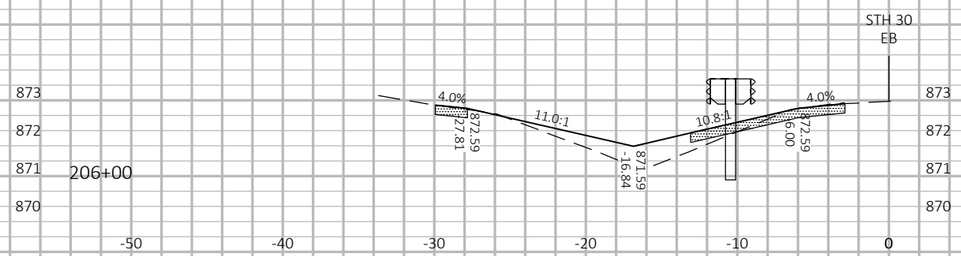

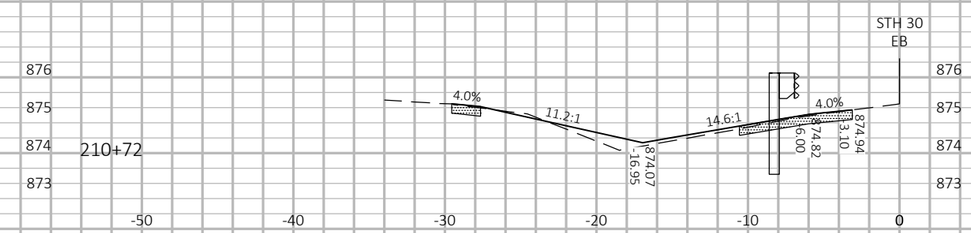

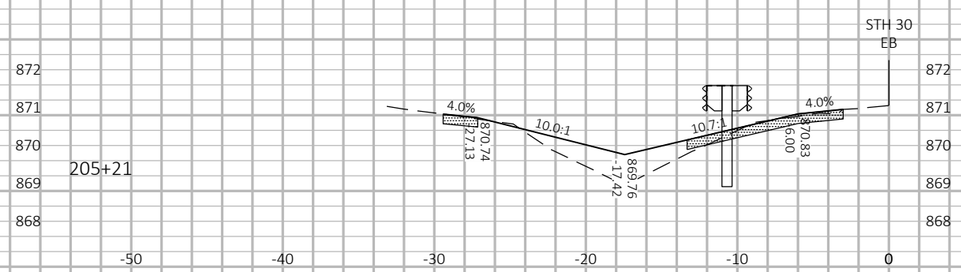

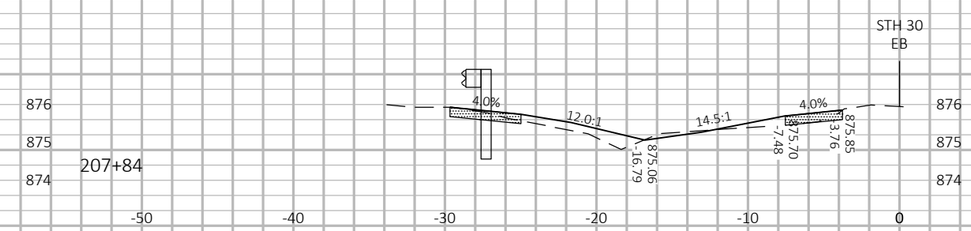

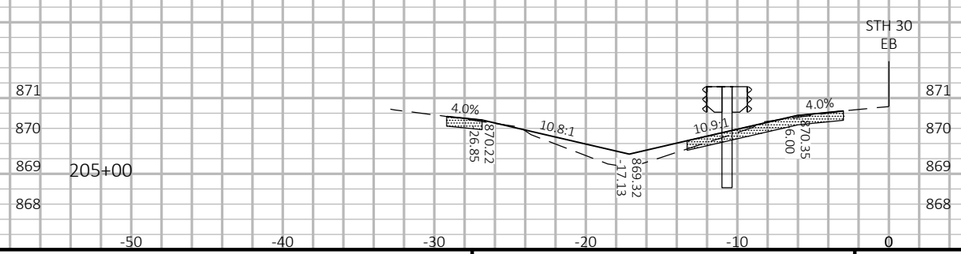

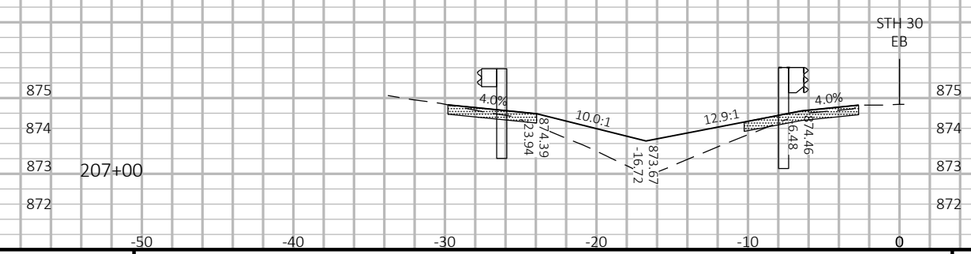

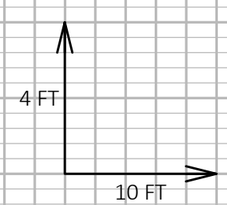

9

9

PROJECT NO: 5490-00-60	HWY: STH 30	COUNTY: DANE	CROSS SECTIONS: STH 30	SHEET 69	E

FILE NAME : N:\PDS\C3D\54900030\SHEETSPLAN\090201-XS.DWG
LAYOUT NAME - 090202
PLOT DATE : 1/16/2018 1:25 PM
PLOT BY : ANDERSON, SHAUN M
PLOT NAME :
PLOT SCALE : 1 IN:10 FT HORZ. / 1 IN:4 FT VERT.

3/4" Base Aggeragate

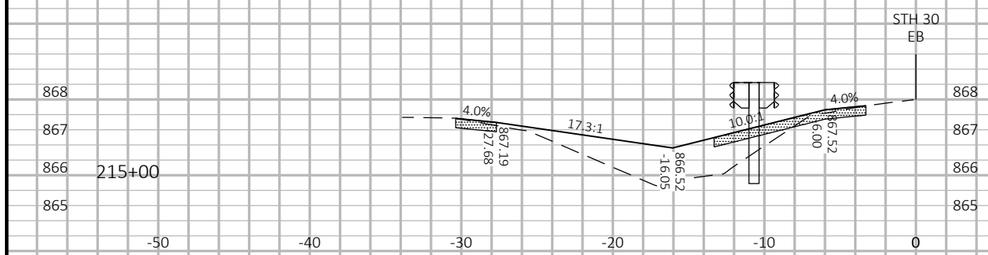

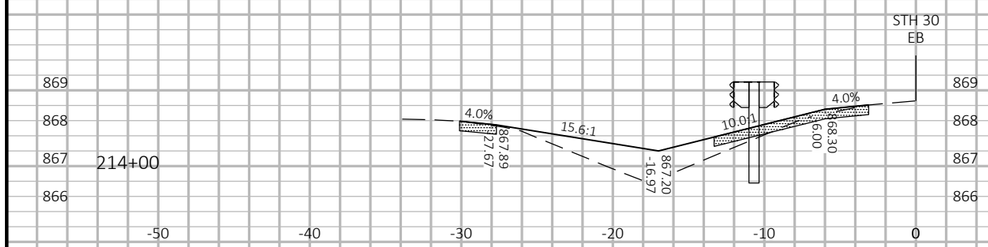

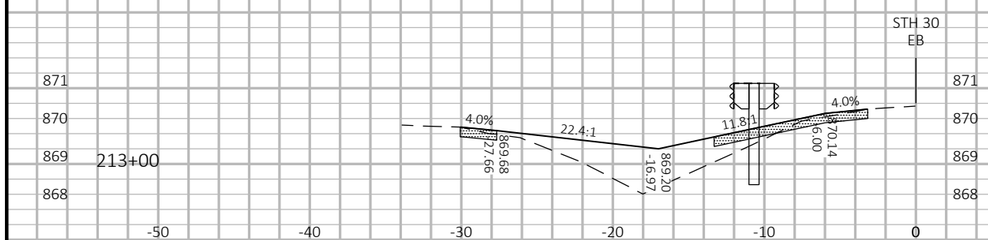

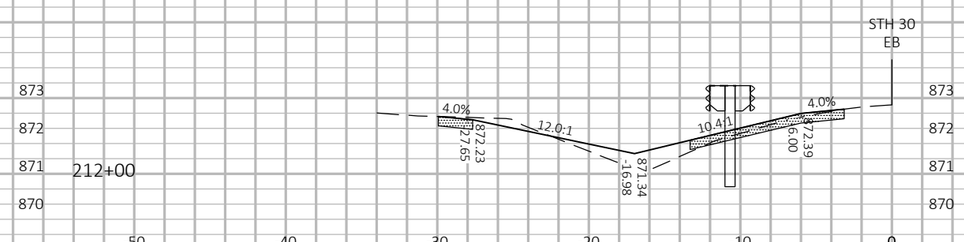

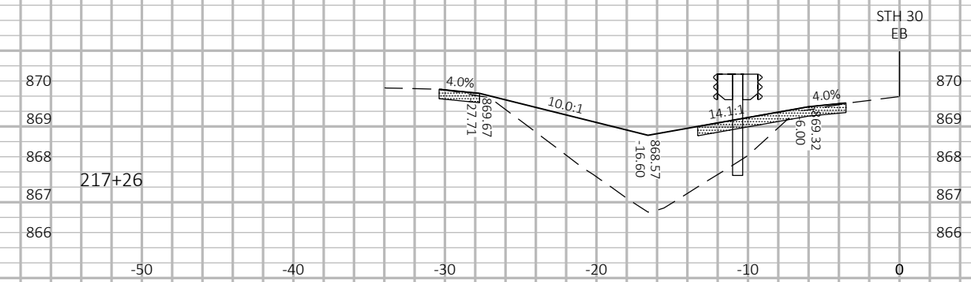

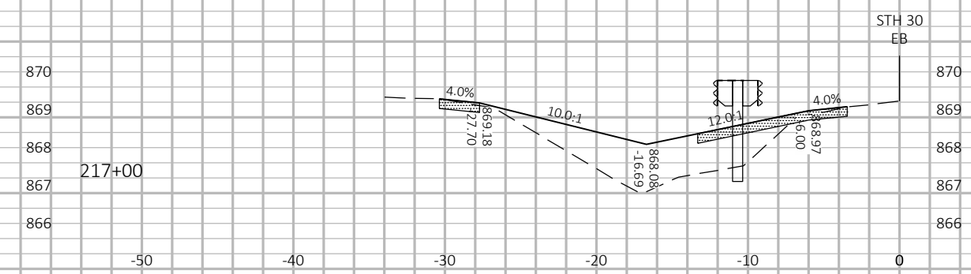

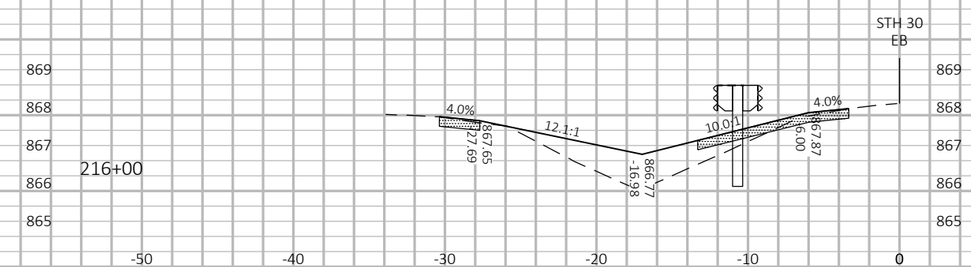

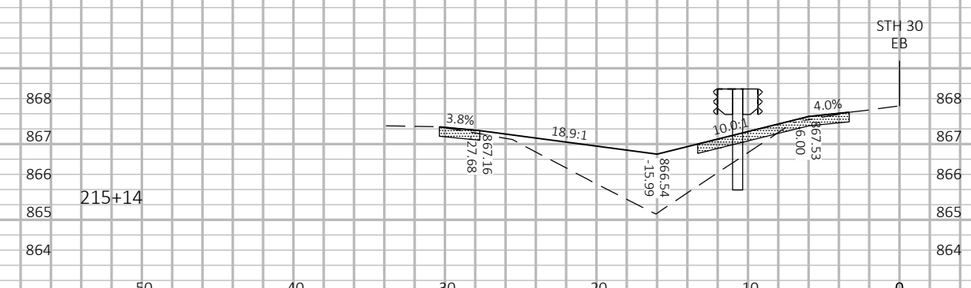

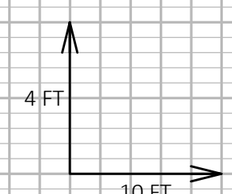

9

9

PROJECT NO: 5490-00-60	HWY: STH 30	COUNTY: DANE	CROSS SECTIONS: STH 30	SHEET 70	E

FILE NAME : N:\PDS\C3D\54900030\SHEETSPLAN\090201-XS.DWG
LAYOUT NAME - 090203
PLOT DATE : 1/16/2018 1:25 PM
PLOT BY : ANDERSON, SHAUN M
PLOT NAME :
PLOT SCALE : 1 IN:10 FT HORZ. / 1 IN:4 FT VERT.
WISDOT/CADDS SHEET 49

3/4" Base Aggeragate

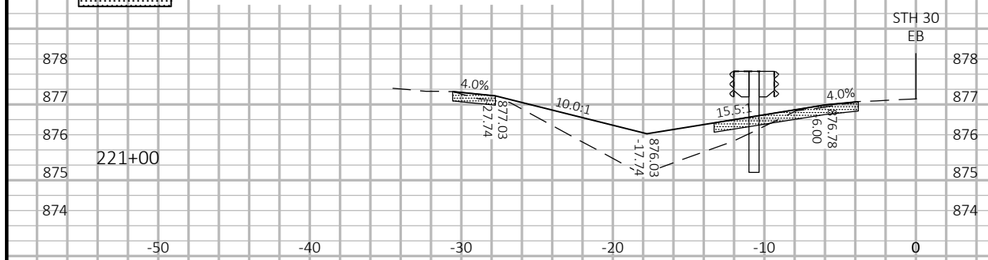

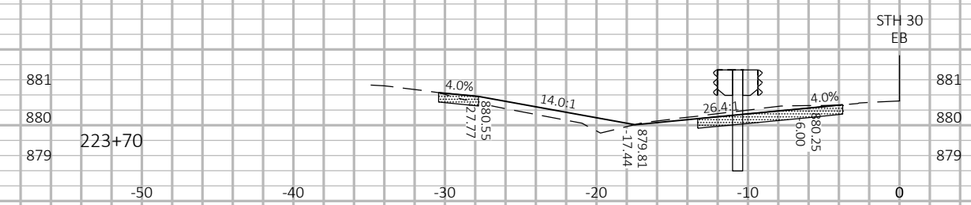

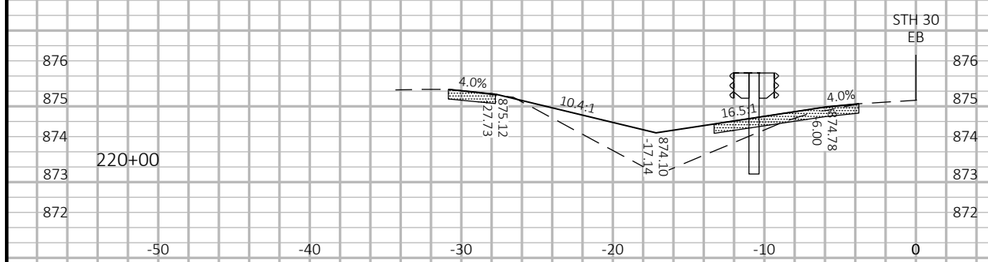

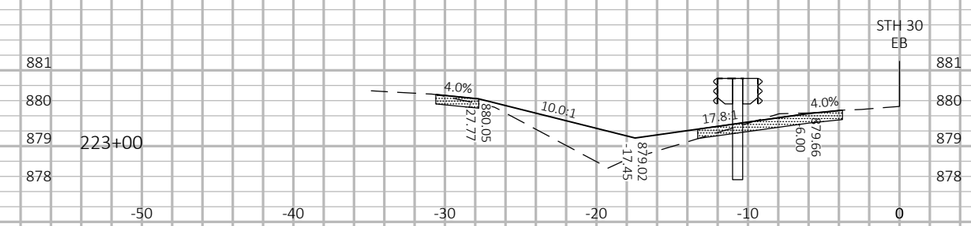

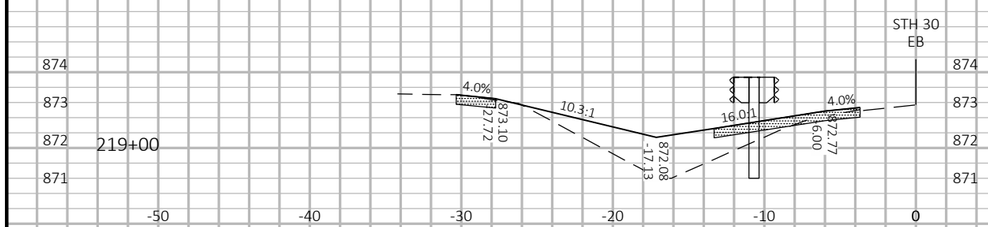

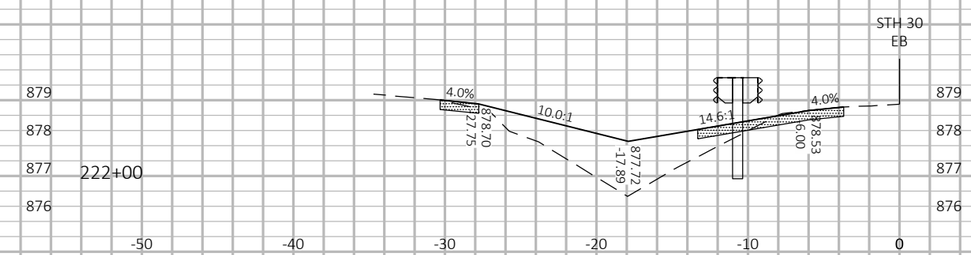

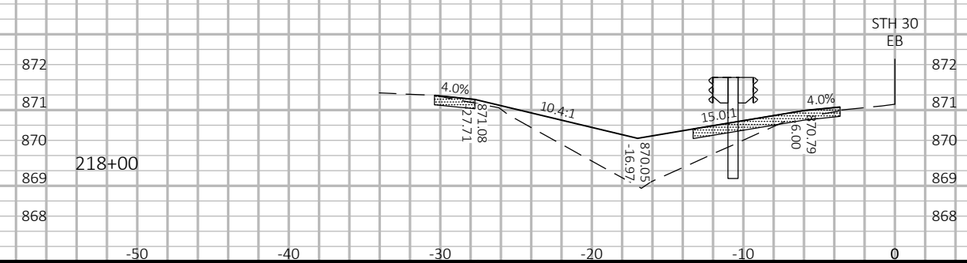

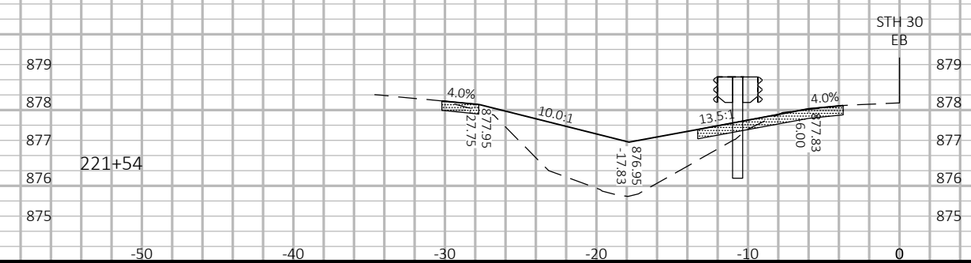

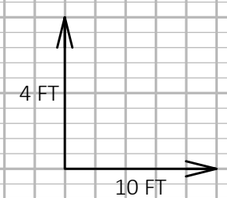

9

9

PROJECT NO: 5490-00-60	HWY: STH 30	COUNTY: DANE	CROSS SECTIONS: STH 30	SHEET 71	E

FILE NAME : N:\PDS\C3D\54900030\SHEETSPLAN\090201-XS.DWG
LAYOUT NAME - 090204
PLOT DATE : 1/16/2018 1:25 PM
PLOT BY : ANDERSON, SHAUN M
PLOT NAME :
PLOT SCALE : 1 IN:10 FT HORZ. / 1 IN:4 FT VERT.
WISDOT/CADDS SHEET 49

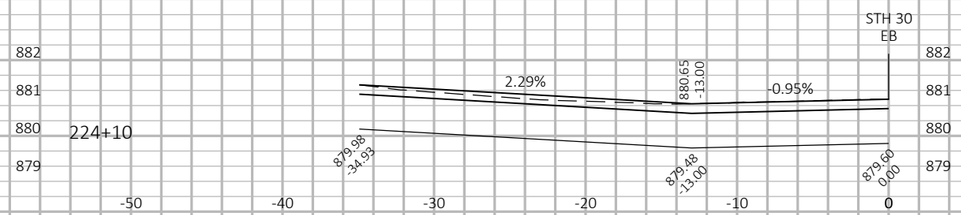

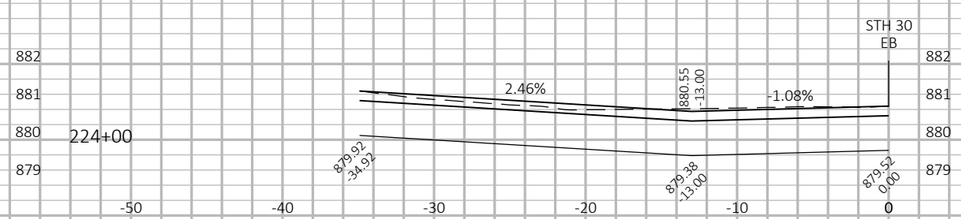

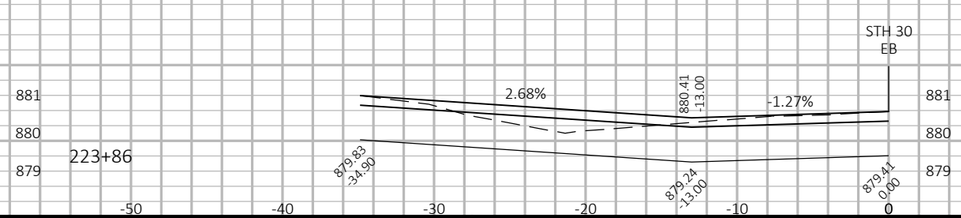

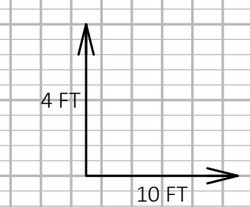

9

9

PROJECT NO: 5490-00-60	HWY: STH 30	COUNTY: DANE	CROSS SECTIONS: STH 30	SHEET 72	E

FILE NAME : N:\PDS\C3D\54900030\SHEETSPLAN\090201-XS_MXO.DWG
LAYOUT NAME - Section Sheet - (20)
PLOT DATE : 4/9/2018 3:28 PM
PLOT BY : ANDERSON, SHAUN M
PLOT NAME :
PLOT SCALE : 1 IN:10 FT HORZ. / 1 IN:10 FT VERT.
WISDOT/CADDS SHEET 49

3/4" Base Aggeragate

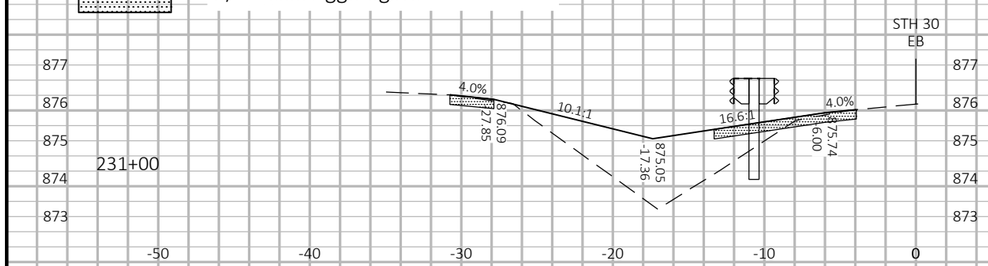

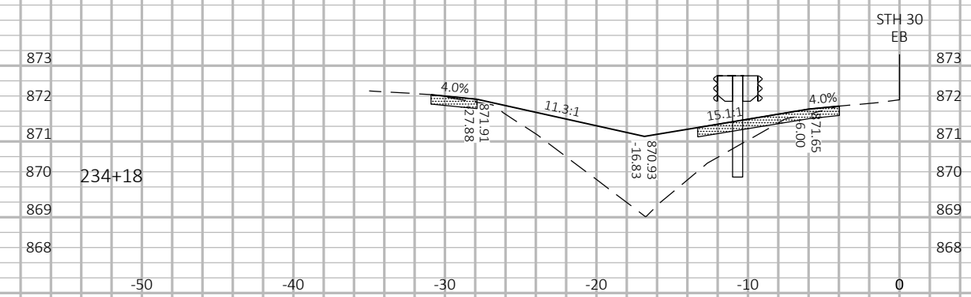

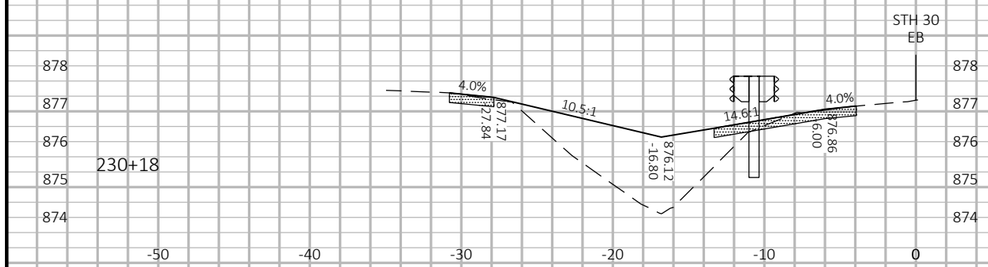

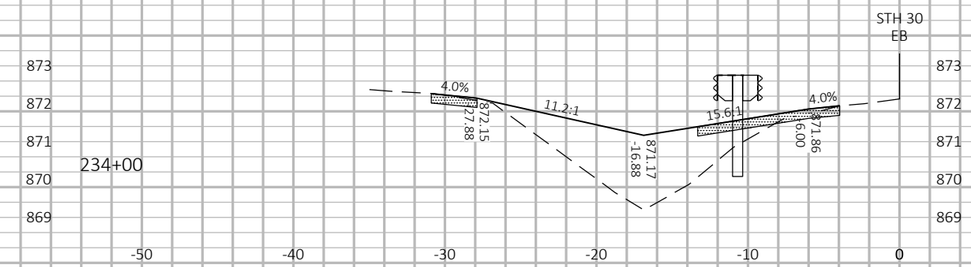

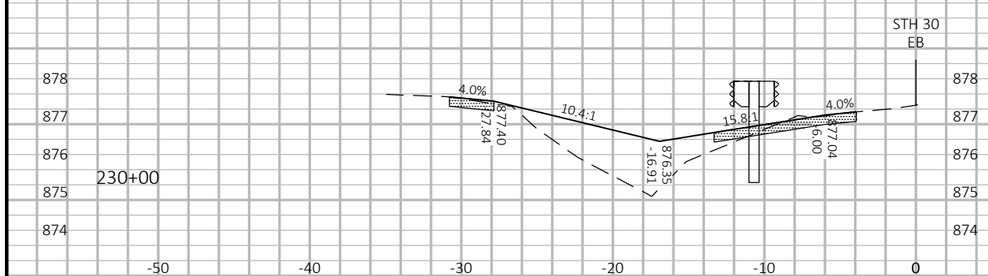

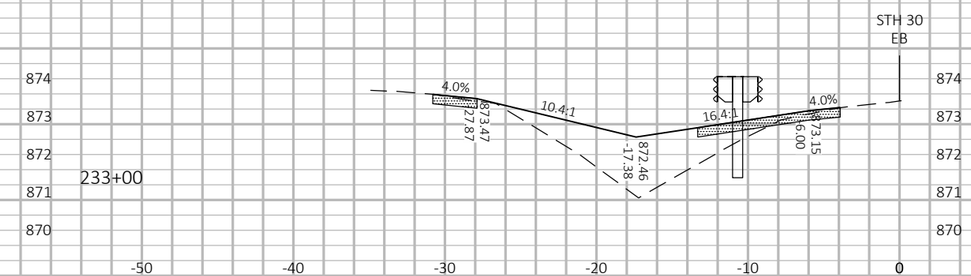

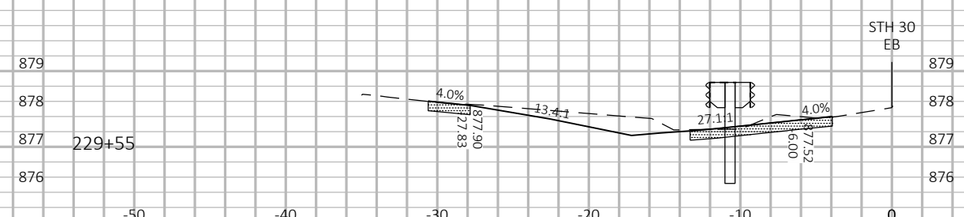

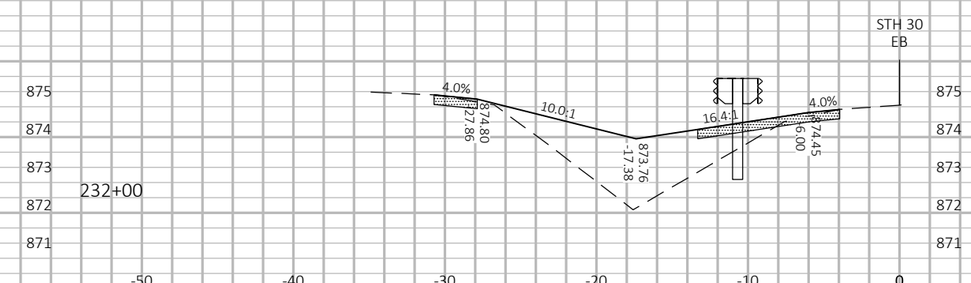

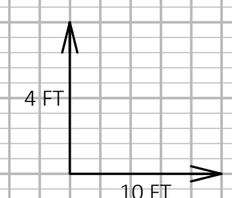

9

9

PROJECT NO: 5490-00-60	HWY: STH 30	COUNTY: DANE	CROSS SECTIONS: STH 30	SHEET 73	E

FILE NAME : N:\PDS\C3D\54900030\SHEETSPLAN\090201-XS.DWG
LAYOUT NAME - 090205
PLOT DATE : 1/16/2018 1:25 PM
PLOT BY : ANDERSON, SHAUN M
PLOT NAME :
PLOT SCALE : 1 IN:10 FT HORZ. / 1 IN:4 FT VERT.
WISDOT/CADDS SHEET 49

3/4" Base Aggeragate

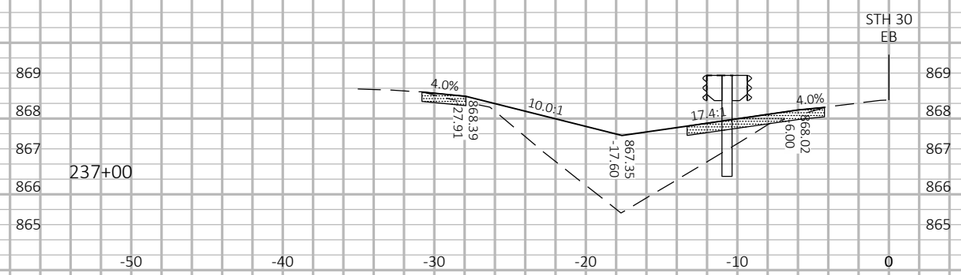

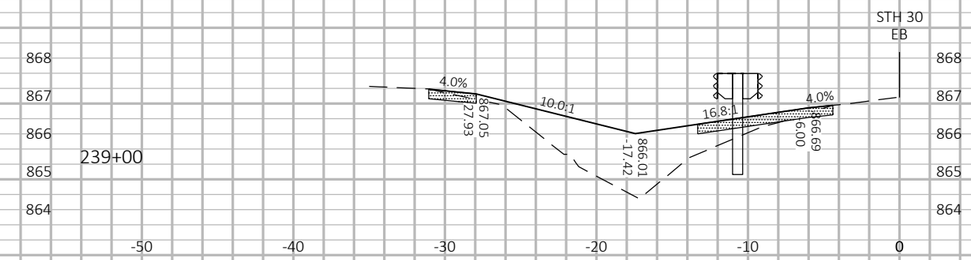

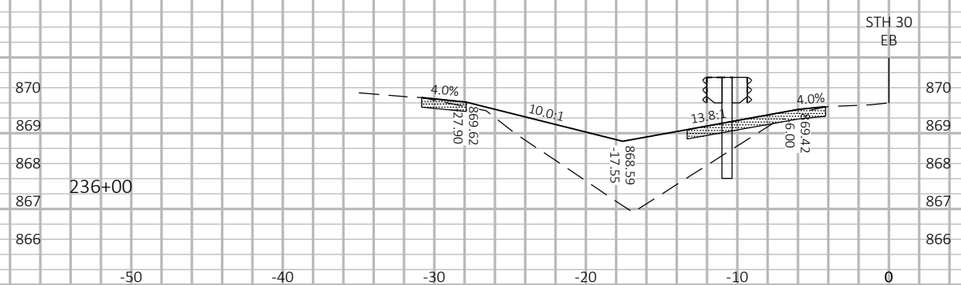

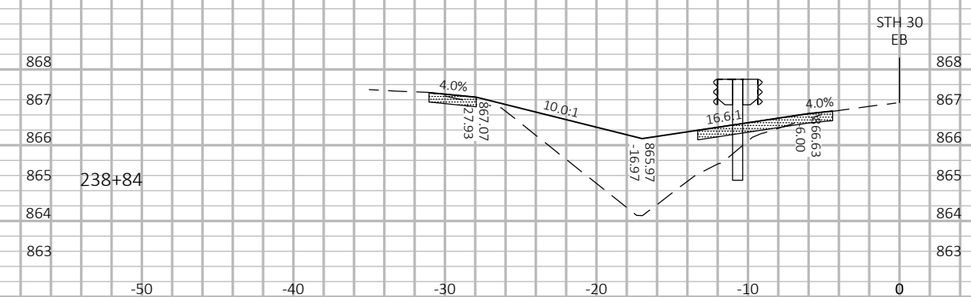

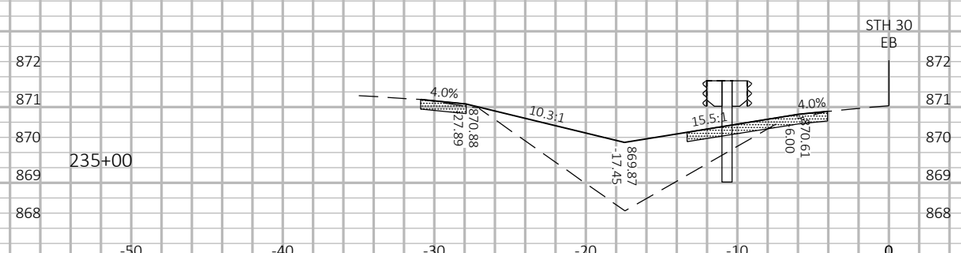

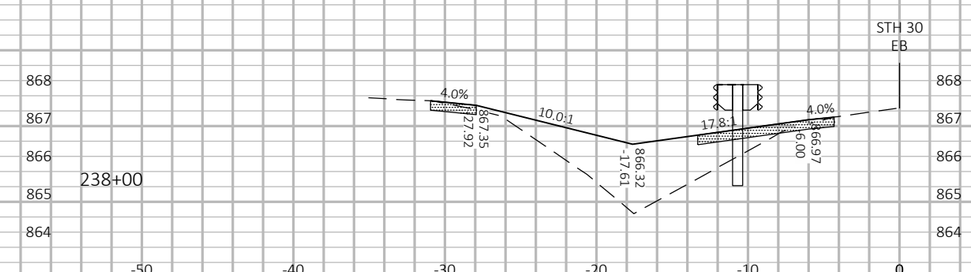

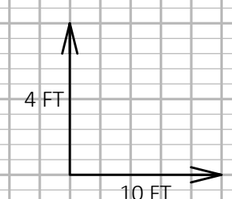

9

9

PROJECT NO:	5490-00-60	HWY:	STH 30	COUNTY:	DANE	CROSS SECTIONS:	STH 30	SHEET	74	E

3/4" Base Aggeragate

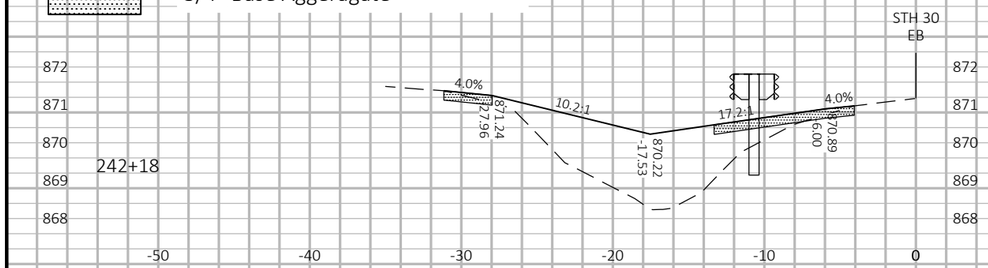

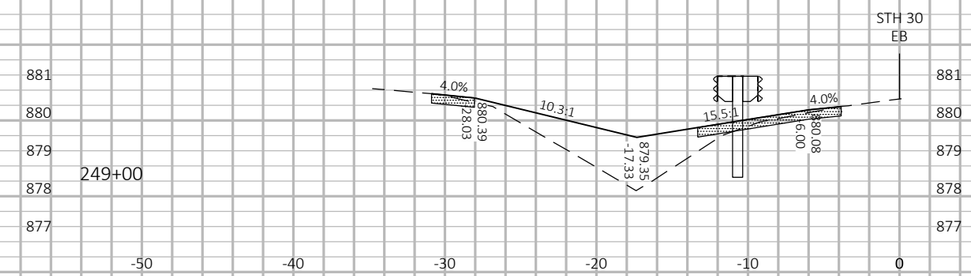

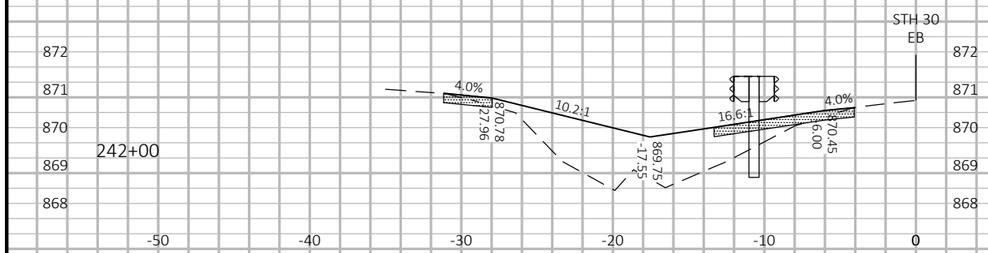

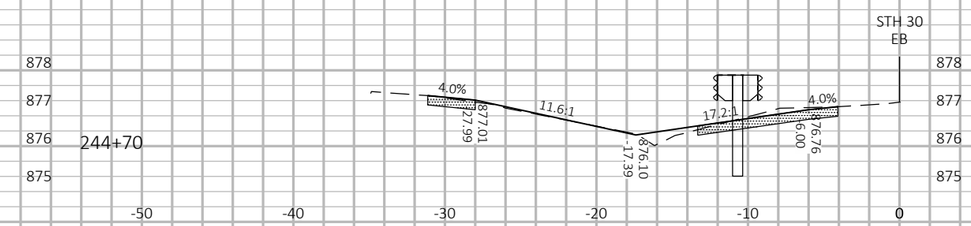

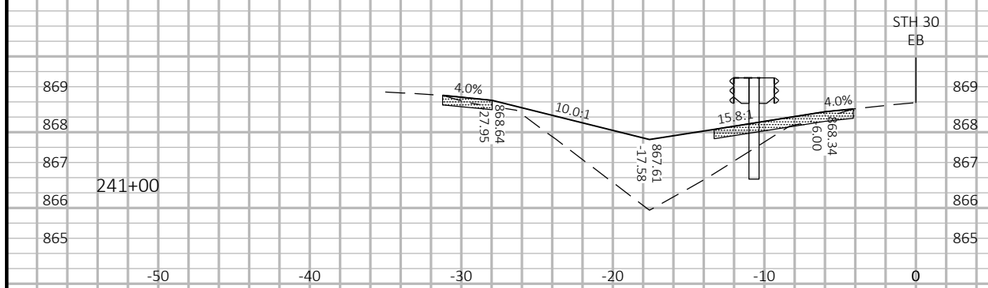

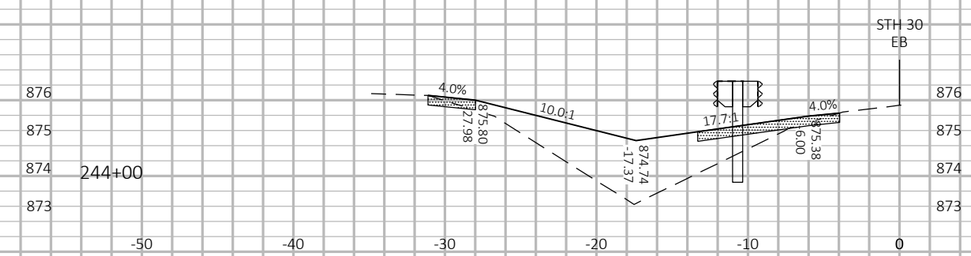

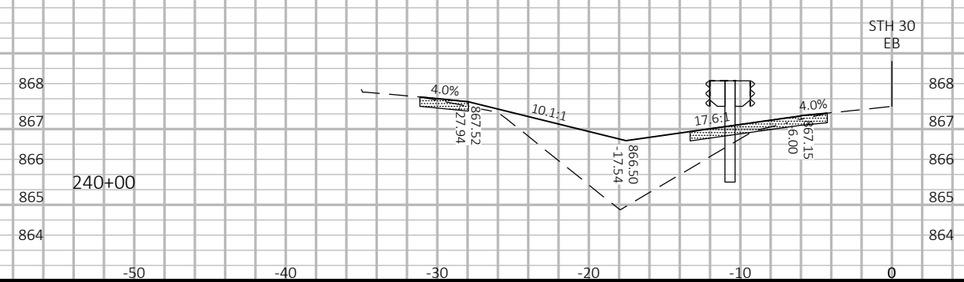

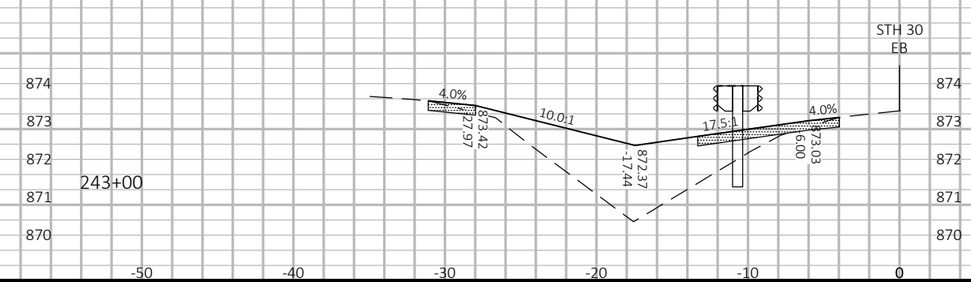

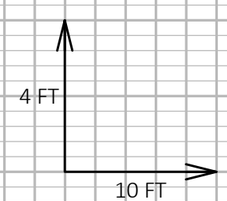

9

9

PROJECT NO: 5490-00-60	HWY: STH 30	COUNTY: DANE	CROSS SECTIONS: STH 30	SHEET 75	E

FILE NAME : N:\PDS\C3D\54900030\SHEETSPLAN\090201-XS.DWG
LAYOUT NAME - 090207
PLOT DATE : 1/16/2018 1:25 PM
PLOT BY : ANDERSON, SHAUN M
PLOT NAME :
PLOT SCALE : 1 IN:10 FT HORZ. / 1 IN:4 FT VERT.
WISDOT/CADDS SHEET 49

3/4" Base Aggeragate

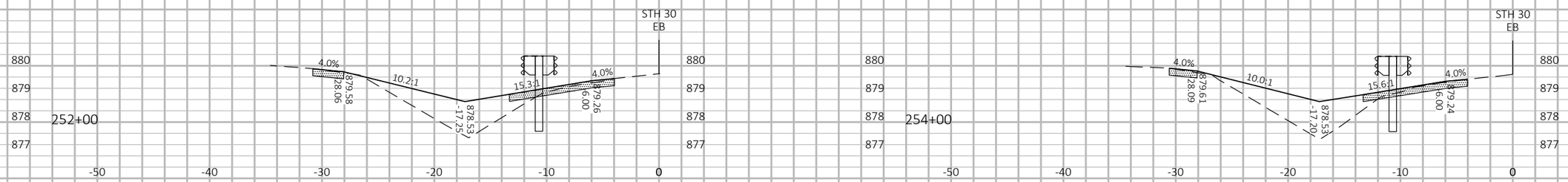

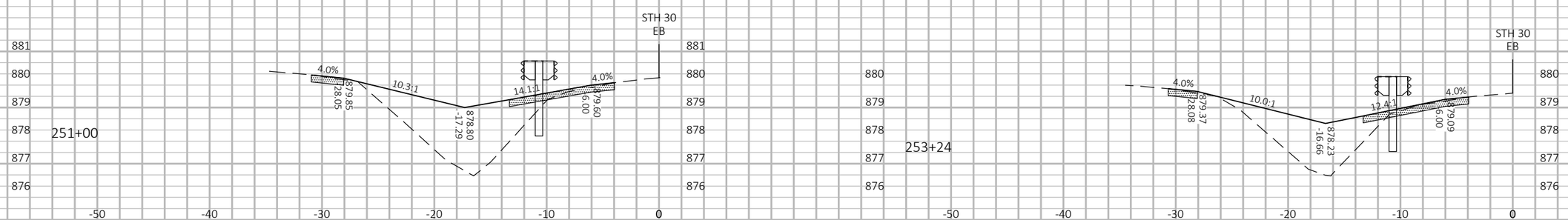

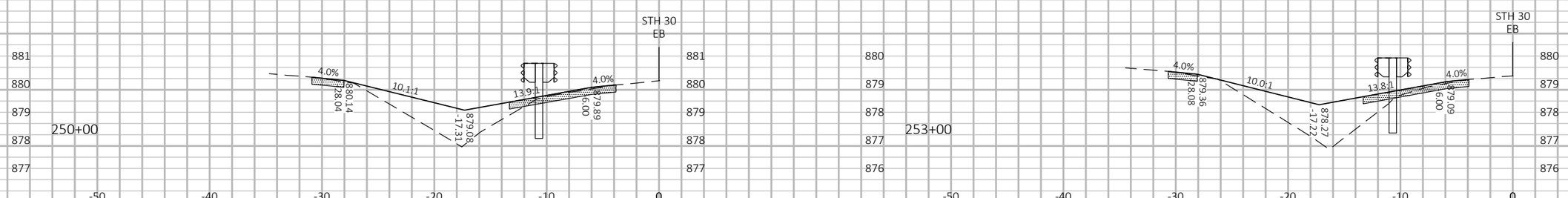

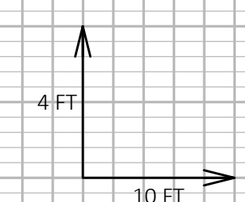

9

9

PROJECT NO: 5490-00-60	HWY: STH 30	COUNTY: DANE	CROSS SECTIONS: STH 30	SHEET 76	E

FILE NAME : N:\PDS\C3D\54900030\SHEETSPLAN\090201-XS.DWG
LAYOUT NAME - 090208
PLOT DATE : 1/16/2018 1:25 PM
PLOT BY : ANDERSON, SHAUN M
PLOT NAME :
PLOT SCALE : 1 IN:10 FT HORZ. / 1 IN:4 FT VERT.
WISDOT/CADDS SHEET 49

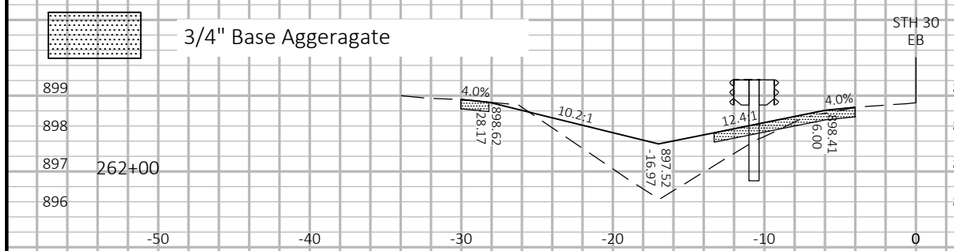

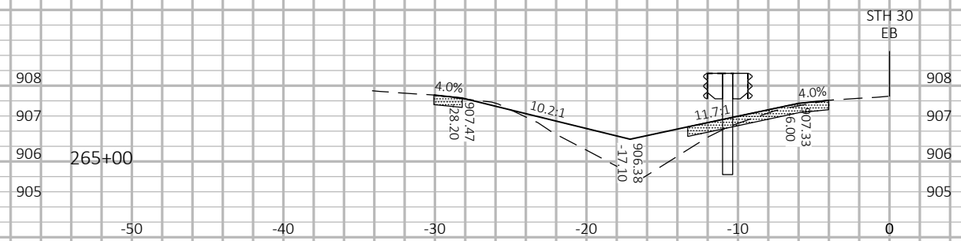

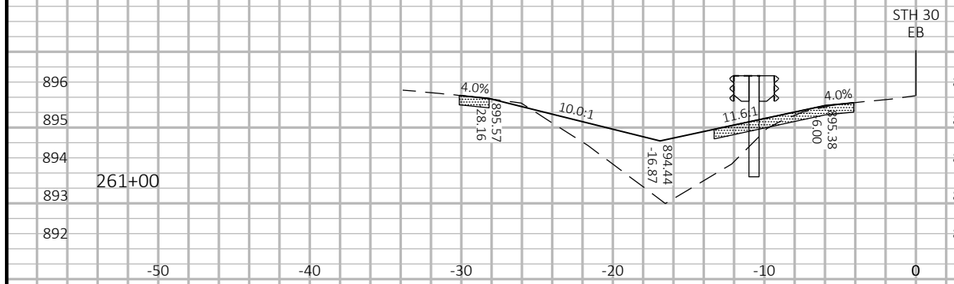

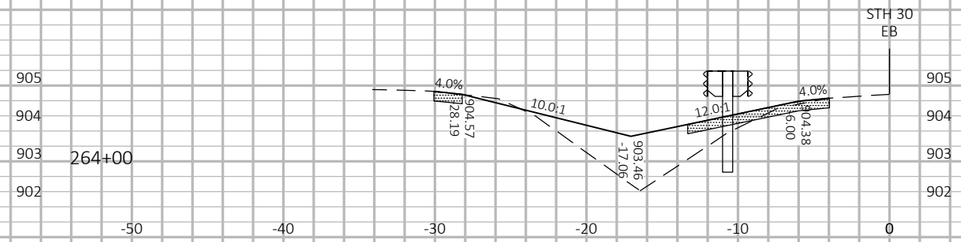

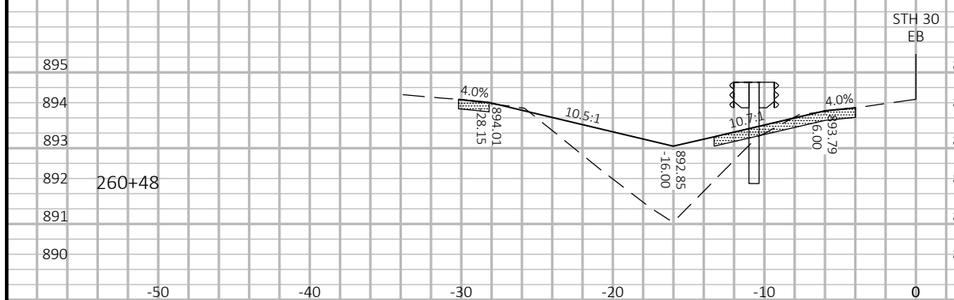

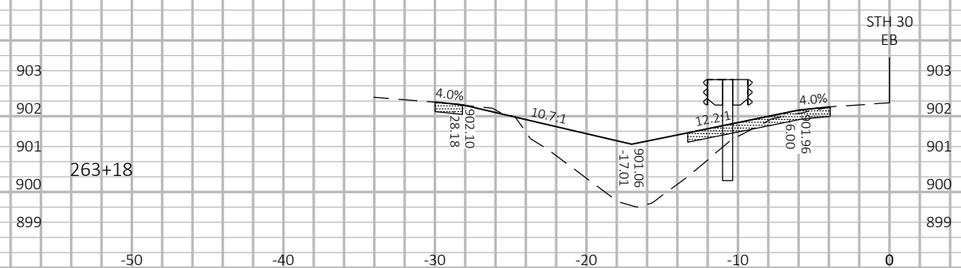

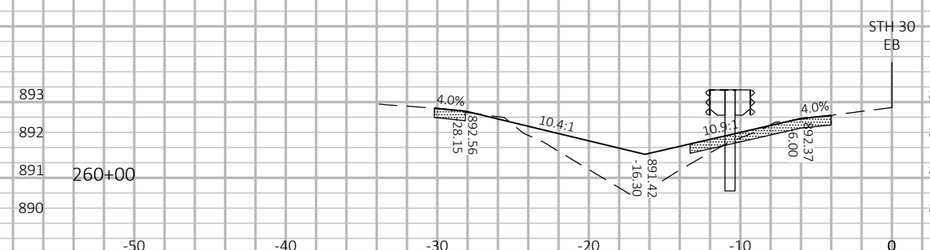

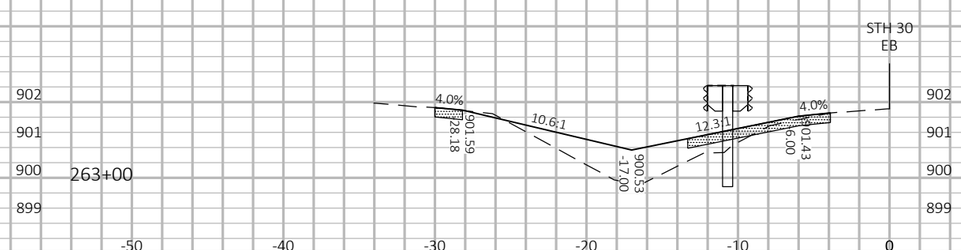

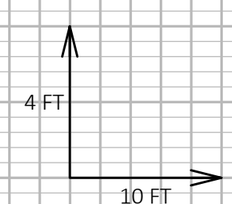

9

9

PROJECT NO: 5490-00-60	HWY: STH 30	COUNTY: DANE	CROSS SECTIONS: STH 30	SHEET 77	E

FILE NAME : N:\PDS\C3D\54900030\SHEETSPLAN\090201-XS.DWG
LAYOUT NAME - 090210
PLOT DATE : 1/16/2018 1:25 PM
PLOT BY : ANDERSON, SHAUN M
PLOT NAME :
PLOT SCALE : 1 IN:10 FT HORZ. / 1 IN:4 FT VERT.
WISDOT/CADDS SHEET 49

3/4" Base Aggeragate

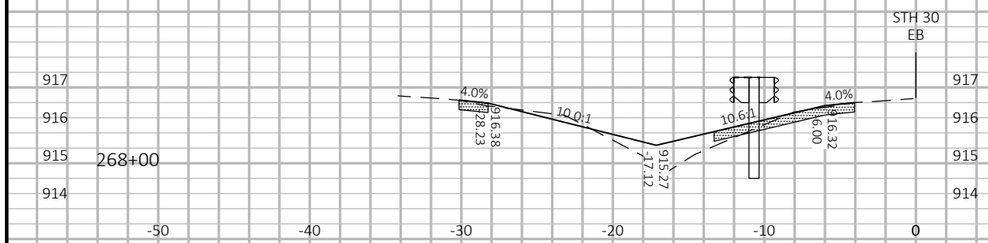

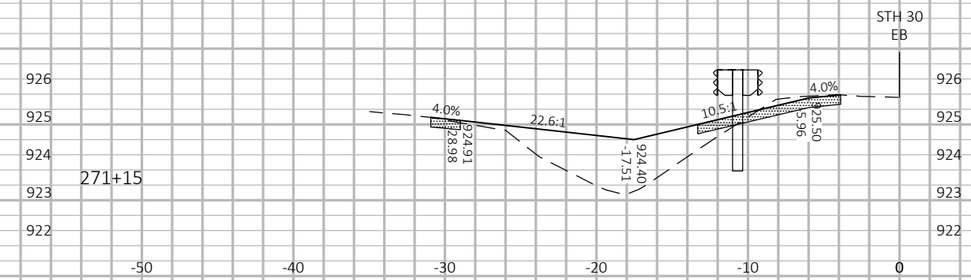

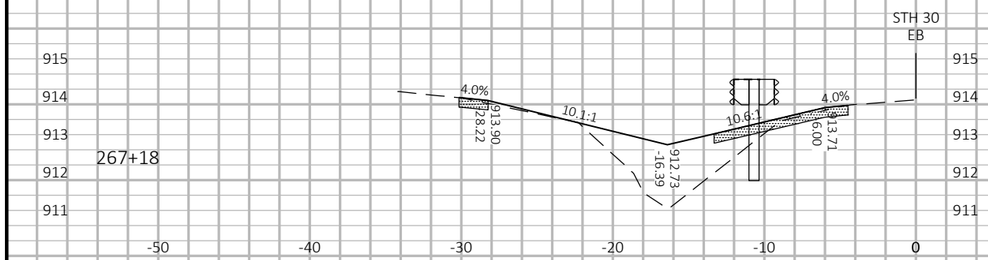

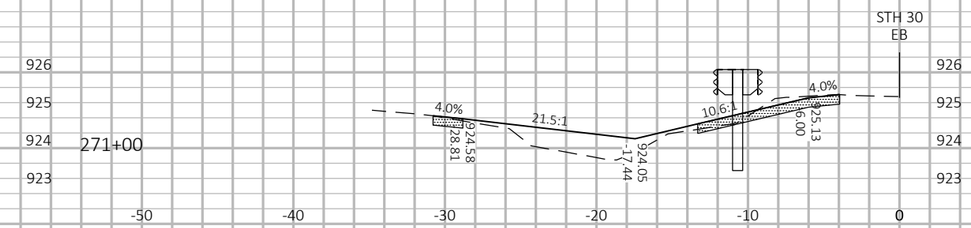

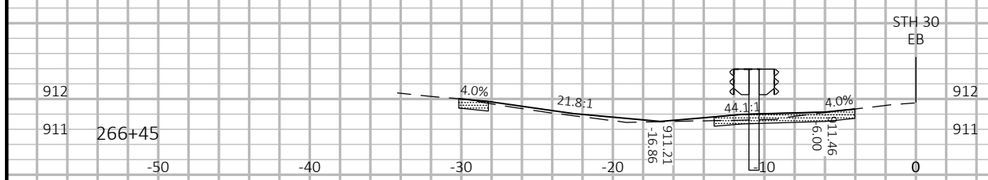

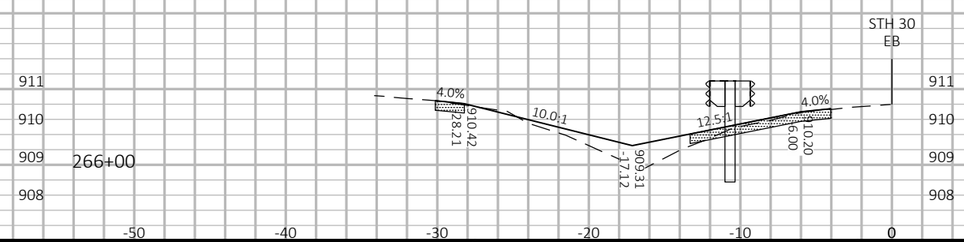

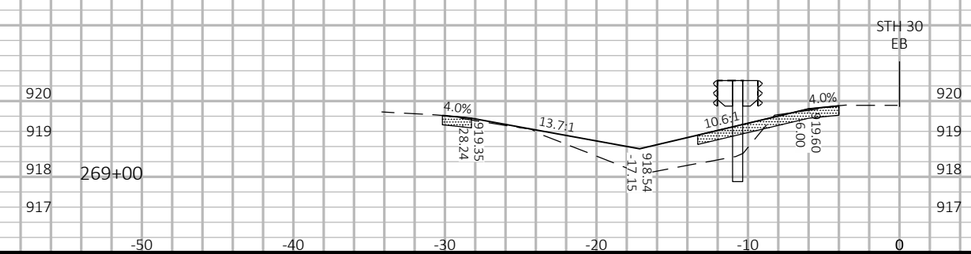

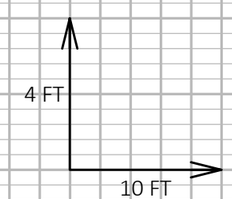

9

9

PROJECT NO: 5490-00-60	HWY: STH 30	COUNTY: DANE	CROSS SECTIONS: STH 30	SHEET 78	E

FILE NAME : N:\PDS\C3D\54900030\SHEETSPLAN\090201-XS.DWG
LAYOUT NAME - 090211
PLOT DATE : 1/16/2018 1:25 PM
PLOT BY : ANDERSON, SHAUN M
PLOT NAME :
PLOT SCALE : 1 IN:10 FT HORZ. / 1 IN:4 FT VERT.
WISDOT/CADDS SHEET 49

3/4" Base Aggeragate

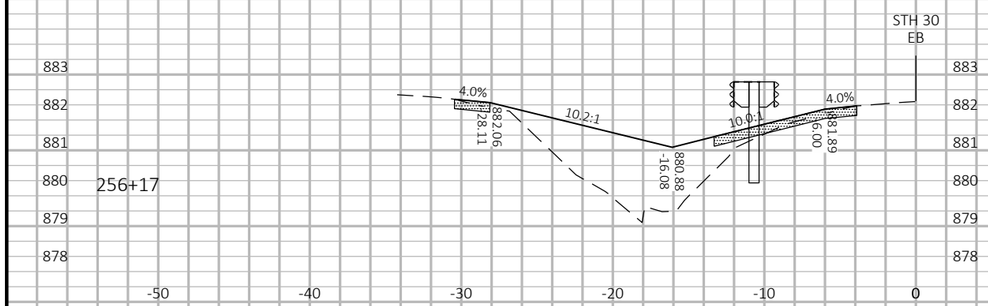

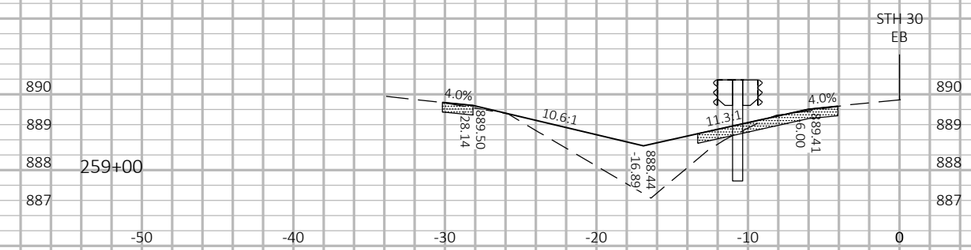

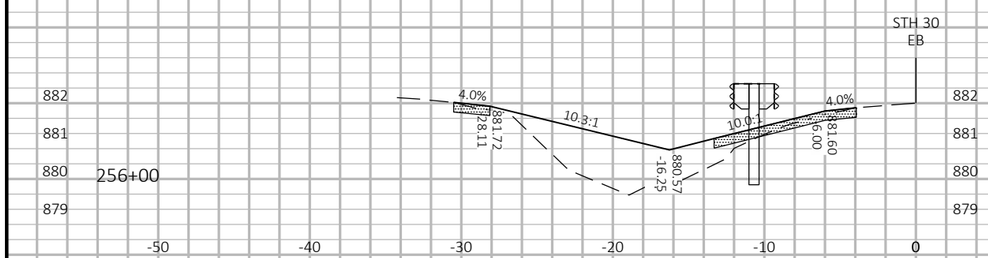

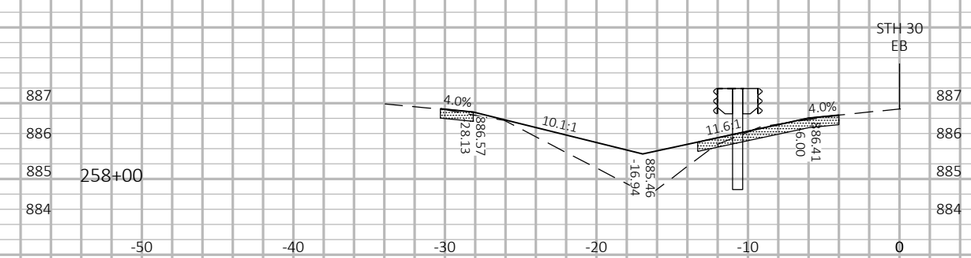

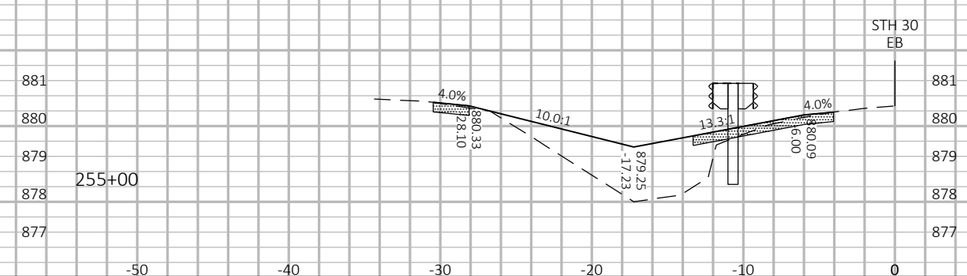

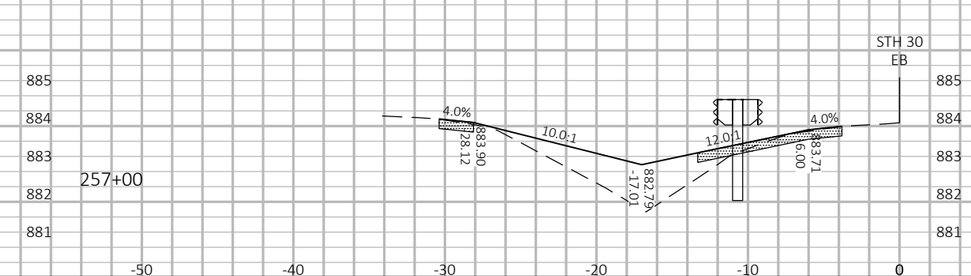

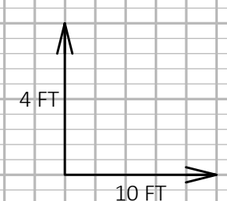

9

9

PROJECT NO: 5490-00-60	HWY: STH 30	COUNTY: DANE	CROSS SECTIONS: STH 30	SHEET 79	E

FILE NAME : N:\PDS\C3D\54900030\SHEETSPLAN\090201-XS.DWG
LAYOUT NAME - 090209
PLOT DATE : 1/16/2018 1:25 PM
PLOT BY : ANDERSON, SHAUN M
PLOT NAME :
PLOT SCALE : 1 IN:10 FT HORZ. / 1 IN:4 FT VERT.
WISDOT/CADDS SHEET 49

3/4" Base Aggeragate

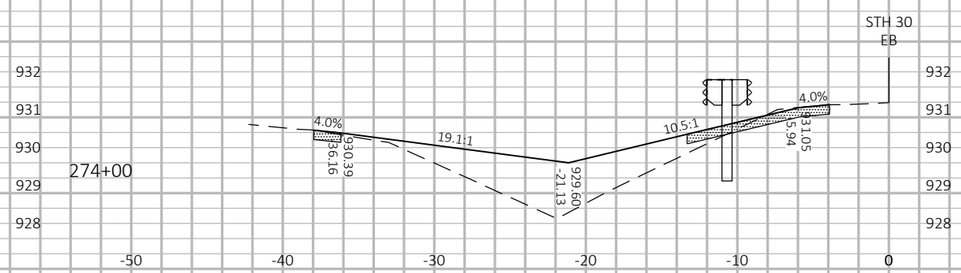

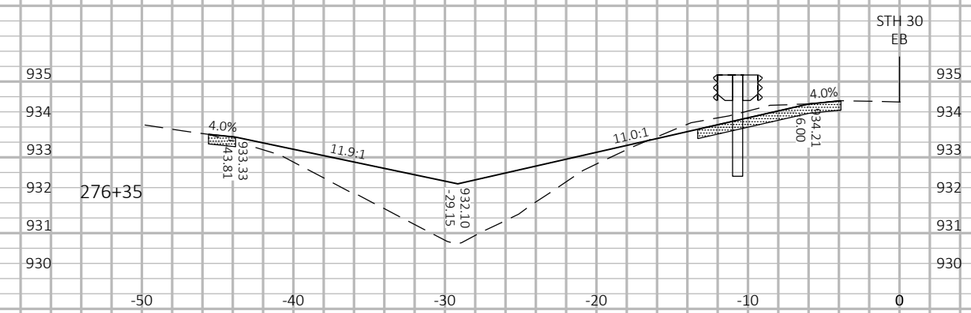

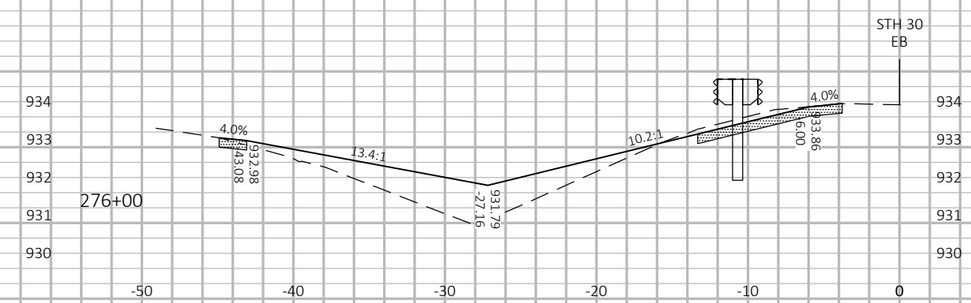

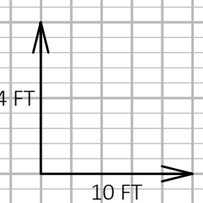

9

9

PROJECT NO: 5490-00-60	HWY: STH 30	COUNTY: DANE	CROSS SECTIONS: STH 30	SHEET 80	E

FILE NAME : N:\PDS\C3D\54900030\SHEETSPLAN\090201-XS.DWG
LAYOUT NAME - 090212
PLOT DATE : 1/16/2018 1:25 PM
PLOT BY : ANDERSON, SHAUN M
PLOT NAME :
PLOT SCALE : 1 IN:10 FT HORZ. / 1 IN:4 FT VERT.
WISDOT/CADDS SHEET 49

3/4" Base Aggeragate

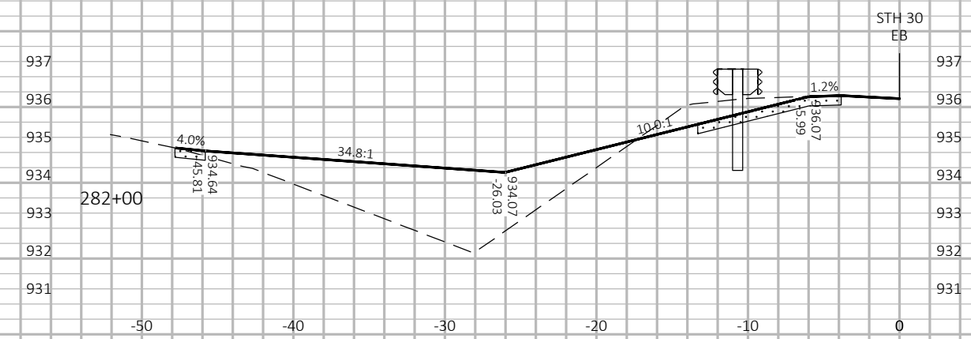

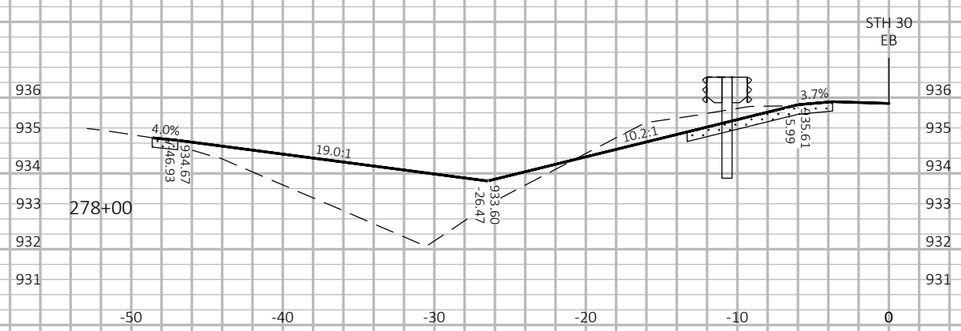

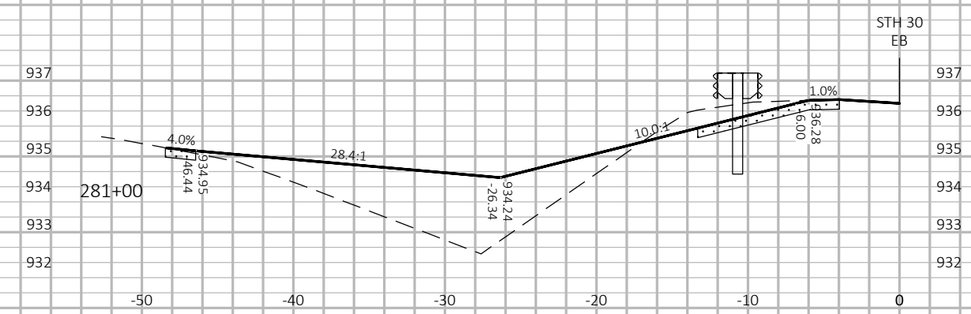

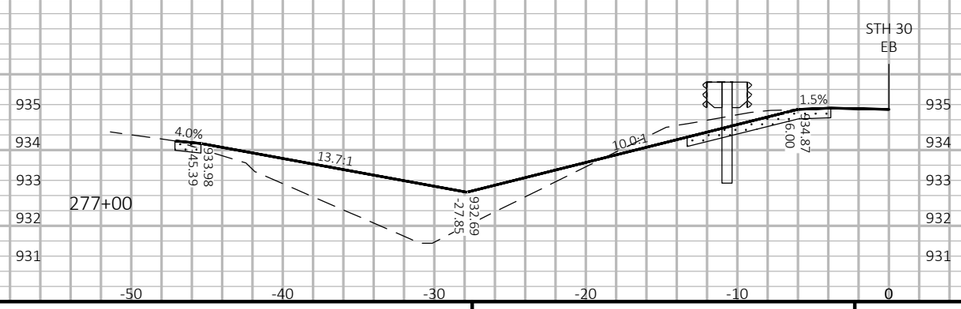

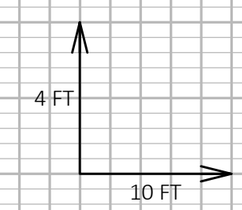

9

9

PROJECT NO: 5490-00-60	HWY: STH 30	COUNTY: DANE	CROSS SECTIONS: STH 30	SHEET 81	E

3/4" Base Aggeragate

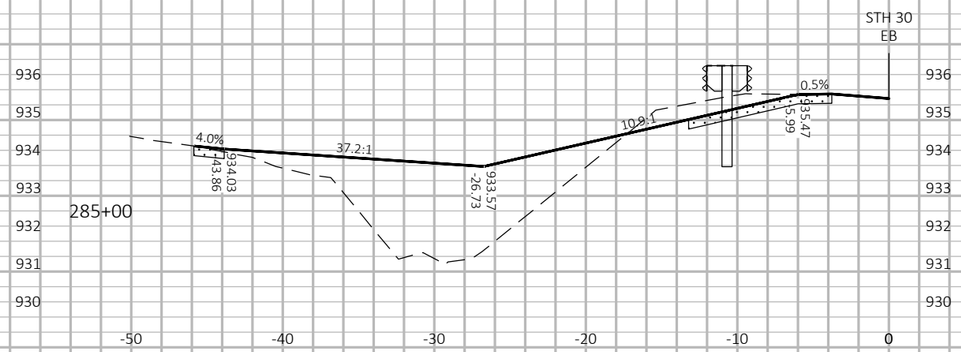

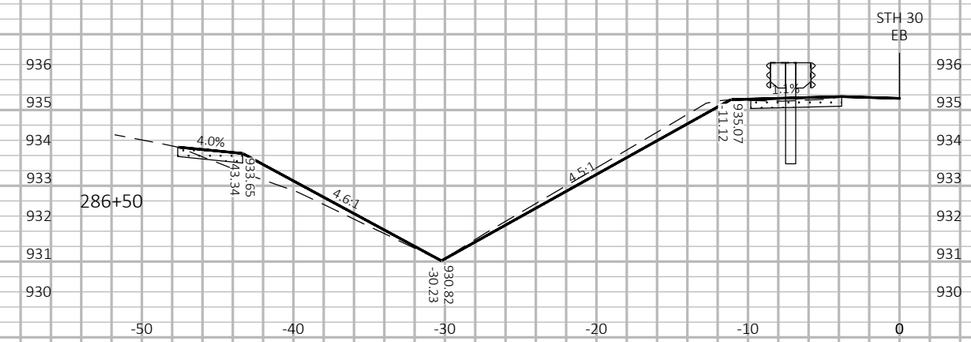

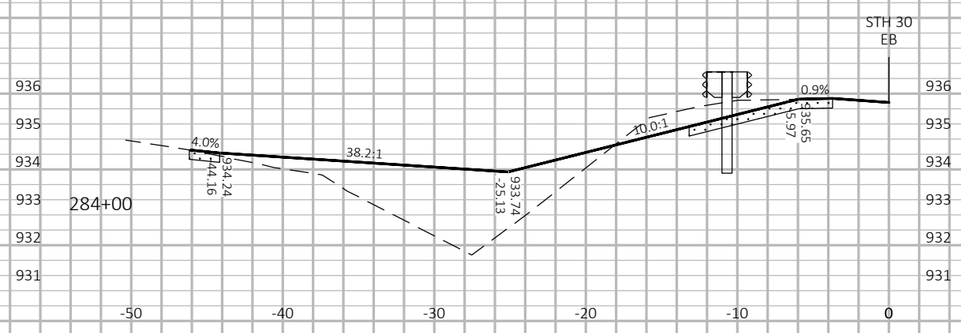

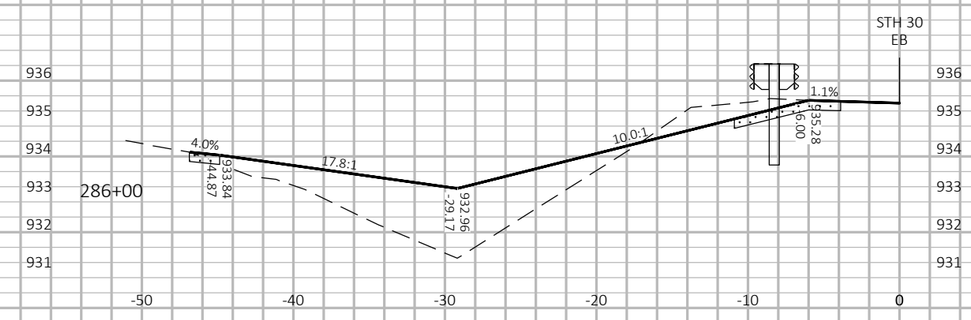

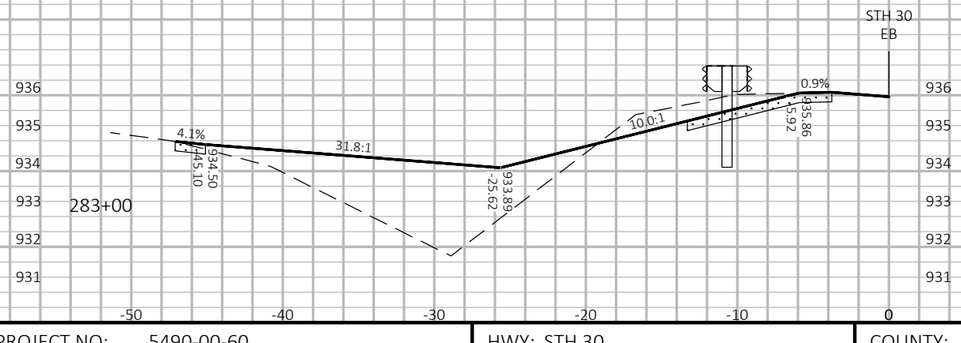

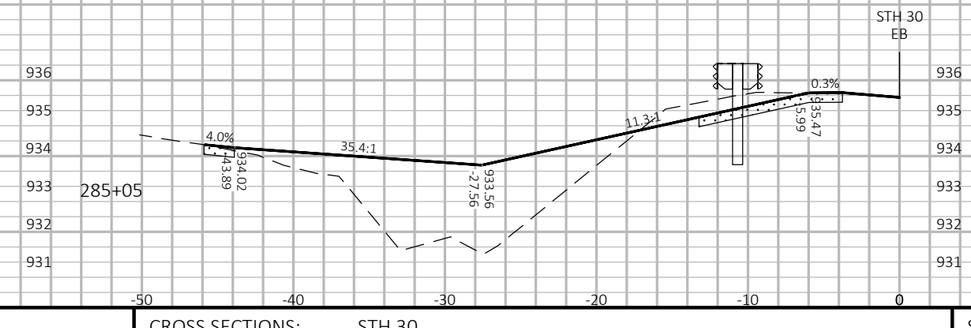

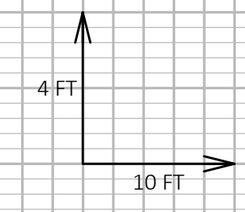

9

9

PROJECT NO: 5490-00-60	HWY: STH 30	COUNTY: DANE	CROSS SECTIONS: STH 30	SHEET 82	E

Notes

Wisconsin Department of Transportation

Dedicated people creating transportation solutions through innovation and exceptional service.

http://www.dot.wisconsin.gov