WIS

PROJECT ID: 6270-00-64

WITH: N/A

COUNTY: PORTAGE/WAUPACA

MAY 2018

ORDER OF SHEETS

Section No.	1	Title
Section No.	2	Typical Sections and Details
Section No.	3	Estimate of Quantities
Section No.	3	Miscellaneous Quantities
~~Section No.~~	~~4~~	~~Right of Way Plat~~
Section No.	5	Plan and Profile
Section No.	6	Standard Detail Drawings
Section No.	7	Sign Plates
~~Section No.~~	~~8~~	~~Structure Plans~~
Section No.	9	Computer Earthwork Data
Section No.	9	Cross Sections

TOTAL SHEETS = 218

STATE PROJECT	FEDERAL PROJECT	
	PROJECT	CONTRACT
6270-00-64		

STATE OF WISCONSIN
DEPARTMENT OF TRANSPORTATION

PLAN OF PROPOSED IMPROVEMENT

WAUPACA - STH 29

PETERSON ROAD TO CEDAR ROAD

STH 49

WAUPACA COUNTY

STATE PROJECT NUMBER
6270-00-64

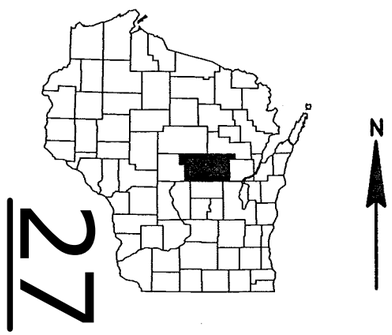

N

DESIGN DESIGNATION

A.A.D.T.	2019	=	650
A.A.D.T.	2029	=	750
D.H.V.		=	12.6%
D.D.		=	60/40
T.		=	14.7%
DESIGN SPEED		=	45/55 MPH
ESALS		=	423,400

END CONSTRUCTION
STA 406+34

NET EXCEPTION TO C/L LENGTH
283+57.75 - 284+24.26

END PROJECT
STA 391+44
Y = 435,225.839
X = 499,410.422

STRUCTURE B-68-119
STH 49 OVER FLUME CREEK

BEGIN PROJECT
STA 97+00
Y = 413,054.965
X = 506,871.289

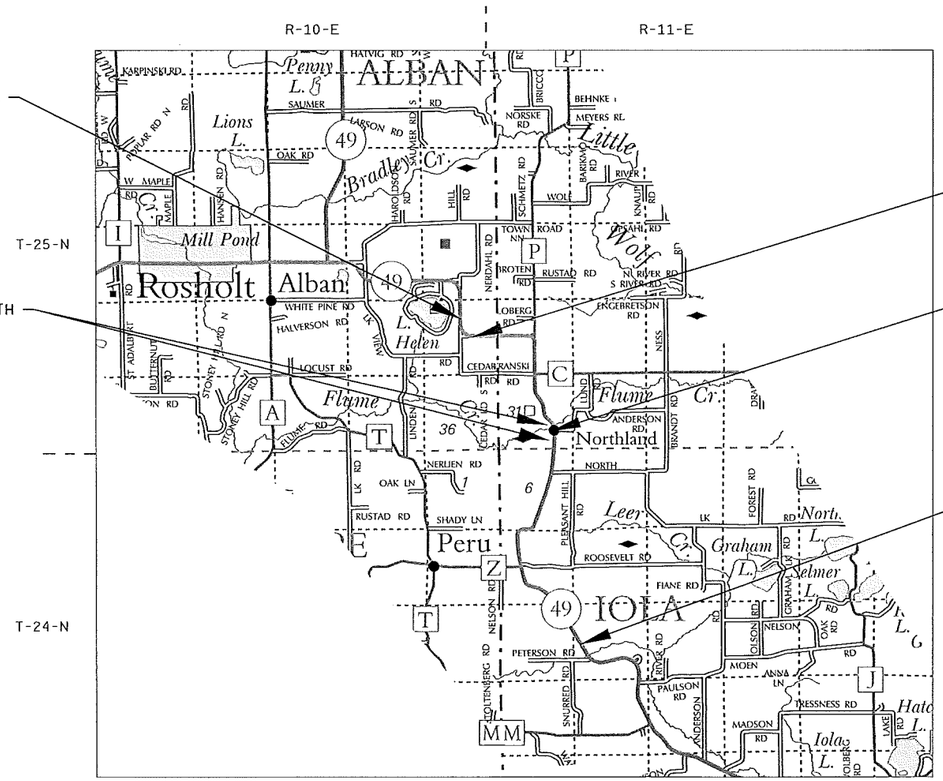

CONVENTIONAL SYMBOLS

PLAN

CORPORATE LIMITS
PROPERTY LINE
LOT LINE
LIMITED HIGHWAY EASEMENT
EXISTING RIGHT OF WAY
PROPOSED OR NEW R/W LINE
SLOPE INTERCEPT
REFERENCE LINE
EXISTING CULVERT
PROPOSED CULVERT (Box or Pipe)
COMBUSTIBLE FLUIDS — CAUTION
MARSH AREA
WOODED OR SHRUB AREA

PROFILE

GRADE LINE
ORIGINAL GROUND
MARSH OR ROCK PROFILE (To be noted as such) — ROCK
SPECIAL DITCH — LABEL
GRADE ELEVATION — 95.36
CULVERT (Profile View)

UTILITIES

ELECTRIC — E
FIBER OPTIC — FO
GAS — G
SANITARY SEWER — SAN
STORM SEWER — SS
TELEPHONE — T
WATER — W
UTILITY PEDESTAL
POWER POLE
TELEPHONE POLE

LAYOUT
SCALE 0 — 2 MILE

TOTAL NET LENGTH OF CENTERLINE = 5.56 MI

HORIZONTAL POSITIONS SHOWN ON THIS PLAN ARE WISCONSIN COUNTY COODINATES, WCCS, WAUPACA COUNTY, HORIZONTAL NAD83 (2011), VERTICAL NAD88 (2012). IN U.S. SURVEY FEET. VALUES ARE GRID COORDINATES, GRID BEARINGS, AND GRID DISTANCES. GRID DISTANCES MAY BE USED AS GROUND DISTANCES.

STATE OF WISCONSIN
DEPARTMENT OF TRANSPORTATION

PREPARED BY

Surveyor	QUEST CIVIL ENGINEERS, LLC
Designer	PRESTON BOHN
Project Manager	MARK STEIDL
Regional Examiner	CHERYL SIMON
Regional Supervisor	MIKE KRETSCHMER

APPROVED FOR THE DEPARTMENT

DATE: 1/31/18 (Signature)

E

GENERAL NOTES

CURVE DATA IS BASED ON THE ARC DEFINITION.

WHEN THE QUANTITY OF THE ITEMS OF BASE AGGREGATE, SUBBASE OR HMA PAVEMENT IS MEASURED FOR PAYMENT BY THE TON OR CUBIC YARD, THE DEPTH OR THICKNESS OF THE LAYERS SHOWN ON THE PLAN IS APPROXIMATE AND THE ACTUAL THICKNESS WILL DEPEND ON THE DISTRIBUTION OF THE MATERIAL AS DIRECTED BY THE ENGINEER.

CONTRACTOR WILL BE RESPONSIBLE FOR RESHAPING AND SEEDING ANY PREVIOUSLY GRASSED AREAS WHICH ARE DISTURBED BY HIS OPERATION OUTSIDE OF THE NORMAL CONSTRUCTION LIMITS.

THE LOCATIONS OF EXISTING AND PROPOSED UTILITY INSTALLATIONS AS SHOWN ON THE PLANS ARE APPROXIMATE, THERE MAY BE OTHER UTILITY INSTALLATIONS WITHIN THE PROJECT AREA THAT ARE NOT SHOWN.

PURSUANT TO CHAPTER 59 OF THE WISCONSIN STATUTES, THE CONTRACTOR SHALL CAREFULLY MAKE A SEARCH FOR EVIDENCE OF A LANDMARK IN ALL AREAS WHERE SUCH A LANDMARK MAY EXIST.

THE CONTRACTOR IS TO WORK WITH UTMOST CARE AND PROTECT ALL SURVEY MARKERS. REMOVAL OF ANY SURVEY MARKER IS TO BE WITH THE APPROVAL OF THE ENGINEER.

DIGGERS HOTLINE

Dial 811 or (800)242-8511

www.DiggersHotline.com

UTILITIES

AMHERST TELEPHONE COMPANY - COMMUNICATION LINE
TOM IVERSON
120 MILL STREET, P.O. BOX 279
AMHERST, WI 54406
PHONE: (715) 824-2006 WORK
PHONE: (715) 572-5630 MOBILE
EMAIL: TIVERSON@TVALLEYCOM.COM

TDS TELECOM - COMMUNICATION LINE
STEVE JAKUBIEC
10 COLLEGE AVE
APPLETON, WI 54911
PHONE: (920)882-4166 WORK
PHONE: (920) 562-7221 MOBILE
EMAIL: STEVE.JAKUBIEC@TDSTELECOM.COM

CENTRAL WISCONSIN ELECTRIC COOPERATIVE - ELECTRICITY
KEVIN KURTZWEIL
10401 LYSTUL ROAD, PO BOX 100
ROSHLOT, WI 54473
PHONE: (715)677-2211 WORK
EMAIL: KEVIN.KURTSWEIL@CWECOOP.COM

DNR
MATTHEW SCHAEVE
DNR NORTHEAST REGIONAL HEADQUARTERS
2984 SHAWANO AVENUE
GREEEN BAY, WI 54313
PHONE: (920)-366-1544
MATTHEW.SCHAEVE@WISCONSIN.GOV

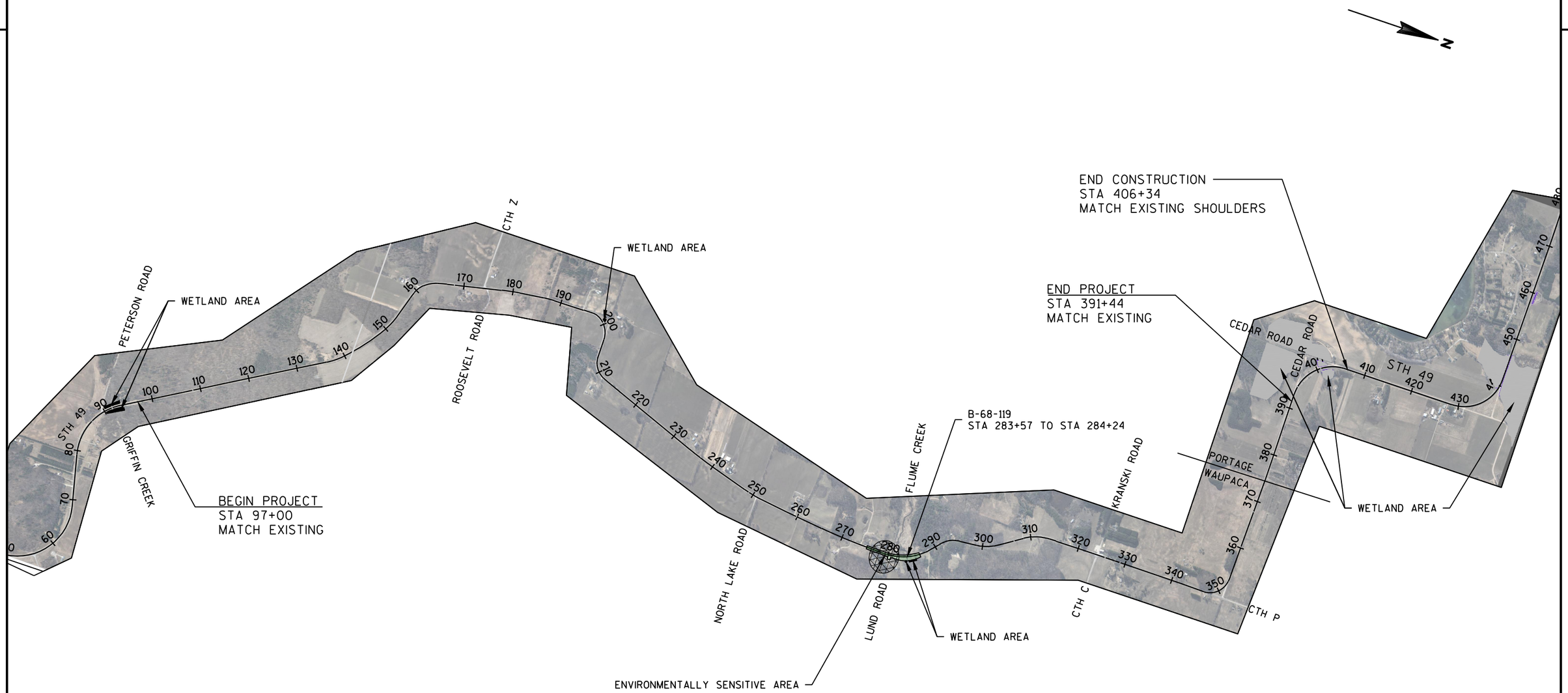

PROJECT NO:6270-00-64	HWY:STH 49	COUNTY:WAUPACA	PROJECT OVERVIEW	SHEET 3	E

FILE NAME : N:\PDS\C3D\62700034\SHEETSPLAN\020201-PO.DWG
LAYOUT NAME - 020201-PO - 020201-PO
PLOT DATE : 1/25/2018 8:35 AM PLOT BY : BRATTLUND, ERIK JOHNPLOT NAME : PLOT SCALE : 1 IN:2000 FT

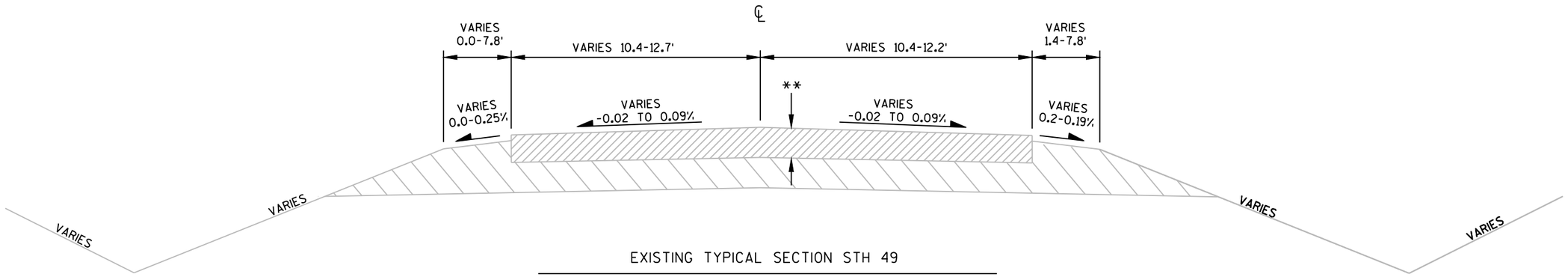

EXISTING TYPICAL SECTION STH 49

STA 97+00	TO	STA 136+08*	STA 251+95	TO	STA 279+33*
STA 153+41	TO	STA 159+17	STA 288+65	TO	STA 291+28
STA 164+92	TO	STA 178+31	STA 294+87	TO	STA 299+36
STA 181+50	TO	STA 186+16	STA 303+06	TO	STA 308+81
STA 188+88	TO	STA 196+76	STA 313+48	TO	STA 347+00*
STA 211+90	TO	STA 234+47*	STA 353+97	TO	STA 392+44
STA 239+77	TO	STA 248+93			

*LOCALIZED AREAS OF EXISTING SUPERELEVATION

** SEE PAVEMENT CORE LOG

PAVEMENT CORE LOG

CORE #	STATION LOCATION	OFFSET LOCATION (FT)	DEPTH (IN)
1	101+22.90	8.39 RT	9.25
2	111+81.68	8.31 LT	9.50
3	122+08.47	7.88 RT	8.75
4	132+90.38	8.85 LT	6.25
5	143+35.21	7.86 RT	11.00
6	153+75.48	8.07 LT	6.50
7A	164+36.17	7.86 LT	9.75
7B	164+37.10	8.16 RT	7.50
8	175+16.89	8.05 LT	9.00
9	185+55.67	6.93 RT	9.00
10	196+06.11	10.79 LT	7.50
11	206+13.52	8.83 RT	9.75
12	217+08.49	8.76 LT	7.75
13	227+60.19	7.99 RT	6.00
14	237+94.97	7.67 LT	4.75
15	248+65.61	8.3 RT	8.25
16	258+85.52	8.02 LT	6.50
17	269+69.76	7.62 RT	5.25
18	280+16.47	8.58 LT	3.75
19	290+72.05	8.18 RT	4.50
20	301+12.09	8.95 LT	6.75
21A	311+77.07	10.16 LT	8.00
21B	311+77.83	8.20 RT	7.25
22	322+52.01	8.44 LT	10.50
23	332+91.65	8.18 RT	9.00
24	343+56.89	8.75 LT	7.25
25	353+93.00	7.19 RT	9.25
26	364+64.25	8.00 LT	8.50
27	375+14.64	7.75 RT	7.50
28	385+89.32	7.65 LT	6.25

LEGEND

EXISTING ASPHALTIC PAVEMENT

EXISTING BASE COURSE

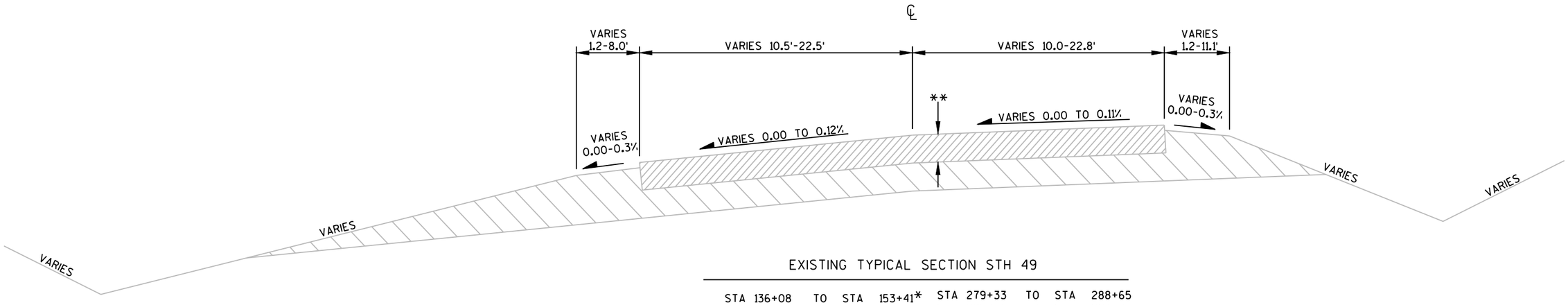

EXISTING TYPICAL SECTION STH 49

STA 136+08	TO	STA 153+41*		STA 279+33	TO	STA 288+65	
STA 159+17	TO	STA 164+92		STA 291+28	TO	STA 294+87	
STA 178+31	TO	STA 181+50*		STA 299+36	TO	STA 303+06	
STA 186+16	TO	STA 188+88*		STA 308+81	TO	STA 313+48*	
STA 196+76	TO	STA 211+90		STA 347+00	TO	STA 353+97	
STA 234+47	TO	STA 239+77*		STA 392+44	TO	STA 405+34	
STA 248+93	TO	STA 251+95*					

*LOCALIZED AREAS OF EXISTING NORMAL CROWN

** SEE PAVEMENT CORE LOG

LEGEND

EXISTING ASPHALTIC PAVEMENT

EXISTING BASE COURSE

PROJECT NO:6270-00-64	HWY:STH 49	COUNTY:WAUPACA	PLAN: TYPICAL SECTION	SHEET 5	E

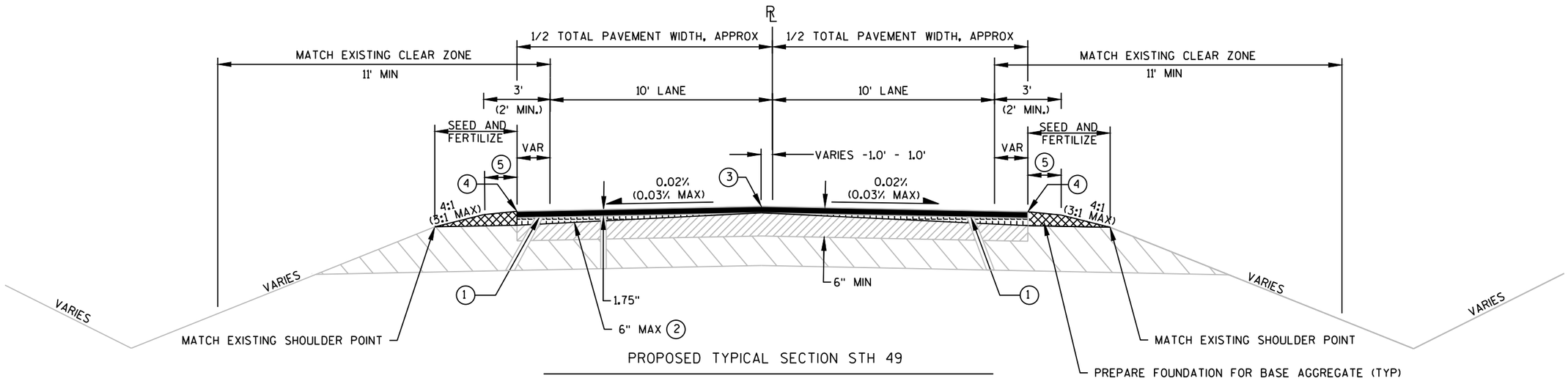

PROPOSED TYPICAL SECTION STH 49

STA 97+00	TO STA 136+08*	STA 251+95	TO STA 279+33
STA 153+41	TO STA 159+17	STA 288+65	TO STA 291+28
STA 164+92	TO STA 178+31	STA 294+87	TO STA 299+36
STA 181+50	TO STA 186+16	STA 303+06	TO STA 308+81
STA 188+88	TO STA 196+75	STA 313+48	TO STA 347+00
STA 211+90	TO STA 234+47	STA 353+97	TO STA 391+44**
STA 239+77	TO STA 248+93		

*STA 97+00 TO STA 122+08 MAX MILL DEPTH = 4.25"

**STA 364+65 TO STA 375+14 MAX MILL DEPTH = 3.25"

1. REMOVING ASPHALTIC SURFACE MILLING 1.75" TYPICAL ADJUST MILLING DEPTH FOR CROWN CORRECTION AND TO PROVIDE UNIFORM MILL SLOPE. MAX MILLING DEPTH = 2.25" UNLESS NOTED OR AS APPROVED BY THE ENGINEER.

2. ADJUST LEVELING (WEDGE) LAYER THICKNESS TO MATCH EXISTING FIELD CONDITIONS AS NECESSARY TO ACHIEVE DESIREABLE CROSS SLOPE FOR UPPER LAYER.

3. REHEATING HMA PAVEMENT LONGITUDINAL JOINTS, MATCH EXISTING JOINT. DO NOT EXCEED 5% ROLLOVER RATE BETWEEN ADJACENT TRAVEL LANES.

4. MATCH EXISTING EDGE OF ASPHALT, HORIZONTALLY. INSTALL SAFETY EDGE.

5. 0.04% TYPICAL, 0.06% MAX.

LEGEND

- HMA TYPE 4 LT 58-28 S
- HMA TYPE 4 LT 58-28 S LEVELING (WEDGE) LAYER
- BASE AGGREGATE DENSE 3/4-INCH
- EXISTING ASPHALTIC PAVEMENT
- EXISTING BASE COURSE

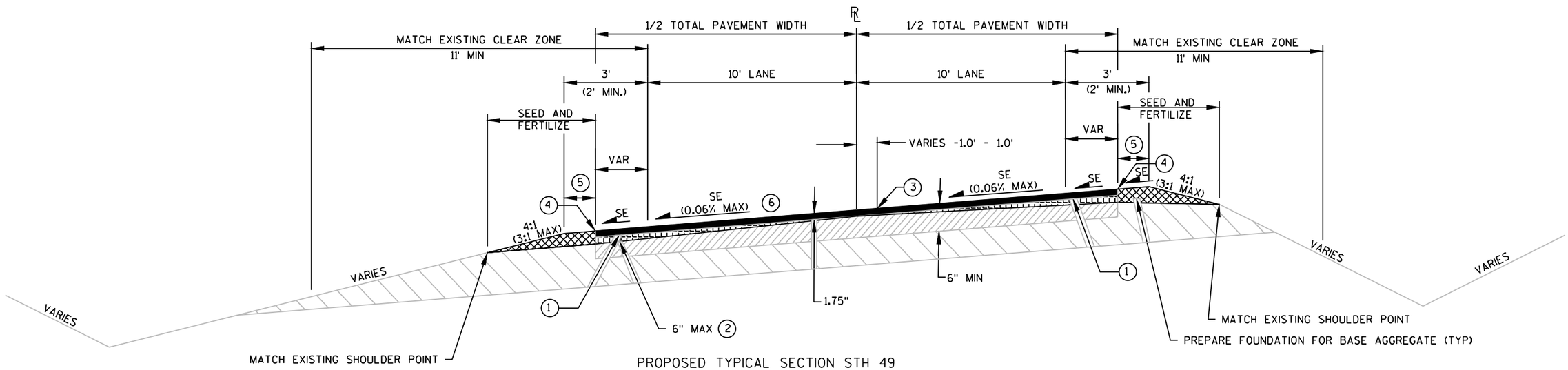

PROPOSED TYPICAL SECTION STH 49

STA 136+08	TO	STA 153+41		STA 279+33	TO	STA 288+65	
STA 178+31	TO	STA 181+50		STA 291+28	TO	STA 294+87*	
STA 186+16	TO	STA 188+88		STA 299+36	TO	STA 303+06	
STA 234+47	TO	STA 239+77		STA 308+81	TO	STA 313+48*	
STA 248+93	TO	STA 251+95					

* SUPERELEVATION = 0.08% MAX

1. REMOVING ASPHALTIC SURFACE MILLING 1.75" TYPICAL ADJUST MILLING DEPTH FOR SUPERELEVATION CORRECTION AND TO PROVIDE UNIFORM MILL SLOPE. MAX MILLING DEPTH = 2.25" UNLESS NOTED OR AS APPROVED BY THE ENGINEER.
2. ADJUST LEVELING (WEDGE) LAYER THICKNESS AS NECESSARY TO ACHIEVE UNIFORM SUPERELEVATION TO THE PRACTICAL EXTENT POSSIBLE.
3. REHEATING HMA PAVEMENT LONGITUDINAL JOINTS. MATCH EXISTING JOINT.
4. MATCH EXISTING EDGE OF ASPHALT, HORIZONTALLY. INSTALL SAFETY EDGE.
5. 0.04% TYPICAL, 0.06% MAX EXCEPT WHEN SUPERELEVATION EXCEEDS 0.04%. THEN MATCH SUPERELEVATION.
6. IMPROVE SUPERELEVATION TO THE EXTENT PRACTICAL. WHERE DESIRABLE SUPERELEVATION CANNOT BE MET WITH A COMBINATION OF VARIABLE MILLING DEPTHS AND HMA WEDGE COARSE, PROVIDE 0.02% (REVERSE CROWN) MINIMUM UNLESS APPROVED BY THE ENGINEER.

LEGEND

- HMA TYPE 4 LT 58-28 S
- HMA TYPE 4 LT 58-28 S LEVELING (WEDGE) LAYER
- BASE AGGREGATE DENSE 3/4-INCH
- EXISTING ASPHALTIC PAVEMENT
- EXISTING BASE COURSE

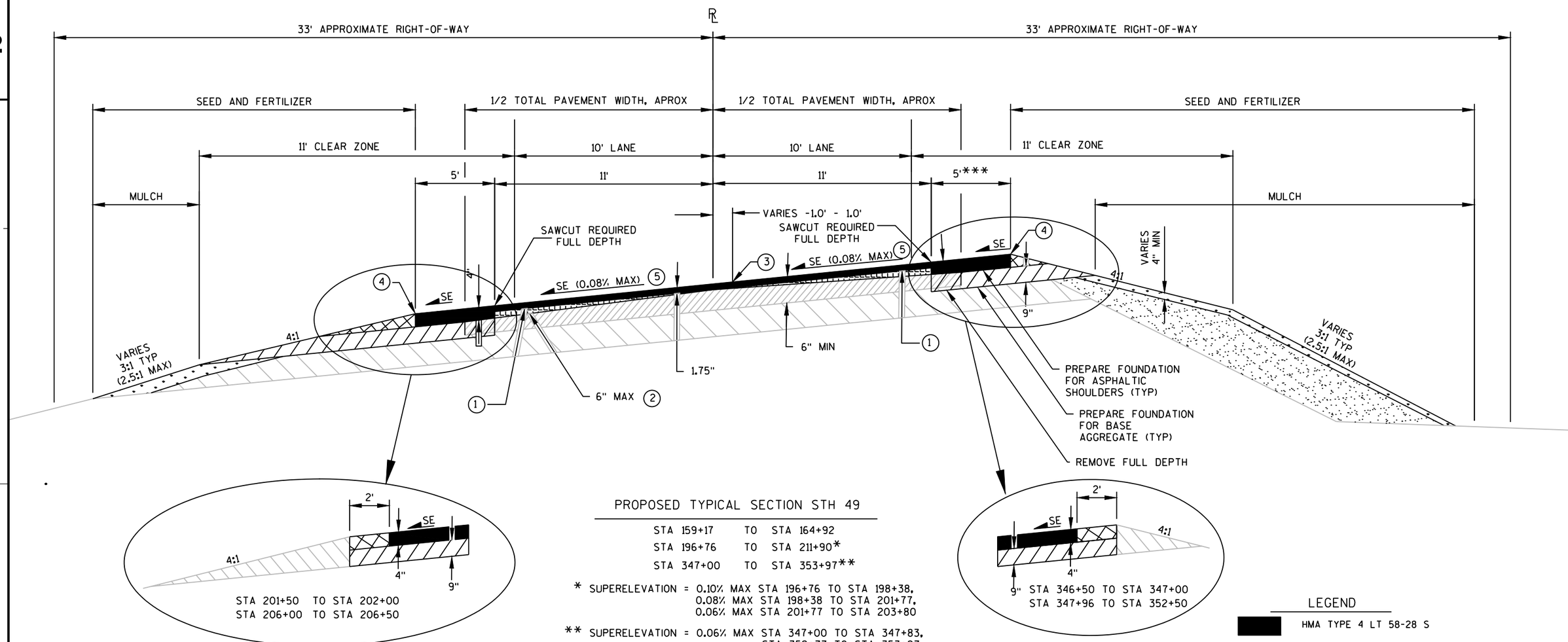

PROPOSED TYPICAL SECTION STH 49

STA 159+17 TO STA 164+92
STA 196+76 TO STA 211+90*
STA 347+00 TO STA 353+97**

* SUPERELEVATION = 0.10% MAX STA 196+76 TO STA 198+38,
0.08% MAX STA 198+38 TO STA 201+77,
0.06% MAX STA 201+77 TO STA 203+80

** SUPERELEVATION = 0.06% MAX STA 347+00 TO STA 347+83,
STA 352+77 TO STA 353+97

*** STA 210+00 - 211+90 RT VARIABLE PAVED SHOULDER WIDTH

LEGEND

- HMA TYPE 4 LT 58-28 S
- BASE AGGREGATE DENSE 3/4-INCH
- HMA TYPE 4 LT 58-28 S LEVELING (WEDGE) LAYER
- BASE AGGREGATE DENSE 1 1/4-INCH
- FILL MATERIAL (FROM COMMON EXCAVATION)
- TOPSOIL
- EXISTING ASPHALTIC PAVEMENT
- EXISTING BASE COURSE
- EXISTING TOPSOIL

1. REMOVING ASPHALTIC SURFACE MILLING; ADJUST MILLING DEPTH FOR SUPERELEVATION CORRECTION AND TO PROVIDE UNIFORM MILL SLOPE. MAX MILLING DEPTH = 2.25" UNLESS NOTED OR AS APPROVED BY ENGINEER.
2. ADJUST LEVELING (WEDGE) LAYER THICKNESS AS NECESSARY TO ACHIEVE UNIFORM SUPERELEVATION TO THE PRACTICAL EXTENT POSSIBLE.
3. REHEATING HMA PAVEMENT LONGITUDINAL JOINTS, MATCH EXISTING JOINT.
4. INSTALL SAFETY EDGE.
5. IMPROVE SUPERELEVATION TO THE EXTENT PRACTICAL. WHERE DESIRABLE SUPERELEVATION CANNOT BE MET WITH A COMBINATION OF VARIABLE MILLING DEPTHS AND HMA WEDGE COARSE, MATCH EXISTING OR BETTER, UNLESS APPROVED BY THE ENGINEER.

PROJECT NO:6270-00-64	HWY:STH 49	COUNTY:WAUPACA	PLAN: TYPICAL SECTION	SHEET 8	E

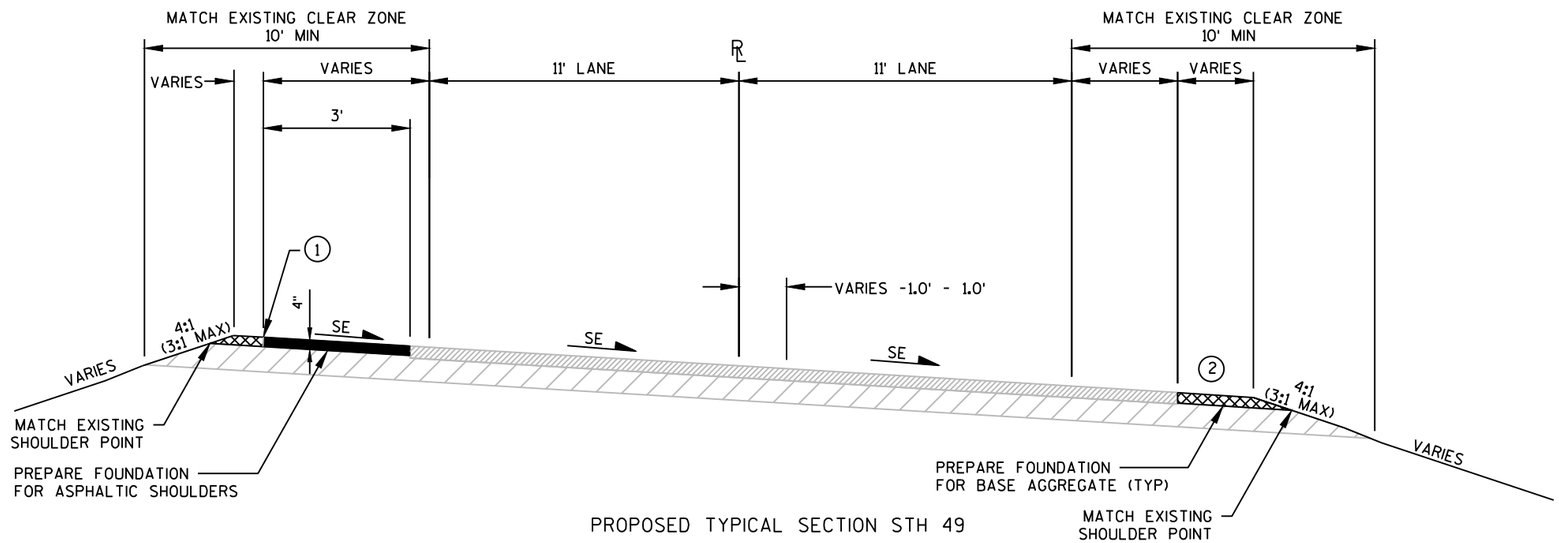

PROPOSED TYPICAL SECTION STH 49

STA 391+44 TO STA 406+34

1. INSTALL SAFETY EDGE.
2. 0.04% TYPICAL, 0.06% MAX EXCEPT WHEN SUPERELEVATION EXCEEDS 0.04%,THEN MATCH SUPERELEVATION.

LEGEND

- HMA TYPE 4 LT 58-28 S
- BASE AGGREGATE DENSE 3/4-INCH
- EXISTING ASPHALTIC PAVEMENT
- EXISTING BASE COURSE

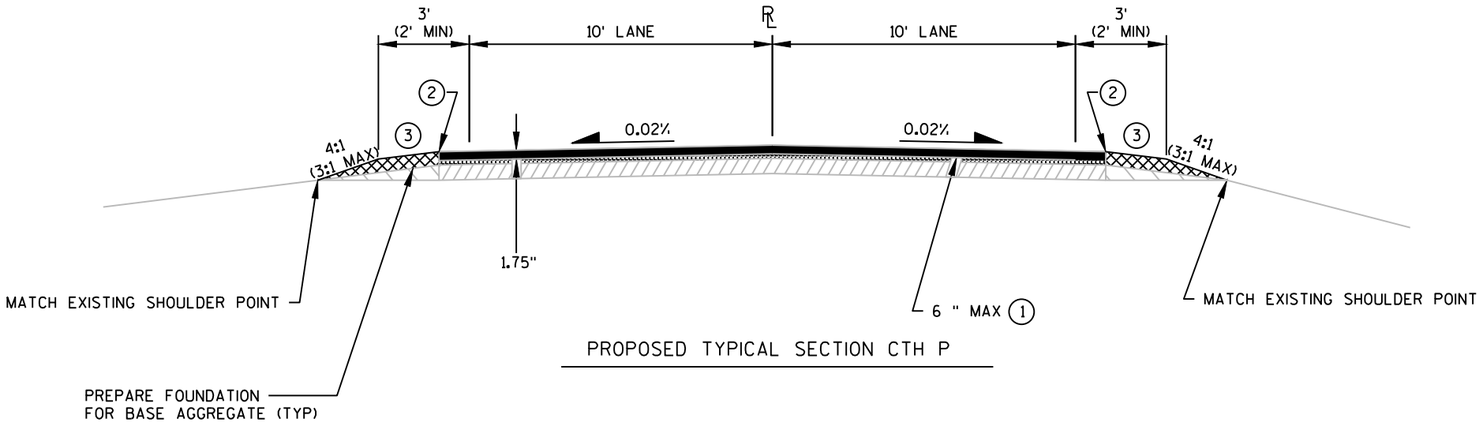

PROPOSED TYPICAL SECTION CTH P

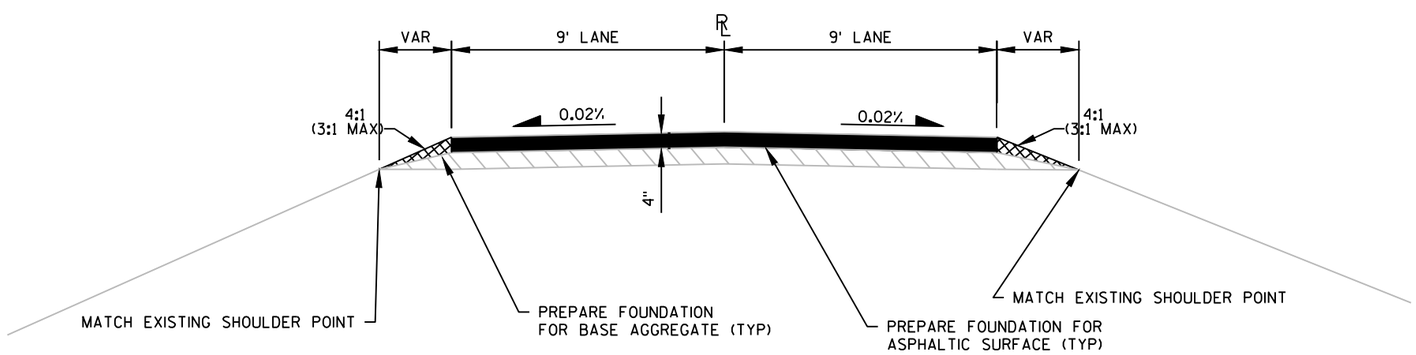

PROPOSED TYPICAL SECTION CEDAR RD

1. ADJUST LEVELING (WEDGE) LAYER THICKNESS TO MATCH EXISTING FIELD CONDITIONS AS NECESSARY TO ACHIEVE DESIREABLE CROSS SLOPE.
2. MATCH EXISTING EDGE OF ASPHALT, HORIZONTALLY.
3. 0.04% TYPICAL, 0.06% MAX.

LEGEND

- HMA TYPE 4 LT 58-28 S
- HMA TYPE 4 LT 58-28 S LEVELING (WEDGE) LAYER
- BASE AGGREGATE DENSE 3/4-INCH
- EXISTING ASPHALTIC PAVEMENT
- EXISTING BASE COURSE

2

NOT TO SCALE

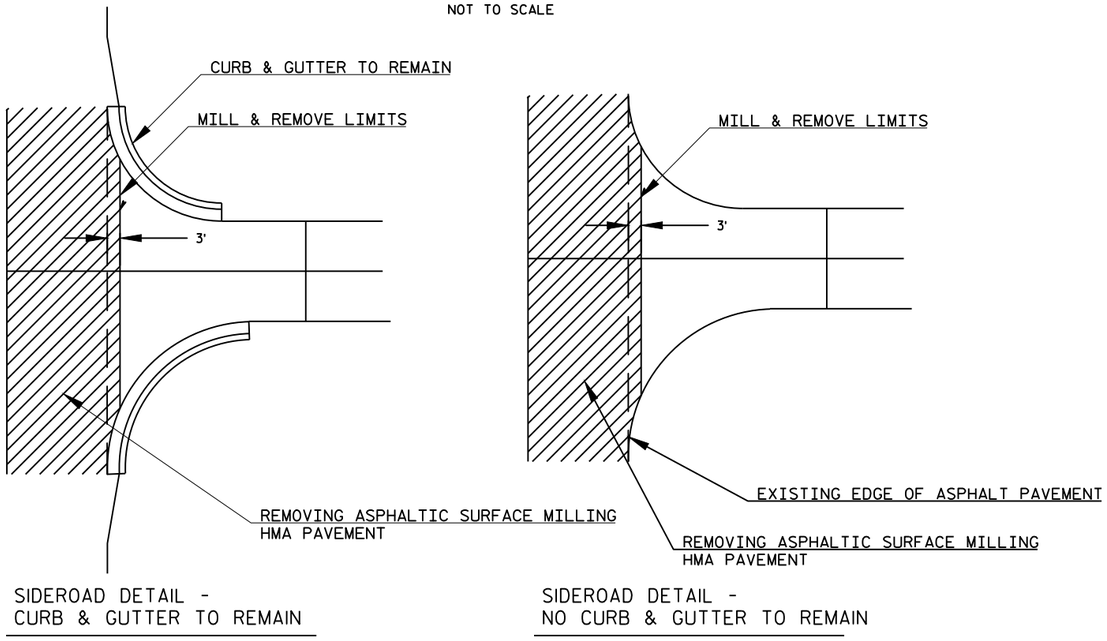

SIDEROAD DETAIL -
CURB & GUTTER TO REMAIN

SIDEROAD DETAIL -
NO CURB & GUTTER TO REMAIN

REMOVING ASPHALT SURFACE MILLING LIMITS

LOCATIONS

CTH Z
ROOSEVELT ROAD
KRANSKI ROAD
LUND ROAD
CTH C

SEE PLAN SHEETS FOR REMOVING ASPHALTIC SURFACE MILLING AND HMA PAVEMENT LIMITS FOR NORTH LAKE RD, CTH P AND CEDAR RD

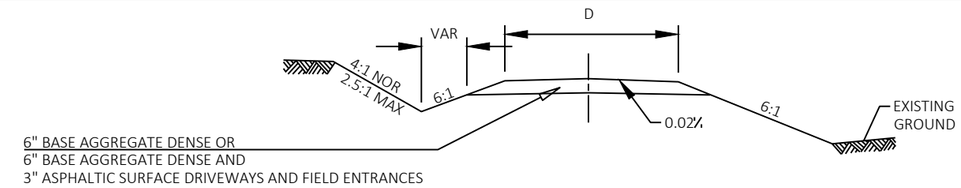

TYPICAL CROSS SECTION

160+77 CE
211+29 PE

D=DRIVEWAY WIDTH
D=20'TYP (PE & FE) (16'MIN-24'MAX)
D=28'TYP (CE & FARM ENT) (24'MIN-35'MAX)

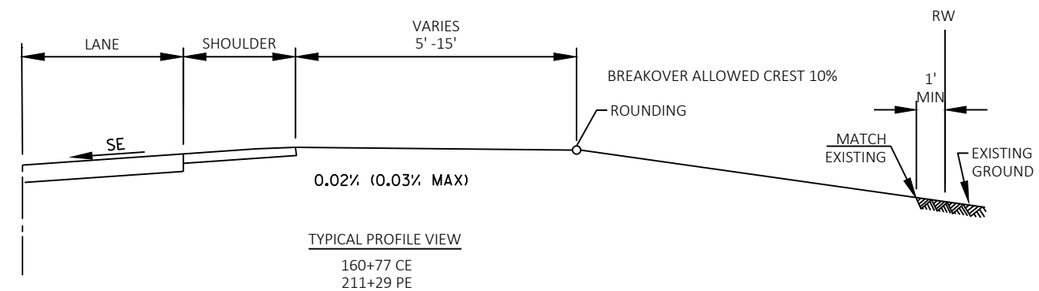

TYPICAL PROFILE VIEW

160+77 CE
211+29 PE

RURAL DRIVEWAY INTERSECTION DETAIL
MODIFIED
(PE, FE's & CE)

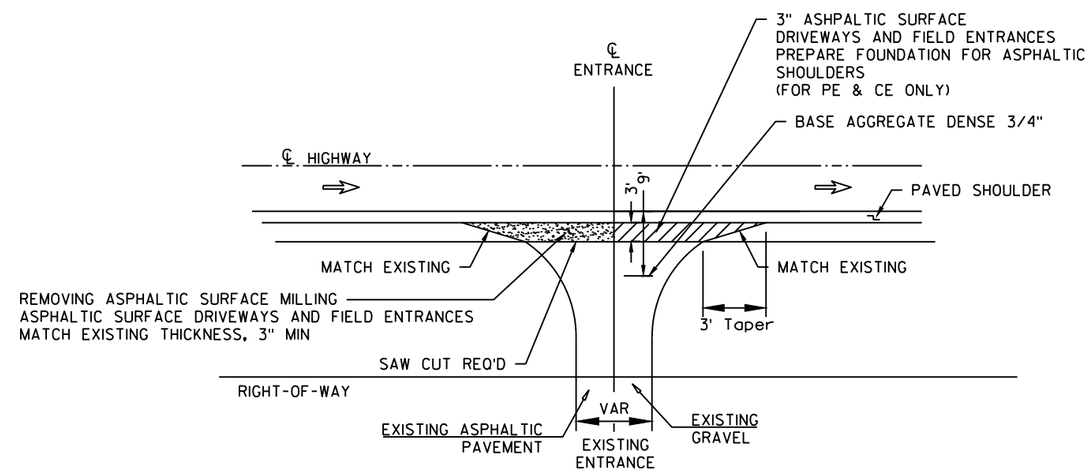

PLAN VIEW

RURAL DRIVEWAY INTERSECTION DETAIL
(PE, FE's & CE)

2

PROJECT NO: 6270-00-64	HWY: STH 49	COUNTY: WAUPACA	PLAN: CONSTRUCTION DETAILS	SHEET 11	E

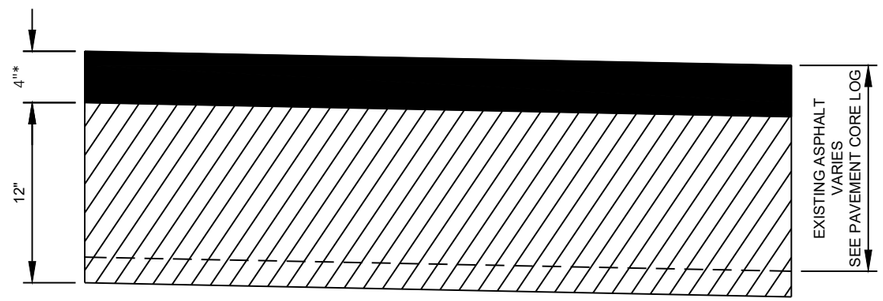

ASPHALTIC SURFACE PATCHING

BASE AGGREGATE DENSE 1 1/4-INCH

ASPHALTIC SURFACE PATCHING

*2 LAYERS

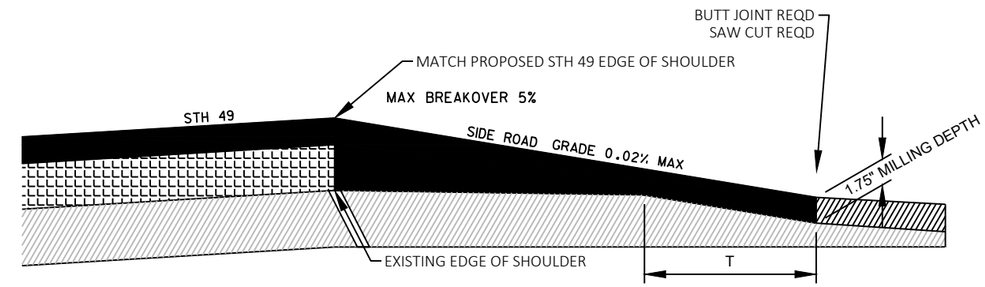

T=BUTT JOINT LIMITS
T=5' MIN

HMA PAVEMENT UPPER LAYER (INCLUDES SIDE ROAD LEVELEING LAYER)

HMA PAVEMENT LEVELING (WEDGE) LAYER

EXISTING ASPHALTIC PAVEMENT

SIDE ROAD TIE IN DETAIL

CTH P
NORTH LAKE RD

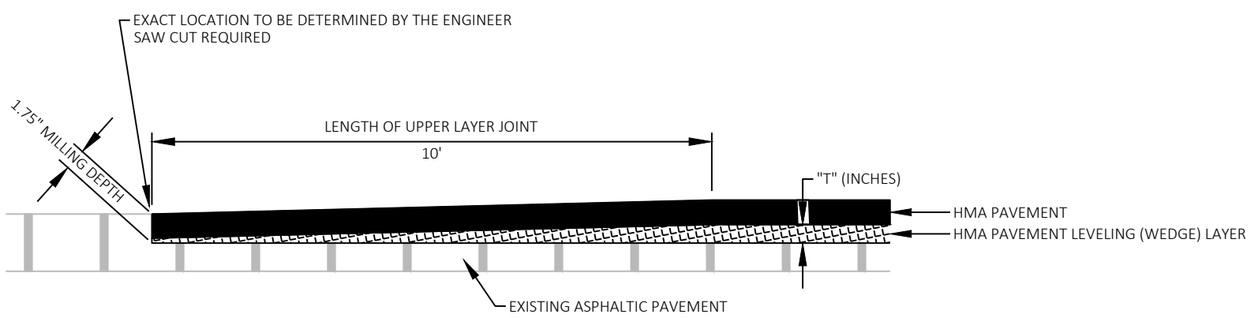

MAINLINE BUTT JOINT

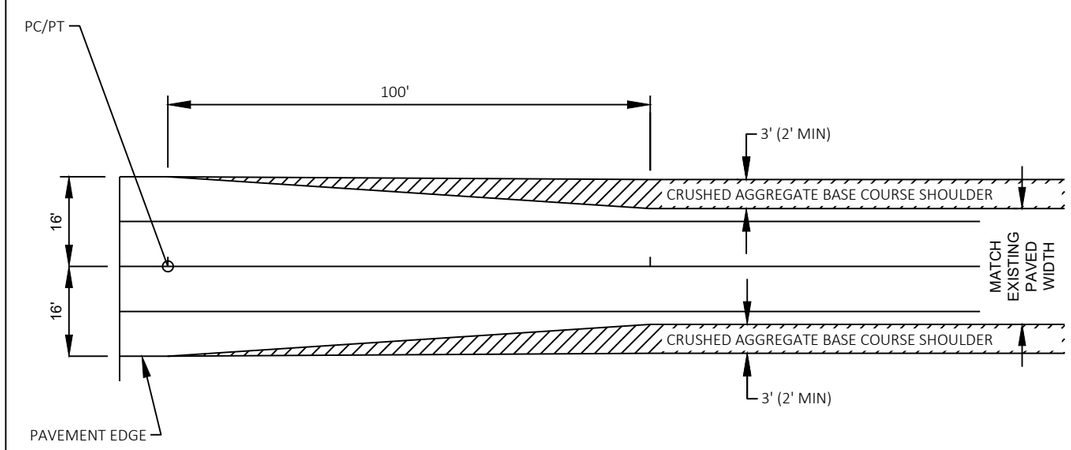

SHOULDER WIDENING TRANSITION DETAIL

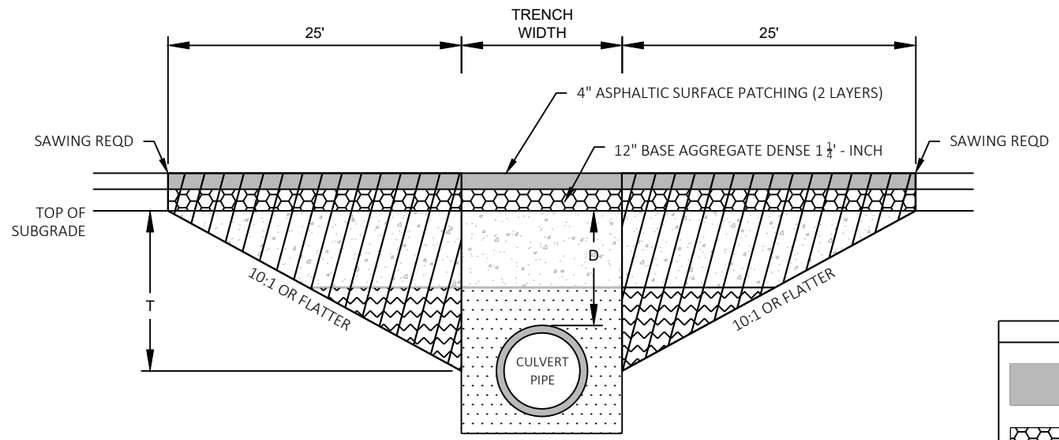

TRANSITION CUT DEPTH (T) = THE LESSER OF
DEPTH TO CENTER OF PIPE OR 5 FT.
DO NOT EXTEND TRANSITION CUT BELOW HORIZONTAL CENTER
OF PIPE.

DEPTH D < 6 FT

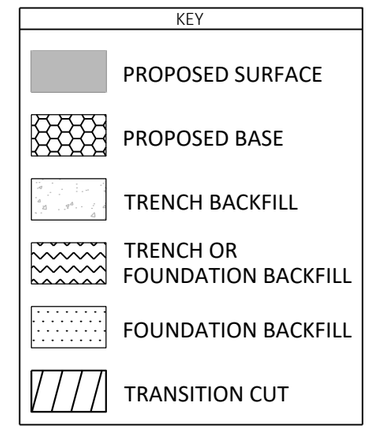

NOTES

TRANSITION CUT IS PAID AS EXCAVATION COMMON.

TRANSITION CUT WIDTH IS FROM SUBGRADE SHOULDER POINT TO SUBGRADE SHOULDER POINT.

TRENCH BACKFILL AND FOUNDATION BACKFILL USED IN TRANSITION CUT AREA IS INCIDENTAL TO PIPE INSTALLATION (PER STD SPEC 520).

PERFORM CULVERT PIPE REPLACEMENT PRIOR TO MILLING AND PAVING.

PLACE ASPHALTIC SURFACE PATCHING AFTER PIPE INSTALLATION AND BEFORE MILLING.

*CULVERT AT 259+86 SITS 4.5" INTO THE PROPOSED BASE

CULVERT PIPE TRANSITION

ROUTE	STA (CL)	DEPTH D (FT)	PIPE DIA (IN)	REMARKS
STH 49	259+86	0*	14x23	68049069
STH 49	367+76	0.26	14x23	68049064

2

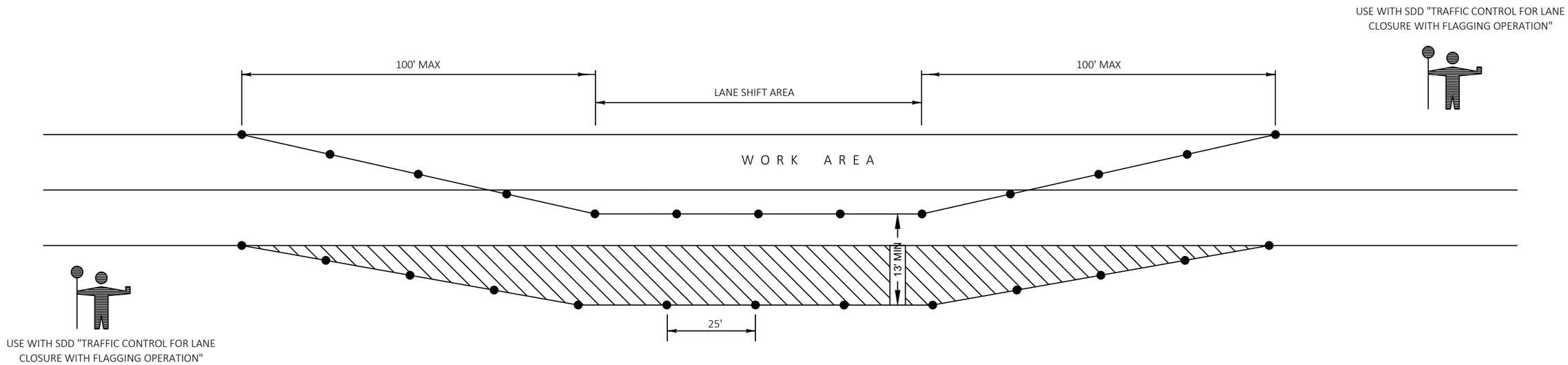

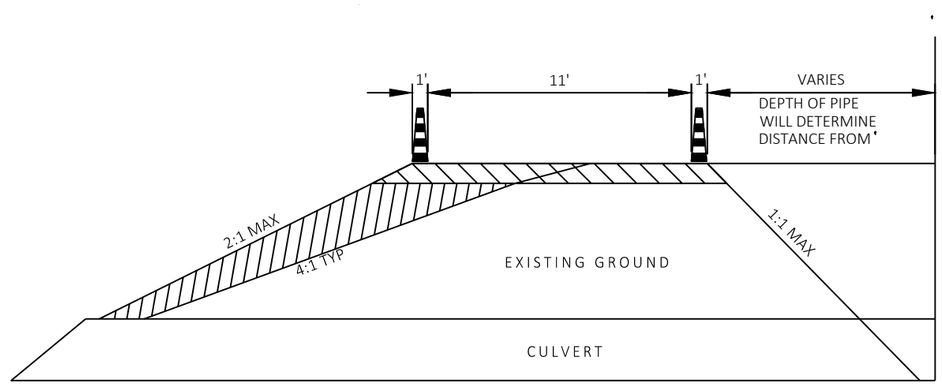

NOTES

1. THE TAPER SHOULD EXTEND ACROSS THE SHOULDER UNLESS DOING SO WOULD GREATLY CONFLICT WITH THE WORK OPERATION
2. ALL LANE CLOSURE SIGNS SHALL BE REMOVED OR COVERED AND ALL DEVICES REMOVED BEYOND THE SHOULDER WHEN WORK IS NOT IN PROGRESS AND THE LANE IS RESTORED TO A SAFE OPERATING CONDITION
3. USE WITH SDD "TRAFFIC CONTROL FOR LANE CLOSURE"

KEY

- ● CONE 42-INCH WITHOUT WARNING LIGHT
- 6" BASE AGGREGATE DENSE 3/4 INCH - INCIDENTAL TO LANE SHIFT ITEM
- FILL - INCIDENTAL TO LANE SHIFT ITEM

LANE SHIFT DETAIL

CULVERT REPLACEMENT STA 259+86
CULVERT REPLACEMENT STA 367+76

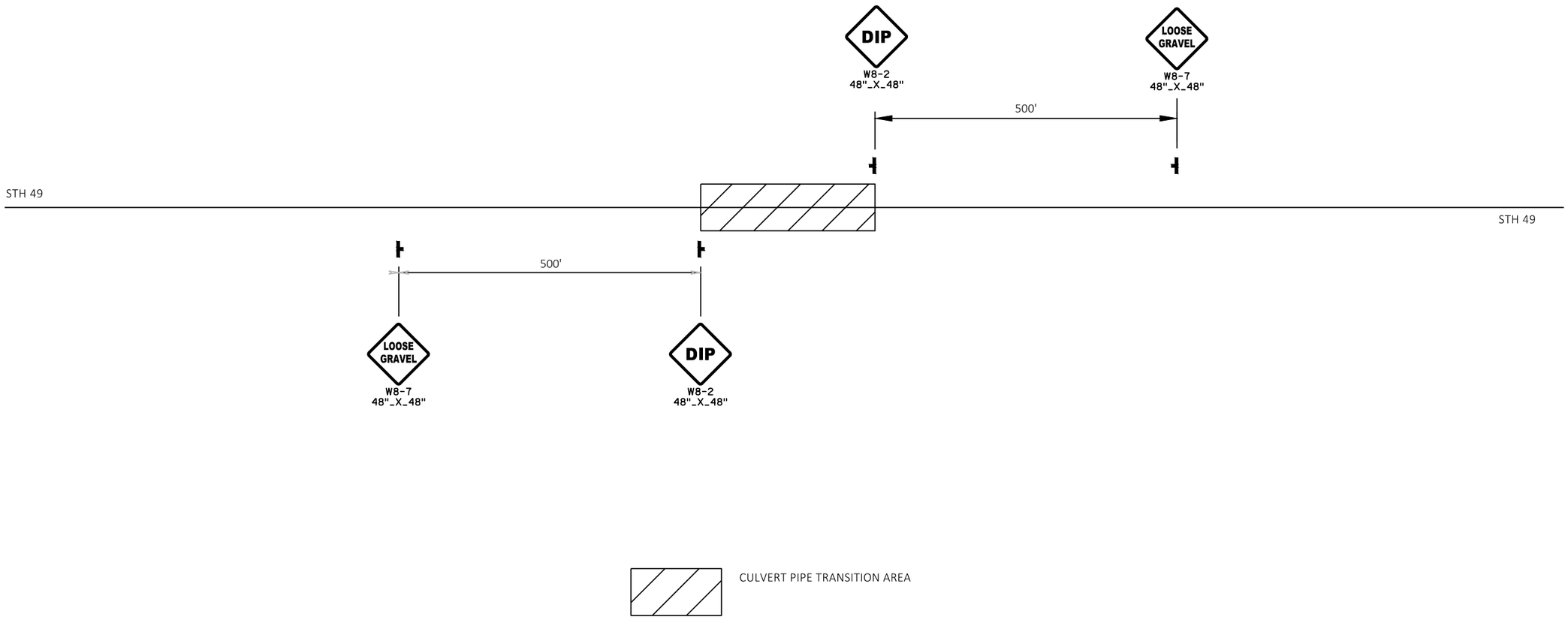

TEMPORARY SIGNING AT CULVERT PIPE REPLACEMENT

CULVERT REPLACEMENT STA 259+85

CULVERT REPLACEMENT STA 367+76

2

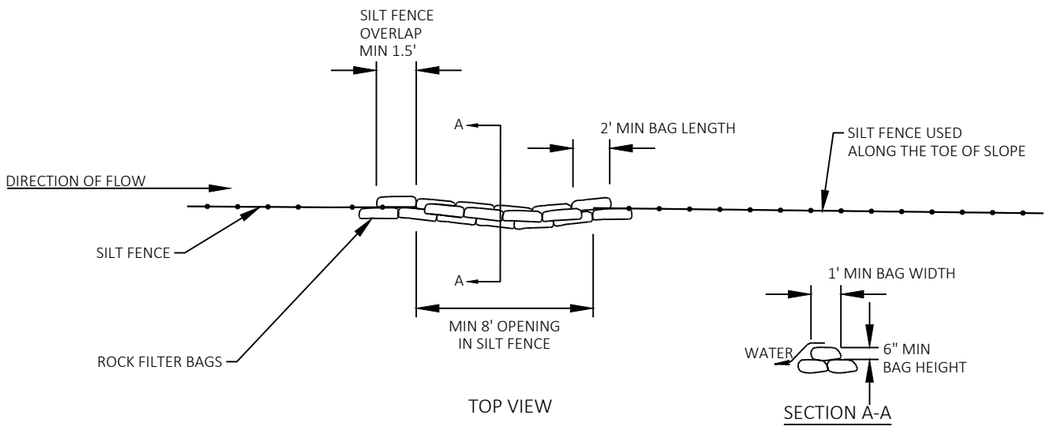

ROCK BAGS USED FOR SILT FENCE RELIEF

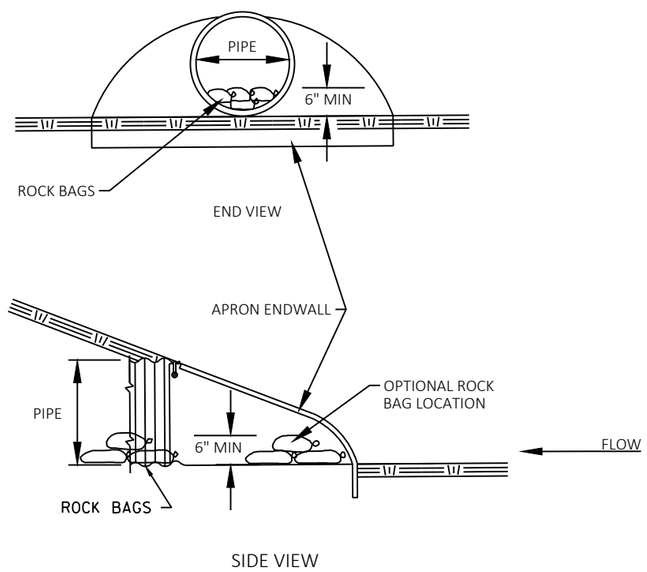

CULVERT PIPE CHECK

(INSTALL ON INLET END ONLY)

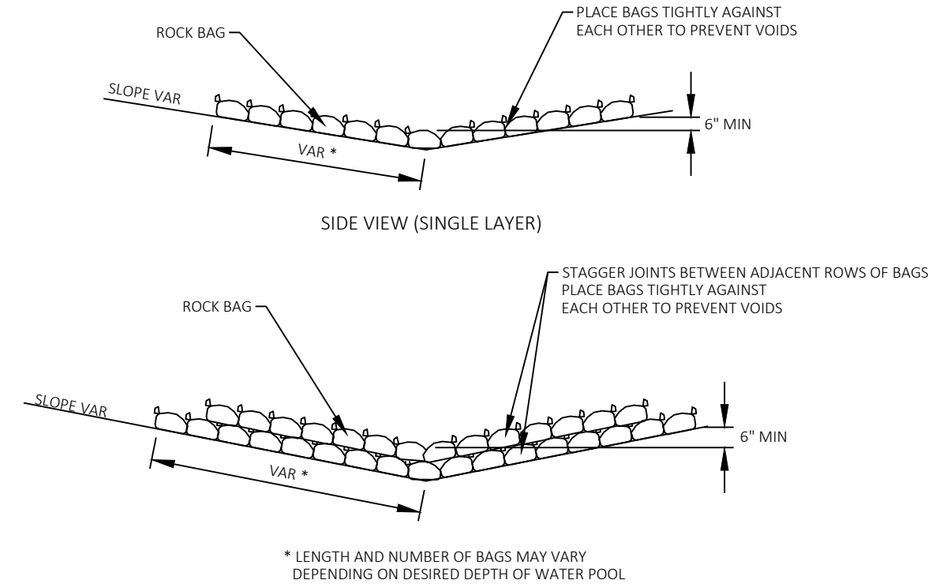

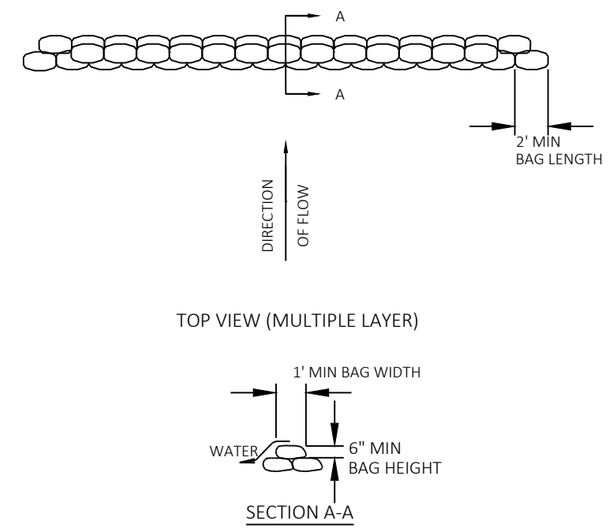

ROCK BAGS USED FOR DITCH CHECKS

2

PROJECT NO: 6270-00-64	HWY: STH 49	COUNTY: WAUPACA	PLAN: CONSTRUCTION DETAILS	SHEET 16	E

FILE NAME : N:\PDS\C3D\62700034\SHEETSPLAN\021001-CD.DWG
LAYOUT NAME - 06
PLOT DATE : 3/16/2018 7:23 AM
PLOT BY : BRATTLUND, ERIK JOHN
PLOT NAME :
PLOT SCALE : 1 IN:10 FT
WISDOT/CADDS SHEET 42

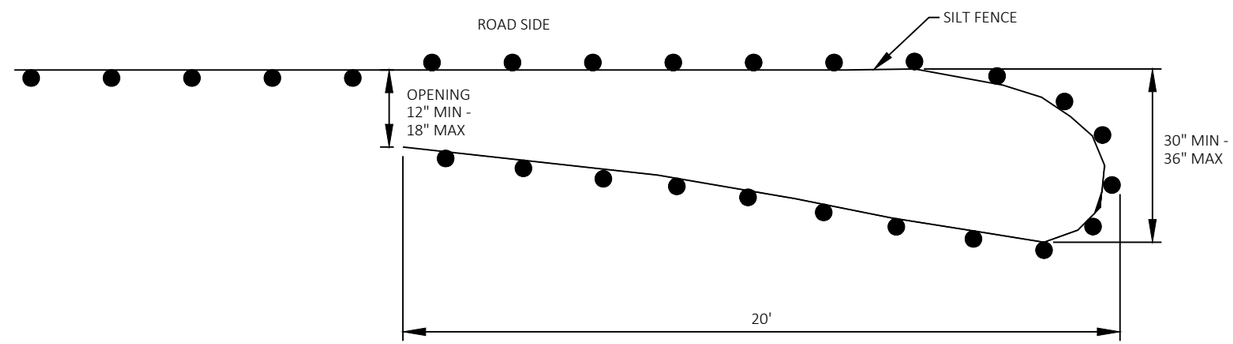

PLAN VIEW

GENERAL NOTES:

SILT FENCE POSTS FOR THE TURN-AROUND SHOULD BE ON THE OUTSIDE OF THE TURN-AROUND. AND TRENCHED IN ACCORDING TO SILT FENCE REQUIREMENTS.

TEMPORARY SMALL ANIMAL TURN-AROUND

RUNOFF COEFFICIENT TABLE

	HYDROLOGIC SOIL GROUP											
	A			B			C			D		
	SLOPE RANGE (PERCENT)			SLOPE RANGE (PERCENT)			SLOPE RANGE (PERCENT)			SLOPE RANGE (PERCENT)		
LAND USE:	0-2	2-6	6 & OVER	0-2	2-6	6 & OVER	0-2	2-6	6 & OVER	0-2	2-6	6 & OVER
ROW CROPS	.08 .22	.16 .30	.22 .38	.12 .26	.20 .34	.27 .44	.15 .30	.24 .37	.33 .50	.19 .34	.28 .41	.38 .56
MEDIAN STRIP-TURF	.19 .24	.20 .26	.24 .30	.19 .25	.22 .28	.26 .33	.20 .26	.23 .30	.30 .37	.20 .27	.25 .32	.30 .40
SIDE SLOPE-TURF			.25 .32			.27 .34			.28 .36			.30 .38
PAVEMENT:												
ASPHALT	.70 - .95											
CONCRETE	.80 - .95											
BRICK	.70 - .80											
DRIVES, WALKS	.75 - .85											
ROOFS	.75 - .95											
GRAVEL ROADS, SHOULDERS	.40 - .60											

TOTAL PROJECT AREA = 58.04 ACRES
TOTAL AREA EXPECTED TO BE DISTURBED BY CONSTRUCTION ACTIVITIES = 22.96 ACRES

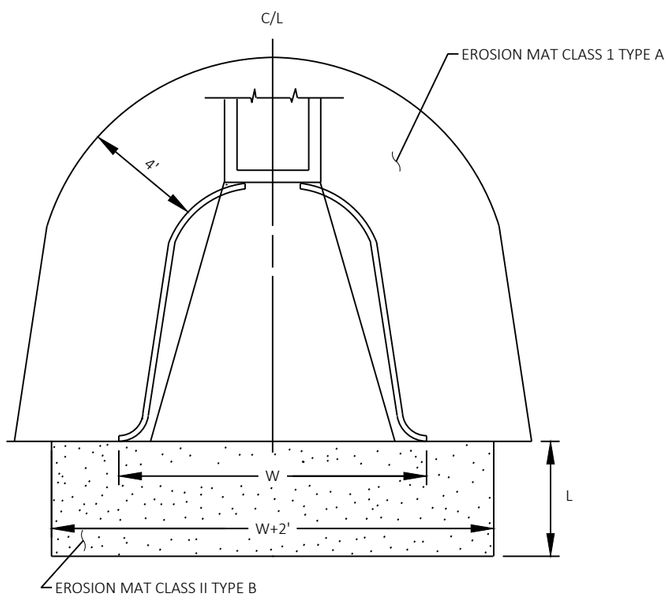

EROSION CONTROL AT PIPE ENDS

L = 3 TIMES DIAMETER OR 10' MIN.
INCREASE IF WARRANTED

NOTE: REMOVE LOOSE ASPHALT BETWEEN POSTS AND REPLACE WITH BASE AGGREGATE AS NEEDED. INCIDENTAL TO REMOVING ASPHALT.

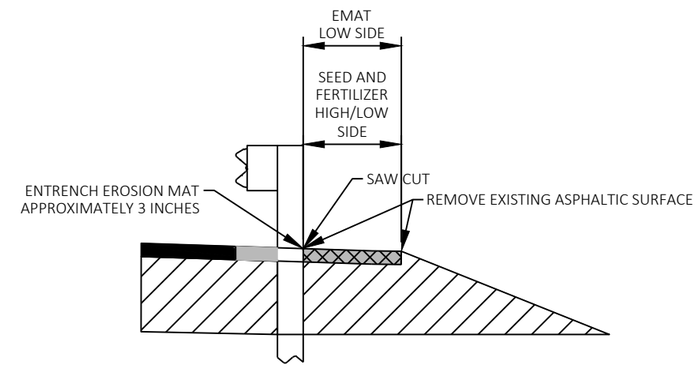

GUARDRAIL MOW STRIP

EXISTING ASPHALTIC SURFACE
BASE AGGREGATE DENSE 3/4-INCH
1.75" MILL AND OVERLAY

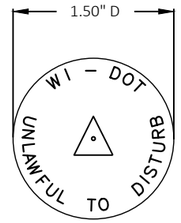

WIS DOT MONUMENT CAP MARKER LOGO (SSDR130)

CONTRACTOR TO ORDER LANDMARK REFERENCE MONUMENTS WITH THE ABOVE STAMPING

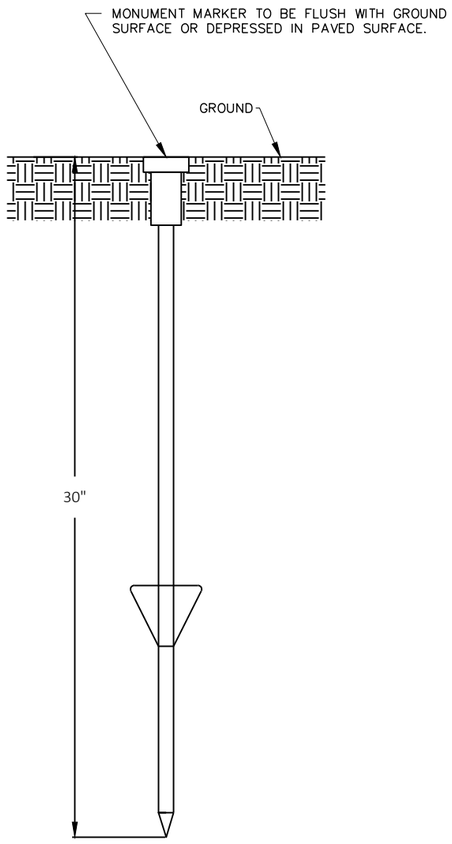

(FRONT VIEW)

BERNSTEN DRIVABLE MONUMENT SSDR130

LANDMARK REFERENCE MONUMENT (TIES ONLY)

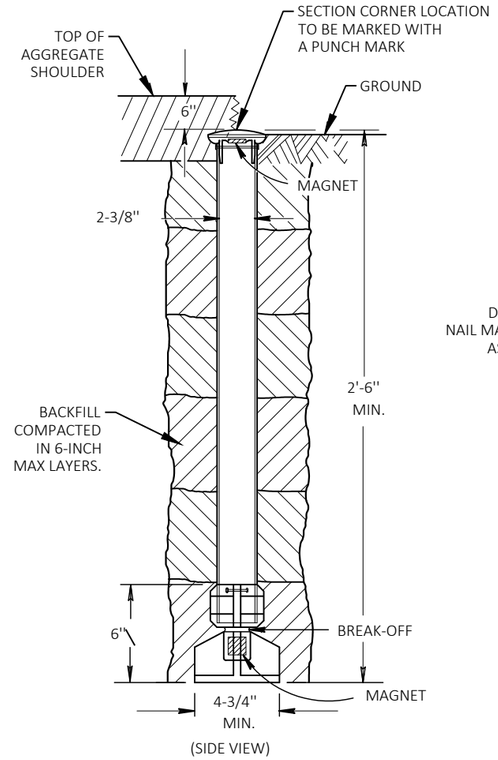

(SIDE VIEW)

OUTSIDE OF PAVEMENT

BERNTSEN A1BR30 ALUMINUM BREAK-OFF MONUMENT

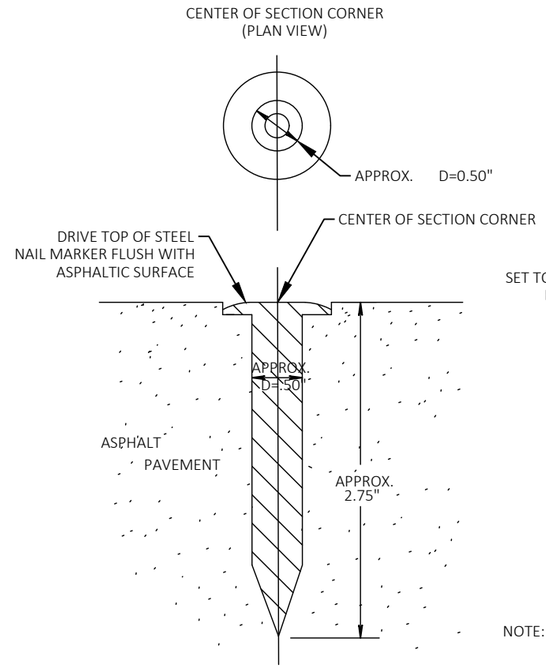

(SIDE VIEW)

IN ASPHALTIC PAVEMENT

BERNTSEN SNM1 STEEL NAIL MARKER

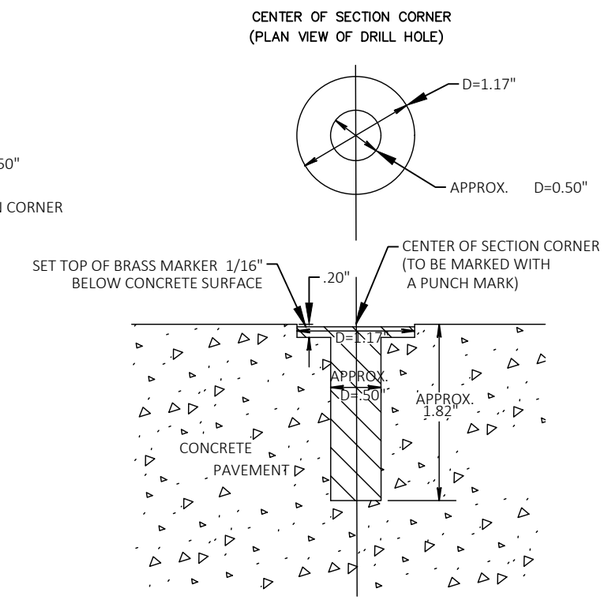

NOTE: TO DRILL HOLE, USE A "SURVEY MARKER COUNTERSINK DRILL BIT" ITEM #BPMDRL, AVAILABLE FROM BERNTSEN INTERNATIONAL INC.

(SIDE VIEW OF DRILL HOLE)

IN CONCRETE PAVEMENT

BERNTSEN BP - 1 BRASS MARKER WITH ANCHOR PLUG

SECTION CORNER MONUMENTS

GENERAL NOTES

DETAILS OF CONSTRUCTION, MATERIALS AND WORKMANSHIP NOT SHOWN ON THIS DRAWING SHALL CONFORM TO THE PERTINENT REQUIREMENTS OF THE STANDARD SPECIFICATIONS AND THE APPLICABLE SPECIAL PROVISIONS.

LOCATE LANDMARK REFERENCE MONUMENTS OUTSIDE THE CONSTRUCTION LIMITS AND WITHIN WISDOT RIGHT OF WAY. LOCATION TO BE APPROVED BY THE ENGINEER.

CONTRACTOR WILL SUPPLY ALL REQUIRED SURVEY MONUMENTS.

SECTION CORNER MONUMENT AND LANDMARK REFERENCE MONUMENT DETAIL

2

2

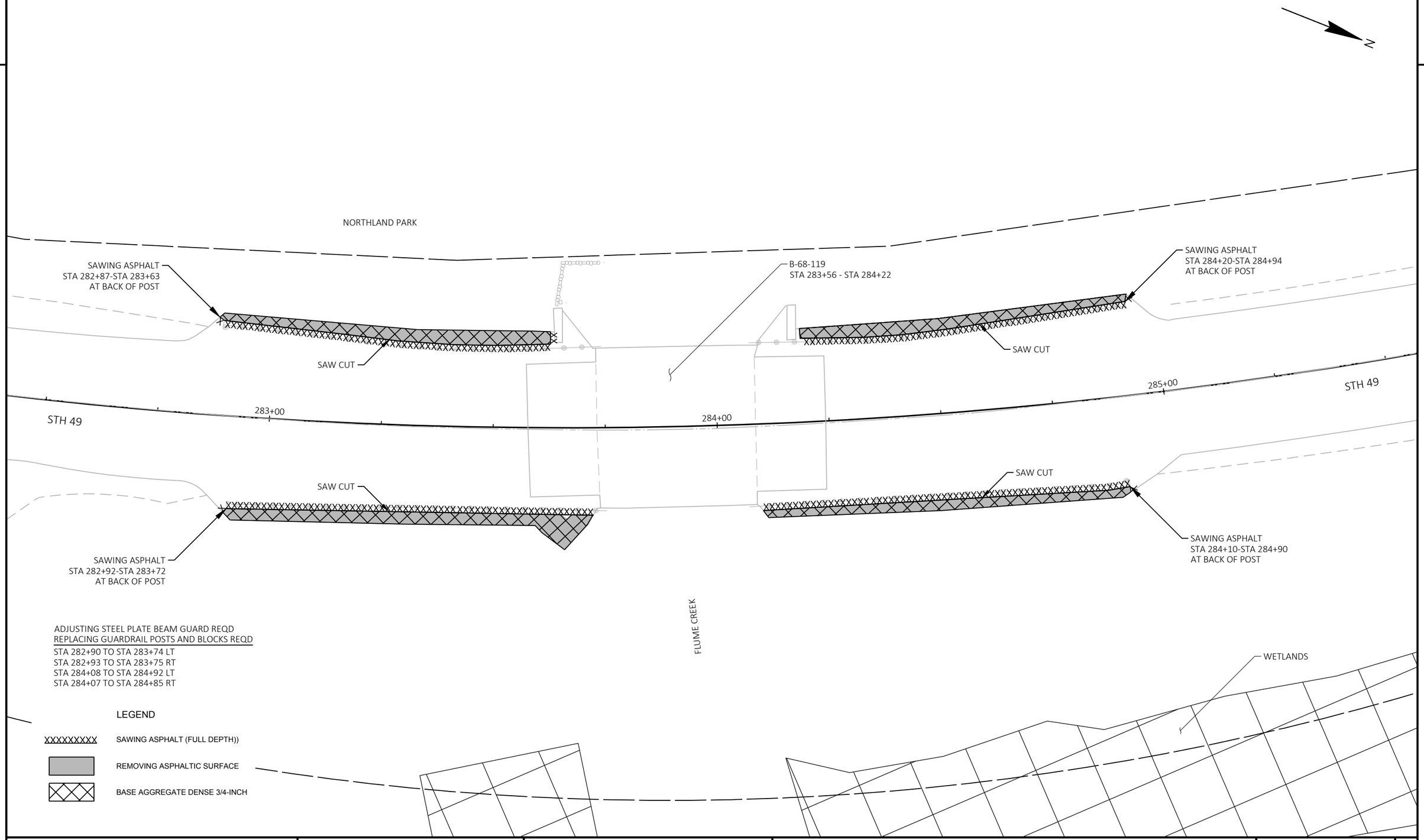

ADJUSTING STEEL PLATE BEAM GUARD REQD
REPLACING GUARDRAIL POSTS AND BLOCKS REQD
STA 282+90 TO STA 283+74 LT
STA 282+93 TO STA 283+75 RT
STA 284+08 TO STA 284+92 LT
STA 284+07 TO STA 284+85 RT

LEGEND

XXXXXXXXX SAWING ASPHALT (FULL DEPTH))

REMOVING ASPHALTIC SURFACE

BASE AGGREGATE DENSE 3/4-INCH

PROJECT NO: 6270-00-64	HWY: STH 49	COUNTY: WAUPACA	CONSTRUCTION DETAIL	SHEET 20	E

FILE NAME : N:\PDS\C3D\62700034\SHEETSPLAN\021002-CD.DWG
LAYOUT NAME - 01
PLOT DATE : 11/28/2017 10:34 AM
PLOT BY : BRATTLUND, ERIK JOHN
PLOT NAME :
PLOT SCALE : 1 IN:20 FT
WISDOT/CADDS SHEET 42

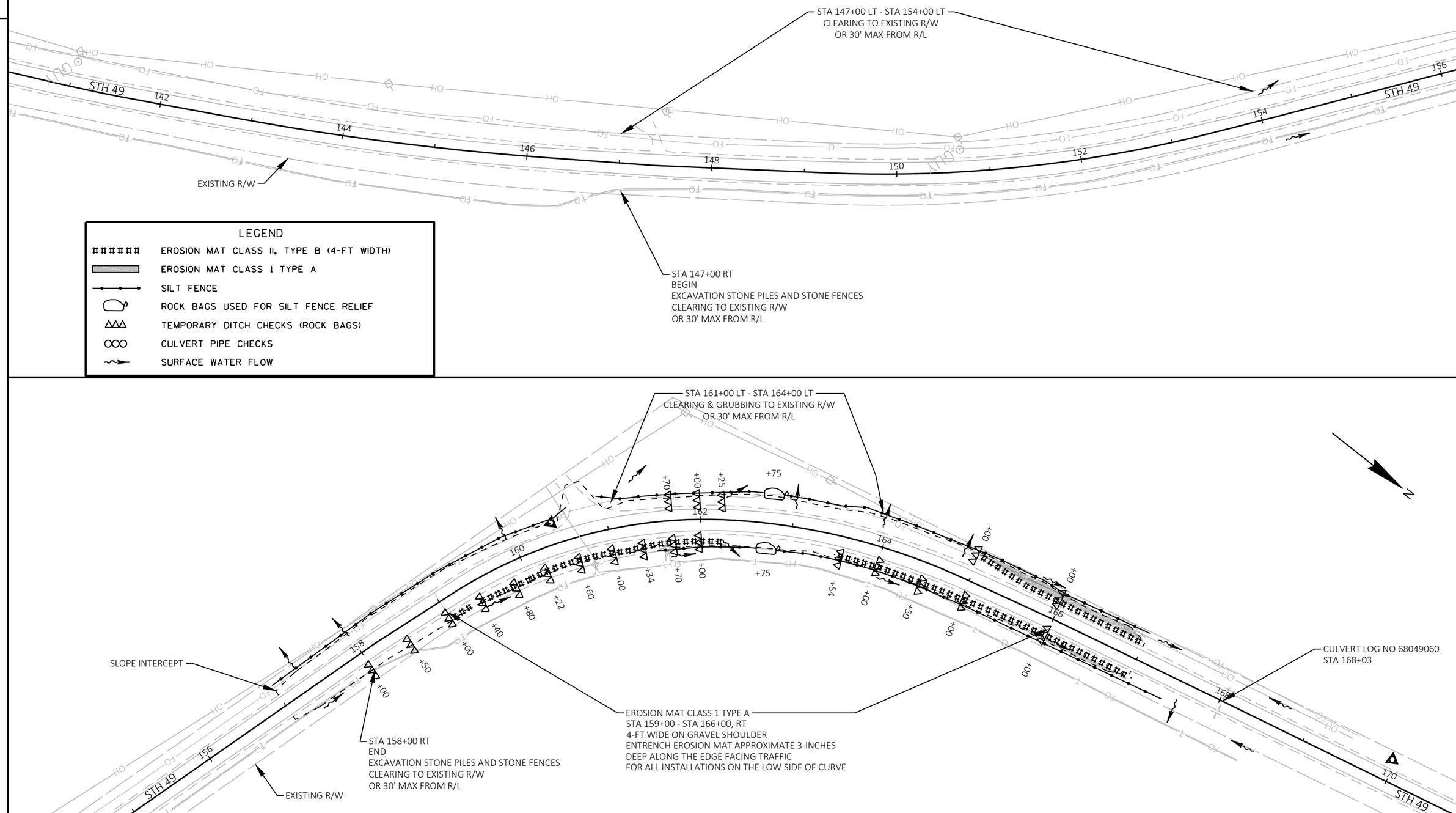

PROJECT NO: 6270-00-64	HWY: STH 49	COUNTY: WAUPACA	PLAN: EROSION CONTROL	SHEET 21	E

2

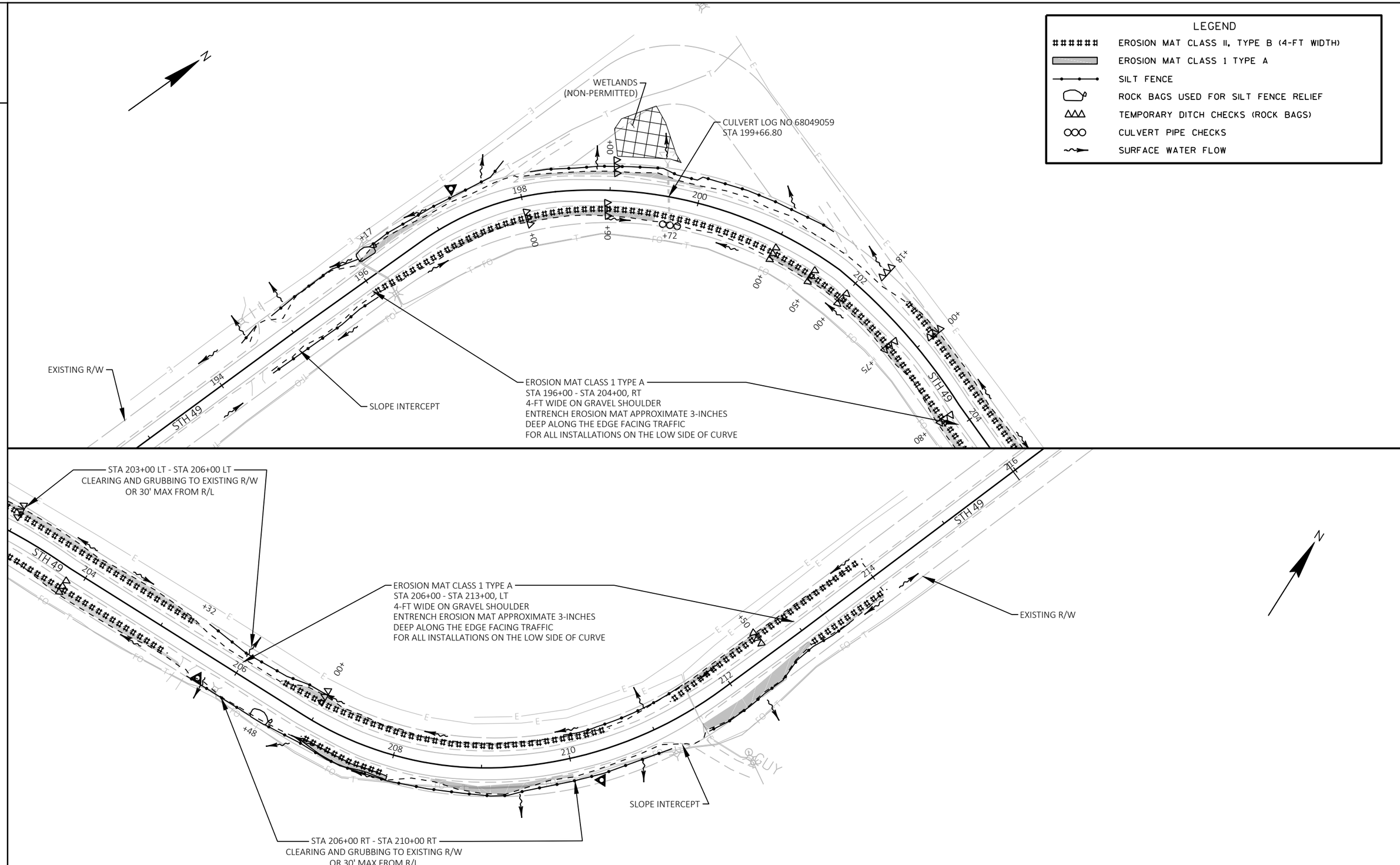

PROJECT NO: 6270-00-64	HWY: STH 49	COUNTY: WAUPACA	PLAN: EROSION CONTROL	SHEET 22	E

FILE NAME : N:\PDS\C3D\62700034\SHEETSPLAN\022001-EC.DWG
LAYOUT NAME - 02-EC
PLOT DATE : 1/24/2018 1:57 PM
PLOT BY : SAEGER, GLENN D
PLOT NAME : _____
PLOT SCALE : 1 IN:100 FT & 1 IN:100 FT

2

2

N

EROSION MAT
SEE CONSTRUCTION DETAIL
EROSION CONTROL AT PIPE ENDS

EXISTING R/W

GRAVEL PE

+83

256 258 260 262 264 266 268 270

STH 49

STH 49

+83

GRAVEL PE

GRAVEL FE

GRAVEL FE

CULVERT LOG NO 68049064
STA 259+83.52

N

SENSITIVE AREA
DO NOT DISTURB OUTSIDE EXISTING
BASE OF DITCH OR BELOW SUBGRADE

LEGEND

######	EROSION MAT CLASS II, TYPE B (4-FT WIDTH)
	EROSION MAT CLASS 1 TYPE A
	SILT FENCE
	ROCK BAGS USED FOR SILT FENCE RELIEF
	TEMPORARY DITCH CHECKS (ROCK BAGS)
	CULVERT PIPE CHECKS
	SURFACE WATER FLOW

GRAVEL FE

278

STH 49

GRAVEL PE

280

GRAVEL PE

282

284

286

288

290

292

294

STH 49

ASPHALTIC CE

STA 292+00 RT
BEGIN
ROADSIDE CLEARING TO EXISTING R/W
OR 30' MAX FROM R/L

EROSION MAT CLASS 1 TYPE A
ENTRENCH EROSION MAT APPROXIMATELY 3 INCHES
DEEP ALONG THE EDGE FACING TRAFFIC FOR ALL
INSTALLATIONS ON THE LOW SIDE OF THE CURVE.

B-68-119

2

2

GRAVEL PE

GRAVEL PE

GRAVEL PE

EXISTING R/W

LUND ROAD

GRAVEL PE

GRAVEL FE

2

2

EROSION MAT CLASS 1 TYPE A

WETLANDS
(NON-PERMITTED)

WETLANDS
(NON-PERMITTED)

2 SEE CONSTRUCTION DETAIL
TEMPORARY SMALL
ANIMAL TURN-AROUND (TYP)

PROJECT NO: 6270-00-64	HWY: STH 49	COUNTY: WAUPACA	PLAN: EROSION CONTROL	SHEET 23	E

FILE NAME : N:\PDS\C3D\62700034\SHEETSPLAN\022001-EC.DWG
LAYOUT NAME - 03-EC

PLOT DATE : 1/24/2018 1:57 PM PLOT BY : SAEGER, GLENN D PLOT NAME : _____ PLOT SCALE : 1 IN:100 FT & 1 IN:100 FT

WISDOT/CADDS SHEET 42

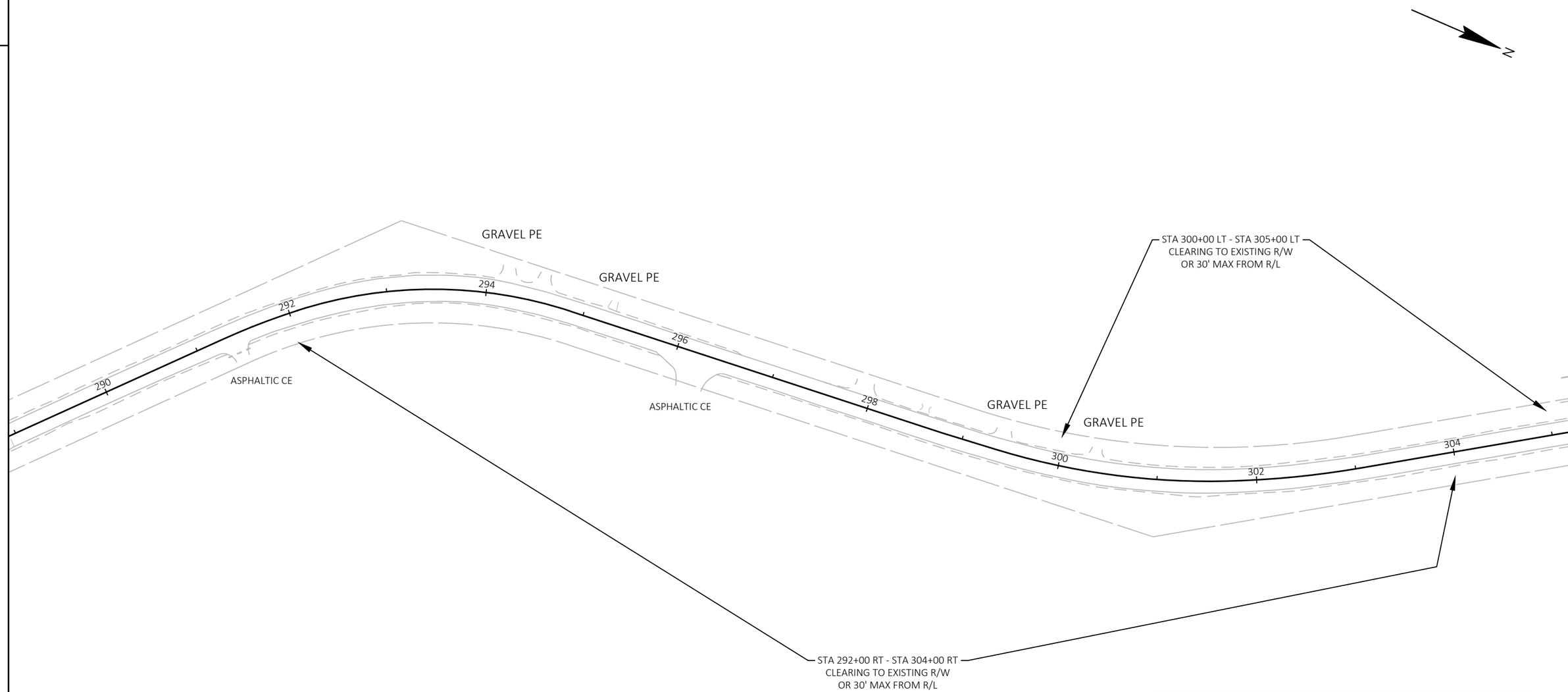

LEGEND

- EROSION MAT CLASS II, TYPE B (4-FT WIDTH)
- EROSION MAT CLASS 1 TYPE A
- SILT FENCE
- ROCK BAGS USED FOR SILT FENCE RELIEF
- TEMPORARY DITCH CHECKS (ROCK BAGS)
- CULVERT PIPE CHECKS
- SURFACE WATER FLOW

PROJECT NO: 6270-00-64	HWY: STH 49	COUNTY: WAUPACA	PLAN: EROSION CONTROL	SHEET 24	E

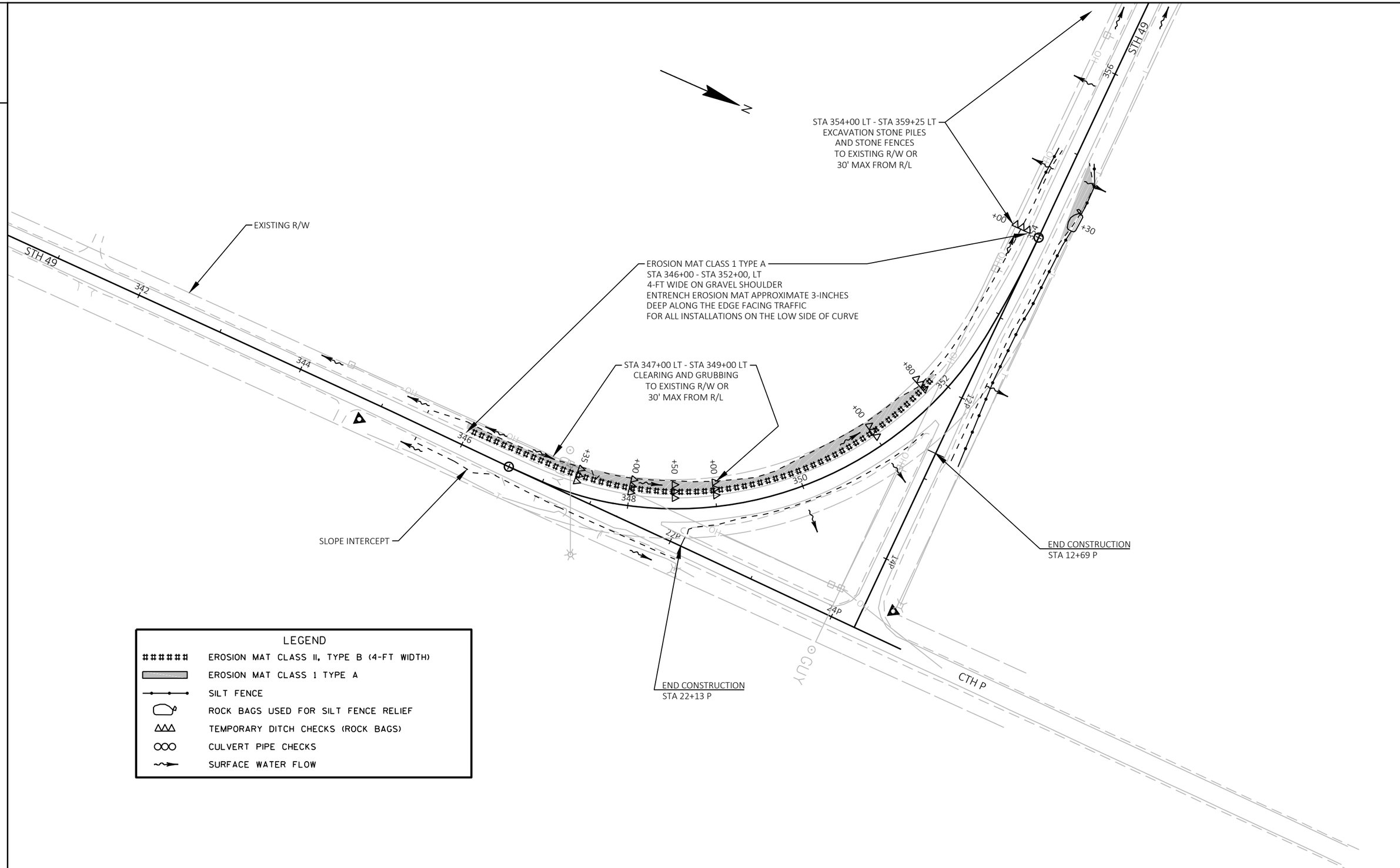
N
STH 49
342
344
346
348
350
352
356
STA 354+00 LT - STA 359+25 LT
EXCAVATION STONE PILES
AND STONE FENCES
TO EXISTING R/W OR
30' MAX FROM R/L
EXISTING R/W
EROSION MAT CLASS 1 TYPE A
STA 346+00 - STA 352+00, LT
4-FT WIDE ON GRAVEL SHOULDER
ENTRENCH EROSION MAT APPROXIMATE 3-INCHES
DEEP ALONG THE EDGE FACING TRAFFIC
FOR ALL INSTALLATIONS ON THE LOW SIDE OF CURVE
STA 347+00 LT - STA 349+00 LT
CLEARING AND GRUBBING
TO EXISTING R/W OR
30' MAX FROM R/L
+00
+30
+80
+35
+50
SLOPE INTERCEPT
END CONSTRUCTION
STA 12+69 P
END CONSTRUCTION
STA 22+13 P
22P
12P
14P
24P
CTH P
LEGEND
EROSION MAT CLASS II, TYPE B (4-FT WIDTH)
EROSION MAT CLASS 1 TYPE A
SILT FENCE
ROCK BAGS USED FOR SILT FENCE RELIEF
TEMPORARY DITCH CHECKS (ROCK BAGS)
CULVERT PIPE CHECKS
SURFACE WATER FLOW

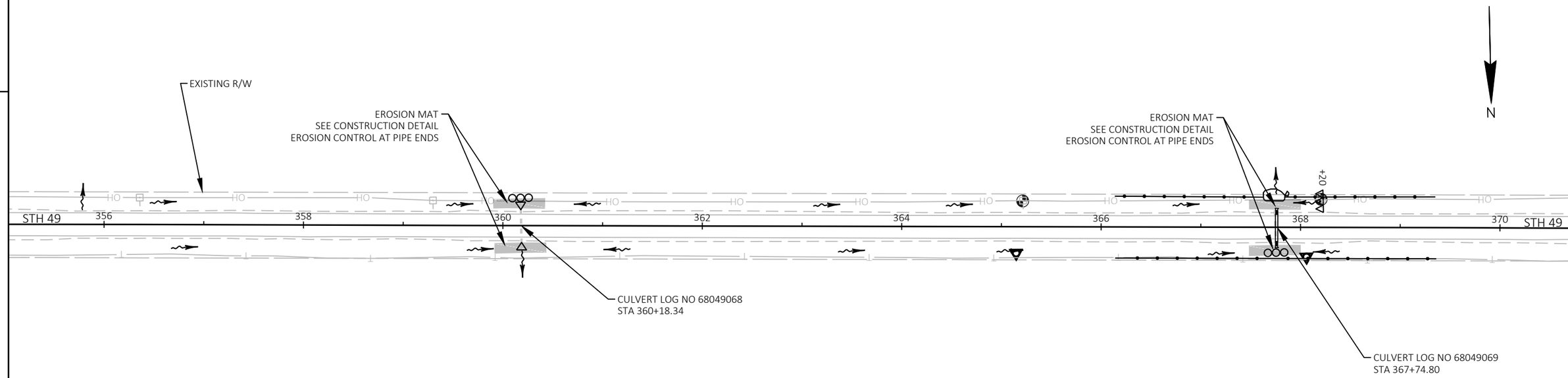

LEGEND

######	EROSION MAT CLASS II, TYPE B (4-FT WIDTH)
	EROSION MAT CLASS 1 TYPE A
	SILT FENCE
	ROCK BAGS USED FOR SILT FENCE RELIEF
	TEMPORARY DITCH CHECKS (ROCK BAGS)
	CULVERT PIPE CHECKS
	SURFACE WATER FLOW

PROJECT NO: 6270-00-64	HWY: STH 49	COUNTY: WAUPACA	PLAN: EROSION CONTROL	SHEET 26	E

NOTE:
PERMANENT SIGN LOCATIONS ARE APPROXIMATE, FINAL LOCATIONS SHALL BE PLACED IN ACCORDANCE TO DETAILS AND MUTCD.
NO PASSING ZONE PENNANTS SHALL BE PLACED IN ACCORDANCE WITH THE RESULTS OF THE LOCATING NO PASSING ZONE ITEM.

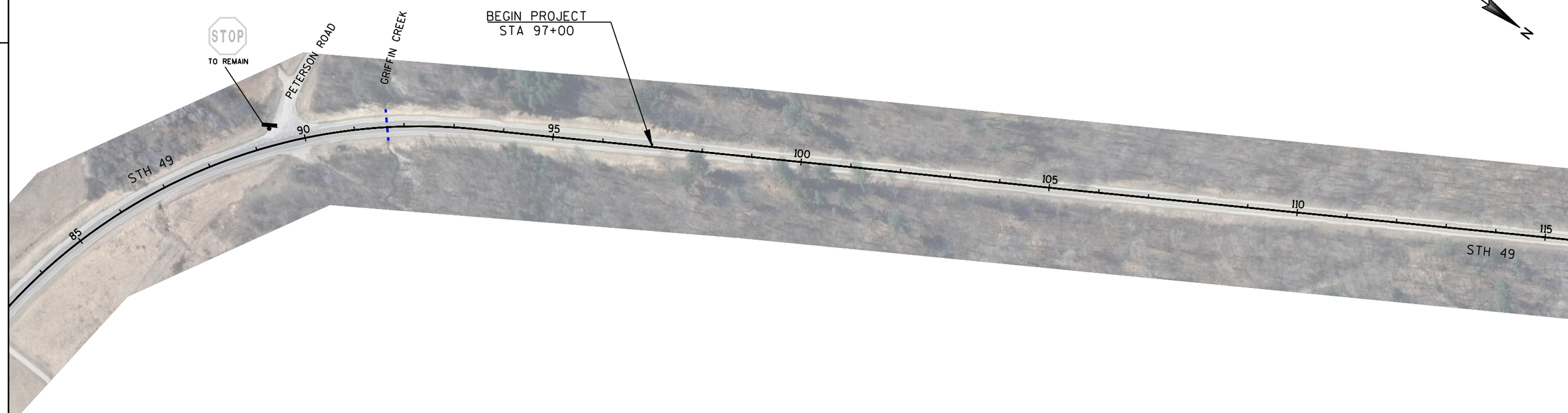

PROJECT NO:6270-00-64	HWY:STH 49	COUNTY:WAUPACA	PERMANENT SIGNING	SHEET 27	E

FILE NAME : N:\PDS\C3D\62700034\SHEETSPLAN\023201-PS.DWG
LAYOUT NAME - PN- (01)
PLOT DATE : 1/31/2018 11:19 AM PLOT BY : EVANS, TONY R PLOT NAME : PLOT SCALE : 1 IN:200 FT

NOTE:
PERMANENT SIGN LOCATIONS ARE APPROXIMATE, FINAL LOCATIONS SHALL BE PLACED IN ACCORDANCE TO DETAILS AND MUTCD.
NO PASSING ZONE PENNANTS SHALL BE PLACED IN ACCORDANCE WITH THE RESULTS OF THE LOCATING NO PASSING ZONE ITEM.

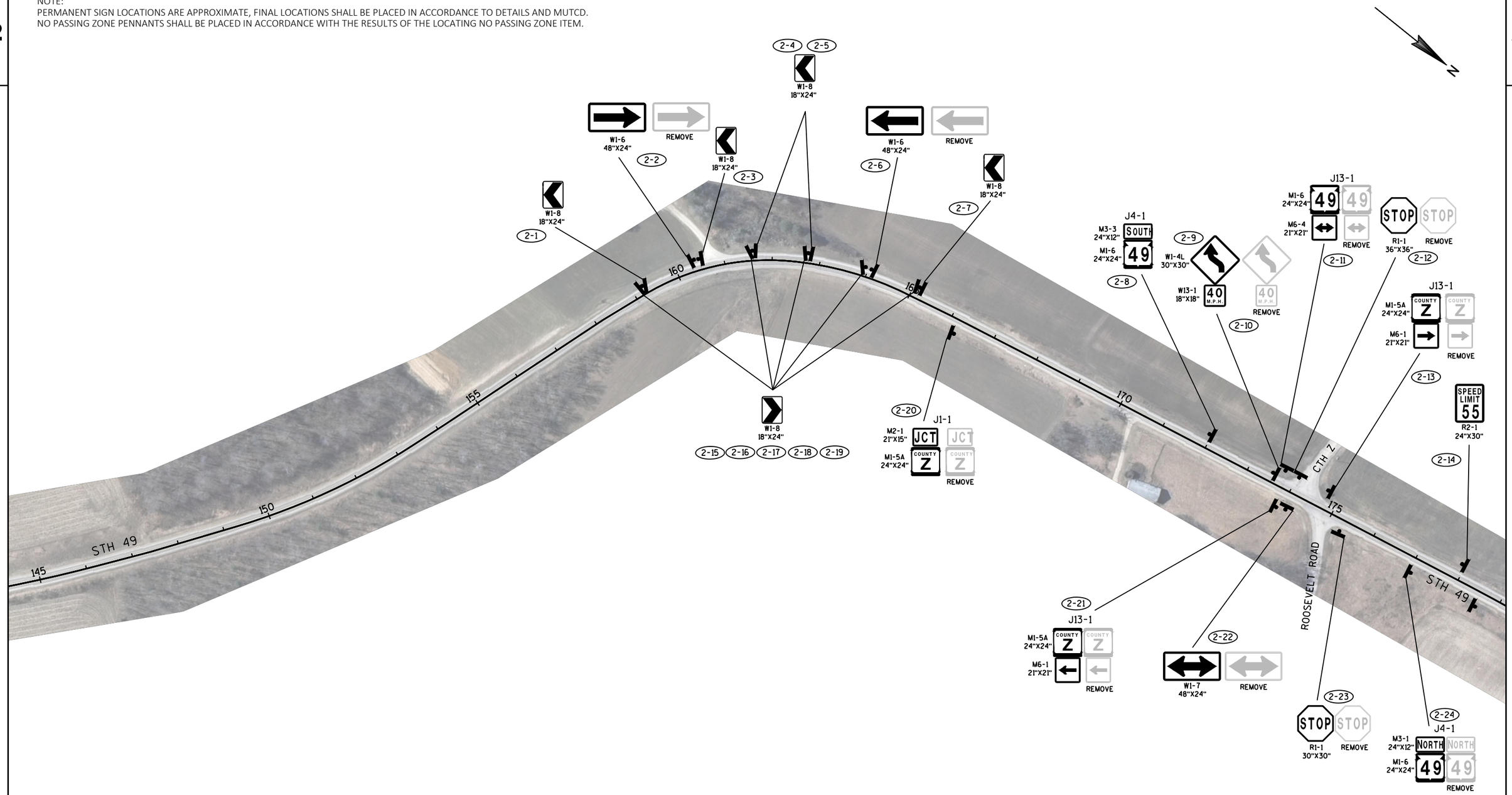

2

NOTE:
PERMANENT SIGN LOCATIONS ARE APPROXIMATE, FINAL LOCATIONS SHALL BE PLACED IN ACCORDANCE TO DETAILS AND MUTCD.
NO PASSING ZONE PENNANTS SHALL BE PLACED IN ACCORDANCE WITH THE RESULTS OF THE LOCATING NO PASSING ZONE ITEM.

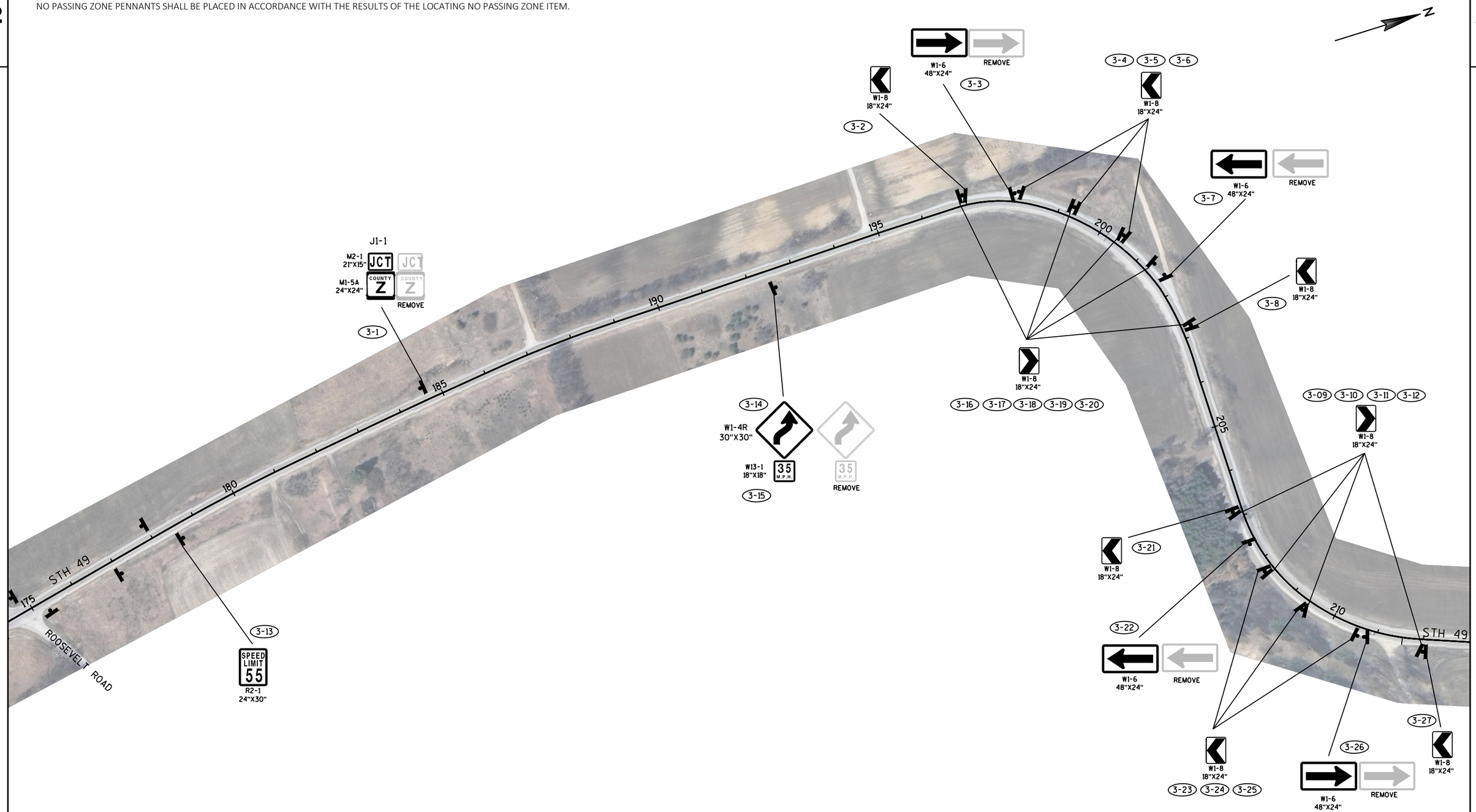

2

PROJECT NO:6270-00-64	HWY:STH 49	COUNTY:WAUPACA	PERMANENT SIGNING	SHEET 29	E

FILE NAME : N:\PDS\C3D\62700034\SHEETSPLAN\023201-PS.DWG
LAYOUT NAME - PN- (03)
PLOT DATE : 1/31/2018 11:20 AM PLOT BY : EVANS, TONY R PLOT NAME : PLOT SCALE : 1 IN:200 FT

WISDOT/CADDS SHEET 42

NOTE:
PERMANENT SIGN LOCATIONS ARE APPROXIMATE, FINAL LOCATIONS SHALL BE PLACED IN ACCORDANCE TO DETAILS AND MUTCD.
NO PASSING ZONE PENNANTS SHALL BE PLACED IN ACCORDANCE WITH THE RESULTS OF THE LOCATING NO PASSING ZONE ITEM.

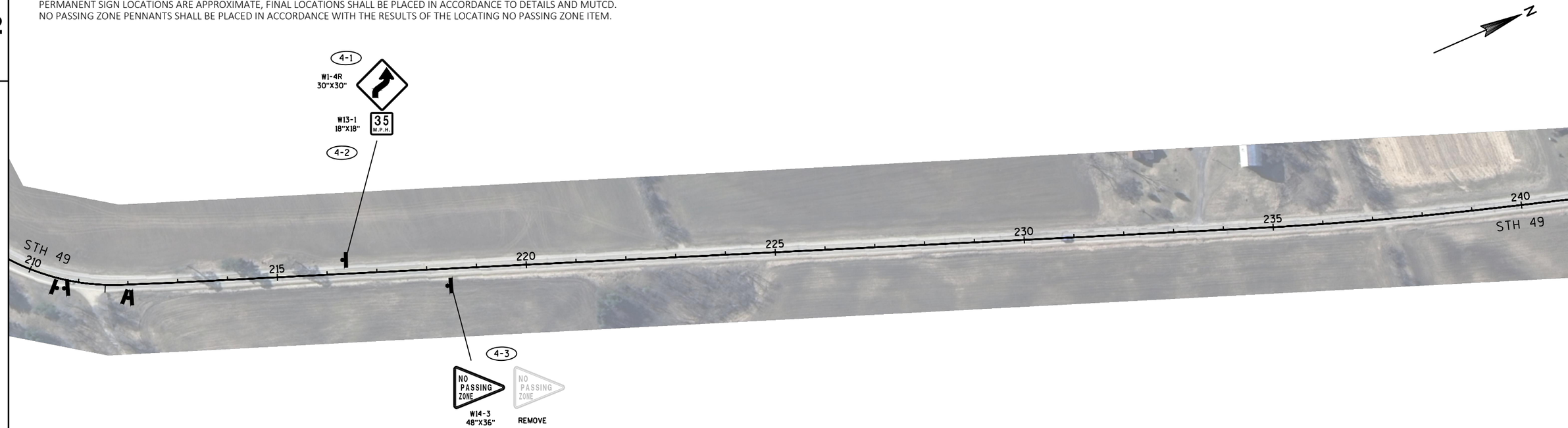

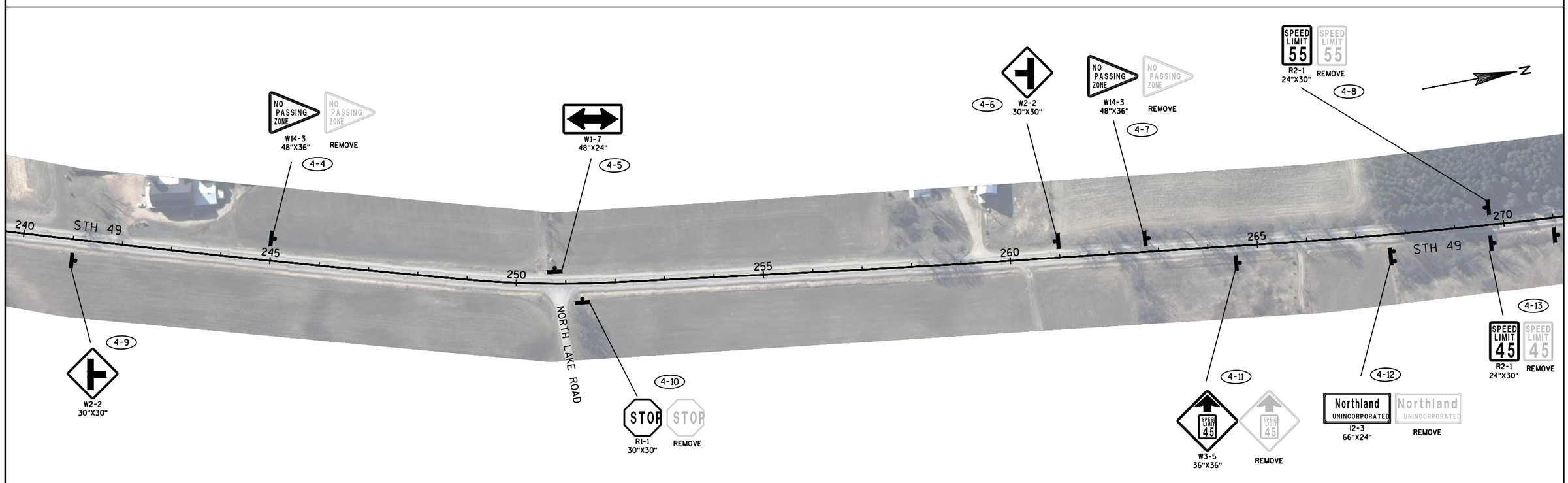

PROJECT NO:6270-00-64	HWY:STH 49	COUNTY:WAUPACA	PERMANENT SIGNING	SHEET 30	E

NOTE:
PERMANENT SIGN LOCATIONS ARE APPROXIMATE, FINAL LOCATIONS SHALL BE PLACED IN ACCORDANCE TO DETAILS AND MUTCD.
NO PASSING ZONE PENNANTS SHALL BE PLACED IN ACCORDANCE WITH THE RESULTS OF THE LOCATING NO PASSING ZONE ITEM.

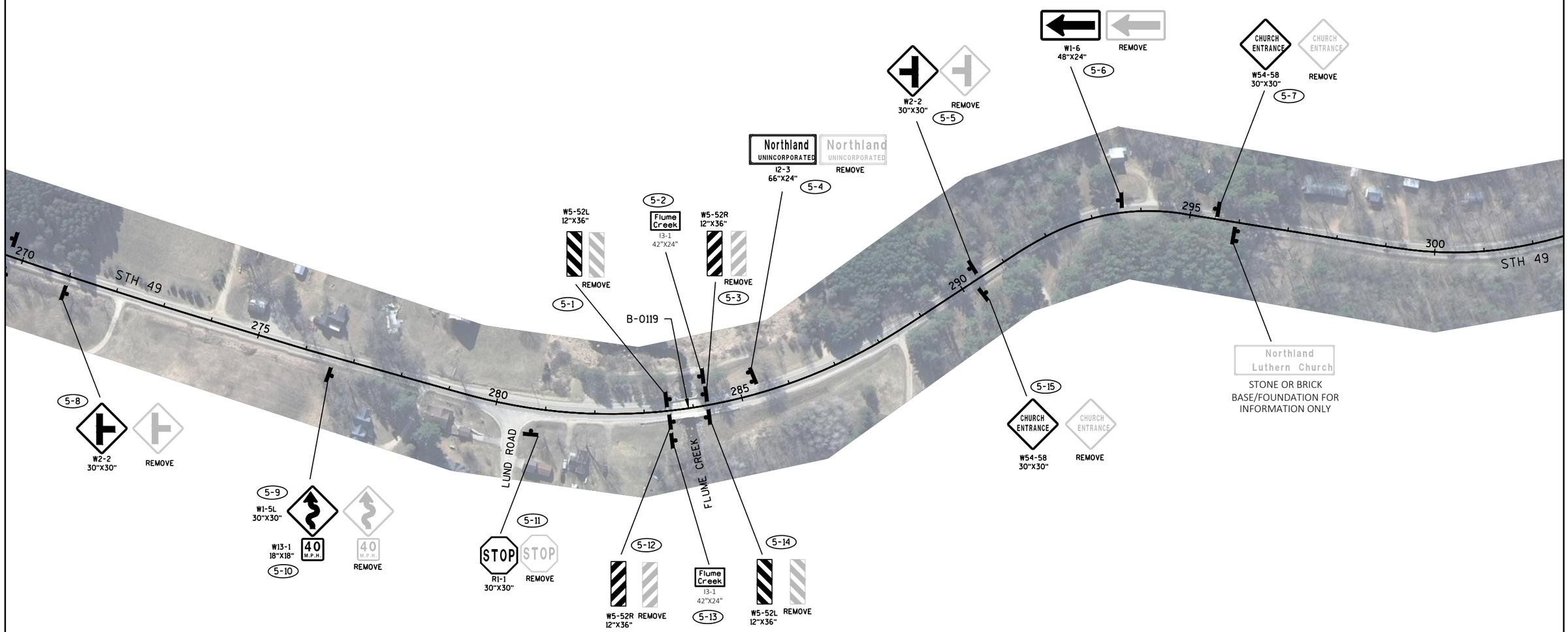

NOTE:
PERMANENT SIGN LOCATIONS ARE APPROXIMATE, FINAL LOCATIONS SHALL BE PLACED IN ACCORDANCE TO DETAILS AND MUTCD.
NO PASSING ZONE PENNANTS SHALL BE PLACED IN ACCORDANCE WITH THE RESULTS OF THE LOCATING NO PASSING ZONE ITEM.

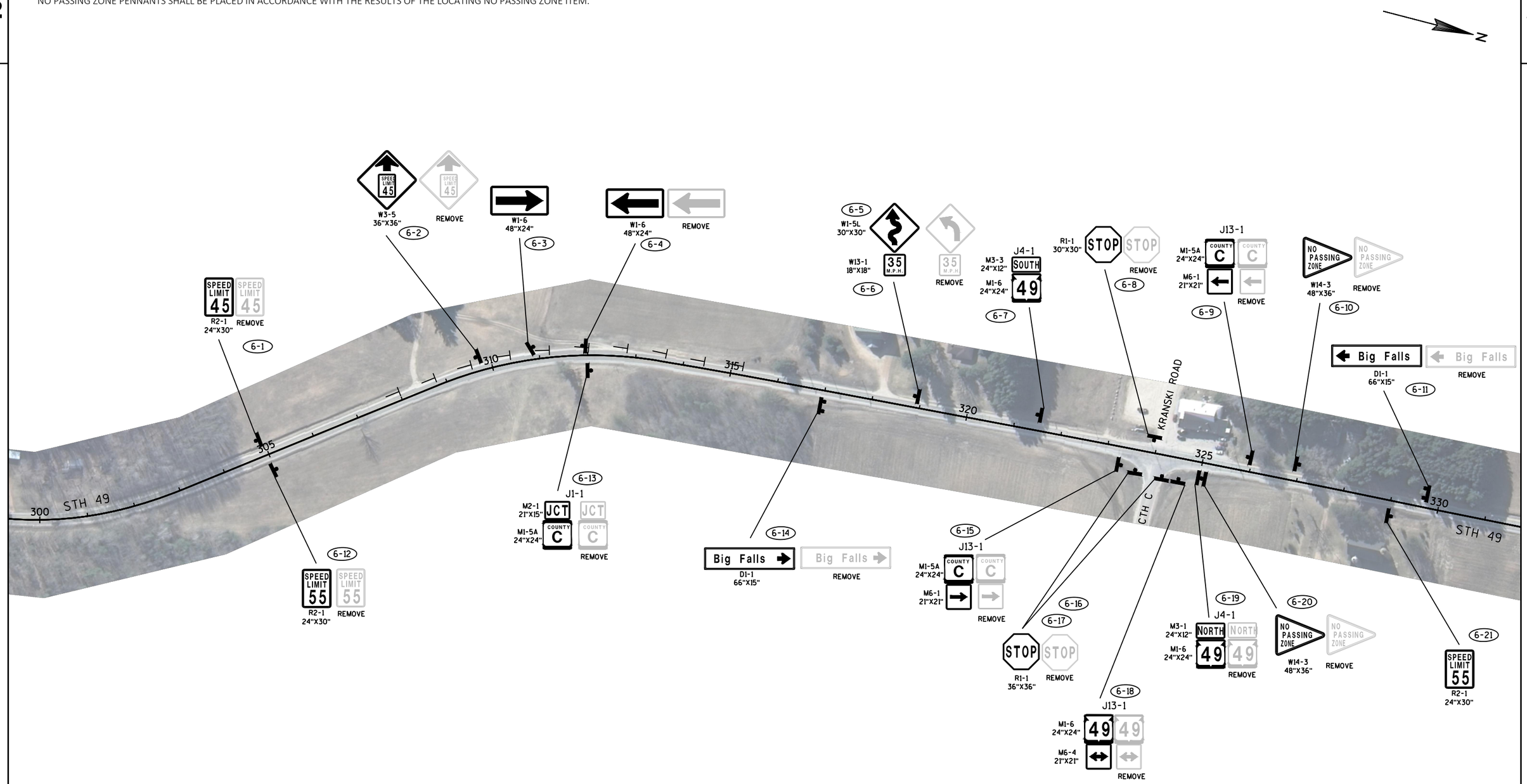

LEGEND

DELINEATOR - 80' SPACING

PROJECT NO:6270-00-64	HWY:STH 49	COUNTY:WAUPACA	PERMANENT SIGNING	SHEET 32	E

FILE NAME : N:\PDS\C3D\62700034\SHEETSPLAN\023201-PS.DWG
LAYOUT NAME - PN- (06)
PLOT DATE : 1/31/2018 11:20 AM PLOT BY : EVANS, TONY R PLOT NAME : PLOT SCALE : 1 IN:200 FT

2

NOTE:
PERMANENT SIGN LOCATIONS ARE APPROXIMATE, FINAL LOCATIONS SHALL BE PLACED IN ACCORDANCE TO DETAILS AND MUTCD.
NO PASSING ZONE PENNANTS SHALL BE PLACED IN ACCORDANCE WITH THE RESULTS OF THE LOCATING NO PASSING ZONE ITEM.

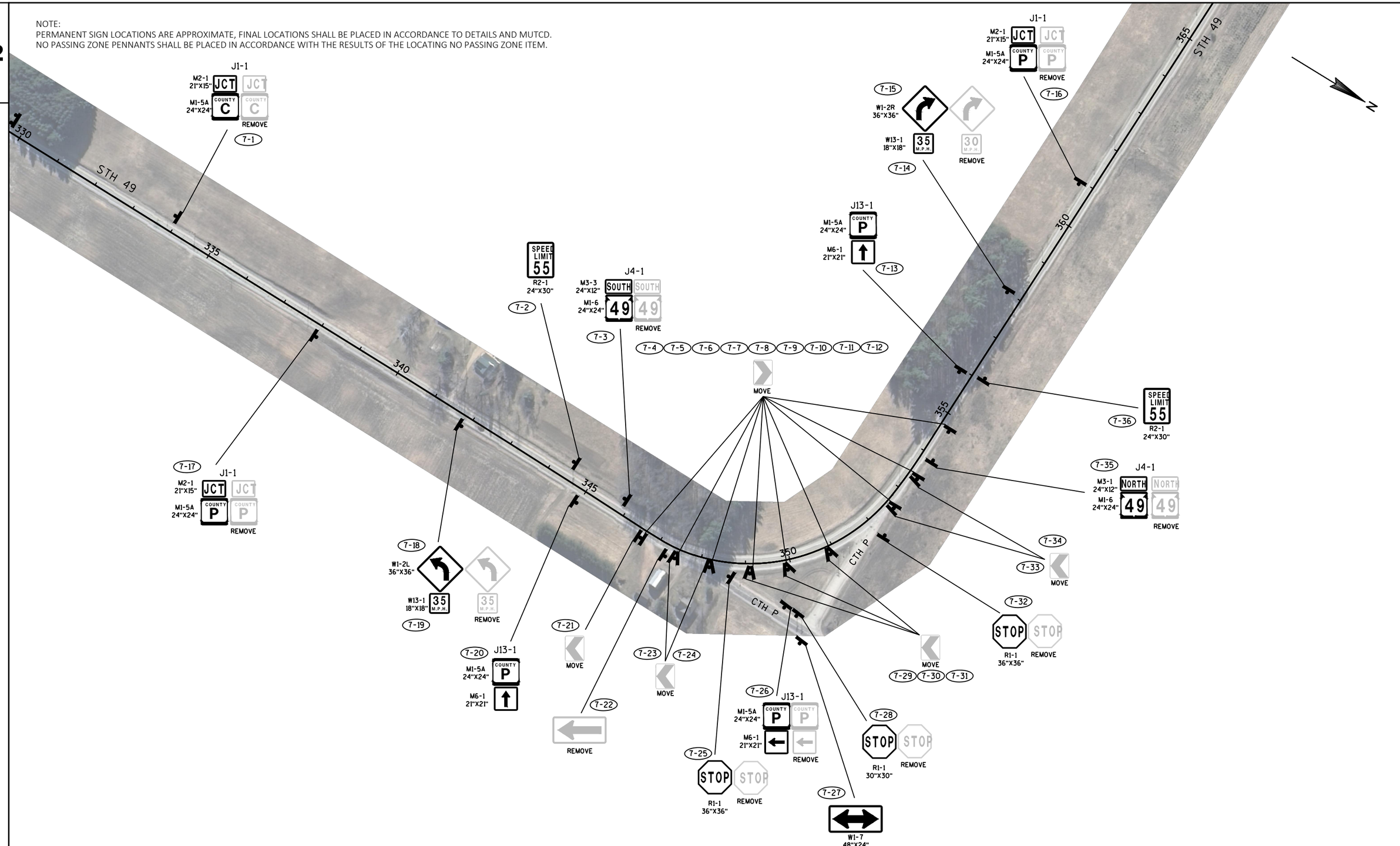

2

PROJECT NO:6270-00-64	HWY:STH 49	COUNTY:WAUPACA	PERMANENT SIGNING	SHEET 33	E

FILE NAME : N:\PDS\C3D\62700034\SHEETSPLAN\023201-PS.DWG
LAYOUT NAME - PN- (07)
PLOT DATE : 1/31/2018 11:20 AM PLOT BY : EVANS, TONY R PLOT NAME : PLOT SCALE : 1 IN:200 FT

2

NOTE:
PERMANENT SIGN LOCATIONS ARE APPROXIMATE, FINAL LOCATIONS SHALL BE PLACED IN ACCORDANCE TO DETAILS AND MUTCD.
NO PASSING ZONE PENNANTS SHALL BE PLACED IN ACCORDANCE WITH THE RESULTS OF THE LOCATING NO PASSING ZONE ITEM.

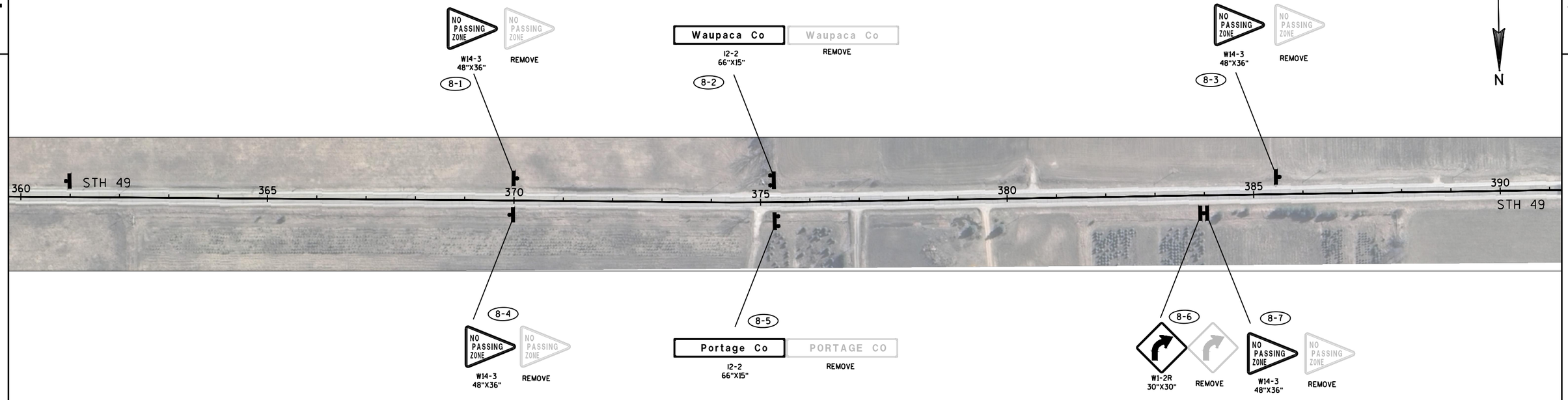

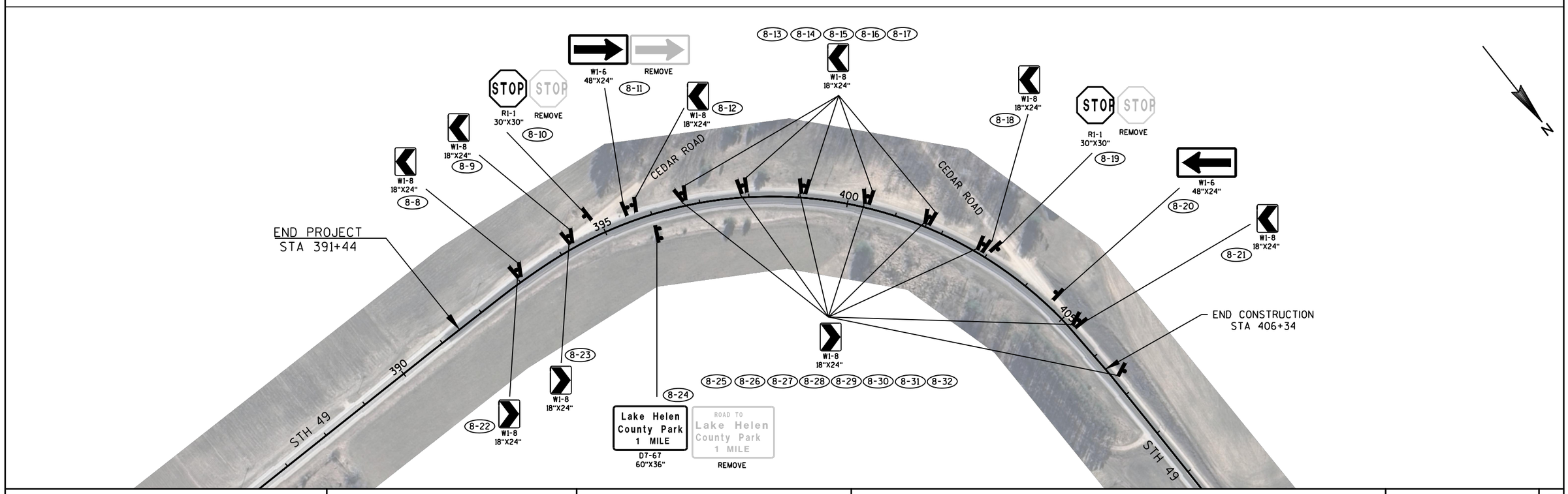

PROJECT NO:6270-00-64	HWY:STH 49	COUNTY:WAUPACA	PERMANENT SIGNING	SHEET 34	E

INSTALL PRIOR TO THE INTERSECTION OF STH 49 (SB) & STH 66, OR AS DIRECTED BY THE ENGINEER.

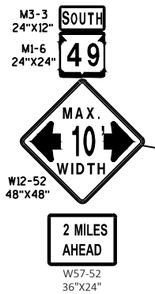

INSTALL PRIOR TO THE INTERSECTION OF STH 66 (EB) & STH 49, OR AS DIRECTED BY THE ENGINEER.

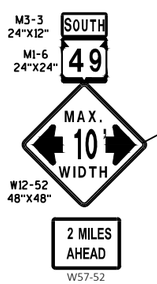

PROJECT LIMITS

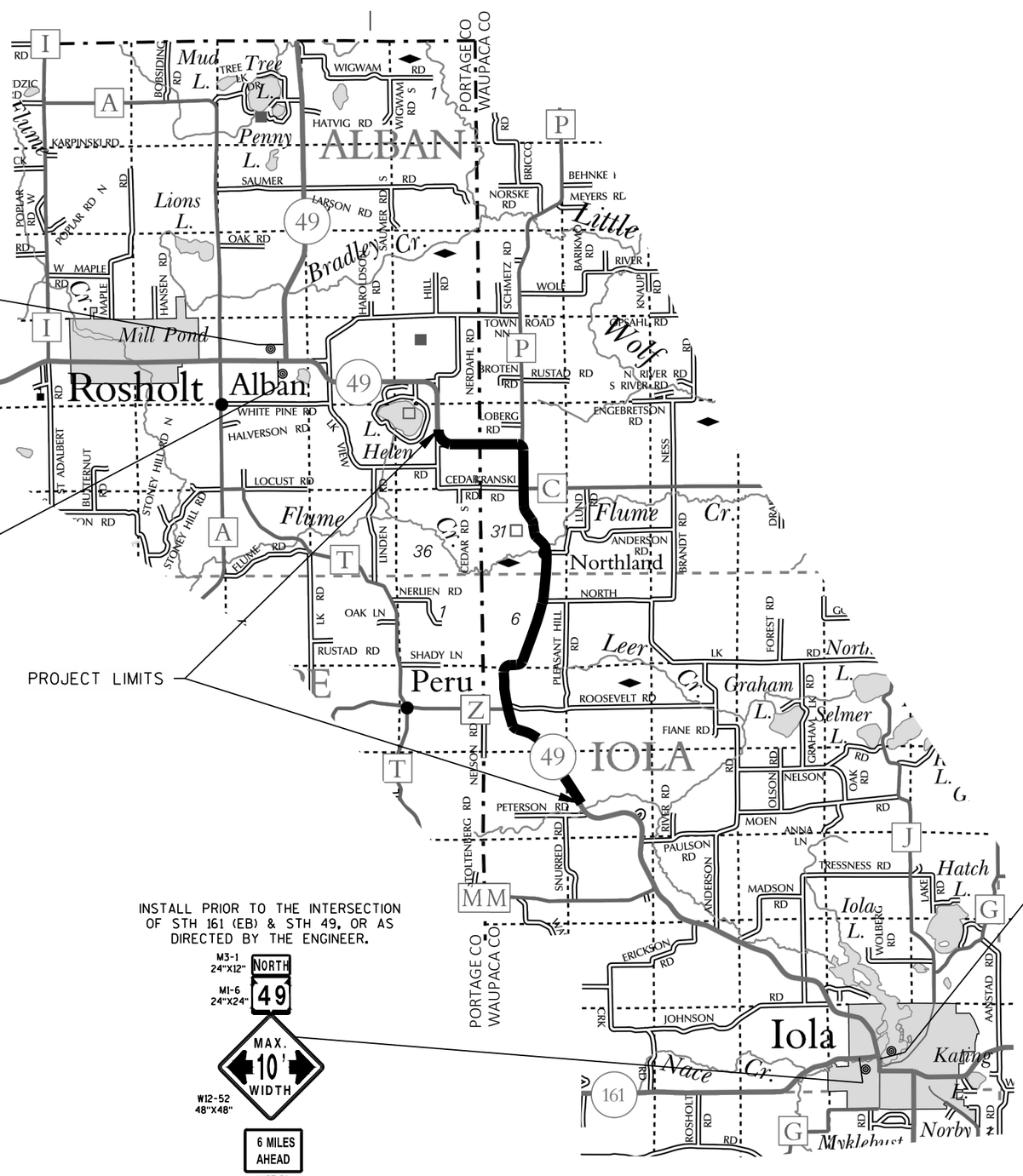

INSTALL PRIOR TO THE INTERSECTION OF STH 161 (EB) & STH 49, OR AS DIRECTED BY THE ENGINEER.

INSTALL PRIOR TO THE INTERSECTION OF STH 49 (NB) & STH 161, OR AS DIRECTED BY THE ENGINEER.

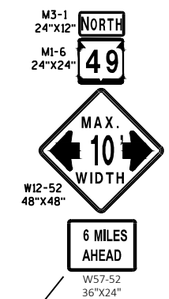

2

NOTE:
FOR MORE INFORMATION SEE SDD TRAFFIC CONTROL,
- ADVANCED WARNING SIGNS 45 MPH OR GREATER TWO-WAY UNDIVIDED ROAD OPEN TO TRAFFIC
- FOR LANE CLOSURE WITH FLAGGING OPERATION (USE FOR EXCAVATING STONE PILES AND STONE FENCES, MAINLINE SAW CUTTING, AND OTHER OPERATIONS AS APPROPRIATE)
- WORK ON SHOULDER OR PARKING LANE, UNDIVIDED ROADWAY
- BARRICADES AND SIGNS FOR SIDEROAD CLOSURES
- DROP-OFF SIGNING
- CHANNELIZING DEVICES DRUMS, CONES, BARRICADES AND VERTICAL PANELS

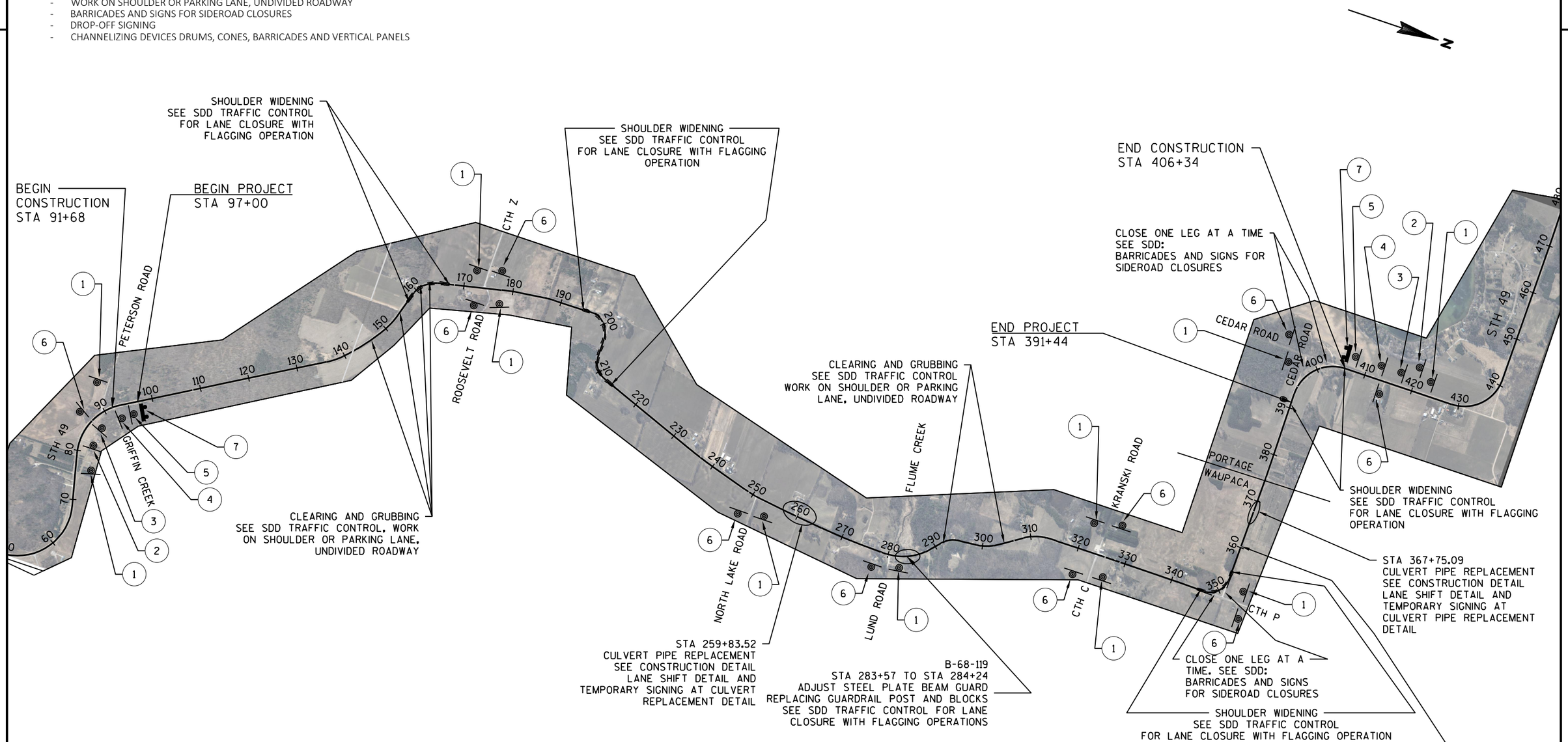

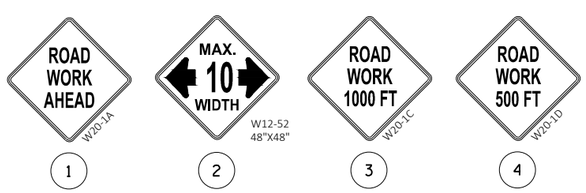

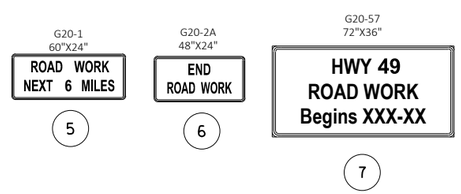

FIXED MESSAGE SIGN
INSTALL 7 DAYS PRIOR TO CONSTRUCTION, REMOVE AFTER CONSTRUCTION BEGINS.

PROJECT NO:6270-00-64	HWY:STH 49	COUNTY:WAUPACA	ADVANCED WARNING & TRAFFIC CONTROL	SHEET 36	E

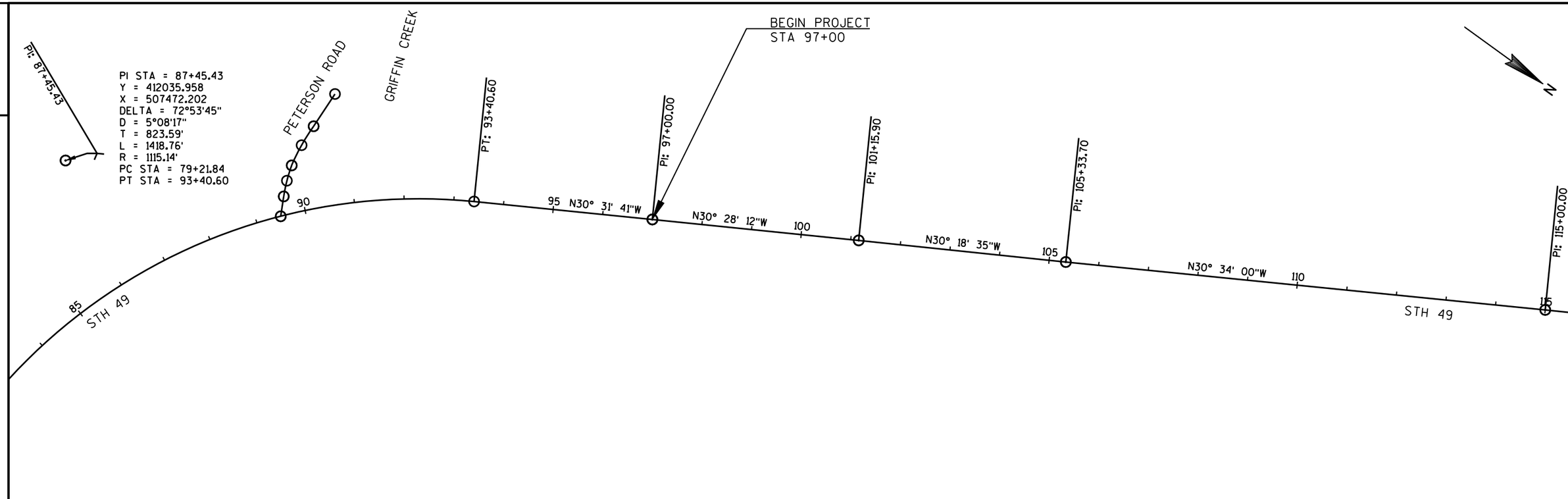

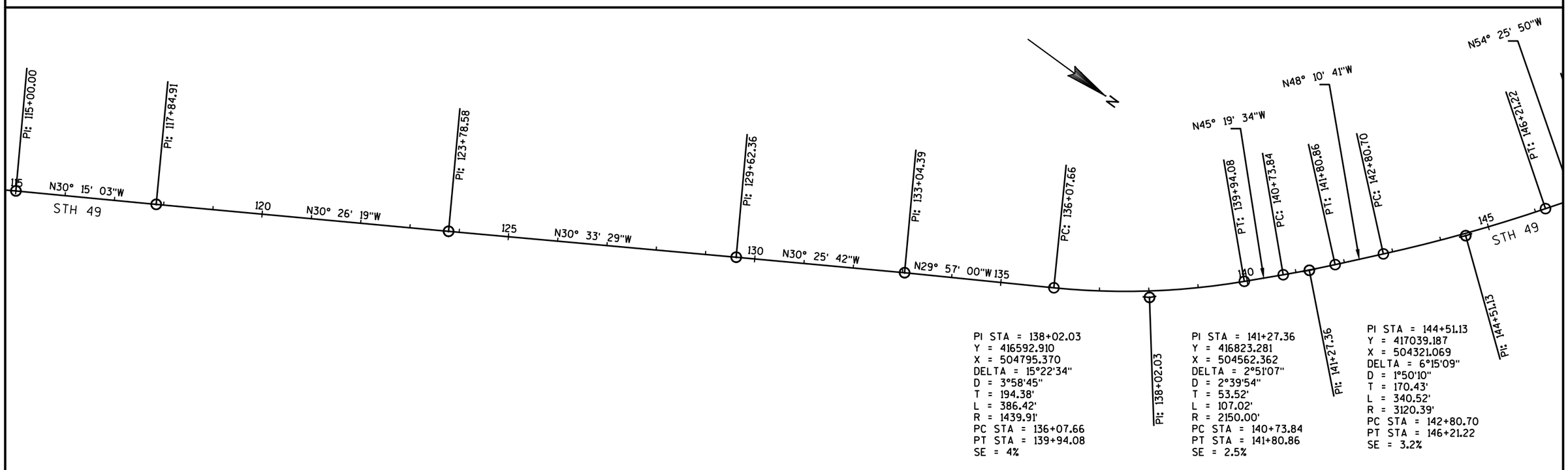

PROJECT NO: 6270-00-64	HWY: STH 49	COUNTY: WAUPACA	ALIGNMENT DIAGRAM	SHEET 37	E

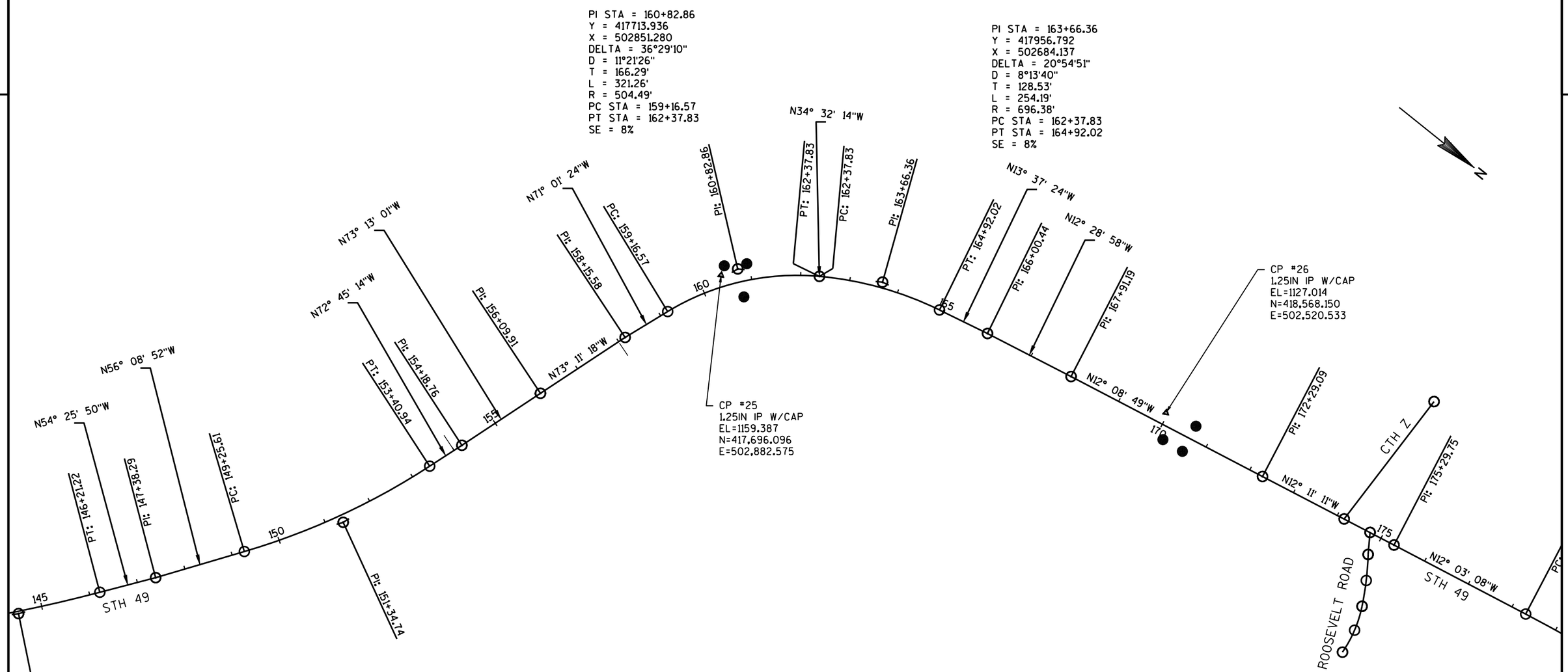

PI STA = 151+34.74
Y = 417427.268
X = 503757.968
DELTA = 16°36'23"
D = 3°59'54"
T = 209.13'
L = 415.33'
R = 1433.00'
PC STA = 149+25.61
PT STA = 153+40.94
SE = 3.5%

PROJECT NO: 6270-00-64	HWY: STH 49	COUNTY: WAUPACA	ALIGNMENT DIAGRAM	SHEET 38	E

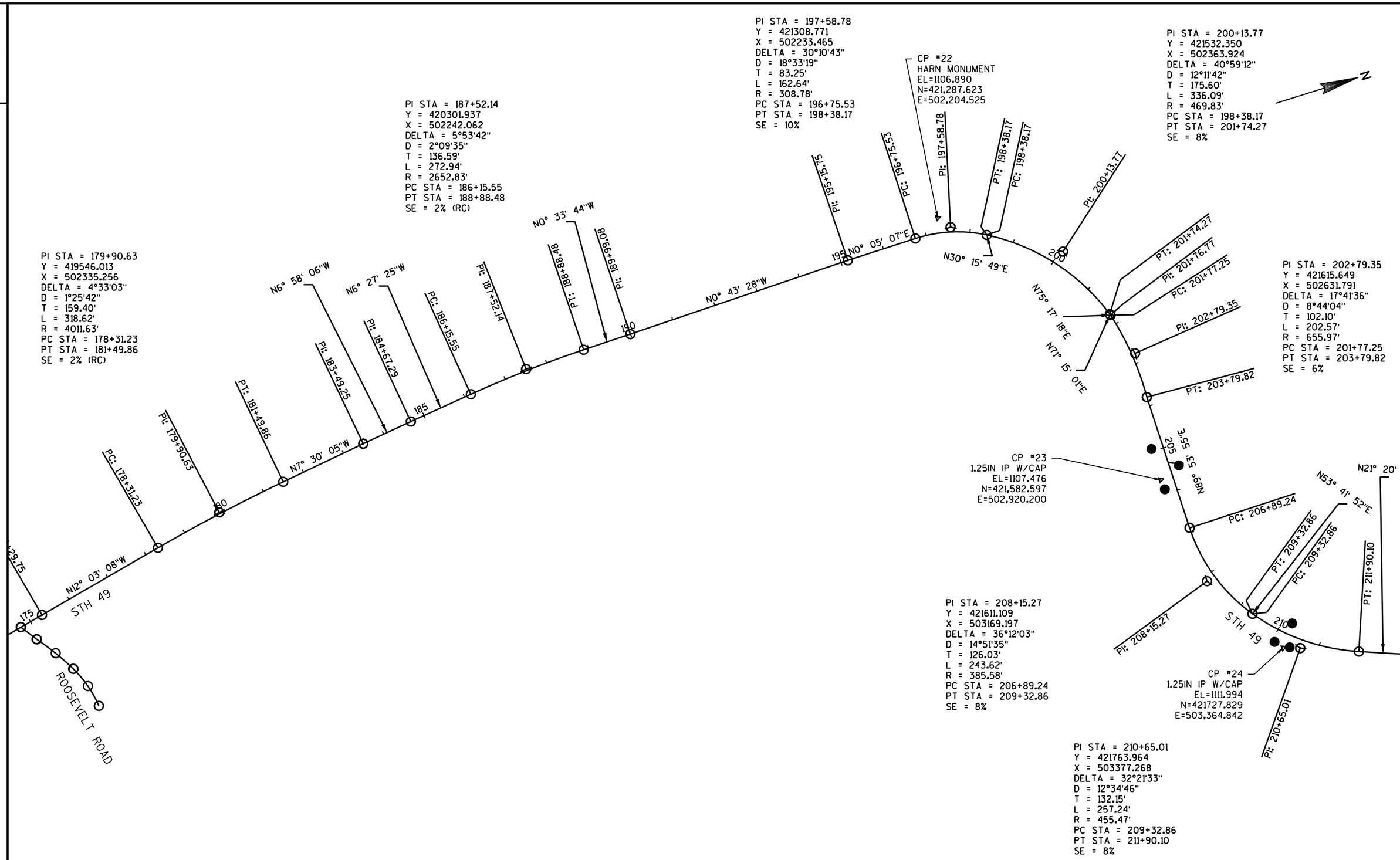

PROJECT NO: 6270-00-64	HWY: STH 49	COUNTY: WAUPACA	ALIGNMENT DIAGRAM	SHEET 39	E

FILE NAME : N:\PDS\C3D\62700034\SHEETSPLAN\027201-AD.DWG
LAYOUT NAME - 050301-PN - PN- (03)
PLOT DATE : 1/24/2018 1:30 PM
PLOT BY : SAEGER, GLENN D
PLOT NAME :
PLOT SCALE : 1 IN:200 FT

= 6%

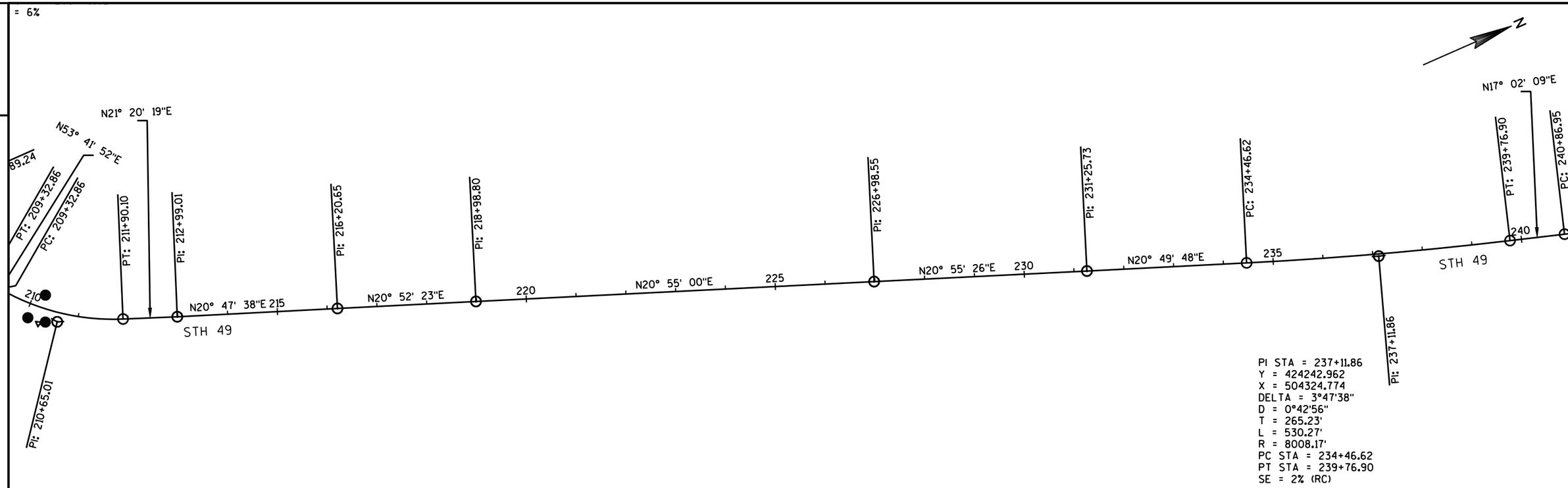

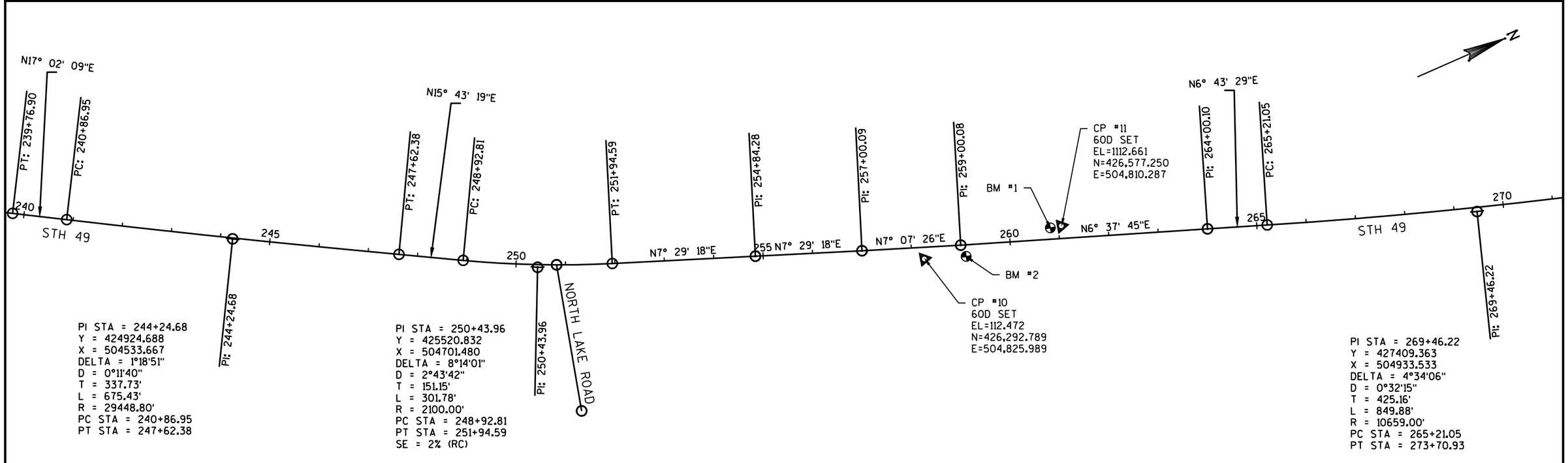

PROJECT NO: 6270-00-64	HWY: STH 49	COUNTY: WAUPACA	ALIGNMENT DIAGRAM	SHEET 40	E

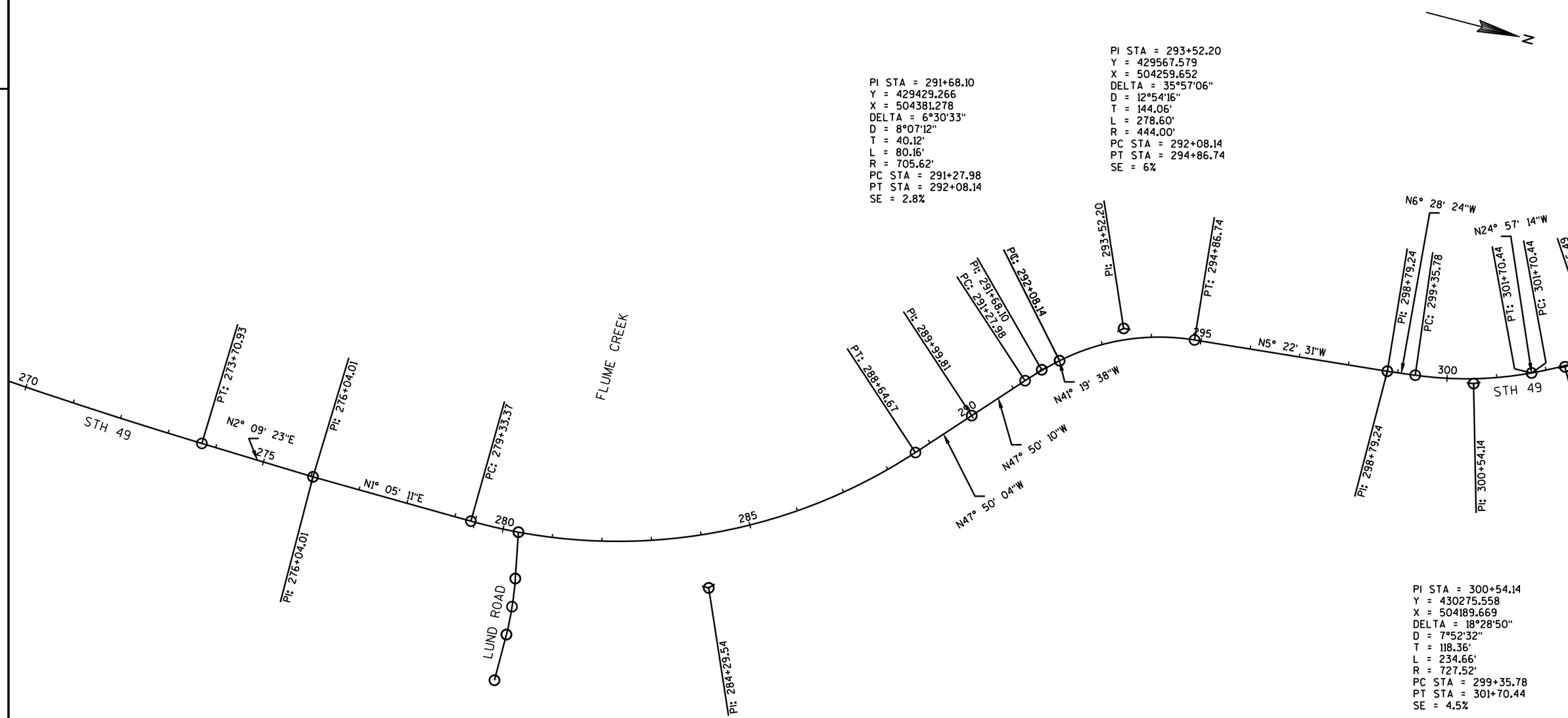

PROJECT NO: 6270-00-64	HWY: STH 49	COUNTY: WAUPACA	ALIGNMENT DIAGRAM	SHEET 41	E

FILE NAME : N:\PDS\C3D\62700034\SHEETSPLAN\027201-AD.DWG
LAYOUT NAME - 050301-PN - PN- (05)
PLOT DATE : 1/24/2018 1:30 PM PLOT BY : SAEGER, GLENN D PLOT NAME : PLOT SCALE : 1 IN:200 FT

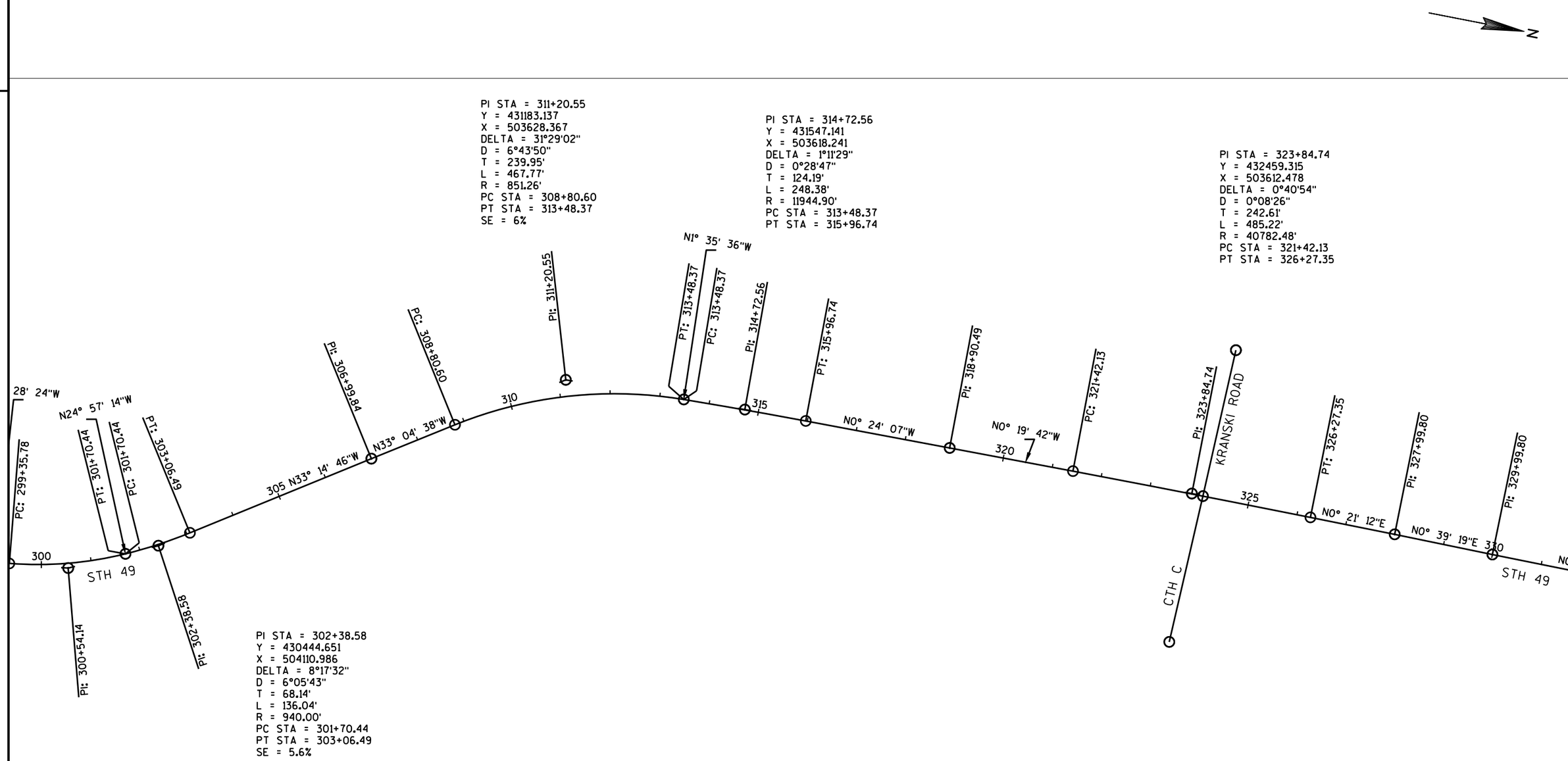

PROJECT NO: 6270-00-64	HWY: STH 49	COUNTY: WAUPACA	ALIGNMENT DIAGRAM	SHEET 42	E

FILE NAME : N:\PDS\C3D\62700034\SHEETSPLAN\027201-AD.DWG
LAYOUT NAME - 050301-PN - PN- (06)
PLOT DATE : 1/24/2018 1:30 PM
PLOT BY : SAEGER, GLENN D
PLOT NAME :
PLOT SCALE : 1 IN:200 FT

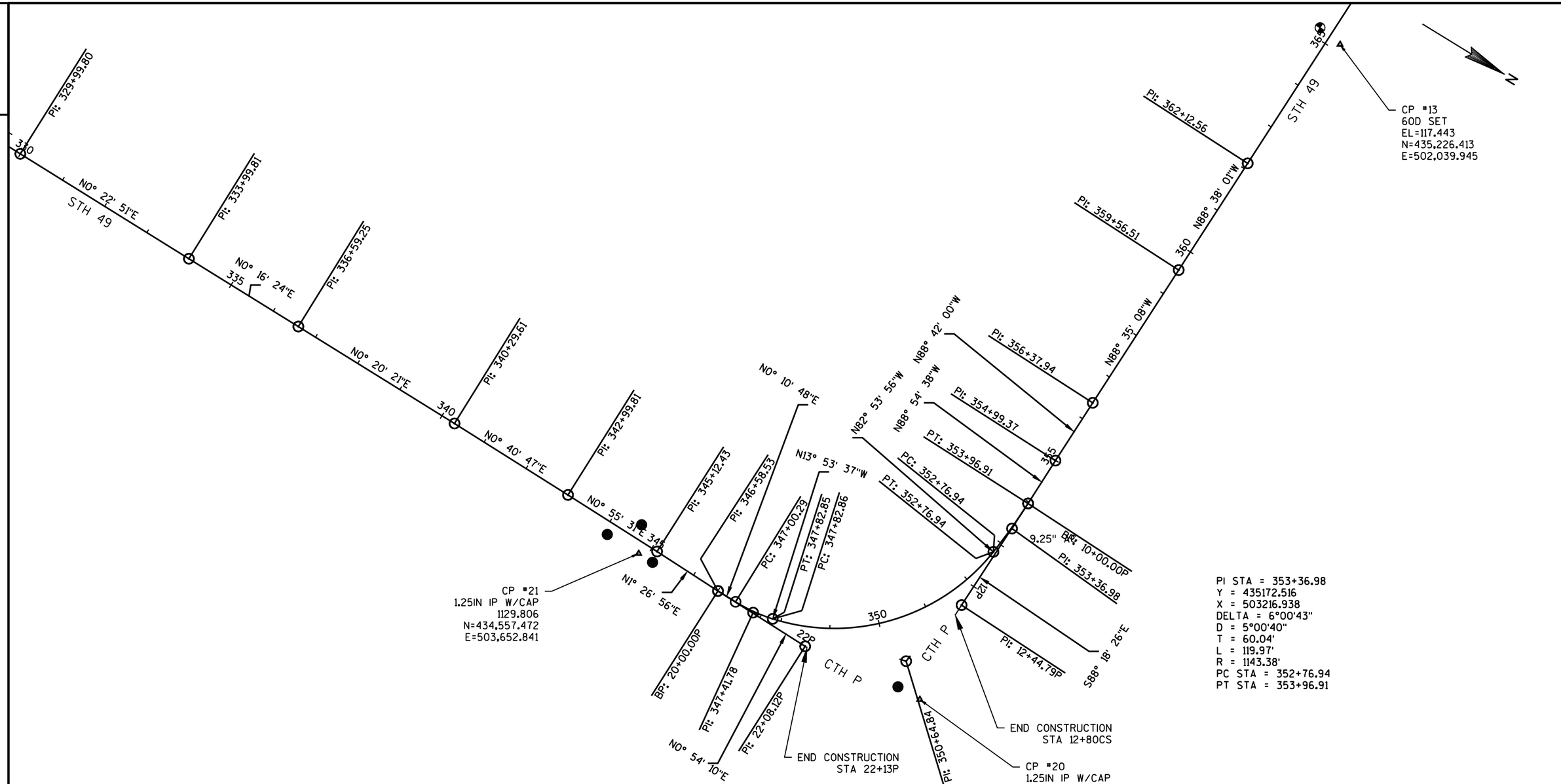
PI: 329+99.80
330
N0° 22' 51"E
STH 49
PI: 333+99.81
N0° 16' 24"E
335
PI: 336+59.25
N0° 20' 21"E
340
PI: 340+29.61
N0° 40' 47"E
PI: 342+99.81
N0° 55' 31"E
345
PI: 345+12.43
PI: 346+58.53
N0° 10' 48"E
N13° 53' 37"W
PC: 347+00.29
PT: 347+82.85
PC: 347+82.86
N82° 53' 56"W
N88° 54' 38"W
N88° 42' 00"W
PT: 352+76.94
PC: 352+76.94
PT: 353+96.91
PI: 354+99.37
355
PI: 356+37.94
N88° 35' 08"W
350
PI: 359+56.51
N88° 38' 01"W
PI: 362+12.56
STH 49
365
CP #13
60D SET
EL=117.443
N=435,226.413
E=502,039.945
N
9.25"
BP: 10+00.00P
PI: 353+36.98
12P
PI: 12+44.79P
S88° 18' 26"E
CP #21
1.25IN IP W/CAP
1129.806
N=434,557.472
E=503,652.841
N1° 26' 56"E
BP: 20+00.00P
PI: 347+41.78
PI: 22+08.12P
22P
N0° 54' 10"E
CTH P
CTH P
PI: 350+64.84
END CONSTRUCTION
STA 22+13P
END CONSTRUCTION
STA 12+80CS
CP #20
1.25IN IP W/CAP
EL=1125.890
N=435,194.127
E=503,607.627
PI STA = 353+36.98
Y = 435172.516
X = 503216.938
DELTA = 6°00'43"
D = 5°00'40"
T = 60.04'
L = 119.97'
R = 1143.38'
PC STA = 352+76.94
PT STA = 353+96.91
PI STA = 347+41.78
Y = 434816.224
X = 503634.008
DELTA = 14°04'25"
D = 17°02'41"
T = 41.49'
L = 82.57'
R = 336.15'
PC STA = 347+00.29
PT STA = 347+82.85
PI STA = 350+64.84
Y = 435130.235
X = 503556.336
DELTA = 69°00'19"
D = 13°57'59"
T = 281.98'
L = 494.08'
R = 410.24'
PC STA = 347+82.86
PT STA = 352+76.94
SE = 8%

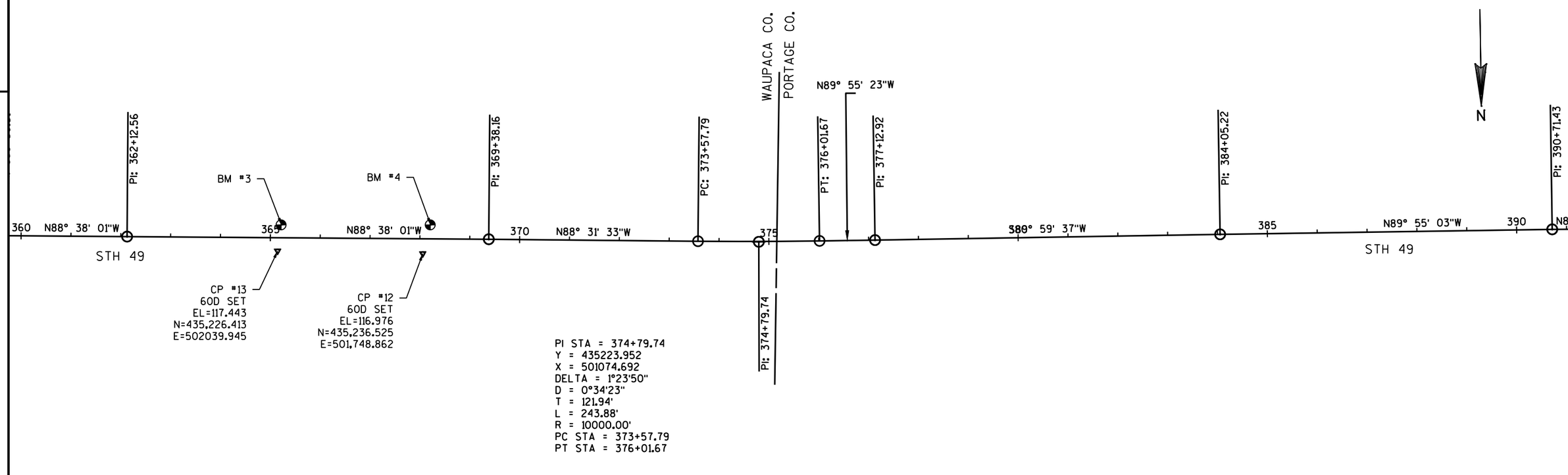

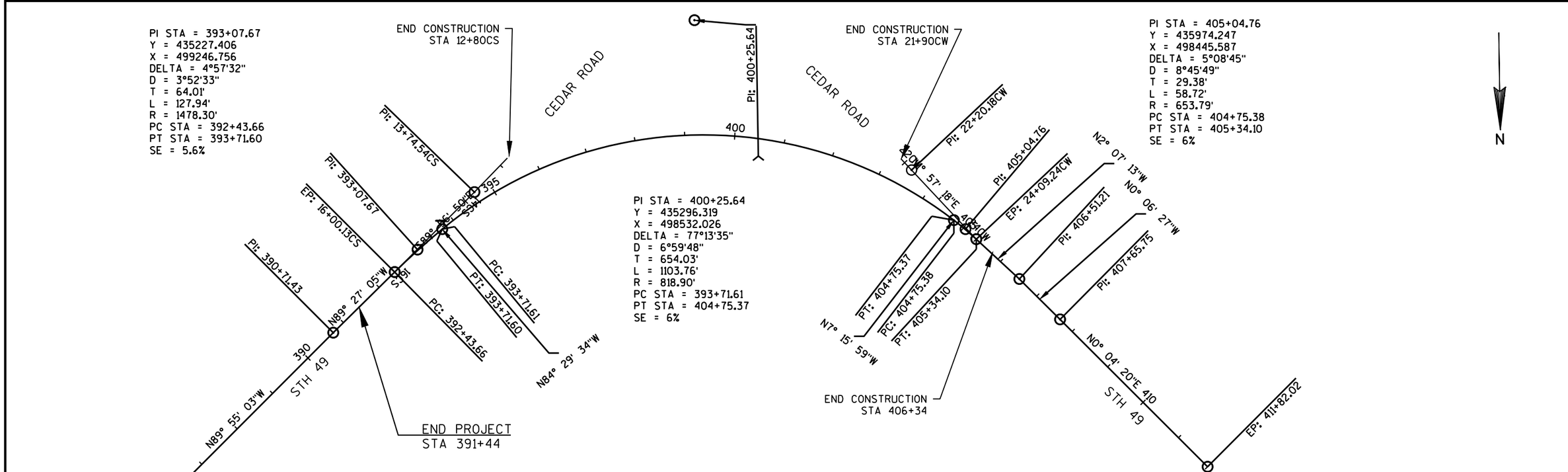

PROJECT NO: 6270-00-64	HWY: STH 49	COUNTY: WAUPACA	ALIGNMENT DIAGRAM	SHEET 44	E

2

Superelevation Region	Station	Description	Left Shoulder	Left Lane	Right Lane	Right Shoulder
4	135+10.32'	End Normal Shoulder	-4.00%	-2.00%	-2.00%	-4.00%
4	135+10.32'	End Normal Crown	-4.00%	-2.00%	-2.00%	-2.00%
4	135+52.32'	Level Crown	-4.00%	-2.00%	-0.39%	-0.39%
4	135+81.44'	Reverse Crown	-4.00%	-2.00%	1.21%	1.21%
4	136+10.57'	Low Shoulder Match	-4.00%	-2.60%	2.60%	2.60%
4	136+35.32'	Begin Full Super	-4.00%	-4.00%	4.00%	4.00%
4	139+45.41'	End Full Super	-4.00%	-4.00%	4.00%	4.00%
4	139+88.96'	Low Shoulder Match	-4.00%	-3.35%	3.35%	3.35%
5	141+13.84'	Begin Full Super	-4.00%	-2.50%	2.50%	2.50%
5	141+40.87'	End Full Super	-4.00%	-2.50%	2.50%	2.50%
6	143+13.03'	Begin Full Super	-4.00%	-3.20%	3.20%	3.20%
6	145+93.22'	End Full Super	-4.00%	-3.20%	3.20%	3.20%
6	146+33.01'	Reverse Crown	-4.00%	-2.00%	2.00%	2.00%
6	146+77.22'	Level Crown	-4.00%	-2.00%	2.00%	2.00%
6	147+25.22'	Begin Normal Crown	-4.00%	-2.00%	2.00%	2.00%
6	147+25.22'	Begin Normal Shoulder	-4.00%	-2.00%	2.00%	2.00%
7	147+77.04'	End Normal Shoulder	-4.00%	-2.00%	2.00%	2.00%
7	147+77.04'	End Normal Crown	-4.00%	-2.00%	2.00%	2.00%
7	148+28.27'	Level Crown	-4.00%	-2.00%	2.00%	2.00%
7	148+79.50'	Reverse Crown	-4.00%	-2.00%	2.00%	2.00%
7	149+30.73'	Low Shoulder Match	-4.00%	-2.00%	2.00%	2.00%
7	149+74.27'	Begin Full Super	-4.00%	-3.50%	3.50%	3.50%
7	153+06.94'	End Full Super	-4.00%	-3.50%	3.50%	3.50%
7	153+37.37'	Low Shoulder Match	-4.00%	-2.00%	2.00%	2.00%
7	153+73.16'	Reverse Crown	-4.00%	-2.00%	2.00%	2.00%
7	154+08.94'	Level Crown	-4.00%	-2.00%	0.00%	0.00%
7	154+59.94'	Begin Normal Crown	-4.00%	-2.00%	-2.00%	-2.00%
7	154+59.94'	Begin Normal Shoulder	-4.00%	-2.00%	-2.00%	-4.00%
8	156+78.56'	End Normal Shoulder	-4.00%	-2.00%	-2.00%	-4.00%
8	157+29.56'	End Normal Crown	-2.00%	-2.00%	-2.00%	-4.00%
8	157+80.56'	Level Crown	0.00%	0.00%	-2.00%	-4.00%
8	158+31.56'	Reverse Crown	2.00%	2.00%	-2.00%	-4.00%
8	158+82.56'	Low Shoulder Match	4.00%	4.00%	-4.00%	-4.00%
8	159+84.56'	Begin Full Super	8.00%	8.00%	-8.00%	-8.00%
9	164+24.03'	End Full Super	8.00%	8.00%	-8.00%	-8.00%
9	165+26.03'	Low Shoulder Match	4.00%	4.00%	-4.00%	-4.00%
9	165+77.03'	Reverse Crown	2.00%	2.00%	-2.00%	-4.00%
9	166+28.03'	Level Crown	0.00%	0.00%	-2.00%	-4.00%
9	166+79.03'	Begin Normal Crown	-2.00%	-2.00%	-2.00%	-4.00%
9	167+30.03'	Begin Normal Shoulder	-4.00%	-2.00%	-2.00%	-4.00%
10	177+46.23'	End Normal Shoulder	-4.00%	-2.00%	-2.00%	-4.00%
10	177+46.23'	End Normal Crown	-2.00%	-2.00%	-2.00%	-4.00%
10	177+97.23'	Level Crown	0.00%	0.00%	-2.00%	-4.00%
10	178+29.11'	Reverse Crown	2.00%	2.00%	-2.00%	-4.00%
10	178+48.23'	Begin Full Super	2.00%	2.00%	-2.00%	-4.00%
10	181+32.86'	End Full Super	2.00%	2.00%	-2.00%	-4.00%
10	181+51.99'	Reverse Crown	2.00%	2.00%	-2.00%	-4.00%
10	181+83.86'	Level Crown	0.00%	0.00%	-2.00%	-4.00%
10	182+34.86'	Begin Normal Crown	-2.00%	-2.00%	-2.00%	-4.00%
10	182+34.86'	Begin Normal Shoulder	-4.00%	-2.00%	-2.00%	-4.00%

2

Superelevation Region	Station	Description	Left Shoulder	Left Lane	Right Lane	Right Shoulder
11	185+30.55'	End Normal Shoulder	-4.00%	-2.00%	-2.00%	-4.00%
11	185+30.55'	End Normal Crown	-2.00%	-2.00%	-2.00%	-4.00%
11	185+81.55'	Level Crown	0.00%	0.00%	-2.00%	-4.00%
11	186+05.83'	Reverse Crown	2.00%	2.00%	-2.00%	-4.00%
11	186+30.12'	Low Shoulder Match	2.00%	2.00%	-2.00%	-4.00%
11	186+32.55'	Begin Full Super	2.00%	2.00%	-2.00%	-4.00%
11	188+71.49'	End Full Super	2.00%	2.00%	-2.00%	-4.00%
11	188+73.92'	Low Shoulder Match	2.00%	2.00%	-2.00%	-4.00%
11	188+98.20'	Reverse Crown	2.00%	2.00%	-2.00%	-4.00%
11	189+22.49'	Level Crown	0.00%	0.00%	-2.00%	-4.00%
11	189+73.49'	Begin Normal Crown	-2.00%	-2.00%	-2.00%	-4.00%
11	189+73.49'	Begin Normal Shoulder	-4.00%	-2.00%	-2.00%	-4.00%
12	194+03.52'	End Normal Shoulder	-4.00%	-2.00%	-2.00%	-4.00%
12	194+54.52'	End Normal Crown	-2.00%	-2.00%	-2.00%	-4.00%
12	195+05.52'	Level Crown	0.00%	0.00%	-2.00%	-4.00%
12	195+56.52'	Reverse Crown	2.00%	2.00%	-2.00%	-4.00%
12	196+07.52'	Low Shoulder Match	4.00%	4.00%	-4.00%	-4.00%
12	197+60.52'	Begin Full Super	10.00%	10.00%	-10.00%	-10.00%
13	199+06.17'	Begin Full Super	8.00%	8.00%	-8.00%	-8.00%
14	202+28.25'	Begin Full Super	6.00%	6.00%	-6.00%	-6.00%
14	203+28.82'	End Full Super	6.00%	6.00%	-6.00%	-6.00%
14	203+91.00'	Manual Edit	4.00%	4.00%	-4.00%	-4.00%
14	204+50.00'	Manual Edit	2.00%	2.00%	-2.00%	-2.00%
15	205+12.00'	Manual Edit	0.00%	0.00%	0.00%	0.00%
15	205+73.00'	Manual Edit	-2.00%	-2.00%	2.00%	2.00%
15	206+34.00'	Manual Edit	-4.00%	-4.00%	4.00%	4.00%
15	206+95.00'	Manual Edit	-6.00%	-6.00%	6.00%	6.00%
15	207+57.23'	Begin Full Super	-8.00%	-8.00%	8.00%	8.00%
16	211+22.10'	End Full Super	-8.00%	-8.00%	8.00%	8.00%
16	212+24.10'	Low Shoulder Match	-4.00%	-4.00%	4.00%	4.00%
16	212+75.10'	Reverse Crown	-4.00%	-2.00%	2.00%	2.00%
16	213+26.10'	Level Crown	-4.00%	-2.00%	0.00%	0.00%
16	213+77.10'	Begin Normal Crown	-4.00%	-2.00%	-2.00%	-2.00%
16	214+28.10'	Begin Normal Shoulder	-4.00%	-2.00%	-2.00%	-4.00%
17	233+61.62'	End Normal Shoulder	-4.00%	-2.00%	-2.00%	-4.00%
17	233+61.62'	End Normal Crown	-4.00%	-2.00%	-2.00%	-2.00%
17	234+12.62'	Level Crown	-4.00%	-2.00%	0.00%	0.00%
17	234+63.62'	Begin Full Super	-4.00%	-2.00%	2.00%	2.00%
17	234+63.62'	Reverse Crown	-4.00%	-2.00%	2.00%	2.00%
17	239+59.90'	End Full Super	-4.00%	-2.00%	2.00%	2.00%
17	239+59.90'	Reverse Crown	-4.00%	-2.00%	2.00%	2.00%
17	240+10.90'	Level Crown	-4.00%	-2.00%	0.00%	0.00%
17	240+61.90'	Begin Normal Crown	-4.00%	-2.00%	-2.00%	-2.00%
17	240+61.90'	Begin Normal Shoulder	-4.00%	-2.00%	-2.00%	-4.00%

2

Superelevation Region	Station	Description	Left Shoulder	Left Lane	Right Lane	Right Shoulder
18	248+07.81'	End Normal Shoulder	-4.00%	-2.00%	-2.00%	-4.00%
18	248+07.81'	End Normal Crown	-4.00%	-2.00%	-2.00%	-2.00%
18	248+58.81'	Level Crown	-4.00%	-2.00%	0.00%	0.00%
18	248+80.06'	Reverse Crown	-4.00%	-2.00%	2.00%	2.00%
18	249+01.31'	Low Shoulder Match	-4.00%	-2.00%	2.00%	2.00%
18	249+09.81'	Begin Full Super	-4.00%	-2.00%	2.00%	2.00%
18	251+77.59'	End Full Super	-4.00%	-2.00%	2.00%	2.00%
18	251+86.09'	Low Shoulder Match	-4.00%	-2.00%	2.00%	2.00%
18	252+07.34'	Reverse Crown	-4.00%	-2.00%	2.00%	2.00%
18	252+28.59'	Level Crown	-4.00%	-2.00%	0.00%	0.00%
18	252+79.59'	Begin Normal Crown	-4.00%	-2.00%	-2.00%	-2.00%
18	252+79.59'	Begin Normal Shoulder	-4.00%	-2.00%	-2.00%	-4.00%
19	278+11.41'	End Normal Shoulder	-4.00%	-2.00%	-2.00%	-4.00%
19	278+11.41'	End Normal Crown	-4.00%	-2.00%	-2.00%	-2.00%
19	278+56.03'	Level Crown	-4.00%	-2.00%	0.00%	0.00%
19	279+00.64'	Reverse Crown	-4.00%	-2.00%	2.00%	2.00%
19	279+45.26'	Low Shoulder Match	-4.00%	-4.00%	4.00%	4.00%
19	279+72.03'	Begin Full Super	-5.20%	-5.20%	5.20%	5.20%
19	288+26.01'	End Full Super	-5.20%	-5.20%	5.20%	5.20%
19	288+52.78'	Low Shoulder Match	-4.00%	-4.00%	4.00%	4.00%
19	288+97.39'	Reverse Crown	-4.00%	-2.00%	2.00%	2.00%
19	289+42.01'	Level Crown	-4.00%	-2.00%	0.00%	0.00%
19	289+86.62'	Begin Normal Crown	-4.00%	-2.00%	-2.00%	-2.00%
19	289+86.62'	Begin Normal Shoulder	-4.00%	-2.00%	-2.00%	-4.00%
20	289+94.97'	End Normal Shoulder	-4.00%	-2.00%	-2.00%	-4.00%
20	289+94.97'	End Normal Crown	-2.00%	-2.00%	-2.00%	-4.00%
20	290+39.31'	Level Crown	0.00%	0.00%	-2.00%	-4.00%
20	290+83.64'	Reverse Crown	2.00%	2.00%	-2.00%	-4.00%
20	291+27.97'	Low Shoulder Match	2.44%	2.44%	-2.44%	-4.00%
20	291+63.81'	End Full Super	2.80%	2.80%	-2.80%	-4.00%
20	291+72.31'	Begin Full Super	2.80%	2.80%	-2.80%	-4.00%
20	292+08.14'	Manual Edit	4.75%	4.75%	-4.75%	-4.75%
21	292+52.47'	Begin Full Super	6.00%	6.00%	-6.00%	-6.00%
21	294+45.41'	End Full Super	6.00%	6.00%	-6.00%	-6.00%
21	294+86.75'	Low Shoulder Match	4.78%	4.78%	-4.78%	-4.78%
21	295+28.08'	Reverse Crown	2.00%	2.00%	-2.00%	-4.00%
21	295+69.41'	Level Crown	0.00%	0.00%	-2.00%	-4.00%
21	296+10.41'	Begin Normal Crown	-2.00%	-2.00%	-2.00%	-4.00%
21	296+10.41'	Begin Normal Shoulder	-4.00%	-2.00%	-2.00%	-4.00%

2

Superelevation Region	Station	Description	Left Shoulder	Left Lane	Right Lane	Right Shoulder
22	298+25.11'	End Normal Shoulder	-4.00%	-2.00%	-2.00%	-4.00%
22	298+25.11'	End Normal Crown	-4.00%	-2.00%	-2.00%	-2.00%
22	298+69.11'	Level Crown	-4.00%	-2.00%	0.00%	0.00%
22	299+02.44'	Reverse Crown	-4.00%	-2.00%	2.00%	2.00%
22	299+35.78'	Low Shoulder Match	-4.00%	-3.40%	3.40%	3.40%
22	299+69.11'	Begin Full Super	-4.50%	-4.50%	4.50%	4.50%
22	301+26.11'	End Full Super	-4.50%	-4.50%	4.50%	4.50%
22	301+70.44'	Low Shoulder Match	-4.98%	-4.98%	4.98%	4.98%
23	302+11.77'	Begin Full Super	-5.60%	-5.60%	5.60%	5.60%
23	302+65.16'	End Full Super	-5.60%	-5.60%	5.60%	5.60%
23	303+44.87'	Reverse Crown	-4.00%	-2.00%	2.00%	2.00%
23	303+89.16'	Level Crown	-4.00%	-2.00%	0.00%	0.00%
23	304+33.16'	Begin Normal Crown	-4.00%	-2.00%	-2.00%	-2.00%
23	304+33.16'	Begin Normal Shoulder	-4.00%	-2.00%	-2.00%	-4.00%
24	307+36.59'	End Normal Shoulder	-4.00%	-2.00%	-2.00%	-4.00%
24	307+36.59'	End Normal Crown	-2.00%	-2.00%	-2.00%	-4.00%
24	307+84.59'	Level Crown	0.00%	0.00%	-2.00%	-4.00%
24	308+32.59'	Reverse Crown	2.00%	2.00%	-2.00%	-4.00%
24	308+80.59'	Low Shoulder Match	4.00%	4.00%	-4.00%	-4.00%
24	309+28.59'	Begin Full Super	6.00%	6.00%	-6.00%	-6.00%
24	313+00.37'	End Full Super	6.00%	6.00%	-6.00%	-6.00%
24	313+48.37'	Low Shoulder Match	4.00%	4.00%	-4.00%	-4.00%
24	313+96.37'	Reverse Crown	2.00%	2.00%	-2.00%	-4.00%
24	314+44.37'	Level Crown	0.00%	0.00%	-2.00%	-4.00%
24	314+92.37'	Begin Normal Crown	-2.00%	-2.00%	-2.00%	-4.00%
24	314+92.37'	Begin Normal Shoulder	-4.00%	-2.00%	-2.00%	-4.00%
25	345+44.85'	End Normal Shoulder	-4.00%	-2.00%	-2.00%	-4.00%
25	345+95.85'	End Normal Crown	-4.00%	-2.00%	-2.00%	-2.00%
25	346+46.85'	Level Crown	-4.00%	-2.00%	0.00%	0.00%
25	346+97.85'	Reverse Crown	-4.00%	-2.00%	2.00%	2.00%
25	347+48.85'	Low Shoulder Match	-4.00%	-4.00%	4.00%	4.00%
25	348+50.85'	Begin Full Super	-8.00%	-8.00%	8.00%	8.00%
25	352+08.95'	End Full Super	-8.00%	-8.00%	8.00%	8.00%
25	353+10.95'	Low Shoulder Match	-4.00%	-4.00%	4.00%	4.00%
25	353+61.95'	Reverse Crown	-4.00%	-2.00%	2.00%	2.00%
25	354+12.95'	Level Crown	-4.00%	-2.00%	0.00%	0.00%
25	354+63.95'	Begin Normal Crown	-4.00%	-2.00%	-2.00%	-2.00%
25	355+14.95'	Begin Normal Shoulder	-4.00%	-2.00%	-2.00%	-4.00%

Estimate Of Quantities

6270-00-64

Line	Item	Item Description	Unit	Total	Qty
0002	201.0105	Clearing	STA	47.000	47.000
0004	201.0205	Grubbing	STA	12.000	12.000
0006	203.0100	Removing Small Pipe Culverts	EACH	2.000	2.000
0008	204.0110	Removing Asphaltic Surface	SY	86.000	86.000
0010	204.0115	Removing Asphaltic Surface Butt Joints	SY	149.000	149.000
0012	204.0120	Removing Asphaltic Surface Milling	SY	749.000	749.000
0014	204.0125	Removing Asphaltic Surface Milling	TON	7,660.000	7,660.000
0016	204.0180	Removing Delineators and Markers	EACH	8.000	8.000
0018	205.0100	Excavation Common	CY	2,551.000	2,551.000
0020	205.0300	Excavation Stone Piles and Stone Fences	CY	10.000	10.000
0022	211.0100	Prepare Foundation for Asphaltic Paving (project) 01. 6270-00-64	LS	1.000	1.000
0024	211.0400	Prepare Foundation for Asphaltic Shoulders	STA	207.000	207.000
0026	213.0100	Finishing Roadway (project) 01. 6270-00-64	EACH	1.000	1.000
0028	305.0110	Base Aggregate Dense 3/4-Inch	TON	3,998.000	3,998.000
0030	305.0120	Base Aggregate Dense 1 1/4-Inch	TON	3,002.000	3,002.000
0032	440.4410	Incentive IRI Ride	DOL	22,310.000	22,310.000
0034	455.0605	Tack Coat	GAL	5,413.000	5,413.000
0036	460.2000	Incentive Density HMA Pavement	DOL	6,380.000	6,380.000
0038	460.4110.S	Reheating HMA Pavement Longitudinal Joints	LF	29,444.000	29,444.000
0040	460.5224	HMA Pavement 4 LT 58-28 S 01. Upper Layer	TON	7,955.000	7,955.000
0042	460.5224	HMA Pavement 4 LT 58-28 S 02. Leveling/Wedge Layer	TON	1,752.000	1,752.000
0044	465.0110	Asphaltic Surface Patching	TON	261.000	261.000
0046	465.0120	Asphaltic Surface Driveways and Field Entrances	TON	85.000	85.000
0048	520.8700	Cleaning Culvert Pipes	EACH	1.000	1.000
0050	521.1018	Apron Endwalls for Culvert Pipe Steel 18-Inch	EACH	2.000	2.000
0052	522.2414	Culvert Pipe Reinforced Concrete Horizontal Elliptical Class HE-IV 14x23-Inch	LF	54.000	54.000
0054	522.2614	Apron Endwalls for Culvert Pipe Reinforced Concrete Horizontal Elliptical 14x23-Inch	EACH	4.000	4.000
0056	614.0400	Adjusting Steel Plate Beam Guard	LF	328.000	328.000
0058	614.0950	Replacing Guardrail Posts and Blocks	EACH	40.000	40.000
0060	618.0100	Maintenance And Repair of Haul Roads (project) 01. 6270-00-64	EACH	1.000	1.000
0062	619.1000	Mobilization	EACH	1.000	1.000
0064	621.0100	Landmark Reference Monuments	EACH	8.000	8.000
0066	624.0100	Water	MGAL	86.000	86.000
0068	625.0100	Topsoil	SY	7,973.000	7,973.000
0070	627.0200	Mulching	SY	7,973.000	7,973.000
0072	628.1504	Silt Fence	LF	5,797.000	5,797.000
0074	628.1520	Silt Fence Maintenance	LF	5,797.000	5,797.000

6270-00-64

Line	Item	Item Description	Unit	Total	Qty
0076	628.1905	Mobilizations Erosion Control	EACH	13.000	13.000
0078	628.1910	Mobilizations Emergency Erosion Control	EACH	3.000	3.000
0080	628.2002	Erosion Mat Class I Type A	SY	2,764.000	2,764.000
0082	628.2023	Erosion Mat Class II Type B	SY	1,361.000	1,361.000
0084	628.7555	Culvert Pipe Checks	EACH	11.000	11.000
0086	628.7570	Rock Bags	EACH	495.000	495.000
0088	629.0210	Fertilizer Type B	CWT	26.300	26.300
0090	630.0120	Seeding Mixture No. 20	LB	1,128.000	1,128.000
0092	633.0100	Delineator Posts Steel	EACH	10.000	10.000
0094	633.0500	Delineator Reflectors	EACH	10.000	10.000
0096	633.5200	Markers Culvert End	EACH	24.000	24.000
0098	634.0612	Posts Wood 4x6-Inch X 12-FT	EACH	60.000	60.000
0100	634.0614	Posts Wood 4x6-Inch X 14-FT	EACH	65.000	65.000
0102	634.0616	Posts Wood 4x6-Inch X 16-FT	EACH	1.000	1.000
0104	634.0808	Posts Tubular Steel 2x2-Inch X 8-FT	EACH	4.000	4.000
0106	637.2210	Signs Type II Reflective H	SF	340.000	340.000
0108	637.2230	Signs Type II Reflective F	SF	456.000	456.000
0110	638.2102	Moving Signs Type II	EACH	17.000	17.000
0112	638.2602	Removing Signs Type II	EACH	83.000	83.000
0114	638.3000	Removing Small Sign Supports	EACH	86.000	86.000
0116	642.5201	Field Office Type C	EACH	1.000	1.000
0118	643.0300	Traffic Control Drums	DAY	120.000	120.000
0120	643.0310.S	Temporary Portable Rumble Strips	LS	1.000	1.000
0122	643.0420	Traffic Control Barricades Type III	DAY	50.000	50.000
0124	643.0705	Traffic Control Warning Lights Type A	DAY	20.000	20.000
0126	643.0900	Traffic Control Signs	DAY	4,589.000	4,589.000
0128	643.1000	Traffic Control Signs Fixed Message	SF	36.000	36.000
0130	643.1070	Traffic Control Cones 42-Inch	DAY	104.000	104.000
0132	643.5000	Traffic Control	EACH	1.000	1.000
0134	646.1020	Marking Line Epoxy 4-Inch	LF	61,227.000	61,227.000
0136	646.4520	Marking Line Same Day Epoxy 4-Inch	LF	52,163.000	52,163.000
0138	646.9000	Marking Removal Line 4-Inch	LF	132.000	132.000
0140	648.0100	Locating No-Passing Zones	MI	5.860	5.860
0142	649.0105	Temporary Marking Line Paint 4-Inch	LF	52,163.000	52,163.000
0144	650.4500	Construction Staking Subgrade	LF	3,775.000	3,775.000
0146	650.5000	Construction Staking Base	LF	3,775.000	3,775.000
0148	650.6000	Construction Staking Pipe Culverts	EACH	2.000	2.000
0150	650.8000	Construction Staking Resurfacing Reference	LF	30,934.000	30,934.000
0152	650.9910	Construction Staking Supplemental Control (project) 01. 6270-00-64	LS	1.000	1.000

6270-00-64

Line	Item	Item Description	Unit	Total	Qty
0154	650.9920	Construction Staking Slope Stakes	LF	3,775.000	3,775.000
0156	690.0150	Sawing Asphalt	LF	9,995.000	9,995.000
0158	SPV.0060	Special 01. Grading and Shaping Culvert Replacements	EACH	2.000	2.000
0160	SPV.0060	Special 02. Grading and Shaping Apron Endwall Installation	EACH	1.000	1.000
0162	SPV.0060	Special 03. Lane Shift	EACH	2.000	2.000
0164	SPV.0060	Special 04. Reestablish Section Corner Monuments	EACH	2.000	2.000

Division	From/To Station	Location	205.0100 Common Excavation (1)		Salvaged/Unusable Pavement Material (3)	Available Material (4)	Unexpanded Fill	Expanded Fill (5)	Mass Ordinate +/- (6)	Waste	Comment:
			Cut (2)	EBS Excavation				Factor 1.30			
Division 1											
Widening 1	164+00 - 167+00		350	0	0	350	377	490	-140	0	SEE NOTE 7
Division 1 Subtotal			350	0	0	350	377	490	-140	0	
Division 2											
Widening 2	194+00-214+00		1,248	0	0	1,248	249	324	924	784	
Division 2 Subtotal			1,248	0	0	1,248	249	324	924	784	
Division 3											
Widening 3	345+75 - 355+50		521	0	0	521	110	144	377	377	
Division 3 Subtotal			521	0	0	521	110	144	377	377	
Division 4											
Culverts	259+83.52		100	0	23	77	14	18	59	59	
	360+18.34		121	0	31	90	35	46	45	45	
Division 4 Subtotal			221	0	54	167	49	64	103	103	
Division 5											
Asphaltic Surface Patching			211	0	51	160	0	0	160	160	
Division 5 Subtotal			211	0	51	160	0	0	160	160	
Grand Total			2,551	0	105	2,446	785	1,021	1,425	1,425	
Total Common Exc			2,551								

Notes:

(1) Common Excavation is the sum of the Cut and EBS Excavation columns. Item number 205.0100

(2) Salvaged/Unsuable Pavement Material is included in Cut.

(3) Salvaged/Unusable Pavement Material

(4) Available Material = Cut - Salvaged/Unusuable Pavement Material

(5) Expanded Fill Factor = 1.3

Depending on selections: **Expanded Fill = (Unexpanded Fill - Rock* Rock Factor - Reduced Marsh - Reduced EBS) * Fill Factor**

Or Expanded Fill = (Unexpanded Fill - Rock * Rock Factor - Reduced EBS) * Fill Factor

Or Expanded Fill = (Unexpanded Fill - Rock * Rock Factor - Reduced Marsh) * Fill Factor

Or Expanded Fill = (Unexpanded Fill - Rock * Rock Factor) * Fill Factor

(6) The Mass Ordinate + or - Qty calculated for the Division. Plus quantity indicates an excess of material within the Division. Minus indicates a shortage of material within the Division.

(7) USE 140 CY OF MATERIAL FROM DIVISION 2

3

CLEARING & GRUBBING

STATION TO STATION	LOCATION	201.0105 CLEARING STATIONS	201.0205 GRUBBING STATIONS	REMARKS
147+00 - 154+00	LT	7	0	TO EXIST R/W OR 30' MAX
147+00 - 158+00	RT	11	0	TO EXIST R/W OR 30' MAX
161+00- 164+00	LT	3	3	TO EXIST R/W OR 30' MAX
203+00 - 206+00	LT	3	3	TO EXIST R/W OR 30' MAX
206+00 - 210+00	RT	4	4	TO EXIST R/W OR 30' MAX
292+00 - 304+00	RT	12	0	TO EXIST R/W OR 30' MAX
300+00 - 305+00	LT	5	0	TO EXIST R/W OR 30' MAX
347+00 - 349+00	LT	2	2	TO EXIST R/W OR 30' MAX
	TOTALS	47	12	

REMOVING SMALL PIPE CULVERTS

STATION	LOCATION	203.0100 EACH	REMARKS
259+83.52	C/L	1	1-18"X36' CPCS
367+74.80	C/L	1	1-18"X36' CPCS
	TOTAL	2	

3

REMOVING ASPHALTIC SURFACE

STATION - STATION	LOCATION	204.0110 SY	REMARKS
282+87 - 283+63	LT	21	BACK OF POSTS
282+92 - 283+72	RT	27	BACK OF POSTS
284+20 - 284+94	LT	20	BACK OF POSTS
284+10 - 284+90	RT	18	BACK OF POSTS
	TOTAL	86	

REMOVING ASPHALTIC SURFACE MILLING

STATION - STATION	LOCATION	204.0120 SY	204.0125 TON	REMARKS
97+00-391+44	RT & LT	0	7235	MAINLINE MILL
97+00-391+44	RT & LT	471	0	DRIVEWAYS
174+30	LT	41	0	CTH Z
174+84	RT	30	0	ROOSEVELT RD
280+31	RT	31	0	LUND RD
323+97	LT	68	0	KRANSKI RD
323+97	RT	38	0	CTH C
UNDISTRIBUTED		70	425	
	TOTAL	749	7660	

REMOVING ASPHALTIC SURFACE BUTT JOINT

STATION - STATION	LOCATION	204.0115 SY	REMARKS
97+00 - 97+43.75	STH 49	25	MAINLINE
397+00.25 - 391+44	STH 49	25	MAINLINE
12+25.25P - 12+69P	CTH P	38	SIDE ROAD
21+69.25P - 22+13P	CTH P	19	SIDE ROAD
250+51-251+19	N LAKE RD	42	SIDE ROAD
	TOTAL	149	

REMOVING DELINEATORS AND MARKERS

STATION	LOCATION	204.0180 EACH	REMARKS
199+66.80	LT & RT	2	CULVERT END MARKERS
259+83.52	LT & RT	2	CULVERT END MARKERS
360+18.34	LT & RT	2	CULVERT END MARKERS
367+74.80	LT & RT	2	CULVERT END MARKERS
	TOTAL	8	

3

EXCAVATION STONE PILES AND STONE FENCES

STATION TO STATION	LOCATION	205.0300 CY	REMARKS
130+00 - 134+15	RT	2	
147+00 - 158+00	RT	2	
270+00 - 272+00	RT	1	
292+00 - 304+00	RT	1	
354+00 - 359+25	LT	2	
UNDISTRIBUTED	LT & RT	2	
	TOTALS	**10**	

PREPARE FOUNDATION FOR ASPHALTIC PAVING

STATION - STATION	LOCATION	211.0100 LS	REMARKS
97+00 - 406+34	STH 49	1	
	TOTAL	**1**	

PREPARE FOUNDATION FOR ASPHALTIC SHOULDERS

STATION - STATION	LOCATION	211.0400 STATION	REMARKS
157+30-166+79	RT & LT	19	SHOULDER WIDENING
194+55-213+77	RT & LT	39	SHOULDER WIDENING
346+96-391+44	RT & LT	89	SHOULDER WIDENING
392+44-405+34	LT	14	SHOULDER WIDENING
97+00-391+44	RT & LT	46	DRIVEWAYS
	TOTAL	**207**	

3

BASE AGGREGATE DENSE

STATION - STATION	LOCATION	305.0110 3/4-INCH TON	305.0120 1 1/4-INCH TON	REMARKS
97+00-391+44	RT & LT	3432	0	NONWIDENED SHOULDERS (EXCLUDING THE FOLLOWING WIDENED SHOULDERS)
97+00-391+44		0	319	ASPH SURFACE PATCHING (FULL DEPTH)
97+00-391+44	RT & LT	243	0	DRIVEWAYS
157+30-166+79	RT & LT	27	540	WIDENED SHOULDER
194+55-213+77	RT & LT	62	1311	WIDENED SHOULDER
259+60-260+10		0	94	CULVERT # 68049069
346+00-354+96	RT & LT	31	639	WIDENED SHOULDER
367+51-368+01		0	100	CULVERT # 68049064
392+43-406+34	RT & LT	54	0	WIDENED SHOULDER
UNDISTRIBUTED		150	0	
	TOTALS	**3998**	**3002**	

TACK COAT

STATION - STATION	LOCATION	455.0600 TON	REMARKS
97+00-391+44	RT & LT	43	LEVELING (WEDGE) LAYER
97+00-391+44	RT & LT	5263	UPPER LAYER
97+00-391+44	RT & LT	75	INTERSECTIONS
97+00-391+44	RT & LT	32	ASPH SURF PATCHING (FULL DEPTH)
	TOTAL	**5413**	

3

HMA PAVEMENT

STATION - STATION	LOCATION	460.5224 4 LT 58-28 S .01 UPPER LAYER TON	.02 LEVELING/WEDGE LAYER TON	REMARKS
97+00-391+44	RT & LT	0	1209	MAINLINE LEVELING (WEDGE) LAYER
97+00-391+44	RT & LT	7277	0	UPPER LAYER
157+30-166+79	RT & LT	73	0	UPPER LAYER
194+55-213+77	RT & LT	173	0	UPPER LAYER
346+00-354+96	RT & LT	86	0	UPPER LAYER
392+43-406+34	LT	45	0	UPPER LAYER
157+30-166+79	RT & LT	0	93	SHOULDER WIDENING BASE LAYER
194+55-213+77	RT & LT	0	222	SHOULDER WIDENING BASE LAYER
346+00-354+96	RT & LT	0	110	SHOULDER WIDENING BASE LAYER
392+43-406+34	LT	0	58	SHOULDER WIDENING BASE LAYER
UNDISTRIBUTED		0	60	MAINLINE LEVELING (WEDGE) LAYER
174+30	LT	7	0	CTH Z
174+84	RT	5	0	ROOSEVELT RD
250+83	RT	45	0	N LAKE RD (INCLUDES LEVELING LAYER)
280+31	RT	5	0	LUND RD
323+97	LT	11	0	KRANSKI RD
323+97	RT	6	0	CTH C
347+96	RT	39	0	CTH P MAINLINE (INCLUDES LEVELING LAYER)
352+14	RT	46	0	CTH P (INCLUDES LEVELING LAYER)
394+40	LT	66	0	CEDAR RD
404+15	LT	57	0	CEDAR RD MAINLINE
UNDISTRIBUTED	RT & LT	14	0	SIDE ROADS
	TOTALS	**7955**	**1752**	

REHEATING HMA PAVEMENT LONGITUDINAL JOINTS

STATION TO STATION	LOCATION	460.4110.S LF	REMARKS
97+00 - 391+44	C/L	29444	MATCH EXISTING JOINT
	TOTAL	**29444**	

ASPHALTIC SURFACE PATCHING

STATION - STATION	LOCATION	465.0110 TON	REMARKS
97+00-391+44	RT & LT	200	FULL DEPTH
259+60-260+10		30	CULVERT # 68049069
367+51-368+01		31	CULVERT # 68049064
	TOTAL	**261**	

3

ASPHALTIC SURFACE DRIVEWAYS AND FIELD ENTRANCES

STATION	LOCATION	465.0120 TON	REMARKS
97+00-391+44	RT & LT	78	DRIVEWAYS
UNDISTRIBUTED	RT & LT	7	DRIVEWAYS
	TOTAL	**85**	

CLEANING CULVERT PIPES

STATION	LOCATION	520.8700 EACH	DIA	REMARKS
360+18.34	C/L	1	18"	1-18"X33' CPCS
	TOTAL	**1**		

3

CROSS DRAINS & SIDE ROAD CULVERT PIPES

STATION	LOCATION	521.1018 APRON ENDWALLS STEEL 18-INCH EACH	522.2414 CPRC HE CLASS IV 14X23-INCH LF	522.2614 APRON ENDWALLS CPRC HE CLASS IV 14X23-INCH EACH	** JOINT TIES EACH	SPV.0060.01 GRADING AND SHAPING CULVERT REPLACEMENTS EACH	SPV.0060.02 GRADING AND SHAPING APRON ENDWALL INSTALLATION EACH	SPV.0060.03 EACH LANE SHIFT	REMARKS
259+83.52	C/L	0	27	2	10	1	0	1	
360+18.34	LT & RT	2	0	0	0	0	1		1-18" CPCS
367+74.80	C/L	0	27	2	10	1	0	1	
	TOTALS	2	54	4	20	2	1	2	

** TIE ALL JOINTS. FOR INFORMATIONAL PURPOSES ONLY. NOT A BID ITEM.

STEEL PLATE BEAM GUARD

STATION - STATION	LOCATION	614.0400 ADJUSTING STEEL PLATE BEAM GUARD* LF	614.0950 REPLACING GUARDRAIL POST AND BLOCKS* EACH
282+90 - 283+74	LT	84	10
282+93 - 283+75	RT	82	10
284+08 - 284+92	LT	84	10
284+07 - 284+85	RT	78	10
	TOTALS	328	40

* POSTS AND BLOCKS TO BE REPLACED TO BE DETERMINED BY THE ENGINEER. QUANTITY MAY VARY. REPLACING MISSING OR DAMAGED HARDWARE IS INCIDENTAL TO THE WORK

3

LANDMARK REFERENCE MONUMENTS

LANDMARK STATION	LANDMARK LOCATION	621.0100 REFERENCE MONUMENTS EACH	SPV.0060.04 REESTABLISH SECTION CORNER MONUMENTS EACH	REMARKS
327+07, C/L	STH 49	4	1	S 1/4 SEC 30 T25N R11E
375+13, C/L	STH 49	4	1	E 1/4 SEC 25 T25N R10E
	TOTAL	8	2	

MARKERS CULVERT END

STATION	LOCATION	633.5200 EACH	REMARKS
108+42	LT & RT	2	18" CPCS
168+03	LT & RT	2	12" CPCS
199+66.80	LT & RT	2	18" CPCS
248+98.37	LT & RT	2	18" CPCS
259+83.52	LT & RT	2	14"X23" CPRC HE
306+52	LT & RT	2	12" CPCS
325+74.80	LT & RT	2	18" CPCS
328+92	LT & RT	2	18" CPCS
360+18.34	LT & RT	2	18" CPCS
367+74.80	LT & RT	2	14'X23" CPRC HE
394+63.84	LT & RT	2	24" CPCS
400+69.55	LT & RT	2	30" CPCS
	TOTAL	24	

WATER

STATION - STATION	LOCATION	624.0100 MGAL	REMARKS
97+00 - 406+34	LT & RT	86	
	TOTAL	86	

DELINEATORS

STATION	LOCATION	633.0100 POST STEEL EACH	633.0500 REFLECTORS EACH
308+80 - 315+20	LT	10	10
	TOTAL	10	10

3

TOPSOIL, MULCHING, FERTILIZER, AND SEEDING

STATION - STATION	LOCATION	625.0100 TOPSOIL SY	627.0200 MULCHING SY	629.0210 FERTILIZER TYPE B CWT	630.0120 SEEDING MIXTURE NO. 20 LB	REMARKS
97+04 - 157+30	LT & RT	0	0	3.0	127	SHOULDERS ONLY
157+30 - 165+92	LT & RT	1526	1526	1.7	72	SHOULDER WIDENING
165+92 - 194+55	LT & RT	0	0	1.4	60	SHOULDERS ONLY
194+55 - 213+77	LT & RT	2665	2665	3.0	127	SHOULDER WIDENING
213+77 - 346+00	LT & RT	0	0	7.4	317	SHOULDERS ONLY
259+83.52	LT & RT	233	233	0.2	8	CULVERT REPLACEMENT, DITCHING
346+00 - 355+00	LT & RT	829	829	1.0	42	SHOULDER WIDENING
360+18.34	LT & RT	210	210	0.2	7	CLEANING CULVERT, AEW, DITCHING
355+00 - 391+44	LT & RT	0	0	1.8	77	SHOULDERS ONLY
367+74.80	LT & RT	315	315	0.2	9	CULVERT REPLACEMENT, DITCHING
391+44 - 406+34	RT	0	0	0.9	40	SHOULDERS ONLY
UNDISTRIBUTED	LT & RT	1445	1445	5.2	221	
147+00 - 154+00	LT	117	117	0.1	3	CLEARING
147+00 - 158+00	RT	183	183	0.1	5	CLEARING
161+00 - 164+00	LT	50	50	0.0	1	CLEARING & GRUBBING
203+00 - 206+00	LT	50	50	0.0	1	CLEARING & GRUBBING
206+00 - 210+00	RT	67	67	0.0	2	CLEARING & GRUBBING
292+00 - 304+00	RT	200	200	0.1	5	CLEARING
300+00 - 305+00	LT	83	83	0.1	2	CLEARING
282+87 - 283+63	LT	0	0	0.01	1	BEHIND BEAM GUARD
282+92 - 283+72	RT	0	0	0.01	1	BEHIND BEAM GUARD
284+20 - 284+94	LT	0	0	0.01	1	BEHIND BEAM GUARD
284+10 - 284+90	RT	0	0	0.02	1	BEHIND BEAM GUARD
	TOTALS	**7973**	**7973**	**26.3**	**1128**	

MOBILIZATIONS EROSION CONTROL

STATION - STATION	628.1905 MOBILIZATIONS EROSION CONTROL EACH	628.1910 MOBILIZATIONS EMERGENCY EROSION CONTROL EACH	REMARKS
97+04 - 405+34	13	3	6 AREAS
TOTALS	**13**	**3**	

3

SILT FENCE

STATION TO STATION	LOCATION	628.1504 LF	628.1520 MAINTENANCE LF	REMARKS
157+00 - 160+58	LT	358	358	STH 49
161+00 - 167+00	LT	600	600	STH 49
161+50 - 167+50	RT	600	600	STH 49
194+50 - 194+71	LT	21	21	STH 49
194+90 - 197+90	LT	300	300	STH 49
198+15 - 201+44	LT	329	329	STH 49
204+40 - 207+00	LT	260	260	STH 49
210+00 - 211+50	LT	150	150	STH 49
195+00 - 196+00	RT	100	100	STH 49
205+55 - 211+08	RT	553	553	STH 49
211+58 - 213+50	RT	192	192	STH 49
258+00 - 259+21	LT & RT	242	242	18" CPCS
259+60 - 262+00	LT & RT	480	480	18" CPCS
282+44 - 283+62	LT & RT	236	236	B-68-119
SW QUADRANT	LT	50	50	TEMPORARY SMALL ANIMAL TURN-AROUND
SE QUADRANT	RT	50	50	TEMPORARY SMALL ANIMAL TURN-AROUND
284+21 - 285+11	LT & RT	180	180	B-68-119
NW QUADRANT	LT	50	50	TEMPORARY SMALL ANIMAL TURN-AROUND
NE QUADRANT	RT	50	50	TEMPORARY SMALL ANIMAL TURN-AROUND
351+48 - 355+00	RT	352	352	CTH P & STH 49
366+14 - 369+36	LT & RT	644	644	18" CPCS
	TOTALS	**5797**	**5797**	

3

EROSION MAT

STATION	LOCATION	628.2002 CLASS I TYPE A SY	628.2023 CLASS II TYPE B SY	REMARKS
159+00 - 166+00	RT	312	0	ENTRENCH IN GRAVEL SHLD
159+00 - 162+25	RT	0	145	CHANNEL
163+50 - 167+00	RT	0	156	CHANNEL
165+00 - 167+00	LT	95	89	CHANNEL & BACKSLOPE
165+50 - 167+00	RT	50	0	3:1 SLOPE
196+00 - 197+00	LT	15	0	3:1 SLOPE
196+00 - 204+00	RT	356	0	ENTRENCH IN GRAVEL SHLD 4-FT WIDE
197+00 - 199+50	RT	135	0	3:1 SLOPE
198+50 - 200+00	LT	38	0	3:1 SLOPE
196+00 - 205+22	RT	0	410	CHANNEL
199+72	LT & RT	18	16	CPCS 18" AEW
201+00 - 205+50	RT	185	0	3:1 SLOPE
202+50 - 205+50	LT	110	0	3:1 SLOPE
203+00 - 205+32	LT	0	105	CHANNEL
206+00 - 213+00	LT	312	0	ENTRENCH IN GRAVEL SHLD 4-FT WIDE
206+50 - 210+00	LT	71	0	3:1 SLOPE
207+00 - 208+00	RT	26	0	3:1 SLOPE
208+50 - 210+00	RT	63	0	3:1 SLOPE
211+50 - 213+77	LT	63	0	3:1 SLOPE
211+50 - 213+00	RT	100	0	3:1 SLOPE
212+00 - 214+77	LT	0	125	CHANNEL
213+50 - 214+00	RT	20	0	3:1 SLOPE
259+83.52	LT & RT	18	16	CPRC HE 14"X23"
282+87 - 283+63	LT	22	0	BEHIND BEAM GUARD
282+92 - 283+72	RT	22	0	BEHIND BEAM GUARD
284+20 - 284+94	LT	20	0	BEHIND BEAM GUARD
284+10 - 284+90	RT	27	0	BEHIND BEAM GUARD
346+00 - 352+00	LT	0	267	CHANNEL
346+00 - 352+00	LT	267	0	ENTRENCH IN GRAVEL SHLD 4-FT WIDE
345+96 - 352+00	LT	290	0	3:1 SLOPE
354+00 - 355+00	RT	93	0	3:1 SLOPE
360+18.34	LT & RT	18	16	CPCS 18" AEW
368+00 - 368+57	LT & RT	18	16	CPRC HE 14"X23"
	TOTALS	**2764**	**1361**	

CULVERT PIPE CHECKS

STATION	LOCATION	628.7555 EACH	REMARKS
199+72	RT	3	CPCS 18"
259+83	RT	4	CPRC HE 14"x23"
367+75	RT	4	CPRC HE 14"x23"
	TOTAL	**11**	

ROCK BAGS

STATION	LOCATION	628.7570 EACH	REMARKS
162+75	LT	17	SILT FENCE RELIEF
162+75	RT	17	SILT FENCE RELIEF
196+17	LT	17	SILT FENCE RELIEF
206+48	RT	17	SILT FENCE RELIEF
259+83	LT	17	SILT FENCE RELIEF
354+30	RT	17	SILT FENCE RELIEF
367+75	LT	17	SILT FENCE RELIEF
158+00	RT	8	TEMPORARY DITCH CHECK
158+50	RT	8	TEMPORARY DITCH CHECK
159+00	RT	8	TEMPORARY DITCH CHECK
159+40	RT	8	TEMPORARY DITCH CHECK
159+80	RT	8	TEMPORARY DITCH CHECK
160+22	RT	8	TEMPORARY DITCH CHECK
160+60	RT	8	TEMPORARY DITCH CHECK
161+00	RT	8	TEMPORARY DITCH CHECK
161+34	RT	8	TEMPORARY DITCH CHECK
161+70	LT & RT	16	TEMPORARY DITCH CHECK
162+00	LT & RT	16	TEMPORARY DITCH CHECK
162+25	LT	8	TEMPORARY DITCH CHECK
163+54	RT	8	TEMPORARY DITCH CHECK
164+00	RT	8	TEMPORARY DITCH CHECK
164+50	RT	8	TEMPORARY DITCH CHECK
165+00	LT & RT	16	TEMPORARY DITCH CHECK
166+00	LT & RT	16	TEMPORARY DITCH CHECK
198+00	RT	8	TEMPORARY DITCH CHECK
199+00	LT & RT	16	TEMPORARY DITCH CHECK
201+00	RT	8	TEMPORARY DITCH CHECK
201+50	RT	8	TEMPORARY DITCH CHECK
202+00	RT	8	TEMPORARY DITCH CHECK
202+18	LT	8	TEMPORARY DITCH CHECK
202+75	RT	8	TEMPORARY DITCH CHECK
203+00	LT	8	TEMPORARY DITCH CHECK
203+80	RT	8	TEMPORARY DITCH CHECK
207+00	LT	8	TEMPORARY DITCH CHECK
212+50	LT	8	TEMPORARY DITCH CHECK
347+35	LT	8	TEMPORARY DITCH CHECK
348+00	LT	8	TEMPORARY DITCH CHECK
348+50	LT	8	TEMPORARY DITCH CHECK
349+00	LT	8	TEMPORARY DITCH CHECK
351+00	LT	8	TEMPORARY DITCH CHECK
351+80	LT	8	TEMPORARY DITCH CHECK
354+00	LT	8	TEMPORARY DITCH CHECK
368+20	LT	8	TEMPORARY DITCH CHECK
UNDISTRIBUTED	-	48	
	TOTALS	**495**	

3

3

SIGN LISTING

SIGN NO.	SIGN CODE	MESSAGE	SIZE	POSTS WOOD 4"X6" 634.0612 12-FT EACH	634.0614 14-FT EACH	634.0616 16-FT EACH	634.0808 POSTS TUBULAR STEEL 2X2-INCH X 8-FT EACH	637.2210 SIGNS TYPE II REFLECTIVE H SF	637.2230 SIGNS TYPE II REFLECTIVE F SF	638.2102 MOVING SIGNS TYPE II EACH	638.2602 REMOVING SIGNS TYPE II EACH	638.3000 REMOVING SMALL SIGN SUPPORTS EACH	. REMARKS
1-1	W1-4L	LEFT REVERSE CURVE	30"X30"	1	---	---	---	---	6.25	---	1	1	---
1-2	W13-1	40 MPH	18"X18"	---	---	---	---	---	2.25	---	1	---	SAME POST AS 1-1
2-1	W1-8	CHEVRON	18"X24"	1	---	---	---	---	3.00	---	---	---	---
2-2	W1-6	NIGHT ARROW (SINGLE)	48"X24"	1	---	---	---	---	8.00	---	1	1	---
2-3	W1-8	CHEVRON	18"X24"	1	---	---	---	---	3.00	---	---	---	---
2-4	W1-8	CHEVRON	18"X24"	1	---	---	---	---	3.00	---	---	---	---
2-5	W1-8	CHEVRON	18"X24"	1	---	---	---	---	3.00	---	---	---	---
2-6	W1-6	NIGHT ARROW (SINGLE)	48"X24"	1	---	---	---	---	8.00	---	1	1	---
2-7	W1-8	CHEVRON	18"X24"	1	---	---	---	---	3.00	---	---	---	---
2-8	J4-1	SOUTH, STH 49	24"X36"	---	1	---	---	6.00	---	---	1	1	---
2-9	W1-4L	LEFT REVERSE CURVE	30"X30"	---	1	---	---	---	6.25	---	1	1	---
2-10	W13-1	40 MPH	18"X18"	---	1	---	---	---	2.25	---	---	---	SAME POST AS 2-9
2-11	J13-1	STH 49, DOUBLE ARROW	24"X45"	---	1	---	---	7.50	---	---	1	1	---
2-12	R1-1	STOP	36"X36"	---	1	---	---	7.46	---	---	1	1	---
2-13	J13-1	CTH Z, ARROW (RT)	24"X45"	---	1	---	---	7.50	---	---	1	1	---
2-14	R2-1	SPEED LIMIT 55	24"X30"	---	1	---	---	5.00	---	---	---	---	---
2-15	W1-8	CHEVRON	18"X24"	---	---	---	---	---	3.00	---	---	---	SAME POST AS 2-1
2-16	W1-8	CHEVRON	18"X24"	---	---	---	---	---	3.00	---	---	---	SAME POST AS 2-4
2-17	W1-8	CHEVRON	18"X24"	---	---	---	---	---	3.00	---	---	---	SAME POST AS 2-5
2-18	W1-8	CHEVRON	18"X24"	1	---	---	---	---	3.00	---	---	---	
2-19	W1-8	CHEVRON	18"X24"	---	---	---	---	---	3.00	---	---	---	SAME POST AS 2-7
2-20	J1-1	JCT, CTH Z	24"X39"	---	1	---	---	6.50	---	---	1	1	---
2-21	J13-1	CTH Z, ARROW (LT)	24"X45"	---	1	---	---	7.50	---	---	1	1	---
2-22	W1-7	NIGHT ARROW (DOUBLE)	48"X24"	1	---	---	---	---	8.00	---	1	1	---
2-23	R1-1	STOP	30"X30"	1	---	---	---	5.18	---	---	1	1	---
2-24	J4-1	NORTH, STH 49	24"X36"	---	1	---	---	6.00	---	---	1	1	---
3-1	J1-1	JCT, CTH Z	24"X39"	---	1	---	---	6.50	---	---	1	1	---
3-2	W1-8	CHEVRON	18"X24"	1	---	---	---	---	3.00	---	---	---	---
3-3	W1-6	NIGHT ARROW (SINGLE)	48"X24"	1	---	---	---	---	8.00	---	1	1	---
3-4	W1-8	CHEVRON	18"X24"	1	---	---	---	---	3.00	---	---	---	---
3-5	W1-8	CHEVRON	18"X24"	1	---	---	---	---	3.00	---	---	---	---
3-6	W1-8	CHEVRON	18"X24"	1	---	---	---	---	3.00	---	---	---	---
3-7	W1-6	NIGHT ARROW (SINGLE)	48"X24"	1	---	---	---	---	8.00	---	1	1	---
3-8	W1-8	CHEVRON	18"X24"	1	---	---	---	---	3.00	---	---	---	---
3-9	W1-8	CHEVRON	18"X24"	1	---	---	---	---	3.00	---	---	---	---
3-10	W1-8	CHEVRON	18"X24"	1	---	---	---	---	3.00	---	---	---	---
3-11	W1-8	CHEVRON	18"X24"	1	---	---	---	---	3.00	---	---	---	---
3-12	W1-8	CHEVRON	18"X24"	1	---	---	---	---	3.00	---	---	---	---
3-13	R2-1	SPEED LIMIT 55	24"X30"	---	1	---	---	5.00	---	---	1	1	---
3-14	W1-4R	RIGHT REVERSE CURVE	30"X30"	---	1	---	---	---	6.25	---	1	1	---
3-15	W13-1	35 MPH	18"X18"	---	---	---	---	---	2.25	---	---	---	SAME POST AS 3-14
3-16	W1-8	CHEVRON	18"X24"	---	---	---	---	---	3.00	---	---	---	SAME POST AS 3-2
3-17	W1-8	CHEVRON	18"X24"	---	---	---	---	---	3.00	---	---	---	SAME POST AS 3-5
3-18	W1-8	CHEVRON	18"X24"	---	---	---	---	---	3.00	---	---	---	SAME POST AS 3-6

CONTINUED ON NEXT PAGE

SIGN NO.	SIGN CODE	MESSAGE	SIZE	POSTS WOOD 4"X6" 634.0612 12-FT EACH	634.0614 14-FT EACH	634.0616 16-FT EACH	634.0808 POSTS TUBULAR STEEL 2X2-INCH X 8-FT EACH	637.2210 SIGNS TYPE II REFLECTIVE H SF	637.2230 SIGNS TYPE II REFLECTIVE F SF	638.2102 MOVING SIGNS TYPE II EACH	638.2602 REMOVING SIGNS TYPE II EACH	638.3000 REMOVING SMALL SIGN SUPPORTS EACH	
3-19	W1-8	CHEVRON	18"X24"	1	---	---	---	---	3.00	---	---	---	---
3-20	W1-8	CHEVRON	18"X24"	---	---	---	---	---	3.00	---	---	---	SAME POST AS 3-8
3-21	W1-8	CHEVRON	18"X24"	---	---	---	---	---	3.00	---	---	---	SAME POST AS 3-9
3-22	W1-6	NIGHT ARROW (SINGLE)	48"X24"	1	---	---	---	---	8.00	---	1	1	---
3-23	W1-8	CHEVRON	18"X24"	---	---	---	---	---	3.00	---	---	---	SAME POST AS 3-10
3-24	W1-8	CHEVRON	18"X24"	---	---	---	---	---	3.00	---	---	---	SAME POST AS 3-11
3-25	W1-8	CHEVRON	18"X24"	1	---	---	---	---	3.00	---	---	---	---
3-26	W1-6	NIGHT ARROW (SINGLE)	48"X24"	1	---	---	---	---	8.00	---	1	1	---
3-27	W1-8	CHEVRON	18"X24"	1	---	---	---	---	3.00	---	---	---	SAME POST AS 3-12
4-1	W1-4R	RIGHT REVERSE CURVE	30"X30"	---	1	---	---	---	6.25	---	1	1	---
4-2	W13-1	35 MPH	18"X18"	---	---	---	---	---	2.25	---	---	---	SAME POST AS 4-1
4-3	W14-3	NO PASSING ZONE	48"X36"	---	1	---	---	---	5.56	---	1	1	---
4-4	W14-3	NO PASSING ZONE	48"X36"	---	1	---	---	---	5.56	---	1	1	---
4-5	W1-7	NIGHT ARROW (DOUBLE)	48"X24"	1	---	---	---	---	8.00	---	---	---	---
4-6	W2-2	SIDE ROAD (90 DEGREES)	30"X30"	---	1	---	---	---	6.25	---	---	---	---
4-7	W14-3	NO PASSING ZONE	48"X36"	---	1	---	---	---	5.56	---	1	1	---
4-8	R2-1	SPEED LIMIT 55	24"X30"	---	1	---	---	5.00	---	---	1	1	---
4-9	W2-2	SIDE ROAD (90 DEGREES)	30"X30"	---	1	---	---	---	6.25	---	---	---	---
4-10	R1-1	STOP	30"X30"	1	---	---	---	5.18	---	---	1	1	---
4-11	W3-5	SPEED LIMIT 45 AHEAD, ARROW	36"X36"	---	1	---	---	---	9.00	---	1	1	---
4-12	I2-3	NORTHLAND, UNICORPORATED	66"X24"	---	2	---	---	11.00	---	---	1	2	---
4-13	R2-1	SPEED LIMIT 45	24"X30"	---	1	---	---	5.00	---	---	1	1	---
5-1	W5-52L	CLEARANCE STRIPER DOWN LEFT	12"X36"	---	---	---	1	---	3.00	---	1	1	FLUME CREEK
5-2	I3-1	FLUME CREEK	42"24"	---	---	---	---	7.00	---		---	---	---
5-3	W5-52R	CLEARANCE STRIPER DOWN RIGHT	12"X36"	---	---	---	1	---	3.00	---	1	1	FLUME CREEK
5-4	I2-3	NORTHLAND, UNICORPORATED	66"X24"	---	2	---	---	11.00	---	---	1	2	---
5-5	W2-2	SIDE ROAD (90 DEGREES)	30"X30"	---	1	---	---	---	6.25	---	1	1	---
5-6	W1-6	NIGHT ARROW (SINGLE)	48"X24"	1	---	---	---	---	8.00	---	1	1	---
5-7	W54-58	CHURCH ENTRANCE	30"X30"	---	1	---	---	---	6.25	---	1	1	---
5-8	W2-2	SIDE ROAD (90 DEGREES)	30"X30"	---	1	---	---	---	6.25	---	1	1	---
5-9	W1-5L	LEFT WINDING ROAD	30"X30"	---	1	---	---	---	6.25	---	---	---	---
5-10	W13-1	35 MPH	18"X18"	---	---	---	---	---	2.25	---	---	---	SAME POST AS 5-8
5-11	R1-1	STOP	30"X30"	1	---	---	---	5.18	---	---	1	1	---
5-12	W5-52R	CLEARANCE STRIPER DOWN RIGHT	12"X36"	---	---	---	1	---	3.00	---	1	1	FLUME CREEK
5-13	I3-1	FLUME CREEK	42"24"	---	---	---	---	7.00	---	---	---	---	---
5-14	W5-52L	CLEARANCE STRIPER DOWN LEFT	12"X36"	---	---	---	1	---	3.00	---	1	1	FLUME CREEK
5-15	W54-58	CHURCH ENTRANCE	30"X30"	1	---	---	---	---	6.25	---	1	1	---
6-1	R2-1	SPEED LIMIT 45	24"X30"	---	1	---	---	5.00	---	---	1	1	---
6-2	W3-5	SPEED LIMIT 45 AHEAD, ARROW	36"X36"	---	1	---	---	---	9.00	---	1	1	---
6-3	W1-6	NIGHT ARROW (SINGLE)	48"X24"	1	---	---	---	---	8.00	---	---	---	---
6-4	W1-6	NIGHT ARROW (SINGLE)	48"X24"	1	---	---	---	---	8.00	---	1	1	---
6-5	W1-5L	LEFT WINDING ROAD	30"X30"	---	1	---	---	---	6.25	---	1	1	---
6-6	W13-1	35 MPH	18"X18"	---	---	---	---	---	2.25	---	---	---	SAME POST AS 6-5
6-7	J4-1	SOUTH, STH 49	24"X36"	---	1	---	---	6.00	---	---	---	---	---

CONTINUED ON NEXT PAGE

3

SIGN NO.	SIGN CODE	MESSAGE	SIZE	POSTS WOOD 4"X6" 634.0612 12-FT EACH	634.0614 14-FT EACH	634.0616 16-FT EACH	634.0808 POSTS TUBULAR STEEL 2X2-INCH X 8-FT EACH	637.2210 SIGNS TYPE II REFLECTIVE H SF	637.2230 SIGNS TYPE II REFLECTIVE F SF	638.2102 MOVING SIGNS TYPE II EACH	638.2602 REMOVING SIGNS TYPE II EACH	638.3000 REMOVING SMALL SIGN SUPPORTS EACH	
6-8	R1-1	STOP	30"X30"	1	---	---	---	5.18	---	---	1	1	---
6-9	J13-1	CTH C, ARROW (LT)	24"X45"	---	---	1	---	7.50	---	---	1	1	---
6-10	W14-3	NO PASSING ZONE	48"X36"	---	1	---	---	---	5.56	---	1	1	---
6-11	D1-1	ARROW, BIG FALLS	66"X15"	---	2	---	---	6.88	---	---	1	2	---
6-12	R2-1	SPEED LIMIT 55	24"X30"	---	1	---	---	5.00	---	---	1	1	---
6-13	J1-1	JCT, CTH C	24"X39"	---	1	---	---	6.50	---	---	1	1	---
6-14	D1-1	BIG FALLS, ARROW	66"X15"	---	2	---	---	6.88	---	---	1	2	---
6-15	J13-1	CTH C, ARROW (RT)	24"X45"	---	1	---	---	7.50	---	---	1	1	---
6-16	R1-1	STOP	36"X36"	1	---	---	---	7.46	---	---	1	1	---
6-17	R1-1	STOP	36"X36"	1	---	---	---	7.46	---	---	1	1	---
6-18	J13-1	STH 49, DOUBLE ARROW	24"X45"	---	1	---	---	7.50	---	---	1	1	---
6-19	J4-1	NORTH, STH 49	24"X36"	---	1	---	---	6.00	---	---	1	1	---
6-20	W14-3	NO PASSING ZONE	48"X36"	---	1	---	---	---	5.56	---	1	1	---
6-21	R2-1	SPEED LIMIT 55	24"X30"	---	1	---	---	5.00	---	---	1	1	---
7-1	J1-1	JCT, CTH C	24"X39"	---	1	---	---	6.50	---	---	1	1	---
7-2	R2-1	SPEED LIMIT 55	24"X30"	---	1	---	---	5.00	---	---	---	---	---
7-3	J4-1	SOUTH, STH 49	24"X36"	---	1	---	---	6.00	---	---	1	1	---
7-4	W1-8	CHEVRON	18"X24"	---	---	---	---	---	---	1	---	---	MOVE
7-5	W1-8	CHEVRON	18"X24"	---	---	---	---	---	---	1	---	---	MOVE
7-6	W1-8	CHEVRON	18"X24"	---	---	---	---	---	---	1	---	---	MOVE
7-7	W1-8	CHEVRON	18"X24"	---	---	---	---	---	---	1	---	---	MOVE
7-8	W1-8	CHEVRON	18"X24"	---	---	---	---	---	---	1	---	---	MOVE
7-9	W1-8	CHEVRON	18"X24"	---	---	---	---	---	---	1	---	---	MOVE
7-10	W1-8	CHEVRON	18"X24"	---	---	---	---	---	---	1	---	---	MOVE
7-11	W1-8	CHEVRON	18"X24"	---	---	---	---	---	---	1	---	---	MOVE
7-12	W1-8	CHEVRON	18"X24"	---	---	---	---	---	---	1	---	---	MOVE
7-13	J13-1	CTH P, ARROW (UP)	24"X45"	---	1	---	---	7.50	---	---	1	---	---
7-14	W13-1	35 MPH	18"X18"	---	---	---	---	---	2.25	---	---	---	SAME POST AS 7-14
7-15	W1-1R	RIGHT CURVE	36"X36"	---	1	---	---	---	9.00	---	1	1	---
7-16	J1-1	JCT, CTH P	24"X39"	---	1	---	---	6.50	---	---	1	1	---
7-17	J1-1	JCT, CTH P	24"X39"	---	1	---	---	6.50	---	---	1	1	---
7-18	W1-1L	LEFT CURVE	36"X36"	---	1	---	---	---	9.00	---	1	1	---
7-19	W13-1	35 MPH	18"X18"	---	---	---	---	---	2.25	---	---	---	SAME POST AS 7-17
7-20	J13-1	CTH P, ARROW (UP)	24"X45"	---	1	---	---	7.50	---	---	1	---	---
7-21	W1-8	CHEVRON	18"X24"	---	---	---	---	---	---	1	---	---	SAME POST AS 7-4
7-22	W1-6	NIGHT ARROW (SINGLE)	---	---	---	---	---	---	---	---	1	1	REMOVE
7-23	W1-8	CHEVRON	18"X24"	---	---	---	---	---	---	1	---	---	SAME POST AS 7-5
7-24	W1-8	CHEVRON	18"X24"	---	---	---	---	---	---	1	---	---	SAME POST AS 7-6
7-25	R1-1	STOP	36"X36"	1	---	---	---	7.46	---	---	1	1	---
7-26	J12-1	CTH P, ARROW (LT)	24"X45"	---	1	---	---	7.50	---	---	1	1	---
7-27	W1-7	NIGHT ARROW (DOUBLE)	48"X24"	1	---	---	---	---	8.00	---	---	---	---
7-28	R1-1	STOP	30"X30"	1	---	---	---	5.18	---	---	---	---	---
7-29	W1-8	CHEVRON	18"X24"	---	---	---	---	---	---	1	---	---	SAME POST AS 7-7
7-30	W1-8	CHEVRON	18"X24"	---	---	---	---	---	---	1	---	---	SAME POST AS 7-8

CONTINUED ON NEXT PAGE

3

SIGN NO.	SIGN CODE	MESSAGE	SIZE	POSTS WOOD 4"X6" 634.0612 12-FT EACH	634.0614 14-FT EACH	634.0616 16-FT EACH	634.0808 POSTS TUBULAR STEEL 2X2-INCH X 8-FT EACH	637.2210 SIGNS TYPE II REFLECTIVE H SF	637.2230 SIGNS TYPE II REFLECTIVE F SF	638.2102 MOVING SIGNS TYPE II EACH	638.2602 REMOVING SIGNS TYPE II EACH	638.3000 REMOVING SMALL SIGN SUPPORTS EACH	
7-31	W1-8	CHEVRON	18"X24"	---	---	---	---	---	---	1	---	---	SAME POST AS 7-9
7-32	R1-1	STOP	36"X36"	1	---	---	---	7.46	---	---	1	1	---
7-33	W1-8	CHEVRON	18"X24"	---	---	---	---	---	---	1	---	---	SAME POST AS 7-10
7-34	W1-8	CHEVRON	18"X24"	---	---	---	---	---	---	1	---	---	SAME POST AS 7-11
7-35	J4-1	NORTH, STH 49	24"X36"	---	1	---	---	6.00	---	---	1	1	---
7-36	R2-1	SPEED LIMIT 55	24"X30"	---	1	---	---	5.00	---	---	---	---	---
8-1	W14-3	NO PASSING ZONE	48"X36"	---	1	---	---	---	5.56	---	1	1	---
8-2	I2-2	WAUPACA CO	66 "X15"	2	---	---	---	6.88	---	---	1	2	---
8-3	W14-3	NO PASSING ZONE	48"X36"	---	1	---	---	---	5.56	---	1	1	---
8-4	W14-3	NO PASSING ZONE	48"X36"	---	1	---	---	---	5.56	---	1	1	---
8-5	I2-2	PORTAGE CO	66"X15"	2	---	---	---	6.88	---	---	1	2	---
8-6	W1-2R	RIGHT CURVE	30"X30"	---	1	---	---	---	6.25	---	1	1	---
8-7	W14-3	NO PASSING ZONE	48"X36"	---	1	---	---	---	5.56	---	1	---	SAME POST AS 8-6
8-8	W1-8	CHEVRON	18"X24"	1	---	---	---	---	3.00	---	---	---	---
8-9	W1-8	CHEVRON	18"X24"	1	---	---	---	---	3.00	---	---	---	---
8-10	R1-1	STOP	30"X30"	1	---	---	---	5.18	---	---	1	1	---
8-11	W1-6	NIGHT ARROW (SINGLE)	48"X24"	1	---	---	---	---	8.00	---	1	1	---
8-12	W1-8	CHEVRON	18"X24"	1	---	---	---	---	3.00	---	---	---	---
8-13	W1-8	CHEVRON	18"X24"	1	---	---	---	---	3.00	---	---	---	---
8-14	W1-8	CHEVRON	18"X24"	1	---	---	---	---	3.00	---	---	---	---
8-15	W1-8	CHEVRON	18"X24"	1	---	---	---	---	3.00	---	---	---	---
8-16	W1-8	CHEVRON	18"X24"	1	---	---	---	---	3.00	---	---	---	---
8-17	W1-8	CHEVRON	18"X24"	1	---	---	---	---	3.00	---	---	---	---
8-18	W1-8	CHEVRON	18"X24"	1	---	---	---	---	3.00	---	---	---	---
8-19	R1-1	STOP	30"X30"	1	---	---	---	5.18	---	---	1	1	---
8-20	W1-6	NIGHT ARROW (SINGLE)	48"X24"	1	---	---	---	---	8.00	---	---	---	---
8-21	W1-8	CHEVRON	18"X24"	1	---	---	---	---	3.00	---	---	---	---
8-22	W1-8	CHEVRON	18"X24"	---	---	---	---	---	3.00	---	---	---	SAME POST AS 8-8
8-23	W1-8	CHEVRON	18"X24"	---	---	---	---	---	3.00	---	---	---	SAME POST AS 8-9
8-24	D7-67	LAKE HELEN COUNTY PARK 1 MILE	60"X36"	---	2	---	---	15.00	---	---	1	2	---
8-25	W1-8	CHEVRON	18"X24"	---	---	---	---	---	3.00	---	---	---	SAME POST AS 8-13
8-26	W1-8	CHEVRON	18"X24"	---	---	---	---	---	3.00	---	---	---	SAME POST AS 8-14
8-27	W1-8	CHEVRON	18"X24"	---	---	---	---	---	3.00	---	---	---	SAME POST AS 8-15
8-28	W1-8	CHEVRON	18"X24"	---	---	---	---	---	3.00	---	---	---	SAME POST AS 8-16
8-29	W1-8	CHEVRON	18"X24"	---	---	---	---	---	3.00	---	---	---	SAME POST AS 8-18
8-30	W1-8	CHEVRON	18"X24"	---	---	---	---	---	3.00	---	---	---	SAME POST AS 8-18
8-31	W1-8	CHEVRON	18"X24"	---	---	---	---	---	3.00	---	---	---	SAME POST AS 8-21
8-32	W1-8	CHEVRON	18"X24"	1	---	---	---	---	3.00	---	---	---	---
			TOTALS	**60**	**65**	**1**	**4**	**340**	**456**	**17**	**83**	**86**	

3

3

TRAFFIC CONTROL

STATION LOCATION	DAYS	QTY	643.0300 DRUMS DAYS	QTY	643.0420 BARRICADES TYPE III DAYS	QTY	643.0705 WARNING LIGHTS TYPE A DAYS	QTY	643.1070 CONES 42-INCH DAYS	REMARKS
CTH P	5	0	0	5	25	2	10	0	0	CLOSE ONE LEG AT A TIME
CEDAR ROAD	5	0	0	5	25	2	10	0	0	CLOSE ONE LEG AT A TIME
147+00 - 154+00 LT	1	19	19	0	0	0	0	0	0	CLEARING ROADWAY
161+00 - 164+00 LT	1	15	15	0	0	0	0	0	0	CLEARING ROADWAY
203+00 - 206+00 LT	1	15	15	0	0	0	0	0	0	CLEARING ROADWAY
206+00 - 210+00 RT	1	16	16	0	0	0	0	0	0	CLEARING ROADWAY
292+00 - 304+00 RT	1	24	24	0	0	0	0	0	0	CLEARING ROADWAY
300+00 - 305+00 LT	1	17	17	0	0	0	0	0	0	CLEARING ROADWAY
347+00 - 349+00 LT	1	14	14	0	0	0	0	0	0	CLEARING ROADWAY
259+86	2	0	0	0	0	0	0	26	52	CULVERT REPLACEMENT
367+76	2	0	0	0	0	0	0	26	52	CULVERT REPLACEMENT
TOTALS			**120**		**50**		**20**		**104**	

TRAFFIC CONTROL SIGNS

MESSAGE	SIGN CODE	QTY.	643.0900 DAYS	REMARKS
ROAD WORK AHEAD	W20-1A	11	**935**	85 DAYS
ROAD WORK 1500 FT	W12-52	2	**170**	85 DAYS
ROAD WORK 1000 FT	W20-1C	2	**170**	85 DAYS
ROAD WORK 500 FT	W20-1D	2	**170**	85 DAYS
ROAD WORK NEXT 6 MILES	G20-1	2	**170**	85 DAYS
END ROAD WORK	G20-A	10	**850**	85 DAYS
MAX 10' WIDTH	W12-52	6	**510**	85 DAYS
2 MILES AHEAD	W57-52	2	**170**	85 DAYS
6 MILES AHEAD	W57-52	2	**170**	85 DAYS
USH 45	M1-4	4	**340**	85 DAYS
NORTH	M3-1	2	**170**	85 DAYS
SOUTH	M3-3	2	**170**	85 DAYS
ROAD CLOSED	R11-2	2	**20**	CTH P & CEDAR RD
SHOULDER WORK	W21-5	1	**16**	SHOULDER CLOSURES
ROAD NARROWS	W05-1	1	**16**	SHOULDER CLOSURES
DIP	W8-2	4	**40**	CULVERT PIPES
LOOSE GRAVEL	W8-7	4	**40**	CULVERT PIPES
UNEVEN LANES	W8-11	18	**378**	MILLING AND PAVING
LOW SHOULDER	W08-9	2	**42**	SHOULDER WIDENING
SHOULDER DROP-OFF	W8-9A	2	**42**	SHOULDER WIDENING
		TOTALS	**4589**	

TRAFFIC CONTROL SIGNS FIXED MESSAGE

SIGN CODE	SIZE	MESSAGE	643.1000 SF	REMARKS
G20-57	72"X36"	HWY 49 ROAD WORK Begins XXX-XX	18.00	STH 49 NB PLACE 7 DAYS PRIOR TO CONSTRUCTION
G20-57	72"X36"	HWY 49 ROAD WORK Begins XXX-XX	18.00	STH 49 SB PLACE 7 DAYS PRIOR TO CONSTRUCTION
		TOTAL	**36**	

3

MARKING LINE EPOXY

STATION - STATION	LOCATION	646.1020 MARKING LINE EPOXY 4-INCH EDGE LINE (WHITE) LF	646.1020 MARKING LINE EPOXY 4-INCH 3 FT MINI DASH (WHITE) LF	649.0105 TEMPORARY MARKING LINE PAINT 4-INCH (YELLOW) LF	646.4520 MARKING LINE SAME DAY EPOXY 4-INCH (YELLOW) LF	646.9000 MARKING REMOVAL LINE 4-INCH LF	REMARKS
96+68 - 210+42	CL	---	---	22,748	22,748	---	DOUBLE YELLOW
210+42 - 218+37	CL	---	---	795	795	---	SB NO-PASSING
210+42 - 251+42	CL	---	---	1,025	1,025	---	CL SKIPS
243+54 - 251+42	CL	---	---	788	788	---	NB NO-PASSING
251+42 - 315+55	CL	---	---	12,826	12,826	---	DOUBLE YELLOW
315+55 - 324+56	CL	---	---	901	901	---	SB NO-PASSING
315+55 - 334+10	CL	---	---	464	464	---	CL SKIPS
326+15 - 334+10	CL	---	---	795	795	---	NB NO-PASSING
334+10 - 360+07	CL	---	---	5,194	5,194	---	DOUBLE YELLOW
360+07 - 394+26	CL	---	---	855	855	---	CL SKIPS
360+07 - 370+14	CL	---	---	1,007	1,007	---	SB NO-PASSING
370+14 - 376+50	CL	---	---	636	636	---	NB NO-PASSING
377+56 - 384+19	CL	---	---	663	663	---	SB NO-PASSING
385+78 - 394+26	CL	---	---	848	848	---	NB NO-PASSING
394+26 - 407+35	CL	---	---	2,618	2,618	---	DOUBLE YELLOW
96+01 - 174+28	RT	7,827	---	---	---	---	SOLID
175+34 - 250+42	RT	7,508	---	---	---	---	SOLID
251+42 - 279+78	RT	2,836	---	---	---	---	SOLID
280+82 - 323+33	RT	4,251	---	---	---	---	SOLID
324+65 - 346+84	RT	2,219	---	---	---	---	SOLID
347+81 - 351+75	RT	394	---	---	---	---	SOLID
352+75 - 407+35	RT	5,460	---	---	---	---	SOLID
96+01 - 173+65	LT	7,764	---	---	---	---	SOLID
174+66 - 323+56	LT	14,890	---	---	---	---	SOLID
283+56 - 284+22	LT & RT	---	---	---	---	132	4-INCH WHITE LINE
324+56 - 394+02	LT	6,946	---	---	---	---	SOLID
395+02 - 404+41	LT	939	---	---	---	---	SOLID
405+41 - 406+34	LT	93	---	---	---	---	SOLID
174+17	LT	---	---	---	---	---	CTH Z
174+75	RT	---	---	---	---	---	ROOSEVELT ROAD
250+42 - 251+42	RT	---	---	---	---	---	NORTH LAKE ROAD
279+78 - 280+82	RT	---	---	---	---	---	LUND ROAD
324+25	RT	---	---	---	---	---	CTH C
324+25	LT	---	---	---	---	---	KRANSKI ROAD
346+81 - 347+81	RT	---	25	---	---	---	CTH P
351+75 - 352+75	RT	---	25	---	---	---	CTH P
394+02 - 395+02	LT	---	25	---	---	---	CEDAR ROAD
404+41 - 405+41	LT	---	25	---	---	---	CEDAR ROAD
SUB TOTALS		61,127	100	**52,163**	**52,163**	**132**	
PROJECT TOTALS		**61,227**					

3

3

LOCATING NO-PASSING ZONES

STATION - STATION	648.0100 MILES
97+00 - 406+34	5.86
TOTAL	**5.86**

CONSTRUCTION STAKING

STATION - STATION	650.4500 SUBGRADE LF	650.5000 BASE LF	650.6000 PIPE CULVERT EACH	650.8000 RESURFACING REFERENCE LF	650.9910 SUPPLEMENTAL CONTROL (6270-00-64) LS	650.9920 SLOPE STAKES LF
97+00 - 406+34	---	---	---	30,934	1	---
157+29 - 166+79 LT & RT	950	950	---	---	---	950
194+54 - 213+77 LT & RT	1,923	1,923	---	---	---	1,923
259+83.53	---	---	1	---	---	---
345+95 - 354+97 LT & RT	902	902	---	---	---	902
367+74.80	---	---	1	---	---	---
TOTALS	**3,775**	**3,775**	**2**	**30,934**	**1**	**3,775**

3

SAWING ASPHALT

STATION	LOCATION	690.0150 LF	REMARKS
158+17 - 165+92	LT	775	11' FROM R/L
158+17 - 165+92	RT	775	11' FROM R/L
195+76 - 212+90	LT	1714	11' FROM R/L
195+76 - 212+90	RT	1714	11' FROM R/L
282+87 -- 283+63	LT	77	AT BACK OF BG POSTS
282+92 - 283+72	RT	83	AT BACK OF BG POSTS
284+20 - 284+94	LT	75	AT BACK OF BG POSTS
284+10 - 284+90	RT	83	AT BACK OF BG POSTS
346+00 - 354+97	LT	897	11' FROM R/L
346+00 - 354+97	RT	897	11' FROM R/L
259+58	Begin	22	CULVERT
260+12	End	23	CULVERT
367+49	Begin	24	CULVERT
368+03	End	24	CULVERT
97+00 - 391+44		2812	ASPH SURF PATCHING (FULL DEPTH)
	TOTAL	**9995**	

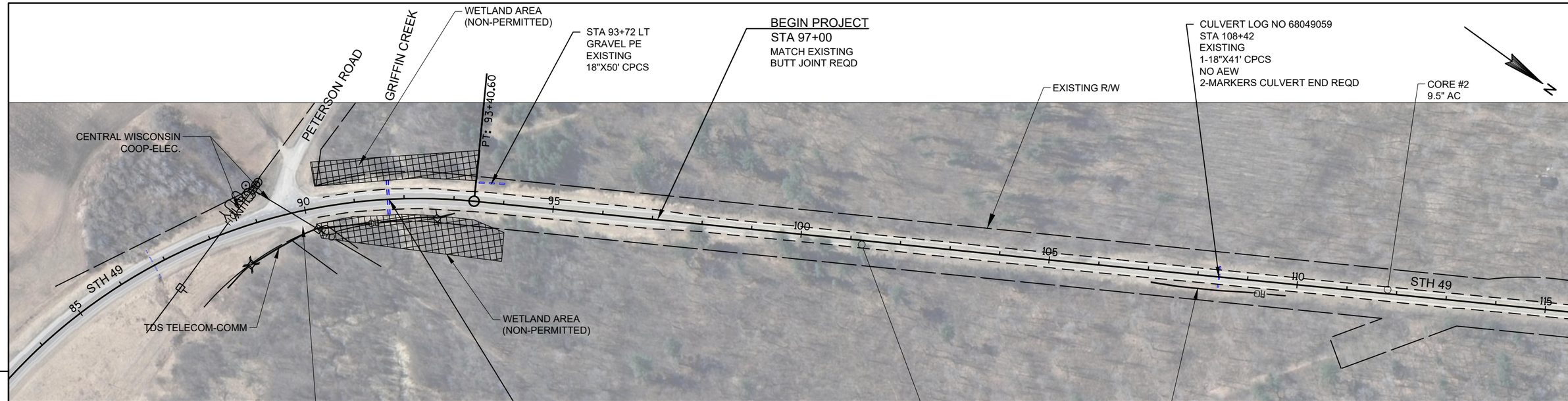

5

5

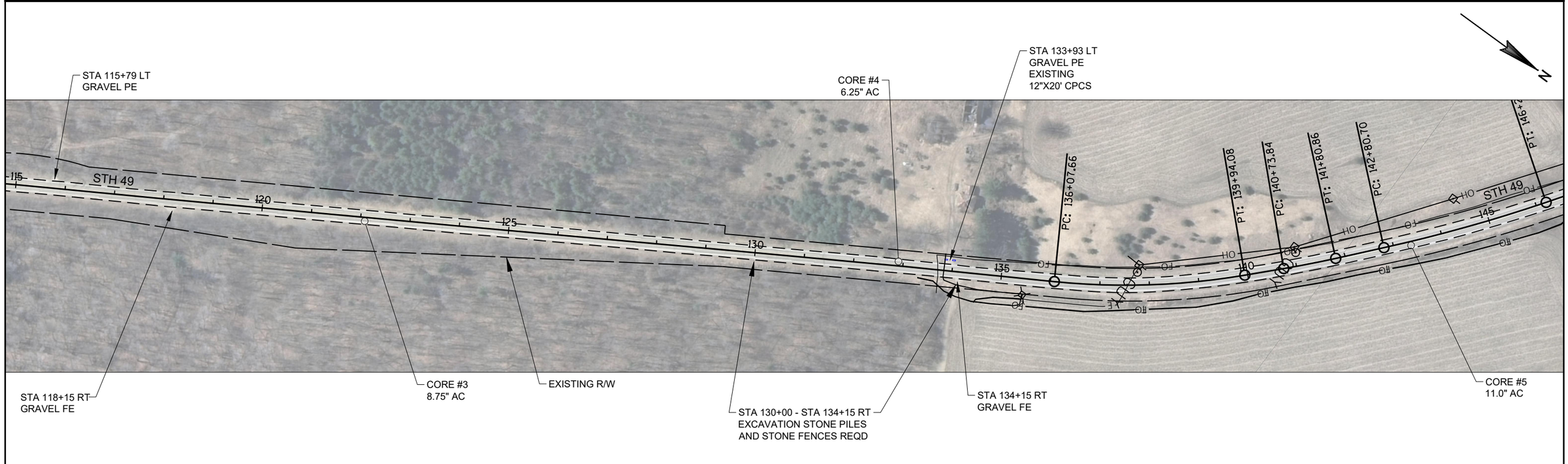

PROJECT NO:6270-00-64	HWY:STH 49	COUNTY:WAUPACA	PLAN SHEET	SHEET 65	E

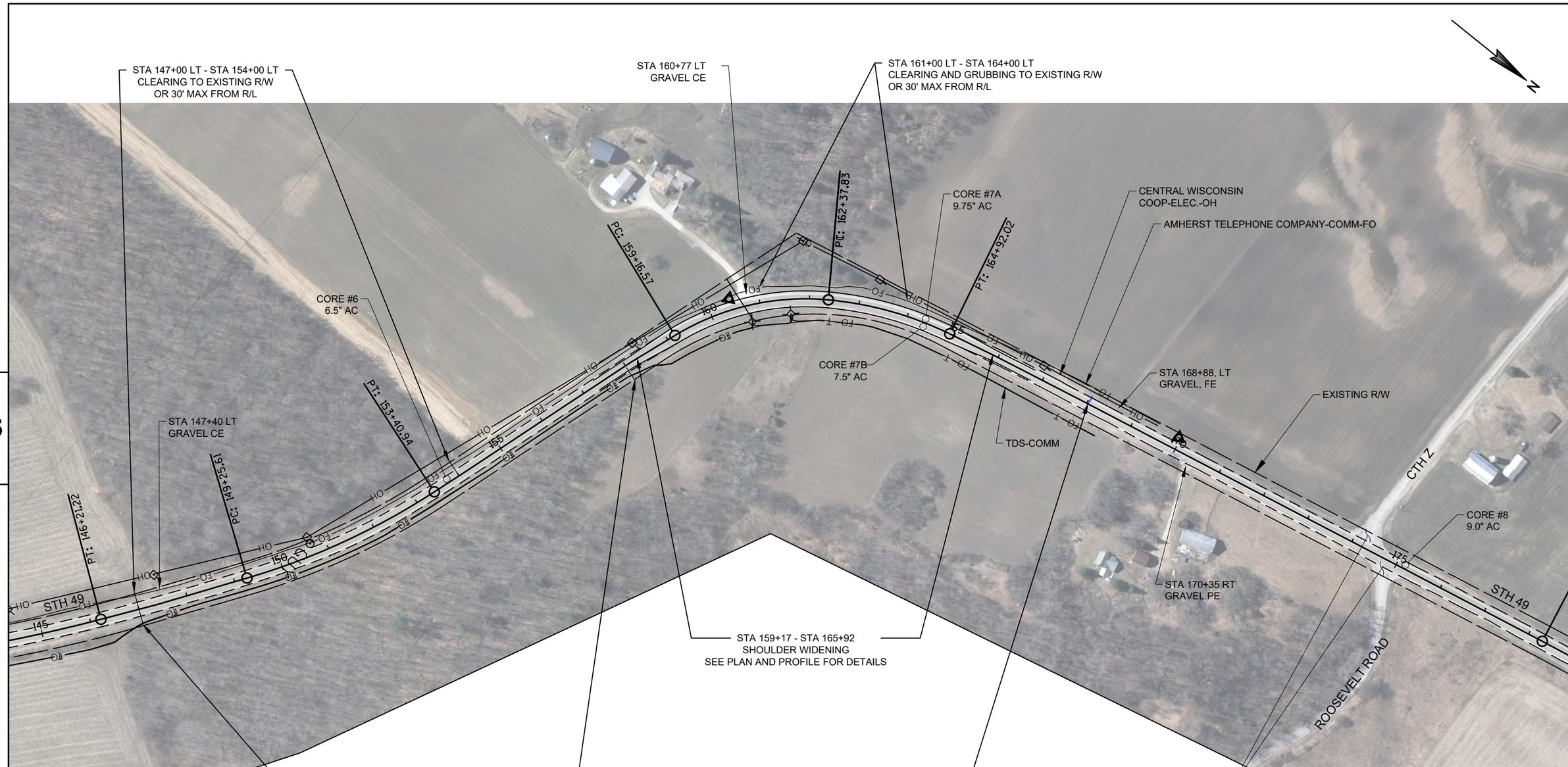

5

5

PROJECT NO:6270-00-64	HWY:STH 49	COUNTY:WAUPACA	PLAN SHEET	SHEET 66	E

FILE NAME : N:\PDS\C3D\62700034\SHEETSPLAN\050101-PN.DWG
LAYOUT NAME - 050301-PN - PN- (02)
PLOT DATE : 3/16/2018 7:26 AM PLOT BY : BRATTLUND, ERIK JOHNPLOT NAME : PLOT SCALE : 1 IN:200 FT

WISDOT/CADDS SHEET 42

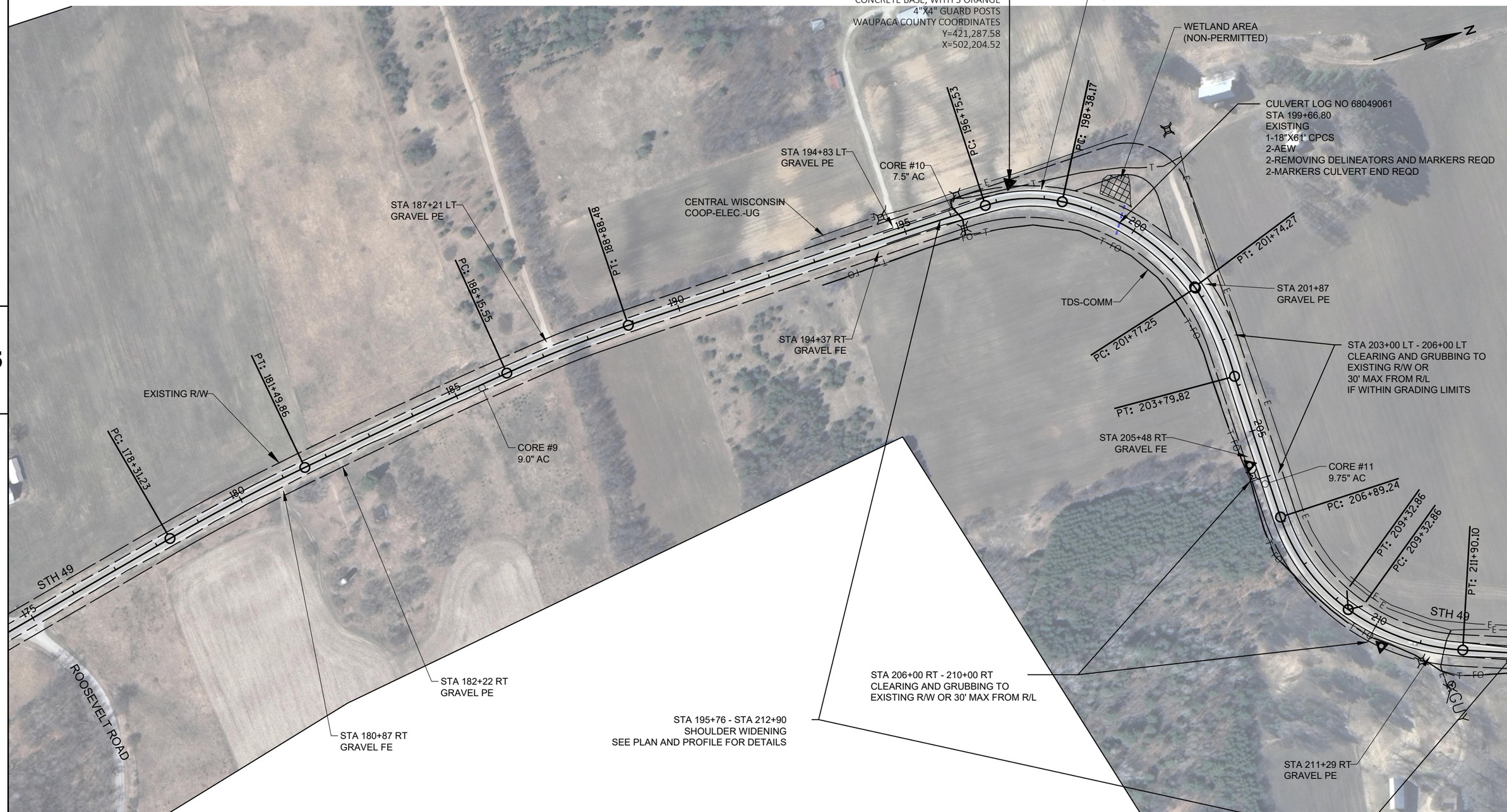

5

5

PROJECT NO:6270-00-64	HWY:STH 49	COUNTY:WAUPACA	PLAN SHEET	SHEET	E

FILE NAME : N:\PDS\C3D\62700034\SHEETSPLAN\050101-PN.DWG
LAYOUT NAME - 050301-PN - PN- (03)
PLOT DATE : 3/16/2018 7:27 AM PLOT BY : BRATTLUND, ERIK JOHNPLOT NAME : PLOT SCALE : 1 IN:200 FT

WISDOT/CADDS SHEET 42

5

5

BENCHMARKS			
NO.	STATION	ELEV.	DESCRIPTION
#2	259+09.61	1113.816	23.64' RT, REBAR WITH CAP
#1	260+83.16	1113.024	23.08' LT, REBAR WITH CAP

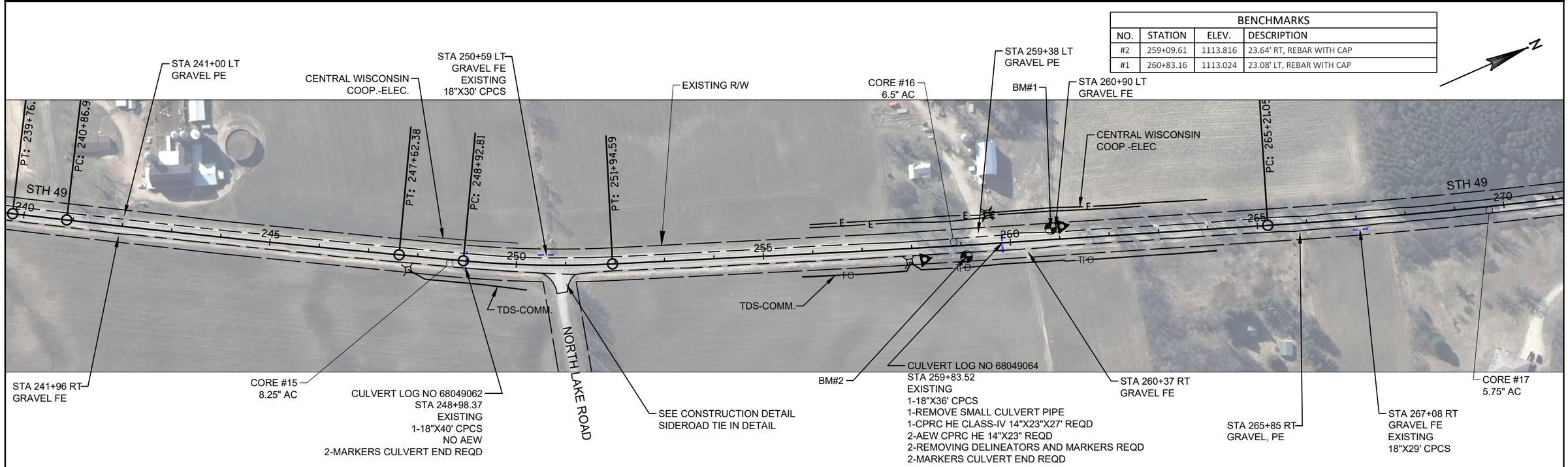

PROJECT NO:6270-00-64	HWY:STH 49	COUNTY:WAUPACA	PLAN SHEET	SHEET 68	E

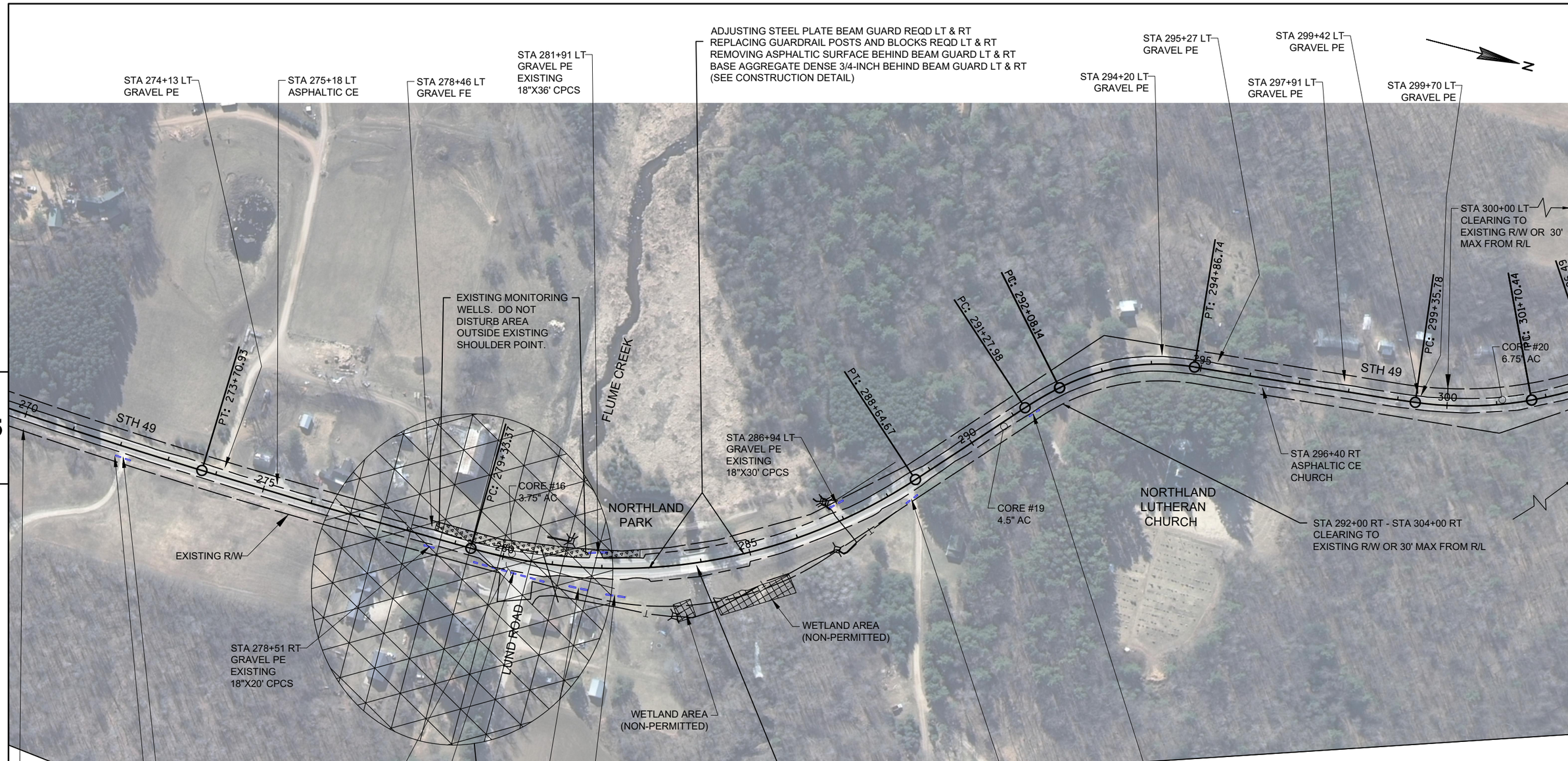

5

5

PROJECT NO:6270-00-64	HWY:STH 49	COUNTY:WAUPACA	PLAN SHEET	SHEET 69	E

FILE NAME : N:\PDS\C3D\62700034\SHEETSPLAN\050101-PN.DWG
LAYOUT NAME - 050301-PN - PN- (05)
PLOT DATE : 3/16/2018 7:27 AM PLOT BY : BRATTLUND, ERIK JOHNPLOT NAME : PLOT SCALE : 1 IN:200 FT

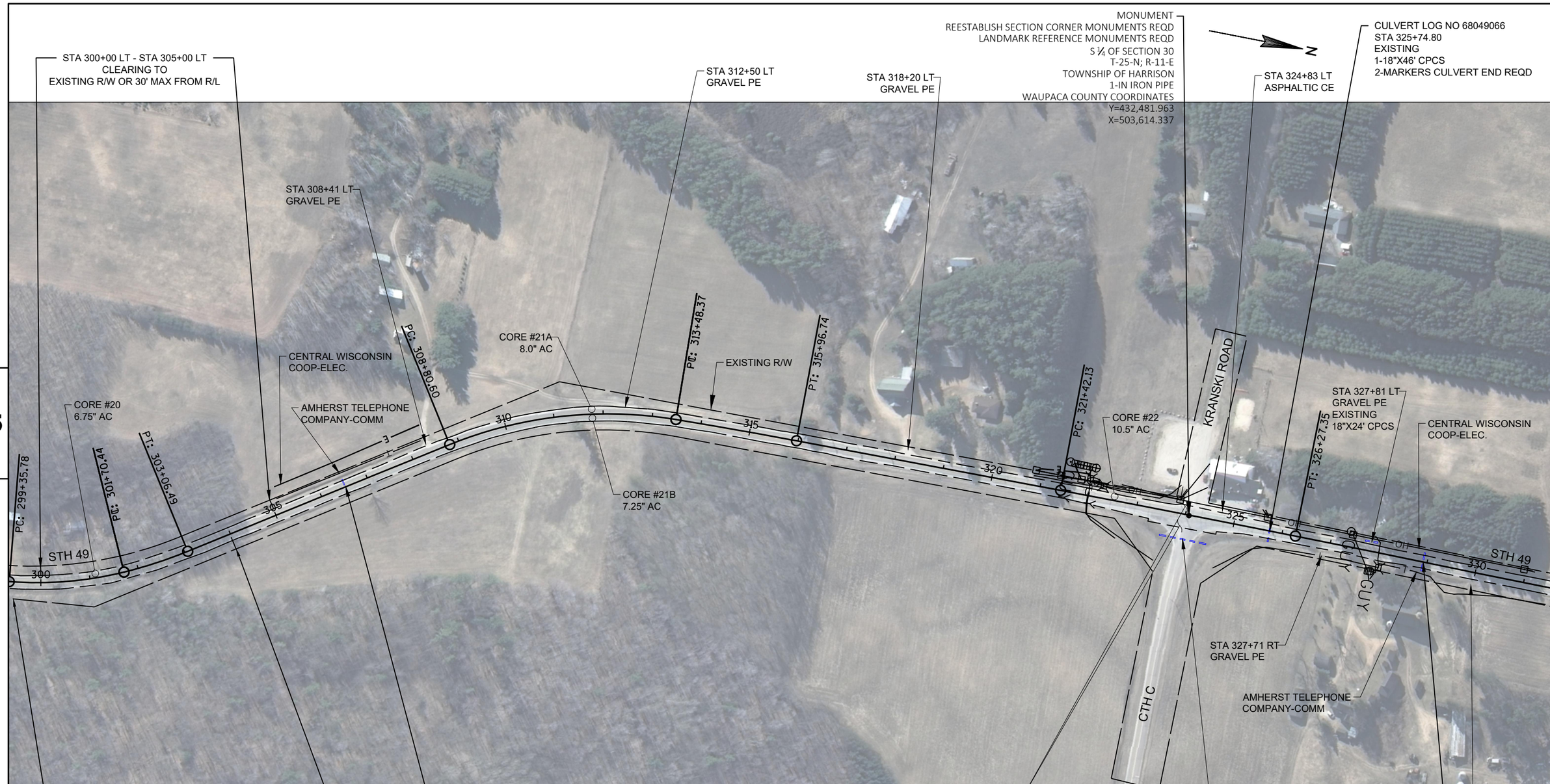

5

5

PROJECT NO:6270-00-64	HWY:STH 49	COUNTY:WAUPACA	PLAN SHEET	SHEET 70	E

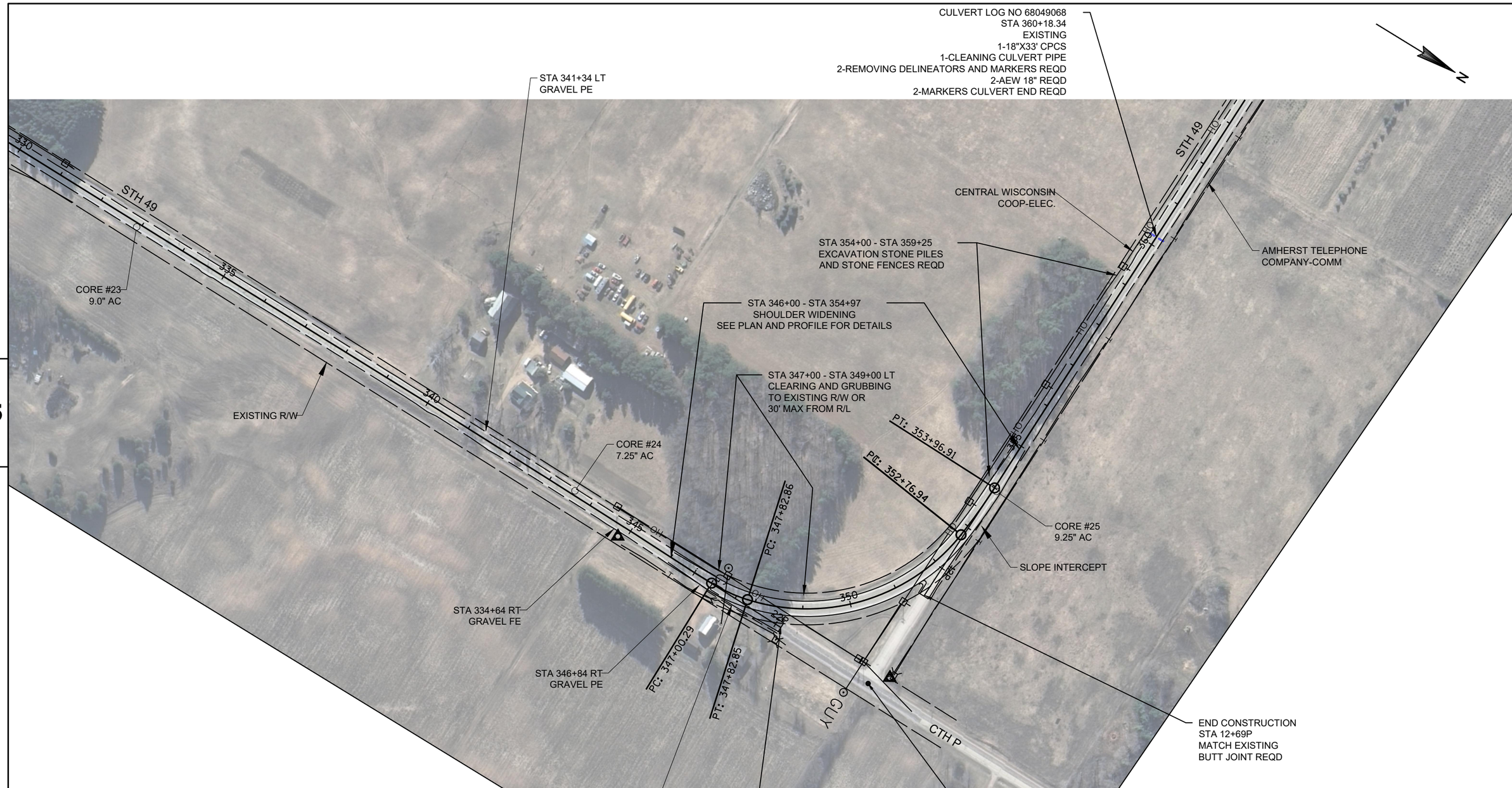

5

5

PROJECT NO:6270-00-64	HWY:STH 49	COUNTY:WAUPACA	PLAN SHEET	SHEET 71	E

FILE NAME : N:\PDS\C3D\62700034\SHEETSPLAN\050101-PN.DWG
LAYOUT NAME - 050301-PN - PN- (07)
PLOT DATE : 3/16/2018 7:27 AM PLOT BY : BRATTLUND, ERIK JOHNPLOT NAME : _____ PLOT SCALE : 1 IN:200 FT

WISDOT/CADDS SHEET 42

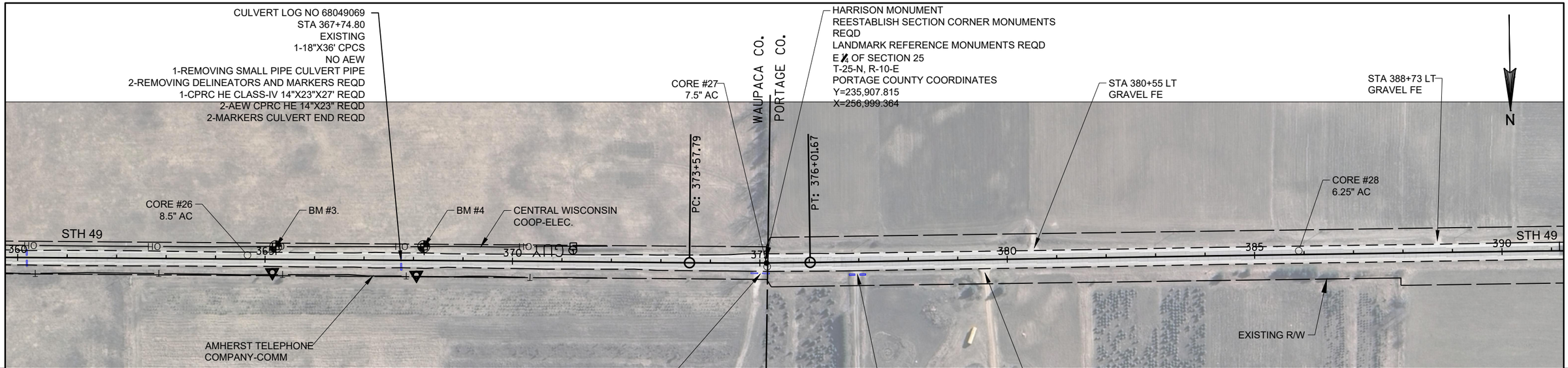

5

BENCHMARKS			
NO.	STATION	ELEV.	DESCRIPTION
3	365+21, 65	1117.503	25.65' LT, 60D SET IN PP
4	368+20.54	1114.998	27.82' LT, 60D SET IN PP

5

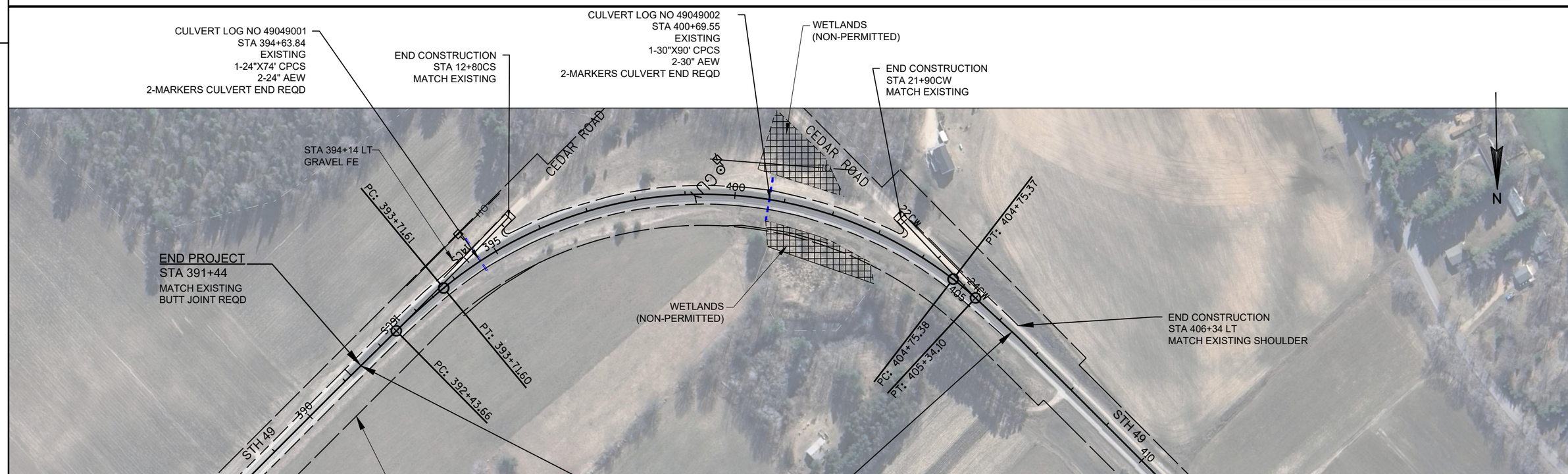

PROJECT NO:6270-00-64	HWY:STH 49	COUNTY:WAUPACA	PLAN SHEET	SHEET	E

FILE NAME : N:\PDS\C3D\62700034\SHEETSPLAN\050101-PN.DWG
LAYOUT NAME - 050301-PN - PN- (08)
PLOT DATE : 3/16/2018 7:27 AM PLOT BY : BRATTLUND, ERIK JOHNPLOT NAME : _____ PLOT SCALE : 1 IN:200 FT

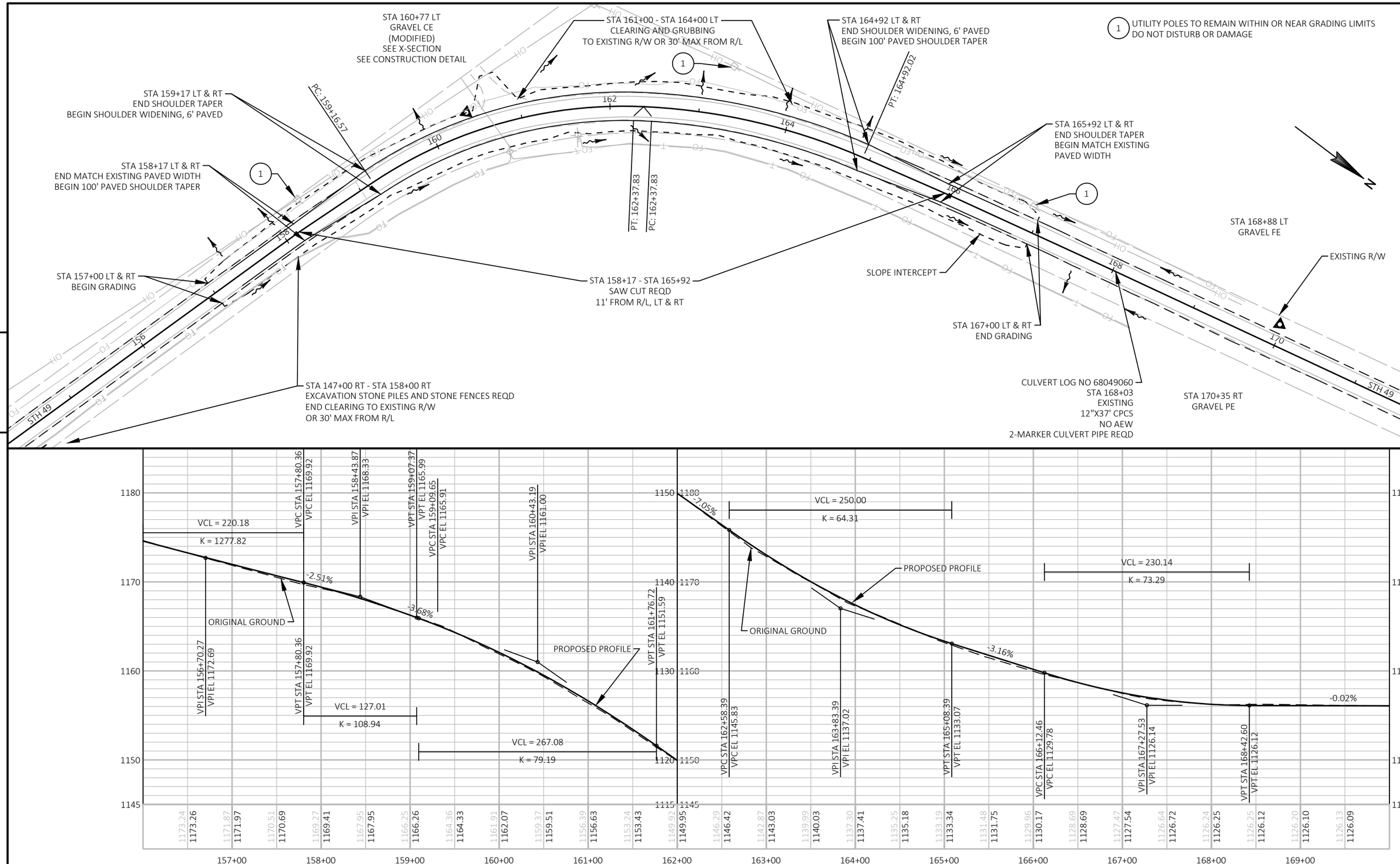

5

5

PROJECT NO: 6270-00-64	HWY: STH 49	COUNTY: WAUPACA	PLAN AND PROFILE: STH 49	SHEET 73	E

FILE NAME : N:\PDS\C3D\62700034\SHEETSPLAN\050102-PP.DWG
LAYOUT NAME - 01pp
PLOT DATE : 1/30/2018 8:23 AM
PLOT BY : BRATTLUND, ERIK JOHN
PLOT NAME :
PLOT SCALE : 1 IN:100 FT

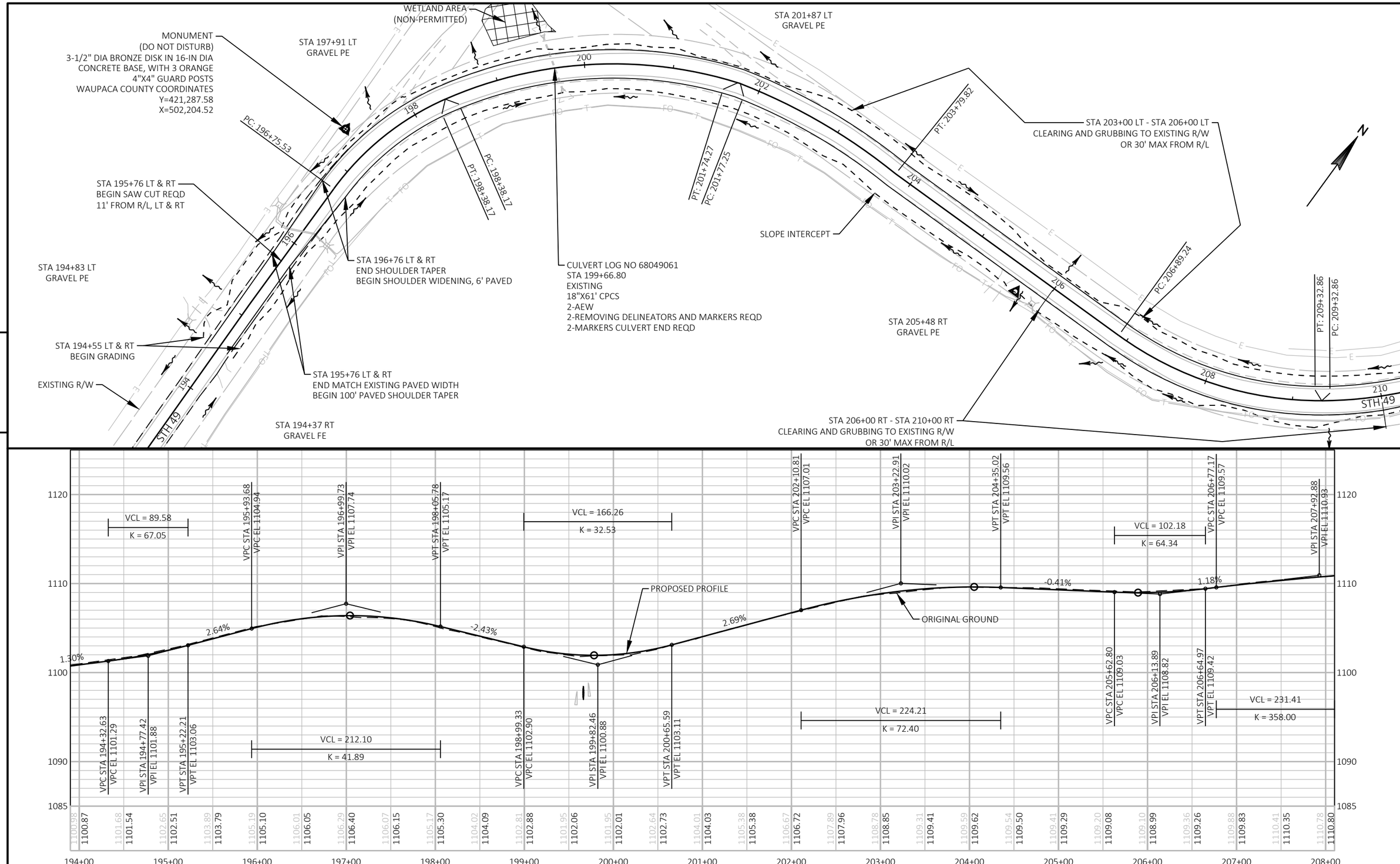

PROJECT NO: 6270-00-64	HWY: STH 49	COUNTY: WAUPACA	PLAN AND PROFILE: STH 49	SHEET 74	E

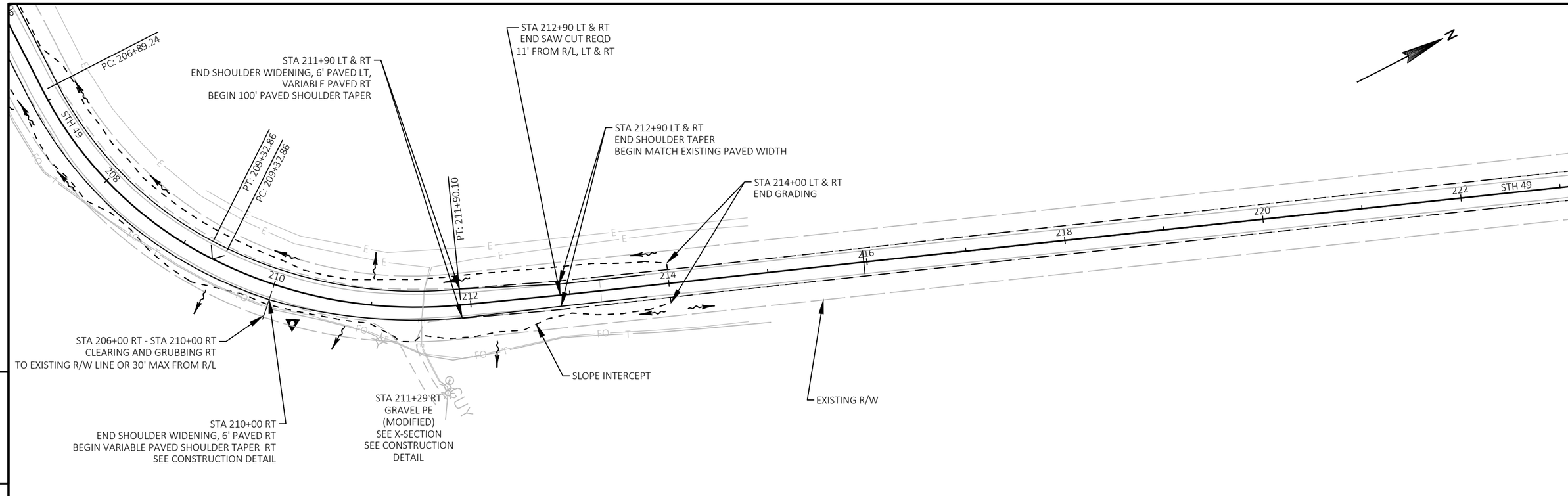

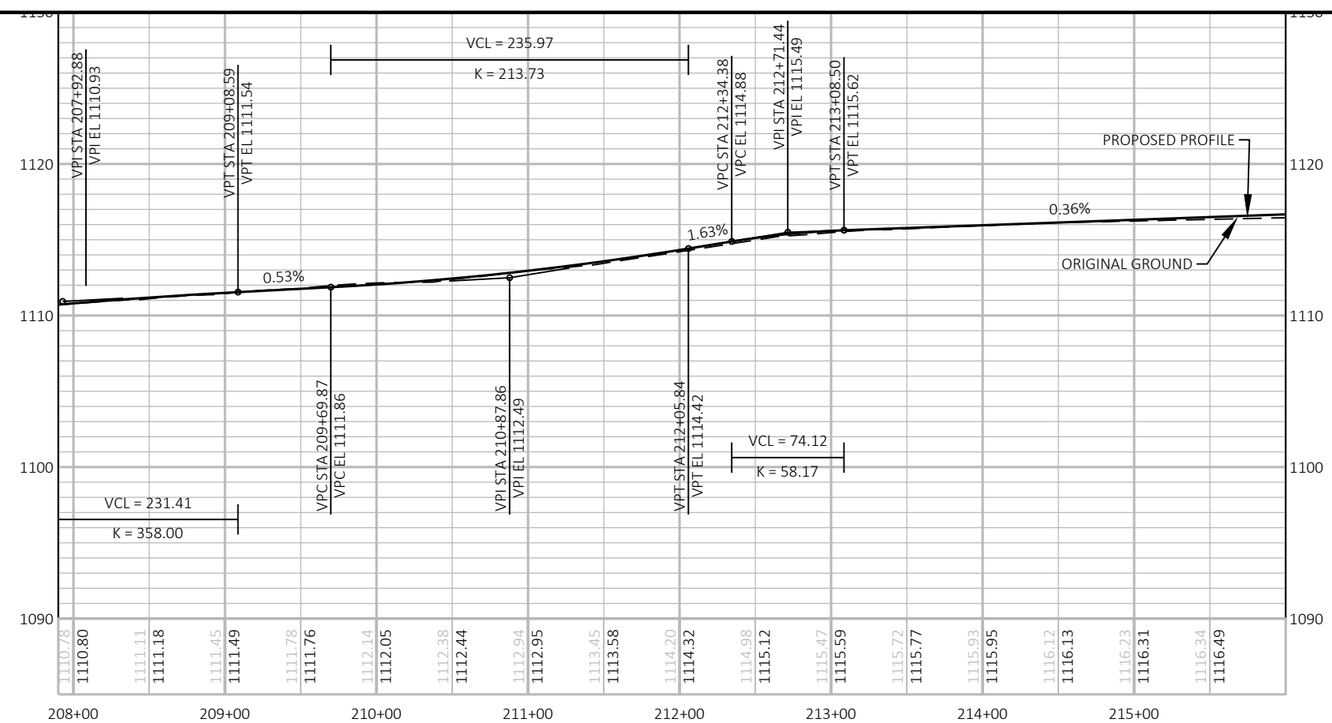

PROJECT NO: 6270-00-64	HWY: STH 49	COUNTY: WAUPACA	PLAN AND PROFILE: STH 49	SHEET 75	E

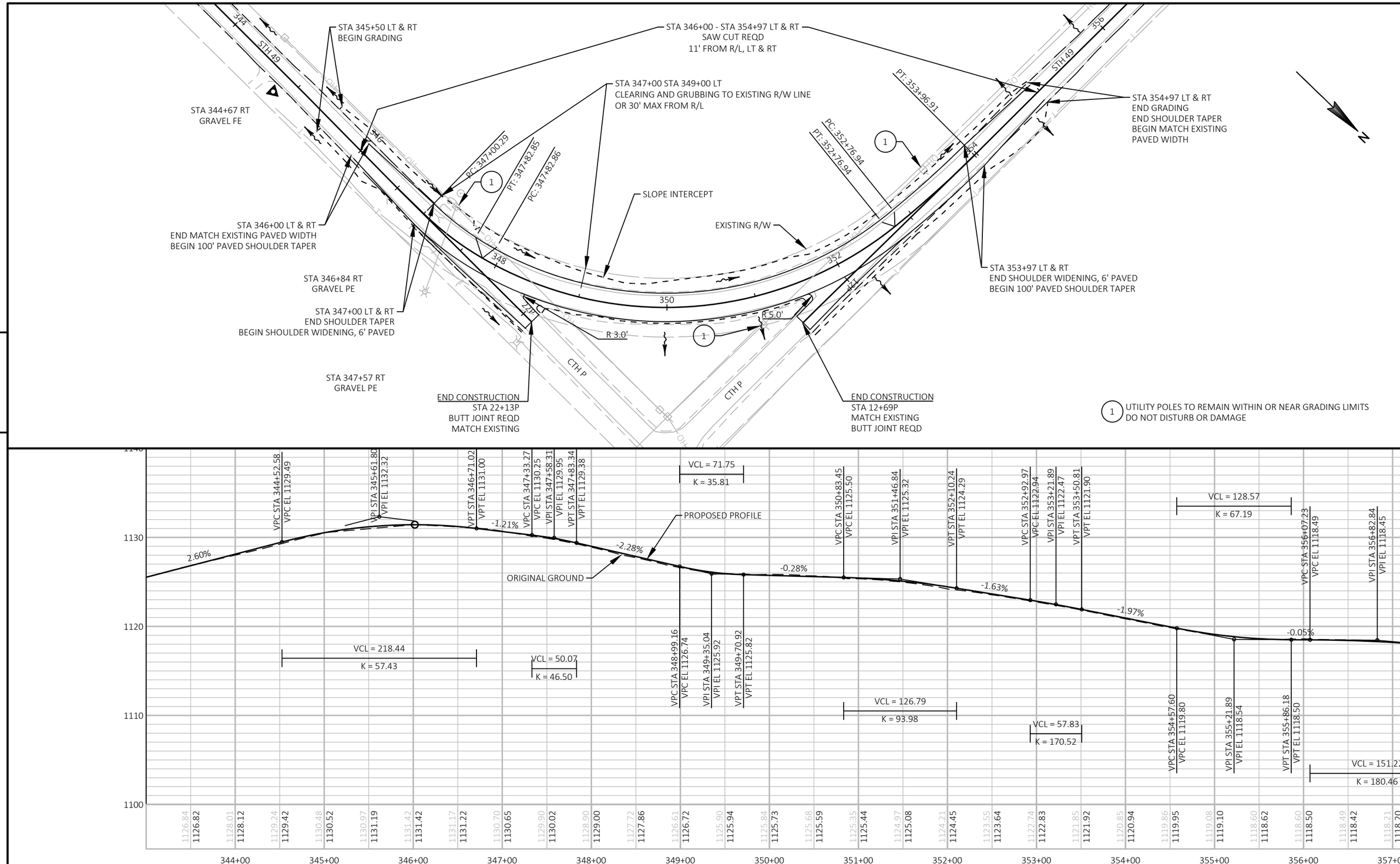

5

5

PROJECT NO: 6270-00-64	HWY: STH 49	COUNTY: WAUPACA	PLAN AND PROFILE: STH 49	SHEET 76	E

FILE NAME : N:\PDS\C3D\62700034\SHEETSPLAN\050102-PP.DWG
LAYOUT NAME - 04pp
PLOT DATE : 1/30/2018 8:24 AM
PLOT BY : BRATTLUND, ERIK JOHN
PLOT NAME :
PLOT SCALE : 1 IN:100 FT

WISDOT/CADDS SHEET 44

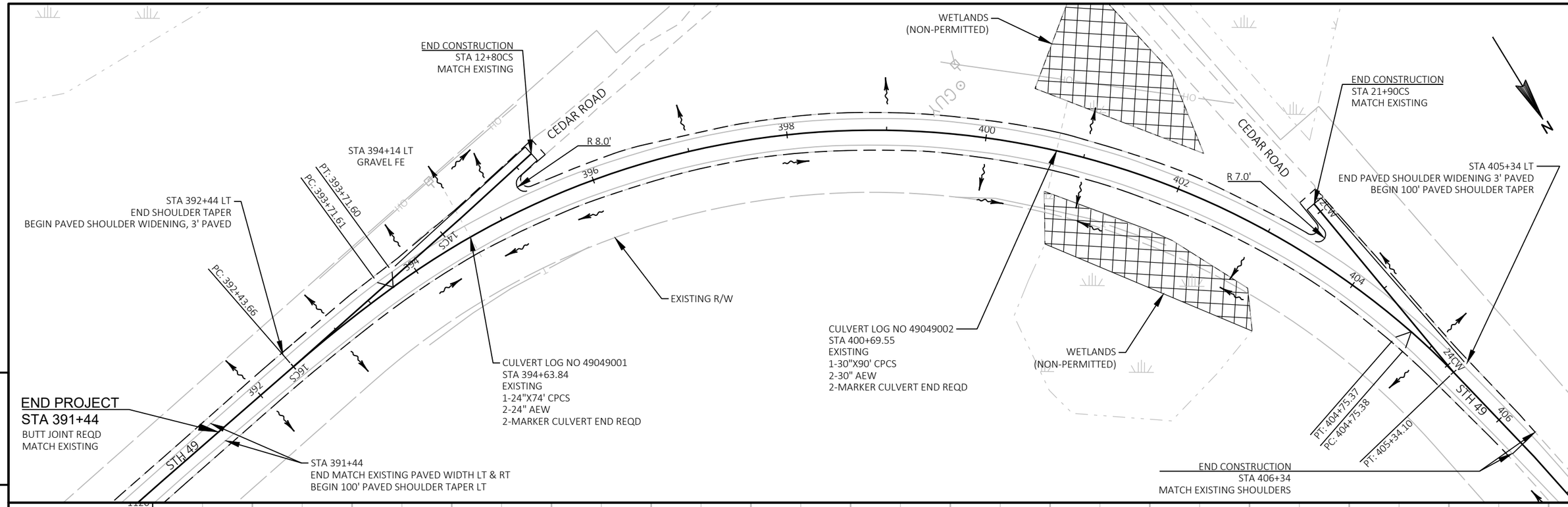

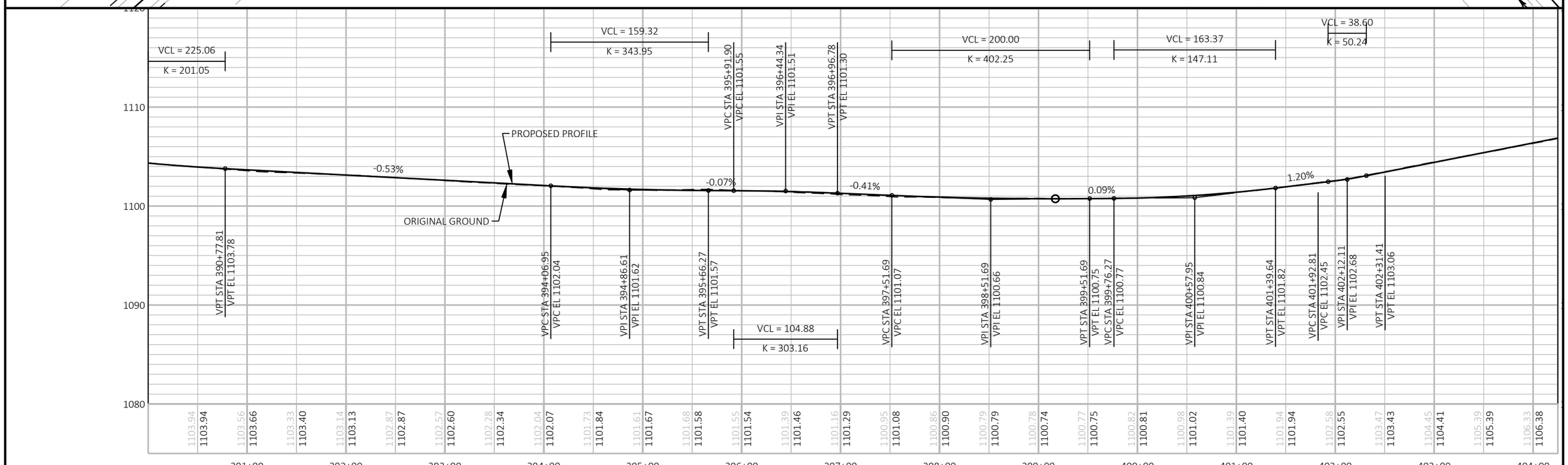

PROJECT NO: 6270-00-64	HWY: STH 49	COUNTY: WAUPACA	PLAN AND PROFILE: STH 49	SHEET 77	E

Standard Detail Drawing List

08E09-06	SILT FENCE
08F01-11	APRON ENDWALLS FOR CULVERT PIPE
08F02-01	APRON ENDWALLS FOR PIPE ARCH AND ELLIPTICAL PIPE
08F04-07	JOINT TIES FOR CONCRETE PIPE AND CONCRETE COLLAR DETAIL
14B15-10A	STEEL PLATE BEAM GUARD, CLASS "A" INSTALLATION & ELEMENTS
14B15-10B	STEEL PLATE BEAM GUARD, CLASS "A" INSTALLATION & ELEMENTS
14B15-10C	STEEL PLATE BEAM GUARD, CLASS "A", INSTALLATION & ELEMENTS
14B18-06A	STEEL PLATE BEAM GUARD, CLASS "A" (AT BRIDGES, OBSTACLES AND SIDEROADS/DRIVEWAYS)
14B20-11A	STEEL THRIE BEAM STRUCTURE APPROACH
14B20-11B	STEEL THRIE BEAM STRUCTURE APPROACH, CONNECTION TO SQUARE END PARAPETS
14B20-11D	STEEL THRIE BEAM STRUCTURE APPROACH, CONNECTION TO SLOPED END PARAPETS
14B24-09A	STEEL PLATE BEAM GUARD ENERGY ABSORBING TERMINAL
14B24-09B	STEEL PLATE BEAM GUARD ENERGY ABSORBING TERMINAL
14B24-09C	STEEL PLATE BEAM GUARD ENERGY ABSORBING TERMINAL
14B29-01	SAFETY EDGE
15A02-09	DELINEATOR POST, DELINEATOR REFLECTOR AND DELINEATOR BRACKET WITH REFLECTIVE SHEETING
15A03-02A	FLEXIBLE MARKER POST FOR CULVERT END
15A03-02B	FLEXIBLE MARKER POST FOR CULVERT END
15A04-03C	DELINEATOR POST WITH REFLECTIVE SHEETING
15A04-03D	DELINEATOR WITH REFLECTIVE SHEETING
15C03-04	BARRICADES AND SIGNS FOR SIDEROAD CLOSURES
15C04-04	TRAFFIC CONTROL, ADVANCE WARNING SIGNS 45 M.P.H. OR GREATER TWO-WAY UNDIVIDED ROAD OPEN TO TRAFFIC
15C06-09	SIGNING & MARKING FOR TWO LANE BRIDGES
15C08-18A	LONGITUDINAL MARKING (MAINLINE)
15C11-07B	CHANNELIZING DEVICES DRUMS, CONES, BARRICADES AND VERTICAL PANELS
15C12-06	TRAFFIC CONTROL FOR LANE CLOSURE WITH FLAGGING OPERATION
15C19-05A	MOVING PAVEMENT MARKING OPERATION TWO-LANE TWO-WAY ROADWAY
15C35-02A	PAVEMENT MARKING (INTERSECTIONS)
15D28-03	TRAFFIC CONTROL, WORK ON SHOULDER OR PARKING LANE, UNDIVIDED ROADWAY
15D38-02A	TEMPORARY TRAFFIC CONTROL SIGN MOUNTING
15D38-02B	ATTACHMENT OF SIGNS TO POSTS
15D39-01	TRAFFIC CONTROL, DROP-OFF SIGNING
16A01-06	LANDMARK REFERENCE MONUMENTS AND COVERS

6

6

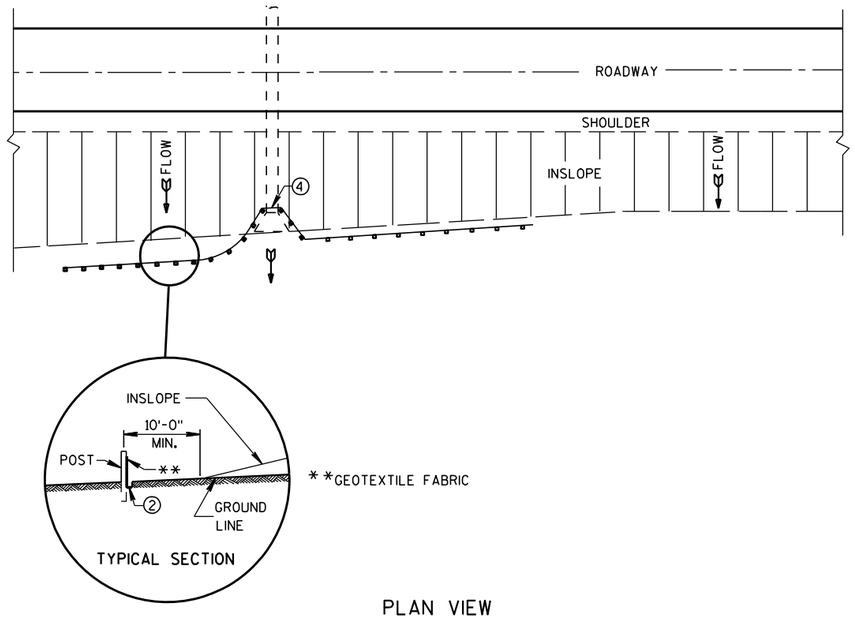

PLAN VIEW

TYPICAL APPLICATION OF SILT FENCE

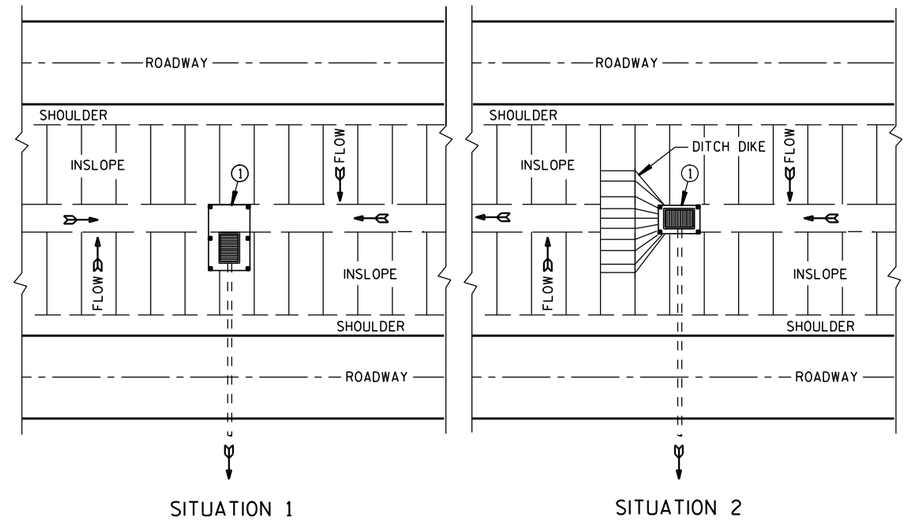

PLAN VIEW

SILT FENCE AT MEDIAN SURFACE DRAINS

GENERAL NOTES

DETAILS OF CONSTRUCTION NOT SHOWN ON THIS DRAWING SHALL CONFORM TO THE PERTINENT REQUIREMENTS OF THE STANDARD SPECIFICATIONS AND APPLICABLE SPECIAL PROVISIONS.

① HORIZONTAL BRACE REQUIRED WITH 2" X 4" WOODEN FRAME OR EQUIVALENT AT TOP OF POSTS.

② FOR MANUAL INSTALLATIONS THE TRENCH SHALL BE A MINIMUM OF 4" WIDE & 6" DEEP TO BURY AND ANCHOR THE GEOTEXTILE FABRIC. FOLD MATERIAL TO FIT TRENCH AND BACKFILL & COMPACT TRENCH WITH EXCAVATED SOIL.

③ WOOD POSTS SHALL BE A MINIMUM SIZE OF 1⅛" X 1⅛" OF OAK OR HICKORY.

④ SILT FENCE TO EXTEND ACROSS THE TOP OF THE PIPE.

⑤ CONSTRUCT SILT FENCE FROM A CONTINUOUS ROLL IF POSSIBLE BY CUTTING LENGTHS TO AVOID JOINTS. IF A JOINT IS NECESSARY USE ONE OF THE FOLLOWING TWO METHODS; A) OVERLAP THE END POSTS AND TWIST, OR ROTATE, AT LEAST 180 DEGREES. B) HOOK THE END OF EACH SILT FENCE LENGTH.

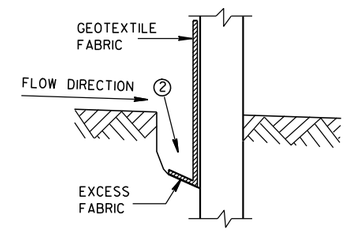

TRENCH DETAIL

NOTE: ADDITIONAL POST DEPTH OR TIE BACKS MAY BE REQUIRED IN UNSTABLE SOILS

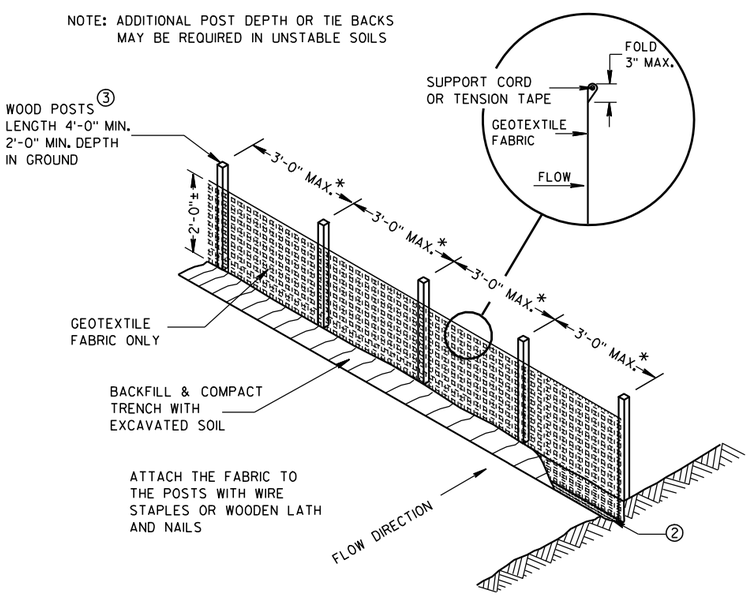

*NOTE: 8'-0" POST SPACING ALLOWED IF A WOVEN GEOTEXTILE FABRIC IS USED.

SILT FENCE

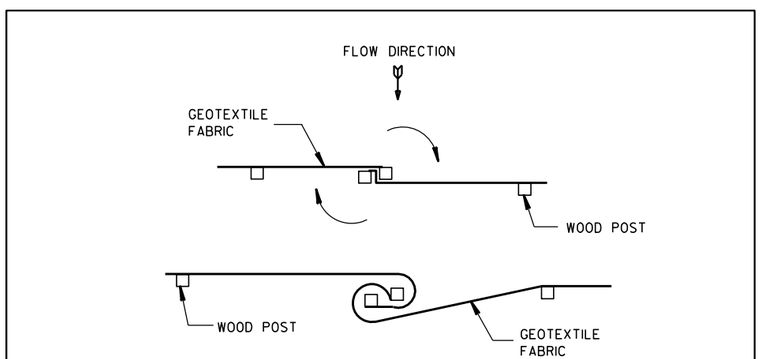

TWIST METHOD

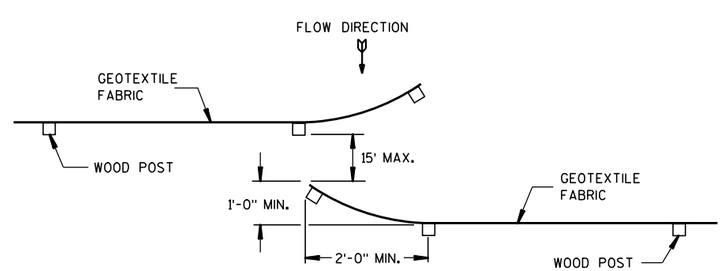

HOOK METHOD

JOINING TWO LENGTHS OF SILT FENCE ⑤

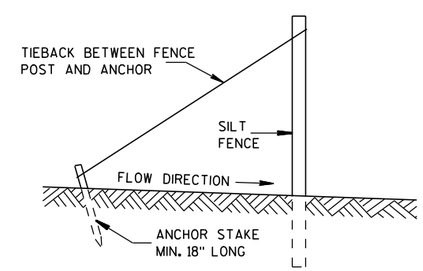

SILT FENCE TIE BACK

(WHEN REQUIRED BY THE ENGINEER)

SILT FENCE
STATE OF WISCONSIN DEPARTMENT OF TRANSPORTATION
APPROVED 4-29-05 /S/ Beth Cann----- DATE CHIEF ROADWAY DEVELOP ENGINEER FHWA

6

6

S.D.D. 8 E 9-6

S.D.D. 8 E 9-6

METAL APRON ENDWALLS

PIPE DIA. (IN.)	MIN. THICK. (Inches) STEEL	MIN. THICK. (Inches) ALUM.	DIMENSIONS (Inches) A (±1")	B (MAX.)	H (±1")	L (±1 1/2")	L1 ①	L2 ①	W (±2")	APPROX. SLOPE	BODY
12	.064	.060	6	6	6	21	12	17 1/2	24	2 1/2 to 1	1 Pc.
15	.064	.060	7	8	6	26	14	21 3/4	30	2 1/2 to 1	1 Pc.
18	.064	.060	8	10	6	31	15	28 1/4	36	2 1/2 to 1	1 Pc.
21	.064	.060	9	12	6	36	18	29 5/8	42	2 1/2 to 1	1 Pc.
24	.064	.075	10	13	6	41	18	37 1/4	48	2 1/2 to 1	1 Pc.
30	.079	.075	12	16	8	51	18	52 1/4	60	2 1/2 to 1	1 Pc.
36	.079	.105	14	19	9	60	24	59 3/4	72	2 1/2 to 1	2 Pc.
42	.109	.105	16	22	11	69	24	75 5/8	84	2 1/2 to 1	2 Pc.
48	.109	.105	18	27	12	78	24	81	90	2 1/4 to 1	3 Pc.
54	.109	.105	18	30	12	84	30	85 1/2	102	2 1/4 to 1	3 Pc.
60	.109×	.105×	18	33	12	87	—	—	114	2 to 1	3 Pc.
66	.109×	.105×	18	36	12	87	—	—	120	2 to 1	3 Pc.
72	.109×	.105×	18	39	12	87	—	—	126	2 to 1	3 Pc.
78	.109×	.105×	18	42	12	87	—	—	132	1 1/2 to 1	3 Pc.
84	.109×	.105×	18	45	12	87	—	—	138	1 1/2 to 1	3 Pc.
90	.109×	.105×	18	37	12	87	—	—	144	1 1/2 to 1	3 Pc.
96	.109×	.105×	18	35	12	87	—	—	150	1 1/2 to 1	3 Pc.

× EXCEPT CENTER PANEL
SEE GENERAL NOTES

REINFORCED CONCRETE APRON ENDWALLS

PIPE DIA. (IN.)	DIMENSIONS (Inches) T	A	B	C	D	E	G	APPROX. SLOPE
12	2	4	24	48 7/8	72 7/8	24	2	3 to 1
15	2 1/4	6	27	46	73	30	2 1/4	3 to 1
18	2 1/2	9	27	46	73	36	2 1/2	3 to 1
21	2 3/4	9	36	37 1/2	73 1/2	42	2 3/4	3 to 1
24	3	9 1/2	43 1/2	30	73 1/2	48	3	3 to 1
27	3 1/4	10 1/2	49 1/2	24	73 1/2	54	3 1/4	3 to 1
30	3 1/2	12	54	19 3/4	73 1/2	60	3 1/2	3 to 1
36	4	15	63	34 3/4	97 3/4	72	4	3 to 1
42	4 1/2	21	63	35	98	78	4 1/2	3 to 1
48	5	24	72	26	98	84	5	3 to 1
54	5 1/2	27	65	*33 1/4-**35	*98 1/4-**100	90	5 1/2	2 2/5 to 1
60	6	*30-**35	60	39	99	96	5	2 to 1
66	6 1/2	*24-**30	*72-**78	*21-**27	99	102	5 1/2	2 to 1
72	7	*24-**36	78	21	99	108	6	2 to 1
78	7 1/2	*24-**36	78	21	99	114	6 1/2	2 to 1
84	8	36	90 1/2	21	111 1/2	120	6 1/2	1 1/2 to 1
90	8 1/2	41	87 1/2	24	111 1/2	132	6 1/2	1 1/2 to 1

*MINIMUM
**MAXIMUM

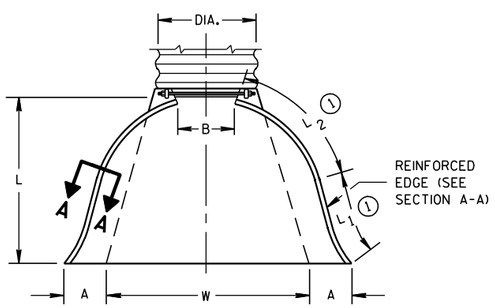

PLAN VIEW

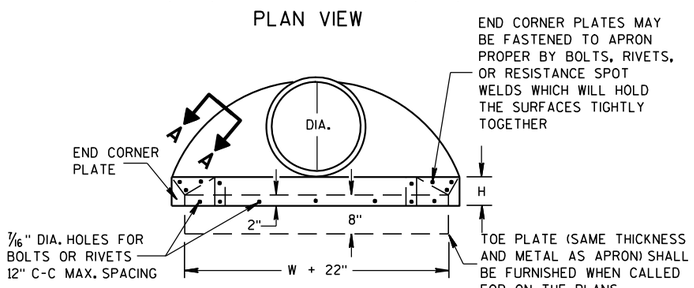

END VIEW

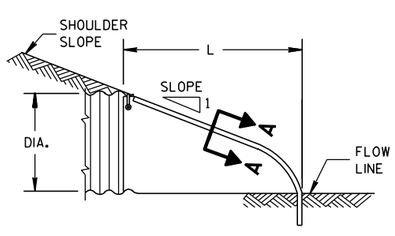

SIDE ELEVATION

METAL ENDWALLS

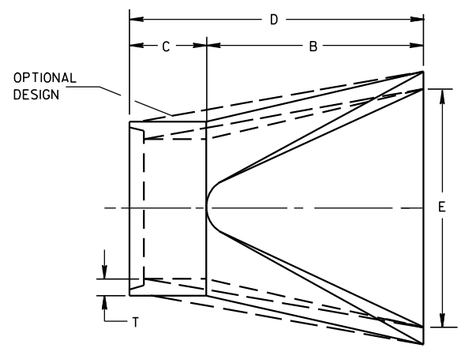

PLAN

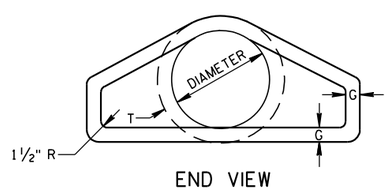

END VIEW

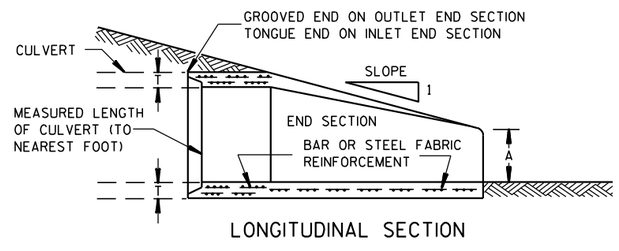

LONGITUDINAL SECTION

CONCRETE ENDWALLS

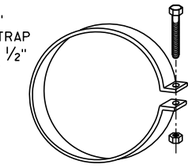

ALTERNATE FOR TYPE 1 CONNECTION

END SECTION CONNECTOR STRAP

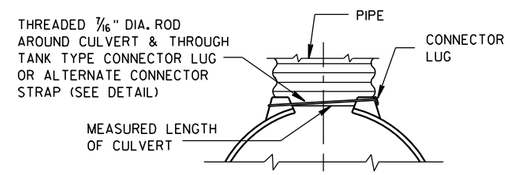

TYPE 1
FOR 12" THRU 24" CORR. PIPE

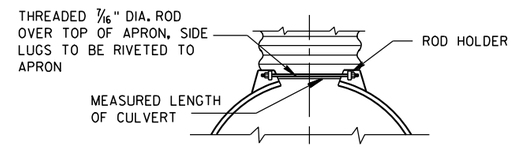

TYPE 2
FOR 30" THRU 96" CORR. PIPE

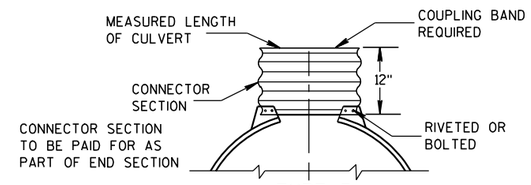

TYPE 3
FOR 42" THRU 96" CORR. PIPE

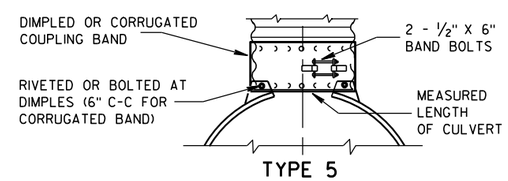

TYPE 5
ALTERNATE FOR:
ALL SIZES CORRUGATED CIRCULAR PIPE

NOTE: DIMPLED BAND FITS OVER OUTSIDE OF ENDWALL, AND CORRUGATED BAND FITS INSIDE ENDWALL. DIMPLED BAND MAY BE USED WITH HELICALLY CORRUGATED PIPE.

FOR CIRCUMFERENTIALLY CORRUGATED PIPE USE ENDWALL CONNECTION DETAILS 1, 2, 3 OR 5 AS APPLICABLE.

FOR HELICALLY CORRUGATED PIPE USE ENDWALL CONNECTION DETAILS 1, 2 OR 5.

FOR HELICALLY CORRUGATED PIPES WITH TWO CIRCUMFERENTIAL CORRUGATIONS AT EACH END USE ENDWALL CONNECTION DETAILS 1, 2 OR 3.

CONNECTION DETAILS

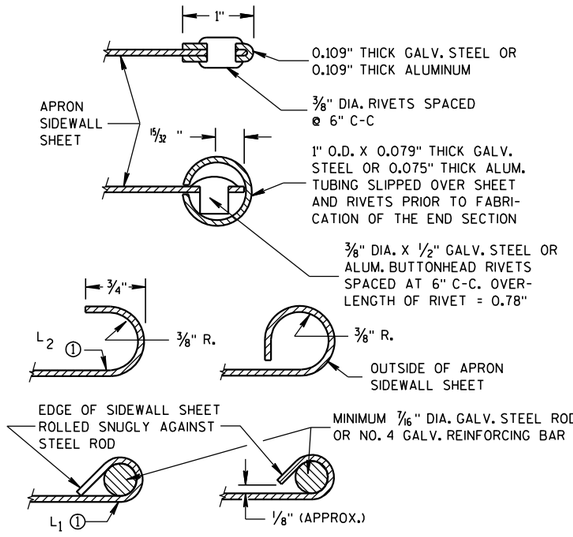

SECTION A-A

GENERAL NOTES

DETAILS OF CONSTRUCTION, MATERIALS AND WORKMANSHIP NOT SHOWN ON THIS DRAWING SHALL CONFORM TO THE PERTINENT REQUIREMENTS OF THE STANDARD SPECIFICATIONS AND THE APPLICABLE SPECIAL PROVISIONS.

CONCRETE CULVERT ENDWALLS MAY NOT BE USED WITH GALVANIZED STEEL OR ALUMINUM CULVERT PIPE OR VISE VERSA. GALVANIZED STEEL OR ALUMINUM ENDWALLS SHALL NORMALLY BE INSTALLED ON CULVERT PIPE OF THE SAME METAL.

ALL THREE PIECE STEEL APRON ENDWALLS FOR 60" DIAMETER PIPE AND LARGER SHALL HAVE 0.109" SIDES AND 0.138" CENTER PANELS. ALL THREE PIECE ALUMINUM APRON ENDWALLS FOR 60" DIAMETER PIPE AND LARGER SHALL HAVE 0.105" SIDES AND 0.134" CENTER PANELS. THE WIDTH OF CENTER PANELS SHALL BE GREATER THAN 20 PERCENT OF THE PIPE PERIMETER.

LAP SEAMS SHALL BE TIGHTLY JOINED BY GALVANIZED RIVETS OR BOLTS FOR STEEL UNITS AND ALUMINUM RIVETS AND BOLTS FOR ALUMINUM UNITS. FOR THE 60" THROUGH 96" DIAMETER APRON ENDWALL SIZES, THE REINFORCED EDGES AND CENTER PANEL SEAMS SHALL BE FURTHER REINFORCED WITH GALVANIZED STEEL OR ALUMINUM STIFFENER ANGLES. THE ANGLES SHALL BE ATTACHED BY GALVANIZED NUTS AND BOLTS FOR STEEL UNITS AND ALUMINUM NUTS AND BOLTS FOR ALUMINUM UNITS.

WHERE TWO OR MORE PIPES WITH APRON ENDWALLS ARE LAID ADJACENT TO EACH OTHER, THEY SHALL BE SEPARATED BY A DISTANCE SUFFICIENT TO PROVIDE A MINIMUM CLEARANCE OF 6 INCHES BETWEEN APRON ENDWALLS.

① FOR PIPE SIZES UP TO 60" DIAMETER, A 180° ROLLED EDGE MAY BE USED INSTEAD OF STEEL ROD REINFORCEMENT. SEE SECTION A-A.

APRON ENDWALLS FOR CULVERT PIPE

STATE OF WISCONSIN
DEPARTMENT OF TRANSPORTATION

APPROVED
11/30/94 — DATE
/S/ Rory L. Rhinesmith — CHIEF ROADWAY DEVELOPMENT ENGINEER
FHWA

6
S.D.D. 8 F 1-11

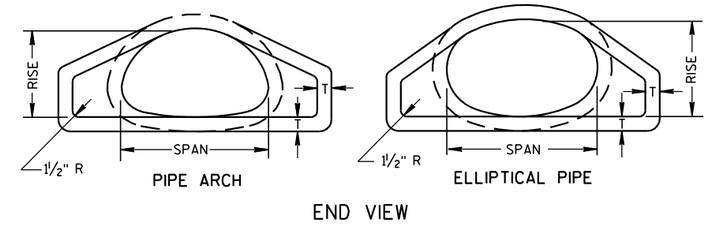

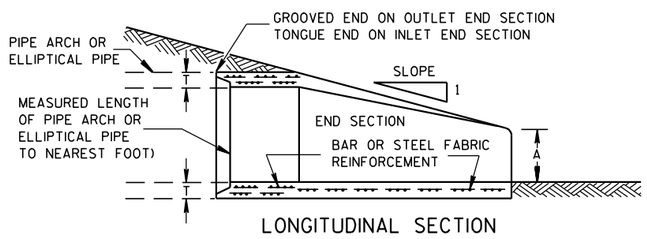

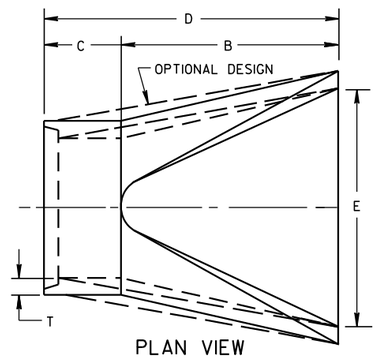

CONCRETE ENDWALLS

2- ⅔" X ½" CORRUGATIONS														
EQUIV. DIA. (Inches)	(Inches)		MIN. THICK. (Inches)		DIMENSIONS (Inches)							APPROX. SLOPE	BODY
	SPAN	RISE	STEEL	ALUM.	A (±1")	B (MAX.)	H (±1")	L (±1½")	L1 ①	L2 ①	W (±2")		
15	17	13	.064	.060	7	9	6	19	14	16	30	2½ to 1	1 Pc.
18	21	15	.064	.060	7	10	6	23	14	19⅜	36	2½ to 1	1 Pc.
21	24	18	.064	.060	8	12	6	28	18	21¾	42	2½ to 1	1 Pc.
24	28	20	.064	.060	9	14	6	32	18	27½	48	2½ to 1	1 Pc.
30	35	24	.079	.075	10	16	6	39	18	37⅝	60	2½ to 1	1 Pc.
36	42	29	.079	.075	12	18	8	46	24	45⅜	75	2½ to 1	1 Pc.
42	49	33	.109	.105	13	21	9	53	24	54¾	85	2½ to 1	2 Pc.
48	57	38	.109	.105	18	26	12	63	24	68	90	2½ to 1	3 Pc.
54	64	43	.109	.105	18	30	12	70	24	72¾	102	2¼ to 1	3 Pc.
60	71	47	.109*	.105*	18	33	12	77	30	82¼	114	2¼ to 1	3 Pc.
66	77	52	.109*	.105*	18	36	12	77	—	—	126	2 to 1	3 Pc.
72	83	57	.109*	.105*	18	39	12	77	—	—	138	2 to 1	3 Pc.

3" X 1" CORRUGATIONS														
EQUIV. DIA. (Inches)	(Inches)		MIN. THICK. (Inches)		DIMENSIONS (Inches)							APPROX. SLOPE	BODY
	SPAN	RISE	STEEL	ALUM.	A (±1")	B (MAX.)	H (±1")	L (±1½")	L1 ①	L2 ①	W (±2")		
48	53	41	.109	.105	18	26	12	63	24	72¾	90	2½ to 1	2 Pc.
54	60	46	.109	.105	18	30	12	70	30	82¼	102	2 to 1	2 Pc.
60	66	51	.109*	.105*	18	33	12	77	—	—	114	1½ to 1	3 Pc.
66	73	55	.109*	.105*	18	36	12	77	—	—	126	1½ to 1	3 Pc.
72	81	59	.109*	.105*	18	39	12	77	—	—	138	2 to 1	3 Pc.
78	87	63	.109*	.105*	22	38	12	77	—	—	148	1½ to 1	3 Pc.
84	95	67	.109*	.105*	22	34	12	77	—	—	162	1½ to 1	3 Pc.
90	103	71	.109*	.105*	22	38	12	77	—	—	174	1½ to 1	3 Pc.
96	112	75	.109*	.105*	24	40	12	77	—	—	174	1½ to 1	3 Pc.

NOTE: ALL SPLICES TO BE LAP RIVETED OR BOLTED.

* EXCEPT CENTER PANEL SEE GENERAL NOTES

REINFORCED CONCRETE PIPE ARCH									
EQUIV. DIA. (Inches)	DIMENSIONS (Inches)								APPROX. SLOPE
	** SPAN	** RISE	T	A	B	C	D	E	
24	29	18	3	8½	39	33	72	48	3 to 1
30	36	22	3½	9½	50	46	96	60	3 to 1
36	44	27	4	11⅛	60	36	96	72	3 to 1
42	51	31	4½	15 13/16	60	36	96	78	3 to 1
48	58	36	5	21	60	36	96	84	3 to 1
54	65	40	5½	25½	60	36	96	90	3 to 1
60	73	45	6	31	60	36	96	96	3 to 1
72	88	54	7	31	60	39	99	120	2 to 1
84	102	62	8	28½	83	19	102	144	2 to 1

REINFORCED CONCRETE ELLIPTICAL PIPE									
EQUIV. DIA. (Inches)	DIMENSIONS (Inches)								APPROX. SLOPE
	** SPAN	** RISE	T	A	B	C	D	E	
24	30	19	3¼	8½	39	33	72	48	3 to 1
30	38	24	3¾	9½	54	18	72	60	3 to 1
36	45	29	4½	11⅛	60	24	84	72	2½ to 1
42	53	34	5	15¾	60	36	96	78	2½ to 1
48	60	38	5½	21	60	36	96	84	2½ to 1
54	68	43	6	25½	60	36	96	90	2½ to 1
60	76	48	6½	30	60	36	96	96	2½ to 1

**NOMINAL SIZE

GENERAL NOTES

DETAILS OF CONSTRUCTION, MATERIALS AND WORKMANSHIP NOT SHOWN ON THIS DRAWING SHALL CONFORM TO THE PERTINENT REQUIREMENTS OF THE STANDARD SPECIFICATIONS AND THE APPLICABLE SPECIAL PROVISIONS.

CONCRETE APRON ENDWALLS MAY NOT BE USED WITH GALVANIZED STEEL OR ALUMINUM CULVERT PIPE OR VISE VERSA. GALVANIZED STEEL OR ALUMINUM APRON ENDWALLS SHALL NORMALLY BE INSTALLED ON CULVERT PIPE OF THE SAME METAL.

ALL THREE PIECE STEEL APRON ENDWALLS FOR 66" X 51" PIPE ARCH AND LARGER SHALL HAVE 0.109" SIDES AND 0.138" CENTER PANELS. ALL THREE PIECE ALUMINUM APRON ENDWALLS FOR 66" X 51" PIPE ARCH AND LARGER SHALL HAVE 0.105" SIDES AND 0.134" CENTER PANELS. THE WIDTH OF CENTER PANELS SHALL BE GREATER THAN 20 PERCENT OF THE PIPE ARCH PERIMETER.

LAP SEAMS SHALL BE TIGHTLY JOINED BY GALVANIZED RIVETS OR BOLTS FOR STEEL UNITS AND ALUMINUM RIVETS AND BOLTS FOR ALUMINUM UNITS. FOR THE 77" X 52" THROUGH 112" X 75" APRON ENDWALL SIZES, THE REINFORCED EDGES AND CENTER PANEL SEAMS SHALL BE FURTHER REINFORCED WITH GALVANIZED STEEL OR ALUMINUM STIFFENER ANGLES. THE ANGLES SHALL BE ATTACHED BY GALVANIZED NUTS AND BOLTS FOR STEEL UNITS AND ALUMINUM NUTS AND BOLTS FOR ALUMINUM UNITS.

WHERE TWO OR MORE PIPES WITH APRON ENDWALLS ARE LAID ADJACENT TO EACH OTHER, THEY SHALL BE SEPARATED BY A DISTANCE SUFFICIENT TO PROVIDE A MINIMUM CLEARANCE OF 6 INCHES BETWEEN APRON ENDWALLS.

① FOR PIPE ARCH SIZES UP TO 73" X 55" A 180° ROLLED EDGE MAY BE USED INSTEAD OF STEEL ROD REINFORCEMENT. SEE SECTION A-A.

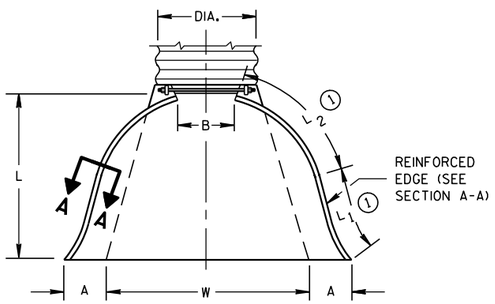

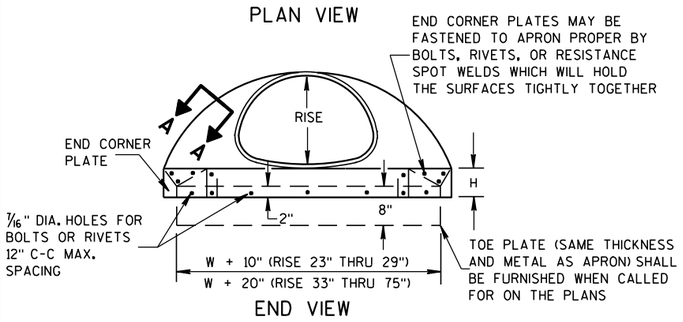

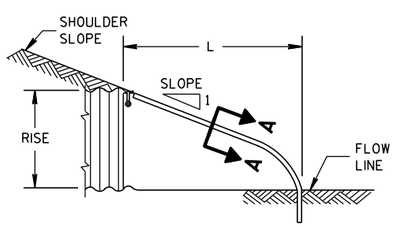

METAL ENDWALLS

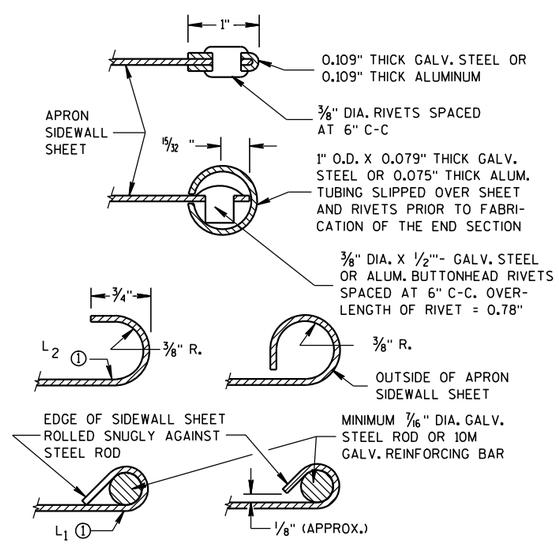

SECTION A-A

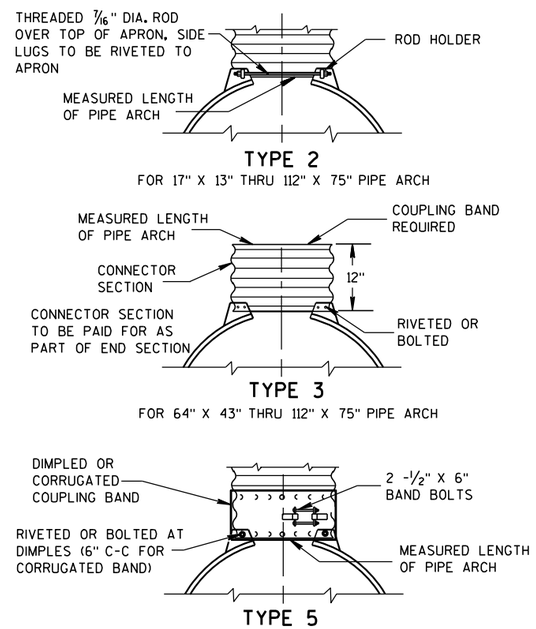

NOTE: DIMPLED BAND FITS OVER OUTSIDE OF ENDWALL, AND CORRUGATED BAND FITS INSIDE ENDWALL.

CONNECTION DETAILS

APRON ENDWALLS FOR PIPE ARCH AND ELLIPTICAL PIPE

STATE OF WISCONSIN
DEPARTMENT OF TRANSPORTATION

APPROVED

11/30/94 — DATE

/S/ Rory L. Rhinesmith — CHIEF ROADWAY DEVELOPMENT ENGINEER

FHWA

6

S.D.D. 8 F 2-1

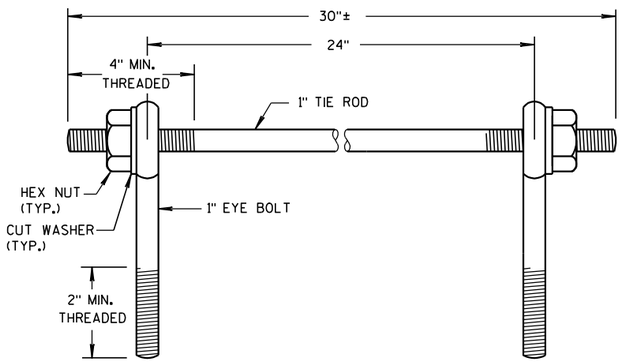

EYE BOLTS AND TIE ROD

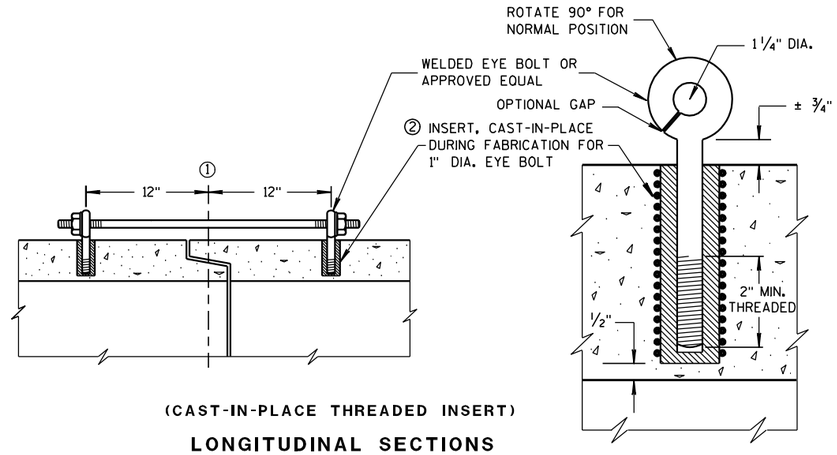

(CAST-IN-PLACE THREADED INSERT)

LONGITUDINAL SECTIONS

EYE BOLT AND TIE ROD ASSEMBLY (ALTERNATE NO. 1)

GENERAL NOTES

DETAILS OF CONSTRUCTION, MATERIALS, AND WORKMANSHIP NOT SHOWN ON THIS DRAWING SHALL CONFORM TO THE PERTINENT REQUIREMENTS OF THE STANDARD SPECIFICATIONS AND APPLICABLE SPECIAL PROVISIONS.

CONCRETE CULVERT AND STORM SEWER PIPE SHALL BE TIED TOGETHER IN THE MANNER ILLUSTRATED BY THIS DETAIL AT LOCATIONS DESIGNATED IN THE STANDARD SPECIFICATIONS AND THE PLAN. THE CONTRACTOR MAY USE EITHER ALTERNATE 1, 2 OR 3 FOR DRAINAGE STRUCTURES. ONLY ALTERNATE 1 AND 3 MAY BE USED FOR CATTLE PASSES, UNLESS OTHERWISE STATED IN THE CONTRACT. THE MATERIALS, FABRICATION AND WORK NECESSARY TO TIE THE PIPE BY THIS DETAIL WILL BE CONSIDERED INCIDENTAL TO THE PIPE AND APRON ENDWALLS IF REQUIRED.

DETAILED DRAWINGS FOR PROPOSED ALTERNATE DESIGNS FOR JOINT TIES SHALL BE SUBMITTED TO THE ENGINEER FOR APPROVAL.

JOINT TIES TO BE HOT-DIP GALVANIZED PER ASTM A 153.

① ℄ OF TONGUE AND GROOVE OR BELL AND SPIGOT JOINTS.

② THE INSIDE OF THE THREADED INSERTS SHALL BE CLEAN TO ALLOW THE INSERTION OF THREADED EYE BOLTS.

③ HOLES SHALL BE CAST-IN-PLACE OR DRILLED 12 INCHES FROM ℄ OF TONGUE AND GROOVE.

④ BOLT PROJECTION INSIDE OF PIPE SHALL NOT EXCEED 2 INCHES.

⑤ OPENING TO BE ROD DIAMETER PLUS 1 INCH.

⑥ LENGTH ADEQUATE TO EXTEND TO WITHIN 1/2 INCH OF THE INNER SURFACE OF THE PIPE.

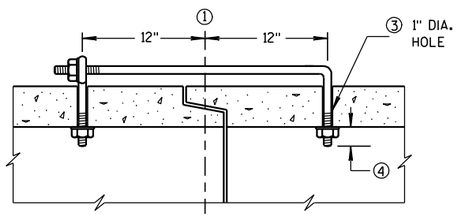

(TONGUE & GROOVE PIPE)

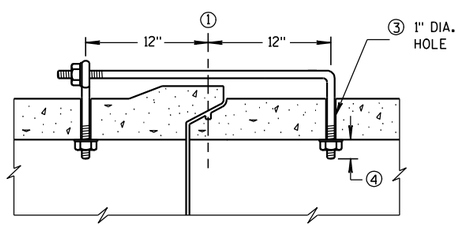

(MODIFIED BELL PIPE)

LONGITUDINAL SECTION

EYE BOLT DIMENSION TABLE

PIPE SIZE	L = LENGTH	
	TONGUE & GROOVE PIPE	MODIFIED BELL PIPE
18" TO 24"	4 1/2"	6 1/4"
30"	5"	7"
36"	5 1/2"	7"
42"	6"	
48"	6 1/2"	
60"	7 1/2"	
66"	8"	

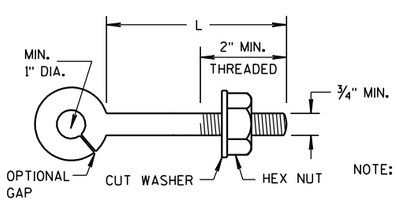

EYE BOLT

NOTE:

NOTE: TWO EYE BOLTS MAY BE USED WITH A 30" LONG THREADED ROD IN LIEU OF THE 90° BENT TIE ROD.

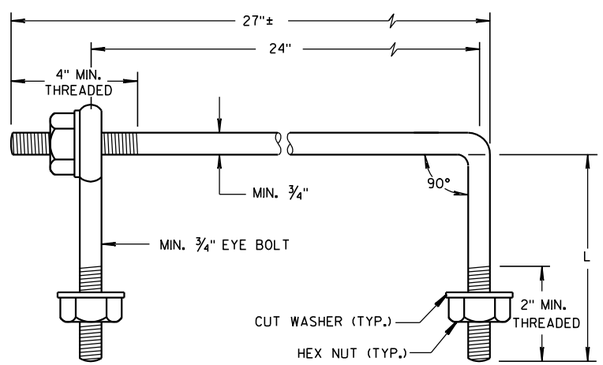

EYE BOLT AND TIE ROD

(JOINT TIES FOR 18" TO 66" DIA. CONCRETE PIPE)

EYE BOLT AND TIE ROD ASSEMBLY (ALTERNATE NO. 2)

ADJUSTABLE TIE ROD TABLE

PIPE DIAMETER	TIE ROD DIAMETER	D	L_1	N
12-60	5/8	5/8	5	1/2
66-84	3/4	3/4	5	1/2
90-108	1	1	7	1 7/16

DIMENSIONS SHOWN ARE IN INCHES

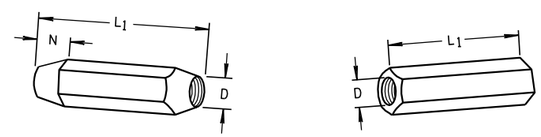

TAPERED PLAIN

RIGHT AND LEFT THREADS

SLEEVE NUTS

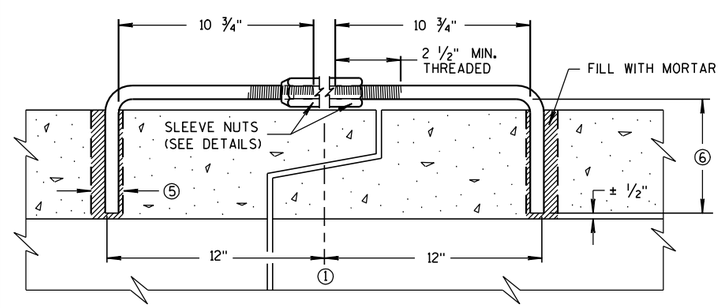

LONGITUDINAL SECTION

(JOINT TIES FOR 12" TO 108" DIA. CONCRETE PIPE)

ADJUSTABLE TIE ROD (ALTERNATE NO. 3)

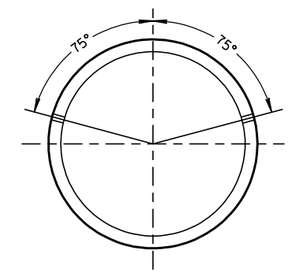

PLACEMENT OF (2) CAST-IN-PLACE INSERTS OR HOLES DURING FABRICATION FOR PIPE SECTIONS REQUIRING TIE RODS

TRANSVERSE SECTION

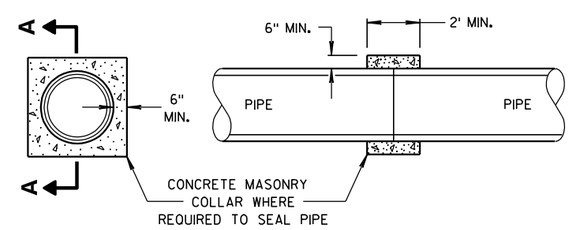

SECTION A-A

CONCRETE COLLAR DETAIL

JOINT TIES FOR CONCRETE PIPE AND CONCRETE COLLAR DETAIL

STATE OF WISCONSIN
DEPARTMENT OF TRANSPORTATION

APPROVED
6/5/2012 /S/ Jerry H. Zogg
DATE ROADWAY STANDARDS DEVELOPMENT ENGINEER
FHWA

6

6

S.D.D. 8 F 4-7

S.D.D. 8 F 4-7

GENERAL NOTES

1. W6 X 9 OR W6 X 8.5 STEEL POSTS AND NOTCHED PLASTIC BLOCKOUTS ARE ACCEPTABLE ALTERNATIVES FOR 6" X 8" WOOD POSTS WITH WOOD OR PLASTIC BLOCKOUTS. USE APPROVED NOTCHED PLASTIC BLOCKOUTS WITH STEEL POSTS. APPROVED PLASTIC BLOCKOUT DESIGNS MAY VARY FROM THIS TYPICAL DETAIL WHEN USED IN CONJUNCTION WITH STEEL POSTS.

   DO NOT MIX STEEL POSTS AND WOOD POSTS IN A SINGLE INSTALLATION.
2. USE STRUCTURAL STEEL POSTS CONFORMING TO ASTM A 36. GALVANIZED POSTS ACCORDING TO AASHTO M 111. EITHER SET THE POSTS IN DRILLED HOLES OR DRIVE TO GRADE. REMOVE MUSHROOMING CAUSED BY DRIVING AND REPAIR DAMAGED SPELTER COATING ON GALVANIZED POSTS.
3. INSTALL STEEL POSTS WITH HOLES ON APPROACHING TRAFFIC SIDE.
4. USE EITHER WOOD OR APPROVED PLASTIC BLOCKOUTS ON WOOD POSTS.
5. IF THE DISTANCE FROM BACK OF POST TO SHOULDER HINGE POINT IS LESS THAN 2 FEET INSTALL LONGER POST AT HALF POST SPACING, W BEAM (LHW).
6. IF ROCK IS ENCOUNTERED DURING EXCAVATION, THE ENGINEER MAY APPROVE USING A 12 INCH DIAMETER POST HOLE EXTENDING 20 INCHES DEEP INTO THE ROCK. PLACE GRANULAR MATERIAL IN THE BOTTOM OF THE HOLE APPROXIMATELY 2½ INCHES DEEP. CUT THE POSTS TO LENGTH AND PLACE IN YHE HOLE. BACKFILL WITH MATERIAL EXCAVATED FROM THE HOLE AND COMPACT ADEQUATEY.
7. WHEN USING STEEL POSTS AND WOOD BLOCKOUTS INSTALL FOUR 16D GALVANIZED NAILS. INSTALL NAILS AT THE BACK CORNERS OF THE BLOCK AND BEND THE NAILS OVER THE FLANGE OF THE STEEL POST.

INSTALL BEAM GUARD SECTIONS AND ALL NECESSARY HARDWARE ACCORDING TO THE APPLICABLE PLAN AND CURRENT STANDARD AND SUPPLEMENTAL SPECIFICATIONS.

ALL DIMENSIONS ARE SUBJECT TO MANUFACTURER'S TOLERANCES EXCEPT WHERE ALLOWABLE TOLERANCES ARE SHOWN.

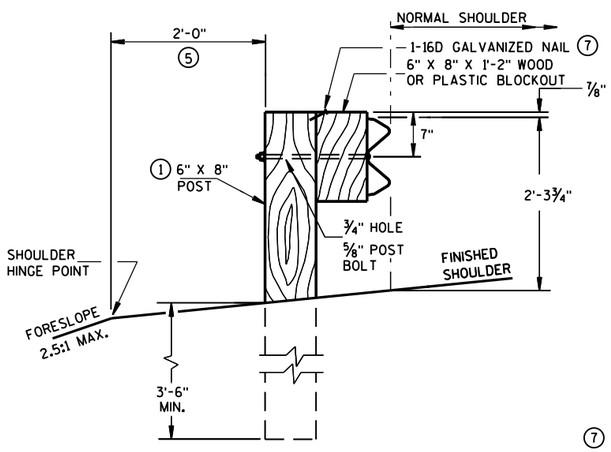

END VIEW
LOCATED ALONG A ROADWAY SHOULDER
STANDARD INSTALLATION

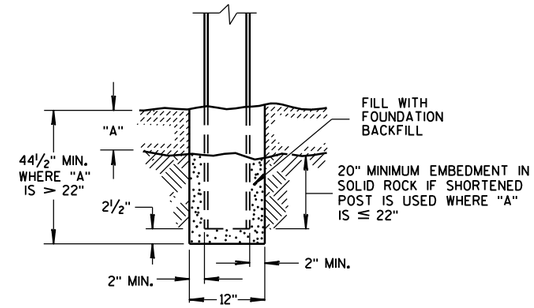

END VIEW
SETTING STEEL OR WOOD POST IN ROCK 6

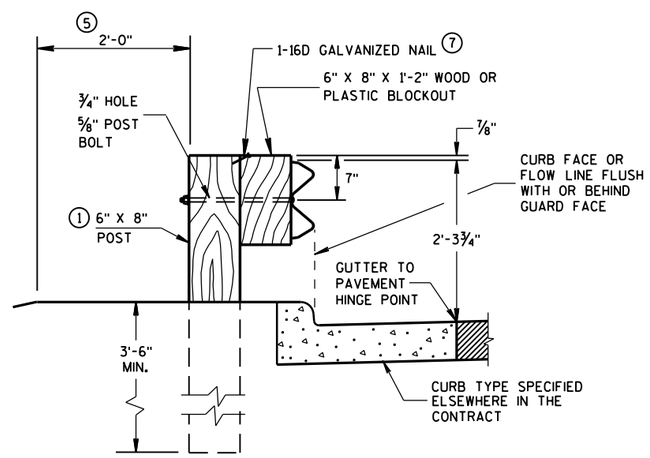

END VIEW
LOCATED ALONG A CURBED ROADWAY

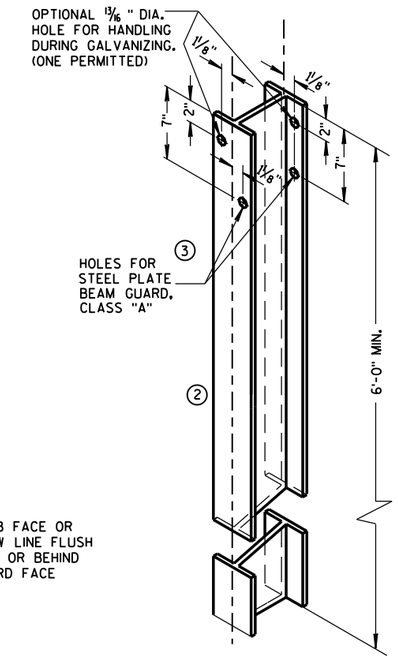

STEEL POST &
HOLE PUNCHING DETAIL
(W6 X 9) 1

ALL HOLES 13/16" DIAMETER EXCEPT AS NOTED

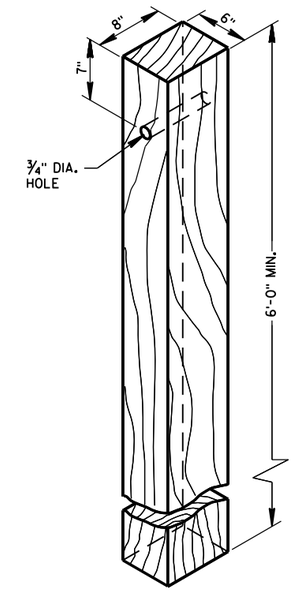

WOOD POST
(6"X8") NOMINAL

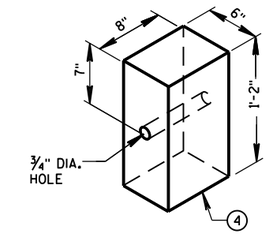

WOOD OR PLASTIC
BLOCKOUT FOR
WOOD POSTS

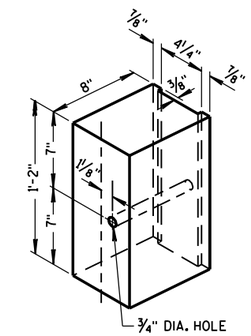

TYPICAL NOTCHED 1
PLASTIC BLOCKOUT
FOR STEEL POSTS

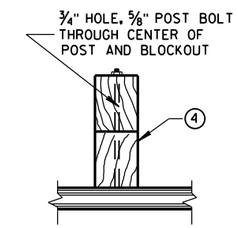

PLAN VIEW
WOOD POST, BLOCKOUT & BEAM

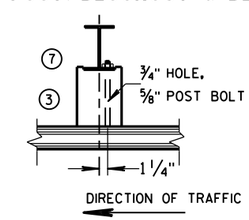

PLAN VIEW
STEEL POST, NOTCHED
PLASTIC BLOCKOUT & BEAM

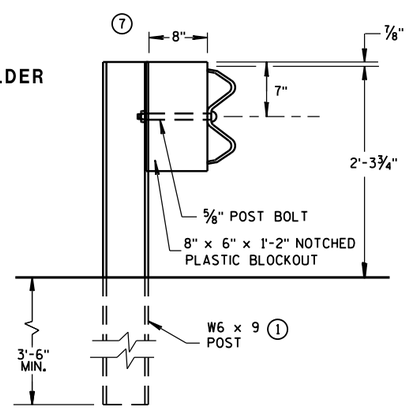

END VIEW
STEEL POST & NOTCHED
PLASTIC BLOCKOUT ALTERNATIVE
STANDARD INSTALLATION

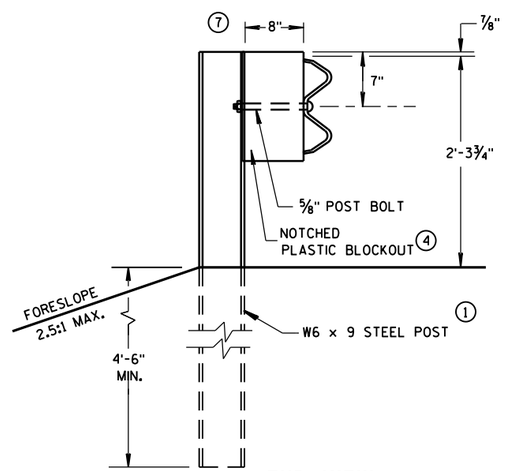

END VIEW
LONGER POST AT HALF
POST SPACING W BEAM
(LHW)

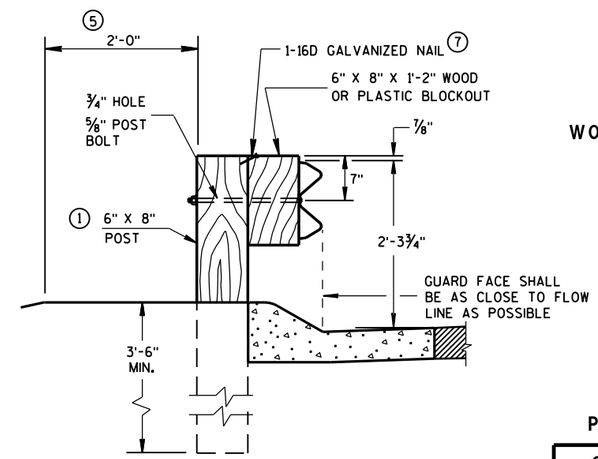

END VIEW
LOCATED ALONG A
MOUNTABLE CURBED ROADWAY

TYPICAL INSTALLATION OF STEEL PLATE BEAM GUARD

STEEL PLATE BEAM GUARD,
CLASS "A"
INSTALLATION & ELEMENTS

STATE OF WISCONSIN
DEPARTMENT OF TRANSPOR

6

S.D.D. 14 B 15-10a

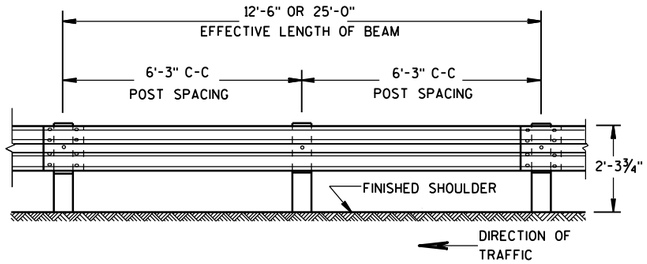

FRONT VIEW

POST SPACING STANDARD INSTALLATION

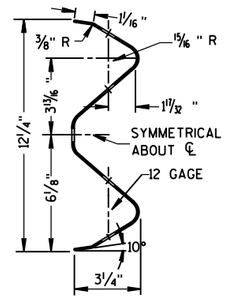

SECTION THRU W BEAM

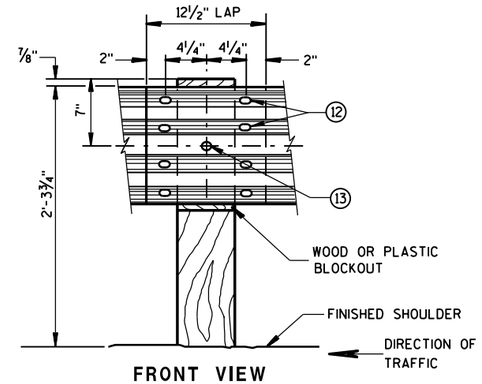

FRONT VIEW

BEAM SPLICE AT WOOD POST AND POST MOUNTING DETAIL

GENERAL NOTES

(9) DO NOT INSTALL REFLECTORS ON THE FIRST 50 FEET OF THE APPROACH END OF THE ENERGY ABSORBING TERMINAL.

(12) 8 -5/8" ϕ X 2" BUTTON HEAD BOLTS WITH OVAL SHOULDERS & RECESS NUTS.

(13) 5/8" DIA. BUTTON HEAD BOLT AND RECESS NUT WITH 5/8" DIA. F844 FLAT WASHER UNDER NUT.

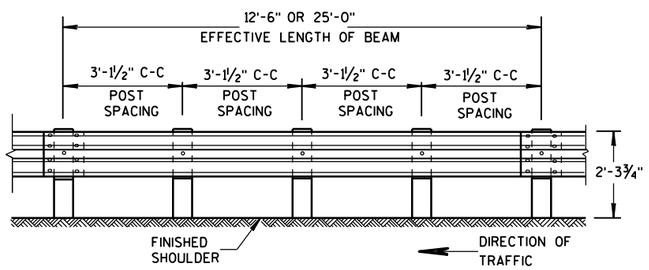

FRONT VIEW

POST SPACING FOR LONGER POST AT HALF POST SPACING W BEAM (LHW)

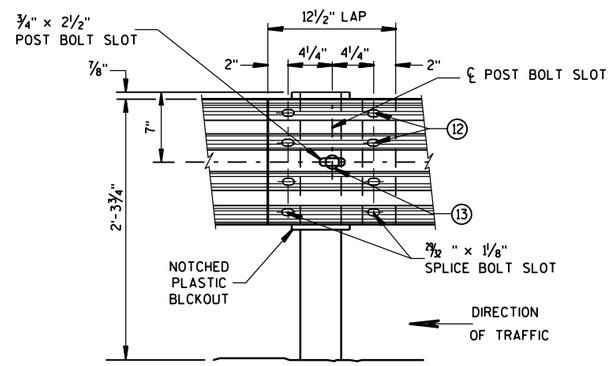

FRONT VIEW
BEAM SPLICE AT STEEL POST

TYPICAL SPLICING DETAILS OF STEEL PLATE BEAM GUARD

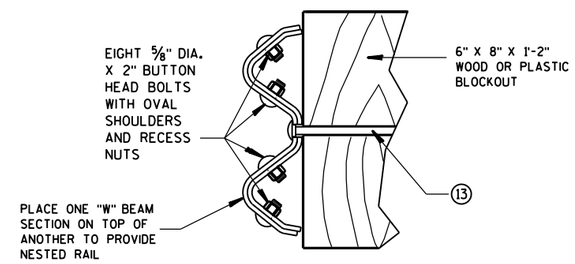

NESTED W BEAM (NW)

USE ALL OTHER STANDARD BEAM GUARD DETAILS FOR CONSTRUCTING NESTED W BEAM (NW)

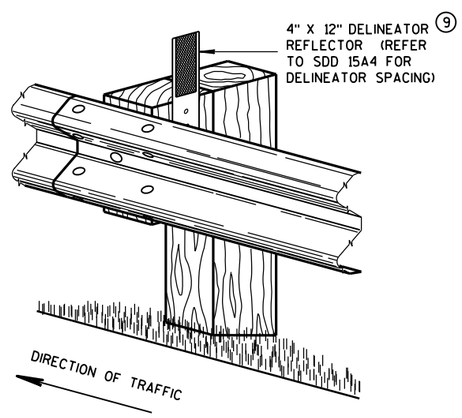

ONE SIDED REFLECTOR DETAIL AND TYPICAL INSTALLATION

STEEL PLATE BEAM GUARD,
CLASS "A",
INSTALLATION & ELEMENTS

STATE OF WISCONSIN
DEPARTMENT OF TRANSPOI

6

6

S.D.D. 14 B 15-10b

S.D.D. 14 B 15-10b

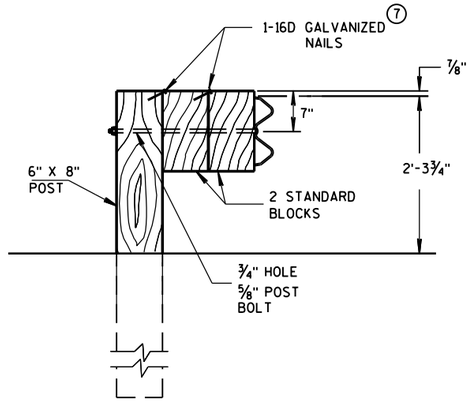

DETAIL FOR DOUBLE BLOCKS

THE NUMBER OF DOUBLE BLOCK POSTS WITHIN A BARRIER RUN IS UNLIMITED

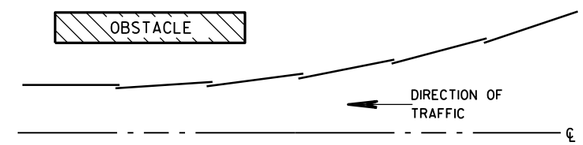

PLAN VIEW
BEAM LAPPING DETAIL

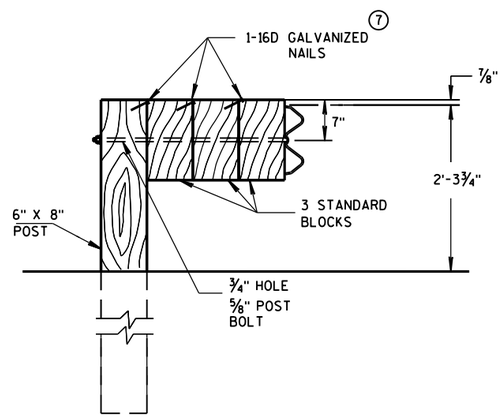

DETAIL FOR TRIPLE BLOCKS

TRIPLE BLOCK DETAIL IS LIMITED TO ONE LOCATION WITHIN A BEAM GUARD RUN.

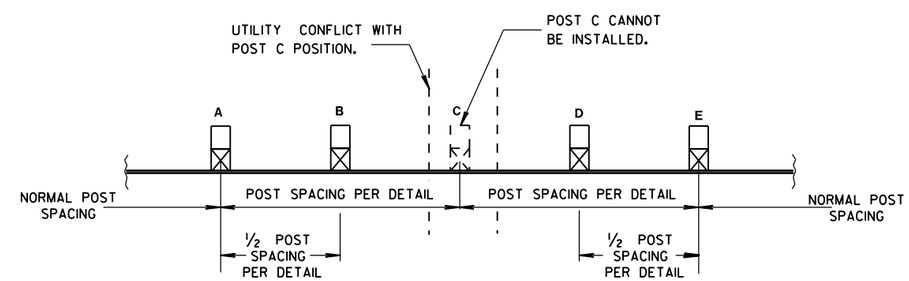

POST DRIVING FOR CONTINUOUS UNDERGROUND OBSTRUCTION

NOTES: USE DOUBLE OR TRIPLE BLOCKS WHEN UNDERGROUND OBSTACLES PREVENT THE POST FROM BEING INSTALLED.

DO NOT USE EXTRA BLOCKOUTS IF IT CAUSES THE POST TO BE DRIVEN BEYOND SHOULDER HINGE POINT OR CAUSES A FIXED OBJECT TO BE WITHIN THE DEFLECTION DISTANCE OF THE BARRIER.

STEEL PLATE BEAM GUARD, CLASS "A", INSTALLATION & ELEMENTS

STATE OF WISCONSIN
DEPARTMENT OF TRANSPORTATION

APPROVED
June 2017 — /S/ Rodney Taylor
DATE — ROADWAY STANDARDS D[illegible] UNIT SUPERVI[illegible] — [illegible]NT
FHWA

6

S.D.D. 14 B 15-10c

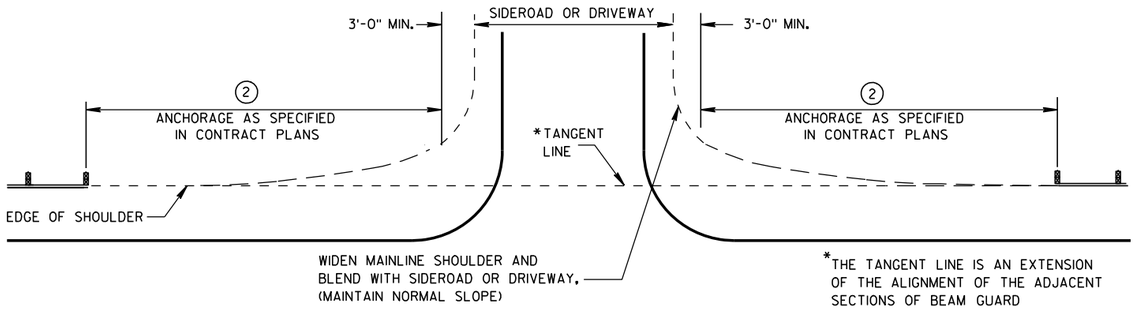

BEAM GUARD AT SIDEROADS OR DRIVEWAYS

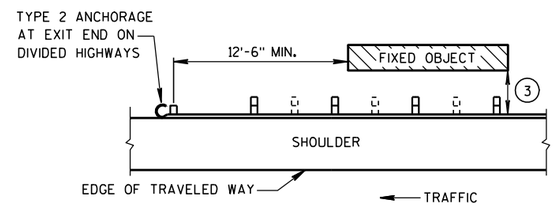

BEAM GUARD AT OBSTACLES EXIT END - ONE WAY TRAFFIC

GENERAL NOTES

DETAILS OF CONSTRUCTION, MATERIALS AND WORKMANSHIP SHALL CONFORM TO THE PERTINENT STANDARD SPECIFICATIONS AND THE APPLICABLE SPECIAL PROVISIONS.

W6 X 9 OR W6 X 8.5 STEEL POSTS WITH NOTCHED PLASTIC BLOCKOUTS ARE ACCEPTABLE ALTERNATIVES FOR 6" X 8" WOOD POSTS WITH WOOD OR PLASTIC BLOCKOUTS. USE APPROVED NOTCHED PLASTIC BLOCKOUTS WITH STEEL POSTS.

THE LOCATIONS AND LENGTHS OF BEAM GUARD ARE SHOWN ELSEWHERE IN THE PLAN.

1. STEEL THRIE BEAM STRUCTURAL APPROACH (STBSA) - SEE CURRENT SDD 14B20.
2. USE AN APPROVED END TREATMENT FOR THE TRAFFIC APPROACH SIDE OF BRIDGE/OBSTACLES. USE TYPE 2 ANCHORAGE ONLY AT THE DOWNSTREAM ENDS OF BEAM GUARD LOCATED ALONG ROADWAYS WITH ONE WAY TRAFFIC.
3.

MINIMUM LATERAL DISTANCE FROM FACE OF BEAM GUARD TO FIXED OBJECT	POST SPACING
3'-6"	3' - 1½"
4'-6"	6' - 3"

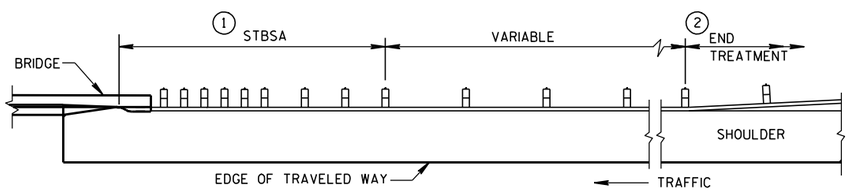

BEAM GUARD AT FULL WIDTH BRIDGES

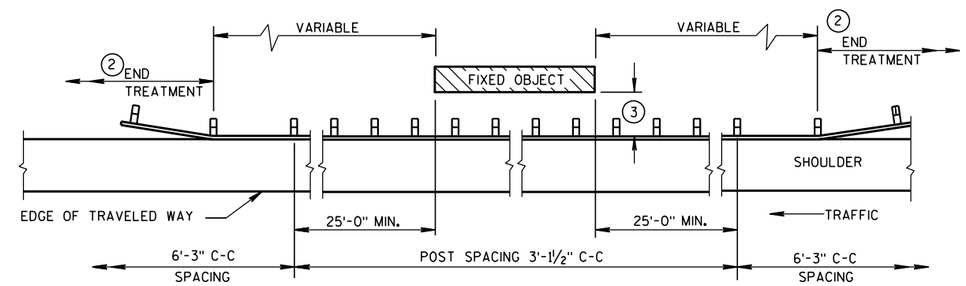

BEAM GUARD AT OBSTACLES - TWO WAY TRAFFIC

(RAIL TO OBSTACLE CLEARANCE 3'-6" TO 4'-6")

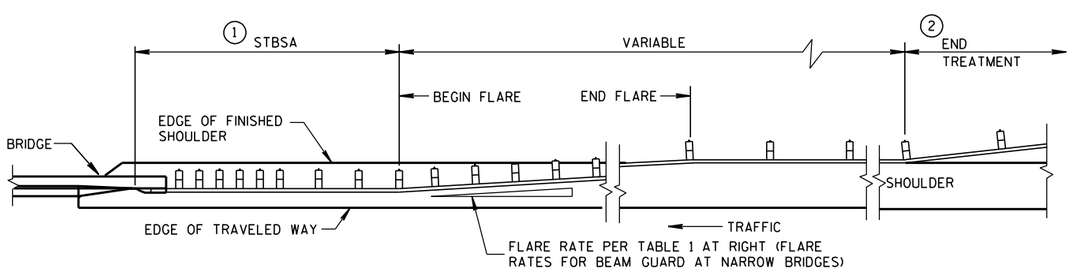

BEAM GUARD AT NARROW BRIDGES

(FLARED TO SHOULDER EDGE, THEN PARALLEL TO ROADWAY)

TABLE 1
FLARE RATES FOR BEAM GUARD AT NARROW BRIDGES

POSTED SPEED (MPH)	FLARE RATE
25	13:1
30	15:1
35	16:1
40	18:1
45	21:1
50	24:1
55	26:1
65	30:1

STEEL PLATE BEAM GUARD CLASS "A" AT BRIDGES, OBSTACLES AND SIDEROADS/DRIVEWAYS

STATE OF WISCONSIN
DEPARTMENT OF TRANSPORTATION

APPROVED
8-21-07 — DATE
/S/ Jerry H. Zogg — ROADWAY STANDARDS DEVELOPMENT ENGINEER
FHWA

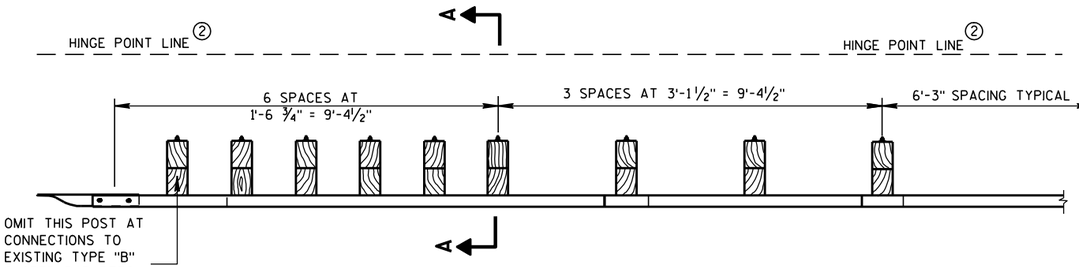

PLAN VIEW

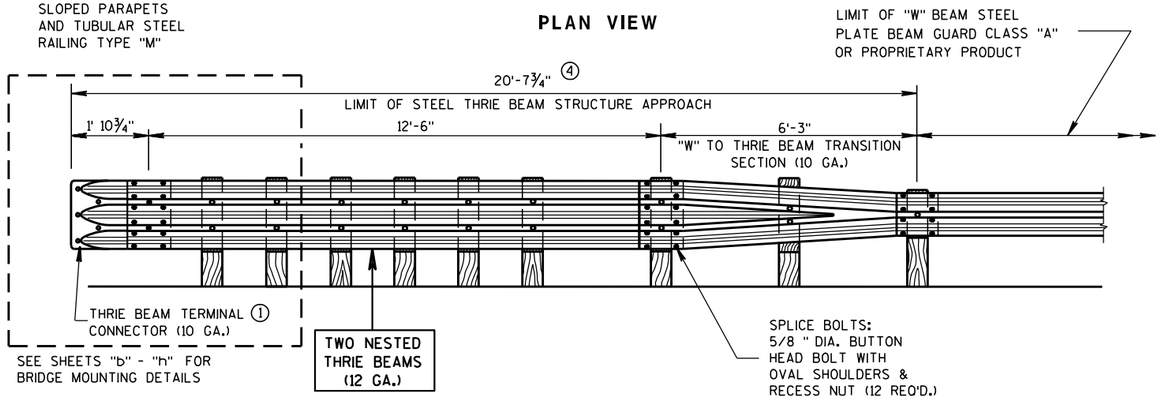

FRONT VIEW

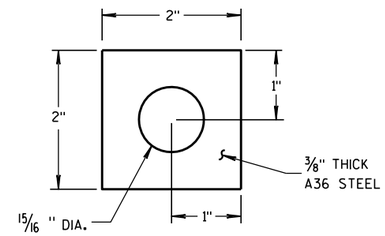

PLATE WASHER DETAIL

GENERAL NOTES

BOLT THE THRIE BEAM TO ALL POSTS AND BLOCKOUTS. DRILL OR PUNCH BOLT HOLES IN THE BEAM IF THE POST SPACING IS LESS THAN 6'-3".

DO NOT USE STEEL POSTS AND NOTCHED PLASTIC BLOCKOUTS IN THE STEEL THRIE BEAM STRUCTURAL APPROACH AND THE TRANSITION SECTION OF STEEL PLATE BEAM GUARD, CLASS "A" INSTALLATIONS.

IF ROCK IS ENCOUNTERED, REMOVE ROCK TO FULL DEPTH OF POST PLUS 2 1/2", AND 12" DIAMETER AROUND POST. SEE 14B15 FOR MORE DETAILS.

① BRIDGE RAILING TYPE "W" DOES NOT REQUIRE A TERMINAL CONNECTOR.

② MINIMUM EMBEDMENT SHALL BE 4'-0". WHERE EXISTING CONDITIONS DO NOT PERMIT THE APPROPRIATE EARTHWORK SHOWN ON THE PLAN TYPICAL SECTIONS OR DETAILS, THE ENGINEER MAY ALLOW THE REDUCTION OR ELIMINATION OF THE 2 FOOT DISTANCE TO THE HINGE POINT. OTHERWISE BUILD AS THE PLAN SHOWS OR AS THE ENGINEER DIRECTS. IF THE 2 FOOT DISTANCE TO THE HINGE POINT IS REDUCED OR ELIMINATED, INCREASE THE POST EMBEDMENT DEPTH TO 4'-6" OR MORE.

③ POST BOLTS ARE 5/8" DIAMETER ASTM A307 BUTTON HEAD BOLT. A POST BOLT REQUIRES A 5/8" DIAMETER A563A DOUBLE RECESSED (DR) HEAVY HEX AND A 5/8" DIAMETER F844 FLAT WASHER. LENGTH OF POST BOLT MAY VARY.

④ ALL WOOD POSTS MUST BE 6" X 8" AND AT LEAST 7'-0" LONG.

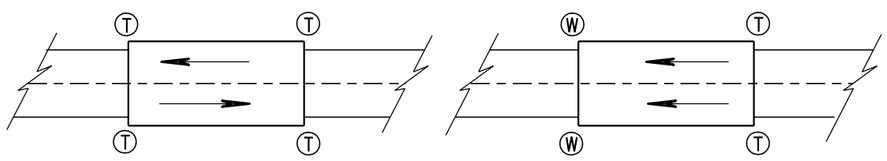

TWO WAY TRAFFIC

ONE WAY TRAFFIC

Ⓣ THRIE BEAM CONNECTION

Ⓦ W-BEAM CONNECTION WHEN REQUIRED

TYPICAL LOCATIONS OF THRIE BEAM AND W-BEAM CONNECTIONS TO BRIDGE

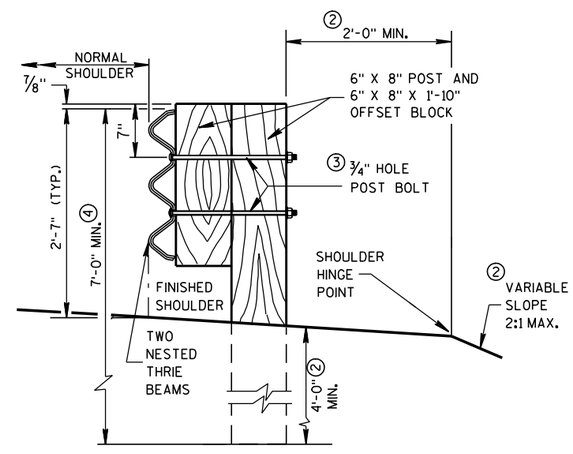

SECTION A-A

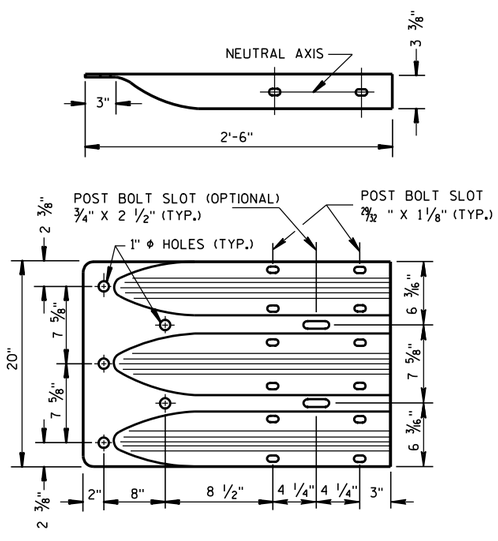

THRIE BEAM TERMINAL CONNECTOR

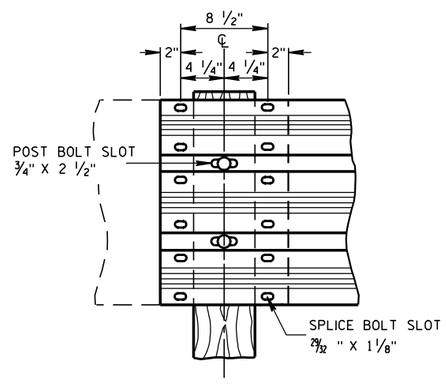

THRIE BEAM SPLICE

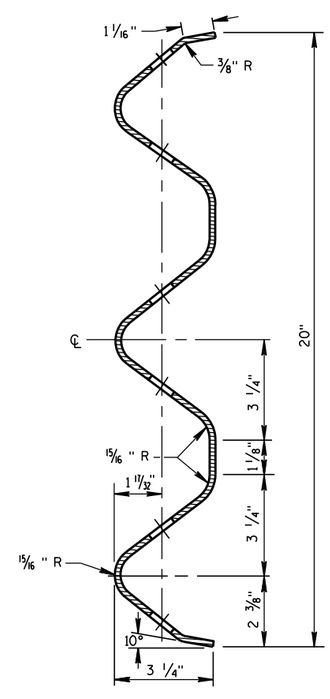

SECTION THRU THRIE BEAM RAIL ELEMENT

STEEL THRIE BEAM STRUCTURE APPROACH

STATE OF WISCONSIN
DEPARTMENT OF TRANSPORTATION

APPROVED

8/31/2012 — DATE

/S/ Jerry H. Zogg — ROADWAY STANDARDS DEVELOPMENT ENGINEER

FHWA

6

6

S.D.D. 14 B 20-11a

S.D.D. 14 B 20-11a

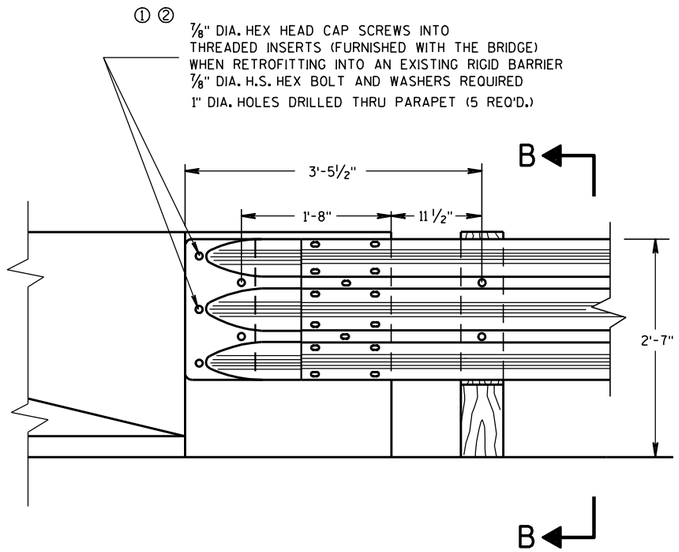

FRONT VIEW

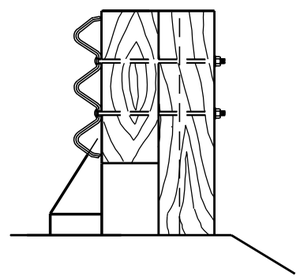

SECTION B-B

THRIE BEAM CONNECTION TO BRIDGE PARAPET WITH SQUARE ENDS

GENERAL NOTES

THESE ARE TYPICAL CONNECTION DETAILS. ADJUST THE POSTION OF CONNECTIONS TO EXISTING BRIDGES TO FIT THE ACTUAL BRIDGE AND SITE DIMENSIONS.

BOLTS, NUTS AND WASHERS SHALL CONFORM TO ASTM A325, A449 AND GALVANIZED PER STANDARD SPECIFICATIONS 614.

① DRILLING BOLT HOLES THROUGH THE PARAPET, BOLTS, NUTS, WASHERS AND REPAIRING DAMAGED CONCRETE ARE INCIDENTAL TO THE CONTRACT.

② BOLTS MAY BE A325 BOLTS OR A449 BOLTS. BOLT LENGTH AND THREADING LENGTH ARE TO ALLOW FOR A TIGHT CONNECTION BETWEEN RIGID BARRIER AND THRIE BEAM CONNECTION PLATE. CONTRACTOR IS TO FIELD VERIFY BOLT LENGTH AND THREAD LENGTH. ONE ROUND WASHER REQUIRED BETWEEN BOLT HEAD AND THRIE BEAM TERMINAL CONNECTOR. BOLTS THAT EXTEND THROUGH THE PARAPET AND OUT THE BACK FACE REQUIRE A HARDENED ROUND STEEL WASHER THAT IS 2" O.D. X ⅝" THICK AND ONE PLATE WASHER. REPAIR ANY DAMAGED CONCRETE FROM BOLT INSTALLATION.

③ THE RECESS FOR A W-BEAM CONNECTION, WHICH EXISTS ON SOME PARAPETS OF THIS TYPE, SHALL BE FILLED WITH A TREATED TIMBER BLOCKOUT. BLOCKOUT SIZE IS 1'-6" X 2'-0" X 3½".

④ W6 X 9 OR W6 X 8.5 STEEL POSTS AND NOTCHED PLASTIC BLOCKOUTS ARE ACCEPTABLE ALTERNATIVES FOR 6" X 8" WOOD POST WITH WOOD OR PLASTIC BLOCKOUTS. USE APPROVED NOTCHED PLASTIC BLOCKOUTS WITH STEEL POSTS.

DO NOT USE STEEL POSTS AND NOTCHED PLASTIC BLOCKOUTS IN THE STEEL THRIE BEAM STRUCTURAL APPROACH AND THE TRANSITION SECTION OF STEEL PLATE BEAM GUARD, CLASS "A" INSTALLATIONS.

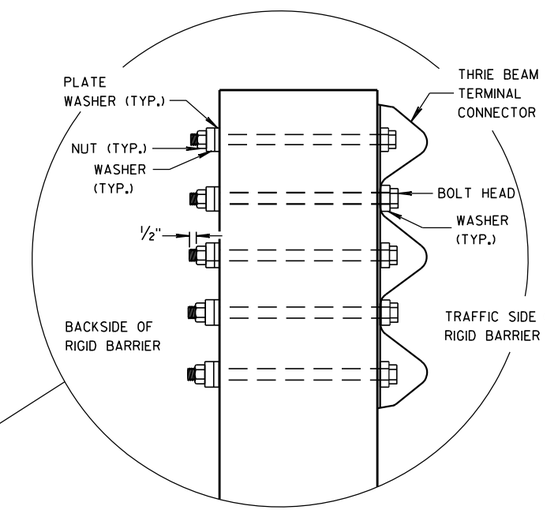

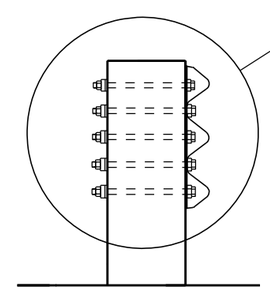

SECTION C-C

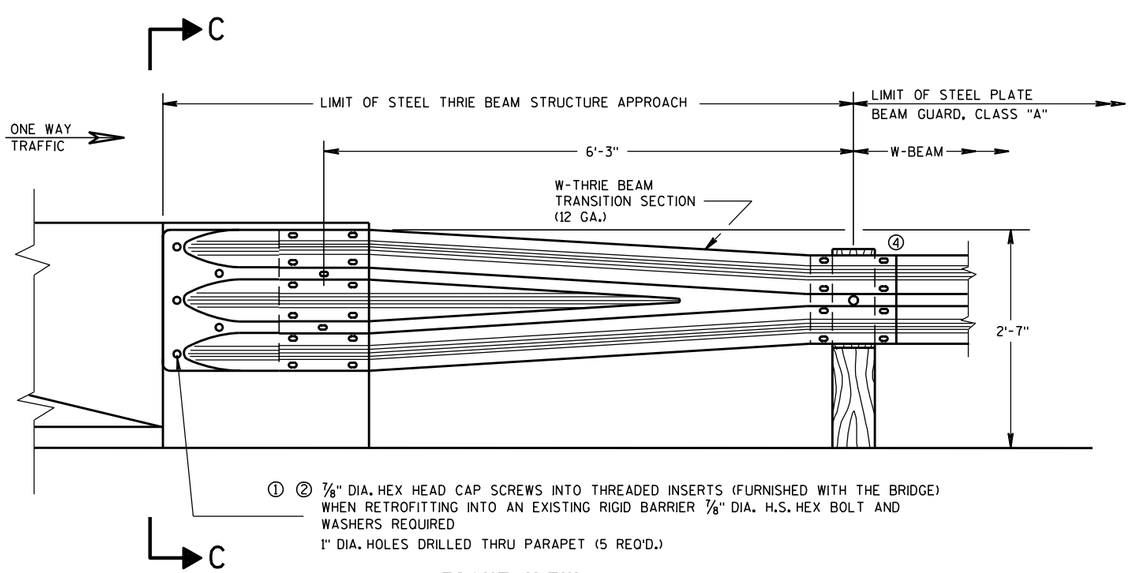

FRONT VIEW

W BEAM TRANSITION AND CONNECTION TO BRIDGE PARAPETS WITH SQUARE ENDS

(USE ONLY ON THE TRAFFIC EXIT END OF ONE WAY BRIDGES)

6

6

S.D.D. 14 B 20-11b

S.D.D. 14 B 20-11b

STEEL THRIE BEAM STRUCTURE APPROACH, CONNECTION TO SQUARE END PARAPETS

STATE OF WISCONSIN
DEPARTMENT OF TRANSPORTATION

APPROVED

8/31/2012 — DATE

/S/ Jerry H. Zogg — ROADWAY STANDARDS DEVELOPMENT ENGINEER

FHWA

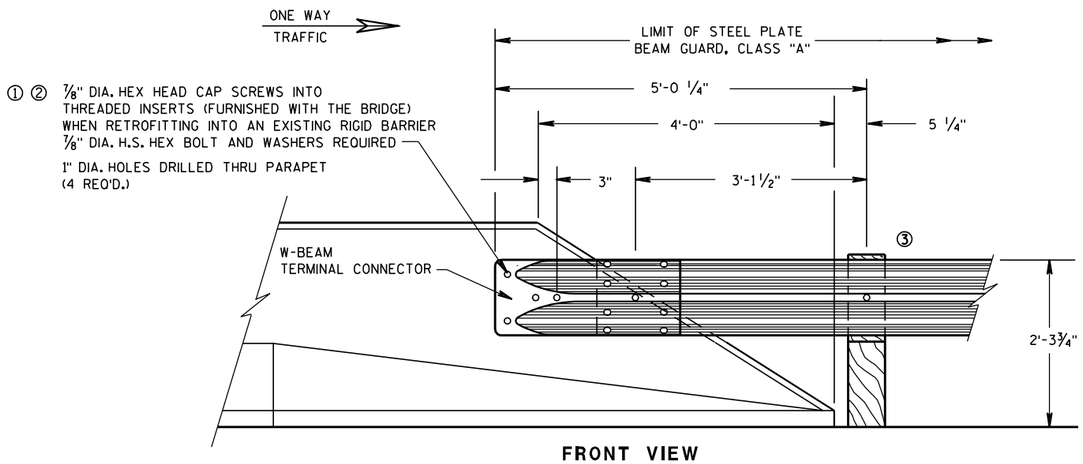

FRONT VIEW

W BEAM CONNECTION TO PARAPETS WITH SLOPED ENDS

(USE ONLY AT TRAFFIC EXIT END OF ONE WAY BRIDGE)

GENERAL NOTES

THESE ARE TYPICAL CONNECTION DETAILS. ADJUST THE POSTION OF CONNECTIONS TO EXISTING BRIDGES TO FIT THE ACTUAL BRIDGE AND SITE DIMENSIONS.

BOLTS, NUTS AND WASHERS SHALL CONFORM TO ASTM A325, A449 AND GALVANIZED PER STANDARD SPECIFICATIONS 614.

① DRILLING BOLT HOLES THROUGH THE PARAPET, BOLTS, NUTS, WASHERS AND REPAIRING DAMAGED CONCRETE ARE INCIDENTAL TO THE CONTRACT.

② BOLTS MAY BE A325 BOLTS OR A449 BOLTS. BOLT LENGTH AND THREADING LENGTH ARE TO ALLOW FOR A TIGHT CONNECTION BETWEEN RIGID BARRIER AND THRIE BEAM CONNECTION PLATE. CONTRACTOR IS TO FIELD VERIFY BOLT LENGTH AND THREAD LENGTH. ONE ROUND WASHER REQUIRED BETWEEN BOLT HEAD AND THRIE BEAM TERMINAL CONNECTOR. BOLTS THAT EXTEND THROUGH THE PARAPET AND OUT THE BACK FACE REQUIRE A HARDENED ROUND STEEL WASHER THAT IS 2" O.D. X 5/8" THICK AND ONE PLATE WASHER. REPAIR ANY DAMAGED CONCRETE FROM BOLT INSTALLATION.

③ W6 X 9 OR W6 X 8.5 STEEL POSTS AND NOTCHED PLASTIC BLOCKOUTS ARE ACCEPTABLE ALTERNATIVES FOR 6" X 8" WOOD POST WITH WOOD OR PLASTIC BLOCKOUTS. USE APPROVED NOTCHED PLASTIC BLOCKOUTS WITH STEEL POSTS.

DO NOT USE STEEL POSTS AND NOTCHED PLASTIC BLOCKOUTS IN THE STEEL THRIE BEAM STRUCTURAL APPROACH AND THE TRANSITION SECTION OF STEEL PLATE BEAM GUARD, CLASS "A" INSTALLATIONS.

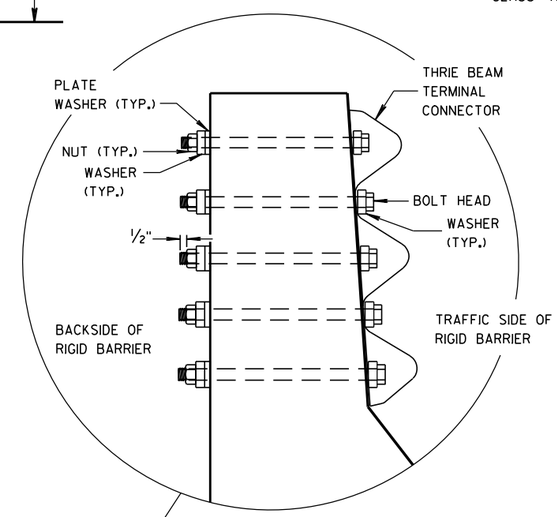

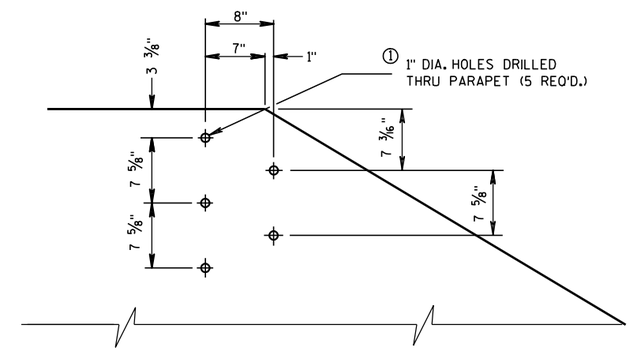

DRILL HOLE LOCATION AND PATTERN FOR THRIE BEAM CONNECTION

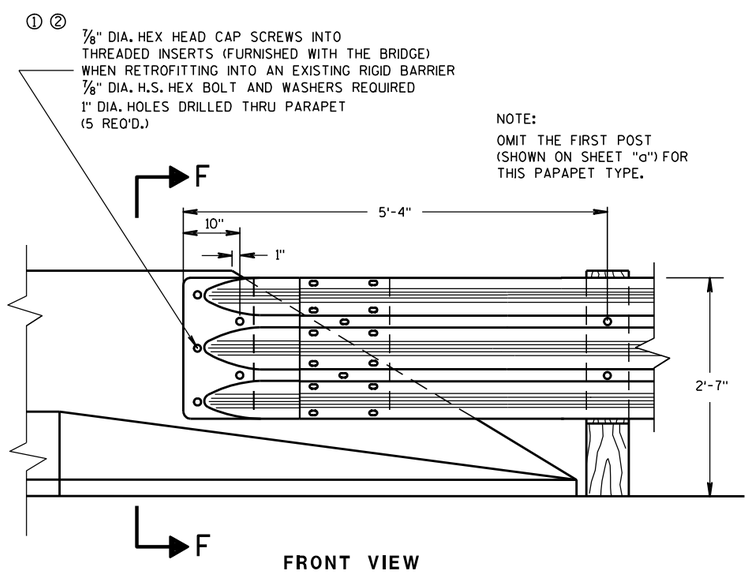

FRONT VIEW

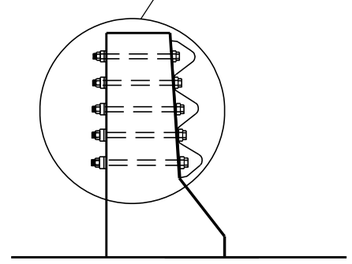

SECTION F-F

THRIE BEAM CONNECTION TO BRIDGE PARAPETS WITH SLOPED ENDS

STEEL THRIE BEAM STRUCTURE APPROACH, CONNECTION TO SLOPED END PARAPETS

STATE OF WISCONSIN
DEPARTMENT OF TRANSPORTATION

APPROVED
8/31/2012 — DATE
/S/ Jerry H. [illegible] — ROADWAY STANDARDS DEVELOPMENT ENGINEER
FHWA

BILL OF MATERIALS

NOTE NO.	DESCRIPTION
1	WOOD BREAKAWAY TERMINAL POST: 5½" X 7½" X 3'-9"
2	STEEL TUBE TS 8" X 6" X 0.188", 6'-0"
4	WOOD BREAKAWAY CRT POST: 6" X 8" X 6'-0"
5	WOOD OFFSET BLOCKS: 6' X 8" X 1'-2"
6	PIPE SLEEVE: 2" X 5 ½" STANDARD PIPE
7	BEARING PLATE
8	BCT CABLE ASSEMBLY
9	CABLE ANCHOR BOX
10	STRUT & YOKE
11	STEEL PLATE BEAM, END PANEL 12 GA.
12	STEEL PLATE BEAM: 12 GA. 13'-6½"
13	IMPACT HEAD
14	0.040" ALUMINUM SHEET WITH REFLECTIVE SHEETING TYPE F PER SECTION 637 OF THE STANDARD SPECIFICATIONS

GENERAL NOTES

FOLLOW MANUFACTURE'S BOLTING RECOMMENDATIONS.

(A) THE SLOPE IN THE AREA BOUNDED BY THE GRADELINE, THE HINGE POINT LINE (HPL), AND THE CLEAR ZONE LIMITS (CZL) SHALL BE 4:1 OR FLATTER.

(B) AFTER FINAL ASSEMBLY, RECHECK CABLE TO BE SURE IT IS TAUT AND HAS NOT RELAXED.

(D) THE TOP OF THE STEEL TUBE ON POSTS 1 AND 2 SHALL NOT BE MORE THAN 3" ABOVE THE FINISH GROUND ELEVATION.

(E) THE CENTER OF THE UPPER 3½" DIAMETER HOLE ON POST 3 THROUGH 8 SHALL BE ¾" ABOVE THE FINISHED GROUND LINE.

(F) ATTACH ALUMINUM SHEET TO E.A.T. HEAD USING 4 STAINLESS STEEL SELF-TAPPING SCREWS. ONE SCREW PER CORNER.

STEEL POSTS SHALL NOT BE ALLOWED FOR USE WITH ENERGY ABSORBING TERMINALS.

DO NOT INSTALL REFLECTORS ON THE FIRST 50 FEET OF THE APPROACH END OF THE ENERGY ABSORBING TERMINAL.

* DO NOT ATTACH BLOCKOUTS TO POSTS 1 AND 2.

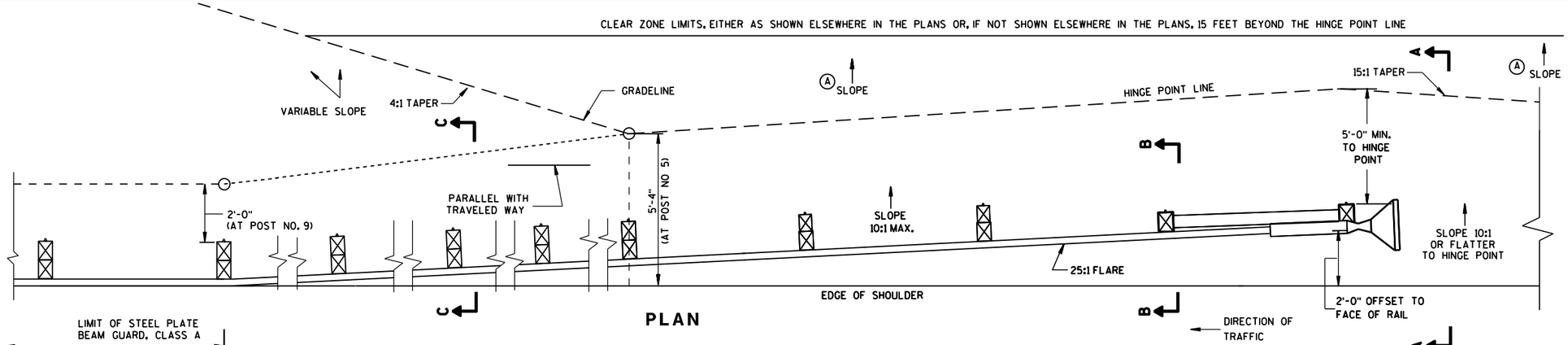

PLAN

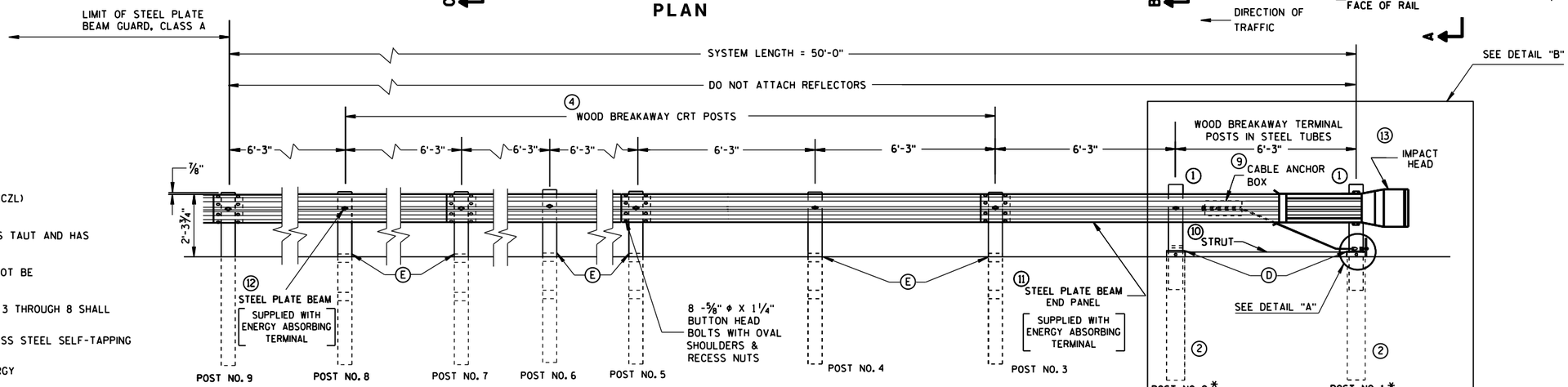

ELEVATION

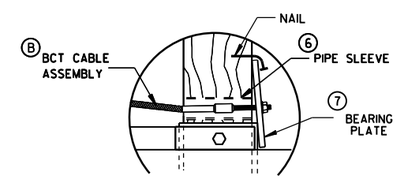

DETAIL "A"

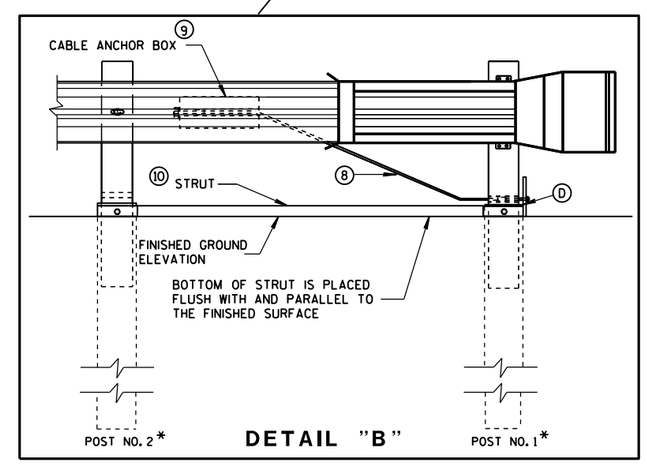

DETAIL "B"

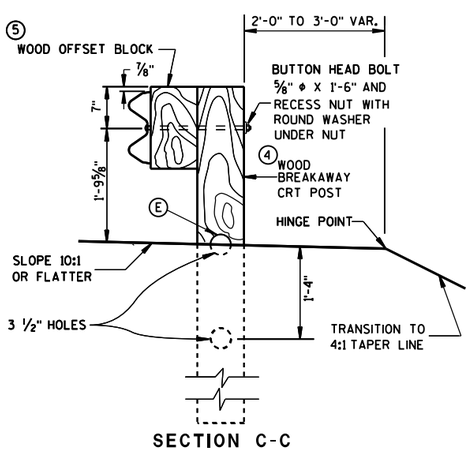

SECTION C-C
TYPICAL AT POST NOS. 6, 8

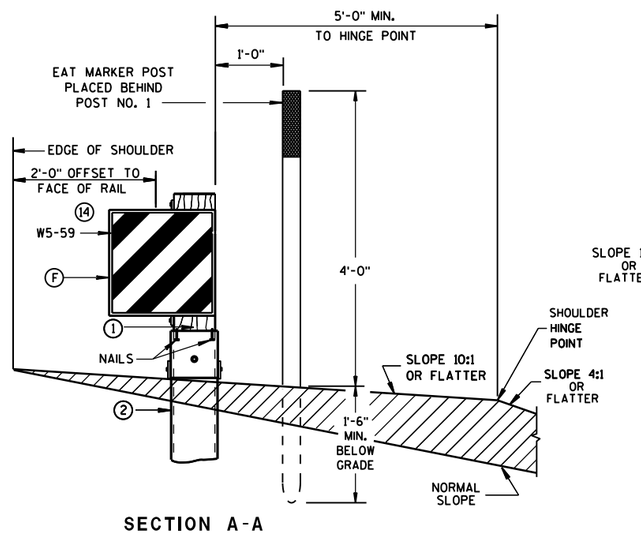

SECTION A-A
TYPICAL AT POST NO. 1*

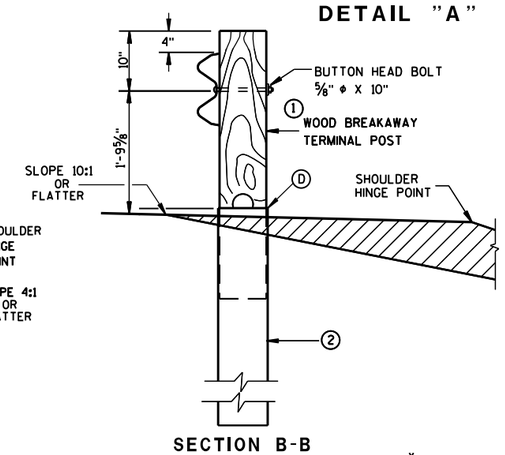

SECTION B-B
TYPICAL AT POST NO. 2*

STEEL PLATE BEAM GUARD
ENERGY ABSORBING TERMINAL

STATE OF WISCONSIN
DEPARTMENT OF TRANSPORTATION

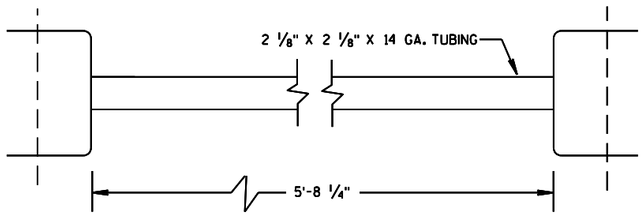

⑩ STRUT DETAIL

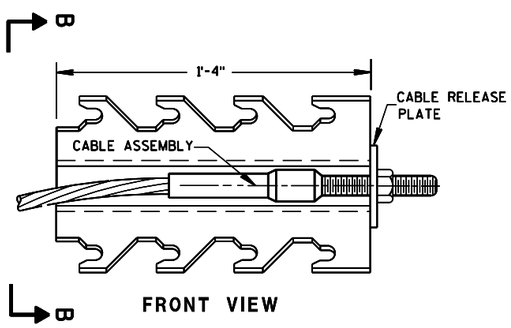

FRONT VIEW

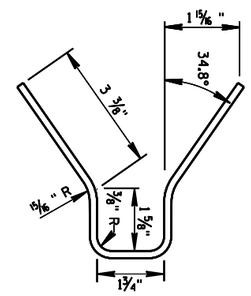

SECTION B-B

⑨ CABLE ANCHOR BOX

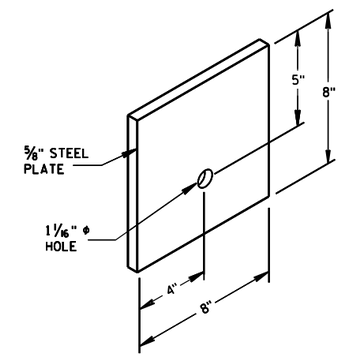

⑦ STEEL BEARING PLATE

6

6

S.D.D. 14 B 24-9b

S.D.D. 14 B 24-9b

STEEL PLATE BEAM GUARD
ENERGY ABSORBING TERMINAL

STATE OF WISCONSIN
DEPARTMENT OF TRANSPOI

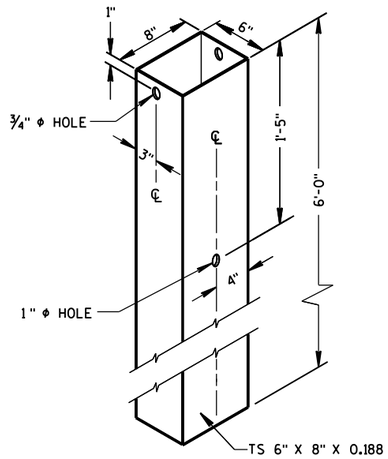

② 72" STEEL TUBE
(POSTS NO. 1-4

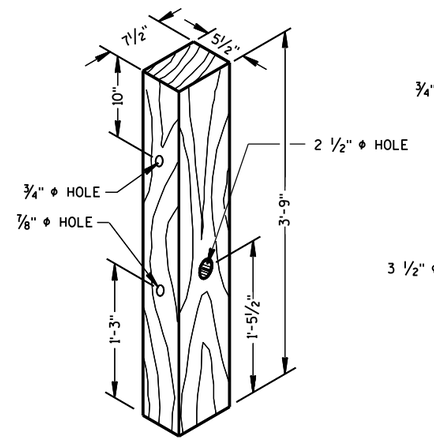

① TERMINAL POST

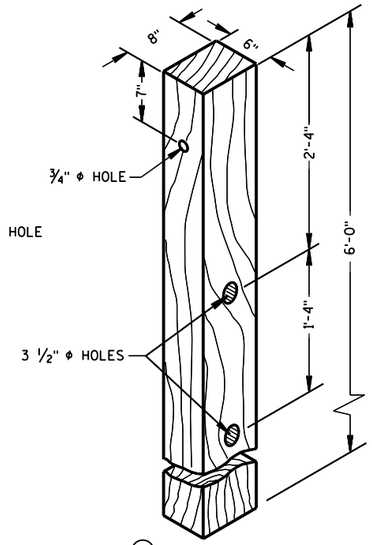

④ CRT POST
(POSTS NO'S 5-8

WOOD BREAKAWAY POSTS

GENERAL NOTES

WHEN ROCK IS ENCOUNTERED DURING EXCAVATION, A 12 INCH DIA. POST HOLE EXTENDING 20 INCHES DEEP INTO THE ROCK MAY BE USED IF APPROVED BY THE ENGINEER. GRANULAR MATERIAL SHALL BE PLACED IN THE BOTTOM OF THE HOLE APPROXIMATELY 2 1/2" INCHES DEEP TO PROVIDE DRAINAGE. THE SOIL TUBES SHALL BE FIELD CUT TO LENGTH, PLACED IN THE HOLE AND BACKFILLED WITH ADEQUATELY COMPACTED MATERIAL EXCAVATED FROM THE HOLE.

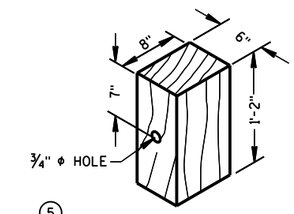

⑤ WOOD OFFSET BLOCK
REQ'D. AT ALL POSTS EXCEPT POST NO'S 1 & 2

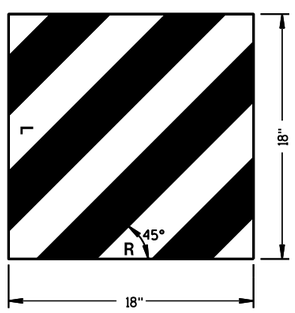

⑭ REFLECTIVE SHEETING DETAILS

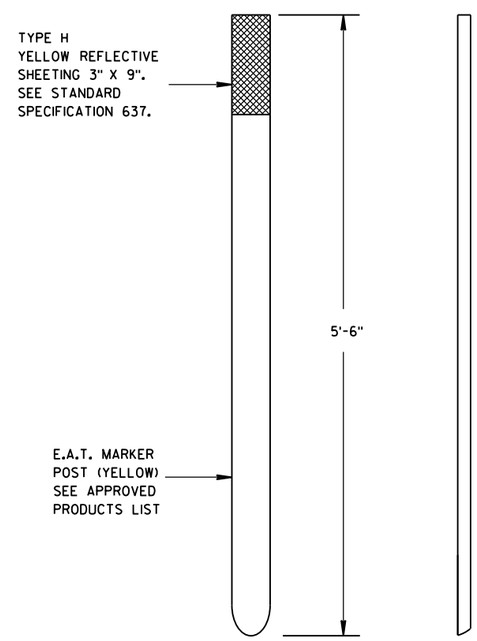

E.A.T. MARKER POST

6

6

S.D.D. 14 B 24-9c

S.D.D. 14 B 24-9c

STEEL PLATE BEAM GUARD
ENERGY ABSORBING TERMINAL

STATE OF WISCONSIN
DEPARTMENT OF TRANSPORTATION

APPROVED
June 2017
DATE
FHWA

/S/ Rodney Taylor
ROADWAY STANDARDS
UNIT SUPERV.

ENT

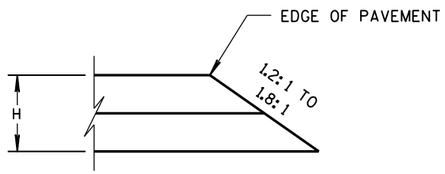

CONSTRUCTED WITH FINAL TWO LAYERS

FOR H 5" OR LESS

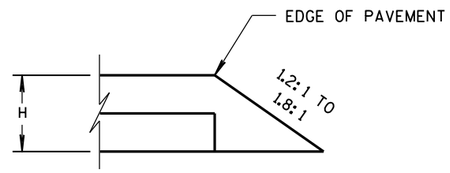

CONSTRUCTED WITH FINAL LAYER

FOR H 5" OR LESS

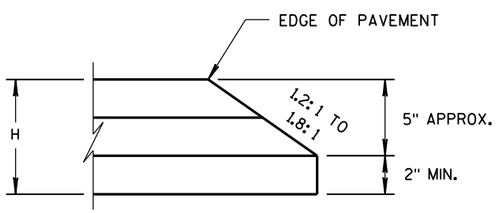

CONSTRUCTED WITH FINAL TWO LAYERS

FOR H GREATER THAN 5"

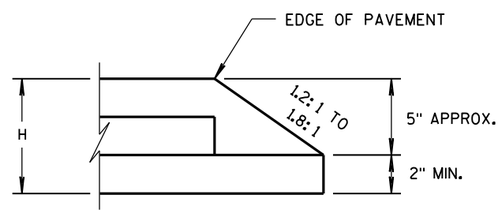

CONSTRUCTED WITH FINAL LAYER

FOR H GREATER THAN 5"

HMA PAVEMENT AND HMA OVERLAYS

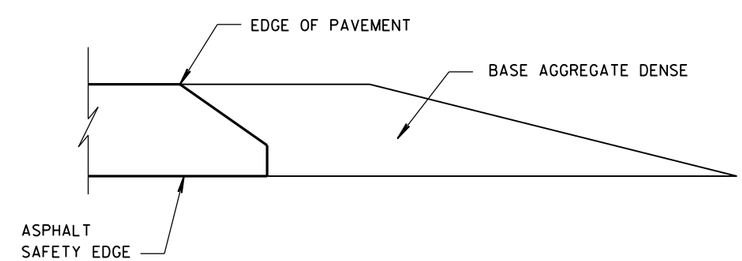

FINISHED SHOULDER AGGREGATE PLACEMENT

6

6

S.D.D. 14 B 29-1

S.D.D. 14 B 29-1

SAFETY EDGE SM

STATE OF WISCONSIN
DEPARTMENT OF TRANSPORTATION

APPROVED

11/30/2012
DATE

/S/ Jerry H. Zogg
ROADWAY STANDARDS DEVELOPMENT ENGINEER

FHWA

GENERAL NOTES

DETAILS OF CONSTRUCTION NOT SHOWN ON THIS DRAWING SHALL CONFORM TO THE PERTINENT REQUIREMENTS OF THE STANDARD SPECIFICATIONS AND THE APPLICABLE SPECIAL PROVISIONS.

① DELINEATORS SHALL BE PLACED AT A CONSTANT DISTANCE FROM THE EDGE OF THE SHOULDER FOR THE LENGTH OF THE INSTALLATION.

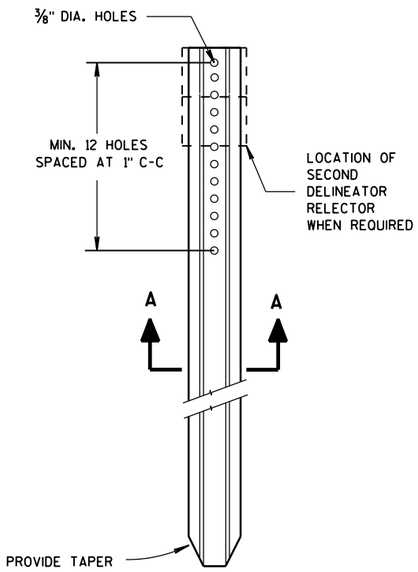

DELINEATOR POST

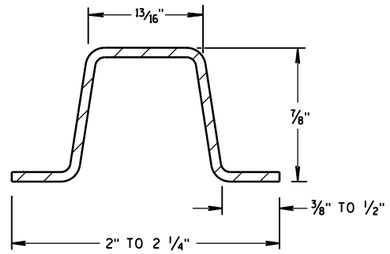

SECTION A-A

WEIGHT 1.12 LBS PER FT. ± 0.1 LB.

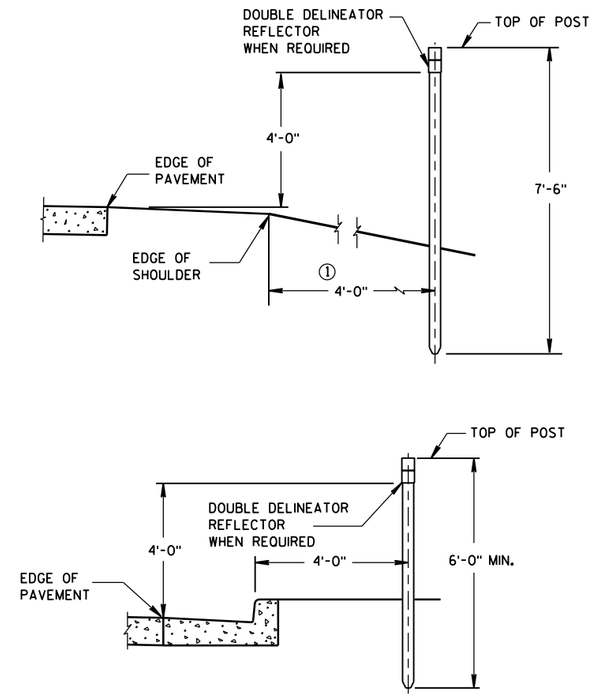

TYPICAL INSTALLATIONS OF DELINEATOR POSTS

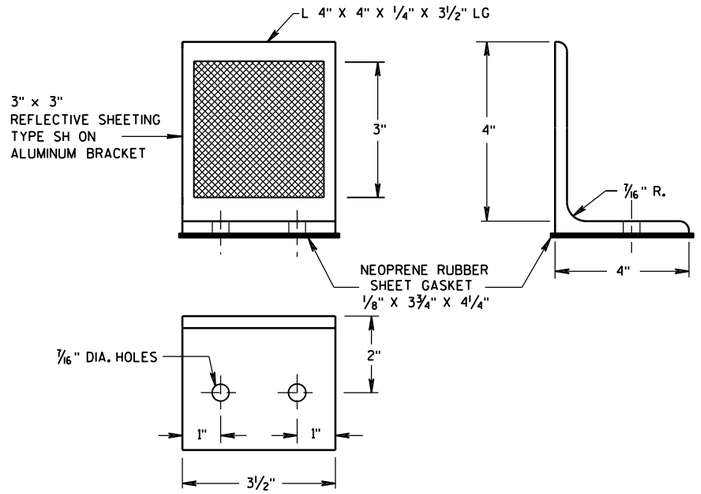

DELINEATOR BRACKET

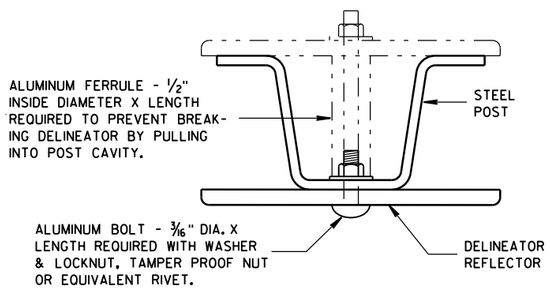

MOUNTING DETAIL FOR DELINEATOR REFLECTOR

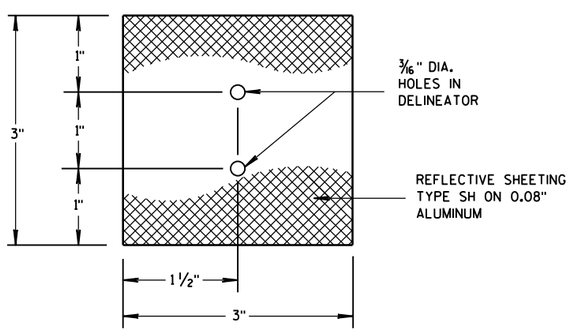

3"x 3" DELINEATOR REFLECTOR

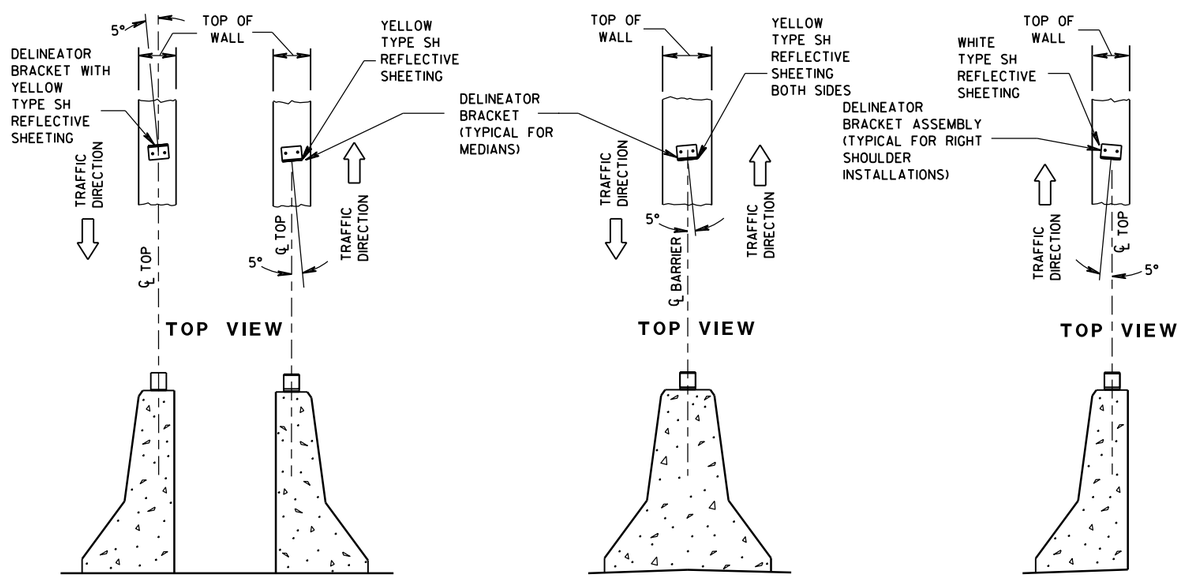

DOUBLE BARRIERS IN MEDIAN

MEDIAN BARRIER

BARRIER LOCATED TO RT. OF TRAFFIC FLOW

LOCATION AND AIMING DETAILS FOR DELINEATOR BRACKETS MOUNTED ON CONCRETE BARRIERS

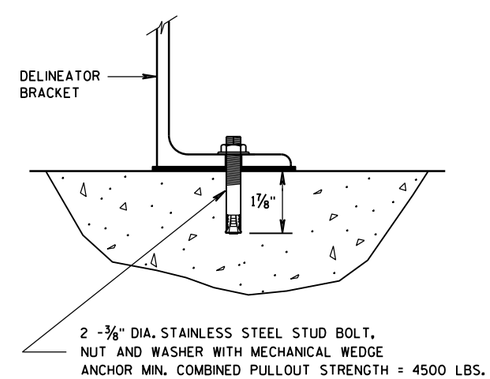

DELINEATOR BRACKET MOUNTING DETAIL

DELINEATOR POST, DELINEATOR REFLECTOR AND DELINEATOR BRACKET WITH REFLECTIVE SHEETING

STATE OF WISCONSIN
DEPARTMENT OF TRANSPORTATION

APPROVED
4-18-16 /S/ Matthew R. Rauch
DATE STATE SIGNING AND MAR 94 GINEER
FHWA

6

6

S.D.D. 15 A 2-9

S.D.D. 15 A 2-9

GENERAL NOTES

DETAILS OF CONSTRUCTION, MATERIALS AND WORKMANSHIP NOT SHOWN ON THIS DRAWING SHALL CONFORM TO THE PERTINENT REQUIREMENTS OF THE STANDARD SPECIFICATIONS AND THE APPLICABLE SPECIAL PROVISIONS.

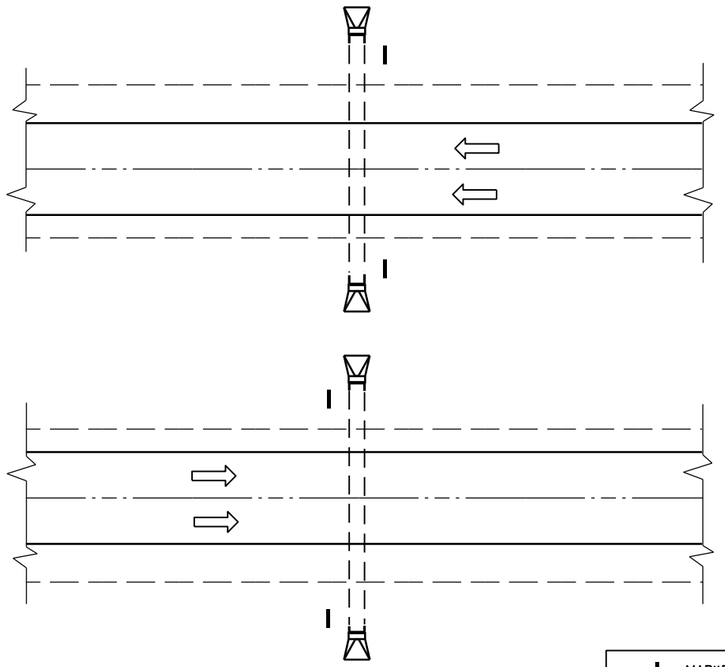

PLAN VIEW

DIVIDED HIGHWAY

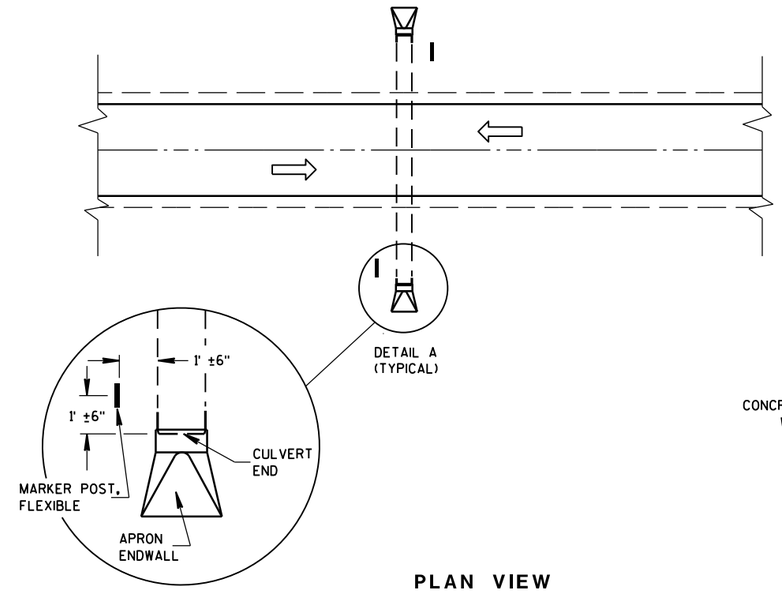

DETAIL A
(TYPICAL)

PLAN VIEW

UNDIVIDED HIGHWAY

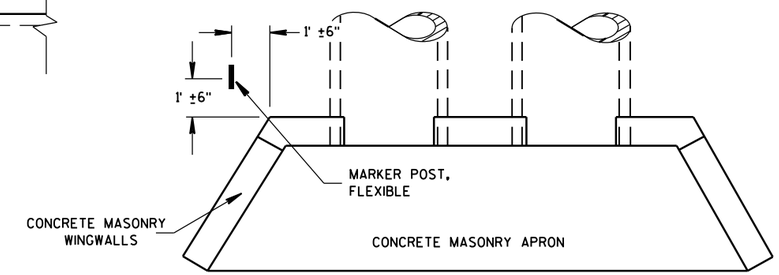

PLAN VIEW

CONCRETE MASONRY ENDWALLS FOR CULVERT PIPE AND PIPE ARCH

MARKER POST, FLEXIBLE

DIRECTION OF TRAFFIC FLOW

FLEXIBLE MARKER POST LOCATION

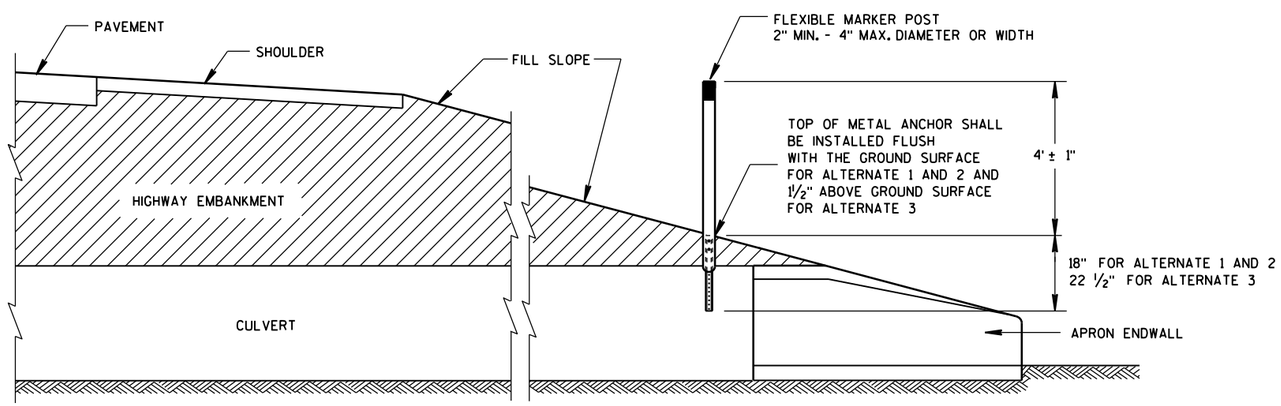

CROSS SECTION

FLEXIBLE MARKER POST

FLEXIBLE MARKER POST FOR CULVERT END

STATE OF WISCONSIN
DEPARTMENT OF TRANSPOR

6

S.D.D. 15 A 3-2a

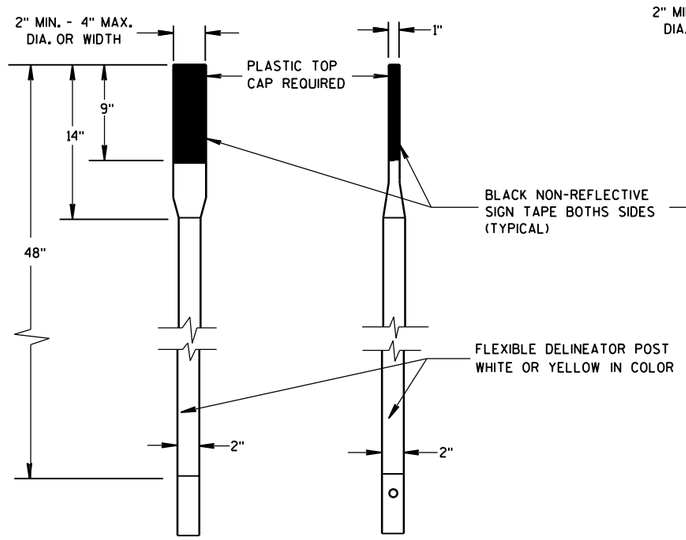

FRONT VIEW SIDE VIEW

ALTERNATE 1

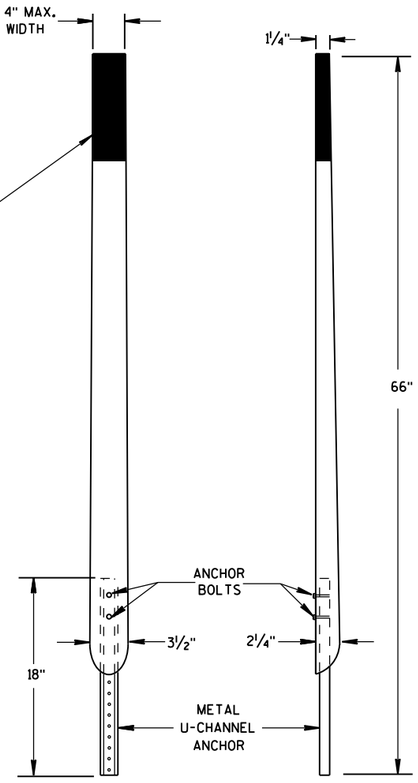

FRONT VIEW SIDE VIEW

ALTERNATE 2

FLEXIBLE MARKER POSTS

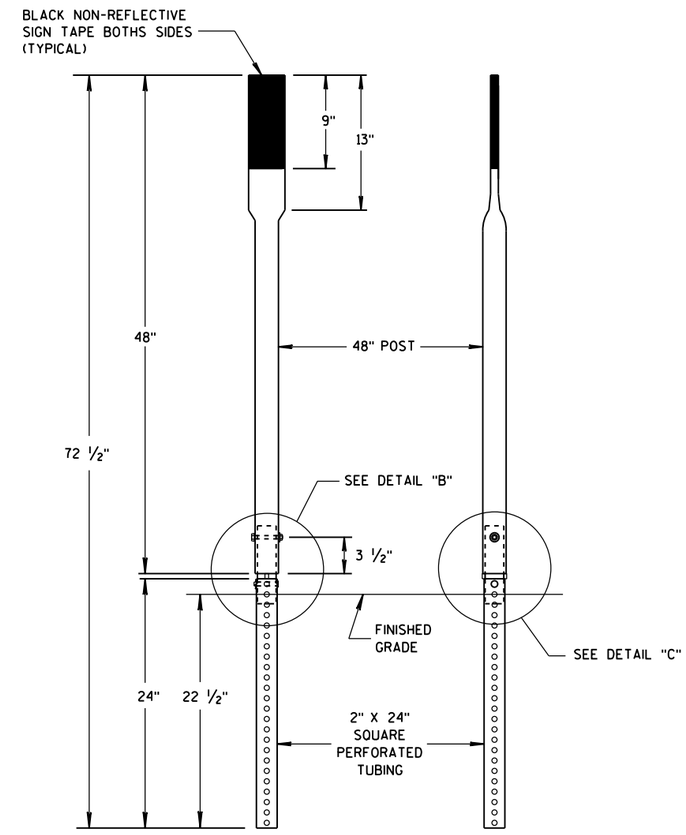

FRONT VIEW SIDE VIEW

ALTERNATE 3

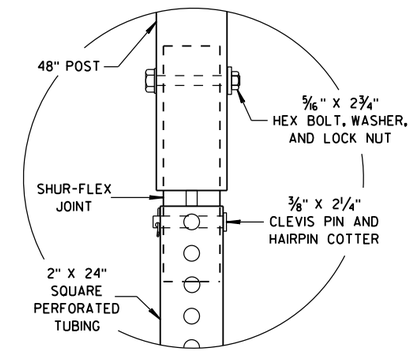

DETAIL B

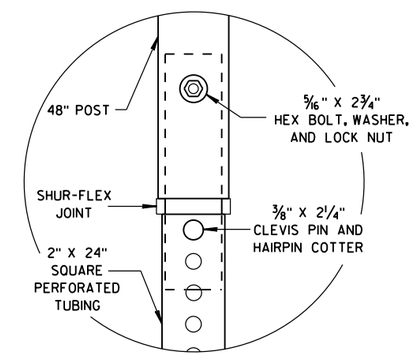

DETAIL C

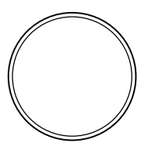

SECTION A-A

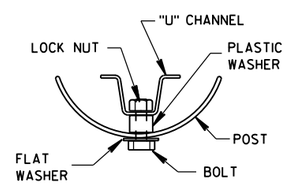

SECTION B-B

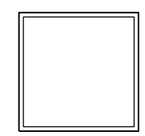

SECTION C-C

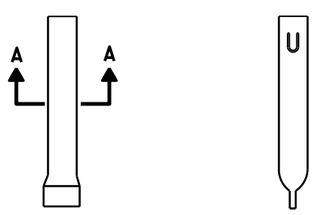

FRONT VIEW SIDE VIEW

ALTERNATE 1

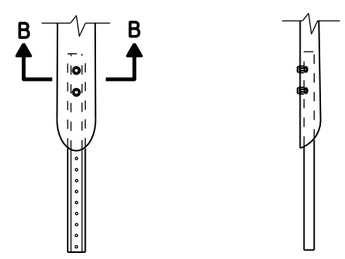

FRONT VIEW SIDE VIEW

ALTERNATE 2

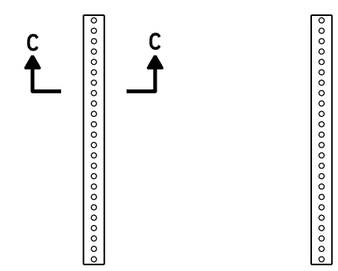

FRONT VIEW SIDE VIEW

ALTERNATE 3

FLEXIBLE MARKER POST ANCHORS

FLEXIBLE MARKER POST
FOR CULVERT END

STATE OF WISCONSIN
DEPARTMENT OF TRANSPORTATION

APPROVED
10/1/2012 /S/ Travis Feltes
DATE STATE TRAFFIC ENGINEER
FHWA

6

6

S.D.D. 15 A 3-2b

S.D.D. 15 A 3-2b

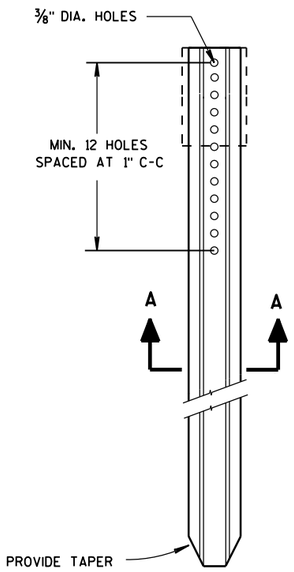

DELINEATOR POST

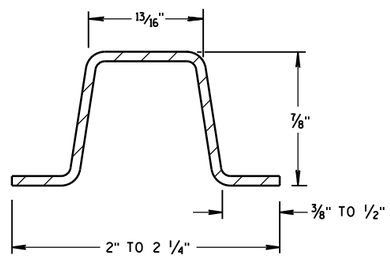

SECTION A-A

WEIGHT 1.12 LBS PER FT. ± 0.1 LB.

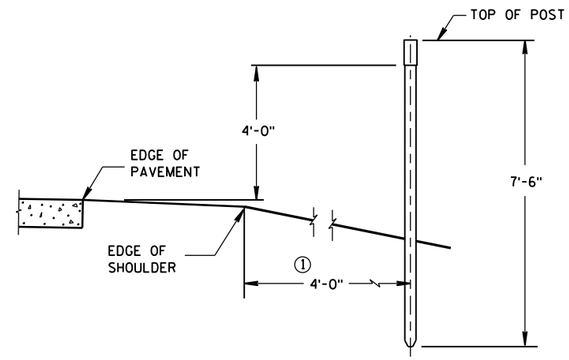

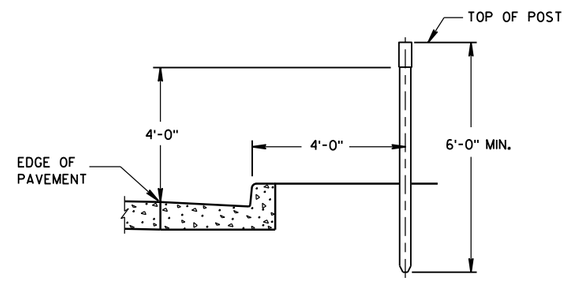

TYPICAL INSTALLATIONS OF DELINEATOR POSTS

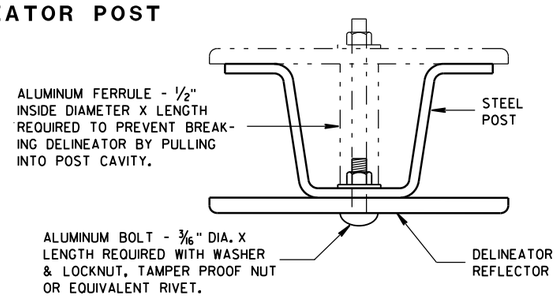

MOUNTING DETAIL FOR DELINEATOR REFLECTOR

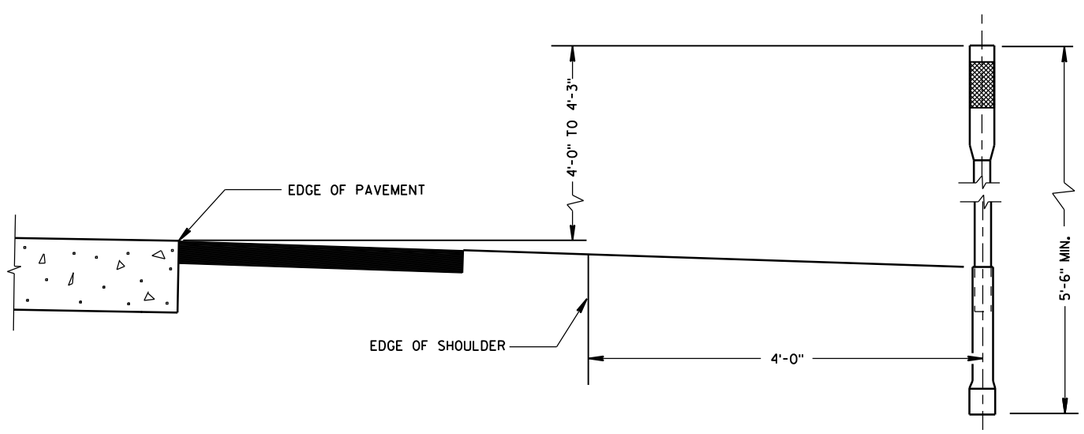

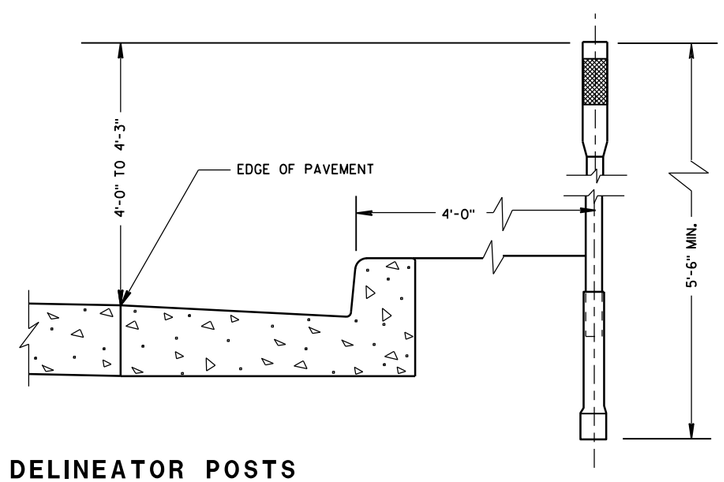

TYPICAL INSTALLATIONS OF FLEXIBLE DELINEATOR POSTS

GENERAL NOTES

DETAILS OF CONSTRUCTION NOT SHOWN ON THIS DRAWING SHALL CONFORM TO THE PERTINENT REQUIREMENTS OF THE STANDARD SPECIFICATIONS AND THE APPLICABLE SPECIAL PROVISIONS.

1 DELINEATORS SHALL BE PLACED AT A CONSTANT DISTANCE FROM THE EDGE OF THE SHOULDER FOR THE LENGTH OF THE INSTALLATION.

REFLECTOR SPACING TABLE

REFLECTOR SPACING	LOCATION
400'	MAINLINE
100'	RAMPS *

* START AT BEGINNING OF RAMP TAPER AND END AT END OF RAMP TAPER.

DELINEATOR POST WITH REFLECTIVE SHEETING

STATE OF WISCONSIN
DEPARTMENT OF TRANSPORTATION

APPROVED
June 2017 /S/ Matthew R. Rauch
DATE STATE SIGNING AND MAR[illegible]GINEER
FHWA

6

S.D.D. 15 A 4-3c

GENERAL NOTES

PANEL THICKNESS SHALL BE A MINIMUM OF 0.08 INCHES.

PLASTIC BASE MATERIAL SHALL BE WHITE, UV STABILIZED, FLAME TREATED TO THE MANUFACTURER SPECIFICATIONS AND BE ABLE TO WITHSTAND SUB FREEZING TEMPERATURES WITHOUT BREAKING.

① FURNISH TYPE H SHEETING FROM THE APPPROVED PRODUCTS LIST.

② FURNISH DELINEATOR REFLECTOR FOR GUARDRAIL FROM THE APPPROVED PRODUCTS LIST.

REFLECTOR SPACING TABLE

REFLECTOR SPACING	MINIMUM NUMBER OF REFLECTORS
100' C-C	3

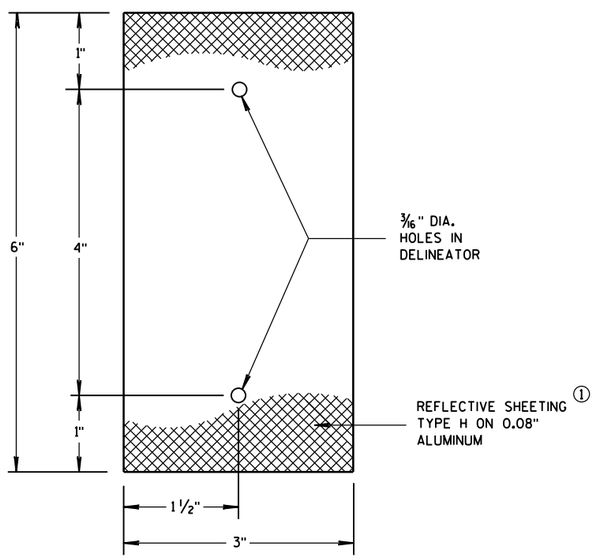

3"x 6" DELINEATOR REFLECTOR

(FOR STEEL POSTS)

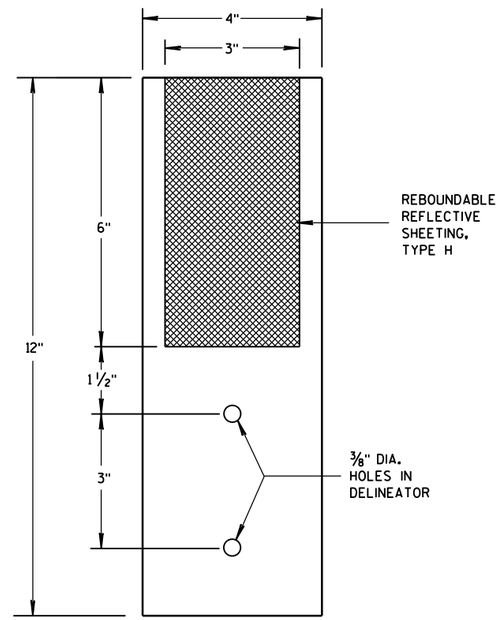

4"x 12" DELINEATOR REFLECTOR

(FOR GUARDRAIL) ②

DELINEATOR
WITH REFLECTIVE SHEETING

STATE OF WISCONSIN
DEPARTMENT OF TRANSPORTATION

APPROVED
June 2017 /S/ Matthew R. Rauch
DATE STATE SIGNING AND MAR 98 GINEER
FHWA

6

S.D.D. 15 A 4-3d

6

S.D.D. 15 A 4-3d

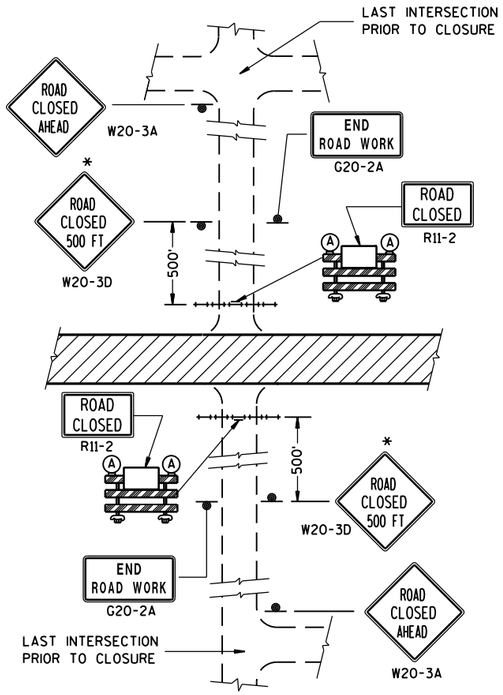

DETAIL 1

(NO ACCESS TO PROJECT)

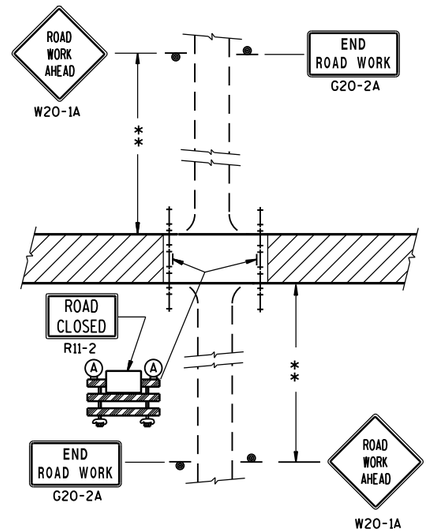

DETAIL 2

(PUBLIC CROSS-TRAFFIC MAINTAINED. NO ACCESS TO PROJECT).

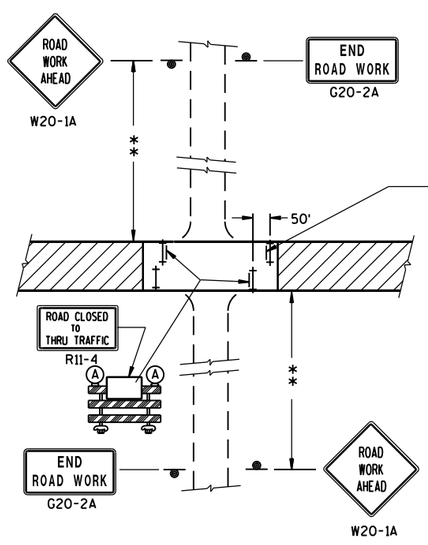

DETAIL 3

(PUBLIC CROSS-TRAFFIC MAINTAINED. CONTRACTOR, LOCAL BUSINESS AND RESIDENT ACCESS).

FOR BRIDGE OR CULVERT REPLACEMENT, USE ADDITIONAL SIGN ON BARRICADE

BRIDGE OUT
XX MILES AHEAD
R11-3C

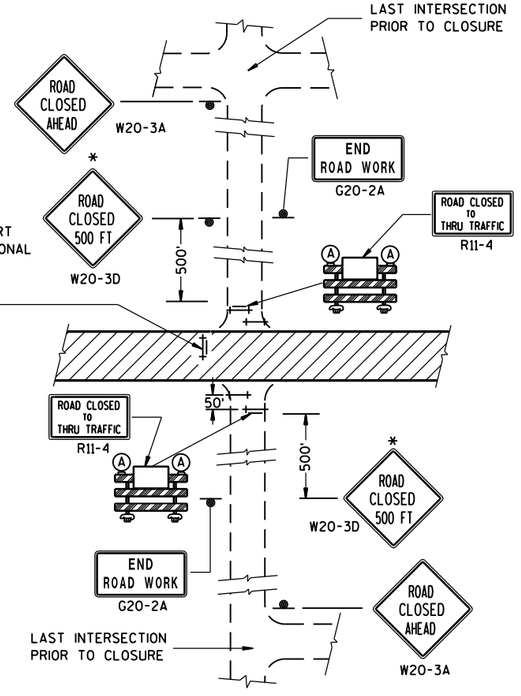

DETAIL 4

(CONTRACTOR, LOCAL BUSINESS AND RESIDENT ACCESS TO PROJECT)

GENERAL NOTES

THE EXACT NUMBER, LOCATION, AND SPACING OF ALL SIGNS AND BARRICADES SHALL BE ADJUSTED TO FIT FIELD CONDITIONS AS APPROVED BY THE ENGINEER.

ANY SIGNS TEMPORARY OR EXISTING, WHICH CONFLICT WITH TRAFFIC CONTROL "IN USE" SHALL BE REMOVED OR COVERED AS NEEDED AND AS APPROVED BY THE ENGINEER.

THE SPACING BETWEEN TRAFFIC CONTROL SIGNS SHOULD BE ADJUSTED TO NOT CONFLICT WITH AND SHOULD PROVIDE A DESIRABLE MINIMUM OF 200 FEET CLEARANCE TO EXISTING SIGNS THAT WILL REMAIN IN PLACE.

IF A "STOP" SIGN MUST BE REMOVED FOR A WORK OPERATION, A TEMPORARY "STOP" SIGN SHALL BE PLACED PRIOR TO THE SIGN REMOVAL, OR A FLAGGER SHALL BE PROVIDED UNTIL THE SIGN IS RE-ESTABLISHED.

BARRICADES THAT MUST BE MOVED FOR A WORK OPERATION SHALL BE IMMEDIATELY RE-ESTABLISHED UPON COMPLETION OF THE OPERATION OR, FOR CONTINUING OPERATIONS, AT THE END OF EACH WORKING DAY.

SIGNS THAT WILL BE IN PLACE LESS THAN 7 CONTINUOUS DAYS AND NIGHTS MAY BE MOUNTED ON PORTABLE SUPPORTS.

ALL TYPE III BARRICADES SHALL HAVE RAILS REFLECTORIZED ON BOTH FACES. STRIPES SHALL BE PROPERLY SLOPED DOWN TOWARD THE TRAFFIC SIDE OR AS SHOWN IN THE ROAD CLOSURE BARRICADE DETAIL D FOR FULL ROAD CLOSURES.

TYPE "A" LOW-INTENSITY FLASHING WARNING LIGHTS SHALL BE VISIBLE ON BOTH SIDES OF THE BARRICADE.

THE R11-2, R11-3 AND R11-4 SIGNS PLACED ON BARRICADES SHALL COVER NO MORE THAN THE TOP RAIL. THE SIGNS SHALL NOT COVER ANY PORTION OF THE MIDDLE OR BOTTOM RAILS.

ALL SIGNS SHALL BE 48" X 48" UNLESS OTHERWISE NOTED BELOW:
R11-2 SHALL BE 48" X 30".
R11-4 AND R11-3 SHALL BE 60" X 30".

*OMIT THE "ROAD CLOSED 500 FT." SIGN IF THE LAST INTERSECTION IS 500 FT. OR LESS FROM THE WORK ZONE.

**500' MAX. OR AT LAST INTERSECTION WHICHEVER IS CLOSER.

LEGEND

- SIGN ON PERMANENT SUPPORT
- TYPE III BARRICADE
- TYPE III BARRICADE WITH ATTACHED SIGN
- (A) TYPE "A" WARNING LIGHT (FLASHING)
- WORK AREA

BARRICADES AND SIGNS FOR SIDEROAD CLOSURES

STATE OF WISCONSIN
DEPARTMENT OF TRANSPORTATION

APPROVED
Sept. 2017 — DATE
/S/ Andrew Heldtke — WORK ZONE ENG
FHWA

TYPICAL SIDEROAD APPROACH WARNING SIGN DETAIL

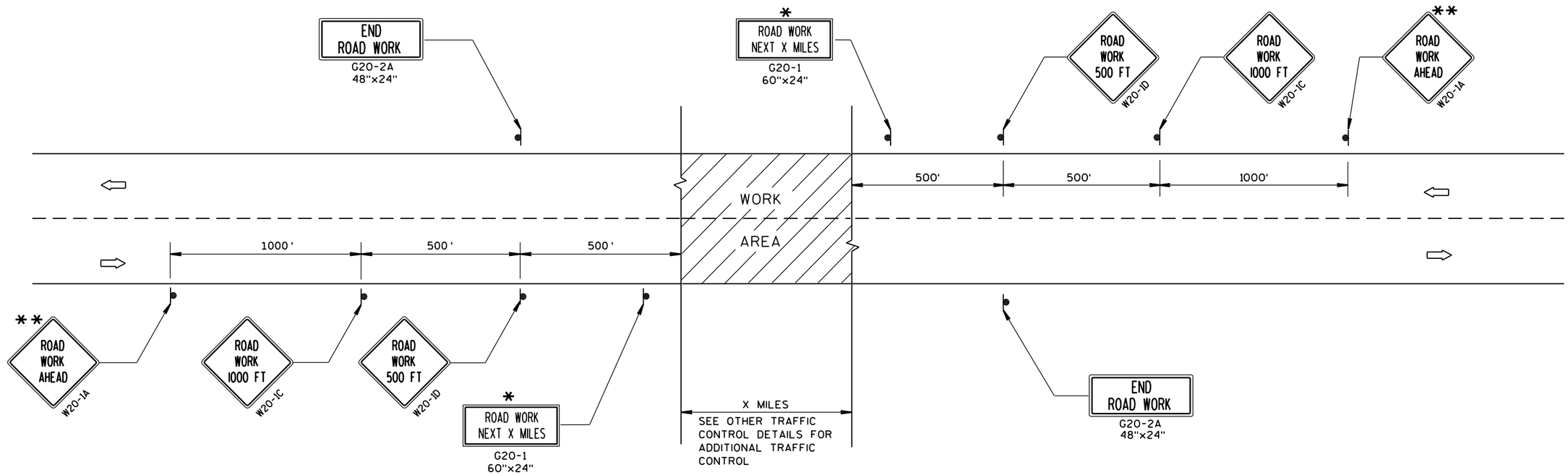

GENERAL NOTES

THE EXACT NUMBER, LOCATION, AND SPACING OF ALL SIGNS AND DEVICES SHALL BE ADJUSTED TO FIT FIELD CONDITIONS.

THE SPACING BETWEEN TRAFFIC CONTROL SIGNS SHOULD BE ADJUSTED TO NOT CONFLICT WITH AND SHOULD PROVIDE A MINIMUM OF 200 FEET (500 FEET DESIRABLE) CLEARANCE TO EXISTING SIGNS THAT WILL REMAIN IN PLACE.

ALL SIGNS ARE 48"x48" UNLESS OTHERWISE NOTED.

SIGNS THAT WILL BE IN PLACE LESS THAN 7 CONTINUOUS DAYS AND NIGHTS MAY BE MOUNTED ON PORTABLE SUPPORTS.

IF A "STOP" SIGN MUST BE REMOVED FOR A WORK OPERATION, A TEMPORARY "STOP" SIGN SHALL BE PLACED PRIOR TO THE SIGN REMOVAL, OR A FLAGGER SHALL BE PROVIDED UNTIL THE SIGN IS RE-ESTABLISHED.

* OMIT G20-1 SIGNS IF LENGTH OF WORK AREA IS 2 MILES OR LESS.

** PLACE ADDITIONAL W20-1A "ROAD WORK AHEAD" SIGN IF WORK AREA WITHIN THE PROJECT IS SEPARATED BY MORE THAN 2 MILES FROM PREVIOUS WORK AREA.

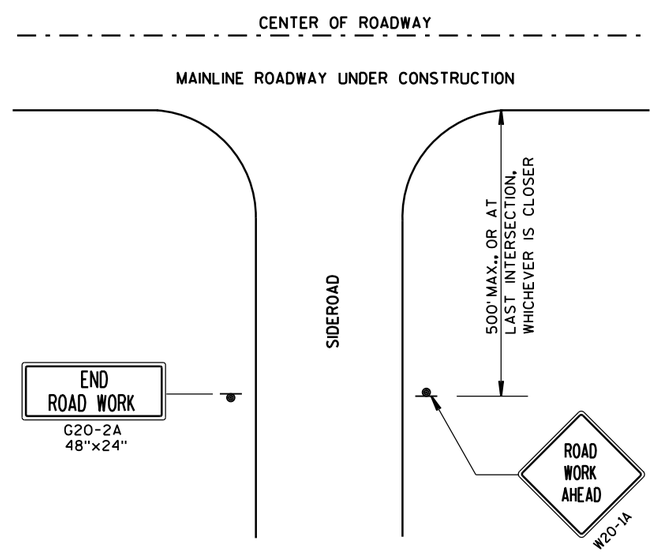

LEGEND

- SIGN ON PERMANENT SUPPORT
- DIRECTION OF TRAFFIC
- WORK AREA

TRAFFIC CONTROL, ADVANCE WARNING SIGNS 45 M.P.H. OR GREATER TWO-WAY UNDIVIDED ROAD OPEN TO TRAFFIC

STATE OF WISCONSIN
DEPARTMENT OF TRANSPORTATION

APPROVED
Sept. 2017 — DATE
/S/ Andrew Heldtke — WORK ZONE ENG
FHWA

6

S.D.D. 15 C 4-4

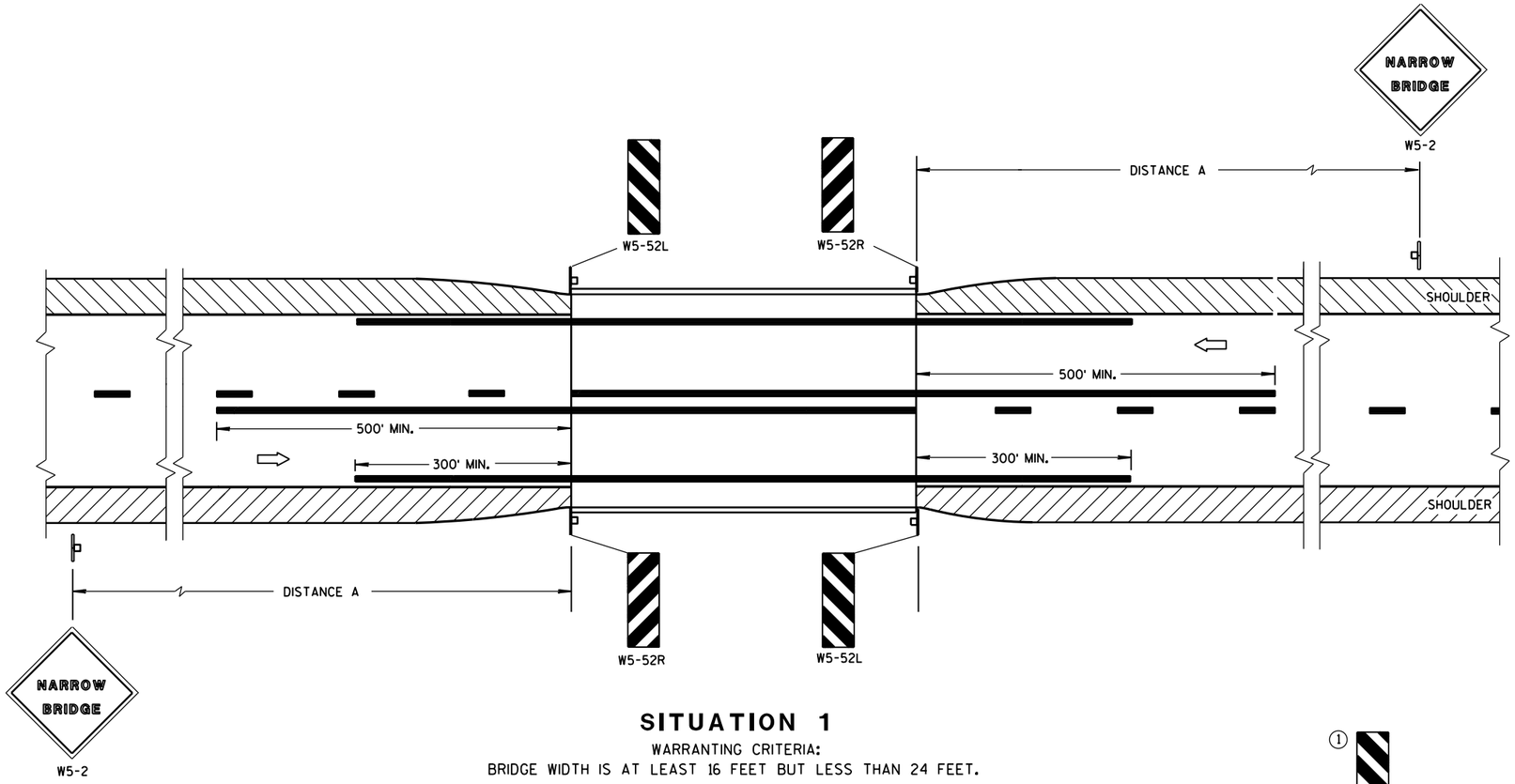

SITUATION 1

WARRANTING CRITERIA:
BRIDGE WIDTH IS AT LEAST 16 FEET BUT LESS THAN 24 FEET.

GENERAL NOTES

DETAILS OF TRAFFIC CONTROL DEVICES AND INSTALLATION NOT SHOWN ON THIS DRAWING SHALL CONFORM TO THE PERTINENT REQUIREMENTS OF THE STANDARD SPECIFICATIONS, THE SPECIAL PROVISIONS, AND THE MANUAL ON UNIFORM TRAFFIC CONTROL DEVICES.

LOCATE W5-52 SIGN POST(S) BEHIND GUARDRAIL WHEN PRESENT.

PLACE THE EDGE OF THE W5-52 SIGN IN LINE WITH FACE OF CURB OR PARAPET.

(1) OMIT ON ONE-WAY TRAVELLED WAYS.

⇨ DIRECTION OF TRAFFIC

DISTANCE TABLE

POSTED OR 85th PERCENTILE SPEED	DISTANCE "A"
25	150'
30	200'
35	250'
40	300'
45	400'
50	550'
55	750'

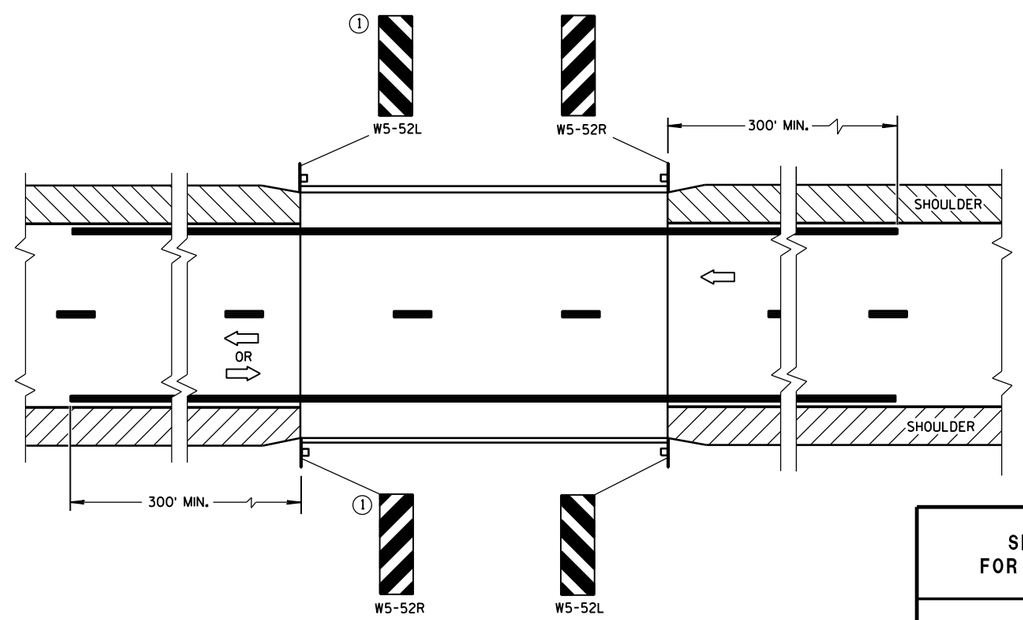

SITUATION 2

WARRANTING CRITERIA:

1. BRIDGE WIDTH IS AT LEAST 24 FEET AND
2. BRIDGE SHOULDER WIDTH IS LESS THAN 6 FEET.

SIGNING & MARKING FOR TWO LANE BRIDGES

STATE OF WISCONSIN
DEPARTMENT OF TRANSPORTATION

APPROVED
June 2017 — DATE
/S/ Matthew R. Rauch — STATE SIGNING AND MAR ... EER
FHWA

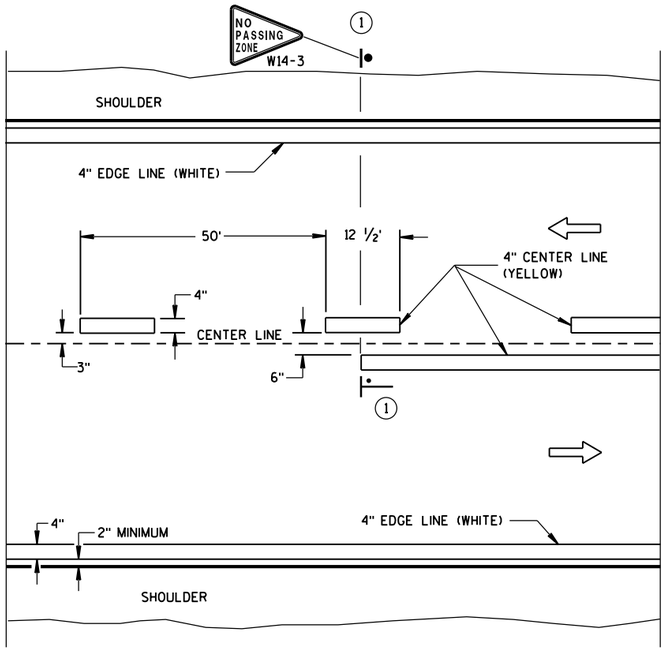

TWO WAY TRAFFIC

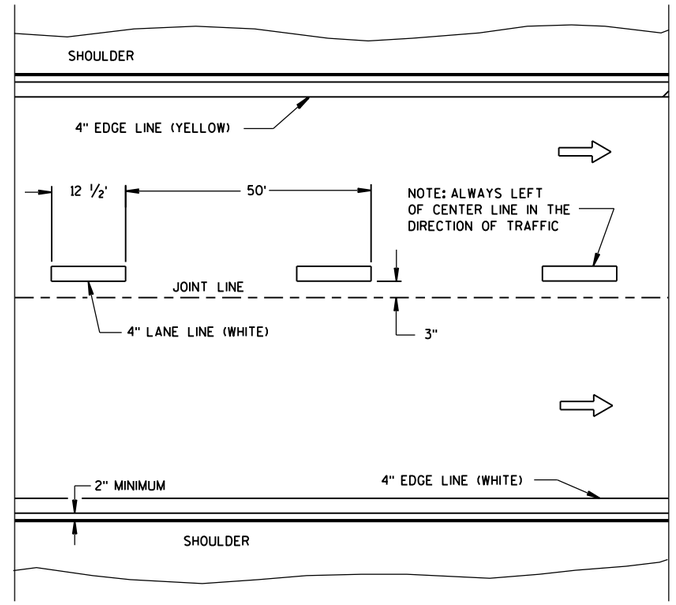

ONE WAY TRAFFIC

PERMANENT PAVEMENT MARKING

GENERAL NOTES

DETAILS OF CONSTRUCTION NOT SHOWN ON THIS DRAWING SHALL CONFORM TO STANDARD SPECIFICATIONS AND SPECIAL PROVISIONS.

(1) LOCATE THE NO PASSING ZONE W14-3 SIGN WITHIN 50 FEET OF THE "T" MARKING.

NOTE

ARROW SYMBOL (⇨) SHOWS DIRECTION OF TRAVEL

LEGEND

"T" MARKING

POST MOUNTED SIGN

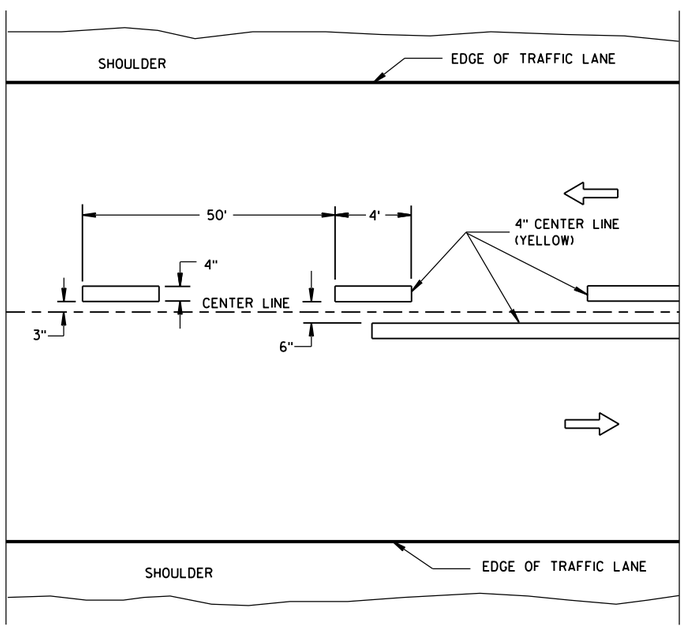

TWO WAY TRAFFIC

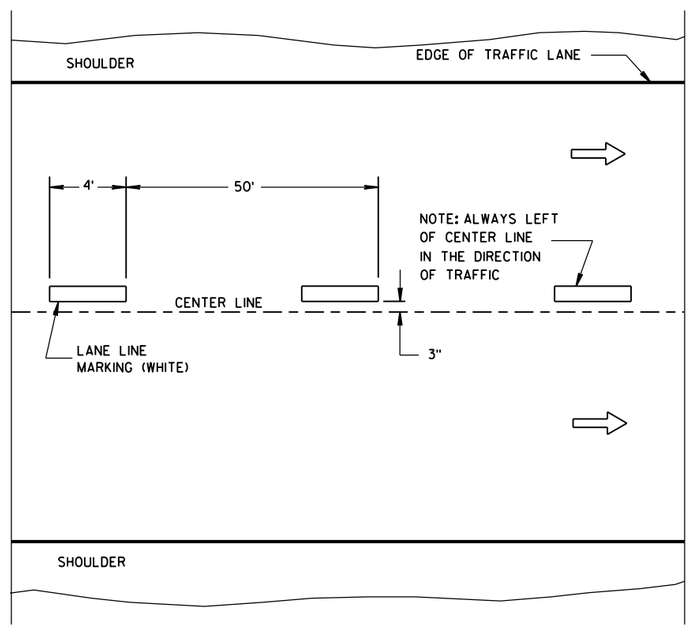

ONE WAY TRAFFIC

TEMPORARY PAVEMENT MARKING

6

6

S.D.D. 15 C 8-18a

S.D.D. 15 C 8-18a

LONGITUDINAL MARKING (MAINLINE)

STATE OF WISCONSIN
DEPARTMENT OF TRANSPORTATION

APPROVED
June 2017 /S/ Matthew R. Rauch
DATE STATE SIGNING AND MAR ENGINEER
FHWA

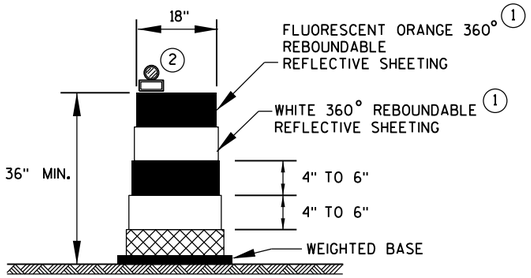

DRUM

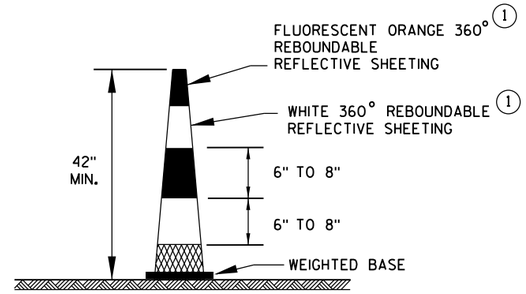

42" CONE

DO NOT USE IN TAPERS
½ SPACING OF DRUMS

GENERAL NOTES

1. REFLECTIVE SHEETING SHALL FOLLOW THE REQUIREMENTS IN THE APPROVED PRODUCTS LISTING FOR SIGN SHEETING.
2. LOCATION OF WARNING LIGHTS WHEN SHOWN ON THE PLAN.

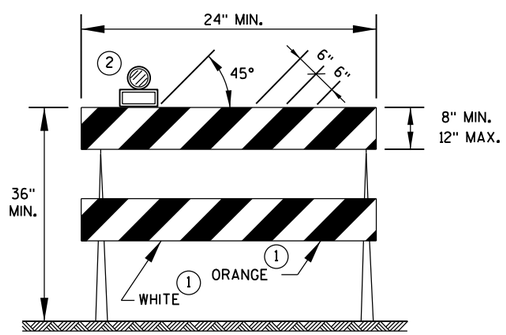

TYPE 2 BARRICADE

FOR RAILS LESS THAN 36" LONG, 4" WIDE STRIPES MAY BE USED. ALL STRIPES SHALL SLOPE DOWNWARD TO THE TRAFFIC SIDE FOR CHANNELIZATION.

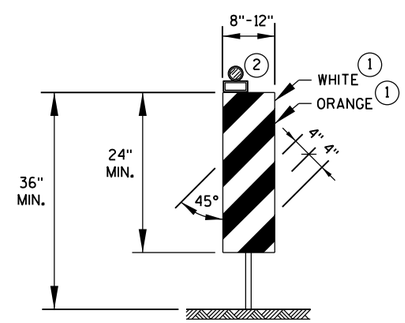

VERTICAL PANEL

THE STRIPES SHALL SLOPE DOWNWARD TO THE TRAFFIC SIDE FOR CHANNELIZATION.

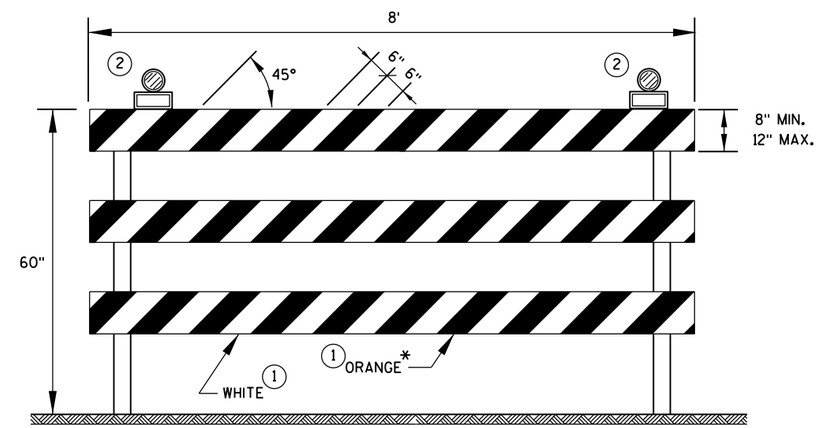

TYPE 3 BARRICADE

IF SIGN MOUNTED, DO NOT COVER MORE THAN 50% OF THE TOP TWO RAILS OR 33% OF THE TOTAL AREA OF THE THREE RAILS.

* IF USED FOR A PERMANENT APPLICATION, USE RED SHEETING.

CHANNELIZING DEVICES DRUMS, CONES, BARRICADES AND VERTICAL PANELS	
STATE OF WISCONSIN DEPARTMENT OF TRANSPORTATION	
APPROVED	
June 2017	/S/ Andrew Heldtke
DATE	WORK ZONE ENG
FHWA	

LEGEND

SIGN ON PORTABLE OR PERMANENT SUPPORT

DIRECTION OF TRAFFIC

WORK AREA

FLAGGER, EQUIPPED WITH STOP/SLOW PADDLE FASTENED ON SUPPORT STAFF

SIGN AND TEMPORARY RUMBLE STRIP ARRAY SPACING TABLE

SPEED LIMIT	SPACING A
25-35 MPH	200'
35-40 MPH	350'
45-55 MPH	500'

USE OF THE "BE PREPARED TO STOP" SIGN IS OPTIONAL. WHEN USED, THIS SIGN SHALL BE LOCATED BETWEEN THE W20-7A AND W20-4A SIGNS, USING SPACING A.

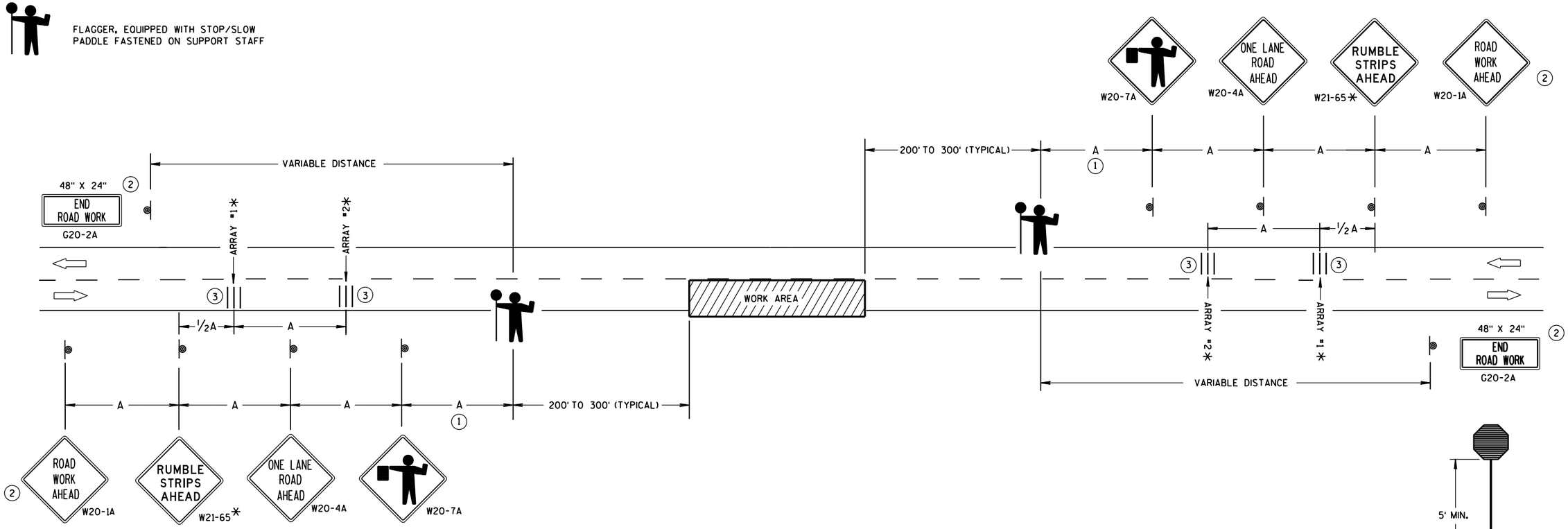

TRAFFIC CONTROL FOR LANE CLOSURE WITH FLAGGING OPERATION

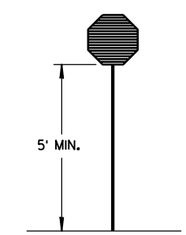

STOP/SLOW PADDLE ON SUPPORT STAFF

GENERAL NOTES

DETAILS OF TRAFFIC CONTROL DEVICES AND INSTALLATION NOT SHOWN ON THIS DRAWING SHALL CONFORM TO THE PERTINENT REQUIREMENTS OF THE STANDARD SPECIFICATIONS, THE SPECIAL PROVISIONS, AND THE MANUAL ON UNIFORM TRAFFIC CONTROL DEVICES.

THE EXACT NUMBER, LOCATION AND SPACING OF ALL SIGNS AND DEVICES (AND THE LOCATION OF ALL FLAGGERS) SHALL BE ADJUSTED TO FIT FIELD CONDITIONS AS APPROVED BY THE ENGINEER.

THE FIRST ADVANCE WARNING SIGN SHOULD TYPICALLY BE LOCATED IN ADVANCE OF THE ANTICIPATED TRAFFIC BACKUP OR QUEUE.

"WO" SIGNS ARE THE SAME AS "W" SIGNS EXCEPT THE BACKGROUND IS ORANGE.

WHEN A SIDE ROAD OR RAMP INTERSECTS THE FACILITY ON WHICH THE WORK IS BEING PERFORMED, ADDITIONAL TRAFFIC CONTROLS SHALL BE PROVIDED AS SPECIFIED IN THE PLANS AND/OR THE SPECIAL PROVISIONS OR AS APPROVED BY THE ENGINEER.

INSTALL TEMPORARY RUMBLE STRIPS PER MANUFACTURER'S RECOMMENDATIONS.

PLACE ADVANCE SIGNING PRIOR TO INSTALLING TEMPORARY RUMBLE STRIPS.

ALL SIGNS ARE 48" X 48" UNLESS OTHERWISE NOTED.

FLAGGERS SHALL BE IN SIGHT OF EACH OTHER OR IN DIRECT COMMUNICATION AT ALL TIMES. THEY SHALL BE EQUIPPED WITH STOP/SLOW PADDLES FASTENED ON SUPPORT STAFFS. WHEN THE FLAGGING OPERATION IS NOT IN EFFECT, REMOVE TEMPORARY RUMBLE STRIPS PRIOR TO COVERING OR REMOVING ALL ADVANCE SIGNING.

* UTILIZE TEMPORARY RUMBLE STRIPS WHEN FLAGGING OPERATION IS ANTICIPATED TO BE STATIONARY IN EXCESS OF TWO HOURS.

1. FOR A MOVING WORK OPERATION, SIGNING AND TEMPORARY RUMBLE STRIPS (IF USED) SHALL BE REESTABLISHED (AS SIMULTANEOUSLY AS PRACTICAL) AT APPROXIMATELY 3,500 FOOT INTERVALS IN THE MOVING WORK OPERATION OR AS APPROVED BY THE ENGINEER.
2. SIGN NOT REQUIRED IF FLAGGING OPERATION OCCURS WITHIN A SIGNED ROAD WORK ZONE AREA.
3. EACH TEMPORARY RUMBLE STRIP ARRAY CONSISTS OF THREE RUMBLE STRIPS SPACED ACCORDING TO MANUFACTURER'S RECOMMENDATION, PLACED TRANSVERSE ACROSS THE LANE AT LOCATIONS SHOWN.

TRAFFIC CONTROL FOR LANE CLOSURE WITH FLAGGING OPERATION

STATE OF WISCONSIN
DEPARTMENT OF TRANSPORTATION

APPROVED
June 2017 — DATE
/S/ Andrew Heldtke — WORK ZONE ENG
FHWA

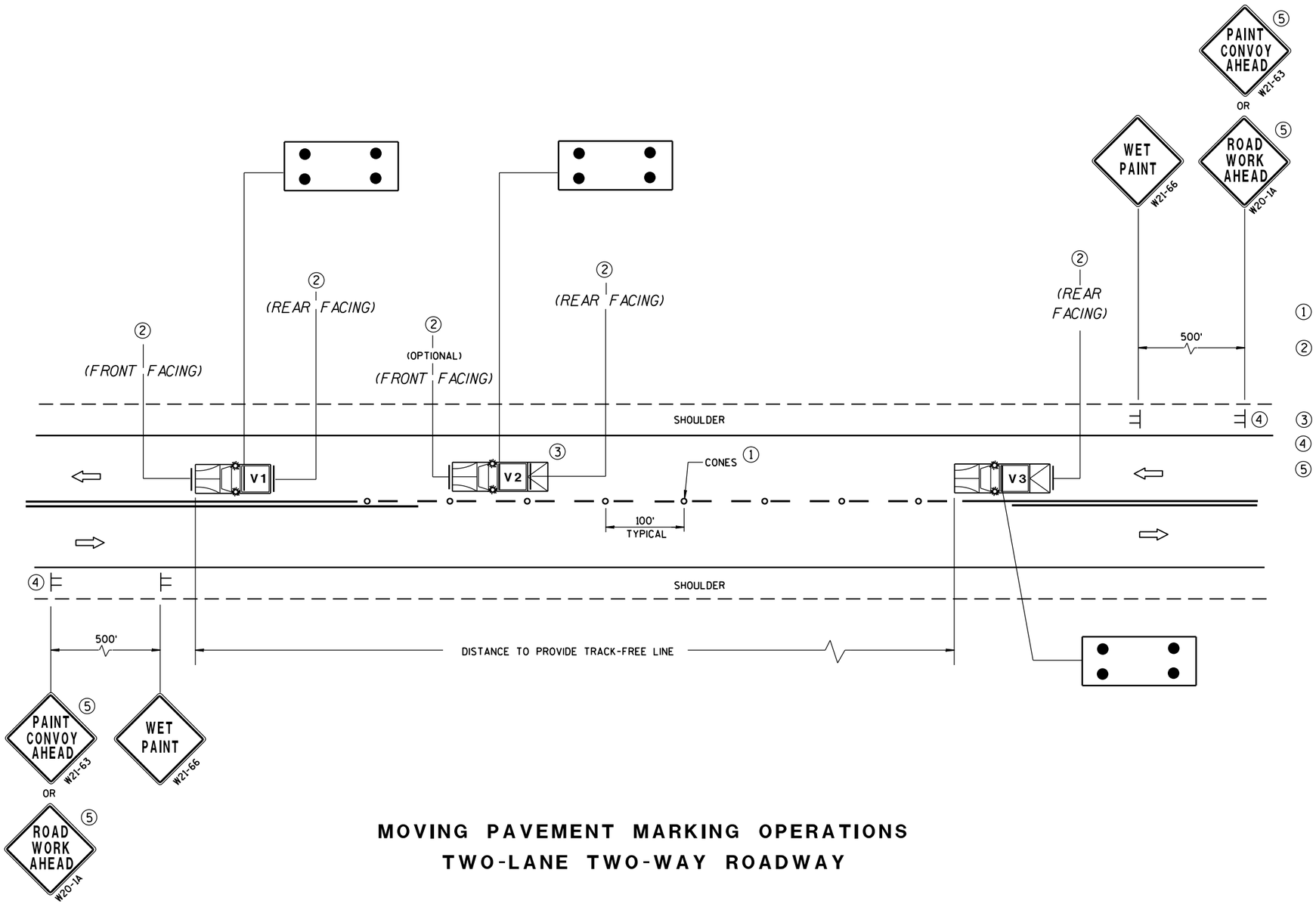

MOVING PAVEMENT MARKING OPERATIONS
TWO-LANE TWO-WAY ROADWAY

GENERAL NOTES

ALL VEHICLES SHALL BE EQUIPPED WITH TWO 360 DEGREE HIGH INTENSITY YELLOW FLASHING LIGHTS OR STROBE LIGHTS AND OPERATED WITH HEADLIGHTS TURNED ON.

VEHICLES SHALL BE EQUIPPED WITH REAR FACING TYPE B OR C FLASHING ARROW PANEL OPERATING IN CAUTION MODE. SIGNS PLACED ON VEHICLES MUST NOT OBSCURE THE ARROW PANEL.

ALL SIGNS ARE 48" X 48" UNLESS OTHERWISE SPECIFIED.

IF SPEED LIMIT IS 40 MPH OR LESS STATIONARY SIGNS MAY BE OMITTED IF CONES ARE USED.

ALTERNATE SIGN MESSAGES, SUCH AS "PAINT CREW AHEAD" OR "ROAD PAINTING AHEAD" MAY BE USED.

DISTANCE BETWEEN VEHICLES MAY VARY ACCORDING TO TERRAIN, SIGHT DISTANCE, PAINT DRYING TIME, AND OTHER FACTORS. WHENEVER ADEQUATE STOPPING SIGHT DISTANCE EXISTS TO THE REAR, SHADOW VEHICLES SHOULD MAINTAIN THE MINIMUM DISTANCE FROM THE WORK VEHICLE AND PROCEED AT THE SAME SPEED AS THE WORK VEHICLE. SHADOW VEHICLES SHOULD SLOW DOWN IN ADVANCE OF VERTICAL OR HORIZONTAL CURVES THAT RESTRICT SIGHT DISTANCE.

THE WORK AND SHADOW VEHICLES SHOULD PULL OVER PERIODICALLY TO ALLOW TRAFFIC TO PASS.

THIS DRAWING SHALL BE USED FOR CENTERLINE OR EDGELINE MARKING.

WHEN NO WORK ACTIVITY IS TAKING PLACE, REMOVE OR TURN THE STATIONARY WARNING SIGNS AWAY FROM TRAFFIC.

1. CONES MAY BE OMITTED ON PAINTED LINE IF APPROVED BY THE ENGINEER. CONSIDER PAVEMENT MARKING DRY OR CURE TIMES AND TRAFFIC VOLUME.
2. USE STANDARD SIGN W21-64 WITH APPROPRIATE ARROW.

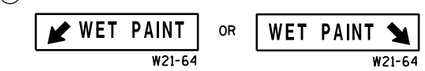

3. OPTIONAL TRUCK-MOUNTED ATTENUATOR.
4. SIGNS SHALL BE REPEATED APPROXIMATELY EVERY THREE MILES.
5. IF CONSTRUCTION WORK ZONE SIGNS ARE IN PLACE, W20-1 OR W21-63 ARE NOT REQUIRED.

LEGEND

V1	LEAD VEHICLE
V2	SHADOW VEHICLE
V3	TRAIL VEHICLE WITH TMA
TMA	TRUCK-MOUNTED ATTENUATOR
	SIGN ON TEMPORARY SUPPORT
	DIRECTION OF TRAFFIC
	CONES
	FLASHING ARROW PANEL (CAUTION)

MOVING PAVEMENT MARKING OPERATION
TWO-LANE TWO-WAY ROADWAY

STATE OF WISCONSIN
DEPARTMENT OF TRANSPORTATION

APPROVED
Sept., 2017 — DATE
/S/ Andrew Heldtke — WORK ZONE ENGR
FHWA

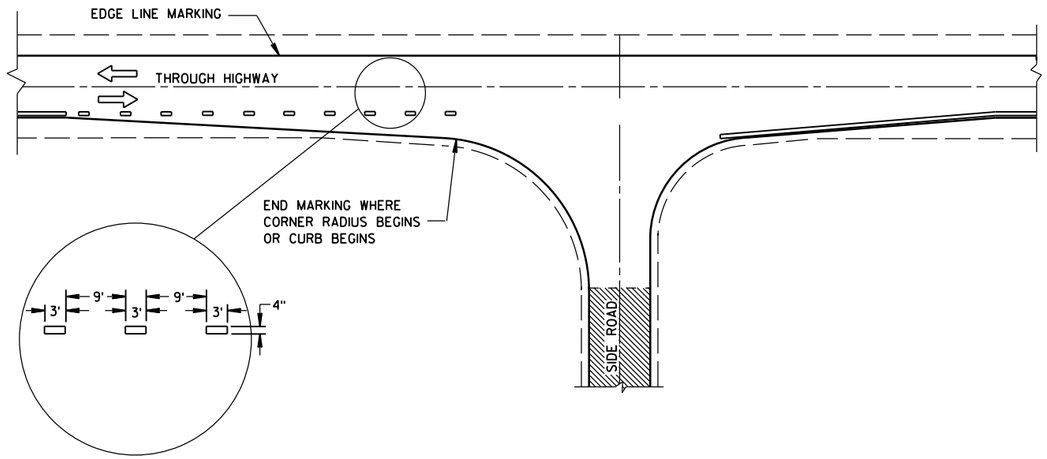

MINOR INTERSECTION

GENERAL NOTES

OMIT EDGE LINES THROUGH INTERSECTIONS. CONTINUE EDGE LINES THROUGH DRIVEWAYS.

1. WHEN DISTANCE "A" IS LESS THAN 250 FEET, OMIT LANE LINE.
2. WHEN DISTANCE "B" IS LESS THAN 100 FEET, OMIT CHANNELIZING LANE LINE.
3. BARRIER LINE ENDS AT SIDE ROAD PAVEMENT/SURFACE EDGE EXTENSION.
4. BARRIER LINE STARTS 500 FEET PRIOR TO THE BYPASS TAPER.

ARROW SYMBOL (⇨) SHOWS DIRECTION OF TRAVEL

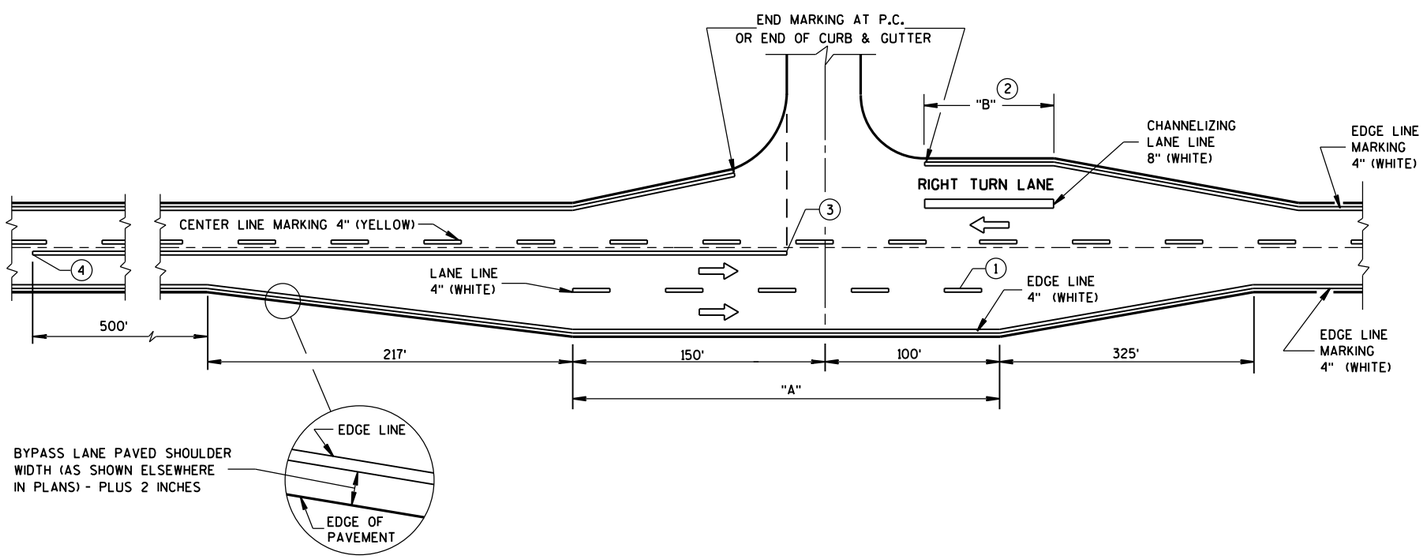

MAJOR INTERSECTIONS

(INTERSECTION WITH FULL RIGHT TURN LANE OR BYPASS LANE)

PAVEMENT MARKING
(INTERSECTIONS)

STATE OF WISCONSIN
DEPARTMENT OF TRANSPOR

6

S.D.D. 15 C 35-2a

GENERAL NOTES

THE EXACT NUMBER, LOCATION AND SPACING OF ALL SIGNS AND DEVICES SHALL BE ADJUSTED TO FIT FIELD CONDITIONS AS APPROVED BY THE ENGINEER.

ALL SIGNS ARE 48" X 48" UNLESS OTHERWISE NOTED. IF NECESSARY DUE TO SPACE CONSTRAINTS IN URBAN AREAS, 36" X 36" SIGNS MAY BE USED IF APPROVED BY DISTRICT TRAFFIC UNIT.

"WO" SIGNS ARE THE SAME AS "W" SIGNS EXCEPT THE BACKGROUND IS ORANGE.

SIGNS THAT WILL BE IN PLACE LESS THAN 7 CONTINUOUS DAYS AND NIGHTS MAY BE MOUNTED ON PORTABLE SUPPORTS.

ANY SIGNS TEMPORARY OR EXISTING, WHICH CONFLICT WITH TRAFFIC CONTROL "IN USE" SHALL BE REMOVED OR COVERED AS NEEDED AND AS APPROVED BY THE ENGINEER.

W20-1A AND G20-2A SIGNS ARE NOT REQUIRED IF THE WORK AREA IS WITHIN A LARGER WORK ZONE WHERE THESE SIGNS ARE ALREADY PRESENT. G20-2A SIGNS MAY ALSO BE OMITTED IF DURATION OF WORK IS LESS THAN 7 CONTINUOUS DAYS AND NIGHTS.

CHANNELIZING DEVICES PLACED ADJACENT TO THE WORK AREA SHALL BE PULLED BACK FROM THE TRAVEL LANE WHEN WORK IS NOT IN PROGRESS.

TABLE A

S \ W	SHOULDER TAPER LENGTH (FEET) 4	6	8	10	BUFFER SPACE (FEET)
30	20	30	40	50	200
35	30	45	55	70	250
40	40	55	75	90	305
45	60	90	120	150	360
50	70	100	135	170	425
55	75	110	150	185	495

SHOULDER TAPER LENGTH = $\frac{1}{3}L$

W = SHOULDER WIDTH (FEET)
S = NON-CONSTRUCTION SPEED LIMIT (MPH)

TAPER LENGTH

$L = WS$ AT 45 MPH OR GREATER

$L = \frac{WS^2}{60}$ AT 40 MPH OR LESS

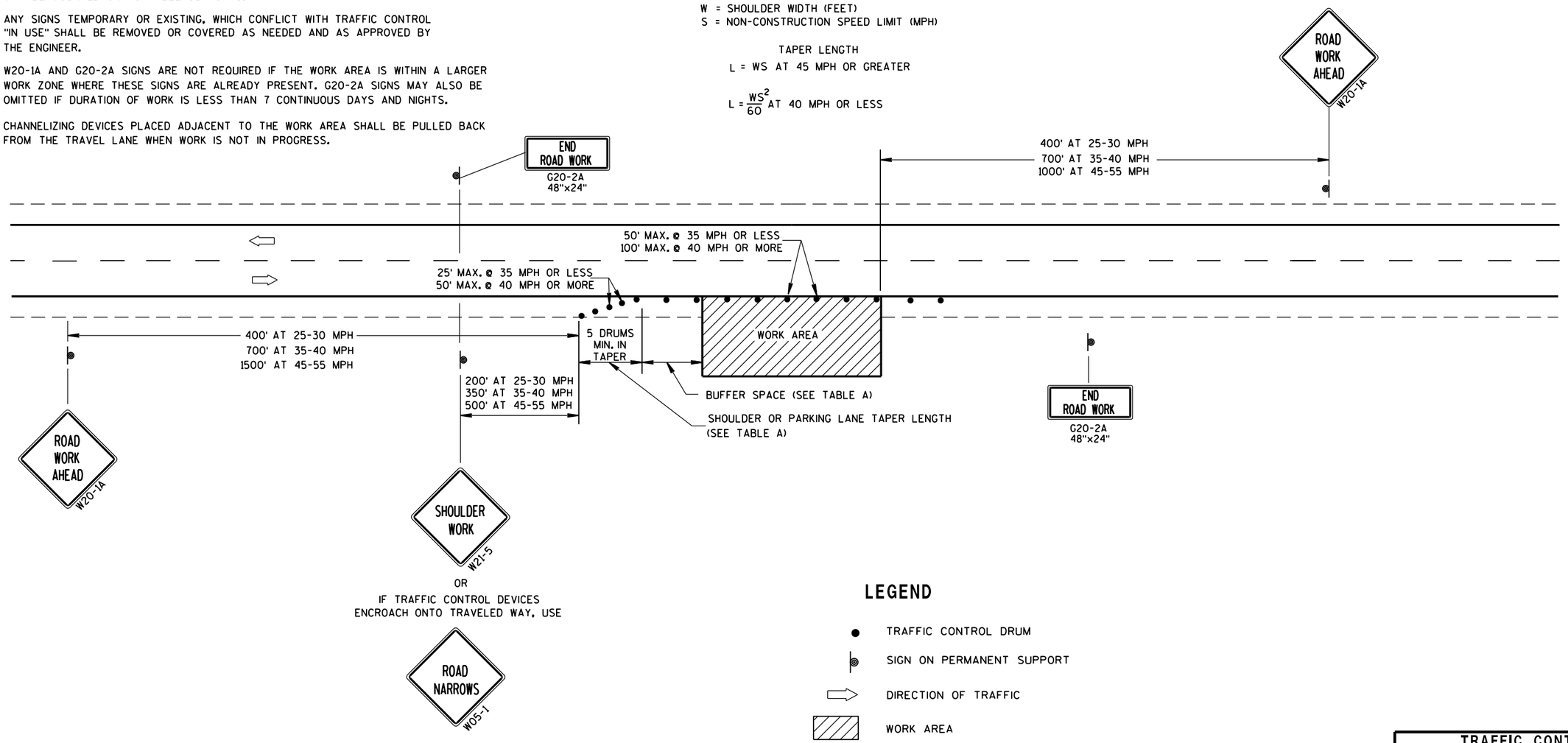

LEGEND

- TRAFFIC CONTROL DRUM
- SIGN ON PERMANENT SUPPORT
- DIRECTION OF TRAFFIC
- WORK AREA

TRAFFIC CONTROL, WORK ON SHOULDER OR PARKING LANE, UNDIVIDED ROADWAY

STATE OF WISCONSIN
DEPARTMENT OF TRANSPORTATION

APPROVED

July 14, 2015 — DATE

/S/ Peter Amakobe Atepe — STATEWIDE WORK ZONE TRAFFIC SAFETY ENGIN

FHWA

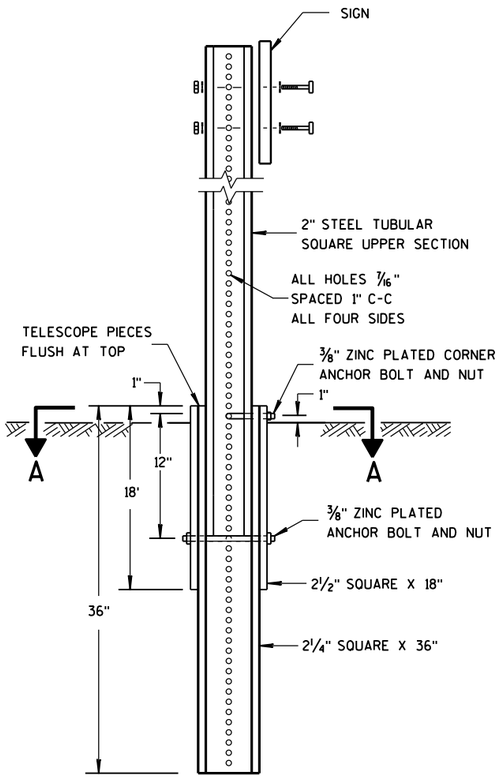

DETAIL OF TUBULAR STEEL SIGN POST

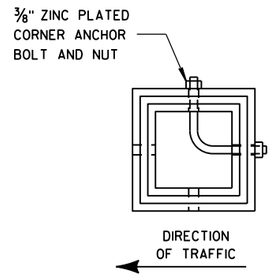

SECTION A-A

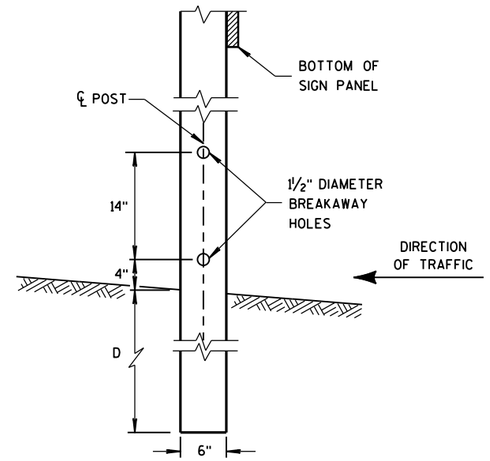

4"x6" WOOD POST MODIFICATION

GENERAL NOTES

1. 6 FEET FROM THE EDGE OF PAVEMENT (EDGE LINE LOCATION) UNLESS OTHERWISE DIRECTED BY THE PROJECT ENGINEER. LATERAL OFFSET SHOULD BE ADJUSTED TO AVOID THE DITCH FLOWLINE.
2. THE EXISTENCE OF CURB AND GUTTER DOES NOT IN ITSELF MANDATE THE VERTICAL CLEARANCE ILLUSTRATED. THAT HEIGHT IS TYPICALLY MEASURED WHERE THERE IS SIDEWALK ADJACENT TO THE ROADWAY OR PARKING IS PERMITTED. IN THE ABSENCE OF SIDEWALK, VERTICAL CLEARANCE IS MEASURED FROM THE TOP OF THE CURB. IF NO SIDEWALK AND NO PARKING, VERTICAL CLEARANCE MAY BE REDUCED TO 5 FOOT MINIMUM. OFFSET OF SIGNS IS MEASURED FROM THE CURB FLOWLINE.
3. FOR SIGNS REQUIRING 4 POSTS, SPACE INTERMEDIATE POSTS EVENLY.

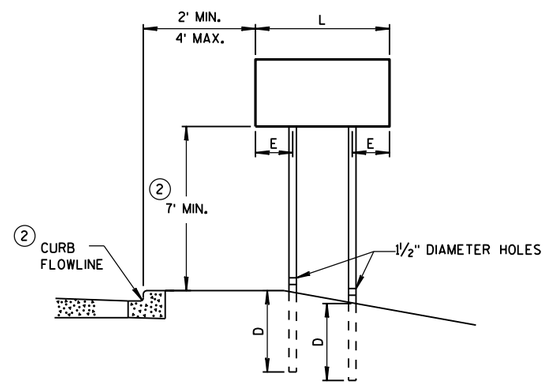

URBAN AREA

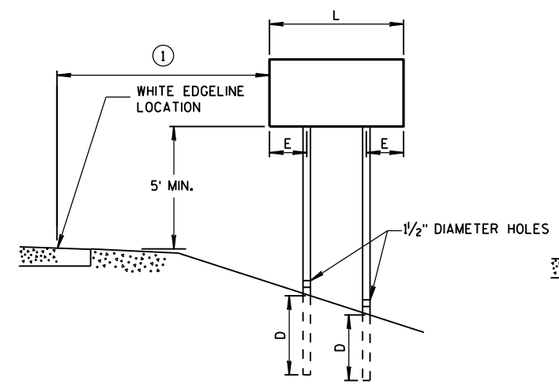

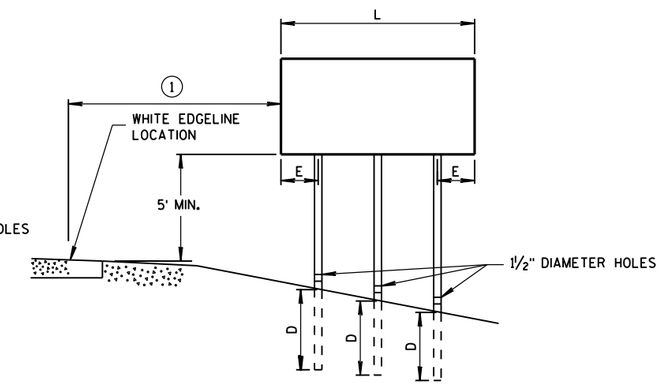

RURAL AREA

POST MOUNTING DETAIL FOR TEMPORARY TRAFFIC CONTROL FIXED MESSAGE SIGNS

TUBULAR STEEL POSTS

AREA OF SIGN INSTALLATION (SQ. FT.)	NUMBER OF REQUIRED TUBULAR STEEL POSTS
9 OR LESS	1
GREATER THAN 9 LESS THAN OR EQUAL TO 18	2
GREATER THAN 18 LESS THAN OR EQUAL TO 27	3

SIGNS WIDER THAN 3 FEET OR LARGER THAN 9 SQ. FT. SHALL BE MOUNTED ON MULTIPLE POSTS (SEE ABOVE TABLE).

SIGNS LARGER THAN 27 SQ. FT. SHALL NOT BE MOUNTED ON TUBULAR STEEL POSTS.

WOOD POST EMBEDMENT DEPTH

AREA OF SIGN INSTALLATION (SQ. FT.)	D (MIN)
20 OR LESS	4'
GREATER THAN 20	5'

4" X 6" WOOD POST

POST SPACING REQUIREMENTS		NUMBER OF WOOD POSTS REQUIRED
L	E	
48" OR LESS AND LESS THAN 20 SQ. FT.	-	1
LESS THAN 60"	12"	2
60" TO 120"	L/5	2
GREATER THAN 120" LESS THAN 168"	12"	3
168" AND GREATER	12"	4

SEE NOTE 3

TEMPORARY TRAFFIC CONTROL SIGN MOUNTING

STATE OF WISCONSIN
DEPARTMENT OF TRANSPO

6

S.D.D. 15 D 38-2a

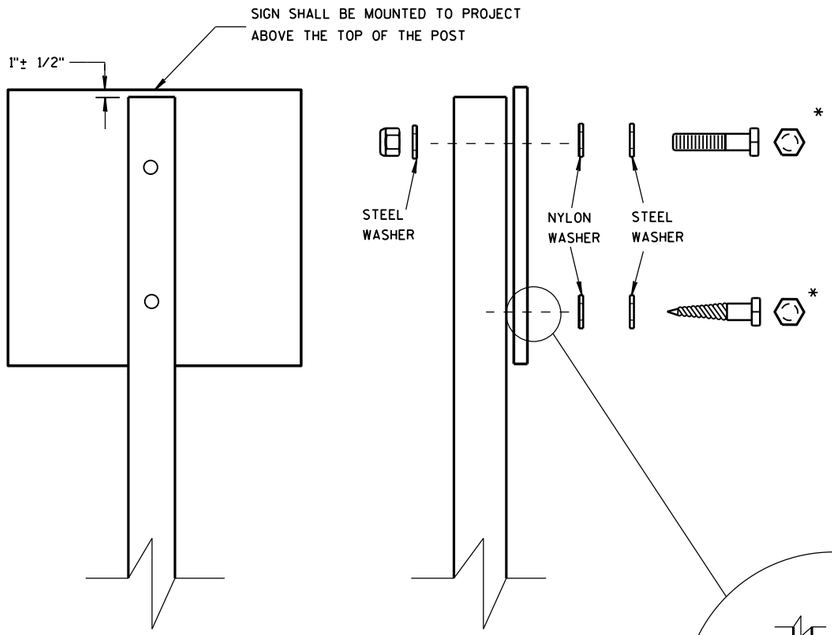

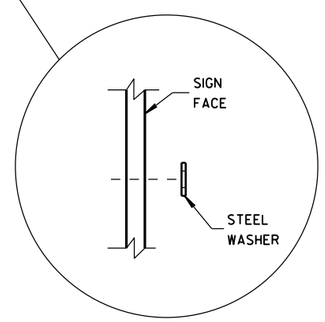

WASHER PLACEMENT WHEN SIGN HAS OTHER THAN TYPE H OR TYPE F FACE

NUTS, BOLTS AND LAGS USED FOR MOUNTING SIGNS SHALL HAVE HEXAGONAL HEADS AND SHALL BE EITHER:

A. HOT DIP GALVANIZED IN ACCORDANCE WITH ASTM DESIGNATION: A 153, CLASS D, OR SC 3

B. ELECTRO-GALVANIZED IN ACCORDANCE WITH ASTM DESIGNATION: B 633, TYPE III, SC 3

THREADS ON BOLTS AND NUTS SHALL BE MANUFACTURED WITH SUFFICIENT ALLOWANCE FOR THE CADMIUM PLATE OR GALVANIZED COATING TO PERMIT THE NUTS TO RUN FREELY ON THE BOLTS.

WOOD POSTS (4" x 4" or 4" x 6")

LAG SCREWS - 3/8" X 3"

MACHINE BOLTS - 5/16" X 6-1/2" OR 7" LENGTH W/ NUTS

SQUARE STEEL POSTS (2" x 2")

MACHINE BOLTS - 3/8" X 3-1/4" LENGTH W/ NUTS

RIVETS - 9/32" (6605-9-6) BULB-TITE, TRI-FOLD, ALUMINUM BODY/MANDREL O.D. FLANGE .720-.765 INCH, GRIP RANGE .042-.375 INCH

WASHERS (ALL POSTS) -

1-1/4" O.D. X 3/8" I.D. X 1/16" STEEL

1-1/4" O.D. X 3/8" I.D. X .080 NYLON FOR ALL TYPE H SIGNS

* TWO DIFFERENT FASTENING SYSTEMS ARE SHOWN FOR ILLUSTRATION PURPOSES. ON ANY INDIVIDUAL SIGN, EITHER ONE OR THE OTHER SYSTEM SHALL BE USED. ACTUAL NUMBER OF FASTENERS PER SIGN VARIES WITH THE SIGN AREA. FOR A SINGLE POST INSTALLATION, ALL SIGNS GREATER THAN 9 SQ. FT. REQUIRE THE USE OF 3 FASTENERS.

6

6

S.D.D. 15 D 38-2b

S.D.D. 15 D 38-2b

ATTACHMENT OF SIGNS TO POSTS

STATE OF WISCONSIN
DEPARTMENT OF TRANSPORTATION

APPROVED

June 2017 — /S/ Andrew Heldtke

DATE — WORK ZONE ENG

FHWA

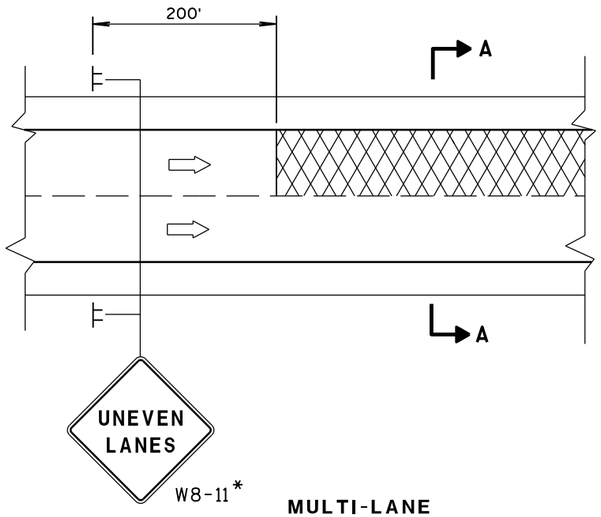

MULTI-LANE

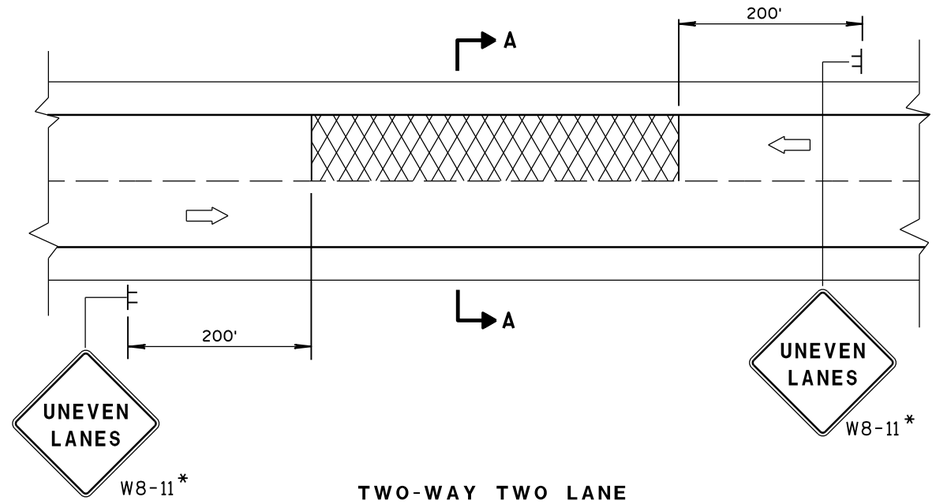

TWO-WAY TWO LANE

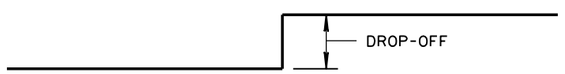

SECTION A-A

OR

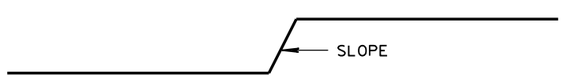

SECTION A-A

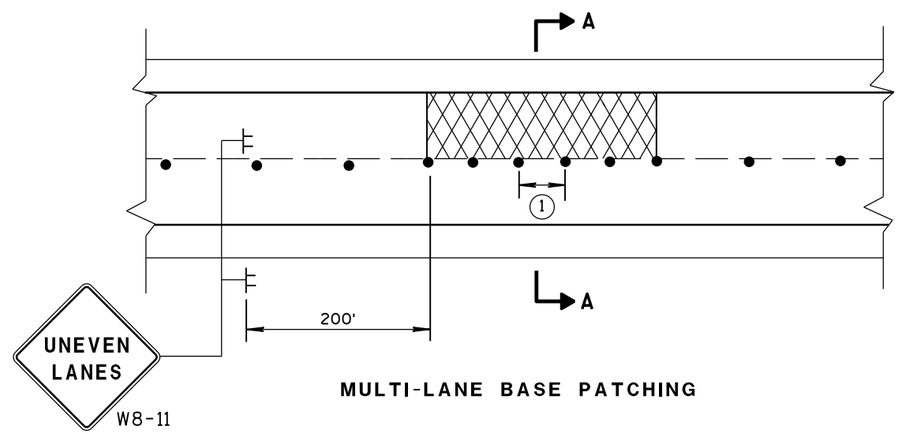

MULTI-LANE BASE PATCHING

ADJACENT LANE DROP-OFFS

GENERAL NOTES

FOR SPOT LOCATIONS USE ENGINEERING JUDGEMENT WHEN PLACING ADDITIONAL SIGNS.

ALL SIGNS ARE 48" X 48" UNLESS OTHERWISE NOTED.

"WO" SIGNS ARE THE SAME AS "W" SIGNS EXCEPT THE BACKGROUND IS ORANGE.

* IF THE DROP-OFF IS CONTINUOUS ALONG THE PROJECT, PLACE ADDITIONAL SIGNS EVERY 1/2 MILE.

(1) USE CLOSER SPACING WHEN DELINEATING DROP-OFF.

LEGEND

- SIGN ON TEMPORARY SUPPORT
- TRAFFIC CONTROL DRUM
- DIRECTION OF TRAFFIC
- WORK AREA WITH DROP-OFF

D	SIGN (C)
< 2" WITH A SLOPE STEEPER THAN 3:1	LOW SHOULDER W08-9
2" < 6" WITH A SLOPE STEEPER THAN 3:1	SHOULDER DROP-OFF W8-9A PROVIDE A 3:1 OR FLATTER SLOPE OF MATERIAL ADJACENT TO THE PAVEMENT

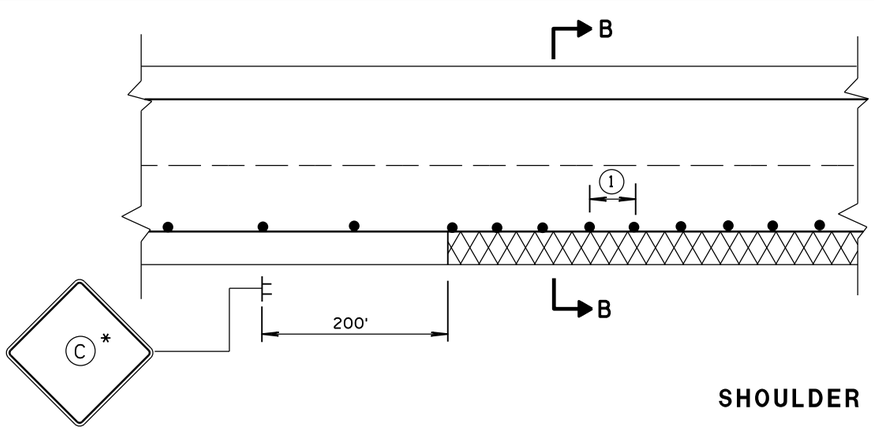

SHOULDER DROP-OFFS

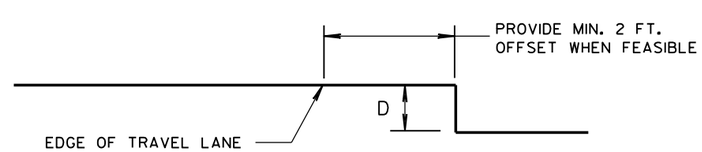

SECTION B-B

TRAFFIC CONTROL, DROP-OFF SIGNING

STATE OF WISCONSIN
DEPARTMENT OF TRANSPORTATION

APPROVED
March, 2017 — DATE
/S/ Andrew Heldtke — WORK ZONE ENGI
FHWA

6

S.D.D. 15 D 39-1

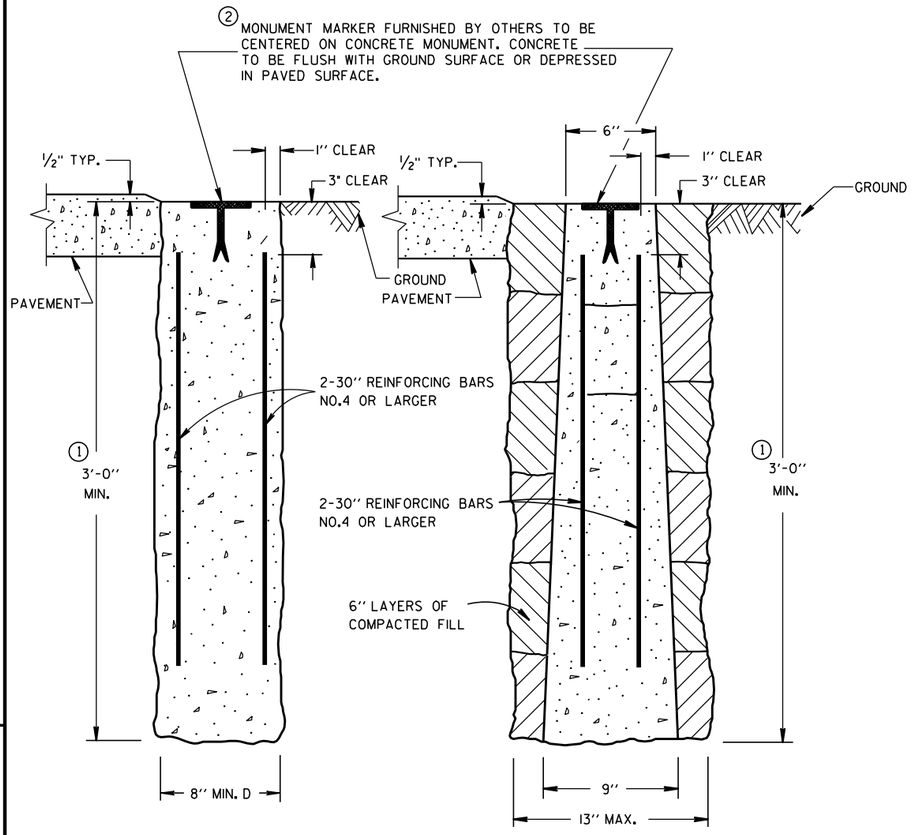

CAST-IN-PLACE PRECAST

CONCRETE MONUMENTS

TYPE A

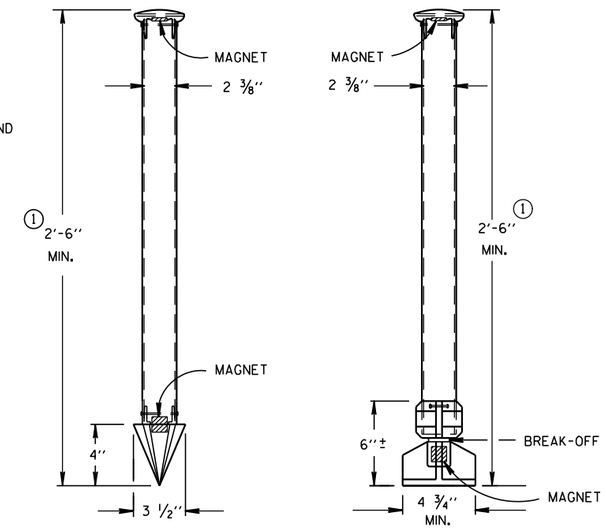

TYPE C TYPE D

DRIVE-IN MONUMENT BREAK-OFF MONUMENT

ALUMINUM MONUMENTS

(INCLUDES MARKER)

GENERAL NOTES

DETAILS OF CONSTRUCTION, MATERIALS AND WORKMANSHIP NOT SHOWN ON THIS DRAWING SHALL CONFORM TO THE PERTINENT REQUIREMENTS OF THE STANDARD SPECIFICATIONS AND THE APPLICABLE SPECIAL PROVISIONS.

DETAILED DRAWINGS OF PROPOSED ALTERNATE DESIGNS FOR METAL MONUMENTS OR MONUMENT COVERS SHALL BE SUBMITTED TO THE ENGINEER FOR APPROVAL.

INSTALLED METAL MONUMENTS MUST BE EASILY DETECTED WITH A DIP NEEDLE. INSERT PERMANENT MAGNETS SHALL BE ATTACHED NEAR THE TOP AND BOTTOM OF THOSE MONUMENTS CONSTRUCTED OF A METAL ALLOY WHICH IS NOT ATTRACTIVE TO A DIP NEEDLE.

THE CAST IRON MONUMENT COVER SHALL BE A "NON-ROCKING" TYPE. ADJUSTMENT OF THE COVER TO GRADE MAY BE ACCOMPLISHED BY THE USE OF MORTAR AND BRICK, OR BY EITHER PRECAST OR CAST-IN-PLACE REINFORCED CONCRETE GRADE RINGS.

MONUMENTS SHALL BE LOCATED AND PLACED AT THE DIRECTION OF THE ENGINEER.

ALUMINUM MONUMENTS AND MONUMENT COVERS SHALL BE MADE FROM AN ALUMINUM AND MAGNESIUM ALLOY AS DETERMINED BY THE MANUFACTURER.

THE MONUMENT COVERS DETAILED ON THIS DRAWING ARE NOT EQUAL ALTERNATES. MONUMENT COVERS SHALL BE CAST IRON UNLESS ALUMINUM IS SPECIFIED ELSEWHERE IN THE CONTRACT.

MONUMENT SHALL BE CAST-IN-PLACE CONCRETE UNLESS PRECAST CONCRETE OR ALUMINUM MONUMENTS ARE SPECIFIED IN THE CONTRACT OR PERMITTED BY THE ENGINEER.

① MINIMUM LENGTH SHALL BE 4'-0" FOR MONUMENTS INSTALLED IN PAVED AREAS.

② AN OFFICIAL COUNTY MONUMENT MARKER SUPPLIED BY A COUNTY MAY BE REQUIRED FOR SOME SECTION CORNERS AND WITNESS MONUMENTS INSTEAD OF THIS WIS DOT MARKER.

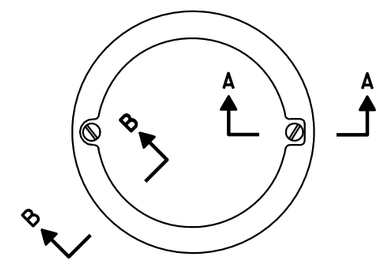

TOP VIEW

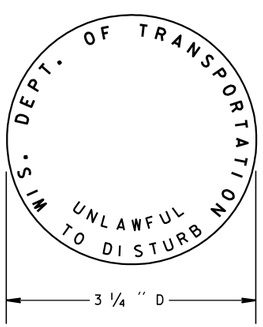

② WIS DOT MONUMENT MARKER LOGO

FOR TYPES "A", "C" & "D"

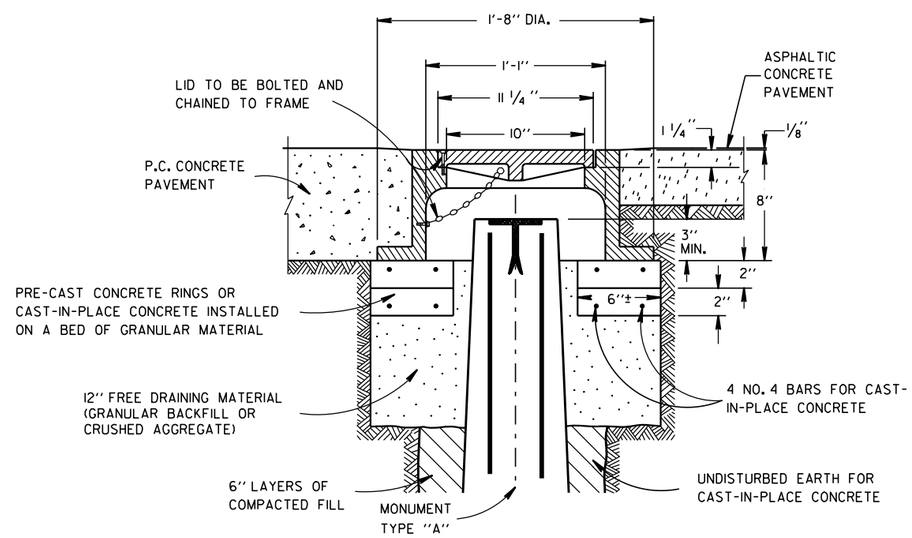

CAST IRON MONUMENT COVER

(APPROXIMATE WEIGHT - 95 LBS.)

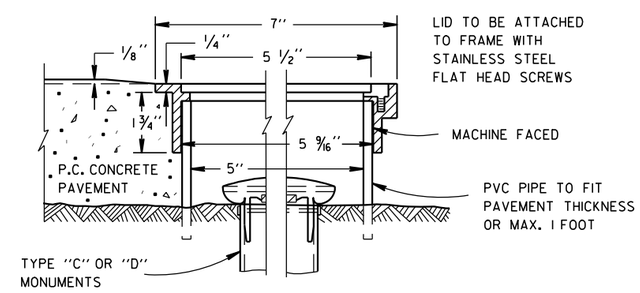

SECTION B-B SECTION A-A

ALUMINUM MONUMENT COVER

(APPROXIMATE WEIGHT 2 LBS)

(FOR CONCRETE PAVEMENT ONLY)

LANDMARK REFERENCE MOUNMENTS AND COVERS

STATE OF WISCONSIN
DEPARTMENT OF TRANSPORTATION

APPROVED

9/22/1999 /S/ Rory L. Rhinesmith

DATE CHIEF ROADWAY DEVELOPMENT ENGINEER

FHWA

NOTES

1. All Signs Type II - Type H Reflective
2. Color:
   Background - Green except as noted
   Message - White
3. Message Series - E except as noted

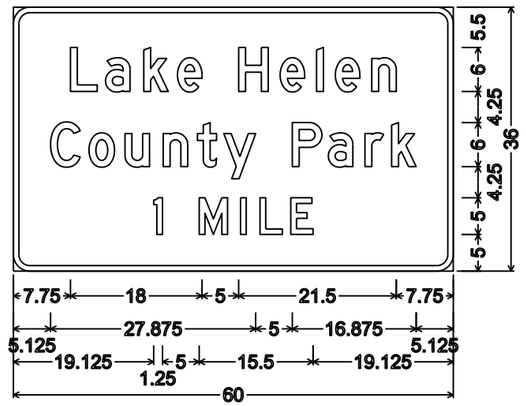

D7-67;
2.250" Radius, 0.750" Border, White on Brown;
"Lake" D; "Helen" D; "County" D "Park" D; "1" D; "MILE" D

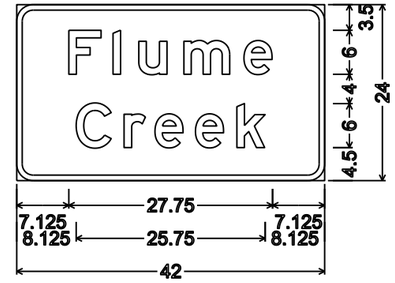

I3-1;
2.250" Radius, 0.750" Border

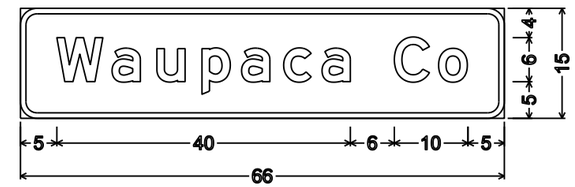

I2-2; 2.250" Radius, 0.750" Border

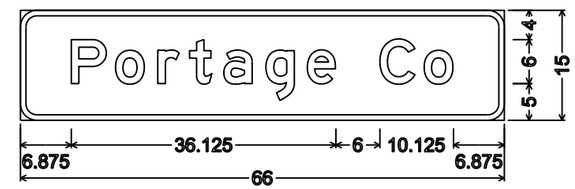

I2-2; 2.250" Radius, 0.750" Border

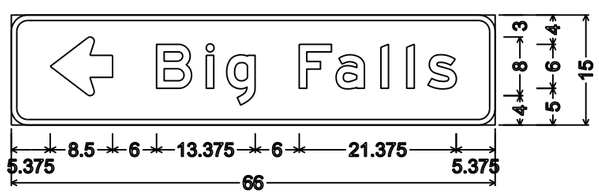

D1-1; 2.250" Radius, 0.750" Border

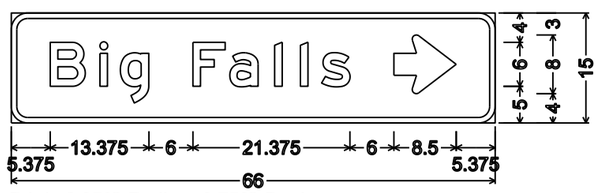

D1-1; 2.250" Radius, 0.750" Border

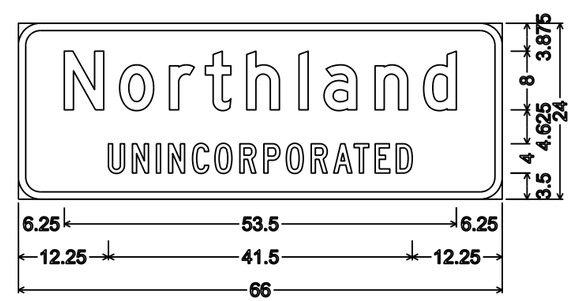

I2-3; 3.000" Radius, 1.000" Border,
"Northland" D; "UNINCORPORATED" C

7

7

TYPICAL ASSEMBLIES

J1-1

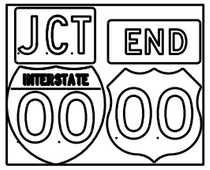

J1-2

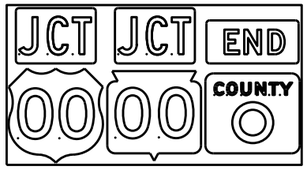

J1-3

J2-1

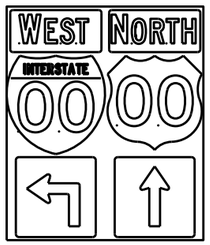

J2-2

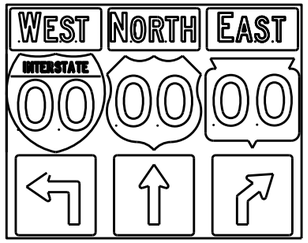

J2-3

JV

(Typical Vertical J-Assembly
See Note 10 and 11)

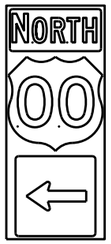

J3-1

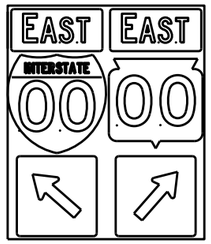

J3-2

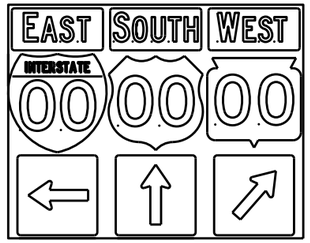

J3-3

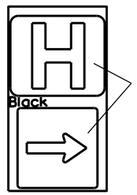

Blue Background

JH-1

J4-1

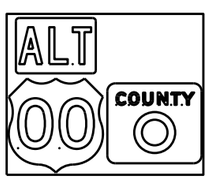

J4-2

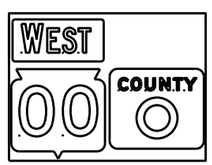

J4-2

J13-1

J12-1

J32-1

J33-1

J23-1

J22-1

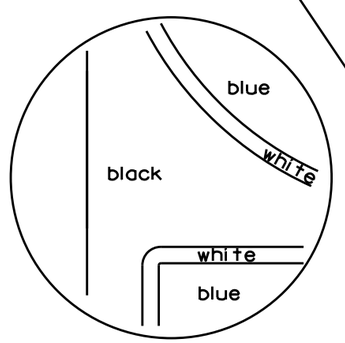

blue background
with interstate

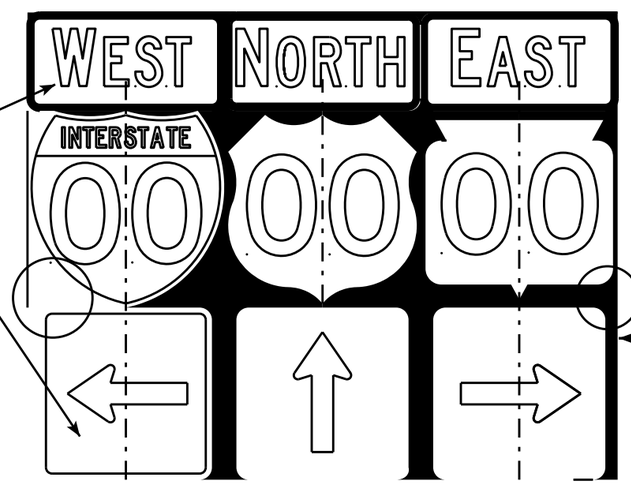

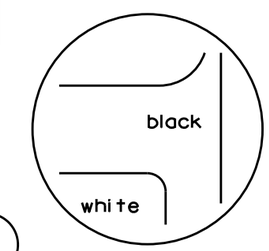

black background

NOTES

1. Signs are Type II - Type H Reflective - reference WIS DOT Standard Specification for HIGHWAY and STRUCTURE CONSTRUCTION latest edition.
2. Color:
   Background - Black Non-reflective
   Message - see Note 5
3. Message Series - See Note 5
4. Corners shall be square or rounded if base material is plywood. If base material is metal the corners shall be rounded.
5. The colors and message spacing on each marker shall be according to the applicable route marker panel specifications.
6. Certain marker heads require the component pieces to be the same color. As an example, all the components used with an M1-1 Interstate marker shall be blue.
7. Single panel j-assemblies shall only be used with route marker shields that are same size. If the route marker shields are different size use multiple piece component.
8. Route assemblies that have 24 inch route shields and have dimensions greater than 48 inches (both vertical and horizontal) shall have one horizontal splice between the arrows and route shields. Vertical splices shall not be used on route assemblies with a horizontal dimension of 144 inches or less. The contractor shall not use more than one vertical joint per sign and the joint shall be between route shields.
9. Route assemblies that have 36 inch shields and have dimensions greater than 48 inchs (both vertical and horizontal) shall have two horizontal splices. One horizontal splice shall be between the cardinal direction and route shields and the other horizontal splice shall be between the arrows and route shields. Vertical splices shall not be used on route assemblies with a horizontal dimension of 144 or less. The contractor shall not use more than one vertical joint per sign and the joint shall be between route shields.
10. All Vertical J Assemblies are given a Sign Code of JV
11. For JV Assemblies that have a mixture of Interstate and non Interstate shields, arrows and cardinals shall be white on blue.

ROUTE MARKERS & COMPONENTS
IN TYPICAL ASSEMBLIES

WISCONSIN DEPT OF TRANSPORTATION

APPROVED Matthew R Rauch
for State Traffic Engineer

DATE 2/06/14 PLATE A2-1S.8

PROJECT NO:

SHEET NO: E

URBAN AREA

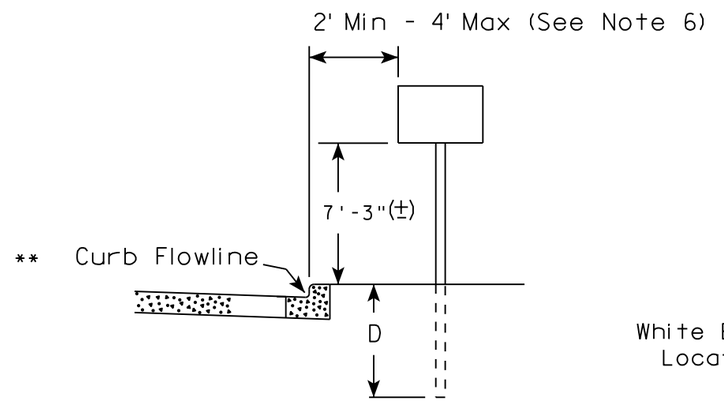

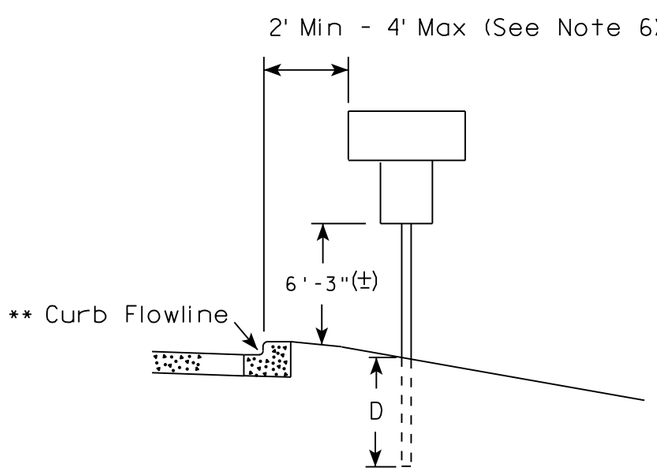

RURAL AREA (See Note 2)

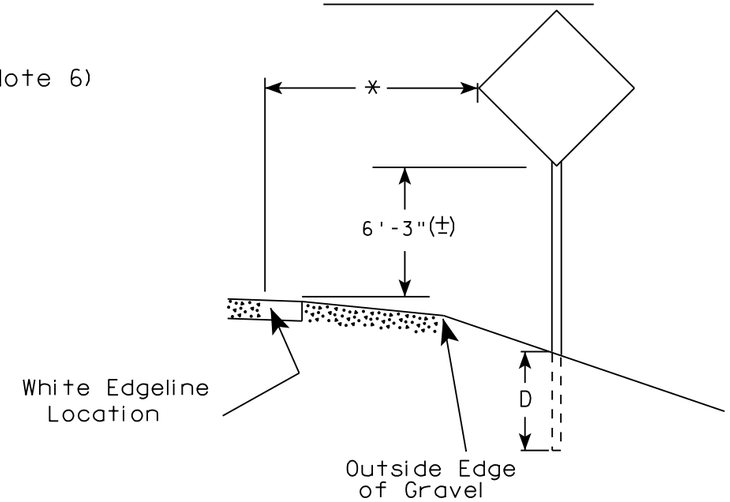

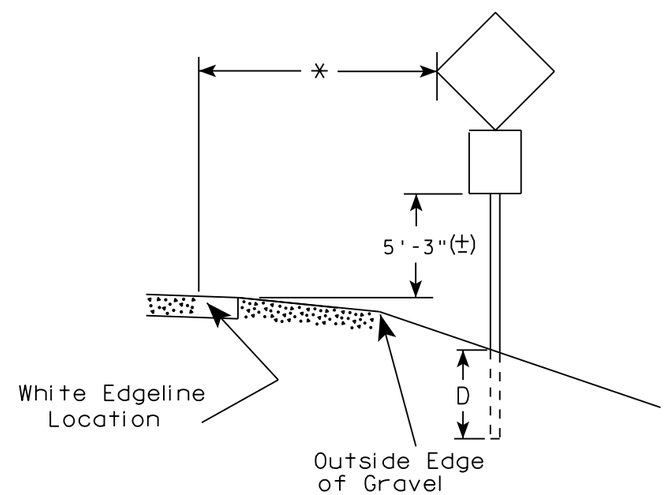

** The existence of curb and gutter does not in itself mandate the vertical clearance illustrated. That height is typically measured where there is sidewalk adjacent to the roadway or parking is permitted. In the absence of sidewalk vertical clearance is measured from the top of the curb. Offset of signs is measured from the flow line.

* 6 feet from edge of a paved shoulder or 12 feet from the edge of pavement (edge line location) or 2 feet from outside edge of gravel, whichever is greater unless directed by project engineer.

GENERAL NOTES

1. Signs wider than 4 feet or 20 sq.ft or larger, shall be mounted on multiple posts. Refer to plate A4-4.
2. If signs are mounted on barrier wall, see A4-10 sign plate.
3. For expressways and freeways, mounting height is 7'- 3" (±) or 6'-3" (±) depending upon existence of a sub-sign.
4. J-Assemblies are considered to be one sign for mounting height.
5. Minimum mounting height for signs mounted on traffic signal poles is 5'- 3" (±).
6. Offset distance shall be consistent with existing signs or consistent throughout length of project.
7. The (±) tolerance for mounting height is 3 inches.
8. Folding signs shall be mounted at a height of 5'-3" (±) or as directd by the Engineer.
9. The Double Arrow sign (W12-1) shall be mounted at a height of 2'-3" (±). The Chevron sign (W1-8), Roundabout Chevron panel (R6-4B), Enhanced Reference Markers, Clearance Markers (W5-52), Mile Markers (D10 series), In Road Object Markers (W5-54) & End of Road Markers (W5-56) shall be mounted at a height of 4'-3" (±).

POST EMBEDMENT DEPTH

Area of Sign Installation (Sq. Ft.)	D (Min)
20 or Less	4'
Greater than 20	5'

TYPICAL INSTALLATION OF PERMANENT TYPE II SIGNS ON SINGLE POSTS

WISCONSIN DEPT OF TRANSPORTATION

APPROVED Matthew R Rauch for State Traffic Engineer

DATE 8/21/17 PLATE NO. A4-3.21

7

7

PROJECT NO:	HWY:	COUNTY:		SHEET NO: 114	E

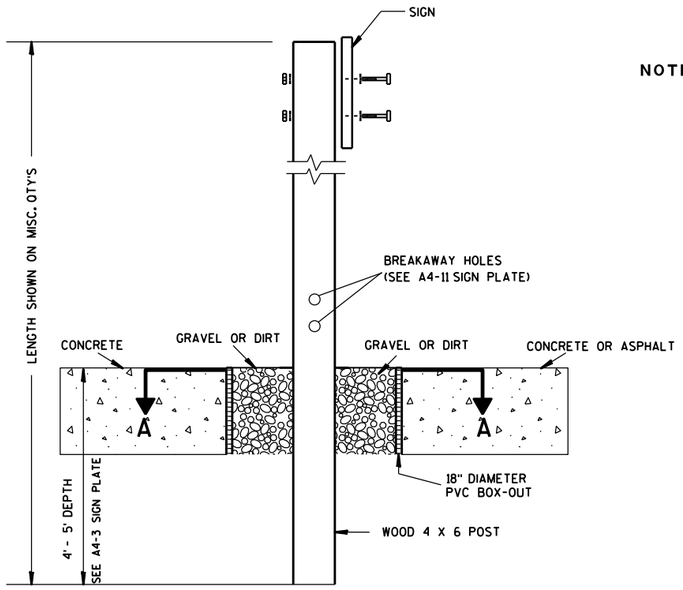

ELEVATION VIEW

DETAIL OF WOOD 4 X 6 SIGN POST IN BOX-OUT

NOTES:
1. ALL MATERIAL TO BE APPROVED BY ENGINEER PRIOR TO INSTALLATION
2. SEE SIGN PLATE A4-8 FOR SIGN HARDWARE REQUIREMENTS
3. 18 INCH X 18 INCH SQUARE BOX-OUTS MAY BE USED FOR INSTALLATIONS IN EXISTING CONCRETE OR ASPHALT LOCATIONS.

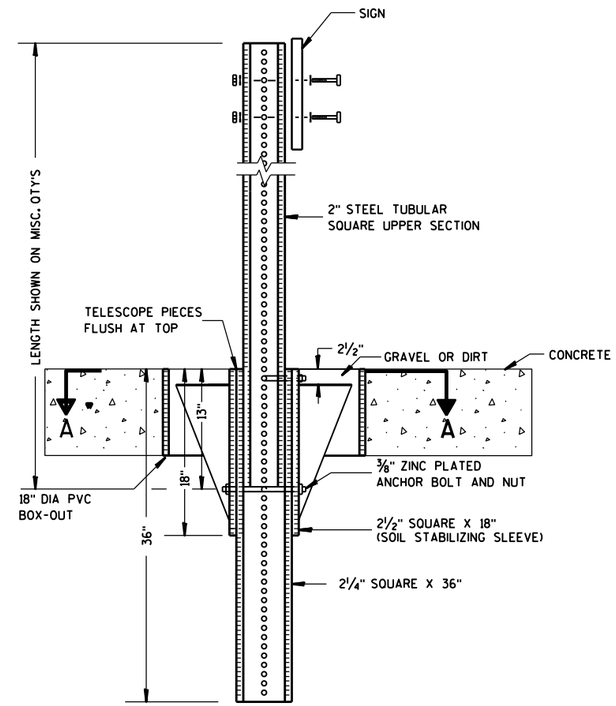

ELEVATION VIEW

DETAIL OF STEEL 2 X 2 SIGN POST IN BOX-OUT

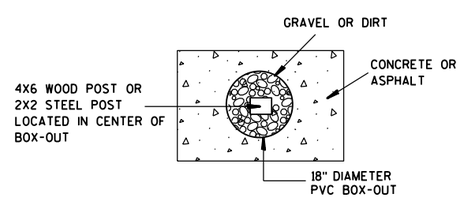

PLAN VIEW

FOR NEW CONCRETE/ASPHALT INSTALLATIONS

SIGN POST
BOX-OUTS
A4-3B

WISCONSIN DEPT OF TRANSPORTATION

APPROVED Matthew R Rauch
for State Traffic Engineer

DATE 1/27/14 PLATE NO. A4-3B.1

PROJECT NO:	HWY:	COUNTY:		SHEET NO:	E

URBAN AREA

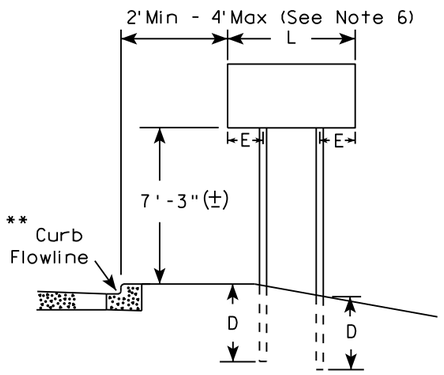

RURAL AREA (See Note 3)

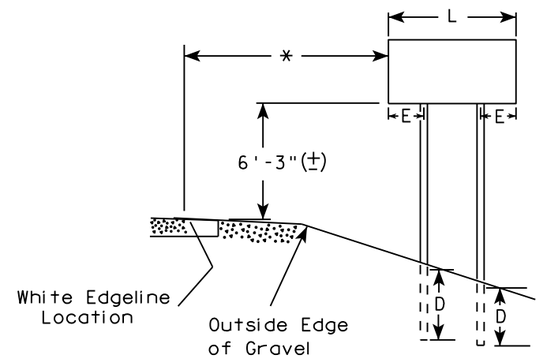

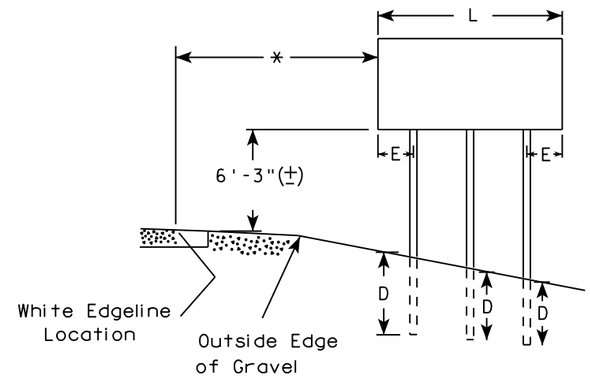

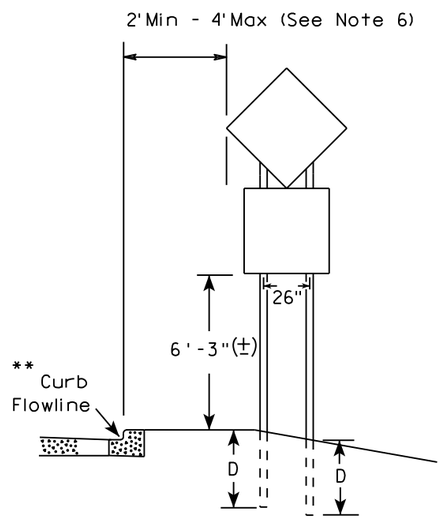

48" DIAMOND WARNING SIGN

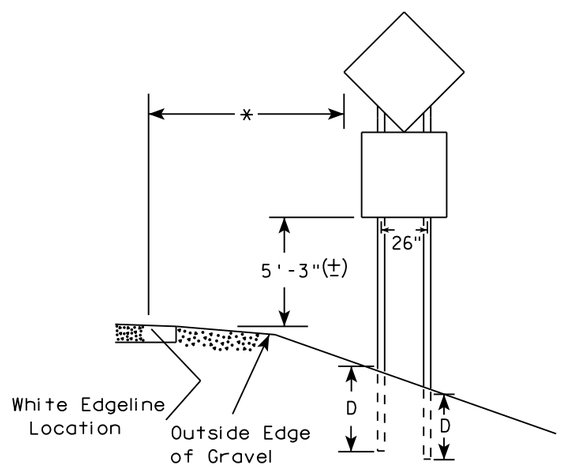

48" DIAMOND WARNING SIGN

SIGN SHAPE OTHER THAN DIAMOND (TWO POSTS REQUIRED)	
L	E
*** Greater than 48" Less than 60"	12"
60" to 108"	L/5

SIGN SHAPE OTHER THAN DIAMOND (THREE POSTS REQUIRED)	
L	E
Greater than 108" to 144"	12"

GENERAL NOTES

1. For 3 or 4 post installations, individual post spacing shall be greater than 3'-6".
2. See tables below for required number of posts.
3. For expressways and freeways, mounting height is 7'-3" (±) or 6'-3" (±) depending upon existence of sub-sign.
4. The (±) tolerance for mounting height is 3 inches.
5. J-Assemblies are considered to be one sign for mounting height.
6. Offset distance shall be consistent with existing signs or consistent throughout length of project.
7. Folding signs shall be mounted at a height of 5'-3" (±) or as directed by the engineer.
8. The Double Arrow sign (W12-1) shall be mounted at a height of 2'-3" (±). The Chevron sign (W1-8), Roundabout Chevron panel (R6-4B), Clearance Markers (W5-52), Mile Markers (D10 series), In Road Object Markers (W5-54) & End of Road Markers (W5-56) shall be mounted at a height of 4"-3" (±).

* 6 feet from edge of a paved shoulder or 12 feet from the edge of pavement (edge line location) or 2 feet from outside edge of gravel, whichever is greater unless directed by project engineer.

** The existence of curb and gutter does not in itself mandate the vertical clearance illustrated. That height is typically measured where there is sidewalk adjacent to the roadway or parking is permitted. In the absence of sidewalk vertical clearance is measured from the top of the curb. Offset of signs is measured from the flow line.

*** See A4-3 sign plate for signs 4' or less in width and less than 20 S.F. in area.

POST EMBEDMENT DEPTH

Area of Sign Installation (Sq. Ft.)	D (Min)
20 or Less	4'
Greater than 20	5'

TYPICAL INSTALLATION OF TYPE II SIGNS ON MULTIPLE POSTS

WISCONSIN DEPT OF TRANSPORTATION

APPROVED Matthew R Rauch
For State Traffic Engineer

DATE 8/21/17 PLATE NO. A4-4.15

7

7

PROJECT NO:	HWY:	COUNTY:		SHEET NO: 116	E

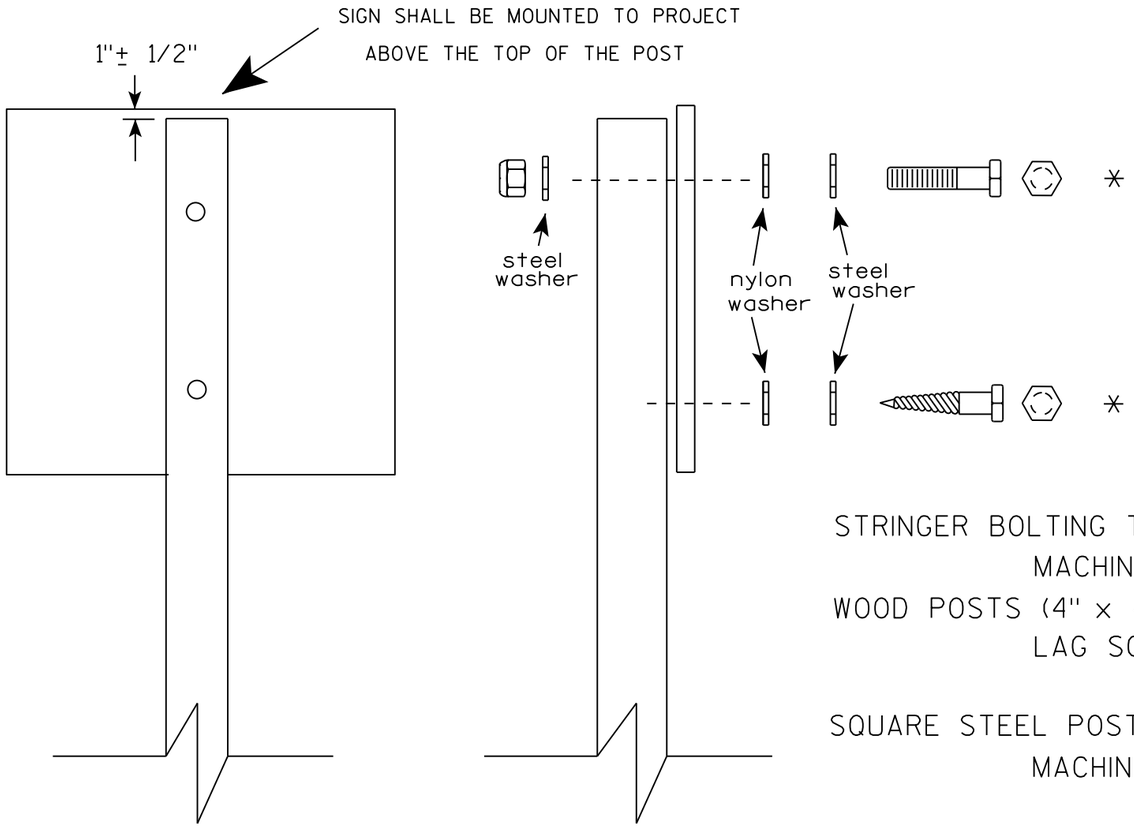

Nuts, bolts and lags used for mounting signs shall have hexagonal heads and shall be either :

a. Hot dip galvanized in accordance with ASTM Designation: A 153, Class D, or SC 3

b. Electro-galvanized in accordance with ASTM Designation : B 633, TYPE III, SC 3.

Threads on bolts and nuts shall be manufactured with sufficient allowance for the cadmium plate or galvanized coating to permit the nuts to run freely on the bolts.

STRINGER BOLTING TO ALUMINUM SIGNS (SEE SIGN PLATE A4-18)

MACHINE BOLTS - 5/16" X 1-3/4" Length w/ lock nuts

WOOD POSTS (4" x 4" or 4" x 6")

LAG SCREWS - 3/8" X 3" (NO STRINGERS ON BACK OF SIGN)

3/8" X 4" (STRINGERS ON BACK OF SIGN)

SQUARE STEEL POSTS (2" x 2")

MACHINE BOLTS - 3/8" X 3-1/4" Length w/ nuts (NO STRINGER ON BACK OF SIGN)

3/8" X 5" Length w/ nuts (STRINGERS ON BACK OF SIGN)

RIVETS - 9/32 " (6605-9-6) BULB-TITE, TRI-FOLD, ALUMINUM BODY/MANDREL

O.D. FLANGE .720-.765 INCH, GRIP RANGE .042-.375 INCH

WASHERS (ALL POSTS) -

1-1/4" O.D. X 3/8" I.D. X 1/16" STEEL

1-1/4" O.D. X 3/8" I.D. X .080 NYLON

* Two different fastening systems are shown for illustration purposes. On any individual sign, either one or the other system shall be used. Actual number of fasteners per sign varies with the sign area, but normally there are two. For a single post installation, all signs greater than 9 sq. ft. require the use of 3 fasteners.

ATTACHMENT OF SIGNS TO POSTS

WISCONSIN DEPT OF TRANSPORTATION

APPROVED Matthew R Rauch
for State Traffic Engineer

DATE 8/11/16 PLATE NO. A4-8.8

PROJECT NO: SHEET NO: E

TELESCOPIC TUBING ANCHORS
TWO PIECE SYSTEM

2 1/4" SQUARE
12 GAUGE
PERFORATED
GALVANIZED FINISH

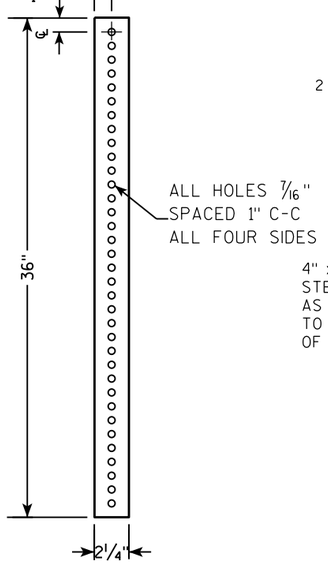

2 1/2" SQUARE
12 GAUGE
OMNI-DIRECTIONAL
PERFORATED
SOIL STABILIZING SLEEVE
GALVANIZED FINISH

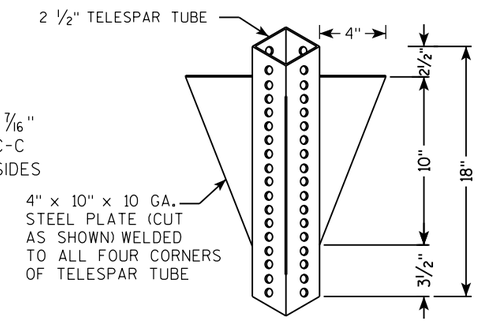

DETAIL OF TUBULAR STEEL SIGN POST
(IN POURED CONCRETE OR ASPHALT)

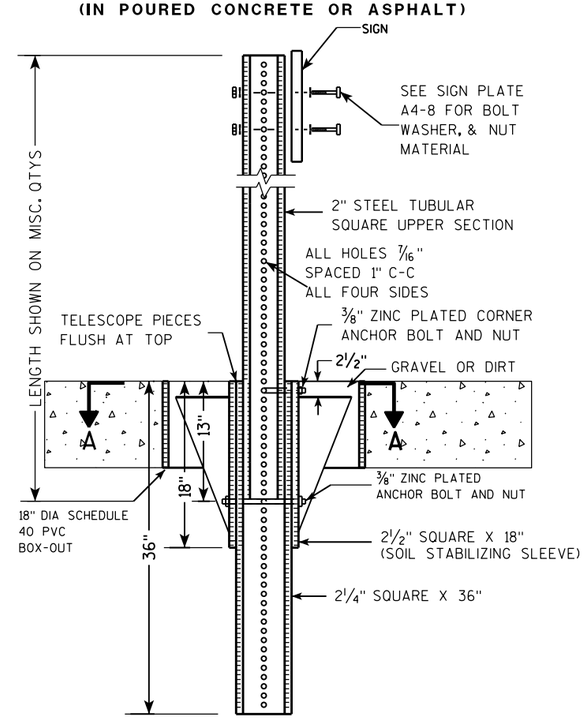

DETAIL OF TUBULAR STEEL SIGN POST
(IN LOCATIONS OTHER THAN POURED CONCRETE OR ASPHALT)

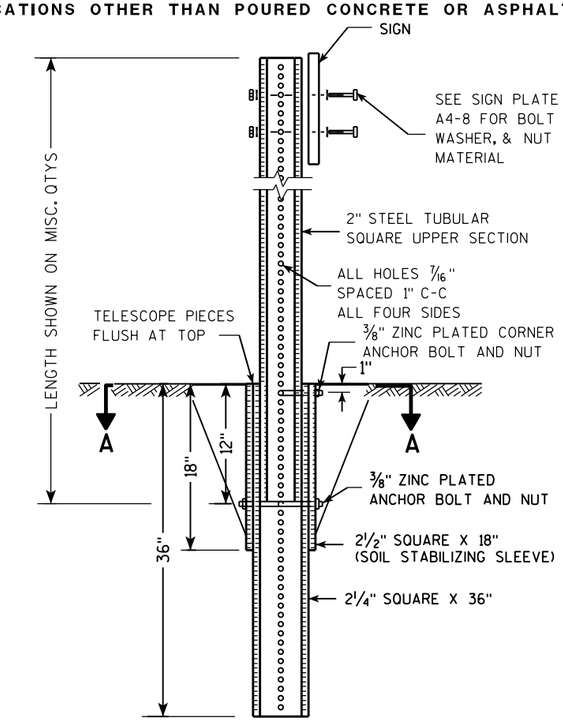

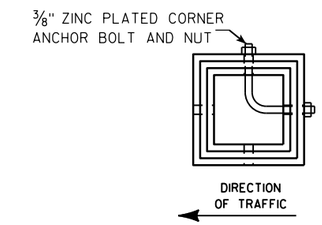

SECTION A-A

Area of Sign Installation (Sq. Ft.)	Number of Required Posts
9 or less	1
Greater than 9 less than or equal to 18	2
Greater than 18 less than or equal to 27	3

Signs wider than 3 feet or larger than 9 sq. ft shall be mounted on multiple posts (see above table).

TUBULAR STEEL
SIGN POST
A4-9

WISCONSIN DEPT OF TRANSPORTATION

APPROVED Matthew R Rauch
for State Traffic Engineer

DATE 2/05/15 PLATE A4-9.9

7 7

PROJECT NO:	HWY:	COUNTY:		SHEET NO:	E

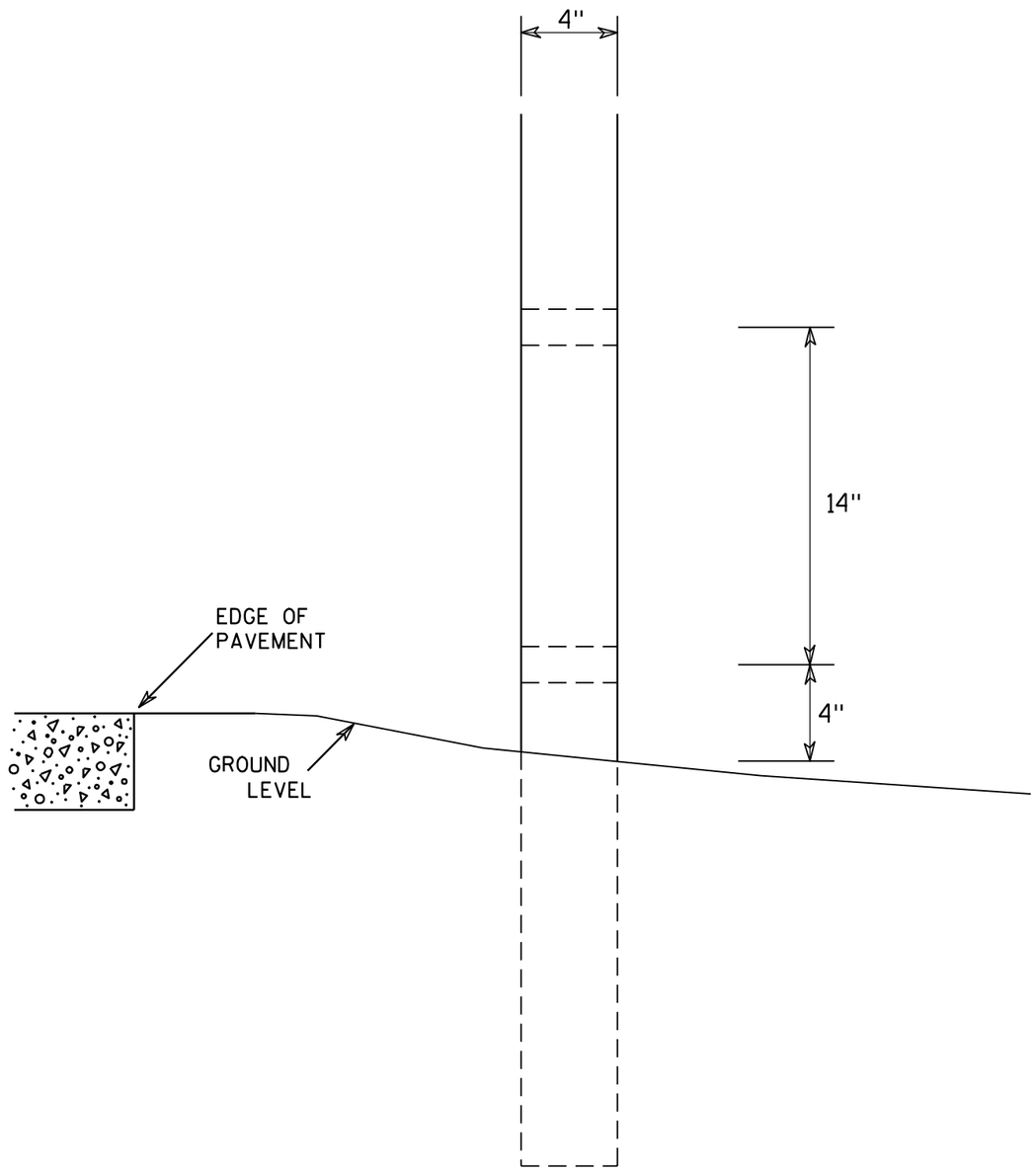

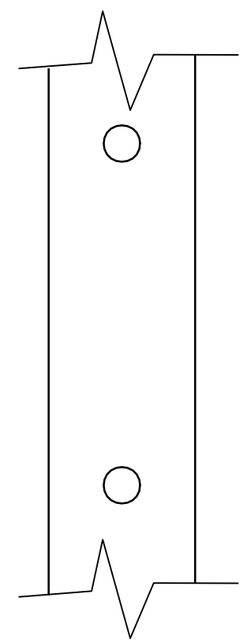

SIDE VIEW

GENERAL NOTES

1. All 4 x 6 Wood Posts shall be modified by having two 1½" diameter holes drilled perpendicular to the roadway centerline.

4 X 6 WOOD POST MODIFICATIONS

WISCONSIN DEPT OF TRANSPORTATION

APPROVED Chester J Spang for State Traffic Engineer

DATE 3/27/97 PLATE NO. A4-11.2

PROJECT NO:	HWY:	COUNTY:		SHEET NO: 119	E

BANDING

SINGLE SIGN

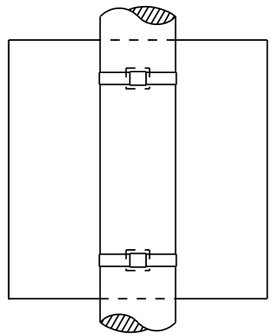

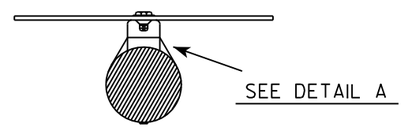

"J" ASSEMBLY

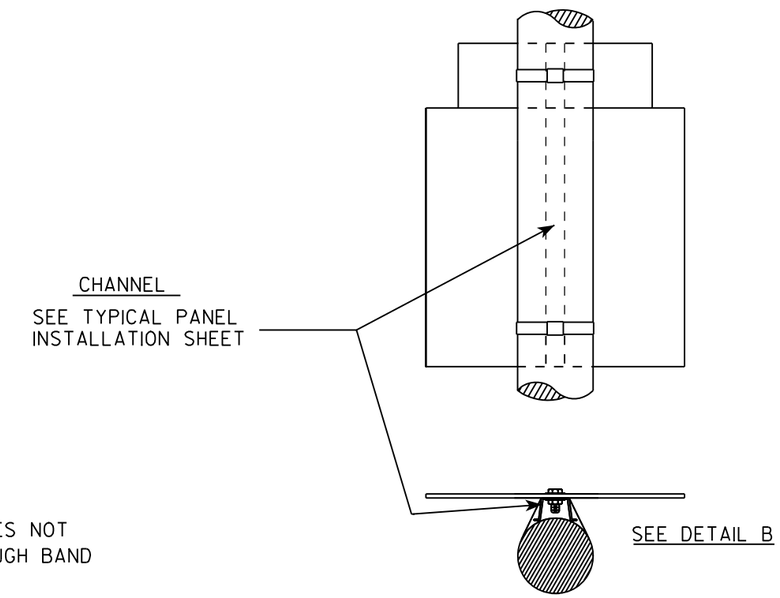

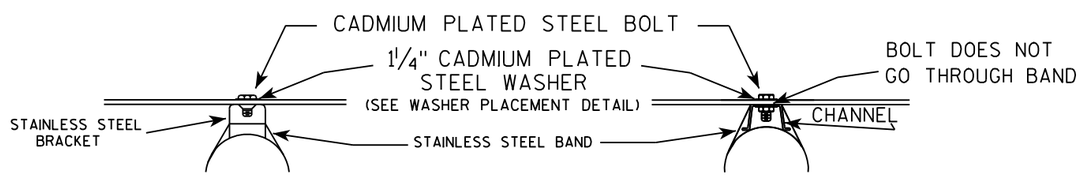

WASHER PLACEMENT

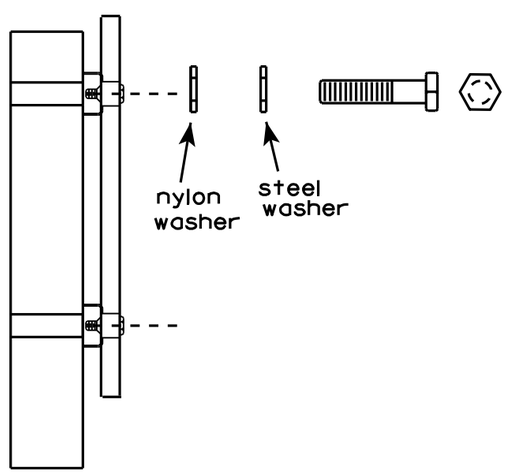

WASHERS (ALL POSTS) -

1-1/4" O.D. X 3/8" I.D. X 1/16" STEEL

1-1/4" O.D. X 3/8" I.D. X .080 NYLON

FOR ALL TYPE H SIGNS

GENERAL NOTES

1. Any sign over 3 feet in width shall use the V-Block banding method. See A5-10 standard plate.
2. Signs 3 feet or greater in height shall have three bracket bands installed. Signs less than 3 feet in height shall have two bracket bands installed.
3. Banding and assembly bracket shall be stainless steel. All bands shall be ¾" in width and 0.025" thickness.

STANDARD SIGN

SIGN BANDING DETAILS

WISCONSIN DEPT OF TRANSPORTATION

APPROVED Matthew R Rauch for State Traffic Engineer

DATE 8/16/13 PLATE NO. A5-9.3

PROJECT NO:	HWY:	COUNTY:		SHEET NO: 120	E

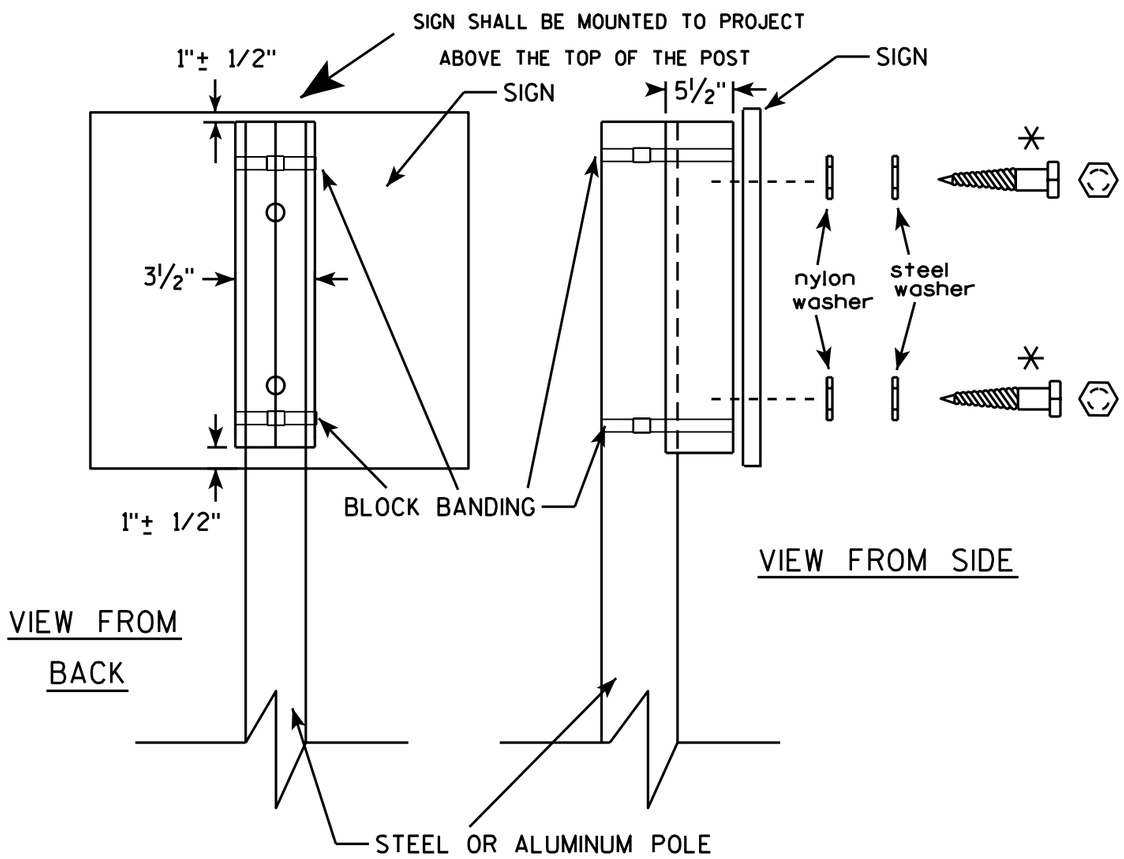

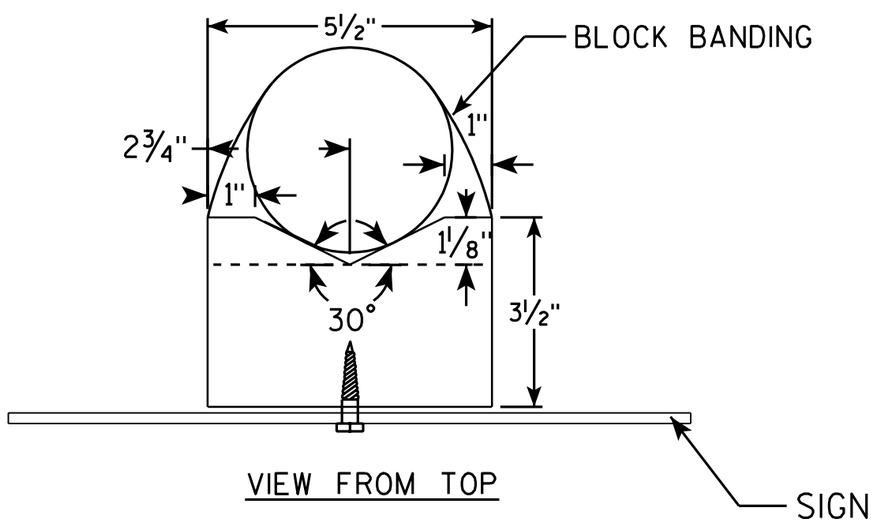

GENERAL NOTES

1. WOOD 4"X6" POST MATERIAL SHALL CONFORM TO 507.2.2 OF THE WisDOT STANDARD SPECIFICATIONS
2. BLOCK BANDING AND CLIPS SHALL BE STAINLESS STEEL, ¾" WIDTH AND 0.025" THICKNESS
3. SIGNS 3' OR GREATER IN HEIGHT SHALL UTILIZE 3 BLOCK BANDS. SIGNS UNDER 3' IN HEIGHT SHALL UTILIZE 2 BLOCK BANDS
4. ACTUAL NUMBER OF FASTENERS PER SIGN VARIES WITH THE SIGN AREA, BUT NORNALLY THERE ARE TWO. FOR SIGNS GREATER THAN 9 S.F. 3 FASTENERS SHALL BE USED.
5. ALL SIGN MOUNTING BOLTS AND WASHERS SHALL BE EITHER:
   a. Hot dip or mechanically galvanized in accordance with ASTM Designation: A 153, Class D, or
   b. Cadmium plated in accordance with ASTM Designation : B 766 TYPE 3, Class 12, or
   c. Electro-galvanized in accordance with ASTM Designation : B 633, TYPE III, SC 3.
6. ALL BOLTS SHALL HAVE HEXAGONAL HEADS.
7. STEEL WASHERS SHALL BE 1¼" O.D. X ⅜" I.D. X 1/16"
8. NYLON WASHERS SHALL BE 1¼" O.D. X ⅜" I.D. X .080 FOR TYPE H OR TYPE F FACE SIGN

✳ LAG BOLTS SHALL BE ⅜" X 2½"

BLOCK BANDING DETAIL
(V-BLOCK OPTION)

WISCONSIN DEPT OF TRANSPORTATION

APPROVED Matthew R Rauch
for State Traffic Engineer

DATE 7/12/07 PLATE NO. A5-10.1

PROJECT NO:				SHEET NO: 121	E

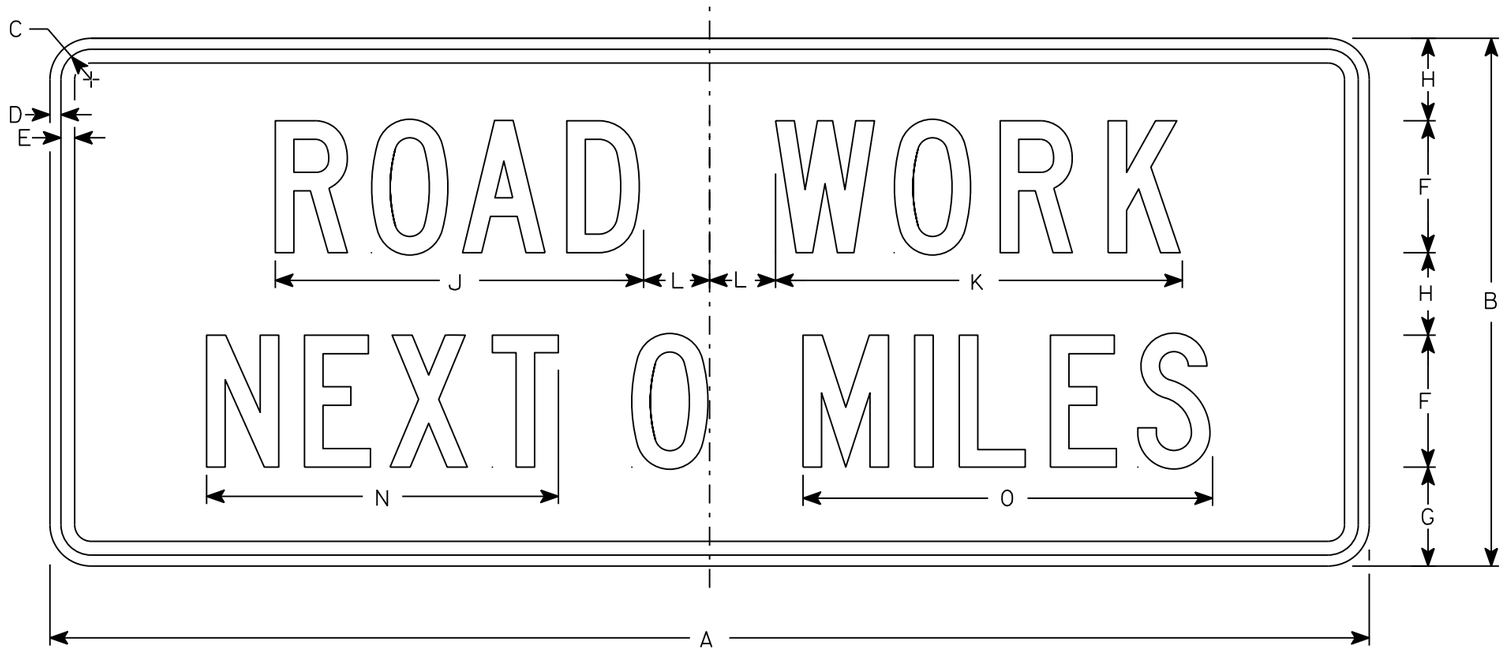

G20-1

NOTES

1. Sign is Type II - Type F Reflective
2. Color:
   Background - Orange
   Message - Black
3. Message Series - C
4. Corners may be square or rounded when base material is plywood but borders shall be rounded as shown. When base material is metal, the corners and borders shall be rounded.
5. Round distance to nearest whole Mile and substitute appropriate numerals and optically adjust spacing to achieve proper balance

SIZE	A	B	C	D	E	F	G	H	I	J	K	L	M	N	O	P	Q	R	S	T	U	V	W	X	Y	Z	Area sq. ft.
1																											
2	60	24	1 3/8	1/2	5/8	6	4 1/2	3 3/4		16 3/4	18 1/2	3		16	18 5/8												10
3																											
4	60	24	1 3/8	1/2	5/8	6	4 1/2	3 3/4		16 3/4	18 1/2	3		16	18 5/8												10
5																											

STANDARD SIGN
G20-1

WISCONSIN DEPT OF TRANSPORTATION

APPROVED Matthew R Rauch
for State Traffic Engineer
DATE 3/14/17 PLATE NO. G20-1.8

PROJECT NO: | HWY: | COUNTY: | SHEET NO: 122 | E

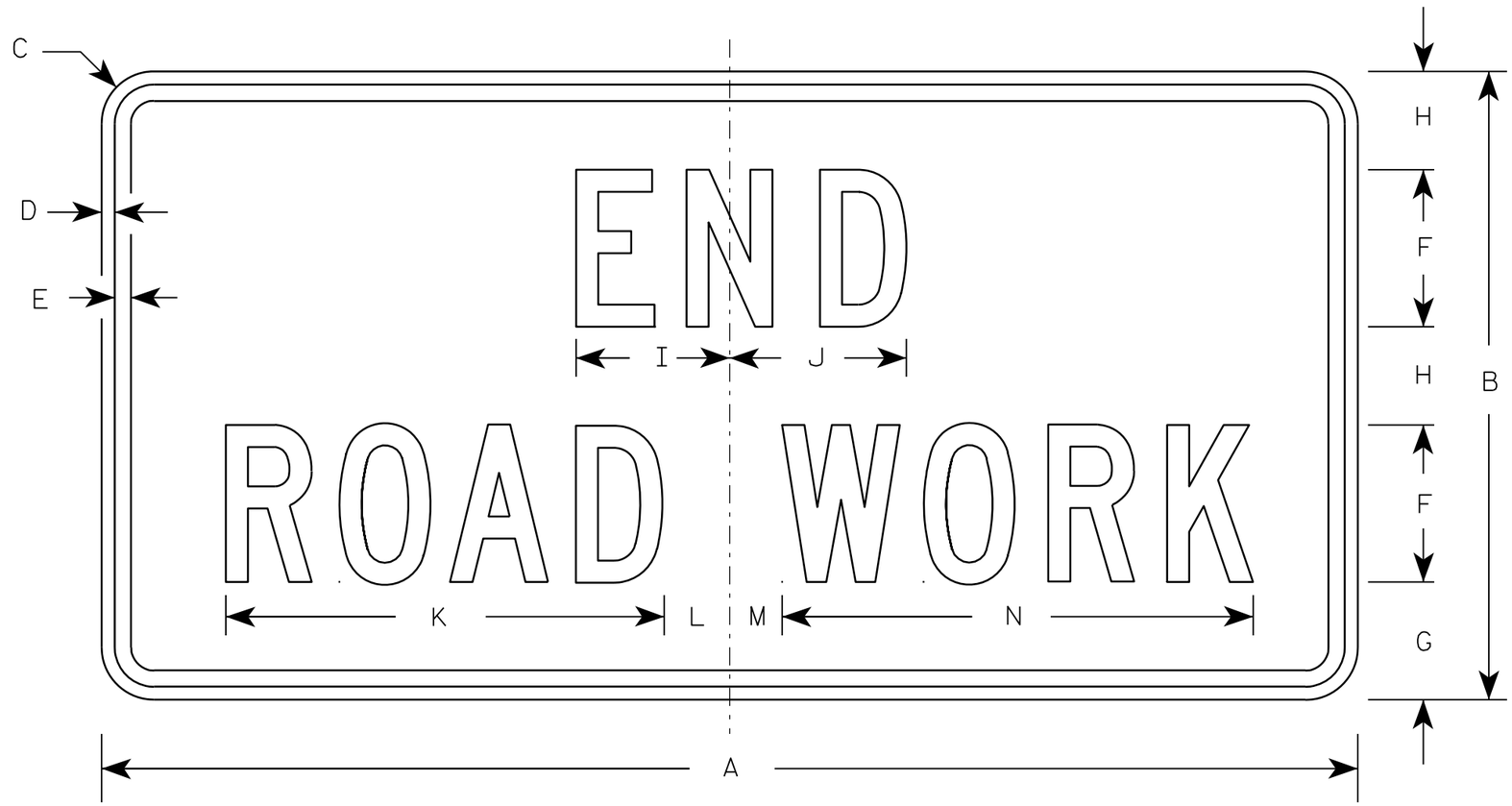

G20-2A

NOTES

1. Sign is Type II - Type F Reflective - reference WIS DOT Standard Specification for HIGHWAY and STRUCTURE CONSTRUCTION latest edition.
2. Color:
   Background - Orange
   Message - Black
3. Message Series - C
4. Corners may be square or rounded when base material is plywood but borders shall be rounded as shown. When base material is metal, the corners and borders shall be rounded.

Metric equivalent for this sign is:

SIZE	
1	900 mm X 450 mm
2	1200 mm X 600 mm
3	1200 mm X 600 mm
4	1200 mm X 600 mm
5	1200 mm X 600 mm

SIZE	A	B	C	D	E	F	G	H	I	J	K	L	M	N	O	P	Q	R	S	T	U	V	W	X	Y	Z	Area sq. ft.	Area m2
1	36	18	1 1/8	3/8	1/2	4	3 3/4	2 1/2	4 1/8	4 1/8	11 1/8	2	1	12 1/8													4.5	0.41
2	48	24	1 1/2	1/2	5/8	6	4 1/2	3 3/4	5 7/8	6 3/4	16 3/4	2 1/2	1 3/4	18 1/2													8.0	0.72
3	48	24	1 1/2	1/2	5/8	6	4 1/2	3 3/4	5 7/8	6 3/4	16 3/4	2 1/2	1 3/4	18 1/2													8.0	0.72
4	48	24	1 1/2	1/2	5/8	6	4 1/2	3 3/4	5 7/8	6 3/4	16 3/4	2 1/2	1 3/4	18 1/2													8.0	0.72
5	48	24	1 1/2	1/2	5/8	6	4 1/2	3 3/4	5 7/8	6 3/4	16 3/4	2 1/2	1 3/4	18 1/2													8.0	0.72

STANDARD SIGN

G20-2A

WISCONSIN DEPT OF TRANSPORTATION

APPROVED Matthew R Rauch
for State Traffic Engineer

DATE 9/30/09 PLATE NO. G20-2A.8

PROJECT NO:	HWY:	COUNTY:		SHEET NO: 123	E

NOTES

1. Sign is Type II - Type F Reflective
2. Color:
   Background - Orange
   Message - Black
3. Message Series - D
4. Substitute appropriate numeral and adjust spacing to achieve proper balance.

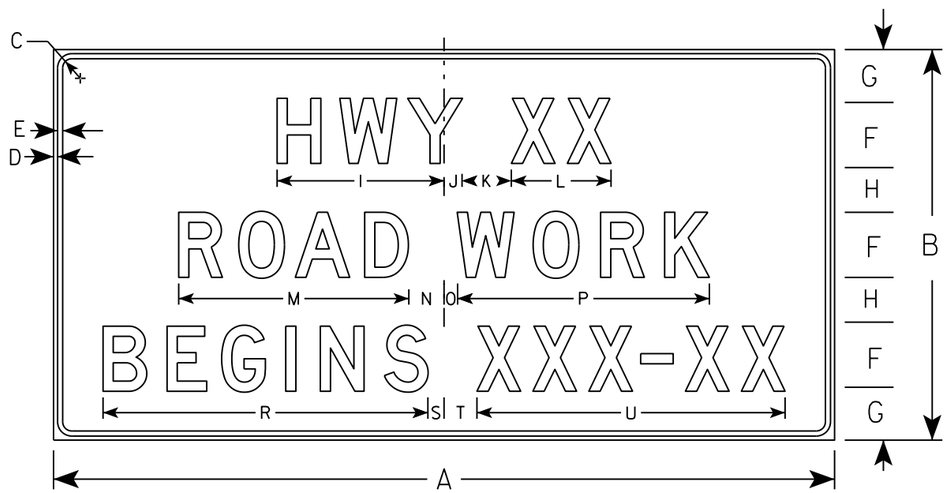

G20-57

SIZE	A	B	C	D	E	F	G	H	I	J	K	L	M	N	O	P	Q	R	S	T	U	V	W	X	Y	Z	Area sq. ft.
1																											
2																											
3	72	36	1 1/8	1/2	5/8	6	5	4	15 5/8	1 5/8	5	9 1/4	21 1/4	3 1/2	1 1/2	28 3/8		29 7/8	1 3/4	3 1/4	28 1/2						18.0
4	96	48	2 1/4	3/4	1	8	6 1/2	5 1/2	20 5/8	2 1/4	6	12 1/4	28 1/4	4 3/8	1 5/8	31		39 1/4	2	4	37 7/8						32.0
5																											

STANDARD SIGN
G20-57

WISCONSIN DEPT OF TRANSPORTATION

APPROVED Matthew R Rauch
for State Traffic Engineer

DATE 3/1/17 PLATE NO. G20-57.3

PROJECT NO: | HWY: | COUNTY: | SHEET NO: 124 | E

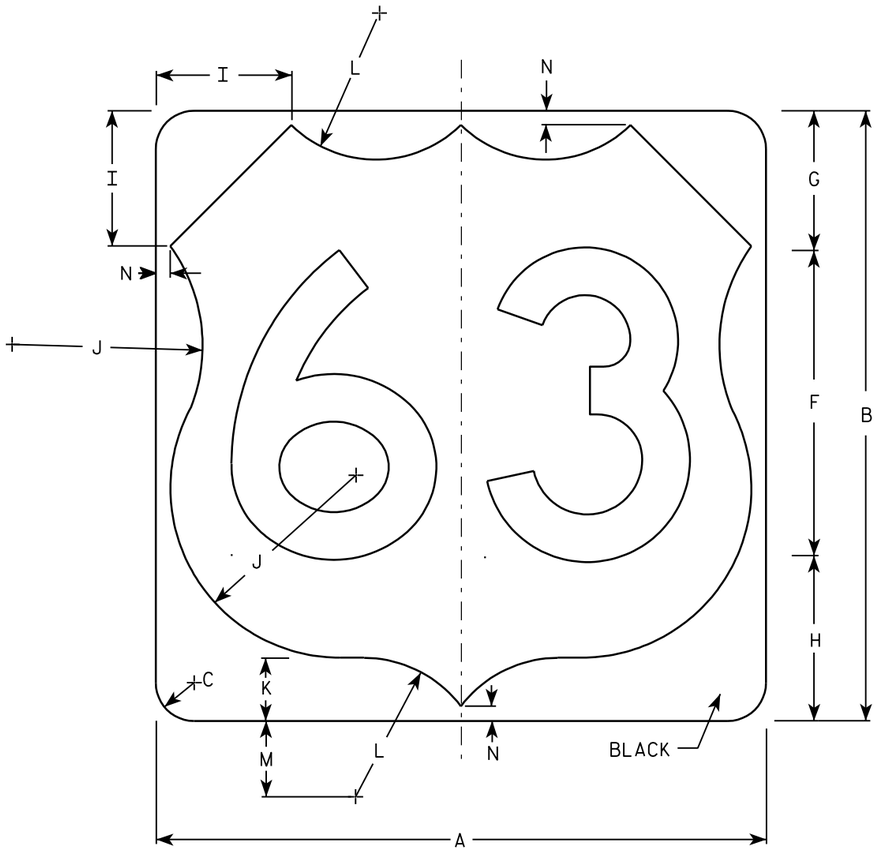

M1-4

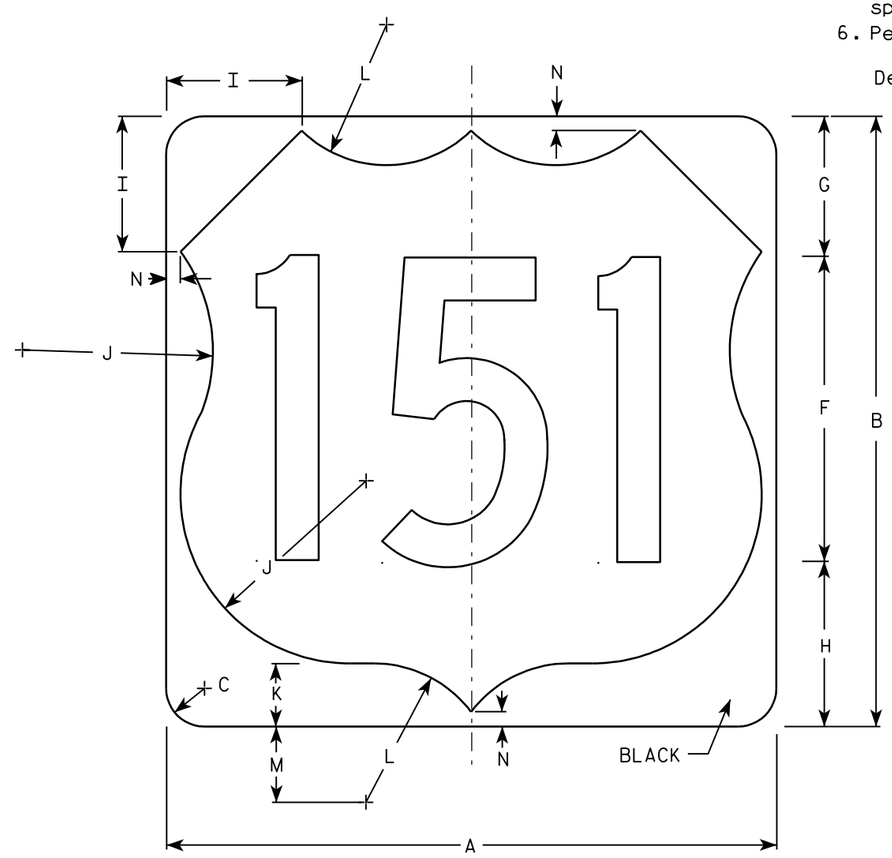

M1-4

NOTES

1. Sign is Type II - See Note 6 - reference WIS DOT Standard Specification for HIGHWAY and STRUCTURE CONSTRUCTION latest edition.
2. Color:
   Background - White & Black - See Note 6
   Message - Black
3. Message Series - See note 5
4. Corners may be square or rounded when base material is plywood but borders shall be rounded as shown. When base material is metal, the corners and borders shall be rounded.
5. Substitute appropriate numerals and adjust spacing as per Plate A10-1.
6. Permanent Signs
   Background - Type H Reflective
   Detour or other temporary signs
   Background - Reflective

Metric equivalent for this sign is:

SIZE	
1	
2	600 mm X 600 mm
3	900 mm X 900 mm
4	900 mm X 900 mm
5	900 mm X 900 mm

SIZE	A	B	C	D	E	F	G	H	I	J	K	L	M	N	O	P	Q	R	S	T	U	V	W	X	Y	Z	Area sq. ft.	Area m2
1																												
2	24	24	1 1/2			12	5 1/2	6 1/2	5	7 1/2	2 1/2	5 1/2	3	1/2													4.0	.36
3	36	36	2 1/4			18	8 1/4	9 1/4	7 1/4	11 1/4	3 3/4	8 1/4	4 1/2	3/4													9.0	.81
4	36	36	2 1/4			18	8 1/4	9 1/4	7 1/4	11 1/4	3 3/4	8 1/4	4 1/2	3/4													9.0	.81
5	36	36	2 1/4			18	8 1/4	9 1/4	7 1/4	11 1/4	3 3/4	8 1/4	4 1/2	3/4													9.0	.81

USH MARKER
M1-4 FOR ASSEMBLIES

WISCONSIN DEPT OF TRANSPORTATION

APPROVED Matthew R Rauch
for State Traffic Engineer

DATE 08/25/05 PLATE NO. M1-4.9

PROJECT NO: | HWY: | COUNTY: | SHEET NO: 125 | E

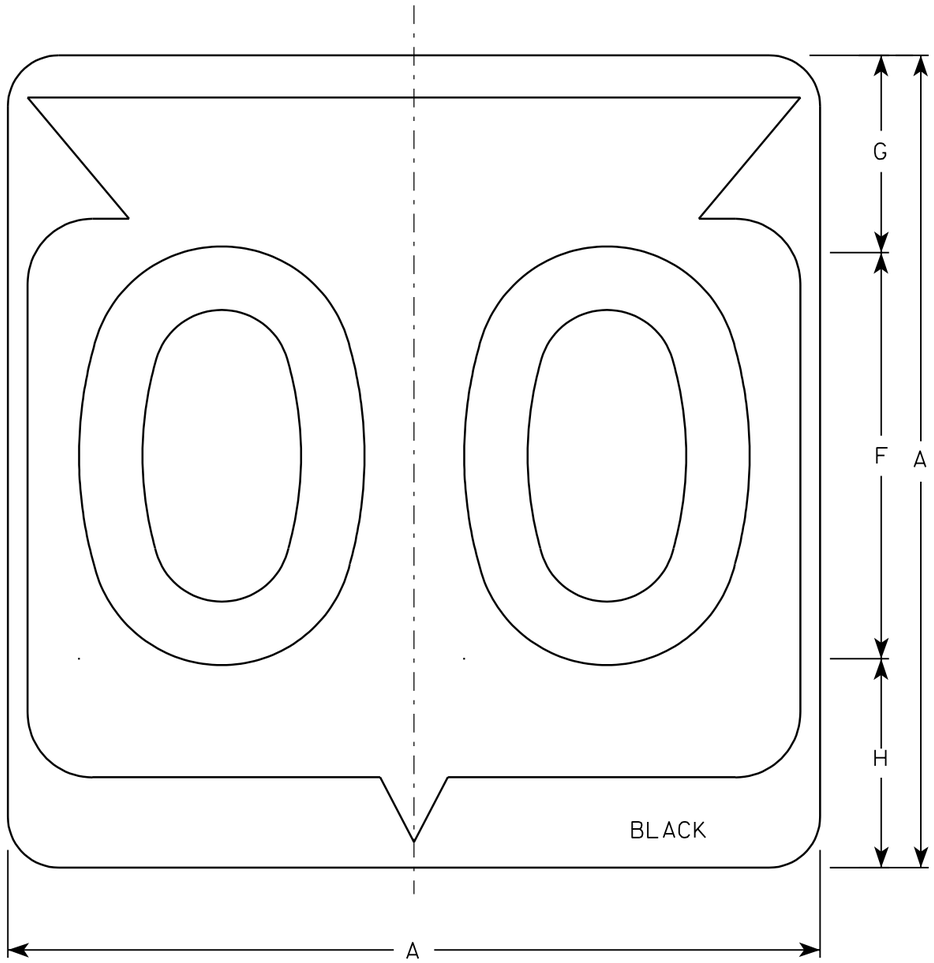

M1-6

NOTES

1. Sign is Type II - See Note 6 - reference WIS DOT Standard Specification for HIGHWAY and STRUCTURE CONSTRUCTION latest edition.
2. Color:
   Background - White & Black - See Note 6
   Message - Black
3. Message Series - See note 5
4. Corners may be square or rounded when base material is plywood but borders shall be rounded as shown. When base material is metal, the corners and borders shall be rounded.
5. Substitute appropriate Series numerals and adjust spacing as per plate A10-1.
6. Permanent Signs
   Background - Type H Reflective
   Detour or temporary Signs
   Background - Reflective

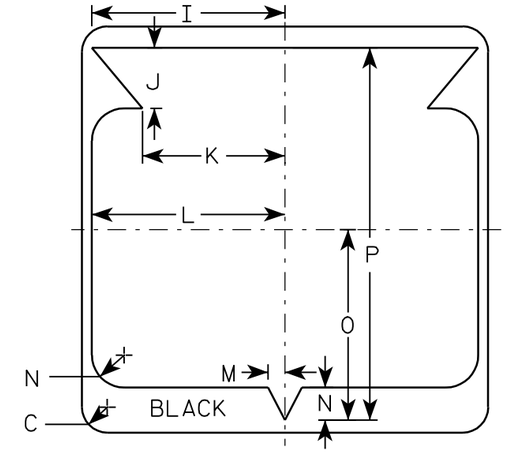

Metric equivalent for this sign is:

SIZE	
1	
2	600 mm X 600 mm
3	900 mm X 900 mm
4	900 mm X 900 mm
5	900 mm X 900 mm

SIZE	A	B	C	D	E	F	G	H	I	J	K	L	M	N	O	P	Q	R	S	T	U	V	W	X	Y	Z	Area sq. ft.	Area m2
1																												
2	24		1 1/2			12	5 1/2	6 1/2	10 1/4	2 1/2	8 7/8	11 1/2	1	1 7/8	11 1/4	21 7/8											4.0	.36
3	36		2 1/4			18	8 3/4	9 1/4	15 3/8	5 3/8	12 5/8	17 1/8	1 1/2	2 7/8	16 7/8	33											9.0	.81
4	36		2 1/4			18	8 3/4	9 1/4	15 3/8	5 3/8	12 5/8	17 1/8	1 1/2	2 7/8	16 7/8	33											9.0	.81
5	36		2 1/4			18	8 3/4	9 1/4	15 3/8	5 3/8	12 5/8	17 1/8	1 1/2	2 7/8	16 7/8	33											9.0	.81

STATE ROUTE MARKER
M1-6 FOR ASSEMBLIES

WISCONSIN DEPT OF TRANSPORTATION

APPROVED Chester J Spang
for State Traffic Engineer

DATE 3/20/02 PLATE NO. M1-6.9

PROJECT NO: | HWY: | COUNTY: | SHEET NO: 126 | E

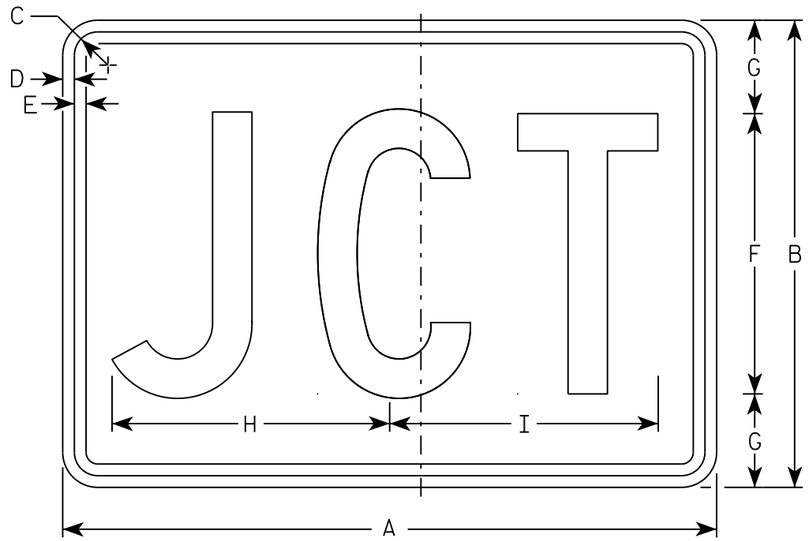

M2-1
MM2-1
MP2-1

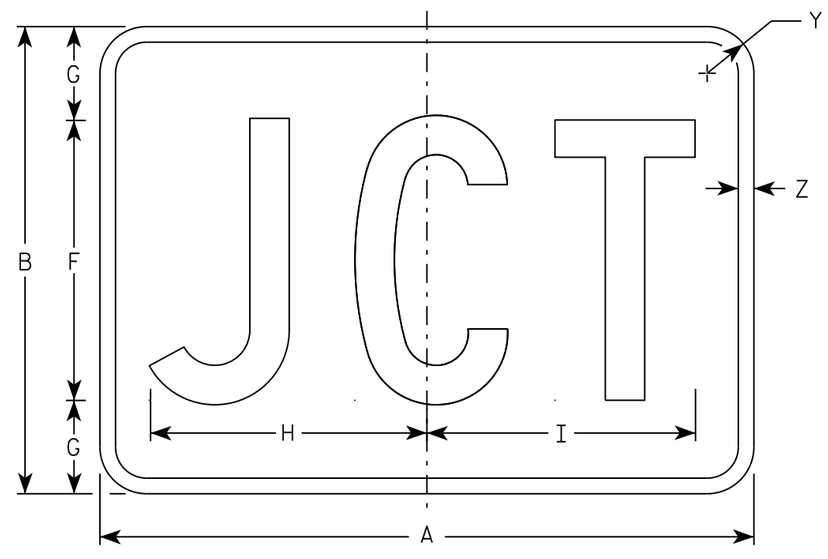

MB2-1
MK2-1
MN2-1
MR2-1

NOTES

1. Sign is Type II - Type H
2. Color:
   Background - See note 5
   Message - See note 5
3. Message Series - C
4. Corners may be square or rounded when base material is plywood but borders shall be rounded as shown. When base material is metal, the corners and borders shall be rounded.
5. M2-1 Background - White
   Message - Black
   MB2-1 Background - Blue
   Message - White
   MK2-1 Background - Green
   Message - White
   MM2-1 Background - White
   Message - Green
   MN2-1 Background - Brown
   Message - White
   MP2-1 Background - White
   Message - Blue
   MR2-1 Background - Brown
   Message - Yellow

SIZE	A	B	C	D	E	F	G	H	I	J	K	L	M	N	O	P	Q	R	S	T	U	V	W	X	Y	Z	Area sq. ft.
1																											
2	21	15	1 1/8	3/8	3/8	9	3	8 7/8	8 5/8																1 1/2	1/2	2.20
3	30	21	1 1/8	3/8	3/8	13	4	12 7/8	12 3/8																1 1/2	1/2	4.40
4	30	21	1 1/8	3/8	3/8	13	4	12 7/8	12 3/8																1 1/2	1/2	4.40
5	30	21	1 1/8	3/8	3/8	13	4	12 7/8	12 3/8																1 1/2	1/2	4.40

STANDARD SIGN
M2-1

WISCONSIN DEPT OF TRANSPORTATION

APPROVED Matthew R Rauch
for State Traffic Engineer

DATE 10/15/15 PLATE 127 M2-1.12

PROJECT NO: | HWY: | COUNTY: | SHEET NO: | E

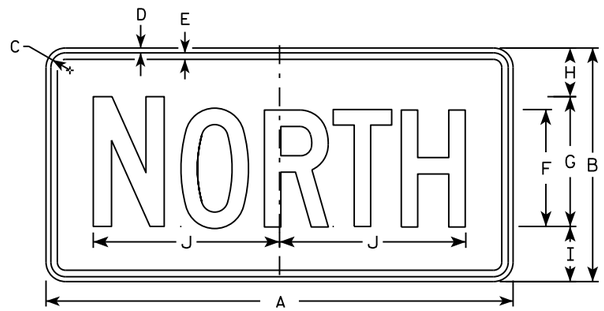

M3-1
MM3-1
MP3-1

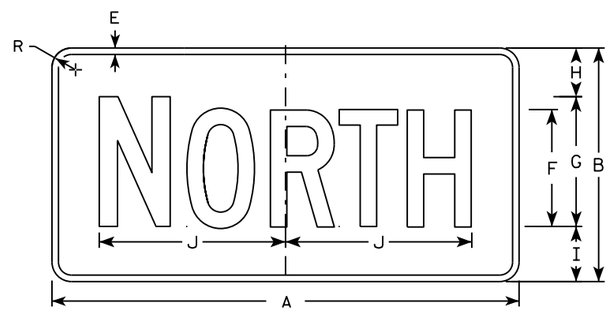

MB3-1
MK3-1
MN3-1

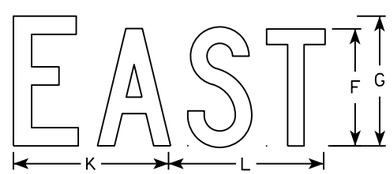

M3-2
MM3-2
MP3-2

MB3-2
MK3-2
MN3-2

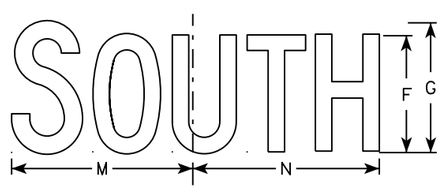

M3-3
MM3-3
MP3-3

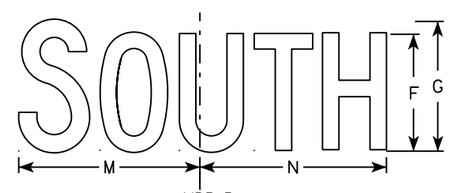

MB3-3
MK3-3
MN3-3

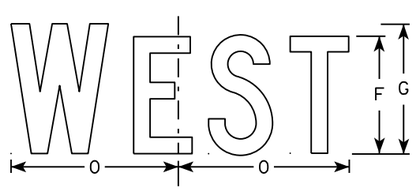

M3-4
MM3-4
MP3-4

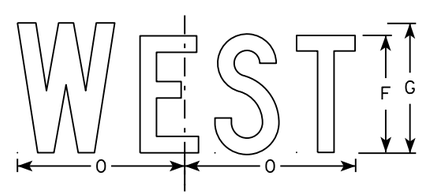

MB3-4
MK3-4
MN3-4

NOTES

1. All Signs Type II - Type H
2. Color:
   Background - See note 5
   Message - See note 5
3. Message Series - C
4. Corners may be square or rounded when base material is plywood but borders shall be rounded as shown. When base material is metal, the corners and borders shall be rounded.
5. M3-1 thru M3-4 Background - White
   Message - Black
   MB3-1 thru MB3-4 Background - Blue
   Message - White
   MK3-1 thru MK3-4 Background - Green
   Message - White
   MM3-1 thru MM3-4 Background - White
   Message - Green
   MN3-1 thru MN3-4 Background - Brown
   Message - White
   MP3-1 thru MP3-4 Background - White
   Message - Blue
6. Note the first letter of each direction is larger than the remainder of the message.

SIZE	A	B	C	D	E	F	G	H	I	J	K	L	M	N	O	P	Q	R	S	T	U	V	W	X	Y	Z	Area sq. ft.
1																											
2	24	12	1 1/8	3/8	3/8	6	7	2 1/4	2 3/4	10 1/4	7 7/8	8 3/8	10 1/4	9 3/4	8 3/4			1 1/2									2.00
3	36	18	1 1/8	3/8	1/2	9	10	3 3/4	4 1/4	14 3/8	12	12 1/8	14	14 1/8	13			1 1/2									4.5
4	36	18	1 1/8	3/8	1/2	9	10	3 3/4	4 1/4	14 3/8	12	12 1/8	14	14 1/8	13			1 1/2									4.5
5	36	18	1 1/8	3/8	1/2	9	10	3 3/4	4 1/4	14 3/8	12	12 1/8	14	14 1/8	13			1 1/2									4.5

STANDARD SIGNS
M3-1 thur M3-4
SERIES

WISCONSIN DEPT OF TRANSPORTATION

APPROVED Matthew R Rauch
for State Traffic Engineer

DATE 10/15/15 PLATE NO M3-1.14

PROJECT NO: | HWY: | COUNTY: | SHEET NO: | E

FILE NAME : C:\CAEfiles\Projects\tr_stdplate\M31.DGN PLOT DATE : 01-DEC-2015 17:54 PLOT BY : $$ plotuser $$ PLOT NAME : PLOT SCALE : 11.675051:1.000000

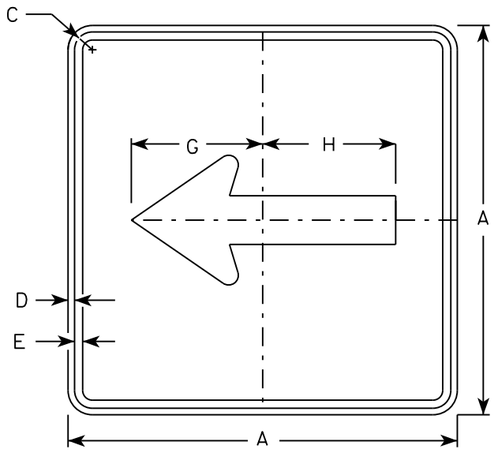

M6-1
MM6-1
MO6-1
MP6-1

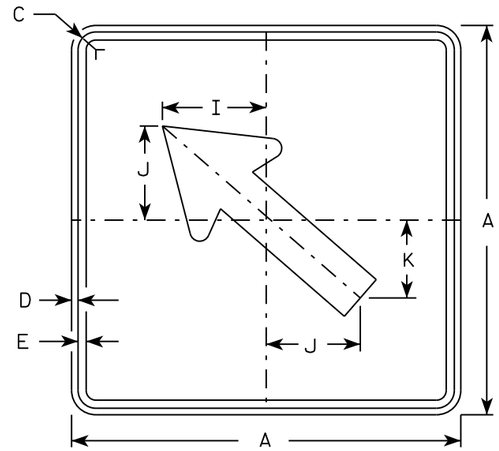

M6-2
MM6-2
MO6-2
MP6-2

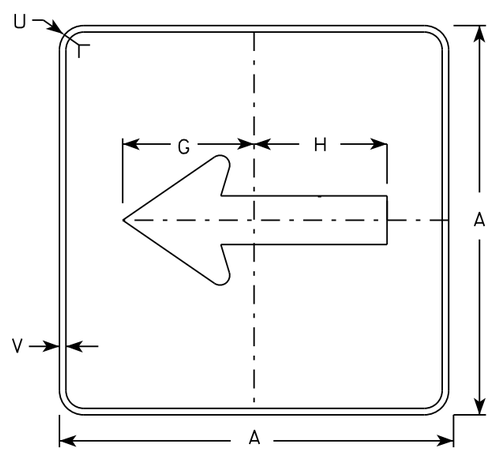

MB6-1
MK6-1
MN6-1
MR6-1

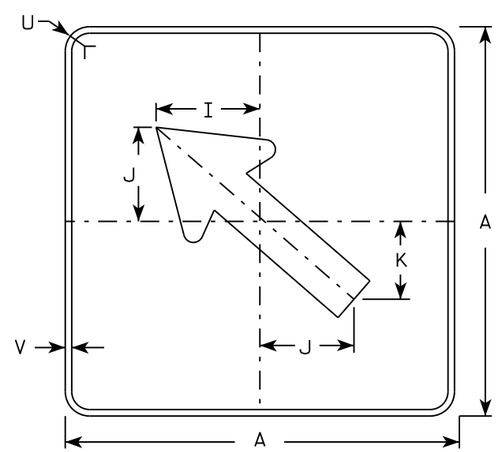

MB6-2
MK6-2
MN6-2
MR6-2

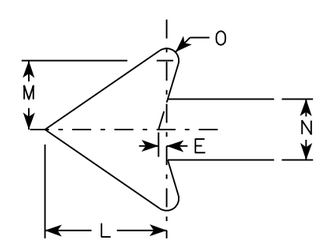

NOTES

1. Signs are Type II - Type H except as Shown
2. Color:
   Background - See note 4
   Message - See note 4
3. Corners may be square or rounded when base material is plywood but borders shall be rounded as shown. When base material is metal, the corners and borders shall be rounded.
4. M6-1 and M6-2 Background - White
   Message - Black
   MB6-1 and MB6-2 Background - Blue
   Message - White
   MK6-1 and MK6-2 Background - Green
   Message - White
   MM6-1 and MM6-2 Background - White
   Message - Green
   MN6-1 and MN6-2 Background - Brown
   Message - White
   MO6-1 and MO6-2 Background - Orange - Type F Reflective
   Message - Black
   MP6-1 and MP6-2 Background - White
   Message - Blue
   MR6-1 and MR6-2 Background - Brown
   Message - Yellow

SIZE	A	B	C	D	E	F	G	H	I	J	K	L	M	N	O	P	Q	R	S	T	U	V	W	X	Y	Z	Area sq. ft.
1																											
2	21		1 1/8	3/8	3/8		7 1/2	7 1/8	5 5/8	5	4 1/4	5 1/4	3	2 5/8	1/2						1 1/2	1/2					3.06
3	30		1 3/8	1/2	5/8		10 3/4	10 1/4	8	7 1/4	6	7 1/2	4 1/4	3 3/4	3/4						1 7/8	1/2					6.25
4	30		1 3/8	1/2	5/8		10 3/4	10 1/4	8	7 1/4	6	7 1/2	4 1/4	3 3/4	3/4						1 7/8	1/2					6.25
5	30		1 3/8	1/2	5/8		10 3/4	10 1/4	8	7 1/4	6	7 1/2	4 1/4	3 3/4	3/4						1 7/8	1/2					6.25

STANDARD SIGN
M6-1 & M6-2
SERIES

WISCONSIN DEPT OF TRANSPORTATION

APPROVED Matthew R Rauch
for State Traffic Engineer

DATE 10/15/15 PLATE 129 M6-1.15

PROJECT NO: | HWY: | COUNTY: | SHEET NO: | E

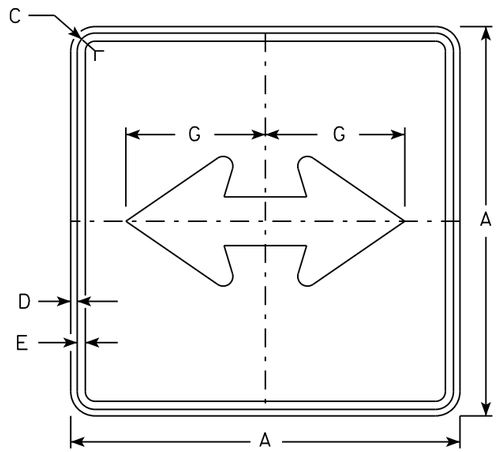

M6-4
MM6-4
MO6-4
MP6-4

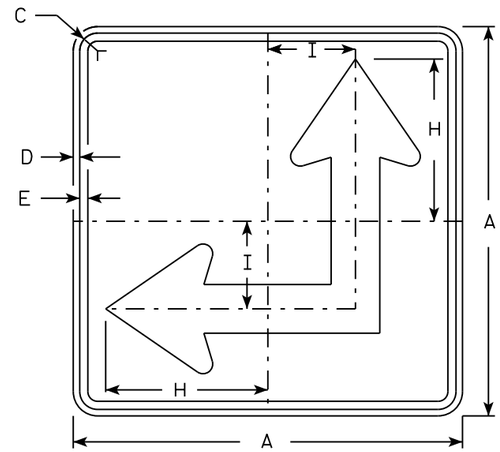

M6-6
MM6-6
MO6-6
MP6-6

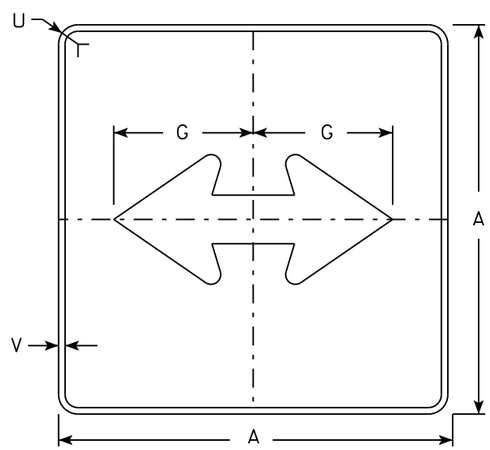

MB6-4
MK6-4
MN6-4
MR6-4

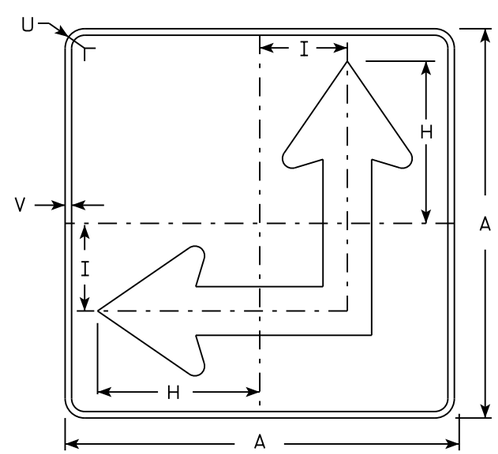

MB6-6
MK6-6
MN6-6
MR6-6

NOTES

1. Signs are Type II - Type H except as Shown
2. Color:
   Background - See Note 4
   Message - See Note 4
3. Corners may be square or rounded when base material is plywood but borders shall be rounded as shown. When base material is metal, the corners and borders shall be rounded.
4. M6-4 and M6-6 Background - White
   Message - Black
   MB6-4 and MB6-6 Background - Blue
   Message - White
   MK6-4 and MK6-6 Background - Green
   Message - White
   MM6-4 and MM6-6 Background - White
   Message - Green
   MN6-4 and MN6-6 Background - Brown
   Message - White
   MO6-4 and MO6-6 Background - Orange - Type F Reflective
   Message - Black
   MP6-4 and MP6-6 Background - White
   Message - Blue
   MR6-4 and MR6-6 Background - Brown
   Message - Yellow
5. M6-6R same as M6-6L except arrow points ahead and right.

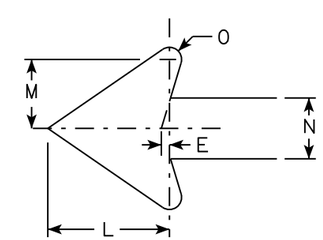

SIZE	A	B	C	D	E	F	G	H	I	J	K	L	M	N	O	P	Q	R	S	T	U	V	W	X	Y	Z	Area sq. ft.
1																											
2	21		1 1/8	3/8	3/8		7 1/2	8 3/4	4 1/4			5 1/4	3	2 5/8	1/2						1 1/2	1/2					3.06
3	30		1 3/8	1/2	5/8		10 3/4	12 1/2	6 3/4			7 1/2	4 1/4	3 3/4	3/4						1 7/8	1/2					6.25
4	30		1 3/8	1/2	5/8		10 3/4	12 1/2	6 3/4			7 1/2	4 1/4	3 3/4	3/4						1 7/8	1/2					6.25
5	30		1 3/8	1/2	5/8		10 3/4	12 1/2	6 3/4			7 1/2	4 1/4	3 3/4	3/4						1 7/8	1/2					6.25

STANDARD SIGN
M6-4 & M6-6
SERIES

WISCONSIN DEPT OF TRANSPORTATION

APPROVED Matthew R Rauch
for State Traffic Engineer

DATE 10/15/15 PLATE 130 M6-4.10

PROJECT NO: HWY: COUNTY: SHEET NO: E

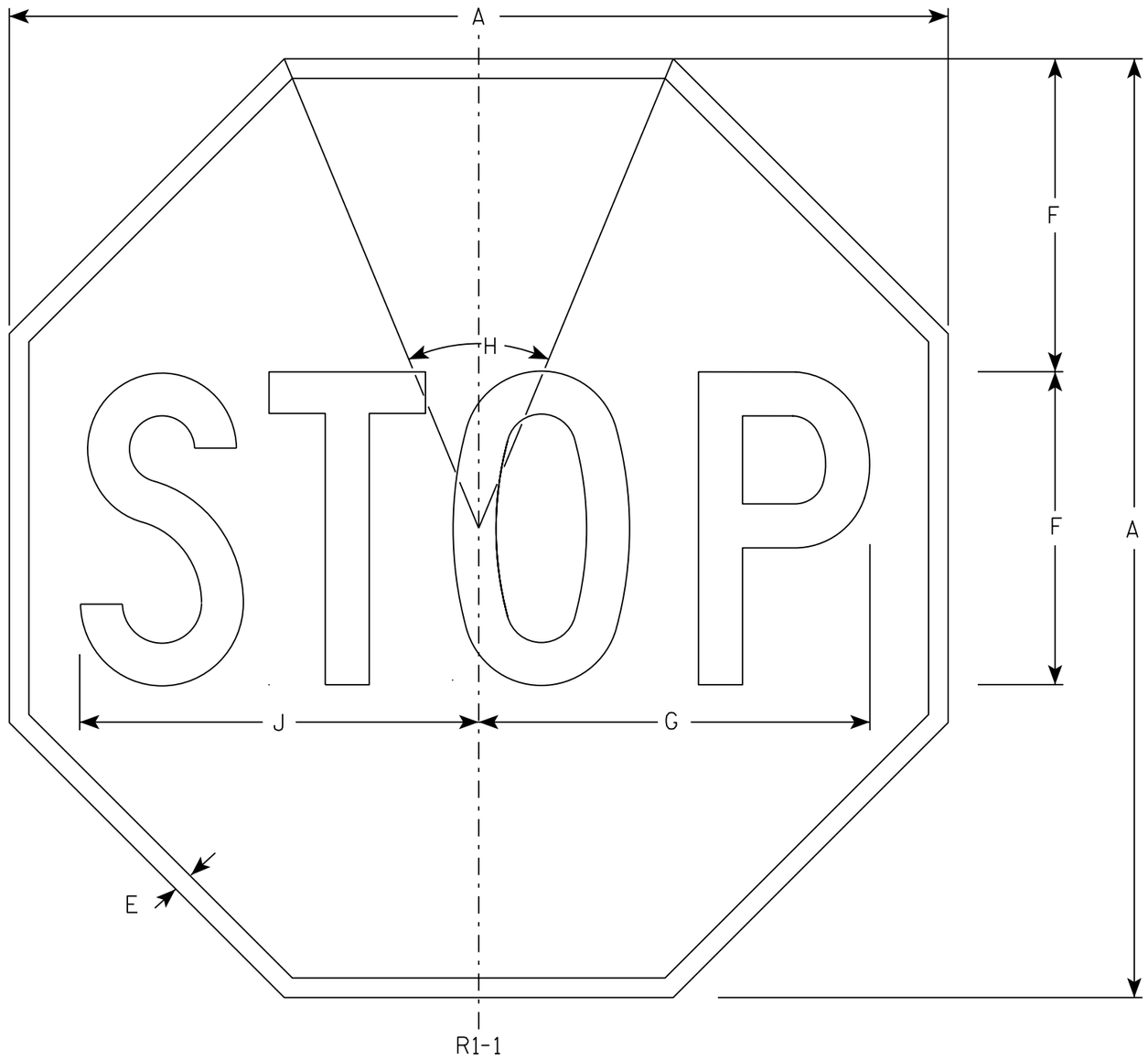

NOTES

1. Sign is Type II - Type H Reflective - reference WIS DOT Standard Specification for HIGHWAY and STRUCTURE CONSTRUCTION latest edition.
2. Color:
   Background - Red
   Message - White
3. Message Series - C

SIZE	A	B	C	D	E	F	G	H	I	J	K	L	M	N	O	P	Q	R	S	T	U	V	W	X	Y	Z	Area sq. ft.
1	30				5/8	10	12 1/2	45°		12 3/4																	5.18
2S	30				5/8	10	12 1/2	45°		12 3/4																	5.18
2M	36				3/4	12	15	45°		15 3/8																	7.46
3	36				3/4	12	15	45°		15 3/8																	7.46
4	48				1	16	20	45°		20 1/2																	13.25
5	48				1	16	20	45°		20 1/2																	13.25
6	18				3/8	6	7 3/4	45°		7 3/4																	1.86
7	12				1/4	4	5	45°		5 1/8																	0.78

STANDARD SIGN
R1-1

WISCONSIN DEPT OF TRANSPORTATION

APPROVED Matthew R Rauch
for State Traffic Engineer

DATE 11/12/15 PLATE NO. R1-1.13

PROJECT NO: | HWY: | COUNTY: | SHEET NO: 131 | E

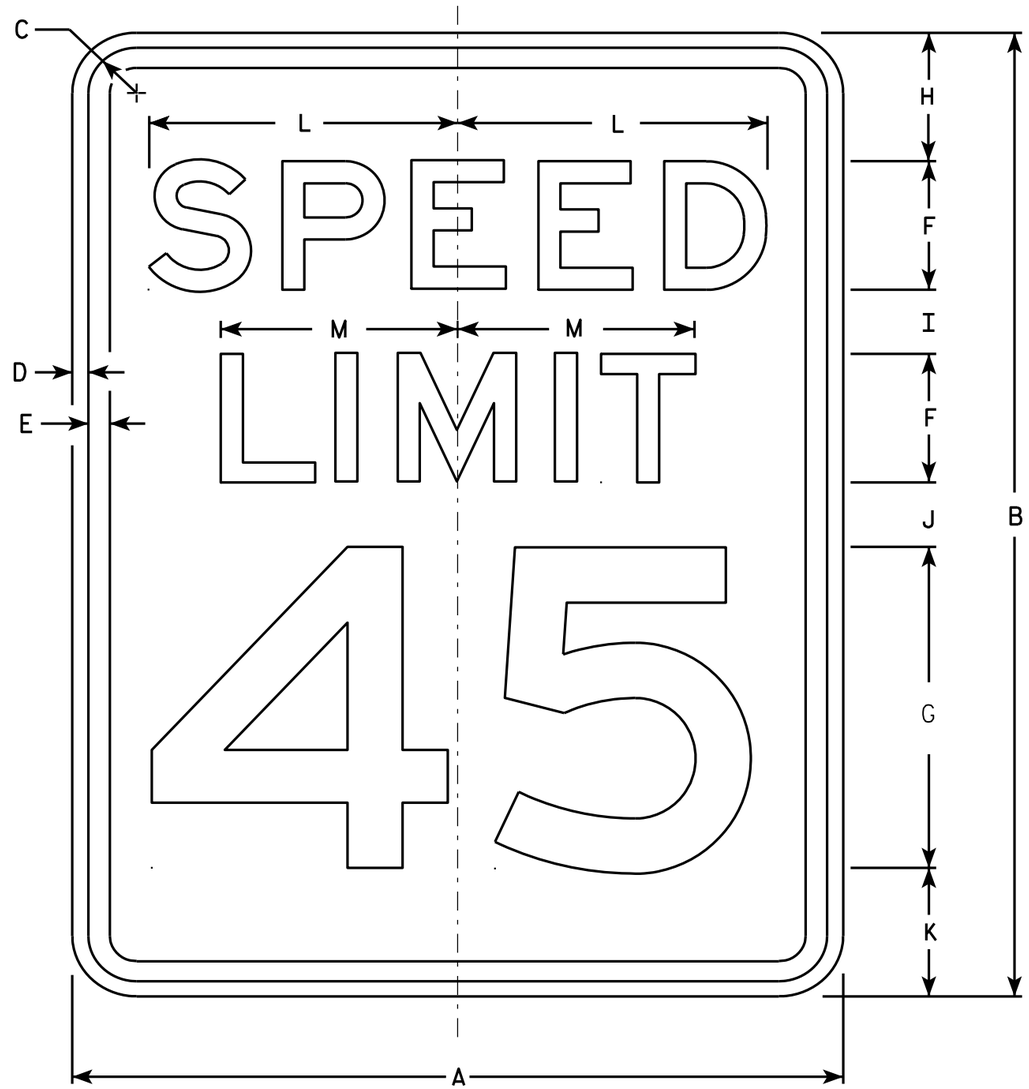

R2-1

NOTES

1. Sign is Type II - Type H Reflective - reference WIS DOT Standard Specification for HIGHWAY and STRUCTURE CONSTRUCTION latest edition.
2. Color:
   Background - White
   Message - Black
3. Message Series - E
4. Corners may be square or rounded when base material is plywood but borders shall be rounded as shown. When base material is metal, the corners and borders shall be rounded.
5. Substitute appropriate numerals and optically adjust spacing to achieve proper balance.

SIZE	A	B	C	D	E	F	G	H	I	J	K	L	M	N	O	P	Q	R	S	T	U	V	W	X	Y	Z	Area sq. ft.
1	18	24	1 1/8	3/8	1/2	3	8	3	2	2	3	7 1/4	5 1/2														3.0
2S	24	30	1 1/8	3/8	1/2	4	10	3	2 1/4	3 3/8	3 3/8	9 5/8	7 3/8														5.0
2M	30	36	1 3/8	1/2	5/8	5	12	5	2 1/2	2 1/2	4	12	9 1/4														7.5
3	36	48	1 3/8	1/2	5/8	6	14	6	5	5	6	14 3/8	11														12.0
4	36	48	1 3/8	1/2	5/8	6	14	6	5	5	6	14 3/8	11														12.0
5	48	60	2 1/4	3/4	1	8	20	6	4 1/2	6 3/4	6 3/4	19 1/4	14 5/8														20.0

STANDARD SIGN
R2-1

WISCONSIN DEPT OF TRANSPORTATION

APPROVED Matthew R Rauch
for State Traffic Engineer

DATE 5/26/10 PLATE NO. R2-1.13

PROJECT NO: | HWY: | COUNTY: | SHEET NO: 132 | E

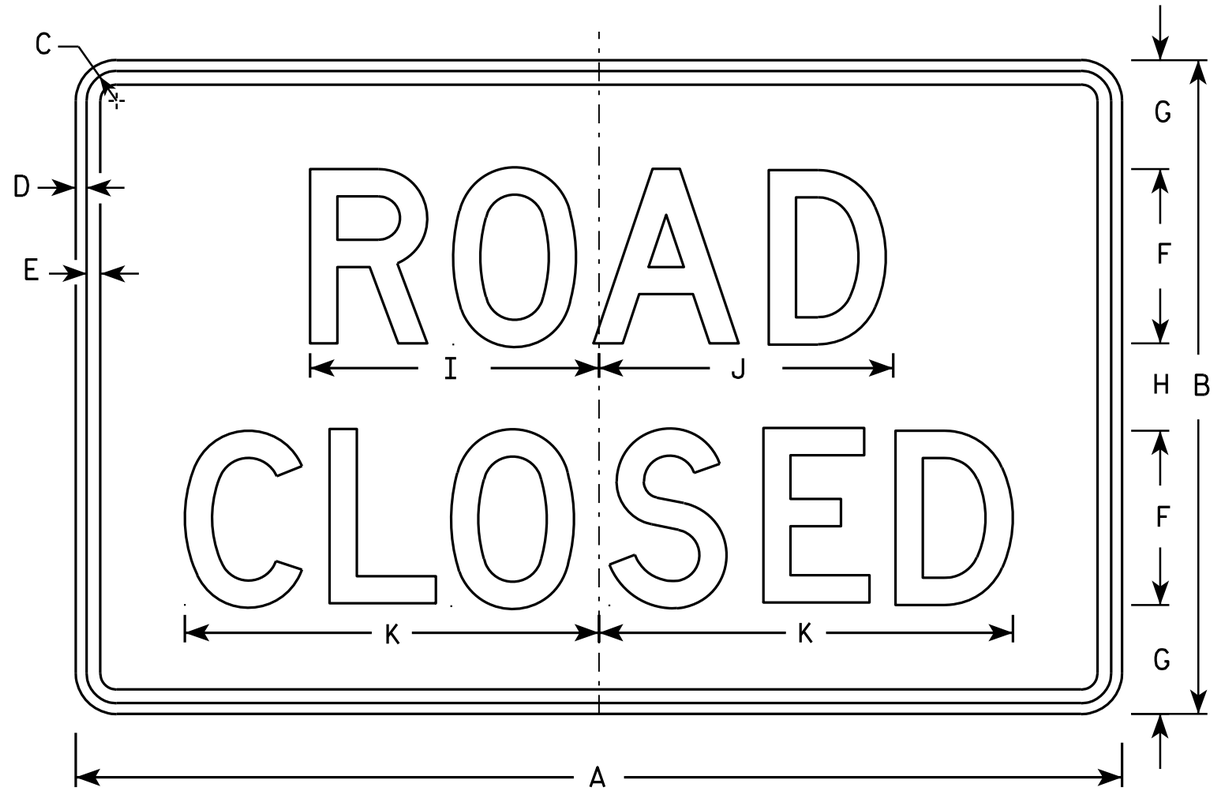

R11-2

NOTES

1. Sign is Type II - Type H Reflective - reference WIS DOT Standard Specification for HIGHWAY and STRUCTURE CONSTRUCTION latest edition.
2. Color:
   Background - White
   Message - Black
3. Message Series - D
4. Corners may be square or rounded when base material is plywood but borders shall be rounded as shown. When base material is metal, the corners and borders shall be rounded.
5. Modify the message as required.

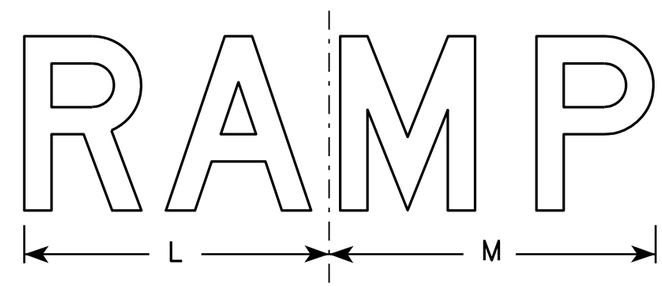

R11-2R

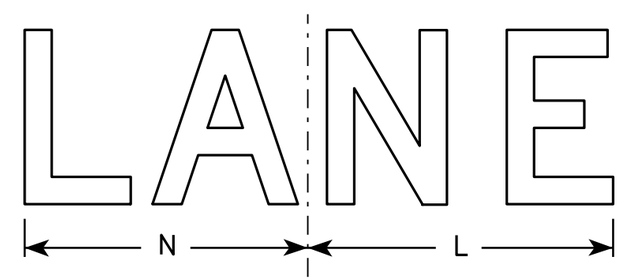

R11-2L

SIZE	A	B	C	D	E	F	G	H	I	J	K	L	M	N	O	P	Q	R	S	T	U	V	W	X	Y	Z	Area sq. ft.
1																											
2S	48	30	1 3/8	1/2	5/8	8	5	4	13 1/4	13 1/2	19	14	15	13													10.0
2M	48	30	1 3/8	1/2	5/8	8	5	4	13 1/4	13 1/2	19	14	15	13													10.0
3	48	30	1 3/8	1/2	5/8	8	5	4	13 1/4	13 1/2	19	14	15	13													10.0
4	48	30	1 3/8	1/2	5/8	8	5	4	13 1/4	13 1/2	19	14	15	13													10.0
5	48	30	1 3/8	1/2	5/8	8	5	4	13 1/4	13 1/2	19	14	15	13													10.0

STANDARD SIGN
R11-2

WISCONSIN DEPT OF TRANSPORTATION

APPROVED Matthew R Rauch
for State Traffic Engineer

DATE 4/1/11 PLATE NO. R11-2.10

PROJECT NO: | HWY: | COUNTY: | SHEET NO: 133 | E

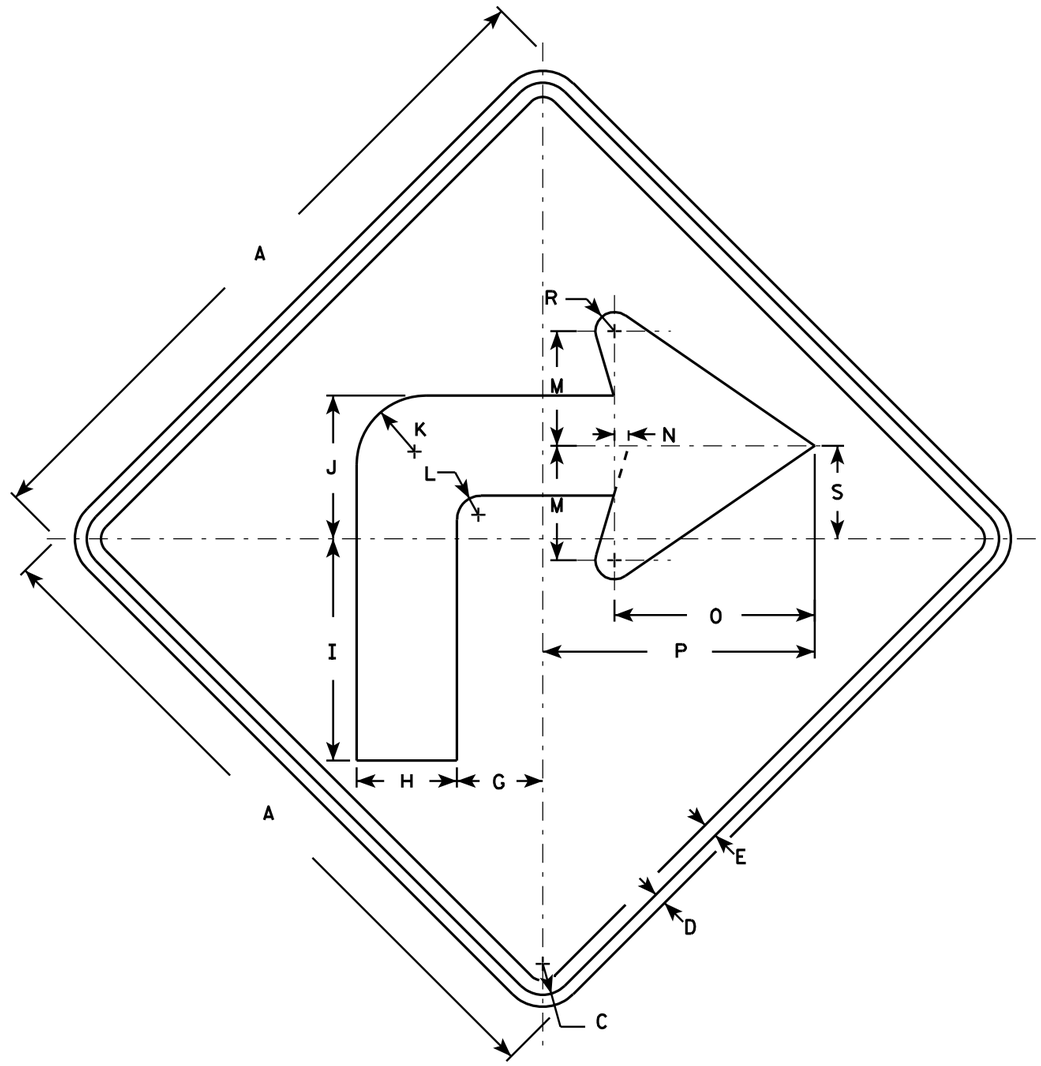

W1-1R

NOTES

1. Sign is Type II - Type F Reflective - reference WIS DOT Standard Specification for HIGHWAY and STRUCTURE CONSTRUCTION latest edition.
2. Color:
   Background - Yellow
   Message - Black
3. Corners may be square or rounded when base material is plywood but borders shall be rounded as shown. When base material is metal, the corners and borders shall be rounded.
4. W1-1L is the same as W1-1R except the arrow is reversed along the vertical centerline.

SIZE	A	B	C	D	E	F	G	H	I	J	K	L	M	N	O	P	Q	R	S	T	U	V	W	X	Y	Z	Area sq. ft.
1	24		1 1/8	3/8	1/2		3	3 1/2	7 3/4	5	2 1/2	7/8	4	1/2	7	9 1/2		5/8	3 1/4								4.0
2S	36		1 5/8	5/8	3/4		4 1/2	5 1/4	11 5/8	7 1/2	3 5/8	1 1/4	6	3/4	10 1/2	14 1/4		1	4 7/8								9.0
2M	36		1 5/8	5/8	3/4		4 1/2	5 1/4	11 5/8	7 1/2	3 5/8	1 1/4	6	3/4	10 1/2	14 1/4		1	4 7/8								9.0
3	36		1 5/8	5/8	3/4		4 1/2	5 1/4	11 5/8	7 1/2	3 5/8	1 1/4	6	3/4	10 1/2	14 1/4		1	4 7/8								9.0
4	48		2 1/4	3/4	1		6	7	15 1/2	10	4 7/8	1 5/8	8	1	14	19		1 1/4	6 1/2								16.0
5	48		2 1/4	3/4	1		6	7	15 1/2	10	4 7/8	1 5/8	8	1	14	19		1 1/4	6 1/2								16.0

STANDARD SIGN
W1-1

WISCONSIN DEPT OF TRANSPORTATION

APPROVED Matthew R Rauch
for State Traffic Engineer

DATE 5/15/12 PLATE NO. W1-1.11

PROJECT NO: | HWY: | COUNTY: | SHEET NO: 134 | E

NOTES

1. Sign is Type II - Type F Reflective - reference WIS DOT Standard Specification for HIGHWAY and STRUCTURE CONSTRUCTION latest edition.
2. Color:
   Background - Yellow
   Message - Black
3. Corners may be square or rounded when base material is plywood but borders shall be rounded as shown. When base material is metal, the corners and borders shall be rounded.
4. W1-2L is the same as W1-2R except the arrow is reversed along the vertical centerline.

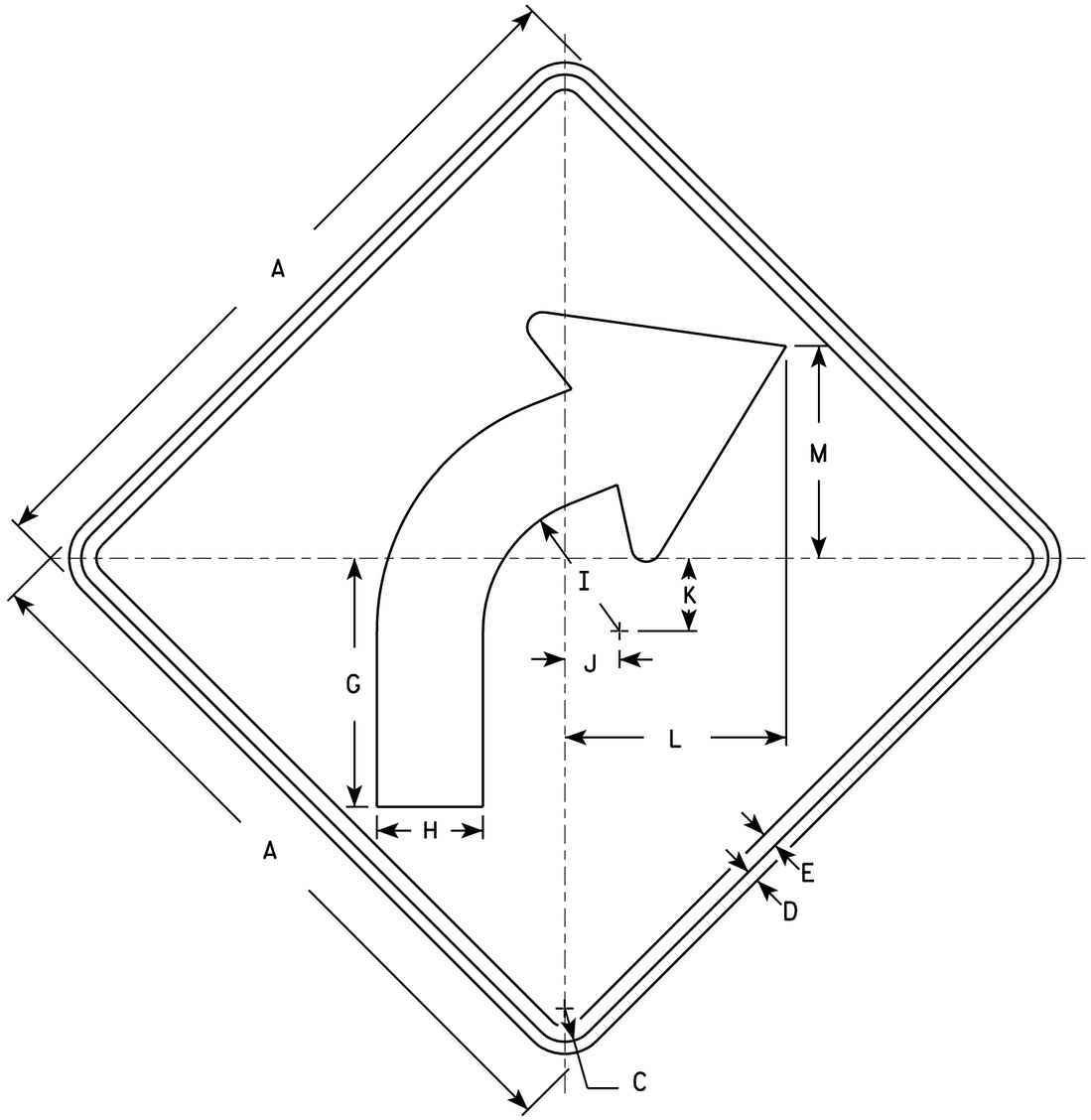

W1-2R

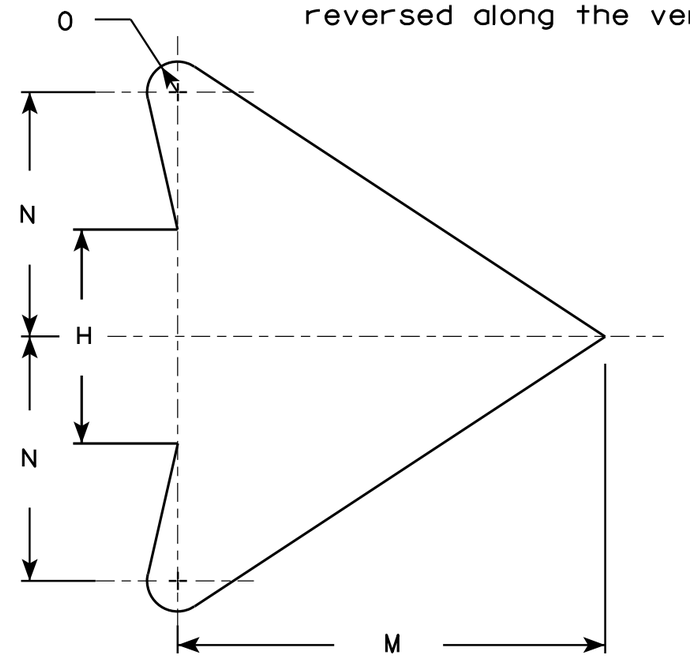

ARROW DETAIL

SIZE	A	B	C	D	E	F	G	H	I	J	K	L	M	N	O	P	Q	R	S	T	U	V	W	X	Y	Z	Area sq. ft.
1	24		1 1/8	3/8	1/2		8 1/4	3 1/2	4 1/2	1 3/4	2 3/8	7 1/4	7	4	1/2												4.0
2S	30		1 3/8	1/2	5/8		10 1/4	4 3/8	5 5/8	2 1/4	3	9 1/8	8 3/4	5	5/8												6.25
2M	36		1 5/8	5/8	3/4		12 3/8	5 1/4	6 3/4	2 5/8	3 1/2	10 7/8	10 1/2	6	3/4												9.0
3	36		1 5/8	5/8	3/4		12 3/8	5 1/4	6 3/4	2 5/8	3 1/2	10 7/8	10 1/2	6	3/4												9.0
4	36		1 5/8	5/8	3/4		12 3/8	5 1/4	6 3/4	2 5/8	3 1/2	10 7/8	10 1/2	6	3/4												9.0
5	48		2 1/4	3/4	1		16 1/2	7	9	3 1/2	4 5/8	14 1/2	14	8	1												16.0

STANDARD SIGN
W1-2

WISCONSIN DEPT OF TRANSPORTATION

APPROVED Matthew R Rauch
for State Traffic Engineer

DATE 5/15/12 PLATE NO. W1-2.10

PROJECT NO:	HWY:	COUNTY:		SHEET NO: 135	E

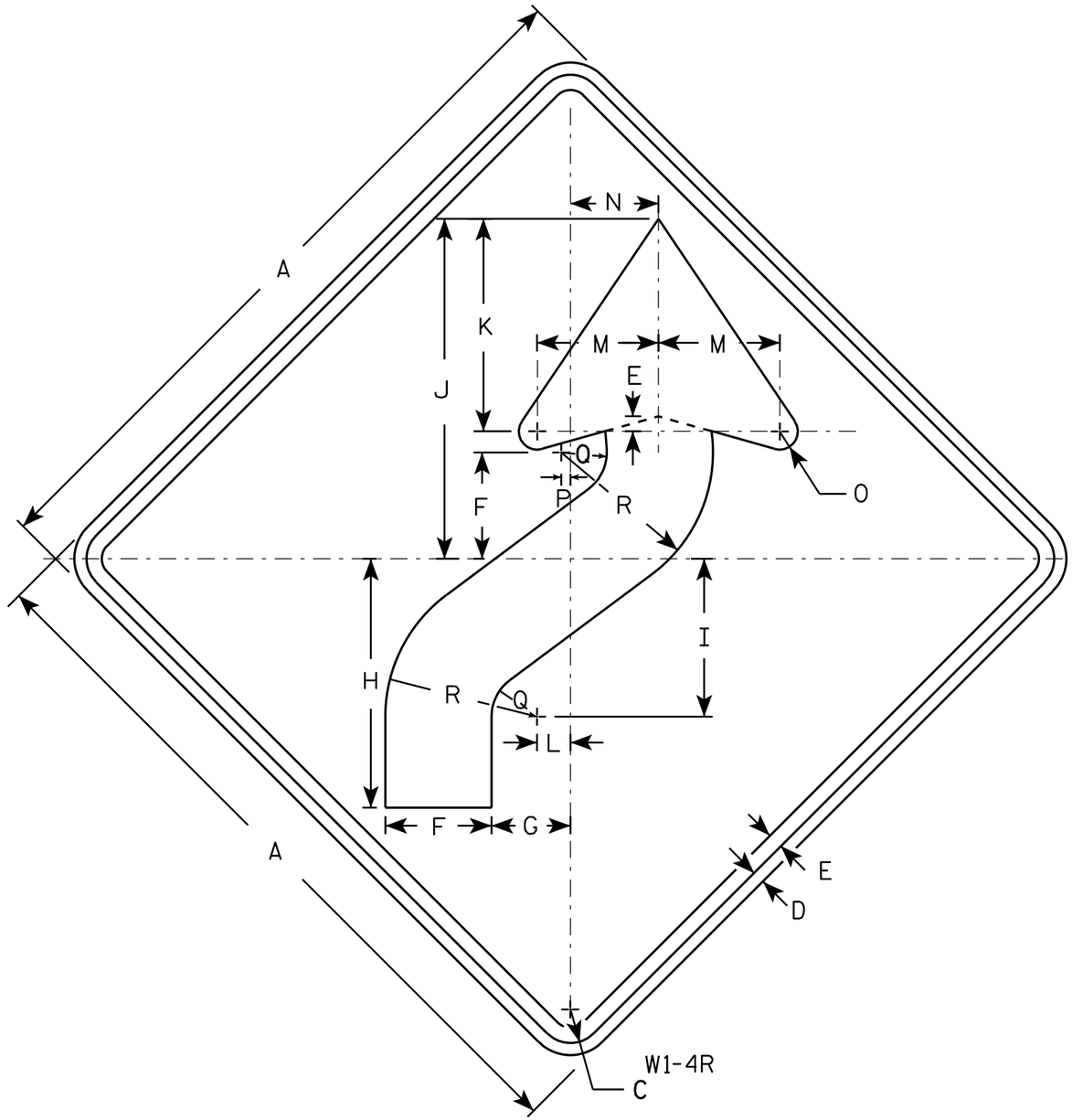

NOTES

1. Sign is Type II - Type F Reflective - reference WIS DOT Standard Specification for HIGHWAY and STRUCTURE CONSTRUCTION latest edition.
2. Color:
   Background - Yellow
   Message - Black
3. Corners may be square or rounded when base material is plywood but borders shall be rounded as shown. When base material is metal, the corners and borders shall be rounded.
4. W1-4L is the same as W1-4R except the arrow is reversed along the vertical centerline.

SIZE	A	B	C	D	E	F	G	H	I	J	K	L	M	N	O	P	Q	R	S	T	U	V	W	X	Y	Z	Area sq. ft.
1	24		1 1/8	3/8	1/2	3 1/2	2 5/8	8 1/4	5 1/4	11 1/4	7	1 1/8	4	3	5/8	1/4	1 1/2	5									4.0
2S	30		1 3/8	1/2	5/8	4 3/8	3 1/4	10 1/4	6 1/2	14	8 3/4	1 3/8	5	3 5/8	3/4	3/8	1 7/8	6 1/4									6.25
2M	36		1 5/8	5/8	3/4	5 1/4	4	12 3/8	7 7/8	16 7/8	10 1/2	1 5/8	6	4 1/2	1	1/2	2 1/4	7 1/2									9.0
3	36		1 5/8	5/8	3/4	5 1/4	4	12 3/8	7 7/8	16 7/8	10 1/2	1 5/8	6	4 1/2	1	1/2	2 1/4	7 1/2									9.0
4	36		1 5/8	5/8	3/4	5 1/4	4	12 3/8	7 7/8	16 7/8	10 1/2	1 5/8	6	4 1/2	1	1/2	2 1/4	7 1/2									9.0
5	48		2 1/4	3/4	1	7	5 1/4	16 1/2	10 1/2	22 1/2	14	2 1/4	8	6	1 1/4	5/8	3	10									16.0

STANDARD SIGN
W1-4

WISCONSIN DEPT OF TRANSPORTATION

APPROVED Matthew R Rauch
for State Traffic Engineer

DATE 5/17/12 PLATE NO. W1-4.11

PROJECT NO: | HWY: | COUNTY: | SHEET NO: 136 | E

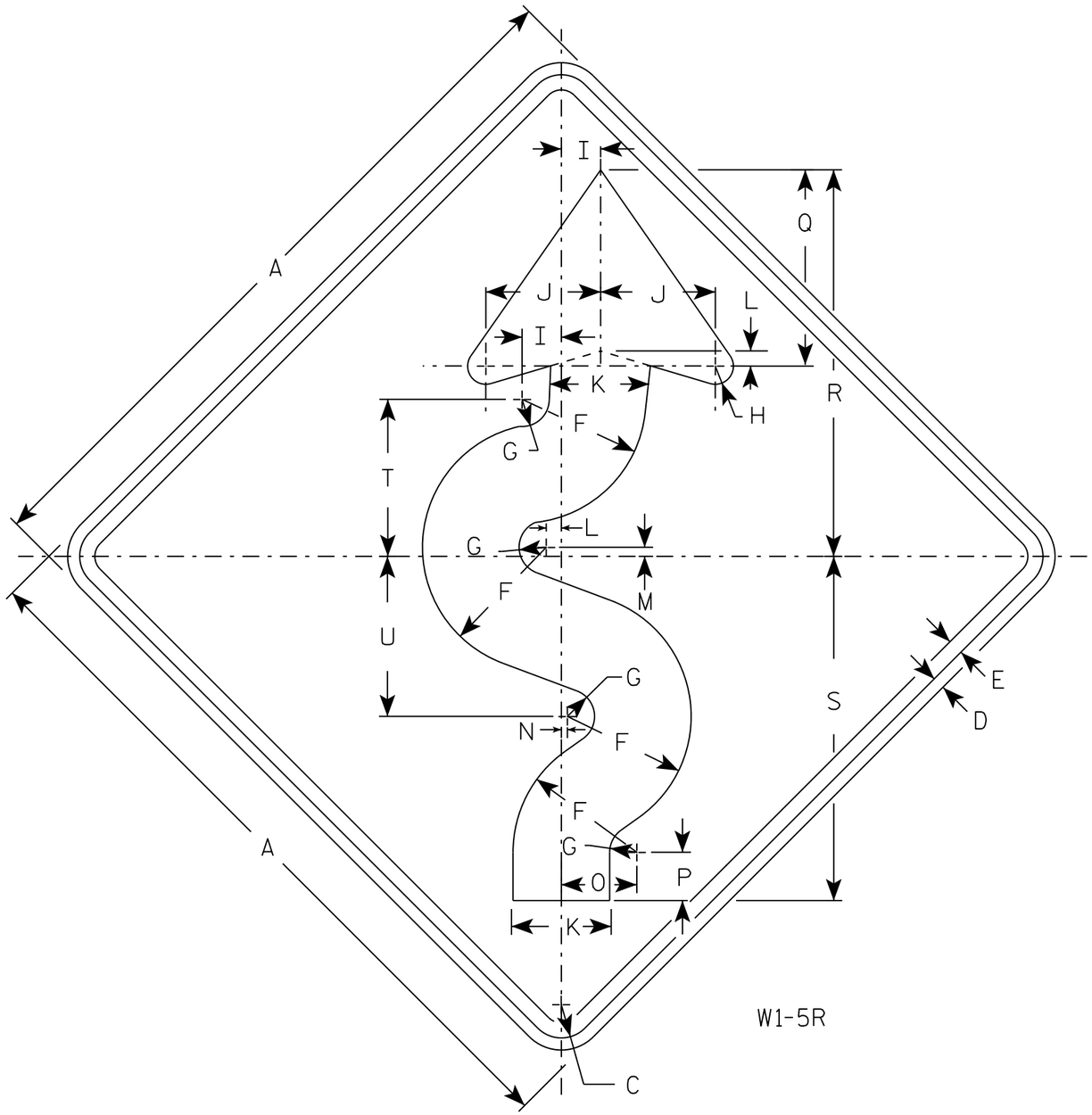

W1-5R

NOTES

1. Sign is Type II - Type F Reflective
2. Color:
   Background - Yellow
   Message - Black
3. W1-5L is the same as W1-5R except the arrow is reversed along the vertical centerline.
4. If used with W13-1 of 30 MPH or less, use 36" sign for Size 2S.

SIZE	A	B	C	D	E	F	G	H	I	J	K	L	M	N	O	P	Q	R	S	T	U	V	W	X	Y	Z	Area sq. ft.
1	24		1 1/8	3/8	1/2	4 1/8	7/8	5/8	1 1/4	3 3/4	3 1/4	1/2	1/4	1/8	2 1/2	1 5/8	6 1/2	12 3/4	11 3/8	5 1/4	5 1/4						4.0
2S	30		1 3/8	1/2	5/8	5 1/8	1 1/8	3/4	1 5/8	4 3/4	4 1/8	5/8	3/8	1/4	3 1/8	2	8 1/8	16	14 1/4	6 1/2	6 5/8						6.25
2M	36		1 5/8	5/8	3/4	6 1/4	1 3/8	1	1 7/8	5 5/8	4 7/8	3/4	3/8	1/4	3 3/4	2 7/8	9 3/4	19 1/8	17 1/8	7 3/4	7 7/8						9.0
3	36		1 5/8	5/8	3/4	6 1/4	1 3/8	1	1 7/8	5 5/8	4 7/8	3/4	3/8	1/4	3 3/4	2 7/8	9 3/4	19 1/8	17 1/8	7 3/4	7 7/8						9.0
4	36		1 5/8	5/8	3/4	6 1/4	1 3/8	1	1 7/8	5 5/8	4 7/8	3/4	3/8	1/4	3 3/4	2 7/8	9 3/4	19 1/8	17 1/8	7 3/4	7 7/8						9.0
5	48		2 1/4	3/4	1	8 1/4	1 3/4	1 1/4	2 1/2	7 1/2	6 1/2	1	1/2	3/8	5	3 1/4	13	25 1/2	22 3/4	10 3/8	10 1/2						16.0

STANDARD SIGN
W1-5

WISCONSIN DEPT OF TRANSPORTATION

APPROVED Matthew R Rauch
for State Traffic Engineer

DATE 8/1/16 PLATE NO. W1-5.9

PROJECT NO: | HWY: | COUNTY: | SHEET NO: E

FILE NAME : C:\CAEfiles\Projects\tr_stdplate\W15.DGN PLOT DATE : 01-AUG-2016 09:34 PLOT BY : $$ plotuser $$ PLOT NAME : PLOT SCALE : 5.594294:1.000000

NOTES

1. Sign is Type II - Type F Reflective - reference WIS DOT Standard Specification for HIGHWAY and STRUCTURE CONSTRUCTION latest edition.
2. Color:
   Background - Yellow
   Message - Black
3. Corners may be square or rounded when base material is plywood but borders shall be rounded as shown. When base material is metal, the corners and borders shall be rounded.

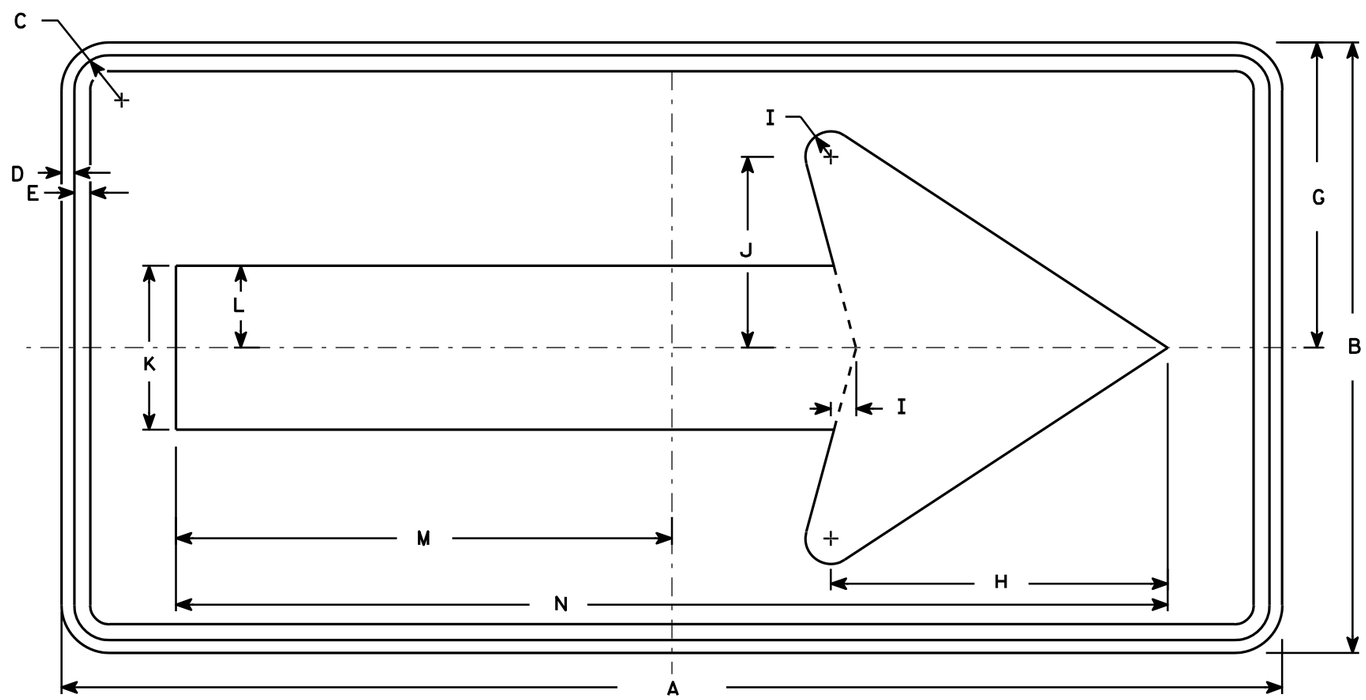

W1-6

SIZE	A	B	C	D	E	F	G	H	I	J	K	L	M	N	O	P	Q	R	S	T	U	V	W	X	Y	Z	Area sq. ft.
1	36	18	1 1/8	3/8	3/8		9	10	3/4	5 5/8	4 3/4	2 3/8	14 5/8	29 1/4													4.5
2S	48	24	1 3/8	1/2	5/8		12	13 1/4	1	7 1/2	6 1/2	3 1/4	19 1/2	39													8.0
2M	48	24	1 3/8	1/2	5/8		12	13 1/4	1	7 1/2	6 1/2	3 1/4	19 1/2	39													8.0
3	60	30	1 3/8	1/2	5/8		15	16 1/4	1 1/4	9 1/4	8	4	24 3/8	48 3/4													12.5
4	60	30	1 3/8	1/2	5/8		15	16 1/4	1 1/4	9 1/4	8	4	24 3/8	48 3/4													12.5
5	96	48	2 1/4	3/4	1		24	26 1/2	2	15	13	6 1/2	39	78													32.0

STANDARD SIGN
W1-6

WISCONSIN DEPT OF TRANSPORTATION

APPROVED Matthew R Rauch
for State Traffic Engineer

DATE 6/7/10 PLATE NO. W1-6.8

PROJECT NO:	HWY:	COUNTY:		SHEET NO: 138	E

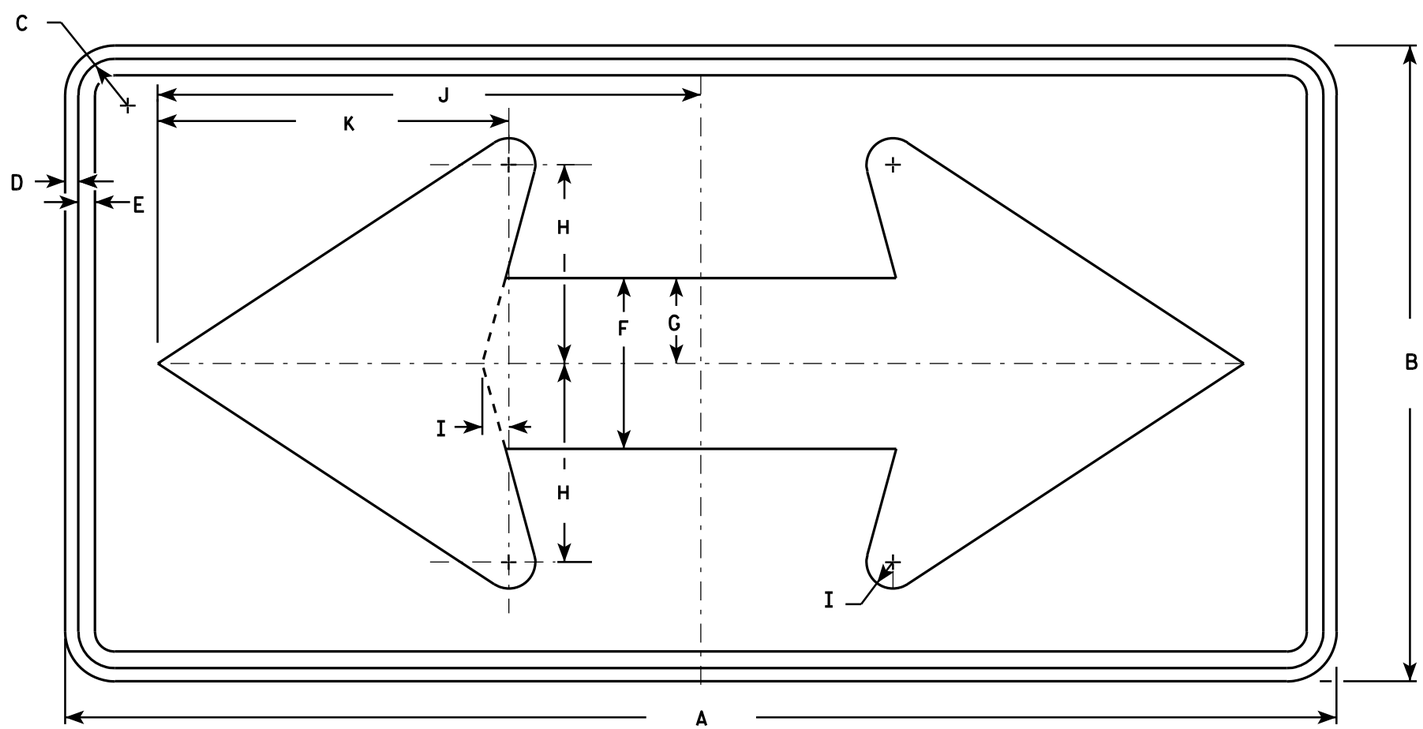

W1-7

NOTES

1. Sign is Type II - Type F Reflective - reference WIS DOT Standard Specification for HIGHWAY and STRUCTURE CONSTRUCTION latest edition.
2. Color:
   Background - Yellow
   Message - Black
3. Corners may be square or rounded when base material is plywood but borders shall be rounded as shown. When base material is metal, the corners and borders shall be rounded.

SIZE	A	B	C	D	E	F	G	H	I	J	K	L	M	N	O	P	Q	R	S	T	U	V	W	X	Y	Z	Area sq. ft.
1	36	18	1 1/8	3/8	1/2	5	2 1/2	5 3/4	3/4	15 5/8	10 1/8																4.5
2S	48	24	1 3/8	1/2	5/8	6 1/2	3 1/4	7 1/2	1	20 1/2	13 1/4																8.0
2M	48	24	1 3/8	1/2	5/8	6 1/2	3 1/4	7 1/2	1	20 1/2	13 1/4																8.0
3	60	30	1 3/8	1/2	5/8	8	4	9 1/4	1 1/4	25 3/8	16 1/4																12.5
4	60	30	1 3/8	1/2	5/8	8	4	9 1/4	1 1/4	25 3/8	16 1/4																12.5
5	96	48	2 1/4	3/4	1	13	6 1/2	15	2	41	26 1/2																32.0

STANDARD SIGN
W1-7

WISCONSIN DEPT OF TRANSPORTATION

APPROVED Matthew R Rauch
for State Traffic Engineer

DATE 6/7/10 PLATE NO. W1-7.7

PROJECT NO: | HWY: | COUNTY: | SHEET NO: 139 | E

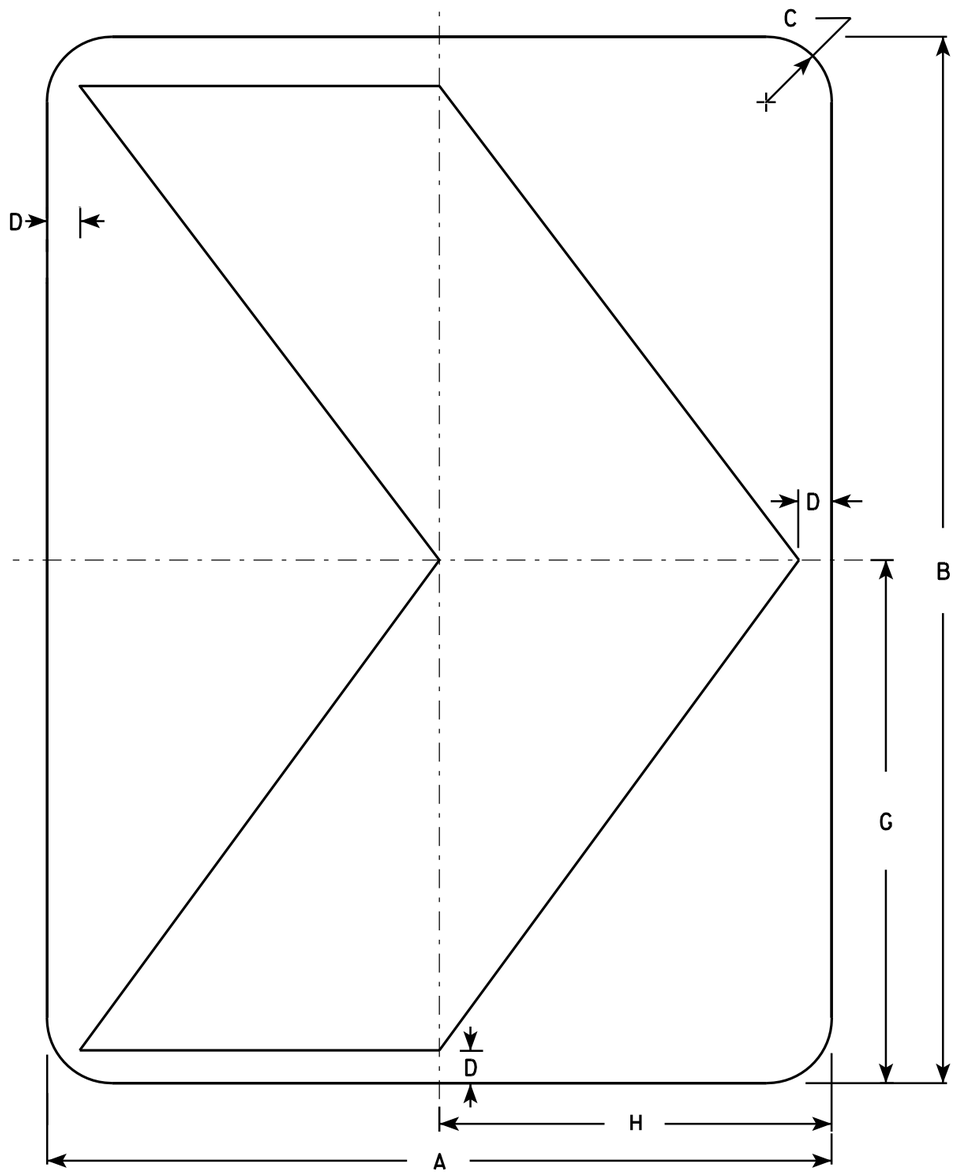

W1-8

NOTES

1. Sign is Type II - Type F Reflective - reference WIS DOT Standard Specification for HIGHWAY and STRUCTURE CONSTRUCTION latest edition.
2. Color:
   Background - Yellow
   Message - Black
3. Corners may be square or rounded when base material is plywood but borders shall be rounded as shown. When base material is metal, the corners and borders shall be rounded.

SIZE	A	B	C	D	E	F	G	H	I	J	K	L	M	N	O	P	Q	R	S	T	U	V	W	X	Y	Z	Area sq. ft.
1	12	18	1 1/2	1/2			9	6																			1.5
2S	18	24	1 1/2	3/4			12	9																			3.0
2M	18	24	1 1/2	3/4			12	9																			3.0
3	24	30	1 1/2	1			15	12																			5.0
4	30	36	1 7/8	1 1/4			18	15																			7.5
5	36	48	2 1/4	1 1/2			24	18																			12.0

STANDARD SIGN
W1-8

WISCONSIN DEPT OF TRANSPORTATION

APPROVED Matthew R Rauch for State Traffic Engineer

DATE 6/7/10 PLATE NO. W1-8.6

PROJECT NO:

SHEET NO: 140 E

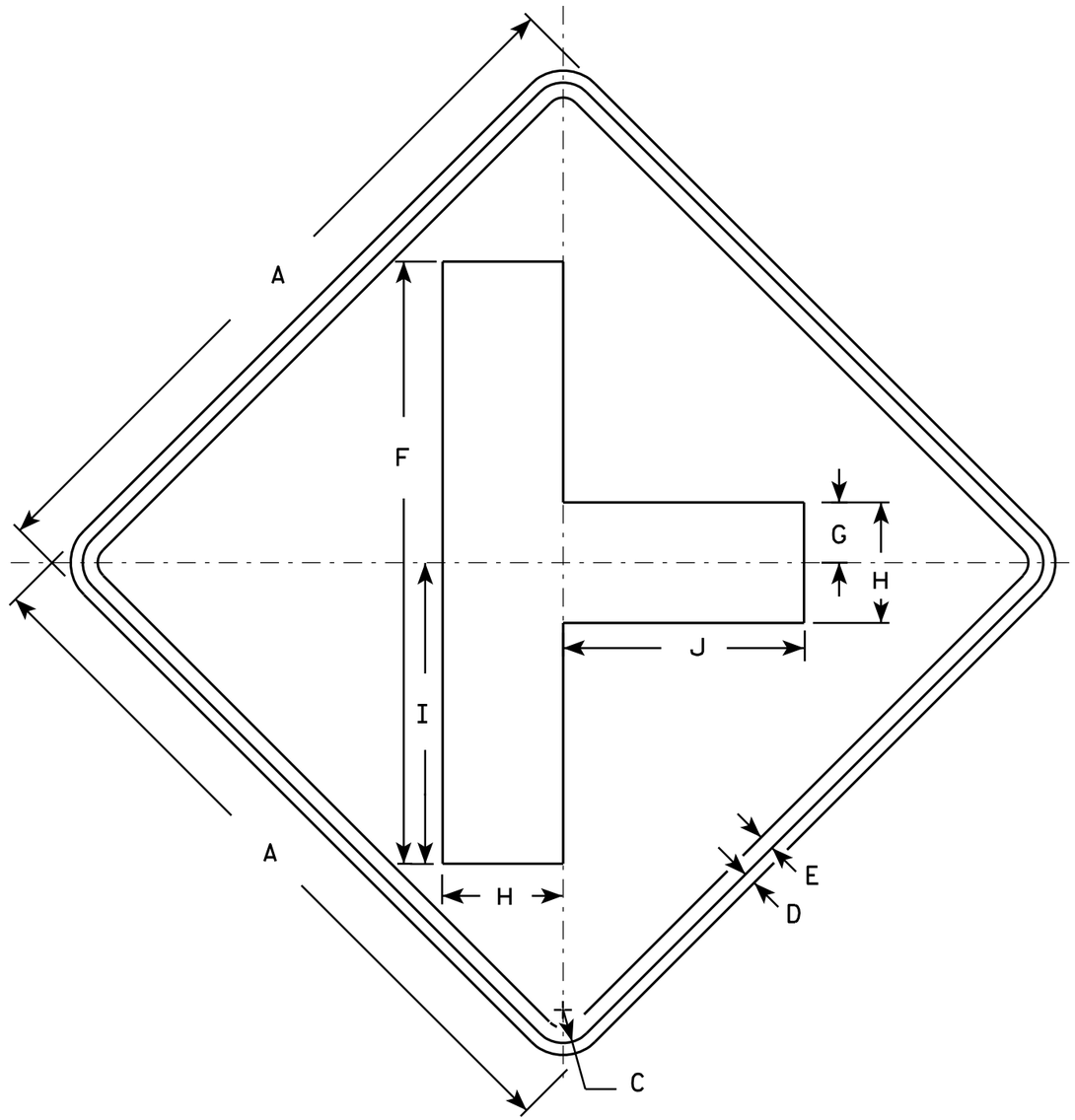

W2-2

NOTES

1. Sign is Type II - Type F Reflective - reference WIS DOT Standard Specification for HIGHWAY and STRUCTURE CONSTRUCTION latest edition.
2. Color:
   Background - Yellow
   Message - Black
3. Corners may be square or rounded when base material is plywood but borders shall be rounded as shown. When base material is metal, the corners and borders shall be rounded.

SIZE	A	B	C	D	E	F	G	H	I	J	K	L	M	N	O	P	Q	R	S	T	U	V	W	X	Y	Z	Area sq. ft.
1	24		1 1/8	3/8	1/2	20	2	4	10	8																	4.0
2S	30		1 3/8	1/2	5/8	25	2 1/2	5	12 1/2	10																	6.25
2M	30		1 3/8	1/2	5/8	25	2 1/2	5	12 1/2	10																	6.25
3	36		1 5/8	5/8	3/4	30	3	6	15	12																	9.0
4	48		2 1/4	3/4	1	40	4	8	20	16																	16.0
5																											

STANDARD SIGN
W2-2

WISCONSIN DEPT OF TRANSPORTATION

APPROVED Matthew R Rauch
for State Traffic Engineer

DATE 5/29/12 PLATE NO. W2-2.6

PROJECT NO:	HWY:	COUNTY:		SHEET NO: 141	E

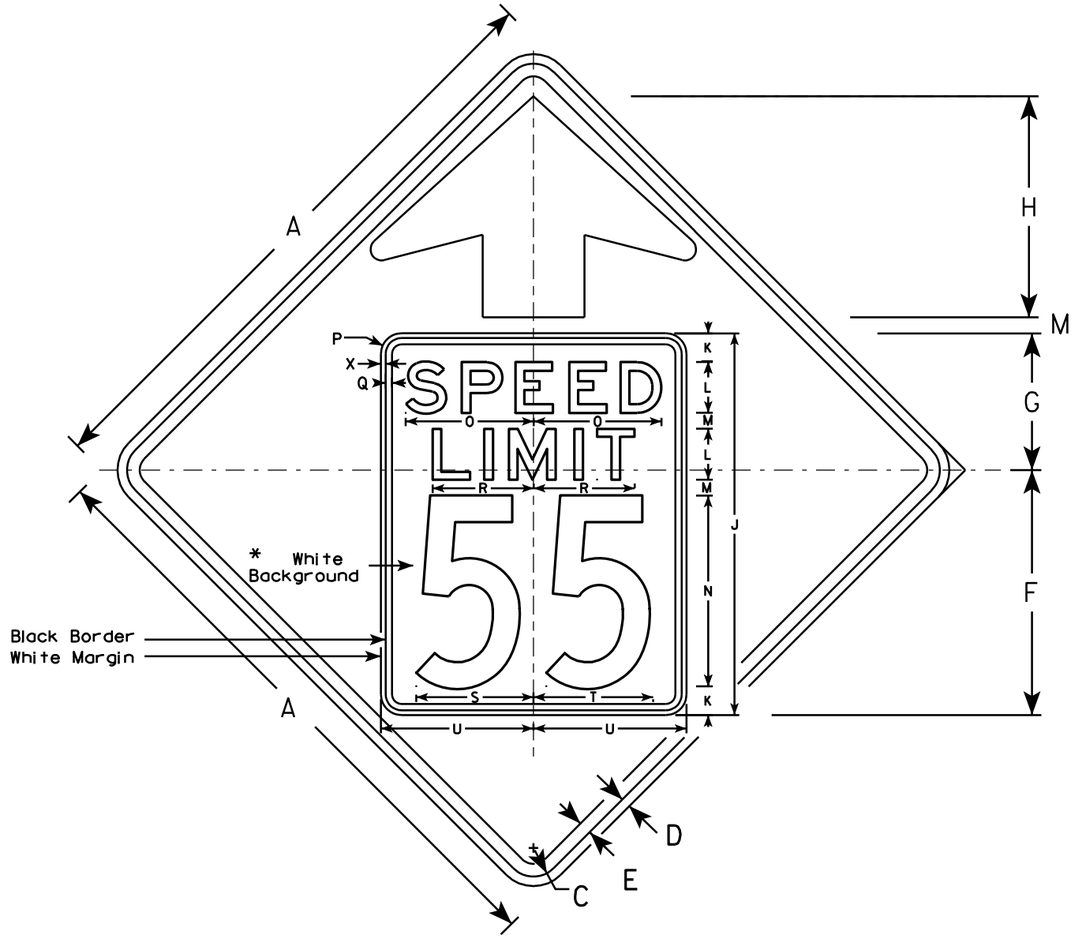

W3-5

NOTES

1. Sign is Type II - Type F Reflective - reference WIS DOT Standard Specification for HIGHWAY and STRUCTURE CONSTRUCTION latest edition.
2. Color: *
   Background - YELLOW*
   Message - BLACK
3. Message Series - C for numbers Series E for wording
4. Substitute appropriate numerals and optically adjust spacing to achieve proper balance

*Speed Limit Sign shall have a White Background

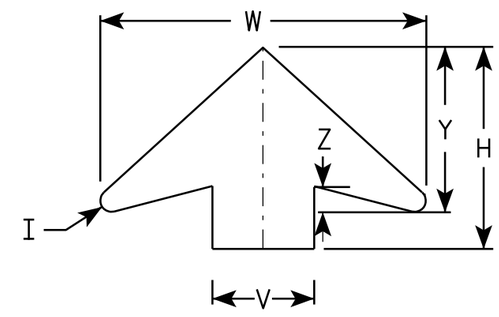

ARROW DETAIL

SIZE	A	B	C	D	E	F	G	H	I	J	K	L	M	N	O	P	Q	R	S	T	U	V	W	X	Y	Z	Area sq. ft.
1																											
2S	36		1 5/8	5/8	3/4	14 1/2	9 1/2	11 1/2	5/8	24	2	3	1	12	7 1/8	1 1/2	3/8	5 3/4	7 1/4	7 1/8	9	6	19 1/4	3/8	9 3/4	1 5/8	9.0
2M	36		1 5/8	5/8	3/4	14 1/2	9 1/2	11 1/2	5/8	24	2	3	1	12	7 1/8	1 1/2	3/8	5 3/4	7 1/4	7 1/8	9	6	19 1/4	3/8	9 3/4	1 5/8	9.0
3	36		1 5/8	5/8	3/4	14 1/2	9 1/2	11 1/2	5/8	24	2	3	1	12	7 1/8	1 1/2	3/8	5 3/4	7 1/4	7 1/8	9	6	19 1/4	3/8	9 3/4	1 5/8	9.0
4	48		2 1/4	3/4	1	19 1/4	10 3/4	17 3/8	7/8	30	2 1/4	4	1 1/4	15	10	1 5/8	1/2	8	9 1/4	9 3/8	12	8	25 5/8	3/8	13	2	16.0
5	48		2 1/4	3/4	1	19 1/4	10 3/4	17 3/8	7/8	30	2 1/4	4	1 1/4	15	10	1 5/8	1/2	8	9 1/4	9 3/8	12	8	25 5/8	3/8	13	2	16.0

STANDARD SIGN
W3-5

WISCONSIN DEPT OF TRANSPORTATION

APPROVED Matthew R Rauch
for State Traffic Engineer

DATE 5/29/12 PLATE NO. W3-5.5

PROJECT NO:

SHEET NO: 142 E

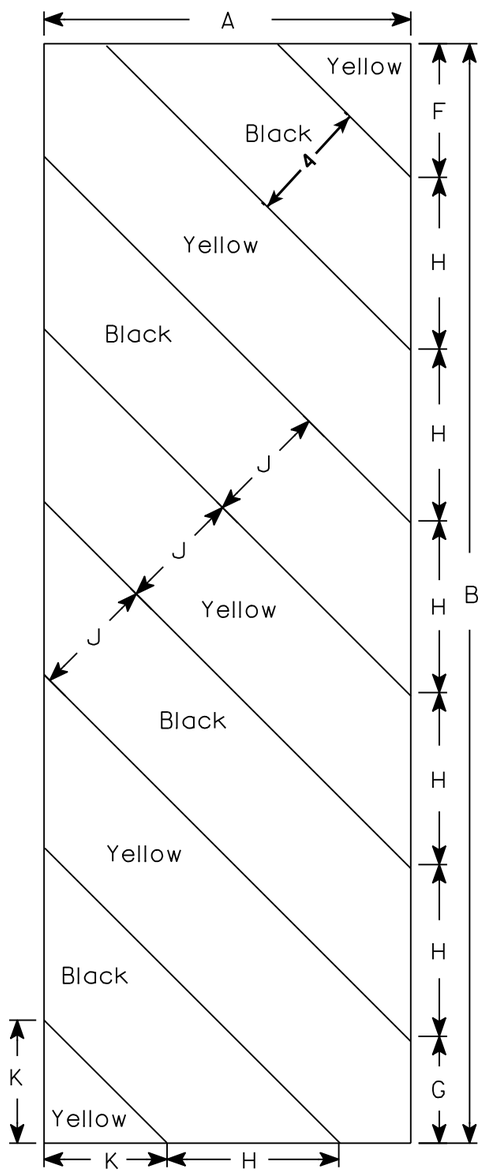

W5-52L

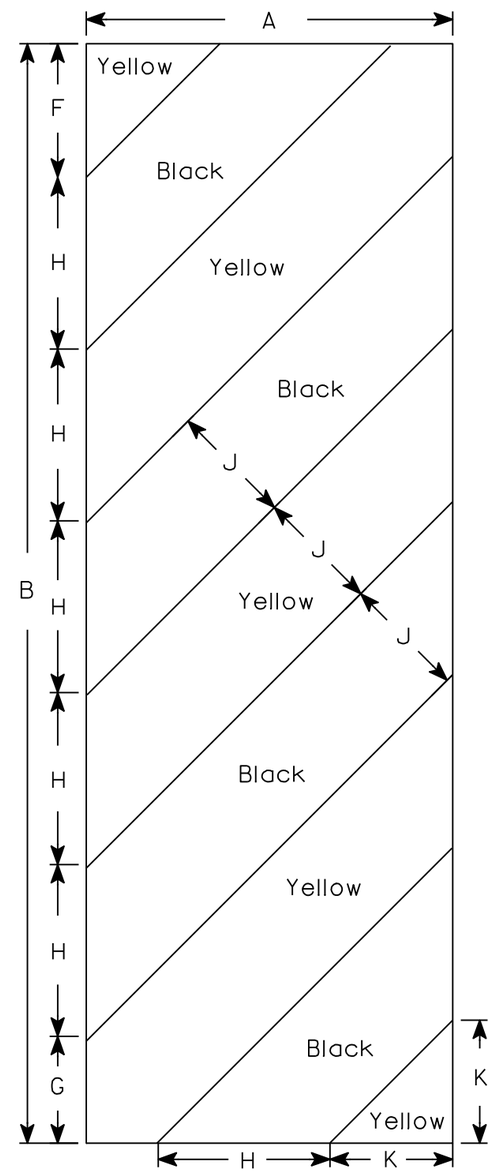

W5-52R

NOTES

1. Sign is Type II - Type F Reflective - reference WIS DOT Standard Specification for HIGHWAY and STRUCTURE CONSTRUCTION latest edition.
2. Color:
   Background - Yellow
   Message - Black
3. Corners may be square or rounded when base material is plywood but borders shall be rounded as shown. When base material is metal, the corners and borders shall be rounded.
4. Alternate colors of stripes as shown.

SIZE	A	B	C	D	E	F	G	H	I	J	K	L	M	N	O	P	Q	R	S	T	U	V	W	X	Y	Z	Area sq. ft.
1																											
2S	12	36				4 3/8	3 1/2	5 5/8	45°	4	4																3.0
2M	12	36				4 3/8	3 1/2	5 5/8	45°	4	4																3.0
3	18	54				6	5 1/2	8 1/2	45°	6	6 9/16																6.75
4																											
5																											

STANDARD SIGN
W5-52L & W5-52R

WISCONSIN DEPT OF TRANSPORTATION

APPROVED Matthew R Rauch
for State Traffic Engineer

DATE 5/29/12 PLATE NO. W5-52.9

PROJECT NO: | HWY: | COUNTY: | SHEET NO: 143 | E

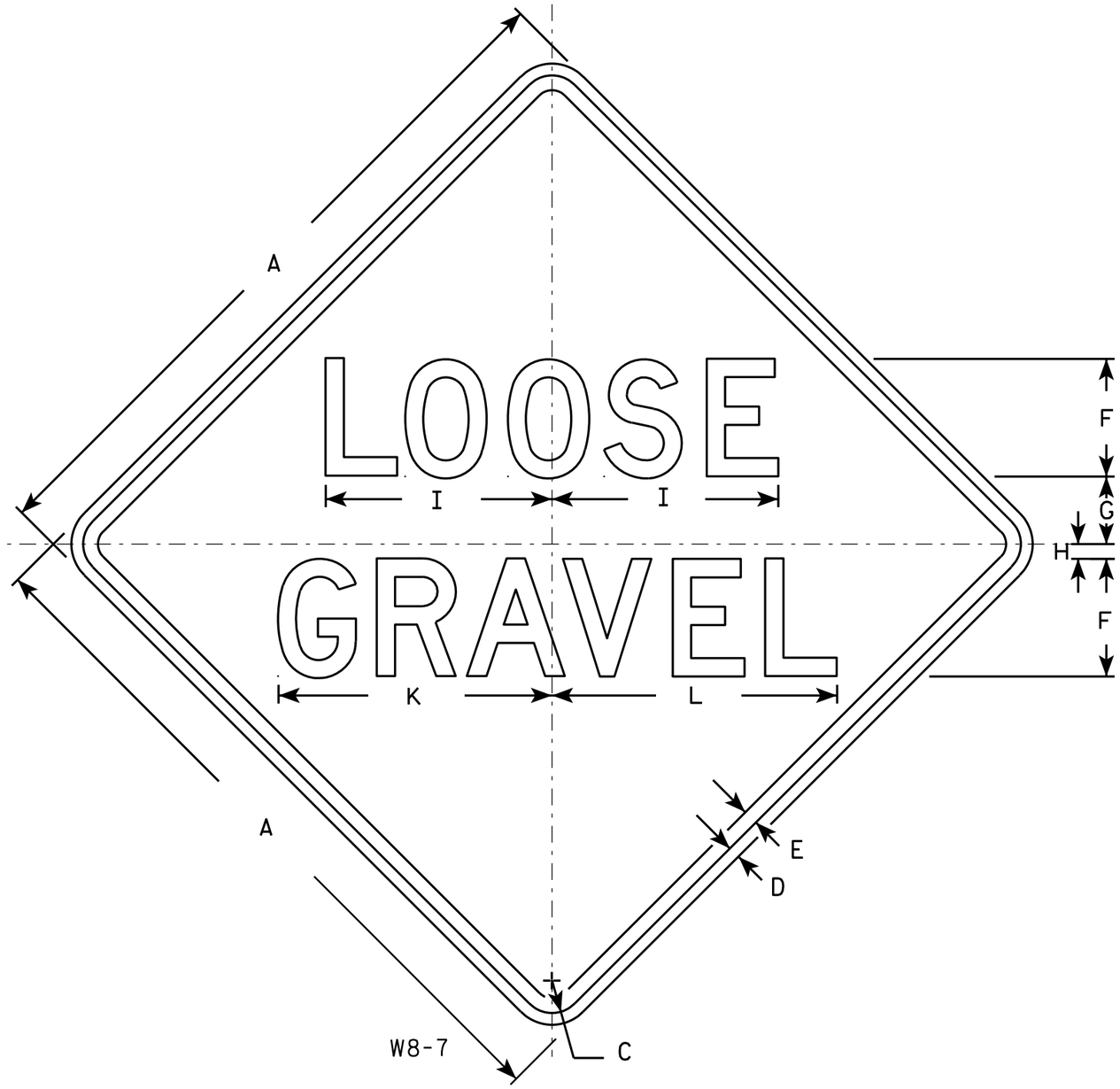

NOTES

1. Sign is Type II - Type F Reflective - reference WIS DOT Standard Specification for HIGHWAY and STRUCTURE CONSTRUCTION latest edition.
2. Color:
   Background - Orange
   Message - Black
3. Message Series - D
4. Corners may be square or rounded when base material is plywood but borders shall be rounded as shown. When base material is metal, the corners and borders shall be rounded.

SIZE	A	B	C	D	E	F	G	H	I	J	K	L	M	N	O	P	Q	R	S	T	U	V	W	X	Y	Z	Area sq. ft.
1	24		1 1/8	3/8	1/2	4	2 3/4	1/2	7 3/4		9 1/4	9 3/4															4.0
2S	36		1 5/8	5/8	3/4	6	4 1/8	3/4	11 5/8		14	14 1/2															9.0
2M	36		1 5/8	5/8	3/4	6	4 1/8	3/4	11 5/8		14	14 1/2															9.0
3	36		1 5/8	5/8	3/4	6	4 1/8	3/4	11 5/8		14	14 1/2															9.0
4	36		1 5/8	5/8	3/4	6	4 1/8	3/4	11 5/8		14	14 1/2															9.0
5	48		2 1/4	3/4	1	8	5 1/2	1	15 1/2		18 5/8	19 3/8															16.0

STANDARD SIGN
W8-7

WISCONSIN DEPT OF TRANSPORTATION

APPROVED Matthew R Rauch
for State Traffic Engineer
DATE 5/30/12 PLATE NO. W8-7.7

PROJECT NO:	HWY:	COUNTY:		SHEET NO: 144	E

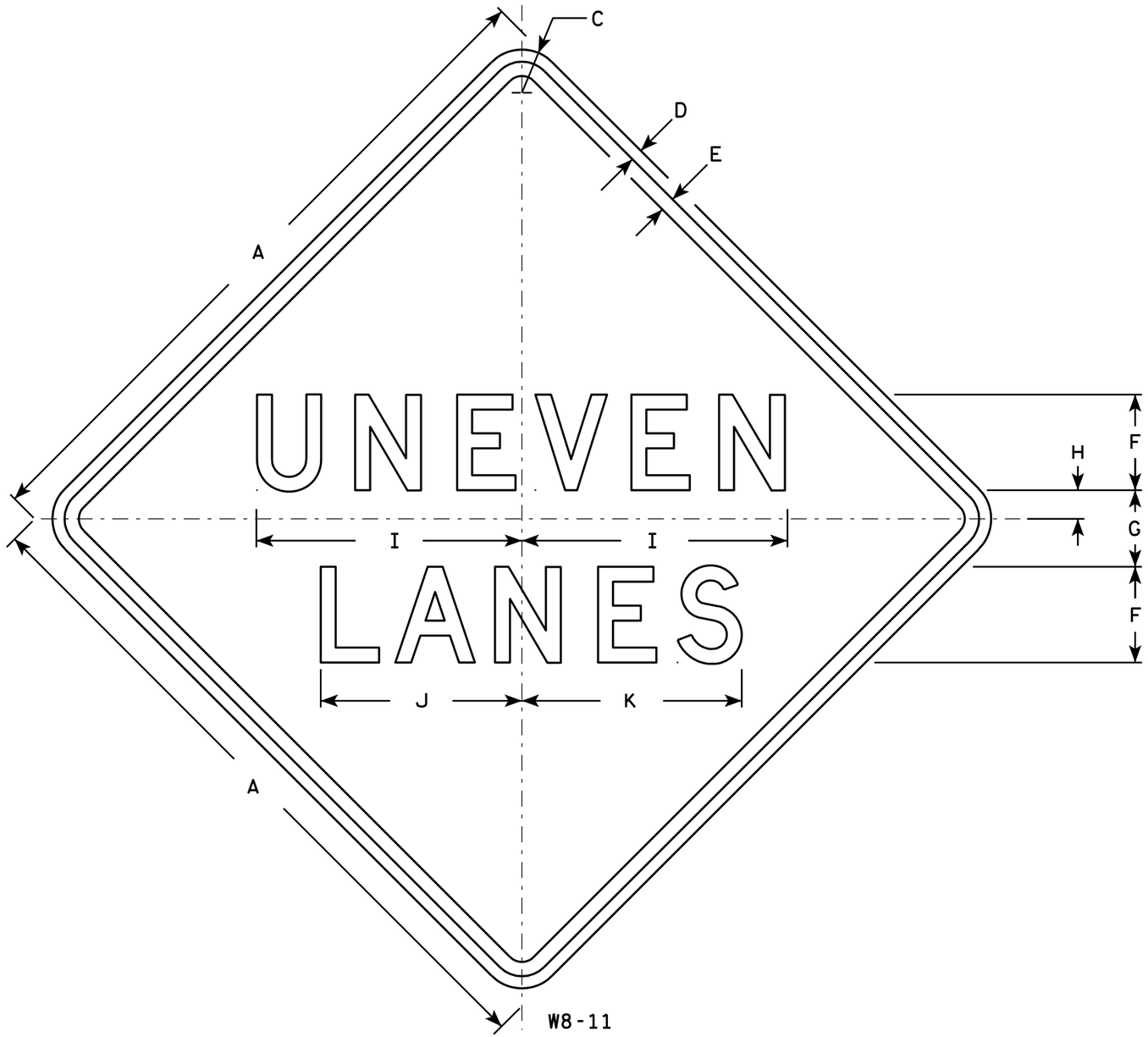

NOTES

1. Sign is Type II - Type F Reflective - reference WIS DOT Standard Specification for HIGHWAY and STRUCTURE CONSTRUCTION latest edition.
2. Color:
   Background - Orange
   Message - Black
3. Message Series - D
4. Corners may be square or rounded when base material is plywood but borders shall be rounded as shown. When base material is metal, the corners and borders shall be rounded.

SIZE	A	B	C	D	E	F	G	H	I	J	K	L	M	N	O	P	Q	R	S	T	U	V	W	X	Y	Z	Area sq. ft.
1																											
2S	36		1 5/8	5/8	3/4	5	4	1 1/2	13 7/8	10 1/2	11 1/2																9.0
2M	36		1 5/8	5/8	3/4	5	4	1 1/2	13 7/8	10 1/2	11 1/2																9.0
3																											
4	36		1 5/8	5/8	3/4	5	4	1 1/2	13 7/8	10 1/2	11 1/2																9.0
5	48		2 1/4	3/4	1	7	5	2	18 1/2	14	15 3/8																16.0

STANDARD SIGN
W8-11

WISCONSIN DEPT OF TRANSPORTATION

APPROVED Matthew R Rauch
for State Traffic Engineer
DATE 3/22/11 PLATE NO. W8-11.4

PROJECT NO: | HWY: | COUNTY: | SHEET NO: 145 | E

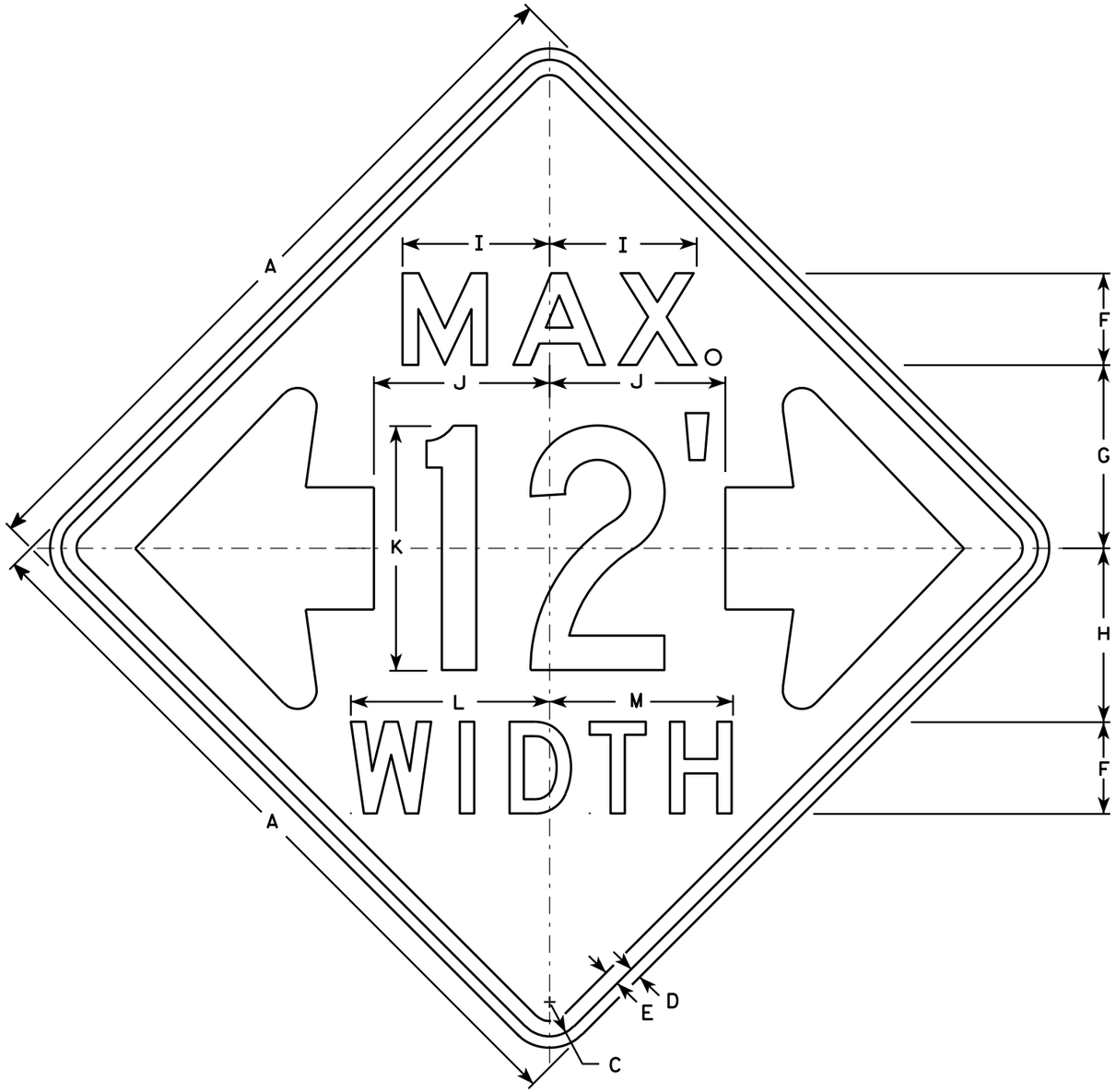

W12-52

NOTES

1. Sign is Type II - Type F Reflective - reference WIS DOT Standard Specification for HIGHWAY and STRUCTURE CONSTRUCTION latest edition.
2. Color:
   Background - Orange
   Message - Black
3. Message Series - See note 5
4. Corners may be square or rounded when base material is plywood but borders shall be rounded as shown. When base material is metal, the corners and borders shall be rounded.
5. The top line is series E, the numerals are series C, and the bottom line is series D.
6. Substitute appropriate numerals and adjust spacing as required.

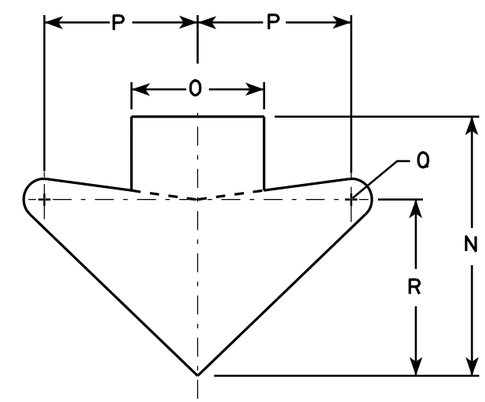

ARROW DETAIL

SIZE	A	B	C	D	E	F	G	H	I	J	K	L	M	N	O	P	Q	R	S	T	U	V	W	X	Y	Z	Area sq. ft.
1																											
2S	48		2 1/4	3/4	1	6	12	11 3/8	9 5/8	11 1/2	16	13	12	15 5/8	8	9 1/4	1 1/4	10 5/8									16.0
2M	48		2 1/4	3/4	1	6	12	11 3/8	9 5/8	11 1/2	16	13	12	15 5/8	8	9 1/4	1 1/4	10 5/8									16.0
3																											
4																											
5																											

STANDARD SIGN
W12-52

WISCONSIN DEPT OF TRANSPORTATION

APPROVED Matthew R Rauch
for State Traffic Engineer

DATE 3/16/11 PLATE NO. W12-52.7

PROJECT NO: | HWY: | COUNTY: | SHEET NO: 146 | E

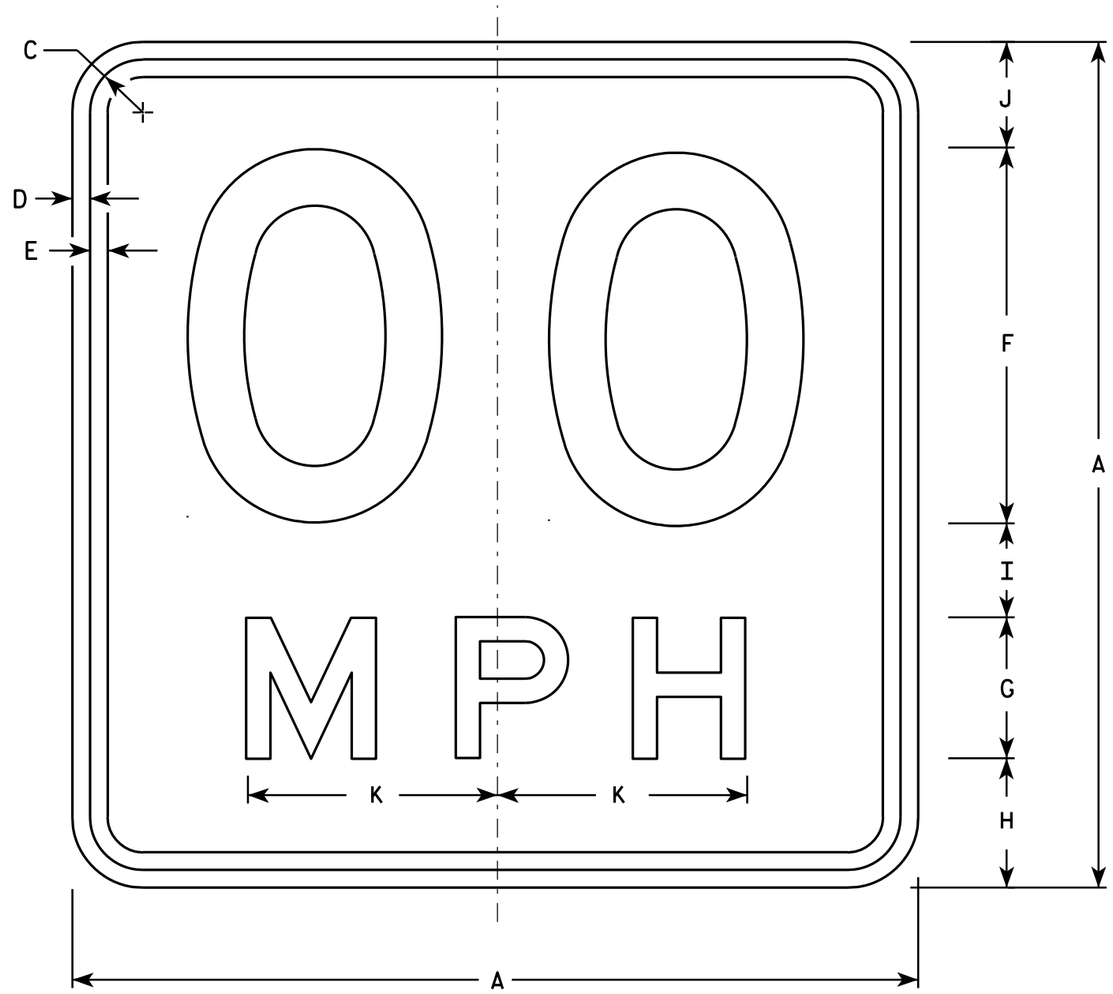

W13-1

* For 30" x 30" Warning Signs, use 18" x 18" W13-1 signs.
For 36" x 36" Warning Signs, use 24" x 24" W13-1 signs.

NOTES

1. Sign is Type II - Type F Reflective - reference WIS DOT Standard Specification for HIGHWAY and STRUCTURE CONSTRUCTION latest edition.
2. Color:
   Background - Yellow
   Message - Black
3. Message Series - See Note 6
4. Corners may be square or rounded when base material is plywood but borders shall be rounded as shown. When base material is metal, the corners and borders shall be rounded.
5. Substitute appropriate numerals and optically space about centerline to achieve proper balance.
6. Line 1 is Series D
   Line 2 is Series E

SIZE	A	B	C	D	E	F	G	H	I	J	K	L	M	N	O	P	Q	R	S	T	U	V	W	X	Y	Z	Area sq. ft.
1	18		1 1/8	3/8	3/8	8	3	2 3/4	2	2 1/4	5 3/8																2.25
* 2S	18		1 1/8	3/8	3/8	8	3	2 3/4	2	2 1/4	5 3/8																2.25
* 2M	18		1 1/8	3/8	3/8	8	3	2 3/4	2	2 1/4	5 3/8																2.25
3	24		1 1/8	3/8	1/2	10	4	4	2 3/4	3 1/4	6 5/8																4.00
4	36		1 5/8	5/8	3/4	16	6	5 1/2	4	4 1/2	10 5/8																9.00
5	36		1 5/8	5/8	3/4	16	6	5 1/2	4	4 1/2	10 5/8																9.00

STANDARD SIGN
W13-1

WISCONSIN DEPT OF TRANSPORTATION

APPROVED Matthew R Rauch
For State Traffic Engineer

DATE 5/31/12 PLATE NO. W13-1.16

PROJECT NO:	HWY:	COUNTY:		SHEET NO: 147	E

NOTES

1. Sign is Type II- Type F Reflective
2. Color:
   Background - Yellow
   Message - Black
3. Message Series - Lines 1 and 2 are Series D.
   Line 3 is series C.
4. Corners and borders shall be rounded on all base materials for this sign.

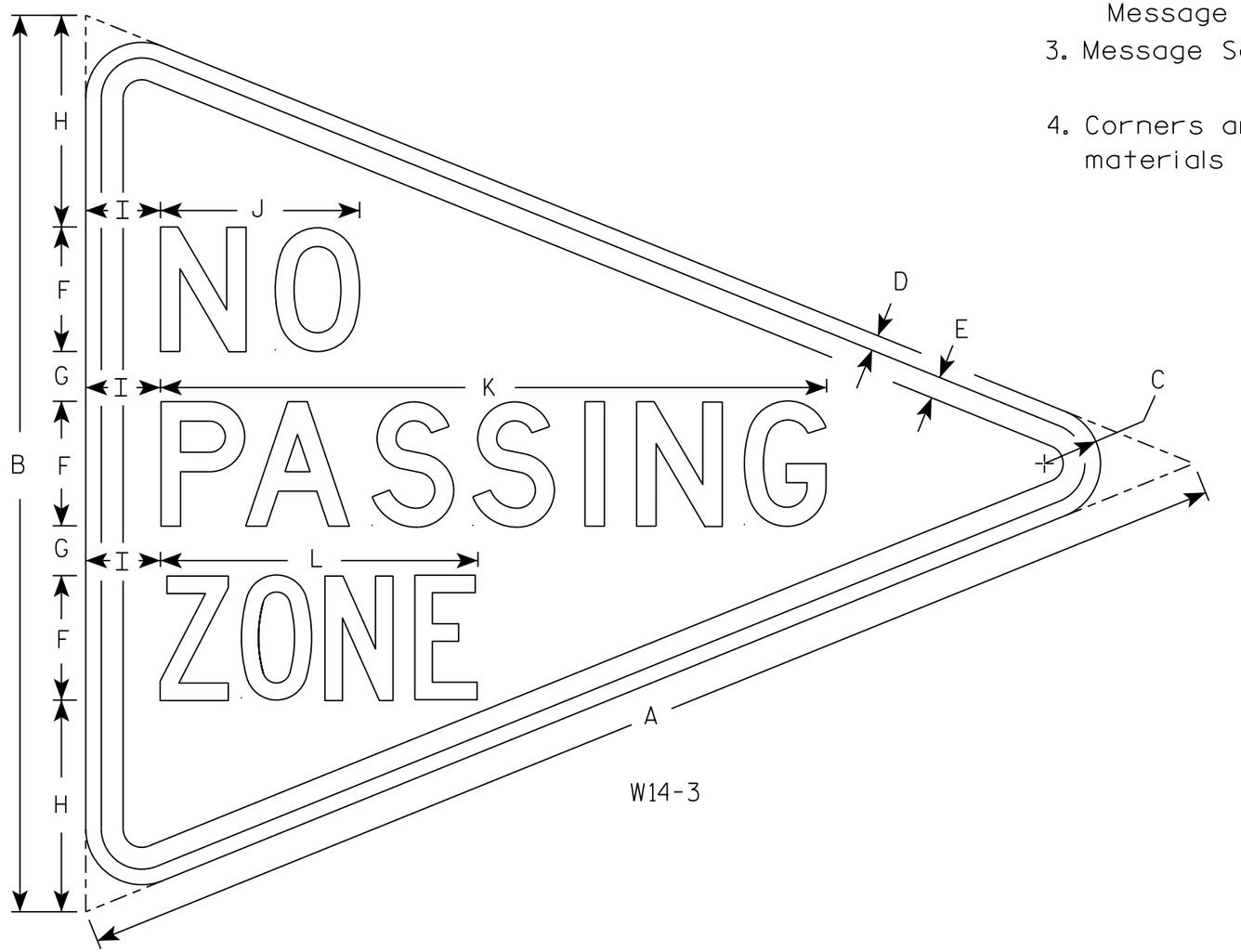

W14-3

SIZE	A	B	C	D	E	F	G	H	I	J	K	L	M	N	O	P	Q	R	S	T	U	V	W	X	Y	Z	Area sq. ft.
1																											
2S	48	36	2 1/4	5/8	7/8	5	2	8 1/2	3	8	26 3/4	12 3/4															5.56
2M																											
3																											
4																											
5																											

STANDARD SIGN
W14-3

WISCONSIN DEPT OF TRANSPORTATION

APPROVED Matthew R Rauch
for State Traffic Engineer
DATE 3/21/17 PLATE NO. W14-3.10

PROJECT NO: | HWY: | COUNTY: | SHEET NO: 148 | E

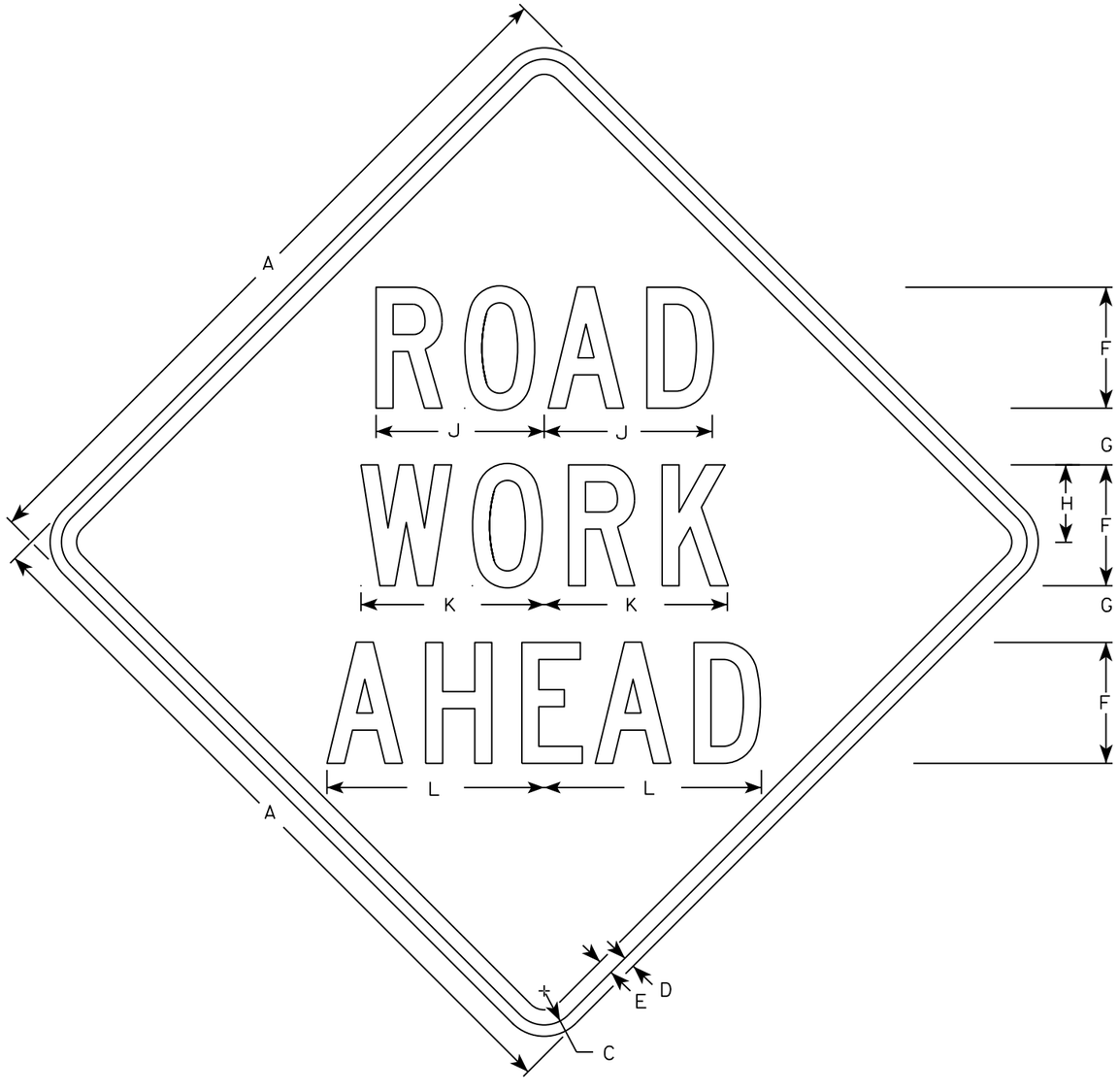

W20-1A

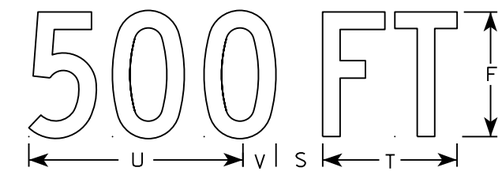

W20-1D

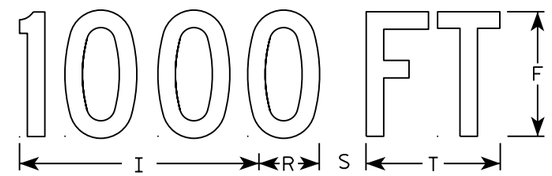

W20-1C

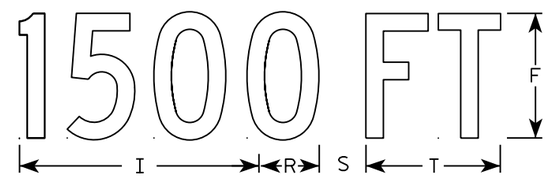

W20-1B

W20-1G

W20-1F

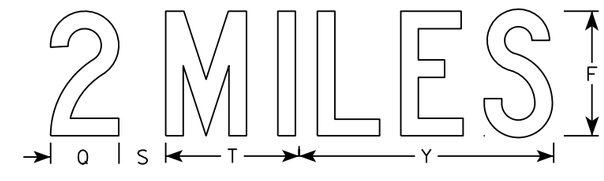

W20-1E

NOTES

1. Sign is Type II - Type F Reflective
2. Color:
   Background - Orange
   Message - Black
3. Message Series - C
4. Corners may be square or rounded when base material is plywood but borders shall be rounded as shown. When base material is metal, the corners and borders shall be rounded.

SIZE	A	B	C	D	E	F	G	H	I	J	K	L	M	N	O	P	Q	R	S	T	U	V	W	X	Y	Z	Area sq. ft.
1	36		1 3/8	1/2	5/8	5	2 5/8	3 1/4	10 1/8	7	7 5/8	8 7/8	1 1/8	4 1/2	3 1/2	9		2 1/2	2 1/4	5 5/8	9	1 3/8	8	1 3/4	10 3/4	6	9.0
2S	48		2 1/4	3/4	1	8	3 3/4	5 1/8	15 3/8	11 1/8	12 1/8	14 3/8	1 5/8	6 7/8	5 3/8	13 7/8	4 3/8	3 7/8	3	8 5/8	13 3/4	2 1/8	11 7/8	2 3/4	16 3/8	9	16.0
2M	48		2 1/4	3/4	1	8	3 3/4	5 1/8	15 3/8	11 1/8	12 1/8	14 3/8	1 5/8	6 7/8	5 3/8	13 7/8	4 3/8	3 7/8	3	8 5/8	13 3/4	2 1/8	11 7/8	2 3/4	16 3/8	9	16.0
3	48		2 1/4	3/4	1	8	3 3/4	5 1/8	15 3/8	11 1/8	12 1/8	14 3/8	1 5/8	6 7/8	5 3/8	13 7/8	4 3/8	3 7/8	3	8 5/8	13 3/4	2 1/8	11 7/8	2 3/4	16 3/8	9	16.0
4	48		2 1/4	3/4	1	8	3 3/4	5 1/8	15 3/8	11 1/8	12 1/8	14 3/8	1 5/8	6 7/8	5 3/8	13 7/8	4 3/8	3 7/8	3	8 5/8	13 3/4	2 1/8	11 7/8	2 3/4	16 3/8	9	16.0
5	48		2 1/4	3/4	1	8	3 3/4	5 1/8	15 3/8	11 1/8	12 1/8	14 3/8	1 5/8	6 7/8	5 3/8	13 7/8	4 3/8	3 7/8	3	8 5/8	13 3/4	2 1/8	11 7/8	2 3/4	16 3/8	9	16.0

STANDARD SIGN
W20-1A, B, C, D, F & G

WISCONSIN DEPT OF TRANSPORTATION

APPROVED Matthew R Rauch
for State Traffic Engineer

DATE 5/07/15 PLATE NO. W20-1.10

PROJECT NO:

SHEET NO: E

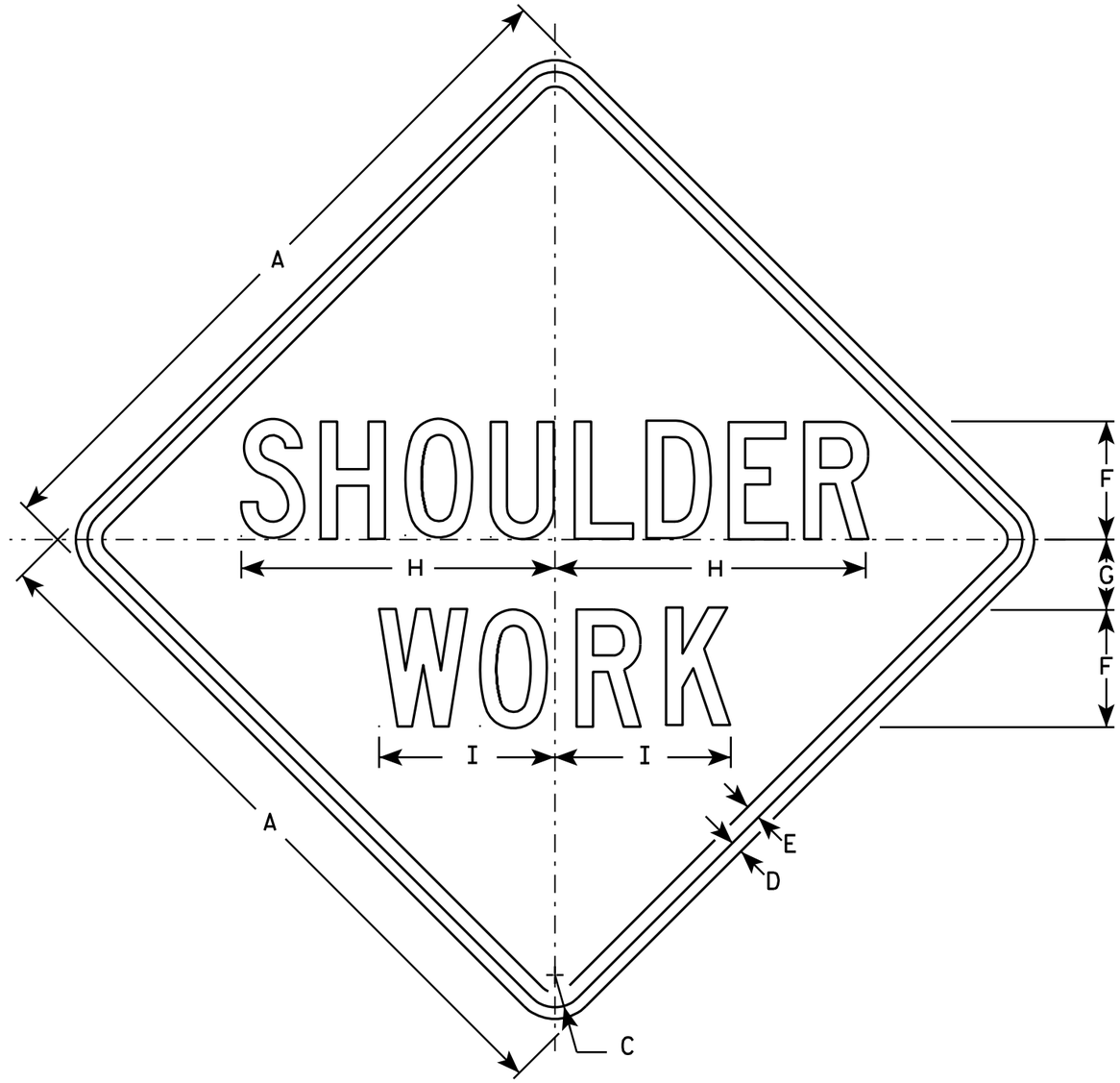

W21-5

NOTES

1. Sign is Type II - Type F Reflective - reference WIS DOT Standard Specification for HIGHWAY and STRUCTURE CONSTRUCTION latest edition.
2. Color:
   Background - Orange
   Message - Black
3. Message Series - C
4. Corners may be square or rounded when base material is plywood but borders shall be rounded as shown. When base material is metal, the corners and borders shall be rounded.

SIZE	A	B	C	D	E	F	G	H	I	J	K	L	M	N	O	P	Q	R	S	T	U	V	W	X	Y	Z	Area sq. ft.
1	24		1 1/8	3/8	1/2	4	2 1/2	10 3/4	6																		4.0
2S	30		1 3/8	1/2	5/8	5	3	13 3/8	7 1/2																		6.25
2M	30		1 3/8	1/2	5/8	5	3	13 3/8	7 1/2																		6.25
3	36		1 5/8	5/8	3/4	6	3 1/2	16	9																		9.0
4	48		2 1/4	3/4	1	8	5	21 3/8	11 1/4																		16.0
5	48		2 1/4	3/4	1	8	5	21 3/8	11 1/4																		16.0

STANDARD SIGN
W21-5

WISCONSIN DEPT OF TRANSPORTATION

APPROVED Matthew R Rauch
for State Traffic Engineer

DATE 3/21/11 PLATE NO. W21-5.5

PROJECT NO:	HWY:	COUNTY:		SHEET NO: 150	E

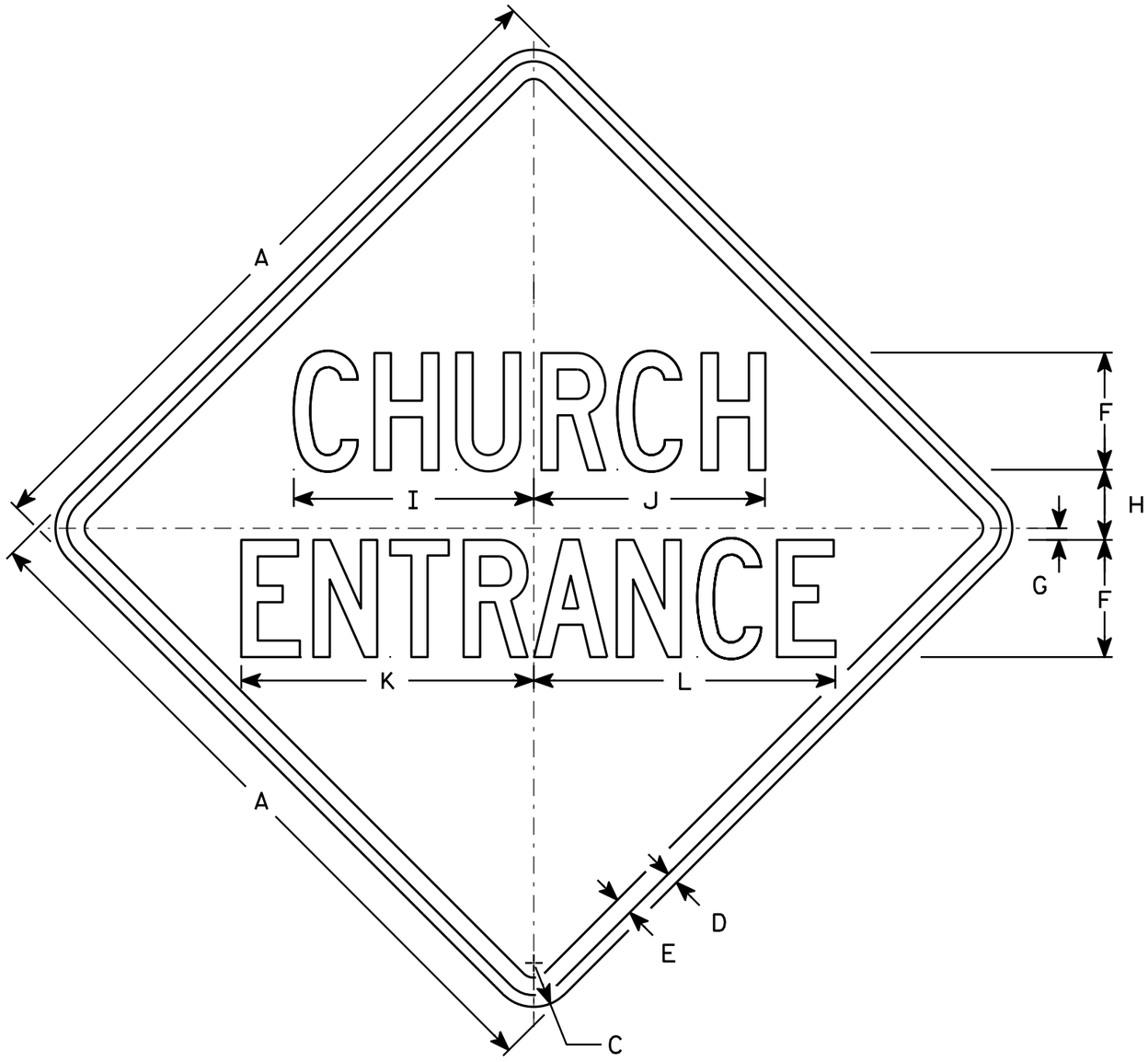

W54-58

NOTES

1. Sign is Type II - Type F Reflective - reference WIS DOT Standard Specification for HIGHWAY and STRUCTURE CONSTRUCTION latest edition.
2. Color:
   Background - Yellow
   Message - Black
3. Message Series - C
4. Corners may be square or rounded when base material is plywood but borders shall be rounded as shown. When base material is metal, the corners and borders shall be rounded.

SIZE	A	B	C	D	E	F	G	H	I	J	K	L	M	N	O	P	Q	R	S	T	U	V	W	X	Y	Z	Area sq. ft.
1																											
2S	30		1 3/8	1/2	5/8	5	1/2	3	10 1/4	9 7/8	12 1/2	12 7/8															6.25
2M	36		1 5/8	5/8	3/4	6	5/8	3 5/8	12 1/4	11 7/8	15	15 3/8															9.00
3	36		1 5/8	5/8	3/4	6	5/8	3 5/8	12 1/4	11 7/8	15	15 3/8															9.00
4																											
5																											

STANDARD SIGN
W54-58

WISCONSIN DEPT OF TRANSPORTATION

APPROVED Matthew R Rauch
for State Traffic Engineer

DATE 3/13/13 PLATE NO. W54-58.8

PROJECT NO: | HWY: | COUNTY: | SHEET NO: 151 | E

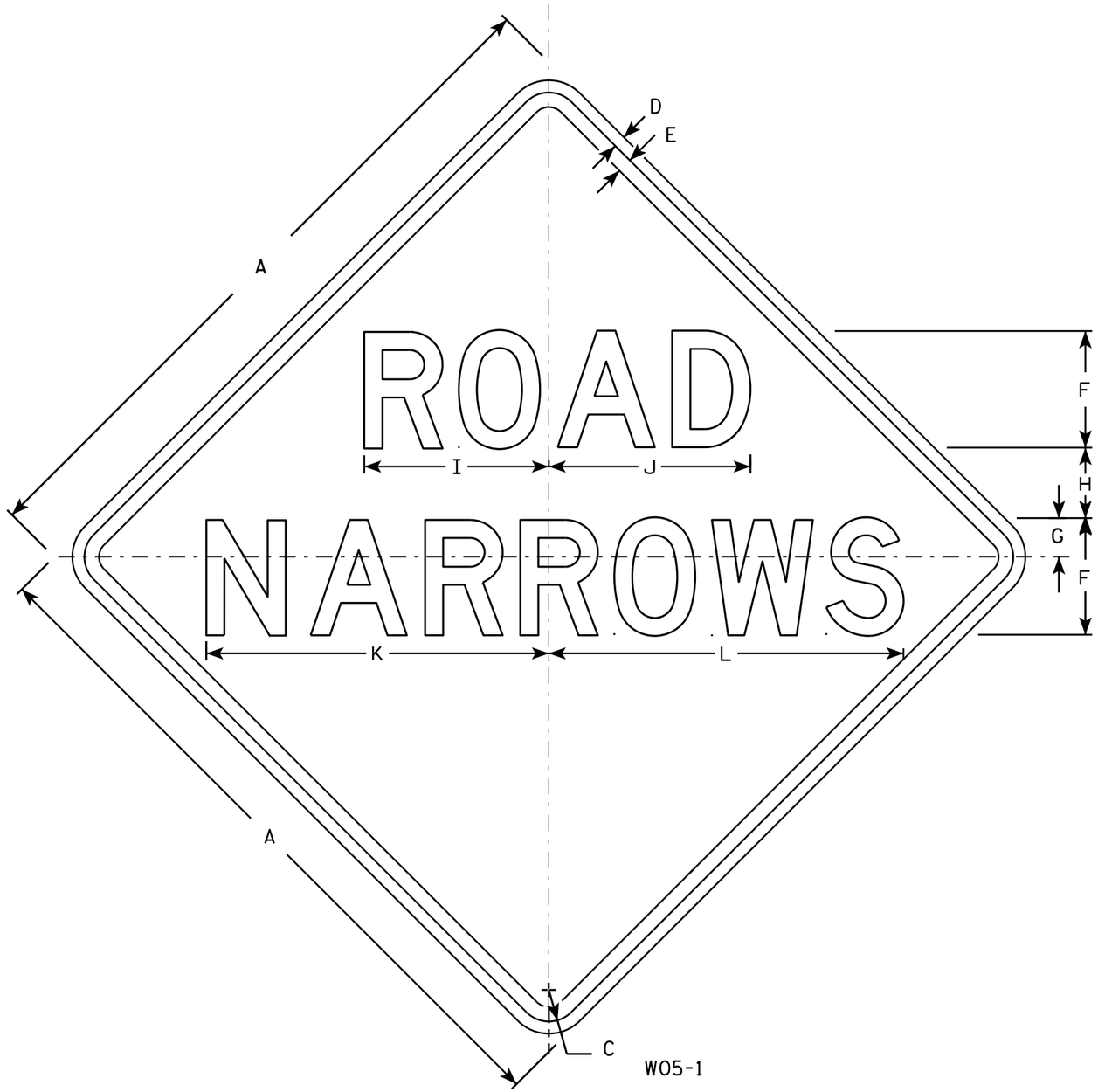

W05-1

NOTES

1. Sign is Type II - Type F Reflective - reference WIS DOT Standard Specification for HIGHWAY and STRUCTURE CONSTRUCTION latest edition.
2. Color:
   Background - Orange
   Message - Black
3. Message Series - D
4. Corners may be square or rounded when base material is plywood but borders shall be rounded as shown. When base material is metal, the corners and borders shall be rounded.

SIZE	A	B	C	D	E	F	G	H	I	J	K	L	M	N	O	P	Q	R	S	T	U	V	W	X	Y	Z	Area sq. ft.
1	36		1 5/8	5/8	3/4	6	2	3 1/2	9 1/2	10 3/8	17 5/8	18 1/4															9.0
2S	48		2 1/4	3/4	1	8	3	4	12 3/4	13 3/4	23 1/2	24 3/8															16.0
2M	48		2 1/4	3/4	1	8	3	4	12 3/4	13 3/4	23 1/2	24 3/8															16.0
3	48		2 1/4	3/4	1	8	3	4	12 3/4	13 3/4	23 1/2	24 3/8															16.0
4	48		2 1/4	3/4	1	8	3	4	12 3/4	13 3/4	23 1/2	24 3/8															16.0
5	48		2 1/4	3/4	1	8	3	4	12 3/4	13 3/4	23 1/2	24 3/8															16.0

STANDARD SIGN
W05-1

WISCONSIN DEPT OF TRANSPORTATION

APPROVED Matthew R Rauch
for State Traffic Engineer

DATE 11/20/13 PLATE NO. W05-1.1

PROJECT NO: | HWY: | COUNTY: | SHEET NO: E

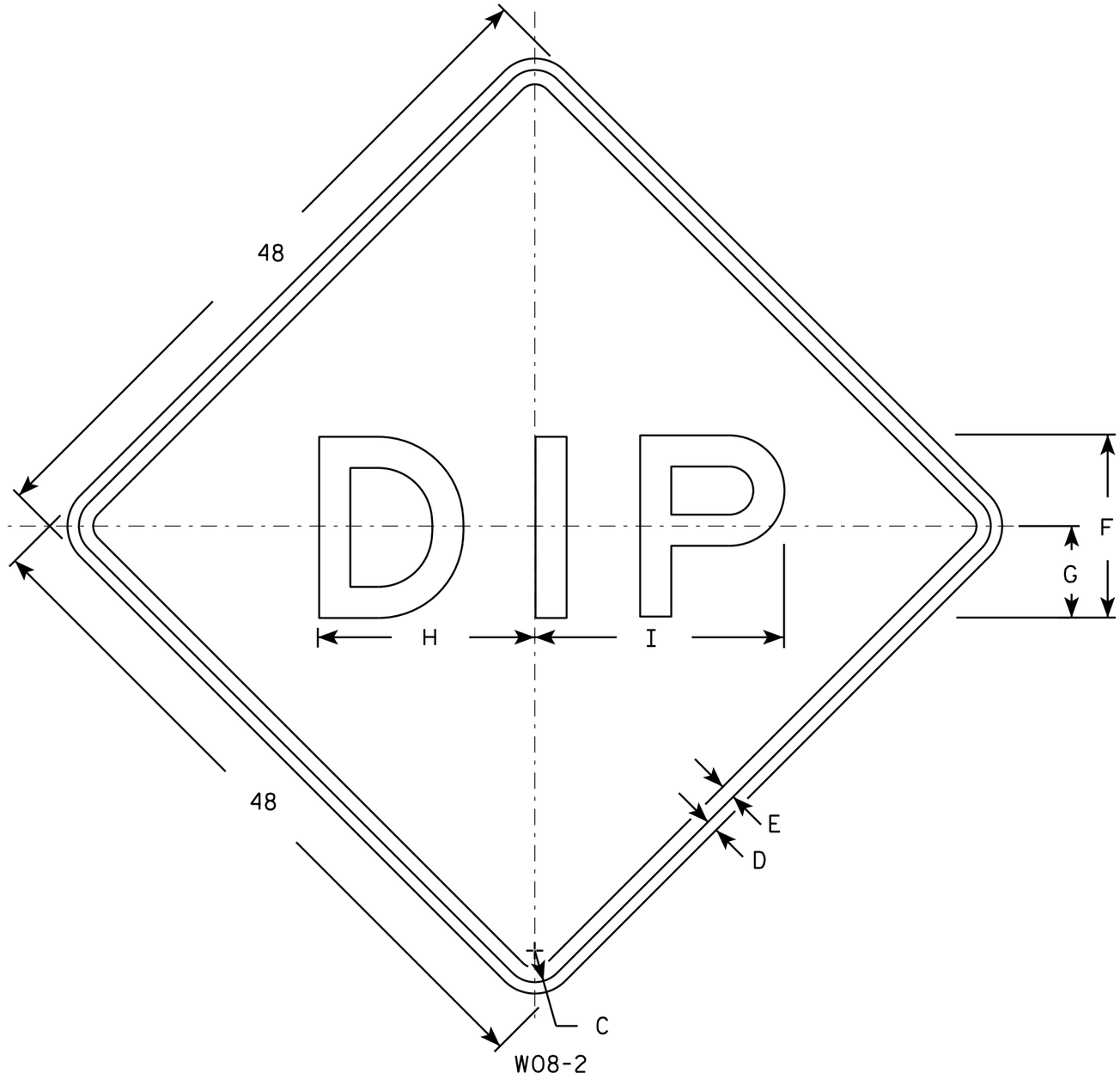

NOTES

1. Sign is Type II - Type F Reflective - reference WIS DOT Standard Specification for HIGHWAY and STRUCTURE CONSTRUCTION latest edition.
2. Color:
   Background - Yellow
   Message - Black
3. Message Series - E
4. Corners may be square or rounded when base material is plywood but borders shall be rounded as shown. When base material is metal, the corners and borders shall be rounded.

SIZE	A	B	C	D	E	F	G	H	I	J	K	L	M	N	O	P	Q	R	S	T	U	V	W	X	Y	Z	Area sq. ft.
1	36		1 5/8	5/8	3/4	10	5	11 7/8	13 1/2																		9.0
2S	48		2 1/4	3/4	1	12	6	14 1/4	16 1/4																		16.0
2M	48		2 1/4	3/4	1	12	6	14 1/4	16 1/4																		16.0
3	48		2 1/4	3/4	1	12	6	14 1/4	16 1/4																		16.0
4	48		2 1/4	3/4	1	12	6	14 1/4	16 1/4																		16.0
5	48		2 1/4	3/4	1	12	6	14 1/4	16 1/4																		16.0

STANDARD SIGN
W08-2

WISCONSIN DEPT OF TRANSPORTATION

APPROVED Matthew R Rauch
for State Traffic Engineer

DATE 11/20/13 PLATE 153 3-2.1

PROJECT NO:	HWY:	COUNTY:		SHEET NO:	E

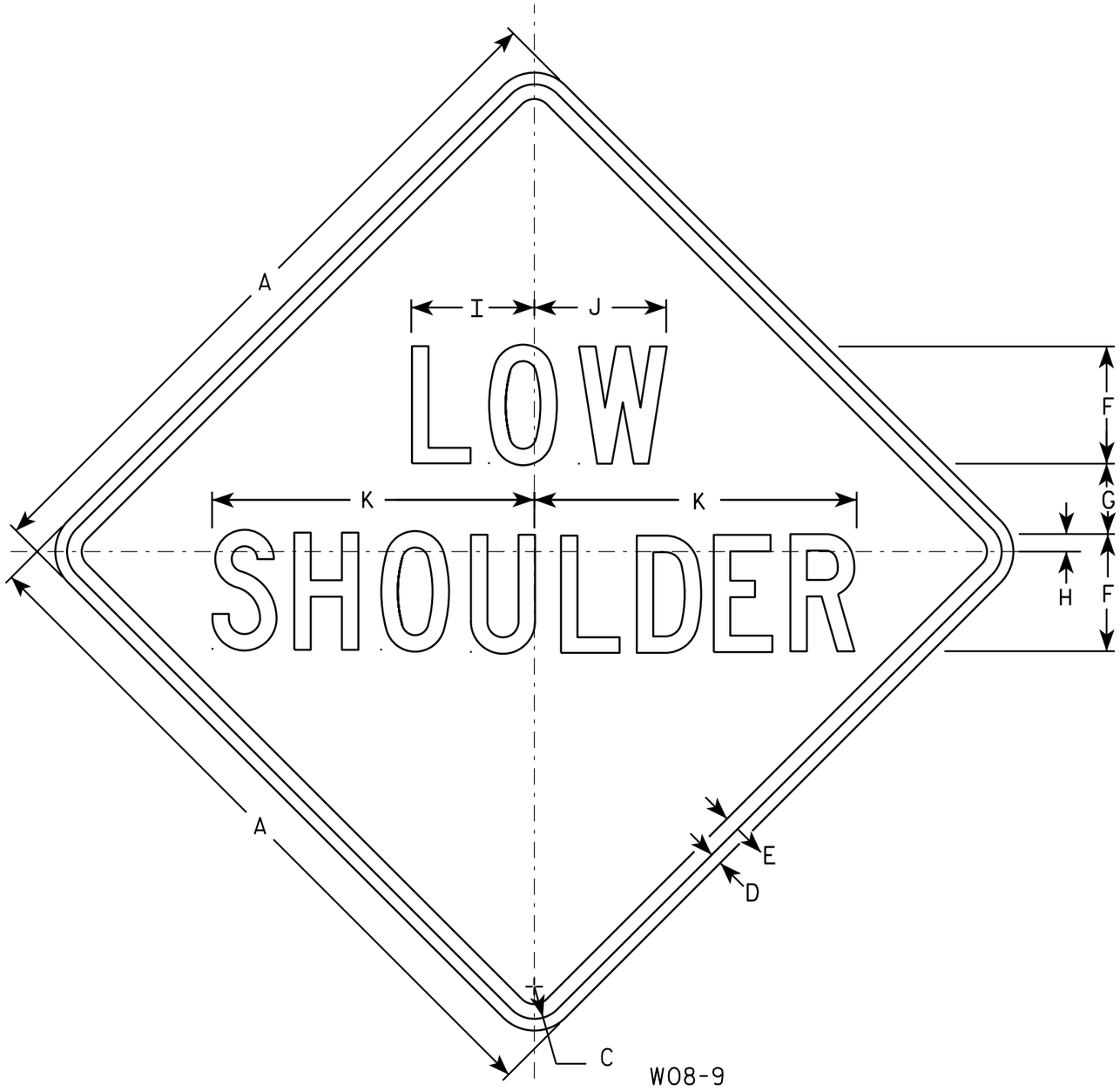

NOTES

1. Sign is Type II - Type F Reflective - reference WIS DOT Standard Specification for HIGHWAY and STRUCTURE CONSTRUCTION latest edition.
2. Color:
   Background - Orange
   Message - Black
3. Message Series - C
4. Corners may be square or rounded when base material is plywood but borders shall be rounded as shown. When base material is metal, the corners and borders shall be rounded.

SIZE	A	B	C	D	E	F	G	H	I	J	K	L	M	N	O	P	Q	R	S	T	U	V	W	X	Y	Z	Area sq. ft.
1	36		1 5/8	5/8	3/4	6	3 1/2	1	6 1/4	6 3/4	16 1/2																9.0
2S	48		2 1/4	3/4	1	8	5	1 1/4	8 1/4	9	21 7/8																16.0
2M	48		2 1/4	3/4	1	8	5	1 1/4	8 1/4	9	21 7/8																16.0
3	48		2 1/4	3/4	1	8	5	1 1/4	8 1/4	9	21 7/8																16.0
4	48		2 1/4	3/4	1	8	5	1 1/4	8 1/4	9	21 7/8																16.0
5	48		2 1/4	3/4	1	8	5	1 1/4	8 1/4	9	21 7/8																16.0

STANDARD SIGN
W08-9

WISCONSIN DEPT OF TRANSPORTATION

APPROVED Matthew R Rauch
for State Traffic Engineer

DATE 11/20/13 PLATE W08-9.1

PROJECT NO: | HWY: | COUNTY: | SHEET NO: | E

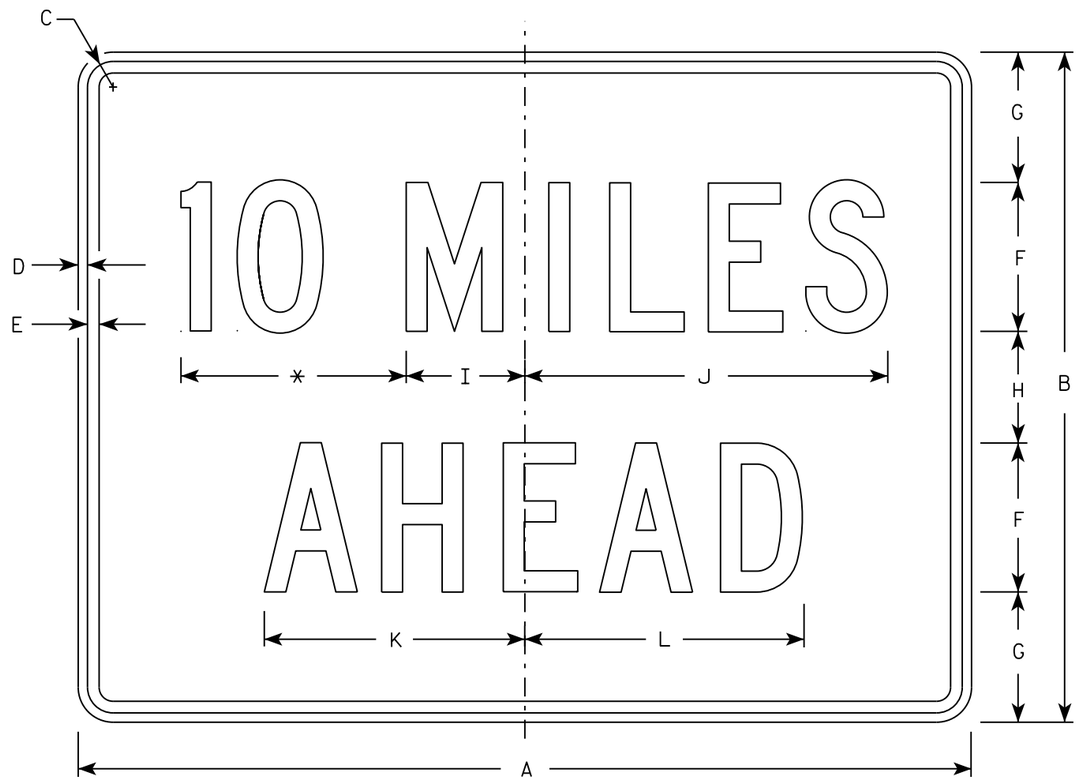

W057-52

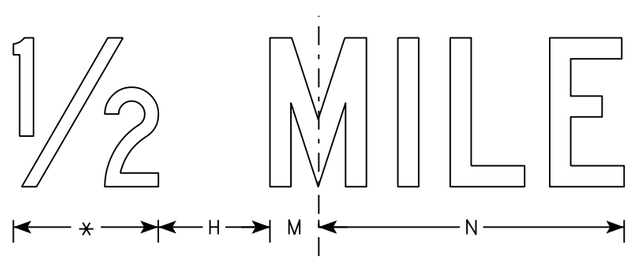

* See note 5

NOTES

1. Sign is Type II - Type F Reflective
2. Color:
   Background - Orange
   Message - Black
3. Message Series - C
4. Corners may be square or rounded when base material is plywood but borders shall be rounded as shown. When base material is metal, the corners and borders shall be rounded.
5. Substitute appropriate numerals to the nearest quarter mile and optically adjust spacing to achieve proper balance.

SIZE	A	B	C	D	E	F	G	H	I	J	K	L	M	N	O	P	Q	R	S	T	U	V	W	X	Y	Z	Area sq. ft.
1	36	24	1 1/8	3/8	1/2	6	4 1/2	3	4 3/4	14 5/8	10 5/8	11 3/8	2	12													6.0
2S	48	36	1 3/8	1/2	5/8	8	7	6	6 3/8	19 1/2	14	15	2 3/4	16 3/8													12.0
2M	48	36	1 3/8	1/2	5/8	8	7	6	6 3/8	19 1/2	14	15	2 3/4	16 3/8													12.0
3	48	36	1 3/8	1/2	5/8	8	7	6	6 3/8	19 1/2	14	15	2 3/4	16 3/8													12.0
4	48	36	1 3/8	1/2	5/8	8	7	6	6 3/8	19 1/2	14	15	2 3/4	16 3/8													12.0
5	48	36	1 3/8	1/2	5/8	8	7	6	6 3/8	19 1/2	14	15	2 3/4	16 3/8													12.0

STANDARD SIGN
W057-52

WISCONSIN DEPT OF TRANSPORTATION

APPROVED Matthew R Rauch
for State Traffic Engineer

DATE 3/21/17 PLATE NO. W057-52.2

PROJECT NO: | HWY: | COUNTY: | SHEET NO: 155 | E

DIVISION 1

STATION	Distance	AREA (SF) Cut	AREA (SF) Fill	Incremental Vol (CY) (Unadjusted) Cut Note 1	Incremental Vol (CY) (Unadjusted) Fill Note 3	Cumulative Vol (CY) Cut 1.00 Note 1	Cumulative Vol (CY) Expanded Fill 1.30	Cumulative Vol (CY) Mass Ordinate Note 8
157+25	15725.00	0.00	0.00	0	0	0	0	0
157+29.54	4.54	0.00	0.00	0	0	0	0	0
157+29.56	0.02	7.13	7.03	0	0	0	0	0
157+50	20.44	6.40	8.44	5	6	5	8	-2
157+75	25.00	5.71	10.39	6	9	11	19	-8
158+00	25.00	4.67	14.56	5	12	16	34	-18
158+25	25.00	5.53	17.71	5	15	20	53	-33
158+50	25.00	5.22	18.30	5	17	25	75	-50
158+75	25.00	5.18	16.46	5	16	30	96	-66
159+00	25.00	6.78	11.39	6	13	36	113	-77
159+25	25.00	10.08	6.49	8	8	43	124	-80
159+50	25.00	11.25	6.05	10	6	53	131	-78
159+75	25.00	10.06	9.00	10	7	63	140	-77
160+00	25.00	8.78	9.32	9	8	72	151	-79
160+25	25.00	8.22	6.51	8	7	80	161	-81
160+50	25.00	9.51	4.28	8	5	88	167	-79
160+75	25.00	10.46	9.81	9	7	97	176	-78
161+00	25.00	11.60	5.34	10	7	107	185	-77
161+25	25.00	13.80	8.41	12	6	119	193	-74
161+50	25.00	11.27	8.33	12	8	131	203	-72
161+75	25.00	15.60	5.82	12	7	143	212	-68
162+00	25.00	15.50	3.92	14	5	158	217	-60
162+25	25.00	9.00	6.10	11	5	169	224	-55
162+50	25.00	5.16	13.29	7	9	175	235	-60
162+75	25.00	3.53	18.56	4	15	180	254	-75
163+00	25.00	4.88	14.01	4	15	183	274	-91
163+25	25.00	7.53	10.02	6	11	189	288	-99
163+50	25.00	10.63	9.86	8	9	198	300	-103
163+75	25.00	9.88	11.66	9	10	207	313	-106
164+00	25.00	10.74	13.77	10	12	217	329	-112
164+25	25.00	16.68	15.44	13	14	229	346	-117
164+50	25.00	16.16	16.48	15	15	244	365	-121
164+75	25.00	12.37	18.90	13	16	258	387	-129
165+00	25.00	7.24	21.95	9	19	267	411	-145
165+25	25.00	5.97	19.66	6	19	273	436	-163
165+50	25.00	7.44	13.61	6	15	279	456	-177
165+75	25.00	15.46	10.32	11	11	290	471	-181
166+00	25.00	12.50	6.97	13	8	303	481	-179
166+25	25.00	12.74	2.63	12	4	314	487	-173
166+50	25.00	17.26	0.78	14	2	328	489	-161
166+75	25.00	22.21	0.19	18	0	346	490	-143
166+79.03	4.03	21.99	0.16	3	0	350	490	-140
166+79.04	0.01	0.00	0.00	0	0	350	490	-140
167+00	20.96	0.00	0.00	0	0	350	490	-140
				350	377			

DIVISION 2

STATION	Distance	AREA (SF) Cut	AREA (SF) Fill	Incremental Vol (CY) (Unadjusted) Cut Note 1	Incremental Vol (CY) (Unadjusted) Fill Note 3	Cumulative Vol (CY) Cut 1.00 Note 1	Cumulative Vol (CY) Expanded Fill 1.30	Cumulative Vol (CY) Mass Ordinate Note 8
194+50	0.00	0.00	0.00	0	0	0	0	0
194+54.51	4.51	0.00	0.00	0	0	0	0	0
194+54.52	0.01	16.94	0.00	0	0	0	0	0
194+75	20.48	20.47	0.00	14	0	14	0	14
195+00	25.00	11.90	0.15	15	0	29	0	29
195+25	25.00	9.40	12.47	10	6	39	8	31
195+50	25.00	8.22	16.94	8	14	47	25	22
195+75	25.00	11.38	11.99	9	13	56	43	13
196+00	25.00	14.84	0.78	12	6	68	50	18
196+25	25.00	17.47	1.66	15	1	83	52	31
196+50	25.00	17.64	1.60	16	2	100	54	46
196+75	25.00	24.72	0.28	20	1	119	55	64
197+00	25.00	18.67	1.72	20	1	139	56	83
197+25	25.00	18.88	3.06	17	2	157	59	98
197+50	25.00	20.39	0.40	18	2	175	61	114
197+75	25.00	22.41	0.06	20	0	195	61	133
198+00	25.00	21.99	1.21	21	1	215	62	153
198+25	25.00	21.27	1.18	20	1	235	64	172
198+50	25.00	18.64	1.39	18	1	254	65	189
198+75	25.00	20.44	1.65	18	1	272	67	205
199+00	25.00	20.52	2.34	19	2	291	69	221
199+25	25.00	21.45	3.16	19	3	310	73	237
199+50	25.00	18.83	2.45	19	3	329	76	253
199+75	25.00	12.29	1.70	14	2	343	79	265
200+00	25.00	15.42	1.01	13	1	356	80	276
200+25	25.00	9.95	3.87	12	2	368	83	285
200+50	25.00	14.94	1.47	12	2	379	86	293
200+75	25.00	16.60	0.42	15	1	394	88	306
201+00	25.00	19.23	0.52	17	0	411	88	322
201+25	25.00	20.24	0.51	18	0	429	89	340
201+50	25.00	19.09	0.98	18	1	447	90	357
201+75	25.00	18.02	0.94	17	1	464	91	373
202+00	25.00	17.26	0.62	16	1	481	92	389
202+25	25.00	16.63	0.19	16	0	496	92	404
202+50	25.00	19.20	0.78	17	0	513	93	420
202+75	25.00	20.57	2.35	18	1	531	95	437
203+00	25.00	19.77	5.17	19	3	550	99	451
203+25	25.00	16.62	8.09	17	6	567	107	460
203+50	25.00	18.80	7.91	16	7	583	117	466
203+75	25.00	20.68	6.54	18	7	601	126	476
204+00	25.00	20.88	6.25	19	6	621	133	487
204+25	25.00	21.47	4.80	20	5	640	140	500
204+50	25.00	22.76	2.96	20	4	661	145	516
204+75	25.00	22.58	1.72	21	2	682	147	534
205+00	25.00	16.27	2.08	18	2	700	150	550

DIVISION 2

STATION	Distance	AREA (SF) Cut	AREA (SF) Fill	Incremental Vol (CY) (Unadjusted) Cut Note 1	Incremental Vol (CY) (Unadjusted) Fill Note 3	Cumulative Vol (CY) Cut 1.00 Note 1	Cumulative Vol (CY) Expanded Fill 1.30	Cumulative Vol (CY) Mass Ordinate Note 8
205+25	25.00	12.95	2.78	14	2	713	153	561
205+50	25.00	10.74	1.09	11	2	724	155	569
205+75	25.00	11.02	4.47	10	3	734	158	576
206+00	25.00	12.62	8.57	11	6	745	166	579
206+25	25.00	14.55	8.80	13	8	758	177	581
206+50	25.00	12.88	10.48	13	9	771	188	582
206+75	25.00	16.72	8.24	14	9	784	199	585
207+00	25.00	24.14	1.93	19	5	803	206	598
207+25	25.00	27.88	1.78	24	2	827	208	619
207+50	25.00	28.80	0.84	26	1	853	209	644
207+75	25.00	22.90	0.00	24	0	877	210	668
208+00	25.00	23.82	0.41	22	0	899	210	689
208+25	25.00	18.59	0.40	20	0	919	211	708
208+50	25.00	18.35	0.40	17	0	936	211	725
208+75	25.00	19.70	2.01	18	1	953	213	741
209+00	25.00	19.77	4.42	18	3	972	216	755
209+25	25.00	21.38	4.53	19	4	991	222	769
209+50	25.00	19.98	0.89	19	3	1,010	225	785
209+75	25.00	20.84	0.18	19	0	1,029	226	803
210+00	25.00	18.36	0.72	18	0	1,047	226	821
210+25	25.00	12.30	0.42	14	1	1,061	227	834
210+50	25.00	10.97	0.69	11	1	1,072	228	844
210+75	25.00	9.93	0.96	10	1	1,082	229	853
211+00	25.00	9.62	1.01	9	1	1,091	230	861
211+25	25.00	11.52	6.74	10	4	1,100	234	866
211+50	25.00	12.36	6.27	11	6	1,111	242	869
211+75	25.00	16.85	17.17	14	11	1,125	256	869
212+00	25.00	18.76	18.11	16	16	1,141	278	864
212+25	25.00	17.04	10.73	17	13	1,158	295	863
212+50	25.00	15.64	10.89	15	10	1,173	308	865
212+75	25.00	14.52	3.96	14	7	1,187	317	870
212+90.17	15.17	14.07	2.90	8	2	1,195	319	876
213+00	9.83	13.90	2.30	5	1	1,200	321	880
213+25	25.00	19.04	0.54	15	1	1,215	322	893
213+50	25.00	17.36	0.59	17	1	1,232	323	909
213+75	25.00	13.57	0.78	14	1	1,247	324	923
213+77.1	2.10	14.31	0.80	1	0	1,248	324	924
213+77.11	0.01	0.00	0.00	0	0	1,248	324	924
214+00	22.89	0.00	0.00	0	0	1,248	324	924
				1,248	249			

DIVISION 3

STATION	Distance	AREA (SF) Cut	AREA (SF) Fill	Incremental Vol (CY) (Unadjusted) Cut Note 1	Incremental Vol (CY) (Unadjusted) Fill Note 3	Cumulative Vol (CY) Cut 1.00 Note 1	Cumulative Vol (CY) Expanded Fill 1.30	Cumulative Vol (CY) Mass Ordinate Note 8
345+75	0.00	0.00	0.00	0	0	0	0	0
345+95.76	20.76	0.00	0.00	0	0	0	0	0
345+95.85	0.09	24.13	0.65	0	0	0	0	0
346+00	4.15	24.80	0.62	4	0	4	0	4
346+25	25.00	20.75	0.00	21	0	25	1	24
346+50	25.00	16.27	0.00	17	0	42	1	42
346+75	25.00	20.10	0.00	17	0	59	1	58
347+00	25.00	20.33	0.14	19	0	78	1	77
347+25	25.00	22.72	0.83	20	0	98	1	96
347+50	25.00	23.68	2.41	21	1	119	3	116
347+75	25.00	22.90	1.20	22	2	141	5	135
348+00	25.00	24.07	0.80	22	1	162	6	156
348+25	25.00	25.27	2.05	23	1	185	8	177
348+50	25.00	25.30	1.70	23	2	209	10	198
348+75	25.00	18.96	2.58	20	2	229	13	216
349+00	25.00	17.06	2.07	17	2	246	16	230
349+25	25.00	15.90	2.11	15	2	261	18	243
349+50	25.00	14.90	1.61	14	2	275	21	255
349+75	25.00	18.07	0.77	15	1	291	22	268
350+00	25.00	24.25	0.32	20	1	310	23	287
350+25	25.00	29.49	0.14	25	0	335	23	312
350+50	25.00	26.59	0.39	26	0	361	23	338
350+75	25.00	19.12	0.96	21	1	382	24	358
351+00	25.00	16.46	2.55	16	2	399	26	372
351+25	25.00	13.13	2.94	14	3	412	30	383
351+50	25.00	8.17	3.48	10	3	422	33	389
351+75	25.00	7.52	3.56	7	3	429	38	392
352+00	25.00	6.94	4.21	7	4	436	42	394
352+25	25.00	8.62	2.36	7	3	443	46	397
352+50	25.00	8.36	2.03	8	2	451	49	402
352+75	25.00	9.29	1.48	8	2	459	51	408
353+00	25.00	9.32	2.60	9	2	468	53	414
353+25	25.00	9.45	3.39	9	3	477	57	420
353+50	25.00	8.79	5.81	8	4	485	63	422
353+75	25.00	6.75	7.44	7	6	492	71	422
354+00	25.00	6.14	8.26	6	7	498	80	418
354+25	25.00	6.06	11.33	6	9	504	92	412
354+50	25.00	6.12	18.93	6	14	510	110	400
354+75	25.00	6.70	19.45	6	18	515	133	382
354+96.91	21.91	7.14	0.47	6	8	521	144	377
354+97.08	0.17	0.00	0.00	0	0	521	144	377
355+00	2.92	0.00	0.00	0	0	521	144	377
355+25	25.00	0.00	0.00	0	0	521	144	377
355+50	25.00	0.00	0.00	0	0	521	144	377
				521	110			

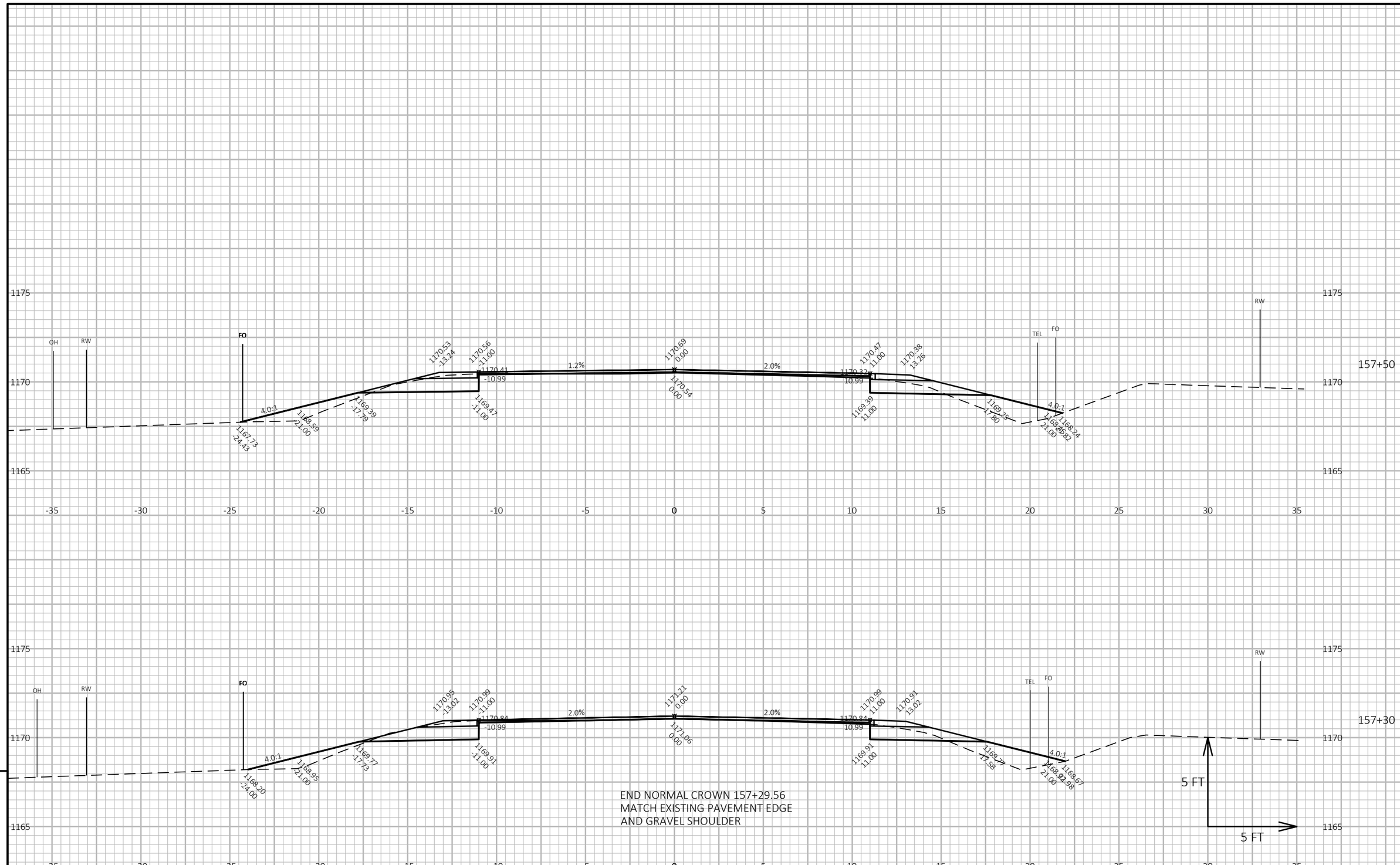

9

9

PROJECT NO: 6270-00-64	HWY: STH 49	COUNTY: WAUPACA	CROSS SECTIONS: STH 49 - MAINILNE	SHEET 158	E

FILE NAME : N:\PDS\C3D\62700034\SHEETSPLAN\090202-XS.DWG
LAYOUT NAME - Section Sheet - (20)
PLOT DATE : 1/25/2018 11:44 AM
PLOT BY : BEAUCHAMP, DANIEL J
PLOT NAME :
PLOT SCALE : 1 IN:10 FT HORZ. / 1 IN:10 FT VERT.
WISDOT/CADDS SHEET 49

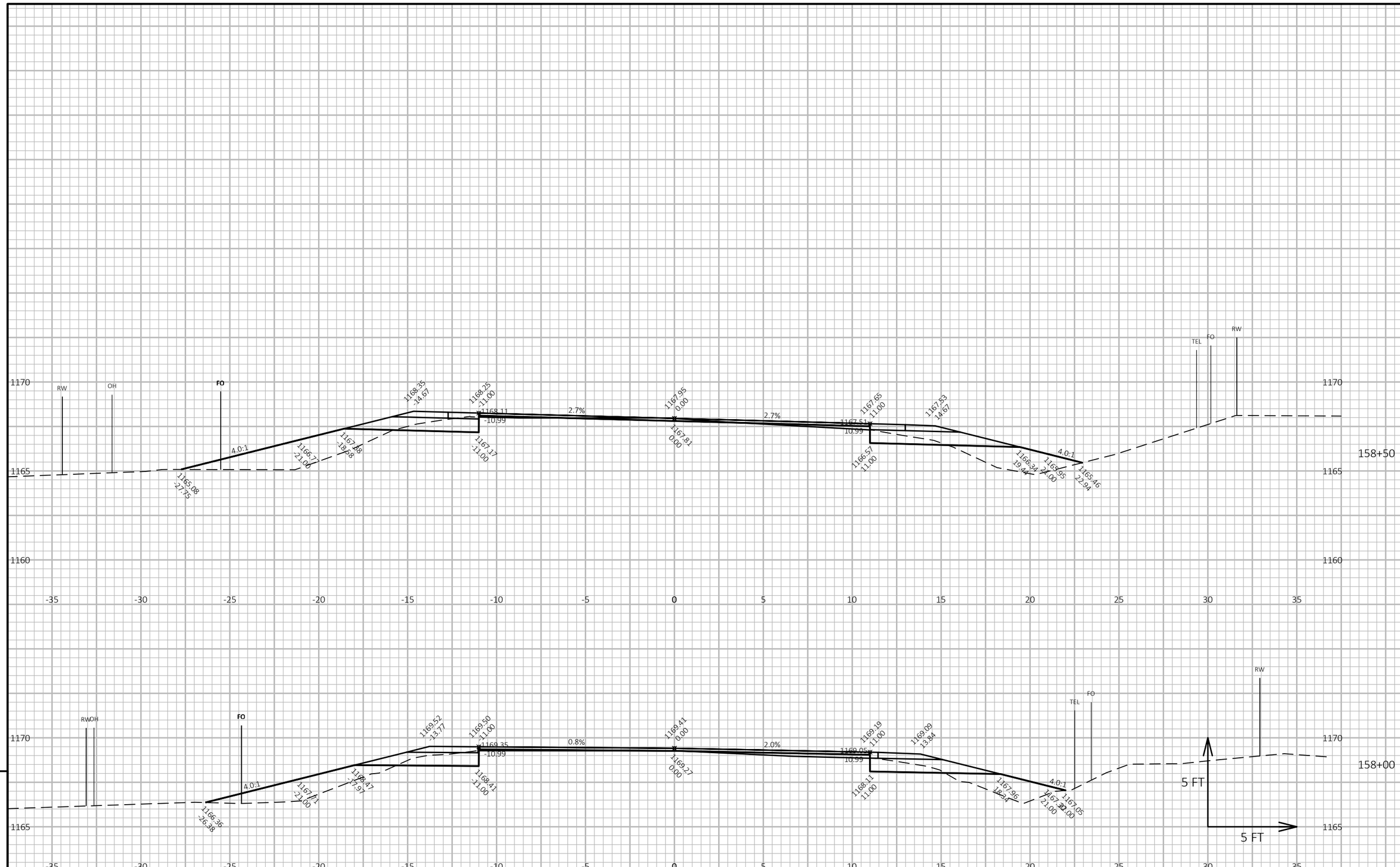

PROJECT NO: 6270-00-64	HWY: STH 49	COUNTY: WAUPACA	CROSS SECTIONS: STH 49 - MAINILNE	SHEET 159	E

FILE NAME : N:\PDS\C3D\62700034\SHEETSPLAN\090202-XS.DWG
LAYOUT NAME - Section Sheet - (21)
PLOT DATE : 1/25/2018 11:44 AM
PLOT BY : BEAUCHAMP, DANIEL J
PLOT NAME :
PLOT SCALE : 1 IN:10 FT HORZ. / 1 IN:10 FT VERT.
WISDOT/CADDS SHEET 49

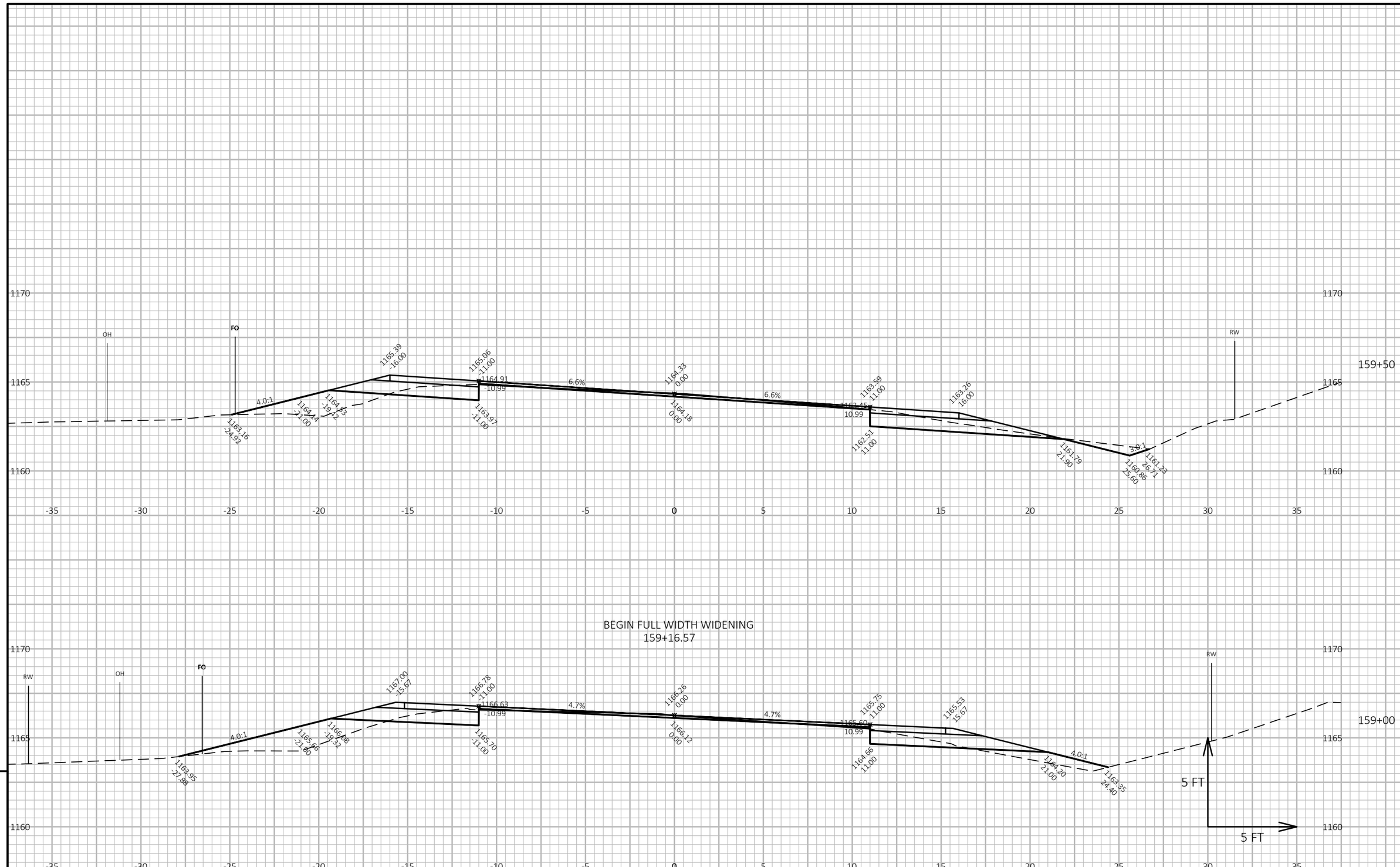

9

9

PROJECT NO: 6270-00-64	HWY: STH 49	COUNTY: WAUPACA	CROSS SECTIONS: STH 49 - MAINILNE	SHEET 160	E

FILE NAME : N:\PDS\C3D\62700034\SHEETSPLAN\090202-XS.DWG
LAYOUT NAME - Section Sheet - (22)
PLOT DATE : 1/25/2018 11:45 AM
PLOT BY : BEAUCHAMP, DANIEL J
PLOT NAME :
PLOT SCALE : 1 IN:10 FT HORZ. / 1 IN:10 FT VERT.
WISDOT/CADDS SHEET 49

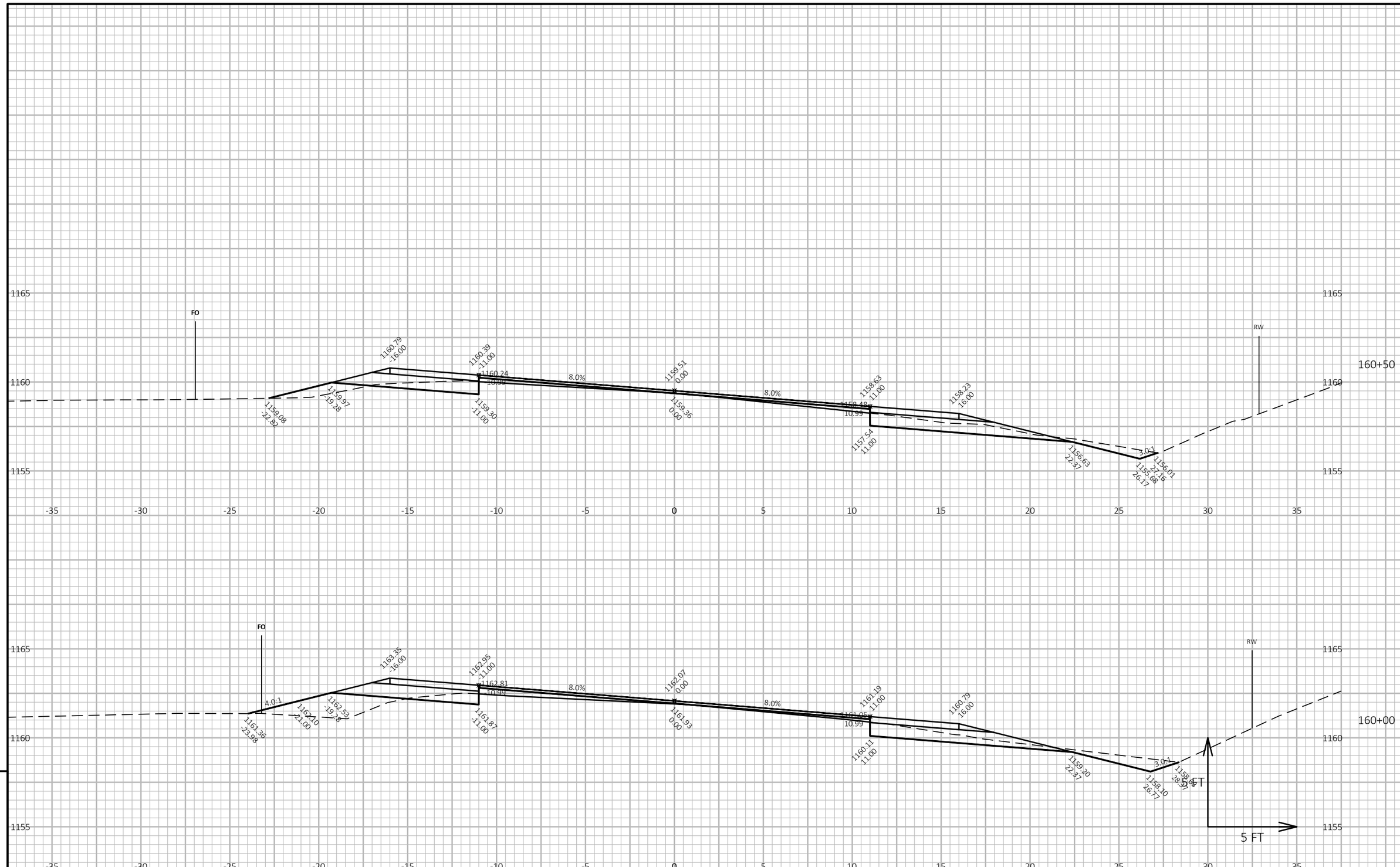

9

9

PROJECT NO: 6270-00-64	HWY: STH 49	COUNTY: WAUPACA	CROSS SECTIONS: STH 49 - MAINILNE	SHEET 161	E

FILE NAME : N:\PDS\C3D\62700034\SHEETSPLAN\090202-XS.DWG
LAYOUT NAME - Section Sheet - (23)
PLOT DATE : 1/25/2018 11:45 AM
PLOT BY : BEAUCHAMP, DANIEL J
PLOT NAME :
PLOT SCALE : 1 IN:10 FT HORZ. / 1 IN:10 FT VERT.
WISDOT/CADDS SHEET 49

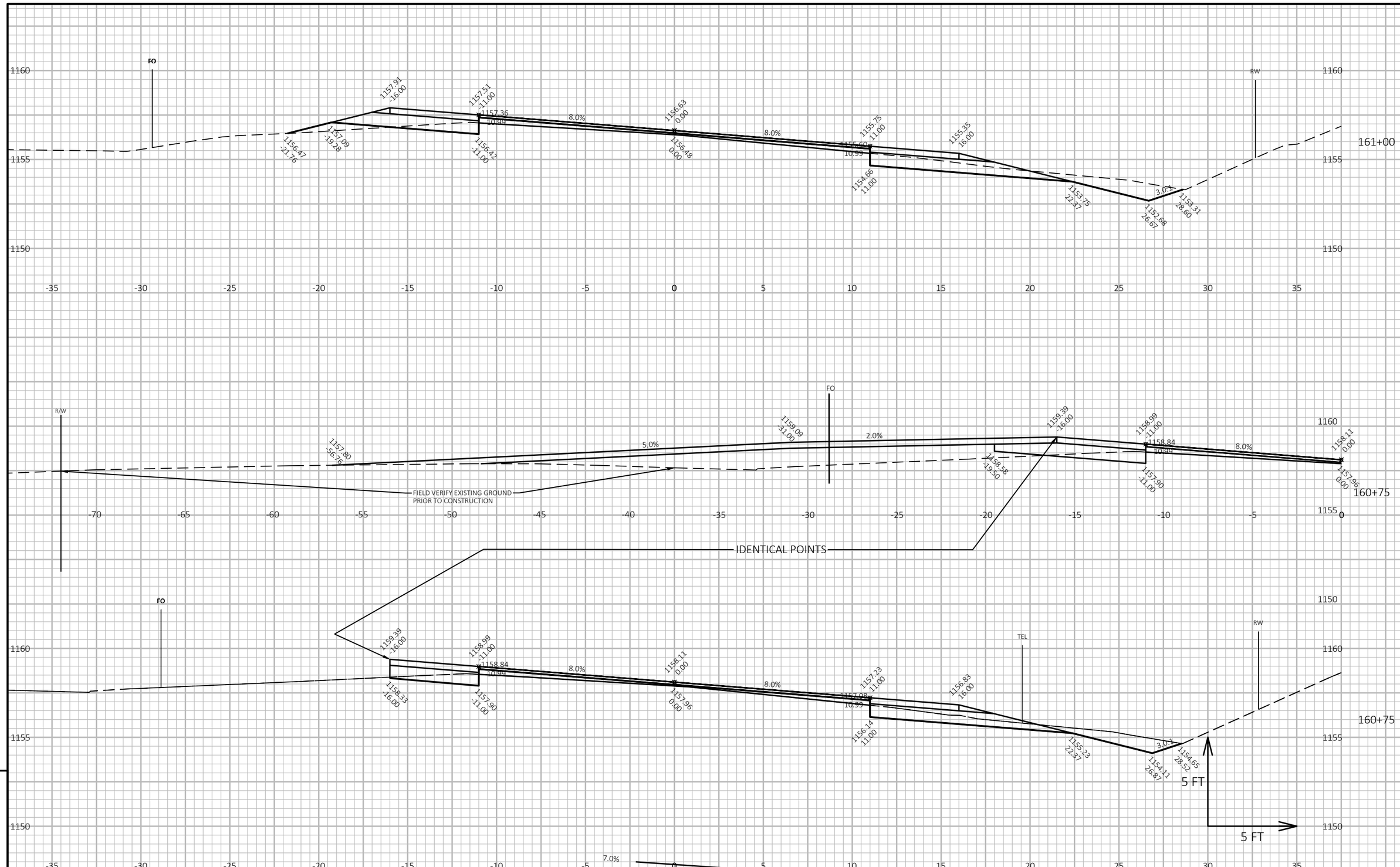

PROJECT NO: 6270-00-64	HWY: STH 49	COUNTY: WAUPACA	CROSS SECTIONS: STH 49 - MAINILNE	SHEET 162	E

FILE NAME : N:\PDS\C3D\62700034\SHEETSPLAN\090202-XS.DWG
LAYOUT NAME - Section Sheet - (24)
PLOT DATE : 1/25/2018 11:45 AM
PLOT BY : BEAUCHAMP, DANIEL J
PLOT NAME :
PLOT SCALE : 1 IN:10 FT HORZ. / 1 IN:10 FT VERT.
WISDOT/CADDS SHEET 49

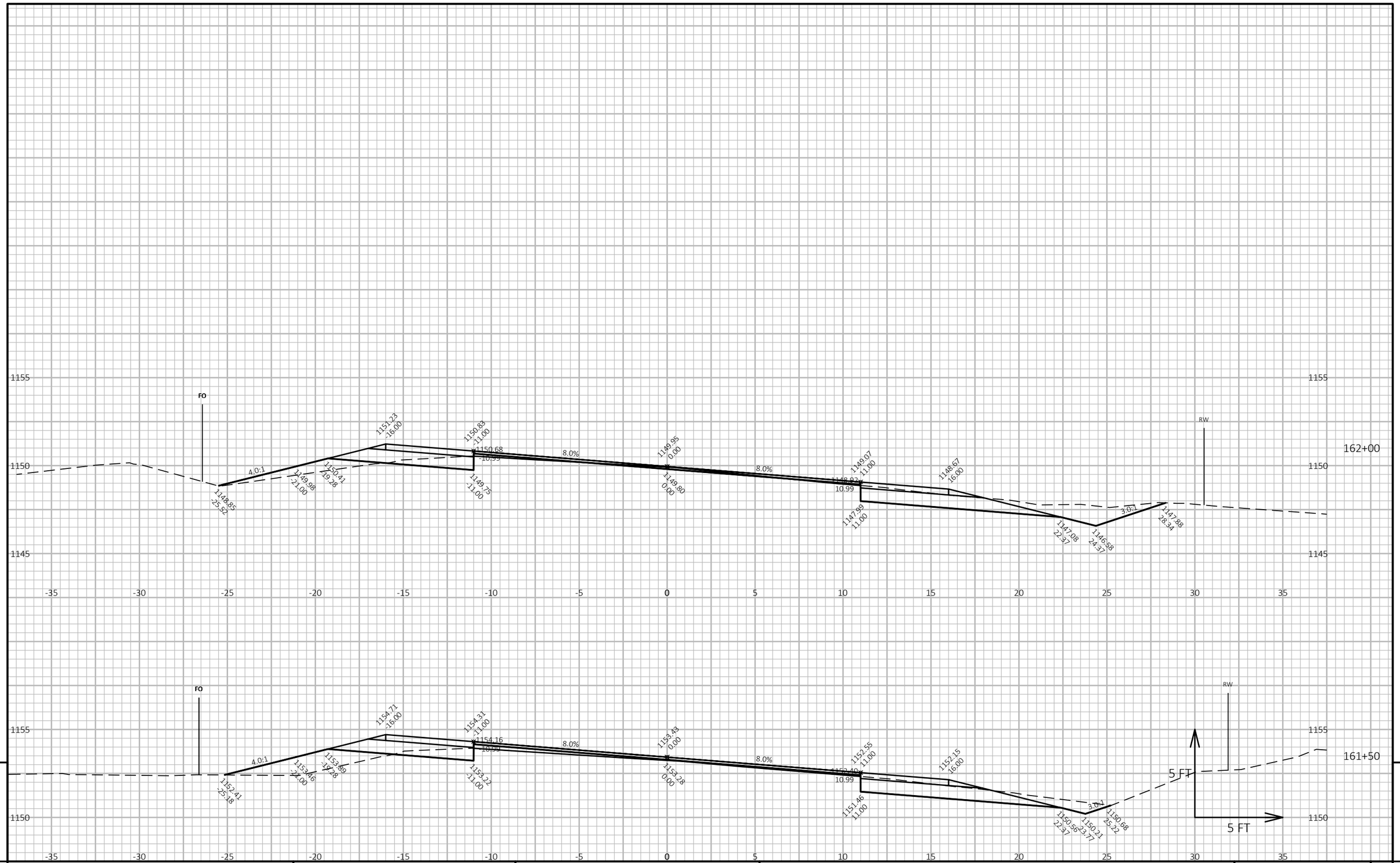

9

9

PROJECT NO: 6270-00-64	HWY: STH 49	COUNTY: WAUPACA	CROSS SECTIONS: STH 49 - MAINILNE	SHEET 163	E

FILE NAME : N:\PDS\C3D\62700034\SHEETSPLAN\090202-XS.DWG
LAYOUT NAME - Section Sheet - (25)

PLOT DATE : 1/25/2018 11:45 AM PLOT BY : BEAUCHAMP, DANIEL J PLOT NAME : PLOT SCALE : 1 IN:10 FT HORZ. / 1 IN:10 FT VERT.

WISDOT/CADDS SHEET 49

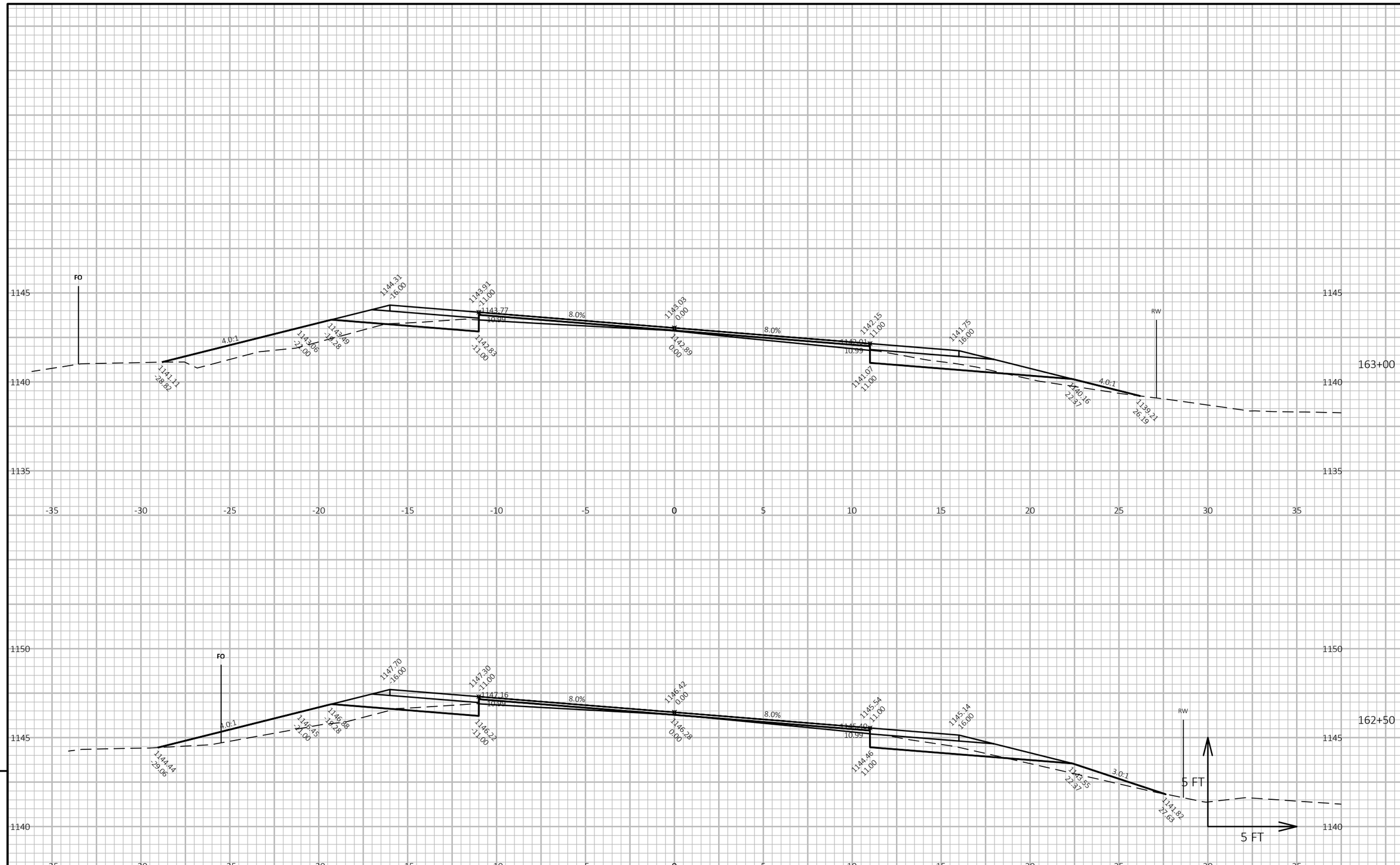

9

9

PROJECT NO: 6270-00-64	HWY: STH 49	COUNTY: WAUPACA	CROSS SECTIONS: STH 49 - MAINILNE	SHEET 164	E

FILE NAME : N:\PDS\C3D\62700034\SHEETSPLAN\090202-XS.DWG
LAYOUT NAME - Section Sheet - (26)
PLOT DATE : 1/25/2018 11:45 AM
PLOT BY : BEAUCHAMP, DANIEL J
PLOT NAME :
PLOT SCALE : 1 IN:10 FT HORZ. / 1 IN:10 FT VERT.
WISDOT/CADDS SHEET 49

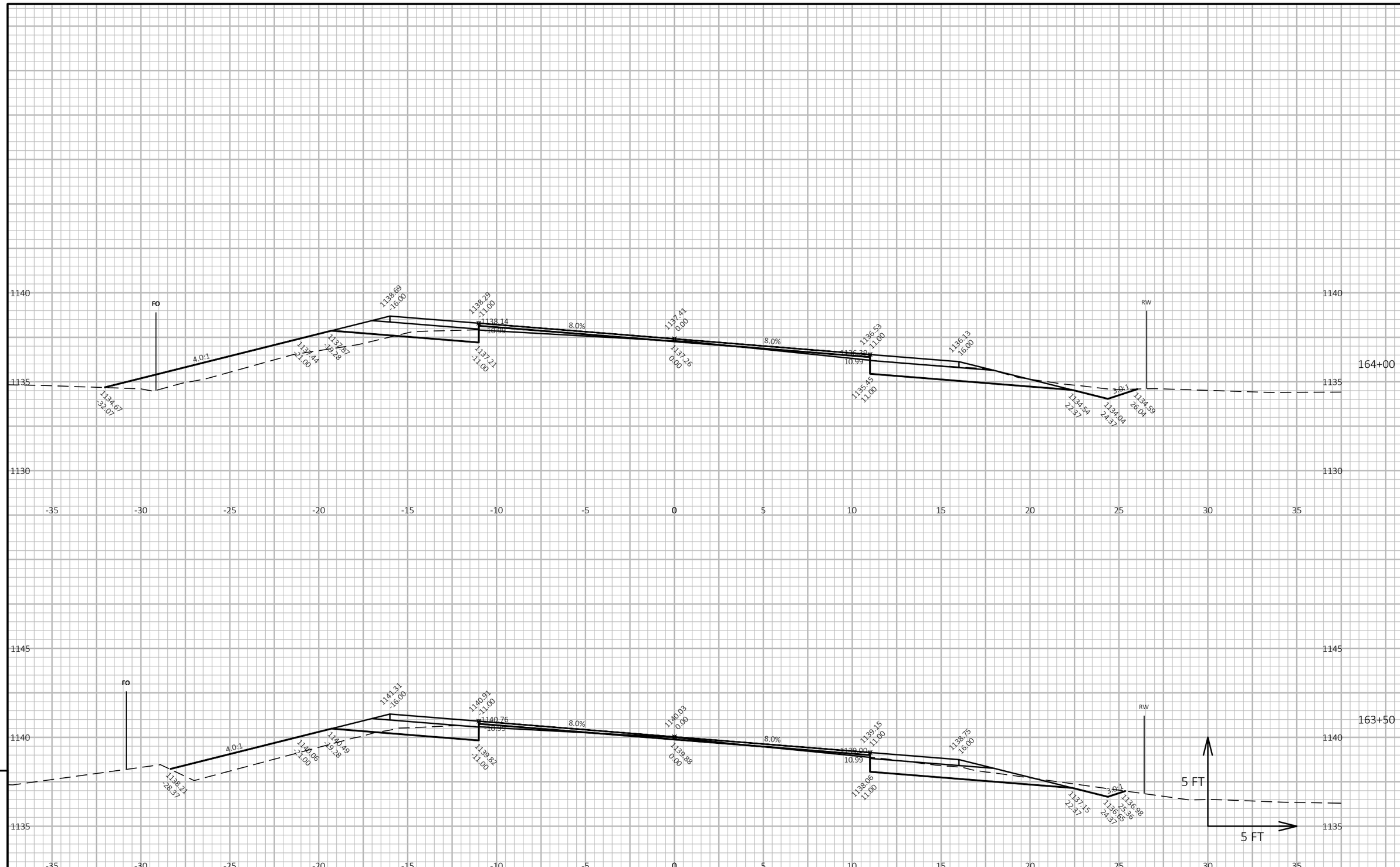

9

9

PROJECT NO: 6270-00-64	HWY: STH 49	COUNTY: WAUPACA	CROSS SECTIONS: STH 49 - MAINILNE	SHEET 165	E

FILE NAME : N:\PDS\C3D\62700034\SHEETSPLAN\090202-XS.DWG
LAYOUT NAME - Section Sheet - (27)
PLOT DATE : 1/25/2018 11:45 AM
PLOT BY : BEAUCHAMP, DANIEL J
PLOT NAME :
PLOT SCALE : 1 IN:10 FT HORZ. / 1 IN:10 FT VERT.
WISDOT/CADDS SHEET 49

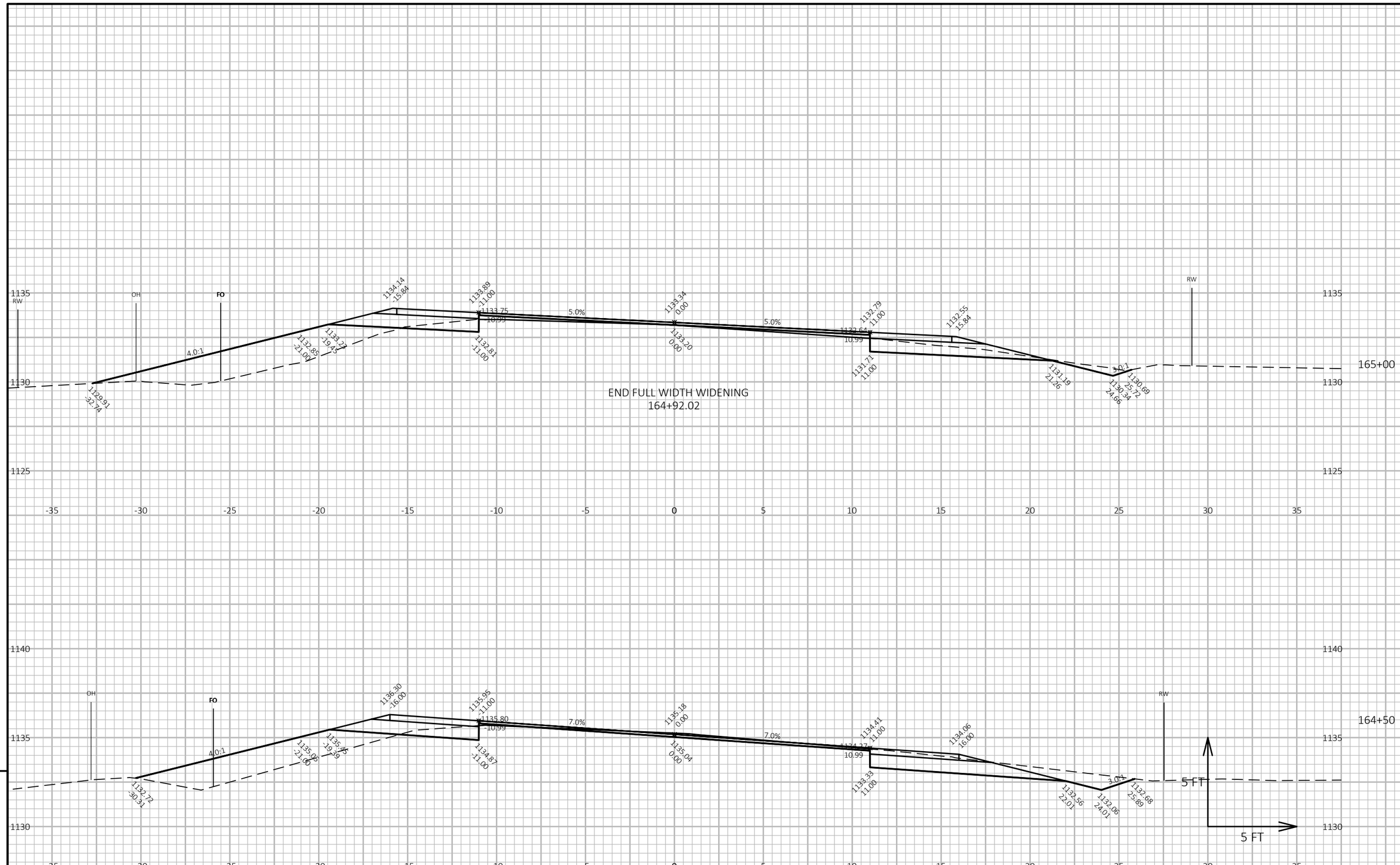

PROJECT NO: 6270-00-64	HWY: STH 49	COUNTY: WAUPACA	CROSS SECTIONS: STH 49 - MAINILNE	SHEET 166	E

FILE NAME : N:\PDS\C3D\62700034\SHEETSPLAN\090202-XS.DWG
LAYOUT NAME - Section Sheet - (28)
PLOT DATE : 1/25/2018 11:45 AM
PLOT BY : BEAUCHAMP, DANIEL J
PLOT NAME :
PLOT SCALE : 1 IN:10 FT HORZ. / 1 IN:10 FT VERT.
WISDOT/CADDS SHEET 49

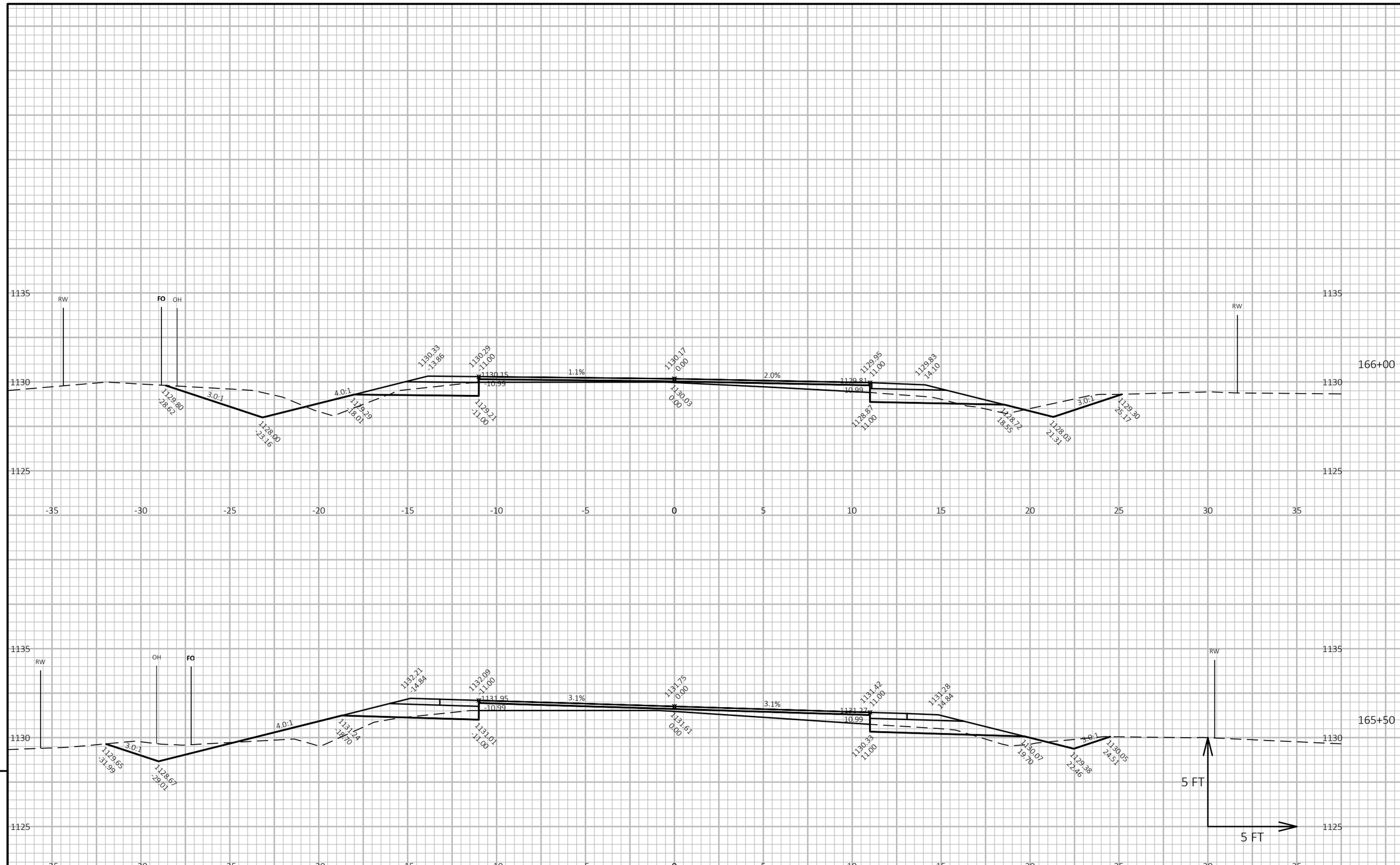

9

9

PROJECT NO: 6270-00-64	HWY: STH 49	COUNTY: WAUPACA	CROSS SECTIONS: STH 49 - MAINILNE	SHEET 167	E

FILE NAME : N:\PDS\C3D\62700034\SHEETSPLAN\090202-XS.DWG
LAYOUT NAME - Section Sheet - (29)
PLOT DATE : 1/25/2018 11:45 AM
PLOT BY : BEAUCHAMP, DANIEL J
PLOT NAME :
PLOT SCALE : 1 IN:10 FT HORZ. / 1 IN:10 FT VERT.
WISDOT/CADDS SHEET 49

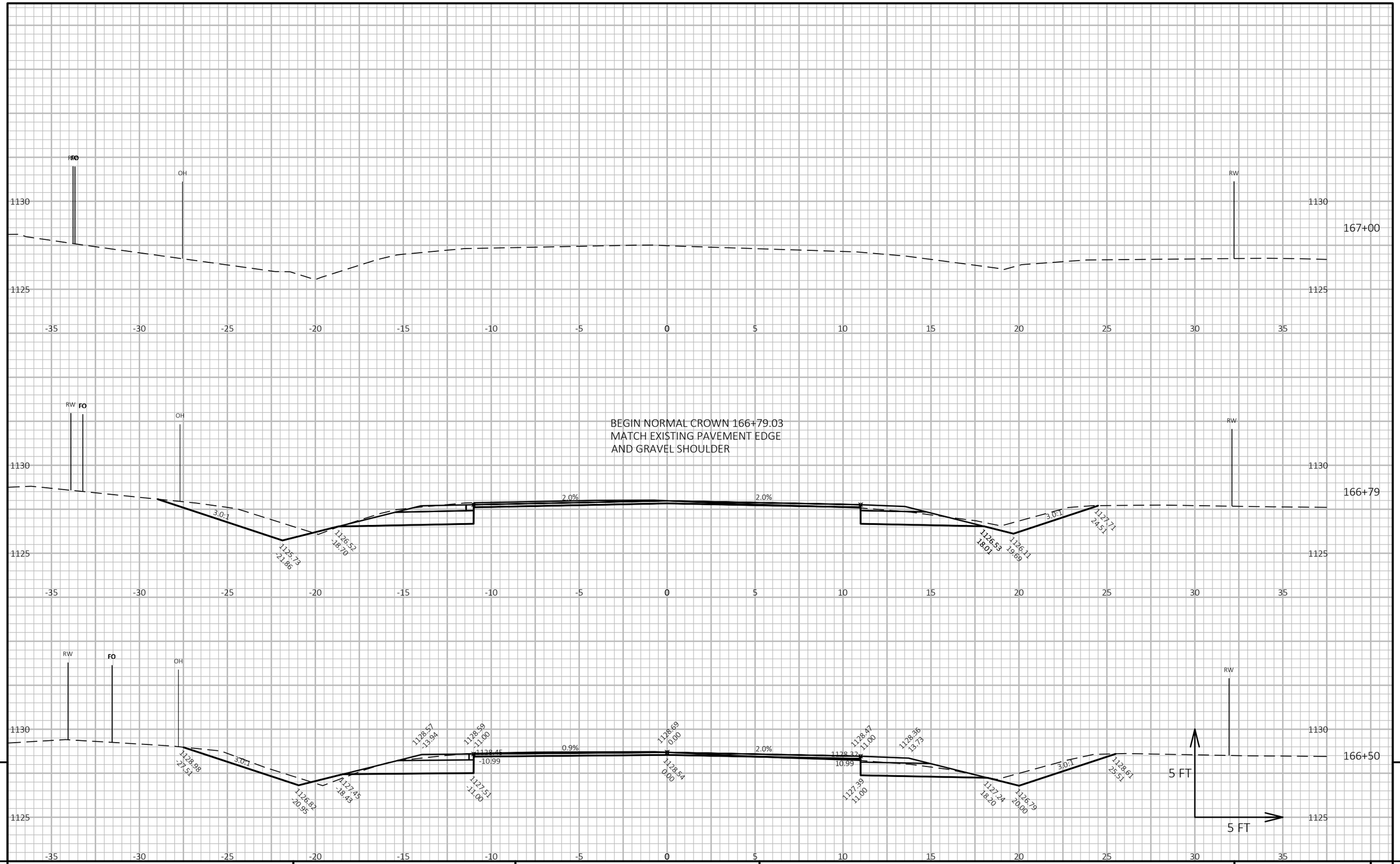

PROJECT NO: 6270-00-64	HWY: STH 49	COUNTY: WAUPACA	CROSS SECTIONS: STH 49 - MAINILNE	SHEET 168	E

FILE NAME : N:\PDS\C3D\62700034\SHEETSPLAN\090202-XS.DWG
LAYOUT NAME - Section Sheet - (30)
PLOT DATE : 1/25/2018 11:45 AM PLOT BY : BEAUCHAMP, DANIEL J PLOT NAME : PLOT SCALE : 1 IN:10 FT HORZ. / 1 IN:10 FT VERT.
WISDOT/CADDS SHEET 49

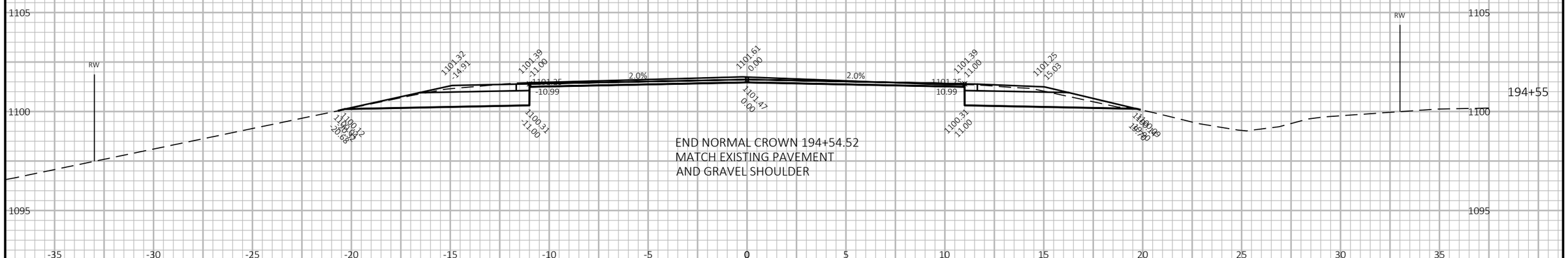

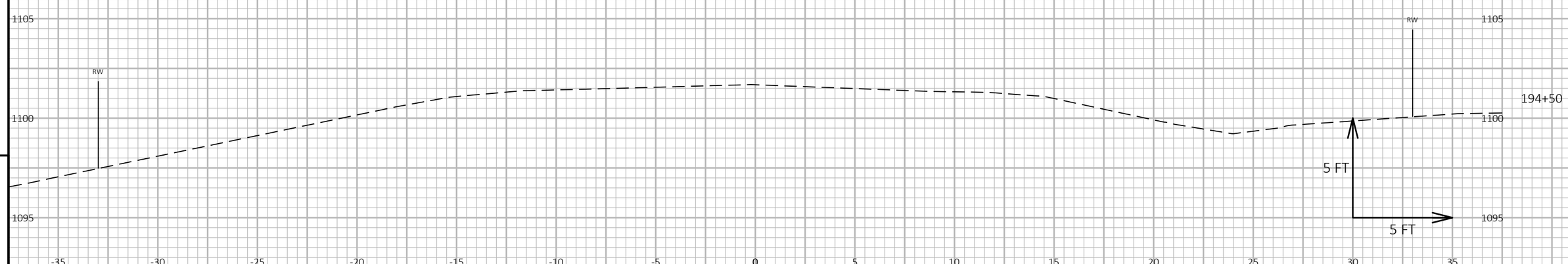

9

9

PROJECT NO: 6270-00-64	HWY: STH 49	COUNTY: WAUPACA	CROSS SECTIONS: STH 49 - MAINILNE	SHEET 169	E

FILE NAME : N:\PDS\C3D\62700034\SHEETSPLAN\090202-XS.DWG
LAYOUT NAME - Section Sheet - (33)
PLOT DATE : 1/25/2018 11:46 AM
PLOT BY : BEAUCHAMP, DANIEL J
PLOT NAME :
PLOT SCALE : 1 IN:10 FT HORZ. / 1 IN:10 FT VERT.
WISDOT/CADDS SHEET 49

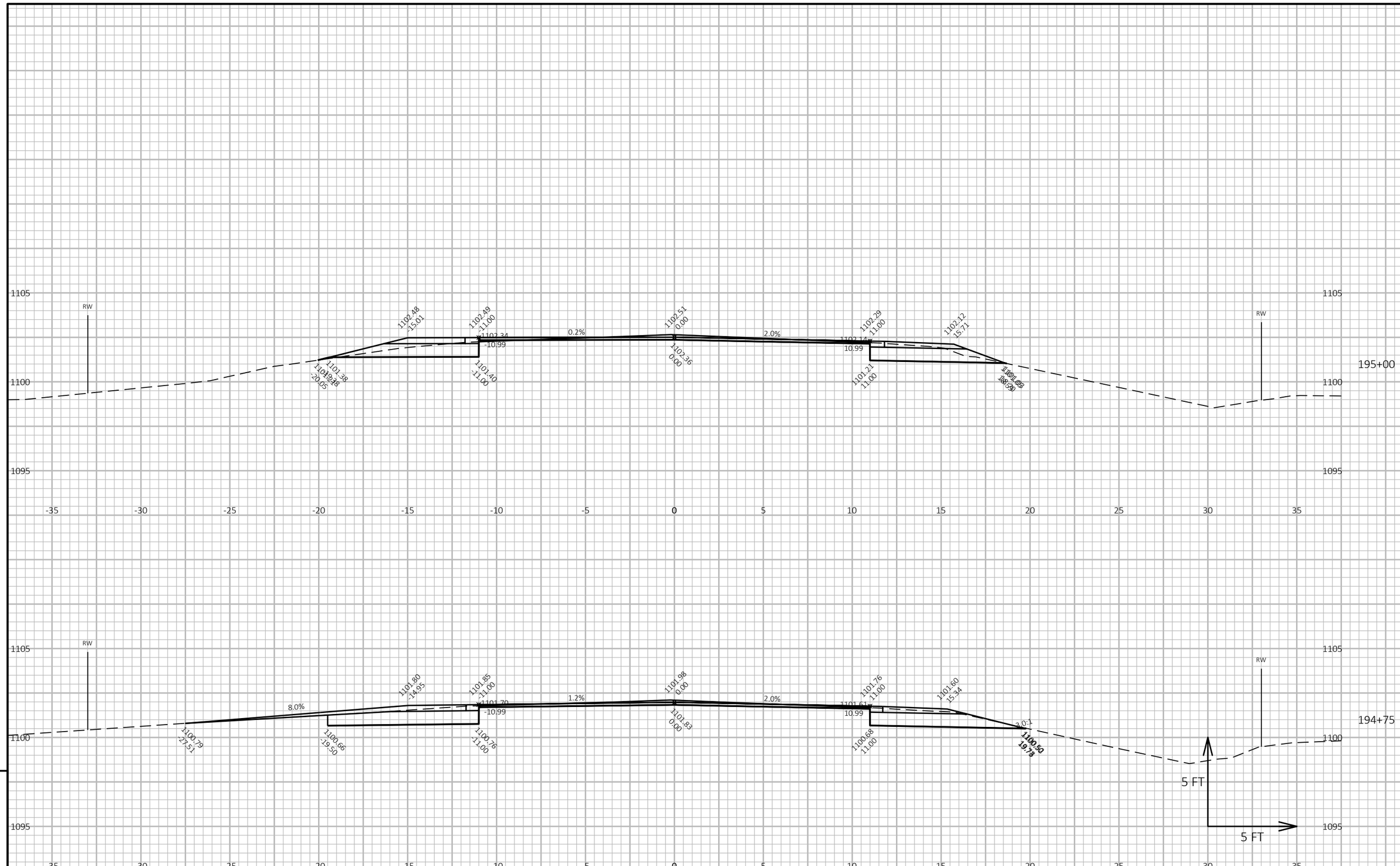

9

9

PROJECT NO: 6270-00-64	HWY: STH 49	COUNTY: WAUPACA	CROSS SECTIONS: STH 49 - MAINILNE	SHEET 170	E

FILE NAME : N:\PDS\C3D\62700034\SHEETSPLAN\090202-XS.DWG
LAYOUT NAME - Section Sheet - (34)
PLOT DATE : 1/25/2018 11:46 AM
PLOT BY : BEAUCHAMP, DANIEL J
PLOT NAME :
PLOT SCALE : 1 IN:10 FT HORZ. / 1 IN:10 FT VERT.
WISDOT/CADDS SHEET 49

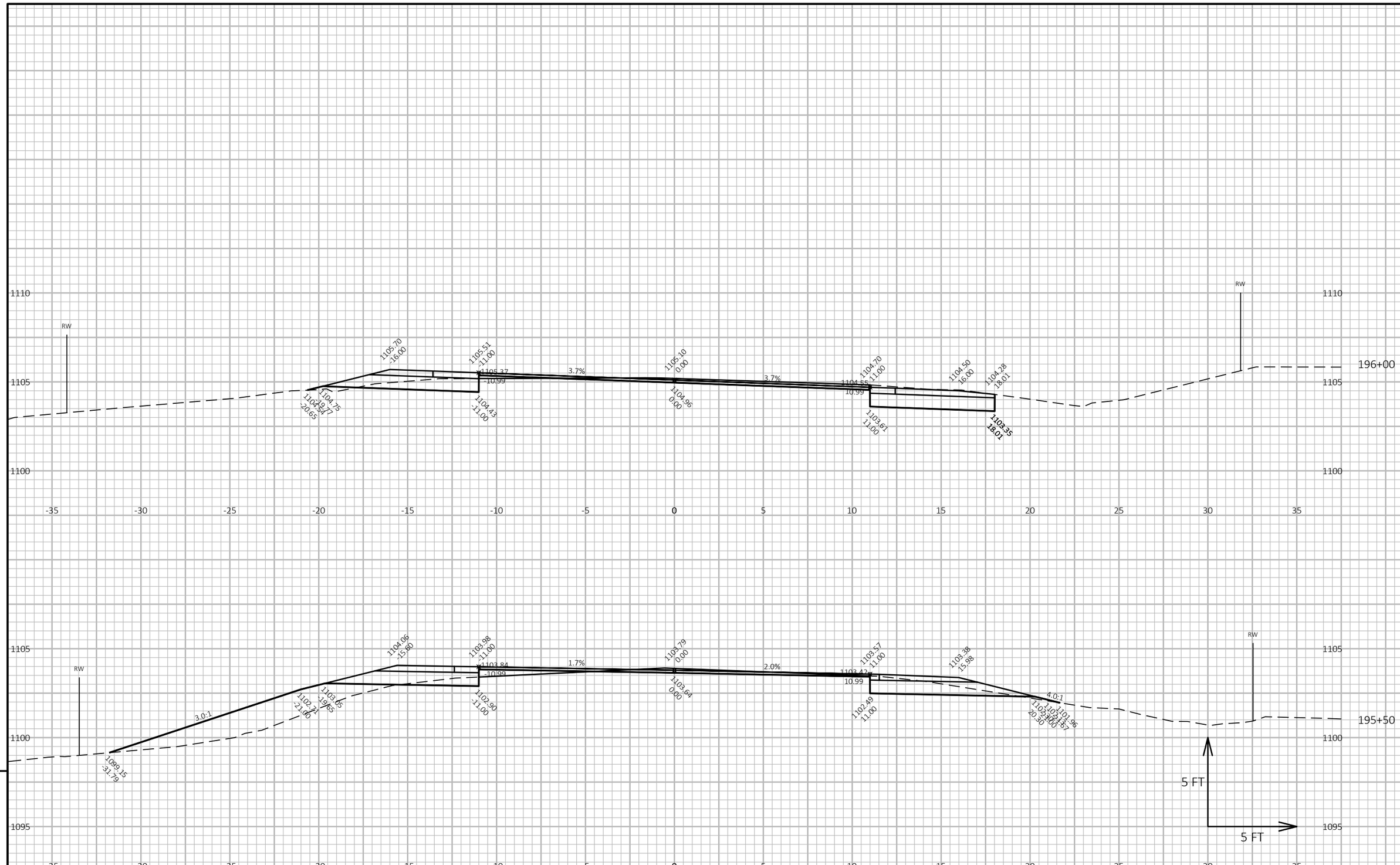

9

9

PROJECT NO: 6270-00-64	HWY: STH 49	COUNTY: WAUPACA	CROSS SECTIONS: STH 49 - MAINILNE	SHEET 171	E

FILE NAME : N:\PDS\C3D\62700034\SHEETSPLAN\090202-XS.DWG
LAYOUT NAME - Section Sheet - (35)
PLOT DATE : 1/25/2018 11:46 AM
PLOT BY : BEAUCHAMP, DANIEL J
PLOT NAME :
PLOT SCALE : 1 IN:10 FT HORZ. / 1 IN:10 FT VERT.
WISDOT/CADDS SHEET 49

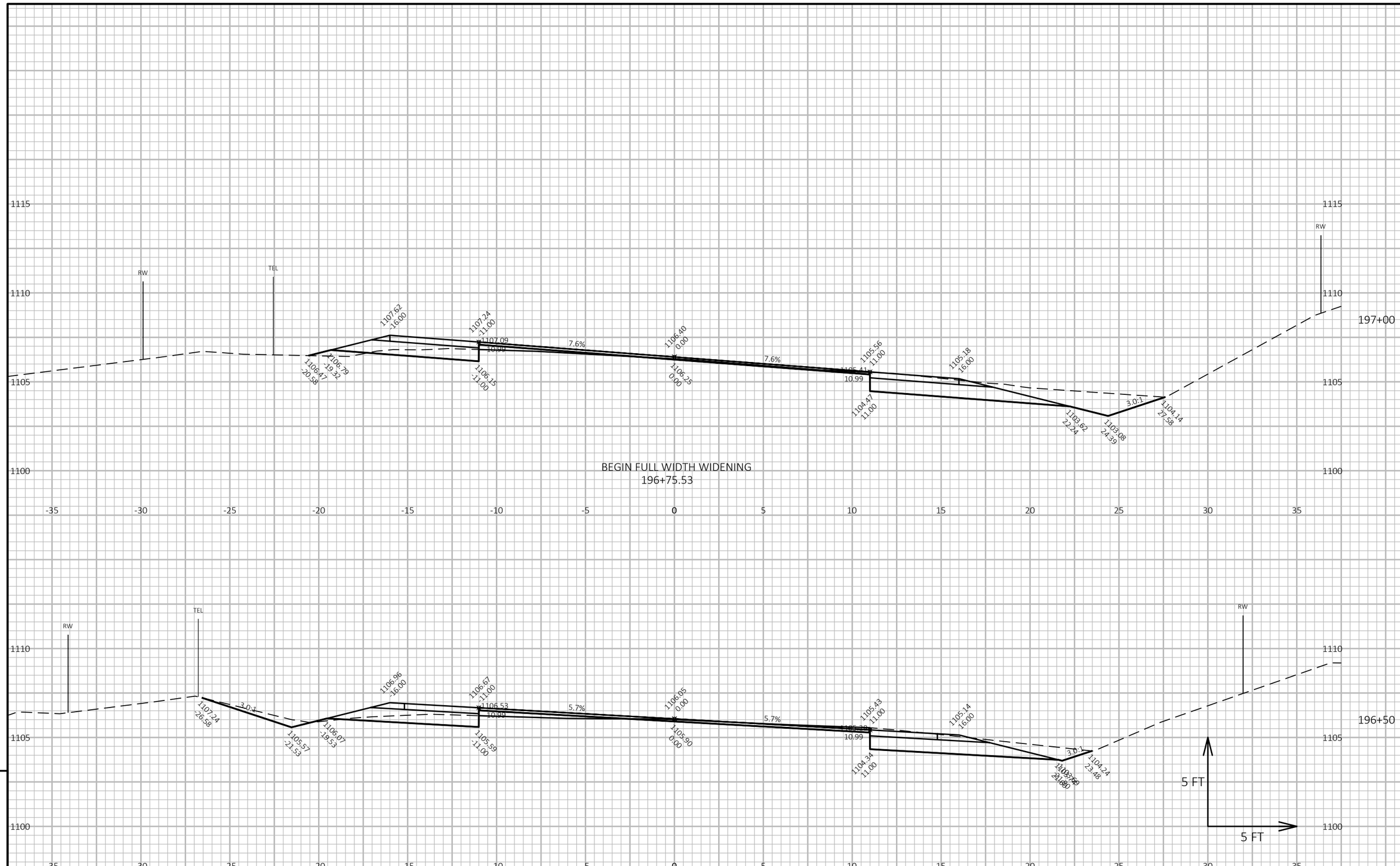

PROJECT NO: 6270-00-64	HWY: STH 49	COUNTY: WAUPACA	CROSS SECTIONS: STH 49 - MAINILNE	SHEET 172	E

FILE NAME : N:\PDS\C3D\62700034\SHEETSPLAN\090202-XS.DWG
LAYOUT NAME - Section Sheet - (36)
PLOT DATE : 1/25/2018 11:46 AM
PLOT BY : BEAUCHAMP, DANIEL J
PLOT NAME :
PLOT SCALE : 1 IN:10 FT HORZ. / 1 IN:10 FT VERT.
WISDOT/CADDS SHEET 49

9

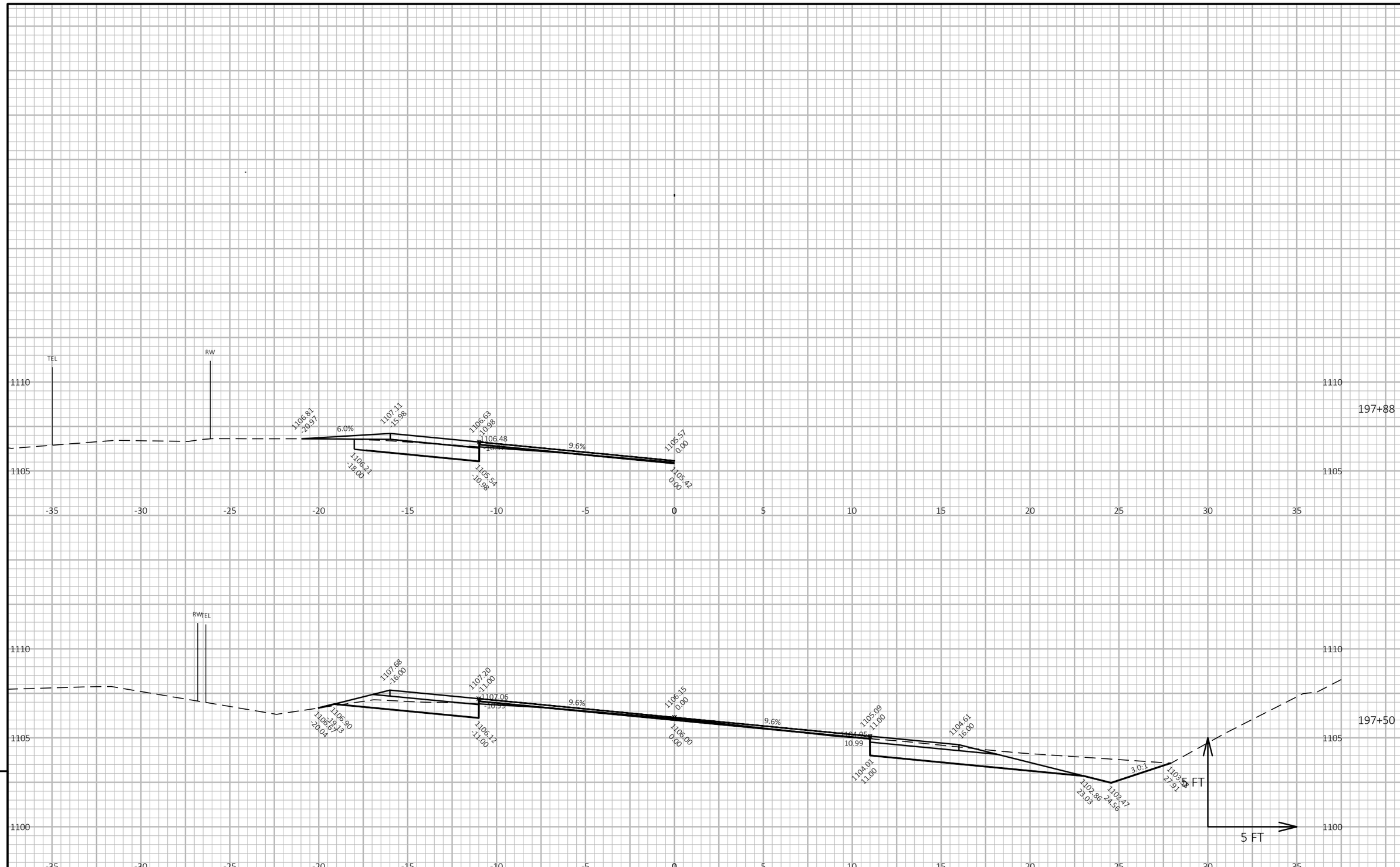

PROJECT NO: 6270-00-64	HWY: STH 49	COUNTY: WAUPACA	CROSS SECTIONS: STH 49 - MAINILNE	SHEET 173	E

FILE NAME : N:\PDS\C3D\62700034\SHEETSPLAN\090202-XS.DWG
LAYOUT NAME - Section Sheet - (37)
PLOT DATE : 1/25/2018 11:46 AM
PLOT BY : BEAUCHAMP, DANIEL J
PLOT NAME :
PLOT SCALE : 1 IN:10 FT HORZ. / 1 IN:10 FT VERT.
WISDOT/CADDS SHEET 49

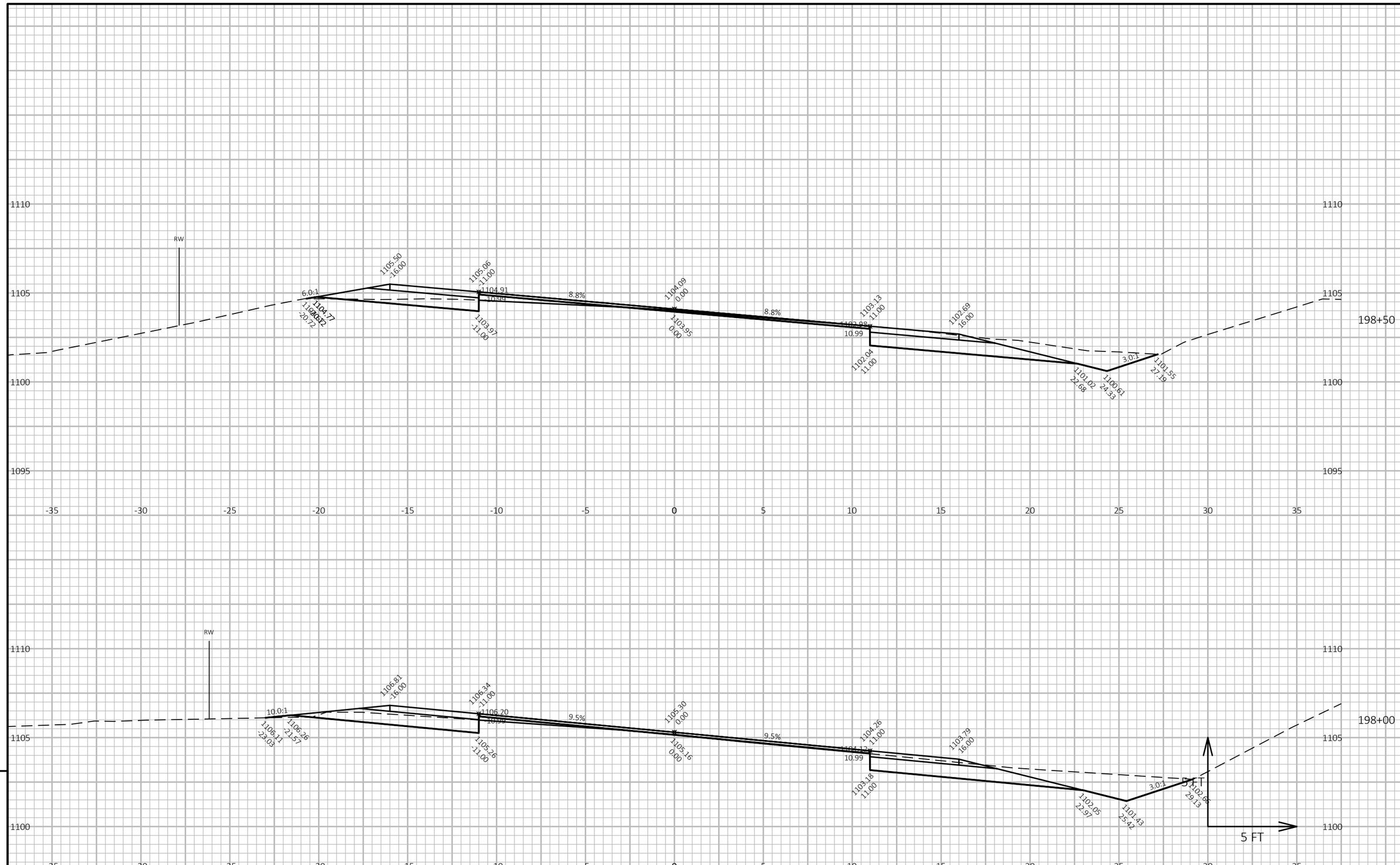

PROJECT NO: 6270-00-64	HWY: STH 49	COUNTY: WAUPACA	CROSS SECTIONS: STH 49 - MAINILNE	SHEET 174	E

FILE NAME : N:\PDS\C3D\62700034\SHEETSPLAN\090202-XS.DWG
LAYOUT NAME - Section Sheet - (38)
PLOT DATE : 1/25/2018 11:46 AM
PLOT BY : BEAUCHAMP, DANIEL J
PLOT NAME :
PLOT SCALE : 1 IN:10 FT HORZ. / 1 IN:10 FT VERT.
WISDOT/CADDS SHEET 49

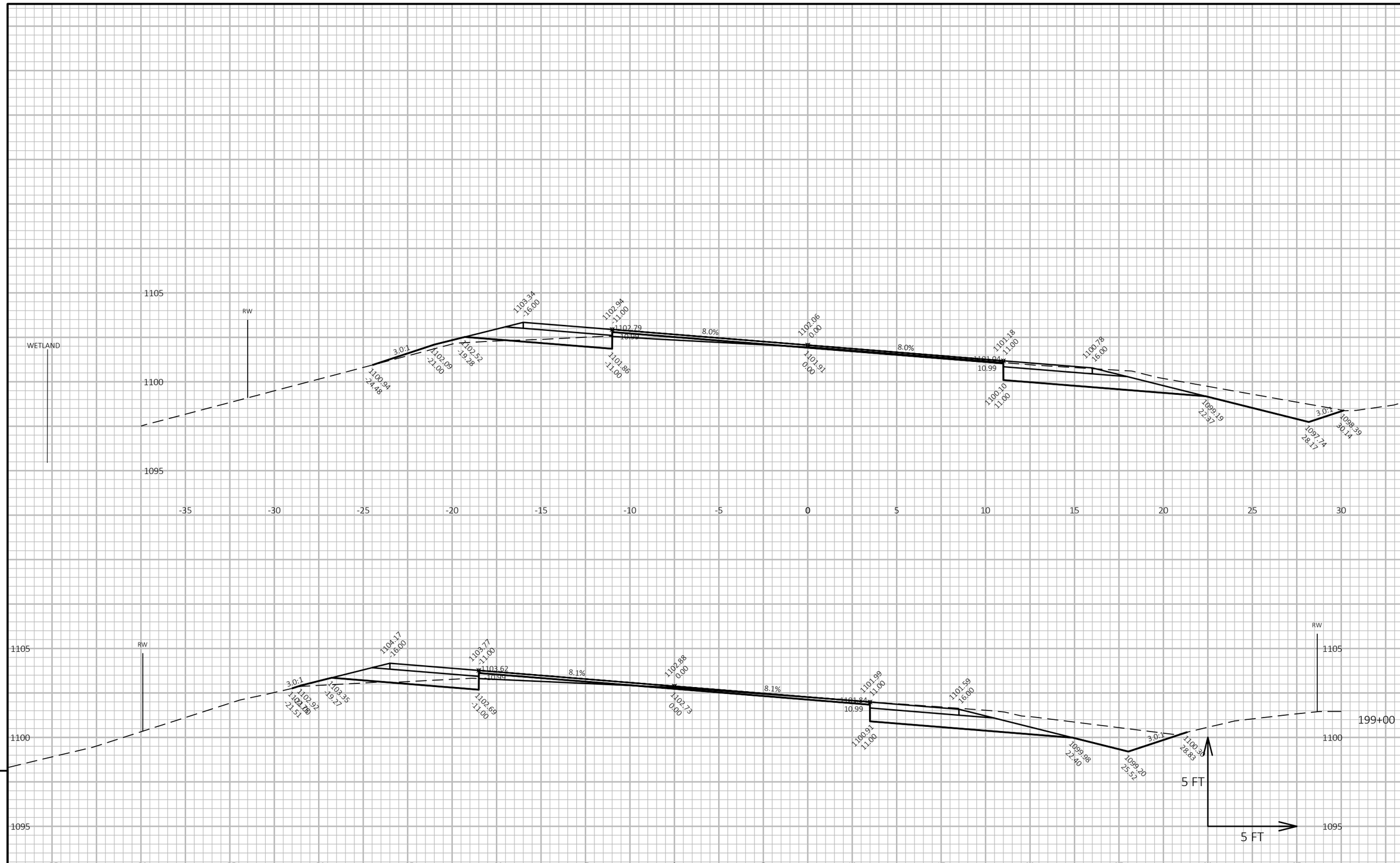

9

9

PROJECT NO: 6270-00-64	HWY: STH 49	COUNTY: WAUPACA	CROSS SECTIONS: STH 49 - MAINILNE	SHEET 175	E

FILE NAME : N:\PDS\C3D\62700034\SHEETSPLAN\090202-XS.DWG
LAYOUT NAME - Section Sheet - (39)
PLOT DATE : 1/25/2018 11:46 AM
PLOT BY : BEAUCHAMP, DANIEL J
PLOT NAME :
PLOT SCALE : 1 IN:10 FT HORZ. / 1 IN:10 FT VERT.
WISDOT/CADDS SHEET 49

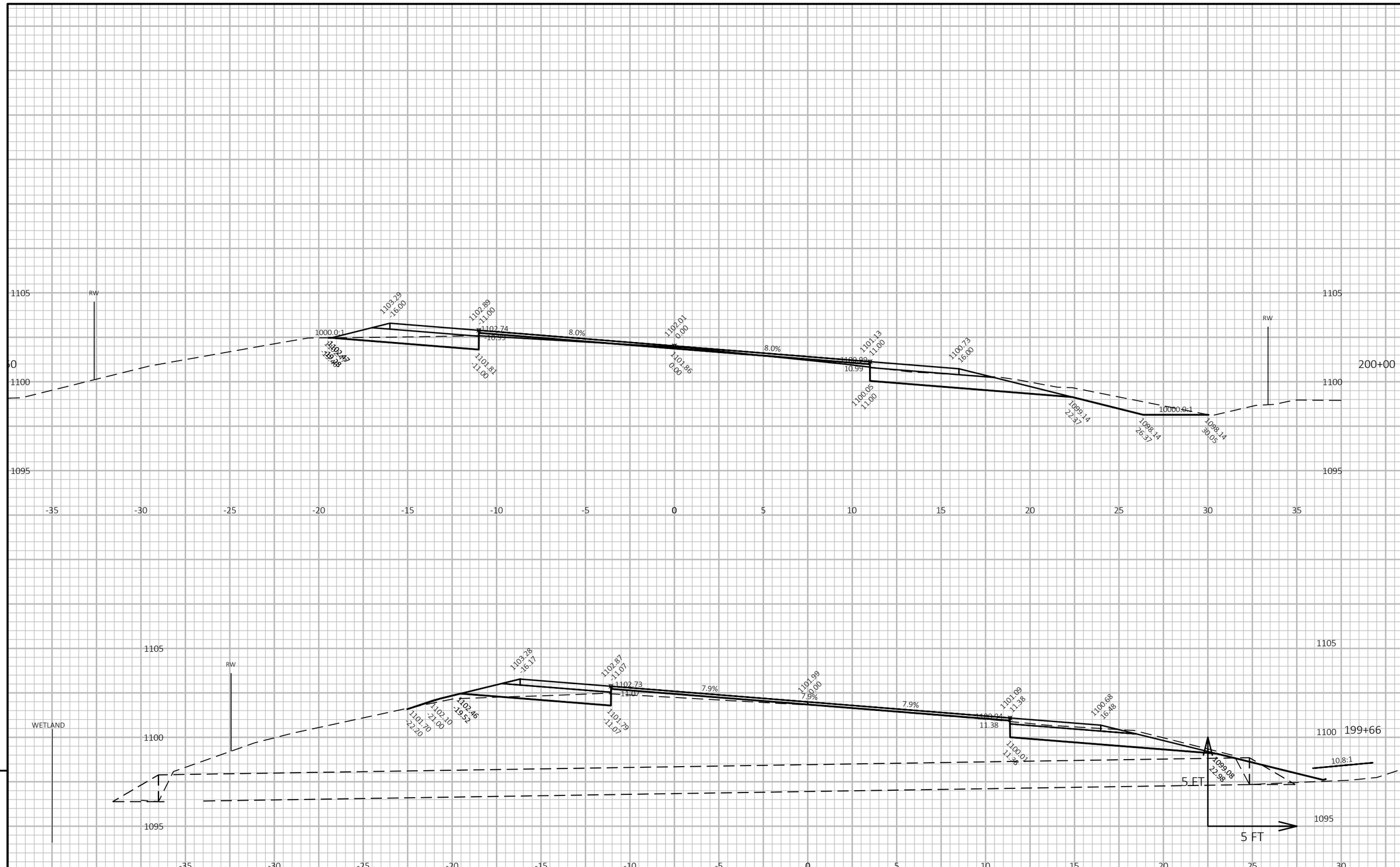

PROJECT NO: 6270-00-64	HWY: STH 49	COUNTY: WAUPACA	CROSS SECTIONS: STH 49 - MAINILNE	SHEET 176	E

FILE NAME : N:\PDS\C3D\62700034\SHEETSPLAN\090202-XS.DWG
LAYOUT NAME - Section Sheet - (40)
PLOT DATE : 1/25/2018 11:46 AM
PLOT BY : BEAUCHAMP, DANIEL J
PLOT NAME :
PLOT SCALE : 1 IN:10 FT HORZ. / 1 IN:10 FT VERT.

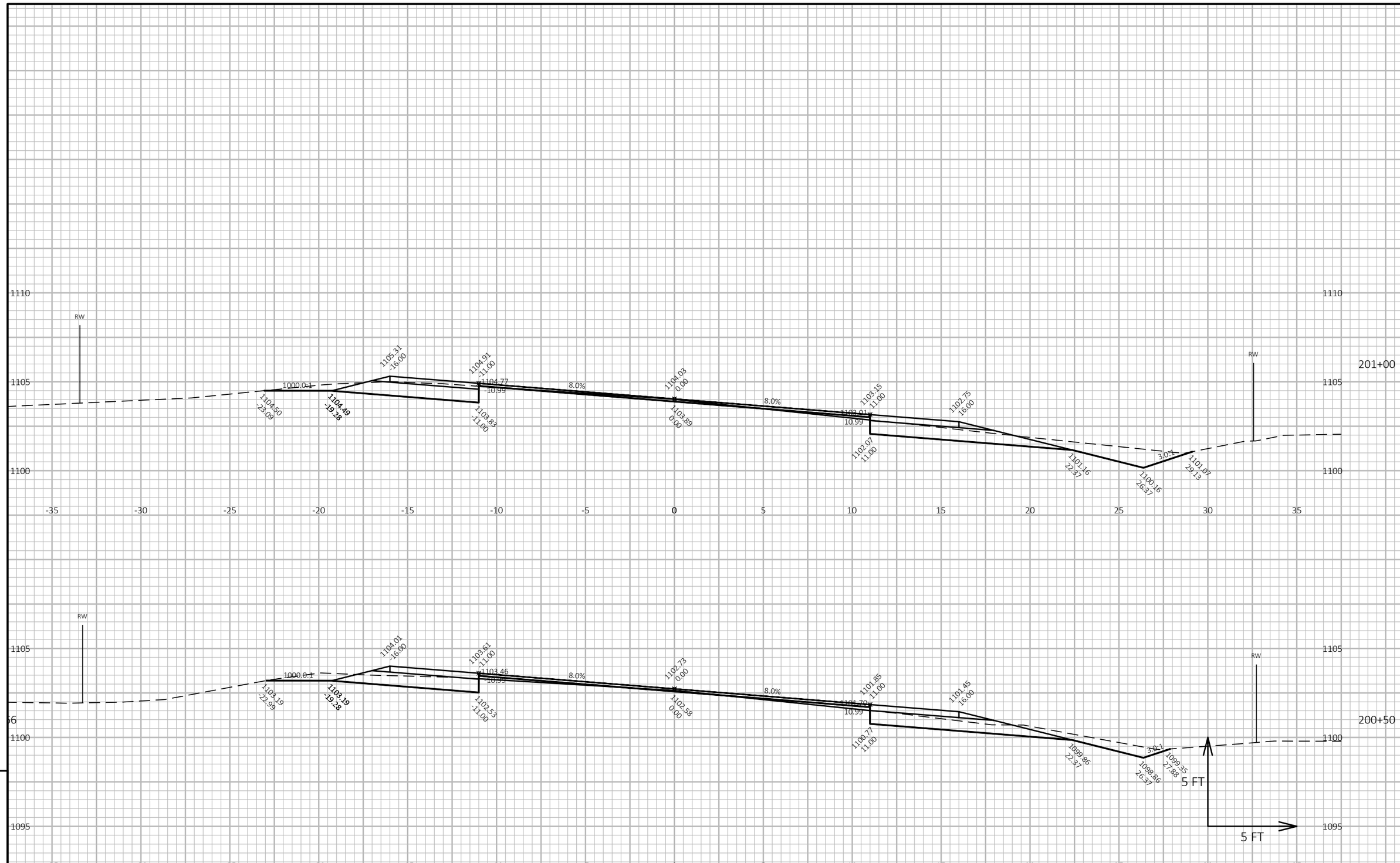

PROJECT NO: 6270-00-64	HWY: STH 49	COUNTY: WAUPACA	CROSS SECTIONS: STH 49 - MAINILNE	SHEET 177	E

FILE NAME : N:\PDS\C3D\62700034\SHEETSPLAN\090202-XS.DWG
LAYOUT NAME - Section Sheet - (41)
PLOT DATE : 1/25/2018 11:46 AM
PLOT BY : BEAUCHAMP, DANIEL J
PLOT NAME :
PLOT SCALE : 1 IN:10 FT HORZ. / 1 IN:10 FT VERT.
WISDOT/CADDS SHEET 49

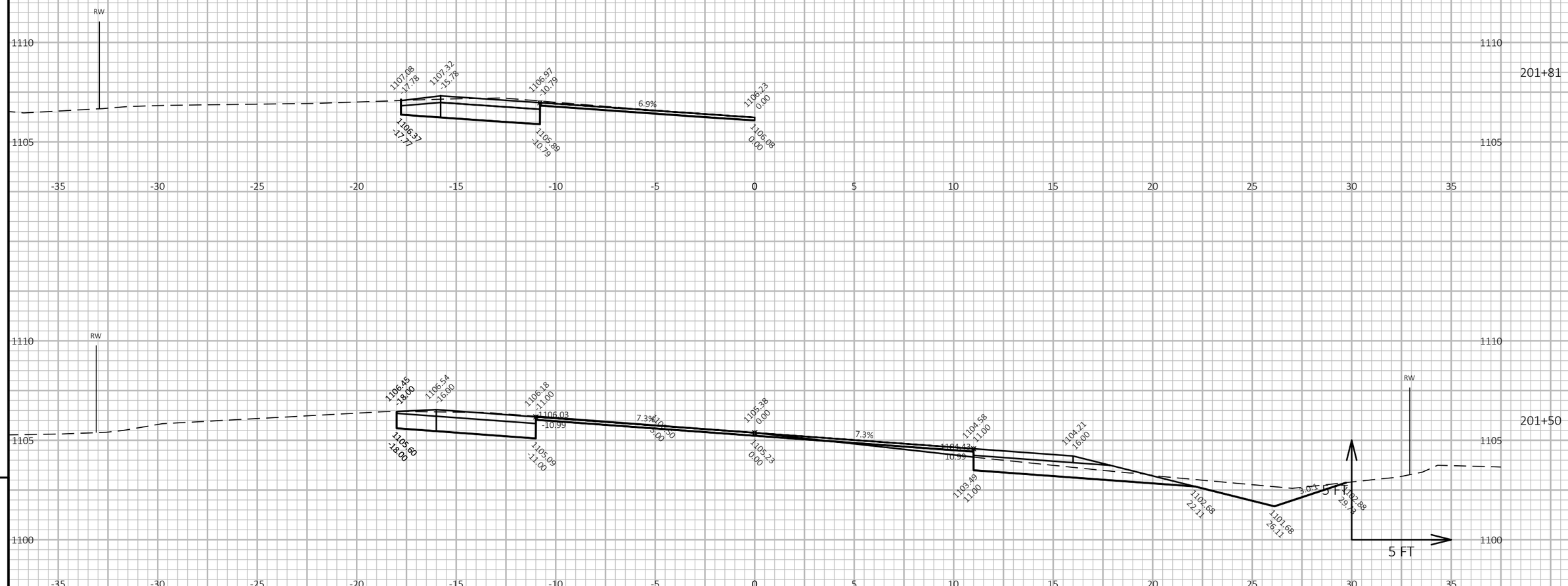
RW
1110
1105
1107.08
-17.78
1107.32
-15.78
1106.97
-10.79
6.9%
1106.23
0.00
1106.37
-17.77
1105.88
-10.79
1106.08
0.00
201+81
-35
-30
-25
-20
-15
-10
-5
0
5
10
15
20
25
30
35
RW
1110
1105
1100
1106.45
-18.00
1106.54
-16.00
1106.18
-11.00
1106.03
-10.99
7.3%
1105.80
0.00
1105.38
0.00
7.3%
1104.58
11.00
1104.43
10.99
1104.21
16.00
1105.60
-18.00
1105.09
-11.00
1105.23
0.00
1103.49
11.00
1102.68
22.11
1101.68
26.11
1102.88
29.73
5.0% 5 FT
5 FT
RW
201+50
9
9
PROJECT NO: 6270-00-64
HWY: STH 49
COUNTY: WAUPACA
CROSS SECTIONS: STH 49 - MAINILNE
SHEET 178
E
FILE NAME : N:\PDS\C3D\62700034\SHEETSPLAN\090202-XS.DWG
LAYOUT NAME - Section Sheet - (42)
PLOT DATE : 1/25/2018 11:46 AM
PLOT BY : BEAUCHAMP, DANIEL J
PLOT NAME :
PLOT SCALE : 1 IN:10 FT HORZ. / 1 IN:10 FT VERT.
WISDOT/CADDS SHEET 49

9

9

PROJECT NO: 6270-00-64	HWY: STH 49	COUNTY: WAUPACA	CROSS SECTIONS: STH 49 - MAINILNE	SHEET 179	E

FILE NAME : N:\PDS\C3D\62700034\SHEETSPLAN\090202-XS.DWG
LAYOUT NAME - Section Sheet - (43)
PLOT DATE : 1/25/2018 11:47 AM
PLOT BY : BEAUCHAMP, DANIEL J
PLOT NAME :
PLOT SCALE : 1 IN:10 FT HORZ. / 1 IN:10 FT VERT.
WISDOT/CADDS SHEET 49

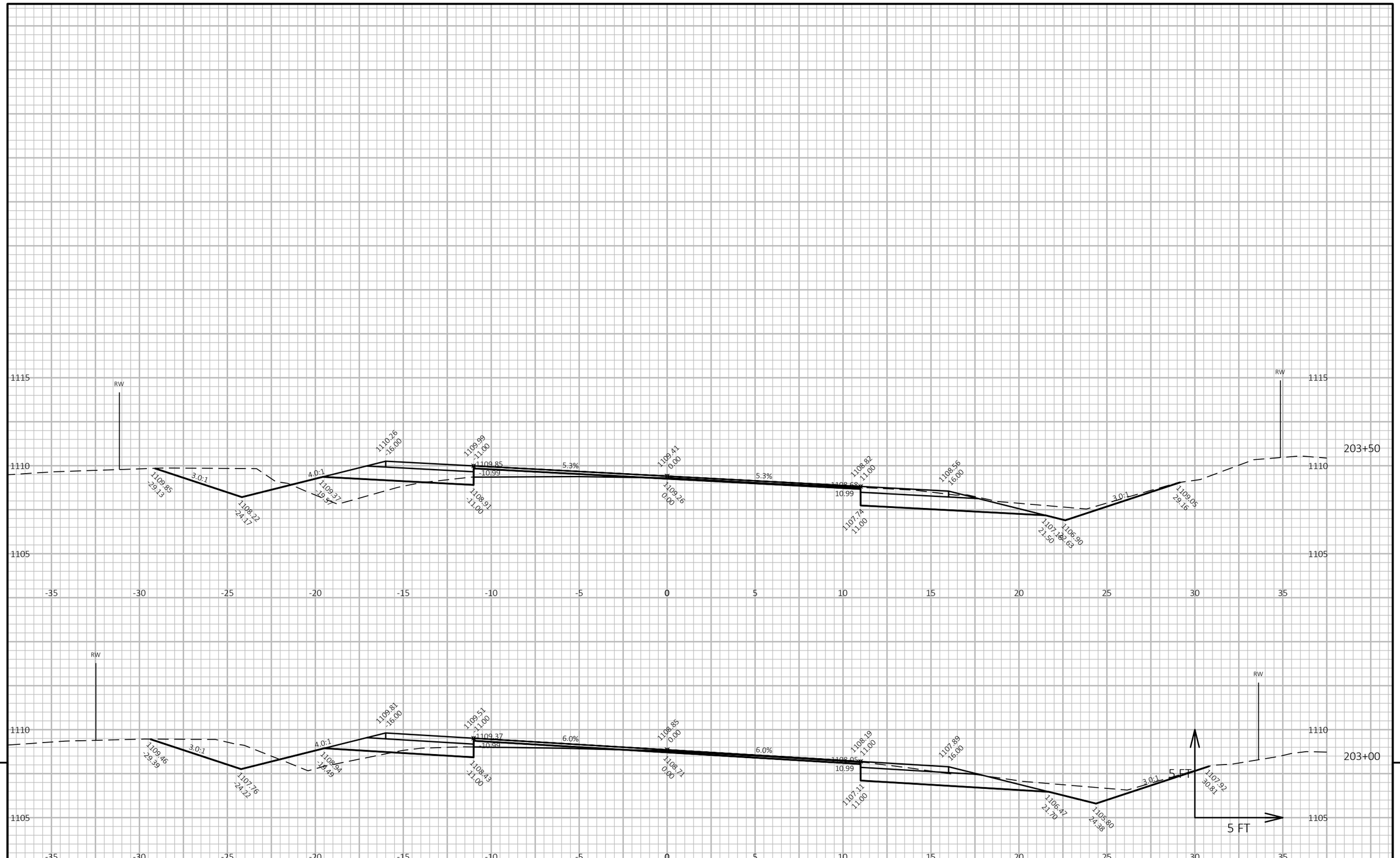

9

9

PROJECT NO: 6270-00-64	HWY: STH 49	COUNTY: WAUPACA	CROSS SECTIONS: STH 49 - MAINILNE	SHEET 180	E

FILE NAME : N:\PDS\C3D\62700034\SHEETSPLAN\090202-XS.DWG
LAYOUT NAME - Section Sheet - (44)

PLOT DATE : 1/25/2018 11:47 AM PLOT BY : BEAUCHAMP, DANIEL J PLOT NAME : PLOT SCALE : 1 IN:10 FT HORZ. / 1 IN:10 FT VERT.

WISDOT/CADDS SHEET 49

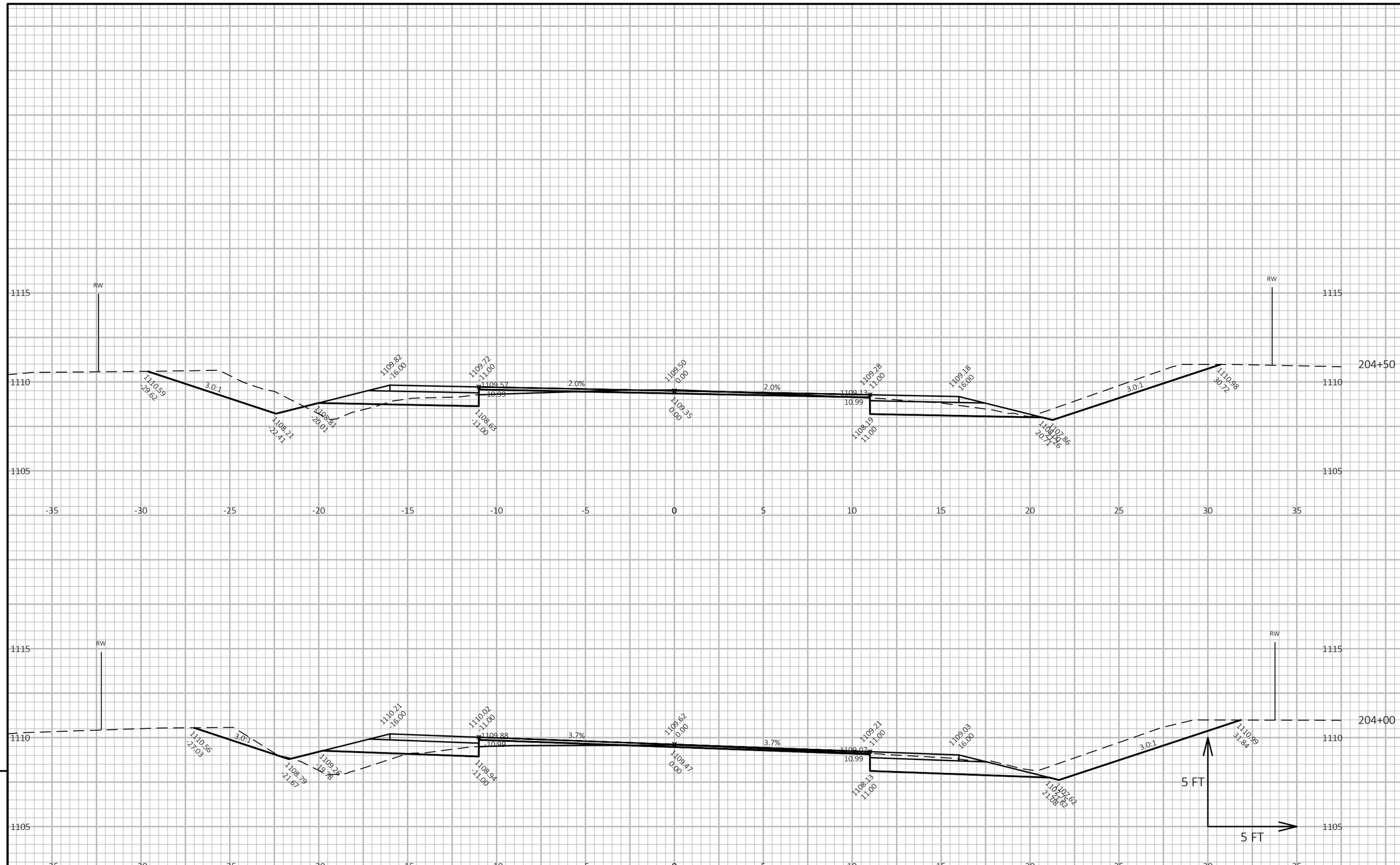

9

9

PROJECT NO: 6270-00-64	HWY: STH 49	COUNTY: WAUPACA	CROSS SECTIONS: STH 49 - MAINILNE	SHEET 181	E

FILE NAME : N:\PDS\C3D\62700034\SHEETSPLAN\090202-XS.DWG
LAYOUT NAME - Section Sheet - (45)
PLOT DATE : 1/25/2018 11:47 AM
PLOT BY : BEAUCHAMP, DANIEL J
PLOT NAME :
PLOT SCALE : 1 IN:10 FT HORZ. / 1 IN:10 FT VERT.
WISDOT/CADDS SHEET 49

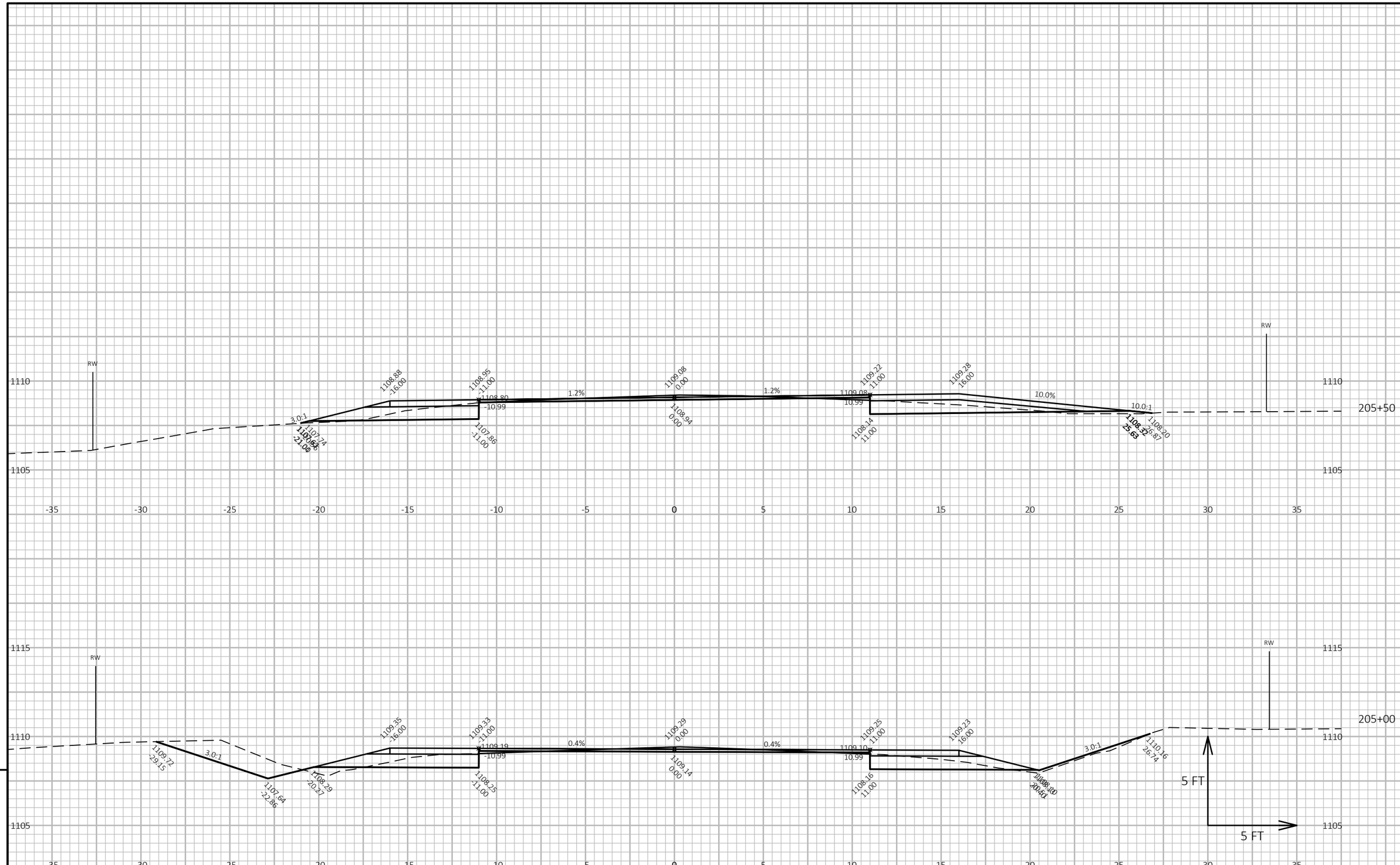

9

9

PROJECT NO: 6270-00-64	HWY: STH 49	COUNTY: WAUPACA	CROSS SECTIONS: STH 49 - MAINILNE	SHEET 182	E

FILE NAME : N:\PDS\C3D\62700034\SHEETSPLAN\090202-XS.DWG
LAYOUT NAME - Section Sheet - (46)

PLOT DATE : 1/25/2018 11:47 AM PLOT BY : BEAUCHAMP, DANIEL J PLOT NAME : PLOT SCALE : 1 IN:10 FT HORZ. / 1 IN:10 FT VERT.

WISDOT/CADDS SHEET 49

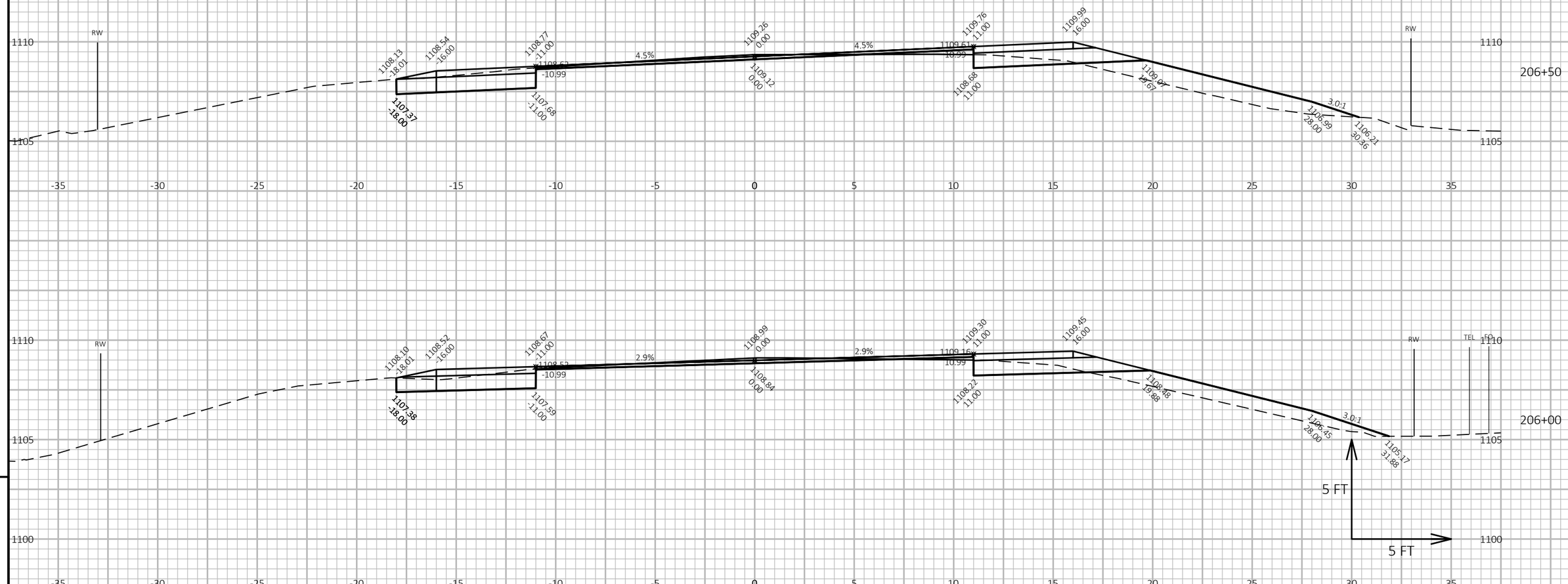

9

9

PROJECT NO: 6270-00-64	HWY: STH 49	COUNTY: WAUPACA	CROSS SECTIONS: STH 49 - MAINILNE	SHEET 183	E

FILE NAME : N:\PDS\C3D\62700034\SHEETSPLAN\090202-XS.DWG
LAYOUT NAME - Section Sheet - (47)
PLOT DATE : 1/25/2018 11:47 AM
PLOT BY : BEAUCHAMP, DANIEL J
PLOT NAME :
PLOT SCALE : 1 IN:10 FT HORZ. / 1 IN:10 FT VERT.
WISDOT/CADDS SHEET 49

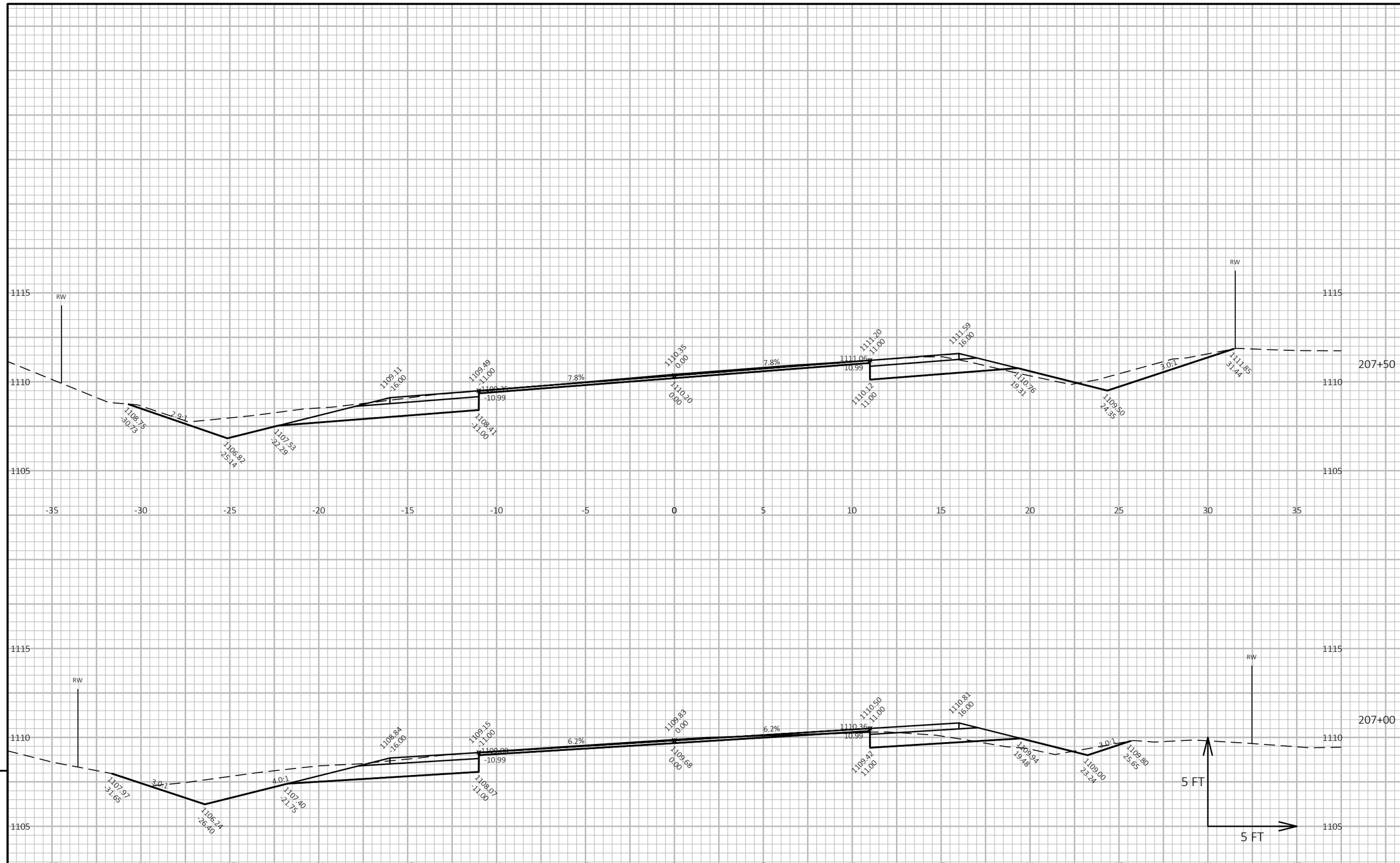

PROJECT NO: 6270-00-64	HWY: STH 49	COUNTY: WAUPACA	CROSS SECTIONS: STH 49 - MAINILNE	SHEET 184	E

FILE NAME : N:\PDS\C3D\62700034\SHEETSPLAN\090202-XS.DWG
LAYOUT NAME - Section Sheet - (48)
PLOT DATE : 1/25/2018 11:47 AM
PLOT BY : BEAUCHAMP, DANIEL J
PLOT NAME :
PLOT SCALE : 1 IN:10 FT HORZ. / 1 IN:10 FT VERT.
WISDOT/CADDS SHEET 49

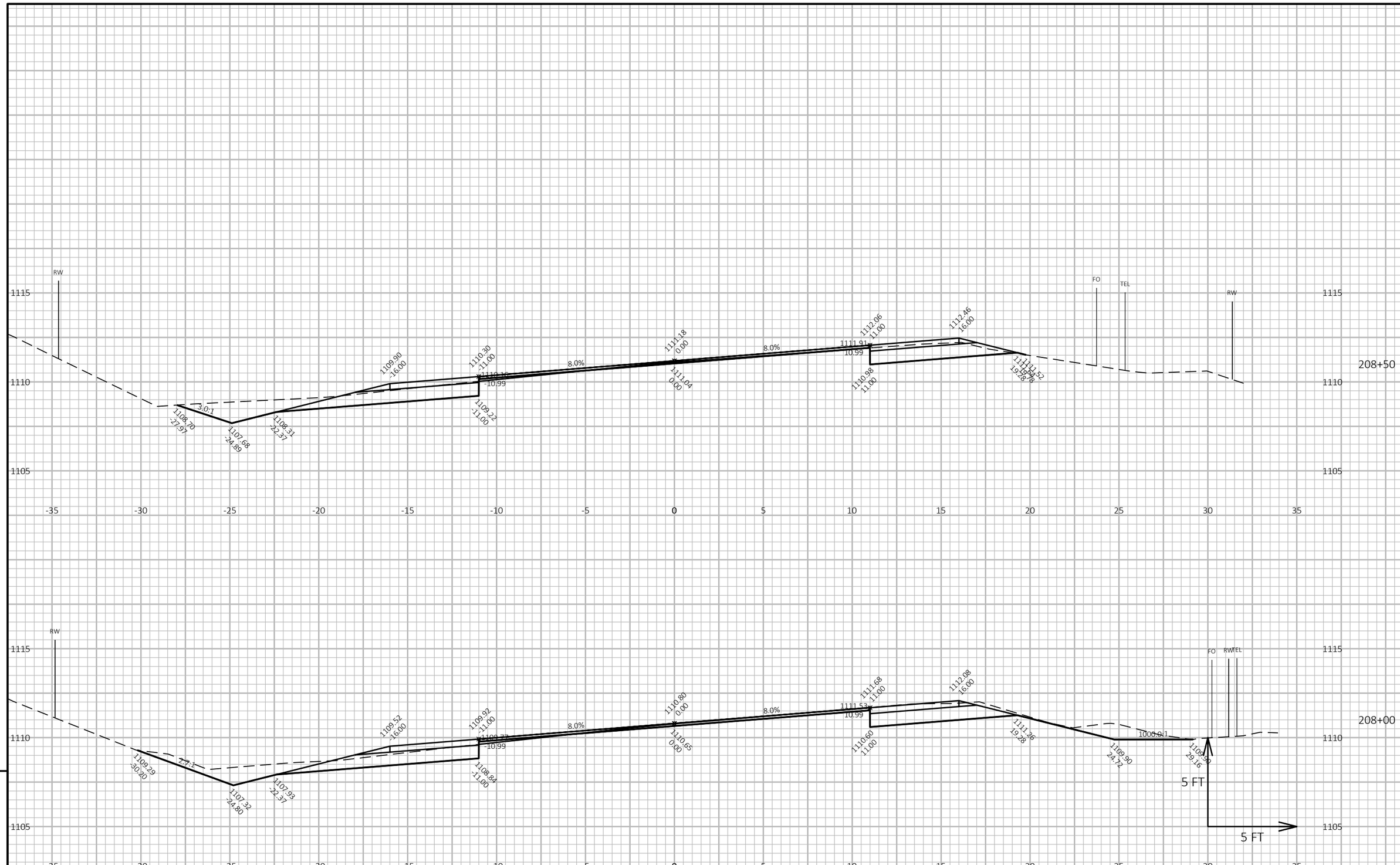

9

9

PROJECT NO: 6270-00-64	HWY: STH 49	COUNTY: WAUPACA	CROSS SECTIONS: STH 49 - MAINILNE	SHEET 185	E

FILE NAME : N:\PDS\C3D\62700034\SHEETSPLAN\090202-XS.DWG
LAYOUT NAME - Section Sheet - (49)
PLOT DATE : 1/25/2018 11:47 AM
PLOT BY : BEAUCHAMP, DANIEL J
PLOT NAME :
PLOT SCALE : 1 IN:10 FT HORZ. / 1 IN:10 FT VERT.
WISDOT/CADDS SHEET 49

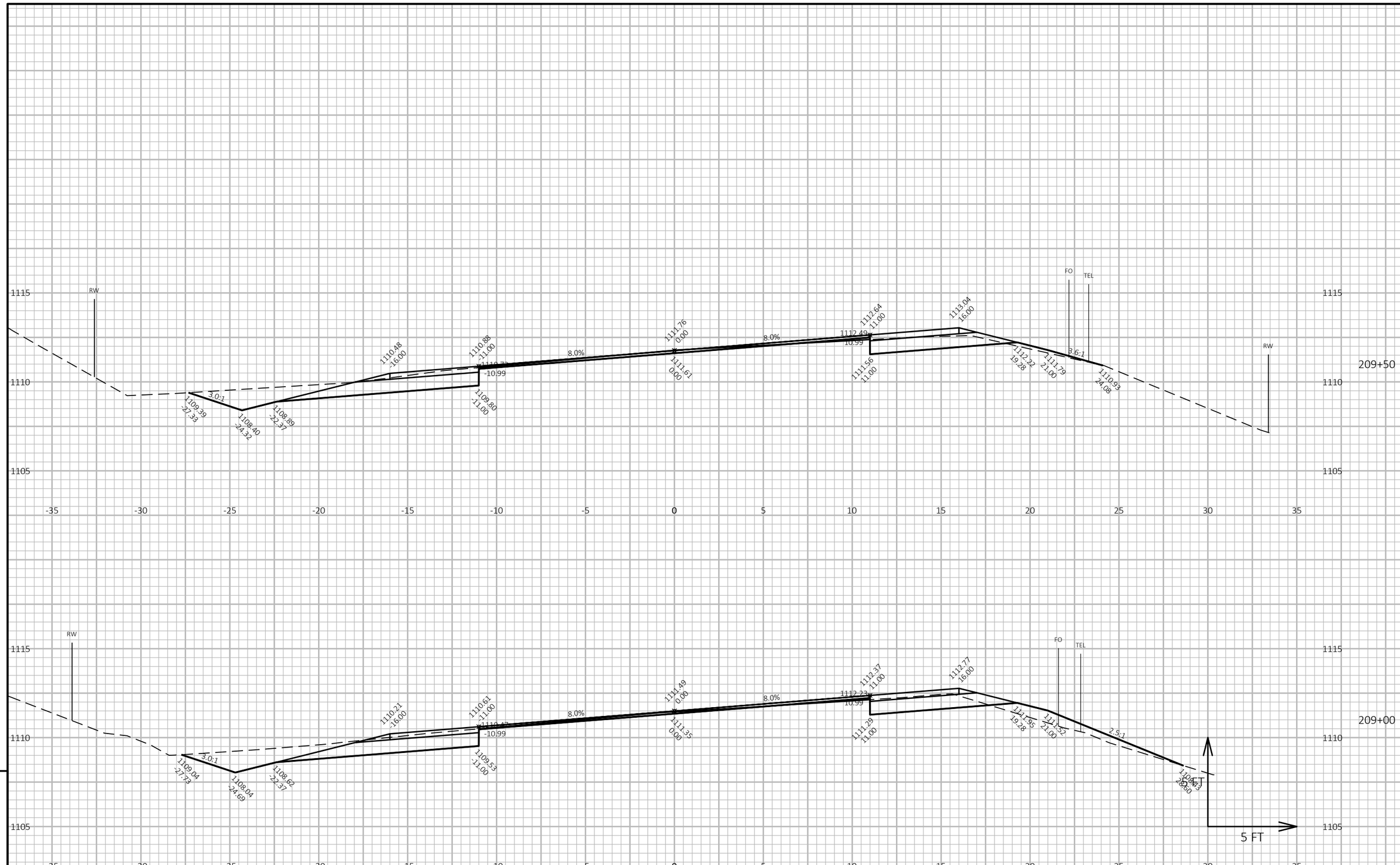

9

9

PROJECT NO: 6270-00-64	HWY: STH 49	COUNTY: WAUPACA	CROSS SECTIONS: STH 49 - MAINILNE	SHEET 186	E

FILE NAME : N:\PDS\C3D\62700034\SHEETSPLAN\090202-XS.DWG
LAYOUT NAME - Section Sheet - (50)
PLOT DATE : 1/25/2018 11:47 AM
PLOT BY : BEAUCHAMP, DANIEL J
PLOT NAME :
PLOT SCALE : 1 IN:10 FT HORZ. / 1 IN:10 FT VERT.
WISDOT/CADDS SHEET 49

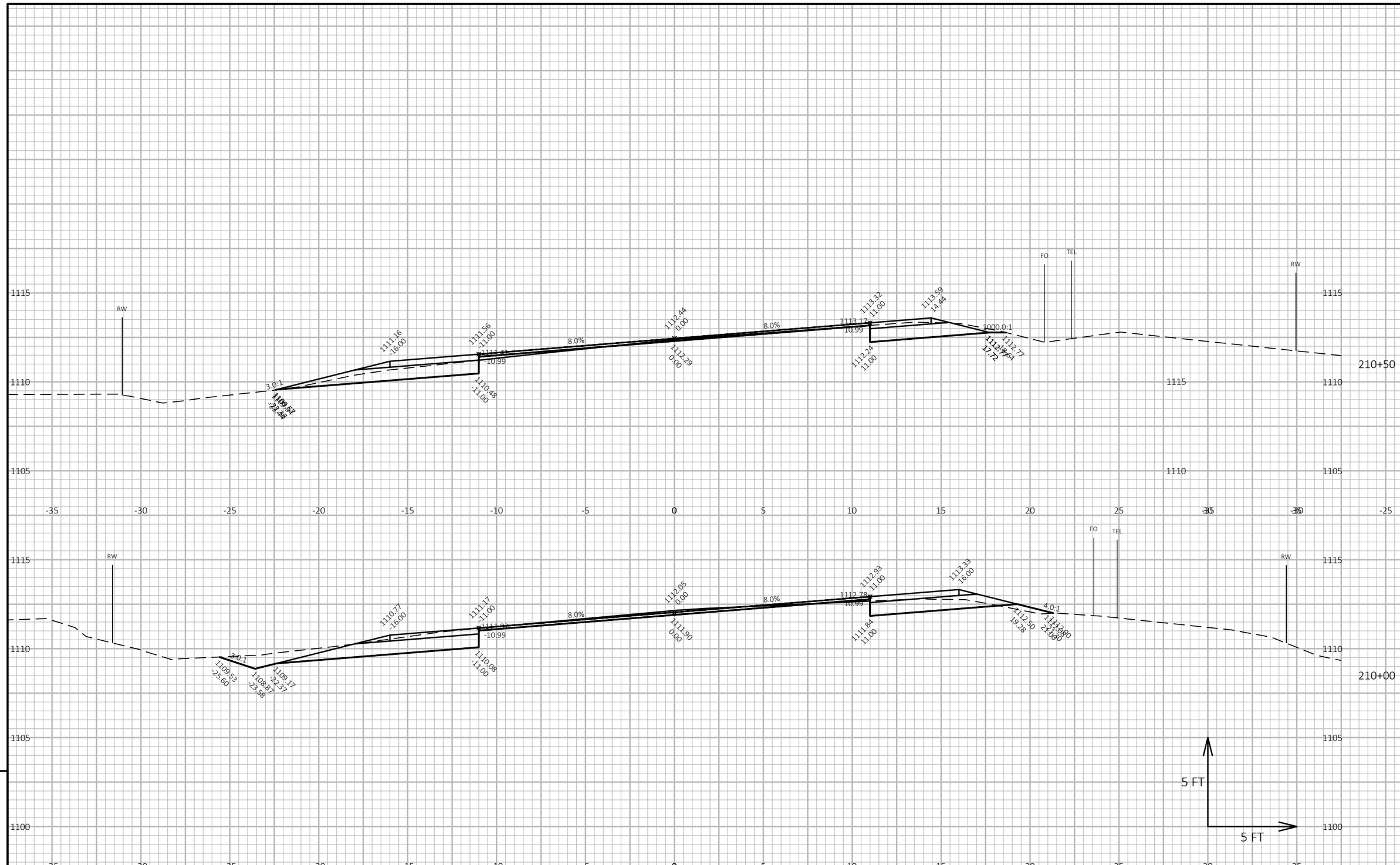

PROJECT NO: 6270-00-64	HWY: STH 49	COUNTY: WAUPACA	CROSS SECTIONS: STH 49 - MAINILNE	SHEET 187	E

FILE NAME : N:\PDS\C3D\62700034\SHEETSPLAN\090202-XS.DWG
LAYOUT NAME - Section Sheet - (51)
PLOT DATE : 1/25/2018 11:47 AM
PLOT BY : BEAUCHAMP, DANIEL J
PLOT NAME :
PLOT SCALE : 1 IN:10 FT HORZ. / 1 IN:10 FT VERT.
WISDOT/CADDS SHEET 49

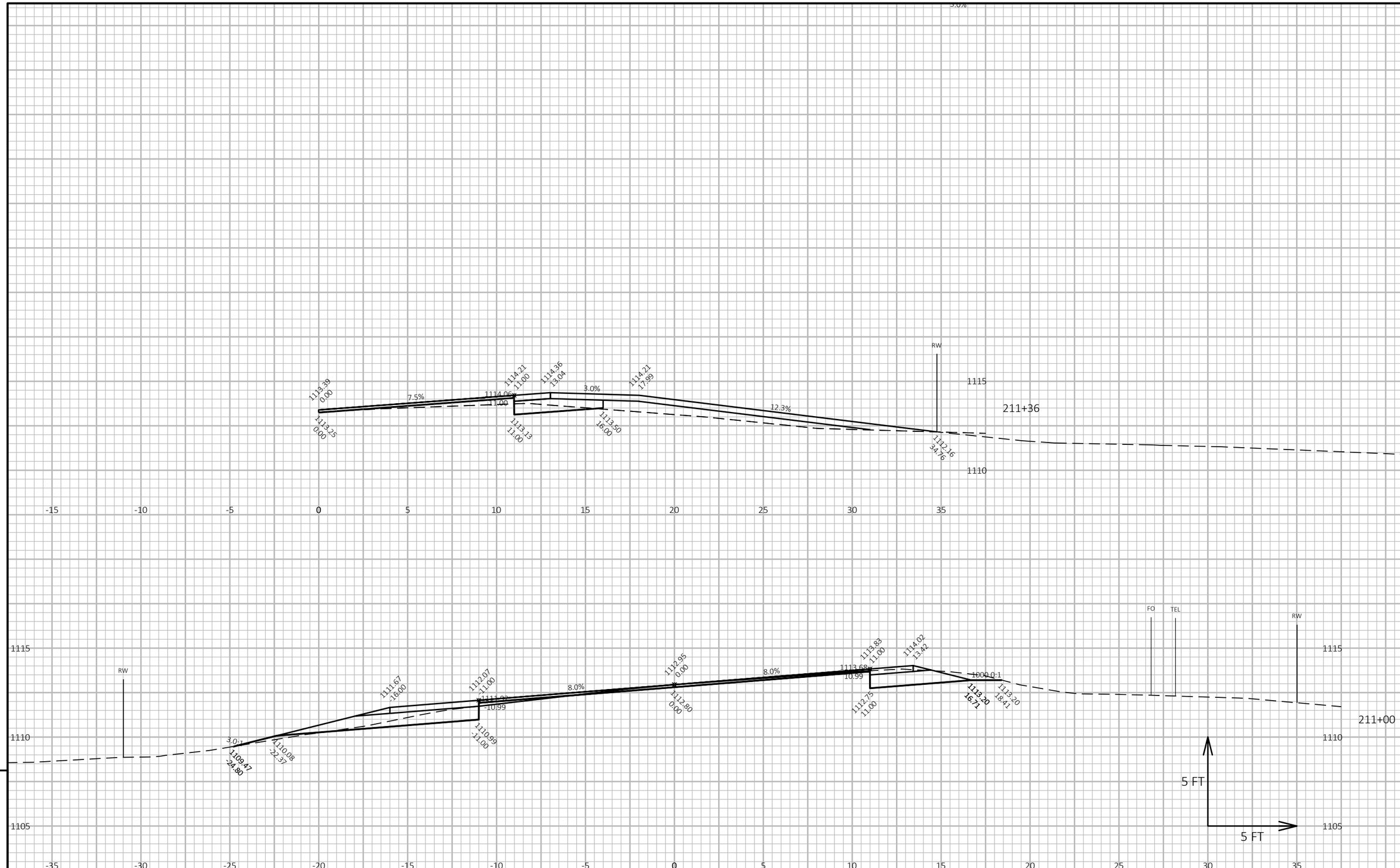

9

9

PROJECT NO: 6270-00-64	HWY: STH 49	COUNTY: WAUPACA	CROSS SECTIONS: STH 49 - MAINILNE	SHEET 188	E

FILE NAME : N:\PDS\C3D\62700034\SHEETSPLAN\090202-XS.DWG
LAYOUT NAME - Section Sheet - (52)
PLOT DATE : 1/25/2018 11:47 AM
PLOT BY : BEAUCHAMP, DANIEL J
PLOT NAME :
PLOT SCALE : 1 IN:10 FT HORZ. / 1 IN:10 FT VERT.
WISDOT/CADDS SHEET 49

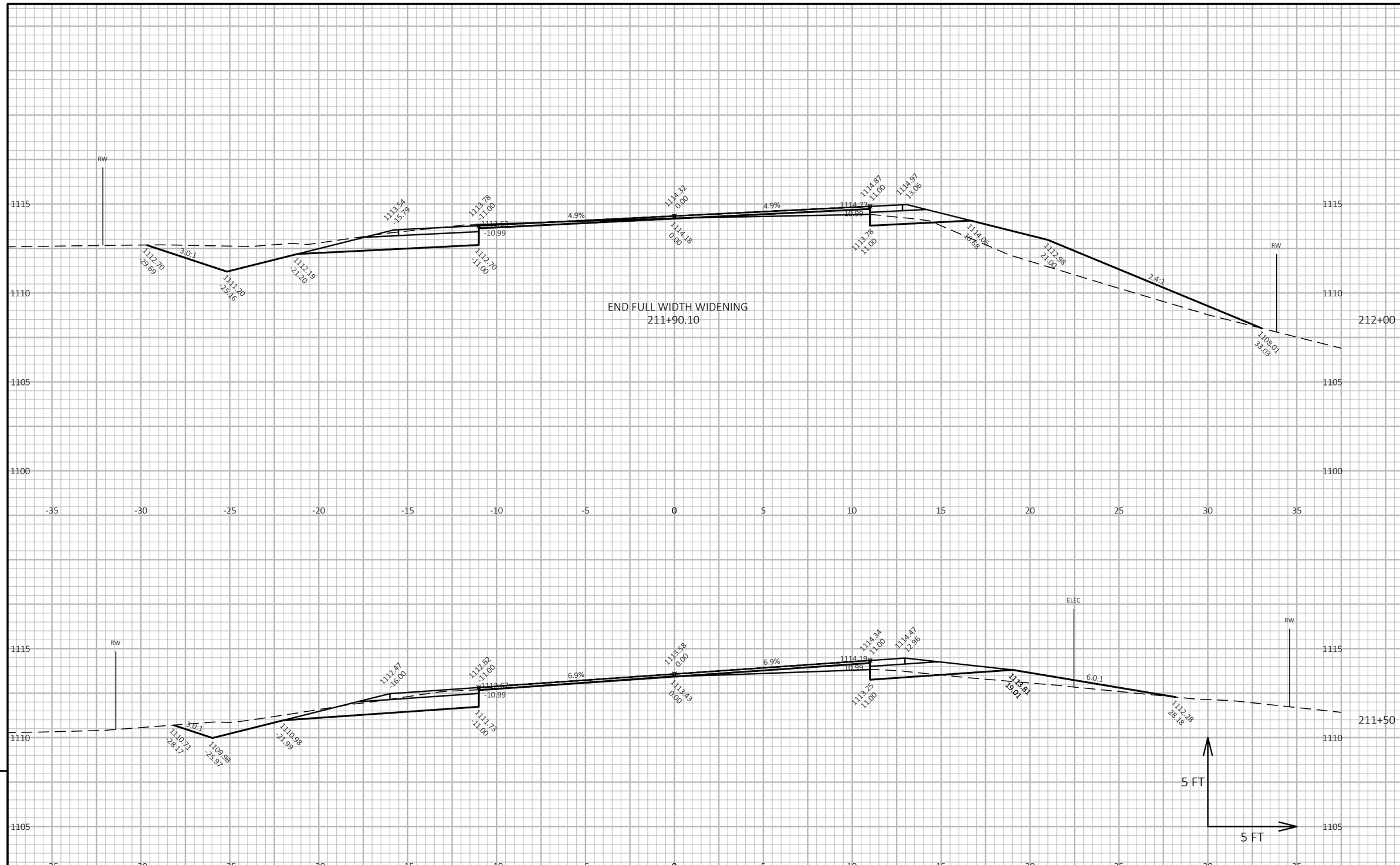

9

9

PROJECT NO: 6270-00-64	HWY: STH 49	COUNTY: WAUPACA	CROSS SECTIONS: STH 49 - MAINILNE	SHEET 189	E

FILE NAME : N:\PDS\C3D\62700034\SHEETSPLAN\090202-XS.DWG
LAYOUT NAME - Section Sheet - (53)
PLOT DATE : 1/25/2018 11:48 AM
PLOT BY : BEAUCHAMP, DANIEL J
PLOT NAME :
PLOT SCALE : 1 IN:10 FT HORZ. / 1 IN:10 FT VERT.
WISDOT/CADDS SHEET 49

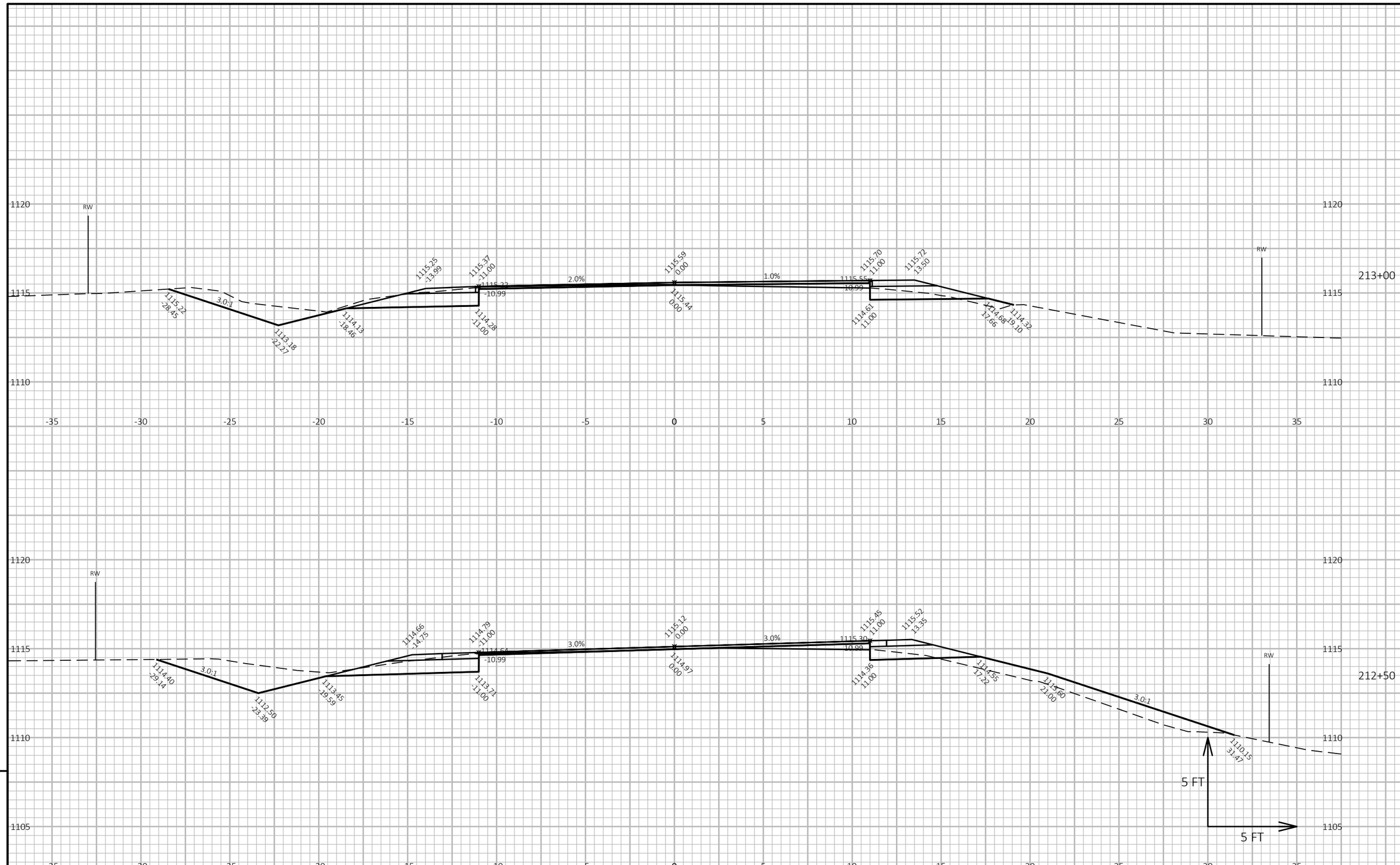

PROJECT NO: 6270-00-64	HWY: STH 49	COUNTY: WAUPACA	CROSS SECTIONS: STH 49 - MAINILNE	SHEET 190	E

FILE NAME : N:\PDS\C3D\62700034\SHEETSPLAN\090202-XS.DWG
LAYOUT NAME - Section Sheet - (54)
PLOT DATE : 1/25/2018 11:48 AM
PLOT BY : BEAUCHAMP, DANIEL J
PLOT NAME :
PLOT SCALE : 1 IN:10 FT HORZ. / 1 IN:10 FT VERT.
WISDOT/CADDS SHEET 49

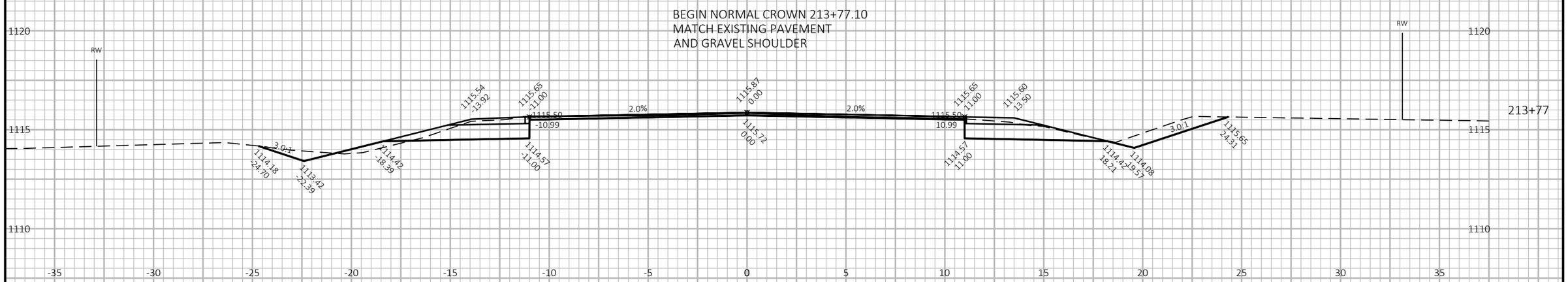

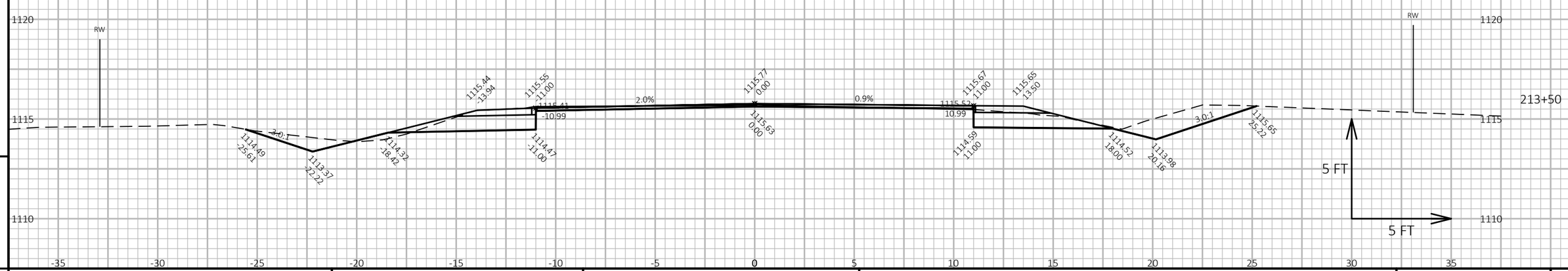

9

9

PROJECT NO: 6270-00-64	HWY: STH 49	COUNTY: WAUPACA	CROSS SECTIONS: STH 49 - MAINILNE	SHEET 191	E

FILE NAME : N:\PDS\C3D\62700034\SHEETSPLAN\090202-XS.DWG
LAYOUT NAME - Section Sheet - (55)
PLOT DATE : 1/25/2018 11:48 AM
PLOT BY : BEAUCHAMP, DANIEL J
PLOT NAME :
PLOT SCALE : 1 IN:10 FT HORZ. / 1 IN:10 FT VERT.
WISDOT/CADDS SHEET 49

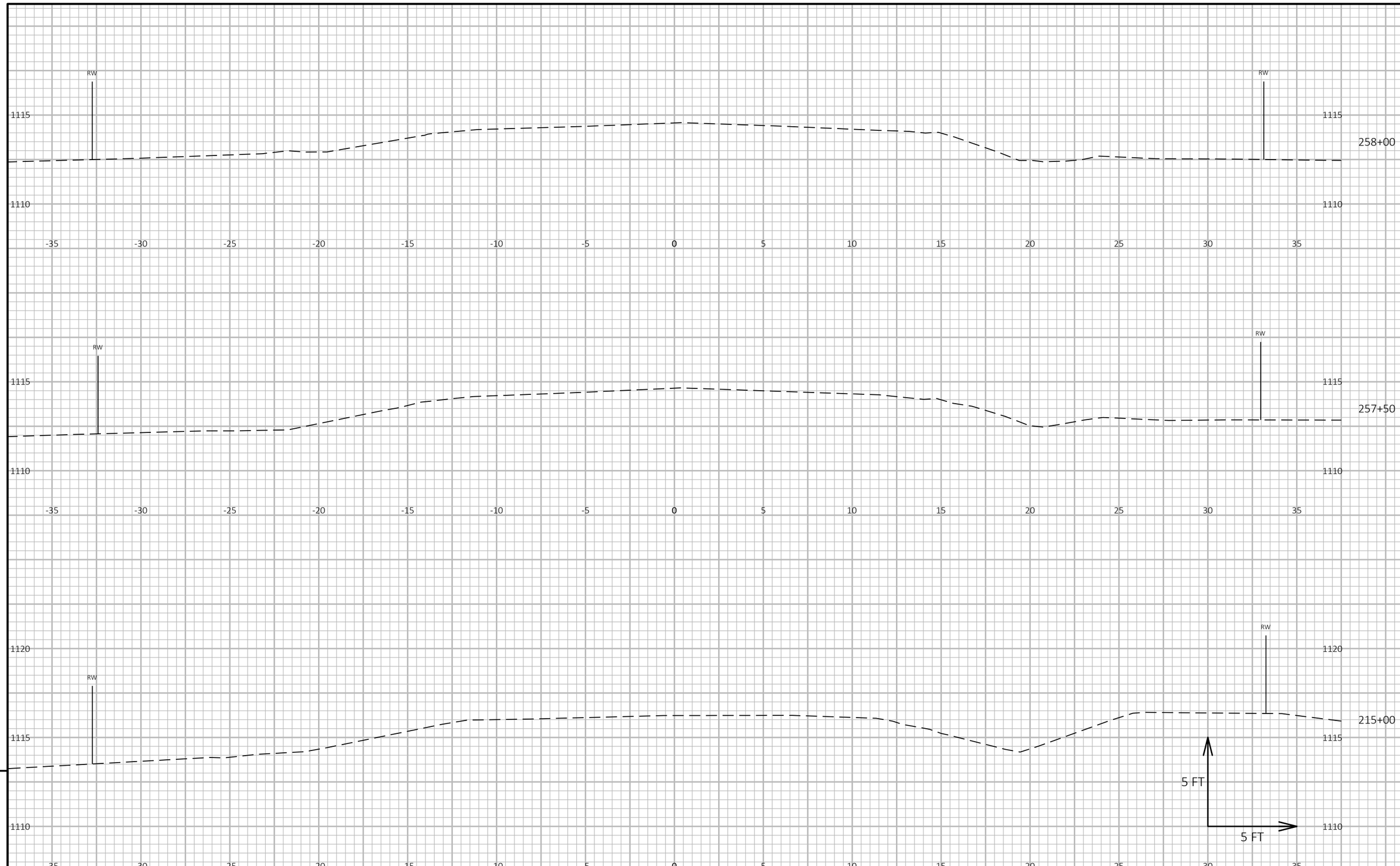

9 9

PROJECT NO: 6270-00-64	HWY: STH 49	COUNTY: WAUPACA	CROSS SECTIONS: STH 49 - MAINILNE	SHEET 192	E

FILE NAME : N:\PDS\C3D\62700034\SHEETSPLAN\090202-XS.DWG
LAYOUT NAME - Section Sheet - (57)
PLOT DATE : 1/25/2018 11:48 AM PLOT BY : BEAUCHAMP, DANIEL J PLOT NAME : PLOT SCALE : 1 IN:10 FT HORZ. / 1 IN:10 FT VERT.
WISDOT/CADDS SHEET 49

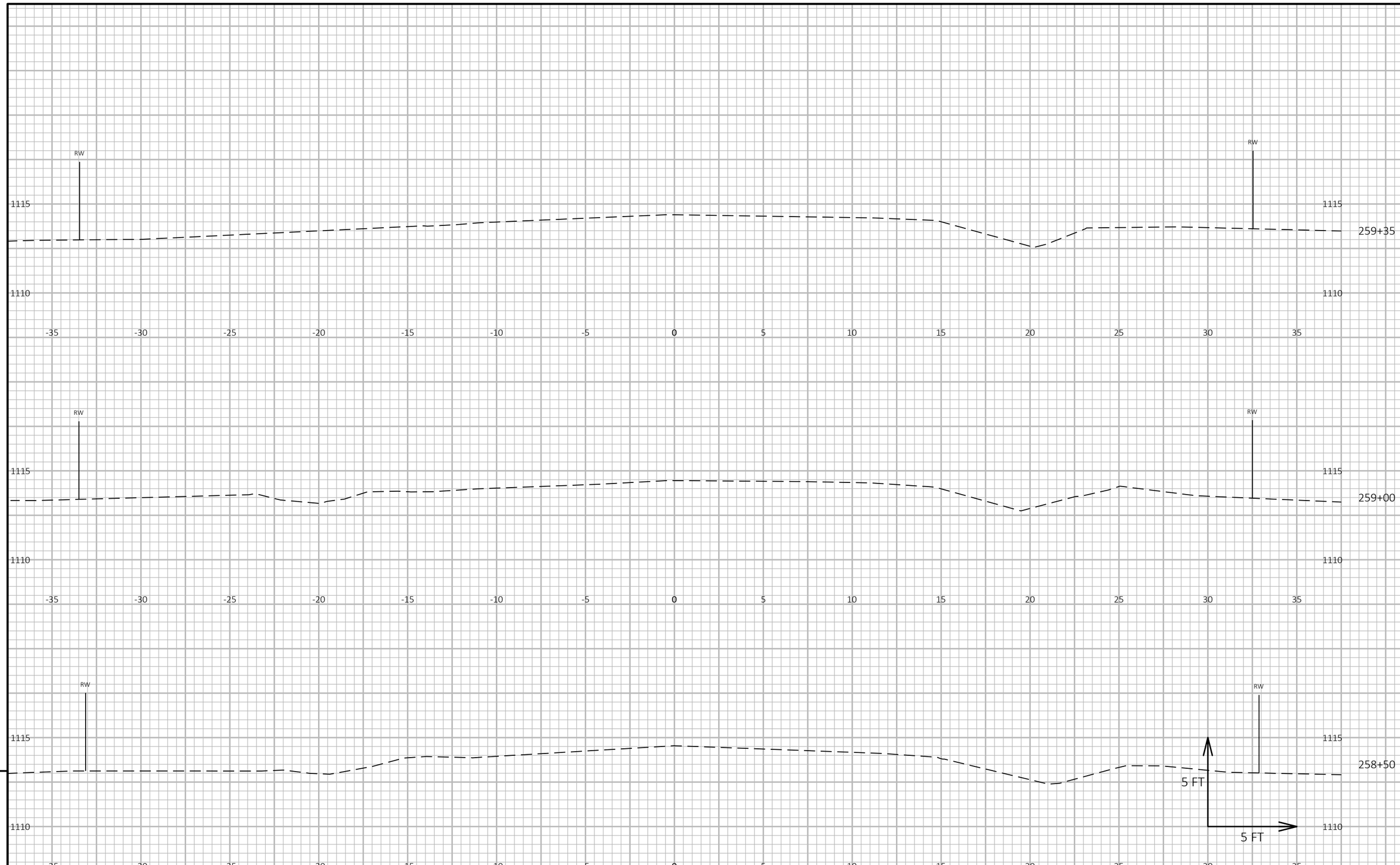

9 9

PROJECT NO: 6270-00-64	HWY: STH 49	COUNTY: WAUPACA	CROSS SECTIONS: STH 49 - MAINILNE	SHEET 193	E

FILE NAME : N:\PDS\C3D\62700034\SHEETSPLAN\090202-XS.DWG
LAYOUT NAME - Section Sheet - (58)
PLOT DATE : 1/25/2018 11:48 AM PLOT BY : BEAUCHAMP, DANIEL J PLOT NAME : PLOT SCALE : 1 IN:10 FT HORZ. / 1 IN:10 FT VERT.
WISDOT/CADDS SHEET 49

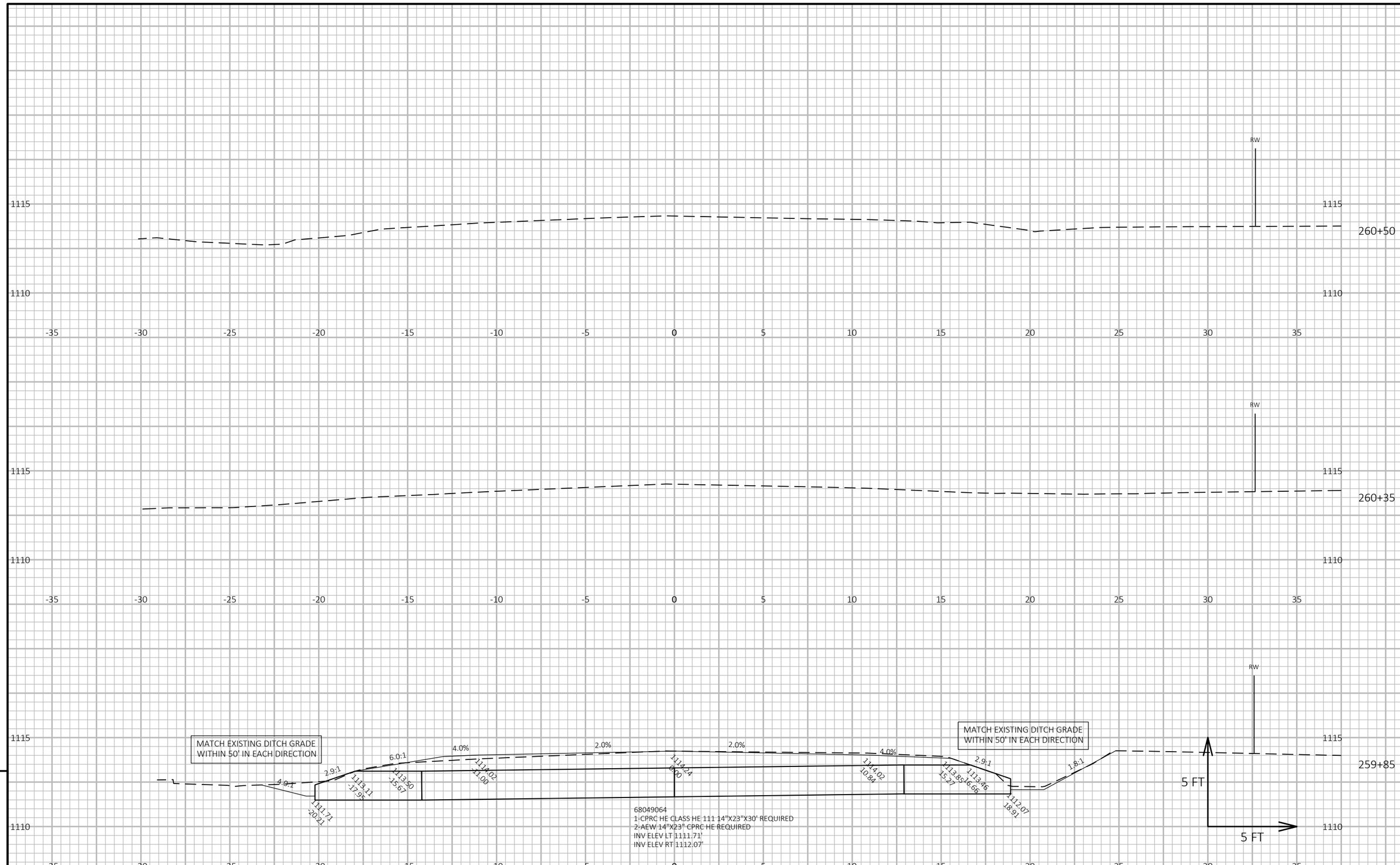

9

9

PROJECT NO: 6270-00-64	HWY: STH 49	COUNTY: WAUPACA	CROSS SECTIONS: STH 49 - MAINILNE	SHEET 194	E

FILE NAME : N:\PDS\C3D\62700034\SHEETSPLAN\090202-XS.DWG
LAYOUT NAME - Section Sheet - (59)
PLOT DATE : 1/25/2018 11:48 AM
PLOT BY : BEAUCHAMP, DANIEL J
PLOT NAME :
PLOT SCALE : 1 IN:10 FT HORZ. / 1 IN:10 FT VERT.
WISDOT/CADDS SHEET 49

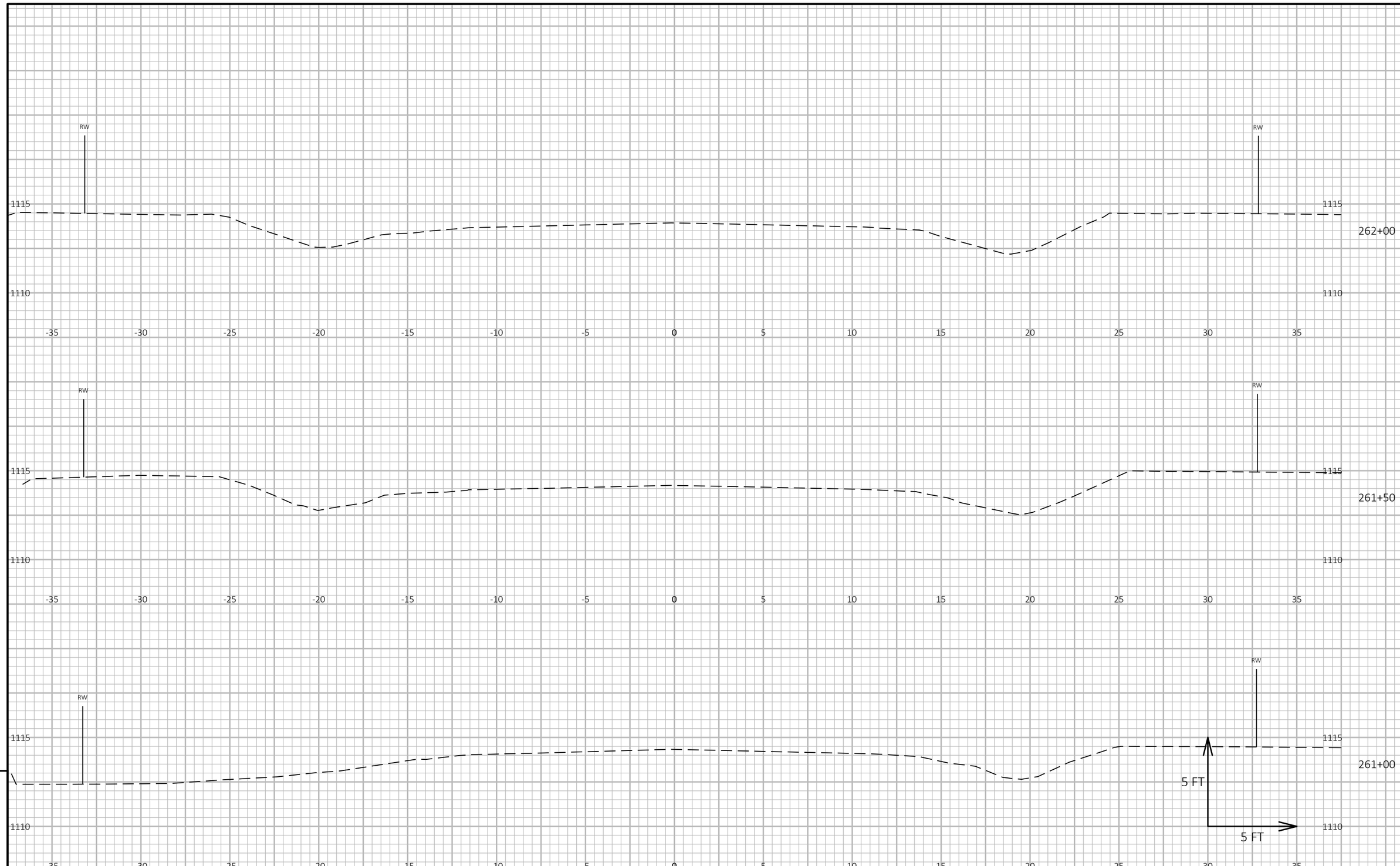

9

9

PROJECT NO: 6270-00-64	HWY: STH 49	COUNTY: WAUPACA	CROSS SECTIONS: STH 49 - MAINILNE	SHEET 195	E

FILE NAME : N:\PDS\C3D\62700034\SHEETSPLAN\090202-XS.DWG
LAYOUT NAME - Section Sheet - (60)
PLOT DATE : 1/25/2018 11:48 AM
PLOT BY : BEAUCHAMP, DANIEL J
PLOT NAME :
PLOT SCALE : 1 IN:10 FT HORZ. / 1 IN:10 FT VERT.
WISDOT/CADDS SHEET 49

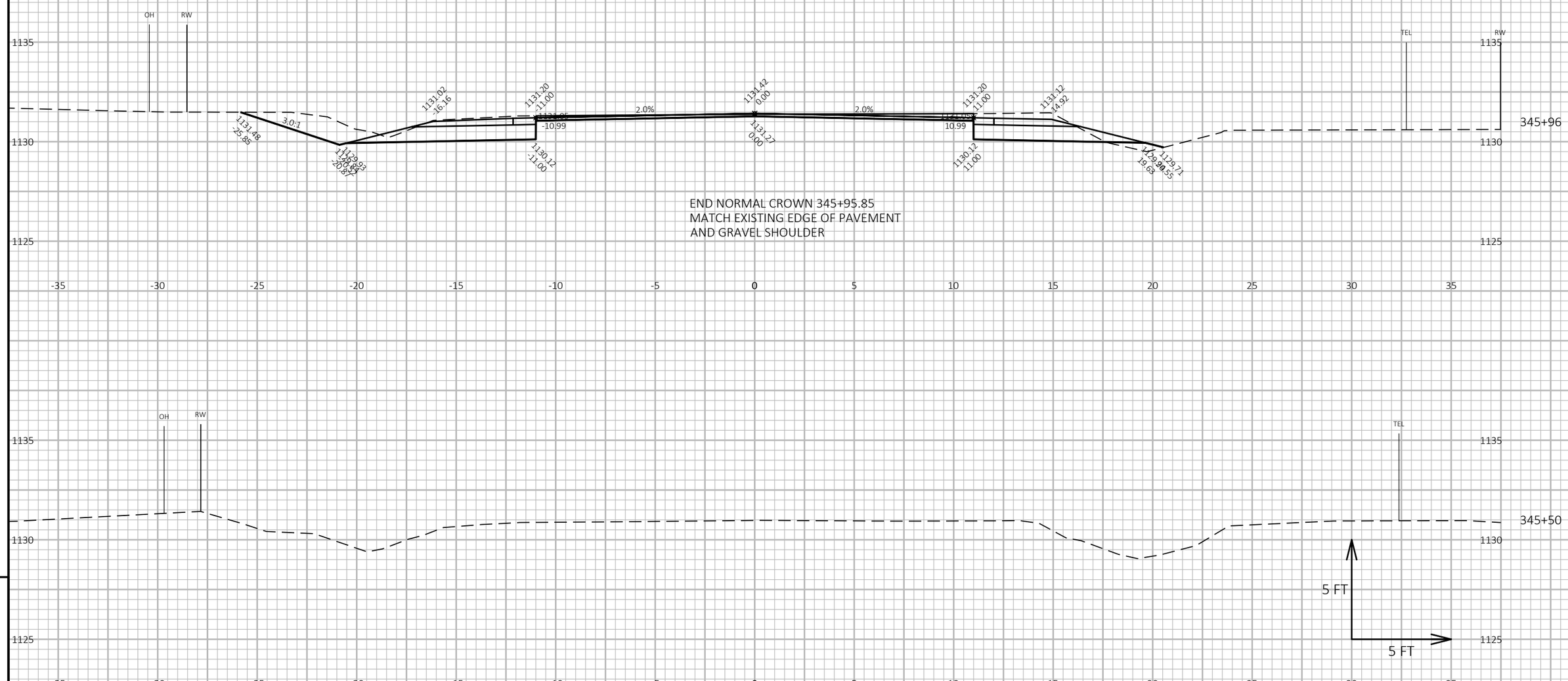

PROJECT NO: 6270-00-64	HWY: STH 49	COUNTY: WAUPACA	CROSS SECTIONS: STH 49 - MAINILNE	SHEET 196	E

FILE NAME : N:\PDS\C3D\62700034\SHEETSPLAN\090202-XS.DWG
LAYOUT NAME - Section Sheet - (62)
PLOT DATE : 1/25/2018 11:48 AM
PLOT BY : BEAUCHAMP, DANIEL J
PLOT NAME :
PLOT SCALE : 1 IN:10 FT HORZ. / 1 IN:10 FT VERT.
WISDOT/CADDS SHEET 49

9 9

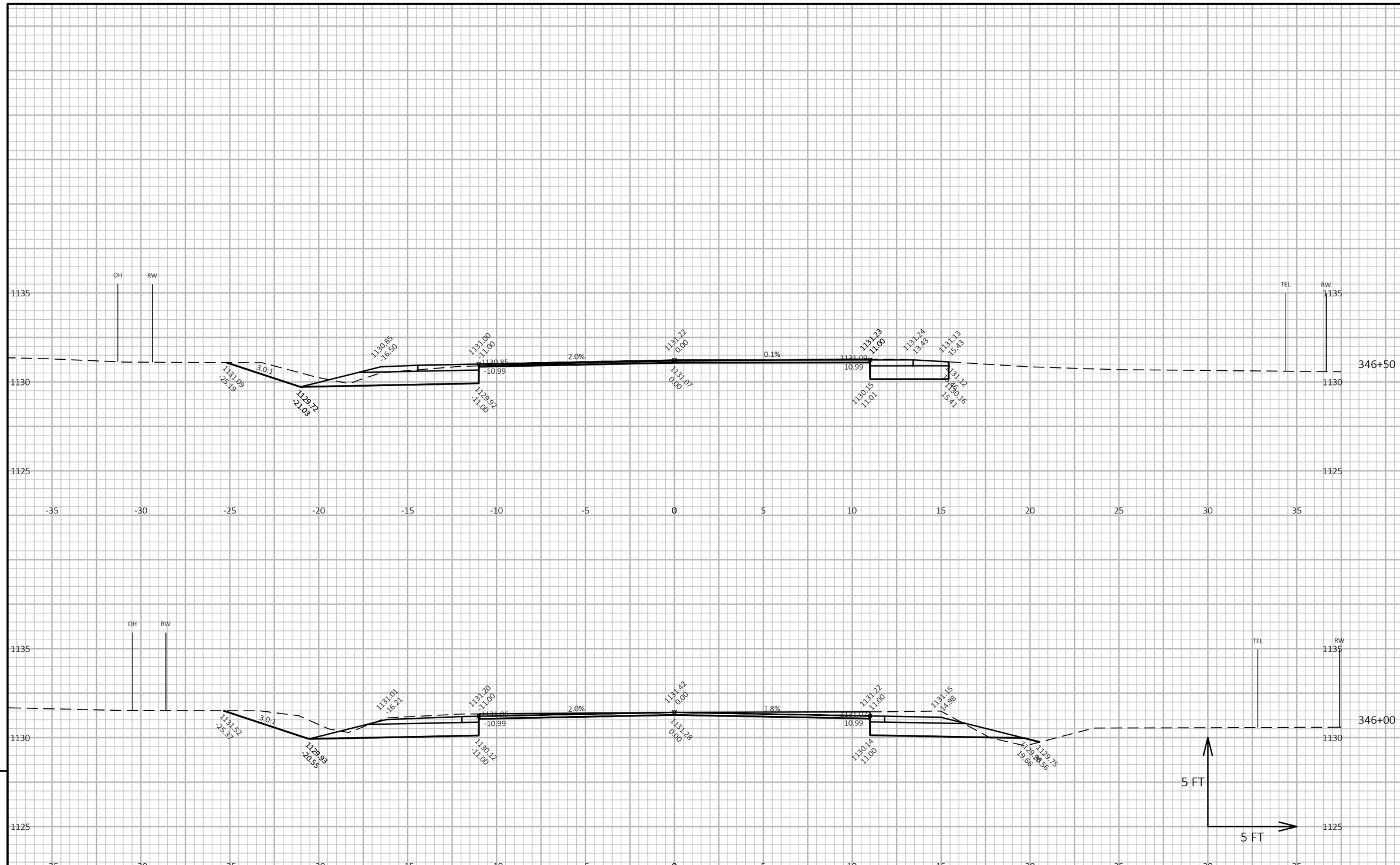

9

9

PROJECT NO: 6270-00-64	HWY: STH 49	COUNTY: WAUPACA	CROSS SECTIONS: STH 49 - MAINILNE	SHEET 197	E

FILE NAME : N:\PDS\C3D\62700034\SHEETSPLAN\090202-XS.DWG
LAYOUT NAME - Section Sheet - (63)
PLOT DATE : 1/25/2018 11:48 AM
PLOT BY : BEAUCHAMP, DANIEL J
PLOT NAME :
PLOT SCALE : 1 IN:10 FT HORZ. / 1 IN:10 FT VERT.
WISDOT/CADDS SHEET 49

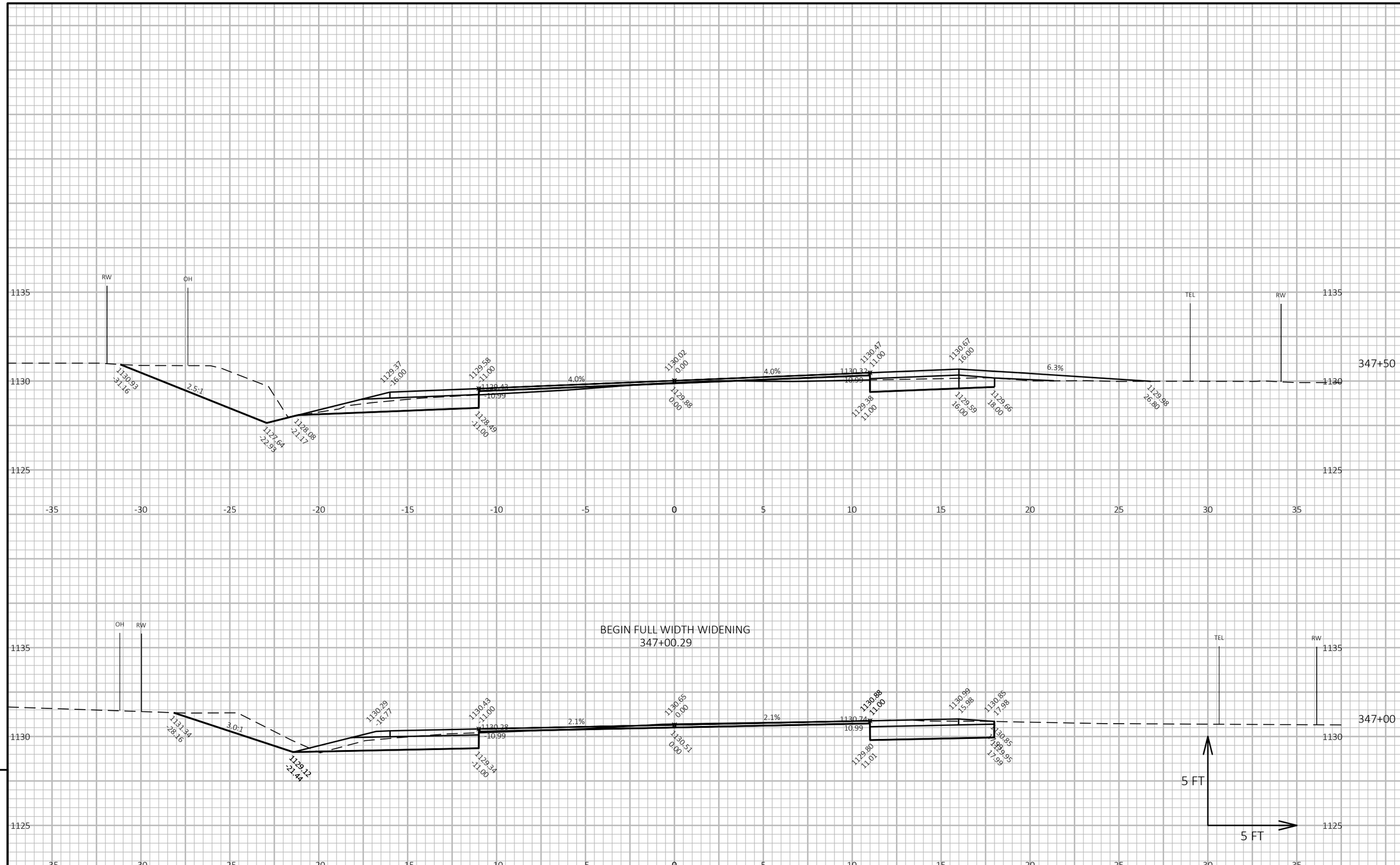

9

9

PROJECT NO: 6270-00-64	HWY: STH 49	COUNTY: WAUPACA	CROSS SECTIONS: STH 49 - MAINILNE	SHEET 198	E

FILE NAME : N:\PDS\C3D\62700034\SHEETSPLAN\090202-XS.DWG
LAYOUT NAME - Section Sheet - (64)
PLOT DATE : 1/25/2018 11:49 AM
PLOT BY : BEAUCHAMP, DANIEL J
PLOT NAME :
PLOT SCALE : 1 IN:10 FT HORZ. / 1 IN:10 FT VERT.
WISDOT/CADDS SHEET 49

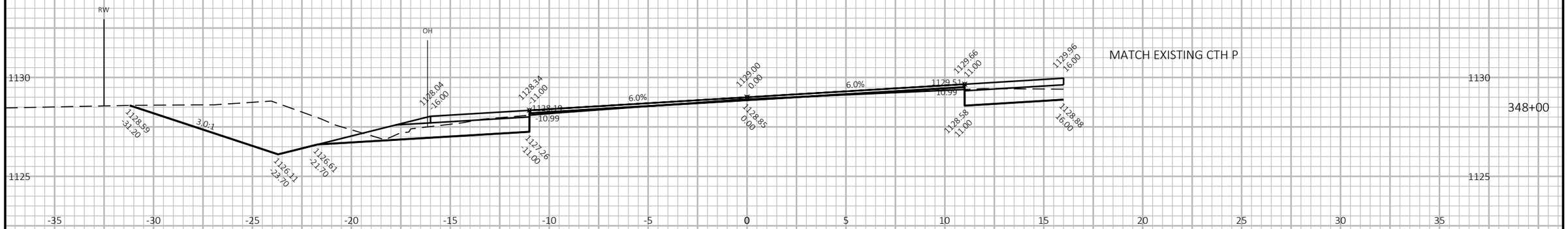

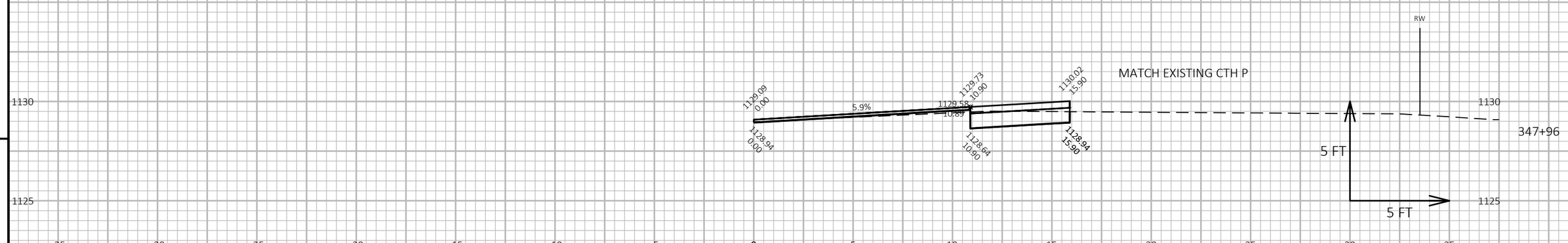

9

9

PROJECT NO: 6270-00-64	HWY: STH 49	COUNTY: WAUPACA	CROSS SECTIONS: STH 49 - MAINILNE	SHEET 199	E

FILE NAME : N:\PDS\C3D\62700034\SHEETSPLAN\090202-XS.DWG
LAYOUT NAME - Section Sheet - (65)
PLOT DATE : 1/25/2018 11:49 AM
PLOT BY : BEAUCHAMP, DANIEL J
PLOT NAME :
PLOT SCALE : 1 IN:10 FT HORZ. / 1 IN:10 FT VERT.
WISDOT/CADDS SHEET 49

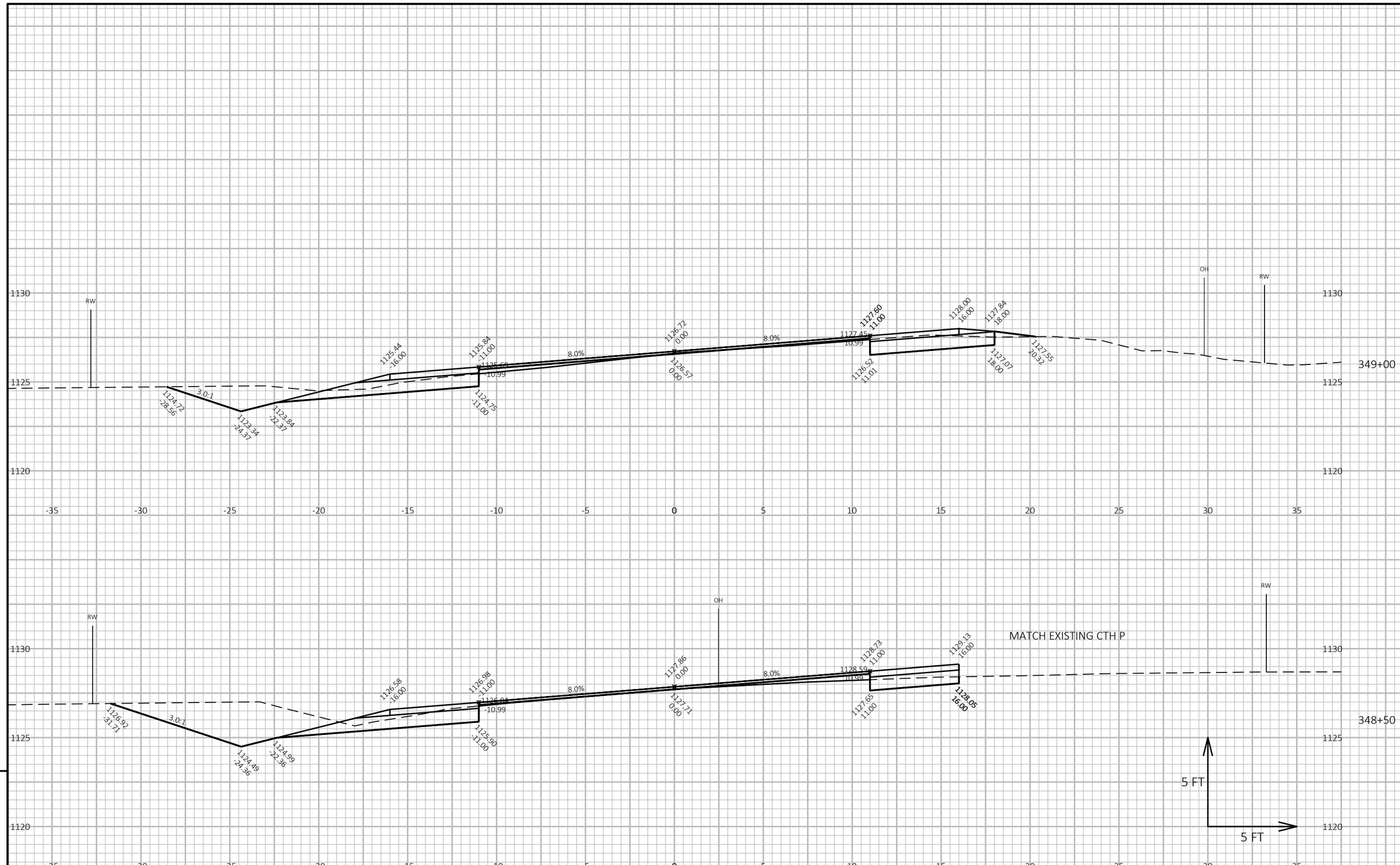

PROJECT NO: 6270-00-64	HWY: STH 49	COUNTY: WAUPACA	CROSS SECTIONS: STH 49 - MAINILNE	SHEET 200	E

FILE NAME : N:\PDS\C3D\62700034\SHEETSPLAN\090202-XS.DWG
LAYOUT NAME - Section Sheet - (66)
PLOT DATE : 1/25/2018 11:49 AM
PLOT BY : BEAUCHAMP, DANIEL J
PLOT NAME :
PLOT SCALE : 1 IN:10 FT HORZ. / 1 IN:10 FT VERT.
WISDOT/CADDS SHEET 49

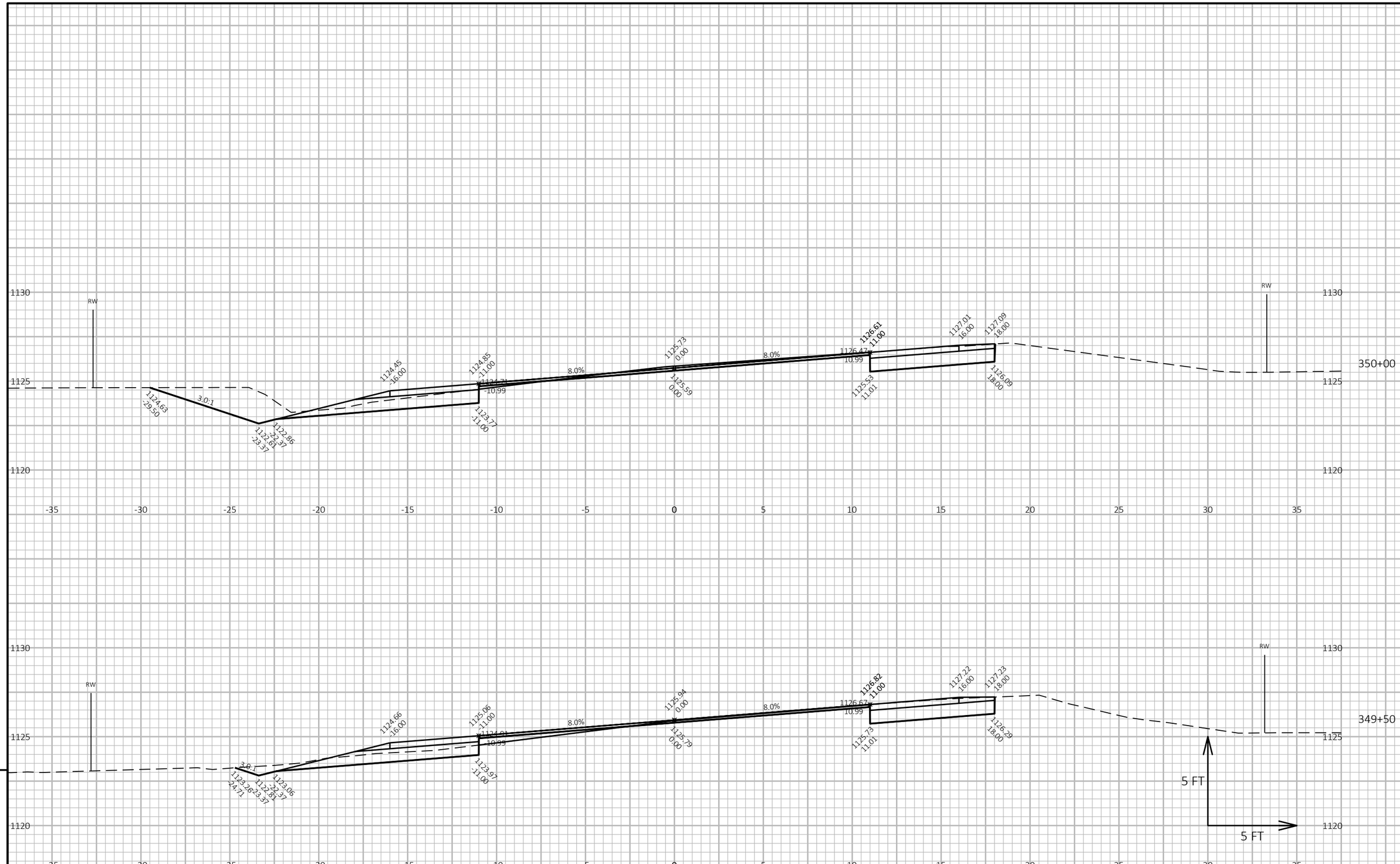

9

9

PROJECT NO: 6270-00-64	HWY: STH 49	COUNTY: WAUPACA	CROSS SECTIONS: STH 49 - MAINILNE	SHEET 201	E

FILE NAME : N:\PDS\C3D\62700034\SHEETSPLAN\090202-XS.DWG
LAYOUT NAME - Section Sheet - (67)

PLOT DATE : 1/25/2018 11:49 AM PLOT BY : BEAUCHAMP, DANIEL J PLOT NAME : PLOT SCALE : 1 IN:10 FT HORZ. / 1 IN:10 FT VERT.

WISDOT/CADDS SHEET 49

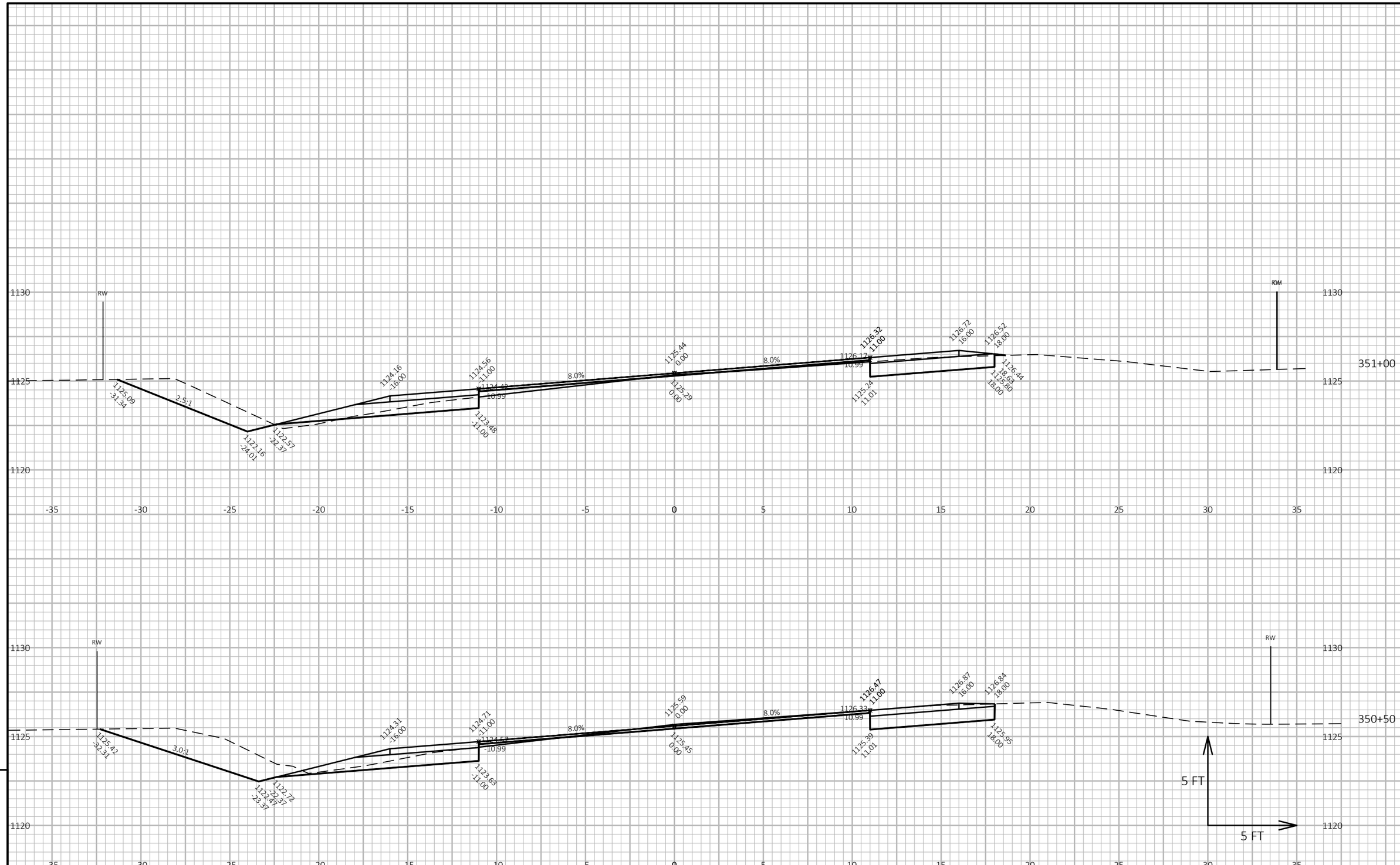

9

9

PROJECT NO: 6270-00-64	HWY: STH 49	COUNTY: WAUPACA	CROSS SECTIONS: STH 49 - MAINILNE	SHEET 202	E

FILE NAME : N:\PDS\C3D\62700034\SHEETSPLAN\090202-XS.DWG
LAYOUT NAME - Section Sheet - (68)

PLOT DATE : 1/25/2018 11:49 AM PLOT BY : BEAUCHAMP, DANIEL J PLOT NAME : PLOT SCALE : 1 IN:10 FT HORZ. / 1 IN:10 FT VERT.

WISDOT/CADDS SHEET 49

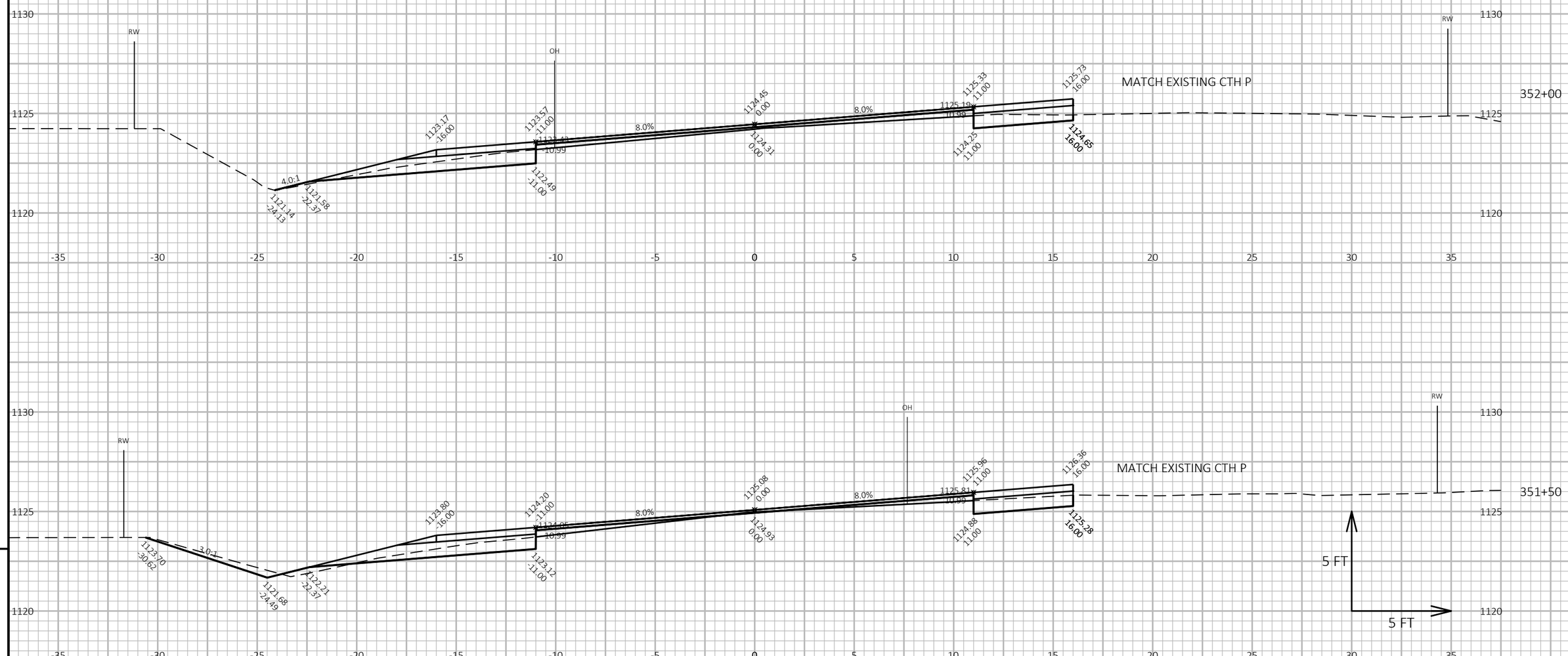

9

9

PROJECT NO: 6270-00-64	HWY: STH 49	COUNTY: WAUPACA	CROSS SECTIONS: STH 49 - MAINILNE	SHEET 203	E

FILE NAME : N:\PDS\C3D\62700034\SHEETSPLAN\090202-XS.DWG
LAYOUT NAME - Section Sheet - (69)
PLOT DATE : 1/25/2018 11:49 AM
PLOT BY : BEAUCHAMP, DANIEL J
PLOT NAME :
PLOT SCALE : 1 IN:10 FT HORZ. / 1 IN:10 FT VERT.
WISDOT/CADDS SHEET 49

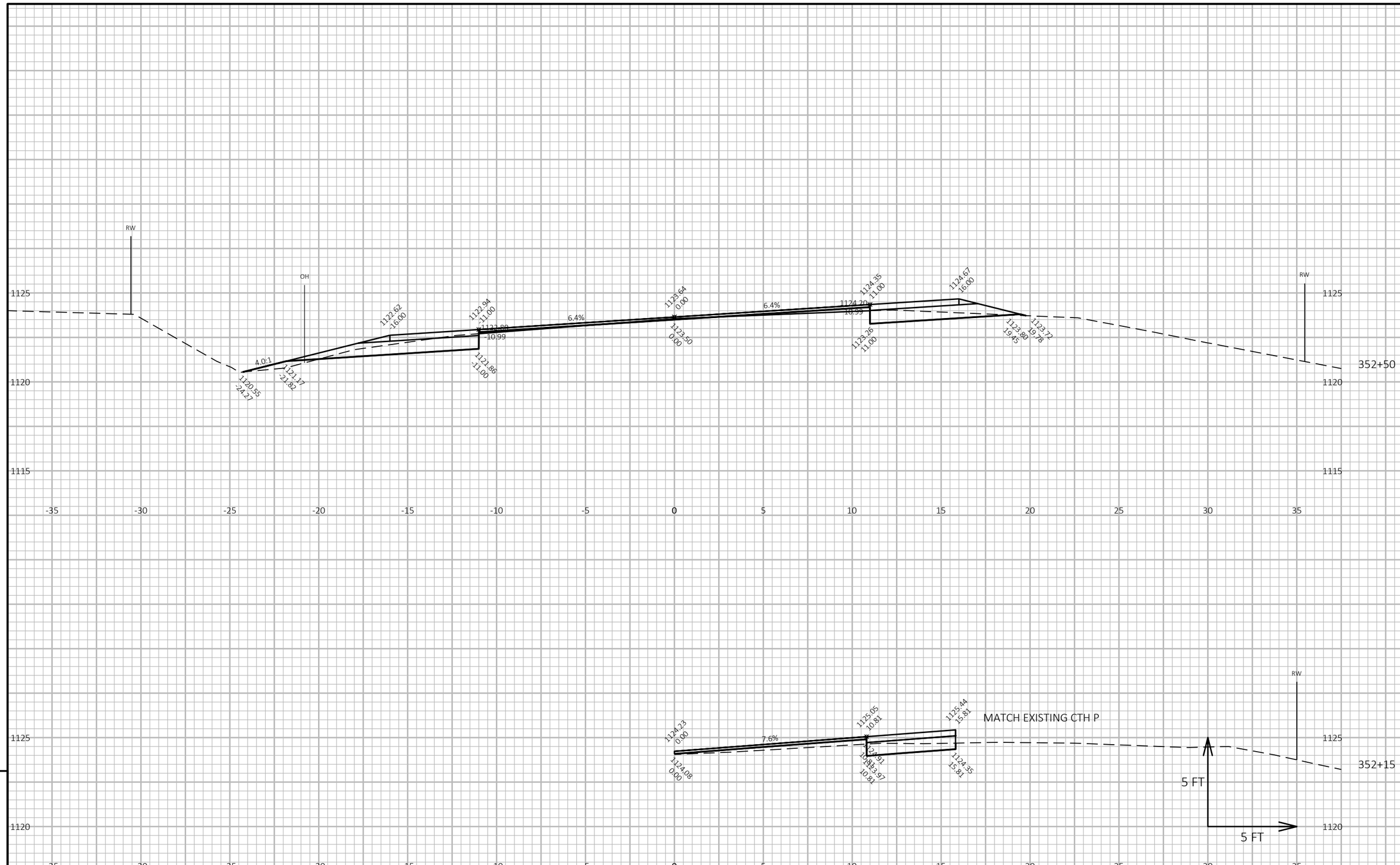

9

9

PROJECT NO: 6270-00-64	HWY: STH 49	COUNTY: WAUPACA	CROSS SECTIONS: STH 49 - MAINILNE	SHEET 204	E

FILE NAME : N:\PDS\C3D\62700034\SHEETSPLAN\090202-XS.DWG
LAYOUT NAME - Section Sheet - (70)
PLOT DATE : 1/25/2018 11:49 AM
PLOT BY : BEAUCHAMP, DANIEL J
PLOT NAME :
PLOT SCALE : 1 IN:10 FT HORZ. / 1 IN:10 FT VERT.
WISDOT/CADDS SHEET 49

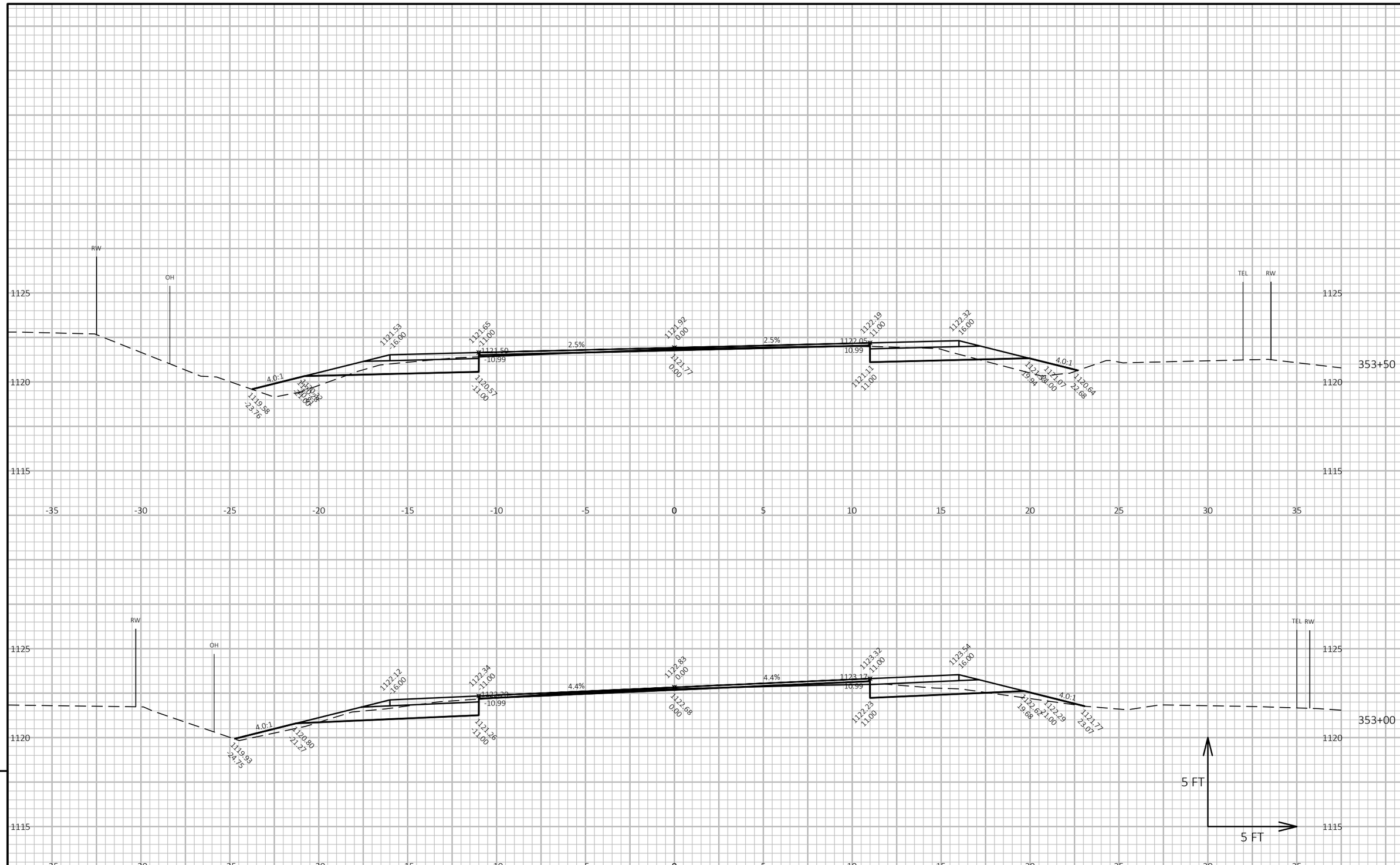

9

9

PROJECT NO: 6270-00-64	HWY: STH 49	COUNTY: WAUPACA	CROSS SECTIONS: STH 49 - MAINILNE	SHEET 205	E

FILE NAME : N:\PDS\C3D\62700034\SHEETSPLAN\090202-XS.DWG
LAYOUT NAME - Section Sheet - (71)
PLOT DATE : 1/25/2018 11:49 AM
PLOT BY : BEAUCHAMP, DANIEL J
PLOT NAME :
PLOT SCALE : 1 IN:10 FT HORZ. / 1 IN:10 FT VERT.
WISDOT/CADDS SHEET 49

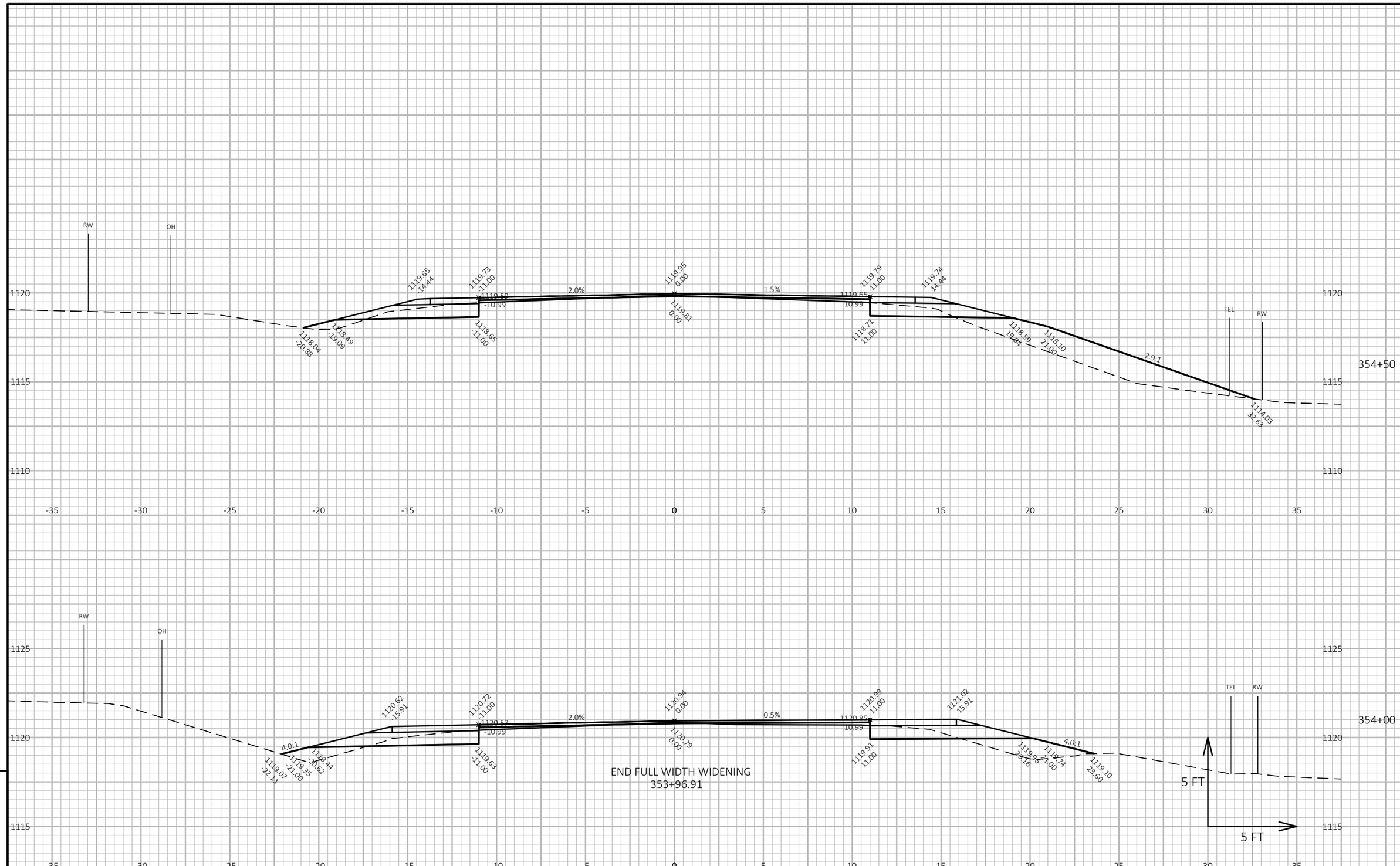

9

9

PROJECT NO: 6270-00-64	HWY: STH 49	COUNTY: WAUPACA	CROSS SECTIONS: STH 49 - MAINILNE	SHEET 206	E

FILE NAME : N:\PDS\C3D\62700034\SHEETSPLAN\090202-XS.DWG
LAYOUT NAME - Section Sheet - (72)
PLOT DATE : 1/25/2018 11:49 AM
PLOT BY : BEAUCHAMP, DANIEL J
PLOT NAME :
PLOT SCALE : 1 IN:10 FT HORZ. / 1 IN:10 FT VERT.
WISDOT/CADDS SHEET 49

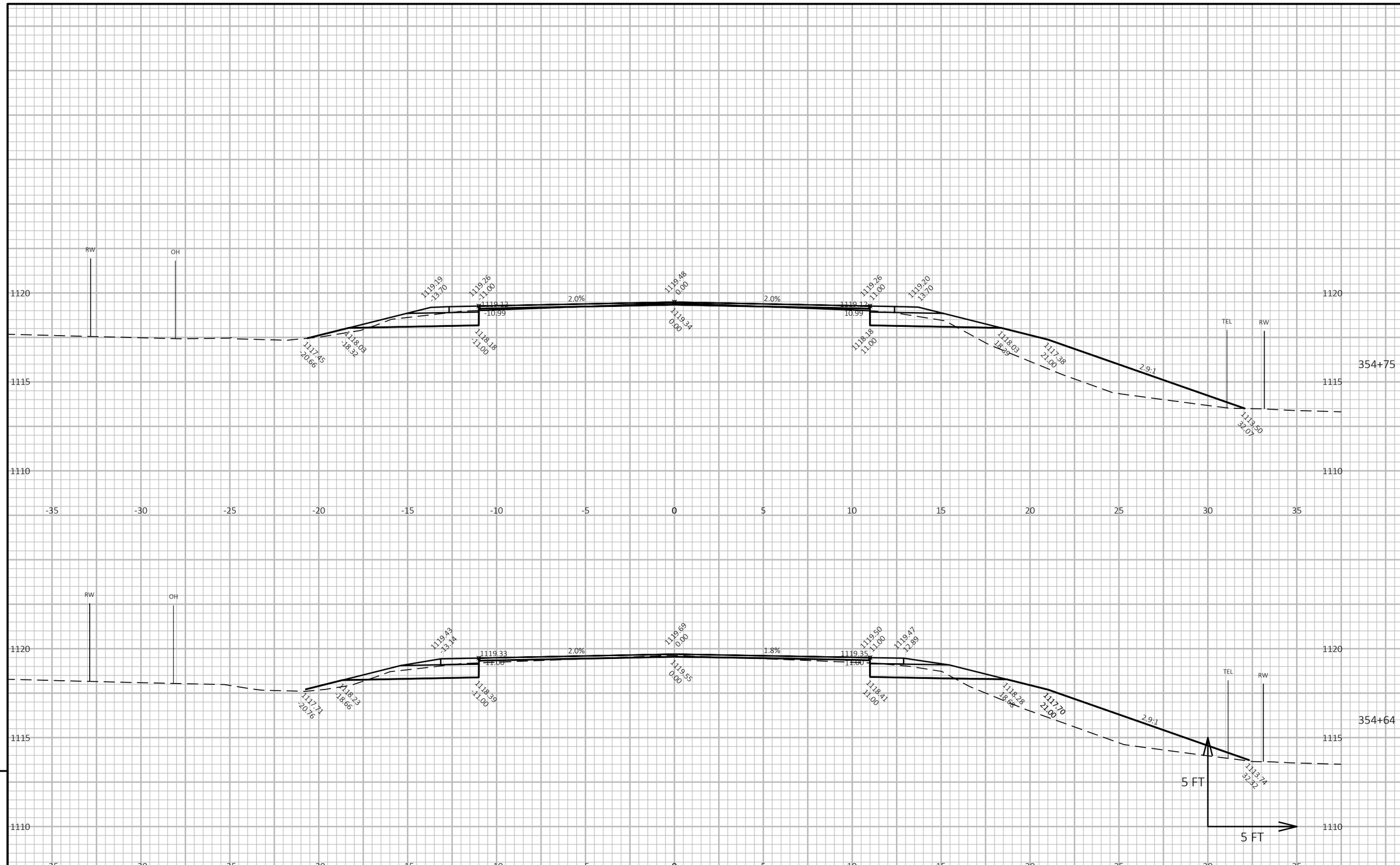

9

9

PROJECT NO: 6270-00-64	HWY: STH 49	COUNTY: WAUPACA	CROSS SECTIONS: STH 49 - MAINILNE	SHEET 207	E

FILE NAME : N:\PDS\C3D\62700034\SHEETSPLAN\090202-XS.DWG
LAYOUT NAME - Section Sheet - (73)
PLOT DATE : 1/25/2018 11:49 AM
PLOT BY : BEAUCHAMP, DANIEL J
PLOT NAME :
PLOT SCALE : 1 IN:10 FT HORZ. / 1 IN:10 FT VERT.
WISDOT/CADDS SHEET 49

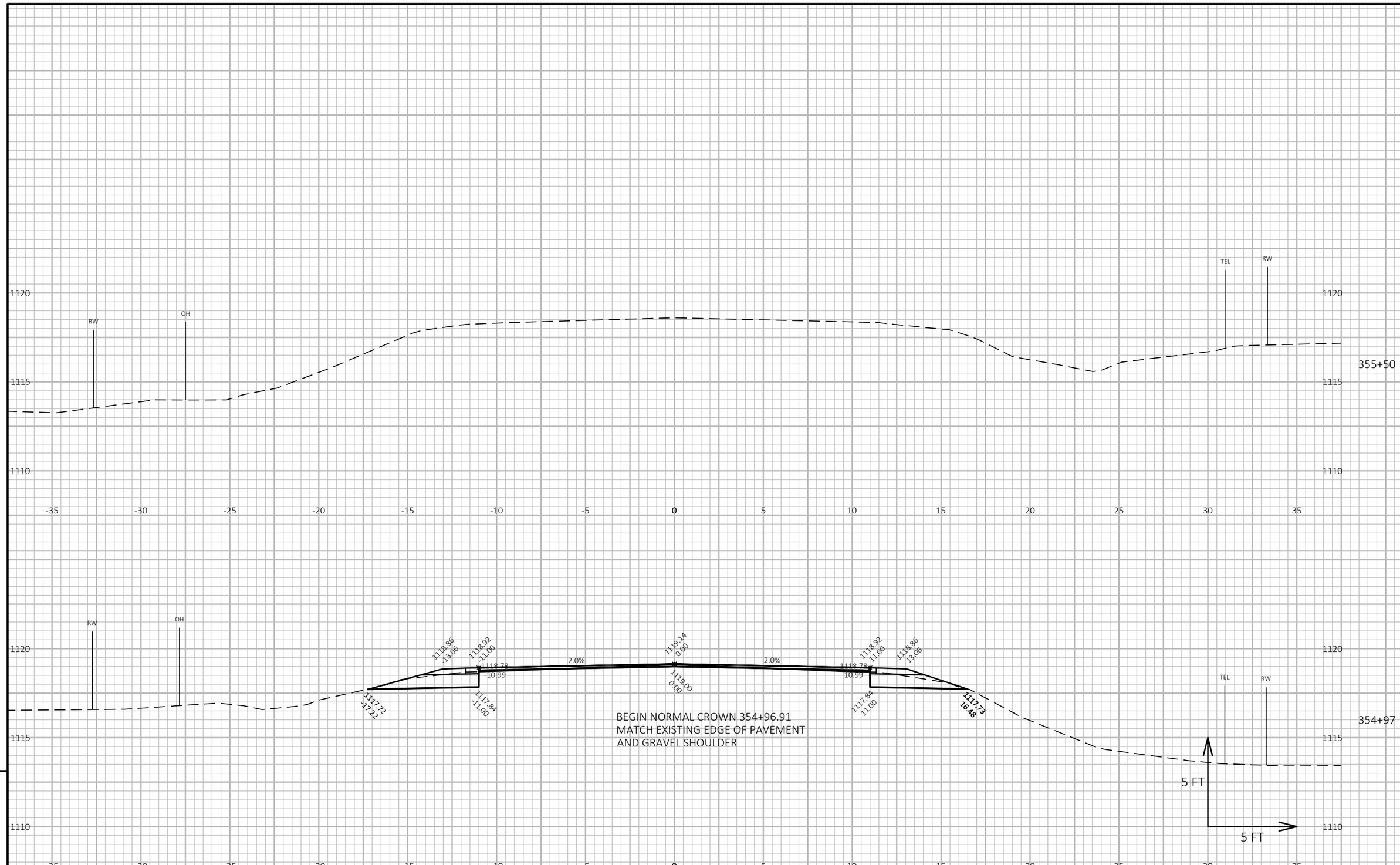

9

9

PROJECT NO: 6270-00-64	HWY: STH 49	COUNTY: WAUPACA	CROSS SECTIONS: STH 49 - MAINILNE	SHEET 208	E

FILE NAME : N:\PDS\C3D\62700034\SHEETSPLAN\090202-XS.DWG
LAYOUT NAME - Section Sheet - (74)
PLOT DATE : 1/25/2018 11:50 AM
PLOT BY : BEAUCHAMP, DANIEL J
PLOT NAME :
PLOT SCALE : 1 IN:10 FT HORZ. / 1 IN:10 FT VERT.
WISDOT/CADDS SHEET 49

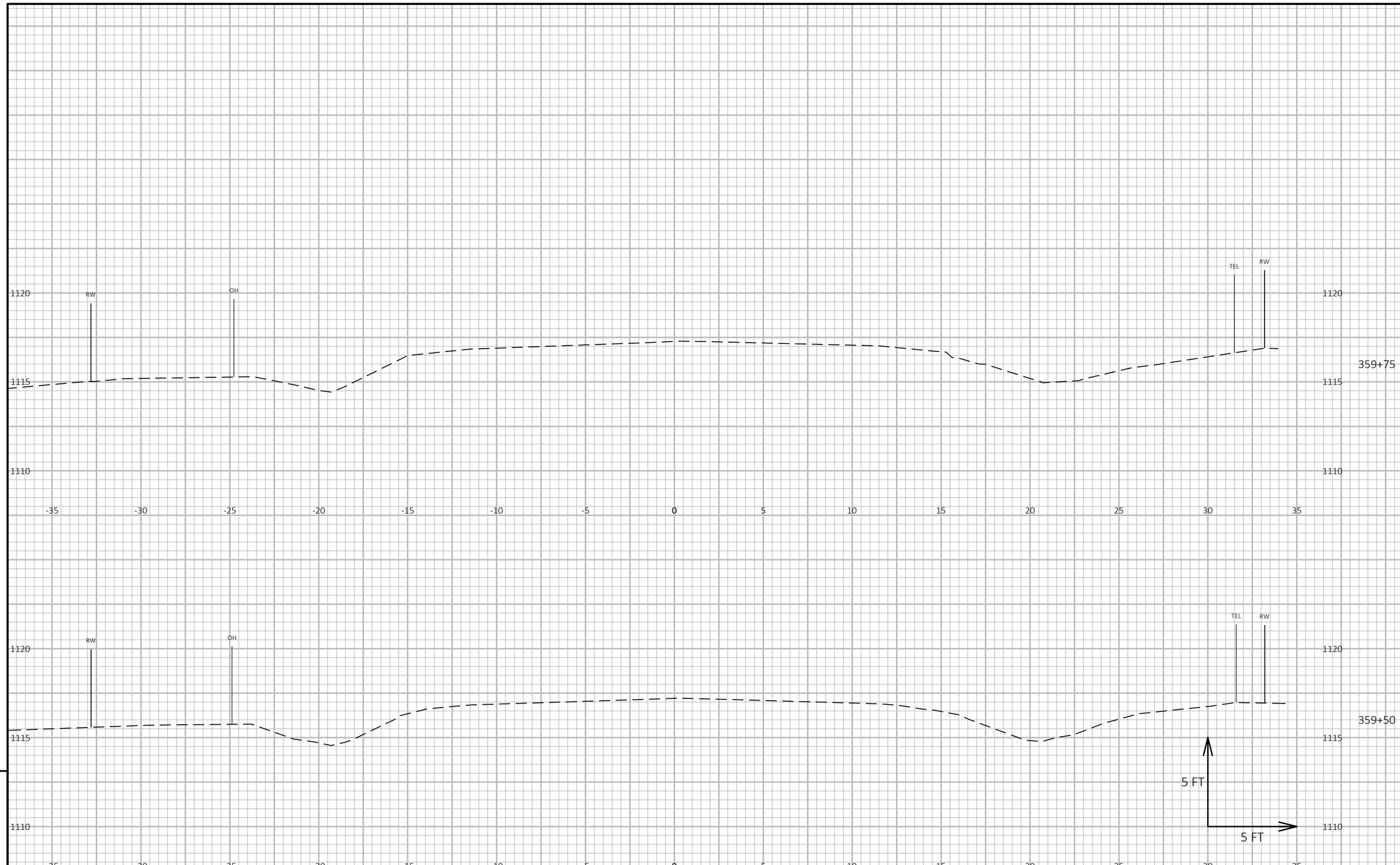

PROJECT NO: 6270-00-64	HWY: STH 49	COUNTY: WAUPACA	CROSS SECTIONS: STH 49 - MAINILNE	SHEET 209	E

FILE NAME : N:\PDS\C3D\62700034\SHEETSPLAN\090202-XS.DWG
LAYOUT NAME - Section Sheet - (78)
PLOT DATE : 1/25/2018 11:50 AM
PLOT BY : BEAUCHAMP, DANIEL J
PLOT NAME :
PLOT SCALE : 1 IN:10 FT HORZ. / 1 IN:10 FT VERT.
WISDOT/CADDS SHEET 49

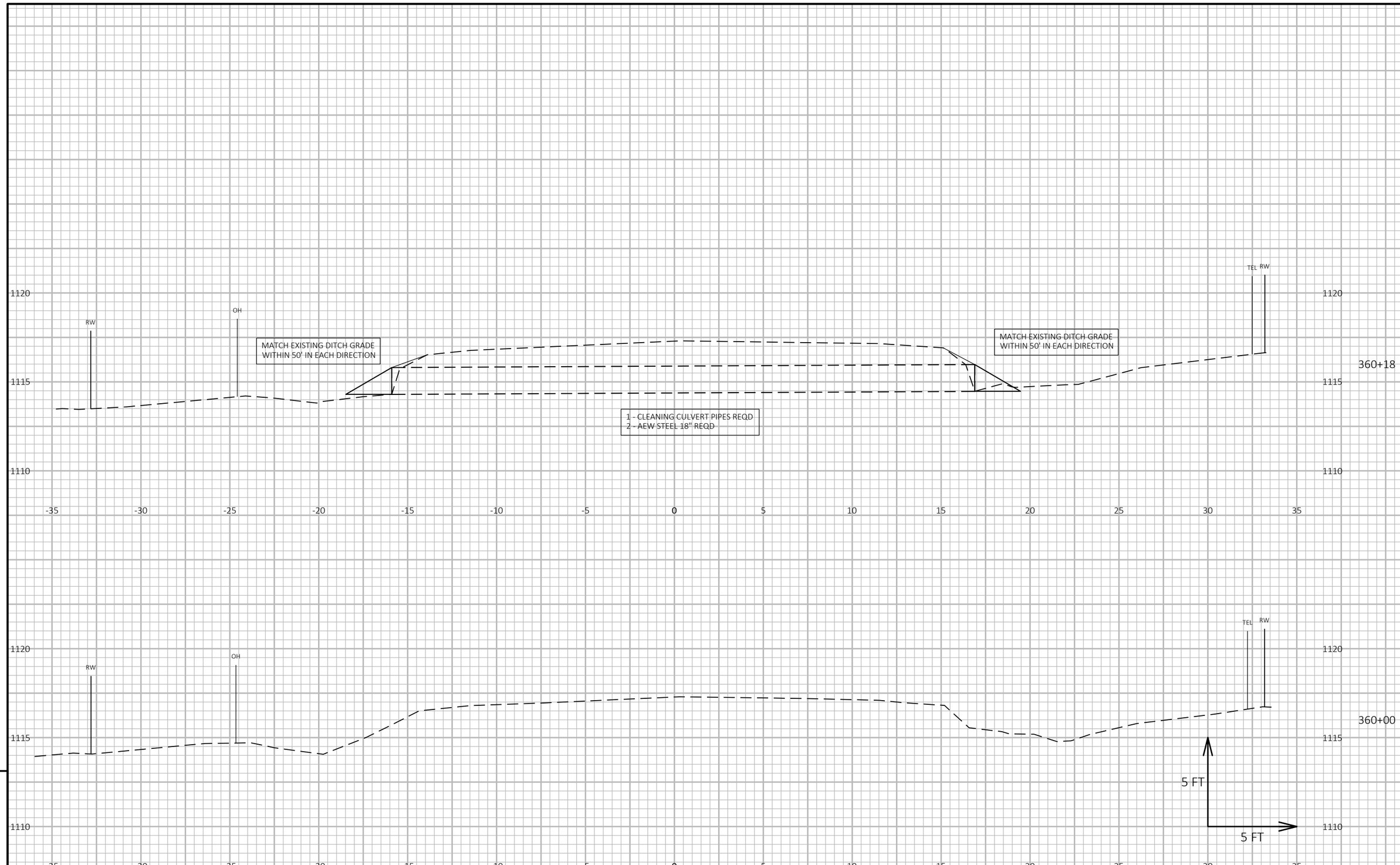

9

9

PROJECT NO: 6270-00-64	HWY: STH 49	COUNTY: WAUPACA	CROSS SECTIONS: STH 49 - MAINILNE	SHEET 210	E

FILE NAME : N:\PDS\C3D\62700034\SHEETSPLAN\090202-XS.DWG
LAYOUT NAME - Section Sheet - (79)
PLOT DATE : 1/25/2018 11:50 AM
PLOT BY : BEAUCHAMP, DANIEL J
PLOT NAME :
PLOT SCALE : 1 IN:10 FT HORZ. / 1 IN:10 FT VERT.
WISDOT/CADDS SHEET 49

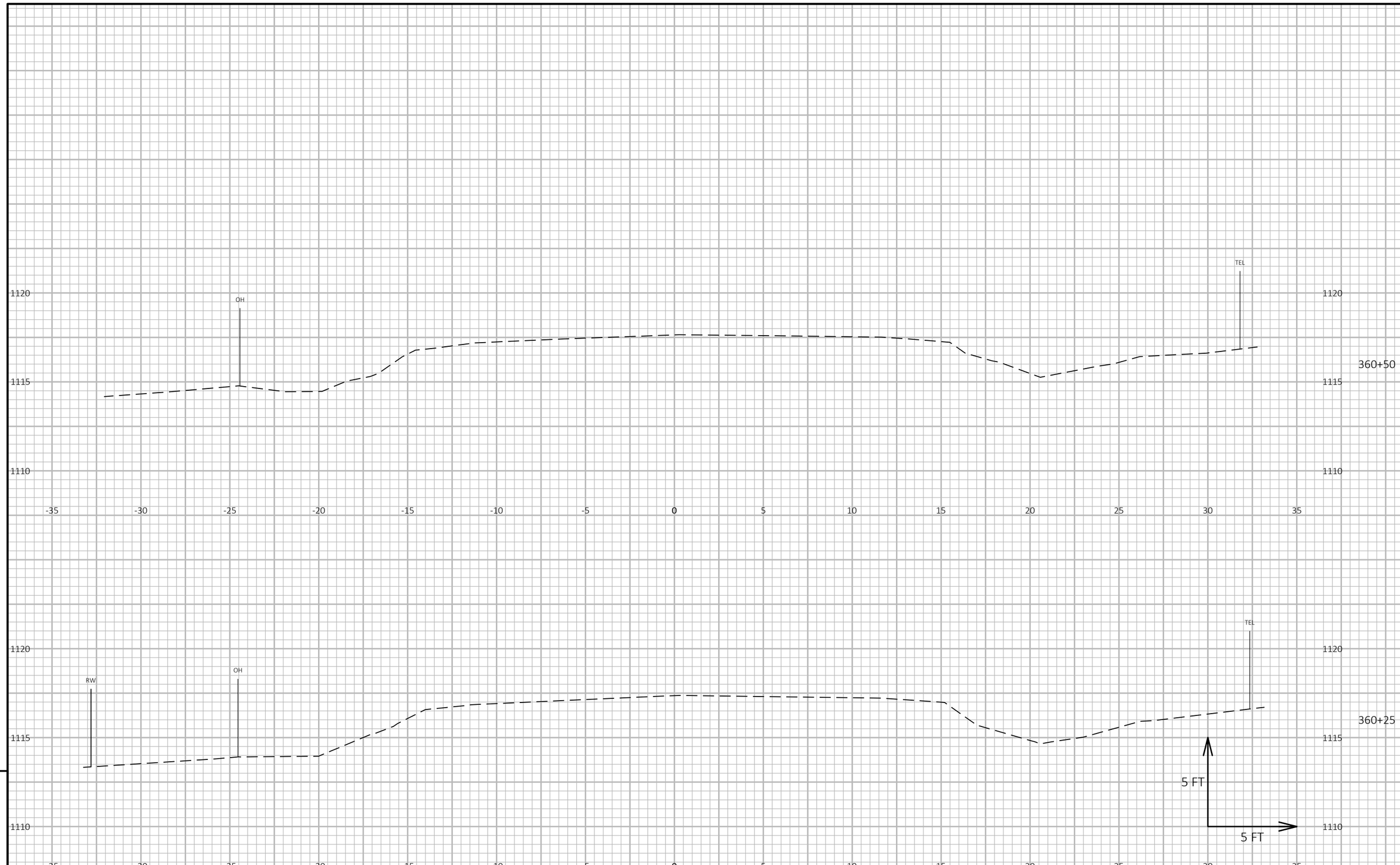

9

9

PROJECT NO: 6270-00-64	HWY: STH 49	COUNTY: WAUPACA	CROSS SECTIONS: STH 49 - MAINILNE	SHEET 211	E

FILE NAME : N:\PDS\C3D\62700034\SHEETSPLAN\090202-XS.DWG
LAYOUT NAME - Section Sheet - (80)
PLOT DATE : 1/25/2018 11:50 AM
PLOT BY : BEAUCHAMP, DANIEL J
PLOT NAME :
PLOT SCALE : 1 IN:10 FT HORZ. / 1 IN:10 FT VERT.
WISDOT/CADDS SHEET 49

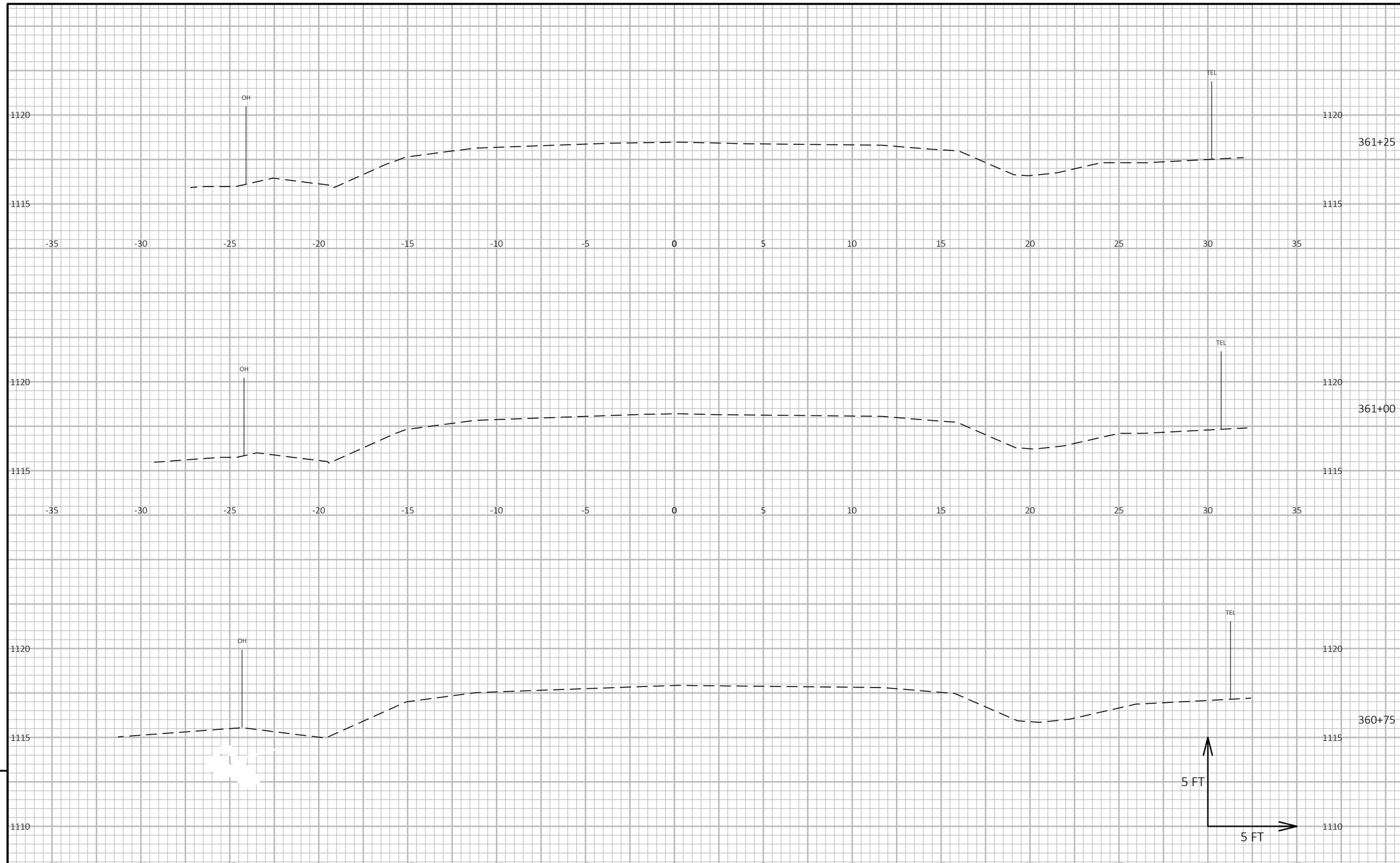

9

9

PROJECT NO: 6270-00-64	HWY: STH 49	COUNTY: WAUPACA	CROSS SECTIONS: STH 49 - MAINILNE	SHEET 212	E

FILE NAME : N:\PDS\C3D\62700034\SHEETSPLAN\090202-XS.DWG
LAYOUT NAME - Section Sheet - (81)
PLOT DATE : 1/25/2018 11:50 AM PLOT BY : BEAUCHAMP, DANIEL J PLOT NAME : PLOT SCALE : 1 IN:10 FT HORZ. / 1 IN:10 FT VERT.
WISDOT/CADDS SHEET 49

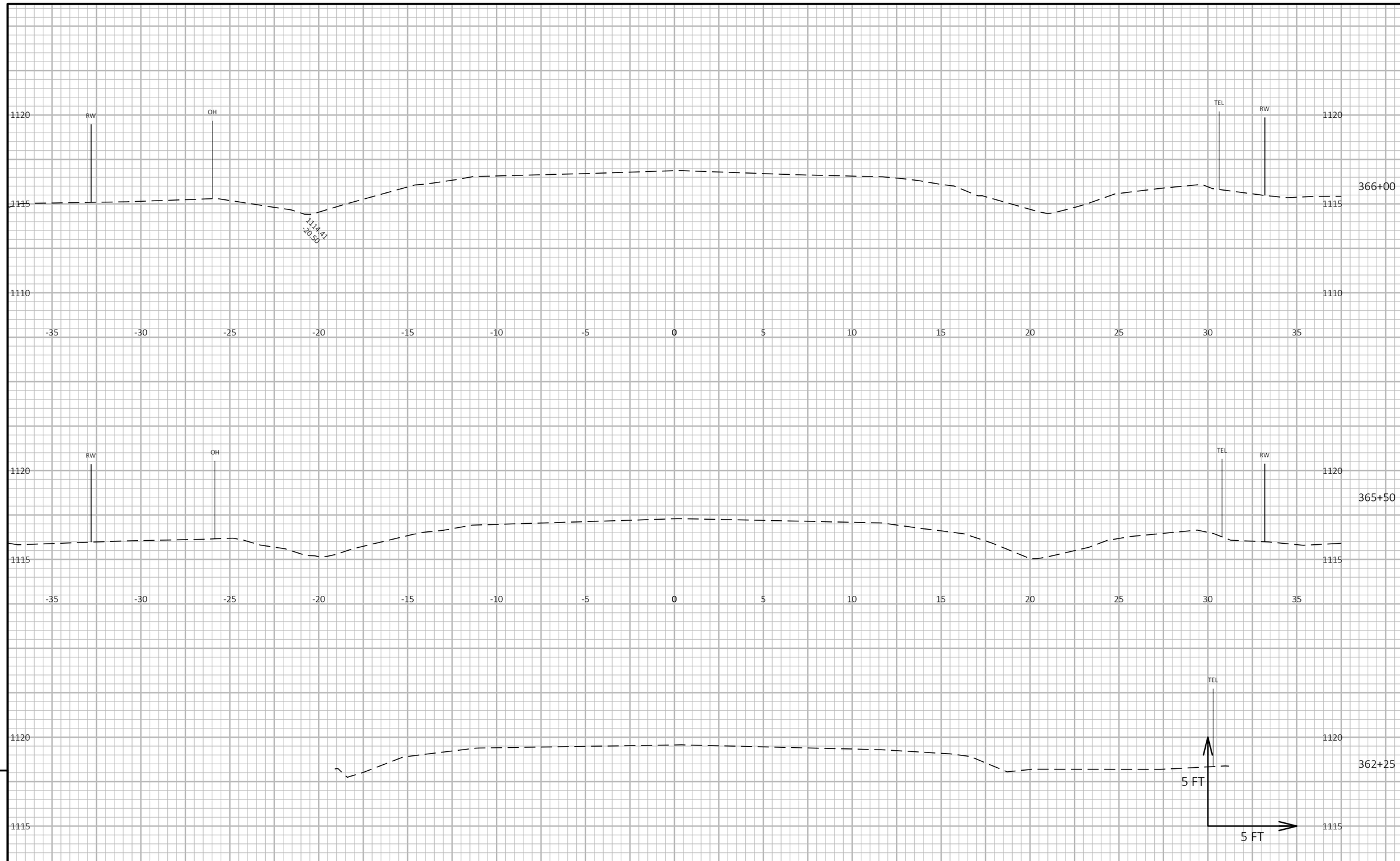

PROJECT NO: 6270-00-64	HWY: STH 49	COUNTY: WAUPACA	CROSS SECTIONS: STH 49 - MAINILNE	SHEET 213	E

FILE NAME : N:\PDS\C3D\62700034\SHEETSPLAN\090202-XS.DWG
LAYOUT NAME - Section Sheet - (83)
PLOT DATE : 1/25/2018 11:50 AM
PLOT BY : BEAUCHAMP, DANIEL J
PLOT NAME :
PLOT SCALE : 1 IN:10 FT HORZ. / 1 IN:10 FT VERT.
WISDOT/CADDS SHEET 49

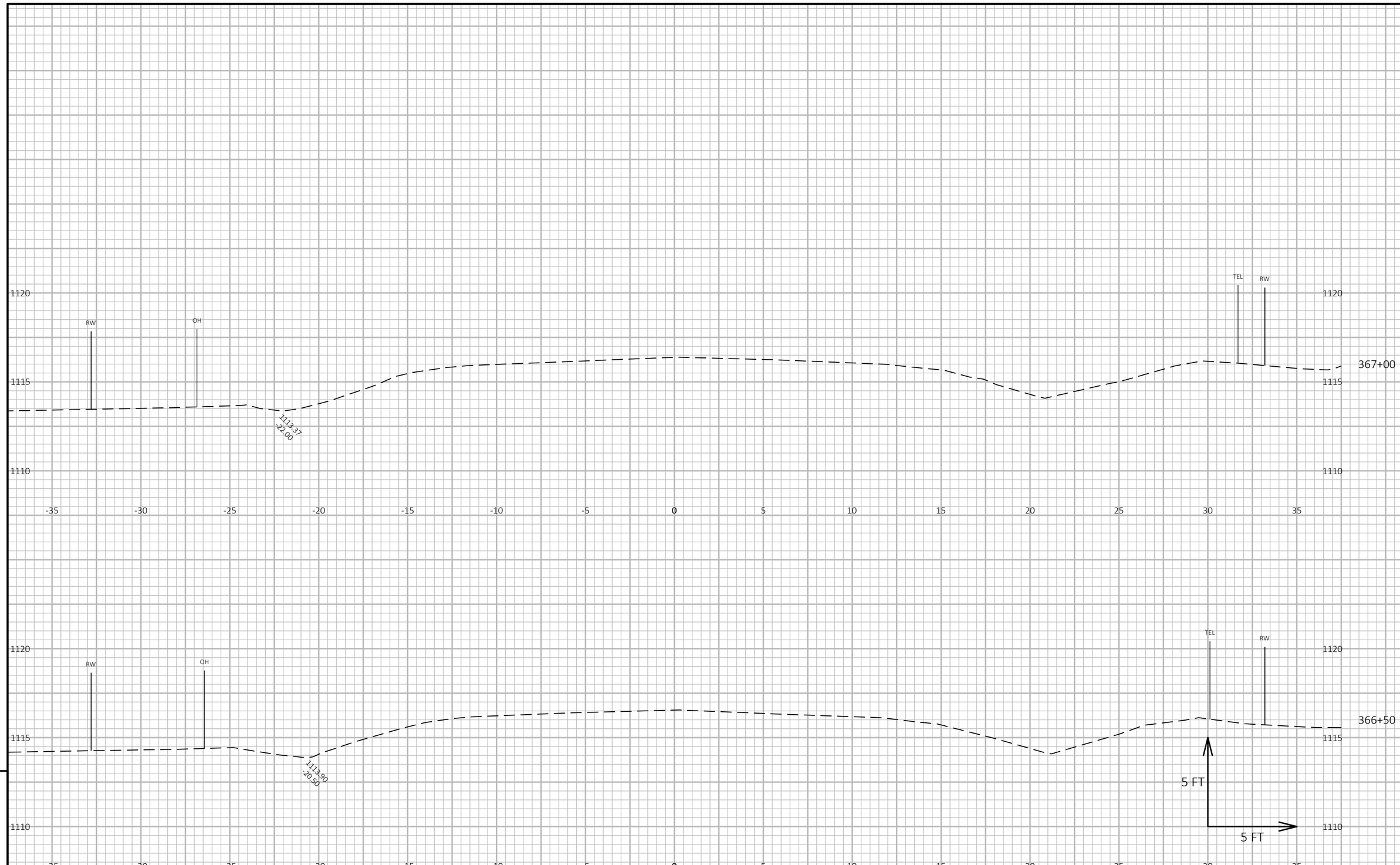

9

9

PROJECT NO: 6270-00-64	HWY: STH 49	COUNTY: WAUPACA	CROSS SECTIONS: STH 49 - MAINILNE	SHEET 214	E

FILE NAME : N:\PDS\C3D\62700034\SHEETSPLAN\090202-XS.DWG
LAYOUT NAME - Section Sheet - (84)
PLOT DATE : 1/25/2018 11:50 AM
PLOT BY : BEAUCHAMP, DANIEL J
PLOT NAME :
PLOT SCALE : 1 IN:10 FT HORZ. / 1 IN:10 FT VERT.
WISDOT/CADDS SHEET 49

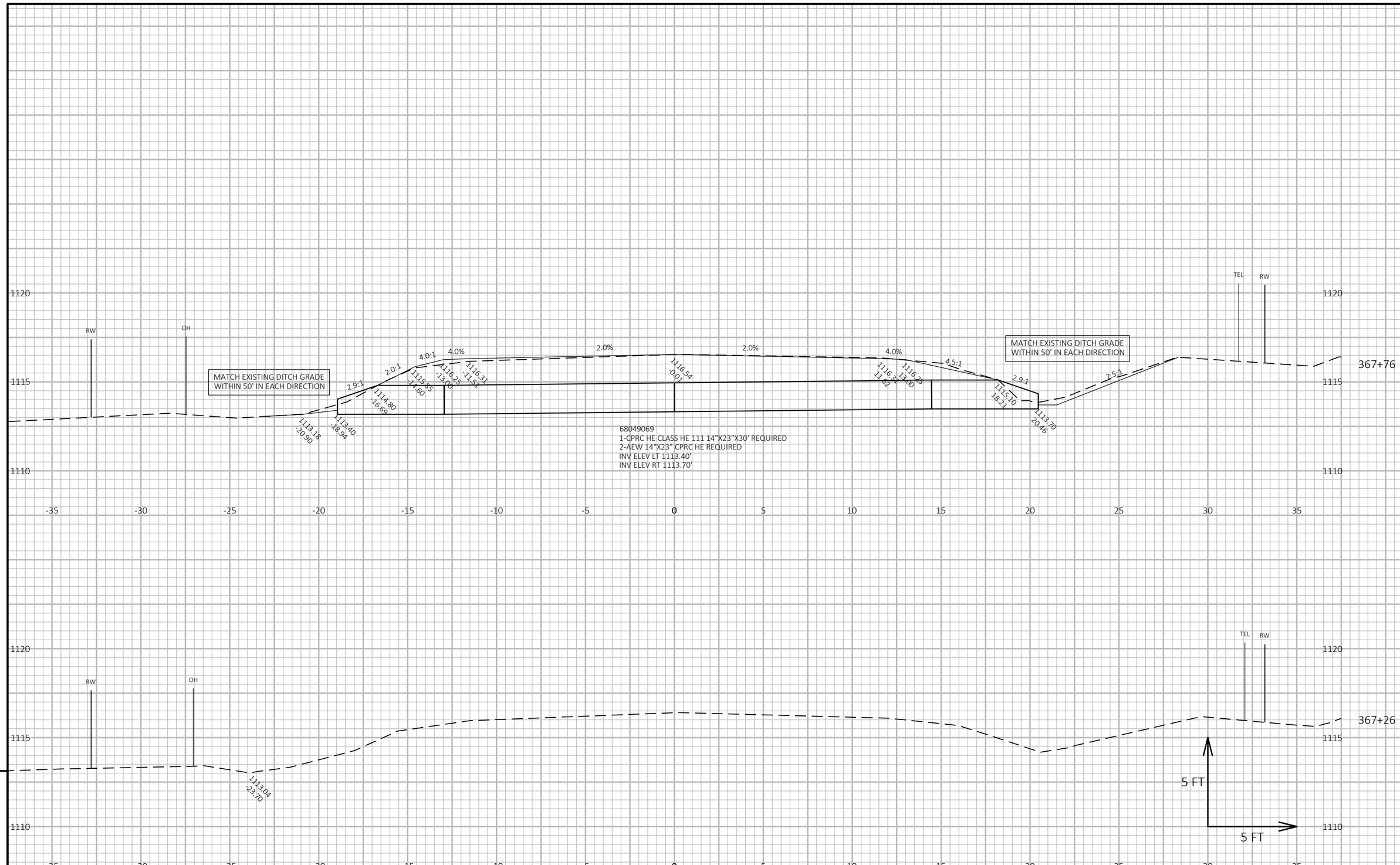

9

9

PROJECT NO: 6270-00-64	HWY: STH 49	COUNTY: WAUPACA	CROSS SECTIONS: STH 49 - MAINILNE	SHEET 215	E

FILE NAME : N:\PDS\C3D\62700034\SHEETSPLAN\090202-XS.DWG
LAYOUT NAME - Section Sheet - (85)
PLOT DATE : 1/25/2018 11:51 AM
PLOT BY : BEAUCHAMP, DANIEL J
PLOT NAME :
PLOT SCALE : 1 IN:10 FT HORZ. / 1 IN:10 FT VERT.
WISDOT/CADDS SHEET 49

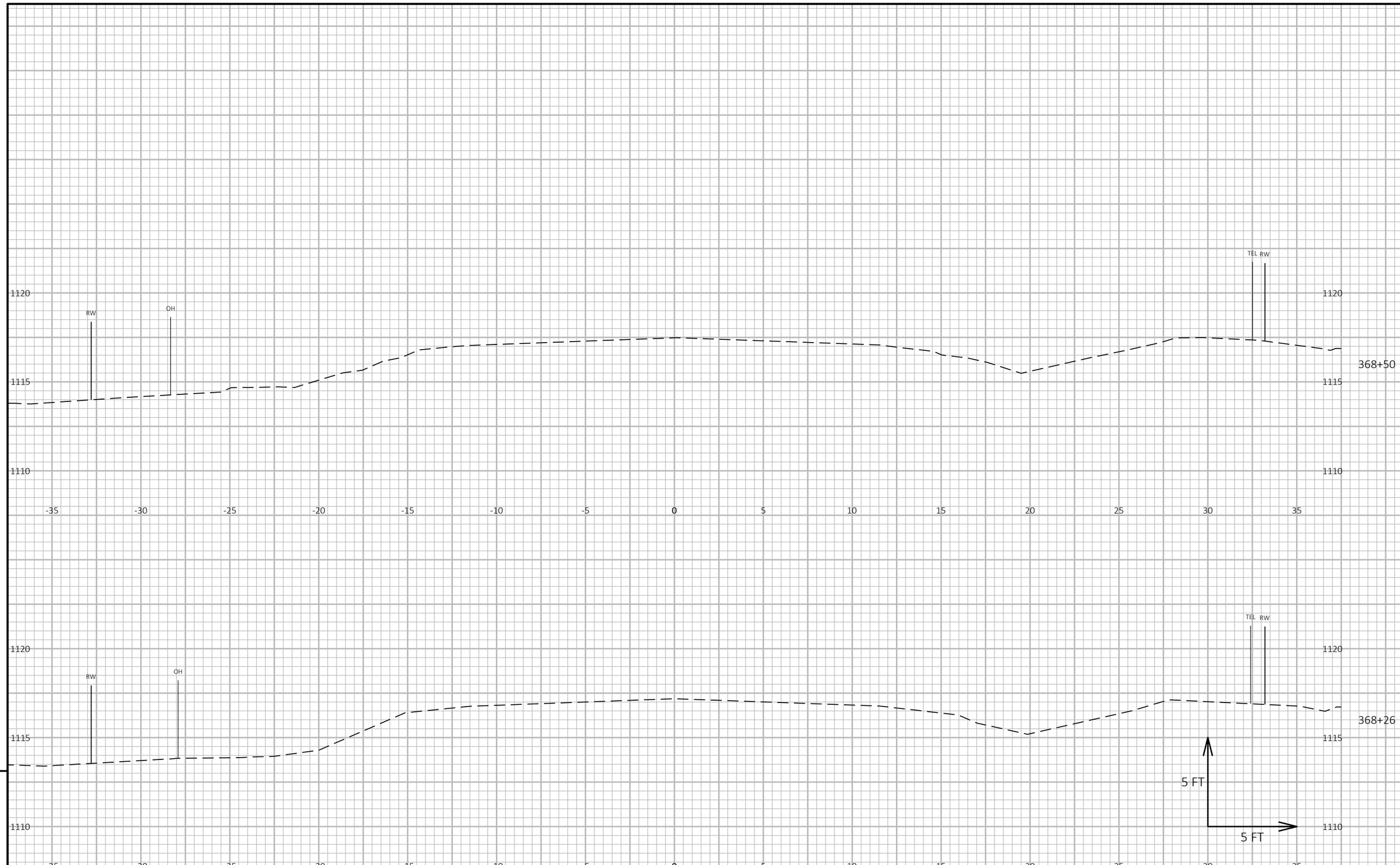

9

9

PROJECT NO: 6270-00-64	HWY: STH 49	COUNTY: WAUPACA	CROSS SECTIONS: STH 49 - MAINILNE	SHEET 216	E

FILE NAME : N:\PDS\C3D\62700034\SHEETSPLAN\090202-XS.DWG
LAYOUT NAME - Section Sheet - (86)
PLOT DATE : 1/25/2018 11:51 AM
PLOT BY : BEAUCHAMP, DANIEL J
PLOT NAME :
PLOT SCALE : 1 IN:10 FT HORZ. / 1 IN:10 FT VERT.
WISDOT/CADDS SHEET 49

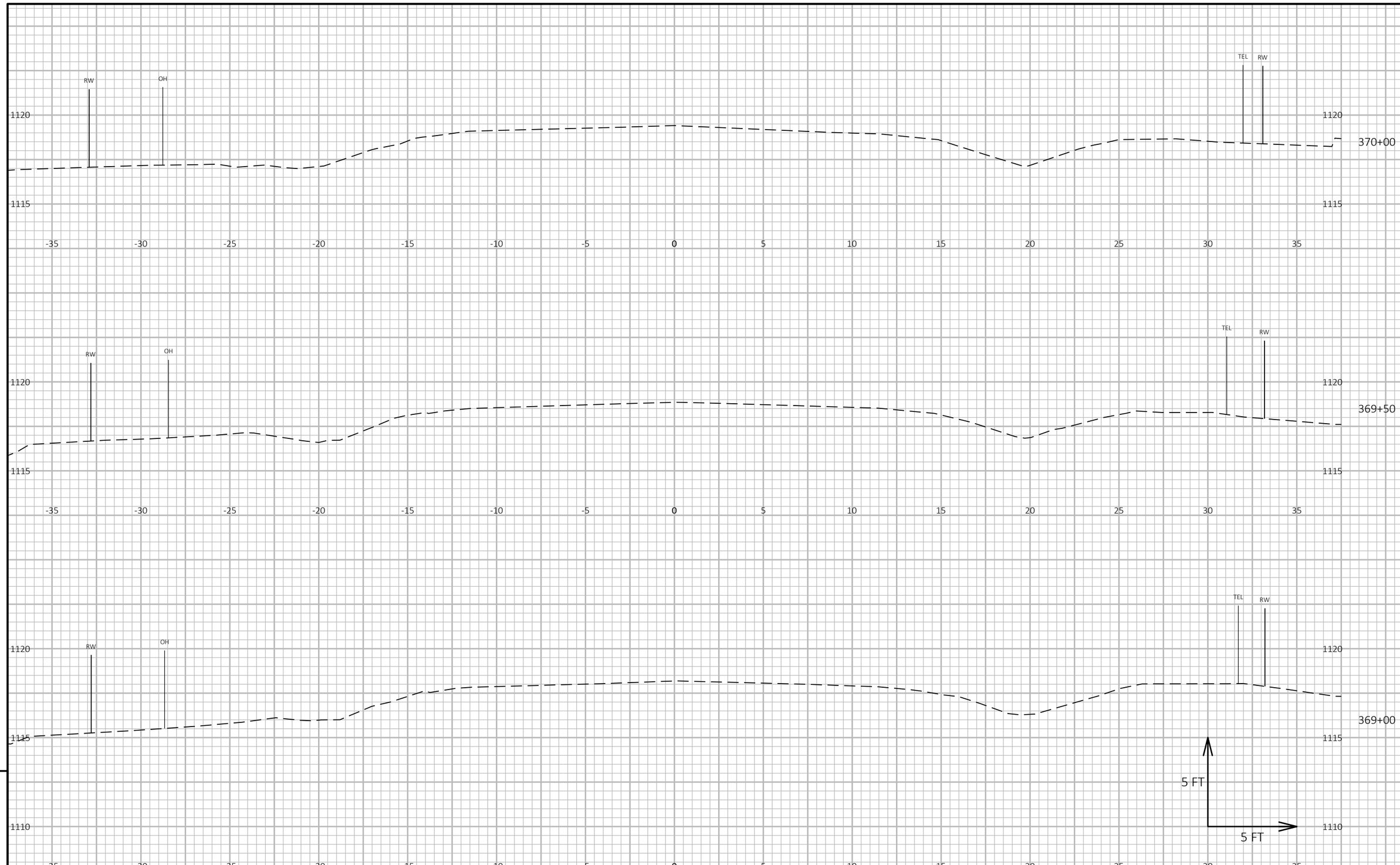

9

9

PROJECT NO: 6270-00-64	HWY: STH 49	COUNTY: WAUPACA	CROSS SECTIONS: STH 49 - MAINILNE	SHEET 217	E

FILE NAME : N:\PDS\C3D\62700034\SHEETSPLAN\090202-XS.DWG
LAYOUT NAME - Section Sheet - (87)
PLOT DATE : 1/25/2018 11:51 AM
PLOT BY : BEAUCHAMP, DANIEL J
PLOT NAME :
PLOT SCALE : 1 IN:10 FT HORZ. / 1 IN:10 FT VERT.
WISDOT/CADDS SHEET 49

Wisconsin Department of Transportation

Dedicated people creating transportation solutions through innovation and exceptional service.

http://www.dot.wisconsin.gov