SUP

APRIL 2018

PROJECT ID: 8997-00-40
WITH: N/A

COUNTY: BARRON

211

STATE OF WISCONSIN
DEPARTMENT OF TRANSPORTATION

PLAN OF PROPOSED IMPROVEMENT

CITY OF RICE LAKE, SOUTH MAIN STREET

(RED CEDAR RIVER BRIDGE B-03-0002)

LOC STR
BARRON COUNTY

STATE PROJECT	FEDERAL PROJECT	
	PROJECT	CONTRACT
8997-00-40	—	—

STATE PROJECT NUMBER
8997-00-40

ORDER OF SHEETS

TOTAL SHEETS = 152

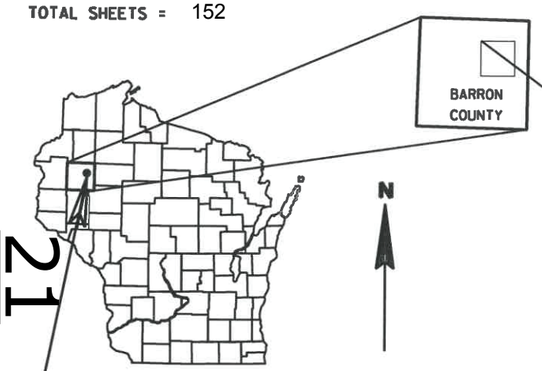

PROJECT LOCATION

DESIGN DESIGNATION

A.A.D.T. (2018)	=	13,150
A.A.D.T. (2038)	=	14,400
D.H.V.	=	1,440
D.	=	59/41
T.	=	5.5%
DESIGN SPEED	=	25 MPH
ESALS	=	2,900,000

CONVENTIONAL SYMBOLS

PLAN
- CORPORATE LIMITS
- PROPERTY LINE (PL + 58.1)
- LOT LINE
- LIMITED HIGHWAY EASEMENT
- EXISTING RIGHT OF WAY
- PROPOSED OR NEW R/W LINE
- SLOPE INTERCEPT
- REFERENCE LINE
- EXISTING CULVERT
- PROPOSED CULVERT (Box or Pipe)
- COMBUSTIBLE FLUIDS (CAUTION)
- HIGH VOLTAGE (CAUTION)
- MARSH AREA
- WOODED OR SHRUB AREA

PROFILE
- GRADE LINE
- ORIGINAL GROUND
- MARSH OR ROCK PROFILE (To be noted as such) (ROCK)
- SPECIAL DITCH (LABEL)
- GRADE ELEVATION (95.36)
- CULVERT (Profile View)

UTILITIES
- OVERHEAD ELECTRIC — OH —
- ELECTRIC — E —
- FIBER OPTIC — FO —
- GAS — G —
- SANITARY SEWER — SAN —
- STORM SEWER — SS —
- TELEPHONE — T —
- WATER — W —
- UTILITY PEDESTAL
- POWER POLE
- TELEPHONE POLE

STRUCTURE B-03-0002

BEGIN PROJECT
STA. 16+10.00
Y=133085.79
X=335510.94

END PROJECT
STA. 22+80.00
Y=133755.48
X=335513.87

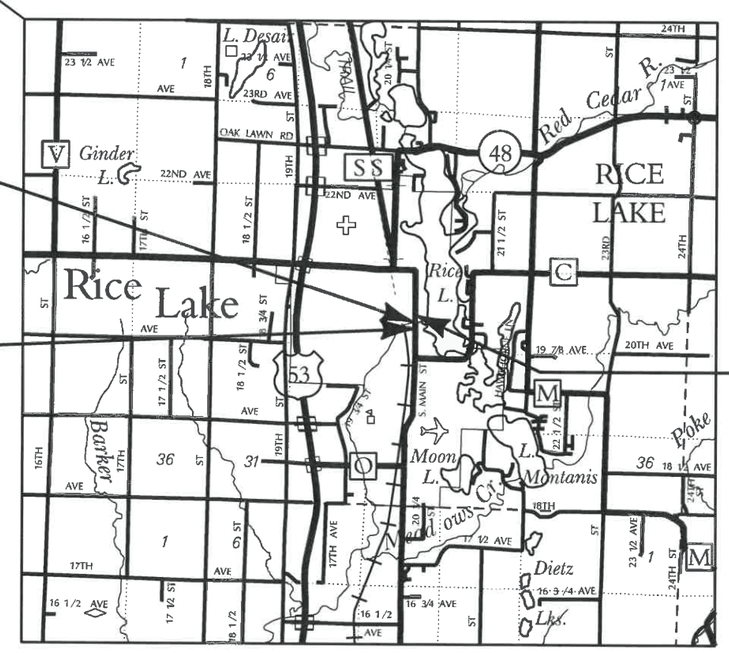

LAYOUT
SCALE 0 — 1 MI.

TOTAL NET LENGTH OF CENTERLINE = 0.127 MI.

COORDINATES ON THIS PLAN ARE REFERENCED TO THE WISCONSIN COUNTY COORDINATE SYSTEM, (WCCS) BARRON COUNTY

ACCEPTED FOR
County of Barron
10/10/17 Date — Highway Commissioner

ACCEPTED FOR
City of Rice Lake
10/10/17 Date — Mayor

ORIGINAL PLANS PREPARED BY
AYRES ASSOCIATES
3433 Oakwood Hills Parkway
Eau Claire, WI 54701
www.AyresAssociates.com

WISCONSIN PROFESSIONAL ENGINEER
DANIEL N. SYDOW
E-38363
WI

DATE 10/6/2017

STATE OF WISCONSIN
DEPARTMENT OF TRANSPORTATION

PREPARED BY
Surveyor: AYRES ASSOCIATES INC
Designer: AYRES ASSOCIATES INC

Management Consultant: KNIGHT EA

APPROVED FOR THE DEPARTMENT
DATE: 10/30/17 — Management Consultant Signature

E

U:\42-0989.00 - Barron Co, City of Rice Lake\Roadway\420989 ti.dgn PENTABLE:BReau_shd_util.tbl marcumc 1:200

WISDOT/CADDS SHEET 10

2

GENERAL NOTES

THE LOCATIONS OF EXISTING AND PROPOSED UTILITY INSTALLATIONS AS SHOWN ON THE PLAN ARE APPROXIMATE. THERE MAY BE OTHER INSTALLATIONS WITHIN THE PROJECT AREA THAT ARE NOT SHOWN.

THE CONTRACTOR SHALL NOTIFY DIGGERS HOTLINE AND AFFECTED UTILITIES PRIOR TO THE START OF WORK. ANY LOCAL MUNICIPAL UTILITY WHICH IS NOT A MEMBER OF THE DIGGERS HOTLINE MUST BE CONTACTED SEPARATELY.

SHRINKAGE OF EARTHWORK IS VARIABLE. AN AVERAGE FACTOR FOR EXCAVATION COMMON IS 30%.

FILL, AS SHOWN ON THE PLAN SHEETS, PERTAINS TO EMBANKMENT CONSTRUCTED FROM EXCAVATION COMMON. THE FACTOR USED FOR EXPANDING THE FILLS TO COMPUTE THE VOLUME OF MATERIAL REQUIRED IS 1.5.

EXCAVATION BELOW SUBGRADE (EBS) WILL BE MEASURED AND PAID FOR AS EXCAVATION COMMON. THE LOCATION FOR EBS WILL BE DETERMINED BY THE ENGINEER IN THE FIELD.

EXCAVATION BELOW SUBGRADE (EBS) IS NOT USED TO BALANCE YARDAGE AND IS NOT SHOWN ON THE CROSS SECTIONS BUT IS MEASURED AND PAID FOR AS (COMMON OR ROCK) EXCAVATION.

WHEN THE QUANTITY OF BASE AGGREGATE DENSE OR ASPHALTIC SURFACE IS MEASURED FOR PAYMENT BY THE TON OR CUBIC YARD THE DEPTH OF THICKNESS OF THE COURSE SHOWN ON THE PLANS IS APPROXIMATE AND THE ACTUAL THICKNESS WILL DEPEND ON THE DISTRIBUTION OF THE MATERIAL AS DIRECTED BY THE ENGINEER.

THE EXACT LOCATION AND WIDTH OF DRIVEWAY ENTRANCES WILL BE DETERMINED IN THE FIELD BY THE ENGINEER. ALL DRIVEWAYS ARE TO BE REPLACED IN KIND UNLESS OTHERWISE DIRECTED BY THE ENGINEER OR AS SHOWN ON THE PLANS.

SAWCUT LOCATIONS SHOWN ON THE PLAN ARE SUBJECT TO ADJUSTMENT BY THE ENGINEER IN THE FIELD. THE LINE OF SUCH SAWCUTS WILL BE NEATLY DELINEATED THROUGH THE ASPHALT AND/OR CONCRETE STREETS, DRIVEWAYS AND/OR PARKING LOTS AT THE MATCH LINE AS SHOWN ON THE PLAN DETAILS OR AS DIRECTED BY THE ENGINEER WITHOUT ANY DAMAGE TO THE REMAINING PORTION OF THE EXISTING PAVEMENT.

PRIOR TO ORDERING DRAINAGE PIPES AND STRUCTURES, VERIFY RELATED DRAINAGE INFORMATION IN THE PLAN AND PROVIDE DOCUMENTATION TO THE ENGINEER.

INLET AND DISCHARGE ELEVATIONS FOR DRAINAGE STRUCTURES SHOWN ON THE PLAN MAY BE ADJUSTED BY THE ENGINEER TO FIT FIELD CONDITIONS.

TEMPORARY STORAGE OF ANY EXCAVATED MATERIAL WILL NOT BE PERMITTED IN WETLANDS, FLOODWAY OR FLOODPLAIN OF ANY WETLANDS.

SEED, INSTALL EROSION MAT, AND FERTILIZE ALL SALVAGED TOPSOILED AREAS WITHIN 7 WORKING DAYS AFTER GRADING WORK IS COMPLETED.

DO NOT APPLY FERTILIZER WITHIN 20 FEET OF A WATER BODY OR WETLAND.

SEED MIXTURE NO.40 SHALL BE USED THROUGHOUT THE PROJECT.

EROSION CONTROL MEASURES WILL BE PLACED AS SHOWN ON THE EROSION CONTROL PLAN. THE EXACT LOCATIONS TO BE DETERMINED BY THE ENGINEER. ANY REMOVAL OF ITEMS ARE INCIDENTAL TO THE RESPECTIVE EROSION CONTROL BID ITEM COSTS.

DISTURBED AREAS WITHIN THE RIGHT-OF-WAY, EXCEPT THE AREAS WITHIN THE FINISHED SHOULDER POINTS, SHALL BE SALVAGED TOPSOIL, FERTILIZED, SEEDED, TEMPORARY SEEDED AND MULCHED AS DIRECTED BY THE ENGINEER.

RESHAPE AND SEEDING OF ANY PREVIOUSLY GRASSED AREAS WHICH ARE DISTURBED BY OPERATIONS OUTSIDE OF THE ENGINEER DETERMINED CONSTRUCTION LIMITS ARE INCIDENTAL TO THE CONTRACT.

NO TREES OR SHRUBS SHALL BE REMOVED WITHOUT APPROVAL BY THE ENGINEER.

ASPHALTIC SURFACE WEIGHT CALCULATIONS ARE BASED ON 110 LB/SY/IN.

STATIONING FOR SIGNS SHOWN IN THE PLANS ARE APPROXIMATE AND THE FINAL LOCATION OF SIGNS ARE TO BE DETERMINED BY THE ENGINEER.

CURB AND GUTTER ELEVATIONS ARE ALONG THE FLANGE LINE UNLESS OTHERWISE NOTED.

RADIUS POINTS, UNLESS OTHERWISE NOTED, ARE TO FLAG OF CURB.

EXISTING ELEVATIONS SHALL BE VERIFIED IN THE FIELD.

ELEVATIONS SHOWN ON THE PLAN ARE REFERENCED TO THE NORTH AMERICAN VERTICAL DATUM OF 1988 (NAVD83(2011)).

UTILITY CONTACTS

CENTURYLINK
20 SOUTH WILSON AVENUE
RICE LAKE, WI 54868
ATTN: Monty Parker
715.234.5528
monty.parker@centurylink.com

RICE LAKE UTILITIES
320 WEST COLEMAN STREET
RICE LAKE, WI 54868
ATTN: TIM AABY - ELECTRIC
715-234-7004
tima@ricelakeutilities.com

ATTN: MIKE MAGEE - SANITARY
715-234-3681
mikem@ricelakeutilities.com

ATTN: DON ROBARGE - WATER
715-234-7004
donr@ricelakeutilities.com

WE ENERGIES
104 WEST SOUTH STREET
RICE LAKE, WI 54868
ATTN: LEWIS KNAPP
715-234-9605
lewis.knapp@we-energies.com

DIGGERS HOTLINE
Dial 811 or (800)242-8511
www.DiggersHotline.com

BARRON COUNTY

HIGHWAY COMMISSIONER
260 N 7TH STREET
BARRON, WI 54812
ATTN: MARK SERVI
715-637-3755
bachwy@co.barron.wi.us

CITY OF RICE LAKE

STREET DIRECTOR
326 SOUTH MAIN STREET
RICE LAKE, WI 54868
ATTN: JIM ANDERSON
715-234-7402
janderson@ricelakegov.org

DESIGN CONTACT

AYRES ASSOCIATES
3433 OAKWOOD HILLS PARKWAY
EAU CLAIRE, WI 54701
ATTN: DAN SYDOW, PE
715-834-3161
sydowd@ayresassociates.com

DNR CONTACT

DNR NORTHERN REGION
810 WEST MAPLE STREET
SPOONER, WI 54801
ATTN: AMY CRONK
715-635-4229
amy.cronk@wisconsin.gov

RUNOFF COEFFICIENT TABLE

	HYDROLOGIC SOIL GROUP											
	A			B			C			D		
	SLOPE RANGE (PERCENT)			SLOPE RANGE (PERCENT)			SLOPE RANGE (PERCENT)			SLOPE RANGE (PERCENT)		
LAND USE:	0-2	2-6	6 & OVER	0-2	2-6	6 & OVER	0-2	2-6	6 & OVER	0-2	2-6	6 & OVER
ROW CROPS	.08 .22	.16 .30	.22 .38	.12 .26	.20 .34	.27 .44	.15 .30	.24 .37	.33 .50	.19 .34	.28 .41	.38 .56
MEDIAN STRIP-TURF	.19 .24	.20 .26	.24 .30	.19 .25	.22 .28	.26 .33	.20 .26	.23 .30	.30 .37	.20 .27	.25 .32	.30 .40
SIDE SLOPE-TURF			.25 .32			.27 .34			.28 .36			.30 .38
PAVEMENT:												
ASPHALT	.70 - .95											
CONCRETE	.80 - .95											
BRICK	.70 - .80											
DRIVES, WALKS	.75 - .85											
ROOFS	.75 - .95											
GRAVEL ROADS, SHOULDERS	.40 - .60											

TOTAL PROJECT AREA = 4.45 ACRES
TOTAL AREA EXPECTED TO BE DISTURBED BY CONSTRUCTION ACTIVITIES = 1.62 ACRES

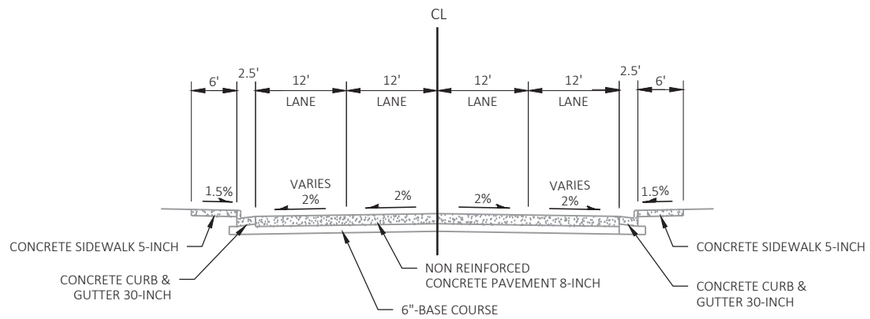

TYPICAL EXISTING SECTION - MAIN STREET

STA. 16+10 TO STA. 18+43

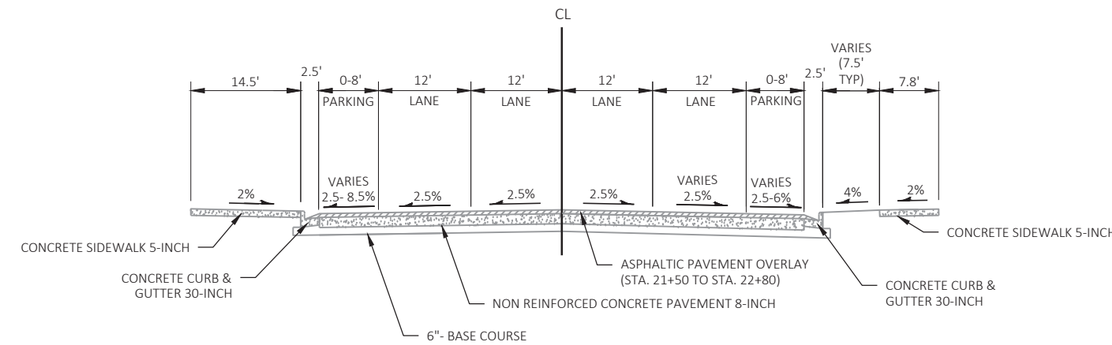

TYPICAL EXISTING SECTION - MAIN STREET

STA. 21+10 TO STA. 22+80

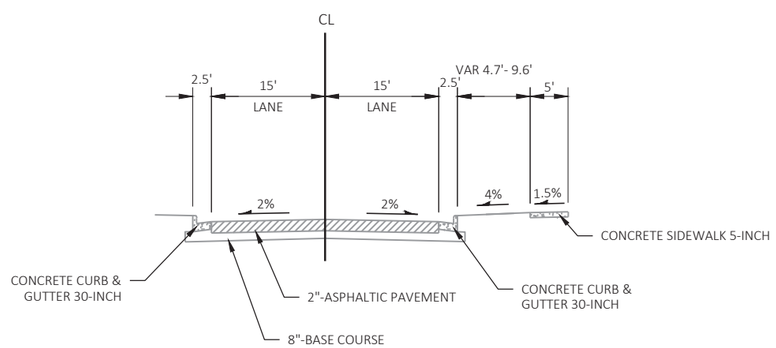

TYPICAL EXISTING SECTION - STEIN STREET

STA. 50+26 TO STA. 50+55

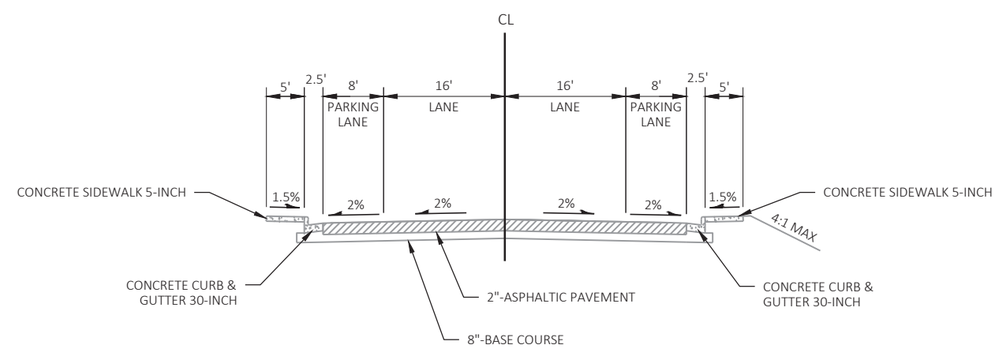

TYPICAL EXISTING SECTION - WATER STREET

STA. 60+87 TO STA. 61+24

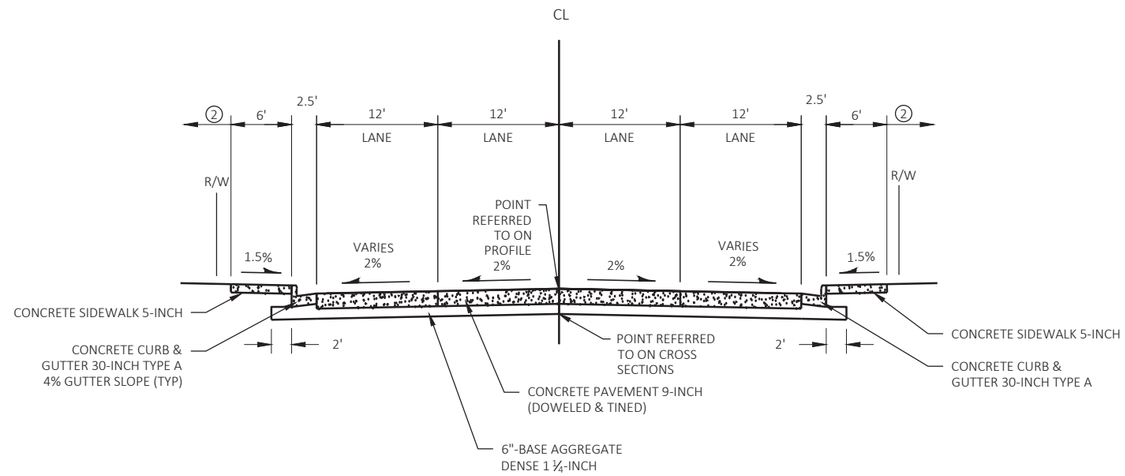

TYPICAL FINISHED SECTION - MAIN STREET

STA. 16+10 TO STA. 18+43

1. TIE BARS ARE INCIDENTAL TO CONCRETE PAVEMENT (UNLESS DRILLED INTO EXISTING PAVEMENT)
2. SALVAGED TOPSOIL, SEEDING MIXTURE #40, SEEDING TEMPORARY, FERTILIZER, AND MULCHING

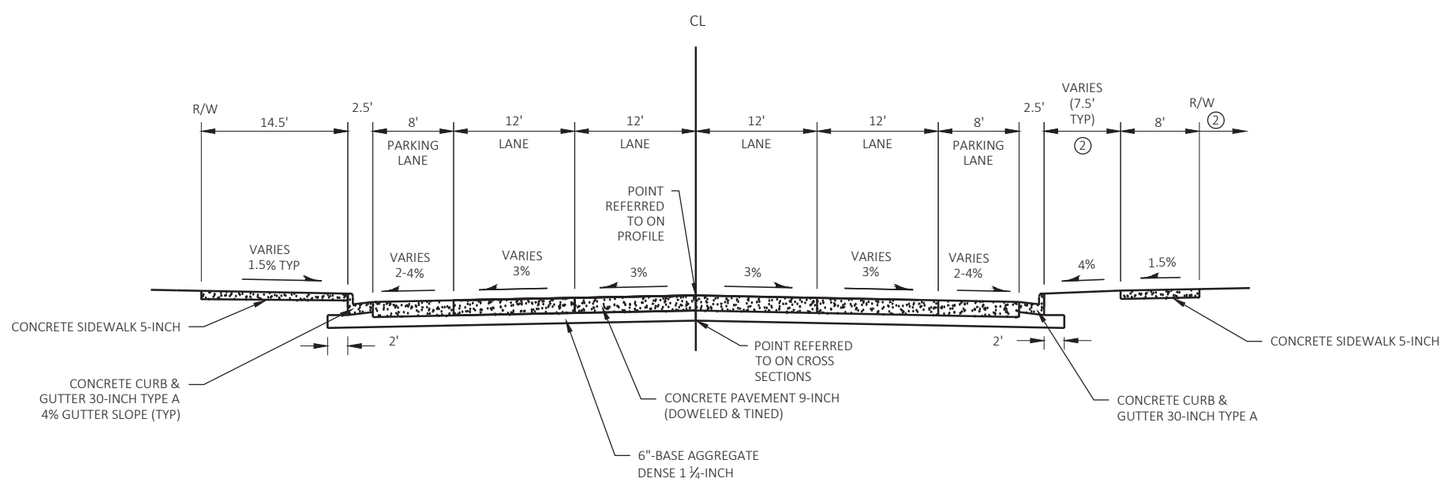

TYPICAL FINISHED SECTION - MAIN STREET

STA. 21+10 TO STA. 22+80

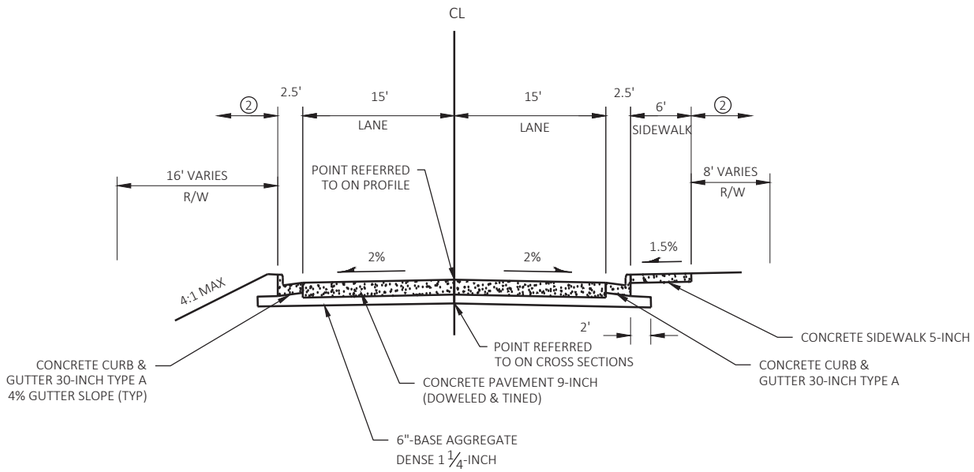

TYPICAL FINISHED SECTION - STEIN STREET

STA. 50+25.7 TO STA. 50+54.7

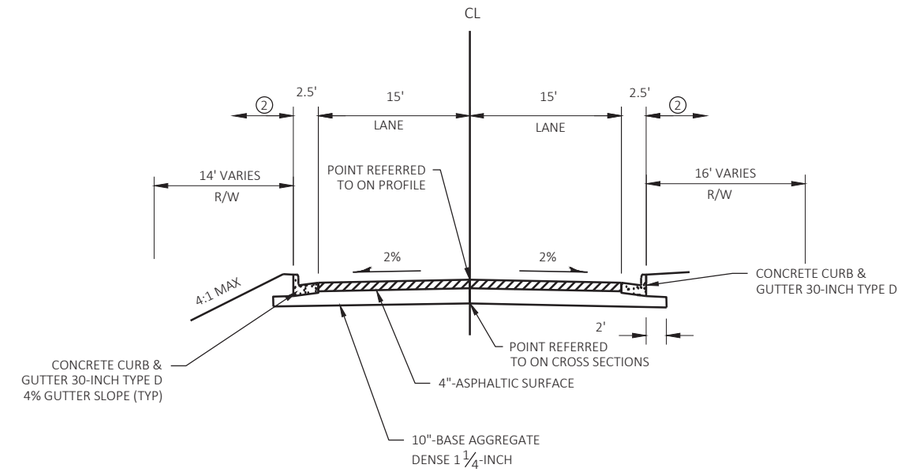

TYPICAL FINISHED SECTION - STEIN STREET

STA. 50+54.7 TO STA. 50+70.1

① TIE BARS ARE INCIDENTAL TO CONCRETE PAVEMENT (UNLESS DRILLED INTO EXISTING PAVEMENT)

② SALVAGED TOPSOIL, SEEDING MIXTURE #40, SEEDING TEMPORARY, FERTILIZER, AND MULCHING

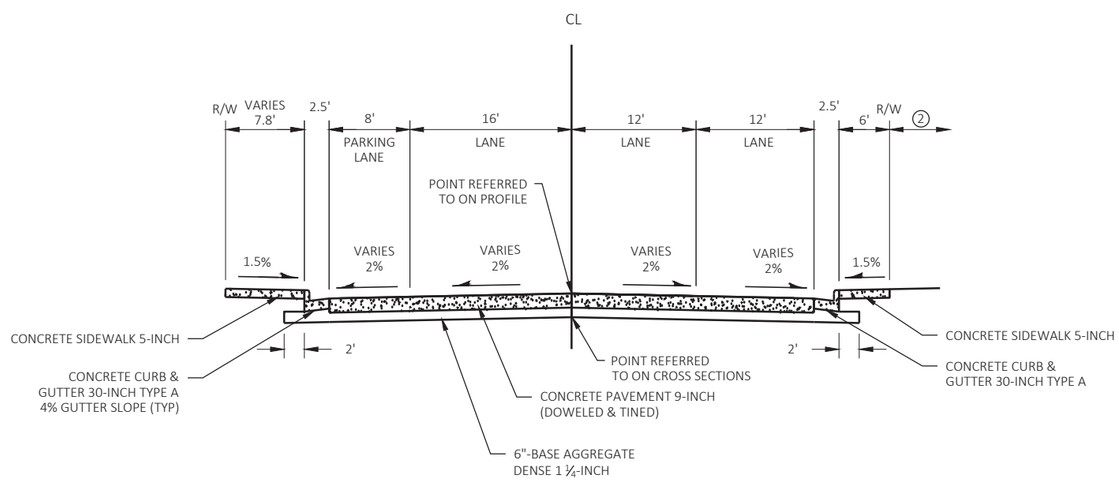

TYPICAL FINISHED SECTION - WATER STREET

STA. 61+02 TO STA. 61+23.4

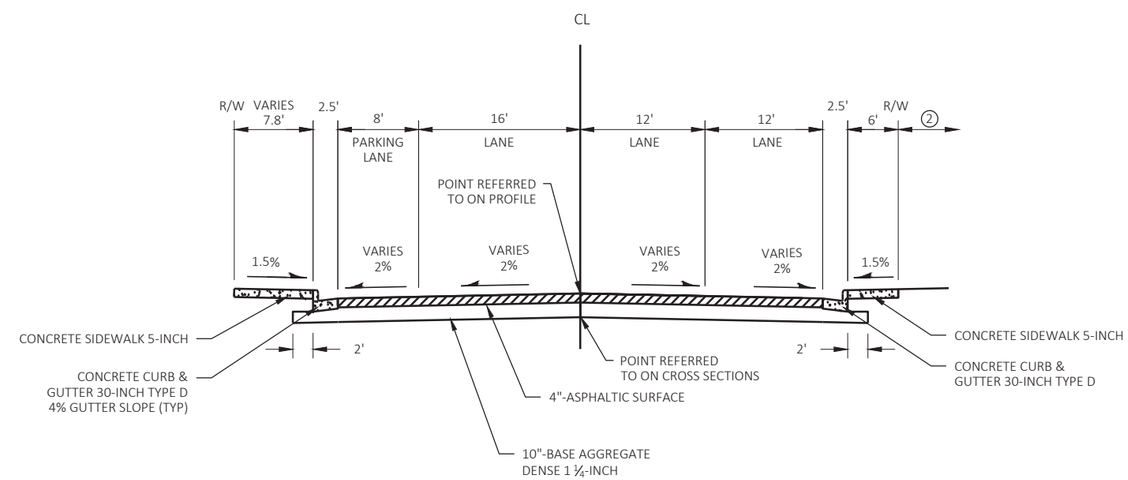

TYPICAL FINISHED SECTION - WATER STREET

STA. 60+70.7 TO STA. 61+02.0

2

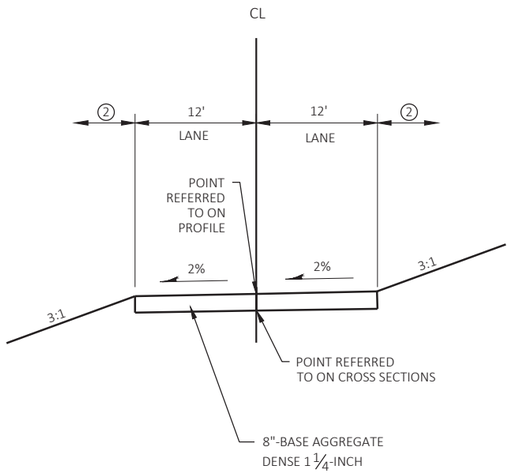

TYPICAL CONSTRUCTION SECTION - ACCESS ROAD

STA. 40+32 TO STA. 42+53

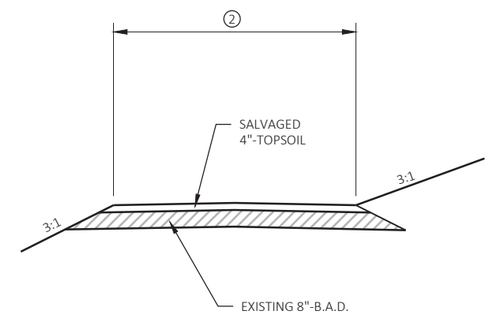

TYPICAL FINISHED SECTION - ACCESS ROAD

STA. 40+32 TO STA. 42+53

2

(2) SALVAGED TOPSOIL, SEEDING MIXTURE #40,
SEEDING TEMPORARY, FERTILIZER, AND MULCHING

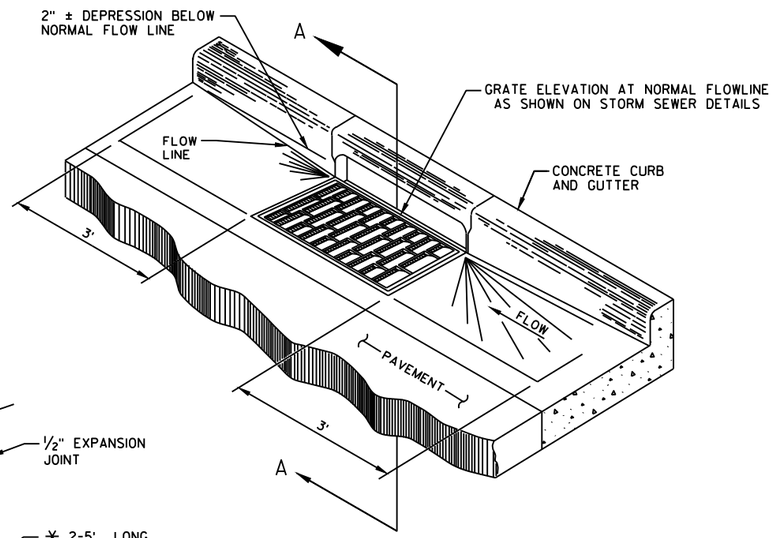

PERSPECTIVE

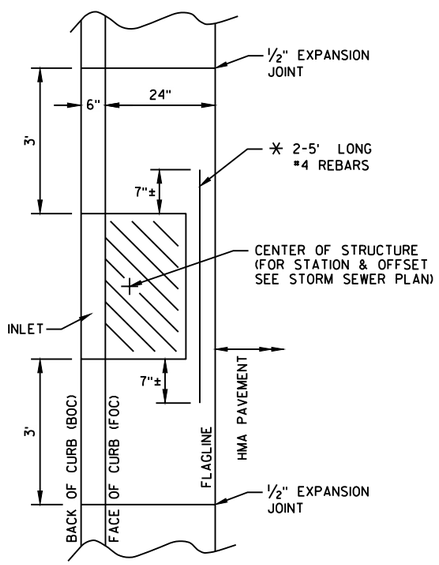

30" CONCRETE CURB & GUTTER

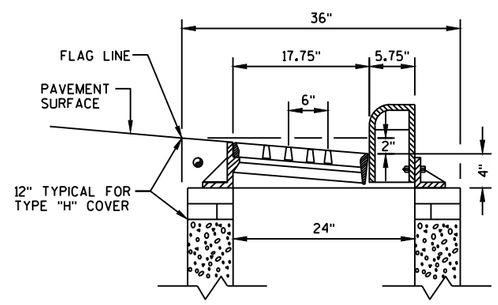

SECTION A-A

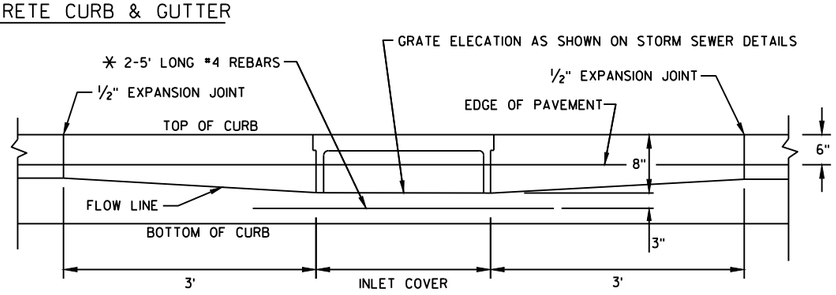

ELEVATION

(✳ INCLUDED IN COST OF "CONCRETE CURB & GUTTER")

DETAIL OF CURB AND GUTTER AT INLETS

(TYPE 2x3-H INLET SHOWN)

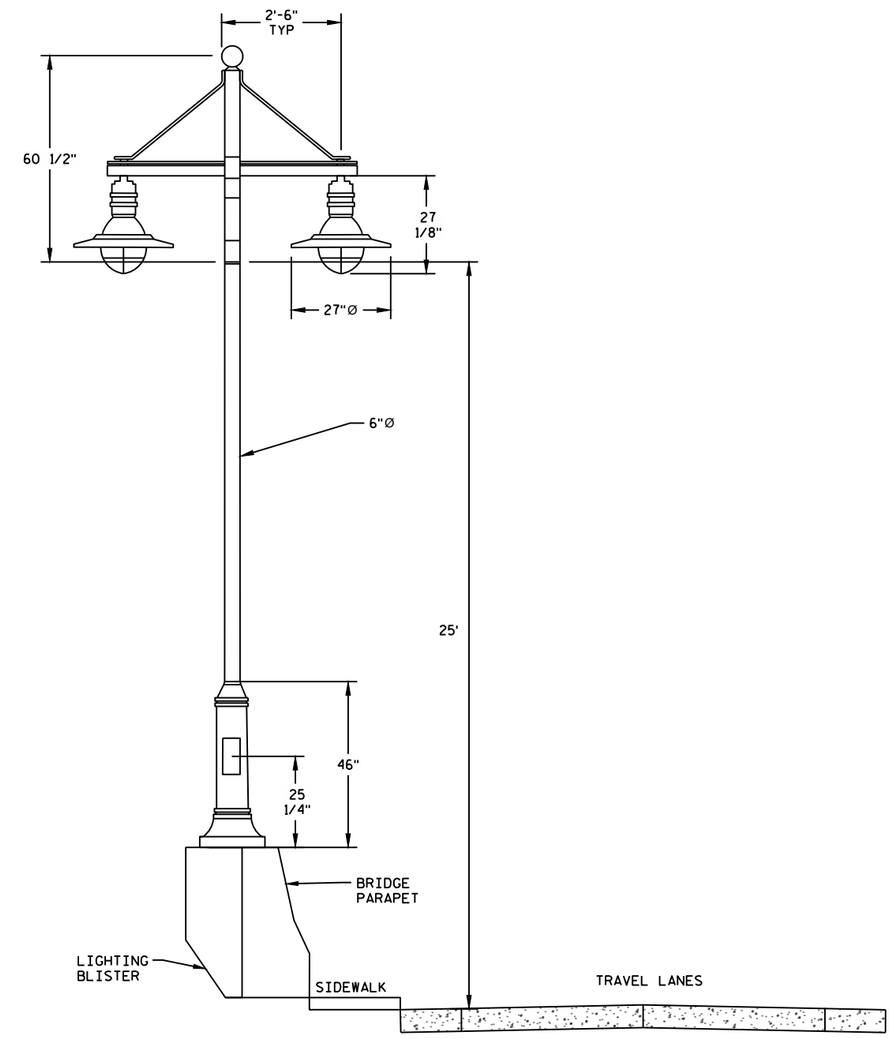

BRIDGE PARAPET SECTION

DECORATIVE LIGHT AND POLE ASSEMBLY TYPE B

LIGHTING DETAIL

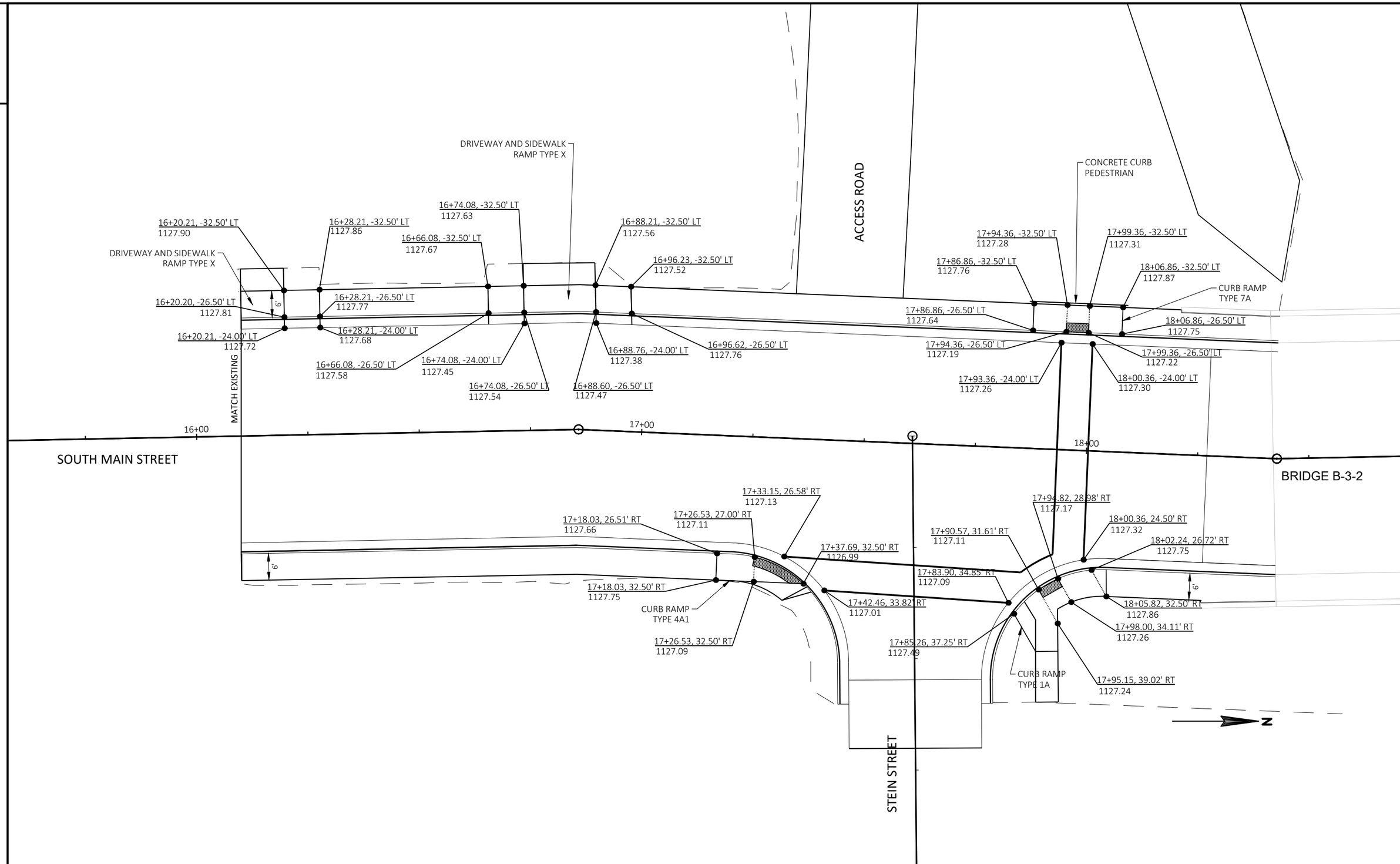

PROJECT NO: 8997-00-40	HWY: MAIN ST	COUNTY: BARRON	CURB RAMP DETAILS	SHEET 8	E

FILE NAME : V:\STRUCTURES-EC\42-0989.00 - BARRON CO, CITY OF RICE LAKE\CADD\SHEETSPLAN\021002_CD.DWG
LAYOUT NAME - 2 CONSTRUCTION DETAILS
PLOT DATE : 1/31/2018 10:06 AM PLOT BY : AYRES ASSOCIATES PLOT NAME : PLOT SCALE : 1 IN:20 FT

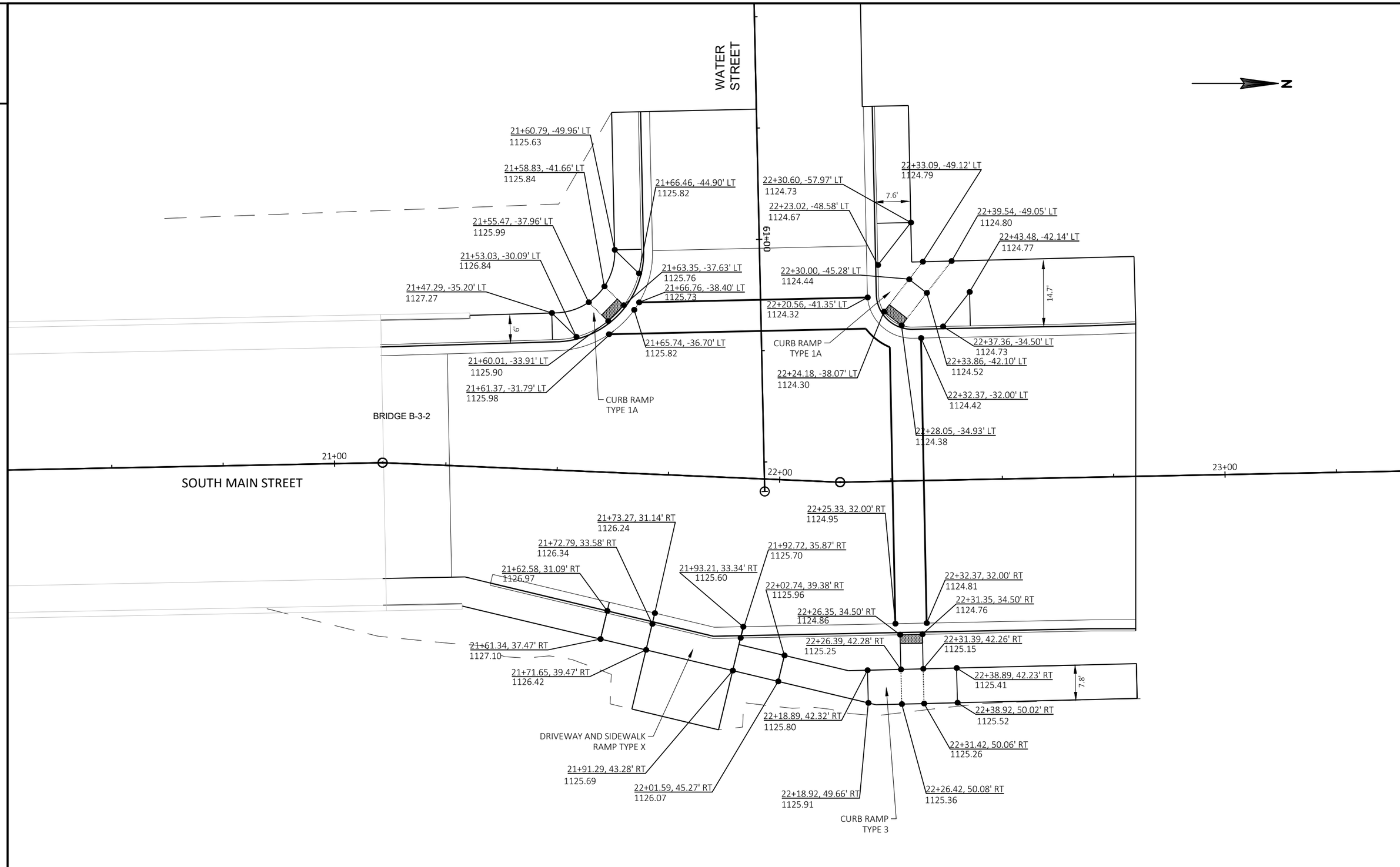
WATER STREET
N
21+60.79, -49.96' LT
1125.63
21+58.83, -41.66' LT
1125.84
21+66.46, -44.90' LT
1125.82
21+55.47, -37.96' LT
1125.99
21+53.03, -30.09' LT
1126.84
21+63.35, -37.63' LT
1125.76
21+66.76, -38.40' LT
1125.73
21+47.29, -35.20' LT
1127.27
9'
21+65.74, -36.70' LT
1125.82
21+60.01, -33.91' LT
1125.90
21+61.37, -31.79' LT
1125.98
CURB RAMP
TYPE 1A
BRIDGE B-3-2
21+00
SOUTH MAIN STREET
22+00
23+00
61+00
22+30.60, -57.97' LT
1124.73
22+33.09, -49.12' LT
1124.79
7.6'
22+23.02, -48.58' LT
1124.67
22+39.54, -49.05' LT
1124.80
22+43.48, -42.14' LT
1124.77
22+30.00, -45.28' LT
1124.44
14.7'
22+20.56, -41.35' LT
1124.32
CURB RAMP
TYPE 1A
22+37.36, -34.50' LT
1124.73
22+33.86, -42.10' LT
1124.52
22+24.18, -38.07' LT
1124.30
22+32.37, -32.00' LT
1124.42
22+28.05, -34.93' LT
1124.38
22+25.33, 32.00' RT
1124.95
21+73.27, 31.14' RT
1126.24
21+72.79, 33.58' RT
1126.34
21+92.72, 35.87' RT
1125.70
21+62.58, 31.09' RT
1126.97
21+93.21, 33.34' RT
1125.60
22+02.74, 39.38' RT
1125.96
22+32.37, 32.00' RT
1124.81
22+31.35, 34.50' RT
1124.76
22+26.35, 34.50' RT
1124.86
21+61.34, 37.47' RT
1127.10
22+26.39, 42.28' RT
1125.25
22+31.39, 42.26' RT
1125.15
21+71.65, 39.47' RT
1126.42
22+38.89, 42.23' RT
1125.41
7.8'
22+38.92, 50.02' RT
1125.52
22+18.89, 42.32' RT
1125.80
DRIVEWAY AND SIDEWALK
RAMP TYPE X
22+31.42, 50.06' RT
1125.26
21+91.29, 43.28' RT
1125.69
22+01.59, 45.27' RT
1126.07
22+18.92, 49.66' RT
1125.91
22+26.42, 50.08' RT
1125.36
CURB RAMP
TYPE 3

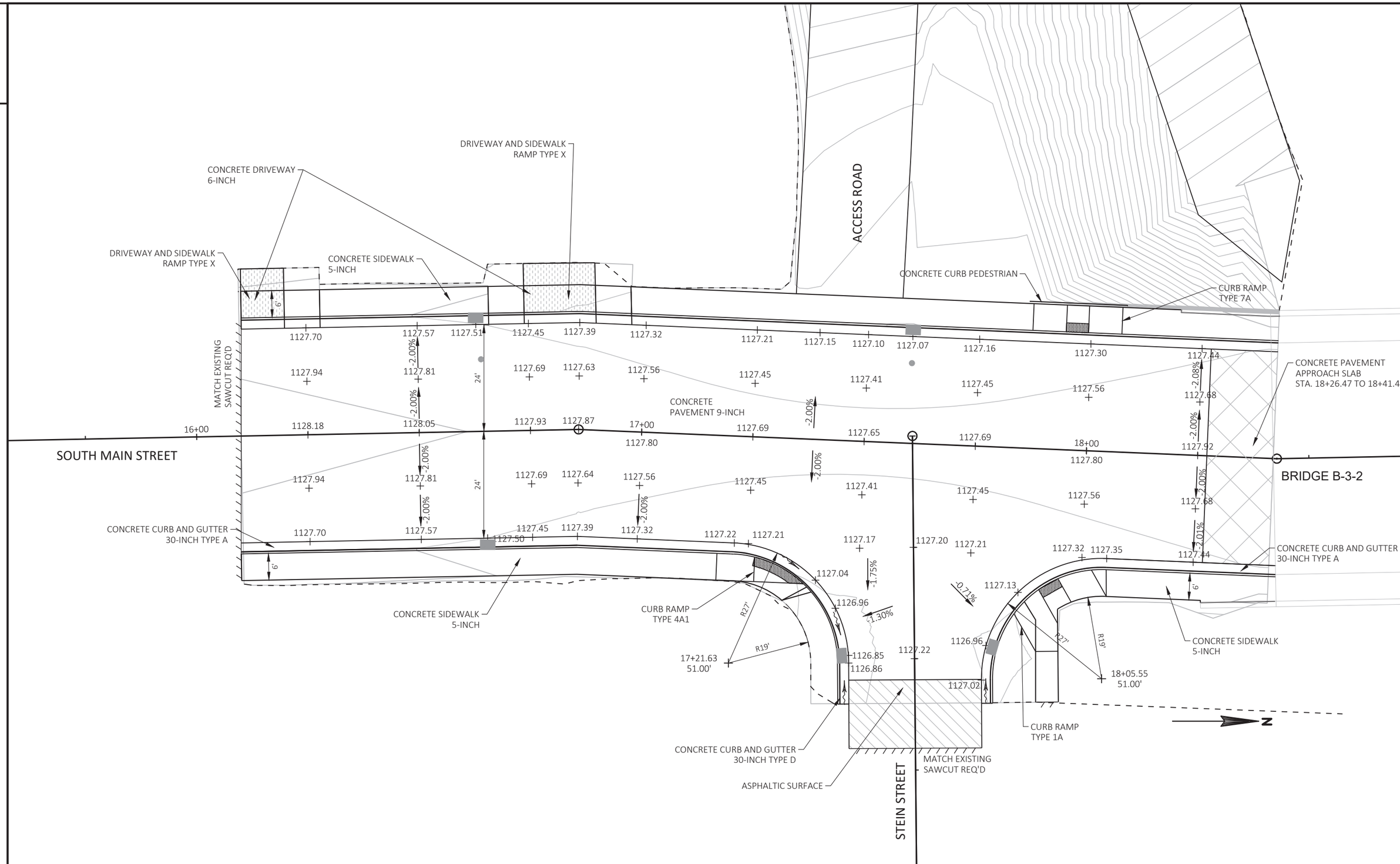

PROJECT NO: 8997-00-40	HWY: MAIN ST	COUNTY: BARRON	PAVING DETAILS	SHEET 10	E

FILE NAME : V:\STRUCTURES-EC\42-0989.00 - BARRON CO, CITY OF RICE LAKE\CADD\SHEETSPLAN\0213_JD.DWG
LAYOUT NAME - 01 PAVING DETAILS
PLOT DATE : 10/27/2017 12:11 PM PLOT BY : AYRES ASSOCIATES PLOT NAME : PLOT SCALE : 1 IN:20 FT

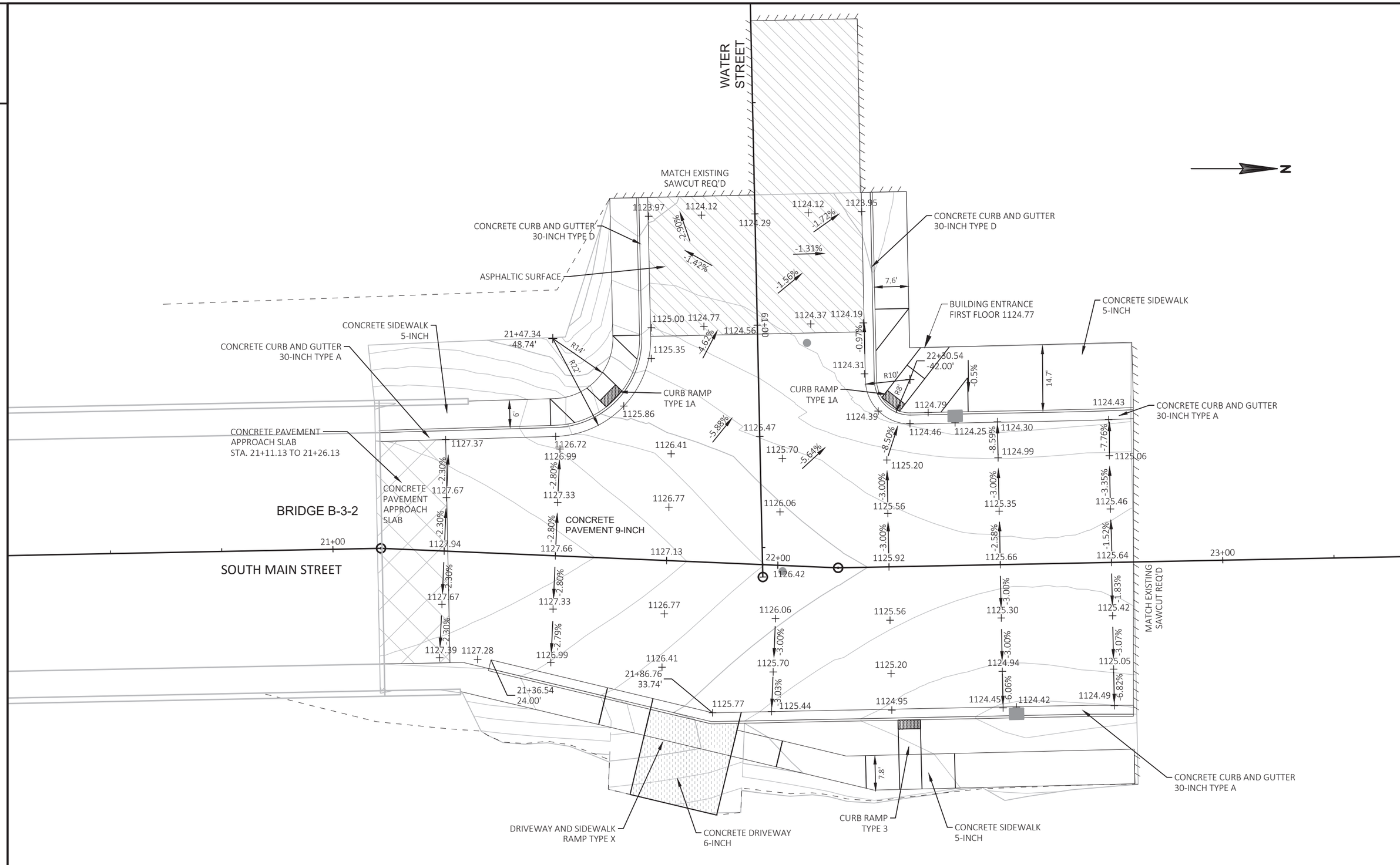

PROJECT NO: 8997-00-40	HWY: MAIN ST	COUNTY: BARRON	PAVING DETAILS	SHEET 11	E

FILE NAME : V:\STRUCTURES-EC\42-0989.00 - BARRON CO, CITY OF RICE LAKE\CADD\SHEETSPLAN\0213_JD.DWG
LAYOUT NAME - 02 PAVING DETAILS
PLOT DATE : 10/27/2017 12:11 PM PLOT BY : AYRES ASSOCIATES PLOT NAME : PLOT SCALE : 1 IN:20 FT

LEGEND

- EROSION MAT URBAN CLASS I , TYPE A
- SILT FENCE
- RIPRAP HEAVY
- INLET PROTECTION, TYPE D

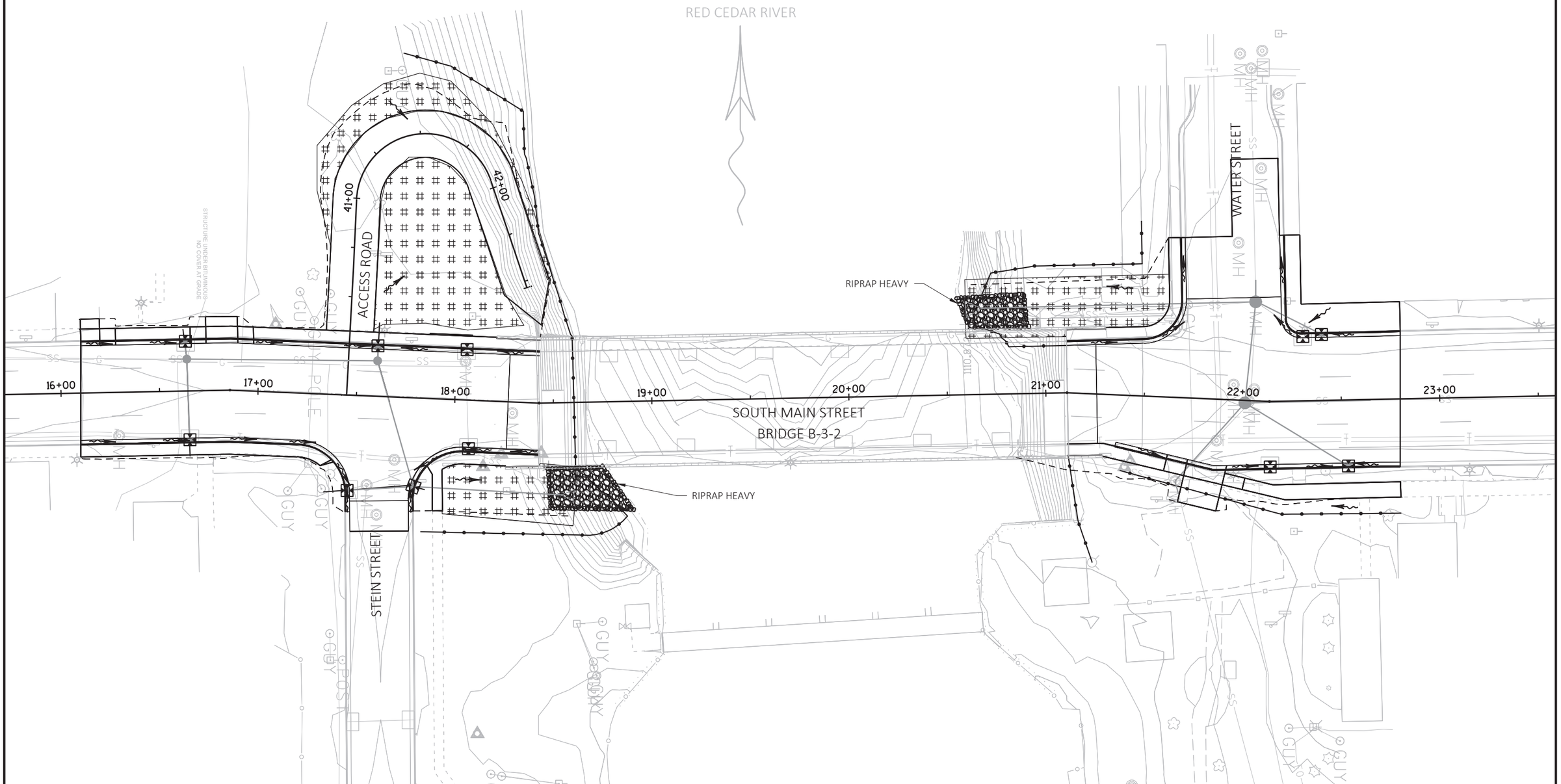

2

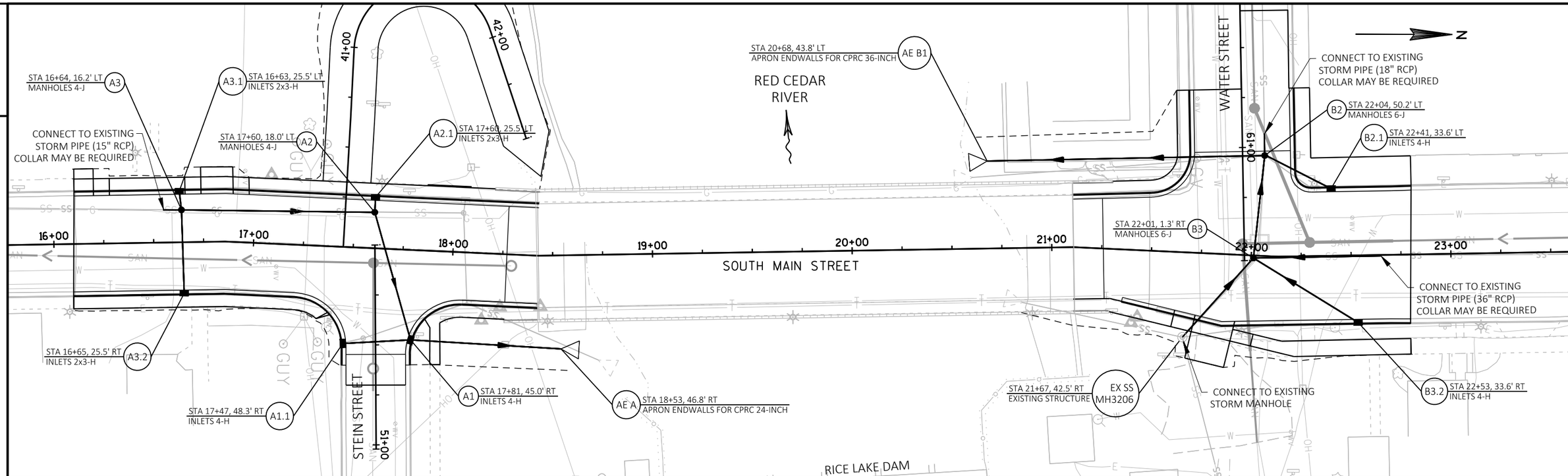

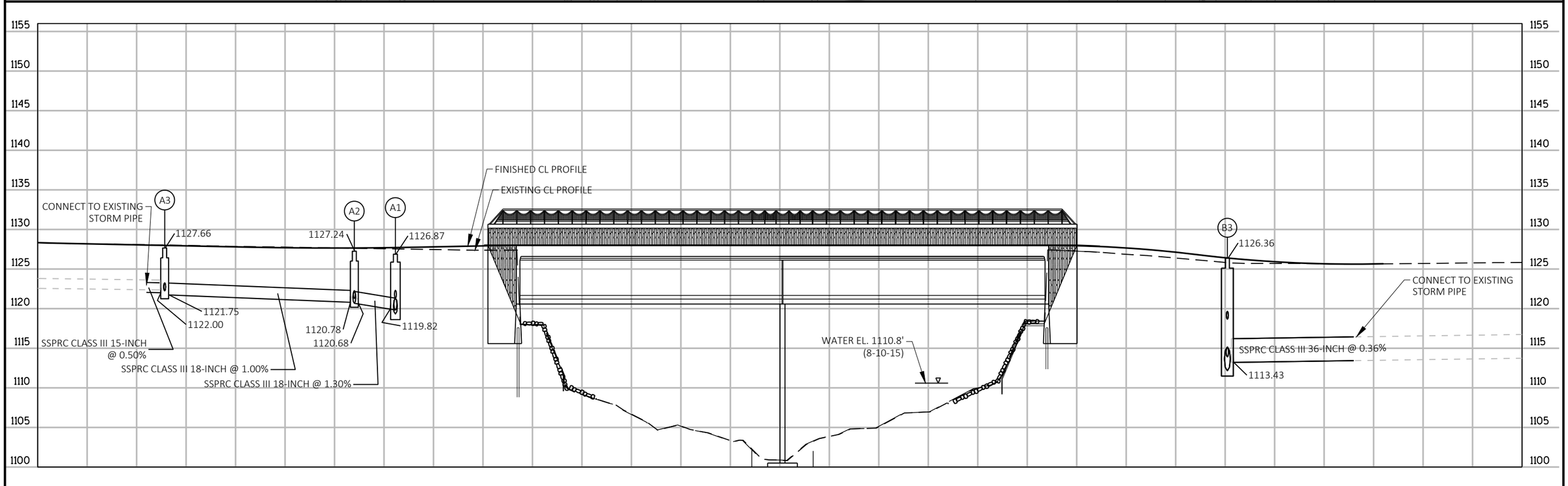

PROJECT NO: 8997-00-40	HWY: MAIN ST	COUNTY: BARRON	STORM SEWER: STORM SEWER	SHEET 13	E

FILE NAME : V:\STRUCTURES-EC\42-0989.00 - BARRON CO, CITY OF RICE LAKE\CADD\SHEETSPLAN\0225_SS.DWG
LAYOUT NAME - STORM SEWER
PLOT DATE : 1/30/2018 3:31 PM
PLOT BY : AYRES ASSOCIATES
PLOT NAME :
PLOT SCALE : 1 IN:50 FT
WISDOT/CADDS SHEET 41

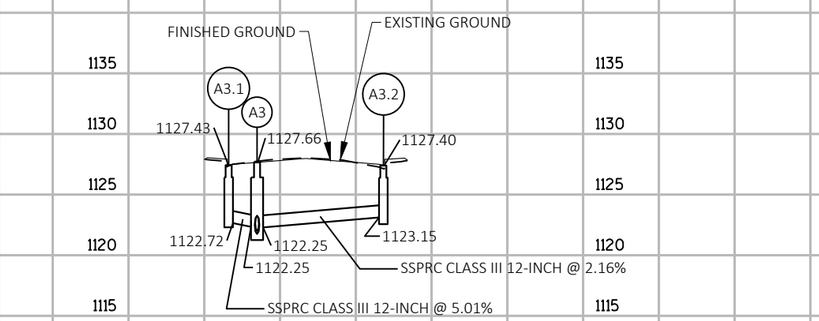

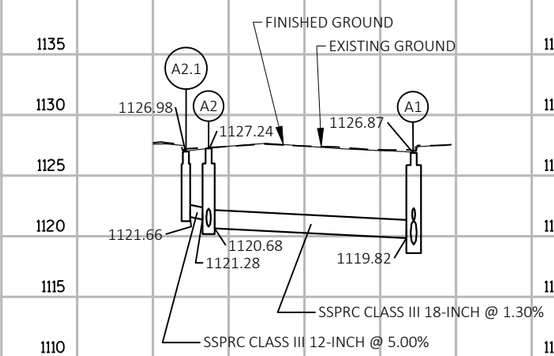

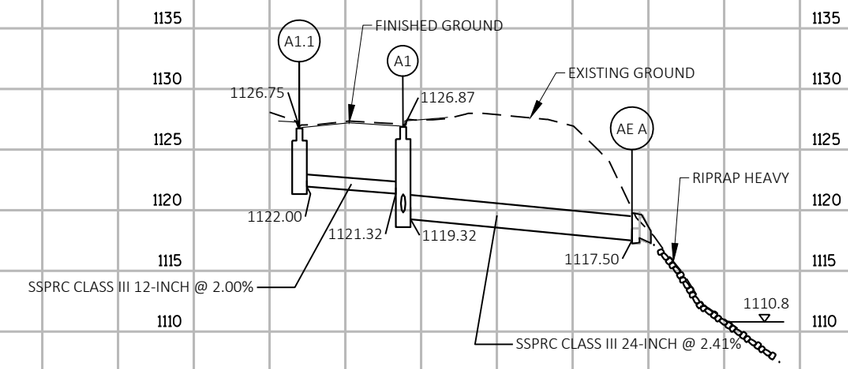

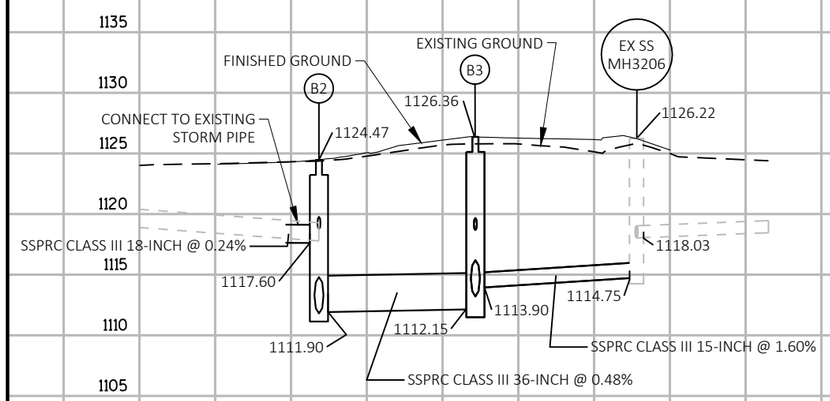

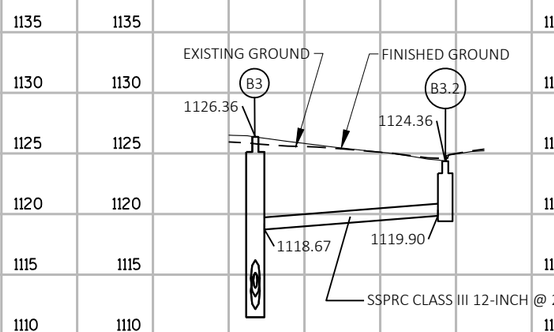

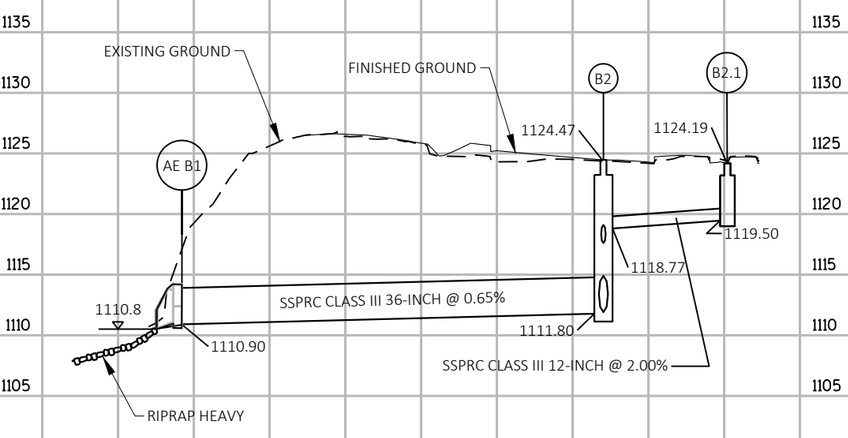

PROJECT NO: 8997-00-40	HWY: MAIN ST	COUNTY: BARRON	STORM SEWER: STORM SEWER	SHEET 14	E

2

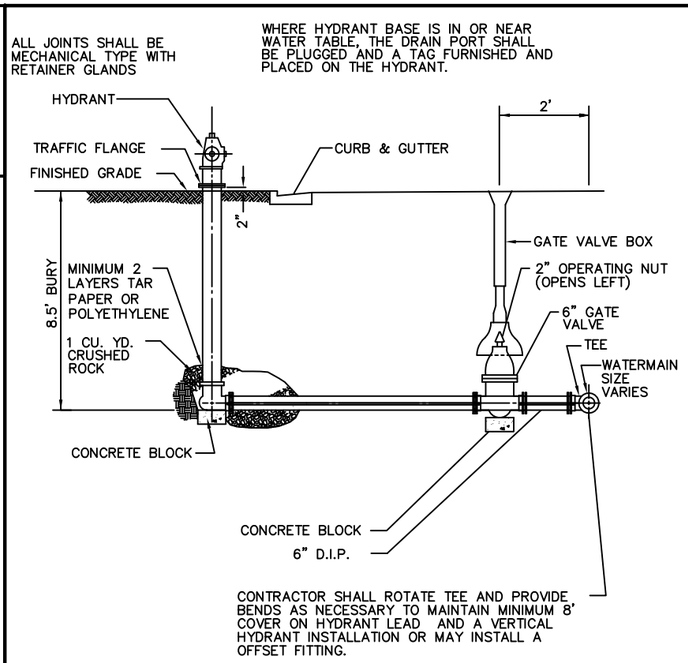

FIRE HYDRANT

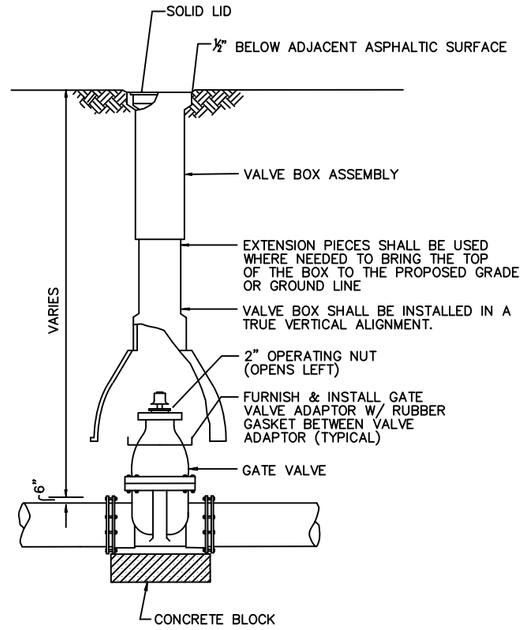

GATE VALVE & BOX

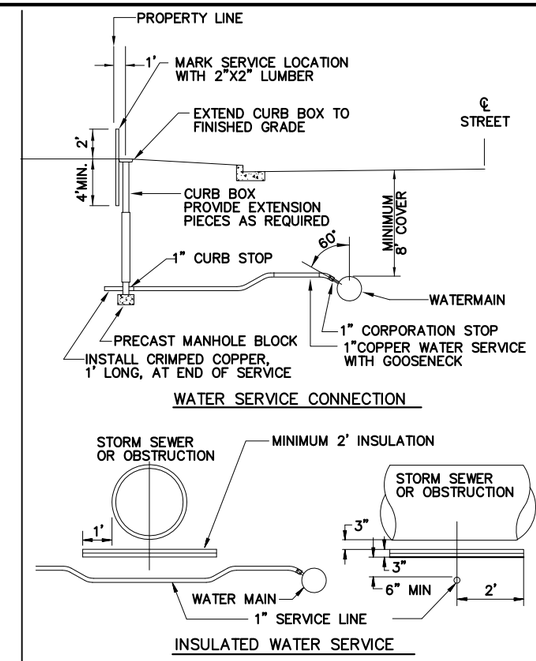

1" WATER SERVICE CONNECTION

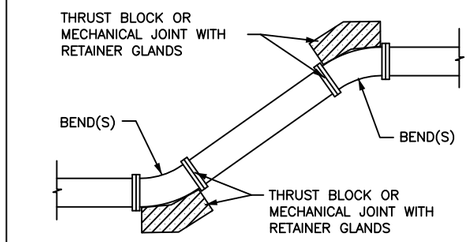

THRUST BLOCK

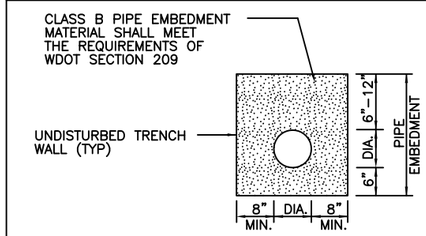

NOTE: CLASS B PIPE EMBEDMENT SHALL BE INCIDENTAL TO ALL PIPE INSTALLATION

CLASS B PIPE EMBEDMENT

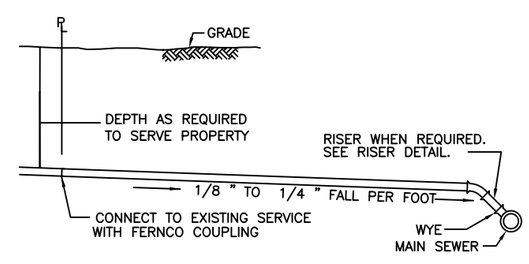

SANITARY SEWER SERVICE

NOTE:
STANDARD SANITARY MANHOLES SHALL INCLUDE ALL DETAILED FEATURES AS SHOWN BELOW AND IN SPECIFICATIONS, EXCEPT FOR EXTERNAL RUBBER SLEEVES AT JOINTS AND ADJUSTING RINGS.

WATERPROOF SANITARY MANHOLES SHALL INCLUDE ALL FEATURES AS SHOWN BELOW, INCLUDING EXTERNAL RUBBER SLEEVES AT JOINTS AND ADJUSTING RINGS.

SEE SPECIFICATIONS FOR ADDITIONAL INFORMATION.

STANDARD MANHOLES: STRUCTURES 1, 4, AND 6
WATERPROOF MANHOLES: STRUCTURES 2, 3, AND 5

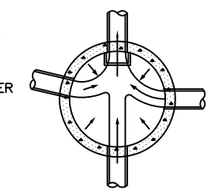

PLAN

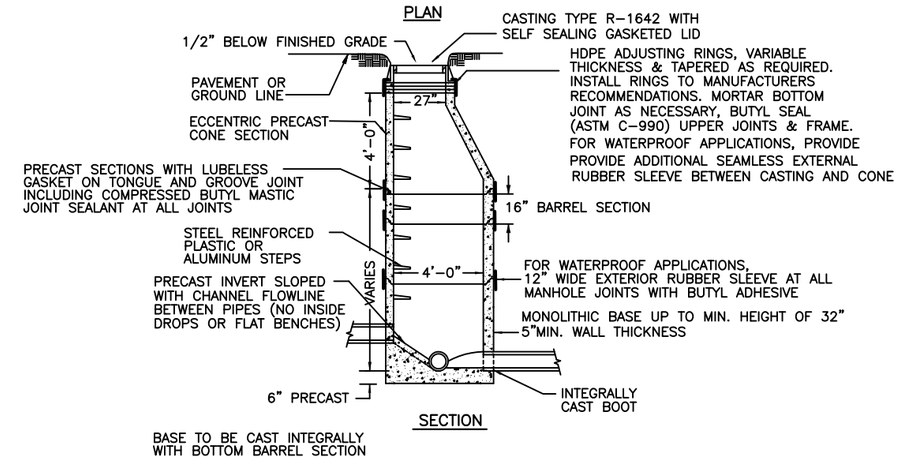

SECTION

STANDARD AND WATERPROOF SANITARY MANHOLE

PROJECT NO: 8997-00-40	HWY: MAIN STREET	COUNTY: BARRON	DETAILS – SANITARY SEWER AND WATER MAIN	SHEET	E

2

REPLCACE ACTIVE SANITARY SERVICES ENCOUNTERED ON WEST SIDE, 3 EXPECTED
15"x 6" WYES
APPROX 42 LF EACH
6" PVC SAN SERVICE PIPE
CONNECT TO EXISTING SAN SERVICES
TRANSITION TO 4" PIPE AT PROPERTY LINE IF REQUIRED

PROTECT EXISTING WATER SERVICES AND CURB BOXES

CONSTRUCTION NEW SANITARY MANHOLE
AT INTERSECTION OF EXISTING 15" & 8" MAINS
VERIFY INVERT ELEVATIONS
ABANDON AND PLUG EXISTING SANITARY SEWER TO NORTH (INCIDENTAL)

41+00

42+00

scale 12.5 25 0 25 50 feet

N

RED CEDAR RIVER

1-8" GV & BOX
1-4"x 8" REDUCER
1-CONNECT TO EXISTING WATER MAIN

1-ABANDON WATER SERVICE
INCL REMOVING VALVE BOX AND REMOVING WATER MAIN BEYOND CORP

1-HYDRANT, STA 21+58, 55' LT
1-6" GV & BOX
23 LF 6" WATER MAIN
1-8"x 6" TEE

WATER STREET

EXIST 24" CONCR SAN SEW

PROTECT EXISTING SANITARY MANHOLE
PLUG PIPE INVERT E & S (INCIDENTAL)
1-ADJUST MH CASTING

84 LF - 18" C900 PVC SAN SEWER
1-CONNECT TO EXISTING SAN SEWER (W)
VERIFY PIPE SLOPE, APPROXIMATELY 0.2%
(SEE MANHOLE 4 ELEVATION INFO BELOW)

REPLACE EXISTING WATER SERVICE
1-1" CORPORATION STOP
(CONNECT TO EXISTING 8" MAIN)
1-1" CURB STOP AND BOX
35 LF 1" COPPER WATER SERVICE
1-CONNECT TO EXISTING WATER SERVICE

ABANDON 10" SANITARY SEWER BETWEEN REMOVED VAULT AND EXISTING MANHOLE
PLUG BOTH ENDS (INCIDENTAL)

EXIST 18" SAN SEW

16+00 17+00 18+00 19+00 20+00 21+00 22+00 23+00

SOUTH MAIN STREET

REMOVE EXISTING 4" WM
1-REMOVE EXISTING GV & BOX
1-8" GV & BOX
1-CONNECT TO EXISTING WATER MAIN

140 LF 8" DIP WATER MAIN
TO REPLACE EXISTING 4" WM
1-8" 90 DEGREE BEND
21+83.0, 17.4' LT

2-ABANDON WATER SERVICE
INCL REMOVING CURB BOX AND SHUTTING OFF CORP AT MAIN
ABANDON SAN SEWER SERVICES ALSO ON EAST SIDE (INCIDENTAL)

1-REMOVE EXISTING SANITARY MANHOLE
ABANDON AND PLUG EXISTING SANITARY SEWER TO SOUTH (INCIDENTAL)

1-REMOVE EXISTING SANITARY MANHOLE
1-REMOVE EXISTING SANITARY VAULT
(APPROX 6.5'x 8.5')

1-REMOVE EXISTING GATE VALVE AND BOX
3 LF 8" WM
2-CONNECT TO EXISTING WATER MAIN

PROTECT EXISTING HYDRANT AND VALVE
1-REPLACE VALVE BOX
(LOCATED IN CURB HEAD)

STEIN STREET

51+00

53 LF - 8" PVC SAN SEWER
1-CONNECT TO EXISTING SAN SEWER (MANHOLE E)
VERIFY PIPE SLOPE TO MATCH INTO EXISTING MH NEAR INV 1119.90, APPROXIMATELY 0.75%

PROTECT EXISTING SANITARY MANHOLE
1-ADJUST MH CASTING (LOW PROFILE)

RICE LAKE DAM

EXIST 21" CONCR SAN SEW

1-REMOVE EXISTING HYDRANT
CAP WATER MAIN AT TEE

54 LF - 8" C900 PVC SAN SEWER @ 0.2%

STA 22+02, 48.0' RT
1-CONNECT TO EXISTING SAN SEWER (E) WITH TEMPORARY CONNECTION TO EXISTING 21" CONCR
FUTURE EXTENSION OF 8" SAN SEWER TO EAST BY OTHERS

2

WISCONSIN
BRYAN W. CUNNINGHAM
E-35947
CUMBERLAND
WI
PROFESSIONAL ENGINEER
1/18/18

APPLIES TO SANITARY AND WATER PAGES

NOTES:
SANITARY SEWER INVERT ELEVATIONS ARE APPROXIMATE BASED ON FIELD DEPTH MEASUREMENTS.
VERIFY AND ADJUST ELEVATIONS AS NEEDED TO MATCH PIPE INVERTS AT CONNECTION POINTS.
VERIFY SANITARY SEWER INSTALLATION VERSUS NEW STORM PIPES AND STRUCTURES.

ALL SANITARY SEWER NEAR MAIN AND WATER STREET INTERSECTION SHALL BE C900 PVC, INCLUDING THE FOLLOWING PIPE RUNS:
MANHOLE 2 TO MANHOLE 3
MANHOLE 3 TO MANHOLE 4
MANHOLE 2 TO 22+02, 48' RT
MANHOLE 3 TO 22+76, 7' LT

SANITARY SEWER MANHOLES 2 AND 3 SHALL BE CONSTRUCTED WITH ADDITIONAL WATERPROOF FEATURES AS DESCRIBED IN SPECIAL PROVISIONS AND BID ITEMS.

SANITARY SEWER ON THE SOUTH SIDE OF THE BRIDGE NEAR STEIN AND MAIN STREET SHALL BE SDR 35, INCLUDING:
MANHOLE 1 TO 16+22, 7' RT
MANHOLE 1 TO 17+62, 59' RT

SANITARY MANHOLE 4
STA 21+98.0, 85.0' LT
TC = 1124.20
INV = 1113.66 (W EX 18")
INV = 1113.71 (E 18")

1155 1150 1145 1140 1135 1130 1125 1120 1115 1110 1105 1100

SANITARY MANHOLE 1
STA 17+60.40, 2.53' RT
TC = 1127.57

REMOVE EXISTING SANITARY MANHOLE

SANITARY MANHOLE 2
STA 21+95.0, 5.5' LT
TC = 1126.34

SANITARY MANHOLE 3
STA 22+29.0, 6.9' LT
TC = 1125.62

EXISTING 15" VCP SAN SEW

APPROX 140 LF - 15" PVC SAN SEW
VERIFY SLOPE TO MATCH EXISTING PIPE
APPROX 0.15%

MAKE CONNECTION WITH 15" PVC PIPE AT LOCATION AS NECESSARY FOR CLEAN JOINT AND FERNCO COUPLING

INV=1119.25 (S 15")
INV=1119.50 (E 8")
(VERIFY EXISTING PIPE ELEV)

PLUG REMAINING 15" MAIN ON BOTH ENDS

PROPOSED STORM SEWER

34 LF - 8" C900 PVC SAN SEW BETWEEN SAN MH 2 & 3 @ 0.40%

COORDINATE WITH STORM SEWER CONSTRUCTION TO INSTALL STORM UNDER SANITARY

INV=1115.90 (E 8")
INV=1115.85 (N 8")

8' MIN COVER OVER WM
VERIFY WITH SAN AND STORM SEWER DEPTH

PROPOSED 8" WATER MAIN

EXISTING 8" WM

EXISTING 18" SAN SEW
VERIFY IF CLAY OR CONCR

APPROX 42 LF - 18" C900 PVC SAN SEW
VERIFY SLOPE TO MATCH EXISTING PIPE
APPROX 0.12%

INV=1115.71 (S 8")
INV=1114.00 (N 18")
INV=1113.95 (W 18")

MAKE CONNECTION WITH EXIST 18" PIPE AT LOCATION AS NECESSARY FOR CLEAN JOINT AND FERNCO COUPLING

NOTE: CONSTRUCT INVERT OF MANHOLE 3 WITH CHANNELIZED FLUME TO DIRECT FLOW FROM UPPER INCOMING SOUTH PIPE INTO LOWER FLOWLINE. DO NOT CONSTRUCT FLAT BENCH IN SOUTH PART OF MANHOLE.

PROJECT NO: 8997-00-40	HWY: MAIN ST	COUNTY: BARRON	SANITARY SEWER AND WATER MAIN: MAIN STREET	SHEET	E

FILE NAME : P:\PT\R\RICLU\143453\5-FINAL-DSGN\CAD\DWG\RLU 143453 PP SAN-WATR.DWG
LAYOUT NAME - MAIN ST UTIL
PLOT DATE : 1/19/2018 4:38 PM PLOT BY : AYRES ASSOCIATES PLOT NAME : PLOT SCALE : 1 IN:50 FT

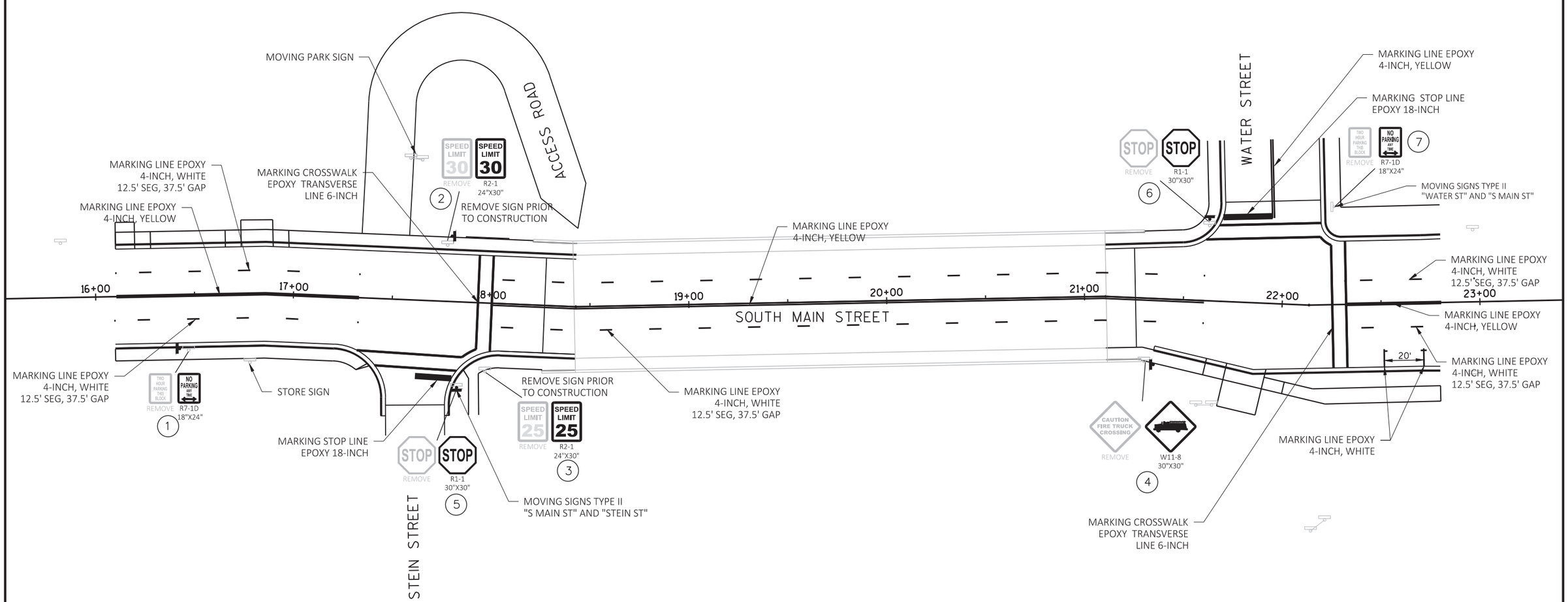

LEGEND:

PROPOSED SIGN ON POST

NOTE:

STATIONING, DISTANCES, AND OFFSETS FOR SIGNS SHOWN IN THE PLANS ARE APPROXIMATE AND THE FINAL LOCATION OF SIGNS ARE TO BE DETERMINED BY THE FIELD ENGINEER

PROJECT NO: 8997-00-40	HWY: MAIN ST	COUNTY: BARRON	PERMANENT SIGNING	SHEET 17	E

2

LEGEND

- CONTROL CABINET DESIGNATION
- LIGHT NUMBER
- STATION, OFFSET
- A-1 / A-2.5-(1)
- LIGHTING CIRCUIT NUMBER
- ARM LENGTH (FT)
- LUMINAIRE DESIGNATION

	LIGHTING UNIT
	LIGHTING PULL BOX (LPB)
(1)	CONDUIT NON-METALLIC SCHEDULE 40 2-INCH UNLESS NOTED
	LIGHTING CONTROL CABINET
2 - #8 LIGHTING 1 - #8 GROUND (1)	CONDUIT WIRE CONFIGURATION (CIRCUIT #(S))

N

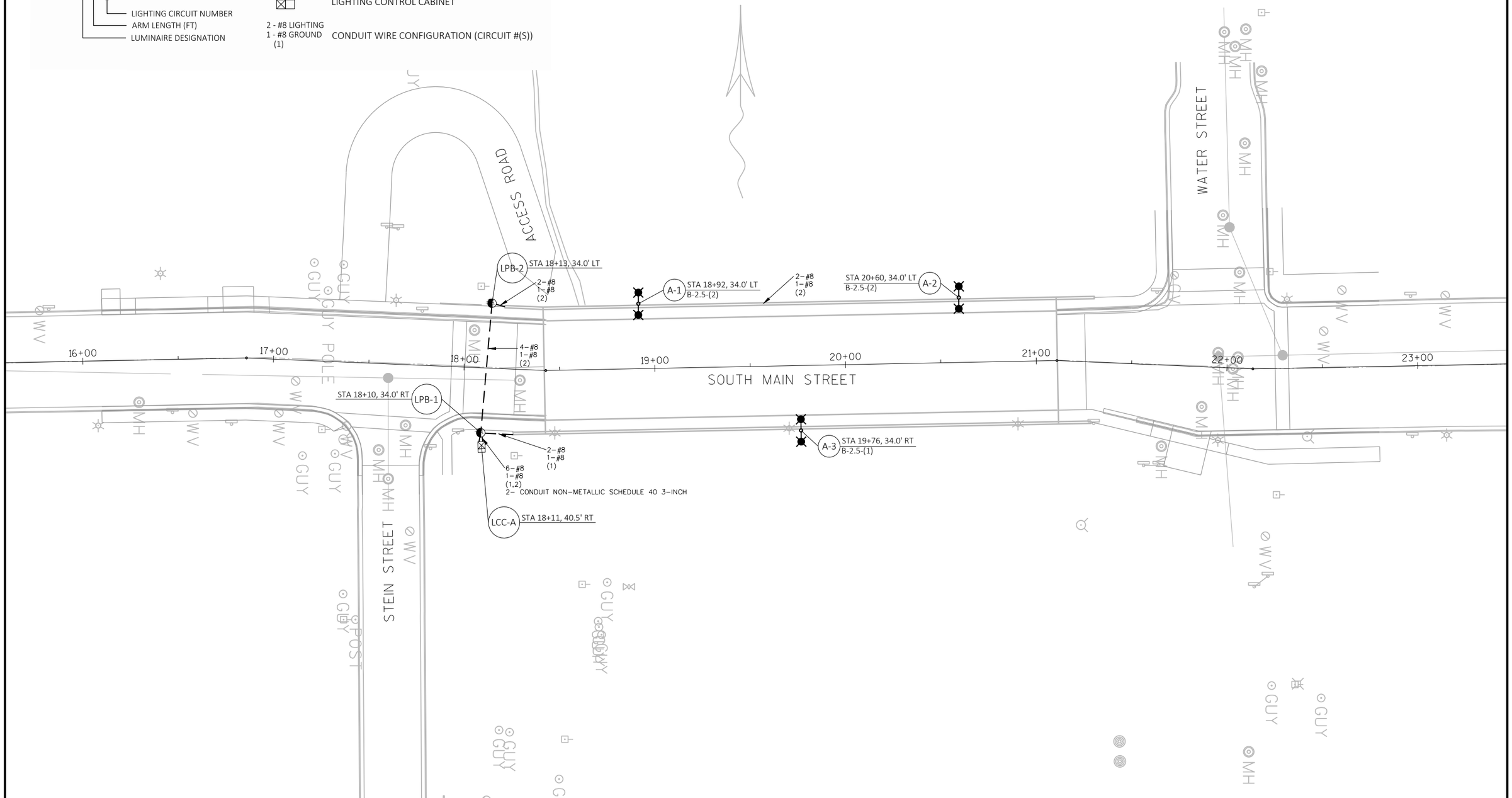

2

PROJECT NO: 8997-00-40	HWY: MAIN ST	COUNTY: BARRON	LIGHTING PLAN	SHEET 18	E

FILE NAME : V:\STRUCTURES-EC\42-0989.00 - BARRON CO, CITY OF RICE LAKE\CADD\SHEETSPLAN\0236_LP.DWG
LAYOUT NAME - LIGHTING PLAN
PLOT DATE : 2/7/2018 4:31 PM
PLOT BY : AYRES ASSOCIATES
PLOT NAME :
PLOT SCALE : 1 IN:50 FT

2

NOTES

ALL SIGNS ARE 48" X 48", UNLESS OTHERWISE NOTED.

"WO" SIGNS ARE THE SAME AS "W" SIGNS, EXCEPT THE BACKGROUND IS ORANGE.

THE EXACT NUMBER, LOCATION, AND SPACING OF ALL SIGNS AND DEVICES SHALL BE ADJUSTED TO FIT FIELD CONDITIONS AS APPROVED BY THE ENGINEER.

WHERE APPROPRIATE, INSTALL PERMANENT SIGNS AND PAVEMENT MARKINGS AS EACH SEGMENT OF PERMANENT ROADWAY IS COMPLETED.

REFERENCED STANDARD DETAIL DRAWINGS

- 15C3 — BARRICADES AND SIGNS FOR SIDEROAD CLOSURES (DETAIL 1 & 2)
- 15D3 — TRAFFIC CONTROL, LANE CLOSURE, SPEEDS GREATER THAN 40 M.P.H. WITH BARRIER
- 15D20 — TRAFFIC CONTROL, SINGLE LANE CLOSURE, NON-FREEWAY/EXPRESSWAY
- 15D21 — TRAFFIC CONTROL, INTERSECTION WITHIN SINGLE LANE CLOSURE
- 15D30 — TRAFFIC CONTROL, PEDESTRIAN ACCOMMODATION

TEMPORARY PAVEMENT MARKING

- RT-4W — TEMPORARY MARKING LINE REMOVABLE TAPE 4-INCH (WHITE)
- RT-4Y — TEMPORARY MARKING LINE REMOVABLE TAPE 4-INCH (YELLOW)
- RT-8W — TEMPORARY MARKING LINE REMOVABLE TAPE 8-INCH (WHITE)
- P-4W — TEMPORARY MARKING LINE PAINT 4-INCH (WHITE)
- P-4Y — TEMPORARY MARKING LINE PAINT 4-INCH (YELLOW)
- REM — MARKING REMOVAL LINE 4-INCH

LEGEND AND SYMBOLS

- GENERAL WORK ZONE
- TRAFFIC FLOW ARROW (ONE PER OPEN LANE)
- EXISTING ROADWAY
- COMPLETED PROPOSED ROADWAY
- TRAFFIC CONTROL DRUMS
- TRAFFIC CONTROL DRUMS WITH LIGHTS
- FLEXIBLE TUBULAR MARKERS
- FLASHING ARROW BOARD
- SIGN ON TEMPORARY SUPPORT (POST DRIVEN INTO GROUND, OR MOVABLE SUPPORT ON PAVED OR GRAVEL SURFACE AS REQUIRED)
- TYPE III BARRICADE WITH ATTACHED SIGN
- TYPE III BARRICADE WITH ATTACHED SIGN
- TYPE II BARRICADE WITH ATTACHED SIGN
- CONCRETE BARRIER TEMPORARY PRECAST

2

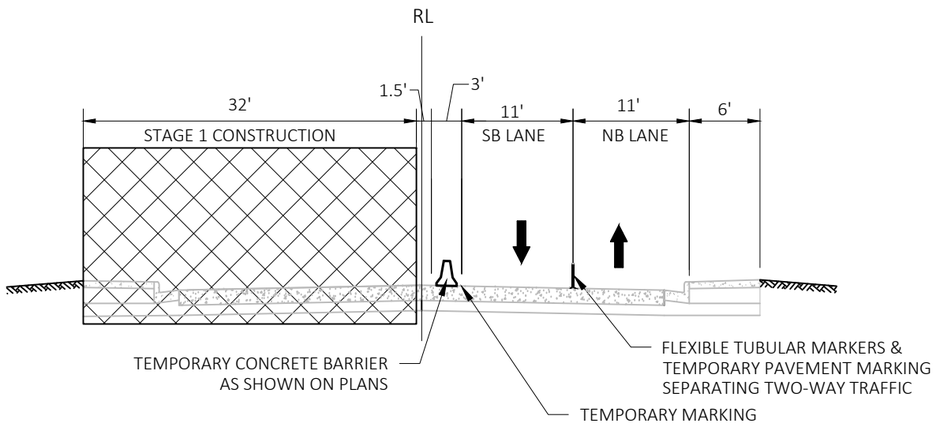

TRAFFIC CONTROL TYPICAL SECTION - STAGE 1

CONSTRUCT NEW GIRDER BRIDGE ON WEST PORTION
SOUTHBOUND LANES CLOSED

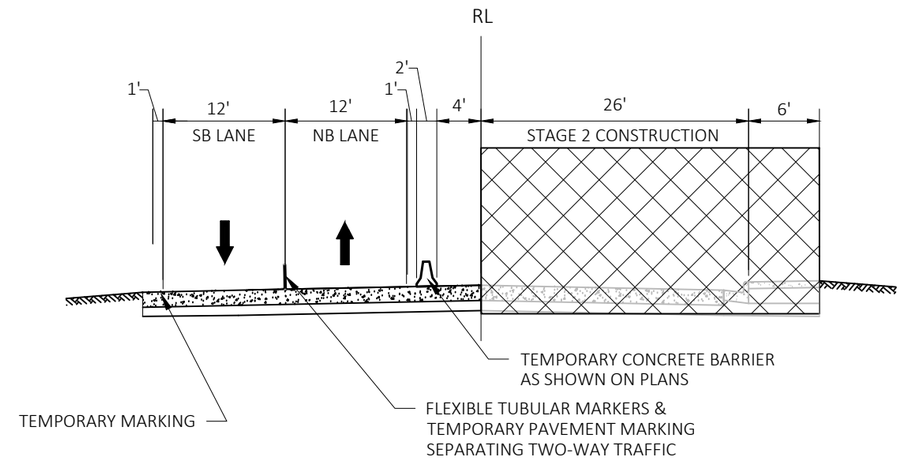

TRAFFIC CONTROL TYPICAL SECTION - STAGE 2

REPLACE DECK, SIDEWALK, & RAILING ON EAST PORTION
NORTHBOUND LANES CLOSED

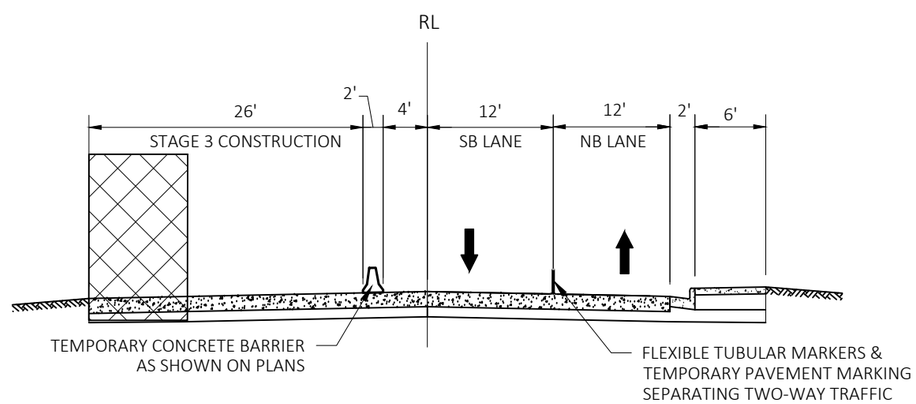

TRAFFIC CONTROL TYPICAL SECTION - STAGE 3

CONSTRUCT SOUTHBOUND SIDEWALK
SOUTHBOUND LANES CLOSED

NOTES AND LEGEND

W12-52
48"X48"

WO57-52
48"X36"

15D20 REFERENCE FOR ADVANCED WARNING SIGNING

15D30 REFERENCE FOR PEDESTRIAN ACCOMODATION SIGNING

PLACE MAX. WIDTH SIGNING AT:
- MAIN STREET/STH 45 INTERSECTION (1/2 MILES AHEAD)
- MAIN STREET/CTH O INTERSECTION (1.5 MILES AHEAD)

FLARE CONCRETE SLOPED END TREATMENTS
REFERENCE SDD 14B7

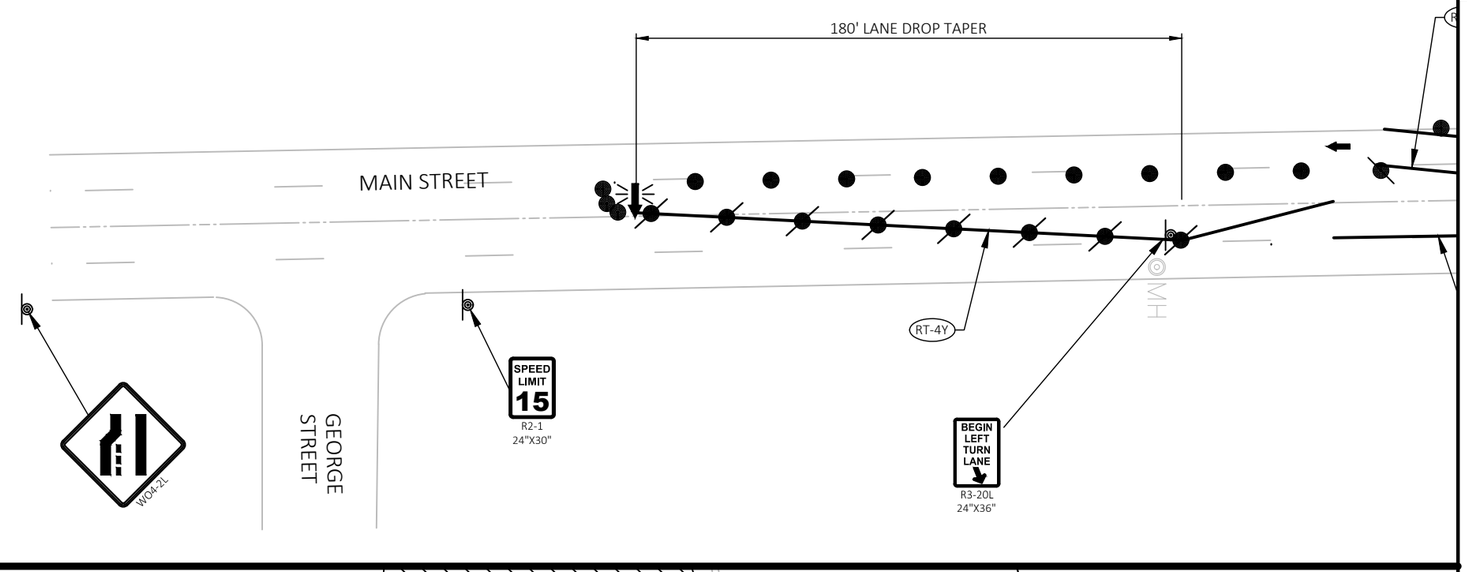

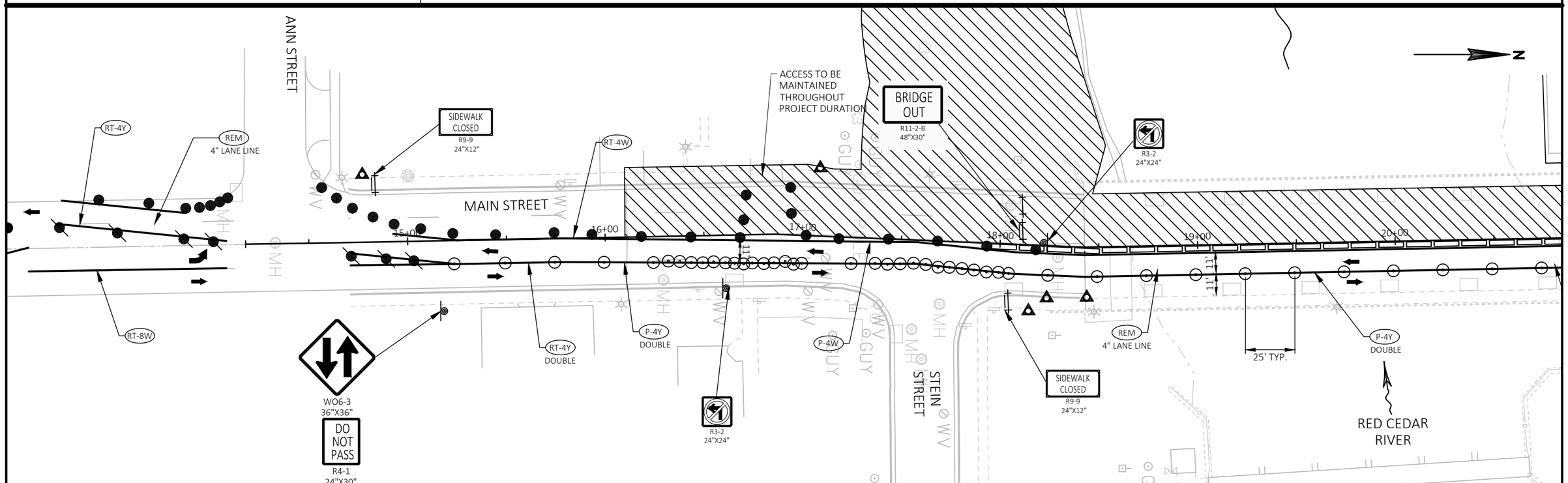

PROJECT NO: 8997-00-40	HWY: MAIN ST	COUNTY: BARRON	TRAFFIC CONTROL - STAGE 1	SHEET 21	E

FILE NAME : V:\STRUCTURES-EC\42-0989.00 - BARRON CO, CITY OF RICE LAKE\CADD\SHEETSPLAN\0250_TC-PHASE 1.DWG
LAYOUT NAME - 1 TRAFFIC CONTROL - STAGE 1
PLOT DATE : 1/31/2018 9:23 AM PLOT BY : AYRES ASSOCIATES PLOT NAME : PLOT SCALE : 1 IN:50 FT

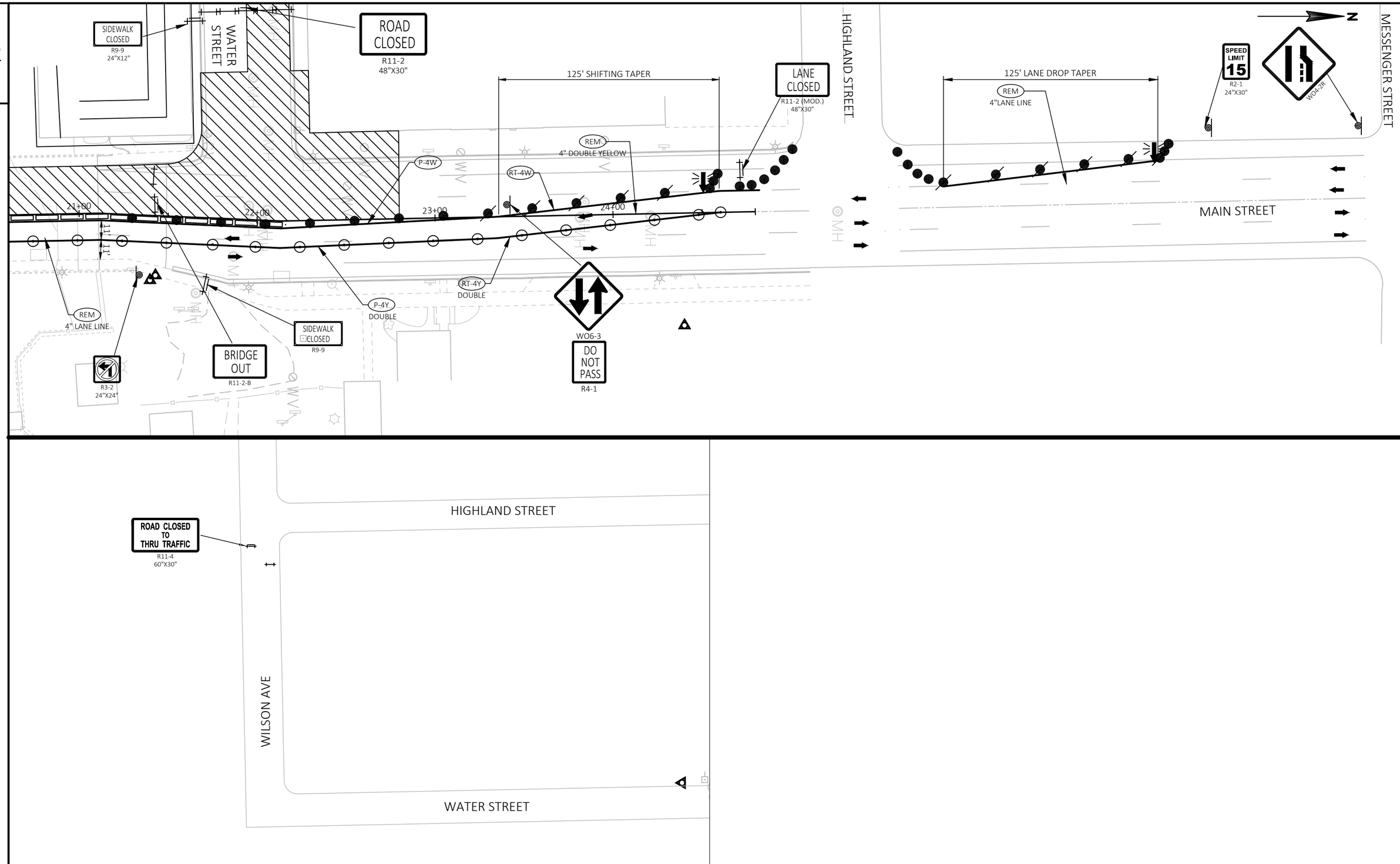

PROJECT NO: 8997-00-40	HWY: MAIN ST	COUNTY: BARRON	TRAFFIC CONTROL - STAGE 1	SHEET 22	E

FILE NAME : V:\STRUCTURES-EC\42-0989.00 - BARRON CO, CITY OF RICE LAKE\CADD\SHEETSPLAN\0250_TC-PHASE 1.DWG
LAYOUT NAME - 2 TRAFFIC CONTROL - STAGE 1
PLOT DATE : 1/31/2018 9:23 AM PLOT BY : AYRES ASSOCIATES PLOT NAME : PLOT SCALE : 1 IN:50 FT

WISDOT/CADDS SHEET 42

2

NOTES AND LEGEND

W12-52
48"X48"

W057-52
48"X36"

15D20 REFERENCE FOR ADVANCED WARNING SIGNING

15D30 REFERENCE FOR PEDESTRIAN ACCOMODATION SIGNING

PLACE MAX. WIDTH SIGNING AT:
- MAIN STREET/STH 45 INTERSECTION (1/2 MILES AHEAD)
- MAIN STREET/CTH O INTERSECTION (1.5 MILES AHEAD)

FLARE CONCRETE SLOPED END TREATMENTS
REFERENCE SDD 14B7

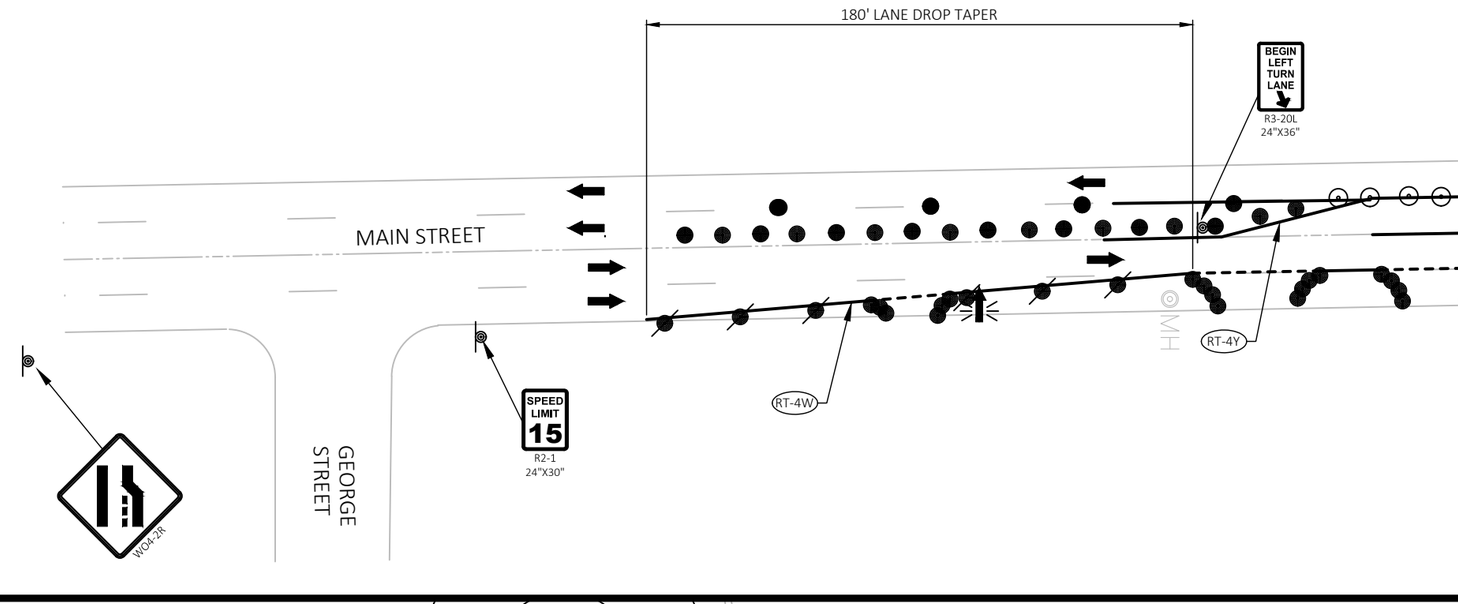

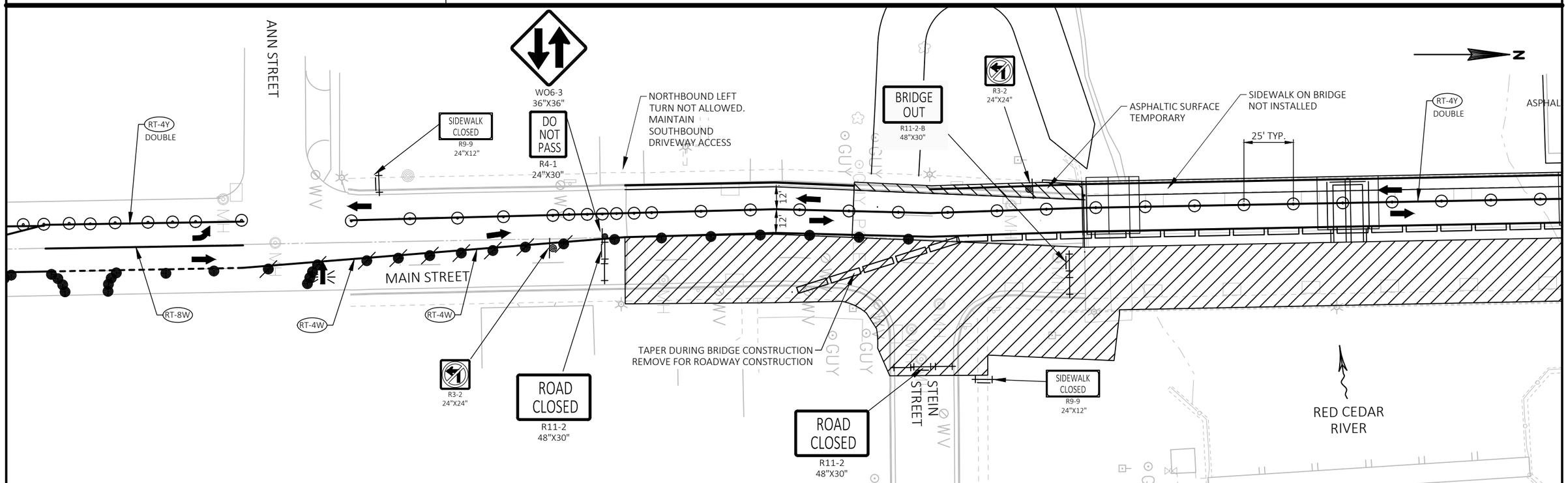

PROJECT NO: 8997-00-40	HWY: MAIN ST	COUNTY: BARRON	TRAFFIC CONTROL - STAGE 2	SHEET 23	E

FILE NAME : V:\STRUCTURES-EC\42-0989.00 - BARRON CO, CITY OF RICE LAKE\CADD\SHEETSPLAN\0250_TC-PHASE 2.DWG
LAYOUT NAME - 1 TRAFFIC CONTROL - STAGE 2
PLOT DATE : 1/31/2018 9:23 AM PLOT BY : AYRES ASSOCIATES PLOT NAME : PLOT SCALE : 1 IN:50 FT

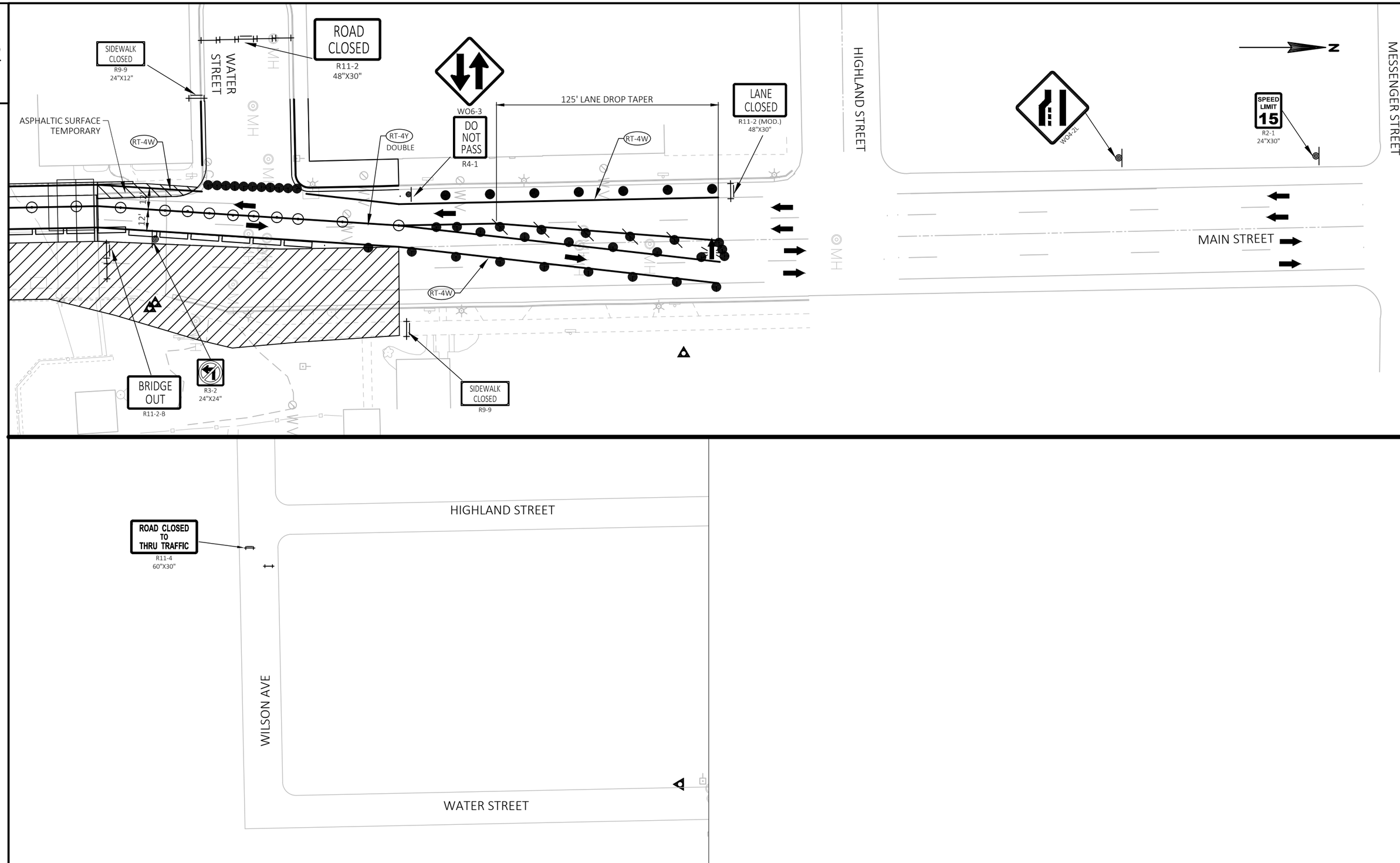

PROJECT NO: 8997-00-40	HWY: MAIN ST	COUNTY: BARRON	TRAFFIC CONTROL - STAGE 2	SHEET 24	E

FILE NAME : V:\STRUCTURES-EC\42-0989.00 - BARRON CO, CITY OF RICE LAKE\CADD\SHEETSPLAN\0250_TC-PHASE 2.DWG
LAYOUT NAME - 2 TRAFFIC CONTROL - STAGE 2
PLOT DATE : 1/31/2018 9:23 AM PLOT BY : AYRES ASSOCIATES PLOT NAME : PLOT SCALE : 1 IN:50 FT

WISDOT/CADDS SHEET 42

NOTES AND LEGEND

W12-52
48"X48"

WO57-52
48"X36"

15D20 REFERENCE FOR ADVANCED WARNING SIGNING

15D30 REFERENCE FOR PEDESTRIAN ACCOMODATION SIGNING

PLACE MAX. WIDTH SIGNING AT:
- MAIN STREET/STH 45 INTERSECTION (1/2 MILES AHEAD)
- MAIN STREET/CTH O INTERSECTION (1.5 MILES AHEAD)

FLARE CONCRETE SLOPED END TREATMENTS
REFERENCE SDD 14B7

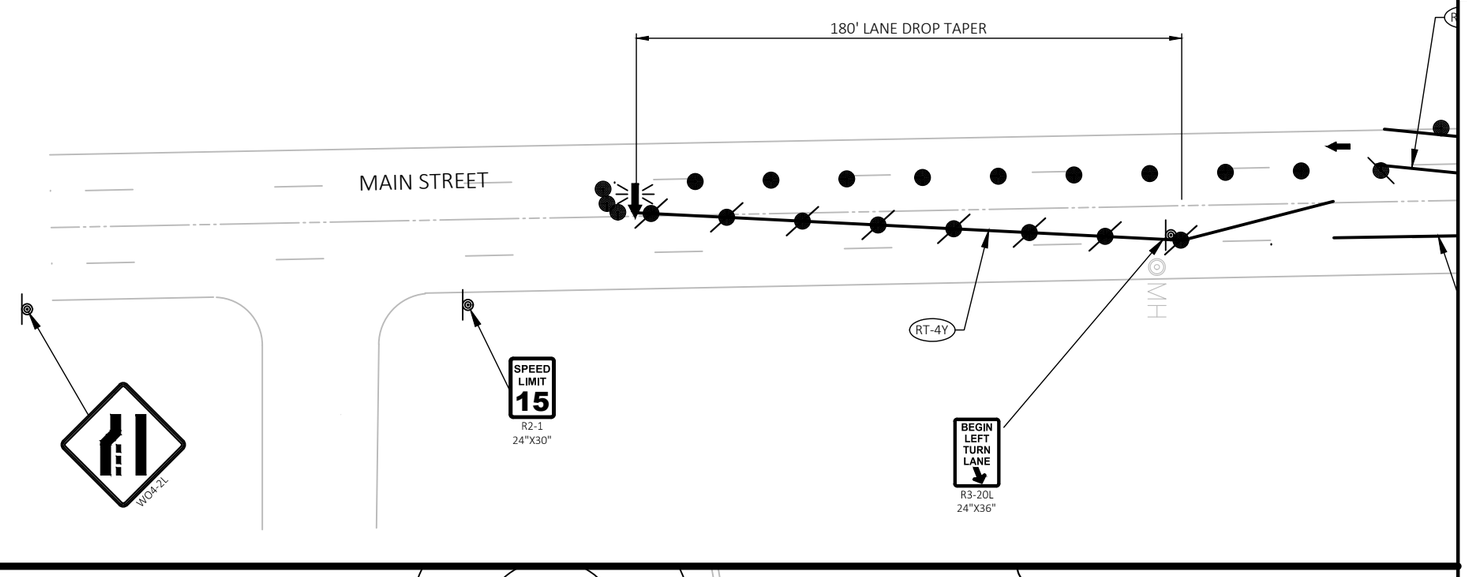

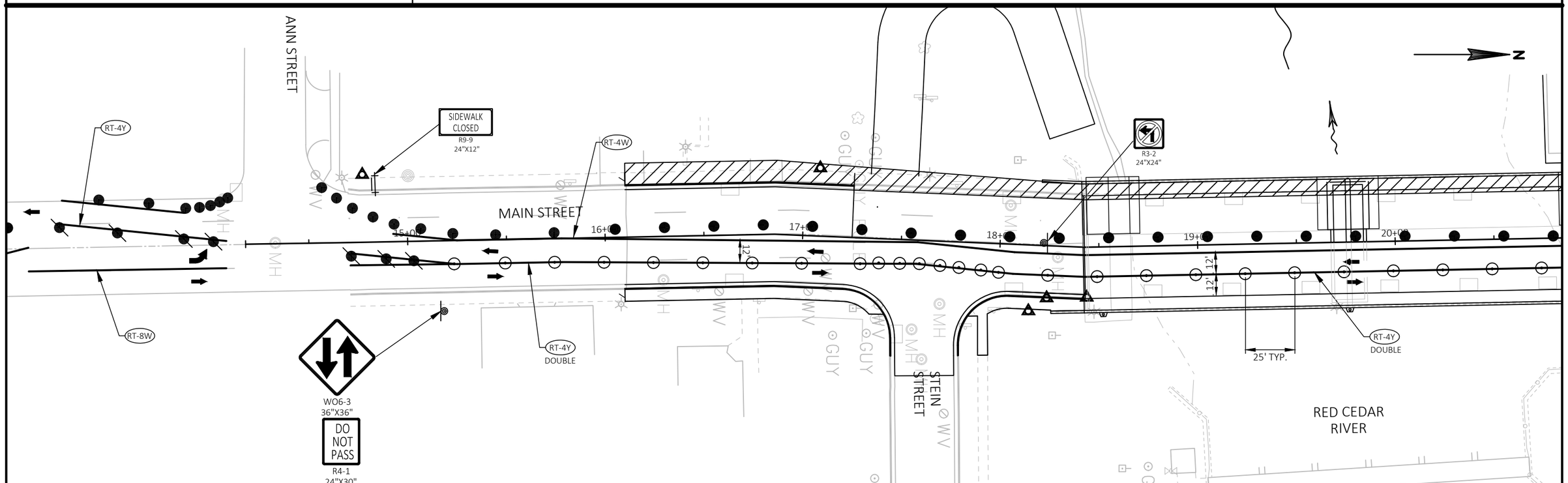

PROJECT NO: 8997-00-40	HWY: MAIN ST	COUNTY: BARRON	TRAFFIC CONTROL - STAGE 3	SHEET 25	E

FILE NAME : V:\STRUCTURES-EC\42-0989.00 - BARRON CO, CITY OF RICE LAKE\CADD\SHEETSPLAN\0250_TC-PHASE 3.DWG
LAYOUT NAME - 1 TRAFFIC CONTROL - STAGE 3
PLOT DATE : 1/31/2018 9:24 AM PLOT BY : AYRES ASSOCIATES PLOT NAME : PLOT SCALE : 1 IN:50 FT

WISDOT/CADDS SHEET 42

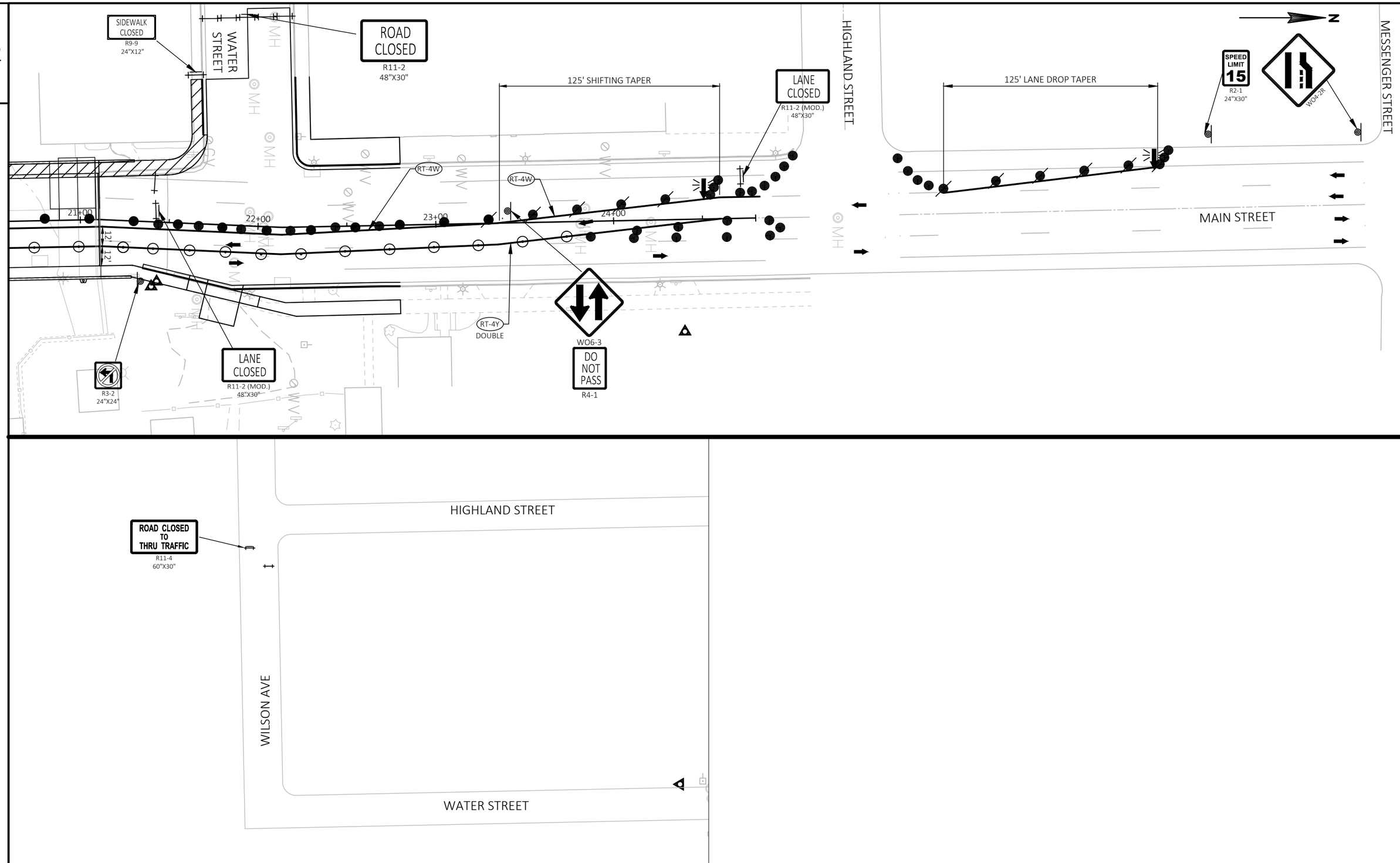

PROJECT NO: 8997-00-40	HWY: MAIN ST	COUNTY: BARRON	TRAFFIC CONTROL - STAGE 3	SHEET 26	E

FILE NAME : V:\STRUCTURES-EC\42-0989.00 - BARRON CO, CITY OF RICE LAKE\CADD\SHEETSPLAN\0250_TC-PHASE 3.DWG
LAYOUT NAME - 2 TRAFFIC CONTROL - STAGE 3
PLOT DATE : 1/31/2018 9:24 AM PLOT BY : AYRES ASSOCIATES PLOT NAME : PLOT SCALE : 1 IN:50 FT

WISDOT/CADDS SHEET 42

2

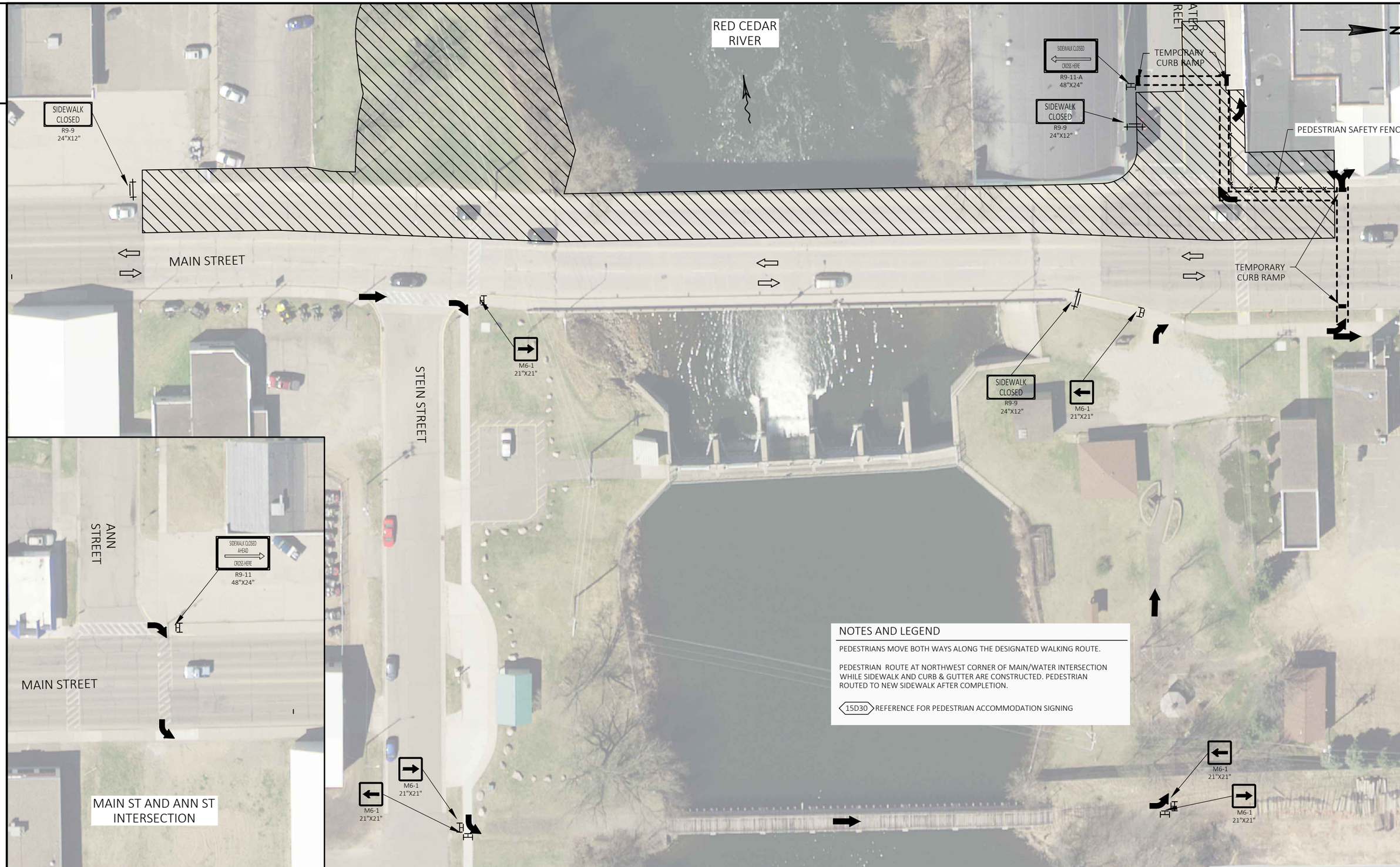

NOTES AND LEGEND

PEDESTRIANS MOVE BOTH WAYS ALONG THE DESIGNATED WALKING ROUTE.

PEDESTRIAN ROUTE AT NORTHWEST CORNER OF MAIN/WATER INTERSECTION WHILE SIDEWALK AND CURB & GUTTER ARE CONSTRUCTED. PEDESTRIAN ROUTED TO NEW SIDEWALK AFTER COMPLETION.

15D30 REFERENCE FOR PEDESTRIAN ACCOMMODATION SIGNING

2

PROJECT NO: 8997-00-40	HWY: MAIN ST	COUNTY: BARRON	TRAFFIC CONTROL - STAGE 1 PEDESTRIAN ACCOMMODATIONS	SHEET 27	E

FILE NAME : V:\STRUCTURES-EC\42-0989.00 - BARRON CO, CITY OF RICE LAKE\CADD\SHEETSPLAN\0250_TC-PHASE 1-P.DWG
LAYOUT NAME - TRAFFIC CONTROL - STAGE 1 PEDESTRIAN ACCOMMODATIONS
PLOT DATE : 1/31/2018 9:24 AM PLOT BY : AYRES ASSOCIATES PLOT NAME : PLOT SCALE : 1 IN:50 FT

WISDOT/CADDS SHEET 42

2

RED CEDAR RIVER

SIDEWALK CLOSED
R9-9
24"X12"

PEDESTRIAN SAFETY FENCE (A)

MAIN STREET

TEMPORARY CURB RAMP

PEDESTRIAN SAFETY FENCE (B)

M6-1
21"X21"
(REMOVE FOR STAGE 2B)

TEMPORARY CURB RAMP

STEIN STREET

SIDEWALK CLOSED
CROSS HERE
R9-11-A
48"X24"

TEMPORARY CURB RAMP

SIDEWALK CLOSED
R9-9
24"X12"

WATER STREET

NO PARKING ON THE SIDEWALK
R7-53D
18"X24"

TEMPORARY CURB RAMP

PEDESTRIAN SAFETY FENCE (A)

TEMPORARY CURB RAMP

(A)

(B)

TEMPORARY CURB RAMP

PEDESTRIAN SAFETY FENCE (B)

SIDEWALK CLOSED
R9-9
24"X12"

M6-1
21"X21"
(REMOVE FOR STAGE 2B)

N

2

ANN STREET

SIDEWALK CLOSED
AHEAD
CROSS HERE
R9-11
48"X24"

MAIN STREET

MAIN ST AND ANN ST INTERSECTION

M6-1
21"X21"

M6-1
21"X21"

M6-1
21"X21"

M6-1
21"X21"

NOTES AND LEGEND

PEDESTRIANS MOVE BOTH WAYS ALONG THE DESIGNATED WALKING ROUTE.

SIGNING AT MAIN/ANN INTERSECTION REMAINS THE SAME AS IN STAGE 1.

STAGE 2A: CONSTRUCT SIDEWALK AT SOUTHEAST CORNER OF MAIN/STEIN INTERSECTION AND AT NORTHEAST CORNER OF MAIN/WATER INTERSECTION - ROUTE PEDESTRIAN TRAFFIC ONTO EXISTING NORTHBOUND LANES & TEMPORARY CROSSWALK NORTH OF WORK ZONE

STAGE 2B: CONSTRUCT REMAINING PORTION OF EAST SIDEWALK - ROUTE PEDESTRIAN TRAFFIC TO TEMPORARY CROSSWALK EAST OF MAIN/STEIN INTERSECTION & NORTH OF WORK ZONE

15D30 REFERENCE FOR PEDESTRIAN ACCOMMODATION SIGNING

PROJECT NO: 8997-00-40	HWY: MAIN ST	COUNTY: BARRON	TRAFFIC CONTROL - STAGE 2 PEDESTRIAN ACCOMMODATIONS	SHEET 28	E

FILE NAME : V:\STRUCTURES-EC\42-0989.00 - BARRON CO, CITY OF RICE LAKE\CADD\SHEETSPLAN\0250_TC-PHASE 2-P.DWG
LAYOUT NAME - 2 TRAFFIC CONTROL - STAGE 2 PEDESTRIAN ACCOMMODATIONS
PLOT DATE : 1/31/2018 9:24 AM PLOT BY : AYRES ASSOCIATES PLOT NAME : PLOT SCALE : 1 IN:50 FT

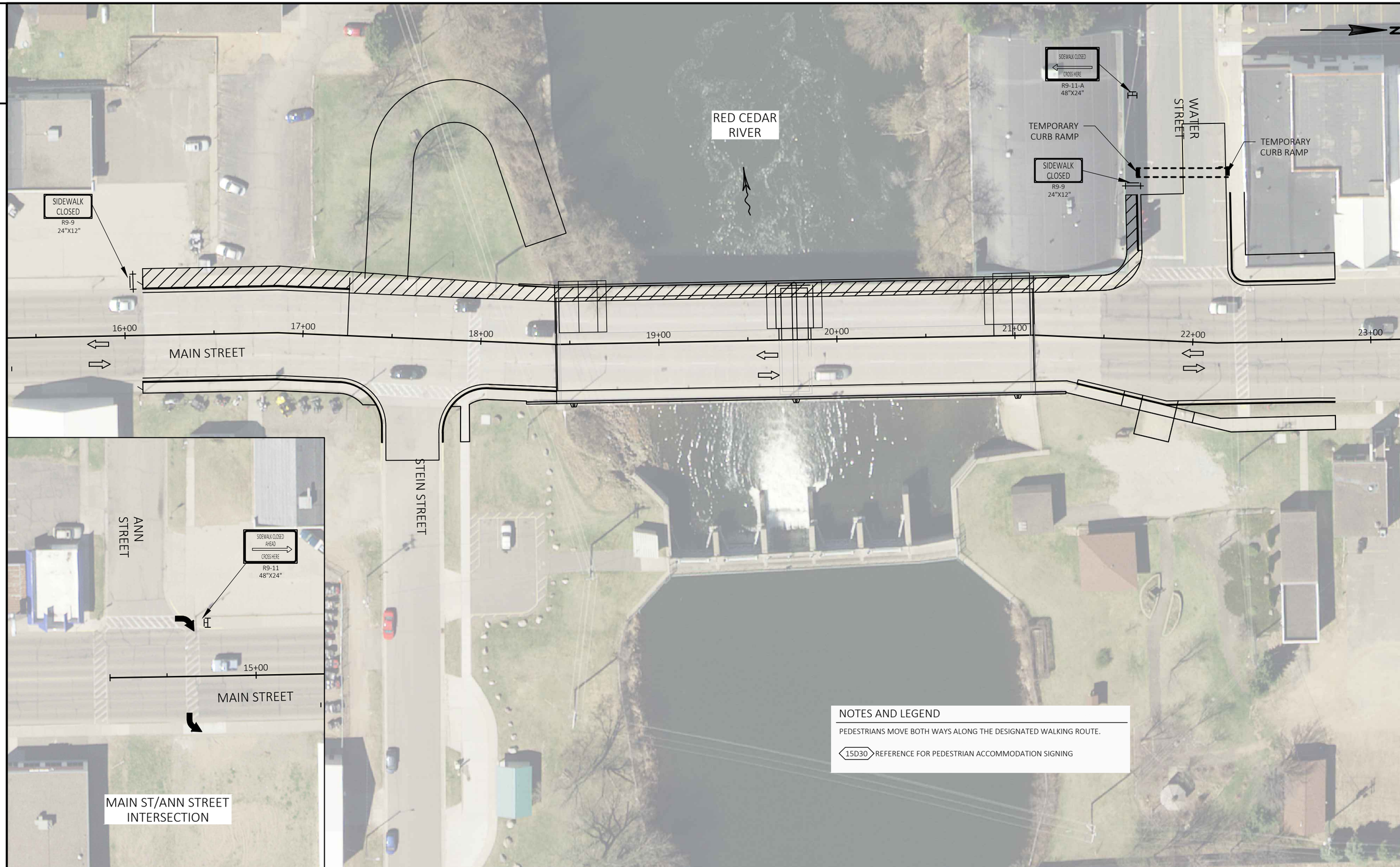

PROJECT NO: 8997-00-40	HWY: MAIN ST	COUNTY: BARRON	TRAFFIC CONTROL - STAGE 3 PEDESTRIAN ACCOMMODATIONS	SHEET 29	E

FILE NAME : V:\STRUCTURES-EC\42-0989.00 - BARRON CO, CITY OF RICE LAKE\CADD\SHEETSPLAN\0250_TC-PHASE 3-P.DWG
LAYOUT NAME - TRAFFIC CONTROL - STAGE 3 PEDESTRIAN ACCOMMODATIONS
PLOT DATE : 1/31/2018 9:25 AM PLOT BY : AYRES ASSOCIATES PLOT NAME : PLOT SCALE : 1 IN:50 FT

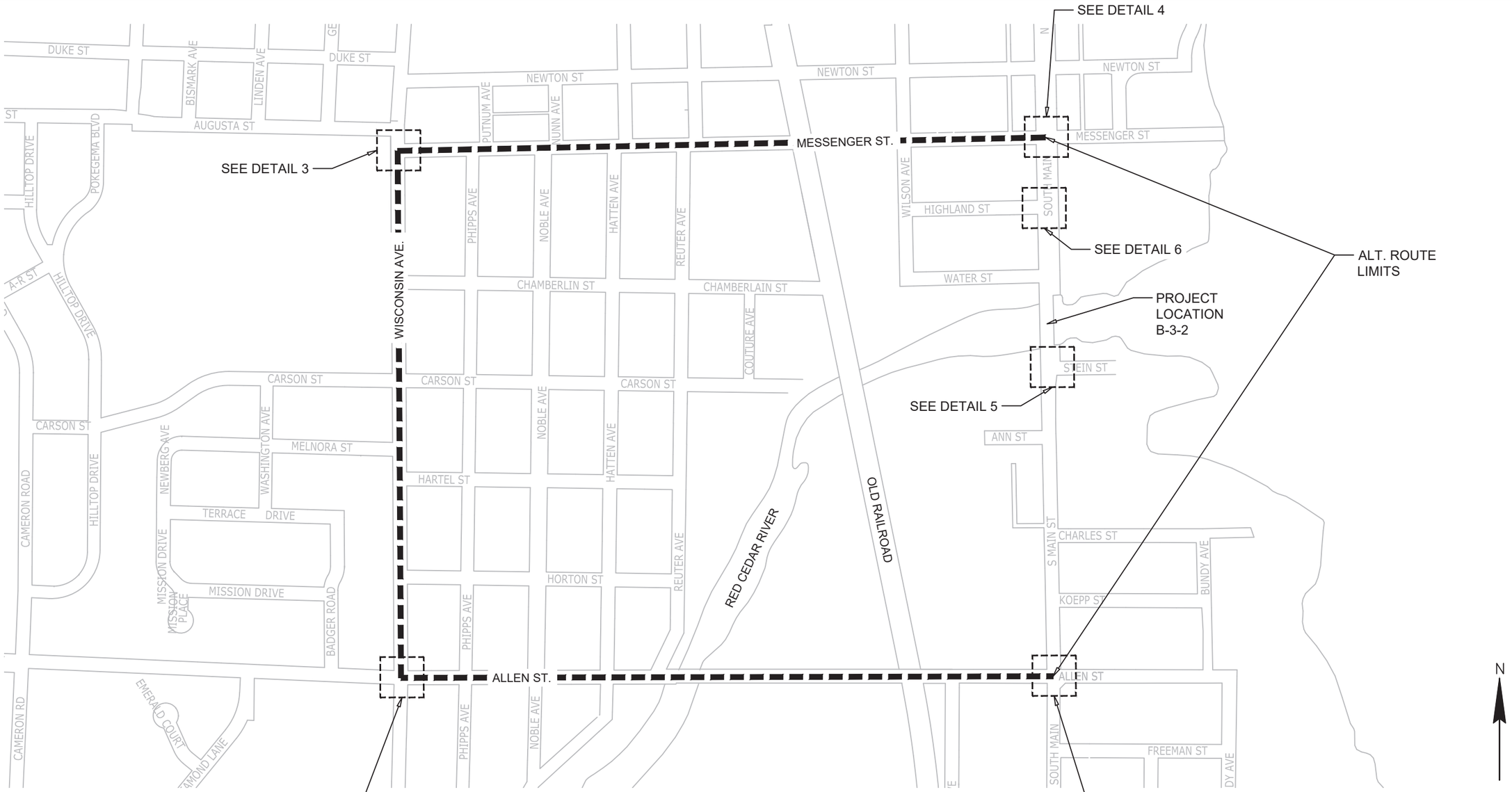

- ALTERNATE MAIN STREET ROUTE -
ALLEN STREET, WISCONSIN AVENUE, MESSENGER STREET

ALTERNATE ROUTE/ DETOUR ROUTE

1. ALL SIGNS AND DEVICES SHALL BE IN CONFORMANCE WITH THE WISCONSIN MANUAL OF TRAFFIC CONTROL DEVICES (WMUTCD)
2. THE EXACT NUMBER, LOCATION, AND SPACING OF ALL SIGNS SHALL BE ADJUSTED TO FIELD CONDITIONS AS DIRECTED BY THE ENGINEER.
3. DURING HOURS OF DARKNESS, ALL BARRICADES USED TO SHIELD A HAZARD SHALL BE EQUIPPED WITH TYPE "A" (LOW-INTENSITY FLASHING) LIGHTS AND DEVICES USED TO DELINEATE A TRAVEL PATH SHALL BE EQUIPPED WITH TYPE "C" (STEADY BURN) LIGHTS.
4. "WO" SIGNS ARE THE SAME AS "W" SIGNS EXCEPT THE BACK-GROUND SHALL BE ORANGE
5. ALL SIGNS ARE 48"x48" UNLESS OTHERWISE NOTED
6. ALL SIGNS INAPPROPRIATE TO THE STATUS OF THE CONTROL ZONE INCLUDING PRE-EXISTING SIGNING IN THE VICINITY, SHALL BE COVERED OR REMOVED AS SPECIFIED IN THE PLANS AND/OR THE SPECIAL PROVISIONS, OR AS DIRECTED BY THE ENGINEER IN THE FIELD.
7. ALL ALTERNATE ROUTE SIGNS SHALL BE ORANGE.
8. REFERENCE SDD15C2 DETOUR SIGNING FOR MAINLINE CLOSURES

PROJECT NO:8997-00-40	HWY:SOUTH MAIN STREET	COUNTY:BARRON	PLAN: ALTERNATE ROUTE PLAN	SHEET 30	E

2

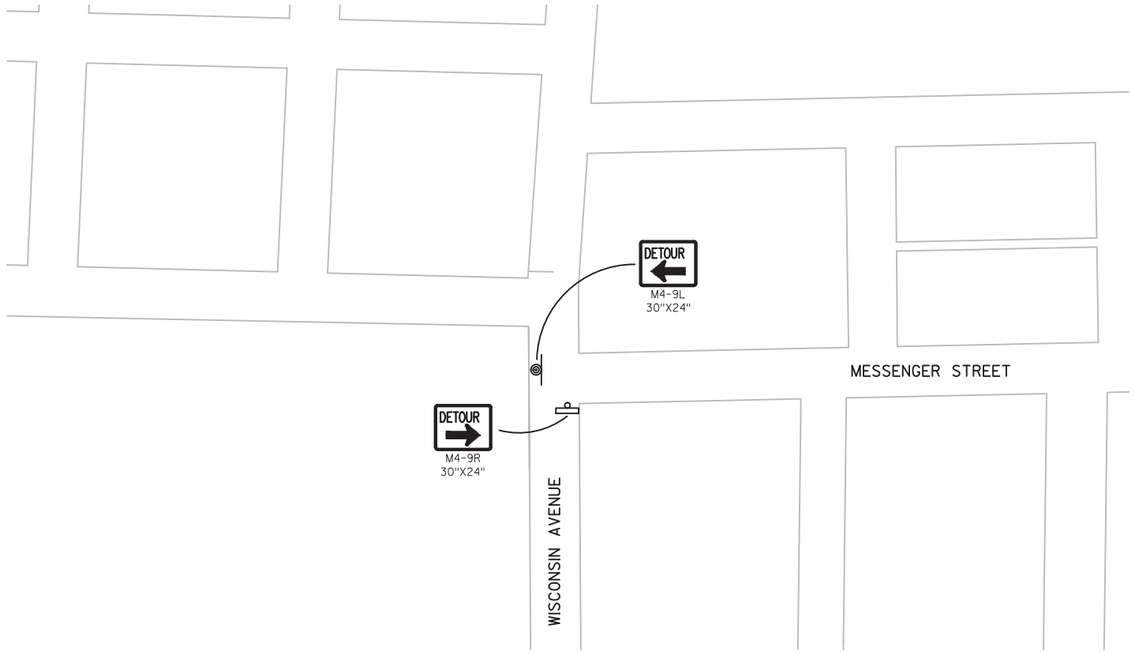

DETAIL 3: WISCONSIN AVENUE
& MESSENGER STREET

① INSTALL DURING ALTERNATE ROUTE
REMOVE DURING STAGE 1 DETOUR

② INSTALL DURING STAGE 1 DETOUR

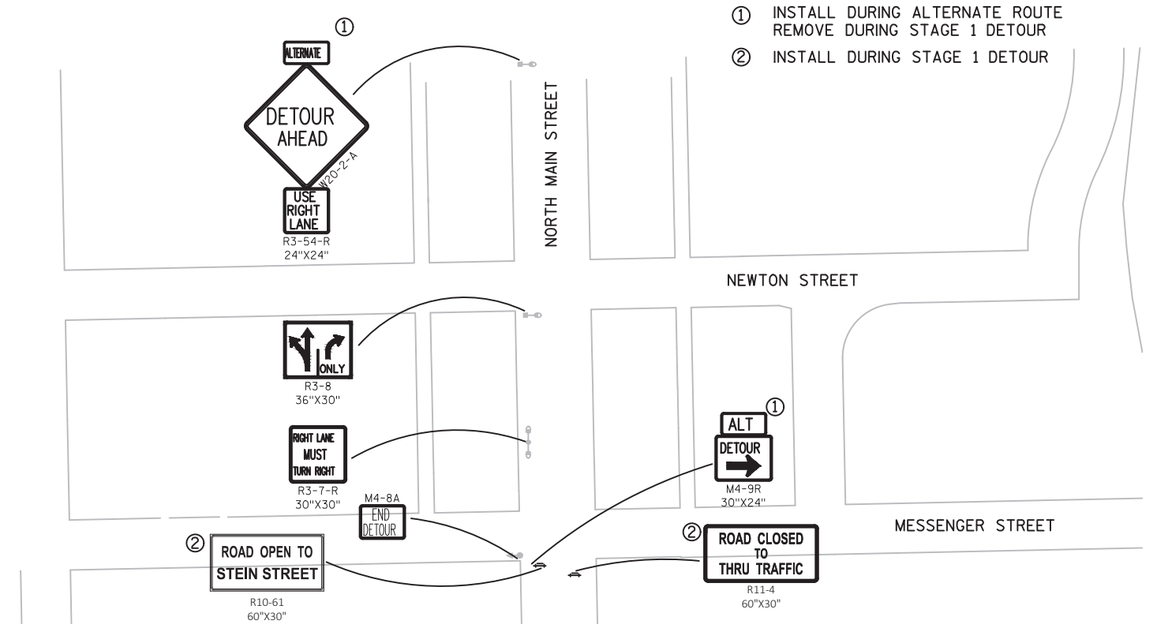

DETAIL 4: NORTH MAIN STREET
& MESSENGER STREET

2

DETAIL 2: WISCONSIN AVENUE
& ALLEN STREET

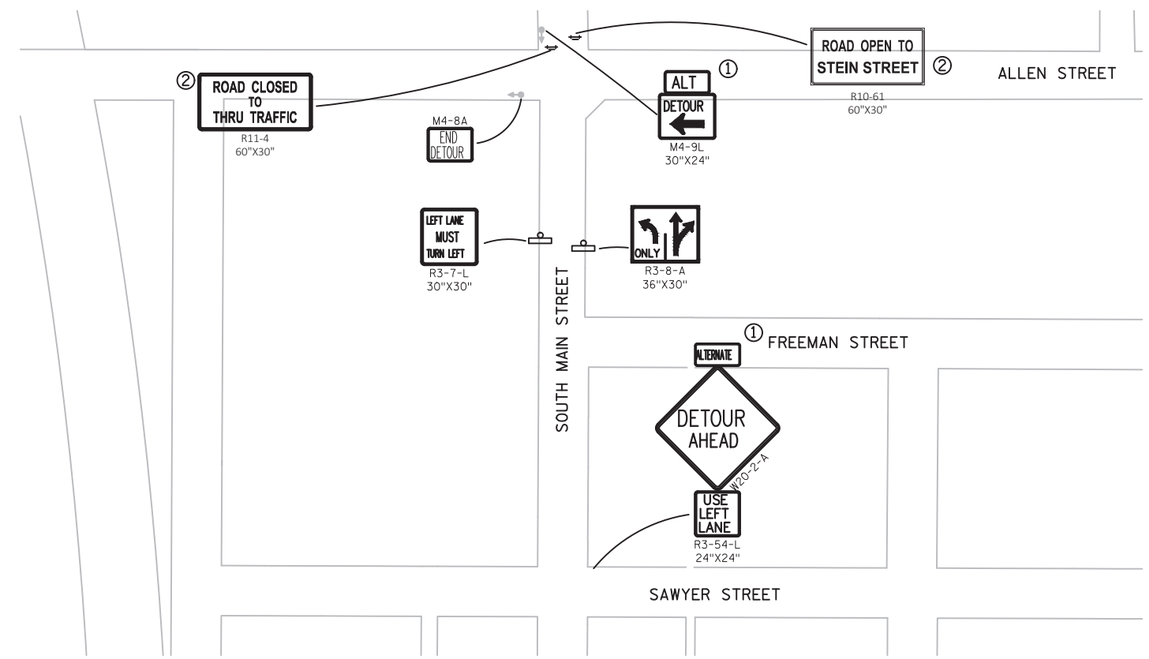

DETAIL 1: SOUTH MAIN STREET
& ALLEN STREET

PROJECT NO:8997-00-40	HWY:SOUTH MAIN STREET	COUNTY:BARRON	PLAN: ALTERNATE ROUTE PLAN	SHEET 31	E

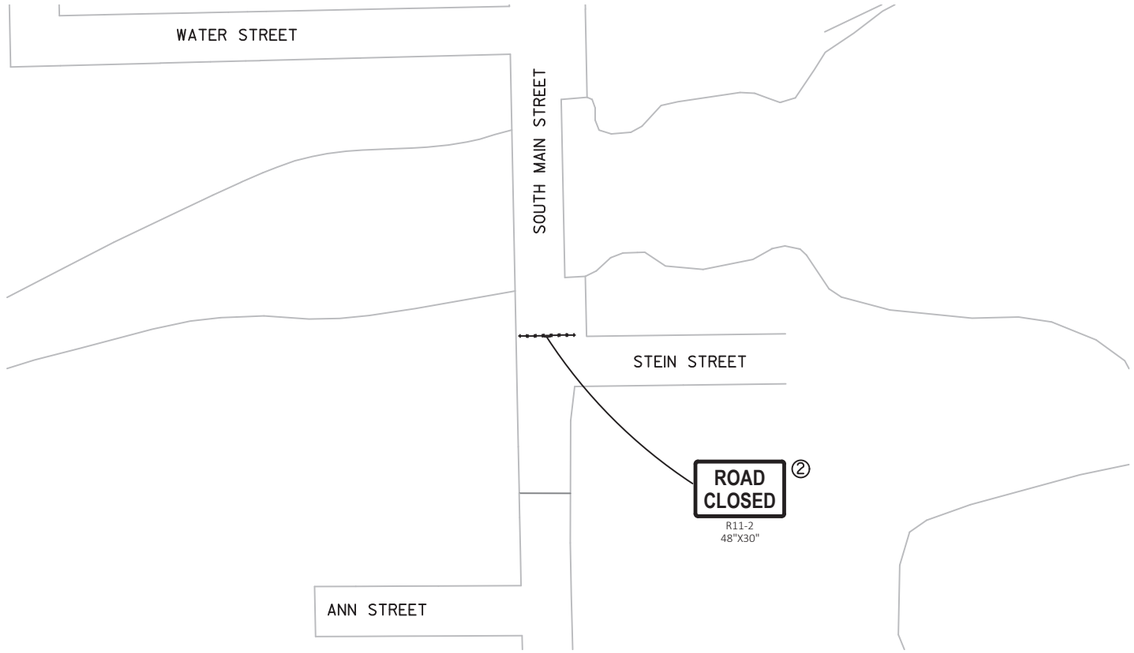

DETAIL 5: SOUTH MAIN STREET & STEIN STREET

DETAIL 6: SOUTH MAIN STREET & STEIN STREET

2

② REMOVE DURING ALTERNATE ROUTE TIME FRAME

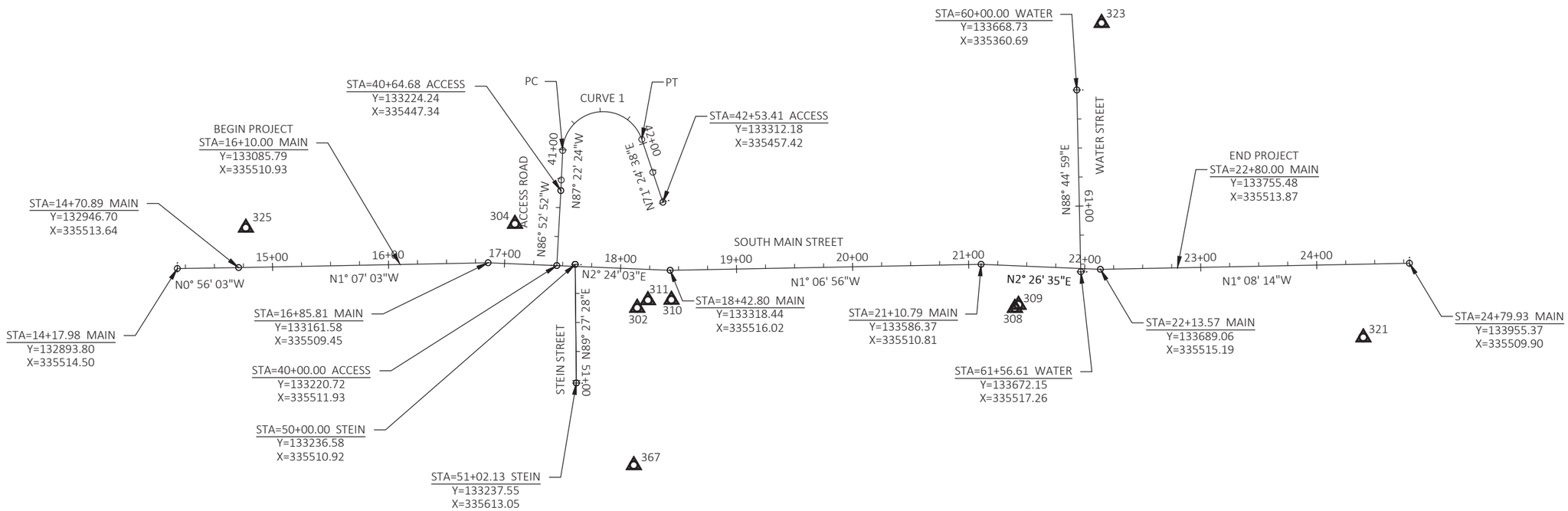

CURVE 1

PI STA = 42+86.13
Y = 133234.388
X = 335226.123
DELTA = 158°47'02"
D = 163°42'08"
T = 186.88'
L = 97.00'
R = 35.00'
PC STA = 40+99.26
Y = 133225.825
X = 335412.802
PT STA = 41+96.25
Y = 133293.962
X = 335403.248
BK = N87°22'24.4"W
AH = N71°24'37.6"E

CONTROL POINTS				
NO.	NORTHING	EASTING	ELEVATION	DESCRIPTION
302	133289.96	335548.33	1127.88	CP spk
304	133184.69	335475.95	1128.02	CP spk
308	133615.37	335548.41	1126.94	CP spk
309	133618.46	335545.68	1127.03	CP mag nail in drill hole
310	133319.50	335541.41	1127.018	CP br cap se bridge (also BM)
311	133299.21	335541.74	1127.38	CP mag nail in drill hole
319	133607.10	335733.64	1126.79	CP spk
321	133915.62	335573.77	1125.73	CP mag nail
323	133690.11	335302.98	1123.42	CP spk
325	132952.81	335479.28	1129.22	CP mag nail in drill hole
329	133268.03	335057.62	1113.042	CP drill hole
337	133264.12	335815.69	1128.31	CP mag nail
367	133287.08	335683.82	1126.84	CP spk

Estimate Of Quantities

8997-00-40

Line	Item	Item Description	Unit	Total	Qty
0002	201.0115	Clearing	ACRE	0.170	0.170
0004	201.0215	Grubbing	ACRE	0.170	0.170
0006	203.0210.S	Abatement of Asbestos Containing Material (structure) 01. B-3-2	LS	1.000	1.000
0008	203.0500.S	Removing Old Structure Over Waterway (station) 02. 19+76.30	LS	1.000	1.000
0010	203.0600.S	Removing Old Structure Over Waterway With Minimal Debris (station) 02. 19+76.30	LS	1.000	1.000
0012	204.0100	Removing Pavement	SY	2,280.000	2,280.000
0014	204.0110	Removing Asphaltic Surface	SY	764.000	764.000
0016	204.0150	Removing Curb & Gutter	LF	815.000	815.000
0018	204.0155	Removing Concrete Sidewalk	SY	581.000	581.000
0020	204.0210	Removing Manholes	EACH	6.000	6.000
0022	204.0220	Removing Inlets	EACH	7.000	7.000
0024	204.0245	Removing Storm Sewer (size) 24. Various	LF	740.000	740.000
0026	204.0270	Abandoning Culvert Pipes	EACH	1.000	1.000
0028	205.0100	Excavation Common	CY	3,348.000	3,348.000
0030	206.1000	Excavation for Structures Bridges (structure) 01. B-3-2	LS	1.000	1.000
0032	206.5000	Cofferdams (structure) 01. B-3-2	LS	1.000	1.000
0034	209.0200.S	Backfill Controlled Low Strength	CY	21.000	21.000
0036	210.1500	Backfill Structure Type A	TON	750.000	750.000
0038	213.0100	Finishing Roadway (project) 01. 8997-00-40	EACH	1.000	1.000
0040	305.0120	Base Aggregate Dense 1 1/4-Inch	TON	1,425.000	1,425.000
0042	415.0090	Concrete Pavement 9-Inch	SY	2,455.000	2,455.000
0044	415.0410	Concrete Pavement Approach Slab	SY	169.000	169.000
0046	415.5110.S	Concrete Pavement Joint Layout	LS	1.000	1.000
0048	416.0160	Concrete Driveway 6-Inch	SY	76.000	76.000
0050	455.0605	Tack Coat	GAL	23.000	23.000
0052	465.0105	Asphaltic Surface	TON	72.000	72.000
0054	465.0125	Asphaltic Surface Temporary	TON	19.000	19.000
0056	502.0100	Concrete Masonry Bridges	CY	943.000	943.000
0058	502.1100	Concrete Masonry Seal	CY	91.000	91.000
0060	502.3200	Protective Surface Treatment	SY	2,130.000	2,130.000
0062	502.3210	Pigmented Surface Sealer	SY	280.000	280.000
0064	502.4204	Adhesive Anchors No. 4 Bar	EACH	1,148.000	1,148.000
0066	502.4205	Adhesive Anchors No. 5 Bar	EACH	84.000	84.000
0068	502.4206	Adhesive Anchors No. 6 Bar	EACH	24.000	24.000
0070	503.0172	Prestressed Girder Type I 72W-Inch	LF	804.000	804.000
0072	505.0400	Bar Steel Reinforcement HS Structures	LB	13,520.000	13,520.000
0074	505.0600	Bar Steel Reinforcement HS Coated Structures	LB	161,540.000	161,540.000

8997-00-40

Line	Item	Item Description	Unit	Total	Qty
0076	505.0905	Bar Couplers No. 5	EACH	809.000	809.000
0078	506.2605	Bearing Pads Elastomeric Non-Laminated	EACH	12.000	12.000
0080	506.4000	Steel Diaphragms (structure) 01. B-3-2	EACH	32.000	32.000
0082	509.1500	Concrete Surface Repair	SF	100.000	100.000
0084	509.9020.S	Epoxy Crack Sealing	LF	50.000	50.000
0086	511.1200	Temporary Shoring (structure) 01. B-3-2	SF	600.000	600.000
0088	513.7016	Railing Steel Type C3 (structure) 01. B-3-2	LF	614.000	614.000
0090	514.0445	Floor Drains Type GC	EACH	12.000	12.000
0092	514.2625	Downspout 6-Inch	LF	85.000	85.000
0094	516.0500	Rubberized Membrane Waterproofing	SY	40.000	40.000
0096	517.1015.S	Concrete Staining Multi-Color (structure) 01. B-3-2	SF	1,950.000	1,950.000
0098	517.1050.S	Architectural Surface Treatment (structure) 01. B-3-2	SF	1,950.000	1,950.000
0100	520.8000	Concrete Collars for Pipe	EACH	3.000	3.000
0102	522.1024	Apron Endwalls for Culvert Pipe Reinforced Concrete 24-Inch	EACH	1.000	1.000
0104	522.1036	Apron Endwalls for Culvert Pipe Reinforced Concrete 36-Inch	EACH	1.000	1.000
0106	550.0500	Pile Points	EACH	32.000	32.000
0108	550.1120	Piling Steel HP 12-Inch X 53 Lb	LF	1,680.000	1,680.000
0110	601.0409	Concrete Curb & Gutter 30-Inch Type A	LF	749.000	749.000
0112	601.0411	Concrete Curb & Gutter 30-Inch Type D	LF	82.000	82.000
0114	601.0600	Concrete Curb Pedestrian	LF	22.000	22.000
0116	602.0410	Concrete Sidewalk 5-Inch	SF	5,093.000	5,093.000
0118	602.0505	Curb Ramp Detectable Warning Field Yellow	SF	50.000	50.000
0120	602.0605	Curb Ramp Detectable Warning Field Radial Yellow	SF	22.000	22.000
0122	603.8000	Concrete Barrier Temporary Precast Delivered	LF	960.000	960.000
0124	603.8125	Concrete Barrier Temporary Precast Installed	LF	960.000	960.000
0126	604.0400	Slope Paving Concrete	SY	170.000	170.000
0128	606.0300	Riprap Heavy	CY	250.000	250.000
0130	608.0312	Storm Sewer Pipe Reinforced Concrete Class III 12-Inch	LF	190.000	190.000
0132	608.0315	Storm Sewer Pipe Reinforced Concrete Class III 15-Inch	LF	62.000	62.000
0134	608.0318	Storm Sewer Pipe Reinforced Concrete Class III 18-Inch	LF	174.000	174.000
0136	608.0324	Storm Sewer Pipe Reinforced Concrete Class III 24-Inch	LF	76.000	76.000
0138	608.0336	Storm Sewer Pipe Reinforced Concrete Class III 36-Inch	LF	254.000	254.000
0140	611.0530	Manhole Covers Type J	EACH	4.000	4.000
0142	611.0624	Inlet Covers Type H	EACH	7.000	7.000

8997-00-40

Line	Item	Item Description	Unit	Total	Qty
0144	611.2004	Manholes 4-FT Diameter	EACH	2.000	2.000
0146	611.2006	Manholes 6-FT Diameter	EACH	2.000	2.000
0148	611.3004	Inlets 4-FT Diameter	EACH	4.000	4.000
0150	611.3230	Inlets 2x3-FT	EACH	3.000	3.000
0152	611.8120.S	Cover Plates Temporary	EACH	1.000	1.000
0154	612.0406	Pipe Underdrain Wrapped 6-Inch	LF	110.000	110.000
0156	618.0100	Maintenance And Repair of Haul Roads (project) 01. 8997-00-40	EACH	1.000	1.000
0158	619.1000	Mobilization	EACH	1.000	1.000
0160	624.0100	Water	MGAL	21.000	21.000
0162	625.0500	Salvaged Topsoil	SY	2,018.000	2,018.000
0164	627.0200	Mulching	SY	2,220.000	2,220.000
0166	628.1504	Silt Fence	LF	858.000	858.000
0168	628.1520	Silt Fence Maintenance	LF	858.000	858.000
0170	628.1905	Mobilizations Erosion Control	EACH	9.000	9.000
0172	628.1910	Mobilizations Emergency Erosion Control	EACH	6.000	6.000
0174	628.2002	Erosion Mat Class I Type A	SY	1,324.000	1,324.000
0176	628.7020	Inlet Protection Type D	EACH	11.000	11.000
0178	629.0205	Fertilizer Type A	CWT	1.400	1.400
0180	630.0140	Seeding Mixture No. 40	LB	40.000	40.000
0182	630.0200	Seeding Temporary	LB	60.000	60.000
0184	634.0811	Posts Tubular Steel 2x2-Inch X 11-FT	EACH	7.000	7.000
0186	637.2210	Signs Type II Reflective H	SF	28.500	28.500
0188	637.2230	Signs Type II Reflective F	SF	6.250	6.250
0190	638.2102	Moving Signs Type II	EACH	2.000	2.000
0192	642.5001	Field Office Type B	EACH	1.000	1.000
0194	643.0300	Traffic Control Drums	DAY	19,146.000	19,146.000
0196	643.0410	Traffic Control Barricades Type II	DAY	1,496.000	1,496.000
0198	643.0420	Traffic Control Barricades Type III	DAY	3,854.000	3,854.000
0200	643.0500	Traffic Control Flexible Tubular Marker Posts	EACH	150.000	150.000
0202	643.0600	Traffic Control Flexible Tubular Marker Bases	EACH	150.000	150.000
0204	643.0705	Traffic Control Warning Lights Type A	DAY	1,712.000	1,712.000
0206	643.0715	Traffic Control Warning Lights Type C	DAY	4,814.000	4,814.000
0208	643.0800	Traffic Control Arrow Boards	DAY	588.000	588.000
0210	643.0900	Traffic Control Signs	DAY	11,598.000	11,598.000
0212	643.5000	Traffic Control	EACH	1.000	1.000
0214	644.1601.S	Temporary Curb Ramp	EACH	12.000	12.000
0216	644.1616.S	Temporary Pedestrian Safety Fence	LF	1,153.000	1,153.000
0218	645.0111	Geotextile Type DF Schedule A	SY	150.000	150.000
0220	645.0120	Geotextile Type HR	SY	213.000	213.000

8997-00-40

Line	Item	Item Description	Unit	Total	Qty
0222	646.1020	Marking Line Epoxy 4-Inch	LF	1,658.000	1,658.000
0224	646.6120	Marking Stop Line Epoxy 18-Inch	LF	43.000	43.000
0226	646.7420	Marking Crosswalk Epoxy Transverse Line 6-Inch	LF	441.000	441.000
0228	646.9000	Marking Removal Line 4-Inch	LF	729.000	729.000
0230	649.0105	Temporary Marking Line Paint 4-Inch	LF	2,271.000	2,271.000
0232	649.0150	Temporary Marking Line Removable Tape 4-Inch	LF	9,189.000	9,189.000
0234	649.0250	Temporary Marking Line Removable Tape 8-Inch	LF	300.000	300.000
0236	650.4000	Construction Staking Storm Sewer	EACH	13.000	13.000
0238	650.4500	Construction Staking Subgrade	LF	537.000	537.000
0240	650.5000	Construction Staking Base	LF	537.000	537.000
0242	650.5500	Construction Staking Curb Gutter and Curb & Gutter	LF	831.000	831.000
0244	650.6500	Construction Staking Structure Layout (structure) 01. B-3-2	LS	1.000	1.000
0246	650.8500	Construction Staking Electrical Installations (project) 01. 8997-00-40	LS	1.000	1.000
0248	650.9000	Construction Staking Curb Ramps	EACH	6.000	6.000
0250	650.9910	Construction Staking Supplemental Control (project) 01. 8997-00-40	LS	1.000	1.000
0252	650.9920	Construction Staking Slope Stakes	LF	537.000	537.000
0254	652.0125	Conduit Rigid Metallic 2-Inch	LF	24.000	24.000
0256	652.0225	Conduit Rigid Nonmetallic Schedule 40 2-Inch	LF	728.000	728.000
0258	652.0235	Conduit Rigid Nonmetallic Schedule 40 3-Inch	LF	14.000	14.000
0260	653.0140	Pull Boxes Steel 24x42-Inch	EACH	2.000	2.000
0262	653.0222	Junction Boxes 18x12x6-Inch	EACH	3.000	3.000
0264	654.0224	Concrete Control Cabinet Bases Type L24	EACH	1.000	1.000
0266	655.0610	Electrical Wire Lighting 12 AWG	LF	525.000	525.000
0268	655.0620	Electrical Wire Lighting 8 AWG	LF	574.000	574.000
0270	656.0100	Electrical Service Meter Socket (location) 01. 8997-00-40	LS	1.000	1.000
0272	656.0200	Electrical Service Meter Breaker Pedestal (location) 01. LCCA	LS	1.000	1.000
0274	657.6005	Anchor Assemblies Light Poles on Structures	EACH	3.000	3.000
0276	659.2124	Lighting Control Cabinets 120/240 24-Inch	EACH	1.000	1.000
0278	690.0150	Sawing Asphalt	LF	161.000	161.000
0280	690.0250	Sawing Concrete	LF	181.000	181.000
0282	715.0415	Incentive Strength Concrete Pavement	DOL	810.000	810.000
0284	715.0502	Incentive Strength Concrete Structures	DOL	5,658.000	5,658.000
0286	999.1000.S	Seismograph	LS	1.000	1.000
0288	999.1500.S	Crack and Damage Survey	LS	1.000	1.000
0290	SPV.0060	Special 01. Connect to Existing Storm Structure	EACH	1.000	1.000
0292	SPV.0060	Special 02. Connect to Existing Storm Pipe	EACH	3.000	3.000

8997-00-40

Line	Item	Item Description	Unit	Total	Qty
0294	SPV.0060	Special 04. Decorative Lighting and Pole Assembly Type B	EACH	3.000	3.000
0296	SPV.0060	Special 05. Moving Signs Park Sign	EACH	1.000	1.000
0298	SPV.0060	Special 10. REMOVE EXISTING SANITARY MANHOLE	EACH	2.000	2.000
0300	SPV.0060	Special 11. REMOVE EXISTING SANITARY VAULT	EACH	1.000	1.000
0302	SPV.0060	Special 12. STANDARD SANITARY MANHOLE WITH CASTING	EACH	1.000	1.000
0304	SPV.0060	Special 13. ADJUST SANITARY MANHOLE CASTING	EACH	5.000	5.000
0306	SPV.0060	Special 14. CONNECT TO EXISTING SANITARY SEWER	EACH	5.000	5.000
0308	SPV.0060	Special 15. REMOVE EXISTING GATE VALVE	EACH	2.000	2.000
0310	SPV.0060	Special 16. CONNECT TO EXISTING WATER MAIN	EACH	4.000	4.000
0312	SPV.0060	Special 17. WATER MAIN GATE VALVE AND BOX 6-INCH	EACH	1.000	1.000
0314	SPV.0060	Special 18. WATER MAIN GATE VALVE AND BOX 8-INCH	EACH	2.000	2.000
0316	SPV.0060	Special 19. FIRE HYDRANT	EACH	1.000	1.000
0318	SPV.0060	Special 20. REMOVE EXISTING HYDRANT	EACH	1.000	1.000
0320	SPV.0060	Special 21. REPLACE GATE VALVE BOX	EACH	1.000	1.000
0322	SPV.0060	Special 22. ADJUST GATE VALVE BOX	EACH	4.000	4.000
0324	SPV.0060	Special 23. CORPORATION STOP 1-INCH	EACH	1.000	1.000
0326	SPV.0060	Special 24. CURB STOP AND BOX 1-INCH	EACH	1.000	1.000
0328	SPV.0060	Special 25. ABANDON WATER SERVICE	EACH	3.000	3.000
0330	SPV.0060	Special 26. WATERPROOF SANITARY MANHOLE WITH CASTING	EACH	3.000	3.000
0332	SPV.0060	Special 27. SANITARY SEWER SERVICE WYE, 15-INCH BY 6-INCH	EACH	3.000	3.000
0334	SPV.0060	Special 28. CONNECT TO EXISTING SANITARY SERVICE	EACH	3.000	3.000
0336	SPV.0085	Special 10. Water Main Fittings	LB	323.000	323.000
0338	SPV.0090	Special 10. PVC SANITARY SEWER 8-INCH, SDR35	LF	66.000	66.000
0340	SPV.0090	Special 11. PVC SANITARY SEWER 18-INCH, C900	LF	138.000	138.000
0342	SPV.0090	Special 12. WATER MAIN 6-INCH	LF	33.000	33.000
0344	SPV.0090	Special 13. WATER MAIN 8-INCH	LF	163.000	163.000
0346	SPV.0090	Special 14. COPPER WATER SERVICE 1-INCH	LF	35.000	35.000
0348	SPV.0090	Special 15. PVC SANITARY SEWER SERVICE, 6-INCH	LF	152.000	152.000
0350	SPV.0090	Special 16.PVC SANITARY SEWER 15-INCH, SDR 35	LF	153.000	153.000
0352	SPV.0090	Special 17. PVC Sanitary Sewer 8-Inch, C900	LF	100.000	100.000
0354	SPV.0105	Special 01. Temporary River Access	LS	1.000	1.000
0356	SPV.0105	Special 10. SANITARY SEWER BYPASS PUMPING	LS	1.000	1.000

					8997-00-40
0358	SPV.0200	Special 10. WATERPROOF SANITARY MANHOLE EXTRA DEPTH	VF	7.200	7.200

3

REMOVING PAVEMENT

LOCATION	204.0100 (SY)	COMMENTS
MAIN ST. & STEIN ST. INTERSECTION	1328	
MAIN ST. & WATER ST. INTERSECTION	863	
WATER ST UTILITIES	89	MAY BE ENCOUNTERED 2 - 3' BELOW EXISTING SURFACE PAVEMENT
TOTALS	2280	

CONCRETE PAVEMENT

STATION	TO	STATION	415.0090 PAVEMENT 9-INCH (SY)	415.0410 CONCRETE PAVEMENT APPROACH SLAB (SY)	415.5110.S JOINT LAYOUT (LS)
16+10		22+80			1
16+10		18+43	1289	86	
21+10		22+80	1166	83	
TOTALS			2455	169	1

MOBILIZATION

LOCATION	619.1000 (Project) (EACH)
PROJECT	1
TOTALS	1

REMOVING ASPHALTIC SURFACE

LOCATION	204.0110 (SY)
STEIN ST.	106
MAIN ST. NORTH OF BRIDGE	320
WATER ST.	338
TOTALS	764

ASPHALT PAVING

LOCATION	465.0105 ASPHALTIC SURFACE (TON)	455.0605 TACK COAT (GAL)
STEIN STREET	11	4
WATER STREET	61	19
TOTALS	72	23

ASPHALTIC SURFACE TEMPORARY

LOCATION	465.0125 (TON)
MAIN & STEIN	12
MAIN & WATER	7
TOTALS	19

CURB & GUTTER

STATION	TO	LOCATION	OFFSET	601.0409 CONCRETE CURB & GUTTER 30-INCH TYPE A (LF)	601.0411 CONCRETE CURB & GUTTER 30-INCH TYPE D (LF)
16+10		18+44	LT	233	--
21+10		21+65	LT	68	--
22+22		22+80	LT	71	--
16+10		17+42	RT	152	--
17+85		18+43	RT	79	--
21+10		22+80	RT	146	--
50+55 STEIN		50+60 STEIN	RT	--	6
50+55 STEIN		50+60 STEIN	LT	--	6
60+70 WATER		61+05 WATER	RT	--	35
60+70 WATER		61+05 WATER	LT	--	35
TOTALS				749	82

REMOVING CURB & GUTTER

STATION	TO	STATION	LOCATION	204.0150 (LF)
16+10		18+44	LT	232
21+10		21+65	LT	107
22+22		22+80	LT	105
16+10		17+42	RT	158
17+85		18+43	RT	85
21+10		22+80	RT	128
TOTALS				815

CONCRETE SIDEWALK 5-INCH

STATION	TO	LOCATION	OFFSET	602.0410 (SF)
16+20		16+74	LT	323
16+88		18+44	LT	922
21+10		21+65	LT	580
22+22		22+80	LT	1101
16+10		17+42	RT	756
17+85		18+43	RT	382
21+10		21+75	RT	374
21+88		22+80	RT	655
TOTALS				5093

SAWING PAVEMENTS

STATION	LOCATION	690.0150 SAWING ASPHALT (LF)	690.0250 SAWING CONCRETE (LF)	NOTES
16+10	LT/RT	--	65	BEGINNING OF PROJECT
17+93	RT	--	5	SIDEWALK TO STEIN STREET
22+80	LT/RT	--	84	END OF PROJECT
22+80	LT	--	8	END OF PROJECT
50+60	RT/LT	35	--	STEIN STEET
60+31 TO 60+70	RT/LT	126	19	WATER STREET
TOTALS		161	181	

REMOVING CONCRETE SIDEWALK

STATION	TO	STATION	LOCATION	204.0155 (SY)
16+10		18+44	LT	149
21+10		21+65	LT	60
22+22		22+80	LT	122
16+10		17+42	RT	83
17+85		18+43	RT	43
21+10		22+80	RT	124
TOTALS				581

CONCRETE DRIVEWAY 6-INCH

STATION	TO	LOCATION	OFFSET	416.0160 (SY)
16+10		16+20	LT	12
16+74		16+88	LT	20
21+75		21+88	RT	44
TOTALS				76

CURB RAMP

STATION	OFFSET	650.9000 CONSTRUCTION STAKING CURB RAMP (EACH)	601.0600 CONCRETE CURB PEDESTRIAN (LF)	602.0505 DETECTABLE WARNING FIELD YELLOW (SF)	602.0605 DETECTABLE WARNING FIELD RADIAL YELLOW (SF)
17+32	30' RT	1	--	--	22
17+93	31' RT	1	--	10	--
17+97	28' LT	1	22	10	--
21+61	36' LT	1	--	10	--
22+27	37' LT	1	--	10	--
22+29	36' RT	1	--	10	--
TOTALS		6	22	50	22

BASE AGGREGATE

STATION	305.0120 BASE AGGREGATE DENSE 1 1/4-INCH (TON)	624.0100 WATER (MGAL)
MAIN ST 16+10 - 18+43	510	8
MAIN ST 21+10 - 22+80	450	7
STEIN ST	30	0
WATER STREET	160	2
ACCESS ROAD	275	4
TOTALS	1425	21

FINISHING ROADWAY

LOCATION	213.0100 (Project) (EACH)
PROJECT	1
TOTALS	1

ALL BID ITEMS ARE CATEGORY 0010 UNLESS NOTED.

3

STORM SEWER STRUCTURES REMOVAL

STRUCTURE	STATION	OFFSET	204.0210 REMOVING MANHOLES (EACH)	204.0220 REMOVING INLETS (EACH)
S(31)	16+64	16' LT	1	--
EX MH 2879	18+04	20' LT	1	--
EX MH 2184	17+57	45' RT	1	--
EX MH 3700	22+04	50' LT	1	--
EX MH 2476	22+03	0' RT	1	--
EX MH 3206	21+67	43' RT	1	--
EX INL 2838	16+63	26' LT	--	1
EX INL 2741	16+65	25' RT	--	1
EX INL 2880	18+05	26' LT	--	1
EX INL 2076	18+08	25' RT	--	1
EX INL 2186	17+46	48' RT	--	1
EX INL 3036	22+13	34' RT	--	1
EX INL 3147	22+31	33' LT	--	1
TOTALS			6	7

REMOVING STORM SEWER

FROM		TO	LOCATION	204.0245 (LF)	PIPE SIZE (IN)
CONNECTION	-	EX MH S(31)	LT	5	15
EX INL 2838	-	EX MH S(31)	LT	10	10
EX INL 2741	-	EX MH S(31)	LT/RT	42	10
EX MH S(31)	-	EX MH 2879	LT	142	15
EX INL 2880	-	EX MH 2879	LT	7	12
EX MH 2879	-	EX INL 2076	LT/RT	45	10
EX INL 2186	-	EX MH 2184	RT	11	10
EX MH 2184	-	EX INL 2076	RT	55	20
EX INL 2076	-	EX AE 2524	RT	73	18
CONNECTION	-	EX MH 3700	LT	5	24
EX MH 3700	-	EX AE 4142	LT	148	36
EX INL 3147	-	EX MH 3700	LT	30	12
EX MH 3700	-	EX MH 2476	LT/CL	52	24
CONNECTION	-	EX MH 2476	CL	5	36
EX MH 2476	-	EX MH 3206	CL/RT	56	36
EX INL 3036		EX MH 3206	LT	49	12
CONNECTION		EX MH 3206	LT	5	12
TOTAL				740	

ABANDONING CULVERT PIPE

FROM		TO	LOCATION	204.0270 (EACH)	209.0200.S BACKFILL CONTROLLED LOW STRENGTH (CY)
EX MH3206	-	EX AE 4083	LT	1	21
TOTAL				1	21

DUST & EROSION CONTROL

LOCATION	OFFSET	628.1504 SILT FENCE (LF)	628.1520 SILT FENCE MAINTENANCE (LF)
NORTH END BRIDGE	LT/RT	400	400
SOUTH END BRIDGE	LT/RT	380	380
UNDISTRIBUTED		78	78
TOTALS		858	858

INLET PROTECTION TYPE D

STATION	LOCATION	628.7020 (EACH)
16+63	LT	1
16+65	RT	1
17+47	RT	1
17+60	LT	1
17+81	RT	1
18+05	LT	1
18+08	RT	1
22+14	RT	1
22+31	LT	1
22+40	LT	1
22+53	RT	1
TOTALS		11

FINISHING ITEMS

LOCATION	625.0500 SALVAGED TOPSOIL (SY)	627.0200 MULCHING (SY)	629.0205 FERTILIZER TYPE A (CWT)	630.0140 SEEDING MIXTURE NO. 40 (LB)	628.2006 EROSION MAT URBAN CLASS 1 TYPE A (SY)	630.0200 TEMPORARY SEEDING (LB)
MAIN AND STEIN	1625	1625	1.02	29	940	44
MAIN AND WATER	393	393	0.25	7	321	11
UNDISTRIBUTED		202	0.13	4	63	5
TOTALS	2018	2220	1.40	40	1324	60

CONSTRUCTION STAKING

LOCATION STA	to	STA	650.4500 SUBGRADE (LF)	650.5000 BASE (LF)	650.9920 SLOPE STAKES (LF)	650.5500 CURB & GUTTER (LF)	ROADWAY
16+10	to	18+43	233	233	233	464	MAIN ST
21+11	to	22+80	169	169	169	285	MAIN ST
50+27	to	50+70	43	43	43	12	STEIN ST
60+31	to	61+23	92	92	92	70	WATER ST
TOTALS			537	537	537	831	

MOBILIZATIONS EROSION CONTROL

LOCATION	628.1905 (EACH)	628.1910 EMERGENCY (EACH)
PROJECT	9	6
TOTALS	9	6

RIPRAP & GEOTEXTILE

LOCATION	606.0300 RIPRAP HEAVY (CY)	645.0120 GEOTEXTILE TYPE HR (SY)
AE A1	56	84
AE B1	39	59
TOTAL	95	143

STORM SEWER CONNECT TO EXISTING

STATION	OFFSET	SPV.0060.01 CONNECT TO EXISTING STORM STRUCTURE (EACH)	SPV.0060.02 CONNECT TO EXISTING STORM PIPE (EACH)	NOTES
16+55	16.3' LT	--	1	15" RCP
21+67	42.5' RT	1	--	12" RCP
22+04	61.3' LT	--	1	18" RCP
2265	0.5' RT	--	1	36" RCP
TOTALS		1	3	

CLEARING AND GRUBBING

LOCATION	201.0115 CLEARING (ACRE)	201.0215 GRUBBING (ACRE)
ACCESS ROAD	0.17	0.17
TOTALS	0.17	0.17

CONCRETE COLLARS FOR PIPE

LOCATION	520.8000 (EACH)
UNDISTRIBUTED	3
TOTALS	3

CONSTRUCTION STAKING SUPPLEMENTAL CONTROL

	650.9910 (LS)
PROJECT	1
	1

ALL BID ITEMS ARE CATEGORY 0010 UNLESS NOTED.

3

3

STORM SEWER STRUCTURES

STRUCTURE	STATION	OFFSET*	LOCATION	522.1024 APRON ENDWALLS FOR CULVERT PIPE REINFORCED CONCRETE 24-INCH (EACH)	522.1036 APRON ENDWALLS FOR CULVERT PIPE REINFORCED CONCRETE 36-INCH (EACH)	611.0530 MANHOLE COVERS TYPE J (EACH)	611.0624 INLET COVERS TYPE H (EACH)	611.2004 MANHOLES 4-FT DIAMETER (EACH)	611.2006 MANHOLES 6-FT DIAMETER (EACH)	611.3004 INLETS 4-FT DIAMETER (EACH)	611.3230 INLETS 2X3-FT (EACH)	650.4000 CONSTRUCTION STAKING STORM SEWER (EACH)	RIM ELEVATION	SUMP ELEVATION	DEPTH** (FT)
A1	17+81	45.0' RT	MAIN	--	--	--	1	--	--	1	--	1	1126.87	1119.11	7.76
A2	17+60	18.0' LT	MAIN	--	--	1	--	1	--	--	--	1	1127.24	1120.68	6.56
A3	16+64	16.2' LT	MAIN	--	--	1	--	1	--	--	--	1	1127.66	1121.75	5.91
B2	22+04	50.2' LT	MAIN	--	--	1	--	--	1	--	--	1	1124.44	1111.80	12.64
B3	22+01	1.3' RT	MAIN	--	--	1	--	--	1	--	--	1	1126.358	1112.15	14.21
A1.1	17+47	48.3' RT	MAIN	--	--	--	1	--	--	1	--	1	1126.747	1121.83	4.91
A2.1	17+60	25.5' LT	MAIN	--	--	--	1	--	--	--	1	1	1126.98	1121.66	5.32
A3.1	16+63	25.5' LT	MAIN	--	--	--	1	--	--	--	1	1	1127.43	1122.72	4.71
A3.2	16+65	25.5' RT	MAIN	--	--	--	1	--	--	--	1	1	1127.409	1122.98	4.43
B2.1	22+41	33.6' LT	MAIN	--	--	--	1	--	--	1	--	1	1124.19	1119.50	4.69
B3.2	22+53	33.6' RT	MAIN	--	--	--	1	--	--	1	--	1	1124.56	1119.90	4.66
AE A	18+53	46.8' RT	MAIN	1	--	--	--	--	--	--	--	1			
AE B1	20+68	43.8' LT	MAIN	--	1	--	--	--	--	--	--	1			
TOTALS				1	1	4	7	2	2	4	3	13			

REMARKS
* STATIONS AND OFFSETS ARE TO CENTER OF STRUCTURE
** DEPTH = RIM ELEV - TOP OF STRUCTURE BASE ELEV - COVER HEIGHT - 6 -INCH ADJUSTMENT RING HEIGHT

STORM SEWER PIPES

FROM		TO	LOCATION	608.0312 STORM SEWER PIPE REINFORCED CONCRETE CLASS III 12-IN (LF)	608.0315 STORM SEWER PIPE REINFORCED CONCRETE CLASS III 15-IN (LF)	608.0318 STORM SEWER PIPE REINFORCED CONCRETE CLASS III 18-IN (LF)	608.0324 STORM SEWER PIPE REINFORCED CONCRETE CLASS III 24-IN (LF)	608.0336 STORM SEWER PIPE REINFORCED CONCRETE CLASS III 36-IN (LF)	SLOPES (FT/FT)	START INVERT	END INVERT	# JOINT TIES REQUIRED
A1	-	AE A	RT	--	--	--	76	--	0.0243	1119.32	1117.50	3
A1.1	-	A1	RT	34	--	--	--	--	0.0200	1122.00	1121.32	--
A2	-	A1	RT/LT	--	--	66	--	--	0.0130	1120.68	1119.82	--
A2.1	-	A2	LT	8	--	--	--	--	0.0500	1121.66	1121.28	--
A3	-	A2	LT	--	--	97	--	--	0.0100	1121.75	1120.78	--
A3.1	-	A3	LT	9	--	--	--	--	0.0501	1122.72	1122.25	--
A3.2	-	A3	RT/LT	42	--	--	--	--	0.0216	1123.15	1122.25	--
EXISTING	-	A3	LT	--	9	--	--	--	0.0056	1122.05	1122.00	--
B2	-	AE B1	LT	--	--	--	--	139	0.0065	1111.80	1110.90	3
EXISTING	-	B2	LT	--	--	11	--	--	0.0024	1117.63	1117.60	--
B2.1	-	B2	LT	36	--	--	--	--	0.0203	1119.50	1118.77	--
B3	-	B2	LT/CL	--	--	--	--	51	0.0048	1112.15	1111.90	--
EXISTING	-	B3	CL/RT	--	--	--	--	64	0.0036	1113.43	1113.20	--
B3.2	-	B3	RT	62	--	--	--	--	0.0198	1119.90	1118.67	--
EX MH3206	-	B3	RT	--	53	--	--	--	0.0160	1114.75	1113.90	--
TOTALS				191	62	174	76	254				

ALL BID ITEMS ARE CATEGORY 0010 UNLESS NOTED.

3

TRAFFIC CONTROL ITEMS

STAGE	SERVICE PERIOD (DAYS)	643.0300 DRUMS NO. IN SERVICE (EACH)	643.0300 DRUMS PAY QUANTITY (DAY)	643.0715 TC WARNING LIGHTS TYPE C NO. IN SERVICE (EACH)	643.0715 TC WARNING LIGHTS TYPE C PAY QUANTITY (DAY)	643.0705 TC WARNING LIGHTS TYPE A NO. IN SERVICE (EACH)	643.0705 TC WARNING LIGHTS TYPE A PAY QUANTITY (DAY)	643.0800 FLASHING ARROW BOARD NO. IN SERVICE (EACH)	643.0800 FLASHING ARROW BOARD PAY QUANTITY (DAY)	643.0410 BARRICADES TYPE II NO. IN SERVICE (EACH)	643.0410 BARRICADES TYPE II PAY QUANTITY (DAY)	643.0420 BARRICADES TYPE III NO. IN SERVICE (EACH)	643.0420 BARRICADES TYPE III PAY QUANTITY (DAY)	644.1601.S TEMP CURB RAMP NO. IN SERVICE (EACH)	644.1616.S TEMP PEDESTRIAN SAFETY FENCE (LF)	643.0900 SIGNS NO. IN SERVICE (EACH)	643.0900 SIGNS PAY QUANTITY (DAY)
1	137	91	12467	26	3562	8	1096	3	411	8	1096	19	2603	4	112	64	8768
1 DETOUR	6	--	--	--	--	24	144	--	--	--	--	18	108	--	--	6	36
2	47	113	5311	20	940	8	376	3	141	8	376	21	987	6	1041	50	2350
3	12	114	1368	26	312	8	96	3	36	2	24	13	156	2	0	37	444
TOTALS			19,146		4,814		1,712		588		1,496		3,854	12	1,153		11,598

CONCRETE BARRIER TEMPORARY PRECAST

STAGE	603.8000 DELIVERED (LF)	603.8125 INSTALLED (LF)
1	420	420
2	540	540
3	--	--
TOTALS	960	960

3

TEMPORARY MARKING LINE

STAGE	LOCATION	649.0150 REMOVABLE TAPE 4-INCH WHITE (LF)	649.0150 REMOVABLE TAPE 4-INCH YELLOW (LF)	649.0250 REMOVABLE TAPE 8-INCH WHITE (LF)	649.0105 PAINT 4-INCH WHITE (LF)	649.0105 PAINT 4-INCH YELLOW (LF)	646.9000 MARKING REMOVAL LINE 4-INCH (LF)
1	PROJECT	416	802	100	757	1514	729
2	PROJECT	1944	2450	100	--	--	--
3	PROJECT	1174	2403	100	--	--	--
	SUBTOTALS	3534	5655	300	757	1514	729
	TOTALS	9189		300	2271		729

MARKING

LOCATION	646.1020 LINE EPOXY 4-INCH WHITE (LF)	646.1020 LINE EPOXY 4-INCH YELLOW (LF)	646.6120 STOP LINE EPOXY 18-INCH (LF)	646.7420 CROSSWALK EPOXY TRANSVERSE LINE 6-INCH (LF)	COMMENTS
MAIN AND STEIN	224	299	--	199	
MAIN AND WATER	64	244	--	242	
MAIN --	150	598	--	--	ACROSS BRIDGE
STEIN --	--	--	18	--	
WATER --	--	80	25	--	
TOTALS	1658		43	441	

TRAFFIC CONTROL FLEXIBLE TUBULAR MARKERS

STAGE	643.0500 MARKER POSTS (EACH)	643.0600 MARKER BASES (EACH)
1	60	60
2	49	49
3	41	41
TOTALS	150	150

TRAFFIC CONTROL

LOCATION	643.5000 (EACH)
PROJECT	1
TOTALS	1

PERMANENT SIGNING

SIGN NUMBER	APPROXIMATE STATION	APPROXIMATE OFFSET	SIGN CODE	SIGN SIZE	634.0811 POSTS TUBULAR STEEL 2X2 11-FT (EACH)	637.2210 SIGNS TYPE II REFLECTIVE H (SF)	637.2230 SIGNS TYPE II REFLECTIVE F (SF)	REMARKS
1	16+46	28' RT	R7-1D	18" X 24"	1	3.00	--	
2	17+77	29' LT	R2-1	24" X 30"	1	5.00	--	30 MPH
3	17+98	34' RT	R2-1	24" X 30"	1	5.00	--	30 MPH
4	21+31	32' RT	W11-8	30" X 30"	1	--	6.25	
5	50+46	21' RT	R1-1	30" X 30"	1	6.25	--	STEIN ST
6	61+13	32' RT	R1-1	30" X 30"	1	6.25	--	WATER ST
7	22+26	49' LT	R7-1D	18" X 24"	1	3.00	--	
TOTALS					7	28.50	6.25	

MOVING SIGNS

LOCATION FROM	LOCATION TO	638.2102 TYPE II (EACH)	SPV 0060.05 PARK SIGN (EACH)	DESCRIPTION/MESSAGE
17+59, LT	17+59, LT	-	1	PARK SIGN
17+84', RT	17+84', RT	1	-	"STEIN ST" AND "S MAIN ST"
22+27', LT	22+27', LT	1	-	"WATER ST" AND "S MAIN ST"
TOTALS		2	1	

ALL BID ITEMS ARE CATEGORY 0010 UNLESS NOTED.

3

CONDUIT RIGID NONMETALIC SCHEDULE 40

FROM	TO	NO.	2-INCH 652.0225 (LF)	3-INCH 652.0235 (LF)
LCC A	LPB-1	2	--	14
LPB-1	BRIDGE	1	17	--
LPB-1	LPB-2	1	69	--
LPB-2	BRIDGE	1	7	--
TOTAL (CATEGORY 0040)			93	14

PULL BOXES STEEL 24X42-INCH

PB NO.	STATION	OFFSET	653.0140 (EACH)
LPB-1	18+10.2	34.0' RT	1
LPB-2	18+13.2	34.0' LT	1
TOTAL (CATEGORY 0040)			2

LIGHTING

LIGHT NO.	STATION	OFFSET	655.0610 ELECTRICAL WIRE LIGHTING 12 AWG (LF)	SPV.0060.04 DECORATIVE LIGHTING AND POLE ASSEMBLY TYPE B (EACH)
A-1	18+92.0	34.0' LT	175	1
A-2	20+60.0	34.0' LT	175	1
A-3	19+76.0	34.0' RT	175	1
TOTAL (CATEGORY 0040)			525	3

LIGHTING CONTROL CABINET AND BASES

DESCRIPTION	LOCATION	654.0224 CONCRETE CONTROL CABINET BASES TYPE L24 (EACH)	656.0200 ELECTRICAL SERVICE METER BREAKER PEDESTAL (LCC A) (LS)	659.2124 LIGHTING CONTROL CABINETS 120/240 24-INCH (EACH)
LCC A	18+10.8, 40.5' RT	1	1	1
TOTAL (CATEGORY 0040)		1	1	1

ELECTRICAL WIRE LIGHTING 8 AWG

FROM	TO	CONDUCTORS	655.0620 (LF)
LCC A	LPB-1	7	91
LPB-1	BRIDGE	3	69
LPB-1	LPB-2	5	375
LPB-2	BRIDGE	3	39
TOTAL (CATEGORY 0040)			574

CONSTRUCTION STAKING ELECTRICAL INSTALLATIONS

LOCATION	650.8500 LS
PROJECT (8997-00-40)	1
TOTAL (CATEGORY 0040)	1

ELECTRICAL SERVICE METER SOCKET

LOCATION	656.0100 LS
PROJECT (8997-00-40)	1
TOTAL (CATEGORY 0040)	1

EARTHWORK SUMMARY

FROM/TO STATION	LOCATION	205.0100 COMMON EXCAVATION** (1) CUT	UNEXPANDED FILL	EXPANDED FILL (2) FACTOR 1.30	MASS ORDINATE +/- (3)	WASTE
16+10 - 18+25	MAIN	860	11	14	850	850
21+25 - 22+80	MAIN	394	27	35	367	367
40+50 - 42+50	ACCESS	2,094	3	4	2,090	2,090
TOTALS		3,348				

1) COMMON EXCAVATION IS THE CUT. ITEM NUMBER 205.0100.
2) EXPANADED FILL. FACTOR = 1.30; EXPANDED FILL = UNEXPANDED FILL * FILL FACTOR
3) THE MASS ORDINATE + OR - QTY CALCULATED FOR THE DIVISION. PLUS QUANTITY INDICATES AN EXCESS OF MATERIAL ON THE PROJECT.
4) ALL QUANTITIES SHOWN IN CY
** PAY PLAN QUANTITY

TEMPORARY COVER PLATES

STRUCTURE	LOCATION	611.8120.S (EACH)
A2.1	17+50, 25.5' LT	1
TOTALS		1

FIELD OFFICE TYPE B

LOCATION	642.5001 (EACH)
PROJECT	1
TOTAL	1

ALL BID ITEMS ARE CATEGORY 0010 UNLESS NOTED.

3

SANITARY SEWER MANHOLES

MANHOLE NO.	STATION	LOCATION	SPV.0060.10 REMOVE EXISTING SANITARY MANHOLE EACH	SPV.0060.11 REMOVE EXISTING SANITARY VAULT EACH	SPV.0060.12 STANDARD SANITARY MANHOLE WITH CASTING EACH	SPV.0060.26 WATERPROOF SANITARY MANHOLE WITH CASTING EACH	SPV.0200.10 WATERPROOF SANITARY MANHOLE EXTRA DEPTH VF	SPV.0060.13 ADJUST SANITARY MANHOLE CASTING EACH
EX	18+30.00	6.00' RT	1					
EX	21+95.00	80.00' LT						1
EX	21+95.00	8.00' LT	1					
EX	22+05.00	6.00' LT		1				
1	17+60.40	2.53' RT			1			1
2	21+95.00	5.50' LT				1	1.9	1
3	22+29.00	6.90' LT				1	3.2	1
4	21+98.00	85.00' LT				1	2.1	1
	ITEM TOTAL		2	1	1	3	7.2	5

3

SANITARY SEWER PIPE

STATION / PIPE RUN	LOCATION	SPV.0090.10 8-INCH, SDR 35 LF	SPV.0090.16 PVC SANITARY SEWER 15-INCH, SDR 35 LF	SPV.0090.11 PVC SANITARY SEWER 18-INCH, C900 LF	SPV.0090.17 PVC SANITARY SEWER 8-INCH, C900 LF	SPV.0060.14 CONNECT TO EXISTING SANITARY SEWER EACH	SPV.0105.10 SANITARY SEWER BYPASS PUMPING LS
16+20 - MH 1	RT		140			1	
MH 1 - EAST	RT	53				1	
MH 2 - EAST	RT				54	1	
MH 2 - MH 3	LT				34		
MH 3 - 22+71	LT			42		1	
MH 3 - MH 4	LT			84		1	
UNDISTRIBUTED		13	13	12	12		1
ITEM TOTAL		66	153	138	100	5	1

WATER MAIN PIPE

STATION	LOCATION	SPV.0090.12 WATER MAIN 6-INCH LF	SPV.0090.13 WATER MAIN 8-INCH LF
17+09.00 - 17+12.00	11.00' RT		3
21+82.00 - WATER ST	17.00' LT		60
21+82.00 - 22+62.00	17.00' LT		80
21+58.00 - 21+82.00	55.00' LT	23	
UNDISTRIBUTED		10	20
ITEM TOTAL		33	163

WATER MAIN ITEMS

STATION	LOCATION	SPV.0060.15 REMOVE EXISTING GATE VALVE EACH	SPV.0060.16 CONNECT TO EXISTING WATER MAIN EACH	SPV.0060.17 WATER MAIN GATE VALVE AND BOX 6-INCH EACH	SPV.0060.18 WATER MAIN GATE VALVE AND BOX 8-INCH EACH	SPV.0060.19 FIRE HYDRANT EACH	SPV.0060.20 REMOVE EXISTING HYDRANT EACH	SPV.0060.21 REPLACE GATE VALVE BOX EACH	SPV.0060.22 ADJUST GATE VALVE BOX EACH	SPV.0085.10 WATER MAIN FITTINGS LB	WATER MAIN FITTING TYPE
17+09.00	11.00' RT		1								
17+12.00	11.00' RT	1	1								
17+41.00	33.00' RT							1	1		
21+79.00	79.00' LT		1		1				1	36	4"x 8" REDUCER
21+83.00	17.00' LT									57	8" - 90° BEND
22+41.00	36.00' RT						1				
21+58.00	55.00' RT			1		1			1	80	8"x 6" TEE
22+62.00	17.00' LT	1	1		1				1		
UNDISTRIBUTED										150	TO BE DETERMINED
ITEM TOTAL		2	4	1	2	1	1	1	4	323	

WATER SERVICES

STATION	LOCATION	SPV.0060.23 CORPORATION STOP 1-INCH EACH	SPV.0060.24 CURB STOP AND BOX 1-INCH EACH	SPV.0060.25 ABANDON WATER SERVICE EACH	SPV.0090.14 COPPER WATER SERVICE 1-INCH LF
16+57.00	29.00' RT			1	
17+04.00	28.00' RT			1	
21+70.00	77.00' LT			1	
22+72.00	20.00' LT	1			
22+60.00	42.00' LT		1		35
ITEM TOTAL		1	1	3	35

SANITARY SEWER SERVICE

STATION	LOCATION	SPV0060.27 SANITARY SEWER SERVICE WYE 15-INCH x 6-INCH EACH	SPV0060.28 CONNECT TO EXISTING SANITARY SERVICE EACH	SPV0090.15 PVC SANITARY SEWER SERVICE 6-INCH LF
16+56.00	32.00' LT	1	1	42
16+94.00	32.00' LT	1	1	42
17+30.00	32.00' LT	1	1	42
UNDISTRIBUTED				26
ITEM TOTAL		3	3	152

ALL ITEMS ON THIS SHEET ARE CATEGORY 0030 UNLESS OTHERWISE NOTED

TRANSPORTATION PROJECT PLAT NO: 8997-00-39 - 4.01 AMENDMENT 1

AMENDS PARCEL 9 OF TRANSPORTATION PROJECT PLAT 8997-00-39 - 4.01, RECORDED AS DOCUMENT No. 838018 AND FILED IN VOL. 1MC, PAGE 167B

THAT PART OF OUTLOTS 150, 151, 159, 161 OF THE CITY OF RICE LAKE AND LOT 4 C.S.M. No. 5088 BEING PART OF LOT 8 ADDITION "B" TO THE CITY OF RICE LAKE AND LOT 1, BLOCK 3 OF ADDITION "C" OF THE CITY OF RICE LAKE, ALL IN GOVT. LOT 3, SECTION 21, T35N-R11W, CITY OF RICE LAKE,BARRON COUNTY, WISCONSIN

RELOCATION ORDER MAIN STREET CITY OF RICE LAKE ANN STREET TO HIGHLAND STREET BARRON COUNTY

TO PROPERLY ESTABLISH, LAY OUT, WIDEN, ENLARGE, EXTEND, CONSTRUCT, RECONSTRUCT, IMPROVE, OR MAINTAIN A PORTION OF THE HIGHWAY DESIGNATED ABOVE, THE CITY OF RICE LAKE DEEMS IT NECESSARY TO RELOCATE OR CHANGE SAID HIGHWAY AND ACQUIRE CERTAIN LANDS AND INTERESTS OR RIGHTS IN LANDS FOR THE ABOVE PROJECT.

TO EFFECT THIS CHANGE, PURSUANT TO AUTHORITY GRANTED UNDER SECTIONS 62.22 AND 84.095, WISCONSIN STATUTES, THE CITY OF RICE LAKE HEREBY ORDERS THAT:

OUTLOT 150 SUBJECT TO RESOLUTION V.423 P.923

1. THAT PORTION OF SAID HIGHWAY AS SHOWN ON THIS PLAT IS LAID OUT AND ESTABLISHED TO THE LINES AND WIDTHS AS SO SHOWN FOR THE ABOVE PROJECT.
2. THE LANDS OR INTERESTS OR RIGHTS IN LANDS AS SHOWN ON THIS PLAT ARE REQUIRED BY THE CITY OF RICE LAKE FOR THE ABOVE PROJECT AND SHALL BE ACQUIRED IN THE NAME OF THE CITY OF RICE LAKE, PURSUANT TO THE PROVISIONS OF SECTION 62.22, WISCONSIN STATUTES.

4

NOTES:

POSITIONS SHOWN ON THIS PLAT ARE WISCONSIN COUNTY COORDINATE SYSTEM COORDINATES (WCCS), BARRON COUNTY, NAD83(2011) IN US SURVEY FEET. VALUES SHOWN ARE GRID COORDINATES, GRID BEARINGS, AND GRID DISTANCES. GRID DISTANCES MAY BE USED AS GROUND DISTANCES.

ALL NEW RIGHT-OF-WAY MONUMENTS WILL BE TYPE 2 (TYPICALLY 3/4"X24" IRON REBARS) UNLESS OTHERWISE NOTED, AND WILL BE PLACED PRIOR TO THE COMPLETION OF THE PROJECT.

RIGHT-OF-WAY BOUNDARIES ARE DEFINED WITH COURSES OF THE PERIMETER OF THE HIGHWAY LANDS REFERENCED TO THE U.S. PUBLIC LAND SURVEY SYSTEM OR OTHER "SURVEYS" OF PUBLIC RECORD.

DIMENSIONING FOR THE NEW RIGHT-OF-WAY IS MEASURED ALONG AND PERPENDICULAR TO THE NEW REFERENCE LINES.

A TEMPORARY LIMITED EASEMENT (TLE) IS A RIGHT FOR CONSTRUCTION PURPOSES, AS DEFINED HEREIN, INCLUDING THE RIGHT TO OPERATE NECESSARY EQUIPMENT THEREON, THE RIGHT OF INGRESS AND EGRESS, AS LONG AS REQUIRED FOR SUCH PUBLIC PURPOSE, INCLUDING THE RIGHT TO PRESERVE, PROTECT, REMOVE, OR PLANT THEREON ANY VEGETATION THAT THE HIGHWAY AUTHORITIES MAY DEEM DESIRABLE. ALL (TLEs) ON THIS PLAT EXPIRE AT THE COMPLETION OF THE CONSTRUCTION PROJECT FOR WHICH THIS INSTRUMENT IS GIVEN.

ALL RIGHT-OF-WAY LINES DEPICTED IN THE NON-ACQUISITION AREAS ARE INTENDED TO RE-ESTABLISH EXISTING RIGHT-OF-WAY LINES AS DETERMINED FROM PREVIOUS PROJECTS, OTHER RECORDED DOCUMENTS, OR FROM CENTERLINE OF EXISTING PAVEMENTS.

PROPERTY LINES SHOWN ON THIS PLAT ARE DRAWN FROM DATA DERIVED FROM MAPS AND DOCUMENTS OF PUBLIC RECORD AND/OR EXISTING OCCUPATIONAL LINES. THIS PLAT MAY NOT BE A TRUE REPRESENTATION OF EXISTING PROPERTY LINES, EXCLUDING RIGHT-OF-WAY, AND SHOULD NOT BE USED AS A SUBSTITUTE FOR AN ACCURATE FIELD SURVEY.

EXISTING HIGHWAY RIGHT OF WAY SHOWN HEREIN IS BASED ON THE FOLLOWING POINTS OF REFERENCE:
LOT 4 C.S.M. No. 5088
LOT 8, ADDITION B TO THE CITY OF RICE LAKE
FLYNNS ADDITION TO THE CITY OF RICE LAKE
OUTLOTS OF THE CITY OF RICE LAKE

SCHEDULE OF LANDS & INTERESTS REQUIRED

OWNER'S NAMES ARE SHOWN FOR REFERENCE PURPOSES ONLY AND ARE SUBJECT TO CHANGE PRIOR TO THE TRANSFER OF LAND INTERESTS TO THE CITY OF RICE LAKE.

PARCEL NUMBER	OWNER(S)	INTEREST REQUIRED	R/W NEW ACRES	R/W EXISTING ACRES	R/W TOTAL ACRES	TLE S.F. OR ACRES
1	RICE LAKE AREA CHAMBER OF COMMERCE, INC.	TLE	-	-	-	270
2	BARRON COUNTY, WI.	TLE	-	-	-	658
3	CITY OF RICE LAKE, WI.	TLE	-	-	-	113
4	LEWIS FAMILY, LLC	TLE	-	-	-	476
6	GERBER RENTALS INC.	TLE	-	-	-	205
7	LIND B. KNUDSON: ROBERT J. YARISH TRUST AGREEMENT	TLE	-	-	-	280
8	CITY OF RICE LAKE, WI., A MUNICIPAL CORPORATION	TLE	-	-	-	0.418 AC.
9	THE NORTHERN STAR THEATRE COMPANY	TLE	-	-	-	0.073 AC.

PARCEL #	UTILITY EASEMENT INFORMATION COMPANY NAME	RECORDING DATA	UTILITY #
2	WISCONSIN-MINNESOTA LIGHT AND POWER CO. (FLOWAGE RIGHTS)	Doc. #139385	
2, 3, 4	BARRON COUNTY, WI.	Doc. #377040	90
8, 9	BARRON COUNTY, WI. (FLOWAGE RIGHTS)	Doc. #377040	
2	BARRON COUNTY, WI.	Doc. #477629	90
8	NORTHERN STATES POWER CO.	Doc. #205908	91

UTILITY #	OWNER	INTEREST REQ'D.
90	BARRON COUNTY, WI.	TEMPORARY RELEASE OF RIGHTS
91	NORTHERN STATES POWER CO.	TEMPORARY RELEASE OF RIGHTS
92	RICE LAKE UTILITIES	TEMPORARY RELEASE OF RIGHTS
93	CENTURYLINK	TEMPORARY RELEASE OF RIGHTS

CONVENTIONAL ABBREVIATIONS

ACCESS RIGHTS	AR	POINT OF INTERSECTION	PI
ACRES	AC	PROPERTY LINE	PL
AHEAD	AH	RECORDED AS	(100')
ALUMINUM	ALUM	REEL / IMAGE	R/I
AND OTHERS	ET AL	REFERENCE LINE	R/L
BACK	BK	REMAINING	REM
BLOCK	BLK	RESTICTIVE DEVELOPMENT EASEMENT	RDE
CENTERLINE	C/L	RIGHT	RT
CERTIFIED SURVEY MAP	CSM	RIGHT OF WAY	R/W
CONCRETE	CONC	SECTION	SEC
COUNTY	CO	SEPTIC VENT	SEPV
COUNTY TRUNK HIGHWAY	CTH	SQUARE FEET	SF
DISTANCE	DIST	STATE TRUNK HIGHWAY	STH
CORNER	COR	STATION	STA
DOCUMENT NUMBER	DOC	TELEPHONE PEDESTAL	TP
EASEMENT	EASE	TEMPORARY LIMITED EASEMENT	TLE
EXISTING	EX	TRANSPORTATION PROJECT PLAT	TPP
GAS VALVE	GV	UNITED STATES HIGHWAY	USH
GRID NORTH	GN	VOLUME	V
HIGHWAY EASEMENT	HE		
IDENTIFICATION	ID		
LAND CONTRACT	LC		
LEFT	LT		
MONUMENT	MON		
NATIONAL GEODETIC SURVEY	NGS		
NUMBER	NO		
OUTLOT	OL		
PAGE	P		
POINT OF TANGENCY	PT		
PERMANENT LIMITED EASEMENT	PLE		
POINT OF BEGINNING	POB		
POINT OF CURVATURE	PC		
POINT OF COMPOUND CURVE	PCC		

CURVE DATA

LONG CHORD	LCH
LONG CHORD BEARING	LCB
RADIUS	R
DEGREE OF CURVE	D
CENTRAL ANGLE	Δ/DELTA
LENGTH OF CURVE	L
TANGENT	T
DIRECTION AHEAD	DA
DIRECTION BACK	DB

CONVENTIONAL UTILITY SYMBOLS

- W — WATER
- G — GAS
- T — TELEPHONE
- OH — OVERHEAD TRANSMISSION LINES
- E — ELECTRIC
- TV — CABLE TELEVISION
- FO — FIBER OPTIC
- SAN — SANITARY SEWER
- SS — STORM SEWER

CONVENTIONAL SYMBOLS

SECTION LINE
QUARTER LINE
SIXTEENTH LINE
NEW REFERENCE LINE
NEW R/W LINE
EXISTING R/W OR HE LINE
PROPERTY LINE
LOT, TIE & OTHER MINOR LINES
SLOPE INTERCEPT
CORPORATE LIMITS
UNDERGROUND FACILITY (COMMUNICATIONS, ELECTRIC, ETC)
NEW R/W (FEE OR HE) (HATCHING VARIES BY OWNER)
TEMPORARY LIMITED EASEMENT AREA
EASEMENT AREA (PERMANENT LIMITED OR RESTRICTED DEVELOPMENT)
TRANSMISSION STRUCTURES
BUILDING
TO BE REMOVED
BRIDGE

SECTION CORNER SYMBOL
SECTION CORNER MONUMENT
R/W MONUMENT (TO BE SET)
NON-MONUMENTED R/W POINT
FOUND IRON PIN (1-INCH UNLESS NOTED)
GEODETIC SURVEY MONUMENT
SIXTEENTH CORNER MONUMENT
SIGN
OFF-PREMISE SIGN

	COMPENSABLE	NON-COMPENSABLE
ELECTRIC POLE		
TELEPHONE POLE		
PEDESTAL (LABEL TYPE) (TV, TEL, ELEC, ETC.)		

ACCESS RESTRICTED BY ACQUISITION
NO ACCESS (BY STATUTORY AUTHORITY)
ACCESS RESTRICTED (BY PREVIOUS PROJECT OR CONTROL)
NO ACCESS (NEW HIGHWAY)
PARCEL NUMBER 25
UTILITY NUMBER 40
PARALLEL OFFSETS

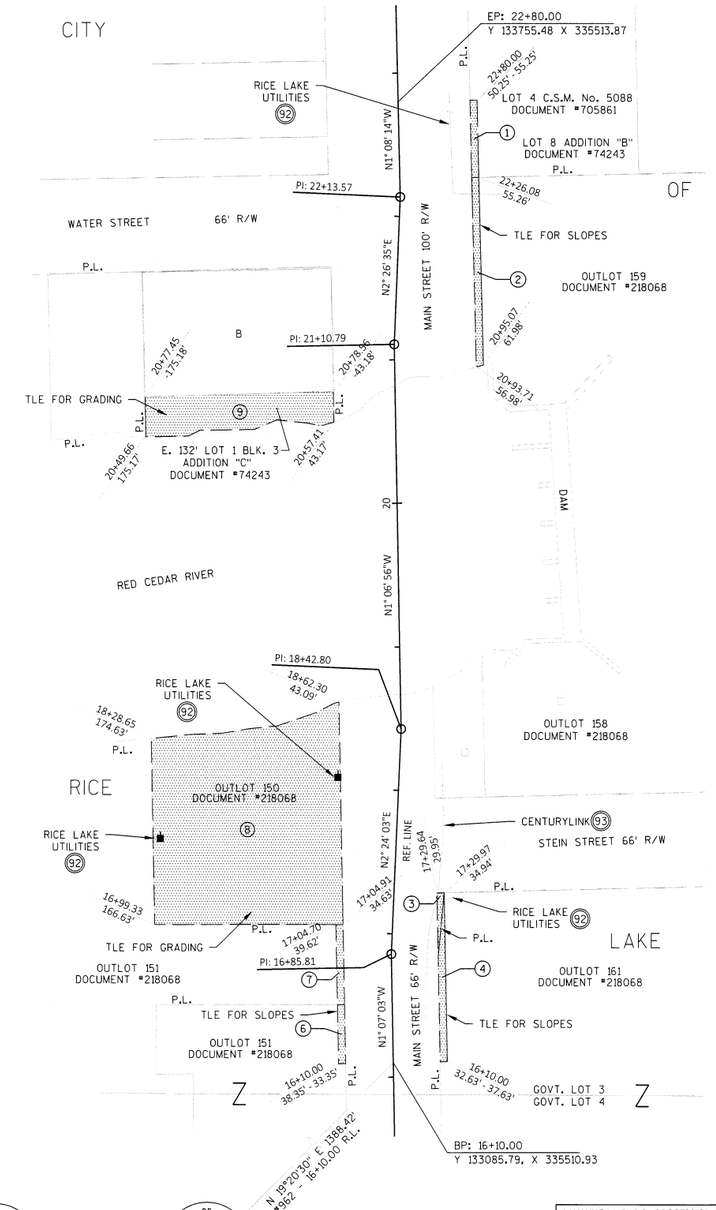

RESERVED FOR REGISTER OF DEEDS
PROJECT NUMBER 8997-00-39 4.01
AMENDMENT NO: 1

GN

4

REF. LINE

P.I.: 16+85.81
Y 133161.58
X 335509.45

P.I.: 18+42.80
Y 133318.44
X 335516.02

P.I.: 21+10.79
Y 133586.37
X 335510.81

P.I.: 22+13.57
Y 133689.06
X 335515.19

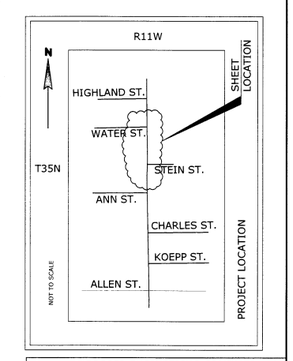

COOPER ENGINEERING COMPANY, INC.
2600 COLLEGE DRIVE, P.O. BOX 230
RICE LAKE, WI. 54868
(715)234-7008

I, WAYNE M. RADO, PROFESSIONAL LAND SURVEYOR, HEREBY CERTIFY THAT IN FULL COMPLIANCE WITH THE PROVISIONS OF SECTIONS 62.22 , 84.095 OF THE WISCONSIN STATUTES AND UNDER THE DIRECTION OF THE CITY OF RICE LAKE, I HAVE MAPPED THIS TRANSPORTATION PROJECT PLAT AND SUCH PLAT CORRECTLY CORRECTLY REPRESENTS ALL EXTERIOR BOUNDARIES OF THE SURVEYED LAND.

WISCONSIN WAYNE M. RADO S-1900 RICE LAKE WIS. LAND SURVEYOR

SIGNATURE: DATE: 8/15/17
PRINT NAME: WAYNE M. RADO
REGISTRATION NUMBER: S-1900

THIS PLAT AND RELOCATION ORDER ARE APPROVED FOR THE CITY OF RICE LAKE, WISCONSIN.

SIGNATURE: DATE: 8/15/17
PRINT NAME: MICHAEL M. DIERCKS, MAYOR

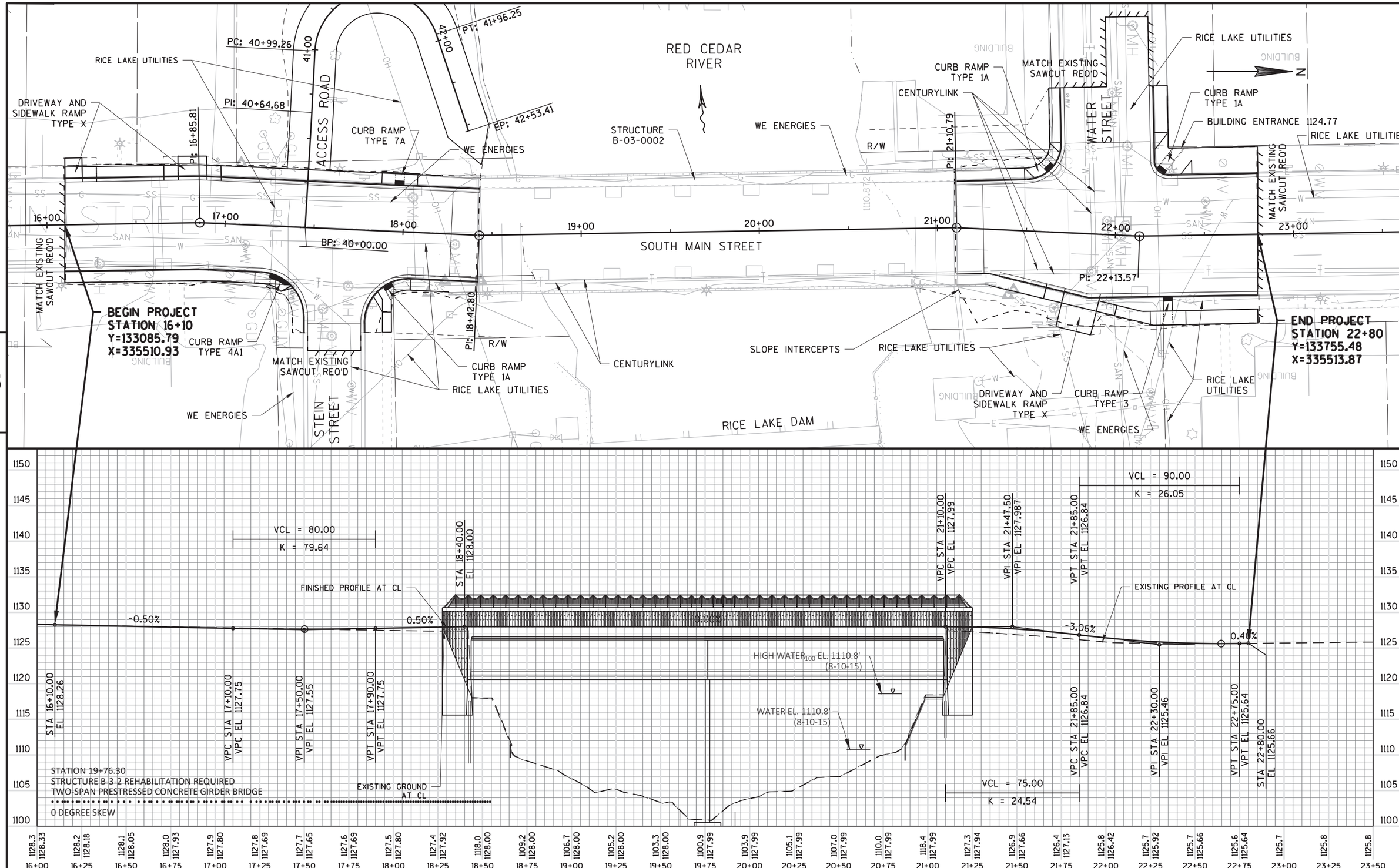

PROJECT NO:8997-00-40	HWY:MAIN ST	COUNTY:BARRON	PLAN AND PROFILE: MAIN ST	SHEET 47	E

FILE NAME : V:\STRUCTURES-EC\42-0989.00 - BARRON CO, CITY OF RICE LAKE\CADD\SHEETSPLAN\0501_PP.DWG
LAYOUT NAME - MAIN ST
PLOT DATE : 10/27/2017 12:14 PM PLOT BY : AYRES ASSOCIATES PLOT NAME : PLOT SCALE : 1 IN:50 FT

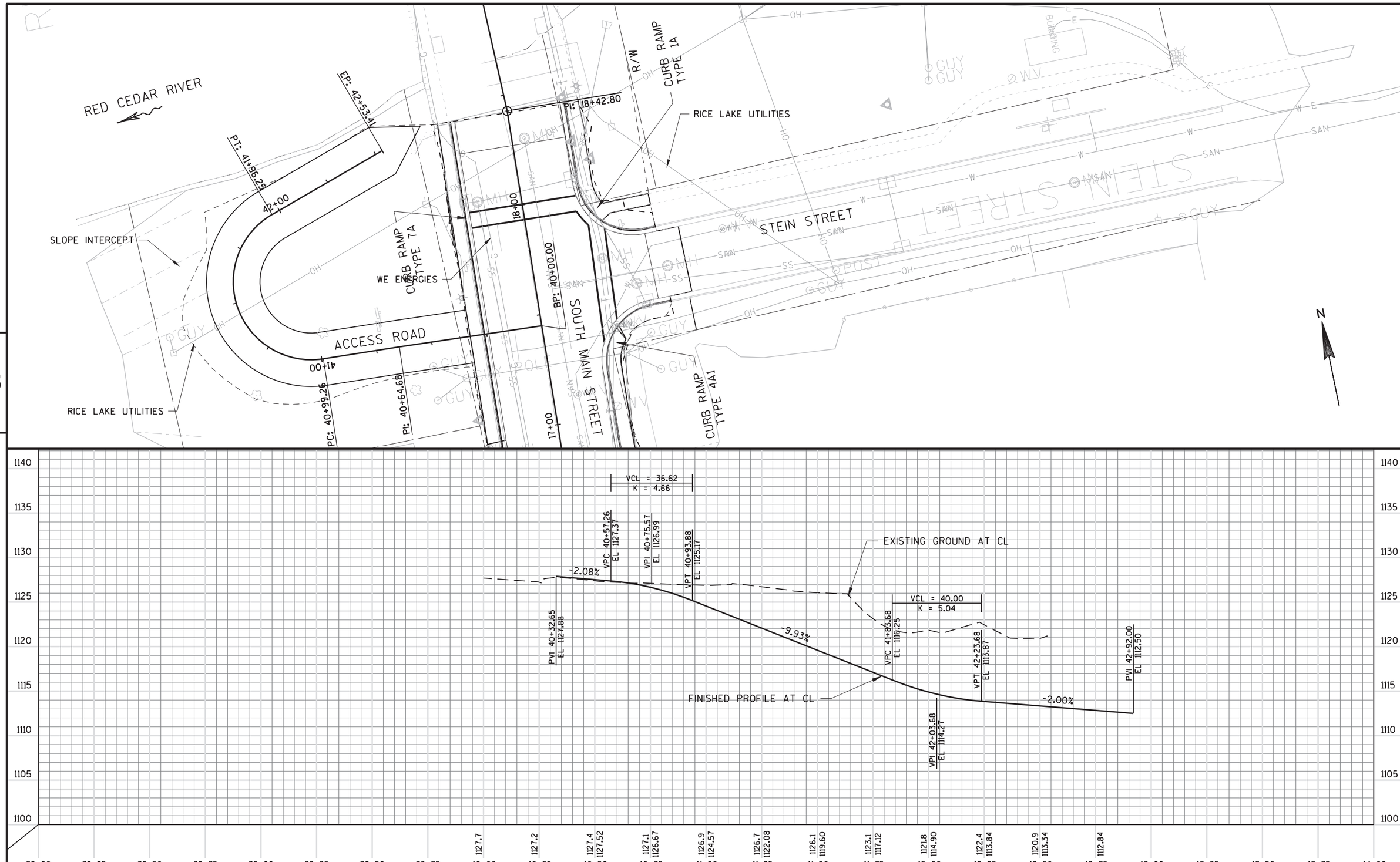

PROJECT NO:8997-00-40	HWY:MAIN ST	COUNTY:BARRON	PLAN AND PROFILE: ACCESS ROUTE	SHEET 48	E

FILE NAME : V:\STRUCTURES-EC\42-0989.00 - BARRON CO, CITY OF RICE LAKE\CADD\SHEETSPLAN\0501_PP.DWG
LAYOUT NAME - ACCESS ROUTE
PLOT DATE : 10/19/2017 2:24 PM PLOT BY : AYRES ASSOCIATES PLOT NAME : PLOT SCALE : 1 IN:40 FT

Standard Detail Drawing List

08A05-19A	INLET COVERS TYPE A, H, A-S, H-S & Z
08A05-19D	INLET COVER TYPE BW, MANHOLE COVERS, TYPE K, J, J-S, L & M
08B09-02	MANHOLES 3-FT, 4-FT, 5-FT, 6-FT, 7-FT AND 8-FT DIAMETER
08C06-02	INLETS 3-FT AND 4-FT DIAMETER
08C07-02	INLETS 2X2-FT, 2X2.5-FT, 2X3-FT AND 2.5X3-FT
08D01-19	CONCRETE CURB, CONCRETE CURB AND GUTTER AND TIES
08D01-20A	CONCRETE CURB & GUTTER
08D01-20B	CONCRETE CURB, TIES AND CURB AND GUTTER APPLICATIONS
08D05-18A	CURB RAMPS TYPES 1 AND 1-A
08D05-18C	CURB RAMPS TYPES 4A AND 4A1
08D05-19B	CURB RAMPS TYPES 2 AND 3
08D05-19C	CURB RAMPS TYPES 4A AND 4A1
08D05-19E	CURB RAMPS TYPES 5, 6, 7A, 7B & 8
08D05-19F	CURB RAMPS RADIAL DETECTABLE WARNING FIELD APPLICATIONS
08D05-19G	CURB RAMPS RECTANGULAR AND RADIAL DETECTABLE WARNING PLATES
08D17-06	MANHOLES, MANHOLE & INLET COVERS
08D18-01	DRIVEWAY AND SIDEWALK RAMPS TYPES X & Y
08E09-06	SILT FENCE
08E10-02	INLET PROTECTION TYPE A, B, C AND D
08F01-11	APRON ENDWALLS FOR CULVERT PIPE
08F04-07	JOINT TIES FOR CONCRETE PIPE AND CONCRETE COLLAR DETAIL
09B02-10	CONDUIT
09B04-11	PULL BOX
09C14-02	CONCRETE CONTROL CABINET BASE, TYPE L
09D04-02	LIGHTING CONTROL CABINET 120/240 VOLT
09E03-05	NON-FREEWAY LIGHTING UNIT POLE WIRING
12A03-10	NAME PLATE (STRUCTURES)
13B02-08A	CONCRETE PAVEMENT APPROACH SLAB
13B02-08B	STRUCTURAL APPROACH SLAB AND CONCRETE PAVEMENT APPROACH SLAB
13C01-18	CONCRETE PAVEMENT LONGITUDINAL JOINTS AND TIES
13C18-05A	CONCRETE PAVEMENT JOINTING
14B07-15A	CONCRETE BARRIER TEMPORARY PRECAST, 12'-6"
14B07-15B	CONCRETE BARRIER TEMPORARY PRECAST, 12'-6"
14B07-15C	CONCRETE BARRIER TEMPORARY PRECAST, 12'-6"
14B07-15D	CONCRETE BARRIER TEMPORARY PRECAST, 12'-6"
14B07-15E	CONCRETE BARRIER TEMPORARY PRECAST, 12'-6"
14B07-15F	CONCRETE BARRIER TEMPORARY PRECAST, 12'-6"
14B07-15G	CONCRETE BARRIER TEMPORARY PRECAST, 12'-6"
14B07-15H	CONCRETE BARRIER TEMPORARY PRECAST, 12'-6"
14B07-15I	CONCRETE BARRIER TEMPORARY PRECAST, 12'-6"
15C02-06A	BARRICADES AND SIGNS FOR MAINLINE CLOSURES
15C02-06B	BARRICADES AND SIGNS FOR MAINLINE CLOSURES
15C03-03	BARRICADES AND SIGNS FOR SIDEROAD CLOSURES
15C05-03	TRAFFIC CONTROL, ADVANCE WARNING SIGNS 40 M.P.H. OR LESS
15C08-18A	LONGITUDINAL MARKING (MAINLINE)
15C11-07A	CHANNELIZING DEVICES FLEXIBLE TUBULAR MARKER POST
15C11-07B	CHANNELIZING DEVICES DRUMS, CONES, BARRICADES AND VERTICAL PANELS
15C33-02	STOP LINE AND CROSSWALK PAVEMENT MARKING
15D03-04	TRAFFIC CONTROL, LANE CLOSURE, SPEEDS GREATER THAN 40 M.P.H. WITH BARRIER
15D20-04	TRAFFIC CONTROL, SINGLE LANE CLOSURE, NON-FREEWAY/EXPRESSWAY
15D21-04	TRAFFIC CONTROL, INTERSECTION WITHIN SINGLE LANE CLOSURE
15D30-03A	TRAFFIC CONTROL, PEDESTRIAN ACCOMMODATION
15D30-03B	TRAFFIC CONTROL, TEMPORARY ADA COMPLIANT PEDESTRIAN ACCOMMODATION
15D30-03C	TRAFFIC CONTROL, PEDESTRIAN ACCOMMODATION

6

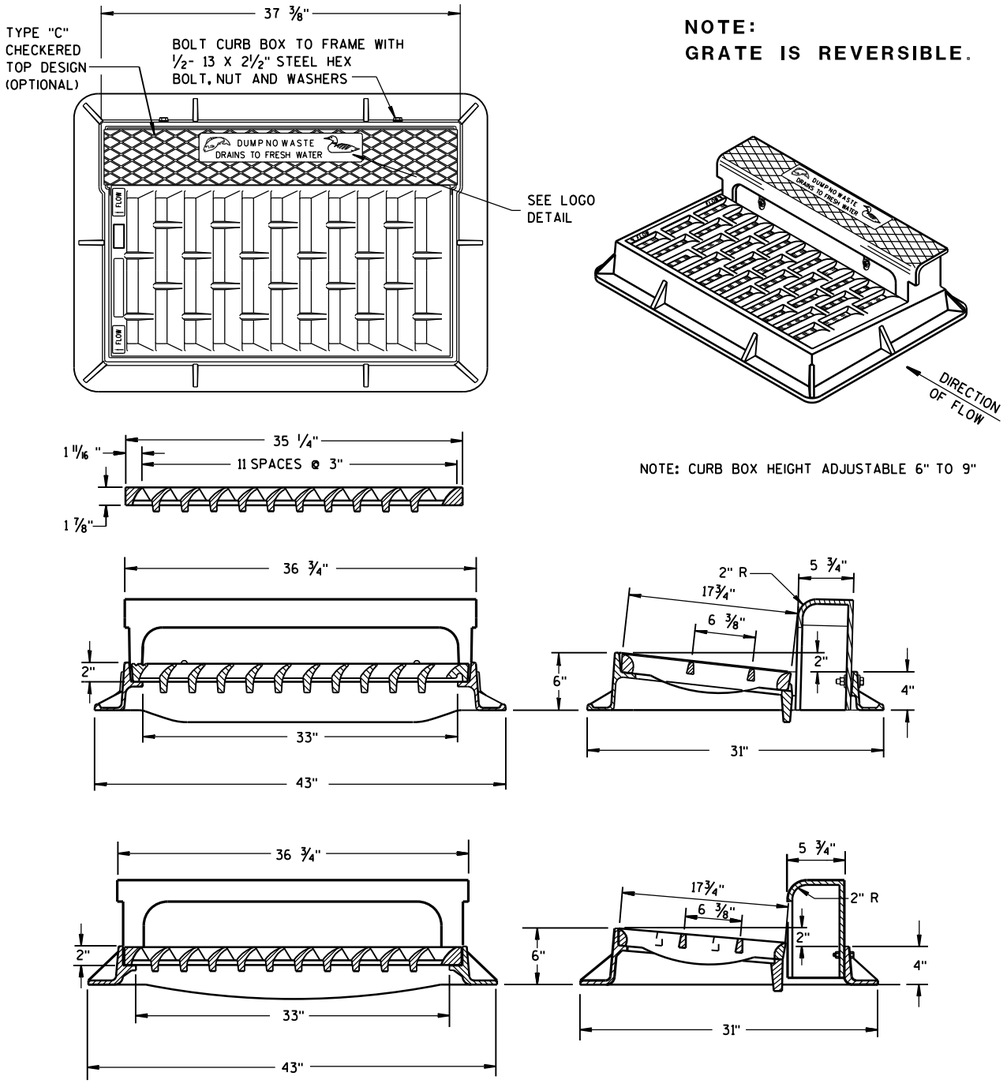

NOTE:
GRATE IS REVERSIBLE.

NOTE: CURB BOX HEIGHT ADJUSTABLE 6" TO 9"

TYPE "H"

NOTE: EITHER CASTING IS ACCEPTABLE

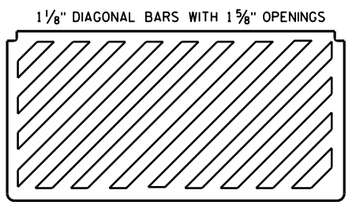

SPECIAL GRATE FOR TYPE "H" COVER

(MEASURES 35 1/4" X 17 3/4" X 2")

(NOTED AS TYPE H-S ON DRAINAGE TABLE)

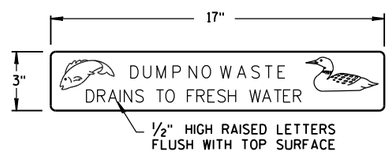

LOGO DETAIL

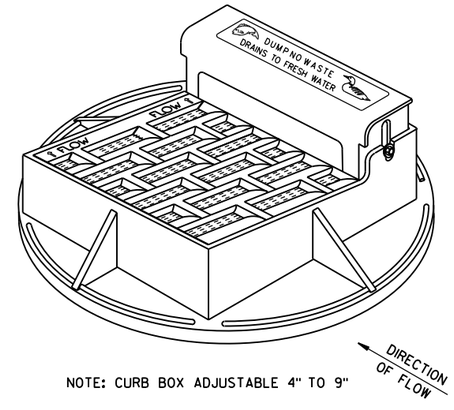

NOTE: CURB BOX ADJUSTABLE 4" TO 9"

NOTE:
GRATE IS REVERSIBLE.

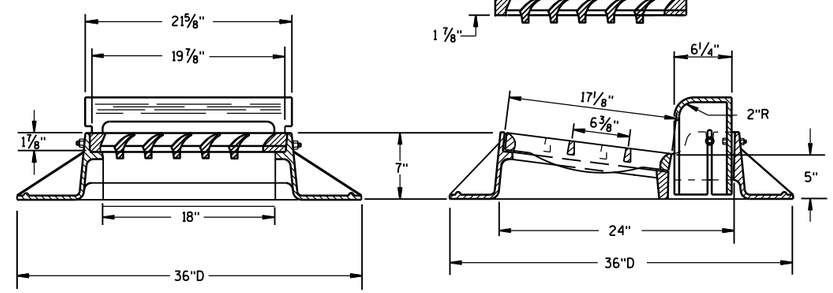

TYPE "A"

GENERAL NOTES

DETAILS OF CONSTRUCTION, MATERIALS AND WORKMANSHIP NOT SHOWN ON THIS DRAWING SHALL CONFORM TO THE PERTINENT REQUIREMENTS OF THE STANDARD SPECIFICATIONS AND THE APPLICABLE SPECIAL PROVISIONS.

DETAIL DRAWINGS FOR PROPOSED ALTERNATE DESIGNS FOR CATCH BASIN, MANHOLE AND INLET COVERS SHALL BE SUBMITTED TO THE ENGINEER FOR APPROVAL PROVIDING THAT SUCH ALTERNATE DESIGNS MAKE PROVISION FOR EQUIVALENT CAPACITY AND STRENGTH.

ROUND FRAMES AND COVERS SHALL HAVE CONTINUOUSLY MACHINED BEARING SURFACES TO PREVENT ROCKING AND RATTLING.

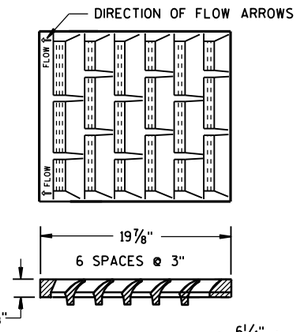

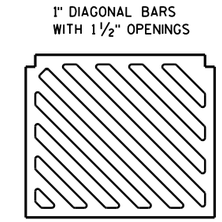

SPECIAL GRATE FOR TYPE "A" COVER

(MEASURES 19 3/4" X 17" X 1 7/8")

(NOTED AS TYPE A-S ON DRAINAGE TABLE)

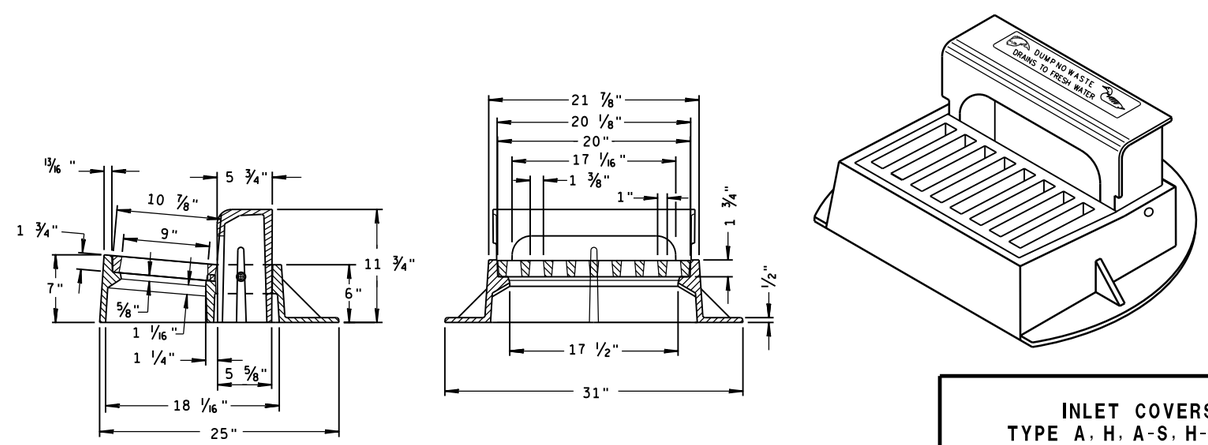

TYPE "Z"

INLET COVERS
TYPE A, H, A-S, H-S & Z

STATE OF WISCONSIN
DEPARTMENT OF TRANSPORTATION

APPROVED
11-27-13 /S/ Jerry H. Zogg
DATE ROADWAY STANDARDS DEVELOPMENT ENGINEER
FHWA

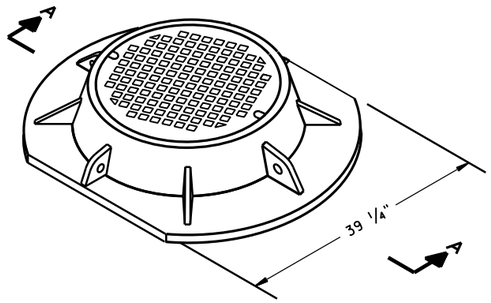

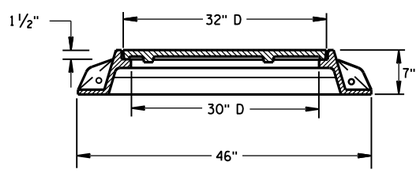

SECTION A-A
TYPE "K"

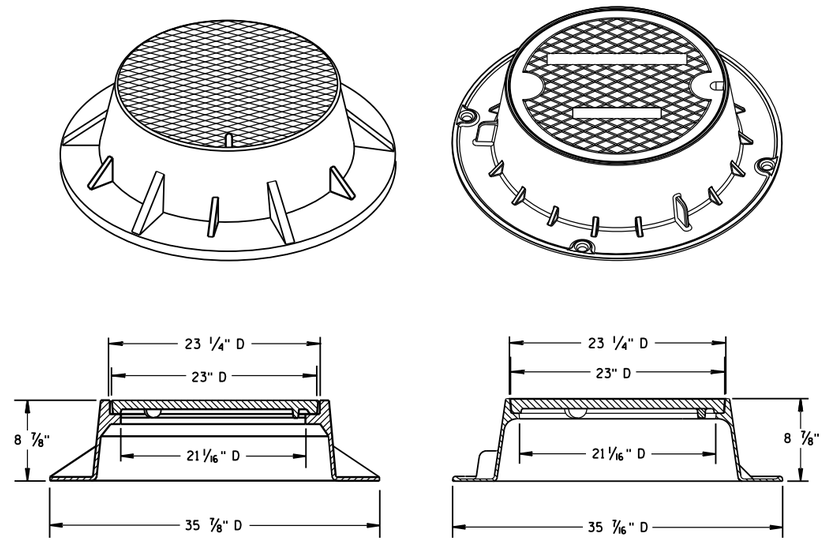

TYPE "J"
NOTE: EITHER CASTING IS ACCEPTABLE

GENERAL NOTES

DETAILS OF CONSTRUCTION, MATERIALS AND WORKMANSHIP NOT SHOWN ON THIS DRAWING SHALL CONFORM TO THE PERTINENT REQUIREMENTS OF THE STANDARD SPECIFICATIONS AND THE APPLICABLE SPECIAL PROVISIONS.

DETAIL DRAWINGS FOR PROPOSED ALTERNATE DESIGNS FOR MANHOLE COVERS SHALL BE SUBMITTED TO THE ENGINEER FOR APPROVAL PROVIDING THAT SUCH ALTERNATE DESIGNS MAKE PROVISION FOR EQUIVALENT CAPACITY AND STRENGTH.

ROUND FRAMES AND COVERS SHALL HAVE CONTINUOUSLY MACHINED BEARING SURFACES TO PREVENT ROCKING AND RATTLING.

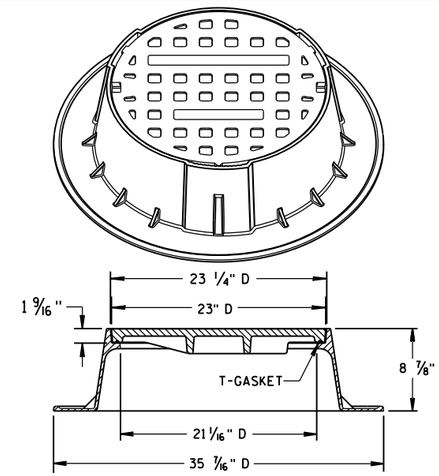

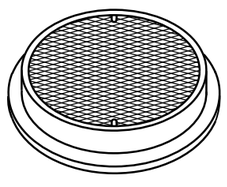

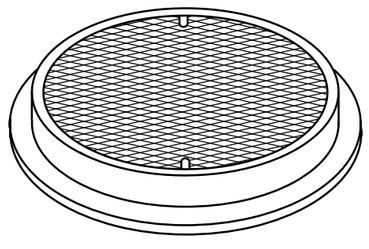

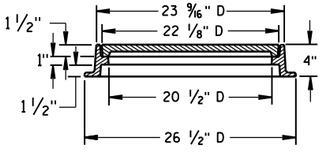

TYPE "L"

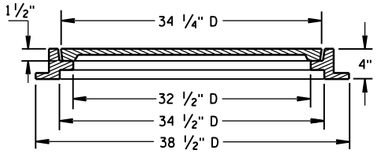

TYPE "M"

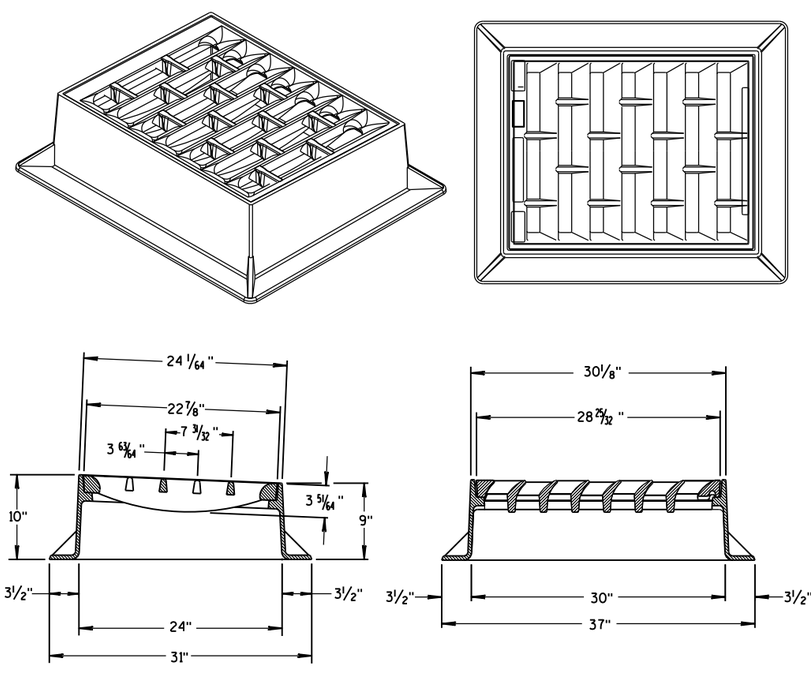

INLET COVER TYPE "BW"

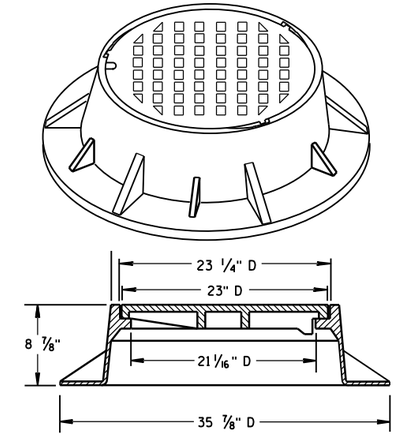

TYPE "J" SPECIAL
TYPE "B" NON-ROCKING SELF-SEAL LID
(NOTED AS TYPE J-S ON THE DRAINAGE TABLE)
NOTE: EITHER CASTING IS ACCEPTABLE

INLET COVER TYPE BW MANHOLE COVERS, TYPE K, J, J-S, L & M	
STATE OF WISCONSIN DEPARTMENT OF TRANSPORTATION	
APPROVED 11/27/2013 DATE FHWA	/S/ Jerry H. Zogg ROADWAY STANDARDS DEVELOPMENT ENGINEER

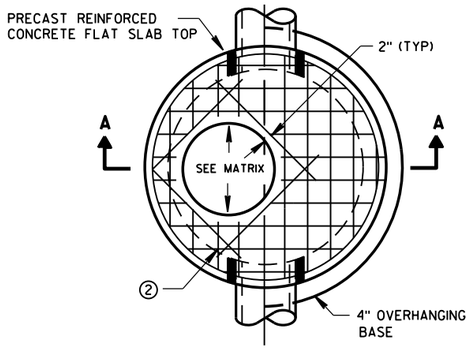

PLAN VIEW CIRCULAR OPENING

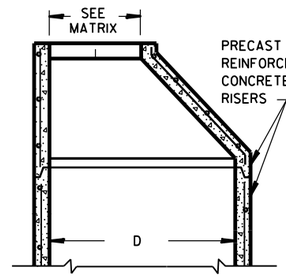

OPTIONAL PRECAST REINFORCED CONCRETE ECCENTRIC TOP

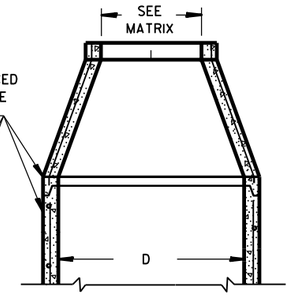

OPTIONAL PRECAST REINFORCED CONCRETE CONCENTRIC TOP

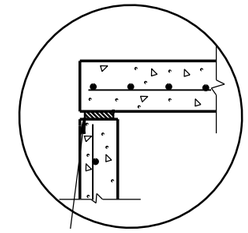

TOP WITH PLAIN END JOINT

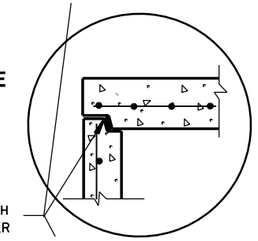

JOINTS TO BE SEALED WITH A BUTYL RUBBER SEAL PER SEALANT MANUFACTURERS RECOMMENDATIONS CONFORMING TO ASTM C990 (TYP)

TOP WITH TONGUE AND GROOVE JOINT

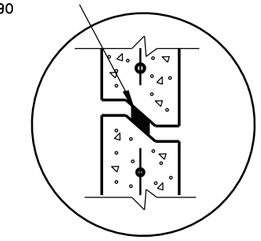

RISER WITH TONGUE AND GROOVE JOINT

DETAIL "B"

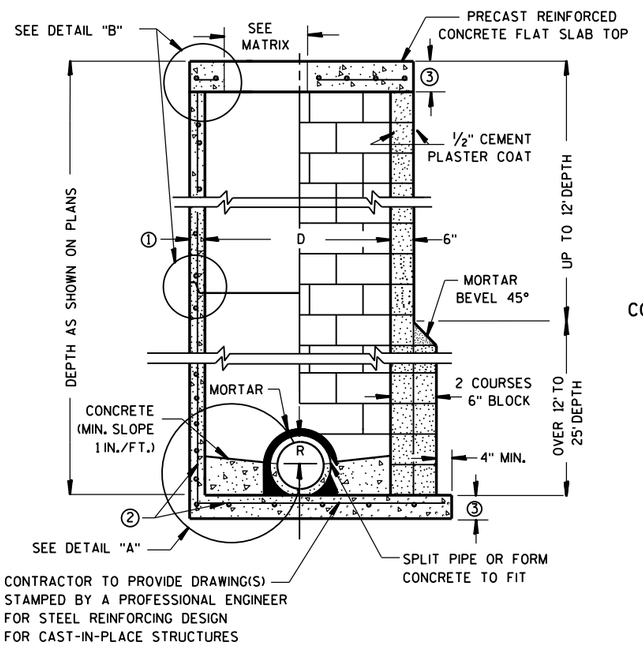

PRECAST REINFORCED CONCRETE WITH MONOLITHIC BASE

CONCRETE BLOCK WITH CAST-IN-PLACE OR PRECAST REINFORCED CONCRETE BASE ②

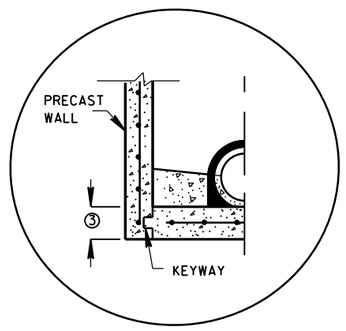

PRECAST REINFORCED CONCRETE WITH INTEGRAL BASE OPTION

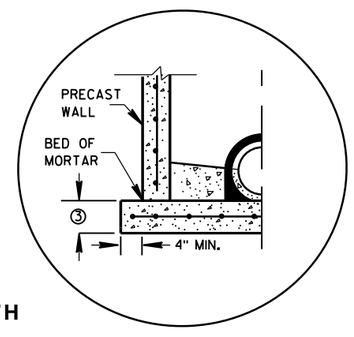

SEPARATE PRECAST REINFORCED CONCRETE BASE OPTION

DETAIL "A"

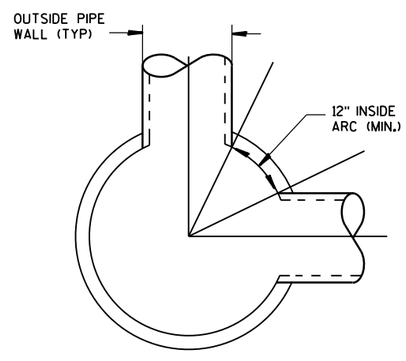

DETAIL "C"

GENERAL NOTES

DETAILS OF CONSTRUCTION, MATERIALS AND WORKMANSHIP NOT SHOWN ON THIS DRAWING SHALL CONFORM TO THE PERTINENT REQUIREMENTS OF THE STANDARD SPECIFICATIONS AND THE APPLICABLE SPECIAL PROVISIONS.

UNLESS OTHERWISE AUTHORIZED IN WRITING BY THE ENGINEER, THE CONTRACTOR SHALL NOT ORDER AND DELIVER PRECAST MANHOLE UNITS REQUIRED FOR THE PROJECT UNTIL A LIST OF SIZES IS FURNISHED BY THE ENGINEER.

DETAILED DRAWINGS FOR PROPOSED ALTERNATE DESIGNS FOR UNDERGROUND DRAINAGE STRUCTURES SHALL BE SUBMITTED TO THE ENGINEER FOR APPROVAL PROVIDING THAT SUCH ALTERNATE DESIGNS MAKE PROVISION FOR EQUIVALENT CAPACITY AND STRENGTH.

ALL DRAINAGE STRUCTURES ARE DESIGNATED ON THE PLANS AS "MANHOLES 3X3-L", "CATCH BASINS 4-B", "INLETS 2X3-H", ETC. THE FIRST NUMBERS DESIGNATE THE SIZE OF THE STRUCTURE, AND THE FOLLOWING LETTER DESIGNATES THE TYPE OF COVER TO BE USED TO COMPRISE THE COMPLETE UNIT.

BASES SHALL BE PLACED ON A BED OF MATERIAL AT LEAST 6 INCHES IN DEPTH, WHICH MEETS THE REQUIREMENTS OF FOUNDATION BACKFILL. THIS BEDDING SHALL BE COMPACTED AND PROVIDE UNIFORM SUPPORT FOR THE ENTIRE AREA OF THE BASE.

PRECAST REINFORCED CONE TOPS (ECCENTRIC OR CONCENTRIC) OR PRECAST REINFORCED FLAT SLAB TOPS MAY BE USED ON CONCRETE BLOCK STRUCTURES.

ECCENTRIC CONE TOPS MAY BE USED ON ALL STRUCTURES, AND CONCENTRIC CONE TOPS SHALL BE USED ONLY ON STRUCTURES 5 FEET OR LESS IN DEPTH, UNLESS OTHERWISE DIRECTED BY THE ENGINEER.

STEPS MEETING AASHTO M199 AND THE FOLLOWING REQUIREMENTS SHALL BE INSTALLED IN ALL STRUCTURES OVER 5 FEET IN DEPTH: 16 INCH C-C MAXIMUM SPACING; PROJECT A MINIMUM CLEAR DISTANCE OF 4 INCHES FROM THE WALL AT THE POINT OF EMBEDMENT; MINIMUM LENGTH OF 10 INCHES; MINIMUM WALL EMBEDMENT OF 3 INCHES. FERROUS METAL STEPS NOT PAINTED OR TREATED TO RESIST CORROSION SHALL HAVE A MINIMUM CROSS SECTIONAL DIMENSION OF 1 INCH.

STEPS OF APPROVED POLYPROPYLENE PLASTIC COATED REINFORCEMENT BAR ARE ACCEPTABLE. REINFORCING BAR MUST BE A MINIMUM OF ½" AND MEET THE REQUIREMENTS OF ASTM A615.

CERTIFICATION SHALL BE PROVIDED THAT INSTALLED STEPS WHEN TESTED IN ACCORDANCE WITH SECTION 10 OF AASHTO T280 CAN WITHSTAND A VERTICAL LOAD OF 800 LBS. AND A HORIZONTAL LOAD OF 400 LBS.

ALL BAR STEEL REINFORCEMENT SHALL BE EMBEDDED 2 INCHES CLEAR UNLESS OTHERWISE SHOWN OR NOTED.

CONCRETE BLOCK WILL NOT BE PERMITED FOR STRUCTURES GREATER THAN 4 FEET IN DIAMETER.

PRECAST REINFORCED RISERS SHALL HAVE A TONGUE AND GROOVE JOINT WITH TONGUE UP OR DOWN.

ALL PRECAST MANHOLE UNITS SHALL CONFORM TO THE PERTINENT REQUIREMENTS OF AASHTO DESIGNATION M 199.

4" OVERHANGING BASES ARE REQUIRED FOR ALL CONCRETE BLOCK INSTALLATIONS. 4" OVERHANG IS REQUIRED WHEN SEPARATE PRECAST BASE IS PROVIDED. OVERHANG IS NOT REQUIRED ON PRECAST STRUCTURES WITH AN INTEGRAL OR MONOLITHIC BASE.

FOR ADDITIONAL CONFIGURATIONS, MAINTAIN A MINIMUM OF 12 INCHES AS MEASURED FROM THE INSIDE OF THE STRUCTURE WALL BETWEEN THE OUTSIDE PIPE WALLS OF ADJACENT PIPES. SEE DETAIL "C".

① MINIMUM WALL THICKNESS SHALL BE 4 INCHES FOR 3-FT, 5 INCHES FOR 4-FT, 6 INCHES FOR 5-FT, 7 INCHES FOR 6-FT, 8 INCHES FOR 7-FT AND 9 INCHES FOR 8-FT DIAMETER PRECAST MANHOLES.

② FOR PRECAST MANHOLES PROVIDE REINFORCING STEEL IN ACCORDANCE TO AASHTO M199.

③ PRECAST FLAT SLAB TOPS AND BASES WITH A DIAMETER OF 48" AND LESS SHALL HAVE A MINIMUM THICKNESS OF 6". PRECAST FLAT SLAB TOPS AND BASES WITH A DIAMETER LARGER THAN 48" SHALL HAVE A MINIMUM THICKNESS OF 8".

MANHOLE COVER OPENING MATRIX

MANHOLE COVER TYPE	C	ALL J'S	K	L	M
OPENING SIZE (FT)					
2 DIA.	X	X		X	
3 DIA.			X		X

PIPE MATRIX

MANHOLE SIZE	MAXIMUM INSIDE PIPE DIAMETER FOR TWO PIPES	
	180° SEPARATION (IN)	90° SEPARATION (IN)
3-FT	15	12
4-FT	24	18
5-FT	36	24
6-FT	42	36
7-FT	48	36
8-FT	60	42

MANHOLES 3-FT, 4-FT, 5-FT, 6-FT, 7-FT AND 8-FT DIAMETER

STATE OF WISCONSIN
DEPARTMENT OF TRANSPORTATION

APPROVED
Sept., 2016 — DATE
/S/ Rodney Taylor — ROADWAY STANDARDS DEVELOPMENT UNIT SUPERV
FHWA

MANHOLES 3-FT, 4-FT, 5-FT, 6-FT, 7-FT AND 8-FT DIAMETER

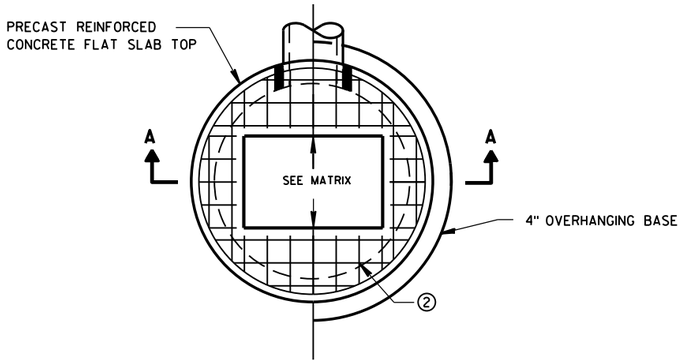

PLAN VIEW RECTANGULAR OPENING

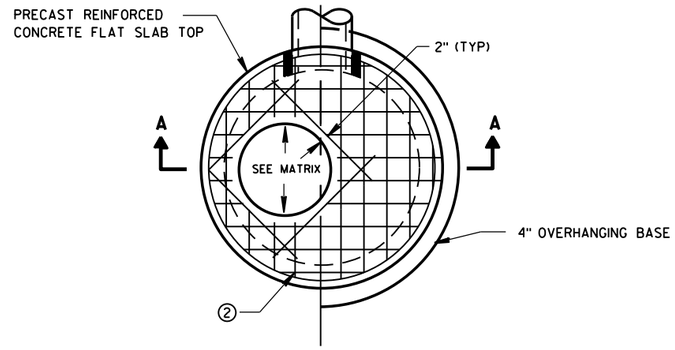

PLAN VIEW CIRCULAR OPENING

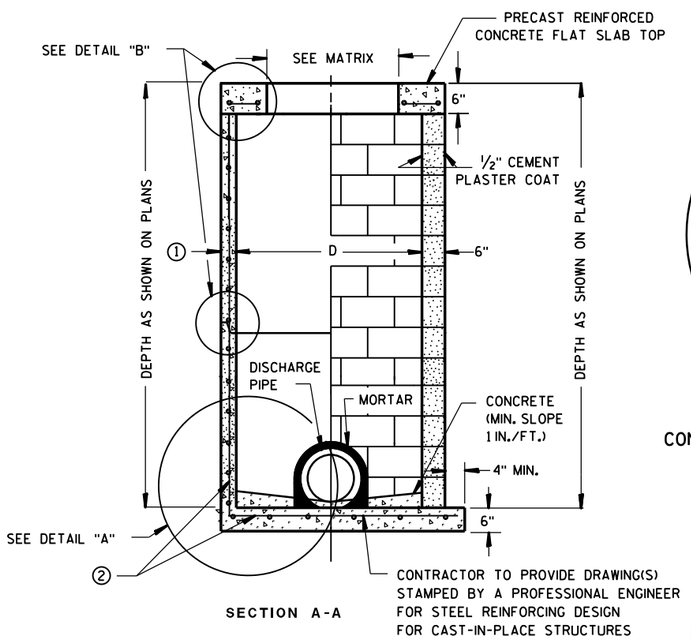

SECTION A-A

PRECAST REINFORCED CONCRETE WITH MONOLITHIC BASE

CONCRETE BLOCK WITH CAST-IN-PLACE OR PRECAST REINFORCED CONCRETE BASE ②

CIRCULAR INLETS W/ FLAT TOP

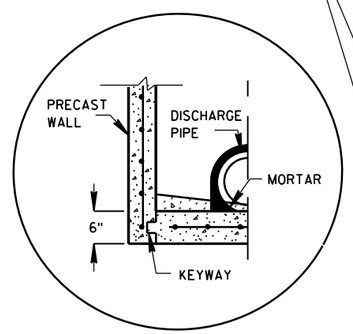

PRECAST REINFORCED CONCRETE WITH INTEGRAL BASE OPTION

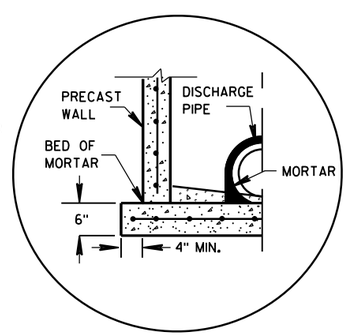

SEPARATE PRECAST REINFORCED CONCRETE BASE OPTION

DETAIL "A"

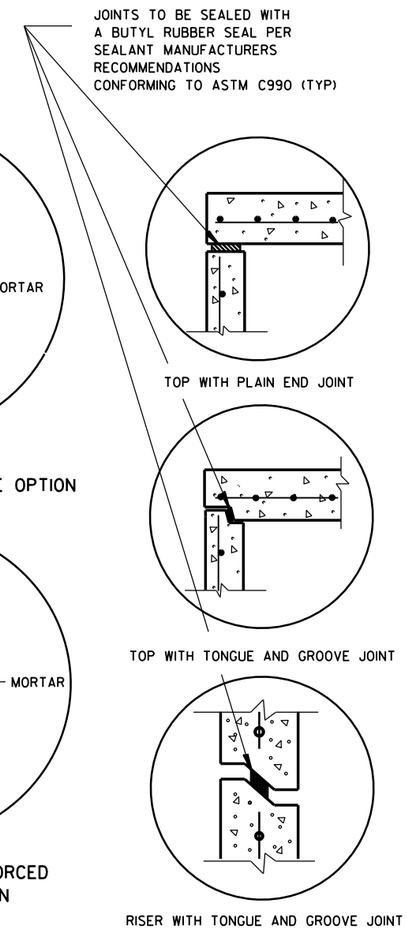

DETAIL "B"

GENERAL NOTES

DETAILS OF CONSTRUCTION, MATERIALS AND WORKMANSHIP NOT SHOWN ON THIS DRAWING SHALL CONFORM TO THE PERTINENT REQUIREMENTS OF THE STANDARD SPECIFICATIONS AND THE APPLICABLE SPECIAL PROVISIONS.

UNLESS OTHERWISE AUTHORIZED IN WRITING BY THE ENGINEER, THE CONTRACTOR SHALL NOT ORDER AND DELIVER PRECAST INLET UNITS REQUIRED FOR THE PROJECT UNTIL A LIST OF SIZES IS FURNISHED BY THE ENGINEER.

DETAILED DRAWINGS FOR PROPOSED ALTERNATE DESIGNS FOR UNDERGROUND DRAINAGE STRUCTURES SHALL BE SUBMITTED TO THE ENGINEER FOR APPROVAL PROVIDING THAT SUCH ALTERNATE DESIGNS MAKE PROVISION FOR EQUIVALENT CAPACITY AND STRENGTH.

ALL DRAINAGE STRUCTURES ARE DESIGNATED ON THE PLANS AS "MANHOLES 3X3-L", "CATCH BASINS 4-B", "INLETS 2X3-H", ETC. THE FIRST NUMBERS DESIGNATE THE SIZE OF THE STRUCTURE, AND THE FOLLOWING LETTER DESIGNATES THE TYPE OF COVER TO BE USED TO COMPRISE THE COMPLETE UNIT.

BASES SHALL BE PLACED ON A BED OF MATERIAL AT LEAST 6 INCHES IN DEPTH, WHICH MEETS THE REQUIREMENTS OF FOUNDATION BACKFILL. THIS BEDDING SHALL BE COMPACTED AND PROVIDE UNIFORM SUPPORT FOR THE ENTIRE AREA OF THE BASE.

ALL BAR STEEL REINFORCEMENT SHALL BE EMBEDDED 2 INCHES CLEAR UNLESS OTHERWISE SHOWN OR NOTED.

ALL PRECAST INLET UNITS SHALL CONFORM TO THE PERTINENT REQUIREMENTS OF AASHTO DESIGNATION M199.

PRECAST REINFORCED RISERS SHALL HAVE A TONGUE AND GROOVE JOINT WITH TONGUE UP OR DOWN.

4" OVERHANGING BASES ARE REQUIRED FOR ALL CONCRETE BLOCK INSTALLATIONS. 4" OVERHANG IS REQUIRED WHEN SEPARATE PRECAST BASE IS PROVIDED. OVERHANG IS NOT REQUIRED ON PRECAST STRUCTURES WITH AN INTEGRAL OR MONOLITHIC BASE.

FOR ADDITIONAL CONFIGURATIONS, MAINTAIN A MINIMUM OF 12 INCHES AS MEASURED FROM THE INSIDE OF THE STRUCTURE WALL BETWEEN THE OUTSIDE PIPE WALLS OF ADJACENT PIPES. SEE DETAIL "C".

① MINIMUM WALL THICKNESS SHALL BE 4-IN FOR 3-FT DIAMETER AND 5-IN FOR 4-FT DIAMETER PRECAST INLETS.

② FOR PRECAST CATCH BASINS PROVIDE REINFORCING STEEL IN ACCORDANCE TO AASHTO M199.

INLET COVER OPENING MATRIX

	INLET COVER TYPE	ALL A'S	ALL B'S	BW	C	F	ALL H'S	S	T	V	WM	Z
INLET SIZE	OPENING SIZE (FT)											
3-FT	2 DIA.				X							X
	2X2	X	X					X		X		
4-FT	2 DIA.				X							X
	2X2	X	X					X		X		
	2X2.5			X				X	X	X	X	
	2X3						X					
	2.5X3					X						

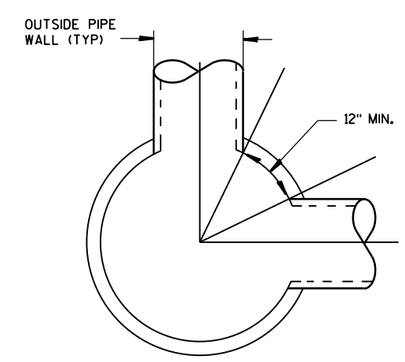

DETAIL "C"

PIPE MATRIX

INLET SIZE	MAXIMUM INSIDE PIPE DIAMETER FOR TWO PIPES	
	180° SEPARATION (IN)	90° SEPARATION (IN)
3-FT	15	12
4-FT	24	18

INLETS 3-FT AND 4-FT DIAMETER

INLETS 3-FT
AND 4-FT DIAMETER

STATE OF WISCONSIN
DEPARTMENT OF TRANSPORTATION

APPROVED
Sept., 2016 — /S/ Rodney Taylor
DATE — ROADWAY STANDARDS DEVELOPMENT UNIT SUPERVISOR
FHWA

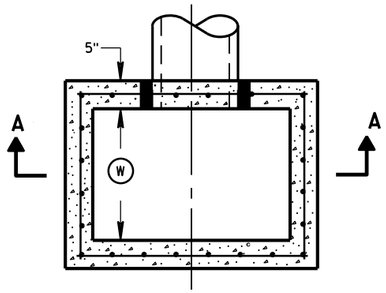

PLAN VIEW

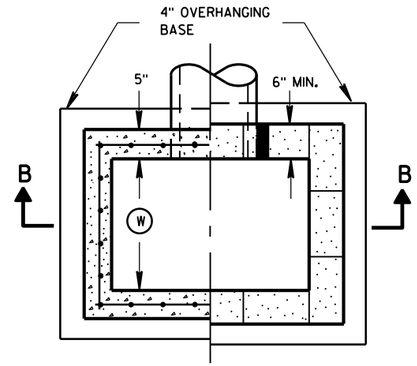

PLAN VIEW

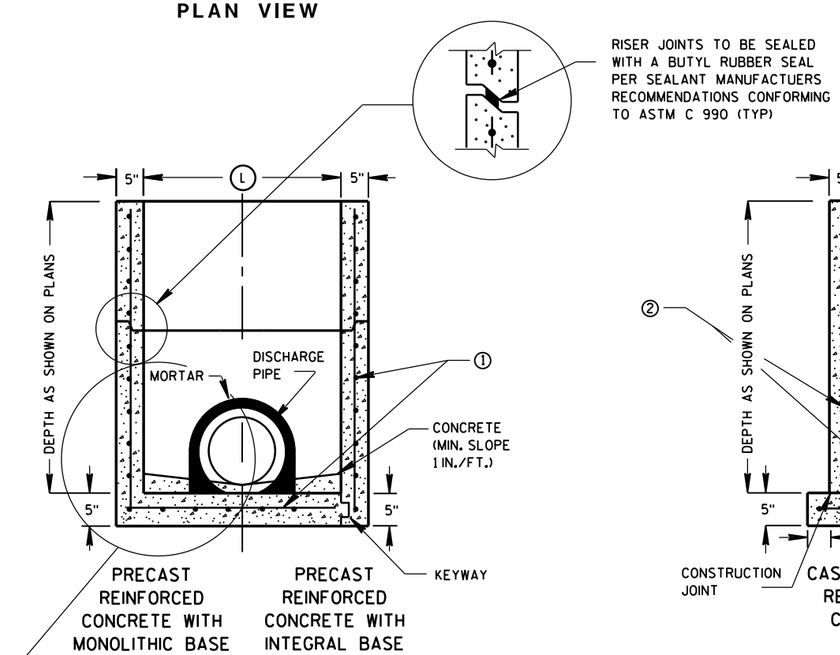

SECTION A-A

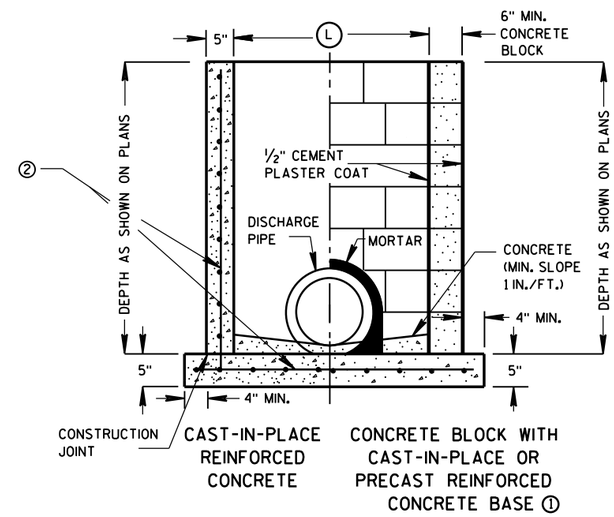

SECTION B-B

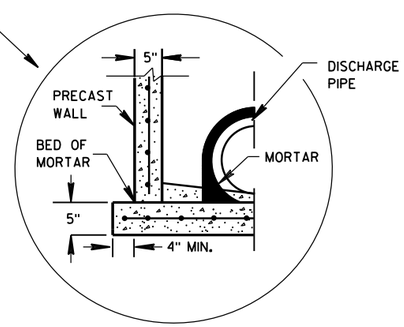

SEPARATE PRECAST REINFORCED CONCRETE BASE OPTION

GENERAL NOTES

DETAILS OF CONSTRUCTION, MATERIALS AND WORKMANSHIP NOT SHOWN ON THIS DRAWING SHALL CONFORM TO THE PERTINENT REQUIREMENTS OF THE STANDARD SPECIFICATIONS AND THE APPLICABLE SPECIAL PROVISIONS.

UNLESS OTHERWISE AUTHORIZED IN WRITING BY THE ENGINEER, THE CONTRACTOR SHALL NOT ORDER AND DELIVER PRECAST INLET UNITS REQUIRED FOR THE PROJECT UNTIL A LIST OF SIZES IS FURNISHED BY THE ENGINEER.

DETAILED DRAWINGS FOR PROPOSED ALTERNATE DESIGNS FOR UNDERGROUND DRAINAGE STRUCTURES SHALL BE SUBMITTED TO THE ENGINEER FOR APPROVAL PROVIDING THAT SUCH ALTERNATE DESIGNS MAKE PROVISION FOR EQUIVALENT CAPACITY AND STRENGTH.

ALL PRECAST INLET UNITS SHALL CONFORM TO THE PERTINENT REQUIREMENTS OF ASTM C 913.

ALL DRAINAGE STRUCTURES ARE DESIGNATED ON THE PLANS AS "MANHOLES 3X3-L", "CATCH BASINS 4-B", "INLETS 2X3-H", ETC. THE FIRST NUMBERS DESIGNATES THE SIZE OF THE STRUCTURE, AND THE FOLLOWING LETTER DESIGNATES THE TYPE OF COVER TO BE USED TO COMPRISE THE COMPLETE UNIT.

BASES SHALL BE PLACED ON A BED OF MATERIAL AT LEAST 6 INCHES IN DEPTH, WHICH MEETS THE REQUIREMENTS OF FOUNDATION BACKFILL. THIS BEDDING SHALL BE COMPACTED AND PROVIDE UNIFORM SUPPORT FOR THE ENTIRE AREA OF THE BASE.

ALL BAR STEEL REINFORCEMENT SHALL BE EMBEDDED 2 INCHES CLEAR UNLESS OTHERWISE SHOWN OR NOTED.

PRECAST REINFORCED RISERS SHALL HAVE A TONGUE AND GROOVE JOINT WITH TONGUE UP OR DOWN.

4" OVERHANGING BASES ARE REQUIRED FOR CAST-IN-PLACE REINFORCED CONCRETE AND CONCRETE BLOCK INSTALLATIONS.
4" OVERHANG IS REQUIRED WHEN SEPARATE PRECAST BASE IS PROVIDED.
OVERHANG IS NOT REQUIRED ON PRECAST STRUCTURES WITH AN INTEGRAL OR MONOLITHIC BASE.

MAXIMUM INSIDE PIPE DIAMETER DETERMINED BY 3 INCH CLEARANCE ON EACH SIDE OF THE OUTSIDE WALL OF THE PIPE. SEE DETAIL "A". ASSUMES PIPE ENTERS PERPENDICULAR TO THE STRUCTURE.

① FOR PRECAST INLETS PROVIDE REINFORCING STEEL IN ACCORDANCE TO ASTM C 913.

② CONTRACTOR TO PROVIDE DRAWING(S) STAMPED BY A PROFESSIONAL ENGINEER FOR STEEL REINFORCING DESIGN FOR CAST-IN-PLACE STRUCTURES.

INLET COVER MATRIX

INLET SIZE		INLET COVER TYPE	ALL A'S	ALL B'S	BW	F	ALL H'S	S	T	V	WM
	WIDTH (W) (FT)	LENGTH (L) (FT)									
2X2-FT	2	2	X	X				X		X	
2X2.5-FT	2	2.5			X			X	X	X	X
2X3-FT	2	3					X				
2.5X3-FT	2.5	3				X					

PIPE MATRIX

INLET SIZE	MAXIMUM INSIDE PIPE DIAMETER	
	WIDTH (IN)	LENGTH (IN)
2X2-FT	12	12
2X2.5-FT	12	18
2X3-FT	12	24
2.5X3-FT	18	24

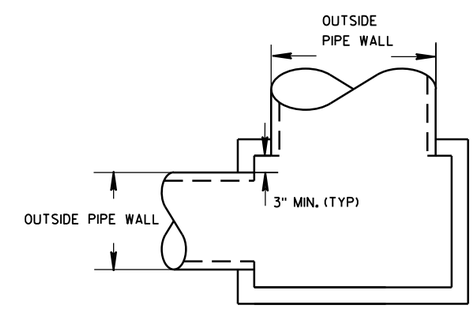

DETAIL "A"

INLETS 2X2-FT, 2X2.5-FT, 2X3-FT AND 2.5X3-FT

INLETS 2X2-FT, 2X2.5-FT, 2X3-FT AND 2.5X3-FT

STATE OF WISCONSIN
DEPARTMENT OF TRANSPORTATION

APPROVED
Sept., 2016 — DATE
/S/ Rodney Taylor
ROADWAY STANDARDS D IT
UNIT SUPERVIS
FHWA

6

6

S.D.D. 8 C 7-2

S.D.D. 8 C 7-2

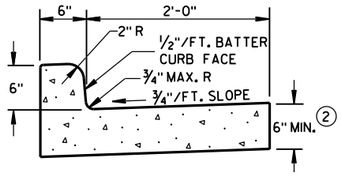

TYPES A & D ①

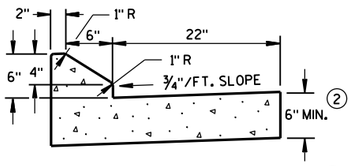

6" SLOPED CURB TYPES G & J ①

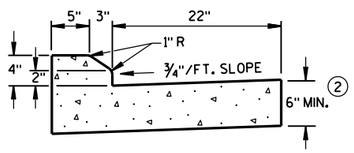

4" SLOPED CURB TYPES G & J ①

CONCRETE CURB & GUTTER 30"

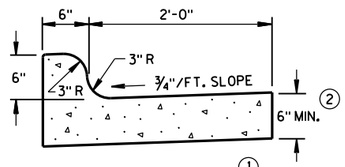

TYPES K & L ①

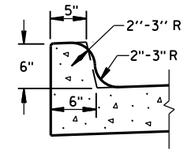

OPTIONAL CURB SHAPE FOR TYPES K & L ①

CONCRETE CURB & GUTTER 30"

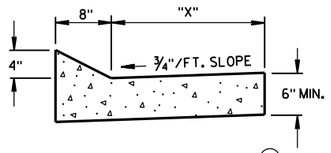

TYPES TBT & TBTT ①

CONCRETE CURB & GUTTER

TBT & TBTT	"X"
30"	22"
36"	28"

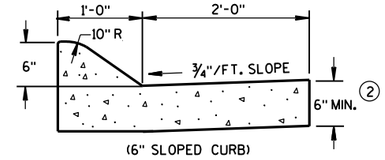

(6" SLOPED CURB)

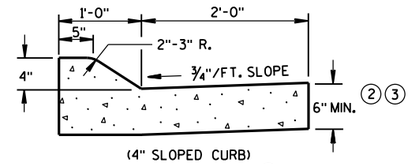

(4" SLOPED CURB)

TYPES A & D ①

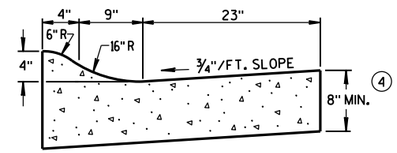

4" SLOPED CURB TYPES R & T ①⑤

CONCRETE CURB & GUTTER 36"

GENERAL NOTES

DETAILS OF CONSTRUCTION, MATERIALS AND WORKMANSHIP NOT SHOWN ON THIS DRAWING SHALL CONFORM TO THE PERTINENT REQUIREMENTS OF THE CONTRACT.

PAVEMENT TIES AND TIE BARS SHALL BE EPOXY COATED IN CONFORMANCE WITH SUBSECTION 505.2.6.2 OF THE STANDARD SPECIFICATIONS.

INTEGRAL CURB & GUTTER SHALL CONFORM TO THE DETAILS SHOWN FOR CONCRETE CURB & GUTTER INCLUDING THE TRANSVERSE GUTTER SLOPE. A LONGITUDINAL CONSTRUCTION JOINT IS NOT REQUIRED WITH INTEGRAL CURB AND GUTTER.

WHERE THE TRANSVERSE JOINTS IN THE PAVEMENT ARE REQUIRED TO BE SEALED, THE JOINTS IN THE INTEGRAL CURB AND GUTTER SHALL BE SEALED TO THE FACE OF CURB WITH THE SAME TYPE OF SEALANT. THE COST OF FURNISHING AND INSTALLING THIS SEALANT SHALL BE INCIDENTAL TO THE ITEM CONCRETE CURB AND GUTTER.

UNLESS OTHERWISE SHOWN ON THE TYPICAL CROSS SECTIONS, THE BASE AGGREGATE AND COMMON EXCAVATION LIMITS ARE 2'-0" BEHIND THE BACK OF CURBS.

① TIE BARS ARE REQUIRED FOR CURB AND GUTTER TYPES A, G, K, R AND TBTT.

② THE BOTTOM OF CURB AND GUTTER MAY BE CONSTRUCTED EITHER LEVEL OR PARALLEL TO THE SLOPE OF THE SUBGRADE OR BASE AGGREGATE PROVIDED A 6" MINIMUM GUTTER THICKNESS IS MAINTAINED.

③ USE 8" MINIMUM GUTTER THICKNESS WHEN USED WITH AN ADJACENT CONCRETE TRUCK APRON PLACED BEHIND BACK OF CURB.

④ THE BOTTOM OF CURB AND GUTTER MAY BE CONSTRUCTED EITHER LEVEL OR PARALLEL TO THE SLOPE OF THE SUBGRADE OR BASE AGGREGATE PROVIDED A 8" MINIMUM GUTTER THICKNESS IS MAINTAINED.

⑤ THE FACE OF CURB IS 6" FROM THE BACK OF CURB.

⑥ WHEN REVERSE SLOPE GUTTER IS REQUIRED, THE LOCATION(S) WILL BE SHOWN ELSEWHERE IN THE PLAN.

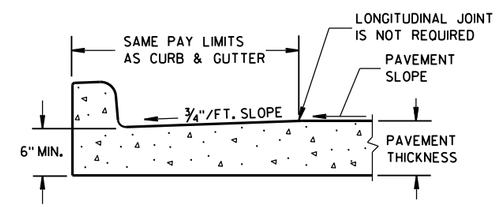

PARTIAL SECTION OF PAVEMENT WITH INTEGRAL CURB & GUTTER

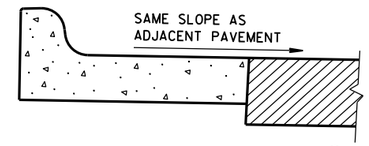

REVERSE SLOPE GUTTER ⑥
(TYPICAL FOR ALL CURB & GUTTER TYPES)

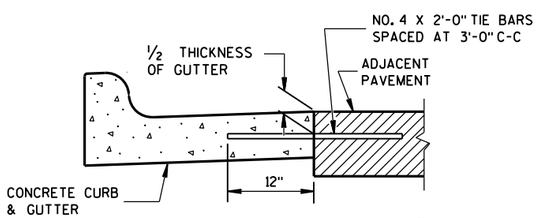

TYPICAL TIE BAR LOCATION ①

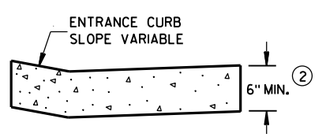

DRIVEWAY ENTRANCE CURB
(WHEN DIRECTED BY THE ENGINEER)

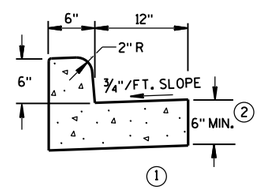

① TYPES A & D

CONCRETE CURB & GUTTER 18"

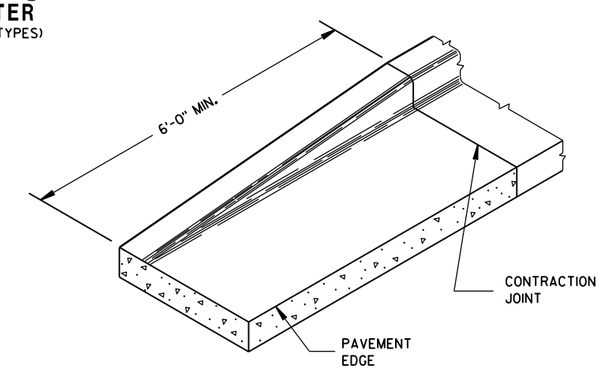

END SECTION CURB & GUTTER

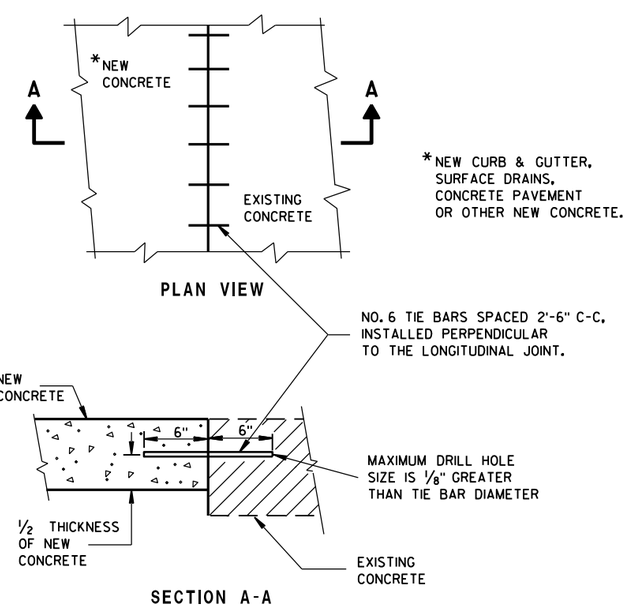

PLAN VIEW

SECTION A-A

TIE BARS DRILLED INTO EXISTING PAVEMENT

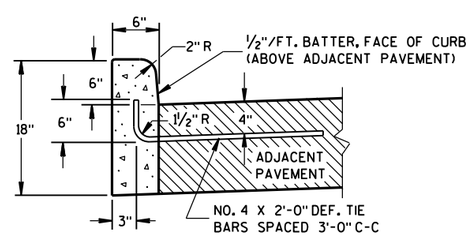

① TYPES A & D

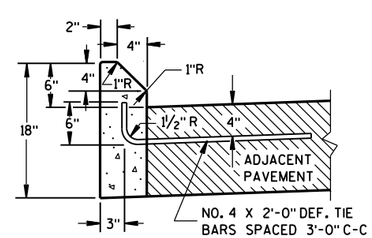

① TYPES G & J

CONCRETE CURB

CONCRETE CURB, CONCRETE CURB & GUTTER AND TIES

STATE OF WISCONSIN
DEPARTMENT OF TRANSPORTATION

APPROVED
June, 2016 — DATE
/S/ Jerry H. Zogg — ROADWAY STANDARDS DEVELOPMENT ENGINEER
FHWA

6

S.D.D. 8 D 1-19

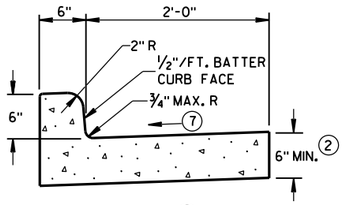

TYPES A[1] & D

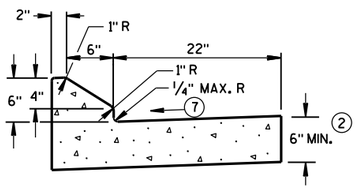

6" SLOPED CURB TYPES G[1] & J

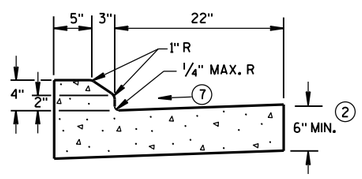

4" SLOPED CURB TYPES G[1] & J

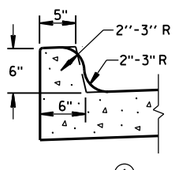

TYPES K[1] & L
(OPTIONAL CURB SHAPE)

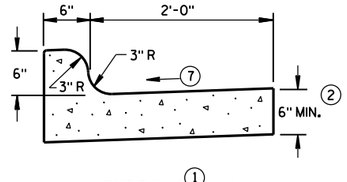

TYPES K[1] & L

CONCRETE CURB & GUTTER 30"

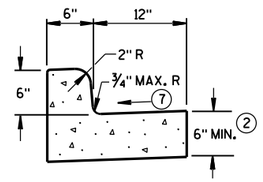

TYPES A[1] & D

CONCRETE CURB & GUTTER 18"

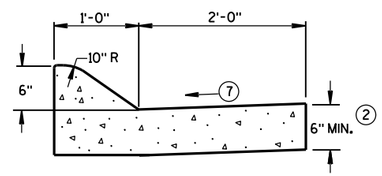

6" SLOPED CURB TYPES A[1] & D

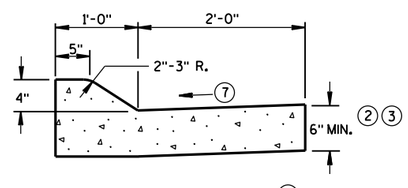

4" SLOPED CURB TYPES A[1] & D

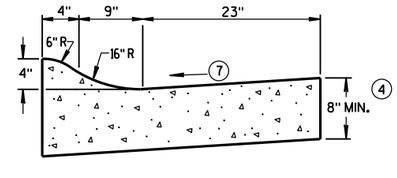

4" SLOPED CURB TYPES R[1] & T[5]

CONCRETE CURB & GUTTER 36"

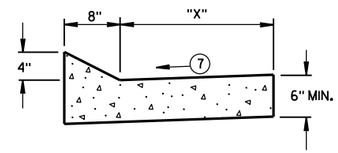

TYPES TBT & TBTT[1]

CONCRETE CURB & GUTTER

TBT & TBTT	"X"
30"	22"
36"	28"

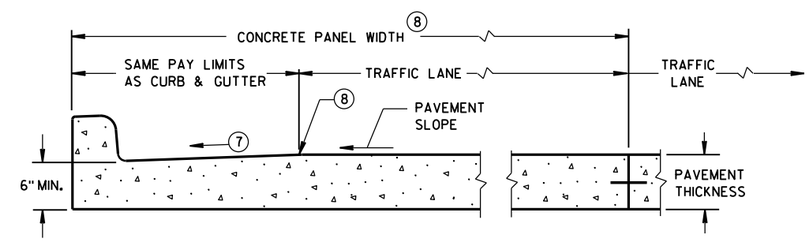

PARTIAL SECTION OF PAVEMENT*
WITH INTEGRAL CURB & GUTTER

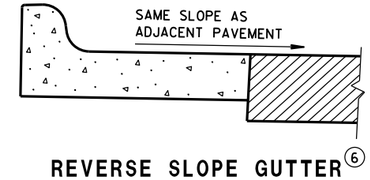

REVERSE SLOPE GUTTER[6]
(TYPICAL FOR ALL CURB & GUTTER TYPES)

GENERAL NOTES

DETAILS OF CONSTRUCTION, MATERIALS AND WORKMANSHIP NOT SHOWN ON THIS DRAWING SHALL CONFORM TO THE PERTINENT REQUIREMENTS OF THE CONTRACT.

PAVEMENT TIES AND TIE BARS SHALL BE EPOXY COATED IN CONFORMANCE WITH SUBSECTION 505.2.6.2 OF THE STANDARD SPECIFICATIONS.

INTEGRAL CURB & GUTTER SHALL CONFORM TO THE DETAILS SHOWN FOR CONCRETE CURB & GUTTER INCLUDING THE TRANSVERSE GUTTER SLOPE.

WHERE THE TRANSVERSE JOINTS IN THE PAVEMENT ARE REQUIRED TO BE SEALED, THE JOINTS IN THE INTEGRAL CURB AND GUTTER SHALL BE SEALED TO THE FACE OF CURB WITH THE SAME TYPE OF SEALANT. THE COST OF FURNISHING AND INSTALLING THIS SEALANT SHALL BE INCIDENTAL TO THE ITEM CONCRETE CURB AND GUTTER.

UNLESS OTHERWISE SHOWN ON THE TYPICAL CROSS SECTIONS, THE BASE AGGREGATE AND COMMON EXCAVATION LIMITS ARE 2'-0" BEHIND THE BACK OF CURBS.

1. TIE BARS ARE REQUIRED FOR CURB AND GUTTER TYPES A, G, K, R AND TBTT.
2. THE BOTTOM OF CURB AND GUTTER MAY BE CONSTRUCTED EITHER LEVEL OR PARALLEL TO THE SLOPE OF THE SUBGRADE OR BASE AGGREGATE PROVIDED A 6" MINIMUM GUTTER THICKNESS IS MAINTAINED.
3. USE 8" MINIMUM GUTTER THICKNESS WHEN USED WITH AN ADJACENT CONCRETE TRUCK APRON PLACED BEHIND BACK OF CURB.
4. THE BOTTOM OF CURB AND GUTTER MAY BE CONSTRUCTED EITHER LEVEL OR PARALLEL TO THE SLOPE OF THE SUBGRADE OR BASE AGGREGATE PROVIDED A 8" MINIMUM GUTTER THICKNESS IS MAINTAINED.
5. THE FACE OF CURB IS 6" FROM THE BACK OF CURB.
6. WHEN REVERSE SLOPE GUTTER IS REQUIRED, THE LOCATION(S) WILL BE SHOWN ELSEWHERE IN THE PLAN.
7. USE 4% GUTTER CROSS SLOPE UNLESS OTHERWISE NOTED IN THE PLANS.
8. INCLUDE LONGITUDINAL JOINT AND TIE BARS ALONG LANE EDGE WHEN CONCRETE PANEL WIDTH EXCEEDS THE MAXIMUM WIDTH PER TABLE BELOW. LONGITUDINAL JOINT(S) ARE NOT ALLOWED WITHIN TRAFFIC LANES AND BIKE LANES. LONGITUDINAL JOINT MAY BE SAWED.

PAVEMENT THICKNESS AND MAXIMUM CONCRETE PANEL WIDTH TABLE

PAVEMENT THICKNESS	MAXIMUM PANEL WIDTH
LESS THAN 10"	12'
10" & ABOVE	15'

* BIKE LANE IS NOT SHOWN.

CONCRETE CURB & GUTTER

STATE OF WISCONSIN
DEPARTMENT OF TRANSPORTATION

GENERAL NOTES

DETAILS OF CONSTRUCTION, MATERIALS AND WORKMANSHIP NOT SHOWN ON THIS DRAWING SHALL CONFORM TO THE PERTINENT REQUIREMENTS OF THE CONTRACT.

PAVEMENT TIES AND TIE BARS SHALL BE EPOXY COATED IN CONFORMANCE WITH SUBSECTION 505.2.6.2 OF THE STANDARD SPECIFICATIONS.

UNLESS OTHERWISE SHOWN ON THE TYPICAL CROSS SECTIONS, THE BASE AGGREGATE AND COMMON EXCAVATION LIMITS ARE 2'-0" BEHIND THE BACK OF CURBS.

(1) TIE BARS ARE REQUIRED FOR CURB AND GUTTER TYPES A, G, K, R AND TBTT.

(2) THE BOTTOM OF CURB AND GUTTER MAY BE CONSTRUCTED EITHER LEVEL OR PARALLEL TO THE SLOPE OF THE SUBGRADE OR BASE AGGREGATE PROVIDED A 6" MINIMUM GUTTER THICKNESS IS MAINTAINED.

(9) REFER TO SDD 8D18 AND SDD 8D19 FOR ADDITIONAL DRIVEWAY ENTRANCE CURB DETAILS.

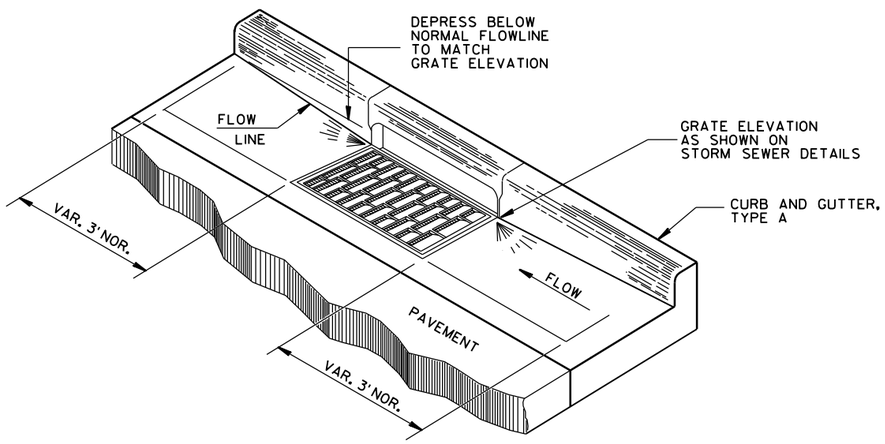

DETAIL OF CURB AND GUTTER AT INLETS

(TYPE H INLET COVER SHOWN)

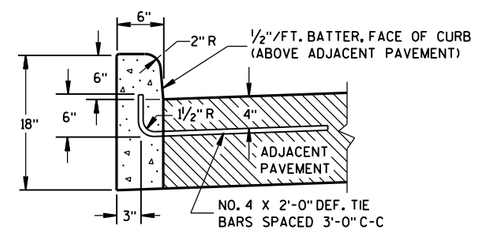

TYPES A(1) & D

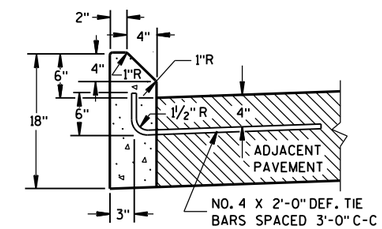

TYPES G(1) & J

CONCRETE CURB

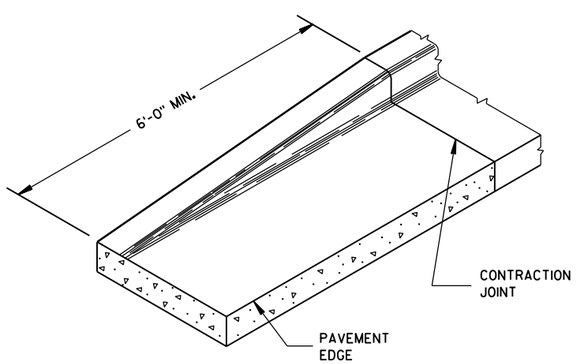

END SECTION CURB & GUTTER

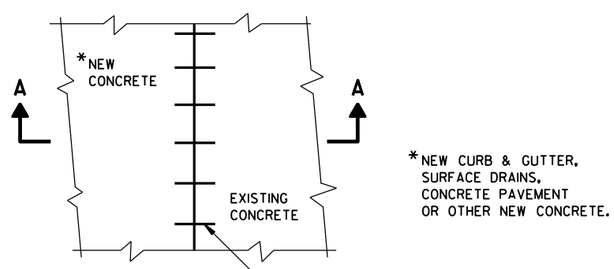

PLAN VIEW

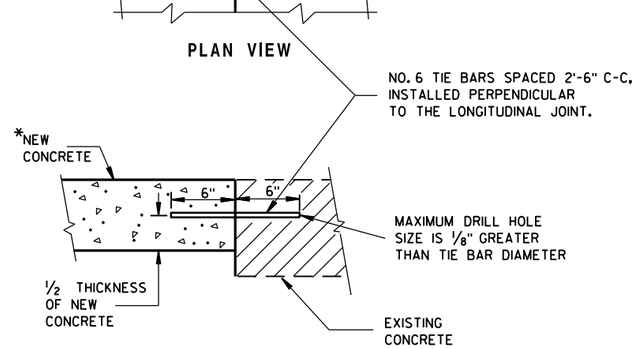

SECTION A-A

TIE BARS DRILLED INTO EXISTING PAVEMENT

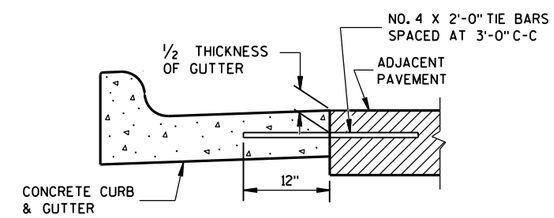

TYPICAL TIE BAR LOCATION (1)

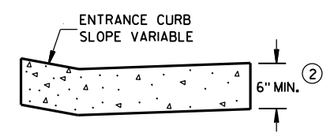

DRIVEWAY ENTRANCE CURB (9)

(WHEN DIRECTED BY THE ENGINEER)

CONCRETE CURB, TIES AND CURB AND GUTTER APPLICATIONS

STATE OF WISCONSIN
DEPARTMENT OF TRANSPORTATION

APPROVED
June, 2017 — DATE
/S/ Rodney Taylor — ROADWAY STANDARDS UNIT SUPERVISOR
ENT
FHWA

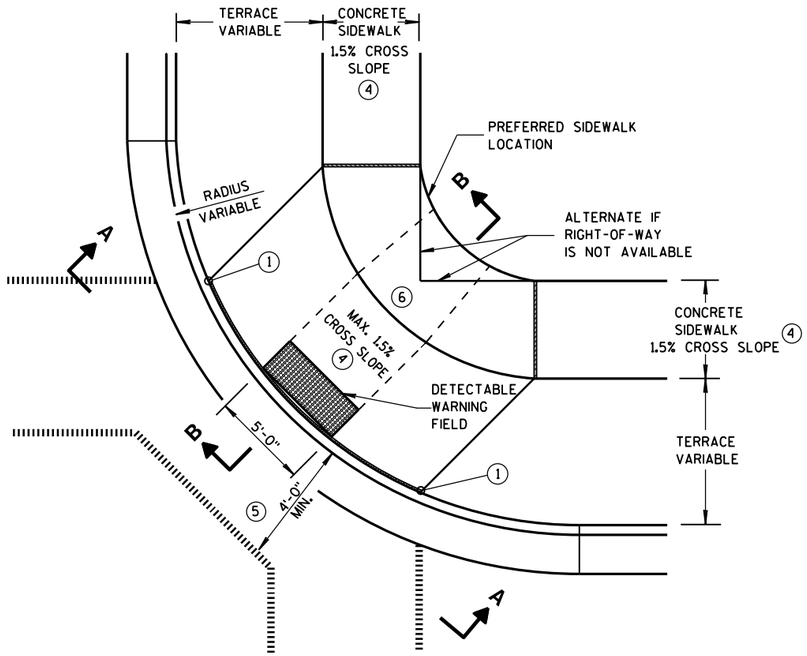

PLAN VIEW

TYPE 1 RAMP

(CENTER OF CORNER RADIUS)

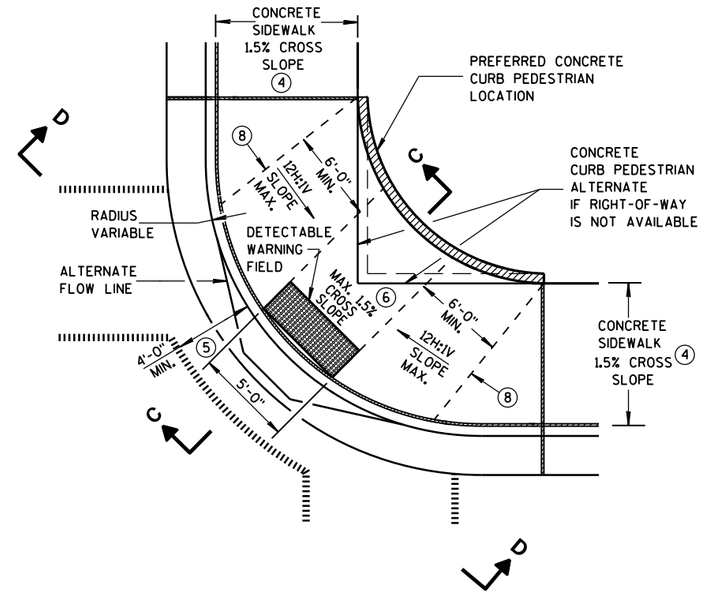

PLAN VIEW

TYPE 1-A RAMP

(NO TERRACE)

GENERAL NOTES

DETAILS OF CONSTRUCTION, MATERIALS AND WORKMANSHIP NOT SHOWN ON THIS DRAWING SHALL CONFORM TO THE PERTINENT REQUIREMENTS OF THE STANDARD SPECIFICATIONS AND THE APPLICABLE SPECIAL PROVISIONS.

WHEN NECESSARY, THE SIDEWALK ELEVATION MAY BE LOWERED TO MEET THE HIGH POINT ON THE RAMP.

TYPE 1 RAMPS SHALL HAVE A NORMAL SIDEWALK APRON AND CURB ON BOTH SIDES OF RAMP.

DETECTABLE WARNING FIELD SHALL BE MEASURED AND PAID BY THE SQUARE FOOT AS "CURB RAMP DETECTABLE WARNING FIELD". THE CONCRETE PEDESTRIAN CURB, IF NEEDED, SHALL BE MEASURED AND PAID BY THE LINEAL FOOT AS "CONCRETE CURB PEDESTRIAN". CONCRETE SIDEWALK IN THE CURB RAMP AREA SHALL BE MEASURED AND PAID BY THE SQUARE FOOT AS CONCRETE SIDEWALK, INCLUDING THE AREA UNDER THE DETECTABLE WARNING FIELD.

SELECT CURB RAMP DETECTABLE WARNING FIELD MATERIALS AND DEVICES FROM THE DEPARTMENT'S APPROVED MATERIALS LIST. THE COLOR OF THE DETECTABLE WARNING FIELD IS SPECIFIED ELSEWHERE AND IS INCIDENTAL TO THE BID ITEM OF "CURB RAMP DETECTABLE WARNING FIELD".

DETECTABLE WARNING FIELDS THAT ARE INSTALLED AS A GROUP OR SIDE BY SIDE, SHALL BE FROM THE SAME MANUFACTURER.

SURFACE TEXTURE OF THE RAMP SHALL BE OBTAINED BY COARSE BROOMING TRANSVERSE TO THE SLOPE OF THE RAMP.

(1) THIS POINT IS AN EXTENSION OF OUTSIDE EDGE OF APPROACHING SIDEWALK WHERE IT MEETS THE BACK OF CONCRETE CURB. POINT LOCATION MAY BE ADJUSTED TO ALIGN WITH BEGINNING OF FULL-HEIGHT CURB IF THIS DISTANCE IS SHORT.

(2) GRADE CHANGE BETWEEN GUTTER FLAG SLOPE AND THE CURB RAMP SLOPE SHALL NOT EXCEED 11%. MAXIMUM GUTTER FLAG SLOPE IS 4%. PROVIDE LONGITUDINAL DRAINAGE AROUND CURB AND AWAY FROM CURB RAMP. NO VERTICAL LIPS OR DISCONTINUITIES GREATER THAN 1/4-INCH ARE ALLOWED. SLOPE OF CURB HEAD OPENING SHALL NOT EXCEED 7%.

(3) ABSOLUTE MAXIMUM 12H:1V (8.33%) CURB RAMP SLOPE IS ALLOWABLE WITH FLATTENED GUTTER FLAG SLOPE AND NOT TO EXCEED 11% GRADE CHANGE.

(4) ±0.5% CONSTRUCTION TOLERANCE IN SIDEWALK CROSS SLOPE. THE SIDEWALK CROSS SLOPE SHALL NOT EXCEED 2% WITHOUT PRIOR APPROVAL FROM THE ENGINEER.

(5) PROVIDE A LEVEL LANDING IN THE STREET AND GUTTER AREA. (2% MAXIMUM SLOPE IN ANY DIRECTION). WHEN THE GUTTER SLOPE EXCEEDS 2%, CONSTRUCT THE LEVEL LANDING IN THE STREET AREA.

(6) PROVIDE A LEVEL LANDING (MAXIMUM 2% SLOPE) IN ANY DIRECTION OF PEDESTRIAN TRAVEL. STANDARD LANDING SIZE IS 5 FEET X 5 FEET.

(8) PROVIDE GRADE BREAK PERPENDICULAR TO DIRECTION OF WHEELCHAIR TRAVEL.

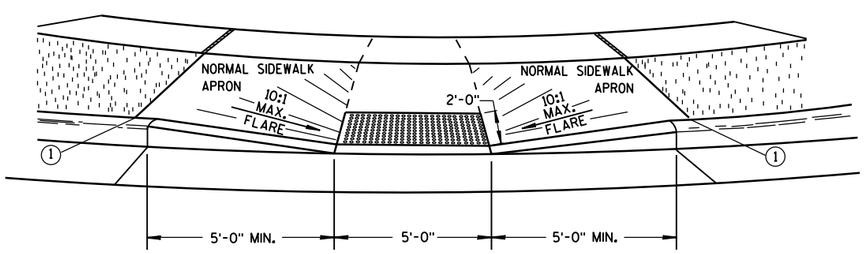

VIEW A-A

** WIDTH SHOWN ELSEWHERE IN THE PLANS

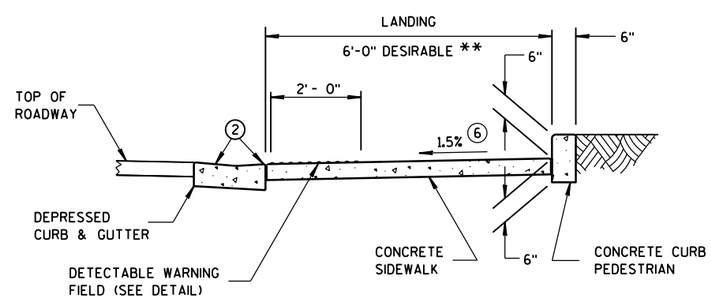

SECTION C-C

LEGEND

- 1/2" EXPANSION JOINT-SIDEWALK
- CONTRACTION JOINT FIELD LOCATED
- PAVEMENT MARKING CROSSWALK (WHITE)
- ALTERNATIVE LAYOUT

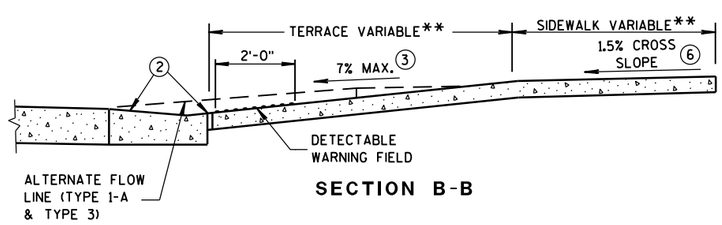

SECTION B-B

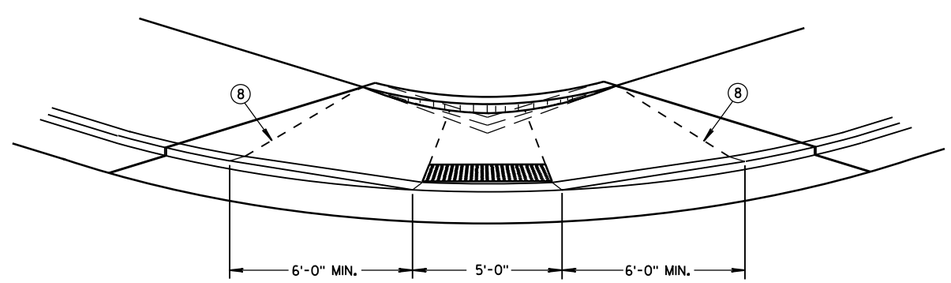

VIEW D-D

CURB RAMPS
TYPES 1 AND 1-A

STATE OF WISCONSIN
DEPARTMENT OF TRANSPORTATION

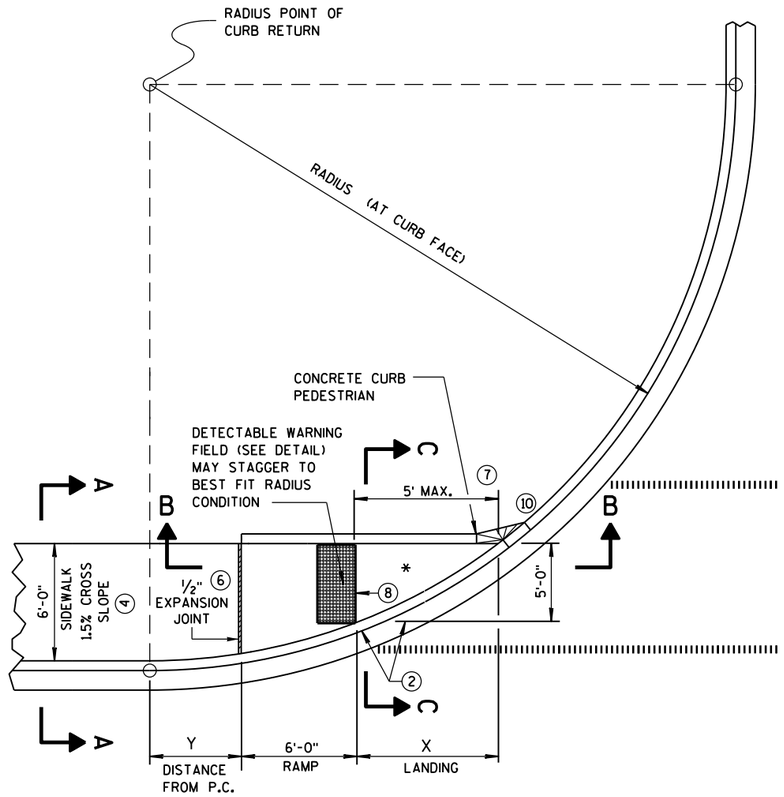

CURB RAMP TYPE 4A
PLAN VIEW

RADIUS (AT CURB FACE)	X	Y
20 FEET	7'-11"	0'-2"
30 FEET	10'-2¾"	1'-7½"
40 FEET	12'-1¼"	2'-10"
50 FEET	13'-8¾"	3'-10¾"
60 FEET	15'-2"	4'-10¼"

INTERMEDIATE RADII CAN BE INTERPOLATED

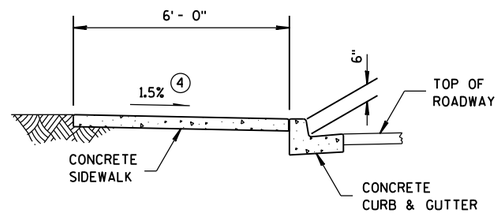

SECTION A-A FOR TYPE 4A

GENERAL NOTES

AVOID PLACING DRAINAGE STRUCTURES, JUNCTION BOXES OR OTHER OBSTRUCTIONS IN FRONT OF RAMP ACCESS AREAS.

DETECTABLE WARNING FIELDS THAT ARE INSTALLED AS A GROUP OR SIDE BY SIDE, SHALL BE FROM THE SAME MANUFACTURER.

(2) GRADE CHANGE BETWEEN GUTTER FLAG SLOPE AND THE CURB RAMP SLOPE SHALL NOT EXCEED 11%. MAXIMUM GUTTER FLAG SLOPE IS 4%. PROVIDE LONGITUDINAL DRAINAGE AROUND CURB AND AWAY FROM CURB RAMP. NO VERTICAL LIPS OR DISCONTINUITIES GREATER THAN ¼-INCH ARE ALLOWED. SLOPE OF CURB HEAD OPENING SHALL NOT EXCEED 7%.

(3) ABSOLUTE MAXIMUM 12H:1V (8.33%) CURB RAMP SLOPE IS ALLOWABLE WITH FLATTENED GUTTER FLAG SLOPE AND NOT TO EXCEED 11% GRADE CHANGE.

(4) ±0.5% CONSTRUCTION TOLERANCE IN SIDEWALK CROSS SLOPE. THE SIDEWALK CROSS SLOPE SHALL NOT EXCEED 2% WITHOUT PRIOR APPROVAL FROM THE ENGINEER.

(6) PROVIDE A LEVEL LANDING (MAXIMUM 2% SLOPE) IN ANY DIRECTION OF PEDESTRIAN TRAVEL. STANDARD LANDING SIZE IS 5 FEET X 5 FEET.

(7) WHEN THIS DISTANCE EXCEEDS 5 FEET, STAGGER ADDITIONAL DETECTABLE WARNING PANEL FORWARD TO REDUCE THIS DISTANCE. PROVIDE MINIMUM 12-INCH ROW OVERLAP TO AVOID SIDESTEP OF DOME DETECTION. USE EQUAL-SIZE PANELS TO DEVELOP OVERLAPPING, STAGGERED ROWS. ALIGN DOMES BETWEEN OVERLAPPING ROWS AND IN DIRECTION OF PEDESTRIAN TRAVEL.

(8) PROVIDE GRADE BREAK PERPENDICULAR TO DIRECTION OF WHEELCHAIR TRAVEL.

(10) INSTALL TRANSITION NOSE. (INCIDENTAL TO OTHER PAY ITEMS). DO NOT MARK TRANSITION NOSE.

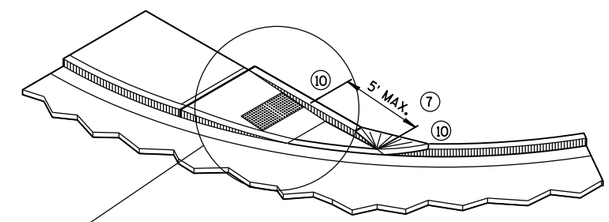

ISOMETRIC VIEW FOR TYPE 4A

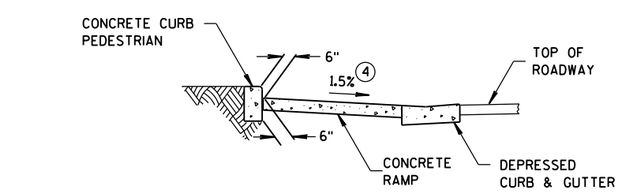

SECTION C-C FOR TYPE 4A

* MAXIMUM 2.0% SLOPE IN ALL DIRECTIONS IN FRONT OF GRADE BREAK

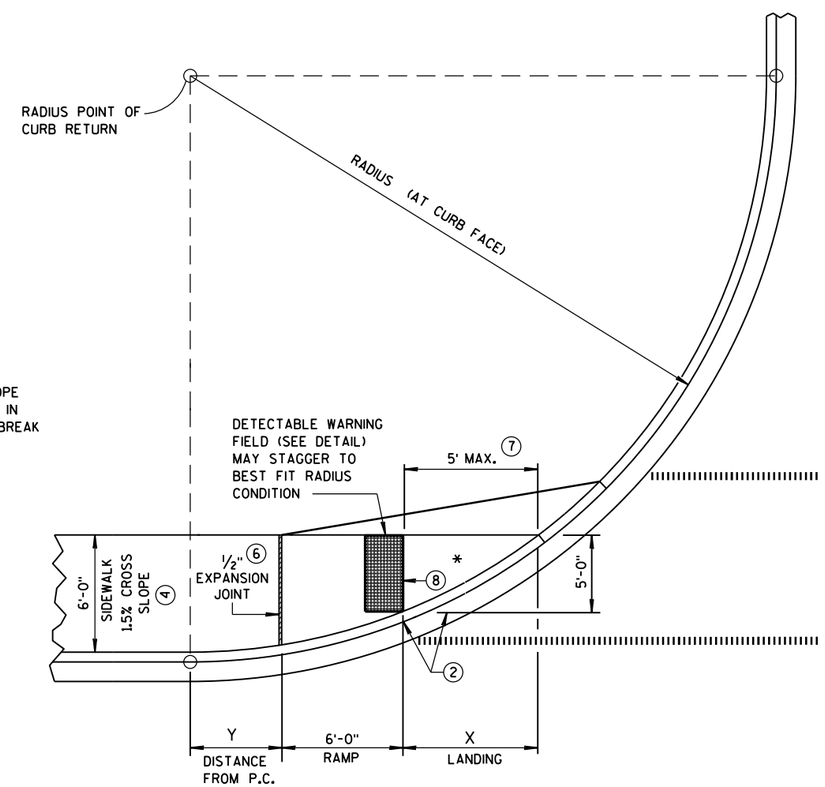

CURB RAMP TYPE 4A1
PLAN VIEW

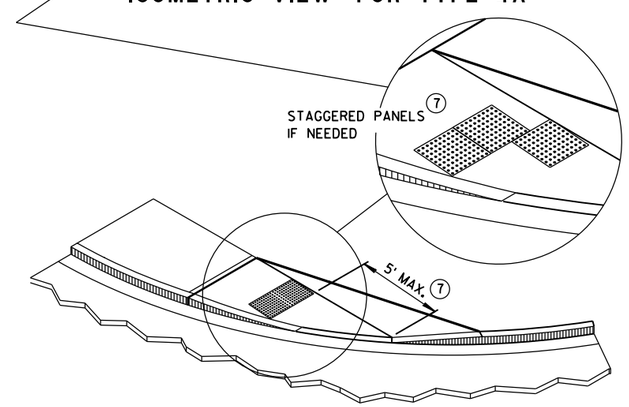

ISOMETRIC VIEW FOR TYPE 4A1

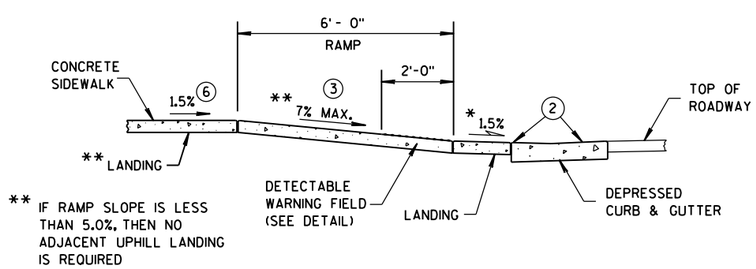

** IF RAMP SLOPE IS LESS THAN 5.0%, THEN NO ADJACENT UPHILL LANDING IS REQUIRED

SECTION B-B FOR TYPE 4A

LEGEND

- ½" EXPANSION JOINT-SIDEWALK
- CONTRACTION JOINT FIELD LOCATED
- PAVEMENT MARKING CROSSWALK (WHITE)

CURB RAMPS
TYPES 4A AND 4A1

STATE OF WISCONSIN
DEPARTMENT OF TRANSPO

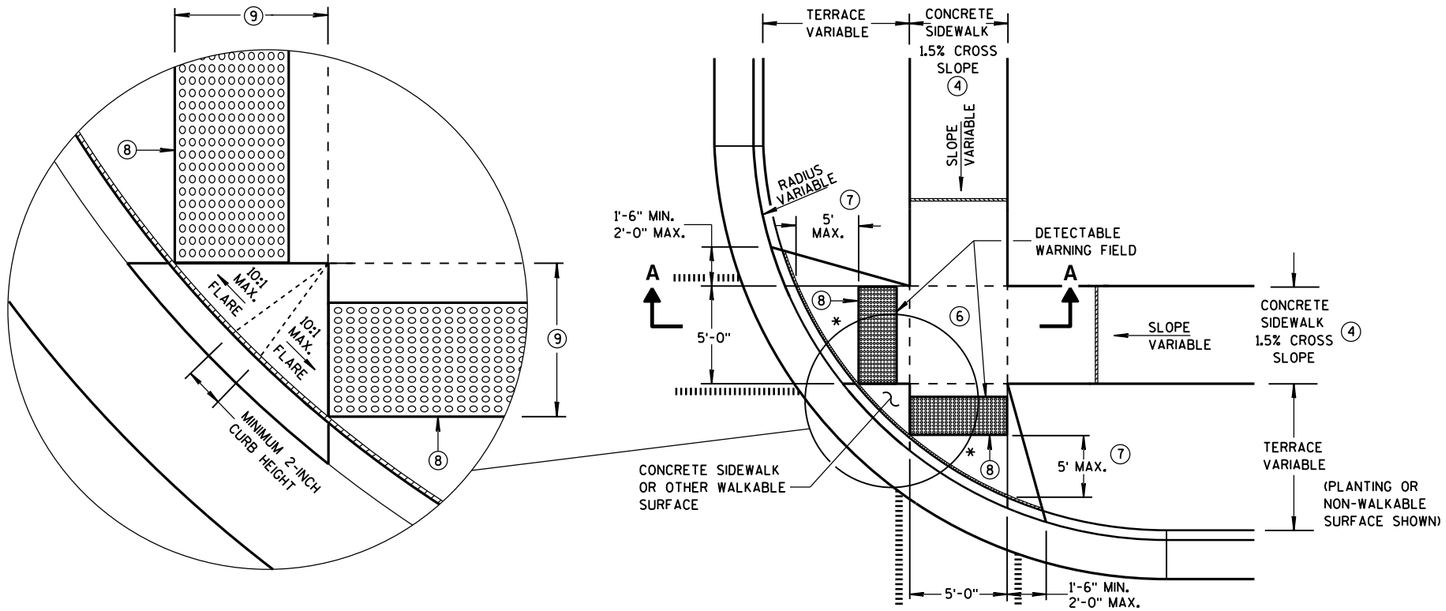

PLAN VIEW
TYPE 2 RAMP
(ON LINE WITH SIDEWALK)

* MAXIMUM 2.0% SLOPE IN ALL DIRECTIONS IN FRONT OF GRADE BREAK

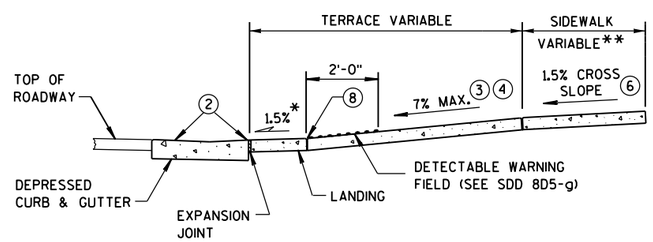

SECTION A-A

** WIDTH SHOWN ELSEWHERE IN THE PLANS

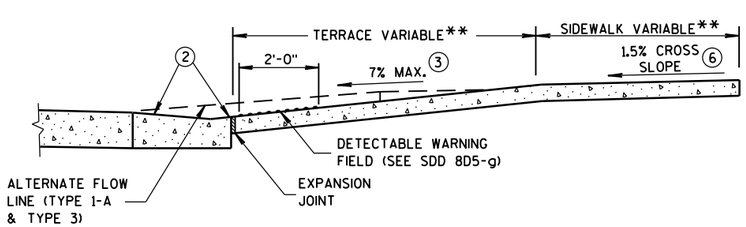

SECTION B-B

GENERAL NOTES

AVOID PLACING DRAINAGE STRUCTURES, JUNCTION BOXES OR OTHER OBSTRUCTIONS IN FRONT OF RAMP ACCESS AREAS.

DETECTABLE WARNING FIELDS THAT ARE INSTALLED AS A GROUP OR SIDE BY SIDE, SHALL BE FROM THE SAME MANUFACTURER.

(2) GRADE CHANGE BETWEEN GUTTER FLAG SLOPE AND THE CURB RAMP SLOPE SHALL NOT EXCEED 11%. MAXIMUM GUTTER FLAG SLOPE IS 4%. PROVIDE LONGITUDINAL DRAINAGE AROUND CURB AND AWAY FROM CURB RAMP. NO VERTICAL LIPS OR DISCONTINUITIES GREATER THAN 1/4-INCH ARE ALLOWED. SLOPE OF CURB HEAD OPENING SHALL MATCH THE RAMP SLOPE, MINIMALLY 1.5% AND NOT TO EXCEED 7%. WHEN ADJACENT TO 1.5% LANDING, CONSTRUCT CURB HEAD OPENING AT 1.5% IN THE DIRECTION OF PEDESTRIAN TRAVEL.

(3) ABSOLUTE MAXIMUM 12H:1V (8.33%) CURB RAMP SLOPE IS ALLOWABLE WITH FLATTENED GUTTER FLAG SLOPE AND NOT TO EXCEED 11% GRADE CHANGE.

(4) ±0.5% CONSTRUCTION TOLERANCE IN SIDEWALK CROSS SLOPE. THE SIDEWALK CROSS SLOPE SHALL NOT EXCEED 2% WITHOUT PRIOR APPROVAL FROM THE ENGINEER.

(6) PROVIDE A LEVEL LANDING (MAXIMUM 2% SLOPE) IN ANY DIRECTION OF PEDESTRIAN TRAVEL. STANDARD LANDING SIZE IS 5 FEET X 5 FEET.

(7) WHEN THIS GRADE BREAK DISTANCE EXCEEDS 5 FEET, USE RADIAL DETECTABLE WARNING FIELD PER SDD 8D5-f.

(8) PROVIDE GRADE BREAK PERPENDICULAR TO DIRECTION OF WHEELCHAIR TRAVEL.

(9) WHEN THIS DISTANCE IS LESS THAN 6'-0", IT MAY BE DIFFICULT TO ACHIEVE A 7% SLOPE OR FLATTER ALONG THE RAMP. REDUCE CURB HEIGHT IN TRIANGLE AREA TO ACHIEVE 7% SLOPE OR FLATTER ON RAMP. CONSTRUCT 2-INCH MINIMUM CURB HEIGHT BETWEEN 10:1 FLARES.

LEGEND

- 1/2" EXPANSION JOINT-SIDEWALK
- CONTRACTION JOINT FIELD LOCATED
- PAVEMENT MARKING CROSSWALK (WHITE)
- ALTERNATIVE LAYOUT

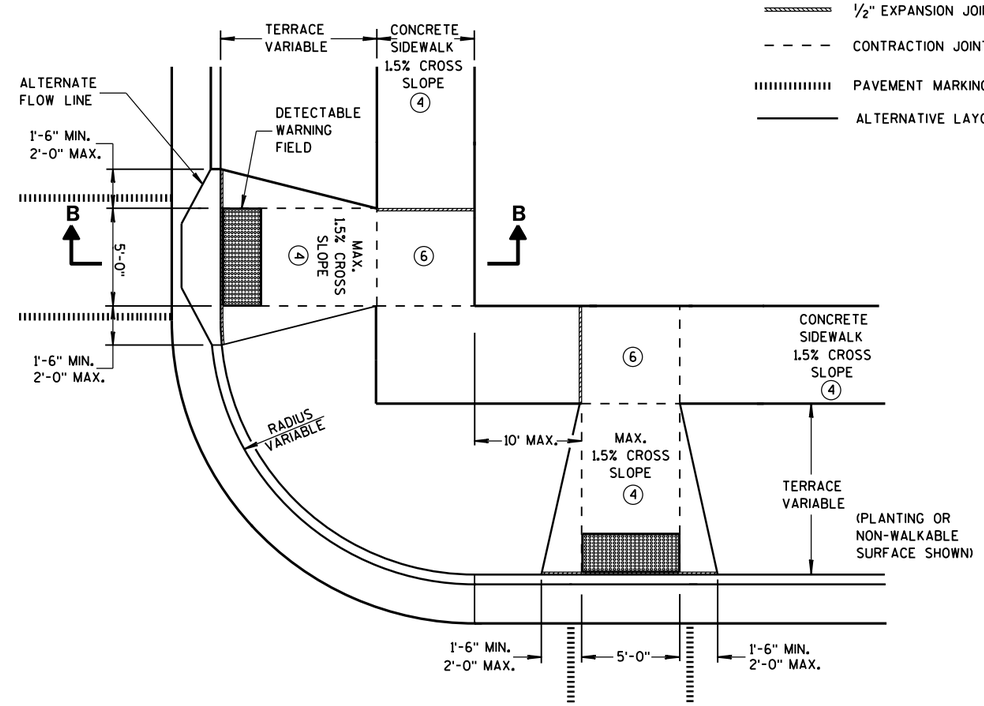

PLAN VIEW
TYPE 3 RAMP
(OUTSIDE OF CROSSWALK AREA)

CURB RAMPS
TYPES 2 AND 3

STATE OF WISCONSIN
DEPARTMENT OF TRANSPO

6

S.D.D. 8 D 5-19b

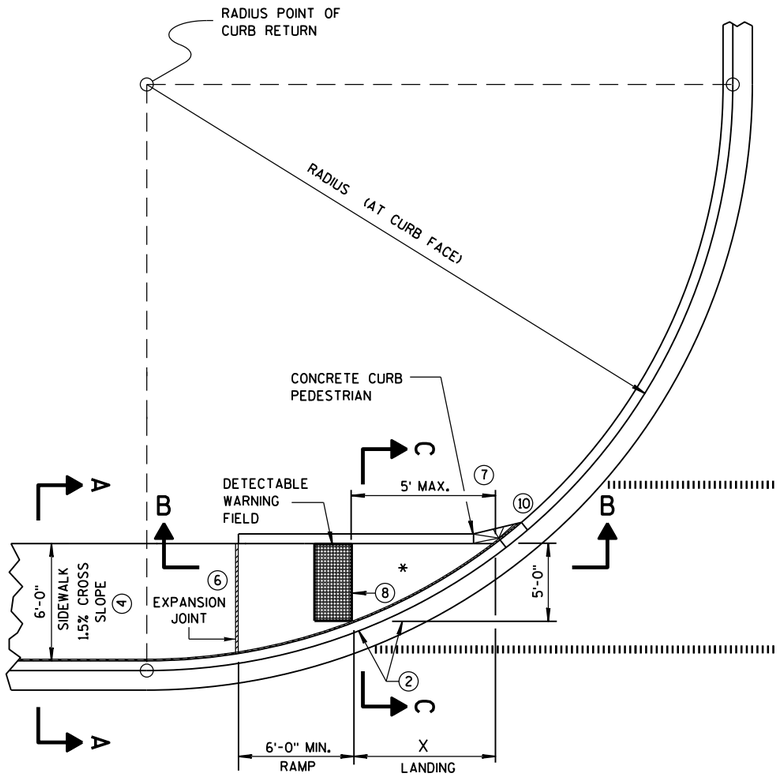

CURB RAMP TYPE 4A
PLAN VIEW

RADIUS (AT CURB FACE)	X
10 FEET	4'-7"
15 FEET	6'-5½"

INTERMEDIATE RADII CAN BE INTERPOLATED

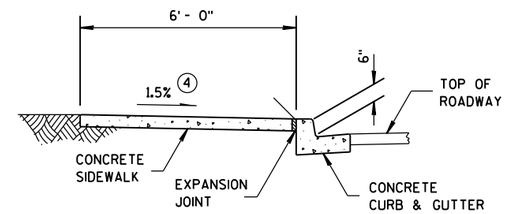

SECTION A-A FOR TYPE 4A

GENERAL NOTES

AVOID PLACING DRAINAGE STRUCTURES, JUNCTION BOXES OR OTHER OBSTRUCTIONS IN FRONT OF RAMP ACCESS AREAS.

DETECTABLE WARNING FIELDS THAT ARE INSTALLED AS A GROUP OR SIDE BY SIDE, SHALL BE FROM THE SAME MANUFACTURER.

(2) GRADE CHANGE BETWEEN GUTTER FLAG SLOPE AND THE CURB RAMP SLOPE SHALL NOT EXCEED 11%. MAXIMUM GUTTER FLAG SLOPE IS 4%. PROVIDE LONGITUDINAL DRAINAGE AROUND CURB AND AWAY FROM CURB RAMP. NO VERTICAL LIPS OR DISCONTINUITIES GREATER THAN ¼-INCH ARE ALLOWED. SLOPE OF CURB HEAD OPENING SHALL MATCH THE RAMP SLOPE, MINIMALLY 1.5% AND NOT TO EXCEED 7%. WHEN ADJACENT TO 1.5% LANDING, CONSTRUCT CURB HEAD OPENING AT 1.5% IN THE DIRECTION OF PEDESTRIAN TRAVEL.

(3) ABSOLUTE MAXIMUM 12H:1V (8.33%) CURB RAMP SLOPE IS ALLOWABLE WITH FLATTENED GUTTER FLAG SLOPE AND NOT TO EXCEED 11% GRADE CHANGE.

(4) ±0.5% CONSTRUCTION TOLERANCE IN SIDEWALK CROSS SLOPE. THE SIDEWALK CROSS SLOPE SHALL NOT EXCEED 2% WITHOUT PRIOR APPROVAL FROM THE ENGINEER.

(6) PROVIDE A LEVEL LANDING (MAXIMUM 2% SLOPE) IN ANY DIRECTION OF PEDESTRIAN TRAVEL. STANDARD LANDING SIZE IS 5 FEET X 5 FEET.

(7) WHEN THIS GRADE BREAK DISTANCE EXCEEDS 5 FEET, USE RADIAL DETECTABLE WARNING FIELD PER SDD 8D5-f.

(8) PROVIDE GRADE BREAK PERPENDICULAR TO DIRECTION OF WHEELCHAIR TRAVEL.

(10) INSTALL TRANSITION NOSE. (INCIDENTAL TO OTHER PAY ITEMS). DO NOT MARK TRANSITION NOSE.

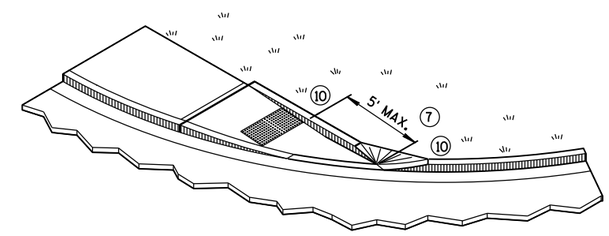

ISOMETRIC VIEW FOR TYPE 4A

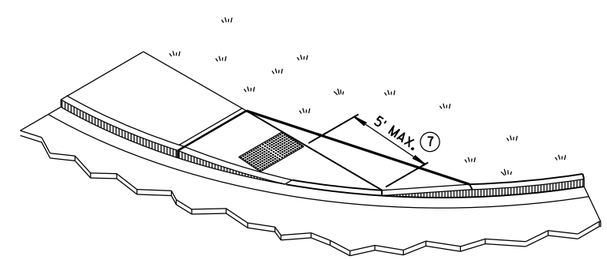

ISOMETRIC VIEW FOR TYPE 4A1

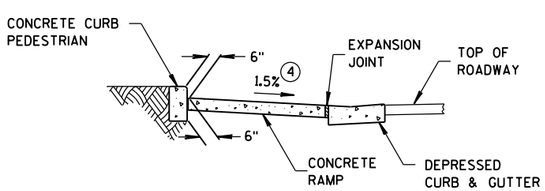

SECTION C-C FOR TYPE 4A

* MAXIMUM 2.0% SLOPE IN ALL DIRECTIONS IN FRONT OF GRADE BREAK

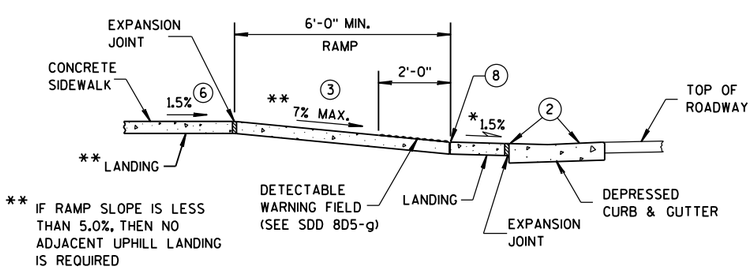

SECTION B-B FOR TYPE 4A

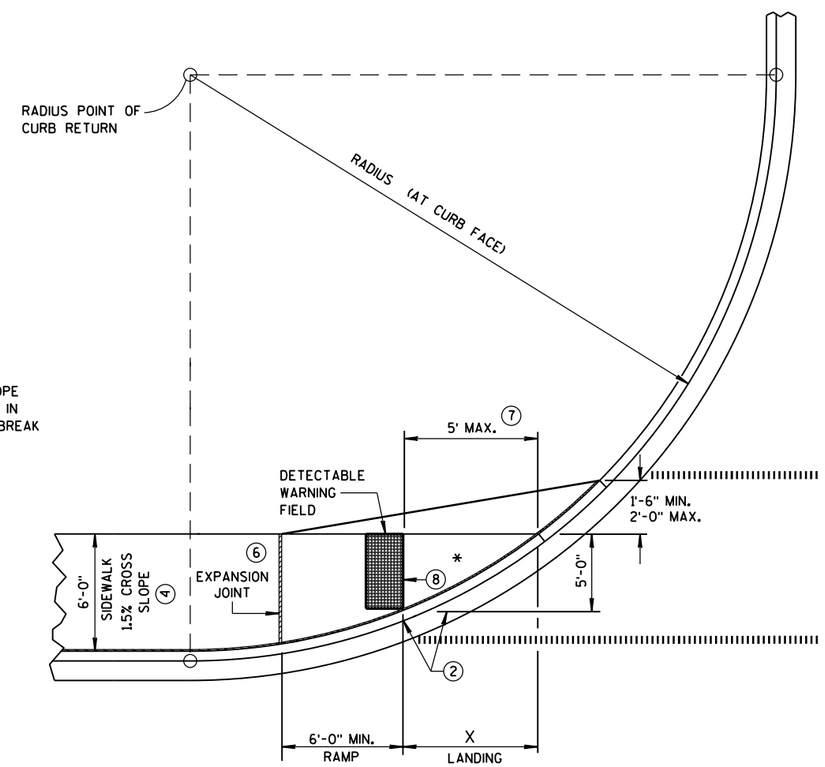

CURB RAMP TYPE 4A1
PLAN VIEW

LEGEND

½" EXPANSION JOINT-SIDEWALK

CONTRACTION JOINT FIELD LOCATED

PAVEMENT MARKING CROSSWALK (WHITE)

CURB RAMPS
TYPES 4A AND 4A1

STATE OF WISCONSIN
DEPARTMENT OF TRANSPO

6

S.D.D. 8 D 5-19c

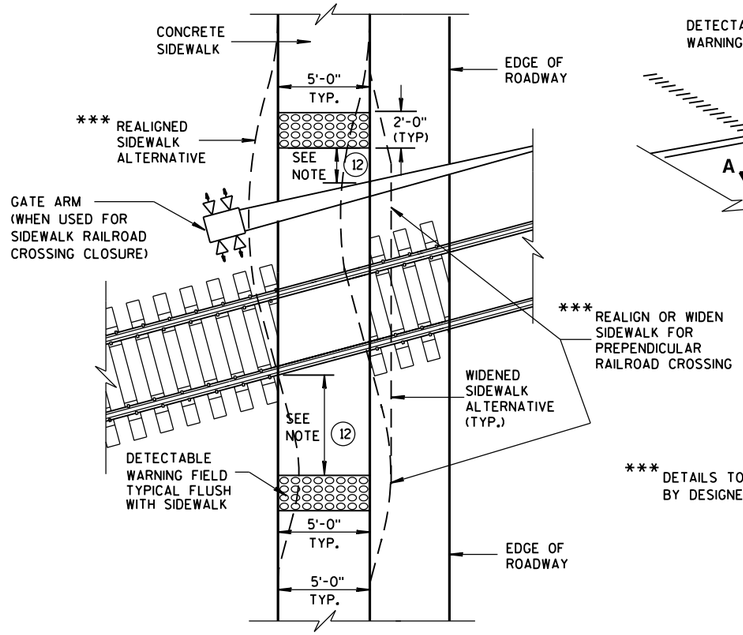

TYPE 8
DETECTABLE WARNINGS AT RAILROAD CROSSING

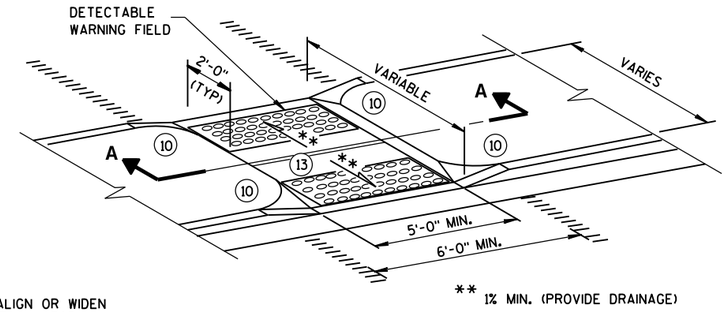

*** DETAILS TO BE DETERMINED BY DESIGNER

MEDIAN ISLAND NON-ELEVATED PEDESTRIAN CROSSING
TYPE 5

GENERAL NOTES

AVOID PLACING DRAINAGE STRUCTURES, JUNCTION BOXES OR OTHER OBSTRUCTIONS IN FRONT OF RAMP ACCESS AREAS.

SIDEWALK CROSS SLOPE SHALL NOT EXCEED 2%.

DETECTABLE WARNING FIELDS THAT ARE INSTALLED AS A GROUP OR SIDE BY SIDE, SHALL BE FROM THE SAME MANUFACTURER.

(2) GRADE CHANGE BETWEEN GUTTER FLAG SLOPE AND THE CURB RAMP SLOPE SHALL NOT EXCEED 11%. MAXIMUM GUTTER FLAG SLOPE IS 4%. PROVIDE LONGITUDINAL DRAINAGE AROUND CURB AND AWAY FROM CURB RAMP. NO VERTICAL LIPS OR DISCONTINUITIES GREATER THAN 1/4-INCH ARE ALLOWED. SLOPE OF CURB HEAD OPENING SHALL MATCH THE RAMP SLOPE, MINIMALLY 1.5% AND NOT TO EXCEED 7%. WHEN ADJACENT TO 1.5% LANDING, CONSTRUCT CURB HEAD OPENING AT 1.5% IN THE DIRECTION OF PEDESTRIAN TRAVEL.

(3) ABSOLUTE MAXIMUM 12H:1V (8.33%) CURB RAMP SLOPE IS ALLOWABLE WITH FLATTENED GUTTER FLAG SLOPE AND NOT TO EXCEED 11% GRADE CHANGE.

(4) ±0.5% CONSTRUCTION TOLERANCE IN SIDEWALK CROSS SLOPE. THE SIDEWALK CROSS SLOPE SHALL NOT EXCEED 2% WITHOUT PRIOR APPROVAL FROM THE ENGINEER.

(6) PROVIDE A LEVEL LANDING (MAXIMUM 2% SLOPE) IN ANY DIRECTION OF PEDESTRIAN TRAVEL. STANDARD LANDING SIZE IS 5 FEET X 5 FEET.

(10) INSTALL TRANSITION NOSE. (INCIDENTAL TO OTHER PAY ITEMS). DO NOT MARK TRANSITION NOSE.

(11) SLOPE SIDEWALK TOWARD LANDING AS SHOWN WHERE THERE IS NO TERRACE OR WHERE THE TERRACE WIDTH IS LESS THAN 6 FEET WIDE.

(12) THE EDGE OF THE DETECTABLE WARNING FIELD NEAREST TO A RAILROAD CROSSING SHALL BE 1.5 FEET ± 0.1' FROM THE FACE OF THE GATE ARM IF THE GATE ARM EXTENDS ACROSS THE SIDEWALK. WHERE THERE IS NO PEDESTRIAN GATE, THE EDGE OF THE DETECTABLE WARNING FIELD NEAREST TO THE RAILROAD CROSSING SHALL BE 15 FEET FROM THE NEAREST RAIL.

(13) DO NOT INSTALL DETECTABLE WARNING FIELDS AT THE EDGES OF STREET-LEVEL PEDESTRIAN REFUGE ISLANDS IF A MINIMUM 2-FOOT CONCRETE SURFACE WITHOUT DETECTABLE WARNINGS (MEASURED IN THE DIRECTION OF PEDESTRIAN TRAVEL) CANNOT BE ACHIEVED.

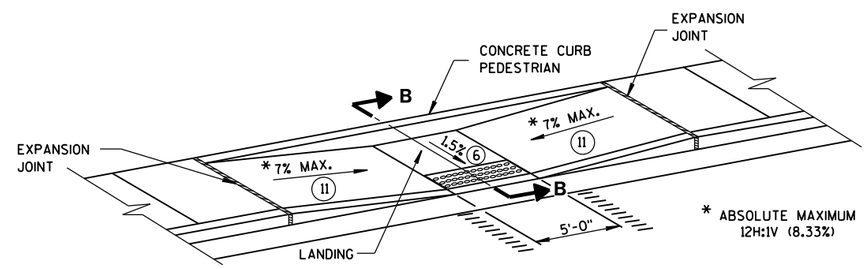

MID-BLOCK CROSSING
TYPE 7A

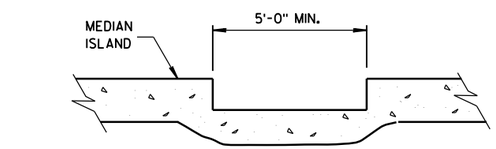

SECTION A-A

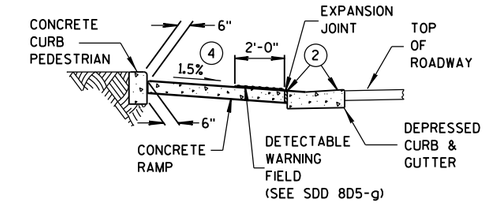

SECTION B-B

REFER TO GENERAL NOTES (2) AND (3) FOR ALL ISLAND CURB RAMPS

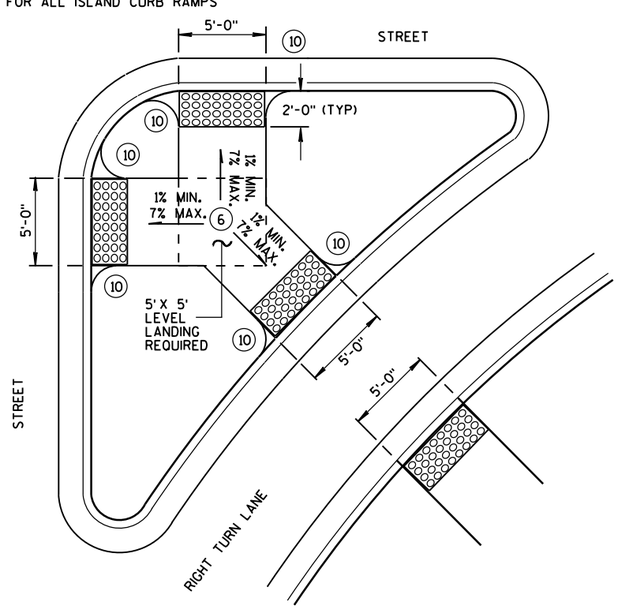

TYPE 6
DETECTABLE WARNING AT ISLANDS

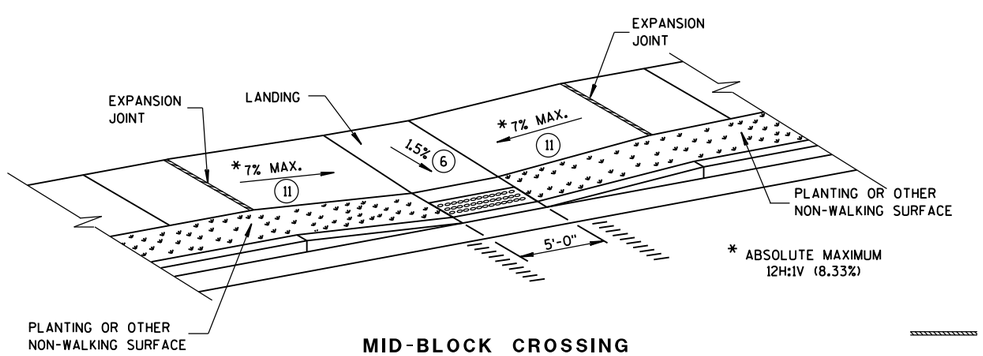

MID-BLOCK CROSSING
TYPE 7B

NOTE: THESE PARALLEL AND PARALLEL/PERPENDICULAR CURB RAMPS MAY BE USED AT INTERSECTIONS AND MID BLOCK LOCATIONS.

LEGEND

- ½" EXPANSION JOINT-SIDEWALK
- CONTRACTION JOINT FIELD LOCATED
- PAVEMENT MARKING CROSSWALK (WHITE)

CURB RAMPS
TYPES 5, 6, 7A, 7B & 8

STATE OF WISCONSIN
DEPARTMENT OF TRANSPOR

6

S.D.D. 8 D 5-19e

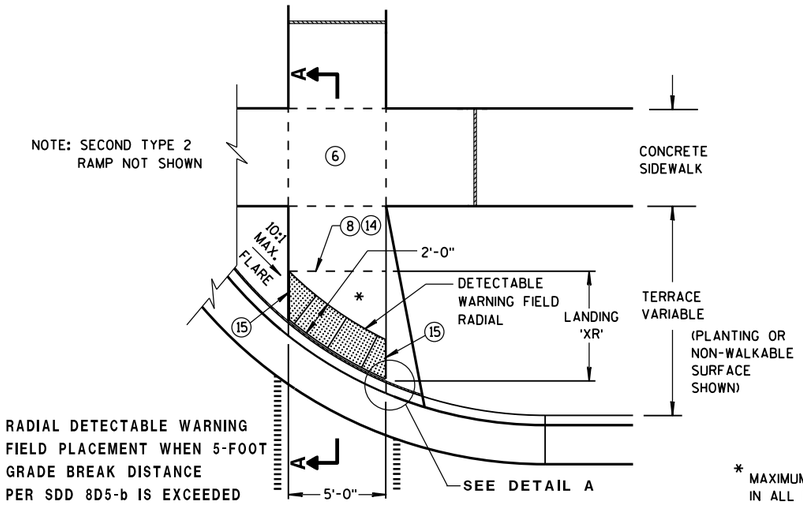

TYPE 2 RAMP
PLAN VIEW
(GRADE BREAK DISTANCE GREATER THAN 5 FEET)

(ON LINE WITH SIDEWALK)

* MAXIMUM 2.0% SLOPE IN ALL DIRECTIONS IN FRONT OF GRADE BREAK

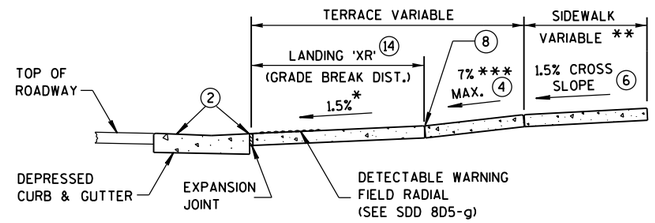

** WIDTH SHOWN ELSEWHERE IN THE PLANS

*** ABSOLUTE MAXIMUM 12H:1V (8.33%)

SECTION A-A

LEGEND

- ½" EXPANSION JOINT-SIDEWALK
- CONTRACTION JOINT FIELD LOCATED
- PAVEMENT MARKING CROSSWALK (WHITE)

GENERAL NOTES

AVOID PLACING DRAINAGE STRUCTURES, JUNCTION BOXES OR OTHER OBSTRUCTIONS IN FRONT OF RAMP ACCESS AREAS.

DETECTABLE WARNING FIELDS (DWFs) THAT ARE INSTALLED AS A GROUP OR SIDE BY SIDE, SHALL BE FROM THE SAME MANUFACTURER.

APPLY RADIAL DETECTABLE WARNING PLACEMENT SIMILARLY FOR TYPE 4A AND 4A1 CURB RAMPS AND SIMILARLY FOR TYPE 4B AND 4B1 CURB RAMPS. TYPE 4A AND 4B CURB RAMPS ARE NOT SHOWN.

REFER TO SDD 8D5-g FOR ADDITIONAL RADIAL PLATE REQUIREMENTS.

FIELD CUTS AT INTERMEDIATE JOINTS WITHIN THE RADIAL DETECTABLE WARNING FIELD ARE PROHIBITED.

DETERMINE FINAL RADIAL WARNING FIELD CONFIGURATION AND ITS INDIVIDUAL PLATE LOCATIONS. PERFORM PRE-LAYOUT PRIOR TO PLACEMENT IN PLASTIC CONCRETE. FOLLOW MANUFACTURER'S PRODUCT LIST AND INSTALLATION RECOMMENDATIONS.

(2) GRADE CHANGE BETWEEN GUTTER FLAG SLOPE AND THE CURB RAMP SLOPE SHALL NOT EXCEED 11%. MAXIMUM GUTTER FLAG SLOPE IS 4%. PROVIDE LONGITUDINAL DRAINAGE AROUND CURB AND AWAY FROM CURB RAMP. NO VERTICAL LIPS OR DISCONTINUITIES GREATER THAN ¼-INCH ARE ALLOWED. SLOPE OF CURB HEAD OPENING SHALL MATCH THE RAMP SLOPE, MINIMALLY 1.5% AND NOT TO EXCEED 7%. WHEN ADJACENT TO 1.5% LANDING, CONSTRUCT CURB HEAD OPENING AT 1.5% IN THE DIRECTION OF PEDESTRIAN TRAVEL.

(3) ABSOLUTE MAXIMUM 12H:1V (8.33%) CURB RAMP SLOPE IS ALLOWABLE WITH FLATTENED GUTTER FLAG SLOPE AND NOT TO EXCEED 11% GRADE CHANGE.

(4) ±0.5% CONSTRUCTION TOLERANCE IN SIDEWALK CROSS SLOPE. THE SIDEWALK CROSS SLOPE SHALL NOT EXCEED 2% WITHOUT PRIOR APPROVAL FROM THE ENGINEER.

(6) PROVIDE A LEVEL LANDING (MAXIMUM 2% SLOPE) IN ANY DIRECTION OF PEDESTRIAN TRAVEL. STANDARD LANDING SIZE IS 5 FEET X 5 FEET.

(8) PROVIDE GRADE BREAK PERPENDICULAR TO DIRECTION OF WHEELCHAIR TRAVEL.

(14) CONSULT ENGINEER IF GRADE BREAK LOCATION (END OF LANDING DIMENSION 'XR') REQUIRES FIELD ADJUSTMENT WHEN ESTABLISHING FINAL RADIAL DETECTABLE WARNING FIELD LOCATION.

(15) FIELD SAW CUTS ALONG RADIAL DETECTABLE WARNING PLATES WILL BE NECESSARY TO MATCH EACH CURB RAMP EDGE. AVOID CUTTING THROUGH DOMES WHENEVER POSSIBLE. MAKE FIELD CUTS TRUE TO LINE AND WITHIN 1/8" DEVIATION. SMOOTH EDGES OF FIELD CUT PLATES.

(16) USE 1'X 2' RECTANGULAR END PLATE AT END OF TYPE 4A1 RAMP AND PROVIDE MINIMUM 2'-0" DETECTABLE WARNING FIELD COVERAGE (IN DIRECTION OF PEDESTRIAN TRAVEL) ALONG THE ENTIRE CURB RAMP WIDTH.

(17) A MAXIMUM 3-INCH CONCRETE BORDER WIDTH IS ALLOWABLE IN FRONT OF RADIAL DETECTABLE WARNING FIELD FOR CONSTRUCTABILITY PURPOSES. CONCRETE BORDER WIDTH MAY VARY UP TO 1 INCH.

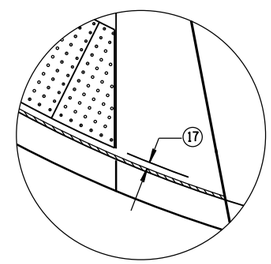

DETAIL A

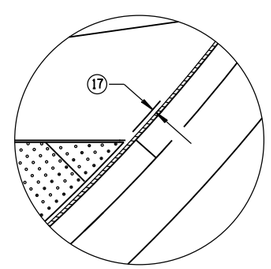

DETAIL C

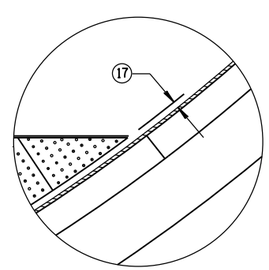

DETAIL B

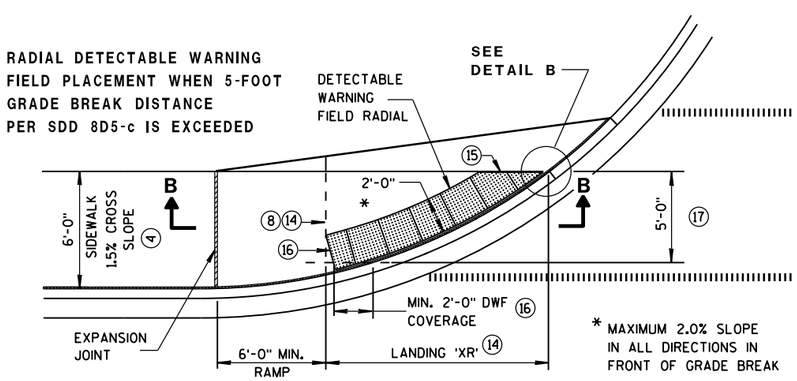

* MAXIMUM 2.0% SLOPE IN ALL DIRECTIONS IN FRONT OF GRADE BREAK

CURB RAMP TYPE 4A1
PLAN VIEW
(GRADE BREAK DISTANCE GREATER THAN 5 FEET)

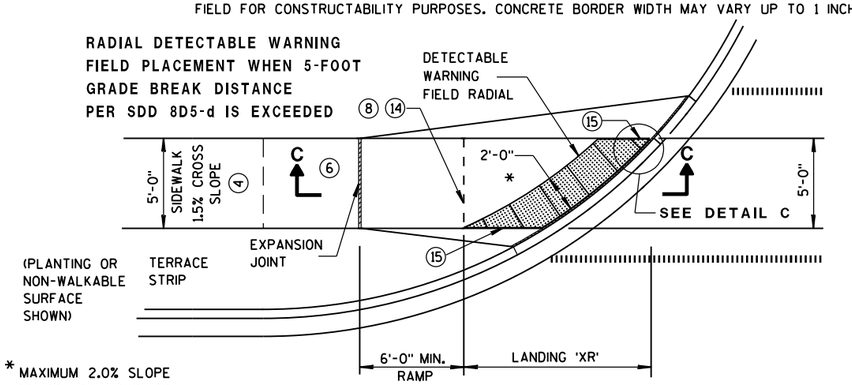

* MAXIMUM 2.0% SLOPE IN ALL DIRECTIONS IN FRONT OF GRADE BREAK

CURB RAMP TYPE 4B1
PLAN VIEW
(GRADE BREAK DISTANCE GREATER THAN 5 FEET)

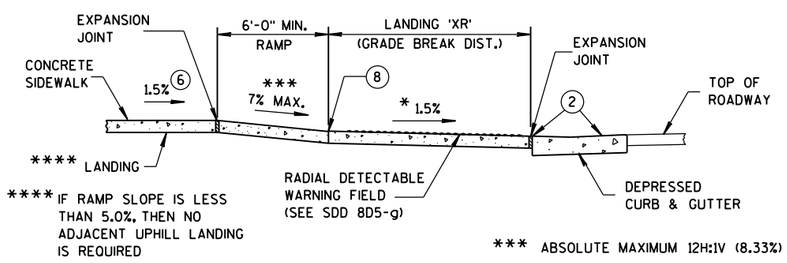

**** IF RAMP SLOPE IS LESS THAN 5.0%, THEN NO ADJACENT UPHILL LANDING IS REQUIRED

*** ABSOLUTE MAXIMUM 12H:1V (8.33%)

SECTION B-B FOR TYPE 4A1

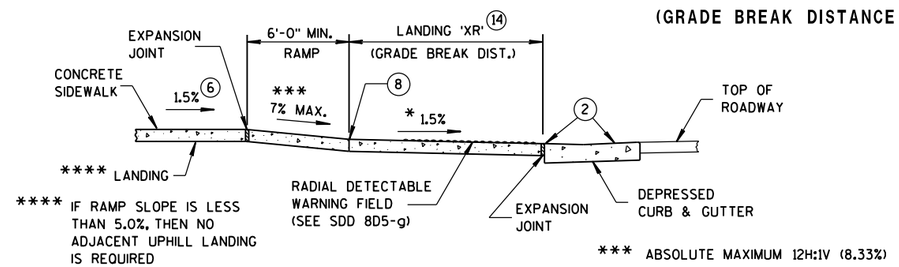

**** IF RAMP SLOPE IS LESS THAN 5.0%, THEN NO ADJACENT UPHILL LANDING IS REQUIRED

*** ABSOLUTE MAXIMUM 12H:1V (8.33%)

SECTION C-C FOR TYPE 4B1

CURB RAMPS
RADIAL DETECTABLE WARNING FIELD APPLICATIONS

STATE OF WISCONSIN
DEPARTMENT OF TRANSPORTATION

6

S.D.D. 8 D 5-19f

	MIN.	MAX.
A	1.6"	2.4"
B	0.65"	1.5"
C	*	*
D	0.9"	1.4"

* THE C DIMENSION IS 50% TO 65% OF THE D DIMENSION.

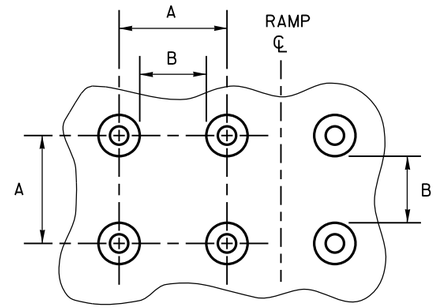

PLAN VIEW

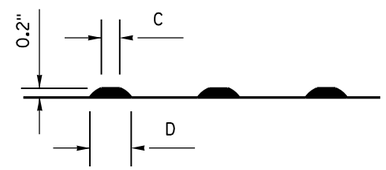

ELEVATION VIEW

TRUNCATED DOMES

DETECTABLE WARNING PATTERN DETAIL

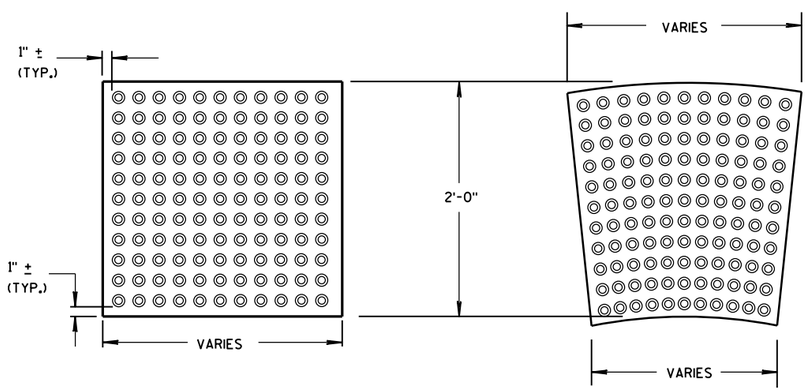

RECTANGULAR PLATES

RADIAL PLATES

DETECTABLE WARNING FIELDS (TYPICAL)

PLAN VIEW

GENERAL NOTES

DETECTABLE WARNING FIELDS THAT ARE INSTALLED AS A GROUP OR SIDE BY SIDE, SHALL BE FROM THE SAME MANUFACTURER.

PLACE ALL DETECTABLE WARNING FIELD SYSTEMS IN ACCORDANCE TO THE MANUFACTURER'S RECOMMENDATION.

FIELD CUTS AT INTERMEDIATE JOINTS WITHIN THE RADIAL DETECTABLE WARNING FIELD ARE PROHIBITED.

DETERMINE FINAL RADIAL WARNING FIELD CONFIGURATION AND ITS INDIVIDUAL PLATE LOCATIONS. PERFORM PRE-LAYOUT PRIOR TO PLACEMENT IN PLASTIC CONCRETE. FOLLOW MANUFACTURER'S PRODUCT LIST AND INSTALLATION RECOMMENDATIONS.

FOR RADIAL DETECTABLE WARNING FIELD APPLICATIONS WHERE STANDARD RADIAL PLATES ARE NOT AVAILABLE AT AN INTERSECTION CURB RADIUS, A COMBINATION OF SQUARE OR RECTANGULAR PLATES AND RADIAL PLATES MAY BE USED TO FORM RADIAL CONFIGURATION. RADIAL WEDGES IN COMBINATION WITH SQUARE PANELS ARE ALSO ACCEPTABLE. FOLLOW MANUFACTURER'S RECOMMENDATIONS.

REFER TO CONTRACT AND STANDARD SPECIFICATIONS FOR FIELD CUTTING REQUIREMENTS.

DO NOT EMBED IN CONCRETE ANY FIELD-CUT PLATES WITH CUT EDGES SHORTER THAN 6 INCHES. CONSULT WITH MANUFACTURER FOR RE-DRILLING AND ANCHORING REQUIREMENTS OF FIELD-CUT PLATES.

(15) FIELD SAW CUTS ALONG RADIAL DETECTABLE WARNING PLATES WILL BE NECESSARY TO MATCH EACH CURB RAMP EDGE. AVOID CUTTING THROUGH DOMES WHENEVER POSSIBLE. MAKE FIELD CUTS TRUE TO LINE AND WITHIN 1/8" DEVIATION. SMOOTH EDGES OF FIELD CUT PLATES.

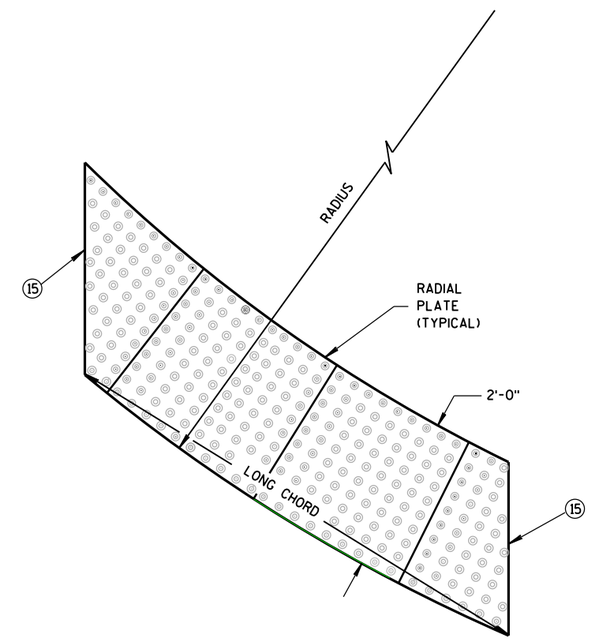

RADIAL DETECTABLE WARNING FIELD ATTRIBUTES

CURB RAMPS
RECTANGULAR AND RADIAL
DETECTABLE WARNING PLATES

STATE OF WISCONSIN
DEPARTMENT OF TRANSPORTATION

APPROVED
June, 2017 — DATE
/S/ Rodney Taylor — ROADWAY STANDARDS UNIT SUPERV
ENT
FHWA

6

S.D.D. 8 D 5-19g

INLET COVERS

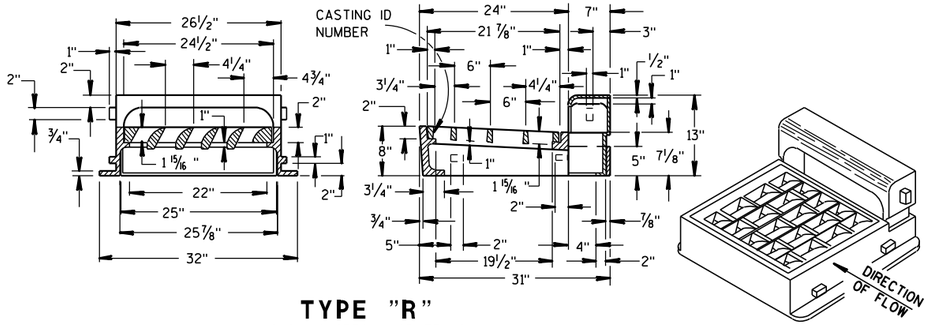

TYPE "R"

SHOWING SPECIAL GRATE NO. 1
(TO BE NOTED AS R-1 IN DRAINAGE TABLE)

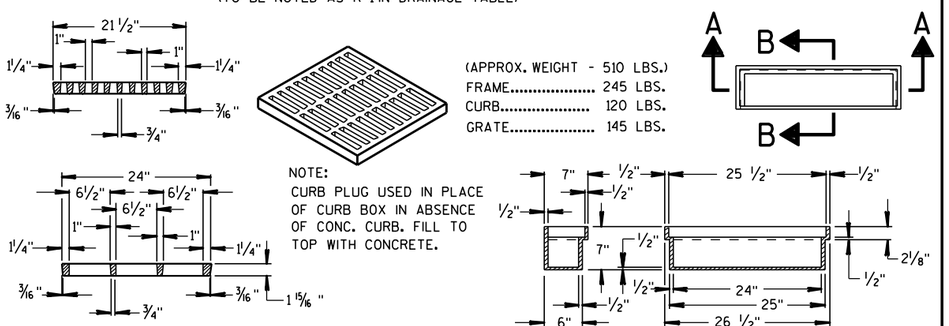

(APPROX. WEIGHT - 510 LBS.)
FRAME..... 245 LBS.
CURB..... 120 LBS.
GRATE..... 145 LBS.

NOTE:
CURB PLUG USED IN PLACE OF CURB BOX IN ABSENCE OF CONC. CURB. FILL TO TOP WITH CONCRETE.

SECTION B-B SECTION A-A

GRATE FOR TYPE "R" INLET COVER

(GRATE..... 150 LBS.)
(TO BE USED UNLESS OTHERWISE NOTED IN DRAINAGE TABLE)

SPECIAL CURB PLUG "P"

(CURB PLUG..... 85 LBS.)
(TO BE NOTED AS R-P IN DRAINAGE TABLE)

'H' = 9" FOR 6" CURB
'H' = 11" FOR 8" CURB
'G' = 13 ¾" FOR 6" CURB
'G' = 15 ¾" FOR 8" CURB

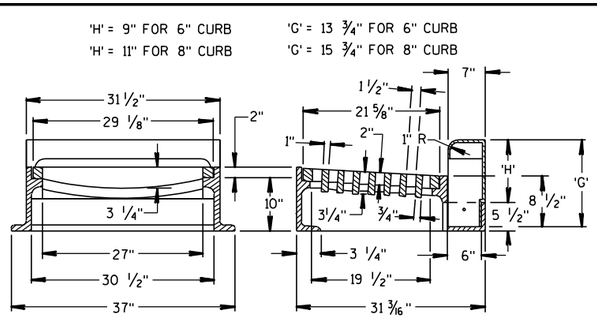

TYPE "W"

(APPROX. WEIGHT - 670 LBS.)
FRAME..... 350 LBS.
CURB BOX..... 135 LBS.
GRATE..... 185 LBS.

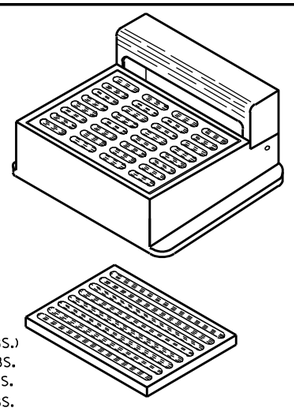

ALTERNATE GRATE
(FOR EXPRESSWAY RAMPS)

TYPES "W" & "X"

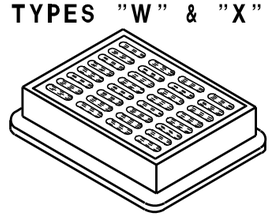

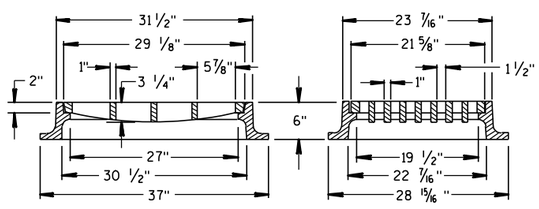

TYPE "X"

(APPROX. WEIGHT - 470 LBS.)

MANHOLE COVER

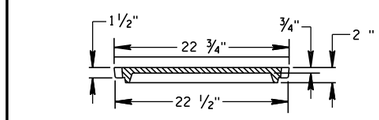

SECTION C-C

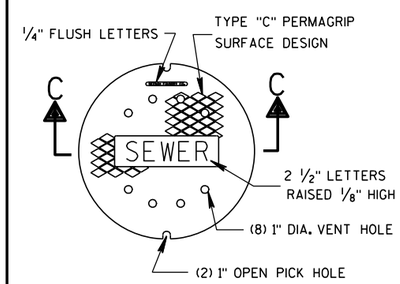

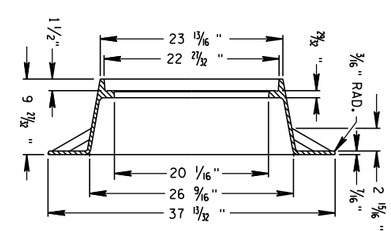

TYPE "Q"

(APPROX. WEIGHT - 290 LBS.)

TABLE OF DIMENSIONS

TYPE	'A'	'B'	'C'
11	3'-6"	2'-8"	12" - 36"*
12	4'-0"	3'-8"	12" - 42"**
13	5'-0"	5'-8"	42" - 48"
14	6'-0"	7'-8"	54" - 60"

* 12" - 21" FOR PRECAST MANHOLES
** 12" - 24" FOR PRECAST MANHOLES

THE FIRST STEP SHALL BE PLACED 16" ABOVE THE BENCH.

MANHOLE

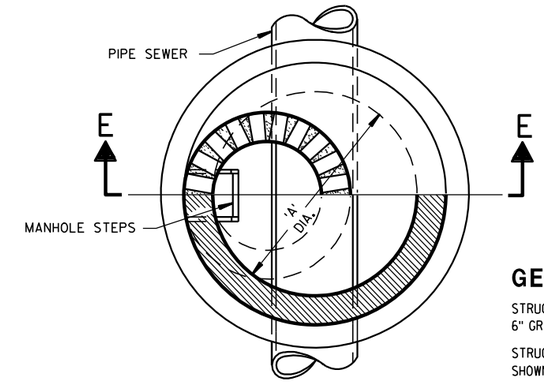

HALF SECTION D-D

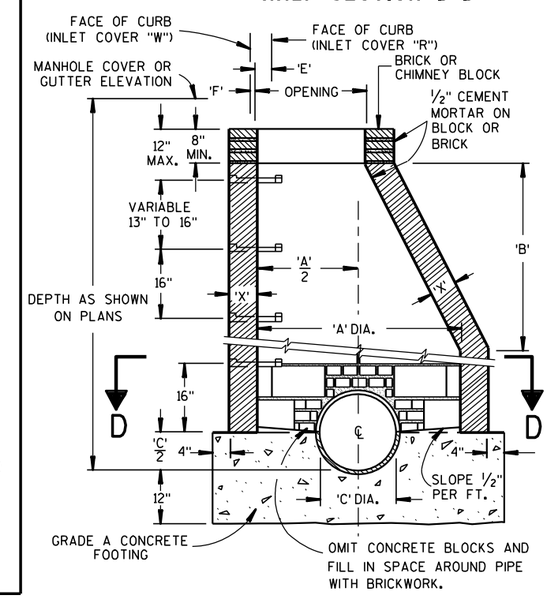

SECTION E-E

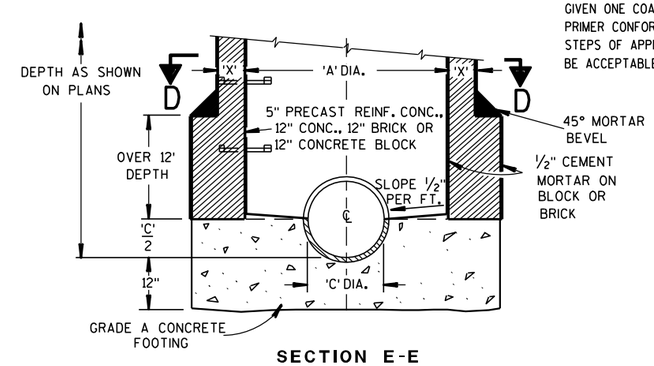

SECTION E-E

TYPES 11, 12, 13 & 14

TABLE OF OPENING DIMENSIONS

COVER TYPE	COVER DESCRIPTION	OPENING	'E'	'F'
"O"	ROUND	2'-2" DIA.	—	—
"W"	CURB BOX	1'-8" X 2'-6"	—	1"
"X"	INLET	1'-10" X 2'-6"	—	—
"R"	CURB BOX	2'-0" X 2'-1"	4"	—

GENERAL NOTES

STRUCTURE WALL THICKNESS 'X' TO BE 8" BRICK, 6" CONCRETE BLOCK, 6" GRADE A CONCRETE OR 5" PRECAST REINFORCED CONCRETE.

STRUCTURE FOOTINGS ARE TO BE GRADE A CONCRETE OF THE THICKNESS SHOWN IN THE DETAIL OR 5" PRECAST REINFORCED CONCRETE.

REINFORCEMENT FOR 5" PRECAST REINFORCED CONCRETE SHALL BE 6" X 6" W16 X W16 WELDED SREEL WIRE FABRIC AND SHALL BE EMBEDDED 2" CLEAR.

PRECAST INLET UNITS AND BASES SHALL CONFORM TO THE PERTINENT REQUIREMENTS OF AASHTO DESIGNATION M 199.

PRECAST CONCRETE FLAT SLAB TOPS MAY BE USED ON THE STRUCTURES. THE TOPS SHALL BE INSTALLED ON A BED OF MORTAR.

PRECAST REINFORCED BASES SHALL BE PLACED ON A BED OF MATERIAL AT LEAST 6" IN DEPTH, WHICH MEETS THE REQUIREMENTS FOR GRANULAR BACK-FILL. THIS BEDDING SHALL BE COMPACTED AND PROVIDE UNIFORM SUPPORT FOR THE ENTIRE AREA OF THE BASE.

SET FRAME ELEVATION 0.03 FT. LOWER THAN ELEVATION INDICATED ON THE PLANS.

THE CONTRACTOR MAY FORM AND POUR MONOLITHIC CONCRETE INVERT PROVIDED THE PIPE ENDS ARE EXTENDED INTO THE M.H. AND NOT TERMINATED WITHIN THE M.H. WALLS.

MANHOLE STEPS

STEPS MEETING THE FOLLOWING REQUIREMENTS SHALL BE INSTALLED IN ALL STRUCTURES OVER 5 FEET IN DEPTH; 16 INCH C-C MAX. SPACING; PROJECT A MINIMUM CLEAR DISTANCE OF 4 INCHES FROM THE WALL AT THE POINT OF EMBEDMENT; MINIMUM WALL EMBEDMENT OF 3 INCHES IN PRECAST MANHOLE AND 6 INCHES IN 8 INCH BRICK OR 6 INCH BLOCK MANHOLE; TREAD OF STEP SHALL HAVE A NON-SKID SURFACE AND BE FLANKED BY CLEATS, WITH A MINIMUM OF 10 INCHES CLEAR BETWEEN CLEATS, TO PREVENT FOOT SLIPPING OFF THE EDGE CLEATS SHALL BE A MINIMUM OF ¾ INCH HIGH BY ¾ INCH WIDE HAVING A MINIMUM THICKNESS OF ⅜ INCH. STEPS SHALL BE CAPABLE OF SUPPORTING A CONCENTRATED LOAD OF 300 LBS. FERROUS METAL STEPS NOT PAINTED OR TREATED TO RESIST CORROSION SHALL HAVE A MINIMUM CROSS SECTIONAL DIMENSION OF 1 INCH.

SOLID ALUMINUM STEPS SHALL HAVE A MINIMUM CROSS SECTIONAL DIMENSION OF 0.75 INCH. ALUMINUM SURFACES TO BE EMBEDDED IN CONCRETE SHALL BE GIVEN ONE COAT OF SUITABLE QUALITY PAINT, SUCH AS ZINC CHROMATE PRIMER CONFORMING TO FEDERAL SPECIFICATION TT-P-645 OR EQUIVALENT. STEPS OF APPROVED POLYPROPYLENE PLASTIC COATED REINFORCING BAR WILL BE ACCEPTABLE.

MANHOLES, MANHOLE & INLET COVERS

STATE OF WISCONSIN
DEPARTMENT OF TRANSPORTATION

APPROVED
4/12/2011 — DATE
/S/ Jerry H. Zogg — ROADSIDE STANDARDS ENGINEER
FHWA

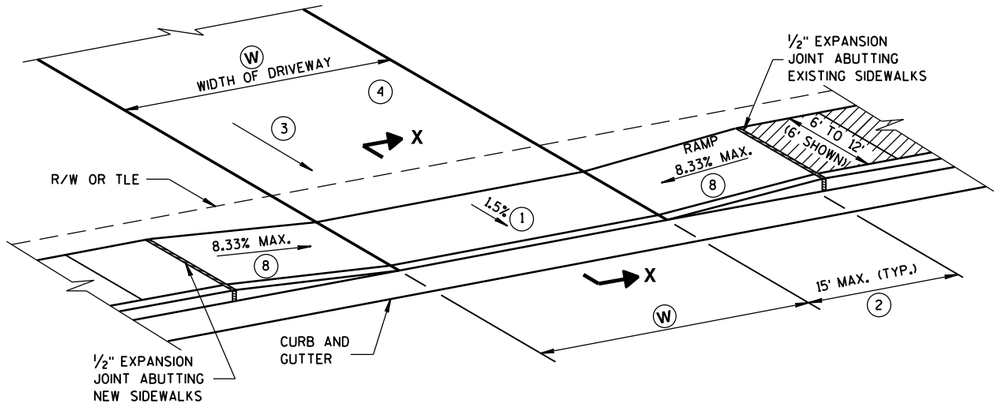

TYPE X

SIDEWALK ABUTS CURB & GUTTER
TERRACE VARIES 0 TO 3 FEET

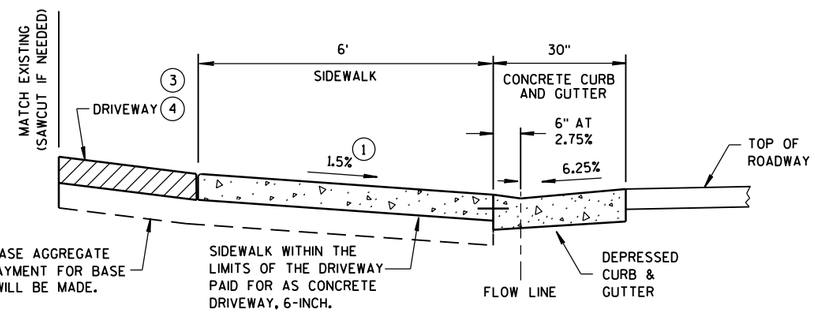

SECTION X-X

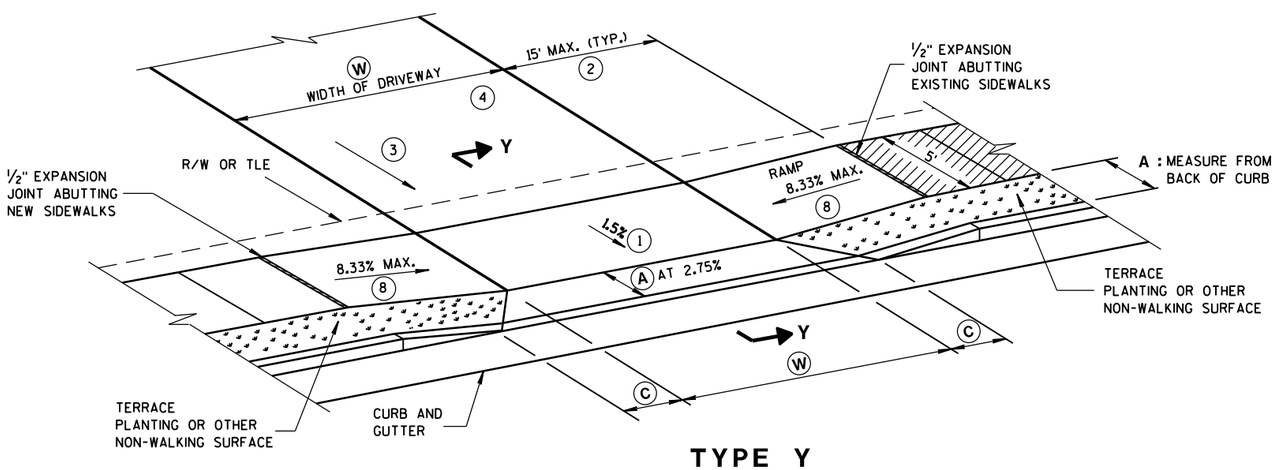

TYPE Y

SIDEWALK WITH NARROWER TERRACE
TERRACE VARIES 4 TO 6 FEET

W: 12' MIN. - 24' MAX. RESIDENTIAL AND NON-COMMERCIAL (PE & FE)
16' MIN. - 35' MAX. COMMERCIAL (CE)

GENERAL NOTES

1. CONSTRUCTION TOLERANCE OF 0.5% ± FOR SIDEWALK CROSS SLOPE. THE SIDEWALK CROSS SLOPE SHALL NOT EXCEED 2%.
2. THE SIDEWALK RAMP MAXIMUM RUNNING SLOPE SHALL NOT REQUIRE THE RAMP LENGTH TO EXCEED 15 FEET TO AVOID CHASING THE SLOPE INDEFINITELY WHEN CONNECTING TO STEEP GRADES. WHEN APPLYING THE 15 FOOT MAXIMUM LENGTH, THE RUNNING SLOPE OF THE SIDEWALK SHALL BE AS FLAT AS FEASIBLE AND NOT EXCEED THE LONGITUDINAL GRADE OF THE ROADWAY.
3. DRIVEWAY SLOPES: DESIRABLE MAXIMUM
   - 10.5% UP AWAY FROM SIDEWALK (SAG)
   - 8.5% DOWN AWAY FROM SIDEWALK (CREST)
   - ABSOLUTE MAXIMUM 15% FOR BOTH CREST AND SAG
4. DRIVEWAY TYPES
   - 6-INCH CONCRETE DRIVEWAY PAVEMENT OVER 6-INCH BASE AGGREGATE
   - 2-INCH TO 3-INCH ASPHALTIC SURFACE OVER 6-INCH BASE AGGREGATE
   - 6-INCH BASE AGGREGATE (MAY BE INCREASED FOR CLAY SUBGRADES)
5. PROVIDE CONSTRUCTION JOINTS ALONG THE CENTER OF THE CONCRETE FOR DRIVEWAYS UNDER 20 FEET IN WIDTH AND AT THE THIRD POINTS OVER 20 FEET IN WIDTH.
6. W IS SHOWN ON PLAN AND PROFILE SHEETS.
7. OFFSETS, ELEVATIONS, AND PERCENT GRADE ARE SHOWN ON THE CROSS SECTIONS.
8. SLOPE SIDEWALK RAMP TOWARD APRON AS SHOWN WHERE THERE IS NO TERRACE OR WHERE THE TERRACE WIDTH IS LESS THAN 6 FEET WIDE.

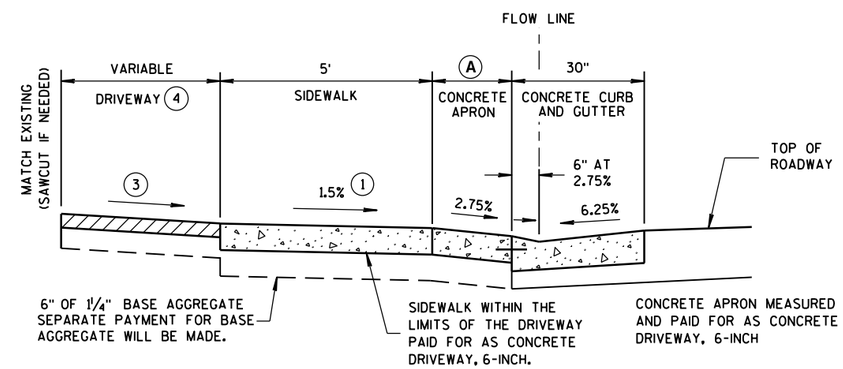

NOTE: SIDEWALK MAY BE DEPRESSED IN DRIVEWAY AREAS

SECTION Y-Y

DRIVEWAY DETAIL
WITH CONCRETE CURB & GUTTER

(URBAN AND SUBURBAN)

TABLE Y

A FEET	C FEET
3.5'	2.0'
4.5'	3.0'
5.5'	3.5'

NOT TO SCALE

DRIVEWAY AND SIDEWALK RAMPS
TYPES X & Y

STATE OF WISCONSIN
DEPARTMENT OF TRANSPORTATION

APPROVED
December, 2016 /S/ Rodney Taylor
DATE ROADWAY STANDARDS UNIT SUPERV ENT
FHWA

6

S.D.D. 8 D 18-1

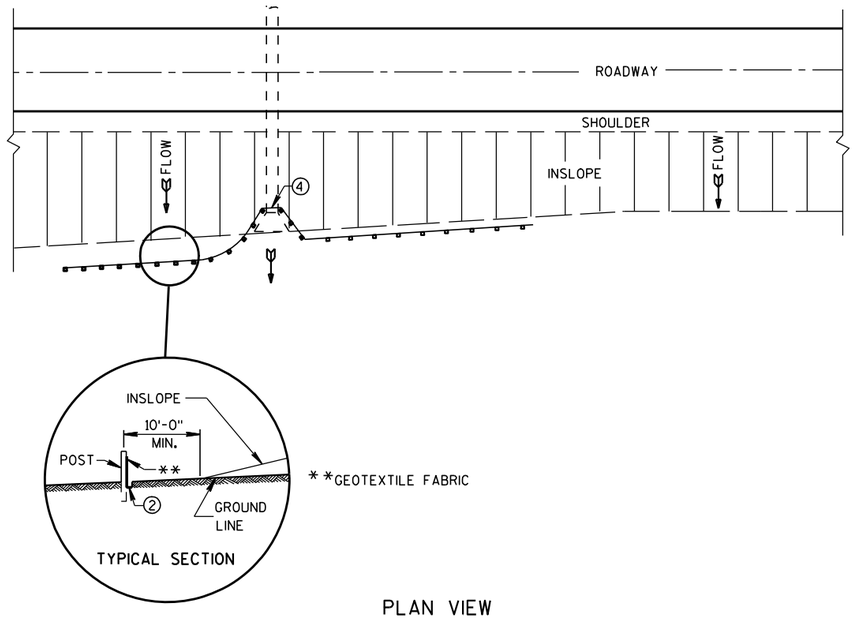

PLAN VIEW

TYPICAL APPLICATION OF SILT FENCE

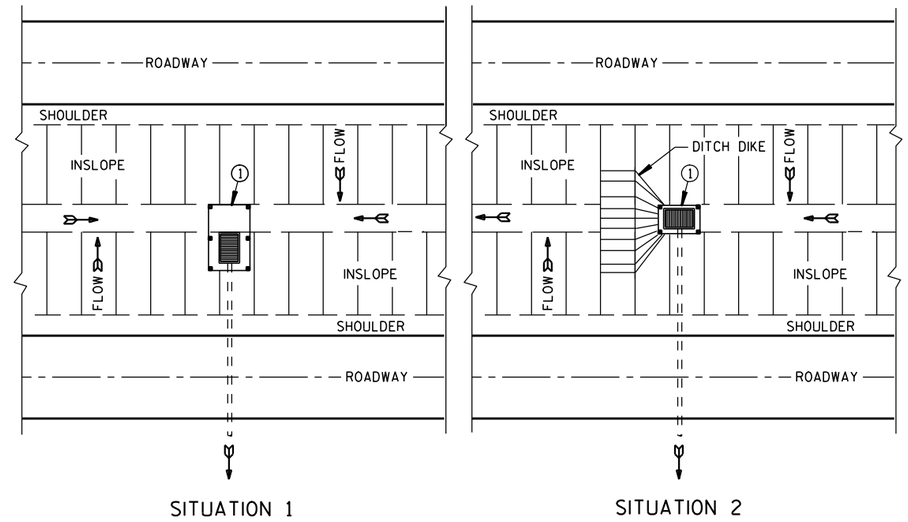

PLAN VIEW

SILT FENCE AT MEDIAN SURFACE DRAINS

GENERAL NOTES

DETAILS OF CONSTRUCTION NOT SHOWN ON THIS DRAWING SHALL CONFORM TO THE PERTINENT REQUIREMENTS OF THE STANDARD SPECIFICATIONS AND APPLICABLE SPECIAL PROVISIONS.

① HORIZONTAL BRACE REQUIRED WITH 2" X 4" WOODEN FRAME OR EQUIVALENT AT TOP OF POSTS.

② FOR MANUAL INSTALLATIONS THE TRENCH SHALL BE A MINIMUM OF 4" WIDE & 6" DEEP TO BURY AND ANCHOR THE GEOTEXTILE FABRIC. FOLD MATERIAL TO FIT TRENCH AND BACKFILL & COMPACT TRENCH WITH EXCAVATED SOIL.

③ WOOD POSTS SHALL BE A MINIMUM SIZE OF 1⅛" X 1⅛" OF OAK OR HICKORY.

④ SILT FENCE TO EXTEND ACROSS THE TOP OF THE PIPE.

⑤ CONSTRUCT SILT FENCE FROM A CONTINUOUS ROLL IF POSSIBLE BY CUTTING LENGTHS TO AVOID JOINTS. IF A JOINT IS NECESSARY USE ONE OF THE FOLLOWING TWO METHODS; A) OVERLAP THE END POSTS AND TWIST, OR ROTATE, AT LEAST 180 DEGREES. B) HOOK THE END OF EACH SILT FENCE LENGTH.

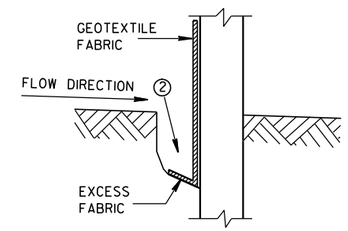

TRENCH DETAIL

NOTE: ADDITIONAL POST DEPTH OR TIE BACKS MAY BE REQUIRED IN UNSTABLE SOILS

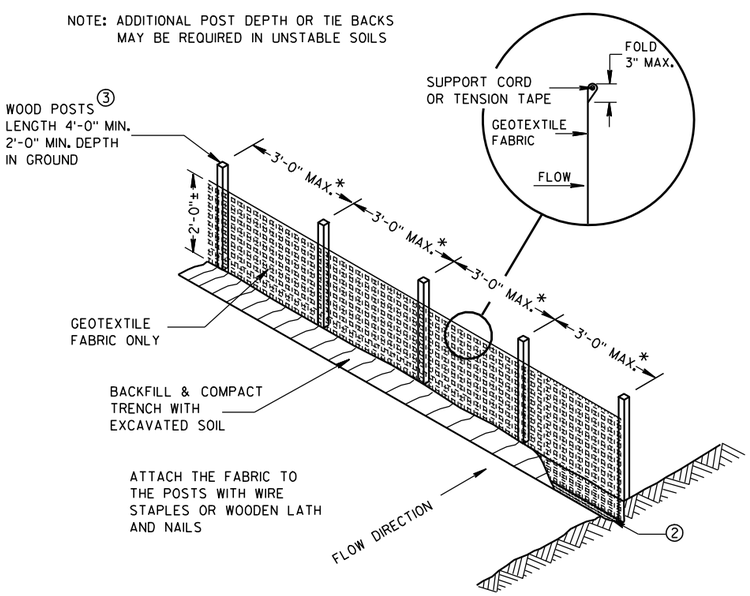

*NOTE: 8'-0" POST SPACING ALLOWED IF A WOVEN GEOTEXTILE FABRIC IS USED.

SILT FENCE

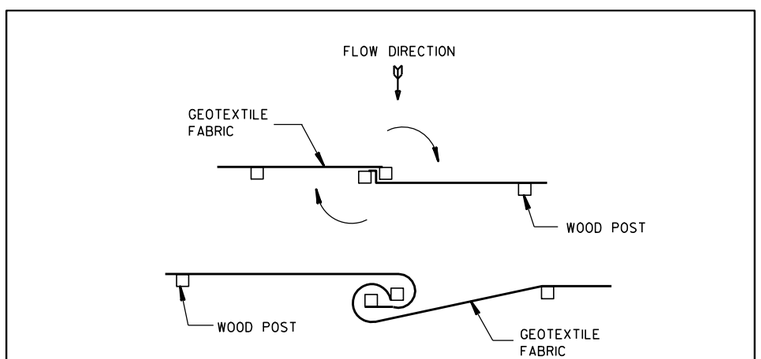

TWIST METHOD

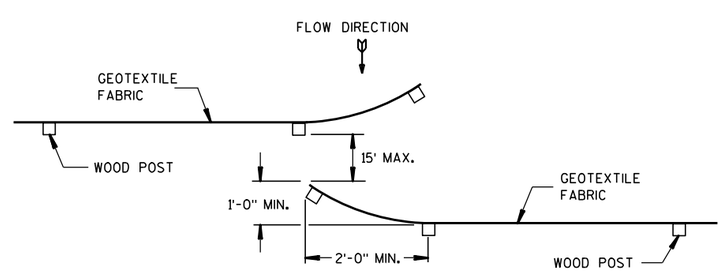

HOOK METHOD

JOINING TWO LENGTHS OF SILT FENCE ⑤

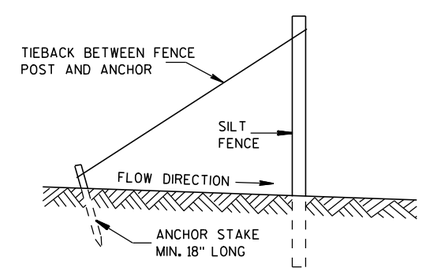

SILT FENCE TIE BACK

(WHEN REQUIRED BY THE ENGINEER)

SILT FENCE
STATE OF WISCONSIN DEPARTMENT OF TRANSPORTATION
APPROVED 4-29-05 /S/ Beth Cann----- DATE CHIEF ROADWAY DEVELOP ENGINEER FHWA

6

6

S.D.D. 8 E 9-6

S.D.D. 8 E 9-6

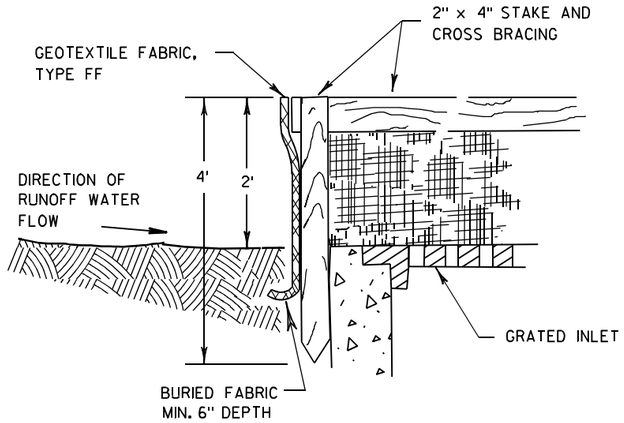

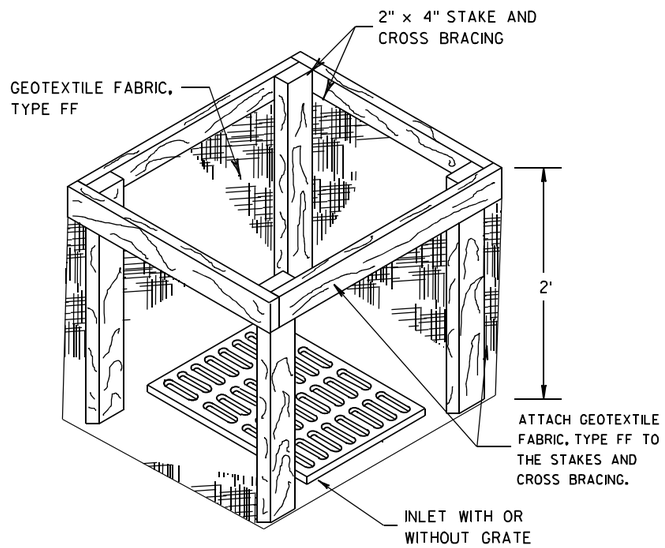

INLET PROTECTION, TYPE A

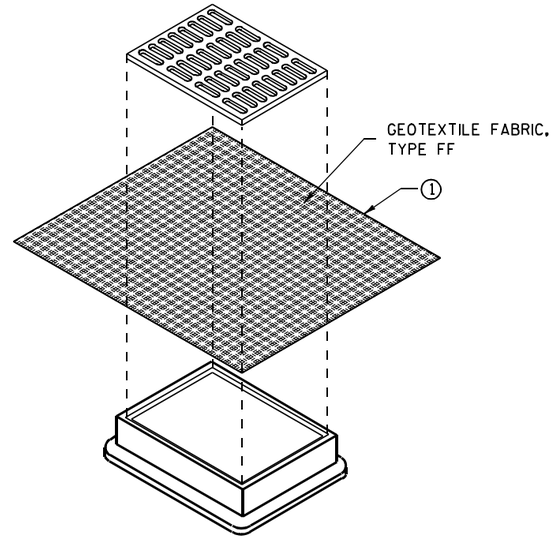

INLET PROTECTION, TYPE B (WITHOUT CURB BOX)

(CAN BE INSTALLED IN ANY INLET WITHOUT A CURB BOX)

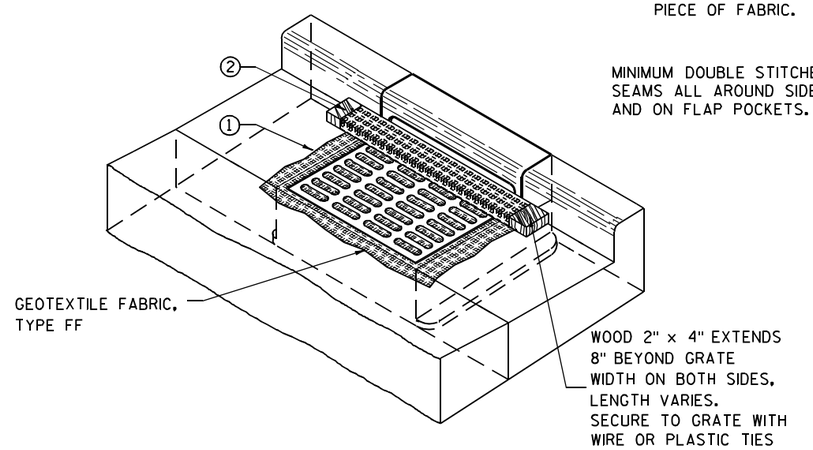

INLET PROTECTION, TYPE C (WITH CURB BOX)

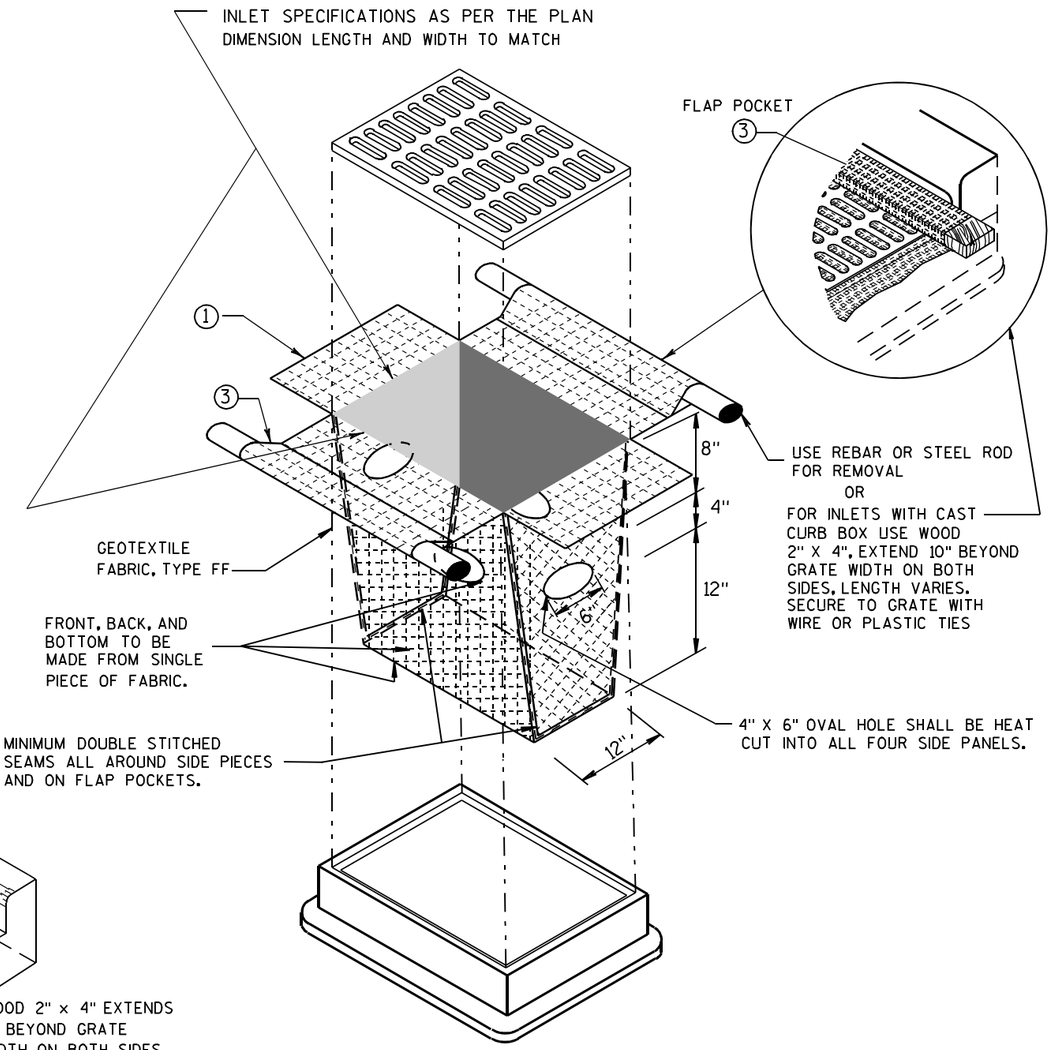

INLET PROTECTION, TYPE D

(CAN BE INSTALLED IN ANY INLET TYPE WITH OR WITHOUT A CURB BOX AS PER NOTE 2)

GENERAL NOTES

INLET PROTECTION DEVICES SHALL BE MAINTAINED OR REPLACED AT THE DIRECTION OF THE ENGINEER.

MANUFACTURED ALTERNATIVES APPROVED AND LISTED ON THE DEPARTMENT'S EROSION CONTROL PRODUCT ACCEPTABILITY LIST MAY BE SUBSTITUTED.

WHEN REMOVING OR MAINTAINING INLET PROTECTION, CARE SHALL BE TAKEN SO THAT THE SEDIMENT TRAPPED ON THE GEOTEXTILE FABRIC DOES NOT FALL INTO THE INLET. ANY MATERIAL FALLING INTO THE INLET SHALL BE REMOVED IMMEDIATELY.

1. FINISHED SIZE, INCLUDING FLAP POCKETS WHERE REQUIRED, SHALL EXTEND A MINIMUM OF 10" AROUND THE PERIMETER TO FACILITATE MAINTENANCE OR REMOVAL.
2. FOR INLET PROTECTION, TYPE C (WITH CURB BOX), AN ADDITIONAL 18" OF FABRIC IS WRAPPED AROUND THE WOOD AND SECURED WITH STAPLES. THE WOOD SHALL NOT BLOCK THE ENTIRE HEIGHT OF THE CURB BOX OPENING.
3. FLAP POCKETS SHALL BE LARGE ENOUGH TO ACCEPT WOOD 2X4.

INSTALLATION NOTES

TYPE B & C

TRIM EXCESS FABRIC IN THE FLOW LINE TO WITHIN 3" OF THE GRATE.

THE CONTRACTOR SHALL DEMONSTRATE A METHOD OF MAINTENANCE, USING A SEWN FLAP, HAND HOLDS OR OTHER METHOD TO PREVENT ACCUMULATED SEDIMENT FROM ENTERING THE INLET.

TYPE D

DO NOT INSTALL INLET PROTECTION TYPE D IN INLETS SHALLOWER THAN 30", MEASURED FROM THE BOTTOM OF THE INLET TO THE TOP OF THE GRATE.

TRIM EXCESS FABRIC IN THE FLOW LINE TO WITHIN 3" OF THE GRATE.

THE INSTALLED BAG SHALL HAVE A MINIMUM SIDE CLEARANCE, BETWEEN THE INLET WALLS AND THE BAG, MEASURED AT THE BOTTOM OF THE OVERFLOW HOLES, OF 3". WHERE NECESSARY THE CONTRACTOR SHALL CINCH THE BAG, USING PLASTIC ZIP TIES, TO ACHIEVE THE 3" CLEARANCE. THE TIES SHALL BE PLACED AT A MAXIMUM OF 4" FROM THE BOTTOM OF THE BAG.

INLET PROTECTION TYPE A, B, C, AND D

STATE OF WISCONSIN
DEPARTMENT OF TRANSPORTATION

APPROVED
10/16/02 — DATE
/S/ Beth Cannestra — CHIEF ROADWAY DEVELOPMENT ENGINEER
FHWA

6

S.D.D. 8 E 10-2

METAL APRON ENDWALLS

PIPE DIA. (IN.)	MIN. THICK. (Inches) STEEL	MIN. THICK. (Inches) ALUM.	DIMENSIONS (Inches) A (±1")	B (MAX.)	H (±1")	L (±1 1/2")	L1 ①	L2 ①	W (±2")	APPROX. SLOPE	BODY
12	.064	.060	6	6	6	21	12	17 1/2	24	2 1/2 to 1	1 Pc.
15	.064	.060	7	8	6	26	14	21 3/4	30	2 1/2 to 1	1 Pc.
18	.064	.060	8	10	6	31	15	28 1/4	36	2 1/2 to 1	1 Pc.
21	.064	.060	9	12	6	36	18	29 5/8	42	2 1/2 to 1	1 Pc.
24	.064	.075	10	13	6	41	18	37 1/4	48	2 1/2 to 1	1 Pc.
30	.079	.075	12	16	8	51	18	52 1/4	60	2 1/2 to 1	1 Pc.
36	.079	.105	14	19	9	60	24	59 3/4	72	2 1/2 to 1	2 Pc.
42	.109	.105	16	22	11	69	24	75 5/8	84	2 1/2 to 1	2 Pc.
48	.109	.105	18	27	12	78	24	81	90	2 1/4 to 1	3 Pc.
54	.109	.105	18	30	12	84	30	85 1/2	102	2 1/4 to 1	3 Pc.
60	.109×	.105×	18	33	12	87	—	—	114	2 to 1	3 Pc.
66	.109×	.105×	18	36	12	87	—	—	120	2 to 1	3 Pc.
72	.109×	.105×	18	39	12	87	—	—	126	2 to 1	3 Pc.
78	.109×	.105×	18	42	12	87	—	—	132	1 1/2 to 1	3 Pc.
84	.109×	.105×	18	45	12	87	—	—	138	1 1/2 to 1	3 Pc.
90	.109×	.105×	18	37	12	87	—	—	144	1 1/2 to 1	3 Pc.
96	.109×	.105×	18	35	12	87	—	—	150	1 1/2 to 1	3 Pc.

× EXCEPT CENTER PANEL
SEE GENERAL NOTES

REINFORCED CONCRETE APRON ENDWALLS

PIPE DIA. (IN.)	DIMENSIONS (Inches) T	A	B	C	D	E	G	APPROX. SLOPE
12	2	4	24	48 7/8	72 7/8	24	2	3 to 1
15	2 1/4	6	27	46	73	30	2 1/4	3 to 1
18	2 1/2	9	27	46	73	36	2 1/2	3 to 1
21	2 3/4	9	36	37 1/2	73 1/2	42	2 3/4	3 to 1
24	3	9 1/2	43 1/2	30	73 1/2	48	3	3 to 1
27	3 1/4	10 1/2	49 1/2	24	73 1/2	54	3 1/4	3 to 1
30	3 1/2	12	54	19 3/4	73 1/2	60	3 1/2	3 to 1
36	4	15	63	34 3/4	97 3/4	72	4	3 to 1
42	4 1/2	21	63	35	98	78	4 1/2	3 to 1
48	5	24	72	26	98	84	5	3 to 1
54	5 1/2	27	65	*33 1/4-**35	*98 1/4-**100	90	5 1/2	2 2/5 to 1
60	6	*30-**35	60	39	99	96	5	2 to 1
66	6 1/2	*24-**30	*72-**78	*21-**27	99	102	5 1/2	2 to 1
72	7	*24-**36	78	21	99	108	6	2 to 1
78	7 1/2	*24-**36	78	21	99	114	6 1/2	2 to 1
84	8	36	90 1/2	21	111 1/2	120	6 1/2	1 1/2 to 1
90	8 1/2	41	87 1/2	24	111 1/2	132	6 1/2	1 1/2 to 1

*MINIMUM
**MAXIMUM

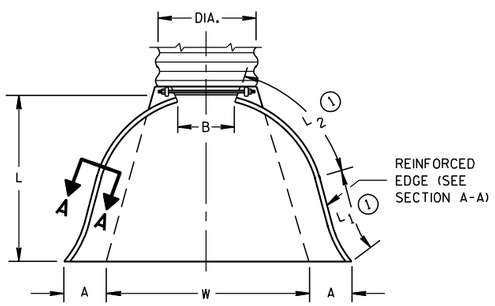

PLAN VIEW

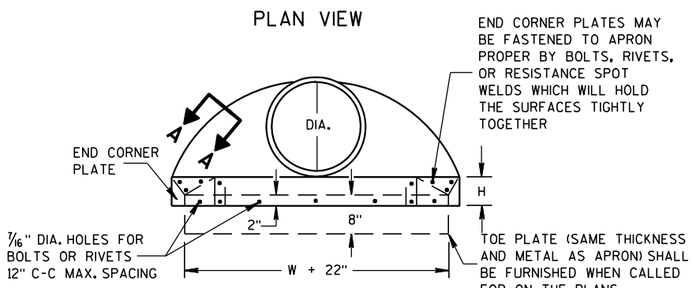

END VIEW

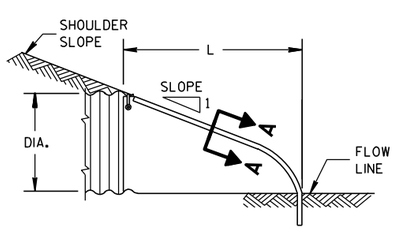

SIDE ELEVATION

METAL ENDWALLS

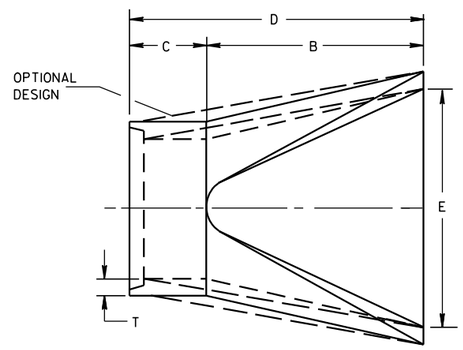

PLAN

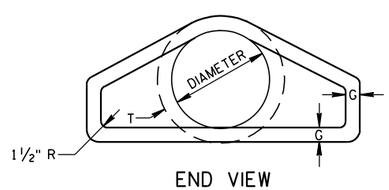

END VIEW

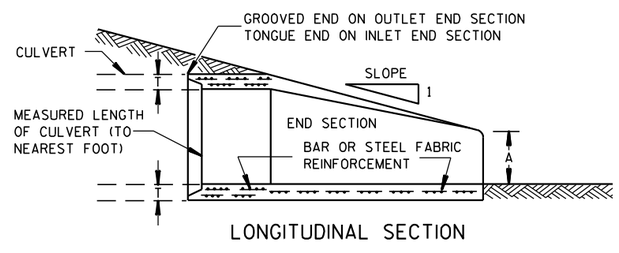

LONGITUDINAL SECTION

CONCRETE ENDWALLS

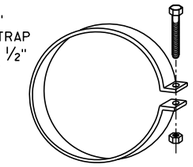

ALTERNATE FOR TYPE 1 CONNECTION

END SECTION CONNECTOR STRAP

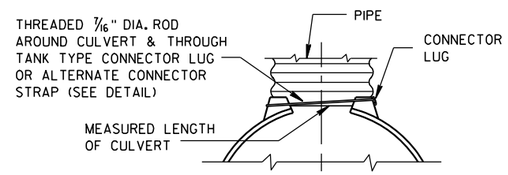

TYPE 1
FOR 12" THRU 24" CORR. PIPE

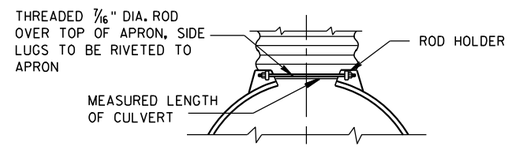

TYPE 2
FOR 30" THRU 96" CORR. PIPE

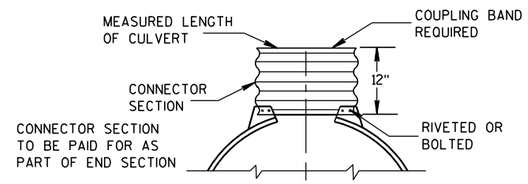

TYPE 3
FOR 42" THRU 96" CORR. PIPE

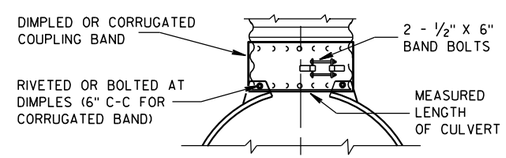

TYPE 5
ALTERNATE FOR:
ALL SIZES CORRUGATED CIRCULAR PIPE

NOTE: DIMPLED BAND FITS OVER OUTSIDE OF ENDWALL, AND CORRUGATED BAND FITS INSIDE ENDWALL. DIMPLED BAND MAY BE USED WITH HELICALLY CORRUGATED PIPE.

FOR CIRCUMFERENTIALLY CORRUGATED PIPE USE ENDWALL CONNECTION DETAILS 1, 2, 3 OR 5 AS APPLICABLE.

FOR HELICALLY CORRUGATED PIPE USE ENDWALL CONNECTION DETAILS 1, 2 OR 5.

FOR HELICALLY CORRUGATED PIPES WITH TWO CIRCUMFERENTIAL CORRUGATIONS AT EACH END USE ENDWALL CONNECTION DETAILS 1, 2 OR 3.

CONNECTION DETAILS

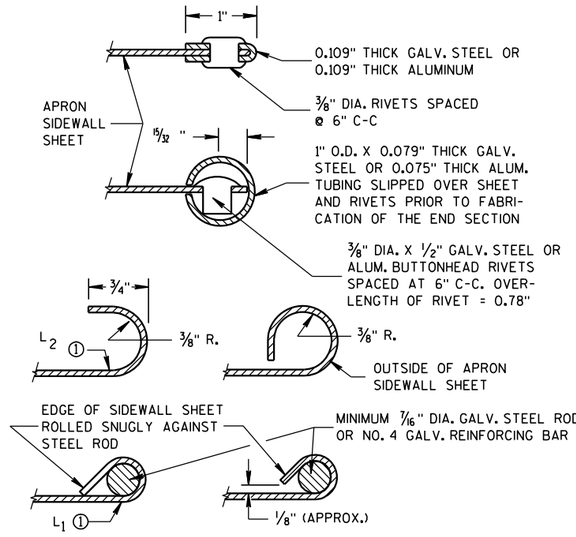

SECTION A-A

GENERAL NOTES

DETAILS OF CONSTRUCTION, MATERIALS AND WORKMANSHIP NOT SHOWN ON THIS DRAWING SHALL CONFORM TO THE PERTINENT REQUIREMENTS OF THE STANDARD SPECIFICATIONS AND THE APPLICABLE SPECIAL PROVISIONS.

CONCRETE CULVERT ENDWALLS MAY NOT BE USED WITH GALVANIZED STEEL OR ALUMINUM CULVERT PIPE OR VISE VERSA. GALVANIZED STEEL OR ALUMINUM ENDWALLS SHALL NORMALLY BE INSTALLED ON CULVERT PIPE OF THE SAME METAL.

ALL THREE PIECE STEEL APRON ENDWALLS FOR 60" DIAMETER PIPE AND LARGER SHALL HAVE 0.109" SIDES AND 0.138" CENTER PANELS. ALL THREE PIECE ALUMINUM APRON ENDWALLS FOR 60" DIAMETER PIPE AND LARGER SHALL HAVE 0.105" SIDES AND 0.134" CENTER PANELS. THE WIDTH OF CENTER PANELS SHALL BE GREATER THAN 20 PERCENT OF THE PIPE PERIMETER.

LAP SEAMS SHALL BE TIGHTLY JOINED BY GALVANIZED RIVETS OR BOLTS FOR STEEL UNITS AND ALUMINUM RIVETS AND BOLTS FOR ALUMINUM UNITS. FOR THE 60" THROUGH 96" DIAMETER APRON ENDWALL SIZES, THE REINFORCED EDGES AND CENTER PANEL SEAMS SHALL BE FURTHER REINFORCED WITH GALVANIZED STEEL OR ALUMINUM STIFFENER ANGLES. THE ANGLES SHALL BE ATTACHED BY GALVANIZED NUTS AND BOLTS FOR STEEL UNITS AND ALUMINUM NUTS AND BOLTS FOR ALUMINUM UNITS.

WHERE TWO OR MORE PIPES WITH APRON ENDWALLS ARE LAID ADJACENT TO EACH OTHER, THEY SHALL BE SEPARATED BY A DISTANCE SUFFICIENT TO PROVIDE A MINIMUM CLEARANCE OF 6 INCHES BETWEEN APRON ENDWALLS.

① FOR PIPE SIZES UP TO 60" DIAMETER, A 180° ROLLED EDGE MAY BE USED INSTEAD OF STEEL ROD REINFORCEMENT. SEE SECTION A-A.

APRON ENDWALLS FOR CULVERT PIPE

STATE OF WISCONSIN
DEPARTMENT OF TRANSPORTATION

APPROVED
11/30/94 — DATE
/S/ Rory L. Rhinesmith — CHIEF ROADWAY DEVELOPMENT ENGINEER
FHWA

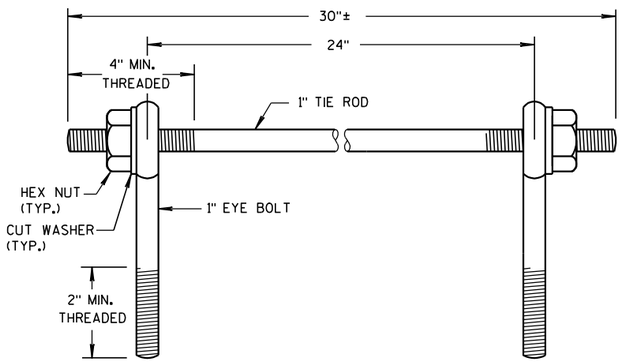

EYE BOLTS AND TIE ROD

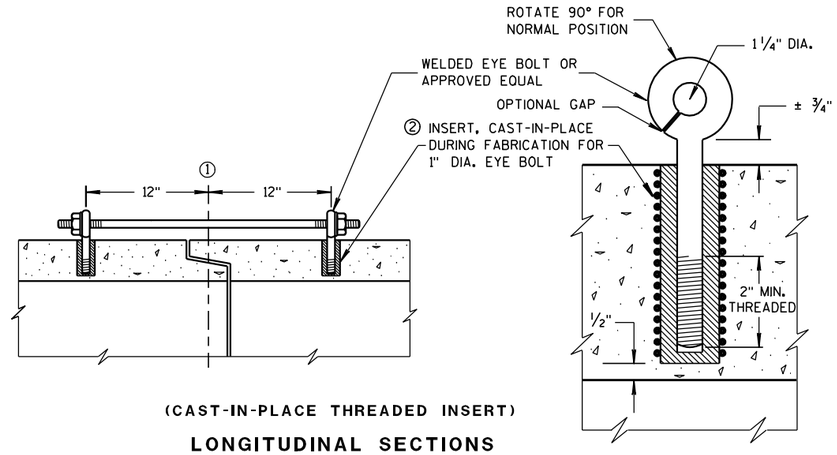

(CAST-IN-PLACE THREADED INSERT)

LONGITUDINAL SECTIONS

EYE BOLT AND TIE ROD ASSEMBLY (ALTERNATE NO. 1)

GENERAL NOTES

DETAILS OF CONSTRUCTION, MATERIALS, AND WORKMANSHIP NOT SHOWN ON THIS DRAWING SHALL CONFORM TO THE PERTINENT REQUIREMENTS OF THE STANDARD SPECIFICATIONS AND APPLICABLE SPECIAL PROVISIONS.

CONCRETE CULVERT AND STORM SEWER PIPE SHALL BE TIED TOGETHER IN THE MANNER ILLUSTRATED BY THIS DETAIL AT LOCATIONS DESIGNATED IN THE STANDARD SPECIFICATIONS AND THE PLAN. THE CONTRACTOR MAY USE EITHER ALTERNATE 1, 2 OR 3 FOR DRAINAGE STRUCTURES. ONLY ALTERNATE 1 AND 3 MAY BE USED FOR CATTLE PASSES, UNLESS OTHERWISE STATED IN THE CONTRACT. THE MATERIALS, FABRICATION AND WORK NECESSARY TO TIE THE PIPE BY THIS DETAIL WILL BE CONSIDERED INCIDENTAL TO THE PIPE AND APRON ENDWALLS IF REQUIRED.

DETAILED DRAWINGS FOR PROPOSED ALTERNATE DESIGNS FOR JOINT TIES SHALL BE SUBMITTED TO THE ENGINEER FOR APPROVAL.

JOINT TIES TO BE HOT-DIP GALVANIZED PER ASTM A 153.

① ℄ OF TONGUE AND GROOVE OR BELL AND SPIGOT JOINTS.

② THE INSIDE OF THE THREADED INSERTS SHALL BE CLEAN TO ALLOW THE INSERTION OF THREADED EYE BOLTS.

③ HOLES SHALL BE CAST-IN-PLACE OR DRILLED 12 INCHES FROM ℄ OF TONGUE AND GROOVE.

④ BOLT PROJECTION INSIDE OF PIPE SHALL NOT EXCEED 2 INCHES.

⑤ OPENING TO BE ROD DIAMETER PLUS 1 INCH.

⑥ LENGTH ADEQUATE TO EXTEND TO WITHIN 1/2 INCH OF THE INNER SURFACE OF THE PIPE.

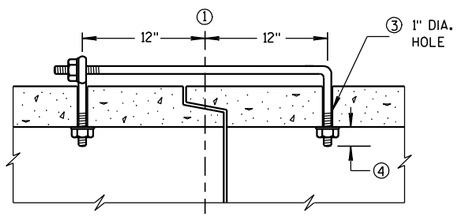

(TONGUE & GROOVE PIPE)

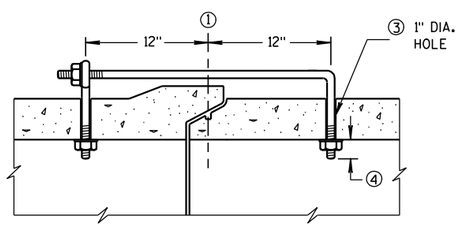

(MODIFIED BELL PIPE)

LONGITUDINAL SECTION

EYE BOLT DIMENSION TABLE

PIPE SIZE	L = LENGTH	
	TONGUE & GROOVE PIPE	MODIFIED BELL PIPE
18" TO 24"	4 1/2"	6 1/4"
30"	5"	7"
36"	5 1/2"	7"
42"	6"	
48"	6 1/2"	
60"	7 1/2"	
66"	8"	

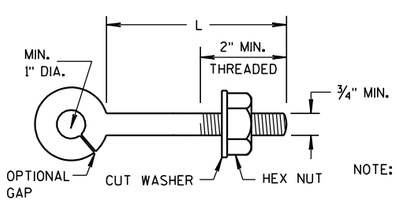

EYE BOLT

NOTE:

NOTE: TWO EYE BOLTS MAY BE USED WITH A 30" LONG THREADED ROD IN LIEU OF THE 90° BENT TIE ROD.

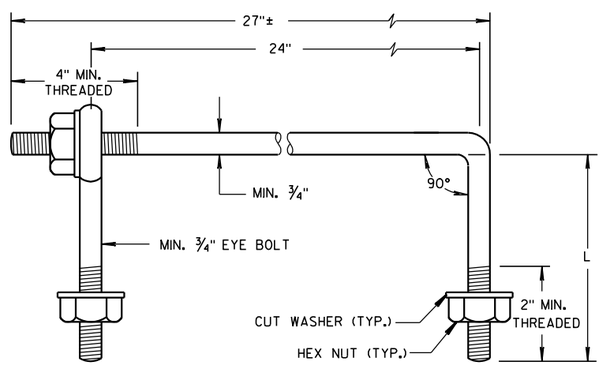

EYE BOLT AND TIE ROD

(JOINT TIES FOR 18" TO 66" DIA. CONCRETE PIPE)

EYE BOLT AND TIE ROD ASSEMBLY (ALTERNATE NO. 2)

ADJUSTABLE TIE ROD TABLE

PIPE DIAMETER	TIE ROD DIAMETER	D	L_1	N
12-60	5/8	5/8	5	1/2
66-84	3/4	3/4	5	1/2
90-108	1	1	7	1 7/16

DIMENSIONS SHOWN ARE IN INCHES

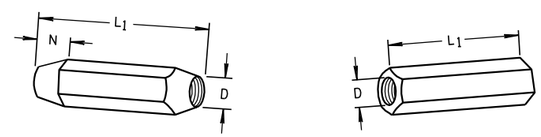

TAPERED PLAIN

RIGHT AND LEFT THREADS

SLEEVE NUTS

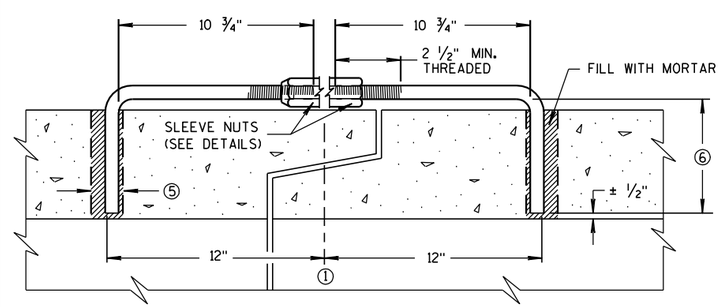

LONGITUDINAL SECTION

(JOINT TIES FOR 12" TO 108" DIA. CONCRETE PIPE)

ADJUSTABLE TIE ROD (ALTERNATE NO. 3)

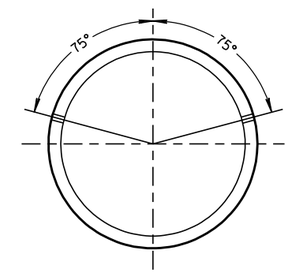

PLACEMENT OF (2) CAST-IN-PLACE INSERTS OR HOLES DURING FABRICATION FOR PIPE SECTIONS REQUIRING TIE RODS

TRANSVERSE SECTION

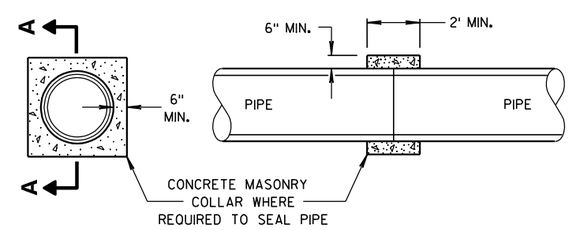

SECTION A-A

CONCRETE COLLAR DETAIL

JOINT TIES FOR CONCRETE PIPE AND CONCRETE COLLAR DETAIL

STATE OF WISCONSIN
DEPARTMENT OF TRANSPORTATION

APPROVED
6/5/2012 /S/ Jerry H. Zogg
DATE ROADWAY STANDARDS DEVELOPMENT ENGINEER
FHWA

6

6

S.D.D. 8 F 4-7

S.D.D. 8 F 4-7

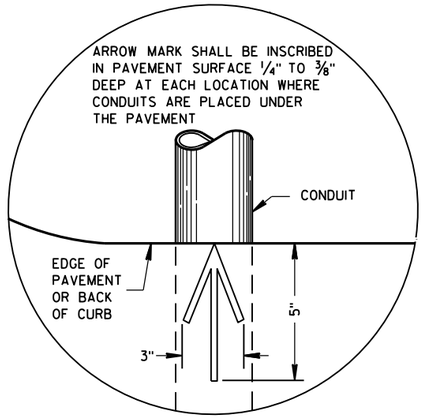

PLAN VIEW

ARROW MARK

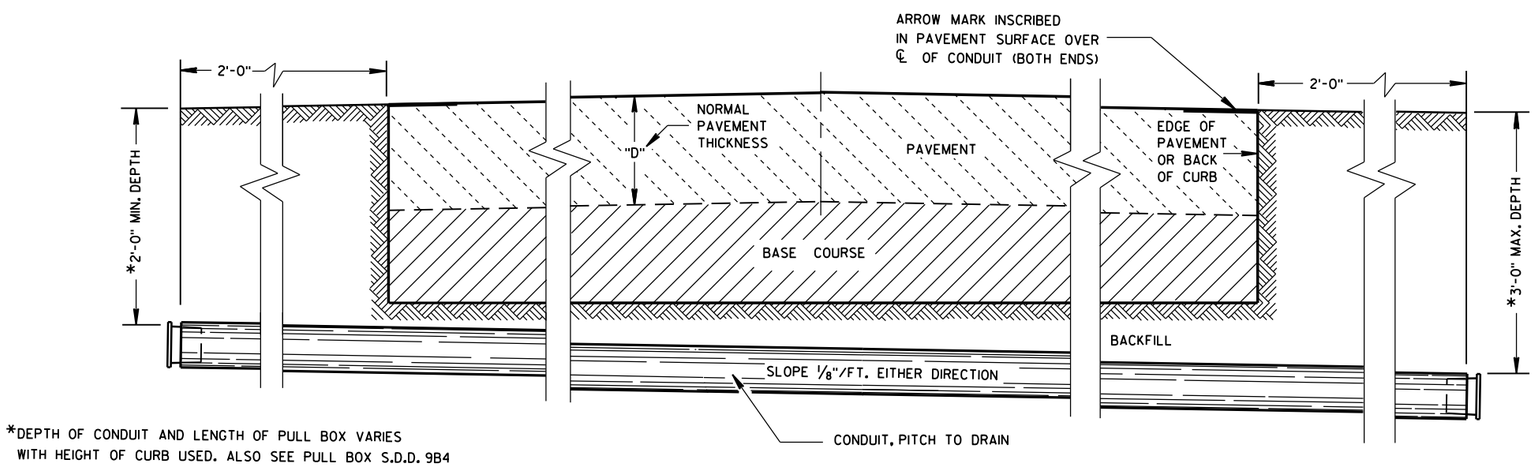

*DEPTH OF CONDUIT AND LENGTH OF PULL BOX VARIES WITH HEIGHT OF CURB USED. ALSO SEE PULL BOX S.D.D. 9B4

SIDE ELEVATION

DETAIL FOR CONDUIT UNDER PAVED HIGHWAYS

GENERAL NOTES

DETAILS OF CONSTRUCTION, MATERIALS AND WORKMANSHIP NOT SHOWN ON THIS DRAWING SHALL CONFORM TO THE PERTINENT REQUIREMENTS OF THE CONTRACT.

METALLIC (STANDARD SPECIFICATION 652.2.2) OR NONMETALLIC (STANDARD SPECIFICATION 652.2.3) CONDUIT SHALL BE FURNISHED AND PLACED AS SHOWN.

DEPTH OF CONDUIT INSTALLED BELOW THE TRAVELED WAY SHALL BE 24 INCHES MINIMUM AND 36 INCHES MAXIMUM.

DEPTH OF CONDUIT INSTALLED THAT IS NOT BELOW THE TRAVELED WAY SHALL BE 18 INCHES MINIMUM AND 36 INCHES MAXIMUM.

ANY EXCEPTION TO THE MAXIMUM DEPTH SHALL BE ONLY WITH THE WRITTEN APPROVAL OF THE ENGINEER.

THE TRENCH SHALL NOT BE BACKFILLED PRIOR TO INSPECTION OF THE CONDUIT.

ALL METALLIC CONDUIT RACEWAY ENDS SHALL BE REAMED AND THREADED.

ALL METALLIC CONDUIT IN WHICH WIRE OR CABLE IS TO BE INSTALLED SHALL BE BUSHED WITH APPROVED THREADED BUSHINGS BEFORE INSTALLATION OF THE WIRE OR CABLE.

ALL METALLIC CONDUITS IN WHICH WIRE OR CABLE IS NOT TO BE INSTALLED SHALL BE CAPPED WITH THREADED PROTECTIVE CAPS, AS APPROVED BY THE ENGINEER.

ALL NONMETALLIC CONDUIT SHALL BE CAPPED OR PLUGGED IMMEDIATELY AFTER INSTALLATION AND SHALL REMAIN CAPPED OR PLUGGED UNTIL WIRE/CABLES ARE INSTALLED.

NONMETALLIC CONDUITS IN WHICH WIRE OR CABLE IS NOT BEING INSTALLED SHALL REMAIN CAPPED OR PLUGGED.

BENDING OF PVC ELECTRICAL CONDUIT SHALL BE ACCOMPLISHED BY USING A BLANKET OR EMERSION TYPE TANK DESIGNED FOR THE PURPOSE OF BENDING PVC ELECTRICAL CONDUIT.

ALL CUT ENDS SHALL BE TRIMMED INSIDE AND OUTSIDE TO REMOVE ALL ROUGH EDGES ON NONMETALLIC CONDUIT. (SEE NEC 347.5)

WHEN REQUIRED TO CONNECT NONMETALLIC CONDUIT TO METALLIC CONDUIT, ONLY U.L. LISTED ADAPTER FITTINGS SHALL BE USED.

PRIOR TO CONDUIT ACCEPTANCE, CONDUIT CAPS OR PLUGS SHALL BE REMOVED, AND THE CAPS, PLUGS AND CONDUIT ENDS SHALL BE THOROUGHLY CLEANED AND THEN THE CAPS OR PLUGS REINSTALLED TO ENSURE THAT THE CAPS OR PLUGS CAN BE EASILY REMOVED IN THE FUTURE.

ALL CONDUIT BEING FURNISHED AND INSTALLED SHALL HAVE THE U.L. LABEL FIRMLY ATTACHED.

CONDUIT RUNS SHALL BE THE SAME SIZE OF CONDUIT FROM ONE END TO THE OTHER (FROM PULL BOX TO PULL BOX-OR-JUNCTION BOX TO JUNCTION BOX-OR-BASE TO BASE, ETC.).

TRACER WIRE SHALL BE INSTALLED AS STATED IN THE STANDARD SPECIFICATION, ITEM 652.3.1.1.

ALL CONDUIT RUNS SHALL BE STRAIGHT (WITHOUT BENDS) FROM PULL BOX TO PULL BOX, PULL BOX TO BASE AND BASE TO BASE AS SHOWN ON THE PLANS.

CONDUIT

STATE OF WISCONSIN
DEPARTMENT OF TRANSPORTATION

APPROVED
March, 2017 — DATE
/S/ Ahmet Demirbilek — STATE ELECTRICAL
FHWA

TABLE OF NOMINAL DIMENSIONS AND WEIGHTS

DIMENSION IN INCHES		CORRUGATED STEEL PIPE								
PIPE DIAMETER (INSIDE)	A	12	12	12	18	18	18	24	24	24
PIPE LENGTH **	B	24	30	36	24	30	36	36	42	48
WALL THICKNESS	C	0.064	0.064	0.064	0.064	0.064	0.064	0.064	0.064	0.064
COVER	D	10 1/4	10 1/4	10 1/4	16 1/4	16 1/4	16 1/4	22 1/4	22 1/4	22 1/4
FRAME	E	14 1/2	14 1/2	14 1/2	20 1/2	20 1/2	20 1/2	26 1/2	26 1/2	26 1/2
FRAME	F	8 1/2	8 1/2	8 1/2	14 1/2	14 1/2	14 1/2	20 1/2	20 1/2	20 1/2
FRAME	G	11 1/2	11 1/2	11 1/2	17 1/2	17 1/2	17 1/2	23 1/2	23 1/2	23 1/2
WEIGHT IN POUNDS *										
FRAME AND COVER		60	60	60	110	110	110	155	155	155

* THE ACTUAL WEIGHT OF THE MANHOLE FRAME AND COVER MAY VARY WITHIN 5 PERCENT PLUS OR MINUS OF THE WEIGHTS SHOWN.

** NORMALLY USED LENGTHS. THE PROJECT ENGINEER SHALL DETERMINE IF PIPE LENGTHS, OTHER THAN THOSE SPECIFIED, SHALL BE USED, TO A MAXIMUM OF 48" (CONTINUOUS LENGTH, NON-SPLICED). THE ADDITIONAL LENGTH SHALL BE INCIDENTAL TO THE PULL BOX BID PRICE.

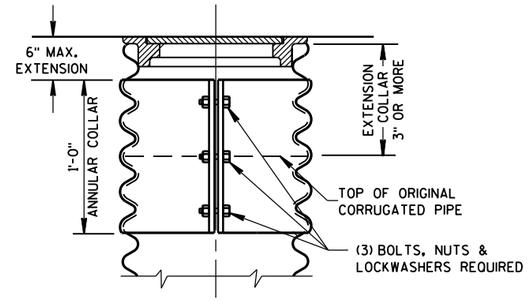

CORRUGATED PIPE EXTENDER

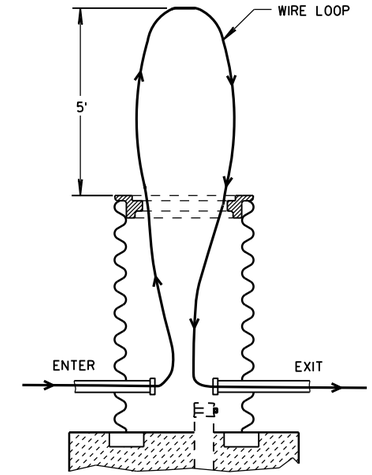

MEASUREMENT DETAIL FOR WIRE/CABLE IN THE PULL BOX

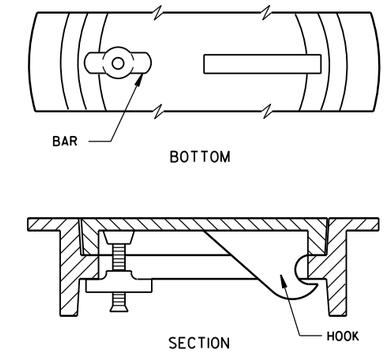

ALTERNATE COVER (LOCKING)

TIGHTENING BAR TYPE

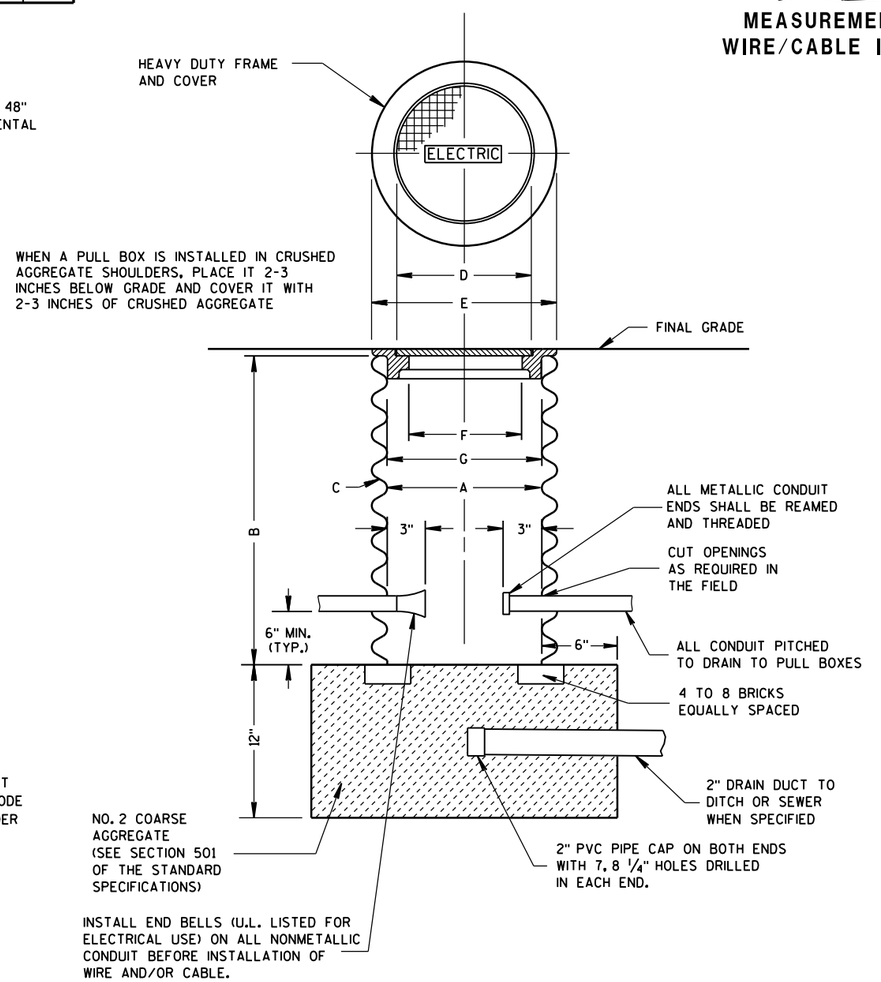

PULL BOX

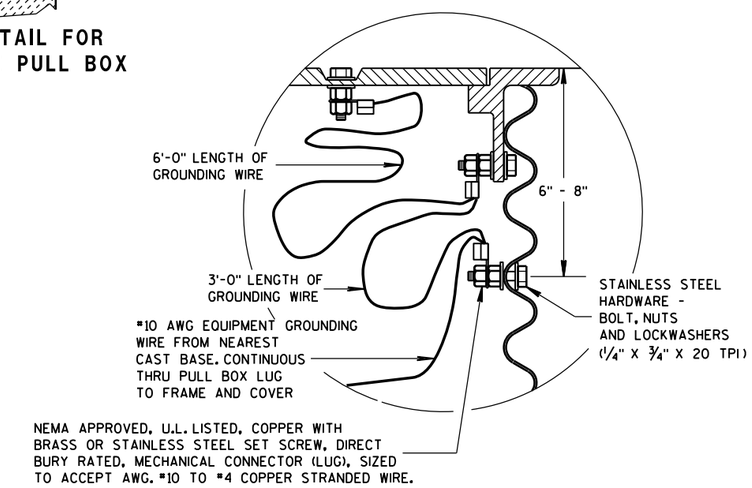

EQUIPMENT GROUNDING LUG AND LOCATION IN STEEL PULL BOXES

GENERAL NOTES

DETAILS OF CONSTRUCTION, MATERIALS AND WORKMANSHIP NOT SHOWN ON THIS DRAWING SHALL CONFORM TO THE PERTINENT REQUIREMENTS OF THE CONTRACT.

ALL FRAMES AND COVERS SHALL BE HEAVY DUTY TYPE, SUITABLE FOR VEHICULAR TRAFFIC LOADS.

PULL BOXES LOCATED IN THE ROADWAYS SHALL HAVE LOCKING COVERS.

ENTRANCE HOLES INTO PULL BOXES SHALL BE CUT WITH A CIRCULAR HOLE SAW OR HYDRAULIC CONDUIT PUNCH. HOLE SIZE SHALL BE THE OUTSIDE DIAMETER OF THE CONDUIT THAT IS TO FIT IN THE OPENING PLUS NO MORE THAN 1/4".

THE CONTRACTOR SHALL NOT INSTALL WIRE IN ANY PULL BOX UNTIL ITS INSTALLATION HAS BEEN INSPECTED AND ACCEPTED BY THE ENGINEER.

GROUNDING LUGS (MECHANICAL CONNECTORS) SHALL BE U.L. LISTED AND APPROVED FOR USE WITH COPPER WIRE.

ALL METALLIC CONDUIT IN WHICH WIRE AND/OR CABLE IS TO BE INSTALLED, SHALL BE BUSHED BEFORE INSTALLATION OF THE WIRE AND/OR CABLE.

WHEN PULL BOXES ARE INSTALLED FOR FUTURE USE, DO NOT INSTALL THE EQUIPMENT GROUNDING LUG. THE EQUIPMENT GROUNDING LUG, THE EQUIPMENT GROUNDING ELECTRODE AND THE EQUIPMENT GROUNDING CONDUCTOR SHALL BE REQUIRED AND INSTALLED UNDER A FUTURE WIRING CONTRACT.

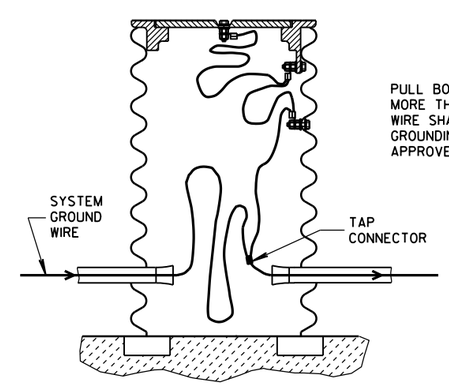

EQUIPMENT GROUNDING LUG AND LOCATION IN STEEL PULL BOXES

PULL BOX

STATE OF WISCONSIN
DEPARTMENT OF TRANSPORTATION

APPROVED
Sept. 2014 — DATE
/S/ Ahmet Demirbilek — STATE ELECTRICAL
FHWA

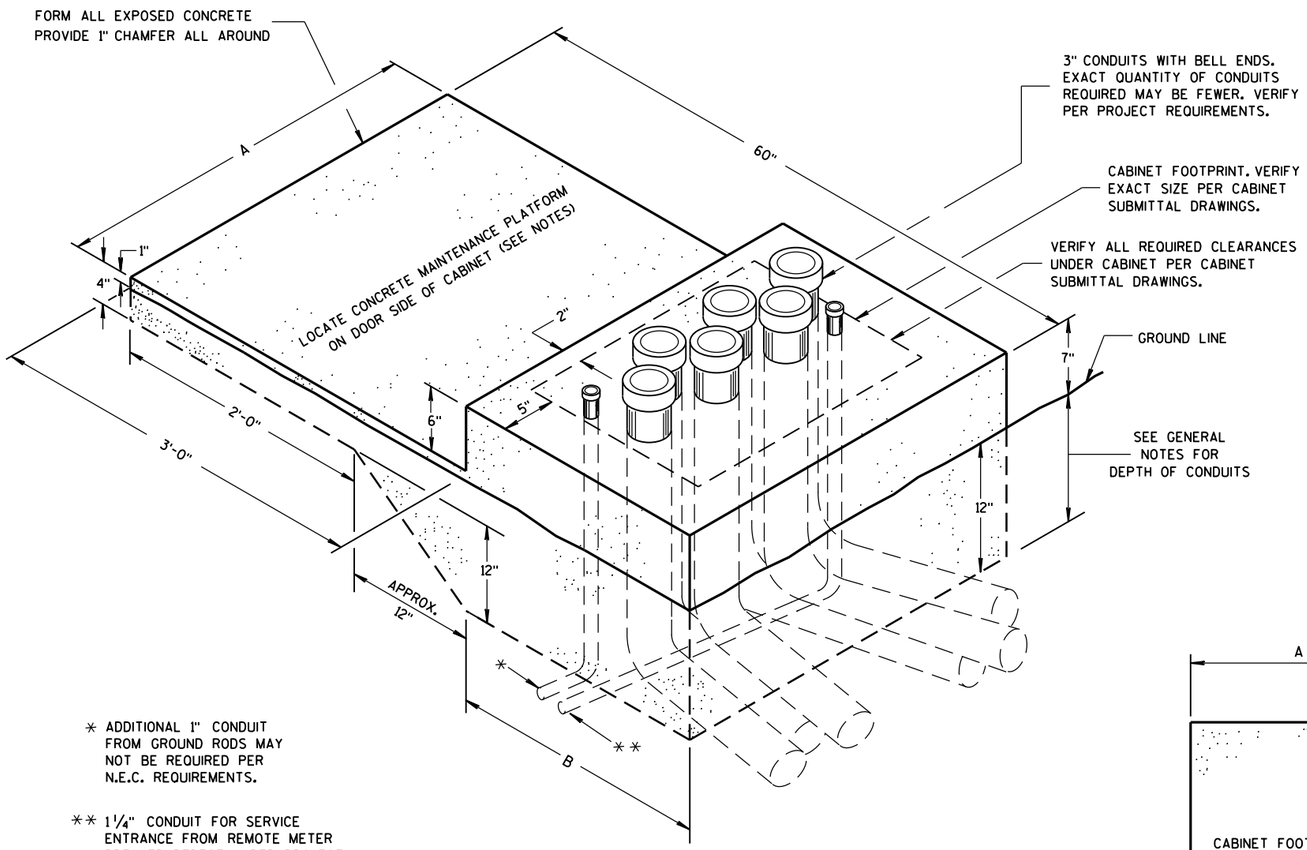

* ADDITIONAL 1" CONDUIT FROM GROUND RODS MAY NOT BE REQUIRED PER N.E.C. REQUIREMENTS.

** 1¼" CONDUIT FOR SERVICE ENTRANCE FROM REMOTE METER BREAKER PEDESTAL PER PROJECT REQUIREMENTS. VERIFY LOCATION OF CONDUIT DEPENDENT UPON LOCATION OF INCOMING FEEDER AND FOR EASE OF CONNECTION TO LOAD CENTER.

ISOMETRIC VIEW

CONCRETE CONTROL CABINET BASE, TYPE L

(C.Y. CONCRETE = APPROX. 0.4)

CONCRETE BASE TYPE	CABINET WIDTH	DIMENSIONS		MAXIMUM 3" CONDUITS
		A	B	
L24	24"	34"	24"	4
L30	30"	40"	24"	6

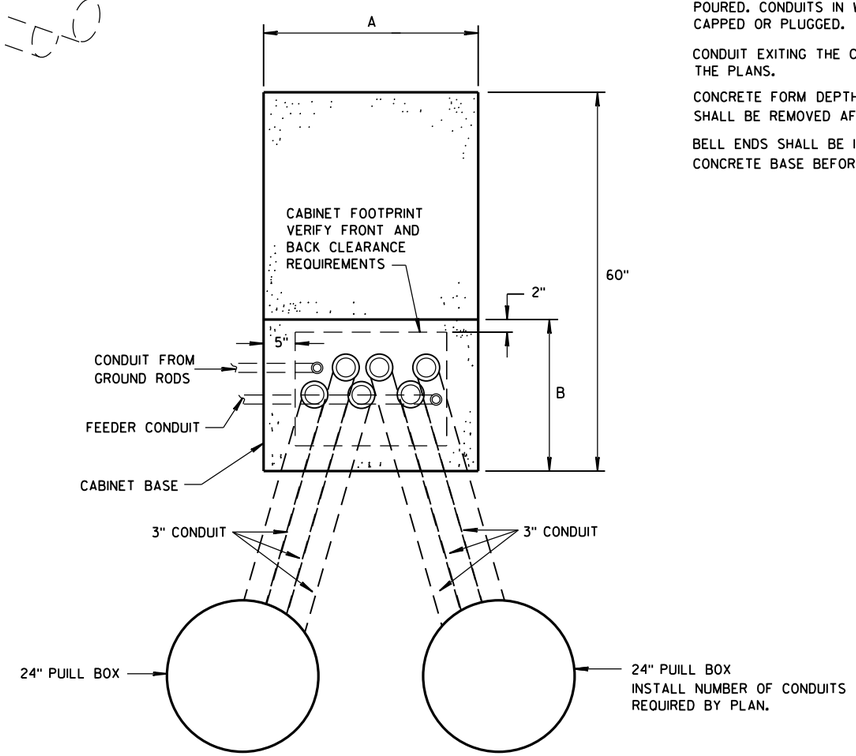

PLAN VIEW

CONCRETE CONTROL CABINET BASE, TYPE L

GENERAL NOTES

DETAILS OF CONSTRUCTION, MATERIALS AND WORKMANSHIP NOT SHOWN ON THIS DRAWING SHALL CONFORM TO THE PERTINENT REQUIREMENTS OF THE CONTRACT.

INSTALL FOUR STAINLESS STEEL APPROVED CONCRETE MASONRY ANCHORS TO ANCHOR THE CABINET BASES. THE ANCHORS SHALL BE LOCATED AS DIRECTED BY THE ENGINEER TO PROPERLY ANCHOR THE CONTROL CABINET TO THE BASE.

WHEN REQUIRED TO CONNECT NONMETALLIC CONDUIT TO METALLIC CONDUIT, ONLY ADAPTER FITTINGS, U.L. LISTED FOR ELECTRICAL USE, SHALL BE USED.

CONDUIT HEIGHT ABOVE THE CONCRETE BASE SHALL BE 1 INCH.

DEPTH OF CONDUIT INSTALLED BELOW THE TRAVELED WAY SHALL BE 24 INCHES MINIMUM AND 36 INCHES MAXIMUM.

DEPTH OF CONDUIT INSTALLED THAT IS NOT BELOW THE TRAVELED WAY SHALL BE 18 INCHES MINIMUM AND 36 INCHES MAXIMUM.

ANY EXCEPTION TO THE MAXIMUM DEPTH SHALL BE ONLY WITH THE WRITTEN APPROVAL OF THE ENGINEER.

CONTROL CABINET BASE TOP SURFACE SHALL BE TROWEL FINISHED SMOOTH AND LEVEL.

MAINTENANCE PLATFORM SHALL BE FLOAT OR BROOM FINISHED AND BE LEVEL.

MAINTENANCE PLATFORMS ARE NOT REQUIRED WHEN THE SURROUNDING AREA IS PAVED.

MINIMUM BENDING RADIUS OF CONDUIT = 6 X THE DIAMETER.

ALL METALLIC CONDUIT ENDS SHALL BE REAMED AND THREADED.

CAP ALL BELOW GRADE METALLIC CONDUIT ENDS IN WHICH WIRE OR CABLE IS NOT BEING INSTALLED.

PLUG ALL BELOW GRADE NONMETALLIC CONDUIT ENDS IN WHICH WIRE OR CABLE IS NOT BEING INSTALLED.

ALL CONDUIT ENDS AT THE TOP OF CONCRETE BASES SHALL BE CAPPED IF METALLIC OR PLUGGED IF NONMETALLIC IMMEDIATELY AFTER PLACEMENT AND BEFORE CONCRETE IS POURED. CONDUITS IN WHICH WIRE OR CABLE IS NOT BEING INSTALLED SHALL REMAIN CAPPED OR PLUGGED.

CONDUIT EXITING THE CONCRETE BASE SHALL TERMINATE IN PULL BOXES AS SHOWN ON THE PLANS.

CONCRETE FORM DEPTH BELOW FINISHED GRADE SHALL BE 6" MAXIMUM. CONCRETE FORMS SHALL BE REMOVED AFTER CONCRETE HAS SET.

BELL ENDS SHALL BE INSTALLED ON ALL PVC CONDUIT EXPOSED AT THE TOP OF THE CONCRETE BASE BEFORE INSTALLATION OF CABLE OR WIRE.

CONCRETE CONTROL CABINET BASE, TYPE L

STATE OF WISCONSIN
DEPARTMENT OF TRANSPORTATION

APPROVED
Nov. 2014 — DATE
/S/ Thomas Gonring — STATE LIGHTING ENGINE — WYS
FHWA

GENERAL NOTES

DETAILS OF CONSTRUCTION, MATERIALS AND WORKMANSHIP NOT SHOWN ON THIS DRAWING SHALL CONFORM TO THE PERTINENT REQUIREMENTS OF THE STANDARD SPECIFICATIONS AND APPLICABLE SPECIAL PROVISIONS.

ALL INTERNAL ELECTRICAL COMPONENTS WILL BE PRE-WIRED BY THE CABINET FABRICATOR.

ALL CONDUIT ENTRIES SHALL BE SEALED WITH AN APPROPRIATE DUCT SEALING COMPOUND.

ORIENT PHOTOCELL AWAY FROM AMBIENT LIGHT SOURCES AND ONCOMING TRAFFIC HEADLIGHTS.

THE CONTRACTOR SHALL TOUCH UP ANY DAMAGE TO THE ANODIZED FINISH CAUSED BY THE INSTALLATION PROCESS. COLOR MATCH PAINT SHALL BE USED.

A COMPLETE LIGHTING OR ELECTRICAL PLAN SHALL BE SECURELY PLACED IN THE DOCUMENT HOLDER ATTACHED TO THE DOOR.

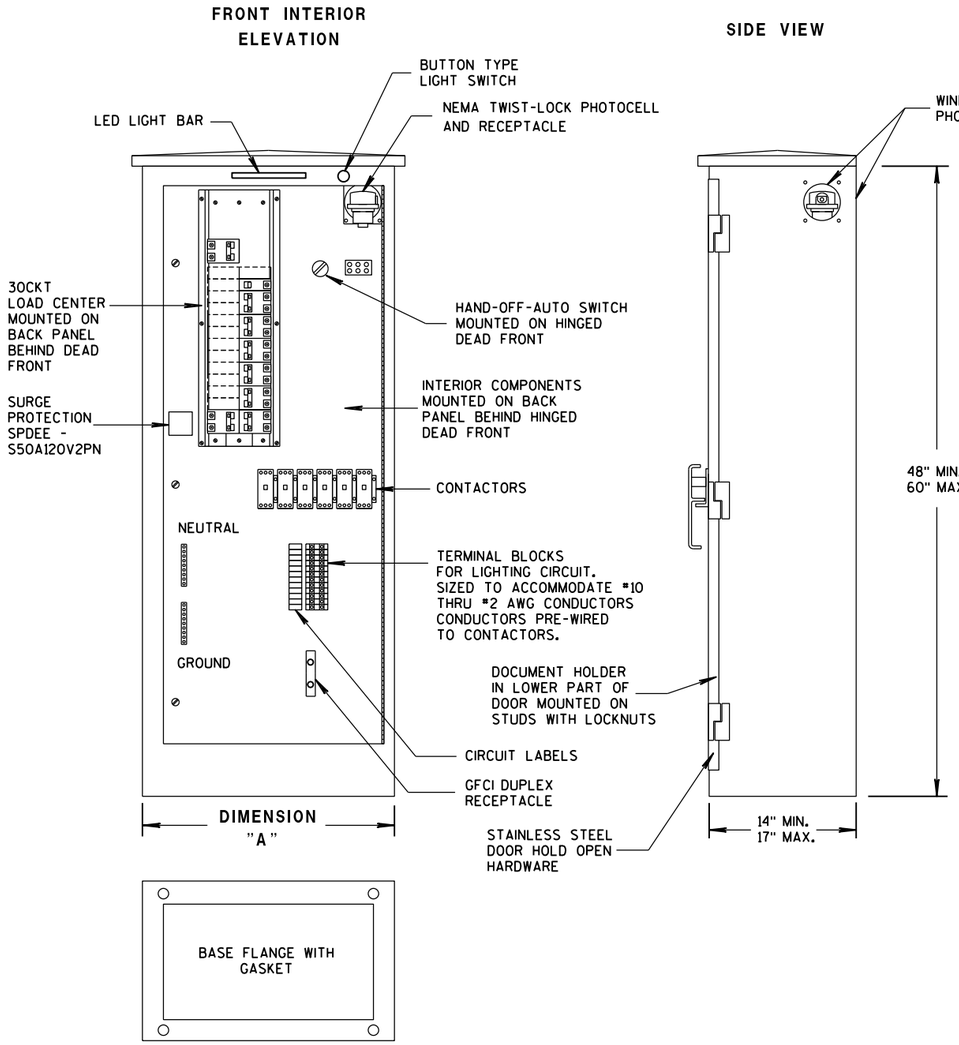

TABLE OF DIMENSIONS (INCHES)

CONCRETE BASE TYPE	CABINET WIDTH	DIMENSION "A"
L24	24"	24"
L30	30"	30"

LIGHTING CONTROL CABINET

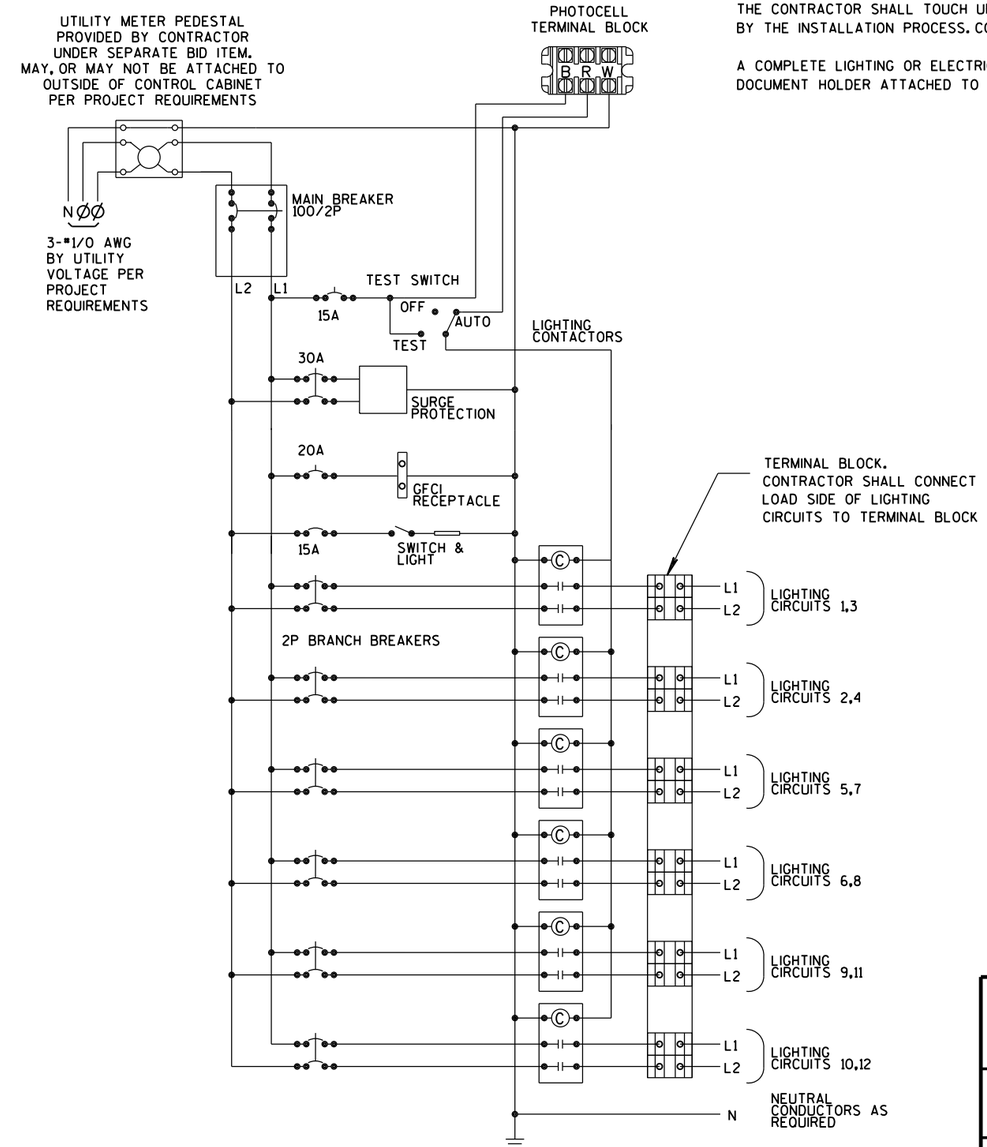

CONTROL CABINET SCHEMATIC

LIGHTING CONTROL CABINET
120/240 VOLT

STATE OF WISCONSIN
DEPARTMENT OF TRANSPORTATION

APPROVED
Sept. 2014 — DATE
/S/ Thomas Gonring — STATE LIGHTING ENGINEER
NYS.
FHWA

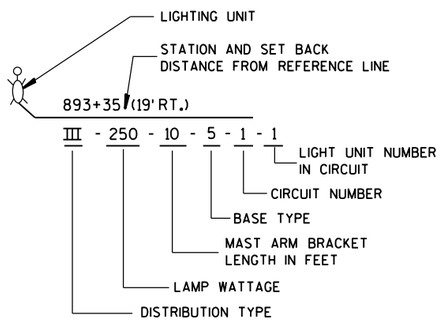

LIGHTING UNIT CODE
(TYPICAL)

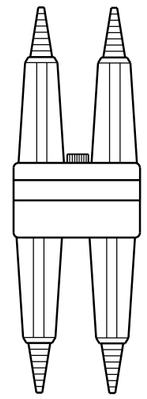

DETAIL "A"
BREAKAWY DOUBLE POLE WITH WATERPROOF INSULATING BOOT

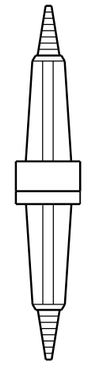

DETAIL "B"
BREAKAWY SINGLE POLE WITH WATERPROOF INSULATING BOOT

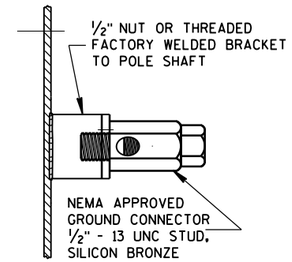

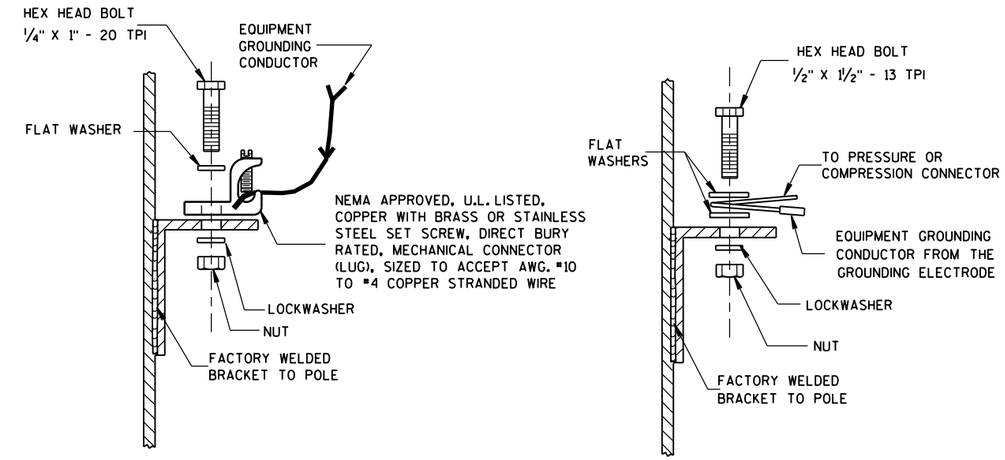

TYPICAL GROUNDING CONNECTIONS
NUT, BOLT, WASHERS AND LOCKWASHERS SHALL BE STAINLESS STEEL

GENERAL NOTES
DETAILS OF CONSTRUCTION, MATERIALS AND WORKMANSHIP NOT SHOWN ON THIS DRAWING SHALL CONFORM TO THE PERTINENT REQUIREMENTS OF THE CONTRACT.

THE EQUIPMENT GROUNDING CONNECTOR SHALL BE TAPED WITH 3 WRAPS (MINIMUM) OF APPROVED RUBBER TAPE AND THEN 3 WRAPS (MINIMUM) OF APPROVED VINYL TAPE TO COVER SHARP WIRE ENDS AFTER THE CONNECTION IS COMPLETED.

WHEN TRANSFORMER BASES ARE USED, ALL WIRING CONNECTIONS SHALL OCCUR WITHIN THE TRANSFORMER BASES.

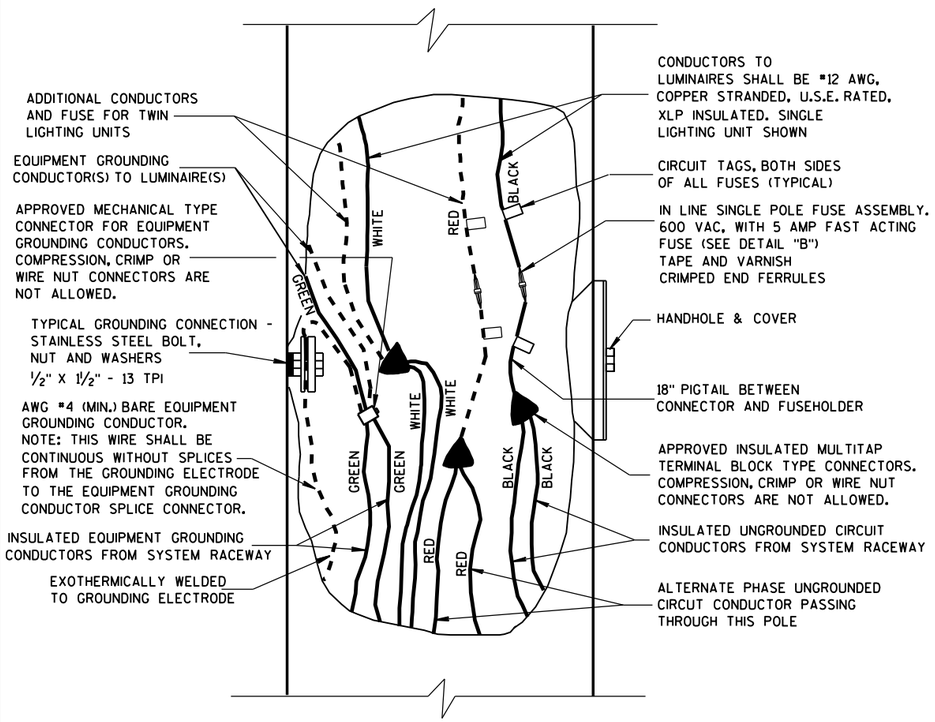

3 WIRE - 120, 240 OR 480 VAC (UNGROUNDED CONDUCTOR) WITH GROUNDED CONDUCTOR AND WITH EQUIPMENT GROUNDING CONDUCTOR

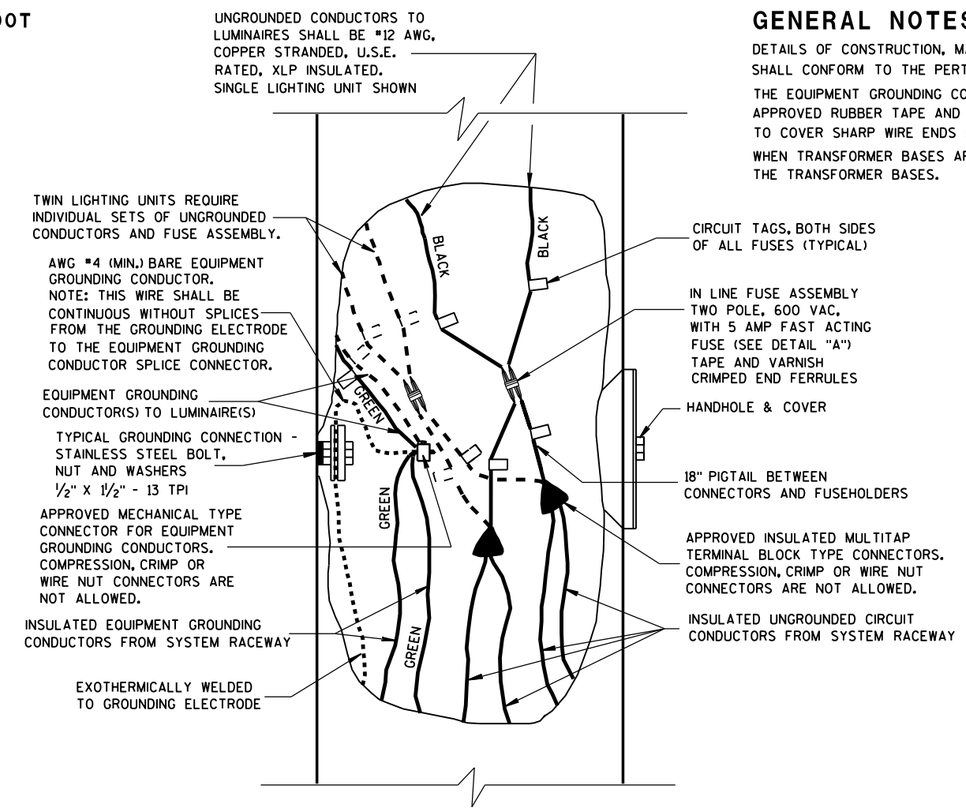

2 WIRE - 240 OR 480 VAC (UNGROUNDED CONDUCTORS) WITH EQUIPMENT GROUNDING CONDUCTOR

NON-FREEWAY LIGHTING UNIT POLE WIRING	
STATE OF WISCONSIN DEPARTMENT OF TRANSPORTATION	
APPROVED Sept. 2014 DATE	/S/ Ahmet Demirbilek STATE ELECTRICAL
FHWA	

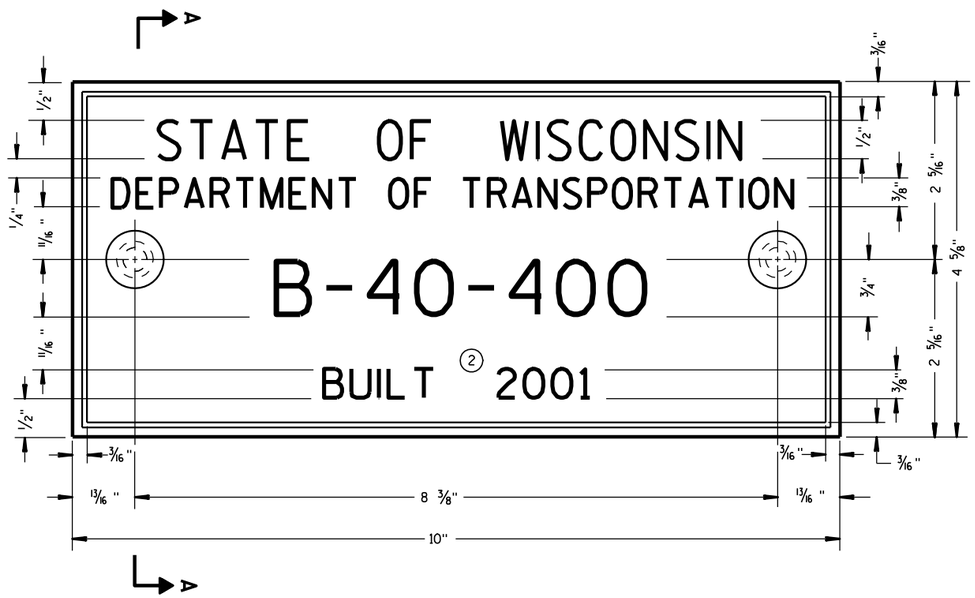

TYPICAL NAME PLATE

(BRIDGES, CULVERTS, AND RETAINING WALLS)

GENERAL NOTES

NAME PLATES TO BE INSTALLED ON BRIDGES, CULVERTS, AND RETAINING WALLS SHALL CONFORM TO THE REQUIREMENTS OF SECTION 502.3.11 OF THE STANDARD SPECIFICATIONS.

THE BRIDGE NUMBER AND YEAR BUILT SHOWN ON THIS DRAWING ARE EXAMPLES ONLY. SEE CONSTRUCTION PLANS FOR INDIVIDUAL NUMBERING AND YEAR BUILT.

① EPOXY RESIN SHALL BE FROM AN APPROVED MANUFACTURER AND USED IN ACCORDANCE WITH MANUFACTURER'S RECOMMENDATIONS.

② REHABILITATION OF AN EXISTING STRUCTURE SHOULD USE THE DATE OF ORIGINAL STRUCTURE CONSTRUCTION.

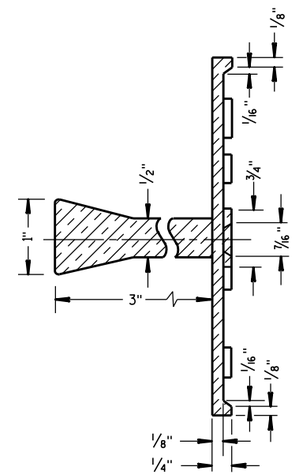

SECTION A-A

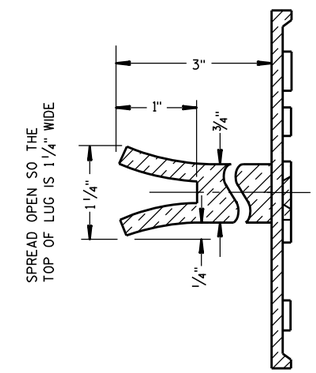

ALTERNATE LUG

6

FOR MULTI-UNIT STRUCTURES
LINE 3 ABOVE SHALL READ

B = BRIDGE
C = CULVERT
R = RETAINING WALL

COUNTY NO.

BRIDGE NO.

UNIT NO. FOR MULTIPLE
UNIT BRIDGE

B-40-400-1A

NUMBERING DESIGNATION
MULTI-UNIT STRUCTURES

① ADHERE ANCHOR LUG TO PRECAST RETAINING WALL WITH EPOXY RESIN.

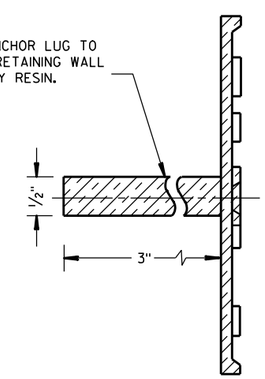

ALTERNATE LUG

(FOR ATTACHMENT TO PRECAST STRUCTURES)

NAME PLATE (STRUCTURES)		
STATE OF WISCONSIN DEPARTMENT OF TRANSPORTATION		
APPROVED		
3/26/10 DATE	/S/ Scot Beck-- CHIEF STRUCTURAL DEVELOP	ENGINEER
FHWA		

S.D.D. 12 A 3-10

*(RS) = REINFORCED CONCRETE SLAB
*(PS) = PAVED CONCRETE SHOULDER OR CONCRETE DRAINAGE SLAB (SEE DETAILS ELSEWHERE IN THE PLAN)
*(NRS) = NON-REINFORCED CONCRETE SLAB

***STANDARD DOWEL BAR DIAMETER (SEE SDD 13C11, & SDD 13C13)

Ⓐ STANDARD CONTRACTION JOINT NORMAL TO ℄ OR ℄

Ⓑ STANDARD LONGITUDINAL JOINT WITH TIE BARS.

Ⓒ 1½" EXPANSION JOINT WITH DOWEL BARS NORMAL TO ℄ OR ℄

GENERAL NOTES

THE CONTRACTOR MAY SPLICE NO. 6 BARS IN THE APPROACH SLAB FOR SKEWED STRUCTURES ONLY. STAGGER SPLICES WITH A MAXIMUM OF ONE SPLICE PER BAR. THE LENGTH OF LAP IS 20 INCHES.

TACK WELD DOWEL BARS TO THE BASKETS ON ALTERNATE ENDS.

① THE CONTRACTOR MAY USE NO. 4 BARS SPACED AT 2'-0" C-C IN BOTH THE LONGITUDINAL AND TRANSVERSE DIRECTIONS FOR TOP REINFORCEMENT AS AN ALTERNATIVE TO THE WELDED WIRE FABRIC.

② THE CONTRACTOR MAY OMIT TIE BARS BETWEEN REINFORCED SLABS WHERE SLAB REINFORCEMENT BARS EXTEND ACROSS THE CENTERLINE OR REFERENCE LINE.

③ DO NOT CONSTRUCT AN EXPANSION JOINT OR INSTALL DOWEL BARS WHEN ABUTTING AN HMA PAVEMENT.

④ USE A JOINT SEALANT MEETING THE REQUIREMENTS OF ASTM D6690.

⑤ PLACE EXPANSION CAP ON THE END OF THE DOWEL THAT IS NOT TACK WELDED TO THE BASKET. DO NOT FORCE DOWEL BAR PAST THE DOWEL STOP.

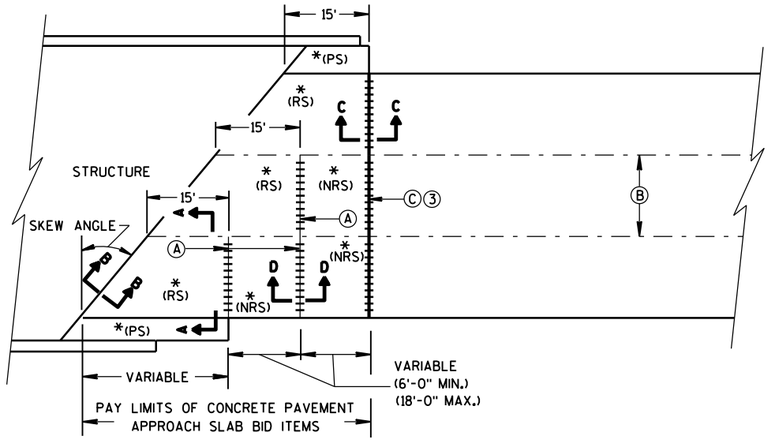

SKEWED APPROACH
(PAVEMENT MORE THAN 2 LANES)

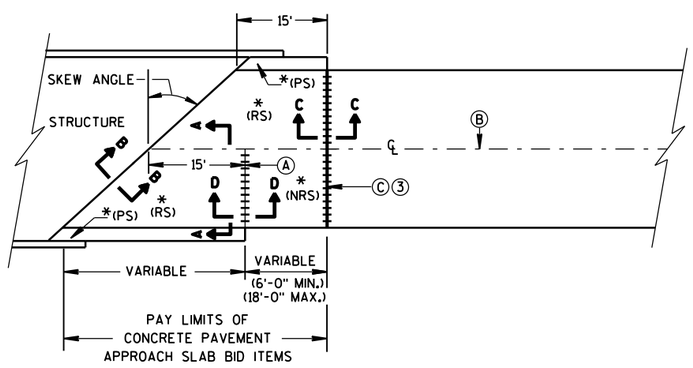

SKEWS >20°
(PAVEMENT WIDTH ≤30')

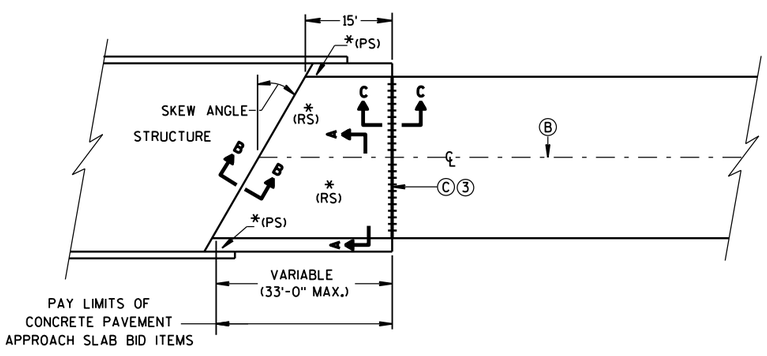

SKEWS ≤20°
(PAVEMENT WIDTH ≤30')

APPROACH SLAB AND ADJACENT PAVEMENT

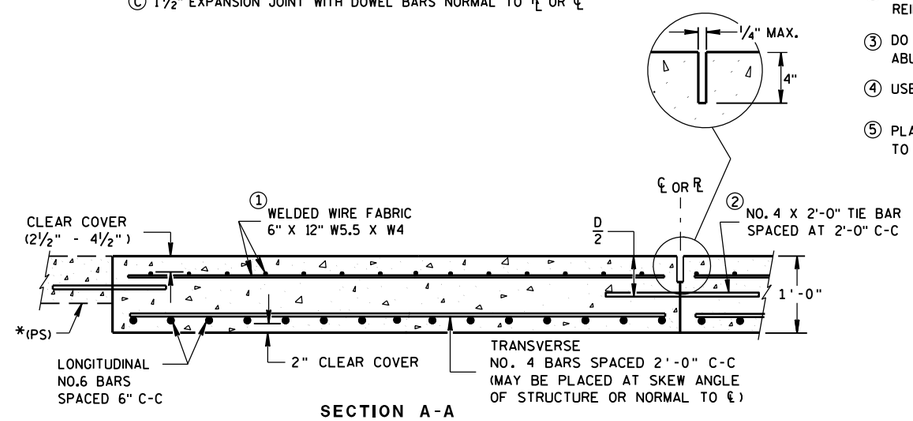

SECTION A-A
REINFORCEMENT POSITIONING DETAIL

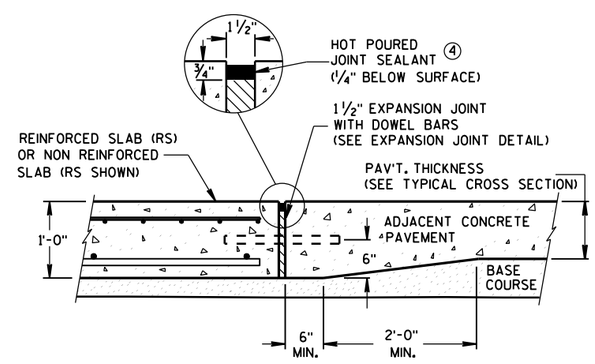

SECTION C-C
TRANSITION DETAIL
APPROACH SLAB TO ADJACENT PAVEMENT

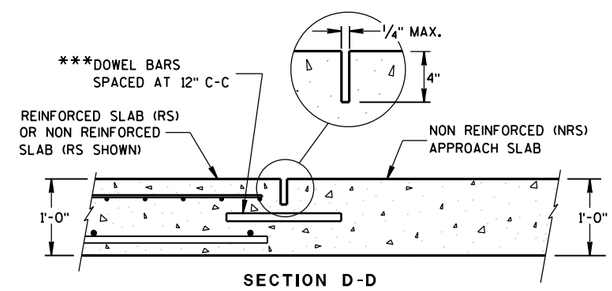

SECTION D-D
CONTRACTION JOINT

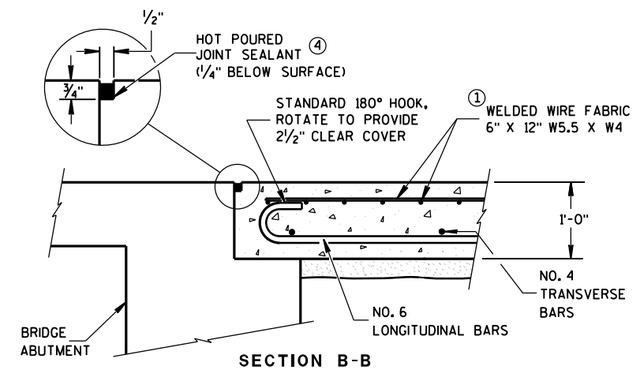

SECTION B-B
BEND DETAIL
BOTTOM REINFORCEMENT

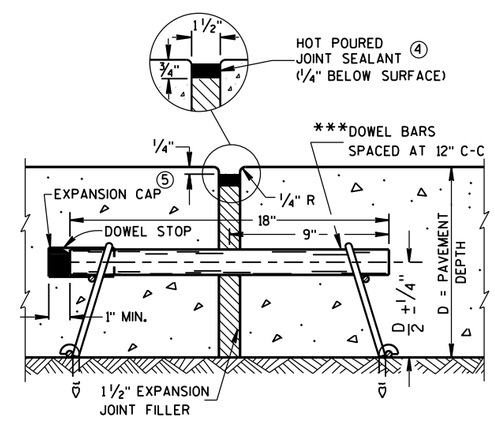

EXPANSION JOINT DETAIL

CONCRETE PAVEMENT
APPROACH SLAB

STATE OF WISCONSIN
DEPARTMENT OF TRANSPORTATION

APPROVED
June, 2015 — /S/ Peter Kemp, P.E.
DATE — PAVEMENT SUPER
FHWA

6

S.D.D. 13 B 2-8a

GENERAL NOTES

ALL PROJECTS THAT INVOLVE A STRUCTURAL APPROACH SLAB WILL ALSO HAVE A CONCRETE PAVEMENT APPROACH SLAB.

① SEE BRIDGE PLAN.

② CONFORM TO SHEET 13 B 2(A) FOR CONCRETE PAVEMENT APPROACH SLAB DETAILS.

③ DO NOT CONSTRUCT AN EXPANSION JOINT OR INSTALL DOWEL BARS WHEN ABUTTING AN HMA PAVEMENT.

Ⓒ 1½" EXPANSION JOINT WITH DOWEL BARS NORMAL TO ℄ OR ℄

Ⓓ 1½" EXPANSION JOINT (NO DOWELS)

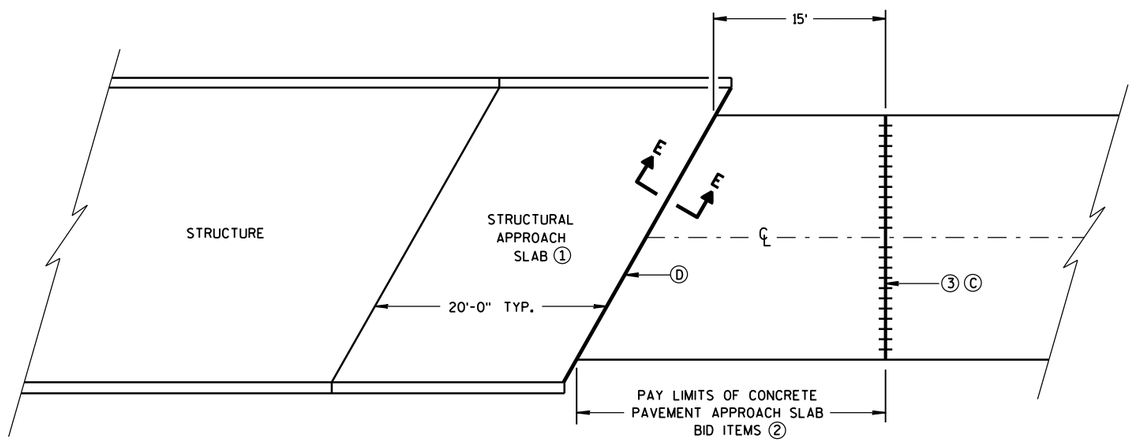

BRIDGE APPROACHES

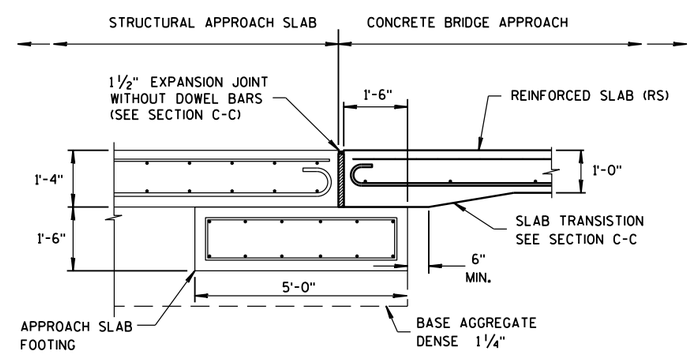

SECTION E-E

FOOTING DETAIL

STRUCTURAL APPROACH SLAB TO CONCRETE BRIDGE APPROACH

STRUCTURAL APPROACH SLAB AND CONCRETE PAVEMENT APPROACH SLAB
STATE OF WISCONSIN DEPARTMENT OF TRANSPORTATION
APPROVED June, 2015 DATE — /S/ Peter Kemp, P.E. PAVEMENT SUPER — FHWA

6

S.D.D. 13 B 2-8b

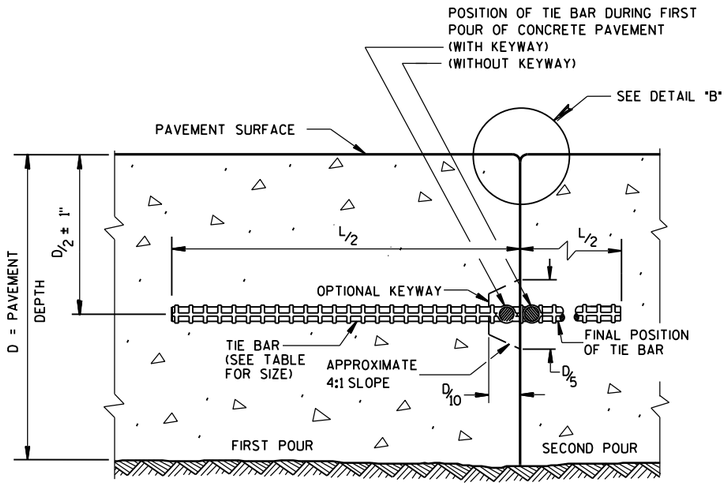

CONSTRUCTION JOINT

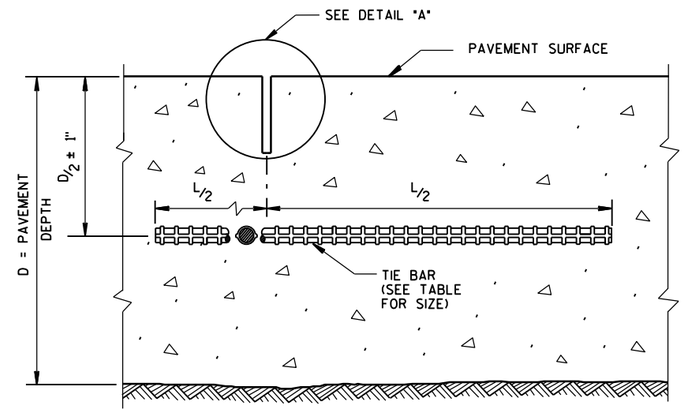

SAWED JOINT

GENERAL NOTES

DO NOT SEAL OR FILL LONGITUDINAL JOINTS.

CREATE A LONGITUDINAL JOINT FOR PAVEMENT WIDTHS GREATER THAN 15 FEET.

CORRELATE LONGITUDINAL JOINTS WITH LANE LINES WHEN POSSIBLE.

(1) ANCHOR TIE BARS INTO DRILLED HOLES WITH AN EPOXY.

(2) PAVEMENT THAT WAS IN PLACE PRIOR TO THE CONTRACT.

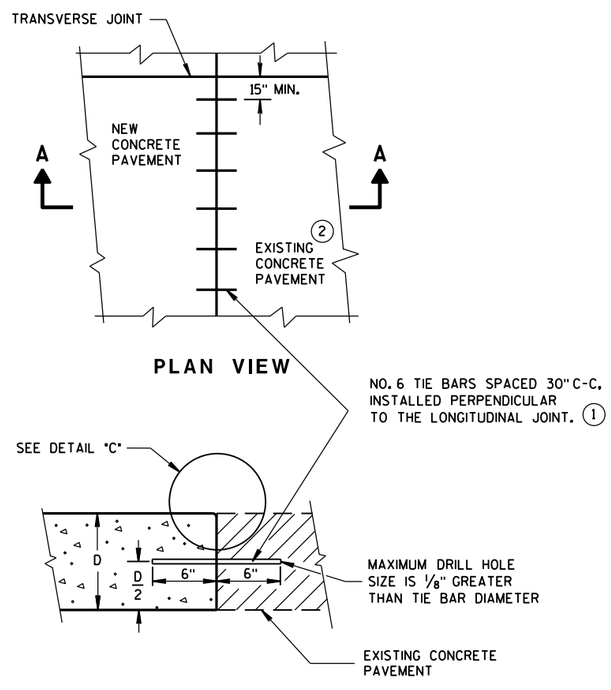

PLAN VIEW

SECTION A-A
LONGITUDINAL CONSTRUCTION JOINT TIE BARS ANCHORED INTO EXISTING PAVEMENT

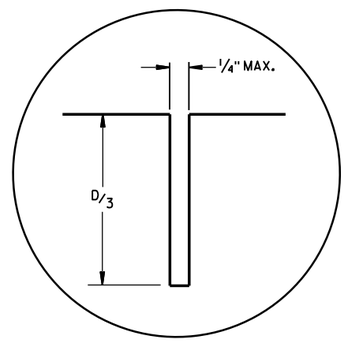

DETAIL "A"

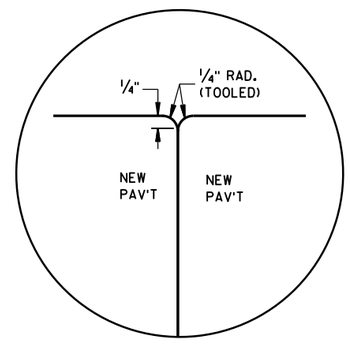

DETAIL "B"

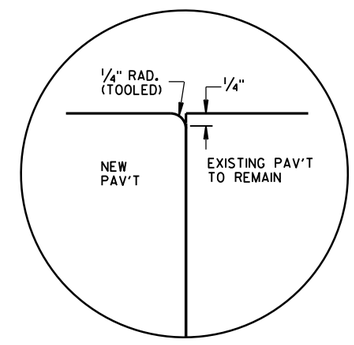

DETAIL "C"

TIE BAR TABLE

PAVEMENT DEPTH (D)	TIE BAR SIZE	TIE BAR LENGTH (L)	MAX. TIE BAR SPACING
< 10 1/2"	NO. 4	30"	36"
≥ 10 1/2"	NO. 5	36"	36"
	NO. 4 *	30"	24" **

* SUBSTITUTE BENT BARS AT LONGITUDINAL JOINTS WHEN EQUIPMENT LIMITATIONS DURING CONSTRUCTION WARRANT (e.g. AUXILIARY LANES OR TURN LANES)

** CONFORM TO 15" MINUMUM SPACING FROM TRANSVERSE JOINTS; SPACING BETWEEN TIE BARS WILL BE 30" AT TRANSVERSE JOINTS.

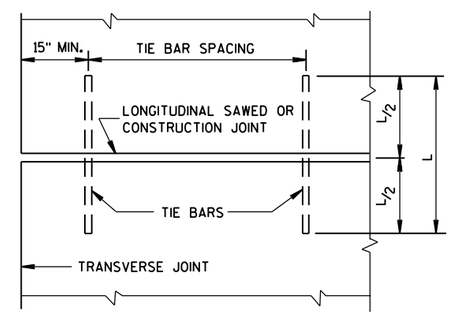

PLAN VIEW
SHOWING LOCATION OF TIE BARS

CONCRETE PAVEMENT
LONGITUDINAL JOINTS AND TIES

STATE OF WISCONSIN
DEPARTMENT OF TRANSPORTATION

APPROVED
June, 2015 — DATE
/S/ Peter Kemp, P.E. — PAVEMENT SUPER
FHWA

6

S.D.D. 13 C 1-18

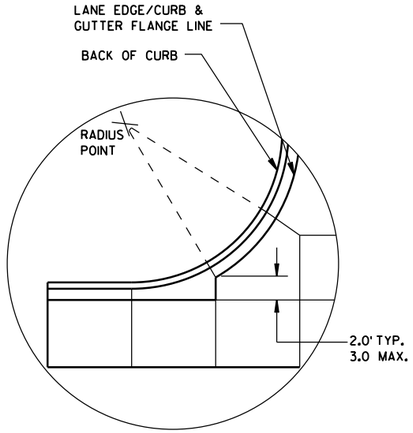

DETAIL "A"

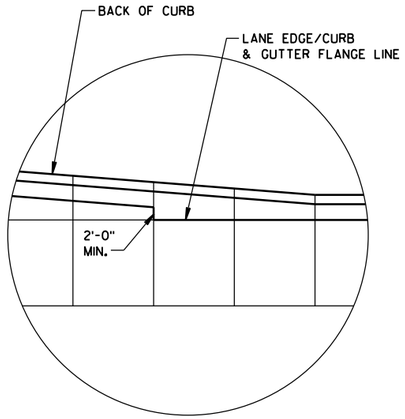

DETAIL "B"

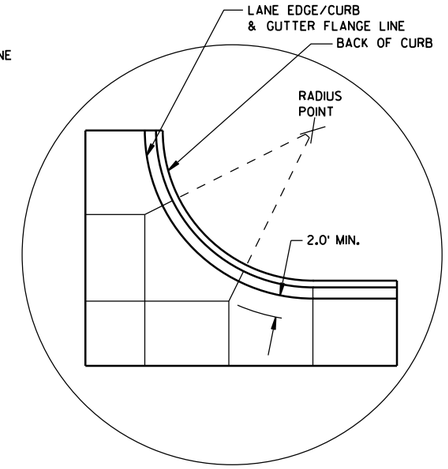

DETAIL "C"

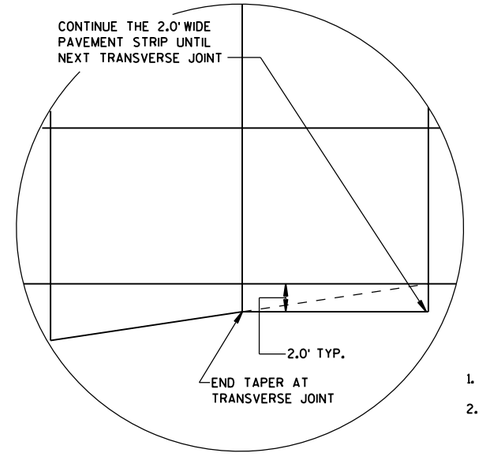

DETAIL "D"

GENERAL NOTES

THE PRIMARY ROADWAY CONTROLS THE TRANSVERSE JOINT PATTERN.

ALIGN NEW JOINTS WITH EXISTING JOINTS OR CRACKS.

CONSTRUCT TRANSVERSE JOINTS PERPENDICULAR TO THE ROADWAY.

ADJUST TRANSVERSE JOINTS TO ALIGN WITH UTILITY FIXTURES (E.G. MANHOLES AND INLETS) IN THE PAVEMENT STRUCTURE WHEN POSSIBLE. WATER VALVES DO NOT REQUIRE JOINT ADJUSTMENT.

AVOID SLABS LESS THAN 2 FEET WIDE OR GREATER THAN 15 FEET WIDE.

SEE TABLE FOR TRANSVERSE JOINT SPACING. JOINT SPACING SPECIFIED IS MAXIMUM AND ACTUAL SPACING CAN BE ADJUSTED TO ACCOMMODATE INTERSECTIONS.

AVOID ANGLES LESS THAN 60° BY DOGLEGGING JOINTS THROUGH CURVE RADIUS POINTS. USE 90° ANGLES WHEN POSSIBLE.

CORRELATE LONGITUDINAL JOINTS WITH LANE LINES WHEN POSSIBLE.

1. PROVIDE TRANSVERSE JOINTS AT ALL PAVEMENT WIDTH CHANGES.
2. CONSTRUCT DOWELED EXPANSION JOINT ON THE SIDE ROAD OF AN INTERSECTION IF THE SIDE ROAD IS CONCRETE PAVEMENT AND GREATER THAN 300 FEET IN LENGTH. ALIGN EXPANSION JOINT WITH EDGE OF RADIUS.
3. THE ENGINEER MAY APPROVE SLIGHT VARIATIONS FROM THESE JOINTING DETAILS.

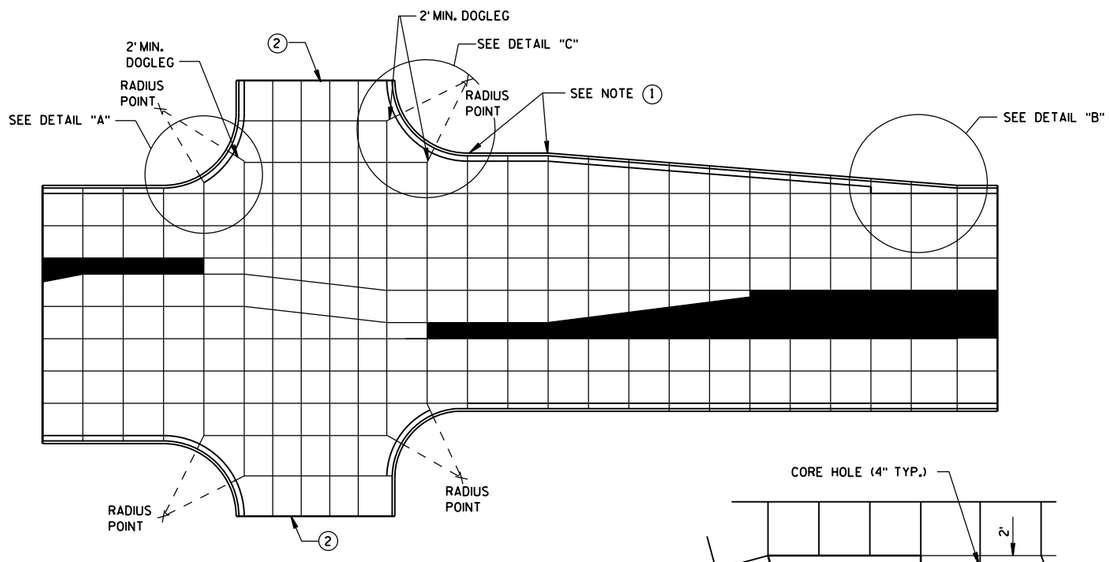

STANDARD INTERSECTION

PAVEMENT DEPTH AND JOINT SPACING TABLE

PAVEMENT DEPTH (D)	CONTRACTION JOINT SPACING
6", 6½"	12'
7", 7½"	14'
8" & ABOVE	15'

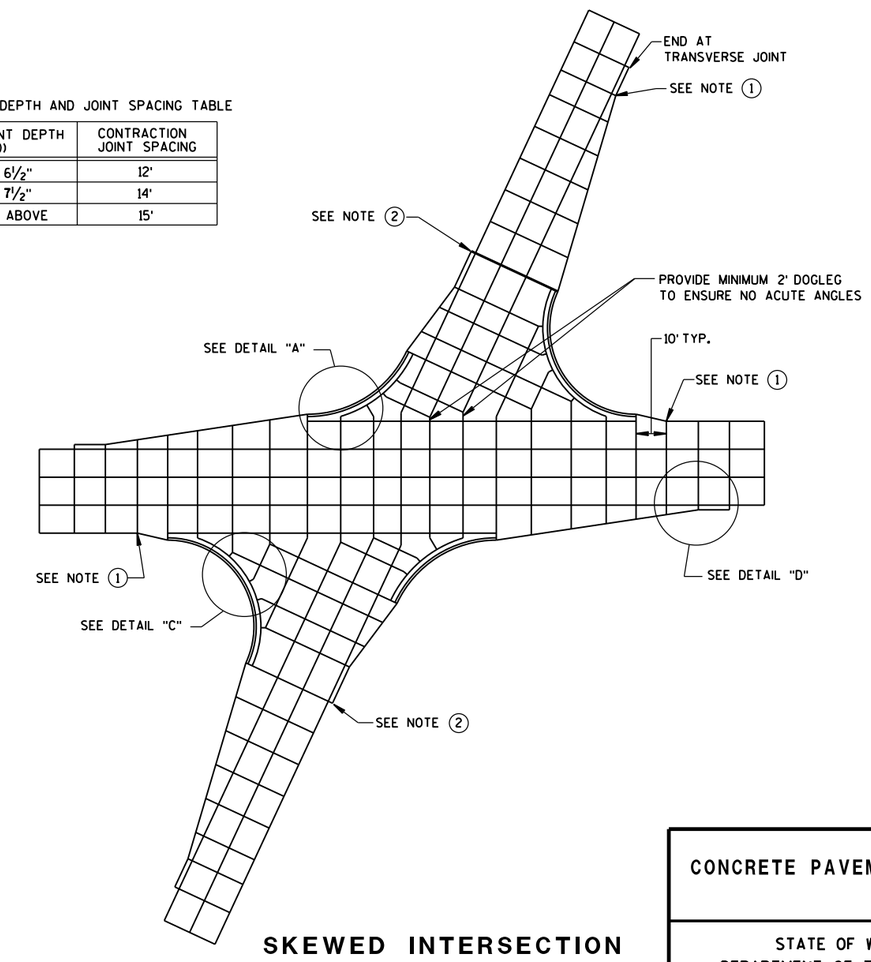

SKEWED INTERSECTION

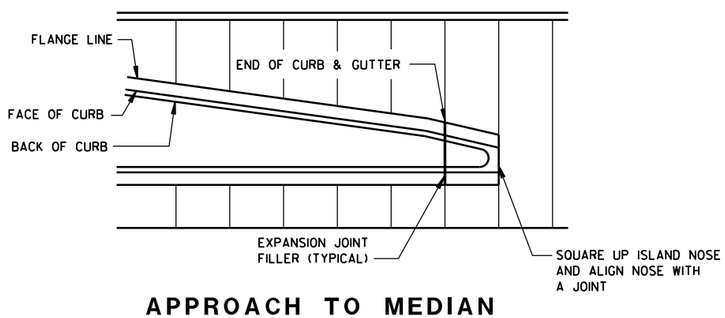

APPROACH TO MEDIAN

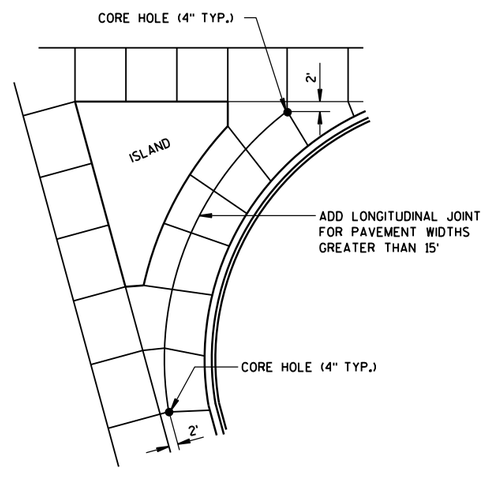

LARGE RIGHT TURN

CONCRETE PAVEMENT JOINTING

STATE OF WISCONSIN
DEPARTMENT OF TRANSPORTATION

6

S.D.D. 13 C 18-5a

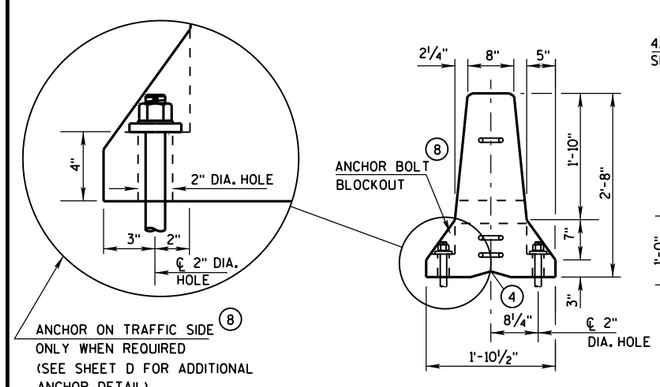

END VIEW

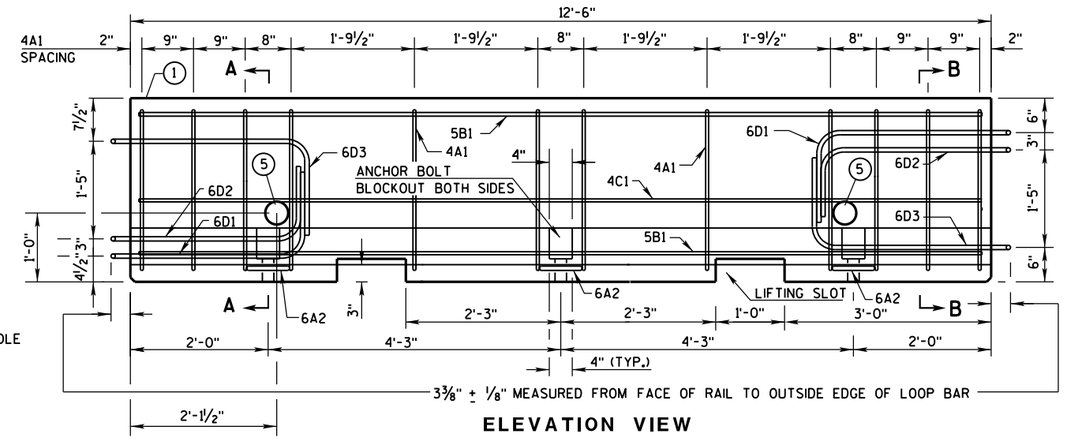

ELEVATION VIEW

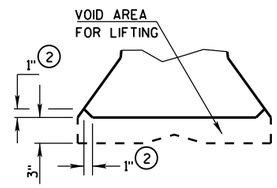

DETAIL "B"
LIFTING SLOT DETAIL

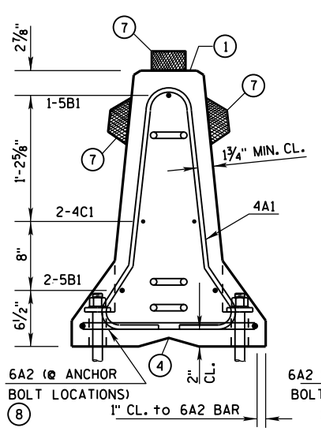

SECTION A-A
(STIRRUP PLACEMENT)

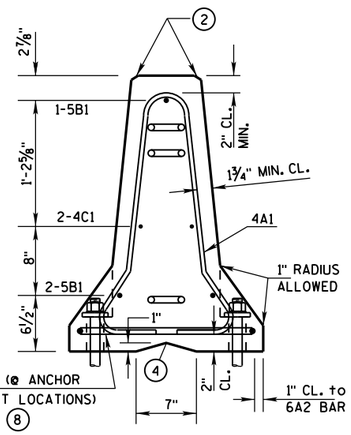

SECTION B-B
(STIRRUP PLACEMENT)

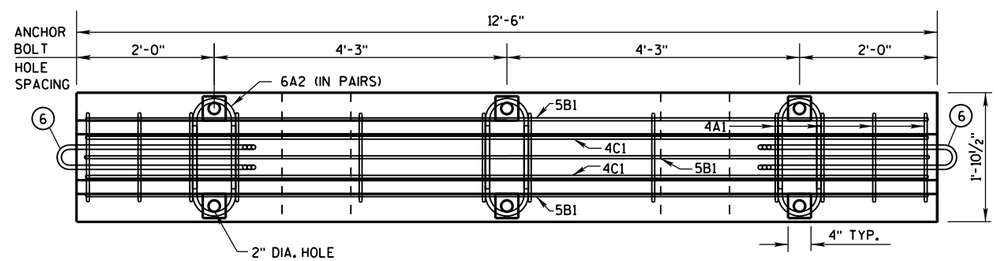

PLAN VIEW

DETAILS OF BARRIER SECTION

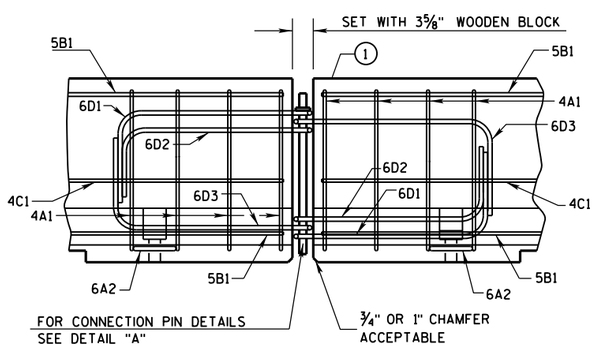

DETAILS OF BARRIER CONNECTION

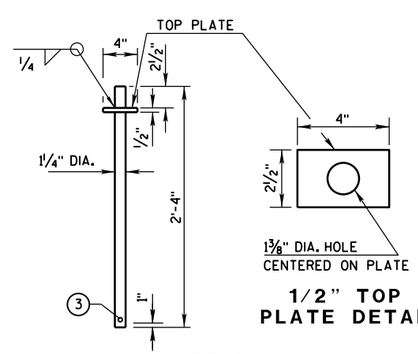

1/2" TOP PLATE DETAIL

DETAIL "A"
CONNECTION PIN
(A36 STEEL (10.9 LB EACH))

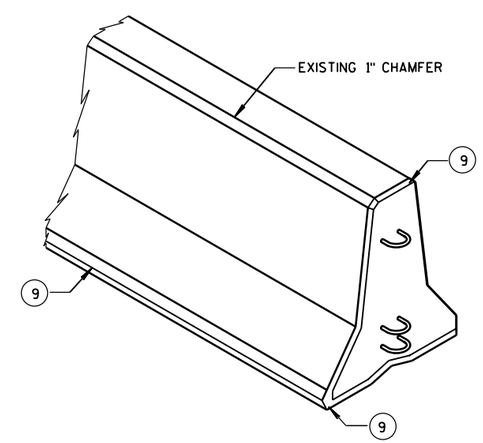

GENERAL NOTES

THESE GENERAL NOTES APPLY TO SHEETS 14B7-15(a) THRU 14B7-15(i).

DO NOT INTERMIX CONCRETE BARRIER TEMPORARY PRCAST, 12'-6" (CBTP12.5) WITH OTHER TEMPORARY CONCRETE BARRIERS.

USE ASTM A-615, GRADE 60, DEFORMED STEEL BARS FOR BARS 4A1, 6A2, 5B1 AND 4C1 IN THE BARRIER SECTION AND FOR 4V1, 4V2, 4V3, 4V4, 4V5, 4V6, 4F1, 4F2 AND 5F3 IN THE BARRIER TAPER SECTION.

LOOP BARS 6D1, 6D2 AND 6D3 SHALL BE ¾" SMOOTH STEEL BARS WITH A MINIMUM YIELD STRENGTH OF 60 KSI, A TENSILE STRENGTH OF NOT LESS THAN 1.25 TIMES THE YIELD STRENGTH BUT A MINIMUM OF 80 KSI, A MINIMUM 14% ELONGATION IN 8 INCHES AND PASSING A 180 DEGREE BEND TEST USING A 3-½" PIN BEND DIAMETER FOR BEND TESTS. THE LOOPS SHALL BE INSTALLED WITHIN ⅛" OF THE PLAN DIMENSION.

CONSTRUCT LIFTING SLOTS AS SPECIFIED ON THE PLANS TO FACILITATE THE DRAINAGE OF WATER AFTER INSTALLATION.

PLACE BARRIER ON A PAVED SURFACE. REMOVE ALL LOOSE DIRT AND SAND FROM THE ROADWAY SURFACE PRIOR TO PLACEMENT OF THE BARRIER.

INSTALL MECHANICAL OR ADHESIVE ANCHORS PER MANUFACTURER'S RECOMMENDATIONS. PROVIDE MANUFACTURER'S INFORMATION TO PROJECT ENGINEER.

1. MARK ONE END OF EACH BARRIER PERMANENTLY BY FORMING INTO THE BARRIER THE FOLLOWING INFORMATION:
   a. TYPE: WI CBTP
   b. MANUFACTURER
   c. DATE MANUFACTURED (MONTH AND YEAR)
2. 1" CHAMFER TO PREVENT SPALLING.
3. A ⅜" HOLE IN THE CONNECTION PIN, AT THE LOCATION SHOWN, IS ACCEPTABLE, BUT NOT REQUIRED..
4. "V" NOTCH IS OPTIONAL.
5. THE 4" DIAMETER, 11 GAUGE STEEL, ROUND MECHANICAL TUBING SLEEVE FOR LIFTING (OPTIONAL).
6. NEVER USE LOOP BARS (6D1, 6D2 OR 6D3) TO LIFT, MOVE OR REPOSITION THE BARRIER.
7. USE DELINEATORS CONFORMING TO SECTION 633 OF THE STANDARD SPECIFICATIONS. CONTRACTOR MAY USE ALTERNATE SHAPES AND HOUSING. INSTALL DELINEATORS ACCORDING TO MANUFACTURES INSTRUCTION. INSTALL YELLOW REFLECTORS WHEN BARRIER IS LOCATED TO THE LEFT OF TRAFFIC AND WHITE REFLECTORS WHEN BARRIER IS LOCATED TO THE RIGHT OF TRAFFIC. SPACE DELINEATORS A MAXIMUM OF 25 FEET APART. PROVIDE TOP MOUNTED DELINEATORS IN ADDITION TO THE SIDE MOUNTED DELINEATORS ON ALL BARRIER INSTALLATIONS LOCATED ON A CURVED ALIGNMENT LONGER THAN 200 FEET AND ON BARRIERS USED TO SEPARATE OPPOSING TRAFFIC.
8. SEE SHEET D FOR HOW TO ANCHOR BARRIER. SEE SHEET E FOR WHEN TO ANCHOR BARRIER.
9. 1" CHAMFER OPTIONAL.

f'c = 4,000 psi

CONCRETE BARRIER
TEMPORARY PRECAST, 12'-6"

STATE OF WISCONSIN
DEPARTMENT OF TRANSPO

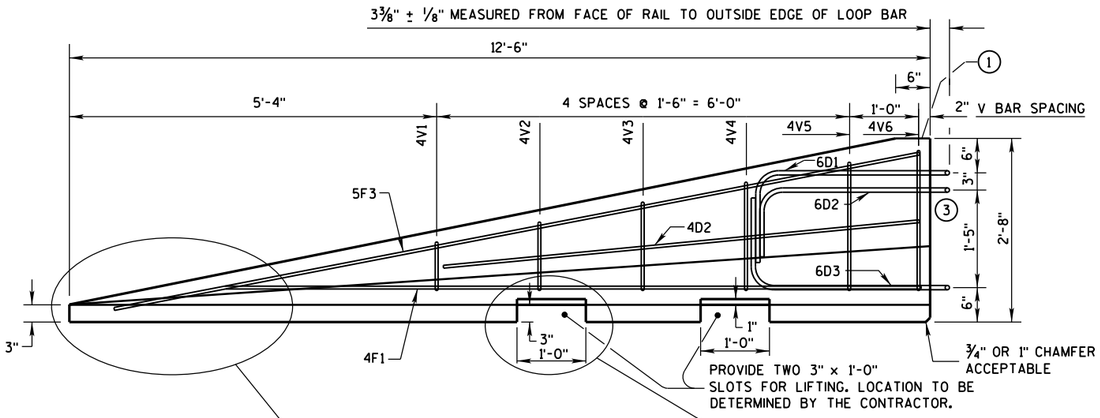

SIDE ELEVATION

(FOR CONNECTION TO LEFT END OF BARRIER)

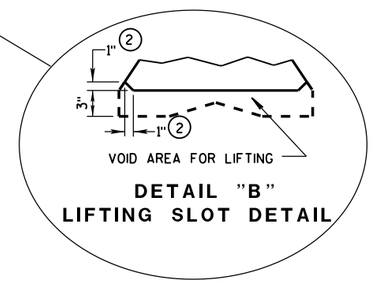

DETAIL "B"
LIFTING SLOT DETAIL

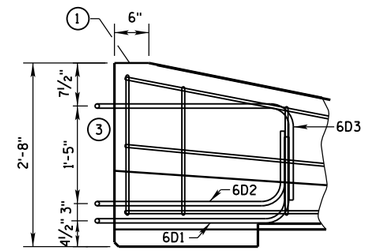

SIDE ELEVATION

LOOP BAR ASSEMBLY INVERTED
FOR OPPOSITE END.
(FOR CONNECTION TO RIGHT END OF BARRIER)

GENERAL NOTES

1. MARK ONE END OF EACH BARRIER PERMANENTLY BY FORMING INTO THE BARRIER THE FOLLOWING INFORMATION:
   a. TYPE WICBTP
   b. MANUFACTURER
   c. DATE MANUFACTURED (MONTH AND YEAR)
2. 1" CHAMFER TO PREVENT SPALLING.
3. NEVER USE LOOP BARS (6D1, 6D2 OR 6D3) TO LIFT, MOVE OR REPOSITION THE BARRIER.

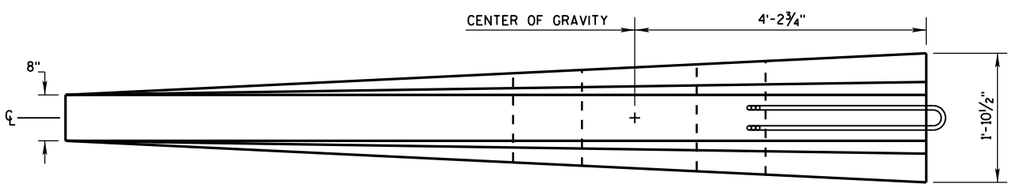

PLAN VIEW

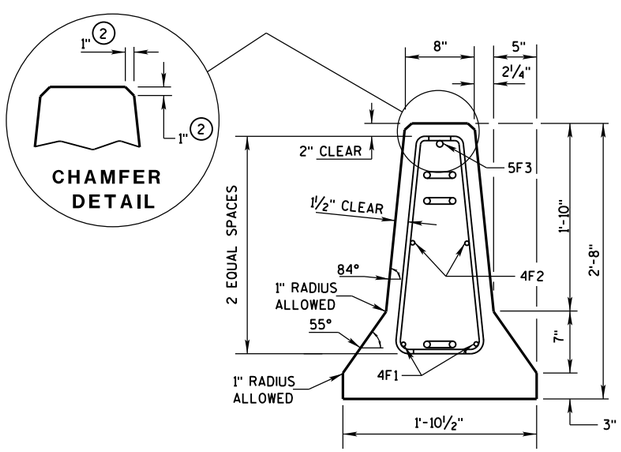

END SECTION

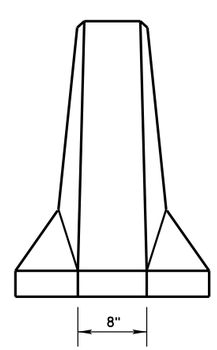

FRONT ELEVATION

DETAILS OF BARRIER TAPER SECTION

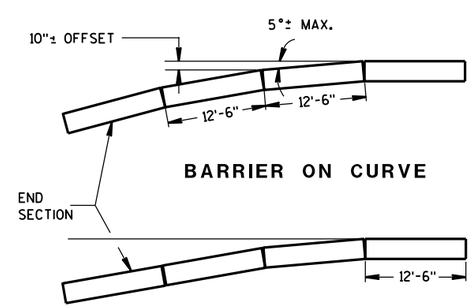

BARRIER ON CURVE

FLARE AT BARRIER END

POSTED SPEED, (MPH)	FLARE RATE
40 OR LESS	6:1
45 OR GREATER	8:1

CONCRETE BARRIER
TEMPORARY PRECAST, 12'-6"

STATE OF WISCONSIN
DEPARTMENT OF TRANSPORTATION

6

S.D.D. 14 B 7-15b

GENERAL NOTES

(1) NEVER USE LOOP BARS (6D1, 6D2 OR 6D3) TO LIFT, MOVE OR REPOSITION THE BARRIER.

BARRIER TAPER SECTION BILL OF MATERIALS

(PER 12'-6" BARRIER TAPER SECTION)

BAR	BAR SIZE	NO. OF BARS	LENGTH FT.
4V1	4	2	1'-11"
4V2	4	2	2'-2"
4V3	4	2	2'-6"
4V4	4	2	2'-9"
4V5	4	2	3'-2"
4V6	4	2	3'-4"
4F1	4	2	12'-0"
4F2	4	2	7'-6"
5F3	5	1	11'-9"
LOOP ASSEMBLY			
6D1	6	1	8'-5"
6D2	6	1	7'-7"
6D3	6	1	8'-6"

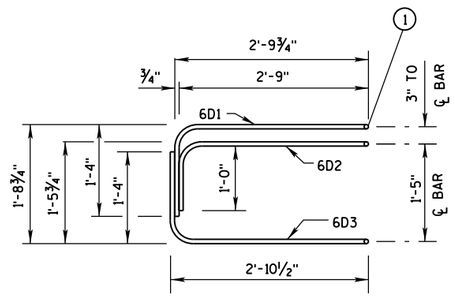

ELEVATION
LOOP BAR ASSEMBLY

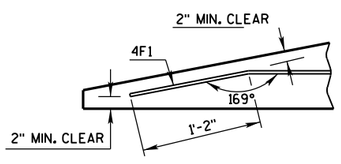

DETAIL "C"
BENT BAR DETAIL

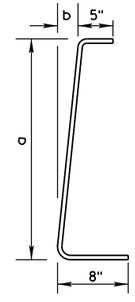

BAR	a	b
V1	10"	1"
V2	1'-1"	1¼"
V3	1'-5"	1⅝"
V4	1'-8"	1⅞"
V5	2'-0½"	2⅜"
V6	2'-3"	2¾"

4V BARS
2 AT EACH SIZE REQUIRED
FOR STIRRUP ASSEMBLY

TAPER BARRIER SECTION

BARRIER SECTION BILL OF MATERIALS

(PER 12'-6" BARRIER SECTION)

BAR	BAR SIZE	NO. OF BARS	LENGTH FT.
4A1	4	12	6'-0"
6A2	6	6	2'-11"
5B1	5	3	12'-2"
4C1	4	2	12'-2"
LOOP ASSEMBLY			
6D1	6	2	8'-5"
6D2	6	2	7'-7"
6D3	6	2	8'-6"

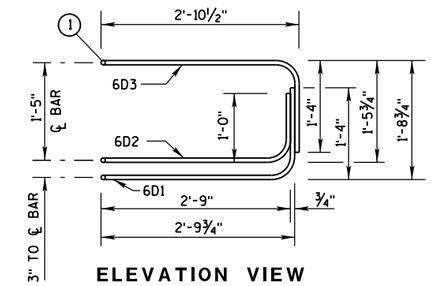

ELEVATION VIEW

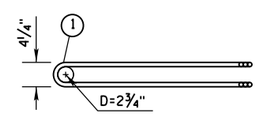

PLAN VIEW
LOOP BAR ASSEMBLY
(MARKED END SHOWN, INVERT FOR OTHER END)

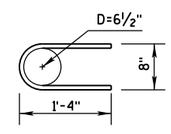

6A2

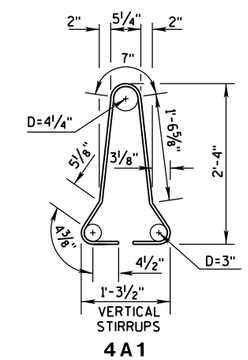

4A1

BARRIER SECTION

CONCRETE BARRIER
TEMPORARY PRECAST, 12'-6"

STATE OF WISCONSIN
DEPARTMENT OF TRANSPO

6

S.D.D. 14 B 7-15c

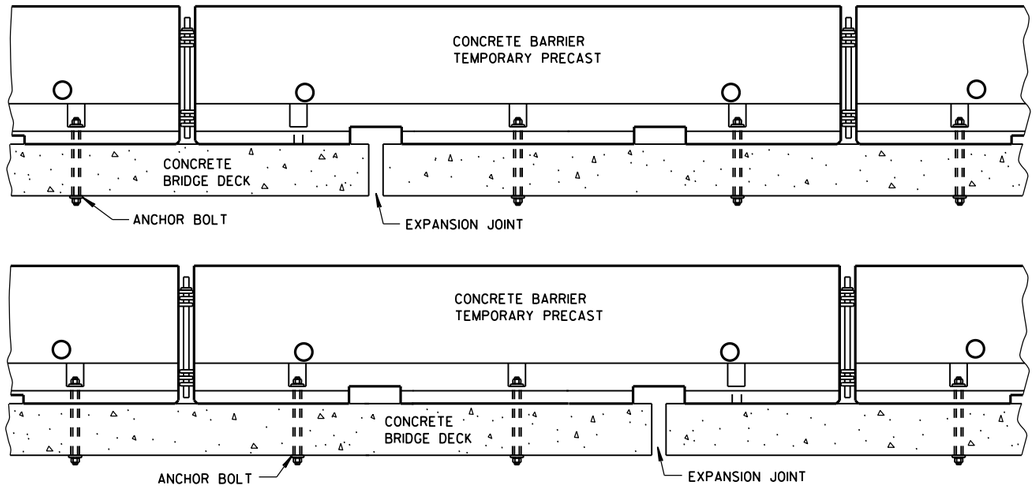

TREATMENT AT BRIDGE DECK EXPANSION JOINTS

(NO SINGLE CONCRETE BARRIER SECTION SHALL BE ANCHORED TO BOTH THE BRIDGE DECK AND THE APPROACH SLAB. ALL ANCHOR BOLT LOCATIONS SHALL BE ANCHORED TO THE DECK IN ACCORDANCE WITH THE DETAIL. NO MORE THAN ONE ANCHOR BOLT SHALL BE ELIMINATED FROM A BARRIER SECTION WHEN SPANNING AN EXPANSION JOINT.)

GENERAL NOTES

SEE SHEET E FOR WHEN TO ANCHOR. OTHER PARTS OF THE PLAN MAY SHOW ADDITIONAL LOCATIONS REQUIRING ANCHORING.

REMOVE ALL ANCHORS WHEN NO LONGER NEEDED. FILL CONCRETE PAVEMENTS, DECKS AND APPROACH SLABS WITH NON-SHRINK COMMERICAL GROUT FROM THE APPROVED PRODUCT LIST. FILL ASPHALT PAVEMENTS WITH ASTM D6690 TYPE II RUBBERIZED CRACK FILLER.

1. 1⅛" DIAMENTER A307 THREADED ROD, ½" X 3" X 3" SQUARE PLATE WASHER WITH ASTM A36 STEEL. ASTM A563A HEAVY HEX NUT.
2. ADHESIVE ANCHORS WITH A MINIMUM BOND STRENGTH OF 1,800 PSI AND 5¼" EMBEDMENT. SEE 603.2 AND 603.3.1.2 OF THE WISCONSIN STANDARD SPECIFICATIONS FOR MORE INFORMATION ON ADHESIVE ANCHORS.
3. ASPHALT SURFACE SHOWN. CONTRACTOR MAY DRILL THROUGH CONCRETE PAVEMENT AND THAN DRIVE ASPHALT ANCHOR PIN.

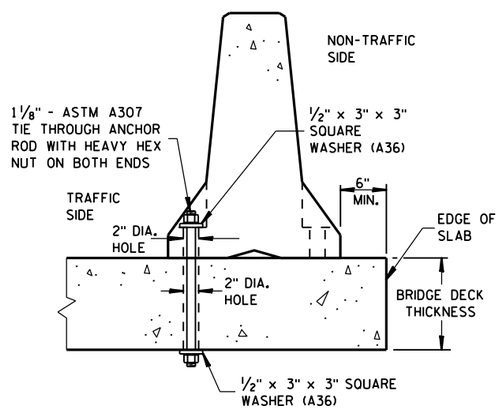

THROUGH BOLTED ANCHOR INSTALLATION ON BRIDGE DECK

(DO NOTUSE ON CONCRETE BRIDGE DECK WITH ASPHALT OVERLAY)

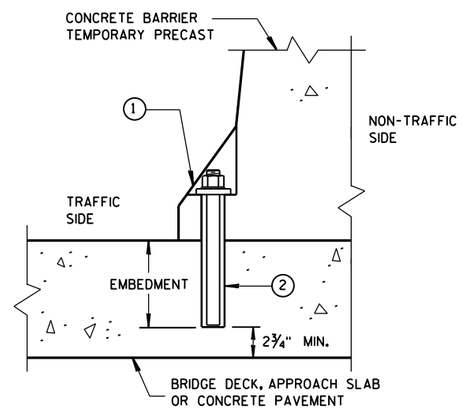

REMOVABLE ADHESIVE ANCHOR INSTALLATION ON CONCRETE BRIDGE DECK, CONCRETE APPROACH SLAB, OR CONCRETE PAVEMENT

(DO NOT USE ON CONCRETE WITH AN ASPHALTIC OVERLAY)

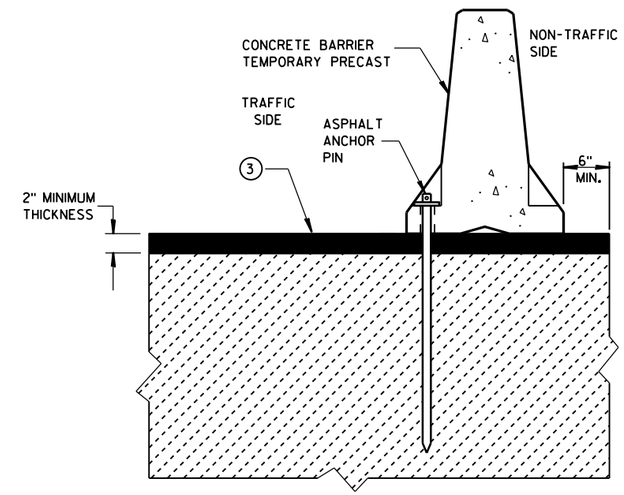

STAKE DOWN INSTALLATION FOR ASPHALTIC SURFACE

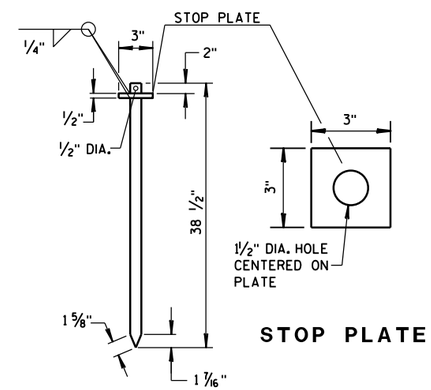

ASPHALT ANCHOR PIN

(ASTM A36 STEEL)

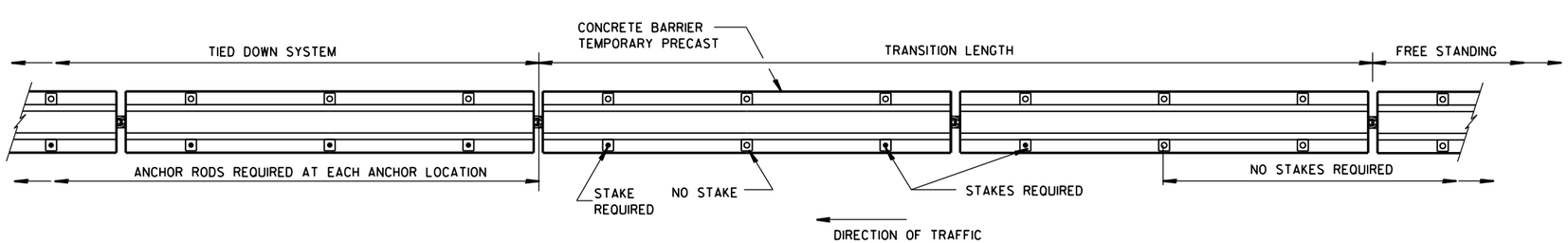

PLAN VIEW

FREE STANDING TRANSITION TO TIED-DOWN SYSTEM

(PLACE TRANSITION IN A TANGENT SECTION OF BARRIER PARALLEL TO THE ROADWAY. IF TRANSITION OCCURS ON STRUCTURAL SLAB, ANCHOR AS SHOWN.)

CONCRETE BARRIER
TEMPORARY PRECAST, 12'-6"

STATE OF WISCONSIN
DEPARTMENT OF TRANSPOI

6

S.D.D. 14 B 7-15d

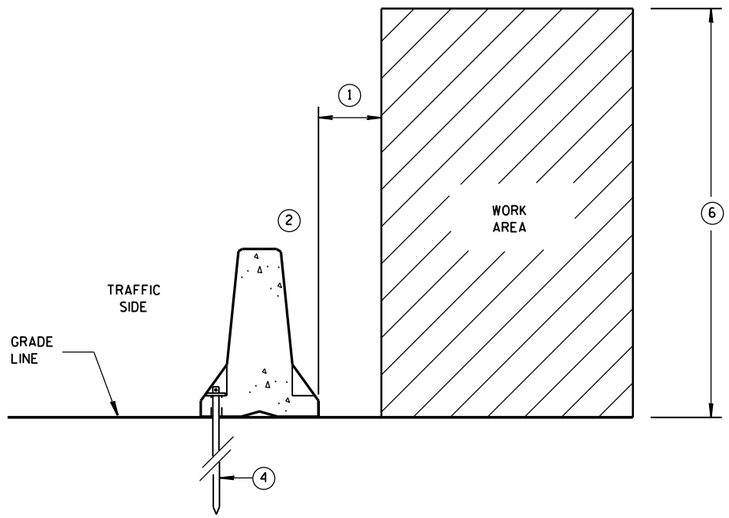

ANCHORED BARRIER SPACE REQUIREMENTS FOR HAZARDS EXTENDED ABOVE THE GRADE LINE

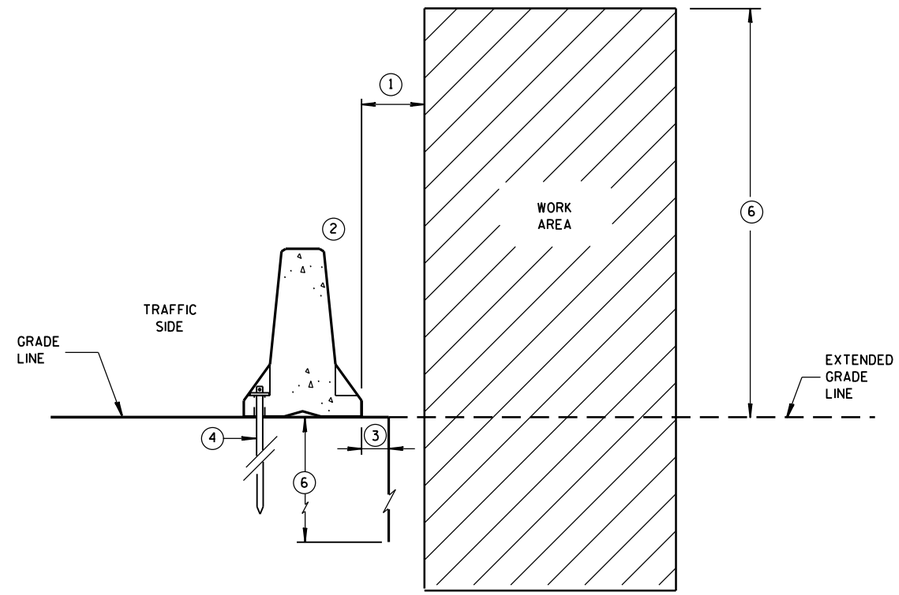

ANCHORED BARRIER SPACE REQUIREMENTS ON VERTICAL DROP OFFS

GENERAL NOTES

1. WHEN OBJECTS EXTEND ABOVE THE GRADE, A MINIMUM OF 1 FOOT IS REQUIRED FROM BACK OF BARRIER TO OBJECT. SEE OTHER DETAILS FOR FOR THE MINIMUM OFFSET FROM BACK OF BARRIER TO SLOPES OR VERTICAL DROPS.
2. OBJECTS ARE NOT TO BE PLACED ON, MOUNTED TO, OR LEANED AGAINST THE BARRIER WITHOUT PERMISSION OF THE PROJECT ENGINEER.
3. SEE OTHER DETAIL ON SHEET "D" FOR SPACE REQUIREMENTS.
4. SEE BOLT THROUGH DECK, REMOVABLE ADHESIVE ANCHOR, OR A STAKE DOWN FOR ASPHALTIC SURFACE TREATMENT DETAILS. ASPHALTIC ANCHOR SHOWN.
5. DEPTH OF 3 FEET OR MORE.
6. Y = 6'-6".

POSTED SPEED MPH	X
45 OR GREATER	4'
40 OR LESS	2'

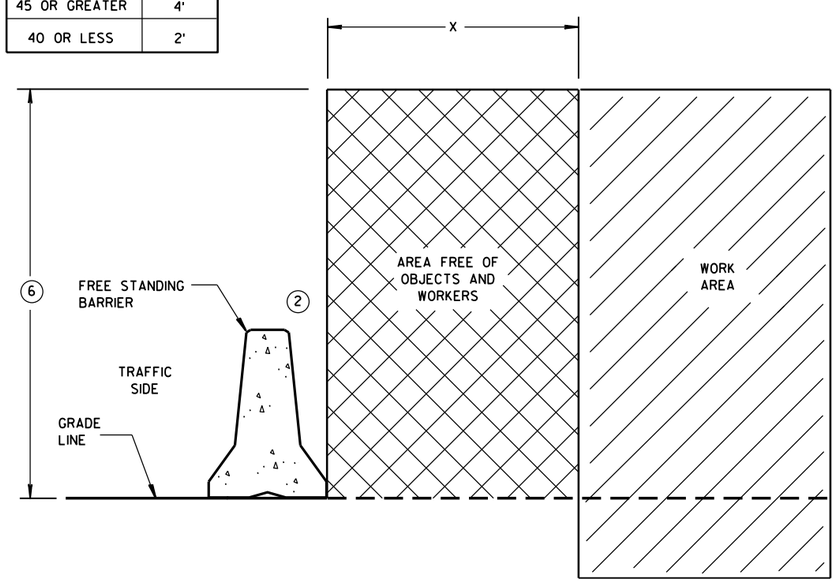

FREE STANDING BARRIER SPACE REQUIREMENTS

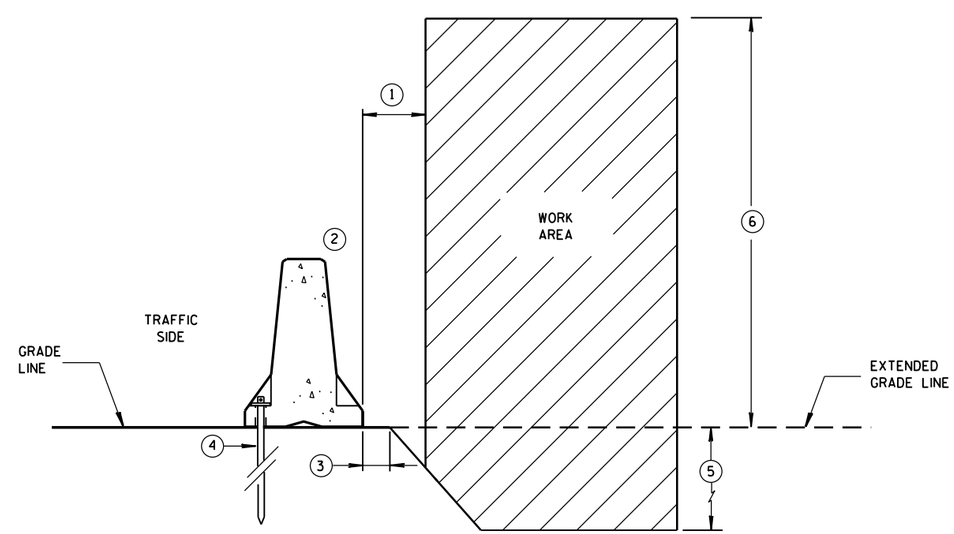

ANCHORED BARRIER SPACE REQUIREMENTS ON SLOPES

CONCRETE BARRIER
TEMPORARY PRECAST, 12'-6"

STATE OF WISCONSIN
DEPARTMENT OF TRANSPORTATION

6

S.D.D. 14 B 7-15e

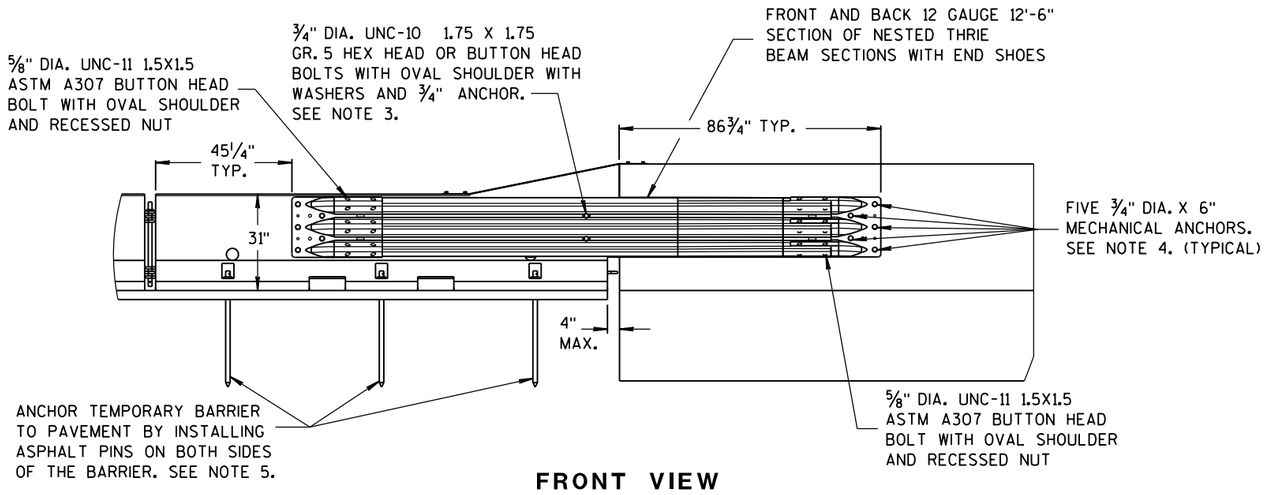

FRONT VIEW

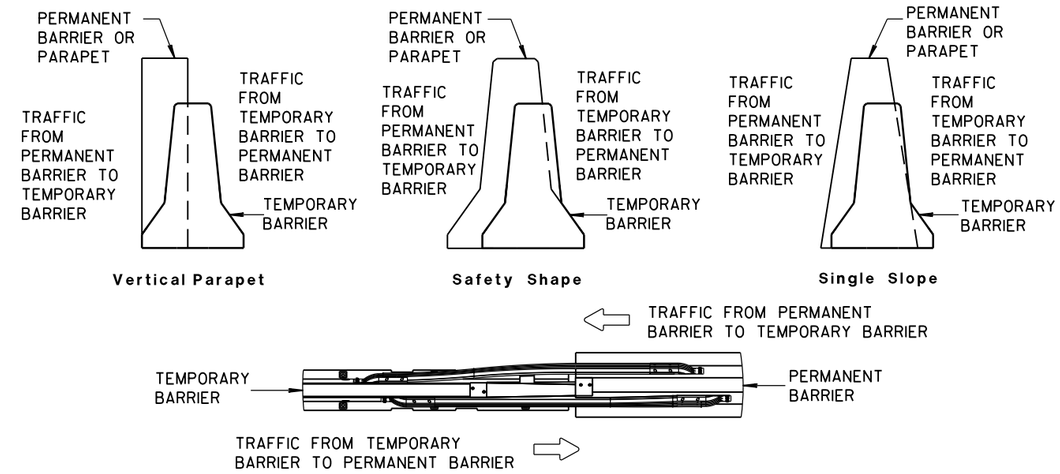

TEMPORARY BARRIER PLACEMENT FOR BI-DIRECTIONAL TRANSITION TO TIED-DOWN SYSTEM

NOTES

NESTED THRIE BEAM IS REQUIRED ON BOTH SIDES OF THE TEMPORARY BARRIER FOR ALL INSTALLATIONS REGARDLESS OF TRAFFIC.

1. CAP END PLATE PLACED FLUSH WITH UPSTREAM END OF PERMANENT BARRIER OR PARAPET.
2. THRIE BEAM PIECES ARE OFFSET 15 1/4" TO PREVENT INTERFERENCE FROM THE ANCHORS ON OPPOSING SIDES.
3. MINIMUM MECHANICAL OR ADHESIVE ANCHOR STRENGTH REQUIREMENTS: ULTIMATE TENSILE LOAD 9.48 KIPS AND ULTIMATE SHEAR LOAD 10.48 KIPS.
4. MINIMUM MECHANICAL OR ADHESIVE ANCHOR STRENGTH REQUIREMENTS: ULTIMATE TENSILE LOAD 17.9 KIPS AND ULTIMATE SHEAR LOAD 21.96 KIPS.
5. MAY BE USED ON CONCRETE OR ASPHALT PAVEMENTS. ASPHALT OPTION SHOWN. FOR CONCRETE OPTION SEE OTHER DETAILS.
6. MINIMUM MECHANICAL OR ADHESIVE ANCHOR STRENGTH REQUIREMENTS: ULTIMATE TENSILE LOAD 12.14 KIPS AND ULTIMATE SHEAR LOAD 17.5 KIPS.

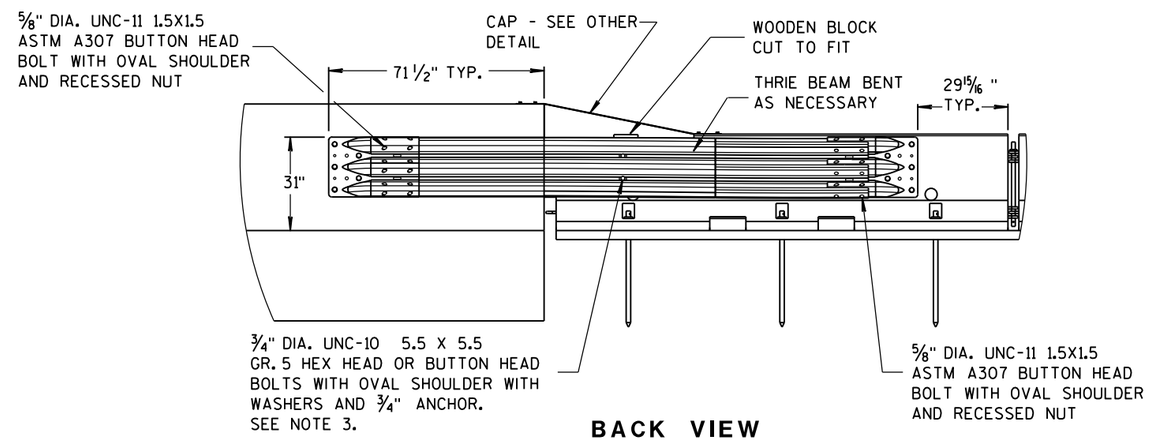

BACK VIEW

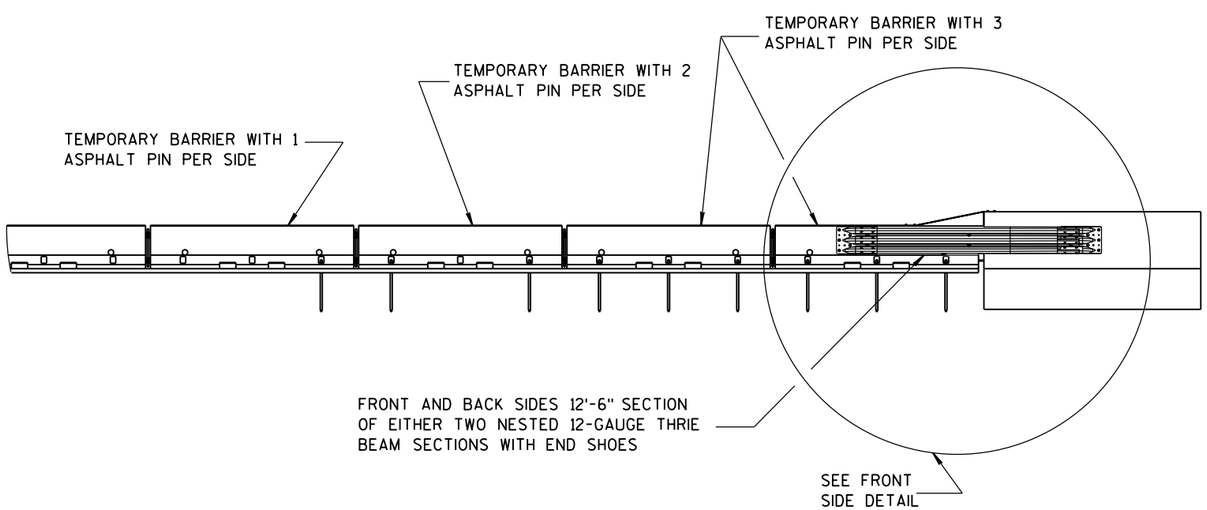

FRONT VIEW

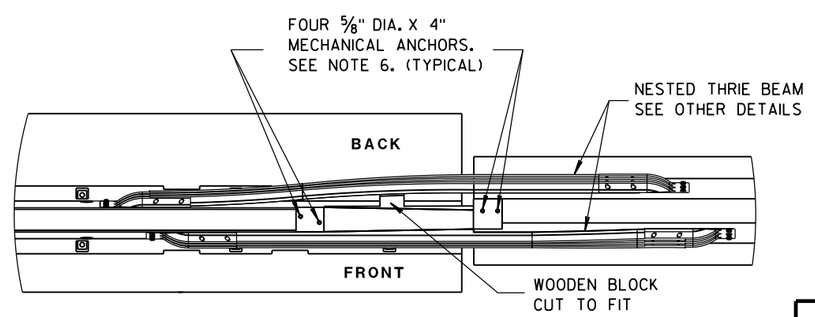

PLAN VIEW

BI-DIRECTIONAL TRANSITION TO TIED-DOWN SYSTEM

CONCRETE BARRIER
TEMPORARY PRECAST, 12'-6"

STATE OF WISCONSIN
DEPARTMENT OF TRANSPO

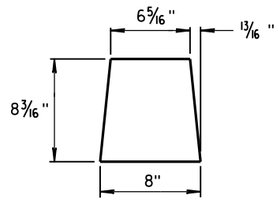

GUSSET 1

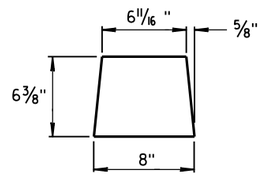

GUSSET 2

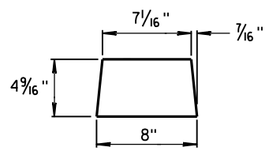

GUSSET 3

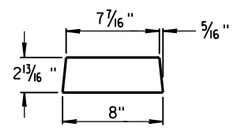

GUSSET 4

GUSSETS

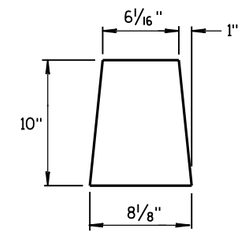

END PLATE

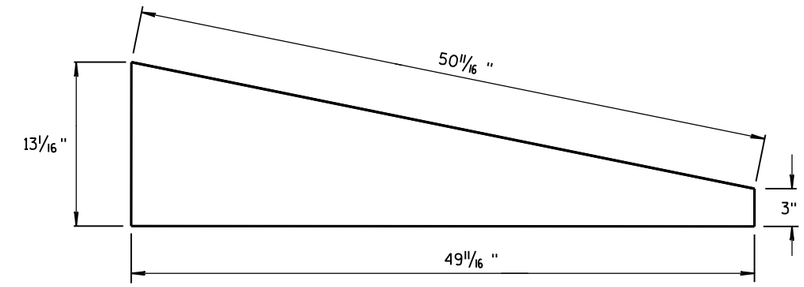

SIDE PLATE

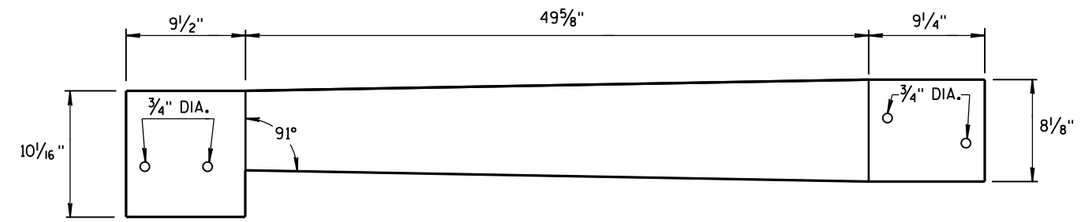

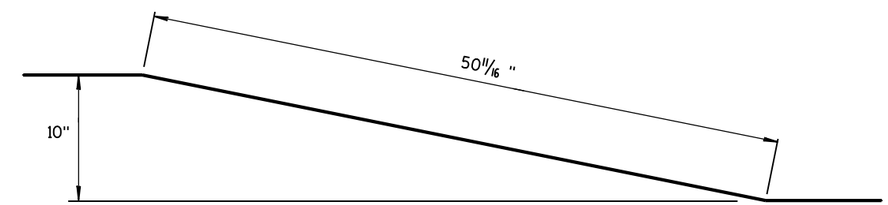

TOP PLATE

SIDE, TOP AND END PLATES FOR CAP FROM TEMPORARY CONCRETE BARRIER TO 42" PERMANENT CONCRETE BARRIER

SIDE PLATES, TOP PLATE, END PLATE AND GUSSETS ARE 12 GAUGE ASTM A36 GALVANIZED STEEL.

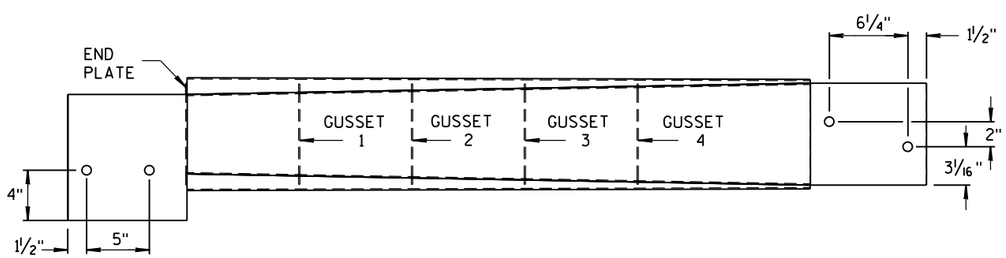

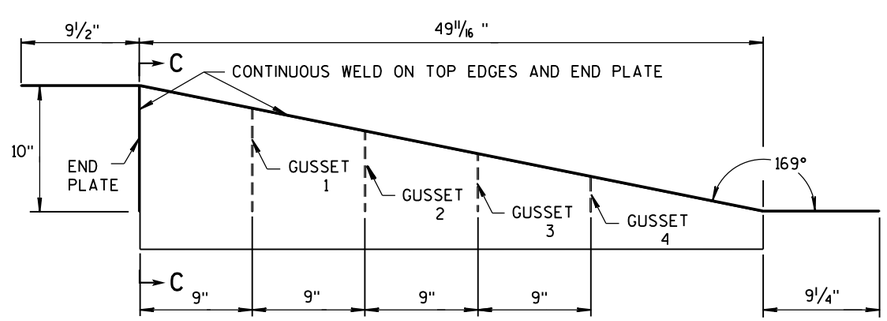

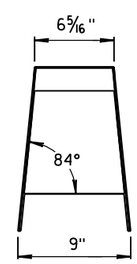

SECTION C-C

NOTES

1. FOUR GUSSETS AND END PLATE ARE STITCH WELDED ON THREE SIDES.
2. TWO TRIANGULAR SIDE PLATES ARE STITCH WELDED TO TOP PLATE, END PLATE, AND GUSSETS.

CAP DETAILS FOR TEMPORARY CONCRETE BARRIER TO 42" PERMANENT CONCRETE BARRIER

CONCRETE BARRIER
TEMPORARY PRECAST, 12'-6"

STATE OF WISCONSIN
DEPARTMENT OF TRANSPOR

6

S.D.D. 14 B 7-15g

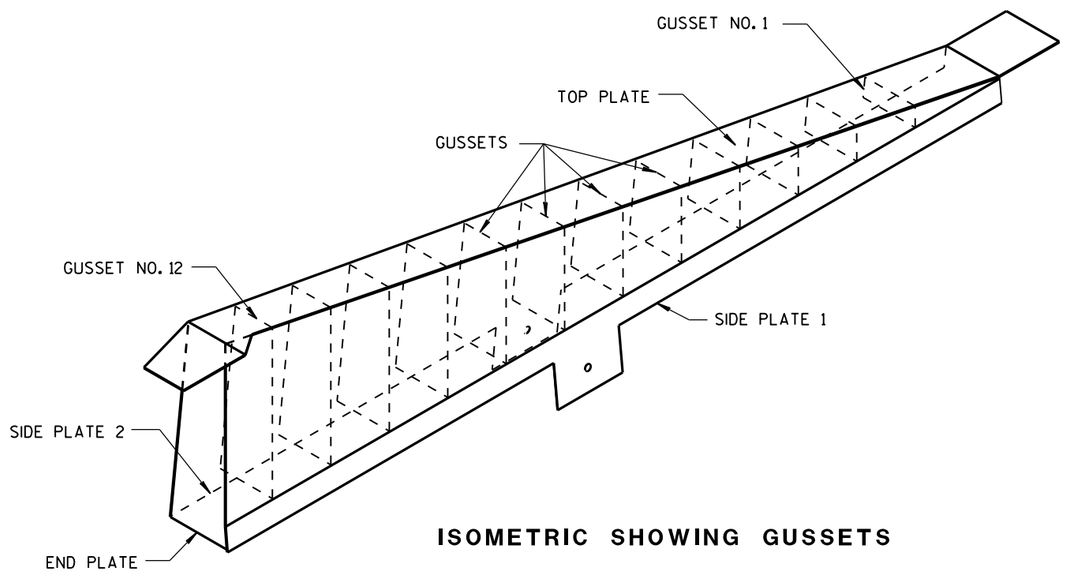

ISOMETRIC SHOWING GUSSETS

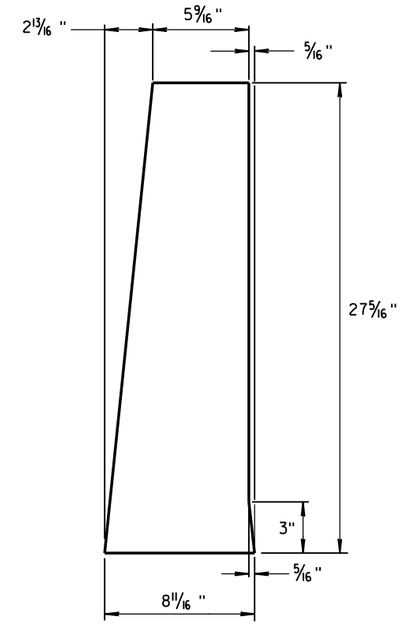

END PLATE

1/8" STEEL PLATE

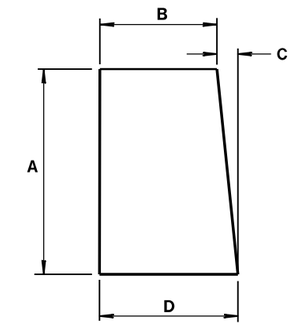

GUSSETS 1 - 12

ALL GUSSETS 1/8" STEEL PLATE

GUSSET DIMENSIONS				
GUSSET NO.	A	B	C	D
1	2 7/8"	7 3/4"	1/4"	8
2	4 11/16 "	7 9/16 "	1/2"	8
3	6 1/2"	7 3/8"	11/16 "	8 1/16 "
4	8 5/16 "	7 3/16 "	7/8"	8 1/16 "
5	10 1/8"	7"	1 1/16 "	8 1/16 "
6	11 15/16 "	6 13/16 "	1 1/4"	8 1/16 "
7	13 3/4"	6 5/8"	1 7/16 "	8 1/16 "
8	15 9/16 "	6 7/16 "	1 9/16 "	8 1/16 "
9	17 3/8"	6 1/4"	1 13/16 "	8 1/16 "
10	19 3/16 "	6 1/16 "	1 15/16 "	8 1/16 "
11	21"	5 7/8"	2 3/16 "	8 1/16 "
12	22 13/16 "	5 11/16 "	2 5/16 "	8 1/16 "

SIDE PLATES, TOP PLATE, END PLATE AND GUSSETS ARE 12 GAUGE ASTM A36 STEEL AND GALVANIZED.

GUSSETS AND END PLATE ARE STITCH WELDED ON 3 SIDES. TWO TRIANGULAR SIDE PLATES ARE STITCH WELDED TO TOP PLATE, END PLATE AND GUSSETS.

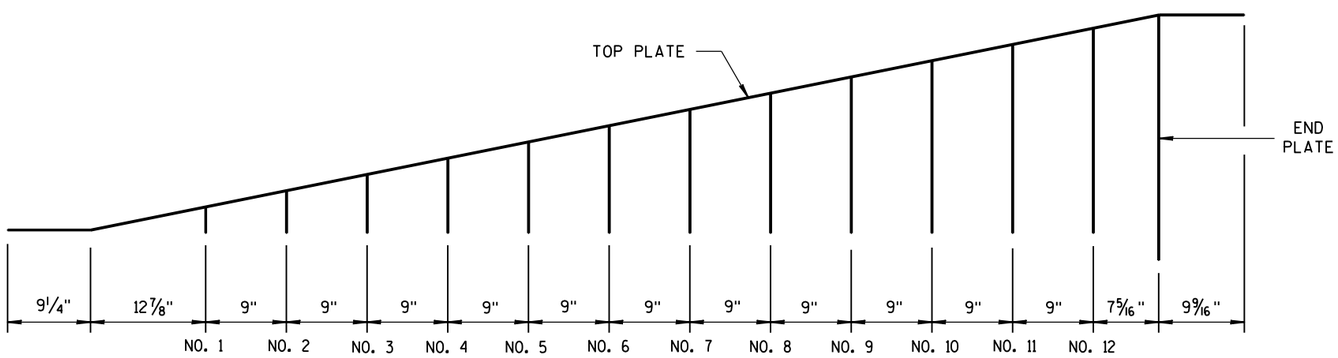

GUSSET LOCATION

CAP DETAILS FOR TEMPORARY CONCRETE BARRIER TO 56" PERMANENT CONCRETE BARRIER

CONCRETE BARRIER
TEMPORARY PRECAST, 12'-6"

STATE OF WISCONSIN
DEPARTMENT OF TRANSPOR 88

6
S.D.D. 14 B 7-15h

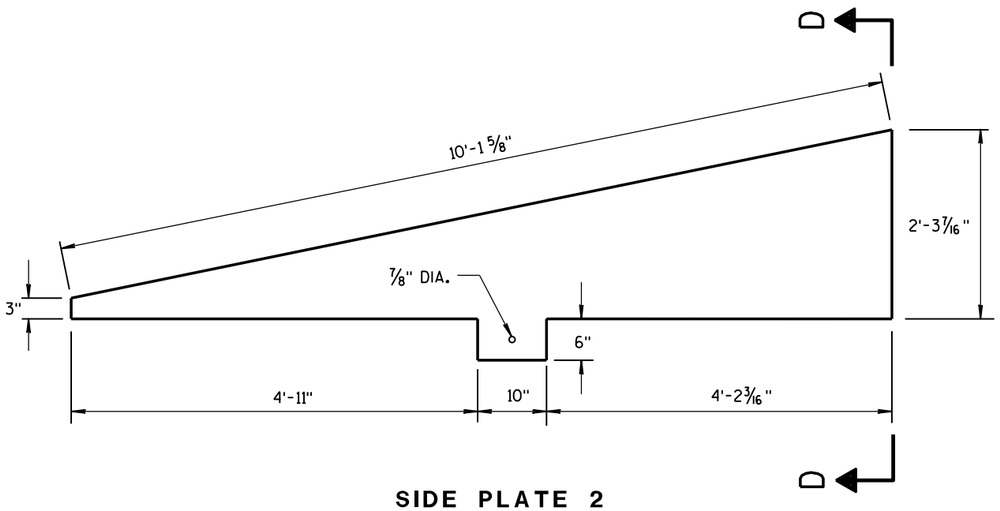

SIDE PLATE 2

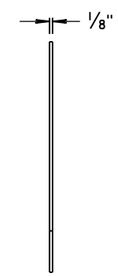

END VIEW

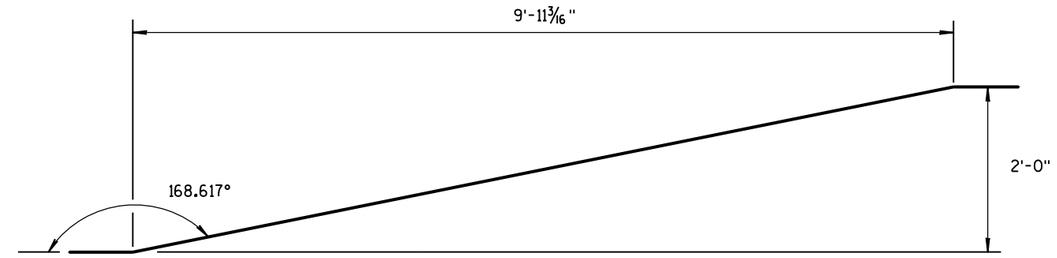

SIDE VIEW

TOP PLATE

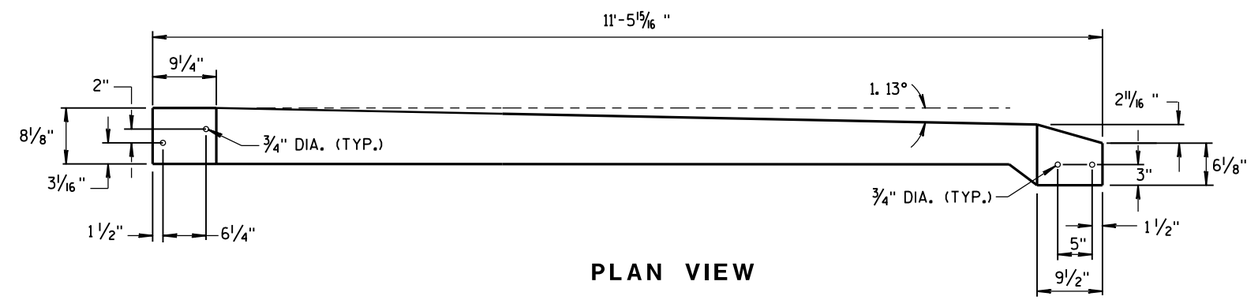

PLAN VIEW

TOP PLATE

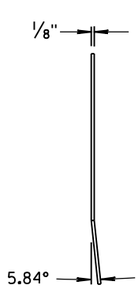

END VIEW

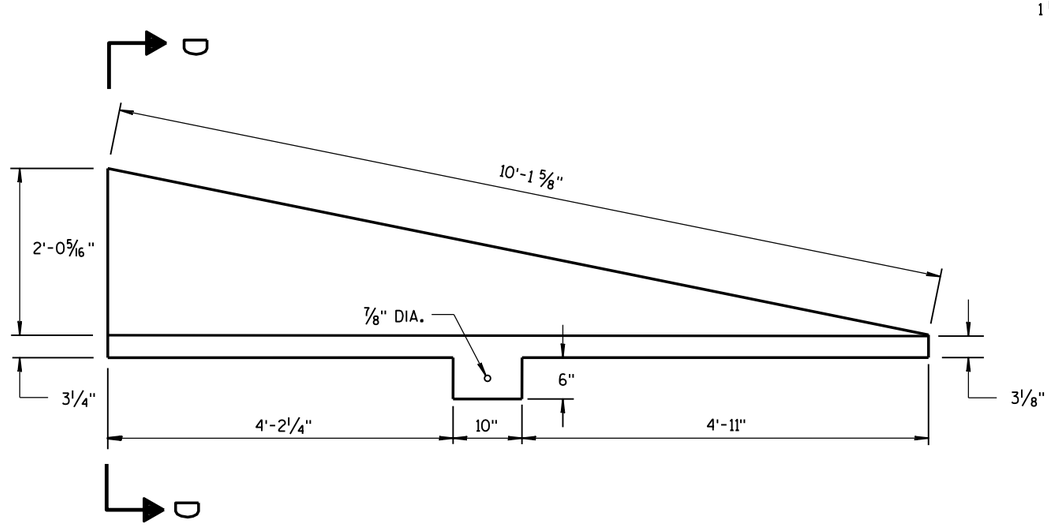

SIDE PLATE 1

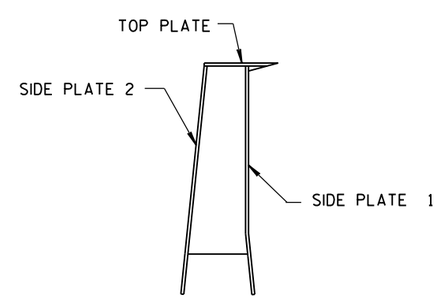

SECTION D-D

CAP DETAILS FOR TEMPORARY CONCRETE BARRIER TO 56" PERMANENT CONCRETE BARRIER

CONCRETE BARRIER
TEMPORARY PRECAST, 12'-6"

STATE OF WISCONSIN
DEPARTMENT OF TRANSPORTATION

APPROVED
June 2017 — DATE
/S/ Rodney Taylor — ROADWAY STANDARD UNIT SUPERV
FHWA

6
S.D.D. 14 B 7-15i

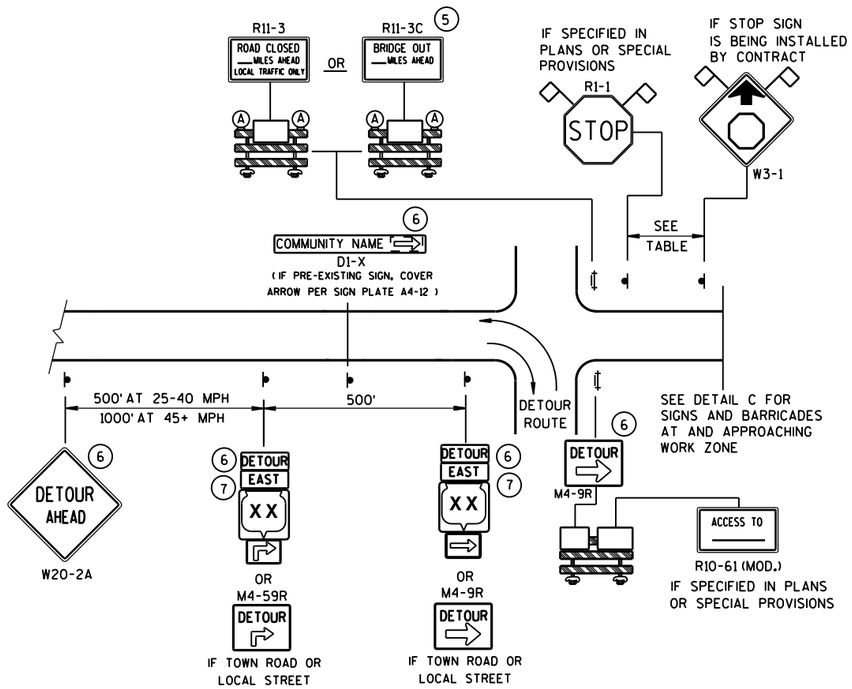

DETAIL A

MAINLINE CLOSURE WITH POSTED DETOUR

WORK ZONE GREATER THAN ½ MILE FROM DETOUR ROUTE (1000 FEET IF URBAN)

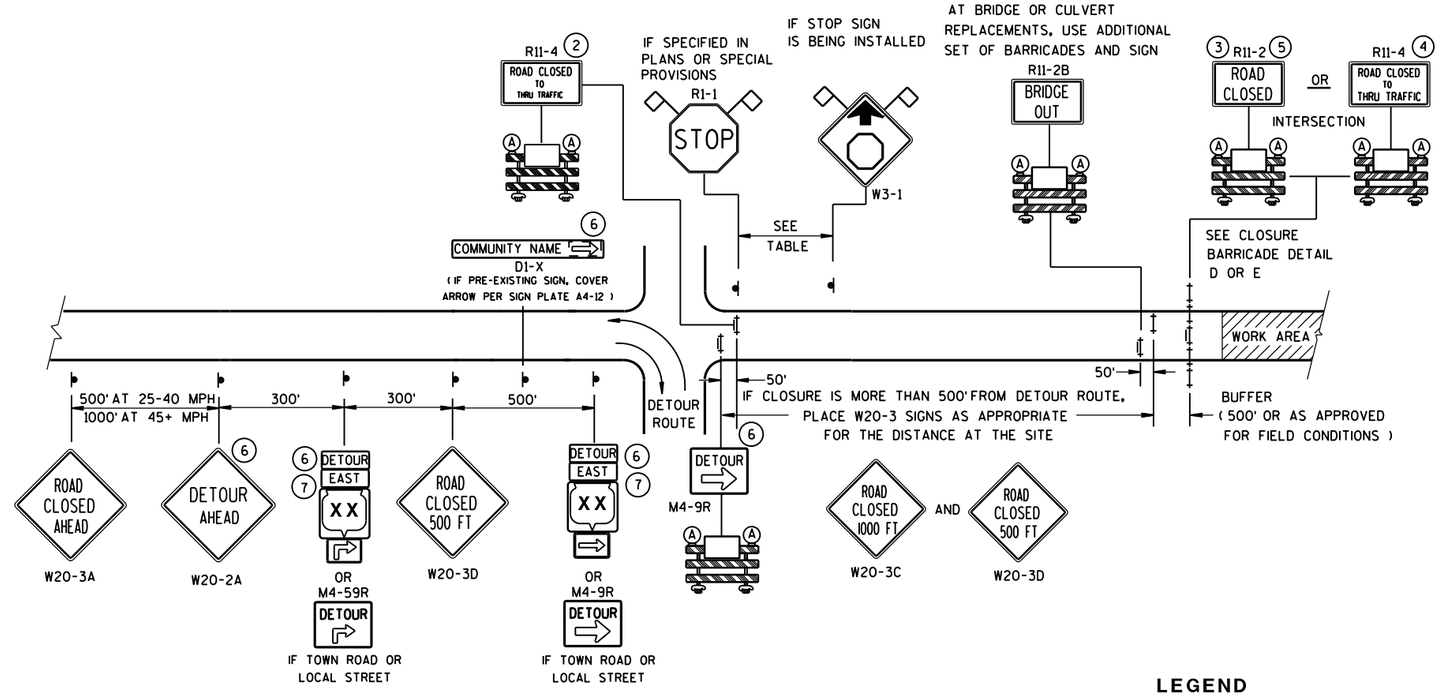

DETAIL B

MAINLINE CLOSURE WITH POSTED DETOUR

WORK ZONE LESS THAN ½ MILE FROM DETOUR ROUTE (1000 FEET IF URBAN)

LEGEND

- SIGN ON PERMANENT SUPPORT
- TYPE III BARRICADE
- TYPE III BARRICADE WITH ATTACHED SIGN
- (A) TYPE "A" WARNING LIGHT (FLASHING)
- WORK AREA
- DETOUR / EAST — M4-8 / M3-X
- XX — M1-4; COUNTY XX — M1-5A; XX — M1-6
- M05-1 OR M06-1
- FLAGS, 16" X 16" MIN., (ORANGE)

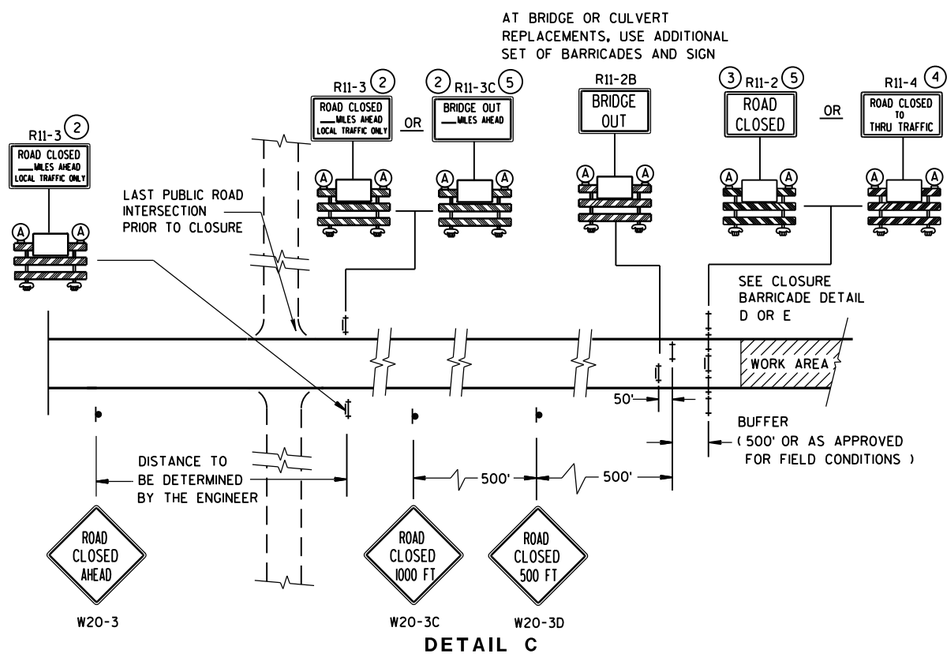

DETAIL C

MAINLINE CLOSURE, NO POSTED DETOUR

SPEED LIMIT (MPH)	"STOP AHEAD" ADVANCE WARNING DISTANCE (FT)
25	200
30	200
35	350
40	350
45	500
50	550
55	750

SEE SDD 15C2-SHEET "**b**" FOR GENERAL NOTES AND FOOTNOTES (1) THROUGH (7)

BARRICADES AND SIGNS FOR MAINLINE CLOSURES

STATE OF WISCONSIN
DEPARTMENT OF TRANSPORTATION

Sept. 2015 — DATE
/S/ Peter Amakobe Atepe — STATEWIDE WORK ZONE TRAFFIC SAFETY ENGINEER
FHWA

6

6

S.D.D. 15 C 2-6a

S.D.D. 15 C 2-6a

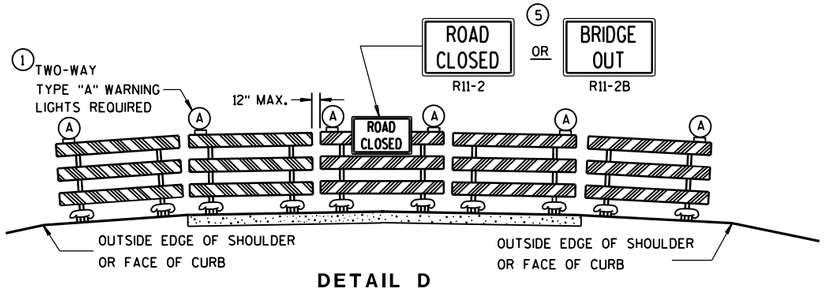

DETAIL D

ROAD CLOSURE BARRICADE DETAIL

APPROACH VIEW

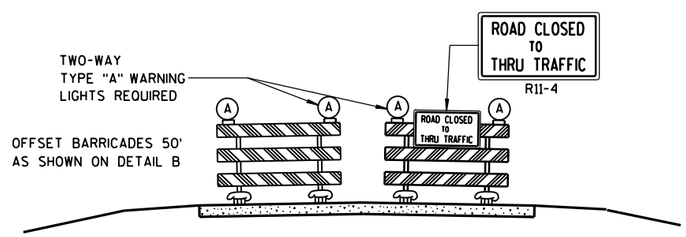

DETAIL E

LANE CLOSURE BARRICADE DETAIL

APPROACH VIEW

SEE SDD 15C2-SHEET "**a**" FOR LEGEND

GENERAL NOTES

THE EXACT NUMBER, LOCATION, AND SPACING OF ALL SIGNS AND BARRICADES SHALL BE ADJUSTED TO FIT FIELD CONDITIONS AS APPROVED BY THE ENGINEER.

ANY SIGNS TEMPORARY OR EXISTING, WHICH CONFLICT WITH TRAFFIC CONTROL "IN USE" SHALL BE REMOVED OR COVERED AS NEEDED AND AS APPROVED BY THE ENGINEER.

THE SPACING BETWEEN TRAFFIC CONTROL SIGNS SHOULD BE ADJUSTED TO NOT CONFLICT WITH AND SHOULD PROVIDE A DESIRABLE MINIMUM OF 200 FEET CLEARANCE TO EXISTING SIGNS THAT WILL REMAIN IN PLACE.

BARRICADES THAT MUST BE MOVED FOR A WORK OPERATION SHALL BE IMMEDIATELY RE-ESTABLISHED UPON COMPLETION OF THE OPERATION OR, FOR CONTINUING OPERATIONS, AT THE END OF EACH WORKING DAY.

SIGNS THAT WILL BE IN PLACE LESS THAN 7 CONTINUOUS DAYS AND NIGHTS MAY BE MOUNTED ON PORTABLE SUPPORTS.

ALL TYPE III BARRICADES SHALL HAVE RAILS REFLECTORIZED ON BOTH FACES. STRIPES SHALL BE PROPERLY SLOPED DOWN TOWARD THE TRAFFIC SIDE OR AS SHOWN IN THE ROAD CLOSURE BARRICADE DETAIL D FOR FULL ROAD CLOSURES.

TYPE "A" LOW-INTENSITY FLASHING WARNING LIGHTS SHALL BE VISIBLE ON BOTH SIDES OF THE BARRICADE.

THE R11-2, R11-3, M4-9, R11-4 AND R10-61 SIGNS PLACED ON BARRICADES SHALL COVER NO MORE THAN THE TOP RAIL. THE SIGNS SHALL NOT COVER ANY PORTION OF THE MIDDLE OR BOTTOM RAILS.

"WO AND "MO" SIGNS ARE THE SAME AS "W" AND "M" SIGNS EXCEPT THE BACKGROUND IS ORANGE.

ALL SIGNS SHALL BE 48" X 48" UNLESS OTHERWISE NOTED BELOW:

R11-2 SHALL BE 48" X 30".
R11-3, R11-4 AND R10-61 SHALL BE 60" X 30".
M4-9 SHALL BE 30" X 24".
M3-X SHALL BE 24" X 12". (36" X 18" IF NEEDED TO MATCH EXISTING SIGNS.)
M4-8 SHALL BE 24" X 12". (30" X 15" IF NEEDED TO MATCH EXISTING SIGNS.)
M1-4, M1-5A, AND M1-6 SHALL BE 24" X 24". (36" X 36" IF NEEDED TO MATCH EXISTING SIGNS.)
M05-1 AND M06-1 SHALL BE 21" X 21". (30" X 30" IF NEEDED TO MATCH EXISTING SIGNS.)
D1-X SHALL BE AS SHOWN ON SPECIFIC PROJECT SIGNING DETAIL SHEETS.
R1-1 SHALL BE 36" X 36".

1. TWO WARNING LIGHTS SHALL BE PROVIDED ON THE CENTER BARRICADE AND A MINIMUM OF ONE WARNING LIGHT SHALL BE PROVIDED ON EACH OF THE OTHER BARRICADES WITHIN THE ROADWAY LIMITS. SPACING OF THE WARNING LIGHTS SHALL BE UNIFORM TO THE EDGE OF ROADWAY AS SHOWN (APPROX. 8-FOOT LIGHT SPACING).
2. THESE SIGNS AND BARRICADES ARE NOT REQUIRED IF ROAD CLOSURE BEGINS AT INTERSECTION.
3. FOR ROAD CLOSURE WITHOUT LOCAL ACCESS TO PROJECT, SEE ROAD CLOSURE BARRICADE DETAIL D.
4. FOR ROAD CLOSURE WITH LOCAL ACCESS TO PROJECT, SEE LANE CLOSURE BARRICADE DETAIL E.
5. FOR BRIDGE OR CULVERT REPLACEMENTS, SUBSTITUTE "BRIDGE OUT" INSTEAD OF "ROAD CLOSED" ON R11-2 AND R11-3 SIGNS.
6. INSTALL DETOUR AND COMMUNITY GUIDE SIGNS AND ARROWS ONLY IF SPECIFIED IN THE CONTRACT. IF THERE ARE EXISTING ROUTE MARKER ASSEMBLIES THAT WILL REMAIN IN PLACE, ADJUST THE LOCATION OF THE DETOUR ROUTE SIGNS TO CORRESPOND WITH THE EXISTING ASSEMBLIES. MODIFY EXISTING SIGNS WHERE POSSIBLE. SEE SPECIFIC PROJECT DETOUR SIGNING DETAIL SHEETS. IF DETOUR SIGNS ARE BEING INSTALLED BY OTHERS, PLACE THE CONTRACTED TRAFFIC CONTROL SIGNS TO ALLOW FOR PLACEMENT OF ALL WARNING, DETOUR AND GUIDE SIGNS AS SHOWN.
7. "EAST" CARDINAL DIRECTION MARKERS AND RIGHT TURN ARROWS ARE SHOWN. USE OTHER CARDINAL DIRECTIONS AND ARROWS AS APPROPRIATE.

BARRICADES AND SIGNS FOR MAINLINE CLOSURES

STATE OF WISCONSIN
DEPARTMENT OF TRANSPORTATION

Sept. 2015 — DATE
/S/ Peter Amakobe Atepe — STATEWIDE WORK ZONE TRAFFIC SAFETY ENGINEER
FHWA

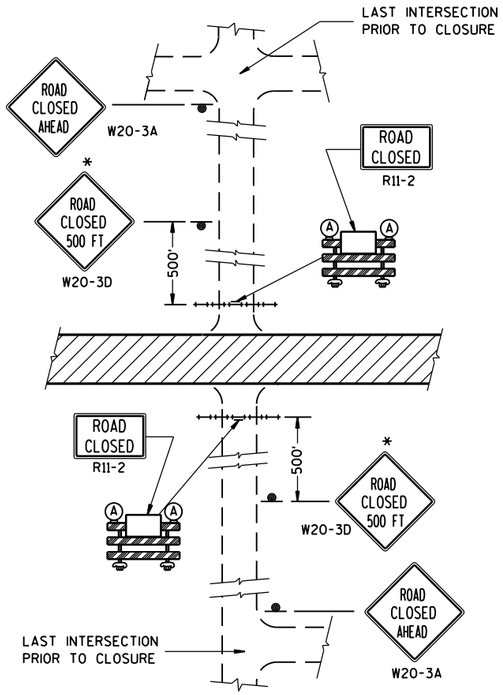

DETAIL 1

(NO ACCESS TO PROJECT)

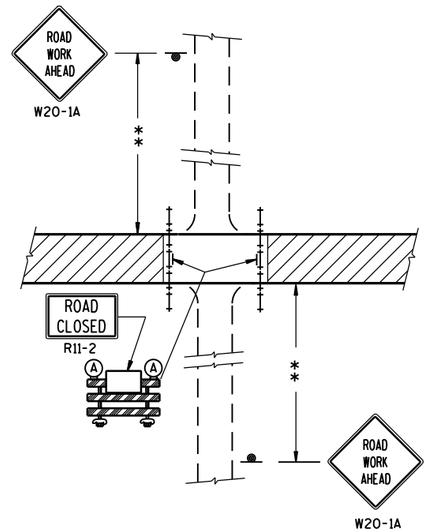

DETAIL 2

(PUBLIC CROSS-TRAFFIC MAINTAINED.
NO ACCESS TO PROJECT).

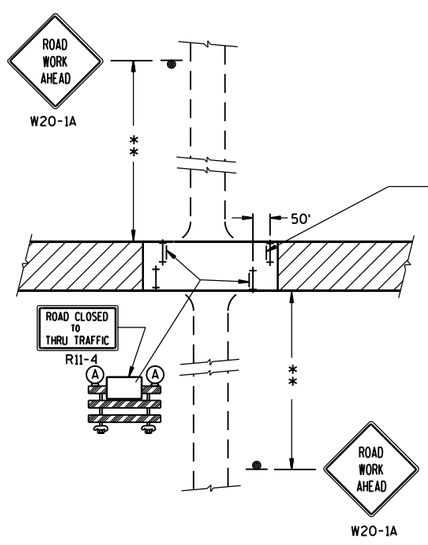

DETAIL 3

(PUBLIC CROSS-TRAFFIC MAINTAINED. CONTRACTOR,
LOCAL BUSINESS AND RESIDENT ACCESS).

FOR BRIDGE OR CULVERT
REPLACEMENT, USE ADDITIONAL
SIGN ON BARRICADE

BRIDGE OUT
XX MILES AHEAD
R11-3C

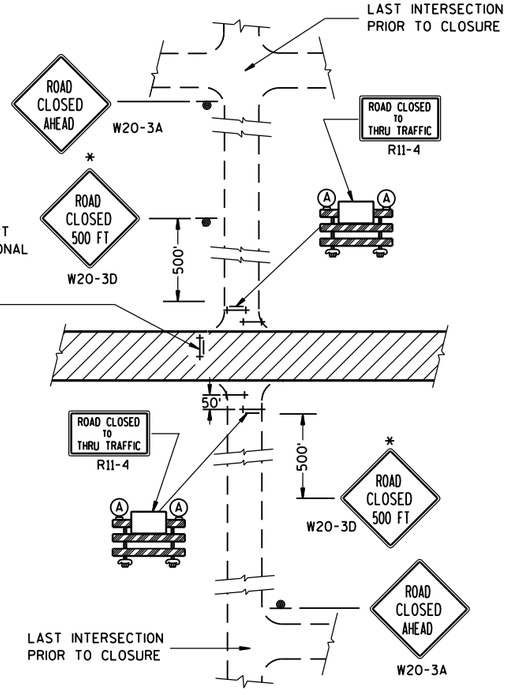

DETAIL 4

(CONTRACTOR, LOCAL BUSINESS AND
RESIDENT ACCESS TO PROJECT)

GENERAL NOTES

THE EXACT NUMBER, LOCATION, AND SPACING OF ALL SIGNS AND BARRICADES SHALL BE ADJUSTED TO FIT FIELD CONDITIONS AS APPROVED BY THE ENGINEER.

ANY SIGNS TEMPORARY OR EXISTING, WHICH CONFLICT WITH TRAFFIC CONTROL "IN USE" SHALL BE REMOVED OR COVERED AS NEEDED AND AS APPROVED BY THE ENGINEER.

THE SPACING BETWEEN TRAFFIC CONTROL SIGNS SHOULD BE ADJUSTED TO NOT CONFLICT WITH AND SHOULD PROVIDE A DESIRABLE MINIMUM OF 200 FEET CLEARANCE TO EXISTING SIGNS THAT WILL REMAIN IN PLACE.

IF A "STOP" SIGN MUST BE REMOVED FOR A WORK OPERATION, A TEMPORARY "STOP" SIGN SHALL BE PLACED PRIOR TO THE SIGN REMOVAL, OR A FLAGGER SHALL BE PROVIDED UNTIL THE SIGN IS RE-ESTABLISHED.

BARRICADES THAT MUST BE MOVED FOR A WORK OPERATION SHALL BE IMMEDIATELY RE-ESTABLISHED UPON COMPLETION OF THE OPERATION OR, FOR CONTINUING OPERATIONS, AT THE END OF EACH WORKING DAY.

SIGNS THAT WILL BE IN PLACE LESS THAN 7 CONTINUOUS DAYS AND NIGHTS MAY BE MOUNTED ON PORTABLE SUPPORTS.

ALL TYPE III BARRICADES SHALL HAVE RAILS REFLECTORIZED ON BOTH FACES. STRIPES SHALL BE PROPERLY SLOPED DOWN TOWARD THE TRAFFIC SIDE OR AS SHOWN IN THE ROAD CLOSURE BARRICADE DETAIL D FOR FULL ROAD CLOSURES.

TYPE "A" LOW-INTENSITY FLASHING WARNING LIGHTS SHALL BE VISIBLE ON BOTH SIDES OF THE BARRICADE.

THE R11-2, R11-3 AND R11-4 SIGNS PLACED ON BARRICADES SHALL COVER NO MORE THAN THE TOP RAIL. THE SIGNS SHALL NOT COVER ANY PORTION OF THE MIDDLE OR BOTTOM RAILS.

ALL SIGNS SHALL BE 48" X 48" UNLESS OTHERWISE NOTED BELOW:
R11-2 SHALL BE 48" X 30".
R11-4 AND R11-3 SHALL BE 60" X 30".

*OMIT THE "ROAD CLOSED 500 FT." SIGN IF THE LAST INTERSECTION IS 500 FT. OR LESS FROM THE WORK ZONE.

**500' MAX. OR AT LAST INTERSECTION WHICHEVER IS CLOSER.

LEGEND

- SIGN ON PERMANENT SUPPORT
- TYPE III BARRICADE
- TYPE III BARRICADE WITH ATTACHED SIGN
- (A) TYPE "A" WARNING LIGHT (FLASHING)
- WORK AREA

BARRICADES AND SIGNS FOR SIDEROAD CLOSURES

STATE OF WISCONSIN
DEPARTMENT OF TRANSPORTATION

APPROVED
Sept. 2015 — DATE
/S/ Peter Amakobe Atepe
STATEWIDE WORK ZONE TRAFFIC SAFETY ENGINEER
FHWA

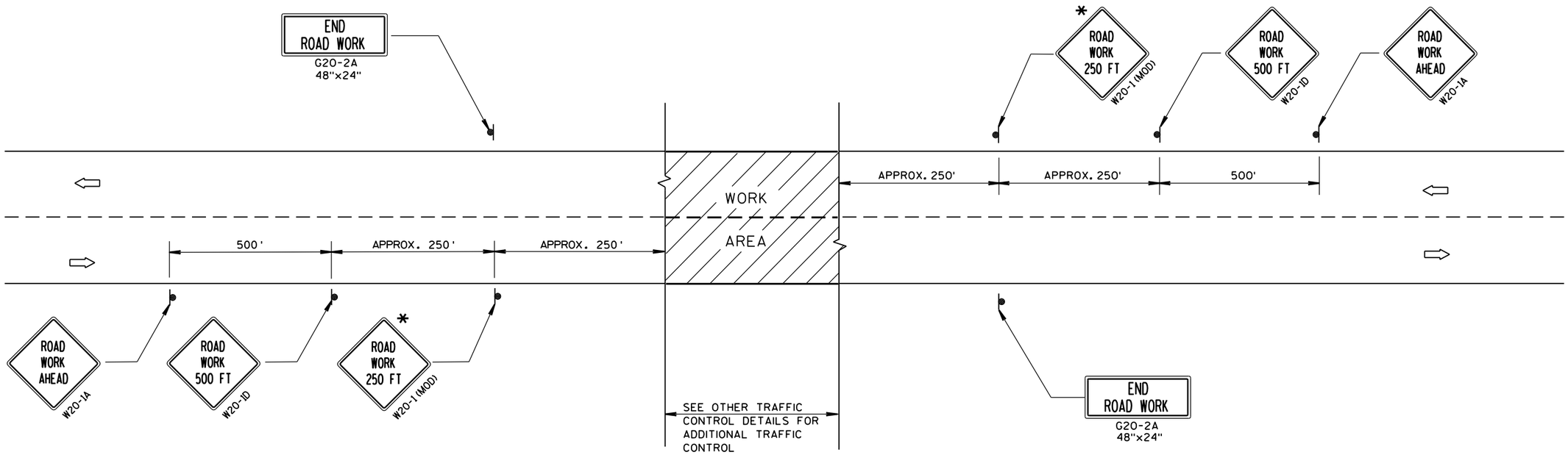

TYPICAL SIDEROAD APPROACH WARNING SIGN DETAIL

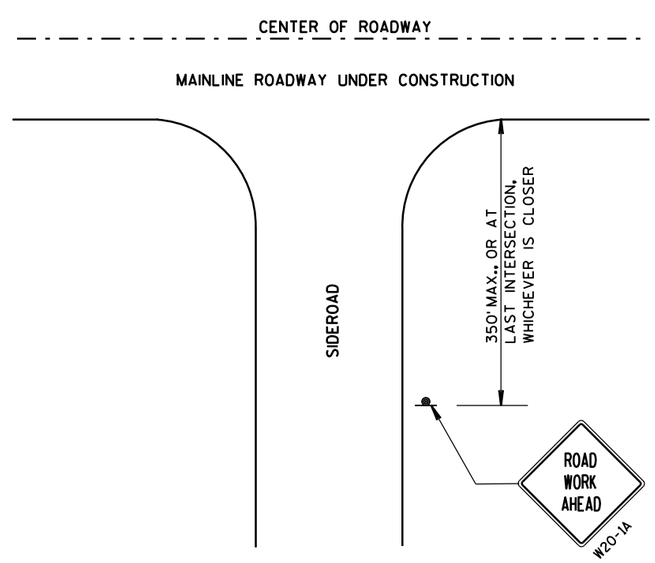

GENERAL NOTES

THE EXACT NUMBER, LOCATION, AND SPACING OF ALL SIGNS AND DEVICES SHALL BE ADJUSTED TO FIT FIELD CONDITIONS.

THE SPACING BETWEEN TRAFFIC CONTROL SIGNS SHOULD BE ADJUSTED TO NOT CONFLICT WITH AND SHOULD PROVIDE A DESIRABLE MINIMUM OF 200 FEET CLEARANCE TO EXISTING SIGNS THAT WILL REMAIN IN PLACE.

ALL SIGNS ARE 48"x48" UNLESS OTHERWISE NOTED. IF NECESSARY DUE TO SPACE CONSTRAINTS, 36"x36" SIGNS MAY BE USED INSTEAD OF 48"x48" SIGNS.

SIGNS THAT WILL BE IN PLACE LESS THAN 7 CONTINUOUS DAYS AND NIGHTS MAY BE MOUNTED ON PORTABLE SUPPORTS.

IF A "STOP" SIGN MUST BE REMOVED FOR A WORK OPERATION, A TEMPORARY "STOP" SIGN SHALL BE PLACED PRIOR TO THE SIGN REMOVAL, OR A FLAGGER SHALL BE PROVIDED UNTIL THE SIGN IS RE-ESTABLISHED.

* THE THIRD W20-1 SIGN IS REQUIRED ONLY IF THERE IS AN INTERSECTION BETWEEN THE "ROAD WORK 500 FT" SIGN AND THE WORK ZONE. ADJUST THE PLACEMENT OF THIS SIGN BASED ON INTERSECTION LOCATION AND OTHER FIELD CONDITIONS.

LEGEND

- SIGN ON PERMANENT SUPPORT
- DIRECTION OF TRAFFIC
- WORK AREA

TRAFFIC CONTROL, ADVANCE WARNING SIGNS 40 M.P.H. OR LESS TWO-WAY UNDIVIDED ROAD OPEN TO TRAFFIC

STATE OF WISCONSIN
DEPARTMENT OF TRANSPORTATION

APPROVED
Sept. 2015 — DATE
/S/ Peter Amakobe Atepe — STATEWIDE WORK ZONE SAFETY ENGIN
FHWA

S.D.D. 15 C 5-3
6

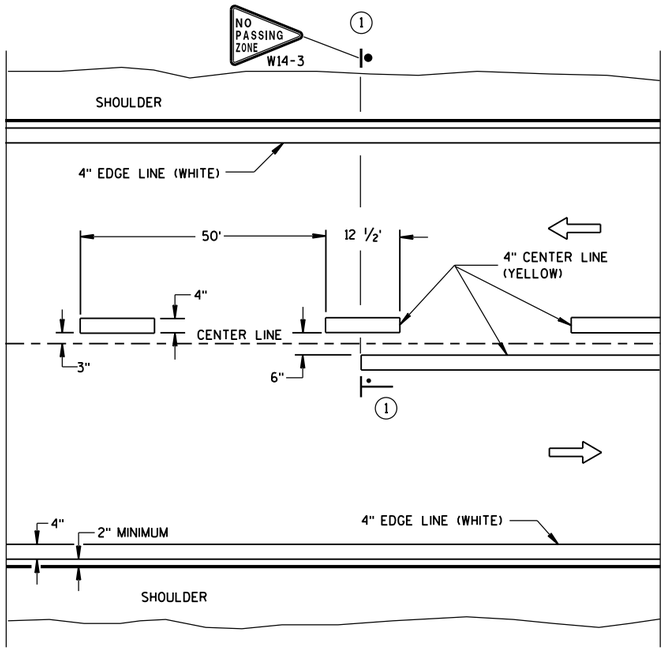

TWO WAY TRAFFIC

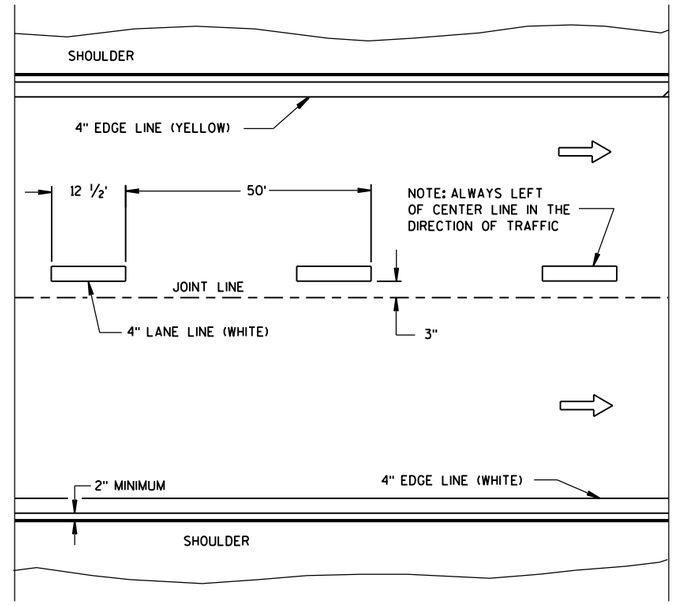

ONE WAY TRAFFIC

PERMANENT PAVEMENT MARKING

GENERAL NOTES

DETAILS OF CONSTRUCTION NOT SHOWN ON THIS DRAWING SHALL CONFORM TO STANDARD SPECIFICATIONS AND SPECIAL PROVISIONS.

(1) LOCATE THE NO PASSING ZONE W14-3 SIGN WITHIN 50 FEET OF THE "T" MARKING.

NOTE

ARROW SYMBOL (⇨) SHOWS DIRECTION OF TRAVEL

LEGEND

"T" MARKING

POST MOUNTED SIGN

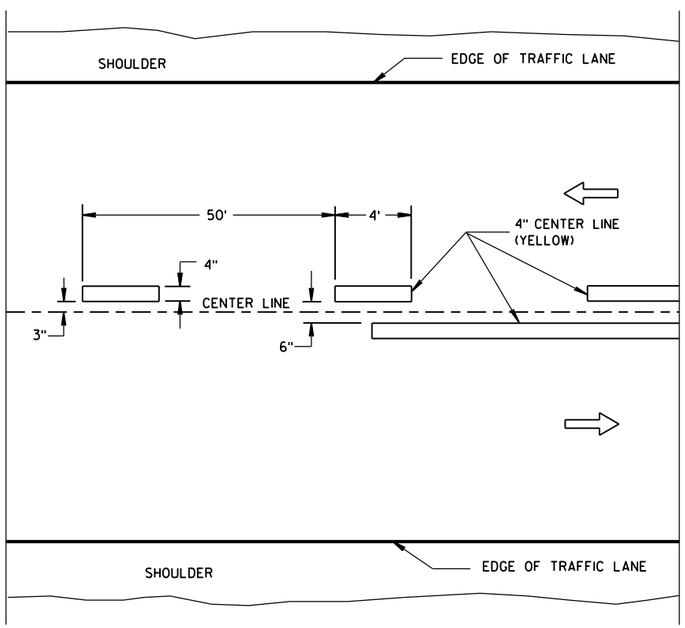

TWO WAY TRAFFIC

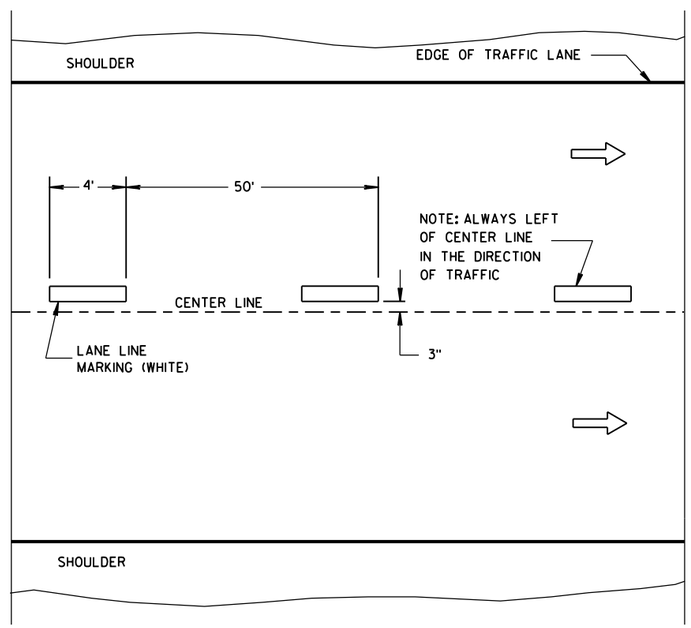

ONE WAY TRAFFIC

TEMPORARY PAVEMENT MARKING

6

6

S.D.D. 15 C 8-18a

S.D.D. 15 C 8-18a

LONGITUDINAL MARKING (MAINLINE)

STATE OF WISCONSIN
DEPARTMENT OF TRANSPORTATION

APPROVED
June 2017 /S/ Matthew R. Rauch
DATE STATE SIGNING AND MAR ENGINEER
FHWA

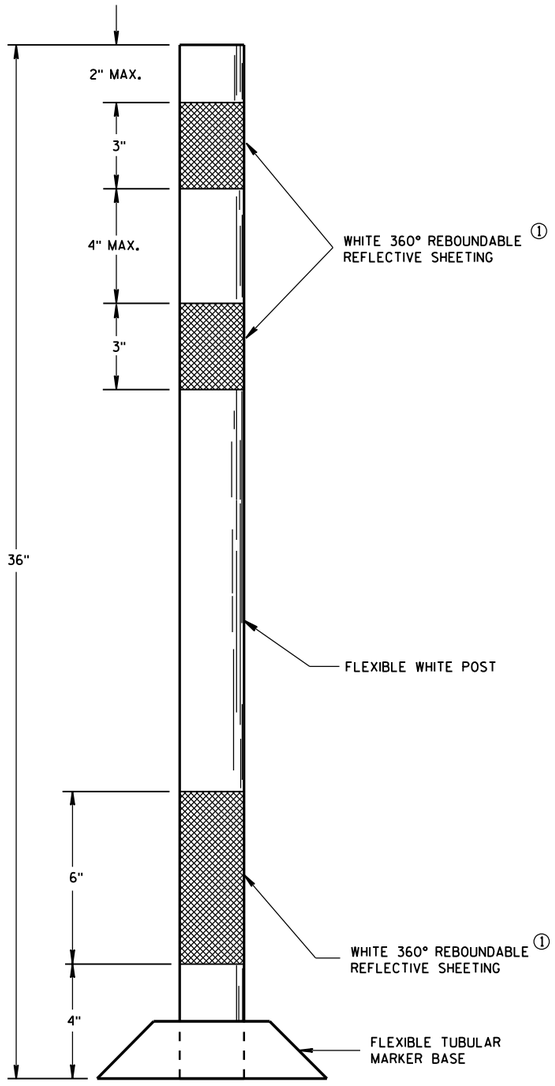

FLEXIBLE
TUBULAR MARKER POST
PERMANENT CROSSOVER

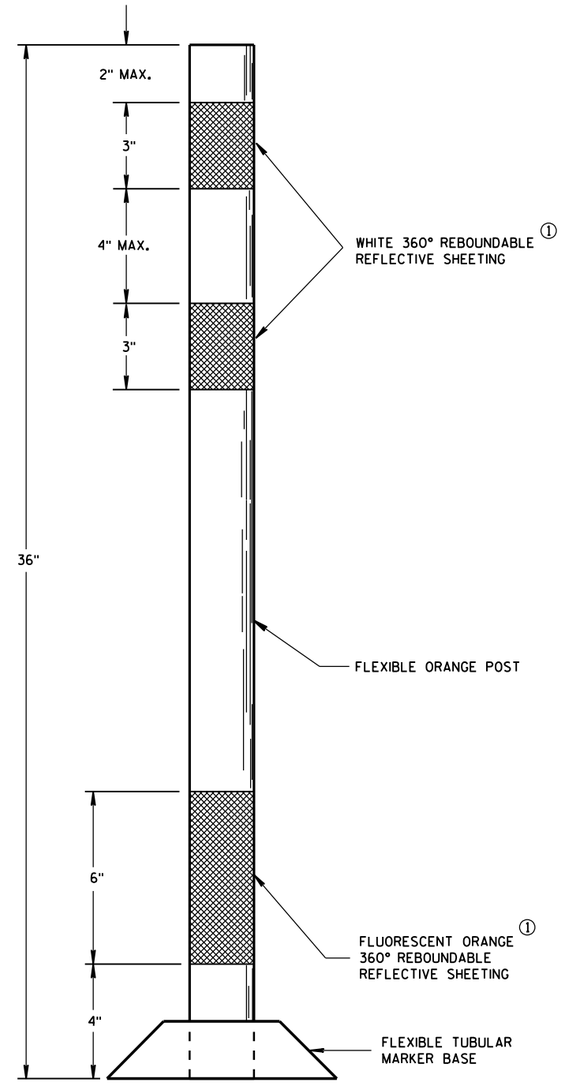

FLEXIBLE
TUBULAR MARKER POST
WORK ZONE

GENERAL NOTES

DETAILS OF CONSTRUCTION NOT SHOWN ON THIS DRAWING SHALL CONFORM TO THE PERTINENT REQUIREMENTS OF THE STANDARD SPECIFICATIONS AND APPLICABLE SPECIAL PROVISIONS.

SURFACE MOUNTED BASES SHALL BE FURNISHED IN ACCORDANCE WITH MANUFACTURERS RECOMMENDATIONS TO BE COMPATIBLE WITH FLEXIBLE TUBULAR MARKER POSTS TO A SIZE AND SHAPE THAT WILL PROVIDE A STABLE POST FOUNDATION WHEN SECURED TO THE PAVEMENT.

THE ASPHALTIC ADHESIVE OR BUTYL PAD FURNISHED SHALL BE IN ACCORDANCE WITH MANUFACTURERS RECOMMENDATIONS, UNLESS DIRECTED BY THE ENGINEER TO USE BOLTS.

① REFLECTIVE SHEETING SHALL FOLLOW THE REQUIREMENTS IN THE APPROVED PRODUCTS LISTING FOR SIGN SHEETING.

6

6

S.D.D. 15 C 11-7a

S.D.D. 15 C 11-7a

CHANNELIZING DEVICES
FLEXIBLE TUBULAR MARKER POST

STATE OF WISCONSIN
DEPARTMENT OF TRANSPORTATION

APPROVED
June 2017 — DATE
/S/ Andrew Heldtke — WORK ZONE ENGR
FHWA

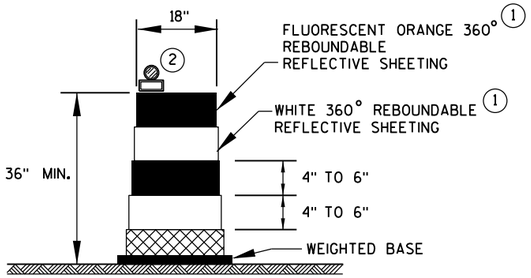

DRUM

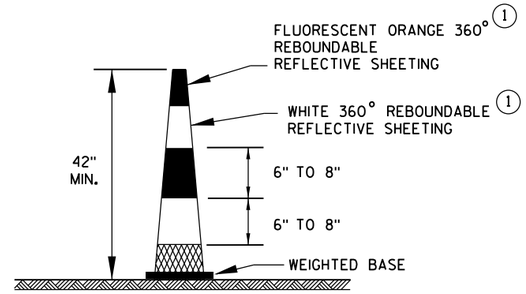

42" CONE

DO NOT USE IN TAPERS
½ SPACING OF DRUMS

GENERAL NOTES

1. REFLECTIVE SHEETING SHALL FOLLOW THE REQUIREMENTS IN THE APPROVED PRODUCTS LISTING FOR SIGN SHEETING.
2. LOCATION OF WARNING LIGHTS WHEN SHOWN ON THE PLAN.

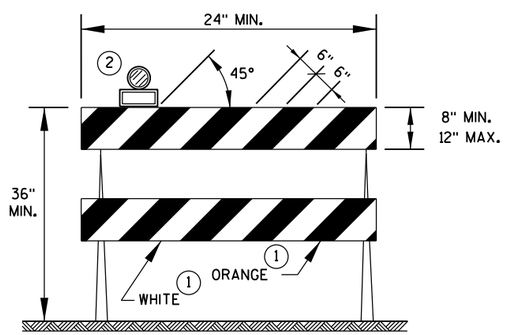

TYPE 2 BARRICADE

FOR RAILS LESS THAN 36" LONG, 4" WIDE STRIPES MAY BE USED. ALL STRIPES SHALL SLOPE DOWNWARD TO THE TRAFFIC SIDE FOR CHANNELIZATION.

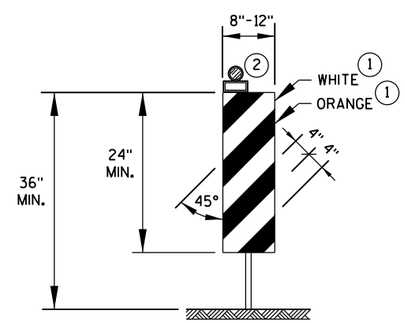

VERTICAL PANEL

THE STRIPES SHALL SLOPE DOWNWARD TO THE TRAFFIC SIDE FOR CHANNELIZATION.

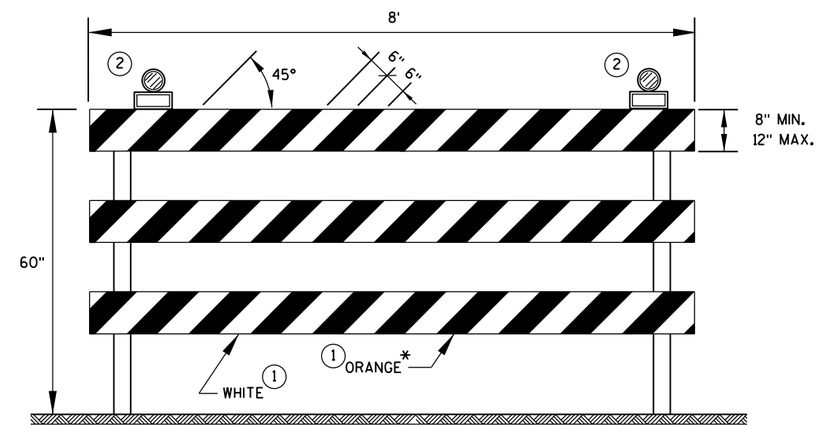

TYPE 3 BARRICADE

IF SIGN MOUNTED, DO NOT COVER MORE THAN 50% OF THE TOP TWO RAILS OR 33% OF THE TOTAL AREA OF THE THREE RAILS.

* IF USED FOR A PERMANENT APPLICATION, USE RED SHEETING.

CHANNELIZING DEVICES DRUMS, CONES, BARRICADES AND VERTICAL PANELS	
STATE OF WISCONSIN DEPARTMENT OF TRANSPORTATION	
APPROVED	
June 2017	/S/ Andrew Heldtke
DATE	WORK ZONE ENG
FHWA	

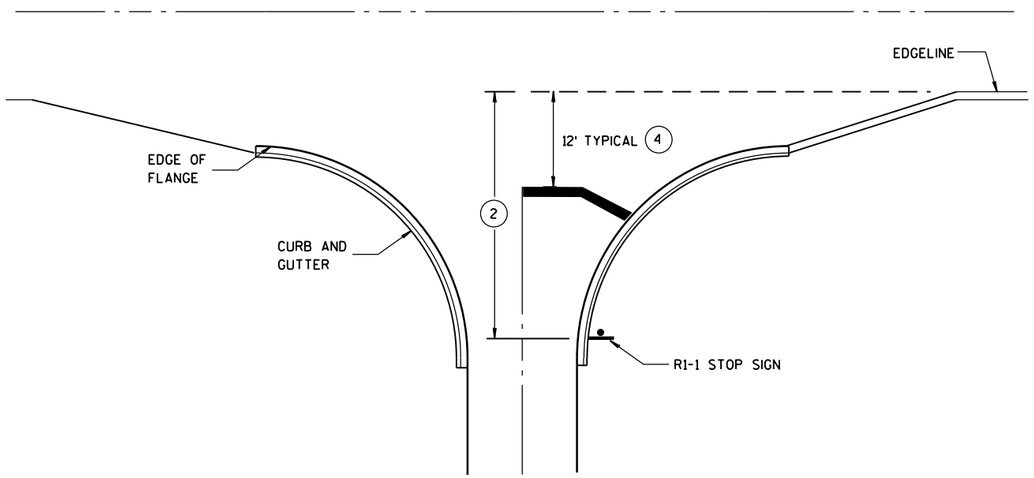

TYPICAL STOP LINE PAVEMENT MARKING WITH CURB AND GUTTER

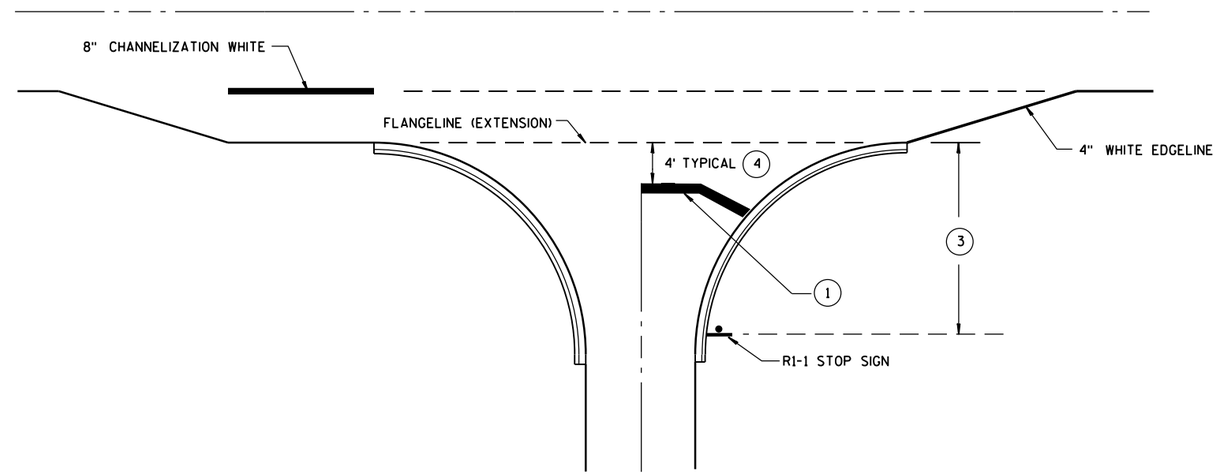

TYPICAL STOP LINE PAVEMENT MARKING FOR SIDEROADS WITH RIGHT TURN LANE

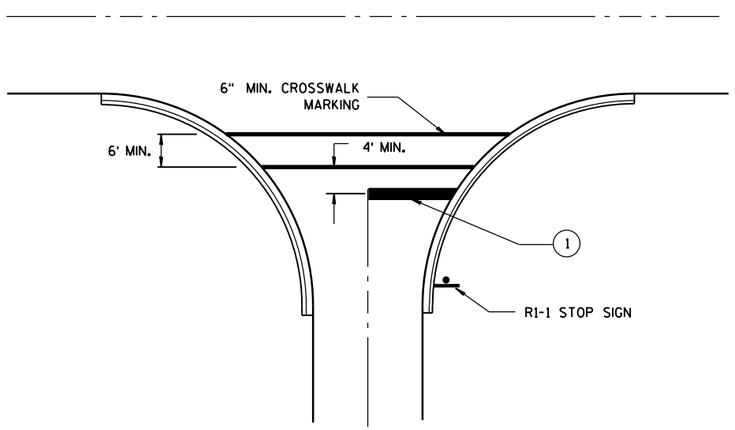

TYPICAL STOP LINE PAVEMENT MARKING FOR SIDEROADS WITH CROSSWALK MARKING

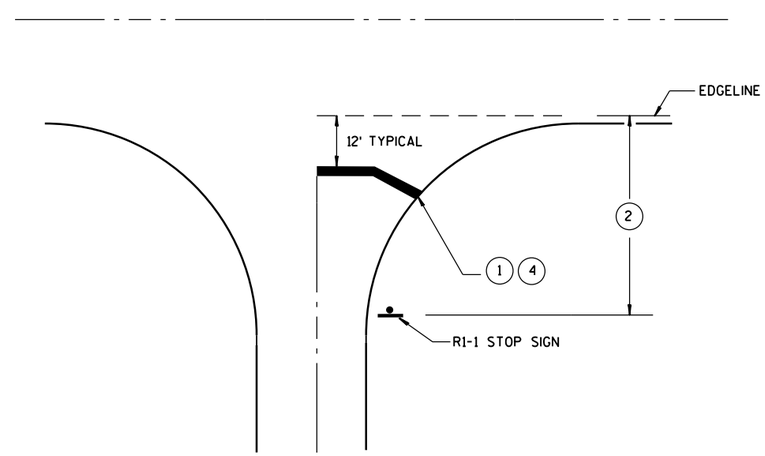

TYPICAL STOP LINE PAVEMENT MARKING WITHOUT CURB AND GUTTER

GENERAL NOTES

1. 18-INCH STOP LINES MAY BE DELETED OR ADDED BY THE PROJECT ENGINEER BASED ON VISIBILITY AND SIGHT LINES.
2. IF STOP SIGN IS LESS THAN OR EQUAL TO 40 FEET FROM THE EDGELINE THAN NO STOP LINE IS REQUIRED.
3. IF STOP SIGN IS LESS THAN OR EQUAL TO 30 FEET FROM THE FLANGELINE EXTENSION THAN NO STOP LINE IS REQUIRED.
4. MOVE CLOSER TO EDGE OF TRAVEL LANE AS NEEDED FOR VISIBILITY AND SIGHT LINES. (NO CLOSER THAN 4 FEET).

STOP LINE AND CROSSWALK PAVEMENT MARKING

STATE OF WISCONSIN
DEPARTMENT OF TRANSPORTATION

APPROVED

4-18-2016 — DATE

/S/ Matthew R. Rauch — STATE SIGNING AND MAR 97 — NEER

FHWA

6

S.D.D. 15 C 33-2

LEGEND

- SIGN ON PERMANENT SUPPORT
- TRAFFIC CONTROL DRUM WITH TYPE "C" STEADY BURN LIGHT
- TRAFFIC CONTROL DRUM
- FLASHING ARROW BOARD
- REMOVING PAVEMENT MARKING
- CONCRETE BARRIER TEMPORARY PRECAST
- DIRECTION OF TRAFFIC
- WORK AREA

L, TAPER LENGTH (MPH)							
SPEED (MPH)	W, LATERAL OFFSET (FT)						
	10	11	12	13	14	15	16
45	450	495	540	585	630	675	720
50	500	550	600	650	700	750	800
55	550	605	660	715	770	825	880
60	600	660	720	780	840	900	960
65	650	715	780	845	910	975	1040
70	700	770	840	910	980	1050	1120

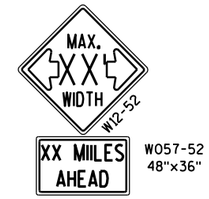

W057-52
48"x36"

INSTALL ON EACH APPROACH AT THE CLOSEST INTERSECTION WITH A STATE OR COUNTY TRUNK HIGHWAY, OR AS DIRECTED BY THE ENGINEER. WIDTH ON SIGN TO BE APPROX. 1 FOOT LESS THAN AVAILABLE WIDTH (OMIT IF AVAILABLE WIDTH IS MORE THAN 16 FEET).

OR

LOCATED 2600 FEET IN ADVANCE OF R2-1 SIGN AND 500 FEET BEYOND THE "ROAD WORK 1 MILE" SIGN.

OR

R2-1
48"x60"
(BLACK AND WHITE)

LOCATED 500 FEET BEYOND W20-5G SIGN.

IF THE REGULATORY SPEED HAS BEEN REDUCED, A SPEED LIMIT SIGN SHALL BE LOCATED 1500 FEET BEYOND THE END OF THE ACCELERATION LANE OF EACH ENTRANCE RAMP. THERE SHOULD BE A SPEED LIMIT SIGN INCORPORATED A MINIMUM OF EVERY 2 OR 3 MILES.

* INCLUDE RESUME SPEED LIMIT SIGN A MINIMUM OF 200 FEET (500 FEET DESIRABLE) AFTER END ROAD WORK SIGNS.

GENERAL NOTES

THIS LANE CLOSURE IS TYPICAL FOR CLOSING RIGHT LANE - REVERSE FOR CLOSING LEFT LANE.

THE EXACT NUMBER, LOCATION, AND SPACING OF ALL SIGNS AND DEVICES SHALL BE ADJUSTED TO FIT FIELD CONDITIONS AS APPROVED BY THE ENGINEER.

THE SPACING BETWEEN SIGNS SHOULD BE ADJUSTED TO NOT CONFLICT WITH AND TO PROVIDE A MINIMUM OF 200 FEET (500 FEET DESIRABLE) CLEARANCE TO EXISTING SIGNS.

ALL SIGNS ARE 48"x48" UNLESS OTHERWISE NOTED.

"WO" IS THE SAME AS "W" EXCEPT THE BACKGROUND IS ORANGE.

ANY SIGNS TEMPORARY OR EXISTING, WHICH CONFLICT WITH TRAFFIC CONTROL "IN USE" SHALL BE REMOVED OR COVERED AS NEEDED OR AS APPROVED BY THE ENGINEER.

(1) CONSIDER ROADWAY GEOMETRICS WHEN LOCATING SIGNS AND ARROW BOARD SO THE DRIVER HAS A CLEAR VIEW OF THE ARROW BOARD AND LANE CLOSURE DRUMS FOR A MINIMUM 1500 FEET IN FRONT OF DRUM TAPER.

FOR A LANE CLOSURE THAT IS IN PLACE LESS THAN 7 CONTINUOUS DAYS AND NIGHTS, THE ADVANCED WARNING SIGNS MAY BE MOUNTED ON PORTABLE SUPPORTS.

REMOVE PAVEMENT MARKINGS IF LANE CLOSURE IS TO BE IN PLACE FOR 4 OR MORE CONTINUOUS DAYS AND NIGHTS.

IF THE HORIZONTAL ALIGNMENT IS SUCH THAT A CURVE MAY REQUIRE ADDITIONAL DELINEATION, THE DEVICE SPACING MAY BE DECREASED TO 50 FEET.

ADJUSTMENTS IN BUFFER SPACE NEED TO BE INCORPORATED WHEN THE LANE CLOSURE OCCURS NEAR AN INTERCHANGE EXIT OR ENTRANCE RAMP OR INTERSECTION. THE LANE CLOSURE MUST TAKE PLACE FAR ENOUGH IN ADVANCE OF AN EXIT OR ENTRANCE RAMP TO STILL ALLOW FOR ADEQUATE BUFFER SPACE. THE MINIMUM LENGTH OF THE BUFFER SPACE BEFORE AN EXIT RAMP SHOULD BE 1/2 THE LENGTH OF THE TRANSITION AREA. THE ENTRANCE RAMP SHOULD BE FOLLOWED BY THE ORIGINAL BUFFER SPACE LENGTH OF 800 FEET DESIRABLE PRIOR TO ANOTHER TRAFFIC CONTROL CHANGE SUCH AS A CROSSOVER MANEUVER.

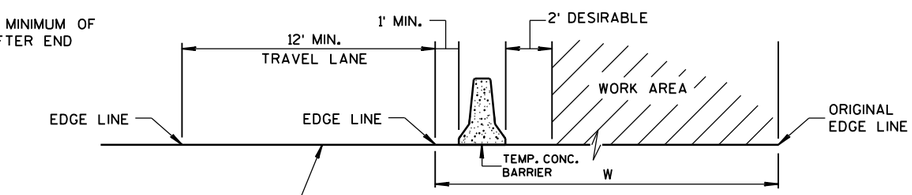

TYPICAL SECTION

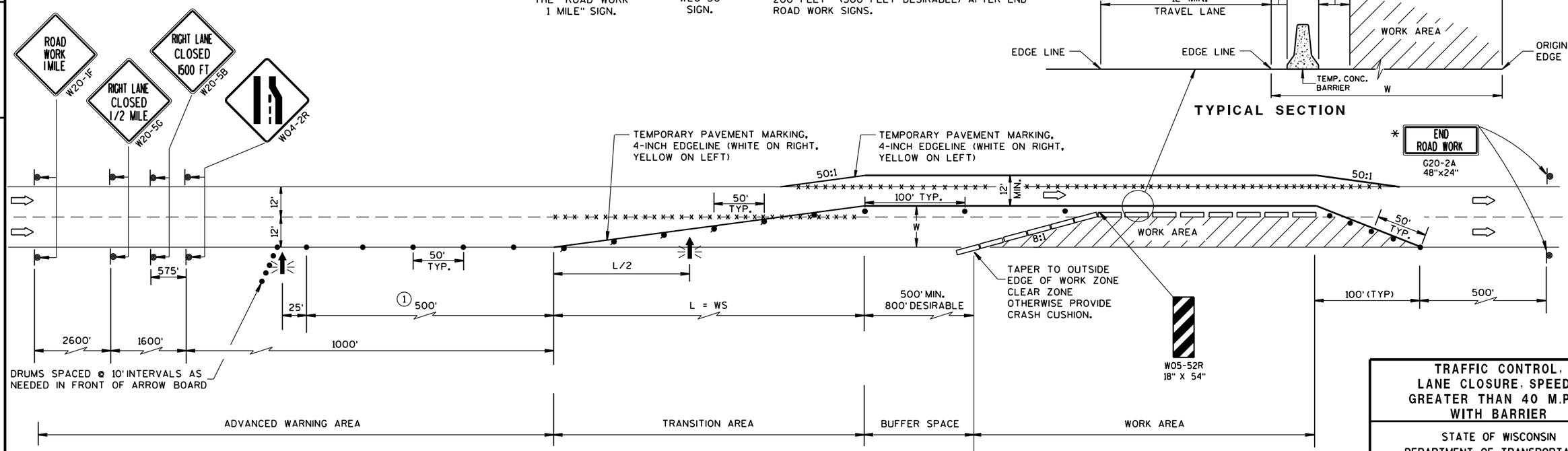

* END ROAD WORK
G20-2A
48"x24"

TRAFFIC CONTROL,
LANE CLOSURE, SPEEDS
GREATER THAN 40 M.P.H.
WITH BARRIER

STATE OF WISCONSIN
DEPARTMENT OF TRANSPORTATION

APPROVED
Sept., 2016 — DATE
/S/ Peter Amakobe Atepe — STATEWIDE WORK ZONE SAFETY ENGIN
FHWA

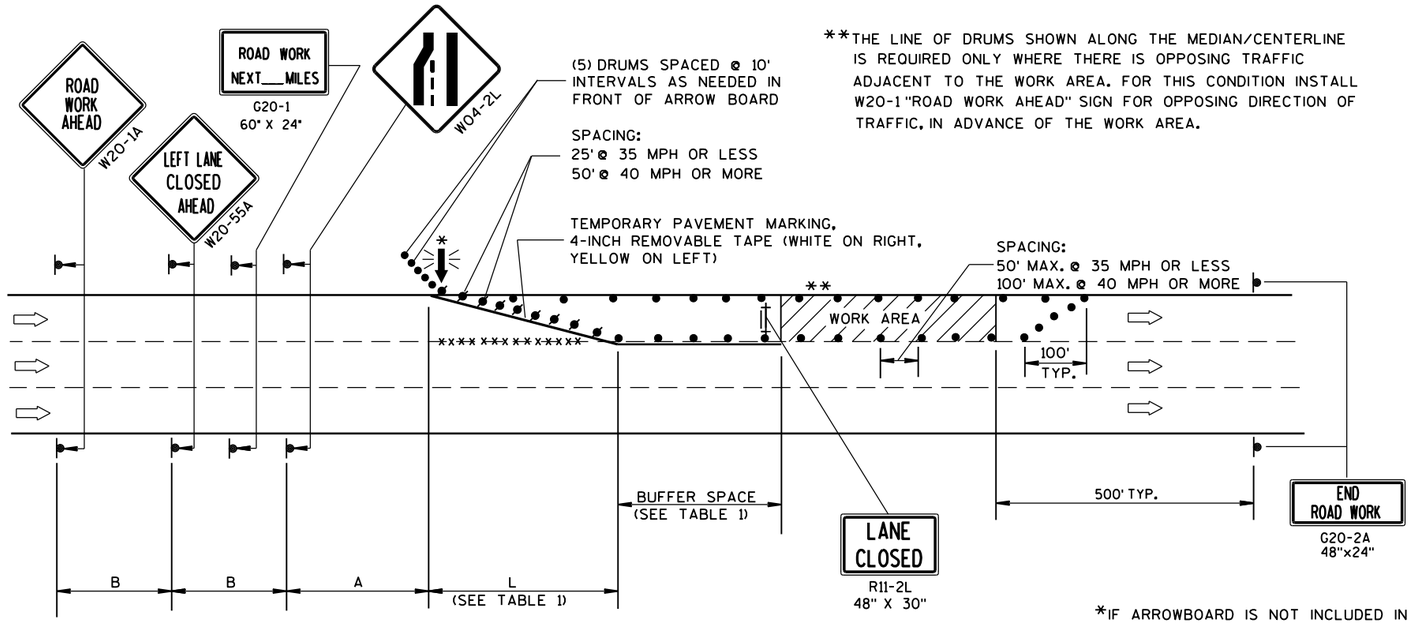

**THE LINE OF DRUMS SHOWN ALONG THE MEDIAN/CENTERLINE IS REQUIRED ONLY WHERE THERE IS OPPOSING TRAFFIC ADJACENT TO THE WORK AREA. FOR THIS CONDITION INSTALL W20-1 "ROAD WORK AHEAD" SIGN FOR OPPOSING DIRECTION OF TRAFFIC, IN ADVANCE OF THE WORK AREA.

B=400' AT 25-30 MPH
700' AT 35-40 MPH
1000' AT 45-55 MPH

A=200' AT 25-30 MPH
350' AT 35-40 MPH
500' AT 45-55 MPH

(PLACE BARRICADE AND SIGN APPROX. EVERY 1000' ACROSS THE CLOSED LANE)

*IF ARROWBOARD IS NOT INCLUDED IN MISCELLANEOUS QUANTITIES, SUBSTITUTE A TYPE III BARRICADE WITH W01-6 SIGN IN THE LANE CLOSURE TAPER.

W01-6
48"x24"

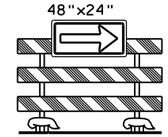

GENERAL NOTES

THIS LANE CLOSURE DETAIL IS TYPICAL FOR CLOSING THE LEFT LANE. FOR A RIGHT LANE CLOSURE, REVERSE THE TRAFFIC CONTROL.

THIS DETAIL MAY BE USED FOR ROADWAYS WITH EITHER TWO OR THREE LANES IN EACH DIRECTION.

THE EXACT NUMBER, LOCATION, AND SPACING OF ALL SIGNS AND DEVICES SHALL BE ADJUSTED TO FIT FIELD CONDITIONS AS APPROVED BY THE ENGINEER.

THE SPACING BETWEEN TRAFFIC CONTROL SIGNS SHOULD BE ADJUSTED TO NOT CONFLICT WITH AND SHOULD PROVIDE A DESIRABLE MINIMUM OF 200 FEET CLEARANCE TO EXISTING SIGNS THAT WILL REMAIN IN PLACE.

ALL SIGNS ARE 48"x48" UNLESS OTHERWISE NOTED. IF NECESSARY DUE TO SPACE CONSTRAINTS IN URBAN AREAS, 36" X 36" SIGNS MAY BE USED IF APPROVED BY DISTRICT TRAFFIC UNIT.

"WO" SIGNS ARE THE SAME AS "W" SIGNS EXCEPT THE BACKGROUND IS ORANGE.

SIGNS THAT WILL BE IN PLACE LESS THAN 7 CONTINUOUS DAYS AND NIGHTS, OR THAT WILL BE PLACED IN A CLOSED LANE, MAY BE MOUNTED ON PORTABLE SUPPORTS.

ANY SIGNS TEMPORARY OR EXISTING, WHICH CONFLICT WITH TRAFFIC CONTROL "IN USE" SHALL BE REMOVED OR COVERED AS NEEDED AND AS APPROVED BY THE ENGINEER.

REMOVE PAVEMENT MARKINGS AND PLACE TEMPORARY PAVEMENT MARKING, REMOVABLE TAPE IF LANE CLOSURE IS TO BE IN PLACE FOR 4 OR MORE CONTINUOUS DAYS AND NIGHTS.

ON UNDIVIDED ROADWAYS, OMIT THE SIGNS SHOWN ON LEFT SIDE OF ROAD.

W20-1A, G20-1 AND G20-2A SIGNS ARE NOT REQUIRED IF THE LANE CLOSURE IS WITHIN A LARGER WORK ZONE WHERE THESE SIGNS ARE ALREADY PRESENT.

OMIT G20-1 SIGNS IF LENGTH OF WORK AREA IS 2 MILES OR LESS.

CONSIDER GEOMETRICS WHEN LOCATING SIGNS AND ARROWBOARDS SO THE APPROACHING DRIVER HAS A CLEAR VIEW OF THE ARROWBOARDS AND LANE CLOSURE DRUMS.

PLACE THE ARROWBOARD AS CLOSE AS POSSIBLE TO THE BEGINNING OF THE LANE CLOSURE TAPER, PREFERABLY ON THE SHOULDER OR TERRACE.

CHANNELIZING DEVICES PLACED ADJACENT TO WORK AREA SHALL BE PULLED BACK FROM THE TRAVEL LANE WHEN WORK IS NOT IN PROGRESS.

BARRICADES IN A CLOSED LANE THAT MUST BE MOVED FOR A WORK OPERATION SHALL BE IMMEDIATELY RE-ESTABLISHED UPON COMPLETION OF THE OPERATION OR, FOR CONTINUING OPERATIONS, AT THE END OF EACH WORKING DAY.

WARNING LIGHTS ARE NOT REQUIRED IF THE LANE CLOSURE IS A DAYTIME ONLY OPERATION.

TABLE 1
TAPER AND BUFFER SPACE
FOR 12' LANE WIDTH

S	L	BUFFER SPACE
25	125'	55'
30	180'	85'
35	245'	120'
40	320'	170'
45	540'	220'
50	600'	280'
55	660'	335'

FOR LANE WIDTH OTHER THAN 12':

L = WS AT 45 MPH OR GREATER

$L = \frac{WS^2}{60}$ AT 40 MPH OR LESS

L = TAPER LENGTH IN FEET

S = NON-CONSTRUCTION SPEED LIMIT (MPH)

W = WIDTH OF LANE CLOSURE

LEGEND

TYPE III BARRICADE WITH ATTACHED SIGN

SIGN ON PERMANENT SUPPORT

TRAFFIC CONTROL DRUM WITH TYPE "C" STEADY BURN LIGHT

TRAFFIC CONTROL DRUM

FLASHING ARROW BOARD

DIRECTION OF TRAFFIC

REMOVING PAVEMENT MARKING (SEE GENERAL NOTES)

WORK AREA

TRAFFIC CONTROL,
SINGLE LANE CLOSURE,
NON-FREEWAY/EXPRESSWAY

STATE OF WISCONSIN
DEPARTMENT OF TRANSPORTATION

APPROVED
June 2016 — DATE
/S/ Peter Amakobe Atepe — STATEWIDE WORK ZONE SAFETY ENGINEER
FHWA

6

S.D.D. 15 D 20-4

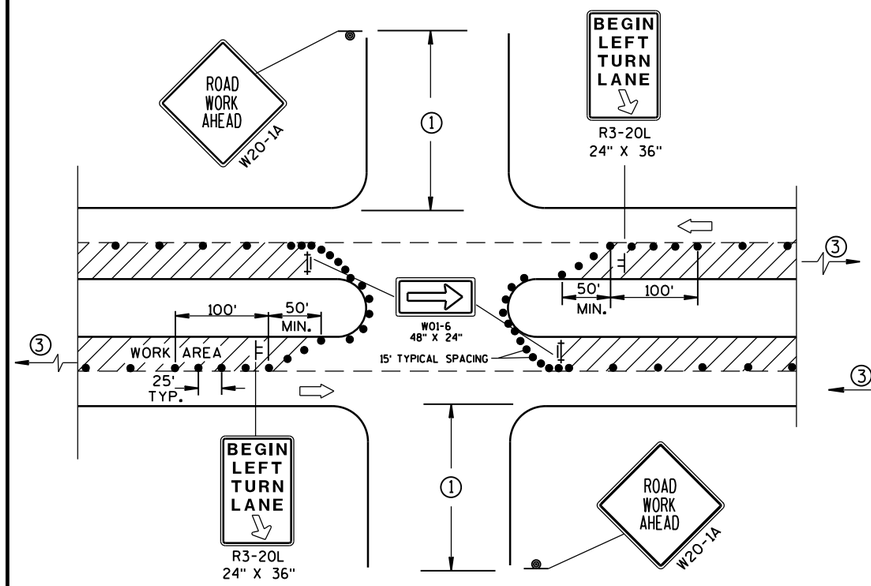

DETAIL A

FOR LEFT LANE CLOSURE AT INTERSECTION OR MEDIAN OPENING

PROVIDE TURN LANES AT INTERSECTIONS WHENEVER STAGING OF WORK ALLOWS. TAPER AND TURN LANE LENGTHS BASED ON FIELD CONDITIONS AS APPROVED BY THE ENGINEER.

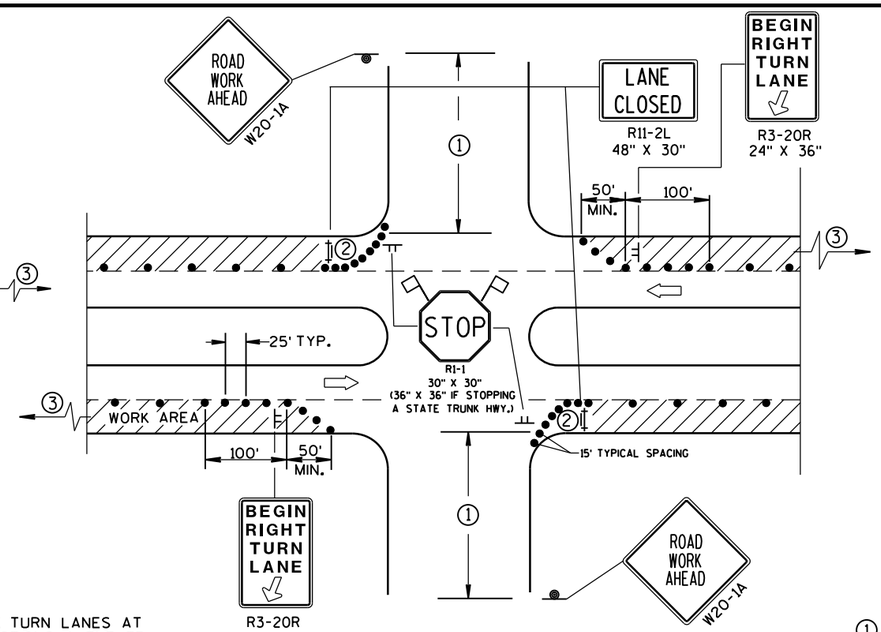

DETAIL B

FOR RIGHT LANE CLOSURE AT INTERSECTION

GENERAL NOTES

THE EXACT NUMBER, LOCATION, AND SPACING OF ALL SIGNS AND DEVICES SHALL BE ADJUSTED TO FIT FIELD CONDITIONS AS APPROVED BY THE ENGINEER.

THE SPACING BETWEEN SIGNS SHOULD BE ADJUSTED TO NOT CONFLICT WITH AND SHOULD PROVIDE A DESIRABLE MINIMUM OF 200 FEET CLEARANCE TO EXISTING SIGNS THAT WILL REMAIN IN PLACE.

ALL SIGNS ARE 48"x48" UNLESS OTHERWISE NOTED. IF NECESSARY DUE TO SPACE CONSTRAINTS IN URBAN AREAS, 36" X 36" SIGNS MAY BE USED IF APPROVED BY DISTRICT TRAFFIC UNIT.

"WO" SIGNS ARE THE SAME AS "W" SIGNS EXCEPT THE BACKGROUND IS ORANGE.

SIGN LAYOUTS SHALL BE IN ACCORDANCE WITH THE FHWA'S MANUAL OF STANDARD HIGHWAY SIGNS OR THE WISCONSIN STANDARD SIGN PLATES.

SIGNS THAT WILL BE IN PLACE LESS THAN 7 CONTINUOUS DAYS AND NIGHTS, OR THAT WILL BE PLACED IN A CLOSED LANE, MAY BE MOUNTED ON PORTABLE SUPPORTS.

ANY SIGNS TEMPORARY OR EXISTING, WHICH CONFLICT WITH TRAFFIC CONTROL "IN USE" SHALL BE REMOVED OR COVERED AS NEEDED AND AS APPROVED BY THE ENGINEER.

CHANNELIZING DEVICES PLACED ADJACENT TO WORK AREA SHALL BE PULLED BACK FROM THE TRAVEL LANE WHEN WORK IS NOT IN PROGRESS.

BARRICADES IN A CLOSED LANE THAT MUST BE MOVED FOR A WORK OPERATION SHALL BE IMMEDIATELY RE-ESTABLISHED UPON COMPLETION OF THE OPERATION OR, FOR CONTINUING OPERATIONS, AT THE END OF EACH WORKING DAY.

① 500' TYPICAL OR AT LAST INTERSECTION, WHICHEVER IS CLOSER.
350' IF 35-40 MPH.
200' IF 25-30 MPH.

② ALSO USE BARRICADE AND 15-FOOT TYPICAL DRUM SPACING AT COMMERCIAL DRIVEWAYS.

③ SEE SEPARATE LANE CLOSURE DETAIL FOR ADDITIONAL TRAFFIC CONTROL.

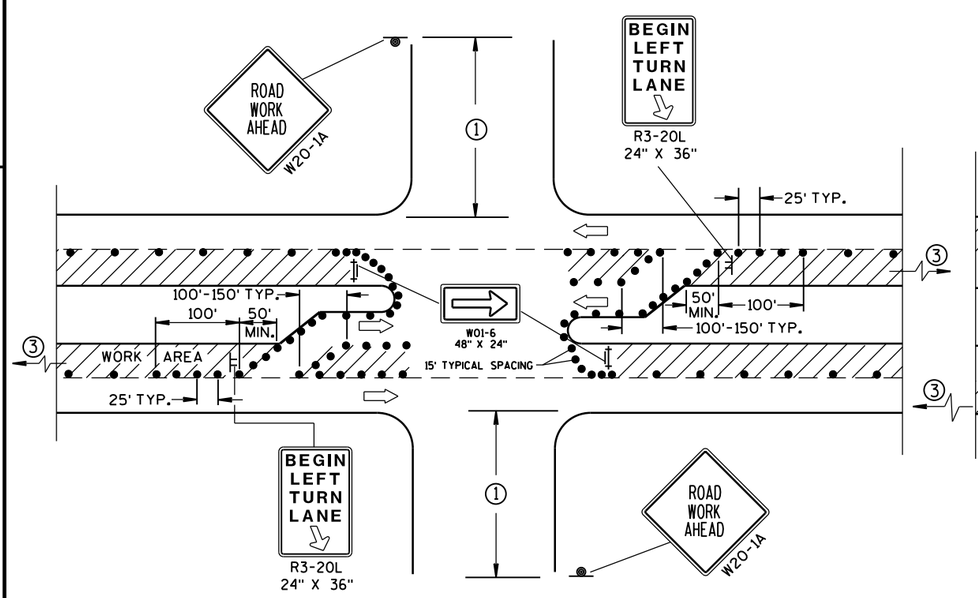

DETAIL C

FOR LEFT LANE CLOSURE AT INTERSECTION OR MEDIAN OPENING (WITH LEFT TURN BAY OPEN)

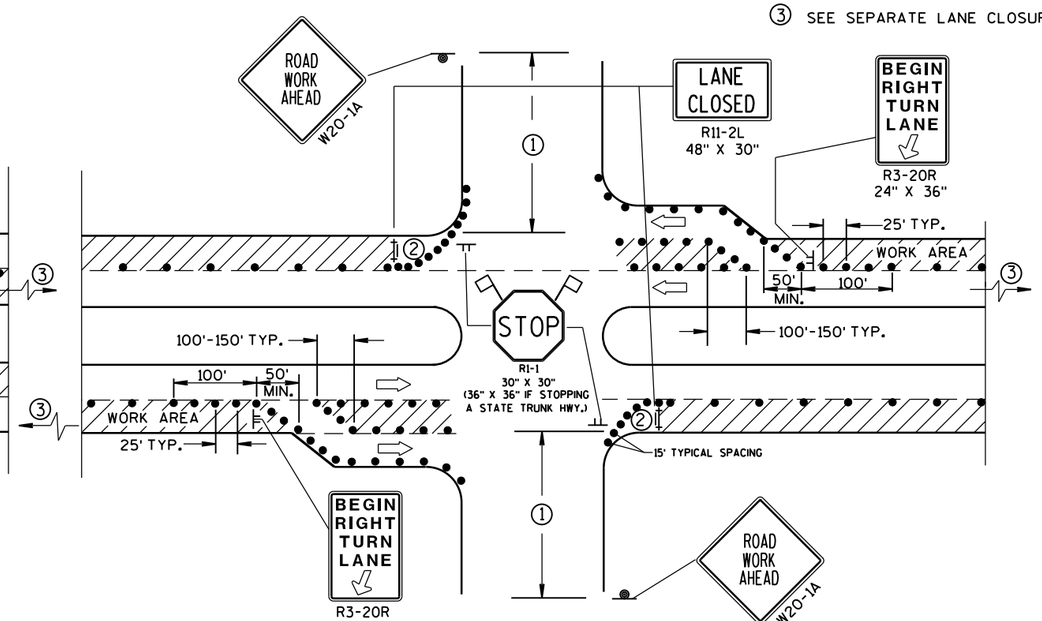

DETAIL D

FOR RIGHT LANE CLOSURE AT INTERSECTION (WITH RIGHT TURN BAY OPEN)

LEGEND

- TRAFFIC CONTROL DRUM
- SIGN ON PERMANENT SUPPORT
- SIGN ON TEMPORARY SUPPORT (5' MIN. MOUNTING HEIGHT)
- TYPE III BARRICADE WITH ATTACHED SIGN AND TYPE "A" WARNING LIGHT (FLASHING)
- DIRECTION OF TRAFFIC
- FLAGS, 16" X 16" MIN., (ORANGE)
- WORK AREA

TRAFFIC CONTROL, INTERSECTION WITHIN SINGLE LANE CLOSURE

STATE OF WISCONSIN
DEPARTMENT OF TRANSPORTATION

APPROVED

June 2016 — DATE

/S/ Peter Anakobe Atepe — STATEWIDE WORK ZONE TRAFFIC SAFETY ENGINEER

FHWA

NOTE: MAY BE USED ON ROADWAY WITH POSTED SPEED OF LESS THAN 40 MPH.

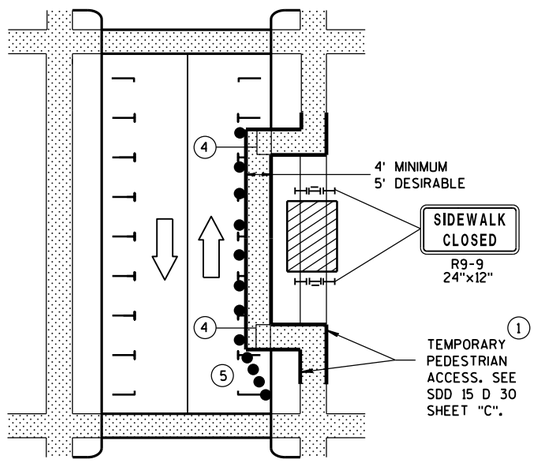

MID-BLOCK SIDEWALK CLOSURE IN PARKING LANE

NOTE: LAYOUT SAME AS ABOVE.

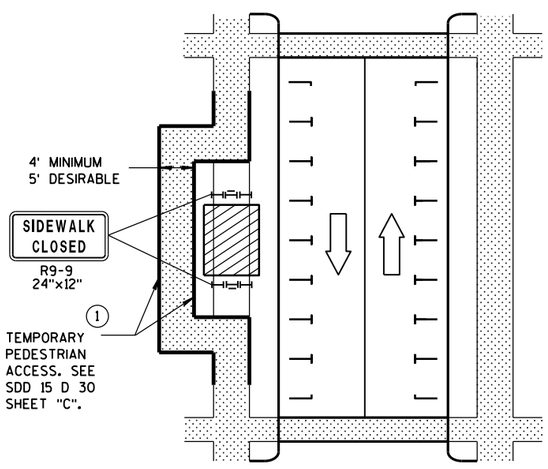

SIDEWALK DIVERSION

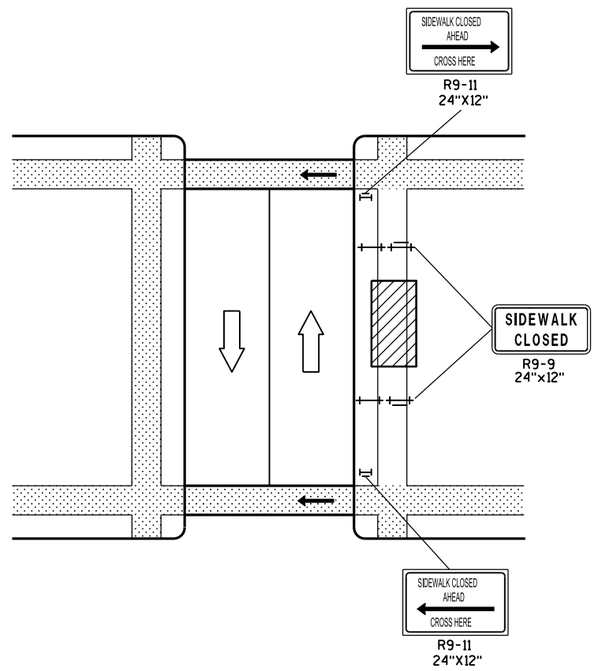

MID-BLOCK SIDEWALK CLOSURE

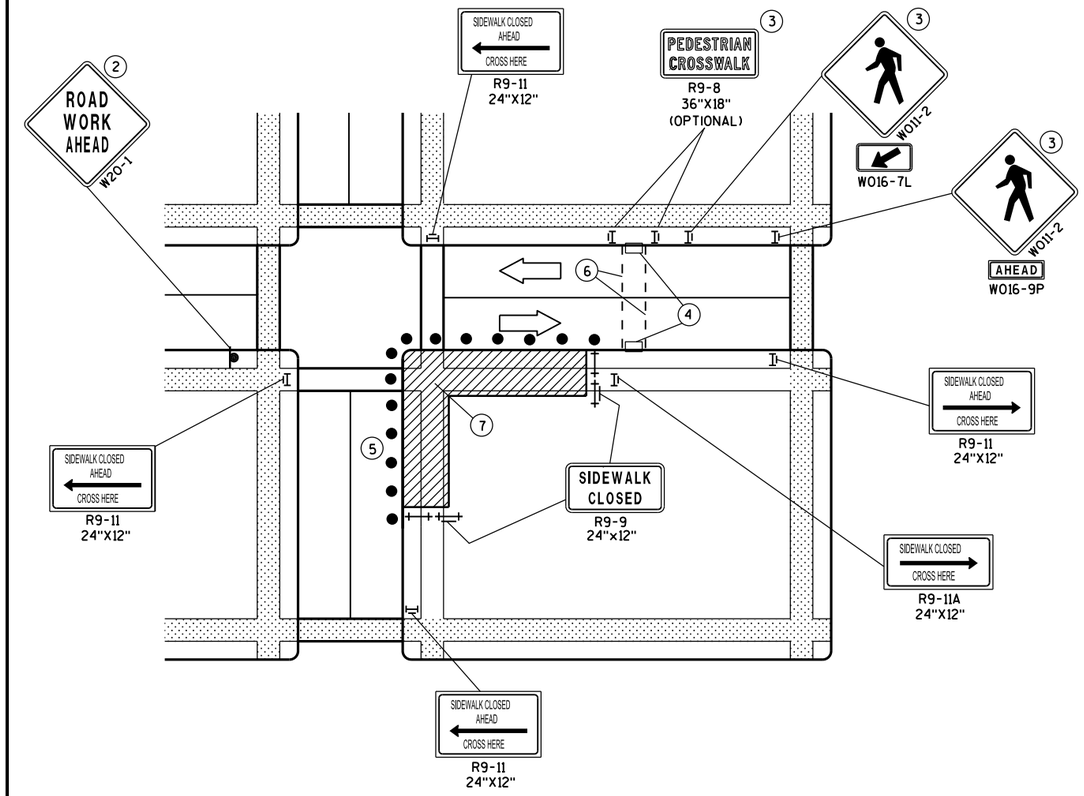

CORNER SIDEWALK CLOSURE WITH TEMPORARY CROSSWALK

GENERAL NOTES

WHEN CLOSING OR RELOCATING CROSSWALKS OR SIDEWALKS, PROVIDE DETECABLE TEMPORARY FACILITIES AND INCLUDE ACCESSIBILITY FEATURES CONSISTENT WITH EXISTING PEDESTRIAN FACILITIES.

TEMPORARY TRAFFIC CONTROL DEVICES FOR PEDESTRIANS ARE SHOWN. OTHER DEVICES MAY BE NECESSARY TO CONTROL VEHICULAR TRAFFIC. STAGE WORK, AS NECESSARY, TO PROVIDE A TEMPORARY PEDESTRIAN ACCESS ROUTE AT ALL TIMES. FOR ROADWAYS WITH NO AVAILABLE DETOURS, MAINTAIN ONE OPEN SIDEWALK AT ALL TIMES.

"WO" SIGN IS THE SAME AS "W" SIGN EXCEPT THE BACKGROUND IS ORANGE.

FOR NIGHTTIME CLOSURE USE TYPE "A" FLASHING WARNING LIGHTS ON BARRICADES, SUPPORTING SIGNS AND CLOSING SIDEWALK. USE TYPE "C" STEADY BURN LIGHTS ON CHANNELIZING DEVICES SEPARATING THE WORK AREA FROM VEHICULAR TRAFFIC.

PEDESTRIAN TRAFFIC SIGNAL DISPLAY CONTROLLING CLOSED CROSSWALK SHALL BE COVERED OR DEACTIVATED.

POST MOUNTED SIGNS LOCATED ADJACENT TO A SIDEWALK SHALL HAVE A 7 FOOT MINIMUM CLEARANCE FROM THE BOTTOM OF THE SIGN TO THE SIDEWALK SURFACE.

ALTERNATE SIDEWALK WORK BETWEEN LEFT AND RIGHT SIDE OF ROADWAY TO MAINTAIN PEDESTRIAN ACCESS.

1. IF SIDEWALK CLOSURE AFFECTS AN ACCESSIBLE AND DETECTABLE FACILITY, MAINTAIN ACCESSIBILITY AND DETECTABILITY ALONG THE ALTERNATE PEDESTRIAN ROUTE.
2. "ROAD WORK AHEAD" SIGNS ARE NOT REQUIRED IF THE SIDEWALK CLOSURE OCCURS WITHIN A LARGER WORK ZONE WHERE ADVANCE WARNING SIGNS ARE ALREADY PRESENT, OR IF THE WORK AREA AND EQUIPMENT ARE MORE THAN 2 FEET BEHIND THE CURB.
3. IF TEMPORARY PEDESTRIAN CROSSWALK IS NOT PROVIDED, OMIT R9-8 AND W011-2 SIGN ASSEMBLIES. IF PROVIDED INCLUDE ON BOTH SIDES OF THE CROSSWALK.
4. TEMPORARY CURB RAMPS. SEE SDD 15 D 30 SHEET "B".
5. DRUMS OR BARRICADES AT 25 FOOT SPACING. STREET PARKING SHALL BE PROHIBITED FOR AT LEAST 50 FEET IN ADVANCE OF THE MID-BLOCK CROSSWALK.
6. TEMPORARY PAVEMENT MARKING FOR CROSSWALK LINES.
7. LIMIT WORK TO ONE QUADRANT AT A TIME TO MINIMIZE PEDESTRIAN DISRUPTION.

LEGEND

- SIGN ON PERMANENT SUPPORT
- UNDER PEDESTRIAN TRAFFIC
- WORK AREA
- PEDESTRIAN CHANNELIZATION DEVICE
- TYPE II BARRICADE WITH/WITHOUT SIGN (ALL WITH ONE WARNING LIGHT, TYPE A, LOW-INTENSITY FLASHING)
- TYPE III BARRICADE WITH/WITHOUT SIGN (ALL WITH ONE WARNING LIGHT, TYPE A, LOW-INTENSITY FLASHING)
- DIRECTION OF TRAFFIC
- TRAFFIC CONTOL DRUM

TRAFFIC CONTROL, PEDESTRIAN ACCOMMODATION

STATE OF WISCONSIN
DEPARTMENT OF TRANSPOI

6

S.D.D. 15 D 30-3a

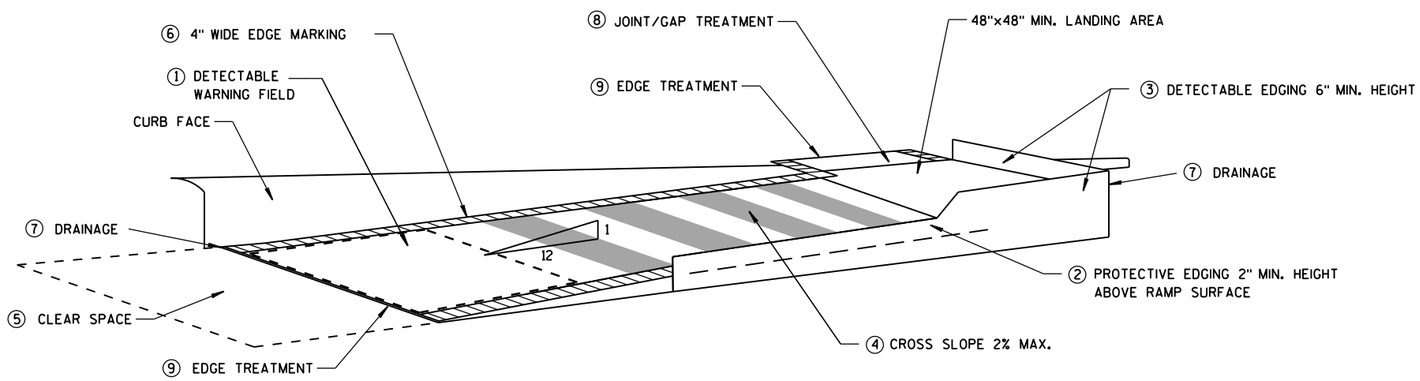

TEMPORARY CURB RAMP PARALLEL TO CURB

GENERAL NOTES

NOTIFY THE BUS COMPANY 7 DAYS IN ADVANCE OF THE BUS STOP RELOCATION.

ALTERNATE SIDEWALK WORK BETWEEN LEFT AND RIGHT SIDE OF ROADWAY TO MAINTAIN PEDESTRIAN ACCESS.

① CURB RAMPS SHALL BE 48" MIN. WIDTH WITH A FIRM, STABLE AND SLIP RESISTANT SURFACE. INSTALL CONTRASTING DETECTABLE WARNING FIELD AT PEDESTRIAN STREET CROSSINGS. REFER TO SDD 8D5 SHEET "E".

② PROTECTIVE EDGING WITH A 2" MIN. HEIGHT SHALL BE INSTALLED WHEN A CURB RAMP OR LANDING PLATFORM HAS A VERTICAL DROP OF 6" OR GREATER OR HAS A SIDE APRON SLOPE STEEPER THAN 1:3 (33%). PROTECTIVE EDGING SHOULD BE CONSIDERED WHEN CURB RAMPS OR LANDING PLATFORMS HAVE A VERTICAL DROP OF 3" OR MORE.

③ DETECTABLE EDGING WITH 6" MIN. HEIGHT AND CONTRASTING COLOR SHALL BE INSTALLED ON ALL CURB RAMP LANDINGS WHERE THE WALKWAY CHANGES DIRECTION (TURNS).

④ CURB RAMPS AND LANDINGS SHALL HAVE A 1:50 (2%) MAX. CROSS-SLOPE.

⑤ CLEAR SPACE OF 48"X48" MIN. SHALL BE PROVIDED ABOVE AND BELOW THE CURB RAMP.

⑥ THE CURB RAMP WALKWAY EDGE SHALL BE MARKED WITH A YELLOW COLOR, 4" WIDE MARKING, UNLESS A CONTRASTING DETECTABLE WARNING FIELD IS PROVIDED.

⑦ DO NOT RESTRICT WATER FLOW IN THE GUTTER SYSTEM.

⑧ LATERAL JOINTS OR GAPS BETWEEN SURFACES SHALL BE LESS THAN 1/2" WIDTH.

⑨ CHANGES BETWEEN SURFACE HEIGHTS SHALL NOT EXCEED 1/2". LATERAL EDGES SHALL BE VERTICAL UP TO 1/4" HIGH, AND BEVELED AT 1:2 BETWEEN 1/4" AND 1/2".

⑩ 5' WIDE MIN. WITH PEDSETRIAN SAFETY FENCE, 10' WIDE MIN. WITHOUT PEDESTRIAN SAFETY FENCE.

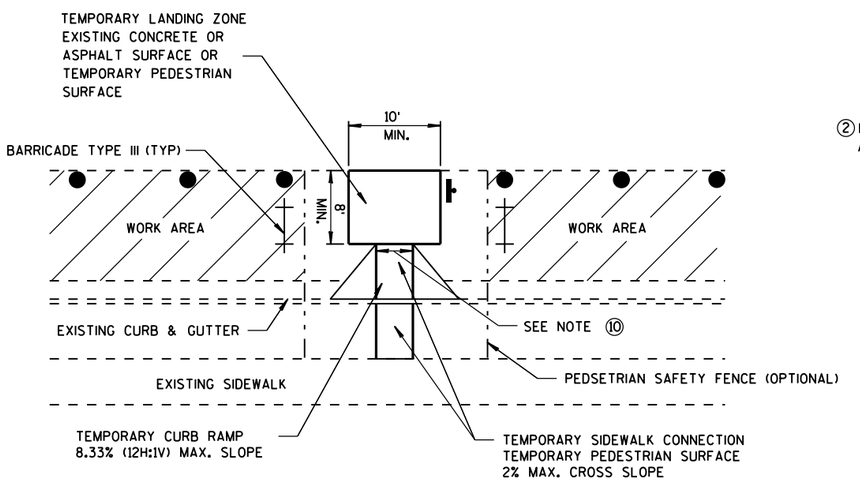

TEMPORARY BUS STOP PAD

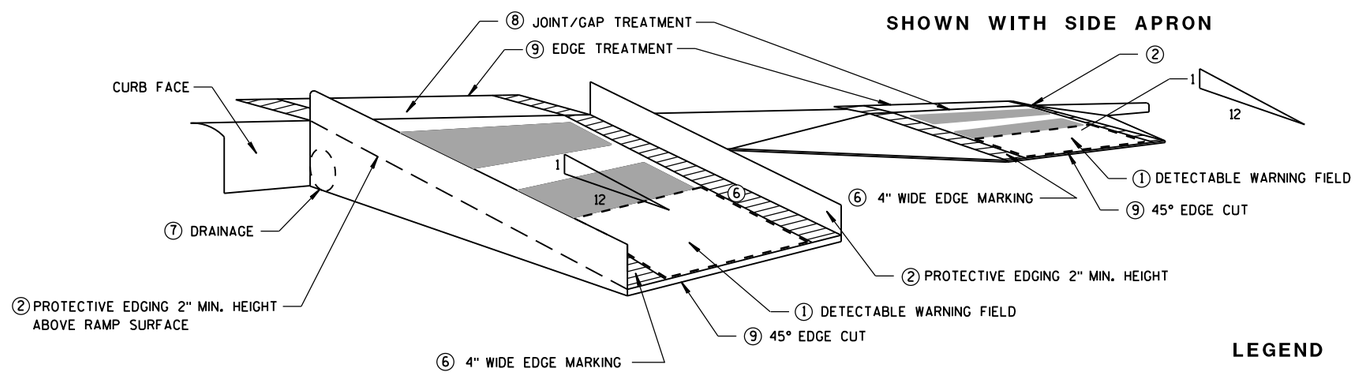

SHOWN WITH PROTECTIVE EDGE

TEMPORARY CURB RAMP PERPENDICULAR TO CURB

LEGEND

WORK AREA

TYPE III BARRICADE

TRAFFIC CONTOL DRUM

TRAFFIC CONTROL, TEMPORARY ADA COMPLIANT PEDESTRIAN ACCOMMODATION

STATE OF WISCONSIN
DEPARTMENT OF TRANSPORTATION

APPROVED
June 2016 — DATE
/S/ Peter Amakobe Atepe — STATEWIDE WORK ZONE TRAFFIC SAFETY ENGINEER
FHWA

6

S.D.D. 15 D 30-3b

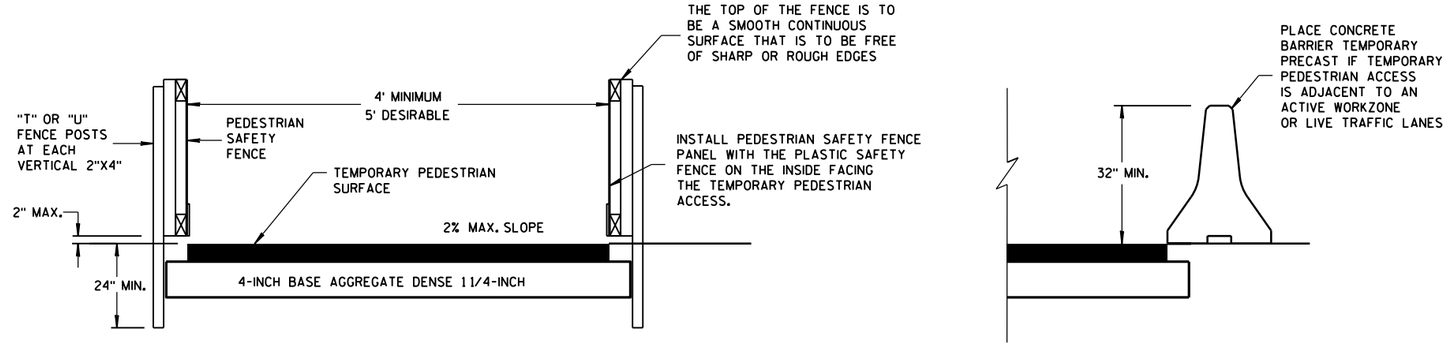

TEMPORARY PEDESTRIAN ACCESS

GENERAL NOTES

1. INTERCHANGEABLE WITH THE PEDESTRIAN SAFETY FENCE.

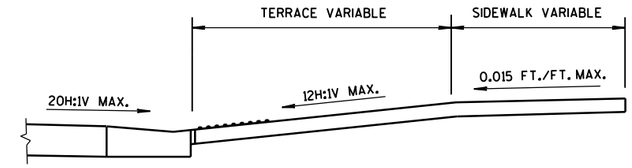

SECTION A-A

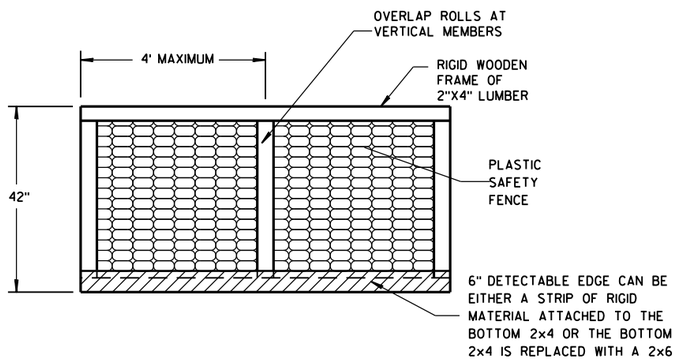

PEDESTRIAN SAFETY FENCE

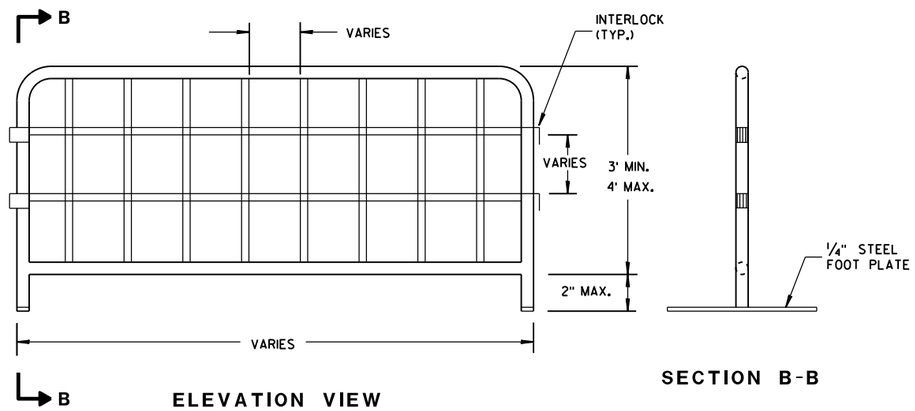

ELEVATION VIEW

SECTION B-B

TEMPORARY PEDESTRIAN STEEL BARRICADE (1)

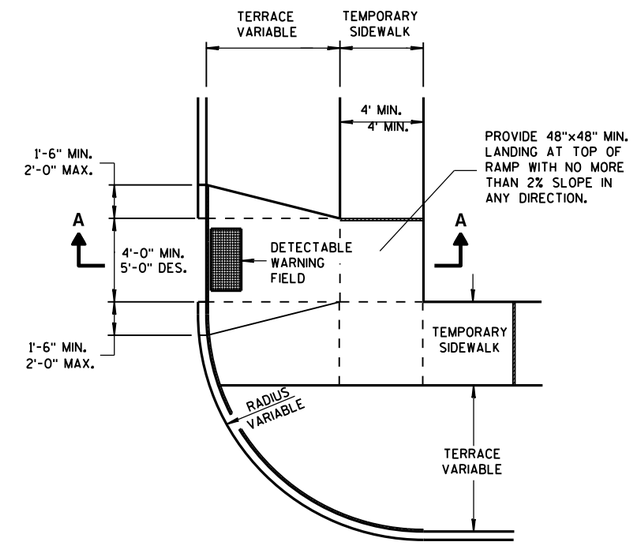

PLAN VIEW

TEMPORARY TYPE 3 RAMP

(OUTSIDE OF CROSSWALK AREA)

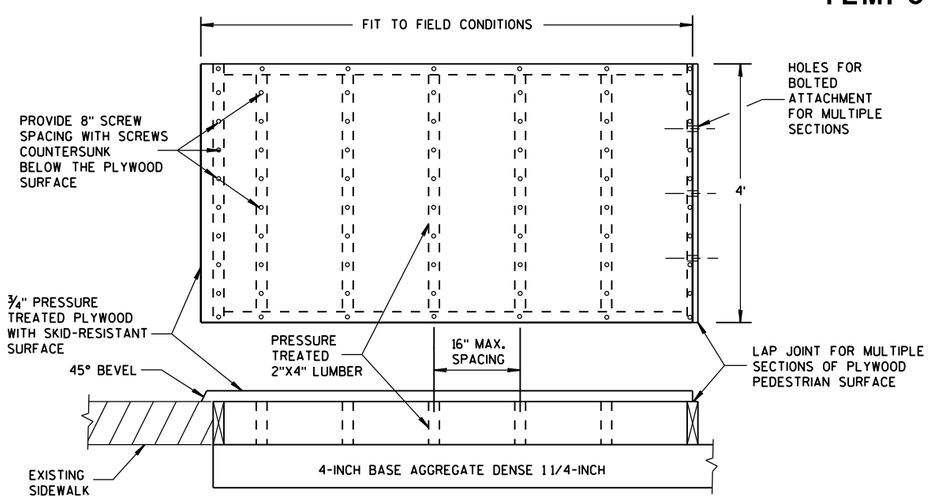

TEMPORARY PEDESTRIAN SURFACE PLYWOOD

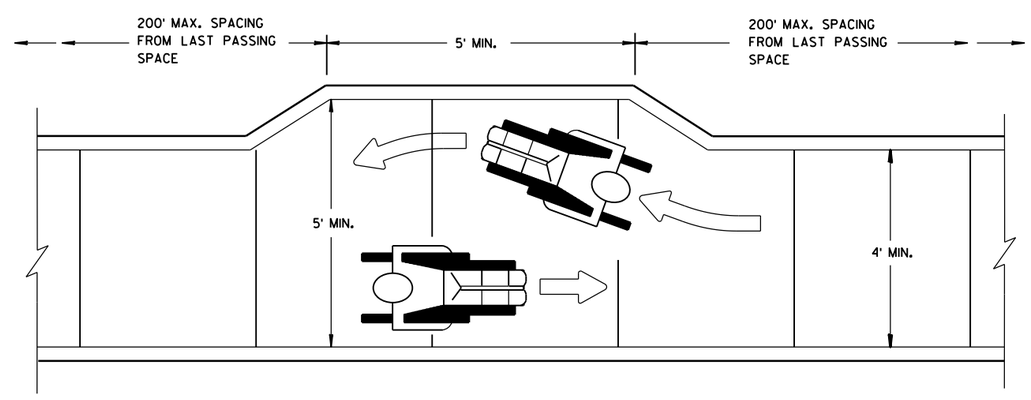

NARROW SIDEWALK PASSING DETAIL

TRAFFIC CONTROL, PEDESTRIAN ACCOMMODATION

STATE OF WISCONSIN
DEPARTMENT OF TRANSPORTATION

APPROVED
June 2016
DATE
FHWA

/S/ Peter Amakobe Atepe
STATEWIDE WORK ZONE TRAFFIC SAFETY ENGINEER

6

S.D.D. 15 D 30-3c

TELESCOPIC TUBING ANCHORS
TWO PIECE SYSTEM

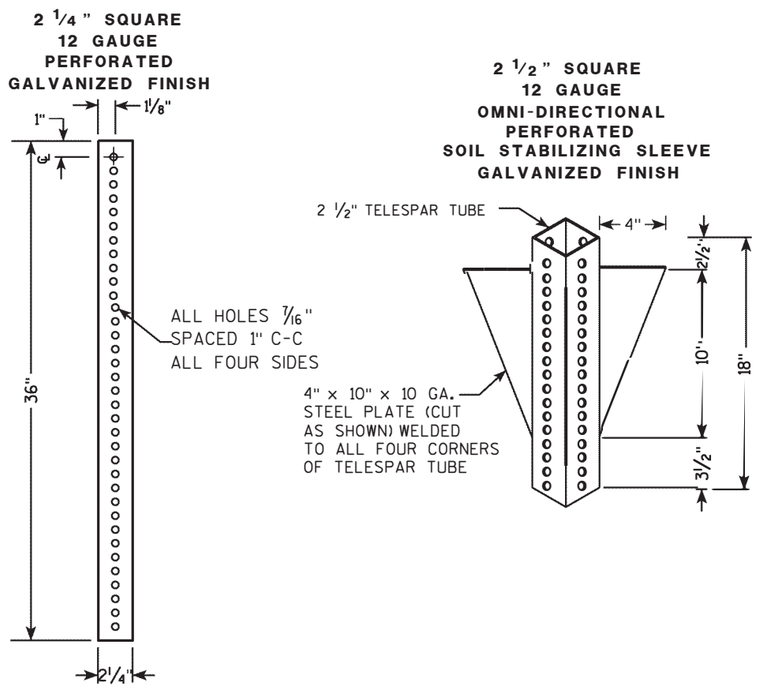

DETAIL OF TUBULAR STEEL SIGN POST
(IN POURED CONCRETE OR ASPHALT)

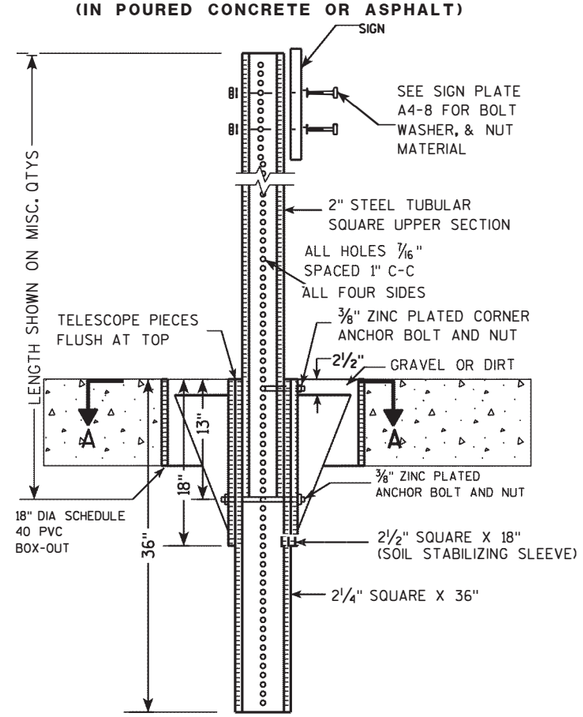

DETAIL OF TUBULAR STEEL SIGN POST
(IN LOCATIONS OTHER THAN POURED CONCRETE OR ASPHALT)

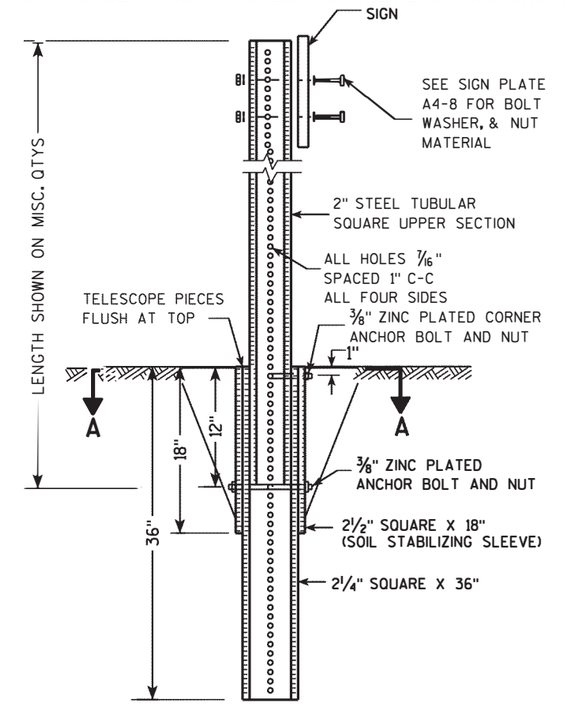

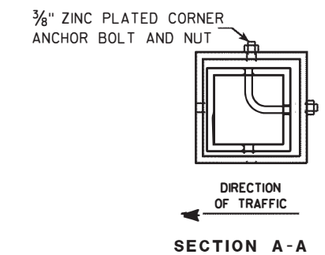

SECTION A-A

Area of Sign Installation (Sq. Ft.)	Number of Required Posts
9 or less	1
Greater than 9 less than or equal to 18	2
Greater than 18 less than or equal to 27	3

Signs wider than 3 feet or larger than 9 sq. ft shall be mounted on multiple posts (see above table).

TUBULAR STEEL
SIGN POST
A4-9

WISCONSIN DEPT OF TRANSPORTATION

APPROVED Matthew R Rauch
For State Traffic Engineer

DATE 2/05/15 PLATE A4-9.9

PROJECT NO: 8997-00-40	HWY: MAIN ST	COUNTY: BARRON		SHEET NO:	E

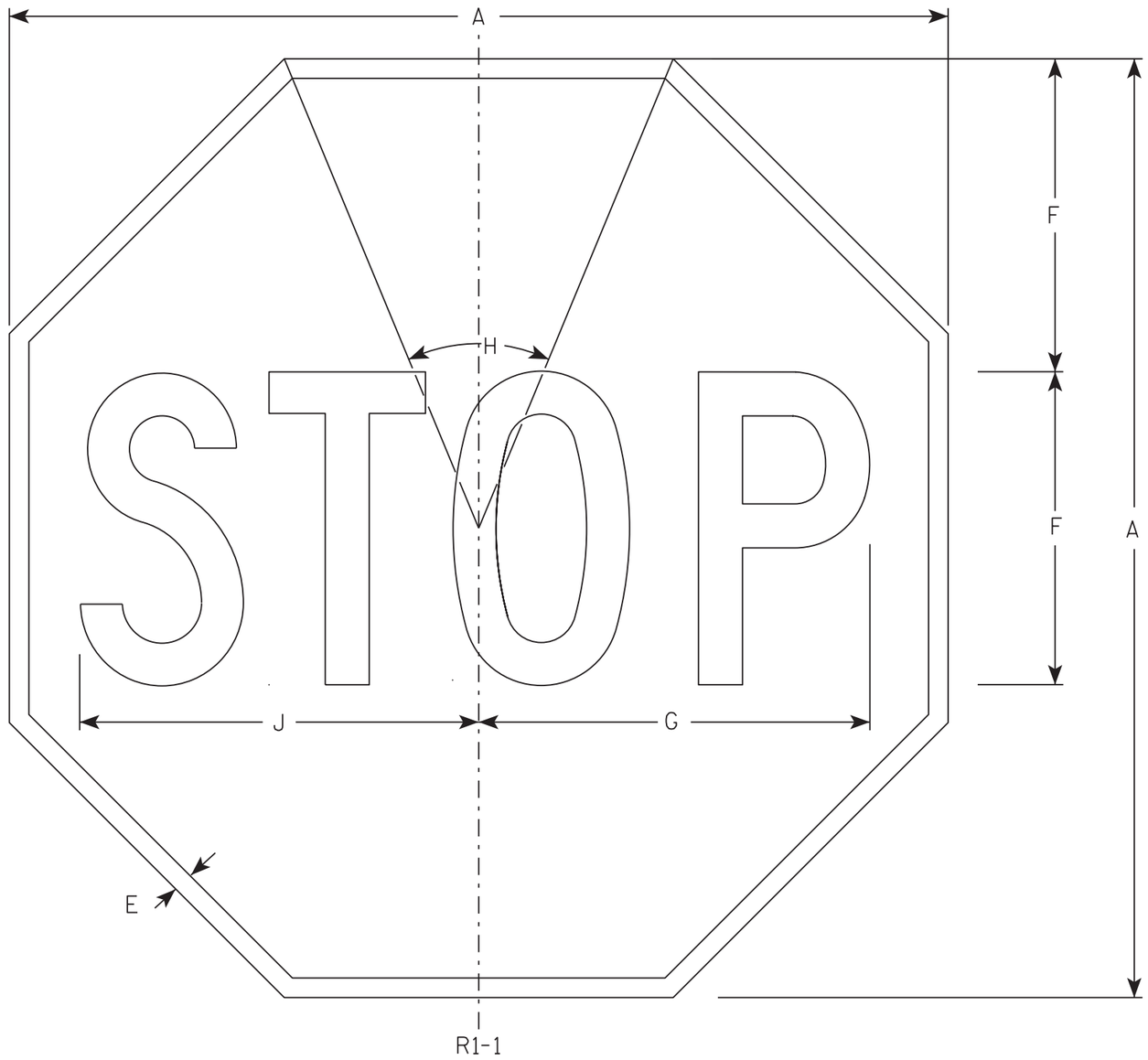

NOTES

1. Sign is Type II - Type H Reflective - reference WIS DOT Standard Specification for HIGHWAY and STRUCTURE CONSTRUCTION latest edition.
2. Color:
   Background - Red
   Message - White
3. Message Series - C

SIZE	A	B	C	D	E	F	G	H	I	J	K	L	M	N	O	P	Q	R	S	T	U	V	W	X	Y	Z	Area sq. ft.
1	30				5/8	10	12 1/2	45°		12 3/4																	5.18
2S	30				5/8	10	12 1/2	45°		12 3/4																	5.18
2M	36				3/4	12	15	45°		15 3/8																	7.46
3	36				3/4	12	15	45°		15 3/8																	7.46
4	48				1	16	20	45°		20 1/2																	13.25
5	48				1	16	20	45°		20 1/2																	13.25
6	18				3/8	6	7 3/4	45°		7 3/4																	1.86
7	12				1/4	4	5	45°		5 1/8																	0.78

STANDARD SIGN
R1-1

WISCONSIN DEPT OF TRANSPORTATION

APPROVED Matthew R Rauch
for State Traffic Engineer

DATE 11/12/15 PLATE NO. R1-1.13

PROJECT NO: 8997-00-40 | HWY: MAIN ST | COUNTY: BARRON | SHEET NO: 105 | E

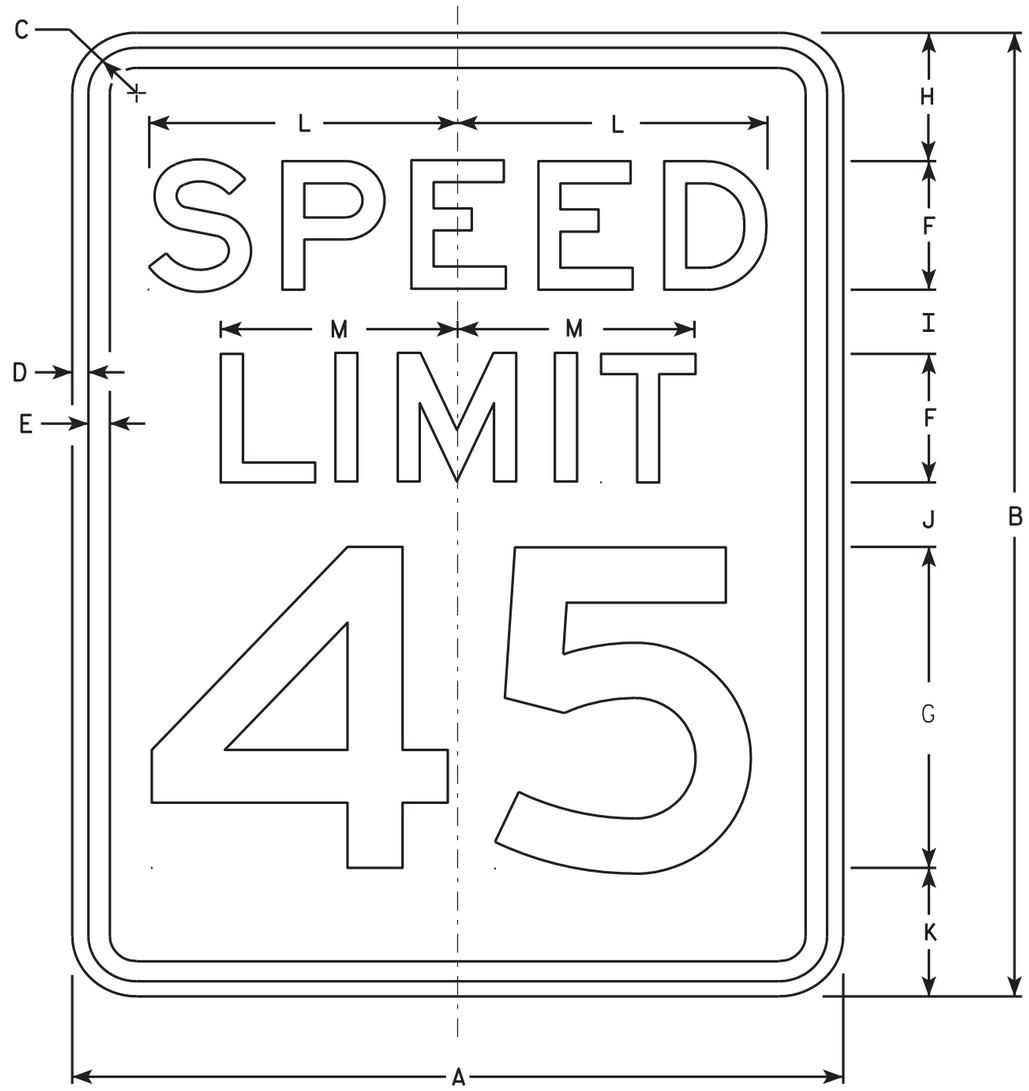

R2-1

NOTES

1. Sign is Type II - Type H Reflective - reference WIS DOT Standard Specification for HIGHWAY and STRUCTURE CONSTRUCTION latest edition.
2. Color:
   Background - White
   Message - Black
3. Message Series - E
4. Corners may be square or rounded when base material is plywood but borders shall be rounded as shown. When base material is metal, the corners and borders shall be rounded.
5. Substitute appropriate numerals and optically adjust spacing to achieve proper balance.

SIZE	A	B	C	D	E	F	G	H	I	J	K	L	M	N	O	P	Q	R	S	T	U	V	W	X	Y	Z	Area sq. ft.
1	18	24	1 1/8	3/8	1/2	3	8	3	2	2	3	7 1/4	5 1/2														3.0
2S	24	30	1 1/8	3/8	1/2	4	10	3	2 1/4	3 3/8	3 3/8	9 5/8	7 3/8														5.0
2M	30	36	1 3/8	1/2	5/8	5	12	5	2 1/2	2 1/2	4	12	9 1/4														7.5
3	36	48	1 3/8	1/2	5/8	6	14	6	5	5	6	14 3/8	11														12.0
4	36	48	1 3/8	1/2	5/8	6	14	6	5	5	6	14 3/8	11														12.0
5	48	60	2 1/4	3/4	1	8	20	6	4 1/2	6 3/4	6 3/4	19 1/4	14 5/8														20.0

STANDARD SIGN
R2-1

WISCONSIN DEPT OF TRANSPORTATION

APPROVED Matthew R Rauch
for State Traffic Engineer

DATE 5/26/10 PLATE NO. R2-1.13

PROJECT NO: 8997-00-40 | HWY: MAIN ST | COUNTY: BARRON | SHEET NO: 106 | E

R7-1

NOTES

1. Sign is Type II - Type H Reflective - reference WIS DOT Standard Specification for HIGHWAY and STRUCTURE CONSTRUCTION latest edition.
2. Color:
   Background - White
   Message - Red
3. Message Series - See Note 5
4. Corners may be square or rounded when base material is plywood but borders shall be rounded as shown. When base material is metal, the corners and borders shall be rounded.
5. Lines 1, 3 and 4 are series C, line 2 is series B.
6. R7-1D (double arrow)
   R7-1L (left arrow)
   R7-1R (right arrow)

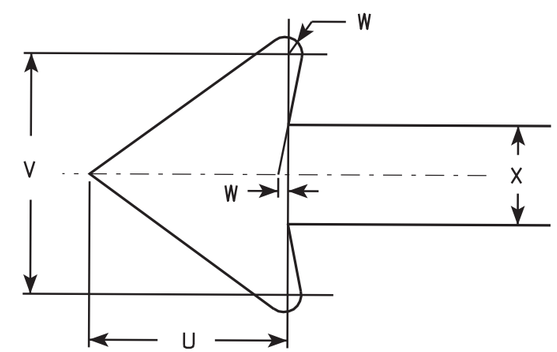

SIZE	A	B	C	D	E	F	G	H	I	J	K	L	M	N	O	P	Q	R	S	T	U	V	W	X	Y	Z	Area sq. ft.
1	12	18	1 1/8	3/8	3/8	3	1 7/8	2	7/8	5/8	1 1/2	2 1/2	2	2	4 7/8	4 7/8	2 1/4	2 1/8	2 1/2	3 7/8	1 1/2	1 3/4	1/8	3/4			1.5
2S	18	24	1 1/8	3/8	1/2	4	2 1/2	2 1/2	1 1/4	1	2	3 1/4	2 3/4	2 5/8	7 1/8	7	2 3/4	2 5/8	3 1/8	5 7/8	2 1/4	2 5/8	1/4	1 1/8			3.0
2M	24	30	1 1/8	3/8	1/2	5	3	3	2	1 1/4	2 1/2	4	3 1/4	3 3/8	9 1/4	9 1/4	3 1/4	3 1/4	3 3/4	7 3/4	3	3 1/2	1/4	1 1/2			5.0
3	24	30	1 1/8	3/8	1/2	5	3	3	2	1 1/4	2 1/2	4	3 1/4	3 3/8	9 1/4	9 1/4	3 1/4	3 1/4	3 3/4	7 3/4	3	3 1/2	1/4	1 1/2			5.0
4																											
5																											

STANDARD SIGN
R7-1

WISCONSIN DEPT OF TRANSPORTATION

APPROVED Matthew R Rauch
for State Traffic Engineer

DATE 3/31/2011 PLATE NO. R7-1.9

PROJECT NO: 8997-00-40 | HWY: MAIN ST | COUNTY: BARRON | SHEET NO: 107 | E

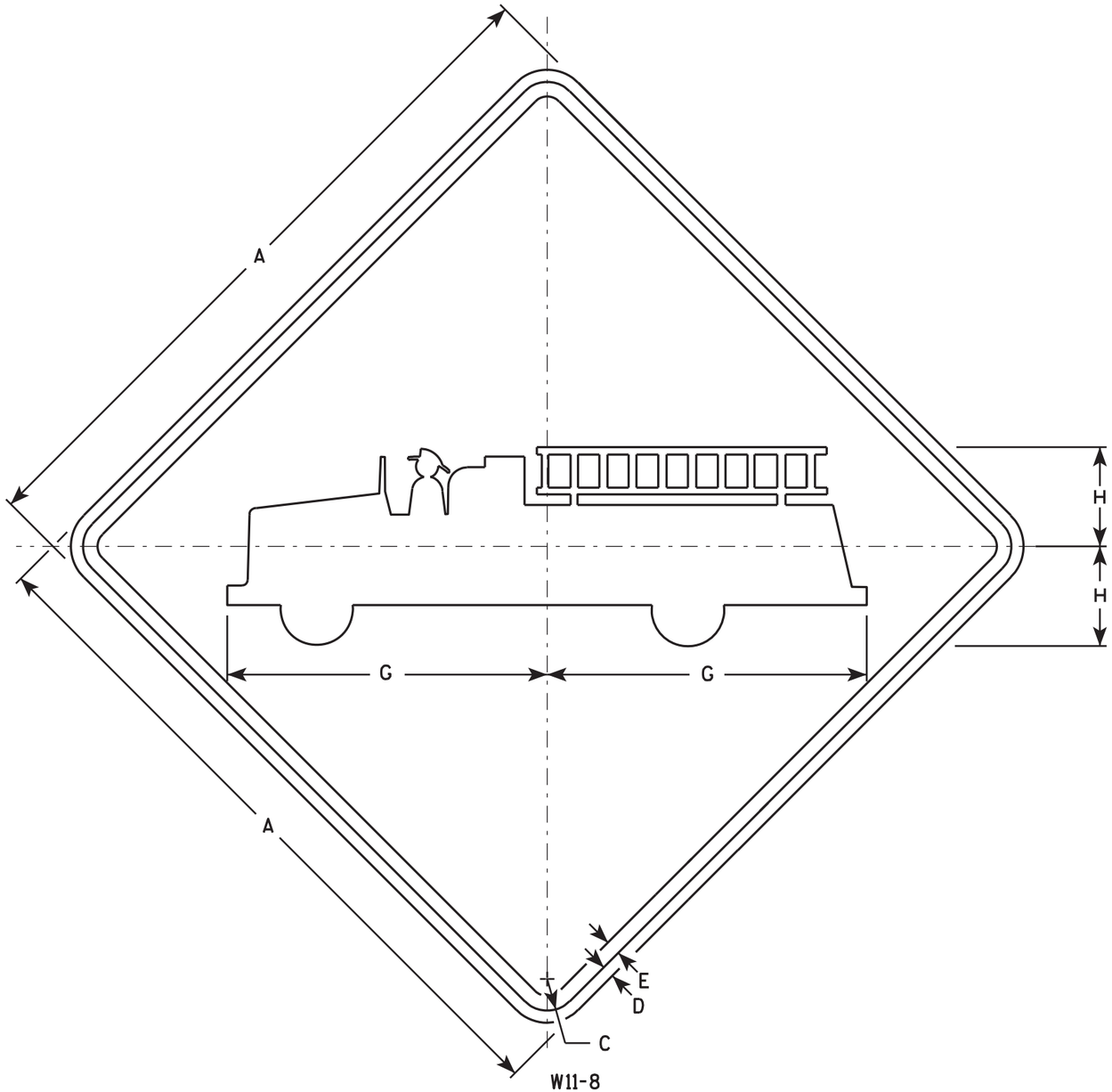

W11-8

NOTES

1. Sign is Type II - Type F Reflective - reference WIS DOT Standard Specification for HIGHWAY and STRUCTURE CONSTRUCTION latest edition.
2. Color:
   Background - Yellow
   Message - Black
3. Corners may be square or rounded when base material is plywood but borders shall be rounded as shown. When base material is metal, the corners and borders shall be rounded.

SIZE	A	B	C	D	E	F	G	H	I	J	K	L	M	N	O	P	Q	R	S	T	U	V	W	X	Y	Z	Area sq. ft.
1	24		1 1/8	3/8	1/2		11	3 3/8																			4.0
2S	30		1 3/8	1/2	5/8		13 3/4	4 3/8																			6.25
2M	30		1 3/8	1/2	5/8		13 3/4	4 3/8																			6.25
3	36		1 5/8	5/8	3/4		16 1/2	5 1/4																			9.0
4	48		2 1/4	3/4	1		22	7																			16.0
5																											

STANDARD SIGN
W11-8

WISCONSIN DEPT OF TRANSPORTATION

APPROVED Matthew R Rauch
for State Traffic Engineer

DATE 3/13/13 PLATE NO. W11-8.7

PROJECT NO: 8997-00-40	HWY: MAIN ST	COUNTY: BARRON		SHEET NO: 108	E

STATE PROJECT NUMBER

8997-00-40

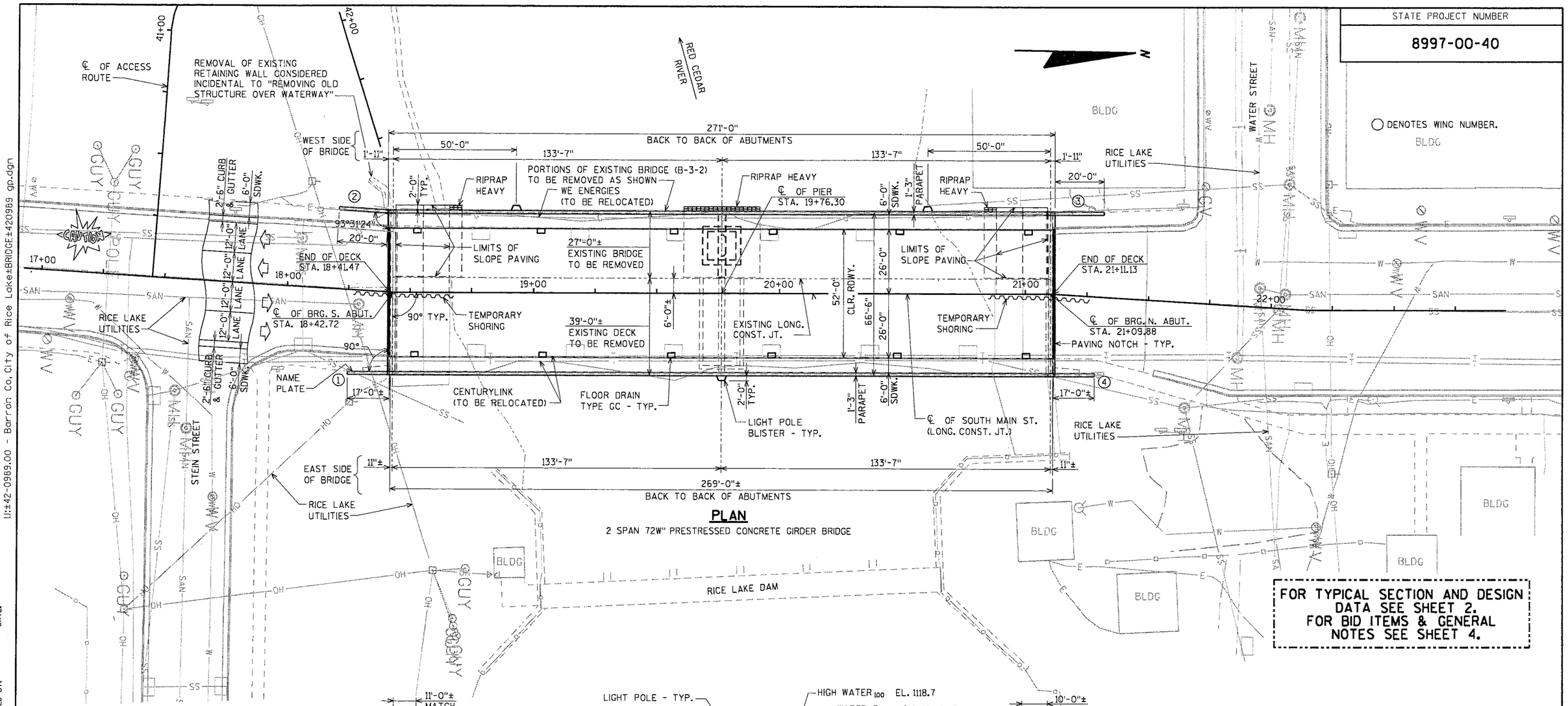

PLAN

2 SPAN 72W" PRESTRESSED CONCRETE GIRDER BRIDGE

FOR TYPICAL SECTION AND DESIGN DATA SEE SHEET 2.
FOR BID ITEMS & GENERAL NOTES SEE SHEET 4.

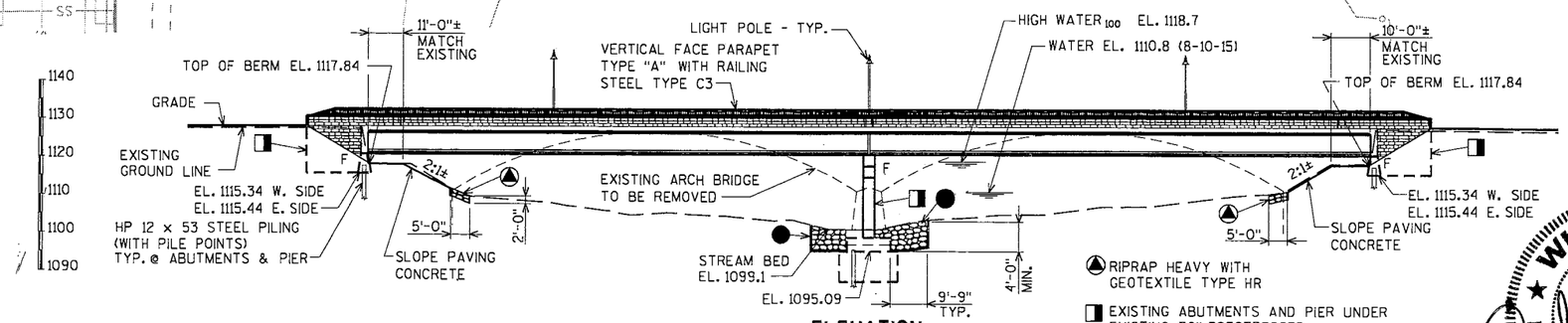

ELEVATION

RIPRAP HEAVY WITH GEOTEXTILE TYPE HR

EXISTING ABUTMENTS AND PIER UNDER EXISTING 70" PRESTRESSED GIRDERS TO REMAIN IN PLACE

RIPRAP HEAVY WITHOUT GEOTEXTILE TYPE HR

LIST OF DRAWINGS

WISCONSIN DANIEL N. SYDOW E-38363 WI PROFESSIONAL ENGINEER 10/23/17

BRIDGE OFFICE CONTACT:
WILLIAM DREHER
(608)-266-8489

CONSULTANT CONTACT:
DAN SYDOW
(715)-834-3161

NO.	DATE	REVISION	BY

ORIGINAL PLANS PREPARED BY
AYRES ASSOCIATES
3433 Oakwood Hills Parkway
Eau Claire, WI 54701
www.AyresAssociates.com

STATE OF WISCONSIN
DEPARTMENT OF TRANSPORTATION

ACCEPTED William C. Dreher SDR 11/08/17
CHIEF STRUCTURES DESIGN ENGINEER — DATE

STRUCTURE B-3-2

SOUTH MAIN STREET OVER RED CEDAR RIVER

COUNTY: BARRON — ~~TOWN~~/CITY/~~VILLAGE~~: RICE LAKE

DESIGN SPEC.: REHABILITATION N/A

DESIGNED BY: CKJ — DESIGN CK'D.: AEB — DRAWN BY: CLS — PLANS CK'D.: DWS

GENERAL PLAN

SHE 109 F 31

$PRFNAME$
U:\42-0989.00 - Barron Co, City of Rice Lake\BRIDGE\420989 gp.dgn

DATE:
DATE:
DATE:

CHECKED BY:
BACK CHECKED BY:
CORRECTED BY:

8

8

10/22/2017

PENTABLE:BRedu_shd_util.tbl

I.D.

DATE:

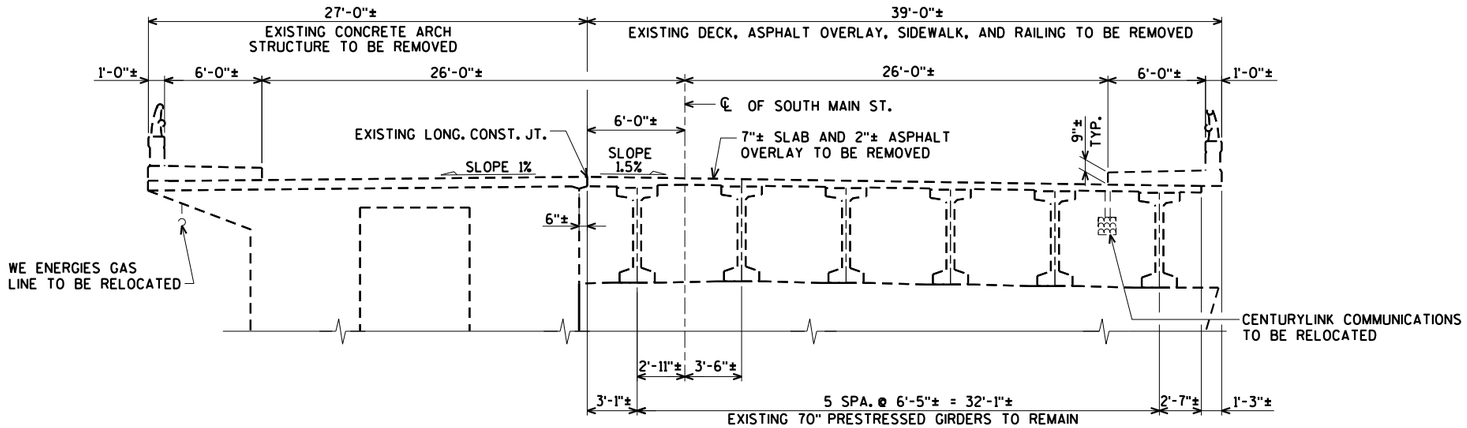

TYPICAL SECTION THRU EXISTING BRIDGE

(LOOKING NORTH)

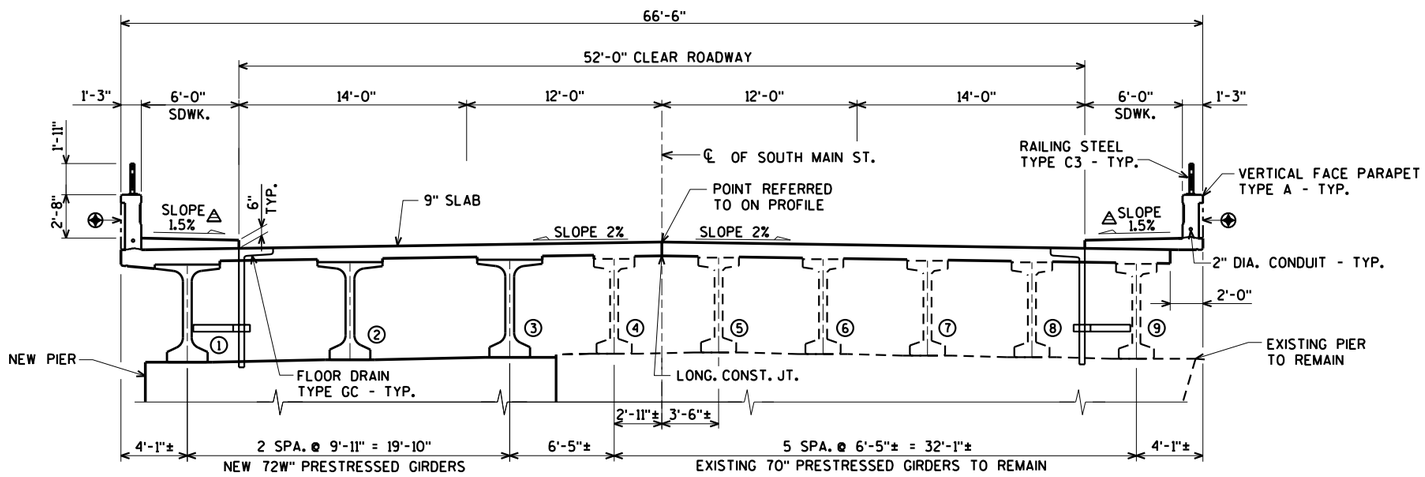

TYPICAL SECTION THRU FINISHED BRIDGE

(LOOKING NORTH)

△ ±0.5% CONSTRUCTION TOLERANCE IN SIDEWALK CROSS SLOPE. THE SIDEWALK CROSS SLOPE SHALL NOT EXCEED 2% WITHOUT PRIOR APPROVAL FROM THE ENGINEER.

⊕ ARCHITECTURAL SURFACE TREATMENT. FOR DETAILS SEE SHEET 6.

DESIGN DATA

LIVE LOAD:

DESIGN LOADING: HS-20 / HL-93
INVENTORY RATING: HS-22 / RF = 1.39
OPERATING RATING: HS-28 / RF = 1.81
WISCONSIN STANDARD PERMIT VEHICLE (WIS-SPV) = 250 KIPS

STRUCTURE IS DESIGNED FOR A FUTURE WEARING SURFACE OF 20 #/S.F.

MATERIAL PROPERTIES:

CONCRETE MASONRY { SUPERSTRUCTURE ____ f'_c = 4,000 p.s.i.
CONCRETE MASONRY { ALL OTHER ____ f'_c = 3,500 p.s.i.
HIGH STRENGTH BAR STEEL REINFORCEMENT (GRADE 60) ____ f_y = 60,000 p.s.i.

72W" PRESTRESSED GIRDER
CONCRETE MASONRY ____ f'_c = 8,000 p.s.i.
STRANDS - 0.6" DIA. WITH ULTIMATE TENSILE STRENGTH OF = 270,000 p.s.i.

HYDRAULIC DATA:

100 YEAR FLOOD	2 YEAR FREQUENCY
Q_{100} = 5,750 c.f.s.	Q_2 = 3,700 c.f.s.
VEL. = 3.0 f.p.s.	VEL. = 2.3 f.p.s.
HW_{100} = EL. 1118.7	HW_2 = EL. 1116.7

WATERWAY AREA = 1,941 sq. ft.
DRAINAGE AREA = 385 sq. mi.
ROADWAY OVERTOPPING = N/A
SCOUR CRITICAL CODE = 8
DATUM = NAVD88 (2012)

REGULATORY HIGHWATER$_{100}$ EL. 1118.7

FOUNDATION DATA:

ABUTMENTS TO BE SUPPORTED ON HP 12 x 53 STEEL PILING (WITH PILE POINTS) DRIVEN TO A REQUIRED DRIVING RESISTANCE OF 200 TONS * PER PILE AS DETERMINED BY THE MODIFIED GATES DYNAMIC FORMULA. ESTIMATED LENGTH 55'-0".

PIER TO BE SUPPORTED ON HP 12 x 53 STEEL PILING (WITH PILE POINTS) DRIVEN TO A REQUIRED DRIVING RESISTANCE OF 220 TONS * PER PILE AS DETERMINED BY THE MODIFIED GATES DYNAMIC FORMULA. ESTIMATED LENGTH 50'-0".

* THE FACTORED AXIAL RESISTANCE OF PILES IN COMPRESSION USED FOR DESIGN IS THE REQUIRED DRIVING RESISTANCE MULTIPLIED BY A RESISTANCE FACTOR OF 0.5 USING MODIFIED GATES TO DETERMINE DRIVEN PILE CAPACITY.

TRAFFIC DATA:

A.A.D.T. = 13,150 (2018)
A.A.D.T. = 14,400 (2038)
R.D.S. = 25 M.P.H.

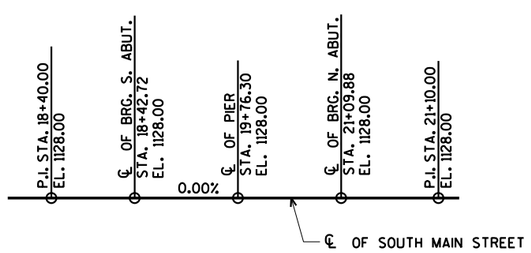

PROFILE GRADE LINE

(SOUTH MAIN STREET)

BENCH MARK:
CAP IN SE QUAD. OF BRIDGE
STA. 18+68.37, 26' RT.
EL. 1127.02

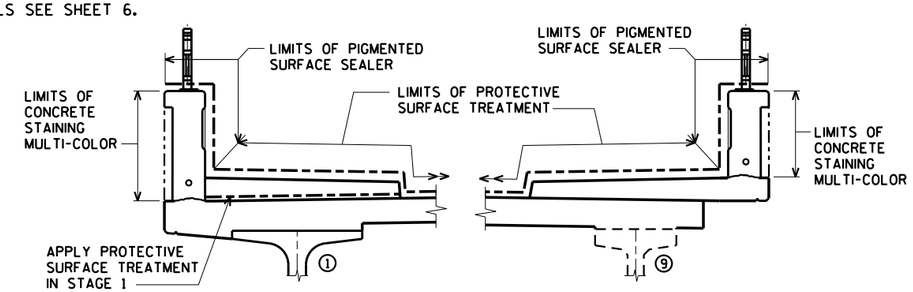

SURFACE TREATMENT DETAILS

NO.	DATE	REVISION	BY

STATE OF WISCONSIN
DEPARTMENT OF TRANSPORTATION

STRUCTURE B-3-2

DRAWN BY CLS | PLANS CK'D. CBM

TYPICAL SECTION AND DESIGN DATA

SHEET 2 OF 31
110

ORIGINAL PLANS PREPARED BY
AYRES ASSOCIATES
3433 Oakwood Hills Parkway
Eau Claire, WI 54701
www.AyresAssociates.com

8

8

$PRFNAME$
U:\42-0989.00 - Barron Co. City of Rice Lake\BRIDGE\420989 gp TY ON.dgn

10/6/2017

PENTABLE:BReau_shd_util.tbl

STATE PROJECT NUMBER

8997-00-40

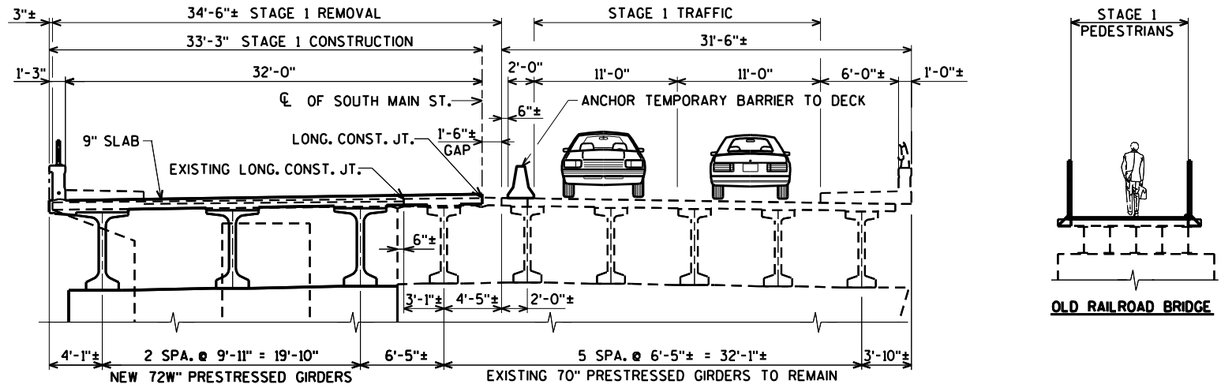

STAGE 1 - REMOVE ARCH BRIDGE AND CONSTRUCT NEW GIRDER BRIDGE ON WEST PORTION
(LOOKING NORTH)

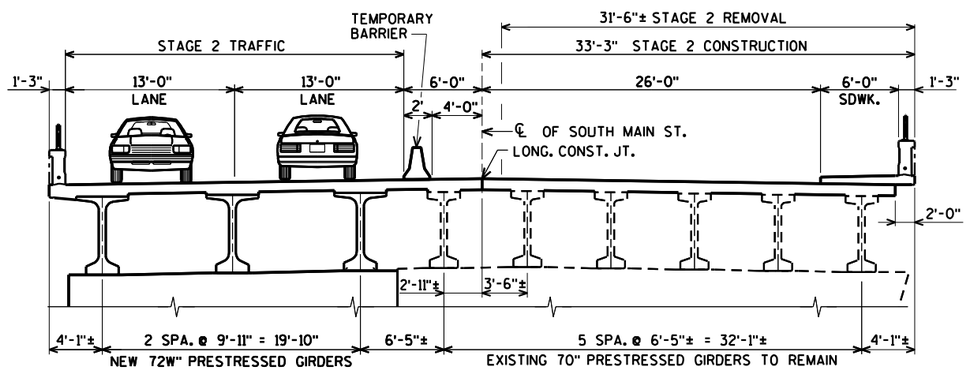

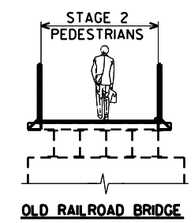

STAGE 2 - REPLACE DECK, SIDEWALK & RAILING ON EAST PORTION
(LOOKING NORTH)

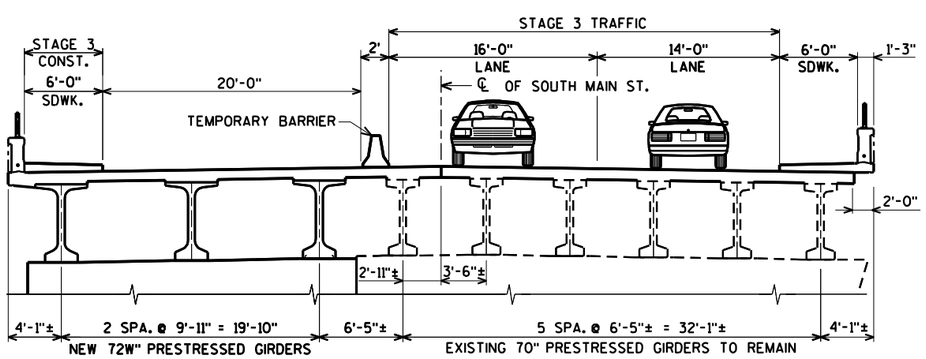

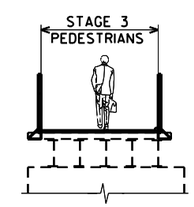

STAGE 3 - ADD SIDEWALK ON WEST PORTION
(LOOKING NORTH)

NO.	DATE	REVISION	BY

STATE OF WISCONSIN
DEPARTMENT OF TRANSPORTATION

STRUCTURE B-3-2

DRAWN BY CLS | PLANS CK'D. CBM

CONSTRUCTION STAGING

SHEET 3 OF 31

111

ORIGINAL PLANS PREPARED BY
AYRES ASSOCIATES
3433 Oakwood Hills Parkway
Eau Claire, WI 54701
www.AyresAssociates.com

8

8

STATE PROJECT NUMBER

8997-00-40

TOTAL ESTIMATED QUANTITIES

	BID ITEM NUMBER	BID ITEMS	UNIT	S. ABUT.	PIER	N. ABUT.	SUPER.	TOTAL
	203.0210.S	ABATEMENT OF ASBESTOS CONTAINING MATERIAL STRUCTURE B-3-2	LS	-----	-----	-----	-----	1
1	203.0500.S	REMOVING OLD STRUCTURE OVER WATERWAY STATION 19+76.30	LS	-----	-----	-----	-----	1
2	203.0600.S	REMOVING OLD STRUCTURE OVER WATERWAY WITH MINIMAL DEBRIS STATION 19+76.30	LS	-----	-----	-----	-----	1
	206.1000	EXCAVATION FOR STRUCTURES BRIDGES B-3-2	LS	-----	-----	-----	-----	1
	206.5000	COFFERDAMS B-3-2	LS	-----	-----	-----	-----	1
	210.1500	BACKFILL STRUCTURE TYPE A	TON	375	-----	375	-----	750
	502.0100	CONCRETE MASONRY BRIDGES	CY	48	47	48	800	943
	502.1100	CONCRETE MASONRY SEAL	CY	-----	91	-----	-----	91
	502.3200	PROTECTIVE SURFACE TREATMENT	SY	-----	-----	-----	2,130	2,130
	502.3210	PIGMENTED SURFACE SEALER	SY	20	-----	20	240	280
	502.4204	ADHESIVE ANCHORS NO. 4 BAR	EACH	-----	-----	-----	1,148	1,148
	502.4205	ADHESIVE ANCHORS NO. 5 BAR	EACH	42	-----	42	-----	84
	502.4206	ADHESIVE ANCHORS NO. 6 BAR	EACH	12	-----	12	-----	24
	503.0172	PRESTRESSED GIRDER TYPE I 72W-INCH	LF	-----	-----	-----	804	804
	505.0400	BAR STEEL REINFORCEMENT HS STRUCTURES	LB	2,080	9,360	2,080	-----	13,520
	505.0600	BAR STEEL REINFORCEMENT HS COATED STRUCTURES	LB	3,810	30	3,810	153,890	161,540
	505.0905	BAR COUPLERS NO. 5	EACH	-----	-----	-----	809	809
	506.2605	BEARING PADS ELASTOMERIC NON-LAMINATED	EACH	3	6	3	-----	12
	506.4000	STEEL DIAPHRAGMS B-3-2	EACH	-----	-----	-----	32	32
3	509.1500	CONCRETE SURFACE REPAIR	SF	-----	-----	-----	-----	100
3	509.9020.S	EPOXY CRACK SEALING	LF	-----	-----	-----	-----	50
	511.1200	TEMPORARY SHORING B-3-2	SF	300	-----	300	-----	600
	513.7016	RAILING STEEL TYPE C3 B-3-2	LF	37	-----	37	540	614
	514.0445	FLOOR DRAINS TYPE GC	EACH	-----	-----	-----	12	12
	514.2625	DOWNSPOUT 6-INCH	LF	-----	-----	-----	85	85
	516.0500	RUBBERIZED MEMBRANE WATERPROOFING	SY	20	-----	20	-----	40
	517.1015.S	CONCRETE STAINING MULTI-COLOR B-3-2	SF	290	-----	290	1,370	1,950
	517.1050.S	ARCHITECTURAL SURFACE TREATMENT B-3-2	SF	290	-----	290	1,370	1,950
	550.0500	PILE POINTS	EACH	8	16	8	-----	32
	550.1120	PILING STEEL HP 12-INCH x 53 LB	LF	440	800	440	-----	1680
	604.0400	SLOPE PAVING CONCRETE	SY	85	-----	85	-----	170
	606.0300	RIPRAP HEAVY	CY	15	125	15	-----	155
	612.0406	PIPE UNDERDRAIN WRAPPED 6-INCH	LF	55	-----	55	-----	110
	645.0111	GEOTEXTILE TYPE DF SCHEDULE A	SY	75	-----	75	-----	150
	645.0120	GEOTEXTILE TYPE HR	SY	35	-----	35	-----	70
	652.0125	CONDUIT RIGID METALLIC 2-INCH	LF	6	-----	6	12	24
	652.0225	CONDUIT RIGID NONMETALLIC SCHEDULE 40 2-INCH	LF	50	-----	50	535	635
	653.0222	JUNCTION BOXES 18x12x6-INCH	EACH	-----	-----	-----	3	3
	657.6005	ANCHOR ASSEMBLIES LIGHT POLES ON STRUCTURES	EACH	-----	-----	-----	3	3
	999.1000.S	SEISMOGRAPH	LS	-----	-----	-----	-----	1
	999.1500.S	CRACK AND DAMAGE SURVEY	LS	-----	-----	-----	-----	1
	SPV.0105.01	TEMPORARY RIVER ACCESS	LS	-----	-----	-----	-----	1
		NON-BID ITEMS						
		FILLER	SIZE	-----	-----	-----	-----	1/2" & 3/4"

1. APPLICABLE TO CONCRETE ARCH BRIDGE REMOVAL (WESTERN PORTION OF BRIDGE).
2. APPLICABLE TO DECK REMOVAL (EASTERN PORTION OF BRIDGE).
3. UNDISTRIBUTED QUANTITY FOR GIRDERS, ABUTMENTS, AND PIERS AS DIRECTED BY THE ENGINEER. GIRDER SURFACE REPAIRS NEEDED AT ABUTMENTS.

GENERAL NOTES

DRAWINGS SHALL NOT BE SCALED.

BAR STEEL REINFORCEMENT SHALL BE EMBEDDED 2" CLEAR UNLESS SHOWN OR NOTED OTHERWISE.

THE FIRST DIGIT OF A THREE DIGIT BAR NO. AND THE FIRST TWO DIGITS OF A FOUR DIGIT BAR NO. SIGNIFIES THE BAR SIZE.

JOINT FILLER SHALL CONFORM TO THE REQUIREMENTS OF A.A.S.H.T.O. DESIGNATION M 153, TYPE I, II OR III OR A.A.S.H.T.O. DESIGNATION M 213.

THE SLOPE OF THE FILL IN FRONT OF THE ABUTMENTS SHALL BE COVERED WITH SLOPE PAVING CONCRETE AND RIPRAP HEAVY TO THE EXTENT SHOWN ON THE GENERAL PLAN SHEET AND IN THE ABUTMENT DETAILS.

PROTECTIVE SURFACE TREATMENT AND PIGMENTED SURFACE SEALER ARE TO BE APPLIED AS SHOWN IN THE DETAIL ON SHEET 2.

ELASTOMERIC BEARING PADS NEED NOT BE INDIVIDUALLY MOLDED PROVIDED THE CUT EDGES ARE SMOOTH AND TRUE.

THE EXISTING GROUNDLINE SHALL BE THE UPPER LIMIT FOR EXCAVATION FOR STRUCTURES.

BEVEL EXPOSED EDGES OF CONCRETE 3/4" UNLESS NOTED OTHERWISE.

AT BACKFACE OF ABUTMENTS ALL VOLUME WHICH CANNOT BE PLACED BEFORE ABUTMENT CONSTRUCTION AND IS NOT OCCUPIED BY THE NEW STRUCTURE SHALL BE BACKFILLED WITH BACKFILL STRUCTURE TYPE A.

EXCAVATION BELOW THE ABUTMENT AND ABUTMENT BEDDING MATERIALS REQUIRES ENGINEER APPROVAL.

DIMENSIONS SHOWN ARE BASED ON ORIGINAL STRUCTURE PLANS.

UTILIZE EXISTING BAR STEEL REINFORCEMENT WHERE SHOWN AND EXTEND 24 BAR DIAMETERS INTO NEW WORK, UNLESS SPECIFIED OTHERWISE.

ALL CONCRETE REMOVAL SHALL BE DEFINED BY A 1" DEEP SAW CUT.

VARIATIONS TO THE NEW GRADE LINE OVER 1/4" MUST BE SUBMITTED BY THE FIELD ENGINEER TO THE STRUCTURES DESIGN SECTION FOR REVIEW.

THE CONTRACTOR SHALL SUPPLY A NEW NAME PLATE IN ACCORDANCE WITH SECTION 502.3.11 OF THE STANDARD SPECIFICATIONS AND THE STANDARD DETAIL DRAWING. NAME PLATE TO SHOW ORIGINAL CONSTRUCTION YEAR AS 1978.

THE HAUNCH CONCRETE QUANTITY IS BASED ON THE AVERAGE HAUNCH SHOWN ON THE 72W" PRESTRESSED GIRDER DETAILS SHEET AND THE DECK ELEVATIONS AND DEFLECTIONS SHEET.

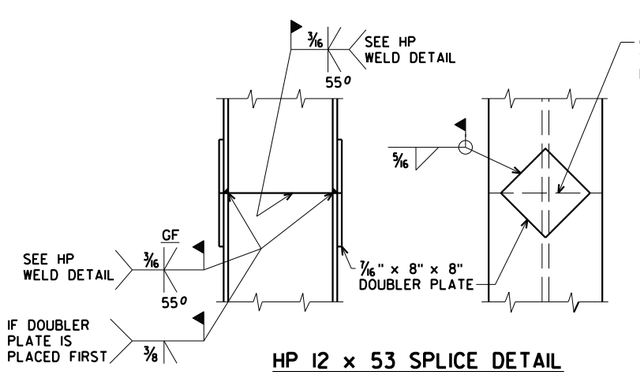

HP 12 x 53 SPLICE DETAIL

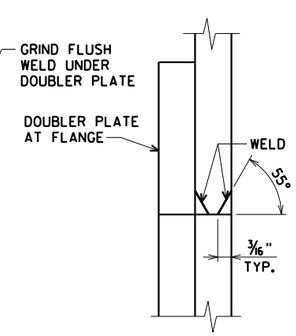

HP WELD DETAIL

FLANGE SHOWN, WEB SIMILAR

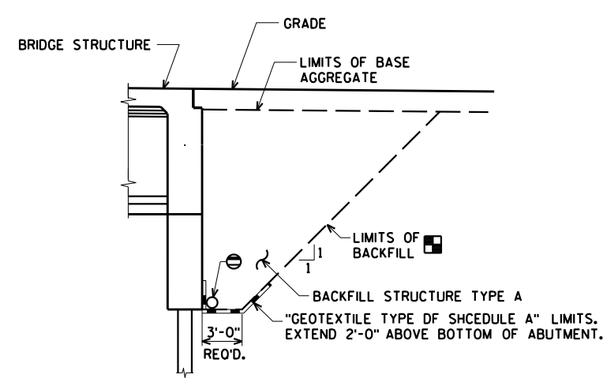

BACKFILL STRUCTURE LIMITS ON WEST SIDE

BACKFILL PAY LIMITS. BACKFILL BEYOND BACKFILL PAY LIMITS SHALL BE INCIDENTAL TO EXCAVATION FOR STRUCTURES. LIMITS OF EXCAVATION SHALL BE DETERMINED BY THE CONTRACTOR.

PIPE UNDERDRAIN WRAPPED 6-INCH. SLOPE 0.5% MIN. TO SUITABLE DRAINAGE. ATTACH RODENT SHIELD AT ENDS OF PIPE UNDERDRAIN AS DETAILED ON SHEET 7.

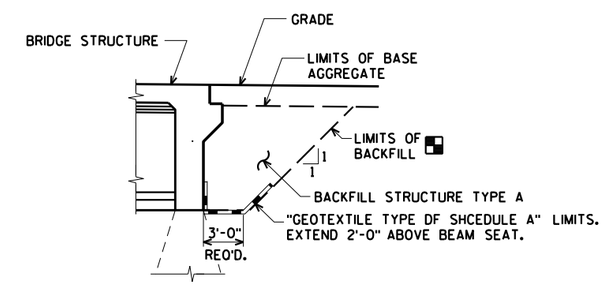

BACKFILL STRUCTURE LIMITS ON EAST SIDE

NO.	DATE	REVISION	BY

STATE OF WISCONSIN
DEPARTMENT OF TRANSPORTATION

STRUCTURE B-3-2

DRAWN BY CLS | PLANS CK'D. CBM

QUANTITIES AND NOTES

SHEET 4 OF 31

112

ORIGINAL PLANS PREPARED BY
AYRES ASSOCIATES
3433 Oakwood Hills Parkway
Eau Claire, WI 54701
www.AyresAssociates.com

8

8

$PRFNAME$
U:\42-0989.00 - Barron Co. City of Rice Lake\BRIDGE\420989 gp TY ON.dgn

10/6/2017

PENTABLE:BReau_shd_util.tbl

BORING #	DATE COMPLETED	NORTHING (Y)	EASTING (X)
1	10/14/15	133596.26	335495.21
2	10/15/15	133306.32	335499.51
BORINGS COMPLETED BY: AMERICAN ENGINEERING TESTING, INC.			
REPORT COMPLETED BY: AMERICAN ENGINEERING TESTING, INC.			
ALL COORDINATES REFERENCED TO WCCS NAD 83(91) BARRON COUNTY			

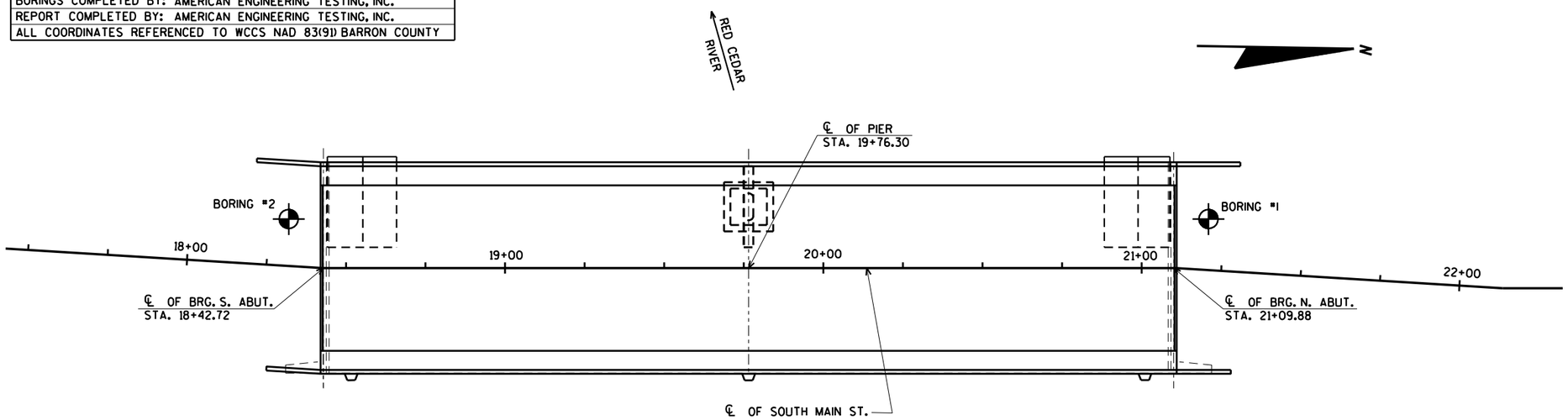

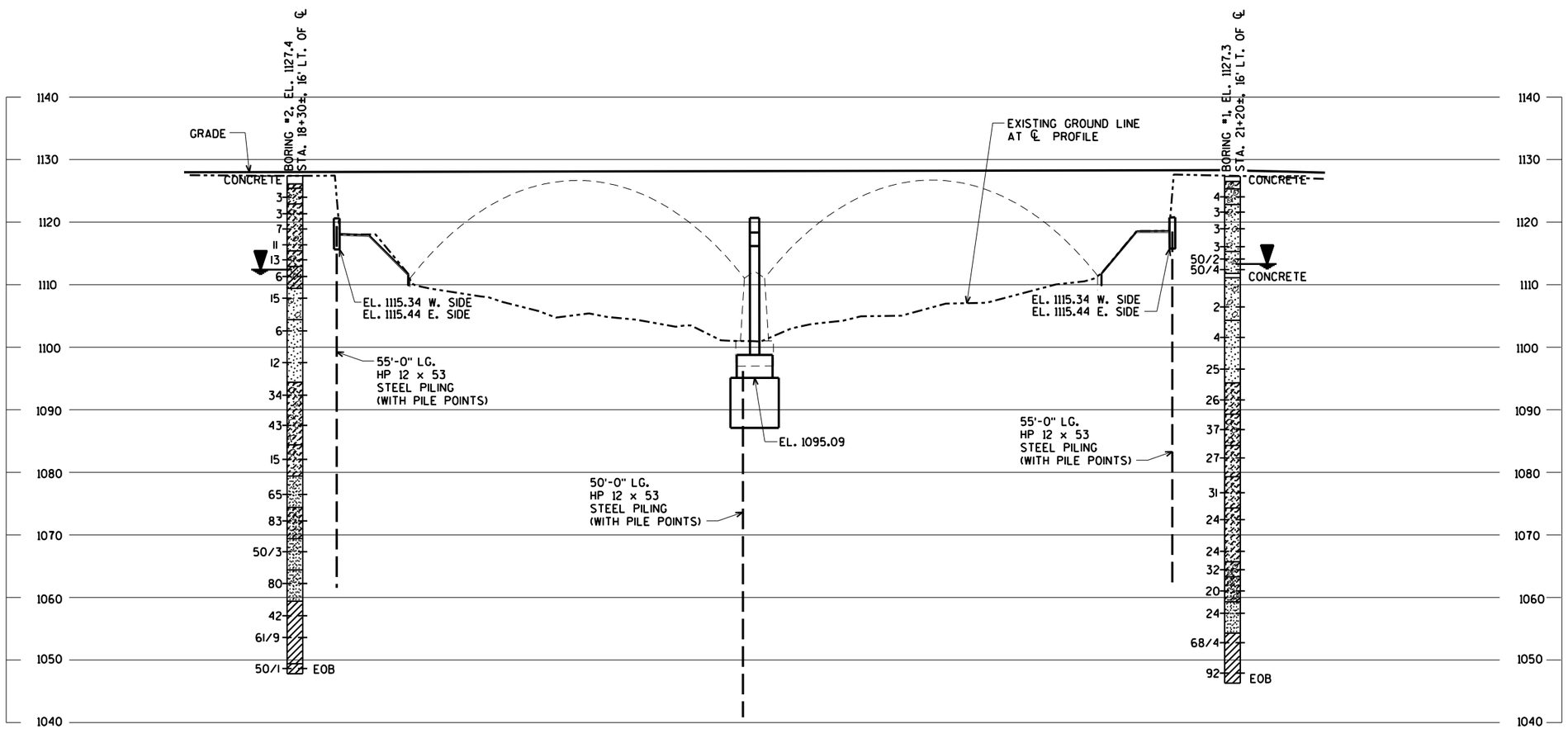

STATE PROJECT NUMBER

8997-00-40

MATERIAL SYMBOLS

ASPHALT, TOPSOIL, PEAT, CONCRETE, FILL, GRAVEL, SAND, CLAY, SILT, BOULDERS OR COBBLES, LIMESTONE, BEDROCK (UNKNOWN), SHALE, SANDSTONE, IGNEOUS/ META

LEGEND OF BORING

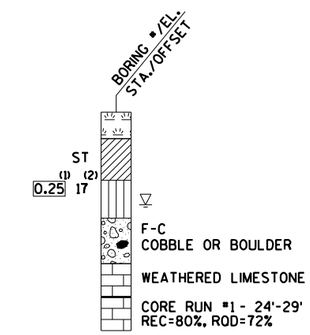

(1) UNCONFINED STRENGTH, AS DETERMINED BY A POCKET PENETROMETER (TSF)

(2) UNLESS OTHERWISE, SPECIFIED THE SPT 'N' VALUE IS BASED ON AASHTO T-206, STANDARD PENETRATION TEST. THE SPT 'N' VALUE PRESENTED HAS NOT BEEN CORRECTED FOR OVERBURDEN PRESSURE OR HAMMER EFFICIENCY.

GROUND WATER ELEVATION

- AT TIME OF DRILLING
- END OF DRILLING
- AFTER DRILLING

ABBREVIATIONS

F-FINE M-MEDIUM C-COARSE ST-SHELBY TUBE

SUBSURFACE EXPLORATION FOR FOUNDATION DESIGN AND BIDDERS INFORMATION

BORINGS WERE COMPLETED AT POINTS APPROXIMATELY AS INDICATED ON THIS DRAWING TO OBTAIN INFORMATION CONCERNING THE CHARACTER OF SUBSURFACE MATERIALS FOUND AT THE SITE. BECAUSE THE INVESTIGATED DEPTHS ARE LIMITED AND THE AREA OF THE BORINGS IS VERY SMALL IN RELATION TO THE ENTIRE SITE, THE WISCONSIN DEPARTMENT OF TRANSPORTATION DOES NOT WARRANT SIMILAR SUBSURFACE CONDITIONS BELOW, BETWEEN, OR BEYOND THESE BORINGS. VARIATIONS IN SOIL CONDITIONS SHOULD BE EXPECTED AND FLUCTUATIONS IN GROUNDWATER LEVELS MAY OCCUR.

NO.	DATE	REVISION	BY

STATE OF WISCONSIN
DEPARTMENT OF TRANSPORTATION

STRUCTURE B-3-2

DRAWN BY CJM PLANS CK'D. CBM

SUBSURFACE EXPLORATION

SHEET 5 OF 31

8

NOTE:
SEAL ALL EXPOSED HORIZONTAL AND VERTICAL SURFACES OF ½" FILLER WITH NON-STAINING GRAY NON-BITUMINOUS JOINT SEALER. (1" DEEP AND HOLD ⅛" BELOW SURFACE OF CONCRETE).

STATE PROJECT NUMBER
8997-00-40

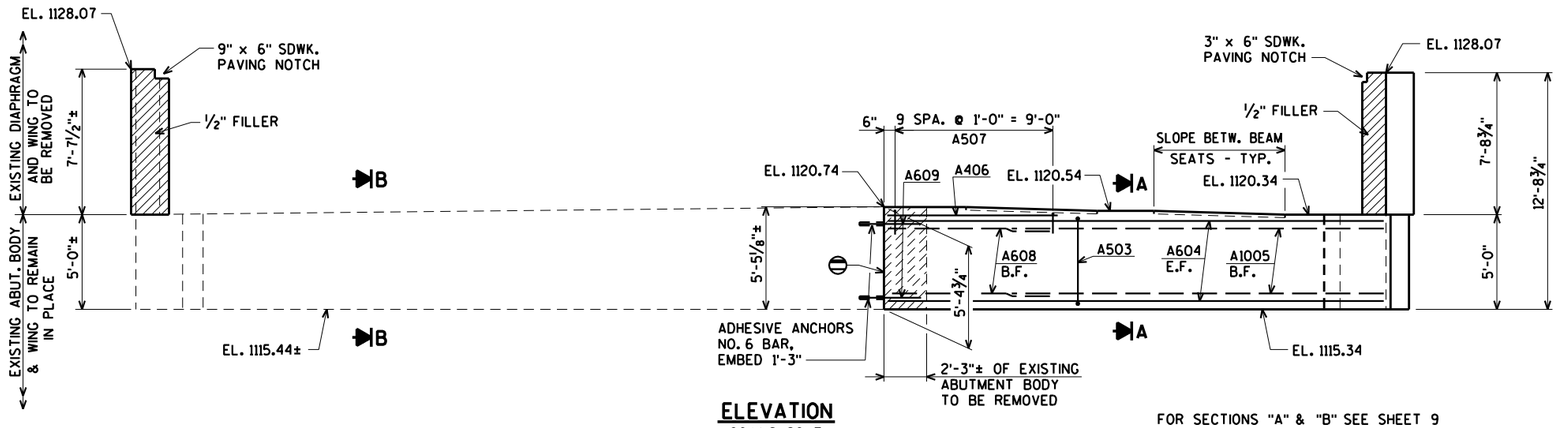

ELEVATION
(LOOKING SOUTH)

FOR SECTIONS "A" & "B" SEE SHEET 9

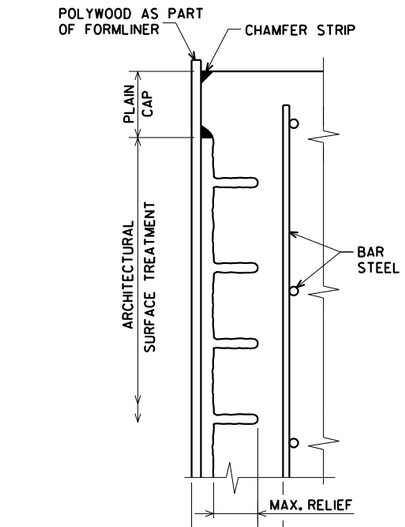

SECTION THRU FORMLINER

ABUTMENT NOTES

THE FORMLINER PATTERN SHALL BE CONTINUOUS ACROSS CONSTRUCTION JOINTS.

FORMLINER COURSING ON WINGS SHALL BE LEVEL.

PARAPET NOTES

FORMLINER COURSING ON PARAPETS SHALL BE PARALLEL TO TOP OF PARAPET.

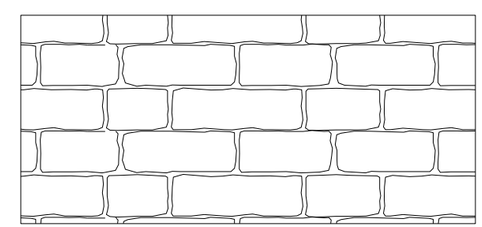

RECTANGULAR CUT STONE

SIZE = 6" TO 24"
RELIEF = 1⅝" MAX.
COURSE HEIGHT = 9"±

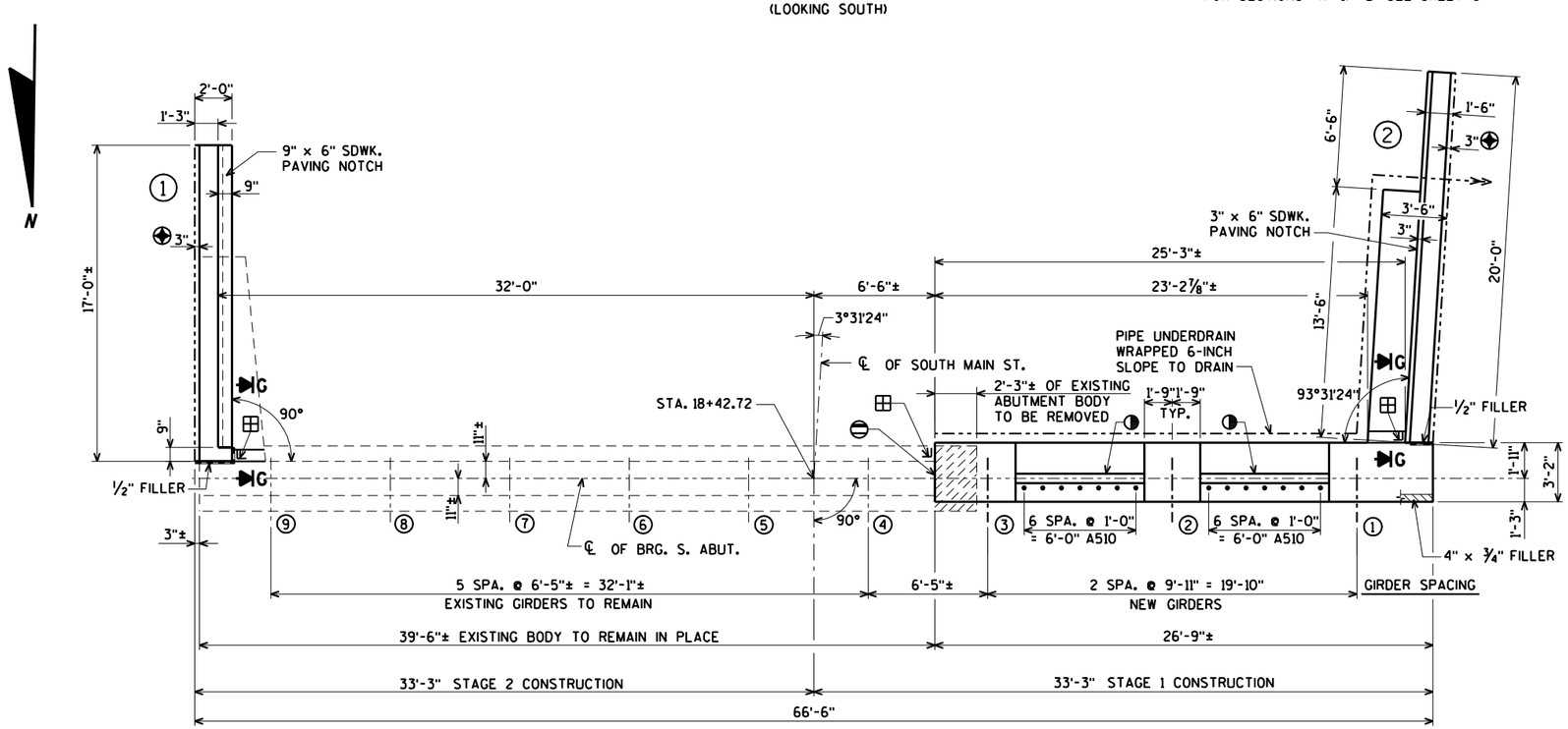

PLAN

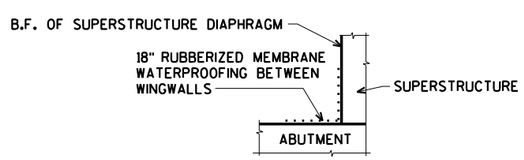

SECTION G

◑ KEYED CONST. JOINT - FORMED BY A BEVELED 2" x 6".

⊖ ROUGHEN SURFACE OF CONCRETE ¼" DEEP MIN. ALL AREAS OF NEW TO EXISTING CONCRETE CONTACT.

✦ ARCHITECTURAL SURFACE TREATMENT. SEE DETAIL ON THIS SHEET.

⊞ 18" RUBBERIZED MEMBRANE WATERPROOFING FROM BRIDGE SEAT TO THE TOP OF WING OR DECK.

B.F. DENOTES BACK FACE

E.F. DENOTES EACH FACE

NO.	DATE	REVISION	BY

STATE OF WISCONSIN
DEPARTMENT OF TRANSPORTATION

STRUCTURE B-3-2

DRAWN BY CLS | PLANS CK'D. CBM

SOUTH ABUTMENT

SHEET 6 OF 31
114

ORIGINAL PLANS PREPARED BY
AYRES ASSOCIATES
3433 Oakwood Hills Parkway
Eau Claire, WI 54701
www.AyresAssociates.com

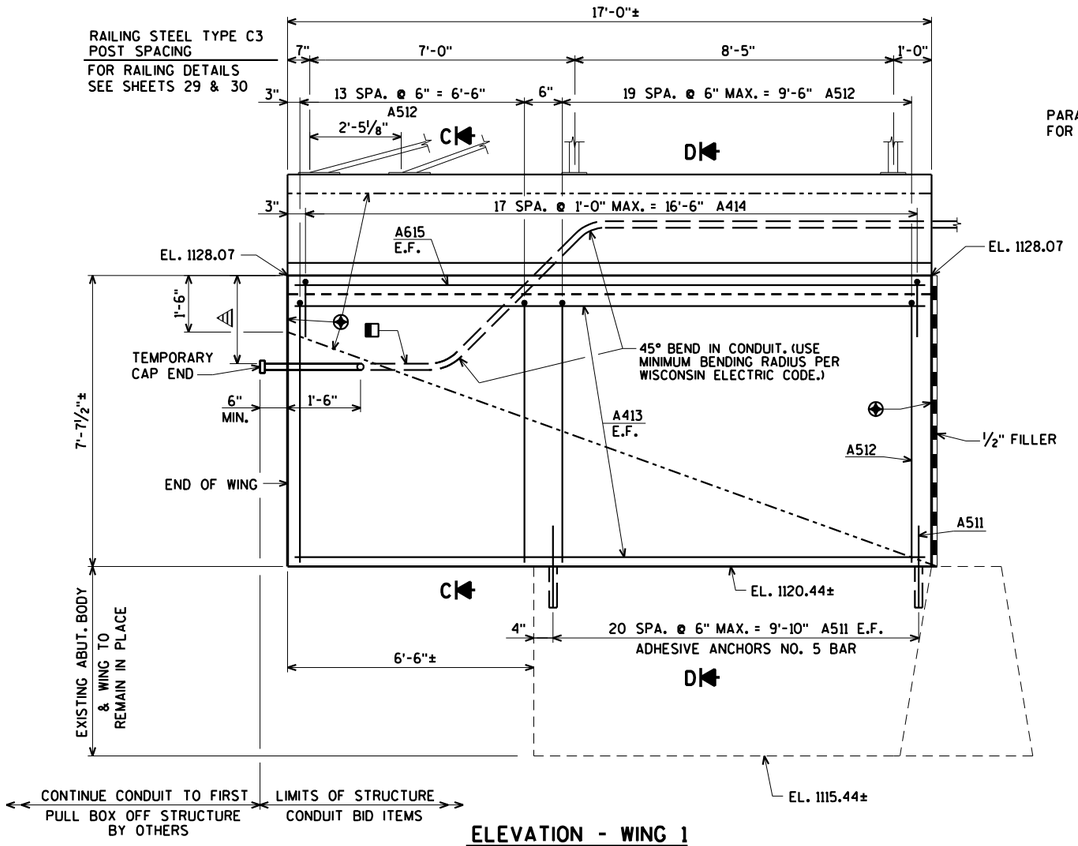

ELEVATION - WING 1

PARAPET STEEL NOT SHOWN.
FOR DETAILS SEE SHEET 29

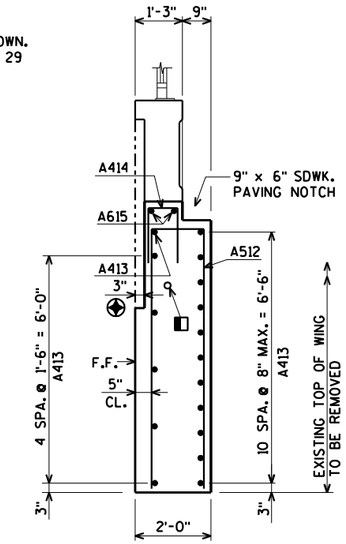

SECTION C

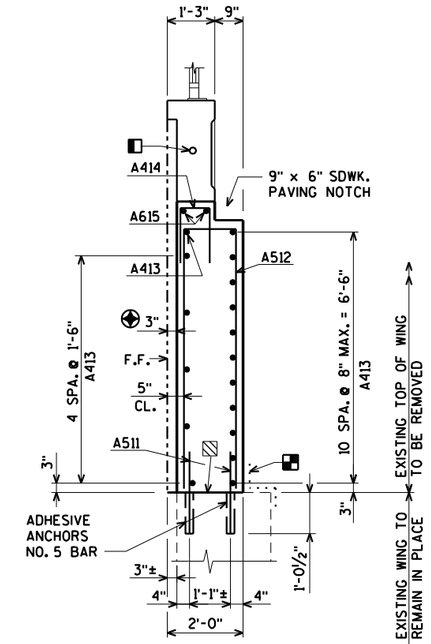

SECTION D

EXISTING CONST. JOINT

18" RUBBERIZED MEMBRANE WATERPROOFING SEAL ALL HORIZONTAL AND VERTICAL JOINTS ON BACK FACE OF ABUTMENT.

ARCHITECTURAL SURFACE TREATMENT. FOR DETAILS SEE SHEET 6

2'-0" MIN. CONDUIT COVER UNDER ROADWAYS. 1'-6" OTHERWISE. CONDUIT COVER SHOULD NOT EXCEED 3'-0".

2" DIA. RIGID NONMETALLIC CONDUIT (PVC) EXCEPT AT EXPANSION FITTING. AT EXPANSION FITTING USE 2" DIA. RIGID METALLIC (RMC) CONDUIT. FOR DETAILS SEE SHEET 27.

F.F. DENOTES FRONT FACE

E.F. DENOTES EACH FACE

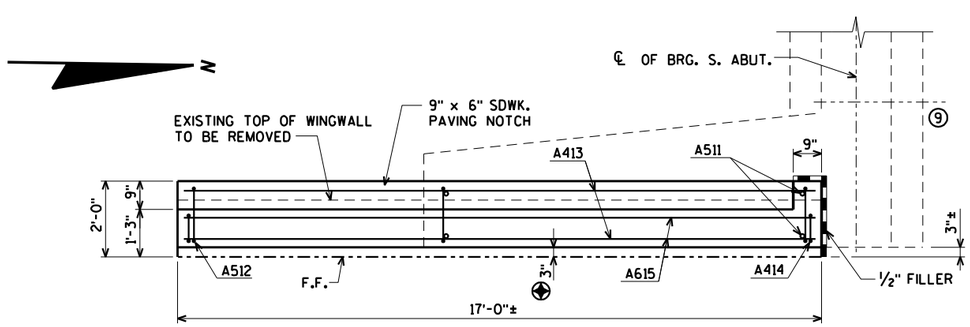

PLAN WING 1

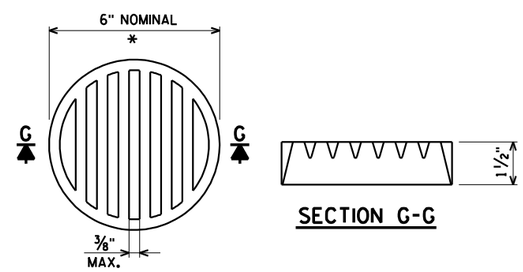

SECTION G-G

* DIMENSIONS ARE APPROXIMATE. THE GRATE IS SIZED TO FIT INTO A PIPE COUPLING. ORIENT SO SLOTS ARE VERTICAL.

THE RODENT SHIELD, PIPE COUPLING AND SCREWS SHALL BE CONSIDERED INCIDENTAL TO THE BID ITEM "PIPE UNDERDRAIN WRAPPED 6-INCH".

THE RODENT SHIELD SHALL BE A PVC GRATE SIMILAR TO THIS DETAIL. THE GRATE IS COMMERCIALLY AVAILABLE AS A FLOOR STRAINER. A PIPE COUPLING IS REQUIRED FOR THE ATTACHMENT OF THIS SHIELD TO THE EXPOSED END OF THE PIPE UNDERDRAIN. THE SHIELD SHALL BE FASTENED TO THE PIPE COUPLING WITH TWO OR MORE NO. 10 x 1-INCH STAINLESS STEEL SHEET METAL SCREWS.

RODENT SHIELD DETAIL

NO.	DATE	REVISION	BY

STATE OF WISCONSIN
DEPARTMENT OF TRANSPORTATION

STRUCTURE B-3-2

DRAWN BY CLS | PLANS CK'D. CBM

SOUTH ABUTMENT
WING 1
DETAILS

SHEET 7 OF 31
115

ORIGINAL PLANS PREPARED BY
AYRES ASSOCIATES
3433 Oakwood Hills Parkway
Eau Claire, WI 54701
www.AyresAssociates.com

STATE PROJECT NUMBER

8997-00-40

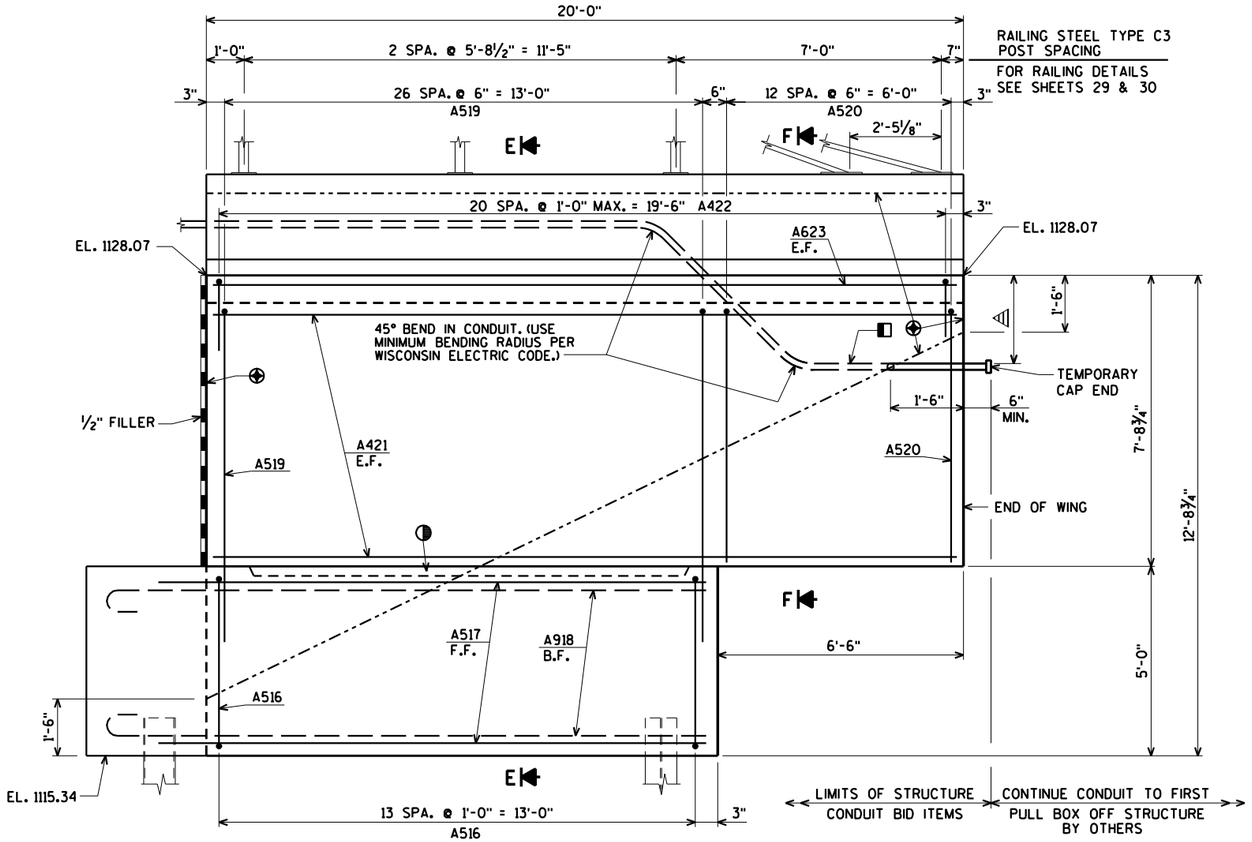

ELEVATION - WING 2

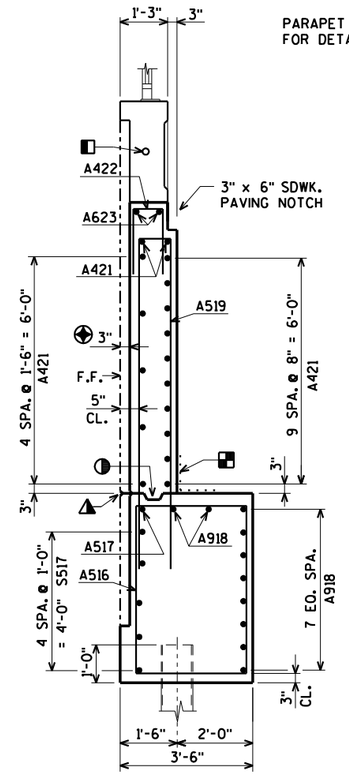

SECTION E

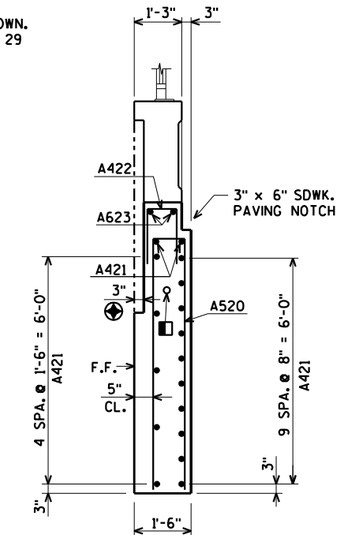

SECTION F

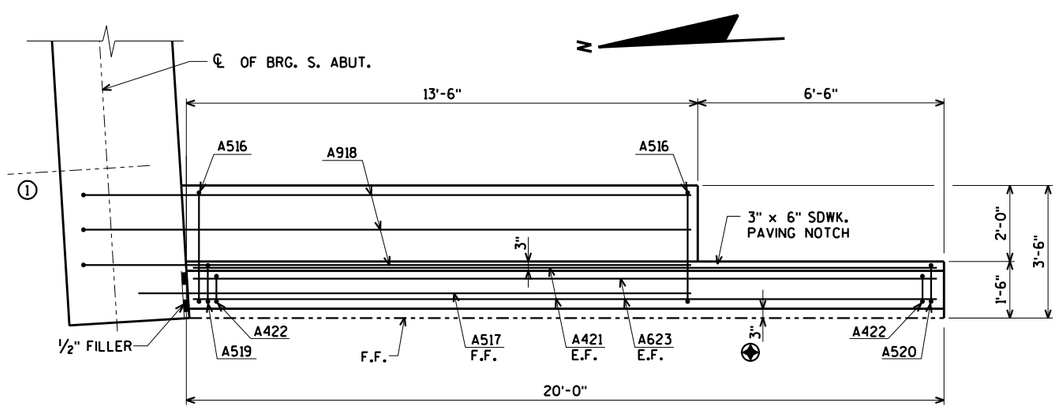

PLAN WING 2

◐ OPT. KEYED CONST. JOINT - FORMED BY A SURFACED BEVELED 2" x 6" WITH RUBBERIZED MEMBRANE WATERPROOFING ON B.F.

◪ 18" RUBBERIZED MEMBRANE WATERPROOFING SEAL ALL HORIZONTAL AND VERTICAL JOINTS ON BACK FACE OF ABUTMENT.

✦ ARCHITECTURAL SURFACE TREATMENT. FOR DETAILS SEE SHEET 6

△ 2'-0" MIN. CONDUIT COVER UNDER ROADWAYS, 1'-6" OTHERWISE. CONDUIT COVER SHOULD NOT EXCEED 3'-0".

◧ 2" DIA. RIGID NONMETALLIC CONDUIT (PVC) EXCEPT AT EXPANSION FITTING. AT EXPANSION FITTING USE 2" DIA. RIGID METALLIC (RMC) CONDUIT. FOR DETAILS SEE SHEET 27.

◭ ¾" 'V' GROOVE ON F.F. OF WINGWALL. OMIT IF CONST. JOINT NOT USED.

B.F. DENOTES BACK FACE

F.F. DENOTES FRONT FACE

E.F. DENOTES EACH FACE

FOR PILE SPLICE DETAIL SEE SHEET 4.

NO.	DATE	REVISION	BY

STATE OF WISCONSIN
DEPARTMENT OF TRANSPORTATION

STRUCTURE B-3-2

DRAWN BY CLS | PLANS CK'D. CBM

SOUTH ABUTMENT
WING 2
DETAILS

SHEET 8 OF 31
116

ORIGINAL PLANS PREPARED BY
AYRES ASSOCIATES
3433 Oakwood Hills Parkway
Eau Claire, WI 54701
www.AyresAssociates.com

STATE PROJECT NUMBER

8997-00-40

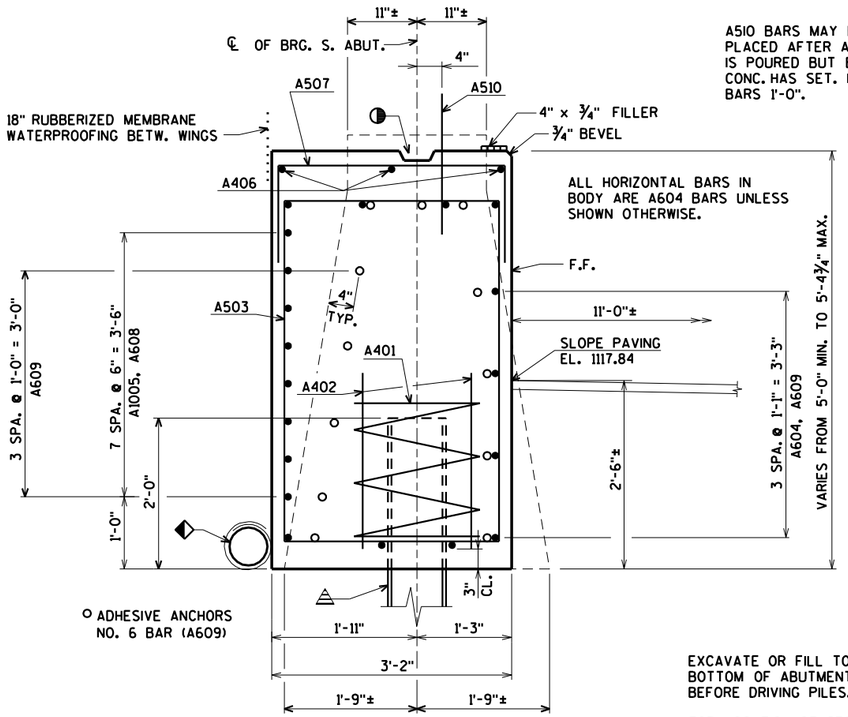

A510 BARS MAY BE PLACED AFTER ABUT. IS POURED BUT BEFORE CONC. HAS SET. IMBED BARS 1'-0".

ALL HORIZONTAL BARS IN BODY ARE A604 BARS UNLESS SHOWN OTHERWISE.

EXCAVATE OR FILL TO BOTTOM OF ABUTMENT BEFORE DRIVING PILES.

FOR LOCATION OF SECTIONS "A" & "B" SEE SHEET 6

SECTION A

△ ABUTMENT TO BE SUPPORTED ON HP 12 x 53 STEEL PILING (WITH PILE POINTS) DRIVEN TO A REQ'D. DRIVING RESISTANCE OF 200 TONS PER PILE. ESTIMATED LENGTH 55'-0".

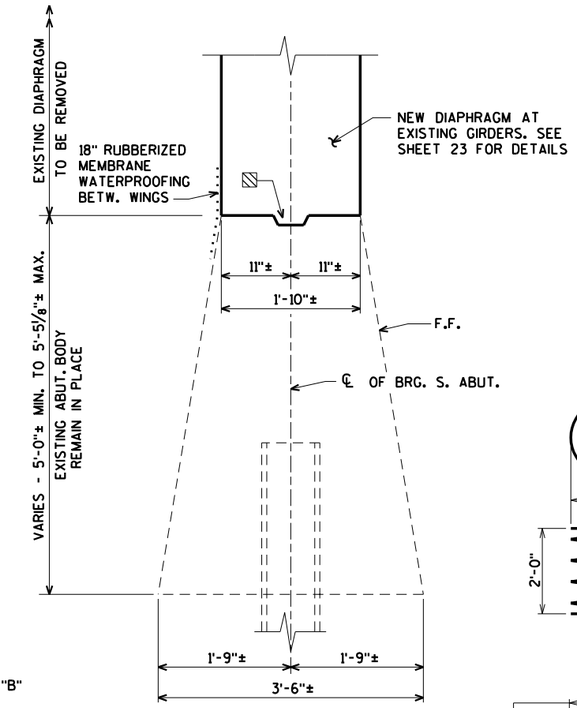

SECTION B

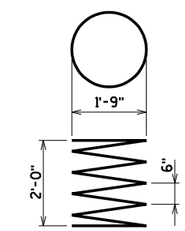

A401

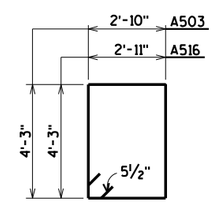

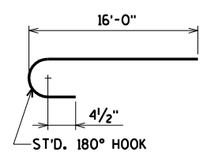

A918

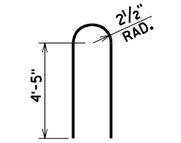

A524

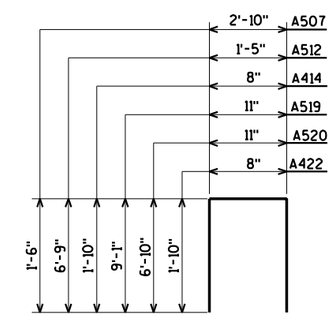

BILL OF BARS

	BAR. NO.	COATED BAR	NO. REQ'D.	LENGTH	BENT BAR	BUNDLED BAR SERIES	2,080# UNCOATED 3,810# COATED LOCATION
	A401		7	28-0	X		BODY @ PILES
	A402		14	2-3			BODY @ PILES
	A503		36	14-10	X		BODY VERT.
	A604		11	26-5			BODY HORIZ.
	A1005		8	20-0			BODY HORIZ. @ WING 2 B.F.
	A406		3	9-10			BODY HORIZ. TOP
	A507		10	5-7	X		BODY VERT. TOP
	A608		8	9-4			BODY HORIZ.
▼▼	A609		12	3-4			BODY DOWELS HORIZ.
	A510	X	14	2-0			BODY DOWELS VERT.
▼	A511	X	42	3-10			WING 1 DOWELS E.F.
	A512	X	34	14-8	X		WING 1 VERT.
	A413	X	17	16-8			WING 1 HORIZ. E.F.
	A414	X	18	4-1	X		WING 1 VERT. TOP
	A615	X	2	16-8			WING 1 HORIZ. E.F. TOP
	A516	X	14	15-0	X		WING 2 VERT.
	A517	X	6	15-1			WING 2 HORIZ. F.F.
	A918	X	10	17-3	X		WING 2 HORIZ. B.F. & BODY TOP
	A519	X	27	18-10	X		WING 2 VERT.
	A520	X	13	14-4	X		WING 2 VERT.
	A421	X	17	19-8			WING 2 HORIZ. E.F.
	A422	X	21	4-1	X		WING 2 VERT. TOP
	A623	X	2	19-8			WING 2 HORIZ. E.F. TOP
	A524	X	54	9-6	X		PARAPET VERT. @ WINGS
	A525	X	8	16-8			PARAPET HORIZ. @ WING 1
	A526	X	8	19-8			PARAPET HORIZ. @ WING 2

BENDING DIMENSIONS ARE OUT TO OUT OF BARS.

▼ ADHESIVE ANCHORS NO. 5 BAR

▼▼ ADHESIVE ANCHORS NO. 6 BAR

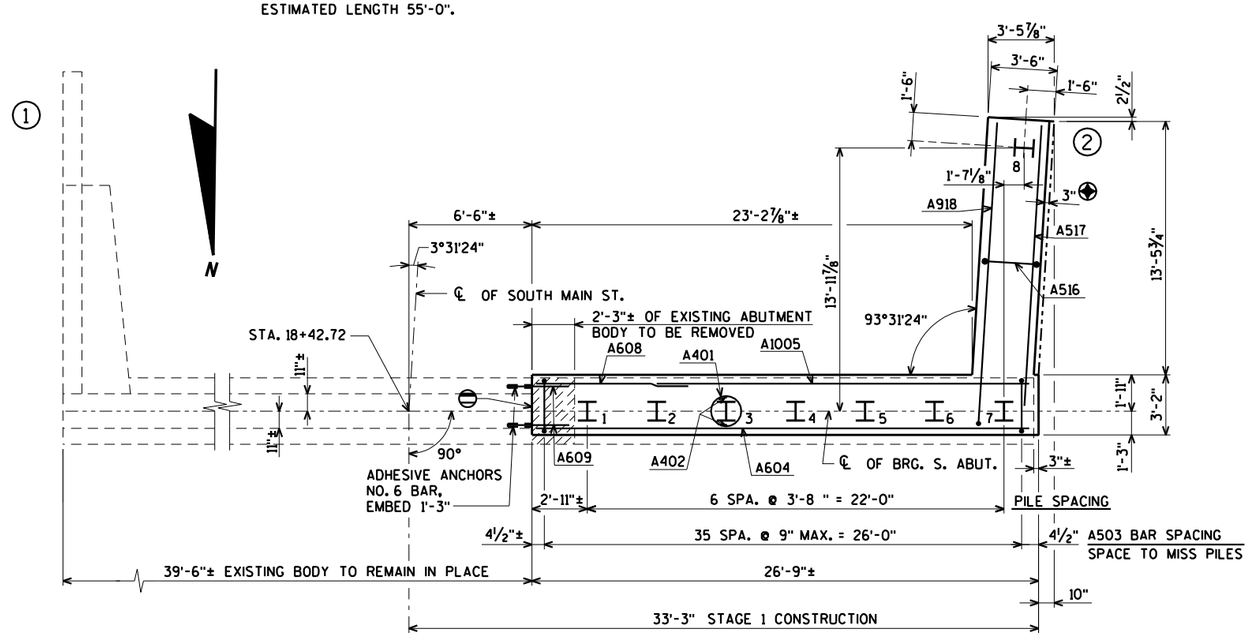

PILE LAYOUT

▧ EXISTING KEYED CONST. JOINT

◆ PIPE UNDERDRAIN WRAPPED 6-INCH. SLOPE 0.5% MIN. TO SUITABLE DRAINAGE. ATTACH RODENT SHIELD AT END OF PIPE UNDERDRAIN. SEE DETAIL ON SHEET 7. RODENT SHIELD TO BE INCLUDED IN BID PRICE OF "PIPE UNDERDRAIN WRAPPED 6-INCH".

◑ KEYED CONST. JOINT - FORMED BY A BEVELED 2" x 6".

⊖ ROUGHEN SURFACE OF CONCRETE ¼" DEEP MIN. ALL AREAS OF NEW TO EXISTING CONCRETE CONTACT.

⊕ ARCHITECTURAL SURFACE TREATMENT. FOR DETAILS SEE SHEET 6

B.F. DENOTES BACK FACE

E.F. DENOTES EACH FACE

F.F. DENOTES FRONT FACE

FOR PILE SPLICE DETAIL SEE SHEET 4.

NO.	DATE	REVISION	BY

STATE OF WISCONSIN
DEPARTMENT OF TRANSPORTATION

STRUCTURE B-3-2

DRAWN BY CLS | PLANS CK'D. CBM

SOUTH ABUTMENT DETAILS & BILL OF BARS

SHEET 9 OF 31

117

ORIGINAL PLANS PREPARED BY
AYRES ASSOCIATES
3433 Oakwood Hills Parkway
Eau Claire, WI 54701
www.AyresAssociates.com

STATE PROJECT NUMBER

8997-00-40

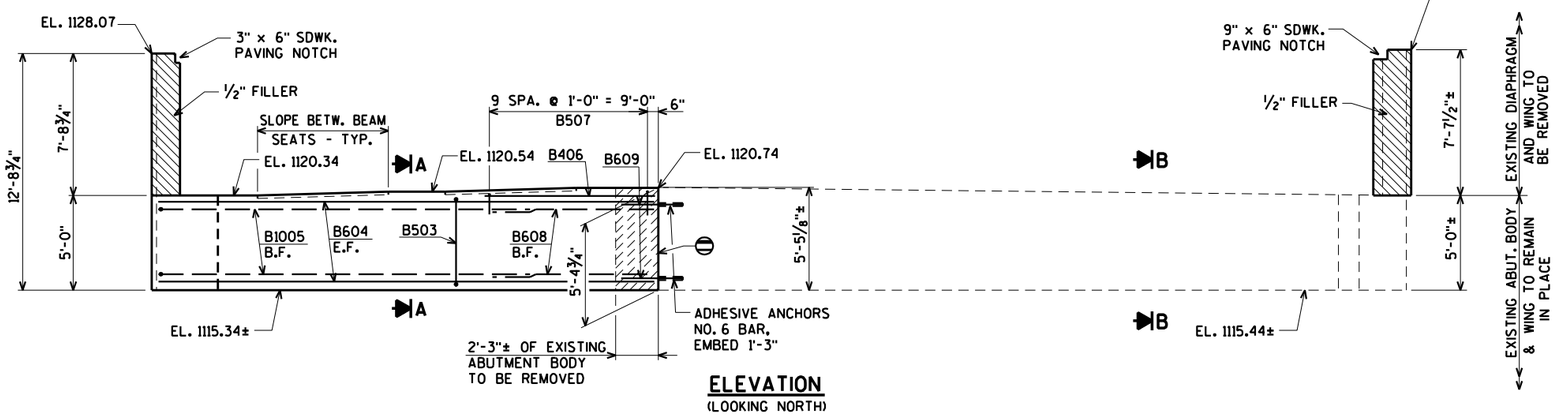

ELEVATION
(LOOKING NORTH)

NOTE:
SEAL ALL EXPOSED HORIZONTAL AND VERTICAL SURFACES OF ½" FILLER WITH NON-STAINING GRAY NON-BITUMINOUS JOINT SEALER. (1" DEEP AND HOLD ⅛" BELOW SURFACE OF CONCRETE).

FOR SECTIONS "A" & "B" SEE SHEET 13

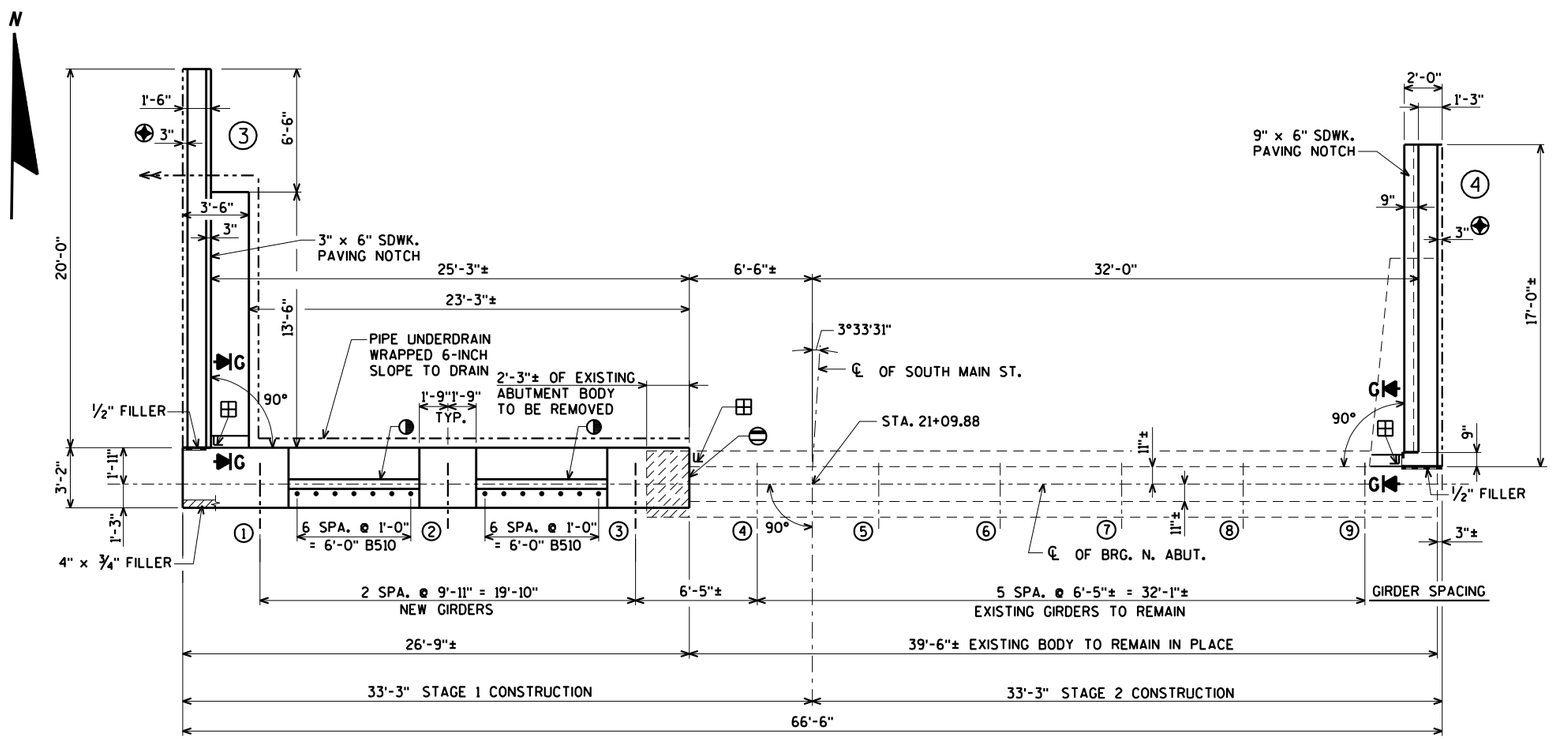

PLAN

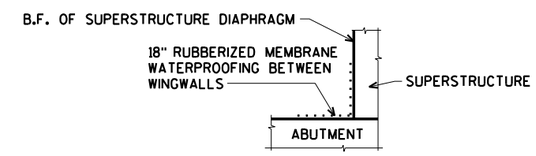

SECTION G

◑ KEYED CONST. JOINT - FORMED BY A BEVELED 2" x 6".

⊖ ROUGHEN SURFACE OF CONCRETE ¼" DEEP MIN. ALL AREAS OF NEW TO EXISTING CONCRETE CONTACT.

◆ ARCHITECTURAL SURFACE TREATMENT. FOR DETAILS SEE SHEET 6

⊞ 18" RUBBERIZED MEMBRANE WATERPROOFING FROM BRIDGE SEAT TO THE TOP OF WING OR DECK.

B.F. DENOTES BACK FACE

E.F. DENOTES EACH FACE

NO.	DATE	REVISION	BY

STATE OF WISCONSIN
DEPARTMENT OF TRANSPORTATION

STRUCTURE B-3-2

DRAWN BY CLS | PLANS CK'D. CBM

NORTH ABUTMENT

SHEET 10 OF 31
118

ORIGINAL PLANS PREPARED BY
AYRES ASSOCIATES
3433 Oakwood Hills Parkway
Eau Claire, WI 54701
www.AyresAssociates.com

8

8

$PRFNAME$
U:±42-0989.00 - Barron Co.City of Rice Lake±BRIDGE±420989 na.dgn

9/12/2017

PENTABLE:BReau_shd_util.tbl

STATE PROJECT NUMBER

8997-00-40

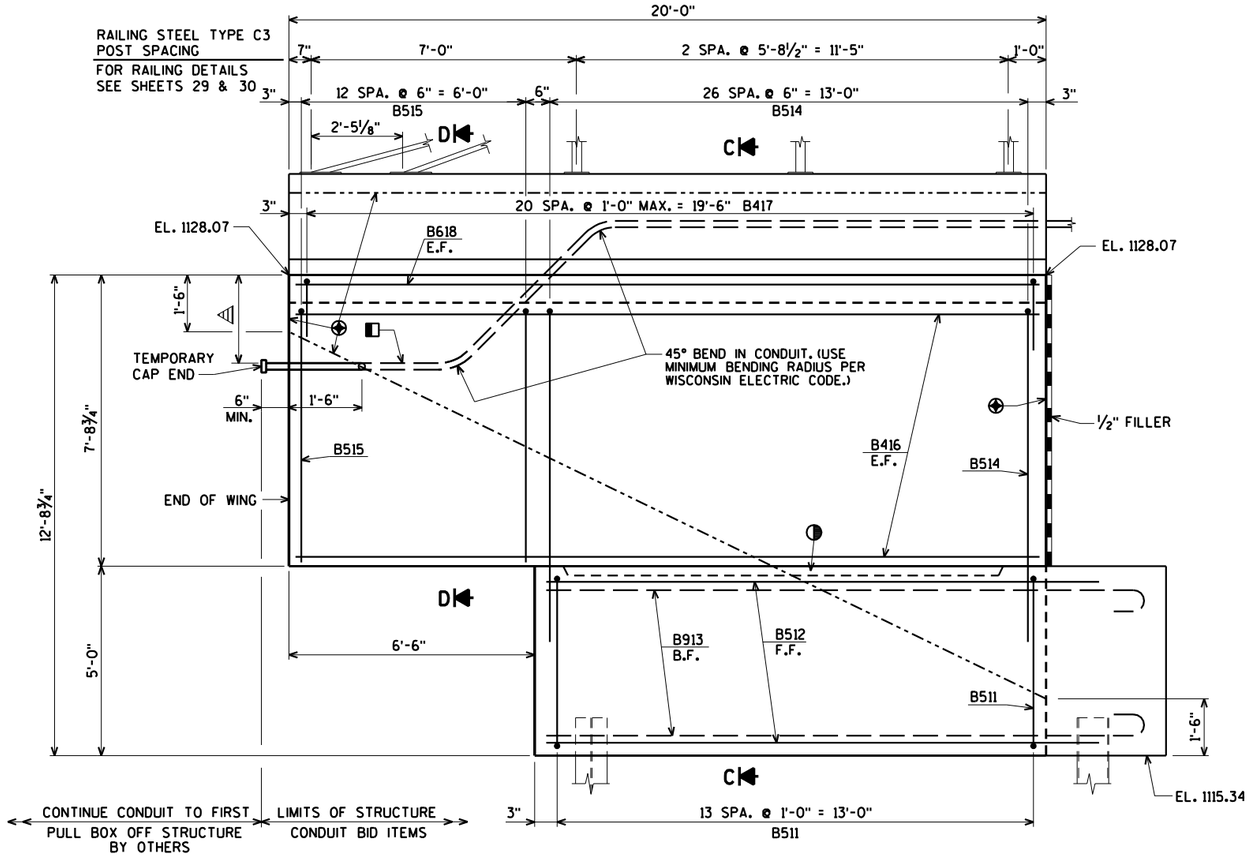

ELEVATION - WING 3

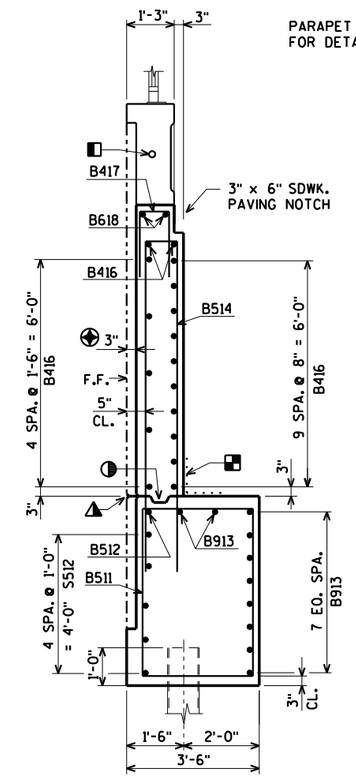

SECTION C

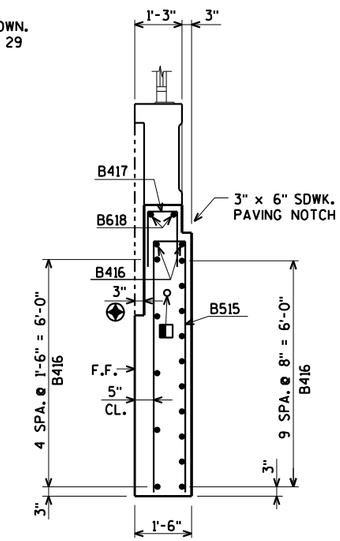

SECTION D

OPT. KEYED CONST. JOINT - FORMED BY A SURFACED BEVELED 2" x 6" WITH RUBBERIZED MEMBRANE WATERPROOFING ON B.F.

18" RUBBERIZED MEMBRANE WATERPROOFING SEAL ALL HORIZONTAL AND VERTICAL JOINTS ON BACK FACE OF ABUTMENT.

ARCHITECTURAL SURFACE TREATMENT. FOR DETAILS SEE SHEET 6

2'-0" MIN. CONDUIT COVER UNDER ROADWAYS, 1'-6" OTHERWISE. CONDUIT COVER SHOULD NOT EXCEED 3'-0".

2" DIA. RIGID NONMETALLIC CONDUIT (PVC) EXCEPT AT EXPANSION FITTING. AT EXPANSION FITTING USE 2" DIA. RIGID METALLIC (RMC) CONDUIT. FOR DETAILS SEE SHEET 27.

¾" 'V' GROOVE ON F.F. OF WINGWALL. OMIT IF CONST. JOINT NOT USED.

B.F. DENOTES BACK FACE

F.F. DENOTES FRONT FACE

E.F. DENOTES EACH FACE

FOR PILE SPLICE DETAIL SEE SHEET 4.

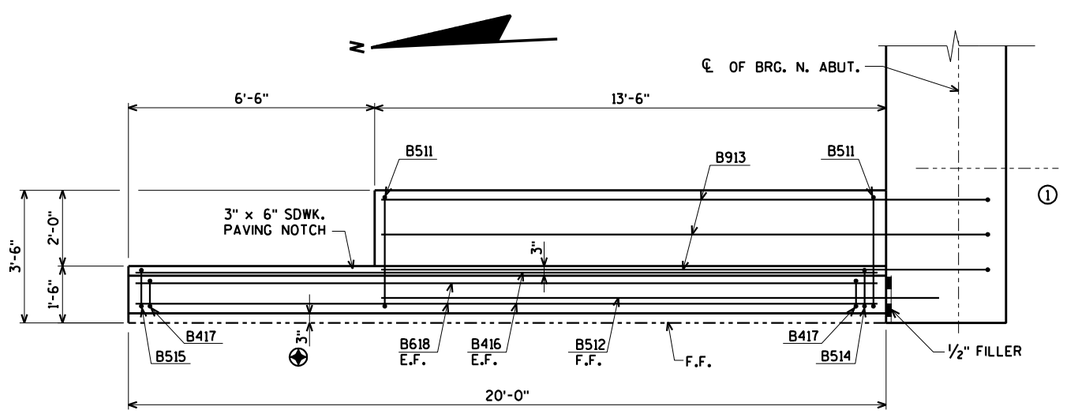

PLAN WING 3

NO.	DATE	REVISION	BY

STATE OF WISCONSIN
DEPARTMENT OF TRANSPORTATION

STRUCTURE B-3-2

DRAWN BY CLS | PLANS CK'D. CBM

NORTH ABUTMENT
WING 3
DETAILS

SHEET 11 OF 31
119

ORIGINAL PLANS PREPARED BY
AYRES ASSOCIATES
3433 Oakwood Hills Parkway
Eau Claire, WI 54701
www.AyresAssociates.com

8

8

$PRFNAME$
U:±42-0989.00 - Barron Co, City of Rice Lake±BRIDGE±420989 na.dgn

9/12/2017

PENTABLE:BReau_shd_util.tbl

STATE PROJECT NUMBER

8997-00-40

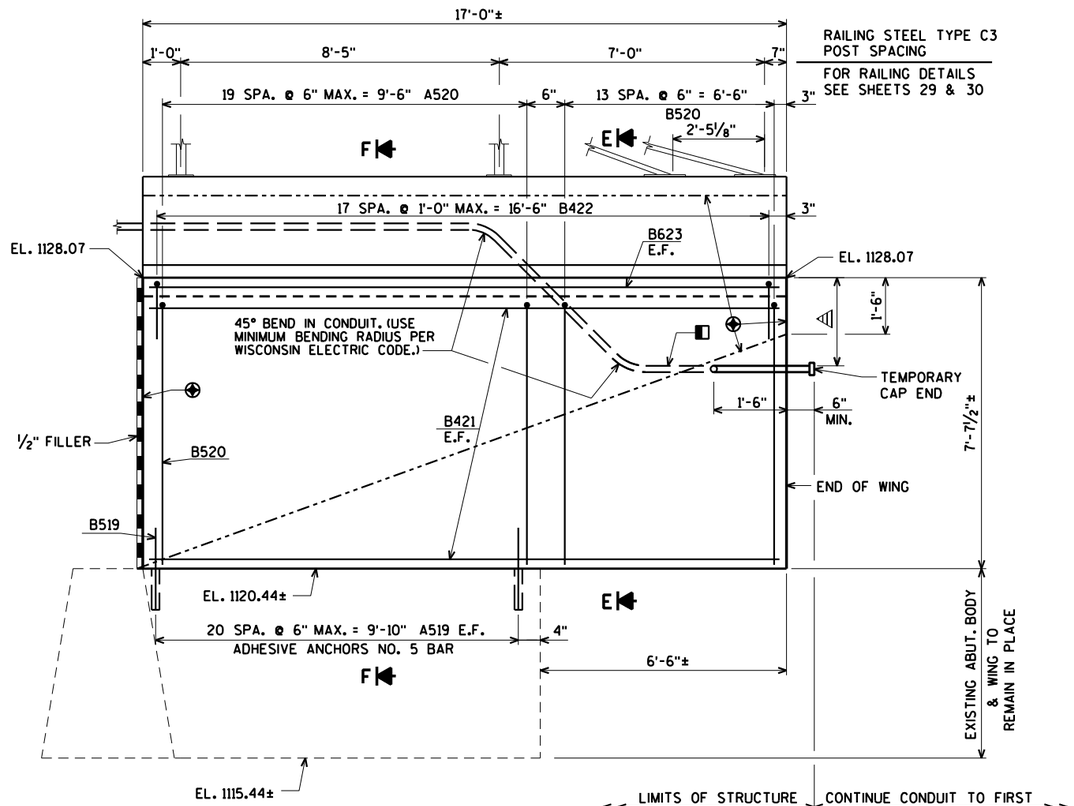

ELEVATION - WING 4

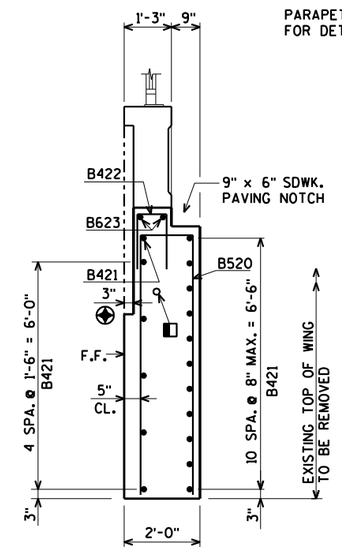

SECTION E

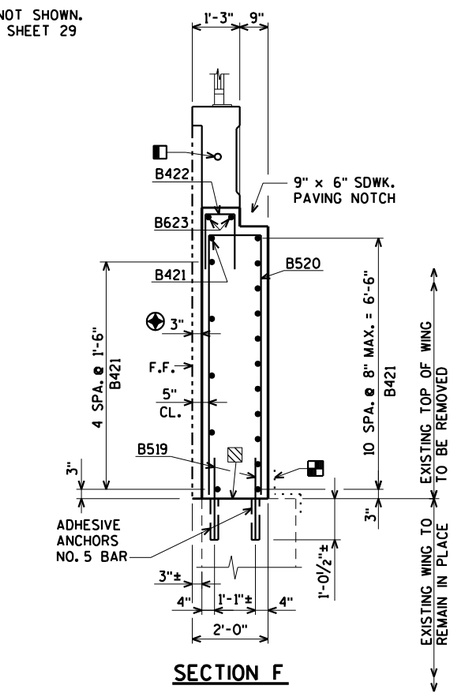

SECTION F

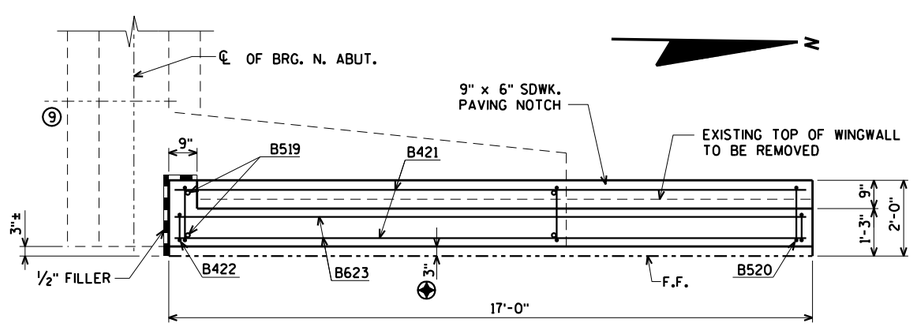

PLAN WING 4

EXISTING CONST. JOINT

18" RUBBERIZED MEMBRANE WATERPROOFING SEAL ALL HORIZONTAL AND VERTICAL JOINTS ON BACK FACE OF ABUTMENT.

ARCHITECTURAL SURFACE TREATMENT. FOR DETAILS SEE SHEET 6

2'-0" MIN. CONDUIT COVER UNDER ROADWAYS, 1'-6" OTHERWISE. CONDUIT COVER SHOULD NOT EXCEED 3'-0".

2" DIA. RIGID NONMETALLIC CONDUIT (PVC) EXCEPT AT EXPANSION FITTING. AT EXPANSION FITTING USE 2" DIA. RIGID METALLIC (RMC) CONDUIT. FOR DETAILS SEE SHEET 27.

F.F. DENOTES FRONT FACE

E.F. DENOTES EACH FACE

NO.	DATE	REVISION	BY

STATE OF WISCONSIN
DEPARTMENT OF TRANSPORTATION

STRUCTURE B-3-2

DRAWN BY CLS | PLANS CK'D. CBM

ORIGINAL PLANS PREPARED BY
AYRES ASSOCIATES
3433 Oakwood Hills Parkway
Eau Claire, WI 54701
www.AyresAssociates.com

NORTH ABUTMENT
WING 4
DETAILS

SHEET 12 OF 31
120

8

8

$PRFNAME$
U:\42-0989.00 - Barron Co, City of Rice Lake\BRIDGE\420989 na.dgn

9/12/2017

PENTABLE:BReau_shd_util.tbl

STATE PROJECT NUMBER

8997-00-40

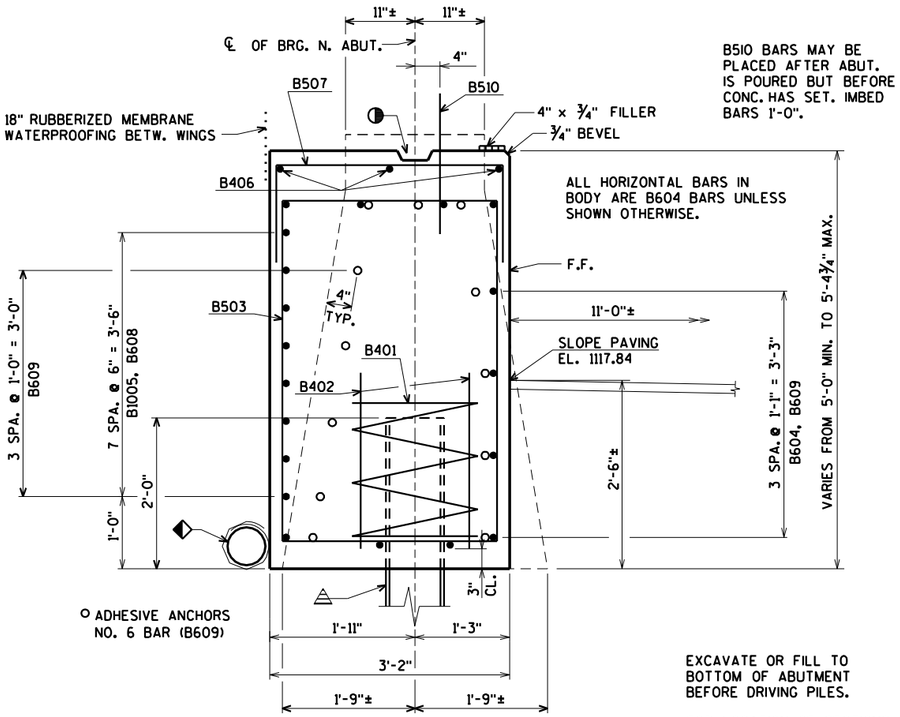

B510 BARS MAY BE PLACED AFTER ABUT. IS POURED BUT BEFORE CONC. HAS SET. IMBED BARS 1'-0".

EXCAVATE OR FILL TO BOTTOM OF ABUTMENT BEFORE DRIVING PILES.

FOR LOCATION OF SECTIONS "A" & "B" SEE SHEET 10

SECTION A

△ ABUTMENT TO BE SUPPORTED ON HP 12 x 53 STEEL PILING (WITH PILE POINTS) DRIVEN TO A REQ'D. DRIVING RESISTANCE OF 200 TONS PER PILE. ESTIMATED LENGTH 55'-0".

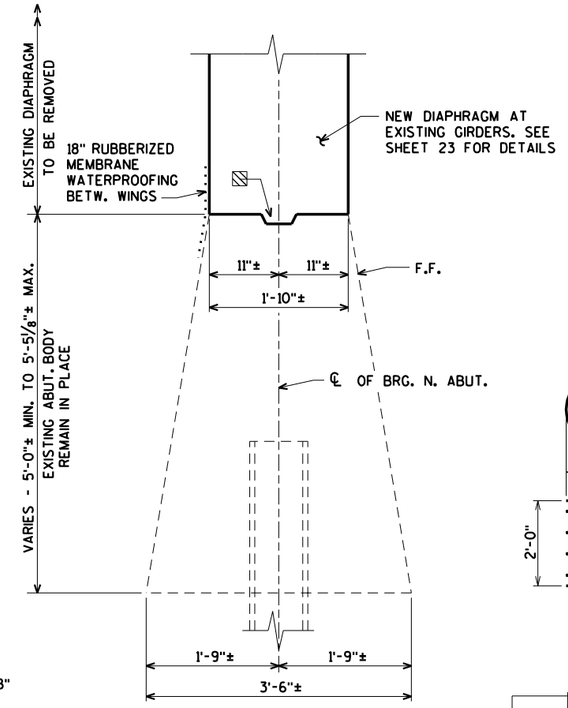

SECTION B

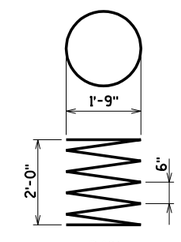

B401

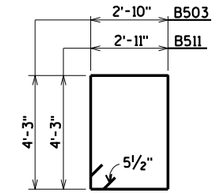

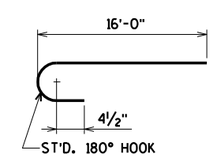

B913

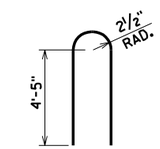

B524

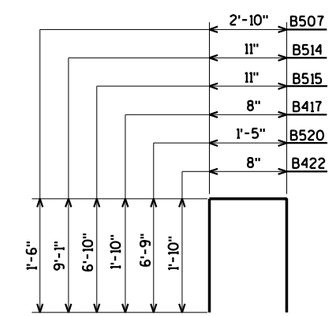

BILL OF BARS

	BAR. NO.	COATED BAR	NO. REQ'D.	LENGTH	BENT BAR	BUNDLED	BAR SERIES	2,080# UNCOATED 3,810# COATED LOCATION
	B401		7	28-0	X			BODY @ PILES
	B402		14	2-3				BODY @ PILES
	B503		36	14-10	X			BODY VERT.
	B604		11	26-5				BODY HORIZ.
	B1005		8	20-0				BODY HORIZ. @ WING 3 B.F.
	B406		3	9-10				BODY HORIZ. TOP
	B507		10	5-7	X			BODY VERT. TOP
	B608		8	9-4				BODY HORIZ.
▼▼	B609		12	3-4				BODY DOWELS HORIZ.
	B510	X	14	2-0				BODY DOWELS VERT.
	B511	X	14	15-0	X			WING 3 VERT.
	B512	X	6	15-1				WING 3 HORIZ. F.F.
	B913	X	10	17-3	X			WING 3 HORIZ. B.F. & BODY TOP
	B514	X	27	18-10	X			WING 3 VERT.
	B515	X	13	14-4	X			WING 3 VERT.
	B416	X	17	19-8				WING 3 HORIZ. E.F.
	B417	X	21	4-1	X			WING 3 VERT. TOP
	B618	X	2	19-8				WING 3 HORIZ. E.F. TOP
▼	B519	X	42	3-10				WING 4 DOWELS E.F.
	B520	X	34	14-8	X			WING 4 VERT.
	B421	X	17	16-8				WING 4 HORIZ. E.F.
	B422	X	18	4-1	X			WING 4 VERT. TOP
	B623	X	2	16-8				WING 4 HORIZ. E.F. TOP
	B524	X	54	9-6	X			PARAPET VERT. @ WINGS
	B525	X	8	19-8				PARAPET HORIZ. @ WING 3
	B526	X	8	16-8				PARAPET HORIZ. @ WING 4

BENDING DIMENSIONS ARE OUT TO OUT OF BARS.

▼ ADHESIVE ANCHORS NO. 5 BAR

▼▼ ADHESIVE ANCHORS NO. 6 BAR

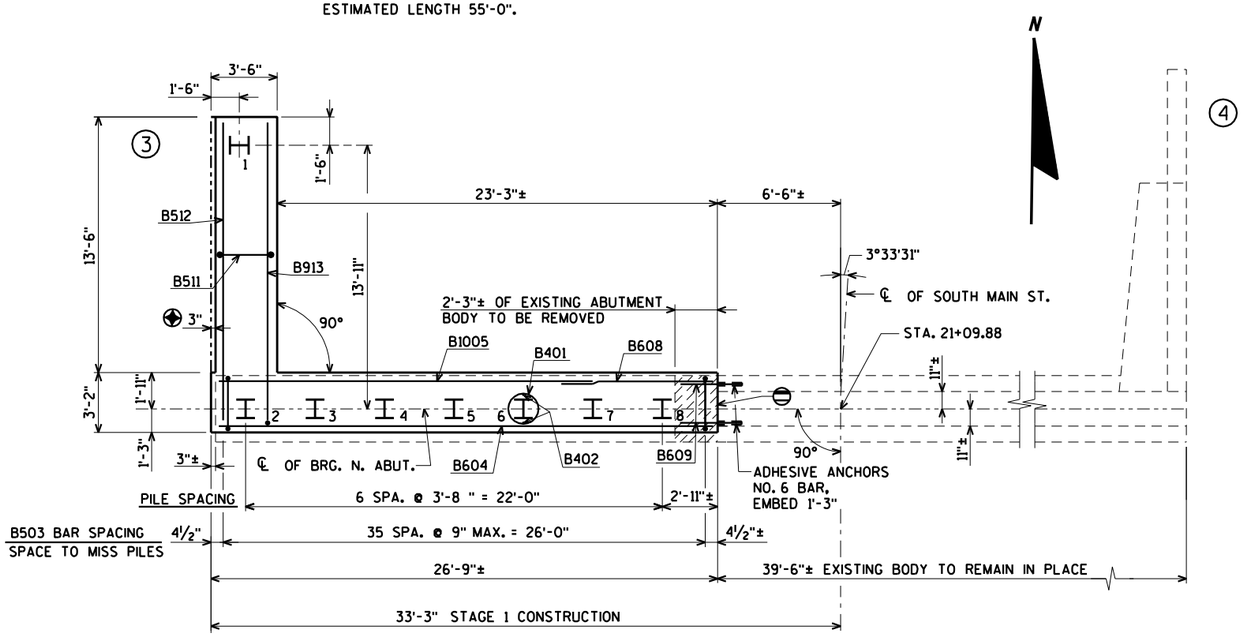

PILE LAYOUT

▧ EXISTING KEYED CONST. JOINT

◆ PIPE UNDERDRAIN WRAPPED 6-INCH. SLOPE 0.5% MIN. TO SUITABLE DRAINAGE. ATTACH RODENT SHIELD AT END OF PIPE UNDERDRAIN. SEE DETAIL ON SHEET 7. RODENT SHIELD TO BE INCLUDED IN BID PRICE OF "PIPE UNDERDRAIN WRAPPED 6-INCH".

◑ KEYED CONST. JOINT - FORMED BY A BEVELED 2" x 6".

⊖ ROUGHEN SURFACE OF CONCRETE ¼" DEEP MIN. ALL AREAS OF NEW TO EXISTING CONCRETE CONTACT.

◈ ARCHITECTURAL SURFACE TREATMENT. FOR DETAILS SEE SHEET 6

B.F. DENOTES BACK FACE

E.F. DENOTES EACH FACE

F.F. DENOTES FRONT FACE

FOR PILE SPLICE DETAIL SEE SHEET 4.

NO.	DATE	REVISION	BY

STATE OF WISCONSIN
DEPARTMENT OF TRANSPORTATION

STRUCTURE B-3-2

DRAWN BY CLS | PLANS CK'D. CBM

NORTH ABUTMENT DETAILS & BILL OF BARS

SHEET 13 OF 31

121

ORIGINAL PLANS PREPARED BY
AYRES ASSOCIATES
3433 Oakwood Hills Parkway
Eau Claire, WI 54701
www.AyresAssociates.com

8

8

$PRFNAME$
U:\42-0989.00 - Barron Co, City of Rice Lake\BRIDGE\420989 na.dgn

9/12/2017

PENTABLE:BReau_shd_util.tbl

STATE PROJECT NUMBER

8997-00-40

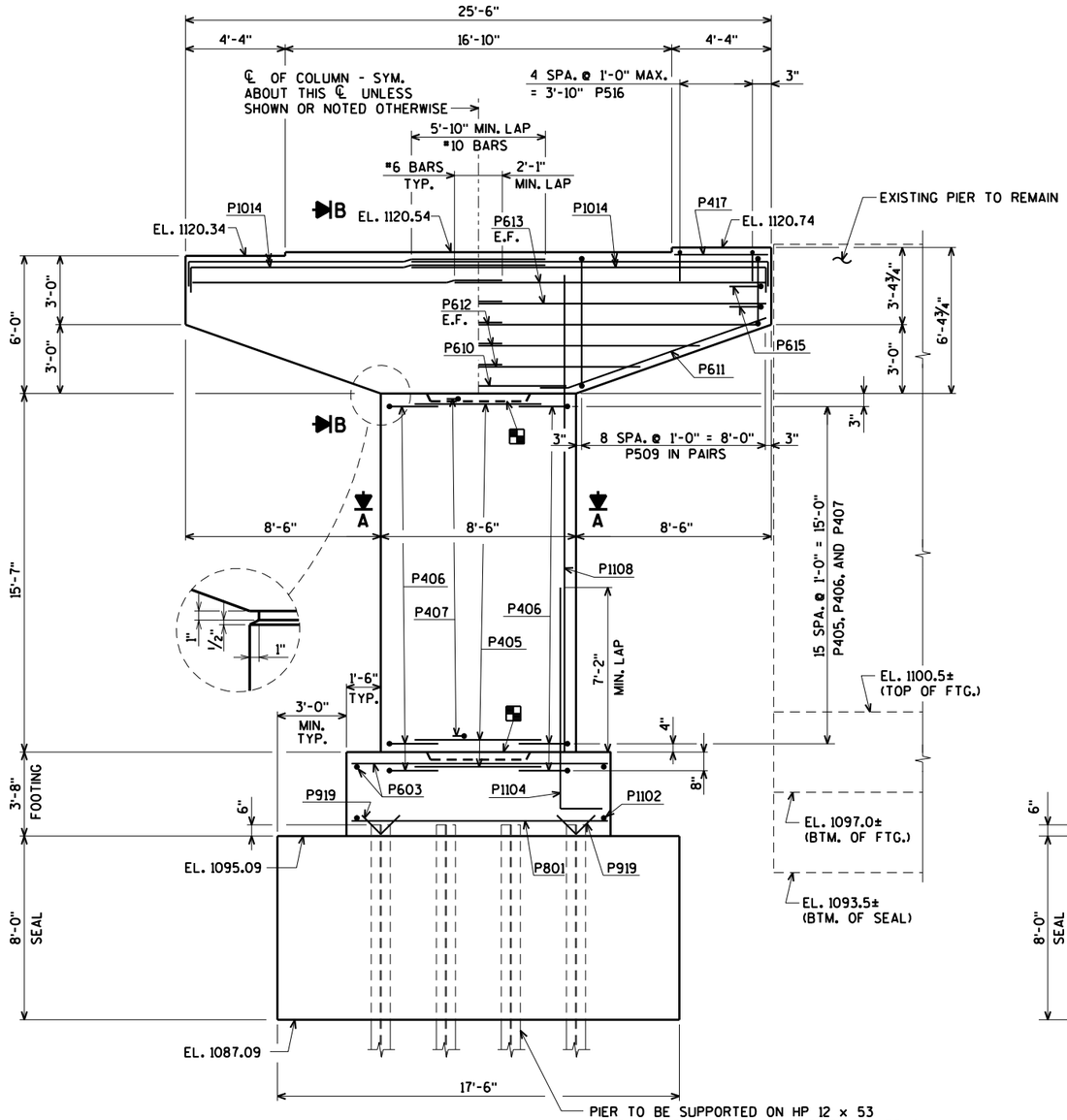

ELEVATION
(LOOKING NORTH)

FOR SECTION "A" SEE SHEET 15

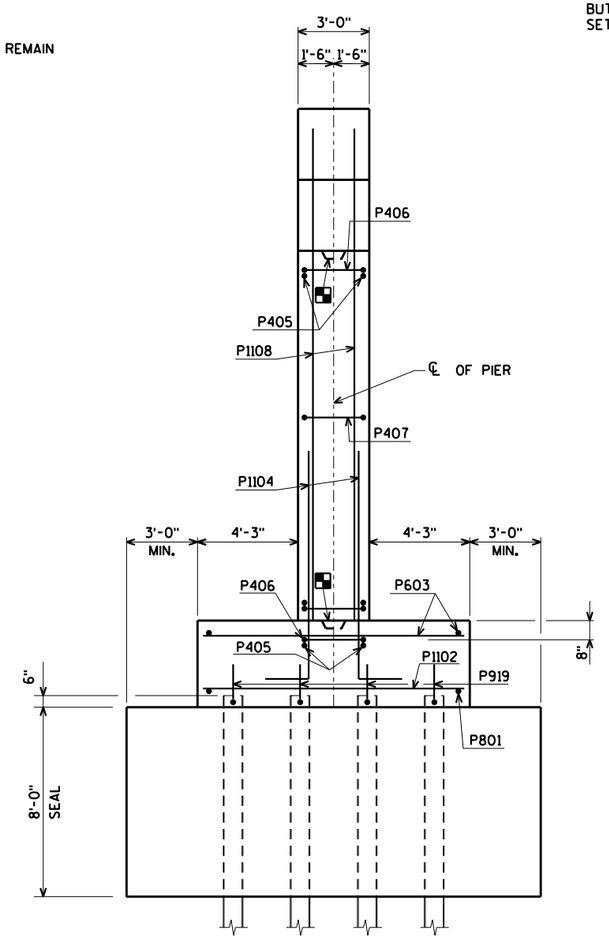

END VIEW
(LOOKING WEST)

P518 BARS MAY BE PLACED AFTER PIER CAP IS POURED BUT BEFORE CONCRETE HAS SET. IMBED BARS 1'-0".

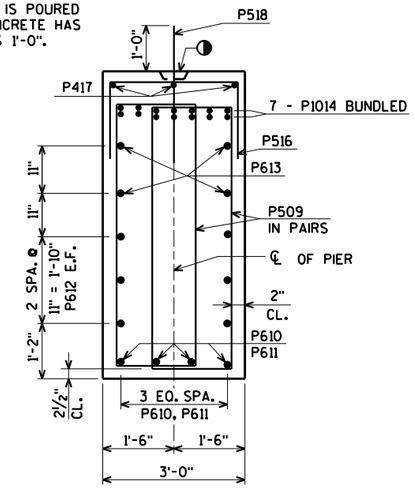

SECTION B

E.F. DENOTES EACH FACE.

KEYED CONST. JOINT FORMED BY A SURFACED BEVELED KEYWAY 4" DEEP x 10" WIDE x 6'-0" LONG

KEYED CONST. JOINT - FORMED BY A BEVELED 2" x 6".

FOR PILE SPLICE DETAIL SEE SHEET 4.

NO.	DATE	REVISION	BY

STATE OF WISCONSIN
DEPARTMENT OF TRANSPORTATION

STRUCTURE B-3-2

DRAWN BY CLS | PLANS CK'D. CBM

PIER

SHEET 14 OF 31
122

ORIGINAL PLANS PREPARED BY
AYRES ASSOCIATES
3433 Oakwood Hills Parkway
Eau Claire, WI 54701
www.AyresAssociates.com

8

8

$PRFNAME$
U:±42-0989.00 - Barron Co.City of Rice Lake±BRIDGE±420989 pier.dgn

10/22/2017

PENTABLE:BReau_shd_util.tbl

STATE PROJECT NUMBER

8997-00-40

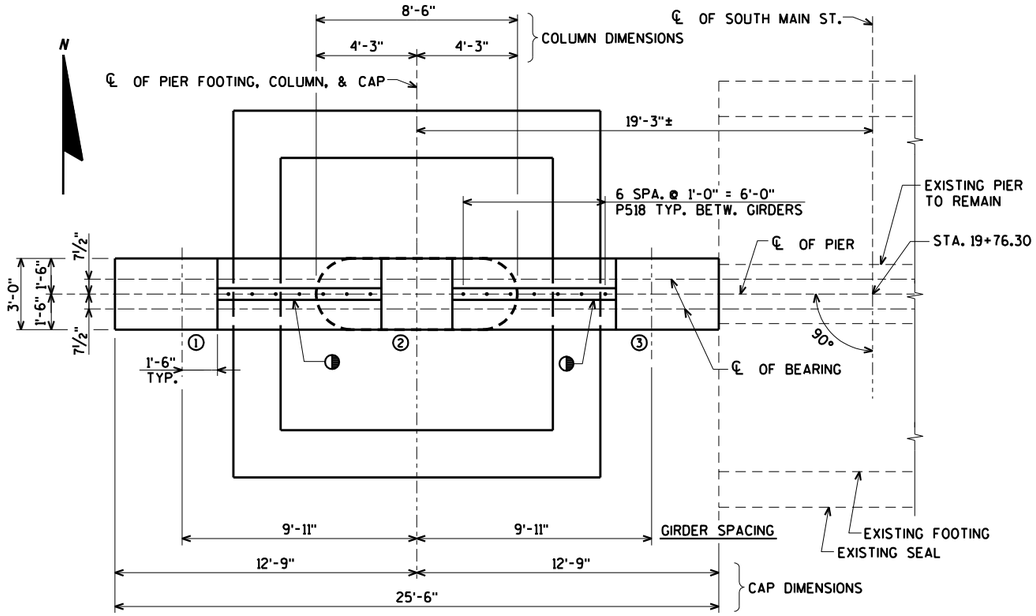

PLAN

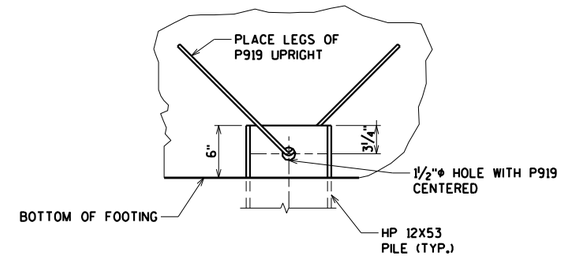

(*) PILE UPLIFT CONNECTION DETAIL

(*) LOCATION OF PILES UPLIFT CONNECTION	
PIER	1, 4, 5, 8, 9, 12, 13, & 16

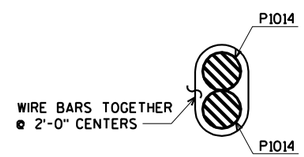

BUNDLING DETAIL

BILL OF BARS

BAR. NO.	COATED BAR	NO. REQ'D.	LENGTH	BENT BAR	BUNDLED	BAR SERIES	9.360" UNCOATED 30" COATED LOCATION
P801		13	11-2				FOOTING BOTTOM
P1102		22	11-2				FOOTING BOTTOM
P603		24	11-2				FOOTING TOP
P1104		20	11-10	X			FOOTING DOWELS
P405		34	5-6				COLUMN HORIZ.
P406		34	6-11	X			COLUMN HORIZ.
P407		64	3-5	X			COLUMN TIES
P1108		20	20-11				COLUMN VERT.
P509		36	12-6	X		⊗	CAP VERT. STIRRUPS
P610		4	8-5				CAP BOTTOM
P611		8	11-0	X			CAP BOTTOM
P612		12	10-8			⊗	CAP HORIZ.
P613		8	13-8				CAP HORIZ.
P1014		28	17-3	X	X		CAP HORIZ. TOP
P615		4	6-6	X			CAP ENDS
P516		5	5-6	X			CAP VERT. TOP
P417		3	4-0				CAP HORIZ. TOP
P518	X	14	2-0				CAP DOWELS
P919		8	6-1	X			FOOTING AT PILES

BENDING DIMENSIONS ARE OUT TO OUT OF BARS.

⊗ LENGTH SHOWN FOR BAR IS AN AVERAGE LENGTH AND SHOULD ONLY BE USED FOR BAR WEIGHT CALCULATIONS. SEE BAR SERIES TABLE FOR ACTUAL LENGTHS.

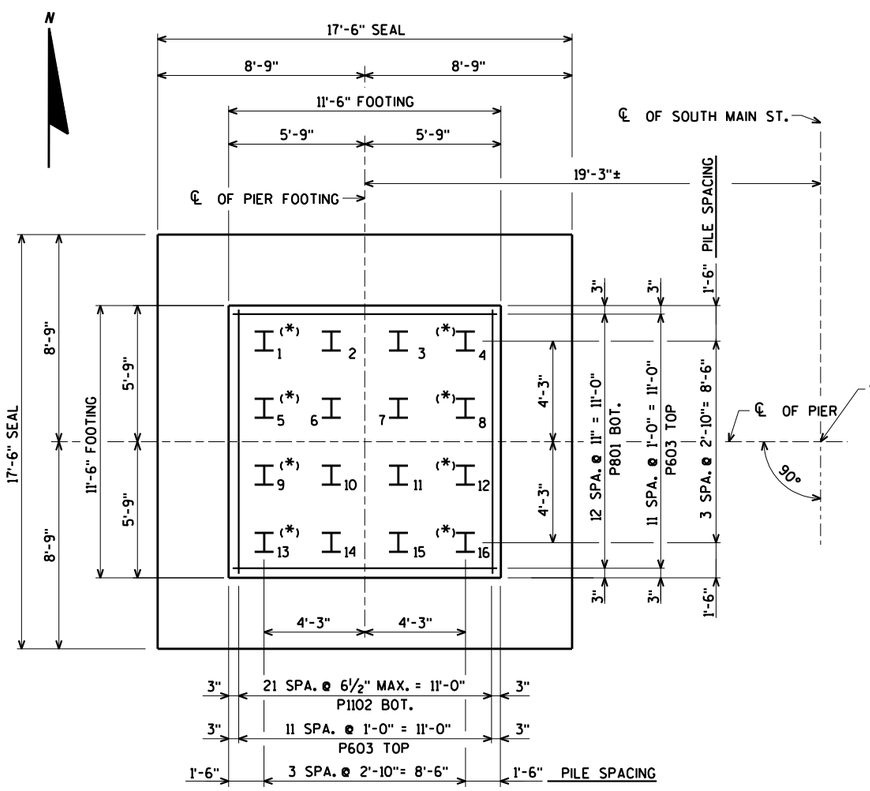

FOOTING LAYOUT

BAR SERIES TABLE

BAR MARK	NO REQ'D.	LENGTH
P509	4 SERIES OF 9	9'-6" TO 15'-6"
P612	4 SERIES OF 3	8'-0" TO 13'-4"

BUNDLE AND TAG EACH SERIES SEPARATELY.

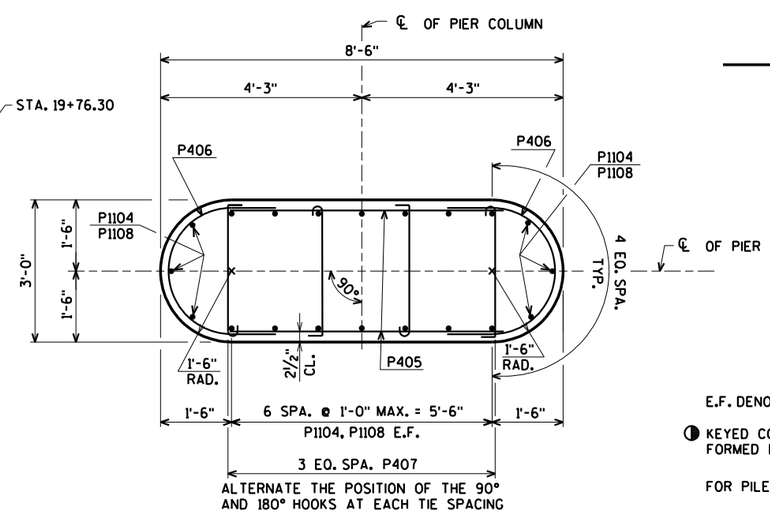

SECTION A

FOR LOCATION OF SECTION "A" SEE SHEET 14

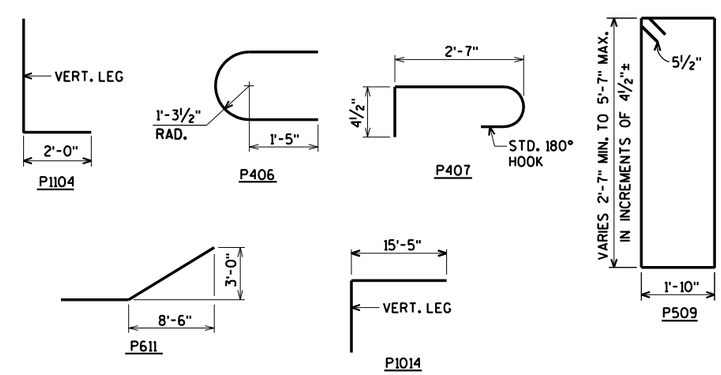

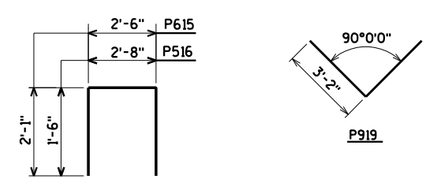

E.F. DENOTES EACH FACE.

◑ KEYED CONST. JOINT - FORMED BY A BEVELED 2" x 6".

FOR PILE SPLICE DETAIL SEE SHEET 4.

NO.	DATE	REVISION	BY

STATE OF WISCONSIN
DEPARTMENT OF TRANSPORTATION

STRUCTURE B-3-2

DRAWN BY CLS | PLANS CK'D. CBM

PIER DETAILS

SHEET 15 OF 31
123

ORIGINAL PLANS PREPARED BY
AYRES ASSOCIATES
3433 Oakwood Hills Parkway
Eau Claire, WI 54701
www.AyresAssociates.com

8

8

$PRFNAME$
U:\42-0989.00 - Barron Co. City of Rice Lake\BRIDGE\420989 pier.dgn

10/22/2017

PENTABLE:BReau_shd_util.tbl

STATE PROJECT NUMBER

8997-00-40

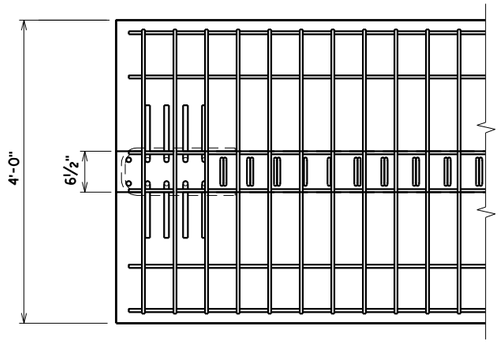

TOP FLANGE

NOTE:
FOR STORAGE, HANDLING AND TRANSPORTING, THIS GIRDER IS REINFORCED TO ALLOW A MAXIMUM OVERHANG FROM THE LIFTING LOCATION OR POINT OF SUPPORT OF UP TO 1/10 OF THE GIRDER LENGTH. THE CONTRACTOR IS RESPONSIBLE FOR LATERAL STABILITY OF THE GIRDER UNTIL THE DECK IS CURED.

GIRDER NOTES

TOP OF GIRDER TO BE ROUGH FLOATED AND BROOMED TRANSVERSELY, EXCEPT THE OUTSIDE 15" OF GIRDER, WHICH SHALL RECEIVE A SMOOTH FINISH. AN APPROVED CONCRETE SEALER SHALL BE APPLIED TO ALL SMOOTH SURFACES INCLUDING THE OUTSIDE 15" OF THE TOP FLANGE.

DO NOT APPLY CONCRETE SEALER OR EPOXY TO SURFACES RECEIVING APPLICATION OF CONCRETE STAINING.

THE GIRDERS SHALL BE PROVIDED WITH A SUITABLE LIFTING DEVICE FOR HANDLING AND ERECTING THE GIRDERS.

STRANDS SHALL BE FLUSH WITH END OF GIRDER. FOR GIRDER ENDS EMBEDDED COMPLETELY IN CONCRETE, END OF STRANDS SHALL BE COATED WITH NON-BITUMINOUS JOINT SEALER.

ALL GIRDERS SHALL BE CAST FULL LENGTH AS SHOWN.

SPACING SHOWN FOR #5 STIRRUPS IS FOR GRADE 60 REINFORCEMENT.

AN ALTERNATE EQUIVALENT OF WELDED WIRE FABRIC (WWF) ASTM A1064 MAY BE SUBSTITUTED FOR THE STIRRUP REINFORCEMENT SHOWN, UPON APPROVAL OF THE STRUCTURES DEVELOPMENT SECTION.

PRESTRESSING STRANDS SHALL BE (0.6" DIA.)-7 WIRE LOW-RELAXATION STRANDS WITH AN ULTIMATE STRENGTH OF 270,000 PSI.

FOR DIAPHRAGM INSERT & CONNECTION DETAILS SEE "STEEL DIAPHRAGM" SHEET.

FOR FLOOR DRAIN DOWNSPOUT INSERT AND CONNECTION DETAILS SEE "FLOOR DRAIN TYPE GC" SHEET.

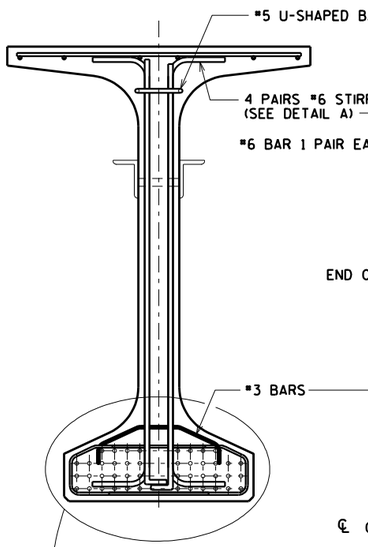

SECTION A-A

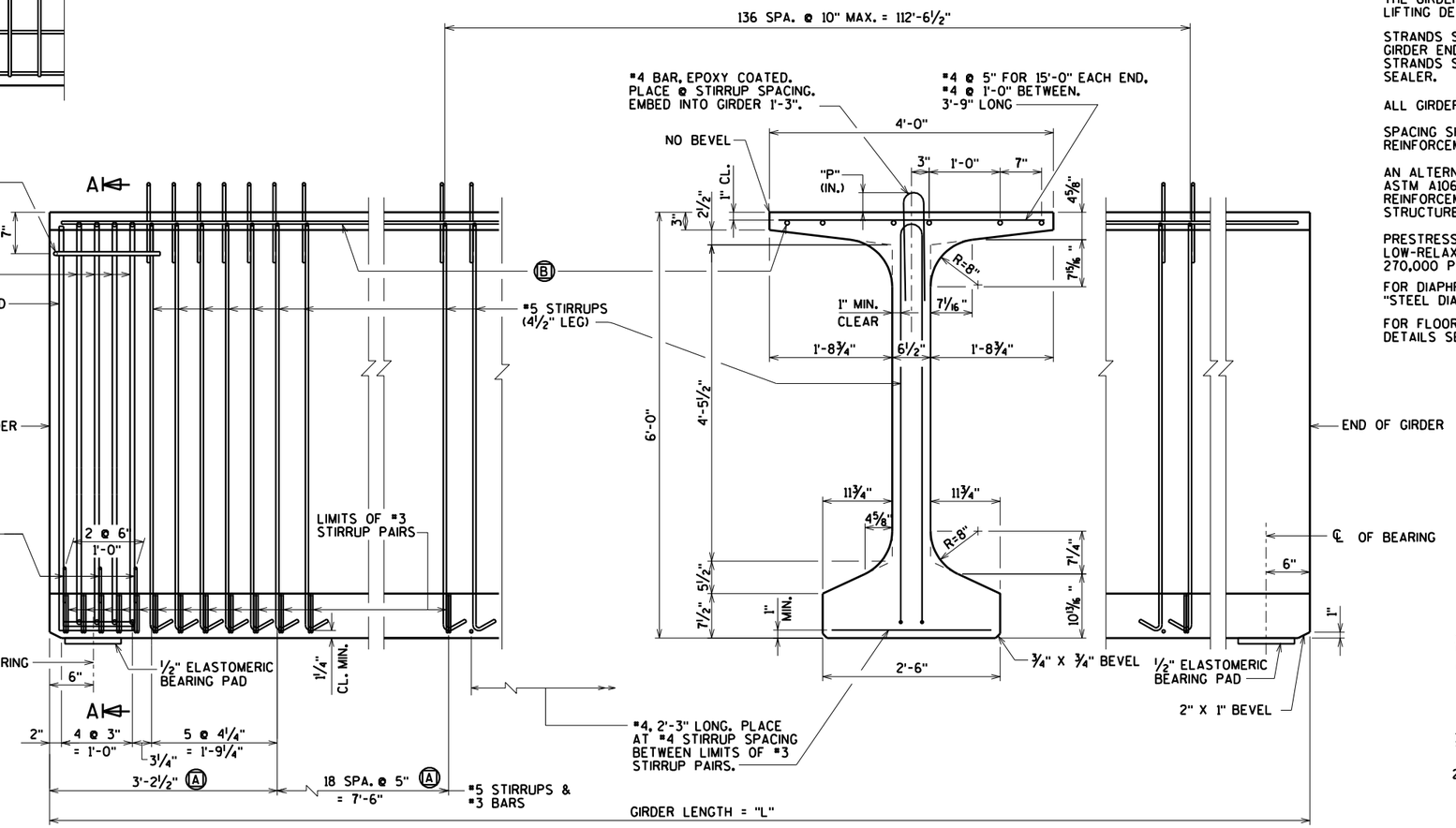

SIDE VIEW & TYP. SECTION IN SPAN

(A) DETAIL TYP. AT EACH END

(B) 6 #6 BARS, FULL LENGTH. MIN. LAP = 3'-6"

NOTE: #5 STIRRUPS REQUIRED

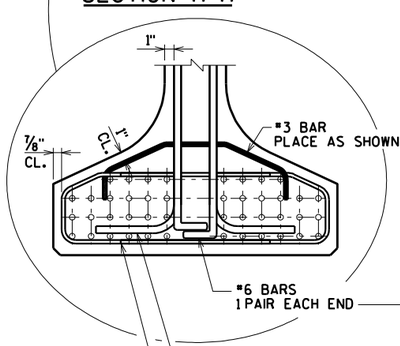

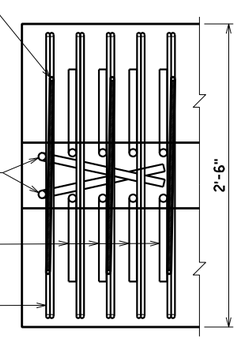

BOTTOM FLANGE
DETAIL A

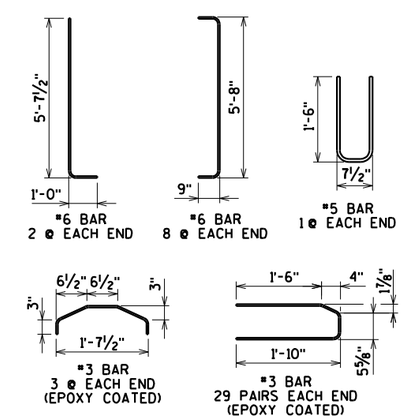

GIRDER DATA

SPAN	GIRDER	GIRDER LENGTH "L"	DEAD LOAD DEFL. (IN.) 1/10	2/10	3/10	4/10	5/10	6/10	7/10	8/10	9/10	CONC. STRGTH. f'c (p.s.i.)	"P" IST 1/3 OF GIRDER	"P" MID 1/3 OF GIRDER	"P" END 1/3 OF GIRDER	DIA. OF STRAND (IN.)	DRAPED PATTERN TOTAL NO. OF STRANDS	f'ci (P.S.I.) *	(IN.) "A"	"B" MIN.	"B" MAX.	"C"	~~UNDRAPED PATTERN TOTAL NO. OF STRANDS~~	~~f'ci (P.S.I.) *~~
1-2	1-3	133'-11½"	0.6	1.2	1.7	2.0	2.1	2.0	1.7	1.2	0.6	8,000	8"	7"	8"	0.6	40	6,400	67	20.5	23.5	5		

* MINIMUM CYLINDER STRENGTH OF CONCRETE @ TIME OF TRANSFER OF PRESTRESS FORCE.

NO.	DATE	REVISION	BY

STATE OF WISCONSIN
DEPARTMENT OF TRANSPORTATION

STRUCTURE B-3-2

DRAWN BY CLS | PLANS CK'D. CBM

ORIGINAL PLANS PREPARED BY
AYRES ASSOCIATES
3433 Oakwood Hills Parkway
Eau Claire, WI 54701
www.AyresAssociates.com

72W" PRESTRESSED GIRDER DETAILS

SHEET 16 OF 31
124

8

8

$PRFNAME$
U:\42-0989.00 - Barron Co, City of Rice Lake\BRIDGE\420989 gdr 72W.dgn

10/22/2017

PENTABLE:BReau_shd_util.tbl

STATE PROJECT NUMBER

8997-00-40

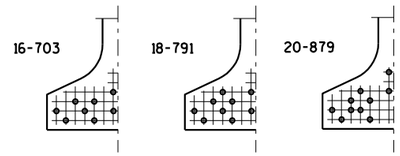

STANDARD ARRANGEMENTS TO RAISE CENTER OF GRAVITY TO AVOID DRAPING OF STRANDS

0.6"Φ STRANDS

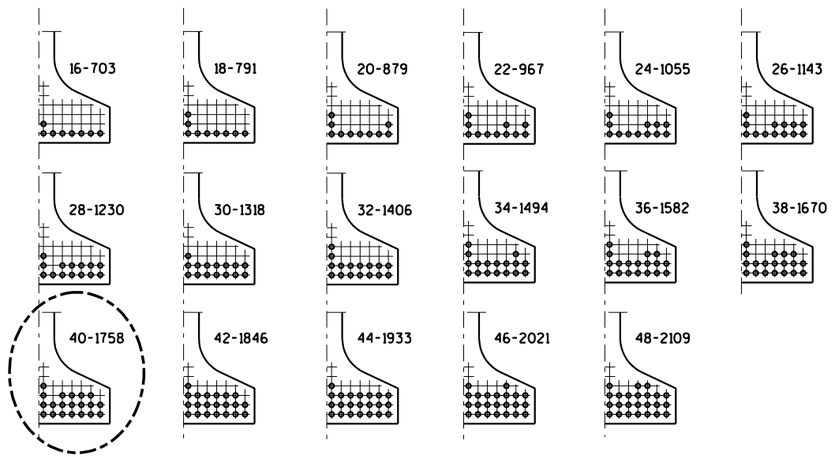

ARRANGEMENT AT ℄ SPAN - FOR GIRDERS WITH DRAPED STRANDS

0.6"Φ STRANDS

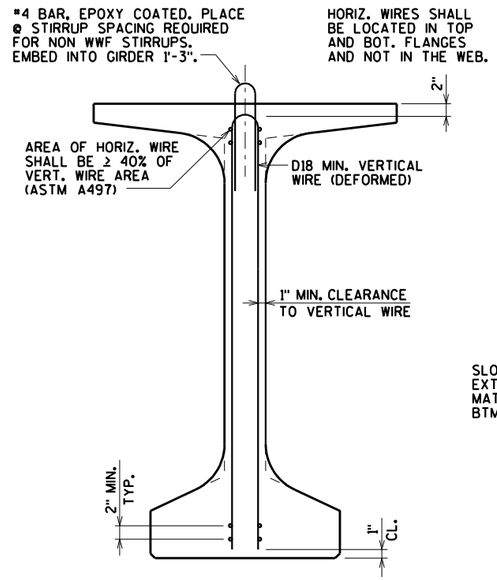

SECTION THRU GIRDER

SHOWING WELDED WIRE FABRIC (WWF) STIRRUPS
ASTM A1064 (FY = 70 KSI)

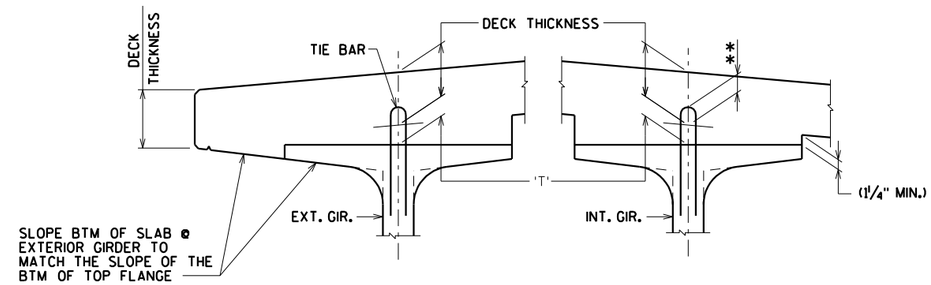

DECK HAUNCH DETAIL

IF 1¼" MINIMUM HAUNCH HEIGHT AT EDGE OF GIRDER CANNOT BE MAINTAINED, THE GRADE LINE MAY BE REVISED BY THE ENGINEER AT THE OPTION OF THE CONTRACTOR. THE PLAN DECK THICKNESS SHALL BE HELD. NOTIFY THE STRUCTURES SECTION IF THE GRADE LINE IS RAISED FROM THE PLAN PROFILE BY MORE THAN ½" OR.

** IF 3" MINIMUM DECK EMBEDMENT OF TIE BAR CANNOT BE OBTAINED.

TO DETERMINE 'T', ELEV. OF TOP OF GIR'S. AT ℄ OF SUBSTRUCTURE UNITS & AT 1/10 POINTS OF EACH SPAN SHALL BE TAKEN. THEN FOLLOW THIS PROCESS:

TOP OF DECK ELEV. AT FINAL GRADE
- TOP OF GIRDER ELEVATION
+ DEAD LOAD DEFLECTION
- DECK THICKNESS
= HAUNCH HEIGHT 'T'

NOTE: AN AVERAGE HAUNCH ('T') OF 3" WAS USED IN THE QUANTITY "CONCRETE MASONRY BRIDGES".

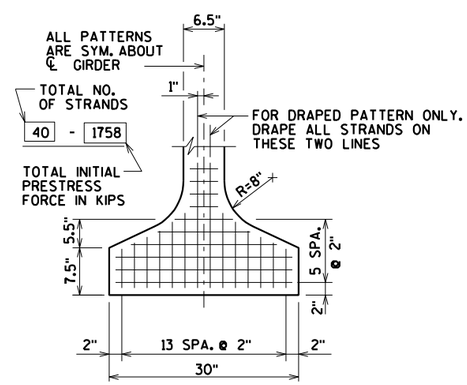

TYP. STRAND PATTERN

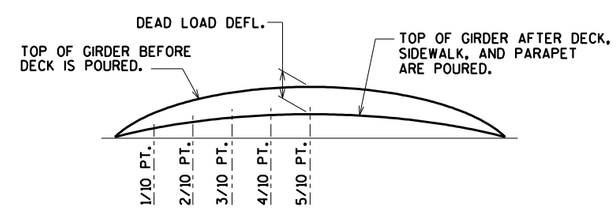

DEAD LOAD DEFLECTION DIAGRAM

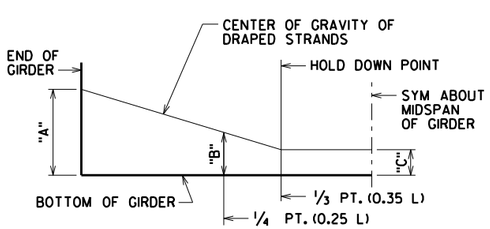

DRAPED STRAND PROFILE

* THE THEORETICAL INITIAL CAMBER VALUE AT THE TIME OF STRAND RELEASE AT MIDSPAN MULTIPLIED BY A FACTOR OF 1.4 TO ACCOUNT FOR CAMBER GROWTH FROM THE TIME OF STRAND RELEASE TO JOBSITE PLACEMENT.

SPAN	CAMBER (IN.) *
1	3.5

THESE VALUES ARE NOT TO BE USED IN DETERMINING 'T'. USE ACTUAL GIRDER SHOTS.

THESE VALUES ARE FOR INFORMATIONAL PURPOSES ONLY.

NO.	DATE	REVISION	BY

STATE OF WISCONSIN
DEPARTMENT OF TRANSPORTATION

STRUCTURE B-3-2

DRAWN BY CLS | PLANS CK'D. CBM

72W" PRESTRESSED GIRDER DETAILS

SHEET 17 OF 31
125

ORIGINAL PLANS PREPARED BY
AYRES ASSOCIATES
3433 Oakwood Hills Parkway
Eau Claire, WI 54701
www.AyresAssociates.com

8

8

$PRFNAME$
U:\42-0989.00 - Barron Co, City of Rice Lake\BRIDGE\420989 gdr 72W.dgn

9/12/2017

PENTABLE:BReau_shd_util.tbl

STATE PROJECT NUMBER

8997-00-40

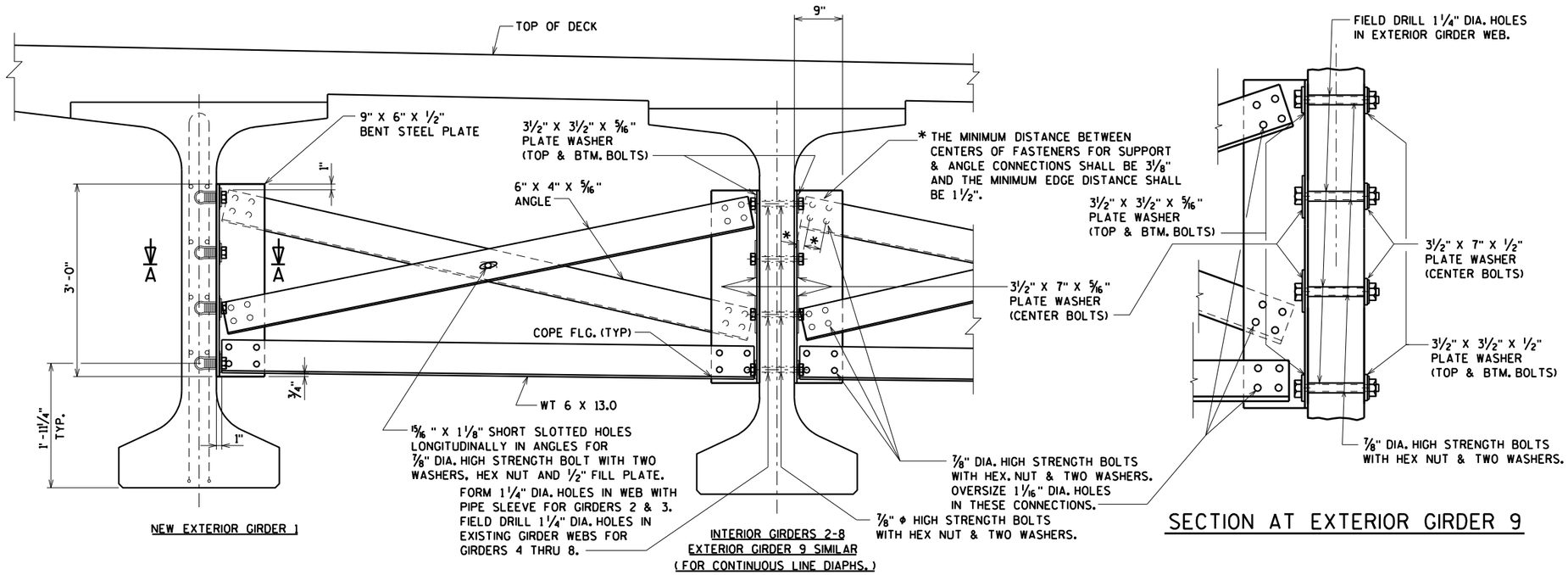

PART TRANSVERSE SECTION AT DIAPHRAGM

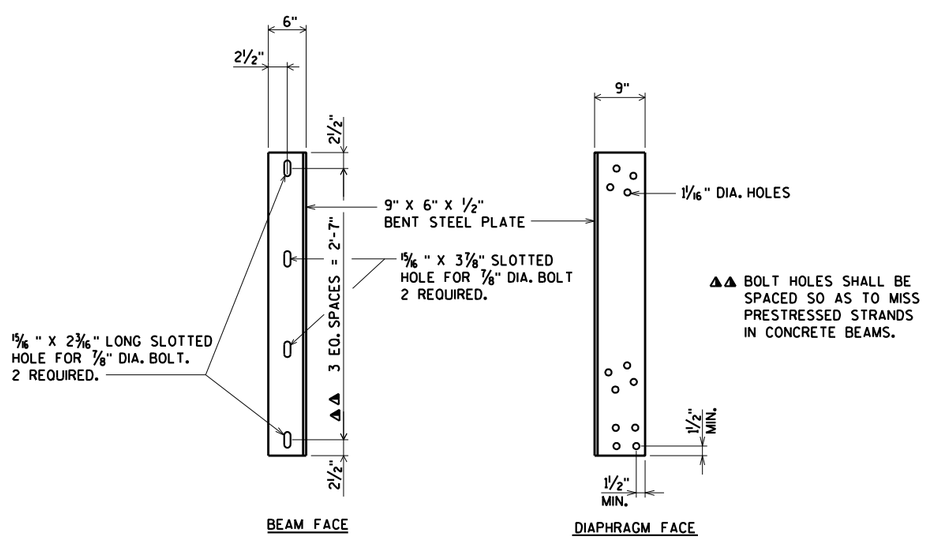

DIAPHRAGM SUPPORT

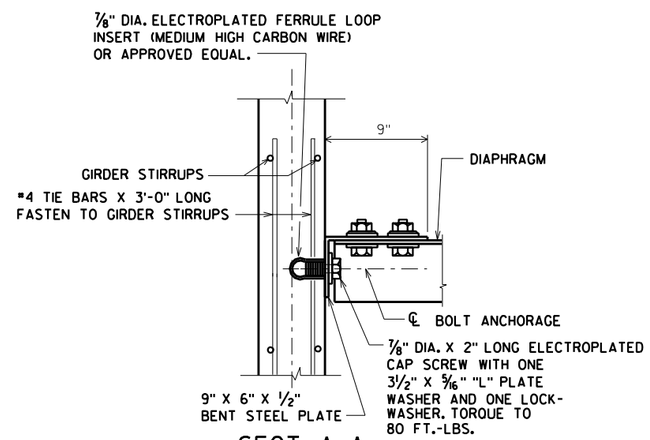

SECT. A-A

(FOR EXTERIOR ATTACHMENT)

"L" = 3 1/2": TOP AND BOTTOM BOLTS
"L" = 7": CENTER BOLTS

NOTES

ALL DIAPHRAGM MATERIAL NOT EMBEDDED IN THE CONCRETE GIRDER SHALL BE PAID FOR AT THE UNIT PRICE BID FOR "STEEL DIAPHRAGMS B-3-2", EACH.

EACH DIAPHRAGM BETWEEN GIRDERS SHALL CONSTITUTE ONE UNIT.

ALL DIAPHRAGM STRUCTURAL STEEL SHALL BE ASTM A709 GRADE 36.

ALL DIAPHRAGM MATERIAL INCLUDING BOLTS, NUTS AND WASHERS SHALL BE GALVANIZED AFTER FABRICATION.

STEEL DIAPHRAGM TO CONCRETE WEB CONNECTION SHALL BE SNUG-TIGHT PLUS 1/4 TURN, UNLESS NOTED OTHERWISE. HIGH STRENGTH BOLTS FOR WEB CONNECTION SHALL MEET THE REQUIREMENTS FOR ASTM A325 OR ASTM A449.

NO.	DATE	REVISION	BY

STATE OF WISCONSIN
DEPARTMENT OF TRANSPORTATION

STRUCTURE B-3-2

DRAWN BY CLS | PLANS CK'D. CBM

STEEL DIAPHRAGM

SHEET 18 OF 31

126

ORIGINAL PLANS PREPARED BY
AYRES ASSOCIATES
3433 Oakwood Hills Parkway
Eau Claire, WI 54701
www.AyresAssociates.com

8

8

$PRFNAME$
U:\42-0989.00 - Barron Co. City of Rice Lake\BRIDGE\420989 diaph.dgn

9/12/2017

PENTABLE:BReau_shd_util.tbl

STATE PROJECT NUMBER

8997-00-40

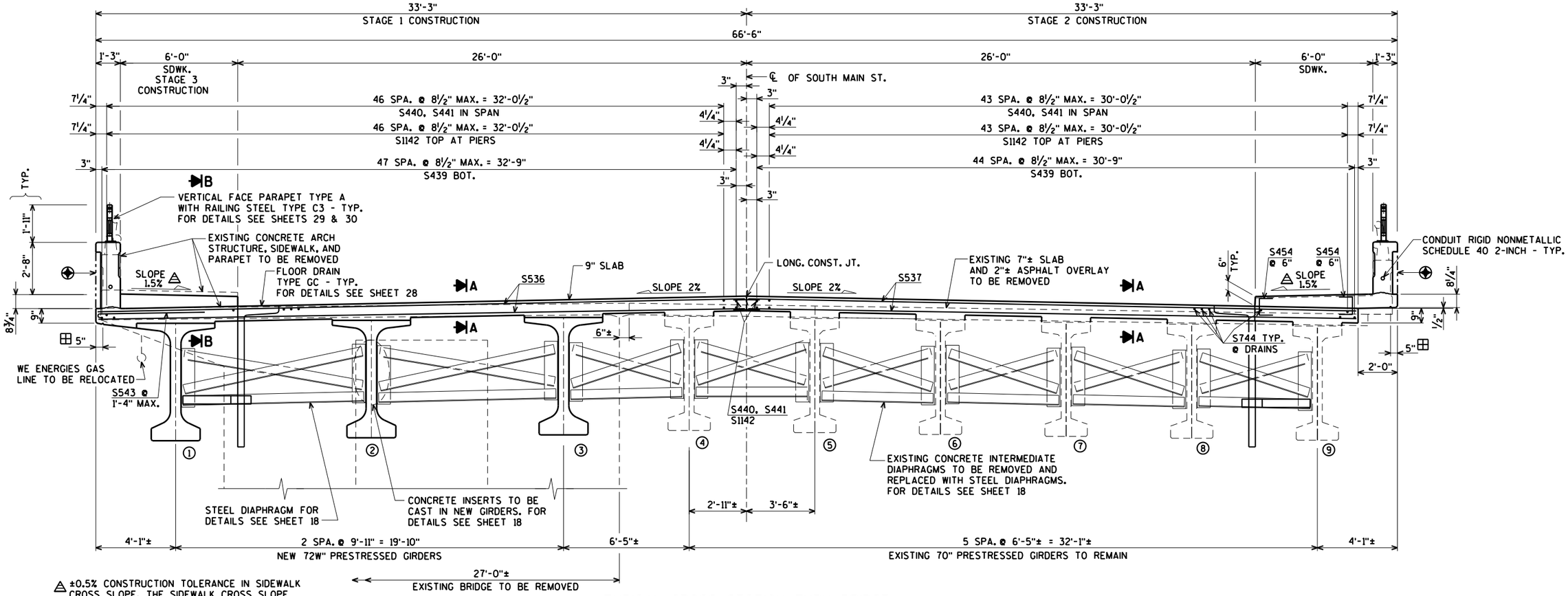

TYPICAL CROSS SECTION THRU BRIDGE

(LOOKING NORTH)

△ ±0.5% CONSTRUCTION TOLERANCE IN SIDEWALK CROSS SLOPE. THE SIDEWALK CROSS SLOPE SHALL NOT EXCEED 2% WITHOUT PRIOR APPROVAL FROM THE ENGINEER.

⊕ ARCHITECTURAL SURFACE TREATMENT. FOR DETAILS SEE SHEET 6

⊞ ¾" V-GROOVE. EXTEND V-GROOVE TO 6" FROM FRONT FACE OF ABUTMENT DIAPHRAGMS - TYP.

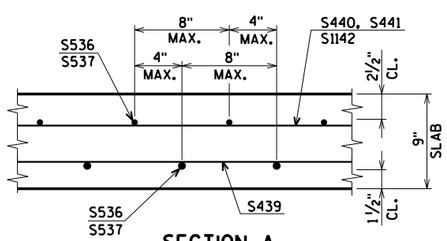

SECTION A

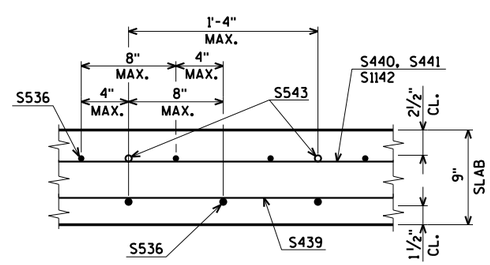

SECTION B

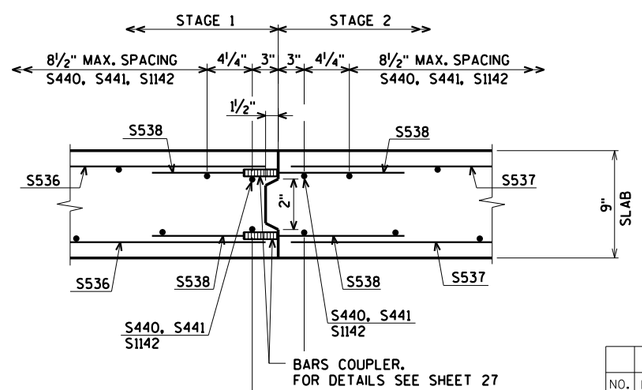

LONGITUDINAL CONST. JOINT DETAIL

NO.	DATE	REVISION	BY

STATE OF WISCONSIN
DEPARTMENT OF TRANSPORTATION

STRUCTURE B-3-2

DRAWN BY CLS | PLANS CK'D. CBM

SUPERSTRUCTURE

SHEET 19 OF 31

127

ORIGINAL PLANS PREPARED BY
AYRES ASSOCIATES
3433 Oakwood Hills Parkway
Eau Claire, WI 54701
www.AyresAssociates.com

8

8

$PRFNAME$
U:\42-0989.00 - Barron Co.City of Rice Lake\BRIDGE\420989 super.dgn

10/6/2017

PENTABLE:BReau_shd_util.tbl

STATE PROJECT NUMBER

8997-00-40

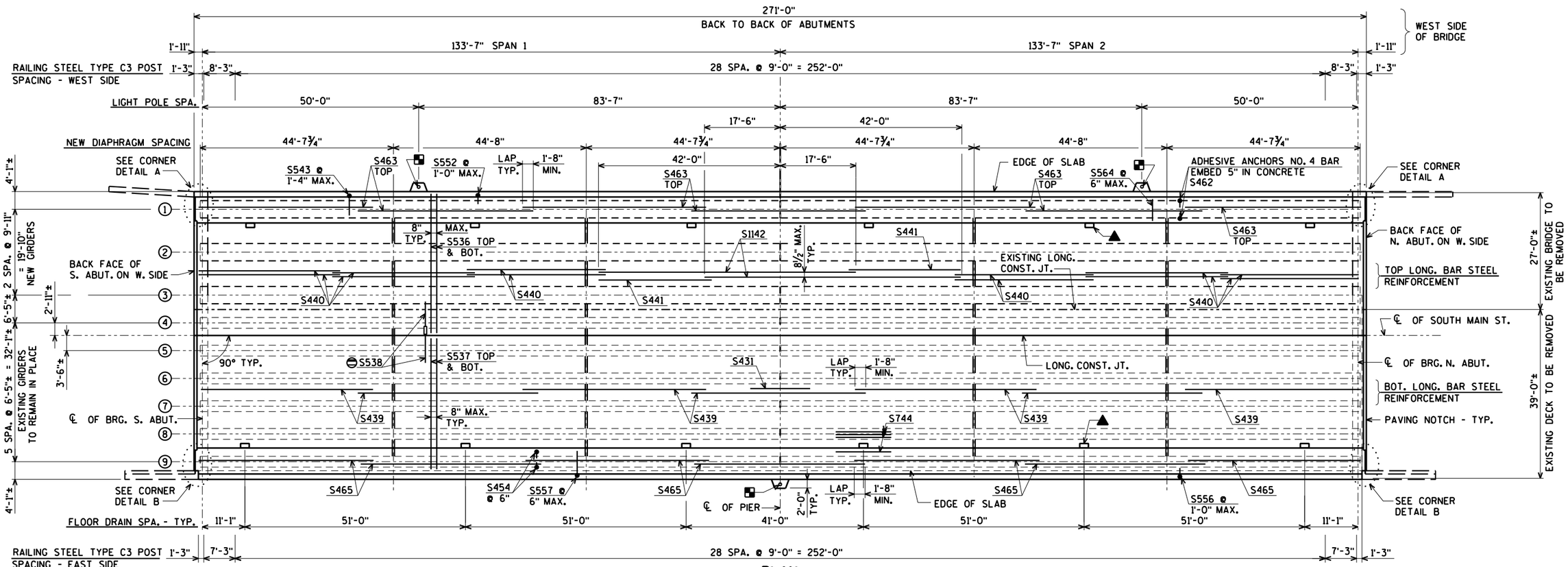

PLAN

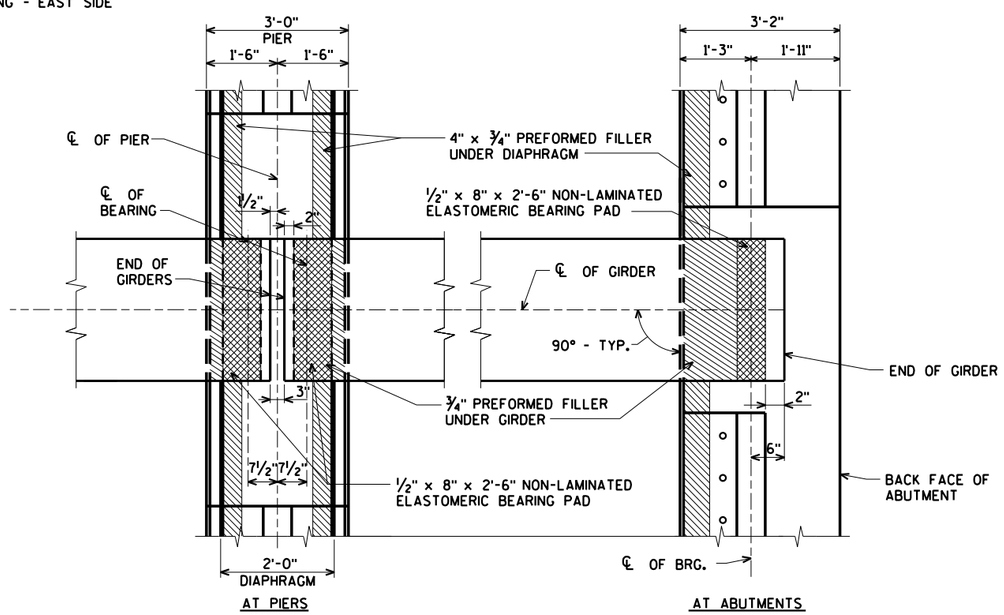

BEARING PAD DETAILS

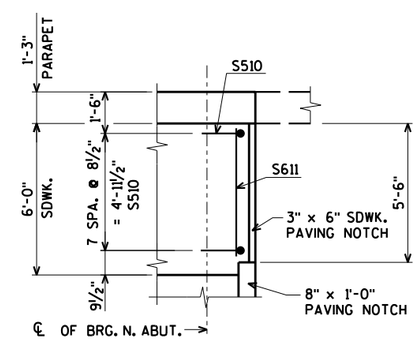

CORNER DETAIL A

(WING 3 CORNER SHOWN, WING 2 SIMILAR)

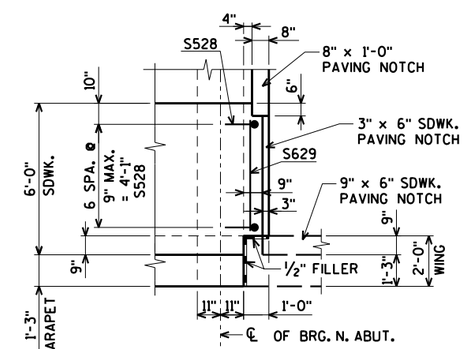

CORNER DETAIL B

(WING 4 CORNER SHOWN, WING 1 SIMILAR)

▲ FLOOR DRAIN - TYP.
FOR DETAILS SEE SHEET 28

⊖ BARS WITH COUPLER.
FOR DETAIL SEE SHEET 27
TYP. ALONG LONG. CONST. JT.

■ NEW LIGHT POLES TO BE INSTALLED - TYP.
(SEE LIGHTING PLANS)
NEW ANCHOR ASSEMBLY REQ'D.
FOR DETAILS SEE SHEET 25

ORIGINAL PLANS PREPARED BY
AYRES ASSOCIATES
3433 Oakwood Hills Parkway
Eau Claire, WI 54701
www.AyresAssociates.com

NO.	DATE	REVISION	BY

STATE OF WISCONSIN
DEPARTMENT OF TRANSPORTATION

STRUCTURE B-3-2

DRAWN BY CLS | PLANS CK'D. CBM

SUPERSTRUCTURE PLAN

SHEET 20 OF 31
128

8

$PRFNAME$
U:±42-0989.00 - Barron Co,City of Rice Lake±BRIDGE±420989 super.dgn

10/6/2017

PENTABLE:BReau_shd_util.tbl

STATE PROJECT NUMBER
8997-00-40

TOP OF DECK ELEVATIONS

	℄ OF BRG. SOUTH ABUT.	SPAN 1 0.1 PT.	0.2 PT.	0.3 PT.	0.4 PT.	0.5 PT.	0.6 PT.	0.7 PT.	0.8 PT.	0.9 PT.	℄ OF PIER	SPAN 2 0.1 PT.	0.2 PT.	0.3 PT.	0.4 PT.	0.5 PT.	0.6 PT.	0.7 PT.	0.8 PT.	0.9 PT.	℄ OF BRG. NORTH ABUT.
WEST EDGE OF DECK	1127.34	1127.34	1127.34	1127.34	1127.34	1127.34	1127.34	1127.34	1127.34	1127.34	1127.34	1127.34	1127.34	1127.34	1127.34	1127.34	1127.34	1127.34	1127.34	1127.34	1127.34
GIRDER 1	1127.42	1127.42	1127.42	1127.42	1127.42	1127.42	1127.42	1127.42	1127.42	1127.42	1127.42	1127.42	1127.42	1127.42	1127.42	1127.42	1127.42	1127.42	1127.42	1127.42	1127.42
GIRDER 2	1127.62	1127.62	1127.62	1127.62	1127.62	1127.62	1127.62	1127.62	1127.62	1127.62	1127.62	1127.62	1127.62	1127.62	1127.62	1127.62	1127.62	1127.62	1127.62	1127.62	1127.62
GIRDER 3	1127.81	1127.81	1127.81	1127.81	1127.81	1127.81	1127.81	1127.81	1127.81	1127.81	1127.81	1127.81	1127.81	1127.81	1127.81	1127.81	1127.81	1127.81	1127.81	1127.81	1127.81
GIRDER 4	1127.94	1127.94	1127.94	1127.94	1127.94	1127.94	1127.94	1127.94	1127.94	1127.94	1127.94	1127.94	1127.94	1127.94	1127.94	1127.94	1127.94	1127.94	1127.94	1127.94	1127.94
℄ OF SOUTH MAIN ST.	1128.00	1128.00	1128.00	1128.00	1128.00	1128.00	1128.00	1128.00	1128.00	1128.00	1128.00	1128.00	1128.00	1128.00	1128.00	1128.00	1128.00	1128.00	1128.00	1128.00	1128.00
GIRDER 5	1127.93	1127.91	1127.89	1127.87	1127.85	1127.83	1127.81	1127.79	1127.77	1127.75	1127.73	1127.71	1127.69	1127.67	1127.65	1127.63	1127.61	1127.59	1127.57	1127.55	1127.53
GIRDER 6	1127.80	1127.80	1127.80	1127.80	1127.80	1127.80	1127.80	1127.80	1127.80	1127.80	1127.80	1127.80	1127.80	1127.80	1127.80	1127.80	1127.80	1127.80	1127.80	1127.80	1127.80
GIRDER 7	1127.67	1127.67	1127.67	1127.67	1127.67	1127.67	1127.67	1127.67	1127.67	1127.67	1127.67	1127.67	1127.67	1127.67	1127.67	1127.67	1127.67	1127.67	1127.67	1127.67	1127.67
GIRDER 8	1127.54	1127.54	1127.54	1127.54	1127.54	1127.54	1127.54	1127.54	1127.54	1127.54	1127.54	1127.54	1127.54	1127.54	1127.54	1127.54	1127.54	1127.54	1127.54	1127.54	1127.54
GIRDER 9	1127.41	1127.41	1127.41	1127.41	1127.41	1127.41	1127.41	1127.41	1127.41	1127.41	1127.41	1127.41	1127.41	1127.41	1127.41	1127.41	1127.41	1127.41	1127.41	1127.41	1127.41
EAST EDGE OF DECK	1127.38	1127.38	1127.38	1127.38	1127.38	1127.38	1127.38	1127.38	1127.38	1127.38	1127.38	1127.38	1127.38	1127.38	1127.38	1127.38	1127.38	1127.38	1127.38	1127.38	1127.38

ELEVATIONS SHOWN ARE FINISHED DECK AND DO NOT INCLUDE ALLOWANCES OF DEAD LOAD DEFLECTION.

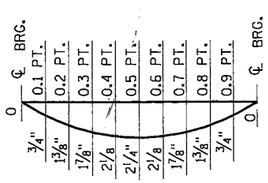

EXISTING EXTERIOR GIRDER 9
ALL SPANS

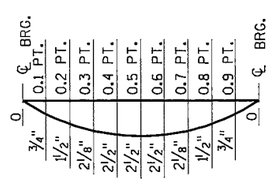

EXISTING INTERIOR GIRDERS 4 - 8
ALL SPANS

ESTIMATED BEAM DEAD LOAD DEFLECTION DIAGRAMS

NOTE: FOR NEW BEAM DEAD LOAD DEFLECTION, SEE 72W" PRESTRESSED GIRDER DETAILS ON SHEET 16

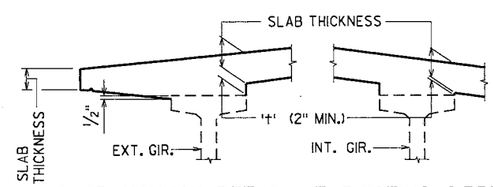

SLAB HAUNCH DETAIL AT EXISTING GIRDERS

IF 2" MINIMUM HAUNCH HEIGHT AT EDGE OF GIRDER CANNOT BE MAINTAINED, THE GRADE LINE MAY BE REVISED BY THE ENGINEER AT THE OPTION OF THE CONTRACTOR. THE PLAN SLAB THICKNESS SHALL BE HELD. NOTIFY THE STRUCTURES SECTION IF THE GRADE LINE IS RAISED FROM THE PLAN AND PROFILE BY MORE THAN 1/2".

TO DETERMINE 'T', ELEV. OF TOP OF GIRDERS AT ℄ OF SUBSTRUCTURE UNITS AND AT 1/10 POINTS OF EACH SPAN SHALL BE TAKEN. THEN FOLLOW THIS PROCESS:

TOP OF DECK ELEV. AT FINAL GRADE
-TOP OF GIRDER ELEVATION
+ DEADLOAD DEFLECTION
-SLAB THICKNESS
=HAUNCH HEIGHT 't'

NOTE:
AN AVERAGE HAUNCH ('T') OF 3" WAS USED IN THE QUANTITY "CONCRETE MASONRY BRIDGES" FOR THE EXISTING GIRDERS

NO.	DATE	REVISION	BY

STATE OF WISCONSIN
DEPARTMENT OF TRANSPORTATION

STRUCTURE B-3-2

DRAWN BY CJM | PLANS CK'D. CBM

DECK ELEVATIONS AND DEFLECTIONS

SHEET 129 31

ORIGINAL PLANS PREPARED BY
AYRES ASSOCIATES
3433 Oakwood Hills Parkway
Eau Claire, WI 54701
www.AyresAssociates.com

$PRFNAME$
LI:142-0989.00 - Barron Co, City of Rice Lake±BRIDGE±420989 elev FOR CJM.dgn

8

8

9/12/2017

PENTABLE:BReau_shd_util.tbl

STATE PROJECT NUMBER

8997-00-40

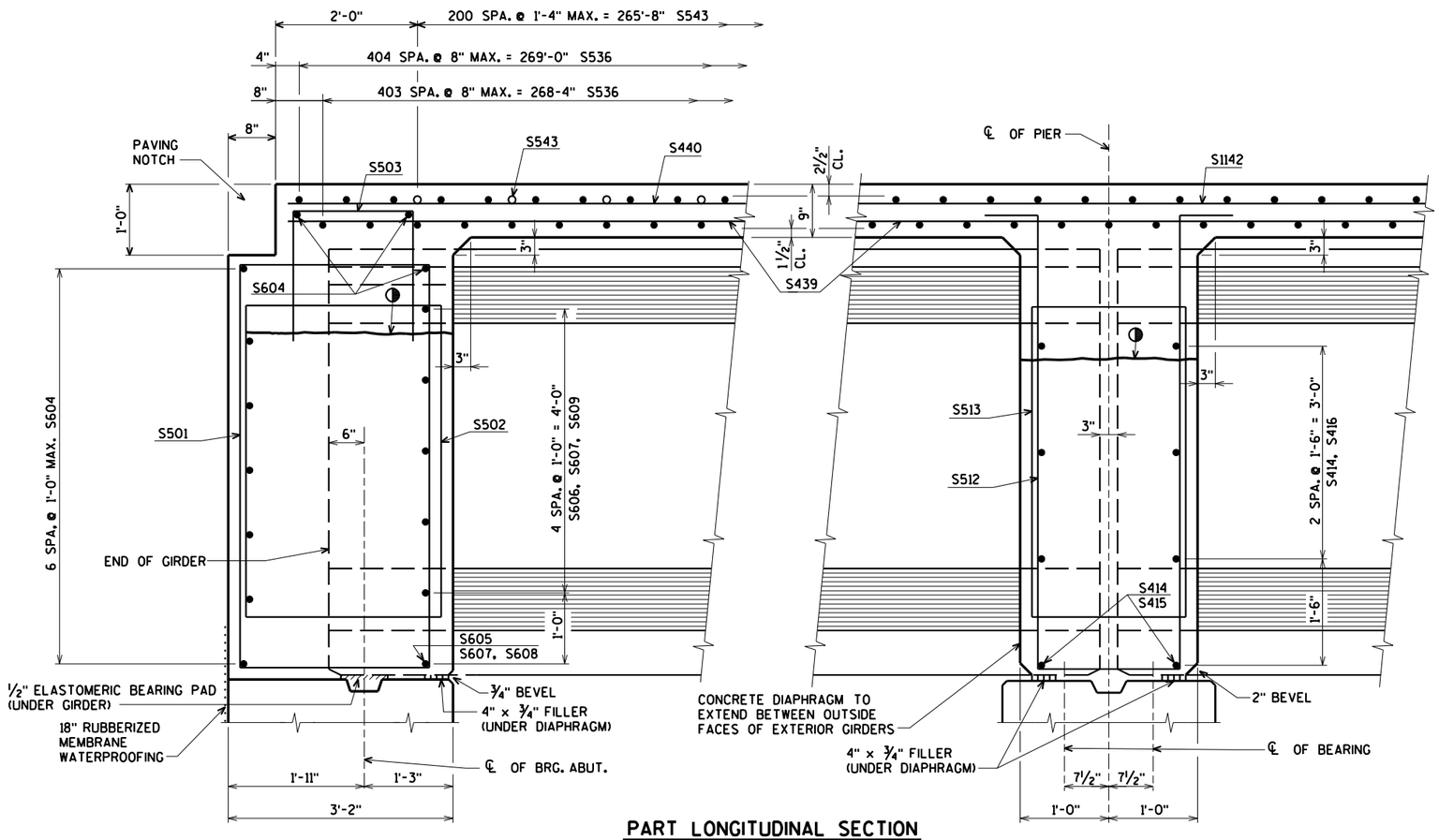

PART LONGITUDINAL SECTION
(AT NEW GIRDERS)

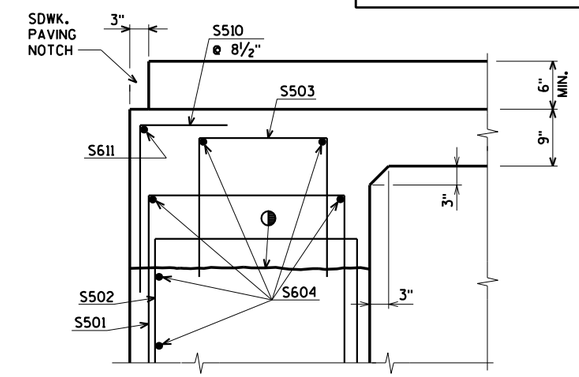

PART LONGITUDINAL SECTION AT SIDEWALK

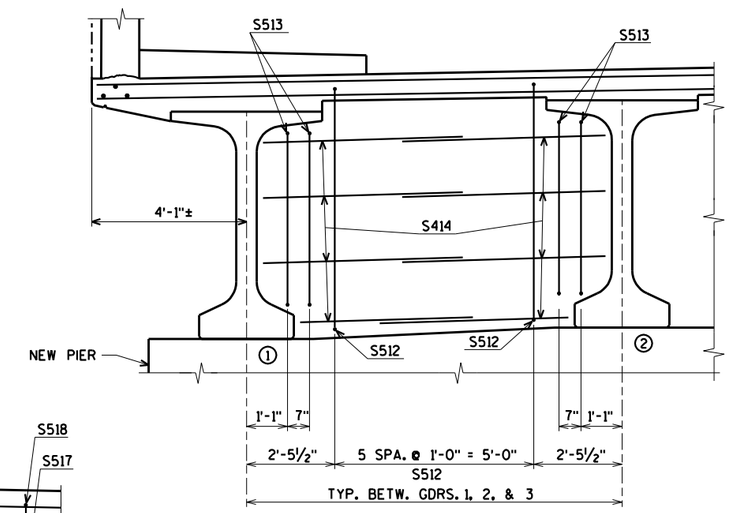

TYPICAL SECTION AT NEW PIER

★ LONG. CONST. JT.

☆ LONG. CONST. JT. (PLACE 18" RUBBERIZED MEMBRANE WATERPROOFING ON BACK FACE)

◑ OPTIONAL CONST. JOINT. 1'-2" BELOW TOP OF GIRDER. IF USED, DECK POUR MUST BE WITHIN 2 WEEKS FROM THE TIME OF THE DIAPHRAGM POUR.

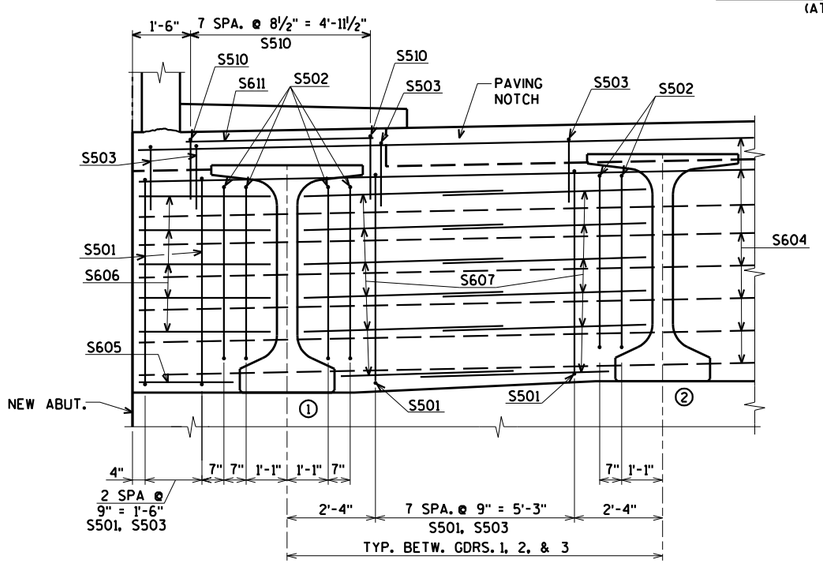

TYPICAL SECTION AT NEW ABUTMENTS

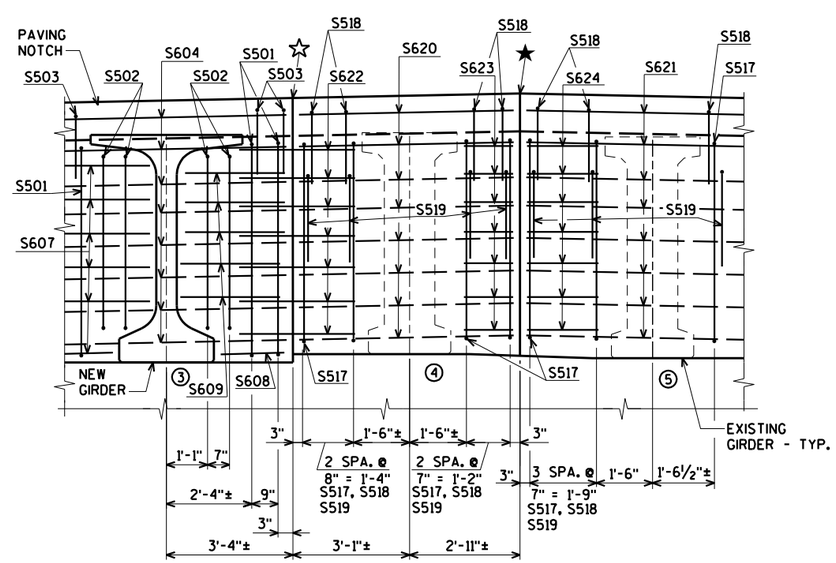

SECTION AT ABUTMENTS GDRS. 3, 4, & 5

NO.	DATE	REVISION	BY

STATE OF WISCONSIN
DEPARTMENT OF TRANSPORTATION

STRUCTURE B-3-2

DRAWN BY CLS | PLANS CK'D. CBM

ORIGINAL PLANS PREPARED BY
AYRES ASSOCIATES
3433 Oakwood Hills Parkway
Eau Claire, WI 54701
www.AyresAssociates.com

SUPERSTRUCTURE NEW GIRDER DETAILS

SHEET 22 OF 31
130

8

8

$PRFNAME$
U:±42-0989.00 - Barron Co, City of Rice Lake±BRIDGE±420989 super.dgn

9/12/2017

PENTABLE:BReau_shd_util.tbl

STATE PROJECT NUMBER

8997-00-40

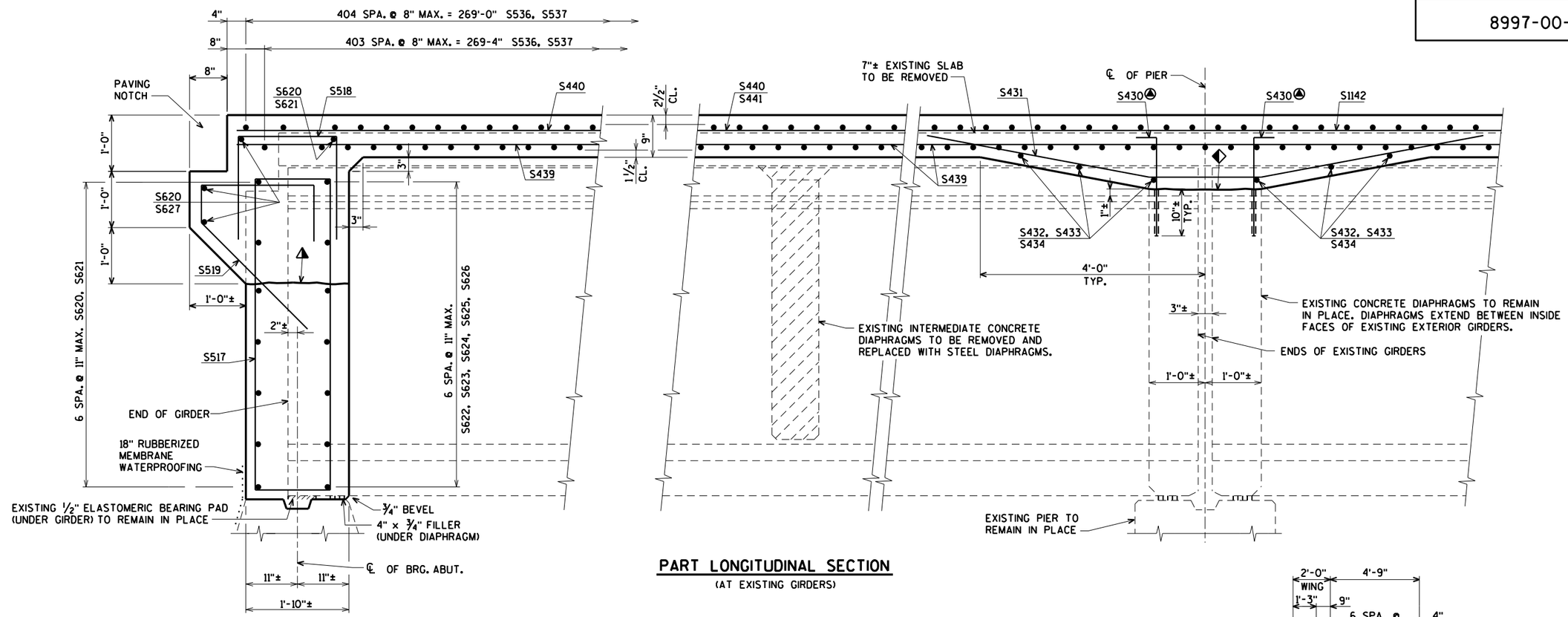

PART LONGITUDINAL SECTION

(AT EXISTING GIRDERS)

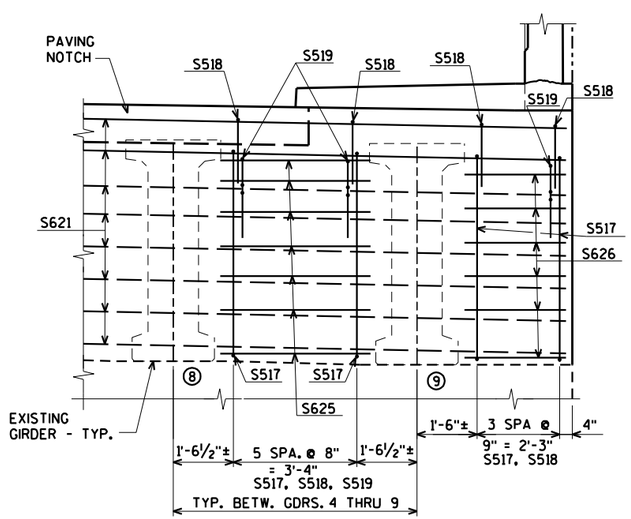

TYPICAL SECTION AT EXISTING ABUTMENTS

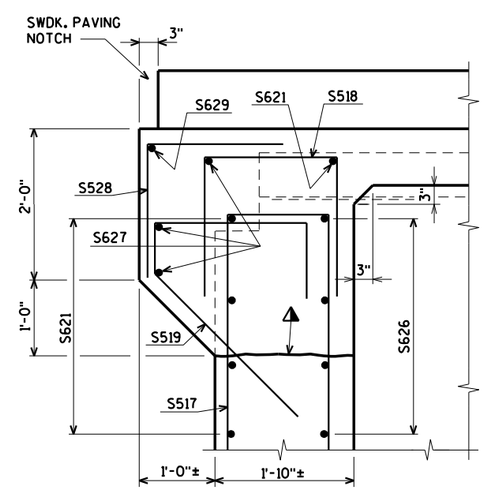

PART LONGITUDINAL SECTION AT SIDEWALK

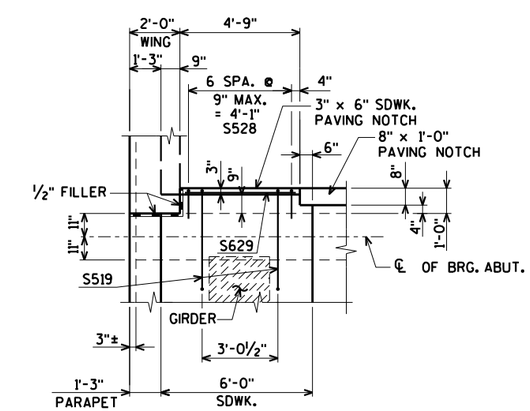

TOP OF DECK AT WING 1

(WING 4 SIMILAR)

NOTE:
EXISTING CONCRETE PILASTER AT PIER AT GIRDER 9 TO REMAIN IN PLACE. FOR DETAILS SEE SHEET 24

◆ CONST. JT. - LEAVE ROUGH

⊕ ADHESIVE ANCHORS NO. 4 BAR

▲ OPTIONAL CONST. JOINT. 1'-11½"± BELOW TOP OF GIRDER. IF USED, DECK POUR MUST BE WITHIN 2 WEEKS FROM THE TIME OF THE DIAPHRAGM POUR.

NO.	DATE	REVISION	BY

STATE OF WISCONSIN
DEPARTMENT OF TRANSPORTATION

STRUCTURE B-3-2

DRAWN BY CLS | PLANS CK'D. CBM

ORIGINAL PLANS PREPARED BY
AYRES ASSOCIATES
3433 Oakwood Hills Parkway
Eau Claire, WI 54701
www.AyresAssociates.com

SUPERSTRUCTURE EXISTING GIRDER DETAILS

SHEET 23 OF 31
131

8

8

$PRFNAME$
U:\42-0989.00 - Barron Co, City of Rice Lake\BRIDGE\420989 super.dgn

9/12/2017

PENTABLE:BRequ_shd_util.tbl

STATE PROJECT NUMBER

8997-00-40

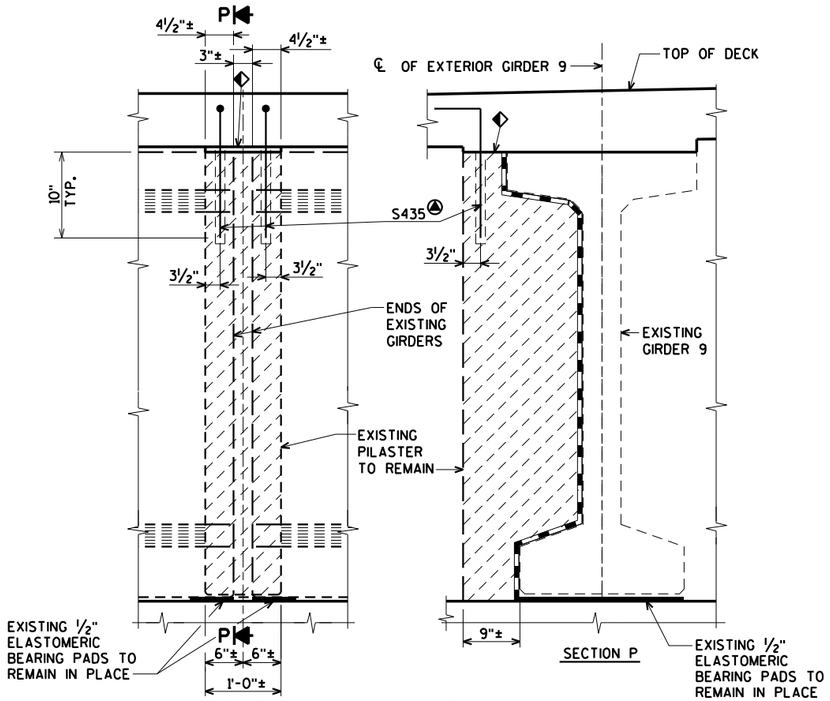

PILASTER DETAIL AT PIER

(OUTSIDE FACE OF EXISTING GIRDER 9 ONLY)

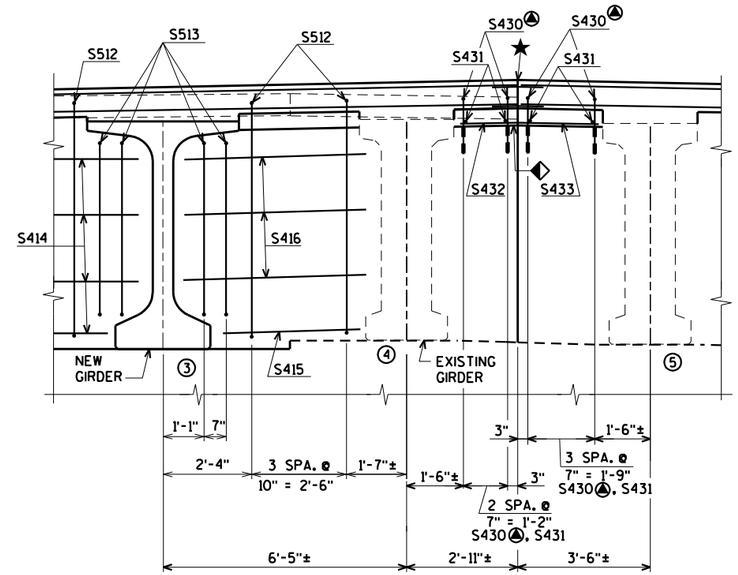

TYPICAL SECTION AT PIER

(BETW. GIRDERS 3 & 4)

★ LONG. CONST. JT.

●● CONST. JOINT - FINISH AS TOP OF DECK AND MATCH BRIDGE X-SLOPE.

◆ CONST. JT. - LEAVE ROUGH

ADHESIVE ANCHORS NO. 4 BAR

±0.5% CONSTRUCTION TOLERANCE IN SIDEWALK CROSS SLOPE. THE SIDEWALK CROSS SLOPE SHALL NOT EXCEED 2% WITHOUT PRIOR APPROVAL FROM THE ENGINEER.

ARCHITECTURAL SURFACE TREATMENT. FOR DETAILS SEE SHEET 6

¾" V-GROOVE. EXTEND V-GROOVE TO 6" FROM FRONT FACE OF ABUTMENT DIAPHRAGMS - TYP.

CONST. JOINT - STRIKE OFF AS SHOWN AND LEAVE ROUGH. FOR DECK POUR, MATCH BRIDGE X-SLOPE.

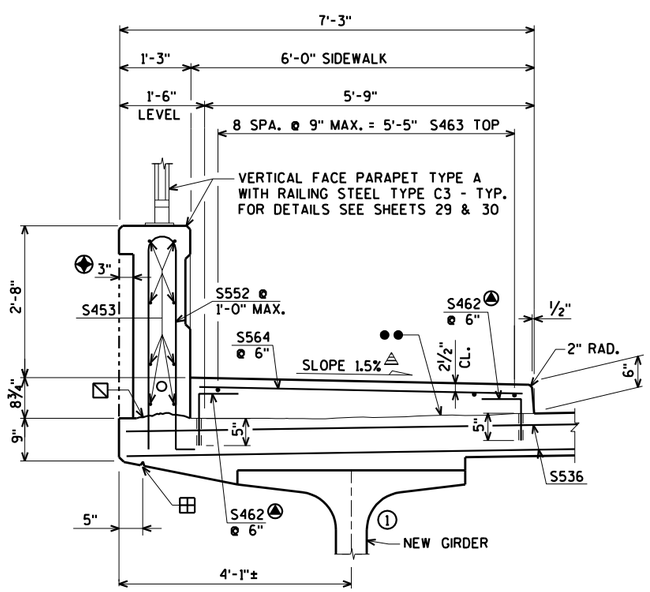

SECTION THRU SIDEWALK WEST SIDE

(LOOKING NORTH)

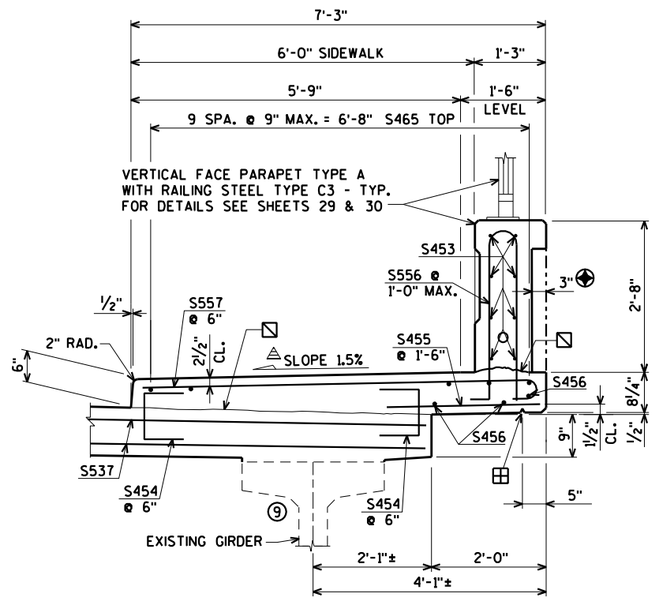

SECTION THRU SIDEWALK EAST SIDE

(LOOKING NORTH)

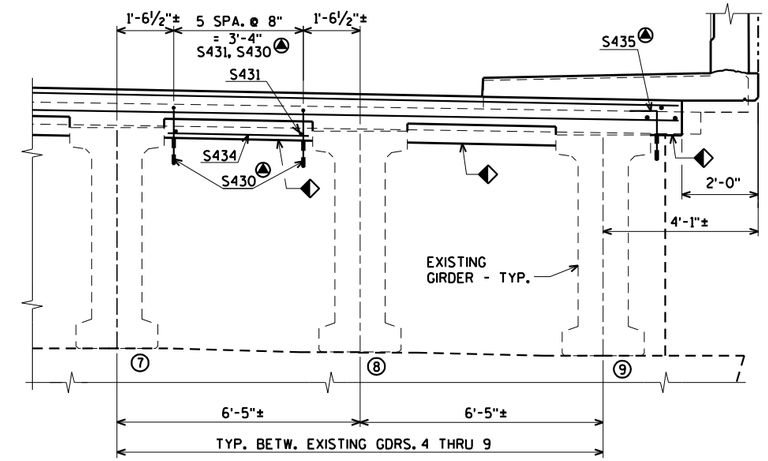

TYPICAL SECTION AT EXISTING PIER

NO.	DATE	REVISION	BY

STATE OF WISCONSIN
DEPARTMENT OF TRANSPORTATION

STRUCTURE B-3-2

DRAWN BY CLS | PLANS CK'D. CBM

SUPERSTRUCTURE DETAILS

SHEET 24 OF 31

132

ORIGINAL PLANS PREPARED BY
AYRES ASSOCIATES
3433 Oakwood Hills Parkway
Eau Claire, WI 54701
www.AyresAssociates.com

8

8

$PRFNAME$
U:±42-0989.00 - Barron Co.City of Rice Lake±BRIDGE±420989 super.dgn

9/12/2017

PENTABLE:BReau_shd_util.tbl

STATE PROJECT NUMBER

8997-00-40

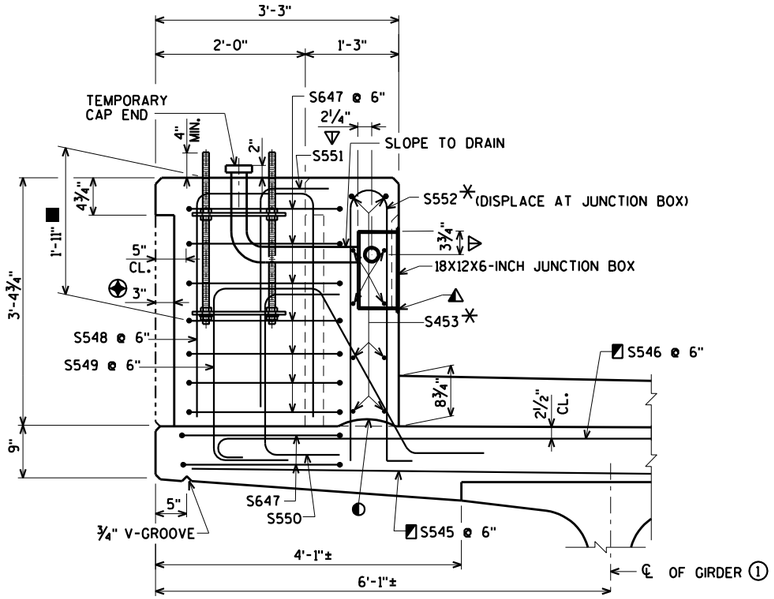

SECTION C-C

WEST SIDE

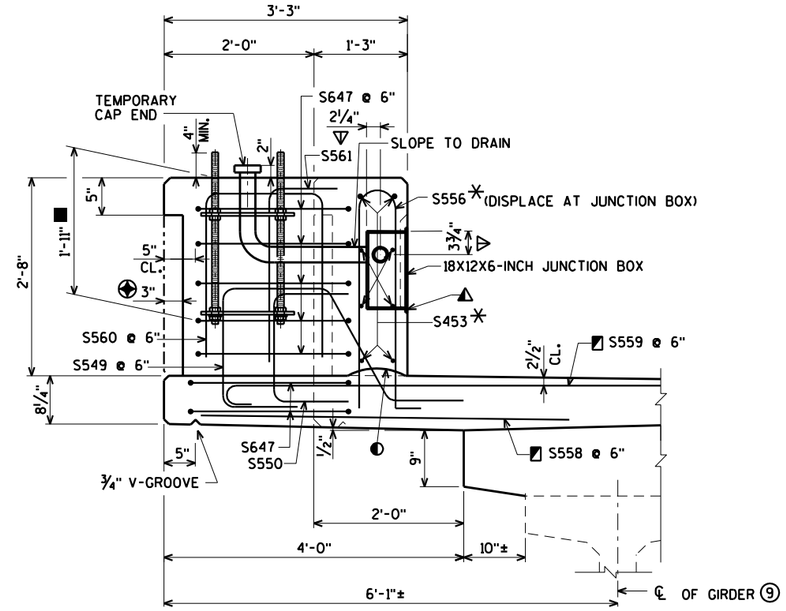

SECTION D-D

EAST SIDE

■ 1" Φ ANCHOR BOLTS = 1'-11"
< 1" Φ ANCHOR BOLTS = 1'-2"

◐ CONST. JT. STRIKE OFF AS SHOWN

◭ CUT OUT ± 1" OF GASKET AT BOTTOM OF JUNCTION BOX COVER TO ALLOW FOR DRAINAGE.

▽ LOCATION OF CONDUIT IS MEASURED FROM OUTSIDE EDGE OF JUNCTION BOX.

◪ THESE BARS ARE IN ADDITION TO STANDARD TRANSVERSE BARS IN DECK OR SIDEWALK.

✳ SEE RAILING STEEL TYPE C3 SHEETS FOR ADDITIONAL BAR STEEL DETAILS

☆ 1" DIA. THREADED ANCHOR BOLTS ASTM A449 OR AASHTO M 314-90 GR 55. HOT DIP ASTM A153, CLASS C, UPPER 8" (MIN.) OF BOLT INCLUDING NUTS & WASHERS. PROVIDE ENLARGED THREAD ON NUTS FOR PROPER FIT AFTER GALVANIZING. PROVIDE DOUBLE FLAT WASHERS & NUTS.

◈ ARCHITECTURAL SURFACE TREATMENT. FOR DETAILS SEE SHEET 6

TABLE FOR "TYPE 5 LIGHT POLE" FROM FACILITIES DEV. MANUAL WITH 1" Φ ANCHOR BOLTS. (ANY OTHER LIGHT POLE TYPE MUST BE DESIGNED FOR).

SO	1'-1½"
E	2 11/16"
W	8⅛"
BC	11½"
D	9½"

W = 0.707 x BC
SO = BC + 2d
d = ANCHOR BOLT DIA.
E = (SO-W1/2)
$D_{MAX.}$ = BC - 2d
$D_{MIN.}$ = 2 x CONDUIT DIA. + 1"

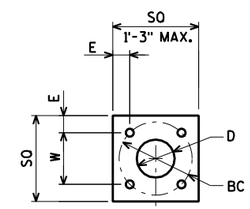

PLATE DETAIL

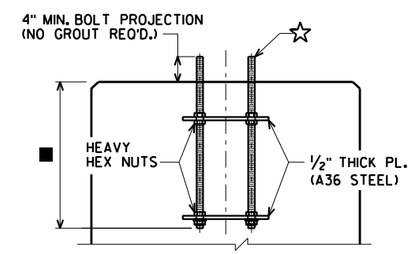

ANCHORAGE DETAIL

(3 REQ'D.)

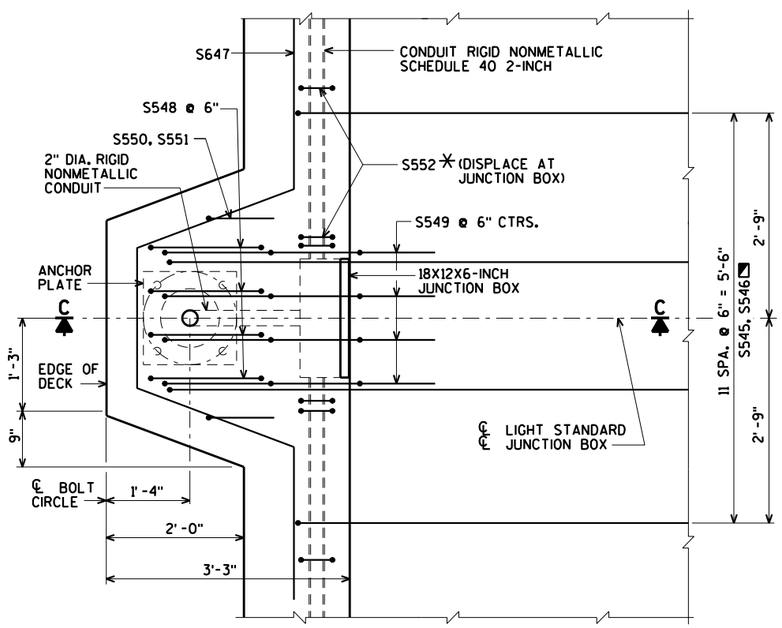

PLAN AT LIGHT STANDARD

WEST SIDE

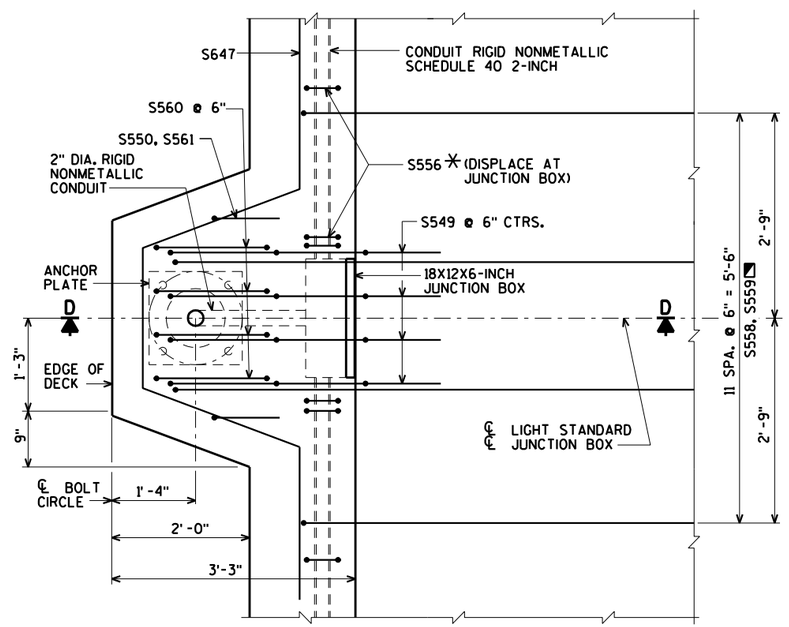

PLAN AT LIGHT STANDARD

EAST SIDE

NO.	DATE	REVISION	BY

STATE OF WISCONSIN
DEPARTMENT OF TRANSPORTATION

STRUCTURE B-3-2

DRAWN BY CLS | PLANS CK'D. CBM

SUPERSTRUCTURE LIGHT STANDARD DETAILS

SHEET 25 OF 31
133

ORIGINAL PLANS PREPARED BY
AYRES ASSOCIATES
3433 Oakwood Hills Parkway
Eau Claire, WI 54701
www.AyresAssociates.com

8

8

$PRFNAME$
U:\42-0989.00 - Barron Co. City of Rice Lake\BRIDGE\420989 super.dgn

9/12/2017

PENTABLE:BReau_shd_util.tbl

STATE PROJECT NUMBER

8997-00-40

BILL OF BARS

BAR. NO.	COATED BAR	NO. REQ'D. STAGE 1	STAGE 2	STAGE 3	LENGTH	BENT BAR	BUNDLED	BAR SERIES	153,890# COATED LOCATION
S501	X	42	0	0	17-6	X			DIAPH. @ ABUT. VERT.
S502	X	24	0	0	14-8	X			DIAPH. @ ABUT. VERT.
S503	X	42	0	0	5-6	X			DIAPH. @ ABUT. VERT.
S604	X	20	0	0	26-10				DIAPH. @ ABUT. HORIZ.
S605	X	2	0	0	2-6				DIAPH. @ ABUT. HORIZ.
S606	X	10	0	0	3-5				DIAPH. @ ABUT. HORIZ.
S607	X	48	0	0	5-6				DIAPH. @ ABUT. HORIZ.
S608	X	2	0	0	1-9				DIAPH. @ ABUT. HORIZ.
S609	X	10	0	0	2-10				DIAPH. @ ABUT. HORIZ.
S510	X	16	0	0	2-9	X			DIAPH. @ ABUT. VERT. @ SDWK.
S611	X	2	0	0	5-1				DIAPH. @ ABUT. HORIZ. @ SDWK.
S512	X	16	0	0	15-10	X			DIAPH. @ PIER VERT.
S513	X	10	0	0	12-4	X			DIAPH. @ PIER VERT.
S414	X	32	0	0	5-9				DIAPH. @ PIER. HORIZ.
S415	X	2	0	0	3-8				DIAPH. @ PIER HORIZ.
S416	X	6	0	0	5-1				DIAPH. @ PIER HORIZ.
S517	X	12	64	0	14-6	X			DIAPH. @ ABUT. VERT.
S518	X	12	64	0	5-4	X			DIAPH. @ ABUT. VERT.
S519	X	12	58	0	6-6	X			DIAPH. @ ABUT. VERT.
S620	X	22	0	0	7-0				DIAPH. @ ABUT. HORIZ.
S621	X	0	16	0	32-11				DIAPH. @ ABUT. HORIZ.
S622	X	14	0	0	2-10				DIAPH. @ ABUT. HORIZ.
S623	X	14	0	0	1-4				DIAPH. @ ABUT. HORIZ.
S624	X	0	14	0	1-11				DIAPH. @ ABUT. HORIZ.
S625	X	0	56	0	3-7				DIAPH. @ ABUT. HORIZ.
S626	X	0	14	0	2-6				DIAPH. @ ABUT. HORIZ.
S627	X	0	6	0	30-11				DIAPH. @ ABUT. HORIZ.
S528	X	0	14	0	2-7	X			DIAPH. @ ABUT. VERT. @ SDWK.
S629	X	0	2	0	4-3				DIAPH. @ ABUT. HORIZ. @ SDWK.
▲ S430	X	6	56	0	2-4	X			EXISTING DIAPH. @ EXISTING PIER VERT.
S431	X	3	28	0	10-8	X			EXISTING DIAPH. @ PIER LONG.
S432	X	6	0	0	1-4				DIAPH. @ PIER TRANS.
S433	X	0	6	0	1-11				DIAPH. @ PIER TRANS.
S434	X	0	24	0	3-7				DIAPH. @ PIER TRANS.
▲ S435	X	0	2	0	2-4	X			PILASTER VERT.
S536	X	809	0	0	32-11				SLAB TRANS. TOP & BOT. STAGE 1
S537	X	0	809	0	30-11				SLAB TRANS. TOP & BOT. STAGE 2
⊖ S538	X	809	809	0	2-8				SLAB COUPLERS ALONG LONG. CONST. JOINT
S439	X	336	315	0	39-11				SLAB LONG. BOT.
S440	X	288	270	0	32-8				SLAB LONG. TOP
S441	X	48	45	0	26-2				SLAB LONG. TOP
S1142	X	48	45	0	59-6				SLAB LONG. TOP @ PIER
S543	X	201	0	0	6-1	X			SLAB TRANS. TOP STAGE 1
S744	X	24	24	0	5-0	X			SLAB LONG. @ FLOOR DRAINS
S545	X	24	0	0	8-11				SLAB TRANS. BOT. @ LIGHT STANDARD
S546	X	24	0	0	9-6	X			SLAB TRANS. TOP @ LIGHT STANDARD
S647	X	18	7	0	10-0				SLAB & PARAPET HORIZ. @ LIGHT STANDARD
S548	X	8	0	0	7-7	X			PARAPET VERT. @ LIGHT STANDARD
S549	X	8	4	0	7-0	X			PARAPET VERT. @ LIGHT STANDARD
S550	X	4	2	0	3-4	X			PARAPET VERT. @ LIGHT STANDARD
S551	X	4	0	0	3-11	X			PARAPET VERT. @ LIGHT STANDARD
S552	X	271	0	0	8-2	X			PARAPET VERT. STAGE 1
S453	X	70	56	0	39-11				PARAPET HORIZ.
S454	X	0	1084	0	2-8	X			SLAB VERT. @ SDWK. STAGE 2
S455	X	0	180	0	2-10				SDWK. TRANS. BOT. STAGE 2
S556	X	0	271	0	6-9	X			SDWK. VERT. @ PARAPET STAGE 2
S557	X	0	542	0	7-5	X			SDWK. TRANS. TOP STAGE 2
S558	X	0	12	0	6-10				SDWK. TRANS. BOT. @ LIGHT STANDARD
S559	X	0	12	0	7-5				SDWK. TRANS. TOP @ LIGHT STANDARD
S560	X	0	4	0	6-0				PARAPET VERT. @ LIGHT STANDARD
S561	X	0	2	0	3-2				PARAPET VERT. @ LIGHT STANDARD
▲ S462	X	0	0	1084	1-8	X			SLAB VERT. @ SDWK. STAGE 3
S463	X	0	0	63	39-11				SDWK. LONG. TOP STAGE 3
S564	X	0	0	542	5-8				SDWK. TRANS. TOP STAGE 3
S465	X	0	91	0	39-11				PARAPET LONG. @ SDWK. STAGE 2

BENDING DIMENSIONS ARE OUT TO OUT OF BARS.

▲ ADHESIVE ANCHORS NO. 4 BAR

⊖ BARS WITH COUPLER.
FOR DETAILS SEE SHEET 27.
TYPICAL ALONG LONG. CONST. JT.

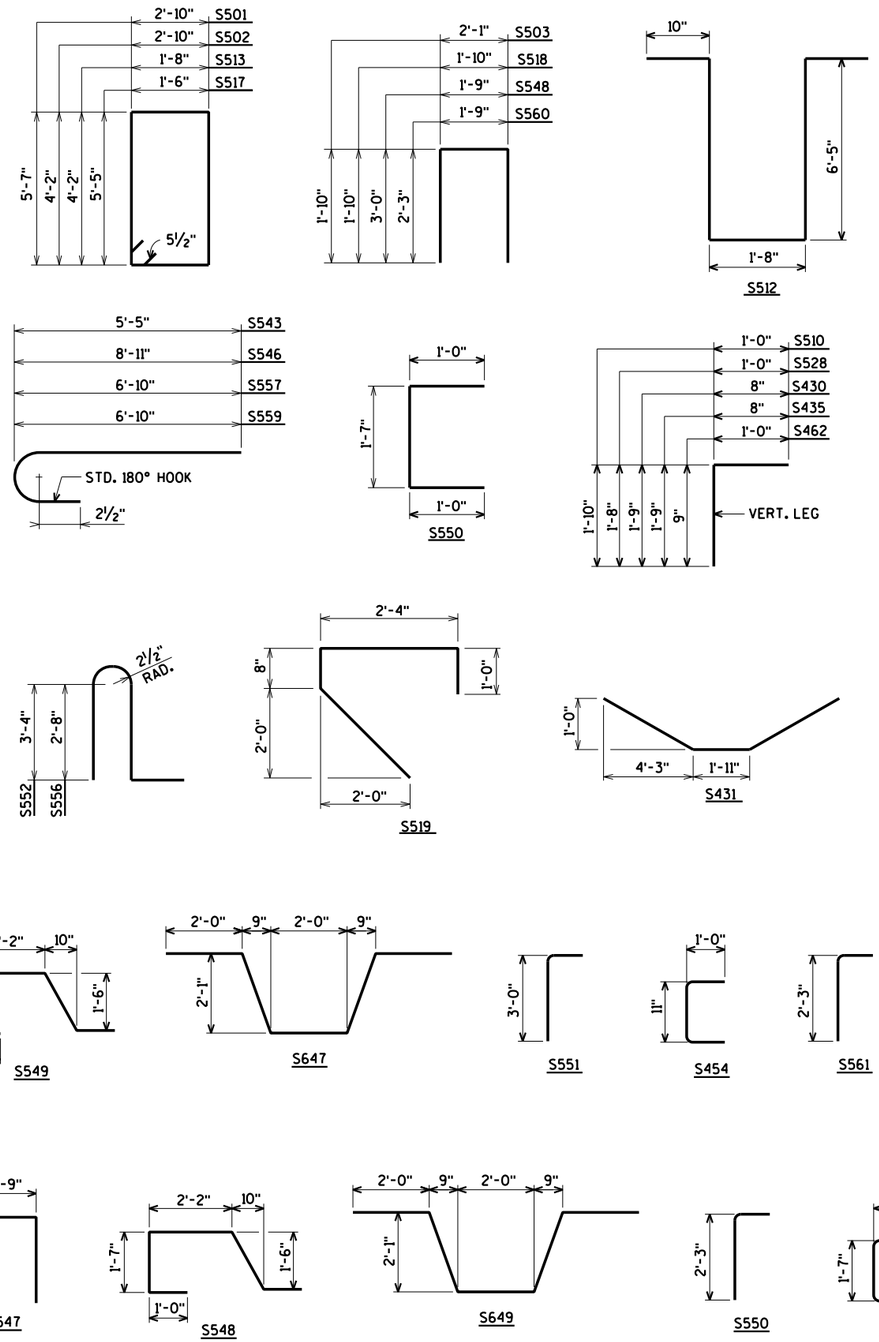

NO.	DATE	REVISION	BY

STATE OF WISCONSIN
DEPARTMENT OF TRANSPORTATION

STRUCTURE B-3-2

DRAWN BY CLS | PLANS CK'D. CBM

SUPERSTRUCTURE BILL OF BARS

SHEET 26 OF 31
134

ORIGINAL PLANS PREPARED BY
AYRES ASSOCIATES
3433 Oakwood Hills Parkway
Eau Claire, WI 54701
www.AyresAssociates.com

8

8

$PRFNAME$
U:42-0989.00 - Barron Co. City of Rice Lake#BRIDGE#420989 super.dgn

10/6/2017

PENTABLE:BReau_shd_util.tbl

STATE PROJECT NUMBER

8997-00-40

NOTES

STEEL SPLICE (COUPLER) ASSEMBLY SHALL BE AN APPROVED TYPE AND SHALL DEVELOP IN TENSION AT LEAST 125% OF THE YIELD STRENGTH OF THE SPLICED REINFORCEMENT BARS.

DOWEL BAR SPLICERS SHALL BE OF MINIMUM 60 ksi YIELD STRENGTH, AND HAVE TENSILE STRENGTH AREA EQUAL OR GREATER THAN THAT OF THE LAPPED REINFORCEMENT BARS.

DOWEL BAR SPLICERS SHALL MEET THE DEFORMATION REQUIREMENTS FOR STANDARD ASTM DEFORMED REINFORCING BARS.

FOR DOWEL BAR SPLICERS, ALL REINFORCEMENT BARS SHALL BE LAPPED AND TIED TO THE SPLICER BARS.

SPLICER (COUPLER) ASSEMBLY IN THE SLAB SHALL BE EPOXY COATED IN ACCORDANCE WITH THE REQUIREMENTS FOR REINFORCEMENT BARS.

OTHER SYSTEMS OF SIMILAR DESIGN MAY BE SUBMITTED TO THE ENGINEER FOR APPROVAL. APPROVAL SHALL BE BASED ON CERTIFIED TEST RESULTS FROM AN APPROVED TESTING LABORATORY THAT THE PROPOSED SPLICER (COUPLER) ASSEMBLY SATISFIES THE FOLLOWING REQUIREMENT:

① MINIMUM CAPACITY = 1.25 X fy X AREA OF SPLICED REINFORCEMENT BAR.

WHERE fy = YIELD STRENGTH OF SPLICED REINFORCEMENT BARS

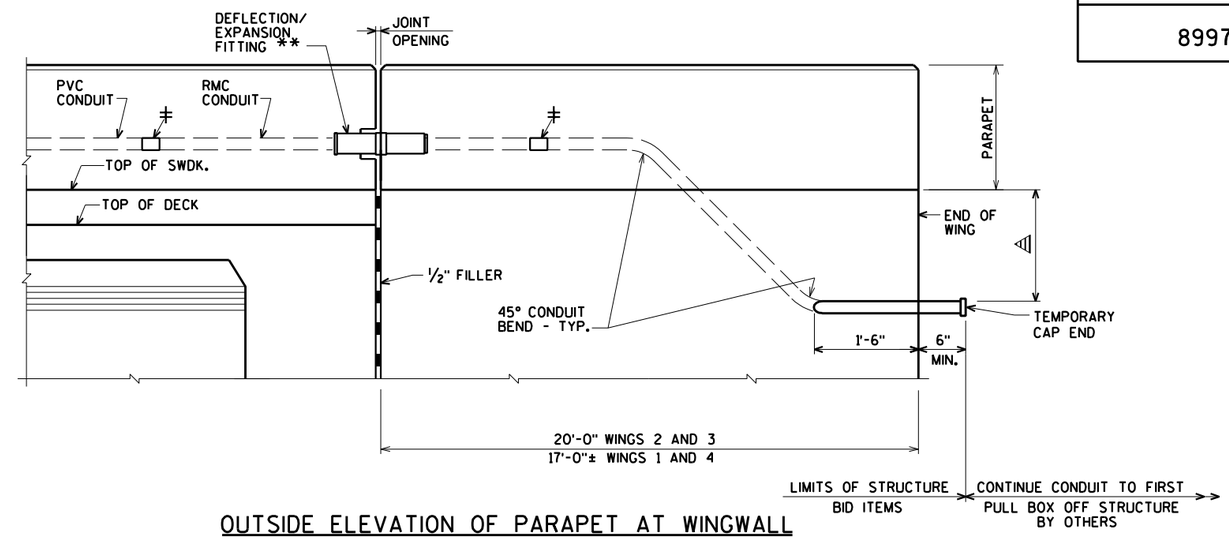

OUTSIDE ELEVATION OF PARAPET AT WINGWALL

(WING 2 SHOWN, WINGS 1, 3, AND 4 SIMILAR)

NOTE: FORMLINER AND RAILING NOT SHOWN FOR CLARITY

DOWEL BAR SPLICER LAP LENGTHS

CONCRETE UNDER BAR	BAR SIZE	4	5	6	7	8	9	10	11
12" OR LESS	f'c = 3500	1'-8"	2'-8"	3'-2"	4'-3"	5'-6"	7'-0"	8'-9"	10'-11"
	f'c = 4000	1'-8"	2'-8"	3'-2"	4'-0"	5'-2"	6'-6"	8'-3"	10'-2"
MORE THAN 12"	f'c = 3500	2'-3"	2'-11"	3'-6"	4'-8"	6'-1"	7'-10"	9'-10"	12'-1"
	f'c = 4000	2'-3"	2'-11"	3'-6"	4'-5"	5'-8"	7'-4"	9'-2"	11'-4"

BAR LENGTH COMPUTED TO ℄ LONGIT. JOINT AND SHALL BE MODIFIED IF REQ'D. TO BAR COUPLER MANUFACTURER RECOMMENDATIONS. PAY BASED ON BARS AS DETAILED.

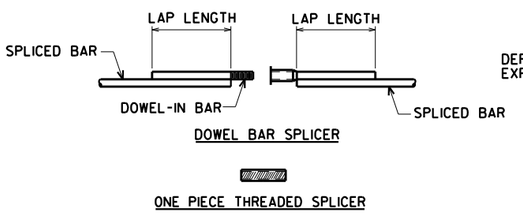

SPLICER ALTERNATIVES

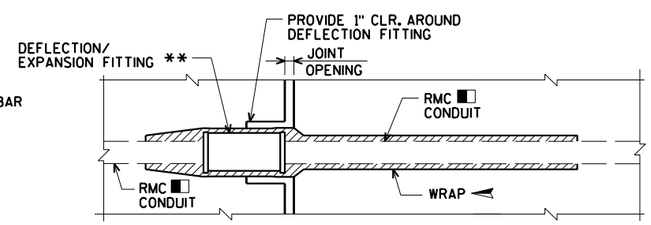

DEFLECTION/EXPANSION FITTING

THIS DETAIL ACCOMMODATES A MAXIMUM OF ¾" TOTAL MOVEMENT AND UP TO 30 DEGREES OF ANGULAR MISALIGNMENT IN ANY DIRECTION. BOND JUMPER NOT SHOWN FOR CLARITY (CONCRETE TO CONCRETE FITTING)

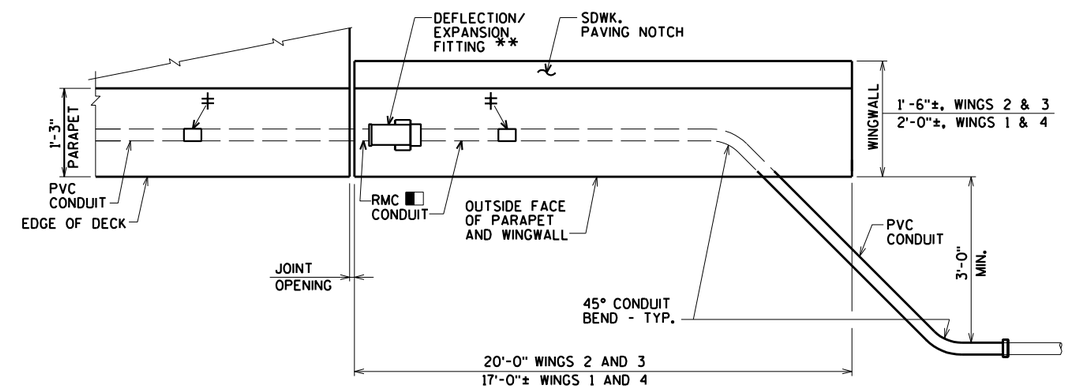

PLAN OF PARAPET AT WINGWALL

(WING 2 SHOWN, WINGS 1, 3, AND 4 SIMILAR)

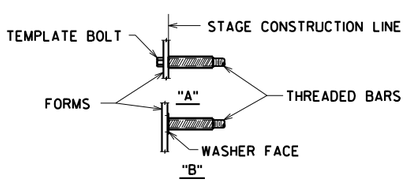

INSTALLATION AND SETTING METHODS

"A" SET SPLICER BY MEANS OF A TEMPLATE BOLT
"B" SET SPLICER BY NAILING TO WOOD FORMS OR CEMENTING TO STEEL FORMS.

LEGEND

‡ NONMETALLIC CONDUIT TO METALLIC CONDUIT ADAPTOR FITTING (UL OR NRTL LISTED FOR ELECTRICAL USE SHALL BE USED)

** DEFLECTION/EXPANSION FITTING REQUIREMENTS (IF USED):

UP TO ¾" CONDUIT CONTRACTION OR EXPANSION AND UP TO 30 DEGREES OF ANGULAR MISALIGNMENT IN ANY DIRECTION WITH BONDING JUMPER

■ USE 2" DIA. RIGID METALLIC (RMC) CONDUIT AT FITTINGS. PROVIDE RMC FOR 3'-0" MIN. ON EACH SIDE OF JOINT OPENINGS UNLESS NOTED OTHERWISE.

◄ SPONGE RUBBER WRAP TO BE AASHTO M153, TYPE 1 OR EQUIVALENT - ¼" MINIMUM THICKNESS. PROVIDE WRAP FOR THE ENTIRE LENGTH OF THE FITTING OR AS SHOWN. SPONGE RUBBER WRAP INCIDENTAL TO "CONDUIT RIGID METALLIC 2-INCH"

NOTES

△ 2'-0" MIN. CONDUIT COVER UNDER ROADWAYS, 1'-6" OTHERWISE. CONDUIT COVER SHOULD NOT EXCEED 3'-0".

CONDUIT SHALL BE EMBEDDED 2" CLEAR.

USE 2" DIA. RIGID NONMETALLIC CONDUIT (PVC) UNLESS NOTED OTHERWISE.

CONDUIT FITTINGS, CONDUIT BENDS, AND ADAPTER FITTINGS INCIDENTAL TO CONDUIT WORK.

CONDUIT BENDS SHALL CONFORM TO THE NATIONAL ELECTRIC CODE.

PROVIDE JUNCTION BOXES FROM THE APPROVED PRODUCTS LIST.

NO.	DATE	REVISION	BY

STATE OF WISCONSIN
DEPARTMENT OF TRANSPORTATION

STRUCTURE B-3-2

DRAWN BY CLS | PLANS CK'D. CBM

MISCELLANEOUS SUPERSTRUCTURE DETAILS

SHEET 27 OF 31
135

ORIGINAL PLANS PREPARED BY
AYRES ASSOCIATES
3433 Oakwood Hills Parkway
Eau Claire, WI 54701
www.AyresAssociates.com

8

8

$PRFNAME$
U:\42-0989.00 - Barron Co, City of Rice Lake\BRIDGE\420989 super.dgn

9/12/2017

PENTABLE:BReau_shd_util.tbl

STATE PROJECT NUMBER

8997-00-40

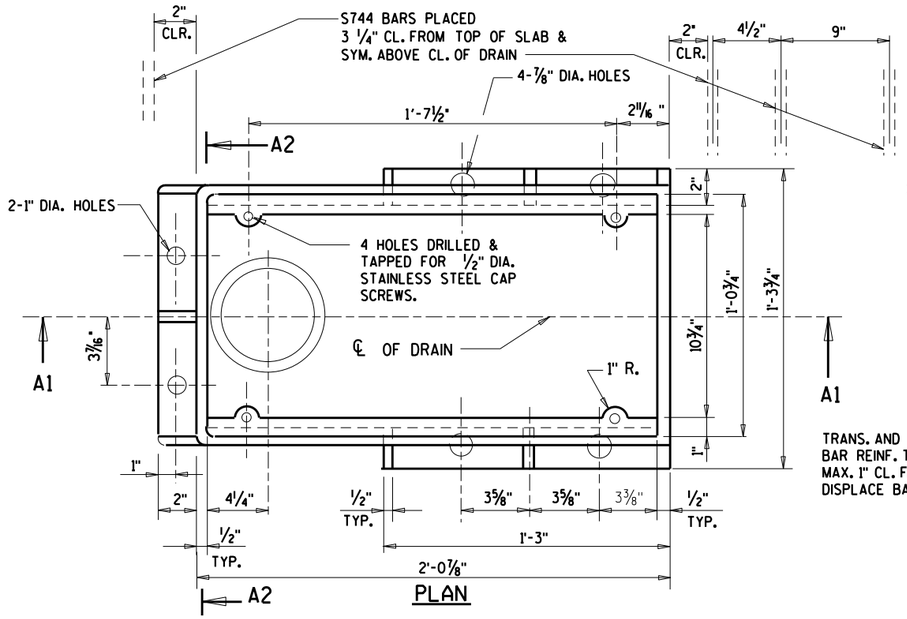

TRANS. AND LONGIT. SLAB BAR REINF. TO BE CUT A MAX. 1" CL. FROM DRAIN FRAME. DISPLACE BARS WHERE POSSIBLE

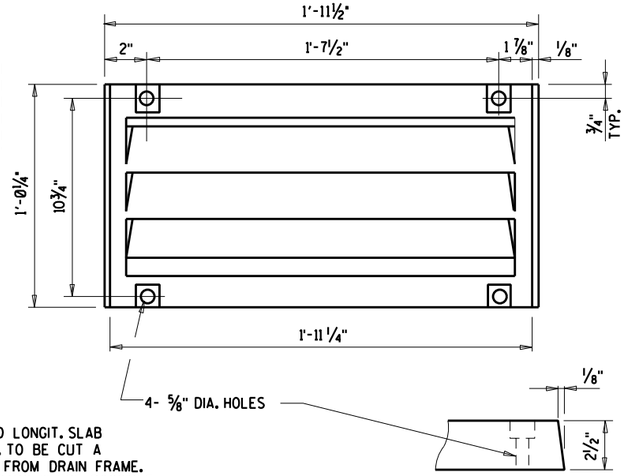

GRATE CASTING DETAIL

ATTACH GRATE TO FRAME FOR SHIPMENT

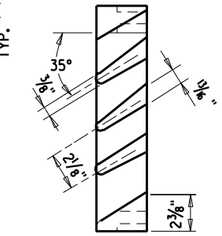

NOTES

ALL MATERIAL FOR TYPE "GC" CASTING, EXCLUDING GRATE HOLD DOWN SCREWS, SHALL BE GRAY IRON CONFORMING TO ASTM A48, CLASS 30. (APPROXIMATE WEIGHT = 225#)

MATERIAL FOR BRACKETS SHALL CONFORM TO ASTM A36.

THE CONTRACTOR MAY PROPOSE AN ALTERNATE TYPE OF BRACKET. THE PROPOSED ALTERNATE DETAILS SHALL BE SUBMITTED AND SUBJECT TO THE APPROVAL OF THE ENGINEER.

◪ FLANGED 6" DIA. DOWNSPOUTS SHALL BE REINFORCED THERMOSETTING RESIN PIPE (RTRP) OR GALVANIZED STANDARD PIPE CONFORMING TO ASTM A53.

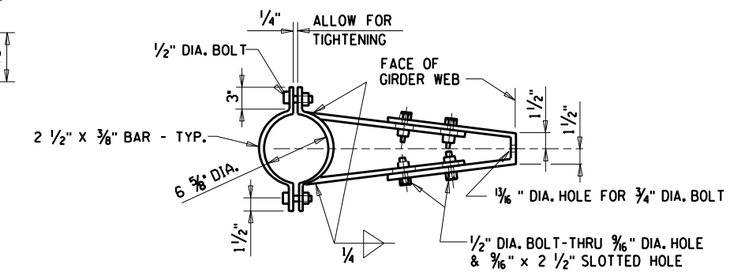

BRACKET DETAIL

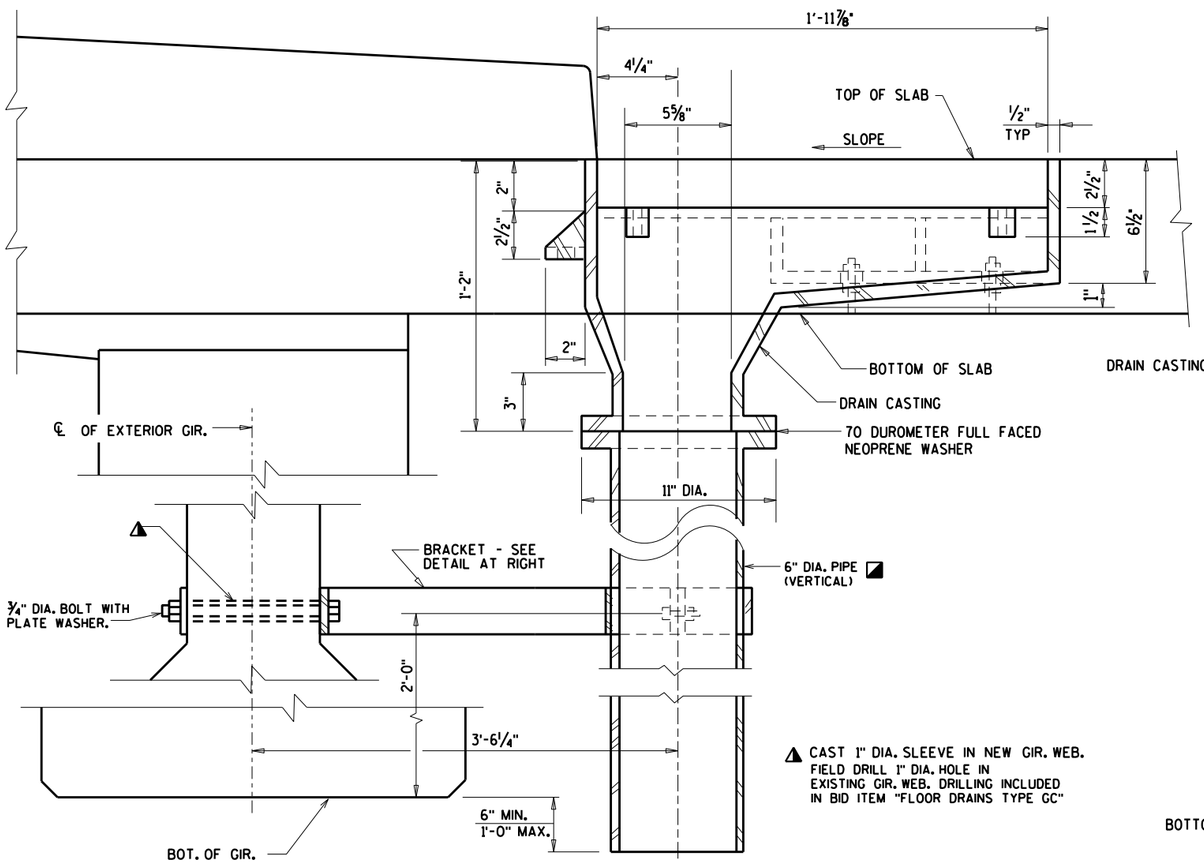

▲ CAST 1" DIA. SLEEVE IN NEW GIR. WEB. FIELD DRILL 1" DIA. HOLE IN EXISTING GIR. WEB. DRILLING INCLUDED IN BID ITEM "FLOOR DRAINS TYPE GC"

SECTION A1

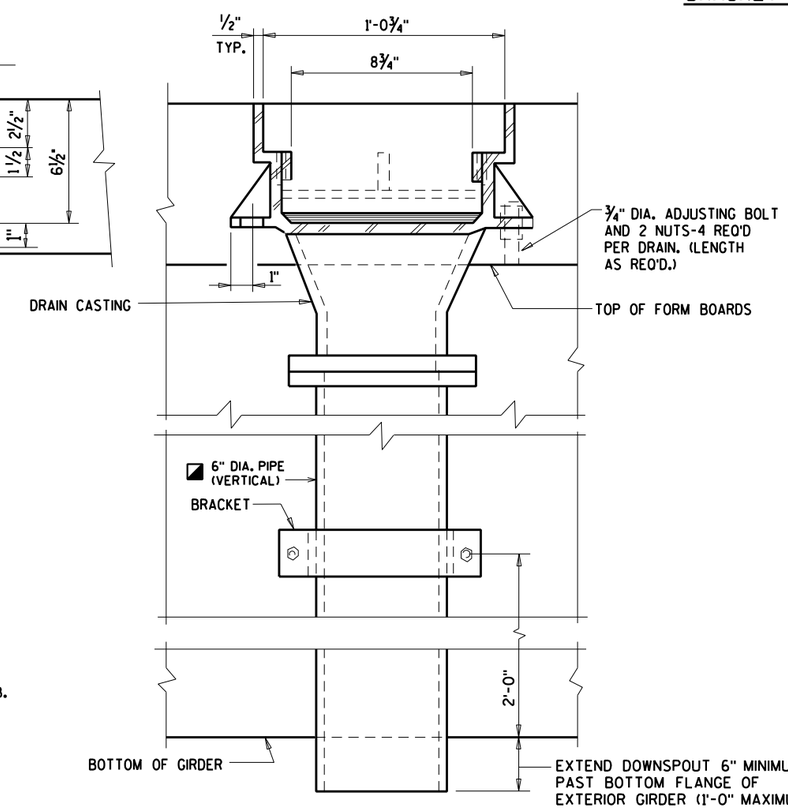

SECTION A2

NO.	DATE	REVISION	BY

STATE OF WISCONSIN
DEPARTMENT OF TRANSPORTATION

STRUCTURE B-3-2

DRAWN BY CLS | PLANS CK'D. CBM

ORIGINAL PLANS PREPARED BY
AYRES ASSOCIATES
3433 Oakwood Hills Parkway
Eau Claire, WI 54701
www.AyresAssociates.com

FLOOR DRAIN TYPE 'GC'

SHEET 28 OF 31
136

8

8

$PRFNAME$
U:\42-0989.00 - Barron Co. City of Rice Lake\BRIDGE\420989 drainGC.dgn

10/6/2017

PENTABLE:BReau_shd_util.tbl

STATE PROJECT NUMBER

8997-00-40

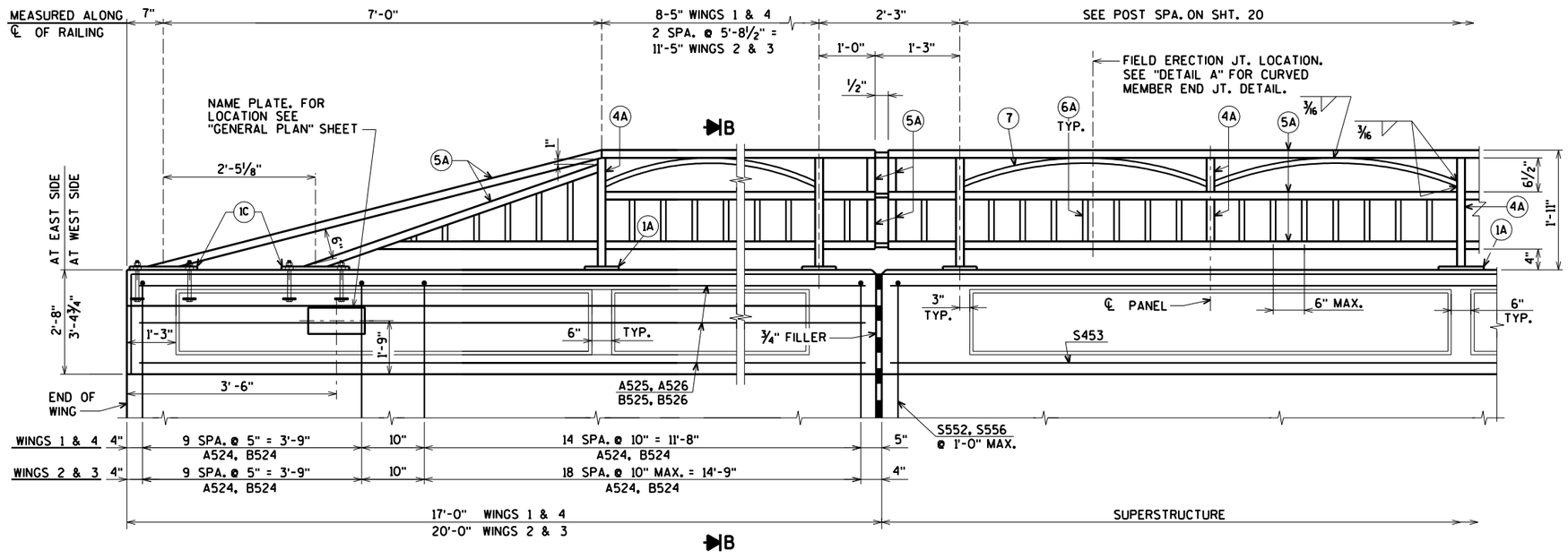

ELEVATION OF RAILING

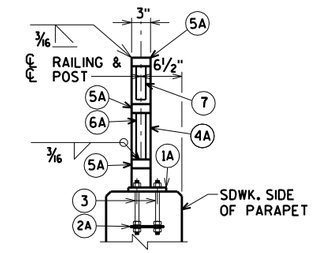

END VIEW

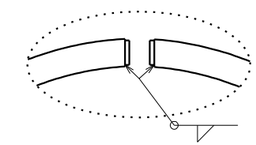

DETAIL A

SEAL ENDS ON CURVED STRUCTURAL TUBING WITH ¼" PLATE. WELD AND GRIND SMOOTH.

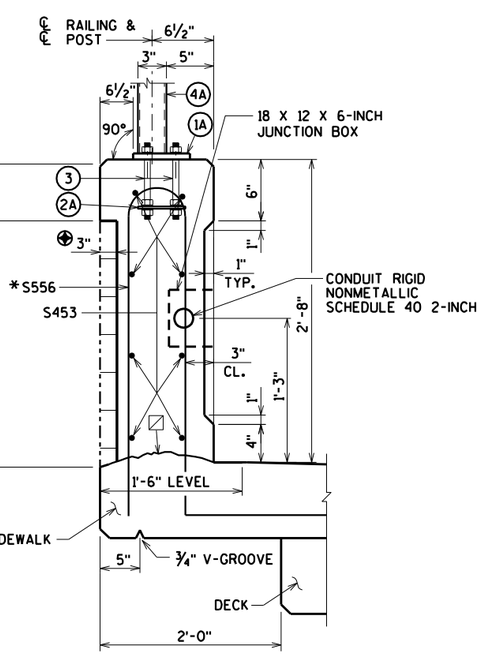

SECTION THRU PARAPET ON BRIDGE

(EAST SIDE OF BRIDGE)

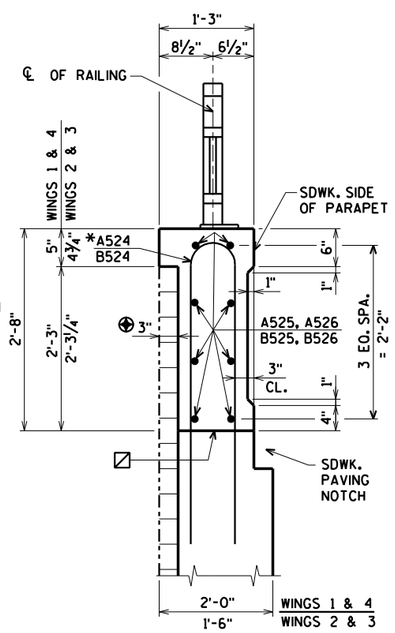

SECTION B

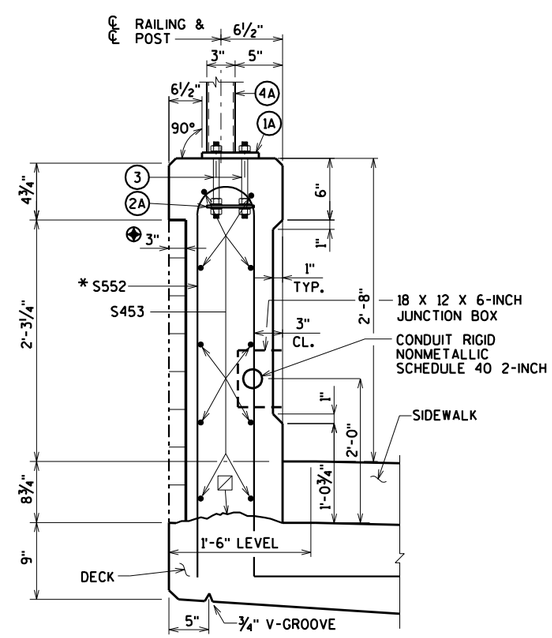

SECTION THRU PARAPET ON BRIDGE

(WEST SIDE OF BRIDGE)

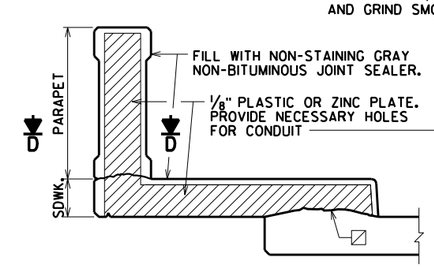

SECTION THRU DEFLECTION JOINT

(SHOWING DEFLECTION JOINT IN PARAPET AND SIDEWALK.)

A DEFLECTION JOINT SHOULD BE PLACED IN THE SIDEWALK AND PARAPET OVER THE PIER.

SINCE THERE IS A LIGHT STANDARD ON THE WEST SIDE AT THE PIER, PLACE A DEFLECTION JOINT APPROX. 4'-0" EACH SIDE OF THE PIER, WITH NONE DIRECTLY OVER THE PIER.

WHEN PARAPETS ARE POURED CONTINUOUSLY FROM END TO END, THEY SHALL BE SEPARATED AT THE DEFLECTION JOINTS BY A PIECE OF ⅛" ZINC OR PLASTIC PLATE CUT AS SHOWN ABOVE BY SHADED AREA. IF CONSTRUCTION JOINTS IN PARAPETS ARE USED AT THE DEFLECTION JOINTS, ONE SIDE OF JOINT SHALL BE COATED WITH AN APPROVED LIQUID BOND BREAKER AND PLATE SEPARATORS MAY BE OMITTED.

* ADJUST LOCATIONS OF BARS TO ALLOW PLACEMENT OF ANCHOR ASSEMBLY FOR RAILING

HORIZ. CONST. JOINT - STRIKE OFF AS SHOWN AND LEAVE ROUGH.

ARCHITECTURAL SURFACE TREATMENT FOR DETAILS SEE SHEET 6

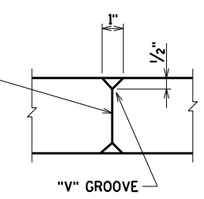

SECTION D-D

NO.	DATE	REVISION	BY

STATE OF WISCONSIN
DEPARTMENT OF TRANSPORTATION

STRUCTURE B-3-2

DRAWN BY CLS | PLANS CK'D. CBM

RAILING STEEL TYPE C3

SHEET 29 OF 31
137

ORIGINAL PLANS PREPARED BY
AYRES ASSOCIATES
3433 Oakwood Hills Parkway
Eau Claire, WI 54701
www.AyresAssociates.com

8

8

$PRFNAME$
U:\42-0989.00 - Barron Co. City of Rice Lake\BRIDGE\420989 C3 rail.dgn

9/12/2017

PENTABLE:BReau_shd_util.tbl

STATE PROJECT NUMBER

8997-00-40

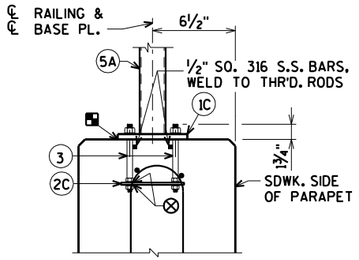

ANCHORAGE FOR END RAIL

NOTE: ANCHOR PLATES NOT REQ'D. WHEN ADHESIVE ANCHORS ARE USED.

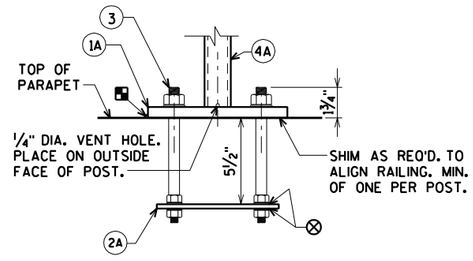

ANCHORAGE FOR RAIL POSTS

NOTE: ANCHOR PLATES NOT REQ'D. WHEN ADHESIVE ANCHORS ARE USED.

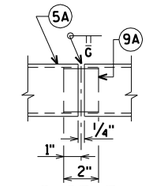

SHOP RAIL SPLICE DETAIL

(LOCATION MUST BE SHOWN ON SHOP DRAWINGS)

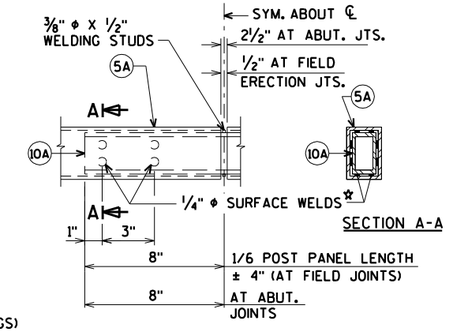

FIELD ERECTION JOINT DETAIL

☆ MIN. ⅝" FLAT SURFACE DIA. PUNCHINGS OR STUDS MAY BE USED AS AN ALTERNATE.

LEGEND

(1A) PLATE ⅝" × 6" × 8" WITH ¾" × 1½" SLOTTED HOLES.

(1C) PLATE ⅝" × 8" × 1'-1" WITH ¾" × 1½" SLOTTED HOLES.

(2A) ¼" × 5" × 7" ANCHOR PLATE WITH 11/16" DIA. HOLES FOR THR'D. RODS NO. 3.

(2C) ¼" × 2½" × 7¼" ANCHOR PLATE WITH 11/16" DIA. HOLES FOR THR'D. RODS NO. 3.

(3) ⅝" DIA. × 9" LONG, TYPE 316 STAINLESS STEEL THR'D. RODS (MIN. TENSILE STRENGTH = 70 KSI) WITH NUT AND WASHERS OF SAME ALLOY GROUP. ALTERNATE ANCHORAGE: CONCRETE ADHESIVE ANCHORS ⅝-INCH. EMBED 7" IN CONCRETE FOR RAIL POSTS. EMBED 5" IN CONCRETE FOR END RAILS. ADHESIVE ANCHORS SHALL CONFORM TO SECTION 502.2.12 OF THE STANDARD SPECIFICATIONS.

(4A) STRUCTURAL TUBING 3" × 1½" × 3/16". PLACE VERTICAL. WELD TO NO. 1 & 5.

(5A) STRUCTURAL TUBING 3" × 1½" × 3/16" RAILS. WELD TO NO. 1 & NO. 4. INSIDE OF TUBE TO BE PAINTED AT ALL FIELD ERECTION & EXPANSION JOINTS.

(6A) BAR 1" × 1" PICKETS. WELD TO NO. 5. (SPACE AT 6" MAX. ℄ TO ℄ SPACING). PLACE VERTICAL.

(7) BAR 1" × 1". BEND TO REQUIRED RADIUS. WELD TO NO. 4 & 5.

(9A) RECTANGULAR SLEEVE FABRICATED FROM 3/16" PLATES. PROVIDE "SLIDING FIT".

(10A) RECTANGULAR SLEEVE FABRICATED FROM 3/16" PLATES. (1'-4" @ FIELD ERECTION JTS.) (1'-4" @ ABUTMENT JTS.)

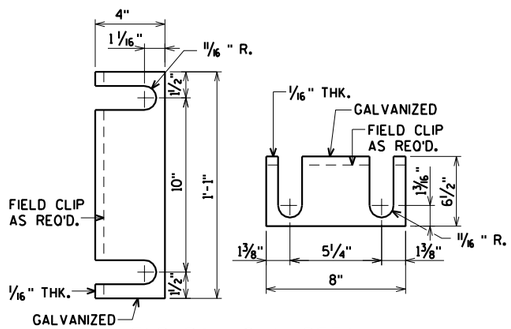

END RAIL SHIM DETAIL

(2 SETS PER POST)

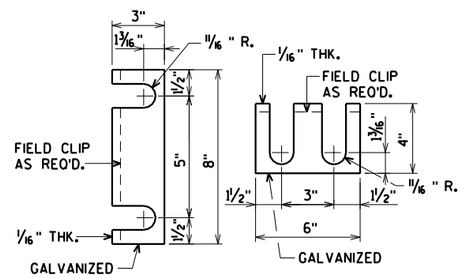

RAIL POST SHIM DETAIL

(2 SETS PER POST)

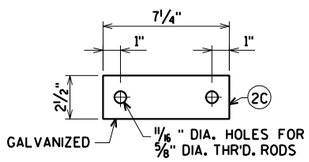

END RAIL ANCHOR PLATE

FOR END RAIL BASE PLATES (1C)
2 REQ'D. PER END RAIL BASE PLATE

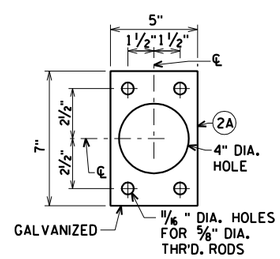

ANCHOR PLATE

FOR 3" X 1½" X 3/16" POSTS (4A)

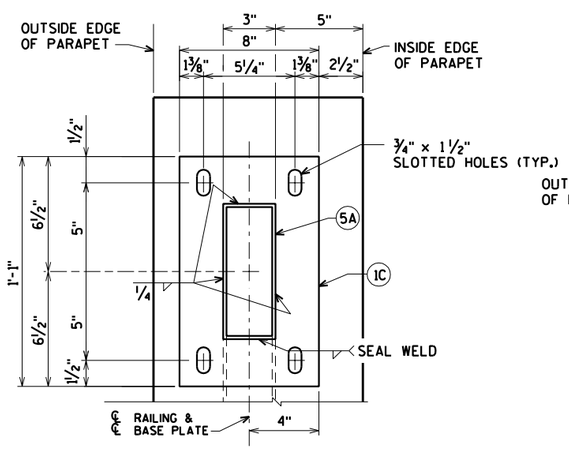

END RAIL BASE PLATE

FOR 3" X 1½" X 3/16" RAIL (5A)

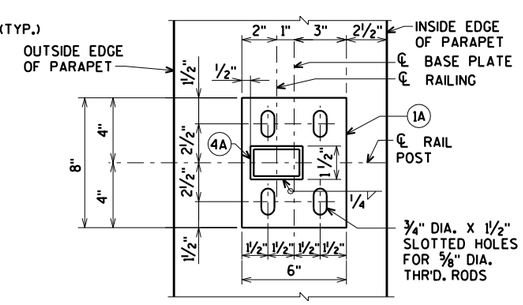

TYP. RAIL POST BASE PLATE

FOR 3" X 1½" X 3/16" POSTS (4A)

NOTES

BID ITEM SHALL BE "RAILING STEEL TYPE C3 B-3-2" WHICH SHALL INCLUDE ALL STEEL ITEMS SHOWN.

POST BASE PLATES SHALL BE FLAT WITH ALL SURFACES SMOOTH AND FREE FROM WARP AND ALL EDGES SMOOTH, STRAIGHT AND VERTICAL. ALL PLATE CUTS SHALL BE MACHINE OR MACHINE FLAME CUTS.

ALL PLATES, BARS, AND RECTANGULAR SLEEVES SHALL CONFORM ASTM A709 GRADE 36. STRUCTURAL TUBING SHALL CONFORM TO ASTM A500 GRADE B.

ANCHORAGES SHALL BE ACCURATELY PLACED TO PROVIDE CORRECT ALIGNMENT OF RAILING. SET NORMAL TO GRADE.

CUT BOTTOM OF POST TO MAKE POST VERTICAL IN BOTH TRANSVERSE AND LONGITUDINAL DIRECTION.

STEEL SHIMS SHALL BE PROVIDED & USED UNDER BASE PLATES WHERE REQUIRED FOR ALIGNMENT, AND SHALL BE GALVANIZED.

✚ CAULK AROUND PERIMETER OF BASE PLATES NO. 1 AND FILL BOLT SLOT OPENINGS IN SHIMS AND BASE PLATES WITH NON-STAINING GREY NON-BITUMINOUS JOINT SEALER.

ALL JOINTS AND RECESSES IN CONCRETE PARAPET ARE TO BE VERTICAL.

ALL MATERIAL (EXCEPT NO. 3) SHALL BE GALVANIZED AFTER FABRICATION. PRIOR TO GALVANIZING, THE STEEL RAILING SHALL BE GIVEN A NO. 6 BLAST CLEANING PER SSPC SPECIFICATIONS. PAINT OVER GALVANIZING WITH AN APPROVED TIE COAT AND TOP COAT AS SPECIFIED IN THE CONTRACT DOCUMENTS. THE RAILING SHALL BE PAINTED FEDERAL COLOR NO. 27038, BLACK.

VENT HOLES SHAL BE DRILLED IN POST AND RAIL MEMBERS AS REQUIRED TO FACILITATE GALVANIZING AND DRAINAGE.

RAILING SHALL BE FABRICATED IN LENGTHS THAT INCLUDE 3 OR 4 POSTS.

TOUCH-UP PAINTING TO BE DONE AT COMPLETION OF STEEL RAILING INSTALLATION TO THE SATISFACTION OF THE ENGINEER AT NO EXTRA COST.

⊗ PLASTIC WASHER USED TO SEPARATE S.S. WASHER AND GALVANIZED STEEL ANCHOR PLATE.

NO.	DATE	REVISION	BY

STATE OF WISCONSIN
DEPARTMENT OF TRANSPORTATION
STRUCTURES DESIGN SECTION

STRUCTURE B-3-2

DRAWN BY CLS | PLANS CK'D. CBM

RAILING STEEL TYPE C3 DETAILS

SHEET 30 OF 31
138

ORIGINAL PLANS PREPARED BY
AYRES ASSOCIATES
3433 Oakwood Hills Parkway
Eau Claire, WI 54701
www.AyresAssociates.com

8

8

$PRFNAME$
U:\42-0989.00 - Barron Co. City of Rice Lake\BRIDGE\420989 C3 rail.dgn

9/12/2017

PENTABLE:BReau_shd_util.tbl

STATE PROJECT NUMBER

8997-00-40

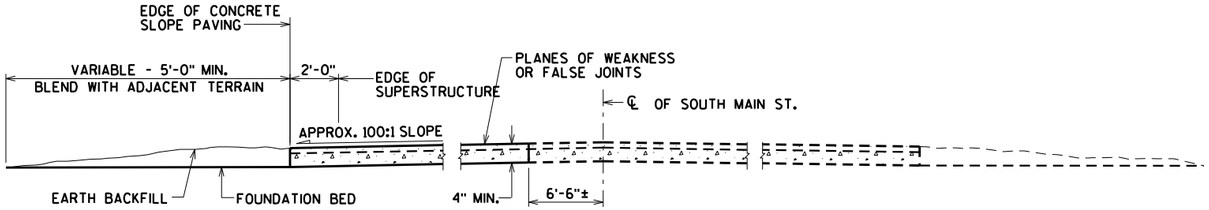

SECTION A-A

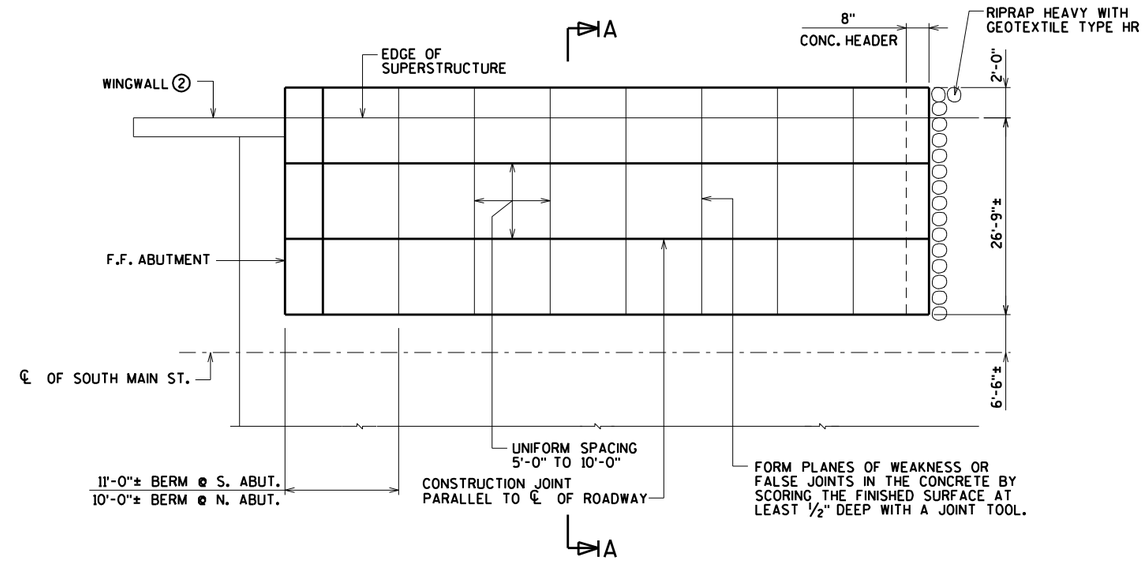

PLAN

(WING 2 SHOWN, WING 3 SIMILAR)

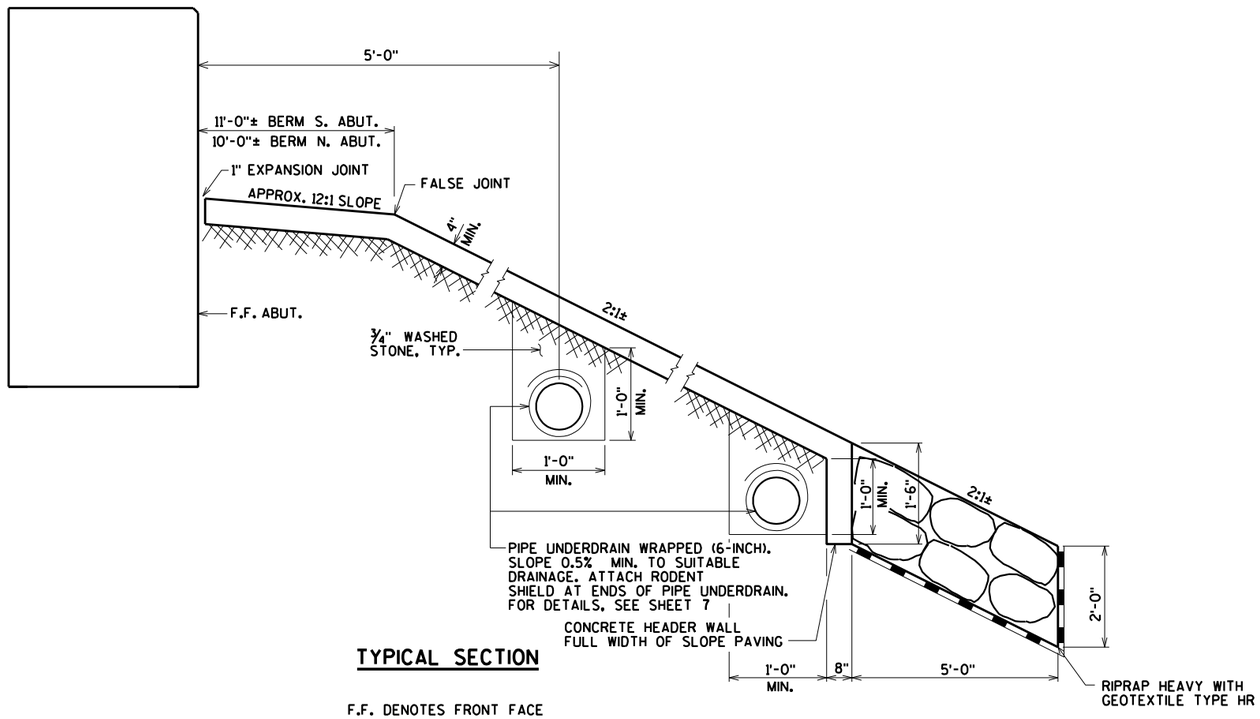

TYPICAL SECTION

F.F. DENOTES FRONT FACE

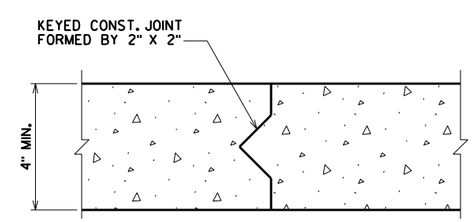

CONSTRUCTION JOINT DETAIL

NOTES

DETAILS OF CONSTRUCTION NOT SHOWN HEREIN SHALL CONFORM TO THE PERTINENT REQUIREMENTS OF THE STANDARD SPECIFICATIONS.

NO.	DATE	REVISION	BY

STATE OF WISCONSIN
DEPARTMENT OF TRANSPORTATION

STRUCTURE B-3-2

DRAWN BY CLS | PLANS CK'D. CBM

SLOPE PAVING CONCRETE

SHEET 31 OF 31

139

ORIGINAL PLANS PREPARED BY
AYRES ASSOCIATES
3433 Oakwood Hills Parkway
Eau Claire, WI 54701
www.AyresAssociates.com

8

8

$PRFNAME$
U:\42-0989.00 - Barron Co, City of Rice Lake\BRIDGE\420989 slpv.dgn

9/12/2017

PENTABLE:BReau_shd_util.tbl

MAIN ST.

STATION	DISTANCE	AREA (SF) CUT	AREA (SF) FILL	INCREMENTAL VOL (CY) (UNADJUSTED) CUT NOTE 1	INCREMENTAL VOL (CY) (UNADJUSTED) FILL NOTE 2	CUMULATIVE VOL (CY) CUT 1.00 NOTE 1	CUMULATIVE VOL (CY) EXPANDED FILL 1.30	MASS ORDINATE NOTE 3
16+10	0.00	80.75	0.06	0	0	0	0	0
16+25	15.00	80.90	0.11	45	0	45	0	45
16+50	25.00	72.61	0.17	71	0	116	0	116
16+75	25.00	84.24	0.07	73	0	189	0	188
17+00	25.00	75.72	0.01	74	0	263	0	262
17+25	25.00	77.25	0.00	71	0	333	0	333
17+50	25.00	72.17	0.00	69	0	403	0	402
17+60.89	10.89	70.93	3.55	29	1	431	1	430
17+75	14.11	65.89	6.66	36	3	467	5	462
18+00	25.00	271.98	1.61	156	4	624	10	614
18+25	25.00	239.36	0.07	237	1	860	11	850
21+25	0.00	42.44	1.09	0	0	0	0	0
21+50	25.00	30.68	7.66	34	4	34	5	29
21+75	25.00	43.30	0.10	34	4	68	10	58
21+95	20.00	50.53	8.08	35	3	103	14	89
22+00	5.00	54.89	7.84	10	1	113	16	97
22+25	25.00	103.96	4.62	74	6	186	23	163
22+36.16	11.16	98.74	1.96	42	1	228	25	203
22+50	13.84	105.09	1.03	52	1	280	26	254
22+75	25.00	100.48	0.44	95	1	375	27	349
22+80	5.00	98.78	0.37	18	0	394	27	367
				1,254	29			

ACCESS ROAD

STATION	DISTANCE	AREA (SF) CUT	AREA (SF) FILL	INCREMENTAL VOL (CY) (UNADJUSTED) CUT NOTE 1	INCREMENTAL VOL (CY) (UNADJUSTED) FILL NOTE 2	CUMULATIVE VOL (CY) CUT 1.00 NOTE 1	CUMULATIVE VOL (CY) EXPANDED FILL 1.30	MASS ORDINATE NOTE 3
40+50	0.00	27.94	5.77	0	0	0	0	0
40+75	25.00	84.46	0.00	52	3	52	3	49
41+00	25.00	161.17	0.00	114	0	166	3	162
41+25	25.00	264.91	0.00	197	0	363	3	360
41+50	25.00	362.89	0.00	291	0	654	3	650
41+75	25.00	325.93	0.00	319	0	973	3	969
42+00	25.00	372.61	0.00	323	0	1,296	3	1,292
42+25	25.00	459.96	0.05	385	0	1,681	4	1,678
42+50	25.00	430.85	0.00	412	0	2,094	4	2,090
				2,094	3			

NOTE 1- CUT	CUT INCLUDES EXISTING ASPHALT PAVEMENT. ASSUMED TO BE REUSED AS FILL OUTSIDE THE 1:1 ROAD CORE.
NOTE 2- FILL	VOLUME NEEDED TO BE FILLED.
NOTE 3- MASS ORDINATE	(CUT)-(FILL*1.30)

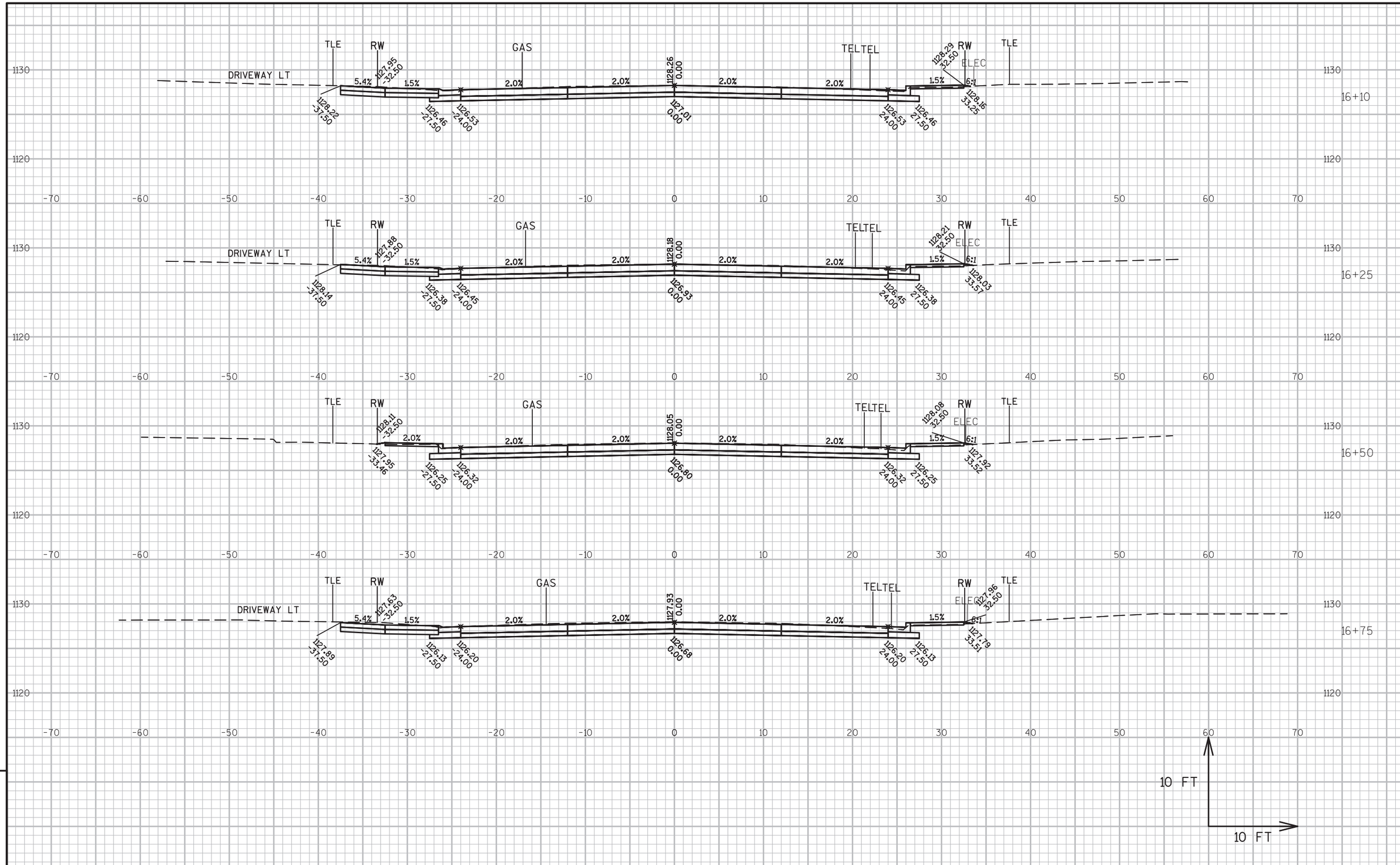

9

9

PROJECT NO:8997-00-40	HWY:MAIN ST	COUNTY:BARRON	CROSS SECTIONS - MAIN STREET	SHEET 141	E

FILE NAME : V:\STRUCTURES-EC\42-0989.00 - BARRON CO, CITY OF RICE LAKE\CADD\SHEETSPLAN\0902_XS.DWG
LAYOUT NAME - CROSS SECTIONS - MAIN STREET

PLOT DATE : 10/27/2017 12:34 PM PLOT BY : AYRES ASSOCIATES PLOT NAME : PLOT SCALE : 1 IN:10 FT

WISDOT/CADDS SHEET 49

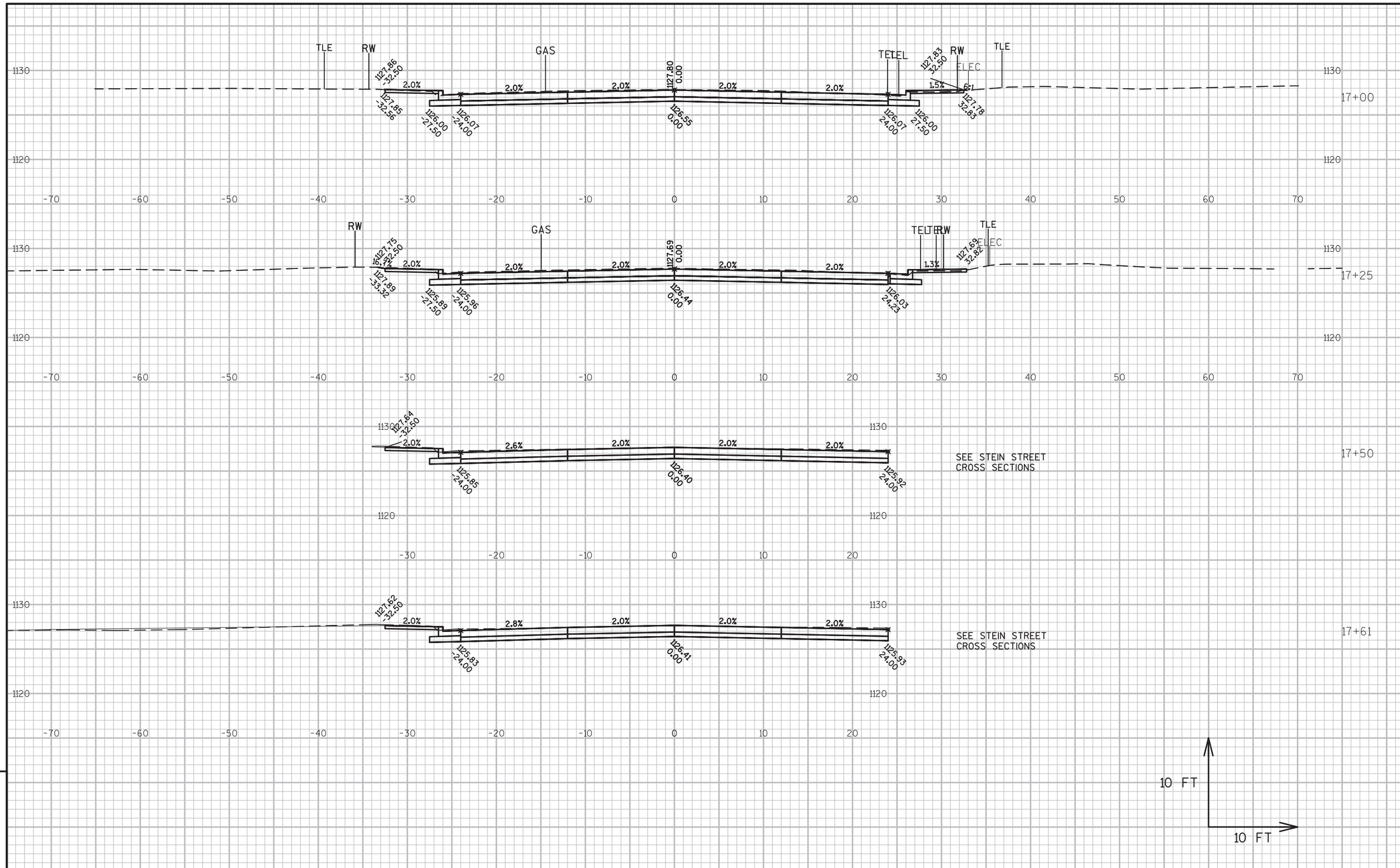

9

9

PROJECT NO:8997-00-40	HWY:MAIN ST	COUNTY:BARRON	CROSS SECTIONS - MAIN STREET	SHEET 142	E

FILE NAME : V:\STRUCTURES-EC\42-0989.00 - BARRON CO, CITY OF RICE LAKE\CADD\SHEETSPLAN\0902_XS.DWG
LAYOUT NAME - 2 CROSS SECTIONS - MAIN STREET

PLOT DATE : 10/27/2017 12:34 PM PLOT BY : AYRES ASSOCIATES PLOT NAME : PLOT SCALE : 1 IN:10 FT

WISDOT/CADDS SHEET 49

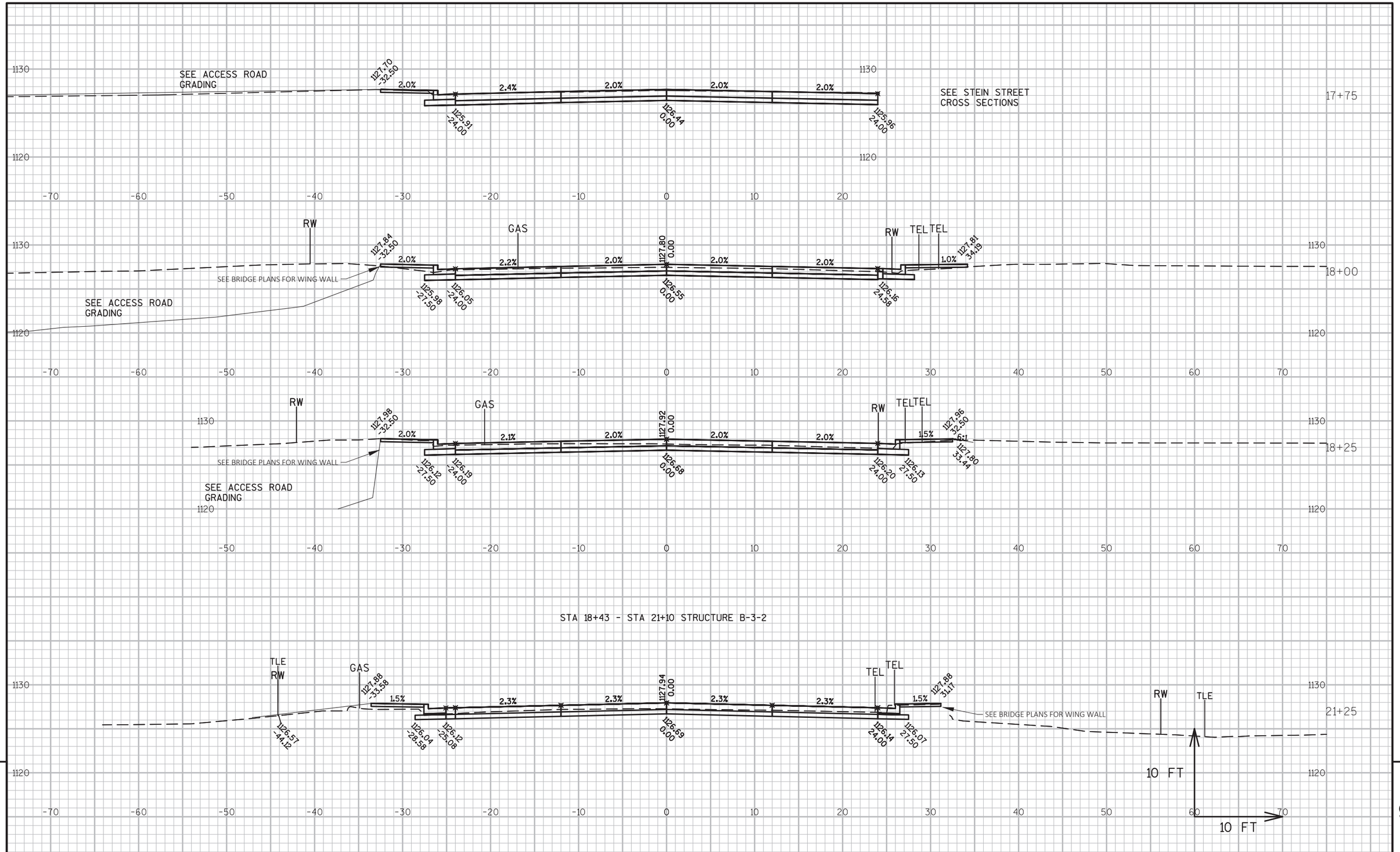

9

9

PROJECT NO:8997-00-40	HWY:MAIN ST	COUNTY:BARRON	CROSS SECTIONS - MAIN STREET	SHEET 143	E

FILE NAME : V:\STRUCTURES-EC\42-0989.00 - BARRON CO, CITY OF RICE LAKE\CADD\SHEETSPLAN\0902_XS.DWG
LAYOUT NAME - 3 CROSS SECTIONS - MAIN STREET

PLOT DATE : 10/27/2017 12:34 PM PLOT BY : AYRES ASSOCIATES PLOT NAME : PLOT SCALE : 1 IN:10 FT

WISDOT/CADDS SHEET 49

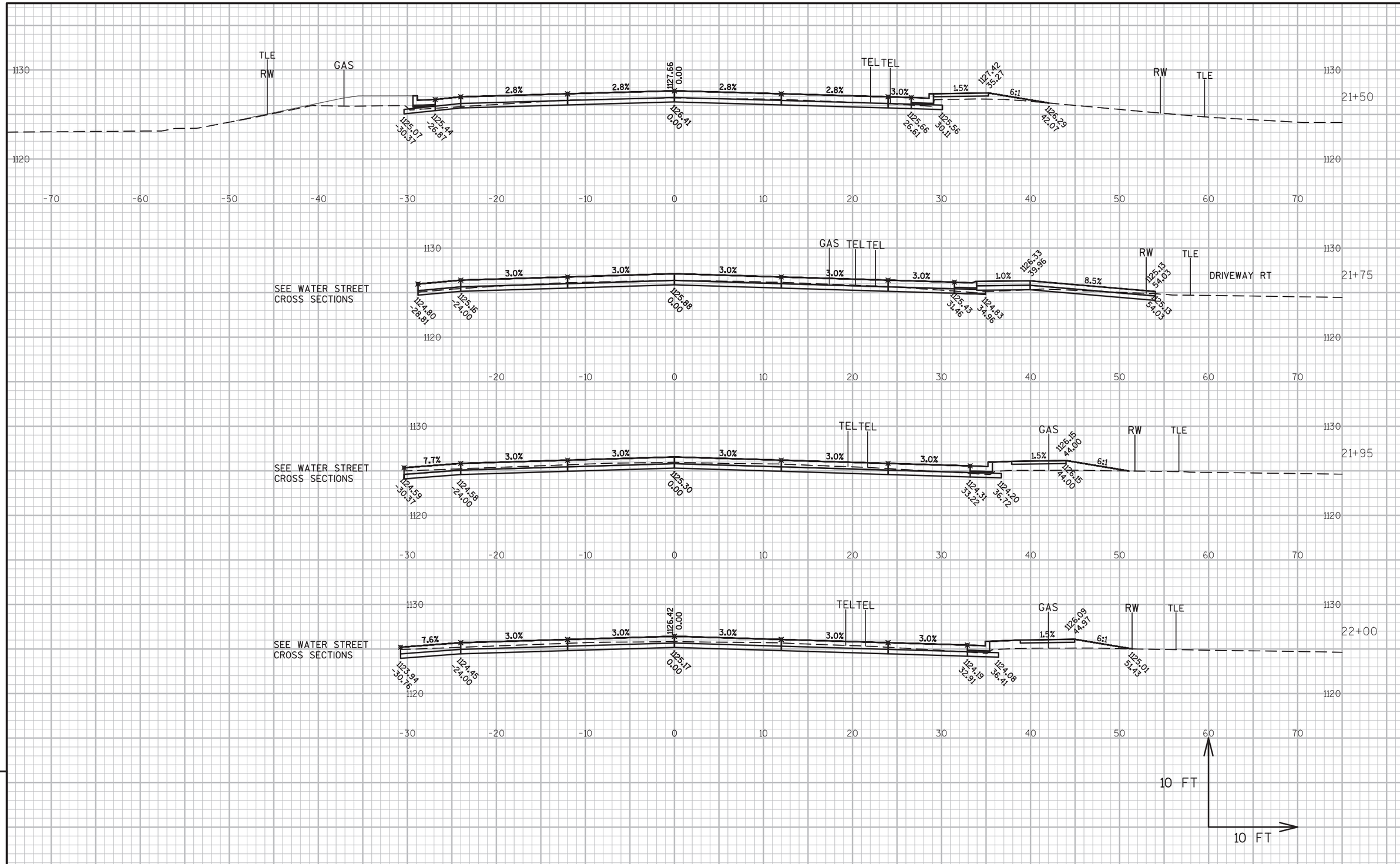

9

9

PROJECT NO:8997-00-40	HWY:MAIN ST	COUNTY:BARRON	CROSS SECTIONS - MAIN STREET	SHEET 144	E

FILE NAME : V:\STRUCTURES-EC\42-0989.00 - BARRON CO, CITY OF RICE LAKE\CADD\SHEETSPLAN\0902_XS.DWG
LAYOUT NAME - 4 CROSS SECTIONS - MAIN STREET
PLOT DATE : 10/27/2017 12:34 PM PLOT BY : AYRES ASSOCIATES PLOT NAME : PLOT SCALE : 1 IN:10 FT

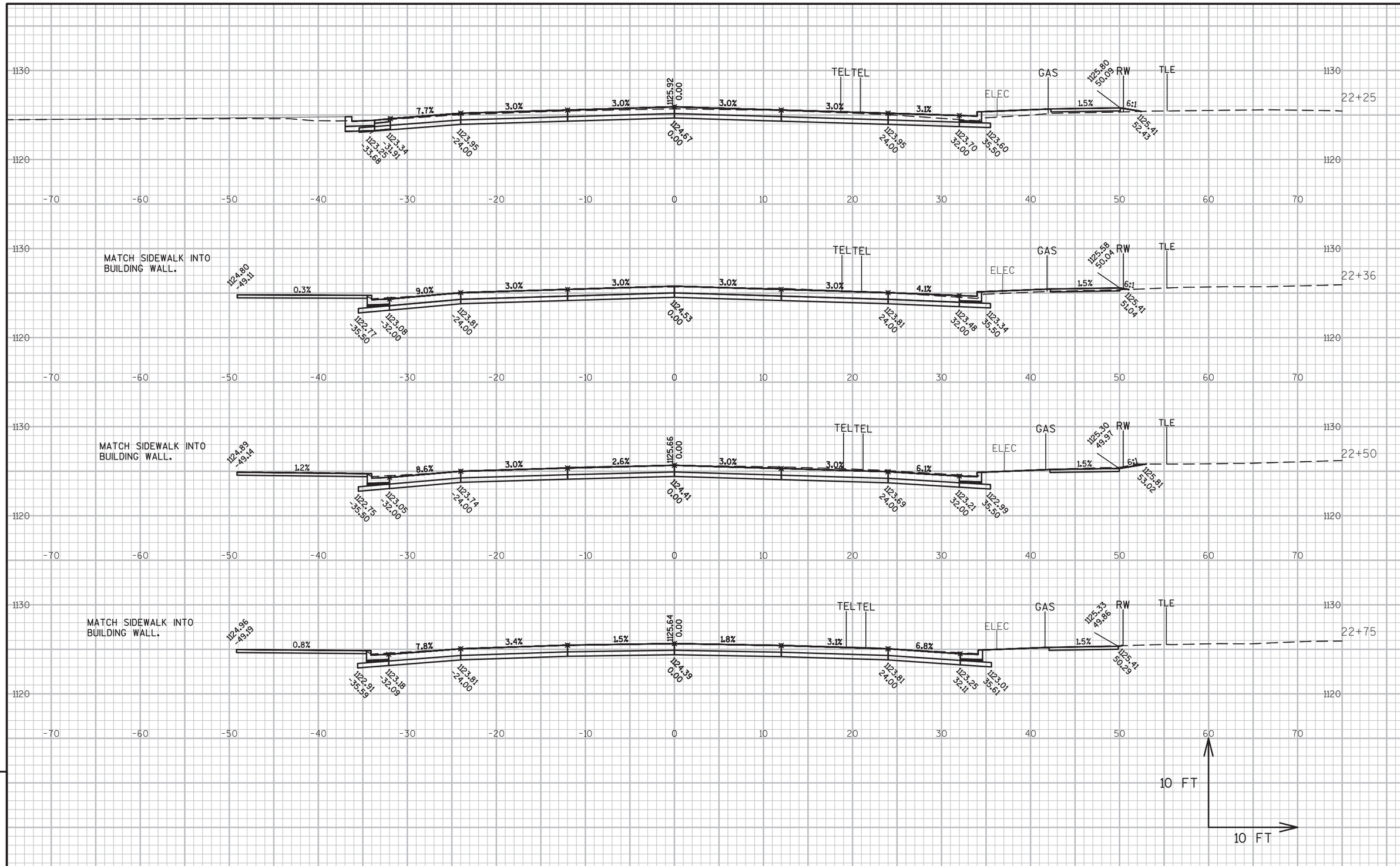

9

9

PROJECT NO:8997-00-40	HWY:MAIN ST	COUNTY:BARRON	CROSS SECTIONS - MAIN STREET	SHEET 145	E

FILE NAME : V:\STRUCTURES-EC\42-0989.00 - BARRON CO, CITY OF RICE LAKE\CADD\SHEETSPLAN\0902_XS.DWG
LAYOUT NAME - 5 CROSS SECTIONS - MAIN STREET

PLOT DATE : 10/27/2017 12:34 PM PLOT BY : AYRES ASSOCIATES PLOT NAME : PLOT SCALE : 1 IN:10 FT

WISDOT/CADDS SHEET 49

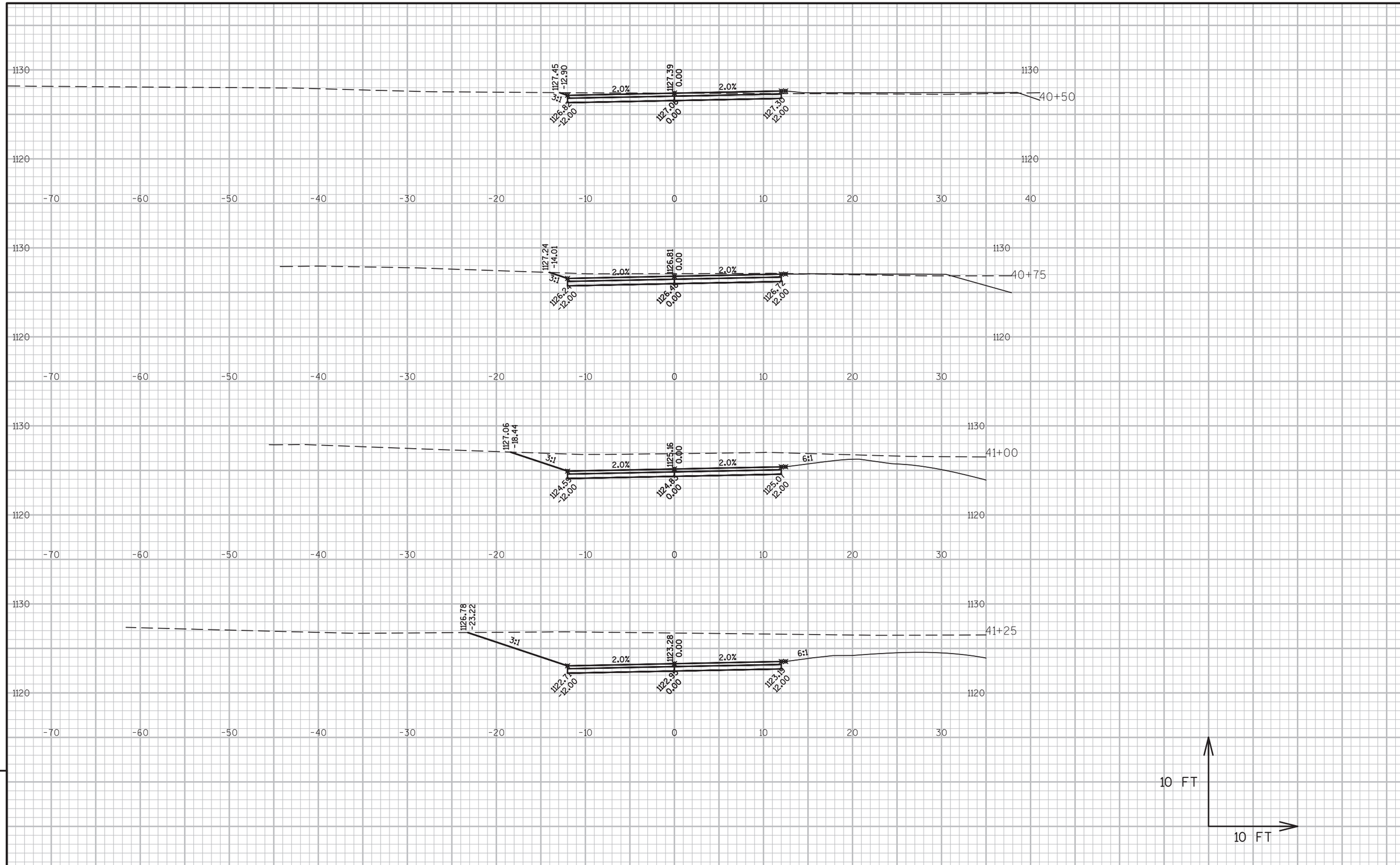

9

9

PROJECT NO:8997-00-40	HWY:MAIN ST	COUNTY:BARRON	CROSS SECTIONS - ACCESS ROAD	SHEET 146	E

FILE NAME : V:\STRUCTURES-EC\42-0989.00 - BARRON CO, CITY OF RICE LAKE\CADD\SHEETSPLAN\0902_XS.DWG
LAYOUT NAME - 6 CROSS SECTIONS - ACCESS ROAD

PLOT DATE : 10/27/2017 12:34 PM PLOT BY : AYRES ASSOCIATES PLOT NAME : PLOT SCALE : 1 IN:10 FT

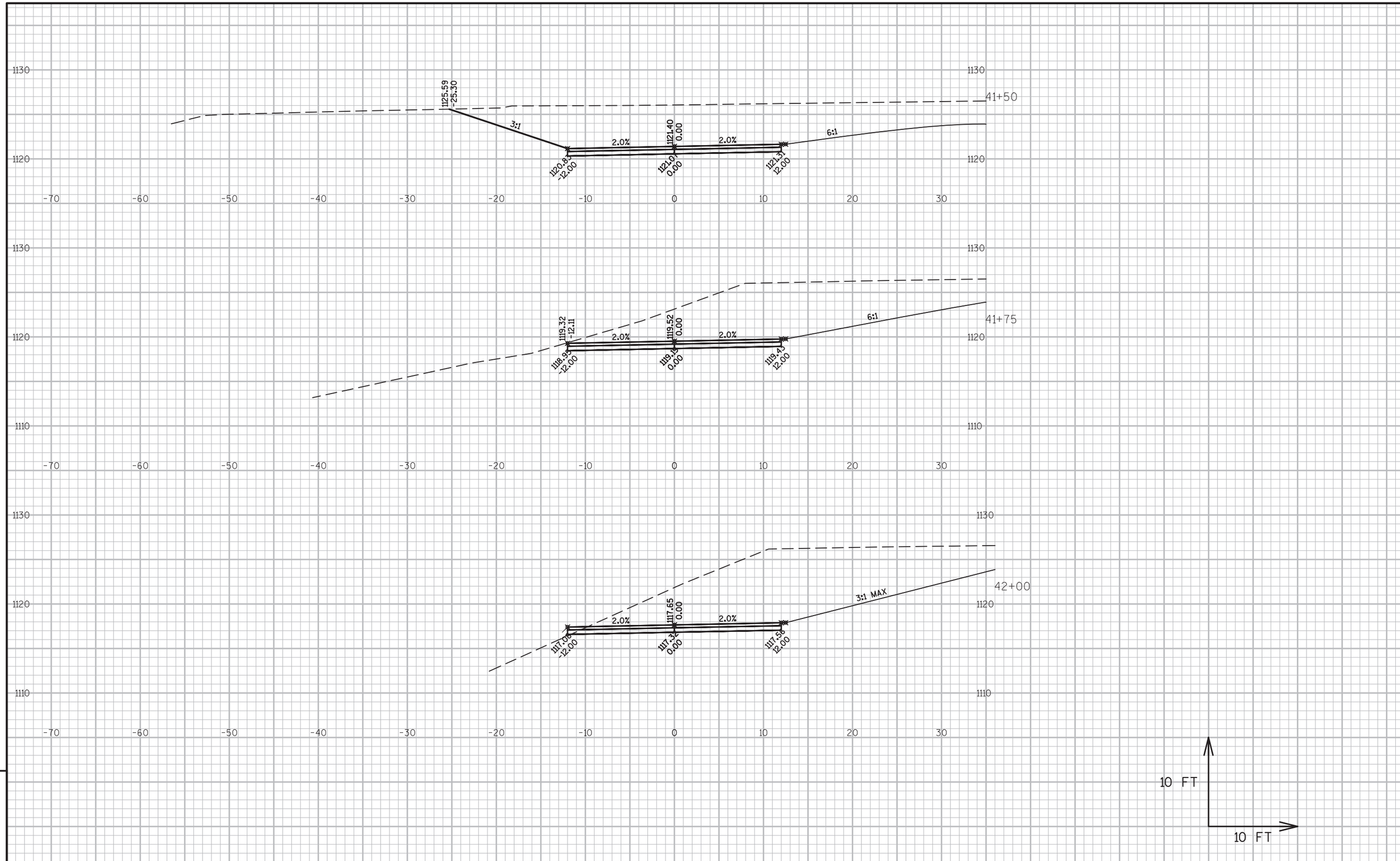

9

9

PROJECT NO:8997-00-40	HWY:MAIN ST	COUNTY:BARRON	CROSS SECTIONS - ACCESS ROAD	SHEET 147	E

FILE NAME : V:\STRUCTURES-EC\42-0989.00 - BARRON CO, CITY OF RICE LAKE\CADD\SHEETSPLAN\0902_XS.DWG
LAYOUT NAME - 7 CROSS SECTIONS - ACCESS ROAD

PLOT DATE : 10/27/2017 12:34 PM PLOT BY : AYRES ASSOCIATES PLOT NAME : PLOT SCALE : 1 IN:10 FT

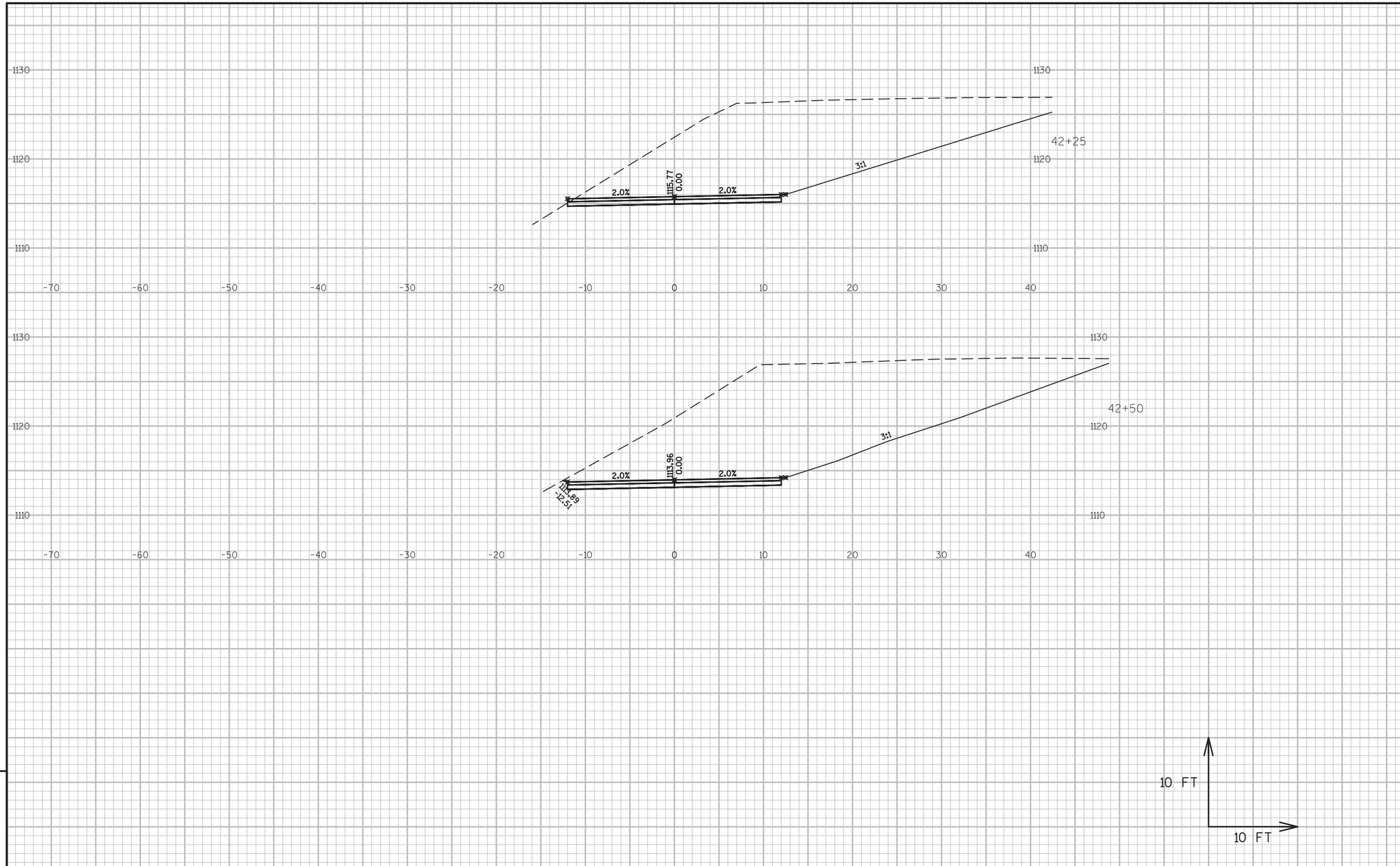

9

9

PROJECT NO:8997-00-40	HWY:MAIN ST	COUNTY:BARRON	CROSS SECTIONS - ACCESS ROAD	SHEET 148	E

FILE NAME : V:\STRUCTURES-EC\42-0989.00 - BARRON CO, CITY OF RICE LAKE\CADD\SHEETSPLAN\0902_XS.DWG
LAYOUT NAME - 8 CROSS SECTIONS - ACCESS ROAD
PLOT DATE : 10/27/2017 12:34 PM PLOT BY : AYRES ASSOCIATES PLOT NAME : PLOT SCALE : 1 IN:10 FT

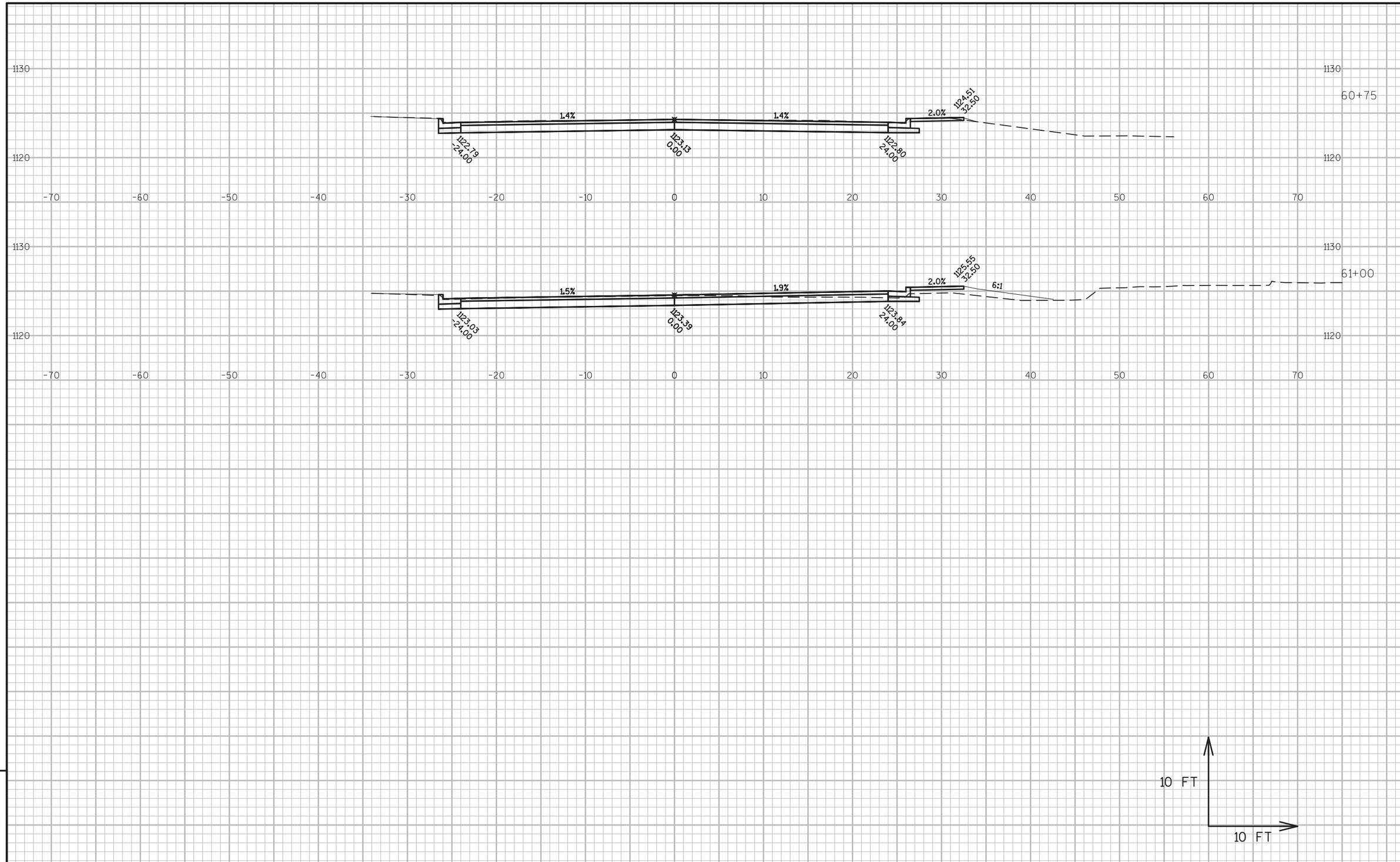

9

9

PROJECT NO:8997-00-40	HWY:MAIN ST	COUNTY:BARRON	CROSS SECTIONS - WATER STREET	SHEET 149	E

FILE NAME : V:\STRUCTURES-EC\42-0989.00 - BARRON CO, CITY OF RICE LAKE\CADD\SHEETSPLAN\0902_XS.DWG
LAYOUT NAME - 10 CROSS SECTIONS - WATER

PLOT DATE : 10/27/2017 12:34 PM PLOT BY : AYRES ASSOCIATES PLOT NAME : PLOT SCALE : 1 IN:10 FT

WISDOT/CADDS SHEET 49

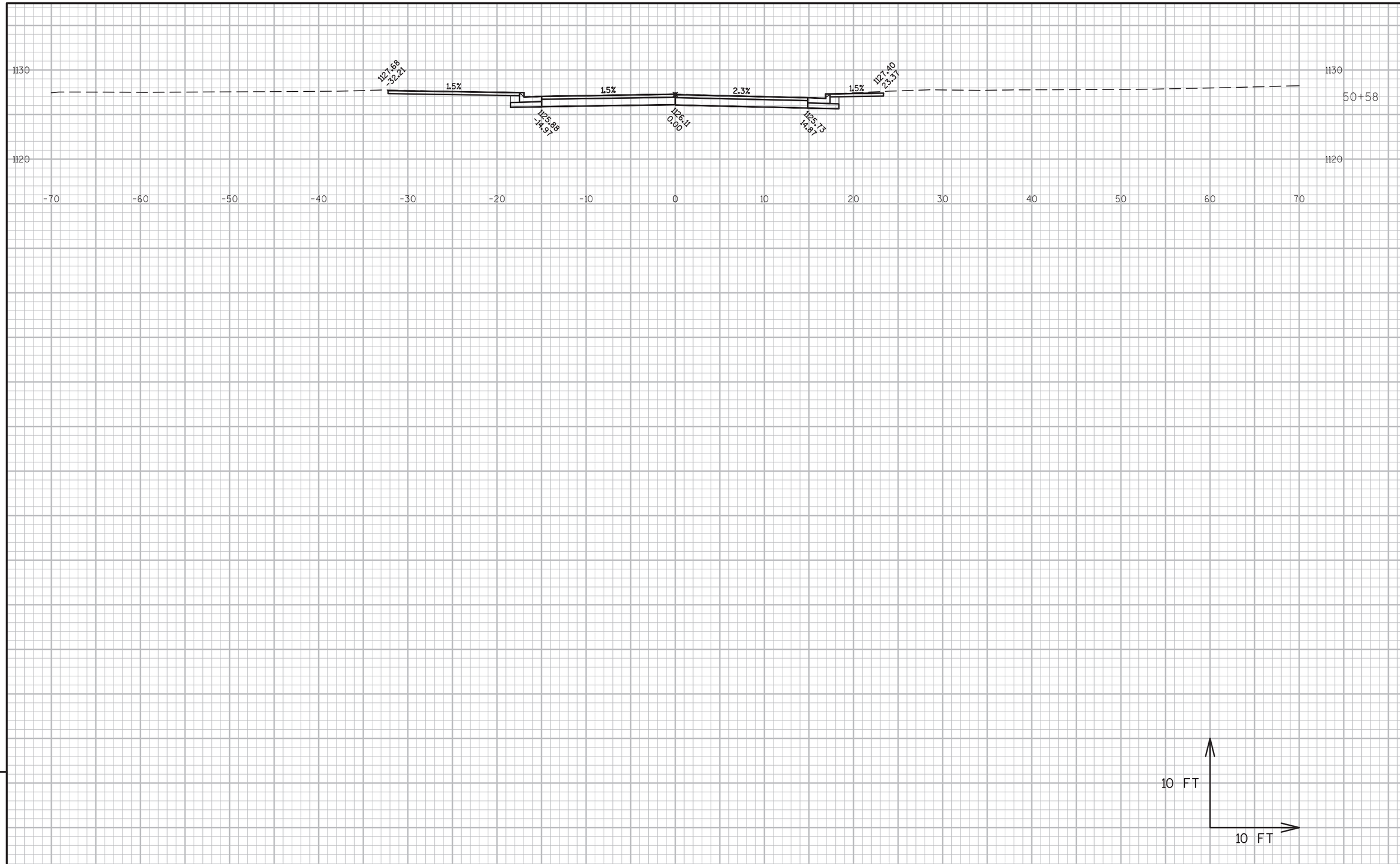

9

9

PROJECT NO:8997-00-40	HWY:MAIN ST	COUNTY:BARRON	CROSS SECTIONS - STEIN STREET	SHEET 150	E

FILE NAME : V:\STRUCTURES-EC\42-0989.00 - BARRON CO, CITY OF RICE LAKE\CADD\SHEETSPLAN\0902_XS.DWG
LAYOUT NAME - 9 CROSS SECTIONS - STEIN

PLOT DATE : 10/27/2017 12:34 PM PLOT BY : AYRES ASSOCIATES PLOT NAME : PLOT SCALE : 1 IN:10 FT

WISDOT/CADDS SHEET 49

Notes

Wisconsin Department of Transportation

Dedicated people creating transportation solutions through innovation and exceptional service.

http://www.dot.wisconsin.gov