WKE MAR 2018

PROJECT ID: 4880-01-70

WITH: N/A

COUNTY: OZAUKEE

26

ORDER OF SHEETS

Section No.	1	Title
Section No.	2	Typical Sections and Details (Includes Erosion Control)
Section No.	3	Estimate of Quantities
Section No.	3	Miscellaneous Quantities
Section No.	4	Right of Way Plat
Section No.	5	Plan and Profile
Section No.	6	Standard Detail Drawings
Section No.	7	Sign Plates
~~Section No.~~	~~8~~	~~Structure Plans~~
Section No.	9	Computer Earthwork Data
Section No.	9	Cross Sections

TOTAL SHEETS = 252

DESIGN DESIGNATION

A.A.D.T. (2017)	=	2,600 VPD
A.A.D.T. (2037)	=	2,900 VPD
D.H.V.	=	307 VPD
D.D.	=	60/40
T.	=	12.7%
DESIGN SPEED	=	30 MPH
ESALS	=	532,900 (HMA)

CONVENTIONAL SYMBOLS

PLAN		PROFILE	
CORPORATE LIMITS		GRADE LINE	
PROPERTY LINE		ORIGINAL GROUND	
LOT LINE		MARSH OR ROCK PROFILE (To be noted as such)	ROCK
LIMITED HIGHWAY EASEMENT		SPECIAL DITCH	LABEL
EXISTING RIGHT OF WAY		GRADE ELEVATION	95.36
PROPOSED OR NEW R/W LINE			
SLOPE INTERCEPT		CULVERT (Profile View)	
REFERENCE LINE	300'EB'	UTILITIES	
EXISTING CULVERT		ELECTRIC	E
PROPOSED CULVERT (Box or Pipe)		FIBER OPTIC	FO
COMBUSTIBLE FLUIDS	CAUTION	GAS	G
		SANITARY SEWER	SAN
		STORM SEWER	SS
		TELEPHONE	T
MARSH AREA		WATER	W
		UTILITY PEDESTAL	
WOODED OR SHRUB AREA		POWER POLE	
		TELEPHONE POLE	

STATE OF WISCONSIN
DEPARTMENT OF TRANSPORTATION

PLAN OF PROPOSED IMPROVEMENT

CTH D (MAIN STREET)

WEST VILLAGE LIMITS - BEECH ST

CTH D

OZAUKEE COUNTY

STATE PROJECT NUMBER
4880-01-70

STATE PROJECT	FEDERAL PROJECT	
	PROJECT	CONTRACT
4880-01-70	WISC 2018155	1

LAYOUT

SCALE 0 2 MILES

TOTAL NET LENGTH OF CENTERLINE = 0.630 MI

HORIZONTAL POSITIONS SHOWN ON THIS PLAN ARE WISCONSIN STATE PLANE COORDINATE SYSTEM (WSPCS), 'SOUTH ZONE', IN U.S. SURVEY FEET. COORDINATES SHOWN ON THIS PLAN ARE GROUND VALUES AND THE COMBINATION FACTOR USED IS 0.99989982.

ACCEPTED FOR
VILLAGE OF BELGIUM

10/2/17 (Date)

VICKIE BOEHNLEIN
VILLAGE PRESIDENT

ACCEPTED FOR
OZAUKEE COUNTY

9/25/17 (Date)

JON EDGREN
DIRECTOR OF PUBLIC WORKS

ORIGINAL PLANS PREPARED BY

GREMMER & ASSOCIATES, INC.
CONSULTING ENGINEERS
Stevens Point • Fond du Lac
93 South Pioneer Road, Suite 300 • Fond du Lac, WI 54935
(920) 924-5720 • fax (920) 924-5725

WISCONSIN
JEFFREY A. CHVOSTA
E-39047
SLINGER, WI
PROFESSIONAL ENGINEER

9/22/17 (Date)

JEFFREY A. CHVOSTA, PE

STATE OF WISCONSIN
DEPARTMENT OF TRANSPORTATION

PREPARED BY

Surveyor	GREMMER & ASSOCIATES, INC.
Designer	GREMMER & ASSOCIATES, INC.
Management Consultant	DAAR ENGINEERING, INC.
C.O. Examiner	

APPROVED FOR THE DEPARTMENT

DATE: 10/19/17 (Management Consultant Signature)

E

GENERAL NOTES

ELEVATIONS SHOWN ON THE PLAN ARE REFERENCED TO THE NATIONAL GEODETIC VERTICAL DATUM OF 1929 (NGVD 29).

THE LOCATIONS OF EXISTING AND PROPOSED UTILITY INSTALLATIONS AS SHOWN ON THE PLANS ARE APPROXIMATE. THERE MAY BE OTHER UTILITY INSTALLATIONS WITHIN THE PROJECT AREA THAT ARE NOT SHOWN.

THE CONTRACTOR SHALL NOTIFY DIGGERS HOTLINE AND AFFECTED UTILITIES PRIOR TO THE START OF WORK. ANY UTILITY WHICH IS NOT A MEMBER OF THE DIGGERS HOTLINE MUST BE CONTACTED SEPARATELY.

A VERTICAL SAW CUT SHALL BE MADE THROUGH EXISTING DRIVEWAYS, SIDEWALKS AND PAVEMENTS AT THE REMOVAL LIMITS.

SAWCUT LOCATIONS SHOWN ON THE PLANS ARE SUBJECT TO ADJUSTMENT BY THE ENGINEER IN THE FIELD.

WHEN THE QUANTITY OF THE ITEMS OF BASE AGGREGATE DENSE, HMA PAVEMENT OR ASPHALTIC SURFACE IS MEASURED FOR PAYMENT BY THE TON, THE DEPTH OR THICKNESS OF THE MATERIAL SHOWN ON THE PLAN IS APPROXIMATE, AND THE ACTUAL THICKNESS WILL DEPEND ON THE DISTRIBUTION OF THE MATERIAL AS DIRECTED BY THE ENGINEER.

THE EXACT LOCATION AND LAYOUT OF PRIVATE ENTRANCES IS TO BE DETERMINED IN THE FIELD BY THE ENGINEER.

EXISTING PRIVATE SIDEWALK AND DRIVEWAY MATCH POINTS AND ELEVATIONS SHALL BE VERIFIED BY THE ENGINEER IN THE FIELD PRIOR TO PLACEMENT OF CONCRETE SIDEWALK.

NO TREES OR SHRUBS ARE TO BE REMOVED WITHOUT THE APPROVAL OF THE ENGINEER.

TOPSOIL, FERTILIZER, AND SOD AS SHOWN IN PLANS OR AS DIRECTED BY THE ENGINEER SHALL BE PLACED ON ALL DISTURBED AREAS, EXCLUSIVE OF THE AREA OCCUPIED BY THE NEW PAVEMENTS, SIDEWALKS, ENTRANCES, AND RELATED STRUCTURES.

SECTIONS AS SHOWN ON THE CROSS-SECTIONS INCLUDE THE THICKNESS OF TOPSOIL WHERE REQUIRED.

CURB AND GUTTER RADII ARE SHOWN TO THE FLOW LINE OF CURB.

CONTRACTOR SHALL VERIFY EXISTING PIPE SIZES, MATERIALS AND INVERT ELEVATIONS WHEN CONNECTING NEW STORM SEWER INTO EXISTING PIPES PRIOR TO MANUFACTURING INLETS AND MANHOLES.

ROTATE MANHOLE COVERS TO MATCH LANE LINES OR CENTER OF LANE AS DIRECTED BY THE ENGINEER IN THE FIELD.

ALL CURB RAMPS SHALL BE 6-INCH THICK AND PAID FOR AS CONCRETE SIDEWALK 6-INCH.

EROSION CONTROL ITEMS SHOWN ARE APPROXIMATE, THE EXACT LOCATION SHALL BE DETERMINED BY THE ENGINEER IN THE FIELD.

ANY IMPACTS TO HISTORIC PROPERTIES OUTSIDE OF THE LIMITS SHOWN ON THE PLANS SHALL BE COORDINATED WITH SHPO.

STREET LIGHTING CONDUIT SHALL BE INSTALLED PRIOR TO PLACEMENT OF CONCRETE CURB & GUTTER AND CONCRETE SIDEWALK.

THE VILLAGE OF BELGIUM HAS AGREED TO BURY ALL OVERHEAD UTILITIES ALONG THE PROJECT CORRIDOR. UTILITY RELOCATIONS ARE ANTICIPATED TO BE COMPLETED PRIOR TO CONSTRUCTION WITH THE EXCEPTION OF FINAL CONNECTIONS AND POLE REMOVALS. CONTRACTOR SHALL CONTACT ALL UTILITY COMPANIES PRIOR TO CONSTRUCTION AND SHALL COORDINATE ALL RELOCATION ACTIVITIES THAT MAY OCCUR CONCURRENT WITH THE PROJECT.

ABBREVIATIONS

AEW	APRON ENDWALL
AGG	AGGREGATE
AH	AHEAD
ASP	ASPHALT
BK	BACK
BAD	BASE AGGREGATE DENSE
BM	BENCH MARK
CC	CENTER OF CURVATURE
CE	COMMERCIAL ENTRANCE
C&G	CURB AND GUTTER
C/L	CENTER OR CONSTRUCTION LINE
CONC	CONCRETE
CP	CULVERT PIPE
CPCM	CULVERT PIPE CORRUGATED METAL
CPCS	CULVERT PIPE CORRUGATED STEEL
CPRC	CULVERT PIPE REINFORCED CONCRETE
CS	CURVE SPIRAL, THE POINT OF CHANGE IN ALIGNMENT FROM CURVE TO SPIRAL
CSD	CONCRETE SURFACE DRAIN
CY	CUBIC YARD
D	DEGREE OF CURVE
Δ	DELTA
DISCH	DISCHARGE
E	EXTERNAL DISTANCE FROM MIDPOINT OF CIRCULAR CURVE FROM ANGLE INTERSECTION
EB	EASTBOUND
ELEV	ELEVATION
FE	FIELD ENTRANCE
HMA	HOT MIX ASPHALT
HP	HIGH POINT
HT	HEIGHT
INV	INVERT
L	LENGTH OF CURVE
LHF	LEFT HAND FORWARD
LP	LOW POINT
Ls	LENGTH OF SPIRAL
LT	LEFT
MAX	MAXIMUM
MIN	MINIMUM
M/L	MATCHLINE
NB	NORTHBOUND
NC	NORMAL CROWN
NOM	NOMINAL
NORM	NORMAL
PAVT	PAVEMENT
PC	POINT OF CURVE
PCC	POINT OF COMPOUND CURVE
PE	PRIVATE ENTRANCE
PI	POINT OF INTERSECTION
PLE	PERMANENT LIMITED EASEMENT
PT	POINT OF TANGENT
R	RADIUS OF CURVE
R/L	REFERENCE LINE
R/W	RIGHT OF WAY
RC	REVERSE CROWN
RCAEW	APRON ENDWALL FOR CULVERT PIPE REINFORCED CONCRETE
RCP	REINFORCED CONCRETE PIPE
REQ'D	REQUIRED
RHF	RIGHT HAND FORWARD
RO	RUN OFF LENGTH
RT	RIGHT
SALV	SALVAGED
SB	SOUTHBOUND
SC	SPIRAL CURVE, THE POINT OF CHANGE IN ALIGNMENT FROM SPIRAL TO CURVE
SDD	STANDARD DETAIL DRAWING
SE	SUPER ELEVATION
SEG	SEGMENT
SF	SQUARE FOOT
SS	STORM SEWER
ST	SPIRAL TANGENT, THE POINT OF CHANGE IN ALIGNMENT FROM SPIRAL TO TANGENT
STA	STATION
SY	SQUARE YARD
T	TANGENT LENGTH
TLE	TEMPORARY LIMITED EASEMENT
TS	TANGENT SPIRAL, THE POINT OF CHANGE IN ALIGNMENT FROM TANGENT TO SPIRAL
TYP	TYPICAL
V	VELOCITY OR DESIGN SPEED
VC	VERTICAL CURVE
VCL	VERTICAL CURVE LENGTH
VPC	POINT OF VERTICAL CURVE
VPI	POINT OF VERTICAL INTERSECTION
VPRC	POINT OF VERTICAL REVERSE CURVE
VPT	POINT OF VERTICAL TANGENT
WB	WESTBOUND
WCL	WISCONSIN CENTRAL LTD.

ORDER OF SECTION 2 SHEETS

GENERAL NOTES /UTILITY CONTACTS
PROJECT OVERVIEW
TYPICAL SECTIONS
CONSTRUCTION DETAILS
REMOVAL PLAN
CURB RAMP DETAILS
PLAN DETAILS
EROSION CONTROL PLAN
STORM SEWER LAYOUT
SIGNING PLAN
LIGHTING PLAN
PAVEMENT MARKING PLAN
TRAFFIC CONTROL
DETOUR PLAN
ALIGNMENT DIAGRAM

UTILITIES

COMMUNICATIONS

* FRONTIER COMMUNICATIONS
118 DIVISION STREET
PLYMOUTH, WI 53073
PHONE: (920) 893-7455
MOBILE: (920) 246-3530
ATTN: MR. RYAN OSNESS
EMAIL: ryan.d.osness@ftr.com

ELECTRIC

* WE ENERGIES - LOCAL
315 S. 6TH STREET
CEDAR GROVE, WI 53013
PHONE: (920) 627-1770
ATTN: MR. DALE MEEUSEN
EMAIL: Dale.Meeusen@we-energies.com

COMMUNICATIONS

* CHARTER COMMUNICATIONS
(FORMERLY DBA TIME WARNER COMMUNICATIONS)
1320 N. DR. MARTIN LUTHER KING JR. DRIVE
MILWAUKEE, WI 53212
PHONE: (414) 908-4822
MOBILE: (414) 430-5812
ATTN: MR. CHARLES BRASILE
EMAIL: charles.brasile@charter.com

GAS

* WE ENERGIES - LOCAL
500 S. 116TH STREET
WEST ALLIS, WI 53024
PHONE: (262) 884-6705
MOBILE: (414) 416-3365
ATTN: MR. JACOB SCHOENUNG
EMAIL: jacob.schoenung@we-energies.com

SANITARY SEWER & WATER MAIN

* VILLAGE OF BELGIUM
104 PETER THEIN AVENUE
BELGIUM, WI 53004-9446
PHONE: (262) 285-7931
MOBILE: (414) 416-7085
ATTN: MR. DANIEL BIRENBAUM
EMAIL: dbirenbaum@village.belgium.wi.gov

* DENOTES MEMBER OF DIGGERS HOTLINE

DIGGERS HOTLINE
Dial 811 or (800)242-8511
www.DiggersHotline.com

DESIGN CONTACT

GREMMER & ASSOCIATES, INC.
93 S. PIONEER ROAD, SUITE 300
FOND DU LAC, WI 54935
PHONE: (920) 924-5720
ATTN: JEFFREY CHVOSTA
EMAIL: j.chvosta@gremmerassociates.com

OZAUKEE COUNTY CONTACT

MR. JON EDGREN
DIRECTOR OF PUBLIC WORKS
OZAUKEE COUNTY HIGHWAY DEPARTMENT
410 SOUTH SPRING STREET
PORT WASHINGTON, WI 53074
PHONE: (262) 284-8331
EMAIL: jedgren@co.ozaukee.wi.us

DNR AREA LIAISON

WISCONSIN DEPT. OF NATURAL RESOURCES
2300 N. DR. MARTIN LUTHER KING JR. DR.
MILWAUKEE, WI 53212
PHONE: (414) 263-8517
ATTN: MS. KRISTINA BETZOLD
EMAIL: kristina.betzold@wisconsin.gov

VILLAGE OF BELGIUM CONTACT

MS. VICKIE BOEHNLEIN
VILLAGE PRESIDENT
104 PETER THEIN AVENUE
BELGIUM, WI 53004
PHONE: (262) 285-7931
EMAIL: vboehnlein@village.belgium.wi.us

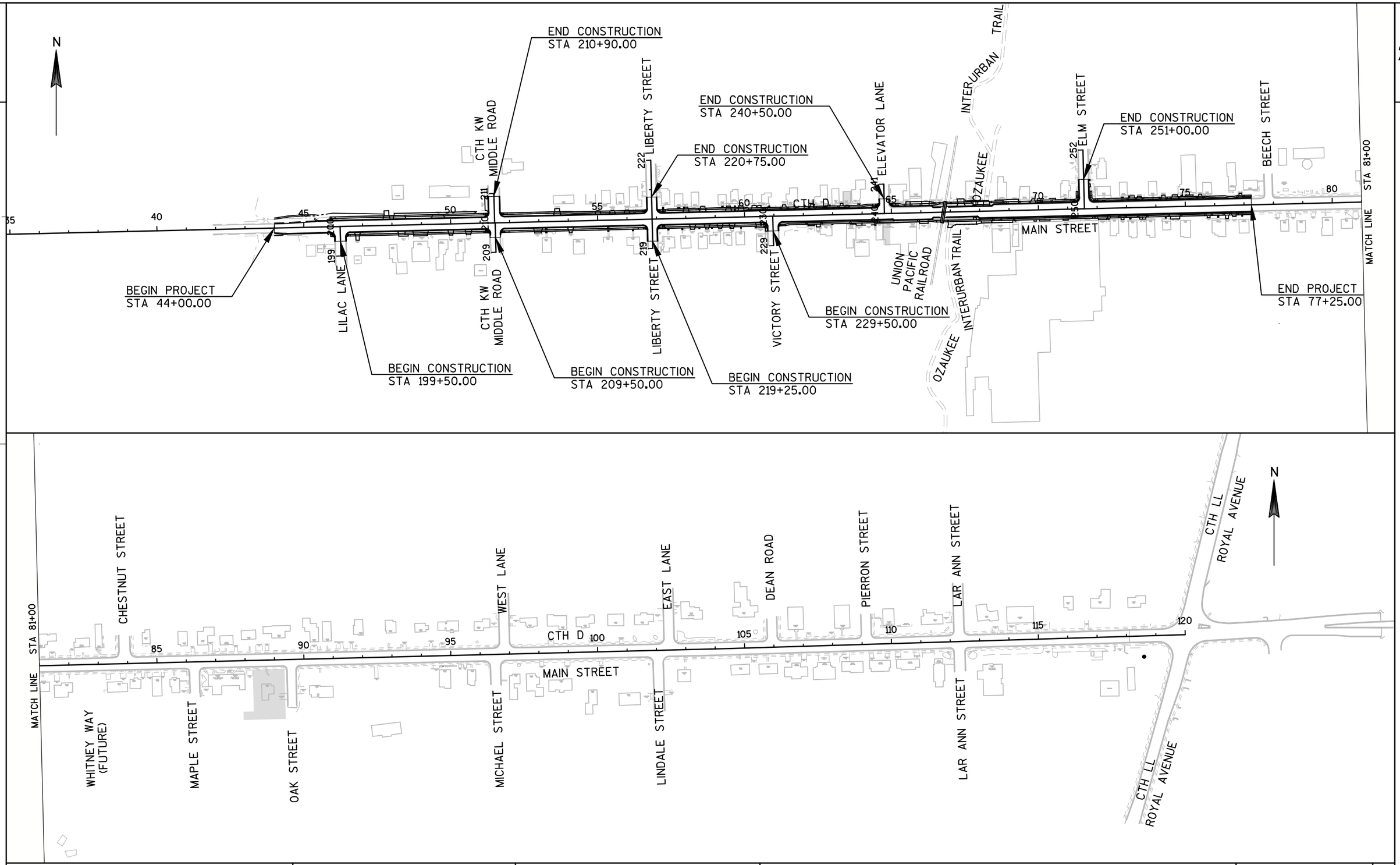

PROJECT NO: 4880-01-70	HWY: CTH D	COUNTY: OZAUKEE	PROJECT OVERVIEW: CTH D	SHEET 3	E

FILE NAME : S:\CURRPROJ\OZAUKEECO\CTH D\CIVIL3D\48800100\SHEETSPLAN\48800170\48800170-020201-PO.DWG PLOT DATE : 12/29/2017 3:51 PM PLOT BY : AARON SARAUER PLOT NAME : ---------- PLOT SCALE : 1:300_XREF

WISDOT/CADDS SHEET 42

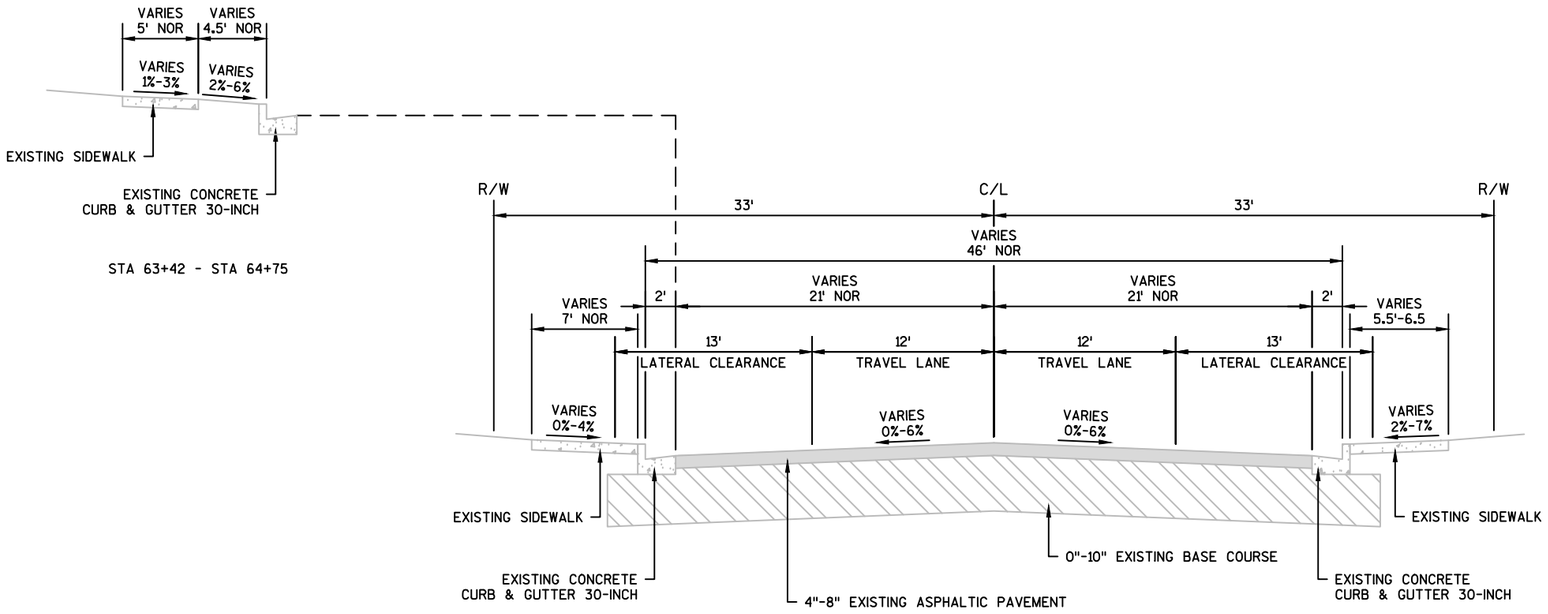

EXISTING TYPICAL SECTION
CTH D
STA 63+42 - STA 66+73

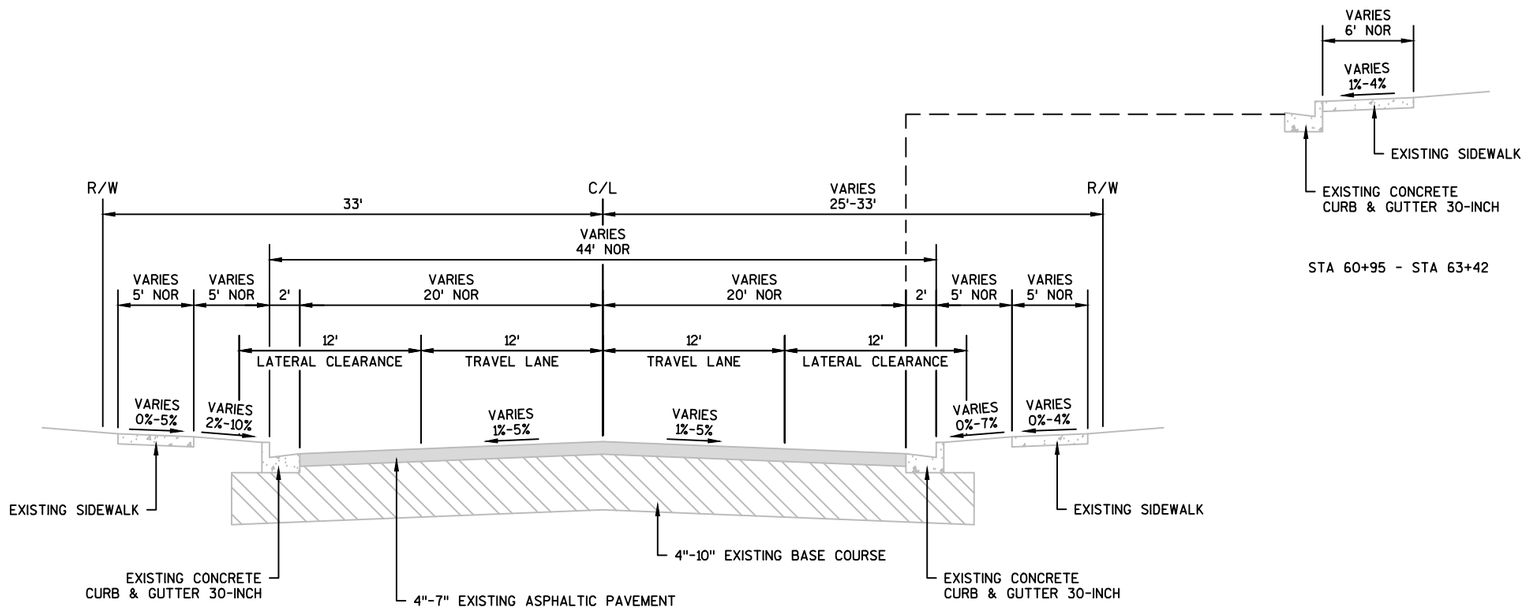

EXISTING TYPICAL SECTION
CTH D
STA 44+00 - STA 63+42

PROJECT NO: 4880-01-70	HWY: CTH D	COUNTY: OZAUKEE	TYPICAL SECTIONS	SHEET 4	E

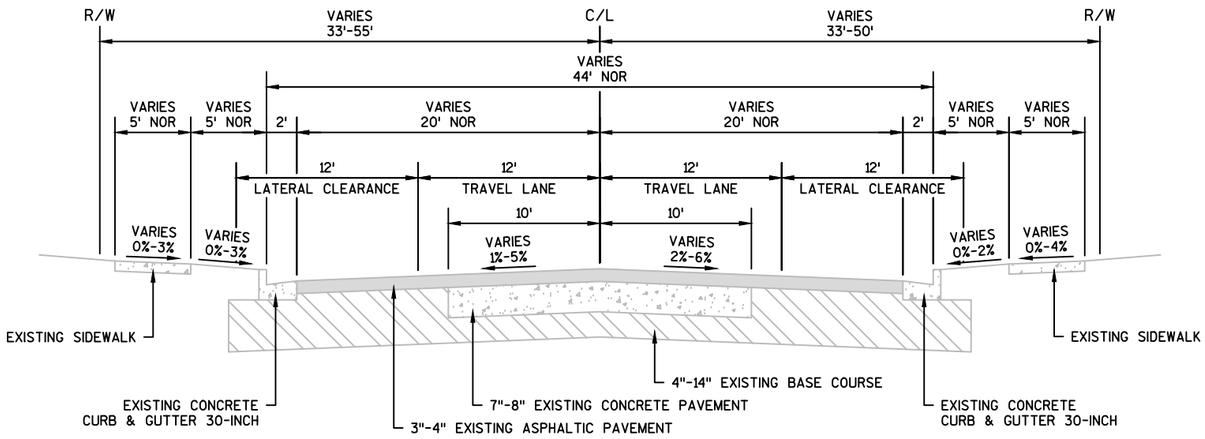

EXISTING TYPICAL SECTION

CTH D
STA 72+38 - STA 77+25

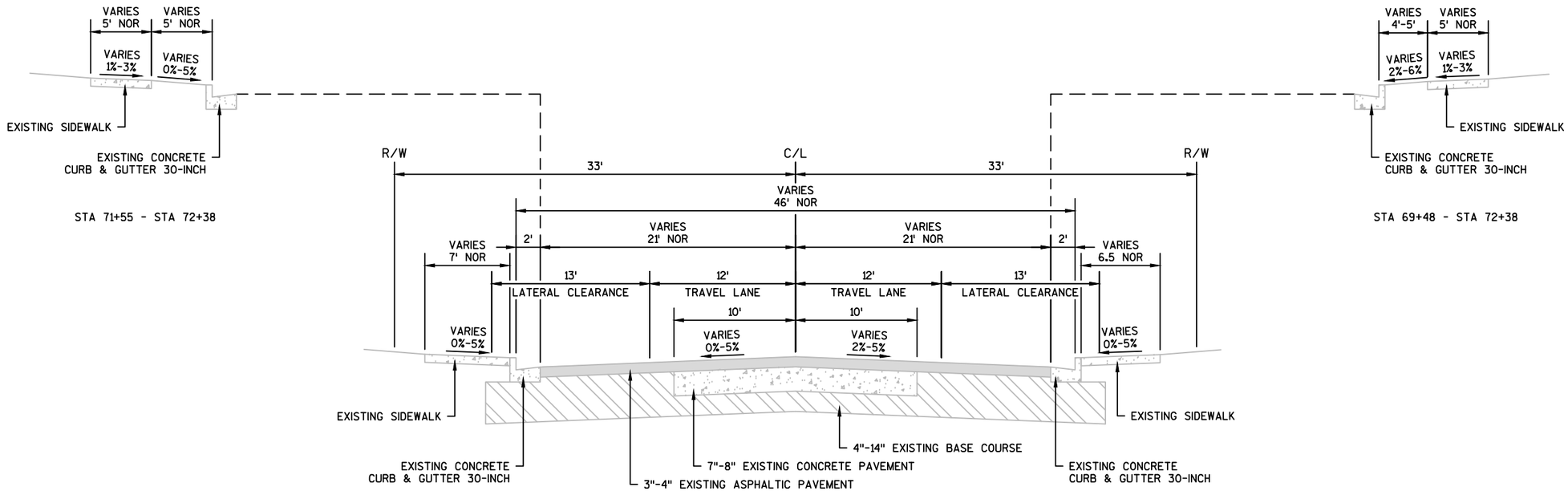

EXISTING TYPICAL SECTION

CTH D
STA 66+83 - STA 72+38

PROJECT NO: 4880-01-70	HWY: CTH D	COUNTY: OZAUKEE	TYPICAL SECTIONS	SHEET 5	E

SIDE ROADS													
STREET	LEFT SIDE						RIGHT SIDE						F-F
	ROW (R)	SIDEWALK (S)	TERRACE (T)	OVERALL WIDTH (W)	LANE WIDTH (L)	LATERAL CLEARANCE (C)	LATERAL CLEARANCE (C)	LANE WIDTH (L)	OVERALL WIDTH (W)	TERRACE (T)	SIDEWALK (S)	ROW (R)	
LILAC LN	33'	N/A	N/A	17.5'	12'	9.25'	9.25'	12'	17.5'	N/A	N/A	33'	38.5'
N CTH KW	22.75'	N/A	N/A	18'	12'	9.75'	9.75'	12'	18'	N/A	N/A	26.75'	39.5'
S LIBERTY ST	25'	N/A	N/A	15'-15.5'	12'	7'-7.25'	7'-7.25'	12'	15.5'-16'	N/A	N/A	25'	34'-34.5'
N LIBERTY ST	25'	N/A	N/A	16'	12'	7.25'	7.25'	12'	15'	N/A	N/A	25'	34.5'
VICTORY ST	25'	5'	3'	17'	12'	9'	9'	12'	17'	N/A	N/A	25'	38'
ELEVATOR LN	18'	N/A	N/A	15'-15.5'	12'	7'-7.25'	7'-7.25'	12'	15.5'-16'	N/A	N/A	18.1'-18.2'	34'-34.5'
ELM ST	26.5'	4.5'	5'	15.5'	12'	7.25'	7.25'	12'	15.5'	5'	4.5'	26.5'	34.5'

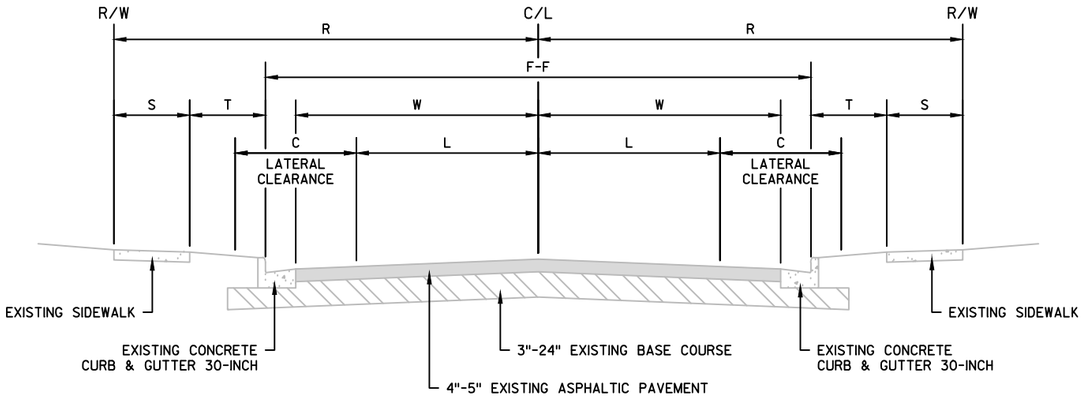

EXISTING TYPICAL SECTION
SIDE ROADS

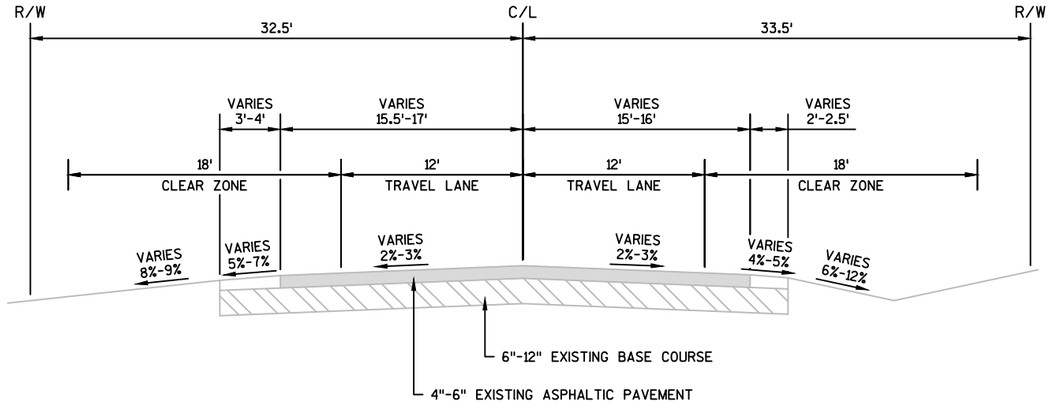

EXISTING TYPICAL SECTION
S CTH KW

PROJECT NO: 4880-01-70	HWY: CTH D	COUNTY: OZAUKEE	TYPICAL SECTIONS	SHEET 6	E

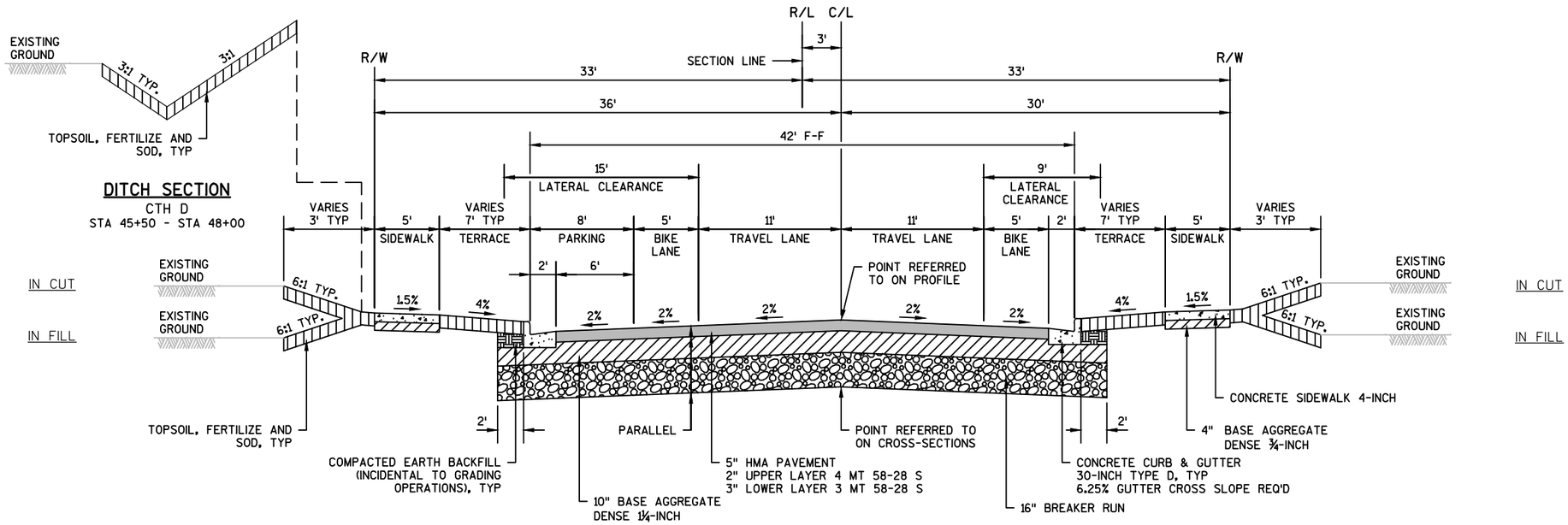

DITCH SECTION

CTH D
STA 45+50 - STA 48+00

FINISHED TYPICAL SECTION

CTH D
STA 45+50 - STA 48+50
STA 60+00 - STA 64+25

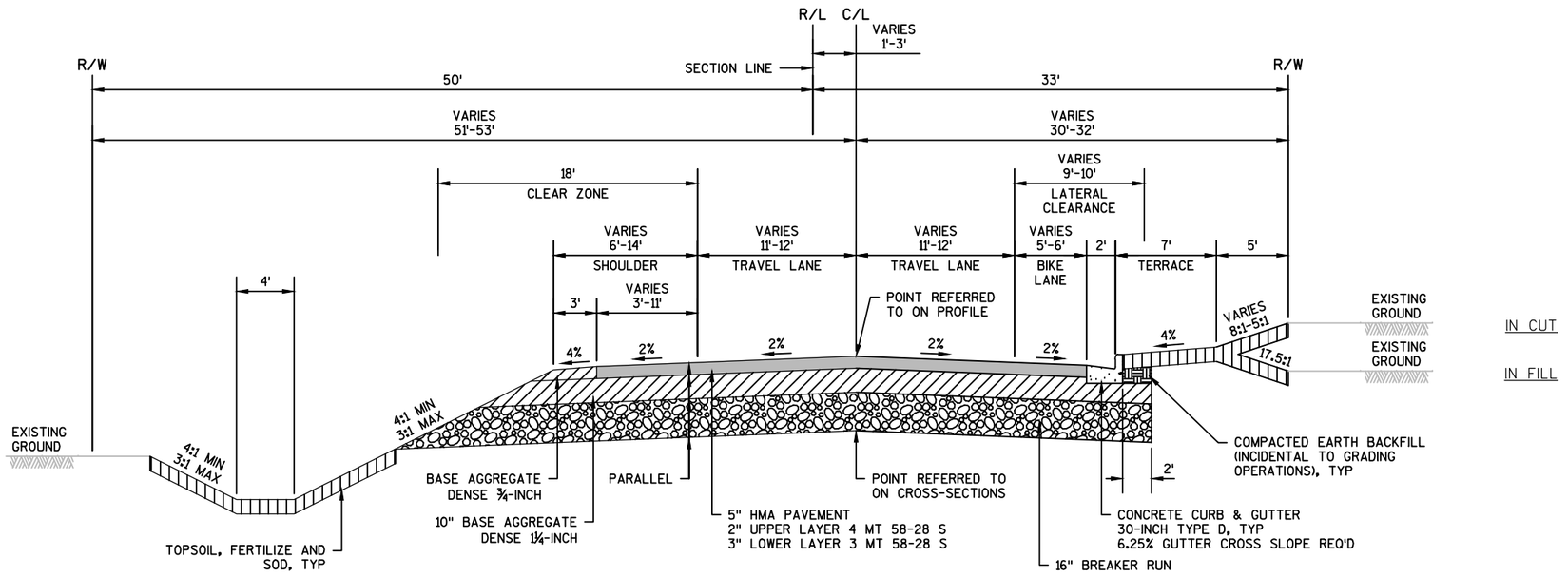

FINISHED TYPICAL SECTION

CTH D
STA 44+00 - STA 45+50

PROJECT NO: 4880-01-70	HWY: CTH D	COUNTY: OZAUKEE	TYPICAL SECTIONS	SHEET 7	E

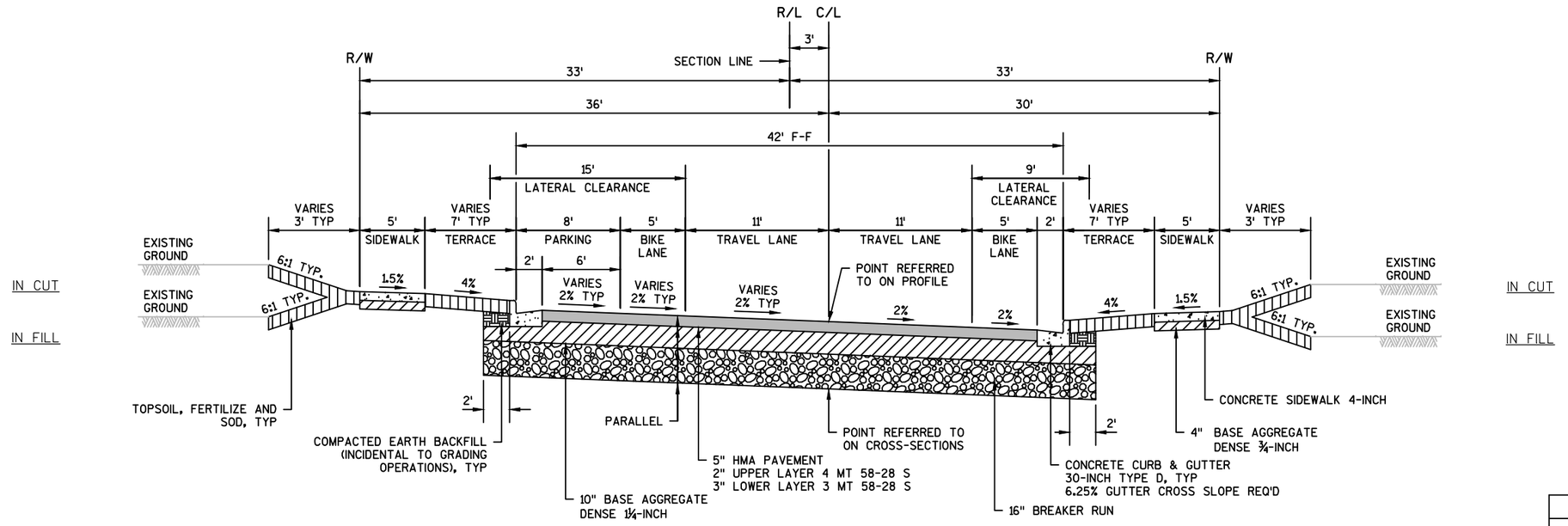

FINISHED TYPICAL SECTION

CTH D
STA 54+50 - STA 60+00

SUPERELEVATION TABLE			
	Left Outside Lane	Left Inside Lane	Right Inside/Outside Lane
Station	Slope	Slope	Slope
44+00	-2.00%	-2.00%	-2.00%
48+50	-2.00%	-2.00%	-2.00%
50+00	-2.00%	2.00%	-2.00%
54+50	-2.00%	2.00%	-2.00%
56+00	2.00%	2.00%	-2.00%
58+00	2.00%	2.00%	-2.00%
58+50	0.67%	2.00%	-2.00%
59+50	-2.00%	-0.67%	-2.00%
60+00	-2.00%	-2.00%	-2.00%

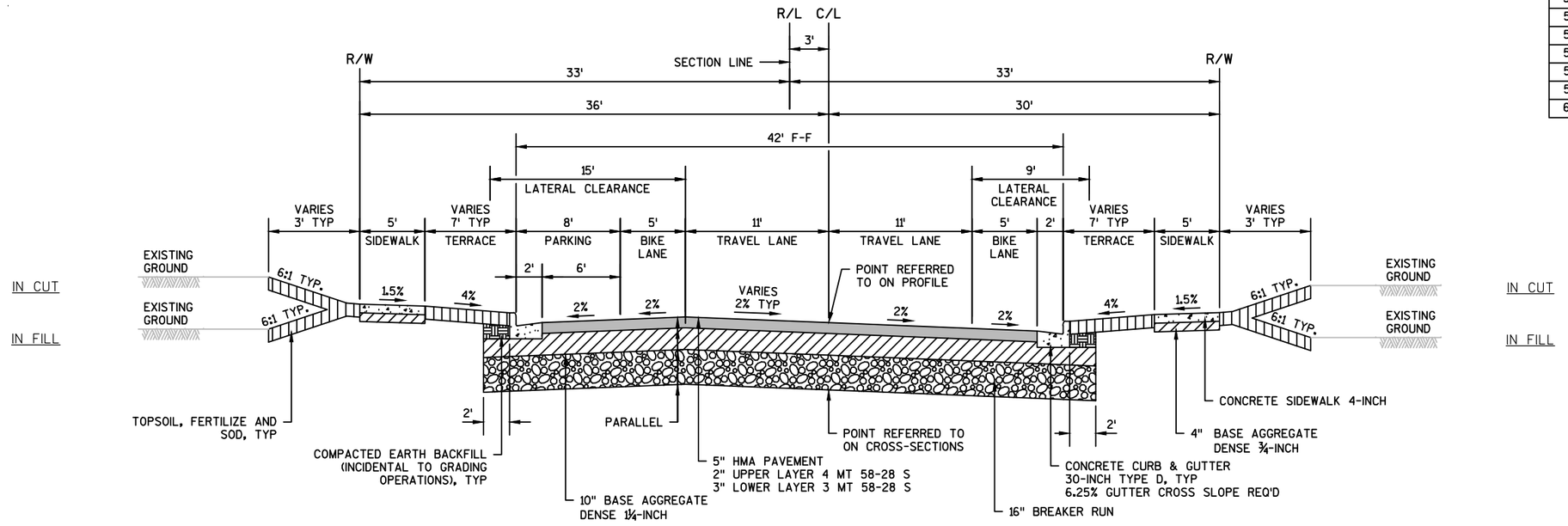

FINISHED TYPICAL SECTION

CTH D
STA 48+50 - STA 54+50

PROJECT NO: 4880-01-70	HWY: CTH D	COUNTY: OZAUKEE	TYPICAL SECTIONS	SHEET 8	E

SUPERELEVATION TABLE			
	Left Outside Lane	Left Inside Lane	Right Inside/Outside Lane
Station	Slope	Slope	Slope
60+00	-2.00%	-2.00%	-2.00%
66+15	-2.00%	-2.00%	-2.00%
66+65	0.00%	0.00%	0.00%
66+90	0.00%	0.00%	0.00%
67+40	-2.00%	-2.00%	-2.00%
77+25	-2.00%	-2.00%	-2.00%

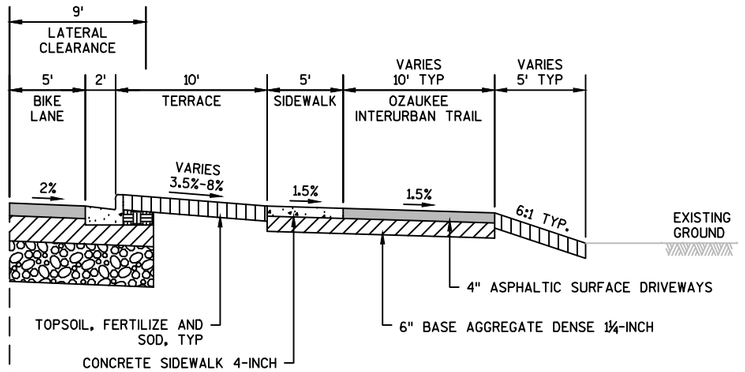

OZAUKEE INTERURBAN TRAIL SECTION

CTH D
STA 66+92 - STA 67+88

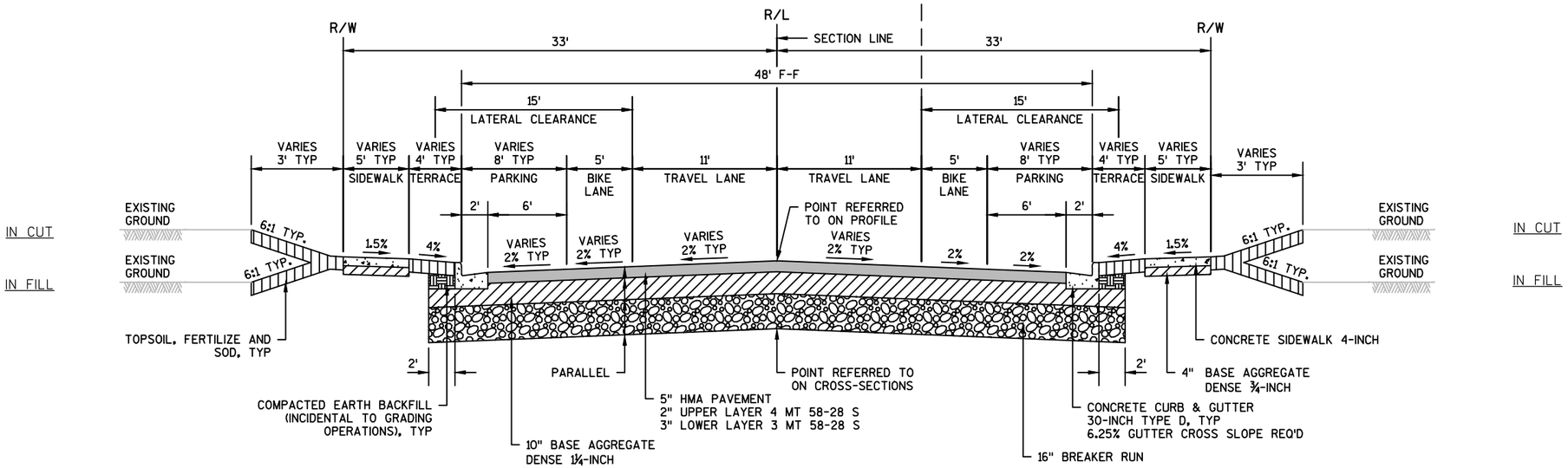

FINISHED TYPICAL SECTION

CTH D
STA 64+25 - STA 66+73
STA 66+83 - STA 77+25

PROJECT NO: 4880-01-70	HWY: CTH D	COUNTY: OZAUKEE	TYPICAL SECTIONS	SHEET 9	E

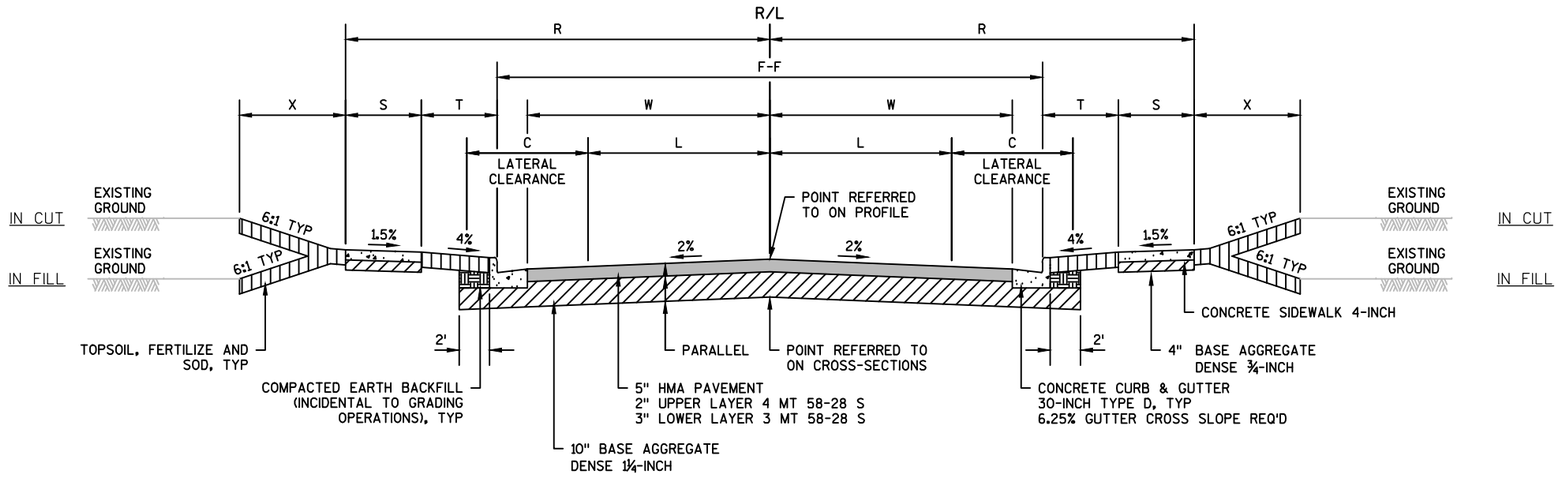

FINISHED TYPICAL SECTION
SIDE ROADS

SIDE ROADS															
STREET	LEFT SIDE							RIGHT SIDE							F-F
	ROW (R)	(X)	SIDEWALK (S)	TERRACE (T)	OVERALL WIDTH (W)	LANE WIDTH (W)	LATERAL CLEARANCE (C)	LATERAL CLEARANCE (C)	LANE WIDTH (W)	OVERALL WIDTH (W)	TERRACE (T)	SIDEWALK (S)	(X)	ROW (R)	
LILAC LN	33'	5'	N/A	N/A	17.5'	12'	9.5'	9.5'	12'	17.5'	N/A	N/A	5'	33'	39'
S CTH KW	32.5'	6.5'	N/A	N/A	16'	12'	8'	8'	12'	16'	N/A	N/A	6.5'	33.5'	36'
N CTH KW	22.75'	10.5'	N/A	N/A	18'	12'	10'	10'	12'	18'	N/A	N/A	6.25'	26.75'	40'
S LIBERTY ST	25'	5'	N/A	N/A	15.5'	12'	7.5'	7.5'	12'	15.5'	N/A	N/A	5'	25'	35'
N LIBERTY ST	25'	2.5'	N/A	N/A	15.5'	12'	7.5'	7.5'	12'	15.5'	N/A	N/A	5'	25'	35'
VICTORY ST	25'	0'	6.85'	0.5'	17'	12'	9'	9'	12'	17'	N/A	N/A	5'	25'	38'
ELEVATOR LN	18'	5'	N/A	N/A	15.5'	12'	7.5'	7.5'	12'	15.5'	N/A	N/A	3'	18'	35'
ELM ST	26.5'	3'	5'	4'	15.5'	12'	7.5'	7.5'	12'	15.5'	4'	5'	5'	26.5'	35'

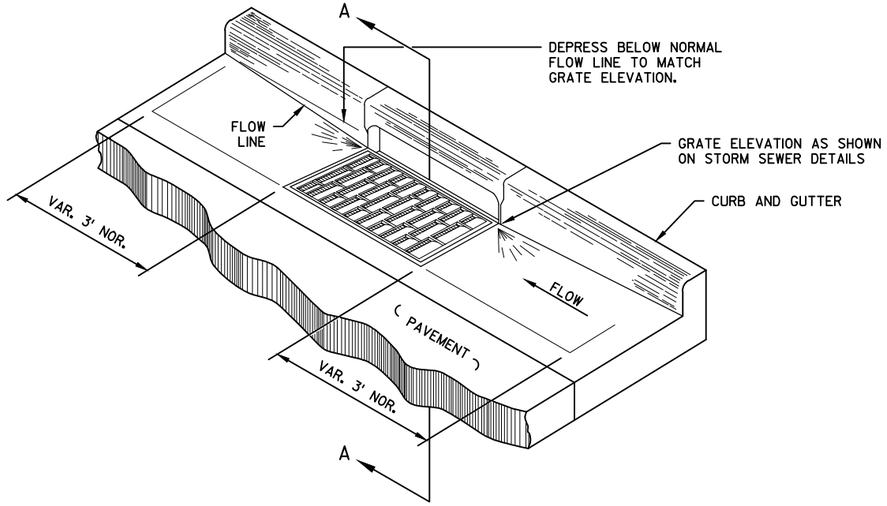

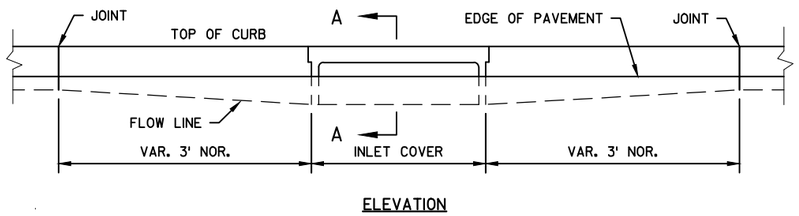

ELEVATION

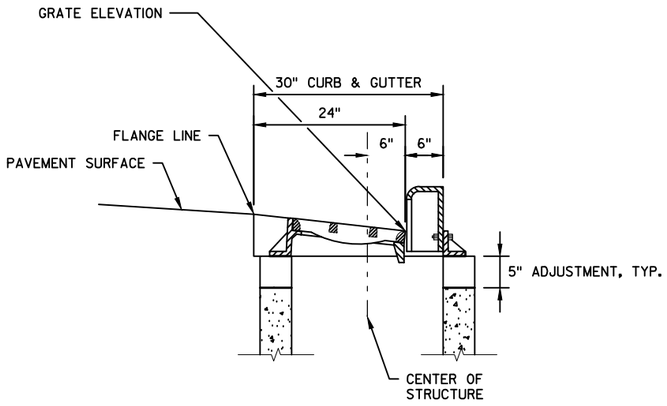

(INLETS 2X3-H & 2X3-HS)
SECTION A-A

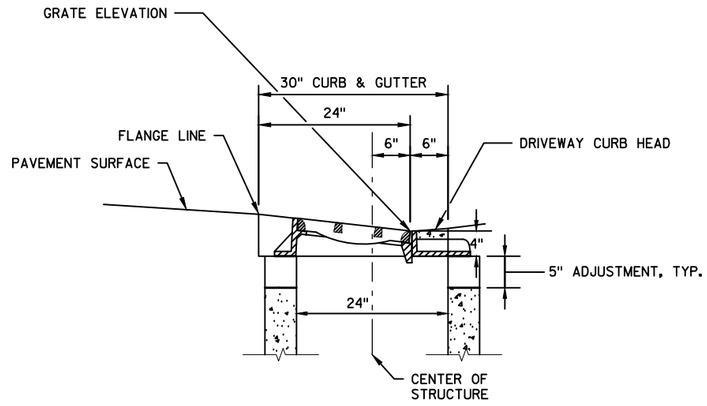

(INLETS 2X3-HC & 2X3-HC-S)
SECTION A-A

CURB AND GUTTER DETAIL AT INLETS

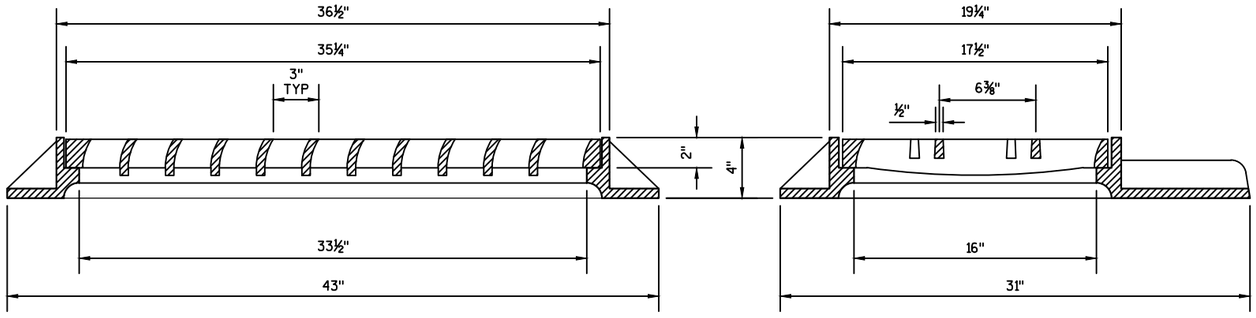

FRONT VIEW

SIDE VIEW

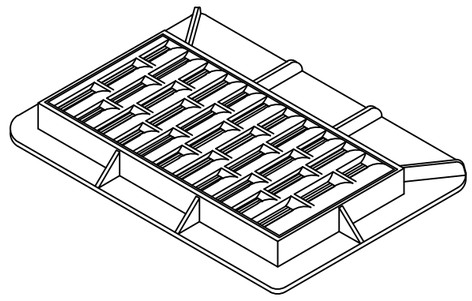

ISOMETRIC VIEW

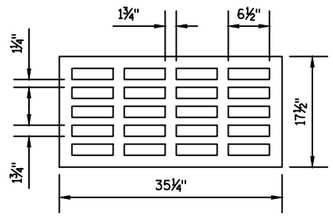

SPECIAL GRATE FOR TYPE "HC" COVER
(NOTED AS TYPE HC-S ON DRAINAGE TABLE)

INLET COVER TYPE HC

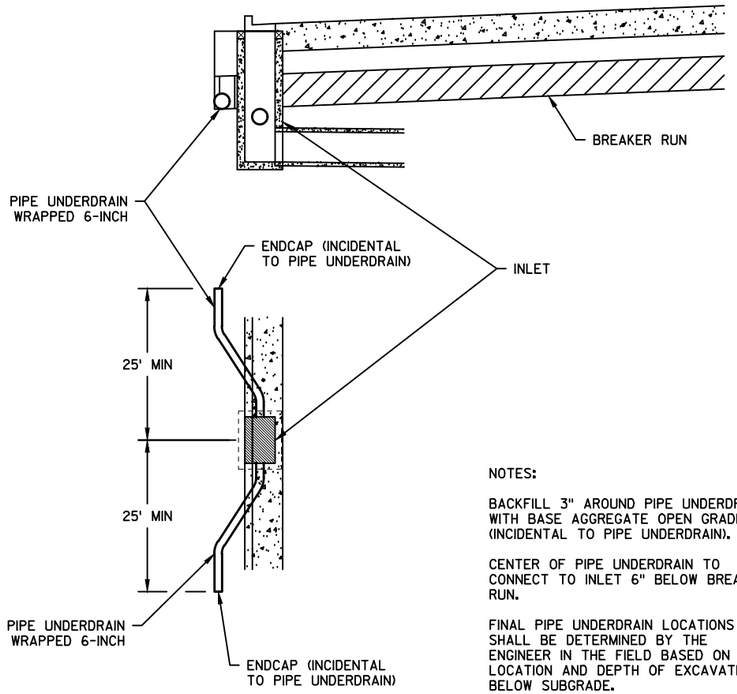

NOTES:

BACKFILL 3" AROUND PIPE UNDERDRAIN WITH BASE AGGREGATE OPEN GRADED (INCIDENTAL TO PIPE UNDERDRAIN).

CENTER OF PIPE UNDERDRAIN TO CONNECT TO INLET 6" BELOW BREAKER RUN.

FINAL PIPE UNDERDRAIN LOCATIONS SHALL BE DETERMINED BY THE ENGINEER IN THE FIELD BASED ON LOCATION AND DEPTH OF EXCAVATION BELOW SUBGRADE.

DETAIL FOR PIPE UNDERDRAIN AT CURB & GUTTER INLETS

NOTES:

STORM SEWER LATERALS SHALL BE INSTALLED WITH 4-FEET OF DESIRABLE COVER AND 3-FEET OF MINIMUM COVER.

STORM SEWER LATERALS WHEN CONNECTED DIRECTLY TO THE STORM SEWER PIPE SHALL BE AT AN ELEVATION NO LOWER THAN THE SPRING LINE.

STORM SEWER LATERAL DEPTHS SHALL BE ADJUSTED TO AVOID UTILITY CONFLICTS.

STORM SEWER LATERALS SHALL BE CAPPED AT A POINT BEYOND THE RIGHT-OF-WAY LINE OR SHALL BE CONNECTED TO AN EXISTING PIPE.

STORM SEWER LATERAL LOCATIONS SHALL BE COORDINATED WITH THE VILLAGE OF BELGIUM AND SHALL BE VERIFIED BY THE ENGINEER IN THE FIELD.

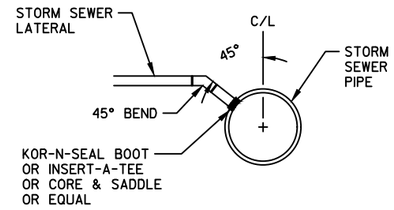

STORM SEWER PIPE CONNECTION

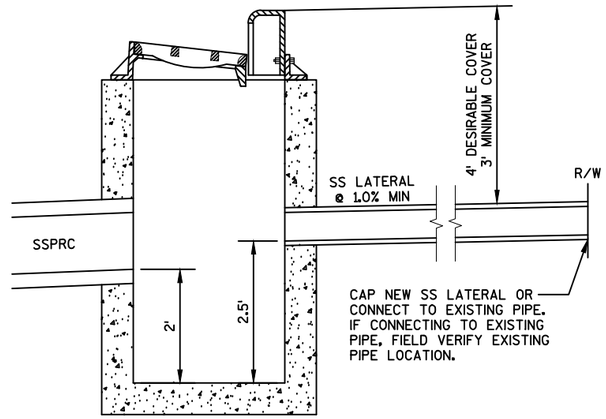

CATCH BASIN CONNECTION

STORM SEWER LATERAL CONNECTION

(INCIDENTAL TO STORM LATERAL BID ITEM)

NOTES:

30" CURB & GUTTER SPECIAL SHALL BE PAID FOR AS CONCRETE CURB & GUTTER 30-INCH, TYPE D.

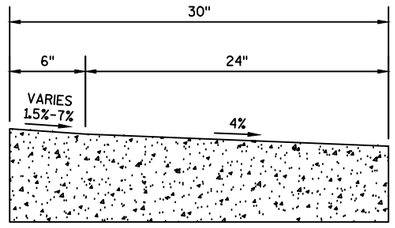

30" CURB & GUTTER SPECIAL DETAIL

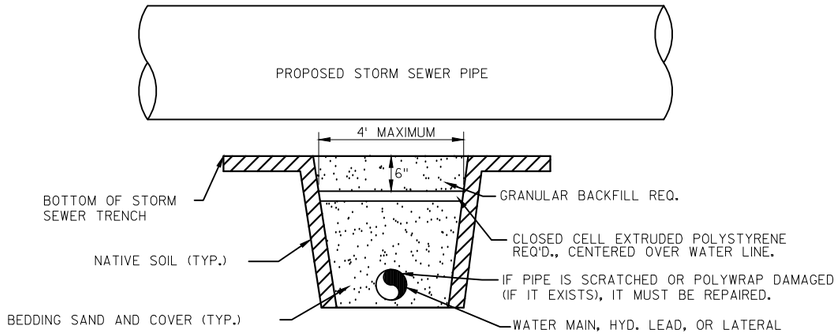

GRANULAR BACKFILL SHALL BE LEVELED OUT SO INSULATION IS UNIFORMLY SUPPORTED, ESPECIALLY IF ANY SHEETS ARE OVERLAPPED

EXTRUDED POLYSTYRENE TO BE MIN. 2-INCH THICK. SEE PLAN SHEETS FOR DETAILS.

INSULATION BOARD POLYSTYRENE, 2-INCH

PROJECT NO: 4880-01-70	HWY: CTH D	COUNTY: OZAUKEE	CONSTRUCTION DETAILS	SHEET 12	E

NOTES:

ALL RISERS SHALL BE SAME HEIGHT. RISER HEIGHT SHALL BE 4" MINIMUM AND 8" MAXIMUM.

ALL TREADS SHALL BE SAME DEPTH. TREAD DEPTH SHALL BE 11" MINIMUM AND 12" MAXIMUM.

ACTUAL HEIGHT AND NUMBER OF STEPS MAY VARY DUE TO FIELD CONDITIONS.

STEEL REINFORCEMENT AND PIPE RAILING NOT REQUIRED ON STEPS WITH 2 RISERS OR LESS. ALL STEEL TO 2" CLEAR.

MINIMUM WIDTH OF STEP SHALL BE 4 FEET.

NUMBER OF STEPS LISTED IN PLANS EQUALS NUMBER OF RISERS.

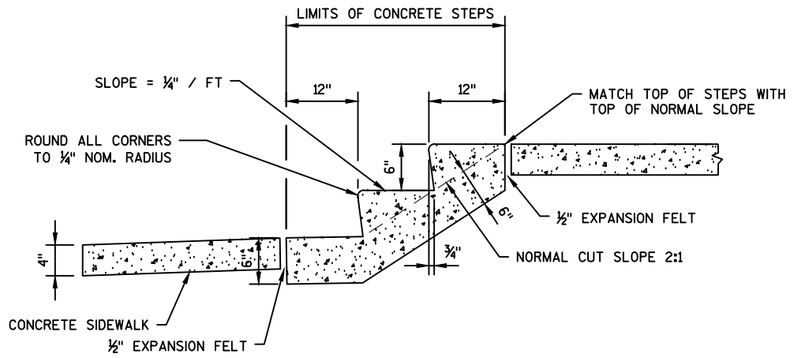

CONCRETE STEPS DETAIL

SEE PLAN SHEETS FOR LOCATIONS

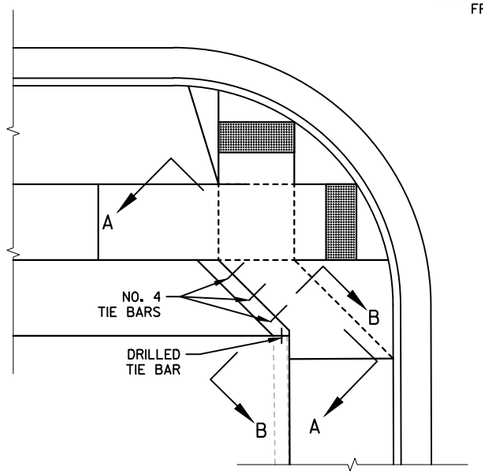

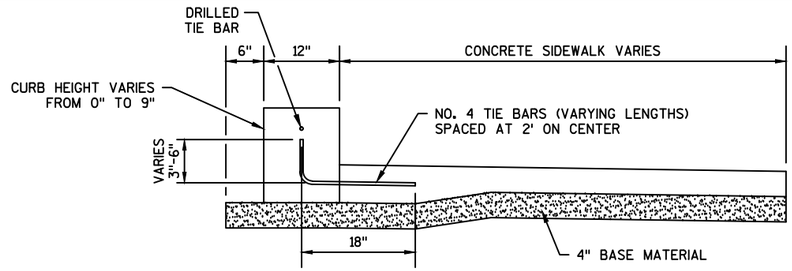

SECTION VIEW B-B

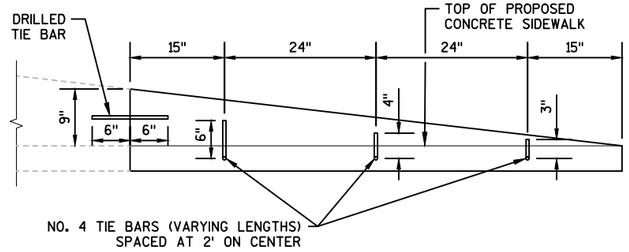

SECTION VIEW A-A

PEDESTRIAN CURB

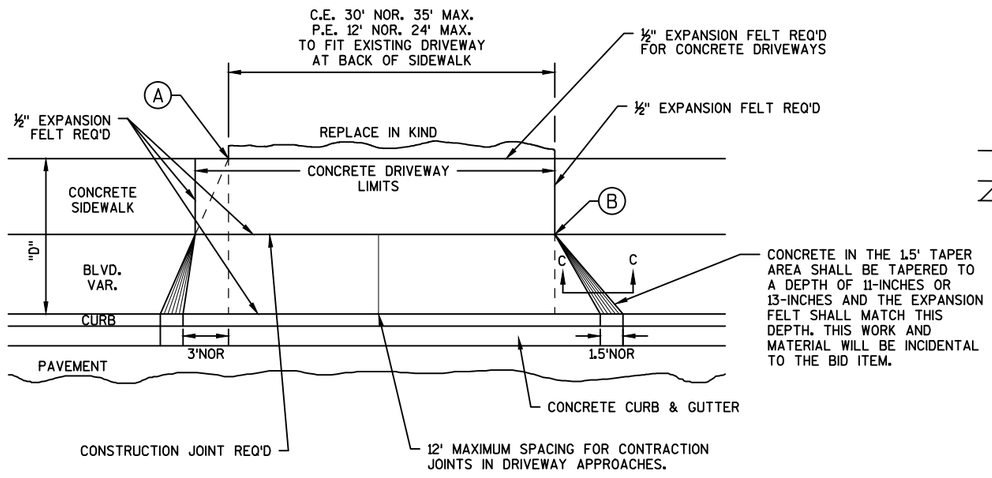

PLAN VIEW

Ⓐ WHEN "D" IS 13' OR LESS, ALIGN TAPER WITH BACK OF SIDEWALK

Ⓑ WHEN "D" IS GREATER THAN 13', ALIGN TAPER WITH FRONT OF SIDEWALK

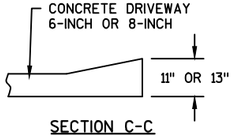

SECTION C-C

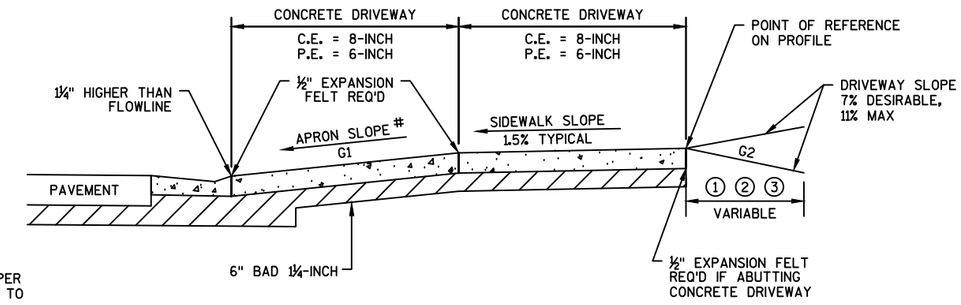

TYPICAL SIDEWALK SECTION

① — C.E. 8" CONC DWY OVER 6" BAD 1¼-INCH
P.E. 6" CONC DWY OVER 6" BAD 1¼-INCH

② — 6" BASE AGG. DENSE ¾-INCH

③ — C.E. 4" ASPH SURFACE OVER 6" BAD 1¼-INCH
P.E. 3" ASPH SURFACE OVER 6" BAD 1¼-INCH

\#

TERRACE WIDTH	APRON SLOPE (G1)		
	MIN %	DESIRABLE %	MAX %
3 FT	7.0	8.5	11.0
4 FT	5.0	7.0	11.0
5 FT	4.0	7.0	11.0
6 FT	4.0	7.0	11.0
7 FT	3.5	7.0	11.0
8 FT	3.0	7.0	11.0

NOTE: ALGEBRAIC DIFFERENCE BETWEEN TANGENT GRADES G1 & G2 TO NOT EXCEED 15%

DEPRESS SIDEWALK PROFILE IF DRIVEWAY APRON EXCEEDS MAX SLOPE

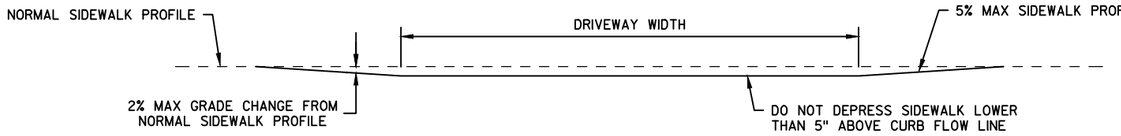

DEPRESSED SIDEWALK PROFILE DETAIL

URBAN ENTRANCE DETAIL WITH SIDEWALK, CURB & GUTTER

PROJECT NO: 4880-01-70	HWY: CTH D	COUNTY: OZAUKEE	CONSTRUCTION DETAILS	SHEET 13	E

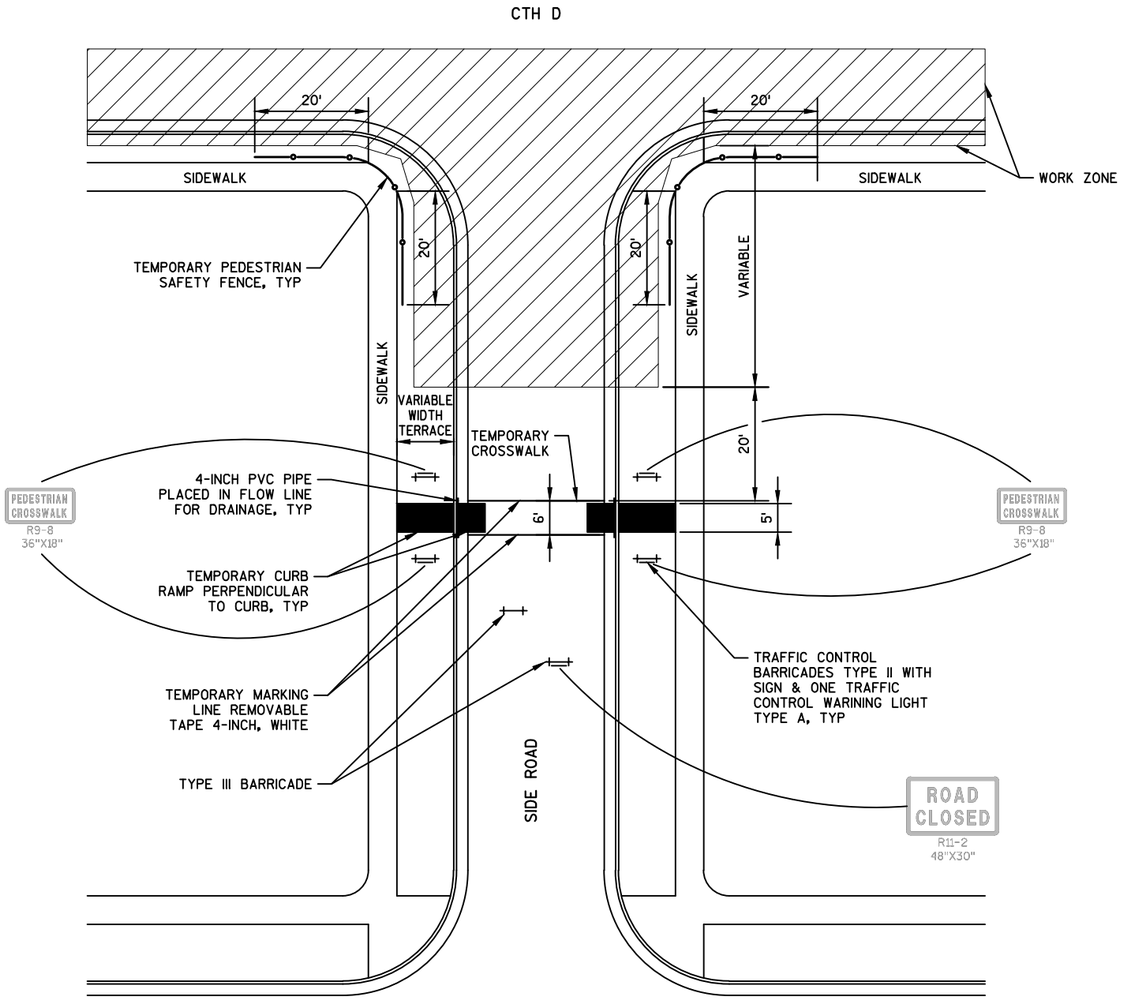

LOCATION OF TEMPORARY CROSSWALK
TO BE DETERMINED BY THE ENGINEER.
DO NOT LOCATE IN EXISTING DRIVEWAY.

TEMPORARY CROSSWALK DETAIL - SIDE ROAD OUTSIDE CONSTRUCTION LIMITS

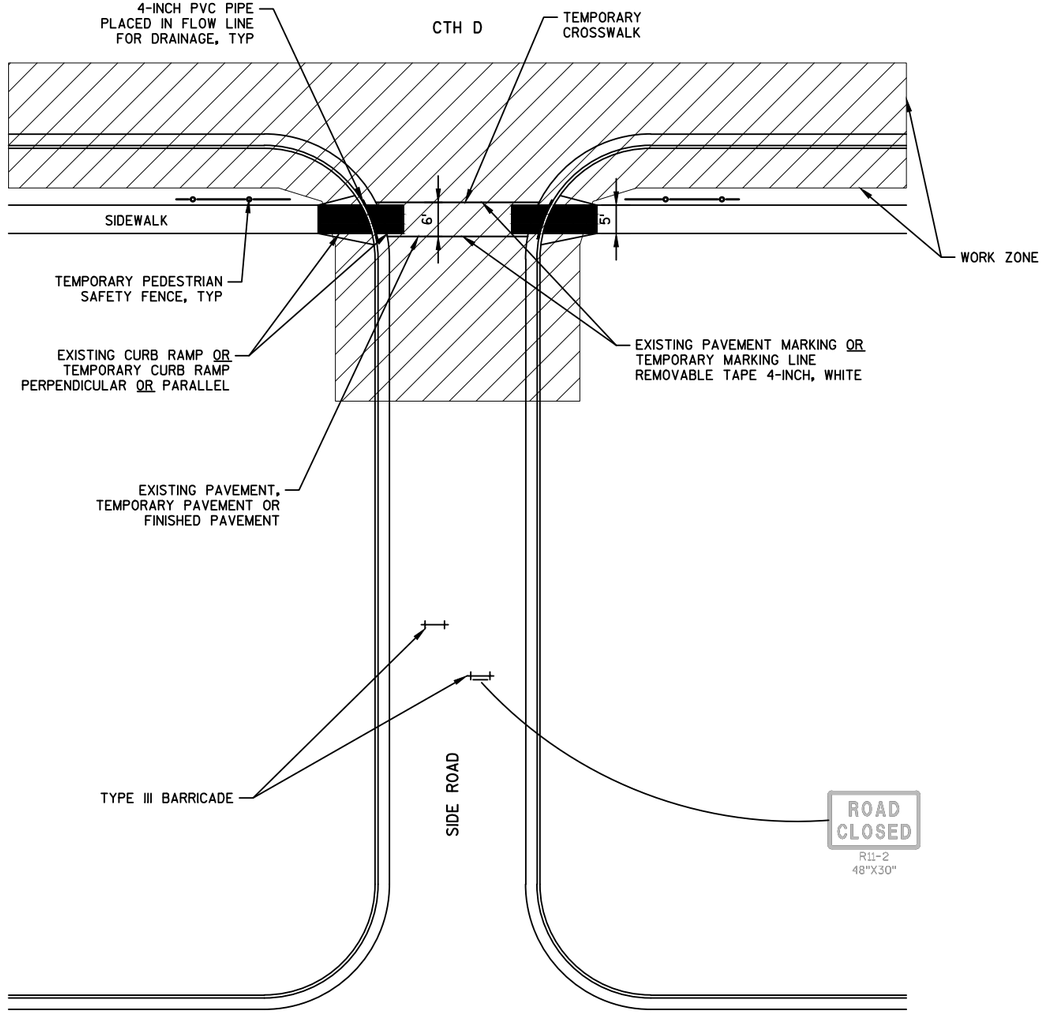

LOCATION OF TEMPORARY CROSSWALK
TO BE DETERMINED BY THE ENGINEER.

TEMPORARY CROSSWALK DETAIL - SIDE ROAD INSIDE CONSTRUCTION LIMITS

2

PROJECT NO: 4880-01-70	HWY: CTH D	COUNTY: OZAUKEE	CONSTRUCTION DETAILS	SHEET 14	E

FILE NAME : S:\CURRPROJ\OZAUKEECO\CTH D\CIVIL3D\48800100\SHEETSPLAN\48800170\48800170-021001-CD.DWG
LAYOUT NAME - 48800170-021001-CD - SHEET-04
PLOT DATE : 10/31/2017 12:00 PM PLOT BY : AARON SARAUER PLOT NAME : PLOT SCALE : 1:1
WISDOT/CADDS SHEET 42

	HYDROLOGIC SOIL GROUP											
	A			B			C			D		
	SLOPE RANGE (PERCENT)			SLOPE RANGE (PERCENT)			SLOPE RANGE (PERCENT)			SLOPE RANGE (PERCENT)		
LAND USE:	0-2	2-6	6 & OVER	0-2	2-6	6 & OVER	0-2	2-6	6 & OVER	0-2	2-6	6 & OVER
ROW CROPS	.08 .22	.16 .30	.22 .38	.12 .26	.20 .34	.27 .44	.15 .30	.24 .37	.33 .50	.19 .34	.28 .41	.38 .56
MEDIAN STRIP-TURF	.19 .24	.20 .26	.24 .30	.19 .25	.22 .28	.26 .33	.20 .26	.23 .30	.30 .37	.20 .27	.25 .32	.30 .40
SIDE SLOPE-TURF			.25 .32			.27 .34			.28 .36			.25 .38
PAVEMENT:												
ASPHALT	.70 - .95											
CONCRETE	.80 - .95											
BRICK	.70 - .80											
DRIVES, WALKS	.75 - .85											
ROOFS	.75 - .95											
GRAVEL ROADS, SHOULDERS	.40 - .60											

TOTAL PROJECT AREA = 6.690 ACRES
TOTAL AREA EXPECTED TO BE DISTURBED BY CONSTRUCTION ACTIVITIES = 5.977 ACRES

RUNOFF COEFFICIENT TABLE

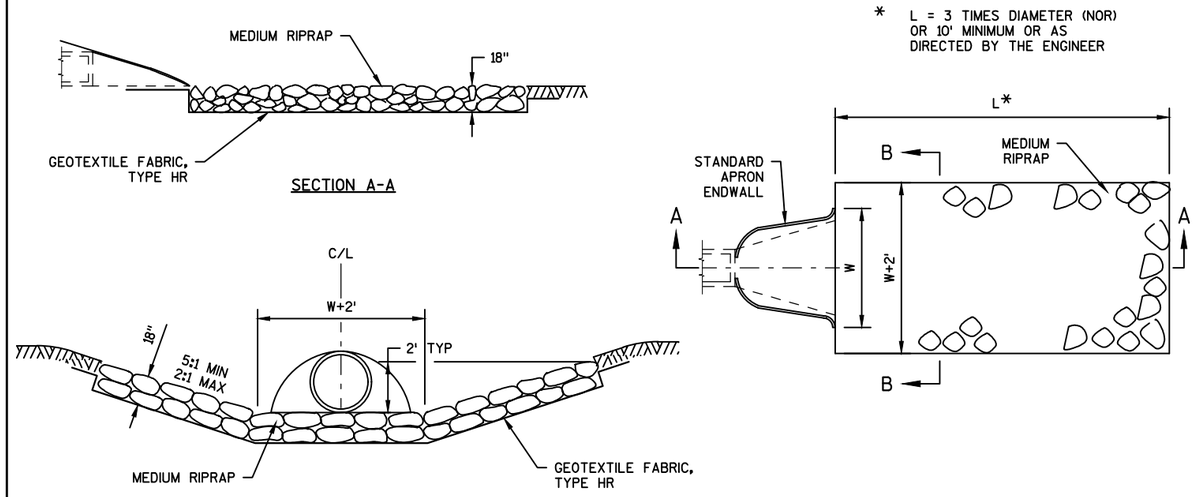

MEDIUM RIPRAP AND GEOTEXTILE FABRIC DETAIL AT APRON ENDWALLS

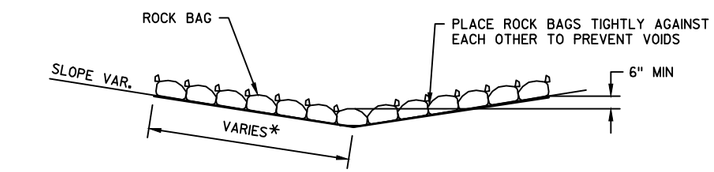

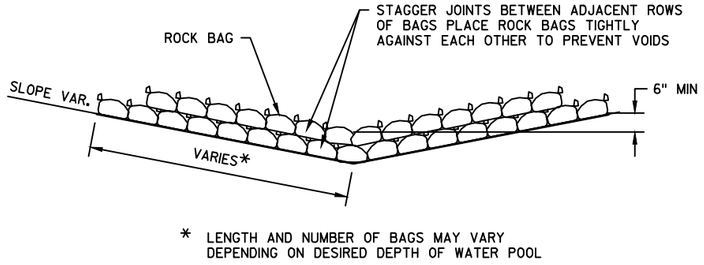

ROCK BAGS USED FOR DITCH CHECKS

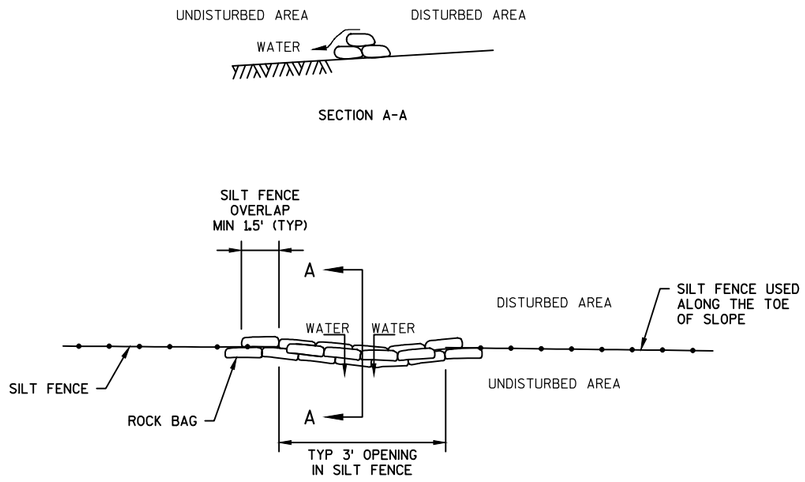

ROCK BAGS USED FOR SILT FENCE RELIEF POINT

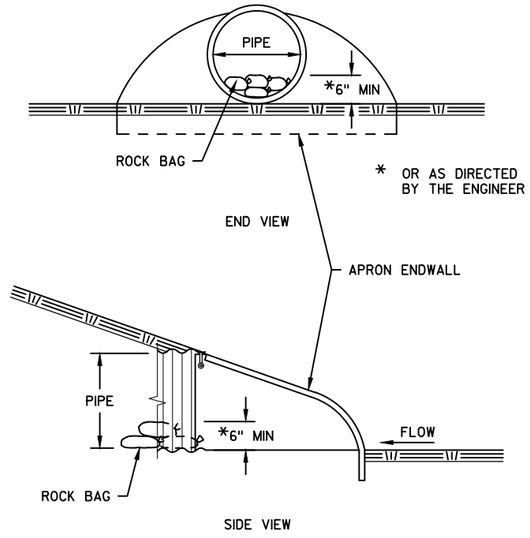

ROCK BAGS USED FOR CULVERT PIPE CHECKS

ROCK BAGS DETAIL

PROJECT NO: 4880-01-70	HWY: CTH D	COUNTY: OZAUKEE	CONSTRUCTION DETAILS	SHEET 15	E

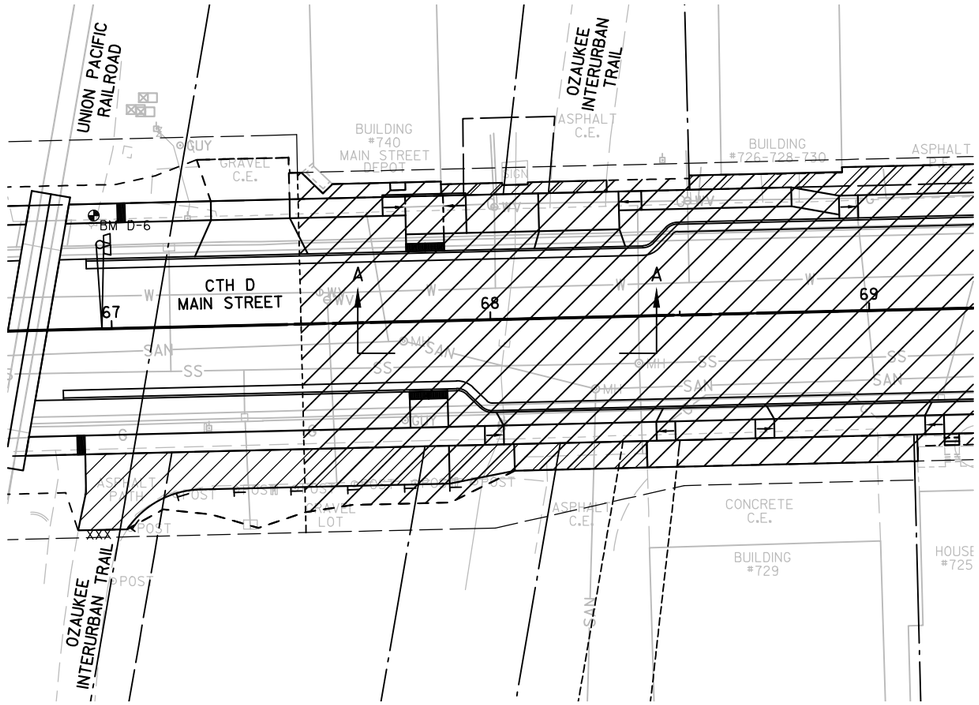

PLAN VIEW

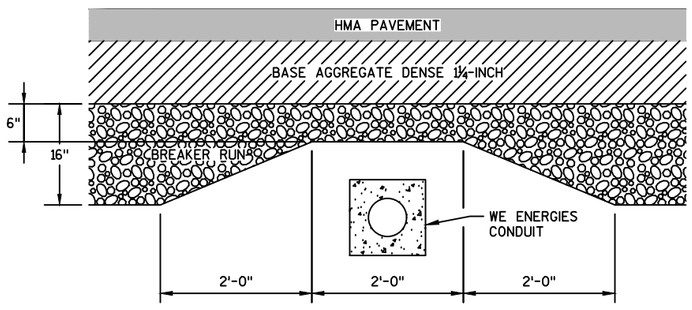

SECTION A-A

DETAIL FOR BREAKER RUN REDUCTION AT WE ENERGIES CONDUIT

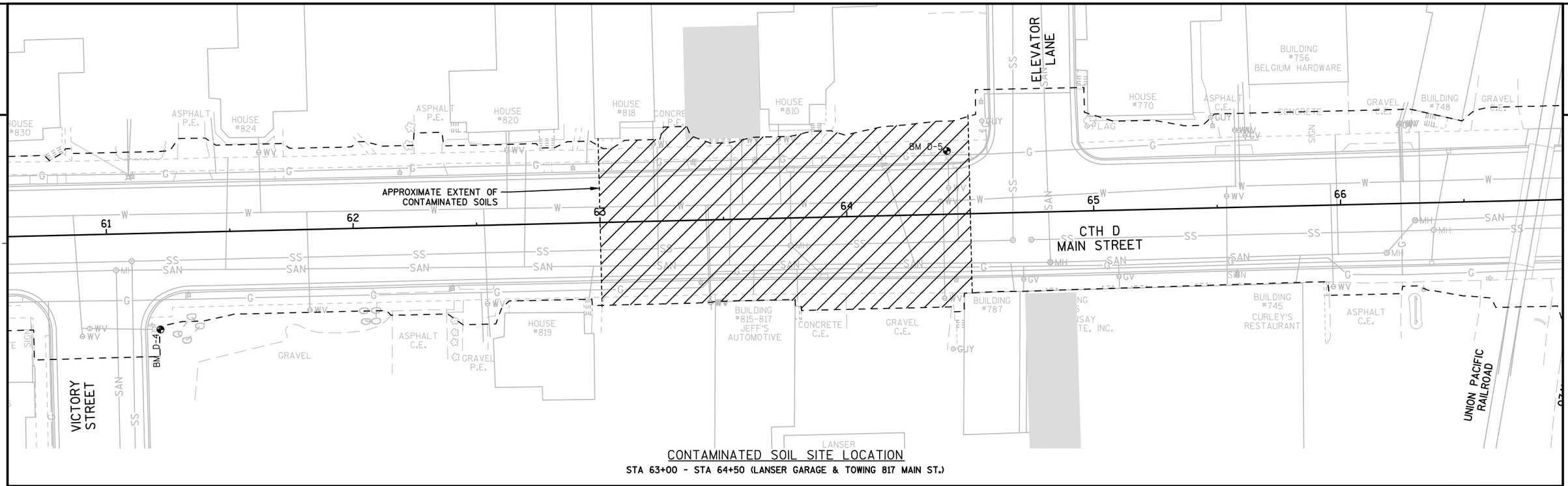

CONTAMINATED SOIL SITE LOCATION

STA 63+00 - STA 64+50 (LANSER GARAGE & TOWING 817 MAIN ST.)

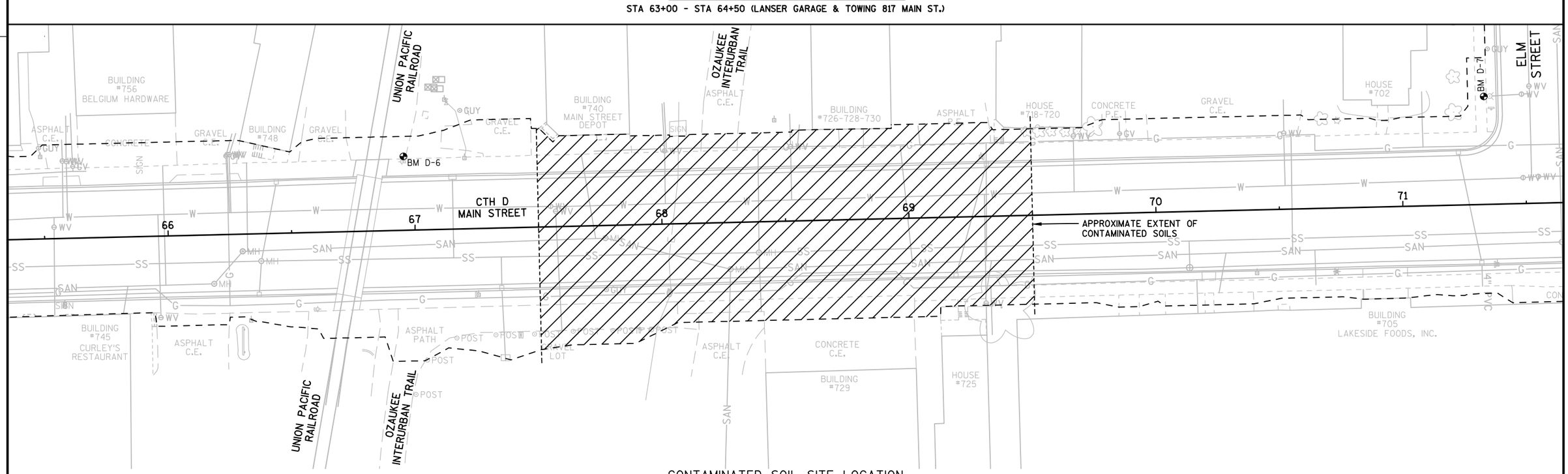

CONTAMINATED SOIL SITE LOCATION

STA 67+50 - STA 69+50 (FORMER GAS STATION/ LAKESIDE FOODS 705 MAIN ST.)

PROJECT NO: 4880-01-70	HWY: CTH D	COUNTY: OZAUKEE	CONSTRUCTION DETAILS	SHEET 17	E

FILE NAME : S:\CURRPROJ\OZAUKEECO\CTH D\CIVIL3D\48800100\SHEETSPLAN\48800170\48800170-021001-CD.DWG
LAYOUT NAME - 48800170-021001-CD - SHEET-07

PLOT DATE : 10/31/2017 12:00 PM PLOT BY : AARON SARAUER PLOT NAME : PLOT SCALE : 1 IN:40 FT

WISDOT/CADDS SHEET 42

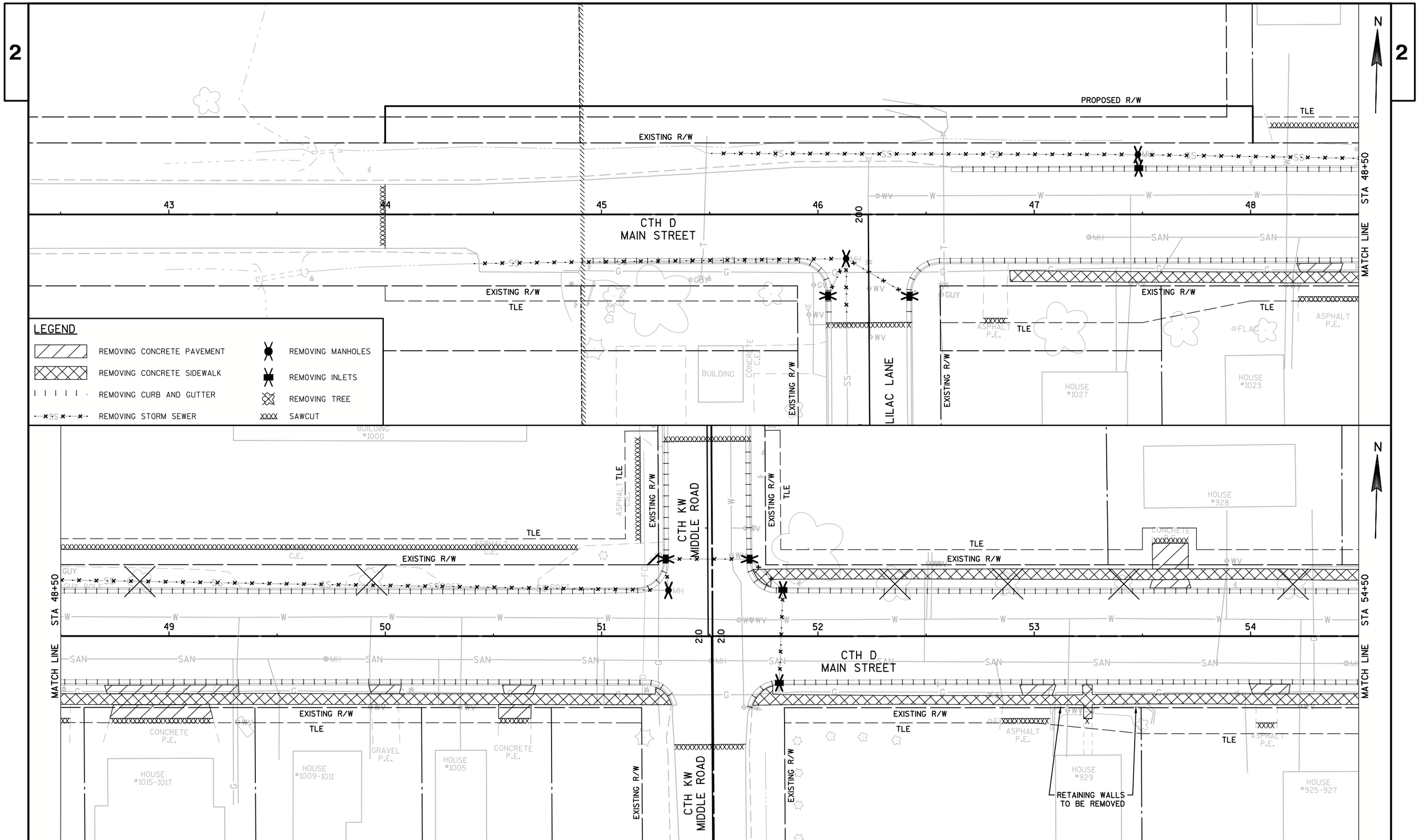

PROJECT NO:4880-01-70	HWY:CTH D	COUNTY:OZAUKEE	REMOVAL PLAN: CTH D	SHEET 18	E

FILE NAME : S:\CURRPROJ\OZAUKEECO\CTH D\CIVIL3D\48800100\SHEETSPLAN\48800170\48800170-021101-RM.DWG PLOT DATE : 10/31/2017 12:02 PM PLOT BY : AARON SARAUER PLOT NAME : PLOT SCALE : ********** WISDOT/CADDS SHEET 42

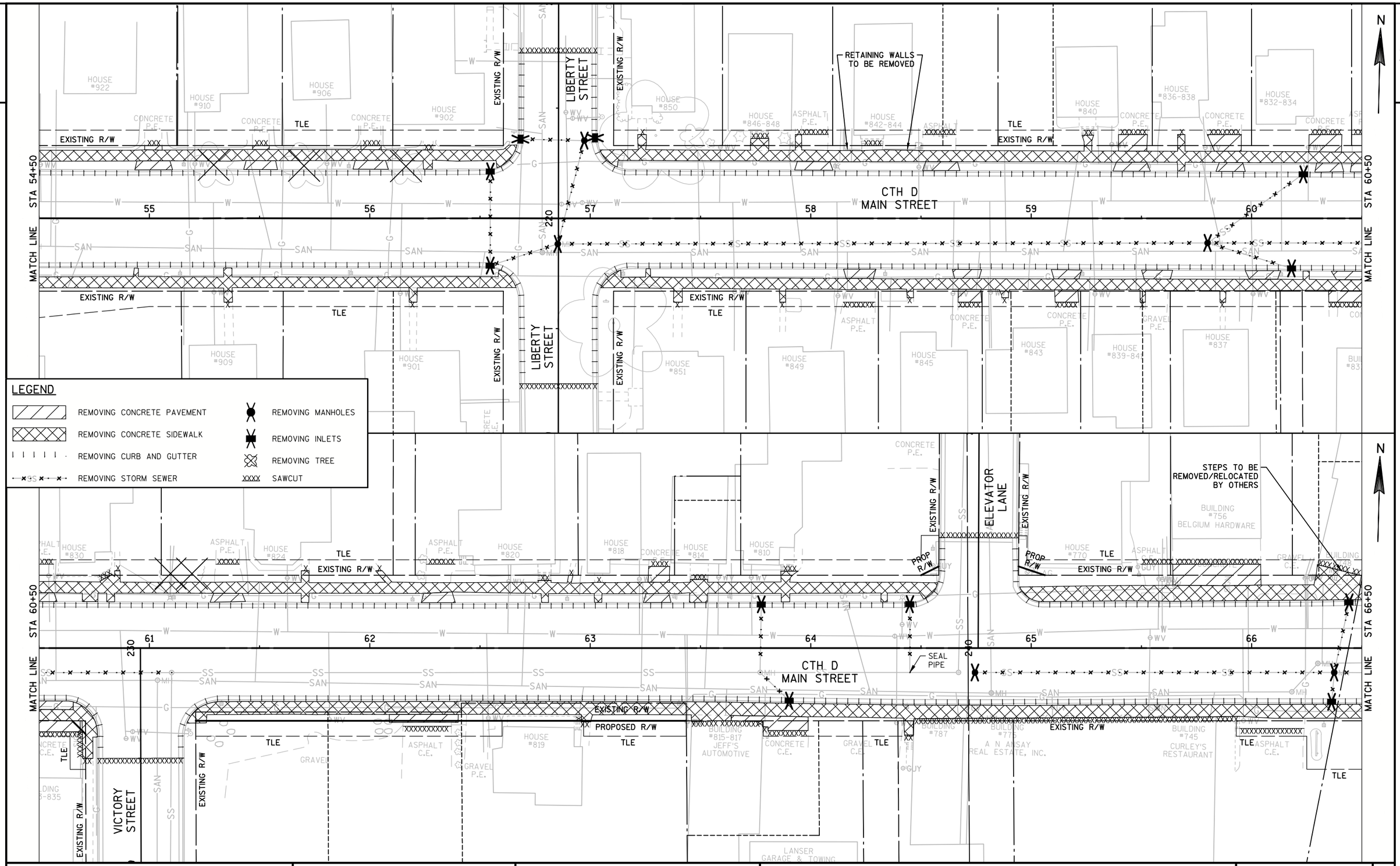

PROJECT NO:4880-01-70	HWY:CTH D	COUNTY:OZAUKEE	REMOVAL PLAN: CTH D	SHEET 19	E

FILE NAME : S:\CURRPROJ\OZAUKEECO\CTH D\CIVIL3D\48800100\SHEETSPLAN\48800170\48800170-021101-RM.DWG PLOT DATE : 10/31/2017 4:04 PM PLOT BY : AARON SARAUER PLOT NAME : PLOT SCALE : ********** WISDOT/CADDS SHEET 42

2

ABANDON EXISTING STORM SEWER PIPE UNDER RAILROAD

UNION PACIFIC RAILROAD

OZAUKEE INTERURBAN TRAIL

STEPS TO BE REMOVED/RELOCATED BY OTHERS

YELLOW WARNING FLASHER UNIT TO BE REMOVED BY OTHERS

ELM STREET

EXISTING R/W

TLE

CTH D
MAIN STREET

STA 66+50

STA 72+50

MATCH LINE

REMOVE POSTS

REMOVE PATIO PAVERS AS NECESSARY

REMOVE BASE (YELLOW WARNING FLASHER UNIT & POLE TO BE REMOVED BY OTHERS)

BUILDING #740 MAIN STREET DEPOT

BUILDING #726-728-730

HOUSE #718-720

HOUSE #702

HOUSE #680

BUILDING #705 LAKESIDE FOODS, INC.

BUILDING #729

HOUSE #725

FENCE TO BE REMOVED

BEECH STREET

COMMUNITY PARK

HOUSE #634

HOUSE #640-642

HOUSE #650-652-654

HOUSE #670-672

HOUSE #604

HOUSE #646

HOUSE #675

HOUSE #669

HOUSE #665

HOUSE #661

HOUSE #655

HOUSE #641-643

HOUSE #635-637

HOUSE #631

4'W X 5'H BOX CULVERT

48" CPRC

LEGEND

- REMOVING CONCRETE PAVEMENT
- REMOVING CONCRETE SIDEWALK
- REMOVING CURB AND GUTTER
- REMOVING STORM SEWER
- REMOVING MANHOLES
- REMOVING INLETS
- REMOVING TREE
- SAWCUT

PROJECT NO: 4880-01-70	HWY: CTH D	COUNTY: OZAUKEE	REMOVAL PLAN: CTH D	SHEET 20	E

FILE NAME : S:\CURRPROJ\OZAUKEECO\CTH D\CIVIL3D\48800100\SHEETSPLAN\48800170\48800170-021101-RM.DWG PLOT DATE : 10/31/2017 12:02 PM PLOT BY : AARON SARAUER PLOT NAME : PLOT SCALE : **********

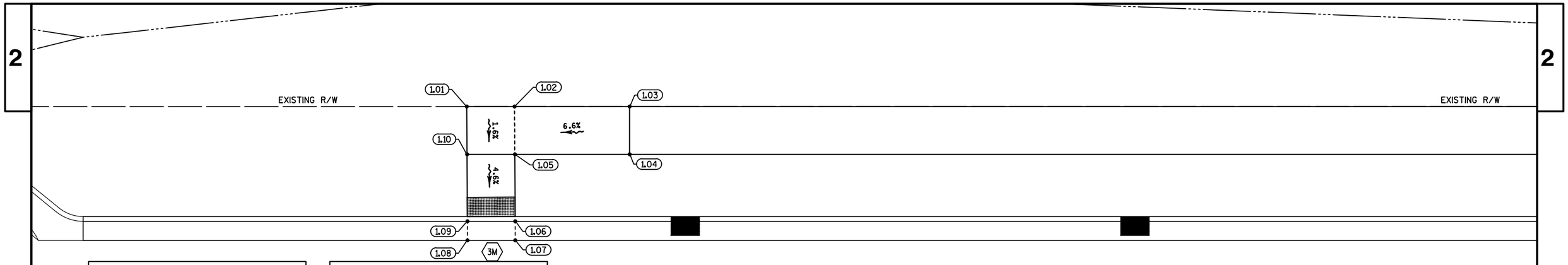

CURB RAMP 1 DATA TABLE			
NUMBER	STATION	OFFSET	ELEVATION
1.01	45+90.11	-33.00	737.24
1.02	45+95.11	-33.00	737.32
1.03	46+07.14	-33.00	738.11
1.04	46+07.14	-28.00	738.03
1.05	45+95.14	-28.00	737.24
1.06	45+95.18	-21.00	736.96

CURB RAMP 1 DATA TABLE			
NUMBER	STATION	OFFSET	ELEVATION
1.07	45+95.18	-19.00	737.08
1.08	45+90.18	-19.00	736.95
1.09	45+90.18	-21.00	736.83
1.10	45+90.14	-28.00	737.16

CTH D
MAIN STREET

46

200

47

CURB RAMP 3 DATA TABLE			
NUMBER	STATION	OFFSET	ELEVATION
3.01	45+90.50	28.00	737.60
3.02	45+90.47	23.03	737.19
3.03	45+90.46	21.07	737.16
3.04	45+90.64	19.07	737.08
3.05	45+96.32	20.63	737.21
3.06	45+95.47	22.44	737.29

CURB RAMP 3 DATA TABLE			
NUMBER	STATION	OFFSET	ELEVATION
3.07	45+95.50	28.00	737.52
3.08	46+01.74	28.00	737.30
3.09	46+03.43	26.93	737.42
3.10	46+05.71	32.60	737.60
3.11	46+03.75	33.00	737.48
3.12	46+01.15	33.00	737.52

CURB RAMP 3 DATA TABLE			
NUMBER	STATION	OFFSET	ELEVATION
3.13	45+95.53	33.00	737.60
3.14	45+90.53	33.00	737.68

CURB RAMP 2 DATA TABLE			
NUMBER	STATION	OFFSET	ELEVATION
2.01	46+43.67	26.93	738.21
2.02	46+45.37	28.00	738.29
2.03	46+51.96	28.00	738.64
2.04	46+51.96	33.00	738.72
2.05	46+45.96	33.00	738.30
2.06	46+43.36	33.00	738.26
2.07	46+41.40	32.60	738.18

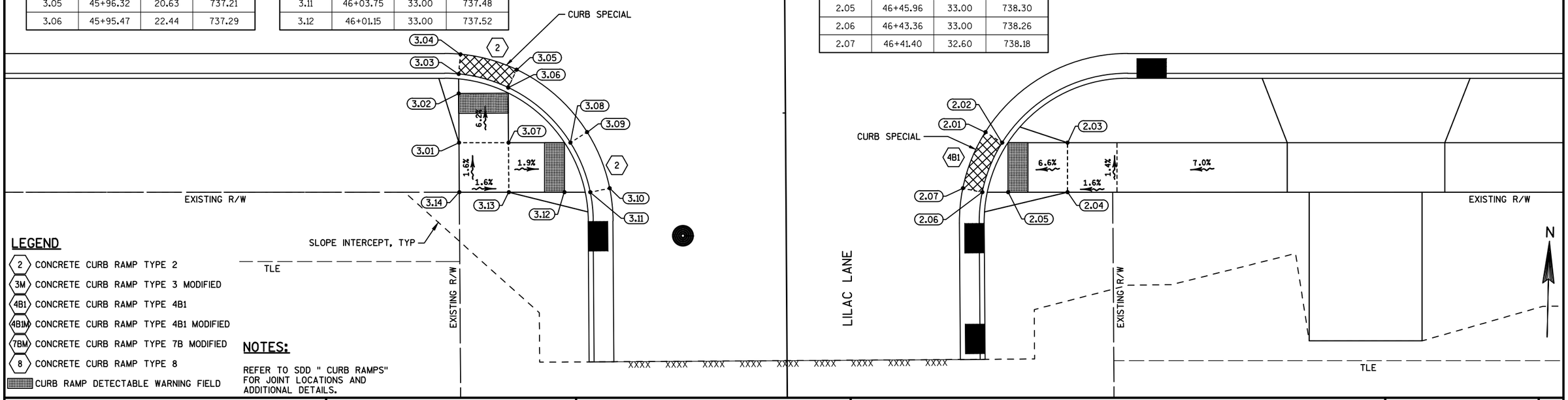

LEGEND

- 2 CONCRETE CURB RAMP TYPE 2
- 3M CONCRETE CURB RAMP TYPE 3 MODIFIED
- 4B1 CONCRETE CURB RAMP TYPE 4B1
- 4B1M CONCRETE CURB RAMP TYPE 4B1 MODIFIED
- 7BM CONCRETE CURB RAMP TYPE 7B MODIFIED
- 8 CONCRETE CURB RAMP TYPE 8
- CURB RAMP DETECTABLE WARNING FIELD

NOTES:

REFER TO SDD " CURB RAMPS" FOR JOINT LOCATIONS AND ADDITIONAL DETAILS.

PROJECT NO: 4880-01-70	HWY: CTH D	COUNTY: OZAUKEE	CURB RAMP DETAILS: LILAC LANE	SHEET 21	E

LEGEND

- 2 CONCRETE CURB RAMP TYPE 2
- 3M CONCRETE CURB RAMP TYPE 3 MODIFIED
- 4B1 CONCRETE CURB RAMP TYPE 4B1
- 4B1M CONCRETE CURB RAMP TYPE 4B1 MODIFIED
- 7BM CONCRETE CURB RAMP TYPE 7B MODIFIED
- 8 CONCRETE CURB RAMP TYPE 8
- CURB RAMP DETECTABLE WARNING FIELD

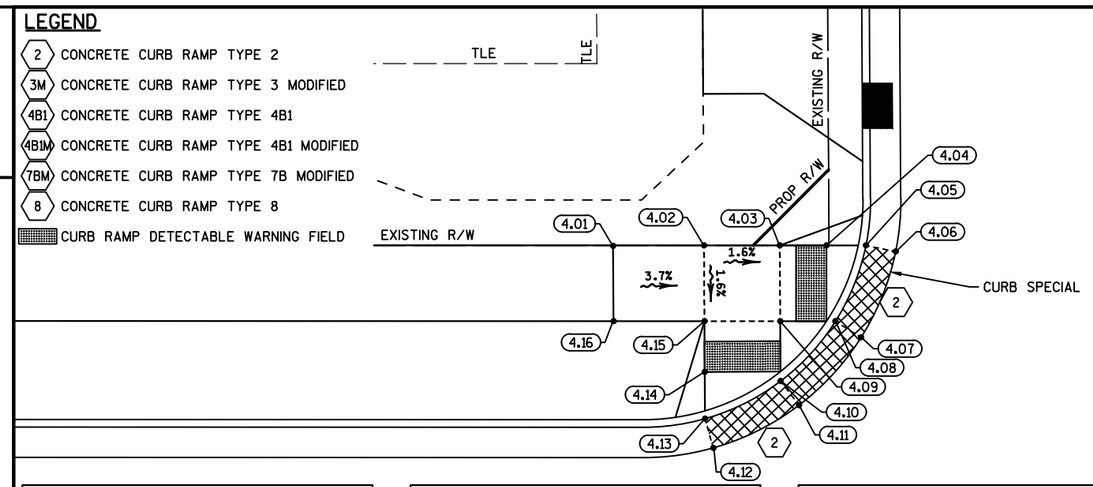

CTH KW
MIDDLE ROAD

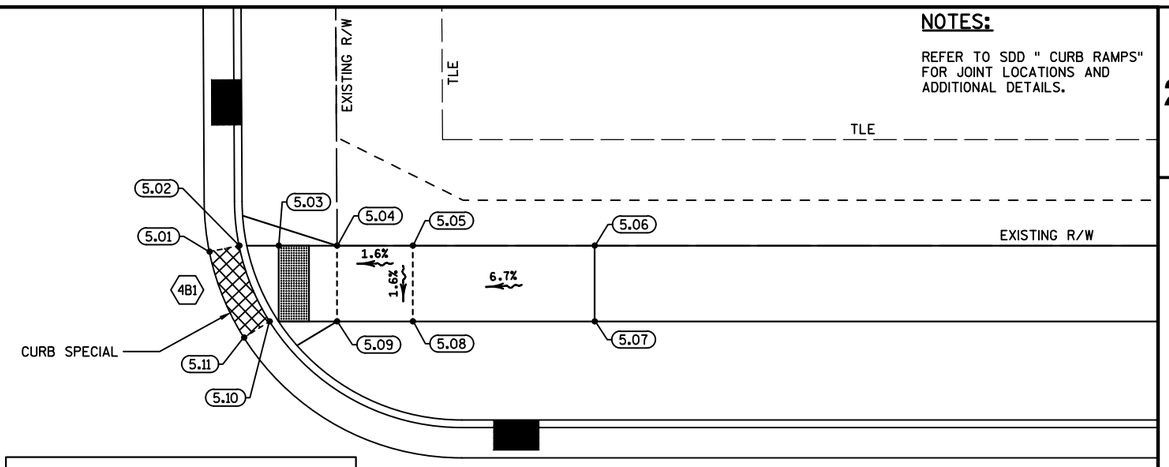

NOTES:

REFER TO SDD " CURB RAMPS" FOR JOINT LOCATIONS AND ADDITIONAL DETAILS.

CURB RAMP 4 DATA TABLE			
NUMBER	STATION	OFFSET	ELEVATION
4.01	51+12.13	-32.96	747.63
4.02	51+18.13	-33.00	747.41
4.03	51+23.13	-33.00	747.33
4.04	51+26.20	-33.00	747.28
4.05	51+28.81	-33.00	747.24
4.06	51+30.76	-32.60	747.16

CURB RAMP 4 DATA TABLE			
NUMBER	STATION	OFFSET	ELEVATION
4.07	51+28.49	-26.93	747.11
4.08	51+26.80	-28.00	747.19
4.09	51+23.16	-28.00	747.25
4.10	51+23.18	-24.05	747.13
4.11	51+24.39	-22.46	747.05
4.12	51+18.74	-19.64	746.99

CURB RAMP 4 DATA TABLE			
NUMBER	STATION	OFFSET	ELEVATION
4.13	51+18.19	-21.57	747.07
4.14	51+18.18	-24.66	747.12
4.15	51+18.16	-28.00	747.33
4.16	51+12.16	-28.00	747.56

CURB RAMP 5 DATA TABLE			
NUMBER	STATION	OFFSET	ELEVATION
5.01	51+67.46	-32.60	747.26
5.02	51+69.42	-33.00	747.34
5.03	51+72.03	-33.00	747.38
5.04	51+75.89	-33.00	747.65
5.05	51+80.89	-33.00	747.73
5.06	51+92.89	-33.00	748.53

CURB RAMP 5 DATA TABLE			
NUMBER	STATION	OFFSET	ELEVATION
5.07	51+92.89	-28.00	748.45
5.08	51+80.89	-28.00	747.65
5.09	51+75.89	-28.00	747.57
5.10	51+71.43	-28.00	747.41
5.11	51+69.74	-26.93	747.39

CTH D
MAIN STREET

51

52

20

20

CURB RAMP 7 DATA TABLE			
NUMBER	STATION	OFFSET	ELEVATION
7.01	51+12.49	28.00	747.24
7.02	51+18.49	28.00	746.82
7.03	51+18.46	22.54	746.57
7.04	51+18.45	21.01	746.55
7.05	51+18.50	19.01	746.67
7.06	51+24.17	20.14	746.71

CURB RAMP 7 DATA TABLE			
NUMBER	STATION	OFFSET	ELEVATION
7.07	51+23.45	22.00	746.59
7.08	51+23.49	27.97	746.74
7.09	51+30.74	28.00	746.56
7.10	51+32.44	26.93	746.68
7.11	51+34.71	32.60	746.58
7.12	51+32.75	33.00	746.46

CURB RAMP 7 DATA TABLE			
NUMBER	STATION	OFFSET	ELEVATION
7.13	51+30.15	33.00	746.50
7.14	51+23.49	32.97	746.82
7.15	51+18.49	33.00	746.90
7.16	51+12.49	33.00	747.32

CURB RAMP 6 DATA TABLE			
NUMBER	STATION	OFFSET	ELEVATION
6.01	51+69.67	26.93	746.83
6.02	51+71.36	28.00	746.91
6.03	51+77.95	28.00	747.08
6.04	51+82.95	28.00	747.16
6.05	51+97.95	28.00	748.19
6.06	51+97.95	33.00	748.27

CURB RAMP 6 DATA TABLE			
NUMBER	STATION	OFFSET	ELEVATION
6.07	51+82.95	33.00	747.24
6.08	51+77.95	33.00	747.16
6.09	51+71.95	33.00	746.74
6.10	51+69.35	33.00	746.70
6.11	51+67.39	32.60	746.62

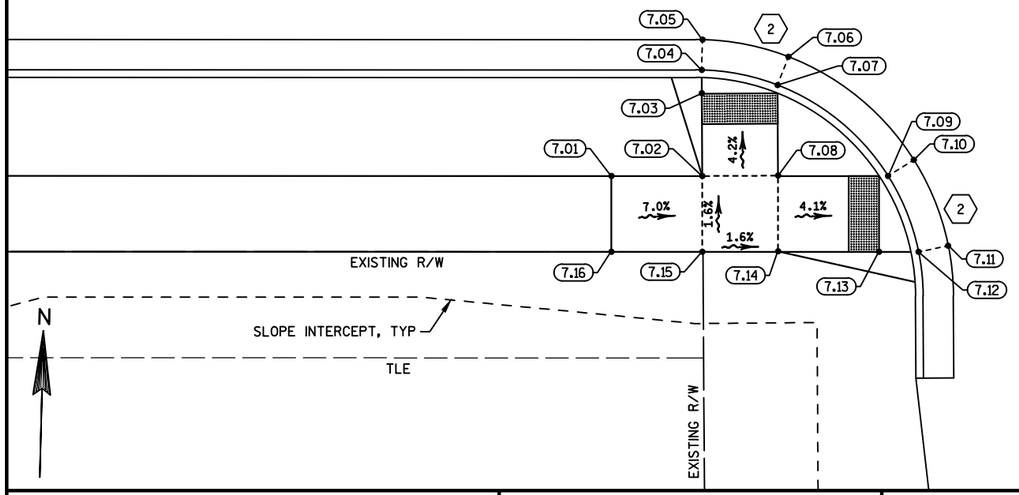

CTH KW
MIDDLE ROAD

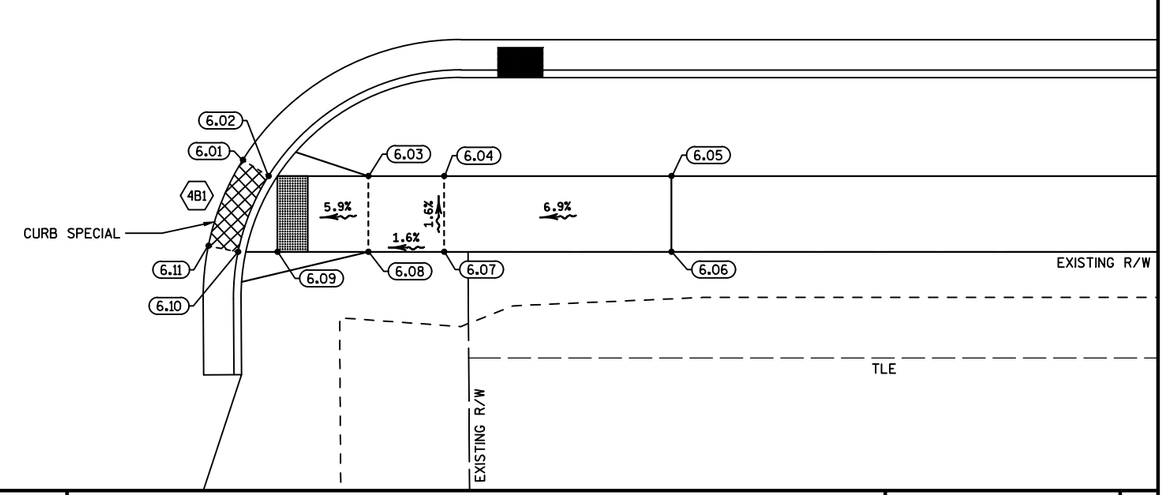

PROJECT NO: 4880-01-70	HWY: CTH D	COUNTY: OZAUKEE	CURB RAMP DETAILS: CTH KW	SHEET 22	E

LEGEND

- 2 CONCRETE CURB RAMP TYPE 2
- 3M CONCRETE CURB RAMP TYPE 3 MODIFIED
- 4B1 CONCRETE CURB RAMP TYPE 4B1
- 4B1M CONCRETE CURB RAMP TYPE 4B1 MODIFIED
- 7BM CONCRETE CURB RAMP TYPE 7B MODIFIED
- 8 CONCRETE CURB RAMP TYPE 8
- CURB RAMP DETECTABLE WARNING FIELD

NOTES:

REFER TO SDD " CURB RAMPS" FOR JOINT LOCATIONS AND ADDITIONAL DETAILS.

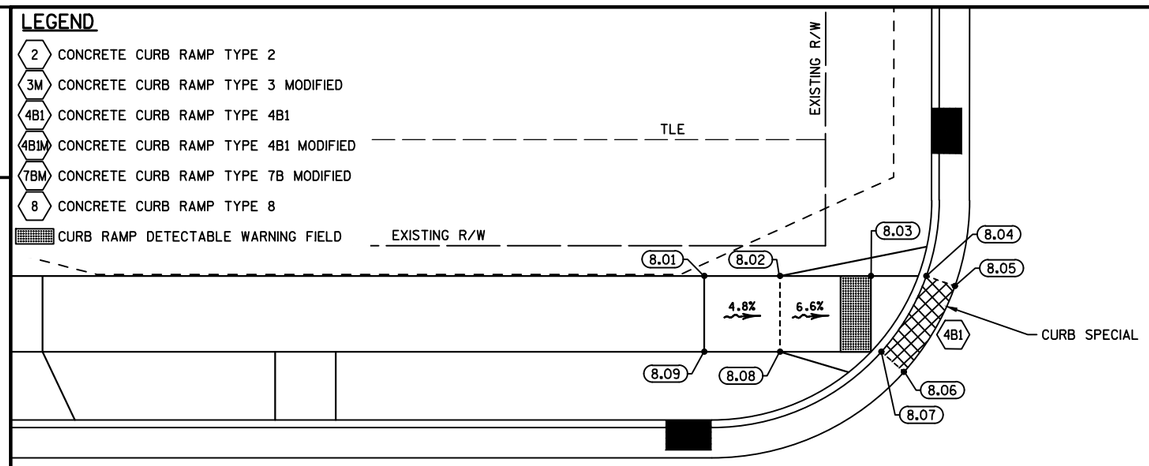

CURB RAMP 8 DATA TABLE			
NUMBER	STATION	OFFSET	ELEVATION
8.01	56+52.59	-31.00	747.49
8.02	56+57.59	-31.00	747.25
8.03	56+63.59	-31.00	746.83
8.04	56+67.24	-31.00	746.78
8.05	56+69.12	-30.33	746.70

CURB RAMP 8 DATA TABLE			
NUMBER	STATION	OFFSET	ELEVATION
8.06	56+65.76	-24.67	746.73
8.07	56+64.27	-26.00	746.81
8.08	56+57.59	-26.00	747.17
8.09	56+52.59	-26.00	747.41

CTH D
MAIN STREET

220

LIBERTY
STREET

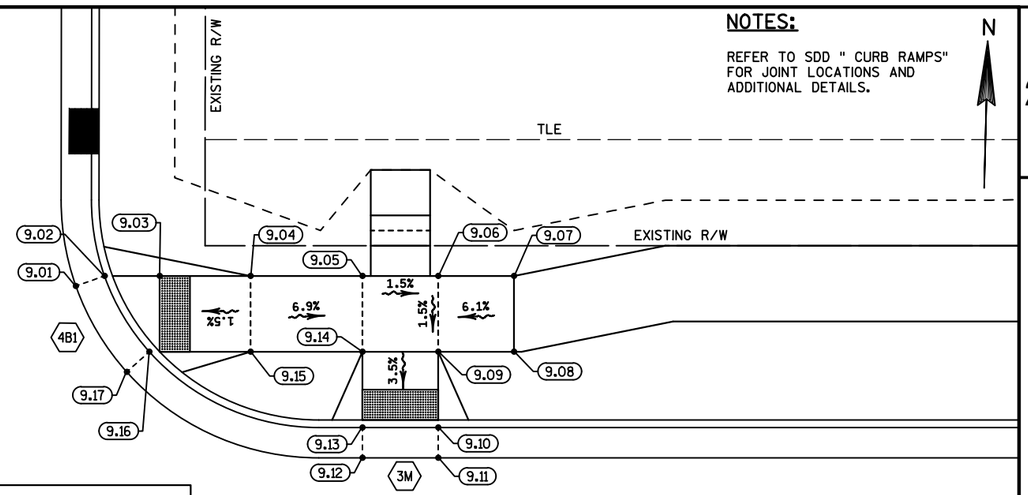

57

CURB RAMP 9 DATA TABLE			
NUMBER	STATION	OFFSET	ELEVATION
9.01	57+02.07	-30.33	745.55
9.02	57+03.95	-31.00	745.43
9.03	57+07.59	-31.00	745.48
9.04	57+13.59	-31.00	745.54
9.05	57+20.98	-31.00	745.03
9.06	57+25.98	-31.00	744.95

CURB RAMP 9 DATA TABLE			
NUMBER	STATION	OFFSET	ELEVATION
9.07	57+30.98	-31.00	745.26
9.08	57+30.98	-26.00	745.18
9.09	57+25.98	-26.00	744.88
9.10	57+25.98	-21.00	744.64
9.11	57+25.98	-19.00	744.76
9.12	57+20.98	-19.00	744.90

CURB RAMP 9 DATA TABLE			
NUMBER	STATION	OFFSET	ELEVATION
9.13	57+20.98	-21.00	744.78
9.14	57+20.98	-26.00	744.95
9.15	57+13.59	-26.00	745.46
9.16	57+06.91	-26.00	745.25
9.17	57+05.42	-24.67	745.37

CURB RAMP 11 DATA TABLE			
NUMBER	STATION	OFFSET	ELEVATION
11.01	56+37.54	28.00	746.96
11.02	56+55.54	28.00	745.70
11.03	56+60.54	28.00	745.62
11.04	56+65.73	28.00	745.47
11.05	56+67.42	26.93	745.39
11.06	56+69.69	32.60	745.26

CURB RAMP 11 DATA TABLE			
NUMBER	STATION	OFFSET	ELEVATION
11.07	56+67.74	33.00	745.34
11.08	56+65.13	33.00	745.38
11.09	56+60.54	33.00	745.70
11.10	56+55.54	33.00	745.78
11.11	56+37.54	33.00	747.04

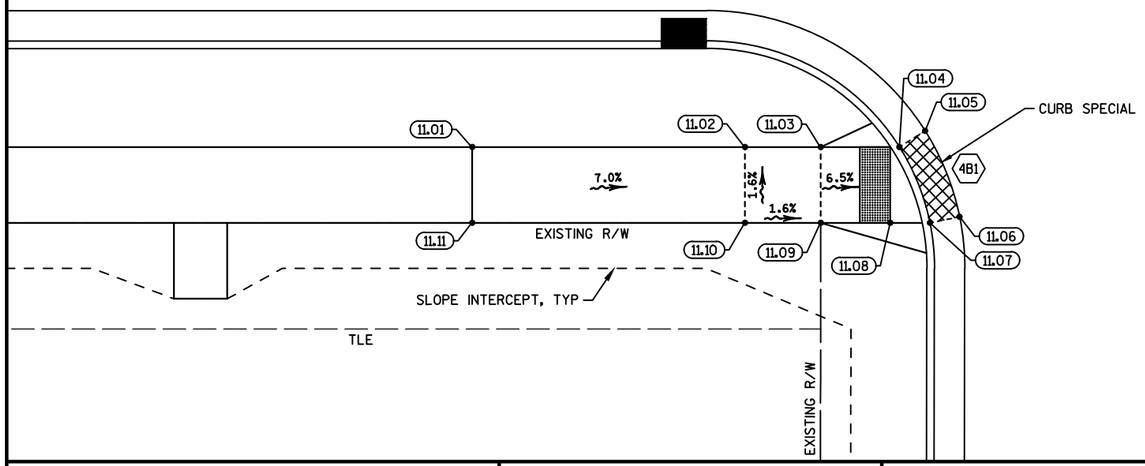

CURB RAMP 10 DATA TABLE			
NUMBER	STATION	OFFSET	ELEVATION
10.01	57+03.66	26.93	744.54
10.02	57+05.35	28.00	744.42
10.03	57+10.54	28.00	744.57
10.04	57+20.98	28.00	744.29
10.05	57+20.98	21.00	744.02
10.06	57+20.98	19.00	744.14

CURB RAMP 10 DATA TABLE			
NUMBER	STATION	OFFSET	ELEVATION
10.07	57+25.98	19.00	744.00
10.08	57+25.98	21.00	743.88
10.09	57+25.98	28.00	744.21
10.10	57+30.98	28.00	744.51
10.11	57+30.98	33.00	744.59
10.12	57+25.98	33.00	744.29

CURB RAMP 10 DATA TABLE			
NUMBER	STATION	OFFSET	ELEVATION
10.13	57+20.98	33.00	744.36
10.14	57+10.54	33.00	744.65
10.15	57+05.95	33.00	744.43
10.16	57+03.34	33.00	744.39
10.17	57+01.38	32.60	744.51

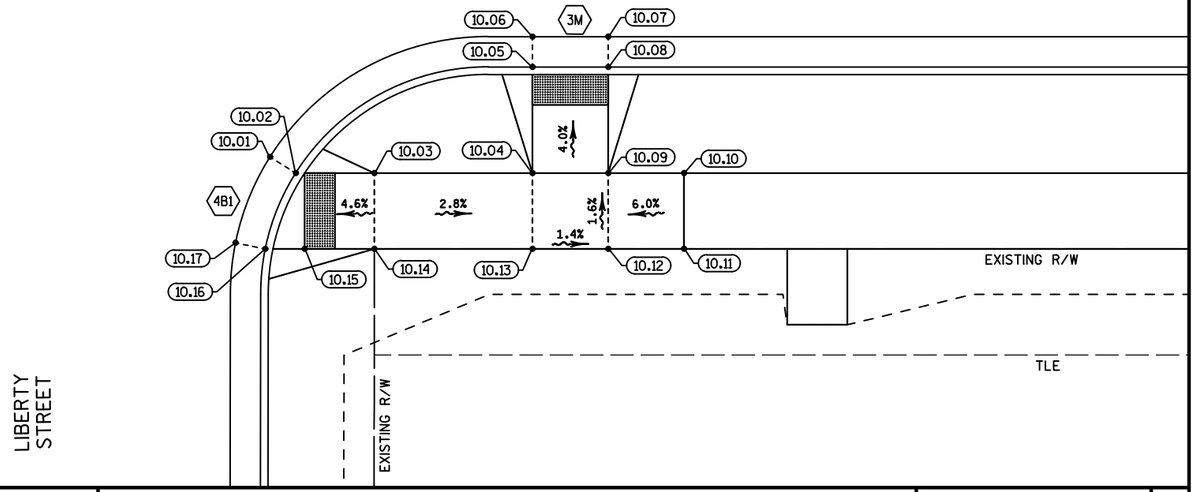

PROJECT NO: 4880-01-70	HWY: CTH D	COUNTY: OZAUKEE	CURB RAMP DETAILS: LIBERTY STREET	SHEET 23	E

FILE NAME : S:\CURRPROJ\OZAUKEECO\CTH D\CIVIL3D\48800100\SHEETSPLAN\48800170\48800170-021121-CR.DWG
LAYOUT NAME - 48800170-021121-CR - SHEET-03
PLOT DATE : 10/31/2017 1:16 PM PLOT BY : AARON SARAUER PLOT NAME : PLOT SCALE : 1:10_XREF
WISDOT/CADDS SHEET 42

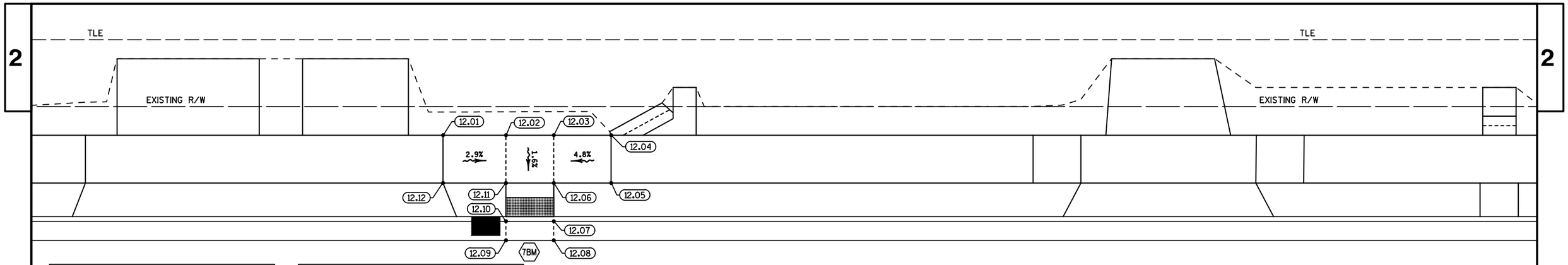

CURB RAMP 12 DATA TABLE			
NUMBER	STATION	OFFSET	ELEVATION
12.01	60+60.19	-30.00	738.06
12.02	60+66.77	-30.00	737.87
12.03	60+71.77	-30.00	737.85
12.04	60+77.77	-30.00	738.14
12.05	60+77.77	-25.00	738.06
12.06	60+71.77	-25.00	737.77

CURB RAMP 12 DATA TABLE			
NUMBER	STATION	OFFSET	ELEVATION
12.07	60+71.77	-21.00	737.58
12.08	60+71.77	-19.00	737.70
12.09	60+66.77	-19.00	737.72
12.10	60+66.77	-21.00	737.60
12.11	60+66.77	-25.00	737.79
12.12	60+60.19	-25.00	737.98

CTH D
MAIN STREET

230

61

CURB RAMP 14 DATA TABLE			
NUMBER	STATION	OFFSET	ELEVATION
14.01	60+57.06	28.00	738.50
14.02	60+64.99	28.00	738.02
14.03	60+64.99	23.90	737.98
14.04	60+64.99	21.30	737.94
14.05	60+65.39	19.34	737.82
14.06	60+71.06	21.61	737.74
14.07	60+69.99	23.30	737.86

CURB RAMP 14 DATA TABLE			
NUMBER	STATION	OFFSET	ELEVATION
14.08	60+69.99	28.00	737.94
14.09	60+74.69	28.00	737.77
14.10	60+76.38	26.93	737.65
14.11	60+78.66	32.60	737.57
14.12	60+76.70	33.00	737.69
14.13	60+74.09	33.00	737.73
14.14	60+69.99	33.00	738.02

CURB RAMP 14 DATA TABLE			
NUMBER	STATION	OFFSET	ELEVATION
14.15	60+76.51	39.50	737.85
14.16	60+69.66	39.52	737.95
14.17	60+69.66	37.65	737.98
14.18	60+68.59	38.00	738.75
14.19	60+64.99	33.00	738.10
14.20	60+63.57	33.00	738.18
14.21	60+57.06	33.00	738.58

CURB RAMP 13 DATA TABLE			
NUMBER	STATION	OFFSET	ELEVATION
13.01	61+15.62	26.93	737.48
13.02	61+17.31	28.00	737.36
13.03	61+20.99	28.00	737.40
13.04	61+38.00	28.00	738.16
13.05	61+38.00	33.00	738.24

CURB RAMP 13 DATA TABLE			
NUMBER	STATION	OFFSET	ELEVATION
13.06	61+20.99	33.00	737.48
13.07	61+17.91	33.00	737.34
13.08	61+15.30	33.00	737.30
13.09	61+13.34	32.60	737.41

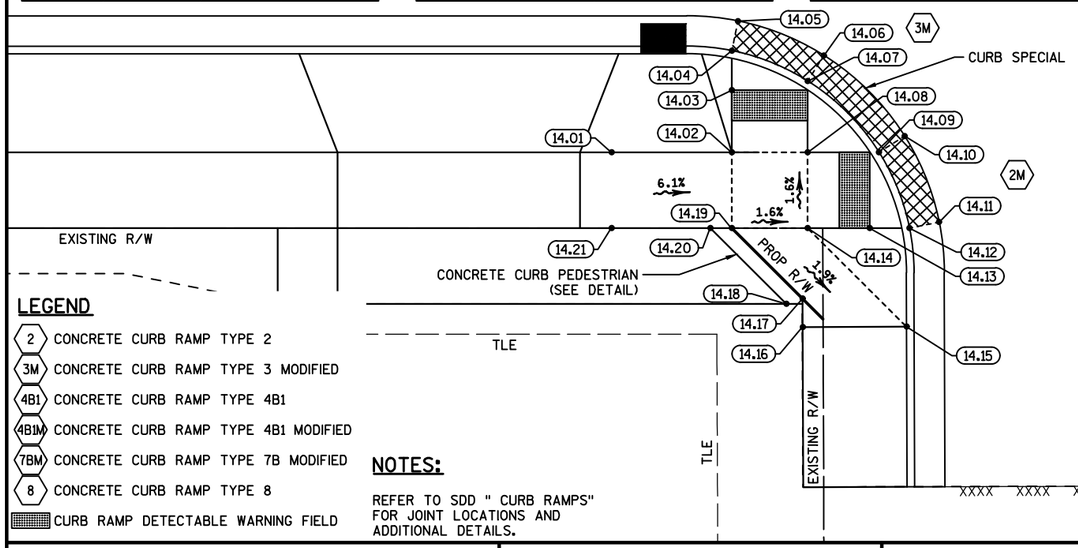

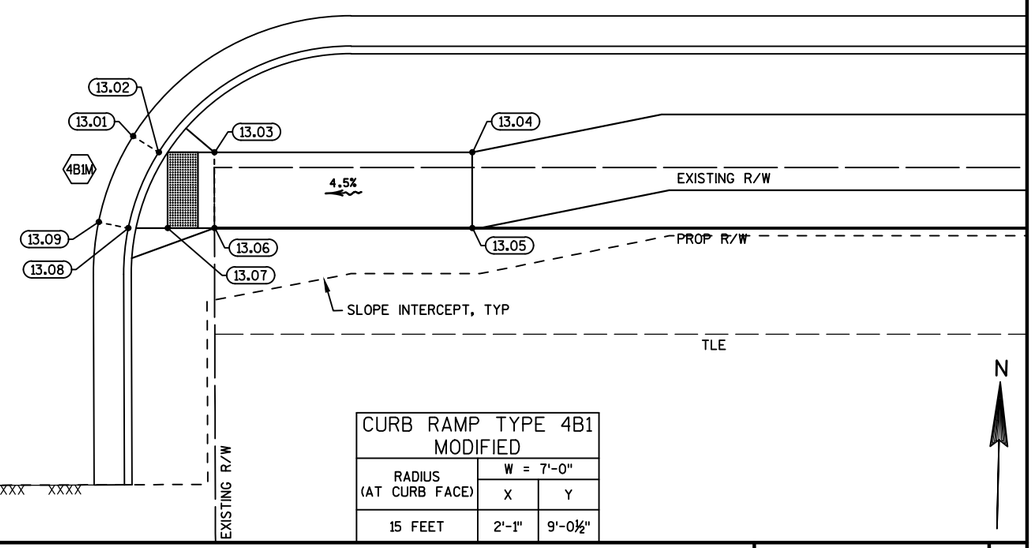

LEGEND

- 2 CONCRETE CURB RAMP TYPE 2
- 3M CONCRETE CURB RAMP TYPE 3 MODIFIED
- 4B1 CONCRETE CURB RAMP TYPE 4B1
- 4B1M CONCRETE CURB RAMP TYPE 4B1 MODIFIED
- 7BM CONCRETE CURB RAMP TYPE 7B MODIFIED
- 8 CONCRETE CURB RAMP TYPE 8
- CURB RAMP DETECTABLE WARNING FIELD

NOTES:

REFER TO SDD " CURB RAMPS" FOR JOINT LOCATIONS AND ADDITIONAL DETAILS.

CURB RAMP TYPE 4B1 MODIFIED		
RADIUS (AT CURB FACE)	W = 7'-0"	
	X	Y
15 FEET	2'-1"	9'-0½"

N

PROJECT NO: 4880-01-70	HWY: CTH D	COUNTY: OZAUKEE	CURB RAMP DETAILS: VICTORY STREET	SHEET 24	E

LEGEND

- 2 — CONCRETE CURB RAMP TYPE 2
- 3M — CONCRETE CURB RAMP TYPE 3 MODIFIED
- 4B1 — CONCRETE CURB RAMP TYPE 4B1
- 4B1M — CONCRETE CURB RAMP TYPE 4B1 MODIFIED
- 7BM — CONCRETE CURB RAMP TYPE 7B MODIFIED
- 8 — CONCRETE CURB RAMP TYPE 8
- CURB RAMP DETECTABLE WARNING FIELD

NOTES:

REFER TO SDD " CURB RAMPS" FOR JOINT LOCATIONS AND ADDITIONAL DETAILS.

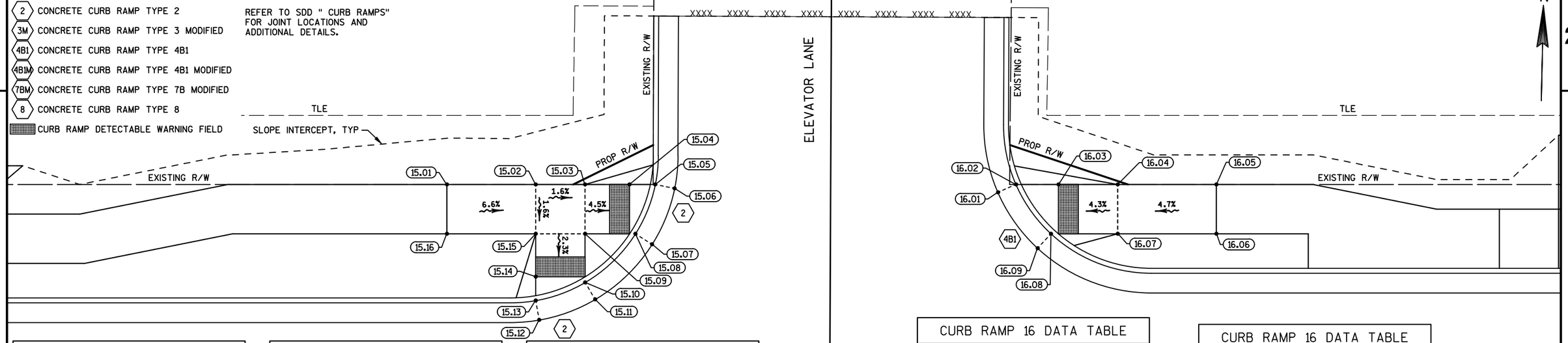

CURB RAMP 15 DATA TABLE			
NUMBER	STATION	OFFSET	ELEVATION
15.01	64+37.21	-33.00	737.71
15.02	64+46.21	-33.00	737.12
15.03	64+51.21	-33.00	737.04
15.04	64+55.71	-33.00	736.83
15.05	64+58.31	-33.00	736.79
15.06	64+60.27	-32.60	736.91

CURB RAMP 15 DATA TABLE			
NUMBER	STATION	OFFSET	ELEVATION
15.07	64+58.00	-26.93	736.94
15.08	64+56.30	-28.00	736.82
15.09	64+51.21	-28.00	736.96
15.10	64+51.21	-23.07	736.86
15.11	64+52.23	-21.34	736.98
15.12	64+46.56	-19.26	737.02

CURB RAMP 15 DATA TABLE			
NUMBER	STATION	OFFSET	ELEVATION
15.13	64+46.21	-21.23	736.90
15.14	64+46.21	-23.65	736.94
15.15	64+46.21	-28.00	737.04
15.16	64+37.21	-28.00	737.63

CURB RAMP 16 DATA TABLE			
NUMBER	STATION	OFFSET	ELEVATION
16.01	64+93.05	-32.20	736.97
16.02	64+94.88	-33.00	736.85
16.03	64+99.18	-33.00	736.91
16.04	65+05.18	-33.00	737.19
16.05	65+15.18	-33.00	737.66

CURB RAMP 16 DATA TABLE			
NUMBER	STATION	OFFSET	ELEVATION
16.06	65+15.18	-28.00	737.58
16.07	65+05.18	-28.00	737.11
16.08	64+98.43	-28.00	736.90
16.09	64+97.07	-26.53	737.02

64 240 65

CURB RAMP 17 DATA TABLE			
NUMBER	STATION	OFFSET	ELEVATION
17.01	64+40.21	25.50	737.26
17.02	64+46.66	25.50	737.13
17.03	64+46.66	21.00	736.92
17.04	64+46.66	19.00	737.04
17.05	64+51.66	19.00	737.07
17.06	64+51.66	21.00	736.95

CURB RAMP 17 DATA TABLE			
NUMBER	STATION	OFFSET	ELEVATION
17.07	64+51.66	25.50	737.16
17.08	64+59.66	25.50	737.56
17.09	64+59.66	30.50	737.64
17.10	64+51.66	30.50	737.24
17.11	64+46.66	30.50	737.21
17.12	64+40.21	30.50	737.34

CTH D
MAIN STREET

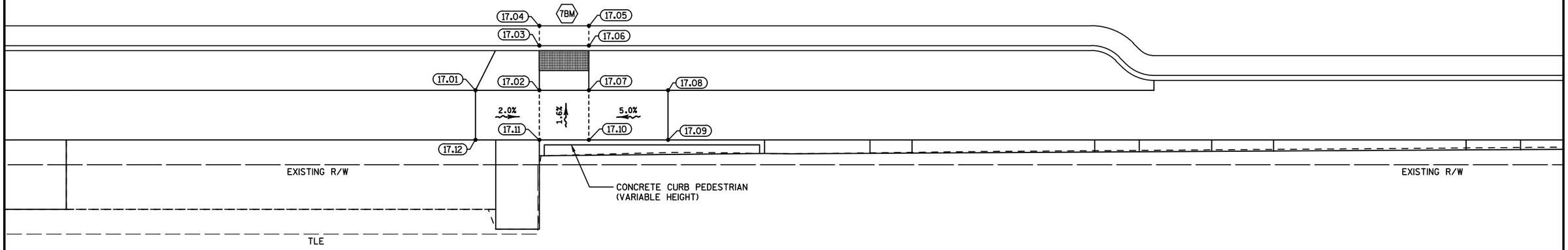

PROJECT NO: 4880-01-70	HWY: CTH D	COUNTY: OZAUKEE	CURB RAMP DETAILS: ELEVATOR LANE	SHEET 25	E

FILE NAME : S:\CURRPROJ\OZAUKEECO\CTH D\CIVIL3D\48800100\SHEETSPLAN\48800170\48800170-021121-CR.DWG
LAYOUT NAME - 48800170-021121-CR - SHEET-05
PLOT DATE : 10/31/2017 4:08 PM PLOT BY : AARON SARAUER PLOT NAME : PLOT SCALE : **********
WISDOT/CADDS SHEET 42

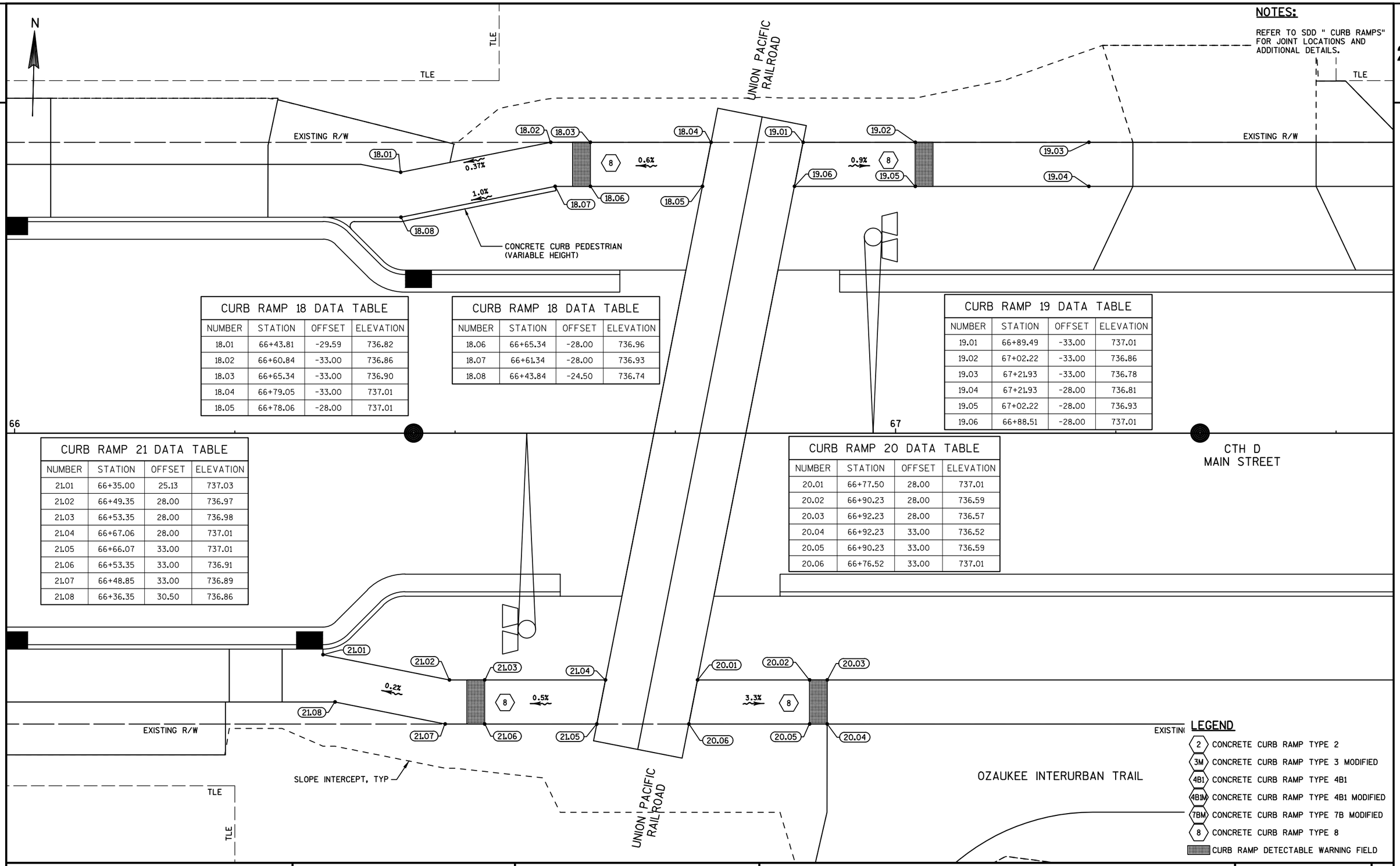

NOTES:

REFER TO SDD " CURB RAMPS" FOR JOINT LOCATIONS AND ADDITIONAL DETAILS.

CURB RAMP 18 DATA TABLE

NUMBER	STATION	OFFSET	ELEVATION
18.01	66+43.81	-29.59	736.82
18.02	66+60.84	-33.00	736.86
18.03	66+65.34	-33.00	736.90
18.04	66+79.05	-33.00	737.01
18.05	66+78.06	-28.00	737.01

CURB RAMP 18 DATA TABLE

NUMBER	STATION	OFFSET	ELEVATION
18.06	66+65.34	-28.00	736.96
18.07	66+61.34	-28.00	736.93
18.08	66+43.84	-24.50	736.74

CURB RAMP 19 DATA TABLE

NUMBER	STATION	OFFSET	ELEVATION
19.01	66+89.49	-33.00	737.01
19.02	67+02.22	-33.00	736.86
19.03	67+21.93	-33.00	736.78
19.04	67+21.93	-28.00	736.81
19.05	67+02.22	-28.00	736.93
19.06	66+88.51	-28.00	737.01

CURB RAMP 21 DATA TABLE

NUMBER	STATION	OFFSET	ELEVATION
21.01	66+35.00	25.13	737.03
21.02	66+49.35	28.00	736.97
21.03	66+53.35	28.00	736.98
21.04	66+67.06	28.00	737.01
21.05	66+66.07	33.00	737.01
21.06	66+53.35	33.00	736.91
21.07	66+48.85	33.00	736.89
21.08	66+36.35	30.50	736.86

CURB RAMP 20 DATA TABLE

NUMBER	STATION	OFFSET	ELEVATION
20.01	66+77.50	28.00	737.01
20.02	66+90.23	28.00	736.59
20.03	66+92.23	28.00	736.57
20.04	66+92.23	33.00	736.52
20.05	66+90.23	33.00	736.59
20.06	66+76.52	33.00	737.01

LEGEND

- 2 CONCRETE CURB RAMP TYPE 2
- 3M CONCRETE CURB RAMP TYPE 3 MODIFIED
- 4B1 CONCRETE CURB RAMP TYPE 4B1
- 4B1M CONCRETE CURB RAMP TYPE 4B1 MODIFIED
- 7BM CONCRETE CURB RAMP TYPE 7B MODIFIED
- 8 CONCRETE CURB RAMP TYPE 8
- CURB RAMP DETECTABLE WARNING FIELD

PROJECT NO:4880-01-70	HWY:CTH D	COUNTY:OZAUKEE	CURB RAMP DETAILS: UNION PACIFIC RAILROAD	SHEET 26	E

FILE NAME : S:\CURRPROJ\OZAUKEECO\CTH D\CIVIL3D\48800100\SHEETSPLAN\48800170\48800170-021121-CR.DWG
LAYOUT NAME - 48800170-021121-CR - SHEET-06
PLOT DATE : 10/31/2017 1:16 PM PLOT BY : AARON SARAUER PLOT NAME : PLOT SCALE : **********
WISDOT/CADDS SHEET 42

NOTES:

REFER TO SDD " CURB RAMPS" FOR JOINT LOCATIONS AND ADDITIONAL DETAILS.

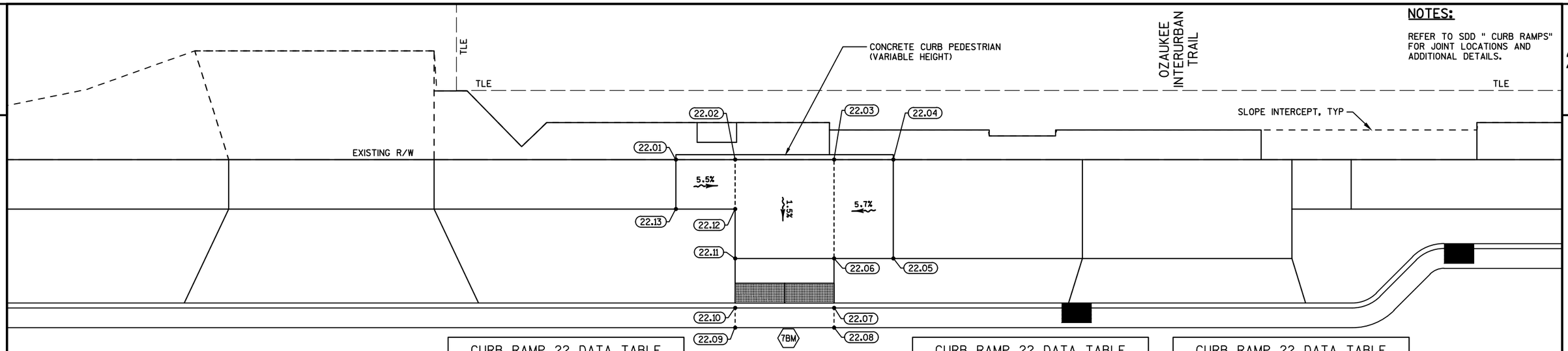

CURB RAMP 22 DATA TABLE			
NUMBER	STATION	OFFSET	ELEVATION
22.01	67+72.22	-33.00	736.46
22.02	67+78.22	-33.00	736.12
22.03	67+88.22	-33.00	736.01
22.04	67+94.22	-33.00	736.35
22.05	67+94.22	-23.00	736.20

CURB RAMP 22 DATA TABLE			
NUMBER	STATION	OFFSET	ELEVATION
22.06	67+88.22	-23.00	735.86
22.07	67+88.22	-18.00	735.66
22.08	67+88.22	-16.00	735.78
22.09	67+78.22	-16.00	735.90
22.10	67+78.22	-18.00	735.77

CURB RAMP 22 DATA TABLE			
NUMBER	STATION	OFFSET	ELEVATION
22.11	67+78.22	-23.00	735.97
22.12	67+78.22	-28.00	736.05
22.13	67+72.22	-28.00	736.38

68

CTH D
MAIN STREET

CURB RAMP 23 DATA TABLE			
NUMBER	STATION	OFFSET	ELEVATION
23.01	67+78.22	28.00	736.23
23.02	67+78.22	18.00	735.77
23.03	67+78.22	16.00	735.90
23.04	67+88.22	16.00	735.78
23.05	67+88.22	18.00	735.66

CURB RAMP 23 DATA TABLE			
NUMBER	STATION	OFFSET	ELEVATION
23.06	67+88.22	28.00	736.20
23.07	67+88.22	33.00	736.12
23.08	67+78.22	33.00	736.16

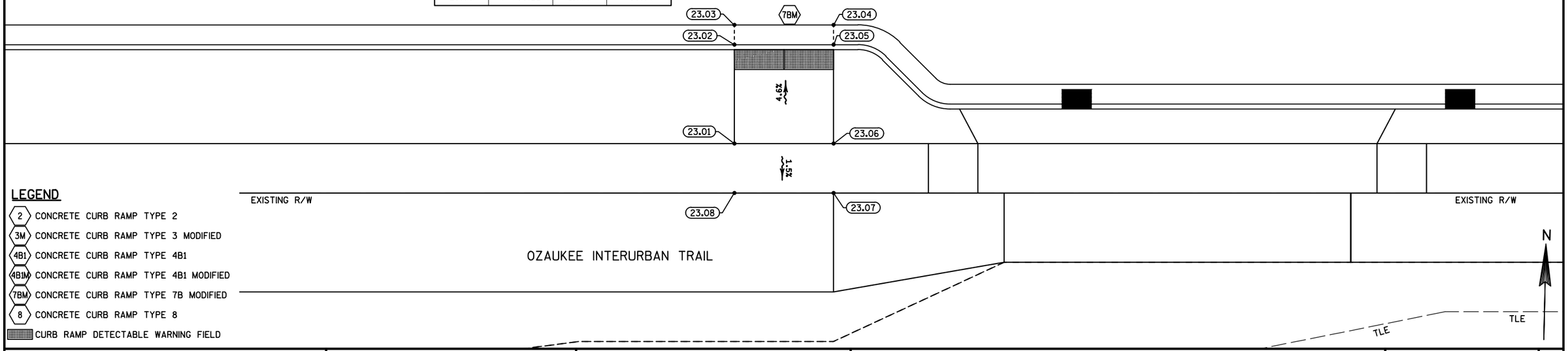

LEGEND

- 2 CONCRETE CURB RAMP TYPE 2
- 3M CONCRETE CURB RAMP TYPE 3 MODIFIED
- 4B1 CONCRETE CURB RAMP TYPE 4B1
- 4B1M CONCRETE CURB RAMP TYPE 4B1 MODIFIED
- 7BM CONCRETE CURB RAMP TYPE 7B MODIFIED
- 8 CONCRETE CURB RAMP TYPE 8
- CURB RAMP DETECTABLE WARNING FIELD

PROJECT NO: 4880-01-70	HWY: CTH D	COUNTY: OZAUKEE	CURB RAMP DETAILS: OZAUKEE INTERURBAN TRAIL	SHEET 27	E

CURB RAMP 24 DATA TABLE			
NUMBER	STATION	OFFSET	ELEVATION
24.01	71+11.28	-33.00	735.54
24.02	71+19.28	-33.00	735.04
24.03	71+24.28	-33.00	735.03
24.04	71+30.28	-39.01	734.65
24.05	71+30.27	-44.01	734.67

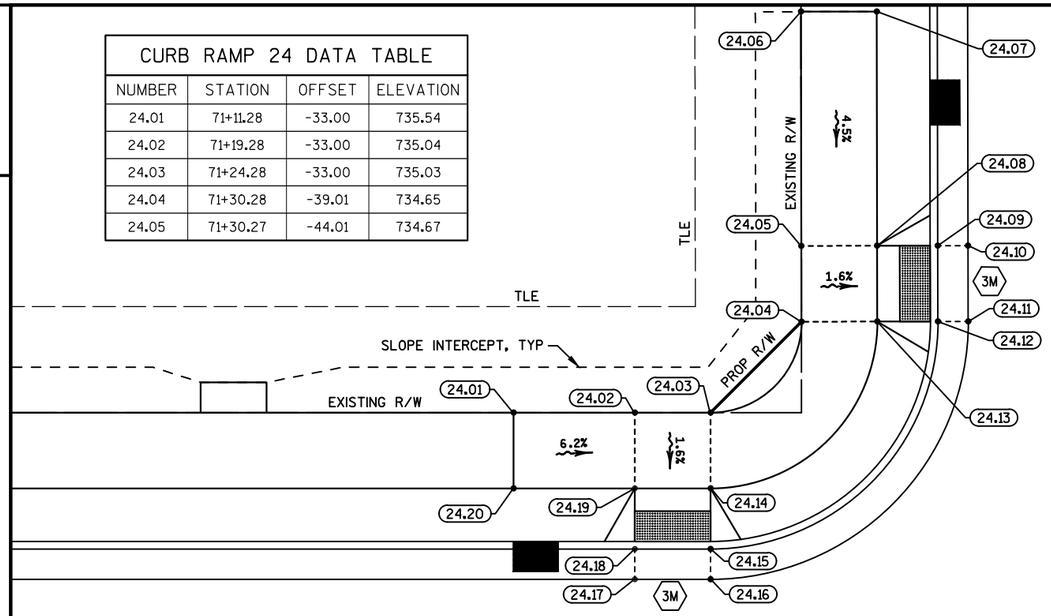

ELM STREET

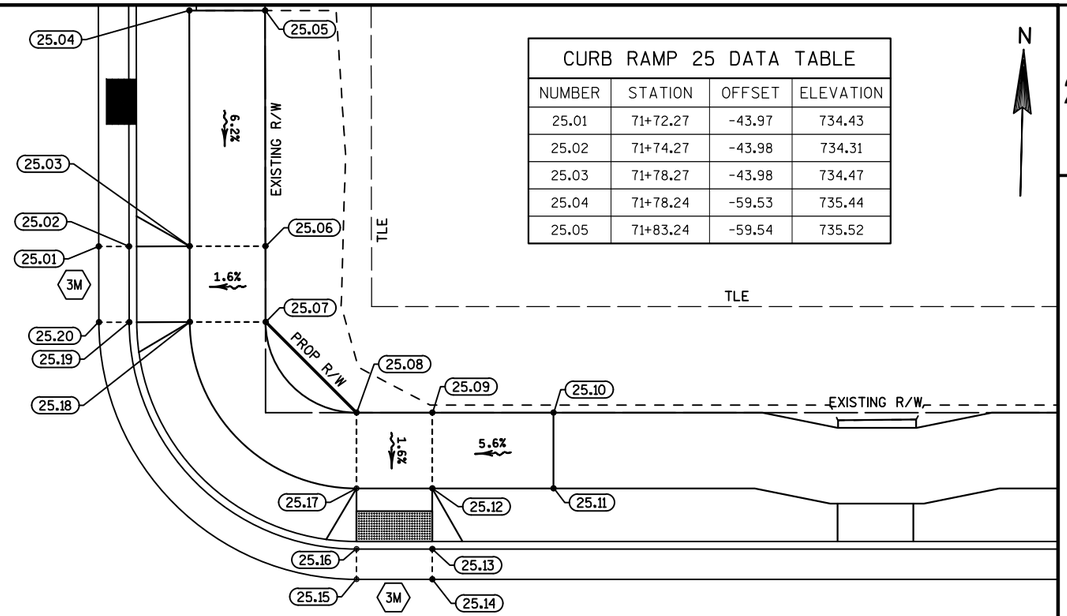

CURB RAMP 25 DATA TABLE			
NUMBER	STATION	OFFSET	ELEVATION
25.01	71+72.27	-43.97	734.43
25.02	71+74.27	-43.98	734.31
25.03	71+78.27	-43.98	734.47
25.04	71+78.24	-59.53	735.44
25.05	71+83.24	-59.54	735.52

N

CURB RAMP 24 DATA TABLE			
NUMBER	STATION	OFFSET	ELEVATION
24.06	71+30.24	-59.46	735.37
24.07	71+35.24	-59.47	735.29
24.08	71+35.27	-44.02	734.59
24.09	71+39.27	-44.02	734.43
24.10	71+41.27	-44.03	734.55

CURB RAMP 24 DATA TABLE			
NUMBER	STATION	OFFSET	ELEVATION
24.11	71+41.28	-39.03	734.53
24.12	71+39.28	-39.02	734.41
24.13	71+35.28	-39.02	734.57
24.14	71+24.28	-28.00	734.95
24.15	71+24.28	-24.00	734.79

CURB RAMP 24 DATA TABLE			
NUMBER	STATION	OFFSET	ELEVATION
24.16	71+24.28	-22.00	734.91
24.17	71+19.28	-22.00	734.92
24.18	71+19.28	-24.00	734.80
24.19	71+19.28	-28.00	734.96
24.20	71+11.28	-28.00	735.46

CURB RAMP 25 DATA TABLE			
NUMBER	STATION	OFFSET	ELEVATION
25.06	71+83.27	-43.99	734.55
25.07	71+83.28	-38.99	734.53
25.08	71+89.28	-33.00	734.81
25.09	71+94.28	-33.00	734.79
25.10	72+02.28	-33.00	735.24

CURB RAMP 25 DATA TABLE			
NUMBER	STATION	OFFSET	ELEVATION
25.11	72+02.28	-28.00	735.16
25.12	71+94.28	-28.00	734.71
25.13	71+94.28	-24.00	734.55
25.14	71+94.28	-22.00	734.67
25.15	71+89.28	-22.00	734.69

CURB RAMP 25 DATA TABLE			
NUMBER	STATION	OFFSET	ELEVATION
25.16	71+89.28	-24.00	734.57
25.17	71+89.28	-28.00	734.73
25.18	71+78.28	-38.98	734.45
25.19	71+74.28	-38.98	734.29
25.20	71+72.28	-38.97	734.41

71

250

72

CTH D
MAIN STREET

CURB RAMP 27 DATA TABLE			
NUMBER	STATION	OFFSET	ELEVATION
27.01	71+13.28	28.00	735.34
27.02	71+19.28	28.00	734.96
27.03	71+19.28	24.00	734.80
27.04	71+19.28	22.00	734.92
27.05	71+24.28	22.00	734.91
27.06	71+24.28	24.00	734.78

CURB RAMP 27 DATA TABLE			
NUMBER	STATION	OFFSET	ELEVATION
27.07	71+24.28	28.00	734.95
27.08	71+30.28	28.00	735.28
27.09	71+30.28	33.00	735.36
27.10	71+24.28	33.00	735.02
27.11	71+19.28	33.00	735.03
27.12	71+13.28	33.00	735.41

LEGEND

- 2 CONCRETE CURB RAMP TYPE 2
- 3M CONCRETE CURB RAMP TYPE 3 MODIFIED
- 4B1 CONCRETE CURB RAMP TYPE 4B1
- 4B1M CONCRETE CURB RAMP TYPE 4B1 MODIFIED
- 7BM CONCRETE CURB RAMP TYPE 7B MODIFIED
- 8 CONCRETE CURB RAMP TYPE 8
- CURB RAMP DETECTABLE WARNING FIELD

NOTES:

REFER TO SDD " CURB RAMPS" FOR JOINT LOCATIONS AND ADDITIONAL DETAILS.

CURB RAMP 26 DATA TABLE			
NUMBER	STATION	OFFSET	ELEVATION
26.01	71+83.28	28.00	735.11
26.02	71+89.28	28.00	734.73
26.03	71+89.28	24.00	734.57
26.04	71+89.28	22.00	734.69
26.05	71+94.28	22.00	734.67
26.06	71+94.28	24.00	734.55

CURB RAMP 26 DATA TABLE			
NUMBER	STATION	OFFSET	ELEVATION
26.07	71+94.28	28.00	734.72
26.08	72+00.97	28.00	734.95
26.09	72+00.97	33.00	735.02
26.10	71+94.28	33.00	734.79
26.11	71+89.28	33.00	734.80
26.12	71+83.28	33.00	735.18

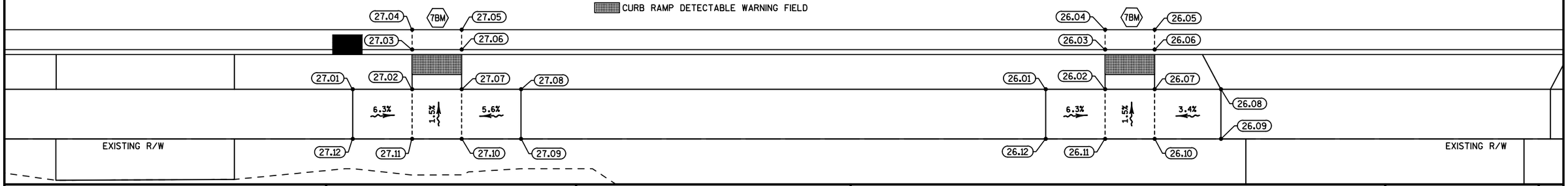

PROJECT NO: 4880-01-70	HWY: CTH D	COUNTY: OZAUKEE	CURB RAMP DETAILS: ELM STREET	SHEET 28	E

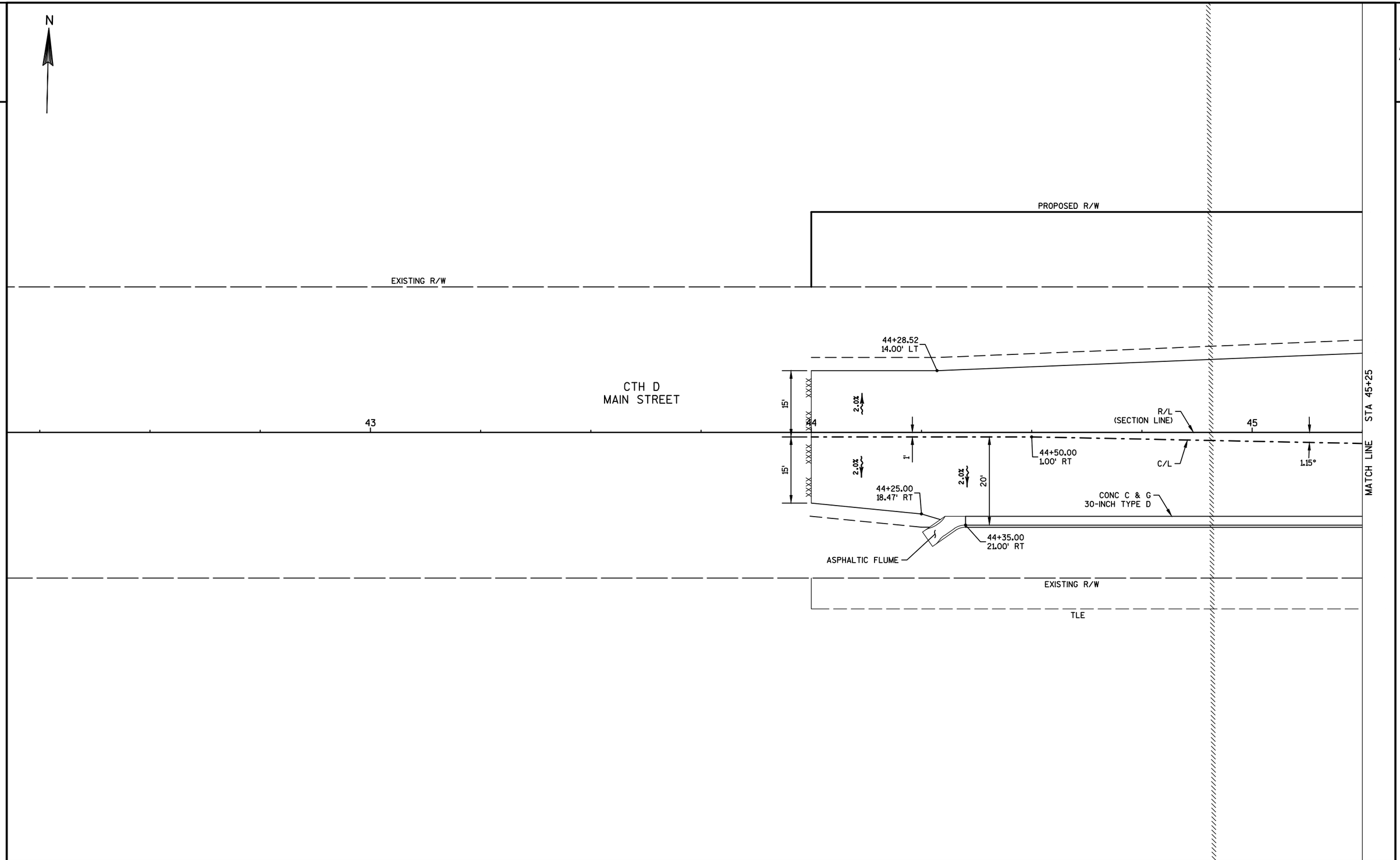
N
PROPOSED R/W
EXISTING R/W
44+28.52
14.00' LT
CTH D
MAIN STREET
43
44
45
R/L
(SECTION LINE)
STA 45+25
MATCH LINE
15'
2.0%
1'
44+50.00
1.00' RT
C/L
1.15°
20'
44+25.00
18.47' RT
CONC C & G
30-INCH TYPE D
44+35.00
21.00' RT
ASPHALTIC FLUME
EXISTING R/W
TLE

* SEE CURB RAMP DETAIL SHEETS FOR ADDITIONAL CURB RAMP INFORMATION

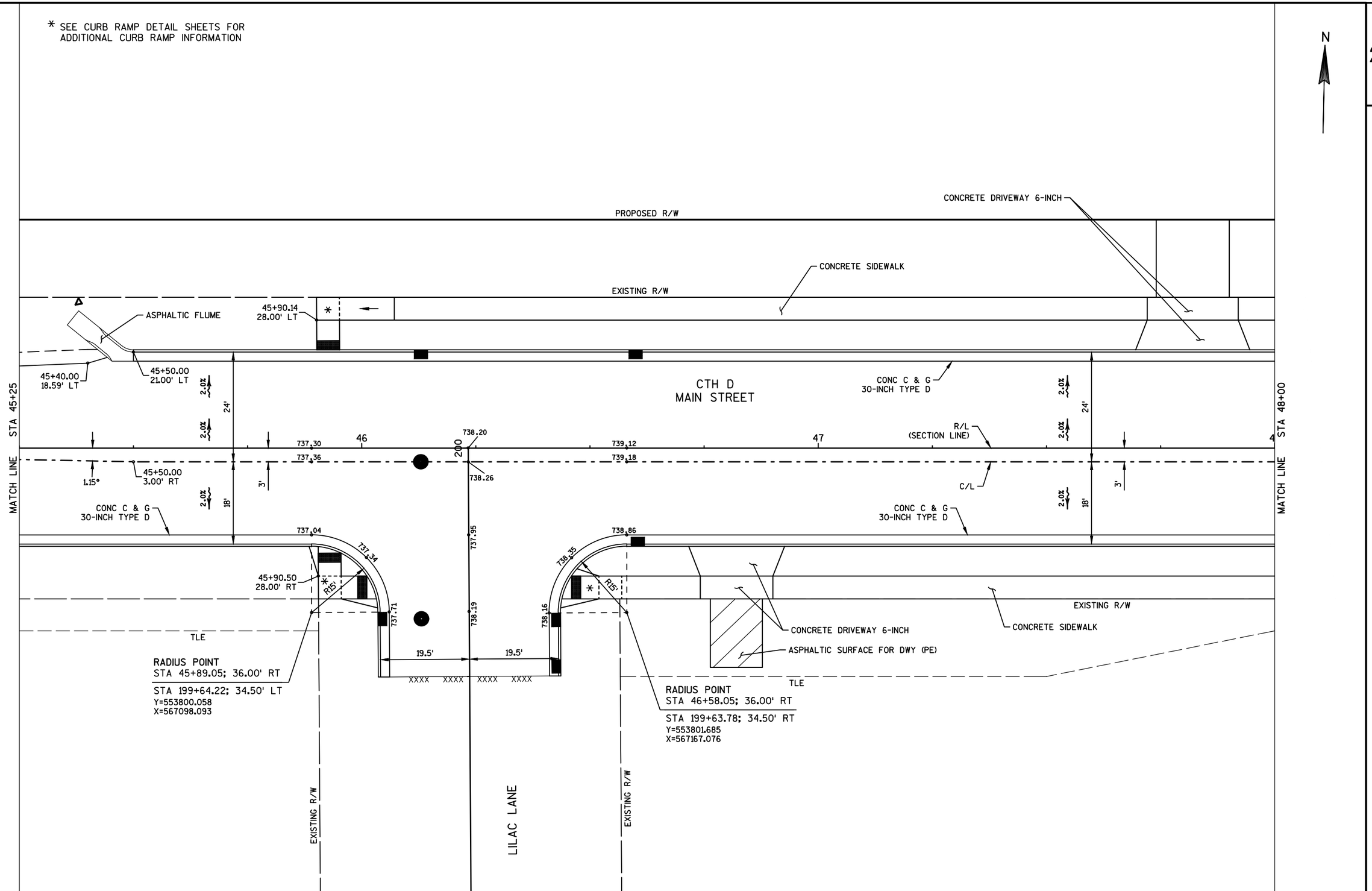

PROJECT NO: 4880-01-70	HWY: CTH D	COUNTY: OZAUKEE	PLAN DETAILS	SHEET 30	E

2

N

CONCRETE DRIVEWAY 8-INCH

CONCRETE SIDEWALK

ASPHALTIC SURFACE FOR DWY (CE)

TLE

CONCRETE DRIVEWAY 8-INCH

50+75.00
28.00' LT
EL=747.14

EXISTING R/W

STA 48+00

MATCH LINE

2.0%

CONC C & G
30-INCH TYPE D

49+76.80
28.00' LT
EL=746.04

50+00.00
28.00' LT
EL=746.89

50+25.00
28.00' LT
EL=747.02

50+50.00
28.00' LT
EL=747.14

CTH D
MAIN STREET

24'

8

49

R/L
(SECTION LINE)

50

STA 50+75

MATCH LINE

3'

C/L

18'

CONC C & G
30-INCH TYPE D

EXISTING R/W

TLE

CONCRETE SIDEWALK

CONCRETE DRIVEWAY 6-INCH

ASPHALTIC SURFACE FOR DWY (PE)

CONCRETE DRIVEWAY 6-INCH

CONCRETE DRIVEWAY 6-INCH

PROJECT NO: 4880-01-70	HWY: CTH D	COUNTY: OZAUKEE	PLAN DETAILS	SHEET 31	E

FILE NAME : S:\CURRPROJ\OZAUKEECO\CTH D\CIVIL3D\48800100\SHEETSPLAN\48800170\48800170-021201-PD.DWG
LAYOUT NAME - 48800170-021201-PD - SHEET-03

PLOT DATE : 12/29/2017 3:52 PM PLOT BY : AARON SARAUER PLOT NAME : PLOT SCALE : 1 IN:20 FT

2

* SEE CURB RAMP DETAIL SHEETS FOR ADDITIONAL CURB RAMP INFORMATION

N

ASPHALTIC SURFACE FOR DWY (CE)

20'

20'

TLE

EXISTING R/W

CTH KW
MIDDLE ROAD

EXISTING R/W

TLE

RADIUS POINT
STA 51+14.11; 36.00' LT

STA 210+36.21; 35.00' LT
Y=553884.418
X=567621.305

RADIUS POINT
STA 51+84.12; 36.00' LT

STA 210+35.80; 35.00' RT
Y=553886.077
X=567691.287

CONCRETE SIDEWALK

TLE

51+00.00
28.00' LT
EL=747.42

EXISTING R/W

PROP R/W

R15'

747.20

747.56

747.20

R15'

747.07

747.16

746.94

747.73

747.34

CONCRETE SIDEWALK

CONC C & G
30-INCH TYPE D

CONC C & G
30-INCH TYPE D

STA 50+75

STA 53+50

MATCH LINE

MATCH LINE

2.0%

2.0%

24'

24'

2.0%

2.0%

747.00

747.05

746.99

746.94

51

747.40

747.41

747.35

747.78

747.72

52

53

R/L
(SECTION LINE)

C/L

3'

3'

2.0%

2.0%

18'

18'

CONC C & G
30-INCH TYPE D

CTH D
MAIN STREET

CONC C & G
30-INCH TYPE D

746.67

746.75

747.04

746.95

747.40

R15'

R15'

746.53

746.82

746.50

18'

18'

CONCRETE SIDEWALK

EXISTING R/W

TLE

TLE
CONCRETE SIDEWALK

RADIUS POINT
STA 51+18.06; 36.00' RT

STA 209+64.21; 33.00' LT
Y=553812.531
X=567626.949

RADIUS POINT
STA 51+84.05; 36.00' RT

STA 209+63.79; 33.00' RT
Y=553814.096
X=567692.932

CONCRETE DRIVEWAY 6-INCH

CONCRETE SIDEWALK

CONCRETE SIDEWALK
AND STEPS (2 REQ'D)

ASPHALTIC SURFACE FOR DWY (PE)

EXISTING R/W

CTH KW
MIDDLE ROAD

EXISTING R/W

PROJECT NO: 4880-01-70	HWY: CTH D	COUNTY: OZAUKEE	PLAN DETAILS	SHEET 32	E

2

N

TLE

CONCRETE DRIVEWAY 6-INCH

CONCRETE SIDEWALK

TLE

CONCRETE DRIVEWAY 6-INCH

54+04.75
28.00' LT
EL=750.82

54+24.75
26.00' LT
EL=750.89

54+50.00
26.00' LT
EL=750.93

54+93.43
26.00' LT
EL=750.75

EXISTING R/W

56+08.93
26.00' LT
EL=748.55

HP 54+44.46
19.00' LT
EL=750.38

CONC C & G
30-INCH TYPE D

54+75.00
26.00' LT
EL=750.89

55+10.16
26.00' LT
EL=750.60

CTH D
MAIN STREET

55+42.22
26.00' LT
EL=750.05

55+58.96
26.00' LT
EL=749.81

55+92.19
26.00' LT
EL=749.00

2.0%

24'

R/L
(SECTION LINE)

STA 53+50

MATCH LINE

54

55

56

STA 56+25

MATCH LINE

3'

18'

C/L

HP 54+44.46
19.00' RT
EL=750.06

CONC C & G
30-INCH TYPE D

EXISTING R/W

CONCRETE DRIVEWAY 6-INCH

TLE

ASPHALTIC SURFACE FOR DWY (PE)

CONCRETE SIDEWALK

TLE

CONCRETE SIDEWALK

PROJECT NO: 4880-01-70	HWY: CTH D	COUNTY: OZAUKEE	PLAN DETAILS	SHEET 33	E

FILE NAME : S:\CURRPROJ\OZAUKEECO\CTH D\CIVIL3D\48800100\SHEETSPLAN\48800170\48800170-021201-PD.DWG
LAYOUT NAME - 48800170-021201-PD - SHEET-05

PLOT DATE : 10/31/2017 1:18 PM PLOT BY : AARON SARAUER PLOT NAME : PLOT SCALE : 1 IN:20 FT

WISDOT/CADDS SHEET 42

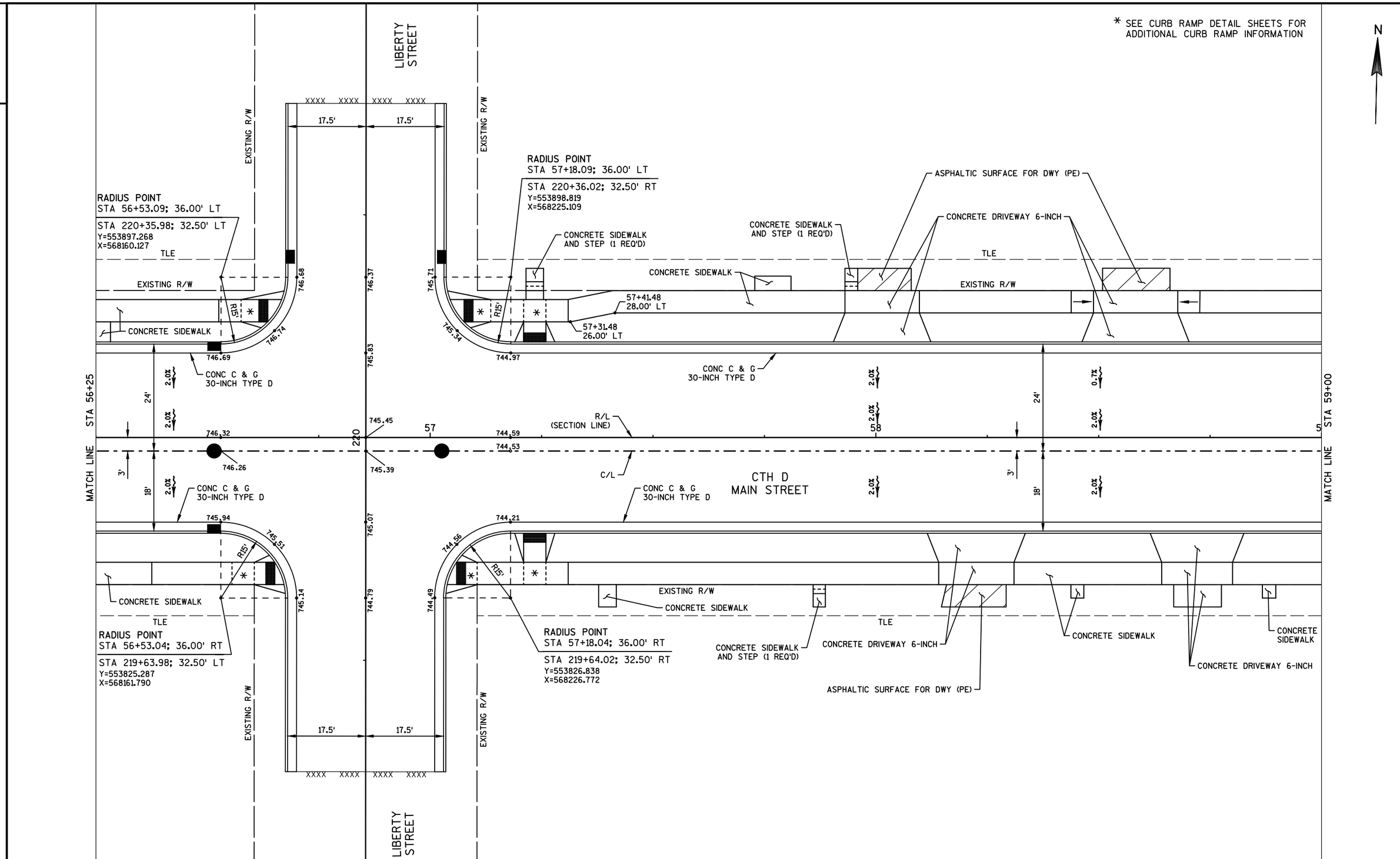

PROJECT NO:4880-01-70	HWY:CTH D	COUNTY:OZAUKEE	PLAN DETAILS	SHEET 34	E

FILE NAME : S:\CURRPROJ\OZAUKEECO\CTH D\CIVIL3D\48800100\SHEETSPLAN\48800170\48800170-021201-PD.DWG
LAYOUT NAME - 48800170-021201-PD - SHEET-06
PLOT DATE : 10/31/2017 1:18 PM PLOT BY : AARON SARAUER PLOT NAME : PLOT SCALE : 1 IN:20 FT
WISDOT/CADDS SHEET 42

2

* SEE CURB RAMP DETAIL SHEETS FOR ADDITIONAL CURB RAMP INFORMATION

N

CONCRETE SIDEWALK AND STEP (1 REQ'D)
CONCRETE DRIVEWAY 6-INCH
CONCRETE SIDEWALK
CONCRETE DRIVEWAY 6-INCH
59+99.50
28.00' LT
ASPHALTIC SURFACE FOR DWY (PE)
CONCRETE SIDEWALK AND STEP (1 REQ'D)
TLE
CONCRETE SIDEWALK
EXISTING R/W
CONCRETE DRIVEWAY 6-INCH
ASPHALTIC SURFACE FOR DWY (PE)
CONCRETE SIDEWALK AND STEP (1 REQ'D)
CONCRETE SIDEWALK

60+15.00
25.00' LT
EL=738.38
60+22.79
25.00' LT
EL=738.15
60+60.19
25.00' LT
EL=737.98
CONC C & G
30-INCH TYPE D
61+21.90
25.00' LT
EL=738.07
61+26.90
25.00' LT
EL=737.83
61+45.20
25.00' LT
EL=737.78
61+50.20
25.00' LT
EL=737.98

STA 59+00
MATCH LINE
2.0%
0.7%
24'
3'
18'
9
60
CTH D
MAIN STREET
R/L
(SECTION LINE)
738.11
738.17
C/L
230
61
737.91
737.97
STA 61+75
MATCH LINE

CONC C & G
30-INCH TYPE D
737.85
737.69
737.75
737.53
737.53
737.65
737.51
737.38
61+38.00
28.00' RT
61+50.50
25.50' RT
EL=738.12
R15'
R15'
EXISTING R/W
PROPOSED R/W
CONCRETE SIDEWALK
TLE
CONCRETE SIDEWALK
CONCRETE DRIVEWAY 6-INCH
BASE AGGREGATE DENSE ¾-INCH
TLE
RADIUS POINT
STA 60+62.00; 36.00' RT
STA 229+64.12; 34.00' LT
Y=553835.045
X=568570.635
CONCRETE CURB
PEDESTRIAN
19'
19'
XXXX XXXX XXXX XXXX
RADIUS POINT
STA 61+30.00; 36.00' RT
STA 229+63.88; 34.00' RT
Y=553836.668
X=568638.616
EXISTING R/W
VICTORY
STREET
EXISTING R/W

PROJECT NO: 4880-01-70	HWY: CTH D	COUNTY: OZAUKEE	PLAN DETAILS	SHEET 35	E

2

N

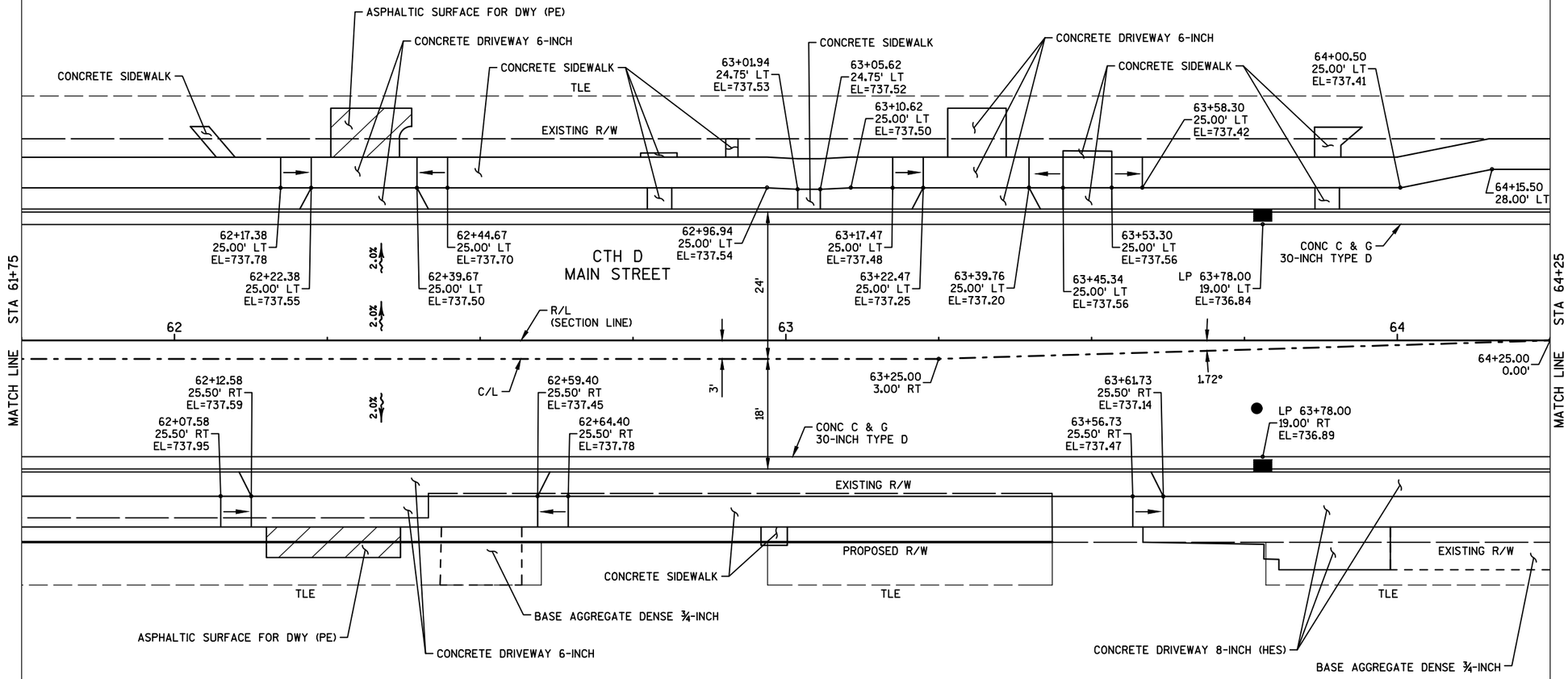

PROJECT NO: 4880-01-70	HWY: CTH D	COUNTY: OZAUKEE	PLAN DETAILS	SHEET 36	E

FILE NAME : S:\CURRPROJ\OZAUKEECO\CTH D\CIVIL3D\48800100\SHEETSPLAN\48800170\48800170-021201-PD.DWG
LAYOUT NAME - 48800170-021201-PD - SHEET-08

PLOT DATE : 10/31/2017 1:18 PM PLOT BY : AARON SARAUER PLOT NAME : PLOT SCALE : 1 IN:20 FT

2

2

* SEE CURB RAMP DETAIL SHEETS FOR ADDITIONAL CURB RAMP INFORMATION

N

ELEVATOR LANE

EXISTING R/W

EXISTING R/W

EXISTING R/W

RADIUS POINT
STA 64+43.62; 36.00' LT
STA 240+35.86; 32.50' LT
Y=553916.131
X=568950.425

RADIUS POINT
STA 65+08.63; 39.00' LT
STA 240+39.14; 32.50' RT
Y=553920.681
X=569015.348

TLE

TLE

TLE

PROP R/W

PROP R/W

R15'

R15'

17.5'

17.5'

XXXX XXXX XXXX XXXX

737.21
737.20
736.89
736.92
737.02
737.11
737.14
737.03
736.96

EXISTING R/W

CONCRETE SIDEWALK

CONC C & G
30-INCH TYPE D

65+25.00
33.00' LT

65+37.50
30.50' LT

65+24.50
28.00' LT

65+24.50
24.50' LT

65+43.88
24.50' LT
EL=737.33

65+49.88
24.50' LT
EL=736.89

65+70.38
24.50' LT
EL=737.14

65+64.38
24.50' LT
EL=736.79

65+98.09
24.50' LT
EL=736.97

66+04.09
24.50' LT
EL=736.54

LP 66+00.00
22.00' LT
EL=736.58

ASPHALTIC SURFACE FOR DWY (CE)

CONCRETE DRIVEWAY 8-INCH

CONCRETE DRIVEWAY 8-INCH (HES)

CONCRETE SIDEWALK

66+49.86
32.82' LT
EL=736.90

66+29.85
37.82' LT
EL=736.81

66+43.84
24.50' LT
EL=736.74

66+50.00
25.73' LT
EL=736.81

CONCRETE CURB
PEDESTRIAN
VARIABLE HEIGHT

UNION PACIFIC
RAILROAD

CONC C & G
30-INCH TYPE D

66+61.34
28.00' LT
EL=736.93

66+93.65
18.00' LT

66+50.00
25.22' LT
EL=737.30

66+61.44
27.51' LT
EL=736.96

66+93.65
16.00' LT
EL=736.94

66+68.70
18.00' LT

66+68.70
16.00' LT
EL=737.00

66+28.36
24.50' LT
EL=736.60

66+35.00
24.50' LT
EL=736.65

66+43.89
24.00' LT
EL=737.24

RADIUS POINT
STA 66+35.00; 20.00' LT
Y=553904.702
X=569142.136

66+35.00
24.00' LT

66+37.83
22.83' LT

66+41.49
19.17' LT

66+44.31
18.00' LT

RADIUS POINT
STA 66+44.31; 22.00' LT
Y=553906.924
X=569151.399

R4'

R4'

STA 64+25

STA 67+00

MATCH LINE

MATCH LINE

2.0%

2.0%

2.0%

2.0%

2.0%

0.0%

0.0%

0.0%

0.0%

21'

21'

24'

24'

18'

18'

18'

65

66

240

737.41
737.55
737.55

64+40.21
25.50' RT
EL=737.26

64+70.00
25.50' RT
EL=737.69

64+75.00
25.50' RT
EL=737.72

64+68.91
31.00' RT
EL=737.76

64+80.00
25.50' RT
EL=737.71

HP 64+93.21
19.00' RT
EL=737.19

65+00.00
25.50' RT
EL=737.62

65+25.00
24.50' RT
EL=737.43

65+08.73
24.50' RT
EL=737.48

CTH D
MAIN STREET

65+50.00
24.50' RT
EL=737.28

CONC C & G
30-INCH TYPE D

65+75.00
24.50' RT
EL=737.11

65+88.37
24.50' RT
EL=737.02

65+94.57
24.50' RT
EL=736.59

66+30.37
24.50' RT
EL=737.01

LP 66+33.47
22.00' RT
EL=736.66

66+23.77
24.50' RT
EL=736.56

66+61.92
16.00' RT
EL=736.95

66+61.92
18.00' RT

66+86.87
16.00' RT
EL=736.99

66+86.87
18.00' RT

CONCRETE STEP
(1 REQ'D)

CONCRETE STEP
(1 REQ'D)

CONCRETE CURB
PEDESTRIAN
VARIABLE HEIGHT

64+47.16
31.00' RT
EL=738.00

CONCRETE SIDEWALK

CONCRETE SIDEWALK

CONCRETE STEP (1 REQ'D)

BASE AGGREGATE DENSE ¾-INCH

CONCRETE DRIVEWAY 8-INCH (HES)

TLE

TLE

EXISTING R/W

CONCRETE DRIVEWAY 8-INCH

ASPHALTIC SURFACE FOR DWY (CE)

UNION PACIFIC
RAILROAD

CONC C & G
30-INCH TYPE D

ASPHALTIC SURFACE FOR DWY (CE)

OZAUKEE
INTERURBAN
TRAIL

RADIUS POINT
STA 65+02.42; 25.00' RT
Y=553856.551
X=569010.668

65+02.42
21.00' RT

65+05.25
22.17' RT

RADIUS POINT
STA 65+08.73; 20.00' RT
Y=553861.700
X=569016.860

65+08.73
24.00' RT

65+08.73
24.50' RT

65+05.91
22.83' RT

65+08.73
25.50' RT

R4'

R4'

EXISTING R/W

RADIUS POINT
STA 66+35.00; 20.00' RT
Y=553864.713
X=569143.090

66+41.49
19.17' RT

66+44.31
18.00' RT

R4'

R4'

RADIUS POINT
STA 66+44.31; 22.00' RT
Y=553862.936
X=569152.449

66+37.83
22.83' RT

66+35.00
24.00' RT

EXISTING R/W

PROJECT NO: 4880-01-70	HWY: CTH D	COUNTY: OZAUKEE	PLAN DETAILS	SHEET 37	E

2

N

* SEE CURB RAMP DETAIL SHEETS FOR ADDITIONAL CURB RAMP INFORMATION

CONCRETE DRIVEWAY 8-INCH

CONCRETE STEP (1 REQ'D)

ASPHALTIC SURFACE FOR DWY (CE)

67+74.35
36.75' LT
EL=736.52

67+72.22
33.50' LT
EL=736.45

67+78.22
33.50' LT
EL=736.45

CONCRETE DRIVEWAY 8-INCH

BASE AGGREGATE DENSE ¾-INCH

67+78.38
36.75' LT
EL=736.52

67+51.08
39.95' LT
EL=736.39

67+87.76
36.75' LT
EL=736.37

67+56.59
34.31' LT
EL=736.82

67+88.22
33.50' LT
EL=736.35

TLE

67+59.14
36.75' LT
EL=736.82

67+94.22
33.50' LT
EL=736.35

OZAUKEE INTERURBAN TRAIL

EXISTING R/W

*

68+34.58
28.00' LT

67+56.59
28.00' LT
EL=736.71

67+26.93
28.00' LT
EL=736.78

67+47.73
28.00' LT
EL=736.60

CONC C & G
30-INCH TYPE D

68+13.38
23.00' LT
EL=735.97

CONCRETE CURB
PEDESTRIAN
VARIABLE HEIGHT

68+34.58
23.00' LT
EL=735.88

68+40.58
28.00' LT
EL=735.88

LP 68+51.53
22.00' LT
EL=735.36

ASPHALTIC SURFACE FOR DWY (PE)

CONCRETE DRIVEWAY 6-INCH

68+80.17
28.00' LT

68+92.67
25.50' LT

68+92.67
24.50' LT
EL=735.84

68+97.67
24.50' LT
EL=735.46

HP 69+25.00
22.00' LT
EL=735.57

69+37.96
24.50' LT
EL=735.90

69+32.96
24.50' LT
EL=735.55

STA 67+00

STA 69+50

7

68

69

18'

24'

2.0%

2.0%

MATCH LINE

MATCH LINE

67+40.00
16.00' LT
EL=736.32

CONCRETE SIDEWALK

67+97.81
28.00' RT
EL=736.02

CTH D
MAIN STREET

68+48.12
28.00' RT
EL=735.87

LP 68+51.53
22.00' RT
EL=735.36

68+74.20
28.00' RT
EL=735.71

69+14.05
28.00' RT
EL=735.83

69+19.05
28.00' RT
EL=736.06

68+02.81
28.00' RT
EL=735.83

68+43.12
28.00' RT
EL=735.66

68+69.20
28.00' RT
EL=735.91

CONC C & G
30-INCH TYPE D

HP 69+25.00
22.00' RT
EL=735.57

67+00.00
28.00' RT
EL=736.50

67+25.00
28.00' RT
EL=736.42

67+50.00
28.00' RT
EL=736.33

EXISTING R/W

67+75.00
28.00' RT
EL=736.24

TLE

TLE

TLE

CONCRETE SIDEWALK AND STEP (1 REQ'D)

CONCRETE DRIVEWAY 8-INCH

ASPHALTIC SURFACE FOR DWY (CE)

CONCRETE DRIVEWAY 8-INCH (HES)

DELINEATOR POSTS STEEL, TYP.

EXISTING R/W

RADIUS POINT
STA 68+40.69; 22.00' LT
Y=553911.609
X=569347.716

68+47.17
22.83' LT

68+50.00
24.00' LT

R4'

R4'

RADIUS POINT
STA 68+50.00; 20.00' LT
Y=553909.832
X=569357.075

68+40.69
18.00' LT

68+43.51
19.17' LT

67+90.69
18.00' RT

67+93.51
19.17' RT

RADIUS POINT
STA 68+00.00; 20.00' RT
Y=553868.650
X=569308.044

R4'

R4'

67+97.17
22.83' RT

68+00.00
24.00' RT

RADIUS POINT
STA 67+90.69; 22.00' RT
Y=553866.429
X=569298.780

EXISTING R/W

PROJECT NO: 4880-01-70	HWY: CTH D	COUNTY: OZAUKEE	PLAN DETAILS	SHEET 38	E

FILE NAME : S:\CURRPROJ\OZAUKEECO\CTH D\CIVIL3D\48800100\SHEETSPLAN\48800170\48800170-021201-PD.DWG
LAYOUT NAME - 48800170-021201-PD - SHEET-10

PLOT DATE : 10/31/2017 4:14 PM PLOT BY : AARON SARAUER PLOT NAME : PLOT SCALE : 1 IN:20 FT

WISDOT/CADDS SHEET 42

* SEE CURB RAMP DETAIL SHEETS FOR ADDITIONAL CURB RAMP INFORMATION

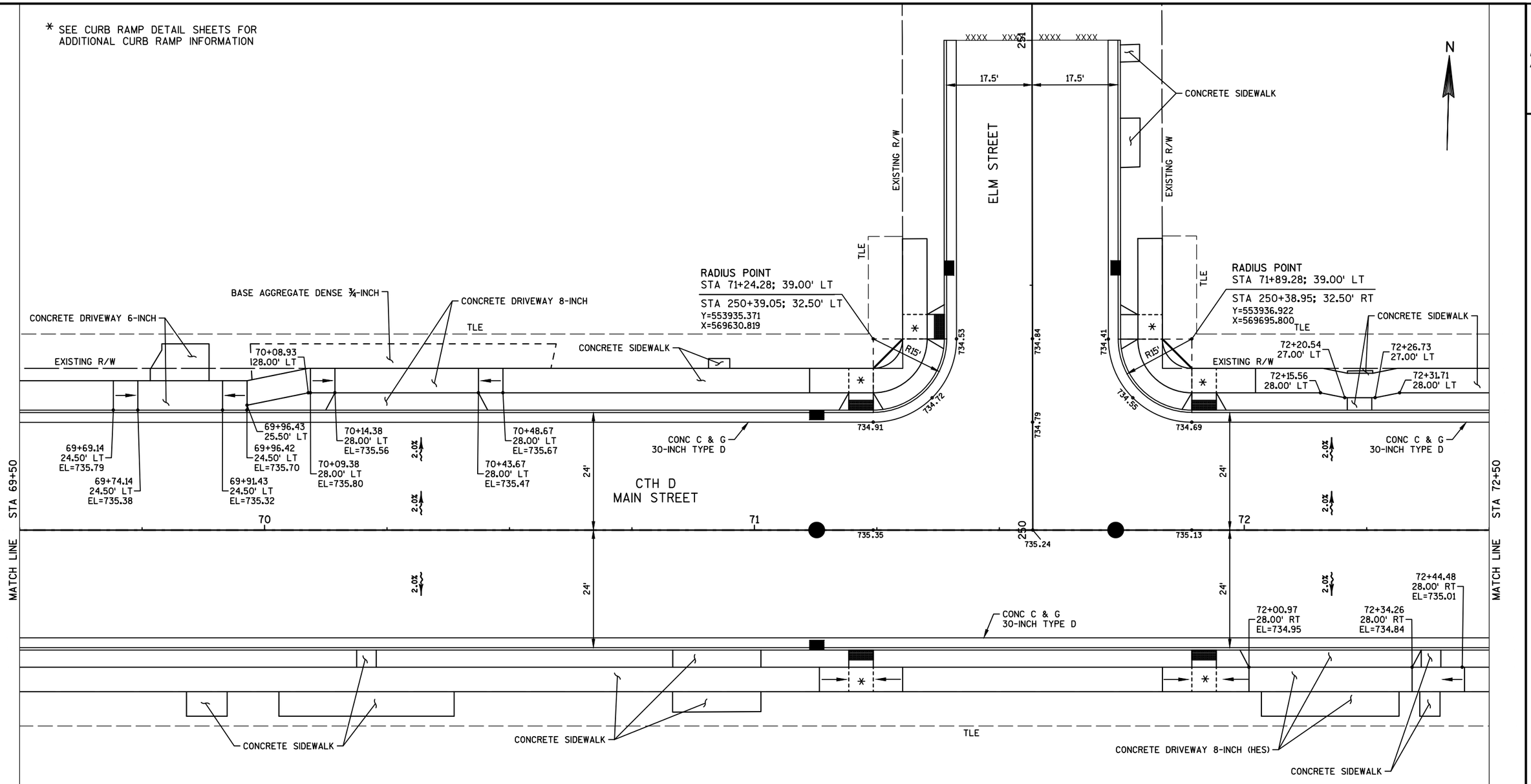

PROJECT NO: 4880-01-70	HWY: CTH D	COUNTY: OZAUKEE	PLAN DETAILS	SHEET 39	E

2

N

ASPHALTIC SURFACE FOR DWY (PE)
CONCRETE SIDEWALK
CONCRETE SIDEWALK AND STEPS (2 REQ'D)
TLE
CONCRETE DRIVEWAY 6-INCH
ASPHALTIC SURFACE FOR DWY (PE)
TLE
CONCRETE SIDEWALK
ASPHALTIC SURFACE FOR DWY (PE)
TLE
CONCRETE DRIVEWAY 6-INCH
CONCRETE SIDEWALK AND STEP (1 REQ'D)
TLE
BASE AGGREGATE DENSE ¾-INCH
CONCRETE DRIVEWAY 6-INCH
CONCRETE SIDEWALK
TLE

73+70.67
28.00' LT
EXISTING R/W
73+75.64
27.00' LT
74+06.36
27.00' LT
74+11.33
28.00' LT

73+02.93
28.00' LT
EL=734.83
73+07.93
28.00' LT
EL=734.59
73+30.22
28.00' LT
EL=734.52
73+34.78
28.00' LT
EL=734.51
73+54.08
28.00' LT
EL=734.44
73+59.08
28.00' LT
EL=734.64
74+12.81
28.00' LT
EL=734.47
74+17.81
28.00' LT
EL=734.23
74+35.10
28.00' LT
EL=734.17
74+40.10
28.00' LT
EL=734.38
74+48.86
28.00' LT
EL=734.35
74+53.86
28.00' LT
EL=734.11
74+77.15
28.00' LT
EL=734.03
74+82.15
28.00' LT
EL=734.24
CONC C & G
30-INCH TYPE D
75+38.16
28.00' LT
EL=734.05
75+43.16
28.00' LT
EL=733.82

CTH D
MAIN STREET

24'
2.0%
2.0%

73
74
75

MATCH LINE STA 72+50
MATCH LINE STA 75+50

72+77.08
28.00' RT
EL=734.70
72+72.08
28.00' RT
EL=734.93
72+94.37
28.00' RT
EL=734.64
72+99.37
28.00' RT
EL=734.84
73+40.98
28.00' RT
EL=734.48
73+35.98
28.00' RT
EL=734.72
73+67.27
28.00' RT
EL=734.40
73+72.27
28.00' RT
EL=734.60
74+45.84
28.00' RT
EL=734.14
74+40.84
28.00' RT
EL=734.37
74+83.14
28.00' RT
EL=734.01
74+88.14
28.00' RT
EL=734.22

24'
2.0%
CONC C & G
30-INCH TYPE D

CONCRETE SIDEWALK
TLE
TLE
TLE
CONCRETE DRIVEWAY 6-INCH
TLE
ASPHALTIC SURFACE FOR DWY (PE)
TLE
CONCRETE SIDEWALK AND STEP (1 REQ'D)
TLE
TLE
CONCRETE DRIVEWAY 6-INCH

PROJECT NO: 4880-01-70	HWY: CTH D	COUNTY: OZAUKEE	PLAN DETAILS	SHEET 40	E

FILE NAME : S:\CURRPROJ\OZAUKEECO\CTH D\CIVIL3D\48800100\SHEETSPLAN\48800170\48800170-021201-PD.DWG
LAYOUT NAME - 48800170-021201-PD - SHEET-12
PLOT DATE : 10/31/2017 1:18 PM
PLOT BY : AARON SARAUER
PLOT NAME :
PLOT SCALE : 1 IN:20 FT
WISDOT/CADDS SHEET 42

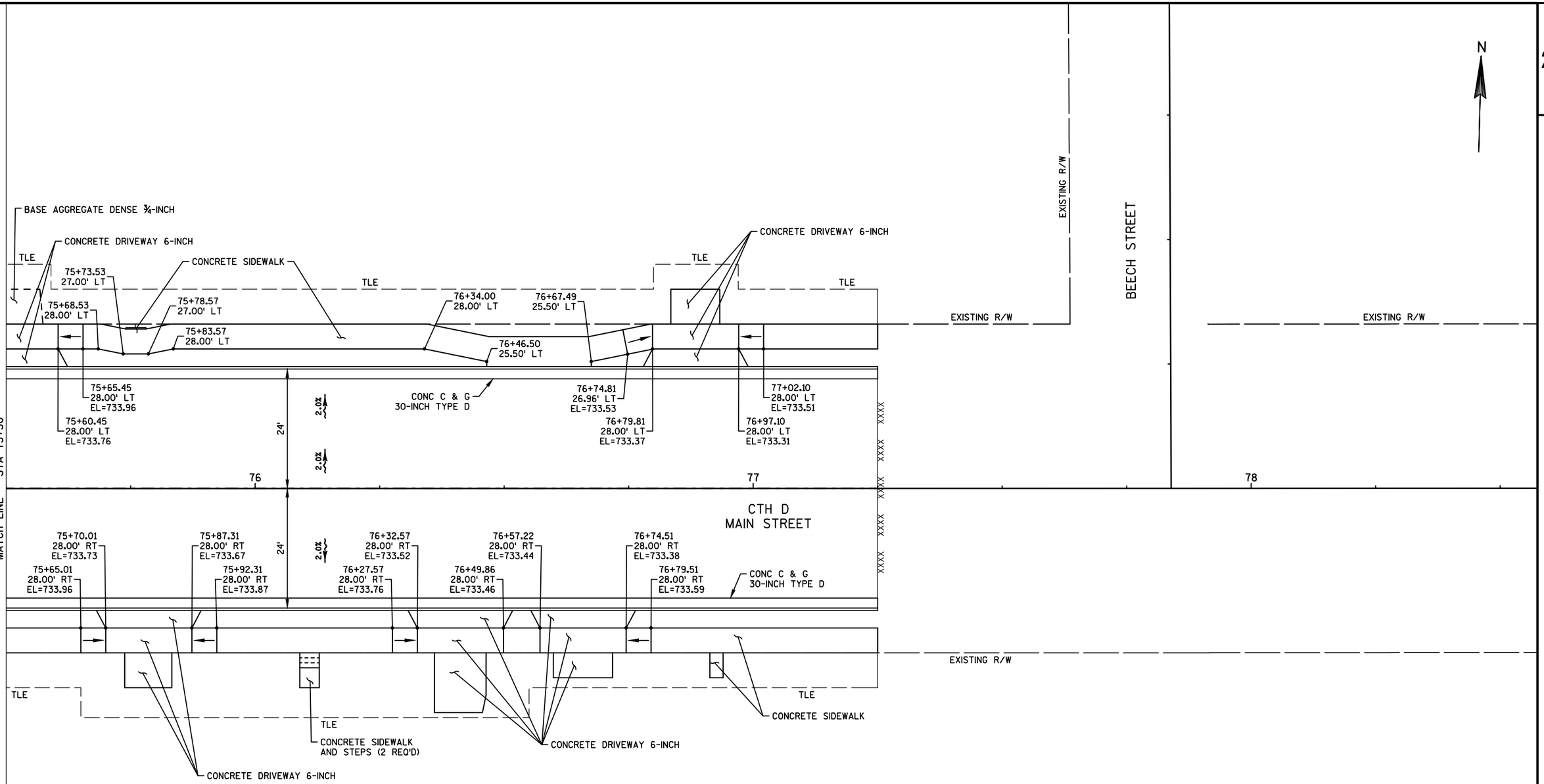

PROJECT NO: 4880-01-70	HWY: CTH D	COUNTY: OZAUKEE	PLAN DETAILS	SHEET 41	E

FILE NAME : S:\CURRPROJ\OZAUKEECO\CTH D\CIVIL3D\48800100\SHEETSPLAN\48800170\48800170-021201-PD.DWG
LAYOUT NAME - 48800170-021201-PD - SHEET-13

PLOT DATE : 10/31/2017 1:18 PM PLOT BY : AARON SARAUER PLOT NAME : PLOT SCALE : 1 IN:20 FT

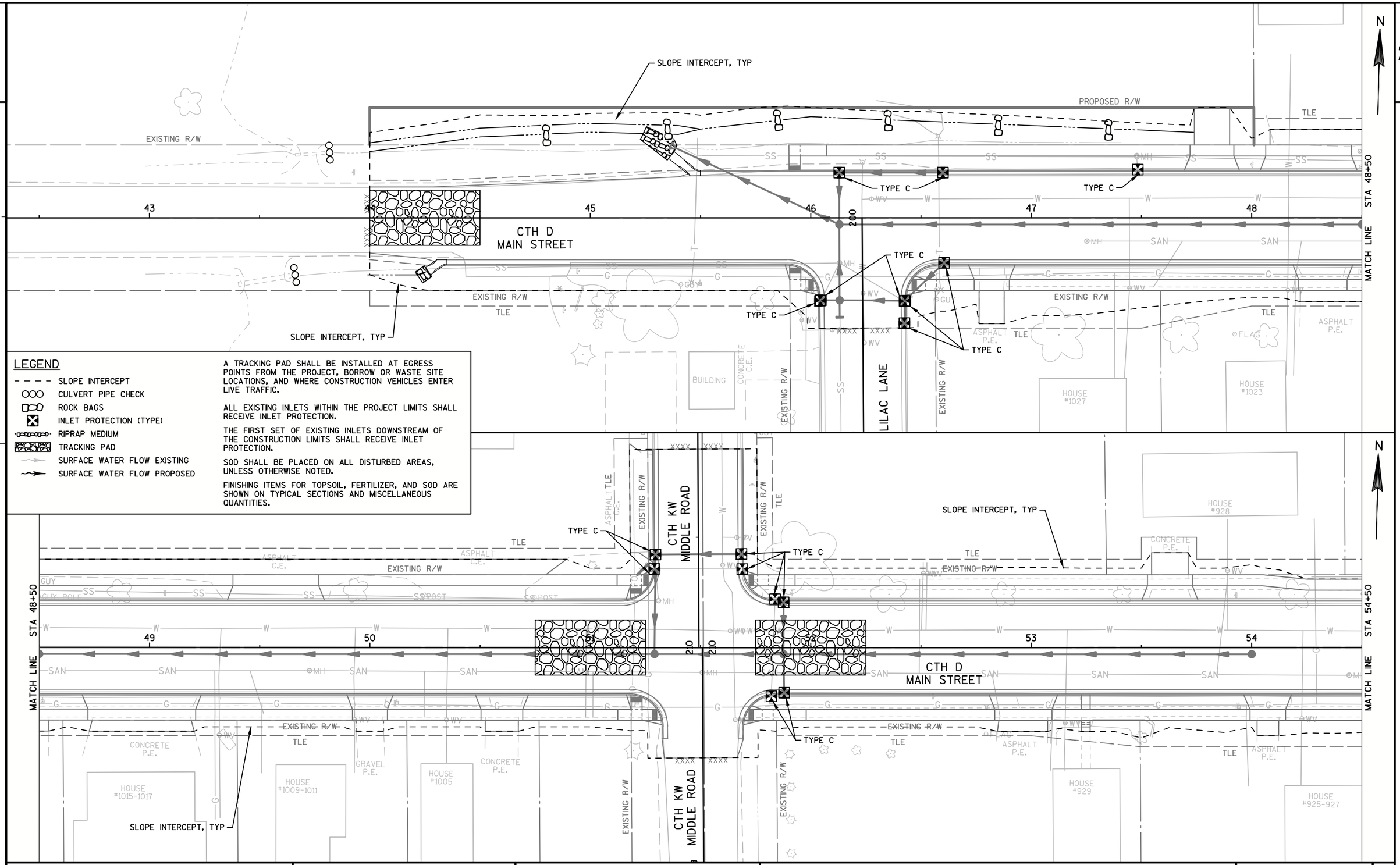

PROJECT NO: 4880-01-70	HWY: CTH D	COUNTY: OZAUKEE	EROSION CONTROL PLAN: CTH D	SHEET 42	E

FILE NAME : S:\CURRPROJ\OZAUKEECO\CTH D\CIVIL3D\48800100\SHEETSPLAN\48800170\48800170-022001-EC.DWG
LAYOUT NAME - 48800170-022001-EC - SHEET-01

PLOT DATE : 12/29/2017 3:54 PM PLOT BY : AARON SARAUER PLOT NAME : PLOT SCALE : **********

WISDOT/CADDS SHEET 42

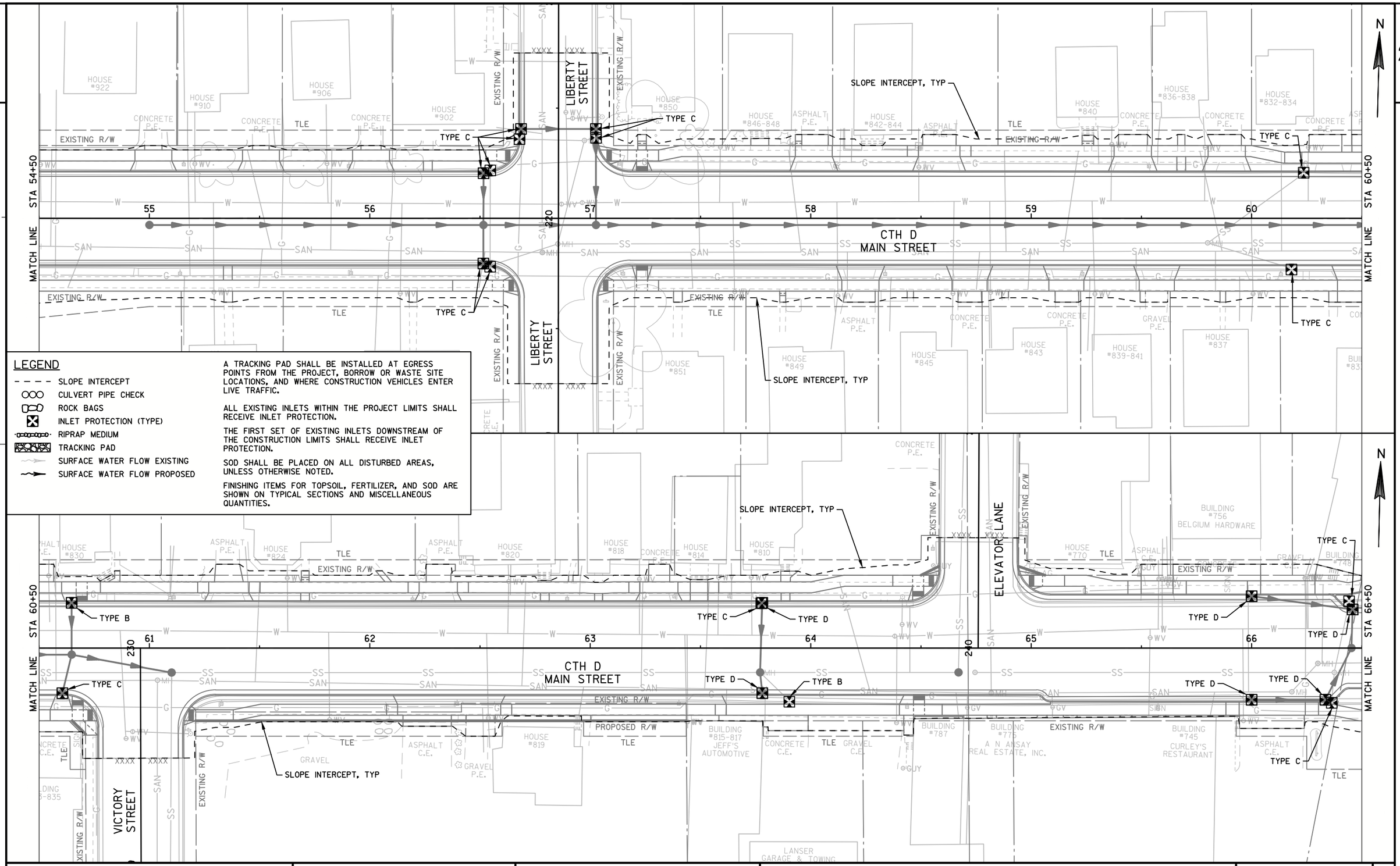

LEGEND

- SLOPE INTERCEPT
- CULVERT PIPE CHECK
- ROCK BAGS
- INLET PROTECTION (TYPE)
- RIPRAP MEDIUM
- TRACKING PAD
- SURFACE WATER FLOW EXISTING
- SURFACE WATER FLOW PROPOSED

A TRACKING PAD SHALL BE INSTALLED AT EGRESS POINTS FROM THE PROJECT, BORROW OR WASTE SITE LOCATIONS, AND WHERE CONSTRUCTION VEHICLES ENTER LIVE TRAFFIC.

ALL EXISTING INLETS WITHIN THE PROJECT LIMITS SHALL RECEIVE INLET PROTECTION.

THE FIRST SET OF EXISTING INLETS DOWNSTREAM OF THE CONSTRUCTION LIMITS SHALL RECEIVE INLET PROTECTION.

SOD SHALL BE PLACED ON ALL DISTURBED AREAS, UNLESS OTHERWISE NOTED.

FINISHING ITEMS FOR TOPSOIL, FERTILIZER, AND SOD ARE SHOWN ON TYPICAL SECTIONS AND MISCELLANEOUS QUANTITIES.

PROJECT NO:4880-01-70	HWY:CTH D	COUNTY:OZAUKEE	EROSION CONTROL PLAN: CTH D	SHEET 43	E

FILE NAME : S:\CURRPROJ\OZAUKEECO\CTH D\CIVIL3D\48800100\SHEETSPLAN\48800170\48800170-022001-EC.DWG
LAYOUT NAME - 48800170-022001-EC - SHEET-02
PLOT DATE : 12/29/2017 3:55 PM PLOT BY : AARON SARAUER PLOT NAME : PLOT SCALE : **********

WISDOT/CADDS SHEET 42

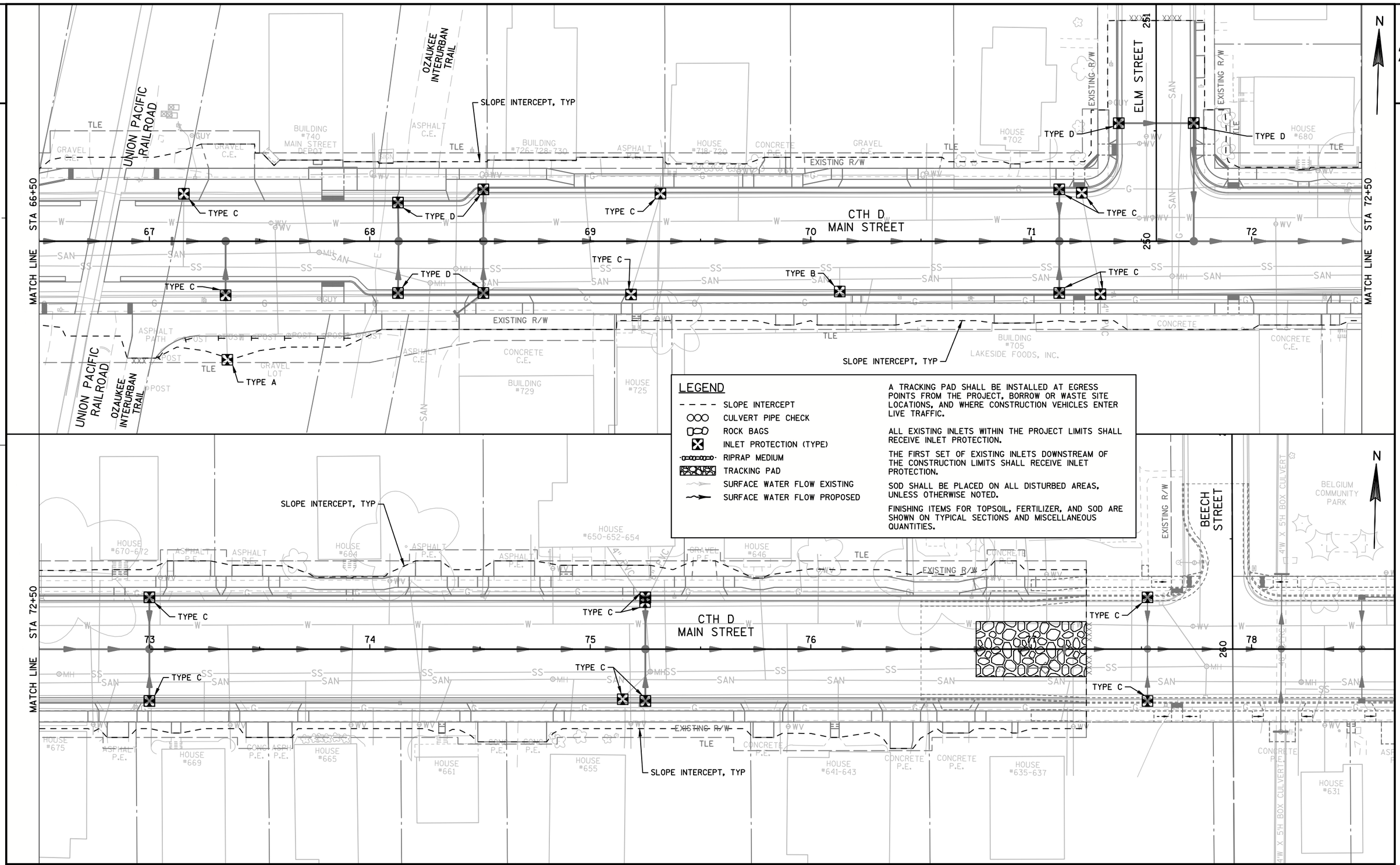

PROJECT NO:4880-01-70	HWY:CTH D	COUNTY:OZAUKEE	EROSION CONTROL PLAN: CTH D	SHEET 44	E

FILE NAME : S:\CURRPROJ\OZAUKEECO\CTH D\CIVIL3D\48800100\SHEETSPLAN\48800170\48800170-022001-EC.DWG
LAYOUT NAME - 48800170-022001-EC - SHEET-03
PLOT DATE : 12/29/2017 3:55 PM PLOT BY : AARON SARAUER PLOT NAME : PLOT SCALE : ##########

LEGEND

- (4) STORM SEWER LATERAL 4-INCH
- (6) STORM SEWER LATERAL 6-INCH
- (8) STORM SEWER LATERAL 8-INCH
- (S) SANITARY SEWER LATERAL 4-INCH
- (W1) WATER SERVICE 1-INCH WITH 4'X8' INSULATION BOARD
- (W2) WATER SERVICE 1¼-INCH WITH 4'X8' INSULATION BOARD
- (W8) WATER MAIN 8-INCH
- (I) 4'X8' INSULATION BOARD

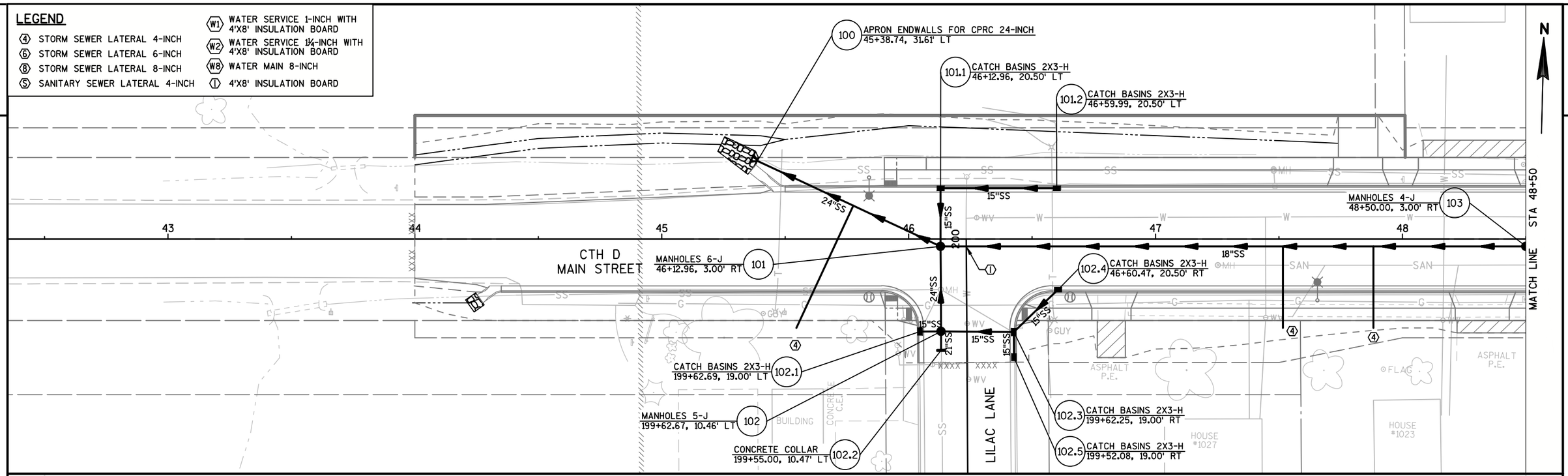

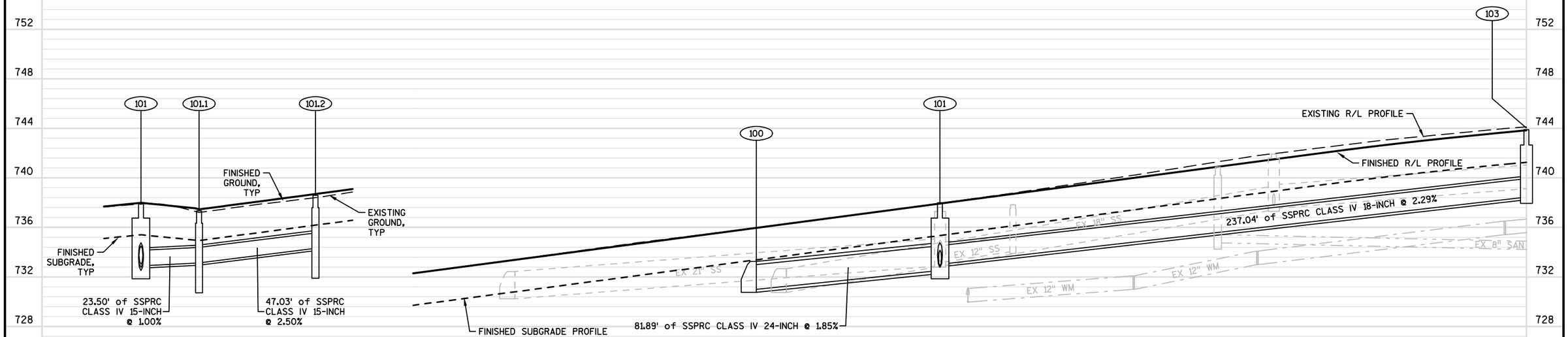

101
RIM: 737.99
SUMP: 732.52
DEPTH: 5.47
E INV IN: 733.02
N INV IN: 732.89
S INV IN: 732.77
NW INV OUT: 732.52

101.1
RIM: 737.35
SUMP: 731.13
DEPTH: 6.22
E INV IN: 733.13
S INV OUT: 733.13

101.2
RIM: 738.59
SUMP: 732.30
DEPTH: 6.29
W INV OUT: 734.30

100
INV: 731.00

101
RIM: 737.99
SUMP: 732.52
DEPTH: 5.47
E INV IN: 733.02
N INV IN: 732.89
S INV IN: 732.77
NW INV OUT: 732.52

103
RIM: 743.90
SUMP: 738.44
DEPTH: 5.46
E INV IN: 738.44
W INV OUT: 738.44

PROJECT NO: 4880-01-70	HWY: CTH D	COUNTY: OZAUKEE	STORM SEWER: CTH D	SHEET 45 E

FILE NAME : S:\CURRPROJ\OZAUKEECO\CTH D\CIVIL3D\48800100\SHEETSPLAN\48800170\48800170-022501-SS.DWG
LAYOUT NAME - 48800170-022501-SS - SHEET-01-A
PLOT DATE : 12/29/2017 3:58 PM PLOT BY : AARON SARAUER PLOT NAME : PLOT SCALE : 1 IN:40 FT
WISDOT/CADDS SHEET 41

LEGEND

- (4) STORM SEWER LATERAL 4-INCH
- (6) STORM SEWER LATERAL 6-INCH
- (8) STORM SEWER LATERAL 8-INCH
- (S) SANITARY SEWER LATERAL 4-INCH
- (W1) WATER SERVICE 1-INCH WITH 4'X8' INSULATION BOARD
- (W2) WATER SERVICE 1¼-INCH WITH 4'X8' INSULATION BOARD
- (W8) WATER MAIN 8-INCH
- (I) 4'X8' INSULATION BOARD

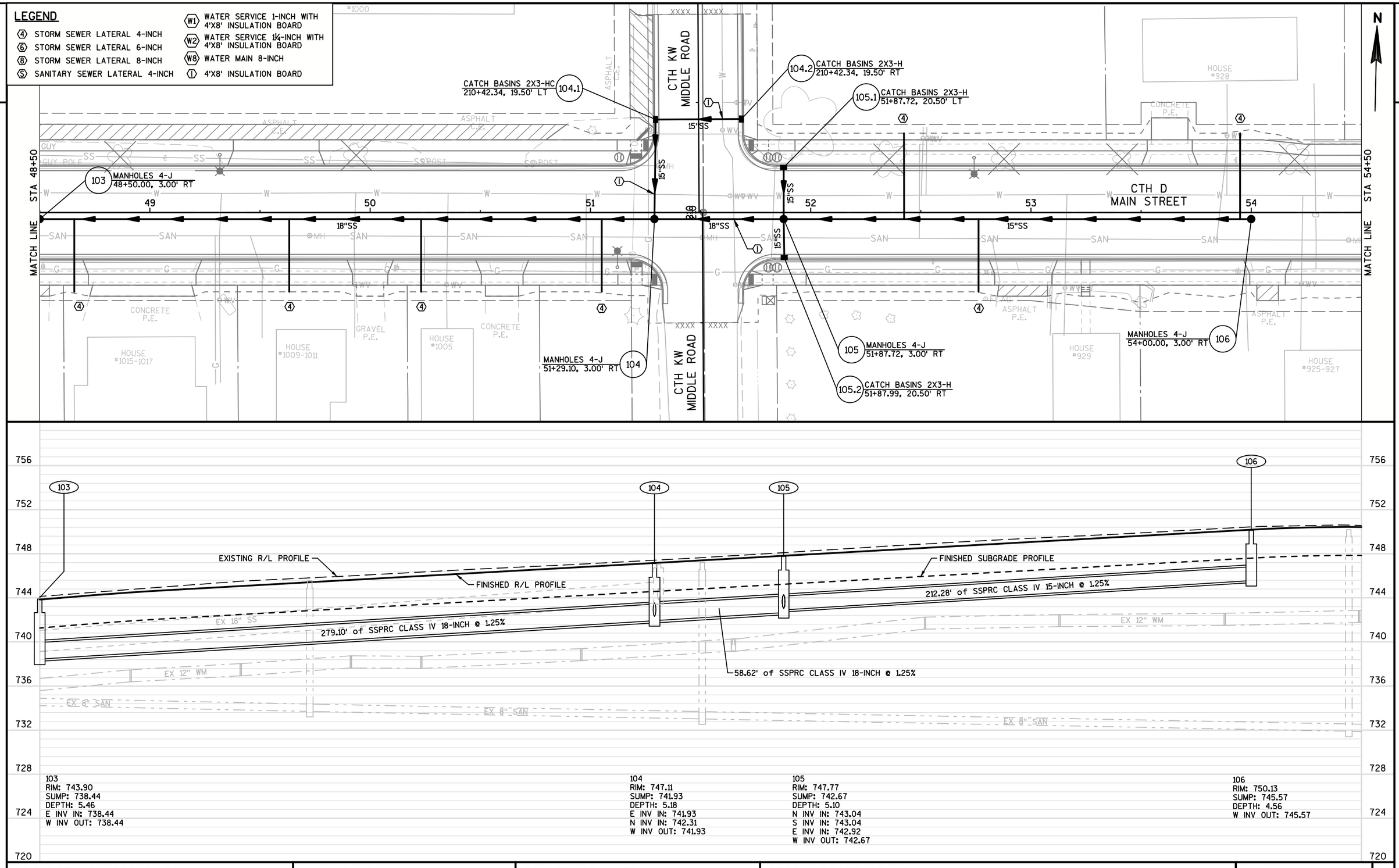

103
RIM: 743.90
SUMP: 738.44
DEPTH: 5.46
E INV IN: 738.44
W INV OUT: 738.44

104
RIM: 747.11
SUMP: 741.93
DEPTH: 5.18
E INV IN: 741.93
N INV IN: 742.31
W INV OUT: 741.93

105
RIM: 747.77
SUMP: 742.67
DEPTH: 5.10
N INV IN: 743.04
S INV IN: 743.04
E INV IN: 742.92
W INV OUT: 742.67

106
RIM: 750.13
SUMP: 745.57
DEPTH: 4.56
W INV OUT: 745.57

PROJECT NO: 4880-01-70	HWY: CTH D	COUNTY: OZAUKEE	STORM SEWER: CTH D	SHEET 46	E

2

LEGEND

- (4) STORM SEWER LATERAL 4-INCH
- (6) STORM SEWER LATERAL 6-INCH
- (8) STORM SEWER LATERAL 8-INCH
- (S) SANITARY SEWER LATERAL 4-INCH
- (W1) WATER SERVICE 1-INCH WITH 4'X8' INSULATION BOARD
- (W2) WATER SERVICE 1¼-INCH WITH 4'X8' INSULATION BOARD
- (W8) WATER MAIN 8-INCH
- (I) 4'X8' INSULATION BOARD

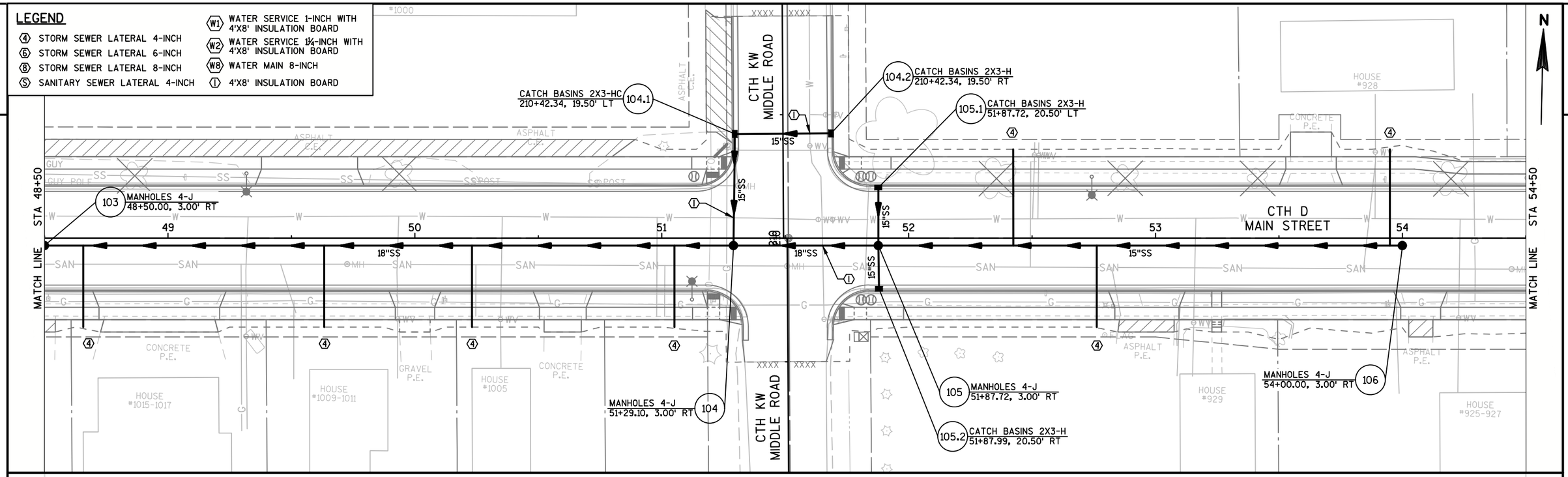

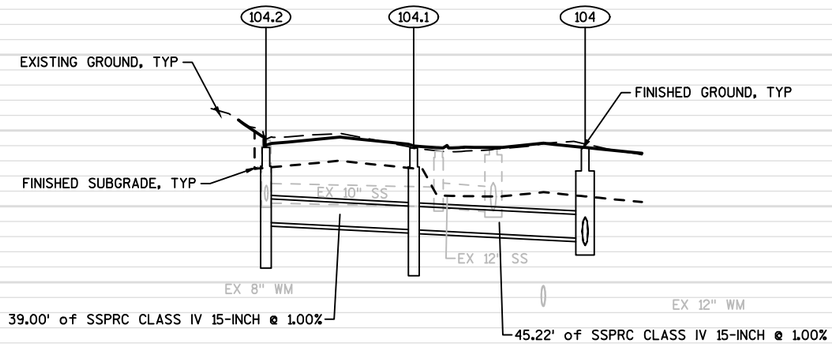

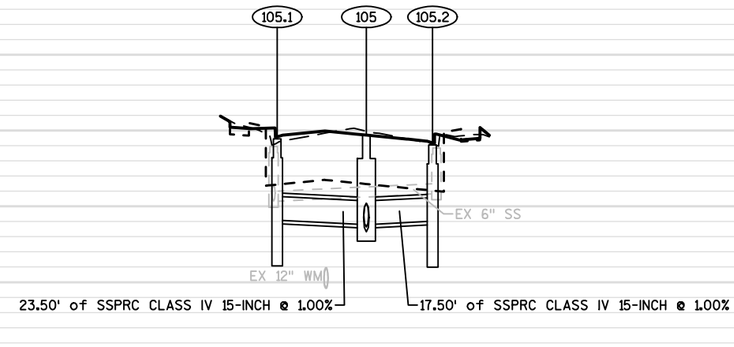

104.2	104.1	104
RIM: 747.12	RIM: 747.08	RIM: 747.11
SUMP: 741.15	SUMP: 740.76	SUMP: 741.93
DEPTH: 5.97	DEPTH: 6.32	DEPTH: 5.18
W INV OUT: 743.15	E INV IN: 742.76	E INV IN: 741.93
	S INV OUT: 742.76	N INV IN: 742.31
		W INV OUT: 741.93

105.1	105	105.2
RIM: 747.56	RIM: 747.77	RIM: 747.24
SUMP: 741.28	SUMP: 742.67	SUMP: 741.22
DEPTH: 6.29	DEPTH: 5.10	DEPTH: 6.03
S INV OUT: 743.28	N INV IN: 743.04	N INV OUT: 743.22
	S INV IN: 743.04	
	E INV IN: 742.92	
	W INV OUT: 742.67	

PROJECT NO: 4880-01-70	HWY: CTH D	COUNTY: OZAUKEE	STORM SEWER: CTH D	SHEET 47	E

FILE NAME : S:\CURRPROJ\OZAUKEECO\CTH D\CIVIL3D\48800100\SHEETSPLAN\48800170\48800170-022501-SS.DWG
LAYOUT NAME - 48800170-022501-SS - SHEET-02-B
PLOT DATE : 12/29/2017 3:58 PM PLOT BY : AARON SARAUER PLOT NAME : PLOT SCALE : 1 IN:40 FT
WISDOT/CADDS SHEET 41

2

LEGEND

- (4) STORM SEWER LATERAL 4-INCH
- (6) STORM SEWER LATERAL 6-INCH
- (8) STORM SEWER LATERAL 8-INCH
- (S) SANITARY SEWER LATERAL 4-INCH
- (W1) WATER SERVICE 1-INCH WITH 4'X8' INSULATION BOARD
- (W2) WATER SERVICE 1¼-INCH WITH 4'X8' INSULATION BOARD
- (W8) WATER MAIN 8-INCH
- (1) 4'X8' INSULATION BOARD

N

CATCH BASINS 2X3-H
220+40.56, 17.00' LT
201.2

CATCH BASINS 2X3-H
56+51.56, 20.50' LT
200.1

CATCH BASINS 2X3-H
220+40.56, 17.00' RT
201.1

CATCH BASINS 2X3-H
56+51.51, 20.50' RT
200.2

MANHOLES 4-J
55+00.00, 3.00' RT
199

MANHOLES 4-J
56+51.53, 3.00' RT
200

MANHOLES 4-J
57+02.60, 3.00' RT
201

LIBERTY STREET

CTH D
MAIN STREET

STA 54+50

STA 60+50

MATCH LINE

MATCH LINE

15"SS

18"SS

HOUSE #922
HOUSE #910
HOUSE #906
HOUSE #902
HOUSE #909
HOUSE #901
HOUSE #850
HOUSE #846-848
HOUSE #842-844
HOUSE #840
HOUSE #836-838
HOUSE #832-834
HOUSE #851
HOUSE #849
HOUSE #845
HOUSE #843
HOUSE #839-841
HOUSE #837

CONCRETE P.E.
ASPHALT P.E.
GRAVEL P.E.

199
RIM: 750.00
SUMP: 745.31
DEPTH: 4.68
E INV OUT: 745.31

200
RIM: 746.30
SUMP: 740.82
DEPTH: 5.48
N INV IN: 741.57
S INV IN: 741.57
W INV IN: 741.07
E INV OUT: 740.82

201
RIM: 744.94
SUMP: 739.39
DEPTH: 5.56
W INV IN: 739.39
N INV IN: 740.14
E INV OUT: 739.39

151.53' of SSPRC CLASS IV 15-INCH @ 2.80%

51.07' of SSPRC CLASS IV 18-INCH @ 2.80%

362.07' of SSPRC CLASS IV 18-INCH @ 2.35%

EXISTING R/L PROFILE

FINISHED SUBGRADE PROFILE

FINISHED R/L PROFILE

EX 12" WM

EX 10" SS

EX 12" SS

EX 8" SAN

EX 15" SS

PROJECT NO: 4880-01-70	HWY: CTH D	COUNTY: OZAUKEE	STORM SEWER: CTH D	SHEET 48	E

FILE NAME : S:\CURRPROJ\OZAUKEECO\CTH D\CIVIL3D\48800100\SHEETSPLAN\48800170\48800170-022501-SS.DWG
LAYOUT NAME - 48800170-022501-SS - SHEET-03-A
PLOT DATE : 10/31/2017 12:55 PM PLOT BY : AARON SARAUER PLOT NAME : PLOT SCALE : 1 IN:40 FT
WISDOT/CADDS SHEET 41

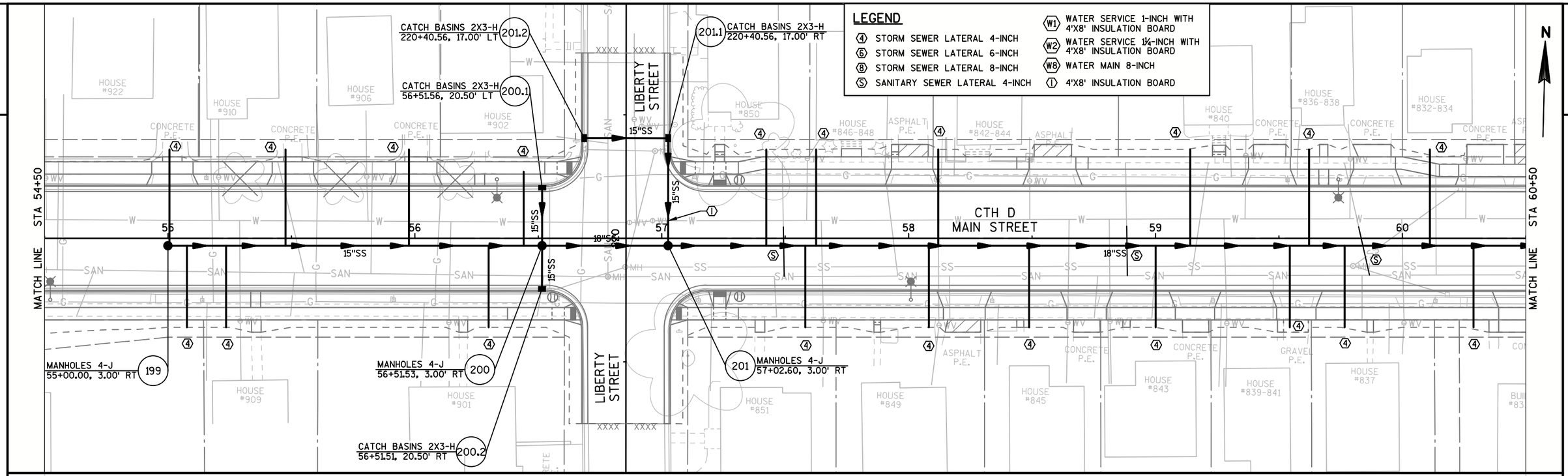

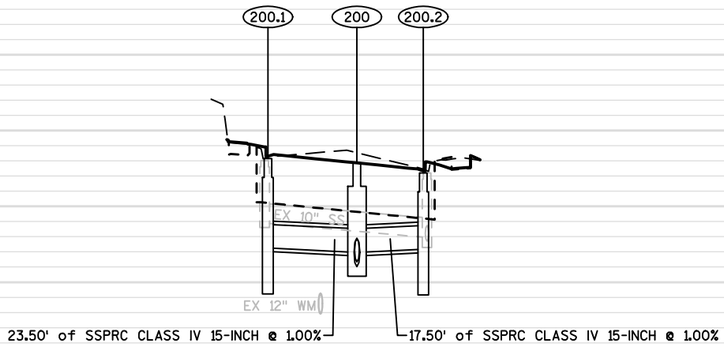

200.1
RIM: 746.53
SUMP: 739.80
DEPTH: 6.73
S INV OUT: 741.80

200
RIM: 746.30
SUMP: 740.82
DEPTH: 5.48
N INV IN: 741.57
S INV IN: 741.57
W INV IN: 741.07
E INV OUT: 740.82

200.2
RIM: 745.77
SUMP: 739.74
DEPTH: 6.03
N INV OUT: 741.74

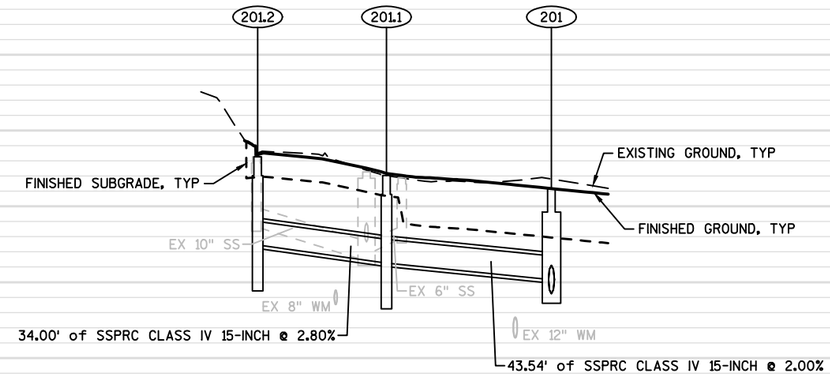

201.2
RIM: 746.62
SUMP: 739.96
DEPTH: 6.66
E INV OUT: 741.96

201.1
RIM: 745.64
SUMP: 739.01
DEPTH: 6.63
W INV IN: 741.01
S INV OUT: 741.01

201
RIM: 744.94
SUMP: 739.39
DEPTH: 5.56
W INV IN: 739.39
N INV IN: 740.14
E INV OUT: 739.39

PROJECT NO: 4880-01-70	HWY: CTH D	COUNTY: OZAUKEE	STORM SEWER: CTH D	SHEET 49	E

FILE NAME : S:\CURRPROJ\OZAUKEECO\CTH D\CIVIL3D\48800100\SHEETSPLAN\48800170\48800170-022501-SS.DWG
LAYOUT NAME - 48800170-022501-SS - SHEET-03-B
PLOT DATE : 10/31/2017 12:55 PM PLOT BY : AARON SARAUER PLOT NAME : PLOT SCALE : 1 IN:40 FT
WISDOT/CADDS SHEET 41

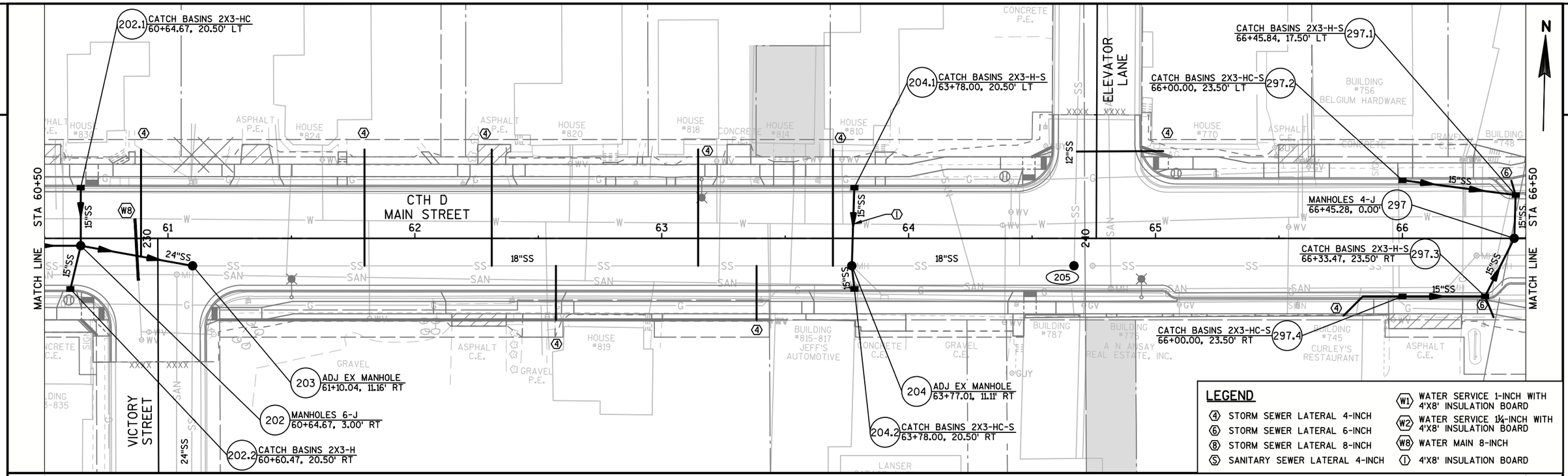

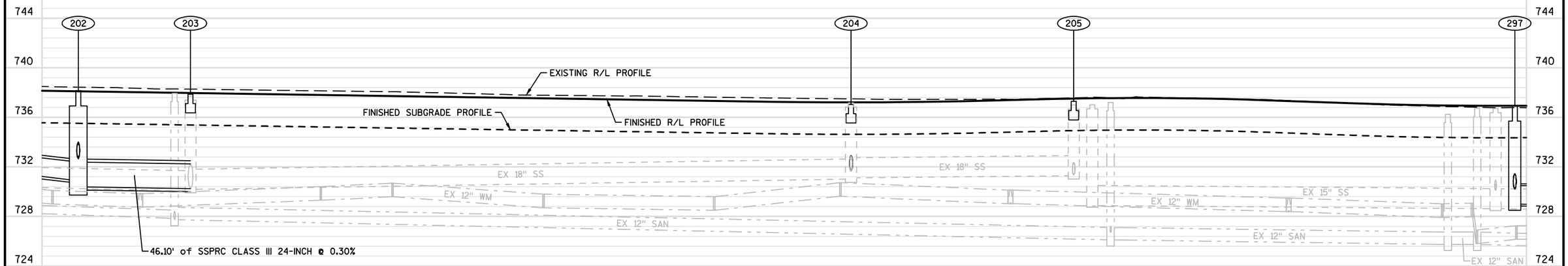

202
RIM: 738.17
SUMP: 730.39
DEPTH: 7.78
W INV IN: 730.89
N INV IN: 732.65
S INV IN: 732.77
E INV OUT: 730.39

203
EXIST RIM: 737.72
PROP RIM: 737.87
W INV IN: 730.25

204
EXIST RIM: 737.18
PROP RIM: 737.05
N INV IN: 731.68
S INV IN: 731.68

205
EXIST RIM: 737.00
PROP RIM: 737.30

297
RIM: 736.94
SUMP: 729.00
DEPTH: 7.94
N INV IN: 730.21
SW INV IN: 730.21
E INV OUT: 729.00

PROJECT NO: 4880-01-70	HWY: CTH D	COUNTY: OZAUKEE	STORM SEWER: CTH D	SHEET 50	E

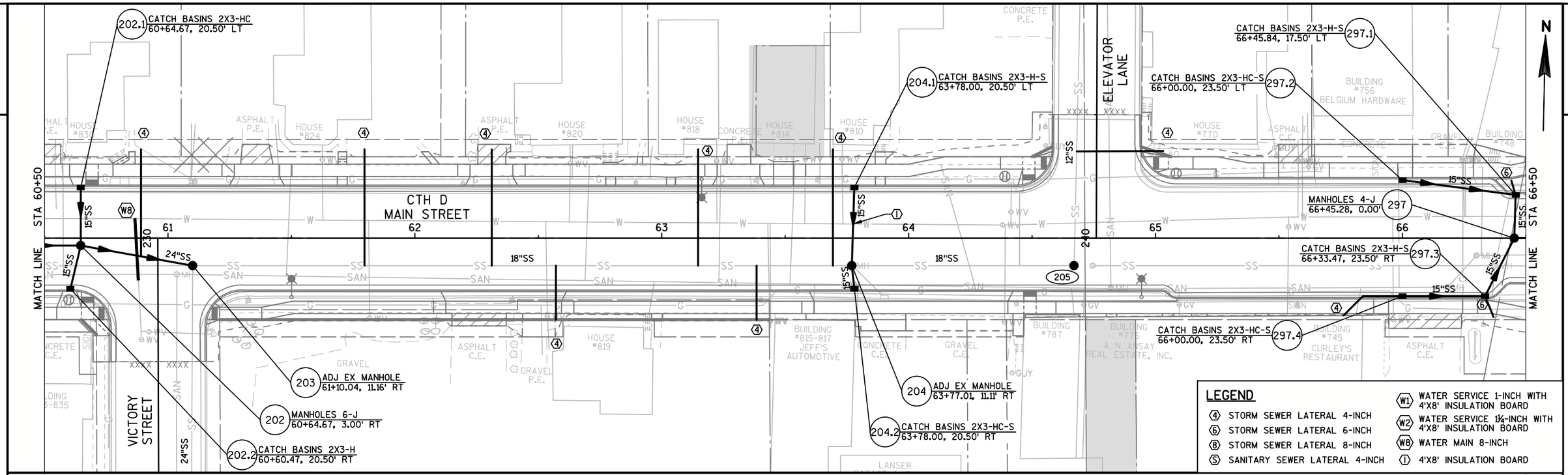

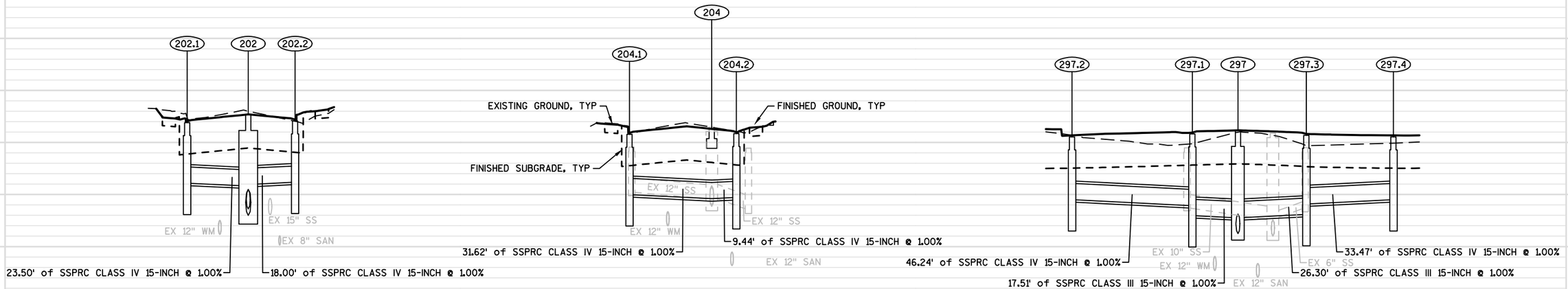

202.1
RIM: 737.52
SUMP: 730.88
DEPTH: 6.64
S INV OUT: 732.88

202
RIM: 738.17
SUMP: 730.39
DEPTH: 7.78
W INV IN: 730.89
N INV IN: 732.65
S INV IN: 732.77
E INV OUT: 730.39

202.2
RIM: 737.65
SUMP: 730.95
DEPTH: 6.70
N INV OUT: 732.95

204.1
RIM: 736.63
SUMP: 730.00
DEPTH: 6.64
S INV OUT: 732.00

204
INV: 731.68
INV: 731.68

204.2
RIM: 736.69
SUMP: 729.77
DEPTH: 6.91
N INV OUT: 731.77

297.2
RIM: 736.44
SUMP: 729.61
DEPTH: 6.83
E INV OUT: 731.61

297.1
RIM: 736.66
SUMP: 728.39
DEPTH: 8.27
W INV IN: 731.14
S INV OUT: 730.39

297
RIM: 736.94
SUMP: 729.00
DEPTH: 7.94
N INV IN: 730.21
SW INV IN: 730.21
E INV OUT: 729.00

297.3
RIM: 736.55
SUMP: 728.47
DEPTH: 8.07
W INV IN: 731.27
NE INV OUT: 730.47

297.4
RIM: 736.44
SUMP: 729.61
DEPTH: 6.83
E INV OUT: 731.61

PROJECT NO: 4880-01-70	HWY: CTH D	COUNTY: OZAUKEE	STORM SEWER: CTH D	SHEET 51	E

FILE NAME : S:\CURRPROJ\OZAUKEECO\CTH D\CIVIL3D\48800100\SHEETSPLAN\48800170\48800170-022501-SS.DWG
LAYOUT NAME - 48800170-022501-SS - SHEET-04-B
PLOT DATE : 10/31/2017 12:55 PM PLOT BY : AARON SARAUER PLOT NAME : PLOT SCALE : 1 IN:40 FT
WISDOT/CADDS SHEET 41

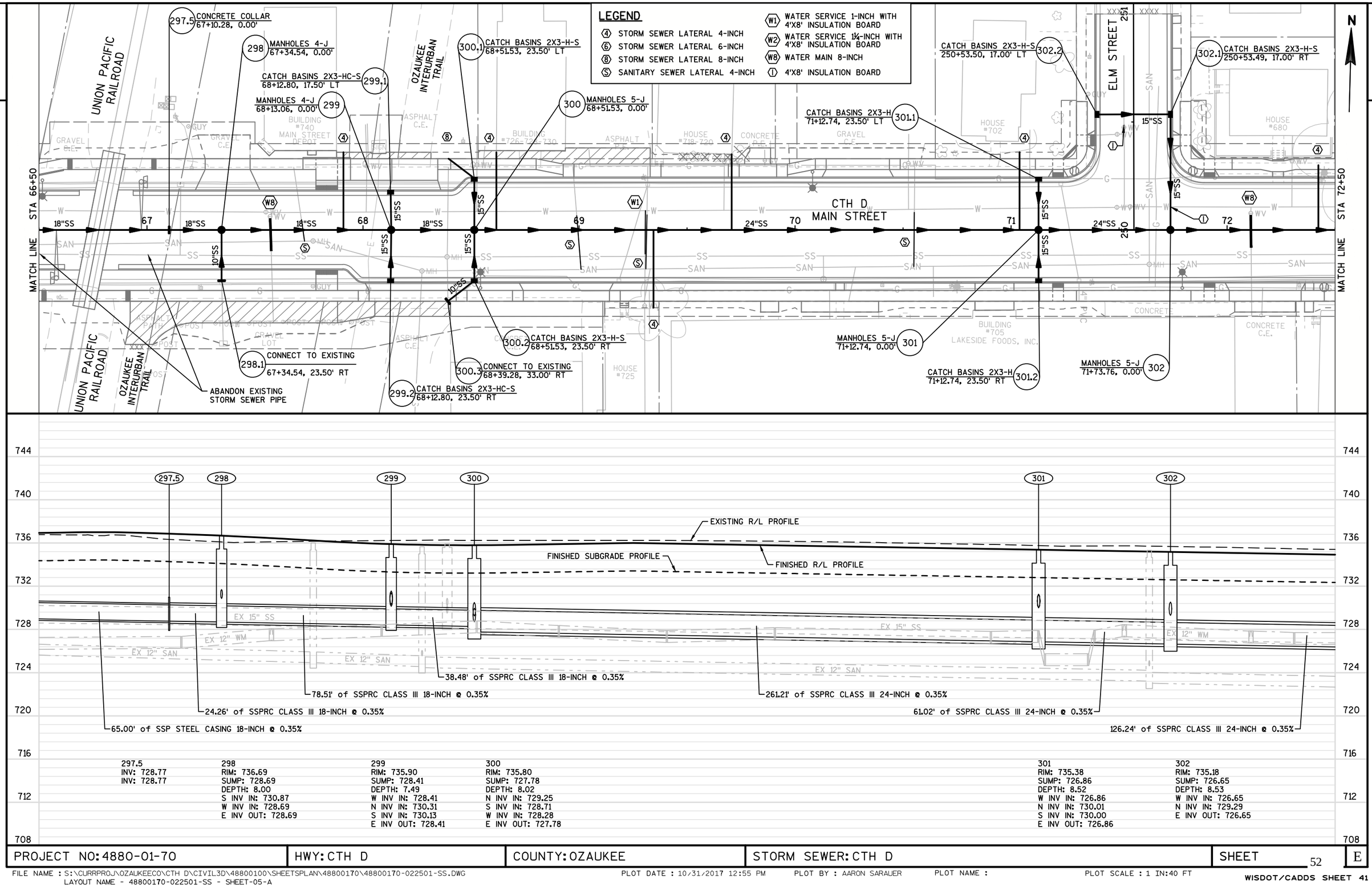

PROJECT NO:4880-01-70	HWY:CTH D	COUNTY:OZAUKEE	STORM SEWER:CTH D	SHEET 52	E

FILE NAME : S:\CURRPROJ\OZAUKEECO\CTH D\CIVIL3D\48800100\SHEETSPLAN\48800170\48800170-022501-SS.DWG
LAYOUT NAME - 48800170-022501-SS - SHEET-05-A
PLOT DATE : 10/31/2017 12:55 PM PLOT BY : AARON SARAUER PLOT NAME : PLOT SCALE : 1 IN:40 FT
WISDOT/CADDS SHEET 41

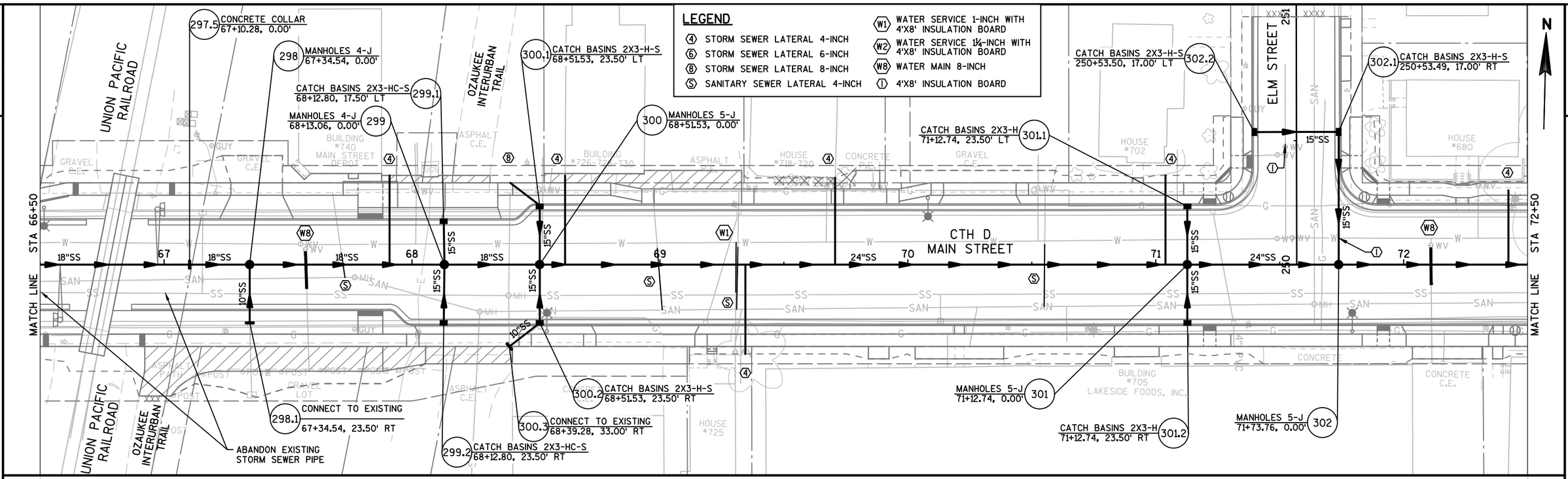

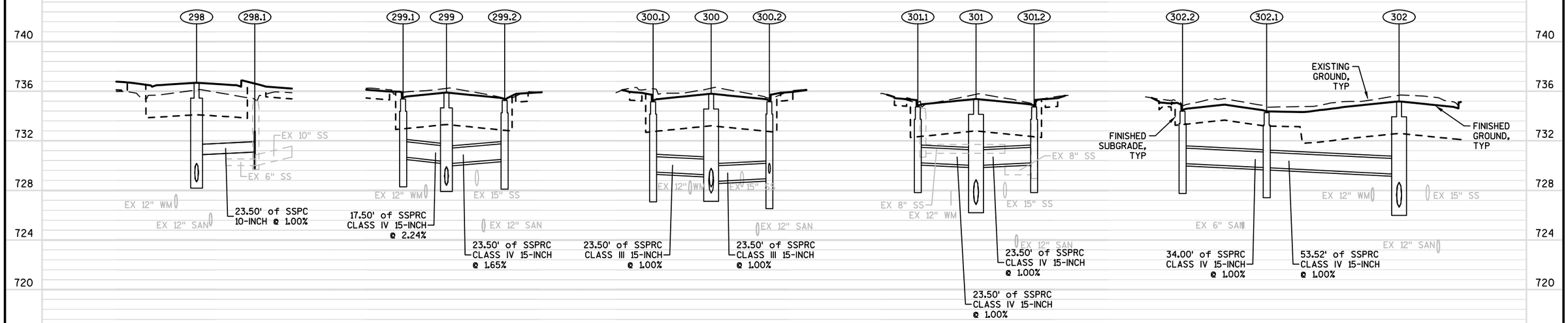

298	298.1	299.1	299	299.2	300.1	300	300.2	301.1	301	301.2	302.2	302.1	302
RIM: 736.69	INV: 731.10	RIM: 735.38	RIM: 735.90	RIM: 735.26	RIM: 735.16	RIM: 735.80	RIM: 735.16	RIM: 734.74	RIM: 735.38	RIM: 734.74	RIM: 734.39	RIM: 734.27	RIM: 735.18
SUMP: 728.69		SUMP: 728.70	SUMP: 728.41	SUMP: 728.52	SUMP: 727.48	SUMP: 727.78	SUMP: 726.95	SUMP: 728.24	SUMP: 726.86	SUMP: 728.24	SUMP: 728.17	SUMP: 727.83	SUMP: 726.65
DEPTH: 8.00		DEPTH: 6.68	DEPTH: 7.49	DEPTH: 6.74	DEPTH: 7.67	DEPTH: 8.02	DEPTH: 8.21	DEPTH: 6.50	DEPTH: 8.52	DEPTH: 6.50	DEPTH: 6.22	DEPTH: 6.44	DEPTH: 8.53
S INV IN: 730.87		S INV OUT: 730.70	W INV IN: 728.41	N INV OUT: 730.52	S INV OUT: 729.48	N INV IN: 729.25	SW INV IN: 729.36	S INV OUT: 730.24	W INV IN: 726.86	N INV OUT: 730.24	E INV OUT: 730.17	W INV IN: 729.83	W INV IN: 726.65
W INV IN: 728.69			N INV IN: 730.31			S INV IN: 728.71	N INV OUT: 728.95		N INV IN: 730.01			S INV OUT: 729.83	N INV IN: 729.29
E INV OUT: 728.69			S INV IN: 730.13			W INV IN: 728.28			S INV IN: 730.00				E INV OUT: 726.65
			E INV OUT: 728.41			E INV OUT: 727.78			E INV OUT: 726.86				

PROJECT NO: 4880-01-70	HWY: CTH D	COUNTY: OZAUKEE	STORM SEWER: CTH D	SHEET 53	E

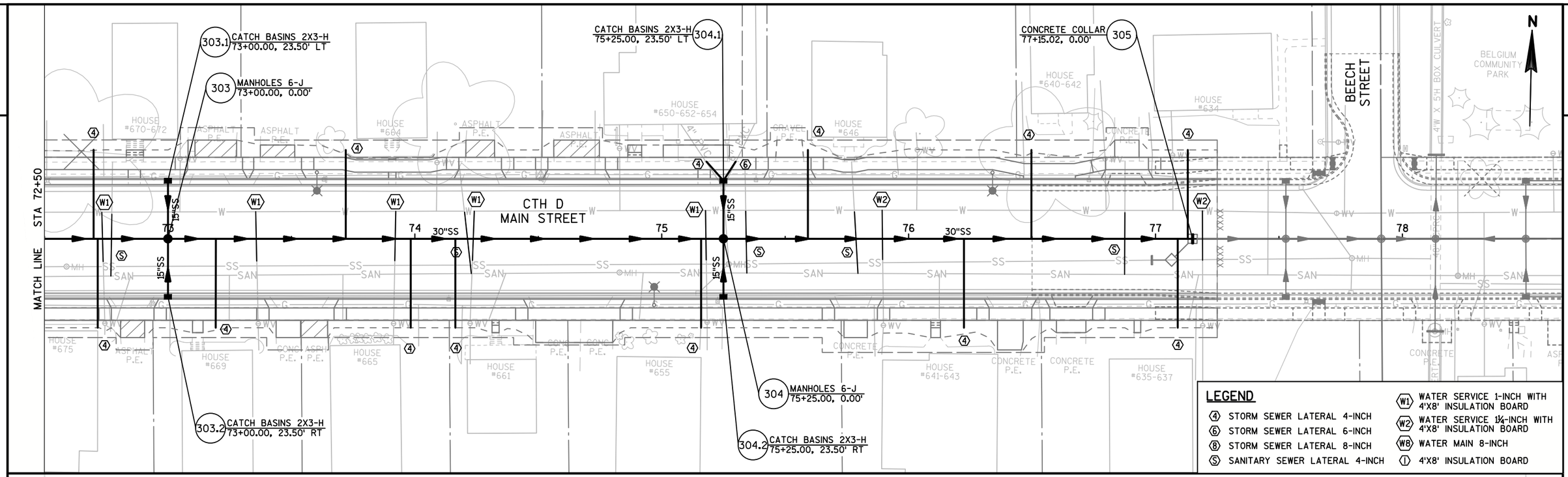

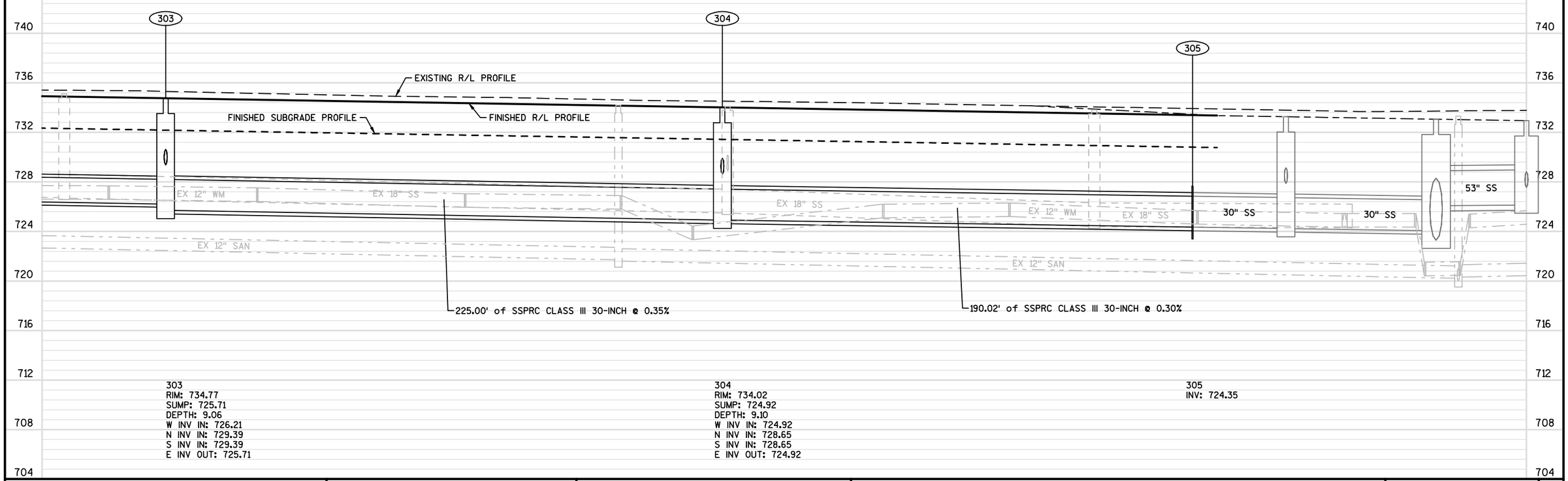

PROJECT NO: 4880-01-70	HWY: CTH D	COUNTY: OZAUKEE	STORM SEWER: CTH D	SHEET 54	E

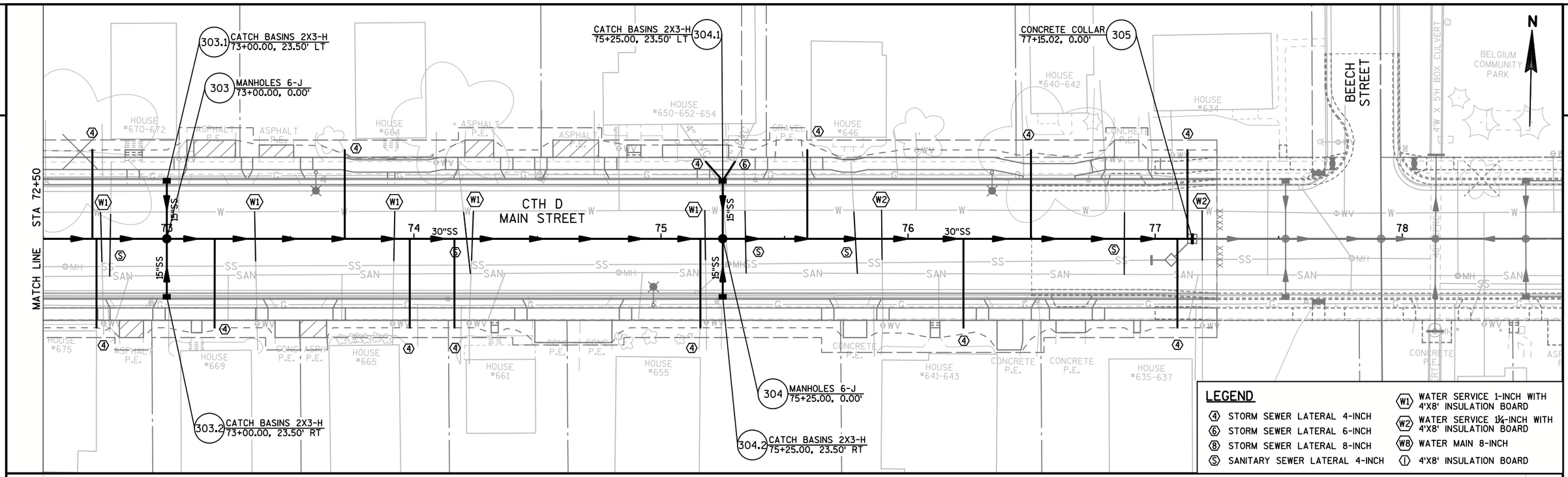

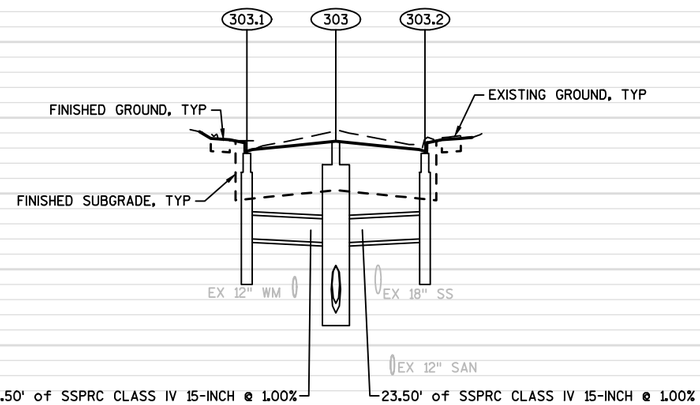

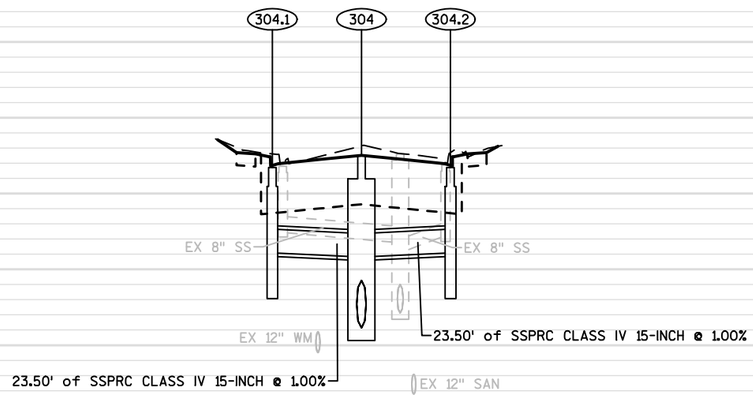

740 736 732 728 724 720 716 712 708 704

303.1
RIM: 734.12
SUMP: 727.62
DEPTH: 6.50
S INV OUT: 729.62

303
RIM: 734.77
SUMP: 725.71
DEPTH: 9.06
W INV IN: 726.21
N INV IN: 729.39
S INV IN: 729.39
E INV OUT: 725.71

303.2
RIM: 734.12
SUMP: 727.62
DEPTH: 6.50
N INV OUT: 729.62

304.1
RIM: 733.38
SUMP: 726.88
DEPTH: 6.50
S INV OUT: 728.88

304
RIM: 734.02
SUMP: 724.92
DEPTH: 9.10
W INV IN: 724.92
N INV IN: 728.65
S INV IN: 728.65
E INV OUT: 724.92

304.2
RIM: 733.38
SUMP: 726.88
DEPTH: 6.50
N INV OUT: 728.88

PROJECT NO: 4880-01-70	HWY: CTH D	COUNTY: OZAUKEE	STORM SEWER: CTH D	SHEET 55	E

FILE NAME : S:\CURRPROJ\OZAUKEECO\CTH D\CIVIL3D\48800100\SHEETSPLAN\48800170\48800170-022501-SS.DWG
LAYOUT NAME - 48800170-022501-SS - SHEET-06-B
PLOT DATE : 10/31/2017 12:56 PM PLOT BY : AARON SARAUER PLOT NAME : PLOT SCALE : 1 IN:40 FT
WISDOT/CADDS SHEET 41

2

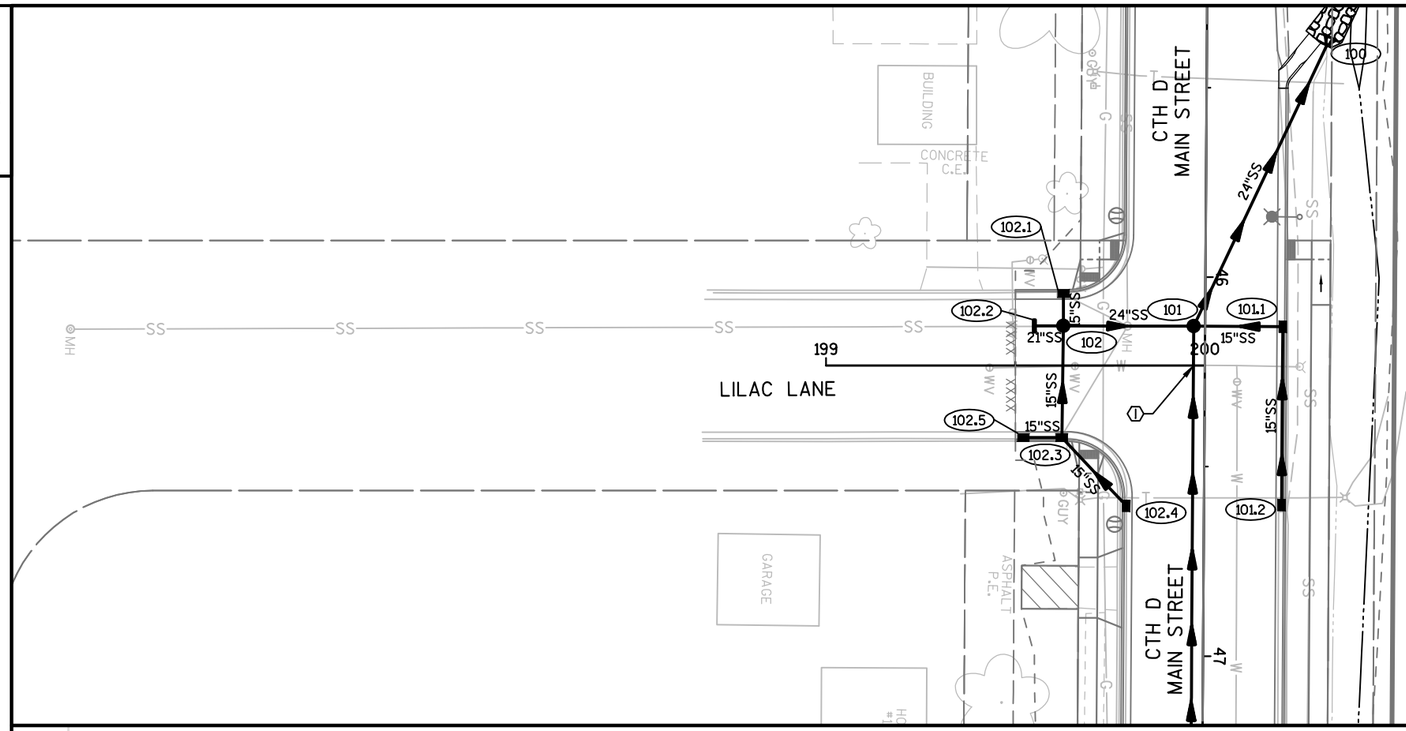

LEGEND

- (4) STORM SEWER LATERAL 4-INCH
- (6) STORM SEWER LATERAL 6-INCH
- (8) STORM SEWER LATERAL 8-INCH
- (S) SANITARY SEWER LATERAL 4-INCH
- (W1) WATER SERVICE 1-INCH WITH 4'X8' INSULATION BOARD
- (W2) WATER SERVICE 1¼-INCH WITH 4'X8' INSULATION BOARD
- (I) 4'X8' INSULATION BOARD

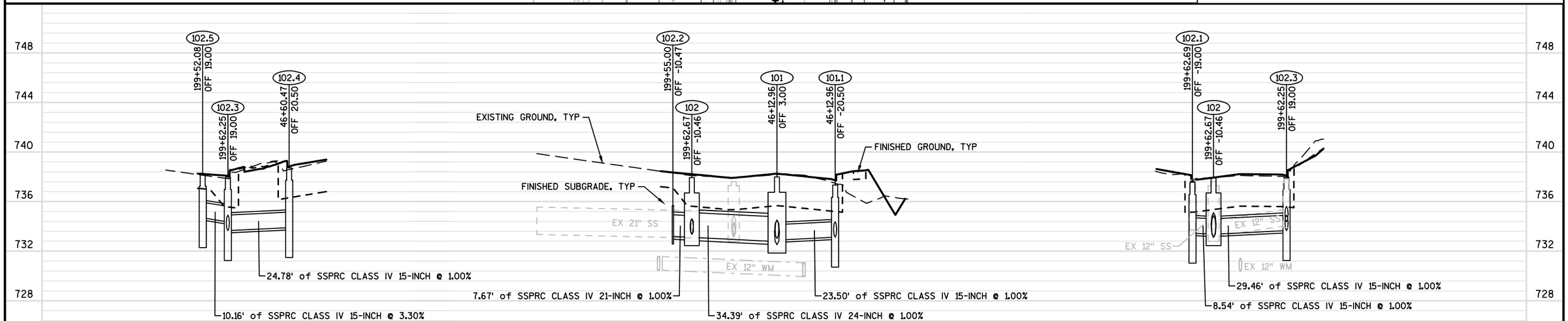

102.5
RIM: 738.23
SUMP: 732.70
DEPTH: 5.53
N INV OUT: 734.70

102.4
RIM: 738.72
SUMP: 731.91
DEPTH: 6.82
SW INV OUT: 733.91

102.2
INV: 733.19

102
RIM: 737.95
SUMP: 733.11
DEPTH: 4.83
S INV IN: 733.11
W INV IN: 733.36
E INV IN: 733.36
N INV OUT: 733.11

101
RIM: 737.99
SUMP: 732.52
DEPTH: 5.47
E INV IN: 733.02
N INV IN: 732.89
S INV IN: 732.77
NW INV OUT: 732.52

101.1
RIM: 737.35
SUMP: 731.13
DEPTH: 6.22
E INV IN: 733.13
S INV OUT: 733.13

102.1
RIM: 737.56
SUMP: 731.45
DEPTH: 6.11
E INV OUT: 733.45

102.3
RIM: 737.98
SUMP: 731.66
DEPTH: 6.32
NE INV IN: 733.66
S INV IN: 734.36
W INV OUT: 733.66

PROJECT NO: 4880-01-70	HWY: CTH D	COUNTY: OZAUKEE	STORM SEWER: LILAC LANE	SHEET 56	E

STORM SEWER STRUCTURE DATA

STRUCTURE NUMBER	ALIGNMENT	STATION	OFFSET	LOCATION	TYPE	RIM/GRATE ELEVATION	STRUCTURE INV ELEV	TOTAL DEPTH	SUMP DEPTH	CONNECTING PIPES	PIPE DIRECTION	PIPE SIZE & TYPE	PIPE INVERT	PIPE ROUTE	PIPE LENGTH	PIPE SLOPE	REMARKS
100	CTHD	45+38.74	-31.61	LT	APRON ENDWALLS FOR CPRC 24-INCH					101-100 IN	SE	SSPRC CLASS IV 24-INCH	731.00	FROM STR: 101	--	--	PIPE GRATE REQUIRED
101	CTHD	46+12.96	3.00	RT	MANHOLES 6-J	737.99	732.52	5.47'	0.00'	103-101 IN 101.1-101 IN 102-101 IN 101-100 OUT	E N S NW	SSPRC CLASS IV 18-INCH SSPRC CLASS IV 15-INCH SSPRC CLASS IV 24-INCH SSPRC CLASS IV 24-INCH	733.02 732.89 732.77 732.52	FROM STR: 103 FROM STR: 101.1 FROM STR: 102 TO STR: 100	-- -- -- 81.89'	-- -- -- 1.85%	
101.1	CTHD	46+12.96	-20.50	LT	CATCH BASINS 2X3-H	737.35	731.13	6.22'	2.00'	101.2-101.1 IN 101.1-101 OUT	E S	SSPRC CLASS IV 15-INCH SSPRC CLASS IV 15-INCH	733.13 733.13	FROM STR: 101.2 TO STR: 101	-- 23.50'	-- 1.00%	
101.2	CTHD	46+59.99	-20.50	LT	CATCH BASINS 2X3-H	738.59	732.30	6.29'	2.00'	101.2-101.1 OUT	W	SSPRC CLASS IV 15-INCH	734.30	TO STR: 101.1	47.03'	2.50%	
102	LILAC	199+62.67	-10.46	LT	MANHOLES 5-J	737.95	733.11	4.83'	0.00'	102.2-102 IN 102.1-102 IN 102.3-102 IN 102-101 OUT	S W E N	SSPRC CLASS IV 21-INCH SSPRC CLASS IV 15-INCH SSPRC CLASS IV 15-INCH SSPRC CLASS IV 24-INCH	733.11 733.36 733.36 733.11	FROM STR: 102.2 FROM STR: 102.1 FROM STR: 102.3 TO STR: 101	-- -- -- 34.39'	-- -- -- 1.00%	
102.1	LILAC	199+62.69	-19.00	LT	CATCH BASINS 2X3-H	737.56	731.45	6.11'	2.00'	102.1-102 OUT	E	SSPRC CLASS IV 15-INCH	733.45	TO STR: 102	8.54'	1.00%	
102.2	LILAC	199+55.00	-10.47	LT	CONCRETE COLLAR					102.2-102 OUT	N	SSPRC CLASS IV 21-INCH	733.19	TO STR: 102	7.67'	1.00%	
102.3	LILAC	199+62.25	19.00	RT	CATCH BASINS 2X3-H	737.98	731.66	6.32'	2.00'	102.4-102.3 IN 102.5-102.3 IN 102.3-102 OUT	NE S W	SSPRC CLASS IV 15-INCH SSPRC CLASS IV 15-INCH SSPRC CLASS IV 15-INCH	733.66 734.36 733.66	FROM STR: 102.4 FROM STR: 102.5 TO STR: 102	-- -- 29.46'	-- -- 1.00%	
102.4	CTHD	46+60.47	20.50	RT	CATCH BASINS 2X3-H	738.72	731.91	6.82'	2.00'	102.4-102.3 OUT	SW	SSPRC CLASS IV 15-INCH	733.91	TO STR: 102.3	24.78'	1.00%	
102.5	LILAC	199+52.08	19.00	RT	CATCH BASINS 2X3-H	738.23	732.70	5.53'	2.00'	102.5-102.3 OUT	N	SSPRC CLASS IV 15-INCH	734.70	TO STR: 102.3	10.16'	3.30%	
103	CTHD	48+50.00	3.00	RT	MANHOLES 4-J	743.90	738.44	5.46'	0.00'	104-103 IN 103-101 OUT	E W	SSPRC CLASS IV 18-INCH SSPRC CLASS IV 18-INCH	738.44 738.44	FROM STR: 104 TO STR: 101	-- 237.04'	-- 2.29%	
104	CTHD	51+29.10	3.00	RT	MANHOLES 4-J	747.11	741.93	5.18'	0.00'	105-104 IN 104.1-104 IN 104-103 OUT	E N W	SSPRC CLASS IV 18-INCH SSPRC CLASS IV 15-INCH SSPRC CLASS IV 18-INCH	741.93 742.31 741.93	FROM STR: 105 FROM STR: 104.1 TO STR: 103	-- -- 279.10'	-- -- 1.25%	
104.1	MIDDLE NORTH CL	210+42.34	-19.50	LT	CATCH BASINS 2X3-HC	747.08	740.76	6.32'	2.00'	104.2-104.1 IN 104.1-104 OUT	E S	SSPRC CLASS IV 15-INCH SSPRC CLASS IV 15-INCH	742.76 742.76	FROM STR: 104.2 TO STR: 104	-- 45.22'	-- 1.00%	
104.2	MIDDLE NORTH CL	210+42.34	19.50	RT	CATCH BASINS 2X3-H	747.12	741.15	5.97'	2.00'	104.2-104.1 OUT	W	SSPRC CLASS IV 15-INCH	743.15	TO STR: 104.1	39.00'	1.00%	
105	CTHD	51+87.72	3.00	RT	MANHOLES 4-J	747.77	742.67	5.10'	0.00'	105.1-105 IN 105.2-105 IN 106-105 IN 105-104 OUT	N S E W	SSPRC CLASS IV 15-INCH SSPRC CLASS IV 15-INCH SSPRC CLASS IV 15-INCH SSPRC CLASS IV 18-INCH	743.04 743.04 742.92 742.67	FROM STR: 105.1 FROM STR: 105.2 FROM STR: 106 TO STR: 104	-- -- -- 58.62'	-- -- -- 1.25%	
105.1	CTHD	51+87.72	-20.50	LT	CATCH BASINS 2X3-H	747.56	741.28	6.29'	2.00'	105.1-105 OUT	S	SSPRC CLASS IV 15-INCH	743.28	TO STR: 105	23.50'	1.00%	
105.2	CTHD	51+87.99	20.50	RT	CATCH BASINS 2X3-H	747.24	741.22	6.03'	2.00'	105.2-105 OUT	N	SSPRC CLASS IV 15-INCH	743.22	TO STR: 105	17.50'	1.00%	
106	CTHD	54+00.00	3.00	RT	MANHOLES 4-J	750.13	745.57	4.56'	0.00'	106-105 OUT	W	SSPRC CLASS IV 15-INCH	745.57	TO STR: 105	212.28'	1.25%	
199	CTHD	55+00.00	3.00	RT	MANHOLES 4-J	750.00	745.31	4.68'	0.00'	199-200 OUT	E	SSPRC CLASS IV 15-INCH	745.31	TO STR: 200	151.53'	2.80%	
200	CTHD	56+51.53	3.00	RT	MANHOLES 4-J	746.30	740.82	5.48'	0.00'	200.1-200 IN 200.2-200 IN 199-200 IN 200-201 OUT	N S W E	SSPRC CLASS IV 15-INCH SSPRC CLASS IV 15-INCH SSPRC CLASS IV 15-INCH SSPRC CLASS IV 18-INCH	741.57 741.57 741.07 740.82	FROM STR: 200.1 FROM STR: 200.2 FROM STR: 199 TO STR: 201	-- -- -- 51.07'	-- -- -- 2.80%	
200.1	CTHD	56+51.56	-20.50	LT	CATCH BASINS 2X3-H	746.53	739.80	6.73'	2.00'	200.1-200 OUT	S	SSPRC CLASS IV 15-INCH	741.80	TO STR: 200	23.50'	1.00%	
200.2	CTHD	56+51.51	20.50	RT	CATCH BASINS 2X3-H	745.77	739.74	6.03'	2.00'	200.2-200 OUT	N	SSPRC CLASS IV 15-INCH	741.74	TO STR: 200	17.50'	1.00%	
201	CTHD	57+02.60	3.00	RT	MANHOLES 4-J	744.94	739.39	5.56'	0.00'	200-201 IN 201.1-201 IN 201-202 OUT	W N E	SSPRC CLASS IV 18-INCH SSPRC CLASS IV 15-INCH SSPRC CLASS IV 18-INCH	739.39 740.14 739.39	FROM STR: 200 FROM STR: 201.1 TO STR: 202	-- -- 362.07'	-- -- 2.35%	
201.1	LIBERTY	220+40.56	17.00	RT	CATCH BASINS 2X3-H	745.64	739.01	6.63'	2.00'	201.2-201.1 IN 201.1-201 OUT	W S	SSPRC CLASS IV 15-INCH SSPRC CLASS IV 15-INCH	741.01 741.01	FROM STR: 201.2 TO STR: 201	-- 43.54'	-- 2.00%	
201.2	LIBERTY	220+40.56	-17.00	LT	CATCH BASINS 2X3-H	746.62	739.96	6.66'	2.00'	201.2-201.1 OUT	E	SSPRC CLASS IV 15-INCH	741.96	TO STR: 201.1	34.00'	2.80%	
202	CTHD	60+64.67	3.00	RT	MANHOLES 6-J	738.17	730.39	7.78'	0.00'	201-202 IN 202.1-202 IN 202.2-202 IN 202-203 OUT	W N S E	SSPRC CLASS IV 18-INCH SSPRC CLASS IV 15-INCH SSPRC CLASS IV 15-INCH SSPRC CLASS III 24-INCH	730.89 732.65 732.77 730.39	FROM STR: 201 FROM STR: 202.1 FROM STR: 202.2 TO STR: 203	-- -- -- 46.10'	-- -- -- 0.30%	
202.1	CTHD	60+64.67	-20.50	LT	CATCH BASINS 2X3-HC	737.52	730.88	6.64'	2.00'	202.1-202 OUT	S	SSPRC CLASS IV 15-INCH	732.88	TO STR: 202	23.50'	1.00%	
202.2	CTHD	60+60.47	20.50	RT	CATCH BASINS 2X3-H	737.65	730.95	6.70'	2.00'	202.2-202 OUT	N	SSPRC CLASS IV 15-INCH	732.95	TO STR: 202	18.00'	1.00%	
203	CTHD	61+10.04	11.16	RT	ADJ EX MANHOLE	737.87				202-203 IN	W	SSPRC CLASS III 24-INCH	730.25	FROM STR: 202	--	--	
204	CTHD	63+77.01	11.11	RT	ADJ EX MANHOLE	737.05				204.1-204 IN 204.2-204 IN	N S	SSPRC CLASS IV 15-INCH SSPRC CLASS IV 15-INCH	731.68 731.68	FROM STR: 204.1 FROM STR: 204.2	-- --	-- --	
204.1	CTHD	63+78.00	-20.50	LT	CATCH BASINS 2X3-H-S	736.63	730.00	6.64'	2.00'	204.1-204 OUT	S	SSPRC CLASS IV 15-INCH	732.00	TO STR: 204	31.62'	1.00%	CONNECT TO PIPE UNDERDRAIN

STORM SEWER STRUCTURE DATA

STRUCTURE NUMBER	ALIGNMENT	STATION	OFFSET	LOCATION	TYPE	RIM/GRATE ELEVATION	STRUCTURE INV ELEV	TOTAL DEPTH	SUMP DEPTH	CONNECTING PIPES	PIPE DIRECTION	PIPE SIZE & TYPE	PIPE INVERT	PIPE ROUTE	PIPE LENGTH	PIPE SLOPE	REMARKS
204.2	CTHD	63+78.00	20.50	RT	CATCH BASINS 2X3-HC-S	736.69	729.77	6.91'	2.00'	204.2-204 OUT	N	SSPRC CLASS IV 15-INCH	731.77	TO STR: 204	9.44'	1.00%	CONNECT TO PIPE UNDERDRAIN
205	CTHD	64+67.01	11.11	RT	ADJ EX MANHOLE	737.30											
297	CTHD	66+45.28	0.00		MANHOLES 4-J	736.94	729.00	7.94'	0.00'	297.1-297 IN 297.3-297 IN 297-297.5 OUT	N SW E	SSPRC CLASS III 15-INCH SSPRC CLASS III 15-INCH SSP STEEL CASING 18-INCH	730.21 730.21 729.00	FROM STR: 297.1 FROM STR: 297.3 TO STR: 297.5	-- -- 65.00'	-- -- 0.35%	
297.1	CTHD	66+45.84	-17.50	LT	CATCH BASINS 2X3-H-S	736.66	728.39	8.27'	2.00'	297.2-297.1 IN 297.1-297 OUT	W S	SSPRC CLASS IV 15-INCH SSPRC CLASS III 15-INCH	731.14 730.39	FROM STR: 297.2 TO STR: 297	-- 17.51'	-- 1.00%	CONNECT TO PIPE UNDERDRAIN
297.2	CTHD	66+00.00	-23.50	LT	CATCH BASINS 2X3-HC-S	736.44	729.61	6.83'	2.00'	297.2-297.1 OUT	E	SSPRC CLASS IV 15-INCH	731.61	TO STR: 297.1	46.24'	1.00%	CONNECT TO PIPE UNDERDRAIN
297.3	CTHD	66+33.47	23.50	RT	CATCH BASINS 2X3-H-S	736.55	728.47	8.07'	2.00'	297.4-297.3 IN 297.3-297 OUT	W NE	SSPRC CLASS IV 15-INCH SSPRC CLASS III 15-INCH	731.27 730.47	FROM STR: 297.4 TO STR: 297	-- 26.30'	-- 1.00%	CONNECT TO PIPE UNDERDRAIN
297.4	CTHD	66+00.00	23.50	RT	CATCH BASINS 2X3-HC-S	736.44	729.61	6.83'	2.00'	297.4-297.3 OUT	E	SSPRC CLASS IV 15-INCH	731.61	TO STR: 297.3	33.47'	1.00%	CONNECT TO PIPE UNDERDRAIN
297.5	CTHD	67+10.28	0.00		CONCRETE COLLAR					297-297.5 IN 297.5-298 OUT	W E	SSP STEEL CASING 18-INCH SSPRC CLASS III 18-INCH	728.77 728.77	FROM STR: 297 TO STR: 298	-- 24.26'	-- 0.35%	
298	CTHD	67+34.54	0.00		MANHOLES 4-J	736.69	728.69	8.00'	0.00'	298.1-298 IN 297.5-298 IN 298-299 OUT	S W E	SSPC 10-INCH SSPRC CLASS III 18-INCH SSPRC CLASS III 18-INCH	730.87 728.69 728.69	FROM STR: 298.1 FROM STR: 297.5 TO STR: 299	-- -- 78.51'	-- -- 0.35%	
298.1	CTHD	67+34.54	23.50	RT	CONNECT TO EXISTING					298.1-298 OUT	N	SSPC 10-INCH	731.10	TO STR: 298	23.50'	1.00%	
299	CTHD	68+13.06	0.00		MANHOLES 4-J	735.90	728.41	7.49'	0.00'	298-299 IN 299.1-299 IN 299.2-299 IN 299-300 OUT	W N S E	SSPRC CLASS III 18-INCH SSPRC CLASS IV 15-INCH SSPRC CLASS IV 15-INCH SSPRC CLASS III 18-INCH	728.41 730.31 730.13 728.41	FROM STR: 298 FROM STR: 299.1 FROM STR: 299.2 TO STR: 300	-- -- -- 38.48'	-- -- -- 0.35%	
299.1	CTHD	68+12.80	-17.50	LT	CATCH BASINS 2X3-HC-S	735.38	728.70	6.68'	2.00'	299.1-299 OUT	S	SSPRC CLASS IV 15-INCH	730.70	TO STR: 299	17.50'	2.24%	CONNECT TO PIPE UNDERDRAIN
299.2	CTHD	68+12.80	23.50	RT	CATCH BASINS 2X3-HC-S	735.26	728.52	6.74'	2.00'	299.2-299 OUT	N	SSPRC CLASS IV 15-INCH	730.52	TO STR: 299	23.50'	1.65%	CONNECT TO PIPE UNDERDRAIN
300	CTHD	68+51.53	0.00		MANHOLES 5-J	735.80	727.78	8.02'	0.00'	300.1-300 IN 300.2-300 IN 299-300 IN 300-301 OUT	N S W E	SSPRC CLASS III 15-INCH SSPRC CLASS III 15-INCH SSPRC CLASS III 18-INCH SSPRC CLASS III 24-INCH	729.25 728.71 728.28 727.78	FROM STR: 300.1 FROM STR: 300.2 FROM STR: 299 TO STR: 301	-- -- -- 261.21'	-- -- -- 0.35%	
300.1	CTHD	68+51.53	-23.50	LT	CATCH BASINS 2X3-H-S	735.16	727.48	7.67'	2.00'	300.1-300 OUT	S	SSPRC CLASS III 15-INCH	729.48	TO STR: 300	23.50'	1.00%	CONNECT TO PIPE UNDERDRAIN
300.2	CTHD	68+51.53	23.50	RT	CATCH BASINS 2X3-H-S	735.16	726.95	8.21'	2.00'	300.3-300.2 IN 300.2-300 OUT	SW N	SSPC 10-INCH SSPRC CLASS III 15-INCH	729.36 728.95	FROM STR: 300.3 TO STR: 300	-- 23.50'	-- 1.00%	CONNECT TO PIPE UNDERDRAIN
300.3	CTHD	68+39.28	33.00	RT	CONNECT TO EXISTING					300.3-300.2 OUT	NE	SSPC 10-INCH	729.52	TO STR: 300.2	15.51'	1.00%	
301	CTHD	71+12.74	0.00		MANHOLES 5-J	735.38	726.86	8.52'	0.00'	300-301 IN 301.1-301 IN 301.2-301 IN 301-302 OUT	W N S E	SSPRC CLASS III 24-INCH SSPRC CLASS IV 15-INCH SSPRC CLASS IV 15-INCH SSPRC CLASS III 24-INCH	726.86 730.01 730.00 726.86	FROM STR: 300 FROM STR: 301.1 FROM STR: 301.2 TO STR: 302	-- -- -- 61.02'	-- -- -- 0.35%	
301.1	CTHD	71+12.74	-23.50	LT	CATCH BASINS 2X3-H	734.74	728.24	6.50'	2.00'	301.1-301 OUT	S	SSPRC CLASS IV 15-INCH	730.24	TO STR: 301	23.50'	1.00%	
301.2	CTHD	71+12.74	23.50	RT	CATCH BASINS 2X3-H	734.74	728.24	6.50'	2.00'	301.2-301 OUT	N	SSPRC CLASS IV 15-INCH	730.24	TO STR: 301	23.50'	1.00%	
302	CTHD	71+73.76	0.00		MANHOLES 5-J	735.18	726.65	8.53'	0.00'	301-302 IN 302.1-302 IN 302-303 OUT	W N E	SSPRC CLASS III 24-INCH SSPRC CLASS IV 15-INCH SSPRC CLASS III 24-INCH	726.65 729.29 726.65	FROM STR: 301 FROM STR: 302.1 TO STR: 303	-- -- 126.24'	-- -- 0.35%	
302.1	ELM	250+53.49	17.00	RT	CATCH BASINS 2X3-H-S	734.27	727.83	6.44'	2.00'	302.2-302.1 IN 302.1-302 OUT	W S	SSPRC CLASS IV 15-INCH SSPRC CLASS IV 15-INCH	729.83 729.83	FROM STR: 302.2 TO STR: 302	-- 53.52'	-- 1.00%	CONNECT TO PIPE UNDERDRAIN
302.2	ELM	250+53.50	-17.00	LT	CATCH BASINS 2X3-H-S	734.39	728.17	6.22'	2.00'	302.2-302.1 OUT	E	SSPRC CLASS IV 15-INCH	730.17	TO STR: 302.1	34.00'	1.00%	CONNECT TO PIPE UNDERDRAIN
303	CTHD	73+00.00	0.00		MANHOLES 6-J	734.77	725.71	9.06'	0.00'	302-303 IN 303.1-303 IN 303.2-303 IN 303-304 OUT	W N S E	SSPRC CLASS III 24-INCH SSPRC CLASS IV 15-INCH SSPRC CLASS IV 15-INCH SSPRC CLASS III 30-INCH	726.21 729.39 729.39 725.71	FROM STR: 302 FROM STR: 303.1 FROM STR: 303.2 TO STR: 304	-- -- -- 225.00'	-- -- -- 0.35%	
303.1	CTHD	73+00.00	-23.50	LT	CATCH BASINS 2X3-H	734.12	727.62	6.50'	2.00'	303.1-303 OUT	S	SSPRC CLASS IV 15-INCH	729.62	TO STR: 303	23.50'	1.00%	
303.2	CTHD	73+00.00	23.50	RT	CATCH BASINS 2X3-H	734.12	727.62	6.50'	2.00'	303.2-303 OUT	N	SSPRC CLASS IV 15-INCH	729.62	TO STR: 303	23.50'	1.00%	
304	CTHD	75+25.00	0.00		MANHOLES 6-J	734.02	724.92	9.10'	0.00'	303-304 IN 304.1-304 IN 304.2-304 IN 304-305 OUT	W N S E	SSPRC CLASS III 30-INCH SSPRC CLASS IV 15-INCH SSPRC CLASS IV 15-INCH SSPRC CLASS III 30-INCH	724.92 728.65 728.65 724.92	FROM STR: 303 FROM STR: 304.1 FROM STR: 304.2 TO STR: 305	-- -- -- 190.02'	-- -- -- 0.30%	
304.1	CTHD	75+25.00	-23.50	LT	CATCH BASINS 2X3-H	733.38	726.88	6.50'	2.00'	304.1-304 OUT	S	SSPRC CLASS IV 15-INCH	728.88	TO STR: 304	23.50'	1.00%	
304.2	CTHD	75+25.00	23.50	RT	CATCH BASINS 2X3-H	733.38	726.88	6.50'	2.00'	304.2-304 OUT	N	SSPRC CLASS IV 15-INCH	728.88	TO STR: 304	23.50'	1.00%	
305	CTHD	77+15.02	0.00		CONCRETE COLLAR					304-305 IN	W	SSPRC CLASS III 30-INCH	724.35	FROM STR: 304	--	--	

LEGEND

- XXX — SIGN - REMOVE EXISTING
- XXX — SIGN - MOVE EXISTING
- XXX — SIGN - PLACE NEW
- EXISTING SIGN
- PROPOSED SIGN MOUNTED ON POST(S)

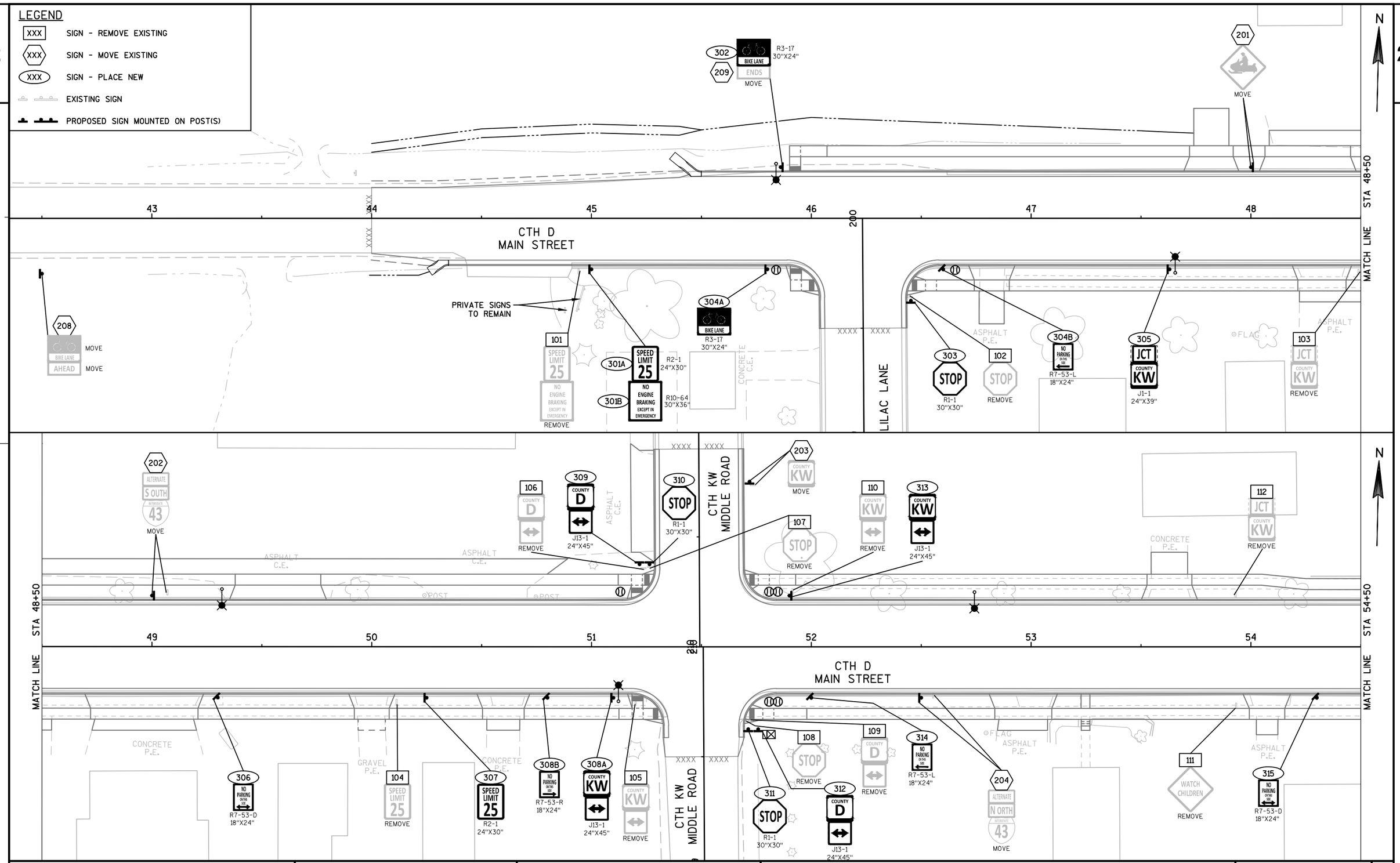

PROJECT NO: 4880-01-70	HWY: CTH D	COUNTY: OZAUKEE	SIGNING PLAN: CTH D	SHEET	E

FILE NAME : S:\CURRPROJ\OZAUKEECO\CTH D\CIVIL3D\48800100\SHEETSPLAN\48800170\48800170-023201-PS.DWG
LAYOUT NAME - 48800170-023201-PS - SHEET-01
PLOT DATE : 12/29/2017 4:00 PM PLOT BY : AARON SARAUER PLOT NAME : PLOT SCALE : **********
WISDOT/CADDS SHEET 42

2

316 JCT COUNTY KW J1-1 24"X39"

318 BIKE LANE R3-17 30"X24"

319 STOP R1-1 30"X30"

114 STOP REMOVE

CONCRETE P.E.

XXXX XXXX

LIBERTY STREET

115 SPEED LIMIT 25 REMOVE

322 SPEED LIMIT 25 R2-1 24"X30"

ASPHALT P.E.

CONCRETE P.E.

STA 54+50

55 56

220

57 58 59 60

STA 60+50

N

2

MATCH LINE

317A SPEED LIMIT 25 R2-1 24"X30"

113 SPEED LIMIT 25 REMOVE

317B NO PARKING ON THIS SIDE R7-53-R 18"X24"

320 STOP R1-1 30"X30"

LIBERTY STREET

CTH D
MAIN STREET

116 STOP REMOVE

321B NO PARKING ON THIS SIDE R7-53-L 18"X24"

321A BIKE LANE R3-17 30"X24"

ASPHALT P.E.

CONCRETE P.E.

GRAVEL P.E.

323 NO PARKING ON THIS SIDE R7-53-D 18"X24"

324 NO PARKING ON THIS SIDE R7-53-R 18"X24"

MATCH LINE

LEGEND

XXX SIGN - REMOVE EXISTING

XXX SIGN - MOVE EXISTING

XXX SIGN - PLACE NEW

EXISTING SIGN

PROPOSED SIGN MOUNTED ON POST(S)

120 WATCH CHILDREN REMOVE

121 SPEED LIMIT 25 REMOVE

328 SPEED LIMIT 25 R2-1 24"X30"

122 STOP REMOVE

329 STOP R1-1 30"X30"

CONCRETE P.E.

ASPHALT P.E.

CONCRETE P.E.

XXXX XXXX

ELEVATOR LANE

ASPHALT C.E.

CONCRETE

GRAVEL C.E.

332B NO PARKING ON THIS SIDE R7-53-R 18"X24"

STA 60+50

61 62 63 64

230

240

65 66

STA 66+50

N

MATCH LINE

CTH D
MAIN STREET

117 STOP REMOVE

325 STOP R1-1 30"X30"

118 SPEED LIMIT 25 REMOVE

326B NO PARKING ON THIS SIDE R7-53-L 18"X24"

326A SPEED LIMIT 25 R2-1 24"X30"

119 2 HOUR PARKING 7AM-5PM REMOVE

327 NO PARKING ON THIS SIDE R7-53-D 18"X24"

330B NO PARKING ON THIS SIDE R7-53-R 18"X24"

330A R R W10-1 36"X36"

331B NO PARKING ON THIS SIDE R7-53-L 18"X24"

PRIVATE SIGN TO REMAIN

VICTORY STREET

PRIVATE SIGN TO REMAIN

ASPHALT C.E.

CONCRETE C.E.

GRAVEL C.E.

SIGN

XXXX XXXX

MATCH LINE

PROJECT NO: 4880-01-70	HWY: CTH D	COUNTY: OZAUKEE	SIGNING PLAN: CTH D	SHEET 60	E

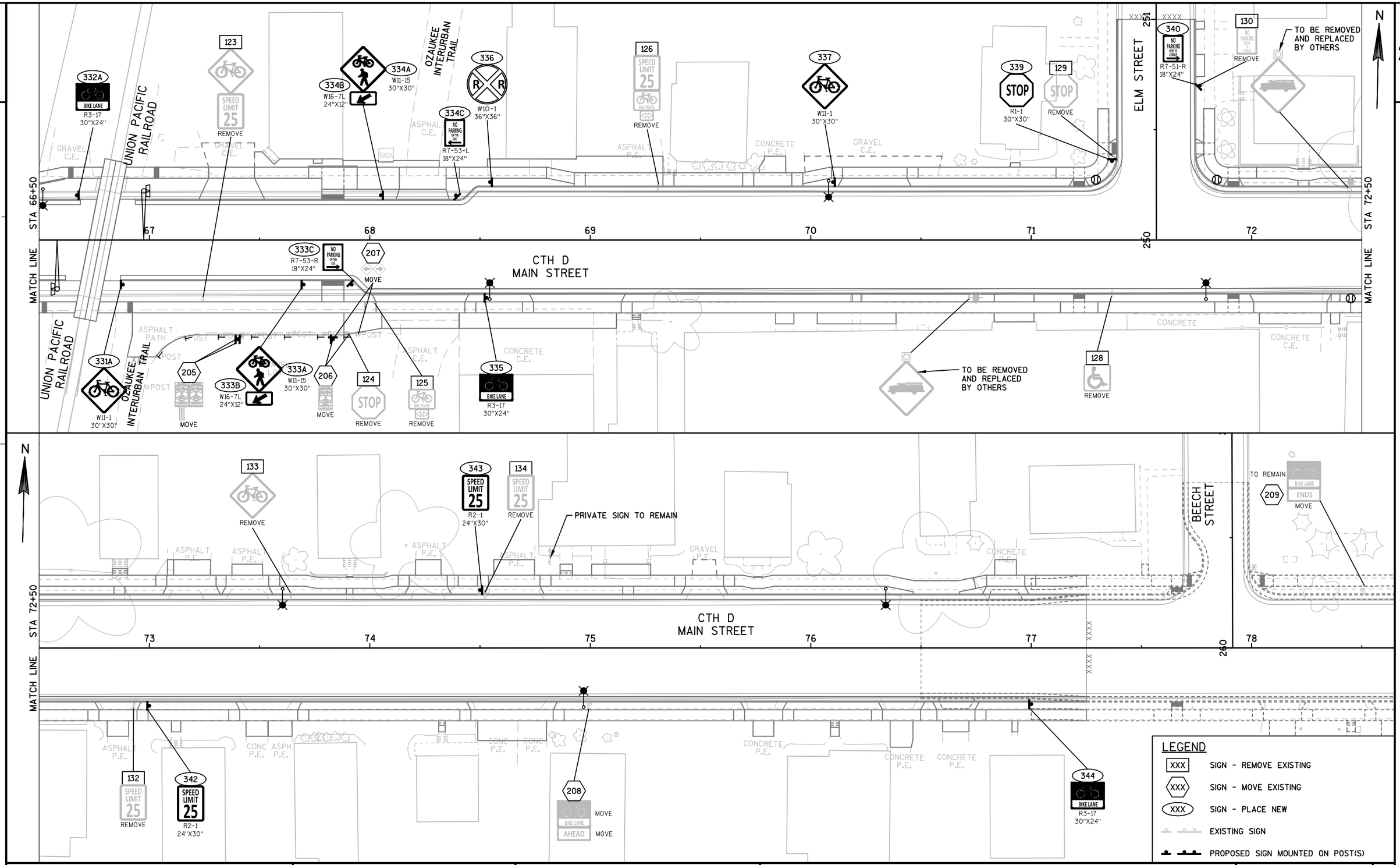

PROJECT NO:4880-01-70	HWY:CTH D	COUNTY:OZAUKEE	SIGNING PLAN: CTH D	SHEET 61	E

FILE NAME : S:\CURRPROJ\OZAUKEECO\CTH D\CIVIL3D\48800100\SHEETSPLAN\48800170\48800170-023201-PS.DWG
LAYOUT NAME - 48800170-023201-PS - SHEET-03
PLOT DATE : 12/29/2017 4:00 PM PLOT BY : AARON SARAUER PLOT NAME : PLOT SCALE : **********
WISDOT/CADDS SHEET 42

2

STREET LIGHTING PLANS PREPARED BY:

WISCONSIN
MIKE D. SCARMON
E-37613
EVANSVILLE, WI
PROFESSIONAL ENGINEER

12/27/2017
(DATE) (SIGNATURE)

LIGHTING PLAN LEGEND:

- SINGLE ARM LIGHTING UNIT
- SINGLE ARM LIGHTING UNIT INSTALLED IN PROJECT ID 4880-01-71
- EXISTING LIGHTING UNIT
- CONCRETE CONTROL CABINET BASE/ELECTRICAL SERVICE
- PULL BOX NON-CONDUCTIVE (24"X42")
- PULL BOX NON-CONDUCTIVE (24"X42") INSTALLED IN PROJECT ID 4880-01-71
- LIGHTING CONDUIT
- LIGHTING CONDUIT INSTALLED IN PROJECT ID 4880-01-71
- EXISTING STREET LIGHT TO BE REMOVED BY OTHERS
- TRANSFORMER BY OTHERS
- FLASHING YELLOW BEACON BY OTHERS

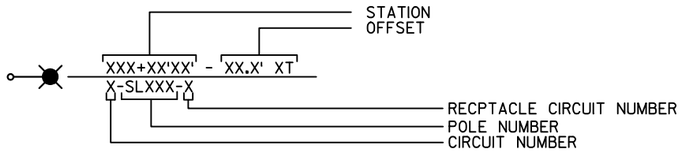

CONDUIT/CONDUCTOR LEGEND

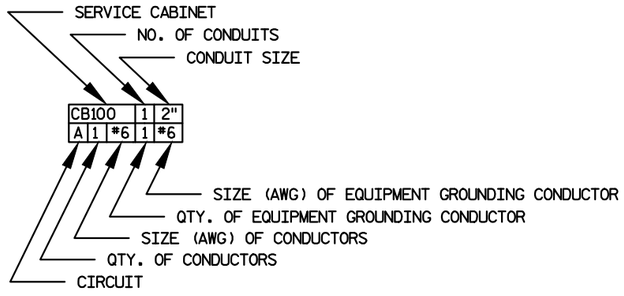

PWO = PULL WIRE ONLY

N = NEUTRAL

CONDUCTOR COLOR LEGEND

CB100

LIGHTING CONDUCTORS
E - BLACK
F - RED
G - BLACK
H - RED
240V PHASE TO PHASE
RECEPTACLE CONDUCTORS
M - BLUE & NEUTRAL
N - BROWN & NEUTRAL
O - BLUE & NEUTRAL
P - BROWN & NEUTRAL
120V PHASE TO NEUTRAL

CB200

LIGHTING CONDUCTORS
A - BLACK
B - RED
C - BLACK
D - RED
E - BLACK
F - RED
G - BLACK
H - RED
240V PHASE TO PHASE
RECEPTACLE CONDUCTORS
I - BLUE & NEUTRAL
J - BROWN & NEUTRAL
K - BLUE & NEUTRAL
L - BROWN & NEUTRAL
M - BLUE & NEUTRAL
N - BROWN & NEUTRAL
O - BLUE & NEUTRAL
P - BROWN & NEUTRAL
120V PHASE TO NEUTRAL

GENERAL STREET LIGHTING NOTES:

1) THE ENGINEER SHALL APPROVE THE FINAL LOCATION FOR ALL CONCRETE BASES IN THE FIELD PRIOR TO CONSTRUCTION.

2) THE LOCATION OF EXISTING AND PROPOSED UTILITIES AS SHOWN ON THE PLANS ARE APPROXIMATE. IN ADDITION, THERE MAY BE OTHER UTILITIES WITHIN THE PROJECT AREA WHICH ARE NOT SHOWN. THE CONTRACTOR SHALL VERIFY THE LOCATIONS OF ALL UTILITIES PRIOR TO CONSTRUCTION.

3) NO SPLICES ALLOWED IN PULL BOXES.

4) PHOTOCONTROL ON LIGHTING CABINET.

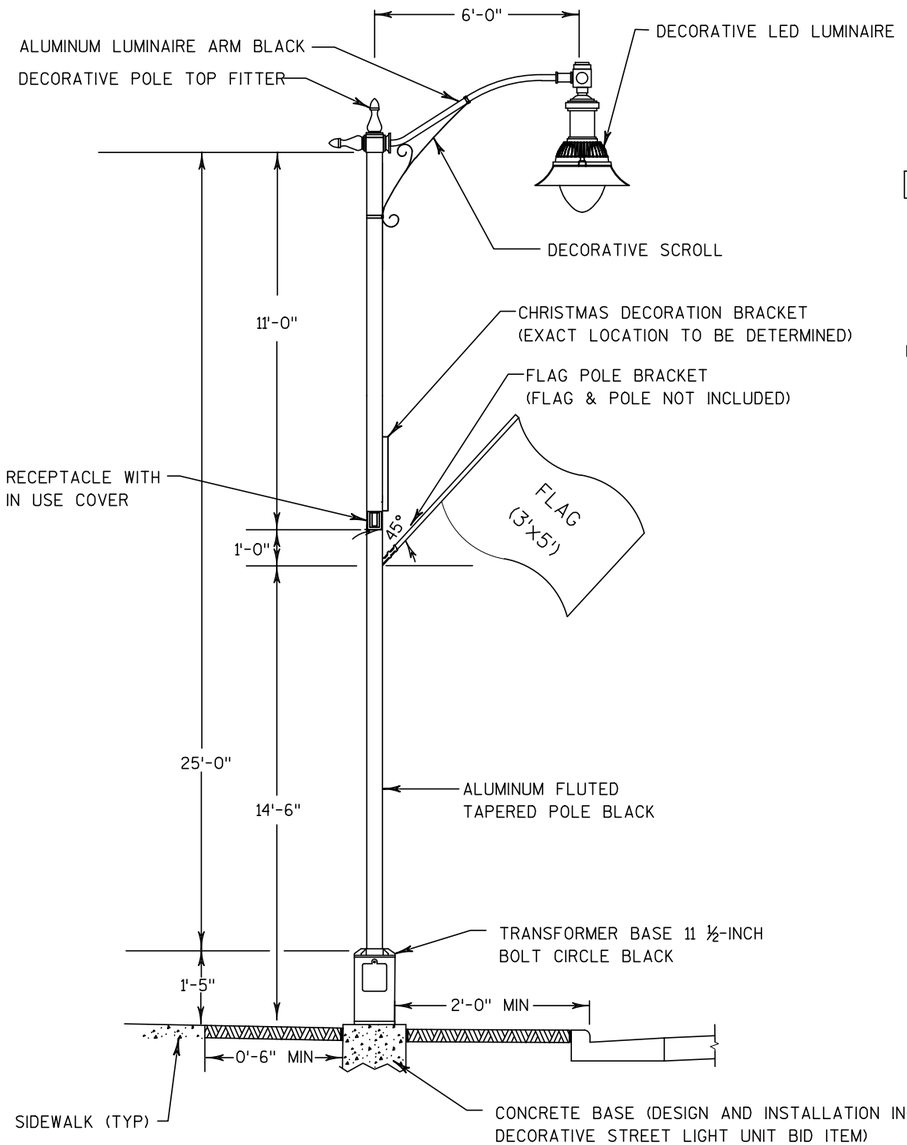

DECORATIVE LIGHTING UNIT DETAIL

NO SCALE

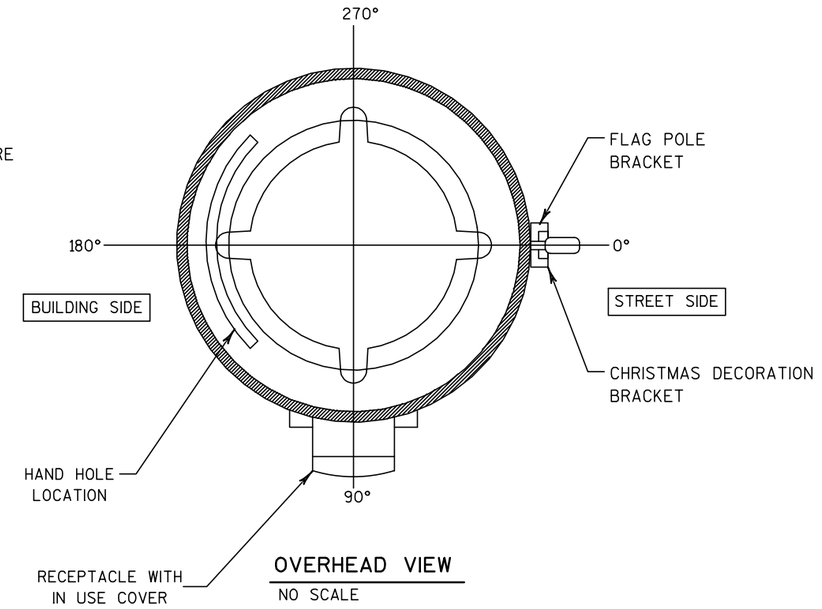

OVERHEAD VIEW

NO SCALE

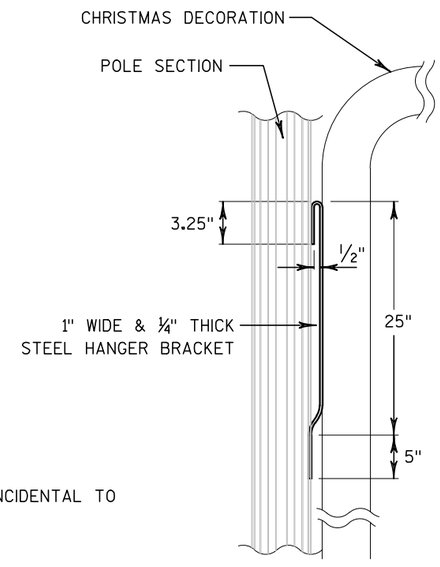

CHRISTMAS DECORATION BRACKET

NO SCALE

LUMINAIRE
MODEL: K719 SOLITAIRE JR.
- K719 - P4RAD - III - 60(SSL) - 7030 - 120:270 - 3K S/F KPL30 - BK

OPTICS: FLAT ARRAY, ACRYLIC DEEP DISH

SPECS: 60 WATT, 3K, TYPE 3 DISTRIBUTION, 120:270 VOLT

LUMINAIRE ARM
MODEL: KA30 - T - 6" - BK
- 6-FT DECORATIVE SCROLL ARM

POLE
MODEL: KSSFF - 25 - DR - FH -BK
- 7 GAUGE 16 FLUTED TAPERED ALUMINUM POLE

BASE
STANDARD TRANSFORMER BASE

ACCESSORIES
GFI PROTECTED FESTOON RECEPTACLE

FLAG HOLDER

CHRISTMAS DECORATION BRACKET

MISCELLANEOUS
HARDWARE: ALL EXPOSED SCREWS WILL BE IN STAINLESS STEEL. ALL SEALS AND SEALING DEVICES ARE MADE AND/OR LINED WITH EPDM AND/OR SILICON.

FINISH: COLOR TO BE BLACK TEXTURED TO MATCH PROJECT 4880-01-71.

NOTES:
BRACKET SHOWN IN THE DETAIL DEPICTS THE DIMENSIONS OF THE VILLAGE OF BELGIUM'S CURRENT CHRISTMAS DECORATION HANGERS.

POLES IN THIS CONTRACT (AS SPECIFIED) SHALL FEATURE A BRACKET DESIGNED TO ACCEPT A HANGER WITH THE DIMENSIONS SHOWN.

MOUNTING BRACKETS SHALL ACCEPT ALL HANGER TYPES.

2

N

45+84 - 24.8' LT
B-SL200-J

R/W (TYP.)

49+32 - 26.2' LT
A-SL202-I

45+00'D' 46+00'D' 47+00'D' 48+00'D' 49+00'D' 50+00'D' 51+00'D'

MATCH LINE STA 51+00 'D'

CTH D

45+84 - 23.5' RT
PB200

46+65 - 23.5' RT
PB201

47+66 - 24.8' RT
D-SL201-L

LILIAC LANE

SHEET 3 OF 14

PROJECT NO: 4880-01-70	HWY: CTH D	COUNTY: OZAUKEE	LIGHTING PLANS	SHEET 64	E

2

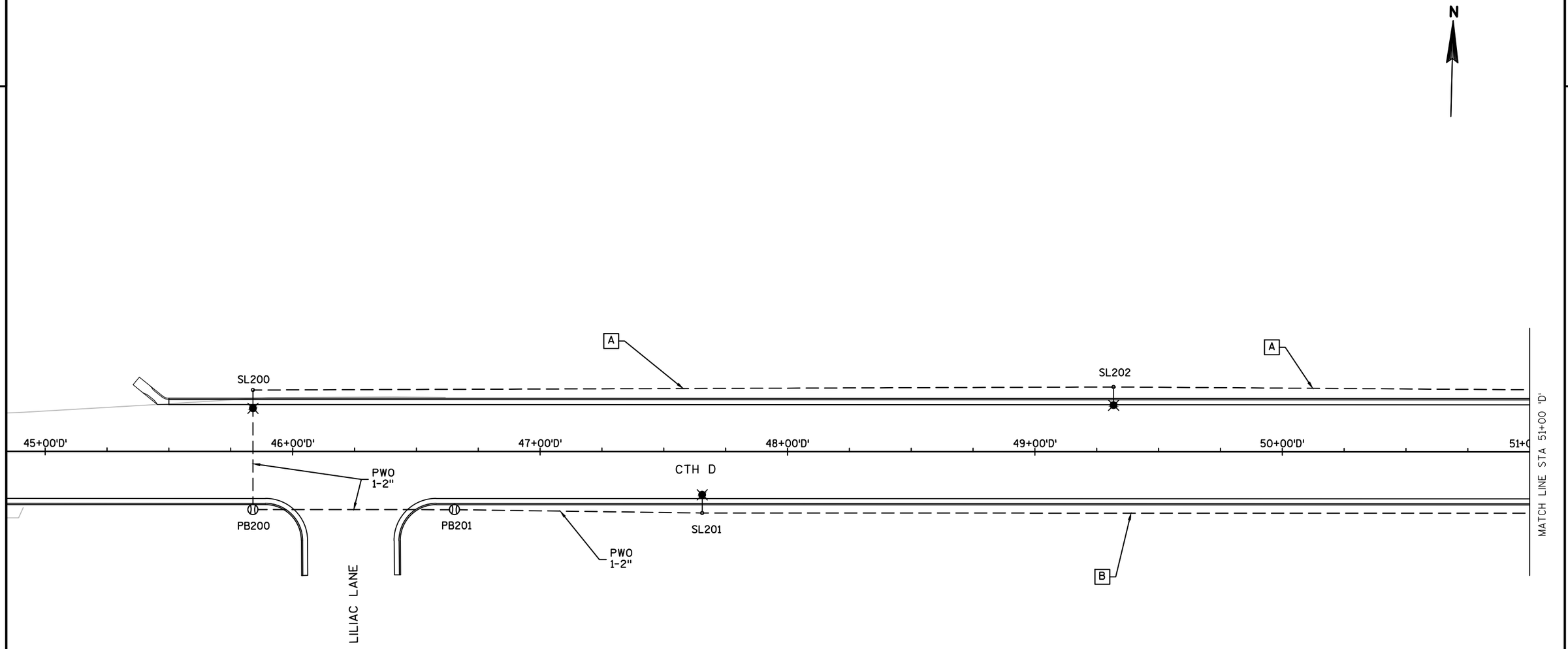

A =

CB200		1	2"		
A	2	#10	1	#10	
B	2	#10	--	--	
I	1	#6	--	--	
J	1	#6	--	--	
NEU	1	#6	--	--	

B =

CB200		1	2"		
C	2	#10	1	#10	
D	2	#10	--	--	
K	1	#6	--	--	
L	1	#6	--	--	
NEU	1	#6	--	--	

SHEET 4 OF 14

PROJECT NO: 4880-01-70	HWY: CTH D	COUNTY: OZAUKEE	LIGHTING PLANS	SHEET 65	E

FILE NAME : G:\GREMMER\15015-00 - CTH D - BELGIUM\LIGHTING\CIVIL 3D\PLAN SHEETS\4880-01-70\023602-LP_70_BODART CHANGES.DWG PLOT DATE : 12/27/2017 11:28 AM PLOT BY : KL ENGINEERING PLOT NAME : PLOT SCALE : 1 IN:40 FT
WISDOT/CADDS SHEET 42

2

N

51+13 - 25.0' LT
PB202

51+81 - 25.0' LT
PB203

51+84 - 25.0' LT
PB204

52+74 - 24.8' LT
E-SL204-M

X

R/W (TYP.)

56+33 - 23.8' LT
F-SL206-N

MATCH LINE STA 51+10 'D'

52+00'D'

53+00'D'

54+00'D'

55+00'D'

56+00'D'

MATCH LINE STA 57+00 'D'

CTH D

X

51+84 - 25.0' RT
PB206

51+81 - 25.0' RT
PB205

51+81 - 39.9' RT
CB200

MIDDLE ROAD

54+52 - 24.8' RT
G-SL205-0

X

56+56 - 23.8' RT
PB207

LIBERTY STREET

51+12 - 24.8' RT
C-SL203-K

SHEET 5 OF 14

PROJECT NO: 4880-01-70	HWY: CTH D	COUNTY: OZAUKEE	LIGHTING PLANS	SHEET 66	E

2

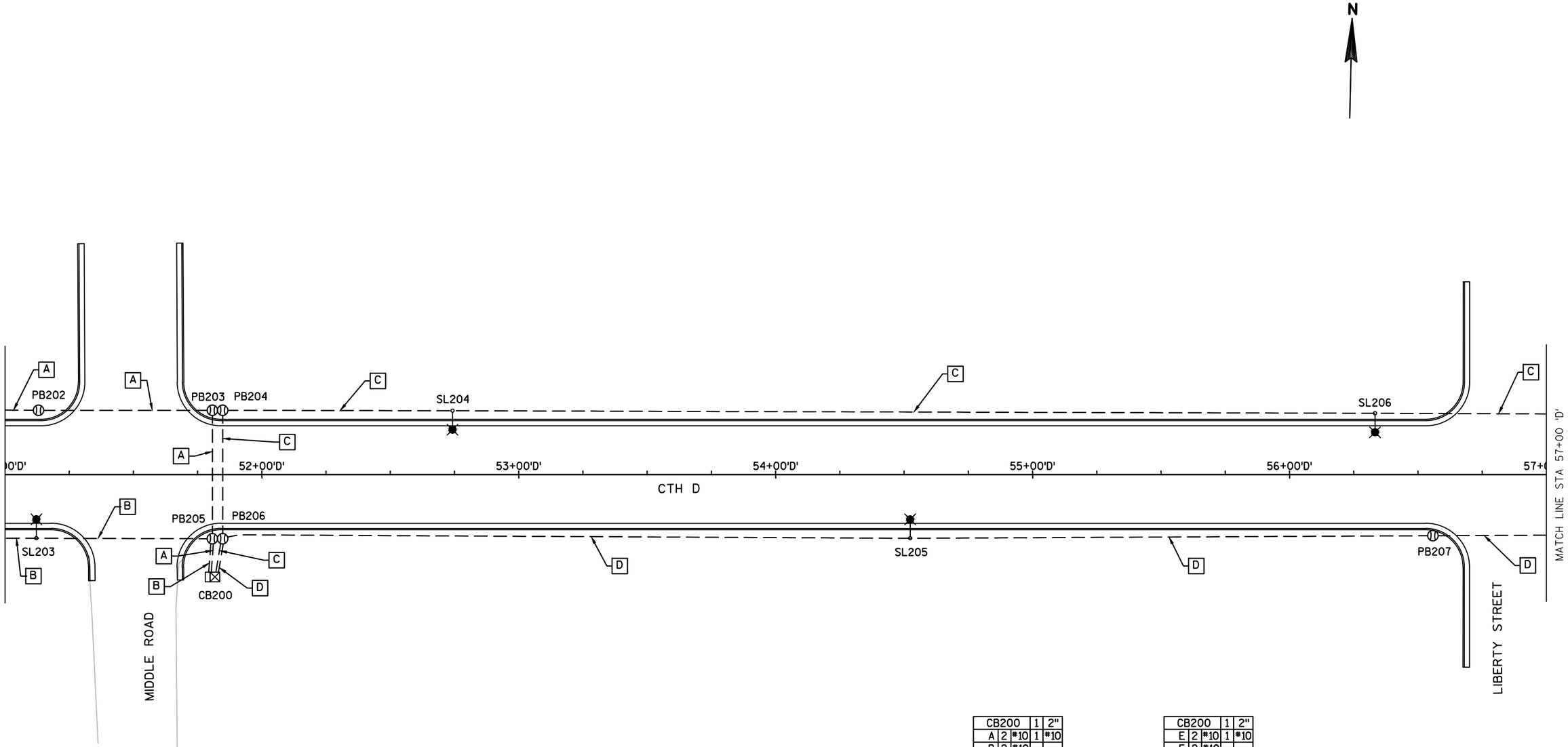

A =

CB200	1	2"
A	2	#10
B	2	#10
I	1	#6
J	1	#6
NEU	1	#6

1	2"
1	#10
--	--
--	--
--	--
--	--

C =

CB200	1	2"
E	2	#10
F	2	#10
M	1	#6
N	1	#6
NEU	1	#6

1	2"
1	#10
--	--
--	--
--	--
--	--

B =

CB200	1	2"
C	2	#10
D	2	#10
K	1	#6
L	1	#6
NEU	1	#6

1	2"
1	#10
--	--
--	--
--	--
--	--

D =

CB200	1	2"
G	2	#10
H	2	#10
O	1	#6
P	1	#6
NEU	1	#6

1	2"
1	#10
--	--
--	--
--	--
--	--

SHEET 6 OF 14

PROJECT NO: 4880-01-70	HWY: CTH D	COUNTY: OZAUKEE	LIGHTING PLANS	SHEET 67	E

2

N

57+31 - 23.5' LT
PB208

59+74 - 23.8' LT
E-SL208-M

X

X

R/W (TYP.)

MATCH LINE STA 57+00 'D'

00'D'

58+00'D'

59+00'D'

60+00'D'

61+00'D'

62+00'D'

63+0

CTH D

MATCH LINE STA 63+00 'D'

X

57+32 - 23.5' RT
PB209

58+01 - 24.8' RT
H-SL207-P

X

60+60 - 25.0' RT
PB210

VICTORY STREET

61+50 - 23.8' RT
G-SL209-0

SHEET 7 OF 14

PROJECT NO: 4880-01-70	HWY: CTH D	COUNTY: OZAUKEE	LIGHTING PLANS	SHEET 68	E

2

N

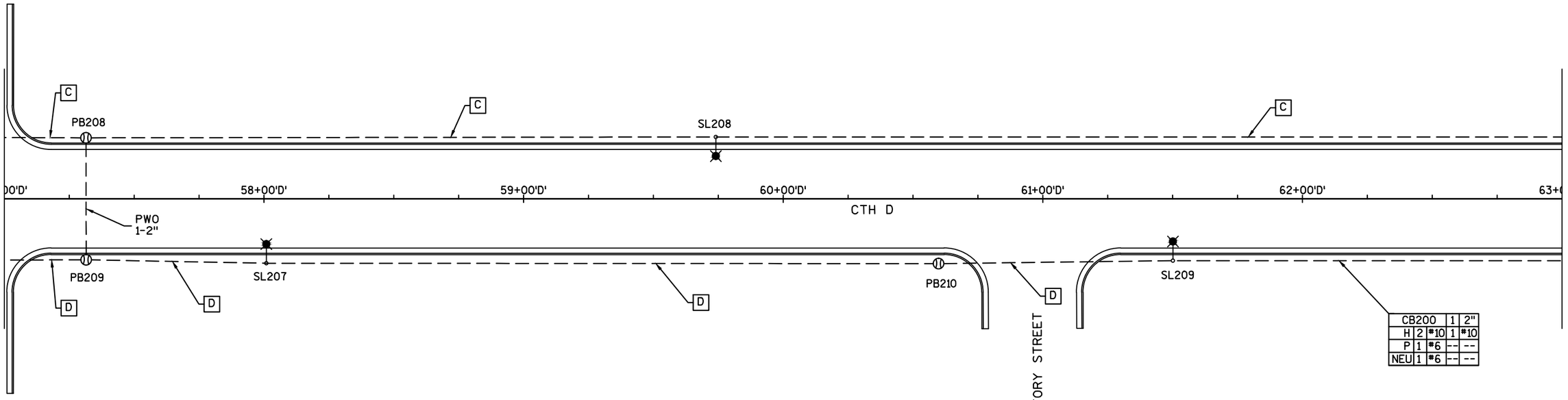

C =

CB200	1	2"		
E	2	#10	1	#10
F	2	#10	--	--
M	1	#6	--	--
N	1	#6	--	--
NEU	1	#6	--	--

D =

CB200	1	2"		
G	2	#10	1	#10
H	2	#10	--	--
O	1	#6	--	--
P	1	#6	--	--
NEU	1	#6	--	--

2

N

ELEVATOR LANE

63+19 - 23.8' LT
F-SL210-N

64+39 - 25.0' LT
PB211

65+08 - 26.3' LT
PB212

66+52 - 23.0' LT
E-SL212-M

X

MATCH LINE STA 63+00 'D'

00'D' 64+00'D' 65+00'D' 66+00'D' 67+00'D' 68+00'D' 69+0

MATCH LINE STA 69+00 'D'

R/W (TYP.)

X

X

64+94 - 23.8' RT
H-SL211-P

68+54 - 26.8' RT
G-SL100-0

SHEET 9 OF 14

PROJECT NO: 4880-01-70	HWY: CTH D	COUNTY: OZAUKEE	LIGHTING PLANS	SHEET 70	E

FILE NAME : G:\GREMMER\15015-00 - CTH D - BELGIUM\LIGHTING\CIVIL 3D\PLAN SHEETS\4880-01-70\023601-LP_70_BODART CHANGES.DWG PLOT DATE : 12/27/2017 11:26 AM PLOT BY : KL ENGINEERING PLOT NAME : PLOT SCALE : 1 IN:40 FT

WISDOT/CADDS SHEET 42

2

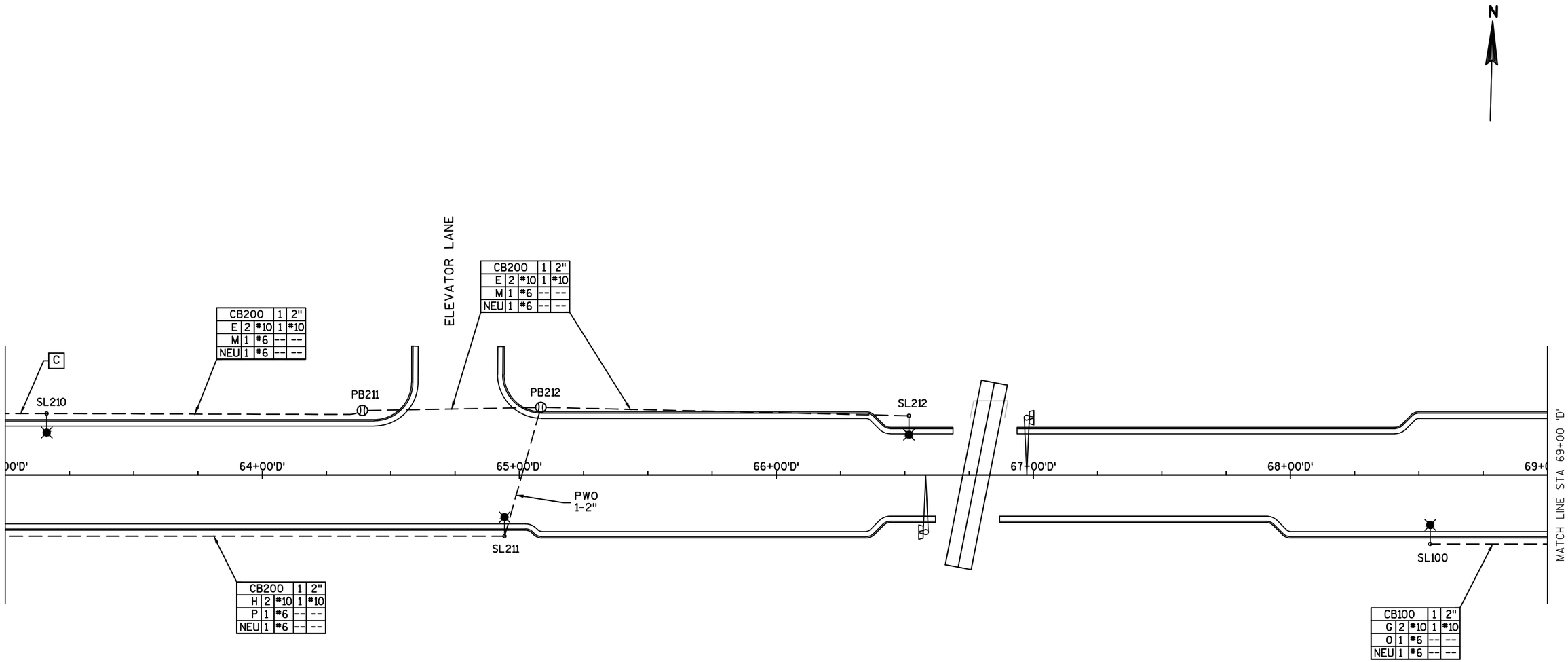

C =

CB200	1	2"		
E	2	#10	1	#10
F	2	#10	--	--
M	1	#6	--	--
N	1	#6	--	--
NEU	1	#6	--	--

SHEET 10 OF 14

PROJECT NO: 4880-01-70	HWY: CTH D	COUNTY: OZAUKEE	LIGHTING PLANS	SHEET 71	E

2

N

ELM STREET

ELECTRICAL CONNECTION BY WE ENERGIES

73+60 - 26.8' LT
F-SL103-N

WE ENERGIES TRANSFORMER

70+08 - 26.8' LT
E-SL101-M

71+29 - 27.3' LT
PB100

SEE NOTE 1
FYB300

71+84 - 27.3' LT
PB101

X

MATCH LINE STA 69+00 'D'

70+00'D'

71+00'D'

72+00'D'

73+00'D'

74+00'D'

MATCH LINE STA 75+00 'D'

CTH D

R/W (TYP.)

X

SEE NOTE 1
FYB301

X

71+79 - 26.8' RT
H-SL102-P

STUB AND CAP CONDUIT
FOR FUTURE BEACON CONNECTION.
FIELD VERIFY EXACT LOCATION.

72+45 - 26.5' RT
PB300

74+97 - 26.8' RT
G-SL104-0

NOTES:

1) FLASHING YELLOW BEACON TO BE REMOVED AND REPLACED BY THE VILLAGE OF BELGIUM.

SHEET 11 OF 14

PROJECT NO: 4880-01-70	HWY: CTH D	COUNTY: OZAUKEE	LIGHTING PLANS	SHEET 72	E

2

N

ELM STREET

CB100	1	2"
E	2	#10
M	1	#6
NEU	1	#6

CB100	1	2"
E	2	#10
M	1	#6
NEU	1	#6

ELECTRICAL CONDUCTORS AND CONDUIT BY OTHERS

E

SL101

PB100

PB101

FYB300

SL103

PWO 1-2"

MATCH LINE STA 69+00 'D'

70+00'D'

71+00'D'

72+00'D'

73+00'D'

74+00'D'

75+00 'D'

CTH D

PWO 1-2"

SL102

PB300

SL104

MATCH LINE STA 75+00 'D'

FYB301

PWO 1-2"

F

CB100	1	2"
G	2	#10
O	1	#6
NEU	1	#6

E =

CB100	1	2"
E	2	#10
F	2	#10
M	1	#6
N	1	#6
NEU	1	#6

F =

CB100	1	2"
G	2	#10
H	2	#10
O	1	#6
P	1	#6
NEU	1	#6

SHEET 12 OF 14

PROJECT NO: 4880-01-70	HWY: CTH D	COUNTY: OZAUKEE	LIGHTING PLANS	SHEET 73	E

FILE NAME : G:\GREMMER\15015-00 - CTH D - BELGIUM\LIGHTING\CIVIL 3D\PLAN SHEETS\4880-01-70\023602-LP_70_BODART CHANGES.DWG PLOT DATE : 12/27/2017 11:28 AM PLOT BY : KL ENGINEERING PLOT NAME : PLOT SCALE : 1 IN:40 FT

2

N

76+34 - 26.8' LT
E-SL105-M

BEECH STREET

LIGHTING IN PROJECT
ID 4880-01-70

EXPB102

EXPB103

EXSL107

R/W (TYP.)

X

INTERCEPT EXISTING
CONDUIT

MATCH LINE STA 75+00 'D'

76+00'D'

77+00'D'

78+00'D'

79+00'D'

80+00'D'

81+00'D'

CTH D

EXSL106

EXSL108

LIGHTING IN PROJECT
ID 4880-01-71

SHEET 13 OF 14

PROJECT NO: 4880-01-70	HWY: CTH D	COUNTY: OZAUKEE	LIGHTING PLANS	SHEET 74	E

2

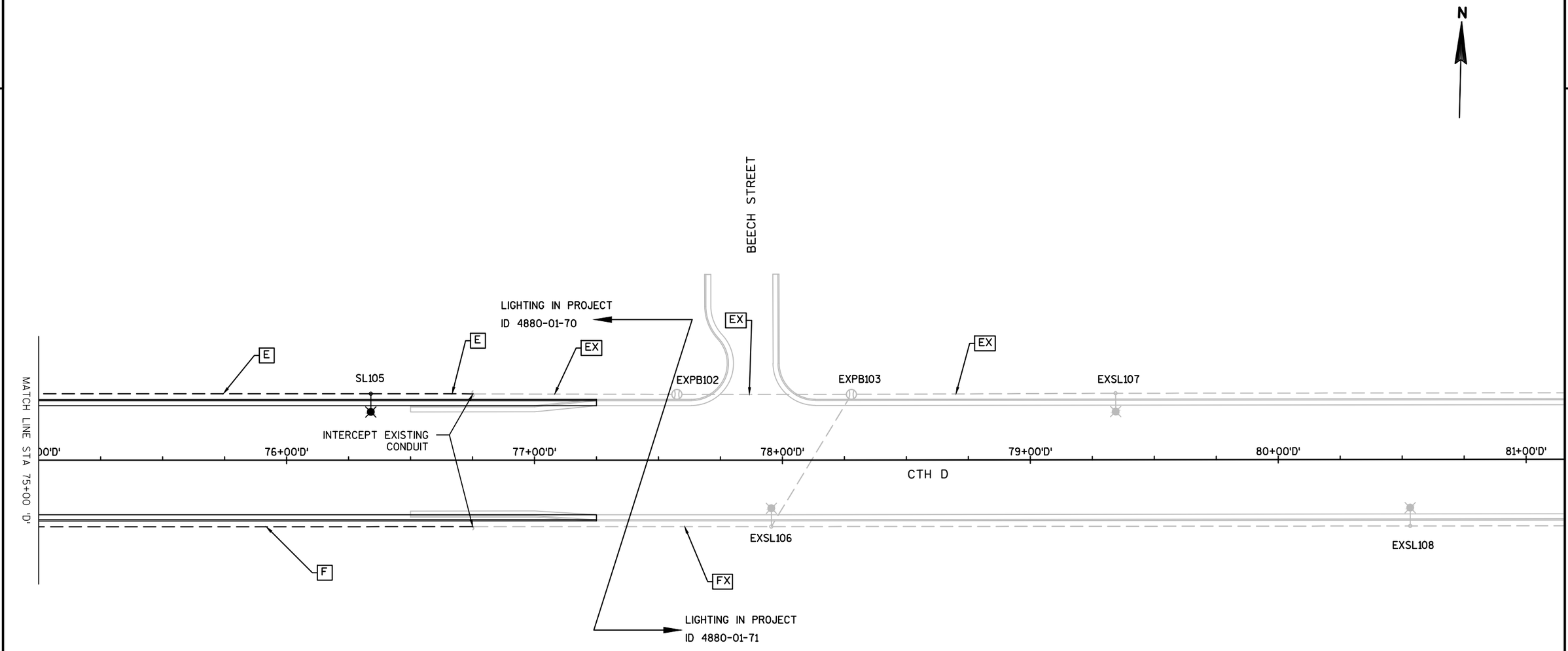

E =	CB100		1	2"
	E	2	#10	1	#10
	F	2	#10	--	--
	M	1	#6	--	--
	N	1	#6	--	--
	NEU	1	#6	--	--

EX =	CB100		EX	
	E	2	#10	1	#10
	F	2	#10	--	--
	M	1	#6	--	--
	N	1	#6	--	--
	NEU	1	#6	--	--

F =	CB100		1	2"
	G	2	#10	1	#10
	H	2	#10	--	--
	O	1	#6	--	--
	P	1	#6	--	--
	NEU	1	#6	--	--

FX =	CB100		EX	
	G	2	#10	1	#10
	H	2	#10	--	--
	O	1	#6	--	--
	P	1	#6	--	--
	NEU	1	#6	--	--

SHEET 14 OF 14

PROJECT NO: 4880-01-70	HWY: CTH D	COUNTY: OZAUKEE	LIGHTING PLANS	SHEET 75	E

LEGEND

ARW-BL	MARKING ARROW EPOXY (BIKE LANE) (WHITE)
CWW6	MARKING CROSSWALK EPOXY TRANSVERSE 6-INCH (WHITE)
CWW24	MARKING CROSSWALK EPOXY LADDER PATTERN 24-INCH (WHITE)
MW4	MARKING LINE EPOXY 4-INCH (WHITE)
MY4	MARKING LINE EPOXY 4-INCH (YELLOW)
RRXW	MARKING RAILROAD CROSSING EPOXY (WHITE)
SLW18	MARKING STOP LINE EPOXY 18-INCH (WHITE)
SYM-BL	MARKING SYMBOL EPOXY (BIKE LANE) (WHITE)
YS4-12.5	MARKING LINE EPOXY 4-INCH (YELLOW SKIP) (12.5' SEG., 37.5' GAP)

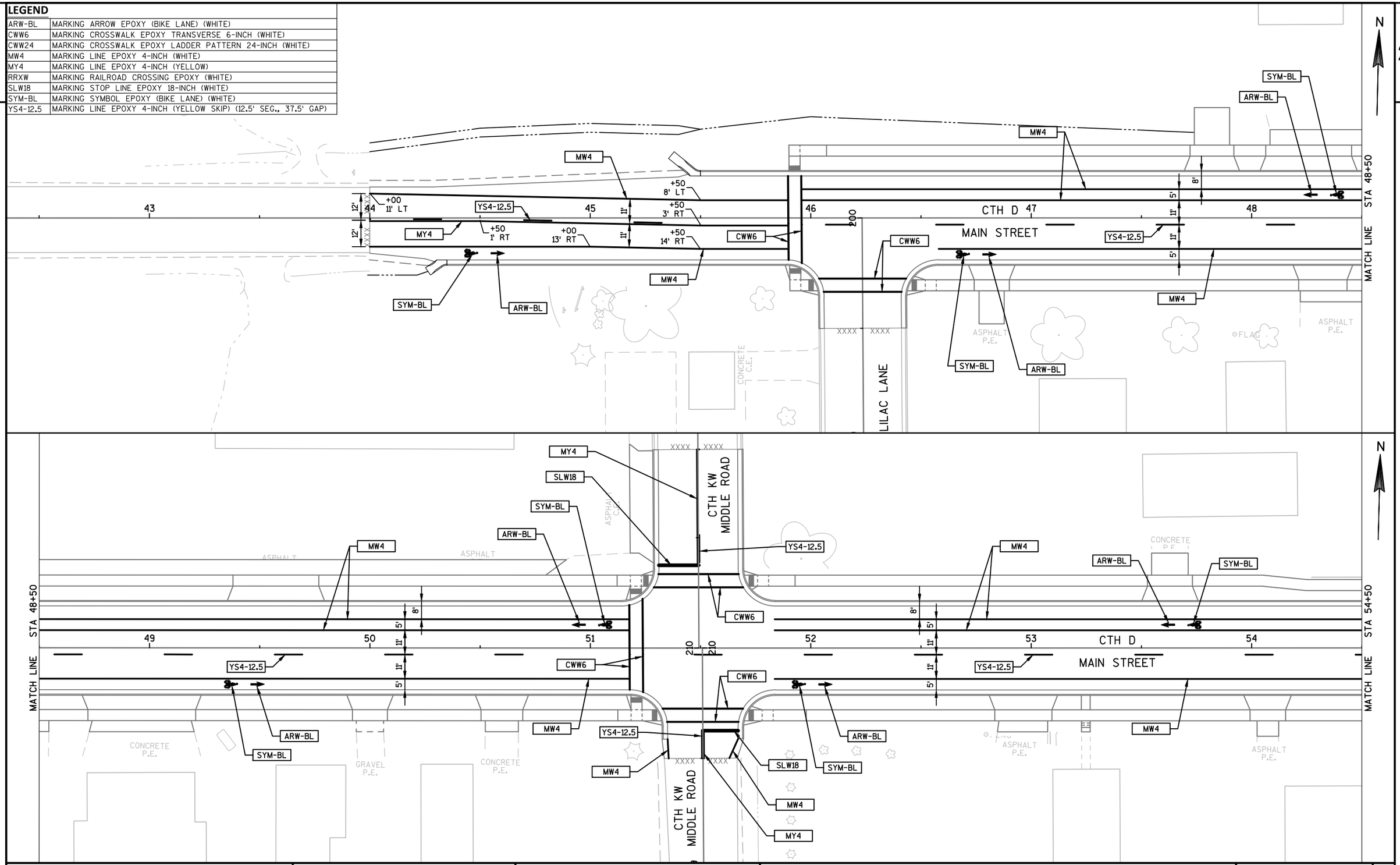

PROJECT NO: 4880-01-70	HWY: CTH D	COUNTY: OZAUKEE	PAVEMENT MARKING PLAN: CTH D	SHEET 76 E

FILE NAME : S:\CURRPROJ\OZAUKEECO\CTH D\CIVIL3D\48800100\SHEETSPLAN\48800170\48800170-024501-PM.DWG
LAYOUT NAME - 48800170-024501-PM - SHEET-01

PLOT DATE : 12/29/2017 4:02 PM PLOT BY : AARON SARAUER PLOT NAME : PLOT SCALE : **********

WISDOT/CADDS SHEET 42

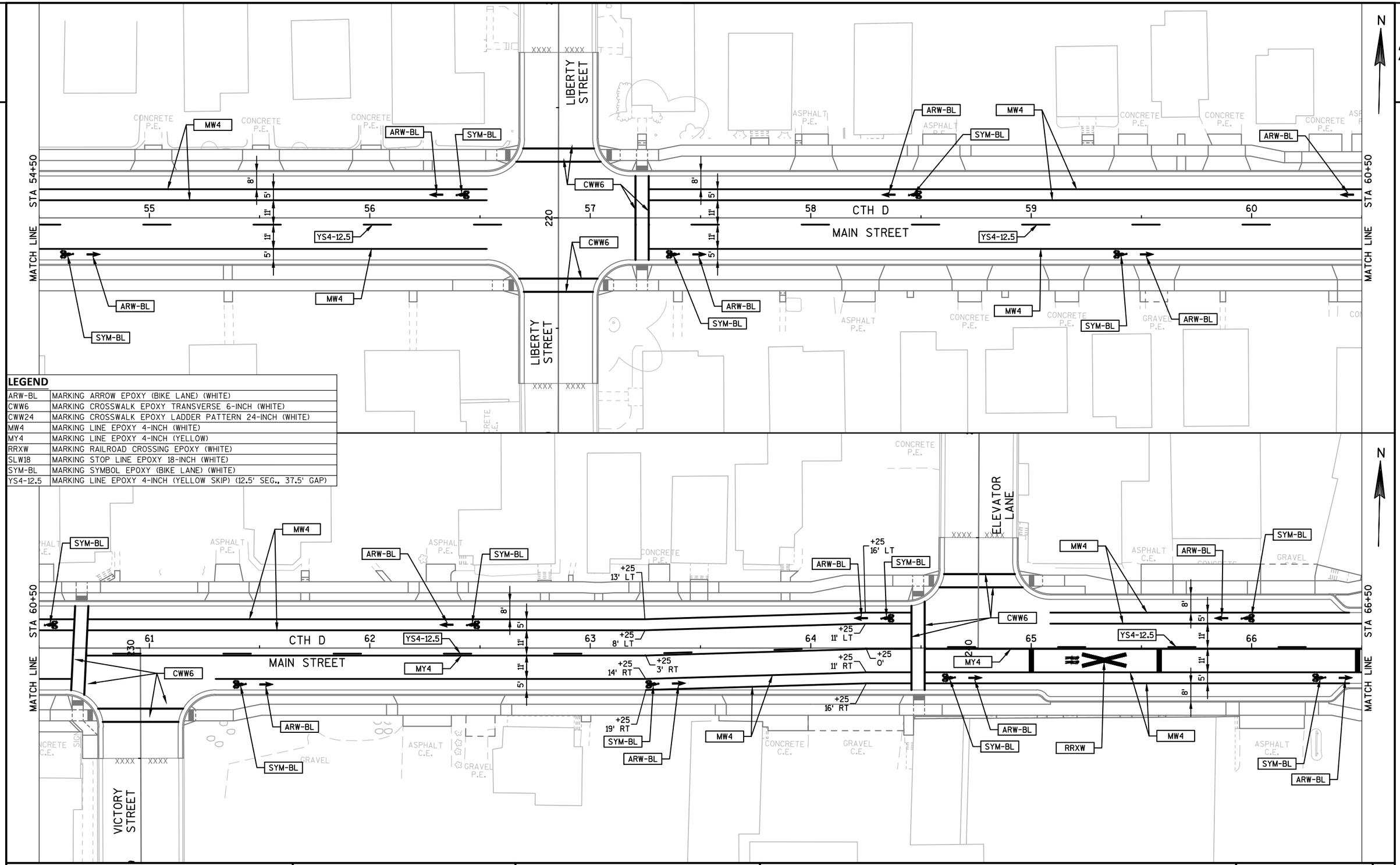

LEGEND

ARW-BL	MARKING ARROW EPOXY (BIKE LANE) (WHITE)
CWW6	MARKING CROSSWALK EPOXY TRANSVERSE 6-INCH (WHITE)
CWW24	MARKING CROSSWALK EPOXY LADDER PATTERN 24-INCH (WHITE)
MW4	MARKING LINE EPOXY 4-INCH (WHITE)
MY4	MARKING LINE EPOXY 4-INCH (YELLOW)
RRXW	MARKING RAILROAD CROSSING EPOXY (WHITE)
SLW18	MARKING STOP LINE EPOXY 18-INCH (WHITE)
SYM-BL	MARKING SYMBOL EPOXY (BIKE LANE) (WHITE)
YS4-12.5	MARKING LINE EPOXY 4-INCH (YELLOW SKIP) (12.5' SEG., 37.5' GAP)

PROJECT NO:4880-01-70	HWY:CTH D	COUNTY:OZAUKEE	PAVEMENT MARKING PLAN: CTH D	SHEET 77	E

FILE NAME : S:\CURRPROJ\OZAUKEECO\CTH D\CIVIL3D\48800100\SHEETSPLAN\48800170\48800170-024501-PM.DWG
LAYOUT NAME - 48800170-024501-PM - SHEET-02
PLOT DATE : 10/31/2017 12:08 PM PLOT BY : AARON SARAUER PLOT NAME : PLOT SCALE : **********

WISDOT/CADDS SHEET 42

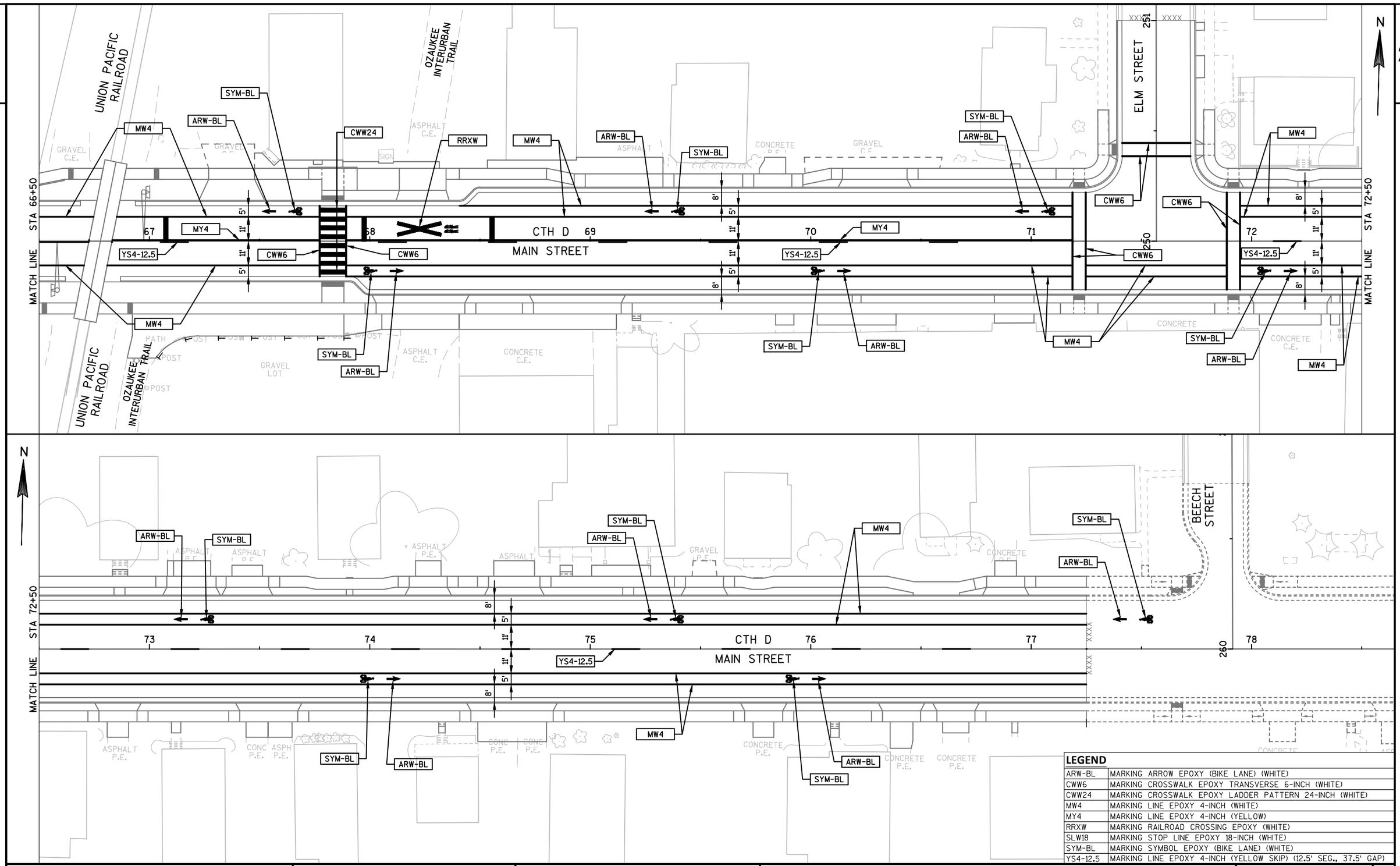

LEGEND

ARW-BL	MARKING ARROW EPOXY (BIKE LANE) (WHITE)
CWW6	MARKING CROSSWALK EPOXY TRANSVERSE 6-INCH (WHITE)
CWW24	MARKING CROSSWALK EPOXY LADDER PATTERN 24-INCH (WHITE)
MW4	MARKING LINE EPOXY 4-INCH (WHITE)
MY4	MARKING LINE EPOXY 4-INCH (YELLOW)
RRXW	MARKING RAILROAD CROSSING EPOXY (WHITE)
SLW18	MARKING STOP LINE EPOXY 18-INCH (WHITE)
SYM-BL	MARKING SYMBOL EPOXY (BIKE LANE) (WHITE)
YS4-12.5	MARKING LINE EPOXY 4-INCH (YELLOW SKIP) (12.5' SEG., 37.5' GAP)

PROJECT NO: 4880-01-70	HWY: CTH D	COUNTY: OZAUKEE	PAVEMENT MARKING PLAN: CTH D	SHEET 78	E

NOTES:

1. REFER TO SDD "BARRICADES AND SIGNS FOR MAINLINE CLOSURES" FOR DETAILS:
   - (A) = DETAIL A (MAINLINE CLOSURE WITH POSTED DETOUR)
   - (B) = DETAIL B (MAINLINE CLOSURE WITH POSTED DETOUR)
   - (C) = DETAIL C (MAINLINE CLOSURE NO DETOUR)
   - (D) = DETAIL D (ROAD CLOSURE BARRICADE DETAIL)
   - (E) = DETAIL E (ROAD CLOSURE BARRICADE DETAIL)
2. REFER TO SDD "BARRICADES AND SIGNS FOR SIDE ROAD CLOSURES" FOR DETAILS:
   - (1) = DETAIL 1 (NO ACCESS TO PROJECT)
   - (2) = DETAIL 2 (PUBLIC CROSS-TRAFFIC MAINTAINED. NO ACCESS TO PROJECT)
   - (3) =DETAIL 3 (PUBLIC CROSS-TRAFFIC MAINTAINED. CONTRACTOR LOCAL BUSINESS AND RESIDENT ACCESS)
   - (4) =DETAIL 4 (CONTRACTOR, LOCAL BUSINESS AND RESIDENT ACCESS TO PROJECT)

LEGEND

WORK AREA

N

0 300 600

1" = 600'

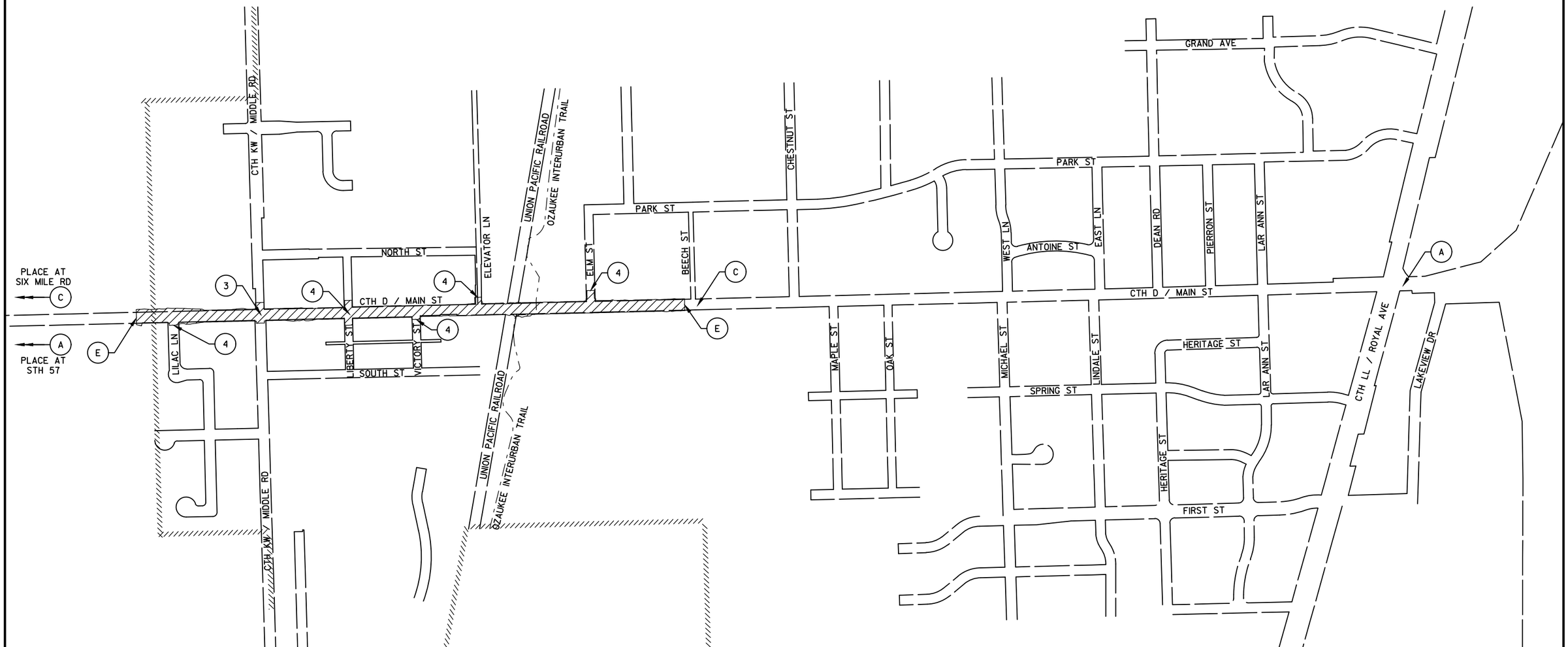

PROJECT NO: 4880-01-70	HWY: CTH D	COUNTY: OZAUKEE	TRAFFIC CONTROL OVERVIEW: ADVANCE WARNING SIGNS	SHEET 79	E

FILE NAME : S:\CURRPROJ\OZAUKEECO\CTH D\CIVIL3D\48800100\SHEETSPLAN\48800170\48800170-025001-TC.DWG
LAYOUT NAME - 48800170-025001-TC - SHEET-01

PLOT DATE : 10/31/2017 12:09 PM PLOT BY : AARON SARAUER PLOT NAME : PLOT SCALE : 1 IN:600 FT

WISDOT/CADDS SHEET 42

NOTES:

1. REFER TO SDD "TRAFFIC CONTROL, PEDESTRIAN ACCOMMODATION" FOR DETAILS.
2. CONTRACTOR SHALL MAINTAIN ADA ACCESSIBILITY THROUGHOUT THE PROJECT AT ALL TIMES, INCLUDING DURING EXISTING AND TEMPORARY CONDITIONS.
3. TEMPORARY CROSSWALKS SHALL BE MOVED AS NEEDED TO PROVIDE CONTINUOUS PEDESTRIAN ACCESS THROUGHOUT THE RECONSTRUCTION PROJECT. TEMPORARY CROSSWALKS SHALL BE PROVIDED AT ALL TIMES FOR A MINIMUM OF ONE NORTH-SOUTH LEG OF THE INDICATED INTERSECTIONS AS DIRECTED BY THE FIELD ENGINEER.
4. POST MOUNTED SIGNS LOCATED NEAR OR ADJACENT TO THE SIDEWALK SHALL HAVE A 7-FT MINIMUM CLEARANCE FROM THE BOTTOM OF THE SIGN TO THE EXISTING OR NEW SIDEWALK.
5. SIDEWALK TO BE MAINTAINED ON ALL SIDEROADS AND ALONG CTH D DURING STORM SEWER, COMMON EXCAVATION AND PAVING OPERATIONS. WORK MAY NEED TO BE LIMITED TO ONE SIDE OF THE ROADWAY AT A TIME TO MAINTAIN ADA ACCESSIBILITY.
6. FURNISH AND INSTALL TEMPORARY CURB RAMPS WHEN EXISTING OR FINISHED CURB RAMPS ARE NOT IN PLACE.
7. MAXIMUM SIDEWALK CLOSURE SHALL BE 72 HOURS.

LEGEND

WORK AREA

(A) = TEMPORARY CROSSWAK ACROSS CTH D

(B) = TEMPORARY CROSSWALK SIDEROAD OUTSIDE CONSTRUCTION LIMITS (SEE DETAIL)

(C) = TEMPORARY CROSSWALK SIDEROAD INSIDE CONSTRUCTION LIMITS (SEE DETAIL)

(D) = MAINTAIN EXISTING CROSSING

N

0 300 600

1" = 600'

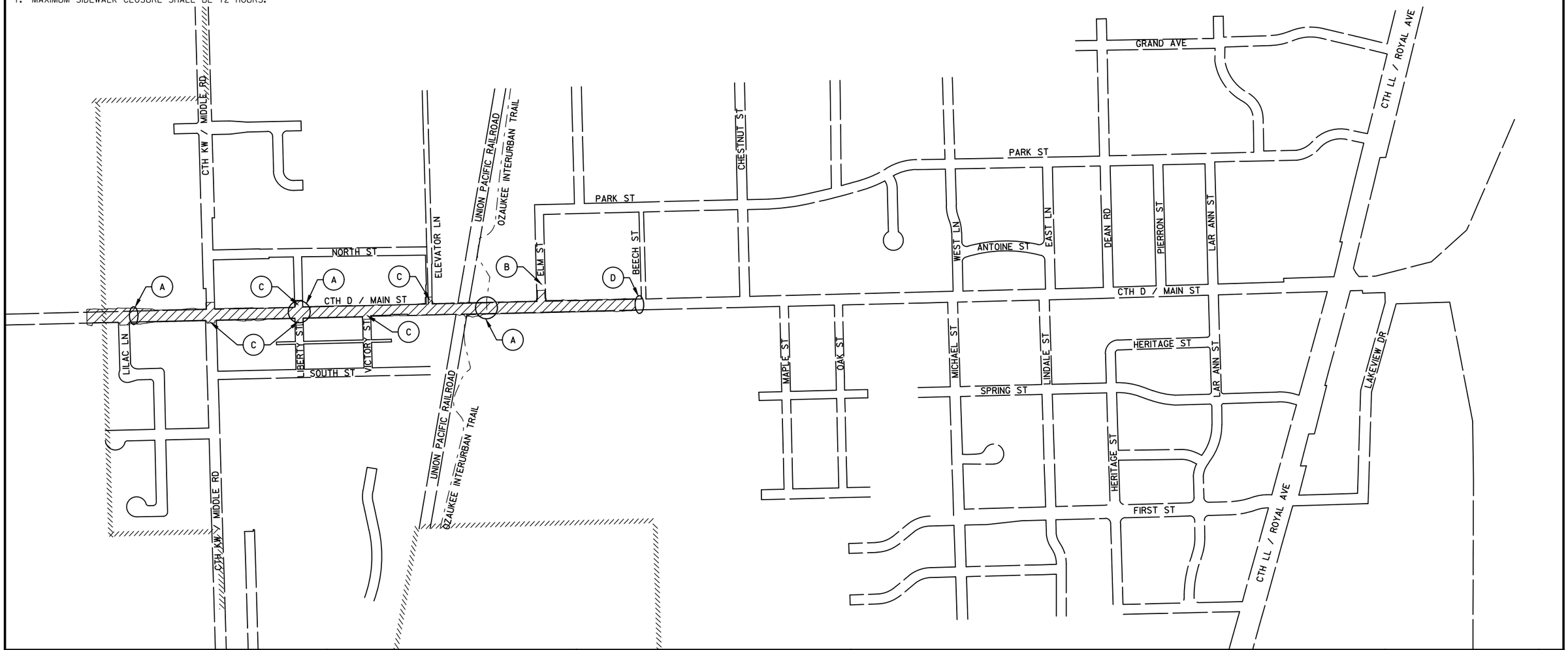

PROJECT NO: 4880-01-70	HWY: CTH D	COUNTY: OZAUKEE	TRAFFIC CONTROL OVERVIEW: PEDESTRIAN ACCESS - ROADWAY CONSTRUCTION	SHEET 80	E

2

STAGE 1A NOTES:

1. INTERIM COMPLETION DATE FOR STAGE 1A IS 60 CALENDAR DAYS.
2. COORDINATE WITH LAKESIDE FOODS FOR ACCESS NEEDS.

STAGE 1B NOTES:

1. STAGE 1B CONSTRUCTION MAY BE CONCURRENT WITH STAGE 1A.
2. COORDINATE WITH LAKESIDE FOODS FOR ACCESS NEEDS.
3. COORDINATE WITH UNION PACIFIC RAILROAD FOR CROSSING REPLACEMENT SCHEDULE.

LEGEND

STAGE 1A

STAGE 1B

N

0 300 600

1" = 600'

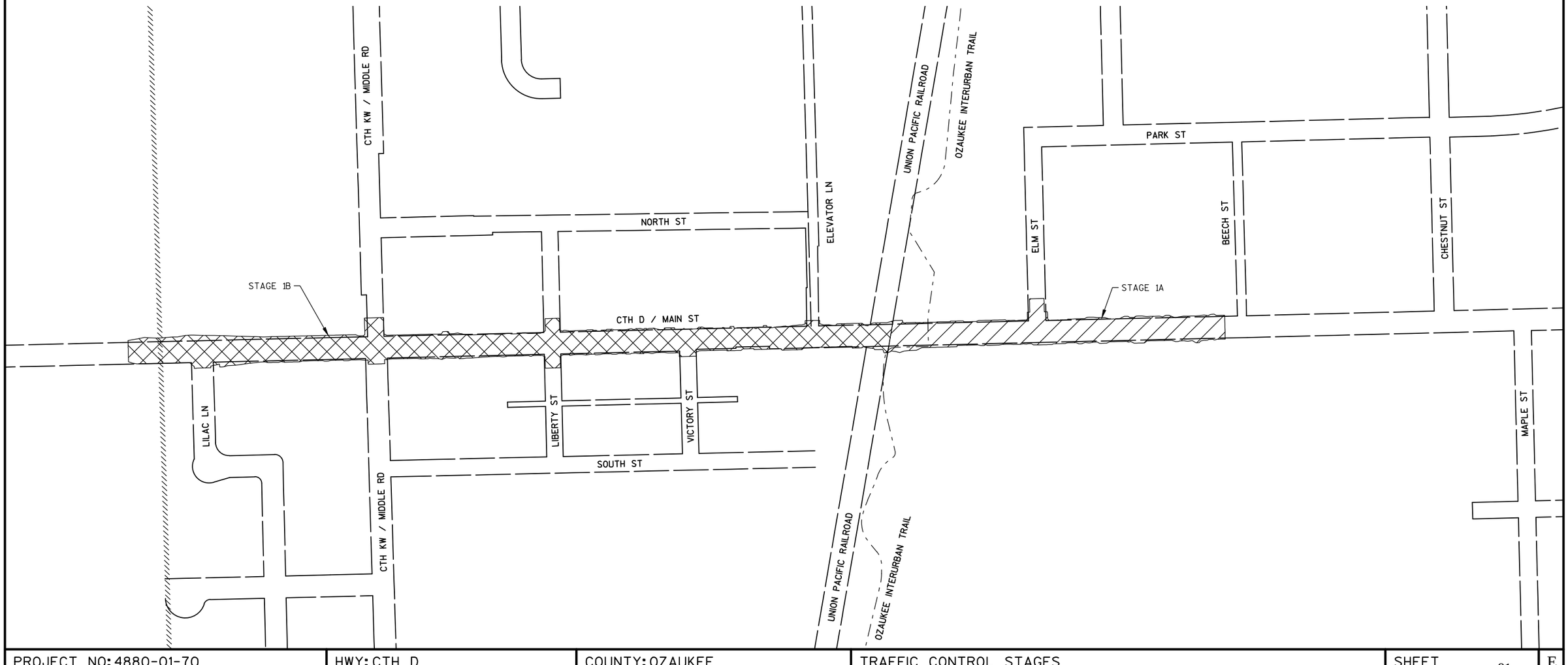

PROJECT NO: 4880-01-70	HWY: CTH D	COUNTY: OZAUKEE	TRAFFIC CONTROL STAGES	SHEET 81	E

FILE NAME : S:\CURRPROJ\OZAUKEECO\CTH D\CIVIL3D\48800100\SHEETSPLAN\48800170\48800170-025003-TC.DWG
LAYOUT NAME - 48800170-025003-TC - SHEET-01

PLOT DATE : 10/31/2017 12:09 PM PLOT BY : AARON SARAUER PLOT NAME : PLOT SCALE : 1 IN:300 FT

WISDOT/CADDS SHEET 42

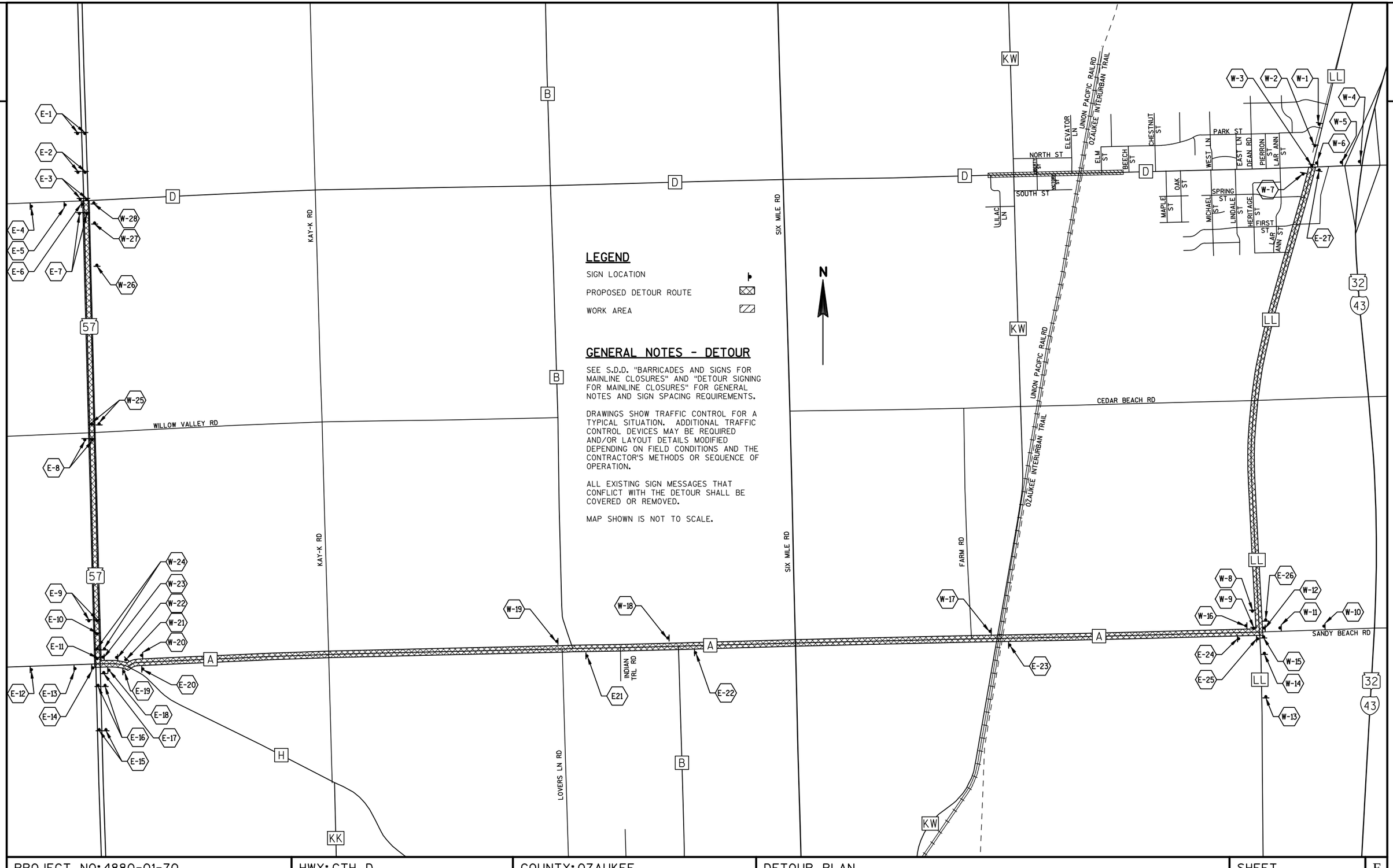

LEGEND

SIGN LOCATION

PROPOSED DETOUR ROUTE

WORK AREA

GENERAL NOTES - DETOUR

SEE S.D.D. "BARRICADES AND SIGNS FOR MAINLINE CLOSURES" AND "DETOUR SIGNING FOR MAINLINE CLOSURES" FOR GENERAL NOTES AND SIGN SPACING REQUIREMENTS.

DRAWINGS SHOW TRAFFIC CONTROL FOR A TYPICAL SITUATION. ADDITIONAL TRAFFIC CONTROL DEVICES MAY BE REQUIRED AND/OR LAYOUT DETAILS MODIFIED DEPENDING ON FIELD CONDITIONS AND THE CONTRACTOR'S METHODS OR SEQUENCE OF OPERATION.

ALL EXISTING SIGN MESSAGES THAT CONFLICT WITH THE DETOUR SHALL BE COVERED OR REMOVED.

MAP SHOWN IS NOT TO SCALE.

PROJECT NO: 4880-01-70	HWY: CTH D	COUNTY: OZAUKEE	DETOUR PLAN	SHEET	E

FILE NAME : S:\CURRPROJ\OZAUKEECO\CTH D\CIVIL3D\48800100\SHEETSPLAN\48800170\48800170-027001-DT.DWG
LAYOUT NAME - 48800170-027001-DT - SHEET-01
PLOT DATE : 10/31/2017 12:10 PM PLOT BY : AARON SARAUER PLOT NAME : PLOT SCALE : 1 IN:2000 FT
WISDOT/CADDS SHEET 42

2

E-1

MODIFY EXISTING SIGN FROM JCT COUNTY D TO E AST COUNTY D M3-2 24"X12"

DETOUR AHEAD W20-2-A 48"X48"

MEDIAN SB STH 57 LANES

E AST COUNTY D M3-2 24"X12" M1-5A 24"X24"

DETOUR AHEAD W20-2-A 48"X48"

E-2

MODIFY EXISTING SIGN FROM E AST COUNTY D TO DETOUR E AST COUNTY D M4-8 24"X12" M06-1 21"X21"

MEDIAN SB STH 57 LANES

DETOUR E AST COUNTY D M4-8 24"X12" M3-2 24"X12" M1-5A 24"X24" M06-1 21"X21"

E-3

MODIFY EXISTING SIGN FROM E AST COUNTY D TO DETOUR E AST COUNTY D M4-8 24"X12" M06-1 21"X21"

MEDIAN SB STH 57 LANES

DETOUR E AST COUNTY D M4-8 24"X12" M3-2 24"X12" M1-5A 24"X24" M06-1 21"X21"

E-4

DETOUR AHEAD W20-2-A 48"X48"

E-5

DETOUR E AST COUNTY D M4-8 24"X12" M3-2 24"X12" M1-5A 24"X24" M05-1R 21"X21"

E-6

DETOUR E AST COUNTY D M4-8 24"X12" M3-2 24"X12" M1-5A 24"X24" M06-1 21"X21"

E-7

M4-8 24"X12" M3-2 24"X12" M1-5A 24"X24" DETOUR E AST COUNTY D

MEDIAN SB STH 57 LANES

DETOUR E AST COUNTY D M4-8 24"X12" M3-2 24"X12" M1-5A 24"X24"

E-8

M4-8 24"X12" M3-2 24"X12" M1-5A 24"X24" DETOUR E AST COUNTY D

MEDIAN SB STH 57 LANES

DETOUR E AST COUNTY D M4-8 24"X12" M3-2 24"X12" M1-5A 24"X24"

E-9

M4-8 24"X12" M3-2 24"X12" M1-5A 24"X24" DETOUR E AST COUNTY D M05-1L 21"X21"

MEDIAN SB STH 57 LANES

DETOUR E AST COUNTY D M4-8 24"X12" M3-2 24"X12" M1-5A 24"X24" M05-1L 21"X21"

E-10

M4-8 24"X12" M3-2 24"X12" M1-5A 24"X24" DETOUR E AST COUNTY D M06-1 21"X21"

MEDIAN SB STH 57 LANES

E-11

DETOUR E AST COUNTY D M4-8 24"X12" M3-2 24"X12" M1-5A 24"X24" M06-1 21"X21"

MEDIAN SB STH 57 LANES

E-12

E AST COUNTY D M3-2 24"X12" M1-5A 24"X24"

DETOUR AHEAD W20-2-A 48"X48"

E-13

DETOUR E AST COUNTY D M4-8 24"X12" M3-2 24"X12" M1-5A 24"X24" M06-1 21"X21"

E-14

DETOUR E AST COUNTY D M4-8 24"X12" M3-2 24"X12" M1-5A 24"X24" M06-1 21"X21"

E-15

M3-2 24"X12" M1-5A 24"X24" E AST COUNTY D

DETOUR AHEAD W20-2-A 48"X48"

MEDIAN NB STH 57 LANES

E AST COUNTY D M3-2 24"X12" M1-5A 24"X24"

DETOUR AHEAD W20-2-A 48"X48"

E-16

M4-8 24"X12" M3-2 24"X12" M1-5A 24"X24" DETOUR E AST COUNTY D M05-1R 21"X21"

MEDIAN NB STH 57 LANES

DETOUR E AST COUNTY D M4-8 24"X12" M3-2 24"X12" M1-5A 24"X24" M05-1R 21"X21"

E-17

MEDIAN NB STH 57 LANES

DETOUR E AST COUNTY D M4-8 24"X12" M3-2 24"X12" M1-5A 24"X24" M06-1 21"X21"

E-18

DETOUR E AST COUNTY D M4-8 24"X12" M3-2 24"X12" M1-5A 24"X24"

E-19

DETOUR E AST COUNTY D M4-8 24"X12" M3-2 24"X12" M1-5A 24"X24" M06-1 21"X21"

E-20

DETOUR E AST COUNTY D M4-8 24"X12" M3-2 24"X12" M1-5A 24"X24"

E-21

DETOUR E AST COUNTY D M4-8 24"X12" M3-2 24"X12" M1-5A 24"X24"

E-22

DETOUR E AST COUNTY D M4-8 24"X12" M3-2 24"X12" M1-5A 24"X24"

E-23

DETOUR E AST COUNTY D M4-8 24"X12" M3-2 24"X12" M1-5A 24"X24"

E-24

DETOUR E AST COUNTY D M4-8 24"X12" M3-2 24"X12" M1-5A 24"X24" M05-1L 21"X21"

E-25

DETOUR E AST COUNTY D M4-8 24"X12" M3-2 24"X12" M1-5A 24"X24" M06-1 21"X21"

E-26

DETOUR E AST COUNTY D M4-8 24"X12" M3-2 24"X12" M1-5A 24"X24"

E-27

END DETOUR E AST COUNTY D M4-8A 24"X18" M3-2 24"X12" M1-5A 24"X24"

PROJECT NO: 4880-01-70	HWY: CTH D	COUNTY: OZAUKEE	DETOUR PLAN: EASTBOUND SIGNS	SHEET 83	E

FILE NAME : S:\CURRPROJ\OZAUKEECO\CTH D\CIVIL3D\48800100\SHEETSPLAN\48800170\48800170-027001-DT.DWG
LAYOUT NAME - 48800170-027001-DT - SHEET-02

PLOT DATE : 10/31/2017 12:10 PM PLOT BY : AARON SARAUER PLOT NAME : PLOT SCALE : 1 IN:2000 FT

WISDOT/CADDS SHEET 42

2

W-1

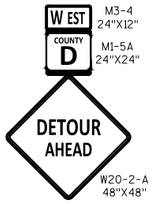

M3-4 24"X12"
M1-5A 24"X24"
W20-2-A 48"X48"

W-2

MODIFY EXISTING SIGN
FROM TO

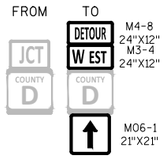

M4-8 24"X12"
M3-4 24"X12"
M06-1 21"X21"

W-3

MODIFY EXISTING SIGN
FROM TO

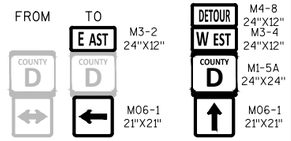

M3-2 24"X12"
M06-1 21"X21"
M4-8 24"X12"
M3-4 24"X12"
M1-5A 24"X24"
M06-1 21"X21"

W-4

W20-2-A 48"X48"

W-5

M4-8 24"X12"
M3-4 24"X12"
M1-5A 24"X24"
M05-1L 21"X21"

W-6

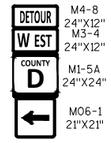

M4-8 24"X12"
M3-4 24"X12"
M1-5A 24"X24"
M06-1 21"X21"

W-7

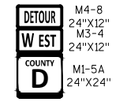

M4-8 24"X12"
M3-4 24"X12"
M1-5A 24"X24"

W-8

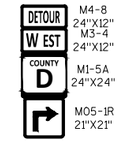

M4-8 24"X12"
M3-4 24"X12"
M1-5A 24"X24"
M05-1R 21"X21"

2

W-9

M4-8 24"X12"
M3-4 24"X12"
M1-5A 24"X24"
M06-1 21"X21"

W-10

M3-4 24"X12"
M1-5A 24"X24"
W20-2-A 48"X48"

W-11

M4-8 24"X12"
M3-4 24"X12"
M1-5A 24"X24"
M06-1 21"X21"

W-12

M4-8 24"X12"
M3-4 24"X12"
M1-5A 24"X24"
M06-1 21"X21"

W-13

M3-4 24"X12"
M1-5A 24"X24"
W20-2-A 48"X48"

W-14

M4-8 24"X12"
M3-2 24"X12"
M1-5A 24"X24"
M05-1L 21"X21"

W-15

M4-8 24"X12"
M3-2 24"X12"
M1-5A 24"X24"
M06-1 21"X21"

W-16

M4-8 24"X12"
M3-4 24"X12"
M1-5A 24"X24"

W-17

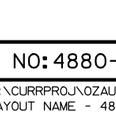

M4-8 24"X12"
M3-4 24"X12"
M1-5A 24"X24"

W-18

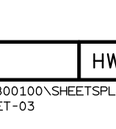

M4-8 24"X12"
M3-4 24"X12"
M1-5A 24"X24"

W-19

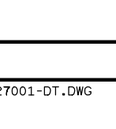

M4-8 24"X12"
M3-4 24"X12"
M1-5A 24"X24"

W-20

M4-8 24"X12"
M3-4 24"X12"
M1-5A 24"X24"
M05-1R 21"X21"

W-21

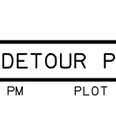

M4-8 24"X12"
M3-4 24"X12"
M1-5A 24"X24"
M06-1 21"X21"

W-22

M4-8 24"X12"
M3-4 24"X12"
M1-5A 24"X24"
M05-1R 21"X21"

W-23

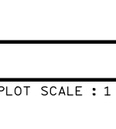

M4-8 24"X12"
M3-4 24"X12"
M1-5A 24"X24"
M06-1 21"X21"

W-24

W-25

W-26

COVER EXISTING SIGN

W-27

COVER EXISTING SIGN

W-28

MODIFY EXISTING SIGN
FROM TO

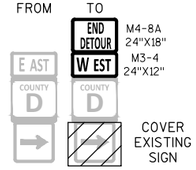

M4-8A 24"X18"
M3-4 24"X12"

PROJECT NO: 4880-01-70	HWY: CTH D	COUNTY: OZAUKEE	DETOUR PLAN: WESTBOUND SIGNS	SHEET 84	E

N

LEGEND

- SIGN LOCATION
- TYPE III BARRICADE WITH SIGN
- PROPOSED DETOUR ROUTE
- WORK AREA

B-4
END DETOUR
M4-8A
24"X18"

B-5
DETOUR
M4-9A
30" X 24"

B-6
DETOUR
M4-9A
30" X 24"

B-3
R11-3
60" X 30"
TRAIL CLOSED
2 MILES AHEAD
TYPE III BARRICADE

B-2
R11-3
60" X 30"
TRAIL CLOSED
1 MILE AHEAD
TYPE III BARRICADE

B-1
R11-2
48" X 30"
TRAIL CLOSED
TYPE III BARRICADE

B-7
DETOUR
M4-9A
30" X 24"

B-8
DETOUR
M4-9A
30" X 24"

B-9
DETOUR
M4-9A
30" X 24"

B-10
DETOUR
M4-9A
30" X 24"

FARM RD
OZAUKEE INTERURBAN TRAIL
UNION PACIFIC RAILRD
CEDAR BEACH RD
SANDY BEACH RD
LAKE CHURCH RD
SEE DETAIL 'A'
LILAC LN
SOUTH ST
LIBERTY ST
VICTORY ST
NORTH ST
ELEVATOR LN
ELM ST
COMMERCE ST
BEECH ST
CHESTNUT ST
MAPLE ST
OAK ST
MICHAEL ST
WEST LN
SPRING ST
PARK ST
LINDALE ST
EAST LN
HERITAGE ST
DEAN RD
FIRST ST
PIERRON ST
LAR ANN ST
LAR ANN ST
KW
D
A
LL
43
32

PROJECT NO: 4880-01-70	HWY: CTH D	COUNTY: OZAUKEE	DETOUR PLAN: OZAUKEE INTERURBAN TRAIL	SHEET 85	E

FILE NAME : S:\CURRPROJ\OZAUKEECO\CTH D\CIVIL3D\48800100\SHEETSPLAN\48800170\48800170-027002-DT.DWG
LAYOUT NAME - 48800170-027002-DT - SHEET-01
PLOT DATE : 10/31/2017 12:10 PM PLOT BY : AARON SARAUER PLOT NAME : PLOT SCALE : 1 IN:1500 FT
WISDOT/CADDS SHEET 42

2

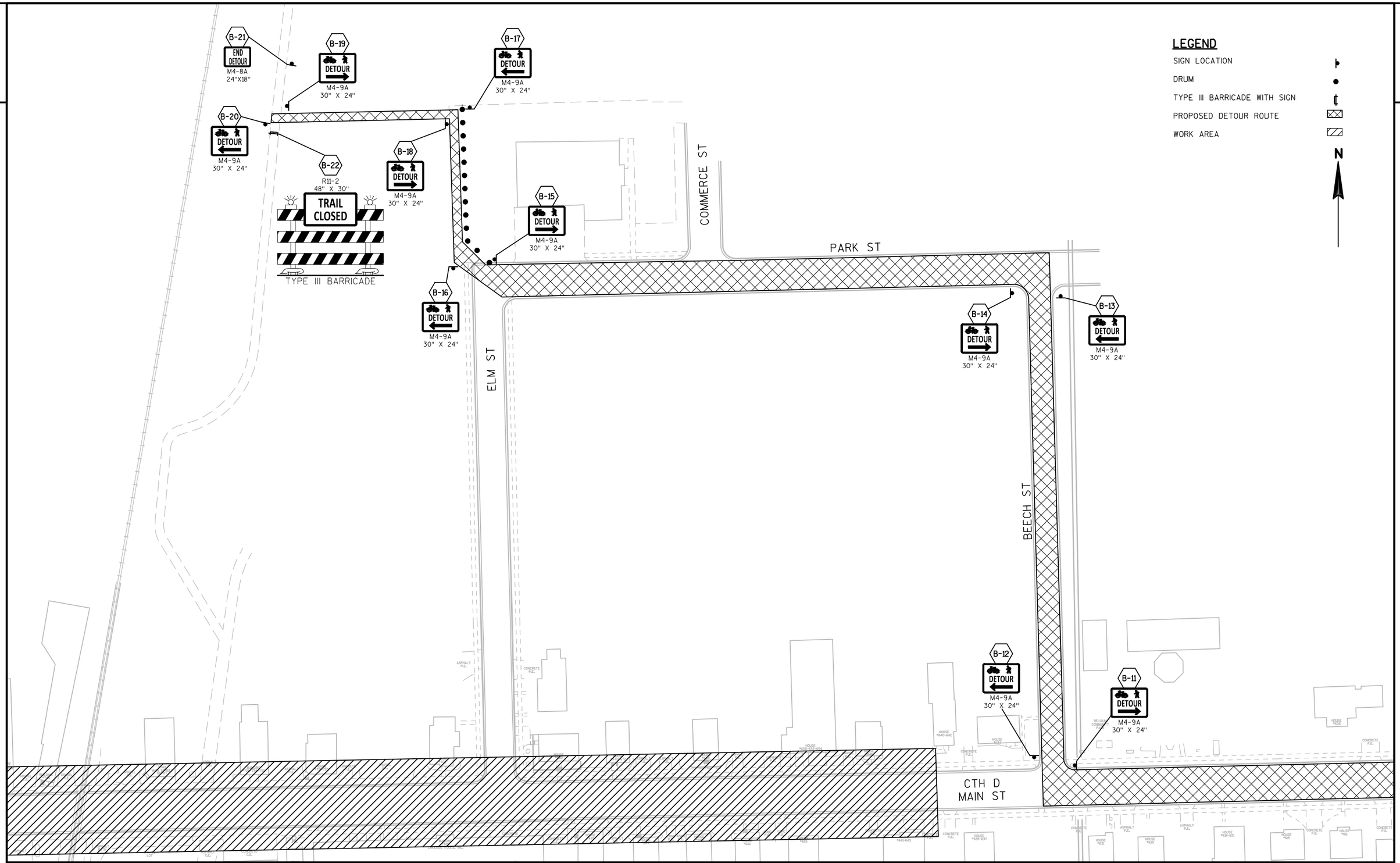

LEGEND

SIGN LOCATION

DRUM

TYPE III BARRICADE WITH SIGN

PROPOSED DETOUR ROUTE

WORK AREA

N

PROJECT NO: 4880-01-70	HWY: CTH D	COUNTY: OZAUKEE	DETOUR PLAN: OZAUKEE INTERURBAN TRAIL (DETAIL 'A')	SHEET 86	E

FILE NAME : S:\CURRPROJ\OZAUKEECO\CTH D\CIVIL3D\48800100\SHEETSPLAN\48800170\48800170-027002-DT.DWG
LAYOUT NAME - 48800170-027002-DT - SHEET-02

PLOT DATE : 10/31/2017 12:10 PM PLOT BY : AARON SARAUER PLOT NAME : PLOT SCALE : 1 IN:100 FT

CONTROL POINT TABLE		
Point #	Northing	Easting
30	553843.9300	566900.7520
31	553873.6800	567624.7620
32	553836.7420	568164.5450
33	553886.7560	568620.4860
34	553895.0720	568948.2010
35	553858.5750	569362.8030
36	553928.9490	569694.4170
37	553877.3880	570306.5190
38	553943.4350	570854.6320
39	553915.5760	571164.4310
40	553976.1430	572229.0010
41	553955.7980	572775.5700
42	553973.3940	573385.1820
43	554034.3430	573751.6280

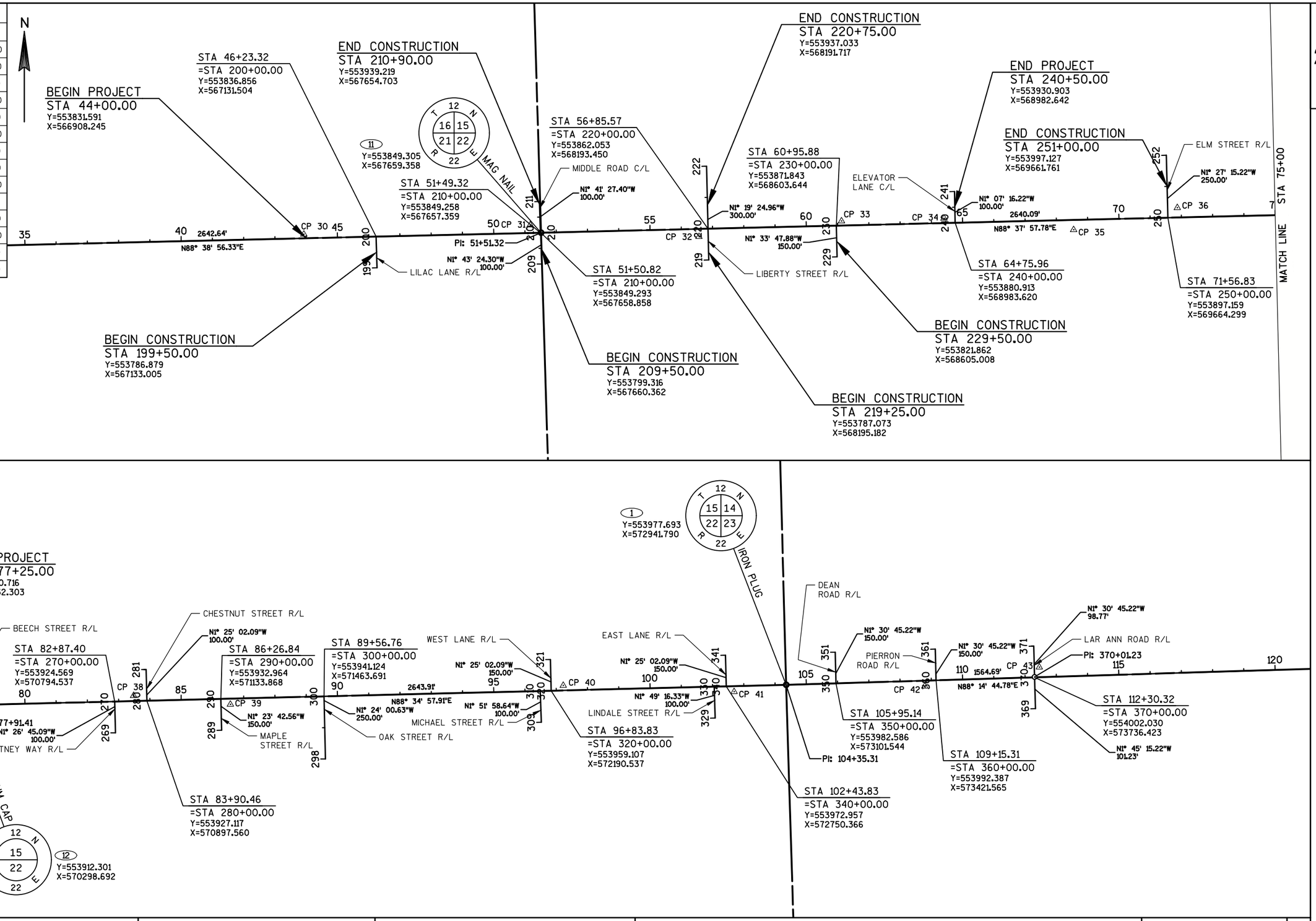

PROJECT NO: 4880-01-70	HWY: CTH D	COUNTY: OZAUKEE	ALIGNMENT DIAGRAM: CTH D	SHEET 87	E

FILE NAME : S:\CURRPROJ\OZAUKEECO\CTH D\CIVIL3D\48800100\SHEETSPLAN\48800170\48800170-027201-AD.DWG PLOT DATE : 11/1/2017 9:52 AM PLOT BY : AARON SARAUER PLOT NAME : ---------- PLOT SCALE : 1:300_XREF
WISDOT/CADDS SHEET 42

4880-01-70

Line	Item	Item Description	Unit	Total	Qty
0002	201.0105	Clearing	STA	6.000	6.000
0004	201.0120	Clearing	ID	32.000	32.000
0006	201.0205	Grubbing	STA	6.000	6.000
0008	201.0220	Grubbing	ID	32.000	32.000
0010	204.0100	Removing Pavement	SY	2,950.000	2,950.000
0012	204.0150	Removing Curb & Gutter	LF	6,600.000	6,600.000
0014	204.0155	Removing Concrete Sidewalk	SY	3,440.000	3,440.000
0016	204.0180	Removing Delineators and Markers	EACH	7.000	7.000
0018	204.0195	Removing Concrete Bases	EACH	1.000	1.000
0020	204.0210	Removing Manholes	EACH	12.000	12.000
0022	204.0220	Removing Inlets	EACH	26.000	26.000
0024	204.0245	Removing Storm Sewer (size) 01. 4-Inch	LF	25.000	25.000
0026	204.0245	Removing Storm Sewer (size) 02. 6-Inch	LF	120.000	120.000
0028	204.0245	Removing Storm Sewer (size) 03. 8-Inch	LF	160.000	160.000
0030	204.0245	Removing Storm Sewer (size) 04. 10-Inch	LF	290.000	290.000
0032	204.0245	Removing Storm Sewer (size) 05. 12-Inch	LF	560.000	560.000
0034	204.0245	Removing Storm Sewer (size) 06. 15-Inch	LF	870.000	870.000
0036	204.0245	Removing Storm Sewer (size) 07. 18-Inch	LF	1,050.000	1,050.000
0038	204.0245	Removing Storm Sewer (size) 08. 21-Inch	LF	200.000	200.000
0040	204.0245	Removing Storm Sewer (size) 09. 30-Inch	LF	15.000	15.000
0042	204.0280	Sealing Pipes	EACH	1.000	1.000
0044	204.0291.S	Abandoning Sewer	CY	2.500	2.500
0046	205.0100	Excavation Common	CY	18,274.000	18,274.000
0048	205.0501.S	Excavation, Hauling, and Disposal of Petroleum Contaminated Soil	TON	3,070.000	3,070.000
0050	213.0100	Finishing Roadway (project) 01. 4880-01-70	EACH	1.000	1.000
0052	305.0110	Base Aggregate Dense 3/4-Inch	TON	1,000.000	1,000.000
0054	305.0120	Base Aggregate Dense 1 1/4-Inch	TON	13,300.000	13,300.000
0056	311.0110	Breaker Run	TON	16,500.000	16,500.000
0058	416.0160	Concrete Driveway 6-Inch	SY	1,180.000	1,180.000
0060	416.0180	Concrete Driveway 8-Inch	SY	380.000	380.000
0062	416.0280	Concrete Driveway HES 8-Inch	SY	215.000	215.000
0064	416.0610	Drilled Tie Bars	EACH	49.000	49.000
0066	440.4410	Incentive IRI Ride	DOL	2,508.000	2,508.000
0068	455.0605	Tack Coat	GAL	880.000	880.000
0070	460.2000	Incentive Density HMA Pavement	DOL	3,110.000	3,110.000
0072	460.6223	HMA Pavement 3 MT 58-28 S	TON	2,910.000	2,910.000
0074	460.6224	HMA Pavement 4 MT 58-28 S	TON	1,940.000	1,940.000
0076	465.0120	Asphaltic Surface Driveways and Field Entrances	TON	150.000	150.000
0078	465.0315	Asphaltic Flumes	SY	11.000	11.000

4880-01-70

Line	Item	Item Description	Unit	Total	Qty
0080	520.8000	Concrete Collars for Pipe	EACH	3.000	3.000
0082	522.1024	Apron Endwalls for Culvert Pipe Reinforced Concrete 24-Inch	EACH	1.000	1.000
0084	601.0411	Concrete Curb & Gutter 30-Inch Type D	LF	6,750.000	6,750.000
0086	601.0600	Concrete Curb Pedestrian	LF	82.000	82.000
0088	602.0405	Concrete Sidewalk 4-Inch	SF	24,590.000	24,590.000
0090	602.0415	Concrete Sidewalk 6-Inch	SF	1,600.000	1,600.000
0092	602.0505	Curb Ramp Detectable Warning Field Yellow	SF	380.000	380.000
0094	602.1500	Concrete Steps	SF	155.000	155.000
0096	606.0200	Riprap Medium	CY	11.000	11.000
0098	608.0315	Storm Sewer Pipe Reinforced Concrete Class III 15-Inch	LF	90.000	90.000
0100	608.0318	Storm Sewer Pipe Reinforced Concrete Class III 18-Inch	LF	141.000	141.000
0102	608.0324	Storm Sewer Pipe Reinforced Concrete Class III 24-Inch	LF	494.000	494.000
0104	608.0330	Storm Sewer Pipe Reinforced Concrete Class III 30-Inch	LF	415.000	415.000
0106	608.0415	Storm Sewer Pipe Reinforced Concrete Class IV 15-Inch	LF	1,183.000	1,183.000
0108	608.0418	Storm Sewer Pipe Reinforced Concrete Class IV 18-Inch	LF	988.000	988.000
0110	608.0421	Storm Sewer Pipe Reinforced Concrete Class IV 21-Inch	LF	8.000	8.000
0112	608.0424	Storm Sewer Pipe Reinforced Concrete Class IV 24-Inch	LF	116.000	116.000
0114	608.6010	Storm Sewer Pipe Composite 10-Inch	LF	39.000	39.000
0116	611.0530	Manhole Covers Type J	EACH	18.000	18.000
0118	611.0624	Inlet Covers Type H	EACH	20.000	20.000
0120	611.0639	Inlet Covers Type H-S	EACH	7.000	7.000
0122	611.1230	Catch Basins 2x3-FT	EACH	34.000	34.000
0124	611.2004	Manholes 4-FT Diameter	EACH	10.000	10.000
0126	611.2005	Manholes 5-FT Diameter	EACH	4.000	4.000
0128	611.2006	Manholes 6-FT Diameter	EACH	4.000	4.000
0130	611.8110	Adjusting Manhole Covers	EACH	3.000	3.000
0132	611.9800.S	Pipe Grates	EACH	1.000	1.000
0134	612.0406	Pipe Underdrain Wrapped 6-Inch	LF	400.000	400.000
0136	612.0902.S	Insulation Board Polystyrene (inch) 01. 2-Inch	SY	64.000	64.000
0138	618.0100	Maintenance And Repair of Haul Roads (project) 01. 4880-01-70	EACH	1.000	1.000
0140	619.1000	Mobilization	EACH	1.000	1.000
0142	621.0100	Landmark Reference Monuments	EACH	4.000	4.000

4880-01-70

Line	Item	Item Description	Unit	Total	Qty
0144	624.0100	Water	MGAL	440.000	440.000
0146	625.0100	Topsoil	SY	6,900.000	6,900.000
0148	628.1905	Mobilizations Erosion Control	EACH	10.000	10.000
0150	628.1910	Mobilizations Emergency Erosion Control	EACH	5.000	5.000
0152	628.7005	Inlet Protection Type A	EACH	1.000	1.000
0154	628.7010	Inlet Protection Type B	EACH	4.000	4.000
0156	628.7015	Inlet Protection Type C	EACH	60.000	60.000
0158	628.7020	Inlet Protection Type D	EACH	15.000	15.000
0160	628.7555	Culvert Pipe Checks	EACH	6.000	6.000
0162	628.7560	Tracking Pads	EACH	4.000	4.000
0164	628.7570	Rock Bags	EACH	130.000	130.000
0166	629.0210	Fertilizer Type B	CWT	4.200	4.200
0168	631.0300	Sod Water	MGAL	155.000	155.000
0170	631.1000	Sod Lawn	SY	6,900.000	6,900.000
0172	633.0100	Delineator Posts Steel	EACH	7.000	7.000
0174	634.0614	Posts Wood 4x6-Inch X 14-FT	EACH	44.000	44.000
0176	634.0616	Posts Wood 4x6-Inch X 16-FT	EACH	15.000	15.000
0178	637.2210	Signs Type II Reflective H	SF	217.940	217.940
0180	637.2230	Signs Type II Reflective F	SF	43.140	43.140
0182	638.2102	Moving Signs Type II	EACH	9.000	9.000
0184	638.2602	Removing Signs Type II	EACH	32.000	32.000
0186	638.3000	Removing Small Sign Supports	EACH	21.000	21.000
0188	642.5201	Field Office Type C	EACH	1.000	1.000
0190	643.0300	Traffic Control Drums	DAY	6,486.000	6,486.000
0192	643.0410	Traffic Control Barricades Type II	DAY	552.000	552.000
0194	643.0420	Traffic Control Barricades Type III	DAY	4,416.000	4,416.000
0196	643.0705	Traffic Control Warning Lights Type A	DAY	9,384.000	9,384.000
0198	643.0900	Traffic Control Signs	DAY	36,708.000	36,708.000
0200	643.0920	Traffic Control Covering Signs Type II	EACH	3.000	3.000
0202	643.5000	Traffic Control	EACH	1.000	1.000
0204	644.1430.S	Temporary Pedestrian Surface Plate	SF	1,865.000	1,865.000
0206	644.1601.S	Temporary Curb Ramp	EACH	18.000	18.000
0208	644.1616.S	Temporary Pedestrian Safety Fence	LF	610.000	610.000
0210	645.0120	Geotextile Type HR	SY	35.000	35.000
0212	645.0220	Geogrid Type SR	SY	5,000.000	5,000.000
0214	646.1020	Marking Line Epoxy 4-Inch	LF	12,100.000	12,100.000
0216	646.5020	Marking Arrow Epoxy	EACH	31.000	31.000
0218	646.5220	Marking Symbol Epoxy	EACH	31.000	31.000
0220	646.5320	Marking Railroad Crossings Epoxy	EACH	2.000	2.000
0222	646.6120	Marking Stop Line Epoxy 18-Inch	LF	34.000	34.000

4880-01-70

Line	Item	Item Description	Unit	Total	Qty
0224	646.7420	Marking Crosswalk Epoxy Transverse Line 6-Inch	LF	1,200.000	1,200.000
0226	646.7520	Marking Crosswalk Epoxy Ladder Pattern 24-Inch	LF	96.000	96.000
0228	649.0150	Temporary Marking Line Removable Tape 4-Inch	LF	680.000	680.000
0230	650.4000	Construction Staking Storm Sewer	EACH	53.000	53.000
0232	650.4500	Construction Staking Subgrade	LF	3,855.000	3,855.000
0234	650.5000	Construction Staking Base	LF	3,855.000	3,855.000
0236	650.5500	Construction Staking Curb Gutter and Curb & Gutter	LF	6,750.000	6,750.000
0238	650.8500	Construction Staking Electrical Installations (project) 01. 4880-01-70	LS	1.000	1.000
0240	650.9910	Construction Staking Supplemental Control (project) 01. 4880-01-70	LS	1.000	1.000
0242	650.9920	Construction Staking Slope Stakes	LF	3,855.000	3,855.000
0244	652.0225	Conduit Rigid Nonmetallic Schedule 40 2-Inch	LF	6,165.000	6,165.000
0246	653.0164	Pull Boxes Non-Conductive 24x42-Inch	EACH	16.000	16.000
0248	654.0230	Concrete Control Cabinet Bases Type L30	EACH	1.000	1.000
0250	655.0610	Electrical Wire Lighting 12 AWG	LF	2,793.000	2,793.000
0252	655.0615	Electrical Wire Lighting 10 AWG	LF	29,162.000	29,162.000
0254	655.0625	Electrical Wire Lighting 6 AWG	LF	17,792.000	17,792.000
0256	656.0200	Electrical Service Meter Breaker Pedestal (location) 001. CB200	LS	1.000	1.000
0258	659.2130	Lighting Control Cabinets 120/240 30-Inch	EACH	1.000	1.000
0260	690.0150	Sawing Asphalt	LF	1,130.000	1,130.000
0262	690.0250	Sawing Concrete	LF	1,100.000	1,100.000
0264	ASP.1T0A	On-the-Job Training Apprentice at $5.00/HR	HRS	500.000	500.000
0266	ASP.1T0G	On-the-Job Training Graduate at $5.00/HR	HRS	800.000	800.000
0268	SPV.0060	Special 01. Section Survey Monuments	EACH	1.000	1.000
0270	SPV.0060	Special 02. Connect to Existing Storm Sewer Pipe	EACH	2.000	2.000
0272	SPV.0060	Special 03. Connect to Existing Storm Sewer Structure	EACH	3.000	3.000
0274	SPV.0060	Special 04. Inlet Covers Type HC	EACH	2.000	2.000
0276	SPV.0060	Special 05. Inlet Covers Type HC-S	EACH	5.000	5.000
0278	SPV.0060	Special 06. Decorative Street Light Unit	EACH	19.000	19.000
0280	SPV.0060	Special 07. Adjust Sanitary Sewer Manhole	EACH	13.000	13.000
0282	SPV.0060	Special 08. Adjust Water Valve Box	EACH	23.000	23.000
0284	SPV.0060	Special 09. Adjust Water Curb Box	EACH	57.000	57.000
0286	SPV.0075	Special 01. Street Sweeping	HRS	40.000	40.000
0288	SPV.0090	Special 01. Temporary PVC Pipe 4-Inch	LF	144.000	144.000
0290	SPV.0090	Special 02. Trenchless Storm Sewer Pipe Steel 18-Inch	LF	65.000	65.000
0292	SPV.0090	Special 03. Storm Sewer Lateral 4-Inch	LF	2,034.000	2,034.000
0294	SPV.0090	Special 04. Storm Sewer Lateral 6-Inch	LF	21.000	21.000
0296	SPV.0090	Special 05. Storm Sewer Lateral 8-Inch	LF	14.000	14.000

4880-01-70

Line	Item	Item Description	Unit	Total	Qty
0298	SPV.0090	Special 06. Sanitary Sewer Lateral 4-Inch	LF	275.000	275.000
0300	SPV.0090	Special 07. Water Service 1-Inch	LF	120.000	120.000
0302	SPV.0090	Special 08. Water Service 1 1/4-Inch	LF	40.000	40.000
0304	SPV.0090	Special 09. Water Main 8-Inch	LF	55.000	55.000
0306	SPV.0105	Special 01. Construction Staking Sidewalk and Curb Ramps	LS	1.000	1.000
0308	SPV.0105	Special 02. Temporary Mailbox Accommodations	LS	1.000	1.000

CLEARING AND GRUBBING ITEMS

STATION - STATION	LOCATION	201.0105 CLEARING STA	201.0120 CLEARING ID	201.0205 GRUBBING STA	201.0220 GRUBBING ID
CATEGORY CODE 0010					
48+87	LT	--	8	--	8
49+94	LT	--	8	--	8
52+00 - 53+00	LT	1	--	1	--
53+41	LT	--	6	--	6
54+20	LT	--	10	--	10
55+00 - 57+00	LT	2	--	2	--
61+00 - 62+00	LT	1	--	1	--
69+00 - 70+00	LT	1	--	1	--
72+00 - 73+00	LT	1	--	1	--
	TOTALS	**6**	**32**	**6**	**32**

REMOVING PAVEMENT

STATION - STATION	LOCATION	204.0100 SY	COMMENTS
CATEGORY CODE 0010			
44+00 - 77+25	LT & RT	800	CONCRETE DRIVEWAYS
66+83 - 76+50	LT & RT	2,150	20' WIDE CONCRETE PAVEMENT UNDER ASPHALT
	TOTAL	**2,950**	

REMOVING CURB & GUTTER

STATION - STATION	LOCATION	204.0150 LF
CATEGORY CODE 0010		
44+91 - 46+04	RT	135
46+43 - 51+33	RT	520
46+62 - 51+29	LT	530
51+69 - 56+68	LT	610
51+69 - 56+68	RT	550
57+03 - 64+59	LT	830
57+03 - 60+77	RT	440
61+15 - 66+68	RT	575
64+93 - 66+77	LT	210
66+78 - 77+25	RT	1,050
66+87 - 71+39	LT	525
71+74 - 77+25	LT	625
	TOTAL	**6,600**

REMOVING CONCRETE SIDEWALK

STATION - STATION	LOCATION	204.0155 SY
CATEGORY CODE 0010		
46+89 - 51+32	RT	245
51+70 - 56+67	LT	272
51+70 - 56+66	RT	275
57+04 - 64+58	LT	462
57+05 - 60+76	RT	228
61+17 - 66+68	RT	373
64+95 - 66+77	LT	153
66+84 - 77+25	RT	666
66+89 - 71+37	LT	399
71+75 - 77+25	LT	360
250+74 - 250+84	RT	5
250+96 - 250+99	RT	2
	TOTAL	**3,440**

REMOVING DELINEATORS AND MARKERS

STATION	LOCATION	204.0180 EACH
CATEGORY CODE 0010		
67+04 - 67+88	RT	7
	TOTAL	**7**

REMOVING CONCRETE BASES

STATION	LOCATION	204.0195 EACH
CATEGORY CODE 0010		
72+44	LT	1
	TOTAL	**1**

ABANDONING SEWER

STATION - STATION	LOCATION	204.0291.S CY	COMMENTS
CATEGORY CODE 0010			
66+51 - 67+01	RT	2.5	STORM SEWER UNDER RAILROAD
	TOTAL	**2.5**	

EXCAVATION, HAULING, AND DISPOSAL OF PETROLEUM CONTAMINATED SOIL

STATION - STATION	LOCATION	205.0501.S TON
CATEGORY CODE 0010		
63+00 - 64+50	LT & RT	1,250
67+50 - 69+50	LT & RT	1,820
	TOTAL	**3,070**

REMOVING STORM SEWER ITEMS

STATION - STATION	LOCATION	204.0210 REMOVING MANHOLES EACH	204.0220 REMOVING INLETS EACH	204.0245.01 REMOVING STORM SEWER 4-INCH LF	204.0245.02 REMOVING STORM SEWER 6-INCH LF	204.0245.03 REMOVING STORM SEWER 8-INCH LF	204.0245.04 REMOVING STORM SEWER 10-INCH LF	204.0245.05 REMOVING STORM SEWER 12-INCH LF	204.0245.06 REMOVING STORM SEWER 15-INCH LF	204.0245.07 REMOVING STORM SEWER 18-INCH LF	204.0245.08 REMOVING STORM SEWER 21-INCH LF	204.0245.09 REMOVING STORM SEWER 30-INCH LF	204.0280 SEALING PIPES EACH
CATEGORY CODE 0010													
44+41 - 46+43	RT	1	2	--	--	--	--	54	--	--	200	--	--
45+51 - 51+84	LT & RT	2	5	--	44	--	60	21	--	593	--	--	--
56+55 - 61+10	LT & RT	3	6	--	5	--	197	346	131	--	--	--	--
63+77 - 63+90	LT & RT	--	2	--	--	--	--	50	--	--	--	--	--
64+45	LT & RT	--	1	--	--	--	--	31	--	--	--	--	1
64+75 - 77+15	LT & RT	6	10	25	71	160	33	58	739	457	--	15	--
	TOTALS	**12**	**26**	**25**	**120**	**160**	**290**	**560**	**870**	**1,050**	**200**	**15**	**1**

EARTHWORK SUMMARY

Division	From/To Station	Location	205.0100 Excavation Common (1)		Salvaged/Unusable Pavement Material (4)	Available Material (5)	Unexpanded Fill	Expanded Fill (6)	Mass Ordinate +/- (7)	Waste	Comment:
			Cut (2)	EBS Excavation (3)				Factor 1.11			
Division 1A											
	66+83/77+25	CTH D	5982	0	1,066	4,916	58	64	4,853	4,853	
	250+00/251+00	Elm Street	267	0	32	235	0	0	235	235	
Division 1A Subtotal			6,250	0	1,098	5,152	58	64	5,088	5,088	
Division 1B											
	44+00/66+73	CTH D	10981	0	2,265	8,716	308	341	8,375	8,375	
	199+50/200+00	Lilac Lane	121	0	14	107	1	1	106	106	
	209+50/210+00	CTH KW South	102	0	13	89	1	1	88	88	
	210+00/210+90	CTH KW North	220	0	32	188	1	1	187	187	
	219+25/220+75	Liberty Street	355	0	45	310	0	0	310	310	
	229+50/230+00	Victory Street	121	0	14	107	0	0	107	107	
	240+00/240+50	Elevator Lane	123	0	13	110	0	0	110	110	
Division 1B Subtotal			12,024	0	2,396	9,628	311	346	9,283	9,283	
Grand Total			18,274	0	3,494	14,780	369	410	14,370	14,370	
Total Common Exc			**18,274**								

Notes:

(1) Common Excavation is the sum of the Cut and EBS Excavation columns. Item number 205.0100

(2) Salvaged/Unsuable Pavement Material is included in Cut.

(3) EBS Excavation to be backfilled with Breaker Run.

(4) Salvaged/Unusable Pavement Material = Length * Typical Width * Typical Depth

5) Available Material = Cut - Salvaged/Unusuable Pavement Material

(6) Expanded Fill Factor = 1.11. Expanded Fill = Unexpanded Fill * Fill Factor

(7) The Mass Ordinate + or - Qty calculated for the Division. Plus quantity indicates an excess of material within the Division. Minus indicates a shortage of material within the Division.

BASE AGGREGATE DENSE, BREAKER RUN, AND WATER ITEMS

STATION - STATION	LOCATION	305.0110 BASE AGGREGATE DENSE 3/4-INCH TON	305.0120 BASE AGGREGATE DENSE 1 1/4-INCH TON	311.0110 BREAKER RUN TON	624.0100 WATER MGAL
CATEGORY CODE 0010					
44+00 - 66+73	LT & RT	672	8,941	11,010	295
66+83 - 77+25	LT & RT	328	4,359	5,490	145
	TOTALS	**1,000**	**13,300**	**16,500**	**440**

BASE AGGREGATE DENSE 3/4-INCH WEIGHT CALCULATIONS BASED ON 2.1 TONS/CY.
BASE AGGREGATE DENSE 1 1/4-INCH WEIGHT CALCULATIONS BASED ON 2.0 TONS/CY.
BREAKER RUN WEIGHT CALCULATIONS BASED ON 1.8 TONS/CY.

DRILLED TIE BARS

STATION	LOCATION	416.0610 EACH	COMMENTS
CATEGORY CODE 0010			
77+25	LT & RT	6	CTH D E. PROJECT LIMITS
199+50	LT & RT	6	LILAC LN S. CONTSRUCTION LIMITS
210+90	LT & RT	6	CTH KW N. CONSTRUCTION LIMITS
219+25	LT & RT	6	LIBERTY ST S. CONSTRUCTION LIMITS
220+25	LT & RT	6	LIBERTY ST N. CONSTRUCTION LIMITS
229+50	LT & RT	6	VICTORY ST S. CONSTRUCTION LIMITS
229+62	LT	1	PEDESTRIAN CURB LIMITS
240+50	LT & RT	6	ELEVATOR LN N. CONSTRUCTION LIMITS
251+00	LT & RT	6	ELM ST N. CONSTRUCTION LIMITS
TOTAL		**49**	

ASPHALTIC ITEMS

STATION - STATION	LOCATION	455.0605 TACK COAT GAL	460.6223 HMA PAVEMENT 3 MT 58-28 S TON	460.6224 HMA PAVEMENT 4 MT 58-28 S TON
CATEGORY CODE 0010				
44+00 - 66+73	LT & RT	595	1,967	1,311
66+83 - 77+25	LT & RT	285	943	629
	TOTALS	**880**	**2,910**	**1,940**

HMA PAVEMENT WEIGHT CALCULATIONS BASED ON 110 LB/SY/IN.
TACK COAT CALCULATIONS BASED ON 0.050 GAL/SY.

CONCRETE DRIVEWAY ITEMS

STATION	LOCATION	416.0160 6-INCH SY	416.0180 8-INCH SY	416.0280 HES 8-INCH SY
CATEGORY CODE 0010				
46+82	RT	22	--	--
47+82	LT	27	--	--
48+26	LT	--	52	--
48+38	RT	30	--	--
48+97	RT	90	--	--
49+57	LT	--	52	--
50+00	RT	22	--	--
50+60	RT	36	--	--
52+96	RT	35	--	--
53+63	LT	47	--	--
54+08	RT	23	--	--
55+02	LT	21	--	--
55+51	LT	21	--	--
56+01	LT	21	--	--
58+02	LT	22	--	--
58+22	RT	24	--	--
58+58	LT	26	--	--
58+66	RT	28	--	--
59+08	RT	28	--	--
59+46	LT	31	--	--
59+49	RT	22	--	--
60+05	RT	32	--	--
60+42	LT	49	--	--
60+47	RT	37	--	--
61+36	LT	18	--	--
62+31	LT	17	--	--
62+36	RT	48	--	--
63+31	LT	26	--	--
64+03	RT	--	--	100
65+58	LT	--	18	--
65+64 - 66+04	LT	--	34	--
66+09	RT	--	28	--
66+16	LT	--	--	25
67+38	LT	--	38	--
68+24	LT	--	36	--
68+30	RT	--	--	40
68+94	RT	--	94	--
69+15	LT	30	--	--
69+83	LT	27	--	--
70+29	LT	--	28	--
72+18	RT	--	--	50
72+86	RT	17	--	--
73+19	LT	22	--	--
73+44	LT	19	--	--
73+54	RT	33	--	--
74+26	LT	17	--	--
74+64	RT	67	--	--
74+66	LT	23	--	--
75+52	LT	17	--	--
75+79	RT	25	--	--
76+41	RT	31	--	--
76+66	RT	24	--	--
76+88	LT	25	--	--
	TOTALS	**1,180**	**380**	**215**

ASPHALTIC SURFACE
DRIVEWAYS AND FIELD ENTRANCES

STATION	LOCATION	465.0120 TON
CATEGORY CODE 0010		
46+82	RT	3
48+32	RT	3
48+08 - 50+89	LT	49
52+96	RT	2
54+08	RT	1
58+02	LT	1
58+22	RT	1
58+58	LT	1
60+51	LT	2
61+36	LT	2
62+26	RT	2
62+31	LT	2
65+58	LT	3
66+09	RT	5
66+92 - 68+40	RT	39
68+24	LT	3
69+15	LT	9
72+86	RT	1
73+19	LT	2
73+44	LT	1
73+54	RT	1
74+26	LT	2
74+66	LT	2
210+63	LT	13
	TOTAL	**150**

ASPHALTIC SURFACE WEIGHT CALCULATIONS
BASED ON 110 LB/SY/IN.

CONCRETE SIDEWALK, DETECTABLE WARNING FIELD & CONCRETE STEPS

STATION - STATION	LOCATION	602.0405 CONCRETE SIDEWALK 4-INCH SF	602.0415 CONCRETE SIDEWALK 6-INCH SF	602.0505 CURB RAMP DETECTABLE WARNING FIELD YELLOW SF	602.1500 CONCRETE STEPS SF
CATEGORY CODE 0010					
45+88 - 46+04	RT	--	124	20	--
45+90 - 51+29	LT	2,177	96	30	--
46+44 - 51+33	RT	1,750	160	30	--
51+70 - 56+67	LT	1,956	88	20	12
51+70 - 56+68	RT	2,312	92	20	--
57+04 - 64+58	LT	3,177	184	50	43
57+04 - 60+77	RT	1,612	156	40	6
61+16 - 66+67	RT	2,059	128	30	27
64+95 - 66+79	LT	651	132	20	--
66+77 - 77+25	RT	4,403	212	50	26
66+89 - 71+39	LT	1,918	176	50	8
71+75 - 77+25	LT	2,521	52	20	33
250+74 - 250+84	RT	40	--	--	--
250+96 - 250+99	RT	14	--	--	--
	TOTALS	**24,590**	**1,600**	**380**	**155**

*CURB RAMPS TO BE PAID FOR AS CONCRETE SIDEWALK 6-INCH

ASPHALTIC FLUMES

STATION	LOCATION	465.0315 SY
CATEGRORY CODE 0010		
44+35	RT	4
45+50	LT	7
	TOTAL	**11**

CONCRETE CURB AND GUTTER ITEMS

STATION - STATION	601.0411 CONCRETE CURB & GUTTER 30-INCH TYPE D LF	601.0600 CONCRETE CURB PEDESTRIAN LF	650.5500 CONSTRUCTION STAKING CURB, GUTTER AND CURB & GUTTER LF
CATEGORY CODE 0010			
44+35 RT - 199+50 LT	190	--	190
45+50 LT - 210+90 LT	640	--	640
199+50 RT - 209+50 LT	530	--	530
209+50 RT - 219+25 LT	560	--	560
210+90 RT - 220+75 LT	610	--	610
219+25 RT - 229+50 LT	440	--	440
220+75 RT - 240+50 LT	830	--	830
60+65 RT - 60+70 RT	--	7	--
229+50 RT - 66+62 RT	570	--	570
64+47 RT - 64+69 RT	--	26	--
240+50 RT - 66+69 LT	200	--	200
66+35 LT - 66+61 LT	--	27	--
66+87 RT - 77+25 RT	1,040	--	1,040
66+94 LT - 251+00 LT	520	--	520
67+72 LT - 67+94 LT	--	22	--
251+00 RT - 77+25 LT	620	--	620
TOTALS	**6,750**	**82**	**6,750**

RIPRAP AND GEOTEXTILE FABRIC ITEMS

STATION - STATION	LOCATION	606.0200 RIPRAP MEDIUM CY	645.0120 GEOTEXTILE TYPE HR SY	COMMENTS
CATEGORY CODE 0010				
44+26	LT	2	7	PLACE AT END OF FLUME
45+39	LT	7	22	PLACE AT END OF AEW & FLUME
UNDISTRIBUTED		2	6	
TOTALS		**11**	**35**	

STORM SEWER PIPES

FROM - TO	LOCATION	608.0315 Storm Sewer Pipe Reinforced Concrete Class III 15-Inch LF	608.0318 Storm Sewer Pipe Reinforced Concrete Class III 18-Inch LF	608.0324 Storm Sewer Pipe Reinforced Concrete Class III 24-Inch LF	608.0330 Storm Sewer Pipe Reinforced Concrete Class III 30-Inch LF	608.0415 Storm Sewer Pipe Reinforced Concrete Class IV 15-Inch LF	608.0418 Storm Sewer Pipe Reinforced Concrete Class IV 18-Inch LF	608.0421 Storm Sewer Pipe Reinforced Concrete Class IV 21-Inch LF	608.0424 Storm Sewer Pipe Reinforced Concrete Class IV 24-Inch LF	608.6010 Storm Sewer Pipe Composite 10-Inch LF	SPV.0090.02 Trenchless Storm Sewer Pipe Steel 18-Inch LF	JOINT TIES* EACH
101 - 100	CTHD	--	--	--	--	--	--	--	82	--	--	4
101.1 - 101	CTHD	--	--	--	--	24	--	--	--	--	--	--
101.2 - 101.1	CTHD	--	--	--	--	47	--	--	--	--	--	--
102 - 101	LILAC	--	--	--	--	--	--	--	34	--	--	--
102.1 - 102	LILAC	--	--	--	--	9	--	--	--	--	--	--
102.2 - 102	LILAC	--	--	--	--	--	--	8	--	--	--	--
102.3 - 102	LILAC	--	--	--	--	29	--	--	--	--	--	--
102.4 - 102.3	CTHD	--	--	--	--	25	--	--	--	--	--	--
102.5 - 102.3	LILAC	--	--	--	--	10	--	--	--	--	--	--
103 - 101	CTHD	--	--	--	--	--	237	--	--	--	--	--
104 - 103	CTHD	--	--	--	--	--	279	--	--	--	--	--
104.1 - 104	MIDDLE NORTH CL	--	--	--	--	45	--	--	--	--	--	--
104.2 - 104.1	MIDDLE NORTH CL	--	--	--	--	39	--	--	--	--	--	--
105 - 104	CTHD	--	--	--	--	--	59	--	--	--	--	--
105.1 - 105	CTHD	--	--	--	--	23	--	--	--	--	--	--
105.2 - 105	CTHD	--	--	--	--	18	--	--	--	--	--	--
106 - 105	CTHD	--	--	--	--	212	--	--	--	--	--	--
199 - 200	CTHD	--	--	--	--	152	--	--	--	--	--	--
200 - 201	CTHD	--	--	--	--	--	51	--	--	--	--	--
200.1 - 200	CTHD	--	--	--	--	24	--	--	--	--	--	--
200.2 - 200	CTHD	--	--	--	--	18	--	--	--	--	--	--
201 - 202	CTHD	--	--	--	--	--	362	--	--	--	--	--
201.1 - 201	LIBERTY	--	--	--	--	44	--	--	--	--	--	--
201.2 - 201.1	LIBERTY	--	--	--	--	34	--	--	--	--	--	--
202 - 203	CTHD	--	--	46	--	--	--	--	--	--	--	--
202.1 - 202	CTHD	--	--	--	--	23	--	--	--	--	--	--
202.2 - 202	CTHD	--	--	--	--	18	--	--	--	--	--	--
204.1 - 204	CTHD	--	--	--	--	32	--	--	--	--	--	--
204.2 - 204	CTHD	--	--	--	--	9	--	--	--	--	--	--
297 - 297.5	CTHD	--	--	--	--	--	--	--	--	--	65	--
297.1 - 297	CTHD	18	--	--	--	--	--	--	--	--	--	--
297.2 - 297.1	CTHD	--	--	--	--	46	--	--	--	--	--	--
297.3 - 297	CTHD	26	--	--	--	--	--	--	--	--	--	--
297.4 - 297.3	CTHD	--	--	--	--	33	--	--	--	--	--	--
297.5 - 298	CTHD	--	24	--	--	--	--	--	--	--	--	--
298 - 299	CTHD	--	79	--	--	--	--	--	--	--	--	--
298.1 - 298	CTHD	--	--	--	--	--	--	--	--	23	--	--
299 - 300	CTHD	--	38	--	--	--	--	--	--	--	--	--
299.1 - 299	CTHD	--	--	--	--	18	--	--	--	--	--	--
299.2 - 299	CTHD	--	--	--	--	24	--	--	--	--	--	--
300 - 301	CTHD	--	--	261	--	--	--	--	--	--	--	--
300.1 - 300	CTHD	23	--	--	--	--	--	--	--	--	--	--
300.2 - 300	CTHD	23	--	--	--	--	--	--	--	--	--	--
300.3 - 300.2	CTHD	--	--	--	--	--	--	--	--	16	--	--
301 - 302	CTHD	--	--	61	--	--	--	--	--	--	--	--
301.1 - 301	CTHD	--	--	--	--	23	--	--	--	--	--	--
301.2 - 301	CTHD	--	--	--	--	24	--	--	--	--	--	--
302 - 303	CTHD	--	--	126	--	--	--	--	--	--	--	--
302.1 - 302	ELM	--	--	--	--	54	--	--	--	--	--	--
302.2 - 302.1	ELM	--	--	--	--	34	--	--	--	--	--	--

* NON-BID ITEM: FOR INFORMATION ONLY

CONTINUED ON NEXT SHEET

STORM SEWER PIPES

FROM	-	TO	LOCATION	608.0315 Storm Sewer Pipe Reinforced Concrete Class III 15-Inch LF	608.0318 Storm Sewer Pipe Reinforced Concrete Class III 18-Inch LF	608.0324 Storm Sewer Pipe Reinforced Concrete Class III 24-Inch LF	608.0330 Storm Sewer Pipe Reinforced Concrete Class III 30-Inch LF	608.0415 Storm Sewer Pipe Reinforced Concrete Class IV 15-Inch LF	608.0418 Storm Sewer Pipe Reinforced Concrete Class IV 18-Inch LF	608.0421 Storm Sewer Pipe Reinforced Concrete Class IV 21-Inch LF	608.0424 Storm Sewer Pipe Reinforced Concrete Class IV 24-Inch LF	608.6010 Storm Sewer Pipe Composite 10-Inch LF	SPV.0090.02 Trenchless Storm Sewer Pipe Steel 18-Inch LF	JOINT TIES* EACH
303	-	304	CTHD	--	--	--	225	--	--	--	--	--	--	--
303.1	-	303	CTHD	--	--	--	--	23	--	--	--	--	--	--
303.2	-	303	CTHD	--	--	--	--	23	--	--	--	--	--	--
304	-	305	CTHD	--	--	--	190	--	--	--	--	--	--	--
304.1	-	304	CTHD	--	--	--	--	23	--	--	--	--	--	--
304.2	-	304	CTHD	--	--	--	--	23	--	--	--	--	--	--
TOTALS				**90**	**141**	**494**	**415**	**1183**	**988**	**8**	**116**	**39**	**65**	

* NON-BID ITEM: FOR INFORMATION ONLY

STORM SEWER STRUCTURES

STRUCTURE	STATION	OFFSET*	LOCATION	520.8000 Concrete Collars for Pipe EACH	522.1024 Apron Endwalls for Culvert Pipe Reinforced Concrete 24-Inch EACH	611.0530 Manhole Covers Type J EACH	611.0624 Inlet Covers Type H EACH	611.0639 Inlet Covers Type H-S EACH	611.1230 Catch Basins 2x3-FT EACH	611.2004 Manholes 4-FT Diameter EACH	611.2005 Manholes 5-FT Diameter EACH	611.2006 Manholes 6-FT Diameter EACH	611.9800.S Pipe Grates EACH	650.4000 Construction Staking Storm Sewer EACH	SPV.0060.02 Connect to Existing Storm Sewer Pipe EACH	SPV.0060.03 Connect to Existing Storm Sewer Structure EACH	SPV.0060.04 Inlet Covers Type HC EACH	SPV.0060.05 Inlet Covers Type HC-S EACH
100	45+39	31.6' RT	CTHD	--	1	--	--	--	--	--	--	--	1	1	--	--	--	--
101	46+13	3' RT	CTHD	--	--	1	--	--	--	--	--	1	--	1	--	--	--	--
101.1	46+13	20.5' RT	CTHD	--	--	--	1	--	1	--	--	--	--	1	--	--	--	--
101.2	46+60	20.5' RT	CTHD	--	--	--	1	--	1	--	--	--	--	1	--	--	--	--
102	199+63	10.5' RT	LILAC	--	--	1	--	--	--	--	1	--	--	1	--	--	--	--
102.1	199+63	19' RT	LILAC	--	--	--	1	--	1	--	--	--	--	1	--	--	--	--
102.2	199+55	10.5' RT	LILAC	1	--	--	--	--	--	--	--	--	--	--	--	--	--	--
102.3	199+62	19' RT	LILAC	--	--	--	1	--	1	--	--	--	--	1	--	--	--	--
102.4	46+60	20.5' RT	CTHD	--	--	--	1	--	1	--	--	--	--	1	--	--	--	--
102.5	199+52	19' RT	LILAC	--	--	--	1	--	1	--	--	--	--	1	--	--	--	--
103	48+50	3' RT	CTHD	--	--	1	--	--	--	1	--	--	--	1	--	--	--	--
104	51+29	3' RT	CTHD	--	--	1	--	--	--	1	--	--	--	1	--	--	--	--
104.1	210+42	19.5' RT	MIDDLE NORTH CL	--	--	--	--	--	1	--	--	--	--	1	--	--	1	--
104.2	210+42	19.5' RT	MIDDLE NORTH CL	--	--	--	1	--	1	--	--	--	--	1	--	--	--	--
105	51+88	3' RT	CTHD	--	--	1	--	--	--	1	--	--	--	1	--	--	--	--
105.1	51+88	20.5' RT	CTHD	--	--	--	1	--	1	--	--	--	--	1	--	--	--	--
105.2	51+88	20.5' RT	CTHD	--	--	--	1	--	1	--	--	--	--	1	--	--	--	--
106	54+00	3' RT	CTHD	--	--	1	--	--	--	1	--	--	--	1	--	--	--	--
199	55+00	3' RT	CTHD	--	--	1	--	--	--	1	--	--	--	1	--	--	--	--
200	56+52	3' RT	CTHD	--	--	1	--	--	--	1	--	--	--	1	--	--	--	--
200.1	56+52	20.5' RT	CTHD	--	--	--	1	--	1	--	--	--	--	1	--	--	--	--
200.2	56+52	20.5' RT	CTHD	--	--	--	1	--	1	--	--	--	--	1	--	--	--	--
201	57+03	3' RT	CTHD	--	--	1	--	--	--	1	--	--	--	1	--	--	--	--
201.1	220+41	17' RT	LIBERTY	--	--	--	1	--	1	--	--	--	--	1	--	--	--	--
201.2	220+41	17' RT	LIBERTY	--	--	--	1	--	1	--	--	--	--	1	--	--	--	--

REMARKS
* STATIONS AND OFFSETS ARE TO CENTER OF STRUCTURE

CONTINUED ON NEXT SHEET

STORM SEWER STRUCTURES

STRUCTURE	STATION	OFFSET*	LOCATION	520.8000 Concrete Collars for Pipe EACH	522.1024 Apron Endwalls for Culvert Pipe Reinforced Concrete 24-Inch EACH	611.0530 Manhole Covers Type J EACH	611.0624 Inlet Covers Type H EACH	611.0639 Inlet Covers Type H-S EACH	611.1230 Catch Basins 2x3-FT EACH	611.2004 Manholes 4-FT Diameter EACH	611.2005 Manholes 5-FT Diameter EACH	611.2006 Manholes 6-FT Diameter EACH	611.9800.S Pipe Grates EACH	650.4000 Construction Staking Storm Sewer EACH	SPV.0060.02 Connect to Existing Storm Sewer Pipe EACH	SPV.0060.03 Connect to Existing Storm Sewer Structure EACH	SPV.0060.04 Inlet Covers Type HC EACH	SPV.0060.05 Inlet Covers Type HC-S EACH
202	60+65	3' RT	CTHD	--	--	1	--	--	--	--	--	1	--	1	--	--	--	--
202.1	60+65	20.5' RT	CTHD	--	--	--	--	--	1	--	--	--	--	1	--	--	1	--
202.2	60+60	20.5' RT	CTHD	--	--	--	1	--	1	--	--	--	--	1	--	--	--	--
203	61+10	11.2' RT	CTHD	--	--	--	--	--	--	--	--	--	--	--	--	1	--	--
204	63+77	11.1' RT	CTHD	--	--	--	--	--	--	--	--	--	--	--	--	2	--	--
204.1	63+78	20.5' RT	CTHD	--	--	--	--	1	1	--	--	--	--	1	--	--	--	--
204.2	63+78	20.5' RT	CTHD	--	--	--	--	--	1	--	--	--	--	1	--	--	--	1
205	64+67	11.1' RT	CTHD	--	--	--	--	--	--	--	--	--	--	--	--	--	--	--
297	66+45	0' RT	CTHD	--	--	1	--	--	--	1	--	--	--	1	--	--	--	--
297.1	66+46	17.5' RT	CTHD	--	--	--	--	1	1	--	--	--	--	1	--	--	--	--
297.2	66+00	23.5' RT	CTHD	--	--	--	--	--	1	--	--	--	--	1	--	--	--	1
297.3	66+33	23.5' RT	CTHD	--	--	--	--	1	1	--	--	--	--	1	--	--	--	--
297.4	66+00	23.5' RT	CTHD	--	--	--	--	--	1	--	--	--	--	1	--	--	--	1
297.5	67+10	0' RT	CTHD	1	--	--	--	--	--	--	--	--	--	--	--	--	--	--
298	67+35	0' RT	CTHD	--	--	1	--	--	--	1	--	--	--	1	--	--	--	--
298.1	67+35	23.5' RT	CTHD	--	--	--	--	--	--	--	--	--	--	--	1	--	--	--
299	68+13	0' RT	CTHD	--	--	1	--	--	--	1	--	--	--	1	--	--	--	--
299.1	68+13	17.5' RT	CTHD	--	--	--	--	--	1	--	--	--	--	1	--	--	--	1
299.2	68+13	23.5' RT	CTHD	--	--	--	--	--	1	--	--	--	--	1	--	--	--	1
300	68+52	0' RT	CTHD	--	--	1	--	--	--	--	1	--	--	1	--	--	--	--
300.1	68+52	23.5' RT	CTHD	--	--	--	--	1	1	--	--	--	--	1	--	--	--	--
300.2	68+52	23.5' RT	CTHD	--	--	--	--	1	1	--	--	--	--	1	--	--	--	--
300.3	68+39	33' RT	CTHD	--	--	--	--	--	--	--	--	--	--	--	1	--	--	--
301	71+13	0' RT	CTHD	--	--	1	--	--	--	--	1	--	--	1	--	--	--	--
301.1	71+13	23.5' RT	CTHD	--	--	--	1	--	1	--	--	--	--	1	--	--	--	--
301.2	71+13	23.5' RT	CTHD	--	--	--	1	--	1	--	--	--	--	1	--	--	--	--
302	71+74	0' RT	CTHD	--	--	1	--	--	--	--	1	--	--	1	--	--	--	--
302.1	250+53	17' RT	ELM	--	--	--	--	1	1	--	--	--	--	1	--	--	--	--
302.2	250+53	17' RT	ELM	--	--	--	--	1	1	--	--	--	--	1	--	--	--	--
303	73+00	0' RT	CTHD	--	--	1	--	--	--	--	--	1	--	1	--	--	--	--
303.1	73+00	23.5' RT	CTHD	--	--	--	1	--	1	--	--	--	--	1	--	--	--	--
303.2	73+00	23.5' RT	CTHD	--	--	--	1	--	1	--	--	--	--	1	--	--	--	--
304	75+25	0' RT	CTHD	--	--	1	--	--	--	--	--	1	--	1	--	--	--	--
304.1	75+25	23.5' RT	CTHD	--	--	--	1	--	1	--	--	--	--	1	--	--	--	--
304.2	75+25	23.5' RT	CTHD	--	--	--	1	--	1	--	--	--	--	1	--	--	--	--
305	77+15	0' RT	CTHD	1	--	--	--	--	--	--	--	--	--	--	--	--	--	--
			TOTALS	**3**	**1**	**18**	**20**	**7**	**34**	**10**	**4**	**4**	**1**	**53**	**2**	**3**	**2**	**5**

REMARKS

* STATIONS AND OFFSETS ARE TO CENTER OF STRUCTURE

ADJUSTING MANHOLE COVERS

STATION	LOCATION	EXISTING ELEVATION	FINISHED ELEVATION	611.8110 EACH	COMMENTS
CATEGORY CODE 0010					
61+10	11' RT	738.05	737.87	1	0.18' ADJUSTMENT DOWN
63+77	11' RT	737.18	737.05	1	0.13' ADJUSTMENT DOWN
64+67	11' RT	737.44	737.30	1	0.14' ADJUSTMENT DOWN
			TOTAL	**3**	

PIPE UNDERDRAIN WRAPPED 6-INCH

STATION	LOCATION	612.0406 LF
CATEGORY CODE 0010		
63+78	LT & RT	100
66+00	LT & RT	50
66+33	RT	25
66+46	LT	25
68+13	LT & RT	50
68+52	LT & RT	50
250+44	LT & RT	100
	TOTAL	**400**

LANDMARK REFERENCE MONUMENTS

LOCATION	621.0100 LANDMARK REFERENCE MONUMENTS EACH	SPV.0060.01 SECTION SURVEY MONUMENTS EACH
CATEGORY CODE 0010		
51+51.32	4	1
TOTALS	**4**	**1**

RESTORATION ITEMS

STATION - STATION	LOCATION	625.0100 TOPSOIL SY	629.0210 FERTILIZER TYPE B CWT	631.0300 SOD WATER MGAL	631.1000 SOD LAWN SY
CATEGORY CODE 0010					
40+00 LT - 210+90 LT		1,220	0.8	28	1,220
44+00 RT - 199+50 LT		262	0.2	6	262
199+50 RT - 209+50 LT		499	0.3	11	499
209+50 RT - 219+25 LT		568	0.4	13	568
210+90 RT - 220+75 LT		405	0.2	9	405
219+25 RT - 229+50 LT		324	0.2	7	324
220+75 RT - 240+50 LT		546	0.3	12	546
229+50 RT - 66+62 RT		251	0.2	6	251
240+50 RT - 66+69 LT		89	0.1	2	89
66+87 RT - 77+25 RT		759	0.5	18	759
66+94 LT - 251+00 LT		281	0.2	7	281
251+00 RT - 77+25 LT		317	0.2	7	317
UNDISTRIBUTED		1,379	0.6	29	1,379
	TOTALS	**6,900**	**4.2**	**155**	**6,900**

MOBILIZATIONS EROSION CONTROL ITEMS

LOCATION	628.1905 MOBILIZATIONS EROSION CONTROL EACH	628.1910 MOBILIZATIONS EMERGENCY EROSION CONTROL EACH
CATEGORY CODE 0010		
PROJECT 4880-01-70	10	5
TOTALS	**10**	**5**

DITCH CHECK ITEMS

STATION	LOCATION	628.7555 CULVERT PIPE CHECKS EACH	628.7570 ROCK BAGS EACH
CATEGORY CODE 0010			
43+64	RT	3	--
43+80 - 48+00	LT	2	90
UNDISTRIBUTED		1	40
	TOTALS	**6**	**130**

INLET PROTECTION ITEMS

LOCATION	628.7005 TYPE A EACH	628.7010 TYPE B EACH	628.7015 TYPE C EACH	628.7020 TYPE D EACH
CATEGORY CODE 0010				
EXISTING STRUCTURES	1	2	26	--
PROPOSED STRUCTURES	--	1	21	12
UNDISTRIBUTED	--	1	13	3
TOTALS	**1**	**4**	**60**	**15**

TRACKING PAD

LOCATION	628.7560 EACH
CATEGORY CODE 0010	
PROJECT 4880-01-70	4
TOTAL	**4**

DELINEATOR POSTS STEEL

STATION	LOCATION	633.0100 EACH	COMMENTS
CATEGORY CODE 0010			
67+04 - 67+88	RT	7	INSTALL POSTS WITH NO REFLECTORS
TOTAL		**7**	

SIGNING ITEMS

SIGN NUMBER	STATION	LOCATION	ROADWAY	SIGN CODE	SIZE	634.0614* POSTS WOOD 4X6X14 EACH	634.0616* POSTS WOOD 4X6X16 EACH	637.2210 SIGNS TYPE II REFLECTIVE H SF	637.2230 SIGNS TYPE II REFLECTIVE F SF	COMMENTS
CATEGORY CODE 0010										
301A	45+00	RT	CTH D	R2-1	24X30	--	1	5.00	--	[25 MPH]
301B	"	"	"	R10-64	30X36	--	--	7.50	--	--
302	45+86	LT	CTH D	R3-17	30X24	1	--	5.00	--	MOUNT ABOVE SIGN #209
303	199+62	RT	LILAC LANE	R1-1	30X30	1	--	5.18	--	--
304A	45+80	RT	CTH D	R3-17	30X24	1	--	5.00	--	--
304B	46+60	RT	CTH D	R7-53L	18X24	1	--	3.00	--	ROTATE 45 DEGREES
305	47+63	RT	CTH D	J1-1	24X39	--	1	6.50	--	[M2-1; M1-5A (KW)]
306	49+30	RT	CTH D	R7-53D	18X24	1	--	3.00	--	ROTATE 45 DEGREES
307	50+25	RT	CTH D	R2-1	24X30	1	--	5.00	--	[25 MPH]
308A	51+10	RT	CTH D	J13-1	24X45	--	1	7.50	--	[M1-5A (KW); M6-4]
308B	50+80	RT	CTH D	R7-53R	18X24	1	--	3.00	--	ROTATE 45 DEGREES
309	210+38	LT	CTH KW	J13-1	24X45	--	1	7.50	--	[M1-5A (D); M6-4]
310	210+38	LT	CTH KW	R1-1	30X30	1	--	5.18	--	--
311	209+62	RT	CTH KW	R1-1	30X30	1	--	5.18	--	--
312	209+62	RT	CTH KW	J13-1	24X45	--	1	7.50	--	[M1-5A (D); M6-4]
313	51+90	LT	CTH D	J13-1	24X45	--	1	7.50	--	[M1-5A (KW); M6-4]
314	52+00	RT	CTH D	R7-53L	18X24	1	--	3.00	--	ROTATE 45 DEGREES
315	54+30	RT	CTH D	R7-53D	18X24	1	--	3.00	--	ROTATE 45 DEGREES
316	55+75	LT	CTH D	J1-1	24X39	--	1	6.50	--	[M2-1; M1-5A (KW)]
317A	55+70	RT	CTH D	R2-1	24X30	1	--	5.00	--	[25 MPH]
317B	56+45	RT	CTH D	R7-53R	18X24	1	--	3.00	--	ROTATE 45 DEGREES
318	56+35	LT	CTH D	R3-17	30X24	1	--	5.00	--	--
319	220+37	LT	LIBERTY STREET	R1-1	30X30	1	--	5.18	--	--
320	219+63	RT	LIBERTY STREET	R1-1	30X30	1	--	5.18	--	--
321A	57+99	RT	CTH D	R3-17	30X24	1	--	5.00	--	--
321B	57+40	RT	CTH D	R7-53L	18X24	1	--	3.00	--	ROTATE 45 DEGREES
322	57+50	LT	CTH D	R2-1	24X30	1	--	5.00	--	[25 MPH]
323	59+00	RT	CTH D	R7-53D	18X24	1	--	3.00	--	ROTATE 45 DEGREES
324	60+32	RT	CTH D	R7-53R	18X24	1	--	3.00	--	ROTATE 45 DEGREES
325	229+64	RT	VICTORY STREET	R1-1	30X30	1	--	5.18	--	--
326A	61+98	RT	CTH D	R2-1	24X30	1	--	5.00	--	[25 MPH]
326B	61+38	RT	CTH D	R7-53L	18X24	1	--	3.00	--	ROTATE 45 DEGREES
327	63+25	RT	CTH D	R7-53D	18X24	1	--	3.00	--	--
328	64+00	LT	CTH D	R2-1	24X30	1	--	5.00	--	[25 MPH]
329	240+37	LT	ELEVATOR LANE	R1-1	30X30	1	--	5.18	--	--
330A	64+92	RT	CTH D	W10-1	36X36	1	--	--	7.07	--
330B	64+62	RT	CTH D	R7-53R	18X24	1	--	3.00	--	ROTATE 45 DEGREES
331A	66+87	RT	CTH D	W11-1	30X30	--	1	--	6.25	--
331B	66+45	RT	CTH D	R7-53L	18X24	1	--	3.00	--	ROTATE 45 DEGREES
332A	66+67	LT	CTH D	R3-17	30X24	1	--	5.00	--	--
332B	66+45	LT	CTH D	R7-53R	18X24	1	--	3.00	--	ROTATE 45 DEGREES
333A	67+70	RT	CTH D	W11-15	30X30	--	1	--	6.25	--
333B	"	"	"	W16-7L	24X12	--	--	--	2.00	--
333C	67+92	RT	CTH D	R7-53R	18X24	1	--	3.00	--	ROTATE 45 DEGREES
334A	68+05	LT	CTH D	W11-15	30X30	--	1	--	6.25	--
334B	"	"	"	W16-7L	24X12	--	--	--	2.00	--
334C	68+39	LT	CTHD	R7-53L	18X24	1	--	3.00	--	ROTATE 45 DEGREES
335	68+53	RT	CTH D	R3-17	30X24	1	--	5.00	--	--
336	68+55	LT	CTH D	W10-1	36X36	1	--	--	7.07	--
337	70+10	LT	CTH D	W11-1	30X30	--	1	--	6.25	--
339	250+36	LT	ELM STREET	R1-1	30X30	1	--	5.18	--	--
340	250+70	RT	ELM STREET	R7-51R	18X24	1	--	3.00	--	--
342	73+00	RT	CTH D	R2-1	24X30	1	--	5.00	--	[25 MPH]
343	74+50	LT	CTH D	R2-1	24X30	1	--	5.00	--	[25 MPH]
344	77+00	RT	CTH D	R3-17	30X24	1	--	5.00	--	--
				TOTALS		**41**	**11**	**217.94**	**43.14**	

*ADDITIONAL QUANTITIES SHOWN ELSEWHERE.

EXISTING SIGNING ITEMS

SIGN NO.	EXISTING SIGN STATION	EXISTING SIGN LOCATION	PROPOSED SIGN STATION	PROPOSED SIGN LOCATION	ROADWAY	634.0614* POSTS WOOD 4X6X14 EACH	634.0616* POSTS WOOD 4X6X16 EACH	638.2102 MOVING SIGNS TYPE II EACH	638.2602 REMOVING SIGNS TYPE II EACH	638.3000 REMOVING SMALL SIGN SUPPORTS EACH	COMMENTS
CATEGORY CODE 0010											
101	44+95	RT	--	--	CTH D	--	--	--	1	1	--
102	199+64	RT	--	--	LILAC LANE	--	--	--	1	1	--
103	48+50	RT	--	--	CTH D	--	--	--	1	--	--
104	50+12	RT	--	--	CTH D	--	--	--	1	--	--
105	51+20	RT	--	--	CTH D	--	--	--	1	--	--
106	210+35	LT	--	--	CTH KW	--	--	--	1	1	--
107	210+36	LT	--	--	CTH KW	--	--	--	1	1	--
108	209+67	RT	--	--	CTH KW	--	--	--	1	1	--
109	209+67	RT	--	--	CTH KW	--	--	--	1	1	--
110	51+91	LT	--	--	CTH D	--	--	--	1	1	--
111	53+93	RT	--	--	CTH D	--	--	--	1	--	--
112	53+93	LT	--	--	CTH D	--	--	--	1	1	--
113	55+91	RT	--	--	CTH D	--	--	--	1	--	--
114	220+39	LT	--	--	LIBERTY STREET	--	--	--	1	1	--
115	219+63	LT	--	--	CTH D	--	--	--	1	--	--
116	57+14	RT	--	--	LIBERTY STREET	--	--	--	1	1	--
117	229+63	RT	--	--	VICTORY STREET	--	--	--	1	1	--
118	61+32	RT	--	--	CTH D	--	--	--	1	--	--
119	62+39	RT	--	--	CTH D	--	--	--	1	--	--
120	63+39	LT	--	--	CTH D	--	--	--	1	--	--
121	63+64	LT	--	--	CTH D	--	--	--	1	--	--
122	240+33	LT	--	--	ELEVATOR LANE	--	--	--	1	1	--
123	67+24	RT	--	--	CTH D	--	--	--	1	--	--
124	67+91	RT	--	--	CTH D	--	--	--	1	--	--
125	68+02	RT	--	--	CTH D	--	--	--	1	--	--
126	69+30	LT	--	--	CTH D	--	--	--	1	--	--
128	71+37	RT	--	--	CTH D	--	--	--	1	--	--
129	250+36	LT	--	--	ELM STREET	--	--	--	1	1	--
130	250+70	RT	--	--	ELM STREET	--	--	--	1	1	--
132	72+93	RT	--	--	CTH D	--	--	--	1	--	--
133	73+64	LT	--	--	CTH D	--	--	--	1	--	--
134	74+52	LT	--	--	CTH D	--	--	--	1	--	--
201	48+00	LT	48+00	LT	CTH D	--	1	1	--	1	--
202	49+07	LT	49+00	LT	CTH D	--	1	1	--	1	--
203	210+74	RT	210+75	RT	CTH D	1	--	1	--	1	--
204	52+56	RT	52+50	RT	CTH D	--	1	1	--	1	--
205	67+42	RT	67+40	RT	CTH D	1	--	1	--	1	--
206	67+91	RT	67+83	RT	CTH D	1	--	1	--	1	--
207	67+95	RT	"	"	CTH D	--	--	1	--	--	MOUNT BELOW SIGN #206
208	75+00	RT	42+50	RT	CTH D	--	1	1	--	1	--
209	78+50	LT	45+86	LT	CTH D	--	--	1	--	--	MOUNT BELOW SIGN #302
					TOTALS	**3**	**4**	**9**	**32**	**21**	

*ADDITIONAL QUANTITIES SHOWN ELSEWHERE.

TRAFFIC CONTROL ITEMS

	NUMBER OF DAYS IN SERVICE	643.0300 TRAFFIC CONTROL DRUMS NO. REQ'D	643.0300 TRAFFIC CONTROL DRUMS TOTAL DAY	643.0410 TRAFFIC CONTROL BARRICADES TYPE II NO. REQ'D	643.0410 TRAFFIC CONTROL BARRICADES TYPE II TOTAL DAY	643.0420 TRAFFIC CONTROL BARRICADES TYPE III NO. REQ'D	643.0420 TRAFFIC CONTROL BARRICADES TYPE III TOTAL DAY	643.0705 TRAFFIC CONTROL WARNING LIGHTS TYPE A NO. REQ'D	643.0705 TRAFFIC CONTROL WARNING LIGHTS TYPE A TOTAL DAY	643.0900 TRAFFIC CONTROL SIGNS NO. REQ'D	643.0900 TRAFFIC CONTROL SIGNS TOTAL DAY	643.0920 TRAFFIC CONTROL COVERING SIGNS TYPE II NO. CYCLES	643.0920 TRAFFIC CONTROL COVERING SIGNS TYPE II EACH
CATEGORY CODE 0010													
CTH D/ STH 57	138	--	--	--	--	2	276	4	552	2	276	--	--
CTH D/ SIX MILE ROAD	138	--	--	--	--	2	276	4	552	5	690	--	--
CTH D AT WEST PROJECT LIMITS	138	--	--	--	--	4	552	8	1,104	1	138	--	--
CTH D/ LILAC LANE	138	--	--	--	--	2	276	4	552	2	276	--	--
CTH D/ CTH KW	138	--	--	--	--	4	552	8	1,104	4	552	--	--
CTH D/ LIBERTY STREET	138	--	--	--	--	4	552	8	1,104	4	552	--	--
CTH D/ VICTORY STREET	138	--	--	--	--	2	276	4	552	2	276	--	--
CTH D/ ELEVATOR LANE	138	--	--	--	--	2	276	4	552	2	276	--	--
CTH D/ ELM STREET	138	--	--	4	552	2	276	8	1,104	6	828	--	--
CTH D AT EAST PROJECT LIMITS	138	--	--	--	--	2	276	4	552	1	138	--	--
CTH D/ BEECH STREET	138	--	--	--	--	--	--	--	--	1	138	--	--
CTH D/ CTH LL	138	--	--	--	--	2	276	4	552	2	276	--	--
EB CTH D DETOUR ROUTE	138	--	--	--	--	--	--	--	--	116	16,008	--	--
WB CTH D DETOUR ROUTE	138	--	--	--	--	--	--	--	--	96	13,248	1	3
OZAUKEE INTERURBAN TRAIL DETOUR	138	13	1,794	--	--	4	552	8	1,104	22	3,036	--	--
UNDISTRIBUTED	138	34	4,692	--	--	--	--	--	--	--	--	--	--
	TOTALS	47	**6,486**	4	**552**	32	**4,416**	68	**9,384**	266	**36,708**	1	**3**

TEMPORARY PEDESTRIAN ACCOMMODATION ITEMS

LOCATION	644.1430.S TEMPORARY PEDESTRIAN SURFACE PLATE SF	644.1601.S TEMPORARY CURB RAMP EACH	644.1616.S TEMPORARY PEDESTRIAN SAFETY FENCE LF	649.0150 TEMPORARY MARKING LINE REMOVABLE TAPE 4-INCH LF	SPV.0090.01 TEMPORARY PVC PIPE 4-INCH LF
CATEGORY CODE 0010					
CTH D AT LILAC LANE	265.0	2.0	30.0	80.0	16.0
S. CTH KW	180.0	2.0	80.0	70.0	16.0
S. LIBERTY STREET	190.0	2.0	70.0	72.0	16.0
N. LIBERTY STREET	195.0	2.0	70.0	73.0	16.0
CTH D AT LIBERTY STREET	265.0	2.0	40.0	80.0	16.0
VICTORY STREET	210.0	2.0	80.0	80.0	16.0
ELEVATOR LANE	215.0	2.0	80.0	79.0	16.0
CTH D AT OIT	305.0	2.0	30.0	84.0	16.0
ELM STREET	40.0	2.0	130.0	62.0	16.0
TOTALS	**1,865.0**	**18.0**	**610.0**	**680.0**	**144.0**

PAVEMENT MARKING ITEMS

STATION - STATION	LOCATION	646.1020 MARKING LINE EPOXY 4-INCH WHITE LF	646.1020 MARKING LINE EPOXY 4-INCH YELLOW LF	646.5020 MARKING ARROW EPOXY WHITE EACH	646.5220 MARKING SYMBOL EPOXY WHITE EACH	646.5320 MARKING RAILROAD CROSSING EPOXY WHITE EACH	646.6120 MARKING STOP LINE EPOXY 18-INCH WHITE LF	646.7420 MARKING CROSSWALK EPOXY TRANSVERSE LINE 6-INCH WHITE LF	646.7520 MARKING CROSSWALK EPOXY LADDER PATTERN 24-INCH WHITE LF
CATEGORY CODE 0010									
44+00 - 77+25	LT & RT	9,929	2,050	31	31	2	--	1,053	96
209+50 - 210+90	LT & RT	19	102	--	--	--	34	147	--
		9,948	2,152						
	TOTALS	**12,100**		**31**	**31**	**2**	**34**	**1,200**	**96**

CONSTRUCTION STAKING ITEMS

STATION - STATION	LOCATION	650.4500 CONSTRUCTION STAKING SUBGRADE LF	650.5000 CONSTRUCTION STAKING BASE LF	650.9910 CONSTRUCTION STAKING SUPPLEMENTAL CONTROL LS	650.9920 CONSTRUCTION STAKING SLOPE STAKES LF	SPV.0105.01 CONSTRUCTION STAKING SIDEWALK AND CURB RAMPS LS
CATEGORY CODE 0010						
44+00 - 66+73	LT & RT	2,273	2,273	1	2,273	1
66+83 - 77+25	LT & RT	1,042	1,042	--	1,042	--
199+50 - 200+00	LT & RT	50	50	--	50	--
209+50 - 210+90	LT & RT	140	140	--	140	--
219+25 - 220+75	LT & RT	150	150	--	150	--
229+50 - 230+00	LT & RT	50	50	--	50	--
240+00 - 240+50	LT & RT	50	50	--	50	--
250+00 - 251+00	LT & RT	100	100	--	100	--
	TOTALS	**3,855**	**3,855**	**1**	**3,855**	**1**

STAKING ITEMS FOR STORM SEWER, CURB & GUTTER, AND ELECTRICAL INSTALLATIONS SHOWN ELSEWHERE

GEOGRID TYPE SR

STATION	645.0220 GEOGRID TYPE SR SY
CATEGORY CODE 0010	
UNDISTRIBUTED	5,000
TOTAL	**5,000**

STREET SWEEPING

LOCATION	SPV.0075.01 HRS
CATEGORY CODE 0010	
PROJECT 4881-01-70	40
TOTAL	**40**

SAWING PAVEMENT ITEMS

STATION	LOCATION	690.0150 ASPHALT LF	690.0250 CONCRETE LF	COMMENTS
CATEGORY CODE 0010				
44+00	LT & RT	30	--	PROJECT LIMITS
46+82	RT	11	--	DRIVEWAY
48+08 - 50+89	LT	280	--	DRIVEWAY
48+32	RT	32	--	DRIVEWAY
48+97	RT	--	48	DRIVEWAY
50+60	RT	--	15	DRIVEWAY
52+96	RT	23	--	DRIVEWAY
53+25	RT	--	4	SIDEWALK
53+63	LT	--	17	DRIVEWAY
54+08	RT	10	--	DRIVEWAY
55+02	LT	--	8	DRIVEWAY
55+36	RT	--	4	SIDEWALK
55+51	LT	--	8	DRIVEWAY
56+01	LT	--	9	DRIVEWAY
56+20	RT	--	4	SIDEWALK
56+26	LT	--	5	SIDEWALK
57+23	LT	--	4	SIDEWALK
57+40	RT	--	4	SIDEWALK
57+77	LT	--	8	SIDEWALK
57+87	RT	--	3	SIDEWALK
58+02	LT	12	3	DRIVEWAY & SIDEWALK
58+22	RT	15	--	DRIVEWAY
58+28	LT	--	10	SIDEWALK
58+45	RT	--	3	SIDEWALK
58+58	LT	15	--	DRIVEWAY
58+66	RT	--	11	DRIVEWAY
58+88	RT	--	3	SIDEWALK
59+08	RT	--	11	DRIVEWAY
59+26	LT	--	5	SIDEWALK
59+46	LT	--	13	DRIVEWAY
59+51	RT	--	3	SIDEWALK
59+68	LT	--	3	SIDEWALK
59+87	RT	--	3	SIDEWALK
59+89	LT	--	16	DRIVEWAY
60+34	LT	--	15	DRIVEWAY
60+35 - 60+70	RT	--	52	SIDEWALK
60+51	LT	11	--	DRIVEWAY
60+80	LT	--	6	SIDEWALK
60+85	LT	--	2	SIDEWALK
61+36	LT	11	--	DRIVEWAY
61+71	LT	--	4	SIDEWALK
62+04	LT	--	3	SIDEWALK
62+26	RT	22	--	DRIVEWAY
62+31	LT	13	--	DRIVEWAY
62+79	LT	--	6	SIDEWALK
62+91	LT	--	2	SIDEWALK
62+98	RT	--	7	SIDEWALK
63+04	LT	--	4	SIDEWALK
63+31	LT	--	10	DRIVEWAY
63+46 - 63+99	RT	--	58	DRIVEWAY & SIDEWALK
63+49	LT	--	8	SIDEWALK
63+90	LT	--	8	SIDEWALK
64+42 - 65+94	RT	--	153	SIDEWALK
65+50 - 66+04	LT	15	41	DRIVEWAY
66+09	RT	29	--	DRIVEWAY
66+30 - 66+50	LT	--	21	SIDEWALK
66+96	RT	13	--	BIKE PATH

SAWING PAVEMENT ITEMS

STATION	LOCATION	690.0150 ASPHALT LF	690.0250 CONCRETE LF	COMMENTS
CATEGORY CODE 0010				
67+48 - 68+31	LT	46	44	DRIVEWAY & SIDEWALK
68+14	RT	30	73	DRIVEWAY
68+62 - 69+33	LT	73	--	DRIVEWAY
69+21	RT	--	4	SIDEWALK
69+83	LT	--	10	DRIVEWAY
69+88	RT	--	8	SIDEWALK
70+21	RT	--	4	SIDEWALK
70+92	RT	--	18	SIDEWALK
70+93	LT	--	5	SIDEWALK
71+44 - 72+32	RT	--	92	DRIVEWAY
72+24	LT	--	5	SIDEWALK
72+38	RT	--	4	SIDEWALK
72+86	RT	10	--	DRIVEWAY
72+87	LT	--	7	SIDEWALK
73+12	RT	--	4	SIDEWALK
73+19	LT	17	3	DRIVEWAY & SIDEWALK
73+44	LT	14	--	DRIVEWAY
73+54	RT	11	10	DRIVEWAY
73+91	LT	--	3	SIDEWALK
74+26	LT	12	--	DRIVEWAY
74+33	RT	--	3	SIDEWALK
74+64	RT	--	33	DRIVEWAY
74+66	LT	19	--	DRIVEWAY
74+86	LT	--	6	SIDEWALK
75+01 - 75+27	LT	--	27	SIDEWALK
75+76	LT	--	4	SIDEWALK
75+79	RT	--	10	DRIVEWAY
76+11	RT	--	4	SIDEWALK
76+41	RT	--	10	DRIVEWAY
76+66	RT	--	12	DRIVEWAY
76+88	LT	--	10	DRIVEWAY
76+93	RT	--	3	SIDEWALK
77+25	LT & RT	44	15	PROJECT LIMITS
199+50	LT & RT	35	5	CONSTRUCTION LIMITS
209+50	LT & RT	33	--	CONSTRUCTION LIMITS
210+43 - 210+93	LT	49	--	DRIVEWAY
210+90	LT & RT	36	5	CONSTRUCTION LIMITS
219+25	LT & RT	31	5	CONSTRUCTION LIMITS
220+75	LT & RT	31	5	CONSTRUCTION LIMITS
229+50	LT & RT	35	5	CONSTRUCTION LIMITS
240+50	LT & RT	31	5	CONSTRUCTION LIMITS
250+60	LT & RT	--	9	SIDEWALK
251+00	LT & RT	31	5	CONSTRUCTION LIMITS
TOTALS		**1,130**	**1,100**	

SANITARY SEWER LATERAL 4-INCH

STATION	LOCATION	NUMBER	SPV.0090.06 LF
CATEGORY CODE 0020			
57+49	LT & RT	850	20
58+88	LT & RT	842-844	20
59+83	LT & RT	836-838	25
67+72	LT & RT	740	10
68+99	LT & RT	726-728-730	25
69+31	LT & RT	718-720	25
70+55	LT & RT	702	25
72+77	LT & RT	670-672	25
74+21	LT & RT	664	25
75+34	LT & RT	650-652-654	25
75+79	LT & RT	646	25
76+88	LT & RT	640-642	25
		TOTAL	**275**

WATER ITEMS

STATION	LOCATION	HOUSE NUMBER	612.0902.S.01 INSULATION BOARD POLYSTYRENE 2-INCH SY	SPV.0090.07 WATER SERVICE 1-INCH LF	SPV.0090.08 WATER SERVICE 1 1/4-INCH LF	SPV.0090.09 WATER MAIN 8-INCH LF
CATEGORY CODE 0020						
46+23	RT	--	4	--	--	--
51+29	LT	--	4	--	--	--
51+65	RT	--	4	--	--	--
57+03	LT	--	4	--	--	--
60+87	LT & RT	--	--	--	--	25
63+78	LT	--	4	--	--	--
67+57	LT & RT	729	--	--	--	15
69+31	LT & RT	725	4	20	--	--
71+74	LT	--	4	--	--	--
72+11	LT & RT	705	--	--	--	15
72+74	LT & RT	675	4	20	--	--
73+36	LT & RT	669	4	20	--	--
73+92	LT & RT	665	4	20	--	--
74+24	LT & RT	661	4	20	--	--
75+18	LT & RT	655	4	20	--	--
75+89	LT & RT	641-643	4	--	20	--
77+19	LT & RT	635-637	4	--	20	--
210+42	RT	--	4	--	--	--
250+53	LT	--	4	--	--	--
		TOTALS	**64**	**120**	**40**	**55**

*INSULATION BOARD SHALL BE PLACED ON ALL CROSSINGS WHERE STORM SEWER IS WITHIN 24-INCHES OF THE WATER MAIN OR WATER SERVICE.

STORM SEWER LATERALS

STATION	LOCATION	HOUSE NUMBER	SPV.0090.03 STORM SEWER LATERAL 4-INCH LF	SPV.0090.04 STORM SEWER LATERAL 6-INCH LF	SPV.0090.05 STORM SEWER LATERAL 8-INCH LF	COMMENTS
CATEGORY CODE 0020						
45+78	LT & RT	1105	55	--	--	CONNECT TO 24" SS
47+52	RT	1027	33	--	--	CONNECT TO 18" SS
47+88	RT	1023	33	--	--	CONNECT TO 18" SS
49+63	RT	1009-1011	33	--	--	CONNECT TO 18" SS
50+23	RT	1005	33	--	--	CONNECT TO 18" SS
51+05	RT	1001	33	--	--	CONNECT TO 18" SS
52+42	LT & RT	934	39	--	--	CONNECT TO 18" SS
52+76	RT	929	33	--	--	CONNECT TO 18" SS
53+95	LT & RT	928	39	--	--	CONNECT TO 18" SS
55+01	LT & RT	922	39	--	--	CONNECT TO 15" SS
55+08	RT	925-927	33	--	--	CONNECT TO 15" SS
55+24	RT	909	33	--	--	CONNECT TO 15" SS
55+48	LT & RT	910	39	--	--	CONNECT TO 15" SS
55+98	LT & RT	906	39	--	--	CONNECT TO 15" SS
56+30	RT	901	33	--	--	CONNECT TO 15" SS
56+44	LT & RT	902	30	--	--	CONNECT TO 15" SS
57+42	LT & RT	850	39	--	--	CONNECT TO 18" SS
57+58	RT	851	33	--	--	CONNECT TO 18" SS
57+63	LT & RT	846-88	39	--	--	CONNECT TO 18" SS
58+08	RT	849	33	--	--	CONNECT TO 18" SS
58+12	LT & RT	842-844	39	--	--	CONNECT TO 18" SS
58+49	RT	845	33	--	--	CONNECT TO 18" SS
59+00	RT	843	33	--	--	CONNECT TO 18" SS
59+14	LT & RT	840	39	--	--	CONNECT TO 18" SS
59+54	RT	839-841	33	--	--	CONNECT TO 18" SS
59+62	LT & RT	836-838	39	--	--	CONNECT TO 18" SS
59+77	RT	837	33	--	--	CONNECT TO 18" SS
60+11	LT & RT	832-834	39	--	--	CONNECT TO 18" SS
60+29	RT	833-835	33	--	--	CONNECT TO 18" SS
60+89	LT & RT	830	44	--	--	CONNECT TO 24" SS
61+80	LT & RT	824	48	--	--	CONNECT TO 18" SS
62+31	LT & RT	820	48	--	--	CONNECT TO 18" SS
62+57	RT	819	22	--	--	CONNECT TO 18" SS
63+15	LT & RT	818	48	--	--	CONNECT TO 18" SS
63+38	RT	815-817	22	--	--	CONNECT TO 18" SS
63+69	LT & RT	810	48	--	--	CONNECT TO 18" SS
65+98	RT	745	26	--	--	CONNECT TO STRUCTURE 297.4
66+34	RT		--	8	--	CONNECT TO STRUCTURE 297.3
66+46	LT	748	--	5	--	CONNECT TO STRUCTURE 297.1
67+91	LT	740	36	--	--	CONNECT TO 18" SS
68+51	LT		--	--	14	CONNECT TO STRUCTURE 300.1
68+62	LT	726-728-730	36	--	--	CONNECT TO 24" SS
69+34	RT	725	36	--	--	CONNECT TO 24" SS
69+71	LT	718-720	36	--	--	CONNECT TO 24" SS
71+04	LT	702	36	--	--	CONNECT TO 24" SS
72+42	LT	680	30	--	--	CONNECT TO 24" SS
72+70	LT	670-672	36	--	--	CONNECT TO 24" SS
72+72	RT	675	36	--	--	CONNECT TO 24" SS
73+19	RT	669	36	--	--	CONNECT TO 30" SS
73+72	LT	664	36	--	--	CONNECT TO 30" SS

STORM SEWER LATERALS

STATION	LOCATION	HOUSE NUMBER	SPV.0090.03 STORM SEWER LATERAL 4-INCH LF	SPV.0090.04 STORM SEWER LATERAL 6-INCH LF	SPV.0090.05 STORM SEWER LATERAL 8-INCH LF	COMMENTS
CATEGORY CODE 0020						
73+98	RT	665	36	--	--	CONNECT TO 30" SS
74+16	RT	661	36	--	--	CONNECT TO 30" SS
75+16	RT	655	36	--	--	CONNECT TO 30" SS
75+24	LT	650-652-654	9	--	--	CONNECT TO STRUCTURE 304.1
75+26	LT	650-652-654	--	8	--	CONNECT TO STRUCTURE 304.1
75+59	LT	646	36	--	--	CONNECT TO 30" SS
76+22	RT	641-643	36	--	--	CONNECT TO 30" SS
76+50	LT	640-642	36	--	--	CONNECT TO 30" SS
77+09	RT	635-637	36	--	--	CONNECT TO 30" SS
77+13	LT	634	36	--	--	CONNECT TO 30" SS
240+35	LT & RT	770	35	--	--	CONNECT TO 12" SS
		TOTALS	**2,034**	**21**	**14**	

ADJUSTING SANITARY SEWER AND WATER MAIN ITEMS

STATION	LOCATION	EXISTING ELEVATION	FINISHED ELEVATION	SPV.0060.07 ADJUST SANITARY SEWER MANHOLE EACH	SPV.0060.08 ADJUST WATER VALVE BOX EACH	SPV.0060.09 ADJUST WATER CURB BOX EACH	COMMENTS
CATEGORY CODE 0020							
46+28	9' LT	738.14	738.14	--	1	--	0' ADJUSTMENT DOWN
47+25	11' RT	740.89	740.81	1	--	--	0.08' ADJUSTMENT DOWN
47+45	32' RT	741.75	741.85	--	--	1	0.1' ADJUSTMENT UP
48+16	33' RT	743.77	743.63	--	--	1	0.14' ADJUSTMENT DOWN
49+73	11' RT	745.55	745.24	1	--	--	0.31' ADJUSTMENT DOWN
49+93	33' RT	745.87	745.99	--	--	1	0.12' ADJUSTMENT UP
50+35	33' RT	746.46	746.45	--	--	1	0.01' ADJUSTMENT DOWN
51+51	11' RT	747.22	747.19	1	--	--	0.03' ADJUSTMENT DOWN
51+63	8' LT	747.70	747.70	--	1	--	0' ADJUSTMENT UP
51+69	8' LT	747.74	747.77	--	1	--	0.03' ADJUSTMENT UP
52+51	34' LT	749.73	749.30	--	--	1	0.43' ADJUSTMENT DOWN
52+53	33' LT	749.30	749.29	--	--	1	0.01' ADJUSTMENT DOWN
53+15	34' RT	750.59	749.89	--	--	1	0.7' ADJUSTMENT DOWN
53+89	35' LT	750.96	750.99	--	--	1	0.03' ADJUSTMENT UP
54+23	32' RT	751.08	750.70	--	--	1	0.38' ADJUSTMENT DOWN
54+44	13' RT	750.19	750.19	1	--	--	0' ADJUSTMENT UP
54+51	24' LT	750.69	750.87	--	--	1	0.18' ADJUSTMENT UP
55+21	25' LT	750.34	750.37	--	--	1	0.03' ADJUSTMENT UP
55+29	33' RT	750.03	749.90	--	--	1	0.13' ADJUSTMENT DOWN
55+81	25' LT	749.08	749.19	--	--	1	0.11' ADJUSTMENT UP
56+14	34' RT	747.46	747.59	--	--	1	0.13' ADJUSTMENT UP
56+78	16' RT	745.48	745.34	1	--	--	0.14' ADJUSTMENT DOWN
56+87	6' LT	745.86	745.55	--	1	--	0.31' ADJUSTMENT DOWN
56+96	7' LT	745.53	745.31	--	1	--	0.22' ADJUSTMENT DOWN
57+59	32' LT	744.47	744.59	--	--	1	0.12' ADJUSTMENT UP
57+65	33' RT	743.61	743.67	--	--	1	0.06' ADJUSTMENT UP
58+12	35' RT	742.16	742.21	--	--	1	0.05' ADJUSTMENT UP
58+49	23' LT	741.83	741.80	--	--	1	0.03' ADJUSTMENT DOWN
58+65	34' RT	741.12	741.08	--	--	1	0.04' ADJUSTMENT DOWN
58+82	34' RT	740.76	740.66	--	--	1	0.1' ADJUSTMENT DOWN
59+29	34' RT	739.65	739.64	--	--	1	0.01' ADJUSTMENT DOWN
59+36	33' LT	739.97	739.67	--	--	1	0.3' ADJUSTMENT DOWN
59+79	32' LT	738.92	738.89	--	--	1	0.03' ADJUSTMENT DOWN
60+01	34' RT	738.32	738.63	--	--	1	0.31' ADJUSTMENT UP
60+26	32' LT	738.74	738.59	--	--	1	0.15' ADJUSTMENT DOWN
60+54	33' LT	738.59	738.33	--	--	1	0.26' ADJUSTMENT DOWN
61+04	15' RT	737.94	737.82	1	--	--	0.12' ADJUSTMENT DOWN
61+63	32' LT	738.68	738.33	--	--	1	0.35' ADJUSTMENT DOWN
61+82	33' RT	737.91	737.97	--	--	1	0.06' ADJUSTMENT UP
62+54	32' RT	737.99	737.61	--	--	1	0.38' ADJUSTMENT DOWN
62+63	30' LT	737.87	737.74	--	--	1	0.13' ADJUSTMENT DOWN
63+22	31' LT	737.80	737.51	--	--	1	0.29' ADJUSTMENT DOWN
63+73	32' LT	737.53	737.46	--	--	1	0.07' ADJUSTMENT DOWN
64+38	5' LT	737.28	737.27	--	1	--	0.01' ADJUSTMENT DOWN
64+39	34' RT	737.87	737.47	--	--	1	0.4' ADJUSTMENT DOWN
64+41	11' LT	736.95	737.18	--	1	--	0.23' ADJUSTMENT UP
64+82	20' RT	737.21	737.09	1	--	--	0.12' ADJUSTMENT DOWN
65+54	5' LT	737.21	737.23	--	1	--	0.02' ADJUSTMENT UP
65+58	31' LT	737.24	736.98	--	--	1	0.26' ADJUSTMENT DOWN
65+59	31' LT	737.26	736.96	--	--	1	0.3' ADJUSTMENT DOWN

ADJUSTING SANITARY SEWER AND WATER MAIN ITEMS

STATION	LOCATION	EXISTING ELEVATION	FINISHED ELEVATION	SPV.0060.07 ADJUST SANITARY SEWER MANHOLE EACH	SPV.0060.08 ADJUST WATER VALVE BOX EACH	SPV.0060.09 ADJUST WATER CURB BOX EACH	COMMENTS
CATEGORY CODE 0020							
65+96	33' RT	736.72	736.80	--	--	1	0.08' ADJUSTMENT UP
66+18	20' RT	736.24	736.58	1	--	--	0.34' ADJUSTMENT UP
66+25	32' LT	736.24	736.64	--	--	1	0.4' ADJUSTMENT UP
66+25	32' LT	736.23	736.61	--	--	1	0.38' ADJUSTMENT UP
66+30	7' RT	736.74	736.84	1	--	--	0.1' ADJUSTMENT UP
67+55	8' LT	735.95	736.32	--	1	--	0.37' ADJUSTMENT UP
67+57	6' LT	736.01	736.34	--	1	--	0.33' ADJUSTMENT UP
67+77	5' RT	736.02	736.13	1	--	--	0.11' ADJUSTMENT UP
68+02	30' LT	736.17	736.21	--	--	1	0.04' ADJUSTMENT UP
68+27	19' RT	735.66	735.46	1	--	--	0.2' ADJUSTMENT DOWN
68+53	30' LT	736.28	735.91	--	--	1	0.37' ADJUSTMENT DOWN
69+30	35' RT	736.55	736.51	--	--	1	0.04' ADJUSTMENT DOWN
69+67	32' LT	736.37	736.01	--	--	1	0.36' ADJUSTMENT DOWN
70+52	31' LT	735.63	735.70	--	--	1	0.07' ADJUSTMENT UP
71+49	10' LT	735.47	735.06	--	1	--	0.41' ADJUSTMENT DOWN
71+55	11' LT	735.55	735.03	--	1	--	0.52' ADJUSTMENT DOWN
71+64	16' RT	735.32	734.90	1	--	--	0.42' ADJUSTMENT DOWN
72+11	8' LT	735.42	734.90	--	1	--	0.52' ADJUSTMENT DOWN
72+30	32' LT	735.29	735.14	--	--	1	0.15' ADJUSTMENT DOWN
72+74	34' RT	735.56	735.13	--	--	1	0.43' ADJUSTMENT DOWN
73+05	32' LT	734.77	734.80	--	--	1	0.03' ADJUSTMENT UP
73+37	34' RT	734.99	734.90	--	--	1	0.09' ADJUSTMENT DOWN
73+91	34' RT	734.68	734.67	--	--	1	0.01' ADJUSTMENT DOWN
74+09	31' LT	734.53	734.53	--	--	1	0' ADJUSTMENT UP
74+22	34' RT	734.68	734.60	--	--	1	0.08' ADJUSTMENT DOWN
74+83	14' RT	734.21	733.89	1	--	--	0.32' ADJUSTMENT DOWN
74+83	37' LT	734.64	734.55	--	--	1	0.09' ADJUSTMENT DOWN
75+18	34' RT	734.44	734.29	--	--	1	0.15' ADJUSTMENT DOWN
75+90	35' RT	734.43	734.19	--	--	1	0.24' ADJUSTMENT DOWN
76+04	36' LT	734.24	734.32	--	--	1	0.08' ADJUSTMENT UP
76+80	32' LT	733.58	733.44	--	--	1	0.14' ADJUSTMENT DOWN
77+07	34' LT	733.59	733.60	--	--	1	0.01' ADJUSTMENT UP
77+19	35' RT	733.25	733.28	--	--	1	0.03' ADJUSTMENT UP
199+66	0' RT	738.08	738.16	--	1	--	0.08' ADJUSTMENT UP
209+67	15' RT	746.43	746.63	--	1	--	0.2' ADJUSTMENT UP
210+37	11' RT	747.68	747.36	--	1	--	0.32' ADJUSTMENT DOWN
210+50	17' RT	747.65	747.48	--	1	--	0.17' ADJUSTMENT DOWN
220+45	6' RT	746.38	746.40	--	1	--	0.02' ADJUSTMENT UP
220+48	3' RT	746.68	746.62	--	1	--	0.06' ADJUSTMENT DOWN
229+59	7' LT	737.36	737.45	--	1	--	0.09' ADJUSTMENT UP
229+62	4' LT	737.36	737.50	--	1	--	0.14' ADJUSTMENT UP
250+44	8' LT	735.26	734.71	--	1	--	0.55' ADJUSTMENT DOWN
250+47	5' LT	735.43	737.79	--	1	--	2.36' ADJUSTMENT UP
			TOTALS	**13**	**23**	**57**	

3

LIGHTING CONDUIT AND WIRE

FROM	-	TO	652.0225 CONDUIT RIGID NONMETALLIC SCHEDULE 40 2-INCH LF	655.0615 ELECTRICAL WIRE LIGHTING 10 AWG LF	655.0625 ELECTRICAL WIRE LIGHTING 6 AWG LF	REMARKS
ALL ITEMS ARE CATEGORY 0010						
PB 200	-	SL 200	50	--	--	PULL WIRE ONLY
PB 200		PB 201	85	--	--	PULL WIRE ONLY
PB 201	-	SL 201	105	--	--	PULL WIRE ONLY
SL 201	-	SL 203	350	1,800	1,080	--
SL 203	-	PB 205	70	415	249	--
PB 205	-	CB 200	20	190	114	--
PB 205	-	CB 200	20	190	114	--
SL 200	-	SL 202	350	1,800	1,080	--
SL 202	-	PB 202	185	990	594	--
PB 202	-	PB 203	70	430	258	--
PB 203	-	PB 205	55	355	213	--
CB 200	-	PB 206	20	190	114	--
CB 200	-	PB 206	20	190	114	--
PB 206	-	PB 204	55	355	213	--
PB 206	-	SL 205	270	1,415	849	--
SL 205	-	PB 207	205	1,090	654	--
PB 207	-	PB 209	80	480	288	--
PB 209	-	PB 208	50	--	--	PULL WIRE ONLY
PB 209	-	SL 207	70	415	249	--
SL 207	-	PB 210	260	1,365	819	--
PB 210	-	SL 209	95	540	324	--
SL 209	-	SL 211	345	1,065	710	--
SL 211	-	PB 212	55	--	--	PULL WIRE ONLY
PB 204	-	SL 204	95	540	324	--
SL 204	-	SL 206	360	1,850	1,110	--
SL 206	-	PB 208	100	565	339	--
PB 208	-	SL 208	245	1,290	774	--
SL 208	-	SL 210	345	1,775	1,065	--
SL 210	-	PB 211	125	414	276	--
PB 211	-	PB 212	70	258	172	--
PB 212	-	SL 212	145	474	316	--
SL 100	-	SL 102	325	1,005	670	--
SL 102	-	PB 101	55	--	--	PULL WIRE ONLY
SL 102	-	SL 104	320	1,650	990	--
SL 104	-	EXSL 106	185	1,600	960	INTERCEPT EXISTING CONDUIT
SL 101	-	PB 100	125	414	276	--
PB 100	-	PB 101	55	213	142	--
PB 101	-	SL 103	180	579	386	--
SL 103	-	SL 105	280	1,450	870	--
SL 105	-	EXPB 102	45	740	444	INTERCEPT EXISTING CONDUIT
EXPB 102	-	EXPB 103	--	455	273	EXISTING CONDUIT
EXPB 103	-	EXSL 107	--	615	369	EXISTING CONDUIT
FYB 300	-	PB 300	55	--	--	CONDUCTORS BY VILLAGE OF BELGIUM
PB 300	-	FYB 301	170	--	--	CONDUCTORS BY VILLAGE OF BELGIUM
PROJECT TOTALS			6,165	29,162	17,792	

LIGHTING PULLBOXES

PULLBOX NUMBER	STATION	OFFSET	R/L	653.0164 PULL BOX NON-CONDUCTIVE 24X42-INCH EACH
ALL ITEMS ARE CATEGORY 0010				
PB 100	71+29'D'	27.3'	LT	1
PB 101	71+84'D'	27.3'	LT	1
PB 200	45+84'D'	23.5'	RT	1
PB 201	46+65'D'	23.5'	RT	1
PB 202	51+13'D'	25.0'	LT	1
PB 203	51+81'D'	25.0'	LT	1
PB 204	51+84'D'	25.0'	LT	1
PB 205	51+81'D'	25.0'	RT	1
PB 206	51+84'D'	25.0'	RT	1
PB 207	56+56'D'	23.8'	RT	1
PB 208	57+31'D'	23.5'	LT	1
PB 209	57+32'D'	23.5'	RT	1
PB 210	60+60'D'	25.0'	RT	1
PB 211	64+39'D'	25.0'	LT	1
PB 212	65+08'D'	26.3'	LT	1
PB 300	72+45'D'	26.5'	RT	1
PROJECT TOTALS				16

3

LIGHTING BASES

LIGHT NUMBER	STATION	OFFSET	R/L	SPV.0060.06 DECORATIVE STREET LIGHT UNIT EACH	655.0610 ELECTRICAL WIRE LIGHTING 12 AWG LF
ALL ITEMS ARE CATEGORY 0010					
SL 100	68+54'D'	26.8'	RT	1	147
SL 101	70+08'D'	26.8'	LT	1	147
SL 102	71+79'D'	26.8'	RT	1	147
SL 103	73+60'D'	26.8'	LT	1	147
SL 104	74+97'D'	26.8'	RT	1	147
SL 105	76+34'D'	26.8'	LT	1	147
SL 200	45+84'D'	24.8'	LT	1	147
SL 201	47+66'D'	24.8'	RT	1	147
SL 202	49+32'D'	26.2'	LT	1	147
SL 203	51+12'D'	24.8'	RT	1	147
SL 204	52+74'D'	24.8'	LT	1	147
SL 205	54+52'D'	24.8'	RT	1	147
SL 206	56+33'D'	23.8'	LT	1	147
SL 207	58+01'D'	24.8'	RT	1	147
SL 208	59+74'D'	23.8'	LT	1	147
SL 209	61+50'D'	23.8'	RT	1	147
SL 210	63+19'D'	23.8'	LT	1	147
SL 211	64+94'D'	23.8'	RT	1	147
SL 212	66+52'D'	23.0'	LT	1	147
PROJECT TOTALS				19	2793

LIGHTING CONTROL

CABINET NUMBER	STATION	OFFSET	R/L	650.8500.01 CONSTRUCTION STAKING ELECTRICAL INSTALLATIONS 4880-01-70 LS	654.0230 CONCRETE CONTROL CABINET BASES TYPE L30 EACH	656.0200.01 ELECTRICAL SERVICE METER BREAKER PEDESTAL (CB200) LS	659.2130 LIGHTING CONTROL CABINETS 120/240 30-INCH EACH
ALL ITEMS ARE CATEGORY 0010							
CB200	51+81'D'	39.9'	RT	1	1	1	1
PROJECT TOTALS				1	1	1	1

R/W PROJECT NUMBER	SHEET NUMBER	TOTAL SHEETS
4880-01-00	4.01	13
FEDERAL PROJECT NUMBER		

PLAT OF RIGHT OF WAY REQUIRED FOR

CTH D (MAIN STREET)
WEST VILLAGE LIMITS - BEECH STREET

CTH D — OZAUKEE COUNTY

CONSTRUCTION PROJECT NUMBER
4880-01-70

4

CONVENTIONAL SIGNS AND ABBREVIATIONS

SECTION LINE	
QUARTER LINE	
SIXTEENTH LINE	
NEW REFERENCE LINE	
NEW R/W LINE	
EXISTING R/W LINE	
PROPERTY LINE	
CORPORATE LIMITS	
LOT AND TIE LINES	
SLOPE INTERCEPT	
UNDERGROUND FACILITY	T (TYPE)
FENCE	-X-X-
LIMITED EASEMENT	
BUILDING	
IRON PIN	o
R/W MONUMENT	•
MANHOLE	○
BUSHES	
TREES (DECIDUOUS)	
TREES (CONIFEROUS)	
POWER POLE (COMPENSABLE)	
SIGN	
POWER POLE	
UTILITY PEDESTAL	
GUY ANCHOR	×
CATCH BASIN	
VALVE	
HYDRANT	
LIGHT POLE	
POINT NUMBER	
RECORDED AS	*SLANTED*
SAME OWNERSHIP	N
NO ACCESS (BY ACQUISITION)	
NO ACCESS (PREVIOUS)	
TEMPORARY LIMITED EASEMENT	
SECTION CORNER	T 12 N R 22 E

AC.	ACRES
A.P.	ACCESS POINT
BLDG.	BUILDING
C/L	CENTERLINE
CHIS	CHISELED MARK
CONC.	CONCRETE
CSM	CERTIFIED SURVEY MAP
D	DEGREE OF CURVE
DOC*	DOCUMENT NUMBER
E	EAST
E	ELECTRIC CABLE
ETAL	AND OTHERS
FM	FORCE MAIN
FO	FIBER OPTIC CABLE
FT.	FEET
GAR.	GARAGE
G	GAS MAIN
H.	HOUSE
I.P.	IRON PIPE
L	LENGTH OF CURVE
LC	LAND CONTRACT
LC	LONG CHORD
LCB	LONG CHORD BEARING
LT.	LEFT
MI.	MILE
MON.	MONUMENT
N	NORTH
OL	OUTLOT
P.C.	POINT OF CURVE
PERM.	PERMANENT
P.I.	POINT OF INTERSECTION
P.L.	PROPERTY LINE
P.L.E.	PERMANENT LIMITED EASEMENT
P.T.	POINT OF TANGENT
R	RADIUS
R	RANGE
R/L	REFERENCE LINE
REM.	REMAINING
RT.	RIGHT
R/W	RIGHT OF WAY
S	SOUTH
SAN	SANITARY SEWER
SQ.FT.	SQUARE FEET
SS	STORM SEWER
STA.	STATION
T	TELEPHONE
T	TANGENT
T	TOWNSHIP
TEMP.	TEMPORARY
TLE	TEMPORARY LIMITED EASEMENT
V/P	VOLUME/PAGE OF RECORDS
VAR.	VARIES
W	WATER MAIN
W	WEST
X	EAST COORDINATE
Y	NORTH COORDINATE

NOTES

POSITIONS SHOWN ON THIS PLAT ARE WISCONSIN STATE PLANE COORDINATES, SOUTH ZONE, 1927 ADJUSTMENT. VALUES SHOWN ARE GROUND COORDINATES, GROUND BEARINGS AND GROUND DISTANCES. GROUND DISTANCES MAY BE CONVERTED TO GRID DISTANCES BY MULTIPLYING BY A GRID FACTOR OF 0.99989982.

RIGHT-OF-WAY BOUNDARIES ARE DEFINED WITH COURSES OF THE PERIMETER OF THE HIGHWAY LANDS REFERENCED TO THE U.S. PUBLIC LAND SURVEY SYSTEM OR OTHER SURVEYS OF PUBLIC RECORD.

RIGHT-OF-WAY MONUMENTS ARE TYPE 2 MONUMENTS (TYPICALLY 1" x 24" IRON PIPE), AND WILL BE PLACED PRIOR TO THE COMPLETION OF THE PROJECT.

DIMENSIONING FOR THE NEW RIGHT-OF-WAY IS MEASURED ALONG AND PERPENDICULAR TO NEW REFERENCE LINES.

PROPERTY LINES SHOWN ON THIS PLAT ARE DRAWN FROM DATA DERIVED FROM MAPS AND DOCUMENTS OF PUBLIC RECORD AND/OR EXISTING OCCUPATIONAL LINES. THIS PLAT MAY NOT BE A TRUE REPRESENTATION OF EXISTING PROPERTY LINES, EXCLUDING RIGHT-OF-WAY, AND SHOULD NOT BE USED AS A SUBSTITUTE FOR AN ACCURATE FIELD SURVEY.

A TEMPORARY LIMITED EASEMENT (TLE) IS A RIGHT FOR CONSTRUCTION PURPOSES, AS DEFINED HEREIN, INCLUDING THE RIGHT TO OPERATE NECESSARY EQUIPMENT THEREON, THE RIGHT OF INGRESS AND EGRESS, AS LONG AS REQUIRED FOR SUCH PUBLIC PURPOSE, INCLUDING THE RIGHT TO PRESERVE, PROTECT, REMOVE, OR PLANT THEREON ANY VEGETATION THAT THE HIGHWAY AUTHORITIES MAY DEEM DESIRABLE. ALL (TLEs) ON THIS PLAT EXPIRE AT THE COMPLETION OF THE CONSTRUCTION PROJECT FOR WHICH THIS INSTRUMENT IS GIVEN.

FOR THE LATEST ACCESS/DRIVEWAY INFORMATION, CONTACT THE VILLAGE OF BELGIUM.

REVISED: 12/12/16

BEGIN RELOCATION ORDER
STA. 44+00.00
17.71' SOUTH AND 751.11' WEST OF THE NORTHEAST CORNER OF SECTION 21, T12N, R22E
Y 553831.59
X 566908.24

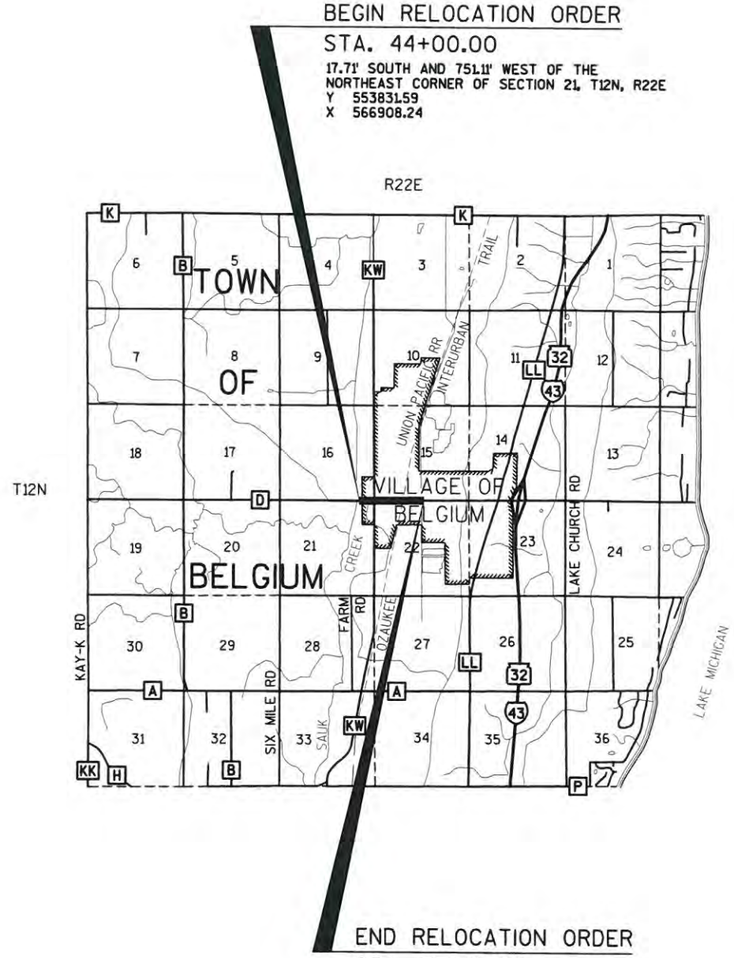

END RELOCATION ORDER
STA. 77+25.00
1.58' SOUTH AND 66.39' WEST OF THE SOUTH QUARTER CORNER OF SECTION 15, T12N, R22E
Y 553910.72
X 570232.30

LAYOUT

0 1 2 MILES
SCALE

TOTAL NET LENGTH OF CENTERLINE = 0.630 MILES

REVISION	DATE
---	---
---	---
---	---
---	---
---	---
---	---
---	---
---	---

ACCEPTED FOR
VILLAGE OF BELGIUM
12/13/16 — DATE
VICKIE BOEHNLEIN
VILLAGE PRESIDENT

ACCEPTED FOR
OZAUKEE COUNTY
12/29/16 — DATE
JON EDGREN
PUBLIC WORKS DIRECTOR

ORIGINAL PLANS PREPARED BY
GREMMER & ASSOCIATES, INC.
CONSULTING ENGINEERS
Stevens Point • Fond du Lac
85 South Pioneer Road, Suite 300 • Fond du Lac, WI 54935
(920) 924-5720 • fax (920) 924-5725

WISCONSIN
JAY W. PANETTI
S-2747
WAUPUN,
WI
LAND SURVEYOR

12/12/16 — DATE
JAY W. PANETTI, 107

E

SCHEDULE OF LANDS & INTERESTS REQUIRED

AREAS SHOWN ON THE TOTAL ACRES COLUMN MAY BE APPROXIMATE AND ARE DERIVED FROM TAX ROLLS OR OTHER AVAILABLE SOURCES AND MAY NOT INCLUDE LANDS OF THE OWNER WHICH ARE NOT CONTIGUOUS TO THE AREA TO BE ACQUIRED. OWNER'S NAMES ARE SHOWN FOR REFERENCE PURPOSES ONLY AND ARE SUBJECT TO CHANGE PRIOR TO THE TRANSFER OF LAND INTERESTS TO THE DEPARTMENT.

PARCEL NUMBER	SHEET NUMBER	OWNER(S)	INTEREST REQUIRED	TOTAL ACRES (EXISTING)	R/W ACRES REQUIRED NEW	EXISTING	TOTAL	TOTAL ACRES REMAINING	T.L.E. ACRES TEMP.	TAX KEY NUMBER
86	4.06	JANICE BIRENBAUM, JOANNE MACIEJEWSKI, MARILYN FROMM & WILLIAM R. LEIDER	FEE	20.000	0.035	0.068	0.103	19.897	0	01-016-16-001.00
87	4.06	FRANCIS KLECKNER & BETTY KLECKNER	TLE	49.960	0	0	0	49.960	0.015	01-021-01-002.00
88	4.06	WILLIAM B. JANESHEK	FEE	14.346	0.121	0.236	0.357	13.989	0	18-050-01-01-006
89	4.06	VILLAGE OF BELGIUM	TLE	0.350	0	0	0	0.350	0.016	18-059-0000.999
96	4.06	BERNICE SCHUELLER	TLE	0.429	0	0	0	0.429	0.040	18-050-06-01.002
97	4.06	BERNICE SCHUELLER	TLE	0.429	0	0	0	0.429	0.020	18-050-06-01.001
98	4.06, 4.07	RANDALL E. INGELSE & DONNA M. INGELSE	FEE, TLE	1.290	0.001	0	0.001	1.289	0.107	18-050-01-02-000
99	4.06, 4.07	CURTIS R. FREDERICK	TLE	0.279	0	0	0	0.279	0.013	18-050-06-02-002
101	4.07	CURTIS R. FREDERICK	TLE	0.269	0	0	0	0.269	0.012	18-050-06-02-001
102	4.07	JOHN F. SPAETH	TLE	0.258	0	0	0	0.258	0.010	18-050-06-03-000
103	4.07	RANDALL E. INGELSE & DONNA M. INGELSE	TLE	0.197	0	0	0	0.197	0.007	18-050-06-04-000
104	4.07	BARBARA SABE-BLEY	TLE	0.330	0	0	0	0.330	0.034	18-050-02-02-019
106	4.07	ANDREW S. OLSEN & KATHLEEN B. OLSEN	TLE	0.877	0	0	0	0.877	0.029	18-050-05-01-001
107	4.07	LOREN G. SHULTIS & DIANE M. J. SHULTIS	TLE	0.355	0	0	0	0.355	0.023	18-050-02-02-012
108	4.07, 4.08	MRS SERVICES LLC	TLE	1.000	0	0	0	1.000	0.041	18-050-05-02-000
109	4.07, 4.08	ANNABELLE ZUELSDORF	TLE	0.257	0	0	0	0.257	0.011	18-050-02-01-000
111	4.08	OZAUKEE COUNTY	TLE	0.010	0	0	0	0.010	0.001	18-055-02-04-003
112	4.08	JEFFREY D. GRUELL & LORI L. GRUELL REVOCABLE TRUST U/A/D OCTOBER 12, 2012	TLE	0.153	0	0	0	0.153	0.008	18-055-02-04-001
113	4.08	JOSEPH M. SLEZAK	TLE	0.161	0	0	0	0.161	0.007	18-055-03-03.000
114	4.08	THOMAS A. EGAN & DAWN E. EGAN	TLE	0.163	0	0	0	0.163	0.008	18-055-02-05-000
116	4.08	WAYNE H. PAULUS & BARBARA M. PAULUS	TLE	0.326	0	0	0	0.326	0.016	18-055-03-01.000
117	4.08	ROLLAND E. ROEBUCK	TLE	0.163	0	0	0	0.163	0.008	18-055-02-06-000
118	4.08	JOHN F. DETTMANN & ANN DETTMANN	TLE	0.160	0	0	0	0.160	0.008	18-055-01-17-000
119	4.08	BRAD VANDE BOOM & JENNIFER VANDE BOOM	TLE	0.196	0	0	0	0.196	0.010	18-055-04-06-000
121	4.08	AARON S. BRAY & JULIE A. HAUSNER	TLE	0.163	0	0	0	0.163	0.008	18-055-01-18-000
122	4.08	ROY W. KELLER & ELIZABETH T. KELLER	TLE	0.196	0	0	0	0.196	0.010	18-055-04-05-000
123	4.08	LARRY M. FOLZ & PEGGY A. FOLZ	TLE	0.244	0	0	0	0.244	0.012	18-055-01-19-001
124	4.08	CARL W. STREHLOW & SUSAN E. STREHLOW	TLE	0.153	0	0	0	0.153	0.008	18-055-04-04-000

NOTE: THE PURPOSE FOR TLE'S IS FOR DRIVEWAYS AND SLOPES UNLESS OTHERWISE NOTED.

4

4

REVISION DATE

DATE 12/12/2016

GRID FACTOR N/A

SCALE. FEET

HWY: CTH D

COUNTY: OZAUKEE

STATE R/W PROJECT NUMBER 4880-01-00

CONSTRUCTION PROJECT NUMBER 4880-01-70

PLAT SHEET 4.02

PS&E SHEET 108 E

SCHEDULE OF LANDS & INTERESTS REQUIRED

AREAS SHOWN ON THE TOTAL ACRES COLUMN MAY BE APPROXIMATE AND ARE DERIVED FROM TAX ROLLS OR OTHER AVAILABLE SOURCES AND MAY NOT INCLUDE LANDS OF THE OWNER WHICH ARE NOT CONTIGUOUS TO THE AREA TO BE ACQUIRED. OWNER'S NAMES ARE SHOWN FOR REFERENCE PURPOSES ONLY AND ARE SUBJECT TO CHANGE PRIOR TO THE TRANSFER OF LAND INTERESTS TO THE DEPARTMENT.

PARCEL NUMBER	SHEET NUMBER	OWNER(S)	INTEREST REQUIRED	TOTAL ACRES (EXISTING)	R/W ACRES REQUIRED NEW	EXISTING	TOTAL	TOTAL ACRES REMAINING	T.L.E. ACRES TEMP.	TAX KEY NUMBER
126	4.08	THOMAS P. SKONIECZNY & BETTY A. SKONIECZNY	TLE	0.143	0	0	0	0.143	0.007	18-055-04-03-002
127	4.08	MICHAEL C. TROUT	TLE	0.228	0	0	0	0.228	0.011	18-055-01-20.001
128	4.08	FRED A. KRIER	TLE	0.134	0	0	0	0.134	0.007	18-055-04-02-002
129	4.08	JOHN P. POULL, JR.	TLE	0.147	0	0	0	0.147	0.007	18-055-01-22.000
131	4.08, 4.09	CHRISTOPHER A. HOEPPNER & JENNIFER L. HOEPPNER	TLE	0.163	0	0	0	0.163	0.008	18-055-04-01-001
132	4.09	BRUCE M. RASMUSSEN	TLE	0.147	0	0	0	0.147	0.007	18-055-01-23.000
133	4.09	J AND P RENTALS II, LLC	FEE, TLE	0.189	0.001	0	0.001	0.188	0.011	18-055-04-01-000
134	4.09	FRED A. KRIER & JANET J. KRIER	TLE	0.227	0	0	0	0.227	0.010	18-050-02-03-000
136	4.09	PAUL V. ANZIA & JUDITH A. ANZIA	TLE	0.436	0	0	0	0.436	0.019	18-050-02-04-000
137	4.09	RANDALL E. INGELSE & DONNA M. INGELSE	FEE, TLE	0.406	0.011	0	0.011	0.395	0.019	18-055-05-01.000
138	4.09	LEONARD J. NOVACK & JOAN M. NOVACK	TLE	0.305	0	0	0	0.305	0.012	18-050-02-05-001
139	4.09	TODD P. WHITE & MONIQUE C. WHITE	FEE, TLE	0.281	0.019	0	0.019	0.262	0.010	18-050-05-06-001
141	4.09	GRACE LANSER	TLE	0.217	0	0	0	0.217	0.007	18-050-02-05-002
142	4.09	TOWN OF BELGIUM	TLE	0.054	0	0	0	0.054	0.005	18-050-02-06-000
143	4.09	RANDALL E. INGELSE & DONNA M. INGELSE	TLE	0.117	0	0	0	0.117	0.004	18-050-05-07-000
	4.09		TLE	0.504	0	0	0	0.504	0.003	18-050-05-08-004
			TOTALS:	0.621	0	0	0	0.621	0.007	
144	4.09	RANDALL E. INGELSE & DONNA M. INGELSE	FEE, TLE	0.230	0.001	0	0.001	0.229	0.016	18-050-02-07-000
146	4.09	STEVEN T. PAULUS & KAREN E. PAULUS	TLE	0.179	0	0	0	0.179	0.004	18-050-05-08-005
147	4.10	770, LLC	FEE, TLE	0.210	0.001	0	0.001	0.209	0.011	18-050-02-18-000
148	4.10	TIMBER CREEK DEVELOPMENT, LLC	TLE	1.790	0	0	0	1.790	0.010	18-050-05-10.000
149	4.10	RICHARD A. USELDING & PATRICIA J. USELDING	TLE	0.347	0	0	0	0.347	0.009	18-050-02-18.001
151	4.10	JEFFREY J. BLEY & DAWN M. BLEY	TLE	0.331	0	0	0	0.331	0.005	18-050-02-15.000
152	4.10	UNION PACIFIC RAILROAD	TLE	N/A	0	0	0	N/A	0.060	
153	4.10	ACIM M. SELEMI REVOCABLE TRUST U/A DATED APRIL 8, 2004	TLE	0.398	0	0	0	0.398	0.021	18-050-02-19.000
154	4.10, 4.11	LAKESIDE FOODS, INC.	TLE	17.931	0	0	0	17.931	0.115	18-050-05-11.003

NOTE: THE PURPOSE FOR TLE'S IS FOR DRIVEWAYS AND SLOPES UNLESS OTHERWISE NOTED.

4

4

REVISION DATE

DATE 12/12/2016

GRID FACTOR N/A

SCALE. FEET

HWY: CTH D

COUNTY: OZAUKEE

STATE R/W PROJECT NUMBER 4880-01-00

CONSTRUCTION PROJECT NUMBER 4880-01-70

PLAT SHEET 4.03

PS&E SHEET 109 E

SCHEDULE OF LANDS & INTERESTS REQUIRED

AREAS SHOWN ON THE TOTAL ACRES COLUMN MAY BE APPROXIMATE AND ARE DERIVED FROM TAX ROLLS OR OTHER AVAILABLE SOURCES AND MAY NOT INCLUDE LANDS OF THE OWNER WHICH ARE NOT CONTIGUOUS TO THE AREA TO BE ACQUIRED. OWNER'S NAMES ARE SHOWN FOR REFERENCE PURPOSES ONLY AND ARE SUBJECT TO CHANGE PRIOR TO THE TRANSFER OF LAND INTERESTS TO THE DEPARTMENT.

PARCEL NUMBER	SHEET NUMBER	OWNER(S)	INTEREST REQUIRED	TOTAL ACRES (EXISTING)	R/W ACRES REQUIRED NEW	EXISTING	TOTAL	TOTAL ACRES REMAINING	T.L.E. ACRES TEMP.	TAX KEY NUMBER
156	4.10	WISCONSIN ELECTRIC POWER COMPANY	TLE	2.010	0	0	0	2.010	0.018	18-050-05-00-001
	4.10		TLE	2.235	0	0	0	2.235	0.008	18-050-00-00.001
			TOTALS:	4.245	0	0	0	4.245	0.026	
157	4.10	STROLI REAL ESTATE, LLC	TLE	0.341	0	0	0	0.341	0.013	18-056-0016.000
158	4.10	ESTATE OF FRANCISCO R. MORENO, DECEASED AND ANEIDIT MORENO	TLE	0.081	0	0	0	0.081	0.004	18-050-05-12.001
159	4.10	MICHAEL J. JOHNS	TLE	0.236	0	0	0	0.236	0.009	18-056-0015.000
161	4.10, 4.11	LAKESIDE FOODS, INC.	TLE	0.281	0	0	0	0.281	0.012	18-056-0014.001
162	4.11	DEBRA A. BLEY, n/k/a DEBRA A. INGERSOLL	FEE, TLE	0.246	0.001	0	0.001	0.245	0.013	18-056-0013.000
163	4.11	JAY M. LAUER & LAUREL L. LAUER	FEE, TLE	0.087	0.001	0	0.001	0.086	0.013	18-056-0006.000
164	4.11	MICHAEL E. MILSAP & HOLLI J. MILSAP	TLE	0.225	0	0	0	0.225	0.012	18-050-05-18-002
166	4.11	JAMES E. MOORE & OLIVIA L. MOORE	TLE	0.316	0	0	0	0.316	0.016	18-056-0007.000
167	4.11	THOMAS J. SMYCZEK	TLE	0.275	0	0	0	0.275	0.011	18-050-05-19.000
168	4.11	JASON A. CHYBOWSKI & JENNIFER L. CHYBOWSKI	TLE	0.745	0	0	0	0.745	0.024	18-050-02-12.015
169	4.11	CHRISTOPHER S. SCHMIDT	TLE	0.275	0	0	0	0.275	0.011	18-050-05-20.000
171	4.11	GARY L. KARRELS & RUTH A. DORNBROOK	TLE	0.220	0	0	0	0.220	0.009	18-050-05-21.000
172	4.11, 4.12	MEADOWLARK STORAGE, LLC	TLE	0.513	0	0	0	0.513	0.017	18-050-02-12-002
173	4.11, 4.12	JOSEPH J. TURCOTTE	TLE	0.514	0	0	0	0.514	0.020	18-050-05-22.000
174	4.12	MICHAEL E. PAULUS & LORI A. PAULUS FAMILY REVOCABLE TRUST DATED APRIL 26, 2007	TLE	0.551	0	0	0	0.551	0.018	18-050-02-21.000
176	4.12	JAMES M. WIRSCHING-NEUSER & CLAUDETTE J. WIRSCHING-NEUSER	TLE	0.376	0	0	0	0.376	0.024	18-050-05-24.000
177	4.12	DENIS A. MUELLER & LILA M. MUELLER	TLE	0.275	0	0	0	0.275	0.010	18-050-02-22-000
	4.12		TLE	0.386	0	0	0	0.386	0.005	18-050-02-23-004
			TOTALS:	0.661	0	0	0	0.661	0.015	
178	4.12	JODI SCHUBERT & JODY SCHUBERT	TLE	0.592	0	0	0	0.592	0.012	18-050-05-25.000
92	4.06, 4.09, 4.10	WE ENERGIES	RELEASE OF RIGHTS							
93	4.06, 4.07, 4.09, 4.10, 4.11	FRONTIER COMMUNICATIONS	RELEASE OF RIGHTS							

NOTE: THE PURPOSE FOR TLE'S IS FOR DRIVEWAYS AND SLOPES UNLESS OTHERWISE NOTED.

TOWN OF BELGIUM

SE-SE

VILLAGE OF BELGIUM

SW-SW

SE-SW

SW-SE

NE-NE

NW-NW

NE-NW

NW-NE

GN

IYLA AVENUE

LANNA LANE

MIDDLE ROAD

C'TH KW

ELEVATOR LANE

UNION PACIFIC RAILROAD

PENNY LANE

PARK STREET

NORTH STREET

ELM STREET

BEECH STREET

CTH D

MAIN STREET

LILAC LANE

LIBERTY STREET

VICTORY STREET

SOUTH AVENUE

ROSE LANE

JAY'S WAY

T 12 N R 22 E
16 15 21 22

T 12 N R 22 E
15 22

86 87 88 89 96 97 98 99 101 102 103 104 106 107 108 109 111 112 113 114 116 117 118 119 121 122 123 124 126 127 128 129 131 132 133 134 136 137 138 139 141 142 143 144 146 147 148 149 151 152 153 154 156 157 158 159 161 162 163 164 166 167 168 169 171 172 173 174 176 177 178

REVISION DATE	DATE 12/12/2016	SCALE, FEET 0 150 300	HWY: CTH D	STATE R/W PROJECT NUMBER 4880-01-00	PLAT SHEET 4.05
	GRID FACTOR N/A		COUNTY: OZAUKEE	CONSTRUCTION PROJECT NUMBER 4880-01-70	PS&E SHEET 111 E

FILE NAME : 48800100-040102-RP.DWG PLOT DATE : 12/12/2016 11:44 AM PLOT BY : JAY PANETTI PLOT NAME : PLOT SCALE : 1:300

WISDOT/CADDS SHEET 75

BASIS FOR EXISTING R/W

ROUTE	BASIS
CTH D	CH. 82.18. WIS. SS, CSM #2379
LILAC LANE	MARVIN GARDENS

SE-SE

SEC. 16, T12N, R22E

GN

TOWN OF BELGIUM

VILLAGE OF BELGIUM

TOWN OF BELGIUM P.L. VILLAGE OF BELGIUM

86

01-016-16-001.00
JANICE BIRENBAUM, JOANNE MACIEJEWSKI,
MARILYN FROMM & WILLIAM R. LEIDER

88

18-050-01-01-006
WILLIAM B. JANESHEK

98

18-050-01-02-000
RANDALL E. INGELSE &
DONNA M. INGELSE

BUILDING

1
BLOCK 1
ASSESSOR'S PLAT
VILLAGE OF BELGIUM

Y 553787.00
X 565017.45

Y 553849.31
X 567659.36

BRASS CAP

MAG NAIL

WE ENERGIES

FRONTIER COMMUNICATIONS

UTILITY EASEMENT V21 MISC./P351

SLOPE INTERCEPT, TYP.

PROPOSED R/W

12' UTILITY EASEMENT V725/P689

EXISTING R/W

44+00 33' FEE

44+00 50' FEE

48+01.03 50' FEE

48+01.06 45' TLE

48+01.13 33' FEE

49+00 45' TLE

TLE

SECTION LINE
N88°38'56"E
2642.64'

R/L = SECTION LINE

CTH D
MAIN STREET

46+23.32
=200+00.00

200

33'

6' 6'

50' 17'

45' 12'

40' 7'

LINE

SHEET 4.07

MATCH SEE

44 45 46 47 48 49

611 612 703 705 820 821 704 822

801 810 815 811 812 813 814

2"IP

44+00 33' TLE

44+00 40' TLE

45+90.58 40' TLE

46+56.64 50' TLE

47+50 50' TLE

48+00 40' TLE

49+00 40' TLE

800 803 802

30' PIPELINE EASEMENT V22/P557

P.L.

R/L N01°43'12"W 199

LILAC LANE 66'

HOUSE #1027

HOUSE #1023

HOUSE #1015-1017

GARAGE

87

01-021-01-002.00
FRANCIS KLECKNER &
BETTY KLECKNER

89

18-059-0000.999
VILLAGE OF BELGIUM

96

18-050-06-01.002
BERNICE SCHUELLER

97

18-050-06-01.001
BERNICE SCHUELLER

99

18-050-06-02-002
CURTIS R. FREDERICK

1
BLOCK 6
ASSESSOR'S PLAT
VILLAGE OF BELGIUM

LOT 2
CSM #2379
V17/P270
DOC. #457884

STIPULATION DOC. #943060

CERTIFICATE OF COMPLIANCE DOC. #959666

DEDICATED TO THE PUBLIC
MARVIN GARDENS

NE-NE

SEC. 21, T12N, R22E

1"IP

BEGIN RELOCATION ORDER
44+00.00
Y 553831.59
X 566908.24
17.71' SOUTH AND 751.11' WEST OF THE
NORTHEAST CORNER OF SECTION 21, T12N, R22E

NOTE: SEE SHEET 4.13 FOR COURSE TABLES AND COORDINATES OF POINTS SHOWN.

REVISION DATE	DATE 12/12/2016	SCALE. FEET 0 20 40	HWY: CTH D	STATE R/W PROJECT NUMBER 4880-01-00	PLAT SHEET 4.06	
	GRID FACTOR 0.99989982		COUNTY: OZAUKEE	CONSTRUCTION PROJECT NUMBER 4880-01-70	PS&E SHEET	E

FILE NAME : 48800100-040102-RP.DWG PLOT DATE : 12/12/2016 11:12 AM PLOT BY : JAY PANETTI PLOT NAME : PLOT SCALE : **********

WISDOT/CADDS SHEET 75

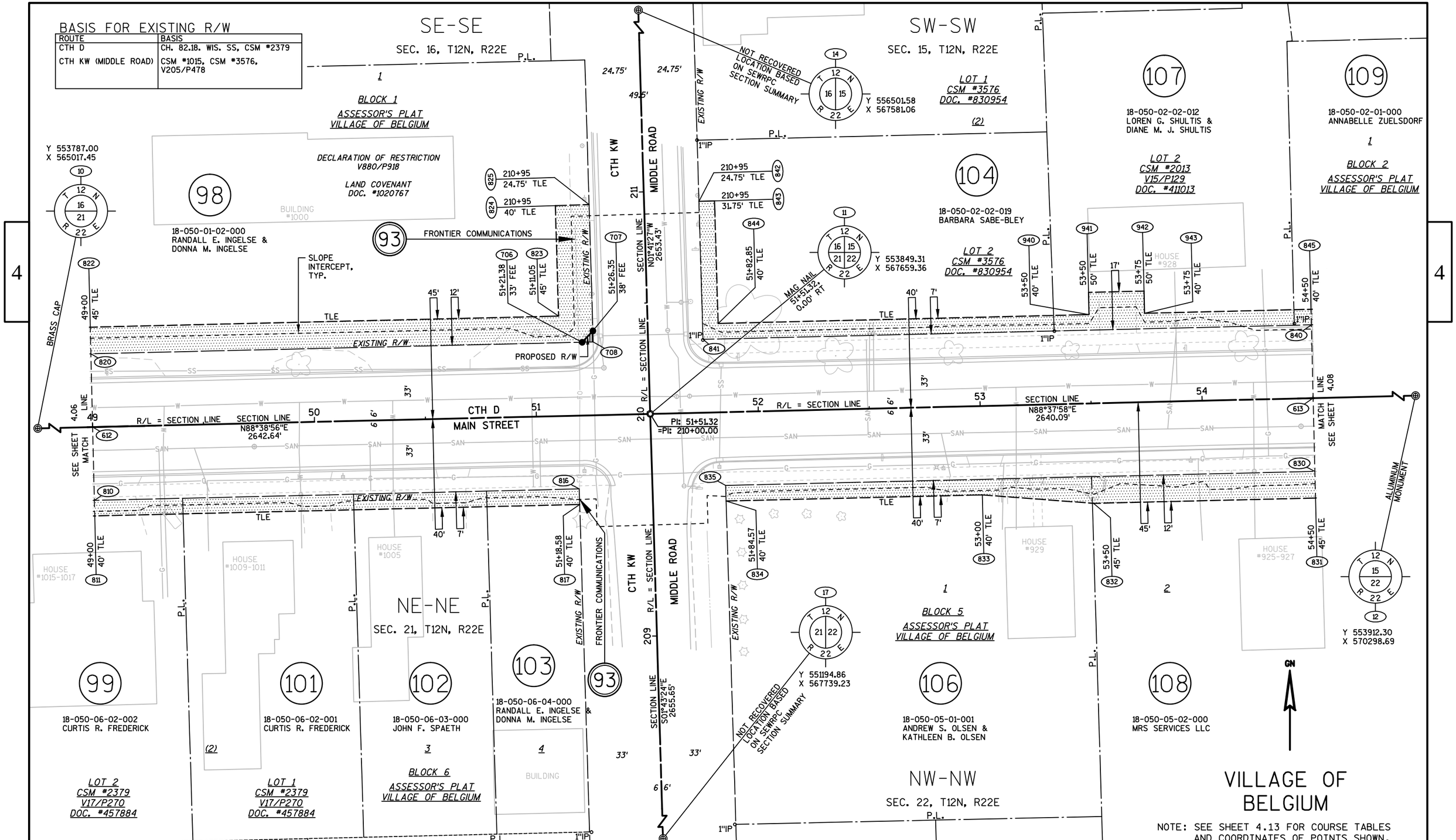

REVISION DATE	DATE 12/12/2016	SCALE, FEET 0 20 40	HWY: CTH D	STATE R/W PROJECT NUMBER 4880-01-00	PLAT SHEET 4.07	
	GRID FACTOR 0.99989982		COUNTY: OZAUKEE	CONSTRUCTION PROJECT NUMBER 4880-01-70	PS&E SHEET 113	E

FILE NAME : 48800100-040102-RP.DWG PLOT DATE : 12/12/2016 11:12 AM PLOT BY : JAY PANETTI PLOT NAME : PLOT SCALE : ********** WISDOT/CADDS SHEET 75

111

18-055-02-04-003
OZAUKEE COUNTY

109

18-050-02-01-000
ANNABELLE ZUELSDORF

1

BLOCK 2
ASSESSOR'S PLAT
VILLAGE OF BELGIUM

112

18-055-02-04-001
JEFFREY D. GRUELL &
LORI L. GRUELL
REVOCABLE TRUST
UAD OCTOBER 12, 2012

114

18-055-02-05-000
THOMAS A. EGAN &
DAWN E. EGAN

BLOCK 2
BELGIUM HEIGHTS

117

18-055-02-06-000
ROLLAND E. ROEBUCK

LIBERTY STREET

EXISTING R/W

50'

221

R/L
N01°19'25"W

118

18-055-01-17-000
JOHN F. DETTMANN &
ANN DETTMANN

WELL AGREEMENT
V13 MISC./P283

121

18-055-01-18-000
AARON S. BRAY &
JULIE A. HAUSNER

SW-SW
SEC. 15, T12N, R22E

123

18-055-01-19-001
LARRY M. FOLZ &
PEGGY A. FOLZ

BLOCK 1
BELGIUM HEIGHTS

SLOPE
INTERCEPT,
TYP.

SEWER AGREEMENT
V9 MISC./P275

127

18-055-01-20.001
MICHAEL C. TROUT

129

18-055-01-22.000
JOHN P. POULL, JR.

Y 553912.30
X 570298.69

ALUMINUM
MONUMENT

HOUSE #922
HOUSE #910
HOUSE #906
HOUSE #902
HOUSE #850
HOUSE #846-848
HOUSE #842-844
HOUSE #840
HOUSE #836-838

845 54+50 40' TLE
846 56+60.60 40' TLE
847
862 57+10.60 40' TLE
861
860
863 60+00 40' TLE

1"IP
EXISTING R/W
TLE
40' 7'

SHEET 4.07 LINE
SEE MATCH

55 56 CTH D MAIN STREET 57 R/L = SECTION LINE 58 59 60
56+85.57 =220+00.00
220
33' 6' 6' 33'
SECTION LINE
N88°37'58"E
2640.09'
SHEET 4.09 LINE
SEE MATCH

613 614

MAG NAIL

830 54+50 45' TLE 831
838 55+00 40' TLE
836 1"IP
837 56+60.54 40' TLE
853
852 57+10.54 40' TLE
851 60+00 40' TLE

HOUSE #909
HOUSE #901
HOUSE #851
HOUSE #849
HOUSE #845
HOUSE #843
HOUSE #839-84
HOUSE #837

2
BLOCK 5
ASSESSOR'S PLAT
VILLAGE OF BELGIUM

3

BLOCK 3
BELGIUM HEIGHTS

2

1

BLOCK 4
BELGIUM HEIGHTS

6 5 4 3 2

T 12 N R 22 E
16 15 21 22

Y 553849.31
X 567659.36

11

219
50'
GN

VILLAGE OF BELGIUM

108

18-050-05-02-000
MRS SERVICES LLC

113

18-055-03-03.000
JOSEPH M. SLEZAK

116

18-055-03-01.000
WAYNE H. PAULUS &
BARBARA M. PAULUS

NW-NW
SEC. 22, T12N, R22E

119

18-055-04-06-000
BRAD VANDE BOOM &
JENNIFER VANDE BOOM

122

18-055-04-05-000
ROY W. KELLER &
ELIZABETH T. KELLER

124

18-055-04-04-000
CARL W. STREHLOW &
SUSAN E. STREHLOW

126

18-055-04-03-002
THOMAS P. SKONIECZNY
BETTY A. SKONIECZNY

128

18-055-04-02-002
FRED A. KRIER

131

18-055-04-01-001
CHRISTOPHER A. HOEPPNER
JENNIFER L. HOEPPNER

COMMON BUILDING
AGREEMENT
V655/P600

BASIS FOR EXISTING R/W

ROUTE	BASIS
CTH D	CH. 82.18. WIS. SS, V161/P425-442
LIBERTY STREET	BELGIUM HEIGHTS

NOTE: SEE SHEET 4.13 FOR COURSE TABLES AND COORDINATES OF POINTS SHOWN.

4

REVISION DATE

DATE 12/12/2016
GRID FACTOR 0.99989982
SCALE. FEET 0 20 40
HWY: CTH D
COUNTY: OZAUKEE
STATE R/W PROJECT NUMBER 4880-01-00
CONSTRUCTION PROJECT NUMBER 4880-01-70
PLAT SHEET 4.08
PS&E SHEET 114 E

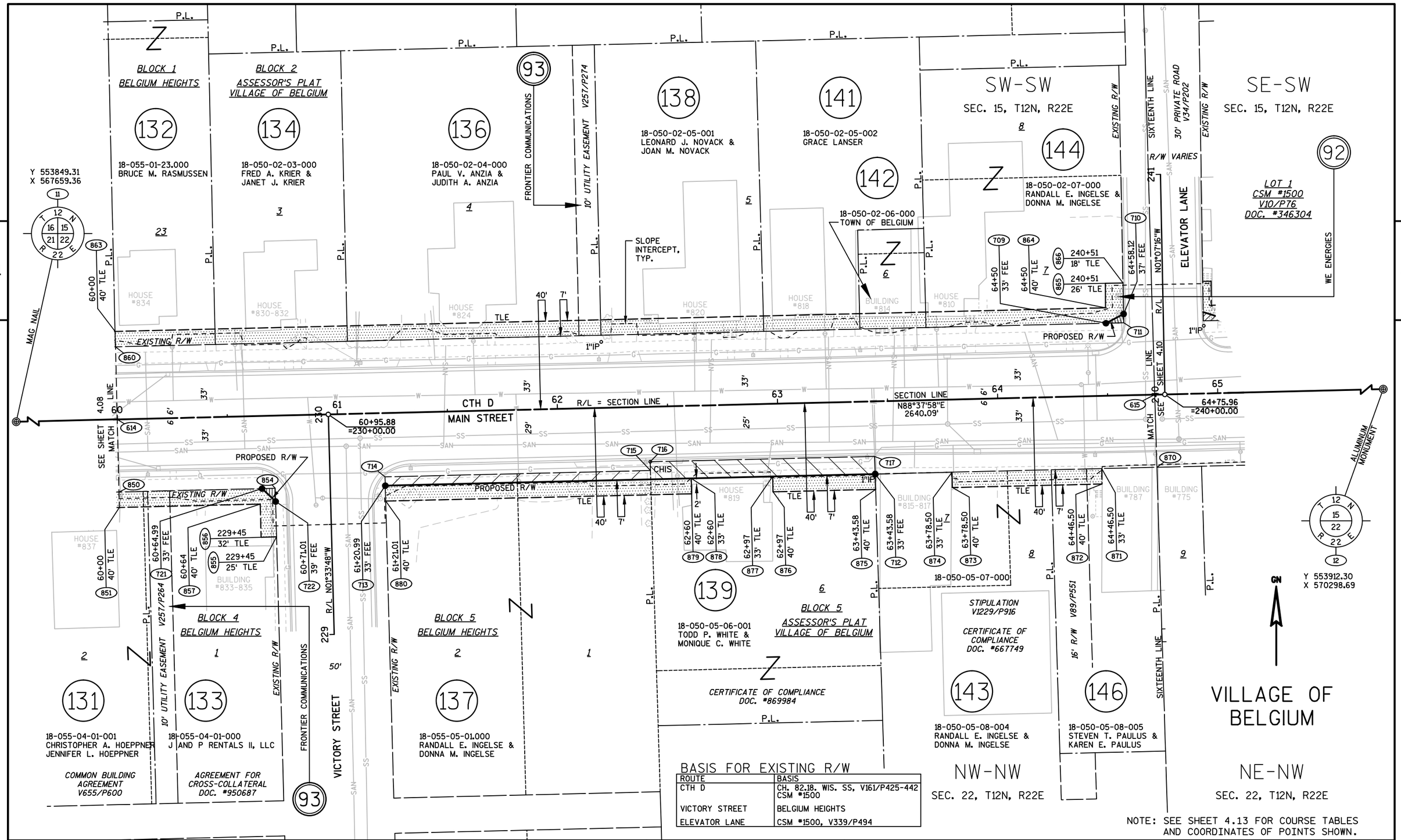

REVISION DATE	DATE 12/12/2016	SCALE, FEET 0 20 40	HWY: CTH D	STATE R/W PROJECT NUMBER 4880-01-00	PLAT SHEET 4.09	
	GRID FACTOR 0.99989982		COUNTY: OZAUKEE	CONSTRUCTION PROJECT NUMBER 4880-01-70	PS&E SHEET	E

FILE NAME : 48800100-040102-RP.DWG PLOT DATE : 12/12/2016 11:14 AM PLOT BY : JAY PANETTI PLOT NAME : PLOT SCALE : **********

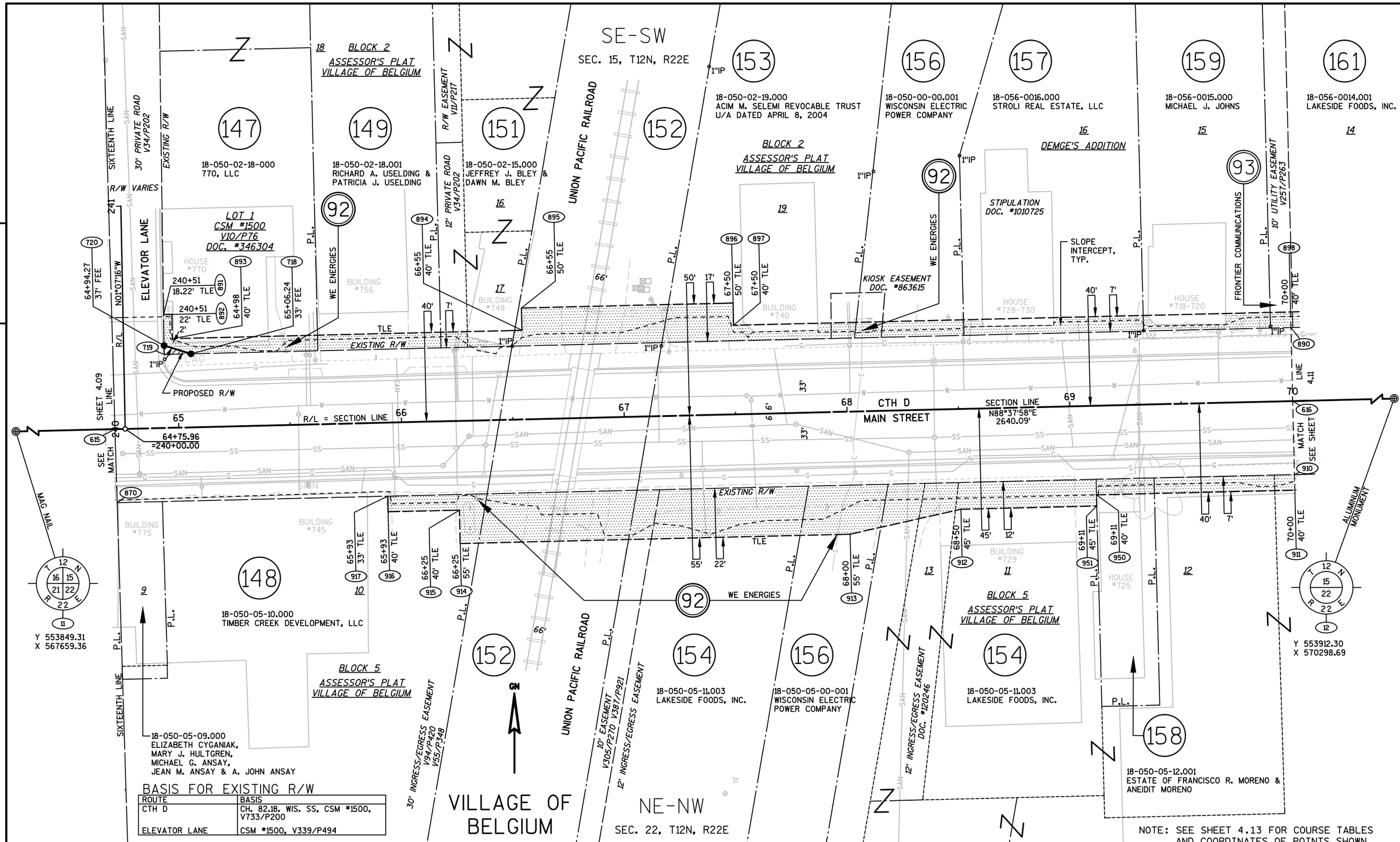

BASIS FOR EXISTING R/W

ROUTE	BASIS
CTH D	CH. 82.18. WIS. SS, CSM #1500, V733/P200
ELEVATOR LANE	CSM #1500, V339/P494

NOTE: SEE SHEET 4.13 FOR COURSE TABLES AND COORDINATES OF POINTS SHOWN.

REVISION DATE	DATE 12/12/2016	SCALE, FEET 0 20 40	HWY: CTH D	STATE R/W PROJECT NUMBER 4880-01-00	PLAT SHEET 4.10	
	GRID FACTOR 0.99989982		COUNTY: OZAUKEE	CONSTRUCTION PROJECT NUMBER 4880-01-70	PS&E SHEET 116	E

FILE NAME : 48800100-040102-RP.DWG PLOT DATE : 12/12/2016 11:15 AM PLOT BY : JAY PANETTI PLOT NAME : PLOT SCALE : ********** WISDOT/CADDS SHEET 75

SE-SW
SEC. 15, T12N, R22E

NE-NW
SEC. 22, T12N, R22E

161
18-056-0014.001
LAKESIDE FOODS, INC.
14

162
18-056-0013.000
DEBRA A. BLEY,
n/k/a DEBRA A. INGERSOLL
13
DEMGE'S ADDITION

163
18-056-0006.000
JAY M. LAUER &
LAUREL L. LAUER
6
DEMGE'S ADDITION
7

166
18-056-0007.000
JAMES E. MOORE &
OLIVIA L. MOORE

168
18-050-02-12.015
JASON A. CHYBOWSKI &
JENNIFER L. CHYBOWSKI
LOT 1
CSM #2211
V16/P240
DOC. #435630
(20)

172
18-050-02-12-002
MEADOWLARK STORAGE, LLC
12
BLOCK 2
ASSESSOR'S PLAT
VILLAGE OF BELGIUM

93
FRONTIER COMMUNICATIONS
10' UTILITY EASEMENT
V251/P263

ELM STREET
EXISTING R/W
R/L
N01°27'15"W
251.3'

CTH D
MAIN STREET
71+56.83
=250+00.00
SECTION LINE
N88°37'58"E
2640.09'
R/L = SECTION LINE

PROPOSED R/W
EXISTING R/W

SEE SHEET 4.10 MATCH LINE
SEE SHEET 4.12 MATCH LINE

MAG NAIL
Y 553849.31
X 567659.36

ALUMINUM MONUMENT
Y 553912.30
X 570298.69

SLOPE INTERCEPT, TYP.

154
18-050-05-11.003
LAKESIDE FOODS, INC.

17
BLOCK 5
ASSESSOR'S PLAT
VILLAGE OF BELGIUM

164
18-050-05-18-002
MICHAEL E. MILSAP &
HOLLI J. MILSAP

167
18-050-05-19.000
THOMAS J. SMYCZEK

169
18-050-05-20.000
CHRISTOPHER S. SCHMIDT

171
18-050-05-21.000
GARY L. KARRELS &
RUTH A. DORNBROOK

173
18-050-05-22.000
JOSEPH J. TURCOTTE

18
19
20
21
22

P.L.
RIGHT OF FIRST REFUSAL
DOC. #988117

BUILDING #680
BUILDING #705
BUILDING #650-652-654
HOUSE #702
HOUSE #670-672
HOUSE #664
HOUSE #675
HOUSE #669
HOUSE #665
HOUSE #661
HOUSE #655

BASIS FOR EXISTING R/W

ROUTE	BASIS
CTH D	CH. 82.18. WIS. SS, V156/P514-516
ELM STREET	V353/P212-218

VILLAGE OF BELGIUM

NOTE: SEE SHEET 4.13 FOR COURSE TABLES AND COORDINATES OF POINTS SHOWN.

REVISION DATE	DATE 12/12/2016	SCALE. FEET 0 20 40	HWY: CTH D	STATE R/W PROJECT NUMBER 4880-01-00	PLAT SHEET 4.11
	GRID FACTOR 0.99989982		COUNTY: OZAUKEE	CONSTRUCTION PROJECT NUMBER 4880-01-70	PS&E SHEET 117 E

FILE NAME : 48800100-040102-RP.DWG PLOT DATE : 12/12/2016 12:00 PM PLOT BY : JAY PANETTI PLOT NAME : PLOT SCALE : ********** WISDOT/CADDS SHEET 75

SE-SW

SEC. 15, T12N, R22E

NE-NW

SEC. 22, T12N, R22E

NW-NE

SEC. 22, T12N, R22E

SW-SE

SEC. 15, T12N, R22E

172

18-050-02-12-002
MEADOWLARK STORAGE, LLC

174

18-050-02-21.000
MICHAEL E. PAULUS &
LORI A. PAULUS
FAMILY REVOCABLE TRUST
DATED APRIL 26, 2007

177

18-050-02-22-000
DENIS A. MUELLER &
LILA M. MUELLER

18-050-02-23-004

173

18-050-05-22.000
JOSEPH J. TURCOTTE

176

18-050-05-24.000
JAMES M. WIRSCHING-NEUSER &
CLAUDETTE J. WIRSCHING-NEUSER

178

18-050-05-25.000
JODI SCHUBERT &
JODY SCHUBERT

CERTIFICATE OF COMPLIANCE
DOC. #1006107

RESOLUTION
10' EASEMENT
V474/P835

BLOCK 2
ASSESSOR'S PLAT
VILLAGE OF BELGIUM

BLOCK 3
ASSESSOR'S PLAT
VILLAGE OF BELGIUM

BLOCK 4
ASSESSOR'S PLAT
VILLAGE OF BELGIUM

BLOCK 5
ASSESSOR'S PLAT
VILLAGE OF BELGIUM

VILLAGE OF
BELGIUM

BEECH STREET

CTH D
MAIN STREET

EXISTING R/W

VARIES

SLOPE
INTERCEPT,
TYP.

TLE

P.I.

P.L.

R/L = QUARTER LINE

R/L = SECTION LINE

SECTION LINE
N88°37'58"E
2640.09'

SECTION LINE
N88°34'58"E
2643.91'

QUARTER LINE
N01°33'59"W
2657.05'

QUARTER LINE
N01°46'15"W
2651.95'

SHEET 4.11
SEE
MATCH
LINE

MAG NAIL

IRON PLUG

ALUMINUM MONUMENT
77+91.41
0.00' RT

NOT RECOVERED
LOCATION BASED
ON SEWRPC
SECTION SUMMARY

Y 556568.36
X 570226.06

Y 553849.31
X 567659.36

Y 553977.69
X 572941.79

Y 553912.30
X 570298.69

Y 551261.62
X 570380.64

END RELOCATION ORDER
77+25.00
Y 553910.72
X 570232.30
1.58' SOUTH AND 66.39' WEST OF THE
SOUTH QUARTER CORNER OF SECTION 15, T12N, R22E

PI: 77+91.41
=280+00.00

HOUSE #640-642
HOUSE #634
HOUSE #646
BUILDING #650-652-654
HOUSE #635-637
HOUSE #641-643
HOUSE #655
HOUSE #631
HOUSE #625
HOUSE #619-621

BASIS FOR EXISTING R/W

ROUTE	BASIS
CTH D	CH. 82.18. WIS. SS
BEECH STREET	SURVEY OF PUBLIC RECORD

NOTE: SEE SHEET 4.13 FOR COURSE TABLES AND COORDINATES OF POINTS SHOWN.

REVISION DATE	DATE 12/12/2016	SCALE, FEET 0 20 40	HWY: CTH D	STATE R/W PROJECT NUMBER 4880-01-00	PLAT SHEET 4.12
	GRID FACTOR 0.99989982		COUNTY: OZAUKEE	CONSTRUCTION PROJECT NUMBER 4880-01-70	PS&E SHEET 118 E

FILE NAME : 48800100-040102-RP.DWG PLOT DATE : 12/12/2016 12:01 PM PLOT BY : JAY PANETTI PLOT NAME : PLOT SCALE : ********** WISDOT/CADDS SHEET 75

COURSE TABLE - SHEET 4.06

FROM POINT	TO POINT	BEARING	DISTANCE
11	705	S88°38'56"W	350.00'
705	611	S88°38'56"W	401.32'
611	701	N01°21'04"W	33.00'
701	702	N01°21'04"W	17.00'
702	703	N88°38'56"E	401.03'
703	704	S01°41'27"E	17.00'
704	705	S01°41'27"E	33.00'
11	611	S88°38'56"W	751.32'
611	800	S01°21'04"E	33.00'
800	801	N88°38'56"E	190.53'
801	802	S01°43'12"E	7.00'
802	803	S88°38'56"W	190.58'
803	800	N01°21'04"W	7.00'
11	612	S88°38'56"W	251.32'
612	810	S01°21'04"E	33.00'
810	811	S01°21'04"E	7.00'
811	812	S88°38'56"W	100.00'
812	813	S77°20'21"W	50.99'
813	814	S88°38'56"W	93.36'
814	815	N01°43'12"W	17.00'
815	810	N88°38'56"E	243.47'
612	820	N01°21'04"W	33.00'
820	704	S88°38'56"W	98.87'
704	821	N01°41'27"W	12.00'
821	822	N88°38'56"E	98.94'
822	820	S01°21'04"E	12.00'

COURSE TABLE - SHEET 4.07

FROM POINT	TO POINT	BEARING	DISTANCE
11	612	S88°38'56"W	251.32'
612	820	N01°21'04"W	33.00'
820	706	N88°38'56"E	221.38'
706	707	N43°28'44"E	7.05'
707	708	S01°41'27"E	5.00'
708	706	S88°38'56"W	5.00'
612	810	S01°21'04"E	33.00'
810	816	N88°38'56"E	218.54'
816	817	S01°43'24"E	7.00'
817	811	S88°38'56"W	218.58'
811	810	N01°21'04"W	7.00'
820	822	N01°21'04"W	12.00'
822	823	N88°38'56"E	211.05'
823	824	N01°41'27"W	49.76'
824	825	N88°18'33"E	15.25'
825	707	S01°41'27"E	56.85'
707	706	S43°28'44"W	7.05'
706	820	S88°38'56"W	221.38'
11	613	N88°37'58"E	298.68'
613	830	S01°22'02"E	33.00'
830	831	S01°22'02"E	12.00'
831	832	S88°37'58"W	100.00'
832	833	N85°39'24"W	50.25'
833	834	S88°37'58"W	115.43'
834	835	N01°43'24"W	7.00'
835	830	N88°37'58"E	265.47'
613	840	N01°22'02"W	33.00'
840	841	S88°37'58"W	274.11'
841	842	N01°41'27"W	62.14'
842	843	N88°18'33"E	7.00'
843	844	S01°41'27"E	55.18'
844	940	N88°37'58"E	167.15'
940	941	N01°22'02"W	10.00'
941	942	N88°37'58"E	25.00'
942	943	S01°22'02"E	10.00'
943	845	N88°37'58"E	75.00'
845	840	S01°22'02"E	7.00'

COURSE TABLE - SHEET 4.08

FROM POINT	TO POINT	BEARING	DISTANCE
11	613	N88°37'58"E	298.68'
613	830	S01°22'02"E	33.00'
830	836	N88°37'58"E	210.54'
836	837	S01°19'25"E	7.00'
837	838	S88°37'58"W	160.54'
838	831	S82°55'20"W	50.25'
831	830	N01°22'02"W	12.00'
613	840	N01°22'02"W	33.00'
840	845	N01°22'02"W	7.00'
845	846	N88°37'58"E	210.60'
846	847	S01°19'25"E	7.00'
847	840	S88°37'58"W	210.59'
11	614	N88°37'58"E	848.68'
614	850	S01°22'02"E	33.00'
850	851	S01°22'02"E	7.00'
851	852	S88°37'58"W	289.46'
852	853	N01°19'25"W	7.00'
853	850	N88°37'58"E	289.46'
614	860	N01°22'02"W	33.00'
860	861	S88°37'58"W	289.41'
861	862	N01°19'25"W	7.00'
862	863	N88°37'58"E	289.40'
863	860	S01°22'02"E	7.00'

COURSE TABLE - SHEET 4.09

FROM POINT	TO POINT	BEARING	DISTANCE
11	614	N88°37'58"E	848.68'
614	860	N01°22'02"W	33.00'
860	709	N88°37'58"E	450.00'
709	710	N62°24'33"E	9.05'
710	711	S01°07'16"E	4.00'
711	709	S88°37'58"W	8.10'
11	615	N88°37'58"E	1320.04'
615	870	S01°44'50"E	33.00'
870	712	S88°37'58"W	128.01'
712	713	S88°37'58"W	222.59'
713	714	N01°33'48"W	4.00'
714	715	N88°37'58"E	120.57'
715	716	N01°44'48"W	4.00'
716	717	N88°37'58"E	102.00'
717	712	S01°44'48"E	8.00'
614	850	S01°22'02"E	33.00'
850	721	N88°37'58"E	64.99'
721	854	N88°37'58"E	6.00'
854	722	S01°33'48"E	6.00'
722	721	N46°27'55"W	8.50'
850	721	N88°37'58"E	64.99'
721	722	S46°27'55"E	8.50'
722	855	S01°33'48"E	16.09'
855	856	S88°26'12"W	7.00'
856	857	N01°36'55"W	15.11'
857	851	S88°37'58"W	64.00'
851	850	N01°22'02"W	7.00'
860	863	N01°22'02"W	7.00'
863	864	N88°37'58"E	450.00'
864	865	N00°26'00"W	11.11'
865	866	N88°52'44"E	8.00'
866	710	S01°07'16"E	14.08'
710	709	S62°24'33"W	9.05'
709	860	S88°37'58"W	450.00'
870	871	S88°37'58"W	25.08'
871	872	S01°22'02"E	7.00'
872	873	S88°37'58"W	68.00'
873	874	N01°22'02"W	7.00'
874	871	N88°37'58"E	68.00'
712	875	S01°22'02"E	7.00'
875	876	S88°37'58"W	46.58'
876	877	N01°22'02"W	7.00'
877	712	N88°37'58"E	46.58'
870	878	S88°37'58"W	211.58'
878	879	S01°22'02"E	7.00'
879	880	S88°37'58"W	138.99'
880	713	N01°33'48"W	7.00'
713	878	N88°37'58"E	139.01'

COURSE TABLE - SHEET 4.10

FROM POINT	TO POINT	BEARING	DISTANCE
12	616	S88°37'58"W	791.41'
616	890	N01°22'02"W	33.00'
890	718	S88°37'58"W	493.76'
718	719	S88°37'58"W	12.01'
719	720	N00°49'02"W	4.00'
720	718	S72°53'18"E	12.62'
890	718	S88°37'58"W	493.76'
718	720	N72°53'18"W	12.62'
720	891	N00°49'02"W	13.92'
891	892	N88°52'44"E	3.78'
892	893	S00°25'05"E	10.91'
893	894	N88°37'58"E	157.00'
894	895	N01°22'02"W	10.00'
895	896	N88°37'58"E	95.00'
896	897	S01°22'02"E	10.00'
897	898	N88°37'58"E	250.00'
898	890	S01°22'02"E	7.00'
616	910	S01°22'02"E	33.00'
910	911	S01°22'02"E	7.00'
911	950	S88°37'58"W	89.00'
950	951	S01°22'02"E	5.00'
951	912	S88°37'58"W	61.00'
912	913	S77°19'22"W	50.99'
913	914	S88°37'58"W	175.00'
914	915	N01°22'02"W	15.00'
915	916	S88°37'58"W	32.00'
916	917	N01°22'02"W	7.00'
917	910	N88°37'58"E	407.00'

COURSE TABLE - SHEET 4.11

FROM POINT	TO POINT	BEARING	DISTANCE
12	616	S88°37'58"W	791.41'
616	890	N01°22'02"W	33.00'
890	723	N88°37'58"E	124.28'
723	724	N43°35'21"E	8.48'
724	902	S01°27'15"E	6.00'
902	723	S88°37'58"W	6.00'
890	898	N01°22'02"W	7.00'
898	899	N88°37'58"E	123.27'
899	900	N01°27'15"W	19.95'
900	901	N88°32'45"E	7.00'
901	724	S01°27'15"E	20.96'
724	723	S43°35'21"W	8.48'
723	890	S88°37'58"W	124.28'
616	910	S01°22'02"E	33.00'
910	918	N88°37'58"E	500.00'
918	925	S01°22'02"E	7.00'
925	926	S88°37'58"W	15.00'
926	927	S01°22'02"E	3.00'
927	928	S88°37'58"W	45.00'
928	929	N01°22'02"W	3.00'
929	952	S88°37'58"W	75.00'
952	953	S01°22'02"E	5.00'
953	954	S88°37'58"W	25.00'
954	955	N01°22'02"W	5.00'
955	956	S88°37'58"W	46.00'
956	957	S01°22'02"E	5.00'
957	958	S88°37'58"W	15.00'
958	959	N01°22'02"W	5.00'
959	911	S88°37'58"W	279.00'
911	910	N01°22'02"W	7.00'
12	617	S88°37'58"W	291.41'
617	930	N01°22'02"W	33.00'
930	725	S88°37'58"W	310.72'
725	931	S88°37'58"W	6.00'
931	726	N01°27'15"W	6.00'
726	725	S46°24'39"E	8.49'

COURSE TABLE - SHEET 4.11 (CONTINUED)

FROM POINT	TO POINT	BEARING	DISTANCE
930	725	S88°37'58"W	310.72'
725	726	N46°24'39"W	8.49'
726	932	N01°27'15"W	21.04'
932	933	N88°32'45"E	7.00'
933	934	S01°27'15"E	20.05'
934	960	N88°37'58"E	114.72'
960	961	N01°19'21"W	5.00'
961	962	N88°37'58"E	30.00'
962	963	S01°22'02"E	5.00'
963	964	N88°37'58"E	83.00'
964	965	N01°22'02"W	5.00'
965	966	N88°37'58"E	58.00'
966	967	S01°22'02"E	5.00'
967	935	N88°37'58"E	24.00'
935	930	S01°22'02"E	7.00'

COURSE TABLE - SHEET 4.12

FROM POINT	TO POINT	BEARING	DISTANCE
12	618	S88°37'58"W	66.41'
618	919	S01°22'02"E	33.00'
919	920	S01°22'02"E	7.00'
920	921	S88°37'58"W	70.00'
921	922	S01°22'02"E	6.00'
922	923	S88°37'58"W	90.00'
923	924	N01°22'02"W	6.00'
924	925	S88°37'58"W	65.00'
925	918	N01°22'02"W	7.00'
918	919	N88°37'58"E	225.00'
618	937	N01°22'02"W	33.00'
937	930	S88°37'58"W	225.00'
930	935	N01°22'02"W	7.00'
935	968	N88°37'58"E	44.00'
968	969	N01°22'02"W	5.00'
969	970	N88°37'58"E	15.00'
970	971	S01°22'02"E	5.00'
971	972	N88°37'58"E	121.00'
972	973	N01°22'02"W	5.00'
973	974	N88°37'58"E	17.00'
974	975	S01°22'02"E	5.00'
975	936	N88°37'58"E	28.00'
936	937	S01°22'02"E	7.00'

COORDINATE TABLE

POINT	Y	X
611	553831.5907	566908.2446
612	553843.3794	567408.1056
613	553856.4319	567957.9507
614	553869.5556	568507.7941
615	553880.8030	568979.0250
616	553893.4169	569507.5093
617	553905.3476	570007.3670
618	553910.7164	570232.3029
701	553864.5815	566907.4665
702	553881.5768	566907.0657
703	553891.0320	567307.9799
704	553874.0391	567308.4815
705	553841.0529	567309.4553
706	553881.5898	567628.6420
707	553886.7055	567633.4931
708	553881.7077	567633.6407
709	553913.2838	568956.8785
710	553917.4764	568964.9013
711	553913.4772	568964.9796
712	553844.7632	568852.0602
713	553839.4520	568629.5371
714	553843.4505	568629.4280
715	553846.3276	568749.9673
716	553850.3258	568749.8454
717	553852.7596	568851.8163
718	553914.6258	569013.1029
719	553914.3393	569001.0991
720	553918.3389	569001.0421
721	553838.1157	568573.5528
722	553832.2611	568579.7148
723	553929.3731	569630.9709
724	553935.5144	569636.8169
725	553930.9241	569695.9524
726	553936.7790	569689.8018
800	553798.5998	566909.0226
801	553803.0921	567099.5031
802	553796.0951	567099.7132
803	553791.6018	566909.1877
810	553810.3886	567408.8836
811	553803.3906	567409.0487
812	553801.0328	567309.0765
813	553789.8567	567259.3261
814	553787.6556	567165.9963
815	553804.6483	567165.4861
816	553815.5412	567627.3590
817	553808.5442	567627.5695
820	553876.3703	567407.3275
821	553886.0340	567308.1274
822	553888.3669	567407.0446
823	553893.3431	567618.0405
824	553943.0833	567616.5721
825	553943.5333	567631.8155
830	553823.4412	567958.7381
831	553811.4447	567959.0244
832	553809.0585	567859.0529
833	553812.8640	567808.9478
834	553810.1098	567693.5523
835	553817.1067	567693.3417
836	553828.4650	568169.2189
837	553821.4669	568169.3806
838	553817.6363	568008.8909
840	553889.4225	567957.1632
841	553882.8817	567683.1276
842	553944.9940	567681.2939
843	553945.2005	567688.2909
844	553890.0458	567689.9191
845	553896.4205	567956.9962
846	553901.4456	568167.5327
847	553894.4474	568167.6944
850	553836.5650	568508.5815
851	553829.5670	568508.7485
852	553822.6600	568219.3664
853	553829.6581	568219.2047
854	553838.2589	568579.5511
855	553816.1818	568580.1536
856	553815.9908	568573.1562
857	553831.0941	568572.7303
860	553902.5462	568507.0066
861	553895.6405	568217.6801
862	553902.6386	568217.5184
863	553909.5442	568506.8396
864	553920.2818	568956.7115
865	553931.3942	568956.6274
866	553931.5507	568964.6259

COORDINATE TABLE

POINT	Y	X
870	553847.8176	568980.0311
871	553847.2191	568954.9544
872	553840.2211	568955.1214
873	553838.5985	568887.1408
874	553845.5965	568886.9737
875	553837.7652	568852.2272
876	553836.6538	568805.6640
877	553843.6518	568805.4969
878	553842.7689	568768.5075
879	553835.7709	568768.6745
880	553832.4545	568629.7281
890	553926.4075	569506.7219
891	553932.2595	569000.8435
892	553932.3334	569004.6182
893	553921.4272	569004.6978
894	553925.1734	569161.6531
895	553935.1705	569161.4145
896	553937.4374	569256.3875
897	553927.4402	569256.6261
898	553933.4055	569506.5549
899	553936.3470	569629.7935
900	553956.2897	569629.2872
901	553956.4674	569636.2850
902	553929.5163	569636.9691
910	553860.4263	569508.2968
911	553853.4283	569508.4638
912	553844.8506	569358.6258
913	553833.6603	569308.8787
914	553829.4846	569133.9285
915	553844.4803	569133.5706
916	553843.7168	569101.5797
917	553850.7148	569101.4127
918	553872.3570	570008.1544
919	553877.7258	570233.0903
920	553870.7278	570233.2574
921	553869.0575	570163.2773
922	553863.0592	570163.4205
923	553860.9117	570073.4461
924	553866.9100	570073.3029
925	553865.3590	570008.3214
926	553865.0011	569993.3257
927	553862.0019	569993.3973
928	553860.9282	569948.4101
929	553863.9273	569948.3385
930	553938.3382	570006.5796
931	553930.7810	569689.9541
932	553957.8124	569689.2679
933	553957.9901	569696.2656
934	553937.9457	569696.7745
935	553945.3362	570006.4125
936	553950.7050	570231.3485
937	553943.7070	570231.5155
940	553894.0343	567857.0247
941	553904.0315	567856.7861
942	553904.6280	567881.7790
943	553894.6309	567882.0176
950	553851.3047	569419.4891
951	553846.3061	569419.6084
952	553862.1377	569873.3599
953	553857.1391	569873.4792
954	553856.5426	569848.4863
955	553861.5412	569848.3670
956	553860.4436	569802.3801
957	553855.4450	569802.4994
958	553855.0871	569787.5037
959	553860.0856	569787.3844
960	553940.6832	569811.4642
961	553945.6818	569811.3487
962	553946.3977	569841.3402
963	553941.3991	569841.4595
964	553943.3796	569924.4359
965	553948.3782	569924.3166
966	553949.7621	569982.3001
967	553944.7636	569982.4194
968	553946.3861	570050.4000
969	553951.3847	570050.2807
970	553951.7426	570065.2764
971	553946.7440	570065.3957
972	553949.6313	570186.3613
973	553954.6298	570186.2420
974	553955.0355	570203.2371
975	553950.0369	570203.3564

4

4

REVISION DATE

DATE 12/12/2016

GRID FACTOR 0.99989982

SCALE, FEET 0 --- ---

HWY: CTH D

COUNTY: OZAUKEE

STATE R/W PROJECT NUMBER 4880-01-00

CONSTRUCTION PROJECT NUMBER 4880-01-70

PLAT SHEET 4.13

PS&E SHEET 119

E

FILE NAME : 48800100-040102-RP.DWG

PLOT DATE : 12/12/2016 11:17 AM PLOT BY : JAY PANETTI PLOT NAME : PLOT SCALE : **********

WISDOT/CADDS SHEET 75

BENCH MARKS

BM	DESCRIPTION	ELEVATION
D-1	NE BOLT ON FLANGE OF HYD, SW CORNER OF CTH D AND LILAC LN.	739.83

**VERTICAL DATUM REFERENCED TO NGVD 29

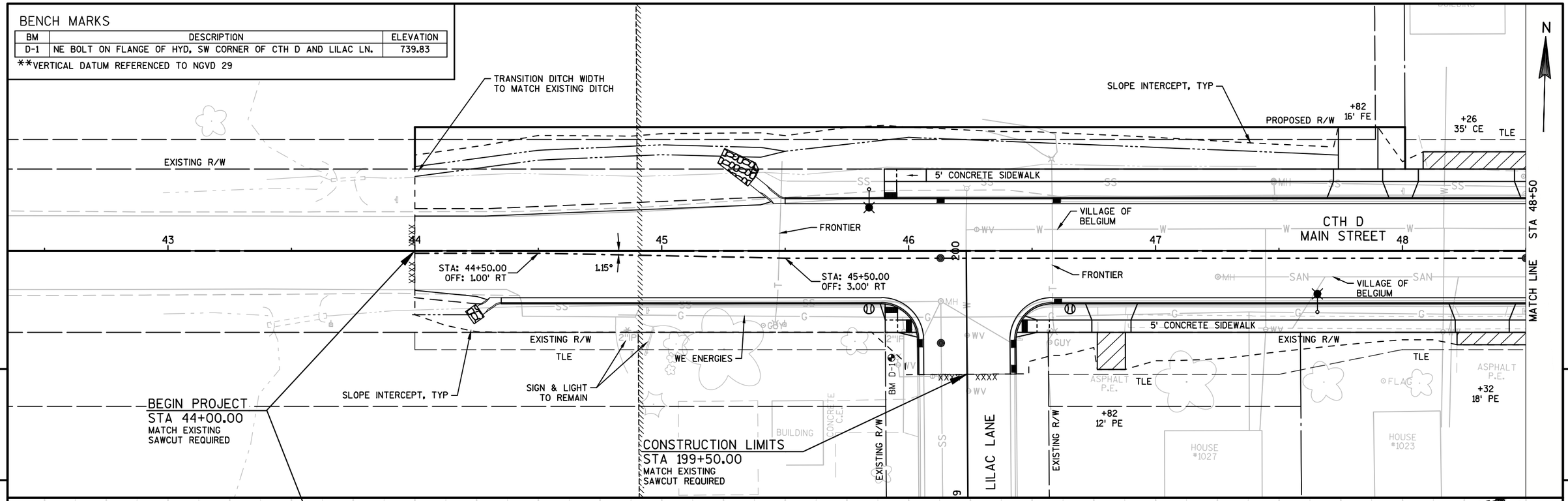

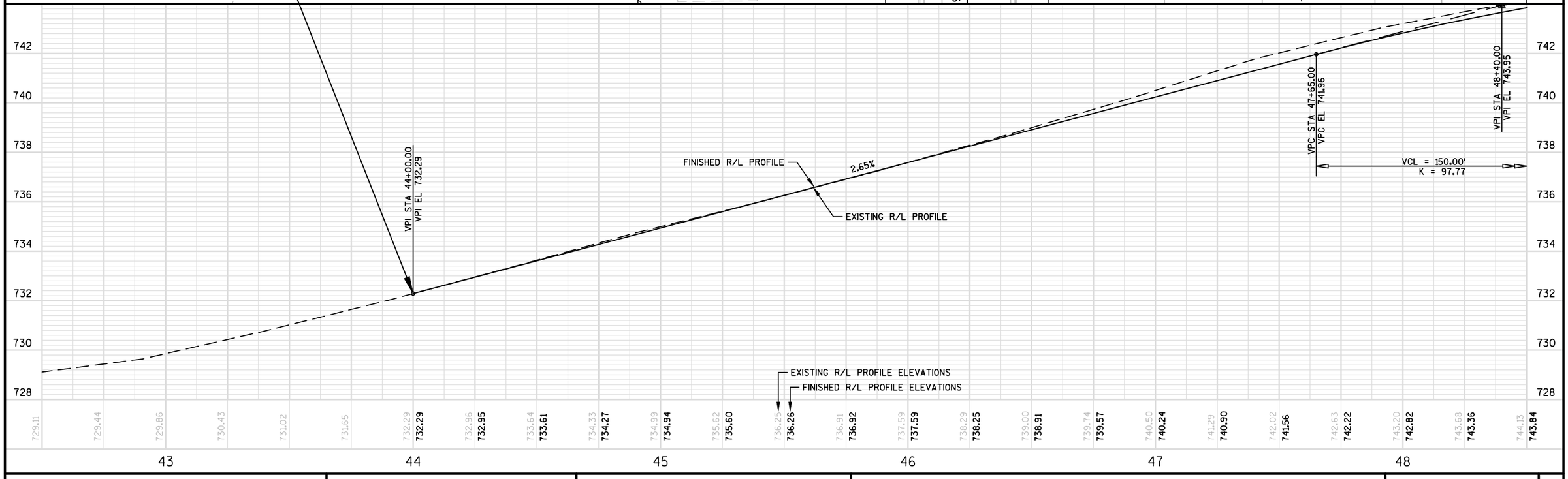

PROJECT NO: 4880-01-70	HWY: CTH D	COUNTY: OZAUKEE	PLAN AND PROFILE: CTH D	SHEET 120	E

BENCH MARKS

BM	DESCRIPTION	ELEVATION
D-2	NE BOLT ON FLANGE OF HYD, NE CORNER OF CTH D AND CTH KW	749.80

**VERTICAL DATUM REFERENCED TO NGVD 29

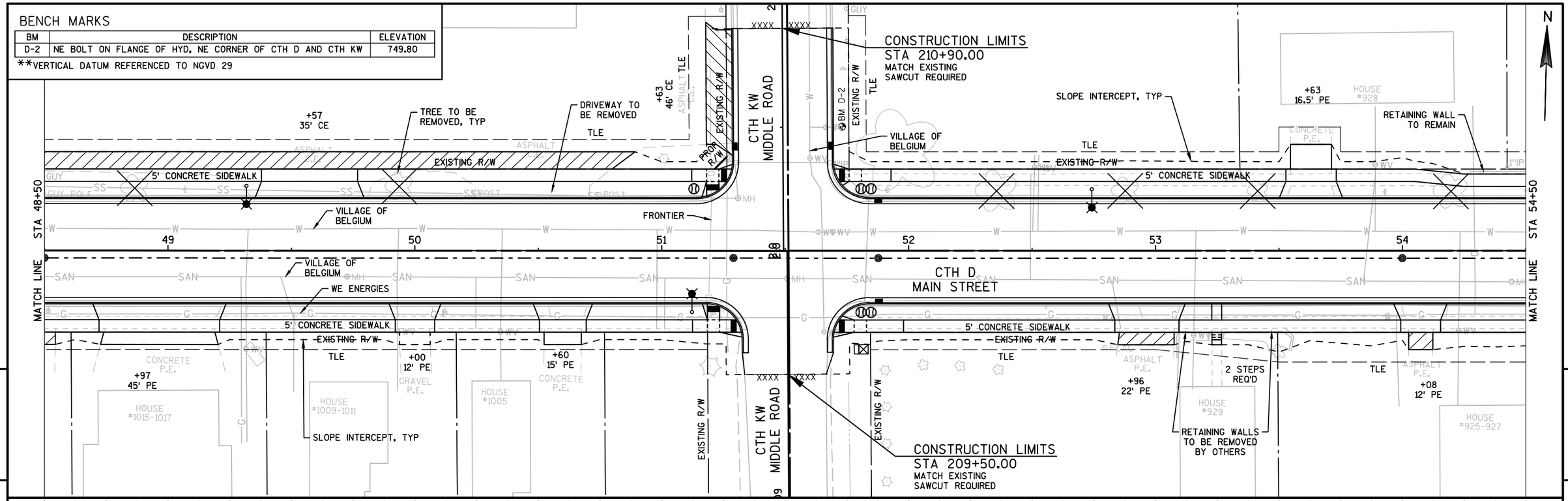

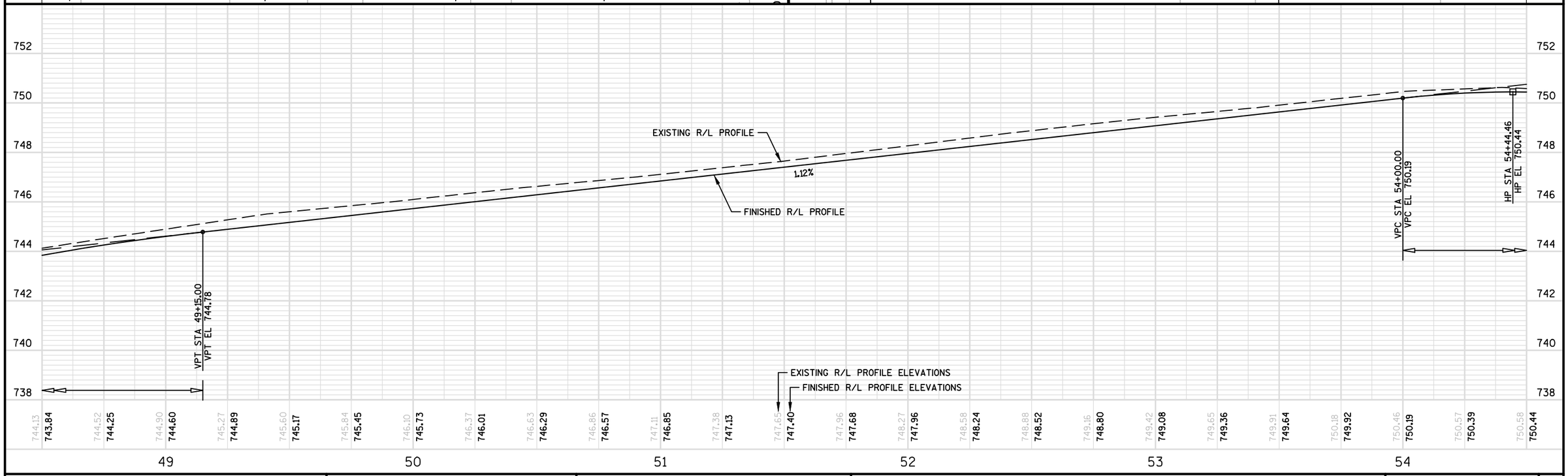

PROJECT NO: 4880-01-70	HWY: CTH D	COUNTY: OZAUKEE	PLAN AND PROFILE: CTH D	SHEET 121	E

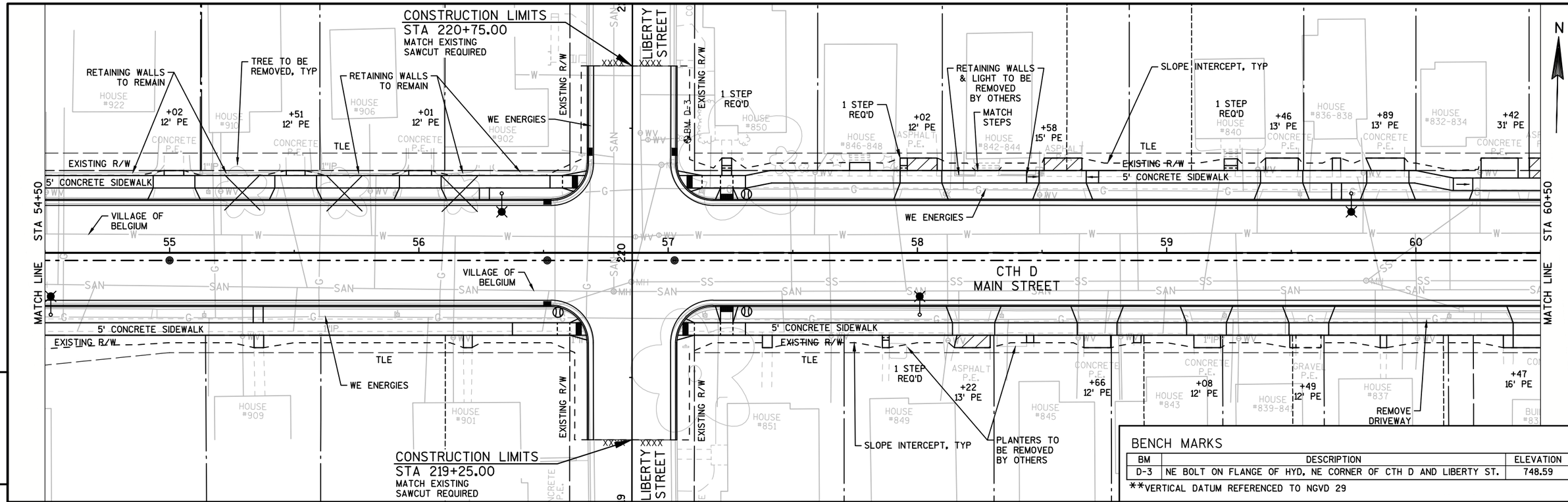

BENCH MARKS

BM	DESCRIPTION	ELEVATION
D-3	NE BOLT ON FLANGE OF HYD, NE CORNER OF CTH D AND LIBERTY ST.	748.59

**VERTICAL DATUM REFERENCED TO NGVD 29

PROJECT NO:4880-01-70	HWY:CTH D	COUNTY:OZAUKEE	PLAN AND PROFILE: CTH D	SHEET 122	E

FILE NAME : S:\CURRPROJ\OZAUKEECO\CTH D\CIVIL3D\48800100\SHEETSPLAN\48800170\48800170-050101-PP.DWG
LAYOUT NAME - 48800170-050101-PP - SHEET-03
PLOT DATE : 10/31/2017 12:25 PM PLOT BY : AARON SARAUER PLOT NAME : PLOT SCALE : 1 IN:40 FT

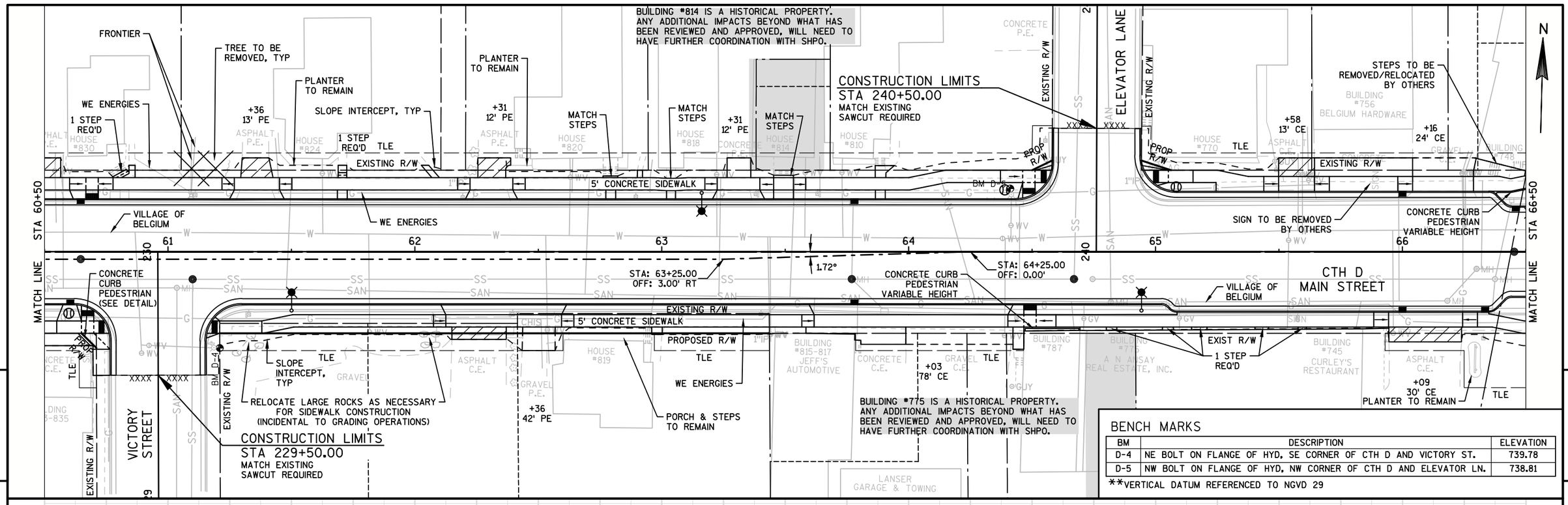

BENCH MARKS

BM	DESCRIPTION	ELEVATION
D-4	NE BOLT ON FLANGE OF HYD, SE CORNER OF CTH D AND VICTORY ST.	739.78
D-5	NW BOLT ON FLANGE OF HYD, NW CORNER OF CTH D AND ELEVATOR LN.	738.81

**VERTICAL DATUM REFERENCED TO NGVD 29

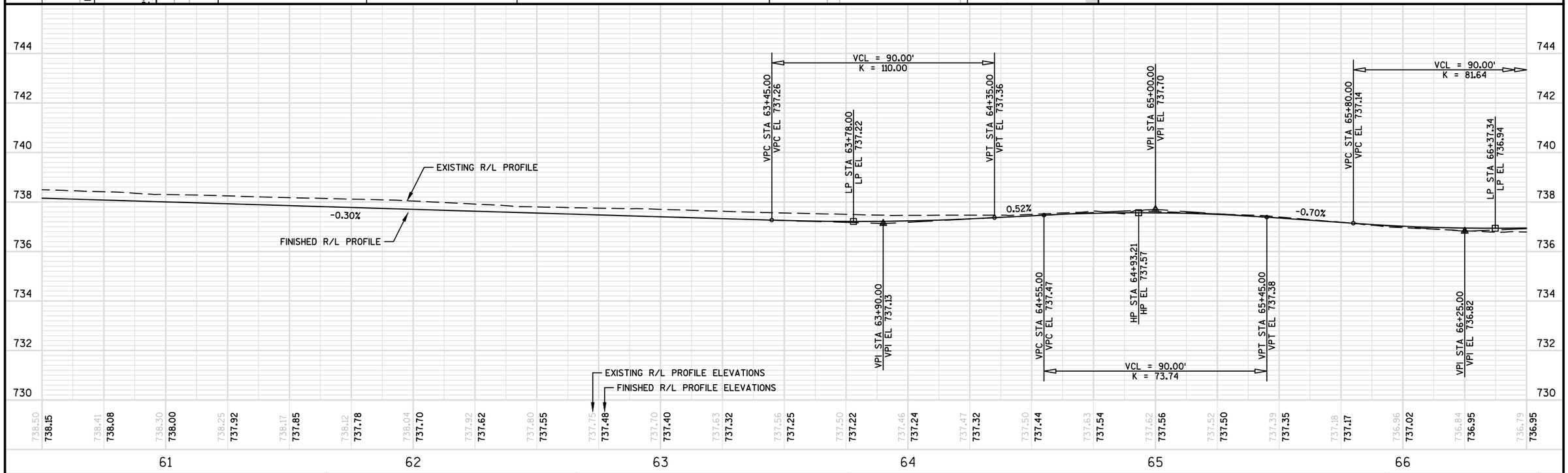

PROJECT NO: 4880-01-70	HWY: CTH D	COUNTY: OZAUKEE	PLAN AND PROFILE: CTH D	SHEET 123	E

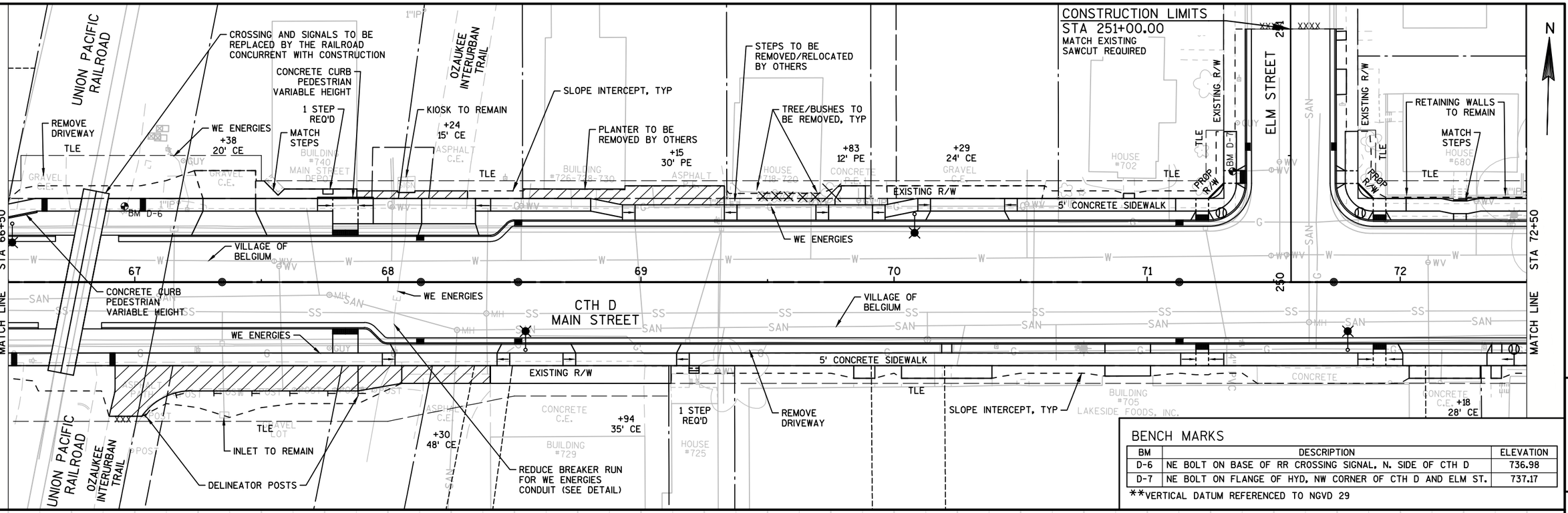

BENCH MARKS

BM	DESCRIPTION	ELEVATION
D-6	NE BOLT ON BASE OF RR CROSSING SIGNAL, N. SIDE OF CTH D	736.98
D-7	NE BOLT ON FLANGE OF HYD, NW CORNER OF CTH D AND ELM ST.	737.17

**VERTICAL DATUM REFERENCED TO NGVD 29

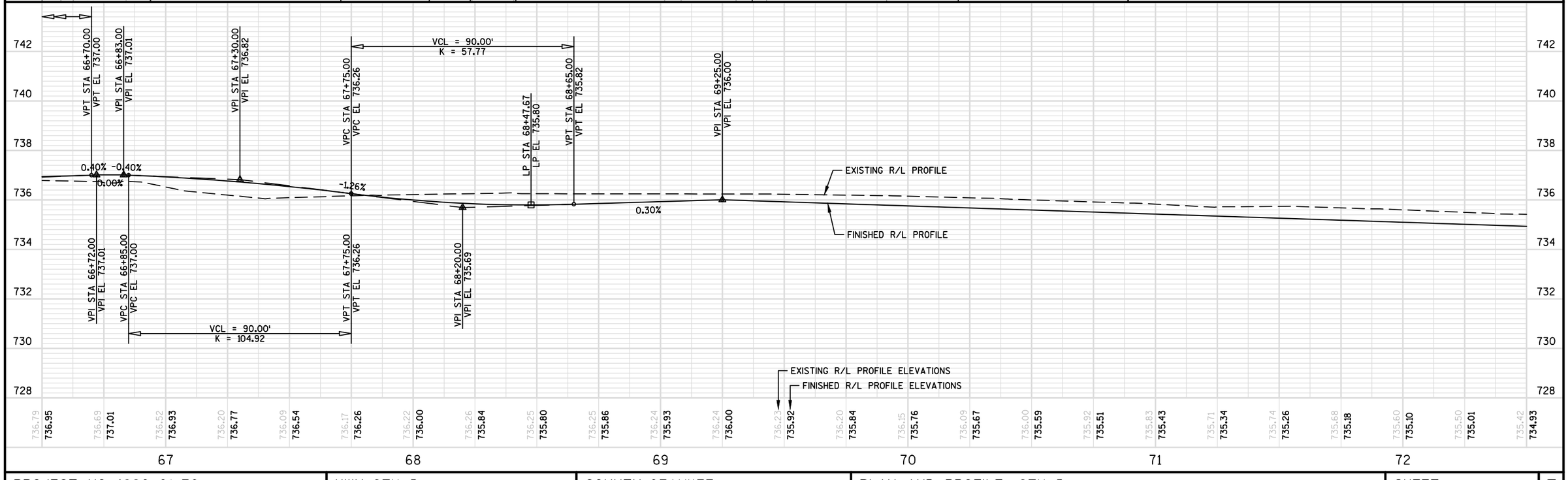

PROJECT NO: 4880-01-70	HWY: CTH D	COUNTY: OZAUKEE	PLAN AND PROFILE: CTH D	SHEET 124	E

N

STA 72+50

MATCH LINE

TREE TO BE REMOVED, TYP

2 STEPS REQ'D

+19 17' PE

+44 14' PE

RETAINING WALLS TO REMAIN

MATCH STEPS

+26 12' PE

+66 18' PE

SLOPE INTERCEPT, TYP

FENCE TO BE REMOVED BY OTHERS

1 STEP REQ'D

+52 12' PE

TREE TO REMAIN

MATCH STEPS

WE ENERGIES

+88 12' PE

PROJECT 4880-01-71 PROPOSED WORK COMPLETED IN 2017

EXISTING R/W

BM D-8

BEECH STREET

BELGIUM COMMUNITY PARK

4'W X 5'H BOX CULVERT

EXISTING R/W

TLE

5' CONCRETE SIDEWALK

VILLAGE OF BELGIUM

WE ENERGIES

CTH D
MAIN STREET

73 74 75 76 77 78

VILLAGE OF BELGIUM

WE ENERGIES

5' CONCRETE SIDEWALK

TLE

WE ENERGIES

WE ENERGIES

EXISTING R/W

+86 12' PE

PLANTER TO BE REMOVED BY OTHERS

+54 21' PE

1 STEP REQ'D

+64 32' PE

SLOPE INTERCEPT, TYP

+79 12' PE

2 STEPS REQ'D

+41 12' PE

+66 12' PE

WE ENERGIES

END PROJECT
STA 77+25.00
MATCH EXISTING
SAWCUT REQUIRED

5 5

BENCH MARKS

BM	DESCRIPTION	ELEVATION
D-8	NE BOLT ON FLANGE OF HYD. NW CORNER OF CTH D AND BEECH ST.	735.26

**VERTICAL DATUM REFERENCED TO NGVD 29

740 738 736 734 732 730 728 726

VPI STA 77+25.00
VPI EL 733.36

-0.33%

EXISTING R/L PROFILE

FINISHED R/L PROFILE

FINISHED R/L PROFILE
PROJECT 4880-01-71

EXISTING R/L PROFILE ELEVATIONS

FINISHED R/L PROFILE ELEVATIONS

735.42	735.39	735.31	735.20	735.10	734.99	734.91	734.85	734.77	734.66	734.57	734.52	734.47	734.41	734.33	734.24	734.15	734.06	733.99	733.90	733.80	733.72	733.70	733.75	733.78
734.93	734.85	734.77	734.68	734.60	734.52	734.43	734.35	734.27	734.19	734.10	734.02	733.94	733.86	733.77	733.69	733.61	733.53	733.44	733.36					

73 74 75 76 77 78

PROJECT NO: 4880-01-70	HWY: CTH D	COUNTY: OZAUKEE	PLAN AND PROFILE: CTH D	SHEET 125	E

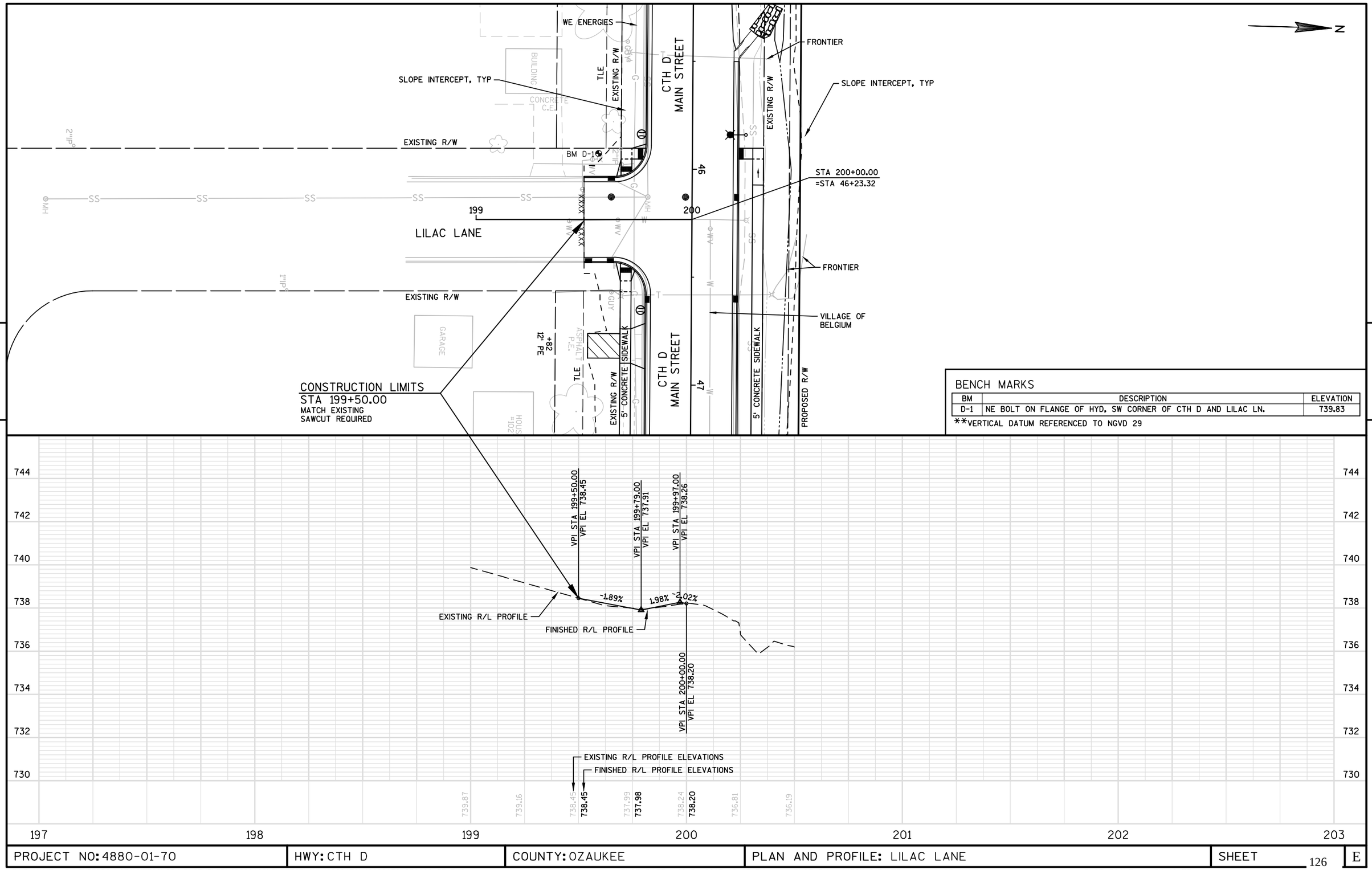

BENCH MARKS

BM	DESCRIPTION	ELEVATION
D-1	NE BOLT ON FLANGE OF HYD. SW CORNER OF CTH D AND LILAC LN.	739.83

**VERTICAL DATUM REFERENCED TO NGVD 29

PROJECT NO: 4880-01-70	HWY: CTH D	COUNTY: OZAUKEE	PLAN AND PROFILE: LILAC LANE	SHEET 126	E

N

SLOPE INTERCEPT, TYP

BUILDING

1"IP

EXISTING R/W

VILLAGE OF BELGIUM

STA 210+00.00
=STA 51+50.82

WE ENERGIES

TLE

5' CONCRETE SIDEWALK

EXISTING R/W

CTH D
MAIN STREET

51

52

CTH KW
MIDDLE ROAD

209

210

211

STA 210+00.00
=STA 51+49.32

+60
15 PE

+63
46' CE

ASPHALT

FRONTIER

BM D-2

CONSTRUCTION LIMITS
STA 209+50.00
MATCH EXISTING
SAWCUT REQUIRED

CONSTRUCTION LIMITS
STA 210+90.00
MATCH EXISTING
SAWCUT REQUIRED

BENCH MARKS

BM	DESCRIPTION	ELEVATION
D-2	NE BOLT ON FLANGE OF HYD, NE CORNER OF CTH D AND CTH KW	749.80

**VERTICAL DATUM REFERENCED TO NGVD 29

VPI STA 209+50.00
VPI EL 746.66

VPI STA 209+79.00
VPI EL 747.00

VPI STA 210+00.00
VPI EL 747.41

VPI STA 210+00.00
VPI EL 747.40

VPI STA 210+08.00
VPI EL 747.56

VPI STA 210+21.00
VPI EL 747.30

VPI STA 210+90.00
VPI EL 748.48

1.16%
1.99%
1.99%
-2.01%
1.72%

EXISTING R/L PROFILE

FINISHED R/L PROFILE

EXISTING R/L PROFILE ELEVATIONS
FINISHED R/L PROFILE ELEVATIONS

745.85	746.26	746.66	746.95	747.61	747.94	748.28
		746.66	**746.95**	**747.36**	**747.79**	**748.22**

752 750 748 746 744 742 740 738

207 208 209 210 211 212 213

PROJECT NO: 4880-01-70	HWY: CTH D	COUNTY: OZAUKEE	PLAN AND PROFILE: CTH KW/ MIDDLE ROAD	SHEET 127	E

FILE NAME : S:\CURRPROJ\OZAUKEECO\CTH D\CIVIL3D\48800100\SHEETSPLAN\48800170\48800170-050102-PP.DWG
LAYOUT NAME - 48800170-050102-PP - SHEET-02

PLOT DATE : 1/2/2018 9:57 AM PLOT BY : AARON SARAUER PLOT NAME : PLOT SCALE : 1 IN:40 FT

WISDOT/CADDS SHEET 44

BENCH MARKS

BM	DESCRIPTION	ELEVATION
D-3	NE BOLT ON FLANGE OF HYD, NE CORNER OF CTH D AND LIBERTY ST.	748.59

**VERTICAL DATUM REFERENCED TO NGVD 29

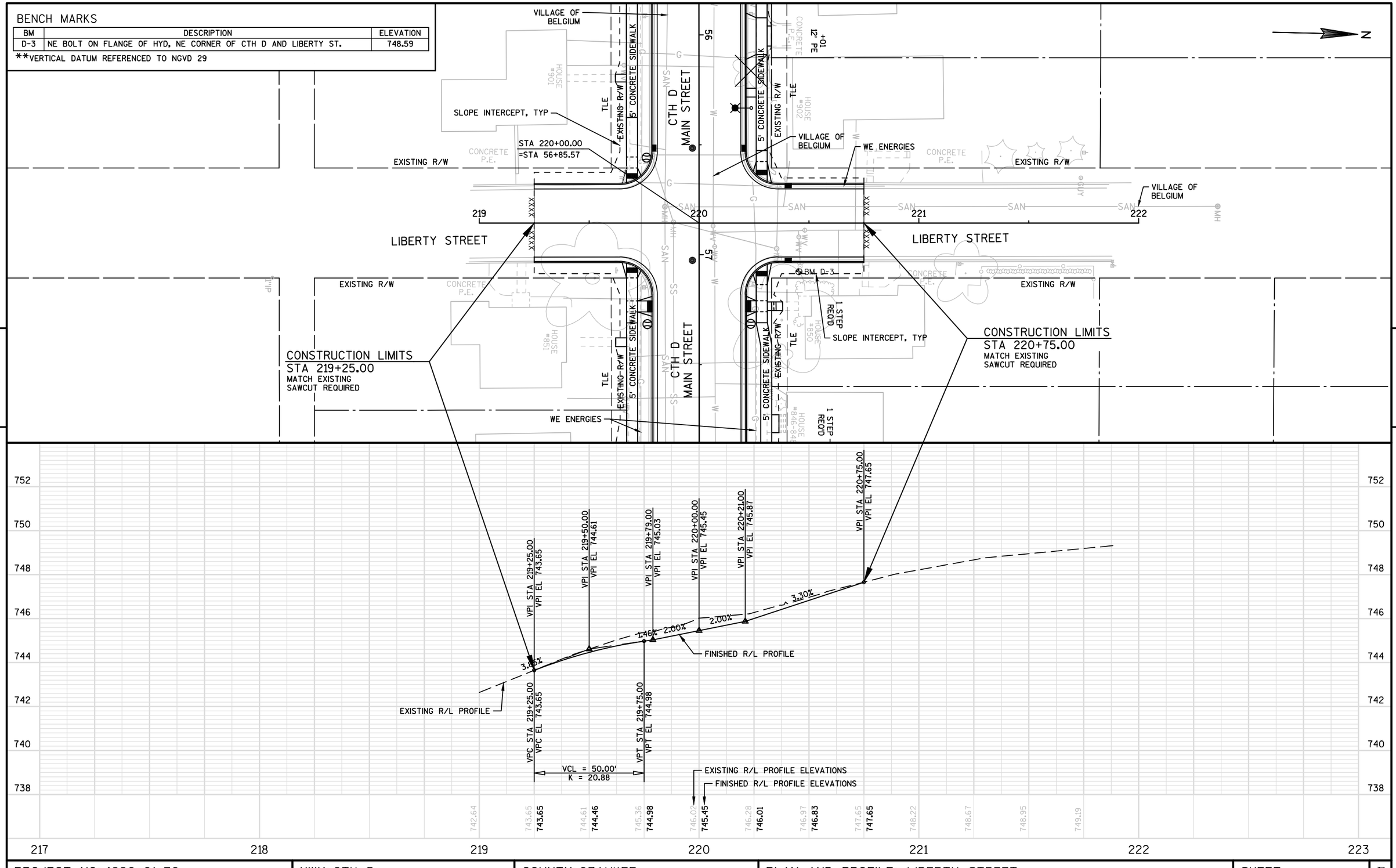

PROJECT NO: 4880-01-70	HWY: CTH D	COUNTY: OZAUKEE	PLAN AND PROFILE: LIBERTY STREET	SHEET 128	E

FILE NAME : S:\CURRPROJ\OZAUKEECO\CTH D\CIVIL3D\48800100\SHEETSPLAN\48800170\48800170-050102-PP.DWG
LAYOUT NAME - 48800170-050102-PP - SHEET-03
PLOT DATE : 10/31/2017 12:27 PM PLOT BY : AARON SARAUER PLOT NAME : PLOT SCALE : 1 IN:40 FT
WISDOT/CADDS SHEET 44

BENCH MARKS

BM	DESCRIPTION	ELEVATION
D-4	NE BOLT ON FLANGE OF HYD. SE CORNER OF CTH D AND VICTORY ST.	739.78

**VERTICAL DATUM REFERENCED TO NGVD 29

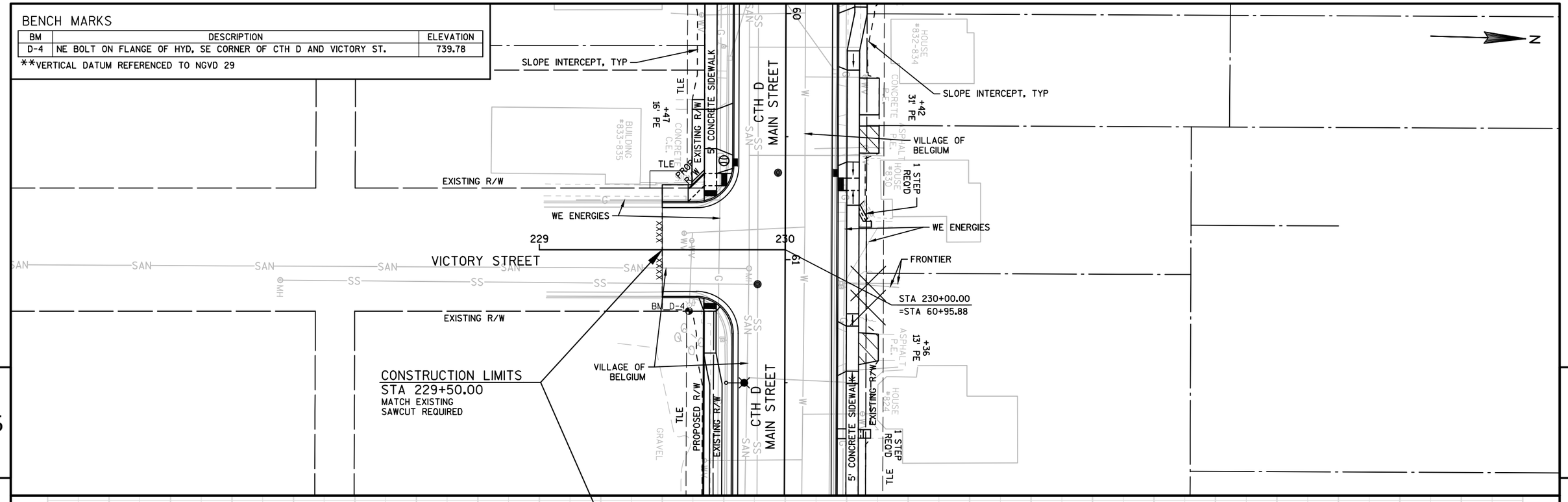

PROJECT NO: 4880-01-70	HWY: CTH D	COUNTY: OZAUKEE	PLAN AND PROFILE: VICTORY STREET	SHEET 129	E

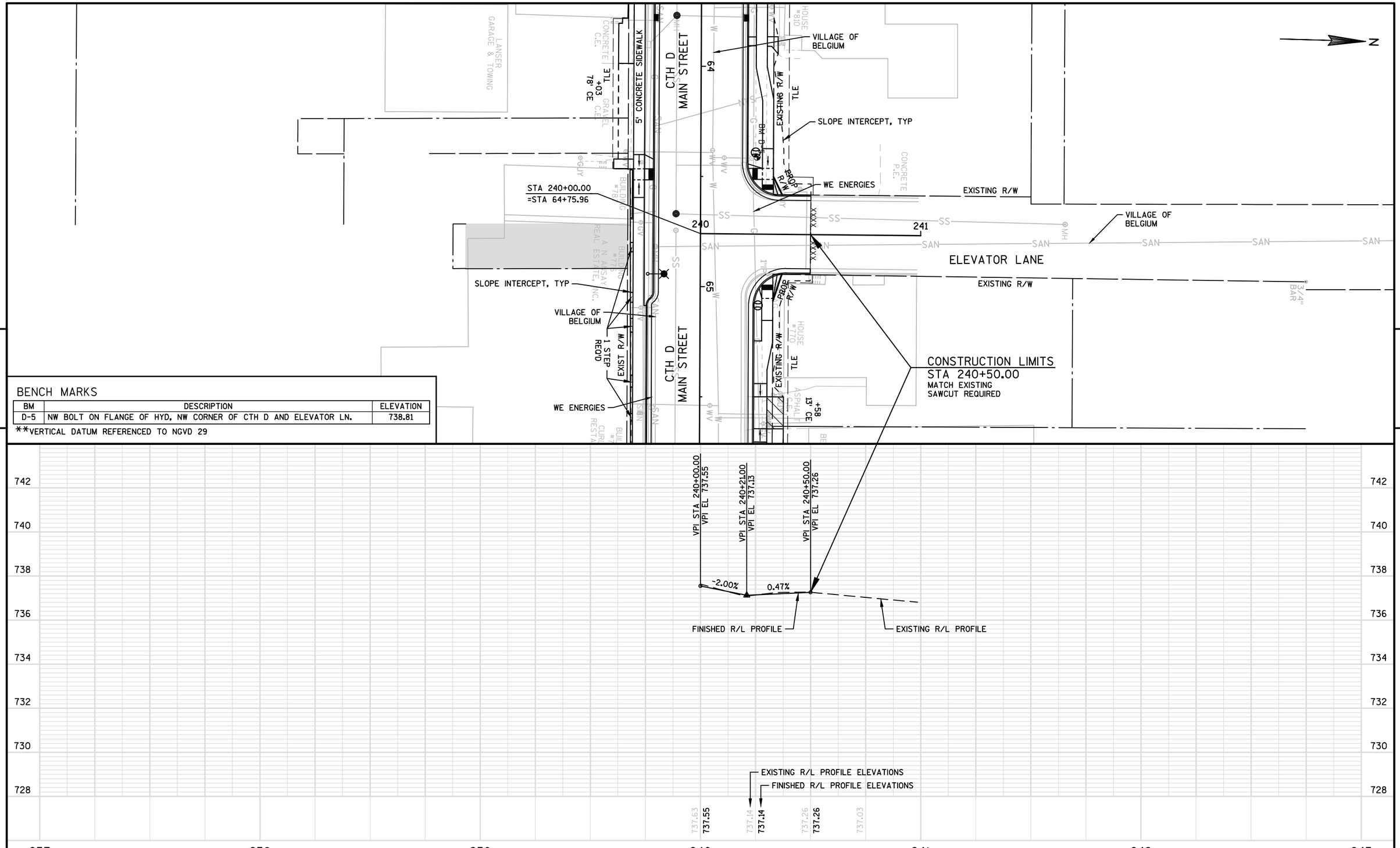

BENCH MARKS

BM	DESCRIPTION	ELEVATION
D-5	NW BOLT ON FLANGE OF HYD, NW CORNER OF CTH D AND ELEVATOR LN.	738.81

**VERTICAL DATUM REFERENCED TO NGVD 29

5

5

PROJECT NO:4880-01-70	HWY:CTH D	COUNTY:OZAUKEE	PLAN AND PROFILE: ELEVATOR LANE	SHEET 130	E

FILE NAME : S:\CURRPROJ\OZAUKEECO\CTH D\CIVIL3D\48800100\SHEETSPLAN\48800170\48800170-050102-PP.DWG
LAYOUT NAME - 48800170-050102-PP - SHEET-05
PLOT DATE : 10/31/2017 4:27 PM PLOT BY : AARON SARAUER PLOT NAME : PLOT SCALE : 1 IN:40 FT
WISDOT/CADDS SHEET 44

BENCH MARKS

BM	DESCRIPTION	ELEVATION
D-7	NE BOLT ON FLANGE OF HYD. NW CORNER OF CTH D AND ELM ST.	737.17

**VERTICAL DATUM REFERENCED TO NGVD 29

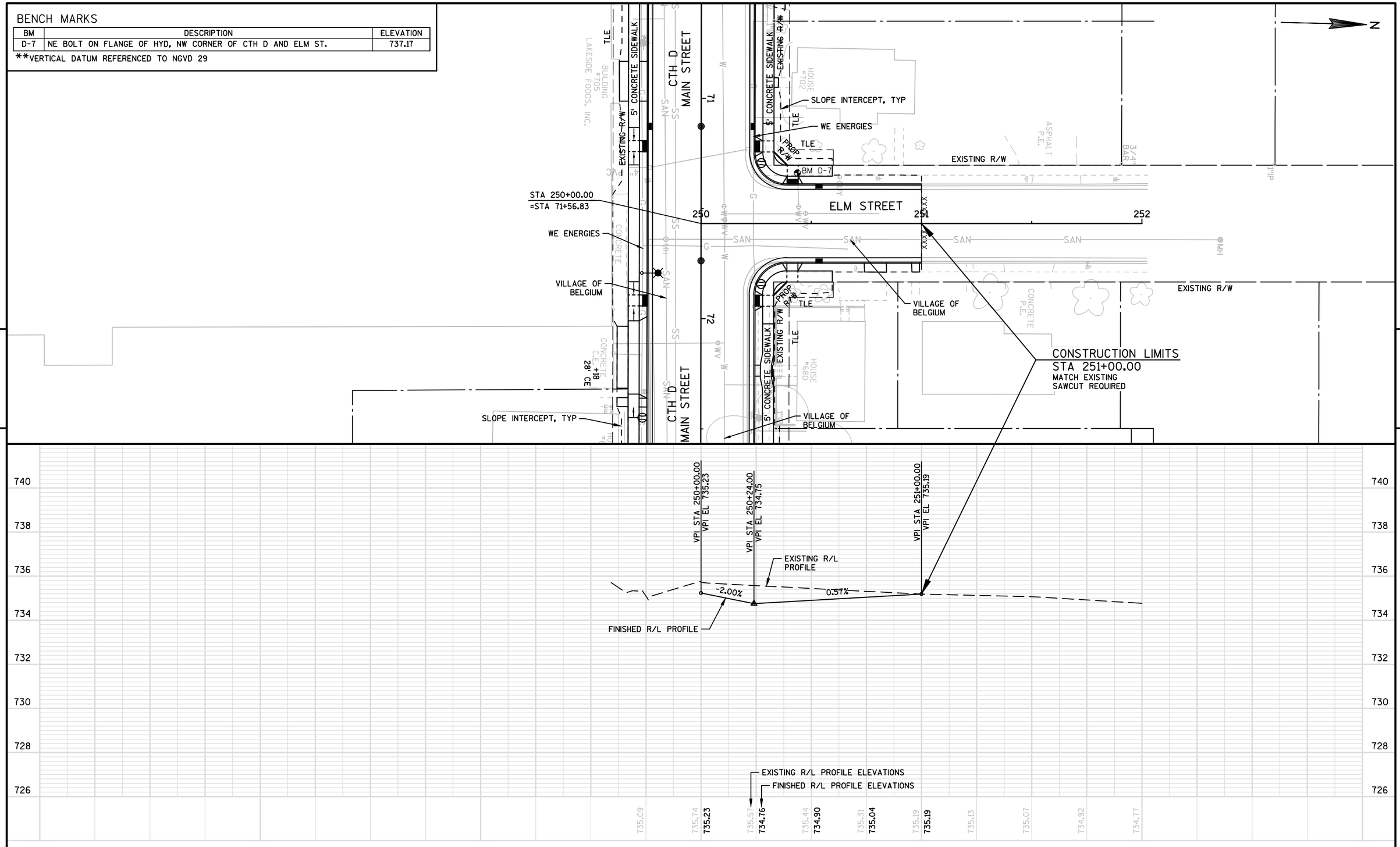

PROJECT NO: 4880-01-70	HWY: CTH D	COUNTY: OZAUKEE	PLAN AND PROFILE: ELM STREET	SHEET 131	E

FILE NAME : S:\CURRPROJ\OZAUKEECO\CTH D\CIVIL3D\48800100\SHEETSPLAN\48800170\48800170-050102-PP.DWG
LAYOUT NAME - 48800170-050102-PP - SHEET-06
PLOT DATE : 10/31/2017 12:27 PM PLOT BY : AARON SARAUER PLOT NAME : PLOT SCALE : 1 IN:40 FT
WISDOT/CADDS SHEET 44

Standard Detail Drawing List

08A05-19A	INLET COVERS TYPE A, H, A-S, H-S & Z
08A05-19D	INLET COVER TYPE BW, MANHOLE COVERS, TYPE K, J, J-S, L & M
08A09-02	CATCH BASINS 2X3-FT AND 2.5X3-FT
08B09-02	MANHOLES 3-FT, 4-FT, 5-FT, 6-FT, 7-FT AND 8-FT DIAMETER
08D01-20A	CONCRETE CURB & GUTTER
08D01-20B	CONCRETE CURB, TIES AND CURB AND GUTTER APPLICATIONS
08D04-05	CONCRETE SURFACE DRAINS & ASPHALTIC FLUMES
08D05-19A	CURB RAMPS TYPES 1 AND 1-A
08D05-19B	CURB RAMPS TYPES 2 AND 3
08D05-19C	CURB RAMPS TYPES 4A AND 4A1
08D05-19D	CURB RAMPS TYPE 4B AND 4B1
08D05-19E	CURB RAMPS TYPES 5, 6, 7A, 7B & 8
08D05-19F	CURB RAMPS RADIAL DETECTABLE WARNING FIELD APPLICATIONS
08D05-19G	CURB RAMPS RECTANGULAR AND RADIAL DETECTABLE WARNING PLATES
08E10-02	INLET PROTECTION TYPE A, B, C AND D
08E14-01	TRACKING PAD
08F01-11	APRON ENDWALLS FOR CULVERT PIPE
08F04-07	JOINT TIES FOR CONCRETE PIPE AND CONCRETE COLLAR DETAIL
09B02-10	CONDUIT
09B16-01	PULL BOX NON-CONDUCTIVE
09C03-04	TRANSFORMER/PEDESTAL BASES
09C14-02	CONCRETE CONTROL CABINET BASE, TYPE L
09D01-05	CABINET SERVICE INSTALLATION (METER BREAKER PEDESTAL)
09D04-02	LIGHTING CONTROL CABINET 120/240 VOLT
09E03-05	NON-FREEWAY LIGHTING UNIT POLE WIRING
13B01-10	PAVEMENT DETAILS FOR RAILROAD APPROACH
15A02-09	DELINEATOR POST, DELINEATOR REFLECTOR AND DELINEATOR BRACKET WITH REFLECTIVE SHEETING
15C02-06A	BARRICADES AND SIGNS FOR MAINLINE CLOSURES
15C02-06B	BARRICADES AND SIGNS FOR MAINLINE CLOSURES
15C02-06C	DETOUR SIGNING FOR MAINLINE CLOSURES
15C03-03	BARRICADES AND SIGNS FOR SIDEROAD CLOSURES
15C07-14E	PAVEMENT MARKING FOR BIKE LANES
15C08-18A	LONGITUDINAL MARKING (MAINLINE)
15C09-10A	SIGNING AND PAVEMENT MARKING DETAILS FOR RAILROAD-HIGHWAY GRADE CROSSINGS
15C33-02	STOP LINE AND CROSSWALK PAVEMENT MARKING
15D30-03A	TRAFFIC CONTROL, PEDESTRIAN ACCOMMODATION
15D30-03B	TRAFFIC CONTROL, TEMPORARY ADA COMPLIANT PEDESTRIAN ACCOMMODATION
15D30-03C	TRAFFIC CONTROL, PEDESTRIAN ACCOMMODATION
16A01-06	LANDMARK REFERENCE MONUMENTS AND COVERS

6

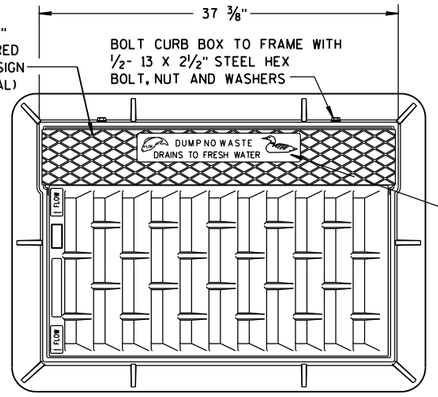

NOTE:
GRATE IS REVERSIBLE.

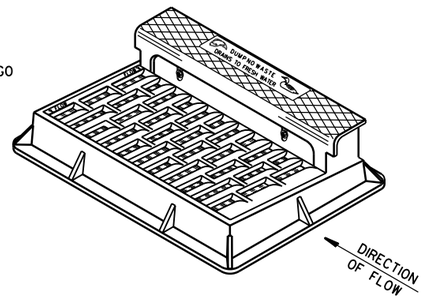

NOTE: CURB BOX HEIGHT ADJUSTABLE 6" TO 9"

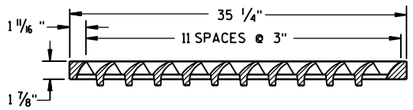

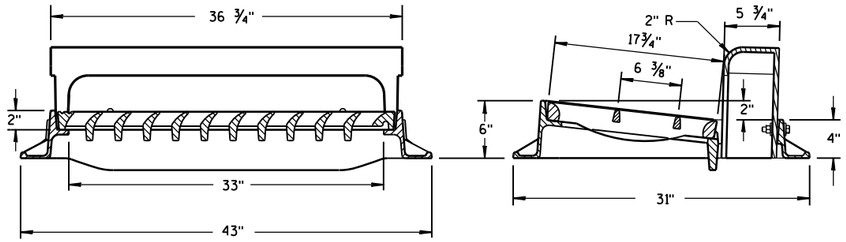

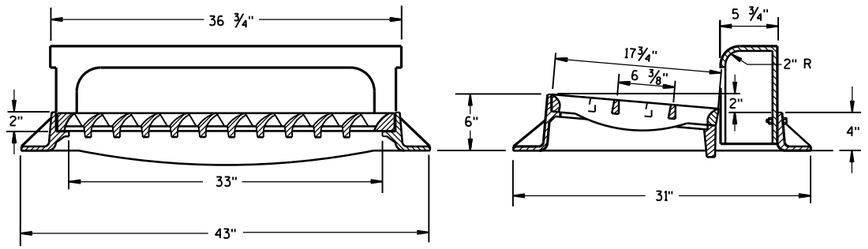

TYPE "H"

NOTE: EITHER CASTING IS ACCEPTABLE

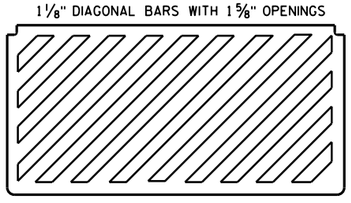

SPECIAL GRATE FOR TYPE "H" COVER

(MEASURES 35 1/4" X 17 3/4" X 2")

(NOTED AS TYPE H-S ON DRAINAGE TABLE)

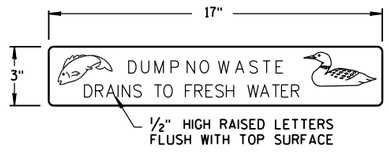

LOGO DETAIL

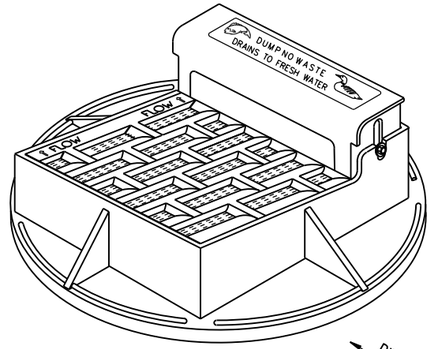

NOTE: CURB BOX ADJUSTABLE 4" TO 9"

NOTE:
GRATE IS REVERSIBLE.

GENERAL NOTES

DETAILS OF CONSTRUCTION, MATERIALS AND WORKMANSHIP NOT SHOWN ON THIS DRAWING SHALL CONFORM TO THE PERTINENT REQUIREMENTS OF THE STANDARD SPECIFICATIONS AND THE APPLICABLE SPECIAL PROVISIONS.

DETAIL DRAWINGS FOR PROPOSED ALTERNATE DESIGNS FOR CATCH BASIN, MANHOLE AND INLET COVERS SHALL BE SUBMITTED TO THE ENGINEER FOR APPROVAL PROVIDING THAT SUCH ALTERNATE DESIGNS MAKE PROVISION FOR EQUIVALENT CAPACITY AND STRENGTH.

ROUND FRAMES AND COVERS SHALL HAVE CONTINUOUSLY MACHINED BEARING SURFACES TO PREVENT ROCKING AND RATTLING.

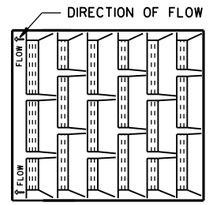

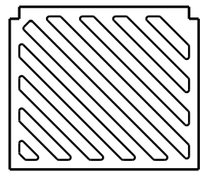

SPECIAL GRATE FOR TYPE "A" COVER

(MEASURES 19 3/4" X 17" X 1 7/8")

(NOTED AS TYPE A-S ON DRAINAGE TABLE)

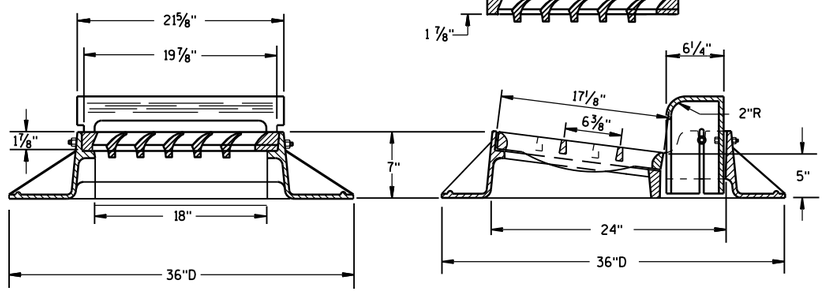

TYPE "A"

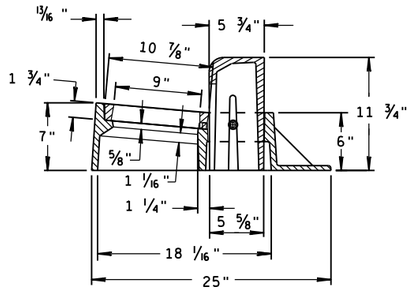

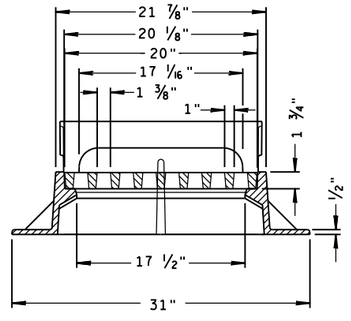

TYPE "Z"

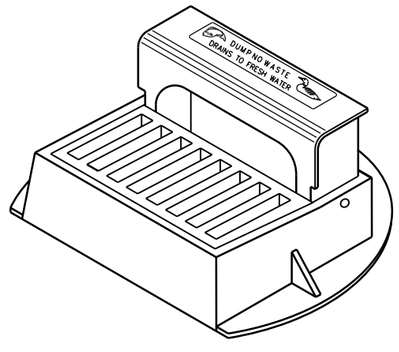

INLET COVERS
TYPE A, H, A-S, H-S & Z

STATE OF WISCONSIN
DEPARTMENT OF TRANSPORTATION

APPROVED
11-27-13 — DATE
/S/ Jerry H. Zogg — ROADWAY STANDARDS ENGINEER
FHWA

6

S.D.D. 8 A 5-19a

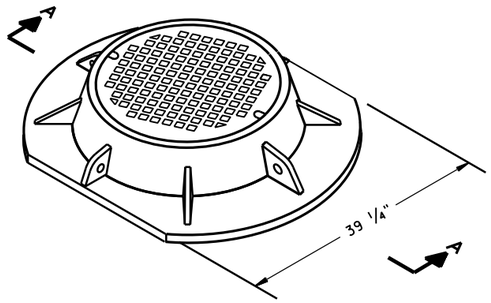

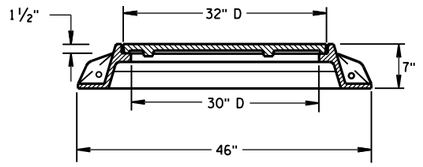

SECTION A-A
TYPE "K"

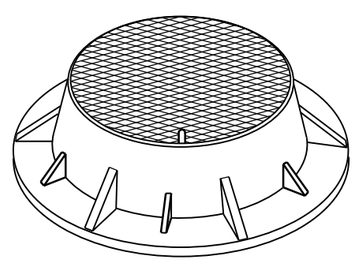

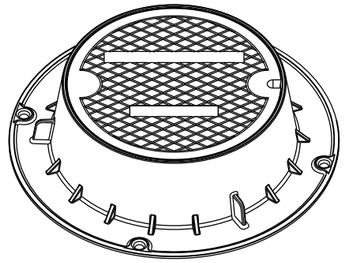

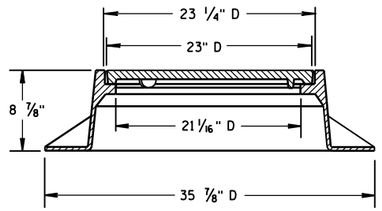

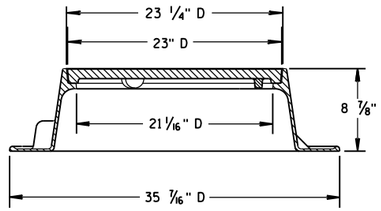

TYPE "J"
NOTE: EITHER CASTING IS ACCEPTABLE

GENERAL NOTES

DETAILS OF CONSTRUCTION, MATERIALS AND WORKMANSHIP NOT SHOWN ON THIS DRAWING SHALL CONFORM TO THE PERTINENT REQUIREMENTS OF THE STANDARD SPECIFICATIONS AND THE APPLICABLE SPECIAL PROVISIONS.

DETAIL DRAWINGS FOR PROPOSED ALTERNATE DESIGNS FOR MANHOLE COVERS SHALL BE SUBMITTED TO THE ENGINEER FOR APPROVAL PROVIDING THAT SUCH ALTERNATE DESIGNS MAKE PROVISION FOR EQUIVALENT CAPACITY AND STRENGTH.

ROUND FRAMES AND COVERS SHALL HAVE CONTINUOUSLY MACHINED BEARING SURFACES TO PREVENT ROCKING AND RATTLING.

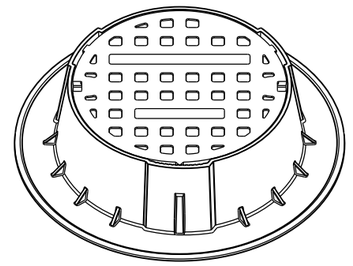

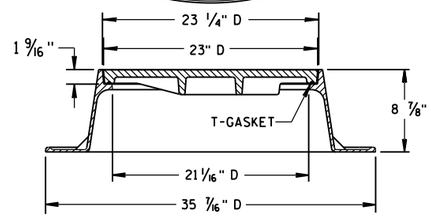

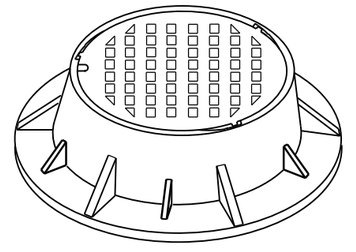

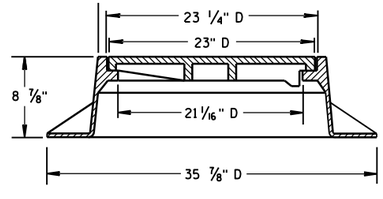

TYPE "J" SPECIAL
TYPE "B" NON-ROCKING SELF-SEAL LID
(NOTED AS TYPE J-S ON THE DRAINAGE TABLE)
NOTE: EITHER CASTING IS ACCEPTABLE

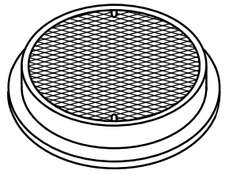

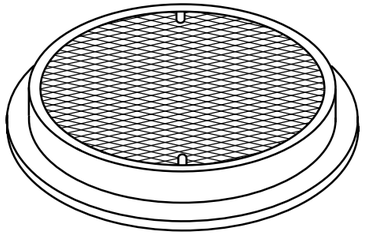

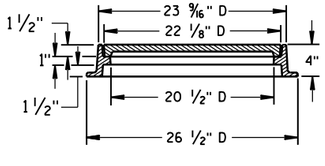

TYPE "L"

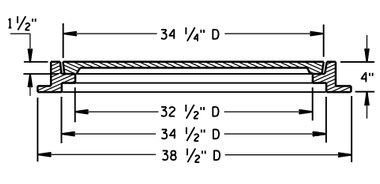

TYPE "M"

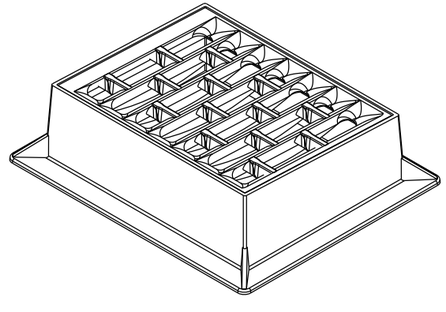

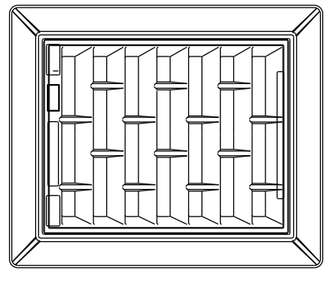

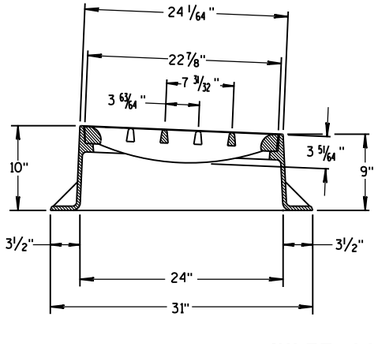

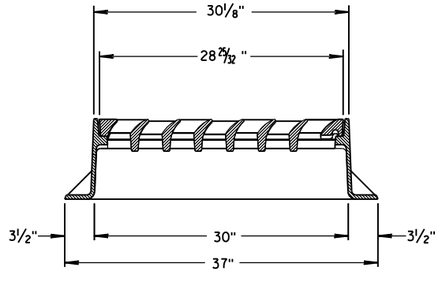

INLET COVER TYPE "BW"

INLET COVER TYPE BW
MANHOLE COVERS, TYPE K, J, J-S, L & M

STATE OF WISCONSIN
DEPARTMENT OF TRANSPORTATION

APPROVED
11/27/2013
DATE
FHWA

/S/ Jerry H. Zogg
ROADWAY STANDARDS DEVELOPMENT ENGINEER

6

S.D.D. 8 A 5-19d

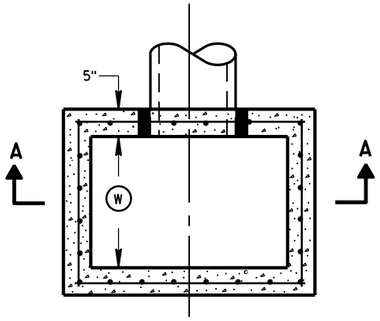

PLAN VIEW

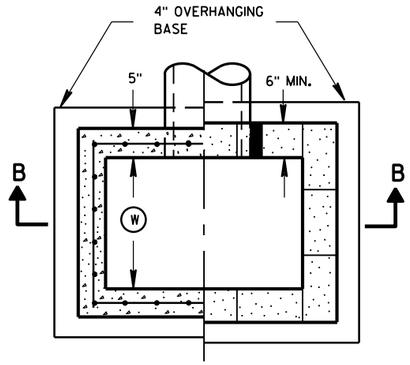

PLAN VIEW

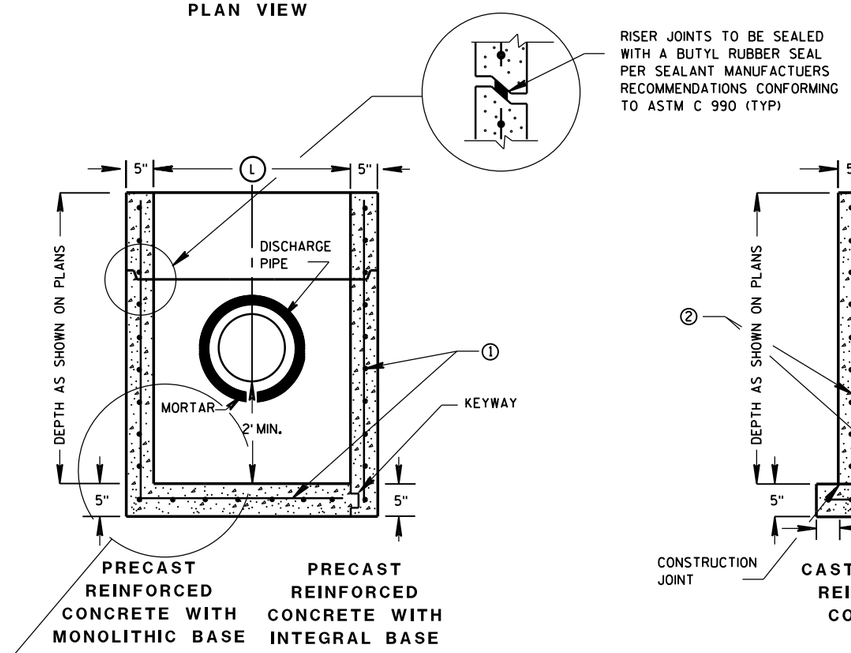

SECTION A-A

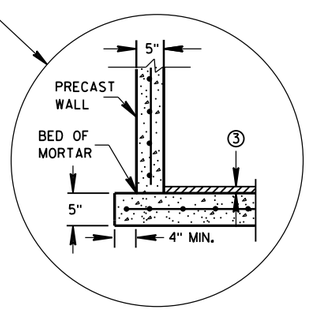

SEPARATE PRECAST REINFORCED CONCRETE BASE OPTION

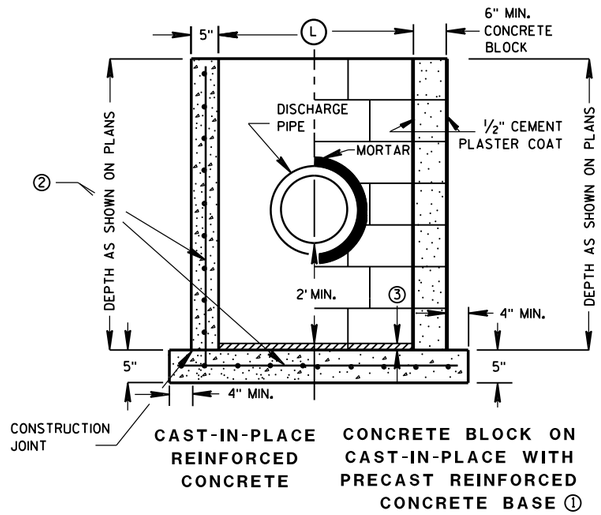

SECTION B-B

GENERAL NOTES

DETAILS OF CONSTRUCTION, MATERIALS AND WORKMANSHIP NOT SHOWN ON THIS DRAWING SHALL CONFORM TO THE PERTINENT REQUIREMENTS OF THE STANDARD SPECIFICATIONS AND THE APPLICABLE SPECIAL PROVISIONS.

UNLESS OTHERWISE AUTHORIZED IN WRITING BY THE ENGINEER, THE CONTRACTOR SHALL NOT ORDER AND DELIVER PRECAST CATCH BASIN UNITS REQUIRED FOR THE PROJECT UNTIL A LIST OF SIZES IS FURNISHED BY THE ENGINEER.

DETAILED DRAWINGS FOR PROPOSED ALTERNATE DESIGNS FOR UNDERGROUND DRAINAGE STRUCTURES SHALL BE SUBMITTED TO THE ENGINEER FOR APPROVAL PROVIDING THAT SUCH ALTERNATE DESIGNS MAKE PROVISION FOR EQUIVALENT CAPACITY AND STRENGTH.

ALL PRECAST CATCH BASIN UNITS SHALL CONFORM TO THE PERTINENT REQUIREMENTS OF ASTM C 913.

ALL DRAINAGE STRUCTURES ARE DESIGNATED ON THE PLANS AS "MANHOLES 3X3-L", "CATCH BASINS 4-B", "INLETS 2X3-H", ETC. THE FIRST NUMBERS DESIGNATES THE SIZE OF THE STRUCTURE, AND THE FOLLOWING LETTER DESIGNATES THE TYPE OF COVER TO BE USED TO COMPRISE THE COMPLETE UNIT.

BASES SHALL BE PLACED ON A BED OF MATERIAL AT LEAST 6 INCHES IN DEPTH, WHICH MEETS THE REQUIREMENTS OF FOUNDATION BACKFILL. THIS BEDDING SHALL BE COMPACTED AND PROVIDE UNIFORM SUPPORT FOR THE ENTIRE AREA OF THE BASE.

ALL BAR STEEL REINFORCEMENT SHALL BE EMBEDDED 2 INCHES CLEAR UNLESS OTHERWISE SHOWN OR NOTED.

PRECAST REINFORCED RISERS SHALL HAVE A TONGUE AND GROOVE JOINT WITH TONGUE UP OR DOWN.

4" OVERHANGING BASES ARE REQUIRED FOR CAST-IN-PLACE REINFORCED CONCRETE AND CONCRETE BLOCK INSTALLATIONS.
4" OVERHANG IS REQUIRED WHEN SEPARATE PRECAST BASE IS PROVIDED.
OVERHANG IS NOT REQUIRED ON PRECAST STRUCTURES WITH AN INTEGRAL OR MONOLITHIC BASE.

MAXIMUM INSIDE PIPE DIAMETER DETERMINED BY 3" CLEARANCE ON EACH SIDE OF THE OUTSIDE WALL OF THE PIPE. SEE DETAIL "A". ASSUMES PIPE ENTERS PERPENDICULAR TO THE STRUCTURE.

① FOR PRECAST CATCH BASINS PROVIDE REINFORCING STEEL IN ACCORDANCE TO ASTM C 913.

② CONTRACTOR TO PROVIDE DRAWING(S) STAMPED BY A PROFESSIONAL ENGINEER FOR STEEL REINFORCING DESIGN FOR CAST-IN-PLACE STRUCTURES.

③ 1" CONCRETE KEY POURED AFTER INSTALLATION. 2' SUMP MEASURED FROM TOP OF KEY.

CATCH BASIN COVER MATRIX

CATCH BASIN SIZE		INLET COVER TYPE	F	ALL H'S
	WIDTH (W) (FT)	LENGTH (L) (FT)		
2X3-FT	2	3		X
2.5X3-FT	2.5	3	X	

PIPE MATRIX

CATCH BASIN SIZE	MAXIMUM INSIDE PIPE DIAMETER FOR TWO PIPES	
	WIDTH (IN)	LENGTH (IN)
2X3-FT	12	24
2.5X3-FT	18	24

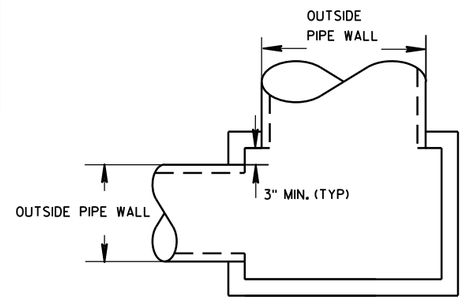

DETAIL "A"

CATCH BASINS 2X3-FT AND 2.5X3-FT

CATCH BASINS 2X3-FT AND 2.5X3-FT

STATE OF WISCONSIN
DEPARTMENT OF TRANSPORTATION

APPROVED
Sept., 2016
DATE
FHWA

/S/ Rodney Taylor
ROADWAY STANDARDS DEVELOPMENT UNIT SUPERVISOR

6

S.D.D. 8 A 9-2

6

S.D.D. 8 A 9-2

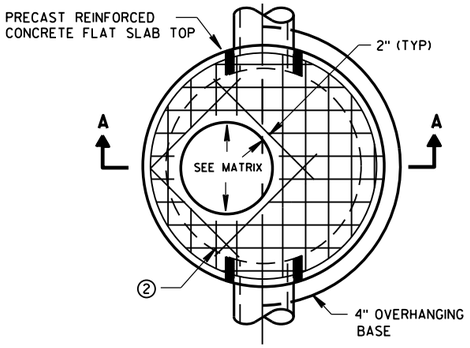

PLAN VIEW CIRCULAR OPENING

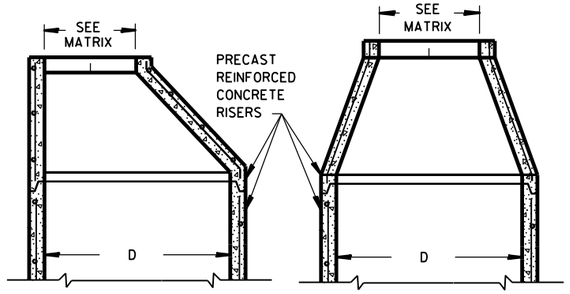

OPTIONAL PRECAST REINFORCED CONCRETE ECCENTRIC TOP

OPTIONAL PRECAST REINFORCED CONCRETE CONCENTRIC TOP

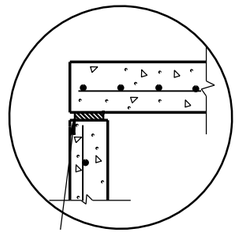

TOP WITH PLAIN END JOINT

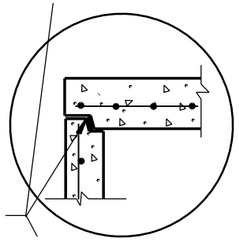

JOINTS TO BE SEALED WITH A BUTYL RUBBER SEAL PER SEALANT MANUFACTURERS RECOMMENDATIONS CONFORMING TO ASTM C990 (TYP)

TOP WITH TONGUE AND GROOVE JOINT

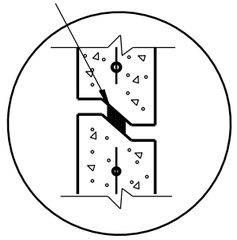

RISER WITH TONGUE AND GROOVE JOINT

DETAIL "B"

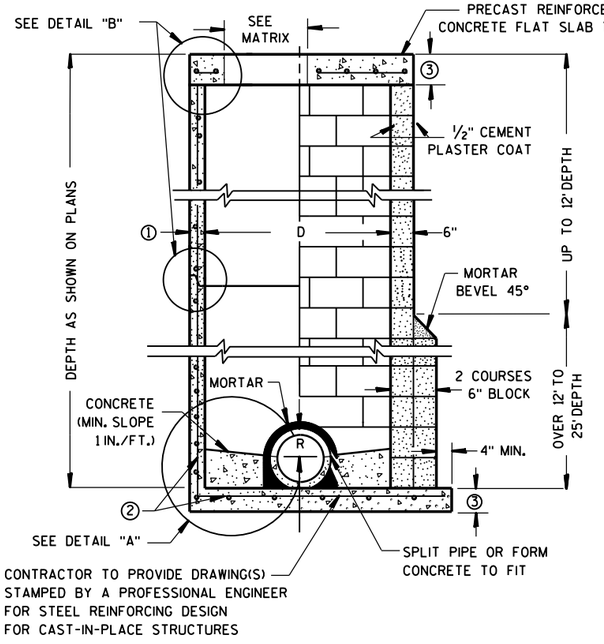

PRECAST REINFORCED CONCRETE WITH MONOLITHIC BASE

CONCRETE BLOCK WITH CAST-IN-PLACE OR PRECAST REINFORCED CONCRETE BASE ②

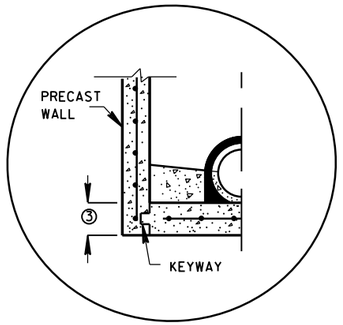

PRECAST REINFORCED CONCRETE WITH INTEGRAL BASE OPTION

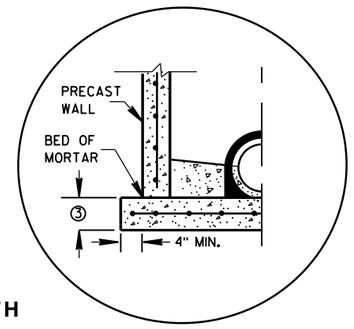

SEPARATE PRECAST REINFORCED CONCRETE BASE OPTION

DETAIL "A"

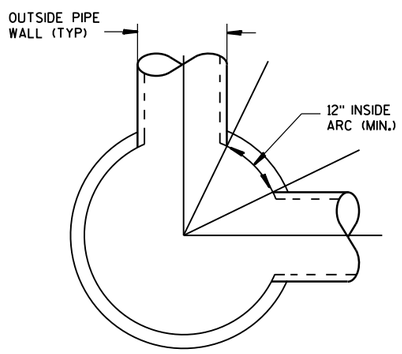

DETAIL "C"

GENERAL NOTES

DETAILS OF CONSTRUCTION, MATERIALS AND WORKMANSHIP NOT SHOWN ON THIS DRAWING SHALL CONFORM TO THE PERTINENT REQUIREMENTS OF THE STANDARD SPECIFICATIONS AND THE APPLICABLE SPECIAL PROVISIONS.

UNLESS OTHERWISE AUTHORIZED IN WRITING BY THE ENGINEER, THE CONTRACTOR SHALL NOT ORDER AND DELIVER PRECAST MANHOLE UNITS REQUIRED FOR THE PROJECT UNTIL A LIST OF SIZES IS FURNISHED BY THE ENGINEER.

DETAILED DRAWINGS FOR PROPOSED ALTERNATE DESIGNS FOR UNDERGROUND DRAINAGE STRUCTURES SHALL BE SUBMITTED TO THE ENGINEER FOR APPROVAL PROVIDING THAT SUCH ALTERNATE DESIGNS MAKE PROVISION FOR EQUIVALENT CAPACITY AND STRENGTH.

ALL DRAINAGE STRUCTURES ARE DESIGNATED ON THE PLANS AS "MANHOLES 3X3-L", "CATCH BASINS 4-B", "INLETS 2X3-H", ETC. THE FIRST NUMBERS DESIGNATE THE SIZE OF THE STRUCTURE, AND THE FOLLOWING LETTER DESIGNATES THE TYPE OF COVER TO BE USED TO COMPRISE THE COMPLETE UNIT.

BASES SHALL BE PLACED ON A BED OF MATERIAL AT LEAST 6 INCHES IN DEPTH, WHICH MEETS THE REQUIREMENTS OF FOUNDATION BACKFILL. THIS BEDDING SHALL BE COMPACTED AND PROVIDE UNIFORM SUPPORT FOR THE ENTIRE AREA OF THE BASE.

PRECAST REINFORCED CONE TOPS (ECCENTRIC OR CONCENTRIC) OR PRECAST REINFORCED FLAT SLAB TOPS MAY BE USED ON CONCRETE BLOCK STRUCTURES.

ECCENTRIC CONE TOPS MAY BE USED ON ALL STRUCTURES, AND CONCENTRIC CONE TOPS SHALL BE USED ONLY ON STRUCTURES 5 FEET OR LESS IN DEPTH, UNLESS OTHERWISE DIRECTED BY THE ENGINEER.

STEPS MEETING AASHTO M199 AND THE FOLLOWING REQUIREMENTS SHALL BE INSTALLED IN ALL STRUCTURES OVER 5 FEET IN DEPTH: 16 INCH C-C MAXIMUM SPACING; PROJECT A MINIMUM CLEAR DISTANCE OF 4 INCHES FROM THE WALL AT THE POINT OF EMBEDMENT; MINIMUM LENGTH OF 10 INCHES; MINIMUM WALL EMBEDMENT OF 3 INCHES. FERROUS METAL STEPS NOT PAINTED OR TREATED TO RESIST CORROSION SHALL HAVE A MINIMUM CROSS SECTIONAL DIMENSION OF 1 INCH.

STEPS OF APPROVED POLYPROPYLENE PLASTIC COATED REINFORCEMENT BAR ARE ACCEPTABLE. REINFORCING BAR MUST BE A MINIMUM OF ½" AND MEET THE REQUIREMENTS OF ASTM A615.

CERTIFICATION SHALL BE PROVIDED THAT INSTALLED STEPS WHEN TESTED IN ACCORDANCE WITH SECTION 10 OF AASHTO T280 CAN WITHSTAND A VERTICAL LOAD OF 800 LBS. AND A HORIZONTAL LOAD OF 400 LBS.

ALL BAR STEEL REINFORCEMENT SHALL BE EMBEDDED 2 INCHES CLEAR UNLESS OTHERWISE SHOWN OR NOTED.

CONCRETE BLOCK WILL NOT BE PERMITED FOR STRUCTURES GREATER THAN 4 FEET IN DIAMETER.

PRECAST REINFORCED RISERS SHALL HAVE A TONGUE AND GROOVE JOINT WITH TONGUE UP OR DOWN.

ALL PRECAST MANHOLE UNITS SHALL CONFORM TO THE PERTINENT REQUIREMENTS OF AASHTO DESIGNATION M 199.

4" OVERHANGING BASES ARE REQUIRED FOR ALL CONCRETE BLOCK INSTALLATIONS. 4" OVERHANG IS REQUIRED WHEN SEPARATE PRECAST BASE IS PROVIDED. OVERHANG IS NOT REQUIRED ON PRECAST STRUCTURES WITH AN INTEGRAL OR MONOLITHIC BASE.

FOR ADDITIONAL CONFIGURATIONS, MAINTAIN A MINIMUM OF 12 INCHES AS MEASURED FROM THE INSIDE OF THE STRUCTURE WALL BETWEEN THE OUTSIDE PIPE WALLS OF ADJACENT PIPES. SEE DETAIL "C".

① MINIMUM WALL THICKNESS SHALL BE 4 INCHES FOR 3-FT, 5 INCHES FOR 4-FT, 6 INCHES FOR 5-FT, 7 INCHES FOR 6-FT, 8 INCHES FOR 7-FT AND 9 INCHES FOR 8-FT DIAMETER PRECAST MANHOLES.

② FOR PRECAST MANHOLES PROVIDE REINFORCING STEEL IN ACCORDANCE TO AASHTO M199.

③ PRECAST FLAT SLAB TOPS AND BASES WITH A DIAMETER OF 48" AND LESS SHALL HAVE A MINIMUM THICKNESS OF 6". PRECAST FLAT SLAB TOPS AND BASES WITH A DIAMETER LARGER THAN 48" SHALL HAVE A MINIMUM THICKNESS OF 8".

MANHOLE COVER OPENING MATRIX

MANHOLE COVER TYPE	C	ALL J'S	K	L	M
OPENING SIZE (FT)					
2 DIA.	X	X		X	
3 DIA.			X		X

PIPE MATRIX

MANHOLE SIZE	MAXIMUM INSIDE PIPE DIAMETER FOR TWO PIPES	
	180° SEPARATION (IN)	90° SEPARATION (IN)
3-FT	15	12
4-FT	24	18
5-FT	36	24
6-FT	42	36
7-FT	48	36
8-FT	60	42

MANHOLES 3-FT, 4-FT, 5-FT, 6-FT, 7-FT AND 8-FT DIAMETER

STATE OF WISCONSIN
DEPARTMENT OF TRANSPORTATION

APPROVED

Sept., 2016
DATE

/S/ Rodney Taylor
ROADWAY STANDARDS DEVELOPMENT UNIT SUPERV

FHWA

6
S.D.D. 8 B 9-2

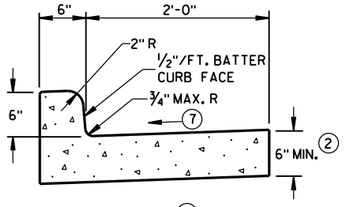

TYPES A (1) & D

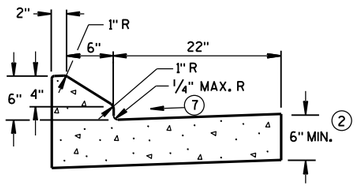

6" SLOPED CURB TYPES G (1) & J

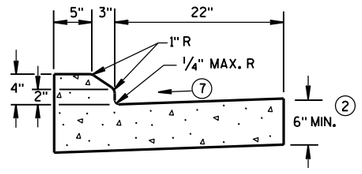

4" SLOPED CURB TYPES G (1) & J

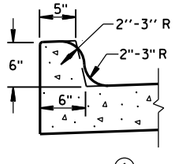

TYPES K (1) & L
(OPTIONAL CURB SHAPE)

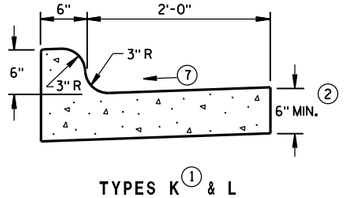

TYPES K (1) & L

CONCRETE CURB & GUTTER 30"

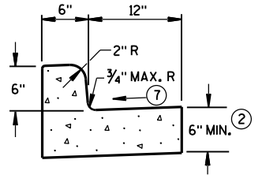

TYPES A (1) & D

CONCRETE CURB & GUTTER 18"

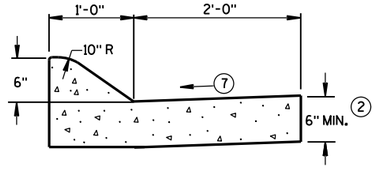

6" SLOPED CURB TYPES A (1) & D

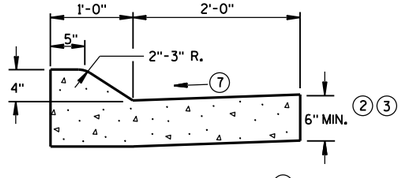

4" SLOPED CURB TYPES A (1) & D

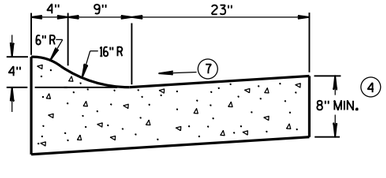

4" SLOPED CURB TYPES R (1) & T (5)

CONCRETE CURB & GUTTER 36"

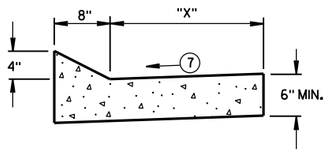

TYPES TBT & TBTT (1)

CONCRETE CURB & GUTTER

TBT & TBTT	"X"
30"	22"
36"	28"

GENERAL NOTES

DETAILS OF CONSTRUCTION, MATERIALS AND WORKMANSHIP NOT SHOWN ON THIS DRAWING SHALL CONFORM TO THE PERTINENT REQUIREMENTS OF THE CONTRACT.

PAVEMENT TIES AND TIE BARS SHALL BE EPOXY COATED IN CONFORMANCE WITH SUBSECTION 505.2.6.2 OF THE STANDARD SPECIFICATIONS.

INTEGRAL CURB & GUTTER SHALL CONFORM TO THE DETAILS SHOWN FOR CONCRETE CURB & GUTTER INCLUDING THE TRANSVERSE GUTTER SLOPE.

WHERE THE TRANSVERSE JOINTS IN THE PAVEMENT ARE REQUIRED TO BE SEALED, THE JOINTS IN THE INTEGRAL CURB AND GUTTER SHALL BE SEALED TO THE FACE OF CURB WITH THE SAME TYPE OF SEALANT. THE COST OF FURNISHING AND INSTALLING THIS SEALANT SHALL BE INCIDENTAL TO THE ITEM CONCRETE CURB AND GUTTER.

UNLESS OTHERWISE SHOWN ON THE TYPICAL CROSS SECTIONS, THE BASE AGGREGATE AND COMMON EXCAVATION LIMITS ARE 2'-0" BEHIND THE BACK OF CURBS.

(1) TIE BARS ARE REQUIRED FOR CURB AND GUTTER TYPES A, G, K, R AND TBTT.

(2) THE BOTTOM OF CURB AND GUTTER MAY BE CONSTRUCTED EITHER LEVEL OR PARALLEL TO THE SLOPE OF THE SUBGRADE OR BASE AGGREGATE PROVIDED A 6" MINIMUM GUTTER THICKNESS IS MAINTAINED.

(3) USE 8" MINIMUM GUTTER THICKNESS WHEN USED WITH AN ADJACENT CONCRETE TRUCK APRON PLACED BEHIND BACK OF CURB.

(4) THE BOTTOM OF CURB AND GUTTER MAY BE CONSTRUCTED EITHER LEVEL OR PARALLEL TO THE SLOPE OF THE SUBGRADE OR BASE AGGREGATE PROVIDED A 8" MINIMUM GUTTER THICKNESS IS MAINTAINED.

(5) THE FACE OF CURB IS 6" FROM THE BACK OF CURB.

(6) WHEN REVERSE SLOPE GUTTER IS REQUIRED, THE LOCATION(S) WILL BE SHOWN ELSEWHERE IN THE PLAN.

(7) USE 4% GUTTER CROSS SLOPE UNLESS OTHERWISE NOTED IN THE PLANS.

(8) INCLUDE LONGITUDINAL JOINT AND TIE BARS ALONG LANE EDGE WHEN CONCRETE PANEL WIDTH EXCEEDS THE MAXIMUM WIDTH PER TABLE BELOW. LONGITUDINAL JOINT(S) ARE NOT ALLOWED WITHIN TRAFFIC LANES AND BIKE LANES. LONGITUDINAL JOINT MAY BE SAWED.

PAVEMENT THICKNESS AND MAXIMUM CONCRETE PANEL WIDTH TABLE

PAVEMENT THICKNESS	MAXIMUM PANEL WIDTH
LESS THAN 10"	12'
10" & ABOVE	15'

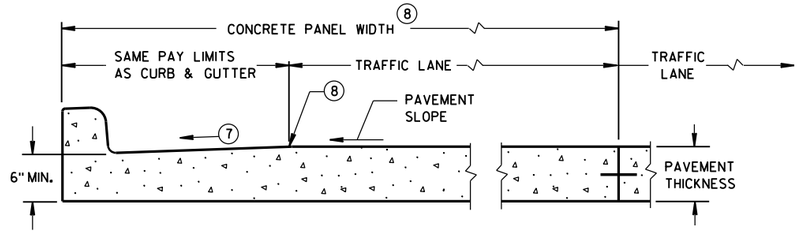

PARTIAL SECTION OF PAVEMENT *
WITH INTEGRAL CURB & GUTTER

* BIKE LANE IS NOT SHOWN.

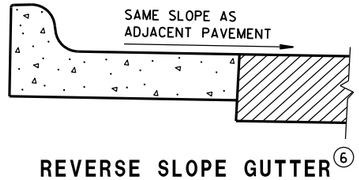

REVERSE SLOPE GUTTER (6)
(TYPICAL FOR ALL CURB & GUTTER TYPES)

CONCRETE CURB & GUTTER

STATE OF WISCONSIN
DEPARTMENT OF TRANSPO...

6

S.D.D. 8 D 1-20a

6

S.D.D. 8 D 1-20a

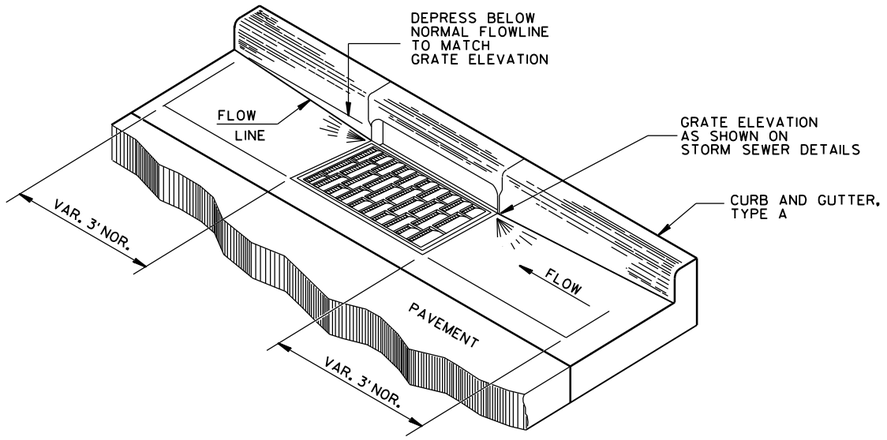

DETAIL OF CURB AND GUTTER AT INLETS

(TYPE H INLET COVER SHOWN)

GENERAL NOTES

DETAILS OF CONSTRUCTION, MATERIALS AND WORKMANSHIP NOT SHOWN ON THIS DRAWING SHALL CONFORM TO THE PERTINENT REQUIREMENTS OF THE CONTRACT.

PAVEMENT TIES AND TIE BARS SHALL BE EPOXY COATED IN CONFORMANCE WITH SUBSECTION 505.2.6.2 OF THE STANDARD SPECIFICATIONS.

UNLESS OTHERWISE SHOWN ON THE TYPICAL CROSS SECTIONS, THE BASE AGGREGATE AND COMMON EXCAVATION LIMITS ARE 2'-0" BEHIND THE BACK OF CURBS.

(1) TIE BARS ARE REQUIRED FOR CURB AND GUTTER TYPES A, G, K, R AND TBTT.

(2) THE BOTTOM OF CURB AND GUTTER MAY BE CONSTRUCTED EITHER LEVEL OR PARALLEL TO THE SLOPE OF THE SUBGRADE OR BASE AGGREGATE PROVIDED A 6" MINIMUM GUTTER THICKNESS IS MAINTAINED.

(9) REFER TO SDD 8D18 AND SDD 8D19 FOR ADDITIONAL DRIVEWAY ENTRANCE CURB DETAILS.

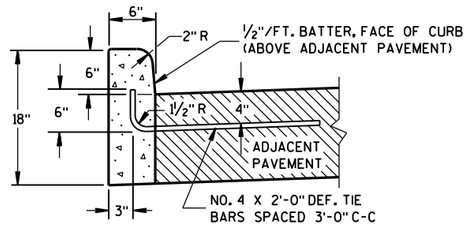

TYPES A(1) & D

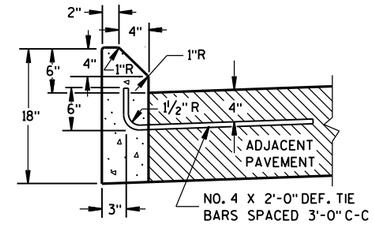

TYPES G(1) & J

CONCRETE CURB

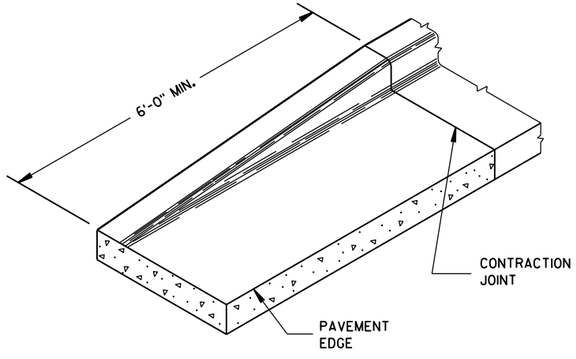

END SECTION CURB & GUTTER

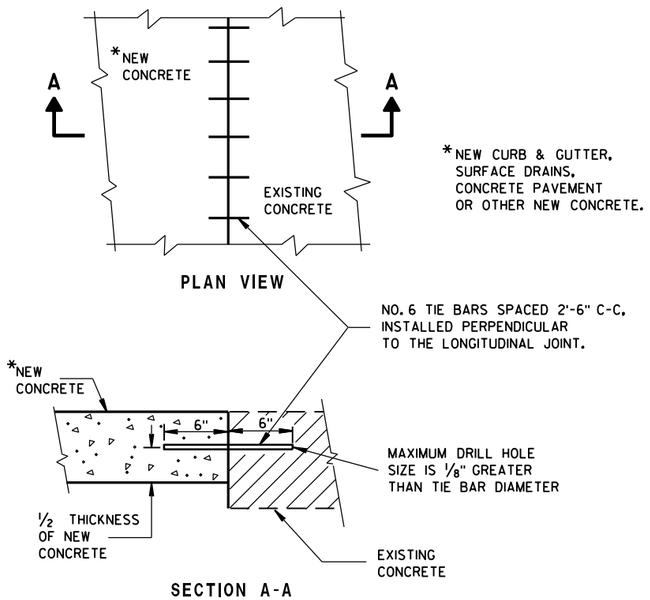

PLAN VIEW

SECTION A-A

TIE BARS DRILLED INTO EXISTING PAVEMENT

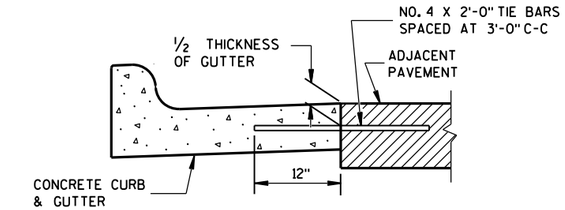

TYPICAL TIE BAR LOCATION (1)

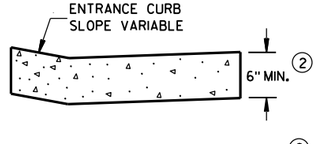

DRIVEWAY ENTRANCE CURB (9)

(WHEN DIRECTED BY THE ENGINEER)

CONCRETE CURB, TIES AND CURB AND GUTTER APPLICATIONS

STATE OF WISCONSIN
DEPARTMENT OF TRANSPORTATION

APPROVED
June, 2017 — DATE
/S/ Rodney Taylor — ROADWAY STANDARDS UNIT SUPERVISOR
FHWA
ENT

6

S.D.D. 8 D 1-20b

ASPHALTIC FLUME

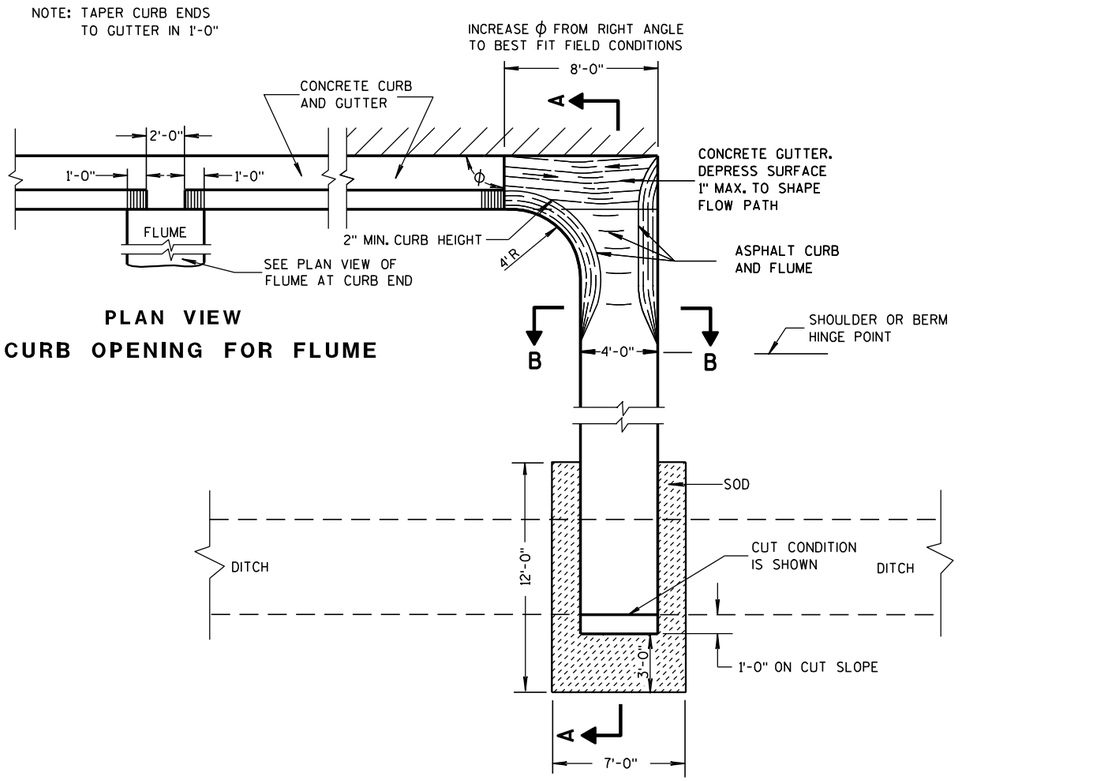

PLAN VIEW
CURB OPENING FOR FLUME

PLAN VIEW
FLUME AT CURB END

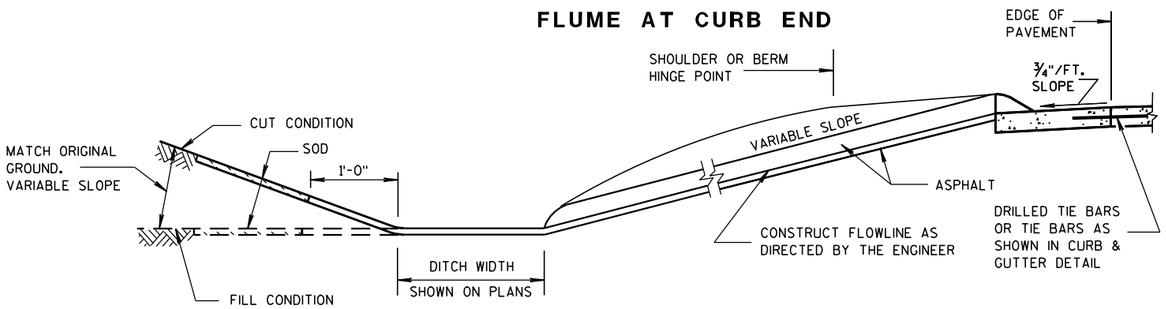

SECTION A-A

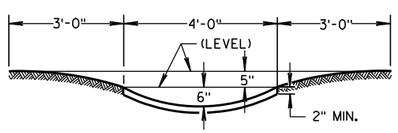

SECTION B-B

GENERAL NOTES

DETAILS OF CONSTRUCTION, MATERIALS AND WORKMANSHIP NOT SHOWN ON THIS DRAWING SHALL CONFORM TO PERTINENT REQUIREMENTS OF THE STANDARD SPECIFICATIONS AND APPLICABLE SPECIAL PROVISIONS.

WELDED STEEL WIRE FABRIC SHALL BE IN ACCORDANCE WITH AASHTO SPECIFICATION M55.

① JOINTS SHALL BE ⅛ TO ¼ INCH WIDE BY 1½ INCHES DEEP AND SPACED AT UNIFORM INTERVALS OF APPROXIMATELY 4 FEET.

② GEOTEXTILE FABRIC TYPE "R" SHALL UNDERLAY THE FULL LENGTH AND WIDTH OF THE CONCRETE SURFACE DRAIN AND RIPRAP.

③ CONCRETE SURFACE DRAIN WITHOUT CURB AND GUTTER MAY BE USED ON BACKSLOPES WHEN SPECIFIED

③ CONCRETE SURFACE DRAIN

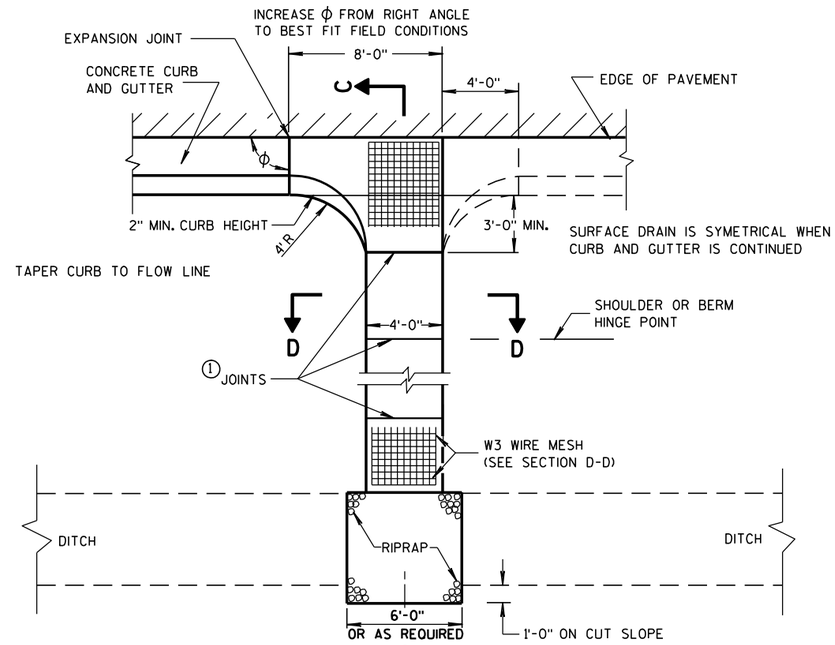

PLAN VIEW

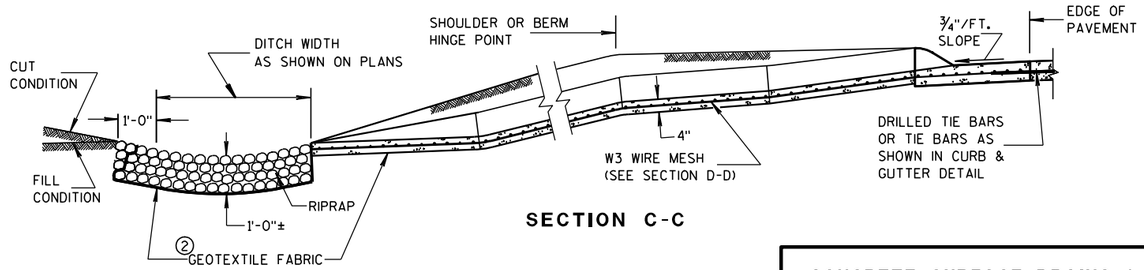

SECTION C-C

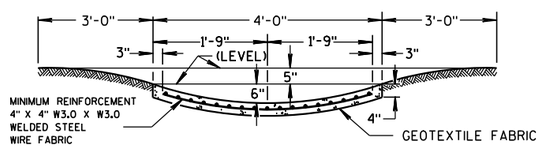

SECTION D-D

CONCRETE SURFACE DRAINS & ASPHALTIC FLUMES

STATE OF WISCONSIN
DEPARTMENT OF TRANSPORTATION

APPROVED
9-4-08 DATE
/S/ Jerry H. [illegible]
ROADWAY STANDARDS ENGINEER
MENT
FHWA

6

S.D.D. 8 D 4-5

6

S.D.D. 8 D 4-5

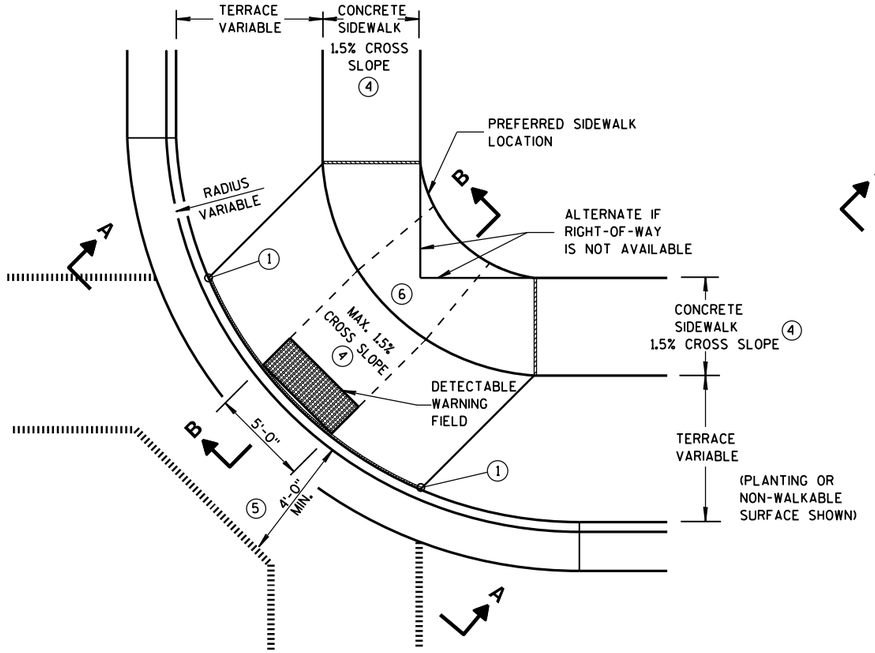

PLAN VIEW

TYPE 1 RAMP

(CENTER OF CORNER RADIUS)

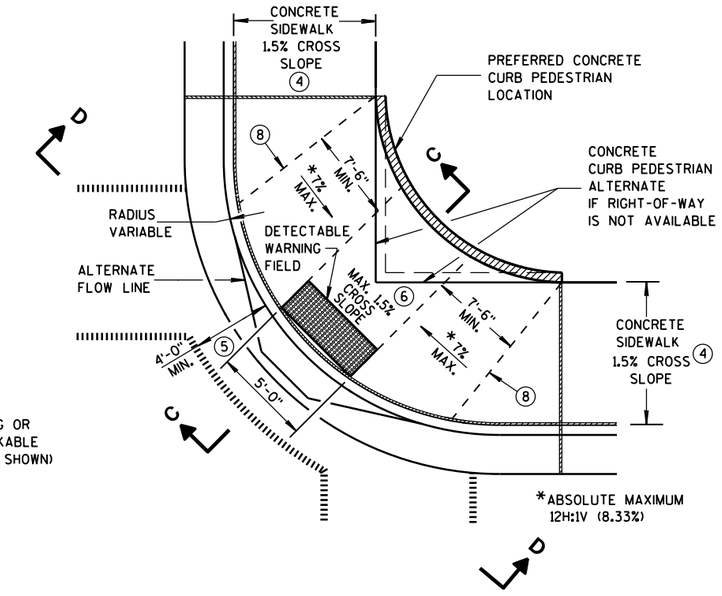

PLAN VIEW

TYPE 1-A RAMP

(NO TERRACE)

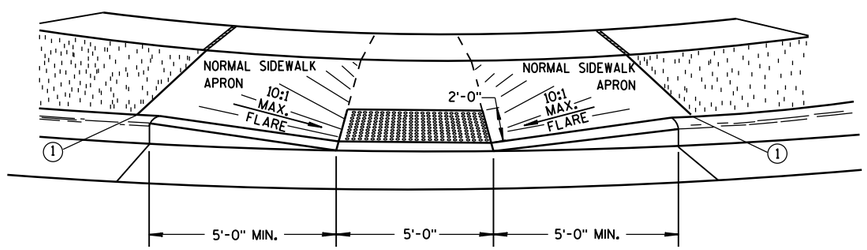

VIEW A-A

** WIDTH SHOWN ELSEWHERE IN THE PLANS

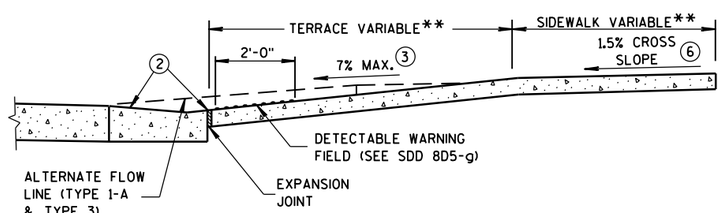

SECTION B-B

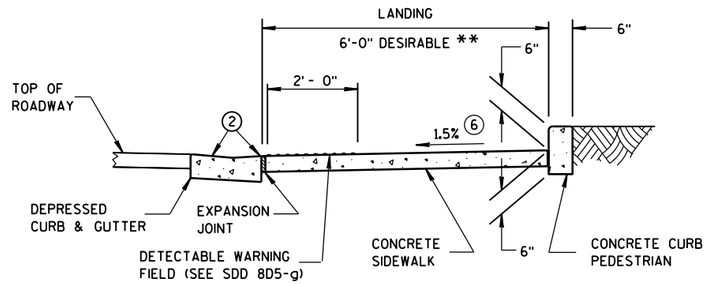

SECTION C-C

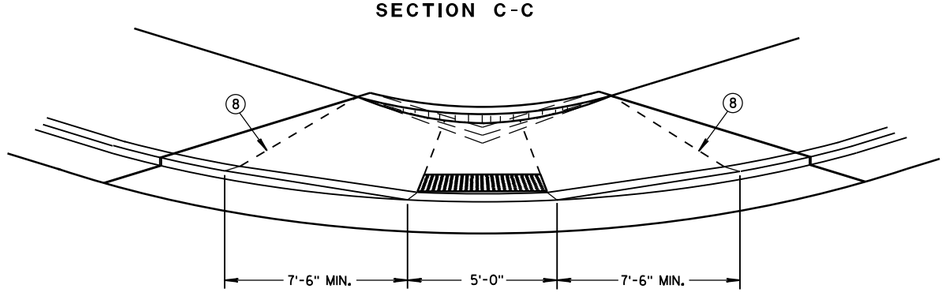

VIEW D-D

GENERAL NOTES

AVOID PLACING DRAINAGE STRUCTURES, JUNCTION BOXES OR OTHER OBSTRUCTIONS IN FRONT OF RAMP ACCESS AREAS.

DETAILS OF CONSTRUCTION, MATERIALS AND WORKMANSHIP NOT SHOWN ON THIS DRAWING SHALL CONFORM TO THE PERTINENT REQUIREMENTS OF THE STANDARD SPECIFICATIONS AND THE APPLICABLE SPECIAL PROVISIONS.

WHEN NECESSARY, THE SIDEWALK ELEVATION MAY BE LOWERED TO MEET THE HIGH POINT ON THE RAMP.

TYPE 1 RAMPS SHALL HAVE A NORMAL SIDEWALK APRON AND CURB ON BOTH SIDES OF RAMP.

DETECTABLE WARNING FIELD SHALL BE MEASURED AND PAID BY THE SQUARE FOOT AS "CURB RAMP DETECTABLE WARNING FIELD". THE CONCRETE PEDESTRIAN CURB, IF NEEDED, SHALL BE MEASURED AND PAID BY THE LINEAL FOOT AS "CONCRETE CURB PEDESTRIAN". CONCRETE SIDEWALK IN THE CURB RAMP AREA SHALL BE MEASURED AND PAID BY THE SQUARE FOOT AS CONCRETE SIDEWALK, INCLUDING THE AREA UNDER THE DETECTABLE WARNING FIELD.

SELECT CURB RAMP DETECTABLE WARNING FIELD MATERIALS AND DEVICES FROM THE DEPARTMENT'S APPROVED MATERIALS LIST. THE COLOR OF THE DETECTABLE WARNING FIELD IS SPECIFIED ELSEWHERE AND IS INCIDENTAL TO THE BID ITEM OF "CURB RAMP DETECTABLE WARNING FIELD".

DETECTABLE WARNING FIELDS THAT ARE INSTALLED AS A GROUP OR SIDE BY SIDE, SHALL BE FROM THE SAME MANUFACTURER.

SURFACE TEXTURE OF THE RAMP SHALL BE OBTAINED BY COARSE BROOMING TRANSVERSE TO THE SLOPE OF THE RAMP.

(1) THIS POINT IS AN EXTENSION OF OUTSIDE EDGE OF APPROACHING SIDEWALK WHERE IT MEETS THE BACK OF CONCRETE CURB. POINT LOCATION MAY BE ADJUSTED TO ALIGN WITH BEGINNING OF FULL-HEIGHT CURB IF THIS DISTANCE IS SHORT.

(2) GRADE CHANGE BETWEEN GUTTER FLAG SLOPE AND THE CURB RAMP SLOPE SHALL NOT EXCEED 11%. MAXIMUM GUTTER FLAG SLOPE IS 4%. PROVIDE LONGITUDINAL DRAINAGE AROUND CURB AND AWAY FROM CURB RAMP. NO VERTICAL LIPS OR DISCONTINUITIES GREATER THAN 1/4-INCH ARE ALLOWED. SLOPE OF CURB HEAD OPENING SHALL MATCH THE RAMP SLOPE, MINIMALLY 1.5% AND NOT TO EXCEED 7%. WHEN ADJACENT TO 1.5% LANDING, CONSTRUCT CURB HEAD OPENING AT 1.5% IN THE DIRECTION OF PEDESTRIAN TRAVEL.

(3) ABSOLUTE MAXIMUM 12H:1V (8.33%) CURB RAMP SLOPE IS ALLOWABLE WITH FLATTENED GUTTER FLAG SLOPE AND NOT TO EXCEED 11% GRADE CHANGE.

(4) ±0.5% CONSTRUCTION TOLERANCE IN SIDEWALK CROSS SLOPE. THE SIDEWALK CROSS SLOPE SHALL NOT EXCEED 2% WITHOUT PRIOR APPROVAL FROM THE ENGINEER.

(5) PROVIDE A LEVEL LANDING IN THE STREET AND GUTTER AREA. (2% MAXIMUM SLOPE IN ANY DIRECTION). WHEN THE GUTTER SLOPE EXCEEDS 2%, CONSTRUCT THE LEVEL LANDING IN THE STREET AREA.

(6) PROVIDE A LEVEL LANDING (MAXIMUM 2% SLOPE) IN ANY DIRECTION OF PEDESTRIAN TRAVEL. STANDARD LANDING SIZE IS 5 FEET X 5 FEET.

(8) PROVIDE GRADE BREAK PERPENDICULAR TO DIRECTION OF WHEELCHAIR TRAVEL.

LEGEND

- 1/2" EXPANSION JOINT-SIDEWALK
- CONTRACTION JOINT FIELD LOCATED
- PAVEMENT MARKING CROSSWALK (WHITE)
- ALTERNATIVE LAYOUT

CURB RAMPS TYPES 1 AND 1-A

STATE OF WISCONSIN
DEPARTMENT OF TRANSPOI

6

S.D.D. 8 D 5-19a

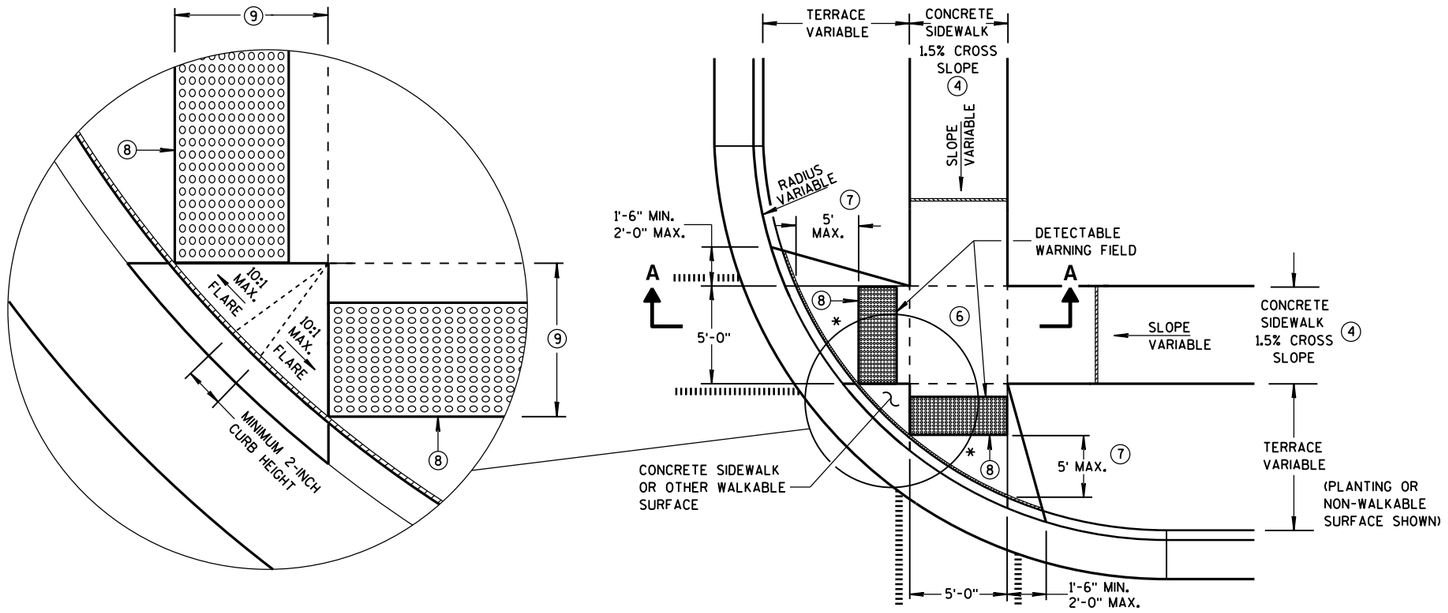

PLAN VIEW

TYPE 2 RAMP

(ON LINE WITH SIDEWALK)

* MAXIMUM 2.0% SLOPE IN ALL DIRECTIONS IN FRONT OF GRADE BREAK

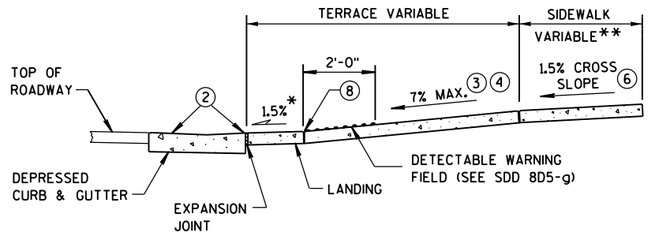

SECTION A-A

** WIDTH SHOWN ELSEWHERE IN THE PLANS

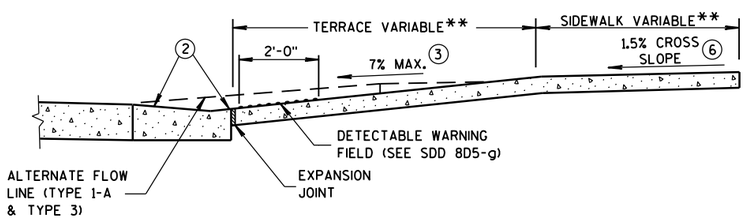

SECTION B-B

GENERAL NOTES

AVOID PLACING DRAINAGE STRUCTURES, JUNCTION BOXES OR OTHER OBSTRUCTIONS IN FRONT OF RAMP ACCESS AREAS.

DETECTABLE WARNING FIELDS THAT ARE INSTALLED AS A GROUP OR SIDE BY SIDE, SHALL BE FROM THE SAME MANUFACTURER.

(2) GRADE CHANGE BETWEEN GUTTER FLAG SLOPE AND THE CURB RAMP SLOPE SHALL NOT EXCEED 11%. MAXIMUM GUTTER FLAG SLOPE IS 4%. PROVIDE LONGITUDINAL DRAINAGE AROUND CURB AND AWAY FROM CURB RAMP. NO VERTICAL LIPS OR DISCONTINUITIES GREATER THAN 1/4-INCH ARE ALLOWED. SLOPE OF CURB HEAD OPENING SHALL MATCH THE RAMP SLOPE, MINIMALLY 1.5% AND NOT TO EXCEED 7%. WHEN ADJACENT TO 1.5% LANDING, CONSTRUCT CURB HEAD OPENING AT 1.5% IN THE DIRECTION OF PEDESTRIAN TRAVEL.

(3) ABSOLUTE MAXIMUM 12H:1V (8.33%) CURB RAMP SLOPE IS ALLOWABLE WITH FLATTENED GUTTER FLAG SLOPE AND NOT TO EXCEED 11% GRADE CHANGE.

(4) ±0.5% CONSTRUCTION TOLERANCE IN SIDEWALK CROSS SLOPE. THE SIDEWALK CROSS SLOPE SHALL NOT EXCEED 2% WITHOUT PRIOR APPROVAL FROM THE ENGINEER.

(6) PROVIDE A LEVEL LANDING (MAXIMUM 2% SLOPE) IN ANY DIRECTION OF PEDESTRIAN TRAVEL. STANDARD LANDING SIZE IS 5 FEET X 5 FEET.

(7) WHEN THIS GRADE BREAK DISTANCE EXCEEDS 5 FEET, USE RADIAL DETECTABLE WARNING FIELD PER SDD 8D5-f.

(8) PROVIDE GRADE BREAK PERPENDICULAR TO DIRECTION OF WHEELCHAIR TRAVEL.

(9) WHEN THIS DISTANCE IS LESS THAN 6'-0", IT MAY BE DIFFICULT TO ACHIEVE A 7% SLOPE OR FLATTER ALONG THE RAMP. REDUCE CURB HEIGHT IN TRIANGLE AREA TO ACHIEVE 7% SLOPE OR FLATTER ON RAMP. CONSTRUCT 2-INCH MINIMUM CURB HEIGHT BETWEEN 10:1 FLARES.

LEGEND

- ½" EXPANSION JOINT-SIDEWALK
- CONTRACTION JOINT FIELD LOCATED
- PAVEMENT MARKING CROSSWALK (WHITE)
- ALTERNATIVE LAYOUT

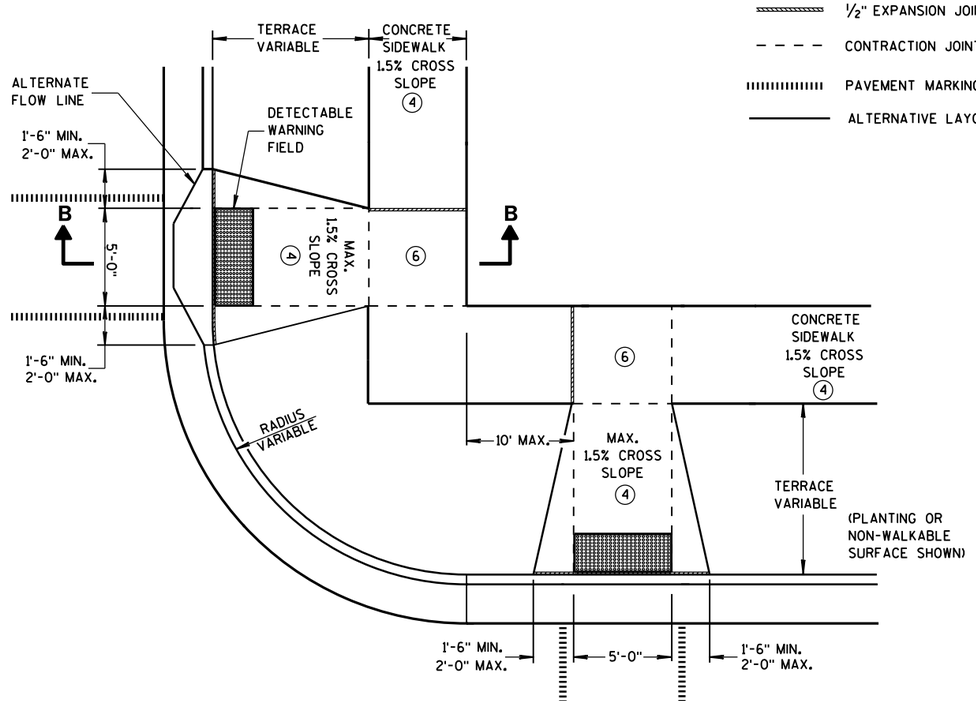

PLAN VIEW

TYPE 3 RAMP

(OUTSIDE OF CROSSWALK AREA)

CURB RAMPS TYPES 2 AND 3

STATE OF WISCONSIN
DEPARTMENT OF TRANSPO

6

S.D.D. 8 D 5-19b

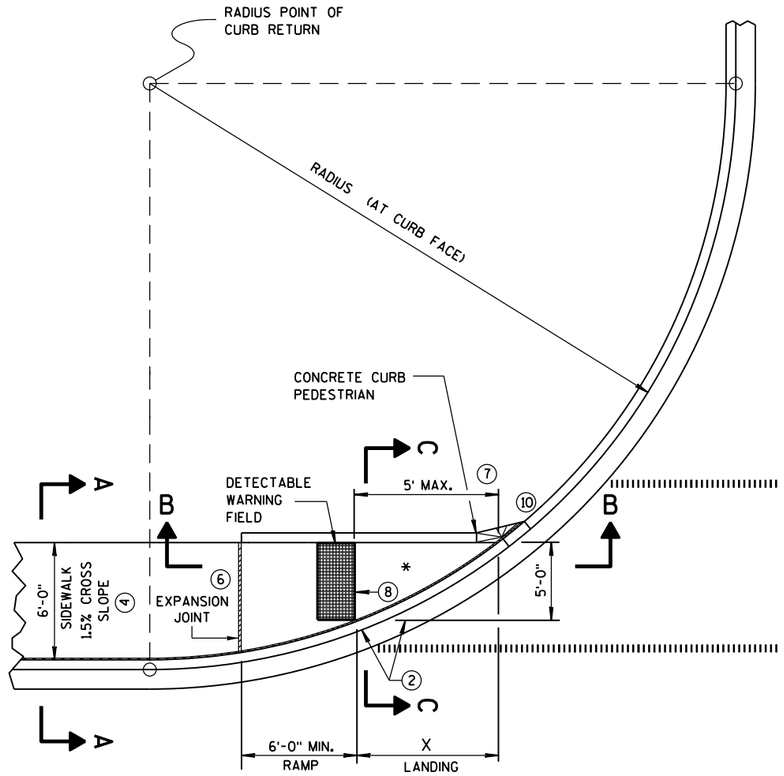

CURB RAMP TYPE 4A
PLAN VIEW

RADIUS (AT CURB FACE)	X
10 FEET	4'-7"
15 FEET	6'-5½"

INTERMEDIATE RADII CAN BE INTERPOLATED

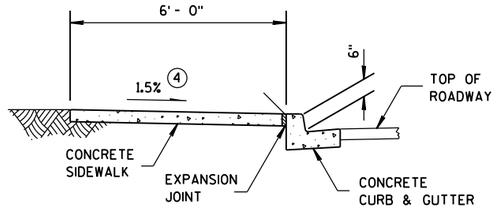

SECTION A-A FOR TYPE 4A

GENERAL NOTES

AVOID PLACING DRAINAGE STRUCTURES, JUNCTION BOXES OR OTHER OBSTRUCTIONS IN FRONT OF RAMP ACCESS AREAS.

DETECTABLE WARNING FIELDS THAT ARE INSTALLED AS A GROUP OR SIDE BY SIDE, SHALL BE FROM THE SAME MANUFACTURER.

(2) GRADE CHANGE BETWEEN GUTTER FLAG SLOPE AND THE CURB RAMP SLOPE SHALL NOT EXCEED 11%. MAXIMUM GUTTER FLAG SLOPE IS 4%. PROVIDE LONGITUDINAL DRAINAGE AROUND CURB AND AWAY FROM CURB RAMP. NO VERTICAL LIPS OR DISCONTINUITIES GREATER THAN ¼-INCH ARE ALLOWED. SLOPE OF CURB HEAD OPENING SHALL MATCH THE RAMP SLOPE, MINIMALLY 1.5% AND NOT TO EXCEED 7%. WHEN ADJACENT TO 1.5% LANDING, CONSTRUCT CURB HEAD OPENING AT 1.5% IN THE DIRECTION OF PEDESTRIAN TRAVEL.

(3) ABSOLUTE MAXIMUM 12H:1V (8.33%) CURB RAMP SLOPE IS ALLOWABLE WITH FLATTENED GUTTER FLAG SLOPE AND NOT TO EXCEED 11% GRADE CHANGE.

(4) ±0.5% CONSTRUCTION TOLERANCE IN SIDEWALK CROSS SLOPE. THE SIDEWALK CROSS SLOPE SHALL NOT EXCEED 2% WITHOUT PRIOR APPROVAL FROM THE ENGINEER.

(6) PROVIDE A LEVEL LANDING (MAXIMUM 2% SLOPE) IN ANY DIRECTION OF PEDESTRIAN TRAVEL. STANDARD LANDING SIZE IS 5 FEET X 5 FEET.

(7) WHEN THIS GRADE BREAK DISTANCE EXCEEDS 5 FEET, USE RADIAL DETECTABLE WARNING FIELD PER SDD 8D5-f.

(8) PROVIDE GRADE BREAK PERPENDICULAR TO DIRECTION OF WHEELCHAIR TRAVEL.

(10) INSTALL TRANSITION NOSE. (INCIDENTAL TO OTHER PAY ITEMS). DO NOT MARK TRANSITION NOSE.

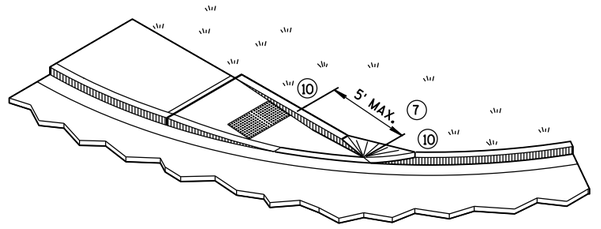

ISOMETRIC VIEW FOR TYPE 4A

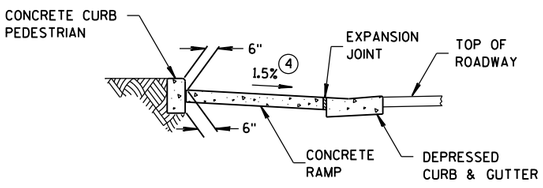

SECTION C-C FOR TYPE 4A

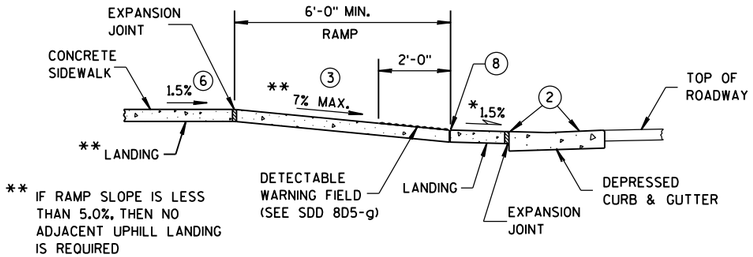

** IF RAMP SLOPE IS LESS THAN 5.0%, THEN NO ADJACENT UPHILL LANDING IS REQUIRED

SECTION B-B FOR TYPE 4A

* MAXIMUM 2.0% SLOPE IN ALL DIRECTIONS IN FRONT OF GRADE BREAK

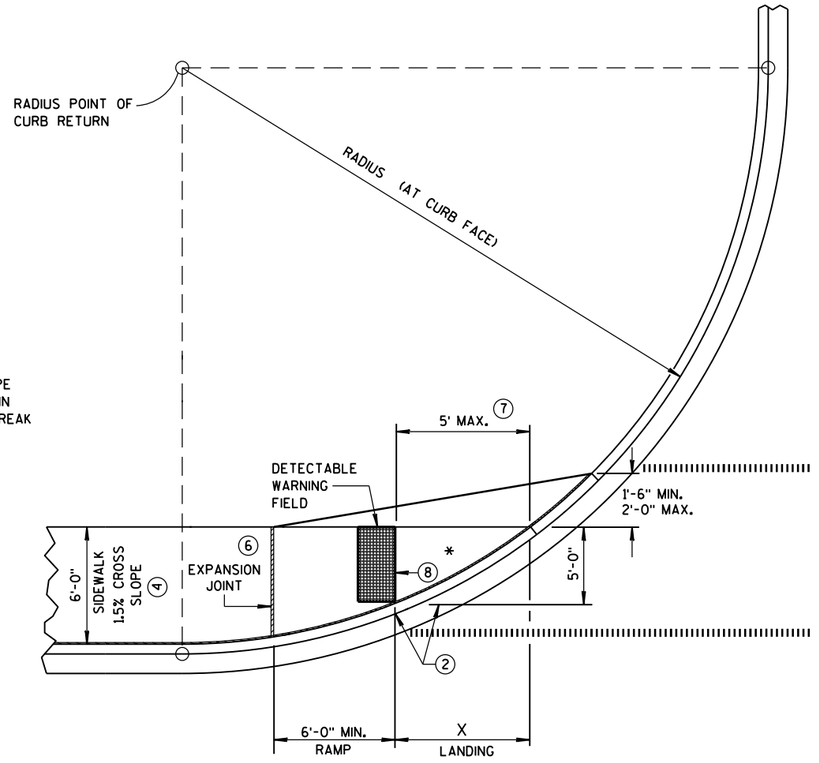

CURB RAMP TYPE 4A1
PLAN VIEW

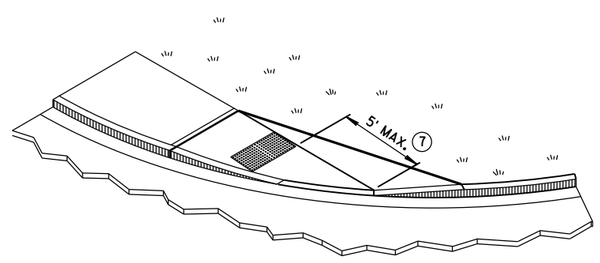

ISOMETRIC VIEW FOR TYPE 4A1

LEGEND

½" EXPANSION JOINT-SIDEWALK

CONTRACTION JOINT FIELD LOCATED

PAVEMENT MARKING CROSSWALK (WHITE)

CURB RAMPS
TYPES 4A AND 4A1

STATE OF WISCONSIN
DEPARTMENT OF TRANSPOR

6

S.D.D. 8 D 5-19c

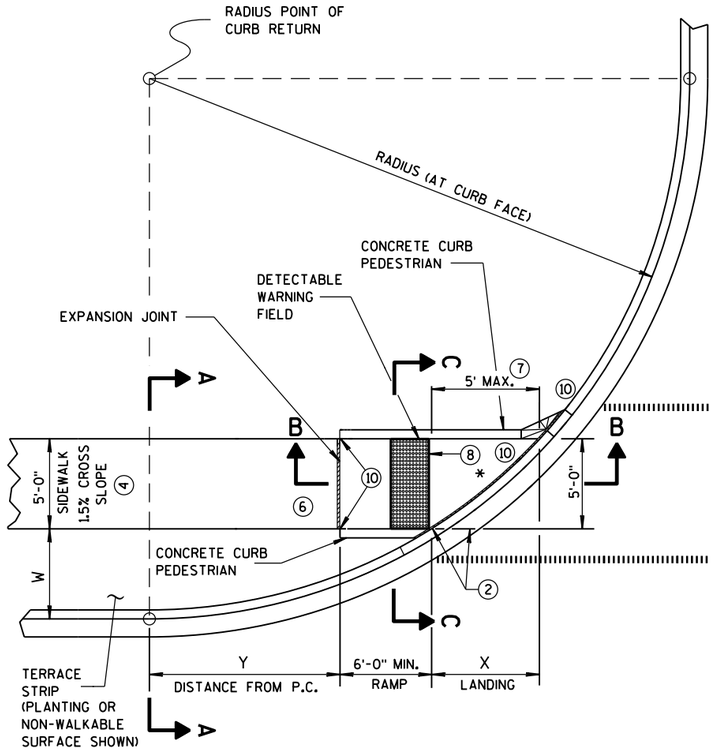

CURB RAMP TYPE 4B
PLAN VIEW

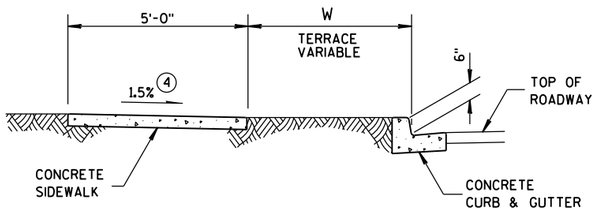

SECTION A-A FOR TYPE 4B

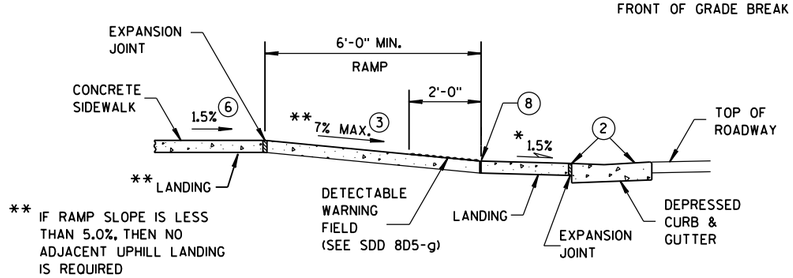

* MAXIMUM 2.0% SLOPE IN ALL DIRECTIONS IN FRONT OF GRADE BREAK

** IF RAMP SLOPE IS LESS THAN 5.0%, THEN NO ADJACENT UPHILL LANDING IS REQUIRED

SECTION B-B FOR TYPE 4B

RADIUS (AT CURB FACE)	W = 3'-0"		W = 4'-0"		W = 5'-0"		W = 6'-0"		W = 7'-0"		W = 8'-0"		W = 9'-0"		W = 10'-0"	
	X	Y	X	Y	X	Y	X	Y	X	Y	X	Y	X	Y	X	Y
10 FEET	2'-10¼"	0'-5"	2'-1"	1'-4½"	1'-5"	2'-1"	0'-10"	2'-7½"	0'-3¼"	3'-0¼"						
15 FEET	4'-6¾"	2'-1¾"	3'-9"	3'-5¼"	3'-1¼"	4'-6"	2'-6¾"	5'-4½"	2'-1"	6'-1"	1'-8"	6'-8½"	1'-3¼"	7'-2½"	0'-10¾"	7'-7¼"
20 FEET	5'-9¾"	3'-6½"	4'-11½"	5'-1¾"	4'-3¼"	6'-5½"	3'-8¾"	7'-7"	3'-3"	8'-6½"	2'-10"	9'-4½"	2'-5½"	10'-1¼"	2'-1¼"	10'-9"
30 FEET			6'-9¼"	7'-11¼"	6'-0¼"	9'-8"	5'-5"	11'-1¾"	4'-10¾"	12'-5¾"	4'-5½"	13'-7¾"	4'-0¾"	14'-8½"	3'-8½"	15'-8¼"
40 FEET									6'-1¾"	15'-8½"	5'-8"	17'-2"	5'-3"	18'-5¾"	4'-10¾"	19'-8¼"
50 FEET															5'-10¼"	23'-2"

INTERMEDIATE RADII CAN BE INTERPOLATED
DIMENSION "Y" IS CALCULATED BASED ON 6'-0" RAMP LENGTH
DIMENSION "X" IS CALCULATED BASED ON 5'-0" SIDEWALK WIDTH

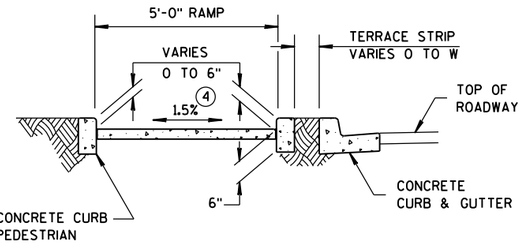

SECTION C-C FOR TYPE 4B

GENERAL NOTES

AVOID PLACING DRAINAGE STRUCTURES, JUNCTION BOXES OR OTHER OBSTRUCTIONS IN FRONT OF RAMP ACCESS AREAS.

DETECTABLE WARNING FIELDS THAT ARE INSTALLED AS A GROUP OR SIDE BY SIDE, SHALL BE FROM THE SAME MANUFACTURER.

(2) GRADE CHANGE BETWEEN GUTTER FLAG SLOPE AND THE CURB RAMP SLOPE SHALL NOT EXCEED 11%. MAXIMUM GUTTER FLAG SLOPE IS 4%. PROVIDE LONGITUDINAL DRAINAGE AROUND CURB AND AWAY FROM CURB RAMP. NO VERTICAL LIPS OR DISCONTINUITIES GREATER THAN ¼-INCH ARE ALLOWED. SLOPE OF CURB HEAD OPENING SHALL MATCH THE RAMP SLOPE, MINIMALLY 1.5% AND NOT TO EXCEED 7%. WHEN ADJACENT TO 1.5% LANDING, CONSTRUCT CURB HEAD OPENING AT 1.5% IN THE DIRECTION OF PEDESTRIAN TRAVEL.

(3) ABSOLUTE MAXIMUM 12H:1V (8.33%) CURB RAMP SLOPE IS ALLOWABLE WITH FLATTENED GUTTER FLAG SLOPE AND NOT TO EXCEED 11% GRADE CHANGE.

(4) ±0.5% CONSTRUCTION TOLERANCE IN SIDEWALK CROSS SLOPE. THE SIDEWALK CROSS SLOPE SHALL NOT EXCEED 2% WITHOUT PRIOR APPROVAL FROM THE ENGINEER.

(6) PROVIDE A LEVEL LANDING (MAXIMUM 2% SLOPE) IN ANY DIRECTION OF PEDESTRIAN TRAVEL. STANDARD LANDING SIZE IS 5 FEET X 5 FEET.

(7) WHEN THIS GRADE BREAK DISTANCE EXCEEDS 5 FEET, USE RADIAL DETECTABLE WARNING FIELD PER SDD 8D5-f.

(8) PROVIDE GRADE BREAK PERPENDICULAR TO DIRECTION OF WHEELCHAIR TRAVEL.

(10) INSTALL TRANSITION NOSE. (INCIDENTAL TO OTHER PAY ITEMS). DO NOT MARK TRANSITION NOSE.

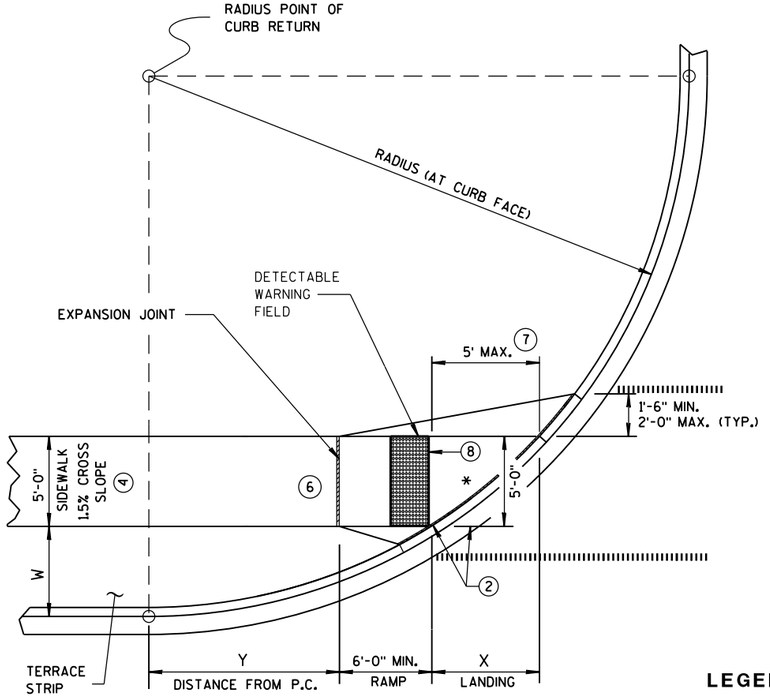

CURB RAMP TYPE 4B1
PLAN VIEW

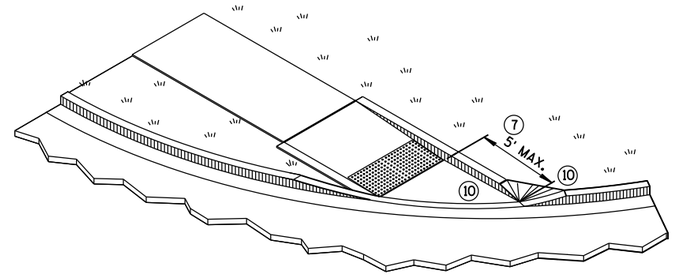

ISOMETRIC VIEW FOR TYPE 4B

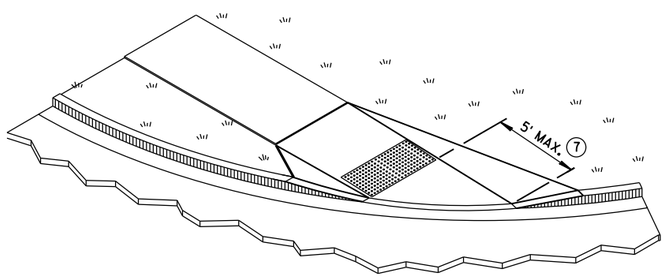

ISOMETRIC VIEW FOR TYPE 4B1

LEGEND

½" EXPANSION JOINT-SIDEWALK

CONTRACTION JOINT FIELD LOCATED

PAVEMENT MARKING CROSSWALK (WHITE)

CURB RAMPS TYPE 4B AND 4B1

STATE OF WISCONSIN
DEPARTMENT OF TRANSPOR

6

S.D.D. 8 D 5-19d

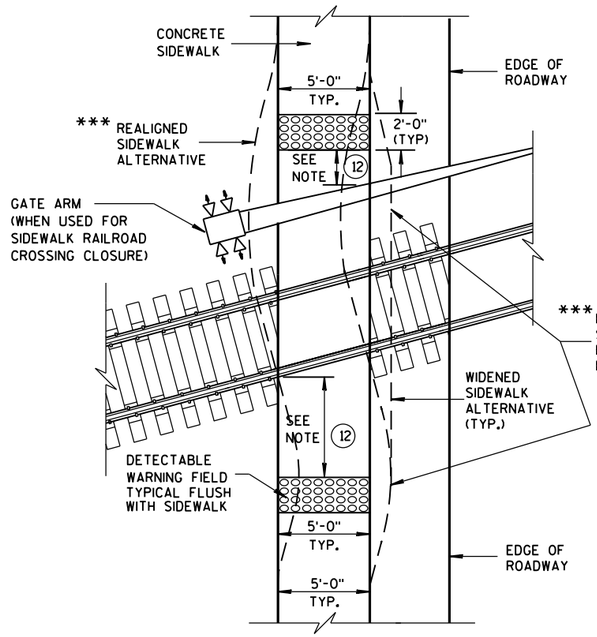

TYPE 8
DETECTABLE WARNINGS AT RAILROAD CROSSING

*** DETAILS TO BE DETERMINED BY DESIGNER

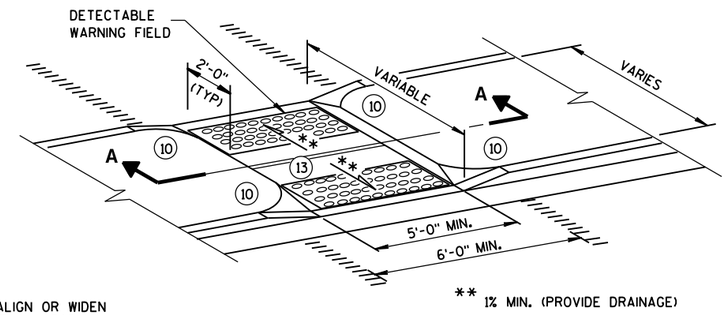

** 1% MIN. (PROVIDE DRAINAGE)

MEDIAN ISLAND
NON-ELEVATED PEDESTRIAN CROSSING
TYPE 5

GENERAL NOTES

AVOID PLACING DRAINAGE STRUCTURES, JUNCTION BOXES OR OTHER OBSTRUCTIONS IN FRONT OF RAMP ACCESS AREAS.

SIDEWALK CROSS SLOPE SHALL NOT EXCEED 2%.

DETECTABLE WARNING FIELDS THAT ARE INSTALLED AS A GROUP OR SIDE BY SIDE, SHALL BE FROM THE SAME MANUFACTURER.

(2) GRADE CHANGE BETWEEN GUTTER FLAG SLOPE AND THE CURB RAMP SLOPE SHALL NOT EXCEED 11%. MAXIMUM GUTTER FLAG SLOPE IS 4%. PROVIDE LONGITUDINAL DRAINAGE AROUND CURB AND AWAY FROM CURB RAMP. NO VERTICAL LIPS OR DISCONTINUITIES GREATER THAN 1/4-INCH ARE ALLOWED. SLOPE OF CURB HEAD OPENING SHALL MATCH THE RAMP SLOPE, MINIMALLY 1.5% AND NOT TO EXCEED 7%. WHEN ADJACENT TO 1.5% LANDING, CONSTRUCT CURB HEAD OPENING AT 1.5% IN THE DIRECTION OF PEDESTRIAN TRAVEL.

(3) ABSOLUTE MAXIMUM 12H:1V (8.33%) CURB RAMP SLOPE IS ALLOWABLE WITH FLATTENED GUTTER FLAG SLOPE AND NOT TO EXCEED 11% GRADE CHANGE.

(4) ±0.5% CONSTRUCTION TOLERANCE IN SIDEWALK CROSS SLOPE. THE SIDEWALK CROSS SLOPE SHALL NOT EXCEED 2% WITHOUT PRIOR APPROVAL FROM THE ENGINEER.

(6) PROVIDE A LEVEL LANDING (MAXIMUM 2% SLOPE) IN ANY DIRECTION OF PEDESTRIAN TRAVEL. STANDARD LANDING SIZE IS 5 FEET X 5 FEET.

(10) INSTALL TRANSITION NOSE. (INCIDENTAL TO OTHER PAY ITEMS). DO NOT MARK TRANSITION NOSE.

(11) SLOPE SIDEWALK TOWARD LANDING AS SHOWN WHERE THERE IS NO TERRACE OR WHERE THE TERRACE WIDTH IS LESS THAN 6 FEET WIDE.

(12) THE EDGE OF THE DETECTABLE WARNING FIELD NEAREST TO A RAILROAD CROSSING SHALL BE 1.5 FEET ± 0.1' FROM THE FACE OF THE GATE ARM IF THE GATE ARM EXTENDS ACROSS THE SIDEWALK. WHERE THERE IS NO PEDESTRIAN GATE, THE EDGE OF THE DETECTABLE WARNING FIELD NEAREST TO THE RAILROAD CROSSING SHALL BE 15 FEET FROM THE NEAREST RAIL.

(13) DO NOT INSTALL DETECTABLE WARNING FIELDS AT THE EDGES OF STREET-LEVEL PEDESTRIAN REFUGE ISLANDS IF A MINIMUM 2-FOOT CONCRETE SURFACE WITHOUT DETECTABLE WARNINGS (MEASURED IN THE DIRECTION OF PEDESTRIAN TRAVEL) CANNOT BE ACHIEVED.

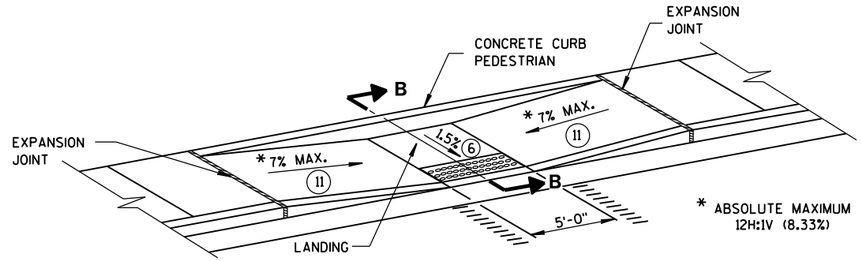

MID-BLOCK CROSSING
TYPE 7A

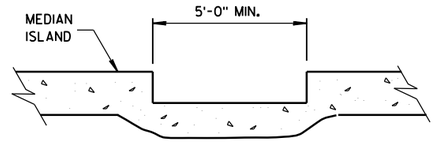

SECTION A-A

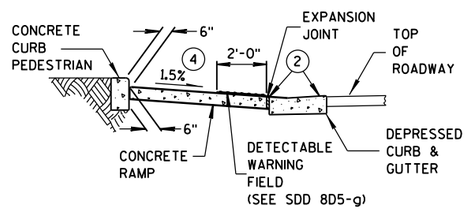

SECTION B-B

REFER TO GENERAL NOTES (2) AND (3) FOR ALL ISLAND CURB RAMPS

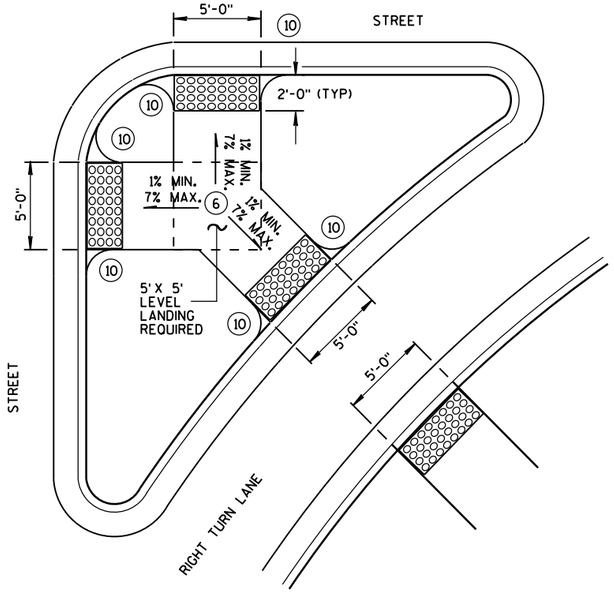

TYPE 6
DETECTABLE WARNING AT ISLANDS

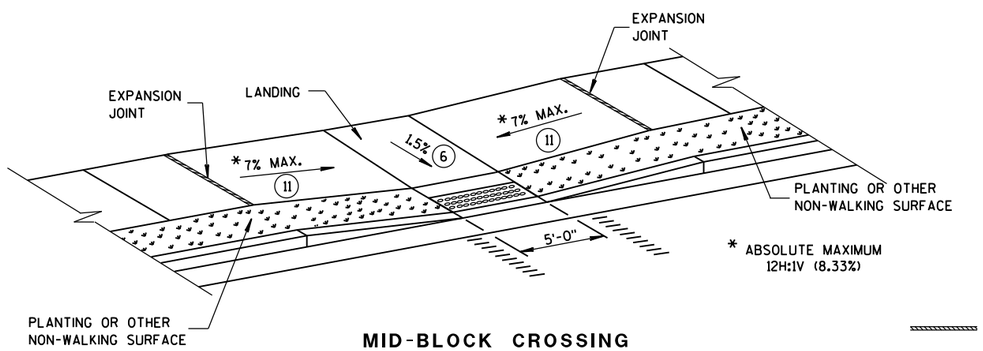

MID-BLOCK CROSSING
TYPE 7B

NOTE: THESE PARALLEL AND PARALLEL/PERPENDICULAR CURB RAMPS MAY BE USED AT INTERSECTIONS AND MID BLOCK LOCATIONS.

LEGEND

- ½" EXPANSION JOINT-SIDEWALK
- CONTRACTION JOINT FIELD LOCATED
- PAVEMENT MARKING CROSSWALK (WHITE)

CURB RAMPS
TYPES 5, 6, 7A, 7B & 8

STATE OF WISCONSIN
DEPARTMENT OF TRANSPOR

6

S.D.D. 8 D 5-19e

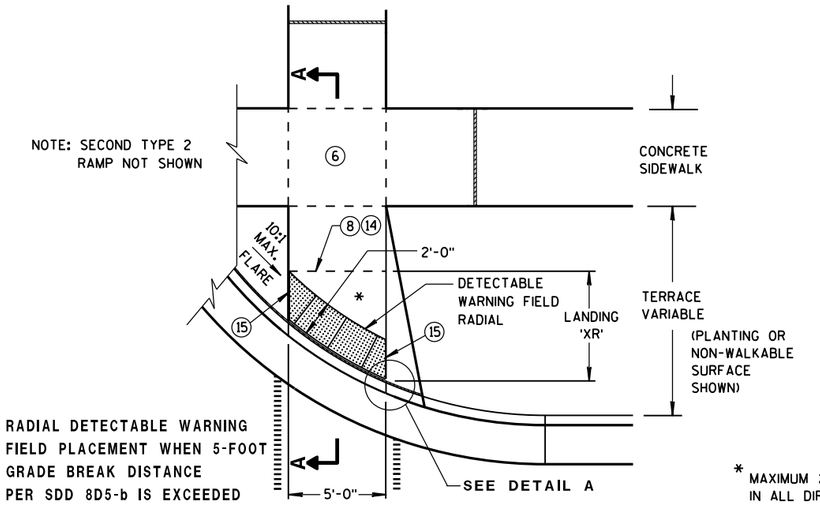

TYPE 2 RAMP
PLAN VIEW
(GRADE BREAK DISTANCE GREATER THAN 5 FEET)

(ON LINE WITH SIDEWALK)

* MAXIMUM 2.0% SLOPE IN ALL DIRECTIONS IN FRONT OF GRADE BREAK

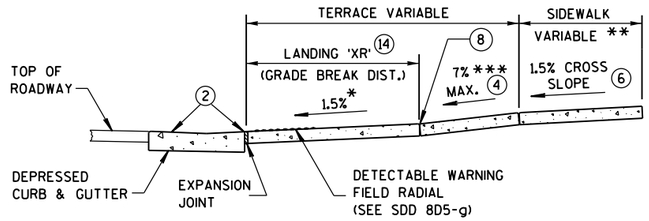

** WIDTH SHOWN ELSEWHERE IN THE PLANS

*** ABSOLUTE MAXIMUM 12H:1V (8.33%)

SECTION A-A

LEGEND

- ½" EXPANSION JOINT-SIDEWALK
- CONTRACTION JOINT FIELD LOCATED
- PAVEMENT MARKING CROSSWALK (WHITE)

GENERAL NOTES

AVOID PLACING DRAINAGE STRUCTURES, JUNCTION BOXES OR OTHER OBSTRUCTIONS IN FRONT OF RAMP ACCESS AREAS.

DETECTABLE WARNING FIELDS (DWFs) THAT ARE INSTALLED AS A GROUP OR SIDE BY SIDE, SHALL BE FROM THE SAME MANUFACTURER.

APPLY RADIAL DETECTABLE WARNING PLACEMENT SIMILARLY FOR TYPE 4A AND 4A1 CURB RAMPS AND SIMILARLY FOR TYPE 4B AND 4B1 CURB RAMPS. TYPE 4A AND 4B CURB RAMPS ARE NOT SHOWN.

REFER TO SDD 8D5-g FOR ADDITIONAL RADIAL PLATE REQUIREMENTS.

FIELD CUTS AT INTERMEDIATE JOINTS WITHIN THE RADIAL DETECTABLE WARNING FIELD ARE PROHIBITED.

DETERMINE FINAL RADIAL WARNING FIELD CONFIGURATION AND ITS INDIVIDUAL PLATE LOCATIONS. PERFORM PRE-LAYOUT PRIOR TO PLACEMENT IN PLASTIC CONCRETE. FOLLOW MANUFACTURER'S PRODUCT LIST AND INSTALLATION RECOMMENDATIONS.

(2) GRADE CHANGE BETWEEN GUTTER FLAG SLOPE AND THE CURB RAMP SLOPE SHALL NOT EXCEED 11%. MAXIMUM GUTTER FLAG SLOPE IS 4%. PROVIDE LONGITUDINAL DRAINAGE AROUND CURB AND AWAY FROM CURB RAMP. NO VERTICAL LIPS OR DISCONTINUITIES GREATER THAN ¼-INCH ARE ALLOWED. SLOPE OF CURB HEAD OPENING SHALL MATCH THE RAMP SLOPE, MINIMALLY 1.5% AND NOT TO EXCEED 7%. WHEN ADJACENT TO 1.5% LANDING, CONSTRUCT CURB HEAD OPENING AT 1.5% IN THE DIRECTION OF PEDESTRIAN TRAVEL.

(3) ABSOLUTE MAXIMUM 12H:1V (8.33%) CURB RAMP SLOPE IS ALLOWABLE WITH FLATTENED GUTTER FLAG SLOPE AND NOT TO EXCEED 11% GRADE CHANGE.

(4) ±0.5% CONSTRUCTION TOLERANCE IN SIDEWALK CROSS SLOPE. THE SIDEWALK CROSS SLOPE SHALL NOT EXCEED 2% WITHOUT PRIOR APPROVAL FROM THE ENGINEER.

(6) PROVIDE A LEVEL LANDING (MAXIMUM 2% SLOPE) IN ANY DIRECTION OF PEDESTRIAN TRAVEL. STANDARD LANDING SIZE IS 5 FEET X 5 FEET.

(8) PROVIDE GRADE BREAK PERPENDICULAR TO DIRECTION OF WHEELCHAIR TRAVEL.

(14) CONSULT ENGINEER IF GRADE BREAK LOCATION (END OF LANDING DIMENSION 'XR') REQUIRES FIELD ADJUSTMENT WHEN ESTABLISHING FINAL RADIAL DETECTABLE WARNING FIELD LOCATION.

(15) FIELD SAW CUTS ALONG RADIAL DETECTABLE WARNING PLATES WILL BE NECESSARY TO MATCH EACH CURB RAMP EDGE. AVOID CUTTING THROUGH DOMES WHENEVER POSSIBLE. MAKE FIELD CUTS TRUE TO LINE AND WITHIN 1/8" DEVIATION. SMOOTH EDGES OF FIELD CUT PLATES.

(16) USE 1'X 2' RECTANGULAR END PLATE AT END OF TYPE 4A1 RAMP AND PROVIDE MINIMUM 2'-0" DETECTABLE WARNING FIELD COVERAGE (IN DIRECTION OF PEDESTRIAN TRAVEL) ALONG THE ENTIRE CURB RAMP WIDTH.

(17) A MAXIMUM 3-INCH CONCRETE BORDER WIDTH IS ALLOWABLE IN FRONT OF RADIAL DETECTABLE WARNING FIELD FOR CONSTRUCTABILITY PURPOSES. CONCRETE BORDER WIDTH MAY VARY UP TO 1 INCH.

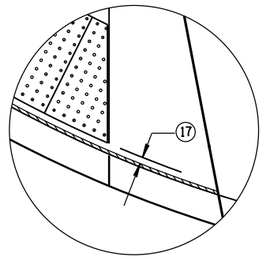

DETAIL A

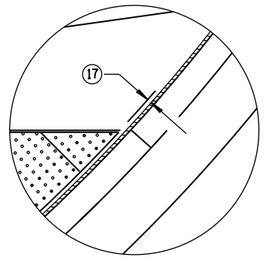

DETAIL C

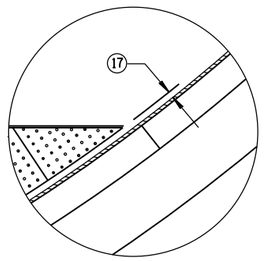

DETAIL B

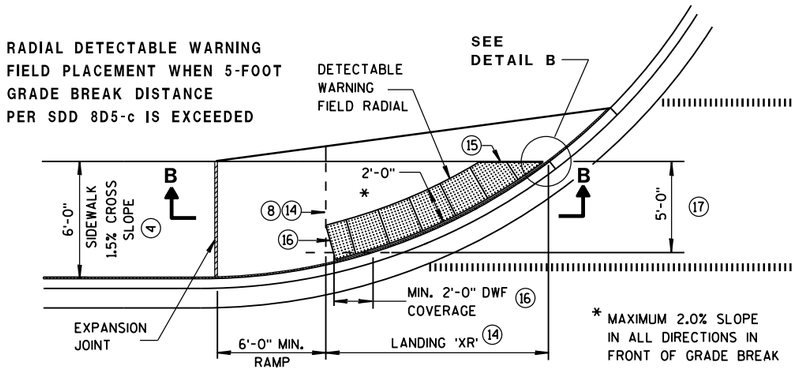

* MAXIMUM 2.0% SLOPE IN ALL DIRECTIONS IN FRONT OF GRADE BREAK

CURB RAMP TYPE 4A1
PLAN VIEW
(GRADE BREAK DISTANCE GREATER THAN 5 FEET)

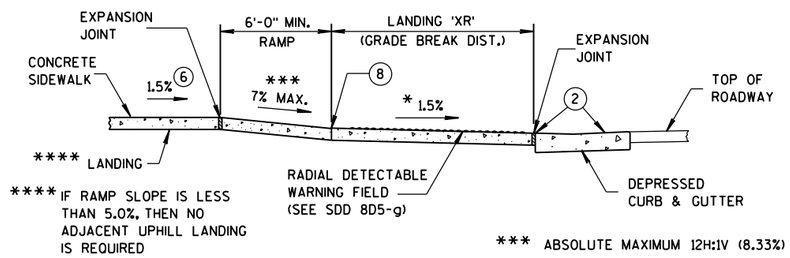

**** IF RAMP SLOPE IS LESS THAN 5.0%, THEN NO ADJACENT UPHILL LANDING IS REQUIRED

*** ABSOLUTE MAXIMUM 12H:1V (8.33%)

SECTION B-B FOR TYPE 4A1

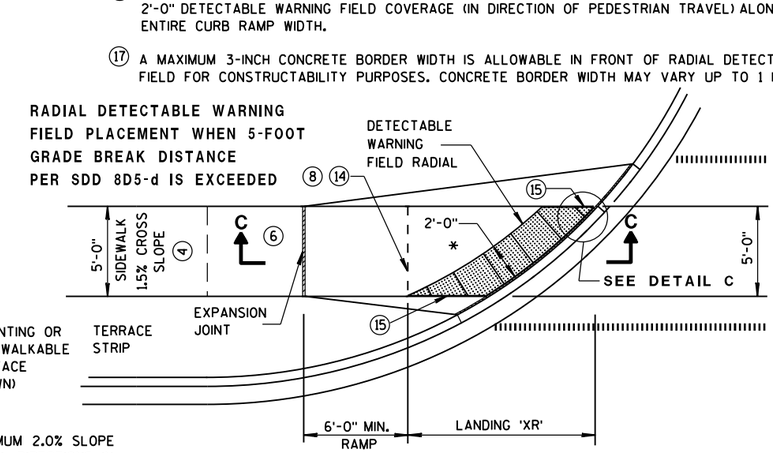

* MAXIMUM 2.0% SLOPE IN ALL DIRECTIONS IN FRONT OF GRADE BREAK

CURB RAMP TYPE 4B1
PLAN VIEW
(GRADE BREAK DISTANCE GREATER THAN 5 FEET)

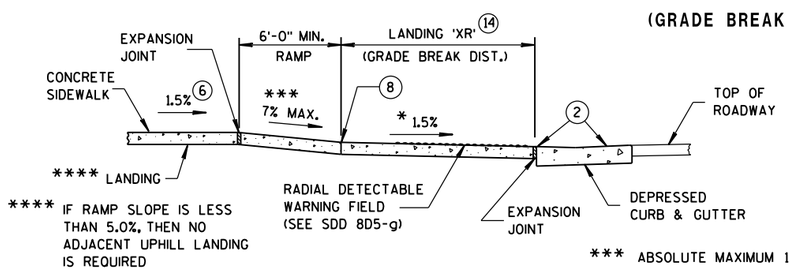

**** IF RAMP SLOPE IS LESS THAN 5.0%, THEN NO ADJACENT UPHILL LANDING IS REQUIRED

*** ABSOLUTE MAXIMUM 12H:1V (8.33%)

SECTION C-C FOR TYPE 4B1

CURB RAMPS
RADIAL DETECTABLE WARNING FIELD APPLICATIONS

STATE OF WISCONSIN
DEPARTMENT OF TRANSPOR

6

S.D.D. 8 D 5-19f

	MIN.	MAX.
A	1.6"	2.4"
B	0.65"	1.5"
C	*	*
D	0.9"	1.4"

* THE C DIMENSION IS 50% TO 65% OF THE D DIMENSION.

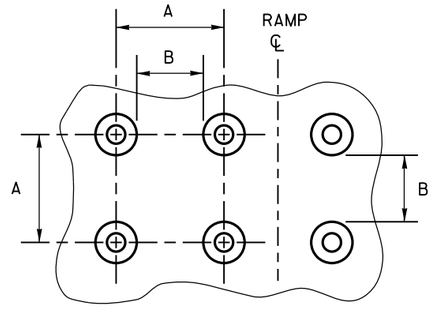

PLAN VIEW

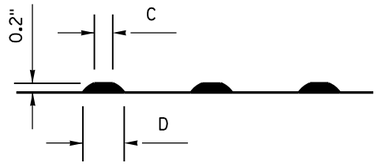

ELEVATION VIEW

TRUNCATED DOMES

DETECTABLE WARNING PATTERN DETAIL

GENERAL NOTES

DETECTABLE WARNING FIELDS THAT ARE INSTALLED AS A GROUP OR SIDE BY SIDE, SHALL BE FROM THE SAME MANUFACTURER.

PLACE ALL DETECTABLE WARNING FIELD SYSTEMS IN ACCORDANCE TO THE MANUFACTURER'S RECOMMENDATION.

FIELD CUTS AT INTERMEDIATE JOINTS WITHIN THE RADIAL DETECTABLE WARNING FIELD ARE PROHIBITED.

DETERMINE FINAL RADIAL WARNING FIELD CONFIGURATION AND ITS INDIVIDUAL PLATE LOCATIONS. PERFORM PRE-LAYOUT PRIOR TO PLACEMENT IN PLASTIC CONCRETE. FOLLOW MANUFACTURER'S PRODUCT LIST AND INSTALLATION RECOMMENDATIONS.

FOR RADIAL DETECTABLE WARNING FIELD APPLICATIONS WHERE STANDARD RADIAL PLATES ARE NOT AVAILABLE AT AN INTERSECTION CURB RADIUS, A COMBINATION OF SQUARE OR RECTANGULAR PLATES AND RADIAL PLATES MAY BE USED TO FORM RADIAL CONFIGURATION. RADIAL WEDGES IN COMBINATION WITH SQUARE PANELS ARE ALSO ACCEPTABLE. FOLLOW MANUFACTURER'S RECOMMENDATIONS.

REFER TO CONTRACT AND STANDARD SPECIFICATIONS FOR FIELD CUTTING REQUIREMENTS.

DO NOT EMBED IN CONCRETE ANY FIELD-CUT PLATES WITH CUT EDGES SHORTER THAN 6 INCHES. CONSULT WITH MANUFACTURER FOR RE-DRILLING AND ANCHORING REQUIREMENTS OF FIELD-CUT PLATES.

⑮ FIELD SAW CUTS ALONG RADIAL DETECTABLE WARNING PLATES WILL BE NECESSARY TO MATCH EACH CURB RAMP EDGE. AVOID CUTTING THROUGH DOMES WHENEVER POSSIBLE. MAKE FIELD CUTS TRUE TO LINE AND WITHIN 1/8" DEVIATION. SMOOTH EDGES OF FIELD CUT PLATES.

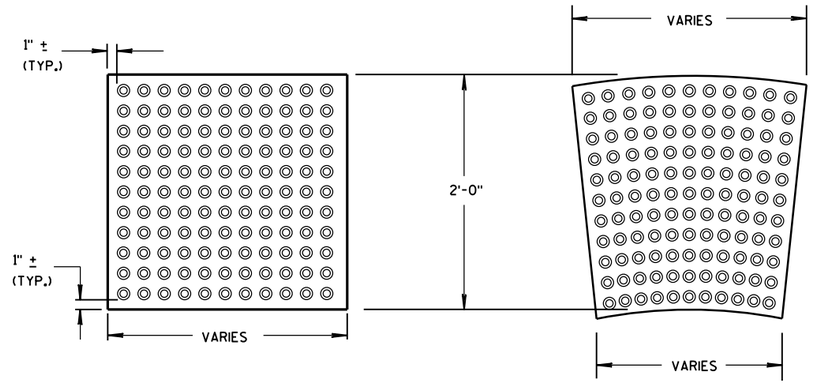

RECTANGULAR PLATES

RADIAL PLATES

DETECTABLE WARNING FIELDS (TYPICAL)

PLAN VIEW

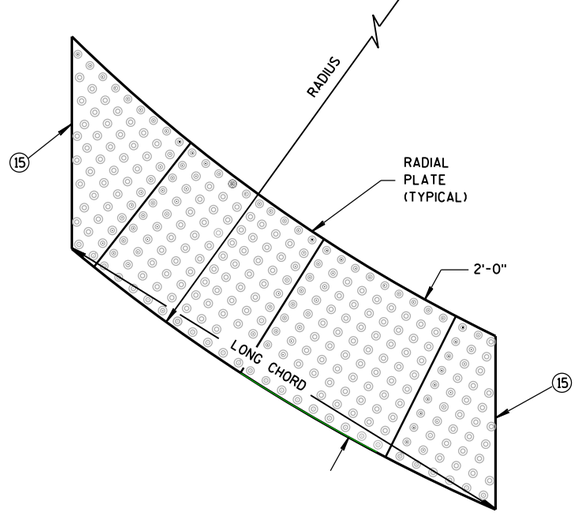

RADIAL DETECTABLE WARNING FIELD ATTRIBUTES

CURB RAMPS
RECTANGULAR AND RADIAL
DETECTABLE WARNING PLATES

STATE OF WISCONSIN
DEPARTMENT OF TRANSPORTATION

APPROVED
June, 2017 — DATE
/S/ Rodney Taylor — ROADWAY STANDARDS UNIT SUPERV
ENT
FHWA

6

S.D.D. 8 D 5-19g

6

S.D.D. 8 D 5-19g

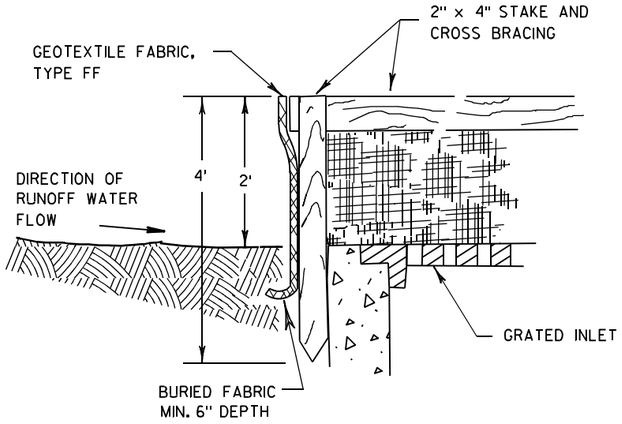

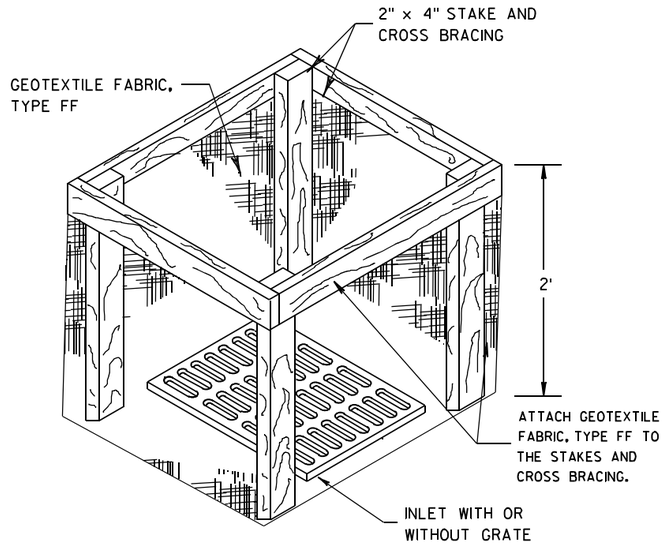

INLET PROTECTION, TYPE A

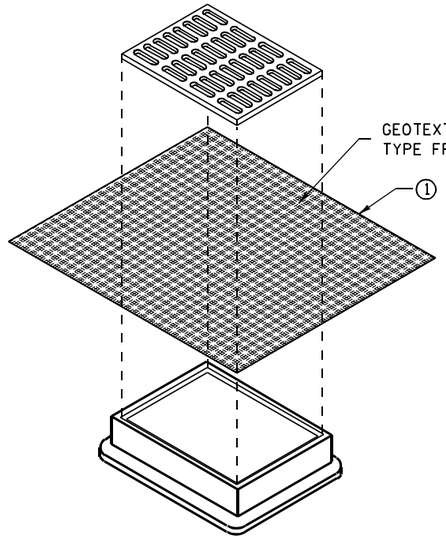

INLET PROTECTION, TYPE B
(WITHOUT CURB BOX)

(CAN BE INSTALLED IN ANY INLET WITHOUT A CURB BOX)

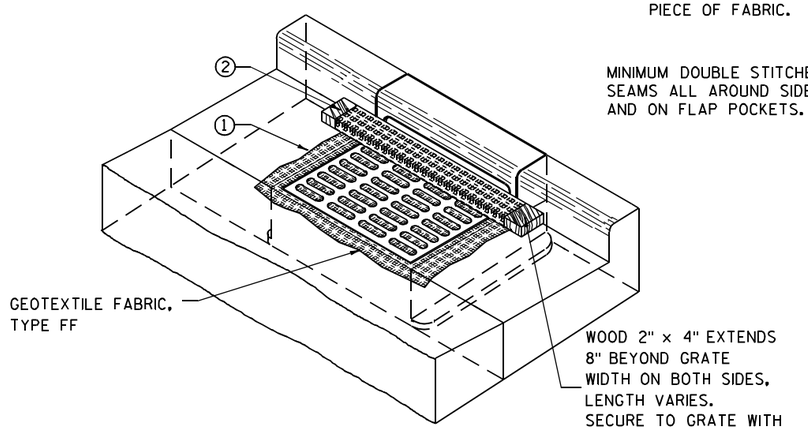

INLET PROTECTION, TYPE C (WITH CURB BOX)

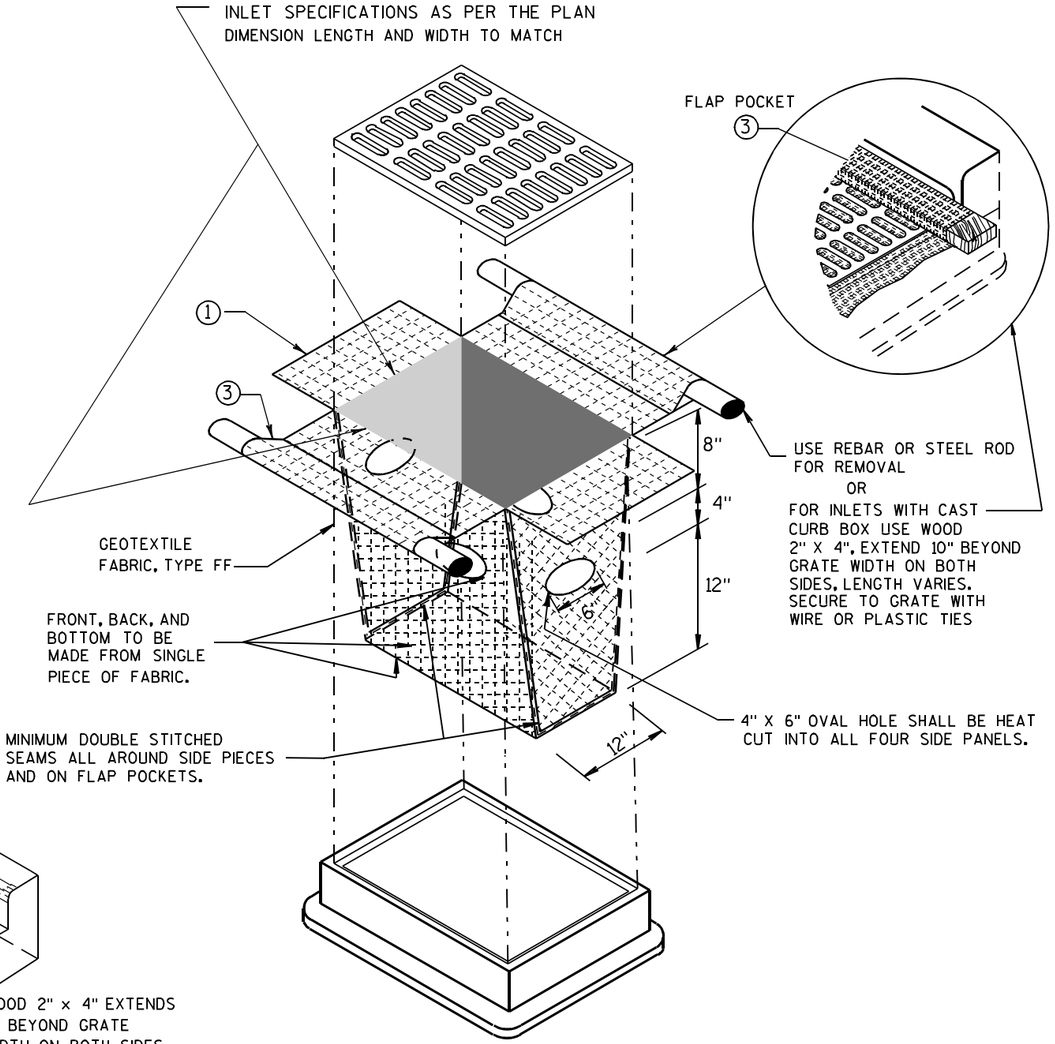

INLET PROTECTION, TYPE D

(CAN BE INSTALLED IN ANY INLET TYPE WITH
OR WITHOUT A CURB BOX AS PER NOTE ②)

GENERAL NOTES

INLET PROTECTION DEVICES SHALL BE MAINTAINED OR REPLACED AT THE DIRECTION OF THE ENGINEER.

MANUFACTURED ALTERNATIVES APPROVED AND LISTED ON THE DEPARTMENT'S EROSION CONTROL PRODUCT ACCEPTABILITY LIST MAY BE SUBSTITUTED.

WHEN REMOVING OR MAINTAINING INLET PROTECTION, CARE SHALL BE TAKEN SO THAT THE SEDIMENT TRAPPED ON THE GEOTEXTILE FABRIC DOES NOT FALL INTO THE INLET. ANY MATERIAL FALLING INTO THE INLET SHALL BE REMOVED IMMEDIATELY.

① FINISHED SIZE, INCLUDING FLAP POCKETS WHERE REQUIRED, SHALL EXTEND A MINIMUM OF 10" AROUND THE PERIMETER TO FACILITATE MAINTENANCE OR REMOVAL.

② FOR INLET PROTECTION, TYPE C (WITH CURB BOX), AN ADDITIONAL 18" OF FABRIC IS WRAPPED AROUND THE WOOD AND SECURED WITH STAPLES. THE WOOD SHALL NOT BLOCK THE ENTIRE HEIGHT OF THE CURB BOX OPENING.

③ FLAP POCKETS SHALL BE LARGE ENOUGH TO ACCEPT WOOD 2X4.

INSTALLATION NOTES

TYPE B & C

TRIM EXCESS FABRIC IN THE FLOW LINE TO WITHIN 3" OF THE GRATE.

THE CONTRACTOR SHALL DEMONSTRATE A METHOD OF MAINTENANCE, USING A SEWN FLAP, HAND HOLDS OR OTHER METHOD TO PREVENT ACCUMULATED SEDIMENT FROM ENTERING THE INLET.

TYPE D

DO NOT INSTALL INLET PROTECTION TYPE D IN INLETS SHALLOWER THAN 30", MEASURED FROM THE BOTTOM OF THE INLET TO THE TOP OF THE GRATE.

TRIM EXCESS FABRIC IN THE FLOW LINE TO WITHIN 3" OF THE GRATE.

THE INSTALLED BAG SHALL HAVE A MINIMUM SIDE CLEARANCE, BETWEEN THE INLET WALLS AND THE BAG, MEASURED AT THE BOTTOM OF THE OVERFLOW HOLES, OF 3". WHERE NECESSARY THE CONTRACTOR SHALL CINCH THE BAG, USING PLASTIC ZIP TIES, TO ACHIEVE THE 3" CLEARANCE. THE TIES SHALL BE PLACED AT A MAXIMUM OF 4" FROM THE BOTTOM OF THE BAG.

INLET PROTECTION
TYPE A, B, C, AND D

STATE OF WISCONSIN
DEPARTMENT OF TRANSPORTATION

APPROVED

10/16/02
DATE

/S/ Beth Cannestra
CHIEF ROADWAY DEVELOPMENT ENGINEER

FHWA

6
S.D.D. 8 E 10-2

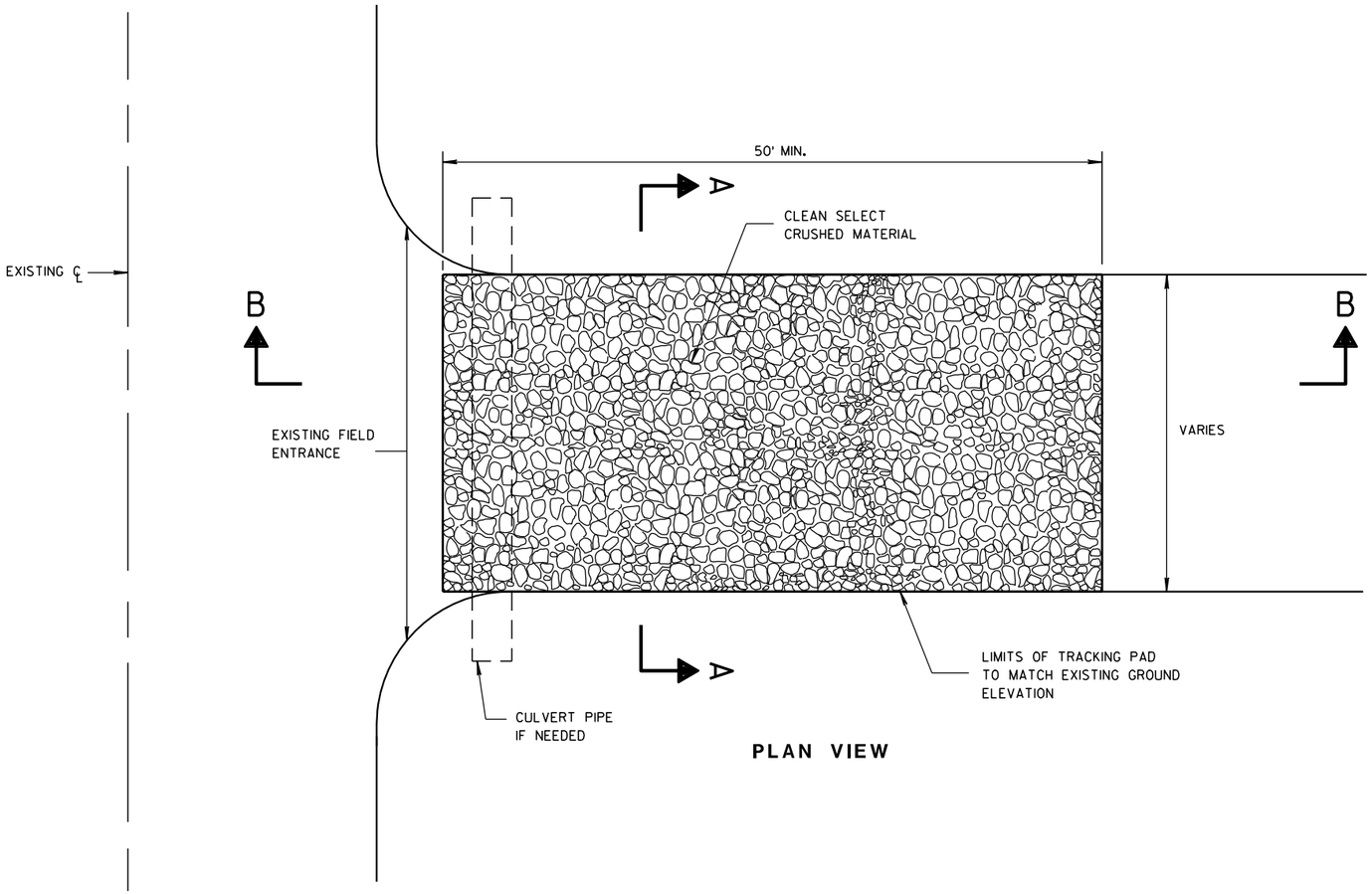

PLAN VIEW

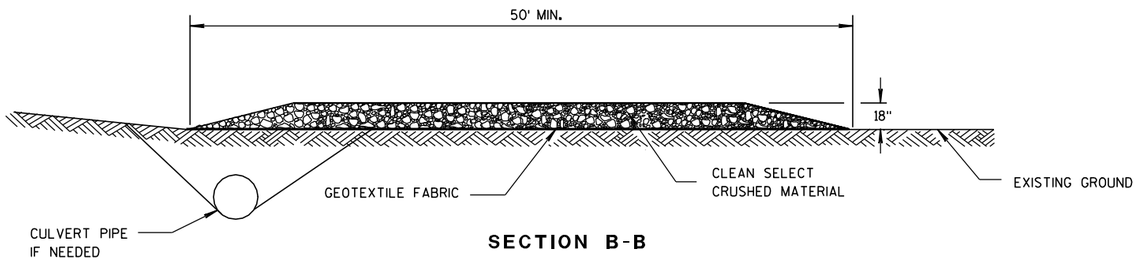

SECTION B-B

GENERAL NOTES

DETAILS OF CONSTRUCTION, MATERIALS AND WORKMANSHIP NOT SHOWN ON THIS DRAWING SHALL CONFORM TO THE PERTINENT REQUIREMENTS OF THE STANDARD SPECIFICATIONS AND THE APPLICABLE SPECIAL PROVISIONS.

TRACKING PAD SHALL BE INSPECTED DAILY. DEFICIENT AREAS SHALL BE REPAIRED OR REPLACED IMMEDIATELY.

TRACKING PAD TO BE REMOVED AFTER CONSTRUCTION IS COMPLETED.

TRACKING PAD SHALL BE THE FULL WIDTH OF THE EGRESS POINT.

SURFACE WATER MUST BE PREVENTED FROM PASSING THROUGH THE TRACKING PAD. FLOWS SHALL BE DIVERTED AWAY, AROUND OR CONVEYED UNDER THE TRACKING PAD.

CULVERT PIPE OR OTHER BMP USED TO DIVERT WATER AWAY, AROUND OR UNDER THE TRACKING PAD SHALL BE DESIGNED TO CONVEY THE 2 YEAR - 24 HOUR EVENT.

THE COST OF ADDITIONAL BMP TO DIVERT WATER ARE INCIDENTAL TO THE TRACKING PAD BID ITEM.

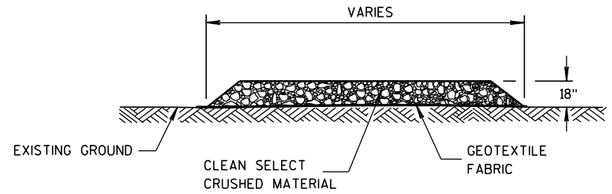

SECTION A-A

TRACKING PAD

TRACKING PAD

STATE OF WISCONSIN
DEPARTMENT OF TRANSPORTATION

APPROVED
3/24/2011 — DATE
/S/ Jerry H. Zoda — ROADWAY STANDARDS ENGINEER
FHWA

6

S.D.D. 8 E 14-1

METAL APRON ENDWALLS

PIPE DIA. (IN.)	MIN. THICK. (Inches) STEEL	MIN. THICK. (Inches) ALUM.	DIMENSIONS (Inches) A (±1")	B (MAX.)	H (±1")	L (±1 1/2")	L1 ①	L2 ①	W (±2")	APPROX. SLOPE	BODY
12	.064	.060	6	6	6	21	12	17 1/2	24	2 1/2 to 1	1 Pc.
15	.064	.060	7	8	6	26	14	21 3/4	30	2 1/2 to 1	1 Pc.
18	.064	.060	8	10	6	31	15	28 1/4	36	2 1/2 to 1	1 Pc.
21	.064	.060	9	12	6	36	18	29 5/8	42	2 1/2 to 1	1 Pc.
24	.064	.075	10	13	6	41	18	37 1/4	48	2 1/2 to 1	1 Pc.
30	.079	.075	12	16	8	51	18	52 1/4	60	2 1/2 to 1	1 Pc.
36	.079	.105	14	19	9	60	24	59 3/4	72	2 1/2 to 1	2 Pc.
42	.109	.105	16	22	11	69	24	75 5/8	84	2 1/2 to 1	2 Pc.
48	.109	.105	18	27	12	78	24	81	90	2 1/4 to 1	3 Pc.
54	.109	.105	18	30	12	84	30	85 1/2	102	2 1/4 to 1	3 Pc.
60	.109×	.105×	18	33	12	87	—	—	114	2 to 1	3 Pc.
66	.109×	.105×	18	36	12	87	—	—	120	2 to 1	3 Pc.
72	.109×	.105×	18	39	12	87	—	—	126	2 to 1	3 Pc.
78	.109×	.105×	18	42	12	87	—	—	132	1 1/2 to 1	3 Pc.
84	.109×	.105×	18	45	12	87	—	—	138	1 1/2 to 1	3 Pc.
90	.109×	.105×	18	37	12	87	—	—	144	1 1/2 to 1	3 Pc.
96	.109×	.105×	18	35	12	87	—	—	150	1 1/2 to 1	3 Pc.

× EXCEPT CENTER PANEL SEE GENERAL NOTES

REINFORCED CONCRETE APRON ENDWALLS

PIPE DIA. (IN.)	DIMENSIONS (Inches) T	A	B	C	D	E	G	APPROX. SLOPE
12	2	4	24	48 7/8	72 1/8	24	2	3 to 1
15	2 1/4	6	27	46	73	30	2 1/4	3 to 1
18	2 1/2	9	27	46	73	36	2 1/2	3 to 1
21	2 3/4	9	36	37 1/2	73 1/2	42	2 3/4	3 to 1
24	3	9 1/2	43 1/2	30	73 1/2	48	3	3 to 1
27	3 1/4	10 1/2	49 1/2	24	73 1/2	54	3 1/4	3 to 1
30	3 1/2	12	54	19 3/4	73 1/2	60	3 1/2	3 to 1
36	4	15	63	34 3/4	97 3/4	72	4	3 to 1
42	4 1/2	21	63	35	98	78	4 1/2	3 to 1
48	5	24	72	26	98	84	5	3 to 1
54	5 1/2	27	65	* 33 1/4 - ** 35	* 98 1/4 - ** 100	90	5 1/2	2 2/5 to 1
60	6	* 30 - ** 35	60	39	99	96	5	2 to 1
66	6 1/2	* 24 - ** 30	* 72 - ** 78	* 21 - ** 27	99	102	5 1/2	2 to 1
72	7	* 24 - ** 36	78	21	99	108	6	2 to 1
78	7 1/2	* 24 - ** 36	78	21	99	114	6 1/2	2 to 1
84	8	36	90 1/2	21	111 1/2	120	6 1/2	1 1/2 to 1
90	8 1/2	41	87 1/2	24	111 1/2	132	6 1/2	1 1/2 to 1

*MINIMUM
**MAXIMUM

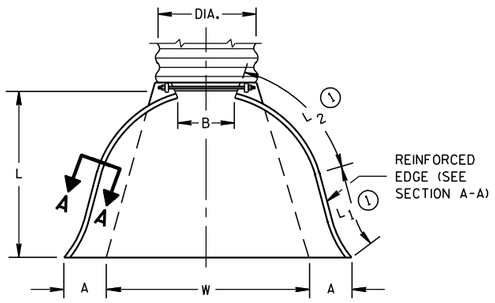

PLAN VIEW

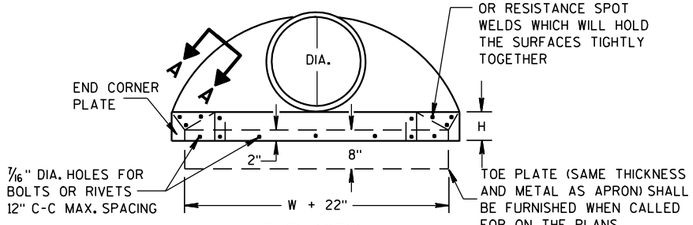

END VIEW

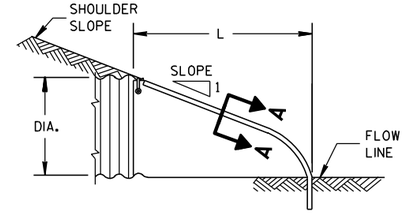

SIDE ELEVATION

METAL ENDWALLS

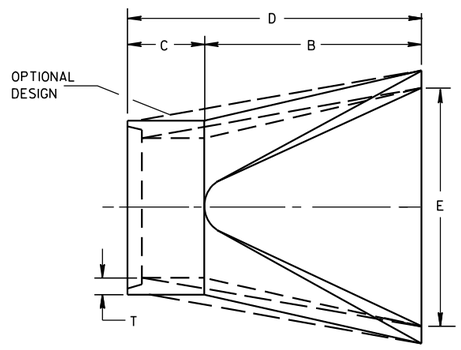

PLAN

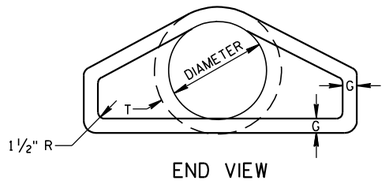

END VIEW

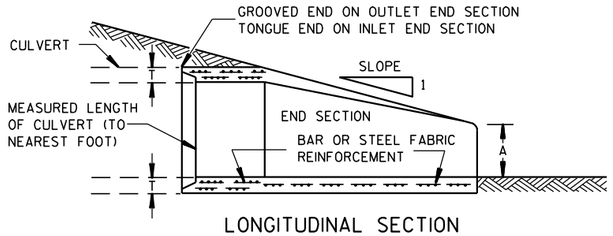

LONGITUDINAL SECTION

CONCRETE ENDWALLS

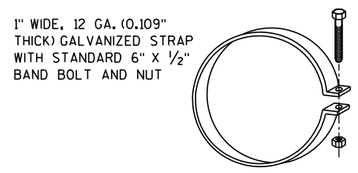

ALTERNATE FOR TYPE 1 CONNECTION

END SECTION CONNECTOR STRAP

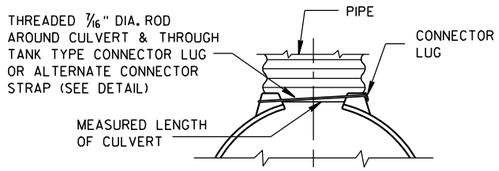

TYPE 1
FOR 12" THRU 24" CORR. PIPE

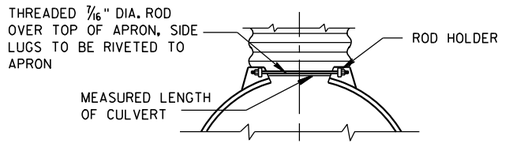

TYPE 2
FOR 30" THRU 96" CORR. PIPE

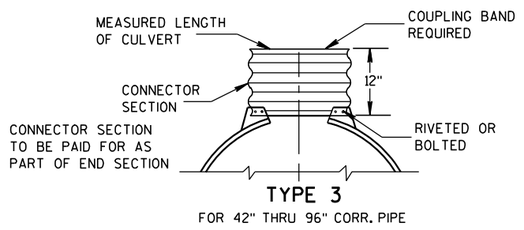

TYPE 3
FOR 42" THRU 96" CORR. PIPE

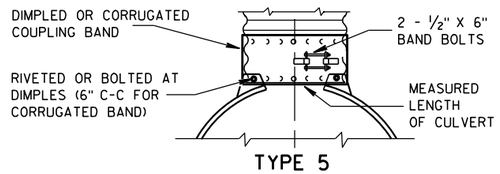

TYPE 5
ALTERNATE FOR:
ALL SIZES CORRUGATED CIRCULAR PIPE

NOTE: DIMPLED BAND FITS OVER OUTSIDE OF ENDWALL. AND CORRUGATED BAND FITS INSIDE ENDWALL. DIMPLED BAND MAY BE USED WITH HELICALLY CORRUGATED PIPE.

FOR CIRCUMFERENTIALLY CORRUGATED PIPE USE ENDWALL CONNECTION DETAILS 1, 2, 3 OR 5 AS APPLICABLE.

FOR HELICALLY CORRUGATED PIPE USE ENDWALL CONNECTION DETAILS 1, 2 OR 5.

FOR HELICALLY CORRUGATED PIPES WITH TWO CIRCUMFERENTIAL CORRUGATIONS AT EACH END USE ENDWALL CONNECTION DETAILS 1, 2 OR 3.

CONNECTION DETAILS

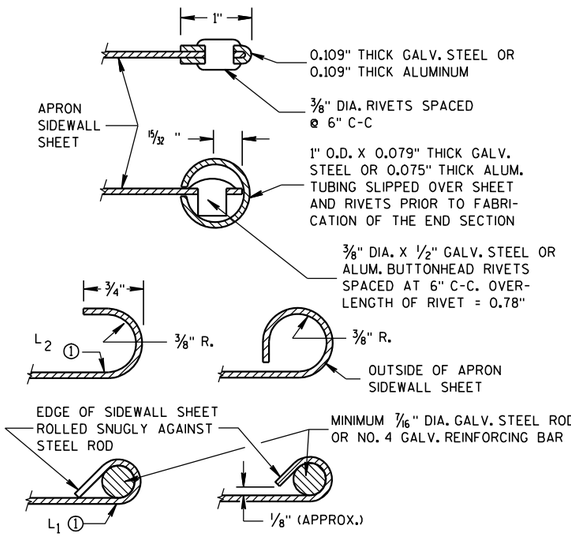

SECTION A-A

GENERAL NOTES

DETAILS OF CONSTRUCTION, MATERIALS AND WORKMANSHIP NOT SHOWN ON THIS DRAWING SHALL CONFORM TO THE PERTINENT REQUIREMENTS OF THE STANDARD SPECIFICATIONS AND THE APPLICABLE SPECIAL PROVISIONS.

CONCRETE CULVERT ENDWALLS MAY NOT BE USED WITH GALVANIZED STEEL OR ALUMINUM CULVERT PIPE OR VISE VERSA. GALVANIZED STEEL OR ALUMINUM ENDWALLS SHALL NORMALLY BE INSTALLED ON CULVERT PIPE OF THE SAME METAL.

ALL THREE PIECE STEEL APRON ENDWALLS FOR 60" DIAMETER PIPE AND LARGER SHALL HAVE 0.109" SIDES AND 0.138" CENTER PANELS. ALL THREE PIECE ALUMINUM APRON ENDWALLS FOR 60" DIAMETER PIPE AND LARGER SHALL HAVE 0.105" SIDES AND 0.134" CENTER PANELS. THE WIDTH OF CENTER PANELS SHALL BE GREATER THAN 20 PERCENT OF THE PIPE PERIMETER.

LAP SEAMS SHALL BE TIGHTLY JOINED BY GALVANIZED RIVETS OR BOLTS FOR STEEL UNITS AND ALUMINUM RIVETS AND BOLTS FOR ALUMINUM UNITS. FOR THE 60" THROUGH 96" DIAMETER APRON ENDWALL SIZES, THE REINFORCED EDGES AND CENTER PANEL SEAMS SHALL BE FURTHER REINFORCED WITH GALVANIZED STEEL OR ALUMINUM STIFFENER ANGLES. THE ANGLES SHALL BE ATTACHED BY GALVANIZED NUTS AND BOLTS FOR STEEL UNITS AND ALUMINUM NUTS AND BOLTS FOR ALUMINUM UNITS.

WHERE TWO OR MORE PIPES WITH APRON ENDWALLS ARE LAID ADJACENT TO EACH OTHER, THEY SHALL BE SEPARATED BY A DISTANCE SUFFICIENT TO PROVIDE A MINIMUM CLEARANCE OF 6 INCHES BETWEEN APRON ENDWALLS.

① FOR PIPE SIZES UP TO 60" DIAMETER, A 180° ROLLED EDGE MAY BE USED INSTEAD OF STEEL ROD REINFORCEMENT. SEE SECTION A-A.

APRON ENDWALLS FOR CULVERT PIPE

STATE OF WISCONSIN
DEPARTMENT OF TRANSPORTATION

APPROVED
11/30/94 DATE
/S/ Rory L. Rhinesmith
CHIEF ROADWAY DEVELOPMENT ENGINEER
FHWA

6

S.D.D. 8 F 1-11

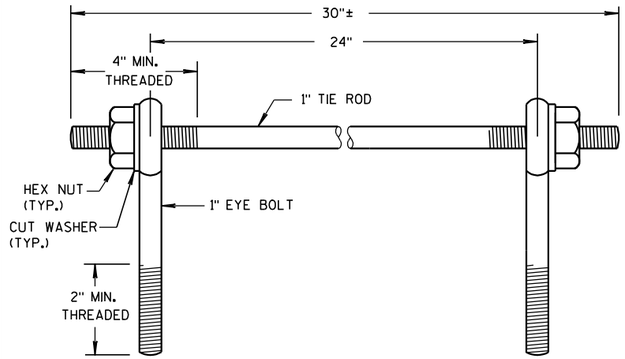

EYE BOLTS AND TIE ROD

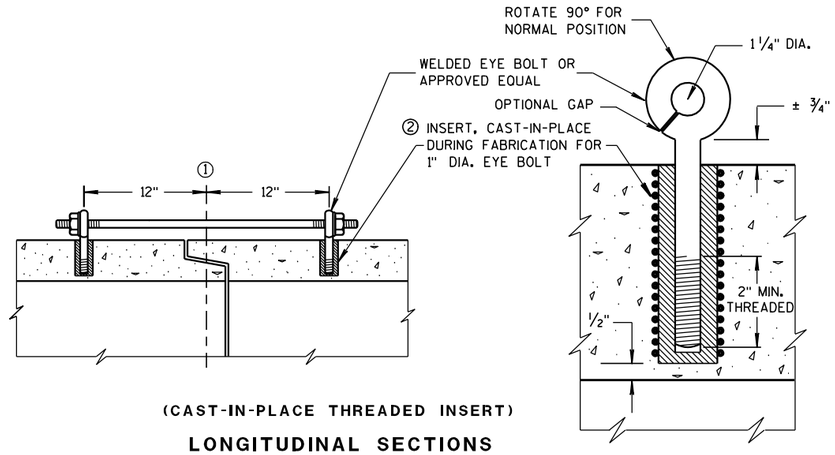

(CAST-IN-PLACE THREADED INSERT)

LONGITUDINAL SECTIONS

EYE BOLT AND TIE ROD ASSEMBLY (ALTERNATE NO. 1)

GENERAL NOTES

DETAILS OF CONSTRUCTION, MATERIALS, AND WORKMANSHIP NOT SHOWN ON THIS DRAWING SHALL CONFORM TO THE PERTINENT REQUIREMENTS OF THE STANDARD SPECIFICATIONS AND APPLICABLE SPECIAL PROVISIONS.

CONCRETE CULVERT AND STORM SEWER PIPE SHALL BE TIED TOGETHER IN THE MANNER ILLUSTRATED BY THIS DETAIL AT LOCATIONS DESIGNATED IN THE STANDARD SPECIFICATIONS AND THE PLAN. THE CONTRACTOR MAY USE EITHER ALTERNATE 1, 2 OR 3 FOR DRAINAGE STRUCTURES. ONLY ALTERNATE 1 AND 3 MAY BE USED FOR CATTLE PASSES, UNLESS OTHERWISE STATED IN THE CONTRACT. THE MATERIALS, FABRICATION AND WORK NECESSARY TO TIE THE PIPE BY THIS DETAIL WILL BE CONSIDERED INCIDENTAL TO THE PIPE AND APRON ENDWALLS IF REQUIRED.

DETAILED DRAWINGS FOR PROPOSED ALTERNATE DESIGNS FOR JOINT TIES SHALL BE SUBMITTED TO THE ENGINEER FOR APPROVAL.

JOINT TIES TO BE HOT-DIP GALVANIZED PER ASTM A 153.

① ℄ OF TONGUE AND GROOVE OR BELL AND SPIGOT JOINTS.

② THE INSIDE OF THE THREADED INSERTS SHALL BE CLEAN TO ALLOW THE INSERTION OF THREADED EYE BOLTS.

③ HOLES SHALL BE CAST-IN-PLACE OR DRILLED 12 INCHES FROM ℄ OF TONGUE AND GROOVE.

④ BOLT PROJECTION INSIDE OF PIPE SHALL NOT EXCEED 2 INCHES.

⑤ OPENING TO BE ROD DIAMETER PLUS 1 INCH.

⑥ LENGTH ADEQUATE TO EXTEND TO WITHIN 1/2 INCH OF THE INNER SURFACE OF THE PIPE.

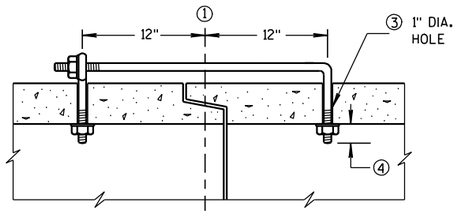

(TONGUE & GROOVE PIPE)

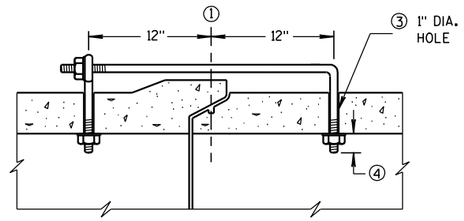

(MODIFIED BELL PIPE)

LONGITUDINAL SECTION

EYE BOLT DIMENSION TABLE

PIPE SIZE	L = LENGTH	
	TONGUE & GROOVE PIPE	MODIFIED BELL PIPE
18" TO 24"	4 1/2"	6 1/4"
30"	5"	7"
36"	5 1/2"	7"
42"	6"	
48"	6 1/2"	
60"	7 1/2"	
66"	8"	

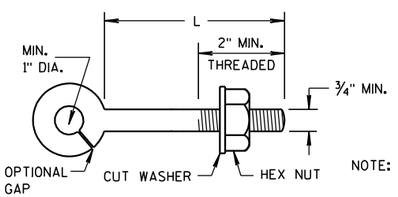

NOTE:

EYE BOLT

NOTE: TWO EYE BOLTS MAY BE USED WITH A 30" LONG THREADED ROD IN LIEU OF THE 90° BENT TIE ROD.

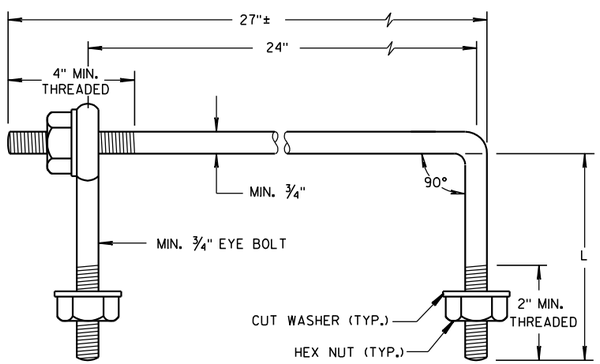

EYE BOLT AND TIE ROD

(JOINT TIES FOR 18" TO 66" DIA. CONCRETE PIPE)

EYE BOLT AND TIE ROD ASSEMBLY (ALTERNATE NO. 2)

ADJUSTABLE TIE ROD TABLE

PIPE DIAMETER	TIE ROD DIAMETER	D	L_1	N
12-60	5/8	5/8	5	1/2
66-84	3/4	3/4	5	1/2
90-108	1	1	7	1 1/16

DIMENSIONS SHOWN ARE IN INCHES

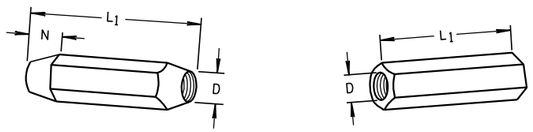

TAPERED PLAIN

RIGHT AND LEFT THREADS

SLEEVE NUTS

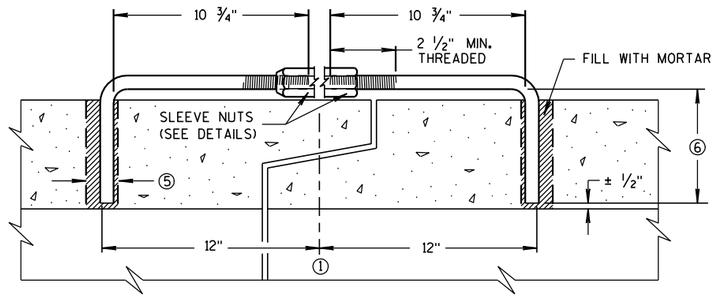

LONGITUDINAL SECTION

(JOINT TIES FOR 12" TO 108" DIA. CONCRETE PIPE)

ADJUSTABLE TIE ROD (ALTERNATE NO. 3)

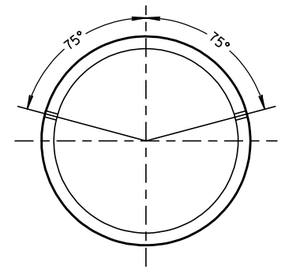

PLACEMENT OF (2) CAST-IN-PLACE INSERTS OR HOLES DURING FABRICATION FOR PIPE SECTIONS REQUIRING TIE RODS

TRANSVERSE SECTION

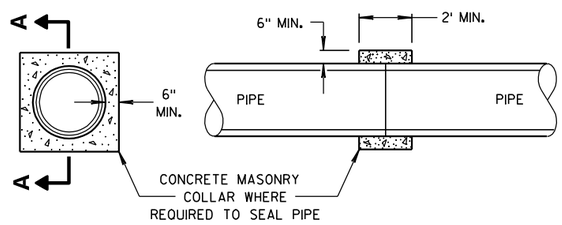

SECTION A-A

CONCRETE COLLAR DETAIL

JOINT TIES FOR CONCRETE PIPE AND CONCRETE COLLAR DETAIL

STATE OF WISCONSIN
DEPARTMENT OF TRANSPORTATION

APPROVED
6/5/2012 DATE
/S/ Jerry H. Zogg
ROADWAY STANDARDS ENGINEER
150
FHWA

6

S.D.D. 8 F 4-7

6

S.D.D. 8 F 4-7

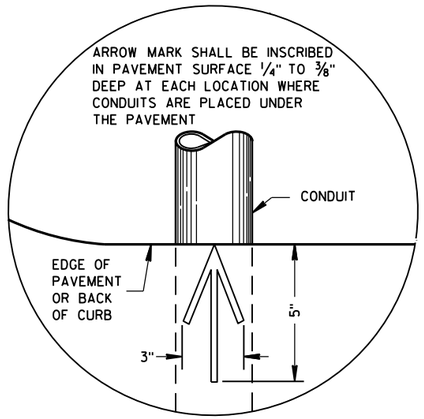

PLAN VIEW

ARROW MARK

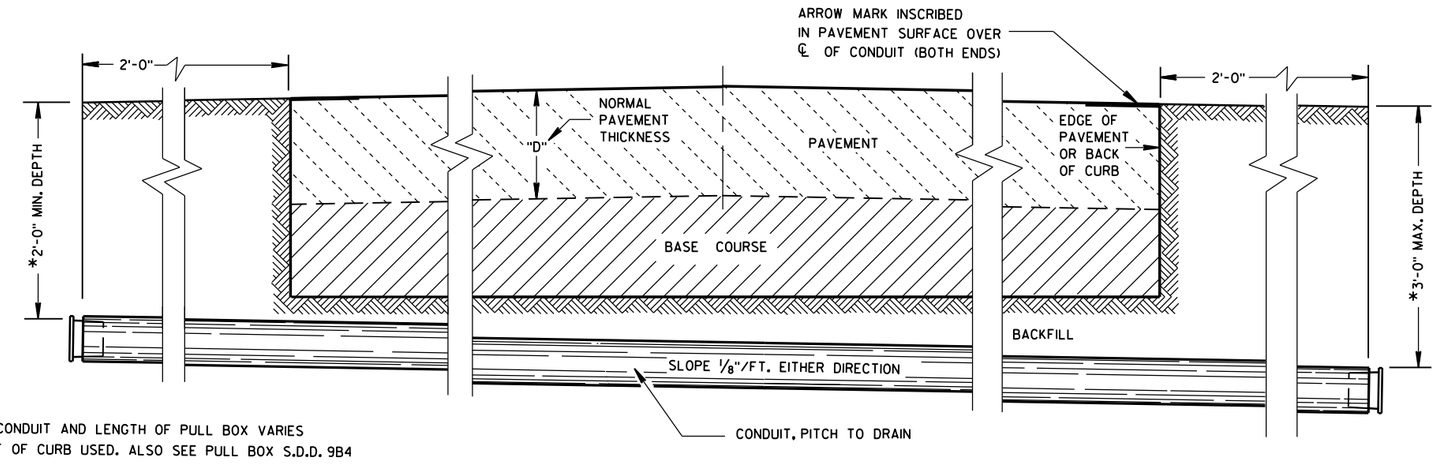

*DEPTH OF CONDUIT AND LENGTH OF PULL BOX VARIES WITH HEIGHT OF CURB USED. ALSO SEE PULL BOX S.D.D. 9B4

SIDE ELEVATION

DETAIL FOR CONDUIT UNDER PAVED HIGHWAYS

GENERAL NOTES

DETAILS OF CONSTRUCTION, MATERIALS AND WORKMANSHIP NOT SHOWN ON THIS DRAWING SHALL CONFORM TO THE PERTINENT REQUIREMENTS OF THE CONTRACT.

METALLIC (STANDARD SPECIFICATION 652.2.2) OR NONMETALLIC (STANDARD SPECIFICATION 652.2.3) CONDUIT SHALL BE FURNISHED AND PLACED AS SHOWN.

DEPTH OF CONDUIT INSTALLED BELOW THE TRAVELED WAY SHALL BE 24 INCHES MINIMUM AND 36 INCHES MAXIMUM.

DEPTH OF CONDUIT INSTALLED THAT IS NOT BELOW THE TRAVELED WAY SHALL BE 18 INCHES MINIMUM AND 36 INCHES MAXIMUM.

ANY EXCEPTION TO THE MAXIMUM DEPTH SHALL BE ONLY WITH THE WRITTEN APPROVAL OF THE ENGINEER.

THE TRENCH SHALL NOT BE BACKFILLED PRIOR TO INSPECTION OF THE CONDUIT.

ALL METALLIC CONDUIT RACEWAY ENDS SHALL BE REAMED AND THREADED.

ALL METALLIC CONDUIT IN WHICH WIRE OR CABLE IS TO BE INSTALLED SHALL BE BUSHED WITH APPROVED THREADED BUSHINGS BEFORE INSTALLATION OF THE WIRE OR CABLE.

ALL METALLIC CONDUITS IN WHICH WIRE OR CABLE IS NOT TO BE INSTALLED SHALL BE CAPPED WITH THREADED PROTECTIVE CAPS, AS APPROVED BY THE ENGINEER.

ALL NONMETALLIC CONDUIT SHALL BE CAPPED OR PLUGGED IMMEDIATELY AFTER INSTALLATION AND SHALL REMAIN CAPPED OR PLUGGED UNTIL WIRE/CABLES ARE INSTALLED.

NONMETALLIC CONDUITS IN WHICH WIRE OR CABLE IS NOT BEING INSTALLED SHALL REMAIN CAPPED OR PLUGGED.

BENDING OF PVC ELECTRICAL CONDUIT SHALL BE ACCOMPLISHED BY USING A BLANKET OR EMERSION TYPE TANK DESIGNED FOR THE PURPOSE OF BENDING PVC ELECTRICAL CONDUIT.

ALL CUT ENDS SHALL BE TRIMMED INSIDE AND OUTSIDE TO REMOVE ALL ROUGH EDGES ON NONMETALLIC CONDUIT. (SEE NEC 347.5)

WHEN REQUIRED TO CONNECT NONMETALLIC CONDUIT TO METALLIC CONDUIT, ONLY U.L. LISTED ADAPTER FITTINGS SHALL BE USED.

PRIOR TO CONDUIT ACCEPTANCE, CONDUIT CAPS OR PLUGS SHALL BE REMOVED, AND THE CAPS, PLUGS AND CONDUIT ENDS SHALL BE THOROUGHLY CLEANED AND THEN THE CAPS OR PLUGS REINSTALLED TO ENSURE THAT THE CAPS OR PLUGS CAN BE EASILY REMOVED IN THE FUTURE.

ALL CONDUIT BEING FURNISHED AND INSTALLED SHALL HAVE THE U.L. LABEL FIRMLY ATTACHED.

CONDUIT RUNS SHALL BE THE SAME SIZE OF CONDUIT FROM ONE END TO THE OTHER (FROM PULL BOX TO PULL BOX-OR-JUNCTION BOX TO JUNCTION BOX-OR-BASE TO BASE, ETC.).

TRACER WIRE SHALL BE INSTALLED AS STATED IN THE STANDARD SPECIFICATION, ITEM 652.3.1.1.

ALL CONDUIT RUNS SHALL BE STRAIGHT (WITHOUT BENDS) FROM PULL BOX TO PULL BOX, PULL BOX TO BASE AND BASE TO BASE AS SHOWN ON THE PLANS.

CONDUIT

STATE OF WISCONSIN
DEPARTMENT OF TRANSPORTATION

APPROVED
March, 2017 — DATE
/S/ Ahmet Demirbilek — STATE ELECTRICAL
FHWA

6

S.D.D. 9 B 2-10

TABLE OF NOMINAL DIMENSIONS AND WEIGHTS

DIMENSION IN INCHES		NON-CONDUCTIVE PULL BOX	
BOX DIAMETER ** (INSIDE)	A	24	24
BOX OVERALL OUTSIDE DIAMETER	B	27	27
BOX LENGTH	C	36	42
FRAME OPENING	D	22 1/2	22 1/2
WEIGHT IN POUNDS *			
COVER		50	50
BOX ONLY		75	85

* THE ACTUAL WEIGHT OF THE COVER OR BOX ONLY MAY VARY NOT TO EXCEED 100 LBS INDIVIDUALLY.

** DIAMETER VARIES FROM TOP TO BOTTOM WITH THE DIAMETER LARGER AT THE BOTTOM TO PREVENT FROST HEAVE

GENERAL NOTES

DETAILS OF CONSTRUCTION, MATERIALS AND WORKMANSHIP NOT SHOWN ON THIS DRAWING SHALL CONFORM TO THE PERTINENT REQUIREMENTS OF THE CONTRACT.

ALL BOXES, FRAMES AND COVERS SHALL BE SUITABLE FOR TIER 15 LOADING AS SPECIFIED IN ANSI/SCTE 77.

PROVIDE AN OPENING FOR TOOL ASSISTED COVER REMOVAL NOT LARGE ENOUGH TO PERMIT PASSAGE OF A SPHERE MORE THAN 1/2" DIAMETER

ENSURE COVER SURFACE IS SKID RESISTANT WITH A COEFFICIENT OF FRICTION OF AT LEAST 0.5 AND VERTICAL SURFACE DICONTINUITIES LESS THAN 1/4".

COVER SHALL BE MAGNETICALLY LOCATABLE.

BOXES AND EXTENSIONS ARE TRIMMABLE FOR CUSTOM LENGTHS. TRIMMED PIECES SHALL MAINTAIN A UNIFORM LENGTH.

ENTRANCE HOLES INTO PULL BOXES SHALL BE CUT WITH A CIRCULAR HOLE SAW OR HYDRAULIC CONDUIT PUNCH. HOLE SIZE SHALL BE THE OUTSIDE DIAMETER OF THE CONDUIT THAT IS TO FIT IN THE OPENING PLUS NO MORE THAN 1/4".

THE CONTRACTOR SHALL NOT INSTALL WIRE IN ANY PULL BOX UNTIL ITS INSTALLATION HAS BEEN INSPECTED AND ACCEPTED BY THE ENGINEER.

ALL METALLIC CONDUIT IN WHICH WIRE AND/OR CABLE IS TO BE INSTALLED, SHALL BE BUSHED BEFORE INSTALLATION OF THE WIRE AND/OR CABLE.

ENTIRE BOX MUST BE CONSTRUCTED OF NON-CONDUCTIVE MATERIALS WITH THE EXCEPTION OF STAINLESS STEEL FASTENERS AND MAGNETIC LOCATABLE DEVICE.

WHEN A PULL BOX IS INSTALLED IN CRUSHED AGGREGATE SHOULDERS, PLACE IT 2-3 INCHES BELOW GRADE AND COVER IT WITH 2-3 INCHES OF CRUSHED AGGREGATE

LABEL ON COVER SHALL READ "ELECTRIC" FOR SIGNAL AND LIGHTING SYSTEMS, "WISDOT ITS" FOR COMMUNICATIONS AND ITS EQUIPMENT SYSTEMS.

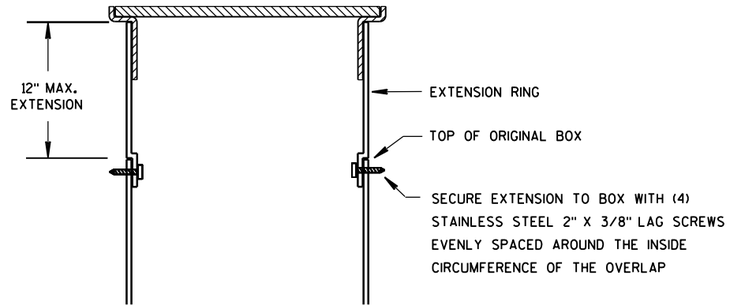

BOX EXTENSION

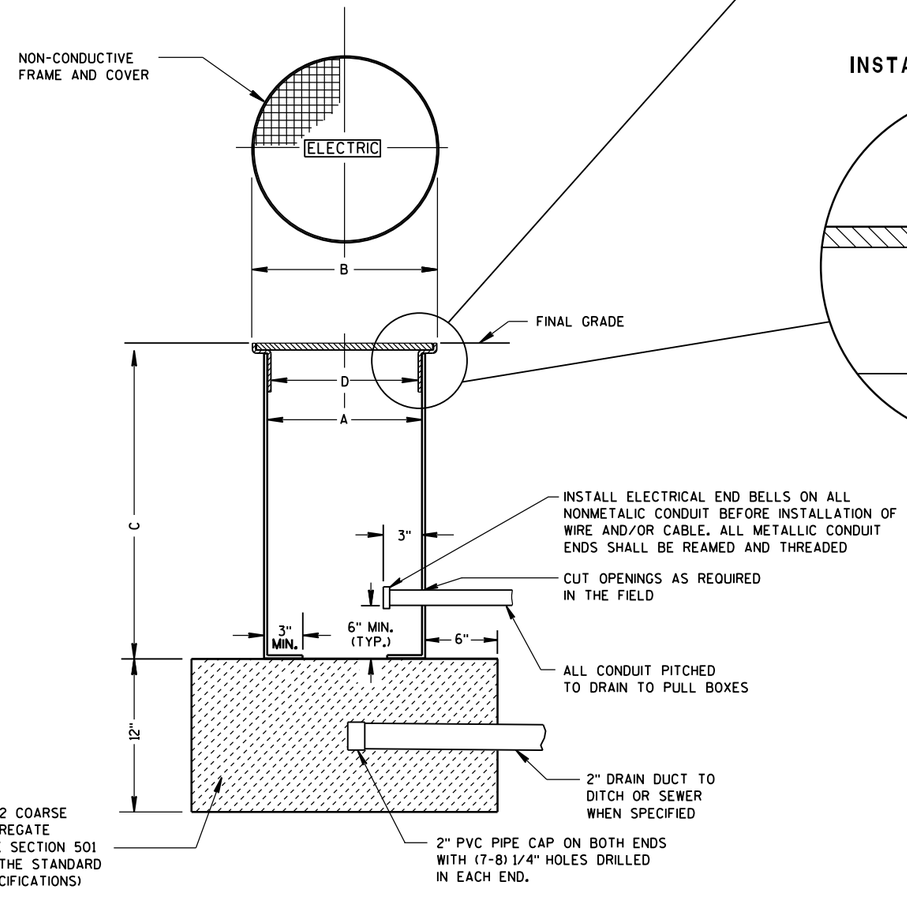

NON-CONDUCTIVE PULL BOX

INSTALLED IN SOD OR CRUSHED AGGREGATE

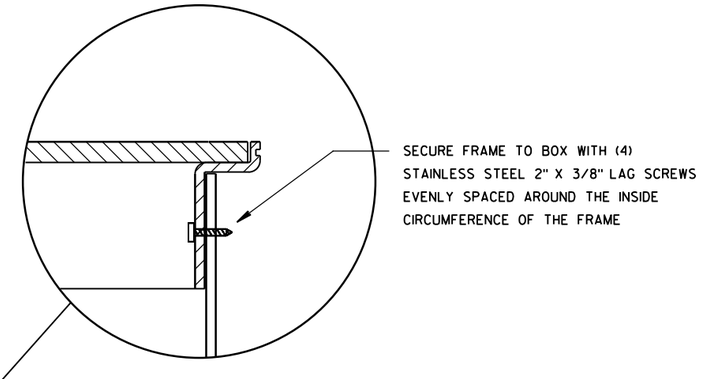

INSTALLED IN SIDEWALK

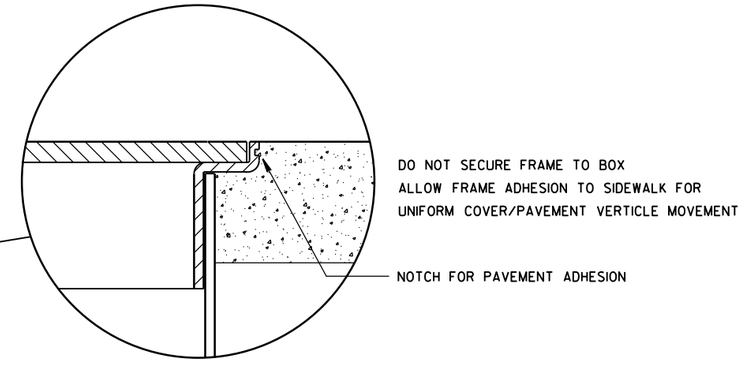

PULL BOX
NON-CONDUCTIVE

STATE OF WISCONSIN
DEPARTMENT OF TRANSPORTATION

APPROVED
May 2017
DATE
/S/ Ahmet Demirbilek
STATE ELECTRICAL
FHWA

6

S.D.D. 9 B 16-1

GENERAL NOTES

DETAILS OF CONSTRUCTION, MATERIALS AND WORKMANSHIP NOT SHOWN ON THIS DRAWING SHALL CONFORM TO THE PERTINENT REQUIREMENTS OF THE CONTRACT.

FOUR (4) BOLTS SHALL BE FURNISHED WITH EACH TRANSFORMER BASE. BOLTS SHALL BE 1" DIAMETER, 4" IN LENGTH, WITH WASHERS, LOCK WASHERS AND NUTS. BOLTS, NUTS AND WASHERS SHALL BE MANUFACTURED IN ACCORDANCE WITH SECTION 641.2.2 OF THE STANDARD SPECIFICATIONS.

LEVELING SHIMS, IF NEEDED, SHALL BE DESIGNED FOR THE PURPOSE AND USED UNDER CAST BASES WHEN PLUMBING POLES OR STANDARDS DURING INSTALLATION. THE USE OF WASHERS IN LIEU OF PROPER LEVELING SHIMS IS NOT ACCEPTABLE.

SHIM LENGTH SHALL BE LONG ENOUGH TO COMPLETELY COVER THE AREA UNDER THE LENGTH AND WIDTH OF THE BASE MOUNTING FLANGE.

DOUBLE NUTTING IS NOT ACCEPTABLE FOR LEVELING OR MOUNTING PURPOSES.

A NEMA APPROVED, U.L. LISTED, COPPER WITH BRASS OR STAINLESS STEEL SET SCREW, DIRECT BURY RATED, MECHANICAL CONNECTOR (LUG), SIZED TO ACCEPT AWG. #10 TO #4 COPPER STRANDED WIRE SHALL BE FURNISHED AND INSTALLED IN THE PEDESTAL AND TRANSFORMER BASES.

THE MECHANICAL CONNECTOR SHALL BE INSTALLED USING A 1/4" - 20 (TPI) STAINLESS STEEL HEX HEAD BOLT OF SUFFICIENT LENGTH TO FIRMLY ATTACH THE LUG TO THE BASE.

SHOULD THE MANNER OF ATTACHMENT OF THE LUG REQUIRE WASHERS, HEX NUTS, LOCK WASHER - THEY SHALL BE STAINLESS STEEL AS IS THE BOLT. THE MANNER OF ATTACHMENT SHALL NOT BLOCK ACCESSIBILITY TO WIRE PLACEMENT IN THE CONNECTOR.

PEDESTAL BASE COLLAR THREADING SHALL BE TAPERED AND IN ACCORDANCE WITH NATIONAL PIPE THREADING DIMENSIONS.

BASE COLLAR THREADING SHALL EXTEND INTO THE BASE COLLAR WITH SUFFICIENT DEPTH TO ACCEPT THE INSTALLATION OF TRAFFIC SIGNAL STANDARDS TO A DEPTH OF 1 1/2", THEN TIGHTENING TO A POINT OF BEING IMMOVABLE.

THE ACCESS DOOR SHALL BE OF THE SAME MATERIAL AS THE BASE.

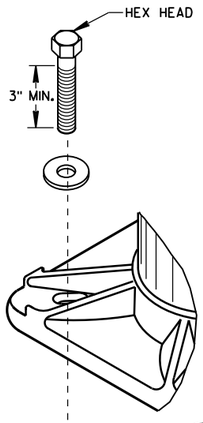

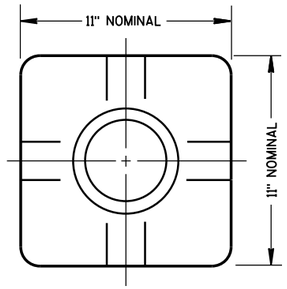

TOP VIEW
(PEDESTAL BASE)

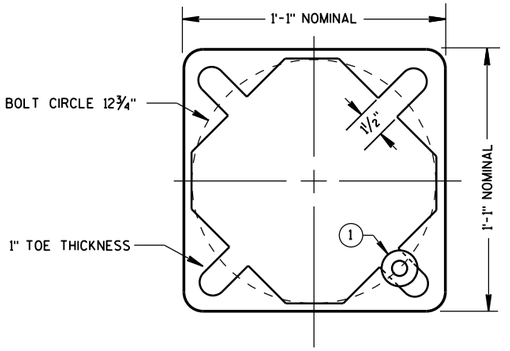

BOTTOM VIEW
(PEDESTAL BASE)

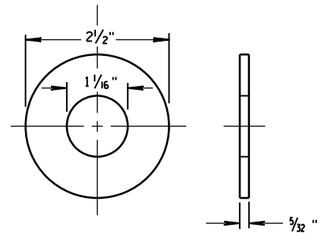

ZINC COATED STEEL WASHER
TO BE PROVIDED BY THE CONTRACTOR

PEDESTAL BASE WASHER (1)

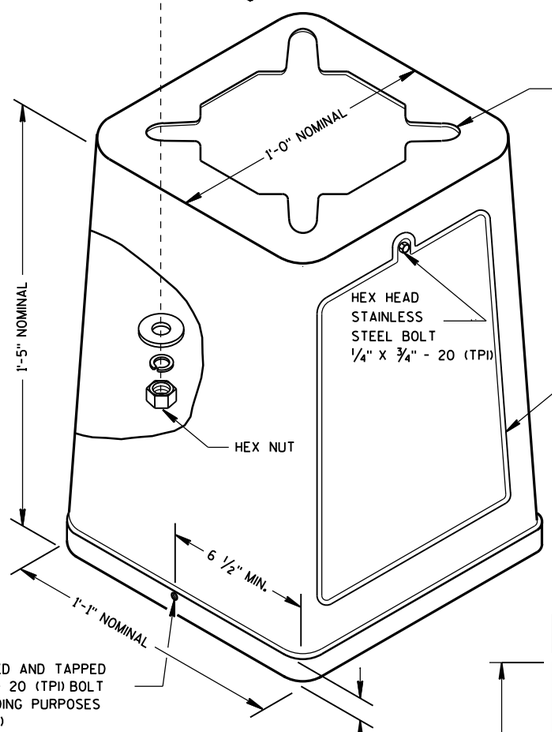

ISOMETRIC VIEW

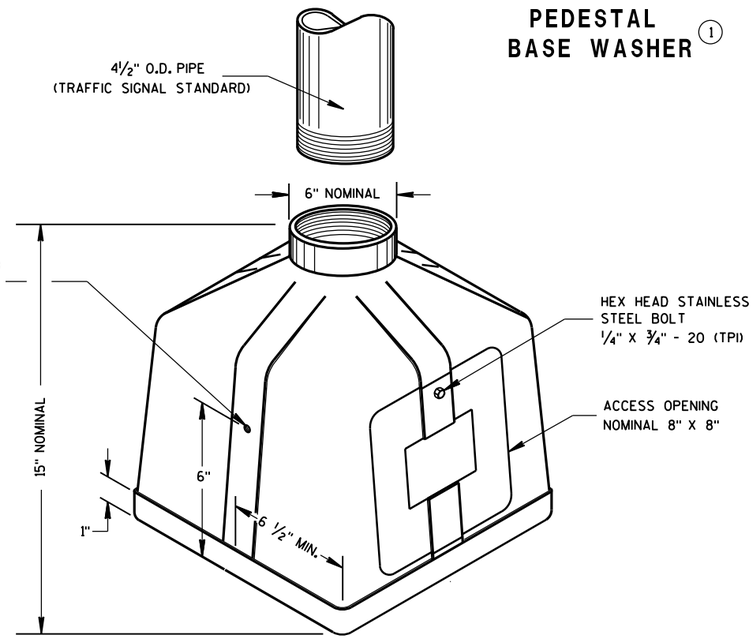

ISOMETRIC VIEW

PEDESTAL BASE

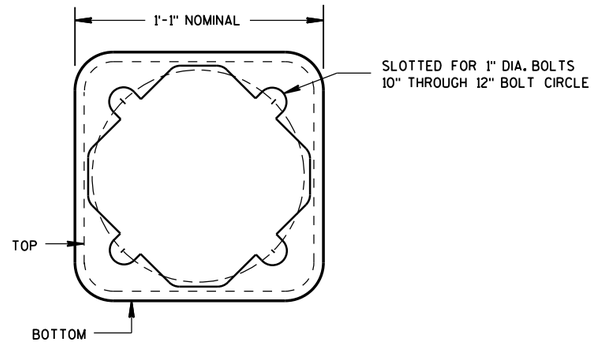

BOTTOM VIEW
(TRANSFORMER BASE)

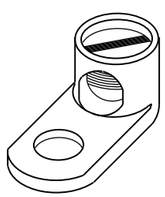

TYPICAL MECHANICAL CONNECTOR LUG

TO BE FURNISHED WITH EACH BASE

TRANSFORMER BASE

INTENDED FOR USE WITH TYPE 2, 3, 4, 5 & 6 POLES

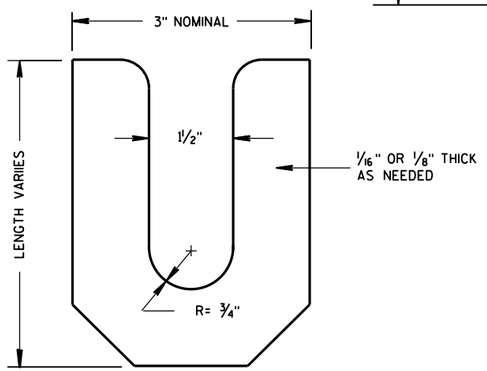

LEVELING SHIM

TRANSFORMER/PEDESTAL BASES

STATE OF WISCONSIN
DEPARTMENT OF TRANSPORTATION

APPROVED
Sept. 2014 — DATE
/S/ Ahmet Demirbilek — STATE ELECTRICAL
FHWA

6

S.D.D. 9 C 3-4

6

S.D.D. 9 C 3-4

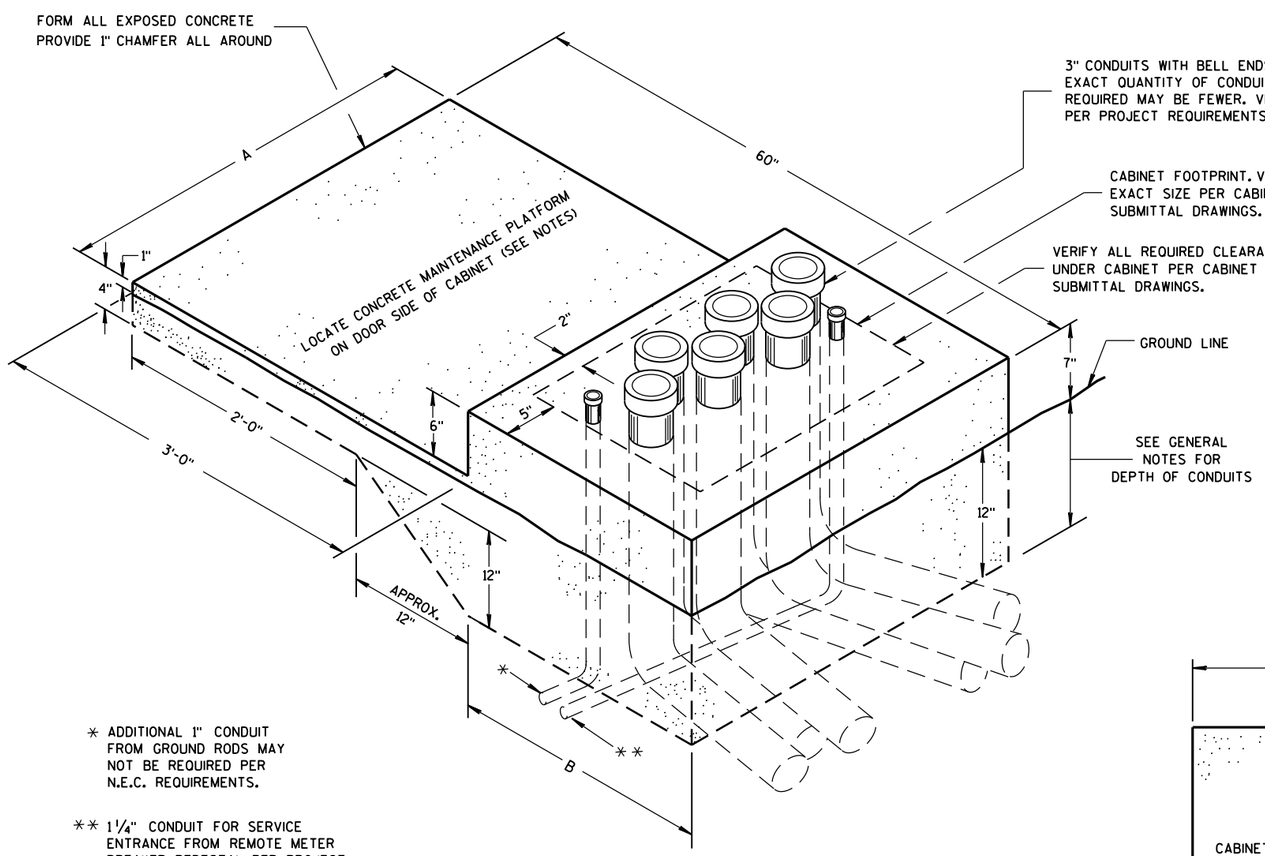

* ADDITIONAL 1" CONDUIT FROM GROUND RODS MAY NOT BE REQUIRED PER N.E.C. REQUIREMENTS.

** 1¼" CONDUIT FOR SERVICE ENTRANCE FROM REMOTE METER BREAKER PEDESTAL PER PROJECT REQUIREMENTS. VERIFY LOCATION OF CONDUIT DEPENDENT UPON LOCATION OF INCOMING FEEDER AND FOR EASE OF CONNECTION TO LOAD CENTER.

ISOMETRIC VIEW

CONCRETE CONTROL CABINET BASE, TYPE L

(C.Y. CONCRETE = APPROX. 0.4)

CONCRETE BASE TYPE	CABINET WIDTH	DIMENSIONS		MAXIMUM 3" CONDUITS
		A	B	
L24	24"	34"	24"	4
L30	30"	40"	24"	6

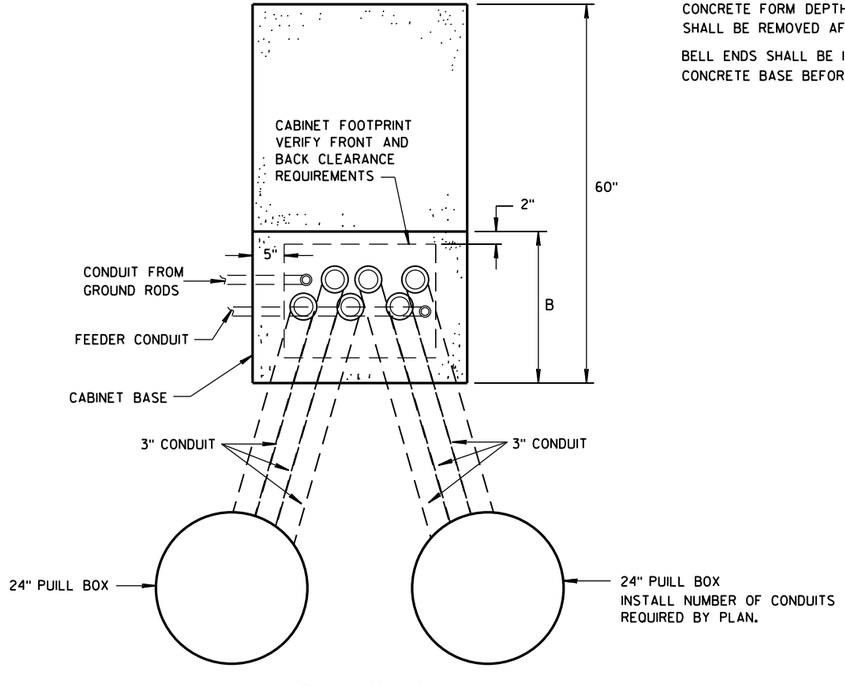

PLAN VIEW

CONCRETE CONTROL CABINET BASE, TYPE L

GENERAL NOTES

DETAILS OF CONSTRUCTION, MATERIALS AND WORKMANSHIP NOT SHOWN ON THIS DRAWING SHALL CONFORM TO THE PERTINENT REQUIREMENTS OF THE CONTRACT.

INSTALL FOUR STAINLESS STEEL APPROVED CONCRETE MASONRY ANCHORS TO ANCHOR THE CABINET BASES. THE ANCHORS SHALL BE LOCATED AS DIRECTED BY THE ENGINEER TO PROPERLY ANCHOR THE CONTROL CABINET TO THE BASE.

WHEN REQUIRED TO CONNECT NONMETALLIC CONDUIT TO METALLIC CONDUIT, ONLY ADAPTER FITTINGS, U.L. LISTED FOR ELECTRICAL USE, SHALL BE USED.

CONDUIT HEIGHT ABOVE THE CONCRETE BASE SHALL BE 1 INCH.

DEPTH OF CONDUIT INSTALLED BELOW THE TRAVELED WAY SHALL BE 24 INCHES MINIMUM AND 36 INCHES MAXIMUM.

DEPTH OF CONDUIT INSTALLED THAT IS NOT BELOW THE TRAVELED WAY SHALL BE 18 INCHES MINIMUM AND 36 INCHES MAXIMUM.

ANY EXCEPTION TO THE MAXIMUM DEPTH SHALL BE ONLY WITH THE WRITTEN APPROVAL OF THE ENGINEER.

CONTROL CABINET BASE TOP SURFACE SHALL BE TROWEL FINISHED SMOOTH AND LEVEL.

MAINTENANCE PLATFORM SHALL BE FLOAT OR BROOM FINISHED AND BE LEVEL.

MAINTENANCE PLATFORMS ARE NOT REQUIRED WHEN THE SURROUNDING AREA IS PAVED.

MINIMUM BENDING RADIUS OF CONDUIT = 6 X THE DIAMETER.

ALL METALLIC CONDUIT ENDS SHALL BE REAMED AND THREADED.

CAP ALL BELOW GRADE METALLIC CONDUIT ENDS IN WHICH WIRE OR CABLE IS NOT BEING INSTALLED.

PLUG ALL BELOW GRADE NONMETALLIC CONDUIT ENDS IN WHICH WIRE OR CABLE IS NOT BEING INSTALLED.

ALL CONDUIT ENDS AT THE TOP OF CONCRETE BASES SHALL BE CAPPED IF METALLIC OR PLUGGED IF NONMETALLIC IMMEDIATELY AFTER PLACEMENT AND BEFORE CONCRETE IS POURED. CONDUITS IN WHICH WIRE OR CABLE IS NOT BEING INSTALLED SHALL REMAIN CAPPED OR PLUGGED.

CONDUIT EXITING THE CONCRETE BASE SHALL TERMINATE IN PULL BOXES AS SHOWN ON THE PLANS.

CONCRETE FORM DEPTH BELOW FINISHED GRADE SHALL BE 6" MAXIMUM. CONCRETE FORMS SHALL BE REMOVED AFTER CONCRETE HAS SET.

BELL ENDS SHALL BE INSTALLED ON ALL PVC CONDUIT EXPOSED AT THE TOP OF THE CONCRETE BASE BEFORE INSTALLATION OF CABLE OR WIRE.

CONCRETE CONTROL CABINET BASE, TYPE L

STATE OF WISCONSIN
DEPARTMENT OF TRANSPORTATION

APPROVED
Nov. 2014 — DATE
/S/ Thomas Gonring — STATE LIGHTING ENGINE — WYS
FHWA

6

S.D.D. 9 C 14-2

6

S.D.D. 9 C 14-2

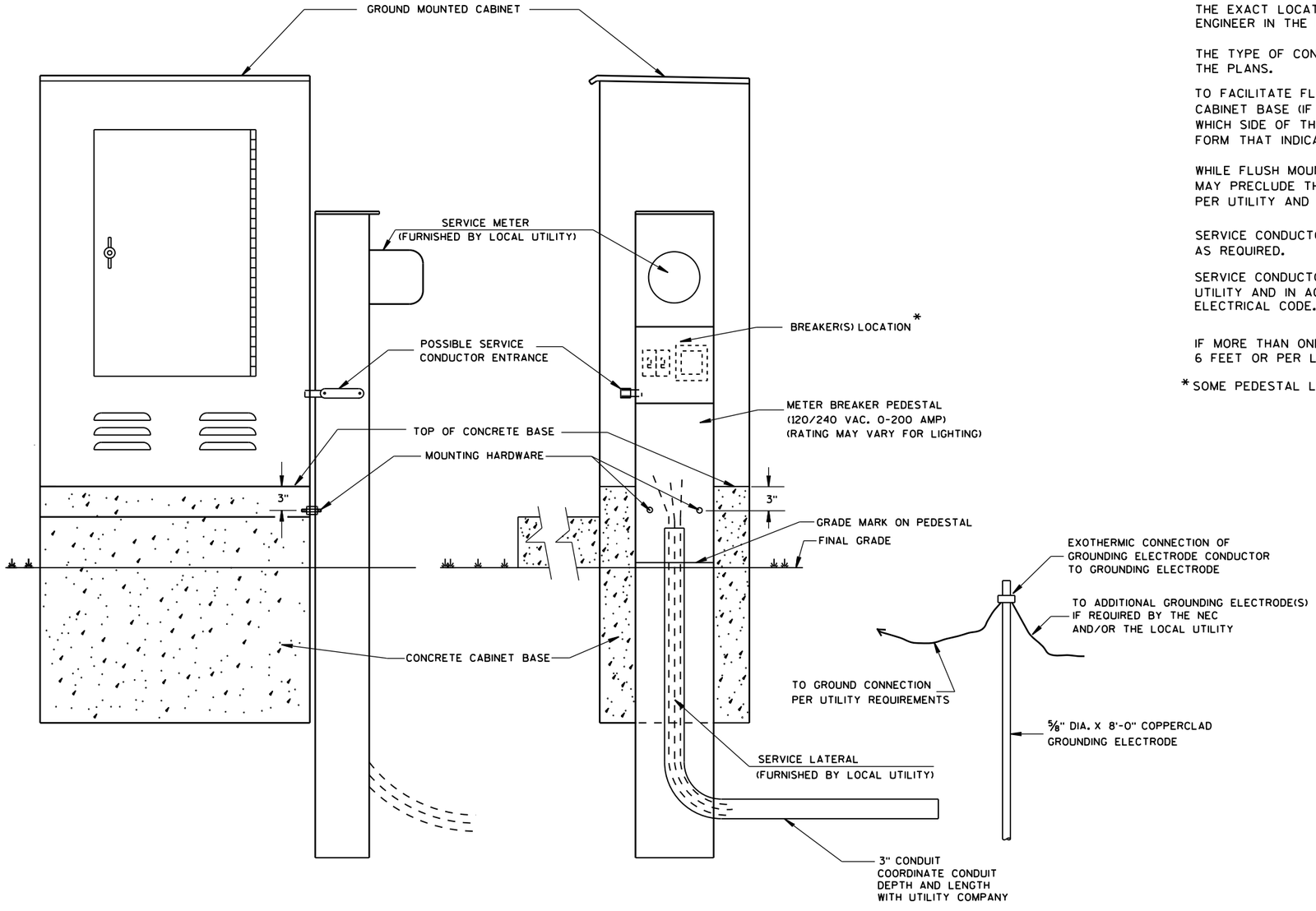

TYPICAL CABINET SERVICE INSTALLATION

GENERAL NOTES

DETAILS OF CONSTRUCTION, MATERIALS AND WORKMANSHIP NOT SHOWN ON THIS DRAWING SHALL CONFORM TO THE PERTINENT REQUIREMENTS OF THE CONTRACT.

THE EXACT LOCATION OF THE METER BREAKER PEDESTAL SHALL BE DETERMINED BY THE ENGINEER IN THE FIELD.

THE TYPE OF CONCRETE CABINET BASE TO BE INSTALLED SHALL BE AS CALLED FOR IN THE PLANS.

TO FACILITATE FLUSH MOUNTING OF THE METER BREAKER PEDESTAL AGAINST THE SIDE OF THE CABINET BASE (IF FLUSH MOUNTING POSSIBLE. CONFER WITH THE LOCAL UTILITY TO DETERMINE WHICH SIDE OF THE CONCRETE BASE THE ELECTRICAL SERVICE LATERAL WILL APPROACH. THEN FORM THAT INDICATED SIDE FOR FULL SIDE DEPTH.

WHILE FLUSH MOUNTING IS THE MOST DESIRABLE MOUNTING CONFIGURATION UTILITY REQUIREMENTS MAY PRECLUDE THIS OPTION. CONTRACTOR MUST PROVIDE UTILITY APPROVED PEDESTAL AND INSTALL PER UTILITY AND MANUFACTURERS REQUIREMENTS.

SERVICE CONDUCTOR ENTRANCES SHALL BE RIGID METALLIC CONDUIT, NIPPLES AND/OR CONDULETS AS REQUIRED.

SERVICE CONDUCTOR ENTRANCES SHALL BE SIZED AND LOCATED AS REQUIRED BY THE LOCAL UTILITY AND IN ACCORDANCE WITH APPROPRIATE ARTICLES OF THE LATEST ACCEPTED NATIONAL ELECTRICAL CODE.

IF MORE THAN ONE GROUNDING ELECTRODE IS REQUIRED, THE DISTANCE APART SHALL BE 6 FEET OR PER LOCAL UTILITY REGULATIONS.

*SOME PEDESTAL LIGHTING PLANS SHOW MAIN LUGS ONLY.

6

S.D.D. 9 D 1-5

6

S.D.D. 9 D 1-5

CABINET SERVICE INSTALLATION (METER BREAKER PEDESTAL)

STATE OF WISCONSIN
DEPARTMENT OF TRANSPORTATION

APPROVED
Sept. 2014
DATE

/S/ Ahmet Demirbilek
STATE ELECTRICAL

FHWA

GENERAL NOTES

DETAILS OF CONSTRUCTION, MATERIALS AND WORKMANSHIP NOT SHOWN ON THIS DRAWING SHALL CONFORM TO THE PERTINENT REQUIREMENTS OF THE STANDARD SPECIFICATIONS AND APPLICABLE SPECIAL PROVISIONS.

ALL INTERNAL ELECTRICAL COMPONENTS WILL BE PRE-WIRED BY THE CABINET FABRICATOR.

ALL CONDUIT ENTRIES SHALL BE SEALED WITH AN APPROPRIATE DUCT SEALING COMPOUND.

ORIENT PHOTOCELL AWAY FROM AMBIENT LIGHT SOURCES AND ONCOMING TRAFFIC HEADLIGHTS.

THE CONTRACTOR SHALL TOUCH UP ANY DAMAGE TO THE ANODIZED FINISH CAUSED BY THE INSTALLATION PROCESS. COLOR MATCH PAINT SHALL BE USED.

A COMPLETE LIGHTING OR ELECTRICAL PLAN SHALL BE SECURELY PLACED IN THE DOCUMENT HOLDER ATTACHED TO THE DOOR.

FRONT INTERIOR ELEVATION

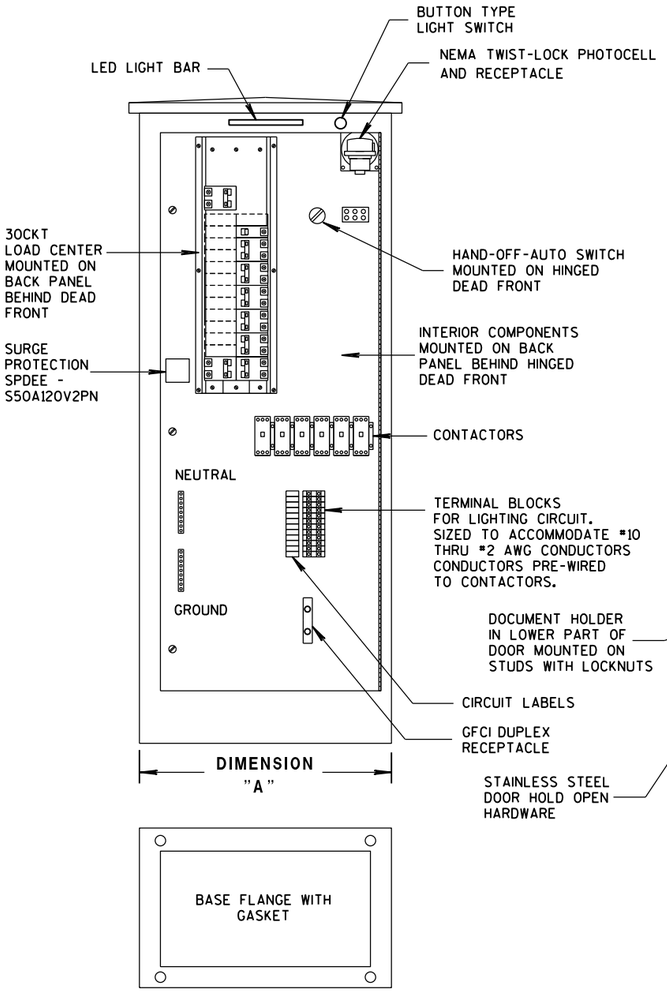

SIDE VIEW

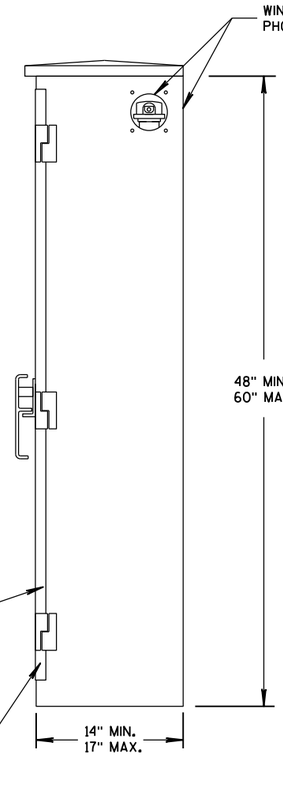

TABLE OF DIMENSIONS (INCHES)

CONCRETE BASE TYPE	CABINET WIDTH	DIMENSION "A"
L24	24"	24"
L30	30"	30"

LIGHTING CONTROL CABINET

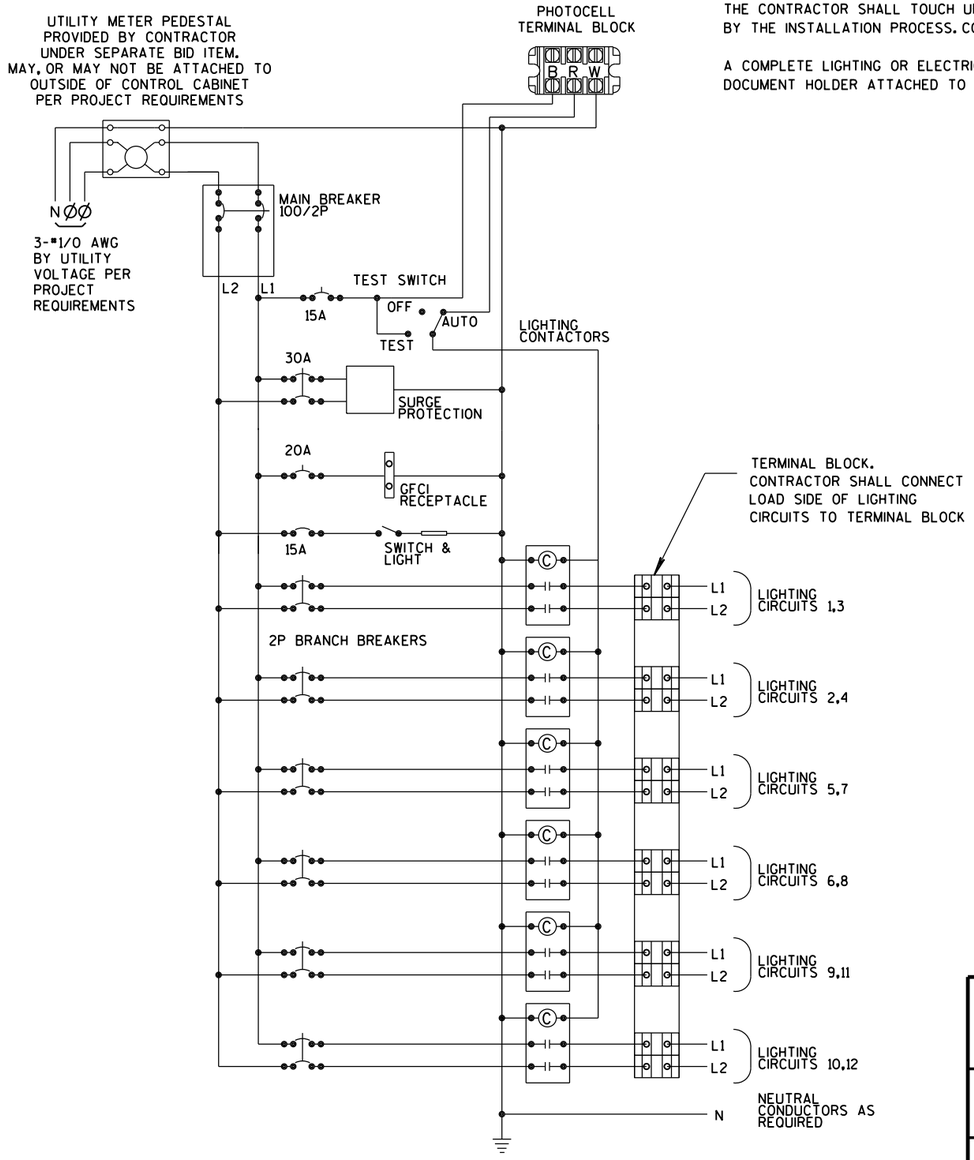

CONTROL CABINET SCHEMATIC

LIGHTING CONTROL CABINET 120/240 VOLT

STATE OF WISCONSIN
DEPARTMENT OF TRANSPORTATION

APPROVED
Sept. 2014 — DATE
/S/ Thomas Gonring — STATE LIGHTING ENGINEER
FHWA

6
S.D.D. 9 D 4-2

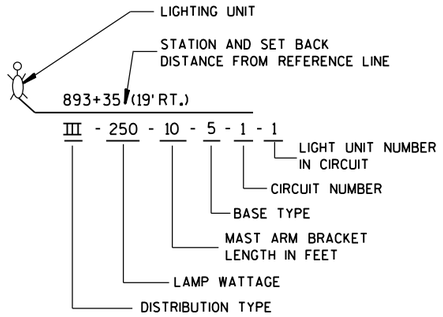

LIGHTING UNIT CODE
(TYPICAL)

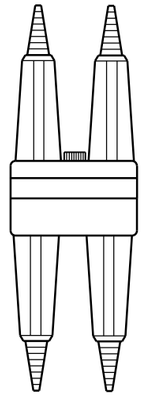

DETAIL "A"
BREAKAWY
DOUBLE POLE WITH
WATERPROOF
INSULATING BOOT

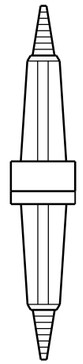

DETAIL "B"
BREAKAWY
SINGLE POLE WITH
WATERPROOF
INSULATING BOOT

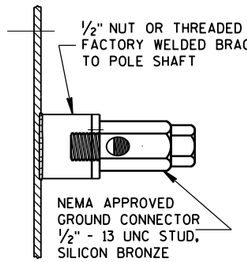

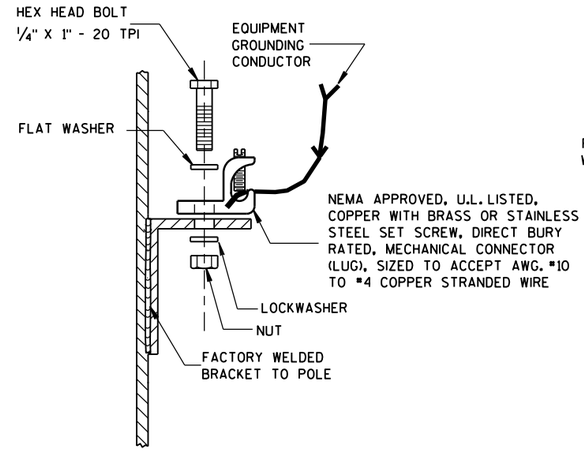

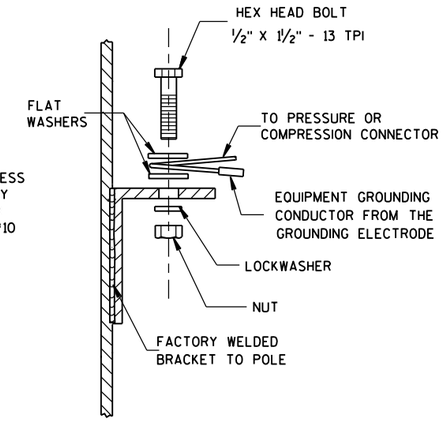

TYPICAL GROUNDING CONNECTIONS
NUT, BOLT, WASHERS AND LOCKWASHERS SHALL BE STAINLESS STEEL

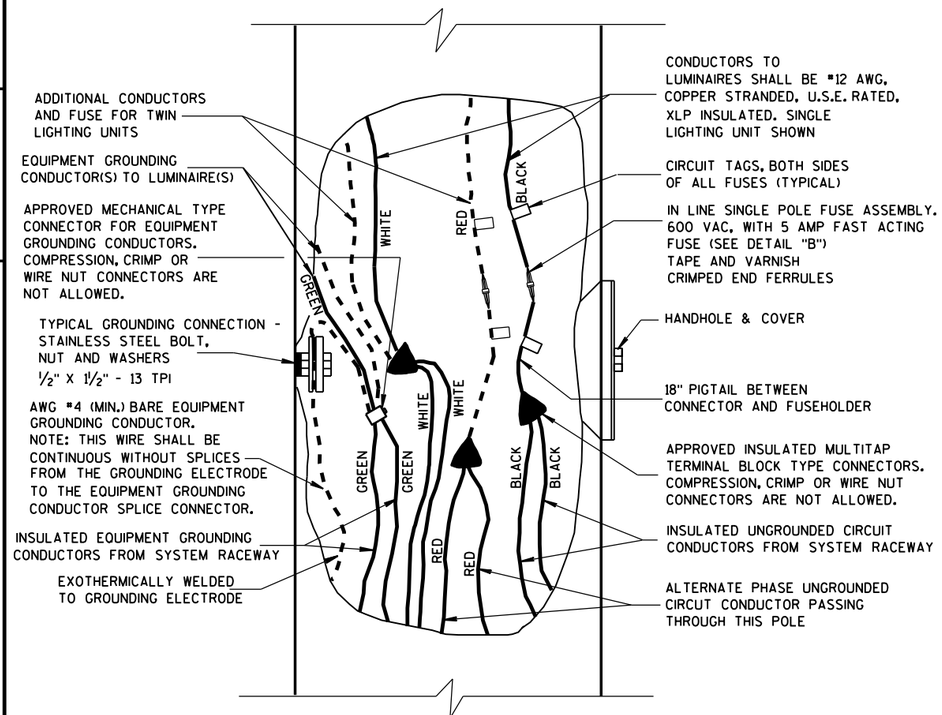

3 WIRE - 120, 240 OR 480 VAC (UNGROUNDED CONDUCTOR) WITH GROUNDED CONDUCTOR AND WITH EQUIPMENT GROUNDING CONDUCTOR

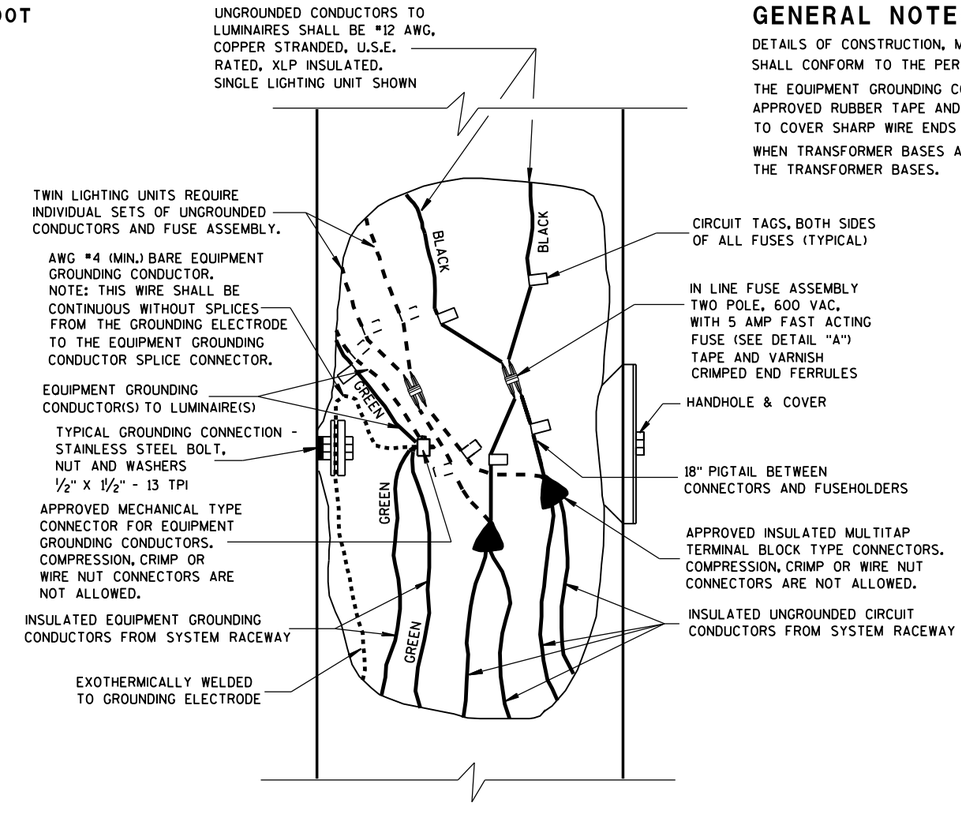

2 WIRE - 240 OR 480 VAC (UNGROUNDED CONDUCTORS) WITH EQUIPMENT GROUNDING CONDUCTOR

GENERAL NOTES

DETAILS OF CONSTRUCTION, MATERIALS AND WORKMANSHIP NOT SHOWN ON THIS DRAWING SHALL CONFORM TO THE PERTINENT REQUIREMENTS OF THE CONTRACT.

THE EQUIPMENT GROUNDING CONNECTOR SHALL BE TAPED WITH 3 WRAPS (MINIMUM) OF APPROVED RUBBER TAPE AND THEN 3 WRAPS (MINIMUM) OF APPROVED VINYL TAPE TO COVER SHARP WIRE ENDS AFTER THE CONNECTION IS COMPLETED.

WHEN TRANSFORMER BASES ARE USED, ALL WIRING CONNECTIONS SHALL OCCUR WITHIN THE TRANSFORMER BASES.

NON-FREEWAY LIGHTING UNIT POLE WIRING

STATE OF WISCONSIN
DEPARTMENT OF TRANSPORTATION

APPROVED
Sept. 2014 — DATE
/S/ Ahmet Demirbilek — STATE ELECTRICAL
FHWA

6
S.D.D. 9 E 3-5

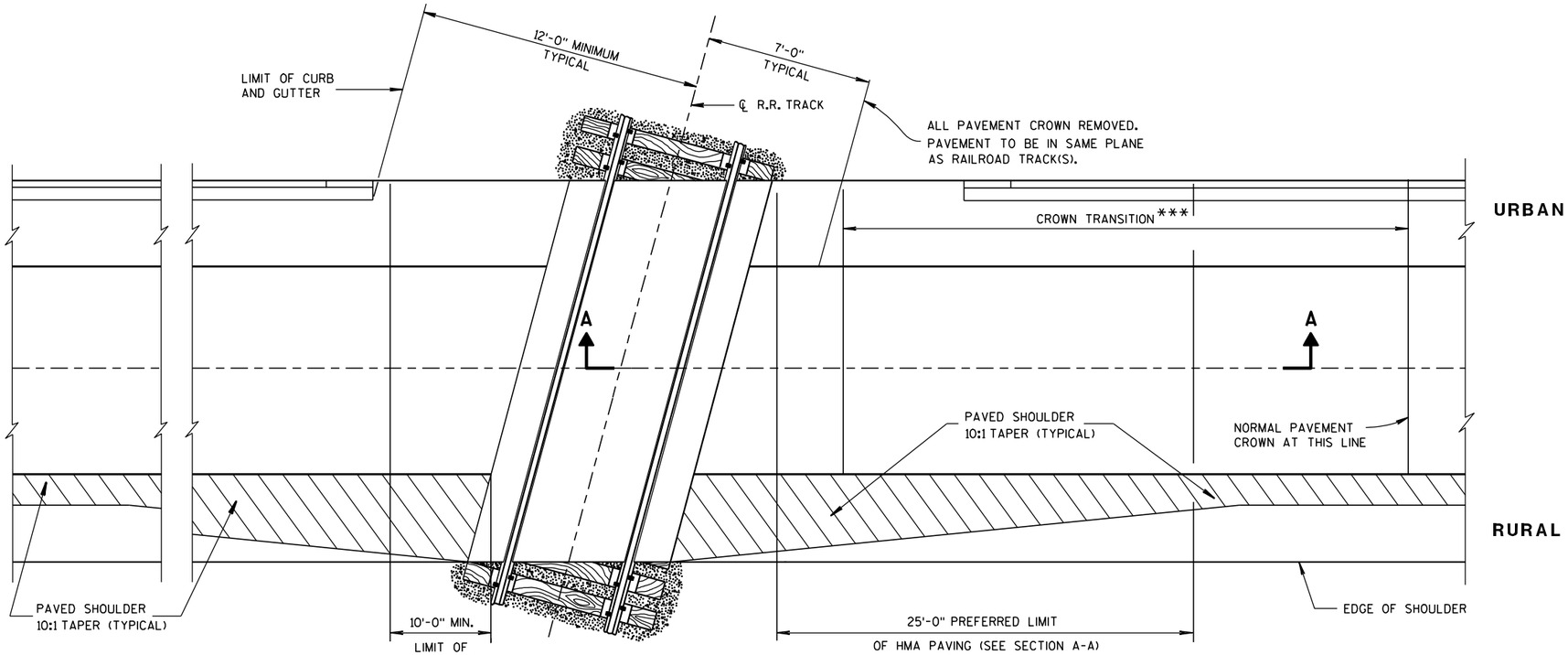

GENERAL NOTES

DETAILS OF CONSTRUCTION, MATERIALS AND WORKMANSHIP NOT SHOWN ON THIS DRAWING SHALL CONFORM TO THE PERTINENT REQUIREMENTS OF THE STANDARD SPECIFICATIONS AND THE APPLICABLE SPECIAL PROVISIONS.

TIMBER, CONCRETE OR RUBBER CROSSING SURFACE MATERIAL, RAILS, TIES, BALLAST, GEOTEXTILE FABRIC AND CROSSING DRAINAGE SYSTEM BY OTHERS UNLESS OTHERWISE PROVIDED.

HMA PAVEMENT APPROACHES AND HMA PAVEMET CROSSING SURFACES TO BE PLACED BY CONTRACTOR UNLESS OTHERWISE PROVIDED.

HMA FLANGEWAY AND FIELD FILLERS TO BE PLACED AND THOROUGHLY HAND COMPACTED BY THE CONTRACTOR WHEN NOT PROVIDED BY OTHERS. SEE DETAIL B. HMA FILLERS NOT REQUIRED WHEN RUBBER FILLERS ARE PROVIDED.

HMA PAVEMENT SHALL BE ROLLED PARALLEL TO THE TRACK.

** CROSSING SURFACE MAY BE TIMBER, RUBBER, CONCRETE, HMA PAVEMENT OR A COMBINATION OF SUCH MATERIALS.

*** CROWN TRANSITION LENGTH SHOWN ELSEWHERE IN THE PLAN.

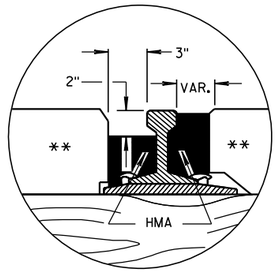

DETAIL B

HMA FLANGEWAY AND FIELD FILLERS

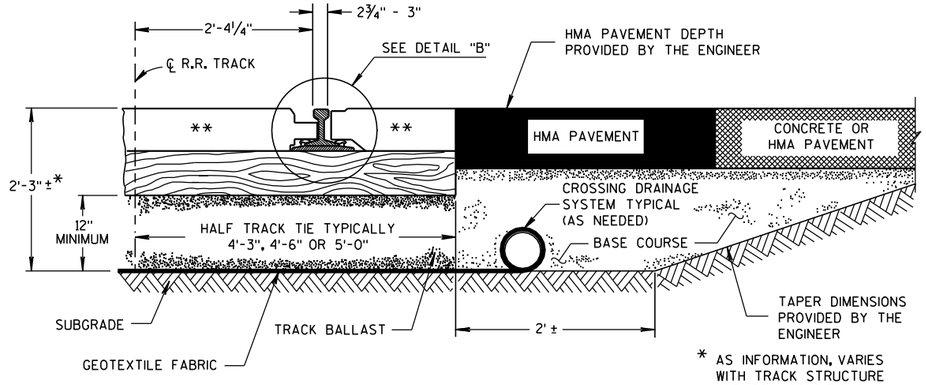

TYPICAL HALF SECTION

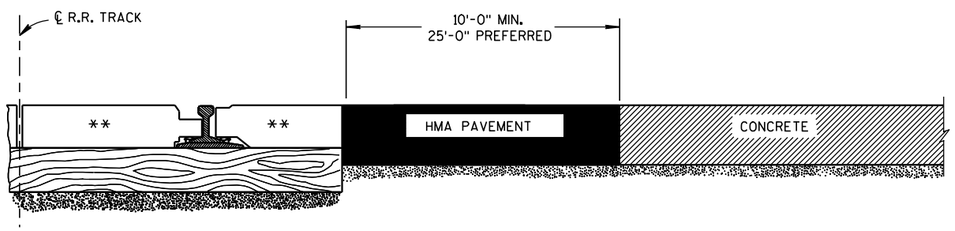

SECTION A-A

CONCRETE PAVEMENT APPROACH

SECTION A-A

HMA PAVEMENT APPROACH

EXAMPLES OF PAVEMENT APPROACHES

PAVEMENT DETAILS FOR RAILROAD APPROACH

STATE OF WISCONSIN
DEPARTMENT OF TRANSPORTATION

APPROVED
8-28-09 DATE
/S/ Ronald E. Adams
CHIEF, RAILROADS & HAI CTION
FHWA

6

S.D.D. 13 B 1-10

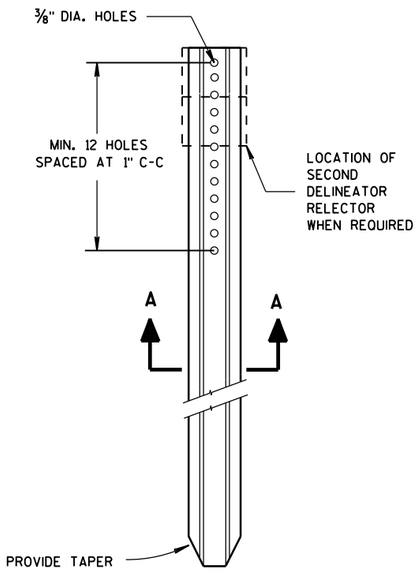

DELINEATOR POST

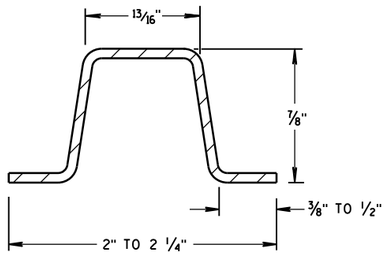

SECTION A-A

WEIGHT 1.12 LBS PER FT. ± 0.1 LB.

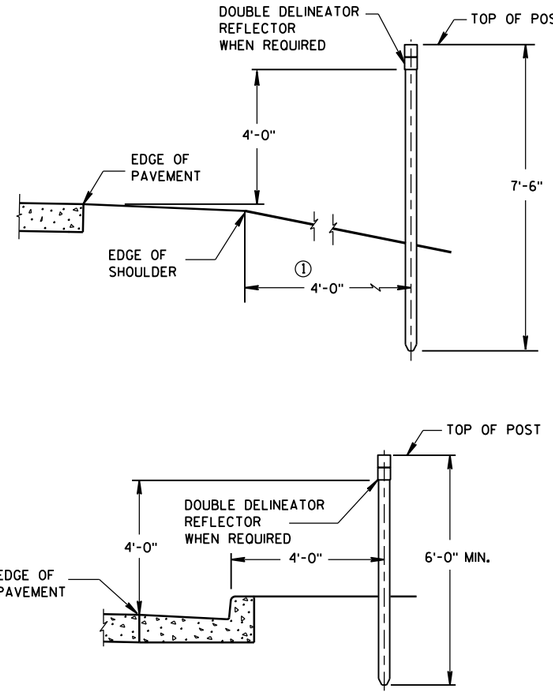

TYPICAL INSTALLATIONS OF DELINEATOR POSTS

GENERAL NOTES

DETAILS OF CONSTRUCTION NOT SHOWN ON THIS DRAWING SHALL CONFORM TO THE PERTINENT REQUIREMENTS OF THE STANDARD SPECIFICATIONS AND THE APPLICABLE SPECIAL PROVISIONS.

① DELINEATORS SHALL BE PLACED AT A CONSTANT DISTANCE FROM THE EDGE OF THE SHOULDER FOR THE LENGTH OF THE INSTALLATION.

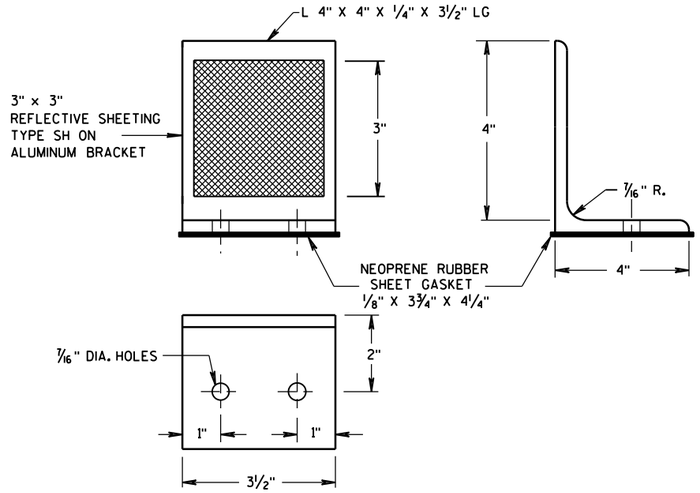

DELINEATOR BRACKET

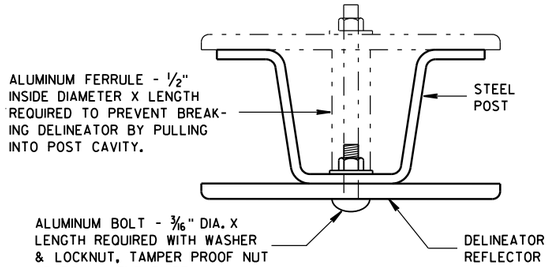

MOUNTING DETAIL FOR DELINEATOR REFLECTOR

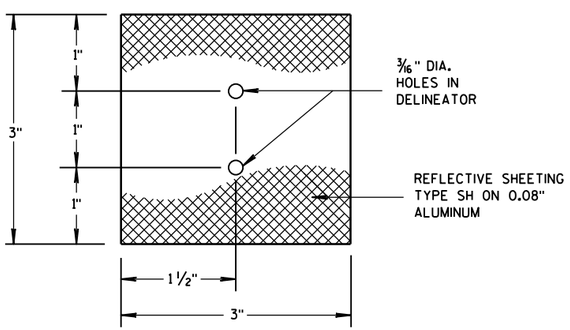

3"x 3" DELINEATOR REFLECTOR

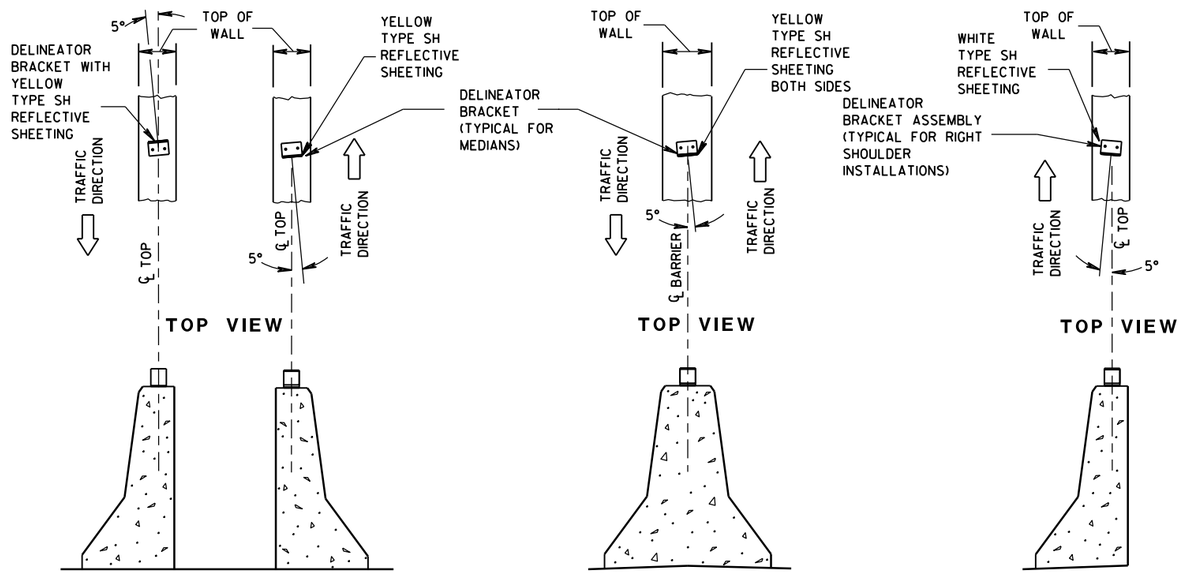

DOUBLE BARRIERS IN MEDIAN | **MEDIAN BARRIER** | **BARRIER LOCATED TO RT. OF TRAFFIC FLOW**

LOCATION AND AIMING DETAILS FOR DELINEATOR BRACKETS MOUNTED ON CONCRETE BARRIERS

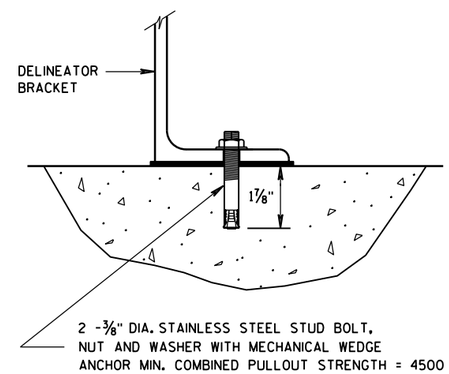

DELINEATOR BRACKET MOUNTING DETAIL

DELINEATOR POST, DELINEATOR REFLECTOR AND DELINEATOR BRACKET WITH REFLECTIVE SHEETING

STATE OF WISCONSIN
DEPARTMENT OF TRANSPORTATION

APPROVED
4-18-16 DATE
/S/ Matthew R. Rauch
STATE SIGNING AND MAR[illegible] GINEER
FHWA

6

S.D.D. 15 A 2-9

6

S.D.D. 15 A 2-9

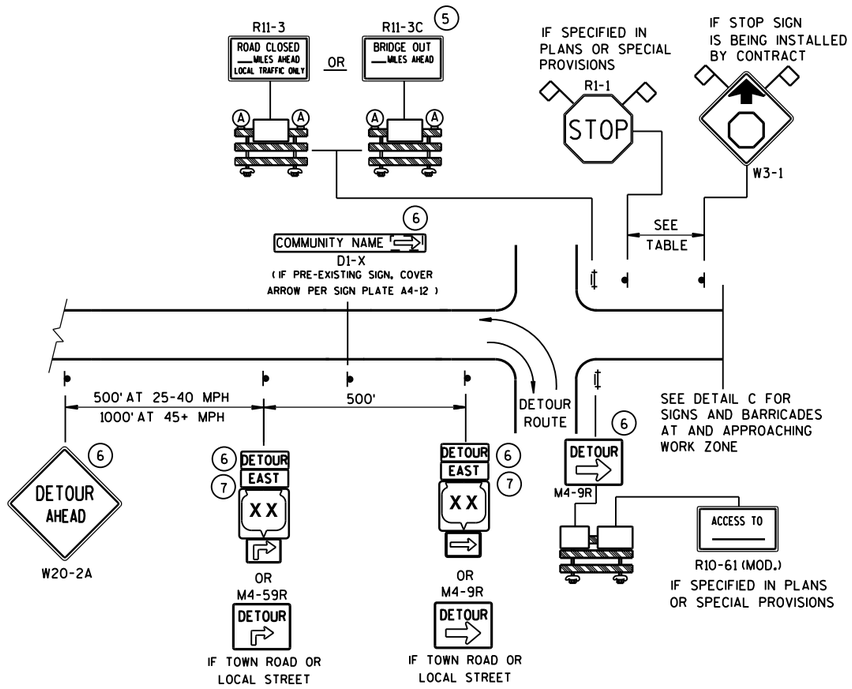

DETAIL A
MAINLINE CLOSURE WITH POSTED DETOUR

WORK ZONE GREATER THAN ½ MILE FROM DETOUR ROUTE (1000 FEET IF URBAN)

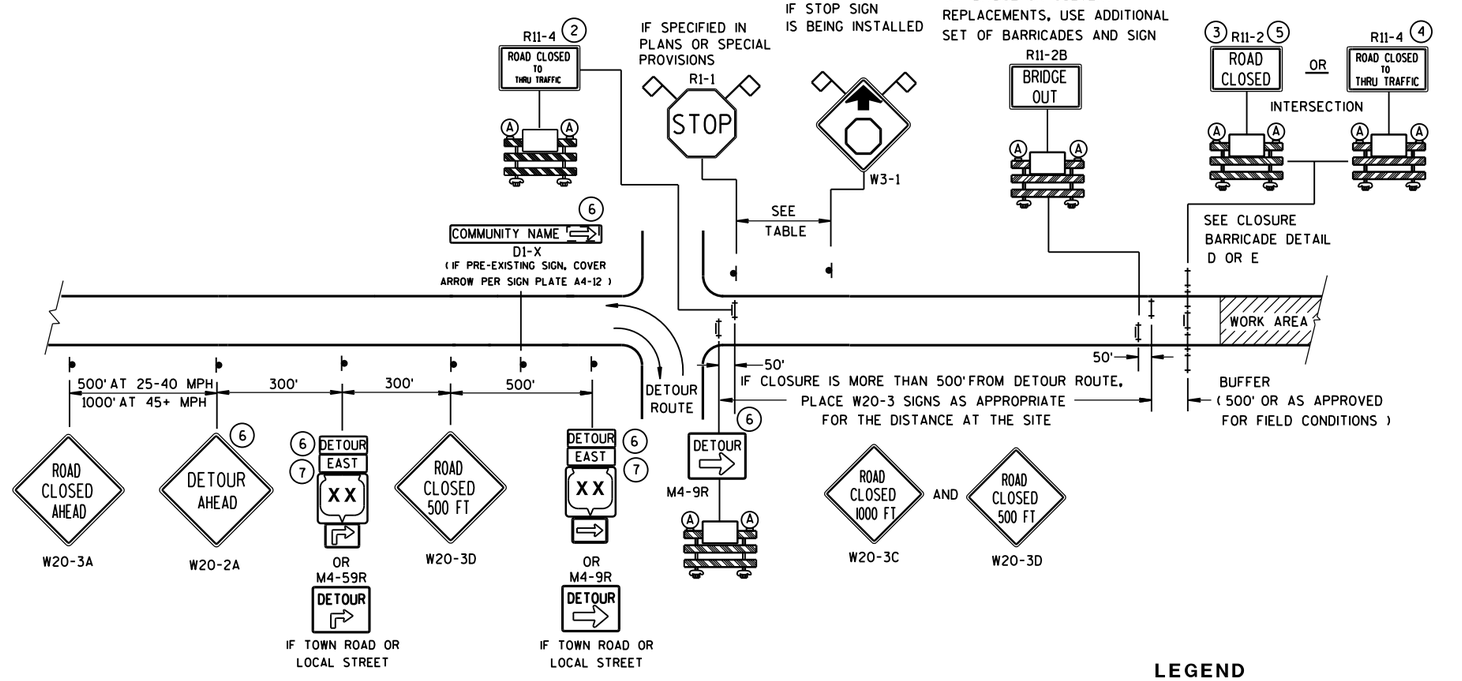

DETAIL B
MAINLINE CLOSURE WITH POSTED DETOUR

WORK ZONE LESS THAN ½ MILE FROM DETOUR ROUTE (1000 FEET IF URBAN)

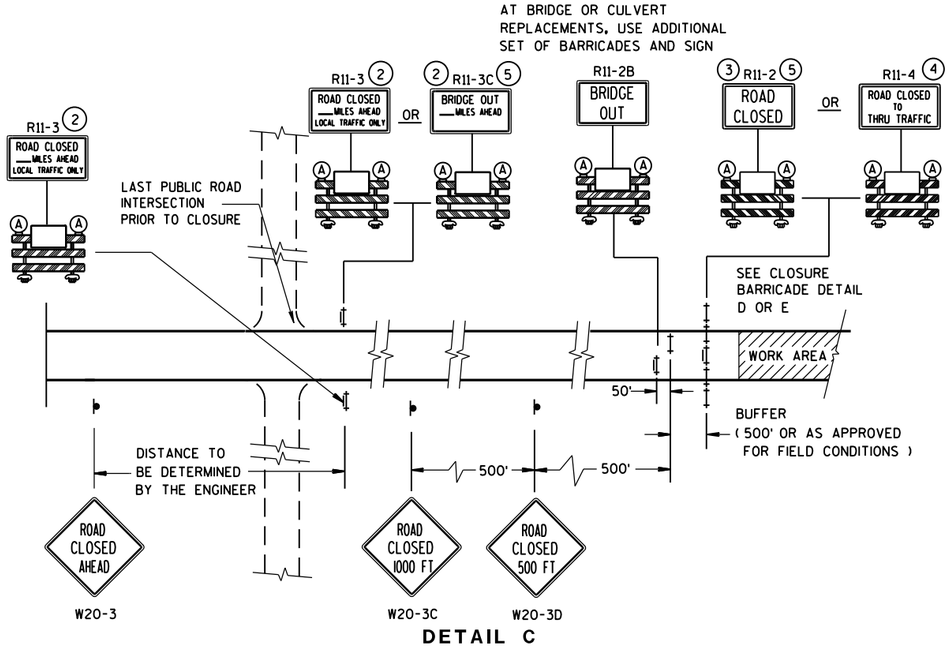

DETAIL C
MAINLINE CLOSURE, NO POSTED DETOUR

SPEED LIMIT (MPH)	"STOP AHEAD" ADVANCE WARNING DISTANCE (FT)
25	200
30	200
35	350
40	350
45	500
50	550
55	750

SEE SDD 15C2-SHEET "**b**" FOR GENERAL NOTES AND FOOTNOTES (1) THROUGH (7)

LEGEND

- SIGN ON PERMANENT SUPPORT
- TYPE III BARRICADE
- TYPE III BARRICADE WITH ATTACHED SIGN
- (A) TYPE "A" WARNING LIGHT (FLASHING)
- WORK AREA
- DETOUR / EAST — M4-8 / M3-X
- XX — M1-4; COUNTY XX — M1-5A; XX — M1-6
- M05-1 OR M06-1
- FLAGS, 16" X 16" MIN., (ORANGE)

BARRICADES AND SIGNS FOR MAINLINE CLOSURES

STATE OF WISCONSIN
DEPARTMENT OF TRANSPORTATION

Sept. 2015 — DATE
/S/ Peter Amakobe Atepe
STATEWIDE WORK ZONE TRAFFIC SAFETY ENGINEER
FHWA

6

S.D.D. 15 C 2-6a

6

S.D.D. 15 C 2-6a

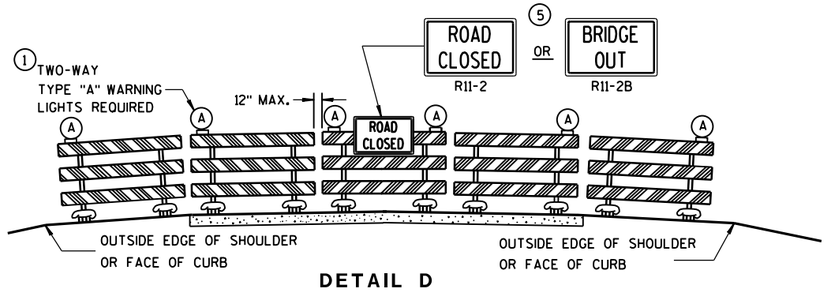

DETAIL D

ROAD CLOSURE BARRICADE DETAIL

APPROACH VIEW

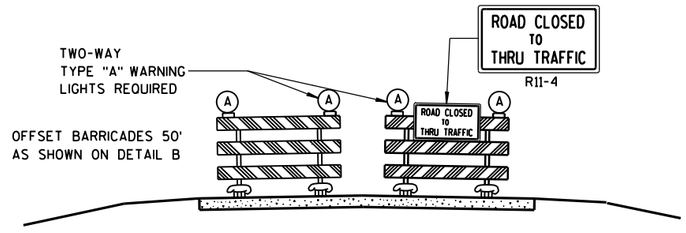

DETAIL E

LANE CLOSURE BARRICADE DETAIL

APPROACH VIEW

SEE SDD 15C2-SHEET "**a**" FOR LEGEND

GENERAL NOTES

THE EXACT NUMBER, LOCATION, AND SPACING OF ALL SIGNS AND BARRICADES SHALL BE ADJUSTED TO FIT FIELD CONDITIONS AS APPROVED BY THE ENGINEER.

ANY SIGNS TEMPORARY OR EXISTING, WHICH CONFLICT WITH TRAFFIC CONTROL "IN USE" SHALL BE REMOVED OR COVERED AS NEEDED AND AS APPROVED BY THE ENGINEER.

THE SPACING BETWEEN TRAFFIC CONTROL SIGNS SHOULD BE ADJUSTED TO NOT CONFLICT WITH AND SHOULD PROVIDE A DESIRABLE MINIMUM OF 200 FEET CLEARANCE TO EXISTING SIGNS THAT WILL REMAIN IN PLACE.

BARRICADES THAT MUST BE MOVED FOR A WORK OPERATION SHALL BE IMMEDIATELY RE-ESTABLISHED UPON COMPLETION OF THE OPERATION OR, FOR CONTINUING OPERATIONS, AT THE END OF EACH WORKING DAY.

SIGNS THAT WILL BE IN PLACE LESS THAN 7 CONTINUOUS DAYS AND NIGHTS MAY BE MOUNTED ON PORTABLE SUPPORTS.

ALL TYPE III BARRICADES SHALL HAVE RAILS REFLECTORIZED ON BOTH FACES. STRIPES SHALL BE PROPERLY SLOPED DOWN TOWARD THE TRAFFIC SIDE OR AS SHOWN IN THE ROAD CLOSURE BARRICADE DETAIL D FOR FULL ROAD CLOSURES.

TYPE "A" LOW-INTENSITY FLASHING WARNING LIGHTS SHALL BE VISIBLE ON BOTH SIDES OF THE BARRICADE.

THE R11-2, R11-3, M4-9, R11-4 AND R10-61 SIGNS PLACED ON BARRICADES SHALL COVER NO MORE THAN THE TOP RAIL. THE SIGNS SHALL NOT COVER ANY PORTION OF THE MIDDLE OR BOTTOM RAILS.

"WO AND "MO" SIGNS ARE THE SAME AS "W" AND "M" SIGNS EXCEPT THE BACKGROUND IS ORANGE.

ALL SIGNS SHALL BE 48" X 48" UNLESS OTHERWISE NOTED BELOW:
- R11-2 SHALL BE 48" X 30".
- R11-3, R11-4 AND R10-61 SHALL BE 60" X 30".
- M4-9 SHALL BE 30" X 24".
- M3-X SHALL BE 24" X 12". (36" X 18" IF NEEDED TO MATCH EXISTING SIGNS.)
- M4-8 SHALL BE 24" X 12". (30" X 15" IF NEEDED TO MATCH EXISTING SIGNS.)
- M1-4, M1-5A, AND M1-6 SHALL BE 24" X 24". (36" X 36" IF NEEDED TO MATCH EXISTING SIGNS.)
- M05-1 AND M06-1 SHALL BE 21" X 21". (30" X 30" IF NEEDED TO MATCH EXISTING SIGNS.)
- D1-X SHALL BE AS SHOWN ON SPECIFIC PROJECT SIGNING DETAIL SHEETS.
- R1-1 SHALL BE 36" X 36".

(1) TWO WARNING LIGHTS SHALL BE PROVIDED ON THE CENTER BARRICADE AND A MINIMUM OF ONE WARNING LIGHT SHALL BE PROVIDED ON EACH OF THE OTHER BARRICADES WITHIN THE ROADWAY LIMITS. SPACING OF THE WARNING LIGHTS SHALL BE UNIFORM TO THE EDGE OF ROADWAY AS SHOWN (APPROX. 8-FOOT LIGHT SPACING).

(2) THESE SIGNS AND BARRICADES ARE NOT REQUIRED IF ROAD CLOSURE BEGINS AT INTERSECTION.

(3) FOR ROAD CLOSURE WITHOUT LOCAL ACCESS TO PROJECT, SEE ROAD CLOSURE BARRICADE DETAIL D.

(4) FOR ROAD CLOSURE WITH LOCAL ACCESS TO PROJECT, SEE LANE CLOSURE BARRICADE DETAIL E.

(5) FOR BRIDGE OR CULVERT REPLACEMENTS, SUBSTITUTE "BRIDGE OUT" INSTEAD OF "ROAD CLOSED" ON R11-2 AND R11-3 SIGNS.

(6) INSTALL DETOUR AND COMMUNITY GUIDE SIGNS AND ARROWS ONLY IF SPECIFIED IN THE CONTRACT. IF THERE ARE EXISTING ROUTE MARKER ASSEMBLIES THAT WILL REMAIN IN PLACE, ADJUST THE LOCATION OF THE DETOUR ROUTE SIGNS TO CORRESPOND WITH THE EXISTING ASSEMBLIES. MODIFY EXISTING SIGNS WHERE POSSIBLE. SEE SPECIFIC PROJECT DETOUR SIGNING DETAIL SHEETS. IF DETOUR SIGNS ARE BEING INSTALLED BY OTHERS, PLACE THE CONTRACTED TRAFFIC CONTROL SIGNS TO ALLOW FOR PLACEMENT OF ALL WARNING, DETOUR AND GUIDE SIGNS AS SHOWN.

(7) "EAST" CARDINAL DIRECTION MARKERS AND RIGHT TURN ARROWS ARE SHOWN. USE OTHER CARDINAL DIRECTIONS AND ARROWS AS APPROPRIATE.

BARRICADES AND SIGNS FOR MAINLINE CLOSURES

STATE OF WISCONSIN
DEPARTMENT OF TRANSPORTATION

Sept. 2015 — DATE

/S/ Peter Amakobe Atepe
STATEWIDE WORK ZO SAFETY ENGI

FHWA

FIC

6

S.D.D. 15 C 2-6b

THIS DRAWING PROVIDES GENERAL GUIDANCE ON TYPICAL DETOUR SIGN LAYOUT AND SPACING. SEE PROJECT DETOUR SIGNING SHEETS FOR SPECIFIC DETAILS FOR EACH PROJECT.

GENERAL NOTES

THE EXACT NUMBER, LOCATION AND SPACING OF ALL SIGNS SHALL BE ADJUSTED TO FIT FIELD CONDITIONS AS APPROVED BY THE ENGINEER.

IF THERE ARE EXISTING ROUTE MARKER ASSEMBLIES THAT WILL REMAIN IN PLACE, ADJUST THE LOCATION OF THE DETOUR ROUTE SIGNS TO CORRESPOND WITH THE EXISTING ASSEMBLIES. SEE SPECIFIC PROJECT DETOUR SIGNING DETAIL SHEETS. MODIFY EXISTING SIGNS WHERE POSSIBLE.

THE SPACING BETWEEN TRAFFIC CONTROL AND DETOUR SIGNS SHOULD BE ADJUSTED TO NOT CONFLICT WITH AND TO PROVIDE A DESIRABLE MINIMUM OF 200 FEET CLEARANCE TO EXISTING SIGNS THAT WILL REMAIN IN PLACE.

ANY SIGNS TEMPORARY OR EXISTING, WHICH CONFLICT WITH TRAFFIC CONTROL "IN USE", SHALL BE REMOVED OR COVERED AS NEEDED AND AS APPROVED BY THE ENGINEER.

SIGNS THAT WILL BE IN PLACE LESS THAN 7 CONTINUOUS DAYS AND NIGHTS MAY BE MOUNTED ON PORTABLE SUPPORTS.

"MO" SIGNS ARE THE SAME AS "M" SIGNS EXCEPT THE BACKGROUND IS ORANGE.

SIGN SIZES SHALL BE AS FOLLOWS:

- M3-X SHALL BE 24" X 12". (36" X 18" IF NEEDED TO MATCH EXISTING SIGNS.)
- M4-8 SHALL BE 24" X 12". (30" X 15" IF NEEDED TO MATCH EXISTING SIGNS.)
- M1-4, M1-5A, AND M1-6 SHALL BE 24" X 24". (36" X 36" IF NEEDED TO MATCH EXISTING SIGNS.)
- MO5-1 AND MO6-1 SHALL BE 21" X 21". (30" X 30" IF NEEDED TO MATCH EXISTING SIGNS.)
- M4-9 SHALL BE 30" X 24".
- M4-8a SHALL BE 24" X 18".
- G20-51 SHALL BE 60" X 24".
- W20-2 SHALL BE 48" X 48".
- D1-X SHALL BE AS SHOWN ON SPECIFIC PROJECT SIGNING DETAIL SHEETS.

* OPTIONAL SIGNS. SEE SPECIFIC PROJECT DETOUR SIGNING DETAIL SHEETS.

** FOR A TOWN ROAD OR LOCAL STREET DETOURED ONTO A STATE TRUNK HIGHWAY, PLACE A ROAD NAME PLAQUE ABOVE THE M4-9 SIGN AS SPECIFIED IN THE CONTRACT.

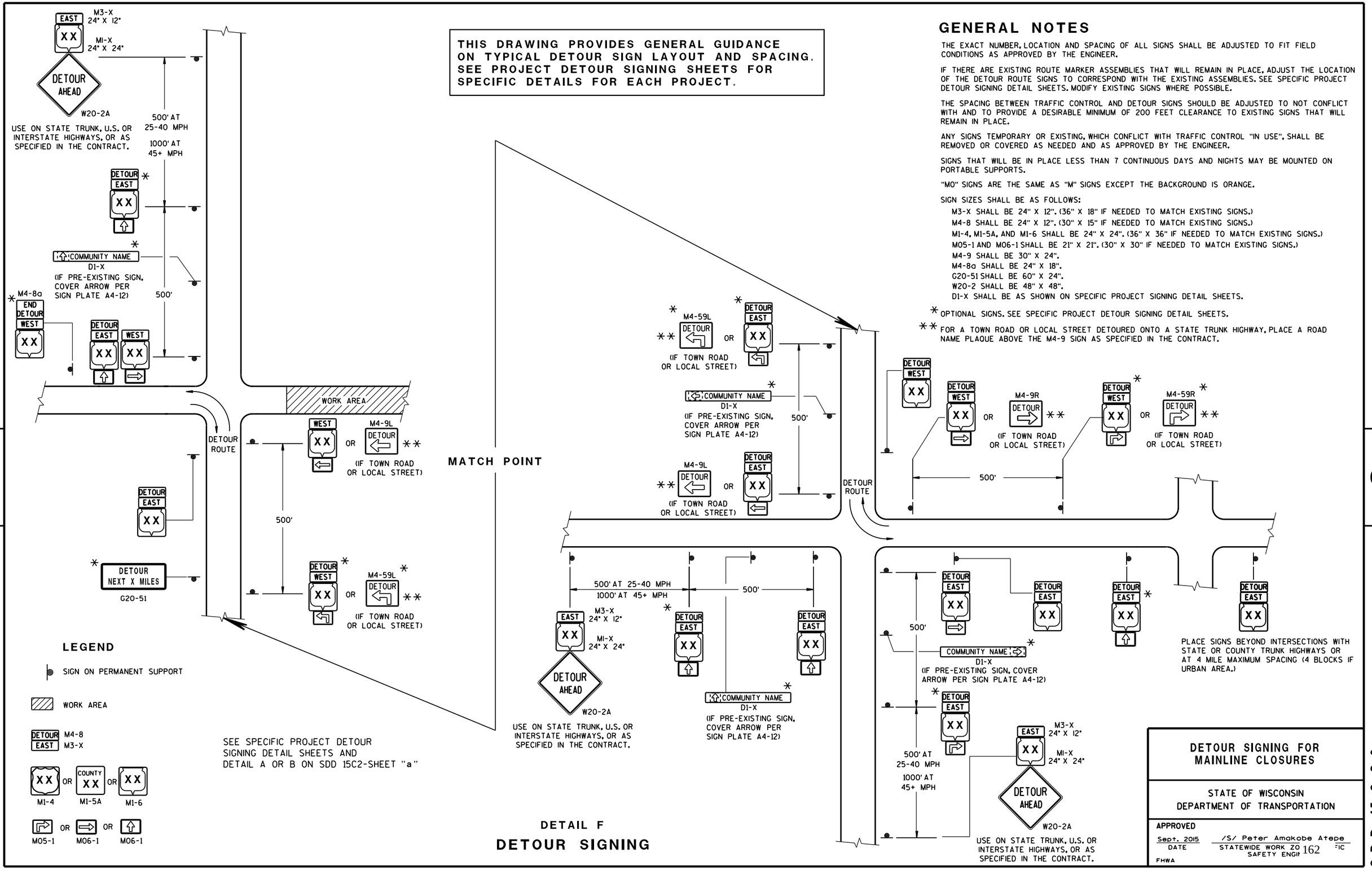

DETAIL F

DETOUR SIGNING

DETOUR SIGNING FOR MAINLINE CLOSURES	
STATE OF WISCONSIN DEPARTMENT OF TRANSPORTATION	
APPROVED	
Sept. 2015 DATE	/S/ Peter Amakobe Atepe STATEWIDE WORK ZO SAFETY ENGI FIC
FHWA	

6

S.D.D. 15 C 2-6c

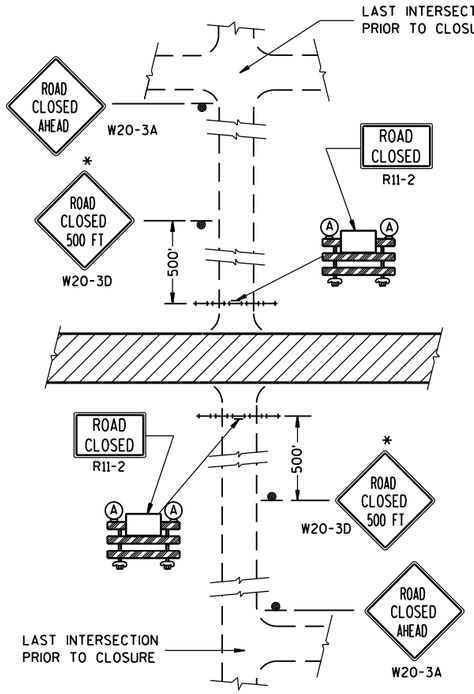

DETAIL 1

(NO ACCESS TO PROJECT)

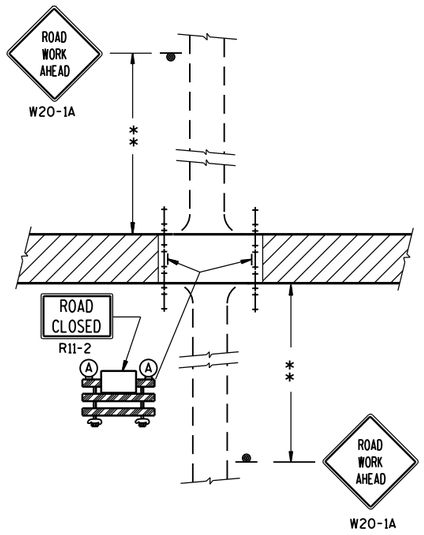

DETAIL 2

(PUBLIC CROSS-TRAFFIC MAINTAINED.
NO ACCESS TO PROJECT).

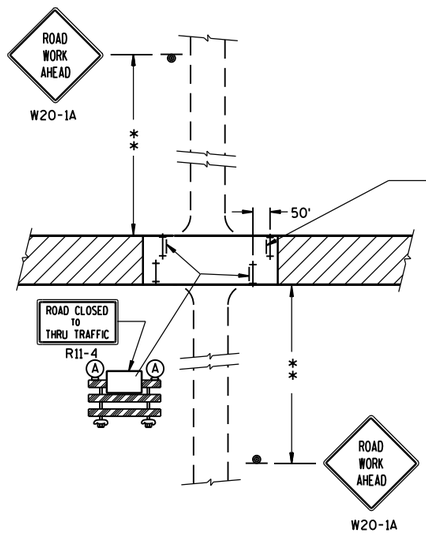

DETAIL 3

(PUBLIC CROSS-TRAFFIC MAINTAINED. CONTRACTOR, LOCAL BUSINESS AND RESIDENT ACCESS).

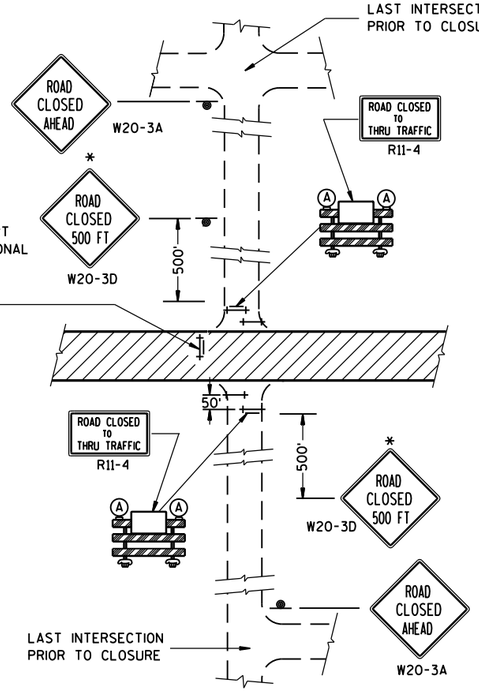

DETAIL 4

(CONTRACTOR, LOCAL BUSINESS AND
RESIDENT ACCESS TO PROJECT)

GENERAL NOTES

THE EXACT NUMBER, LOCATION, AND SPACING OF ALL SIGNS AND BARRICADES SHALL BE ADJUSTED TO FIT FIELD CONDITIONS AS APPROVED BY THE ENGINEER.

ANY SIGNS TEMPORARY OR EXISTING, WHICH CONFLICT WITH TRAFFIC CONTROL "IN USE" SHALL BE REMOVED OR COVERED AS NEEDED AND AS APPROVED BY THE ENGINEER.

THE SPACING BETWEEN TRAFFIC CONTROL SIGNS SHOULD BE ADJUSTED TO NOT CONFLICT WITH AND SHOULD PROVIDE A DESIRABLE MINIMUM OF 200 FEET CLEARANCE TO EXISTING SIGNS THAT WILL REMAIN IN PLACE.

IF A "STOP" SIGN MUST BE REMOVED FOR A WORK OPERATION, A TEMPORARY "STOP" SIGN SHALL BE PLACED PRIOR TO THE SIGN REMOVAL, OR A FLAGGER SHALL BE PROVIDED UNTIL THE SIGN IS RE-ESTABLISHED.

BARRICADES THAT MUST BE MOVED FOR A WORK OPERATION SHALL BE IMMEDIATELY RE-ESTABLISHED UPON COMPLETION OF THE OPERATION OR, FOR CONTINUING OPERATIONS, AT THE END OF EACH WORKING DAY.

SIGNS THAT WILL BE IN PLACE LESS THAN 7 CONTINUOUS DAYS AND NIGHTS MAY BE MOUNTED ON PORTABLE SUPPORTS.

ALL TYPE III BARRICADES SHALL HAVE RAILS REFLECTORIZED ON BOTH FACES. STRIPES SHALL BE PROPERLY SLOPED DOWN TOWARD THE TRAFFIC SIDE OR AS SHOWN IN THE ROAD CLOSURE BARRICADE DETAIL D FOR FULL ROAD CLOSURES.

TYPE "A" LOW-INTENSITY FLASHING WARNING LIGHTS SHALL BE VISIBLE ON BOTH SIDES OF THE BARRICADE.

THE R11-2, R11-3 AND R11-4 SIGNS PLACED ON BARRICADES SHALL COVER NO MORE THAN THE TOP RAIL. THE SIGNS SHALL NOT COVER ANY PORTION OF THE MIDDLE OR BOTTOM RAILS.

ALL SIGNS SHALL BE 48" X 48" UNLESS OTHERWISE NOTED BELOW:
R11-2 SHALL BE 48" X 30".
R11-4 AND R11-3 SHALL BE 60" X 30".

*OMIT THE "ROAD CLOSED 500 FT." SIGN IF THE LAST INTERSECTION IS 500 FT. OR LESS FROM THE WORK ZONE.

**500' MAX. OR AT LAST INTERSECTION WHICHEVER IS CLOSER.

LEGEND

- SIGN ON PERMANENT SUPPORT
- TYPE III BARRICADE
- TYPE III BARRICADE WITH ATTACHED SIGN
- (A) TYPE "A" WARNING LIGHT (FLASHING)
- WORK AREA

BARRICADES AND SIGNS FOR SIDEROAD CLOSURES

STATE OF WISCONSIN
DEPARTMENT OF TRANSPORTATION

APPROVED
Sept. 2015 — DATE
/S/ Peter Amakobe Atepe
STATEWIDE WORK ZO[illegible]FIC SAFETY ENGI[illegible]
FHWA

6

S.D.D. 15 C 3-3

6

S.D.D. 15 C 3-3

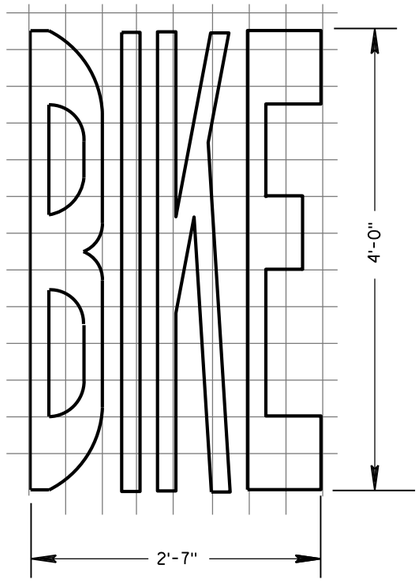

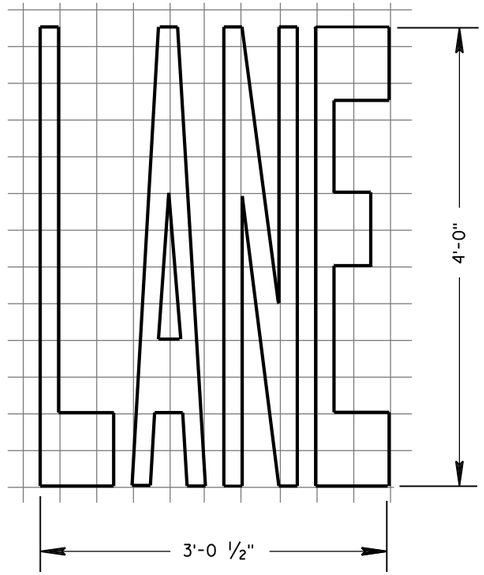

BIKE LANE WORDS

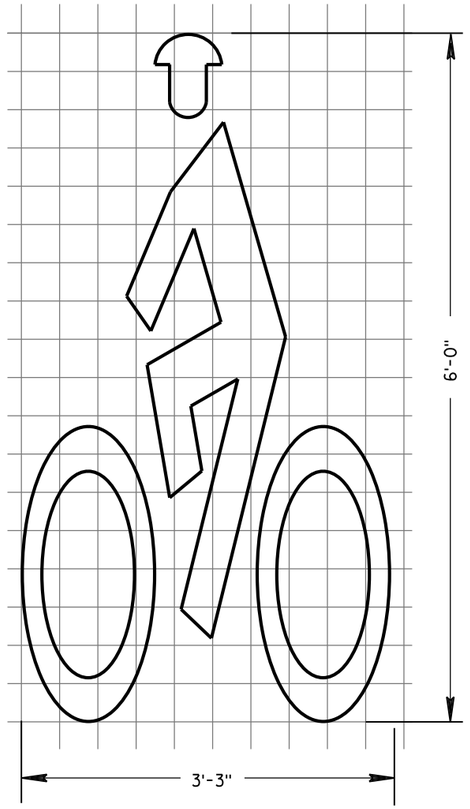

BIKE LANE SYMBOL

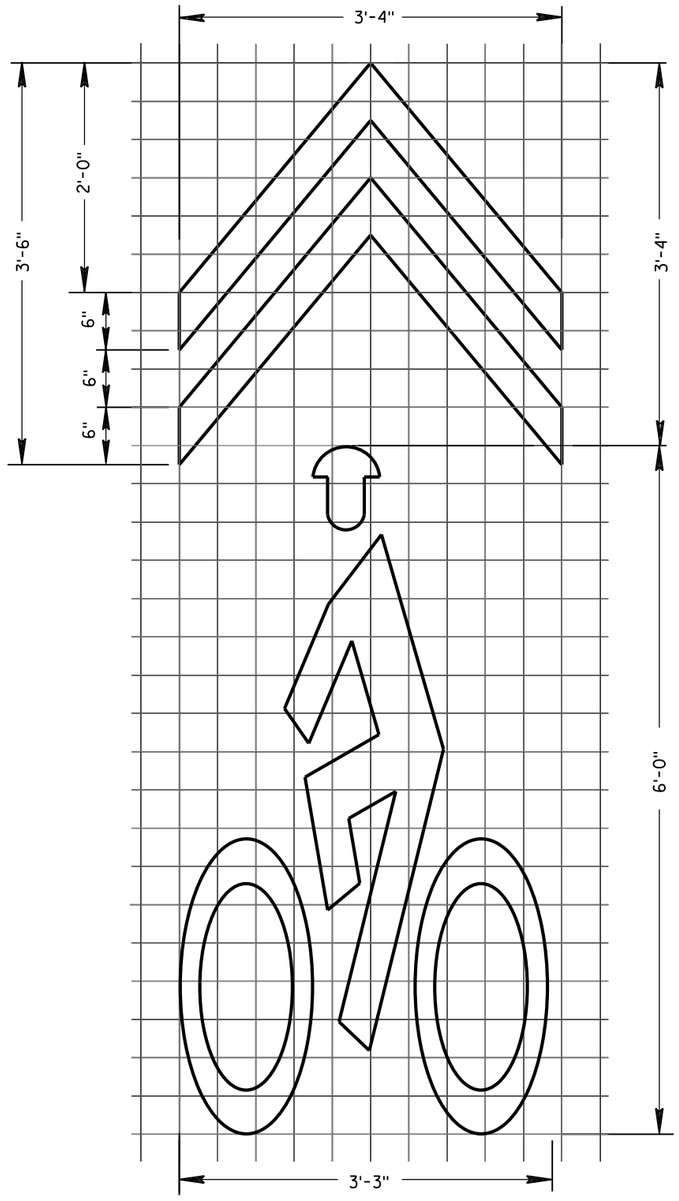

BIKE SYMBOL FOR SHARED LANE

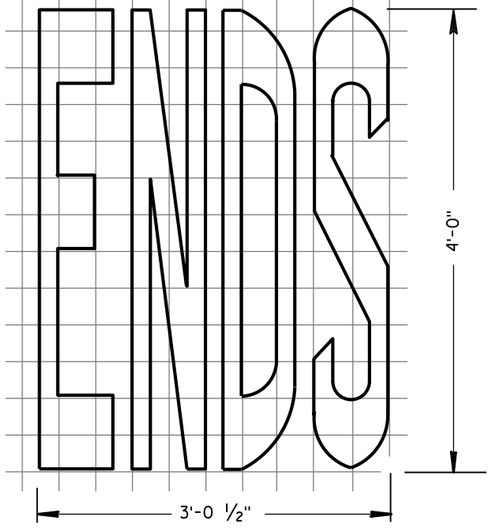

BIKE LANE WORDS

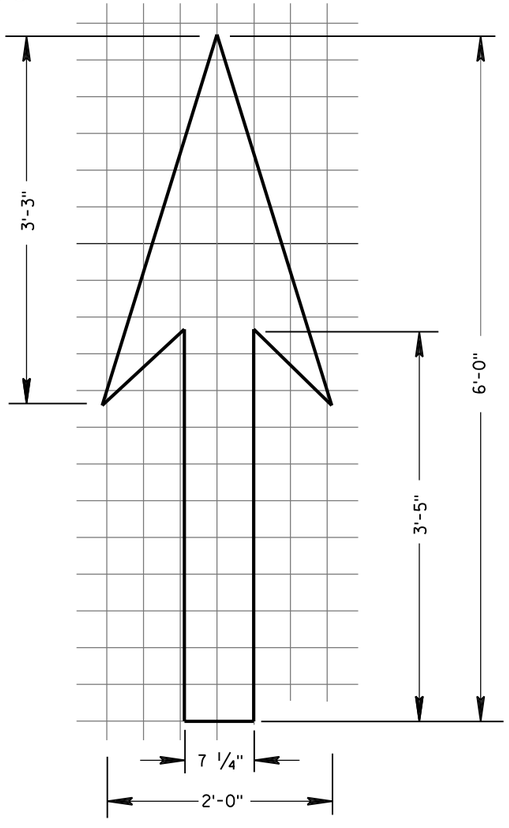

BIKE LANE ARROW

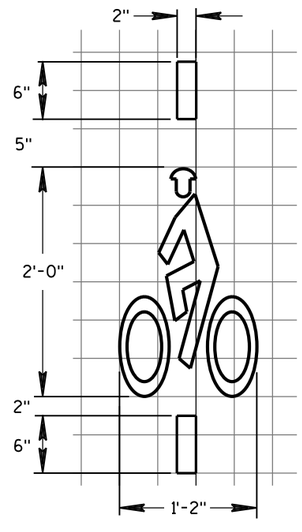

BICYCLE DETECTOR PAVEMENT MARKING

GENERAL NOTES

DETAILS OF INSTALLATION, MATERIALS AND WORKMANSHIP NOT SHOWN ON THIS DRAWING SHALL CONFORM TO THE PERTINENT REQUIREMENTS OF THE STANDARD SPECIFICATIONS AND APPLICABLE SPECIAL PROVISIONS.

PAVEMENT MARKING FOR BIKE LANES

STATE OF WISCONSIN
DEPARTMENT OF TRANSPORTATION

APPROVED
June 2017 — DATE
/S/ Matthew R. Rauch — STATE SIGNING AND MARK ENGINEER
FHWA

6

S.D.D. 15 C 7-14e

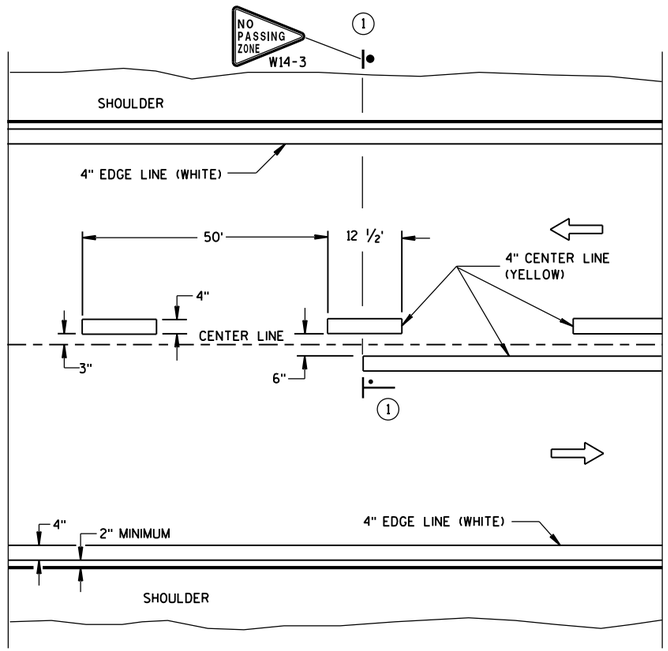

TWO WAY TRAFFIC

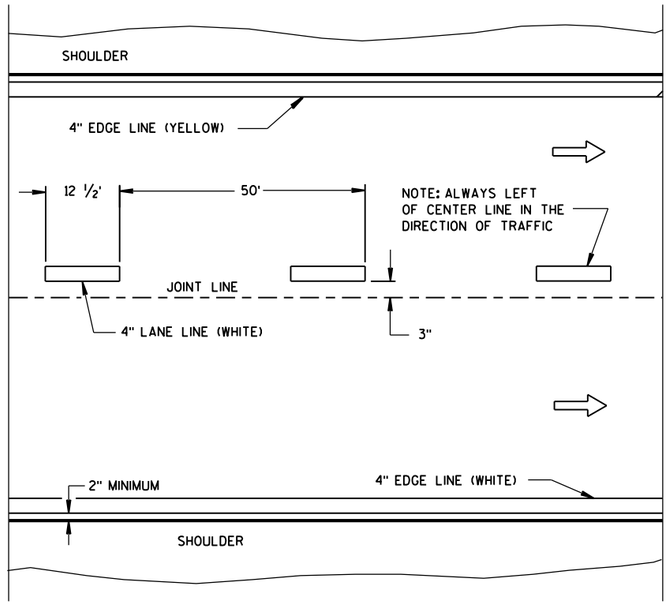

ONE WAY TRAFFIC

PERMANENT PAVEMENT MARKING

GENERAL NOTES

DETAILS OF CONSTRUCTION NOT SHOWN ON THIS DRAWING SHALL CONFORM TO STANDARD SPECIFICATIONS AND SPECIAL PROVISIONS.

(1) LOCATE THE NO PASSING ZONE W14-3 SIGN WITHIN 50 FEET OF THE "T" MARKING.

NOTE

ARROW SYMBOL (⇨) SHOWS DIRECTION OF TRAVEL

LEGEND

"T" MARKING

POST MOUNTED SIGN

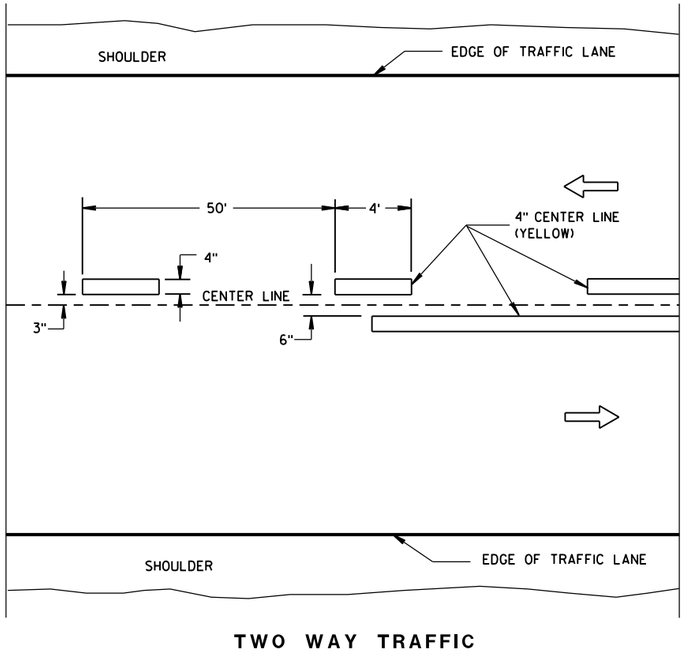

TWO WAY TRAFFIC

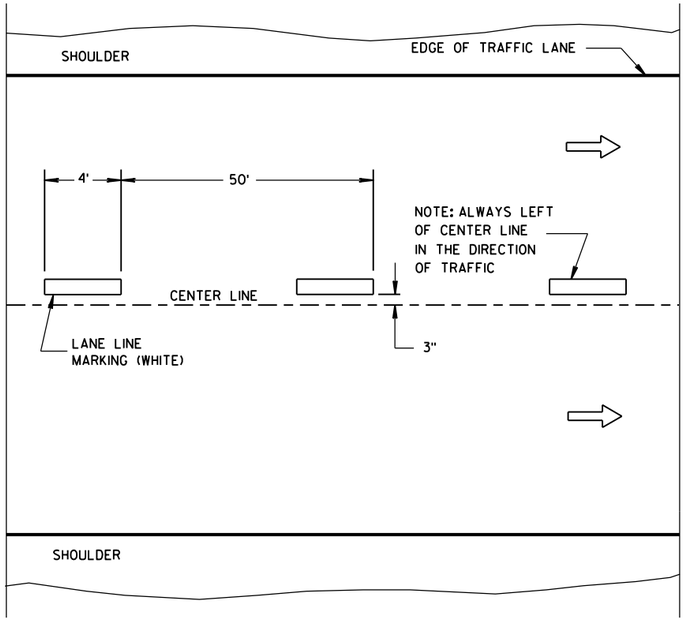

ONE WAY TRAFFIC

TEMPORARY PAVEMENT MARKING

LONGITUDINAL MARKING (MAINLINE)	
STATE OF WISCONSIN DEPARTMENT OF TRANSPORTATION	
APPROVED June 2017 DATE	/S/ Matthew R. Rauch STATE SIGNING AND MAR[illegible]INEER
FHWA	

6

S.D.D. 15 C 8-18a

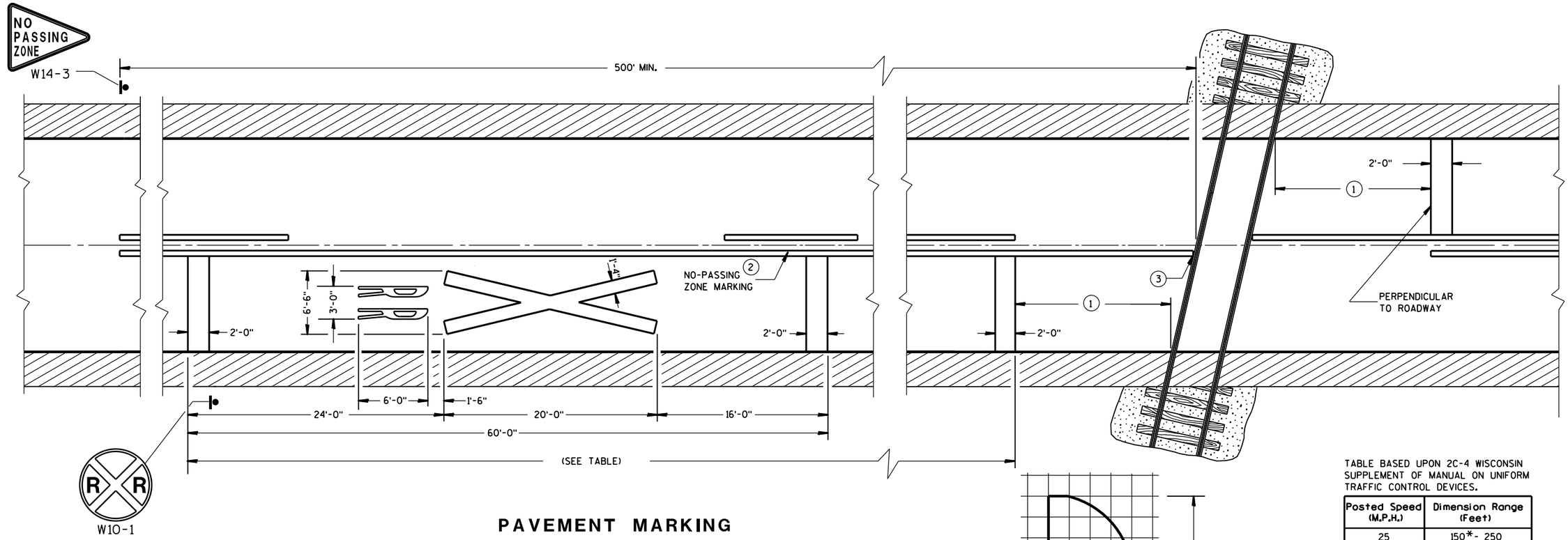

PAVEMENT MARKING

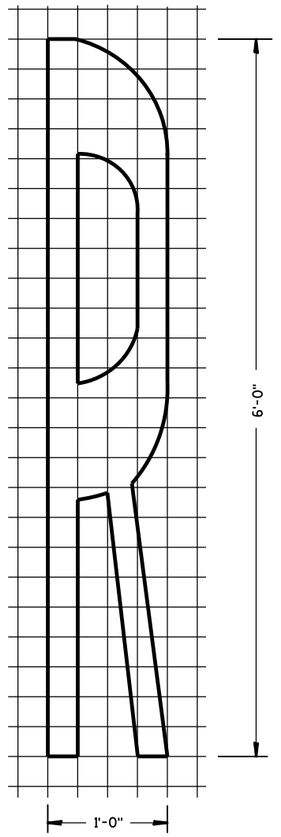

TABLE BASED UPON 2C-4 WISCONSIN SUPPLEMENT OF MANUAL ON UNIFORM TRAFFIC CONTROL DEVICES.

Posted Speed (M.P.H.)	Dimension Range (Feet)
25	150*- 250
30	200*- 300
35	250*- 450
40	300*- 500
45	400*- 650
50	550*- 800
55	750*- 1000
60	1000*- 1250
65	1000*- 1250

* THE MINIMUM DISTANCES IN THE TABLE ARE DESIRABLE AND SHOULD BE USED. THE DISTANCES MAY BE INCREASED UP TO THE MAXIMUM TO ALLOW FOR FIELD CONDITIONS SUCH AS THE CLOSE PROXIMITY OF DRIVEWAYS, BRIDGES, SIDEROADS OR OTHER FEATURES THAT WOULD PROHIBIT THE MINIMUM DISTANCES FROM BEING USED.

GENERAL NOTES

DETAILS OF CONSTRUCTION, MATERIALS, AND WORKMANSHIP NOT SHOWN ON THIS DRAWING SHALL CONFORM TO THE PERTINENT REQUIREMENTS OF THE STANDARD SPECIFICATIONS AND THE APPLICABLE SPECIAL PROVISIONS.

ON MULTI-LANE ROADS THE TRANSVERSE BANDS SHOULD EXTEND ACROSS ALL APPROACH LANES, AND INDIVIDUAL R X R SYMBOLS SHOULD BE USED IN EACH APPROACH LANE.

CENTER OR LANE LINES AND NO-PASSING ZONE MARKINGS SHOWN ON THIS DRAWING ARE REQUIRED AND PAID FOR UNDER OTHER ITEMS IN THE CONTRACT.

RETRACE EXISTING SYMBOL WHERE EXISTING SYMBOLS ARE PLACED.

(1) MINIMUM 8' FROM ANY RAILROAD WARNING DEVICES (SIGNALS, GATES, ETC.) OR 25' FROM THE NEAREST RAIL, WHICHEVER DISTANCE IS GREATER.

(2) 500' MINIMUM. MARKING LIMITS MAY BE EXTENDED AS DIRECTED BY THE ENGINEER TO MEET ADJACENT NO-PASSING ZONE MARKINGS.

(3) FOR MULTIPLE TRACK CROSSINGS, THE BARRIER LINE SHALL EXTEND TO THE NEAR RAIL OF THE FURTHEST TRACK IN THE DIRECTION OF HIGHWAY TRAVEL.

SIGNING AND PAVEMENT MARKING DETAILS FOR RAILROAD-HIGHWAY GRADE CROSSINGS

STATE OF WISCONSIN
DEPARTMENT OF TRANSPORTATION

APPROVED
4-18-2016 — DATE
/S/ Matthew R. Rauch — STATE SIGNING AND MAI[illegible]GINEER
FHWA

6

S.D.D. 15 C 9-10a

6

S.D.D. 15 C 9-10a

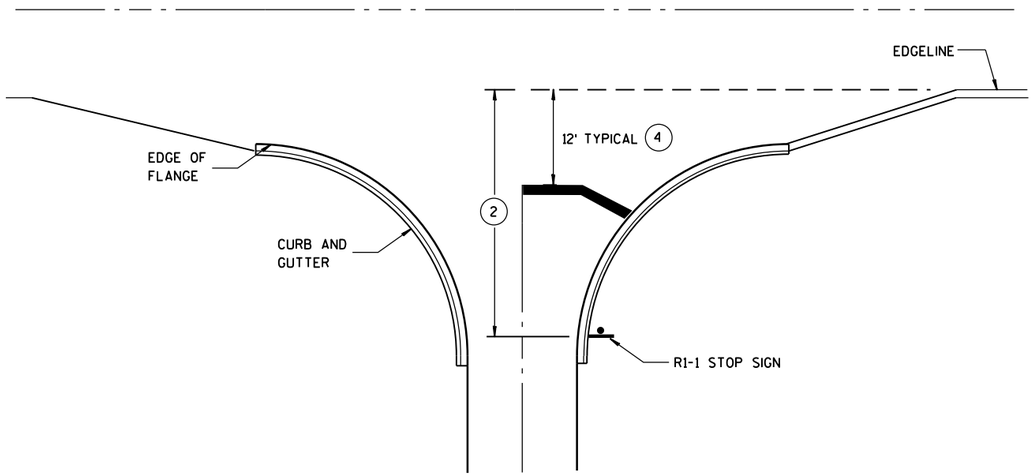

TYPICAL STOP LINE PAVEMENT MARKING WITH CURB AND GUTTER

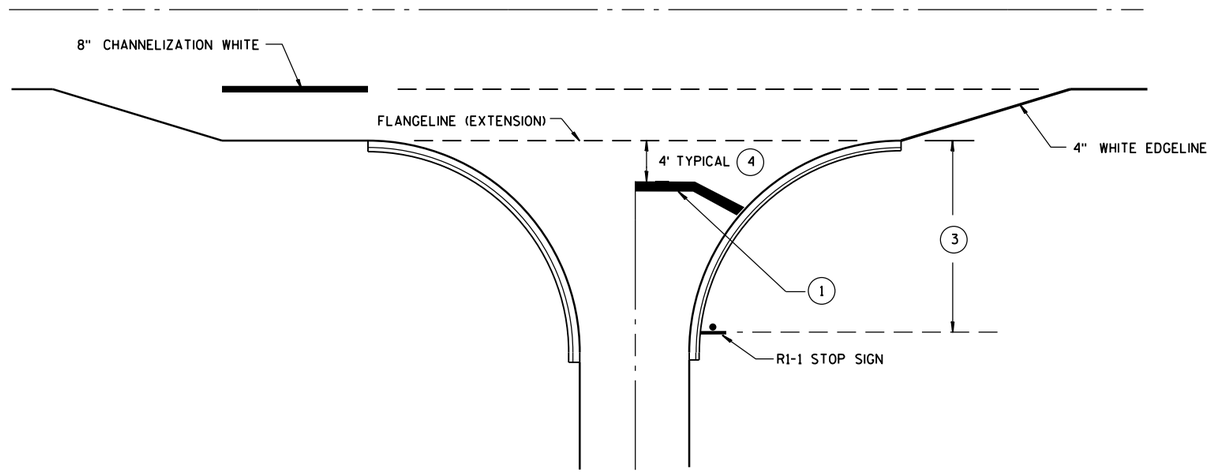

TYPICAL STOP LINE PAVEMENT MARKING FOR SIDEROADS WITH RIGHT TURN LANE

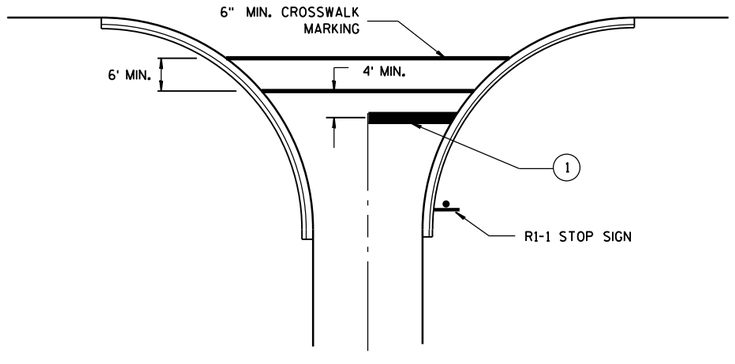

TYPICAL STOP LINE PAVEMENT MARKING FOR SIDEROADS WITH CROSSWALK MARKING

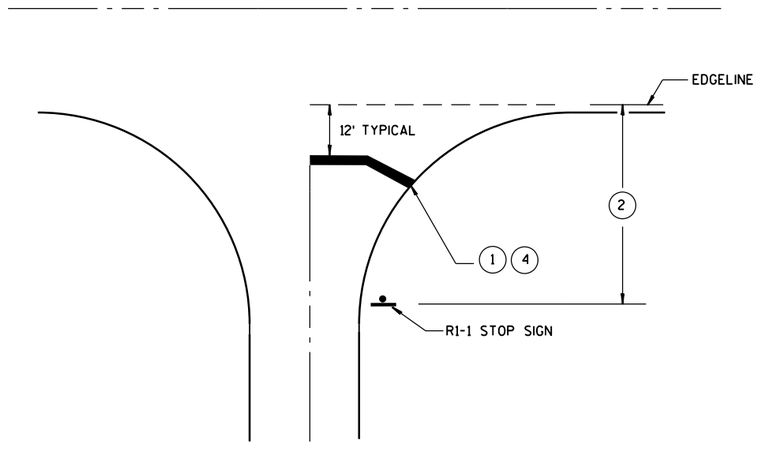

TYPICAL STOP LINE PAVEMENT MARKING WITHOUT CURB AND GUTTER

GENERAL NOTES

1. 18-INCH STOP LINES MAY BE DELETED OR ADDED BY THE PROJECT ENGINEER BASED ON VISIBILITY AND SIGHT LINES.
2. IF STOP SIGN IS LESS THAN OR EQUAL TO 40 FEET FROM THE EDGELINE THAN NO STOP LINE IS REQUIRED.
3. IF STOP SIGN IS LESS THAN OR EQUAL TO 30 FEET FROM THE FLANGELINE EXTENSION THAN NO STOP LINE IS REQUIRED.
4. MOVE CLOSER TO EDGE OF TRAVEL LANE AS NEEDED FOR VISIBILITY AND SIGHT LINES. (NO CLOSER THAN 4 FEET).

STOP LINE AND CROSSWALK PAVEMENT MARKING

STATE OF WISCONSIN
DEPARTMENT OF TRANSPORTATION

APPROVED

4-18-2016
DATE

/S/ Matthew R. Rauch
STATE SIGNING AND MAR[illegible]NEER

FHWA

6

S.D.D. 15 C 33-2

NOTE: MAY BE USED ON ROADWAY WITH POSTED SPEED OF LESS THAN 40 MPH.

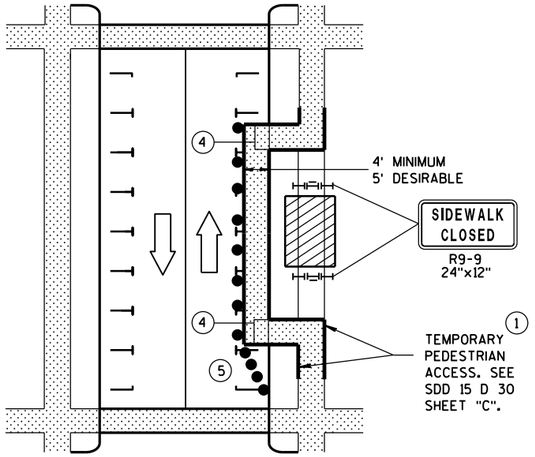

MID-BLOCK SIDEWALK CLOSURE IN PARKING LANE

NOTE: LAYOUT SAME AS ABOVE.

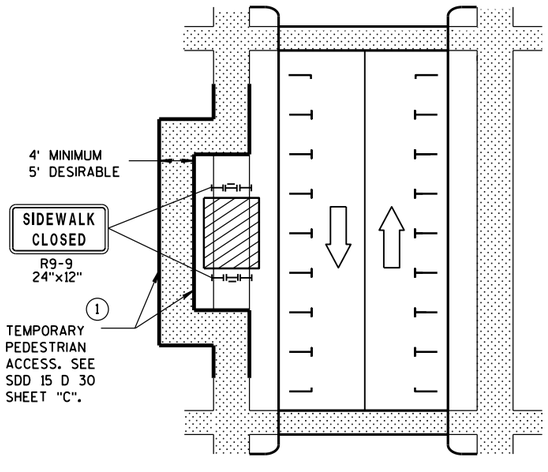

SIDEWALK DIVERSION

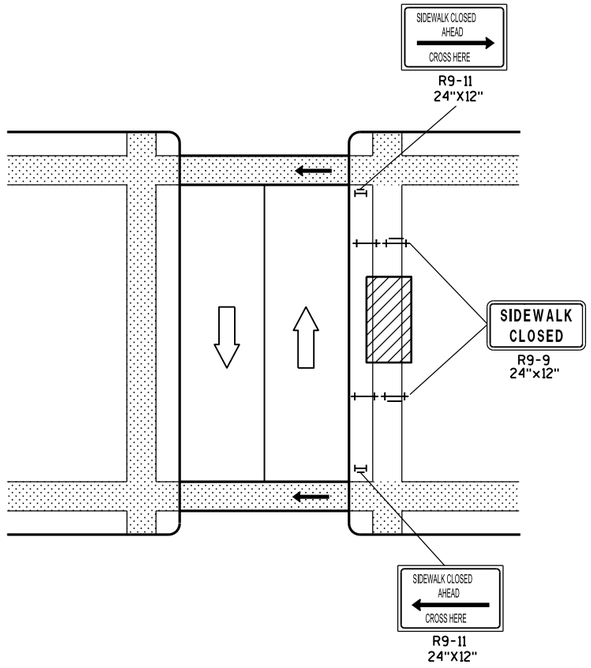

MID-BLOCK SIDEWALK CLOSURE

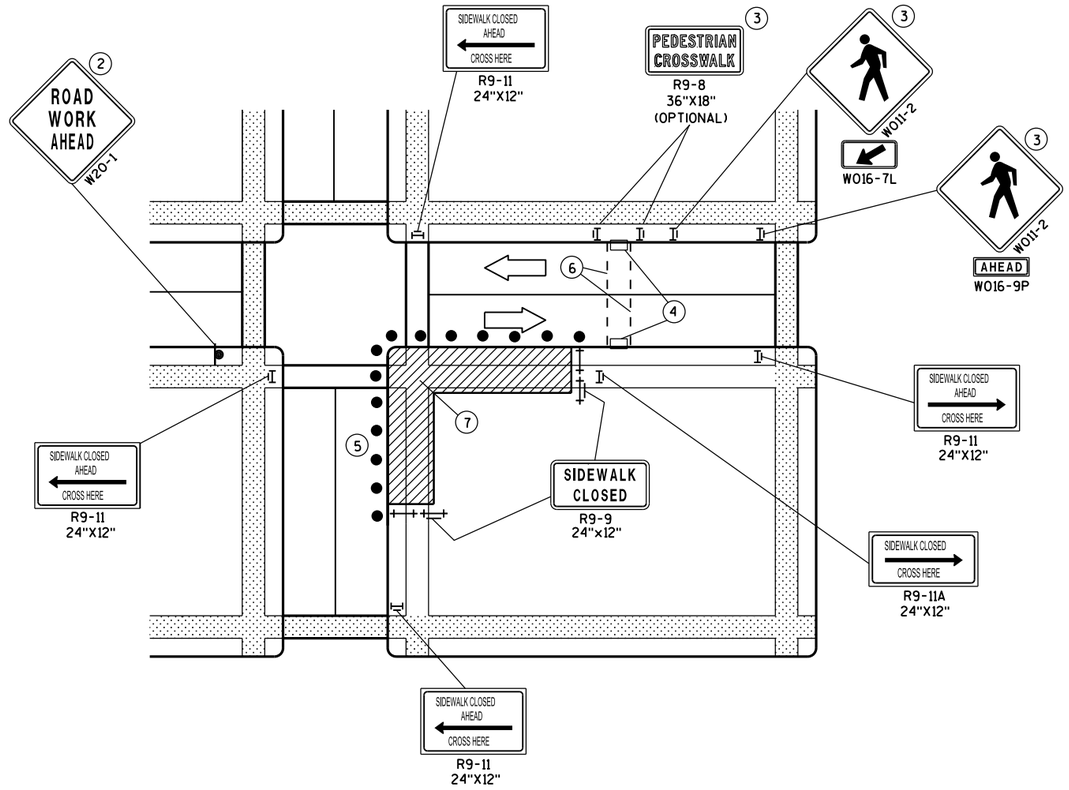

CORNER SIDEWALK CLOSURE WITH TEMPORARY CROSSWALK

GENERAL NOTES

WHEN CLOSING OR RELOCATING CROSSWALKS OR SIDEWALKS, PROVIDE DETECABLE TEMPORARY FACILITIES AND INCLUDE ACCESSIBILITY FEATURES CONSISTENT WITH EXISTING PEDESTRIAN FACILITIES.

TEMPORARY TRAFFIC CONTROL DEVICES FOR PEDESTRIANS ARE SHOWN. OTHER DEVICES MAY BE NECESSARY TO CONTROL VEHICULAR TRAFFIC. STAGE WORK, AS NECESSARY, TO PROVIDE A TEMPORARY PEDESTRIAN ACCESS ROUTE AT ALL TIMES. FOR ROADWAYS WITH NO AVAILABLE DETOURS, MAINTAIN ONE OPEN SIDEWALK AT ALL TIMES.

"WO" SIGN IS THE SAME AS "W" SIGN EXCEPT THE BACKGROUND IS ORANGE.

FOR NIGHTTIME CLOSURE USE TYPE "A" FLASHING WARNING LIGHTS ON BARRICADES, SUPPORTING SIGNS AND CLOSING SIDEWALK. USE TYPE "C" STEADY BURN LIGHTS ON CHANNELIZING DEVICES SEPARATING THE WORK AREA FROM VEHICULAR TRAFFIC.

PEDESTRIAN TRAFFIC SIGNAL DISPLAY CONTROLLING CLOSED CROSSWALK SHALL BE COVERED OR DEACTIVATED.

POST MOUNTED SIGNS LOCATED ADJACENT TO A SIDEWALK SHALL HAVE A 7 FOOT MINIMUM CLEARANCE FROM THE BOTTOM OF THE SIGN TO THE SIDEWALK SURFACE.

ALTERNATE SIDEWALK WORK BETWEEN LEFT AND RIGHT SIDE OF ROADWAY TO MAINTAIN PEDESTRIAN ACCESS.

(1) IF SIDEWALK CLOSURE AFFECTS AN ACCESSIBLE AND DETECTABLE FACILITY, MAINTAIN ACCESSIBILITY AND DETECTABILITY ALONG THE ALTERNATE PEDESTRIAN ROUTE.

(2) "ROAD WORK AHEAD" SIGNS ARE NOT REQUIRED IF THE SIDEWALK CLOSURE OCCURS WITHIN A LARGER WORK ZONE WHERE ADVANCE WARNING SIGNS ARE ALREADY PRESENT, OR IF THE WORK AREA AND EQUIPMENT ARE MORE THAN 2 FEET BEHIND THE CURB.

(3) IF TEMPORARY PEDESTRIAN CROSSWALK IS NOT PROVIDED, OMIT R9-8 AND W011-2 SIGN ASSEMBLIES. IF PROVIDED INCLUDE ON BOTH SIDES OF THE CROSSWALK.

(4) TEMPORARY CURB RAMPS. SEE SDD 15 D 30 SHEET "B".

(5) DRUMS OR BARRICADES AT 25 FOOT SPACING. STREET PARKING SHALL BE PROHIBITED FOR AT LEAST 50 FEET IN ADVANCE OF THE MID-BLOCK CROSSWALK.

(6) TEMPORARY PAVEMENT MARKING FOR CROSSWALK LINES.

(7) LIMIT WORK TO ONE QUADRANT AT A TIME TO MINIMIZE PEDESTRIAN DISRUPTION.

LEGEND

- SIGN ON PERMANENT SUPPORT
- UNDER PEDESTRIAN TRAFFIC
- WORK AREA
- PEDESTRIAN CHANNELIZATION DEVICE
- TYPE II BARRICADE WITH/WITHOUT SIGN (ALL WITH ONE WARNING LIGHT, TYPE A, LOW-INTENSITY FLASHING)
- TYPE III BARRICADE WITH/WITHOUT SIGN (ALL WITH ONE WARNING LIGHT, TYPE A, LOW-INTENSITY FLASHING)
- DIRECTION OF TRAFFIC
- TRAFFIC CONTOL DRUM

TRAFFIC CONTROL, PEDESTRIAN ACCOMMODATION

STATE OF WISCONSIN
DEPARTMENT OF TRANSPOR

6

S.D.D. 15 D 30-3a

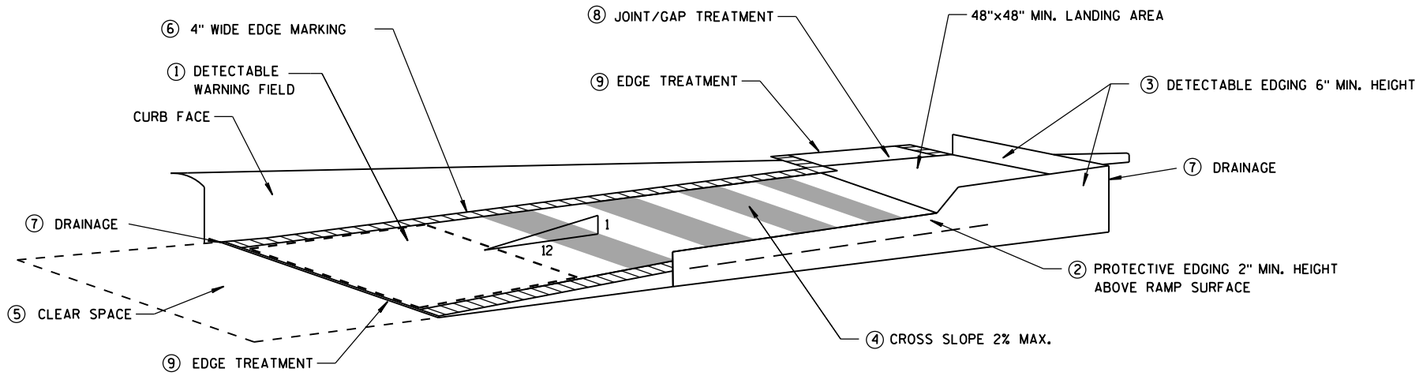

TEMPORARY CURB RAMP PARALLEL TO CURB

GENERAL NOTES

NOTIFY THE BUS COMPANY 7 DAYS IN ADVANCE OF THE BUS STOP RELOCATION.

ALTERNATE SIDEWALK WORK BETWEEN LEFT AND RIGHT SIDE OF ROADWAY TO MAINTAIN PEDESTRIAN ACCESS.

① CURB RAMPS SHALL BE 48" MIN. WIDTH WITH A FIRM, STABLE AND SLIP RESISTANT SURFACE. INSTALL CONTRASTING DETECTABLE WARNING FIELD AT PEDESTRIAN STREET CROSSINGS. REFER TO SDD 8D5 SHEET "E".

② PROTECTIVE EDGING WITH A 2" MIN. HEIGHT SHALL BE INSTALLED WHEN A CURB RAMP OR LANDING PLATFORM HAS A VERTICAL DROP OF 6" OR GREATER OR HAS A SIDE APRON SLOPE STEEPER THAN 1:3 (33%). PROTECTIVE EDGING SHOULD BE CONSIDERED WHEN CURB RAMPS OR LANDING PLATFORMS HAVE A VERTICAL DROP OF 3" OR MORE.

③ DETECTABLE EDGING WITH 6" MIN. HEIGHT AND CONTRASTING COLOR SHALL BE INSTALLED ON ALL CURB RAMP LANDINGS WHERE THE WALKWAY CHANGES DIRECTION (TURNS).

④ CURB RAMPS AND LANDINGS SHALL HAVE A 1:50 (2%) MAX. CROSS-SLOPE.

⑤ CLEAR SPACE OF 48"X48" MIN. SHALL BE PROVIDED ABOVE AND BELOW THE CURB RAMP.

⑥ THE CURB RAMP WALKWAY EDGE SHALL BE MARKED WITH A YELLOW COLOR, 4" WIDE MARKING, UNLESS A CONTRASTING DETECTABLE WARNING FIELD IS PROVIDED.

⑦ DO NOT RESTRICT WATER FLOW IN THE GUTTER SYSTEM.

⑧ LATERAL JOINTS OR GAPS BETWEEN SURFACES SHALL BE LESS THAN 1/2" WIDTH.

⑨ CHANGES BETWEEN SURFACE HEIGHTS SHALL NOT EXCEED 1/2". LATERAL EDGES SHALL BE VERTICAL UP TO 1/4" HIGH, AND BEVELED AT 1:2 BETWEEN 1/4" AND 1/2".

⑩ 5' WIDE MIN. WITH PEDSETRIAN SAFETY FENCE, 10' WIDE MIN. WITHOUT PEDESTRIAN SAFETY FENCE.

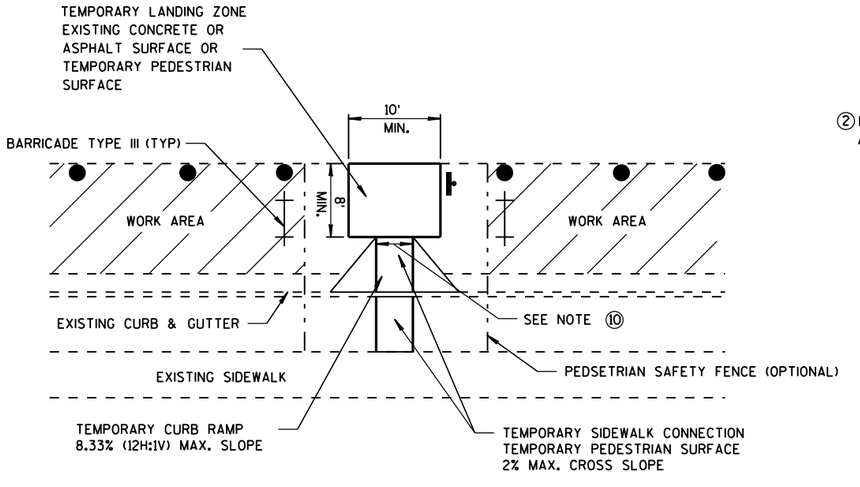

TEMPORARY BUS STOP PAD

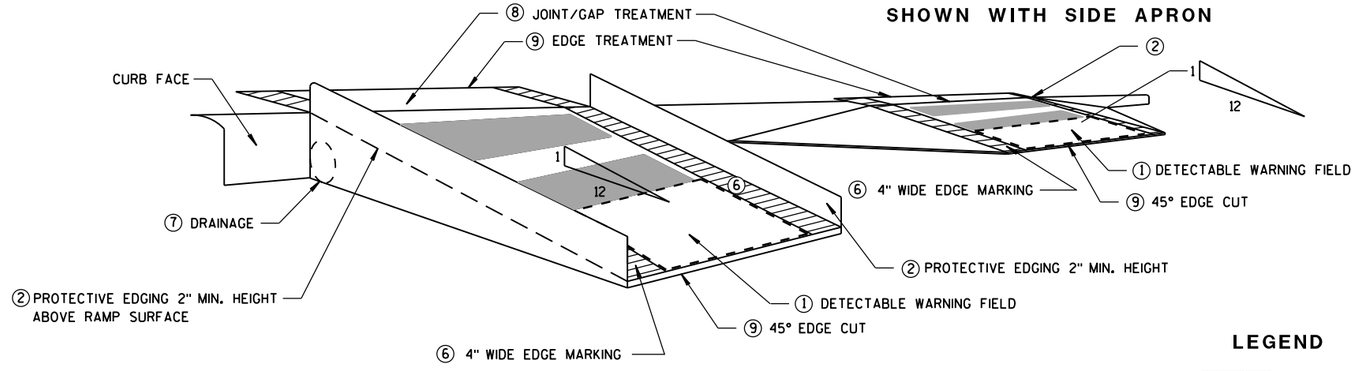

SHOWN WITH PROTECTIVE EDGE

SHOWN WITH SIDE APRON

TEMPORARY CURB RAMP PERPENDICULAR TO CURB

LEGEND

WORK AREA

TYPE III BARRICADE

TRAFFIC CONTOL DRUM

TRAFFIC CONTROL, TEMPORARY ADA COMPLIANT PEDESTRIAN ACCOMMODATION

STATE OF WISCONSIN
DEPARTMENT OF TRANSPORTATION

APPROVED

June 2016
DATE

/S/ Peter Amakobe Atepe
STATEWIDE WORK ZO SAFETY ENGI IC

FHWA

6

S.D.D. 15 D 30-3b

6

S.D.D. 15 D 30-3b

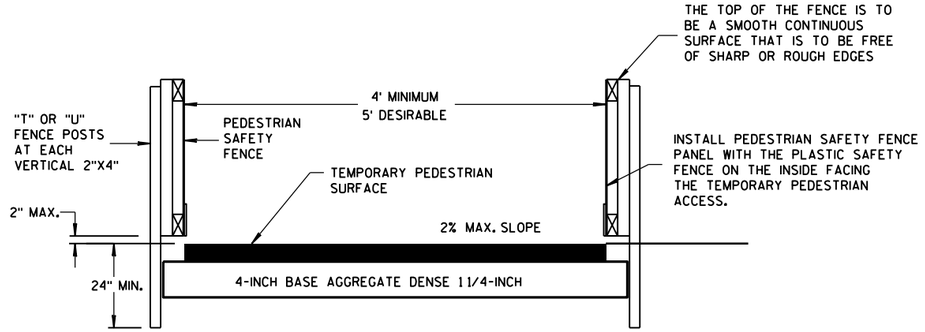

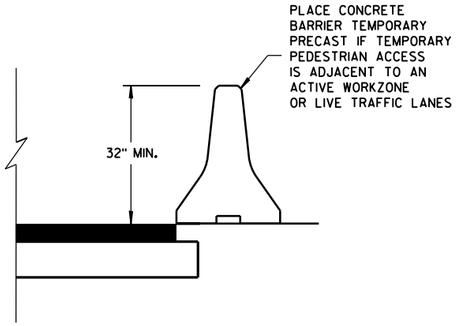

TEMPORARY PEDESTRIAN ACCESS

GENERAL NOTES

(1) INTERCHANGEABLE WITH THE PEDESTRIAN SAFETY FENCE.

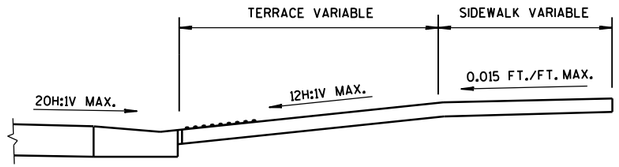

SECTION A-A

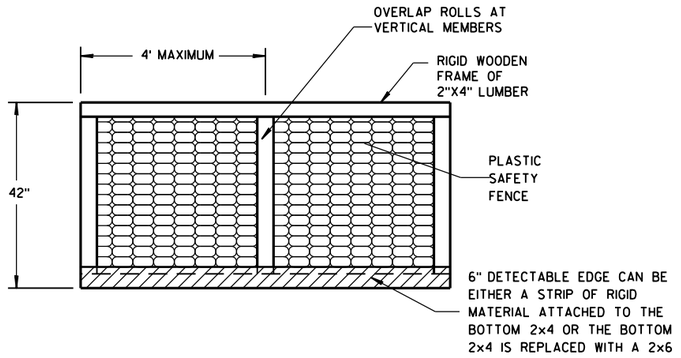

PEDESTRIAN SAFETY FENCE

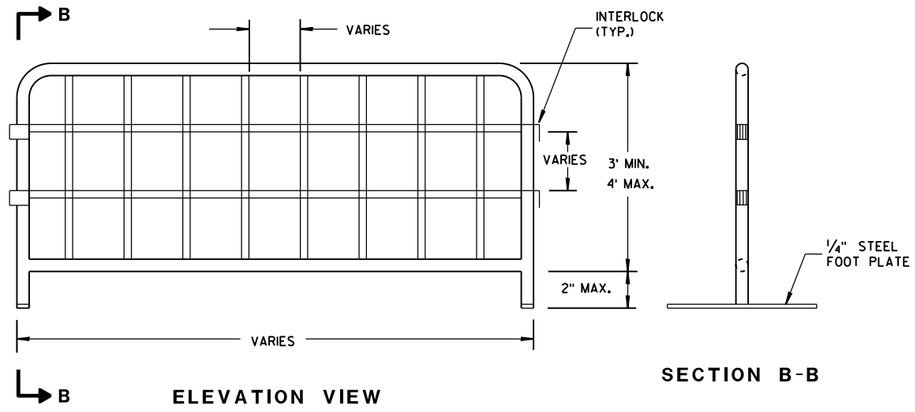

ELEVATION VIEW

SECTION B-B

TEMPORARY PEDESTRIAN STEEL BARRICADE (1)

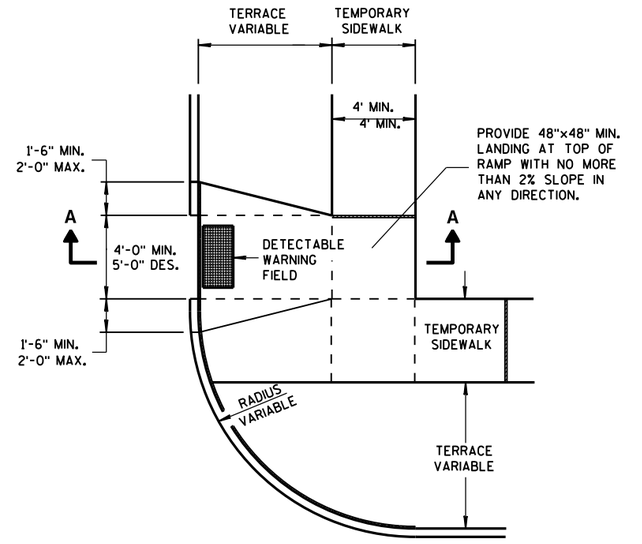

PLAN VIEW

TEMPORARY TYPE 3 RAMP

(OUTSIDE OF CROSSWALK AREA)

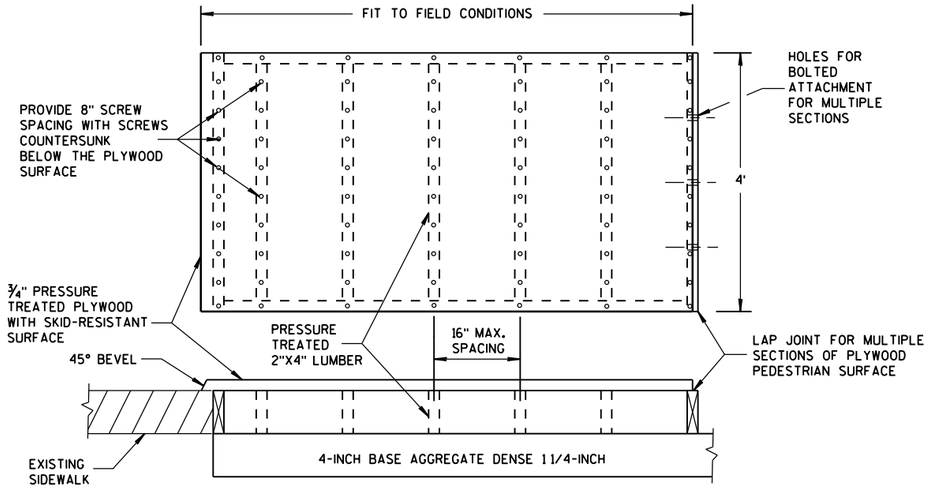

TEMPORARY PEDESTRIAN SURFACE PLYWOOD

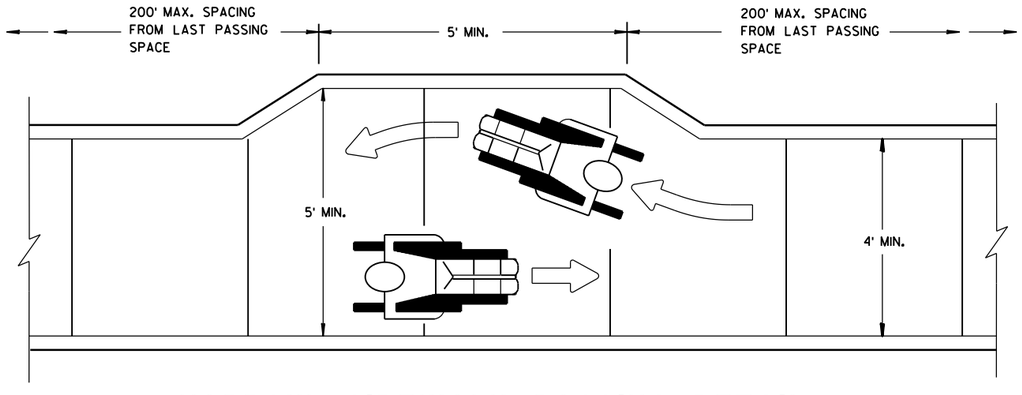

NARROW SIDEWALK PASSING DETAIL

TRAFFIC CONTROL, PEDESTRIAN ACCOMMODATION

STATE OF WISCONSIN
DEPARTMENT OF TRANSPORTATION

APPROVED
June 2016
DATE
/S/ Peter Amakobe Atepe
STATEWIDE WORK ZON IC
SAFETY ENGIN
FHWA

6

S.D.D. 15 D 30-3c

6

S.D.D. 15 D 30-3c

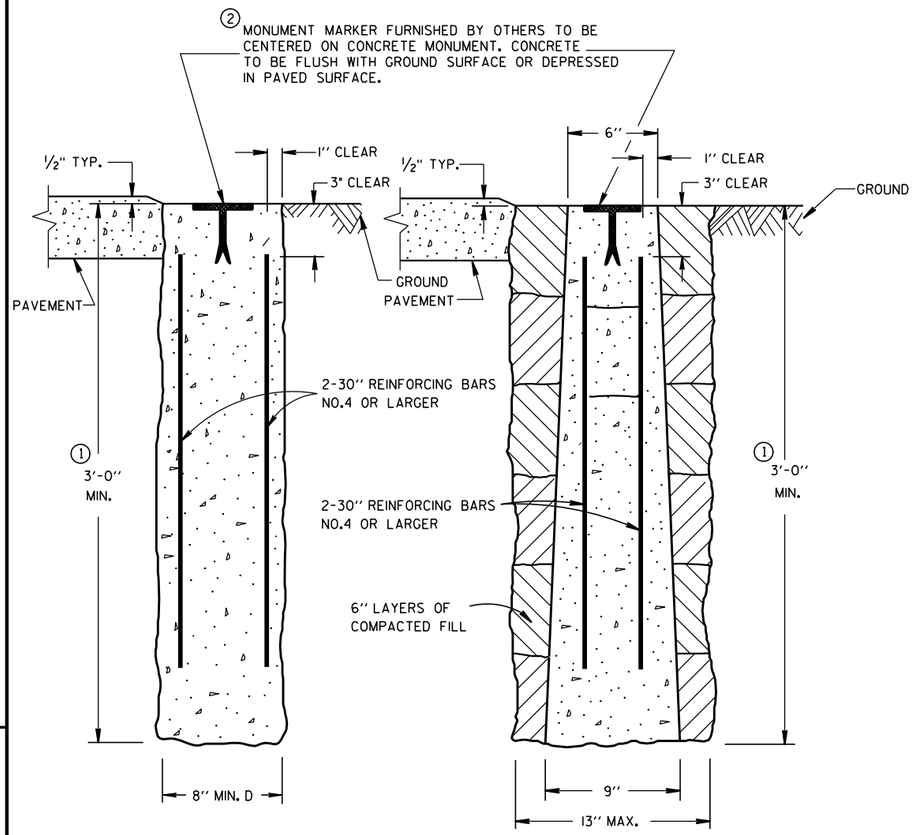

CAST-IN-PLACE PRECAST

CONCRETE MONUMENTS

TYPE A

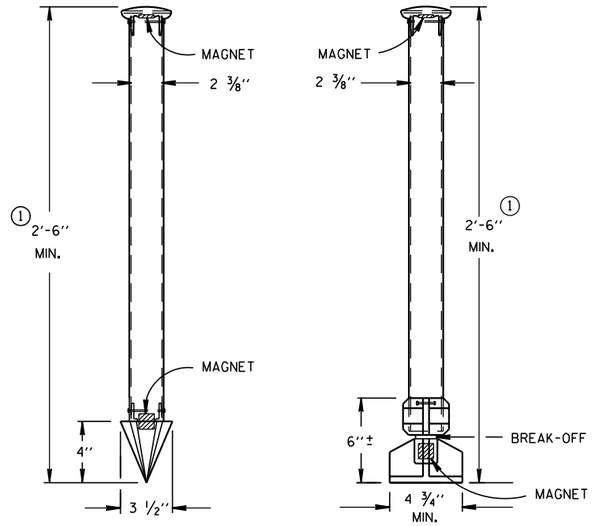

TYPE C DRIVE-IN MONUMENT

TYPE D BREAK-OFF MONUMENT

ALUMINUM MONUMENTS

(INCLUDES MARKER)

GENERAL NOTES

DETAILS OF CONSTRUCTION, MATERIALS AND WORKMANSHIP NOT SHOWN ON THIS DRAWING SHALL CONFORM TO THE PERTINENT REQUIREMENTS OF THE STANDARD SPECIFICATIONS AND THE APPLICABLE SPECIAL PROVISIONS.

DETAILED DRAWINGS OF PROPOSED ALTERNATE DESIGNS FOR METAL MONUMENTS OR MONUMENT COVERS SHALL BE SUBMITTED TO THE ENGINEER FOR APPROVAL.

INSTALLED METAL MONUMENTS MUST BE EASILY DETECTED WITH A DIP NEEDLE. INSERT PERMANENT MAGNETS SHALL BE ATTACHED NEAR THE TOP AND BOTTOM OF THOSE MONUMENTS CONSTRUCTED OF A METAL ALLOY WHICH IS NOT ATTRACTIVE TO A DIP NEEDLE.

THE CAST IRON MONUMENT COVER SHALL BE A "NON-ROCKING" TYPE. ADJUSTMENT OF THE COVER TO GRADE MAY BE ACCOMPLISHED BY THE USE OF MORTAR AND BRICK, OR BY EITHER PRECAST OR CAST-IN-PLACE REINFORCED CONCRETE GRADE RINGS.

MONUMENTS SHALL BE LOCATED AND PLACED AT THE DIRECTION OF THE ENGINEER.

ALUMINUM MONUMENTS AND MONUMENT COVERS SHALL BE MADE FROM AN ALUMINUM AND MAGNESIUM ALLOY AS DETERMINED BY THE MANUFACTURER.

THE MONUMENT COVERS DETAILED ON THIS DRAWING ARE NOT EQUAL ALTERNATES. MONUMENT COVERS SHALL BE CAST IRON UNLESS ALUMINUM IS SPECIFIED ELSEWHERE IN THE CONTRACT.

MONUMENT SHALL BE CAST-IN-PLACE CONCRETE UNLESS PRECAST CONCRETE OR ALUMINUM MONUMENTS ARE SPECIFIED IN THE CONTRACT OR PERMITTED BY THE ENGINEER.

① MINIMUM LENGTH SHALL BE 4'-0" FOR MONUMENTS INSTALLED IN PAVED AREAS.

② AN OFFICIAL COUNTY MONUMENT MARKER SUPPLIED BY A COUNTY MAY BE REQUIRED FOR SOME SECTION CORNERS AND WITNESS MONUMENTS INSTEAD OF THIS WIS DOT MARKER.

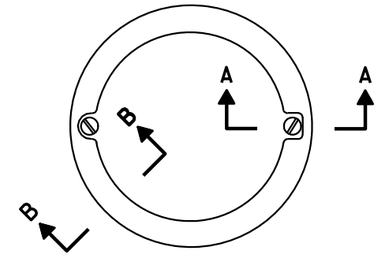

TOP VIEW

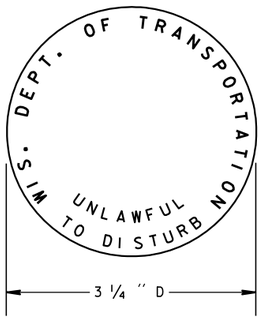

② WIS DOT MONUMENT MARKER LOGO FOR TYPES "A", "C" & "D"

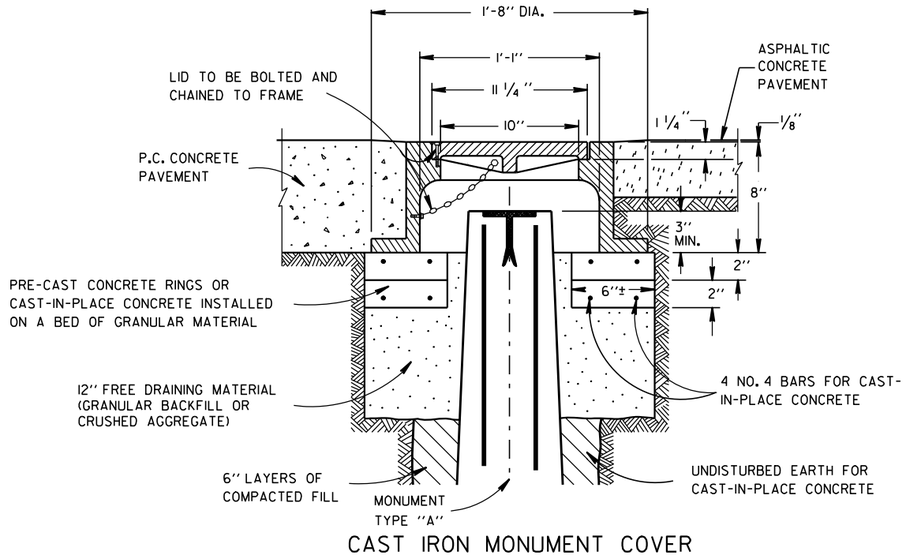

CAST IRON MONUMENT COVER

(APPROXIMATE WEIGHT - 95 LBS.)

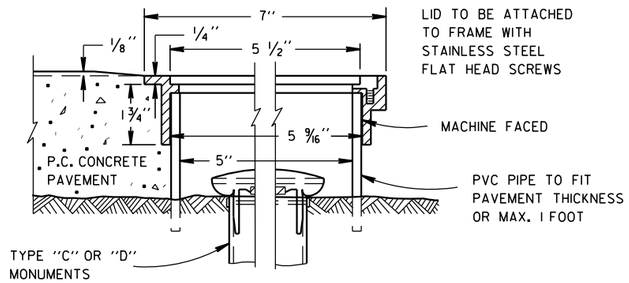

SECTION B-B SECTION A-A

ALUMINUM MONUMENT COVER

(APPROXIMATE WEIGHT 2 LBS)

(FOR CONCRETE PAVEMENT ONLY)

LANDMARK REFERENCE MOUNMENTS AND COVERS

STATE OF WISCONSIN
DEPARTMENT OF TRANSPORTATION

APPROVED
9/22/1999 DATE
/S/ Rory L. Rhinesmith
CHIEF ROADWAY DEVELOPMENT ENGINEER
FHWA

6

S.D.D. 16 A 1-6

6

S.D.D. 16 A 1-6

M4-9a

BICYCLE PEDESTRIAN DETOUR

*Series 2000 Standard Alphabets.
**See page 6-10 for symbol design.
***See page 6-7 for symbol design.
****See page 6-2 for arrow design.

C

A	B	C	D	E	F	G	H	J	K	L	M
30	24	.5	.75	2	7.205	1	5 D	3.802	5	5.324	3.122
48	36	.75	1.25	3	10.648	1.641	8 D	5.924	6.805	8.086	4.403
60	48	.75	1.25	5.203	13.330	2.081	10 D	7.405	10	6.925	10.127

N	P	Q	R	S	T
9	8.526	12.169	7	2	1.875
13.530	13.290	19.454	11.208	3.202	3
16.812	16.812	24.318	14	4	

TTC SIGN COLORS:
LEGEND — BLACK
BACKGROUND— ORANGE (RETROREFLECTIVE)

FILE NAME : S:\CURRPROJ\OZAUKEECO\CTH D\CIVIL3D\48800100\SHEETSPLAN\48800170\48800170-070101-SD.DWG
LAYOUT NAME - 48800170-070101-SD - SHEET-01
PLOT DATE : 10/31/2017 12:21 PM PLOT BY : AARON SARAUER PLOT NAME : PLOT SCALE : 1 IN:6 FT
WISDOT/CADDS SHEET

TYPICAL ASSEMBLIES

J1-1

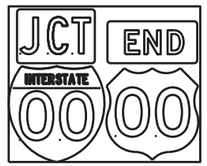

J1-2

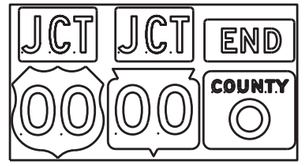

J1-3

J2-1

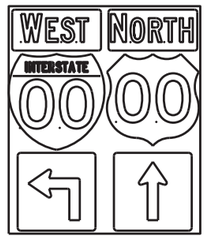

J2-2

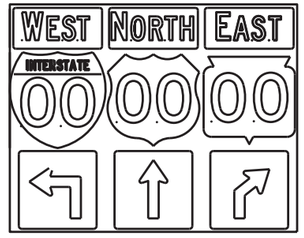

J2-3

JV

(Typical Vertical J-Assembly
See Note 10 and 11)

J3-1

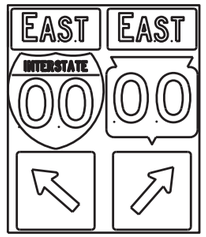

J3-2

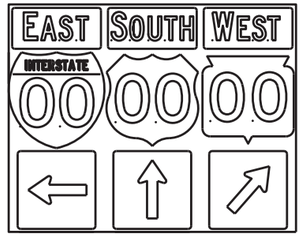

J3-3

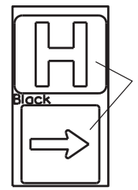

Blue Background

JH-1

J4-1

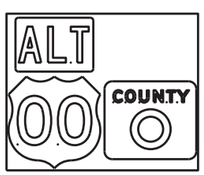

J4-2

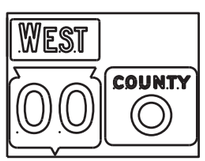

J4-2

J13-1

J12-1

J32-1

J33-1

J23-1

J22-1

blue background
with interstate

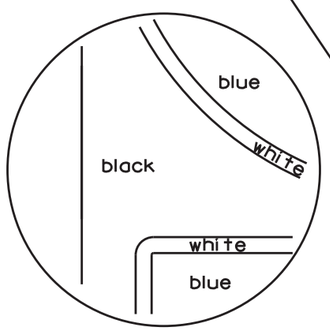

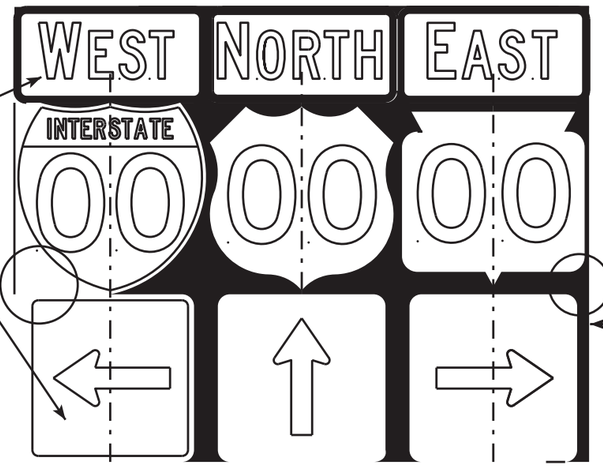

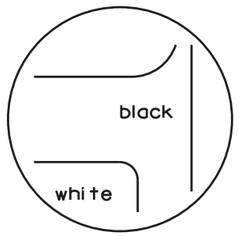

black background

NOTES

1. Signs are Type II - Type H Reflective - reference WIS DOT Standard Specification for HIGHWAY and STRUCTURE CONSTRUCTION latest edition.
2. Color:
   Background - Black Non-reflective
   Message - see Note 5
3. Message Series - See Note 5
4. Corners shall be square or rounded if base material is plywood. If base material is metal the corners shall be rounded.
5. The colors and message spacing on each marker shall be according to the applicable route marker panel specifications.
6. Certain marker heads require the component pieces to be the same color. As an example, all the components used with an M1-1 Interstate marker shall be blue.
7. Single panel j-assemblies shall only be used with route marker shields that are same size. If the route marker shields are different size use multiple piece component.
8. Route assemblies that have 24 inch route shields and have dimensions greater than 48 inches (both vertical and horizontal) shall have one horizontal splice between the arrows and route shields. Vertical splices shall not be used on route assemblies with a horizontal dimension of 144 inches or less. The contractor shall not use more than one vertical joint per sign and the joint shall be between route shields.
9. Route assemblies that have 36 inch shields and have dimensions greater than 48 inchs (both vertical and horizontal) shall have two horizontal splices. One horizontal splice shall be between the cardinal direction and route shields and the other horizontal splice shall be between the arrows and route shields. Vertical splices shall not be used on route assemblies with a horizontal dimension of 144 or less. The contractor shall not use more than one vertical joint per sign and the joint shall be between route shields.
10. All Vertical J Assemblies are given a Sign Code of JV
11. For JV Assemblies that have a mixture of Interstate and non Interstate shields, arrows and cardinals shall be white on blue.

ROUTE MARKERS & COMPONENTS
IN TYPICAL ASSEMBLIES

WISCONSIN DEPT OF TRANSPORTATION

APPROVED Matthew R Rauch
for State Traffic Engineer

DATE 2/06/14 PLATE NO. A2-1S.8

PROJECT NO:

SHEET NO: 173 E

URBAN AREA

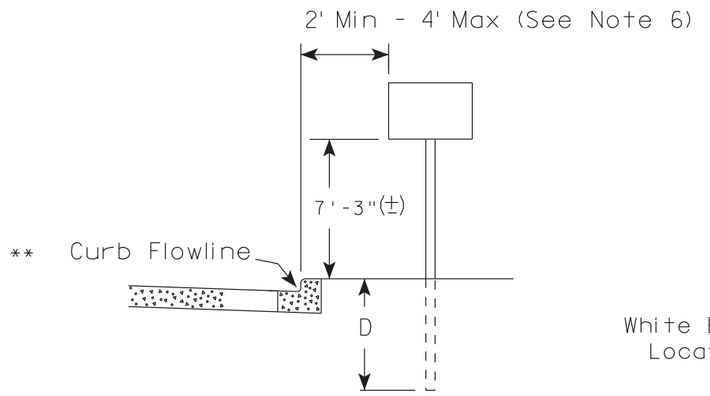

RURAL AREA (See Note 2)

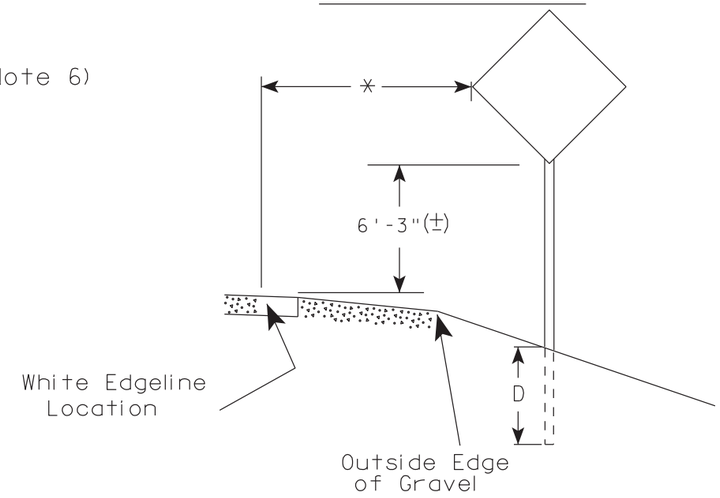

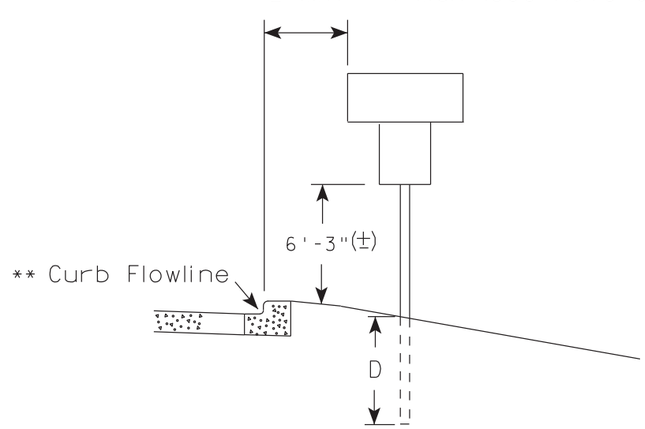

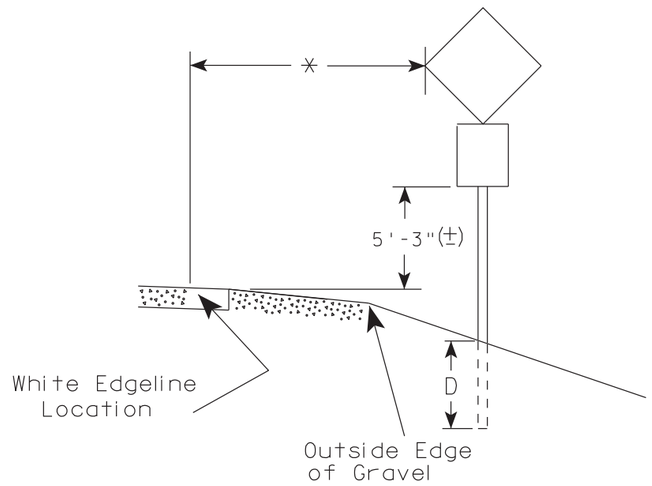

** The existence of curb and gutter does not in itself mandate the vertical clearance illustrated. That height is typically measured where there is sidewalk adjacent to the roadway or parking is permitted. In the absence of sidewalk vertical clearance is measured from the top of the curb. Offset of signs is measured from the flow line.

* 6 feet from edge of a paved shoulder or 12 feet from the edge of pavement (edge line location) or 2 feet from outside edge of gravel, whichever is greater unless directed by project engineer.

GENERAL NOTES

1. Signs wider than 4 feet or 20 sq.ft or larger, shall be mounted on multiple posts. Refer to plate A4-4.
2. If signs are mounted on barrier wall, see A4-10 sign plate.
3. For expressways and freeways, mounting height is 7'- 3" (±) or 6'-3" (±) depending upon existence of a sub-sign.
4. Minimum mounting height for J assemblies (A2-1S) is 7'-3" (±) or 6'-3" (±) per urban or rural detail respectively.
5. Minimum mounting height for signs mounted on traffic signal poles is 5'- 3" (±).
6. Offset distance shall be consistent with existing signs or consistent throughout length of project.
7. The (±) tolerance for mounting height is 3 inches.
8. Folding signs shall be mounted at a height of 5'-3" (±) or as directd by the Engineer.
9. The Double Arrow sign (W12-1) shall be mounted at a height of 2'-3" (±). The Chevron sign (W1-8), Roundabout Chevron panel (R6-4B), Enhanced Reference Markers, Clearance Markers (W5-52), Mile Markers (D10 series), In Road Object Markers (W5-54) & End of Road Markers (W5-56) shall be mounted at a height of 4'-3" (±).

POST EMBEDMENT DEPTH

Area of Sign Installation (Sq.Ft.)	D (Min)
20 or Less	4'
Greater than 20	5'

TYPICAL INSTALLATION OF PERMANENT TYPE II SIGNS ON SINGLE POSTS

WISCONSIN DEPT OF TRANSPORTATION

APPROVED Matthew R Rauch for State Traffic Engineer

DATE 7/23/15 PLATE NO. A4-3.20

PROJECT NO:	HWY:	COUNTY:		SHEET NO: 174	E

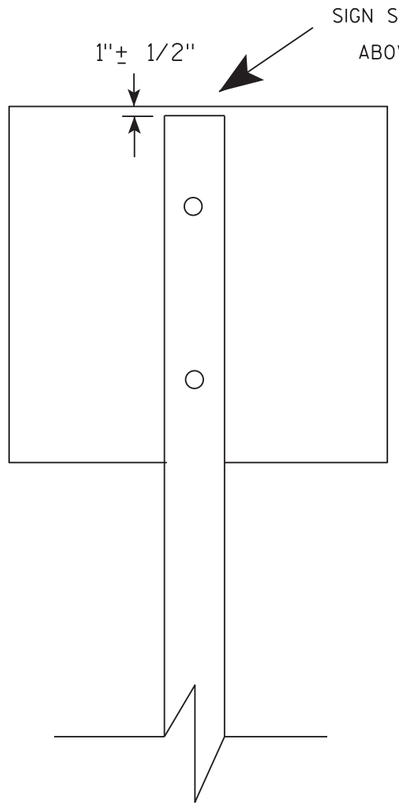

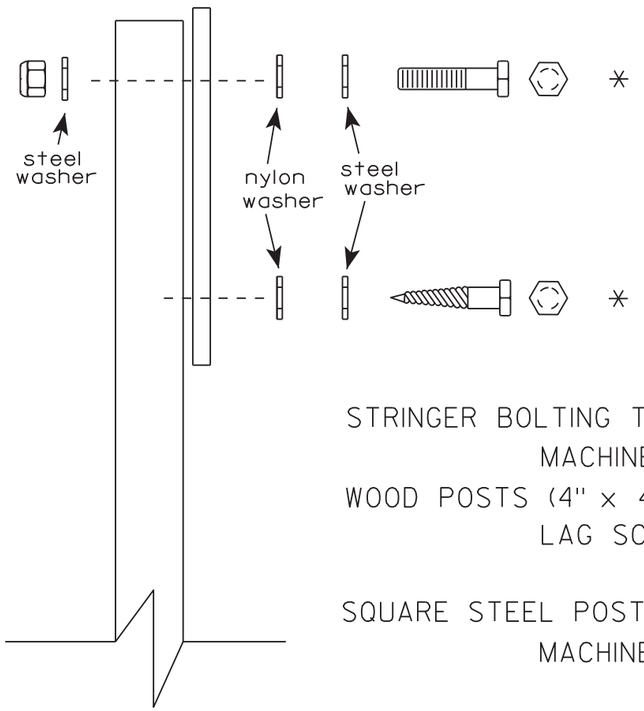

Nuts, bolts and lags used for mounting signs shall have hexagonal heads and shall be either :

a. Hot dip galvanized in accordance with ASTM Designation: A 153, Class D, or SC 3

b. Electro-galvanized in accordance with ASTM Designation : B 633, TYPE III, SC 3.

Threads on bolts and nuts shall be manufactured with sufficient allowance for the cadmium plate or galvanized coating to permit the nuts to run freely on the bolts.

STRINGER BOLTING TO ALUMINUM SIGNS (SEE SIGN PLATE A4-18)

MACHINE BOLTS - 5/16" X 1-3/4" Length w/ lock nuts

WOOD POSTS (4" x 4" or 4" x 6")

LAG SCREWS - 3/8" X 3" (NO STRINGERS ON BACK OF SIGN)

3/8" X 4" (STRINGERS ON BACK OF SIGN)

SQUARE STEEL POSTS (2" x 2")

MACHINE BOLTS - 3/8" X 3-1/4" Length w/ nuts (NO STRINGER ON BACK OF SIGN)

3/8" X 5" Length w/ nuts (STRINGERS ON BACK OF SIGN)

RIVETS - 9/32" (6605-9-6) BULB-TITE, TRI-FOLD, ALUMINUM BODY/MANDREL O.D. FLANGE .720-.765 INCH, GRIP RANGE .042-.375 INCH

WASHERS (ALL POSTS) -

1-1/4" O.D. X 3/8" I.D. X 1/16" STEEL

1-1/4" O.D. X 3/8" I.D. X .080 NYLON

* Two different fastening systems are shown for illustration purposes. On any individual sign, either one or the other system shall be used. Actual number of fasteners per sign varies with the sign area, but normally there are two. For a single post installation, all signs greater than 9 sq. ft. require the use of 3 fasteners.

ATTACHMENT OF SIGNS TO POSTS

WISCONSIN DEPT OF TRANSPORTATION

APPROVED Matthew R Rauch
for State Traffic Engineer

DATE 8/11/16 PLATE NO. A4-8.8

FILE NAME : C:\CAEfiles\Projects\tr_stdplate\A48.DGN PLOT DATE : 11-AUG-2016 11:35 PLOT BY : $$ platuser $$

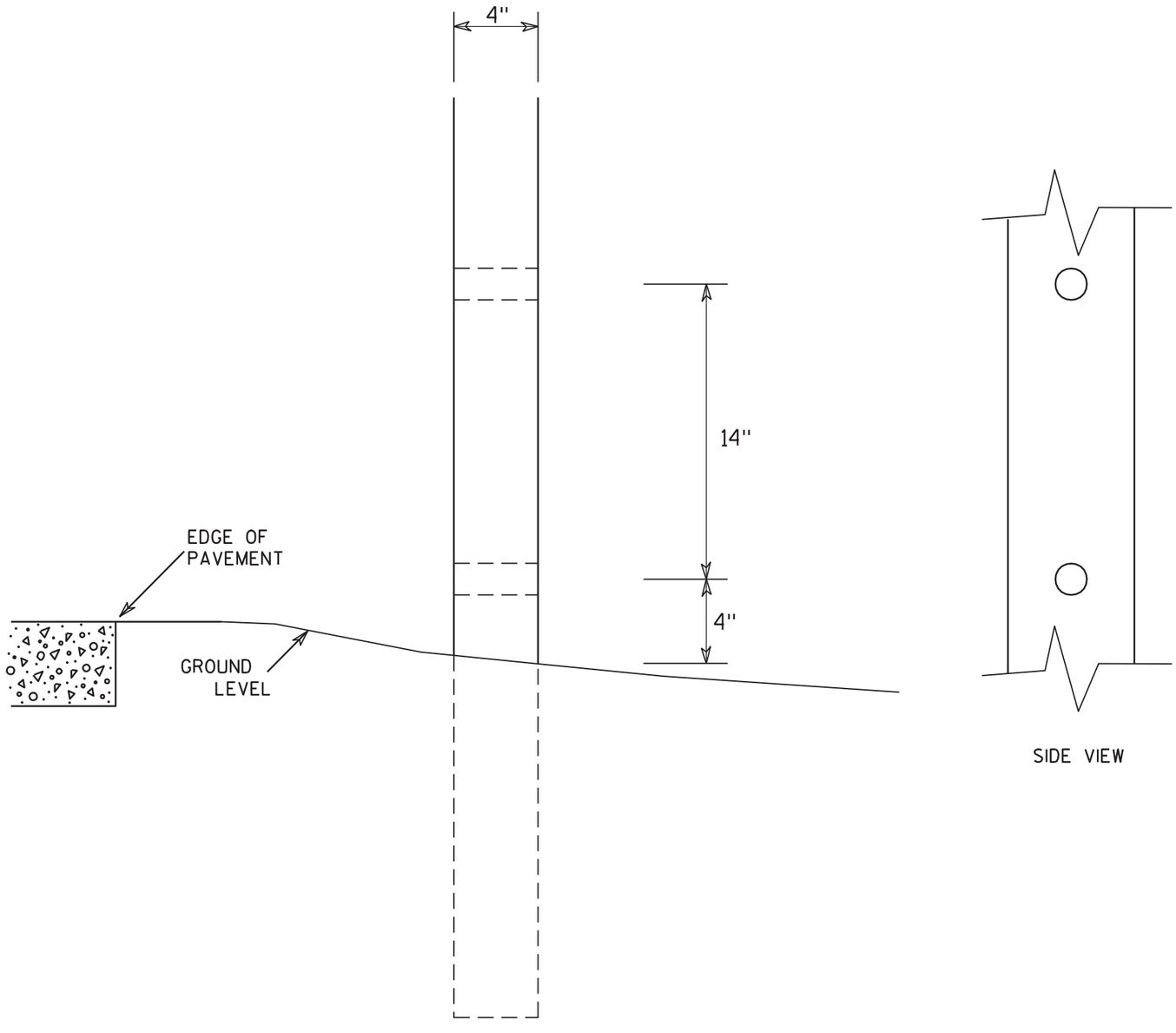

SIDE VIEW

GENERAL NOTES

1. All 4 x 6 Wood Posts shall be modified by having two 1½" diameter holes drilled perpendicular to the roadway centerline.

7

7

4 X 6 WOOD POST MODIFICATIONS

WISCONSIN DEPT OF TRANSPORTATION

APPROVED Chester J Spang
for State Traffic Engineer

DATE 3/27/97 PLATE NO. A4-11.2

PROJECT NO:	HWY:	COUNTY:		SHEET NO: 176	E

BANDING

SINGLE SIGN

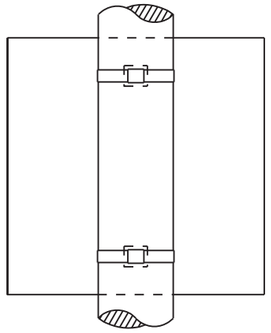

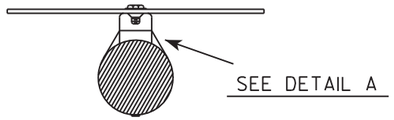

"J" ASSEMBLY

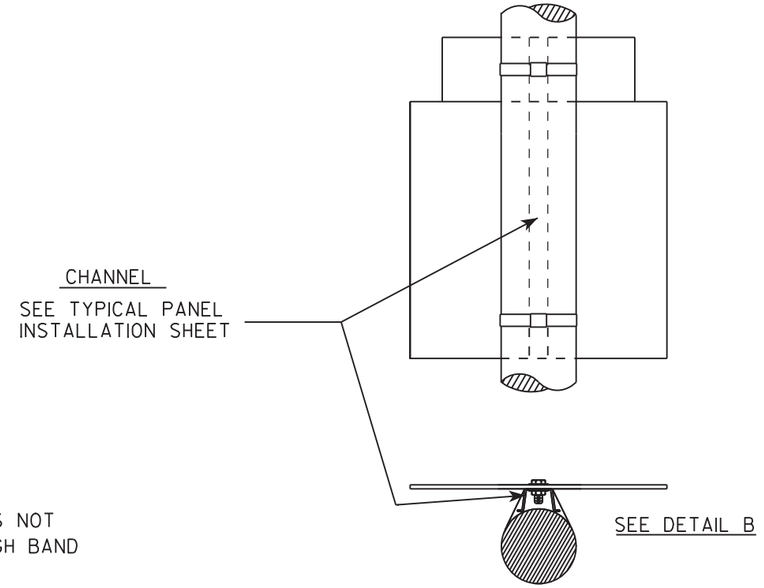

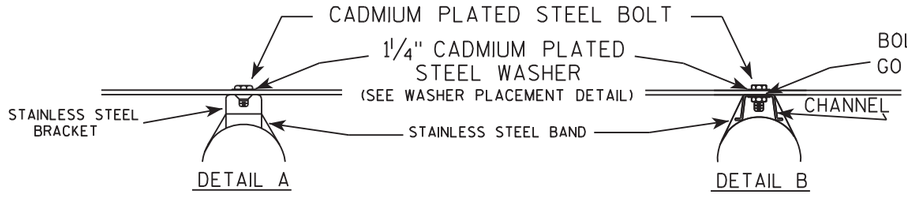

WASHER PLACEMENT

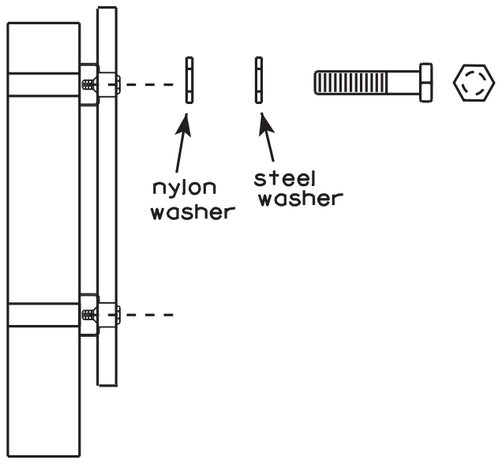

WASHERS (ALL POSTS) -
1-1/4" O.D. X 3/8" I.D. X 1/16" STEEL
1-1/4" O.D. X 3/8" I.D. X .080 NYLON
FOR ALL TYPE H SIGNS

GENERAL NOTES

1. Any sign over 3 feet in width shall use the V-Block banding method. See A5-10 standard plate.
2. Signs 3 feet or greater in height shall have three bracket bands installed. Signs less than 3 feet in height shall have two bracket bands installed.
3. Banding and assembly bracket shall be stainless steel. All bands shall be 3/4" in width and 0.025" thickness.

STANDARD SIGN
SIGN BANDING DETAILS

WISCONSIN DEPT OF TRANSPORTATION

APPROVED Matthew R Rauch
for State Traffic Engineer

DATE 8/16/13 PLATE NO. A5-9.3

PROJECT NO:	HWY:	COUNTY:		SHEET NO: 177	E

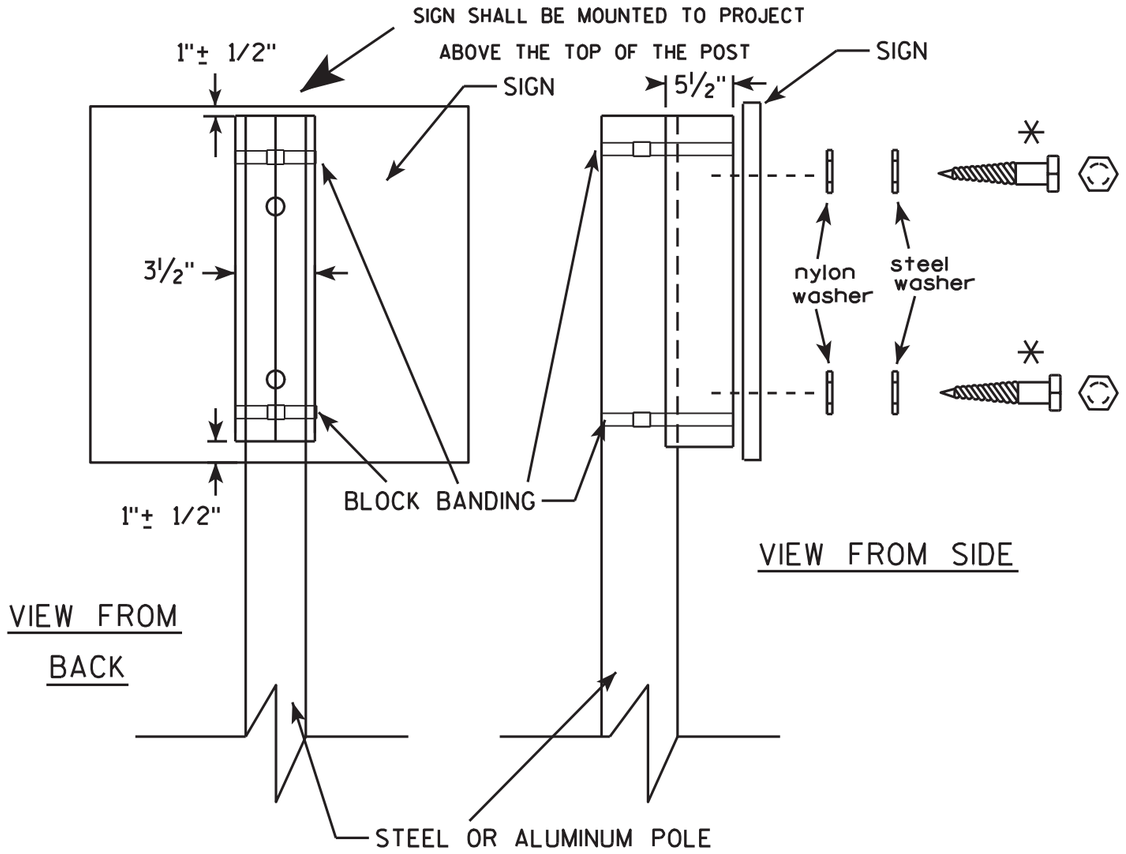

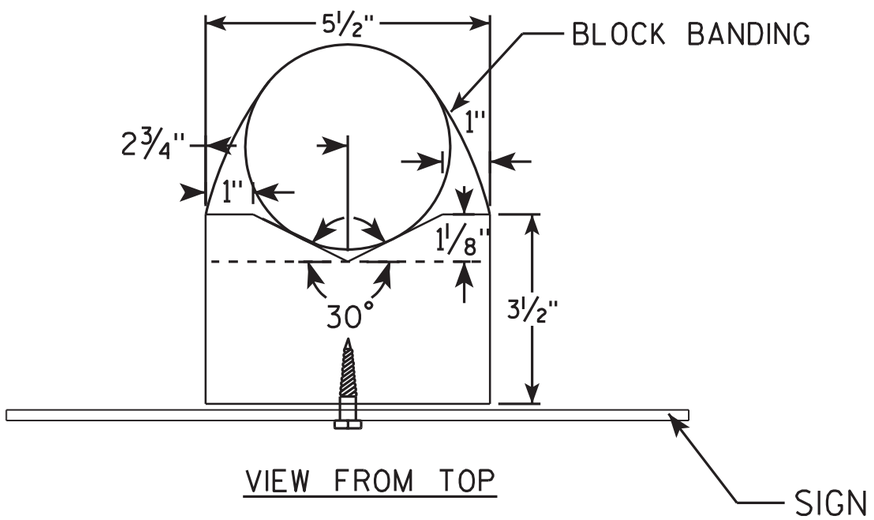

GENERAL NOTES

1. WOOD 4"X6" POST MATERIAL SHALL CONFORM TO 507.2.2 OF THE WisDOT STANDARD SPECIFICATIONS
2. BLOCK BANDING AND CLIPS SHALL BE STAINLESS STEEL, ¾" WIDTH AND 0.025" THICKNESS
3. SIGNS 3' OR GREATER IN HEIGHT SHALL UTILIZE 3 BLOCK BANDS. SIGNS UNDER 3' IN HEIGHT SHALL UTILIZE 2 BLOCK BANDS
4. ACTUAL NUMBER OF FASTENERS PER SIGN VARIES WITH THE SIGN AREA, BUT NORNALLY THERE ARE TWO. FOR SIGNS GREATER THAN 9 S.F. 3 FASTENERS SHALL BE USED.
5. ALL SIGN MOUNTING BOLTS AND WASHERS SHALL BE EITHER:
   a. Hot dip or mechanically galvanized in accordance with ASTM Designation: A 153, Class D, or
   b. Cadmium plated in accordance with ASTM Designation : B 766 TYPE 3, Class 12, or
   c. Electro-galvanized in accordance with ASTM Designation : B 633, TYPE III, SC 3.
6. ALL BOLTS SHALL HAVE HEXAGONAL HEADS.
7. STEEL WASHERS SHALL BE 1¼" O.D. X ⅜" I.D. X 1/16"
8. NYLON WASHERS SHALL BE 1¼" O.D. X ⅜" I.D. X .080 FOR TYPE H OR TYPE F FACE SIGN

✳ LAG BOLTS SHALL BE ⅜" X 2½"

BLOCK BANDING DETAIL (V-BLOCK OPTION)

WISCONSIN DEPT OF TRANSPORTATION

APPROVED Matthew R Rauch
for State Traffic Engineer

DATE 7/12/07 PLATE NO. A5-10.1

PROJECT NO:

SHEET NO: 178 E

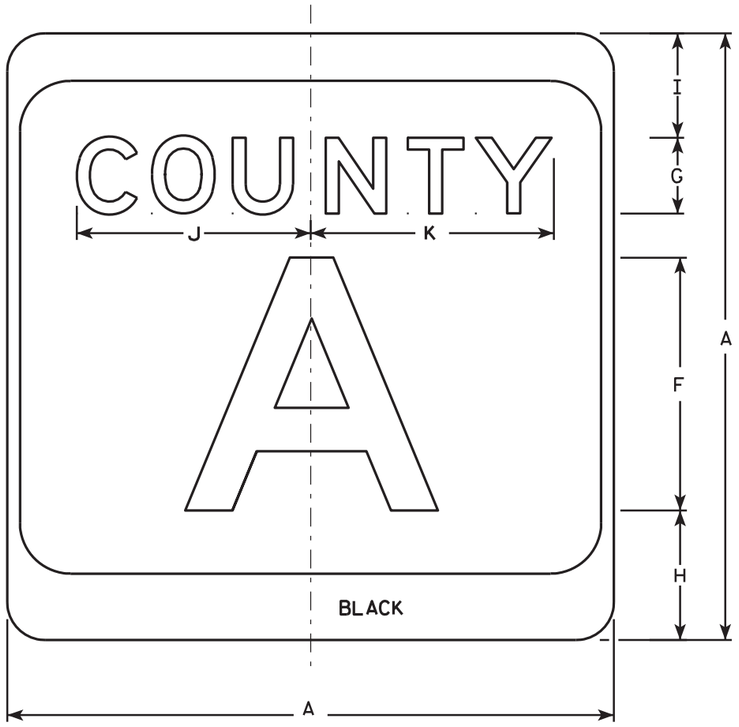

M1-5A

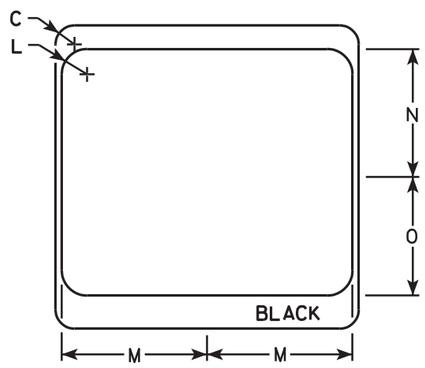

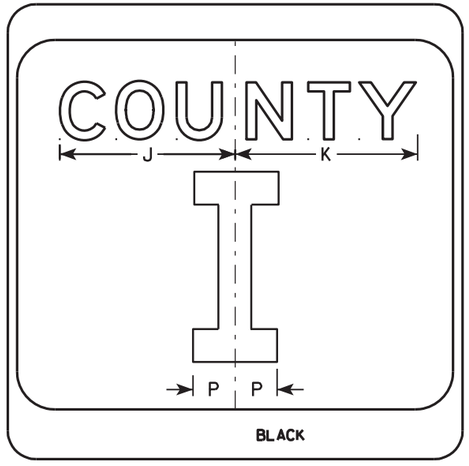

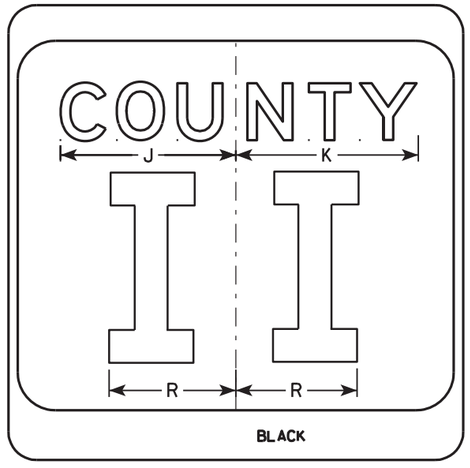

NOTES

1. Sign is Type II - see Note 7 - reference WIS DOT Standard Specification for HIGHWAY and STRUCTURE CONSTRUCTION latest edition.
2. Color:
   Background - White & Black - See Note 7
   Message - Black
3. Message Series - see Note 5
4. Corners may be square or rounded when base material is plywood but borders shall be rounded as shown. When base material is metal, the corners and borders shall be rounded.
5. Message Series E for 1 letter.
   Message Series D for 2 letters unless message is too big then Series C.
   Message Series C for 3 letters unless message is too big then Series B.
6. Substitute appropriate letters & optically center to achieve proper balance.
7. Permanent Signs
   Background - Type H Reflective
   Detour or temporary Signs
   Background - Reflective

SIZE	A	B	C	D	E	F	G	H	I	J	K	L	M	N	O	P	Q	R	S	T	U	V	W	X	Y	Z	Area sq. ft.
1																											
2	24		1 1/2			10	3	5 1/8	4 1/8	9 1/4	9 5/8	2	11 1/2	10 1/8	9 3/8	2 1/4		6 5/8									4.0
3	36		2 1/4			16	4	7 5/8	5 5/8	12 1/4	12 7/8	3	17 1/8	15 1/4	14	3 3/8		10									9.0
4	36		2 1/4			16	4	7 5/8	5 5/8	12 1/4	12 7/8	3	17 1/8	15 1/4	14	3 3/8		10									9.0
5	36		2 1/4			16	4	7 5/8	5 5/8	12 1/4	12 7/8	3	17 1/8	15 1/4	14	3 3/8		10									9.0

CTH MARKER
M1-5A FOR ASSEMBLIES

WISCONSIN DEPT OF TRANSPORTATION

APPROVED Matthew R Rauch
for State Traffic Engineer

DATE 9/27/11 PLATE NO. M1-5A.8

PROJECT NO: | HWY: | COUNTY: | SHEET NO: 179 | E

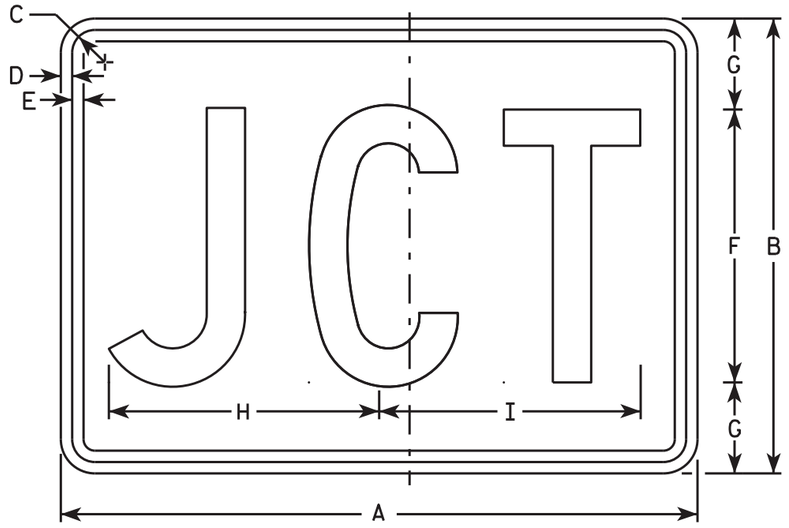

M2-1
MM2-1
MP2-1

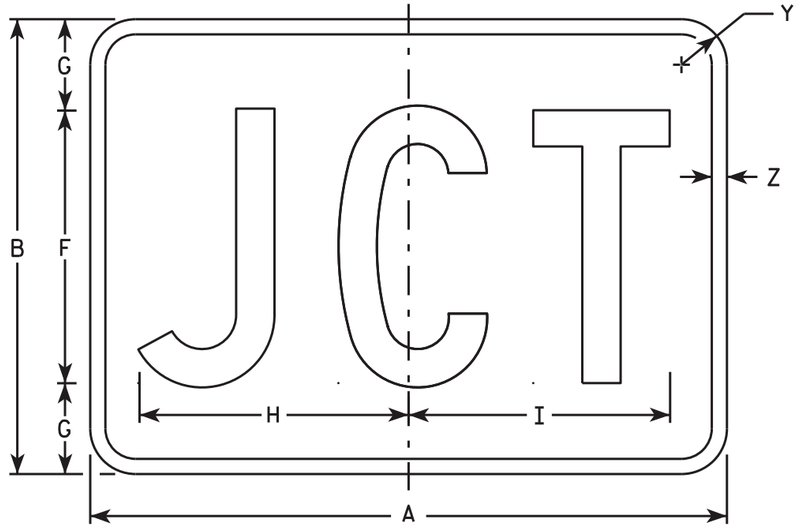

MB2-1
MK2-1
MN2-1
MR2-1

NOTES

1. Sign is Type II - Type H
2. Color:
   Background - See note 5
   Message - See note 5
3. Message Series - C
4. Corners may be square or rounded when base material is plywood but borders shall be rounded as shown. When base material is metal, the corners and borders shall be rounded.
5. M2-1 Background - White
   Message - Black
   MB2-1 Background - Blue
   Message - White
   MK2-1 Background - Green
   Message - White
   MM2-1 Background - White
   Message - Green
   MN2-1 Background - Brown
   Message - White
   MP2-1 Background - White
   Message - Blue
   MR2-1 Background - Brown
   Message - Yellow

SIZE	A	B	C	D	E	F	G	H	I	J	K	L	M	N	O	P	Q	R	S	T	U	V	W	X	Y	Z	Area sq. ft.
1																											
2	21	15	1 1/8	3/8	3/8	9	3	8 7/8	8 5/8																1 1/2	1/2	2.20
3	30	21	1 1/8	3/8	3/8	13	4	12 7/8	12 3/8																1 1/2	1/2	4.40
4	30	21	1 1/8	3/8	3/8	13	4	12 7/8	12 3/8																1 1/2	1/2	4.40
5	30	21	1 1/8	3/8	3/8	13	4	12 7/8	12 3/8																1 1/2	1/2	4.40

STANDARD SIGN
M2-1

WISCONSIN DEPT OF TRANSPORTATION

APPROVED Matthew R Rauch
for State Traffic Engineer

DATE 10/15/15 PLATE NO. M2-1.12

PROJECT NO: | HWY: | COUNTY: | SHEET NO: 180 E

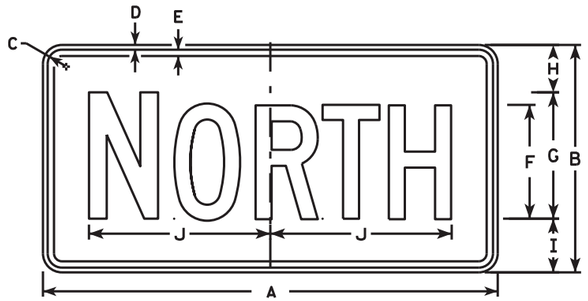

M3-1
MM3-1
MP3-1

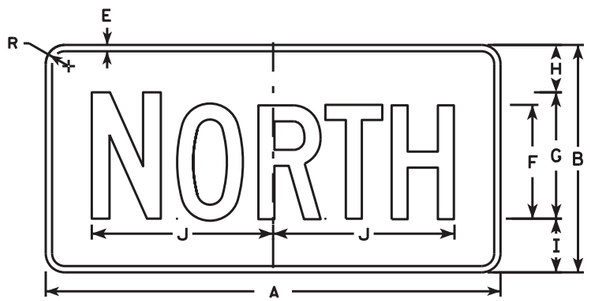

MB3-1
MK3-1
MN3-1

M3-2
MM3-2
MP3-2

MB3-2
MK3-2
MN3-2

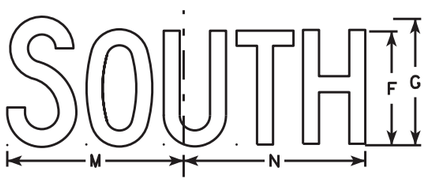

M3-3
MM3-3
MP3-3

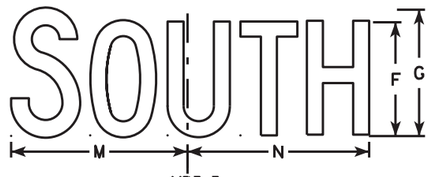

MB3-3
MK3-3
MN3-3

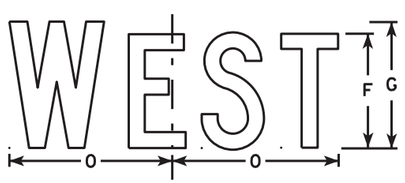

M3-4
MM3-4
MP3-4

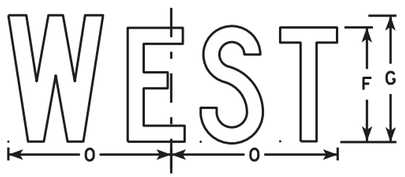

MB3-4
MK3-4
MN3-4

NOTES

1. All Signs Type II - Type H
2. Color:
   Background - See note 5
   Message - See note 5
3. Message Series - C
4. Corners may be square or rounded when base material is plywood but borders shall be rounded as shown. When base material is metal, the corners and borders shall be rounded.
5. M3-1 thru M3-4 Background - White
   Message - Black
   MB3-1 thru MB3-4 Background - Blue
   Message - White
   MK3-1 thru MK3-4 Background - Green
   Message - White
   MM3-1 thru MM3-4 Background - White
   Message - Green
   MN3-1 thru MN3-4 Background - Brown
   Message - White
   MP3-1 thru MP3-4 Background - White
   Message - Blue
6. Note the first letter of each direction is larger than the remainder of the message.

SIZE	A	B	C	D	E	F	G	H	I	J	K	L	M	N	O	P	Q	R	S	T	U	V	W	X	Y	Z	Area sq. ft.
1																											
2	24	12	1 1/8	3/8	3/8	6	7	2 1/4	2 3/4	10 1/4	7 7/8	8 3/8	10 1/4	9 3/4	8 3/4			1 1/2									2.00
3	36	18	1 1/8	3/8	1/2	9	10	3 3/4	4 1/4	14 3/8	12	12 1/8	14	14 1/8	13			1 1/2									4.5
4	36	18	1 1/8	3/8	1/2	9	10	3 3/4	4 1/4	14 3/8	12	12 1/8	14	14 1/8	13			1 1/2									4.5
5	36	18	1 1/8	3/8	1/2	9	10	3 3/4	4 1/4	14 3/8	12	12 1/8	14	14 1/8	13			1 1/2									4.5

STANDARD SIGNS
M3-1 thur M3-4
SERIES

WISCONSIN DEPT OF TRANSPORTATION

APPROVED Matthew R Rauch for State Traffic Engineer

DATE 10/15/15 PLATE NO. M3-1.14

PROJECT NO: | HWY: | COUNTY: | SHEET NO: 181 | E

FILE NAME : C:\CAEfiles\Projects\tr_stdplate\M31.DGN PLOT DATE : 15-OCT-2015 12:16 PLOT BY : $$...plotuser...$$ PLOT NAME : PLOT SCALE : 18.607113:1.000000 WISDOT/CADDS SHEET 42

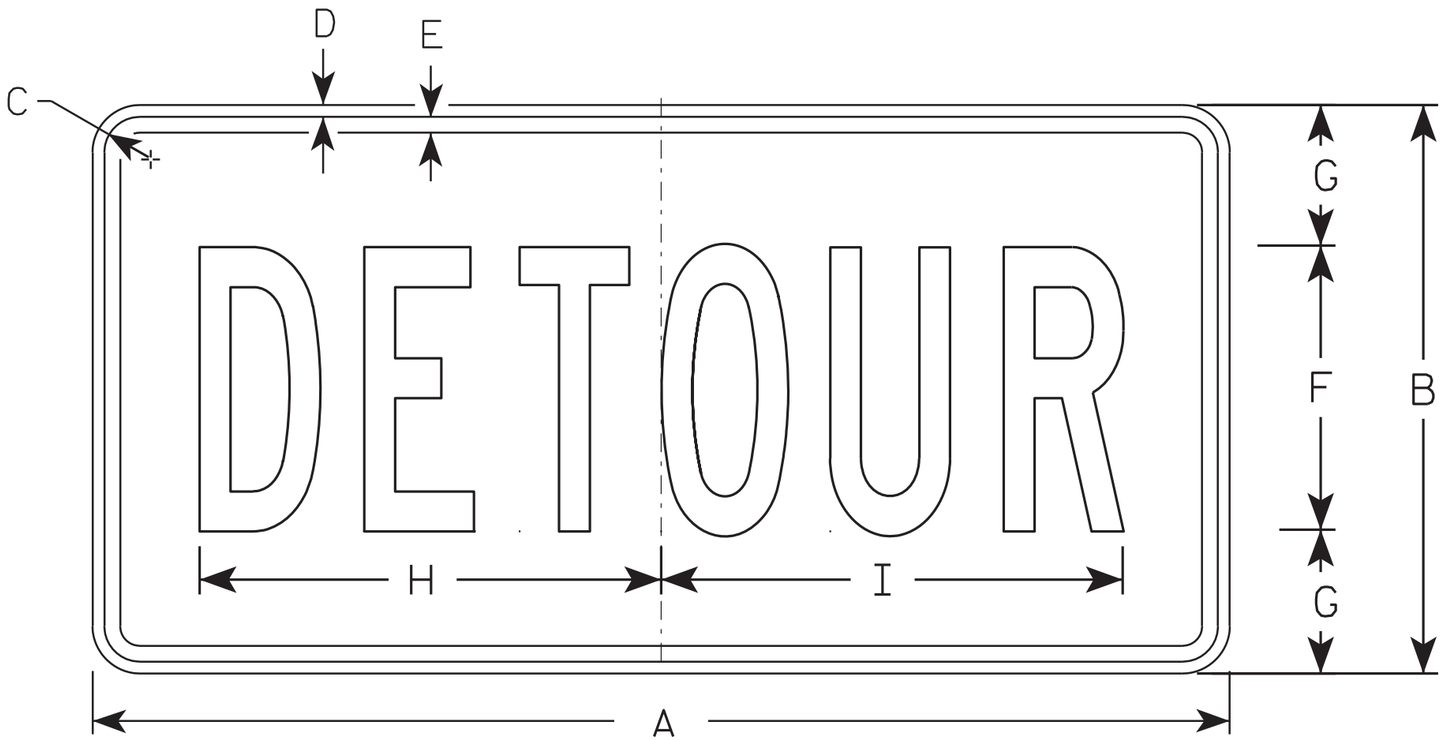

M4-8

NOTES

1. Sign is Type II - Type F Reflective - reference WIS DOT Standard Specification for HIGHWAY and STRUCTURE CONSTRUCTION latest edition.
2. Color:
   Background - Orange
   Message - Black
3. Message Series - B
4. Corners may be square or rounded when base material is plywood but borders shall be rounded as shown. When base material is metal, the corners and borders shall be rounded.

SIZE	A	B	C	D	E	F	G	H	I	J	K	L	M	N	O	P	Q	R	S	T	U	V	W	X	Y	Z	Area sq. ft.
1																											
2	24	12	1 1/8	3/8	3/8	6	3	10	10 1/4																		2.0
3	36	18	1 1/8	3/8	1/2	9	4 1/2	14 5/8	14 1/2																		4.5
4																											
5																											

STANDARD SIGN
M4-8

WISCONSIN DEPT OF TRANSPORTATION

APPROVED Matthew R Rauch
for State Traffic Engineer

DATE 11/10/10 PLATE NO. M4-8.2

PROJECT NO:	HWY:	COUNTY:		SHEET NO: 182	E

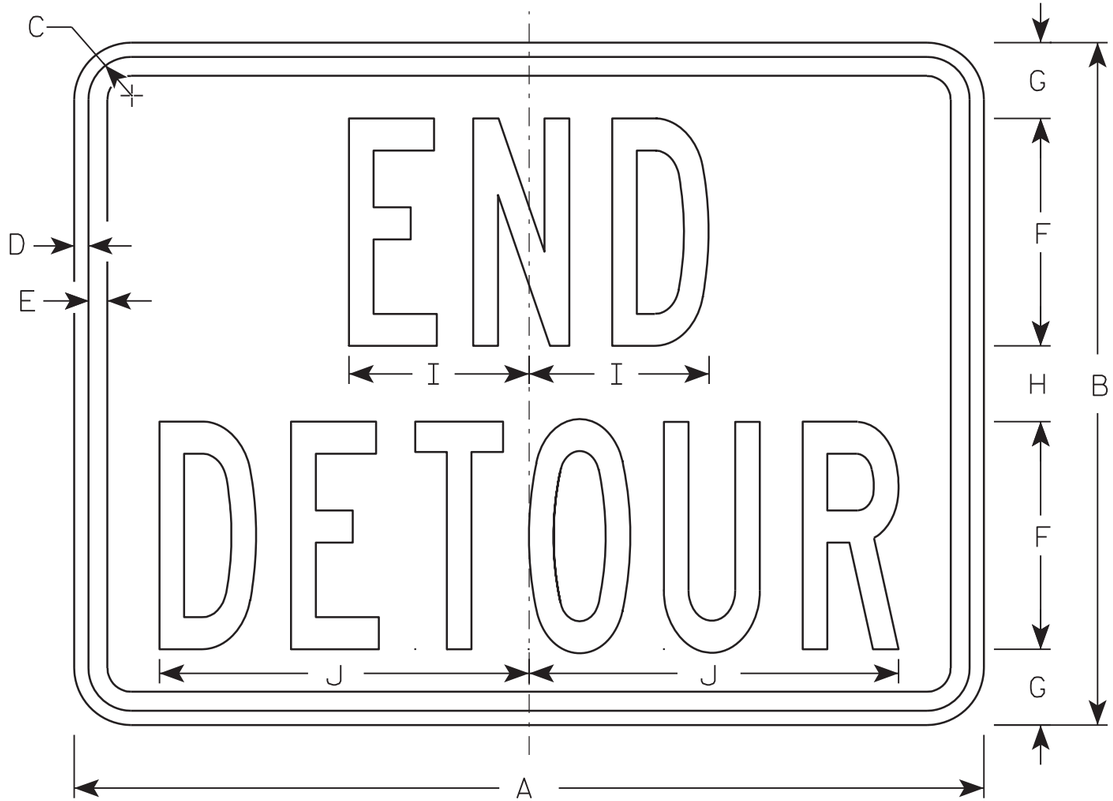

M4-8A

NOTES

1. Sign is Type II - Type F Reflective - reference WIS DOT Standard Specification for HIGHWAY and STRUCTURE CONSTRUCTION latest edition.
2. Color:
   Background - Orange
   Message - Black
3. Message Series - B
4. Corners may be square or rounded when base material is plywood but borders shall be rounded as shown. When base material is metal, the corners and borders shall be rounded.

SIZE	A	B	C	D	E	F	G	H	I	J	K	L	M	N	O	P	Q	R	S	T	U	V	W	X	Y	Z	Area sq. ft.
1																											
2	24	18	1 1/8	3/8	1/2	6	2	2	4 3/4	9 3/4																	3.0
3	30	24	1 1/8	3/8	1/2	8	2 1/2	3	6 3/4	13																	5.0
4																											
5																											

STANDARD SIGN
M4-8A

WISCONSIN DEPT OF TRANSPORTATION

APPROVED Matthew R Rauch
for State Traffic Engineer

DATE 3/9/11 PLATE NO. M4-8A.2

PROJECT NO:	HWY:	COUNTY:		SHEET NO: 183	E

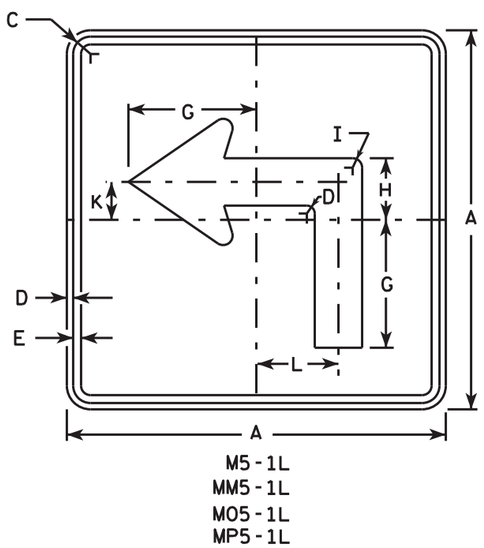

M5-1L
MM5-1L
MO5-1L
MP5-1L

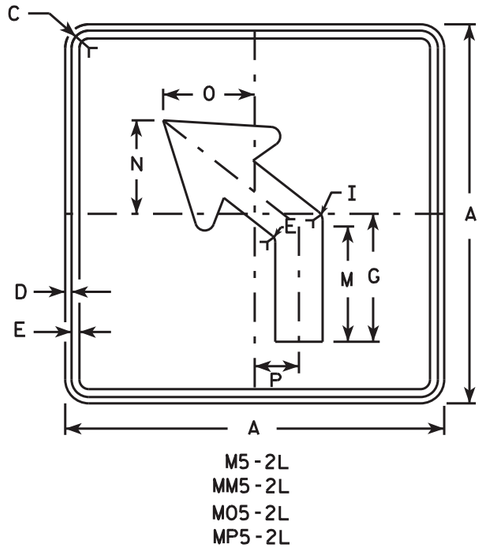

M5-2L
MM5-2L
MO5-2L
MP5-2L

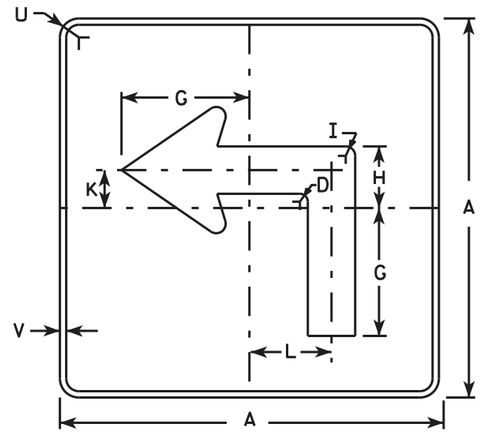

MB5-1L
MK5-1L
MN5-1L
MR5-1L

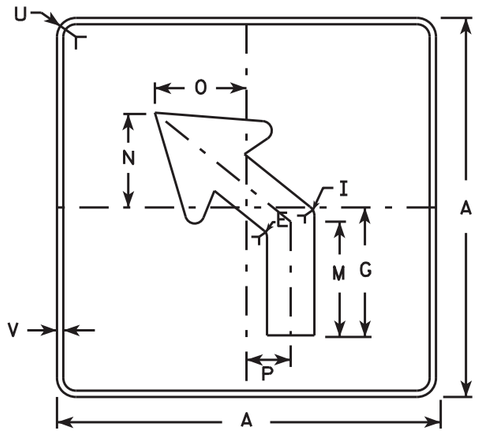

MB5-2L
MK5-2L
MN5-2L
MR5-2L

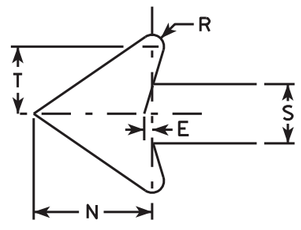

NOTES

1. Signs are Type II - Type H reflective except as shown
2. Color:
   Background - See note 4
   Message - See note 4
3. Corners may be square or rounded when base material is plywood but borders shall be rounded as shown. When base material is metal, the corners and borders shall be rounded.
4. M5-1 and M5-2 Background - White
   Message - Black
   MB5-1 and MB5-2 Background - Blue
   Message - White
   MK5-1 and MK5-2 Background - Green
   Message - White
   MM5-1 and MM5-2 Background - White
   Message - Green
   MN5-1 and MN5-2 Background - Brown
   Message - White
   MO5-1 and MO5-2 Background - Orange - Type F Reflective
   Message - Black
   MP5-1 and MP5-2 Background - White - Type H Reflective
   Message - Blue
   MR5-1 and MR5-2 Background - Brown
   Message - Yellow
5. M5-1R same as M5-1L except arrow points right.
6. M5-2R same as M5-2L except arrow tilts right.

SIZE	A	B	C	D	E	F	G	H	I	J	K	L	M	N	O	P	Q	R	S	T	U	V	W	X	Y	Z	Area sq. ft.
1																											
2	21		1 1/8	3/8	3/8		7	3 3/8	5/8		2 1/8	4 1/2	6 3/8	5 1/4	5	2 1/2		1/2	2 5/8	3	1 1/2	1/2					3.06
3	30		1 3/8	1/2	5/8		10 1/8	4 7/8	7/8		3	6 1/2	9 1/8	7 1/2	7 1/4	3 1/2		3/4	3 3/4	4 1/4	1 7/8	1/2					6.25
4	30		1 3/8	1/2	5/8		10 1/8	4 7/8	7/8		3	6 1/2	9 1/8	7 1/2	7 1/4	3 1/2		3/4	3 3/4	4 1/4	1 7/8	1/2					6.25
5	30		1 3/8	1/2	5/8		10 1/8	4 7/8	7/8		3	6 1/2	9 1/8	7 1/2	7 1/4	3 1/2		3/4	3 3/4	4 1/4	1 7/8	1/2					6.25

STANDARD SIGN
M5-1 & M5-2

WISCONSIN DEPT OF TRANSPORTATION

APPROVED Matthew R Rauch
for State Traffic Engineer

DATE 10/15/15 PLATE NO. M5-1.13

PROJECT NO: | HWY: | COUNTY: | SHEET NO: 184 | E

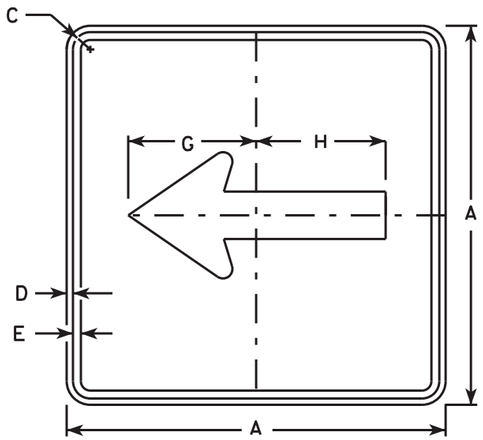

M6-1
MM6-1
MO6-1
MP6-1

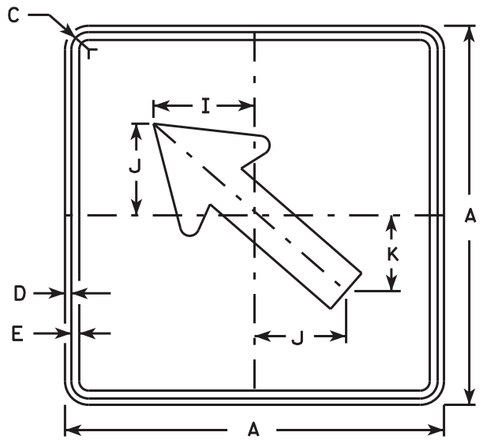

M6-2
MM6-2
MO6-2
MP6-2

NOTES

1. Signs are Type II - Type H except as Shown
2. Color:
   Background - See note 4
   Message - See note 4
3. Corners may be square or rounded when base material is plywood but borders shall be rounded as shown. When base material is metal, the corners and borders shall be rounded.
4. M6-1 and M6-2 Background - White
   Message - Black
   MB6-1 and MB6-2 Background - Blue
   Message - White
   MK6-1 and MK6-2 Background - Green
   Message - White
   MM6-1 and MM6-2 Background - White
   Message - Green
   MN6-1 and MN6-2 Background - Brown
   Message - White
   MO6-1 and MO6-2 Background - Orange - Type F Reflective
   Message - Black
   MP6-1 and MP6-2 Background - White
   Message - Blue
   MR6-1 and MR6-2 Background - Brown
   Message - Yellow

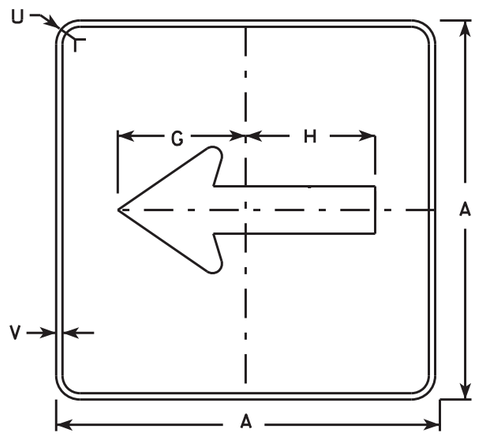

MB6-1
MK6-1
MN6-1
MR6-1

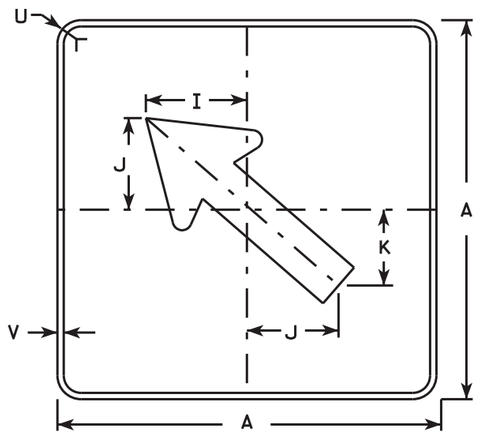

MB6-2
MK6-2
MN6-2
MR6-2

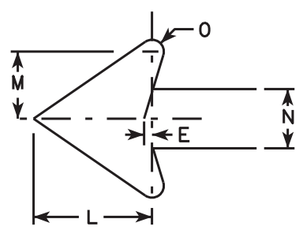

SIZE	A	B	C	D	E	F	G	H	I	J	K	L	M	N	O	P	Q	R	S	T	U	V	W	X	Y	Z	Area sq. ft.
1																											
2	21		1 1/8	3/8	3/8		7 1/2	7 1/8	5 5/8	5	4 1/4	5 1/4	3	2 5/8	1/2						1 1/2	1/2					3.06
3	30		1 3/8	1/2	5/8		10 3/4	10 1/4	8	7 1/4	6	7 1/2	4 1/4	3 3/4	3/4						1 7/8	1/2					6.25
4	30		1 3/8	1/2	5/8		10 3/4	10 1/4	8	7 1/4	6	7 1/2	4 1/4	3 3/4	3/4						1 7/8	1/2					6.25
5	30		1 3/8	1/2	5/8		10 3/4	10 1/4	8	7 1/4	6	7 1/2	4 1/4	3 3/4	3/4						1 7/8	1/2					6.25

STANDARD SIGN
M6-1 & M6-2
SERIES

WISCONSIN DEPT OF TRANSPORTATION

APPROVED Matthew R Rauch
for State Traffic Engineer

DATE 10/15/15 PLATE NO. M6-1.15

PROJECT NO: | HWY: | COUNTY: | SHEET NO: 185 | E

7

FILE NAME : C:\CAEfiles\Projects\tr_stdplate\M61.DGN PLOT DATE : 15-OCT-2015 13:17 PLOT BY : ss...plotuser...ss PLOT NAME : PLOT SCALE : 18.607113:1.000000
WISDOT/CADDS SHEET 42

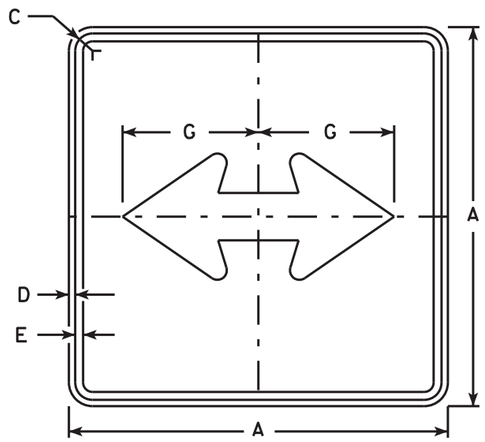

M6-4
MM6-4
MO6-4
MP6-4

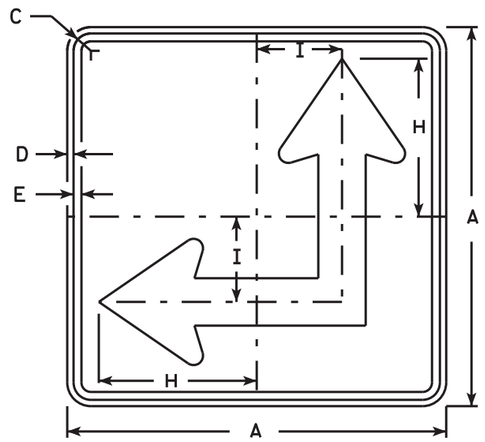

M6-6
MM6-6
MO6-6
MP6-6

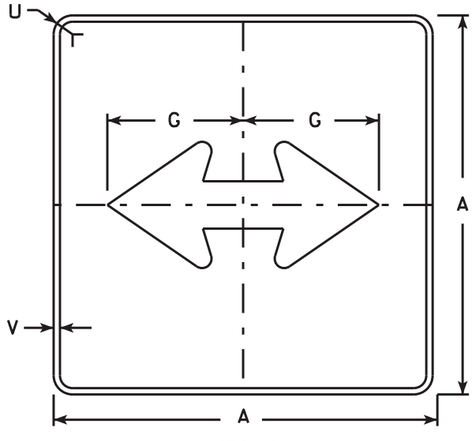

MB6-4
MK6-4
MN6-4
MR6-4

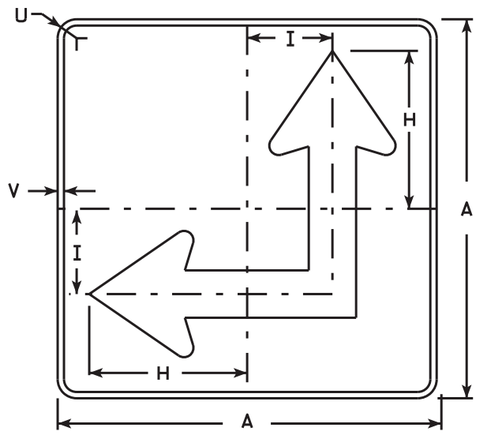

MB6-6
MK6-6
MN6-6
MR6-6

NOTES

1. Signs are Type II - Type H except as Shown
2. Color:
   Background - See Note 4
   Message - See Note 4
3. Corners may be square or rounded when base material is plywood but borders shall be rounded as shown. When base material is metal, the corners and borders shall be rounded.
4. M6-4 and M6-6 Background - White
   Message - Black
   MB6-4 and MB6-6 Background - Blue
   Message - White
   MK6-4 and MK6-6 Background - Green
   Message - White
   MM6-4 and MM6-6 Background - White
   Message - Green
   MN6-4 and MN6-6 Background - Brown
   Message - White
   MO6-4 and MO6-6 Background - Orange - Type F Reflective
   Message - Black
   MP6-4 and MP6-6 Background - White
   Message - Blue
   MR6-4 and MR6-6 Background - Brown
   Message - Yellow
5. M6-6R same as M6-6L except arrow points ahead and right.

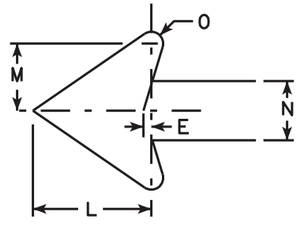

SIZE	A	B	C	D	E	F	G	H	I	J	K	L	M	N	O	P	Q	R	S	T	U	V	W	X	Y	Z	Area sq. ft.
1																											
2	21		1 1/8	3/8	3/8		7 1/2	8 3/4	4 1/4			5 1/4	3	2 5/8	1/2						1 1/2	1/2					3.06
3	30		1 3/8	1/2	5/8		10 3/4	12 1/2	6 3/4			7 1/2	4 1/4	3 3/4	3/4						1 7/8	1/2					6.25
4	30		1 3/8	1/2	5/8		10 3/4	12 1/2	6 3/4			7 1/2	4 1/4	3 3/4	3/4						1 7/8	1/2					6.25
5	30		1 3/8	1/2	5/8		10 3/4	12 1/2	6 3/4			7 1/2	4 1/4	3 3/4	3/4						1 7/8	1/2					6.25

STANDARD SIGN
M6-4 & M6-6
SERIES

WISCONSIN DEPT OF TRANSPORTATION

APPROVED Matthew R Rauch for State Traffic Engineer

DATE 10/15/15 PLATE NO. M6-4.10

PROJECT NO: | HWY: | COUNTY: | SHEET NO: 186 | E

FILE NAME : C:\CAEfiles\Projects\tr_stdplate\M64.DGN PLOT DATE : 15-OCT-2015 13:20 PLOT BY : ss...plotuser...ss PLOT NAME : PLOT SCALE : 18.607113:1.000000
WISDOT/CADDS SHEET 42

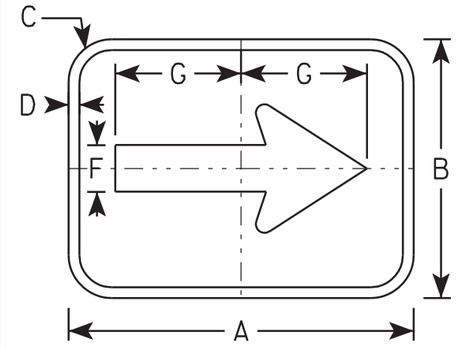

M7-1

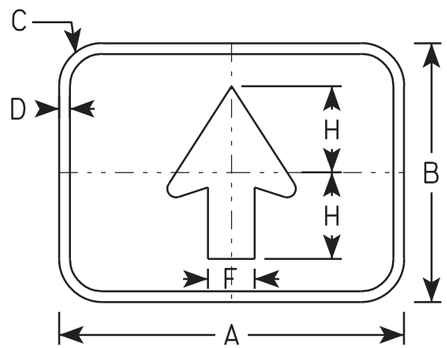

M7-2

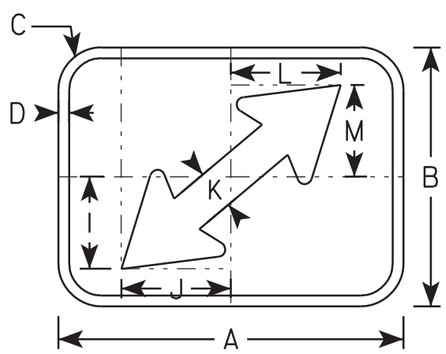

M7-3

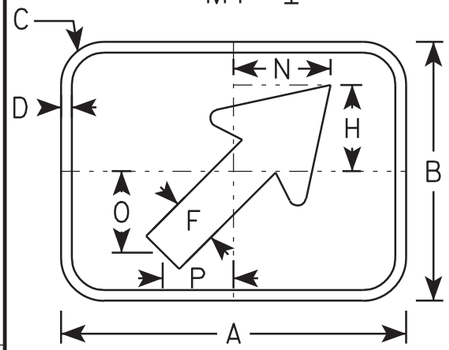

M7-4

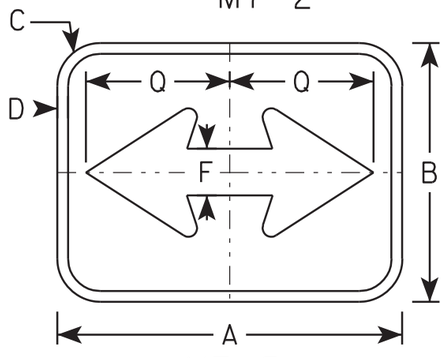

M7-5

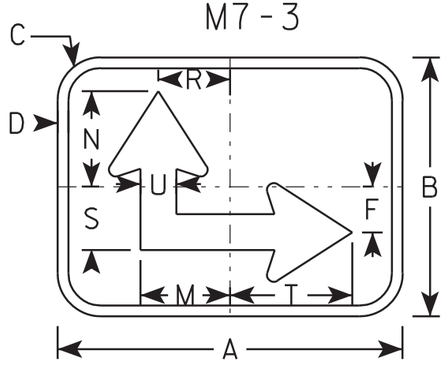

M7-6

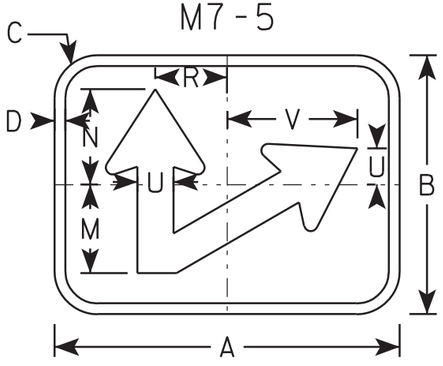

M7-7

NOTES

1. Sign is Type II - Type H Reflective - reference WIS DOT Standard Specification for HIGHWAY and STRUCTURE CONSTRUCTION latest edition.
2. Color:
   Background - Green
   Message -White
3. Corners may be square or rounded when base material is plywood but borders shall be rounded as shown. When base material is metal, the corners and borders shall be rounded.

SIZE	A	B	C	D	E	F	G	H	I	J	K	L	M	N	O	P	Q	R	S	T	U	V	W	X	Y	Z	Area sq. ft.
1																											
2	12	9	1 1/2	3/8		1 5/8	4 3/8	3	3 1/4	3 3/4	1 3/8	3 7/8	3 1/8	3 3/8	2 7/8	2 1/2	5	2 1/2	2 1/4	4 1/4	1 1/4	4 1/2					.75
3																											
4																											
5																											

STANDARD SIGN
M7 SERIES

WISCONSIN DEPT OF TRANSPORTATION

APPROVED Matthew R Rauch
for State Traffic Engineer

DATE 05/04/10 PLATE NO. M7-1.1

PROJECT NO:	HWY:	COUNTY:		SHEET NO: 187	E

FILE NAME : C:\Users\PROJECTS\tr_stdplate\M71.DGN PLOT DATE : 28-MAY-2010 08:14 PLOT BY : ditjph PLOT NAME : PLOT SCALE : 5.237442:1.000000

WISDOT/CADDS SHEET 42

7

7

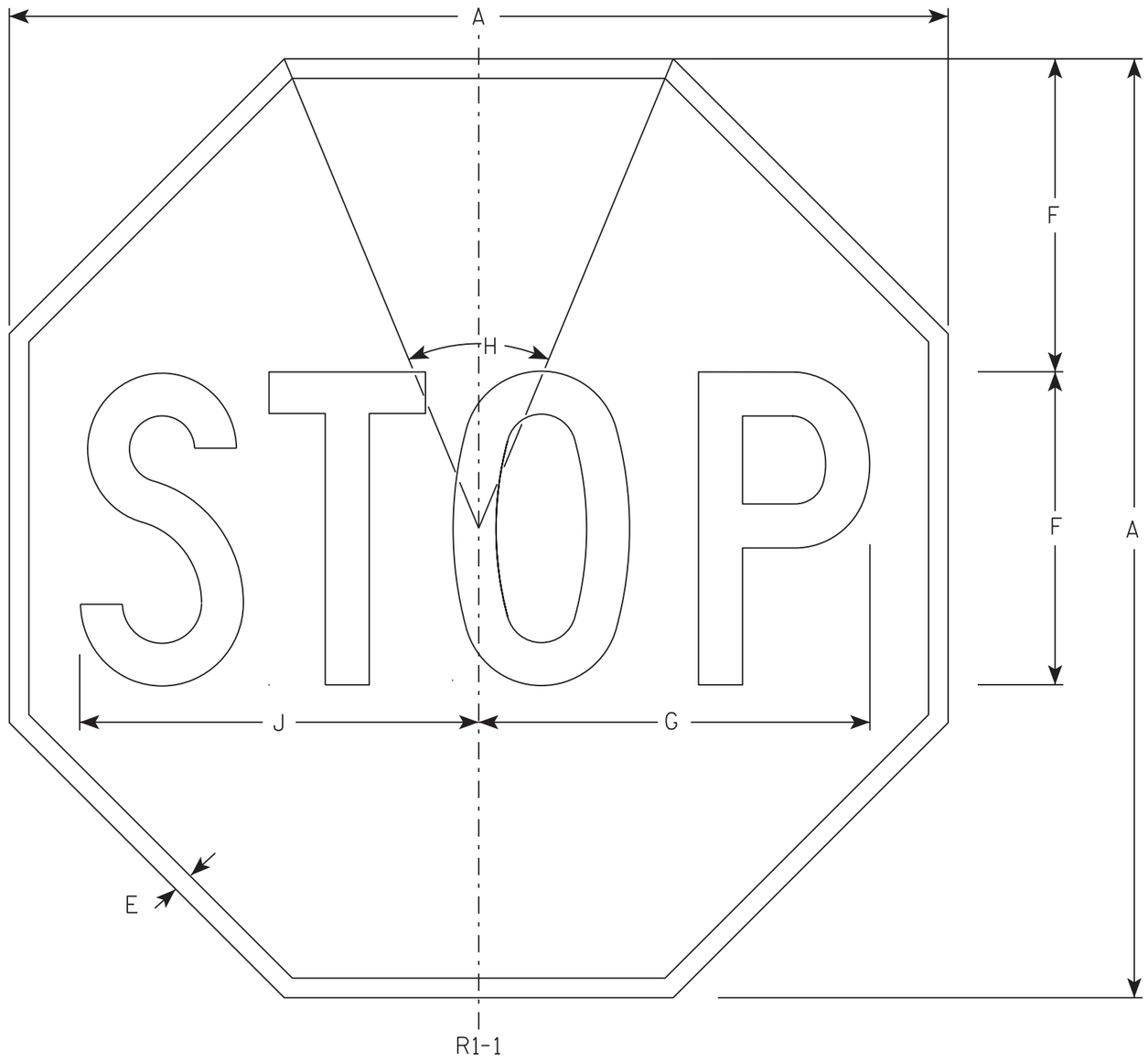

NOTES

1. Sign is Type II - Type H Reflective - reference WIS DOT Standard Specification for HIGHWAY and STRUCTURE CONSTRUCTION latest edition.
2. Color:
   Background - Red
   Message - White
3. Message Series - C

SIZE	A	B	C	D	E	F	G	H	I	J	K	L	M	N	O	P	Q	R	S	T	U	V	W	X	Y	Z	Area sq. ft.
1	30				5/8	10	12 1/2	45°		12 3/4																	5.18
2S	30				5/8	10	12 1/2	45°		12 3/4																	5.18
2M	36				3/4	12	15	45°		15 3/8																	7.46
3	36				3/4	12	15	45°		15 3/8																	7.46
4	48				1	16	20	45°		20 1/2																	13.25
5	48				1	16	20	45°		20 1/2																	13.25
6	18				3/8	6	7 3/4	45°		7 3/4																	1.86
7	12				1/4	4	5	45°		5 1/8																	0.78

STANDARD SIGN

R1-1

WISCONSIN DEPT OF TRANSPORTATION

APPROVED Matthew R Rauch
for State Traffic Engineer

DATE 11/12/15 PLATE NO. R1-1.13

PROJECT NO:	HWY:	COUNTY:		SHEET NO: 188	E

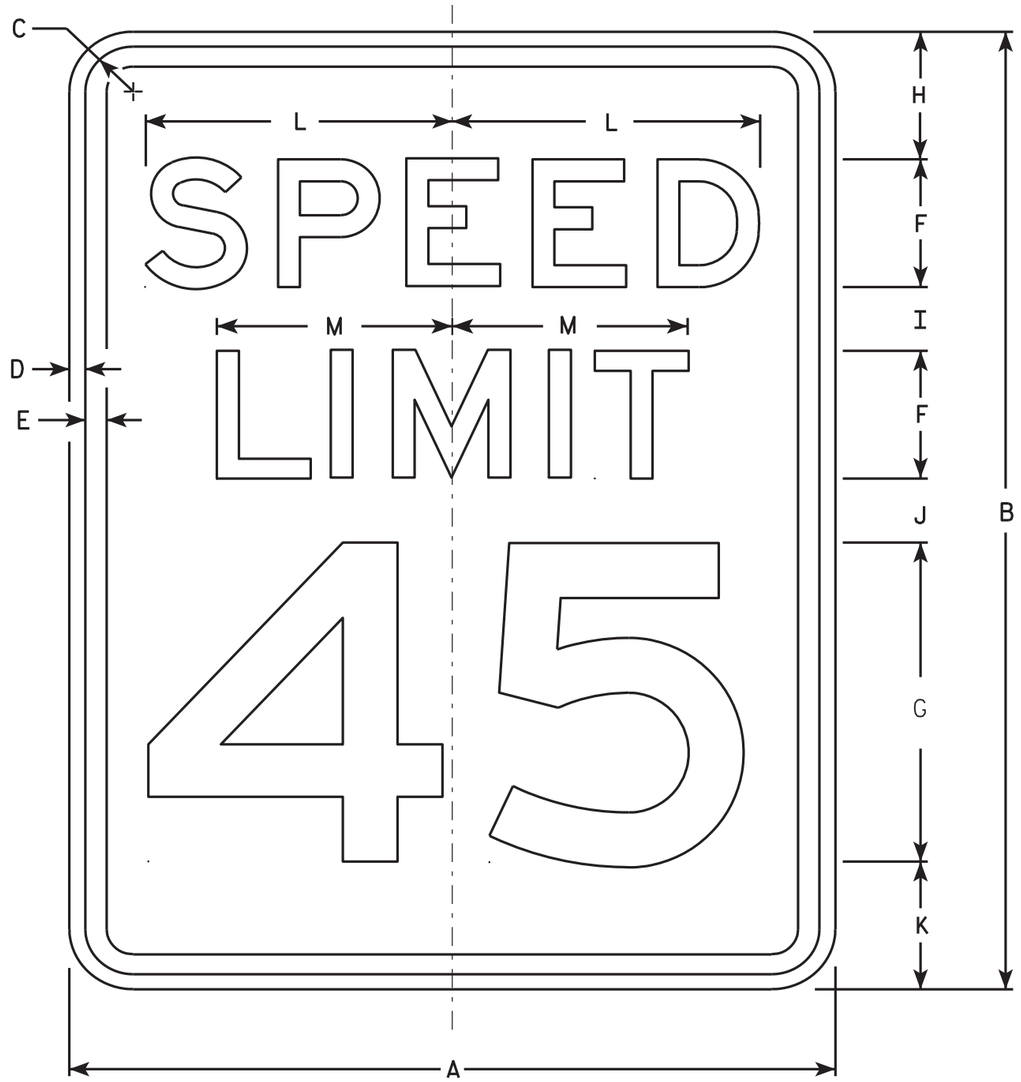

R2-1

NOTES

1. Sign is Type II - Type H Reflective - reference WIS DOT Standard Specification for HIGHWAY and STRUCTURE CONSTRUCTION latest edition.
2. Color:
   Background - White
   Message - Black
3. Message Series - E
4. Corners may be square or rounded when base material is plywood but borders shall be rounded as shown. When base material is metal, the corners and borders shall be rounded.
5. Substitute appropriate numerals and optically adjust spacing to achieve proper balance.

SIZE	A	B	C	D	E	F	G	H	I	J	K	L	M	N	O	P	Q	R	S	T	U	V	W	X	Y	Z	Area sq. ft.
1	18	24	1 1/8	3/8	1/2	3	8	3	2	2	3	7 1/4	5 1/2														3.0
2S	24	30	1 1/8	3/8	1/2	4	10	3	2 1/4	3 3/8	3 3/8	9 5/8	7 3/8														5.0
2M	30	36	1 3/8	1/2	5/8	5	12	5	2 1/2	2 1/2	4	12	9 1/4														7.5
3	36	48	1 3/8	1/2	5/8	6	14	6	5	5	6	14 3/8	11														12.0
4	36	48	1 3/8	1/2	5/8	6	14	6	5	5	6	14 3/8	11														12.0
5	48	60	2 1/4	3/4	1	8	20	6	4 1/2	6 3/4	6 3/4	19 1/4	14 5/8														20.0

STANDARD SIGN
R2-1

WISCONSIN DEPT OF TRANSPORTATION

APPROVED Matthew R Rauch
for State Traffic Engineer

DATE 5/26/10 PLATE NO. R2-1.13

PROJECT NO: | HWY: | COUNTY: | SHEET NO: 189 | E

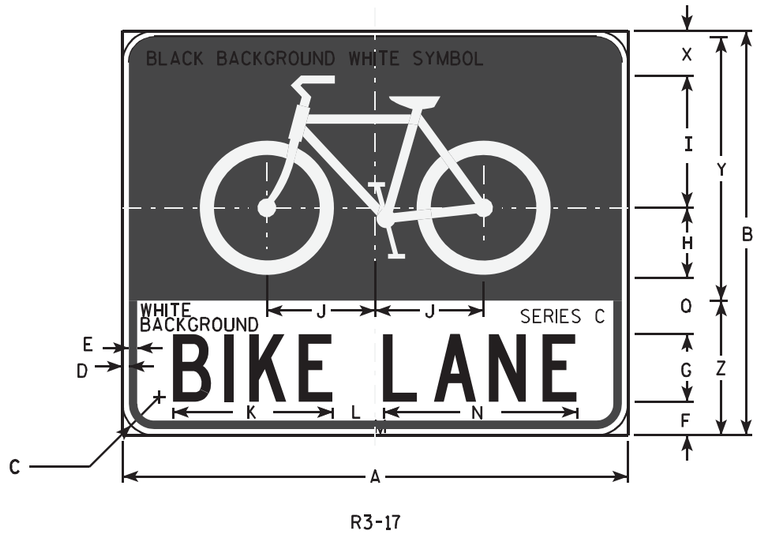

R3-17

NOTES

1. Sign is Type II - Type H Reflective - reference WIS DOT Standard Specification for HIGHWAY and STRUCTURE CONSTRUCTION latest edition.
2. Color:
   Background - AS SHOWN
   Message - BLACK
3. Message Series - C or as noted on the Signs.
4. Corners may be square or rounded when base material is plywood but borders shall be rounded as shown. When base material is metal, the corners and borders shall be rounded.

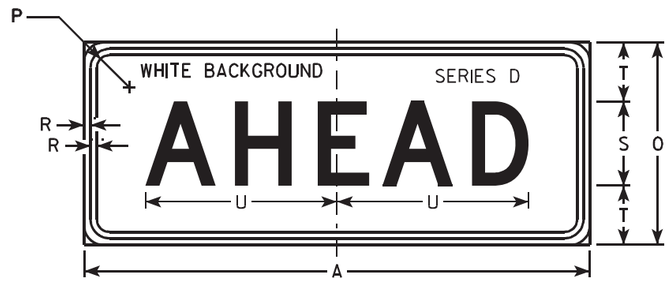

R3-17ap

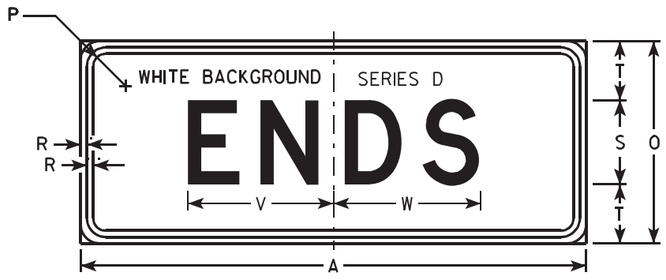

R3-17bp

SIZE	A	B	C	D	E	F	G	H	I	J	K	L	M	N	O	P	Q	R	S	T	U	V	W	X	Y	Z	R3-17 Area sq. ft.	R3-17ap Area sq. ft.	R3-17bp Area sq. ft.
1																													
2S	30	24	1 1/8	3/8	1/2	2	4	4 1/8	7 1/8	6 3/8	9 1/2	2 5/8	7/8	13	12	1 1/8	3 3/8	3/8	5	3 1/2	11 3/8	8 5/8	8 3/4	2 3/8	15 5/8	8	5.0	2.5	2.5
2M	30	24	1 1/8	3/8	1/2	2	4	4 1/8	7 1/8	6 3/8	9 1/2	2 5/8	7/8	13	12	1 1/8	3 3/8	3/8	5	3 1/2	11 3/8	8 5/8	8 3/4	2 3/8	15 5/8	8	5.0	2.5	2.5
3																													
4																													
5																													

STANDARD SIGN
R3-17 & R3-17a&bp

WISCONSIN DEPT OF TRANSPORTATION

APPROVED Matthew R Rauch
for State Traffic Engineer

DATE 4/12/2011 PLATE NO. R3-17.2

PROJECT NO:

SHEET NO: 190 E

R7-51

NOTES

1. Sign is Type II - Type H Reflective - reference WIS DOT Standard Specification for HIGHWAY and STRUCTURE CONSTRUCTION latest edition.
2. Color:
   Background - White
   Message - Red
3. Message Series - See Note 6
4. Corners may be square or rounded when base material is plywood but borders shall be rounded as shown. When base material is metal, the corners and borders shall be rounded.
5. R7-51D (double arrow)
   R7-51R (right arrow)
   R7-51L (left arrow)
6. Lines 1, 3 and 4 are Series C.
   Line 2 is Series B.

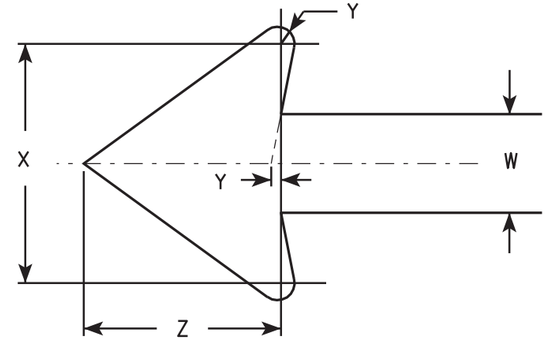

ARROW DETAIL

SIZE	A	B	C	D	E	F	G	H	I	J	K	L	M	N	O	P	Q	R	S	T	U	V	W	X	Y	Z	Area sq. ft.
1	12	18	1 1/8	3/8	3/8	3	1 7/8	2	7/8	5/8	1 1/2	2 1/2	2	2	4 7/8	4 7/8	4 7/8	5/8	1 3/4	2 1/2	4 3/8	3 7/8	3/4	1 3/4	1/8	1 1/2	1.5
2S	18	24	1 1/8	3/8	1/2	4	2 1/2	2 1/2	1 1/4	1	2	3 1/4	2 3/4	2 5/8	7 1/8	7	5 3/4	1 1/8	1 1/2	3 1/8	5 1/2	5 7/8	1 1/8	2 5/8	1/4	2 1/4	3.0
2M	24	30	1 1/8	3/8	1/2	5	3	3	2	1 1/4	2 1/2	4	3 1/4	3 3/8	9 1/4	9 1/4	7 1/8	1 1/4	2	3 3/4	6 1/2	7 3/4	1 1/2	3 1/2	1/4	3	5.0
3	24	30	1 1/8	3/8	1/2	5	3	3	2	1 1/4	2 1/2	4	3 1/4	3 3/8	9 1/4	9 1/4	7 1/8	1 1/4	2	3 3/4	6 1/2	7 3/4	1 1/2	3 1/2	1/4	3	5.0
4																											
5																											

STANDARD SIGN
R7-51

WISCONSIN DEPT OF TRANSPORTATION

APPROVED Matthew R Rauch
for State Traffic Engineer

DATE 3/31/2011 PLATE NO. R7-51.6

PROJECT NO:	HWY:	COUNTY:			SHEET NO: 191	E

R7-53

NOTES

1. Sign is Type II - Type H Reflective - reference WIS DOT Standard Specification for HIGHWAY and STRUCTURE CONSTRUCTION latest edition.
2. Color:
   Background - White
   Message - Red
3. Message Series - See Note 5
4. Corners may be square or rounded when base material is plywood but borders shall be rounded as shown. When base material is metal, the corners and borders shall be rounded.
5. Lines 1, 3 and 4 are series C, line 2 is series B.
6. R7-53D (double arrow)
   R7-53L (left arrow)
   R7-53R (right arrow)

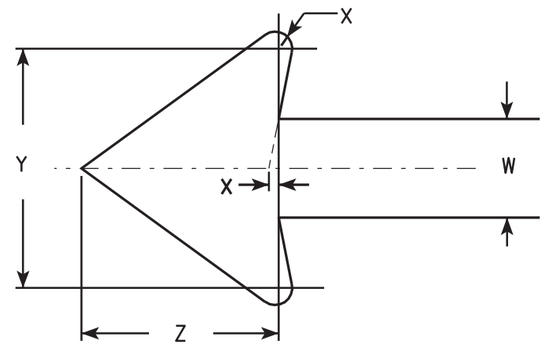

ARROW DETAIL

SIZE	A	B	C	D	E	F	G	H	I	J	K	L	M	N	O	P	Q	R	S	T	U	V	W	X	Y	Z	Area sq. ft.
1	12	18	1 1/8	3/8	3/8	3	1 7/8	2	7/8	5/8	1 1/2	2 1/2	2	2	4 7/8	4 7/8	2 5/8	1 3/4	1/4	4 1/2	2 3/8	3 7/8	3/4	1/8	1 3/4	1 1/2	1.5
2S	18	24	1 1/8	3/8	1/2	4	2 1/2	2 1/2	1 1/4	1	2	3 1/4	2 3/4	2 5/8	7 1/8	7	3 3/8	1 1/2	5/8	5 3/8	3	5 7/8	1 1/8	1/4	2 5/8	2 1/4	3.0
2M	24	30	1 1/8	3/8	1/2	5	3	3	2	1 1/4	2 1/2	4	3 1/4	3 3/8	9 1/4	9 1/4	4	2	5/8	6 5/8	3 5/8	7 3/4	1 1/2	1/4	3 1/2	3	5.0
3	24	30	1 1/8	3/8	1/2	5	3	3	2	1 1/4	2 1/2	4	3 1/4	3 3/8	9 1/4	9 1/4	4	2	5/8	6 5/8	3 5/8	7 3/4	1 1/2	1/4	3 1/2	3	5.0
4																											
5																											

STANDARD SIGN
R7-53

WISCONSIN DEPT OF TRANSPORTATION

APPROVED Matthew R Rauch
for State Traffic Engineer

DATE 3/31/2011 PLATE NO. R7-53.6

PROJECT NO:	HWY:	COUNTY:		SHEET NO: 192	E

R9-8

NOTES

1. Sign is Type II - Type H Reflective - reference WIS DOT Standard Specification for HIGHWAY and STRUCTURE CONSTRUCTION latest edition.
2. Color:
   Background - White
   Message - Black
3. Message Series - C
4. Corners may be square or rounded when base material is plywood but borders shall be rounded as shown. When base material is metal, the corners and borders shall be rounded.

SIZE	A	B	C	D	E	F	G	H	I	J	K	L	M	N	O	P	Q	R	S	T	U	V	W	X	Y	Z	Area sq. ft.
1																											
2S	24	12	1 3/4	1/2	1/2	3	2 1/8	1 3/4	10	9 3/4																	2.0
2M	24	12	1 3/4	1/2	1/2	3	2 1/8	1 3/4	10	9 3/4																	2.0
3	30	18	1 3/4	1/2	1/2	4	3 1/2	3	13	13																	3.75
4																											
5																											

STANDARD SIGN
R9-8

WISCONSIN DEPT OF TRANSPORTATION

APPROVED Matthew R Rauch
for State Traffic Engineer

DATE 3/17/16 PLATE NO. R9-8.1

PROJECT NO:	HWY:	COUNTY:		SHEET NO: 193	E

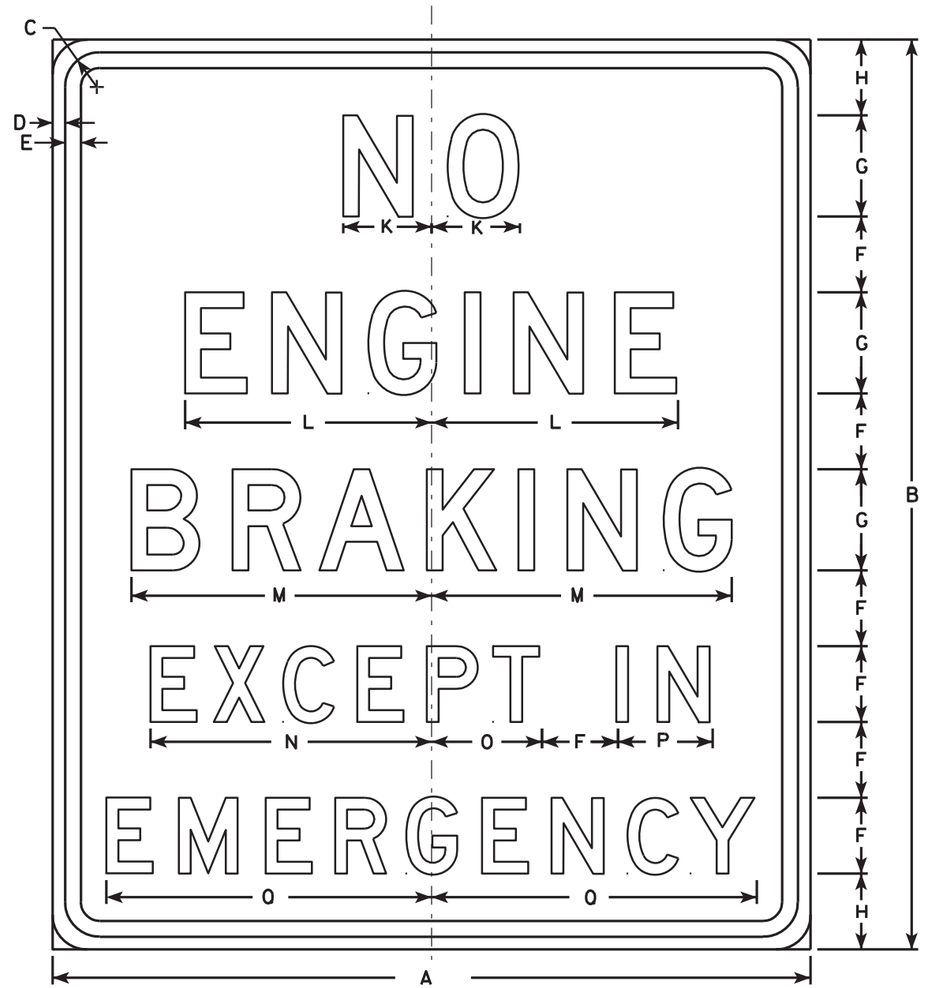

R10-64

NOTES

1. Signs are Type II - Type H Reflective - reference WIS DOT Standard Specification for HIGHWAY and STRUCTURE CONSTRUCTION latest edition.
2. Color:
   Background - White
   Message - Black
3. Message Series - D See note 5
4. Corners may be square or rounded when base material is plywood but borders shall be rounded as shown. When base material is metal, the corners and borders shall be rounded.
5. Line 2 of R10-64F is Series C for "TOWNSHIP" Only

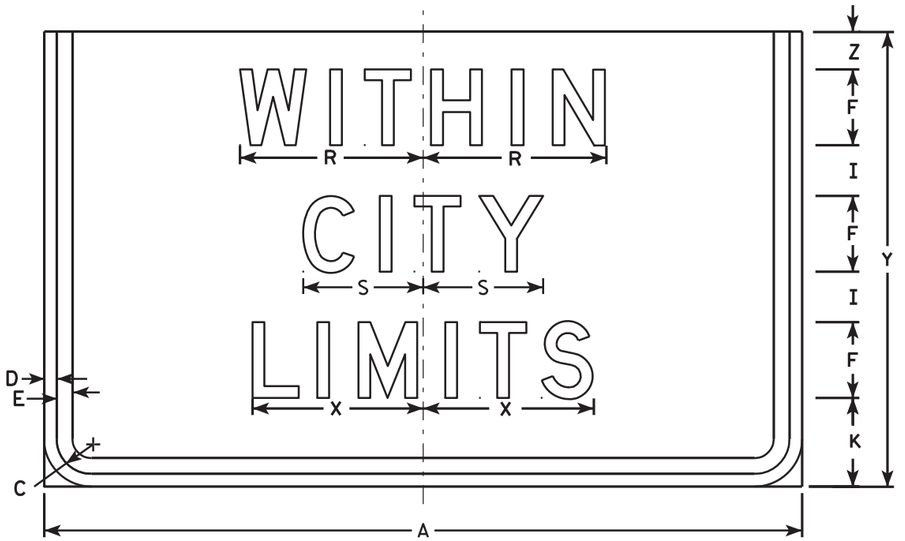

R10-64F

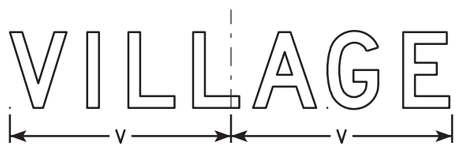

Area sq. ft.
3.75
7.0

SIZE	A	B	C	D	E	F	G	H	I	J	K	L	M	N	O	P	Q	R	S	T	U	V	W	X	Y	Z	Area sq. ft.
1	30	36	1 3/8	1/2	5/8	3	4	3	2		3 1/2	9 3/4	11 7/8	11 1/8	4 3/8	3 3/4	12 7/8	7 1/4	4 3/4		8 1/4	8 3/4	5/8	6 3/4	18	1 1/2	7.5
2S	30	36	1 3/8	1/2	5/8	3	4	3	2		3 1/2	9 3/4	11 7/8	11 1/8	4 3/8	3 3/4	12 7/8	7 1/4	4 3/4		8 1/4	8 3/4	5/8	6 3/4	18	1 1/2	7.5
2M	30	36	1 3/8	1/2	5/8	3	4	3	2		3 1/2	9 3/4	11 7/8	11 1/8	4 3/8	3 3/4	12 7/8	7 1/4	4 3/4		8 1/4	8 3/4	5/8	6 3/4	18	1 1/2	7.5
3	42	48	1 3/8	1/2	5/8	4	5	4 1/2	3		4	12 1/4	14 7/8	14 1/8	5 1/4	4 3/4	16 1/4	9	6		11	11 1/4	1 1/2	8 1/2	24	2	14.0
4																											
5																											

STANDARD SIGN
R10-64 & R10-64F

WISCONSIN DEPT OF TRANSPORTATION

APPROVED Matthew R Rauch
for State Traffic Engineer

DATE 4/4/11 PLATE NO. R10-64.7

PROJECT NO:	HWY:	COUNTY:		SHEET NO: 194	E

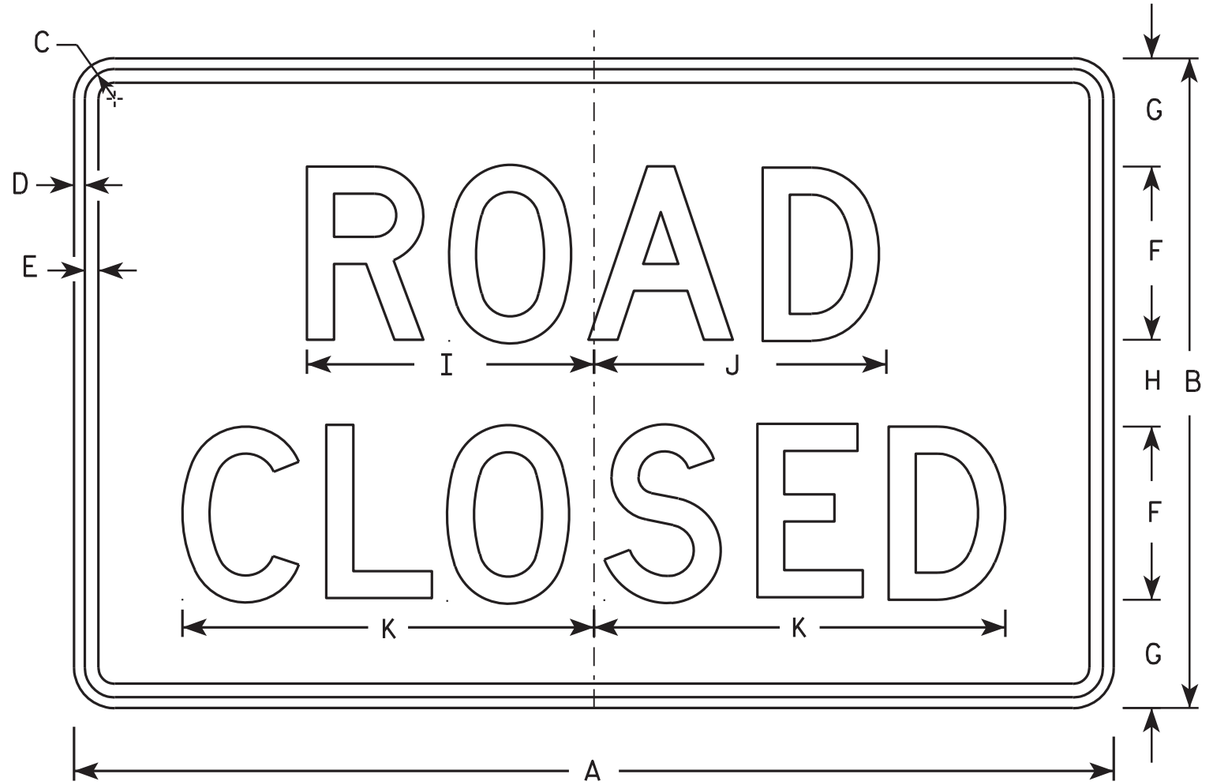

R11-2

NOTES

1. Sign is Type II - Type H Reflective - reference WIS DOT Standard Specification for HIGHWAY and STRUCTURE CONSTRUCTION latest edition.
2. Color:
   Background - White
   Message - Black
3. Message Series - D
4. Corners may be square or rounded when base material is plywood but borders shall be rounded as shown. When base material is metal, the corners and borders shall be rounded.
5. Modify the message as required.

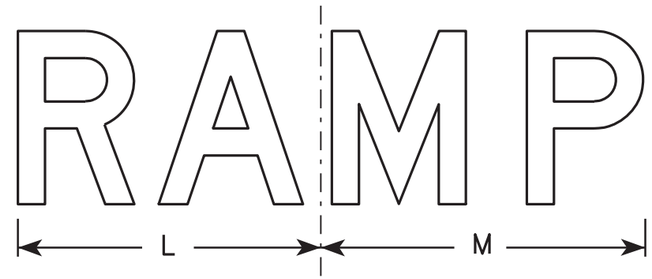

R11-2R

R11-2L

SIZE	A	B	C	D	E	F	G	H	I	J	K	L	M	N	O	P	Q	R	S	T	U	V	W	X	Y	Z	Area sq. ft.
1																											
2S	48	30	1 3/8	1/2	5/8	8	5	4	13 1/4	13 1/2	19	14	15	13													10.0
2M	48	30	1 3/8	1/2	5/8	8	5	4	13 1/4	13 1/2	19	14	15	13													10.0
3	48	30	1 3/8	1/2	5/8	8	5	4	13 1/4	13 1/2	19	14	15	13													10.0
4	48	30	1 3/8	1/2	5/8	8	5	4	13 1/4	13 1/2	19	14	15	13													10.0
5	48	30	1 3/8	1/2	5/8	8	5	4	13 1/4	13 1/2	19	14	15	13													10.0

STANDARD SIGN
R11-2

WISCONSIN DEPT OF TRANSPORTATION

APPROVED Matthew R Rauch
for State Traffic Engineer
DATE 4/1/11 PLATE NO. R11-2.10

PROJECT NO:	HWY:	COUNTY:		SHEET NO: 195	E

FILE NAME : C:\Users\PROJECTS\tr_stdplate\R112.DGN PLOT DATE : 01-APR-2011 14:25 PLOT BY : mscj9h PLOT NAME : PLOT SCALE : 6.952219:1.000000

WISDOT/CADDS SHEET 42

NOTES

1. Sign is Type II - Type H Reflective
2. Color:
   Background - White
   Message - Black
3. Message Series - C
4. Corners may be square or rounded when base material is plywood but borders shall be rounded as shown. When base material is metal, the corners and borders shall be rounded.
5. Substitute appropriate numerals to nearest quarter mile and optically adjust spacing to achieve proper balance.

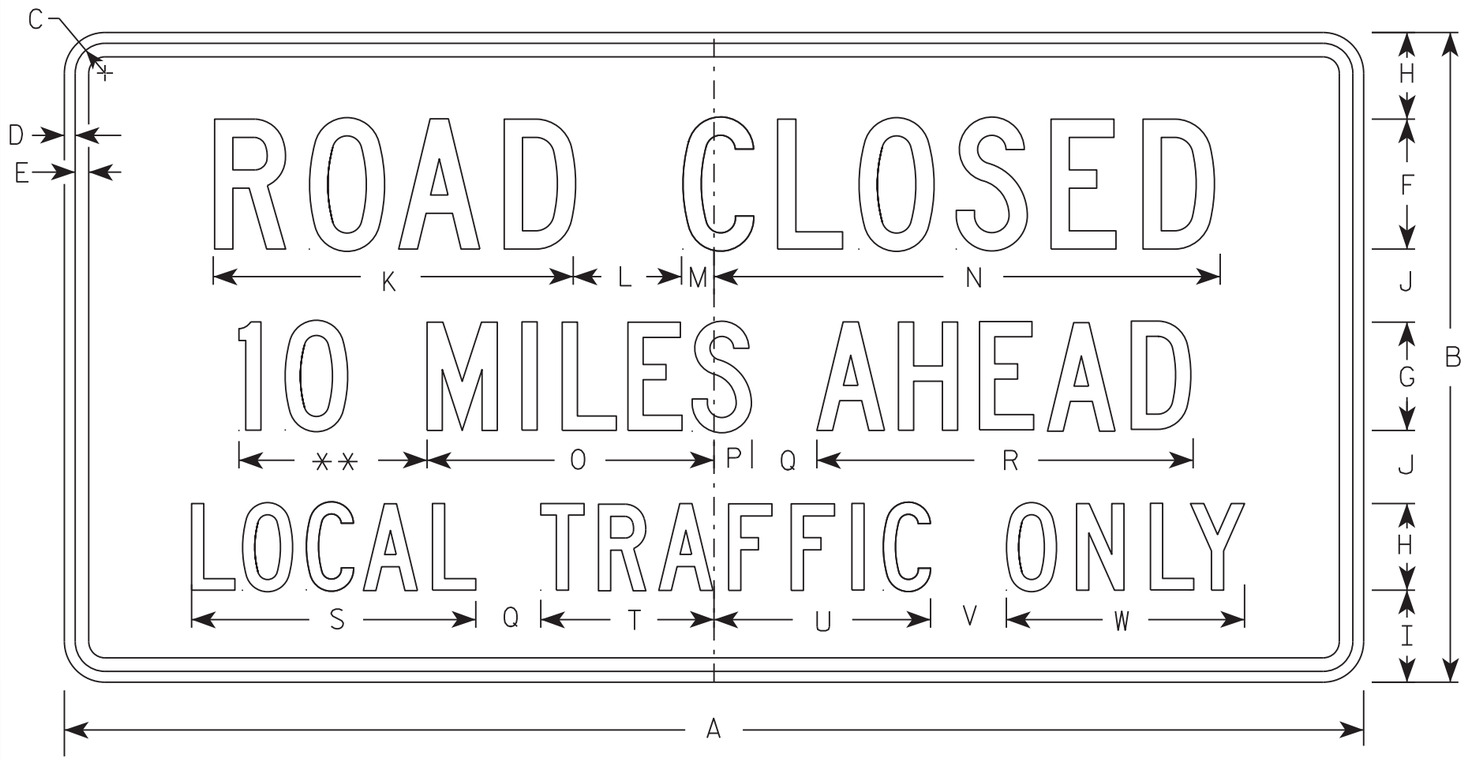

R11-3

** See Note 5

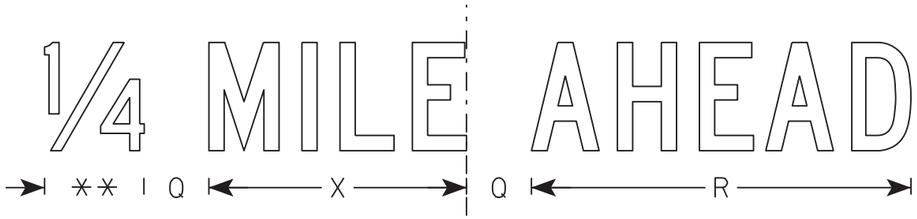

SIZE	A	B	C	D	E	F	G	H	I	J	K	L	M	N	O	P	Q	R	S	T	U	V	W	X	Y	Z	Area sq. ft.
1	36	18	1 3/8	1/2	5/8	4	3	2 1/2	2	2	11 1/8	3	1 1/8	15 1/4	8	1 1/2	2	10 3/4	8 3/8	4 3/4	6 1/2	2	6 3/4	7 1/8			4.5
2S	60	30	1 3/8	1/2	5/8	6	5	4	4 1/4	3 3/8	16 5/8	5	1 1/2	23	13 1/4	1 3/4	3	17 3/8	13 1/8	8	10	3 1/2	11	11 7/8			12.5
2M	60	30	1 3/8	1/2	5/8	6	5	4	4 1/4	3 3/8	16 5/8	5	1 1/2	23	13 1/4	1 3/4	3	17 3/8	13 1/8	8	10	3 1/2	11	11 7/8			12.5
3																											
4																											
5																											

STANDARD SIGN
R11-3

WISCONSIN DEPT OF TRANSPORTATION

APPROVED Matthew R Rauch
for State Traffic Engineer

DATE 3/15/17 PLATE NO. R11-3.8

PROJECT NO: | HWY: | COUNTY: | SHEET NO: 196 E

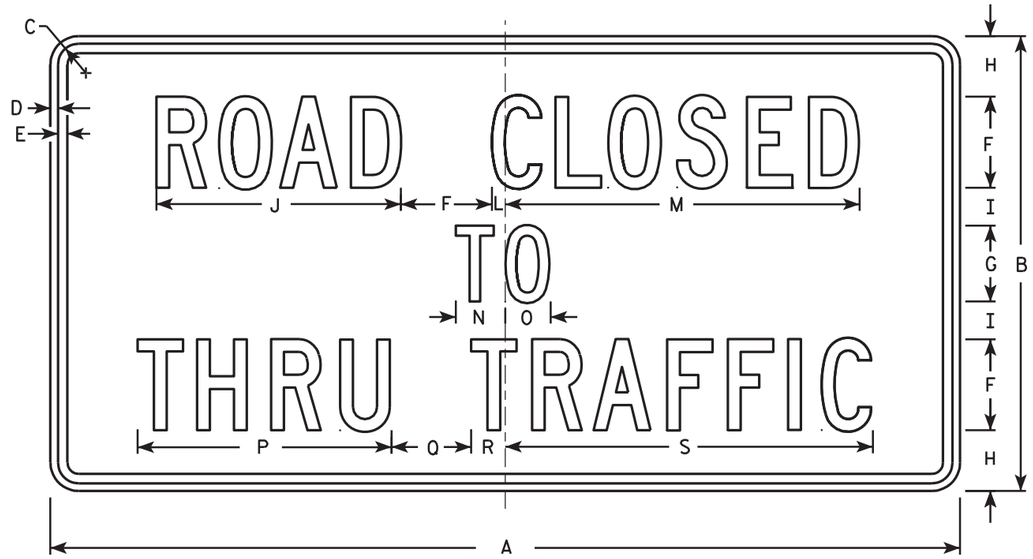

R11-4

NOTES

1. Sign is Type II - Type H Reflective - reference WIS DOT Standard Specification for HIGHWAY and STRUCTURE CONSTRUCTION latest edition.
2. Color:
   Background - White
   Message - Black
3. Message Series - C
4. Corners may be square or rounded when base material is plywood but borders shall be rounded as shown. When base material is metal, the corners and borders shall be rounded.

SIZE	A	B	C	D	E	F	G	H	I	J	K	L	M	N	O	P	Q	R	S	T	U	V	W	X	Y	Z	Area sq. ft.
1																											
2S	60	30	1 3/8	1/2	5/8	6	5	4	2 1/2	16 1/8		7/8	23 3/8	3 1/4	3	16 3/4	5 1/4	2 1/4	24 1/4								12.5
2M	60	30	1 3/8	1/2	5/8	6	5	4	2 1/2	16 1/8		7/8	23 3/8	3 1/4	3	16 3/4	5 1/4	2 1/4	24 1/4								12.5
3																											
4																											
5																											

STANDARD SIGN
R11 - 4

WISCONSIN DEPT OF TRANSPORTATION

APPROVED Matthew R Rauch for State Traffic Engineer

DATE 4/1/11 PLATE NO. R11-4.3

PROJECT NO: | HWY: | COUNTY: | SHEET NO: 197 | E

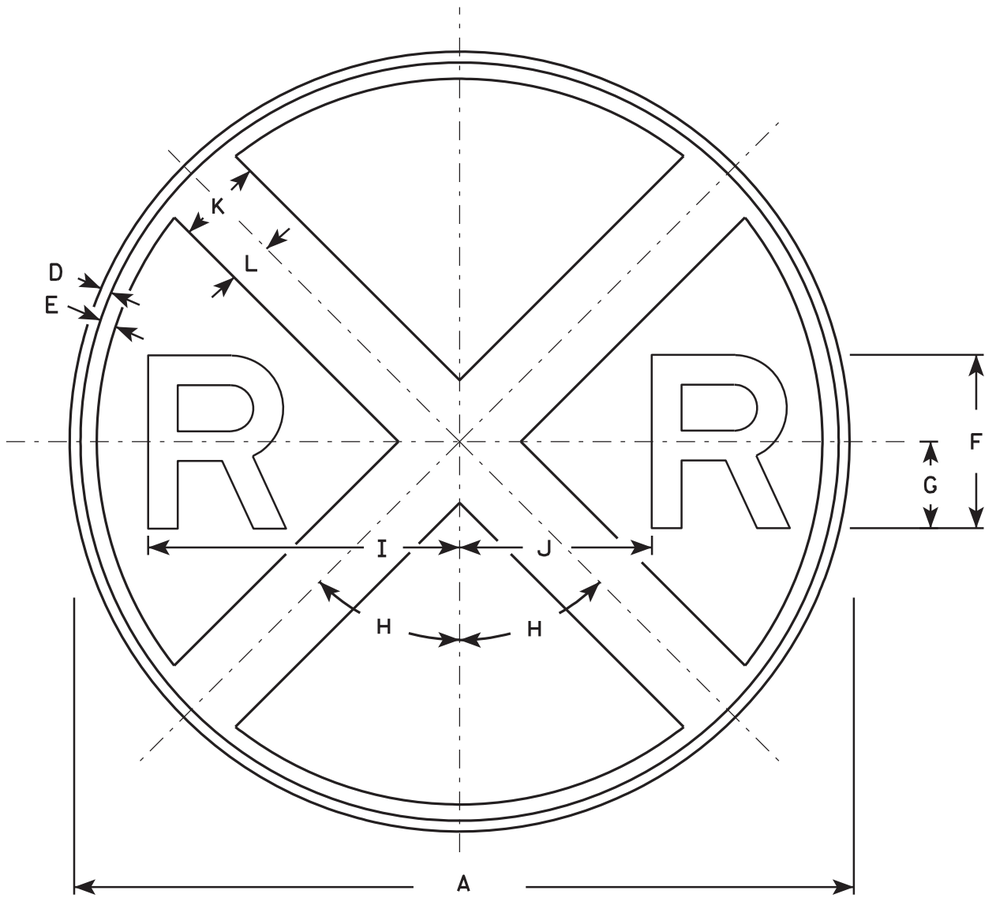

W10-1

NOTES

1. Sign is Type II - Type F Reflective - reference WIS DOT Standard Specification for HIGHWAY and STRUCTURE CONSTRUCTION latest edition.
2. Color:
   Background - Yellow
   Message - Black
3. Message Series - E

SIZE	A	B	C	D	E	F	G	H	I	J	K	L	M	N	O	P	Q	R	S	T	U	V	W	X	Y	Z	Area sq. ft.
1	30			3/8	5/8	7	3 1/2	45°	12 3/8	7 1/8	3	1 1/2															4.91
2S	36			5/8	3/4	8	4	45°	14 3/8	8 5/8	4	2															7.07
2M	36			5/8	3/4	8	4	45°	14 3/8	8 5/8	4	2															7.07
3																											
4	48			3/4	1 1/4	10	5	45°	18 3/8	11 5/8	5	2 1/2															12.57
5																											

STANDARD SIGN
W10-1

WISCONSIN DEPT OF TRANSPORTATION

APPROVED Matthew R Rauch
for State Traffic Engineer

DATE 3/13/13 PLATE NO. W10-1.8

PROJECT NO: | HWY: | COUNTY: | SHEET NO: 198 E

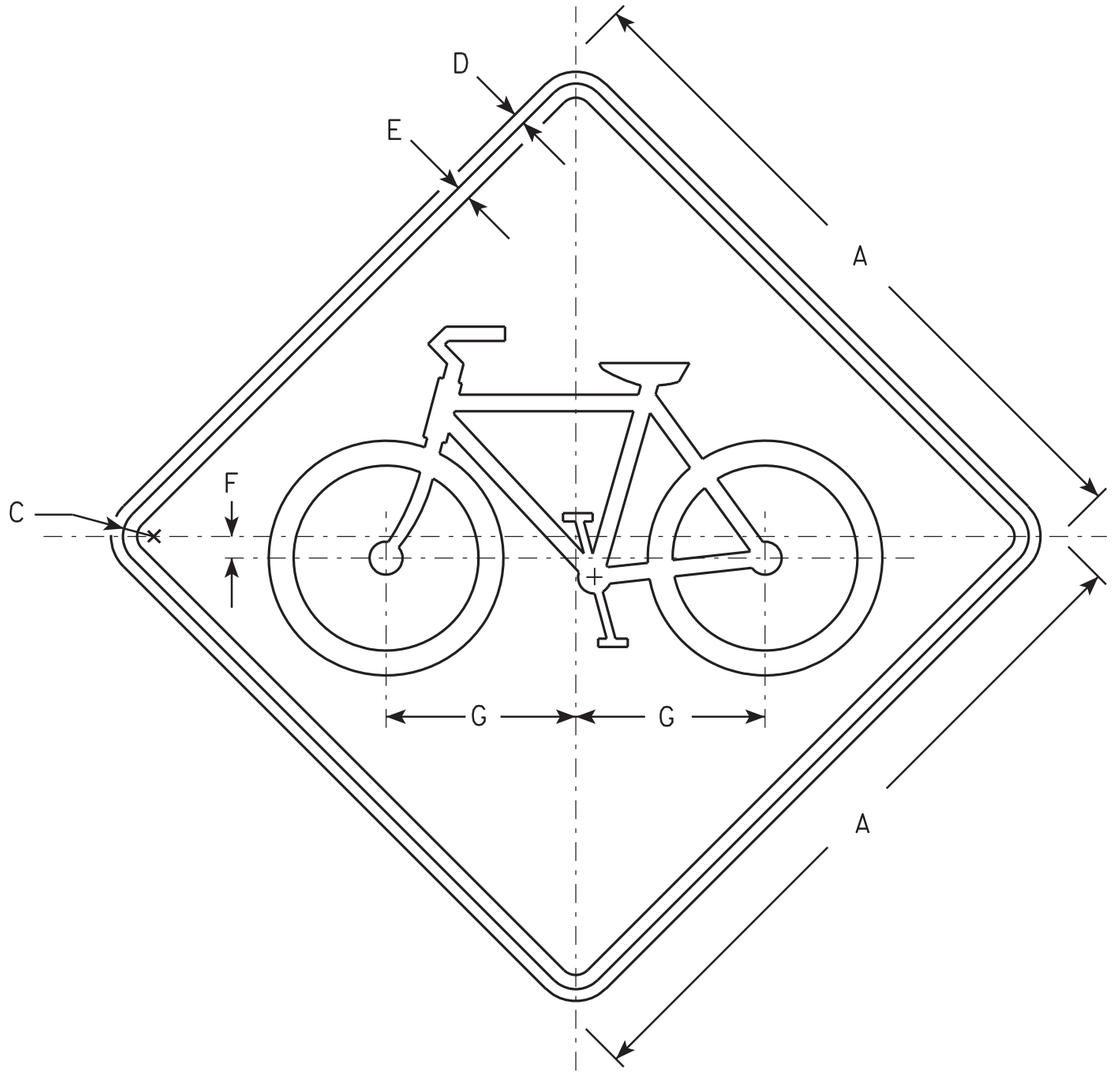

W11-1

NOTES

1. Sign is Type II - Type F Reflective - reference WIS DOT Standard Specification for HIGHWAY and STRUCTURE CONSTRUCTION latest edition.
2. Color:
   Background - Yellow
   Message - Black
3. Corners may be square or rounded when base material is plywood but borders shall be rounded as shown. When base material is metal, the corners and borders shall be rounded.

SIZE	A	B	C	D	E	F	G	H	I	J	K	L	M	N	O	P	Q	R	S	T	U	V	W	X	Y	Z	Area sq. ft.
1	24		1 1/8	3/4	1/2	3/4	6 5/8																				4.0
2S	30		1 3/8	1/2	5/8	1	8 1/2																				6.25
2M	36		1 5/8	5/8	3/4	1 1/4	10																				9.0
3	36		1 5/8	5/8	3/4	1 1/4	10																				9.0
4	48		2 1/4	3/4	1	1 5/8	13 3/8																				16.0
5																											16.0

STANDARD SIGN
W11-1

WISCONSIN DEPT OF TRANSPORTATION

APPROVED Matthew R Rauch
for State Traffic Engineer

DATE 12/21/10 PLATE NO. W11-1.9

PROJECT NO: | HWY: | COUNTY: | SHEET NO: 199 | E

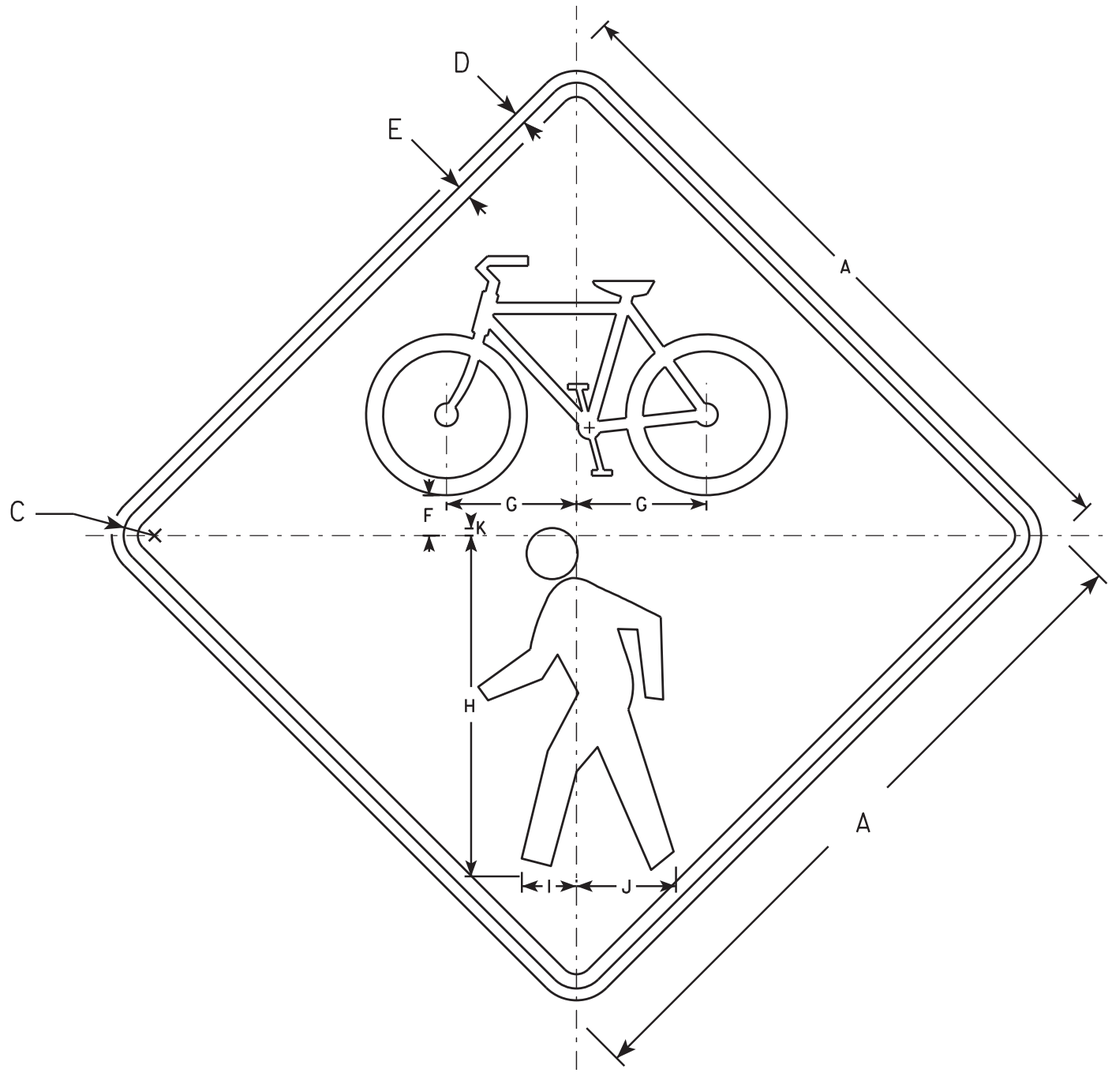

W11-15

NOTES

1. Sign is Type II - Type F Reflective
2. Color:
   Background - Yellow
   Message - Black
3. Corners may be square or rounded when base material is plywood but borders shall be rounded as shown. When base material is metal, the corners and borders shall be rounded.

SIZE	A	B	C	D	E	F	G	H	I	J	K	L	M	N	O	P	Q	R	S	T	U	V	W	X	Y	Z	Area sq. ft.
1	24		1 1/8	3/8	1/2	1 3/8	4 5/8	12	1 7/8	3 1/2	1/4																4.0
2S	30		1 3/8	1/2	5/8	1 3/4	5 3/4	15	2 3/8	4 3/8	3/8																6.25
2M	36		1 5/8	5/8	3/4	2 1/8	6 7/8	18	2 7/8	5 1/4	3/8																9.0
3	36		1 5/8	5/8	3/4	2 1/8	6 7/8	18	2 7/8	5 1/4	3/8																16.0
4	48		2 1/4	3/4	1	2 7/8	9 1/8	24	3 7/8	7	1/2																16.0
5																											

STANDARD SIGN
W11-15

WISCONSIN DEPT OF TRANSPORTATION

APPROVED Matthew R Rauch for State Traffic Engineer

DATE 2/13/14 PLATE NO. W11-15.4

PROJECT NO: | HWY: | COUNTY: | SHEET NO: 200 E

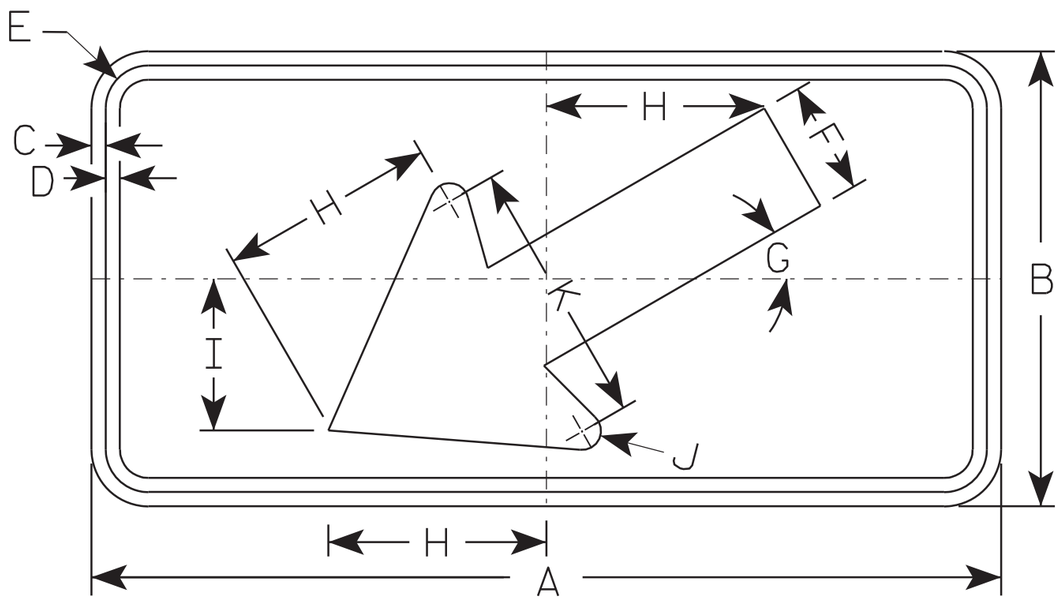

W16-7L

NOTES

1. Sign is Type II - Type F Reflective - reference WIS DOT Standard Specification for HIGHWAY and STRUCTURE CONSTRUCTION latest edition.
2. Color:
   Background - Yellow
   Message - Black
3. Corners may be square or rounded when base material is plywood but borders shall be rounded as shown. When base material is metal, the corners and borders shall be rounded.
4. W16-7R is the same as W16-L except the arrow is reversed along the vertical centerline.

SIZE	A	B	C	D	E	F	G	H	I	J	K	L	M	N	O	P	Q	R	S	T	U	V	W	X	Y	Z	Area sq. ft.
1																											
2S	24	12	3/8	3/8	1 1/8	3	30°	5 3/4	4	1/2	7																2.0
2M	30	18	3/8	1/2	1 1/8	4 1/2	30°	8 1/2	6	5/8	10 1/4																3.75
3	30	18	3/8	1/2	1 1/8	4 1/2	30°	8 1/2	6	5/8	10 1/4																3.75
4																											8
5																											8

STANDARD SIGN
W16-7

WISCONSIN DEPT OF TRANSPORTATION

APPROVED Matthew R Rauch
for State Traffic Engineer

DATE 11/02/10 PLATE NO. W16-7.5

PROJECT NO:	HWY:	COUNTY:		SHEET NO: 201	E

FILE NAME : C:\Users\PROJECTS\tr_stdplate\W167.DGN PLOT DATE : 02-NOV-2010 09:34 PLOT BY : dotsja PLOT NAME : PLOT SCALE : 3.972696:1.000000

WISDOT/CADDS SHEET 42

7

7

W20-1A

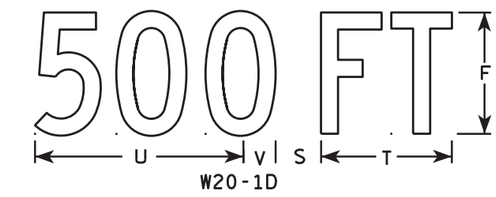

W20-1D

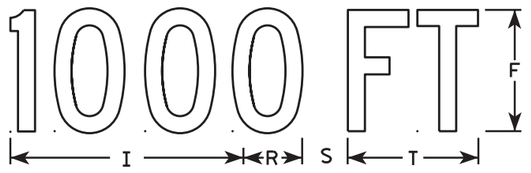

W20-1C

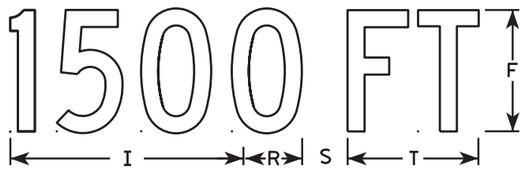

W20-1B

W20-1G

W20-1F

W20-1E

NOTES

1. Sign is Type II - Type F Reflective
2. Color:
   Background - Orange
   Message - Black
3. Message Series - C
4. Corners may be square or rounded when base material is plywood but borders shall be rounded as shown. When base material is metal, the corners and borders shall be rounded.

SIZE	A	B	C	D	E	F	G	H	I	J	K	L	M	N	O	P	Q	R	S	T	U	V	W	X	Y	Z	Area sq. ft.
1	36		1 3/8	1/2	5/8	5	2 5/8	3 1/4	10 1/8	7	7 5/8	8 7/8	1 1/8	4 1/2	3 1/2	9		2 1/2	2 1/4	5 5/8	9	1 3/8	8	1 3/4	10 3/4	6	9.0
2S	48		2 1/4	3/4	1	8	3 3/4	5 1/8	15 3/8	11 1/8	12 1/8	14 3/8	1 5/8	6 7/8	5 3/8	13 7/8	4 3/8	3 7/8	3	8 5/8	13 3/4	2 1/8	11 7/8	2 3/4	16 3/8	9	16.0
2M	48		2 1/4	3/4	1	8	3 3/4	5 1/8	15 3/8	11 1/8	12 1/8	14 3/8	1 5/8	6 7/8	5 3/8	13 7/8	4 3/8	3 7/8	3	8 5/8	13 3/4	2 1/8	11 7/8	2 3/4	16 3/8	9	16.0
3	48		2 1/4	3/4	1	8	3 3/4	5 1/8	15 3/8	11 1/8	12 1/8	14 3/8	1 5/8	6 7/8	5 3/8	13 7/8	4 3/8	3 7/8	3	8 5/8	13 3/4	2 1/8	11 7/8	2 3/4	16 3/8	9	16.0
4	48		2 1/4	3/4	1	8	3 3/4	5 1/8	15 3/8	11 1/8	12 1/8	14 3/8	1 5/8	6 7/8	5 3/8	13 7/8	4 3/8	3 7/8	3	8 5/8	13 3/4	2 1/8	11 7/8	2 3/4	16 3/8	9	16.0
5	48		2 1/4	3/4	1	8	3 3/4	5 1/8	15 3/8	11 1/8	12 1/8	14 3/8	1 5/8	6 7/8	5 3/8	13 7/8	4 3/8	3 7/8	3	8 5/8	13 3/4	2 1/8	11 7/8	2 3/4	16 3/8	9	16.0

STANDARD SIGN
W20-1A, B, C, D, F & G

WISCONSIN DEPT OF TRANSPORTATION

APPROVED

State Traffic Engineer

DATE 5/07/15

PLATE NO. W20-1.10

PROJECT NO:

SHEET NO: 202

E

7

7

FILE NAME : C:\CAEFiles\Projects\tr_stdplate\W201.dgn

PLOT DATE : 27-MAY-2015 15:58

PLOT BY : mscsja

WISDOT/CADDS SHEET 42

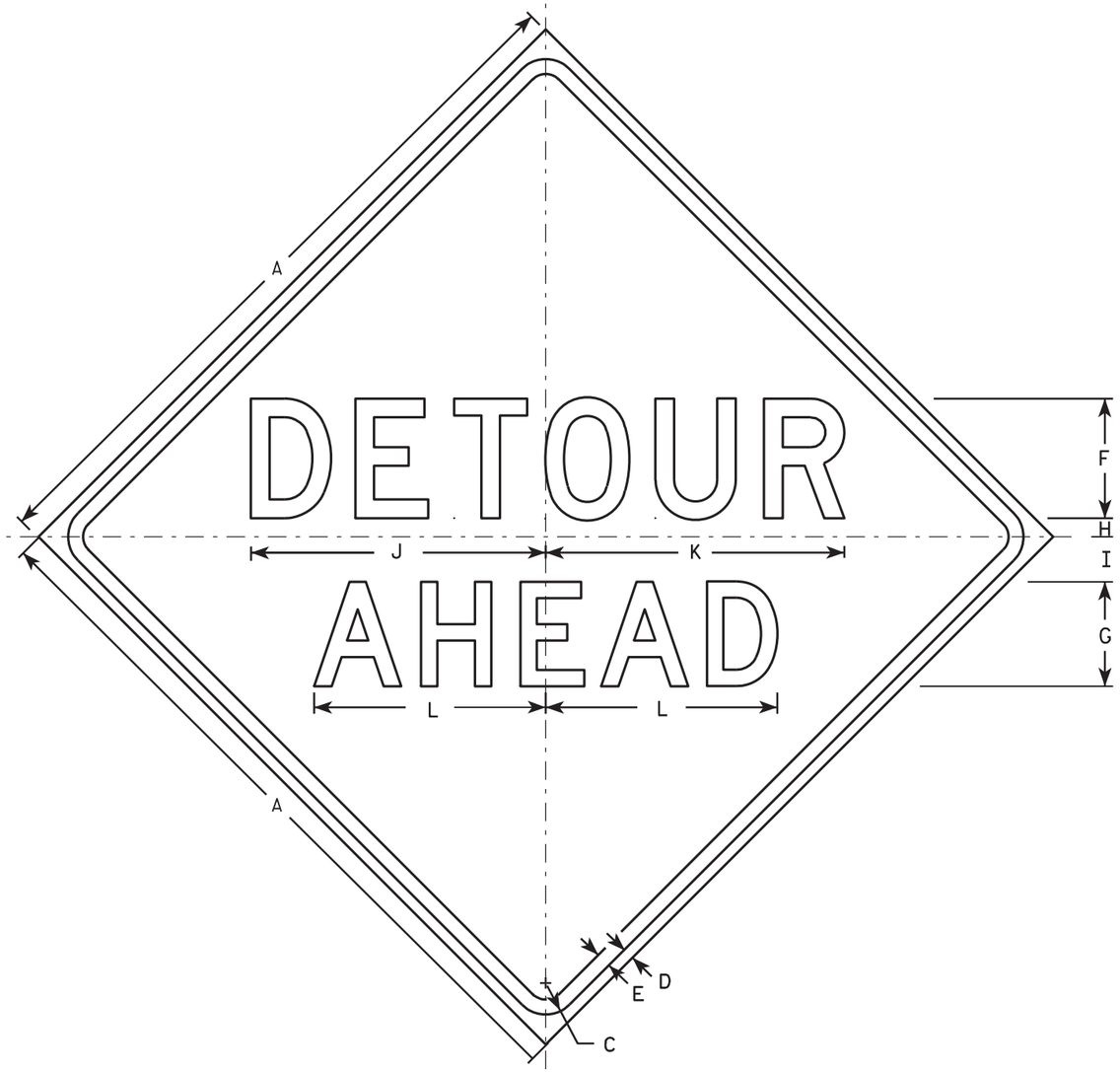

W20-2A

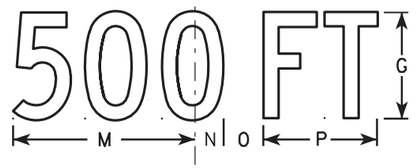

W20-2D

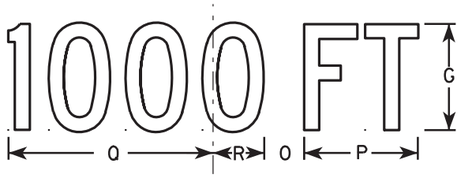

W20-2C

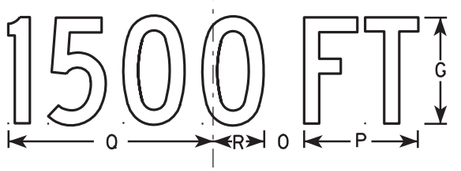

W20-2B

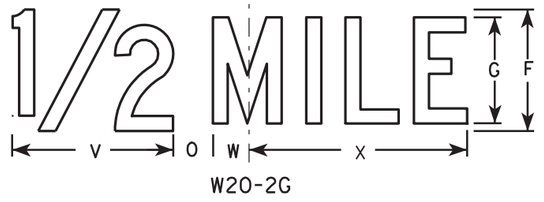

W20-2G

W20-2F

NOTES

1. Sign is Type II - Type F Reflective - reference WIS DOT Standard Specification for HIGHWAY and STRUCTURE CONSTRUCTION latest edition.
2. Color:
   Background - Orange
   Message - Black
3. Message Series - See note 5
4. Corners may be square or rounded when base material is plywood but borders shall be rounded as shown. When base material is metal, the corners and borders shall be rounded.
5. Line 1 is Series D.
   Line 2 is Series D for AHEAD and Series C for all other distances.

SIZE	A	B	C	D	E	F	G	H	I	J	K	L	M	N	O	P	Q	R	S	T	U	V	W	X	Y	Z	Area sq. ft.
1	36		1 5/8	5/8	3/4	6	5	1	2 1/4	14 3/4	15	11 5/8	9	1 3/8	1 7/8	5 5/8	10 1/8	2 1/2	1 1/8	4 1/2	3 1/2	8	1 3/4	10 3/4			9.0
2S	48		2 1/4	3/4	1	8	7	1 1/4	3	19 3/4	20	15 1/2	12	1 7/8	2 5/8	7 1/2	13 1/2	3 3/8	1 1/2	6	4 5/8	10 5/8	2 3/8	14 3/8			16.0
2M	48		2 1/4	3/4	1	8	7	1 1/4	3	19 3/4	20	15 1/2	12	1 7/8	2 5/8	7 1/2	13 1/2	3 3/8	1 1/2	6	4 5/8	10 5/8	2 3/8	14 3/8			16.0
3	48		2 1/4	3/4	1	8	7	1 1/4	3	19 3/4	20	15 1/2	12	1 7/8	2 5/8	7 1/2	13 1/2	3 3/8	1 1/2	6	4 5/8	10 5/8	2 3/8	14 3/8			16.0
4	48		2 1/4	3/4	1	8	7	1 1/4	3	19 3/4	20	15 1/2	12	1 7/8	2 5/8	7 1/2	13 1/2	3 3/8	1 1/2	6	4 5/8	10 5/8	2 3/8	14 3/8			16.0
5	48		2 1/4	3/4	1	8	7	1 1/4	3	19 3/4	20	15 1/2	12	1 7/8	2 5/8	7 1/2	13 1/2	3 3/8	1 1/2	6	4 5/8	10 5/8	2 3/8	14 3/8			16.0

STANDARD SIGN
W20-2A,B,C,D,F & G

WISCONSIN DEPT OF TRANSPORTATION

APPROVED Matthew R Rauch for State Traffic Engineer

DATE 3/18/11 PLATE NO. W20-2.6

PROJECT NO: | HWY: | COUNTY: | SHEET NO: 203 E

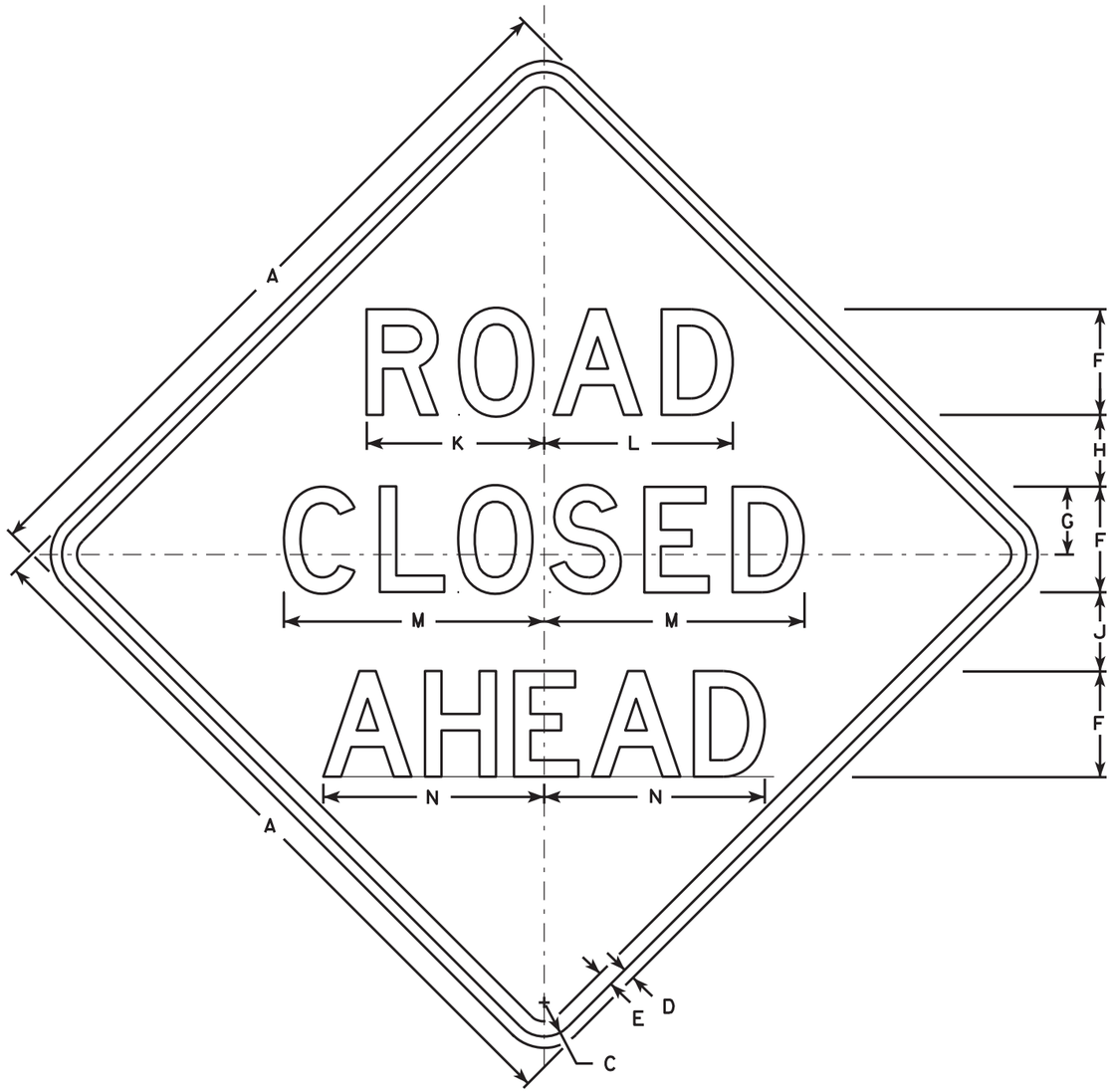

W20-3A

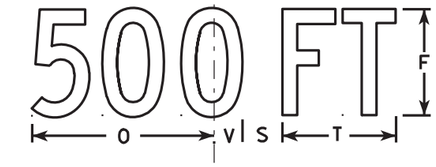

W20-3D

W20-3C

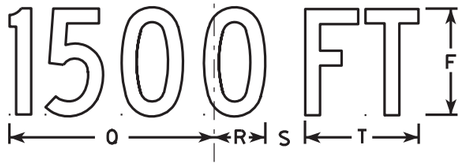

W20-3B

W20-3G

W20-3F

NOTES

1. Sign is Type II - Type F Reflective - reference WIS DOT Standard Specification for HIGHWAY and STRUCTURE CONSTRUCTION latest edition.
2. Color:
   Background - Orange
   Message - Black
3. Message Series - see note 5
4. Corners may be square or rounded when base material is plywood but borders shall be rounded as shown. When base material is metal, the corners and borders shall be rounded.
5. Lines 1 and 2 are Series D.
   Line 3 is Series D for AHEAD and Series C for all other distances.

SIZE	A	B	C	D	E	F	G	H	I	J	K	L	M	N	O	P	Q	R	S	T	U	V	W	X	Y	Z	Area sq. ft.
1	36		1 5/8	5/8	3/4	5	3 3/8	3 1/2	1 1/8	4	8 3/8	8 7/8	12 1/2	11	9	6	10 1/8	2 1/2	1 7/8	5 5/8	8	1 3/8	4 1/2	3 1/2	10 3/4	1 3/4	9.0
2S	48		2 1/4	3/4	1	7	4 1/2	4 3/4	1 1/2	5 1/4	11 3/4	12 1/2	17 1/4	14 5/8	12	8	13 1/2	3 3/8	2 5/8	7 1/2	10 5/8	1 7/8	6	4 5/8	14 3/8	2 3/8	16.0
2M	48		2 1/4	3/4	1	7	4 1/2	4 3/4	1 1/2	5 1/4	11 3/4	12 1/2	17 1/4	14 5/8	12	8	13 1/2	3 3/8	2 5/8	7 1/2	10 5/8	1 7/8	6	4 5/8	14 3/8	2 3/8	16.0
3	48		2 1/4	3/4	1	7	4 1/2	4 3/4	1 1/2	5 1/4	11 3/4	12 1/2	17 1/4	14 5/8	12	8	13 1/2	3 3/8	2 5/8	7 1/2	10 5/8	1 7/8	6	4 5/8	14 3/8	2 3/8	16.0
4	48		2 1/4	3/4	1	7	4 1/2	4 3/4	1 1/2	5 1/4	11 3/4	12 1/2	17 1/4	14 5/8	12	8	13 1/2	3 3/8	2 5/8	7 1/2	10 5/8	1 7/8	6	4 5/8	14 3/8	2 3/8	16.0
5	48		2 1/4	3/4	1	7	4 1/2	4 3/4	1 1/2	5 1/4	11 3/4	12 1/2	17 1/4	14 5/8	12	8	13 1/2	3 3/8	2 5/8	7 1/2	10 5/8	1 7/8	6	4 5/8	14 3/8	2 3/8	16.0

STANDARD SIGN
W20-3A, B, C, D, F & G

WISCONSIN DEPT OF TRANSPORTATION

APPROVED Matthew R Rauch
for State Traffic Engineer

DATE 3/18/11 PLATE NO. W20-3.7

PROJECT NO: | HWY: | COUNTY: | SHEET NO: 204 | E

CTH D - Division 1B

Station	Real Station	Distance	Area (SF) Cut	Area (SF) Fill	Incremental Vol (CY) (Unadjusted) Cut Note 1	Incremental Vol (CY) (Unadjusted) Fill Note 2	Cumulative Vol (CY) Cut 1.00 Note 1	Cumulative Vol (CY) Expanded Fill 1.11	Mass Ordinate Note 3
44+00	4400	0	108	8	0	0	0	0	0
44+50	4450	50	130	12	220	18	220	20	200
45+00	4500	50	124	10	235	20	455	42	413
45+50	4550	50	123	35	229	41	684	88	596
46+00	4600	50	111	28	217	58	900	152	748
46+50	4650	50	109	18	204	43	1,104	199	905
47+00	4700	50	137	9	228	25	1,332	227	1,105
47+50	4750	50	139	2	255	10	1,587	238	1,349
48+00	4800	50	136	3	255	4	1,841	243	1,598
48+50	4850	50	131	1	248	3	2,089	247	1,842
49+00	4900	50	130	2	242	3	2,331	250	2,081
49+50	4950	50	131	3	241	4	2,572	254	2,318
50+00	5000	50	133	2	244	4	2,816	259	2,557
50+50	5050	50	134	1	247	2	3,063	261	2,801
51+00	5100	50	127	2	241	3	3,304	265	3,039
51+50	5150	50	101	0	211	2	3,515	267	3,248
52+00	5200	50	126	3	210	2	3,724	270	3,454
52+50	5250	50	130	2	237	4	3,961	274	3,686
53+00	5300	50	131	1	242	3	4,203	277	3,925
53+50	5350	50	141	1	252	1	4,454	279	4,176
54+00	5400	50	136	1	256	1	4,711	280	4,431
54+50	5450	50	128	0	244	1	4,955	281	4,673
55+00	5500	50	133	0	242	0	5,197	282	4,914
55+50	5550	50	136	1	250	1	5,446	283	5,163
56+00	5600	50	143	1	259	1	5,705	284	5,421
56+50	5650	50	140	1	262	1	5,967	286	5,681
57+00	5700	50	110	0	231	1	6,198	286	5,911
57+50	5750	50	135	2	226	1	6,424	288	6,136
58+00	5800	50	136	1	251	2	6,675	291	6,385
58+50	5850	50	149	0	264	1	6,940	292	6,648
59+00	5900	50	152	0	279	0	7,219	292	6,927
59+50	5950	50	149	0	279	0	7,497	292	7,205
60+00	6000	50	137	2	265	2	7,762	294	7,468
60+50	6050	50	135	4	252	5	8,015	300	7,714
61+00	6100	50	124	0	240	3	8,255	304	7,951
61+50	6150	50	144	0	247	0	8,502	305	8,198
62+00	6200	50	141	0	264	1	8,766	305	8,461
62+50	6250	50	142	0	262	0	9,028	306	8,722
63+00	6300	50	137	0	258	0	9,287	306	8,980
63+50	6350	50	137	1	254	1	9,541	308	9,233
64+00	6400	50	132	1	249	2	9,790	310	9,480
64+50	6450	50	120	0	233	1	10,023	311	9,712
65+00	6500	50	107	1	210	1	10,233	312	9,921
65+50	6550	50	138	0	227	1	10,460	314	10,146
66+00	6600	50	129	1	247	1	10,708	315	10,393
66+50	6650	50	91	11	204	11	10,912	328	10,584
66+72.56	6673	23	75	19	69	12	10,981	341	10,640
				Column Totals	10,981	308			

NOTES	
1 - CUT	SALVAGED/UNUSABLE PAVEMENT MATERIAL IS INCLUDED IN CUT.
2 - FILL	DOES NOT INCLUDE PAVEMENT EXCAVATION VOLUME.
3 - MASS ORDINATE	[(CUT) - ((FILL) * FILL FACTOR)]

CTH D - Division 1A

Station	Real Station	Distance	Area (SF) Cut	Area (SF) Fill	Incremental Vol (CY) (Unadjusted) Cut Note 1	Incremental Vol (CY) (Unadjusted) Fill Note 2	Cumulative Vol (CY) Cut 1.00 Note 1	Cumulative Vol (CY) Expanded Fill 1.11	Mass Ordinate Note 3
66+83.01	6683	0	75	18	0	0	0	0	0
67+00	6700	17	95	14	53	10	53	11	42
67+50	6750	50	91	15	173	26	226	40	186
68+00	6800	50	138	1	212	15	438	56	382
68+50	6850	50	168	0	283	1	721	58	663
69+00	6900	50	153	0	297	0	1,018	59	960
69+50	6950	50	150	0	281	1	1,299	59	1,240
70+00	7000	50	157	0	284	1	1,584	60	1,524
70+50	7050	50	155	0	289	1	1,872	61	1,812
71+00	7100	50	155	0	287	1	2,159	61	2,098
71+50	7150	50	148	1	280	1	2,440	62	2,377
72+00	7200	50	170	0	294	0	2,734	63	2,671
72+50	7250	50	168	0	313	0	3,046	63	2,983
73+00	7300	50	165	0	308	0	3,354	63	3,291
73+50	7350	50	168	0	308	0	3,662	63	3,600
74+00	7400	50	161	0	305	0	3,968	63	3,905
74+50	7450	50	165	0	302	0	4,270	63	4,207
75+00	7500	50	162	0	303	0	4,573	63	4,509
75+50	7550	50	171	0	308	0	4,881	63	4,817
76+00	7600	50	171	0	316	0	5,197	63	5,134
76+50	7650	50	174	0	320	0	5,517	63	5,453
77+00	7700	50	165	0	314	0	5,831	64	5,767
77+25	7725	25	163	0	152	0	5,982	64	5,919
				Column Totals	5,982	58			

Lilac Lane - Division 1B

Station	Real Station	Distance	Area (SF) Cut	Area (SF) Fill	Incremental Vol (CY) (Unadjusted) Cut Note 1	Incremental Vol (CY) (Unadjusted) Fill Note 2	Cumulative Vol (CY) Cut 1.00 Note 1	Cumulative Vol (CY) Expanded Fill 1.11	Mass Ordinate Note 3
199+50	19950	0	0	0	0	0	0	0	0
199+63.78	19964	14	117	2	30	1	30	1	29
199+81	19981	17	169	0	91	1	121	1	120
				Column Totals	121	1			

NOTES	
1 - CUT	SALVAGED/UNUSABLE PAVEMENT MATERIAL IS INCLUDED IN CUT.
2 - FILL	DOES NOT INCLUDE PAVEMENT EXCAVATION VOLUME.
3 - MASS ORDINATE	[(CUT) - ((FILL) * FILL FACTOR)]

Middle Road South - Division 1B

Station	Real Station	Distance	Area (SF) Cut	Area (SF) Fill	Incremental Vol (CY) (Unadjusted) Cut Note 1	Incremental Vol (CY) (Unadjusted) Fill Note 2	Cumulative Vol (CY) Cut 1.00 Note 1	Cumulative Vol (CY) Expanded Fill 1.11	Mass Ordinate Note 3
209+50	20950	0	47	1	0	0	0	0	0
209+58.79	20959	9	50	1	16	0	16	0	15
209+81	20981	22	161	0	87	1	102	1	101
				Column Totals	102	1			

Middle Road North - Division 1B

Station	Real Station	Distance	Area (SF) Cut	Area (SF) Fill	Incremental Vol (CY) (Unadjusted) Cut Note 1	Incremental Vol (CY) (Unadjusted) Fill Note 3	Cumulative Vol (CY) Cut 1.00 Note 1	Cumulative Vol (CY) Expanded Fill 1.11	Mass Ordinate Note 8
210+19.01	21019	0	180	0	0	0	0	0	0
210+36.21	21036	17	130	0	99	0	99	0	99
210+50	21050	14	61	1	49	0	147	0	147
210+75	21075	25	60	0	56	1	204	1	202
210+90	21090	15	0	0	17	0	220	1	219
				Column Totals	220	1			

Liberty Street - Division 1B

Station	Real Station	Distance	Area (SF) Cut	Area (SF) Fill	Incremental Vol (CY) (Unadjusted) Cut Note 1	Incremental Vol (CY) (Unadjusted) Fill Note 2	Cumulative Vol (CY) Cut 1.00 Note 1	Cumulative Vol (CY) Expanded Fill 1.11	Mass Ordinate Note 3
219+25	21925	0	0	0	0	0	0	0	0
219+50	21950	25	58	0	27	0	27	0	27
219+63.98	21964	14	114	0	45	0	71	0	71
219+81	21981	17	183	0	94	0	165	0	165
219+81.1	21981	0	3	0	0	0	165	0	165
220+18.9	22019	38	3	0	4	0	169	0	169
220+19	22019	0	175	0	0	0	170	0	170
220+36.02	22036	17	112	0	90	0	260	0	260
220+50	22050	14	55	0	43	0	303	0	303
220+75	22075	25	56	0	51	0	355	0	355
				Column Totals	355	0			

NOTES	
1 - CUT	SALVAGED/UNUSABLE PAVEMENT MATERIAL IS INCLUDED IN CUT.
2 - FILL	DOES NOT INCLUDE PAVEMENT EXCAVATION VOLUME.
3 - MASS ORDINATE	[(CUT) - ((FILL) * FILL FACTOR)]

Victory Street - Division 1B

Station	Real Station	Distance	Area (SF) Cut	Area (SF) Fill	Incremental Vol (CY) (Unadjusted) Cut Note 1	Incremental Vol (CY) (Unadjusted) Fill Note 2	Cumulative Vol (CY) Cut Note 1	Cumulative Vol (CY) Expanded Fill 1.00 / 1.11	Mass Ordinate Note 3
229+50	22950	0	0	0	0	0	0	0	0
229+63.88	22964	14	111	1	29	0	29	0	28
229+81	22981	17	181	0	93	0	121	0	121
				Column Totals	121	0			

Elevator Lane - Division 1B

Station	Real Station	Distance	Area (SF) Cut	Area (SF) Fill	Incremental Vol (CY) (Unadjusted) Cut Note 1	Incremental Vol (CY) (Unadjusted) Fill Note 2	Cumulative Vol (CY) Cut Note 1	Cumulative Vol (CY) Expanded Fill 1.00 / 1.11	Mass Ordinate Note 3
240+20.5	24020	0	157	0	0	0	0	0	0
240+39.14	24039	19	107	0	91	0	91	0	91
240+50	24050	11	52	0	32	0	123	0	123
				Column Totals	123	0			

Elm Street - Division 1A

Station	Real Station	Distance	Area (SF) Cut	Area (SF) Fill	Incremental Vol (CY) (Unadjusted) Cut Note 1	Incremental Vol (CY) (Unadjusted) Fill Note 2	Cumulative Vol (CY) Cut Note 1	Cumulative Vol (CY) Expanded Fill 1.00 / 1.11	Mass Ordinate Note 3
250+22	25022	0	190	0	0	0	0	0	0
250+39.05	25039	17	139	0	104	0	104	0	104
250+50	25050	11	82	0	45	0	149	0	149
250+75	25075	25	61	0	66	0	215	0	215
251+00	25100	25	52	0	52	0	267	0	267
				Column Totals	267	0			

NOTES	
1 - CUT	SALVAGED/UNUSABLE PAVEMENT MATERIAL IS INCLUDED IN CUT.
2 - FILL	DOES NOT INCLUDE PAVEMENT EXCAVATION VOLUME.
3 - MASS ORDINATE	[(CUT) - ((FILL) * FILL FACTOR)]

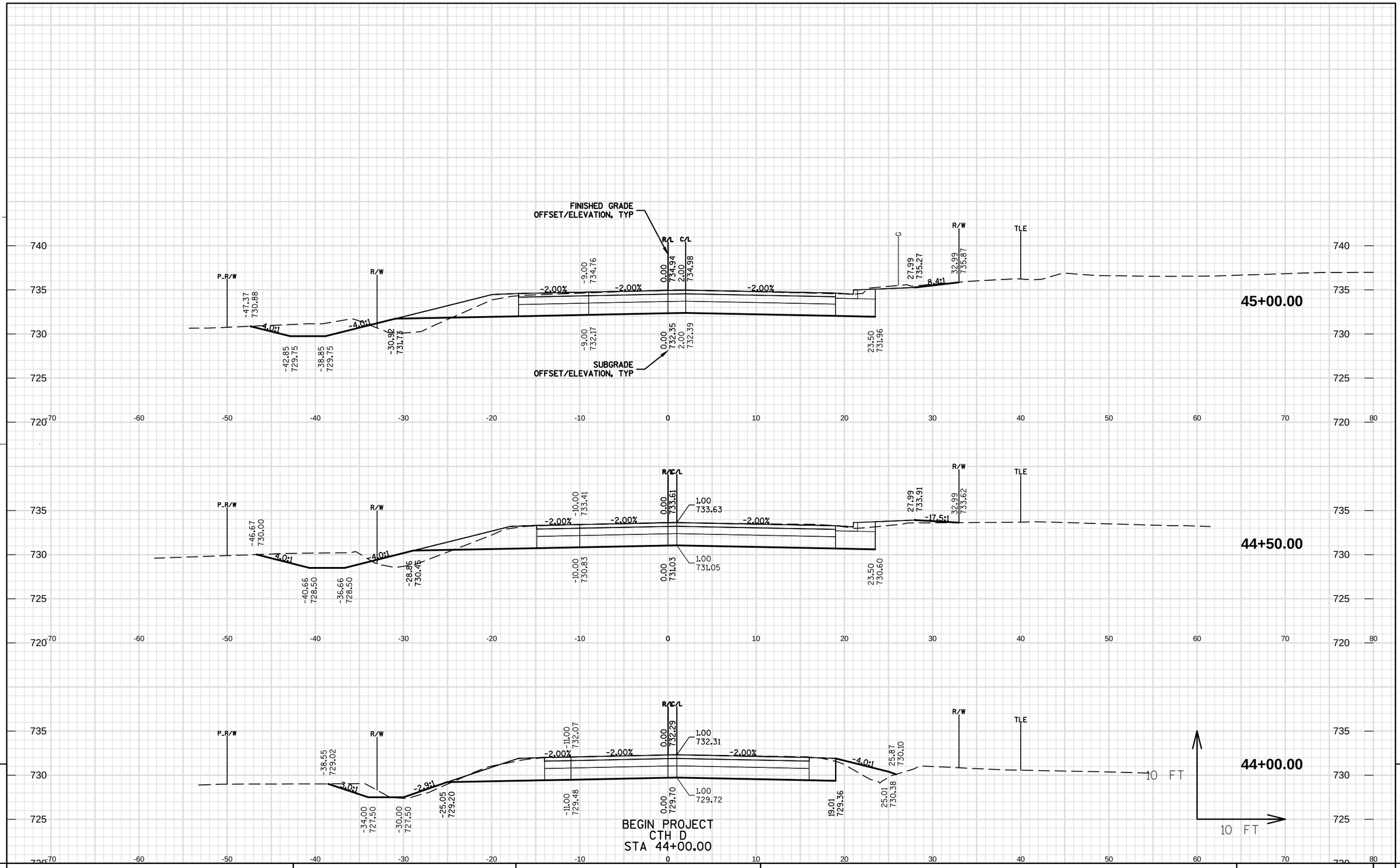

PROJECT NO: 4880-01-70	HWY: CTH D	COUNTY: OZAUKEE	CROSS SECTIONS: CTH D	SHEET 209 E

FILE NAME : S:\CURRPROJ\OZAUKEECO\CTH D\CIVIL3D\48800100\SHEETSPLAN\48800170\48800170-090201-XS.DWG
LAYOUT NAME - 48800170-090201-XS - SHEET-01

PLOT DATE : 11/1/2017 9:10 AM PLOT BY : AARON SARAUER PLOT NAME : ---------- PLOT SCALE : 1 IN:10 FT

WISDOT/CADDS SHEET 49

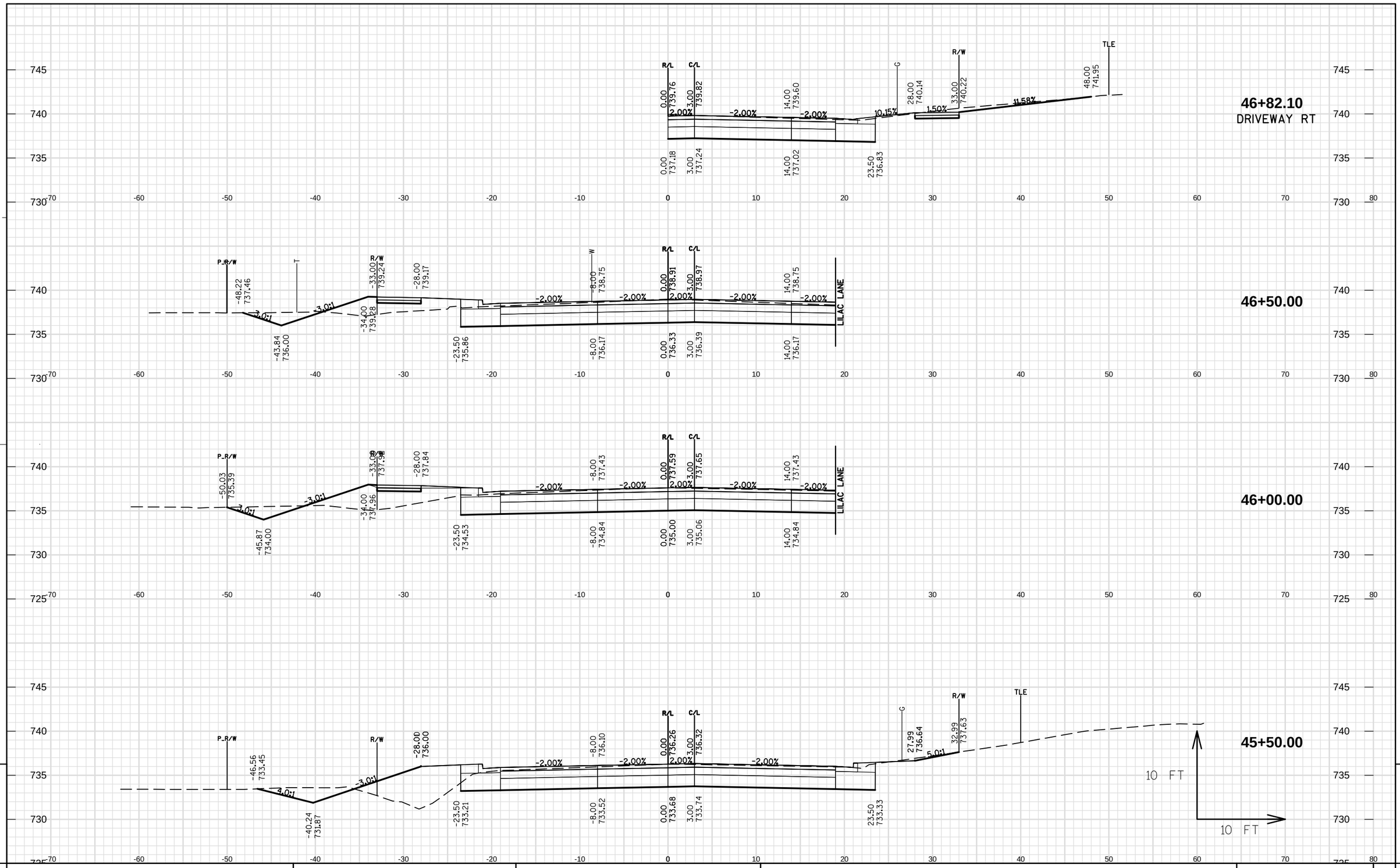

PROJECT NO: 4880-01-70	HWY: CTH D	COUNTY: OZAUKEE	CROSS SECTIONS: CTH D	SHEET 210	E

FILE NAME : S:\CURRPROJ\OZAUKEECO\CTH D\CIVIL3D\48800100\SHEETSPLAN\48800170\48800170-090201-XS.DWG
LAYOUT NAME - 48800170-090201-XS - SHEET-02

PLOT DATE : 11/1/2017 9:10 AM PLOT BY : AARON SARAUER PLOT NAME : ---------- PLOT SCALE : 1 IN:10 FT

WISDOT/CADDS SHEET 49

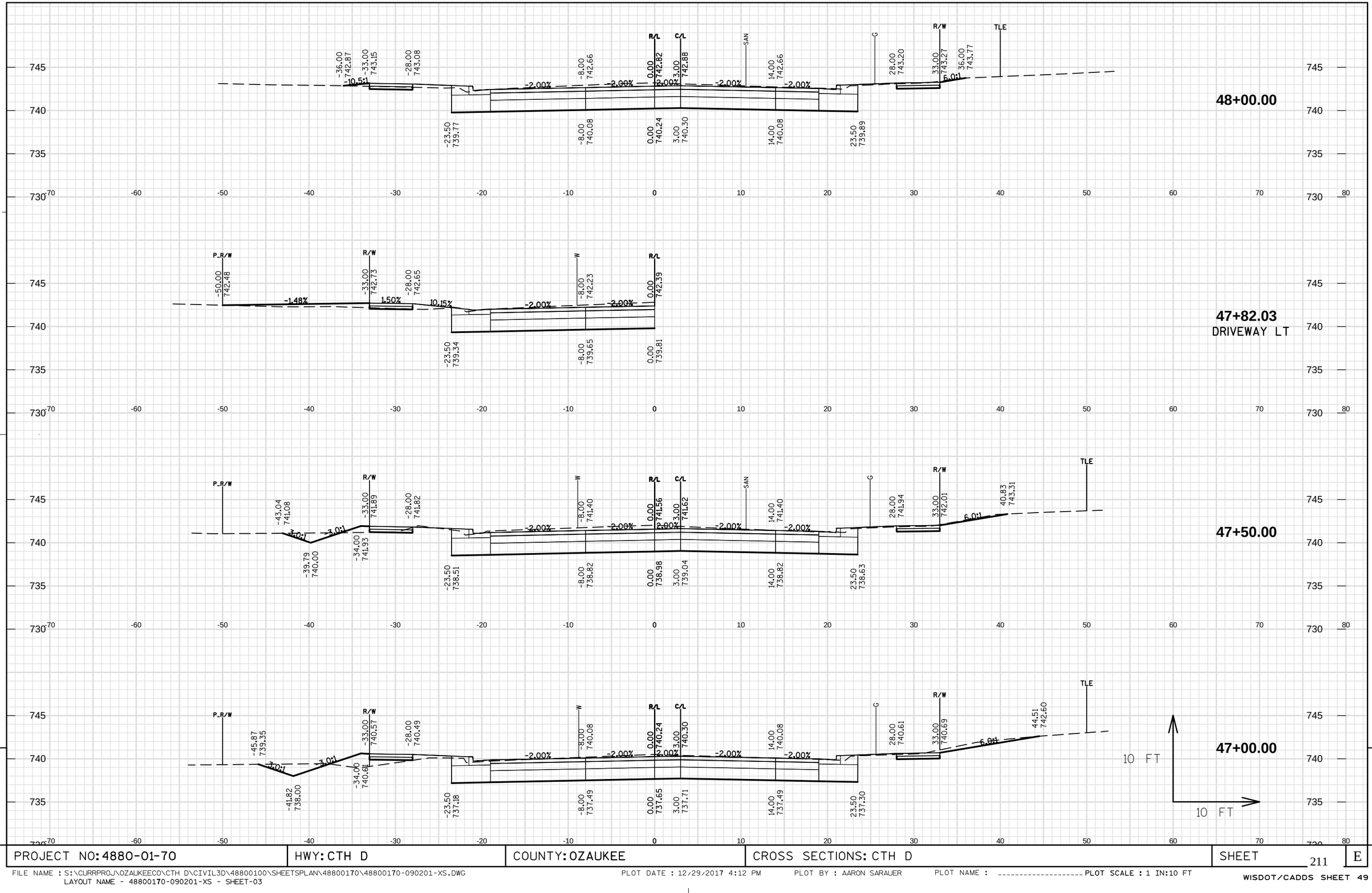

9

PROJECT NO: 4880-01-70	HWY: CTH D	COUNTY: OZAUKEE	CROSS SECTIONS: CTH D	SHEET 211	E

9

FILE NAME : S:\CURRPROJ\OZAUKEECO\CTH D\CIVIL3D\48800100\SHEETSPLAN\48800170\48800170-090201-XS.DWG
LAYOUT NAME - 48800170-090201-XS - SHEET-03
PLOT DATE : 12/29/2017 4:12 PM PLOT BY : AARON SARAUER PLOT NAME : _____ PLOT SCALE : 1 IN:10 FT
WISDOT/CADDS SHEET 49

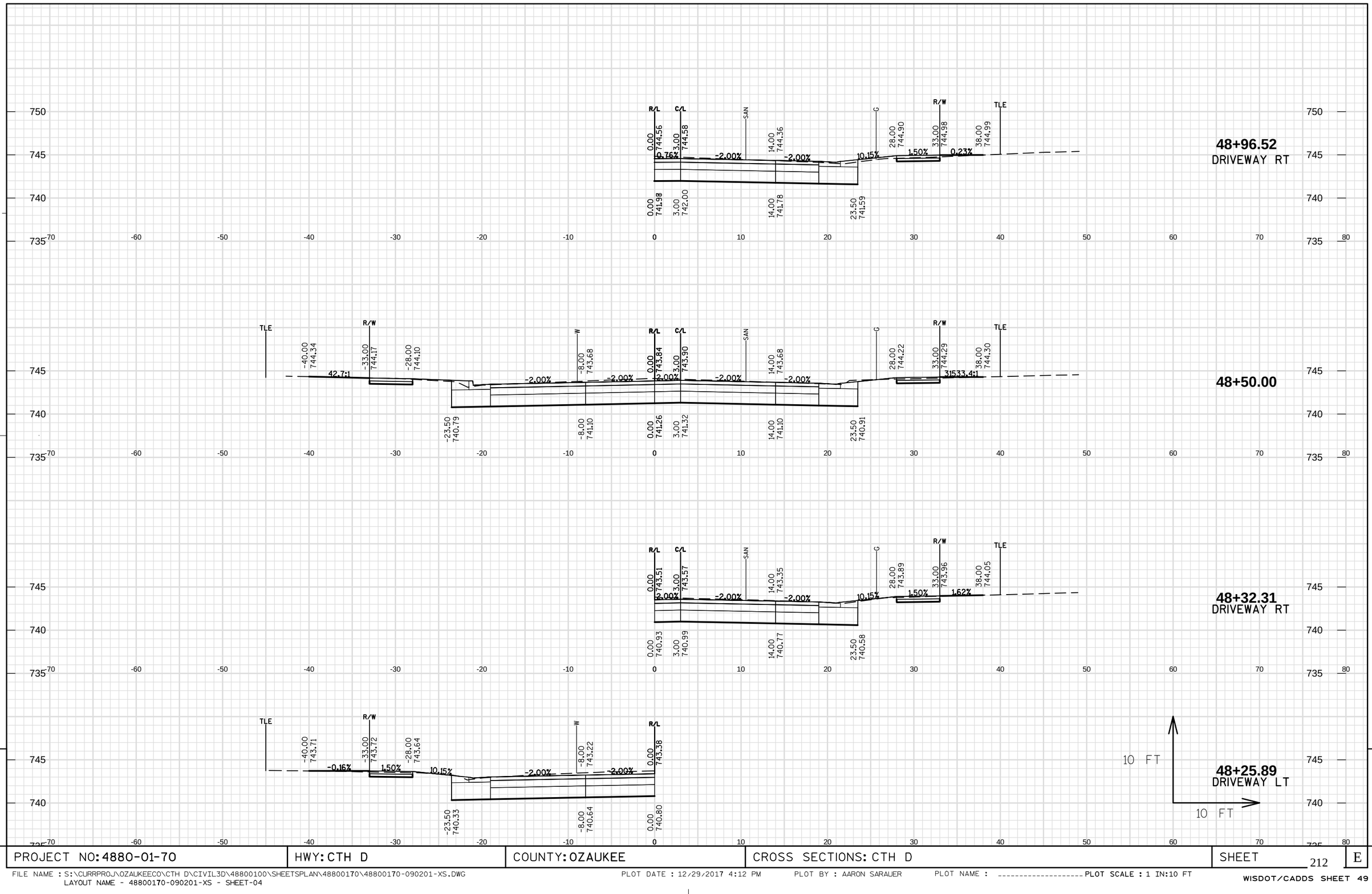

PROJECT NO: 4880-01-70	HWY: CTH D	COUNTY: OZAUKEE	CROSS SECTIONS: CTH D	SHEET 212	E

FILE NAME : S:\CURRPROJ\OZAUKEECO\CTH D\CIVIL3D\48800100\SHEETSPLAN\48800170\48800170-090201-XS.DWG
LAYOUT NAME - 48800170-090201-XS - SHEET-04

PLOT DATE : 12/29/2017 4:12 PM PLOT BY : AARON SARAUER PLOT NAME : _____ PLOT SCALE : 1 IN:10 FT

WISDOT/CADDS SHEET 49

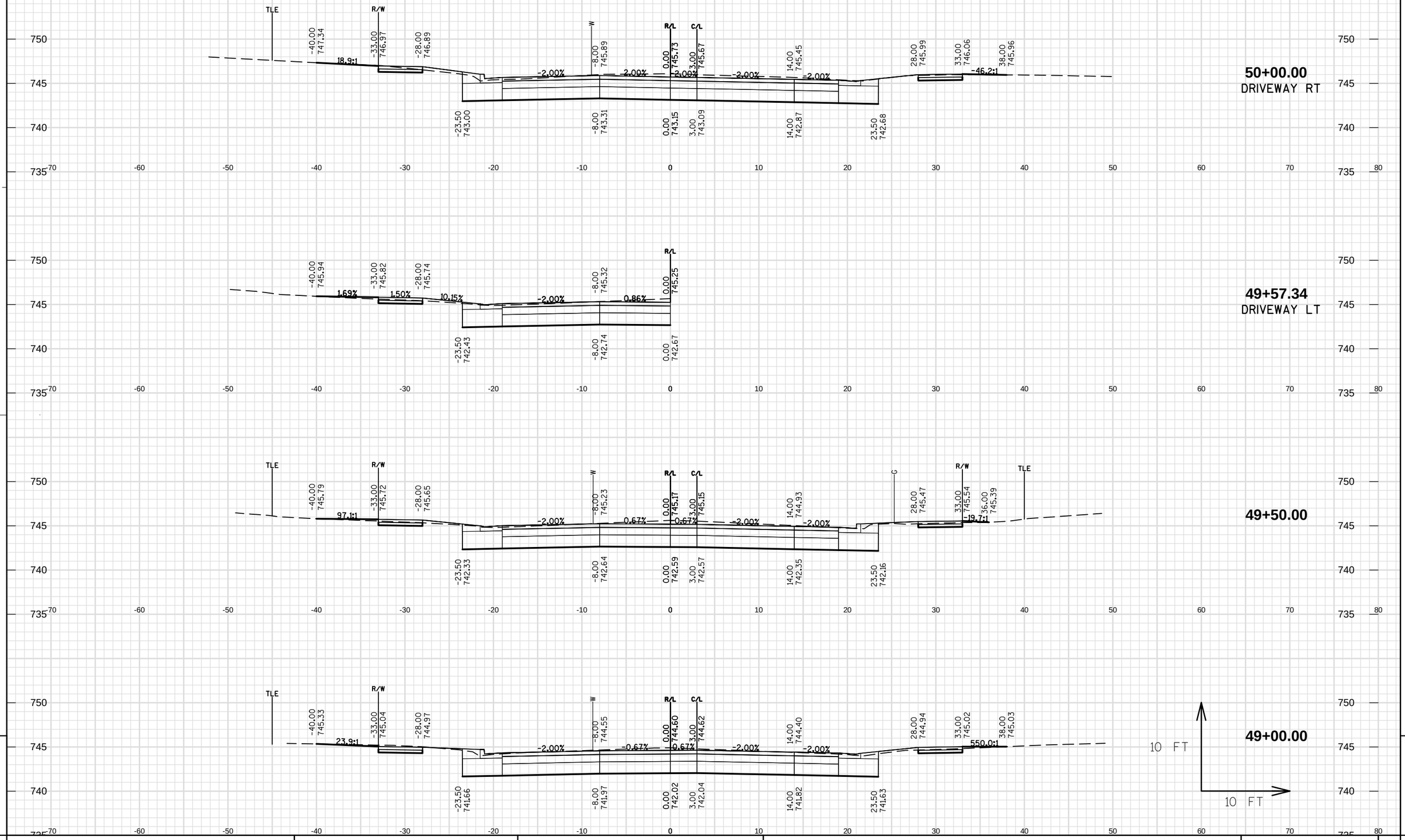

PROJECT NO: 4880-01-70	HWY: CTH D	COUNTY: OZAUKEE	CROSS SECTIONS: CTH D	SHEET 213 E

FILE NAME : S:\CURRPROJ\OZAUKEECO\CTH D\CIVIL3D\48800100\SHEETSPLAN\48800170\48800170-090201-XS.DWG
LAYOUT NAME - 48800170-090201-XS - SHEET-05

PLOT DATE : 12/29/2017 4:12 PM PLOT BY : AARON SARAUER PLOT NAME : _____ PLOT SCALE : 1 IN:10 FT

WISDOT/CADDS SHEET 49

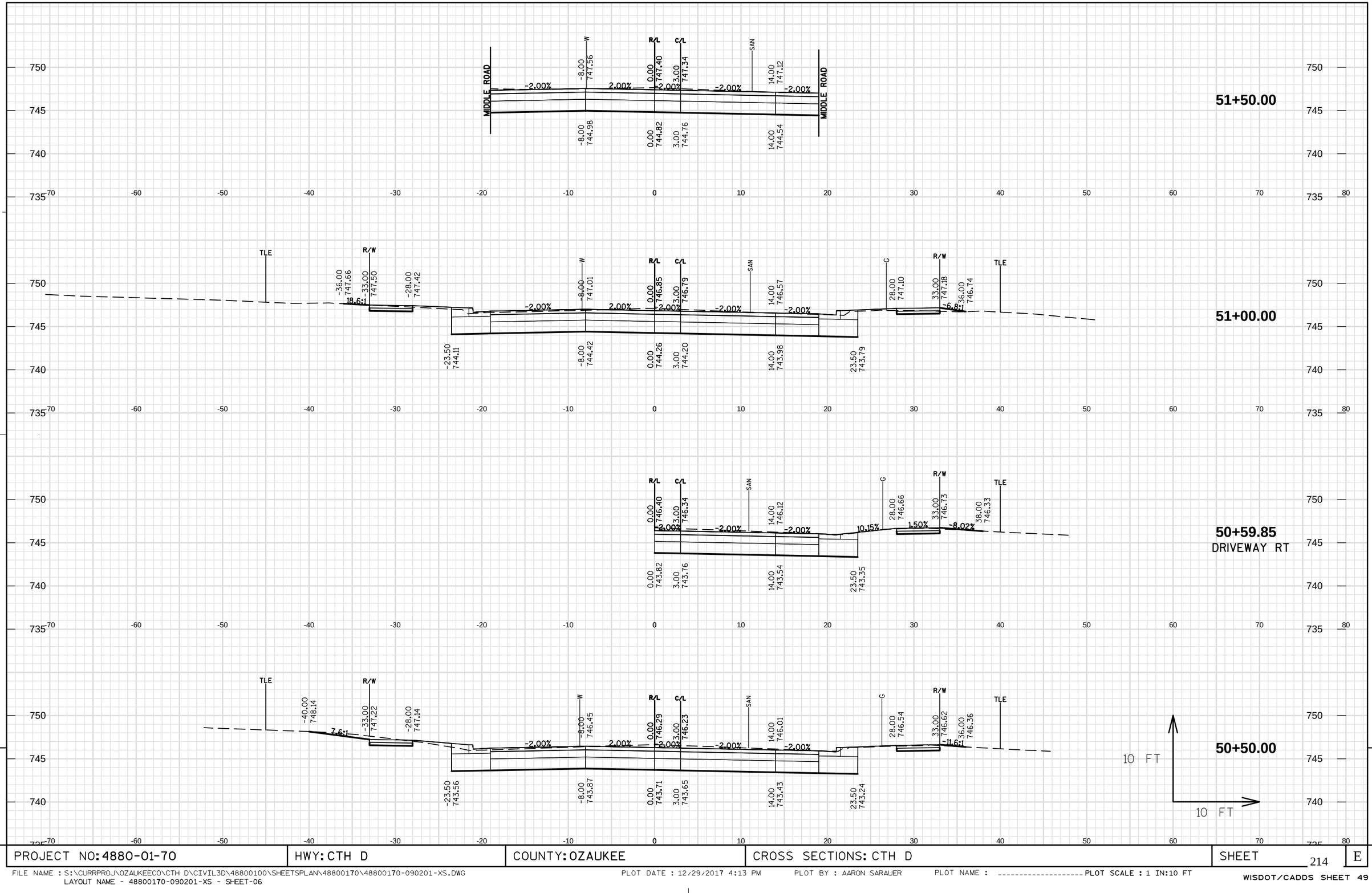

PROJECT NO: 4880-01-70	HWY: CTH D	COUNTY: OZAUKEE	CROSS SECTIONS: CTH D	SHEET 214	E

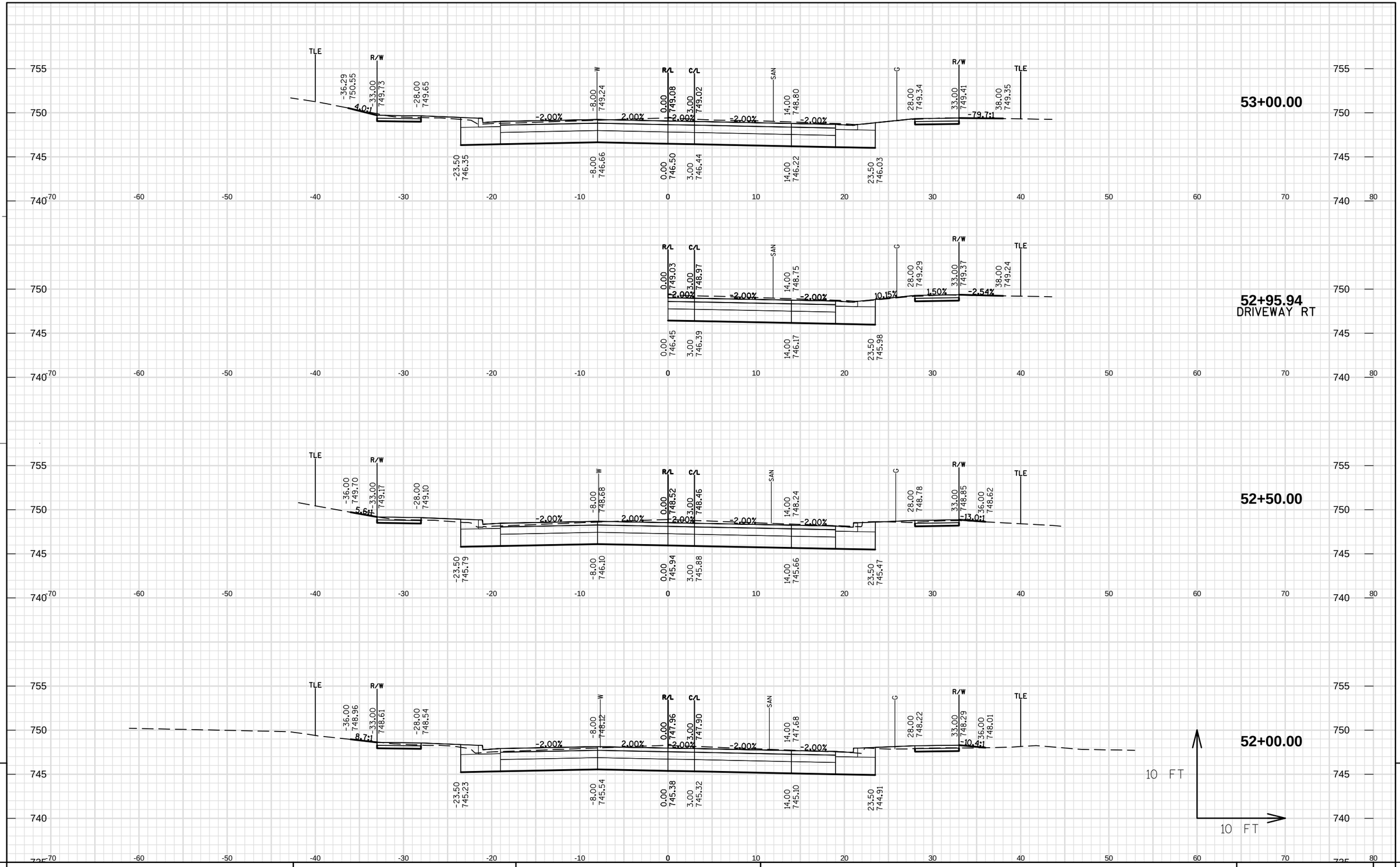

PROJECT NO: 4880-01-70	HWY: CTH D	COUNTY: OZAUKEE	CROSS SECTIONS: CTH D	SHEET 215 E

FILE NAME : S:\CURRPROJ\OZAUKEECO\CTH D\CIVIL3D\48800100\SHEETSPLAN\48800170\48800170-090201-XS.DWG
LAYOUT NAME - 48800170-090201-XS - SHEET-07

PLOT DATE : 11/1/2017 9:12 AM PLOT BY : AARON SARAUER PLOT NAME : ---------- PLOT SCALE : 1 IN:10 FT

WISDOT/CADDS SHEET 49

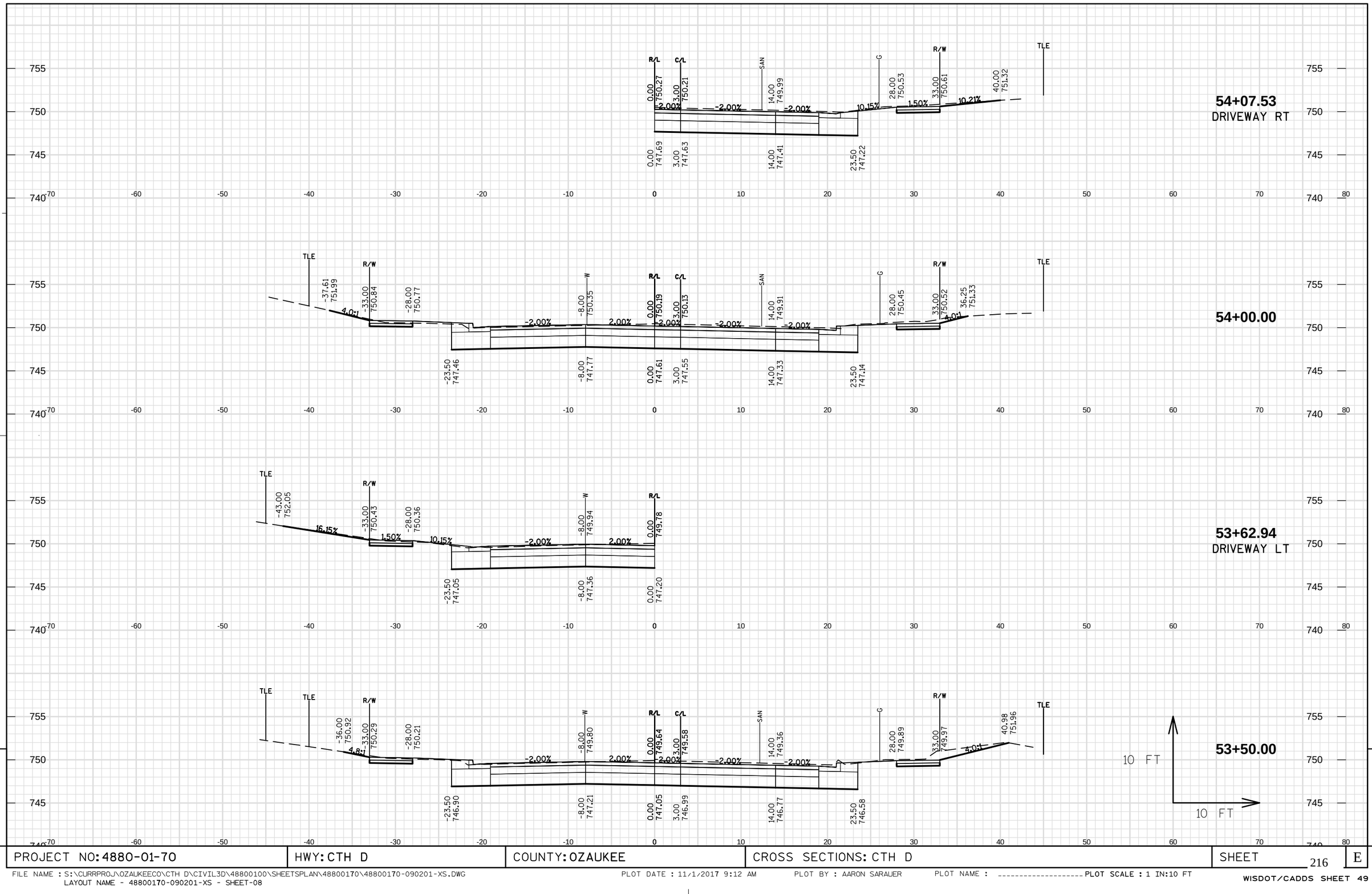

PROJECT NO: 4880-01-70	HWY: CTH D	COUNTY: OZAUKEE	CROSS SECTIONS: CTH D	SHEET 216	E

FILE NAME : S:\CURRPROJ\OZAUKEECO\CTH D\CIVIL3D\48800100\SHEETSPLAN\48800170\48800170-090201-XS.DWG
LAYOUT NAME - 48800170-090201-XS - SHEET-08

PLOT DATE : 11/1/2017 9:12 AM PLOT BY : AARON SARAUER PLOT NAME : _____ PLOT SCALE : 1 IN:10 FT

WISDOT/CADDS SHEET 49

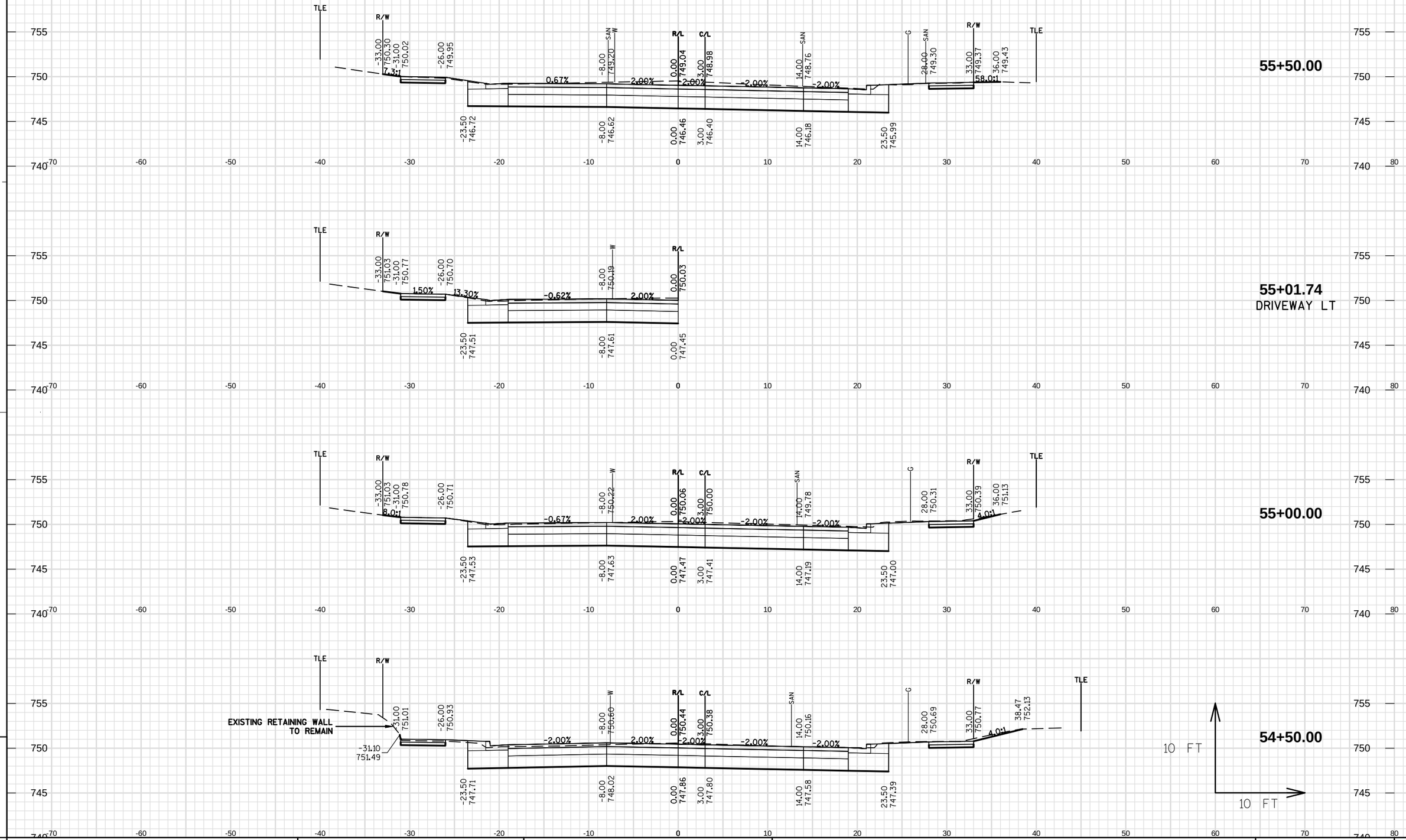

PROJECT NO: 4880-01-70	HWY: CTH D	COUNTY: OZAUKEE	CROSS SECTIONS: CTH D	SHEET 217	E

FILE NAME : S:\CURRPROJ\OZAUKEECO\CTH D\CIVIL3D\48800100\SHEETSPLAN\48800170\48800170-090201-XS.DWG
LAYOUT NAME - 48800170-090201-XS - SHEET-09
PLOT DATE : 11/1/2017 9:12 AM
PLOT BY : AARON SARAUER
PLOT NAME : _____ PLOT SCALE : 1 IN:10 FT
WISDOT/CADDS SHEET 49

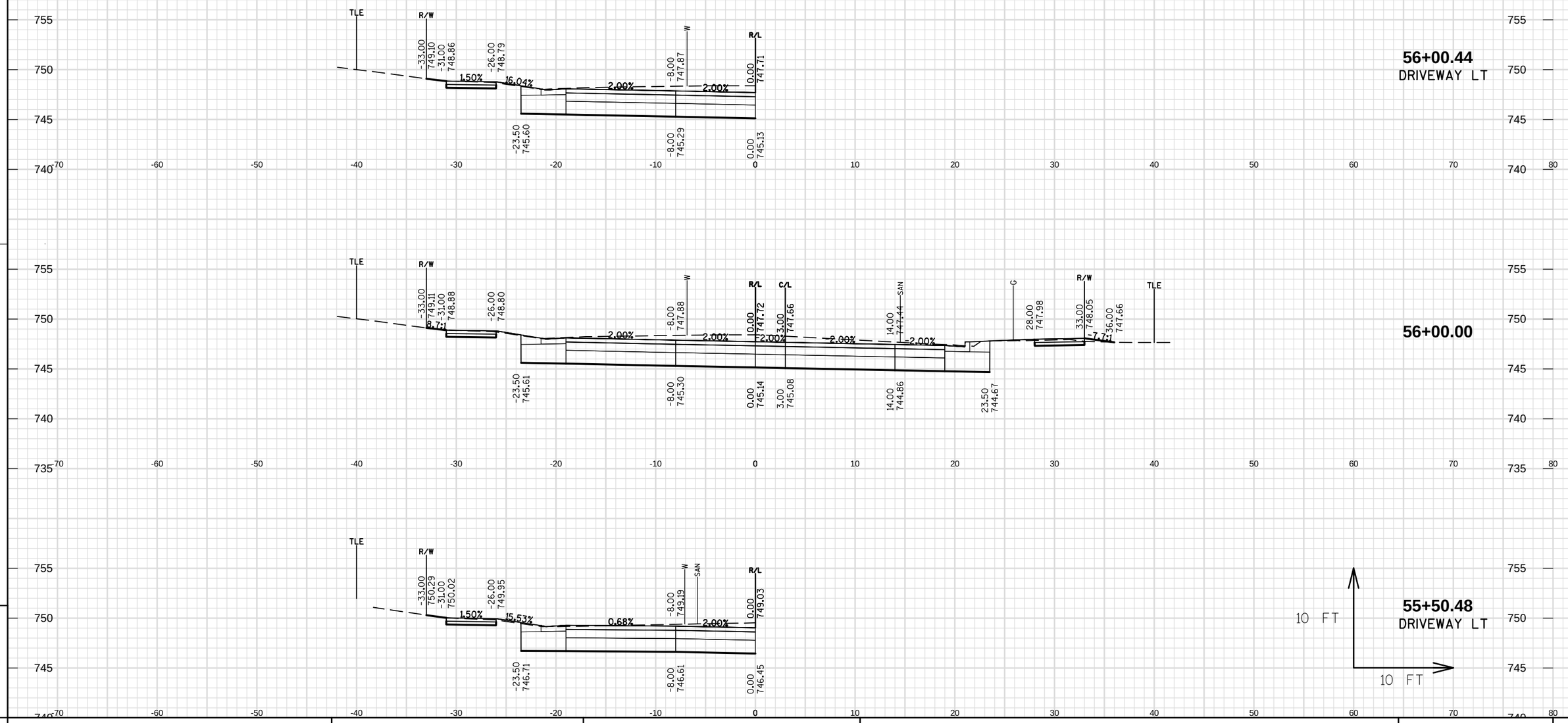

PROJECT NO: 4880-01-70	HWY: CTH D	COUNTY: OZAUKEE	CROSS SECTIONS: CTH D	SHEET 218 E

FILE NAME : S:\CURRPROJ\OZAUKEECO\CTH D\CIVIL3D\48800100\SHEETSPLAN\48800170\48800170-090201-XS.DWG
LAYOUT NAME - 48800170-090201-XS - SHEET-10

PLOT DATE : 11/1/2017 9:12 AM PLOT BY : AARON SARAUER PLOT NAME : ---------- PLOT SCALE : 1 IN:10 FT

WISDOT/CADDS SHEET 49

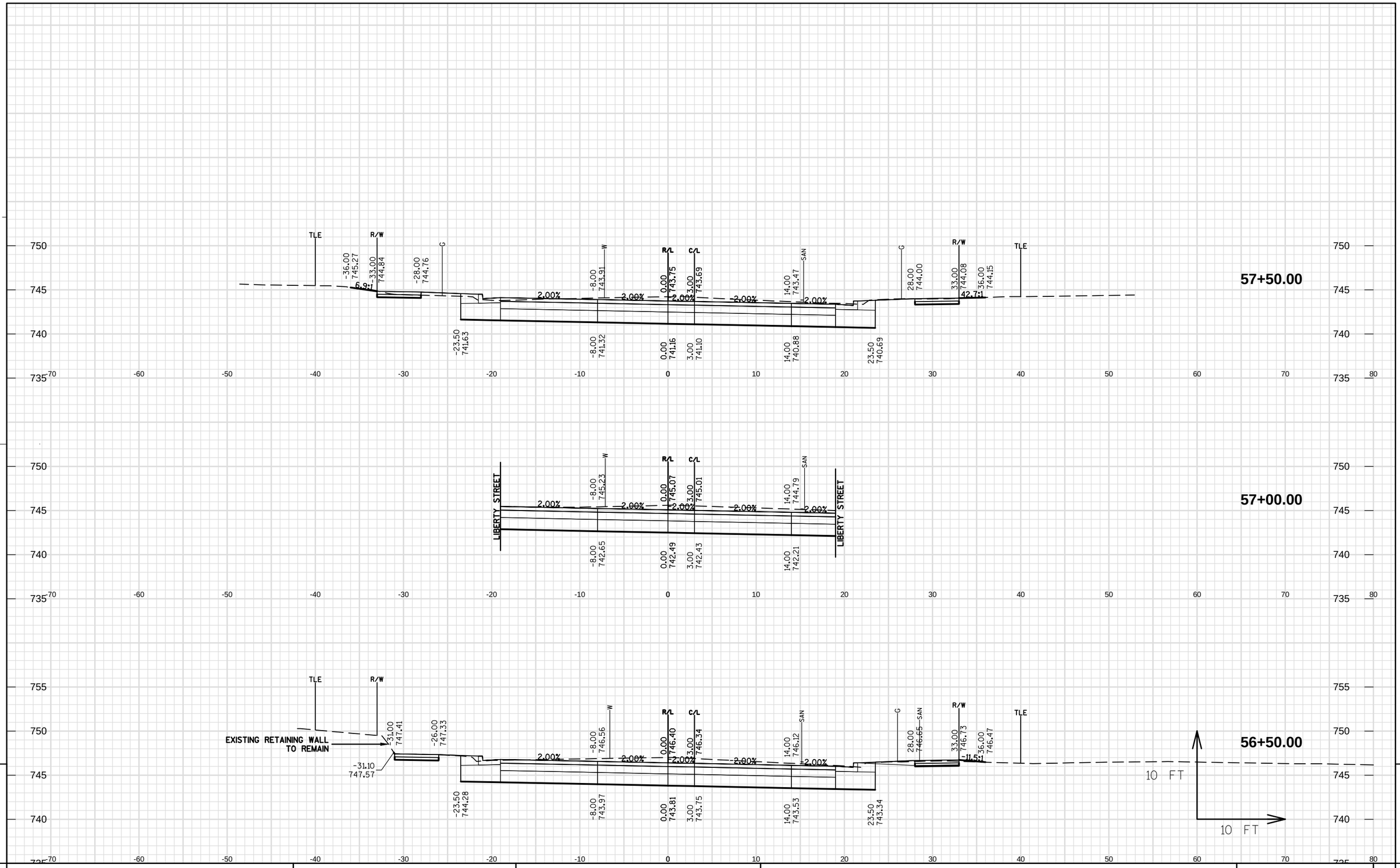

PROJECT NO: 4880-01-70	HWY: CTH D	COUNTY: OZAUKEE	CROSS SECTIONS: CTH D	SHEET 219	E

FILE NAME : S:\CURRPROJ\OZAUKEECO\CTH D\CIVIL3D\48800100\SHEETSPLAN\48800170\48800170-090201-XS.DWG
LAYOUT NAME - 48800170-090201-XS - SHEET-11

PLOT DATE : 11/1/2017 9:13 AM PLOT BY : AARON SARAUER PLOT NAME : ---------- PLOT SCALE : 1 IN:10 FT

WISDOT/CADDS SHEET 49

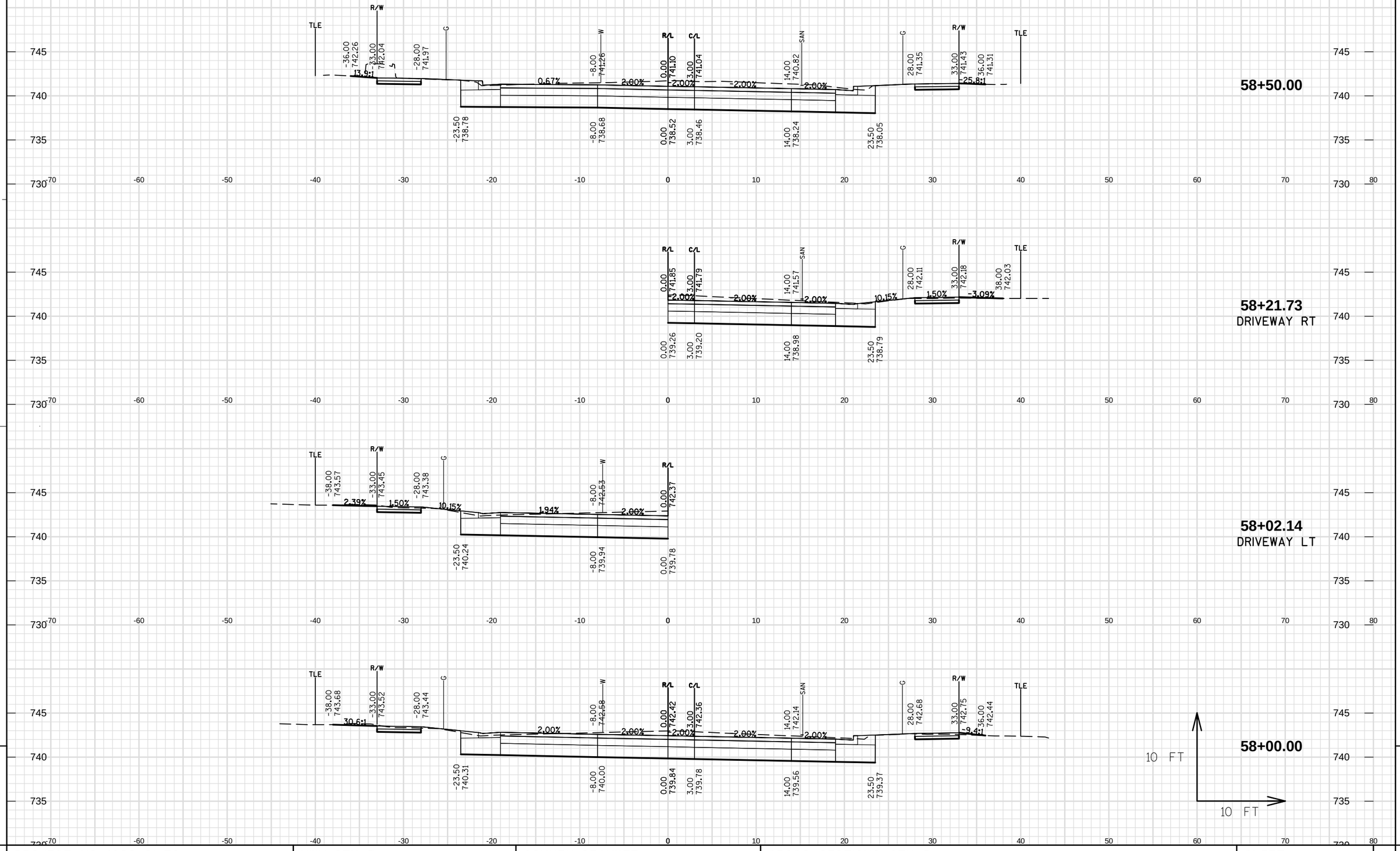

9

9

PROJECT NO: 4880-01-70	HWY: CTH D	COUNTY: OZAUKEE	CROSS SECTIONS: CTH D	SHEET 220	E

FILE NAME : S:\CURRPROJ\OZAUKEECO\CTH D\CIVIL3D\48800100\SHEETSPLAN\48800170\48800170-090201-XS.DWG
LAYOUT NAME - 48800170-090201-XS - SHEET-12

PLOT DATE : 11/1/2017 9:13 AM PLOT BY : AARON SARAUER PLOT NAME : ---------- PLOT SCALE : 1 IN:10 FT

WISDOT/CADDS SHEET 49

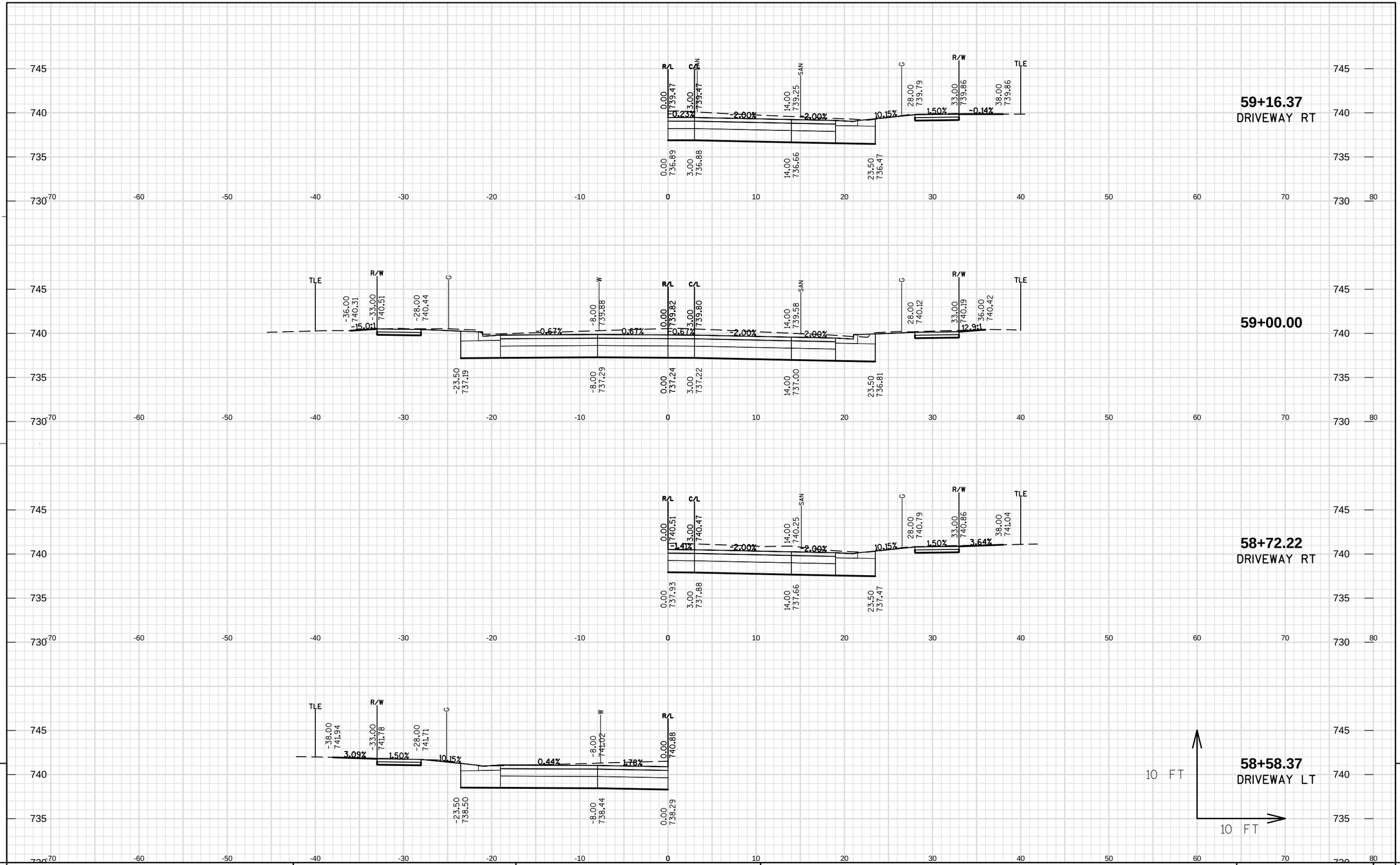

9

9

PROJECT NO: 4880-01-70	HWY: CTH D	COUNTY: OZAUKEE	CROSS SECTIONS: CTH D	SHEET 221	E

FILE NAME : S:\CURRPROJ\OZAUKEECO\CTH D\CIVIL3D\48800100\SHEETSPLAN\48800170\48800170-090201-XS.DWG
LAYOUT NAME - 48800170-090201-XS - SHEET-13
PLOT DATE : 11/1/2017 9:13 AM PLOT BY : AARON SARAUER PLOT NAME : _____ PLOT SCALE : 1 IN:10 FT
WISDOT/CADDS SHEET 49

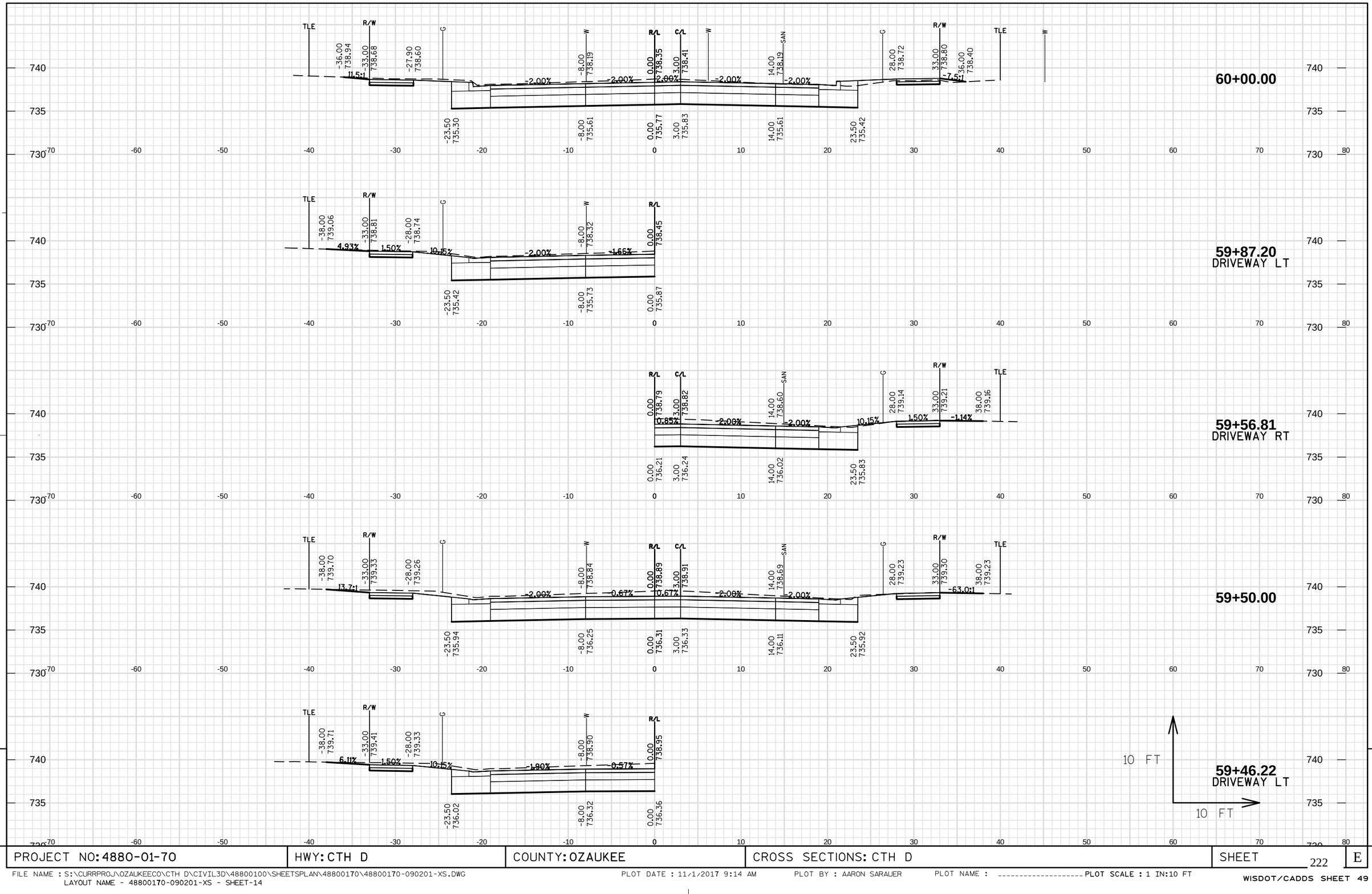

9

9

PROJECT NO: 4880-01-70	HWY: CTH D	COUNTY: OZAUKEE	CROSS SECTIONS: CTH D	SHEET 222	E

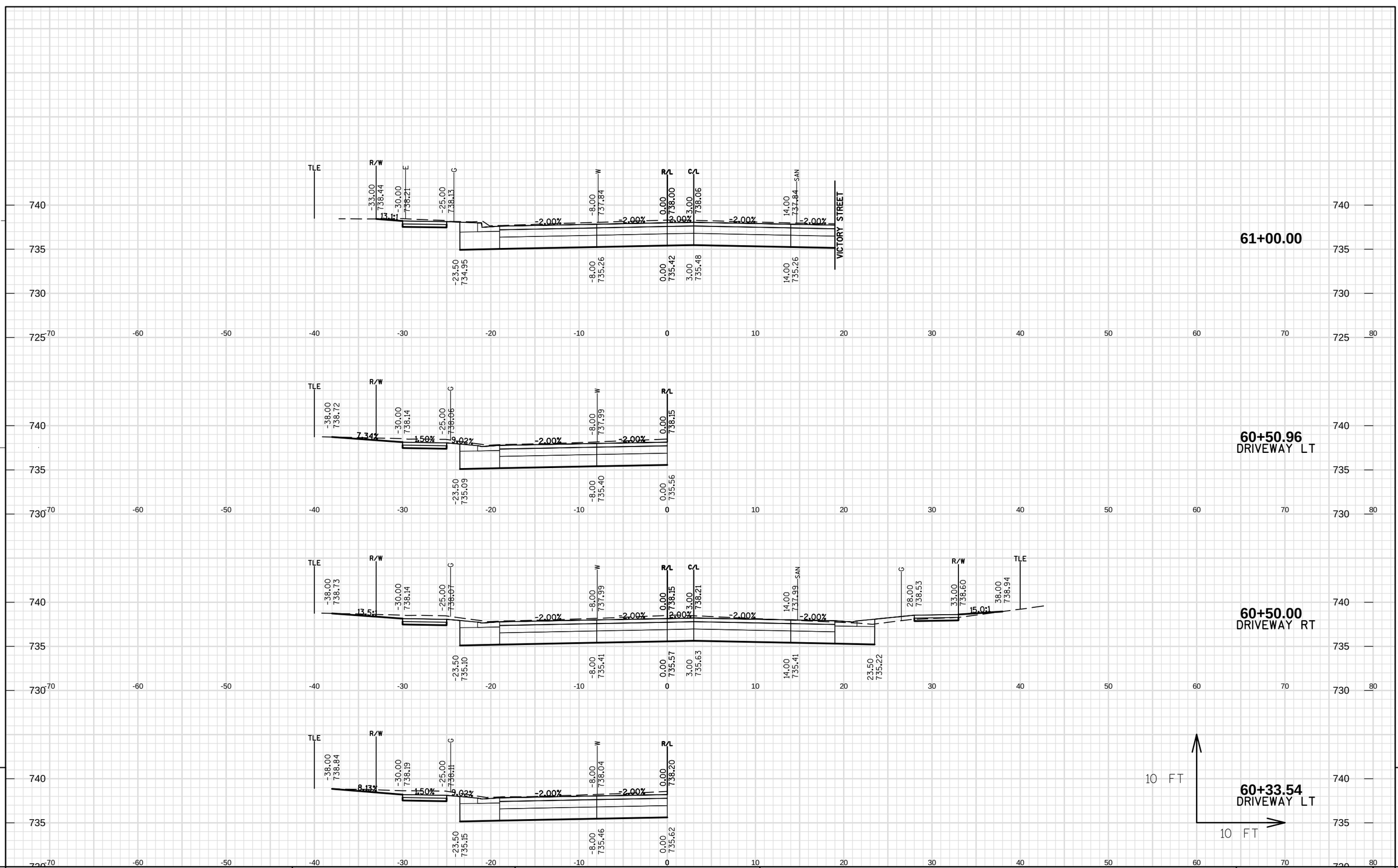

9

9

PROJECT NO: 4880-01-70	HWY: CTH D	COUNTY: OZAUKEE	CROSS SECTIONS: CTH D	SHEET 223	E

FILE NAME : S:\CURRPROJ\OZAUKEECO\CTH D\CIVIL3D\48800100\SHEETSPLAN\48800170\48800170-090201-XS.DWG
LAYOUT NAME - 48800170-090201-XS - SHEET-15

PLOT DATE : 11/1/2017 9:14 AM PLOT BY : AARON SARAUER PLOT NAME : ---------- PLOT SCALE : 1 IN:10 FT

WISDOT/CADDS SHEET 49

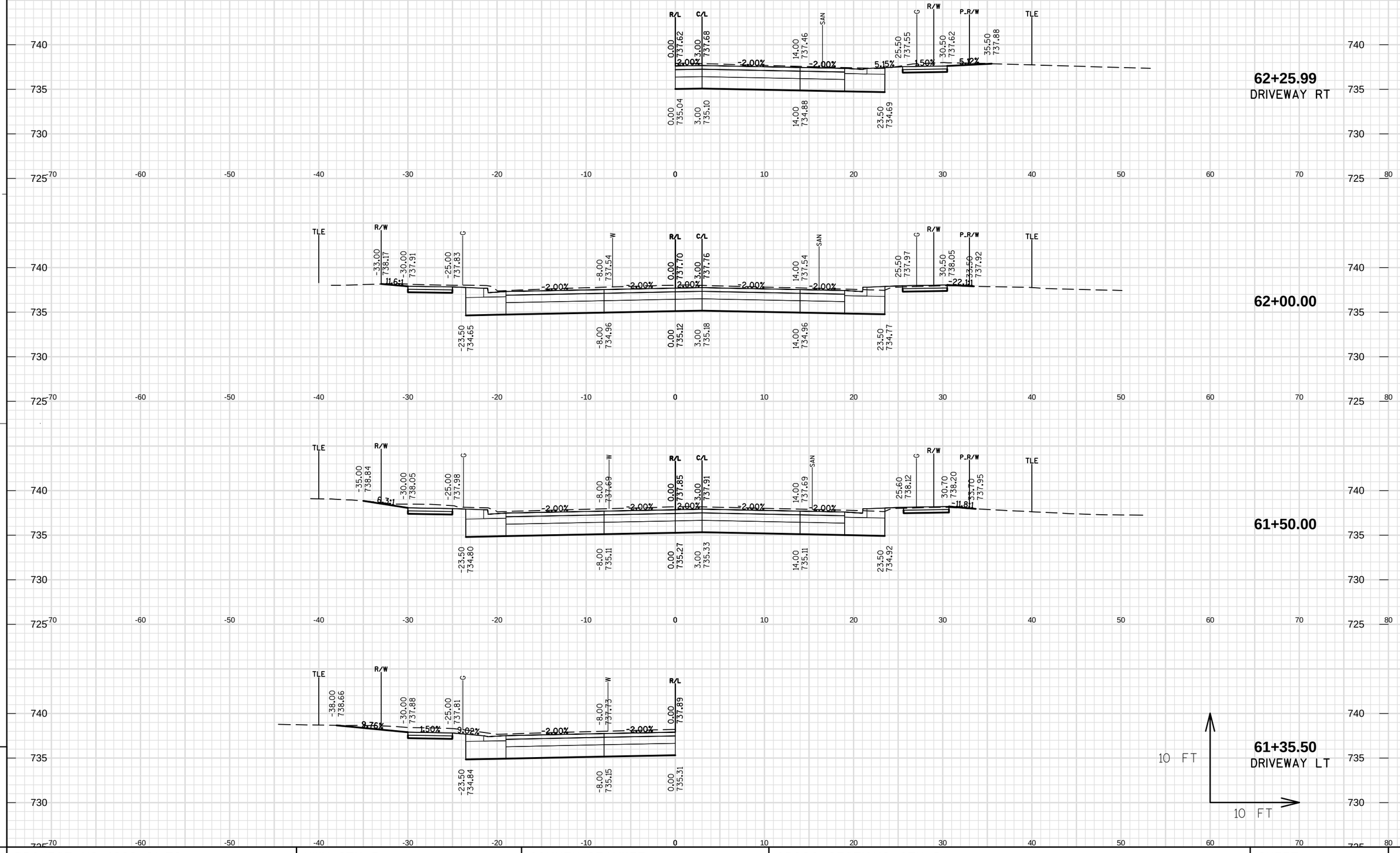

9

9

PROJECT NO: 4880-01-70	HWY: CTH D	COUNTY: OZAUKEE	CROSS SECTIONS: CTH D	SHEET 224	E

FILE NAME : S:\CURRPROJ\OZAUKEECO\CTH D\CIVIL3D\48800100\SHEETSPLAN\48800170\48800170-090201-XS.DWG
LAYOUT NAME - 48800170-090201-XS - SHEET-16
PLOT DATE : 11/1/2017 9:14 AM PLOT BY : AARON SARAUER PLOT NAME : ---------- PLOT SCALE : 1 IN:10 FT
WISDOT/CADDS SHEET 49

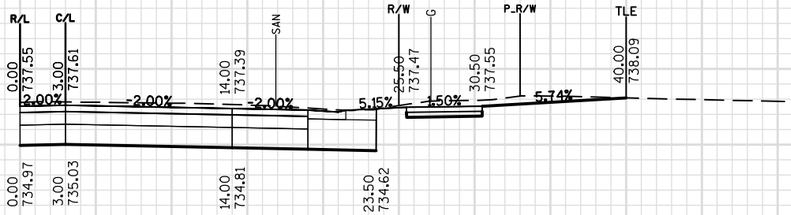

62+50.23
DRIVEWAY RT

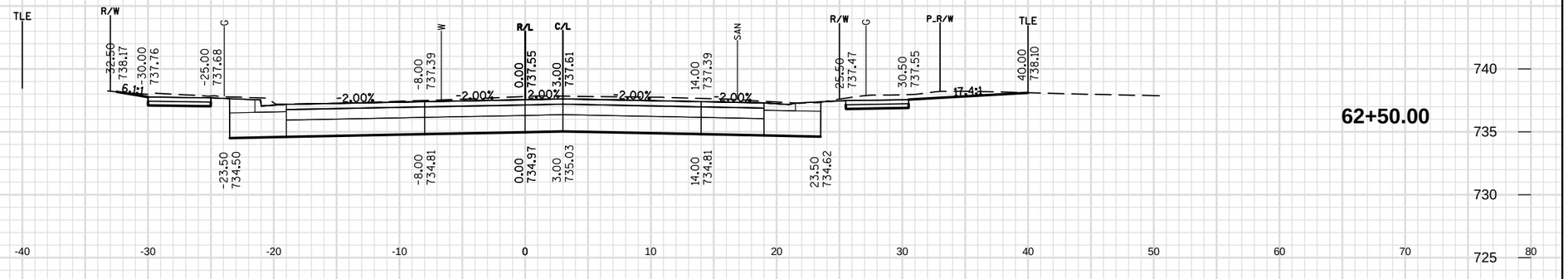

62+50.00

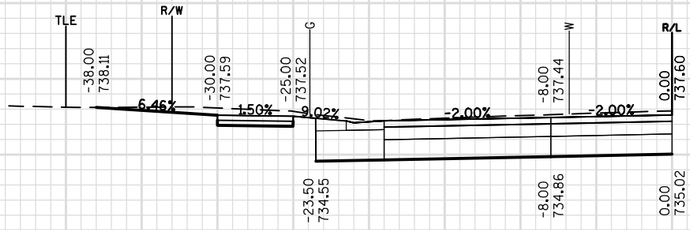

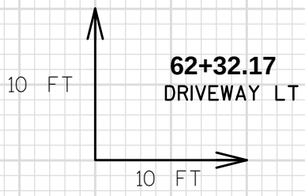

62+32.17
DRIVEWAY LT

PROJECT NO: 4880-01-70	HWY: CTH D	COUNTY: OZAUKEE	CROSS SECTIONS: CTH D	SHEET 225	E

FILE NAME : S:\CURRPROJ\OZAUKEECO\CTH D\CIVIL3D\48800100\SHEETSPLAN\48800170\48800170-090201-XS.DWG
LAYOUT NAME - 48800170-090201-XS - SHEET-17
PLOT DATE : 11/1/2017 9:14 AM PLOT BY : AARON SARAUER PLOT NAME : _____ PLOT SCALE : 1 IN:10 FT
WISDOT/CADDS SHEET 49

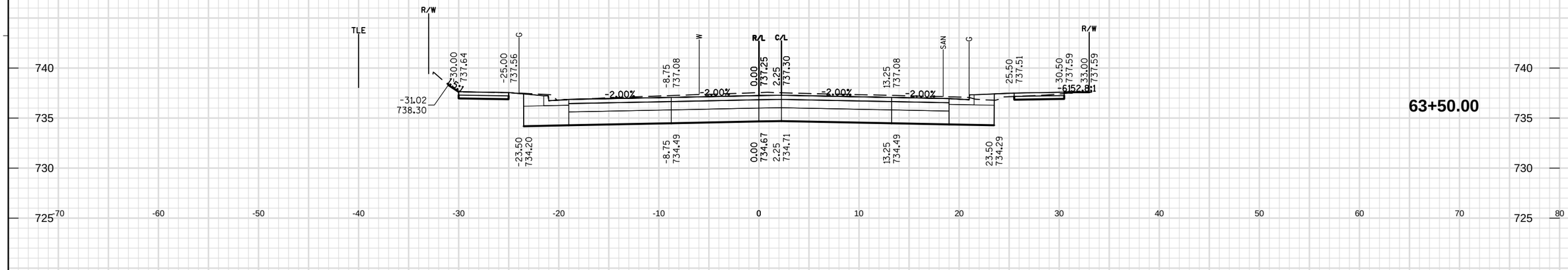

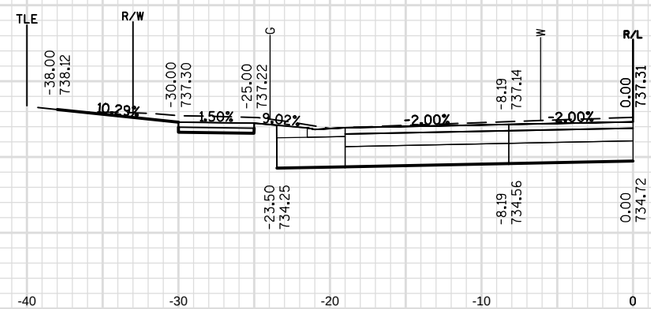

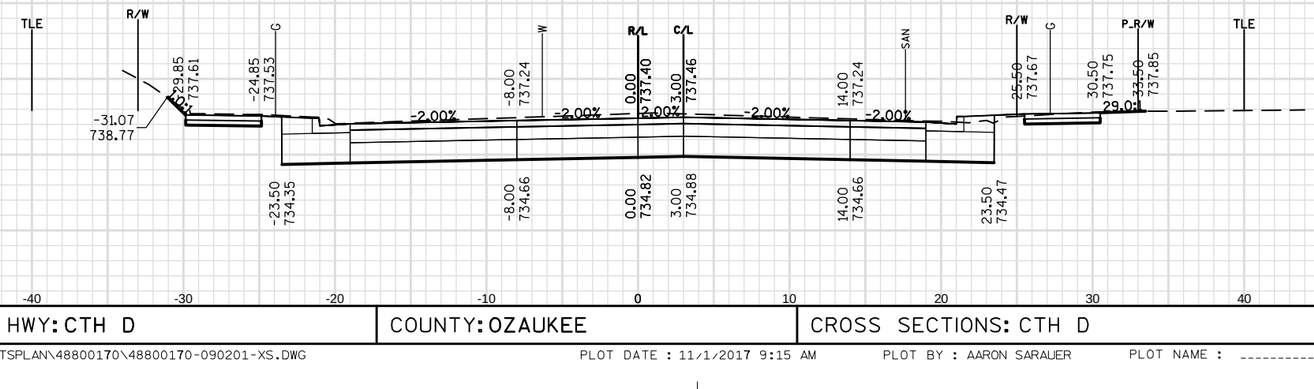

PROJECT NO: 4880-01-70	HWY: CTH D	COUNTY: OZAUKEE	CROSS SECTIONS: CTH D	SHEET 226 E

FILE NAME : S:\CURRPROJ\OZAUKEECO\CTH D\CIVIL3D\48800100\SHEETSPLAN\48800170\48800170-090201-XS.DWG
LAYOUT NAME - 48800170-090201-XS - SHEET-18

PLOT DATE : 11/1/2017 9:15 AM PLOT BY : AARON SARAUER PLOT NAME : ---------- PLOT SCALE : 1 IN:10 FT

WISDOT/CADDS SHEET 49

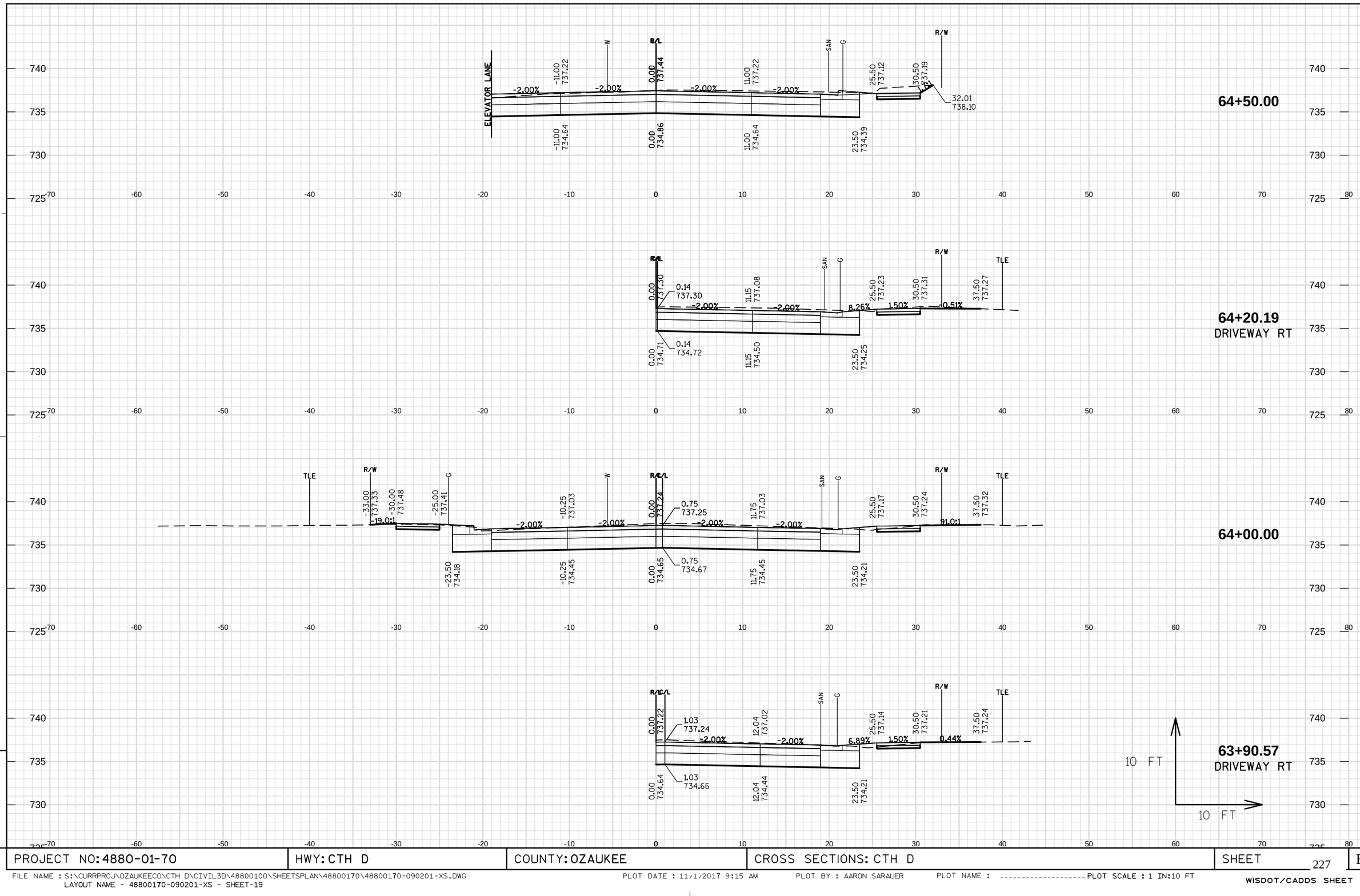

9

PROJECT NO: 4880-01-70	HWY: CTH D	COUNTY: OZAUKEE	CROSS SECTIONS: CTH D	SHEET 227	E

FILE NAME : S:\CURRPROJ\OZAUKEECO\CTH D\CIVIL3D\48800100\SHEETSPLAN\48800170\48800170-090201-XS.DWG
LAYOUT NAME - 48800170-090201-XS - SHEET-19
PLOT DATE : 11/1/2017 9:15 AM PLOT BY : AARON SARAUER PLOT NAME : _____ PLOT SCALE : 1 IN:10 FT
WISDOT/CADDS SHEET 49

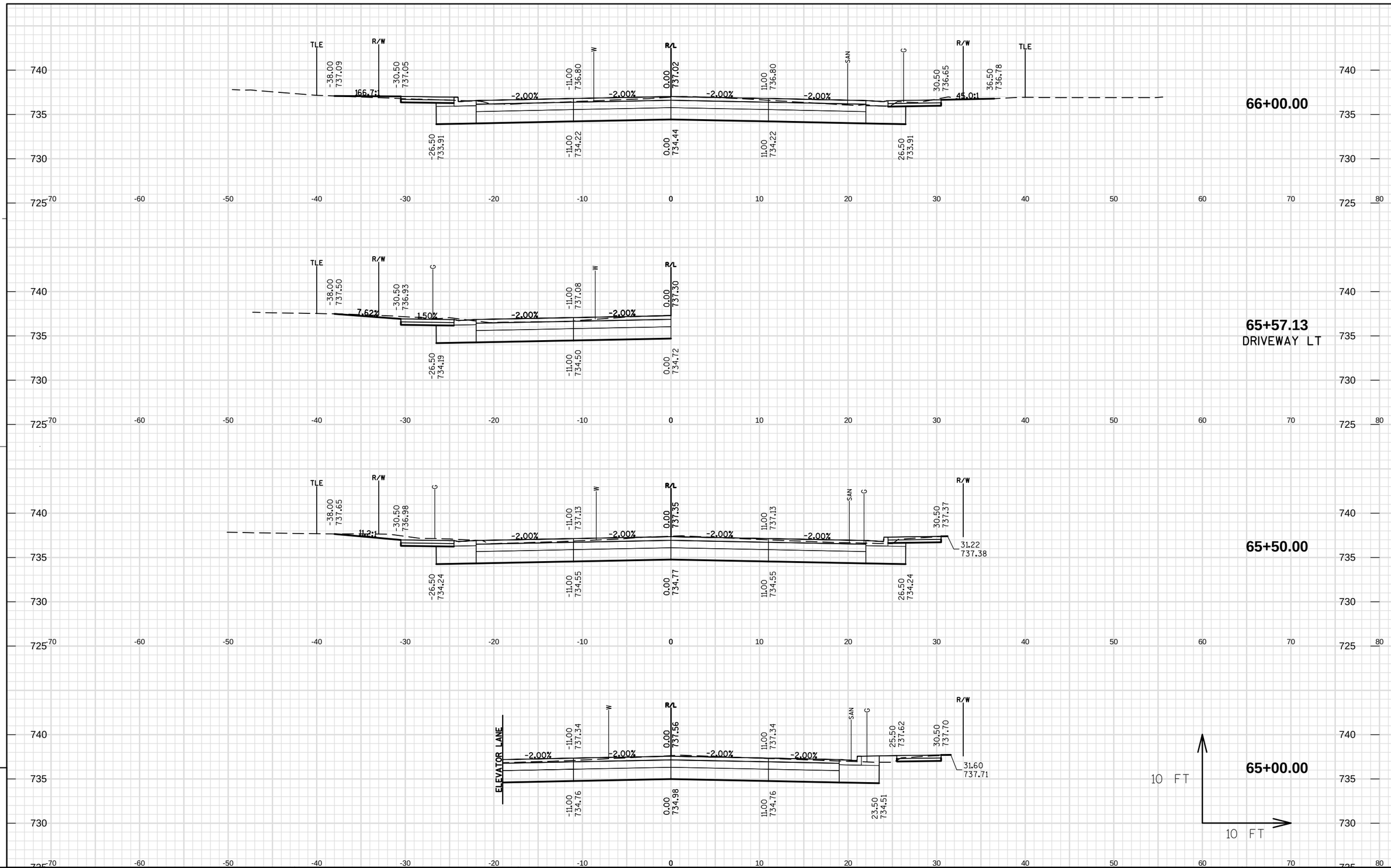

9

9

PROJECT NO: 4880-01-70	HWY: CTH D	COUNTY: OZAUKEE	CROSS SECTIONS: CTH D	SHEET 228	E

FILE NAME : S:\CURRPROJ\OZAUKEECO\CTH D\CIVIL3D\48800100\SHEETSPLAN\48800170\48800170-090201-XS.DWG
LAYOUT NAME - 48800170-090201-XS - SHEET-20

PLOT DATE : 11/1/2017 9:15 AM PLOT BY : AARON SARAUER PLOT NAME : _____ PLOT SCALE : 1 IN:10 FT

WISDOT/CADDS SHEET 49

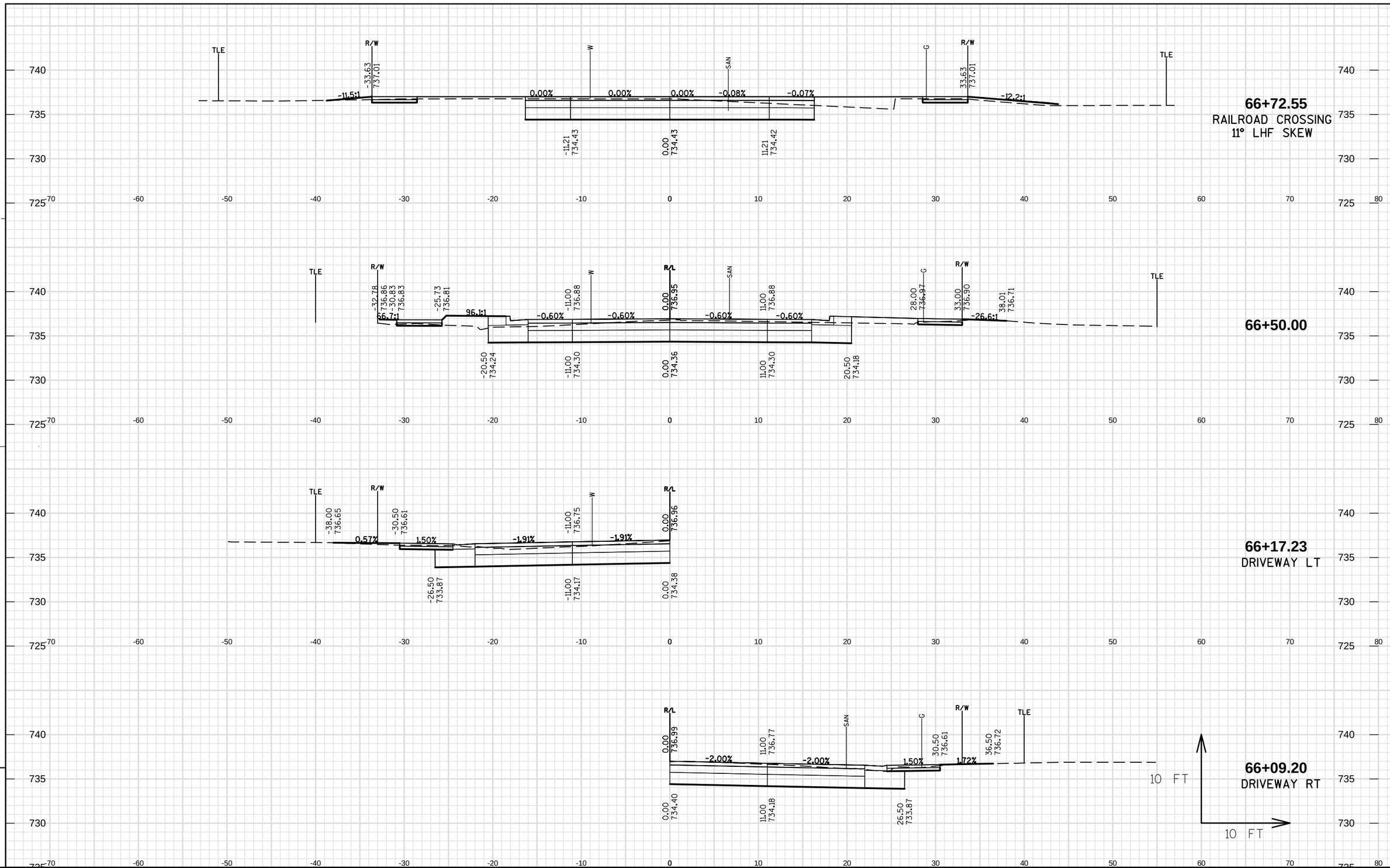

PROJECT NO: 4880-01-70	HWY: CTH D	COUNTY: OZAUKEE	CROSS SECTIONS: CTH D	SHEET 229	E

FILE NAME : S:\CURRPROJ\OZAUKEECO\CTH D\CIVIL3D\48800100\SHEETSPLAN\48800170\48800170-090201-XS.DWG
LAYOUT NAME - 48800170-090201-XS - SHEET-21
PLOT DATE : 11/1/2017 9:15 AM PLOT BY : AARON SARAUER PLOT NAME : _____ PLOT SCALE : 1 IN:10 FT
WISDOT/CADDS SHEET 49

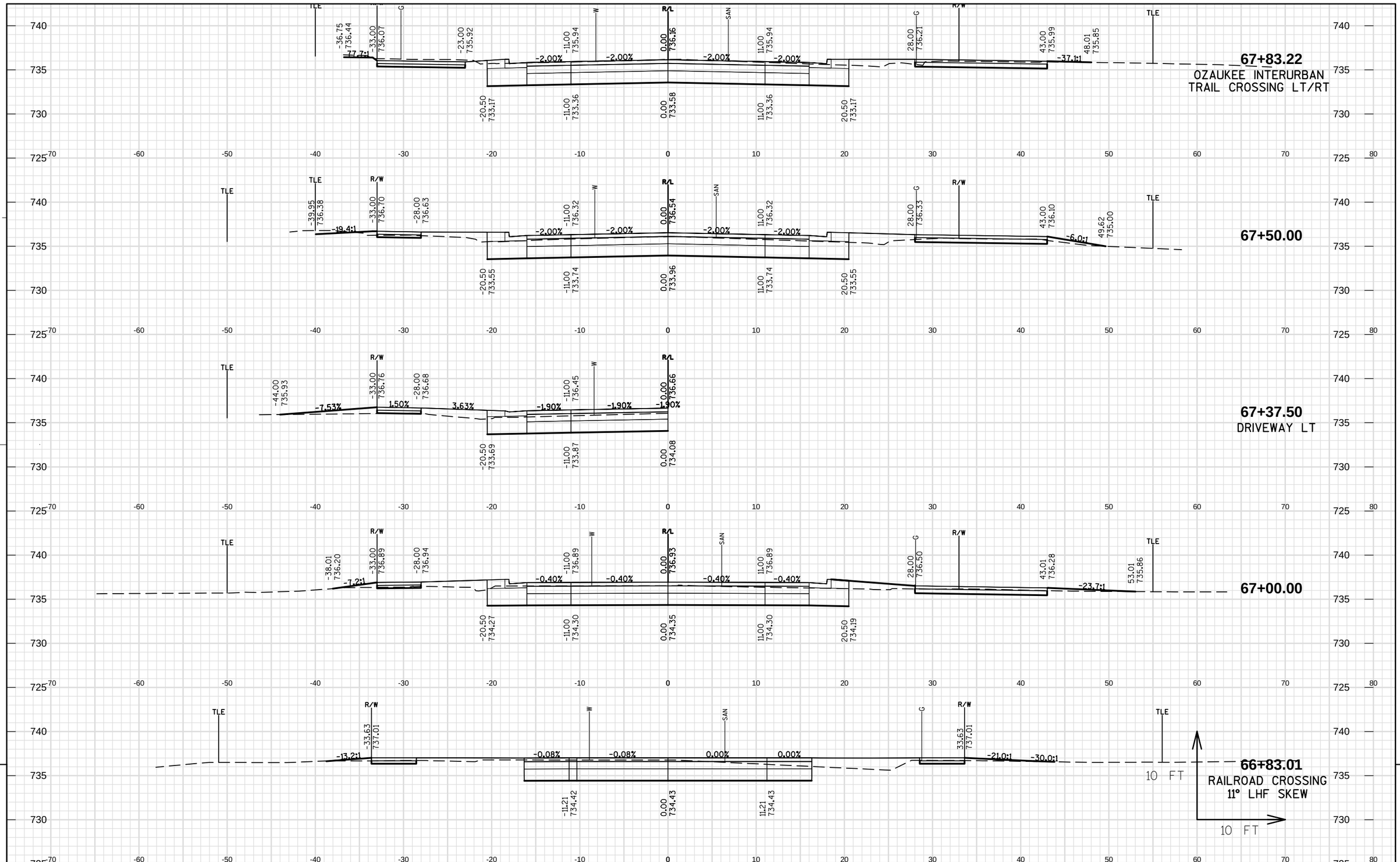

PROJECT NO: 4880-01-70	HWY: CTH D	COUNTY: OZAUKEE	CROSS SECTIONS: CTH D	SHEET 230	E

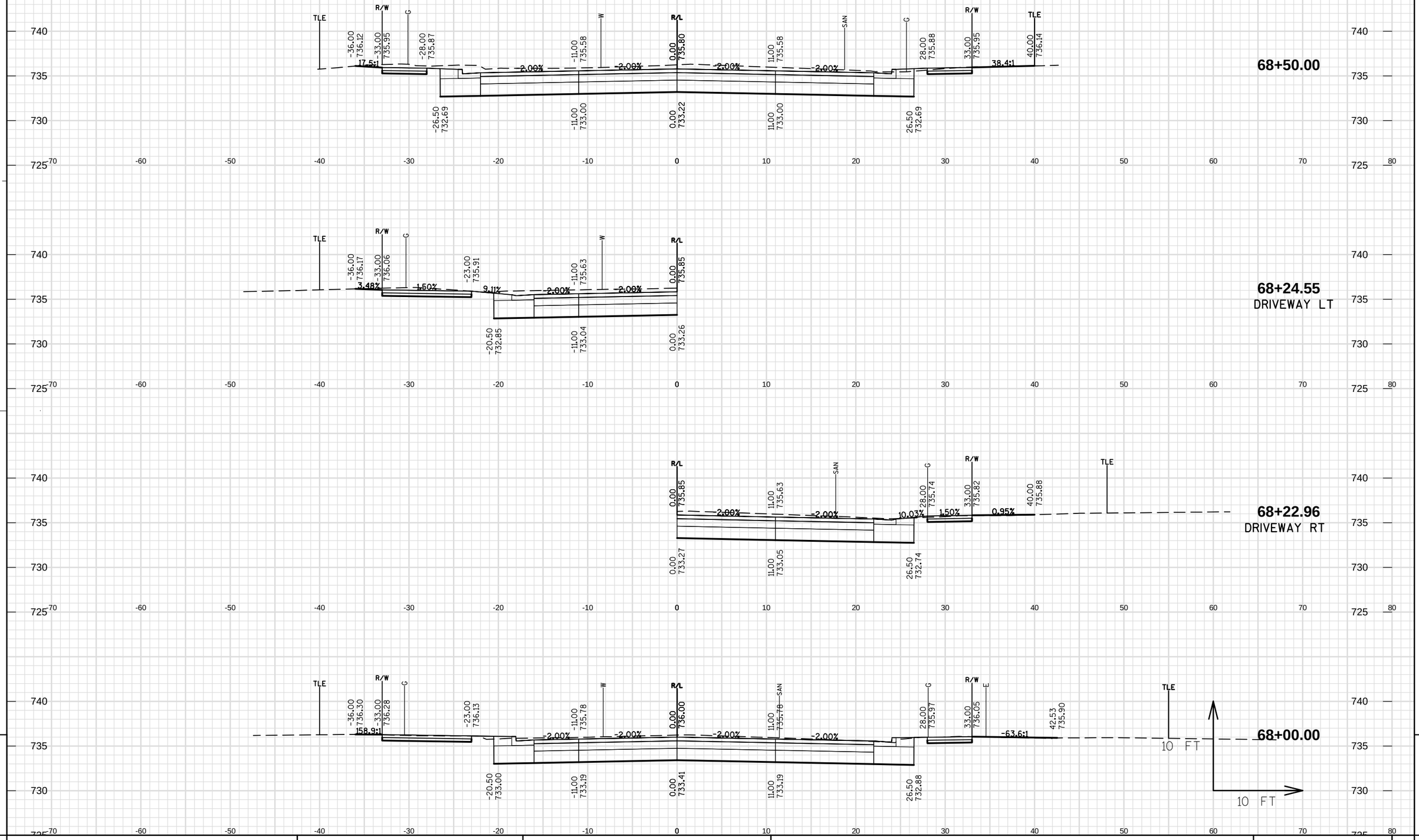

PROJECT NO: 4880-01-70	HWY: CTH D	COUNTY: OZAUKEE	CROSS SECTIONS: CTH D	SHEET 231	E

FILE NAME : S:\CURRPROJ\OZAUKEECO\CTH D\CIVIL3D\48800100\SHEETSPLAN\48800170\48800170-090201-XS.DWG
LAYOUT NAME - 48800170-090201-XS - SHEET-23
PLOT DATE : 11/1/2017 9:16 AM PLOT BY : AARON SARAUER PLOT NAME : _____ PLOT SCALE : 1 IN:10 FT
WISDOT/CADDS SHEET 49

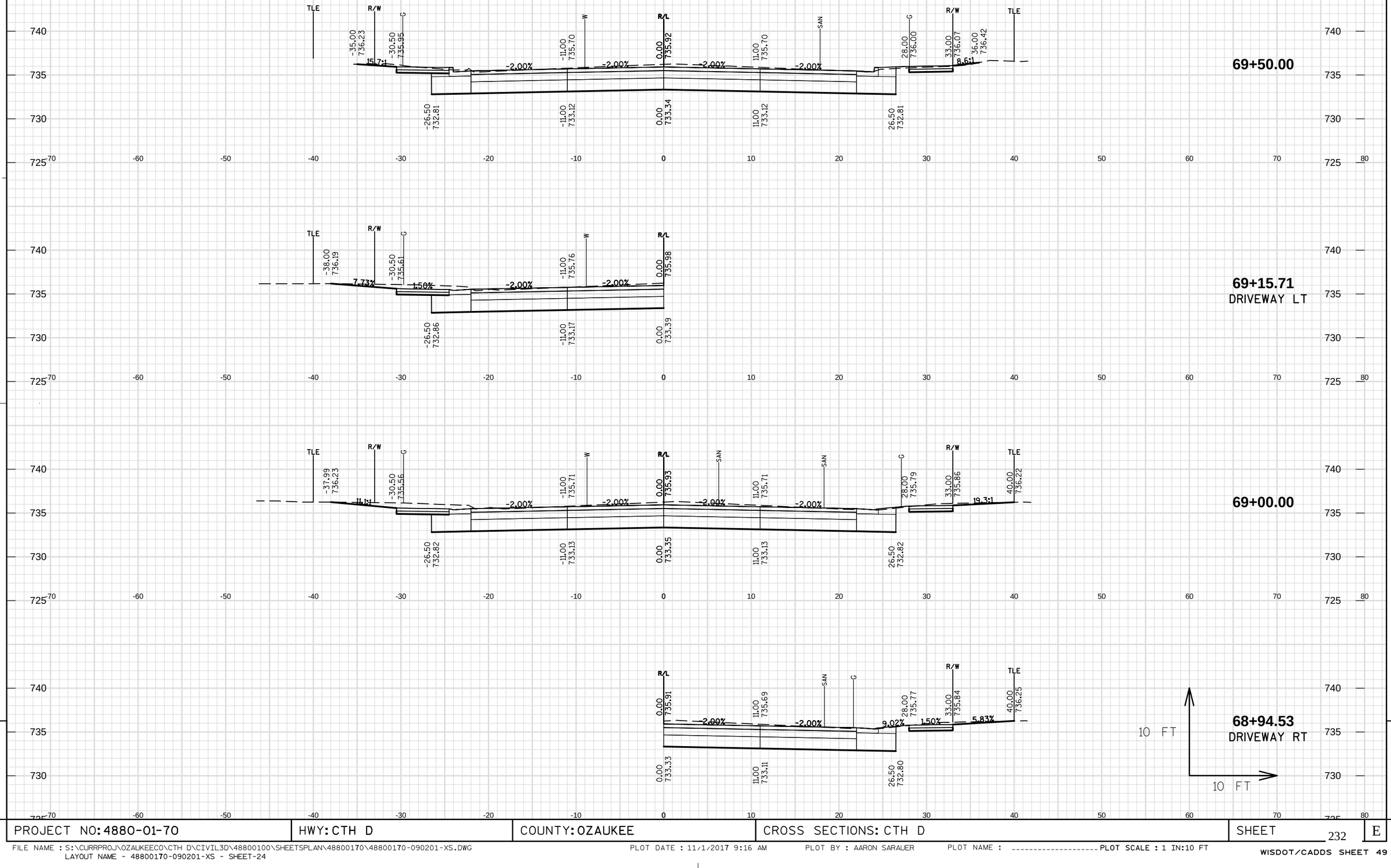

9

9

PROJECT NO: 4880-01-70	HWY: CTH D	COUNTY: OZAUKEE	CROSS SECTIONS: CTH D	SHEET 232	E

FILE NAME : S:\CURRPROJ\OZAUKEECO\CTH D\CIVIL3D\48800100\SHEETSPLAN\48800170\48800170-090201-XS.DWG
LAYOUT NAME - 48800170-090201-XS - SHEET-24
PLOT DATE : 11/1/2017 9:16 AM PLOT BY : AARON SARAUER PLOT NAME : _____ PLOT SCALE : 1 IN:10 FT
WISDOT/CADDS SHEET 49

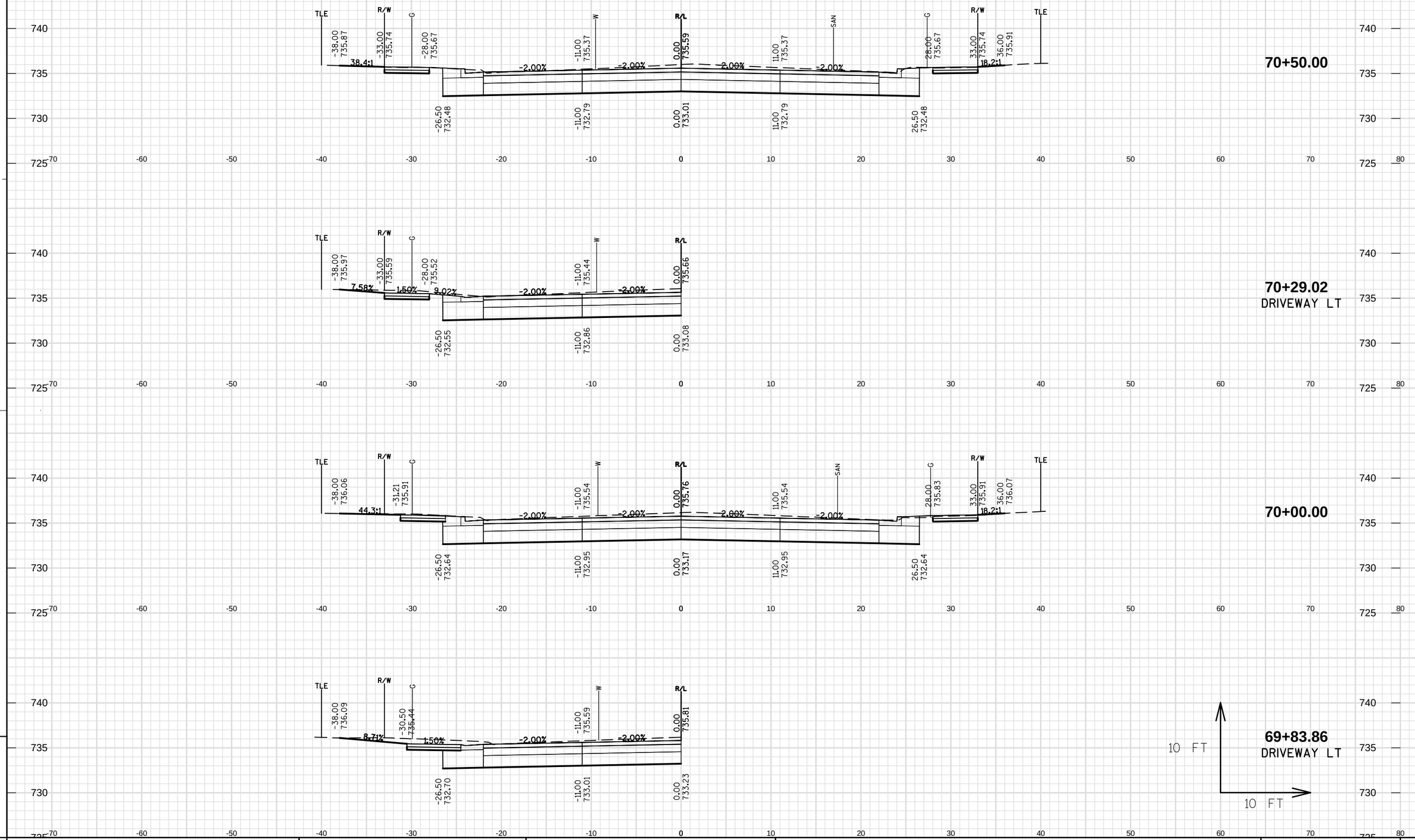

9

9

PROJECT NO: 4880-01-70	HWY: CTH D	COUNTY: OZAUKEE	CROSS SECTIONS: CTH D	SHEET 233	E

FILE NAME : S:\CURRPROJ\OZAUKEECO\CTH D\CIVIL3D\48800100\SHEETSPLAN\48800170\48800170-090201-XS.DWG
LAYOUT NAME - 48800170-090201-XS - SHEET-25

PLOT DATE : 11/1/2017 9:16 AM PLOT BY : AARON SARAUER PLOT NAME : _____ PLOT SCALE : 1 IN:10 FT

WISDOT/CADDS SHEET 49

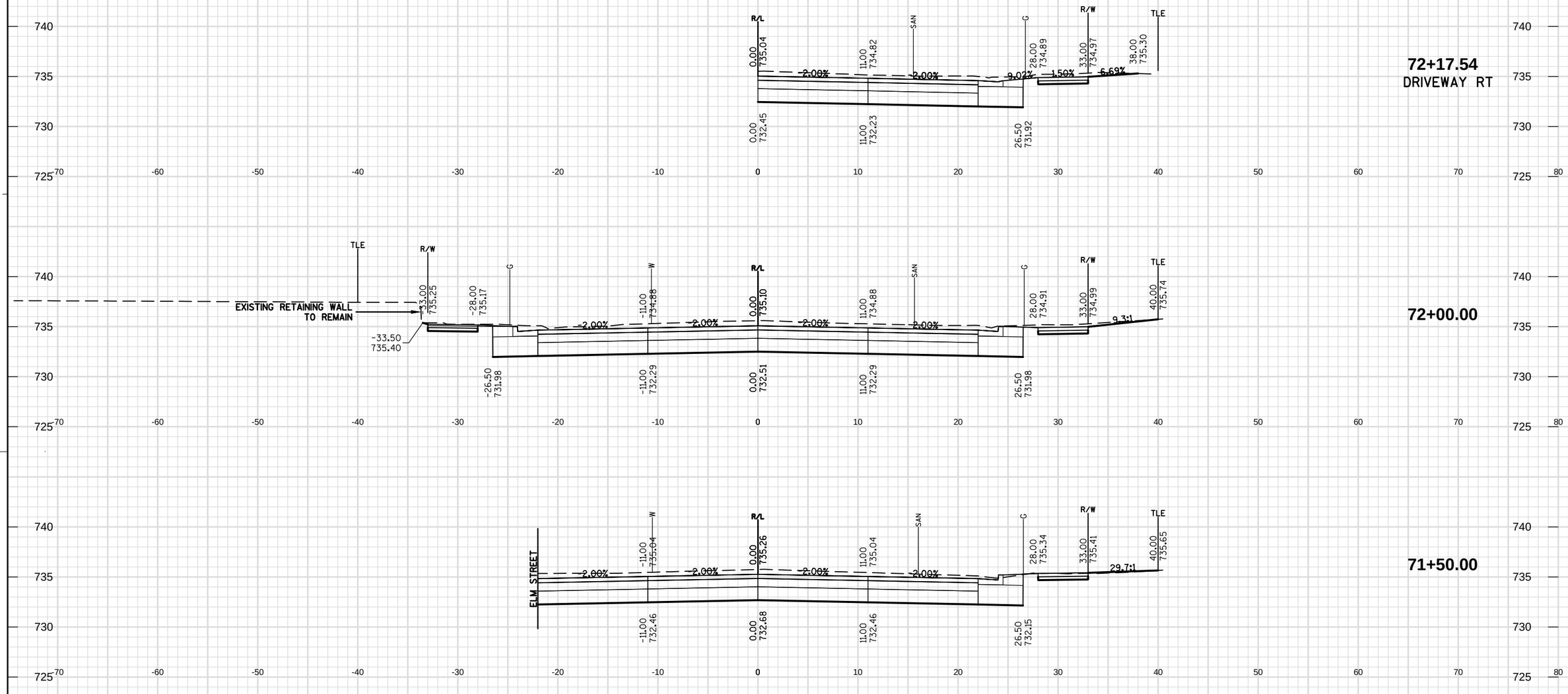

PROJECT NO: 4880-01-70	HWY: CTH D	COUNTY: OZAUKEE	CROSS SECTIONS: CTH D	SHEET 234	E

FILE NAME : S:\CURRPROJ\OZAUKEECO\CTH D\CIVIL3D\48800100\SHEETSPLAN\48800170\48800170-090201-XS.DWG
LAYOUT NAME - 48800170-090201-XS - SHEET-26
PLOT DATE : 11/1/2017 9:17 AM PLOT BY : AARON SARAUER PLOT NAME : _____ PLOT SCALE : 1 IN:10 FT
WISDOT/CADDS SHEET 49

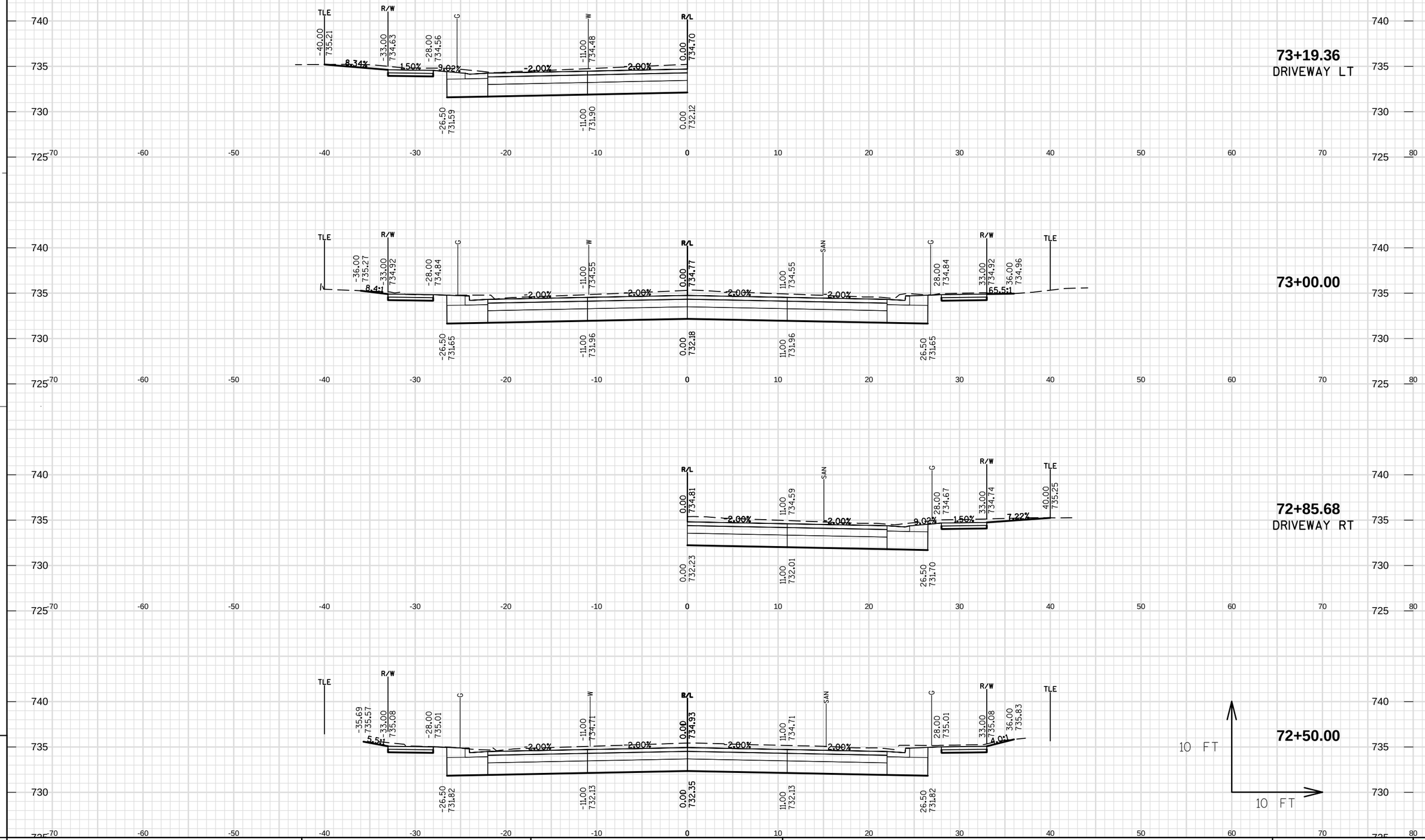

9

9

PROJECT NO: 4880-01-70	HWY: CTH D	COUNTY: OZAUKEE	CROSS SECTIONS: CTH D	SHEET 235	E

FILE NAME : S:\CURRPROJ\OZAUKEECO\CTH D\CIVIL3D\48800100\SHEETSPLAN\48800170\48800170-090201-XS.DWG
LAYOUT NAME - 48800170-090201-XS - SHEET-27

PLOT DATE : 11/1/2017 9:17 AM PLOT BY : AARON SARAUER PLOT NAME : _____ PLOT SCALE : 1 IN:10 FT

WISDOT/CADDS SHEET 49

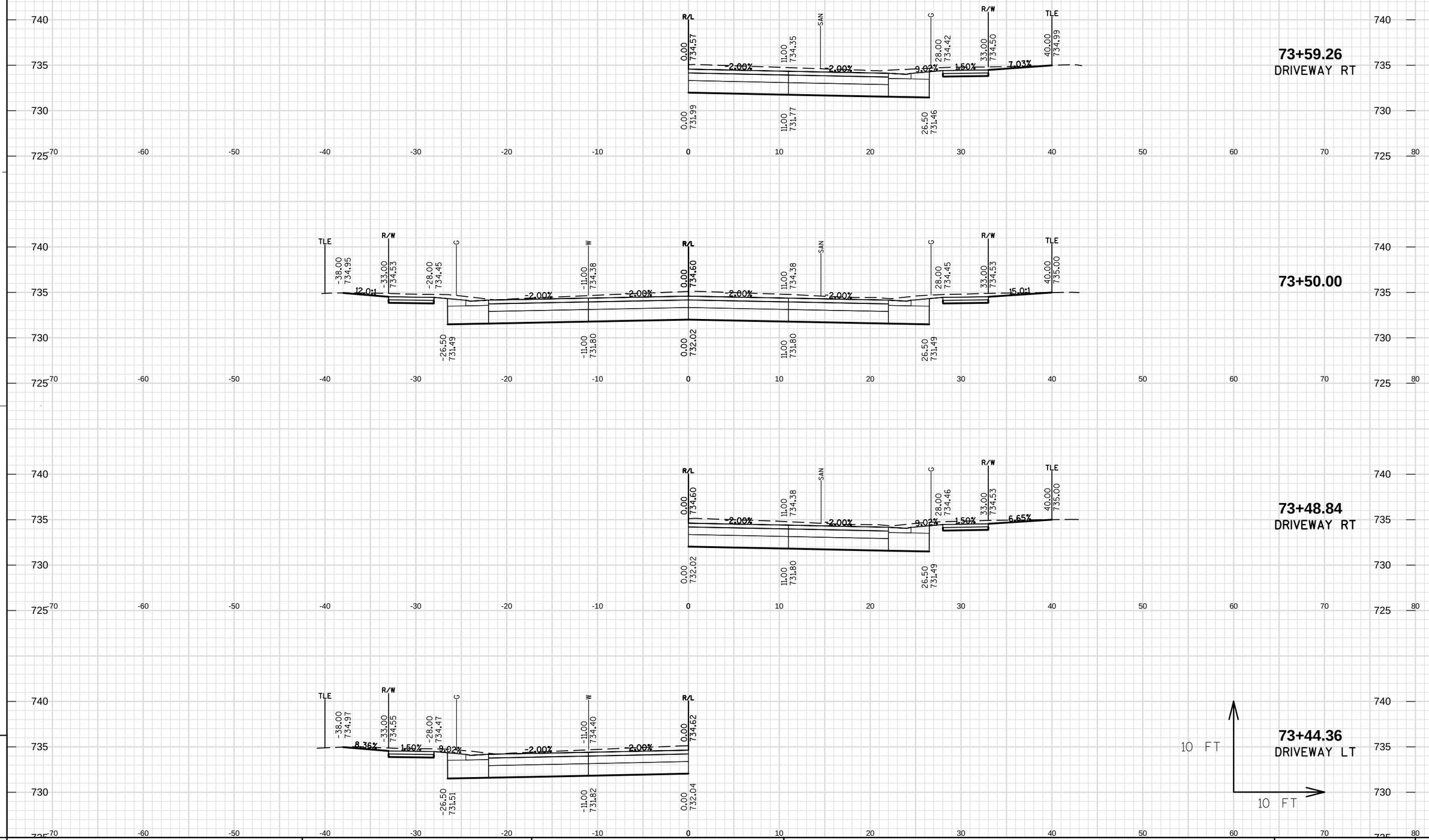

9

9

PROJECT NO: 4880-01-70	HWY: CTH D	COUNTY: OZAUKEE	CROSS SECTIONS: CTH D	SHEET 236	E

FILE NAME : S:\CURRPROJ\OZAUKEECO\CTH D\CIVIL3D\48800100\SHEETSPLAN\48800170\48800170-090201-XS.DWG
LAYOUT NAME - 48800170-090201-XS - SHEET-28
PLOT DATE : 11/1/2017 9:17 AM
PLOT BY : AARON SARAUER
PLOT NAME : _____ PLOT SCALE : 1 IN:10 FT
WISDOT/CADDS SHEET 49

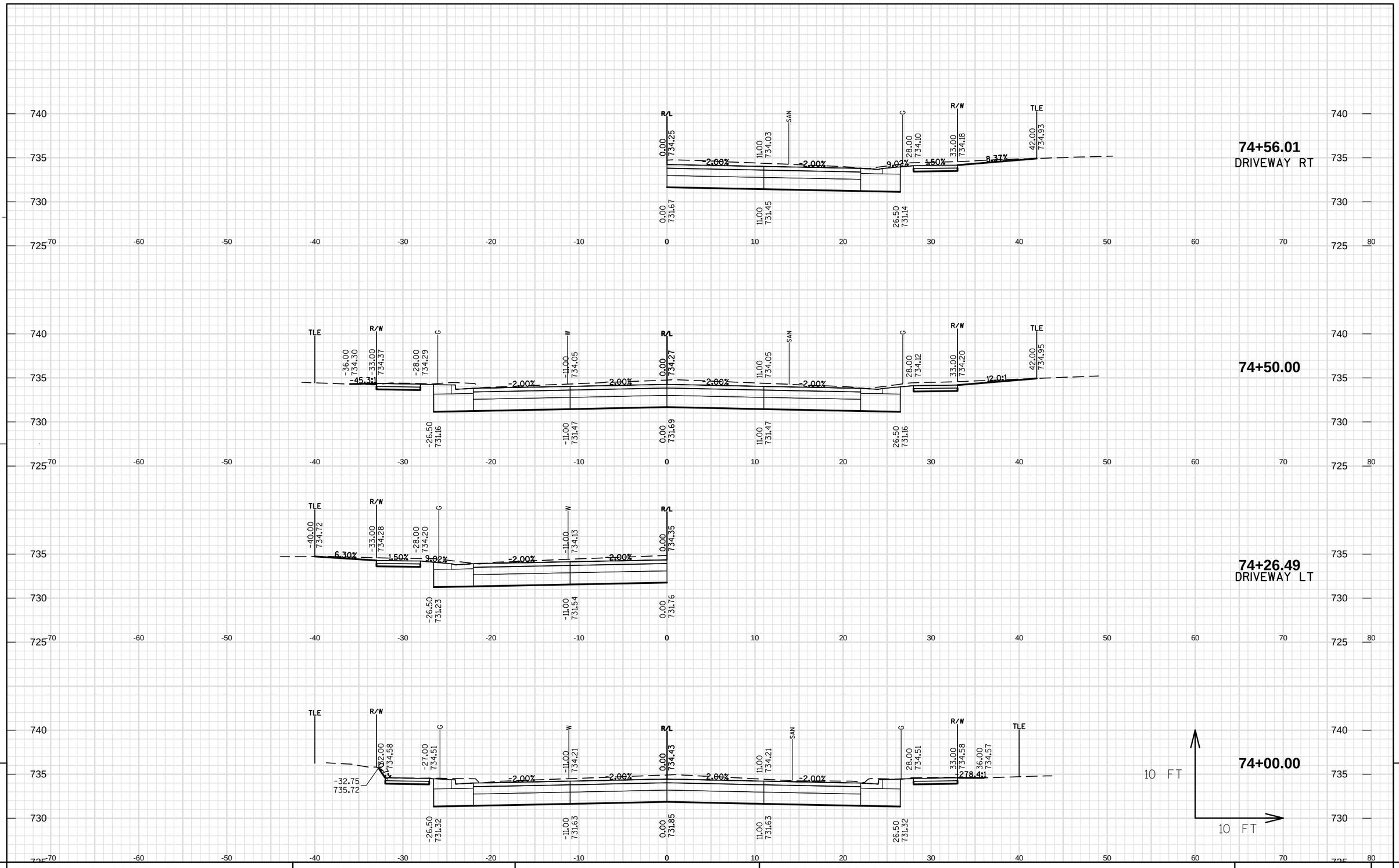

9

9

PROJECT NO: 4880-01-70	HWY: CTH D	COUNTY: OZAUKEE	CROSS SECTIONS: CTH D	SHEET 237	E

FILE NAME : S:\CURRPROJ\OZAUKEECO\CTH D\CIVIL3D\48800100\SHEETSPLAN\48800170\48800170-090201-XS.DWG
LAYOUT NAME - 48800170-090201-XS - SHEET-29
PLOT DATE : 11/1/2017 9:18 AM PLOT BY : AARON SARAUER PLOT NAME : ---------- PLOT SCALE : 1 IN:10 FT
WISDOT/CADDS SHEET 49

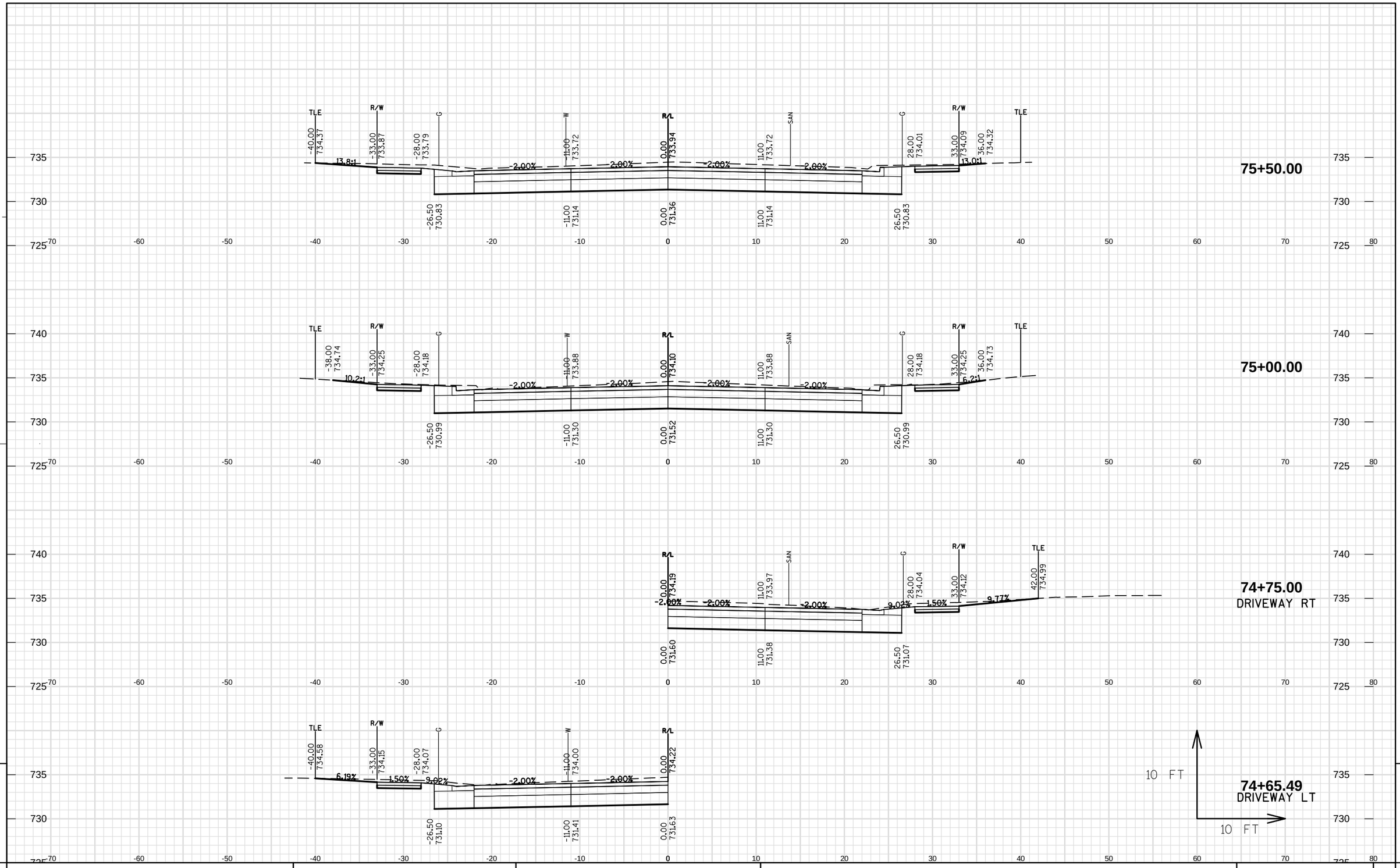

9

9

PROJECT NO: 4880-01-70	HWY: CTH D	COUNTY: OZAUKEE	CROSS SECTIONS: CTH D	SHEET 238	E

FILE NAME : S:\CURRPROJ\OZAUKEEC0\CTH D\CIVIL3D\48800100\SHEETSPLAN\48800170\48800170-090201-XS.DWG
LAYOUT NAME - 48800170-090201-XS - SHEET-30

PLOT DATE : 11/1/2017 9:18 AM PLOT BY : AARON SARAUER PLOT NAME : _____ PLOT SCALE : 1 IN:10 FT

WISDOT/CADDS SHEET 49

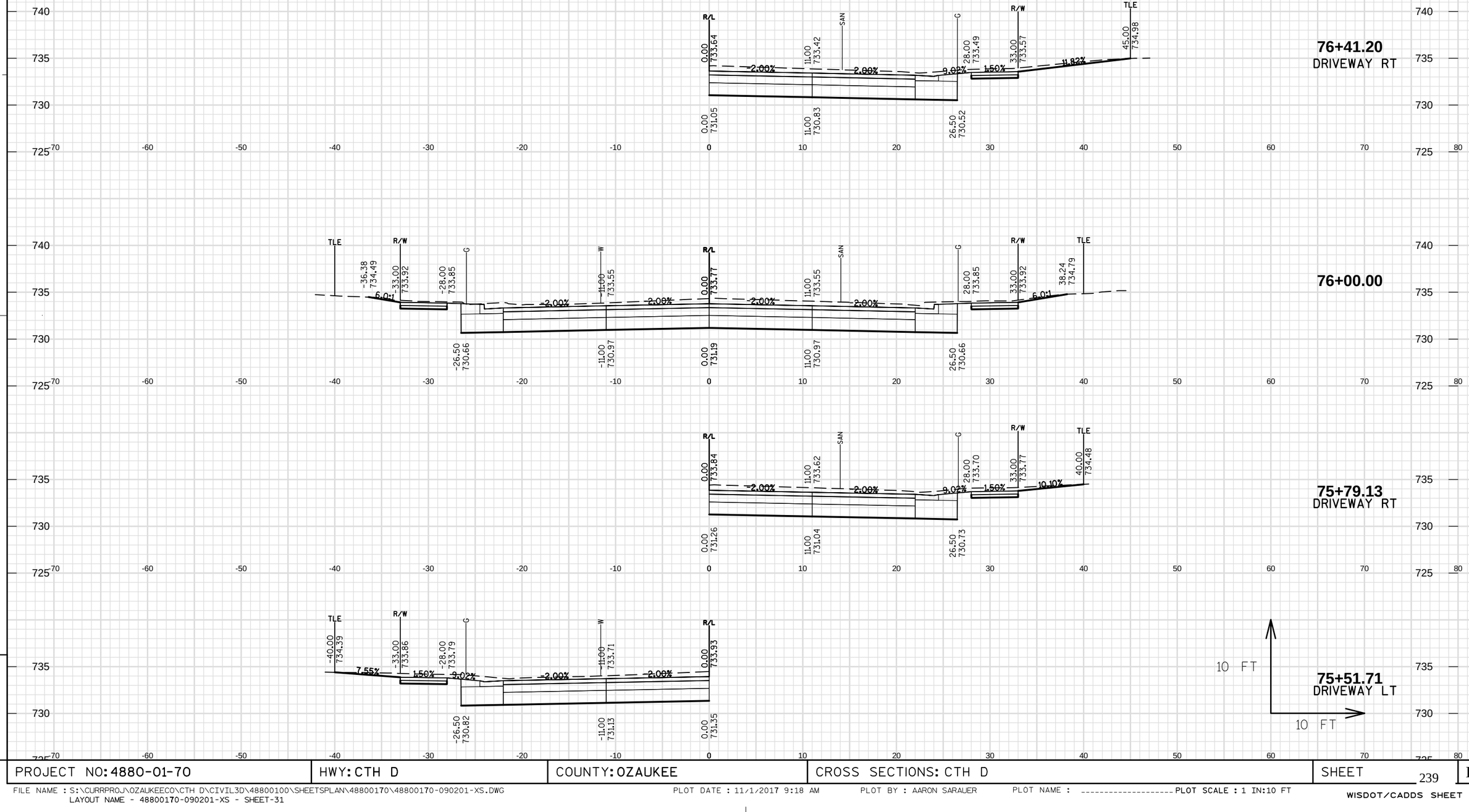

PROJECT NO: 4880-01-70	HWY: CTH D	COUNTY: OZAUKEE	CROSS SECTIONS: CTH D	SHEET 239 E

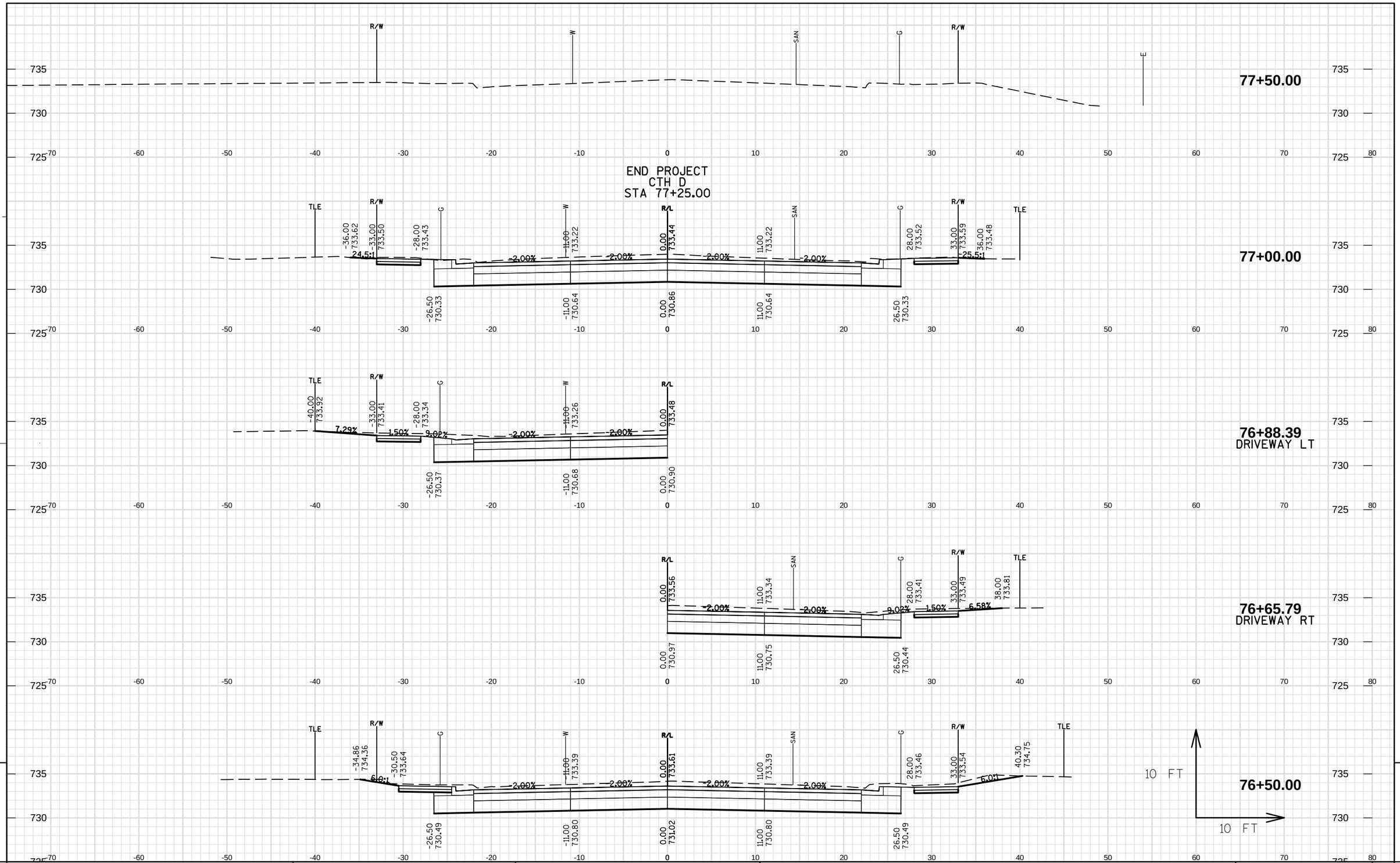

9

PROJECT NO: 4880-01-70	HWY: CTH D	COUNTY: OZAUKEE	CROSS SECTIONS: CTH D	SHEET 240 E

9

FILE NAME : S:\CURRPROJ\OZAUKEECO\CTH D\CIVIL3D\48800100\SHEETSPLAN\48800170\48800170-090201-XS.DWG
LAYOUT NAME - 48800170-090201-XS - SHEET-32
PLOT DATE : 11/1/2017 9:18 AM PLOT BY : AARON SARAUER PLOT NAME : ---------- PLOT SCALE : 1 IN:10 FT
WISDOT/CADDS SHEET 49

END CONSTRUCTION
LILAC LANE
STA 200+00.00

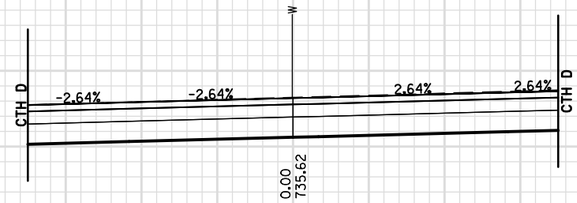

200+00.00

199+75.00

BEGIN CONSTRUCTION
LILAC LANE
STA 199+50.00

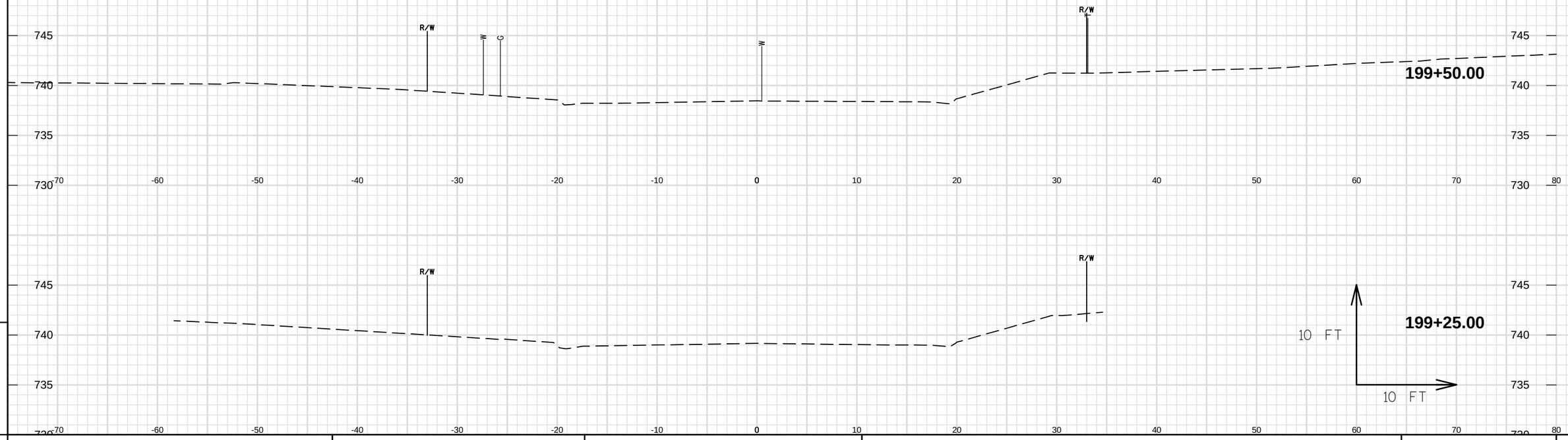

PROJECT NO: 4880-01-70	HWY: CTH D	COUNTY: OZAUKEE	CROSS SECTIONS: LILAC LANE	SHEET 241	E

FILE NAME : S:\CURRPROJ\OZAUKEECO\CTH D\CIVIL3D\48800100\SHEETSPLAN\48800170\48800170-090201-XS.DWG
LAYOUT NAME - 48800170-090201-XS - SHEET-33
PLOT DATE : 11/1/2017 9:19 AM PLOT BY : AARON SARAUER PLOT NAME : _____ PLOT SCALE : 1 IN:10 FT

WISDOT/CADDS SHEET 49

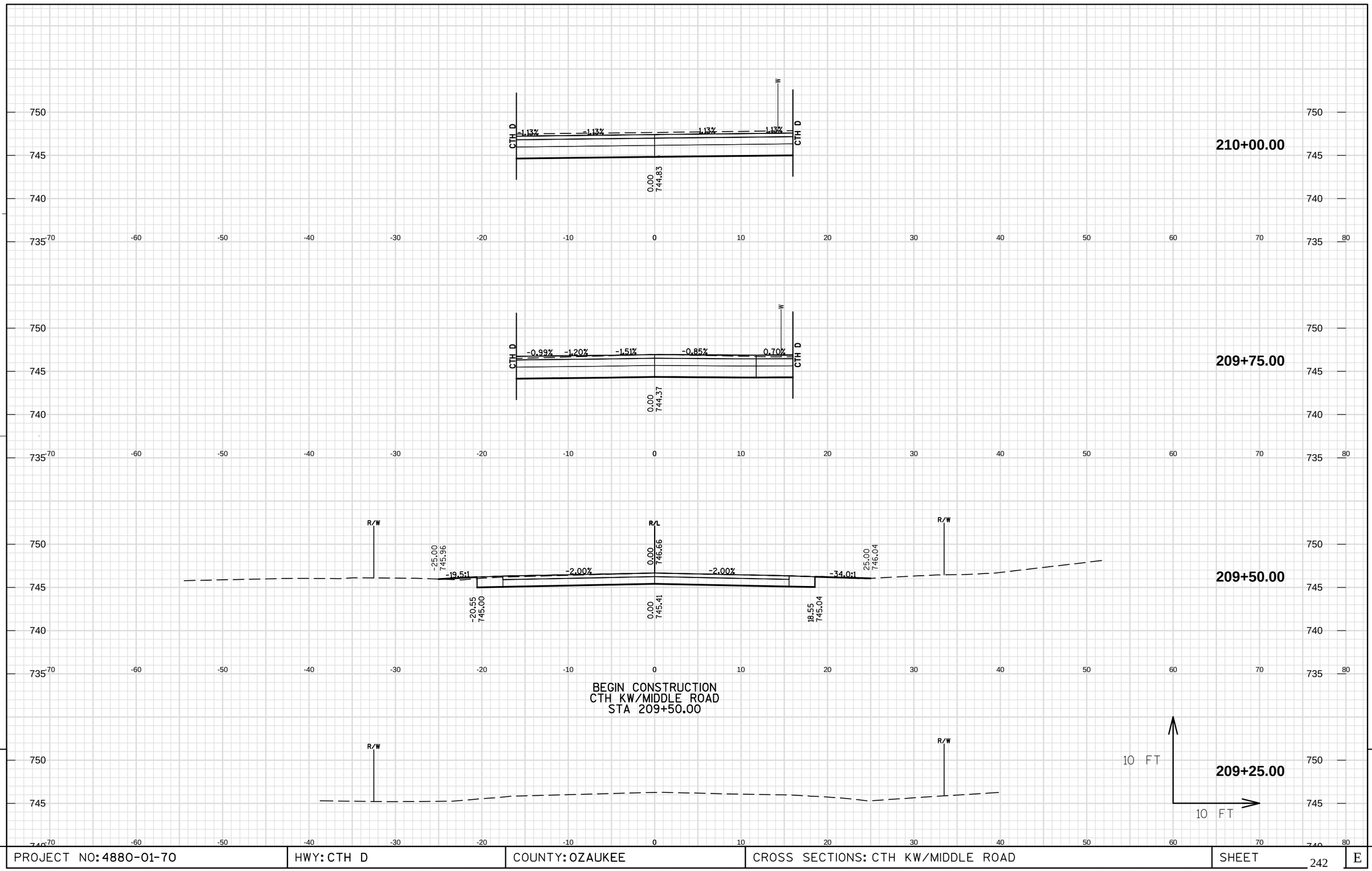

9

9

PROJECT NO: 4880-01-70	HWY: CTH D	COUNTY: OZAUKEE	CROSS SECTIONS: CTH KW/MIDDLE ROAD	SHEET 242	E

FILE NAME : S:\CURRPROJ\OZAUKEECO\CTH D\CIVIL3D\48800100\SHEETSPLAN\48800170\48800170-090201-XS.DWG
LAYOUT NAME - 48800170-090201-XS - SHEET-34

PLOT DATE : 11/1/2017 9:19 AM PLOT BY : AARON SARAUER PLOT NAME : ---------- PLOT SCALE : 1 IN:10 FT

WISDOT/CADDS SHEET 49

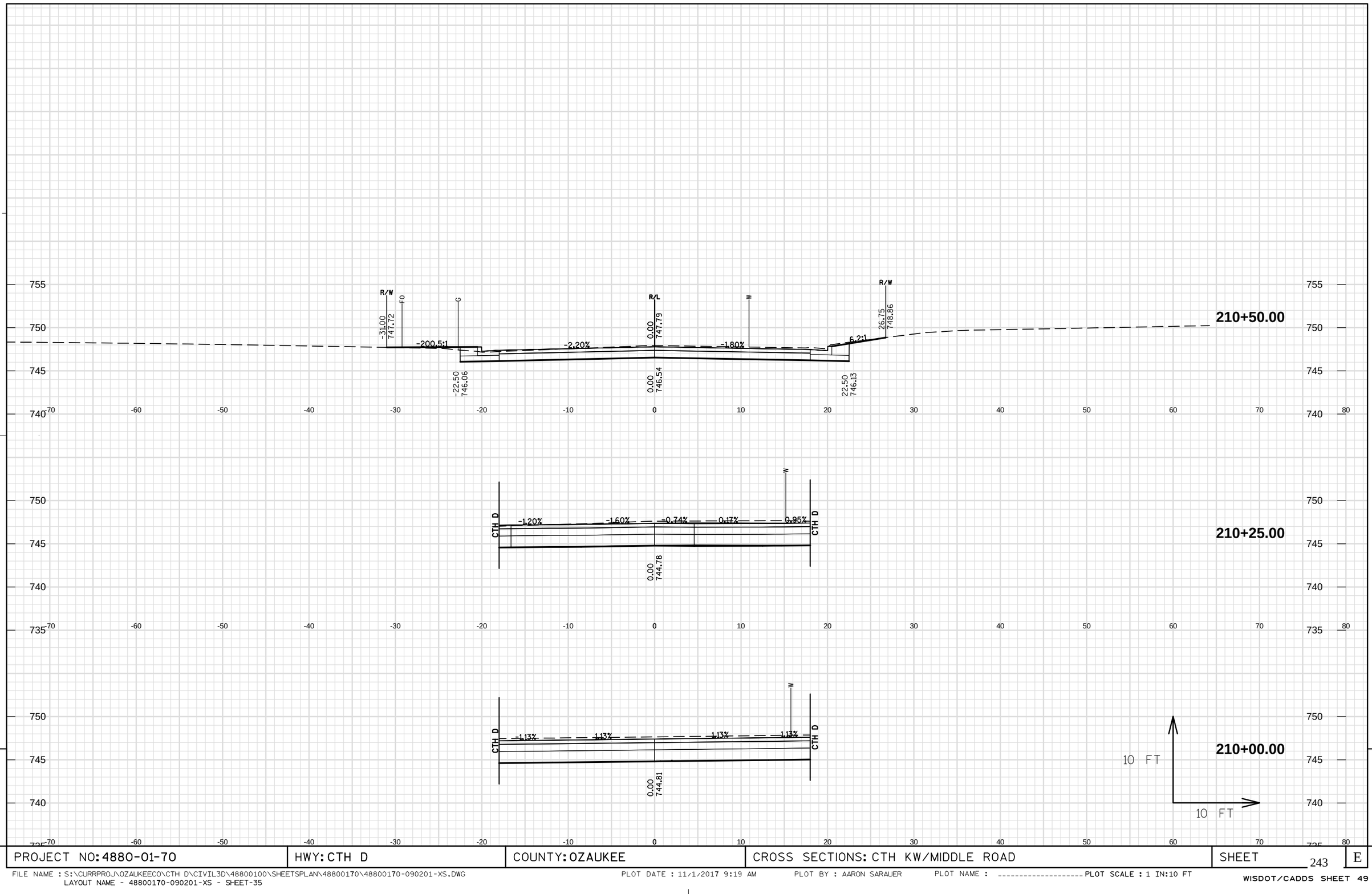

9

9

PROJECT NO: 4880-01-70	HWY: CTH D	COUNTY: OZAUKEE	CROSS SECTIONS: CTH KW/MIDDLE ROAD	SHEET 243	E

FILE NAME : S:\CURRPROJ\OZAUKEECO\CTH D\CIVIL3D\48800100\SHEETSPLAN\48800170\48800170-090201-XS.DWG
LAYOUT NAME - 48800170-090201-XS - SHEET-35

PLOT DATE : 11/1/2017 9:19 AM PLOT BY : AARON SARAUER PLOT NAME : _____ PLOT SCALE : 1 IN:10 FT

WISDOT/CADDS SHEET 49

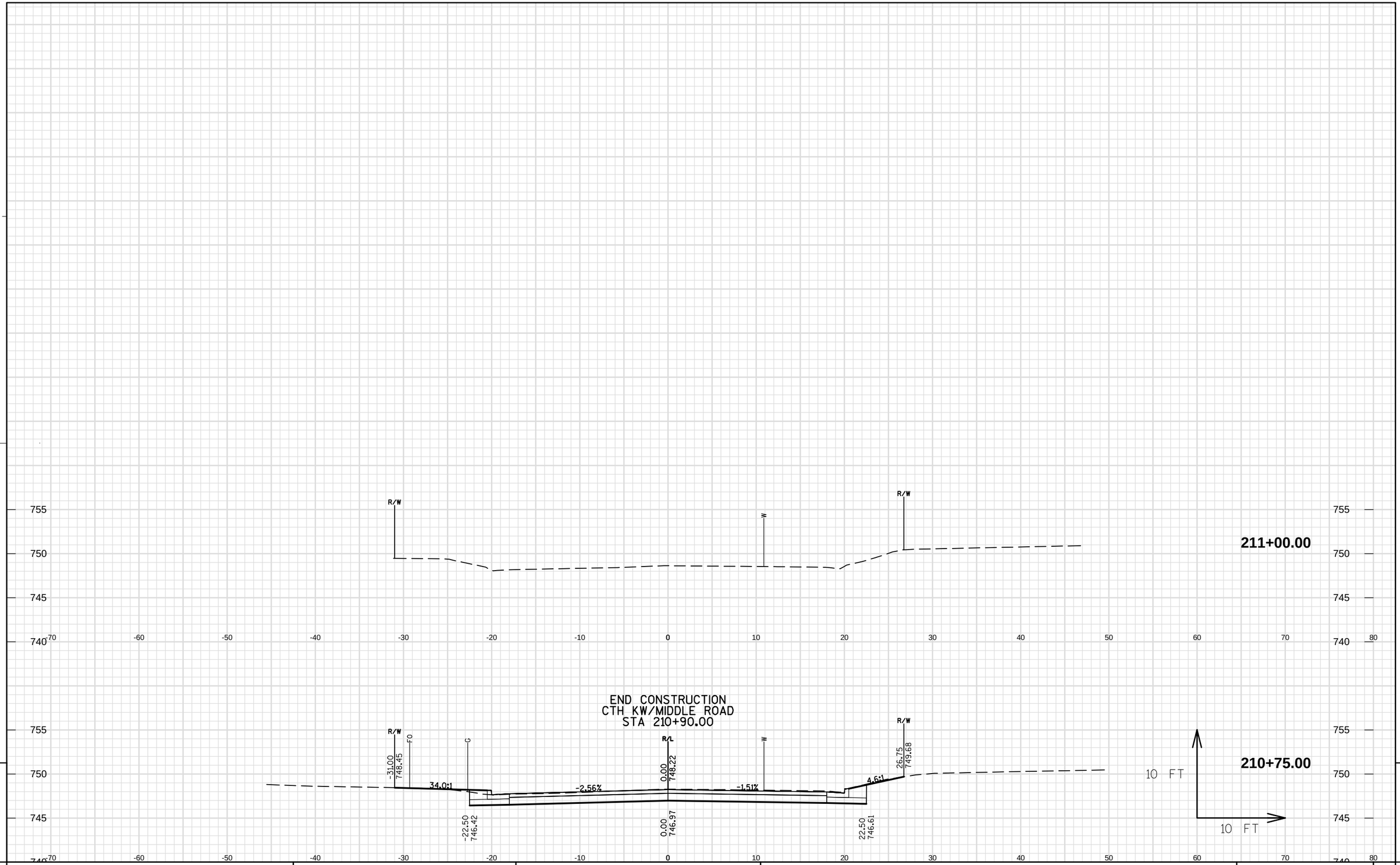

9

9

PROJECT NO: 4880-01-70	HWY: CTH D	COUNTY: OZAUKEE	CROSS SECTIONS: CTH KW/MIDDLE ROAD	SHEET 244	E

FILE NAME : S:\CURRPROJ\OZAUKEECO\CTH D\CIVIL3D\48800100\SHEETSPLAN\48800170\48800170-090201-XS.DWG
LAYOUT NAME - 48800170-090201-XS - SHEET-36

PLOT DATE : 11/1/2017 9:19 AM PLOT BY : AARON SARAUER PLOT NAME : _____ PLOT SCALE : 1 IN:10 FT

WISDOT/CADDS SHEET 49

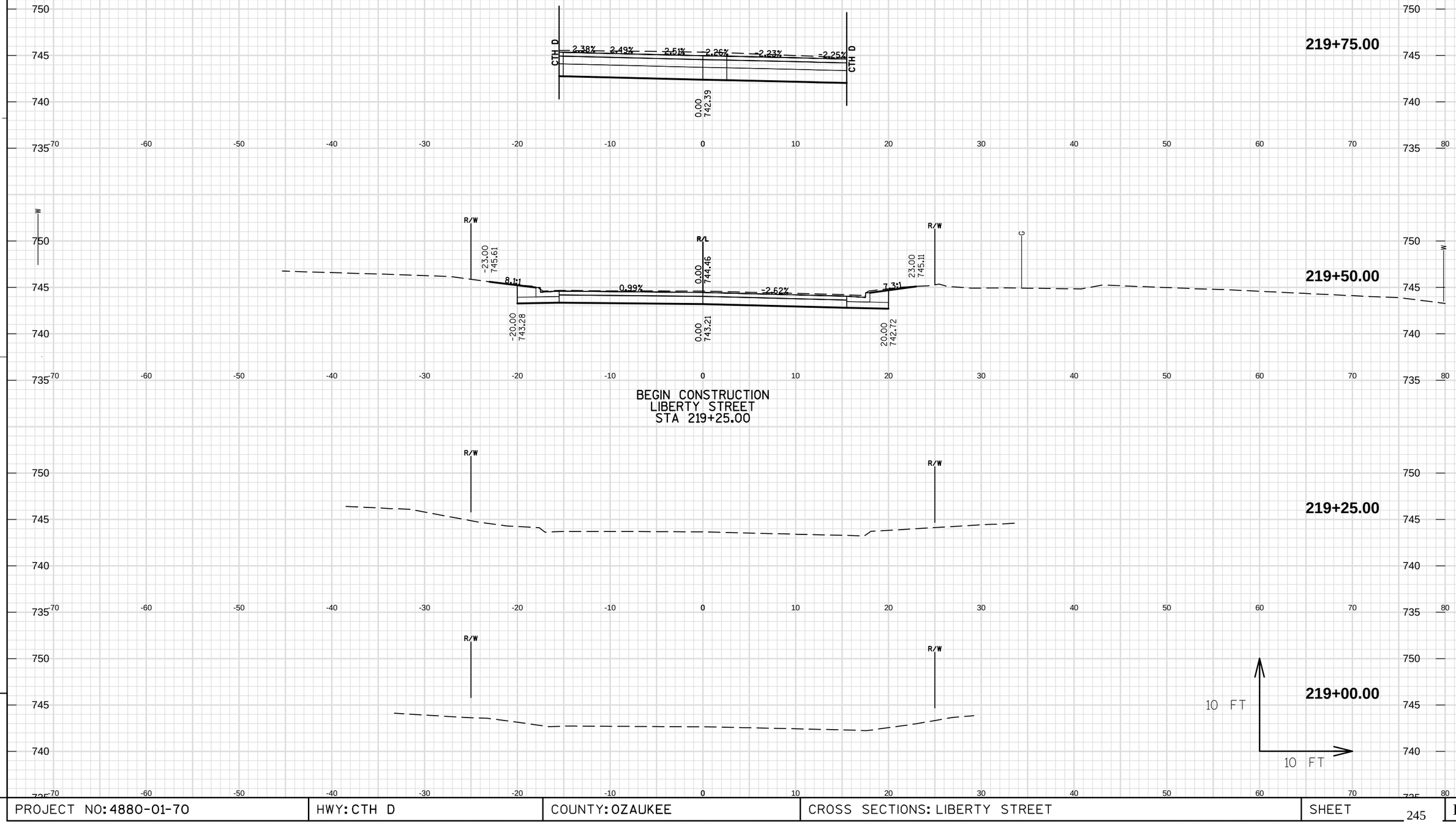

PROJECT NO: 4880-01-70	HWY: CTH D	COUNTY: OZAUKEE	CROSS SECTIONS: LIBERTY STREET	SHEET 245 E

FILE NAME : S:\CURRPROJ\OZAUKEECO\CTH D\CIVIL3D\48800100\SHEETSPLAN\48800170\48800170-090201-XS.DWG
LAYOUT NAME - 48800170-090201-XS - SHEET-37

PLOT DATE : 11/1/2017 9:20 AM PLOT BY : AARON SARAUER PLOT NAME : ---------- PLOT SCALE : 1 IN:10 FT

WISDOT/CADDS SHEET 49

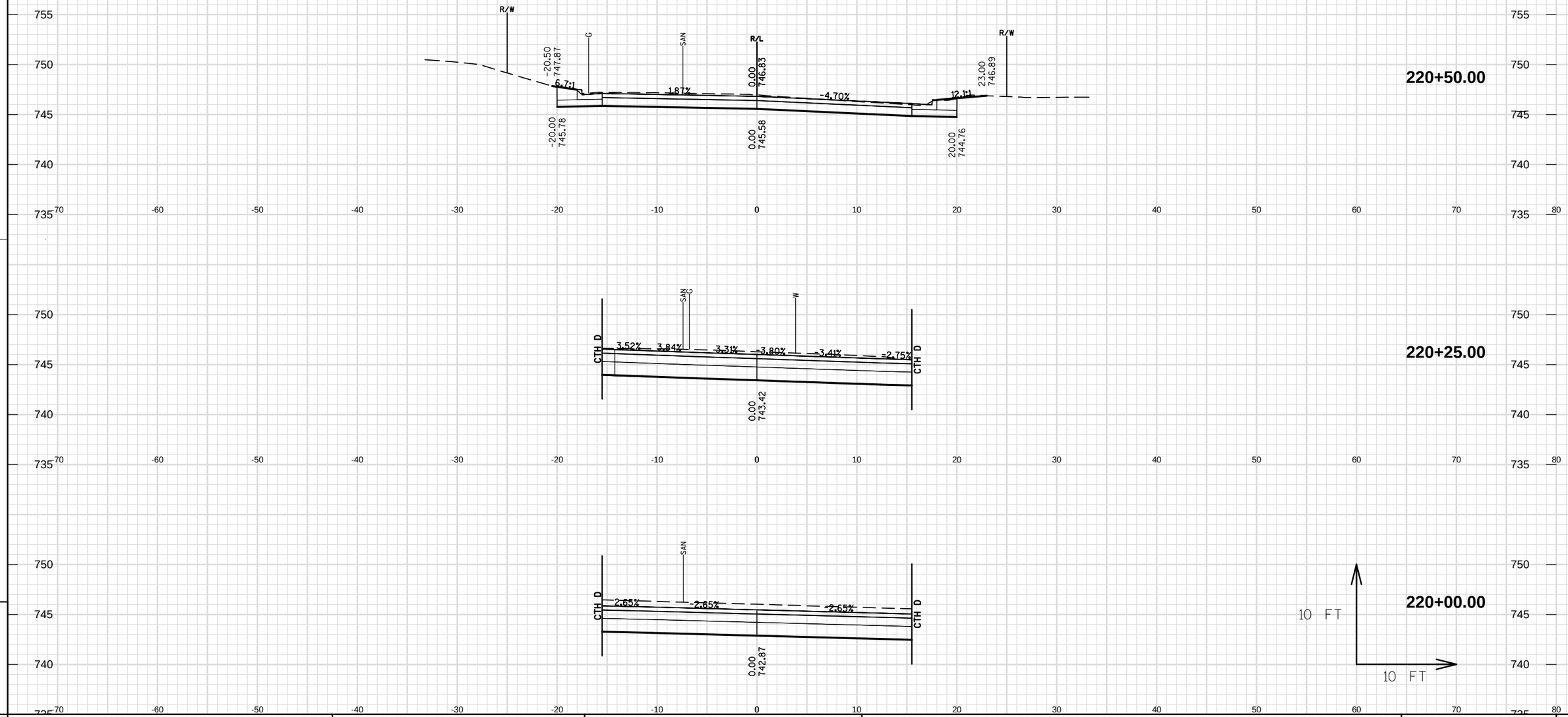

PROJECT NO: 4880-01-70	HWY: CTH D	COUNTY: OZAUKEE	CROSS SECTIONS: LIBERTY STREET	SHEET 246	E

FILE NAME : S:\CURRPROJ\OZAUKEECO\CTH D\CIVIL3D\48800100\SHEETSPLAN\48800170\48800170-090201-XS.DWG
LAYOUT NAME - 48800170-090201-XS - SHEET-38

PLOT DATE : 11/1/2017 9:20 AM PLOT BY : AARON SARAUER PLOT NAME : _____ PLOT SCALE : 1 IN:10 FT

WISDOT/CADDS SHEET 49

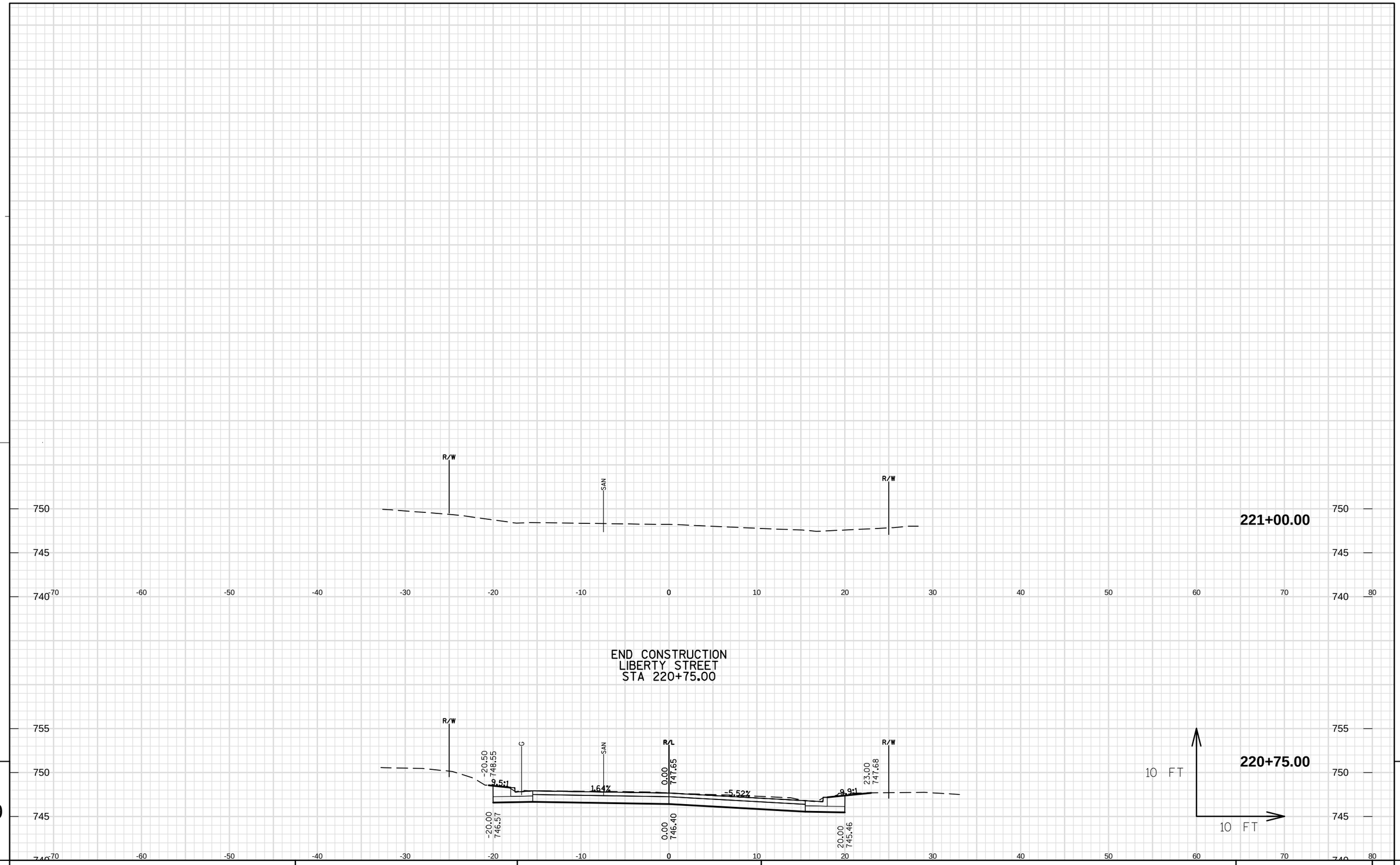

PROJECT NO: 4880-01-70	HWY: CTH D	COUNTY: OZAUKEE	CROSS SECTIONS: LIBERTY STREET	SHEET 247	E

FILE NAME : S:\CURRPROJ\OZAUKEECO\CTH D\CIVIL3D\48800100\SHEETSPLAN\48800170\48800170-090201-XS.DWG
LAYOUT NAME - 48800170-090201-XS - SHEET-39

PLOT DATE : 11/1/2017 9:20 AM PLOT BY : AARON SARAUER PLOT NAME : ---------- PLOT SCALE : 1 IN:10 FT

WISDOT/CADDS SHEET 49

BEGIN CONSTRUCTION
VICTORY STREET
STA 230+00.00

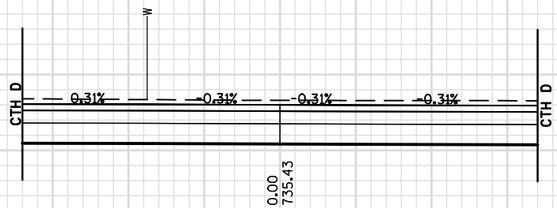

230+00.00

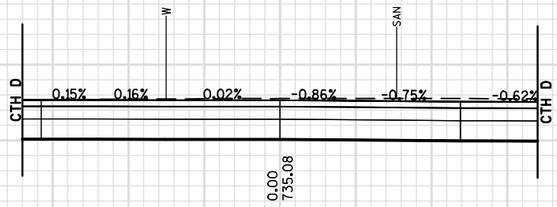

229+75.00

BEGIN CONSTRUCTION
VICTORY STREET
STA 229+50.00

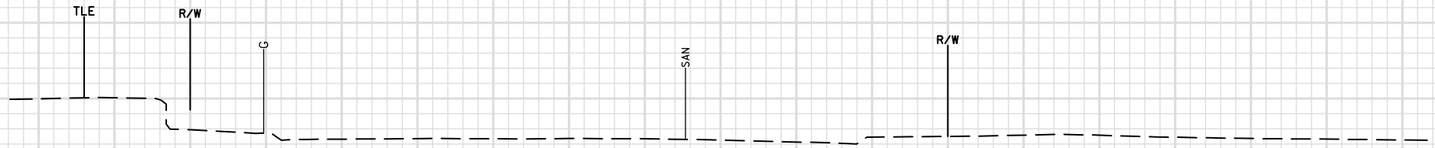

229+50.00

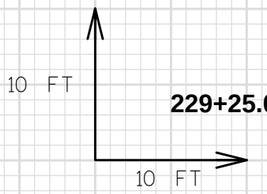

229+25.00

9

9

PROJECT NO: 4880-01-70	HWY: CTH D	COUNTY: OZAUKEE	CROSS SECTIONS: VICTORY STREET	SHEET 248	E

FILE NAME : S:\CURRPROJ\OZAUKEECO\CTH D\CIVIL3D\48800100\SHEETSPLAN\48800170\48800170-090201-XS.DWG
LAYOUT NAME - 48800170-090201-XS - SHEET-40

PLOT DATE : 11/1/2017 9:21 AM PLOT BY : AARON SARAUER PLOT NAME : ---------- PLOT SCALE : 1 IN:10 FT

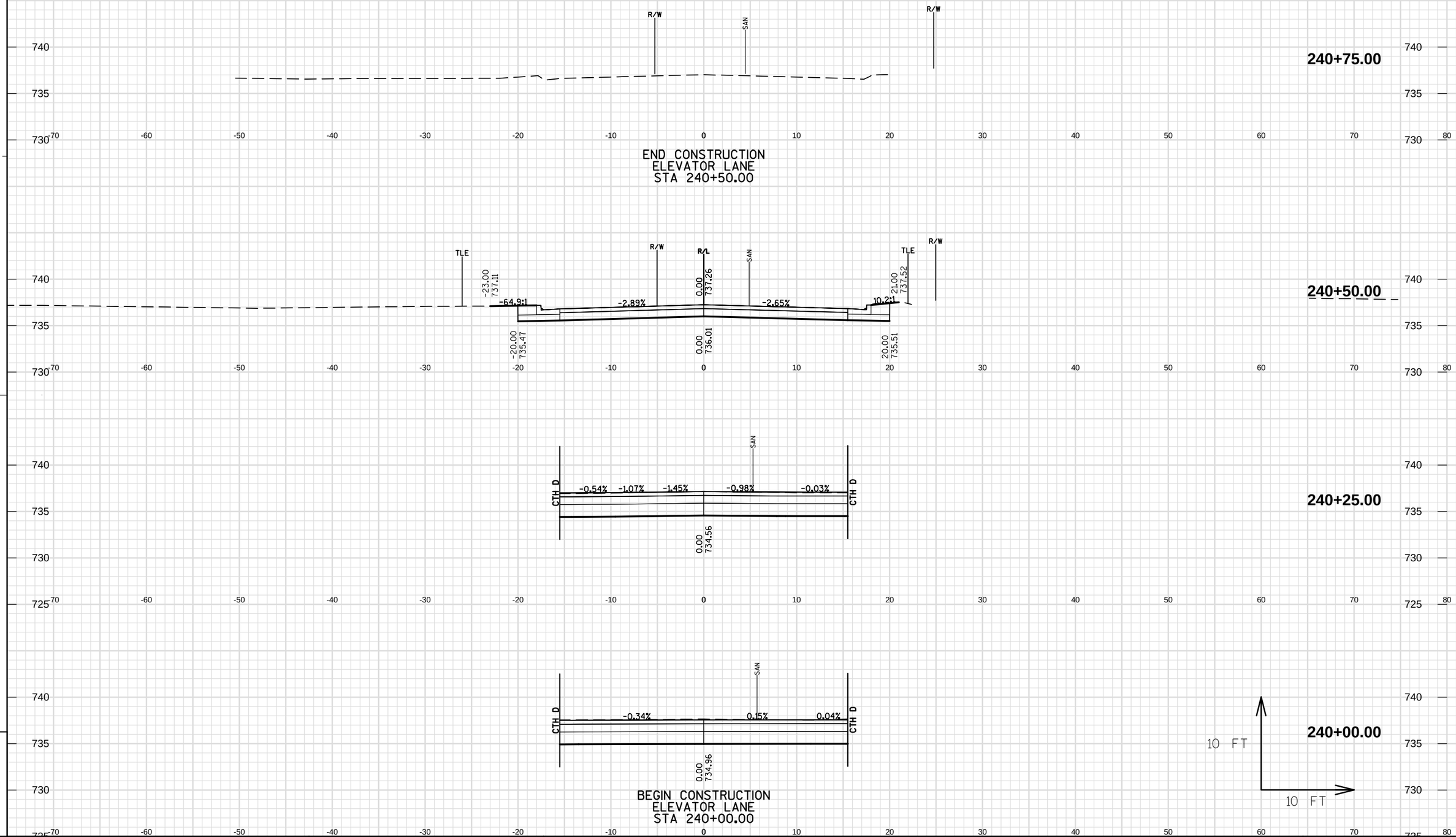

9

9

PROJECT NO: 4880-01-70	HWY: CTH D	COUNTY: OZAUKEE	CROSS SECTIONS: ELEVATOR LANE	SHEET 249	E

FILE NAME : S:\CURRPROJ\OZAUKEECO\CTH D\CIVIL3D\48800100\SHEETSPLAN\48800170\48800170-090201-XS.DWG
LAYOUT NAME - 48800170-090201-XS - SHEET-41
PLOT DATE : 11/1/2017 9:21 AM PLOT BY : AARON SARAUER PLOT NAME : _____ PLOT SCALE : 1 IN:10 FT
WISDOT/CADDS SHEET 49

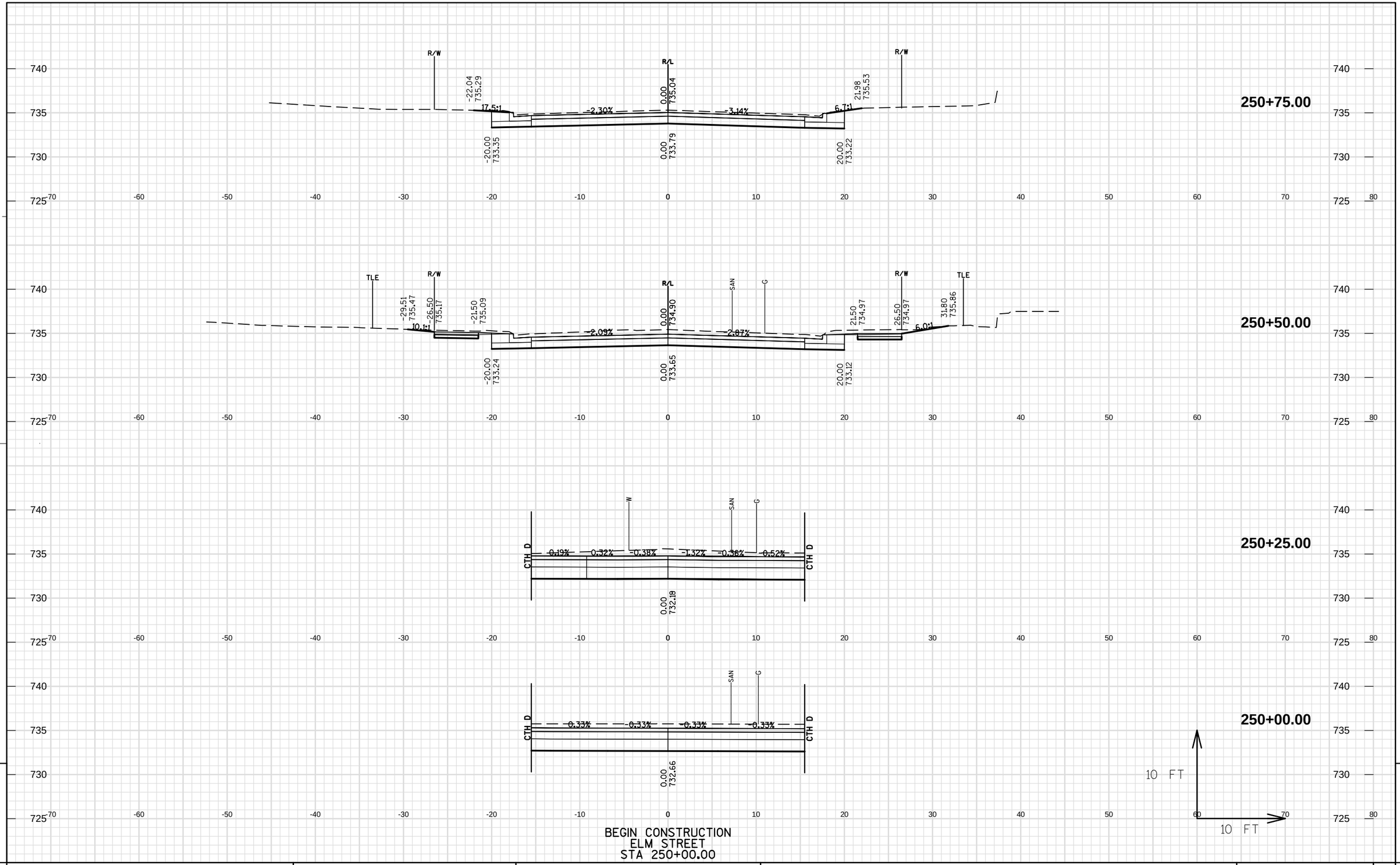

PROJECT NO: 4880-01-70	HWY: CTH D	COUNTY: OZAUKEE	CROSS SECTIONS: ELM STREET	SHEET 250	E

FILE NAME : S:\CURRPROJ\OZAUKEECO\CTH D\CIVIL3D\48800100\SHEETSPLAN\48800170\48800170-090201-XS.DWG
LAYOUT NAME - 48800170-090201-XS - SHEET-42
PLOT DATE : 11/1/2017 9:21 AM PLOT BY : AARON SARAUER PLOT NAME : _____ PLOT SCALE : 1 IN:10 FT
WISDOT/CADDS SHEET 49

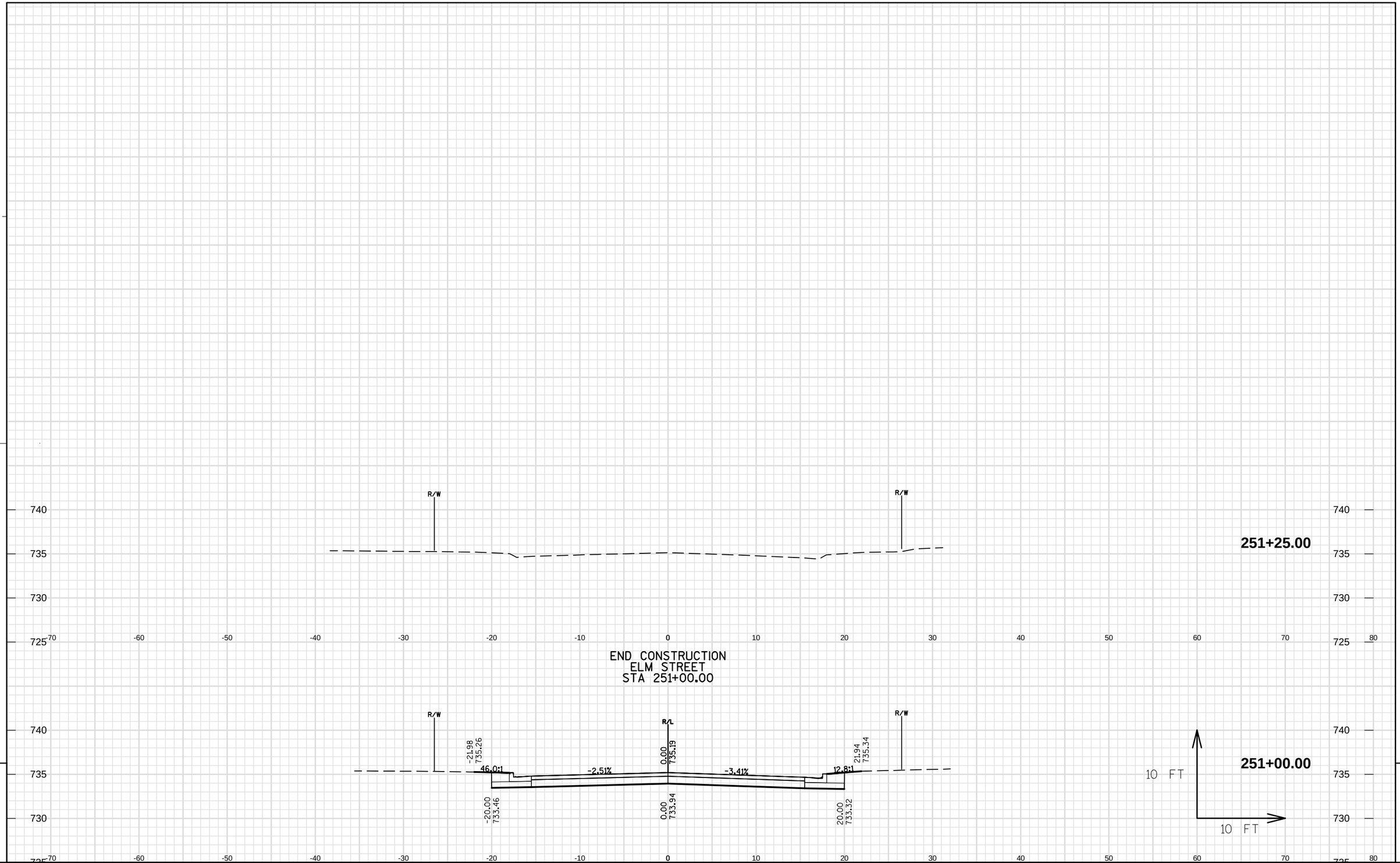

9

9

PROJECT NO: 4880-01-70	HWY: CTH D	COUNTY: OZAUKEE	CROSS SECTIONS: ELM STREET	SHEET 251	E

Wisconsin Department of Transportation

Dedicated people creating transportation solutions
through innovation and exceptional service.

http://www.dot.wisconsin.gov