WKE

MAR 2018

PROJECT ID: 2025-14-71
WITH: N/A

COUNTY: WAUKESHA

ORDER OF SHEETS

TOTAL SHEETS = 550

STATE PROJECT	FEDERAL PROJECT	
	PROJECT	CONTRACT
2025-14-71	WISC 2018144	1

STATE OF WISCONSIN
DEPARTMENT OF TRANSPORTATION

PLAN OF PROPOSED IMPROVEMENT

CAPITOL DRIVE

CTH F TO BROOKFIELD ROAD
STH 190
WAUKESHA COUNTY

STATE PROJECT NUMBER
2025-14-71

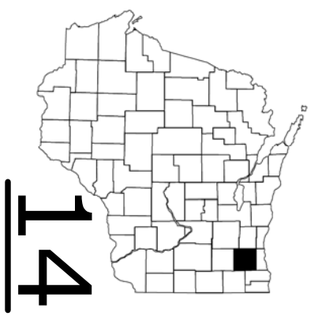

N

DESIGN DESIGNATION

A.A.D.T.	(2019)	=	36,500
A.A.D.T.	(2039)	=	44,400
D.H.V.		=	4,346
D.D.		=	59/41
T.		=	8.9%
DESIGN SPEED		=	60 MPH
ESALS		=	3,153,600

CONVENTIONAL SYMBOLS

PLAN
- CORPORATE LIMITS
- PROPERTY LINE
- LOT LINE
- LIMITED HIGHWAY EASEMENT
- EXISTING RIGHT OF WAY
- PROPOSED OR NEW R/W LINE
- SLOPE INTERCEPT
- REFERENCE LINE
- EXISTING CULVERT
- PROPOSED CULVERT (Box or Pipe)
- COMBUSTIBLE FLUIDS — CAUTION
- MARSH AREA
- WOODED OR SHRUB AREA

PROFILE
- GRADE LINE
- ORIGINAL GROUND
- MARSH OR ROCK PROFILE (To be noted as such) — ROCK
- SPECIAL DITCH — LABEL
- GRADE ELEVATION — 95.36
- CULVERT (Profile View)

UTILITIES
- ELECTRIC — E
- FIBER OPTIC — FO
- GAS — G
- SANITARY SEWER — SAN
- STORM SEWER — SS
- TELEPHONE — T
- WATER — W
- UTILITY PEDESTAL
- POWER POLE
- TELEPHONE POLE

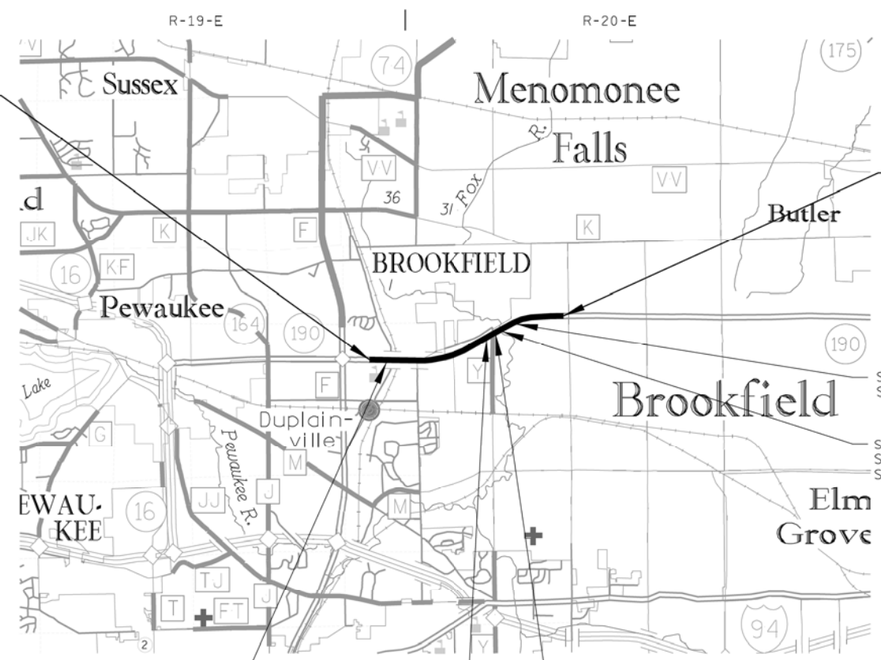

LAYOUT
SCALE 0 — 0.7 MI.

TOTAL NET LENGTH OF CENTERLINE = 2.524 MI.

COORDINATES ON THIS PLAN ARE REFERENCED TO THE WISCONSIN COUNTY COORDINATE SYSTEM (WCCS), WAUKESHA COUNTY, NAD83 (97).

ELEVATIONS SHOWN ON THE PLAN ARE REFERENCED TO THE NORTH AMERICAN VERTICAL DATUM, NAVD88 (91).

ORIGINAL PLANS PREPARED BY

GRAEF

WISCONSIN
STEVE L. HUBERTY
32396
WAUWATOSA, WI
PROFESSIONAL ENGINEER

10/27/17 (Date) (Signature)

STATE OF WISCONSIN
DEPARTMENT OF TRANSPORTATION

PREPARED BY

Surveyor	EMCS
Designer	GRAEF
Project Manager	BRIAN PLUEMER
Regional Examiner	
Regional Supervisor	REEM SHAHIN
C.O. Examiner	

APPROVED FOR THE DEPARTMENT
DATE: 11/1/17 (Signature)

E

2

GENERAL NOTES

THE CONTRACTOR SHALL NOTIFY DIGGERS HOTLINE AND AFFECTED UTILITIES PRIOR TO THE START OF WORK. ANY LOCAL MUNICIPALITY UTILITY WHICH IS NOT A MEMBER OF THE DIGGERS HOTLINE MUST BE CONTACTED SEPARATELY.

NO TREES OR SHRUBS ARE TO BE REMOVED UNLESS INDICATED FOR REMOVAL BY THE ENGINEER.

THE EXACT LOCATION OF PRIVATE ENTRANCES IS TO BE DETERMINED IN THE FIELD BY THE ENGINEER.

ALL HOLES OR OPENINGS BELOW SUBGRADE RESULTING FROM THE ABANDONMENT OR REMOVAL OF EXISTING STRUCTURES, GRUBBING OF TREES OR STUMPS, AND REMOVED GUARDRAIL POSTS SHALL BE BACKFILLED WITH BACKFILL GRANULAR GRADE 1.

ALL RADIUS DIMENSIONS FOR CURB & GUTTER ARE GIVEN TO THE FLANGE. ALL ELEVATIONS ALONG CURB & GUTTER ARE GIVEN TO THE FLANGE. OFFSETS NOTED ARE TO THE FLANGE OR EDGE OF LANE IF NO CURB, UNLESS OTHERWISE NOTED.

CONTRACTOR SHALL CONTACT SOUTHEASTERN WISCONSIN REGIONAL PLANNING COMMISSION (SEWRPC) BEFORE DISTURBING ANY PUBLIC SURVEY MONUMENTS. CONTACT LEE KREBLIN AT (262) 547-6721 FOR MONUMENT RELOCATION PROCEDURES. CONTRACTOR SHALL ALSO CONTACT TOM LIPSKY AT WDOT SOUTH EAST REGION AT(262) 548-6737.

THE LOCATION OF KNOWN EXISTING UTILITIES IN THE VICINITY OF THE PROJECT ON THE PLANS IS APPROXIMATE. THERE MAY BE OTHER UTILITIES IN THE AREA THAT ARE NOT SHOWN.

HMA PAVEMENT WHERE INDICATED ON THE PLANS, SHALL CONSIST OF LAYERS AS FOLLOWS, UNLESS OTHERWISE NOTED ON THE PLANS OR DIRECTED BY THE ENGINEER.

4" TO 4½" DEPTH	VARIES, 2¼" TO 2¾" OF HMA PAVEMENT 3 MT 58-28 S AS THE LOWER LAYER
	1¾" OF HMA PAVEMENT 4 MT 58-28 S AS THE UPPER LAYER
6½" DEPTH	2½" OF HMA PAVEMENT 3 MT 58-28 S AS THE LOWER LAYER
	2¼" OF HMA PAVEMENT 3 MT 58-28 S AS THE LOWER LAYER
	1¾" OF HMA PAVEMENT 4 MT 58-28 S AS THE UPPER LAYER

ALL EROSION CONTROL MEASURES SHALL BE ADJUSTED TO MEET FIELD CONDITIONS AT THE TIME OF CONSTRUCTION AND SHALL BE INSTALLED PRIOR TO ANY GRADING OR DISTURBANCE OF EXISTING SURFACE MATERIAL ON THE SITE.

LANDSCAPE ALL TOPSOILED AREAS AS THE PLAN SHOWS OR AS DIRECTED BY THE ENGINEER WITHIN 5 CALENDAR DAYS AFTER THE PLACEMENT OF TOPSOIL.

SILT FENCE SHALL BE INSTALLED IN THE LOCATIONS SHOWN ON THE PLANS, OR AS DIRECTED BY THE ENGINEER.

ASPHALT AND CONCRETE DRIVEWAYS SHALL BE SAWCUT AT THE MATCH LINE AS SHOWN ON THE PLANS OR AS DIRECTED BY THE ENGINEER.

INLET PROTECTION IS REQUIRED AT ALL INLETS AS PER DETAIL OR AS DIRECTED BY THE ENGINEER.

SIGNS IN CONFLICT WITH TRAFFIC CONTROL "IN USE" SHALL BE COVERED AS DIRECTED BY THE ENGINEER AND PAID FOR UNDER THE ITEM TRAFFIC CONTROL COVERING SIGNS.

TRAFFIC CONTROL DEVICES SHALL BE ADJUSTED TO FIT FIELD CONDITIONS AS DIRECTED BY THE ENGINEER.

CONCRETE JOINTS SHALL MATCH ABUTTING PAVEMENT AND CURB AND GUTTER JOINTS UNLESS OTHERWISE DESIGNATED BY THE ENGINEER.

ALL TIE OR DOWEL BARS INSERTED INTO A HOLE DRILLED IN THE EXISTING CONCRETE SHALL BE PAID FOR UNDER THE ITEM "DRILLED PAVEMENT TIES" AND "DRILLED DOWEL BARS." ALL OTHER TIE OR DOWEL BARS INCORPORATED INTO NEW POURED CONCRETE SHALL BE INCIDENTAL TO THE APPROPRIATE ITEM.

THE LOCATIONS OF LONGITUDINAL JOINTS IN HMA PAVEMENT SHALL BE APPROVED BY THE ENGINEER.

SEE SPECIAL PROVISIONS FOR ADDITIONAL EROSION CONTROL REQUIREMENTS.

STANDARD ABBREVIATIONS

AEW	APRON END WALL
AGG	AGGREGATE
BAD	BASE AGGREGATE DENSE
BM	BENCH MARK
C&G	CURB AND GUTTER
C/L	CENTER OR CONSTRUCTION LINE
CONC	CONCRETE
CP	CULVERT PIPE
CPCM	CULVERT PIPE CORRUGATED METAL
CPRC	CULVERT PIPE REINFORCED CONCRETE
CPRCHE	CULVERT PIPE REINFORCED CONCRETE HORIZONTAL ELLIPTICAL
CSCP	CORRUGATED STEEL CULVERT PIPE
CSPA	CORRUGATED STEEL PIPE ARCH
CSD	CONCRETE SURFACE DRAIN
CY	CUBIC-YARD
D	DEGREE OF CURVE
DISCH	DISCHARGE
FE	FIELD ENTRANCE
HERCP	HORIZONTAL ELLIPTICAL REINFORCED CONCRETE PIPE
HMA	HOT MIX ASPHALT
INV	INVERT
L	LENGTH OF CURVE
LHF	LEFT HAND FORWARD
LT	LEFT
MIN	MINIMUM
M/L	MATCHLINE
NB	NORTHBOUND
NC	NORMAL CROWN
NTS	NOT TO SCALE
PAVT	PAVEMENT
PB	PULL BOX
PC	POINT-OF-CURVE
PCC	POINT OF COMPOUND CURVE
PE	PRIVATE ENTRANCE
PI	POINT OF INTERSECTION
PLE	PERMANENT LIMITED EASEMENT
PT	POINT OF TANGENT
PVC	POINT OF VERTICAL CURVE
PVI	POINT OF VERTICAL INTERSECTION
PVT	POINT OF VERTICAL TANGENT
R	RADIUS OF CURVE
R/L	REFERENCE LINE
R/W	RIGHT OF WAY
RAD	RADIUS
RC	REVERSE CROWN
RCAEW	APRON ENDWALL FOR CULVERT PIPE REINFORCED CONCRETE
SSPRCHE	STORM SEWER PIPE REINFORCED CONCRETE HORIZONTAL ELLIPTICAL
SSPRC	STORM SEWER PIPE REINFORCED CONCRETE
SSPC	STORM SEWER PIPE COMPOSITE
REQD	REQUIRED
RHF	RIGHT HAND FORWARD
RO	RUN OFF LENGTH
RT	RIGHT
SALV	SALVAGED
SB	SIGNAL BASE
SDD	STANDARD DETAIL DRAWING
SE	SUPER ELEVATION
SF	SQUARE FOOT
STA	STATION
SY	SQUARE YARD
T	TANGENT LENGTH
TC	TOP OF CURB
TLE	TEMPORARY LIMITED EASEMENT

AGENCIES

MR. TOM GRISA
CITY OF BROOKFIELD
DEPARTMENT OF PUBLIC WORKS
2000 N. CALHOUN ROAD
BROOKFIELD, WI 53005
(262) 782-9650
GRISA@CI.BROOKFIELD.WI.US

MR. JEFF GOLNER, SUPERINTENDENT
TOWN OF BROOKFIELD
DEPARTMENT OF PUBLIC WORKS
645 N. JANACEK ROAD
BROOKFIELD, WI 53045
262-796-3795
DPW@TOWNOFBROOKFIELD.COM

MR. JEFF WEIGEL, DPW
CITY OF PEWAUKEE
W240 N3065 PEWAUKEE ROAD
PEWAUKEE, WI 53072
262-691-0770
WEIGEL@PEWAUKEE.WI.US

MR. GARY EVANS
WAUKESHA COUNTY PUBLIC WORKS
1320 PEWAUKEE ROAD, ROOM 220
WAUKESHA, WI 53188
262-548-7740
GEVANS@WAUKESHACOUNTY.GOV

DNR CONTACT

WISCONSIN DEPT OF NATURAL RESOURCES LIAISON
MR. CRAIG WEBSTER
141 NW BARSTOW STREET, ROOM 180
WAUKESHA, WI 53188
(262) 574-2141
CRAIG.WEBSTER@WISCONSIN.GOV

WISDOT CONTACT

WISCONSIN DEPT OF TRANSPORTATION, SE REGION
MR. BRIAN PLUEMER
141 NW BARSTOW STREET
P.O. BOX 798
WAUKESHA, WI 53187-0798
(262) 548-6721
BRIAN.PLUEMER@DOT.WI.GOV

DESIGN CONTACT

GRAEF
MR. STEVE HUBERTY
HONEY CREEK CORPORATE CENTER
125 S. 84TH STREET, SUITE 401
MILWAUKEE, WI 53212
(414) 266-9090
STEVE.HUBERTY@GRAEF-USA.COM

UTILITIES

MR. DAN SANDE
WE ENERGIES - ELECTRIC
333 W. EVERETT ST, PSBA-A299
MILWAUKEE, WI 53203
(414) 221-4578
DAN SANDE@WE-ENERGIES.COM

CONSTRUCTION FIELD CONTACT:
MR. BRIAN STOEHR
WE ENERGIES - ELECTRIC
500 S. 116TH ST.
WEST ALLIS, WI 53214
(414) 944-5516 / MOBILE: (414) 416-6059

MR. DAN SANDE
WE ENERGIES - GAS
333 W. EVERETT ST, PSBA-A299
MILWAUKEE, WI 53203
(414) 221-4578
DAN SANDE@WE-ENERGIES.COM

CONSTRUCTION FIELD CONTACT:
MR. ALEX DANTINNE
WE ENERGIES - GAS
500 S. 16TH STREET
WEST ALLIS, WI 53214
(920) 621-6903

MR. ERIC PEREA
WISDOT TRAFFIC LIGHTING
141 NW BARSTOW ST.
PO BOX 798
WAUKESHA, WI 53187-0798
(262) 574-5422
ERIC.PEREA@DOT.WI.GOV

PARWINDER VIRK
WISDOT SIGNAL OPERATIONS
141 NW BARSTOW ST.
PO BOX 798
WAUKESHA, WI 53187-0798
(262) 548-6717
PARWINDER.VIRK@DOT.WI.GOV

WISDOT ELECTRICAL FIELD UNIT
935 S. 60TH STREET
WEST ALLIS, WI 53214
(414) 266-1170

MR. LARRY HUBER
ANR PIPELINE CO.
W3925 PIPELINE LANE
EDEN, WI 53019
(920) 477-2235 EXT. 13
LAWRENCE_HUBER@TRANSCANADA.COM

UTILITIES

MR. STEVE CRAMER
CHARTER COMMUNICATIONS
1320 N. DR. MARTIN LUTHER KING JR DRIVE
MILWAUKEE, WI 53212
(414) 277-4045
STEVE.CRAMER@CHARTER.COM

MR. RON GILLENARDO, FACILITIES MANAGER
CITY OF BROOKFIELD SEWER DEPT
21225 ENTERPRISE AVE
BROOKFIELD, WI 53045
(262)782-0199 / FAX: (262)782-8994
EMAIL: GILLENARDO@CI.BROOKFIELD.WI.US

MR. JOHN CARLSON
CITY OF BROOKFIELD WATER DEPT
19700 RIVERVIEW DR.
BROOKFIELD, WI 53045
(262)796-6717
CARLSON@CI.BROOKFIELD.WI.US

MR. RICHARD TRGOVEC
MIDWEST FIBER NETWORKS
6070 NORTH FLINT ROAD
GLENDALE, WI 53209
(414) 672-5612
RTRGOVEC@MIDWESTFIBERNETWORKS.COM

MR. BRAHIM GADDOUR
LEVEL 3 COMMUNICATIONS, LLC
3235 INTERCONNECT DRIVE, SUITE 600
BROOKFIELD, WI 53045
(414) 908-1027
RELO@LEVEL3.COM

MR. ANTHONY MARCINIAK
ATC MANAGEMENT, INC.
W234 N200 RIDGEVIEW PARKWAY COURT
PO BOX 47
WAUKESHA, WI 53187-0047
(262) 506-6814
AMARCINIAK@ATCLLC.COM

MR. ALPER KOLCU, MANAGER
AT&T WISCONSIN
2005 PEWAUKEE ROAD
WAUKESHA, WI 53188
(262) 970-8494
AK308X@ATT.COM

DIGGERS HOTLINE
Dial 811 or (800) 242-8511
www.DiggersHotline.com

2

PROJECT NO:2025-14-71	HWY:STH 190	COUNTY:WAUKESHA	GENERAL NOTES	SHEET 2	E

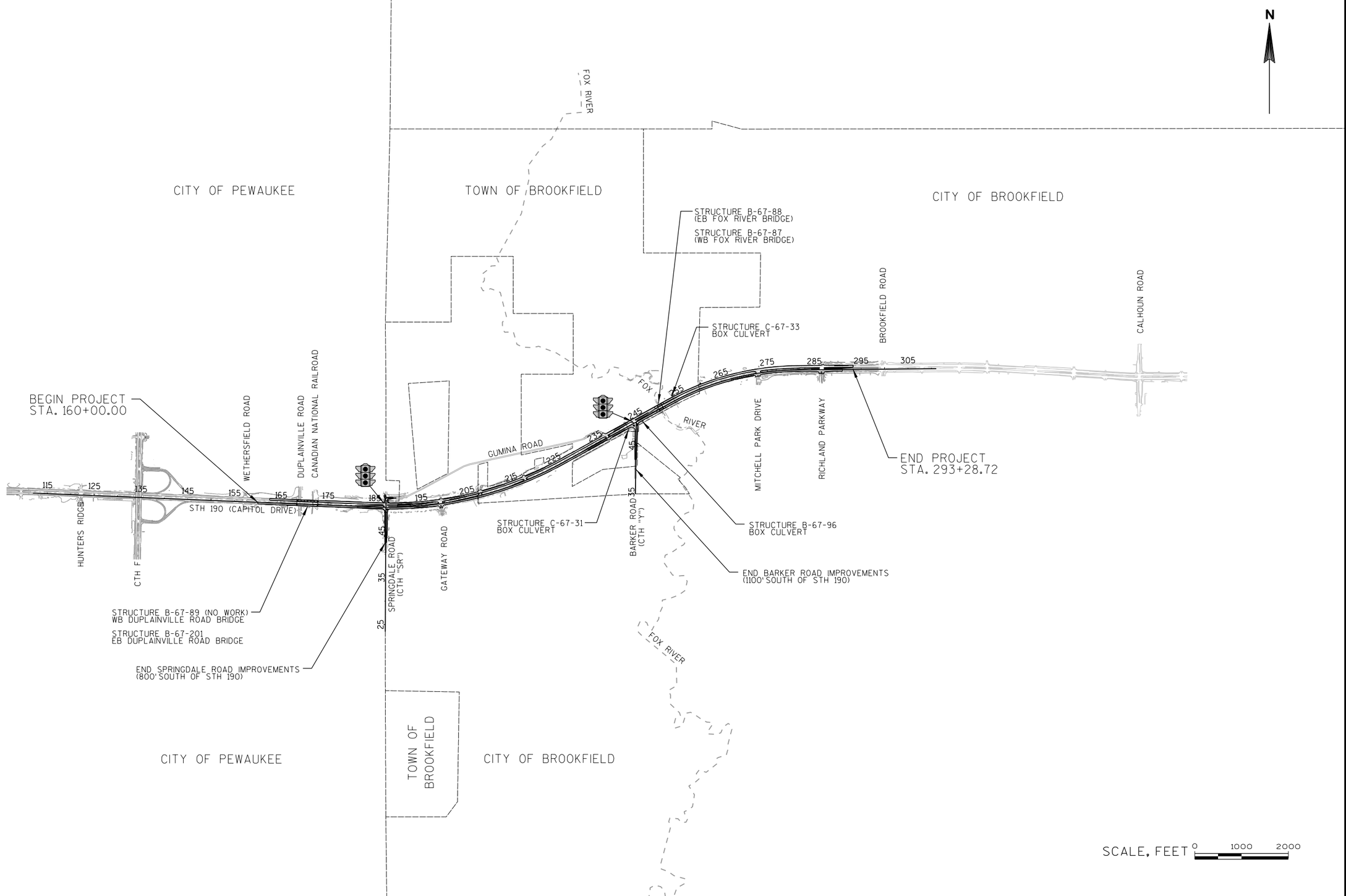

PROJECT NO:2025-14-71	HWY:STH 190	COUNTY:WAUKESHA	PROJECT OVERVIEW	SHEET 3	E

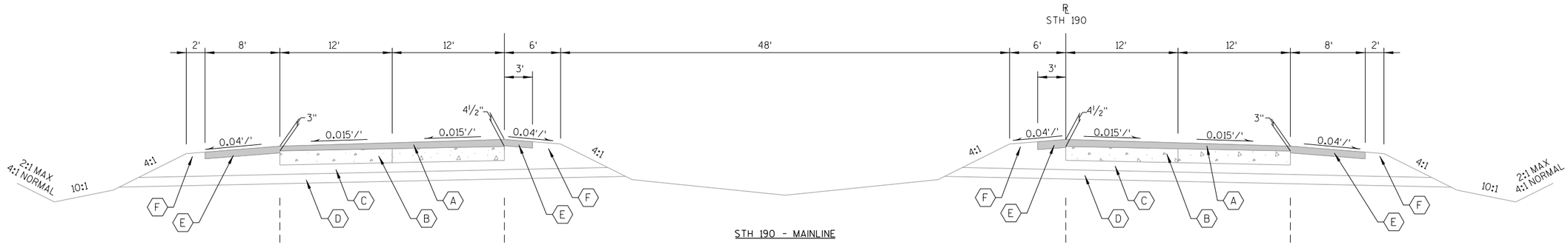

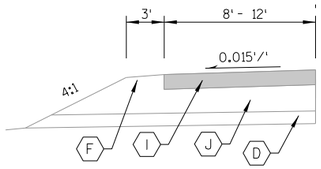

WESTBOUND RIGHT TURN LANE

STA. 188+08 - STA. 191+21
STA. 237+94 - STA. 240+69

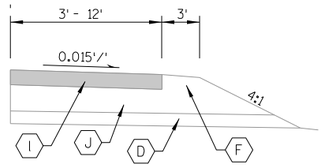

WESTBOUND LEFT TURN LANE

STA. 190+89 - STA. 195+48
STA. 199+55 - STA. 202+89
STA. 247+97 - STA. 250+00

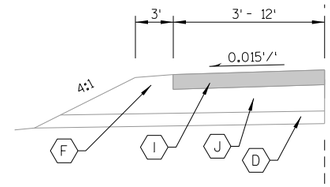

EASTBOUND LEFT TURN LANE

STA. 179+73 - STA. 183+93
STA. 203+67 - STA. 207+05

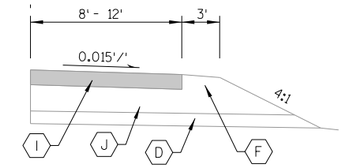

EASTBOUND RIGHT TURN LANE

STA. 184+14 - STA. 186+72
STA. 195+40 - STA. 198+35
STA. 233+37 - STA. 237+50
STA. 240+62 - STA. 243+86
STA. 268+00 - STA. 272+00
STA. 280+51 - STA. 281+38

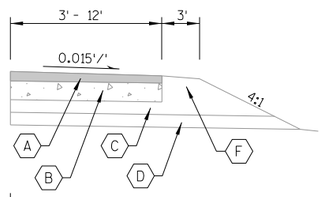

WESTBOUND LEFT TURN LANE

STA. 238+07 - STA. 240+62
STA. 273+71 - STA. 282+00

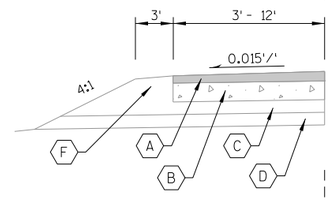

EASTBOUND LEFT TURN LANE

STA. 194+70 - STA. 198+70
STA. 214+73 - STA. 217+83
STA. 234+58 - STA. 237+62

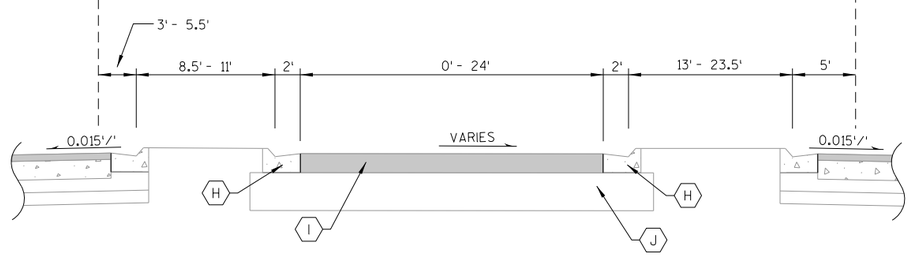

SLOTTED LEFT TURN(S)

STA. 183+93 - STA. 186+70
STA. 187+67 - STA. 190+89
STA. 244+83 - STA. 247+97

TYPICAL EXISTING SECTION

STA. 160+00 - STA. 281+38

LEGEND

- (A) 3" - 4½" ASPHALTIC CONC. PAVEMENT
- (B) 9" P.C. REINFORCED CONC.
- (C) 6" GRANULAR OR CRUSHED STONE BASE COURSE
- (D) 6" GRANULAR SUBBASE COURSE
- (E) 4" ASPHALTIC CONC. PAVED SHOULDERS
- (F) CRUSHED AGGREGATE SHOULDERS
- (G) 3" ASPHALTIC CONC. PAVEMENT
- (H) 36" CURB & GUTTER
- (I) 5" - 7" ASPHALTIC CONC. PAVEMENT
- (J) 12" - 14" CRUSHED AGGREGATE BASE COURSE

* NOTE: EXISTING CONCRETE BASE SLOPE = 0.01'/'.
ASPHALT WEDGING WAS CONSTRUCTED TO
OBTAIN 0.015'/' SURFACE CROSS SLOPE.

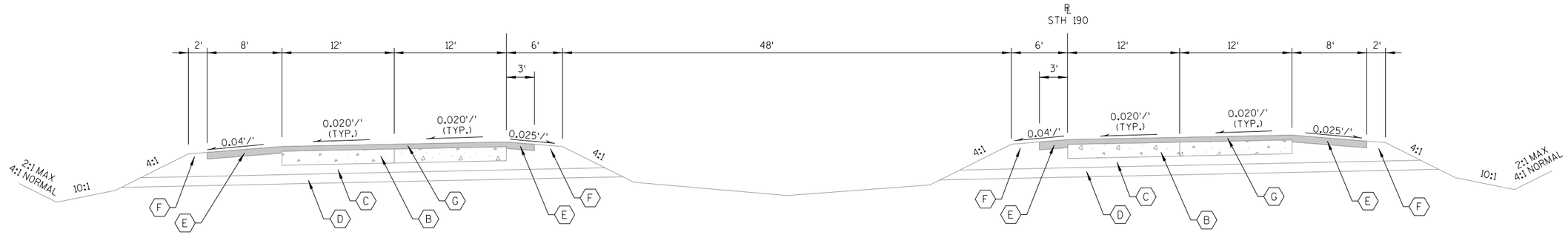

TYPICAL EXISTING SECTION - SUPERELEVATED

STA. 185+16 - STA. 226+82

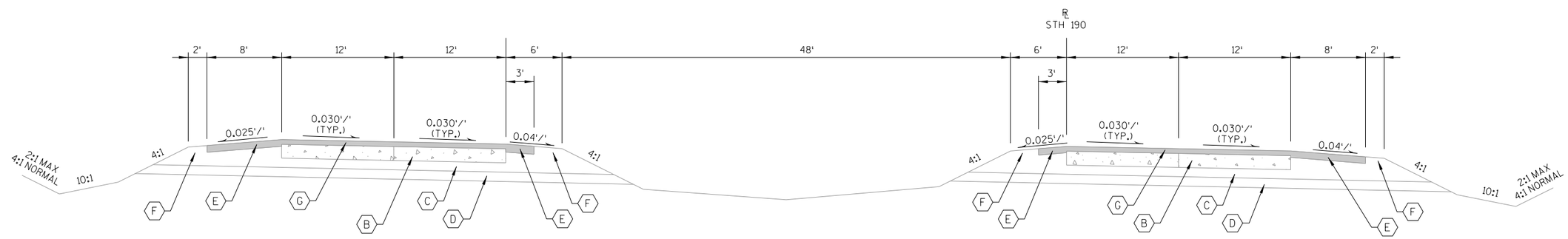

TYPICAL EXISTING SECTION - SUPERELEVATED

STA. 252+92 - STA. 281+38

LEGEND

- (A) 3" - 4½" ASPHALTIC CONC. PAVEMENT
- (B) 9" P.C. REINFORCED CONC.
- (C) 6" GRANULAR OR CRUSHED STONE BASE COURSE
- (D) 6" GRANULAR SUBBASE COURSE
- (E) 4" ASPHALTIC CONC. PAVED SHOULDERS
- (F) CRUSHED AGGREGATE SHOULDERS
- (G) 3" ASPHALTIC CONC. PAVEMENT
- (H) 36" CURB & GUTTER
- (I) 5" - 7" ASPHALTIC CONC. PAVEMENT
- (J) 12" - 14" CRUSHED AGGREGATE BASE COURSE

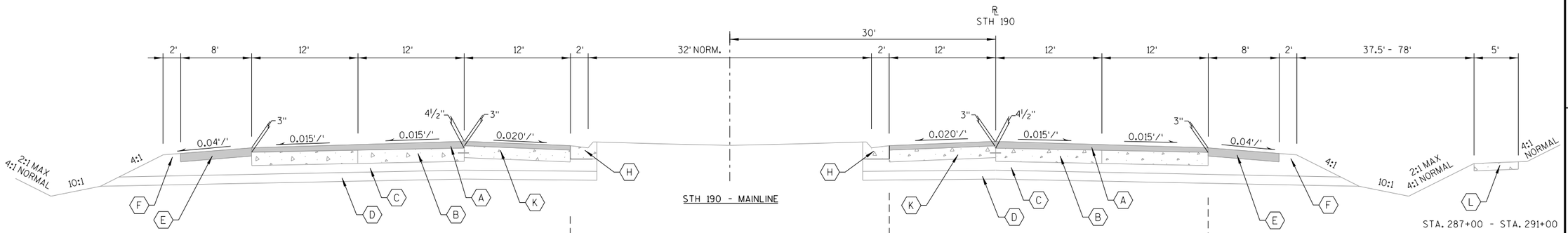

STH 190 - MAINLINE

STA. 287+00 - STA. 291+00

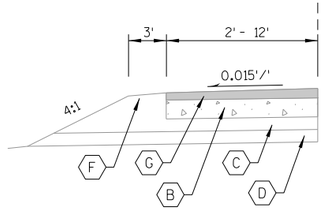

WESTBOUND RIGHT TURN LANE

STA. 287+29 - STA. 291+40

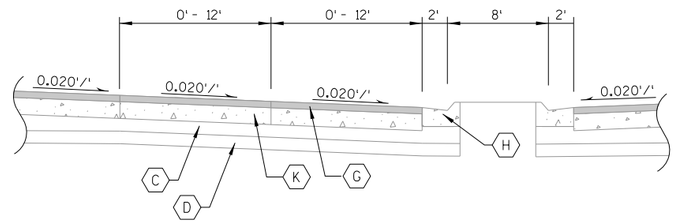

LEFT TURN LANE

STA. 281+38 - STA. 284+34
STA. 288+61 - STA. 290+98

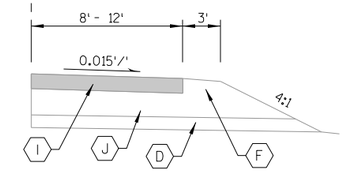

EASTBOUND RIGHT TURN LANE

STA. 281+38 - STA. 285+65

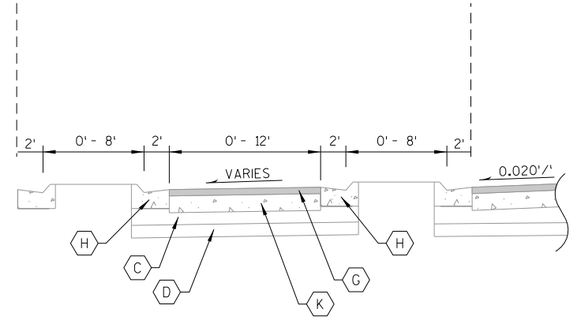

SLOTTED LEFT TURN

STA. 284+34 - STA. 288+61

TYPICAL EXISTING SECTION

STA. 281+38 - STA. 293+28.72

LEGEND

- (A) 3" - 4½" ASPHALTIC CONC. PAVEMENT
- (B) 9" P.C. REINFORCED CONC.
- (C) 6" GRANULAR OR CRUSHED STONE BASE COURSE
- (D) 6" GRANULAR SUBBASE COURSE
- (E) 4" ASPHALTIC CONC. PAVED SHOULDERS
- (F) CRUSHED AGGREGATE SHOULDERS
- (G) 3" ASPHALTIC CONC. PAVEMENT
- (H) 36" CURB & GUTTER
- (I) 5" - 7" ASPHALTIC CONC. PAVEMENT
- (J) 12" - 14" CRUSHED AGGREGATE BASE COURSE
- (K) 8" P.C. REINFORCED CONC.
- (L) CONCRETE WALK 5-INCH

* NOTE: EXISTING CONCRETE BASE SLOPE = 0.01'/'.
ASPHALT WEDGING WAS CONSTRUCTED TO
OBTAIN 0.015'/' SURFACE CROSS SLOPE.

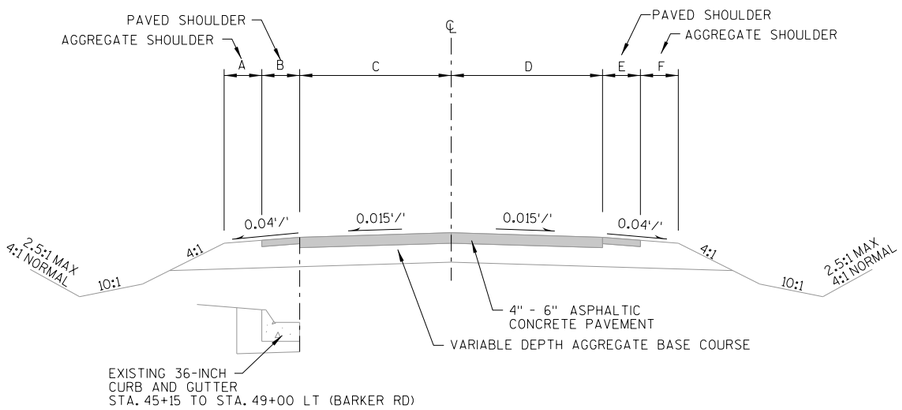

TYPICAL EXISTING SECTION - SPRINGDALE & BARKER ROAD

SPRINGDALE ROAD - STA. 42+50 TO STA. 49+50
BARKER ROAD - STA. 39+90 TO STA. 49+50

SIDE STREET	A FT	B FT	C FT	D FT	E FT	F FT
SPRINGDALE ROAD	0-3	3-5	12	12-24	0-3	1-3
BARKER ROAD	0-3	0-3	12-24	12-24	0-6	0-7

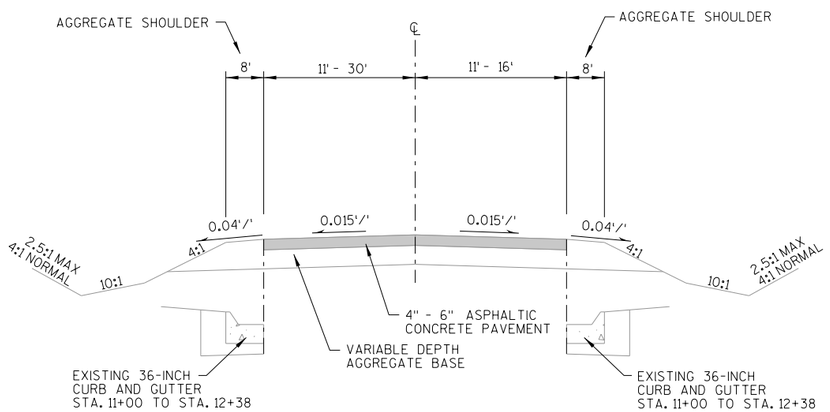

TYPICAL EXISTING SECTION - GUMINA ROAD

GUMINA ROAD - STA. 11+00 TO STA. 13+29

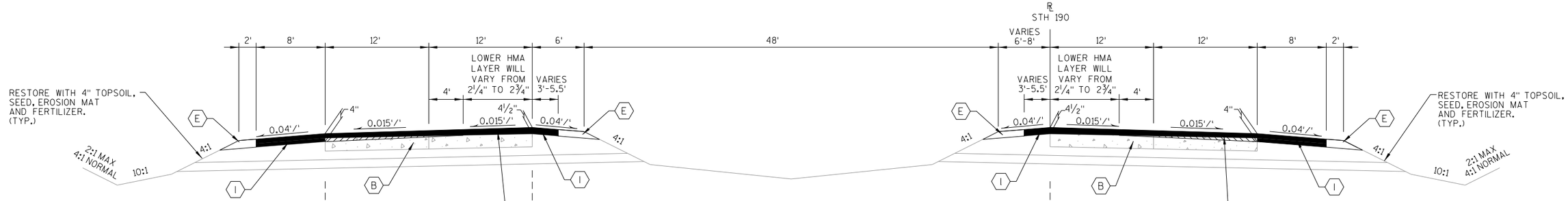

STH 190 - MAINLINE

VARIABLE MILL CONCRETE TO PROVIDE 0.015'/' CROSS SLOPE. SEE CONSTRUCTION DETAIL.

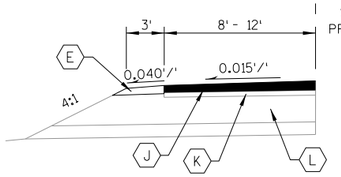

WESTBOUND RIGHT TURN LANE **

STA. 237+94 - STA. 239+75

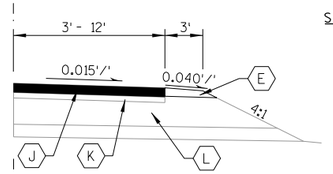

WESTBOUND LEFT TURN LANE

STA. 199+55 - STA. 201+15
STA. 247+97 - STA. 250+00

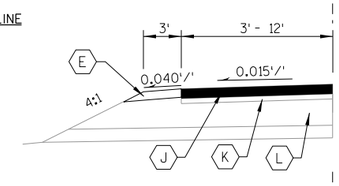

EASTBOUND LEFT TURN LANE

STA. 179+73 - STA. 183+93
STA. 204+75 - STA. 206+89
STA. 280+51 - STA. 282+00

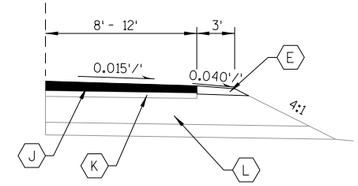

EASTBOUND RIGHT TURN LANE **

STA. 196+31 - STA. 198+35
STA. 241+90 - STA. 243+86
STA. 280+51 - STA. 282+00

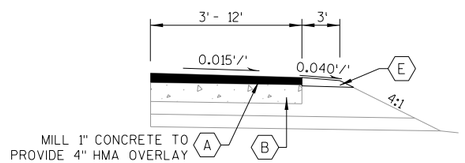

WESTBOUND LEFT TURN LANE

STA. 238+69 - STA. 239+50
STA. 273+71 - STA. 282+00

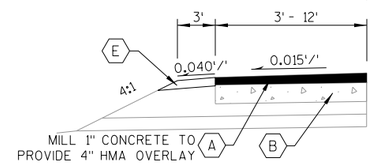

EASTBOUND LEFT TURN LANE

STA. 194+70 - STA. 198+70
STA. 216+58 - STA. 217+83
STA. 236+25 - STA. 237+62

** NOTE:

THE PAVEMENT SECTION SHOWN BELOW SHALL BE USED IN AREAS WHERE EXISTING TURN LANES ARE LENGTHENED, RECONSTRUCTED OR NEWLY CONSTRUCTED.

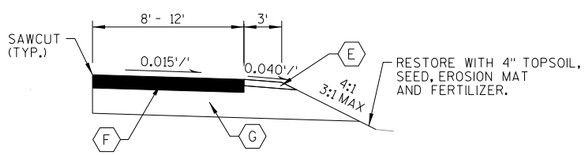

RURAL SECTION

WESTBOUND LEFT TURN LANE

STA. 201+15 - STA. 205+75

WESTBOUND RIGHT TURN LANE

STA. 188+04 - STA. 193+00
STA. 208+50 - STA. 213+50
STA. 239+75 - STA. 243+13
STA. 289+29 - STA. 292+29

WESTBOUND SHOULDER

STA. 199+75 - STA. 204+50
STA. 218+25 - STA. 223+00

EASTBOUND LEFT TURN LANE

STA. 194+29 - STA. 198+70
STA. 201+50 - STA. 204+75
STA. 206+89 - STA. 208+54
STA. 238+05 - STA. 238+69

EASTBOUND RIGHT TURN LANE

STA. 181+20 - STA. 186+70
STA. 193+35 - STA. 196+31
STA. 238+75 - STA. 241+90
STA. 267+00 - STA. 272+00

EASTBOUND SHOULDER

STA. 232+75 - STA. 237+50

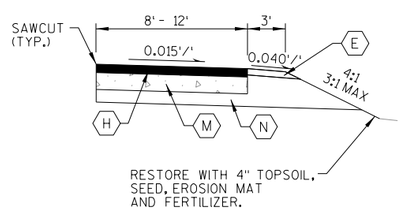

RURAL SECTION

WESTBOUND LEFT TURN LANE

STA. 239+50 - STA. 242+47

EASTBOUND LEFT TURN LANE

STA. 214+25 - STA. 216+58
STA. 231+50 - STA. 236+25

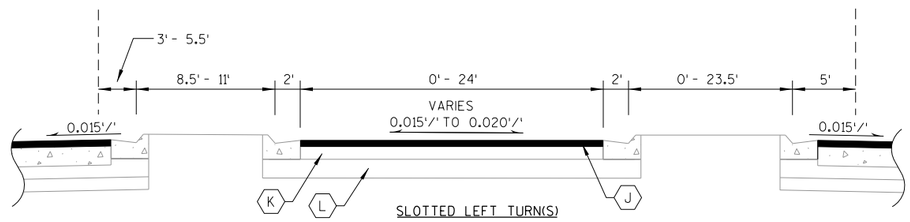

SLOTTED LEFT TURN(S)

STA. 183+93 - STA. 186+70
STA. 187+67 - STA. 189+85
STA. 244+83 - STA. 247+97

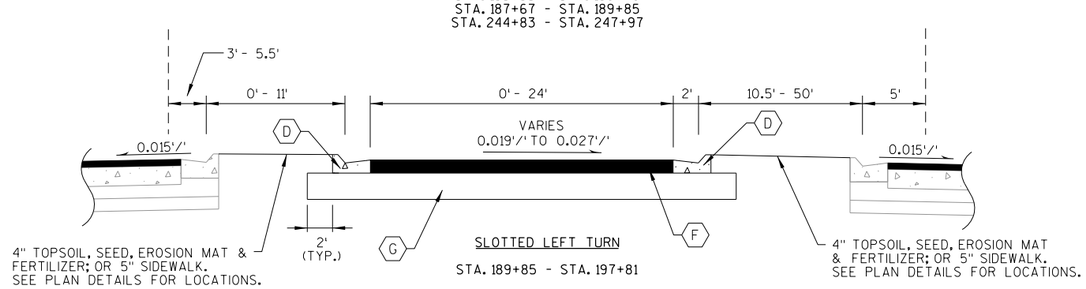

SLOTTED LEFT TURN

STA. 189+85 - STA. 197+81

TYPICAL FINISHED SECTION

STA. 160+00 - STA. 250+29
STA. 251+27 - STA. 282+00

LEGEND

- (A) MILL ASPHALT 3" - 4½" DOWN TO CONCRETE. MILL CONCRETE TO PROVIDE 0.015 '/' CROSS SLOPE. PLACE 4" - 4½" HMA PAVEMENT SEE CONSTRUCTION DETAIL.
- (B) EXISTING 9" P.C. REINFORCED CONC.
- (C) CONCRETE CURB & GUTTER 4-INCH SLOPED 36-INCH TYPE A
- (D) CONCRETE CURB & GUTTER 4-INCH SLOPED 36-INCH TYPE D
- (E) BASE AGGREGATE DENSE, 3/4-INCH TO BRING SHOULDERS UP TO GRADE
- (F) 6½" HMA PAVEMENT
- (G) 12" BASE AGGREGATE DENSE, 1¼-INCH
- (H) 4" HMA PAVEMENT
- (I) 4" HMA PAVEMENT SHOULDER
- (J) MILL 4" AND PLACE 4" HMA PAVEMENT
- (K) EXISTING ASPHALT
- (L) EXISTING 12" - 14" CRUSHED AGGREGATE BASE COURSE
- (M) PROPOSED 8" CONCRETE BASE
- (N) 6" BASE AGGREGATE DENSE, 1¼-INCH

NOTE: EXISTING CONCRETE BASE SLOPE = 0.01'/'. ASPHALT WEDGING WAS CONSTRUCTED TO OBTAIN 0.015'/' SURFACE CROSS SLOPE.

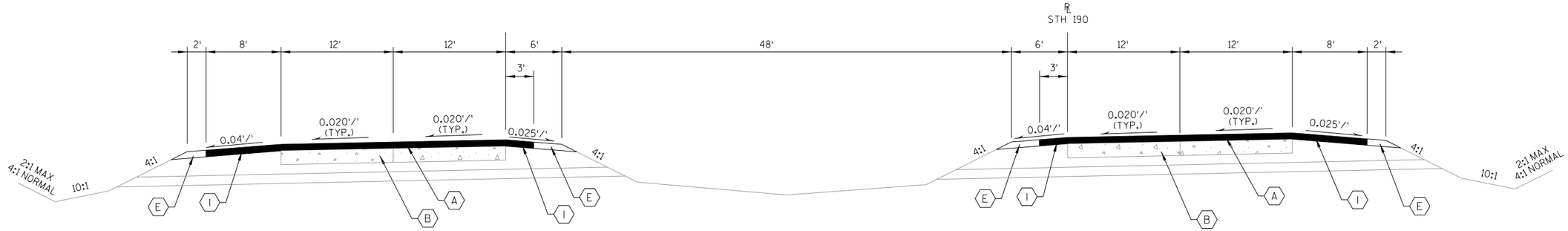

TYPICAL FINISHED SECTION - SUPERELEVATED

STA. 185+16 - STA. 226+82

SUPERELEVATION DATA WB LANES		
STATION	RATE (%)	REMARKS
185+21	-1.5%	NORMAL CROWN
185+41	-2.0%	BEGIN FULL SUPER
226+57	-2.0%	END FULL SUPER
226+77	-1.5%	NORMAL CROWN

SE TRANSITIONS LISTED ABOVE ARE BASED ON THEORETICAL VALUES. CONTRACTOR TO VERIFY AND MATCH EXISTING SE TRANSITIONS PRIOR TO MILLING AND OVERLAY OPERATIONS.

SUPERELEVATION DATA EB LANES		
STATION	RATE (%)	REMARKS
183+81	-1.5%	NORMAL CROWN
184+61	0%	LEVEL CROWN
185+41	2%	BEGIN FULL SUPER
226+57	2%	END FULL SUPER
227+37	0%	LEVEL CROWN
228+17	-1.5%	NORMAL CROWN

SE TRANSITIONS LISTED ABOVE ARE BASED ON THEORETICAL VALUES. CONTRACTOR TO VERIFY AND MATCH EXISTING SE TRANSITIONS PRIOR TO MILLING AND OVERLAY OPERATIONS.

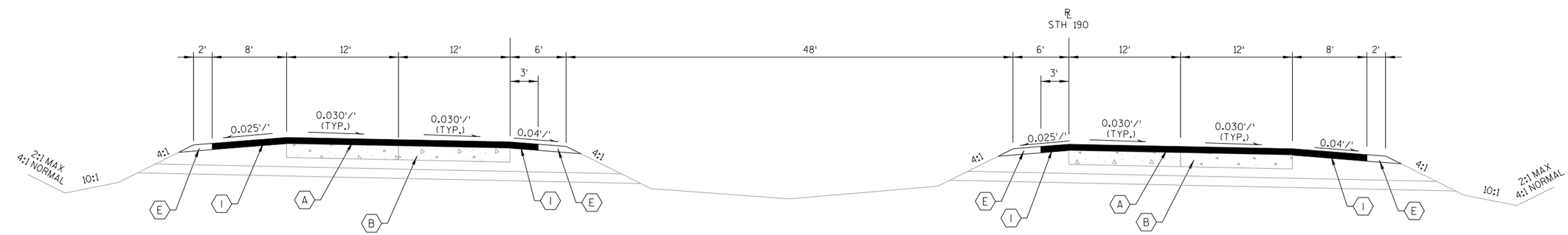

TYPICAL FINISHED SECTION - SUPERELEVATED

STA. 252+92 - STA. 281+38

SUPERELEVATION DATA EB LANES		
STATION	RATE (%)	REMARKS
251+32	-1.5%	NORMAL CROWN
252+12	0%	LEVEL CROWN
253+32	3%	BEGIN FULL SUPER
280+98	3%	END FULL SUPER
282+18	0%	LEVEL CROWN
282+98	-1.5%	NORMAL CROWN

SE TRANSITIONS LISTED ABOVE ARE BASED ON THEORETICAL VALUES. CONTRACTOR TO VERIFY AND MATCH EXISTING SE TRANSITIONS PRIOR TO MILLING AND OVERLAY OPERATIONS.

SUPERELEVATION DATA EB LANES		
STATION	RATE (%)	REMARKS
252+72	-1.5%	NORMAL CROWN
253+32	-3.0%	BEGIN FULL SUPER
280+98	-3.0%	END FULL SUPER
281+58	-1.5%	NORMAL CROWN

SE TRANSITIONS LISTED ABOVE ARE BASED ON THEORETICAL VALUES. CONTRACTOR TO VERIFY AND MATCH EXISTING SE TRANSITIONS PRIOR TO MILLING AND OVERLAY OPERATIONS.

LEGEND

- (A) MILL ASPHALT 3" DOWN TO CONCRETE. PLACE 4" HMA PAVEMENT.
- (B) EXISTING 9" P.C. REINFORCED CONC.
- (C) CONCRETE CURB & GUTTER 4-INCH SLOPED 36-INCH TYPE A
- (D) CONCRETE CURB & GUTTER 4-INCH SLOPED 36-INCH TYPE D
- (E) BASE AGGREGATE DENSE, 3/4-INCH TO BRING SHOULDERS UP TO GRADE
- (F) 6½" HMA PAVEMENT
- (G) 12" BASE AGGREGATE DENSE, 1¼-INCH
- (I) 4" HMA PAVEMENT SHOULDER

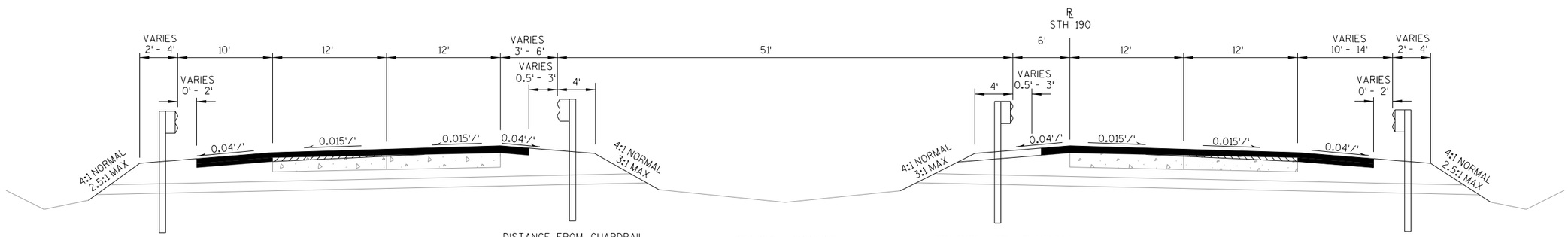

DISTANCE FROM GUARDRAIL
TO EDGE OF PAVED SHOULDER
2' - STA. 174+36 - 185+50
0' - STA. 242+13 - 250+34
0' - STA. 251+22 - 256+16

DISTANCE FROM GUARDRAIL
TO EDGE OF PAVED SHOULDER
3' - STA. 174+00 - 175+63
0.5' - STA. 251+22 - 254+70

STH 190 - MAINLINE

DISTANCE FROM GUARDRAIL
TO EDGE OF PAVED SHOULDER
1' TO 3' - STA. 165+45 - 168+34
0.5' - STA. 248+76 - 250+34

DISTANCE FROM GUARDRAIL
TO EDGE OF PAVED SHOULDER
2' - STA. 166+70 - 168+34
2' - STA. 172+80 - 186+59
2' - STA. 245+00 - 250+34
0' - STA. 251+22 - 254+49

TYPICAL FINISHED SECTION WITH GUARDRAIL

STA. 160+00 - STA. 250+29
STA. 251+27 - STA. 282+00

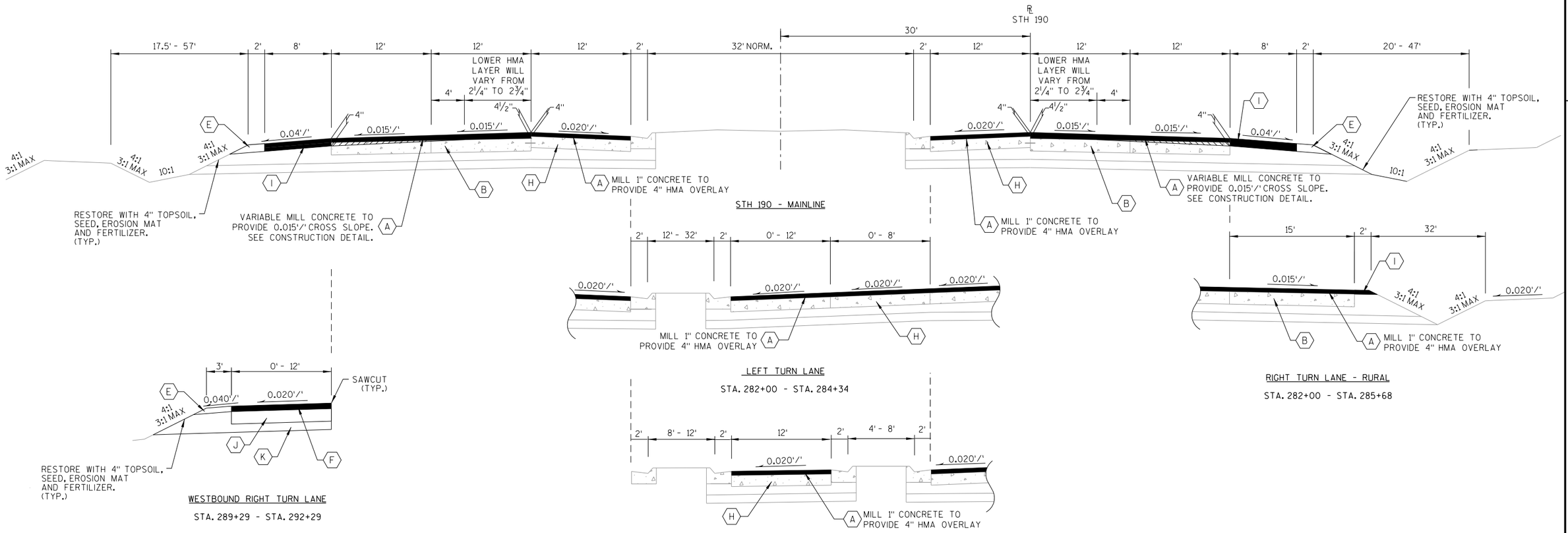

LEGEND

- (A) MILL ASPHALT 3" - 4½" DOWN TO CONCRETE. MILL CONCRETE TO PROVIDE 0.015 '/' CROSS SLOPE. PLACE 4" - 4½" HMA PAVEMENT SEE CONSTRUCTION DETAIL.
- (B) EXISTING 9" P.C. REINFORCED CONC.
- (C) CONCRETE CURB & GUTTER 4-INCH SLOPED 36-INCH TYPE A
- (D) CONCRETE CURB & GUTTER 4-INCH SLOPED 36-INCH TYPE D
- (E) BASE AGGREGATE DENSE, 3/4-INCH TO BRING SHOULDERS UP TO GRADE
- (F) 4" HMA PAVEMENT
- (G) 12" BASE AGGREGATE DENSE, 1¼-INCH
- (H) EXISTING 8" P.C. REINFORCED CONC.
- (I) 4" HMA PAVEMENT SHOULDER
- (J) PROPOSED 8" CONCRETE BASE
- (K) 6" BASE AGGREGATE DENSE, 1¼-INCH

TYPICAL FINISHED SECTION

STA. 282+00 - STA. 293+28.72

NOTE: EXISTING CONCRETE BASE SLOPE = 0.01'/'. ASPHALT WEDGING WAS CONSTRUCTED TO OBTAIN 0.015'/' SURFACE CROSS SLOPE.

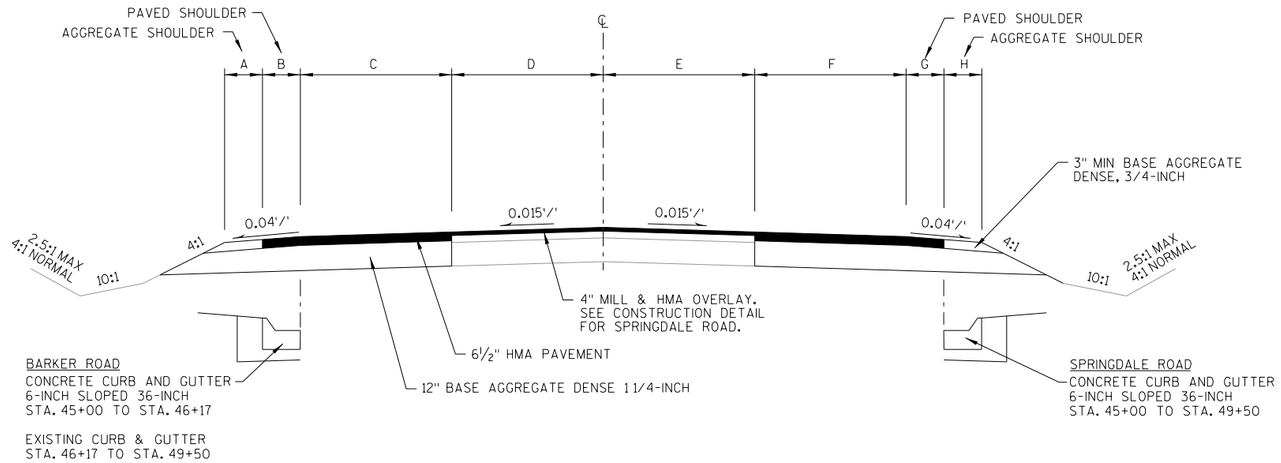

TYPICAL FINISHED SECTION - SPRINGDALE & BARKER ROAD

SPRINGDALE ROAD - STA. 42+50 TO STA. 49+50
BARKER ROAD - STA. 42+00 TO STA. 49+50

SIDE STREET	A FT	B FT	C FT	D FT	E FT	F FT	G FT	H FT
SPRINGDALE ROAD	0-3	0-3	0-13	11-24	11-24	0-11	0-3	3
BARKER ROAD	0-3	0-3	0-10	12-24	10-24	0-7	0-6	1-2

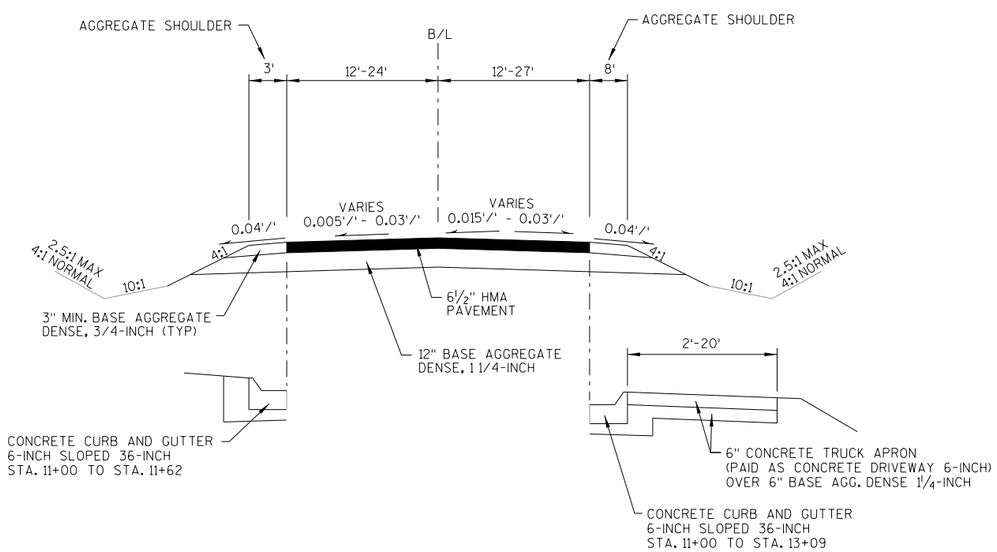

TYPICAL FINISHED SECTION - GUMINA ROAD

GUMINA ROAD - STA. 10+94 TO STA. 13+29

2

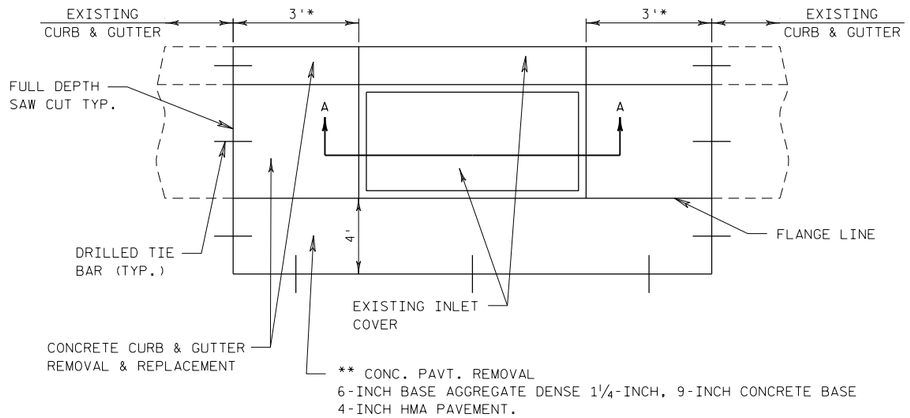

PLAN VIEW

* REMOVE 3' CURB & GUTTER MIN. OR TO THE NEAREST JOINT 6' MAX. UNLESS OTHERWISE DIRECTED

** PAVEMENT REMOVAL & REPLACEMENT IS INCIDENTAL TO ADJUSTING INLETS OR MANHOLES AND RECONSTRUCTING INLETS OR MANHOLES.

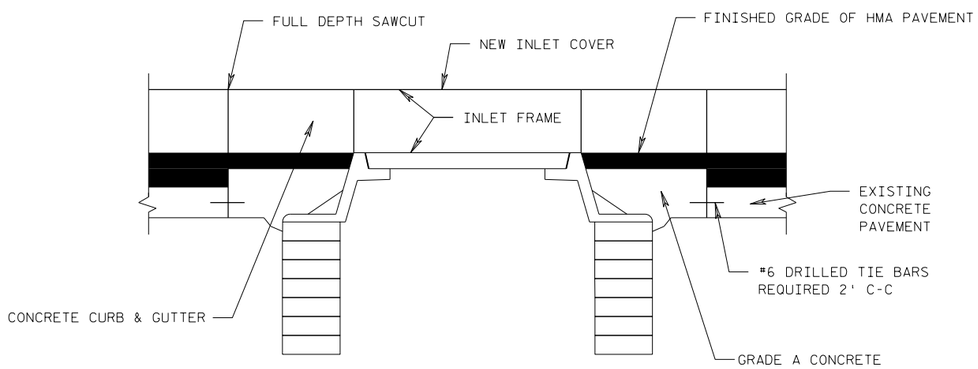

SECTION A-A

GENERAL DRAINAGE STRUCTURE NOTES

1.) WHEN NEW COVERS ARE PLACED, THE FIRST 6" OF ADJUSTMENT OR REPAIRING SHALL BE INCIDENTAL TO THE COST OF THE NEW COVER. ANY ADJUSTMENT OR REPAIR OF BRICKWORK BETWEEN 6" AND 12" WILL BE PAID AS ADJUSTING COVERS. REPAIRS GREATER THAN 12" WILL BE PAID AS RECONSTRUCTING INLETS OR MANHOLES.

2.) WHEN A NEW INLET COVER IS SPECIFIED, BOTH THE FRAME AND GRATE ARE INCLUDED.

3.) THE CURB BOX OPENING SHALL BE SEALED BEFORE POURING CONCRETE CURB TO PREVENT CONCRETE FROM ENTERING STRUCTURE.

4.) SAWING OF EXISTING CURB AND GUTTER AND PAVEMENT SHALL BE PAID FOR AS "SAWING CONCRETE."

5.) LOCATIONS TO BE DETERMINED BY ENGINEER IN THE FIELD.

INLET DETAIL

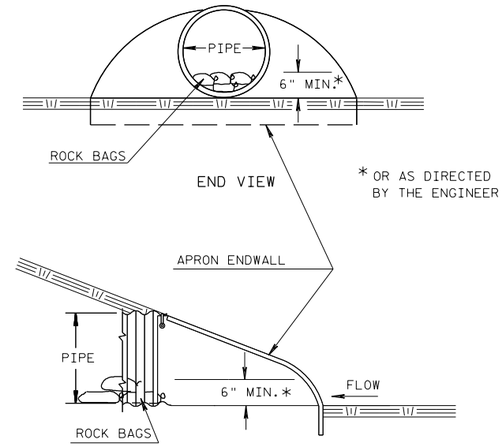

SIDE VIEW

CULVERT PIPE CHECK

(PLACE AT UPSTREAM END OF CULVERTS)

ESTIMATED BAG SIZE = 18" X 12" X 6"	
PIPE SIZE	ESTIMATED NUMBER OF BAGS
12"	1
15"	2
18"	2
24"	3
30"	5
36"	7
42"	7
48"	10
54"	10
60"	13
66"	14
72"	16
17"X13"	2
30"X19"	5
38"X24"	7
45"X29"	10
53"X34"	10
60"X38"	13
76"X48"	18

2

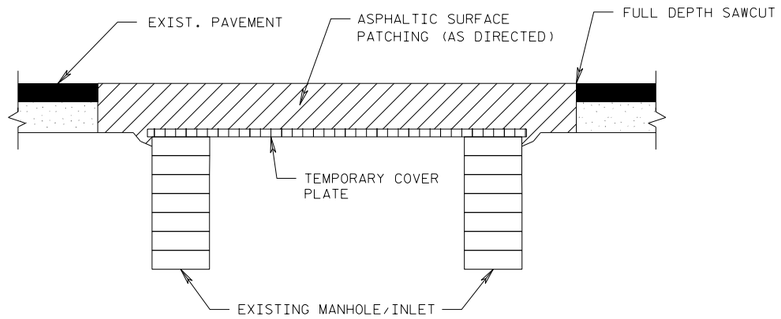

STEP 1

PRIOR TO REMOVING ASPHALTIC SURFACE

A. REMOVE AND STORE MANHOLE COVER
B. FURNISH AND INSTALL TEMPORARY COVER PLATE
C. BACKFILL USING ASPHALT SURFACE, PATCHING

STEP 1A MAY BE DONE BY OTHERS (UTILITY CO. OR MUNICIPALITY)
STEP 1B AND 1C BY CONTRACTOR

COVER PLATES, TEMPORARY

A. DESCRIPTION
THIS WORK CONSISTS OF FURNISHING, INSTALLING AND REMOVING A STEEL PLATE TO COVER AND SUPPORT BACKFILL AND TRAFFIC LOADING AT MANHOLES.

B. MATERIALS
MATERIAL FURNISHED AND USED IN THE WORK SHALL BE 1/4-INCH MINIMUM THICKNESS STEEL PLATE THAT EXTENDS AT LEAST TO THE OUTSIDE EDGE OF EXISTING MANHOLE MASONRY.

C. METHOD OF MEASUREMENT AND BASIS OF PAYMENT
TEMPORARY COVER PLATES WILL BE MEASURED SEPARATELY AS UNITS AND WILL BE PAID FOR AT CONTRACT UNIT PRICE EACH, WHICH PRICE SHALL BE FULL COMPENSATION FOR FURNISHING, INSTALLING AND REMOVING THE COVER PLATES; AND FOR ALL LABOR, TOOLS, EQUIPMENT AND INCIDENTAL NECESSARY TO COMPLETE THE WORK. THE STEEL PLATES SHALL BECOME THE PROPERTY OF THE CONTRACTOR WHEN NO LONGER NEEDED IN THE CONTRACT WORK.

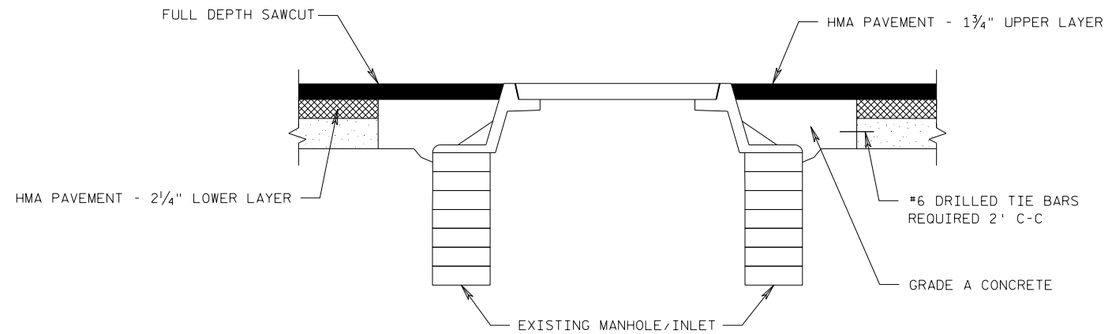

STEP 2

AFTER PAVING LOWER LAYER

A. EXCAVATE AND REMOVE TEMPORARY COVER PLATE
B. ADJUST MANHOLE AND REINSTALL MANHOLE FRAME AND COVER TO FINISHED GRADE

(BACKFILL AND OTHER WORK TO BE DONE IN ACCORDANCE WITH ITEM - ADJUSTING MANHOLE COVERS)

ALL WORK DONE BY OTHERS (UTILITY CO. OR MUNICIPALITY)
TEMPORARY COVER PLATES TO BE RETURNED TO CONTRACTOR.

NOTES
1.) ADJUSTING MANHOLE COVERS WILL NOT BE PAID FOR AS A SEPARATE ITEM OF WORK WHEN ADJUSTMENTS ARE MADE BY OTHERS (UTILITY CO. OR MUNICIPALITY).

ADJUSTING MANHOLE/INLET COVERS

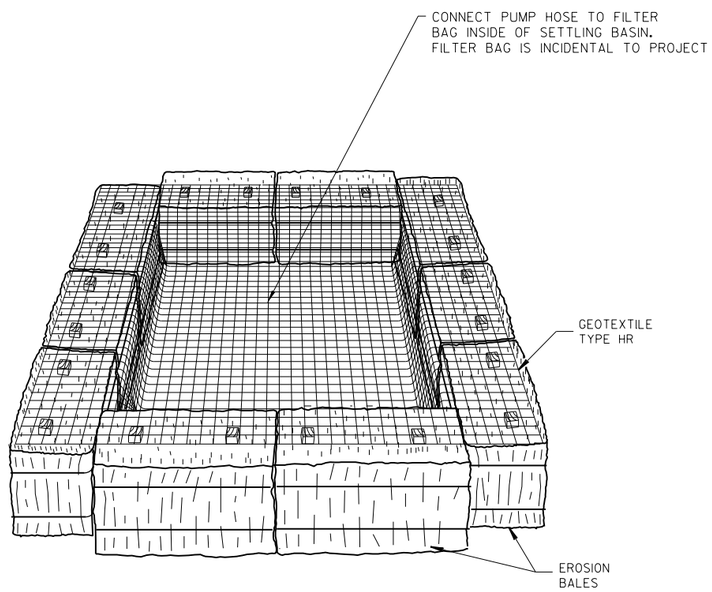

TEMPORARY SETTLING BASIN

(SIZE TO BE DETERMINED IN FIELD AS INDICATED BELOW:)

STORAGE VOLUME (C.F.) = 16 X GPM (PUMP RATE)

EXAMPLE:
CONTRACTOR INDICATES PUMP CAPABLE OF 50 GPM
HEIGHT OF BALES = 1.5 FT.

SOLUTION:
SV (C.F.) = 16 X 50
SV = 800 C.F.

$\frac{800 \text{ C.F.}}{1.5 \text{ FT.}} = 533$ S.F.

USE A 20 FT. X 27 FT. BASIN

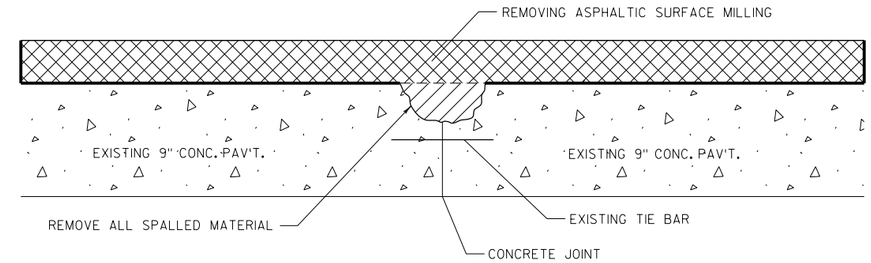

LONGITUDINAL JOINT REPAIR DETAIL

NOTES:
1. EMBANKMENT PLACED IN LAYERS AND COMPACTED PER SPECIFICATIONS.
2. BENCH AS REQUIRED TO FACILITATE CONSTRUCTION FILLING OPERATIONS (3' MAXIMUM BENCH DEPTH, INCIDENTAL)
3. EBS AS REQUIRED IN THE PLANS OR DIRECTED BY THE ENGINEER SHALL BE PAID UNDER THE ITEM "EXCAVATION COMMON".

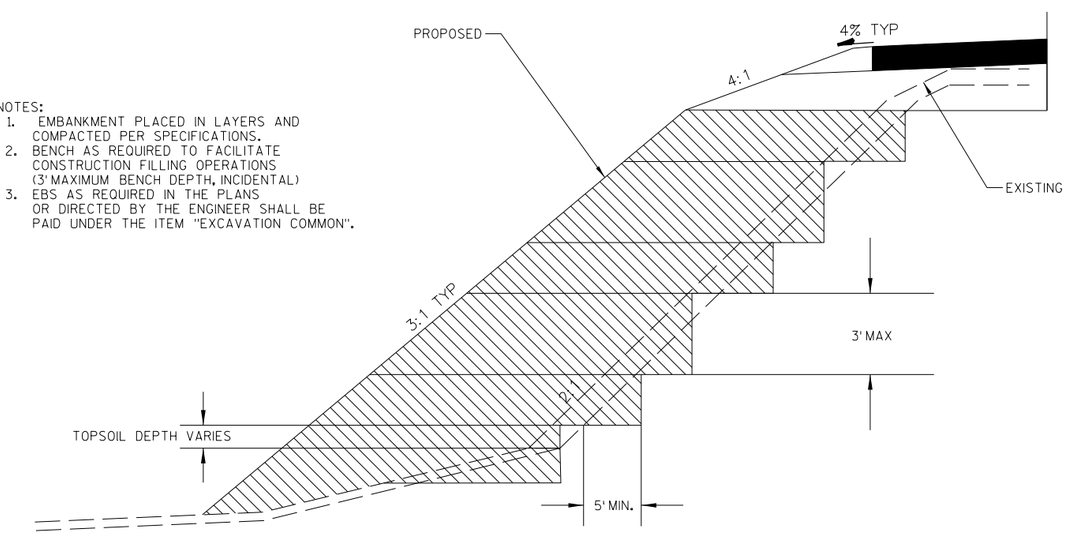

STEPPED EMBANKMENT DETAIL

SUITABLE FILL

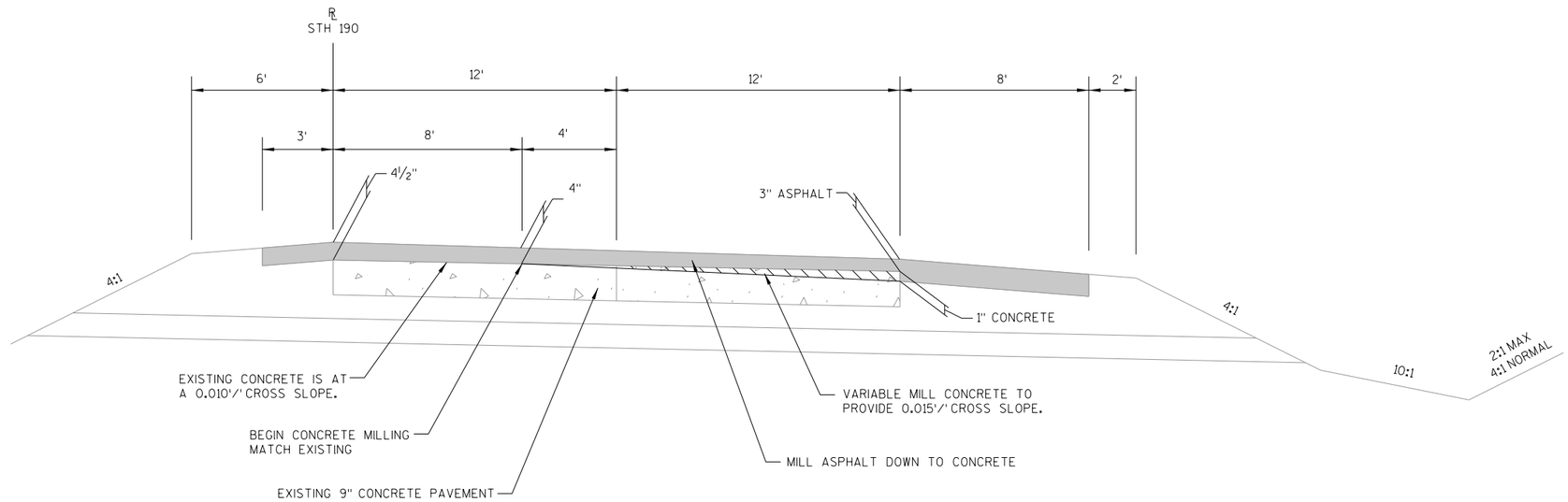

MILLING DETAIL CAPITOL DRIVE

(EB DIRECTION SHOWN. MIRROR DETAIL
FOR APPLICATION TO WB DIRECTION.)

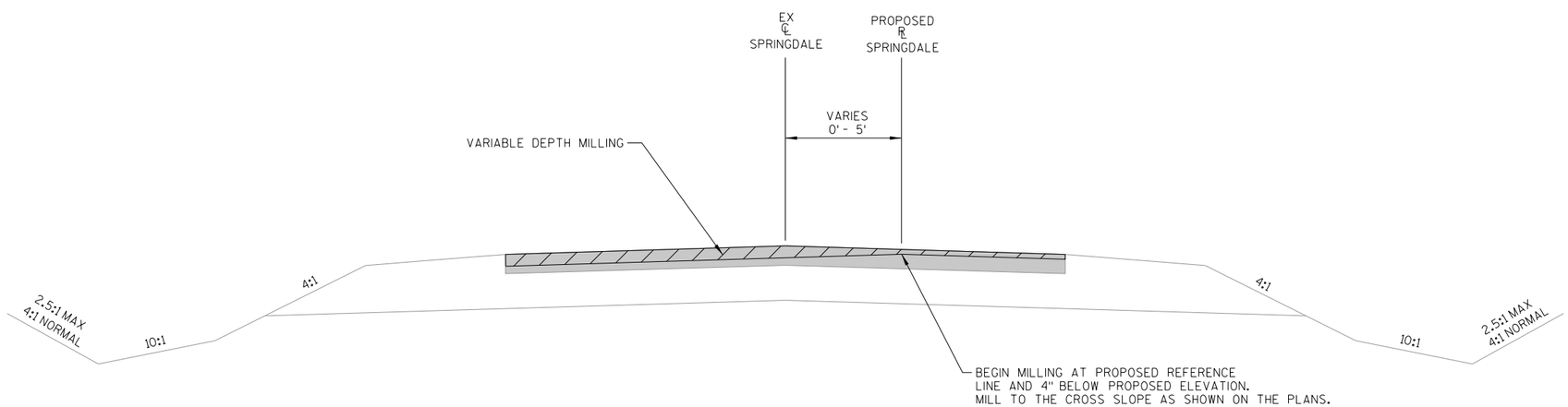

MILLING DETAIL SPRINGDALE ROAD

PROJECT NO:2025-14-71	HWY:STH 190	COUNTY:WAUKESHA	CONSTRUCTION DETAILS	SHEET 16	E

2

* WELDING IS TO BE COMPLETED USING THE GAS-METAL ARC WELDING (GMAW) PROCESS WITH ER70S-3 WELDING WIRE AND ARGON-OXYGEN OR CO_2 COVER GAS.

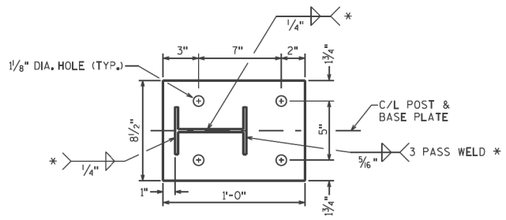

SECTION A-A

POST & BASE PLATE

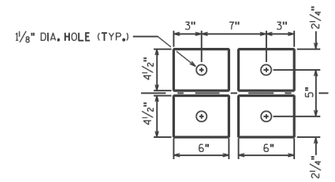

SECTION B-B

(4)-BOTTOM PLATES

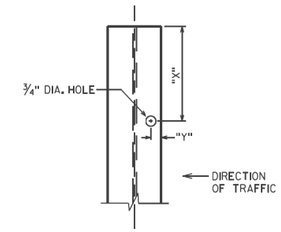

SECTION C-C

HOLE IN POST FLANGE ON APPROACHING TRAFFIC SIDE

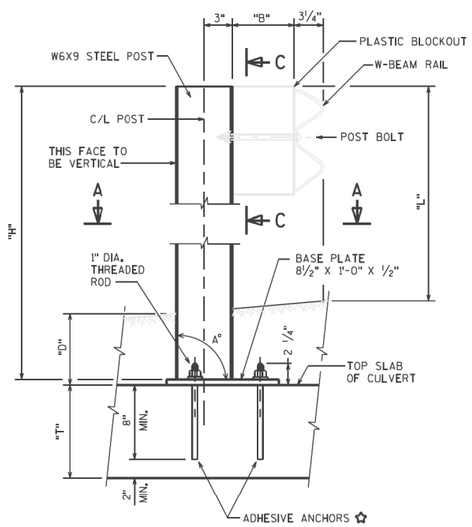

ELEVATION

GUARDRAIL POST ANCHORS TYPE 1

USE FOR THICKNESS "T" OF 10 INCHES OR MORE AND MINIMUM CONCRETE STRENGTH (f'_c) OF 4,000 PSI

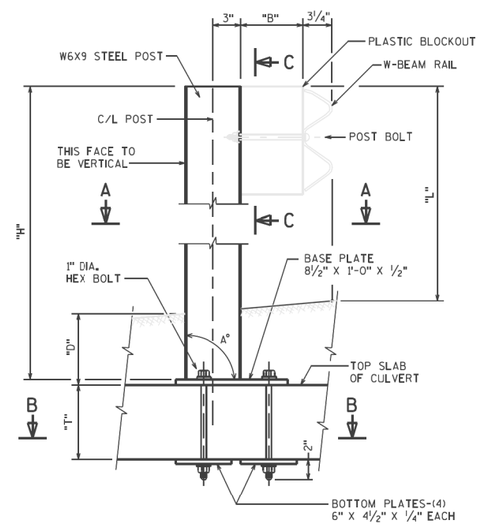

ELEVATION

GUARDRAIL POST ANCHORS TYPE 2

USE FOR THICKNESS "T" OF 8 INCHES OR MORE AND MINIMUM CONCRETE STRENGTH (f'_c) OF 3,500 PSI

GUARDRAIL POST ANCHORAGE SYSTEM

CRITERIA:

USE FOR POSTS WITH "D" EMBEDMENT LESS THAN OR EQUAL TO 4'-0" AND GREATER THAN OR EQUAL TO 9".
NOT REQ'D FOR POSTS WITH "D" EMBEDMENT MORE THAN 4'-0".
NOT ALLOWED FOR POSTS WITH "D" EMBEDMENT LESS THAN 9".

	"L"	"B"	"X"	"Y"
CLASS "A" GUARDRAIL	2'-4 5/8"	8"	7"	13/16"
MGS GUARDRAIL	2'-7 7/8"	12"	7 1/8"	3/4"

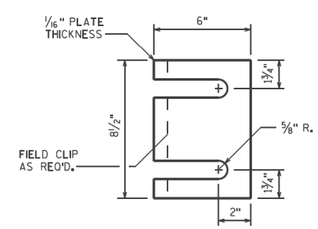

STEEL SHIM DETAIL

4 PER POST

ANCHORING GUARDRAIL TO BOX CULVERT

(COST OF ANCHORING GUARDRAIL TO BOX CULVERT IS INCIDENTAL TO GUARDRAIL INSTALLATION)

NOTES

DETAILS SHOWN FOR POSTS, PLATES, ANCHORAGE SYSTEM AND INSTALLATION, BLOCKS, AND GUARD RAIL ARE NOT PART OF THE STRUCTURE CONTRACT, BUT ARE BID PER THE ROADWAY DESIGN PLANS.

POST BASE PLATES (AND BOTTOM PLATES IF USED) SHALL BE FLAT WITH ALL SURFACES SMOOTH AND FREE FROM WARP AND ALL EDGES SMOOTH, STRAIGHT AND VERTICAL. ALL PLATE CUTS SHALL BE MACHINE OR MACHINE FLAME CUTS.

CUT BOTTOM OF POST SO THAT POST WILL BE VERTICAL WHEN POST ASSEMBLY IS PLACED ON TOP OF THE CULVERT, ALONG THE ROADWAY THE POST WILL BE NORMAL TO GRADE LINE. HEX BOLTS AND THREADED RODS ARE TO BE PLACED PERPENDICULAR TO THE BASE PLATE.

POST, BASE PLATE (AND BOTTOM PLATE IF USED), AND SHIMS SHALL BE GALVANIZED AFTER FABRICATION.

PRIOR TO GALVANIZING, ALL STEEL POSTS AND PLATES SHALL BE GIVEN A NO. 6 COMMERCIAL BLAST CLEANING BY SSPC SPECS.

ALL MATERIAL USED IN POSTS AND PLATES SHALL BE MADE FROM MATERIAL CONFORMING TO ASTM DESIGNATION A709 GRADE 50 OR 50S.

HEX BOLTS, THREADED RODS, HEX NUTS AND WASHERS SHALL CONFORM TO THE REQUIREMENTS OF ASTM F1554 GRADE 36, AND SHALL BE GALVANIZED. RODS ARE TO BE FULLY THREADED AND BOLTS TO BE THREADED 3". CHAMFER TOP OF BOLTS AND RODS BEFORE THREADING.

✿ ADHESIVE ANCHORS 1-INCH, EMBED IN CONCRETE AS DETAILED. CHARACTERISTIC BOND STRENGTH SHALL MEET OR EXCEED 1305 PSI FOR UNCRACKED CONCRETE.

STEEL SHIMS MAY BE USED BETWEEN PLATES AND SLAB WHERE REQUIRED FOR ALIGNMENT.

2

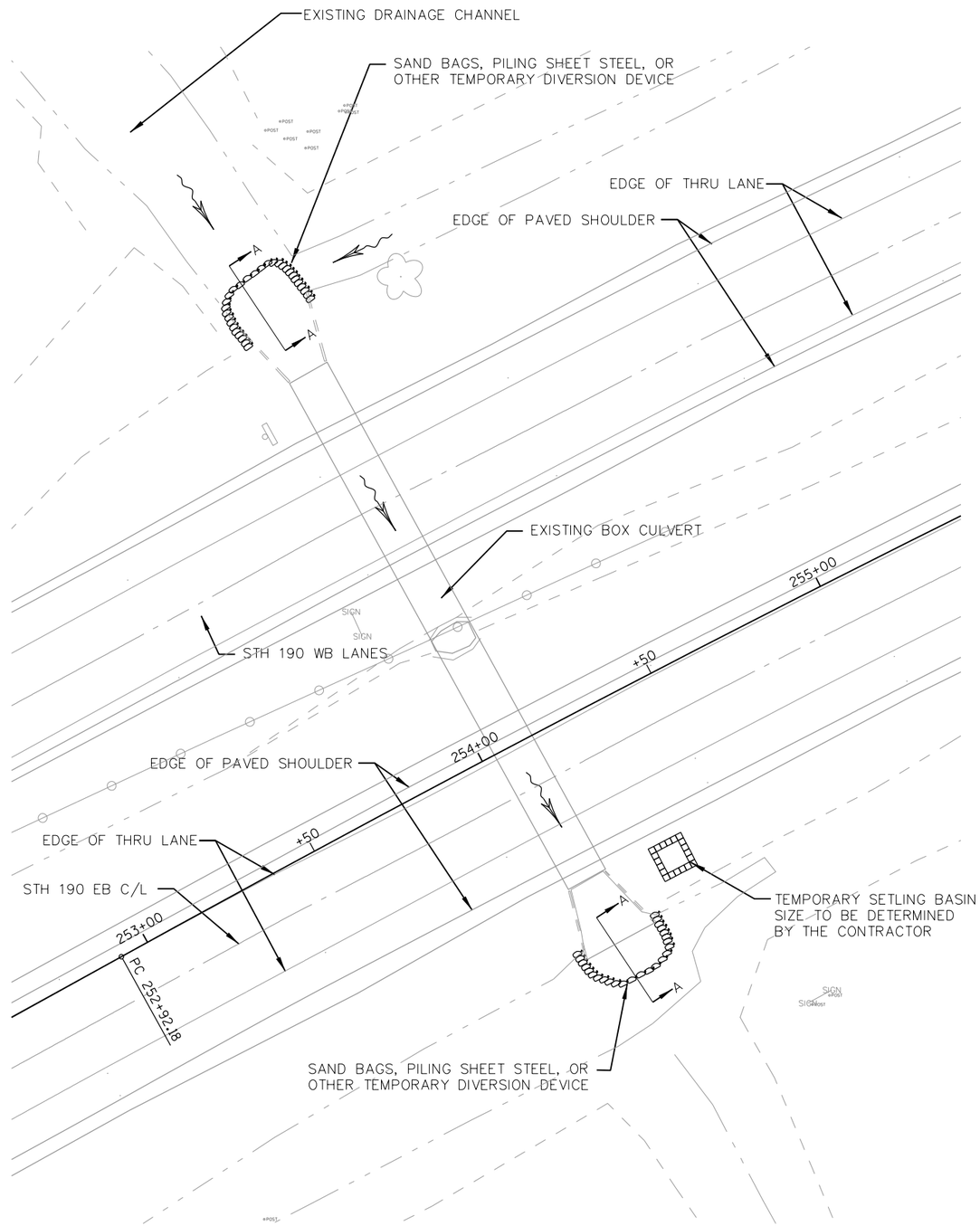

MAINTAINING TEMPORARY DRAINAGE DETAIL
SEE TABLE FOR LOCATIONS – TYPICAL

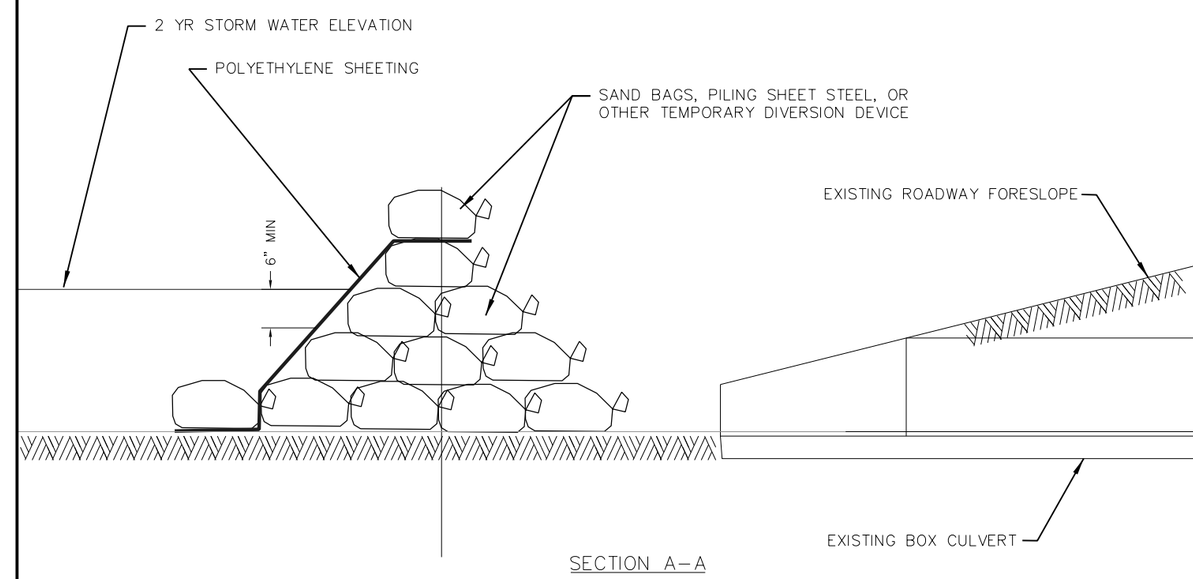

SECTION A–A

MAINTAINING TEMPORARY DRAINAGE
LOCATIONS

STRUCTURE NO.	LOCATION	Q2 (CFS)	Q2 HW ELEV	APPROX. NORMAL HW ELEV	INVERT ELEV	DISCH ELEV
C–67–0031	STA 242+57 LT & RT	90	824.56	820.49	819.50	819.45
C–67–0033	STA 254+10, LT & RT	90	824.56	820.49	818.95	818.83
B–67–0096	STA 245+93, LT & RT	130	824.52	820.49	819.91	819.88

NOTES:
1. CONTRACTOR TO SUBMIT DESIGN FOR MAINTAINING TEMPORARY DRAINAGE DURING CONSTRUCTION AS PART OF THE EROSION CONTROL IMPLEMENTATION PLAN (ECIP).
2. PAYMENT SHALL BE THROUGH ITEMS SPV.0105.17, SPV.0105.18, AND SPV.0105.19 – MAINTAINING TEMPORARY DRAINAGE.
3. DETAIL SHOWN ON THIS SHEET IS FOR REFERENCE ONLY TO SHOW ONE POTENTIAL METHOD OF MAINTAINING TEMPORARY DRAINAGE.
4. FOR BOX CULVERTS B–67–0096, CLOSE OFF FLOW TO ONLY 2 OF THE 3 BOX CELLS AT ANY GIVEN TIME.
5. METHOD OF MAINTAINING TEMPORARY DRAINAGE SHALL BE DESIGNED FOR THE 2 YEAR 24–HOUR STORM.
6. METHOD OF MAINTAINING TEMPORARY DRAINAGE MAY INCLUDE PILING SHEET STEEL TEMPORARY TO BE DETERMINED BY THE CONTRACTOR.
7. IF BYPASS PUMPING IS USED A BACKUP PUMP SHALL BE ON–SITE AT ALL TIMES.
8. ANY WATER THAT COMES INTO CONTACT WITH DIRT THAT IS PUMPED SHALL BE DISCHARGED INTO A SEDIMENT BASIN OR FILTER BAG. THE SIZE OF THAT BASIN OR BAG SHALL BE DESIGNED BY THE CONTRACTOR AS PART OF THE ECIP. SEDIMENTATION BASINS ARE INCIDENTAL TO MAINTAINING TEMPORARY DRAINAGE PAY ITEMS. CLEAN WATER CAN BE PUMPED AROUND THE WORK ZONE.
9. FILTER BAGS AND SAND BAGS ARE INCIDENTAL TO MAINTAINING TEMPORARY DRAINAGE PAY ITEMS.
10. MAINTAINING TEMPORARY DRAINAGE FOR CROSS CULVERT PIPES SMALLER THAN A 60" IN DIAMETER ARE INCIDENTAL TO THE PROJECT.
11. DO NOT BLOCK THE FLOW OF WATER AT ANY LOCATION MORE THAN 5 DAYS.
12. DO NOT DISTURB WETLANDS BEYOND WHAT IS APPROVED IN THE 404 WETLAND PERMIT.

2

DATA TABLE

STH 190

POINT NO.	STATION	OFFSET	COMMENTS
1	163+63.57	57.61' LT.	BEGIN SAWCUT
2	163+63.61	3.88' LT.	BEGIN SAWCUT

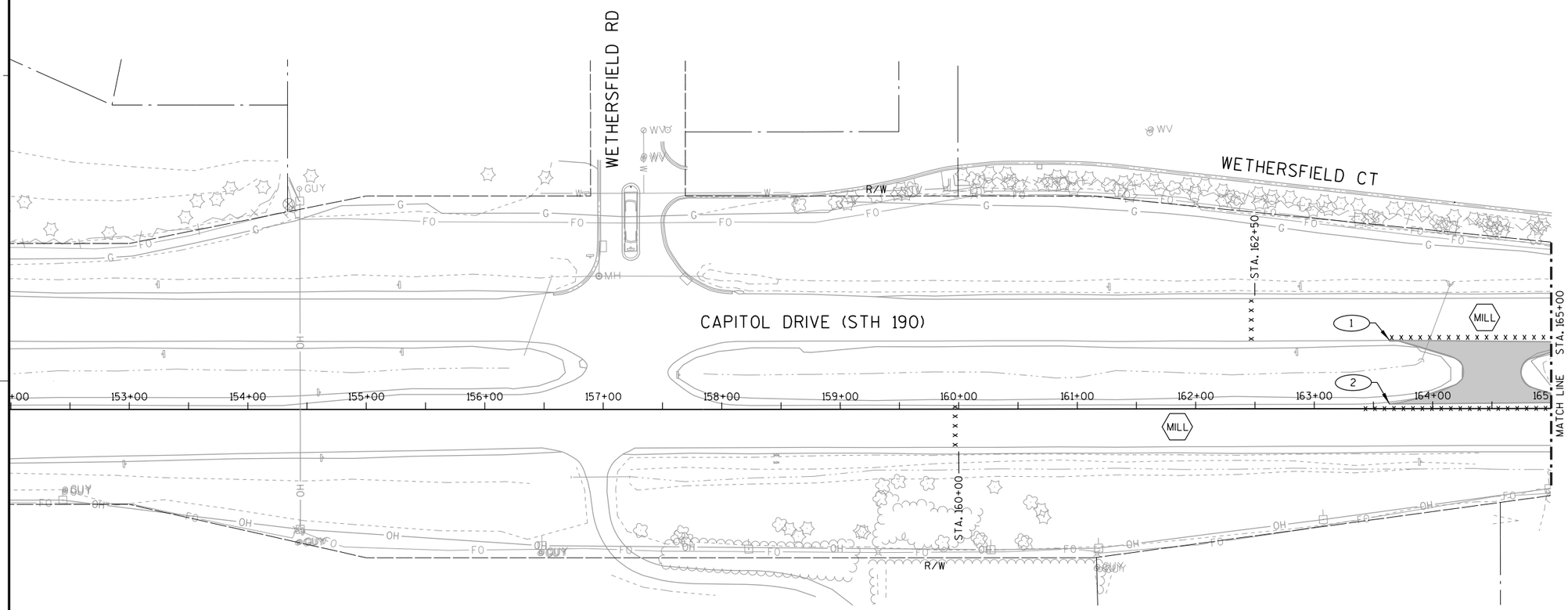

LEGEND

MILL	MILL EXISTING PAVEMENT/SHOULDERS
	REMOVING ASPHALTIC SURFACE BUTT JOINTS (MILL 2" DEPTH)
	REMOVING PAVEMENT (SEE GENERAL NOTE #7)
	REMOVING CONCRETE SIDEWALK
////////	REMOVING CURB AND GUTTER
X X X X X	SAWING CONCRETE
Y Y Y Y	SAWING ASPHALT
X	CLEARING AND GRUBBING (TREE REMOVAL)

GENERAL NOTES:

1. A FIELD REVIEW WAS PERFORMED ON JULY 6, 2017 WITH WISDOT SE REGION STAFF TO ESTIMATE AN UNDISTRIBUTED QUANTITY TO BE INCLUDED IN THE LET PLANS. EXACT LOCATIONS OF BASE PATCHING AND CONCRETE JOINT REPAIR SHALL BE DETERMINED BY THE ENGINEER IN THE FIELD.
2. CURB AND GUTTER REMOVALS SHALL BE SAWCUT OR REMOVED TO THE NEAREST JOINT AS DIRECTED BY THE ENGINEER.
3. SIDEWALK REMOVALS SHALL BE PERFORMED TO THE NEAREST JOINT.
4. BASE PATCH LENGTHS SHALL BE 6' MINIMUM AND FOR THE ENTIRE WIDTH OF THE LANE OR AS SHOWN ON THE PLANS.
5. BASE PATCHING IS REQUIRED FOR INSTALLATION OF LOOP DETECTORS. SEE SIGNAL PLAN FOR LOCATIONS.
6. REFER TO STANDARD DETAIL DRAWINGS FOR BASE PATCHING DETAILS/ADDITIONAL INFORMATION.
7. AREAS THAT INCLUDE CONCRETE PAVEMENT SHALL BE PAID FOR AS "REMOVING PAVEMENT". AREAS WITH ONLY ASPHALT PAVEMENT SHALL BE PAID FOR AS "EXCAVATION COMMON".

DATA TABLE

STH 190

POINT NO.	STATION	OFFSET	COMMENTS
1	165+26.47	55.90' LT.	END SAWCUT
2	165+25.10	5.00' LT.	END SAWCUT
3	174+36.00	94.00' LT.	BEGIN GUARDRAIL REMOVAL
4	174+00.00	54.00' LT.	BEGIN GUARDRAIL REMOVAL

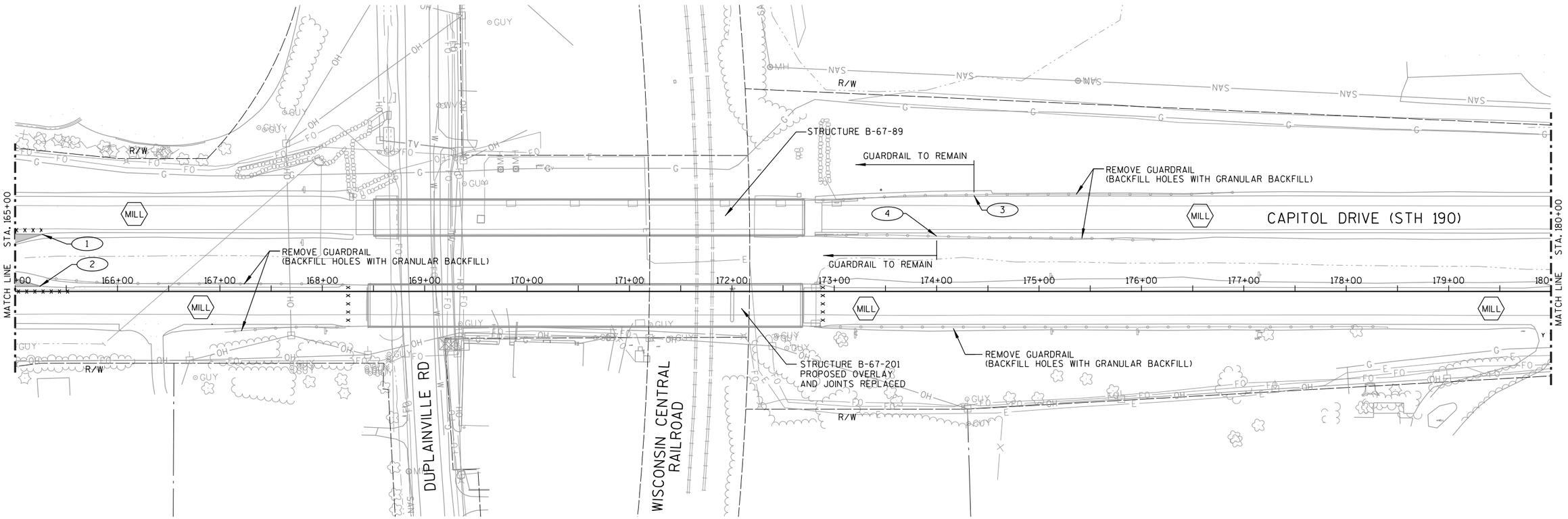

LEGEND

MILL	MILL EXISTING PAVEMENT/SHOULDERS
	REMOVING ASPHALTIC SURFACE BUTT JOINTS (MILL 2" DEPTH)
	REMOVING PAVEMENT (SEE GENERAL NOTE #7)
	REMOVING CONCRETE SIDEWALK
////////	REMOVING CURB AND GUTTER
X X X X X	SAWING CONCRETE
Y Y Y Y	SAWING ASPHALT
X	CLEARING AND GRUBBING (TREE REMOVAL)

GENERAL NOTES:

1. A FIELD REVIEW WAS PERFORMED ON JULY 6, 2017 WITH WISDOT SE REGION STAFF TO ESTIMATE AN UNDISTRIBUTED QUANTITY TO BE INCLUDED IN THE LET PLANS. EXACT LOCATIONS OF BASE PATCHING AND CONCRETE JOINT REPAIR SHALL BE DETERMINED BY THE ENGINEER IN THE FIELD.
2. CURB AND GUTTER REMOVALS SHALL BE SAWCUT OR REMOVED TO THE NEAREST JOINT AS DIRECTED BY THE ENGINEER.
3. SIDEWALK REMOVALS SHALL BE PERFORMED TO THE NEAREST JOINT.
4. BASE PATCH LENGTHS SHALL BE 6' MINIMUM AND FOR THE ENTIRE WIDTH OF THE LANE OR AS SHOWN ON THE PLANS.
5. BASE PATCHING IS REQUIRED FOR INSTALLATION OF LOOP DETECTORS. SEE SIGNAL PLAN FOR LOCATIONS.
6. REFER TO STANDARD DETAIL DRAWINGS FOR BASE PATCHING DETAILS/ADDITIONAL INFORMATION.
7. AREAS THAT INCLUDE CONCRETE PAVEMENT SHALL BE PAID FOR AS "REMOVING PAVEMENT". AREAS WITH ONLY ASPHALT PAVEMENT SHALL BE PAID FOR AS "EXCAVATION COMMON".

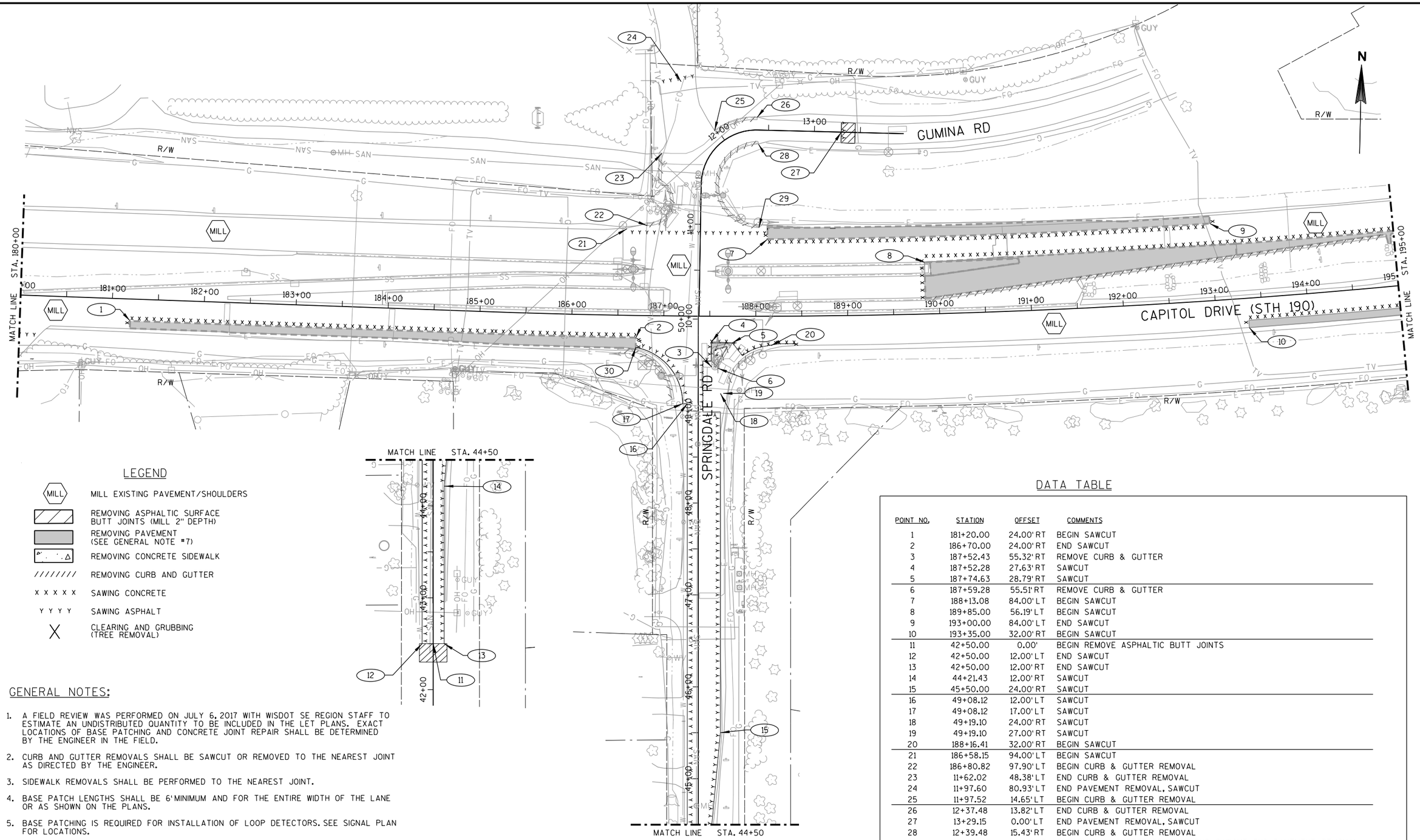

LEGEND

MILL	MILL EXISTING PAVEMENT/SHOULDERS
	REMOVING ASPHALTIC SURFACE BUTT JOINTS (MILL 2" DEPTH)
	REMOVING PAVEMENT (SEE GENERAL NOTE #7)
	REMOVING CONCRETE SIDEWALK
////////	REMOVING CURB AND GUTTER
X X X X X	SAWING CONCRETE
Y Y Y Y	SAWING ASPHALT
X	CLEARING AND GRUBBING (TREE REMOVAL)

GENERAL NOTES:

1. A FIELD REVIEW WAS PERFORMED ON JULY 6, 2017 WITH WISDOT SE REGION STAFF TO ESTIMATE AN UNDISTRIBUTED QUANTITY TO BE INCLUDED IN THE LET PLANS. EXACT LOCATIONS OF BASE PATCHING AND CONCRETE JOINT REPAIR SHALL BE DETERMINED BY THE ENGINEER IN THE FIELD.
2. CURB AND GUTTER REMOVALS SHALL BE SAWCUT OR REMOVED TO THE NEAREST JOINT AS DIRECTED BY THE ENGINEER.
3. SIDEWALK REMOVALS SHALL BE PERFORMED TO THE NEAREST JOINT.
4. BASE PATCH LENGTHS SHALL BE 6' MINIMUM AND FOR THE ENTIRE WIDTH OF THE LANE OR AS SHOWN ON THE PLANS.
5. BASE PATCHING IS REQUIRED FOR INSTALLATION OF LOOP DETECTORS. SEE SIGNAL PLAN FOR LOCATIONS.
6. REFER TO STANDARD DETAIL DRAWINGS FOR BASE PATCHING DETAILS/ADDITIONAL INFORMATION.
7. AREAS THAT INCLUDE CONCRETE PAVEMENT SHALL BE PAID FOR AS "REMOVING PAVEMENT". AREAS WITH ONLY ASPHALT PAVEMENT SHALL BE PAID FOR AS "EXCAVATION COMMON".

DATA TABLE

POINT NO.	STATION	OFFSET	COMMENTS
1	181+20.00	24.00' RT	BEGIN SAWCUT
2	186+70.00	24.00' RT	END SAWCUT
3	187+52.43	55.32' RT	REMOVE CURB & GUTTER
4	187+52.28	27.63' RT	SAWCUT
5	187+74.63	28.79' RT	SAWCUT
6	187+59.28	55.51' RT	REMOVE CURB & GUTTER
7	188+13.08	84.00' LT	BEGIN SAWCUT
8	189+85.00	56.19' LT	BEGIN SAWCUT
9	193+00.00	84.00' LT	END SAWCUT
10	193+35.00	32.00' RT	BEGIN SAWCUT
11	42+50.00	0.00'	BEGIN REMOVE ASPHALTIC BUTT JOINTS
12	42+50.00	12.00' LT	END SAWCUT
13	42+50.00	12.00' RT	END SAWCUT
14	44+21.43	12.00' RT	SAWCUT
15	45+50.00	24.00' RT	SAWCUT
16	49+08.12	12.00' LT	SAWCUT
17	49+08.12	17.00' LT	SAWCUT
18	49+19.10	24.00' RT	SAWCUT
19	49+19.10	27.00' RT	SAWCUT
20	188+16.41	32.00' RT	BEGIN SAWCUT
21	186+58.15	94.00' LT	BEGIN SAWCUT
22	186+80.82	97.90' LT	BEGIN CURB & GUTTER REMOVAL
23	11+62.02	48.38' LT	END CURB & GUTTER REMOVAL
24	11+97.60	80.93' LT	END PAVEMENT REMOVAL, SAWCUT
25	11+97.52	14.65' LT	BEGIN CURB & GUTTER REMOVAL
26	12+37.48	13.82' LT	END CURB & GUTTER REMOVAL
27	13+29.15	0.00' LT	END PAVEMENT REMOVAL, SAWCUT
28	12+39.48	15.43' RT	BEGIN CURB & GUTTER REMOVAL
29	188+04.47	94.00' LT	END CURB & GUTTER REMOVAL, END SAWCUT, END PAVEMENT REMOVAL
30	186+70.00	34.81' RT	SAWCUT

DATA TABLE

STH 190

POINT NO.	STATION	OFFSET	COMMENTS
1	196+31.00	24.00' RT	END SAWCUT
2	198+00.00	60.00' LT	END PAVEMENT REMOVAL
3	199+75.00	84.00' LT	BEGIN SAWCUT
4	201+15.29	60.00' LT	BEGIN SAWCUT
5	201+50.00	0.00'	BEGIN SAWCUT
6	204+50.00	84.00' LT	END SAWCUT
7	204+75.00	0.00'	END SAWCUT
8	206+89.07	0.00'	BEGIN SAWCUT
9	208+50.00	84.00' LT	BEGIN SAWCUT
10	208+54.00	60.00' LT	END SAWCUT
11	208+54.00	0.00'	END SAWCUT

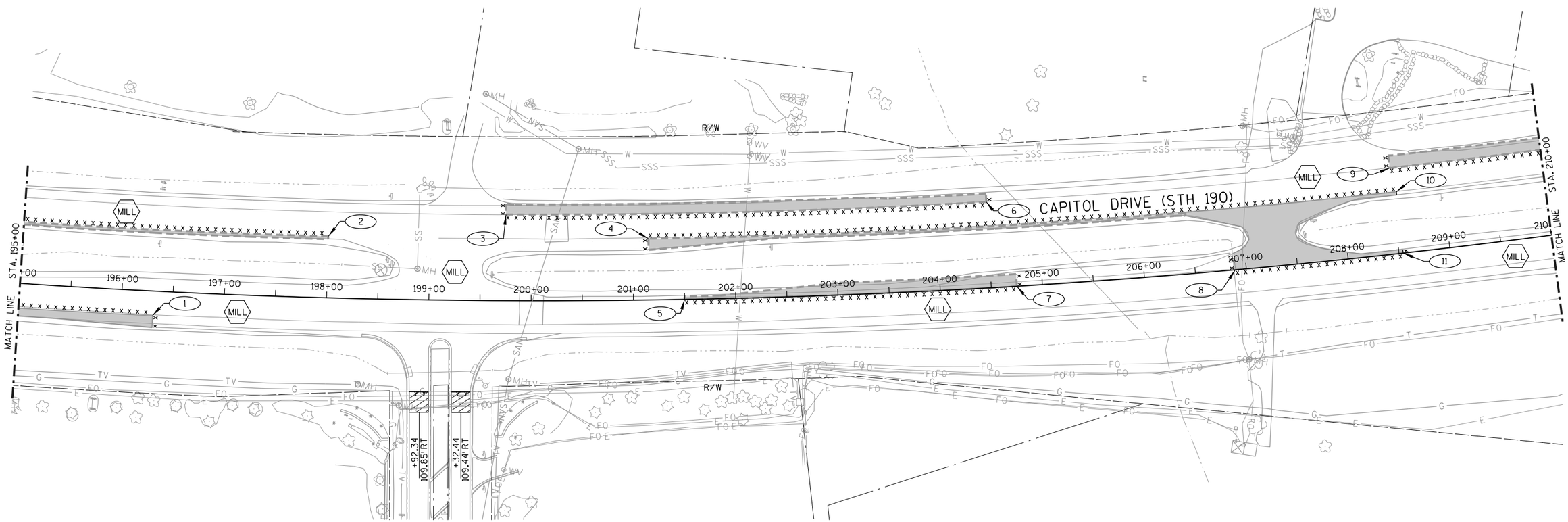

LEGEND

MILL	MILL EXISTING PAVEMENT/SHOULDERS
	REMOVING ASPHALTIC SURFACE BUTT JOINTS (MILL 2" DEPTH)
	REMOVING PAVEMENT (SEE GENERAL NOTE #7)
	REMOVING CONCRETE SIDEWALK
////////	REMOVING CURB AND GUTTER
X X X X X	SAWING CONCRETE
Y Y Y Y	SAWING ASPHALT
X	CLEARING AND GRUBBING (TREE REMOVAL)

GENERAL NOTES:

1. A FIELD REVIEW WAS PERFORMED ON JULY 6, 2017 WITH WISDOT SE REGION STAFF TO ESTIMATE AN UNDISTRIBUTED QUANTITY TO BE INCLUDED IN THE LET PLANS. EXACT LOCATIONS OF BASE PATCHING AND CONCRETE JOINT REPAIR SHALL BE DETERMINED BY THE ENGINEER IN THE FIELD.
2. CURB AND GUTTER REMOVALS SHALL BE SAWCUT OR REMOVED TO THE NEAREST JOINT AS DIRECTED BY THE ENGINEER.
3. SIDEWALK REMOVALS SHALL BE PERFORMED TO THE NEAREST JOINT.
4. BASE PATCH LENGTHS SHALL BE 6' MINIMUM AND FOR THE ENTIRE WIDTH OF THE LANE OR AS SHOWN ON THE PLANS.
5. BASE PATCHING IS REQUIRED FOR INSTALLATION OF LOOP DETECTORS. SEE SIGNAL PLAN FOR LOCATIONS.
6. REFER TO STANDARD DETAIL DRAWINGS FOR BASE PATCHING DETAILS/ADDITIONAL INFORMATION.
7. AREAS THAT INCLUDE CONCRETE PAVEMENT SHALL BE PAID FOR AS "REMOVING PAVEMENT". AREAS WITH ONLY ASPHALT PAVEMENT SHALL BE PAID FOR AS "EXCAVATION COMMON".

DATA TABLE

STH 190

POINT NO.	STATION	OFFSET	COMMENTS
1	213+50.00	84.00' LT	END SAWCUT
2	214+25.00	0.00'	BEGIN SAWCUT
3	216+58.33	0.00'	END SAWCUT
4	218+25.00	84.00' LT	BEGIN SAWCUT
5	223+00.00	84.00' LT	END SAWCUT

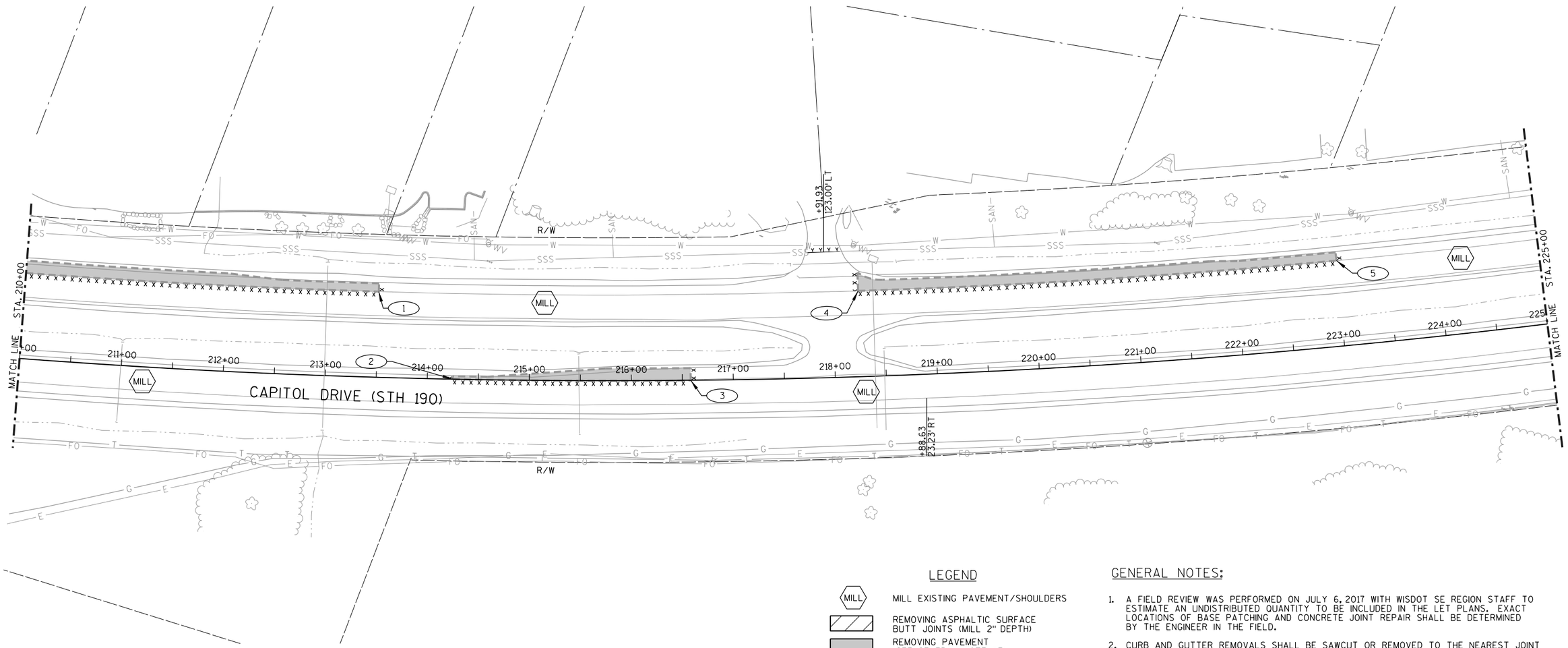

LEGEND

MILL	MILL EXISTING PAVEMENT/SHOULDERS
	REMOVING ASPHALTIC SURFACE BUTT JOINTS (MILL 2" DEPTH)
	REMOVING PAVEMENT (SEE GENERAL NOTE #7)
	REMOVING CONCRETE SIDEWALK
////////	REMOVING CURB AND GUTTER
X X X X X	SAWING CONCRETE
Y Y Y Y	SAWING ASPHALT
X	CLEARING AND GRUBBING (TREE REMOVAL)

GENERAL NOTES:

1. A FIELD REVIEW WAS PERFORMED ON JULY 6, 2017 WITH WISDOT SE REGION STAFF TO ESTIMATE AN UNDISTRIBUTED QUANTITY TO BE INCLUDED IN THE LET PLANS. EXACT LOCATIONS OF BASE PATCHING AND CONCRETE JOINT REPAIR SHALL BE DETERMINED BY THE ENGINEER IN THE FIELD.
2. CURB AND GUTTER REMOVALS SHALL BE SAWCUT OR REMOVED TO THE NEAREST JOINT AS DIRECTED BY THE ENGINEER.
3. SIDEWALK REMOVALS SHALL BE PERFORMED TO THE NEAREST JOINT.
4. BASE PATCH LENGTHS SHALL BE 6' MINIMUM AND FOR THE ENTIRE WIDTH OF THE LANE OR AS SHOWN ON THE PLANS.
5. BASE PATCHING IS REQUIRED FOR INSTALLATION OF LOOP DETECTORS. SEE SIGNAL PLAN FOR LOCATIONS.
6. REFER TO STANDARD DETAIL DRAWINGS FOR BASE PATCHING DETAILS/ADDITIONAL INFORMATION.
7. AREAS THAT INCLUDE CONCRETE PAVEMENT SHALL BE PAID FOR AS "REMOVING PAVEMENT". AREAS WITH ONLY ASPHALT PAVEMENT SHALL BE PAID FOR AS "EXCAVATION COMMON".

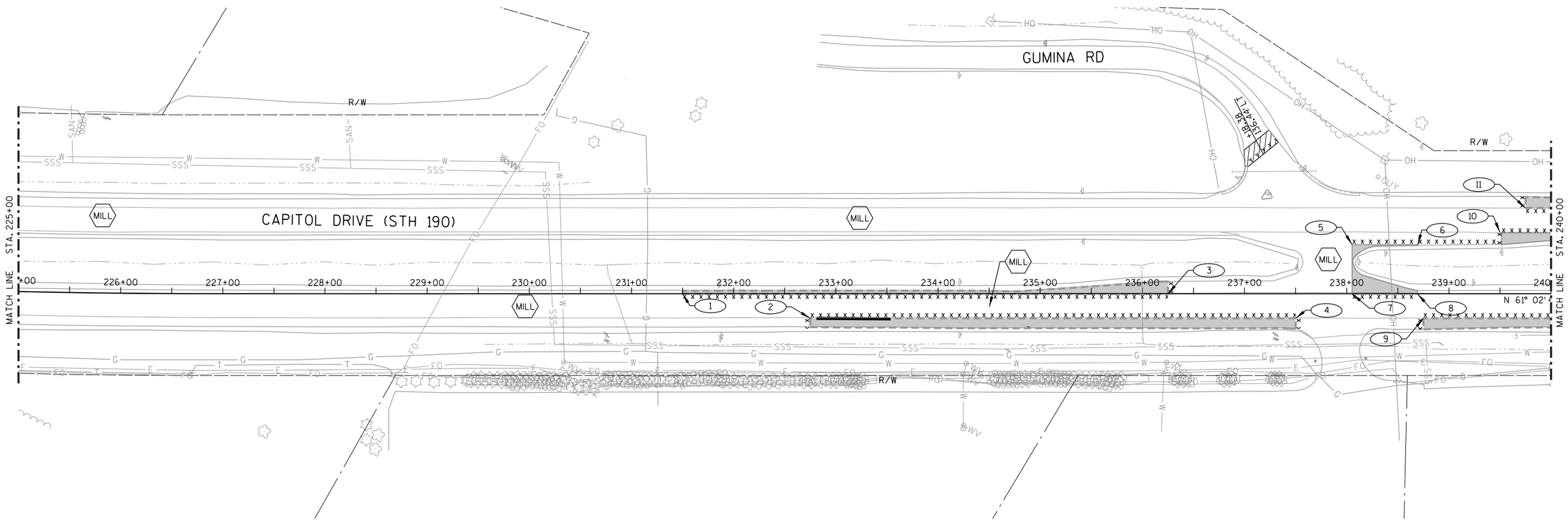

DATA TABLE

STH 190

POINT NO.	STATION	OFFSET	COMMENTS
1	231+50.00	0.00'	BEGIN SAWCUT
2	232+75.00	24.00'RT	BEGIN SAWCUT
3	236+25.00	0.00'	END SAWCUT
4	237+50.00	24.00'RT	END SAWCUT
5	238+05.29	48.00'LT	BEGIN SAWCUT
6	238+70.00	48.00'LT	END PAVEMENT REMOVAL
7	238+05.29	0.00'	BEGIN SAWCUT
8	238+69.21	0.00'	END SAWCUT
9	238+75.00	24.00'RT	BEGIN SAWCUT
10	239+50.00	60.00'LT	SAWCUT
11	239.75.00	84.00'LT	BEGIN SAWCUT

LEGEND

- MILL — MILL EXISTING PAVEMENT/SHOULDERS
- REMOVING ASPHALTIC SURFACE BUTT JOINTS (MILL 2" DEPTH)
- REMOVING PAVEMENT (SEE GENERAL NOTE #7)
- REMOVING CONCRETE SIDEWALK
- //////// REMOVING CURB AND GUTTER
- X X X X X SAWING CONCRETE
- Y Y Y Y SAWING ASPHALT
- X CLEARING AND GRUBBING (TREE REMOVAL)

GENERAL NOTES:

1. A FIELD REVIEW WAS PERFORMED ON JULY 6, 2017 WITH WISDOT SE REGION STAFF TO ESTIMATE AN UNDISTRIBUTED QUANTITY TO BE INCLUDED IN THE LET PLANS. EXACT LOCATIONS OF BASE PATCHING AND CONCRETE JOINT REPAIR SHALL BE DETERMINED BY THE ENGINEER IN THE FIELD.
2. CURB AND GUTTER REMOVALS SHALL BE SAWCUT OR REMOVED TO THE NEAREST JOINT AS DIRECTED BY THE ENGINEER.
3. SIDEWALK REMOVALS SHALL BE PERFORMED TO THE NEAREST JOINT.
4. BASE PATCH LENGTHS SHALL BE 6' MINIMUM AND FOR THE ENTIRE WIDTH OF THE LANE OR AS SHOWN ON THE PLANS.
5. BASE PATCHING IS REQUIRED FOR INSTALLATION OF LOOP DETECTORS. SEE SIGNAL PLAN FOR LOCATIONS.
6. REFER TO STANDARD DETAIL DRAWINGS FOR BASE PATCHING DETAILS/ADDITIONAL INFORMATION.
7. AREAS THAT INCLUDE CONCRETE PAVEMENT SHALL BE PAID FOR AS "REMOVING PAVEMENT". AREAS WITH ONLY ASPHALT PAVEMENT SHALL BE PAID FOR AS "EXCAVATION COMMON".

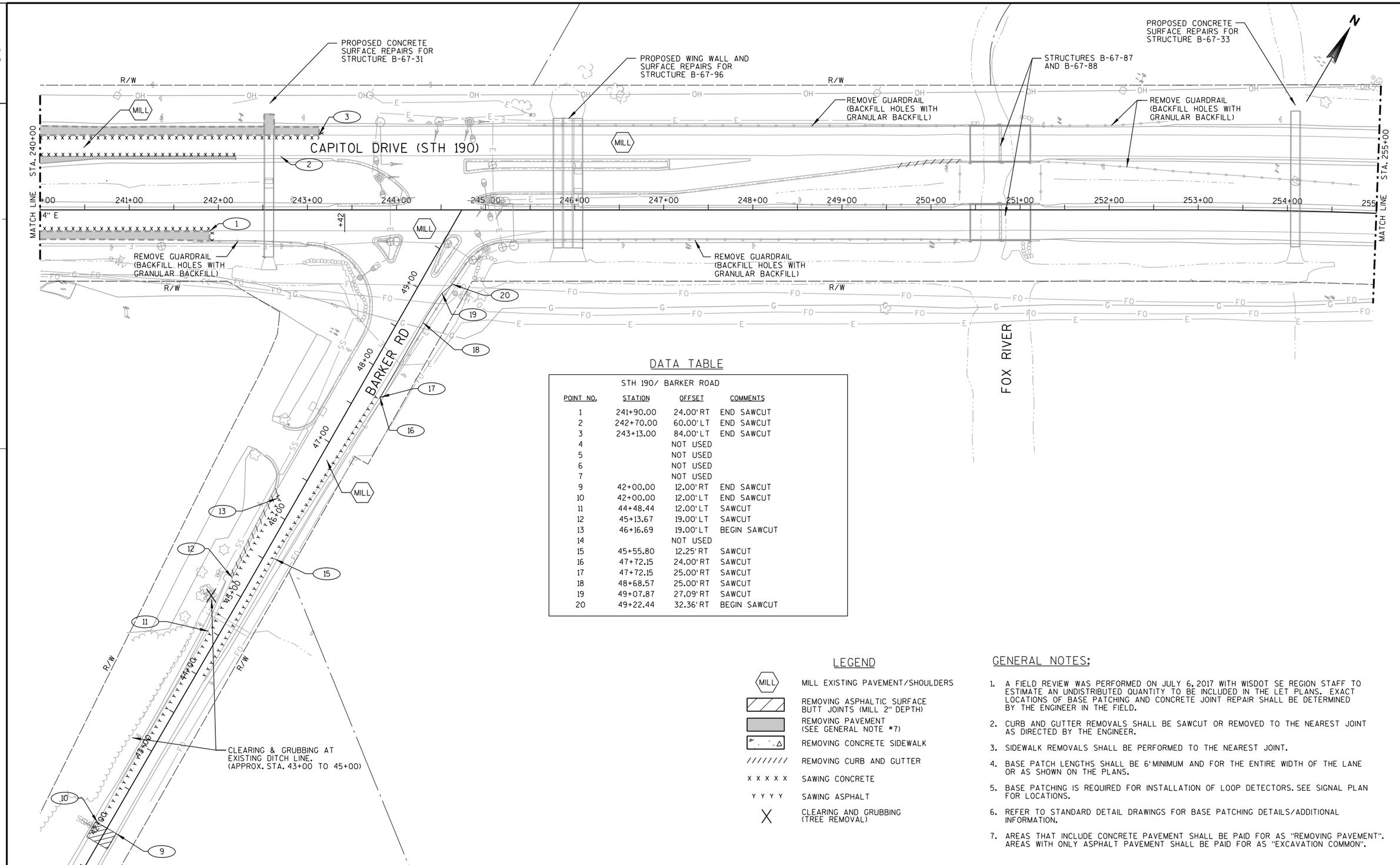

DATA TABLE

STH 190/ BARKER ROAD

POINT NO.	STATION	OFFSET	COMMENTS
1	241+90.00	24.00'RT	END SAWCUT
2	242+70.00	60.00'LT	END SAWCUT
3	243+13.00	84.00'LT	END SAWCUT
4		NOT USED	
5		NOT USED	
6		NOT USED	
7		NOT USED	
9	42+00.00	12.00'RT	END SAWCUT
10	42+00.00	12.00'LT	END SAWCUT
11	44+48.44	12.00'LT	SAWCUT
12	45+13.67	19.00'LT	SAWCUT
13	46+16.69	19.00'LT	BEGIN SAWCUT
14		NOT USED	
15	45+55.80	12.25'RT	SAWCUT
16	47+72.15	24.00'RT	SAWCUT
17	47+72.15	25.00'RT	SAWCUT
18	48+68.57	25.00'RT	SAWCUT
19	49+07.87	27.09'RT	SAWCUT
20	49+22.44	32.36'RT	BEGIN SAWCUT

LEGEND

- MILL — MILL EXISTING PAVEMENT/SHOULDERS
- REMOVING ASPHALTIC SURFACE BUTT JOINTS (MILL 2" DEPTH)
- REMOVING PAVEMENT (SEE GENERAL NOTE #7)
- REMOVING CONCRETE SIDEWALK
- //////// — REMOVING CURB AND GUTTER
- X X X X X — SAWING CONCRETE
- Y Y Y Y — SAWING ASPHALT
- X — CLEARING AND GRUBBING (TREE REMOVAL)

GENERAL NOTES:

1. A FIELD REVIEW WAS PERFORMED ON JULY 6, 2017 WITH WISDOT SE REGION STAFF TO ESTIMATE AN UNDISTRIBUTED QUANTITY TO BE INCLUDED IN THE LET PLANS. EXACT LOCATIONS OF BASE PATCHING AND CONCRETE JOINT REPAIR SHALL BE DETERMINED BY THE ENGINEER IN THE FIELD.
2. CURB AND GUTTER REMOVALS SHALL BE SAWCUT OR REMOVED TO THE NEAREST JOINT AS DIRECTED BY THE ENGINEER.
3. SIDEWALK REMOVALS SHALL BE PERFORMED TO THE NEAREST JOINT.
4. BASE PATCH LENGTHS SHALL BE 6'MINIMUM AND FOR THE ENTIRE WIDTH OF THE LANE OR AS SHOWN ON THE PLANS.
5. BASE PATCHING IS REQUIRED FOR INSTALLATION OF LOOP DETECTORS. SEE SIGNAL PLAN FOR LOCATIONS.
6. REFER TO STANDARD DETAIL DRAWINGS FOR BASE PATCHING DETAILS/ADDITIONAL INFORMATION.
7. AREAS THAT INCLUDE CONCRETE PAVEMENT SHALL BE PAID FOR AS "REMOVING PAVEMENT". AREAS WITH ONLY ASPHALT PAVEMENT SHALL BE PAID FOR AS "EXCAVATION COMMON".

2

DATA TABLE

STH 190

POINT NO.	STATION	OFFSET	COMMENTS
1	267+00.00	24.00' RT.	BEGIN SAWCUT

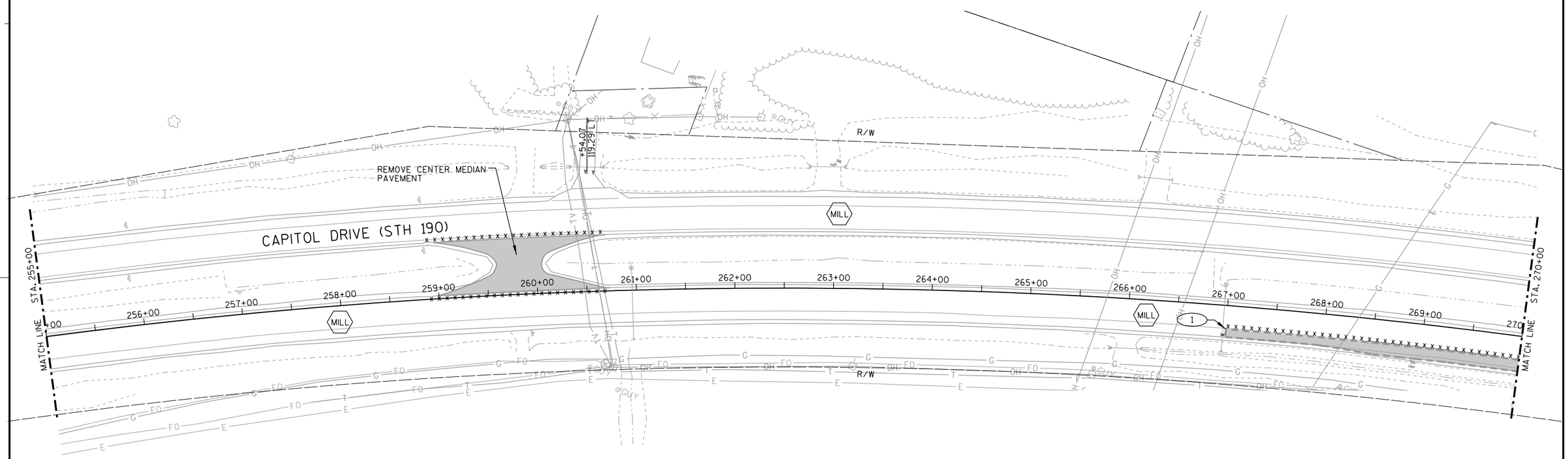

LEGEND

MILL	MILL EXISTING PAVEMENT/SHOULDERS
	REMOVING ASPHALTIC SURFACE BUTT JOINTS (MILL 2" DEPTH)
	REMOVING PAVEMENT (SEE GENERAL NOTE #7)
	REMOVING CONCRETE SIDEWALK
////////	REMOVING CURB AND GUTTER
X X X X X	SAWING CONCRETE
Y Y Y Y	SAWING ASPHALT
X	CLEARING AND GRUBBING (TREE REMOVAL)

GENERAL NOTES:

1. A FIELD REVIEW WAS PERFORMED ON JULY 6, 2017 WITH WISDOT SE REGION STAFF TO ESTIMATE AN UNDISTRIBUTED QUANTITY TO BE INCLUDED IN THE LET PLANS. EXACT LOCATIONS OF BASE PATCHING AND CONCRETE JOINT REPAIR SHALL BE DETERMINED BY THE ENGINEER IN THE FIELD.
2. CURB AND GUTTER REMOVALS SHALL BE SAWCUT OR REMOVED TO THE NEAREST JOINT AS DIRECTED BY THE ENGINEER.
3. SIDEWALK REMOVALS SHALL BE PERFORMED TO THE NEAREST JOINT.
4. BASE PATCH LENGTHS SHALL BE 6' MINIMUM AND FOR THE ENTIRE WIDTH OF THE LANE OR AS SHOWN ON THE PLANS.
5. BASE PATCHING IS REQUIRED FOR INSTALLATION OF LOOP DETECTORS. SEE SIGNAL PLAN FOR LOCATIONS.
6. REFER TO STANDARD DETAIL DRAWINGS FOR BASE PATCHING DETAILS/ADDITIONAL INFORMATION.
7. AREAS THAT INCLUDE CONCRETE PAVEMENT SHALL BE PAID FOR AS "REMOVING PAVEMENT". AREAS WITH ONLY ASPHALT PAVEMENT SHALL BE PAID FOR AS "EXCAVATION COMMON".

2

DATA TABLE

STH 190			
POINT NO.	STATION	OFFSET	COMMENTS
1	272+00.00	24.00' RT	END SAWCUT

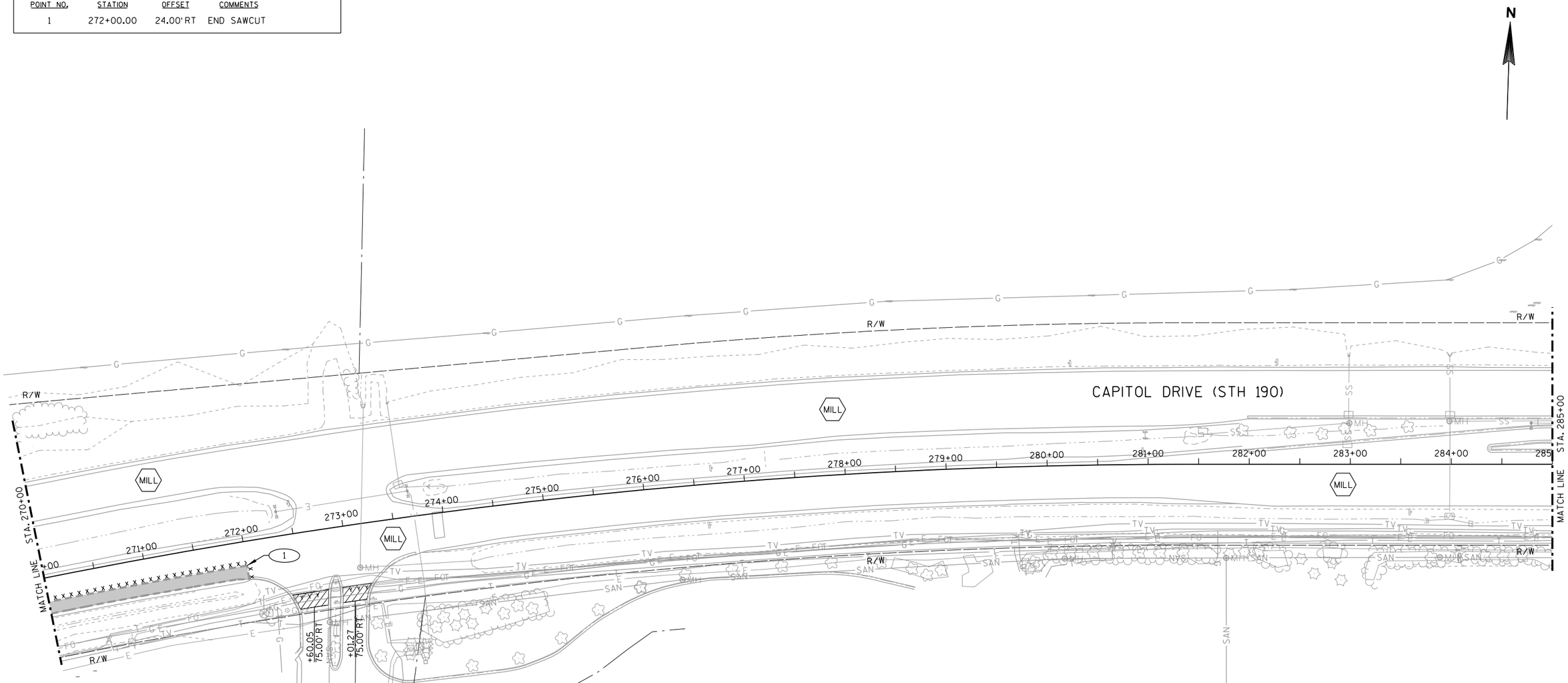

LEGEND

MILL	MILL EXISTING PAVEMENT/SHOULDERS
	REMOVING ASPHALTIC SURFACE BUTT JOINTS (MILL 2" DEPTH)
	REMOVING PAVEMENT (SEE GENERAL NOTE #7)
	REMOVING CONCRETE SIDEWALK
////////	REMOVING CURB AND GUTTER
X X X X X	SAWING CONCRETE
Y Y Y Y	SAWING ASPHALT
X	CLEARING AND GRUBBING (TREE REMOVAL)

GENERAL NOTES:

1. A FIELD REVIEW WAS PERFORMED ON JULY 6, 2017 WITH WISDOT SE REGION STAFF TO ESTIMATE AN UNDISTRIBUTED QUANTITY TO BE INCLUDED IN THE LET PLANS. EXACT LOCATIONS OF BASE PATCHING AND CONCRETE JOINT REPAIR SHALL BE DETERMINED BY THE ENGINEER IN THE FIELD.
2. CURB AND GUTTER REMOVALS SHALL BE SAWCUT OR REMOVED TO THE NEAREST JOINT AS DIRECTED BY THE ENGINEER.
3. SIDEWALK REMOVALS SHALL BE PERFORMED TO THE NEAREST JOINT.
4. BASE PATCH LENGTHS SHALL BE 6' MINIMUM AND FOR THE ENTIRE WIDTH OF THE LANE OR AS SHOWN ON THE PLANS.
5. BASE PATCHING IS REQUIRED FOR INSTALLATION OF LOOP DETECTORS. SEE SIGNAL PLAN FOR LOCATIONS.
6. REFER TO STANDARD DETAIL DRAWINGS FOR BASE PATCHING DETAILS/ADDITIONAL INFORMATION.
7. AREAS THAT INCLUDE CONCRETE PAVEMENT SHALL BE PAID FOR AS "REMOVING PAVEMENT". AREAS WITH ONLY ASPHALT PAVEMENT SHALL BE PAID FOR AS "EXCAVATION COMMON".

DATA TABLE

STH 190

POINT NO.	STATION	OFFSET	COMMENTS
1	287+97.73	48.00'LT	BEGIN CURB REMOVAL
2	287+97.73	24.00'LT	BEGIN CURB REMOVAL
3	289+28.87	84.00'LT	BEGIN SAWCUT
4	292+29.00	84.00'LT	END SAWCUT

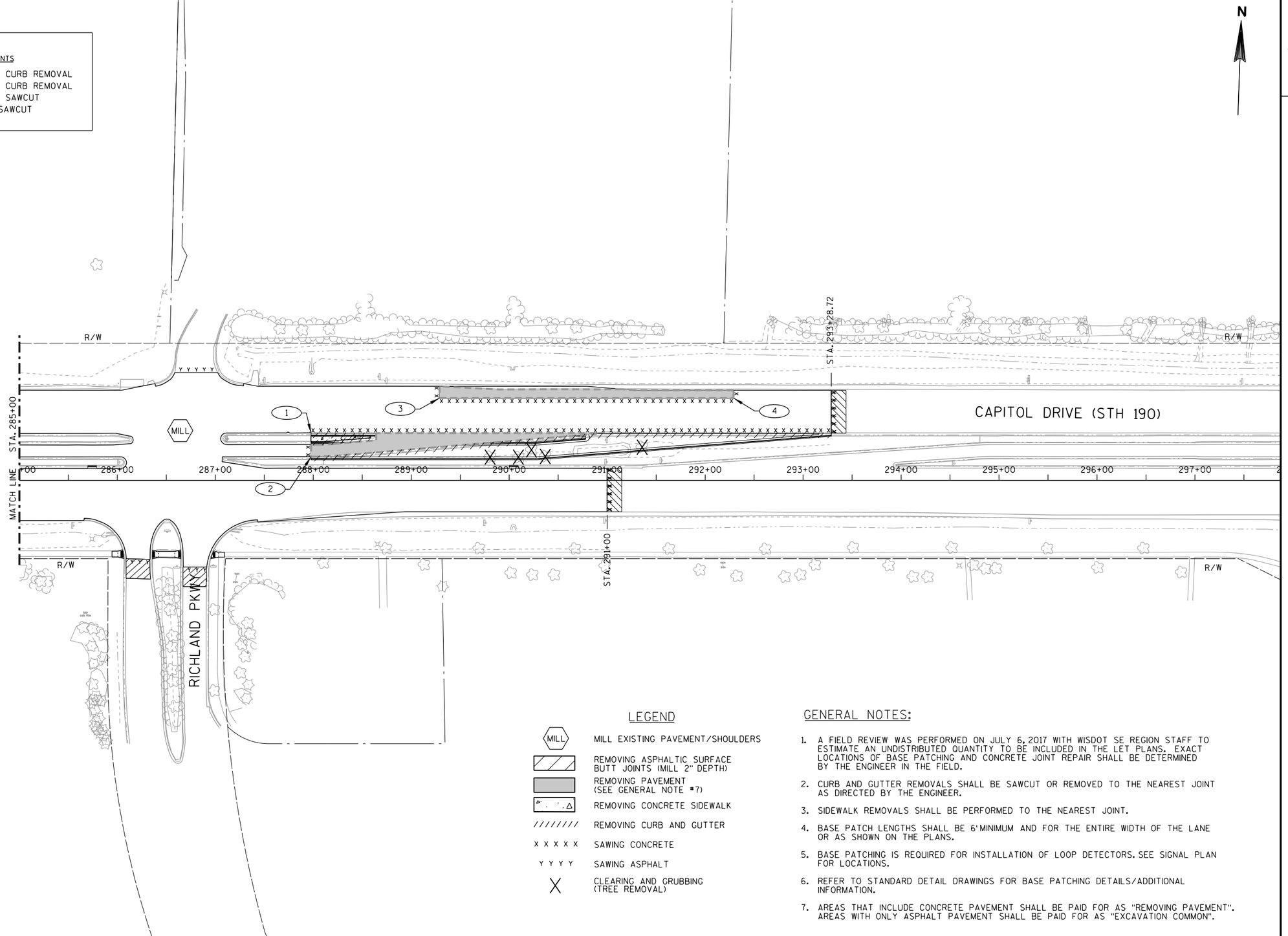

LEGEND

MILL	MILL EXISTING PAVEMENT/SHOULDERS
	REMOVING ASPHALTIC SURFACE BUTT JOINTS (MILL 2" DEPTH)
	REMOVING PAVEMENT (SEE GENERAL NOTE #7)
	REMOVING CONCRETE SIDEWALK
////////	REMOVING CURB AND GUTTER
X X X X X	SAWING CONCRETE
Y Y Y Y	SAWING ASPHALT
X	CLEARING AND GRUBBING (TREE REMOVAL)

GENERAL NOTES:

1. A FIELD REVIEW WAS PERFORMED ON JULY 6, 2017 WITH WISDOT SE REGION STAFF TO ESTIMATE AN UNDISTRIBUTED QUANTITY TO BE INCLUDED IN THE LET PLANS. EXACT LOCATIONS OF BASE PATCHING AND CONCRETE JOINT REPAIR SHALL BE DETERMINED BY THE ENGINEER IN THE FIELD.
2. CURB AND GUTTER REMOVALS SHALL BE SAWCUT OR REMOVED TO THE NEAREST JOINT AS DIRECTED BY THE ENGINEER.
3. SIDEWALK REMOVALS SHALL BE PERFORMED TO THE NEAREST JOINT.
4. BASE PATCH LENGTHS SHALL BE 6' MINIMUM AND FOR THE ENTIRE WIDTH OF THE LANE OR AS SHOWN ON THE PLANS.
5. BASE PATCHING IS REQUIRED FOR INSTALLATION OF LOOP DETECTORS. SEE SIGNAL PLAN FOR LOCATIONS.
6. REFER TO STANDARD DETAIL DRAWINGS FOR BASE PATCHING DETAILS/ADDITIONAL INFORMATION.
7. AREAS THAT INCLUDE CONCRETE PAVEMENT SHALL BE PAID FOR AS "REMOVING PAVEMENT". AREAS WITH ONLY ASPHALT PAVEMENT SHALL BE PAID FOR AS "EXCAVATION COMMON".

2

DATA TABLE

STH 190

POINT NO.	STATION	OFFSET	COMMENTS
1	160+00.00	3.00' LT	BEGIN CONSTRUCTION, MATCH EXISTING
2	160+00.00	32.00' RT	BEGIN CONSTRUCTION, MATCH EXISTING

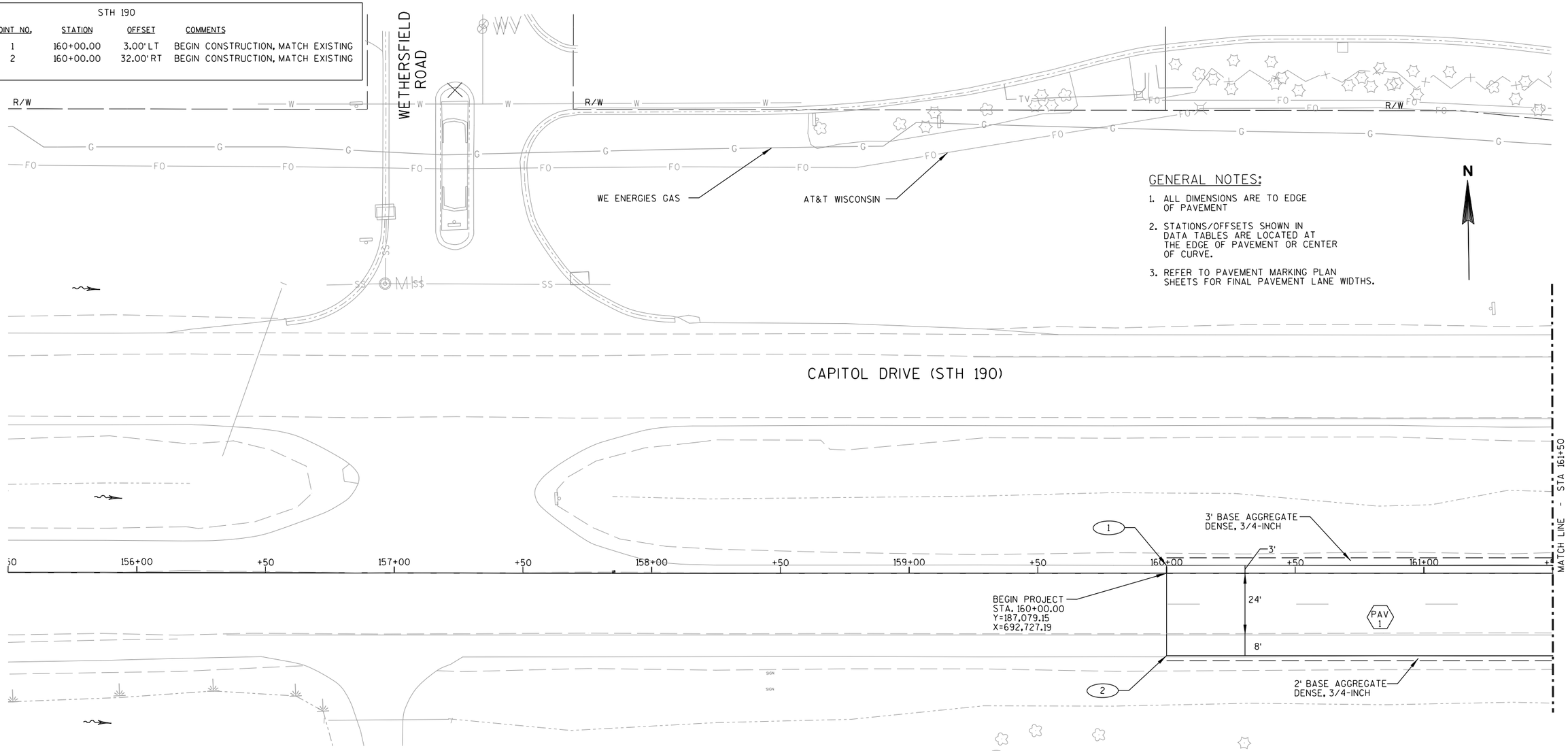

GENERAL NOTES:

1. ALL DIMENSIONS ARE TO EDGE OF PAVEMENT
2. STATIONS/OFFSETS SHOWN IN DATA TABLES ARE LOCATED AT THE EDGE OF PAVEMENT OR CENTER OF CURVE.
3. REFER TO PAVEMENT MARKING PLAN SHEETS FOR FINAL PAVEMENT LANE WIDTHS.

N

LEGEND

- 30A — CONCRETE CURB AND GUTTER (TYPE / SIZE (INCHES))
- SN — SLOPED NOSE
- SW5 — CONCRETE SIDEWALK 5-INCH
- AS1 — ASPHALT SURFACE DRIVEWAY 3½" HMA OVER 6" BASE AGGREGATE DENSE 1¼-INCH
- AS2 — ASPHALTIC SURFACE DRIVEWAY 2" MILL & 2" HMA PAVEMENT OVERLAY
- PAV 1 — 4" - 4½" MILL & 4" - 4½" HMA PAVEMENT OVERLAY
- PAV 2 — 6½" HMA PAVEMENT, OVER 12" BASE AGGREGATE DENSE 1¼-INCH
- PAV 3 — 4" HMA PAVEMENT, OVER 8" CONCRETE BASE, OVER 6" BASE AGGREGATE DENSE 1¼-INCH

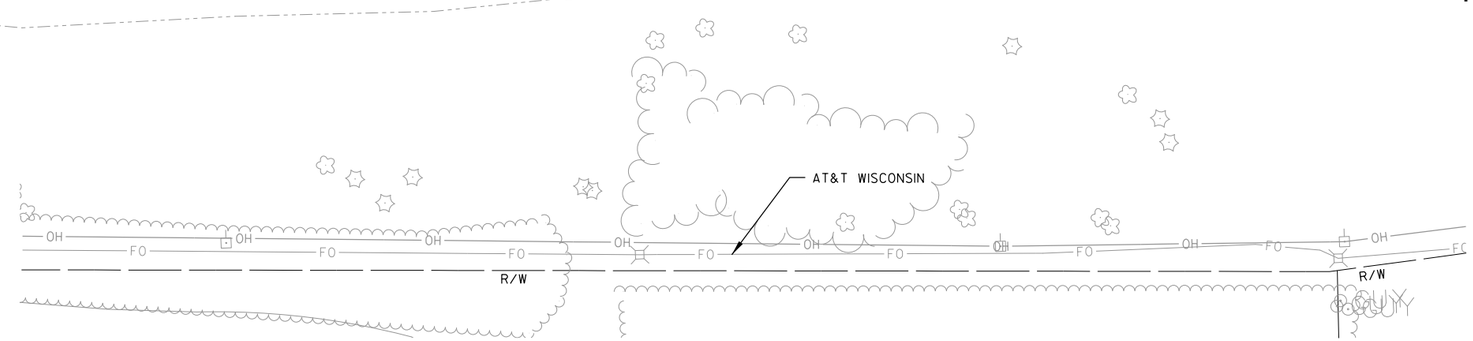

PROJECT NO:2025-14-71	HWY:STH 190	COUNTY:WAUKESHA	PLAN DETAIL	SHEET 29	E

2

DATA TABLE

STH 190

POINT NO.	STATION	OFFSET	COMMENTS
1	162+50.00	92.00' LT.	BEGIN CONSTRUCTION, MATCH EXISTING
2	162+50.00	57.00' LT.	BEGIN CONSTRUCTION, MATCH EXISTING
3	164+40.00	6.00' LT.	BEGIN 15:1 AGGREGATE SHOULDER TAPER
4	165+45.00	13.00' LT.	END 15:1 AGGREGATE SHOULDER TAPER
5	165+70.00	12.00' LT.	BEGIN AGGREGATE SHOULDER TAPER
6	165+95.00	10.00' LT.	END AGGREGATE SHOULDER TAPER
7	165+45.00	8.00' LT.	POST 1 OF ENERGY ABSORBING TERMINAL
8	165+65.00	34.00' RT.	BEGIN 15:1 AGGREGATE SHOULDER TAPER
9	166+17.90	47.00' RT.	15' RADIUS
10	166+59.77	47.00' RT.	15' RADIUS
11	166+70.00	36.00' RT	POST 1 OF ENERGY ABSORBING TERMINAL
12	166+70.00	41.00' RT	END 15:1 AGGREGATE SHOULDER TAPER
13	166+95.00	40.00' RT	BEGIN AGGREGATE SHOULDER TAPER
14	167+20.00	36.00' RT	END AGGREGATE SHOULDER TAPER
15	166+15.00	3.00' LT	BEGIN SHOULDER TAPER
16	166+35.00	5.00' LT	END SHOULDER TAPER

RADII SHOWN ARE TO CURB FLANGE OR EDGE OF PAVEMENT

GENERAL NOTES:

1. ALL DIMENSIONS ARE TO EDGE OF PAVEMENT
2. STATIONS/OFFSETS SHOWN IN DATA TABLES ARE LOCATED AT THE EDGE OF PAVEMENT OR CENTER OF CURVE.
3. REFER TO PAVEMENT MARKING PLAN SHEETS FOR FINAL PAVEMENT LANE WIDTHS.

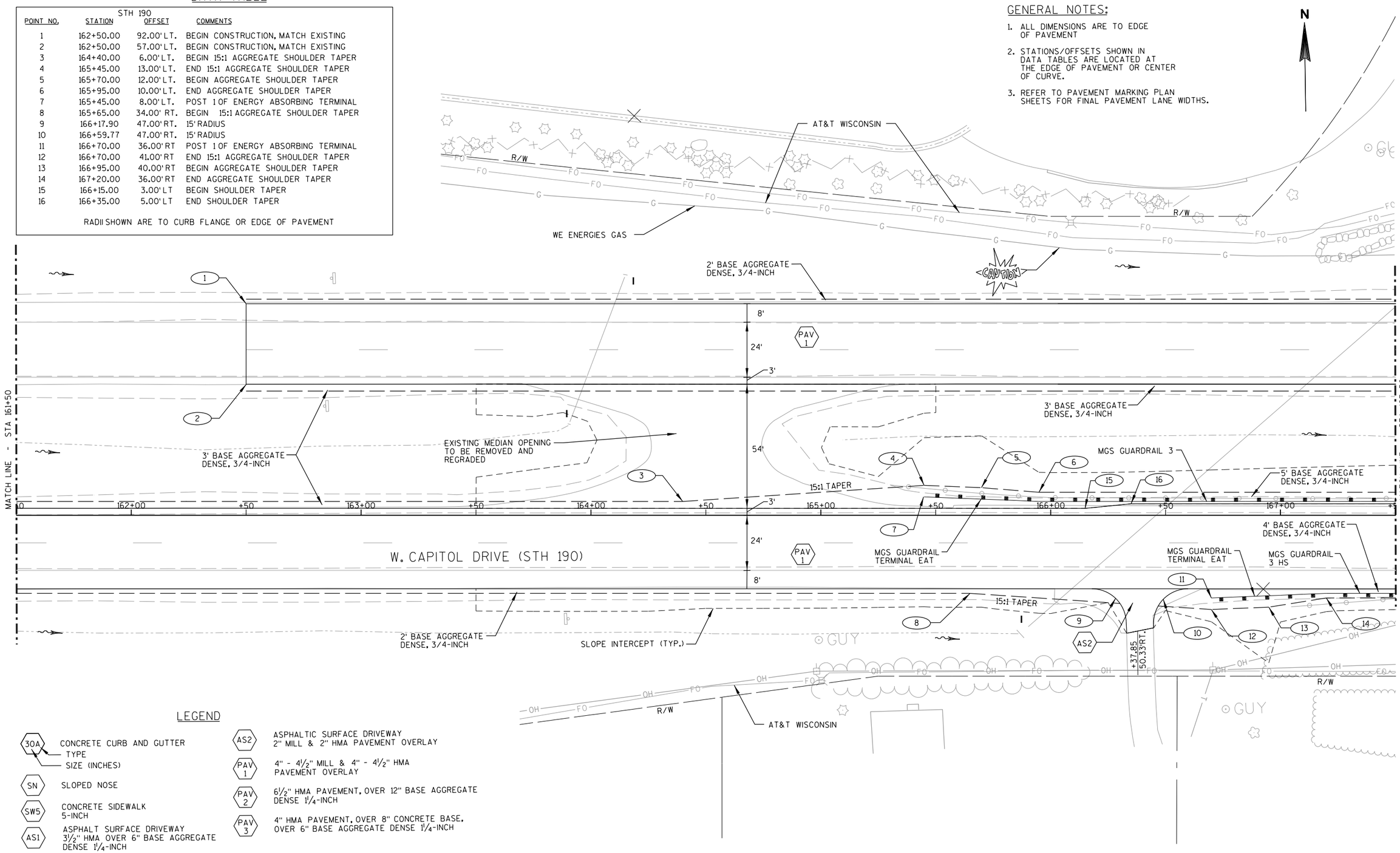

LEGEND

- 30A — CONCRETE CURB AND GUTTER (TYPE; SIZE (INCHES))
- SN — SLOPED NOSE
- SW5 — CONCRETE SIDEWALK 5-INCH
- AS1 — ASPHALT SURFACE DRIVEWAY 3½" HMA OVER 6" BASE AGGREGATE DENSE 1¼-INCH
- AS2 — ASPHALTIC SURFACE DRIVEWAY 2" MILL & 2" HMA PAVEMENT OVERLAY
- PAV 1 — 4" - 4½" MILL & 4" - 4½" HMA PAVEMENT OVERLAY
- PAV 2 — 6½" HMA PAVEMENT, OVER 12" BASE AGGREGATE DENSE 1¼-INCH
- PAV 3 — 4" HMA PAVEMENT, OVER 8" CONCRETE BASE, OVER 6" BASE AGGREGATE DENSE 1¼-INCH

DATA TABLE

STH 190

POINT NO.	STATION	OFFSET	COMMENTS
1	168+98.00	92.00'LT.	BEGIN SHOULDER TAPER
2	168+33.20	88.75'LT.	END SHOULDER TAPER, MATCH EXISTING
3	168+13.00	57.00'LT.	BEGIN SHOULDER TAPER
4	168+33.20	55.25'LT.	END SHOULDER TAPER, MATCH EXISTING
5	168+18.25	5.00'LT.	BEGIN SHOULDER TAPER
6	168+28.25	6.00'LT.	END SHOULDER TAPER, BEGIN CONCRETE APPROACH SLAB
7	168+08.25	32.00'RT.	BEGIN SHOULDER TAPER
8	168+28.25	34.00'RT.	END SHOULDER TAPER, BEGIN CONCRETE APPROACH SLAB
9	172+88.13	88.75'LT.	BEGIN SHOULDER, MATCH EXISTING APPROACH SLAB
10	172+88.02	55.25'LT.	BEGIN SHOULDER TAPER, MATCH EXISTING APPROACH SLAB
11	173+05.52	57.00'LT.	END SHOULDER TAPER
12	172+85.75	6.00'LT.	END CONCRETE APPROACH SLAB
13	172+85.75	34.00'RT	END CONCRETE APPROACH SLAB, BEGIN SHOULDER TAPER
14	173+05.75	32.00'RT.	END SHOULDER TAPER

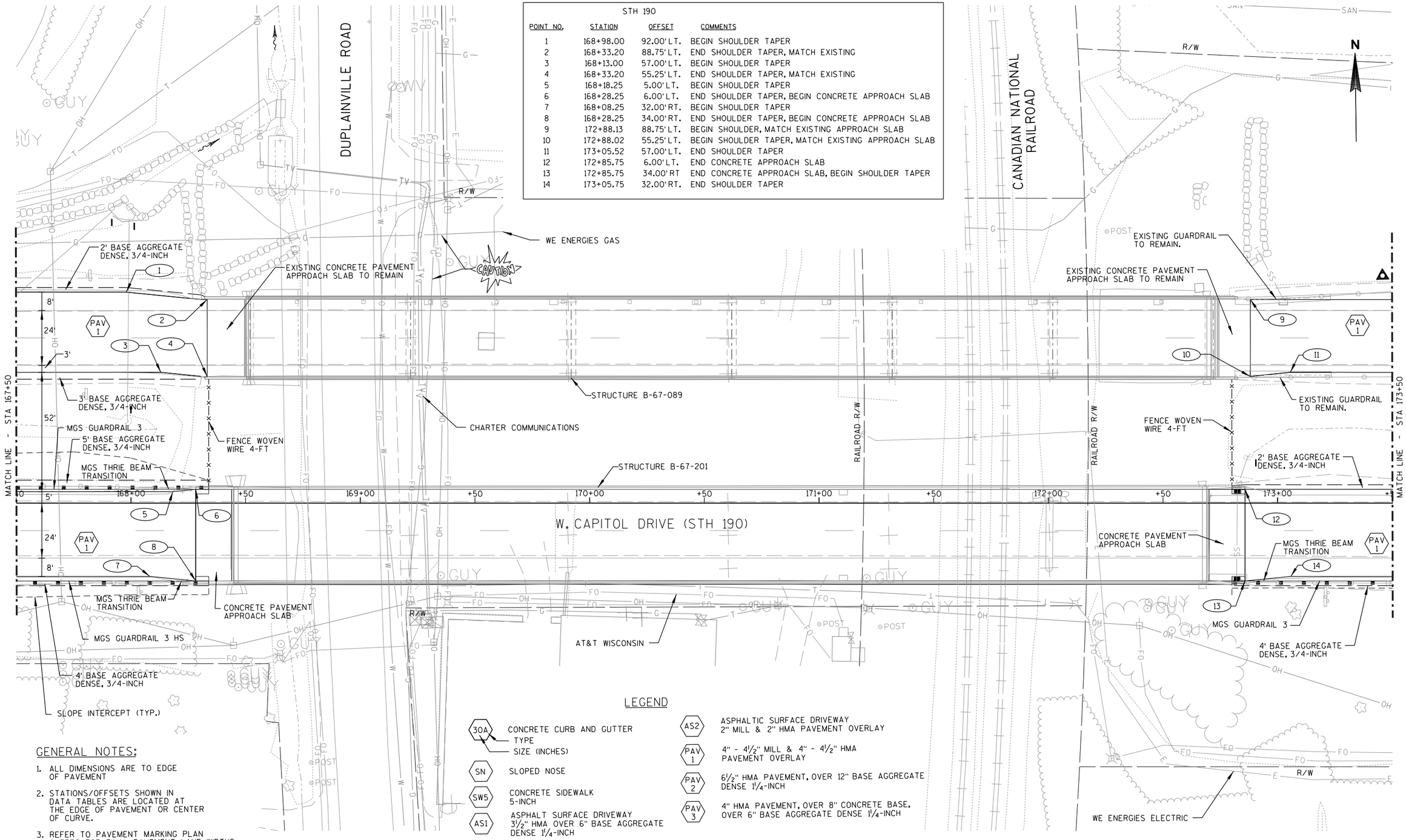

GENERAL NOTES:

1. ALL DIMENSIONS ARE TO EDGE OF PAVEMENT
2. STATIONS/OFFSETS SHOWN IN DATA TABLES ARE LOCATED AT THE EDGE OF PAVEMENT OR CENTER OF CURVE.
3. REFER TO PAVEMENT MARKING PLAN SHEETS FOR FINAL PAVEMENT LANE WIDTHS.

LEGEND

- 30A — CONCRETE CURB AND GUTTER (TYPE: 30A; SIZE (INCHES))
- SN — SLOPED NOSE
- SW5 — CONCRETE SIDEWALK 5-INCH
- AS1 — ASPHALT SURFACE DRIVEWAY 3½" HMA OVER 6" BASE AGGREGATE DENSE 1¼-INCH
- AS2 — ASPHALTIC SURFACE DRIVEWAY 2" MILL & 2" HMA PAVEMENT OVERLAY
- PAV 1 — 4" - 4½" MILL & 4" - 4½" HMA PAVEMENT OVERLAY
- PAV 2 — 6½" HMA PAVEMENT, OVER 12" BASE AGGREGATE DENSE 1¼-INCH
- PAV 3 — 4" HMA PAVEMENT, OVER 8" CONCRETE BASE, OVER 6" BASE AGGREGATE DENSE 1¼-INCH

PROJECT NO: 2025-14-71	HWY: STH 190	COUNTY: WAUKESHA	PLAN DETAIL	SHEET 31	E

2

DATA TABLE

STH 190

POINT NO.	STATION	OFFSET	COMMENTS
1	174+36.44	94.00'LT.	MATCH EXISTING GUARDRAIL, BEGIN MGS GUARDRAIL
2	174+00.00	54.00'LT.	MATCH EXISTING GUARDRAIL, BEGIN MGS GUARDRAIL
3	175+62.77	52.00'LT.	POST 1 OF ENERGY ABSORBING TERMINAL
4	175+12.77	50.00'LT.	BEGIN AGGREGATE SHOULDER TAPER
5	175+37.77	48.00'LT.	END AGGREGATE SHOULDER TAPER
6	175+62.77	47.00'LT.	BEGIN 15:1 AGGREGATE SHOULDER TAPER
7	176+67.77	54.00'LT.	END 15:1 AGGREGATE SHOULDER TAPER
8	173+80.00	6.00'LT.	BEGIN SHOULDER TAPER
9	174+10.00	3.00'LT.	END SHOULDER TAPER

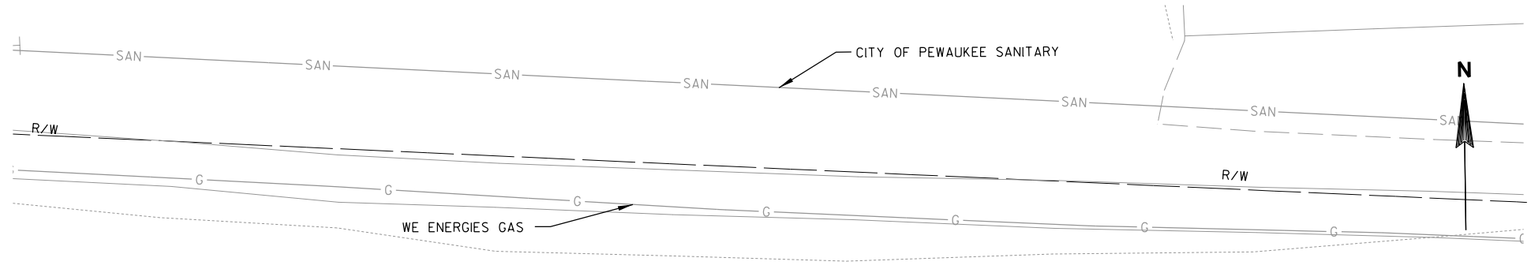

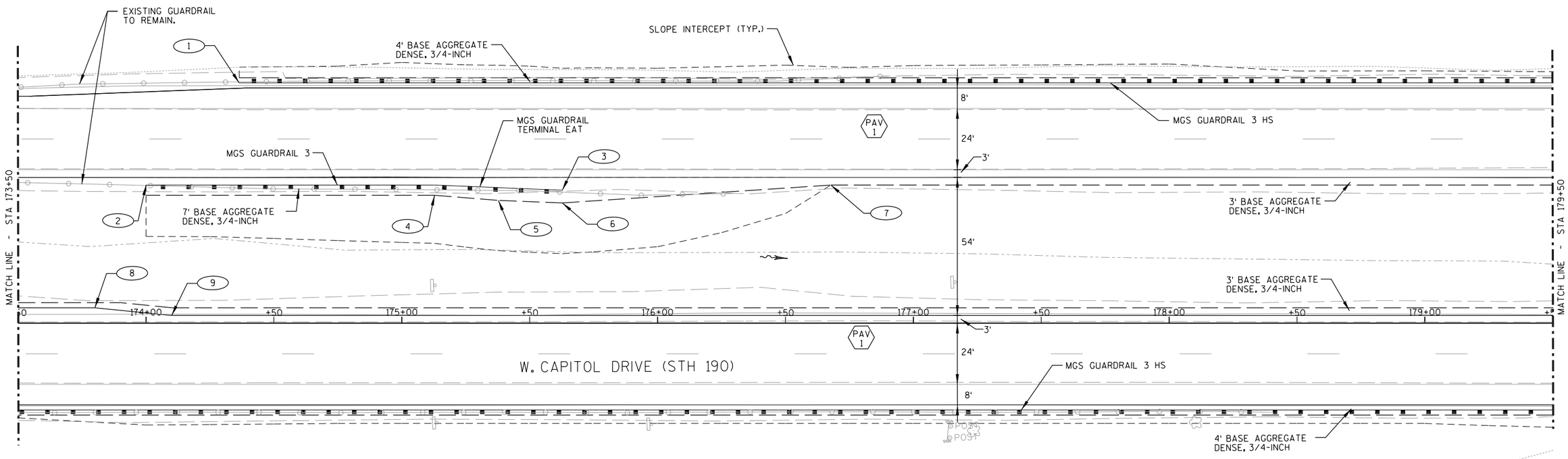

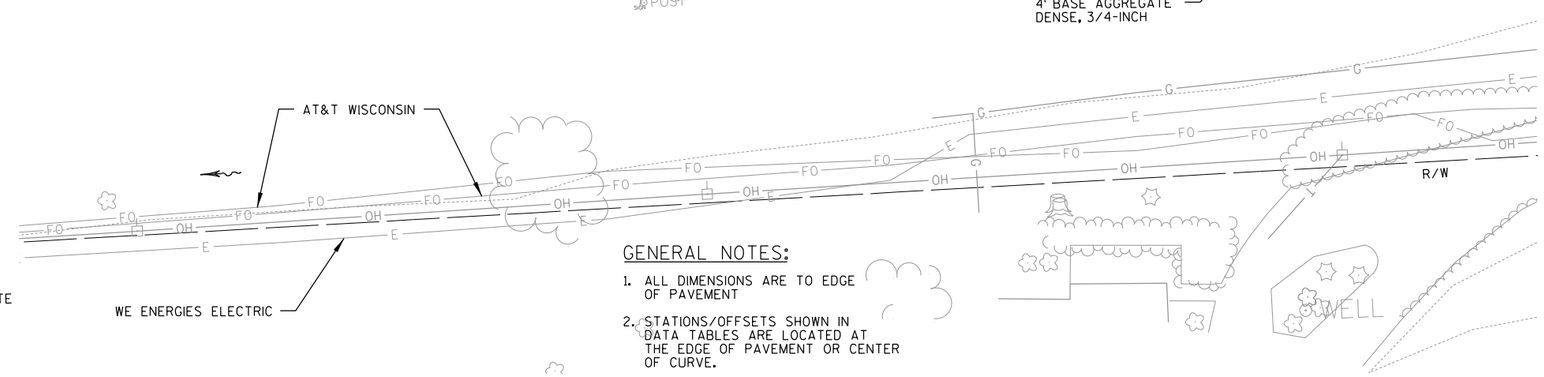

LEGEND

- 30A — CONCRETE CURB AND GUTTER (TYPE; SIZE (INCHES))
- SN — SLOPED NOSE
- SW5 — CONCRETE SIDEWALK 5-INCH
- AS1 — ASPHALT SURFACE DRIVEWAY 3½" HMA OVER 6" BASE AGGREGATE DENSE 1¼-INCH
- AS2 — ASPHALTIC SURFACE DRIVEWAY 2" MILL & 2" HMA PAVEMENT OVERLAY
- PAV 1 — 4" - 4½" MILL & 4" - 4½" HMA PAVEMENT OVERLAY
- PAV 2 — 6½" HMA PAVEMENT, OVER 12" BASE AGGREGATE DENSE 1¼-INCH
- PAV 3 — 4" HMA PAVEMENT, OVER 8" CONCRETE BASE, OVER 6" BASE AGGREGATE DENSE 1¼-INCH

GENERAL NOTES:

1. ALL DIMENSIONS ARE TO EDGE OF PAVEMENT
2. STATIONS/OFFSETS SHOWN IN DATA TABLES ARE LOCATED AT THE EDGE OF PAVEMENT OR CENTER OF CURVE.
3. REFER TO PAVEMENT MARKING PLAN SHEETS FOR FINAL PAVEMENT LANE WIDTHS.

DATA TABLE

STH 190

POINT NO.	STATION	OFFSET	COMMENTS
1	179+77.19	34.00'RT.	TYPE 2 TERMINAL
2	180+35.00	36.00'RT.	POST 1 OF ENERGY ABSORBING TERMINAL
3	180+34.99	41.00'RT.	END 15:1 AGGREGATE SHOULDER TAPER
4	180+60.00	39.50'RT.	BEGIN AGGREGATE SHOULDER TAPER
5	180+85.00	36.00'RT.	END AGGREGATE SHOULDER TAPER
6	181+20.00	24.00'LT.	BEGIN SHOULDER RECONSTRUCTION
7	182+20.00	32.00'LT.	BEGIN SHOULDER TAPER
8	182+70.00	36.00'LT.	END SHOULDER TAPER
9	185+00.00	96.00'LT.	BEGIN AGGREGATE SHOULDER TAPER
10	185+25.00	100.00'LT.	END AGGREGATE SHOULDER TAPER
11	185+50.00	101.00'LT.	BEGIN 15:1 AGGREGATE SHOULDER TAPER
12	185+50.00	96.00'LT.	POST 1 OF ENERGY ABSORBING TERMINAL

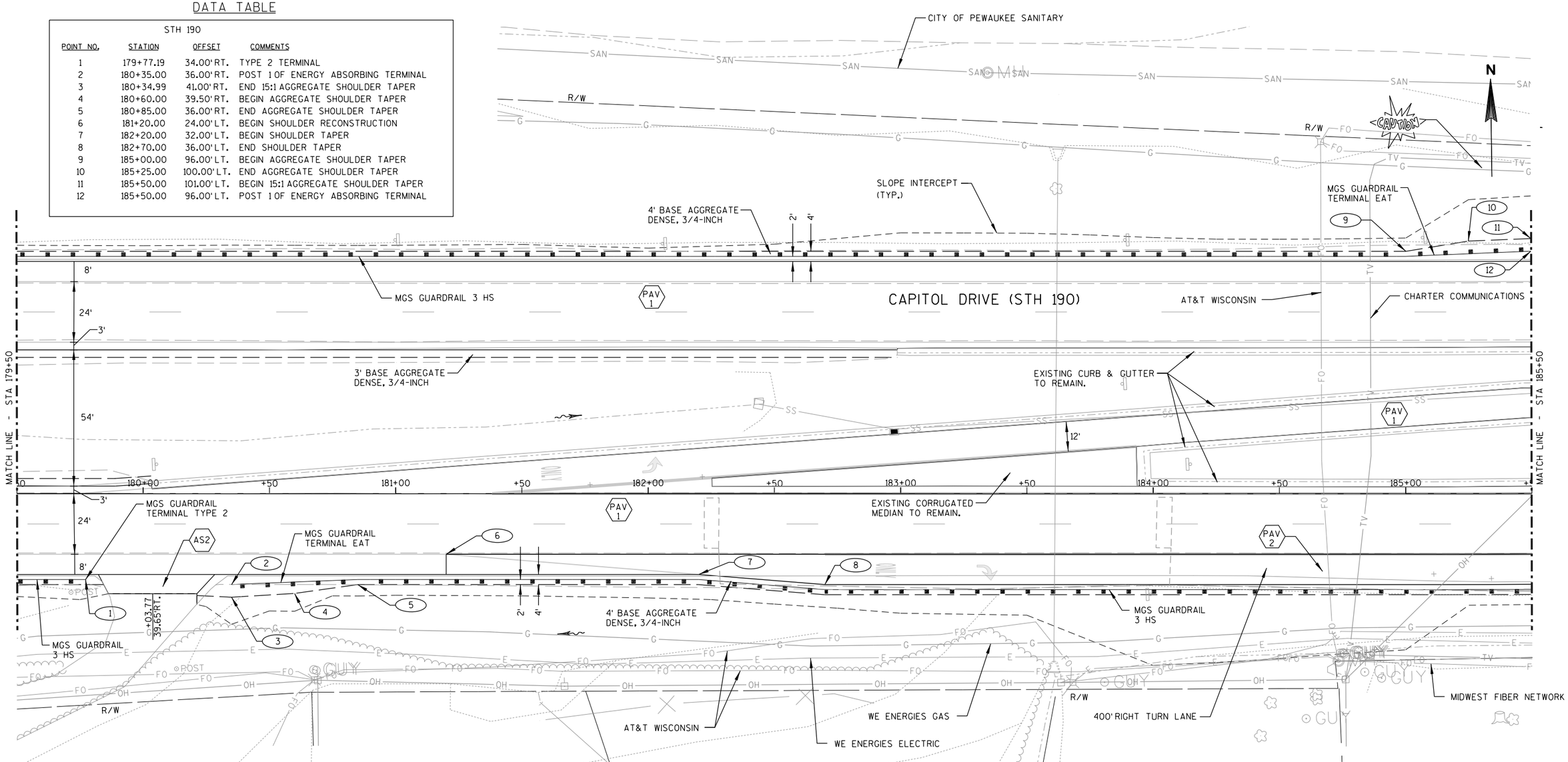

LEGEND

- 30A — CONCRETE CURB AND GUTTER (TYPE; SIZE (INCHES))
- SN — SLOPED NOSE
- SW5 — CONCRETE SIDEWALK 5-INCH
- AS1 — ASPHALT SURFACE DRIVEWAY 3½" HMA OVER 6" BASE AGGREGATE DENSE 1¼-INCH
- AS2 — ASPHALTIC SURFACE DRIVEWAY 2" MILL & 2" HMA PAVEMENT OVERLAY
- PAV 1 — 4" - 4½" MILL & 4" - 4½" HMA PAVEMENT OVERLAY
- PAV 2 — 6½" HMA PAVEMENT, OVER 12" BASE AGGREGATE DENSE 1¼-INCH
- PAV 3 — 4" HMA PAVEMENT, OVER 8" CONCRETE BASE, OVER 6" BASE AGGREGATE DENSE 1¼-INCH

GENERAL NOTES:

1. ALL DIMENSIONS ARE TO EDGE OF PAVEMENT
2. STATIONS/OFFSETS SHOWN IN DATA TABLES ARE LOCATED AT THE EDGE OF PAVEMENT OR CENTER OF CURVE.
3. REFER TO PAVEMENT MARKING PLAN SHEETS FOR FINAL PAVEMENT LANE WIDTHS.

GENERAL NOTES:

1. ALL DIMENSIONS ARE TO EDGE OF PAVEMENT
2. STATIONS/OFFSETS SHOWN IN DATA TABLES ARE LOCATED AT THE EDGE OF PAVEMENT OR CENTER OF CURVE.
3. REFER TO PAVEMENT MARKING PLAN SHEETS FOR FINAL PAVEMENT LANE WIDTHS.

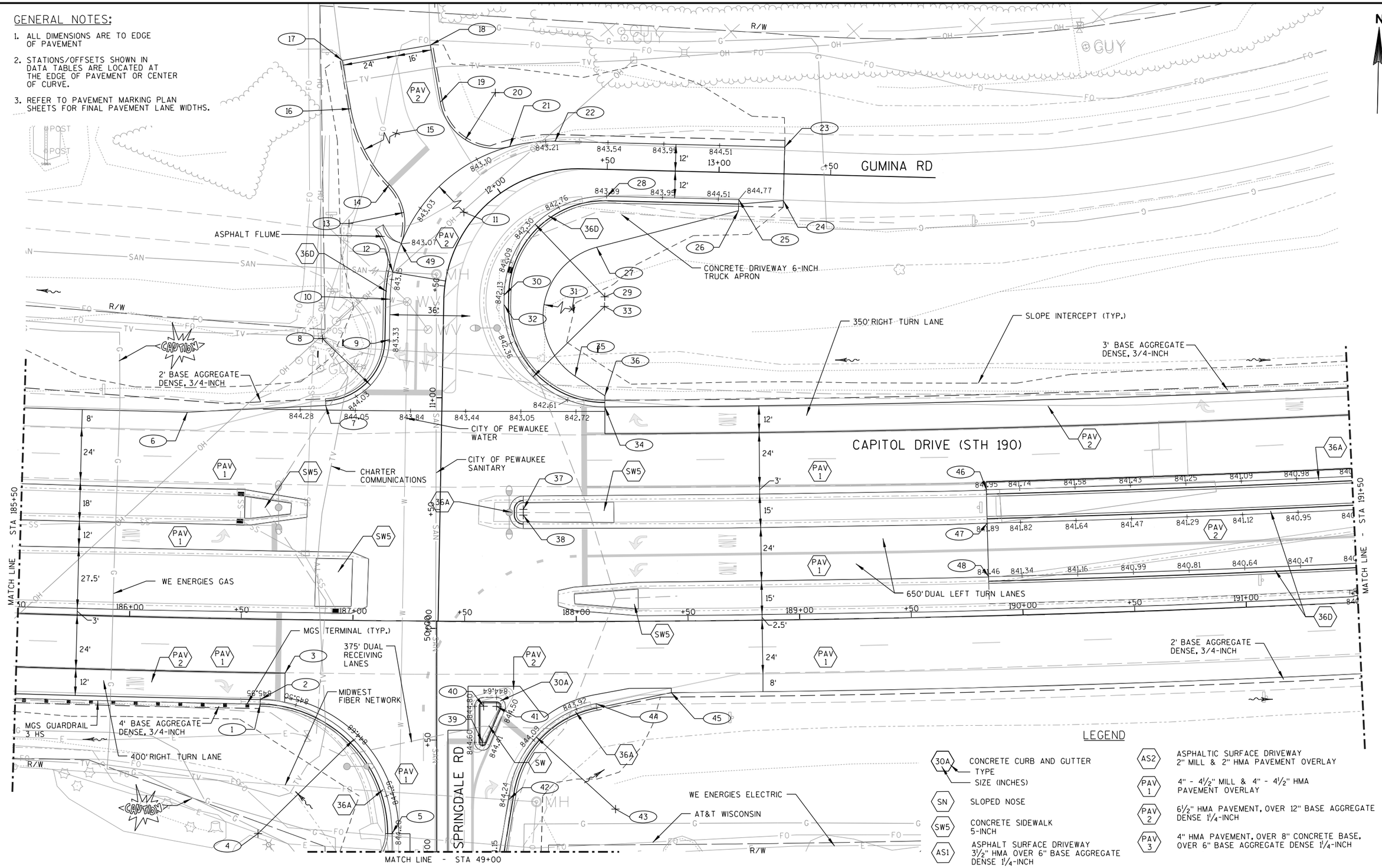

LEGEND

30A	CONCRETE CURB AND GUTTER (TYPE, SIZE (INCHES))
SN	SLOPED NOSE
SW5	CONCRETE SIDEWALK 5-INCH
AS1	ASPHALT SURFACE DRIVEWAY 3½" HMA OVER 6" BASE AGGREGATE DENSE 1¼-INCH
AS2	ASPHALTIC SURFACE DRIVEWAY 2" MILL & 2" HMA PAVEMENT OVERLAY
PAV 1	4" - 4½" MILL & 4" - 4½" HMA PAVEMENT OVERLAY
PAV 2	6½" HMA PAVEMENT, OVER 12" BASE AGGREGATE DENSE 1¼-INCH
PAV 3	4" HMA PAVEMENT, OVER 8" CONCRETE BASE, OVER 6" BASE AGGREGATE DENSE 1¼-INCH

2

DATA TABLE FOR PLAN DETAIL SHEET STA. 185+50 TO STA. 191+50

STH 190 / SPRINGDALE ROAD / GUMINA ROAD

POINT NO.	STATION	OFFSET	COMMENTS
1	186+59.13	38.00' RT.	TYPE 2 TERMINAL
2	186+59.13	36.00' RT.	BEGIN CURB & GUTTER, BEGIN 60' RADIUS
3	186+70.00	24.00' RT.	END SHOULDER RECONSTRUCTION
4	49+08.13	80.00' LT.	60' RADIUS
5	49+08.13	20.00' LT.	END CURB & GUTTER, END 60' RADIUS
6	186+23.92	92.00' LT.	BEGIN SHOULDER TAPER
7	186+86.52	96.06' LT.	BEGIN CURB & GUTTER, BEGIN 30' RADIUS
8	186+84.65	126.00' LT.	30' RADIUS
9	187+15.15	125.82' LT.	END 30' RADIUS
10	187+15.30	143.90' LT.	BEGIN 72' RADIUS
11	11+44.05	48.00' RT	72' RADIUS
12	11+52.32	23.88' LT.	END CURB & GUTTER
13	11+62.57	48.36' LT.	25' RADIUS
14	11+76.12	39.57' LT.	END 25' RADIUS, BEGIN 65' RADIUS
15	12+14.81	44.94' LT.	65' RADIUS
16	11+84.96	73.66' LT.	END 65' RADIUS
17	11+90.53	91.25' LT.	END ROADWAY IMPROVEMENTS
18	12+05.61	72.88' LT.	END ROADWAY IMPROVEMENTS
19	12+00.73	48.83' LT.	BEGIN 25' RADIUS
20	12+14.35	41.03' LT.	25' RADIUS
21	12+12.11	16.25' LT.	END 25' RADIUS
22	12+28.39	12.99' LT.	END 72' RADIUS
23	13+29.15	12.00' LT.	END ROADWAY IMPROVEMENTS
24	13+29.15	12.00' RT.	END ROADWAY IMPROVEMENTS
25	13+09.15	12.00' RT.	BEGIN CURB & GUTTER
26	13+09.15	17.00' RT.	BEGIN TRUCK APRON
27	12+46.15	34.94' RT.	BEGIN 32' RADIUS
28	12+50.27	12.00' RT.	BEGIN 45' RADIUS
29	12+50.27	57.00' RT.	45' RADIUS
30	11+48.85	26.87' RT.	END 45' RADIUS
31	12+54.91	65.72' RT.	32' RADIUS
32	11+42.17	27.00' RT.	BEGIN 45' RADIUS
33	12+50.31	61.32' RT.	45' RADIUS
34	188+13.09	96.00' LT.	END 45' RADIUS, END CURB & GUTTER
35	187+99.62	109.84' LT.	END 32' RADIUS
36	188+13.09	101.00' LT.	END TRUCK APRON
37	187+76.20	50.16' LT.	6' RADIUS
38	187+76.19	47.62' LT.	6' RADIUS
39	49+48.95	20.50' RT.	3.5' RADIUS
40	49+65.10	21.00' RT.	4' RADIUS
41	49+65.08	26.75' RT.	4' RADIUS
42	49+23.40	32.19' RT.	BEGIN CURB & GUTTER, BEGIN 48' RADIUS
43	49+19.10	80.00' RT.	48' RADIUS
44	188+08.69	36.78' RT.	END CURB & GUTTER, END 48' RADIUS
45	188+42.30	32.00' RT.	END SHOULDER TAPER
46	189+85.00	56.50' LT.	BEGIN CURB & GUTTER
47	189+85.00	41.50' LT.	BEGIN CURB & GUTTER
48	189+85.00	17.50' LT.	BEGIN CURB & GUTTER
49	11+61.90	23.39' LT.	BEGIN 25' RADIUS

RADII SHOWN ARE TO CURB FLANGE OR EDGE OF PAVEMENT

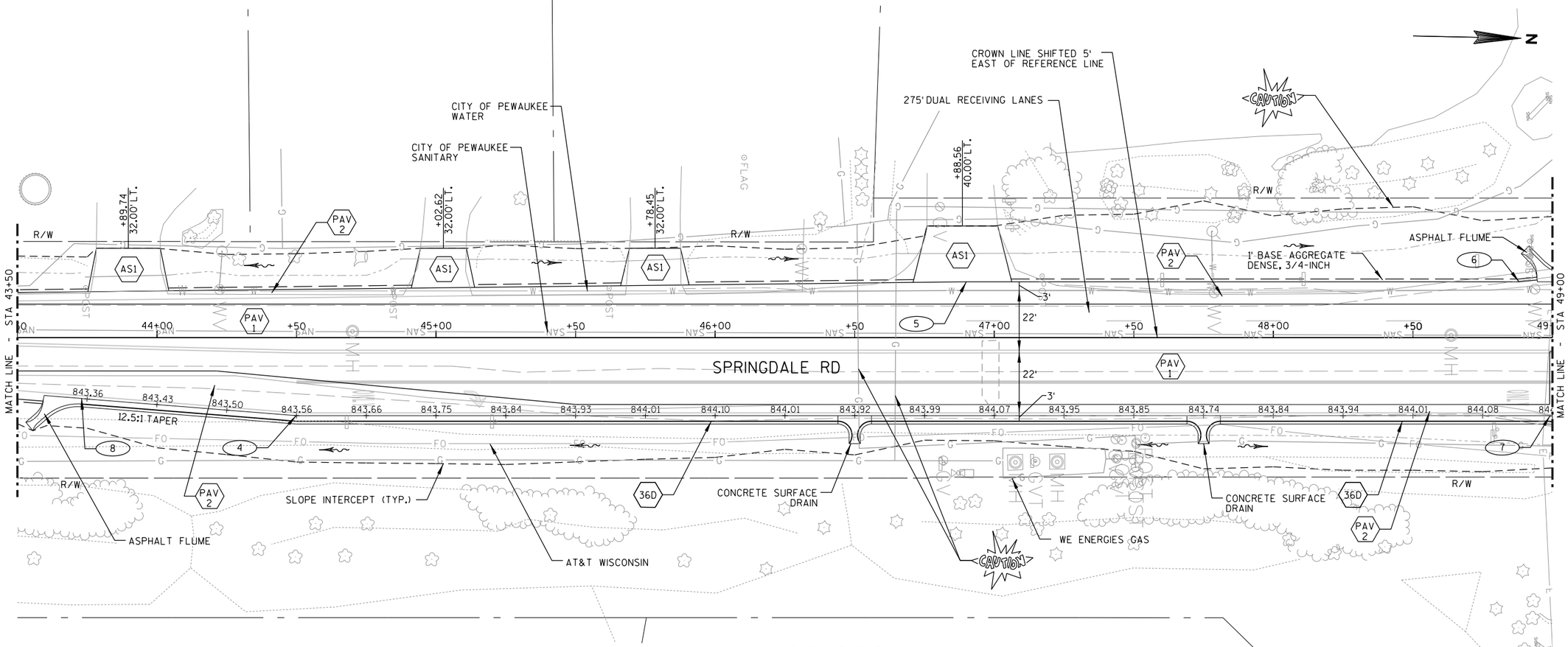

DATA TABLE

SPRINGDALE ROAD

POINT NO.	STATION	OFFSET	COMMENTS
1	42+50.00	15.00' LT.	BEGIN ROADWORK, MATCH EXISTING, BEGIN SHOULDER TAPER
2	42+50.00	15.00' RT.	BEGIN ROADWORK, MATCH EXISTING
3	42+62.38	15.00' RT.	BEGIN 12.5:1 SHOULDER TAPER
4	44+50.04	28.00' RT.	END 12.5:1 SHOULDER TAPER
5	46+90.00	20.00' LT.	END SHOULDER TAPER
6	48+88.03	20.00' LT.	BEGIN TAPER
7	48+99.17	28.00' RT.	BEGIN TAPER
8	43+73.00	21.84' RT.	BEGIN CURB AND GUTTER

LEGEND

- 30A — CONCRETE CURB AND GUTTER (TYPE / SIZE (INCHES))
- SN — SLOPED NOSE
- SW5 — CONCRETE SIDEWALK 5-INCH
- AS1 — ASPHALT SURFACE DRIVEWAY 3½" HMA OVER 6" BASE AGGREGATE DENSE 1¼-INCH
- AS2 — ASPHALTIC SURFACE DRIVEWAY 2" MILL & 2" HMA PAVEMENT OVERLAY
- PAV 1 — 4" - 4½" MILL & 4" - 4½" HMA PAVEMENT OVERLAY
- PAV 2 — 6½" HMA PAVEMENT, OVER 12" BASE AGGREGATE DENSE 1¼-INCH
- PAV 3 — 4" HMA PAVEMENT, OVER 8" CONCRETE BASE, OVER 6" BASE AGGREGATE DENSE 1¼-INCH

GENERAL NOTES:

1. ALL DIMENSIONS ARE TO EDGE OF PAVEMENT
2. STATIONS/OFFSETS SHOWN IN DATA TABLES ARE LOCATED AT THE EDGE OF PAVEMENT OR CENTER OF CURVE.
3. REFER TO PAVEMENT MARKING PLAN SHEETS FOR FINAL PAVEMENT LANE WIDTHS.

DATA TABLE

STH 190

POINT NO.	STATION	OFFSET	COMMENTS
1	191+50.00	69.00' LT.	BEGIN SHOULDER TAPER
2	192+04.25	92.00' LT.	END SHOULDER TAPER
3	192+48.68	41.50' LT.	BEGIN CURB & GUTTER TAPER
4	192+50.00	17.50' LT.	BEGIN CURB & GUTTER TAPER
5	193+00.00	84.00' LT.	END SHOULDER RECONSTRUCTION
6	193+15.20	56.50' LT.	END CURB & GUTTER
7	193+15.61	48.52' LT.	END CURB & GUTTER
8	193+35.00	24.00' RT.	BEGIN SHOULDER RECONSTRUCTION
9	193+50.00	3.00' LT.	END CURB & GUTTER
10	194+38.98	32.00' RT.	BEGIN SHOULDER TAPER
11	194+70.08	3.00' LT.	BEGIN SHOULDER TAPER
12	194+85.00	36.00' RT.	END SHOULDER TAPER
13	196+20.00	12.00' LT.	END SHOULDER TAPER
14	196.31.00	24.00' RT.	END SHOULDER RECONSTRUCTION

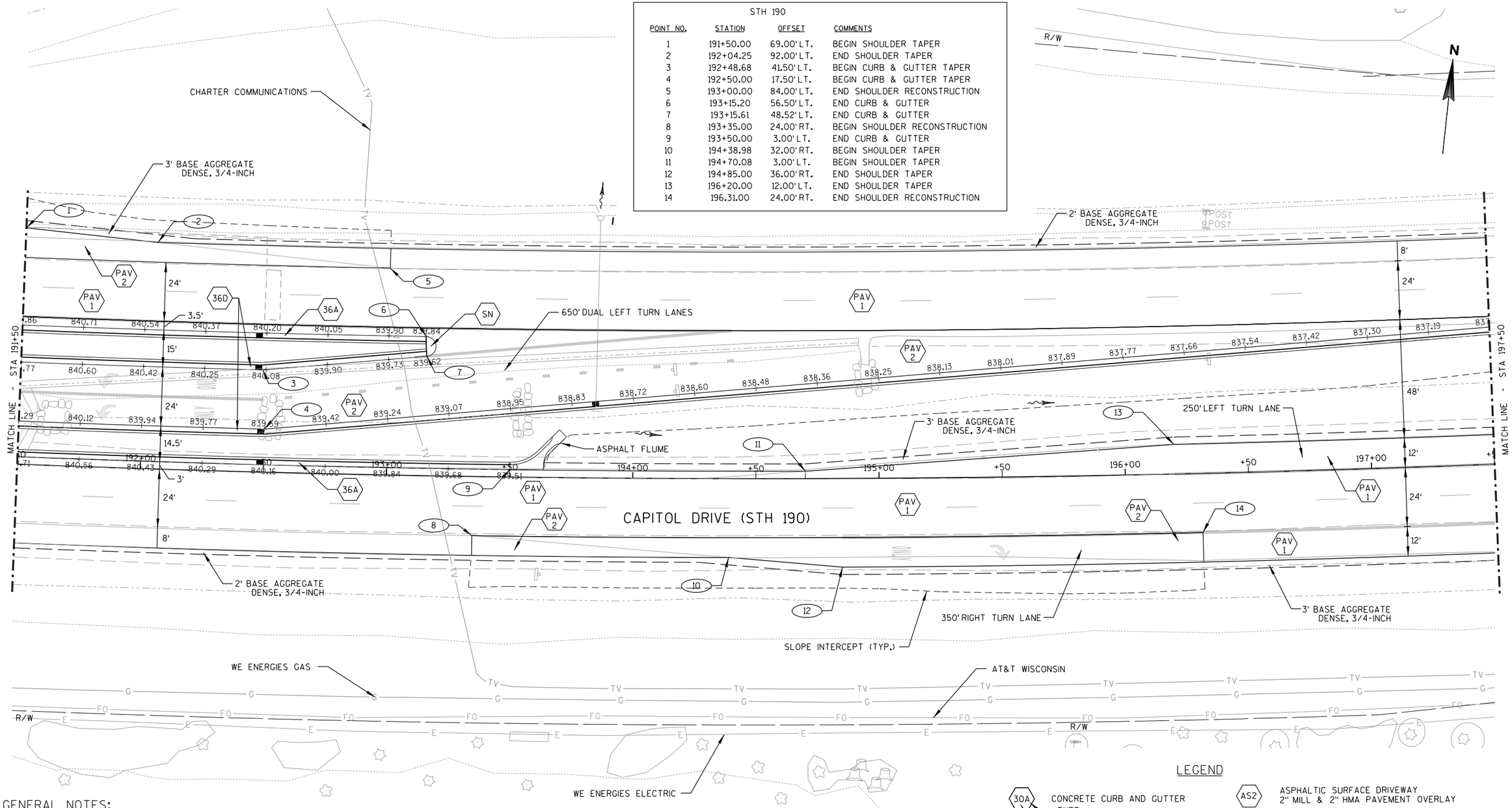

GENERAL NOTES:

1. ALL DIMENSIONS ARE TO EDGE OF PAVEMENT
2. STATIONS/OFFSETS SHOWN IN DATA TABLES ARE LOCATED AT THE EDGE OF PAVEMENT OR CENTER OF CURVE.
3. REFER TO PAVEMENT MARKING PLAN SHEETS FOR FINAL PAVEMENT LANE WIDTHS.

LEGEND

- 30A — CONCRETE CURB AND GUTTER (TYPE, SIZE (INCHES))
- SN — SLOPED NOSE
- SW5 — CONCRETE SIDEWALK 5-INCH
- AS1 — ASPHALT SURFACE DRIVEWAY 3½" HMA OVER 6" BASE AGGREGATE DENSE 1¼-INCH
- AS2 — ASPHALTIC SURFACE DRIVEWAY 2" MILL & 2" HMA PAVEMENT OVERLAY
- PAV 1 — 4" - 4½" MILL & 4" - 4½" HMA PAVEMENT OVERLAY
- PAV 2 — 6½" HMA PAVEMENT, OVER 12" BASE AGGREGATE DENSE 1¼-INCH
- PAV 3 — 4" HMA PAVEMENT, OVER 8" CONCRETE BASE, OVER 6" BASE AGGREGATE DENSE 1¼-INCH

DATA TABLE

STH 190

POINT NO.	STATION	OFFSET	COMMENTS
1	197+81.00	57.00' LT.	END CURB & GUTTER TAPER
2	198+00.00	60.00' LT.	END SHOULDER RECONSTRUCTION
3	198+13.93	57.20' LT.	BEGIN SHOULDER TAPER
4	198+53.08	45.15' LT.	END SHOULDER TAPER, BEGIN 100' RADIUS
5	198+23.43	50.35' RT.	100' RADIUS
6	198+70.12	38.06' LT.	END 100' RADIUS, BEGIN 10' RADIUS
7	198+65.40	29.23' LT.	10' RADIUS
8	198+69.32	20.02' LT.	END 10' RADIUS, BEGIN 100' RADIUS
9	198+29.72	112.00' LT.	100' RADIUS
10	198+29.72	12.00' LT.	END 100' RADIUS
11	198+15.00	36.00' RT.	BEGIN SHOULDER TAPER
12	198+35.45	38.15' RT.	END SHOULDER TAPER

RADII SHOWN ARE TO CURB FLANGE OR EDGE OF PAVEMENT

STH 190

POINT NO.	STATION	OFFSET	COMMENTS
13	199+75.00	84.00' LT.	BEGIN SHOULDER RECONSTRUCTION
14	199+99.92	48.00' LT.	BEGIN 100' RADIUS
15	199+99.92	52.00' RT.	100' RADIUS
16	199+57.19	38.39' LT.	END 100' RADIUS, BEGIN 10' RADIUS
17	199+61.51	29.37' LT.	10' RADIUS
18	199+58.58	19.80' LT.	END 10' RADIUS, BEGIN SHOULDER TAPER
19	200+13.01	3.00' LT.	END SHOULDER TAPER
20	199+95.71	39.26' RT.	BEGIN SHOULDER TAPER
21	200+30.65	32.00' RT.	END SHOULDER TAPER
22	201+15.29	60.00' LT.	BEGIN SHOULDER RECONSTRUCTION
23	201+50.00	0.00' LT.	BEGIN SHOULDER RECONSTRUCTION
24	201+84.22	3.00' LT.	BEGIN SHOULDER TAPER

RADII SHOWN ARE TO CURB FLANGE OR EDGE OF PAVEMENT

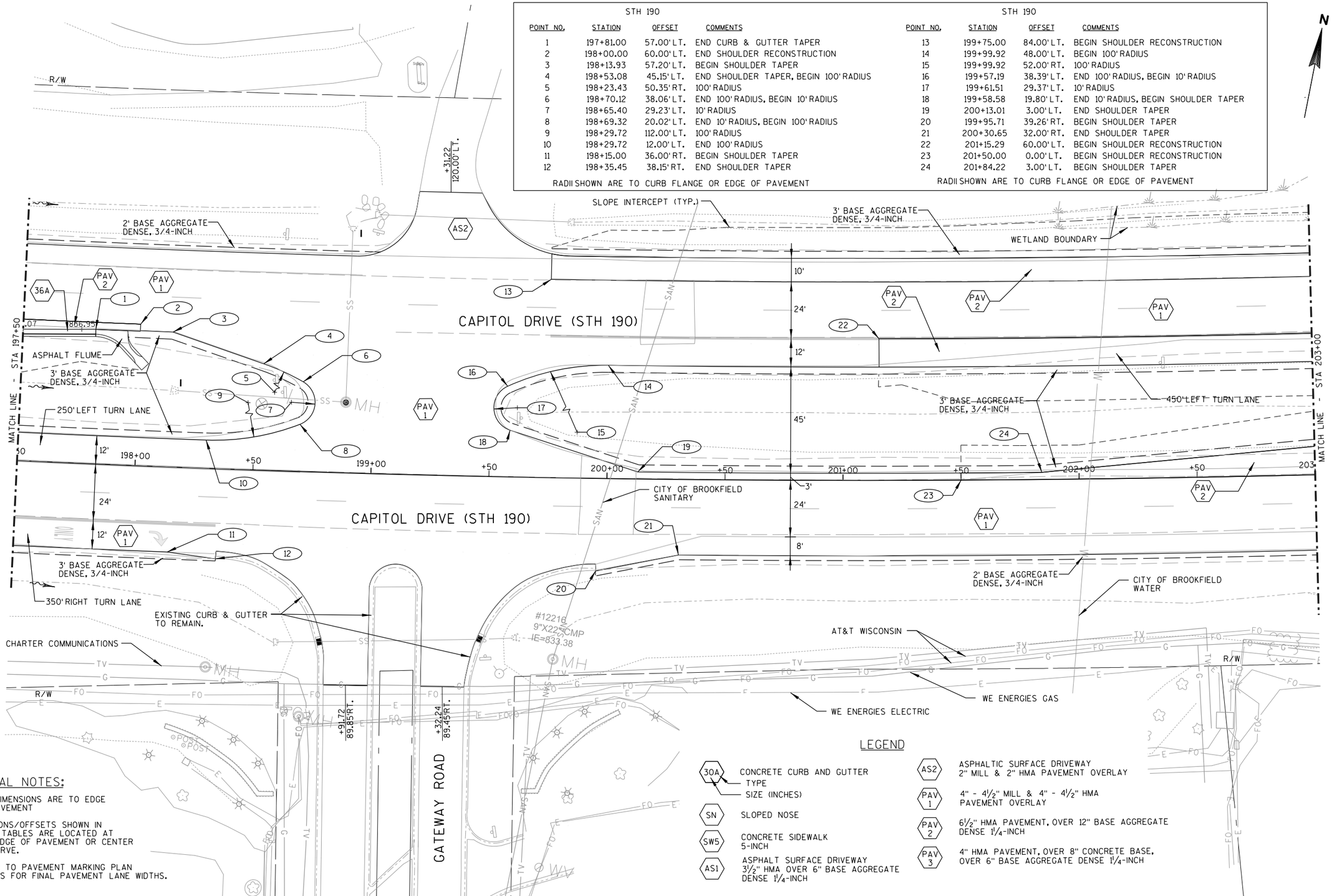

GENERAL NOTES:

1. ALL DIMENSIONS ARE TO EDGE OF PAVEMENT
2. STATIONS/OFFSETS SHOWN IN DATA TABLES ARE LOCATED AT THE EDGE OF PAVEMENT OR CENTER OF CURVE.
3. REFER TO PAVEMENT MARKING PLAN SHEETS FOR FINAL PAVEMENT LANE WIDTHS.

LEGEND

- 30A — CONCRETE CURB AND GUTTER (TYPE / SIZE (INCHES))
- SN — SLOPED NOSE
- SW5 — CONCRETE SIDEWALK 5-INCH
- AS1 — ASPHALT SURFACE DRIVEWAY 3½" HMA OVER 6" BASE AGGREGATE DENSE 1¼-INCH
- AS2 — ASPHALTIC SURFACE DRIVEWAY 2" MILL & 2" HMA PAVEMENT OVERLAY
- PAV 1 — 4" - 4½" MILL & 4" - 4½" HMA PAVEMENT OVERLAY
- PAV 2 — 6½" HMA PAVEMENT, OVER 12" BASE AGGREGATE DENSE 1¼-INCH
- PAV 3 — 4" HMA PAVEMENT, OVER 8" CONCRETE BASE, OVER 6" BASE AGGREGATE DENSE 1¼-INCH

PROJECT NO: 2025-14-71	HWY: STH 190	COUNTY: WAUKESHA	PLAN DETAIL	SHEET 38	E

2

DATA TABLE

STH 190

POINT NO.	STATION	OFFSET	COMMENTS
1	203+25.00	94.00' LT.	BEGIN SHOULDER TAPER
2	203+52.18	92.00' LT.	END SHOULDER TAPER
3	204+25.00	48.00' LT.	BEGIN SHOULDER TAPER
4	204+50.00	84.00' LT.	END SHOULDER RECONSTRUCTION
5	204+75.00	0.00' LT.	END SHOULDER RECONSTRUCTION
6	205+33.81	57.00' LT.	END SHOULDER TAPER
7	207+26.18	92.00' LT.	BEGIN 40' RADIUS
8	207+26.18	132.00' LT.	40' RADIUS
9	207+62.62	114.27' LT.	END 40' RADIUS
10	206+89.07	0.00' LT.	BEGIN SHOULDER RECONSTRUCTION
11	206+89.07	12.00' LT.	BEGIN 100' RADIUS
12	206+89.07	112.00' LT.	100' RADIUS
13	207+58.90	39.75' LT.	END 100' RADIUS, BEGIN 10' RADIUS
14	207+51.98	47.00' LT.	10' RADIUS
15	207+51.98	57.00' LT.	END 10' RADIUS

RADII SHOWN ARE TO CURB FLANGE OR EDGE OF PAVEMENT

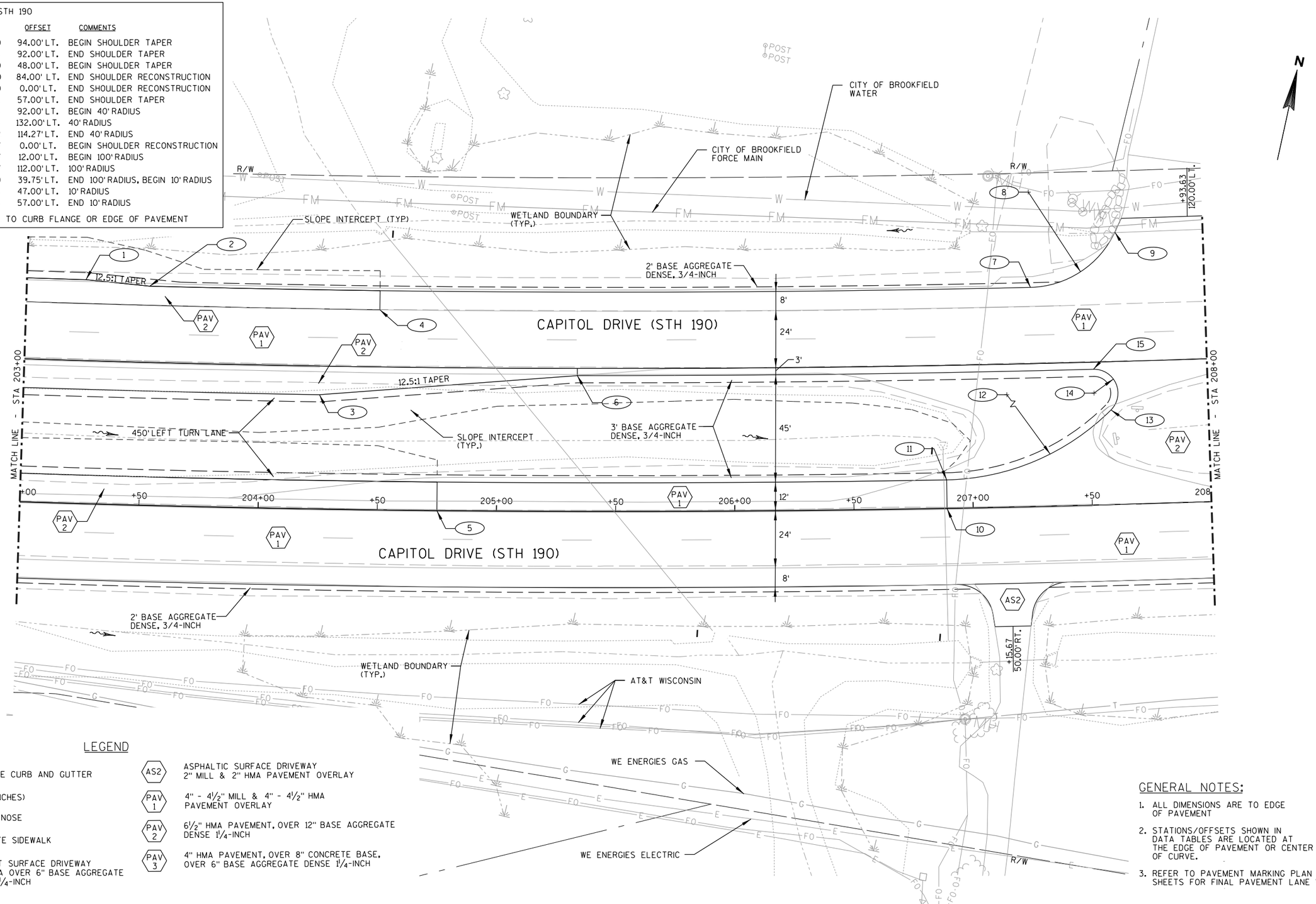

LEGEND

- 30A — CONCRETE CURB AND GUTTER (TYPE / SIZE (INCHES))
- SN — SLOPED NOSE
- SW5 — CONCRETE SIDEWALK 5-INCH
- AS1 — ASPHALT SURFACE DRIVEWAY 3½" HMA OVER 6" BASE AGGREGATE DENSE 1¼-INCH
- AS2 — ASPHALTIC SURFACE DRIVEWAY 2" MILL & 2" HMA PAVEMENT OVERLAY
- PAV 1 — 4" - 4½" MILL & 4" - 4½" HMA PAVEMENT OVERLAY
- PAV 2 — 6½" HMA PAVEMENT, OVER 12" BASE AGGREGATE DENSE 1¼-INCH
- PAV 3 — 4" HMA PAVEMENT, OVER 8" CONCRETE BASE, OVER 6" BASE AGGREGATE DENSE 1¼-INCH

GENERAL NOTES:

1. ALL DIMENSIONS ARE TO EDGE OF PAVEMENT
2. STATIONS/OFFSETS SHOWN IN DATA TABLES ARE LOCATED AT THE EDGE OF PAVEMENT OR CENTER OF CURVE.
3. REFER TO PAVEMENT MARKING PLAN SHEETS FOR FINAL PAVEMENT LANE WIDTHS.

DATA TABLE

STH 190

POINT NO.	STATION	OFFSET	COMMENTS
1	208+54.00	3.00' LT.	BEGIN 60' RADIUS
2	208+54.00	63.00' LT.	60' RADIUS
3	208+08.79	23.27' LT.	END 60' RADIUS, BEGIN 10' RADIUS
4	208+16.29	29.91' LT.	10' RADIUS
5	208+08.71	36.47' LT.	END 10' RADIUS, BEGIN 60' RADIUS
6	208+54.00	3.00' RT.	60' RADIUS
7	208+54.00	57.00' LT.	END 60' RADIUS
8	208+30.08	108.56' LT.	BEGIN 30' RADIUS
9	208+54.87	126.00' LT.	30' RADIUS
10	208+54.87	96.00' LT.	END 30' RADIUS
11	208+50.00	84.00' LT.	BEGIN SHOULDER RECONSTRUCTION
12	212+00.00	96.00' LT.	BEGIN SHOULDER TAPER
13	212+54.25	92.00' LT.	END SHOULDER TAPER

RADII SHOWN ARE TO CURB FLANGE OR EDGE OF PAVEMENT

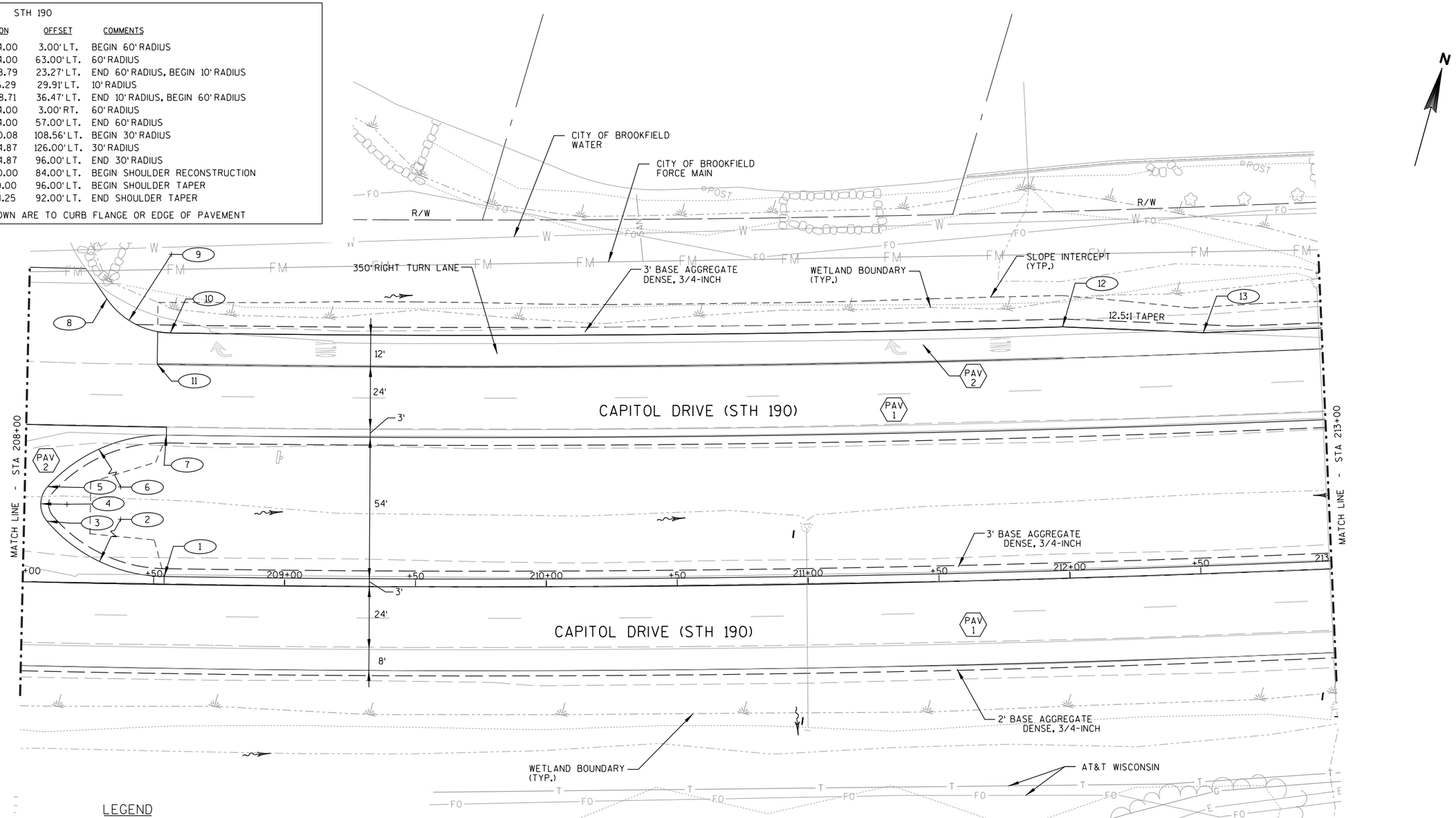

LEGEND

- 30A — CONCRETE CURB AND GUTTER (TYPE / SIZE (INCHES))
- SN — SLOPED NOSE
- SW5 — CONCRETE SIDEWALK 5-INCH
- AS1 — ASPHALT SURFACE DRIVEWAY 3½" HMA OVER 6" BASE AGGREGATE DENSE 1¼-INCH
- AS2 — ASPHALTIC SURFACE DRIVEWAY 2" MILL & 2" HMA PAVEMENT OVERLAY
- PAV 1 — 4" - 4½" MILL & 4" - 4½" HMA PAVEMENT OVERLAY
- PAV 2 — 6½" HMA PAVEMENT, OVER 12" BASE AGGREGATE DENSE 1¼-INCH
- PAV 3 — 4" HMA PAVEMENT, OVER 8" CONCRETE BASE, OVER 6" BASE AGGREGATE DENSE 1¼-INCH

GENERAL NOTES:

1. ALL DIMENSIONS ARE TO EDGE OF PAVEMENT
2. STATIONS/OFFSETS SHOWN IN DATA TABLES ARE LOCATED AT THE EDGE OF PAVEMENT OR CENTER OF CURVE.
3. REFER TO PAVEMENT MARKING PLAN SHEETS FOR FINAL PAVEMENT LANE WIDTHS.

DATA TABLE

STH 190

POINT NO.	STATION	OFFSET	COMMENTS
1	213+50.00	84.00' LT.	END SHOULDER RECONSTRUCTION
2	214+25.00	0.00' LT.	BEGIN SHOULDER RECONSTRUCTION
3	214+59.22	3.00' LT.	BEGIN SHOULDER TAPER
4	215+75.00	12.00' LT.	END SHOULDER TAPER
5	216+58.33	0.00' LT.	END SHOULDER RECONSTRUCTION
6	217+39.08	12.00' LT.	BEGIN 60' RADIUS
7	217+39.08	72.00' LT.	60' RADIUS
8	217+73.11	22.44' LT.	END 60' RADIUS, BEGIN 10' RADIUS
9	217+67.47	30.71' LT.	10' RADIUS
10	217+17.59	39.83' LT.	END 10' RADIUS, BEGIN 200' RADIUS
11	216+91.06	143.00' RT.	200' RADIUS
12	216+91.06	57.00' LT.	END 200' RADIUS
13	217+34.18	92.00' LT.	BEGIN 40' RADIUS

RADIUS SHOWN IS TO CURB FLANGE

DATA TABLE

STH 190

POINT NO.	STATION	OFFSET	COMMENTS
14	217+34.18	132.00' LT.	40' RADIUS
15	217+73.78	122.83' LT.	END 40' RADIUS
16	218+11.41	119.78' LT.	BEGIN 40' RADIUS
17	218+49.42	134.00' LT.	40' RADIUS
18	218+49.42	94.00' LT.	END 40' RADIUS
19	218+25.00	84.00' LT.	BEGIN SHOULDER RECONSTRUCTION
20	218+95.99	57.00' LT.	BEGIN 150' RADIUS
21	218+95.99	93.00' RT.	150' RADIUS
22	218+26.32	39.71' LT.	END 150' RADIUS, BEGIN 10' RADIUS
23	218+31.04	30.88' LT.	10' RADIUS
24	218+26.17	22.14' LT.	END 10' RADIUS, BEGIN 150' RADIUS
25	219+00.34	153.00' LT.	150' RADIUS
26	219+00.34	3.00' LT.	END 150' RADIUS

RADIUS SHOWN IS TO CURB FLANGE

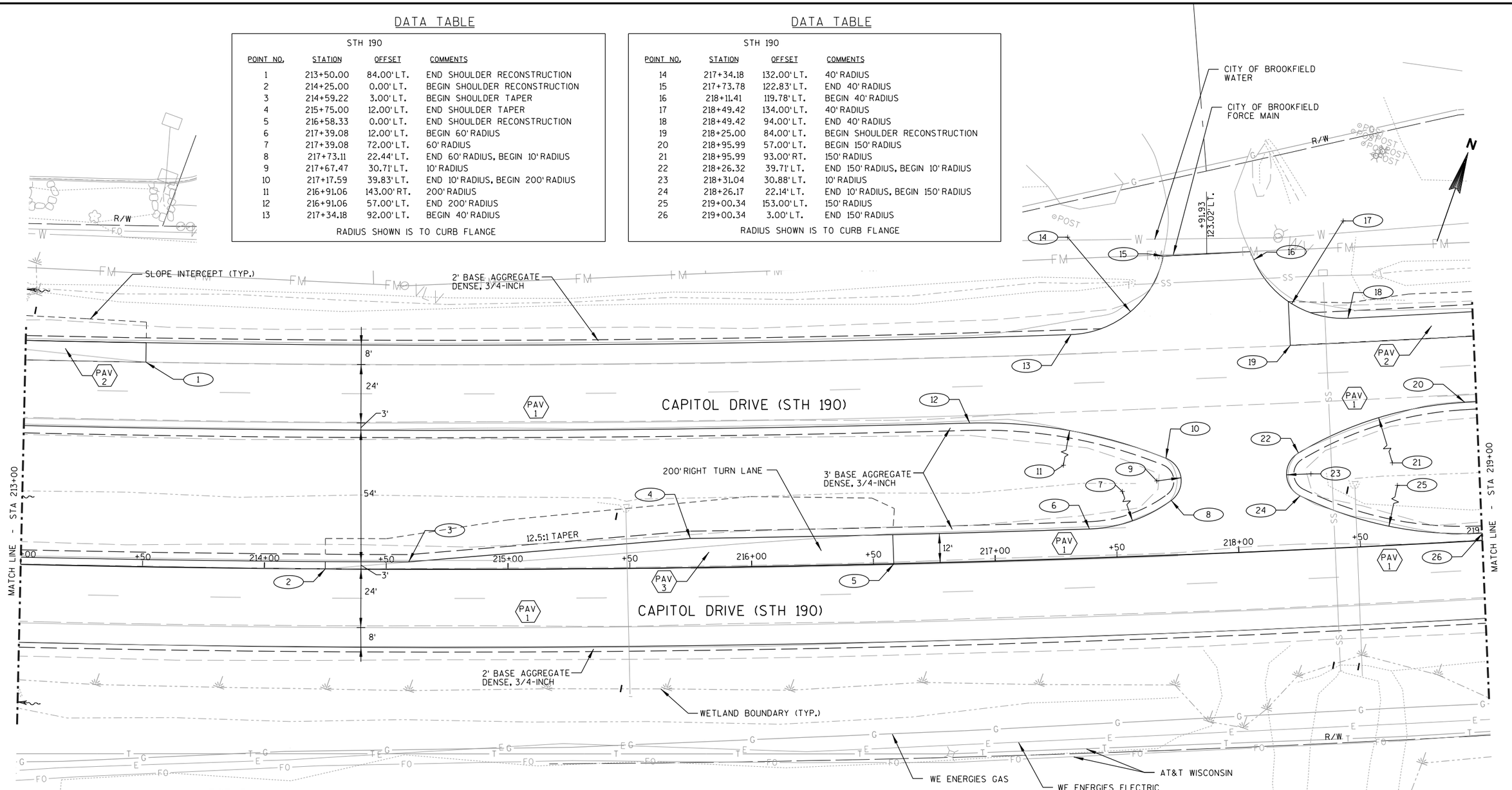

LEGEND

- 30A — CONCRETE CURB AND GUTTER (TYPE; SIZE (INCHES))
- SN — SLOPED NOSE
- SW5 — CONCRETE SIDEWALK 5-INCH
- AS1 — ASPHALT SURFACE DRIVEWAY 3½" HMA OVER 6" BASE AGGREGATE DENSE 1¼-INCH
- AS2 — ASPHALTIC SURFACE DRIVEWAY 2" MILL & 2" HMA PAVEMENT OVERLAY
- PAV 1 — 4" - 4½" MILL & 4" - 4½" HMA PAVEMENT OVERLAY
- PAV 2 — 6½" HMA PAVEMENT, OVER 12" BASE AGGREGATE DENSE 1¼-INCH
- PAV 3 — 4" HMA PAVEMENT, OVER 8" CONCRETE BASE, OVER 6" BASE AGGREGATE DENSE 1¼-INCH

GENERAL NOTES:

1. ALL DIMENSIONS ARE TO EDGE OF PAVEMENT
2. STATIONS/OFFSETS SHOWN IN DATA TABLES ARE LOCATED AT THE EDGE OF PAVEMENT OR CENTER OF CURVE.
3. REFER TO PAVEMENT MARKING PLAN SHEETS FOR FINAL PAVEMENT LANE WIDTHS.

DATA TABLE

STH 190

POINT NO.	STATION	OFFSET	COMMENTS
1	221+75.00	94.00' LT.	BEGIN SHOULDER TAPER
2	222+02.18	92.00' LT.	END SHOULDER TAPER
3	223+00.00	84.00' LT.	END SHOULDER RECONSTRUCTION

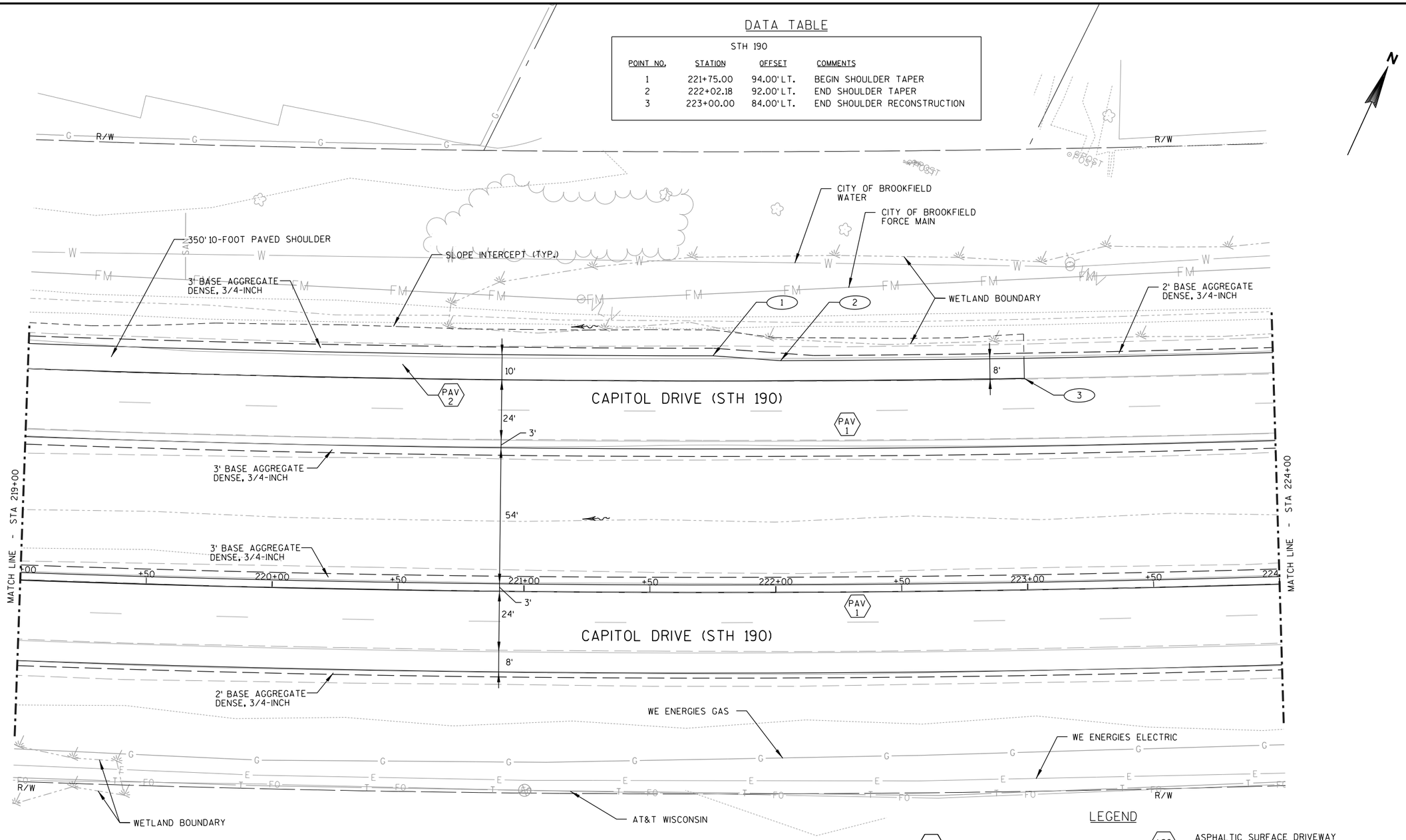

GENERAL NOTES:

1. ALL DIMENSIONS ARE TO EDGE OF PAVEMENT
2. STATIONS/OFFSETS SHOWN IN DATA TABLES ARE LOCATED AT THE EDGE OF PAVEMENT OR CENTER OF CURVE.
3. REFER TO PAVEMENT MARKING PLAN SHEETS FOR FINAL PAVEMENT LANE WIDTHS.

LEGEND

- 30A — CONCRETE CURB AND GUTTER (TYPE / SIZE (INCHES))
- SN — SLOPED NOSE
- SW5 — CONCRETE SIDEWALK 5-INCH
- AS1 — ASPHALT SURFACE DRIVEWAY 3½" HMA OVER 6" BASE AGGREGATE DENSE 1¼-INCH
- AS2 — ASPHALTIC SURFACE DRIVEWAY 2" MILL & 2" HMA PAVEMENT OVERLAY
- PAV 1 — 4" - 4½" MILL & 4" - 4½" HMA PAVEMENT OVERLAY
- PAV 2 — 6½" HMA PAVEMENT, OVER 12" BASE AGGREGATE DENSE 1¼-INCH
- PAV 3 — 4" HMA PAVEMENT, OVER 8" CONCRETE BASE, OVER 6" BASE AGGREGATE DENSE 1¼-INCH

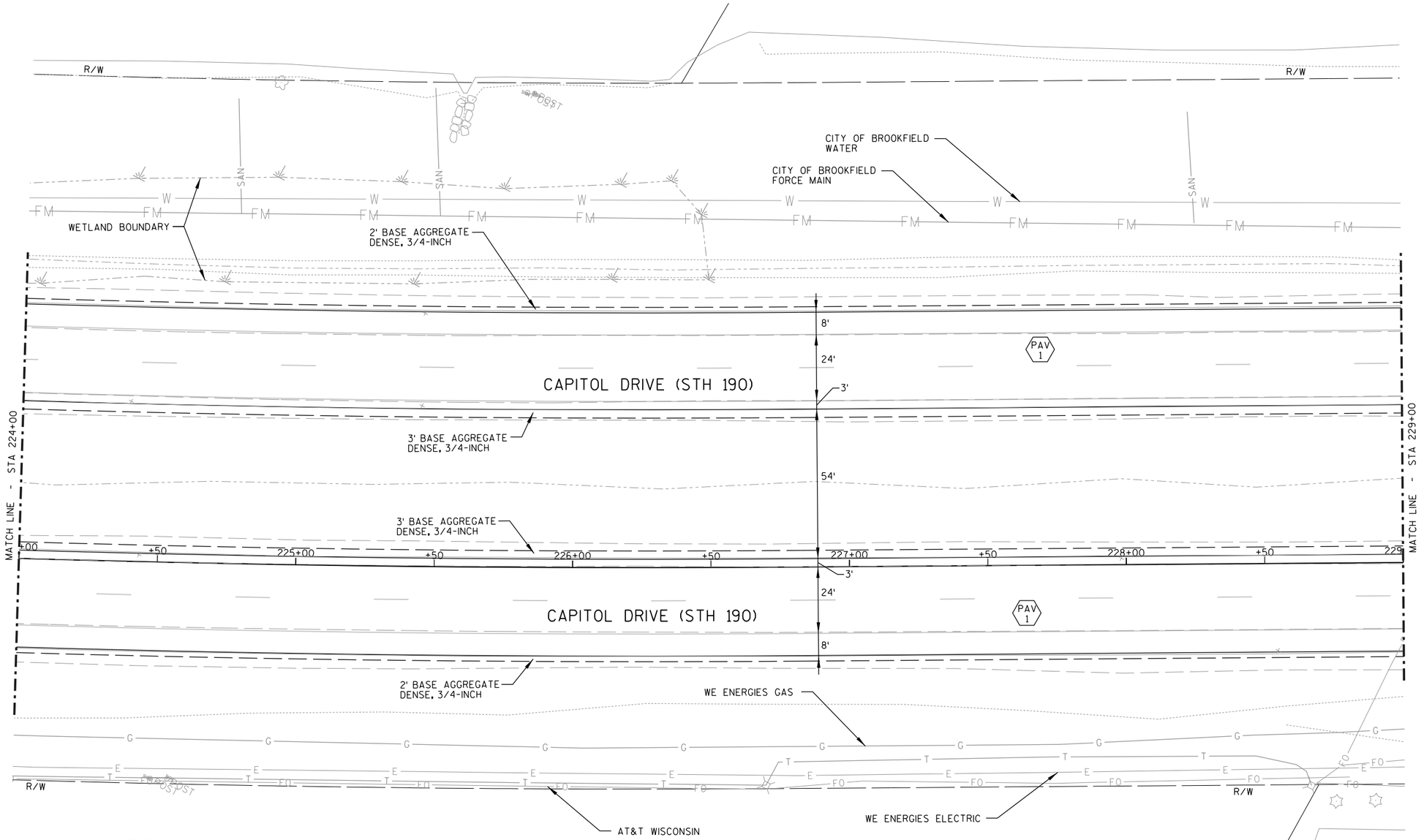

LEGEND

- 30A — CONCRETE CURB AND GUTTER (TYPE: 30A; SIZE (INCHES))
- SN — SLOPED NOSE
- SW5 — CONCRETE SIDEWALK 5-INCH
- AS1 — ASPHALT SURFACE DRIVEWAY 3½" HMA OVER 6" BASE AGGREGATE DENSE 1¼-INCH
- AS2 — ASPHALTIC SURFACE DRIVEWAY 2" MILL & 2" HMA PAVEMENT OVERLAY
- PAV 1 — 4" - 4½" MILL & 4" - 4½" HMA PAVEMENT OVERLAY
- PAV 2 — 6½" HMA PAVEMENT, OVER 12" BASE AGGREGATE DENSE 1¼-INCH
- PAV 3 — 4" HMA PAVEMENT, OVER 8" CONCRETE BASE, OVER 6" BASE AGGREGATE DENSE 1¼-INCH

GENERAL NOTES:

1. ALL DIMENSIONS ARE TO EDGE OF PAVEMENT
2. STATIONS/OFFSETS SHOWN IN DATA TABLES ARE LOCATED AT THE EDGE OF PAVEMENT OR CENTER OF CURVE.
3. REFER TO PAVEMENT MARKING PLAN SHEETS FOR FINAL PAVEMENT LANE WIDTHS.

PROJECT NO:2025-14-71	HWY:STH 190	COUNTY:WAUKESHA	PLAN DETAIL	SHEET 43	E

DATA TABLE

STH 190

POINT NO.	STATION	OFFSET	COMMENTS
1	231+50.00	0.00'LT.	BEGIN SHOULDER RECONSTRUCTION
2	231+87.50	3.00'LT.	BEGIN SHOULDER TAPER
3	232+75.00	24.00'RT.	BEGIN SHOULDER RECONSTRUCTION
4	232+99.90	34.00'RT.	END SHOULDER TAPER
5	233+00.00	12.00'LT.	END SHOULDER TAPER

RADIUS SHOWN IS TO CURB FLANGE

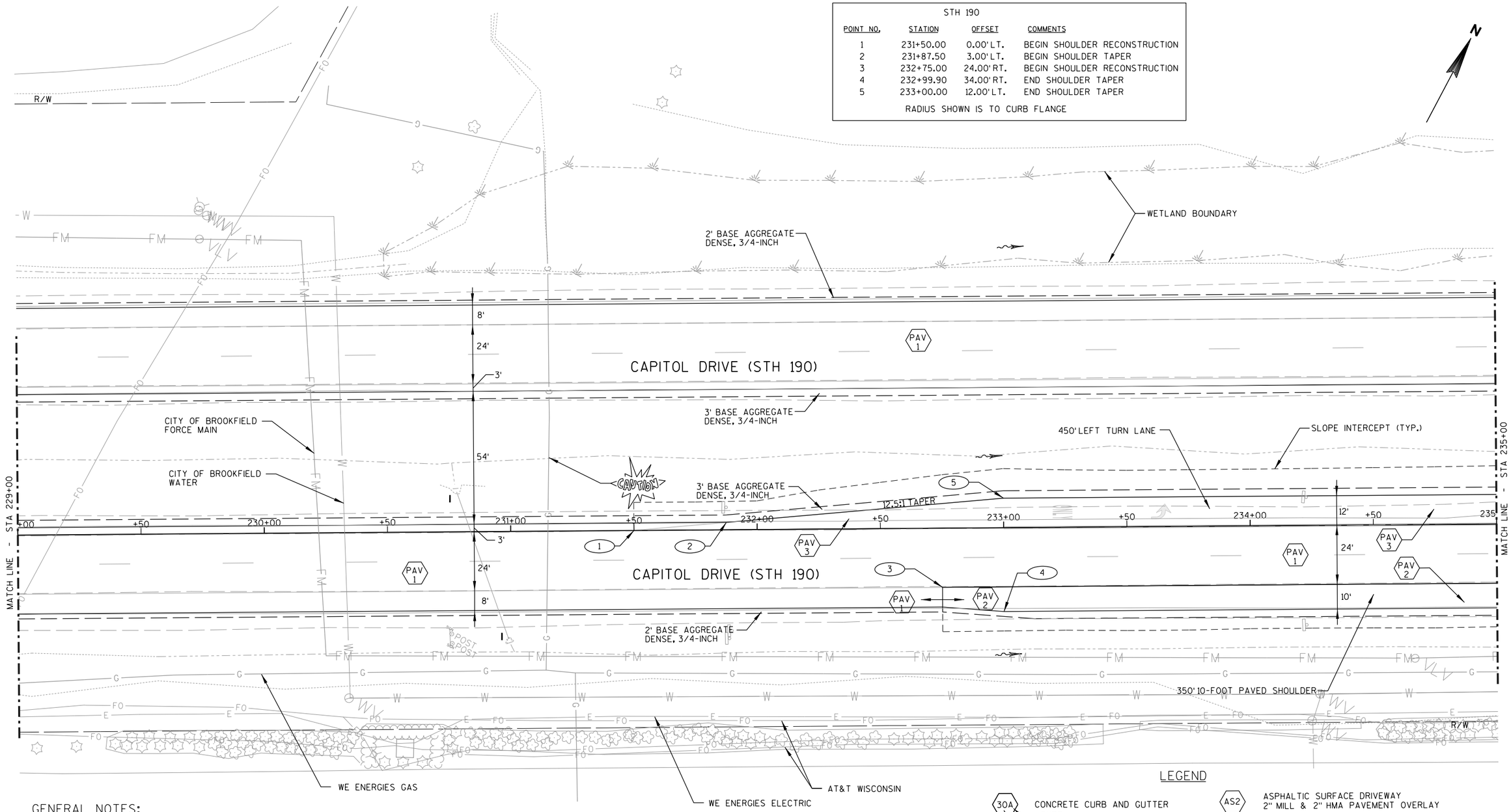

GENERAL NOTES:

1. ALL DIMENSIONS ARE TO EDGE OF PAVEMENT
2. STATIONS/OFFSETS SHOWN IN DATA TABLES ARE LOCATED AT THE EDGE OF PAVEMENT OR CENTER OF CURVE.
3. REFER TO PAVEMENT MARKING PLAN SHEETS FOR FINAL PAVEMENT LANE WIDTHS.

LEGEND

- 30A — CONCRETE CURB AND GUTTER (TYPE; SIZE (INCHES))
- SN — SLOPED NOSE
- SW5 — CONCRETE SIDEWALK 5-INCH
- AS1 — ASPHALT SURFACE DRIVEWAY 3½" HMA OVER 6" BASE AGGREGATE DENSE 1¼-INCH
- AS2 — ASPHALTIC SURFACE DRIVEWAY 2" MILL & 2" HMA PAVEMENT OVERLAY
- PAV 1 — 4" - 4½" MILL & 4" - 4½" HMA PAVEMENT OVERLAY
- PAV 2 — 6½" HMA PAVEMENT, OVER 12" BASE AGGREGATE DENSE 1¼-INCH
- PAV 3 — 4" HMA PAVEMENT, OVER 8" CONCRETE BASE, OVER 6" BASE AGGREGATE DENSE 1¼-INCH

2

DATA TABLE

STH 190

POINT NO.	STATION	OFFSET	COMMENTS
1	236+59.32	92.00' LT.	BEGIN SHOULDER TAPER
2	237+03.48	124.44' LT.	END ROADWAY IMPROVEMENTS
3	237+33.29	148.44' LT.	END ROADWAY IMPROVEMENTS
4	236+71.25	57.00' LT.	BEGIN 200' RADIUS
5	236+71.25	143.00' RT.	200' RADIUS
6	237+52.87	39.59' LT.	END 200' RADIUS, BEGIN 10' RADIUS
7	237+48.79	30.46' LT.	10' RADIUS
8	237+54.35	22.15' LT.	END 10' RADIUS, BEGIN 60' RADIUS
9	237+20.96	72.00' LT.	60' RADIUS
10	237+20.96	12.00' LT.	END 60' RADIUS
11	236+25.00	0.00' LT.	END SHOULDER RECONSTRUCTION
12	237+50.00	24.00' RT.	END SHOULDER RECONSTRUCTION
13	237+44.30	34.00' RT.	BEGIN 30' RADIUS
14	237+44.30	64.00' RT.	30' RADIUS
15	237+70.83	50.00' RT.	END 30' RADIUS, END ROADWAY IMPROVEMENTS

RADII SHOWN ARE TO CURB FLANGE OR EDGE OF PAVEMENT

DATA TABLE

STH 190

POINT NO.	STATION	OFFSET	COMMENTS
16	238+13.65	50.00' RT.	END ROADWAY IMPROVEMENTS, BEGIN 18' RADIUS
17	238+31.40	53.00' RT.	18' RADIUS
18	238+31.40	35.00' RT.	END 18' RADIUS
19	238+75.00	24.00' RT.	BEGIN SHOULDER RECONSTRUCTION
20	238+69.21	2.95' LT.	BEGIN TAPER
21	238+26.87	14.79' LT.	END TAPER, BEGIN 10' RADIUS
22	238+29.69	24.39' LT.	10' RADIUS
23	238+23.57	32.29' LT.	END 10' RADIUS, BEGIN 75' RADIUS
24	238+69.49	27.00' RT.	75' RADIUS
25	238+69.49	48.00' LT.	END 75' RADIUS
26	239+50.00	60.00' LT.	BEGIN SHOULDER RECONSTRUCTION
27	239+75.00	84.00' LT.	BEGIN SHOULDER RECONSTRUCTION
28	239+46.72	39.00' RT.	BEGIN 15:1 AGGREGATE SHOULDER TAPER
29	240+36.72	40.00' RT.	POST 1 OF ENERGY ABSORBING TERMINAL
30	240+36.75	45.00' RT.	END 15: AGGREGATE SHOULDER TAPER
31	240+61.72	44.00' RT.	BEGIN AGGREGATE TAPER
32	240+86.72	39.00' RT.	END AGGREGATE TAPER

RADII SHOWN ARE TO CURB FLANGE OR EDGE OF PAVEMENT

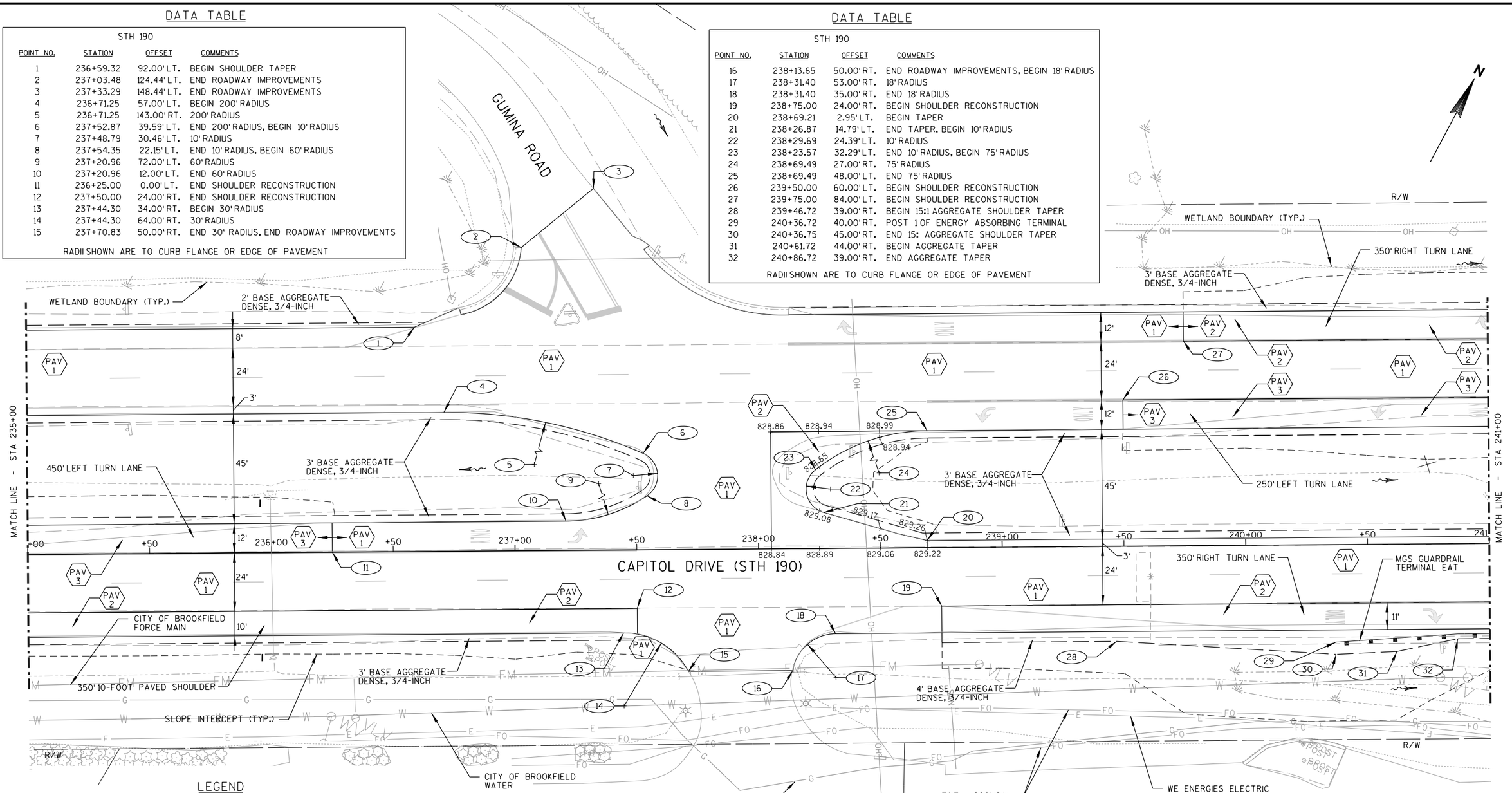

LEGEND

- 30A — CONCRETE CURB AND GUTTER (TYPE / SIZE (INCHES))
- SN — SLOPED NOSE
- SW5 — CONCRETE SIDEWALK 5-INCH
- AS1 — ASPHALT SURFACE DRIVEWAY 3½" HMA OVER 6" BASE AGGREGATE DENSE 1¼-INCH
- AS2 — ASPHALTIC SURFACE DRIVEWAY 2" MILL & 2" HMA PAVEMENT OVERLAY
- PAV 1 — 4" - 4½" MILL & 4" - 4½" HMA PAVEMENT OVERLAY
- PAV 2 — 6½" HMA PAVEMENT, OVER 12" BASE AGGREGATE DENSE 1¼-INCH
- PAV 3 — 4" HMA PAVEMENT, OVER 8" CONCRETE BASE, OVER 6" BASE AGGREGATE DENSE 1¼-INCH

GENERAL NOTES:

1. ALL DIMENSIONS ARE TO EDGE OF PAVEMENT
2. STATIONS/OFFSETS SHOWN IN DATA TABLES ARE LOCATED AT THE EDGE OF PAVEMENT OR CENTER OF CURVE.
3. REFER TO PAVEMENT MARKING PLAN SHEETS FOR FINAL PAVEMENT LANE WIDTHS.

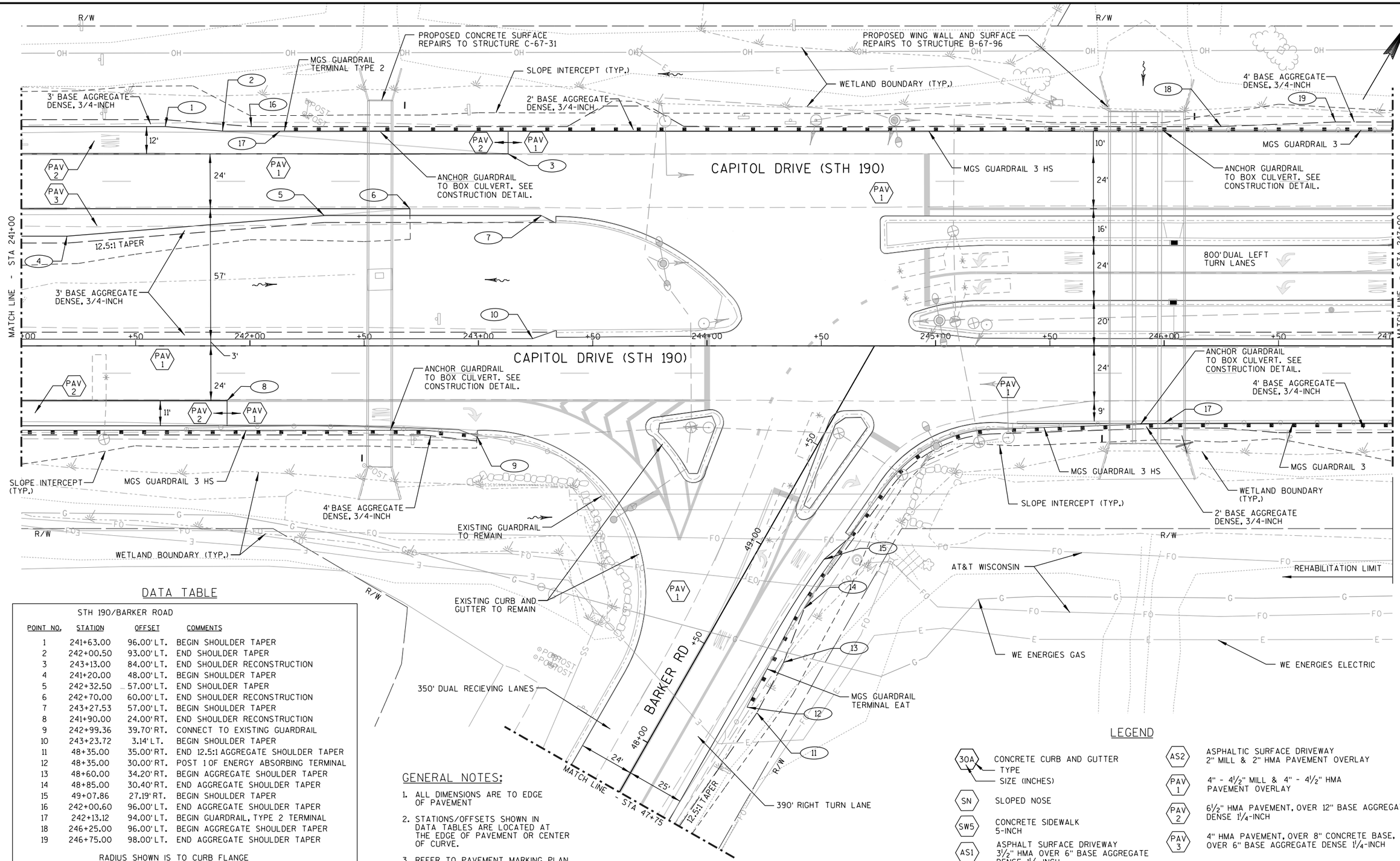

DATA TABLE

STH 190/BARKER ROAD

POINT NO.	STATION	OFFSET	COMMENTS
1	241+63.00	96.00' LT.	BEGIN SHOULDER TAPER
2	242+00.50	93.00' LT.	END SHOULDER TAPER
3	243+13.00	84.00' LT.	END SHOULDER RECONSTRUCTION
4	241+20.00	48.00' LT.	BEGIN SHOULDER TAPER
5	242+32.50	57.00' LT.	END SHOULDER TAPER
6	242+70.00	60.00' LT.	END SHOULDER RECONSTRUCTION
7	243+27.53	57.00' LT.	BEGIN SHOULDER TAPER
8	241+90.00	24.00' RT.	END SHOULDER RECONSTRUCTION
9	242+99.36	39.70' RT.	CONNECT TO EXISTING GUARDRAIL
10	243+23.72	3.14' LT.	BEGIN SHOULDER TAPER
11	48+35.00	35.00' RT.	END 12.5:1 AGGREGATE SHOULDER TAPER
12	48+35.00	30.00' RT.	POST 1 OF ENERGY ABSORBING TERMINAL
13	48+60.00	34.20' RT.	BEGIN AGGREGATE SHOULDER TAPER
14	48+85.00	30.40' RT.	END AGGREGATE SHOULDER TAPER
15	49+07.86	27.19' RT.	BEGIN SHOULDER TAPER
16	242+00.60	96.00' LT.	END AGGREGATE SHOULDER TAPER
17	242+13.12	94.00' LT.	BEGIN GUARDRAIL, TYPE 2 TERMINAL
18	246+25.00	96.00' LT.	BEGIN AGGREGATE SHOULDER TAPER
19	246+75.00	98.00' LT.	END AGGREGATE SHOULDER TAPER

RADIUS SHOWN IS TO CURB FLANGE

GENERAL NOTES:

1. ALL DIMENSIONS ARE TO EDGE OF PAVEMENT
2. STATIONS/OFFSETS SHOWN IN DATA TABLES ARE LOCATED AT THE EDGE OF PAVEMENT OR CENTER OF CURVE.
3. REFER TO PAVEMENT MARKING PLAN SHEETS FOR FINAL PAVEMENT LANE WIDTHS.

LEGEND

- 30A — CONCRETE CURB AND GUTTER (TYPE / SIZE (INCHES))
- SN — SLOPED NOSE
- SW5 — CONCRETE SIDEWALK 5-INCH
- AS1 — ASPHALT SURFACE DRIVEWAY 3½" HMA OVER 6" BASE AGGREGATE DENSE 1¼-INCH
- AS2 — ASPHALTIC SURFACE DRIVEWAY 2" MILL & 2" HMA PAVEMENT OVERLAY
- PAV 1 — 4" - 4½" MILL & 4" - 4½" HMA PAVEMENT OVERLAY
- PAV 2 — 6½" HMA PAVEMENT, OVER 12" BASE AGGREGATE DENSE 1¼-INCH
- PAV 3 — 4" HMA PAVEMENT, OVER 8" CONCRETE BASE, OVER 6" BASE AGGREGATE DENSE 1¼-INCH

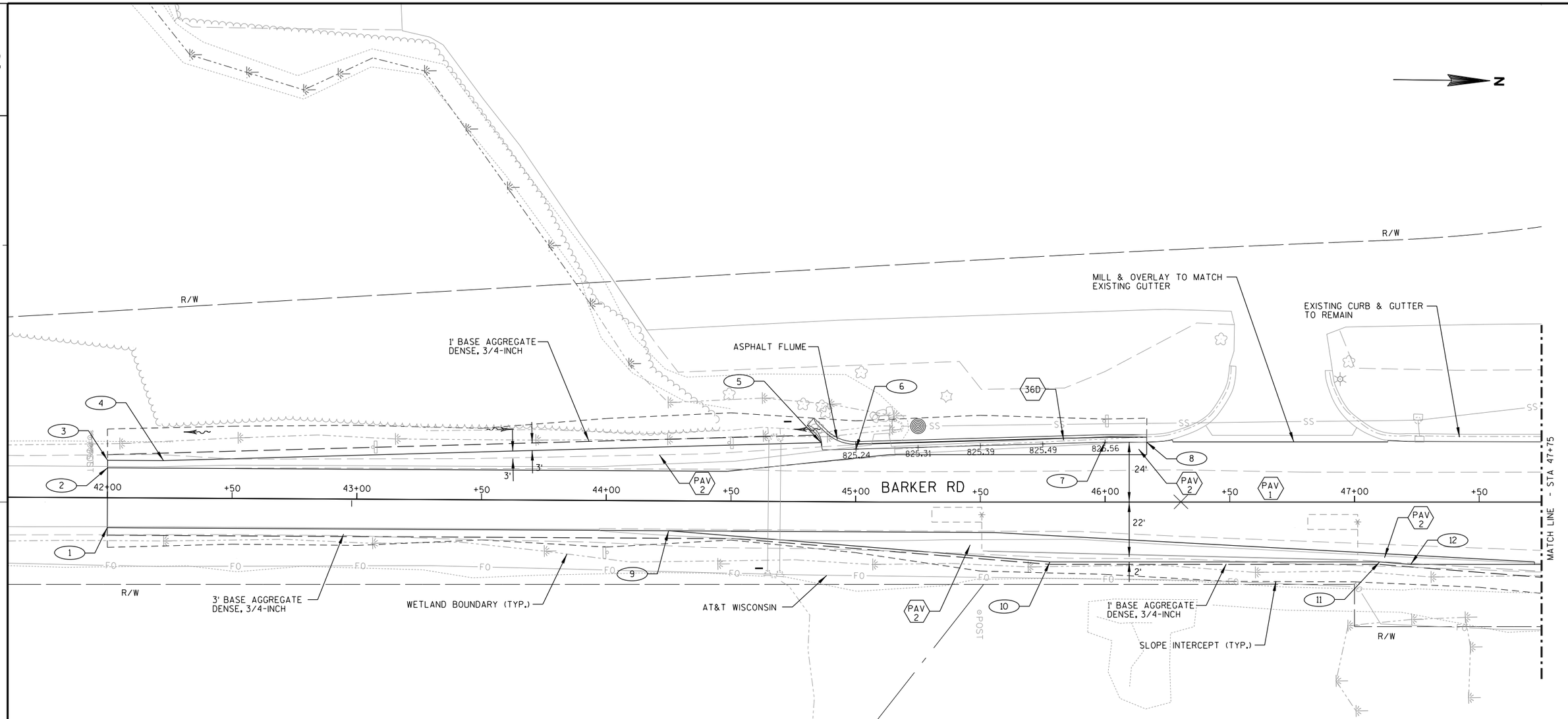

DATA TABLE

BARKER ROAD

POINT NO.	STATION	OFFSET	COMMENTS
1	42+00.00	12.00'RT	BEGIN MILL & OVERLAY
2	42+00.00	12.00'LT	BEGIN MILL & OVERLAY; PAVED SHOULDER
3	42+00.00	15.00'LT	BEGIN PAVED SHOULDER
4	42+22.40	15.00'LT	PAVED SHOULDER ANGLE POINT
5	44+85.98	23.73'LT	PAVED SHOULDER ANGLE POINT
6	45+00.02	21.19'LT	BEGIN CURB & GUTTER
7	46+00.00	24.00'LT	CURB & GUTTER ANGLE POINT
8	46+16.69	24.00'LT	END CURB & GUTTER
9	44+25.07	12.00'RT	PAVEMENT EDGE - BEGIN TAPER POINT
10	45+77.86	24.00'RT	PAVEMENT EDGE - END TAPER POINT
11	47+10.04	24.00'RT	PAVEMENT EDGE - BEGIN TAPER POINT
12	47+22.54	25.00'RT	PAVEMENT EDGE - END TAPER POINT

GENERAL NOTES:

1. ALL DIMENSIONS ARE TO EDGE OF PAVEMENT
2. STATIONS/OFFSETS SHOWN IN DATA TABLES ARE LOCATED AT THE EDGE OF PAVEMENT OR CENTER OF CURVE.
3. REFER TO PAVEMENT MARKING PLAN SHEETS FOR FINAL PAVEMENT LANE WIDTHS.

LEGEND

- 30A — CONCRETE CURB AND GUTTER (TYPE: 30; SIZE (INCHES): A)
- SN — SLOPED NOSE
- SW5 — CONCRETE SIDEWALK 5-INCH
- AS1 — ASPHALT SURFACE DRIVEWAY 3½" HMA OVER 6" BASE AGGREGATE DENSE 1¼-INCH
- AS2 — ASPHALTIC SURFACE DRIVEWAY 2" MILL & 2" HMA PAVEMENT OVERLAY
- PAV 1 — 4" - 4½" MILL & 4" - 4½" HMA PAVEMENT OVERLAY
- PAV 2 — 6½" HMA PAVEMENT, OVER 12" BASE AGGREGATE DENSE 1¼-INCH
- PAV 3 — 4" HMA PAVEMENT, OVER 8" CONCRETE BASE, OVER 6" BASE AGGREGATE DENSE 1¼-INCH

PROJECT NO:2025-14-71	HWY:STH 190	COUNTY:WAUKESHA	PLAN DETAIL - BARKER ROAD	SHEET 47	E

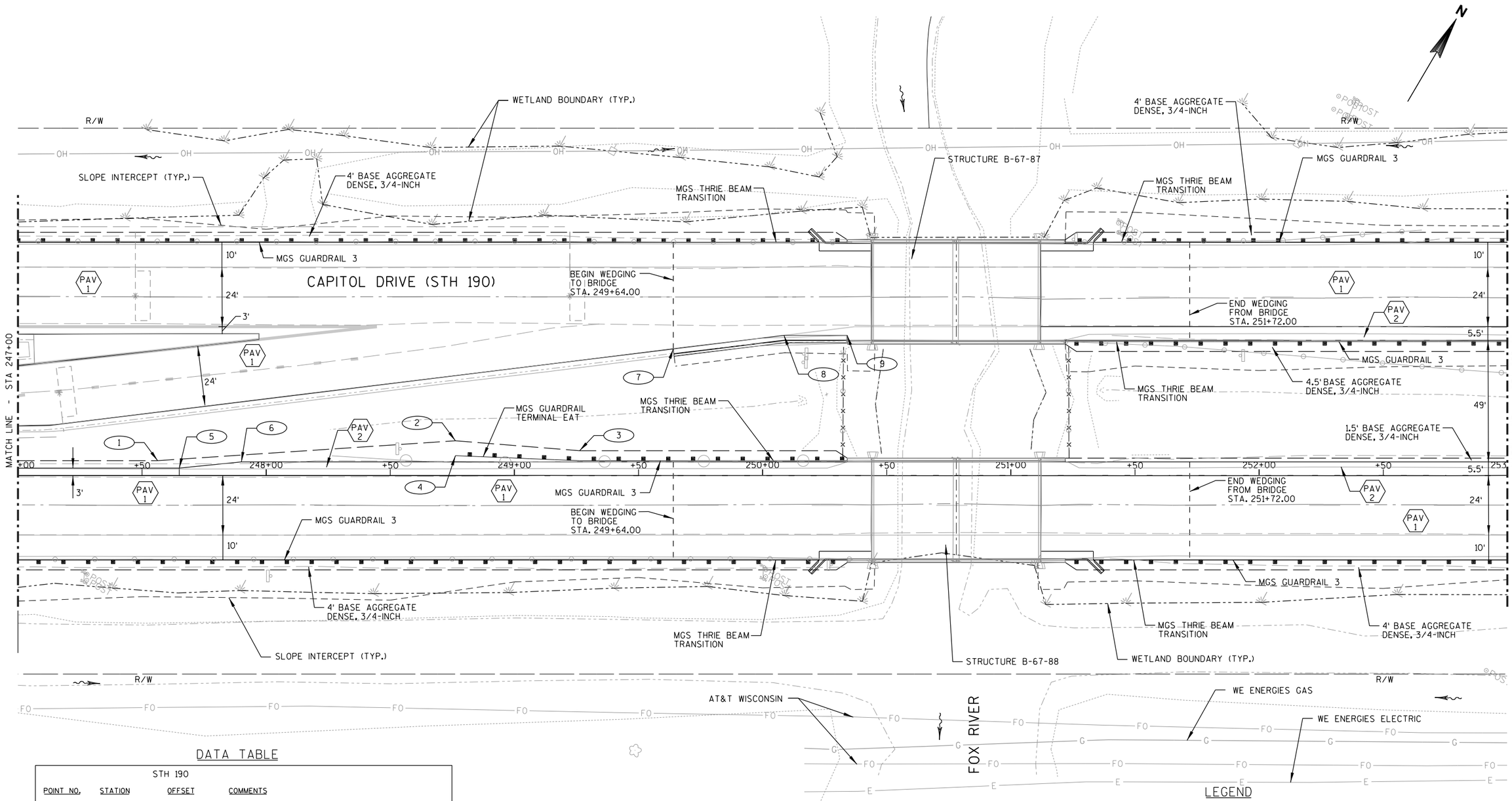

DATA TABLE

STH 190

POINT NO.	STATION	OFFSET	COMMENTS
1	247+56.25	6.00' LT	BASE AGGREGATE SHOULDER POINT
2	248+76.25	14.00' LT	BASE AGGREGATE SHOULDER POINT
3	249+26.25	10.00' LT	BASE AGGREGATE SHOULDER POINT
4	248+76.25	8.00' LT	POST 1 OF ENERGY ABSORBING TERMINAL
5	247+65.00	3.00' LT	ASPHALT SHOULDER TAPER POINT, BEGIN PAV2
6	247+90.00	5.50' LT	ASPHALT SHOULDER TAPER POINT
7	249+64.00	51.00' LT	BEGIN CURB & GUTTER
8	250+08.60	56.50' LT	CURB & GUTTER TAPER POINT
9	250+34.08	56.50' LT	END CURB & GUTTER

GENERAL NOTES:

1. ALL DIMENSIONS ARE TO EDGE OF PAVEMENT
2. STATIONS/OFFSETS SHOWN IN DATA TABLES ARE LOCATED AT THE EDGE OF PAVEMENT OR CENTER OF CURVE.
3. REFER TO PAVEMENT MARKING PLAN SHEETS FOR FINAL PAVEMENT LANE WIDTHS.

LEGEND

- 30A — CONCRETE CURB AND GUTTER (TYPE / SIZE (INCHES))
- SN — SLOPED NOSE
- SW5 — CONCRETE SIDEWALK 5-INCH
- AS1 — ASPHALT SURFACE DRIVEWAY 3½" HMA OVER 6" BASE AGGREGATE DENSE 1¼-INCH
- AS2 — ASPHALTIC SURFACE DRIVEWAY 2" MILL & 2" HMA PAVEMENT OVERLAY
- PAV 1 — 4" - 4½" MILL & 4" - 4½" HMA PAVEMENT OVERLAY
- PAV 2 — 6½" HMA PAVEMENT, OVER 12" BASE AGGREGATE DENSE 1¼-INCH
- PAV 3 — 4" HMA PAVEMENT, OVER 8" CONCRETE BASE, OVER 6" BASE AGGREGATE DENSE 1¼-INCH

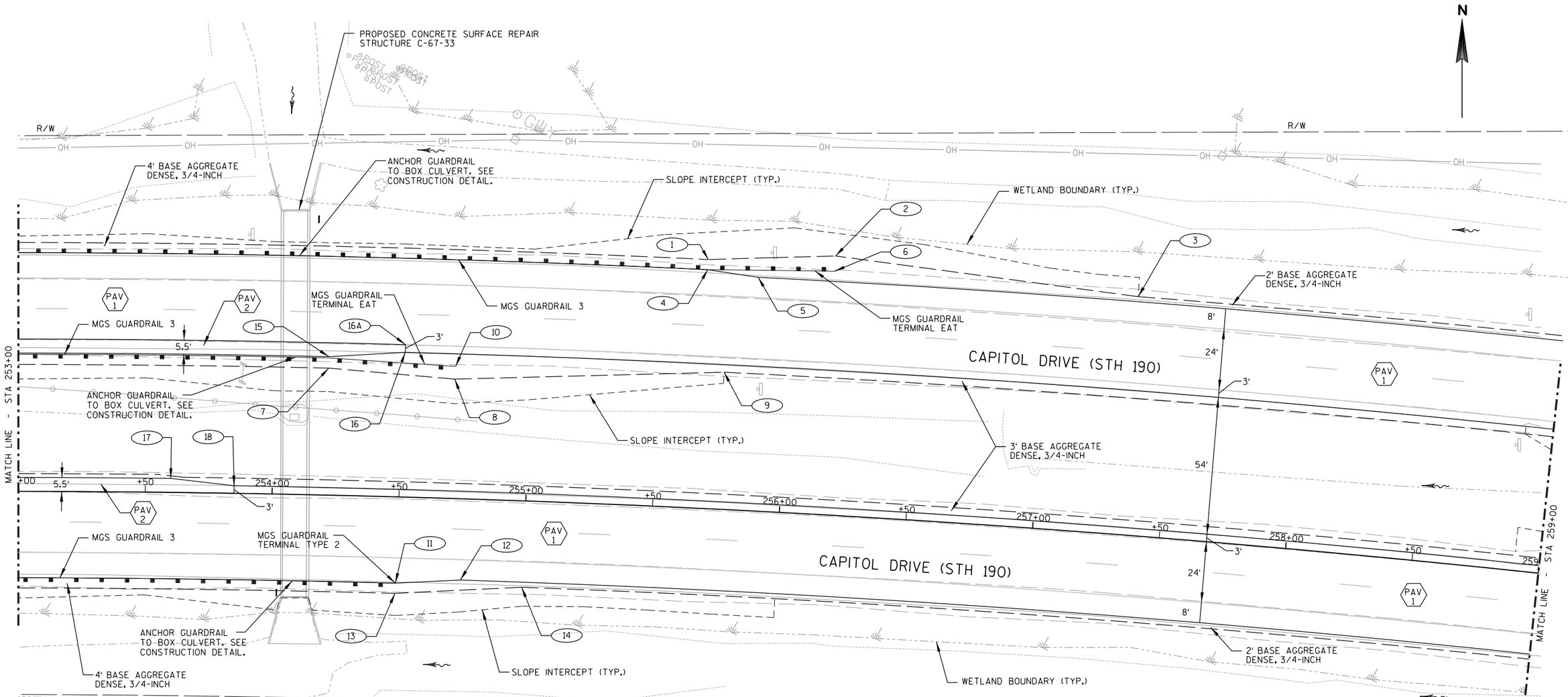

DATA TABLE

POINT NO.	STATION	OFFSET	COMMENTS
1	255+67.24	98.00'LT	BASE AGGREGATE SHOULDER POINT
2	256+16.38	102.00'LT	BASE AGGREGATE SHOULDER POINT
3	257+34.45	94.00'LT	BASE AGGREGATE SHOULDER POINT
4	255+67.24	94.00'LT	ASPHALT SHOULDER TAPER POINT
5	255+86.91	92.00'LT	ASPHALT SHOULDER TAPER POINT
6	256+16.38	96.00'LT	POST 1 OF ENERGY ABSORBING TERMINAL
7	254+21.19	50.00'LT	BASE AGGREGATE SHOULDER POINT
8	254+70.52	47.00'LT	BASE AGGREGATE SHOULDER POINT
9	255+75.52	54.00'LT	BASE AGGREGATE SHOULDER POINT
10	254+70.70	52.00'LT	POST 1 OF ENERGY ABSORBING TERMINAL
11	254+49.51	34.00'RT	ASPHALT SHOULDER TAPER POINT
12	254+75.23	32.00'RT	ASPHALT SHOULDER TAPER POINT
13	254+49.51	38.00'RT	BASE AGGREGATE SHOULDER POINT
14	254+99.51	34.00'RT	BASE AGGREGATE SHOULDER POINT
15	254+21.19	54.50'LT	ASPHALT SHOULDER TAPER POINT
16	254+50.89	57.00'LT	ASPHALT SHOULDER TAPER POINT
16A	254+50.89	60.00'LT	END SHOULDER RECONSTRUCTION
17	253+59.98	5.50'LT	ASPHALT SHOULDER TAPER POINT
18	253+84.96	3.00'LT	ASPHALT SHOULDER TAPER POINT

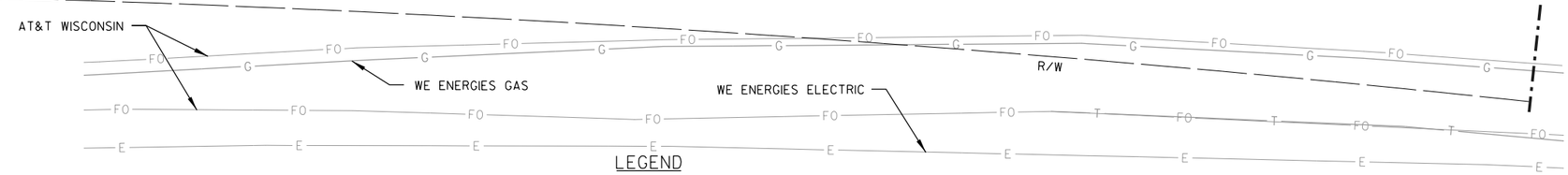

LEGEND

- 30A — CONCRETE CURB AND GUTTER; TYPE; SIZE (INCHES)
- SN — SLOPED NOSE
- SW5 — CONCRETE SIDEWALK 5-INCH
- AS1 — ASPHALT SURFACE DRIVEWAY 3½" HMA OVER 6" BASE AGGREGATE DENSE 1¼-INCH
- AS2 — ASPHALTIC SURFACE DRIVEWAY 2" MILL & 2" HMA PAVEMENT OVERLAY
- PAV 1 — 4" - 4½" MILL & 4" - 4½" HMA PAVEMENT OVERLAY
- PAV 2 — 6½" HMA PAVEMENT, OVER 12" BASE AGGREGATE DENSE 1¼-INCH
- PAV 3 — 4" HMA PAVEMENT, OVER 8" CONCRETE BASE, OVER 6" BASE AGGREGATE DENSE 1¼-INCH

GENERAL NOTES:

1. ALL DIMENSIONS ARE TO EDGE OF PAVEMENT
2. STATIONS/OFFSETS SHOWN IN DATA TABLES ARE LOCATED AT THE EDGE OF PAVEMENT OR CENTER OF CURVE.
3. REFER TO PAVEMENT MARKING PLAN SHEETS FOR FINAL PAVEMENT LANE WIDTHS.

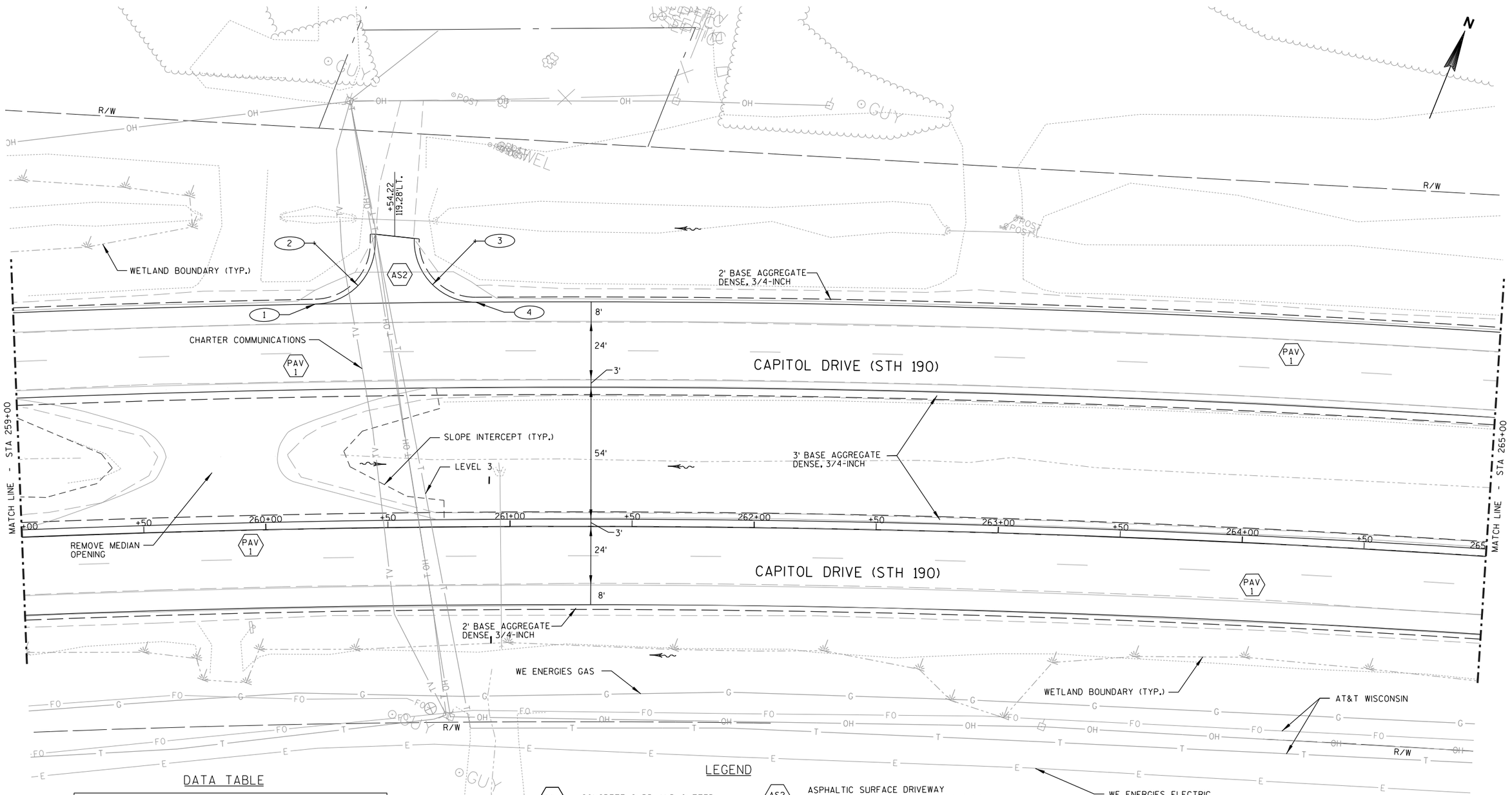

DATA TABLE

STH 190

POINT NO.	STATION	OFFSET	COMMENTS
1	260+21.88	92.00' LT.	BEGIN 25' RADIUS
2	260+21.88	117.00' LT.	25' RADIUS
3	260+86.56	117.00' LT.	25' RADIUS
4	260+86.56	92.00' LT.	END 25' RADIUS

RADII SHOWN ARE TO CURB FLANGE OR EDGE OF PAVEMENT

LEGEND

- 30A — CONCRETE CURB AND GUTTER (TYPE, SIZE (INCHES))
- SN — SLOPED NOSE
- SW5 — CONCRETE SIDEWALK 5-INCH
- AS1 — ASPHALT SURFACE DRIVEWAY 3½" HMA OVER 6" BASE AGGREGATE DENSE 1¼-INCH
- AS2 — ASPHALTIC SURFACE DRIVEWAY 2" MILL & 2" HMA PAVEMENT OVERLAY
- PAV 1 — 4" - 4½" MILL & 4" - 4½" HMA PAVEMENT OVERLAY
- PAV 2 — 6½" HMA PAVEMENT, OVER 12" BASE AGGREGATE DENSE 1¼-INCH
- PAV 3 — 4" HMA PAVEMENT, OVER 8" CONCRETE BASE, OVER 6" BASE AGGREGATE DENSE 1¼-INCH

GENERAL NOTES:

1. ALL DIMENSIONS ARE TO EDGE OF PAVEMENT
2. STATIONS/OFFSETS SHOWN IN DATA TABLES ARE LOCATED AT THE EDGE OF PAVEMENT OR CENTER OF CURVE.
3. REFER TO PAVEMENT MARKING PLAN SHEETS FOR FINAL PAVEMENT LANE WIDTHS.

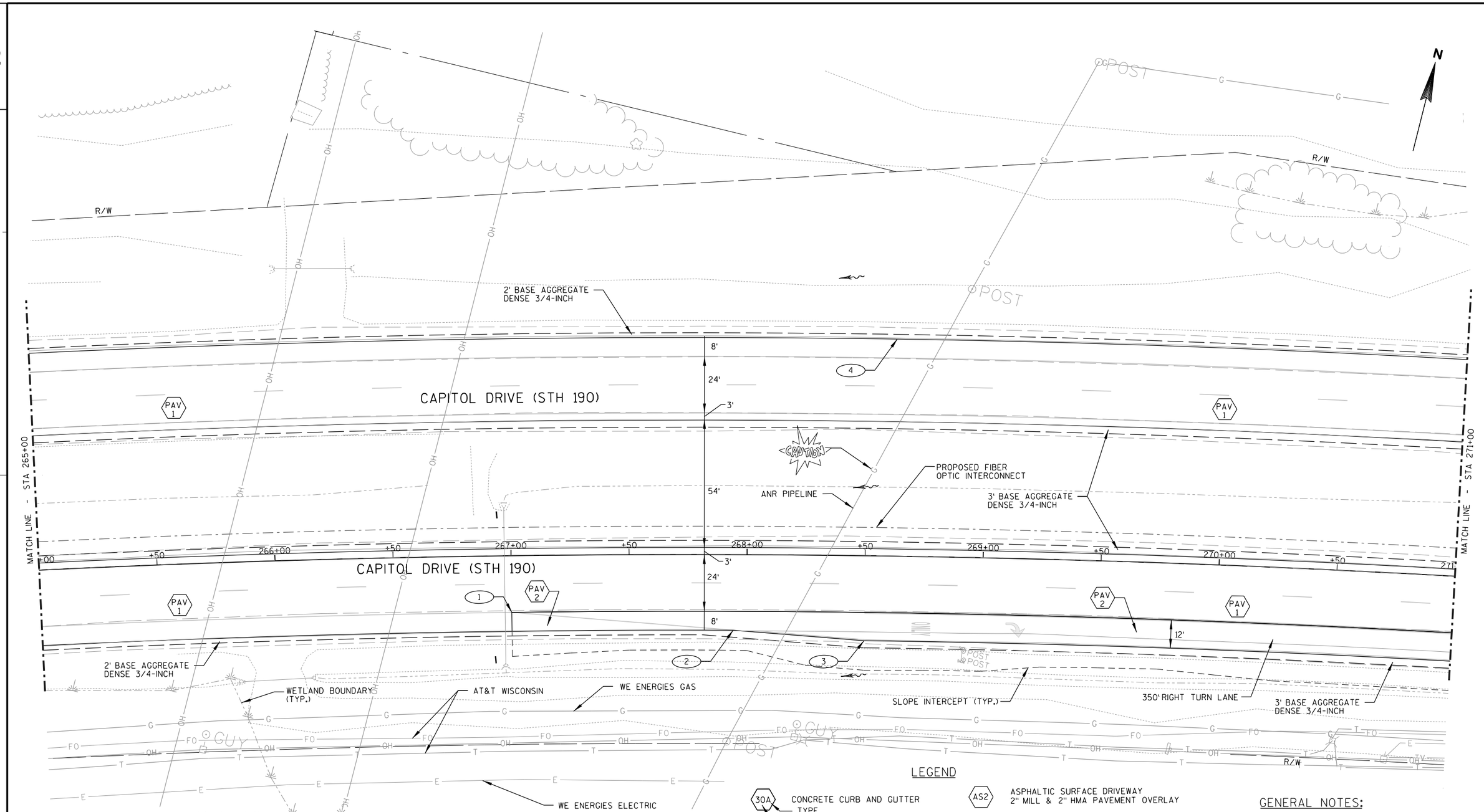

DATA TABLE

STH 190

POINT NO.	STATION	OFFSET	COMMENTS
1	267+00.00	24.00' RT.	BEGIN SHOULDER RECONSTRUCTION
2	267+94.23	92.00' RT.	BEGIN SHOULDER TAPER
3	268+50.00	96.00' RT.	END SHOULDER TAPER
4	252+92.18	5,729.58 RT.	5,821.58' RADIUS

LEGEND

- 30A — CONCRETE CURB AND GUTTER (TYPE: 30; SIZE (INCHES): A)
- SN — SLOPED NOSE
- SW5 — CONCRETE SIDEWALK 5-INCH
- AS1 — ASPHALT SURFACE DRIVEWAY 3½" HMA OVER 6" BASE AGGREGATE DENSE 1¼-INCH
- AS2 — ASPHALTIC SURFACE DRIVEWAY 2" MILL & 2" HMA PAVEMENT OVERLAY
- PAV 1 — 4" - 4½" MILL & 4" - 4½" HMA PAVEMENT OVERLAY
- PAV 2 — 6½" HMA PAVEMENT, OVER 12" BASE AGGREGATE DENSE 1¼-INCH
- PAV 3 — 4" HMA PAVEMENT, OVER 8" CONCRETE BASE, OVER 6" BASE AGGREGATE DENSE 1¼-INCH

GENERAL NOTES:

1. ALL DIMENSIONS ARE TO EDGE OF PAVEMENT
2. STATIONS/OFFSETS SHOWN IN DATA TABLES ARE LOCATED AT THE EDGE OF PAVEMENT OR CENTER OF CURVE.
3. REFER TO PAVEMENT MARKING PLAN SHEETS FOR FINAL PAVEMENT LANE WIDTHS.

DATA TABLE

STH 190

POINT NO.	STATION	OFFSET	COMMENTS
1	272+00.00	24.00' RT.	END SHOULDER RECONSTRUCTION
2	272+18.90	3.00' LT.	BEGIN 60' RADIUS
3	272+18.90	63.00' LT.	60' RADIUS
4	272+50.86	12.36' LT.	END 60' RADIUS, BEGIN 15' RADIUS
5	272+42.82	25.00' LT.	15' RADIUS
6	272+50.88	37.62' LT.	END 15' RADIUS, BEGIN 120' RADIUS
7	271+85.34	63.00' RT.	120' RADIUS
8	271+85.34	57.00' LT.	END 120' RADIUS
9	273+80.83	41.98' LT.	BEGIN 60' RADIUS
10	273+79.91	18.02' RT.	60' RADIUS
11	273+51.51	34.82' LT.	END 60' RADIUS, BEGIN 10' RADIUS
12	273+56.21	26.00' LT.	10' RADIUS
13	273+52.53	16.71' LT.	END 10' RADIUS, BEGIN 200' RADIUS
14	274+23.93	203.00' LT.	200' RADIUS
15	274+23.93	3.00' LT.	END 200' RADIUS

RADII SHOWN ARE TO CURB FLANGE OR EDGE OF PAVEMENT

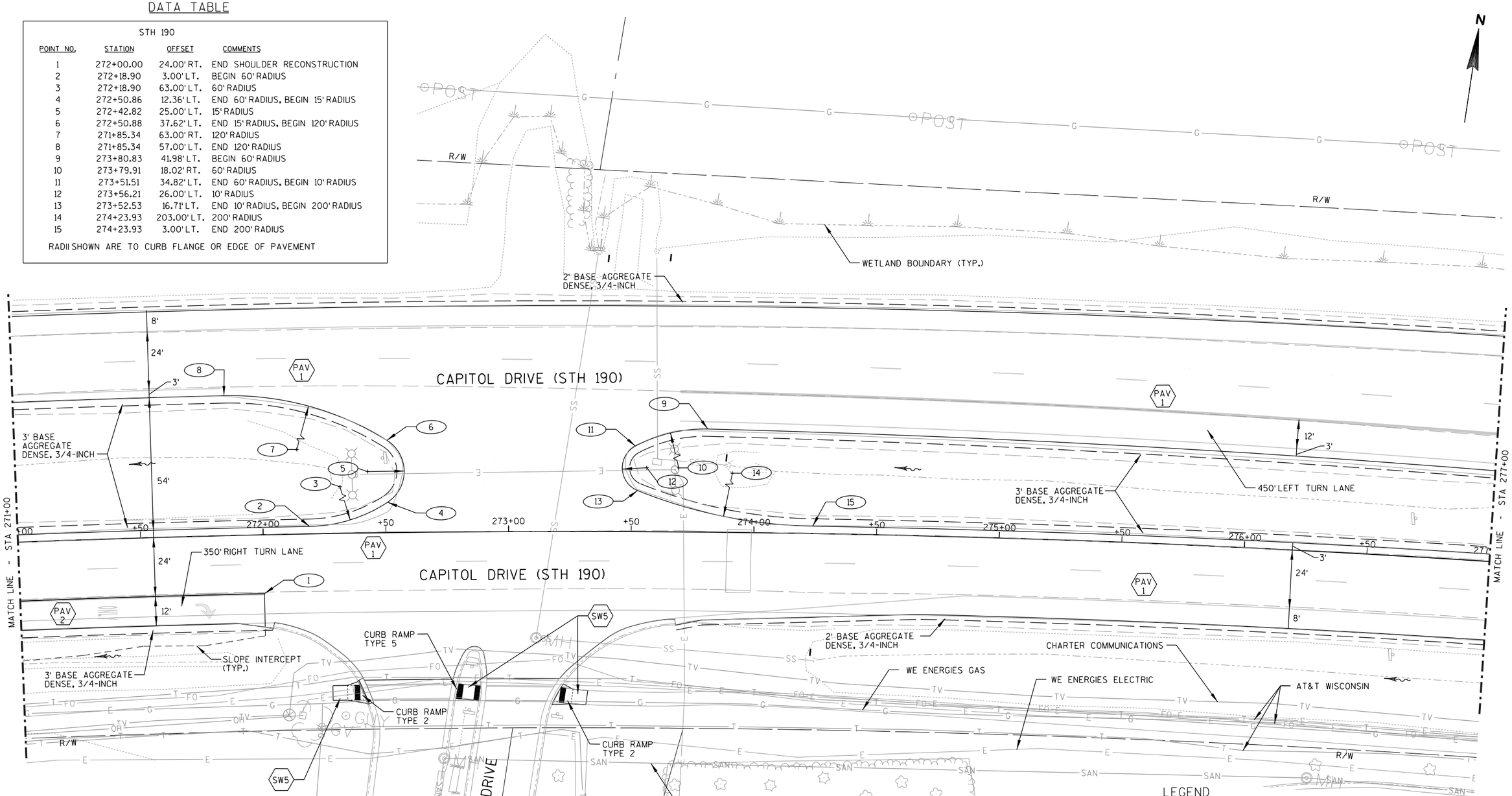

GENERAL NOTES:

1. ALL DIMENSIONS ARE TO EDGE OF PAVEMENT
2. STATIONS/OFFSETS SHOWN IN DATA TABLES ARE LOCATED AT THE EDGE OF PAVEMENT OR CENTER OF CURVE.
3. REFER TO PAVEMENT MARKING PLAN SHEETS FOR FINAL PAVEMENT LANE WIDTHS.

LEGEND

- 30A — CONCRETE CURB AND GUTTER (TYPE / SIZE (INCHES))
- SN — SLOPED NOSE
- SW5 — CONCRETE SIDEWALK 5-INCH
- AS1 — ASPHALT SURFACE DRIVEWAY 3½" HMA OVER 6" BASE AGGREGATE DENSE 1¼-INCH
- AS2 — ASPHALTIC SURFACE DRIVEWAY 2" MILL & 2" HMA PAVEMENT OVERLAY
- PAV 1 — 4" - 4½" MILL & 4" - 4½" HMA PAVEMENT OVERLAY
- PAV 2 — 6½" HMA PAVEMENT, OVER 12" BASE AGGREGATE DENSE 1¼-INCH
- PAV 3 — 4" HMA PAVEMENT, OVER 8" CONCRETE BASE, OVER 6" BASE AGGREGATE DENSE 1¼-INCH

DATA TABLE

STH 190

POINT NO.	STATION	OFFSET	COMMENTS
1	278+15.21	35.30' LT.	BEGIN SHOULDER TAPER
2	277+63.80	38.00' LT.	END SHOULDER TAPER
3	281+11.11	38.00' LT.	BEGIN SHOULDER TAPER
4	281+98.61	44.86' LT.	END SHOULDER TAPER
5	280+54.03	3.00' LT.	BEGIN SHOULDER TAPER
6	281+98.85	15.00' LT.	END SHOULDER TAPER
7	281+11.41	32.00' RT.	BEGIN SHOULDER TAPER
8	282+24.47	41.00' RT.	END SHOULDER TAPER
9	281+37.62	92.00 LT.	END SHOULDER TAPER (5821.58' R)

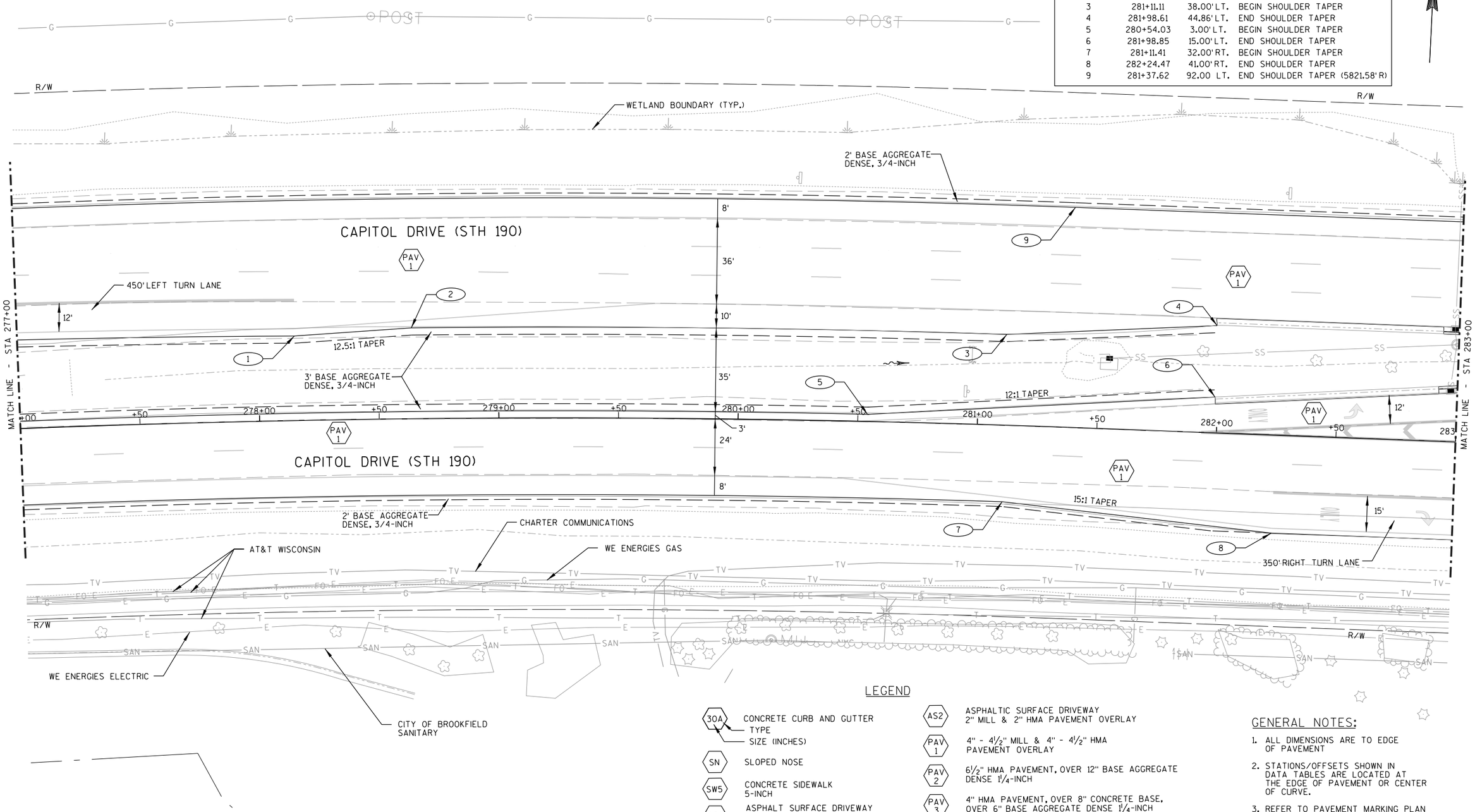

LEGEND

- 30A — CONCRETE CURB AND GUTTER (TYPE / SIZE (INCHES))
- SN — SLOPED NOSE
- SW5 — CONCRETE SIDEWALK 5-INCH
- AS1 — ASPHALT SURFACE DRIVEWAY 3½" HMA OVER 6" BASE AGGREGATE DENSE 1¼-INCH
- AS2 — ASPHALTIC SURFACE DRIVEWAY 2" MILL & 2" HMA PAVEMENT OVERLAY
- PAV 1 — 4" - 4½" MILL & 4" - 4½" HMA PAVEMENT OVERLAY
- PAV 2 — 6½" HMA PAVEMENT, OVER 12" BASE AGGREGATE DENSE 1¼-INCH
- PAV 3 — 4" HMA PAVEMENT, OVER 8" CONCRETE BASE, OVER 6" BASE AGGREGATE DENSE 1¼-INCH

GENERAL NOTES:

1. ALL DIMENSIONS ARE TO EDGE OF PAVEMENT
2. STATIONS/OFFSETS SHOWN IN DATA TABLES ARE LOCATED AT THE EDGE OF PAVEMENT OR CENTER OF CURVE.
3. REFER TO PAVEMENT MARKING PLAN SHEETS FOR FINAL PAVEMENT LANE WIDTHS.

2

DATA TABLE

STH 190

POINT NO.	STATION	OFFSET	COMMENTS
1	286+04.30	92.00'LT.	BEGIN SHOULDER TAPER
2	287+43.82	96.00'LT.	END SHOULDER TAPER
3	287+43.38	42.53'RT.	BEGIN SHOULDER TAPER
4	287+97.73	48.00'LT.	BEGIN CURB & GUTTER
5	287+97.73	36.00'LT.	BEGIN CURB & GUTTER/TURN LANE RECONSTRUCTION
6	287+97.73	24.00'LT.	BEGIN CURB & GUTTER/TURN LANE RECONSTRUCTION

LEGEND

- 30A — CONCRETE CURB AND GUTTER (TYPE / SIZE (INCHES))
- SN — SLOPED NOSE
- SW5 — CONCRETE SIDEWALK 5-INCH
- AS1 — ASPHALT SURFACE DRIVEWAY 3½" HMA OVER 6" BASE AGGREGATE DENSE 1¼-INCH
- AS2 — ASPHALTIC SURFACE DRIVEWAY 2" MILL & 2" HMA PAVEMENT OVERLAY
- PAV 1 — 4" - 4½" MILL & 4" - 4½" HMA PAVEMENT OVERLAY
- PAV 2 — 6½" HMA PAVEMENT, OVER 12" BASE AGGREGATE DENSE 1¼-INCH
- PAV 3 — 4" HMA PAVEMENT, OVER 8" CONCRETE BASE, OVER 6" BASE AGGREGATE DENSE 1¼-INCH

GENERAL NOTES:

1. ALL DIMENSIONS ARE TO EDGE OF PAVEMENT
2. STATIONS/OFFSETS SHOWN IN DATA TABLES ARE LOCATED AT THE EDGE OF PAVEMENT OR CENTER OF CURVE.
3. REFER TO PAVEMENT MARKING PLAN SHEETS FOR FINAL PAVEMENT LANE WIDTHS.

N

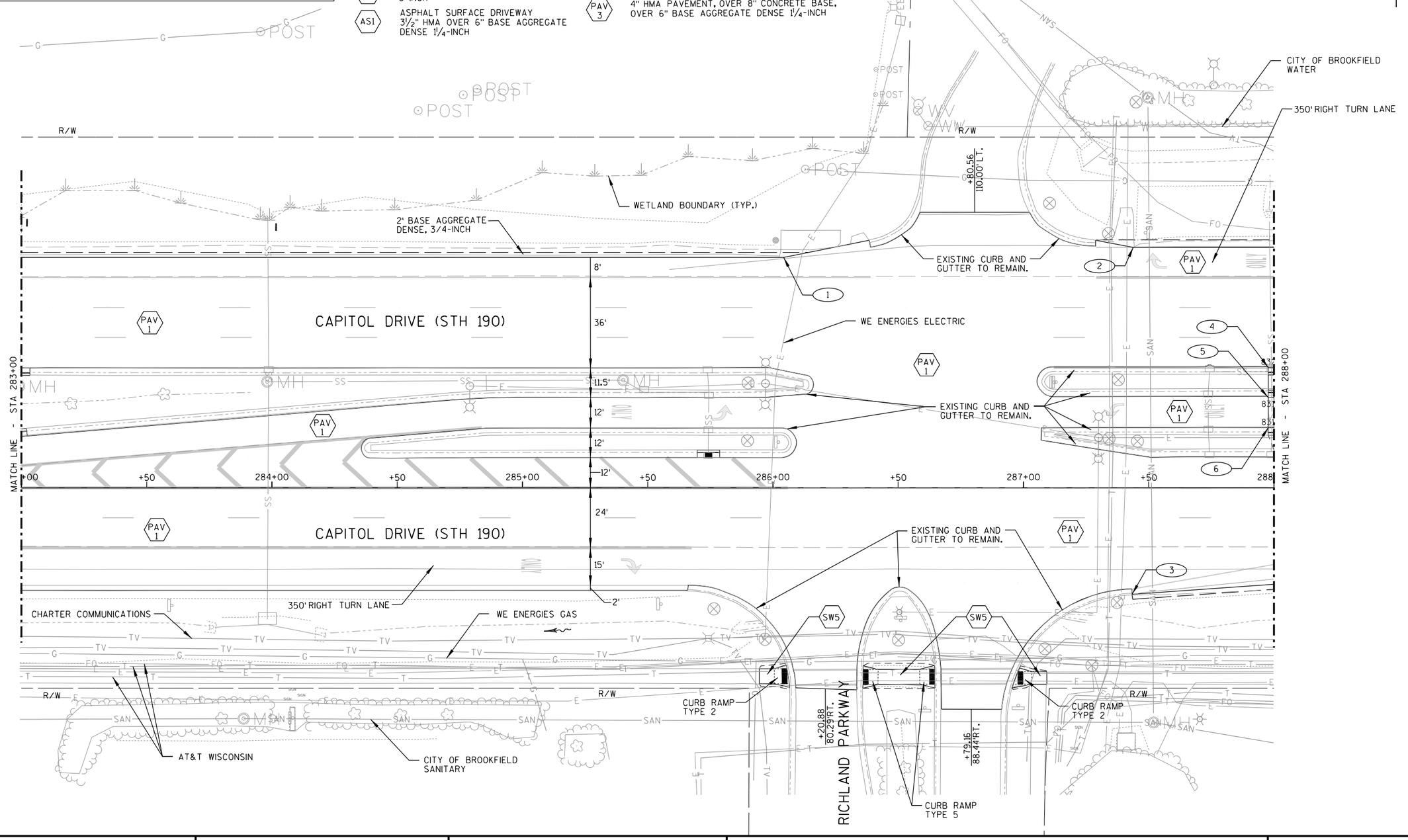

2

PROJECT NO: 2025-14-71	HWY: STH 190	COUNTY: WAUKESHA	PLAN DETAIL	SHEET 54	E

2

DATA TABLE

STH 190

POINT NO.	STATION	OFFSET	COMMENTS
1	288+93.38	32.00'RT.	END SHOULDER TAPER
2	291+00.00	12.23'LT.	END CONSTRUCTION, MATCH EXISTING
3	291+00.00	32.00'RT.	END CONSTRUCTION, MATCH EXISTING
4	289+28.87	84.19'LT.	BEGIN SHOULDER RECONSTRUCTION
5	290+28.16	36.00'LT.	BEGIN CURB & GUTTER TAPER
6	290+28.64	24.00'LT.	BEGIN 12.5:1 CURB & GUTTER TAPER
7	290+79.00	96.00'LT.	BEGIN SHOULDER TAPER
8	290+78.00	48.00'LT.	END CURB & GUTTER
9	290+78.32	40.00'LT.	END CURB & GUTTER
10	291+29.00	92.00'LT.	END SHOULDER TAPER
11	292+29.00	84.00'LT.	END SHOULDER RECONSTRUCTION
12	293+28.72	92.00'LT.	END CONSTRUCTION, MATCH EXISTING
13	293+28.72	48.00'LT.	END CONSTRUCTION, MATCH EXISTING

GENERAL NOTES:

1. ALL DIMENSIONS ARE TO EDGE OF PAVEMENT
2. STATIONS/OFFSETS SHOWN IN DATA TABLES ARE LOCATED AT THE EDGE OF PAVEMENT OR CENTER OF CURVE.
3. REFER TO PAVEMENT MARKING PLAN SHEETS FOR FINAL PAVEMENT LANE WIDTHS.

LEGEND

- 30A — CONCRETE CURB AND GUTTER (TYPE; SIZE (INCHES))
- SN — SLOPED NOSE
- SW5 — CONCRETE SIDEWALK 5-INCH
- AS1 — ASPHALT SURFACE DRIVEWAY 3½" HMA OVER 6" BASE AGGREGATE DENSE 1¼-INCH
- AS2 — ASPHALTIC SURFACE DRIVEWAY 2" MILL & 2" HMA PAVEMENT OVERLAY
- PAV 1 — 4" - 4½" MILL & 4" - 4½" HMA PAVEMENT OVERLAY
- PAV 2 — 6½" HMA PAVEMENT, OVER 12" BASE AGGREGATE DENSE 1¼-INCH
- PAV 3 — 4" HMA PAVEMENT, OVER 8" CONCRETE BASE, OVER 6" BASE AGGREGATE DENSE 1¼-INCH

N

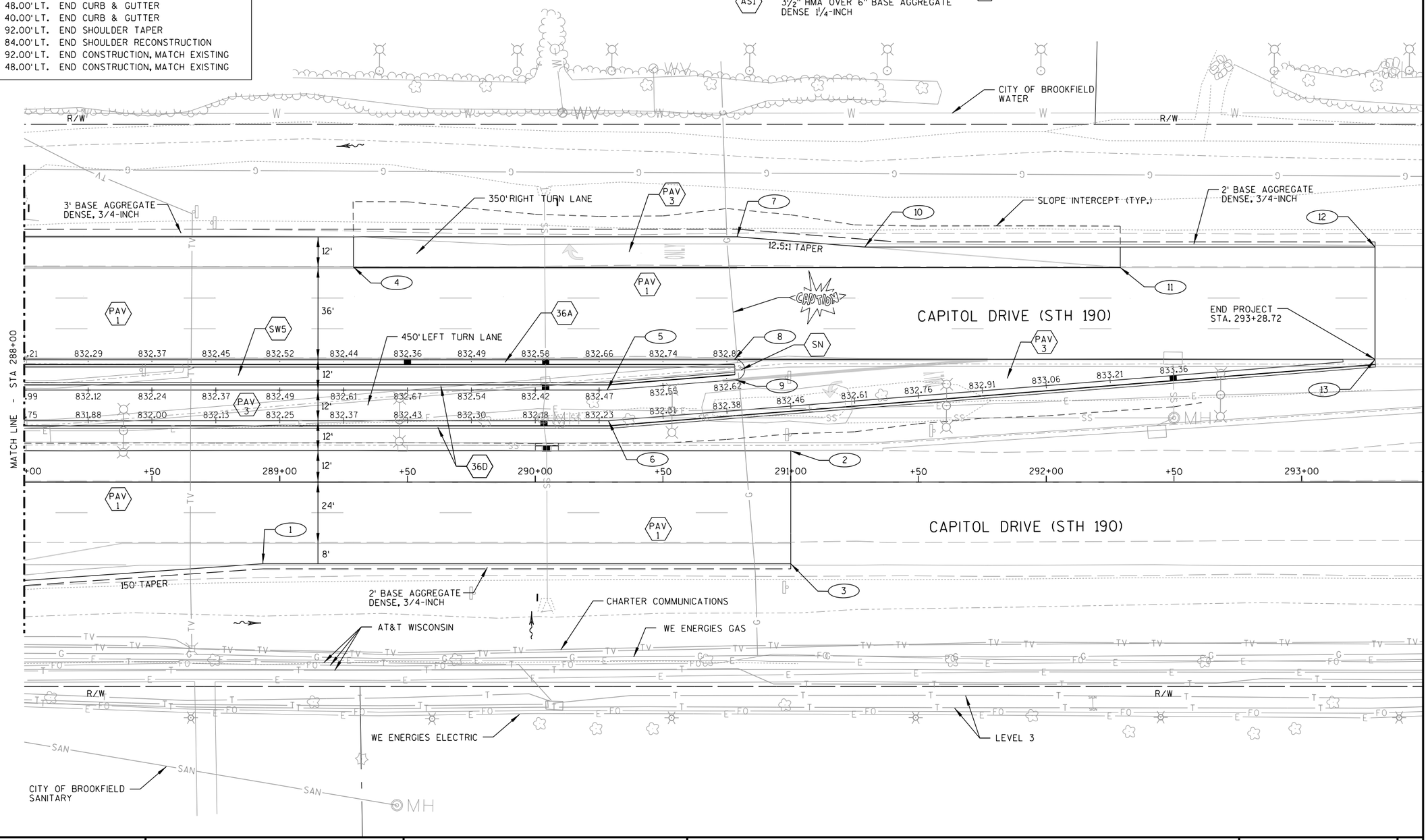

PROJECT NO:2025-14-71	HWY:STH 190	COUNTY:WAUKESHA	PLAN DETAIL	SHEET 55	E

2

2

LEGEND

- EROSION MAT CLASS I, TYPE A (ECRM)
- EROSION MAT URBAN CLASS I, TYPE B (ECRM)
- SOD
- SILT FENCE
- RIP RAP
- WETLAND BOUNDARY
- SLOPE INTERCEPT
- INLET PROTECTION - TYPE C (UNLESS OTHERWISE NOTED)
- TEMPORARY DITCH CHECK
- CULVERT PIPE CHECK
- SURFACE WATER FLOW

NOTES:

1. INSTALL INLET PROTECTION ON ALL NEWLY CONSTRUCTED INLETS.
2. IN AREAS ADJACENT TO WETLANDS, STAKE SILT FENCE EVERY 3' OR CLOSER AND APPLY TEMPORARY SEEDING AND MULCH TO THE FRONT AND BACK SIDE OF TRENCH THE SAME DAY AS INSTALLATION.

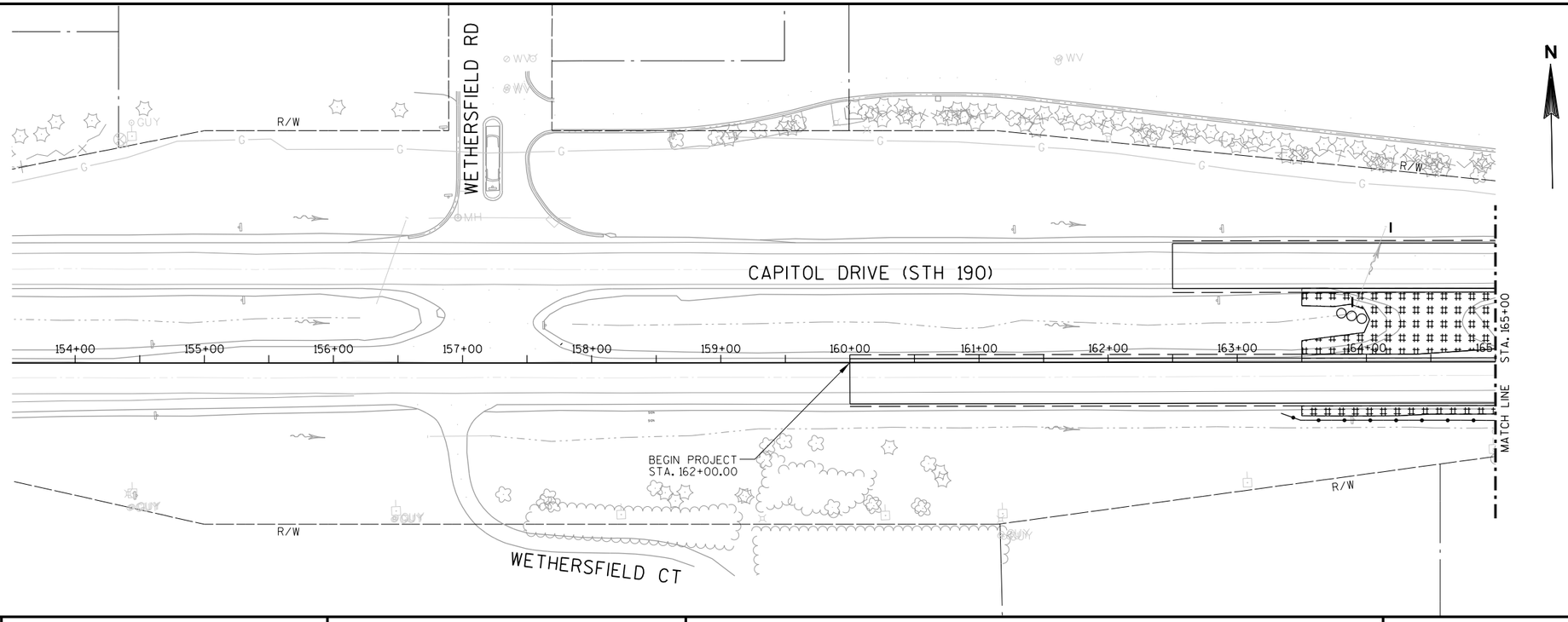

PROJECT NO: 2025-14-71	HWY: STH 190	COUNTY: WAUKESHA	EROSION CONTROL PLAN	SHEET 56	E

2

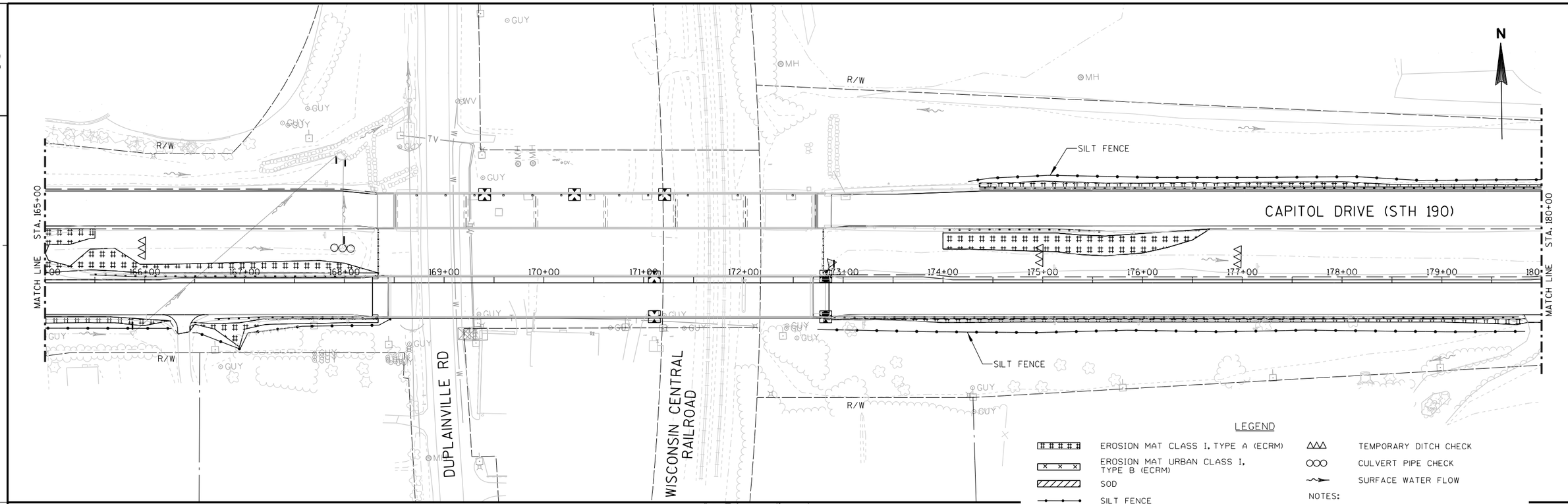

LEGEND

- EROSION MAT CLASS I, TYPE A (ECRM)
- EROSION MAT URBAN CLASS I, TYPE B (ECRM)
- SOD
- SILT FENCE
- RIP RAP
- WETLAND BOUNDARY
- SLOPE INTERCEPT
- INLET PROTECTION - TYPE C (UNLESS OTHERWISE NOTED)
- TEMPORARY DITCH CHECK
- CULVERT PIPE CHECK
- SURFACE WATER FLOW

NOTES:

1. INSTALL INLET PROTECTION ON ALL NEWLY CONSTRUCTED INLETS.
2. IN AREAS ADJACENT TO WETLANDS, STAKE SILT FENCE EVERY 3' OR CLOSER AND APPLY TEMPORARY SEEDING AND MULCH TO THE FRONT AND BACK SIDE OF TRENCH THE SAME DAY AS INSTALLATION.

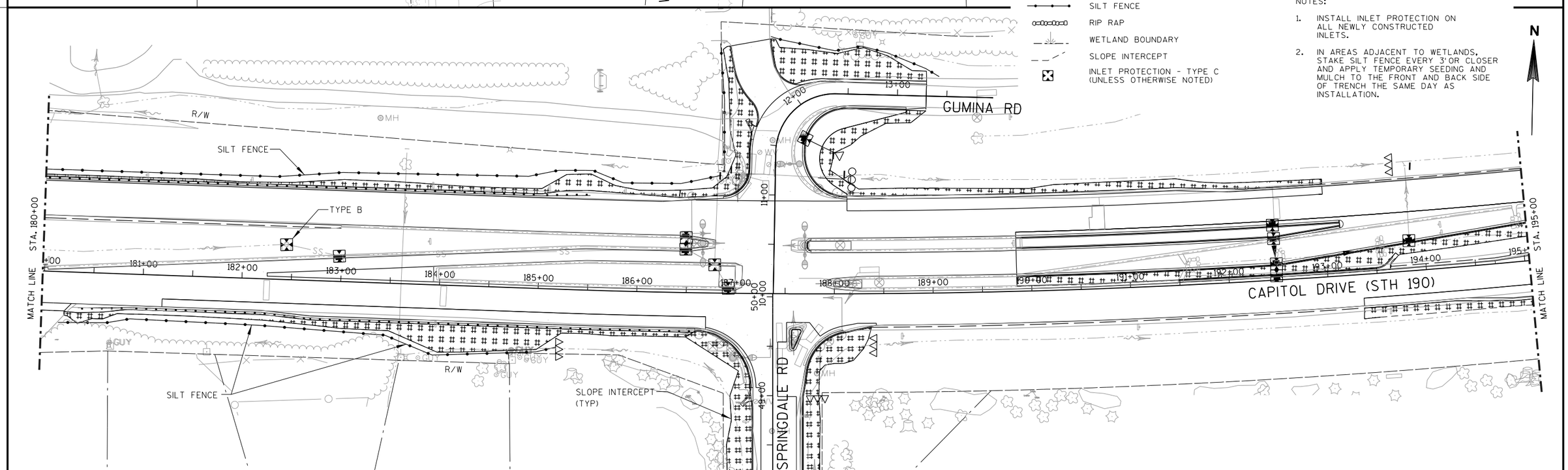

PROJECT NO:2025-14-71	HWY:STH 190	COUNTY:WAUKESHA	EROSION CONTROL PLAN	SHEET 57	E

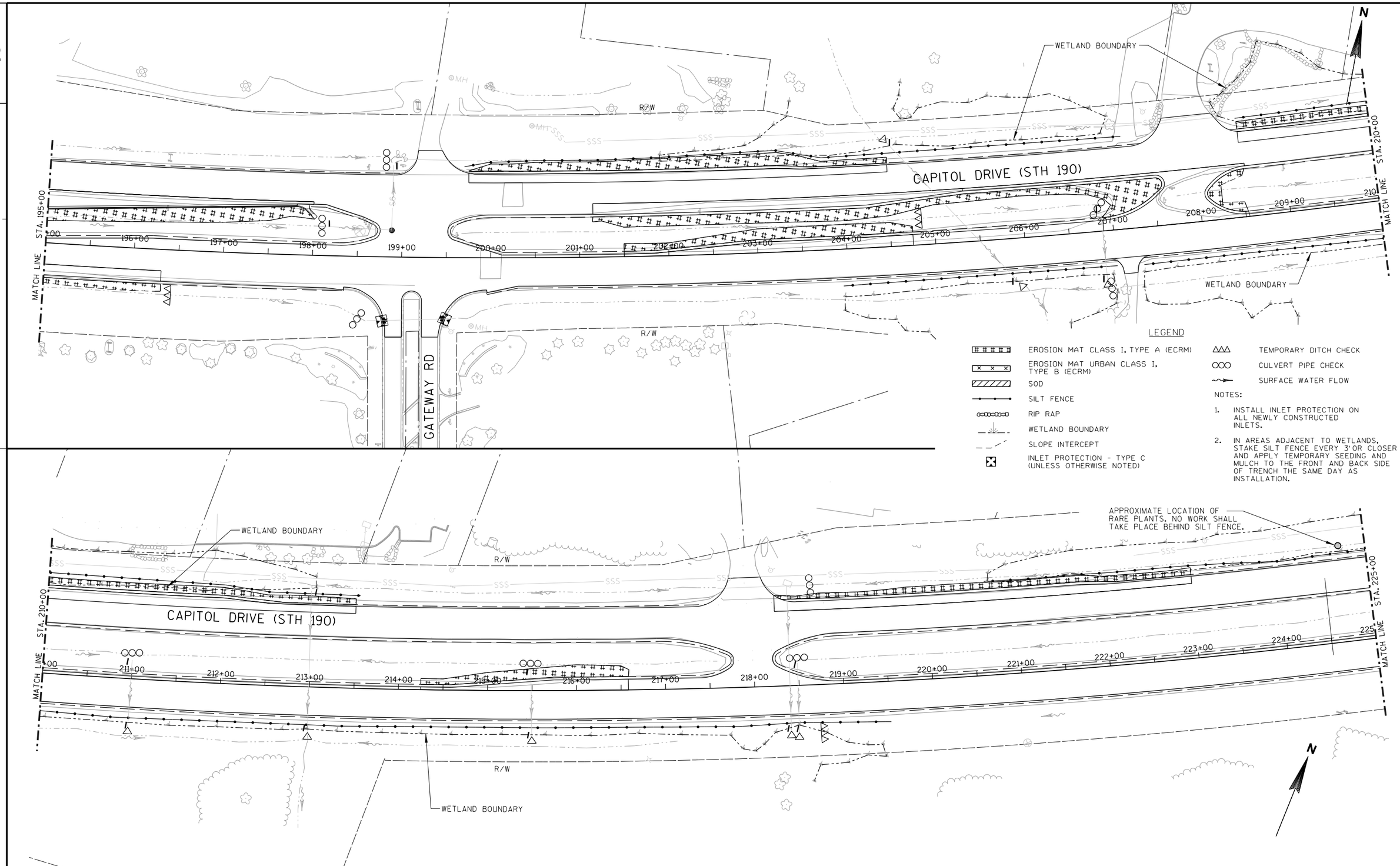

LEGEND

- EROSION MAT CLASS I, TYPE A (ECRM)
- EROSION MAT URBAN CLASS I, TYPE B (ECRM)
- SOD
- SILT FENCE
- RIP RAP
- WETLAND BOUNDARY
- SLOPE INTERCEPT
- INLET PROTECTION - TYPE C (UNLESS OTHERWISE NOTED)
- TEMPORARY DITCH CHECK
- CULVERT PIPE CHECK
- SURFACE WATER FLOW

NOTES:

1. INSTALL INLET PROTECTION ON ALL NEWLY CONSTRUCTED INLETS.
2. IN AREAS ADJACENT TO WETLANDS, STAKE SILT FENCE EVERY 3' OR CLOSER AND APPLY TEMPORARY SEEDING AND MULCH TO THE FRONT AND BACK SIDE OF TRENCH THE SAME DAY AS INSTALLATION.

PROJECT NO:2025-14-71	HWY:STH 190	COUNTY:WAUKESHA	EROSION CONTROL PLAN	SHEET 58	E

2

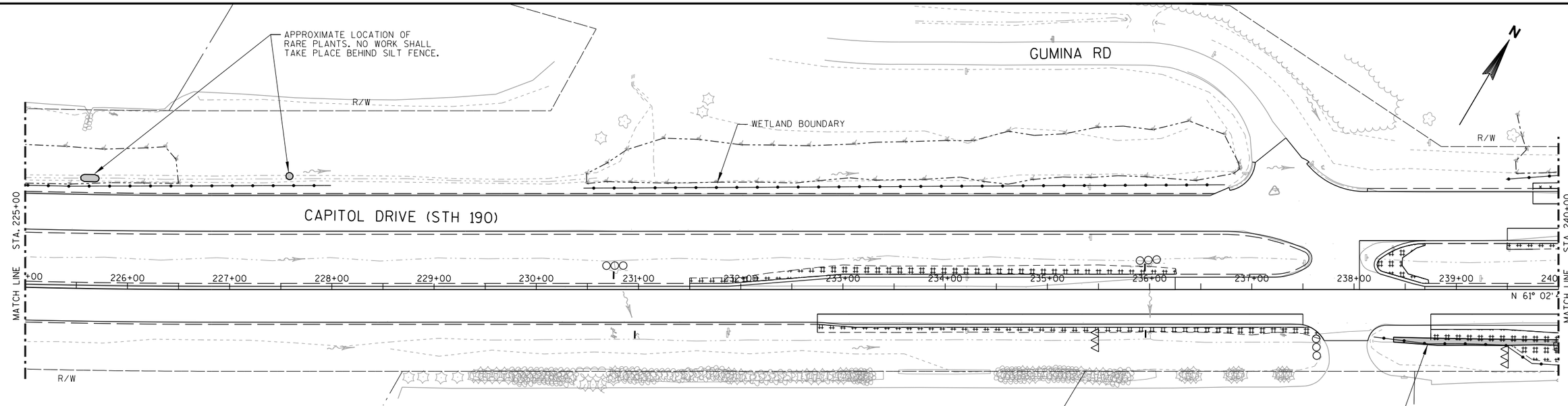

LEGEND

- EROSION MAT CLASS I, TYPE A (ECRM)
- EROSION MAT URBAN CLASS I, TYPE B (ECRM)
- SOD
- SILT FENCE
- RIP RAP
- WETLAND BOUNDARY
- SLOPE INTERCEPT
- INLET PROTECTION - TYPE C (UNLESS OTHERWISE NOTED)
- TEMPORARY DITCH CHECK
- CULVERT PIPE CHECK
- SURFACE WATER FLOW

NOTES:

1. INSTALL INLET PROTECTION ON ALL NEWLY CONSTRUCTED INLETS.
2. IN AREAS ADJACENT TO WETLANDS, STAKE SILT FENCE EVERY 3' OR CLOSER AND APPLY TEMPORARY SEEDING AND MULCH TO THE FRONT AND BACK SIDE OF TRENCH THE SAME DAY AS INSTALLATION.

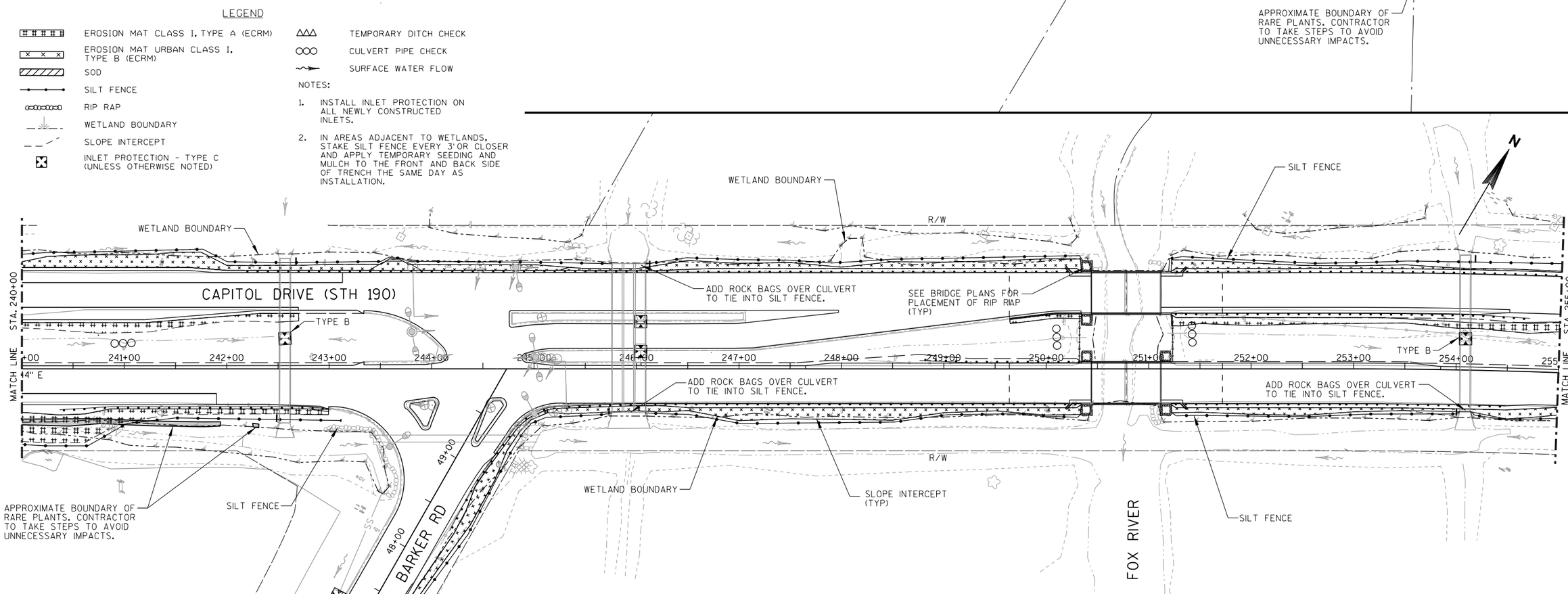

PROJECT NO: 2025-14-71	HWY: STH 190	COUNTY: WAUKESHA	EROSION CONTROL PLAN	SHEET 59	E

2

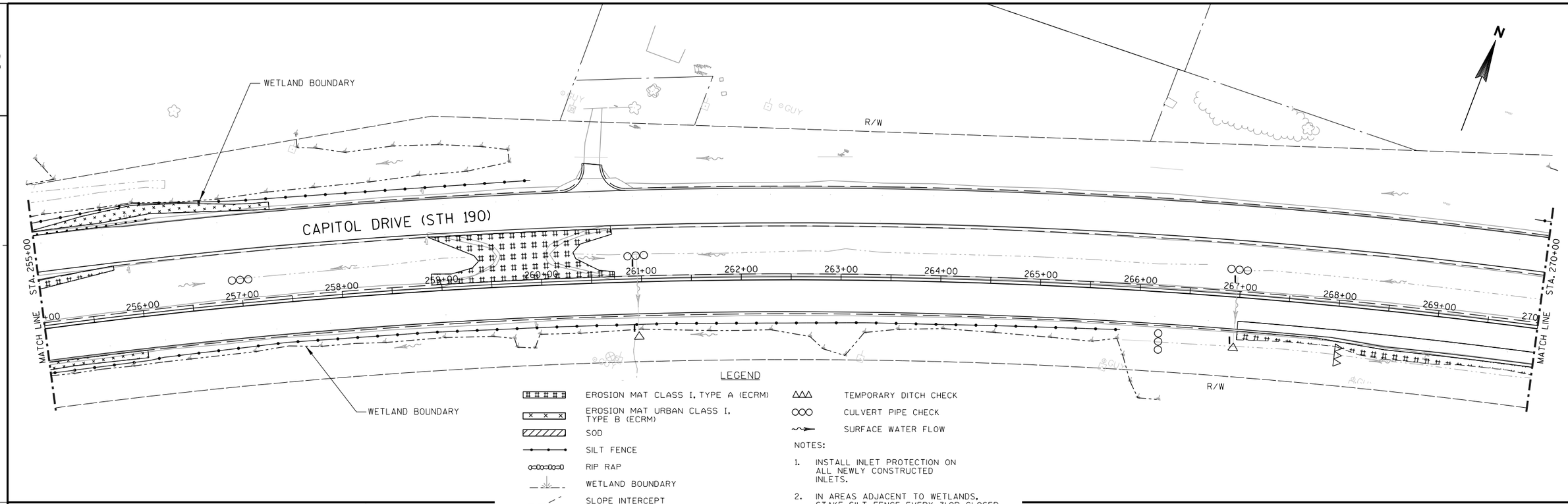

LEGEND

- EROSION MAT CLASS I, TYPE A (ECRM)
- EROSION MAT URBAN CLASS I, TYPE B (ECRM)
- SOD
- SILT FENCE
- RIP RAP
- WETLAND BOUNDARY
- SLOPE INTERCEPT
- INLET PROTECTION - TYPE C (UNLESS OTHERWISE NOTED)
- TEMPORARY DITCH CHECK
- CULVERT PIPE CHECK
- SURFACE WATER FLOW

NOTES:

1. INSTALL INLET PROTECTION ON ALL NEWLY CONSTRUCTED INLETS.
2. IN AREAS ADJACENT TO WETLANDS, STAKE SILT FENCE EVERY 3' OR CLOSER AND APPLY TEMPORARY SEEDING AND MULCH TO THE FRONT AND BACK SIDE OF TRENCH THE SAME DAY AS INSTALLATION.

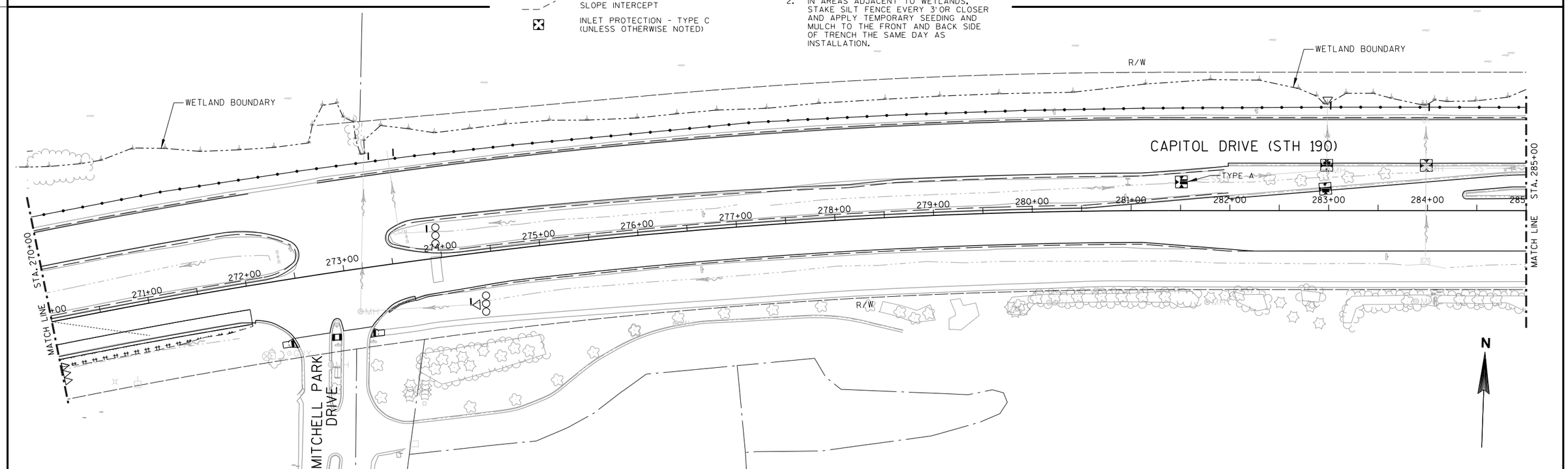

PROJECT NO:2025-14-71	HWY:STH 190	COUNTY:WAUKESHA	EROSION CONTROL PLAN	SHEET 60	E

2

LEGEND

- EROSION MAT CLASS I, TYPE A (ECRM)
- EROSION MAT URBAN CLASS I, TYPE B (ECRM)
- SOD
- SILT FENCE
- RIP RAP
- WETLAND BOUNDARY
- SLOPE INTERCEPT
- INLET PROTECTION - TYPE C (UNLESS OTHERWISE NOTED)
- TEMPORARY DITCH CHECK
- CULVERT PIPE CHECK
- SURFACE WATER FLOW

NOTES:

1. INSTALL INLET PROTECTION ON ALL NEWLY CONSTRUCTED INLETS.
2. IN AREAS ADJACENT TO WETLANDS, STAKE SILT FENCE EVERY 3' OR CLOSER AND APPLY TEMPORARY SEEDING AND MULCH TO THE FRONT AND BACK SIDE OF TRENCH THE SAME DAY AS INSTALLATION.

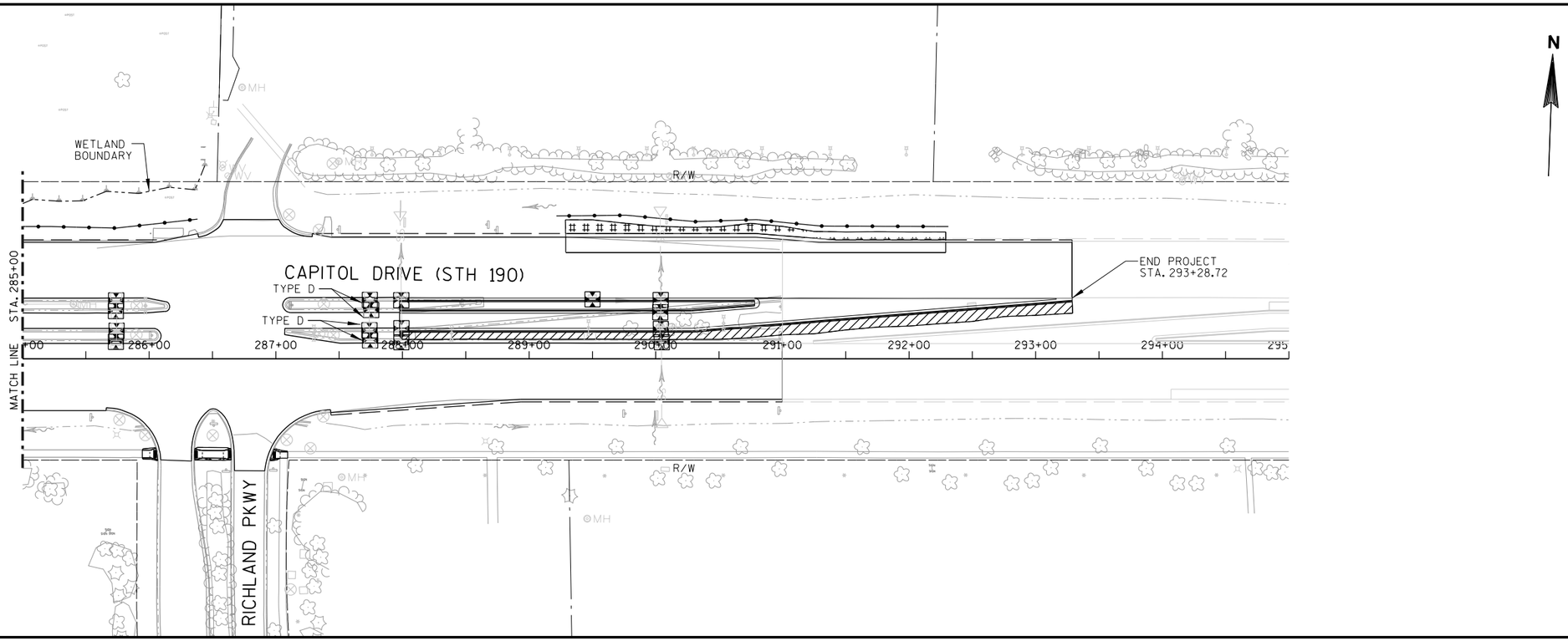

2

PROJECT NO:2025-14-71	HWY:STH 190	COUNTY:WAUKESHA	EROSION CONTROL PLAN	SHEET 61	E

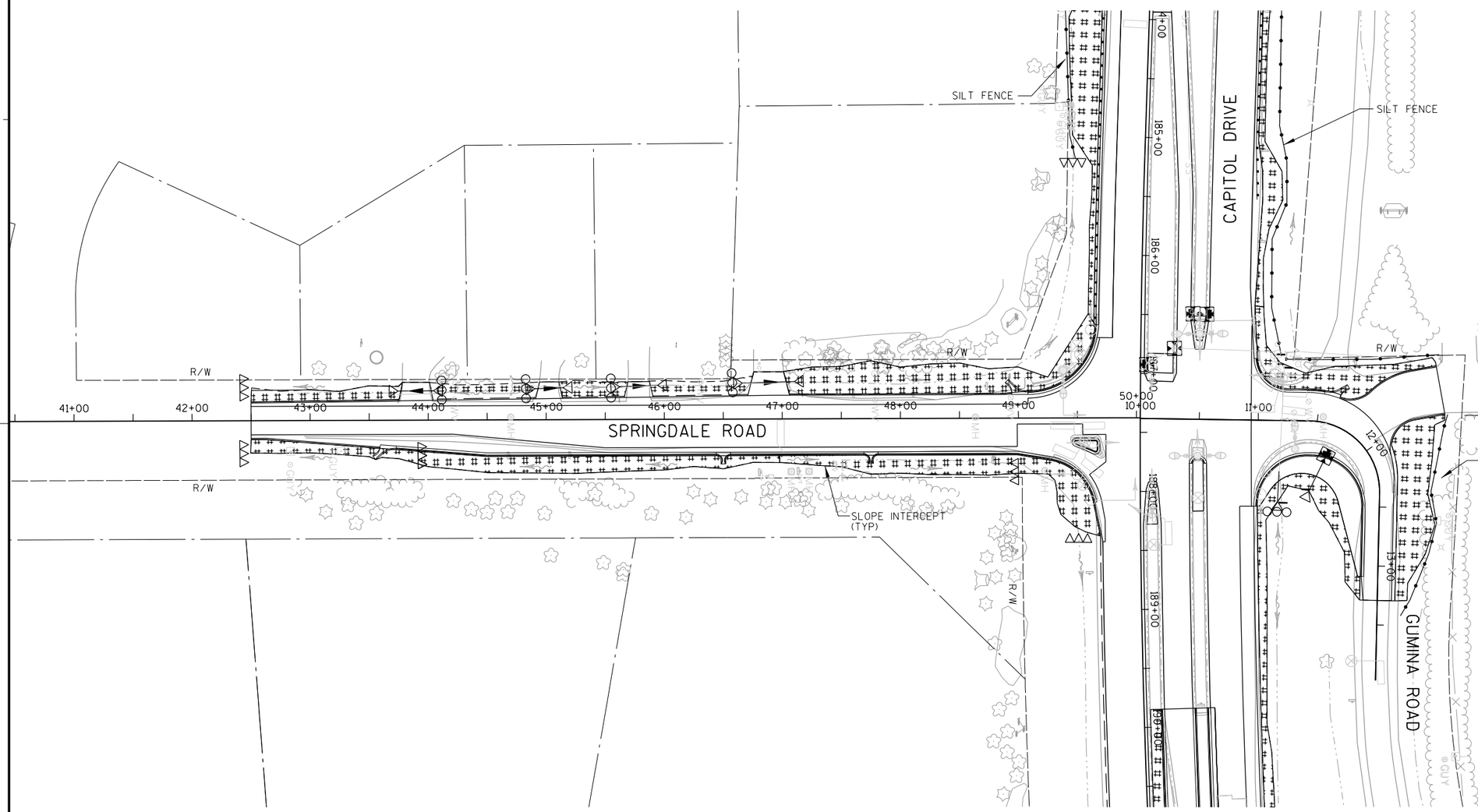

LEGEND

- EROSION MAT CLASS I, TYPE A (ECRM)
- EROSION MAT URBAN CLASS I, TYPE B (ECRM)
- SOD
- SILT FENCE
- RIP RAP
- WETLAND BOUNDARY
- SLOPE INTERCEPT
- INLET PROTECTION - TYPE C (UNLESS OTHERWISE NOTED)
- TEMPORARY DITCH CHECK
- CULVERT PIPE CHECK
- SURFACE WATER FLOW

NOTES:

1. INSTALL INLET PROTECTION ON ALL NEWLY CONSTRUCTED INLETS.
2. IN AREAS ADJACENT TO WETLANDS, STAKE SILT FENCE EVERY 3' OR CLOSER AND APPLY TEMPORARY SEEDING AND MULCH TO THE FRONT AND BACK SIDE OF TRENCH THE SAME DAY AS INSTALLATION.

PROJECT NO:2025-14-71	HWY:STH 190	COUNTY:WAUKESHA	EROSION CONTROL PLAN - SPRINGDALE ROAD	SHEET 62	E

2

2

N

R/W

WETLAND BOUNDARY

39+00 40+00 41+00 42+00 43+00 44+00 45+00 46+00 47+00 48+00 49+00

BARKER ROAD

R/W

CAPITOL DRIVE

241+00 242+00 243+00 244+00 245+00 246+00 247+00 248+00

WETLAND BOUNDARY

SILT FENCE

R/W

R/W

R/W

LEGEND

- EROSION MAT CLASS I, TYPE A (ECRM)
- EROSION MAT URBAN CLASS I, TYPE B (ECRM)
- SOD
- SILT FENCE
- RIP RAP
- WETLAND BOUNDARY
- SLOPE INTERCEPT
- INLET PROTECTION - TYPE C (UNLESS OTHERWISE NOTED)
- TEMPORARY DITCH CHECK
- CULVERT PIPE CHECK
- SURFACE WATER FLOW

NOTES:

1. INSTALL INLET PROTECTION ON ALL NEWLY CONSTRUCTED INLETS.
2. IN AREAS ADJACENT TO WETLANDS, STAKE SILT FENCE EVERY 3' OR CLOSER AND APPLY TEMPORARY SEEDING AND MULCH TO THE FRONT AND BACK SIDE OF TRENCH THE SAME DAY AS INSTALLATION.

PROJECT NO:2025-14-71	HWY:STH 190	COUNTY:WAUKESHA	EROSION CONTROL PLAN - BARKER ROAD	SHEET 63	E

2

LEGEND

- (XXX) PROPOSED STORM SEWER STRUCTURE NUMBER
- [XXX] EXISTING STORM SEWER STRUCTURE TO BE RECONSTRUCTED
- ⟨XXX⟩ EXISTING STORM SEWER STRUCTURE TO BE ADJUSTED
- (AS) ADJUSTING SANITARY MANHOLE COVERS
- (AW) ADJUSTING WATER VALVES
- — MARKERS CULVERT END

NOTE:

THE CONTRACTOR WILL BE REQUIRED TO ADJUST ALL WATER VALVES AND SANITARY MANHOLES TO FINISHED GRADE. REFER TO THE MISCELLANEOUS QUANTITY TABLES FOR APPROXIMATE LOCATIONS. EXACT LOCATIONS TO BE FIELD VERIFIED.

N

2

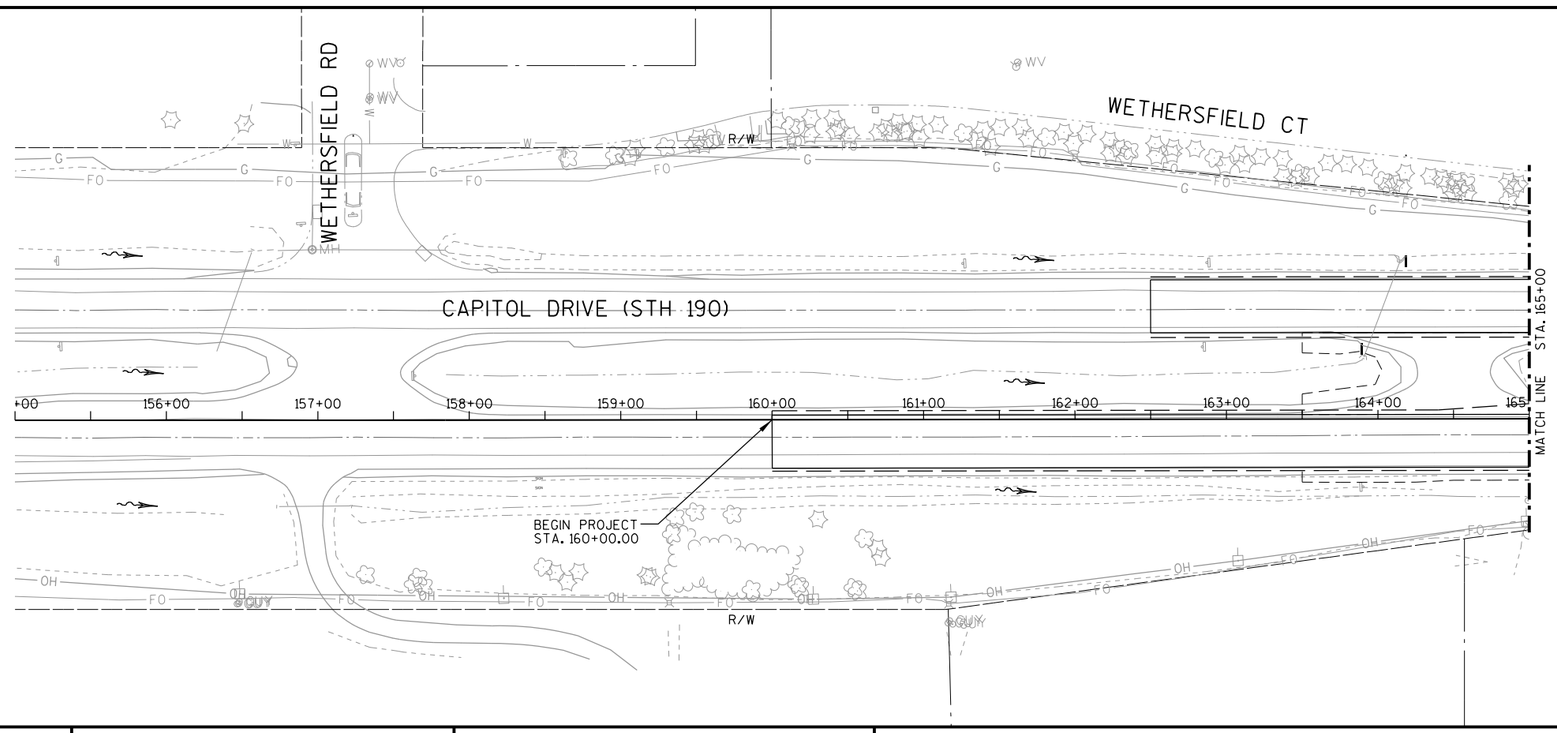

N

PROJECT NO:2025-14-71	HWY:STH 190	COUNTY:WAUKESHA	STORM SEWER & UTILITY PLAN	SHEET 64	E

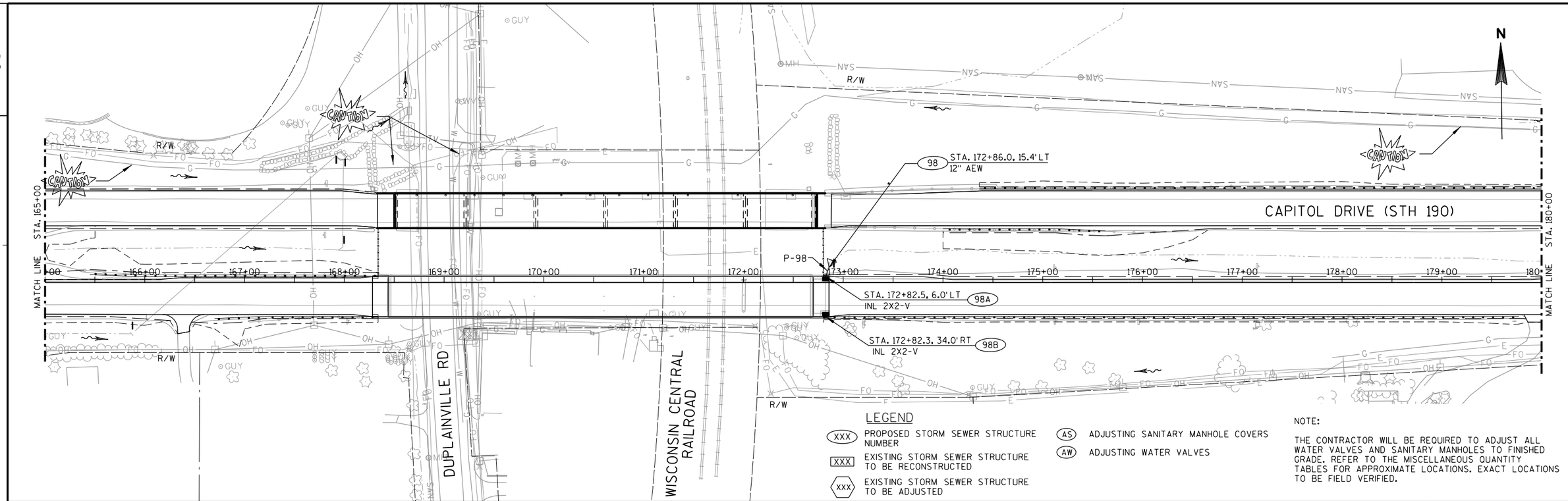

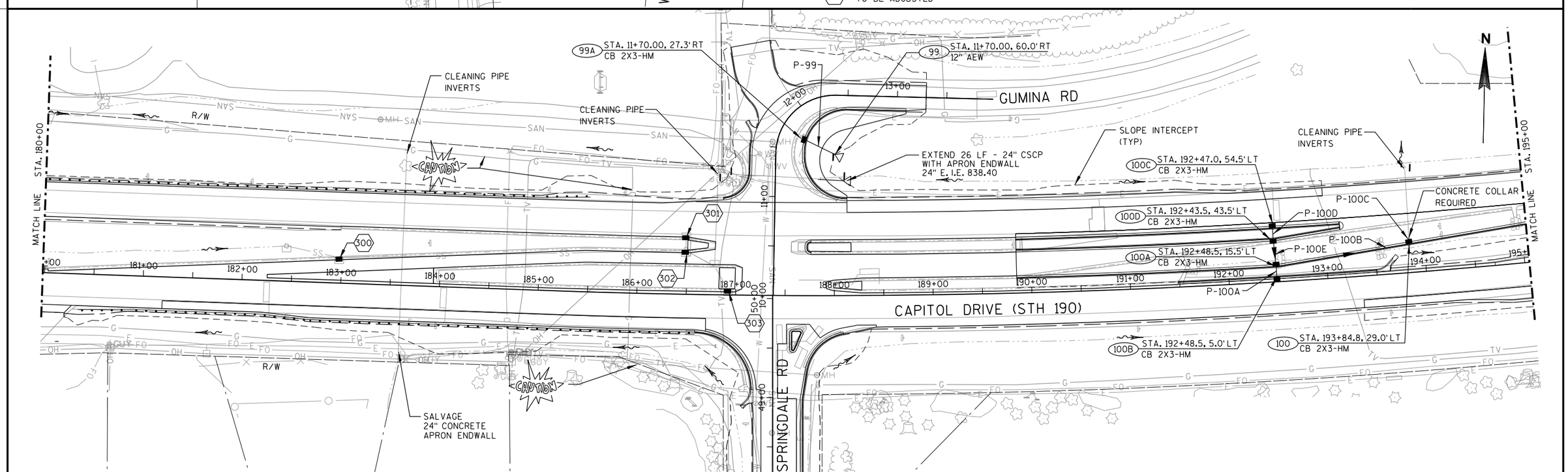

PROJECT NO:2025-14-71	HWY:STH 190	COUNTY:WAUKESHA	STORM SEWER & UTILITY PLAN	SHEET 65	E

2

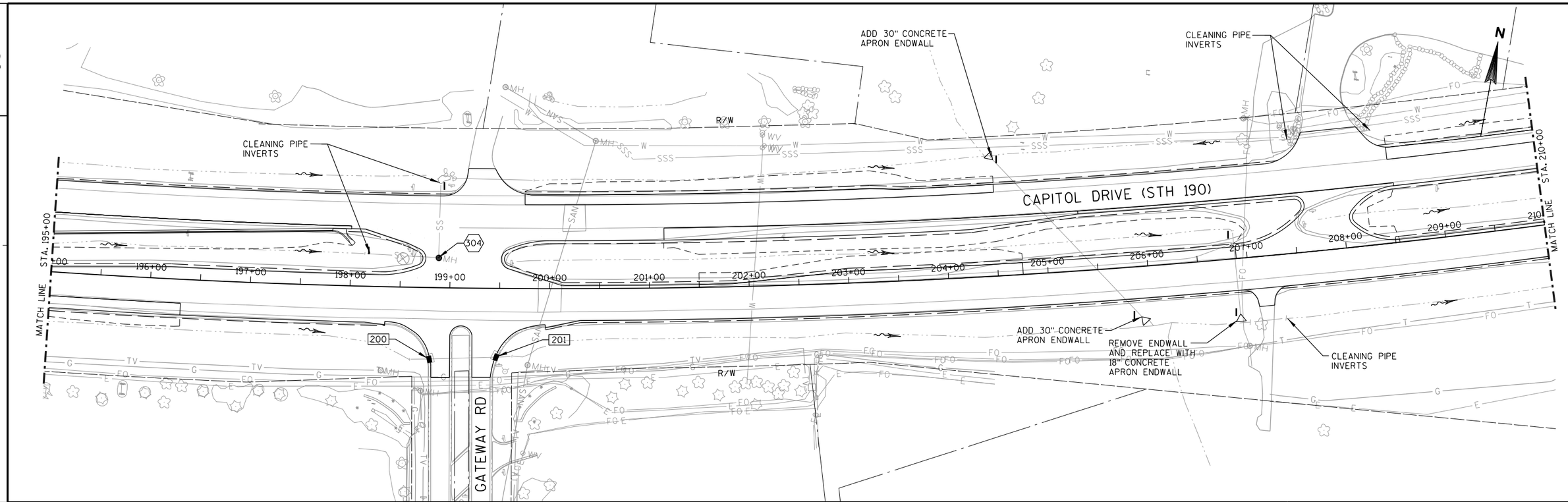

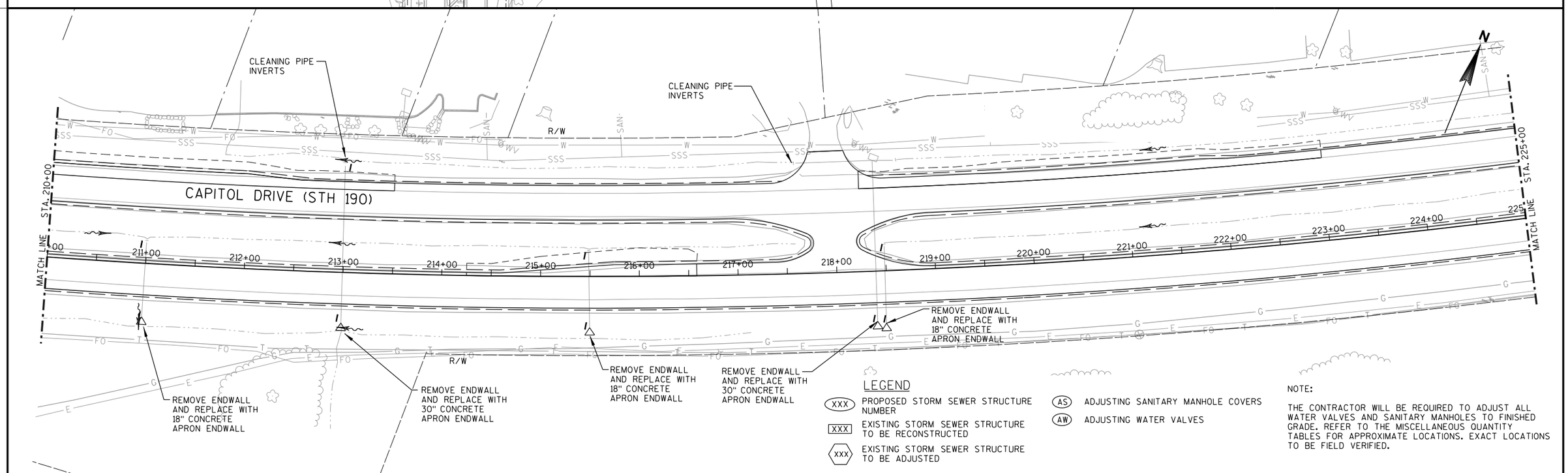

LEGEND

- (XXX) PROPOSED STORM SEWER STRUCTURE NUMBER
- [XXX] EXISTING STORM SEWER STRUCTURE TO BE RECONSTRUCTED
- ⬡XXX⬡ EXISTING STORM SEWER STRUCTURE TO BE ADJUSTED
- (AS) ADJUSTING SANITARY MANHOLE COVERS
- (AW) ADJUSTING WATER VALVES

NOTE:

THE CONTRACTOR WILL BE REQUIRED TO ADJUST ALL WATER VALVES AND SANITARY MANHOLES TO FINISHED GRADE. REFER TO THE MISCELLANEOUS QUANTITY TABLES FOR APPROXIMATE LOCATIONS. EXACT LOCATIONS TO BE FIELD VERIFIED.

PROJECT NO:2025-14-71	HWY:STH 190	COUNTY:WAUKESHA	STORM SEWER & UTILITY PLAN	SHEET 66	E

2

LEGEND

- (XXX) PROPOSED STORM SEWER STRUCTURE NUMBER
- [XXX] EXISTING STORM SEWER STRUCTURE TO BE RECONSTRUCTED
- ⟨XXX⟩ EXISTING STORM SEWER STRUCTURE TO BE ADJUSTED
- (AS) ADJUSTING SANITARY MANHOLE COVERS
- (AW) ADJUSTING WATER VALVES

NOTE:

THE CONTRACTOR WILL BE REQUIRED TO ADJUST ALL WATER VALVES AND SANITARY MANHOLES TO FINISHED GRADE. REFER TO THE MISCELLANEOUS QUANTITY TABLES FOR APPROXIMATE LOCATIONS. EXACT LOCATIONS TO BE FIELD VERIFIED.

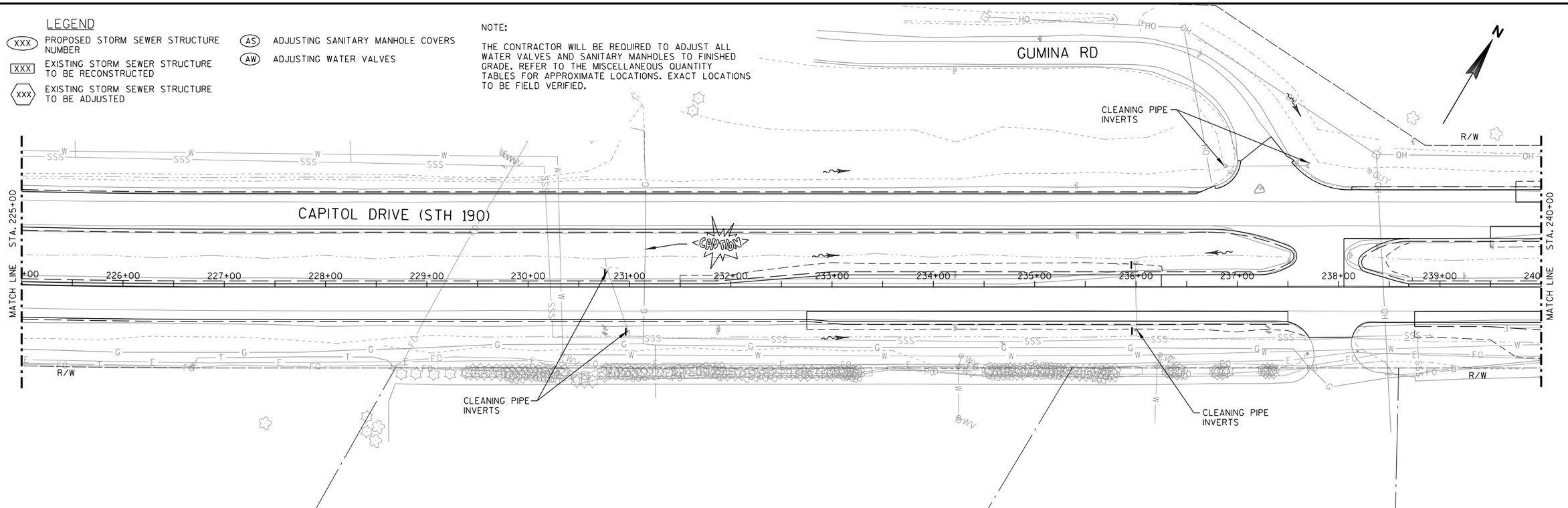

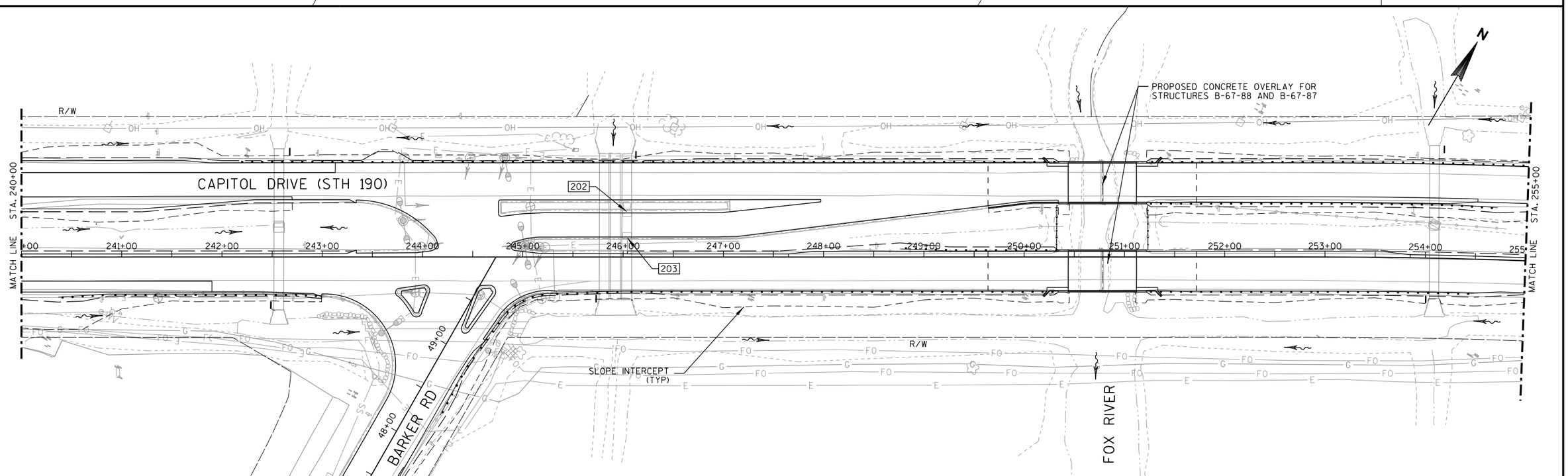

PROJECT NO:2025-14-71	HWY:STH 190	COUNTY:WAUKESHA	STORM SEWER & UTILITY PLAN	SHEET 67	E

2

LEGEND

- (XXX) PROPOSED STORM SEWER STRUCTURE NUMBER
- [XXX] EXISTING STORM SEWER STRUCTURE TO BE RECONSTRUCTED
- ⟨XXX⟩ EXISTING STORM SEWER STRUCTURE TO BE ADJUSTED
- (AS) ADJUSTING SANITARY MANHOLE COVERS
- (AW) ADJUSTING WATER VALVES

NOTE:

THE CONTRACTOR WILL BE REQUIRED TO ADJUST ALL WATER VALVES AND SANITARY MANHOLES TO FINISHED GRADE. REFER TO THE MISCELLANEOUS QUANTITY TABLES FOR APPROXIMATE LOCATIONS. EXACT LOCATIONS TO BE FIELD VERIFIED.

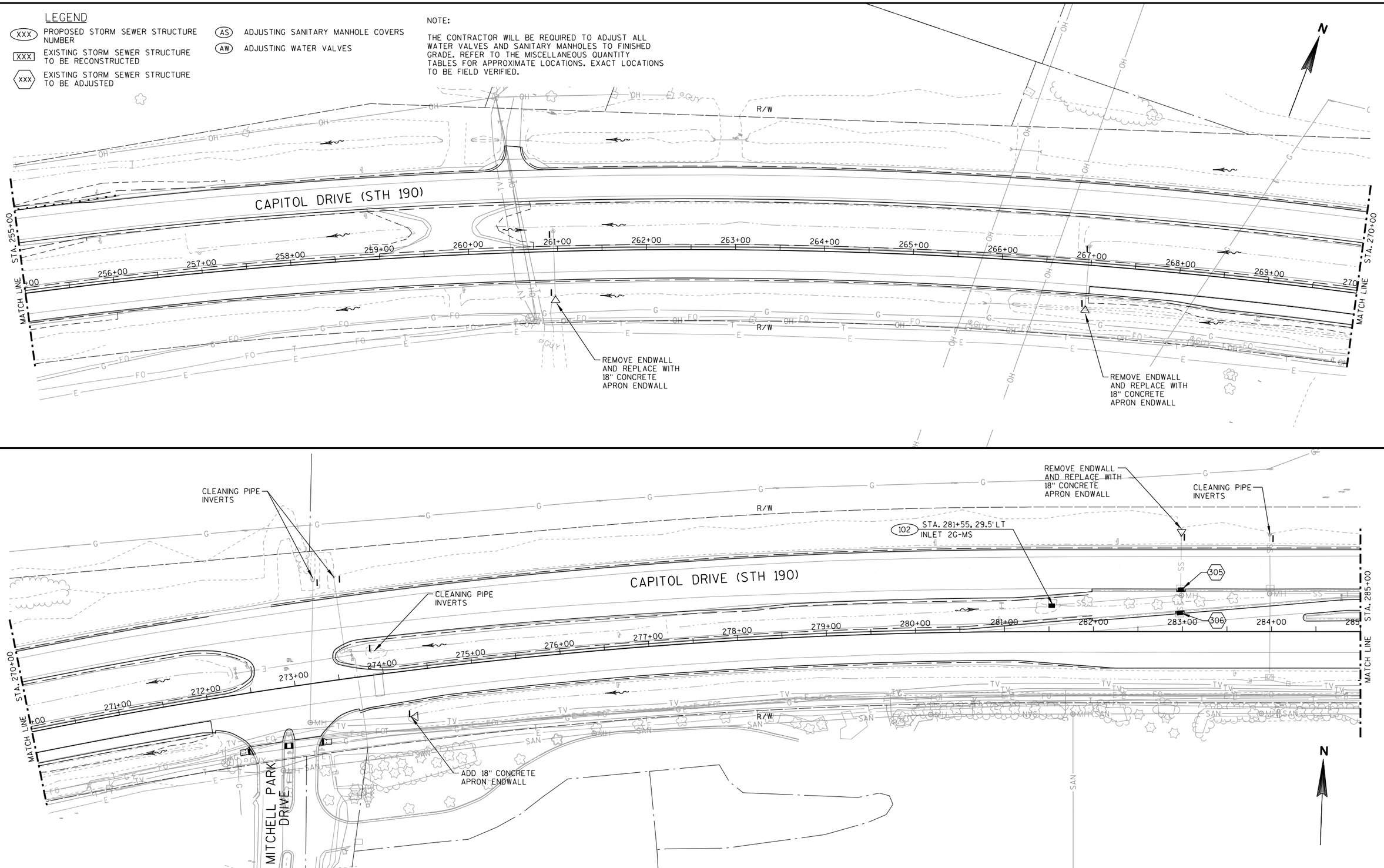

PROJECT NO:2025-14-71	HWY:STH 190	COUNTY:WAUKESHA	STORM SEWER & UTILITY PLAN	SHEET 68	E

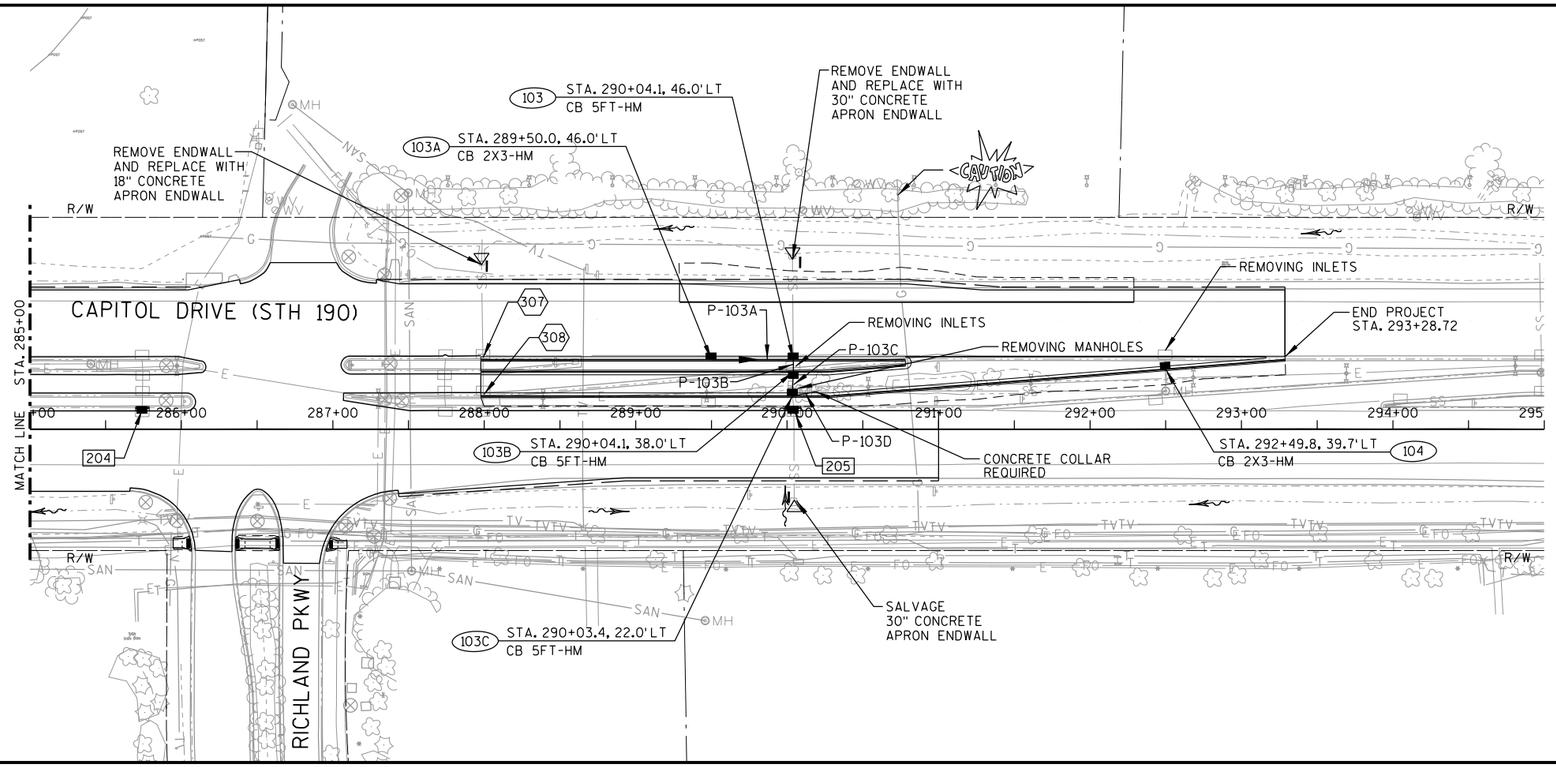

LEGEND

- (XXX) PROPOSED STORM SEWER STRUCTURE NUMBER
- [XXX] EXISTING STORM SEWER STRUCTURE TO BE RECONSTRUCTED
- ⟨XXX⟩ EXISTING STORM SEWER STRUCTURE TO BE ADJUSTED
- (AS) ADJUSTING SANITARY MANHOLE COVERS
- (AW) ADJUSTING WATER VALVES
- ▬ MARKERS CULVERT END

NOTE:

THE CONTRACTOR WILL BE REQUIRED TO ADJUST ALL WATER VALVES AND SANITARY MANHOLES TO FINISHED GRADE. REFER TO THE MISCELLANEOUS QUANTITY TABLES FOR APPROXIMATE LOCATIONS. EXACT LOCATIONS TO BE FIELD VERIFIED.

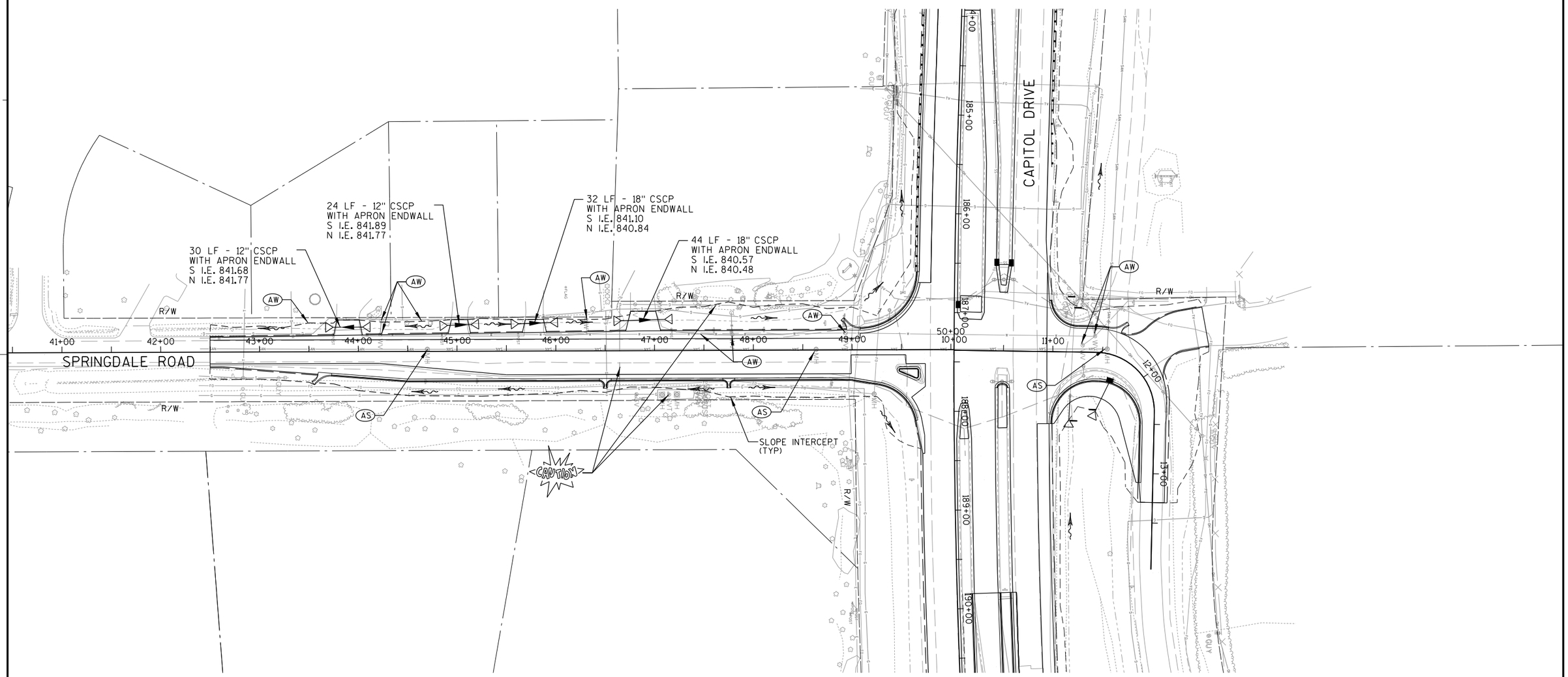

LEGEND

- (XXX) PROPOSED STORM SEWER STRUCTURE NUMBER
- [XXX] EXISTING STORM SEWER STRUCTURE TO BE RECONSTRUCTED
- ⟨XXX⟩ EXISTING STORM SEWER STRUCTURE TO BE ADJUSTED
- (AS) ADJUSTING SANITARY MANHOLE COVERS
- (AW) ADJUSTING WATER VALVES

NOTE:

THE CONTRACTOR WILL BE REQUIRED TO ADJUST ALL WATER VALVES AND SANITARY MANHOLES TO FINISHED GRADE. REFER TO THE MISCELLANEOUS QUANTITY TABLES FOR APPROXIMATE LOCATIONS. EXACT LOCATIONS TO BE FIELD VERIFIED.

PROJECT NO:2025-14-71	HWY:STH 190	COUNTY:WAUKESHA	STORM SEWER & UTILITY PLAN - SPRINGDALE ROAD	SHEET 70	E

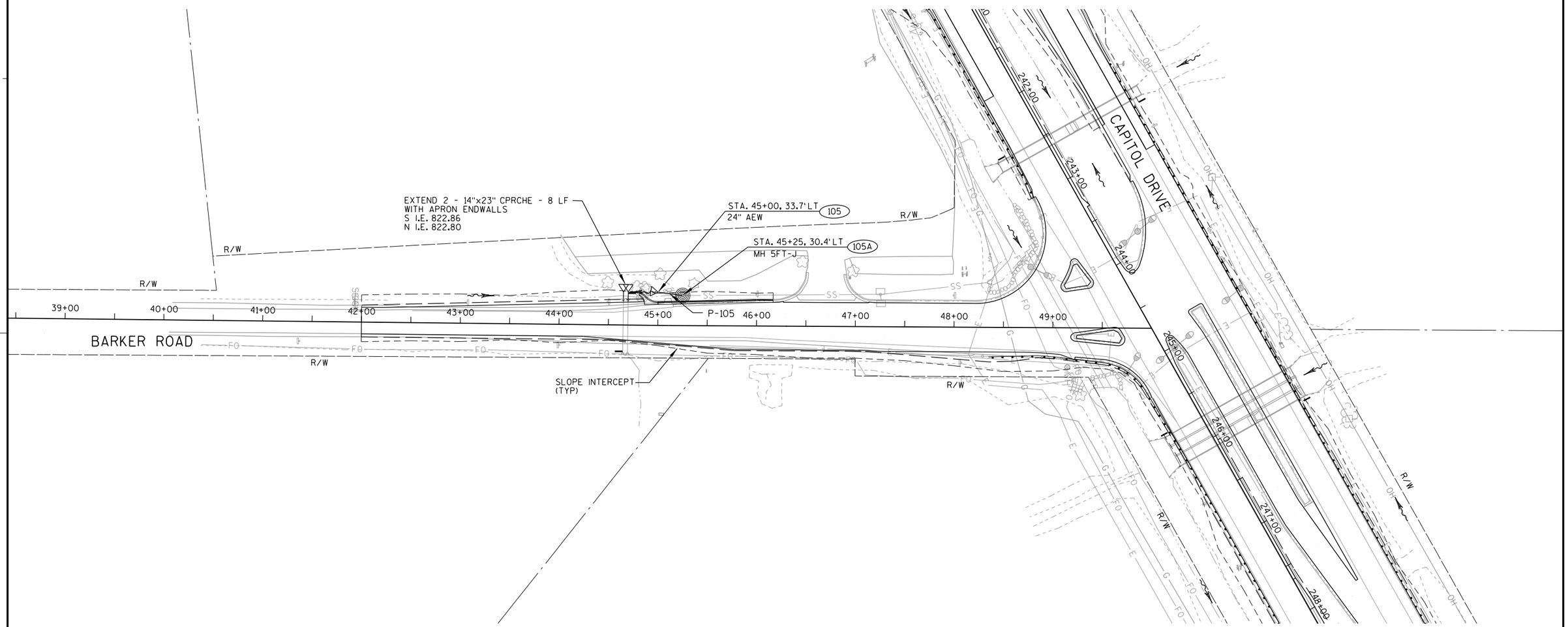

LEGEND

- (XXX) PROPOSED STORM SEWER STRUCTURE NUMBER
- [XXX] EXISTING STORM SEWER STRUCTURE TO BE RECONSTRUCTED
- ⟨XXX⟩ EXISTING STORM SEWER STRUCTURE TO BE ADJUSTED
- (AS) ADJUSTING SANITARY MANHOLE COVERS
- (AW) ADJUSTING WATER VALVES

NOTE:

THE CONTRACTOR WILL BE REQUIRED TO ADJUST ALL WATER VALVES AND SANITARY MANHOLES TO FINISHED GRADE. REFER TO THE MISCELLANEOUS QUANTITY TABLES FOR APPROXIMATE LOCATIONS. EXACT LOCATIONS TO BE FIELD VERIFIED.

PROJECT NO:2025-14-71	HWY:STH 190	COUNTY:WAUKESHA	STORM SEWER & UTILITY PLAN - BARKER ROAD	SHEET 71	E

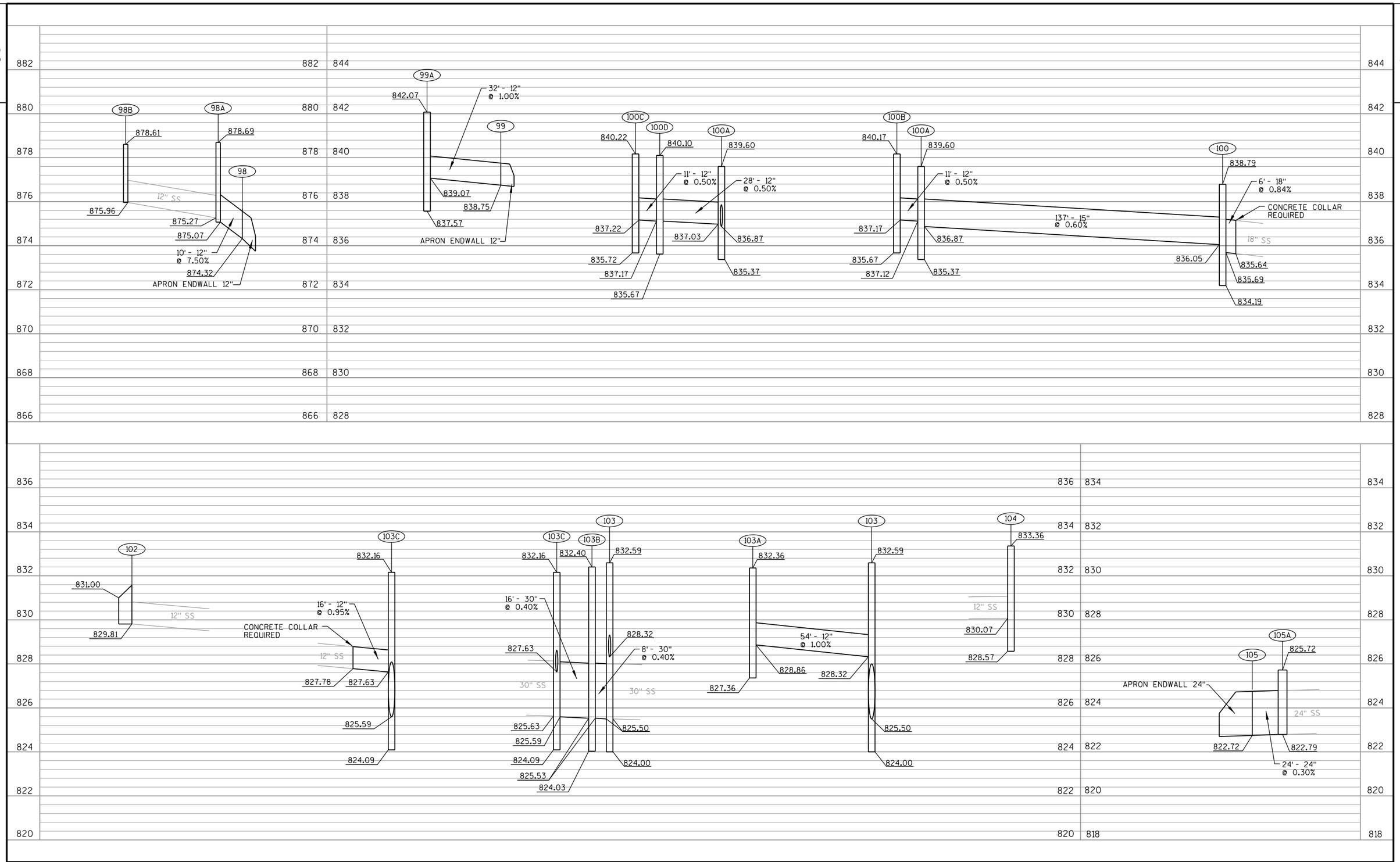

PROJECT NO:2025-14-71	HWY:STH 190	COUNTY:WAUKESHA	STORM SEWER PROFILES	SHEET 72	E

FILE NAME : X:\ML\2016\20160073\CAD\Transportation\dgn\00\022523_ss.dgn PLOT DATE : 10/31/2017 PLOT BY : $$...plotuser...$$ PLOT NAME : PLOT SCALE : $$.....plotscale.....$$ WISDOT/CADDS SHEET 41

STRUCT. NO.	STATION	OFFSET	PIPE NO.	C-C (FT)	TO STRUCT.	INLET/CB TYPE & COVER		MH TYPE & COVER		RIM/GRATE ELEV.	DEPTH (FT)	DISCHARGE PIPE SIZE (IN)	INLET ELEV.	DISCH. ELEV.	LENGTH (FT)	SLOPE (%)	PIPE CLASS	REMARKS
98	172+86.0	15.4' LT	--	--	--	--	--	--	--	--	--	12	874.32	--	--	--	--	APRON ENDWALL
98A	172+82.5	6.0' LT	P-98	10	98	INL 2X2	V	--	--	878.69	3.62	12	875.07	874.32	10.00	7.50	III	CONNECT TO EX. STORM SEWER, 12" S I.E.=875.27
98B	172+82.3	34.0' RT	--	--	98A	INL 2X2	V	--	--	878.61	2.65	12	875.96	--	--	--	--	CONNECT TO EX. STORM SEWER, 12" N I.E.=875.96
99	11+70.0	60.0' RT	--	--	--	--	--	--	--	--	--	12	838.75	--	--	--	--	APRON ENDWALL
99A	11+70.0	27.3' RT	P-99	32	99	CB 2X3	HM	--	--	842.07	3.00	12	839.07	838.75	32.00	1.00	III	
100	193+84.8	29.0' LT	P-100C	6	--	CB 2X3	HM	--	--	838.79	3.10	18	835.69	835.64	6.00	0.84	IV	CONNECT TO EX. STORM SEWER, 18" N I.E.=835.64 CONCRETE COLLAR REQUIRED
100A	192+48.5	15.5' LT	P-100B	137	100C	CB 2X3	HM	--	--	839.60	2.73	15	836.87	836.05	137.00	0.60	III	
100B	192+48.5	5.0' LT	P-100A	11	100A	CB 2X3	HM	--	--	840.17	3.00	12	837.17	837.12	11.00	0.50	III	
100C	192+47.0	54.5' LT	P-100D	11	100D	CB 2X3	HM	--	--	840.22	3.00	12	837.22	837.17	11.00	0.50	III	
100D	192+47.0	43.5' LT	P-100E	28	100A	CB 2X3	HM	--	--	840.10	2.93	12	837.17	837.03	28.00	0.50	III	
102	281+55	29.5' LT	--	--	--	INL MED 2 GRATE	MS	--	--	831.00	1.19	12	829.81	--	--	--	--	CONNECT TO EX. STORM SEWER, 12" E I.E.=829.81
103	290+04.1	46.0' LT	--	--	--	CB 5 FT DIA	HM	--	--	832.59	7.09	30	825.50	--	--	--	--	CONNECT TO EX. STORM SEWER, 30" N I.E.=825.50
103A	289+50	46.0' LT	P-103A	54	103	CB 2X3	HM	--	--	832.36	3.50	12	828.86	828.32	54.00	1.00	III	
103B	290+04.1	38.0' LT	P-103B	8	103A	CB 5 FT DIA	HM	--	--	832.40	6.87	30	825.53	825.50	8.00	0.40	III	
103C	290+03.4	22.0' LT	P-103C	16	103B	CB 5 FT DIA	HM	--	--	832.16	6.57	30	825.59	825.53	16.00	0.40	III	CONNECT TO EX. STORM SEWER, 30" S I.E.=825.63
--	290+19	25.0' LT	P-103D	16	103C	--	--	--	--	--	--	12	827.78	827.63	16.00	0.95	III	CONCRETE COLLAR REQUIRED
104	292+49.8	39.7' LT	--	--	--	CB 2X3	HM	--	--	833.36	3.29	12	830.07	--	--	--	--	CONNECT TO EX. STORM SEWER, 12" S I.E.=830.07
105	45+00	33.7' LT	--	--	--	--	--	--	--	--	--	24	822.72	--	--	--	--	APRON END WALL
105A	45+25	30.4' LT	P-105	24	105	--	--	5 FT	J	825.72	2.93	24	822.79	822.72	24.00	0.30	III	CONNECT MH TO EX. STORM SEWER, 24" N I.E.=822.79

NOTES:

1. STATIONS AND OFFSETS TO MANHOLES ARE GIVEN TO THE CENTER OF STRUCTURE.
2. STATIONS AND OFFSETS TO CATCH BASINS AND INLETS ARE GIVEN TO THE FACE OF CURB.
3. MANHOLE RIM/GRATE ELEVATIONS ARE GIVEN TO THE CENTER OF STRUCTURE.
4. CATCH BASIN AND INLET RIM/GRATE ELEVATIONS ARE GIVEN TO THE FLANGE LINE.
5. DEPTH OF MANHOLES AND INLETS ARE MEASURED FROM THE LOWEST INVERT OF THE STRUCTURE TO THE RIM/GRATE ELEVATION.
6. DEPTH OF CATCH BASINS ARE MEASURED FROM THE LOWEST PROPOSED INVERT TO THE RIM/GRATE ELEVATION. (SUMP DEPTH AND EXISTING INVERTS NOT INCLUDED. SEE STORM SEWER PROFILES FOR ADDITIONAL INFORMATION.)
7. PIPE LENGTHS FOR STRUCTURES ARE SHOWN FROM CENTER OF STRUCTURE TO CENTER OF STRUCTURE.
8. 5 FT DIAMETER CATCH BASINS WITH TYPE HM FRAME AND GRATE REQUIRE A PRECAST REINFORCED FLAT SLAB TOP WITH 2'X 3'OPENING.

LEGEND

- EXISTING SIGN MOUNTED ON POST(S)
- EXISTING SIGN MOUNTED ON BRIDGE OR SIGN BRIDGE
- PROPOSED SIGN MOUNTED ON POST(S)
- PROPOSED SIGN MOUNTED ON BRIDGE OR SIGN BRIDGE
- SIGN BRIDGE
- CANTILEVER SIGN BRIDGE
- (XXX) DENOTES SIGN NUMBER
- (X) INDICATES SIGN SIZE
- ESTR EXISTING SIGN TO REMAIN

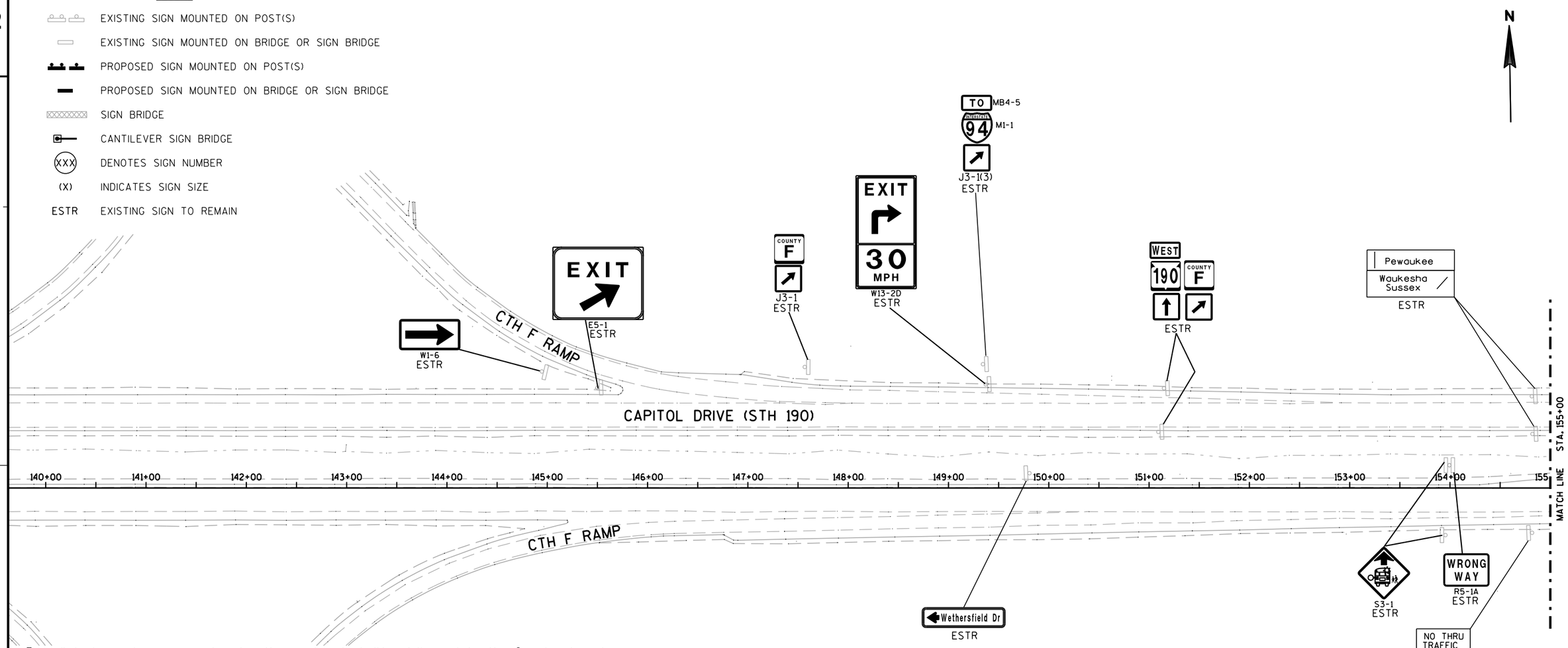

Type II aluminum signs removed under the contract shall be delivered to the County sign shop. Contact Dennis Newton, 414-266-1165 for distribution county location.

Signs shall be carefully removed from sign supports. The signs shall be palletized for handling with a forklift (see special provision 638.3.4). The Regional sign shop (414-266-1165) shall be notified three working days prior to delivery of the signs.

When an existing stop sign support is to be removed and a new stop sign and support erected, the work shall be done concurrently. For other signs and supports that are to be removed and new signs and supports erected, the removal of the existing sign/support and erection of the new sign/support should be done as concurrently as possible. In no case shall a new sign/support be down for more than 24 hours and there shall not be more than one sign of the same legend missing in a row.

Wood posts sizes, for type II signs are estimated lengths and the actual length will be determined in the field.

Street name signs are property of the municipality (city, village or town). The municipality shall be contacted to remove their street name signs prior to construction and it is their responsibility to reinstall the old signs or replace them following construction. WisDOT does not furnish or install street name signs. The street name signs shall not be placed on top of the STOP signs.

NOTE:

MANY SIGNS REPLACED UNDER 2025-13-71 (2017)

NOTE:

DO NOT PLACE STREET NAME SIGNS ON TOP OF STOP SIGNS
STREET NAME SIGNS - GROUND MOUNT BY CITY

SHEET 1 OF 12

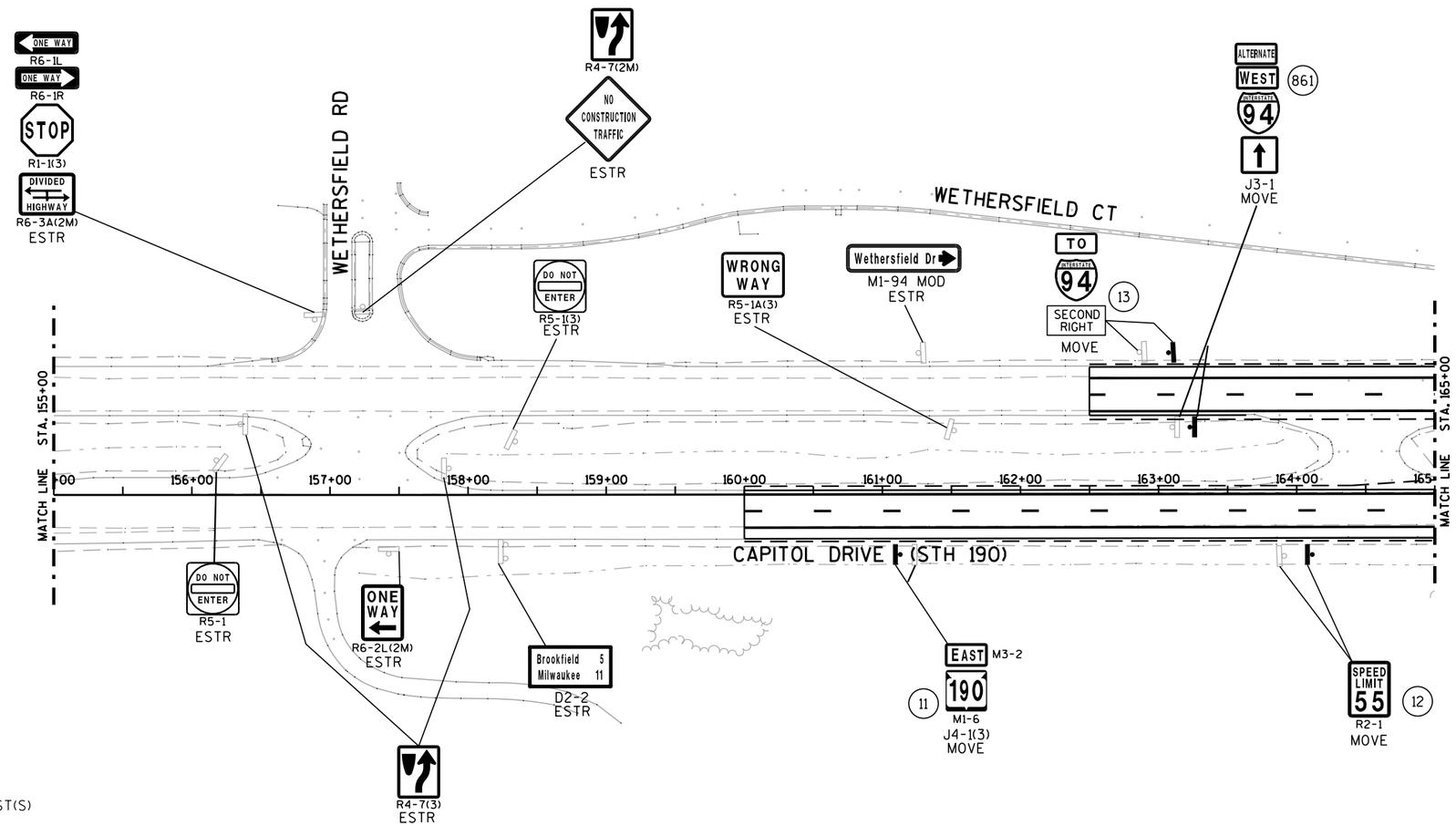

LEGEND

- EXISTING SIGN MOUNTED ON POST(S)
- EXISTING SIGN MOUNTED ON BRIDGE OR SIGN BRIDGE
- PROPOSED SIGN MOUNTED ON POST(S)
- PROPOSED SIGN MOUNTED ON BRIDGE OR SIGN BRIDGE
- SIGN BRIDGE
- CANTILEVER SIGN BRIDGE
- (XXX) DENOTES SIGN NUMBER
- (X) INDICATES SIGN SIZE
- ESTR EXISTING SIGN TO REMAIN

NOTE:

DO NOT PLACE STREET NAME SIGNS ON TOP OF STOP SIGNS
STREET NAME SIGNS - GROUND MOUNT BY CITY

SHEET 2 OF 12

PROJECT NO:2025-14-71	HWY:STH 190	COUNTY:WAUKESHA	PERMANENT SIGNING	SHEET 75	E

LEGEND

- EXISTING SIGN MOUNTED ON POST(S)
- EXISTING SIGN MOUNTED ON BRIDGE OR SIGN BRIDGE
- PROPOSED SIGN MOUNTED ON POST(S)
- PROPOSED SIGN MOUNTED ON BRIDGE OR SIGN BRIDGE
- SIGN BRIDGE
- CANTILEVER SIGN BRIDGE
- XXX DENOTES SIGN NUMBER
- (X) INDICATES SIGN SIZE
- ESTR EXISTING SIGN TO REMAIN

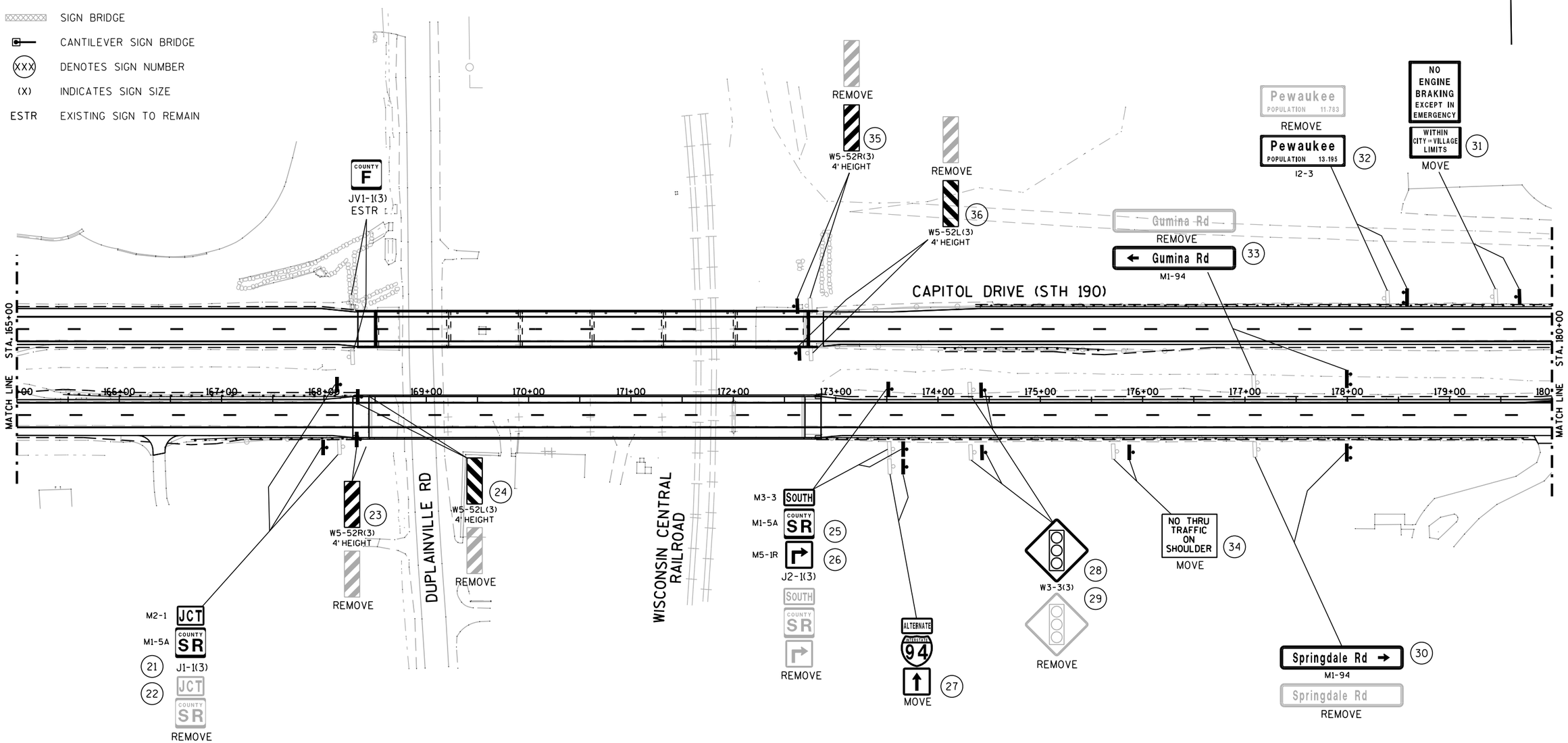

NOTE:

DO NOT PLACE STREET NAME
SIGNS ON TOP OF STOP SIGNS
STREET NAME SIGNS - GROUND MOUNT BY CITY

SHEET 3 OF 12

PROJECT NO:2025-14-71	HWY:STH 190	COUNTY:WAUKESHA	PERMANENT SIGNING	SHEET 76	E

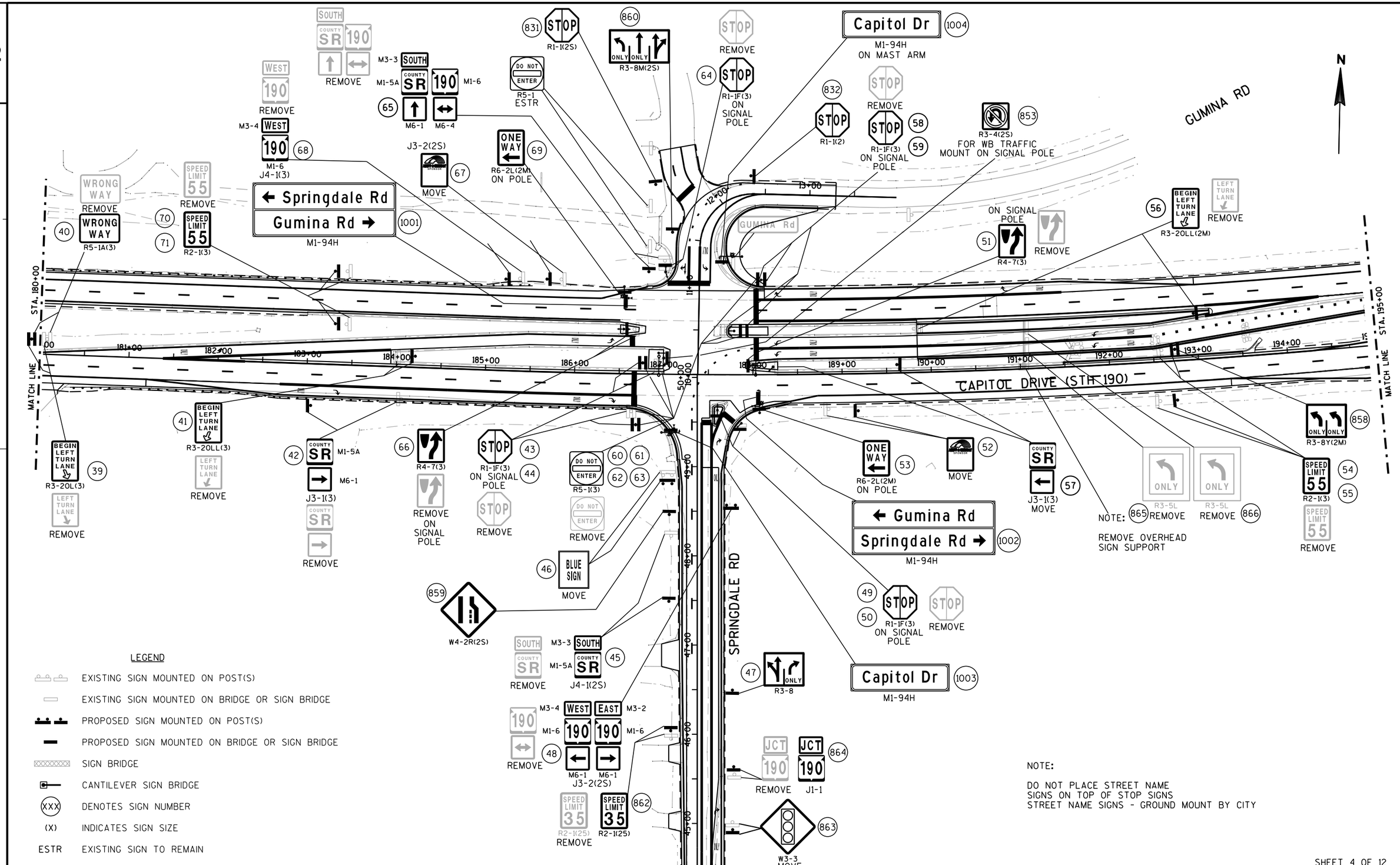

SHEET 4 OF 12

PROJECT NO: 2025-14-71	HWY: STH 190	COUNTY: WAUKESHA	PERMANENT SIGNING	SHEET 77	E

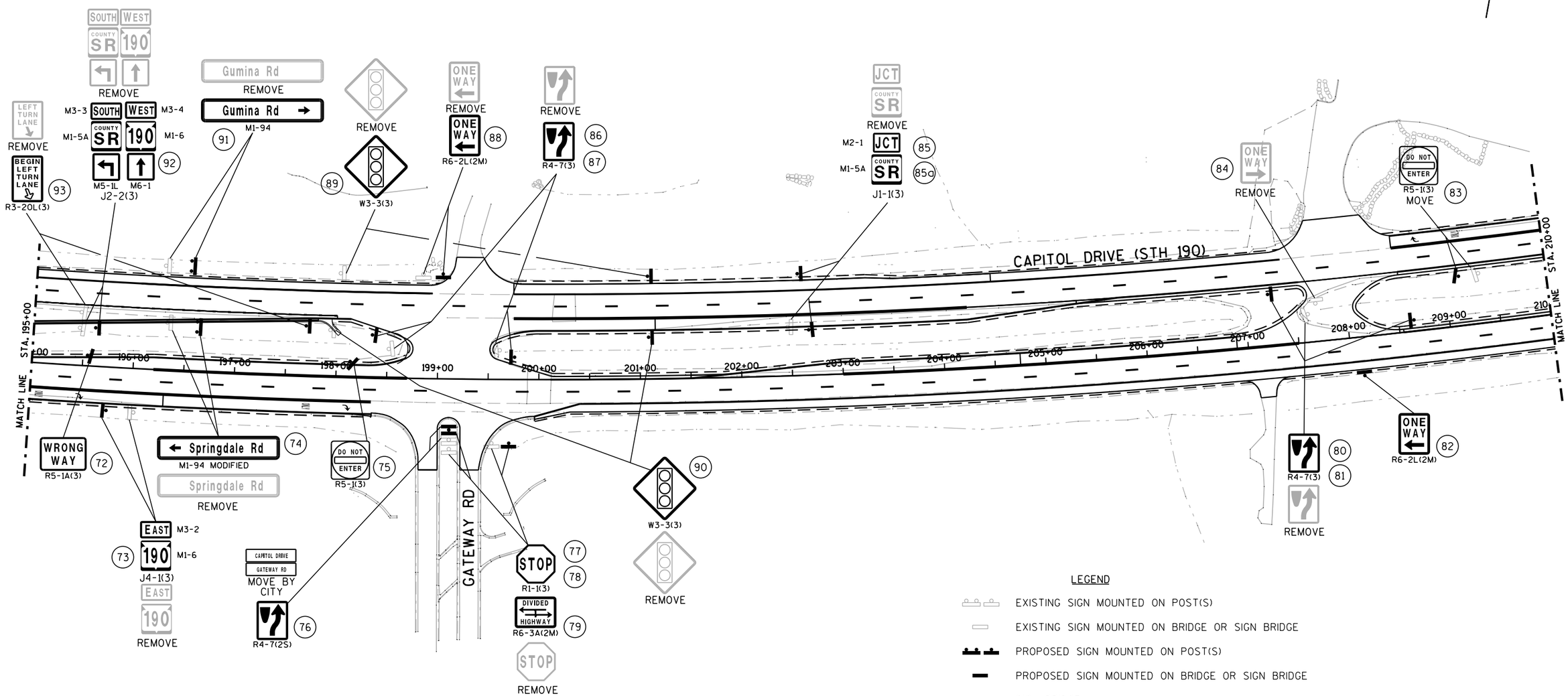

LEGEND

- EXISTING SIGN MOUNTED ON POST(S)
- EXISTING SIGN MOUNTED ON BRIDGE OR SIGN BRIDGE
- PROPOSED SIGN MOUNTED ON POST(S)
- PROPOSED SIGN MOUNTED ON BRIDGE OR SIGN BRIDGE
- SIGN BRIDGE
- CANTILEVER SIGN BRIDGE
- (XXX) DENOTES SIGN NUMBER
- (X) INDICATES SIGN SIZE
- ESTR EXISTING SIGN TO REMAIN

NOTE:

DO NOT PLACE STREET NAME SIGNS ON TOP OF STOP SIGNS
STREET NAME SIGNS - GROUND MOUNT BY CITY

SHEET 5 OF 12

PROJECT NO:2025-14-71	HWY:STH 190	COUNTY:WAUKESHA	PERMANENT SIGNING	SHEET 78	E

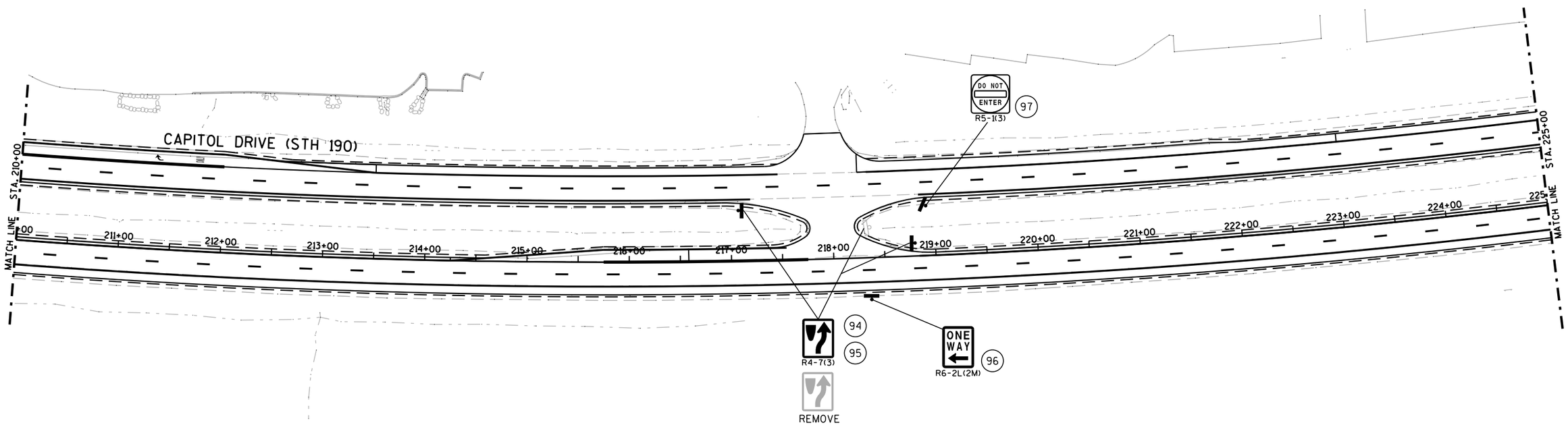

LEGEND

- EXISTING SIGN MOUNTED ON POST(S)
- EXISTING SIGN MOUNTED ON BRIDGE OR SIGN BRIDGE
- PROPOSED SIGN MOUNTED ON POST(S)
- PROPOSED SIGN MOUNTED ON BRIDGE OR SIGN BRIDGE
- SIGN BRIDGE
- CANTILEVER SIGN BRIDGE
- (XXX) DENOTES SIGN NUMBER
- (X) INDICATES SIGN SIZE
- ESTR EXISTING SIGN TO REMAIN

NOTE:

DO NOT PLACE STREET NAME
SIGNS ON TOP OF STOP SIGNS
STREET NAME SIGNS - GROUND MOUNT BY CITY

SHEET 6 OF 12

PROJECT NO:2025-14-71	HWY:STH 190	COUNTY:WAUKESHA	PERMANENT SIGNING	SHEET 79	E

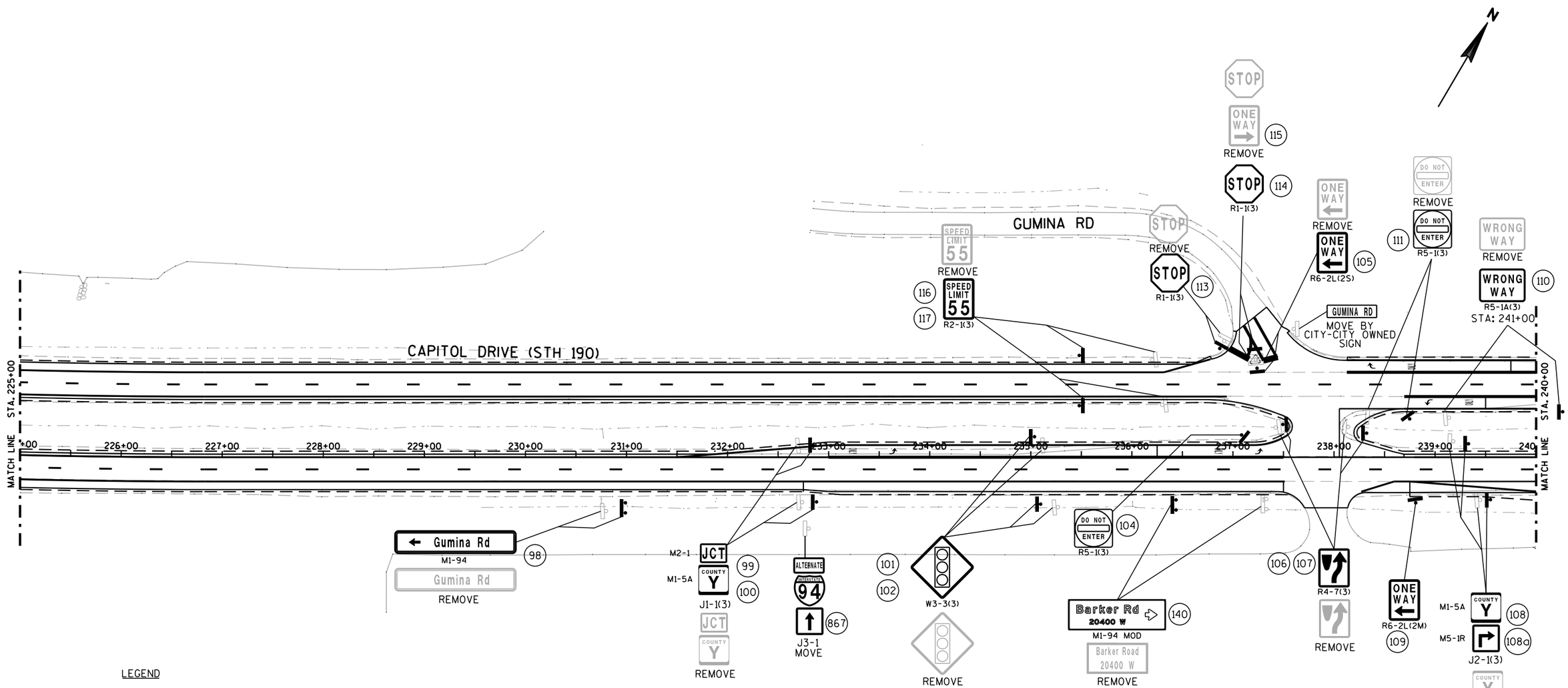

LEGEND

- EXISTING SIGN MOUNTED ON POST(S)
- EXISTING SIGN MOUNTED ON BRIDGE OR SIGN BRIDGE
- PROPOSED SIGN MOUNTED ON POST(S)
- PROPOSED SIGN MOUNTED ON BRIDGE OR SIGN BRIDGE
- SIGN BRIDGE
- CANTILEVER SIGN BRIDGE
- (XXX) DENOTES SIGN NUMBER
- (X) INDICATES SIGN SIZE
- ESTR EXISTING SIGN TO REMAIN

NOTE:

DO NOT PLACE STREET NAME
SIGNS ON TOP OF STOP SIGNS
STREET NAME SIGNS - GROUND MOUNT BY CITY

SHEET 7 OF 12

PROJECT NO:2025-14-71	HWY:STH 190	COUNTY:WAUKESHA	PERMANENT SIGNING	SHEET 80	E

LEGEND

- EXISTING SIGN MOUNTED ON POST(S)
- EXISTING SIGN MOUNTED ON BRIDGE OR SIGN BRIDGE
- PROPOSED SIGN MOUNTED ON POST(S)
- PROPOSED SIGN MOUNTED ON BRIDGE OR SIGN BRIDGE
- SIGN BRIDGE
- CANTILEVER SIGN BRIDGE
- (XXX) DENOTES SIGN NUMBER
- (X) INDICATES SIGN SIZE
- ESTR EXISTING SIGN TO REMAIN

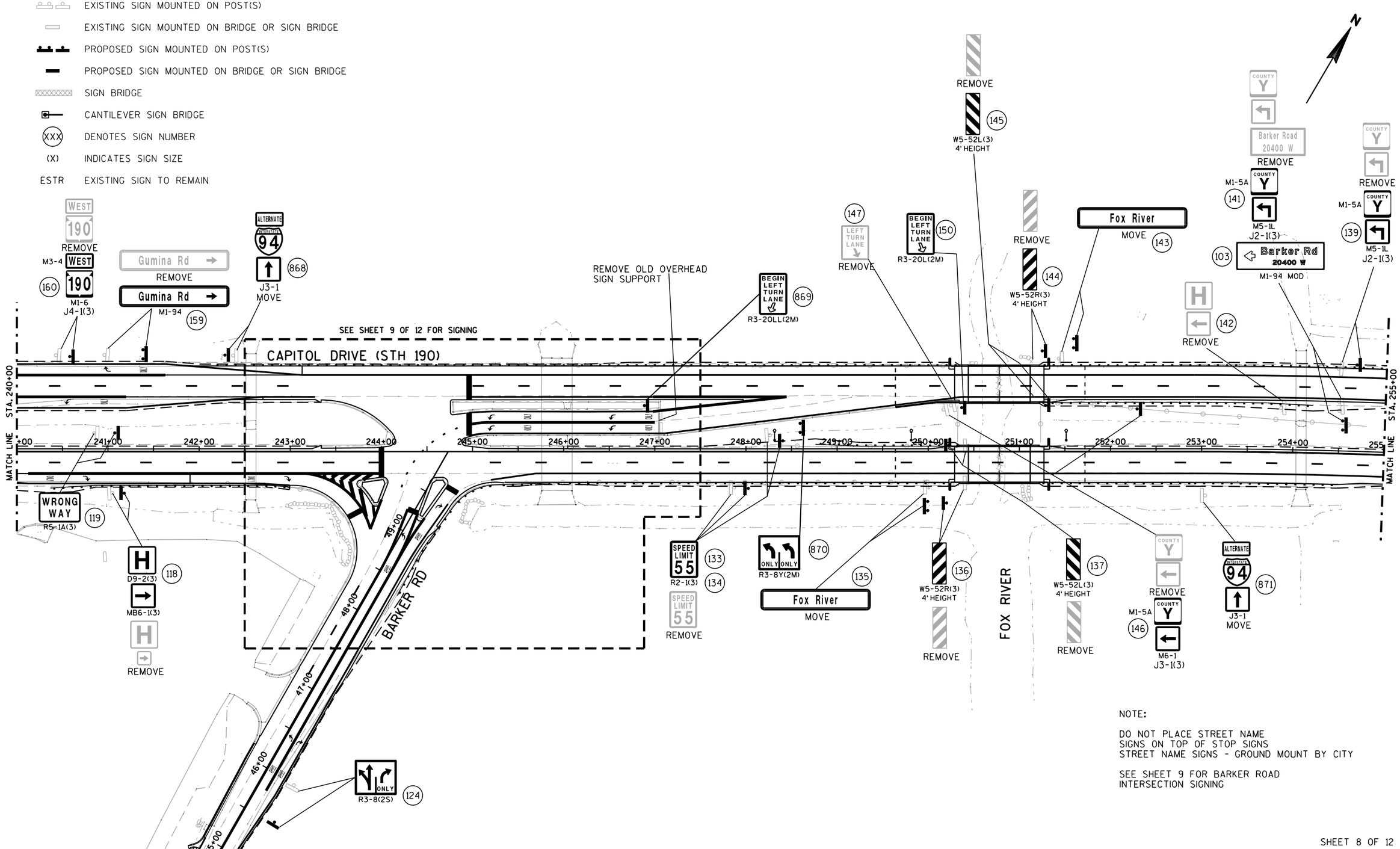

NOTE:

DO NOT PLACE STREET NAME SIGNS ON TOP OF STOP SIGNS
STREET NAME SIGNS - GROUND MOUNT BY CITY

SEE SHEET 9 FOR BARKER ROAD INTERSECTION SIGNING

SHEET 8 OF 12

PROJECT NO: 2025-14-71	HWY: STH 190	COUNTY: WAUKESHA	PERMANENT SIGNING	SHEET 81	E

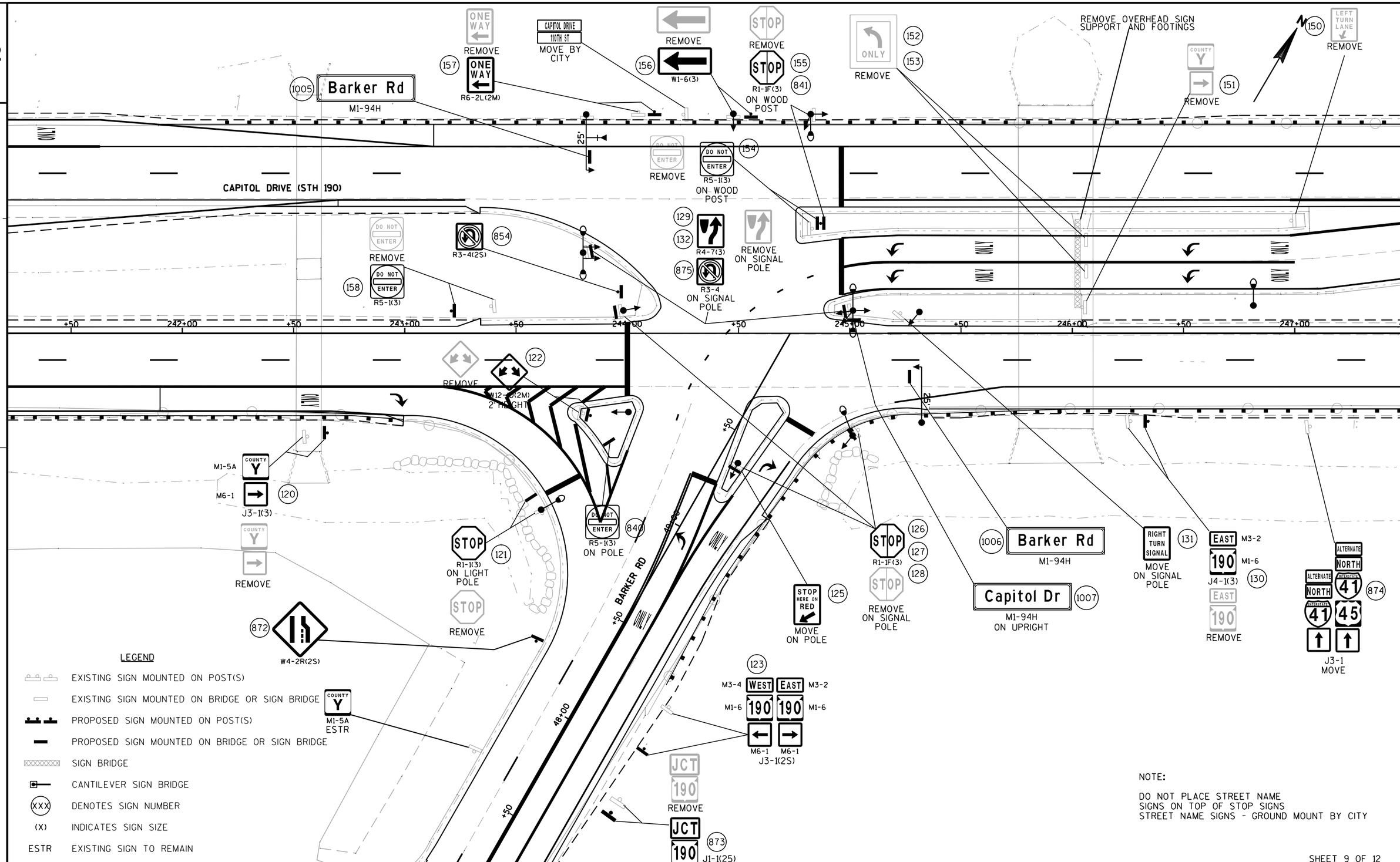

PROJECT NO: 2025-14-71	HWY: STH 190	COUNTY: WAUKESHA	PERMANENT SIGNING	SHEET 82	E

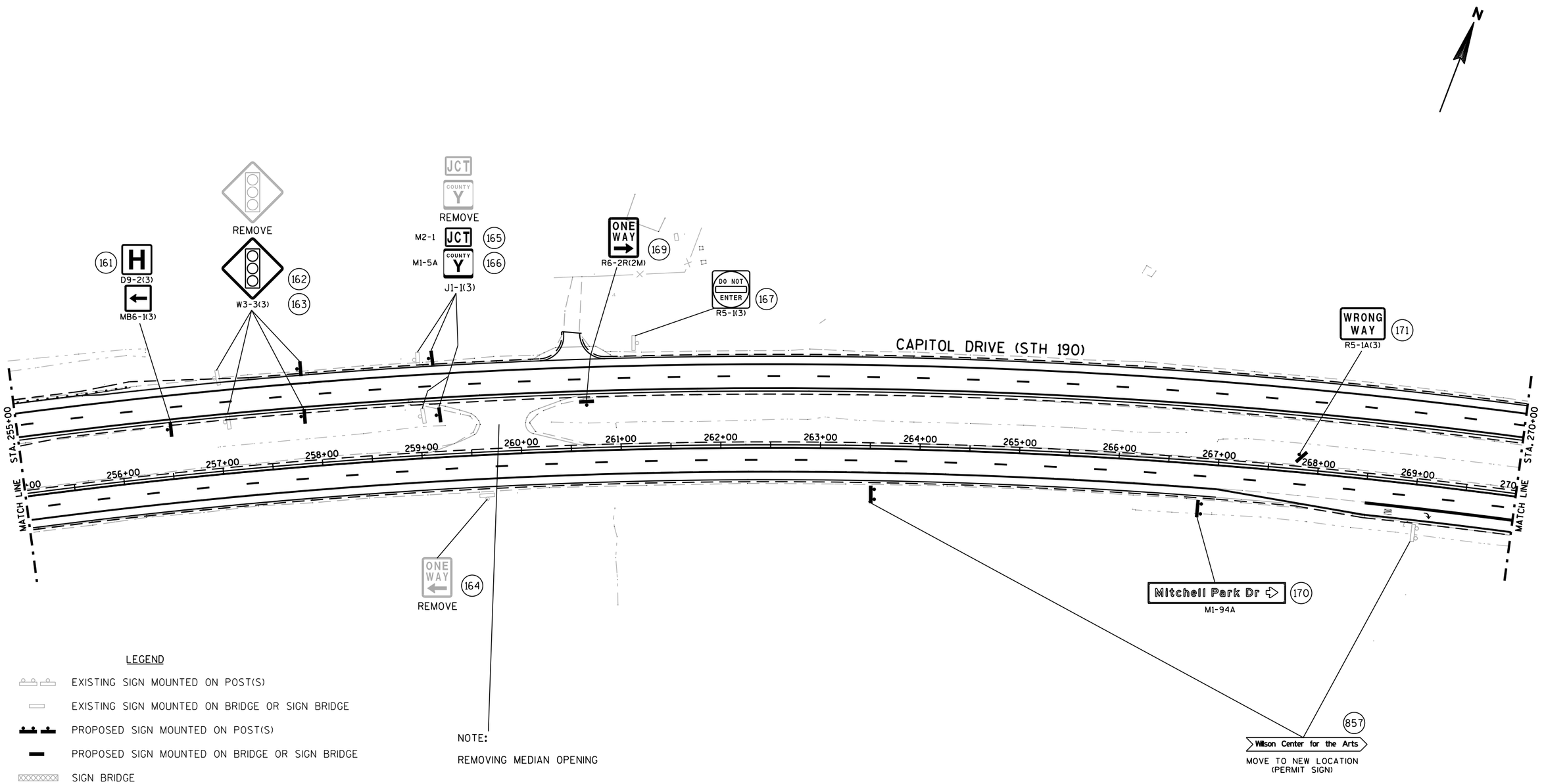

LEGEND

- EXISTING SIGN MOUNTED ON POST(S)
- EXISTING SIGN MOUNTED ON BRIDGE OR SIGN BRIDGE
- PROPOSED SIGN MOUNTED ON POST(S)
- PROPOSED SIGN MOUNTED ON BRIDGE OR SIGN BRIDGE
- SIGN BRIDGE
- CANTILEVER SIGN BRIDGE
- (XXX) DENOTES SIGN NUMBER
- (X) INDICATES SIGN SIZE
- ESTR EXISTING SIGN TO REMAIN

NOTE:

REMOVING MEDIAN OPENING

NOTE:

DO NOT PLACE STREET NAME
SIGNS ON TOP OF STOP SIGNS
STREET NAME SIGNS - GROUND MOUNT BY CITY

SHEET 10 OF 12

PROJECT NO:2025-14-71	HWY:STH 190	COUNTY:WAUKESHA	PERMANENT SIGNING	SHEET 83	E

LEGEND

- EXISTING SIGN MOUNTED ON POST(S)
- EXISTING SIGN MOUNTED ON BRIDGE OR SIGN BRIDGE
- PROPOSED SIGN MOUNTED ON POST(S)
- PROPOSED SIGN MOUNTED ON BRIDGE OR SIGN BRIDGE
- SIGN BRIDGE
- CANTILEVER SIGN BRIDGE
- (XXX) DENOTES SIGN NUMBER
- (X) INDICATES SIGN SIZE
- ESTR EXISTING SIGN TO REMAIN

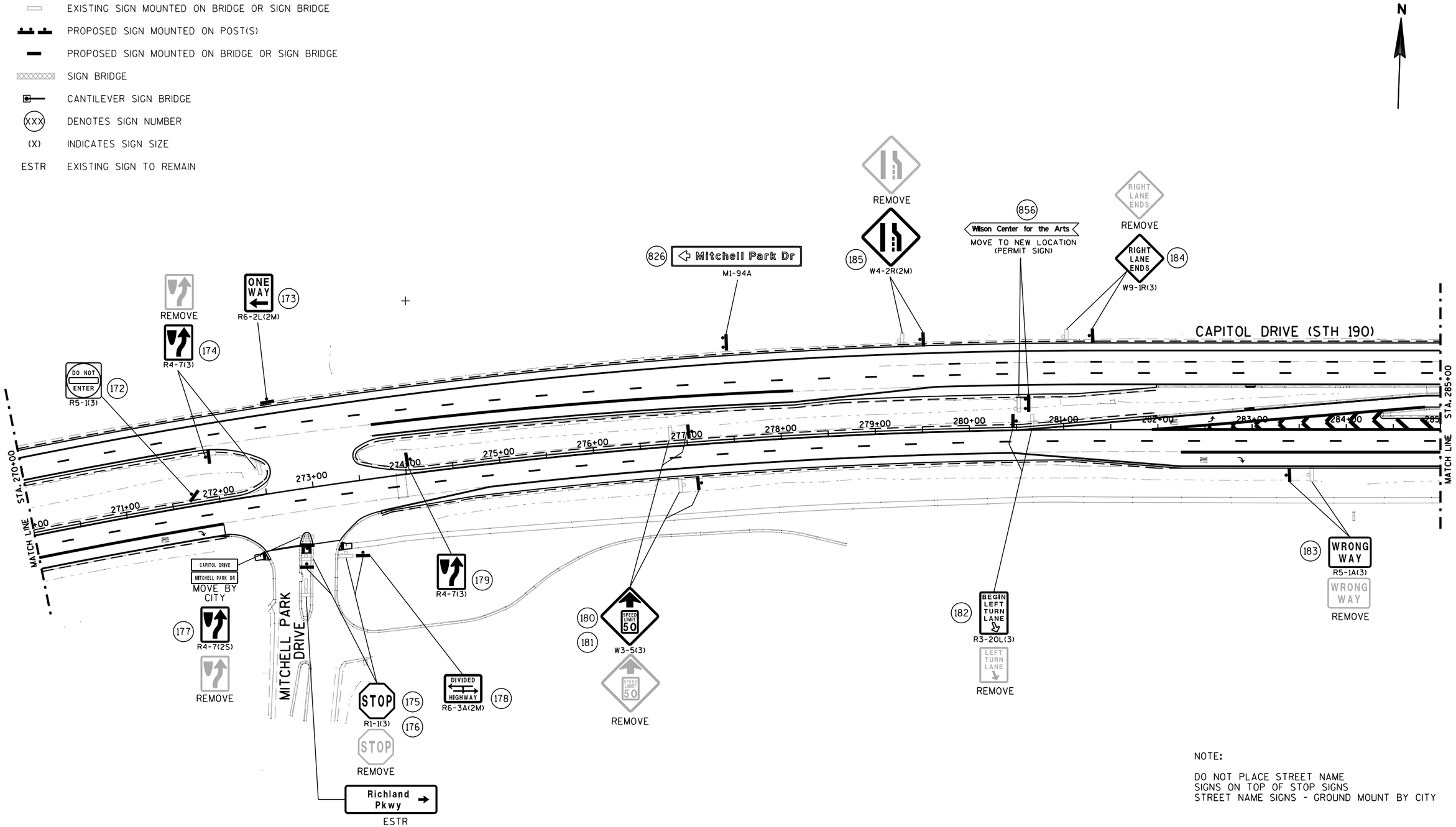

NOTE:

DO NOT PLACE STREET NAME SIGNS ON TOP OF STOP SIGNS
STREET NAME SIGNS - GROUND MOUNT BY CITY

SHEET 11 OF 12

PROJECT NO:2025-14-71	HWY:STH 190	COUNTY:WAUKESHA	PERMANENT SIGNING	SHEET 84	E

2

LEGEND

- EXISTING SIGN MOUNTED ON POST(S)
- EXISTING SIGN MOUNTED ON BRIDGE OR SIGN BRIDGE
- PROPOSED SIGN MOUNTED ON POST(S)
- PROPOSED SIGN MOUNTED ON BRIDGE OR SIGN BRIDGE
- SIGN BRIDGE
- CANTILEVER SIGN BRIDGE
- (XXX) DENOTES SIGN NUMBER
- (X) INDICATES SIGN SIZE
- ESTR EXISTING SIGN TO REMAIN

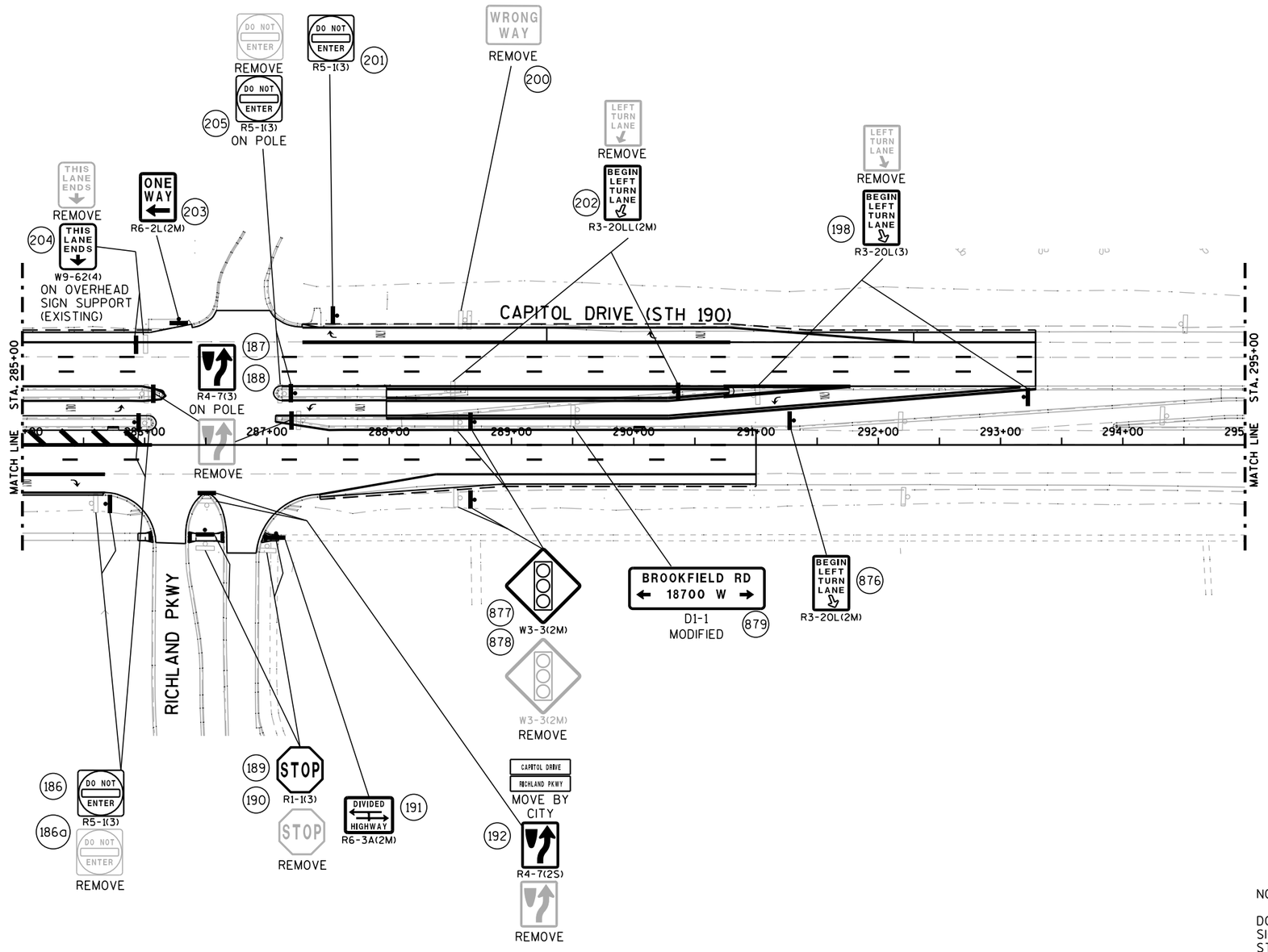

NOTE:

DO NOT PLACE STREET NAME
SIGNS ON TOP OF STOP SIGNS
STREET NAME SIGNS - GROUND MOUNT BY CITY

SHEET 12 OF 12

PROJECT NO:2025-14-71	HWY:STH 190	COUNTY:WAUKESHA	PERMANENT SIGNING	SHEET 85	E

2

LIGHTING PLAN LEGEND

- SALVAGE AND RELOCATE DECORATIVE LIGHTING UNIT.
- EXISTING DECORATIVE LIGHTING UNIT.
- EXISTING PULL BOX
- PROPOSED CABLE-IN-DUCT: 3#4 AND 1#6 GROUND IN NON-METALLIC CONDUIT SCHEDULE 40, 2-INCH

STA. XX+XX.XX. XX.X' LT = CONCRETE BASE/POLE LOCATION
TC-1-1
- POLE NUMBER
- LUMINARE CIRCUIT NUMBER
- CONTROL CABINET

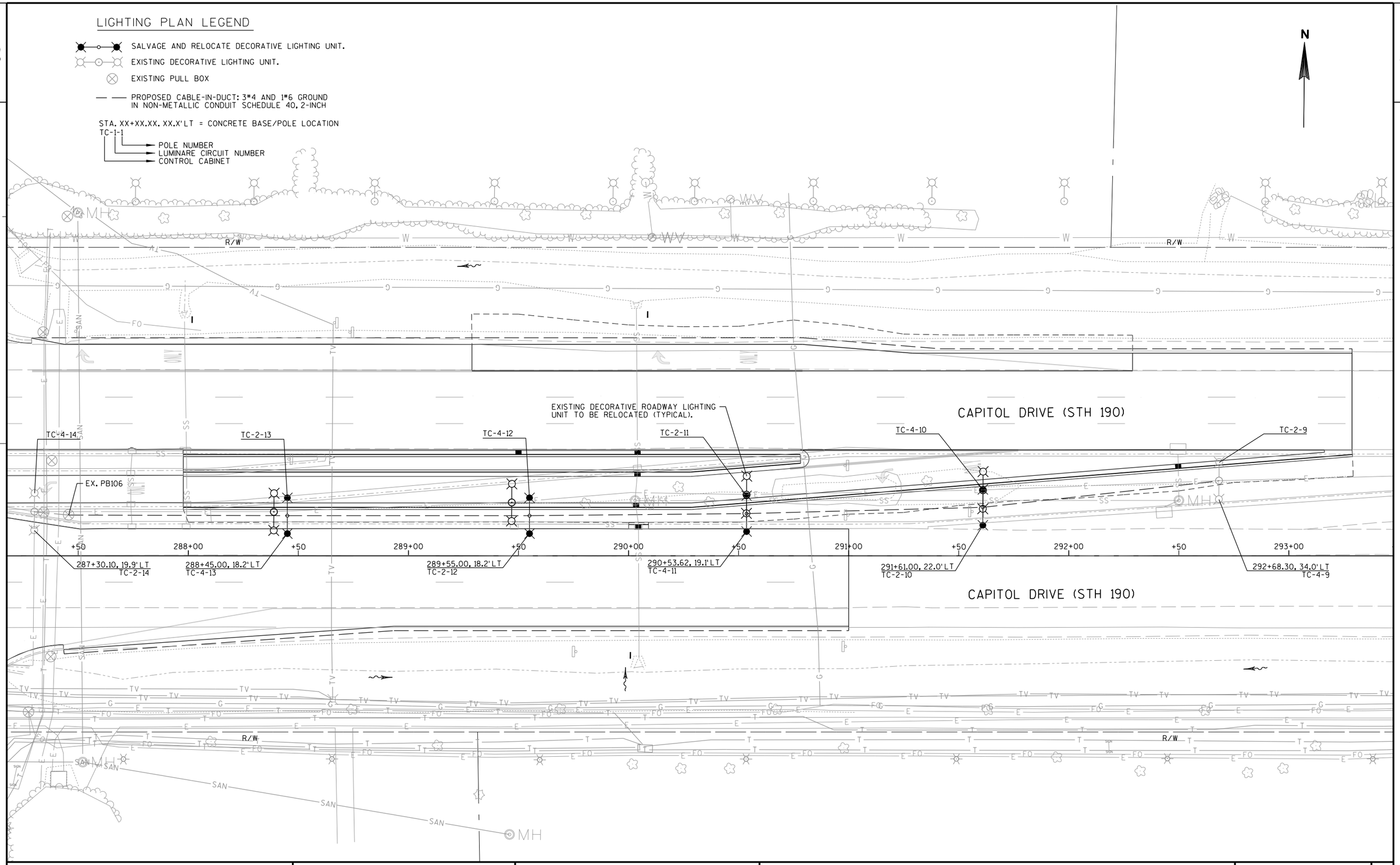

PROJECT NO:2025-14-71	HWY:STH 190	COUNTY:WAUKESHA	LIGHTING PLAN	SHEET 86	E

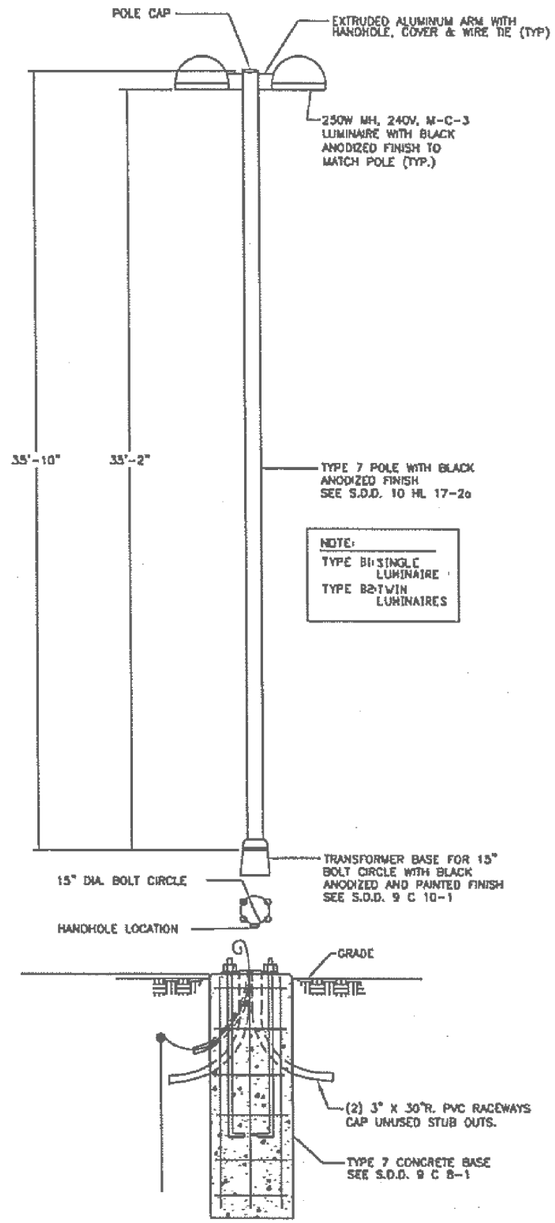

DECORATIVE ROADWAY LIGHTING UNIT-
TYPE B1/B2
NO SCALE

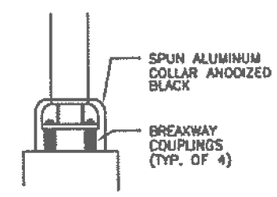

BASE DETAIL

2

LEGEND

- WORK AREA
- SIGNAL HEAD, OVERHEAD MOUNT
- CLASS 4 WOOD POLE
- TEMPORARY LUMINAIRE
- CABLE - OVERHEAD
- SIGNAL HEAD NUMBER
- (R) RED CIRCULAR INDICATOR
- (Y) YELLOW CIRCULAR INDICATOR
- (G) GREEN CIRCULAR INDICATOR
- (R) RED ARROW
- (Y) YELLOW ARROW
- (G) GREEN ARROW
- (X) EVP DESIGNATOR
- EVP DETECTOR HEAD
- (S) STOP SIGN
- NON-INTRUSIVE DETECTION AREA
- TRAFFIC SIGNAL HEAD TO BE COVERED AND DE-ENERGIZED

NOTE: ALL LENSES ARE 12-INCH

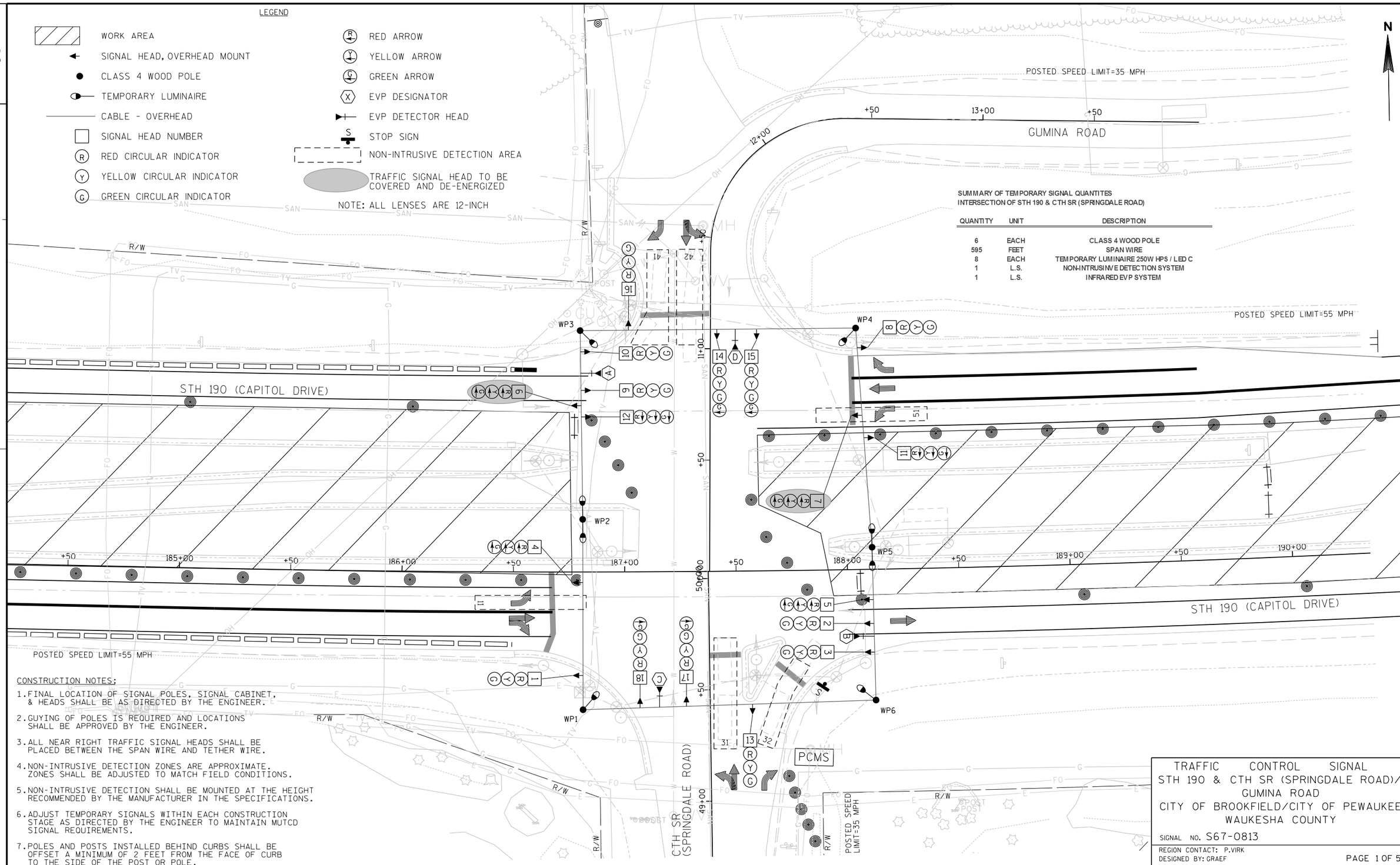

SUMMARY OF TEMPORARY SIGNAL QUANTITES
INTERSECTION OF STH 190 & CTH SR (SPRINGDALE ROAD)

QUANTITY	UNIT	DESCRIPTION
6	EACH	CLASS 4 WOOD POLE
595	FEET	SPAN WIRE
8	EACH	TEMPORARY LUMINAIRE 250W HPS / LED C
1	L.S.	NON-INTRUSINVE DETECTION SYSTEM
1	L.S.	INFRARED EVP SYSTEM

CONSTRUCTION NOTES;

1. FINAL LOCATION OF SIGNAL POLES, SIGNAL CABINET, & HEADS SHALL BE AS DIRECTED BY THE ENGINEER.
2. GUYING OF POLES IS REQUIRED AND LOCATIONS SHALL BE APPROVED BY THE ENGINEER.
3. ALL NEAR RIGHT TRAFFIC SIGNAL HEADS SHALL BE PLACED BETWEEN THE SPAN WIRE AND TETHER WIRE.
4. NON-INTRUSIVE DETECTION ZONES ARE APPROXIMATE. ZONES SHALL BE ADJUSTED TO MATCH FIELD CONDITIONS.
5. NON-INTRUSIVE DETECTION SHALL BE MOUNTED AT THE HEIGHT RECOMMENDED BY THE MANUFACTURER IN THE SPECIFICATIONS.
6. ADJUST TEMPORARY SIGNALS WITHIN EACH CONSTRUCTION STAGE AS DIRECTED BY THE ENGINEER TO MAINTAIN MUTCD SIGNAL REQUIREMENTS.
7. POLES AND POSTS INSTALLED BEHIND CURBS SHALL BE OFFSET A MINIMUM OF 2 FEET FROM THE FACE OF CURB TO THE SIDE OF THE POST OR POLE.

TRAFFIC CONTROL SIGNAL
STH 190 & CTH SR (SPRINGDALE ROAD)/ GUMINA ROAD
CITY OF BROOKFIELD/CITY OF PEWAUKEE
WAUKESHA COUNTY

SIGNAL NO. S67-0813

REGION CONTACT: P.VIRK
DESIGNED BY: GRAEF
REVISED BY:

PAGE 1 OF 5

PROJECT NO:2025-14-71	HWY:STH 190	COUNTY:WAUKESHA	TEMPORARY TRAFFIC SIGNAL PLAN - STAGE 1	SHEET 88	E

2

LEGEND

- WORK AREA
- SIGNAL HEAD, OVERHEAD MOUNT
- CLASS 4 WOOD POLE
- TEMPORARY LUMINAIRE
- CABLE - OVERHEAD
- SIGNAL HEAD NUMBER
- (R) RED CIRCULAR INDICATOR
- (Y) YELLOW CIRCULAR INDICATOR
- (G) GREEN CIRCULAR INDICATOR
- (R) RED ARROW
- (Y) YELLOW ARROW
- (G) GREEN ARROW
- (X) EVP DESIGNATOR
- EVP DETECTOR HEAD
- (S) STOP SIGN
- NON-INTRUSIVE DETECTION AREA
- TRAFFIC SIGNAL HEAD TO BE COVERED AND DE-ENERGIZED

NOTE: ALL LENSES ARE 12-INCH

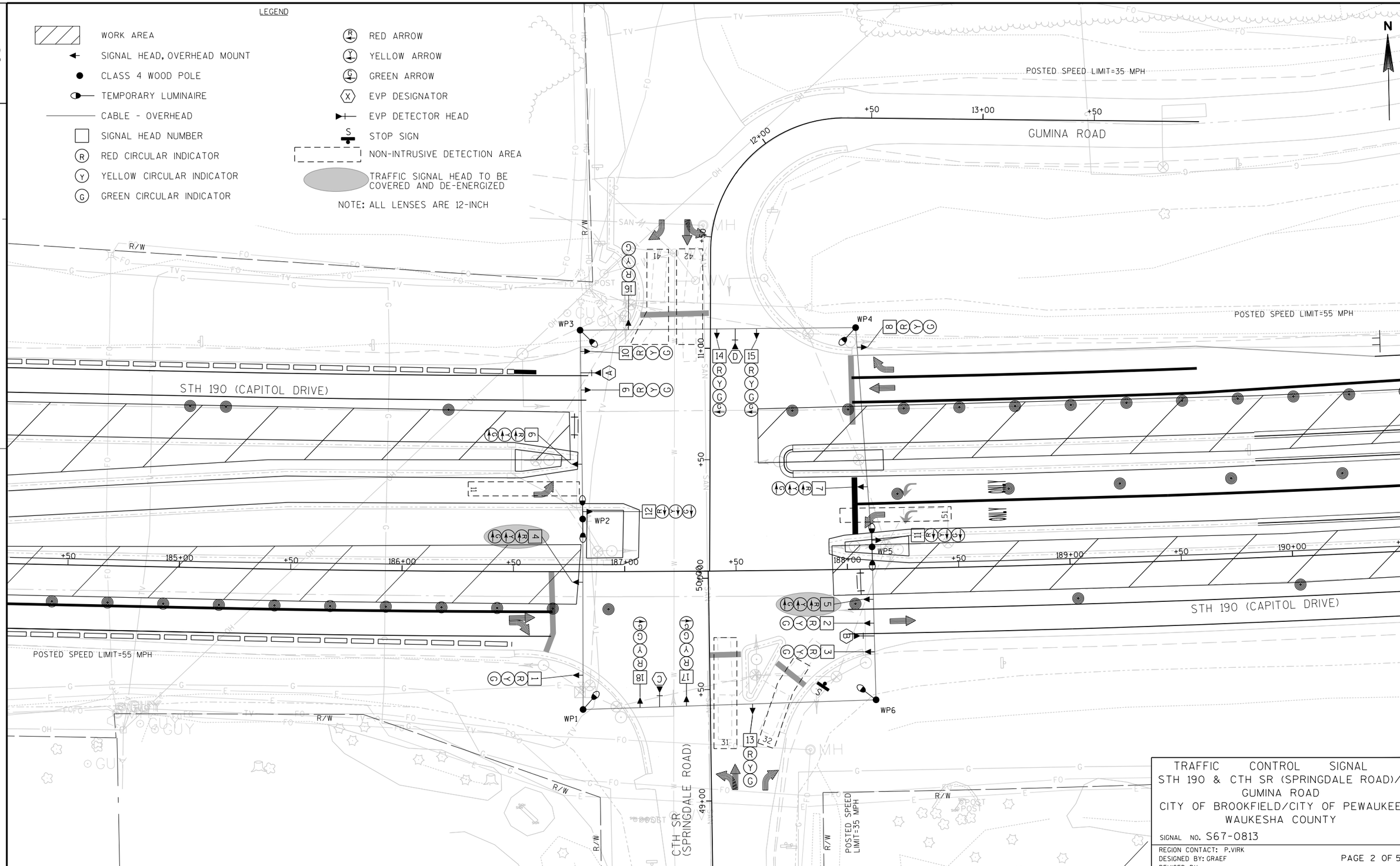

TRAFFIC CONTROL SIGNAL
STH 190 & CTH SR (SPRINGDALE ROAD)/
GUMINA ROAD
CITY OF BROOKFIELD/CITY OF PEWAUKEE
WAUKESHA COUNTY

SIGNAL NO. S67-0813

REGION CONTACT: P.VIRK
DESIGNED BY: GRAEF
REVISED BY:

PAGE 2 OF 5

PROJECT NO:2025-14-71	HWY:STH 190	COUNTY:WAUKESHA	TEMPORARY TRAFFIC SIGNAL PLAN - STAGE 1A	SHEET 89	E

2

LEGEND

- WORK AREA
- SIGNAL HEAD, OVERHEAD MOUNT
- CLASS 4 WOOD POLE
- TEMPORARY LUMINAIRE
- CABLE - OVERHEAD
- SIGNAL HEAD NUMBER
- (R) RED CIRCULAR INDICATOR
- (Y) YELLOW CIRCULAR INDICATOR
- (G) GREEN CIRCULAR INDICATOR
- (R) RED ARROW
- (Y) YELLOW ARROW
- (G) GREEN ARROW
- (X) EVP DESIGNATOR
- EVP DETECTOR HEAD
- (S) STOP SIGN
- NON-INTRUSIVE DETECTION AREA
- TRAFFIC SIGNAL HEAD TO BE COVERED AND DE-ENERGIZED

NOTE: ALL LENSES ARE 12-INCH

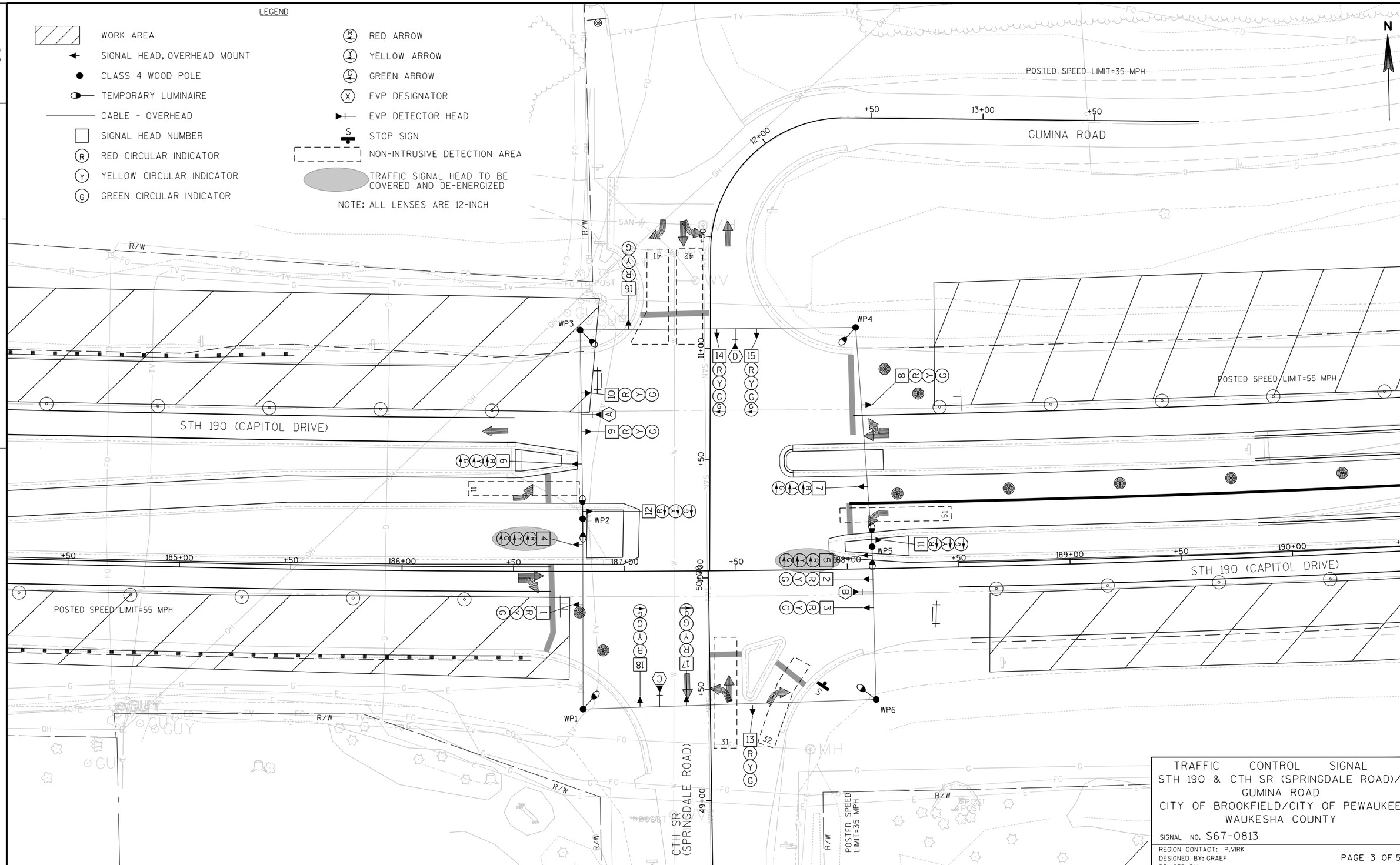

TRAFFIC CONTROL SIGNAL
STH 190 & CTH SR (SPRINGDALE ROAD)/
GUMINA ROAD
CITY OF BROOKFIELD/CITY OF PEWAUKEE
WAUKESHA COUNTY

SIGNAL NO. S67-0813

REGION CONTACT: P.VIRK
DESIGNED BY: GRAEF
REVISED BY:

PAGE 3 OF 5

PROJECT NO:2025-14-71	HWY:STH 190	COUNTY:WAUKESHA	TEMPORARY TRAFFIC SIGNAL PLAN - STAGE 2	SHEET 90	E

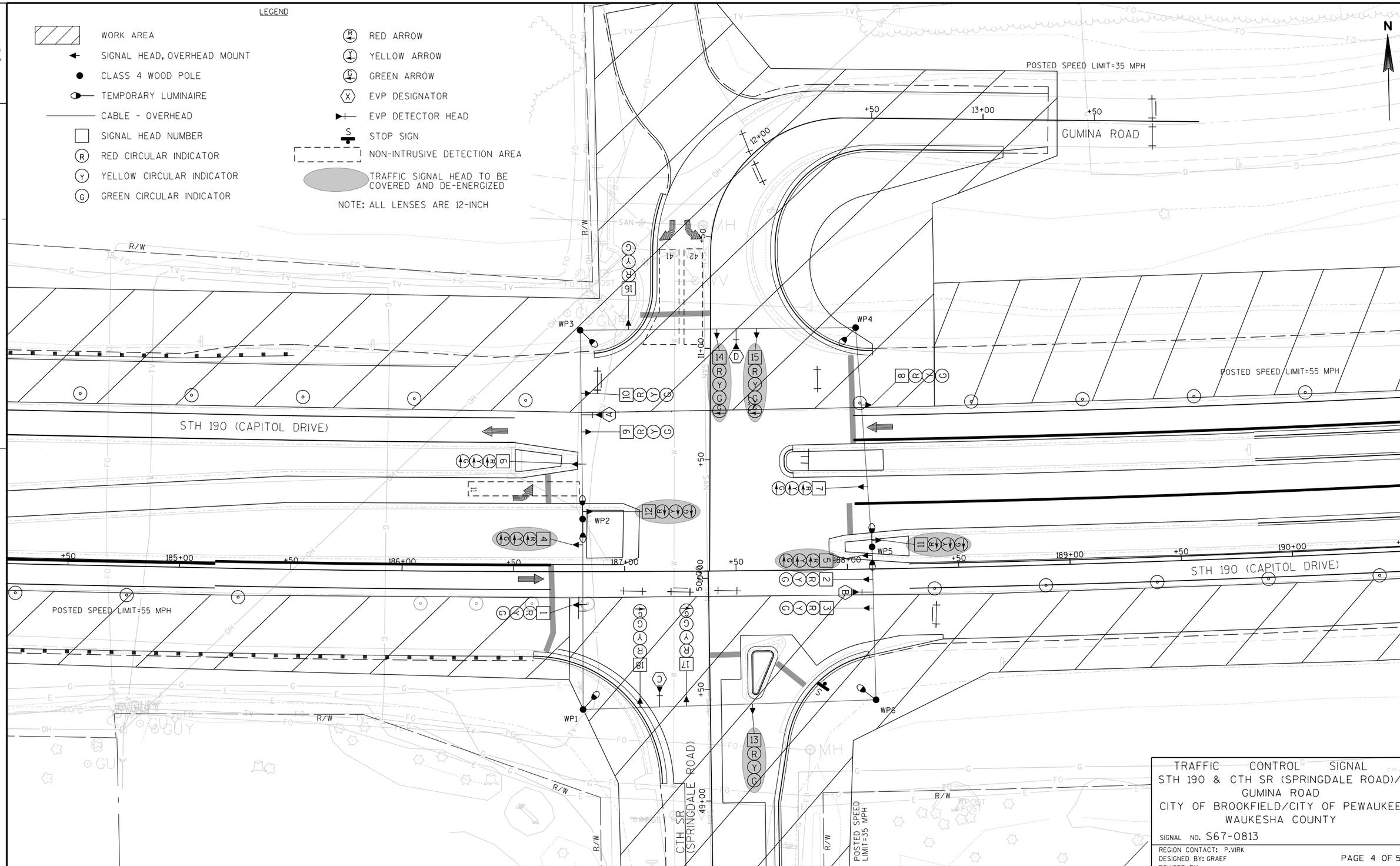

TRAFFIC CONTROL SIGNAL
STH 190 & CTH SR (SPRINGDALE ROAD)/
GUMINA ROAD
CITY OF BROOKFIELD/CITY OF PEWAUKEE
WAUKESHA COUNTY

SIGNAL NO. S67-0813

REGION CONTACT: P.VIRK
DESIGNED BY: GRAEF
REVISED BY:

PAGE 4 OF 5

PROJECT NO:2025-14-71	HWY:STH 190	COUNTY:WAUKESHA	TEMPORARY TRAFFIC SIGNAL PLAN - STAGE 2A	SHEET 91	E

FILE NAME : X:\ML\2016\20160073\CAD\Transportation\dgn\00\01_Springdale\024002A_sp.dgn PLOT DATE : 10/27/2017 PLOT BY : $$...plotuser...$$ PLOT NAME : PLOT SCALE : $$.....plotscale.....$$ WISDOT/CADDS SHEET 42

	HEAD NUMBERS	FLASH
Ø1	4,5,6,7	R ←
Ø2	8,9,10	R
Ø3	13,14,15	R
Ø4	16,17,18	R
Ø5	11,12	R ←
Ø6	1,2,3	R
Ø7		
Ø8		
Ø2P		
Ø4P		
Ø6P		
Ø8P		
OLE		
OLF		
OLG		
OLH		

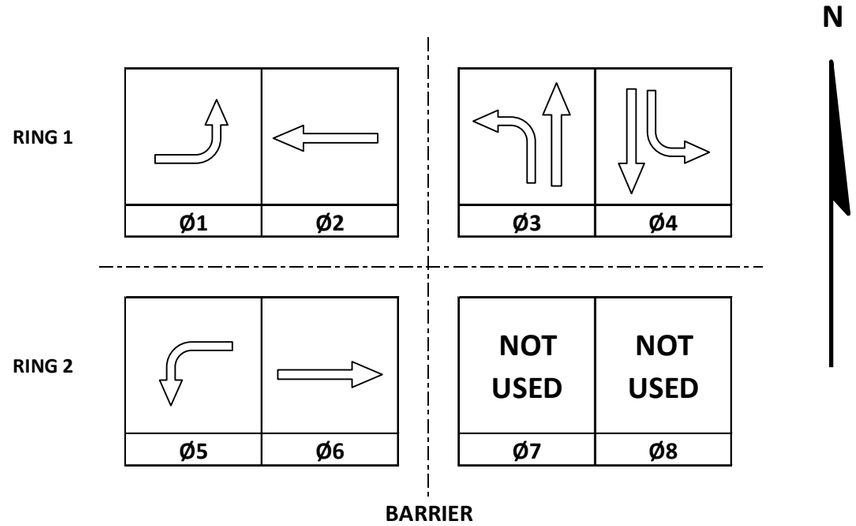

CONTROLLER LOGIC

PHASE NUMBER	PHASE LOCKING	DUAL ENTRY W / Ø	PHASE RECALL	PHASE ACTIVE
1		6		X
2	X	6	MIN	X
3				X
4				X
5		2		X
6	X	2	MIN	X
7				
8				

EMERGENCY VEHICLE PREEMPTION SEQUENCE

EMERGENCY VEHICLE PREEMPTOR	A	B	C	D
MOVEMENT	←	→	↓	↑
PHASE	2+5	6+1	4	3

AFTER PREEMPTION SEQUENCE 2+5 OR 6+1, CONTROLLER SHALL RETURN TO PHASES 2+6.
AFTER PREEMPTION SEQUENCE 4, CONTROLLER SHALL RETURN TO PHASE 4.
AFTER PREEMPTION SEQUENCE 3, CONTROLLER SHALL RETURN TO PHASE 3.

TYPE OF INTERCONNECT/COMMUNICATION	
NONE	X
CLOSED LOOP	
TWISTED PAIR	
FIBER OPTIC*	
FIBER OPTIC (ETHERNET)	
RADIO	
CELL MODEM	

TYPE OF COORDINATION	
NONE	X
TBC	
TRAFFIC RESPONSIVE	
ADAPTIVE	
*LOCATION OF MASTER CONTROLLER NO:	S-
SIGNAL SYSTEM NO:	SS-

TYPE OF LIGHTING	
BY OTHER AGENCY	
IN TRAFFIC CABINET	X
IN SEPARATE DOT LIGHTING CABINET	

TYPE OF PRE-EMPT	
NONE	
RAILROAD	
EMERGENCY VEHICLE	
GTT	X
TOMAR	
HARDWIRE	
OTHER	
LIFT BRIDGE	
QUEUE DETECTION	

DETECTOR LOGIC

DETECTOR INPUT	3	1	7	5	11	9	15	13	19	17	23	21	27	25	31	29	DETECTOR INPUT
PLAN LOOP DETECTOR*(S)	11	32	42														PLAN LOOP DETECTOR*(S)
CALLED PHASE	1	3	4														CALLED PHASE
CALL OPTION	X	X	X														CALL OPTION
DELAY TIME		X	X														DELAY TIME
EXTENTION OPTION	X	X	X														EXTENTION OPTION
EXTEND TIME																	EXTEND TIME
USE ADDED INITIAL																	USE ADDED INITIAL
CROSS SWITCH PHASE																	CROSS SWITCH PHASE

DETECTOR INPUT	4	2	8	6	12	10	16	14	20	18	24	22	28	26	32	30	DETECTOR INPUT
PLAN LOOP DETECTOR*(S)	31	41	51														PLAN LOOP DETECTOR*(S)
CALLED PHASE	3	4	5														CALLED PHASE
CALL OPTION	X	X	X														CALL OPTION
DELAY TIME		X															DELAY TIME
EXTENTION OPTION	X	X	X														EXTENTION OPTION
EXTEND TIME																	EXTEND TIME
USE ADDED INITIAL																	USE ADDED INITIAL
CROSS SWITCH PHASE																	CROSS SWITCH PHASE

GENERAL NOTES:

1. PHASE 1 & 5 ARE IN CONFLICT DURING STAGE 1. LEFT TURNS MUST OPERATE UNDER LEAD-LAG SEQUENCING DURING THIS STAGE.
2. CTH SR (SPRINGDALE ROAD) WILL BE CLOSED DURING STAGE 2A. SKIP PHASES 3 & 5 DURING THIS STAGE.

STH 190 & CTH SR (SPRINGDALE ROAD)/ GUMINA ROAD
CITY OF BROOKFIELD/ CITY OF PEWAUKEE
WAUKESHA COUNTY

SIGNAL NO: S67-0813	CABINET TYPE: TEMP
	CONTROLLER TYPE: TEMP
DATE: 10/17	PAGE NO. 5 OF 5

2

LEGEND

- NONMETALLIC CONDUIT 2", UNLESS OTHERWISE NOTED
- SIGNAL HEAD, TRAFFIC SIGNAL STANDARD, PEDESTAL BASE
- (XX) SIGNAL POLE, XX' ARM
- LUMINAIRE, TRAFFIC POLE, TRANSFORMER BASE
- LOOP DETECTOR CONDUIT 1" NONMETALLIC
- LOOP DETECTOR IN 1" NONMETALLIC CONDUIT
- PULL BOX, 24" X 36"
- CONTROL CABINET
- TRAFFIC SIGNAL HEAD
- SIGNAL HEAD NUMBER
- (R) RED CIRCULAR INDICATOR
- (Y) YELLOW CIRCULAR INDICATOR
- (G) GREEN CIRCULAR INDICATOR
- RED ARROW
- YELLOW ARROW
- GREEN ARROW
- (X) EVP DESIGNATOR
- EVP DETECTOR HEAD

NOTE: GRAYSHADE REPRESENTS EXISTING TO REMAIN. BOLD REPRESENTS EXISTING TO BE REMOVED.

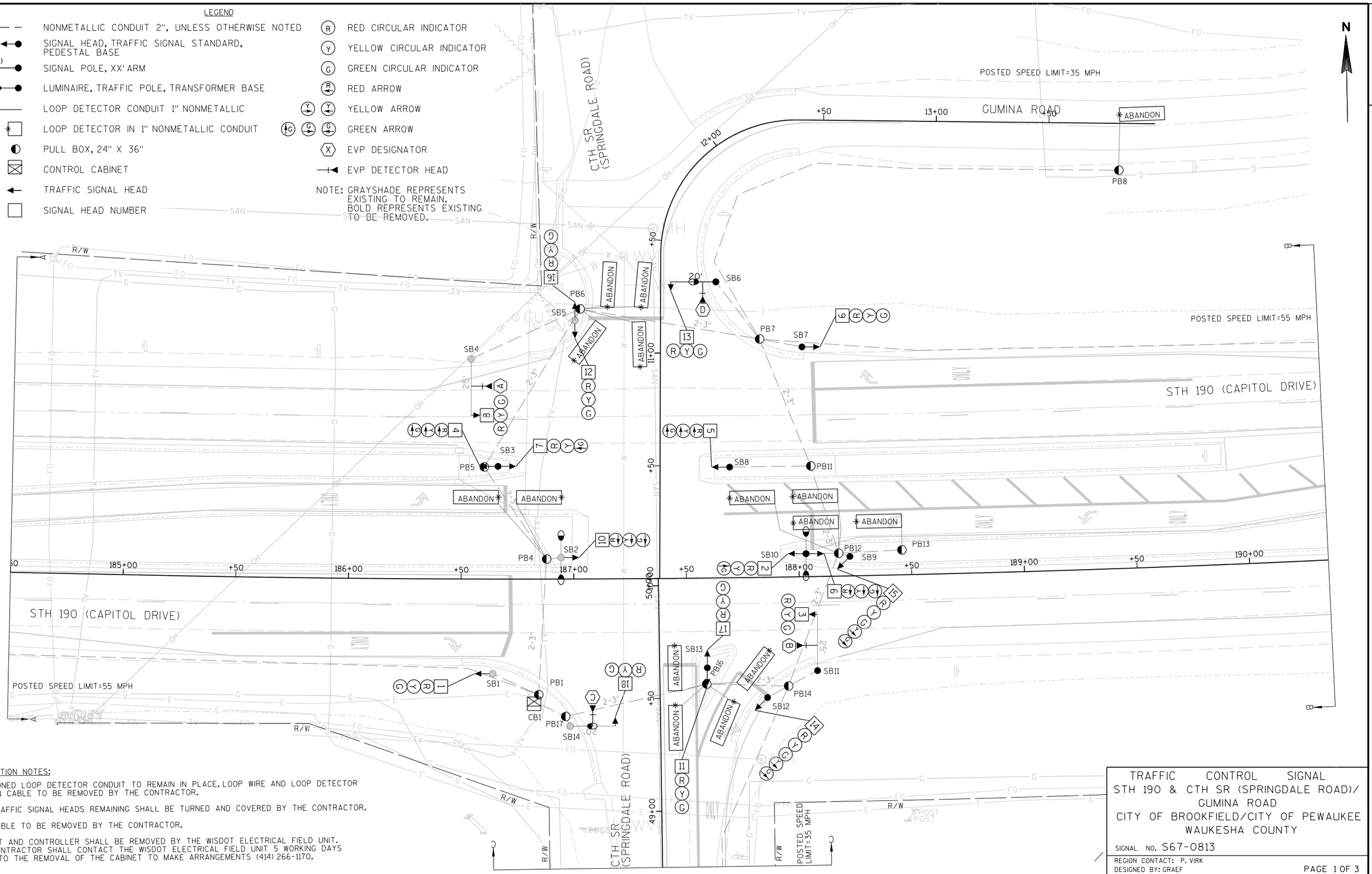

CONSTRUCTION NOTES:

1. ABANDONED LOOP DETECTOR CONDUIT TO REMAIN IN PLACE. LOOP WIRE AND LOOP DETECTOR LEAD-IN CABLE TO BE REMOVED BY THE CONTRACTOR.
2. ALL TRAFFIC SIGNAL HEADS REMAINING SHALL BE TURNED AND COVERED BY THE CONTRACTOR.
3. EVP CABLE TO BE REMOVED BY THE CONTRACTOR.
4. CABINET AND CONTROLLER SHALL BE REMOVED BY THE WISDOT ELECTRICAL FIELD UNIT. THE CONTRACTOR SHALL CONTACT THE WISDOT ELECTRICAL FIELD UNIT 5 WORKING DAYS PRIOR TO THE REMOVAL OF THE CABINET TO MAKE ARRANGEMENTS (414) 266-1170.

TRAFFIC CONTROL SIGNAL
STH 190 & CTH SR (SPRINGDALE ROAD)/ GUMINA ROAD
CITY OF BROOKFIELD/CITY OF PEWAUKEE
WAUKESHA COUNTY

SIGNAL NO. S67-0813

REGION CONTACT: P. VIRK
DESIGNED BY: GRAEF
REVISED BY:

PAGE 1 OF 3

PROJECT NO: 2025-14-71	HWY: STH 190	COUNTY: WAUKESHA	TRAFFIC SIGNAL REMOVAL PLAN	SHEET 93	E

2

2

N

STH 190 (CAPITOL DRIVE)

50 181+00 +50 182+00 +50 183+00 +50 184+00 +5

ABANDON

PB3

ABANDON

PB2

POSTED SPEED LIMIT=55 MPH

POSTED SPEED LIMIT=55 MPH

PB9

ABANDON

PB10

ABANDON

STH 190 (CAPITOL DRIVE)

+50 191+00 +50 192+00 +50 193+00 +50 194+00 +5

TRAFFIC CONTROL SIGNAL
STH 190 & CTH SR (SPRINGDALE ROAD)/
GUMINA ROAD
CITY OF BROOKFIELD/CITY OF PEWAUKEE
WAUKESHA COUNTY

SIGNAL NO. S67-0813

REGION CONTACT: P. VIRK
DESIGNED BY: GRAEF
REVISED BY:

PAGE 2 OF 3

PROJECT NO:2025-14-71	HWY:STH 190	COUNTY:WAUKESHA	TRAFFIC SIGNAL REMOVAL PLAN	SHEET 94	E

2

N

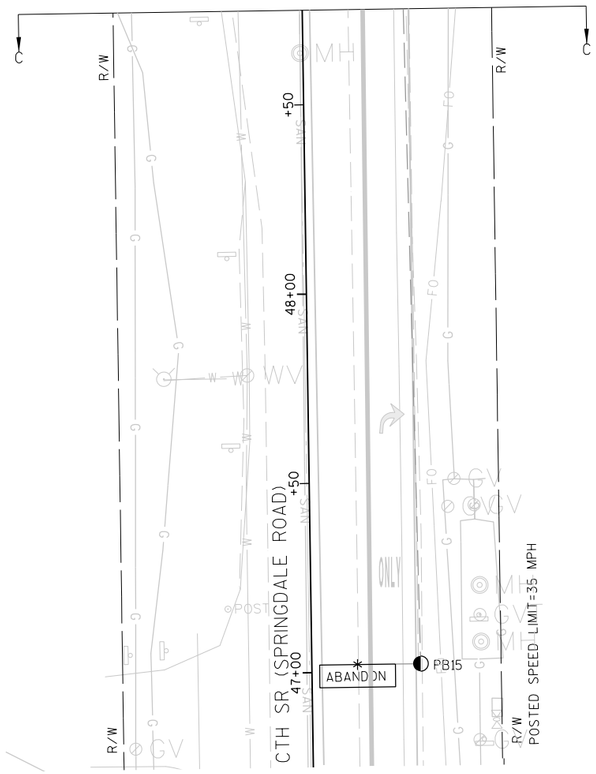

TRAFFIC CONTROL SIGNAL
STH 190 & CTH SR (SPRINGDALE ROAD)/
GUMINA ROAD
CITY OF BROOKFIELD/CITY OF PEWAUKEE
WAUKESHA COUNTY

SIGNAL NO. S67-0813

REGION CONTACT: P. VIRK
DESIGNED BY: GRAEF
REVISED BY:

PAGE 3 OF 3

PROJECT NO:2025-14-71	HWY:STH 190	COUNTY:WAUKESHA	TRAFFIC SIGNAL REMOVAL PLAN	SHEET 95	E

2

LEGEND

- NONMETALLIC CONDUIT 2", UNLESS OTHERWISE NOTED
- SIGNAL HEAD, TRAFFIC SIGNAL STANDARD, PEDESTAL BASE
- (XX) SIGNAL HEAD, TRAFFIC SIGNAL POLE TRANSFORMER BASE
- LUMINAIRE, TRAFFIC POLE, TRANSFORMER BASE
- LOOP DETECTOR CONDUIT 1" NONMETALLIC
- LOOP DETECTOR IN 1" NONMETALLIC CONDUIT
- RADAR DETECTION ZONE
- PULL BOX, 24" X 36"
- PULL BOX, 24" X 42"
- CONTROL CABINET
- TRAFFIC SIGNAL HEAD
- SIGNAL HEAD NUMBER
- (R) RED CIRCULAR INDICATOR
- (Y) YELLOW CIRCULAR INDICATOR
- (G) GREEN CIRCULAR INDICATOR
- (R) RED ARROW
- (FY) (Y) YELLOW ARROW
- (G) GREEN ARROW
- (X) EVP DESIGNATOR
- EVP DETECTOR HEAD
- EVP CONFIRMATION LIGHT
- RA XX RADAR DETECTOR
- (V) COMMUNICATIONS VAULT
- NONMETALLIC INTERCONNECT CONDUIT

NOTE: ALL LENSES ARE 12-INCH
GRAYSHADE REPRESENTS EXISTING

EVP CONSTRUCTION NOTES:

1. INSTALL THE TRAFFIC SIGNAL EMERGENCY VEHICLE PRE-EMPTION DETECTOR CABLE TO RUN CONTINOUSLY (WITHOUT SPLICES) FROM THE CABINET TO THE DETECTOR HEADS. MOUNT THE EVP DETECTOR HEADS AND WIRE THEM PER MANUFACTURER INSTRUCTIONS.
2. THE DEPARTMENT WILL DETERMINE THE EXACT LOCATION OF THE EVP DETECTORS TO ENSURE THAT THE INSTALLATION DOES NOT CREATE A SIGHT OBSTURCTION.
3. ALL EVP DETECTOR CABLE SHALL BE ROUTED THROUGH EXISTING SIGNAL BASES, PULL BOXES, AND CONDUIT AS INDICATED. PROVIDE ENOUGH CABLE TO ALLOW 10 FEET OF SLACK IN THE CABINET, IN EACH PULL BOX, AND IN THE SIGNAL POLE HANDHOLE.
4. FOR A CABINET THAT IS NOT OPERATING THE SIGNAL, CABINET WIRING WILL BE DONE BY THE CONRACTOR. THE CONTRACOR SHALL INSTALL AND TERMINATE THE EVP CABLE AS DESCRIBED AND SHALL LABEL EACH CABLE AS NOTED ON THE PLAN SHEETS (I.E. A-B-C-D).

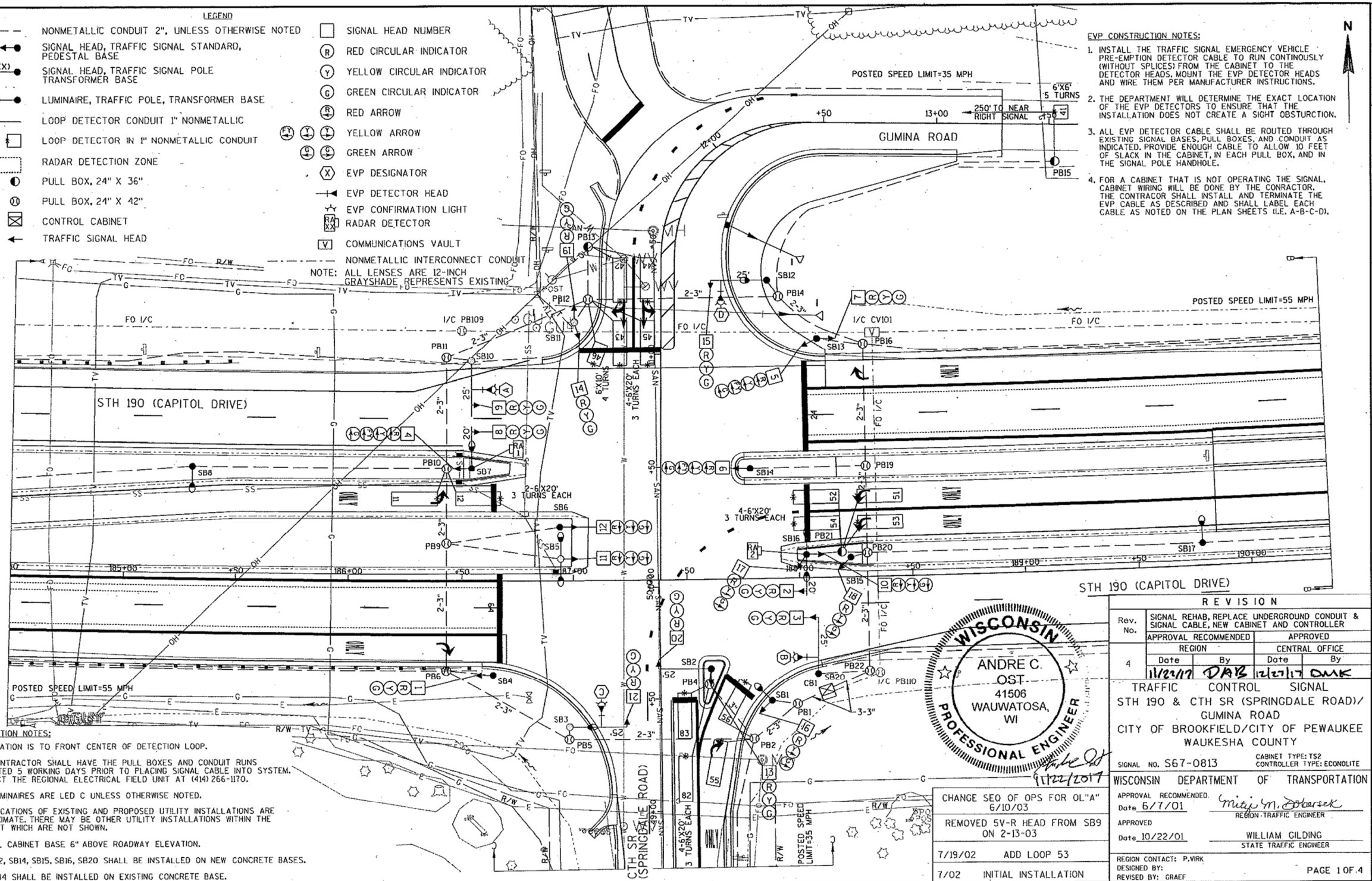

CONSTRUCTION NOTES:

1. * LOCATION IS TO FRONT CENTER OF DETECTION LOOP.
2. THE CONTRACTOR SHALL HAVE THE PULL BOXES AND CONDUIT RUNS INSPECTED 5 WORKING DAYS PRIOR TO PLACING SIGNAL CABLE INTO SYSTEM. CONTACT THE REGIONAL ELECTRICAL FIELD UNIT AT (414) 266-1170.
3. ALL LUMINAIRES ARE LED C UNLESS OTHERWISE NOTED.
4. THE LOCATIONS OF EXISTING AND PROPOSED UTILITY INSTALLATIONS ARE APPROXIMATE. THERE MAY BE OTHER UTILITY INSTALLATIONS WITHIN THE PROJECT WHICH ARE NOT SHOWN.
5. INSTALL CABINET BASE 6" ABOVE ROADWAY ELEVATION.
6. SB1, SB2, SB14, SB15, SB16, SB20 SHALL BE INSTALLED ON NEW CONCRETE BASES.
7. NEW SB4 SHALL BE INSTALLED ON EXISTING CONCRETE BASE.

WISCONSIN ANDRE C. OST 41506 WAUWATOSA, WI PROFESSIONAL ENGINEER 11/22/2017

CHANGE SEQ OF OPS FOR OL"A" 6/10/03	
REMOVED 5V-R HEAD FROM SB9 ON 2-13-03	
7/19/02	ADD LOOP 53
7/02	INITIAL INSTALLATION

REVISION

Rev. No.	SIGNAL REHAB, REPLACE UNDERGROUND CONDUIT & SIGNAL CABLE, NEW CABINET AND CONTROLLER			
	APPROVAL RECOMMENDED		APPROVED	
	REGION		CENTRAL OFFICE	
	Date	By	Date	By
4	11/22/17	DAB	12/27/17	DMK

TRAFFIC CONTROL SIGNAL
STH 190 & CTH SR (SPRINGDALE ROAD)/ GUMINA ROAD
CITY OF BROOKFIELD/CITY OF PEWAUKEE
WAUKESHA COUNTY

SIGNAL NO. S67-0813 — CABINET TYPE: TS2 — CONTROLLER TYPE: ECONOLITE

WISCONSIN DEPARTMENT OF TRANSPORTATION

APPROVAL RECOMMENDED. Date 6/7/01 — Mitch M. Doberseck, REGION TRAFFIC ENGINEER

APPROVED Date 10/22/01 — WILLIAM GILDING, STATE TRAFFIC ENGINEER

REGION CONTACT: P.VIRK
DESIGNED BY:
REVISED BY: GRAEF

PAGE 1 OF 4

PROJECT NO: 2025-14-71	HWY: STH 190	COUNTY: WAUKESHA	TRAFFIC SIGNAL PLAN	SHEET 96	E

FILE NAME : X:\ML\2016\20160073\CAD\Transportation\dgn\00\01_Springdale\024021_sp.dgn — PLOT DATE : 11/22/2017 — PLOT BY : GRAEF — PLOT NAME : — PLOT SCALE : 40.0000 sf / in. — WISDOT/CADDS SHEET 42

11/22/2017 JSV

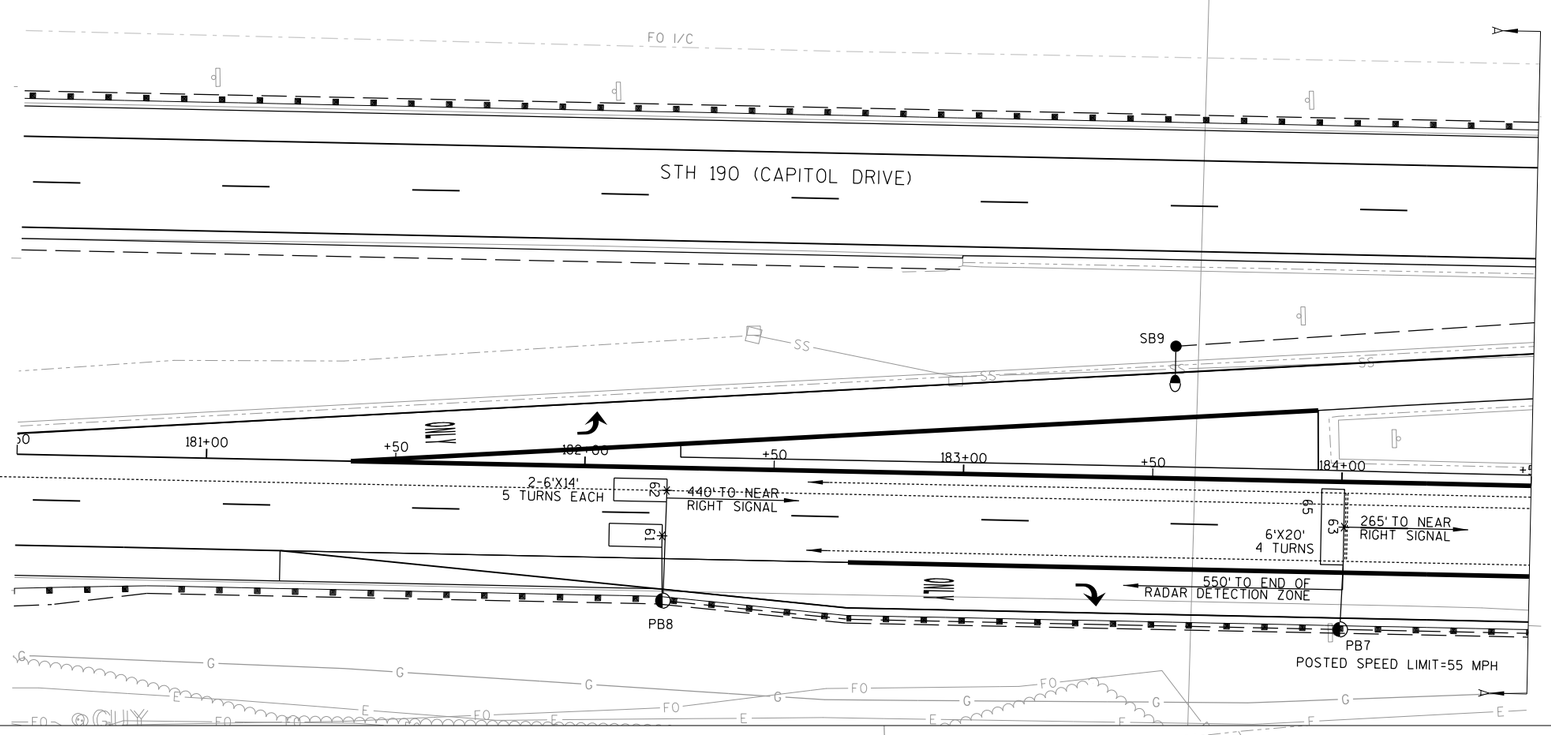

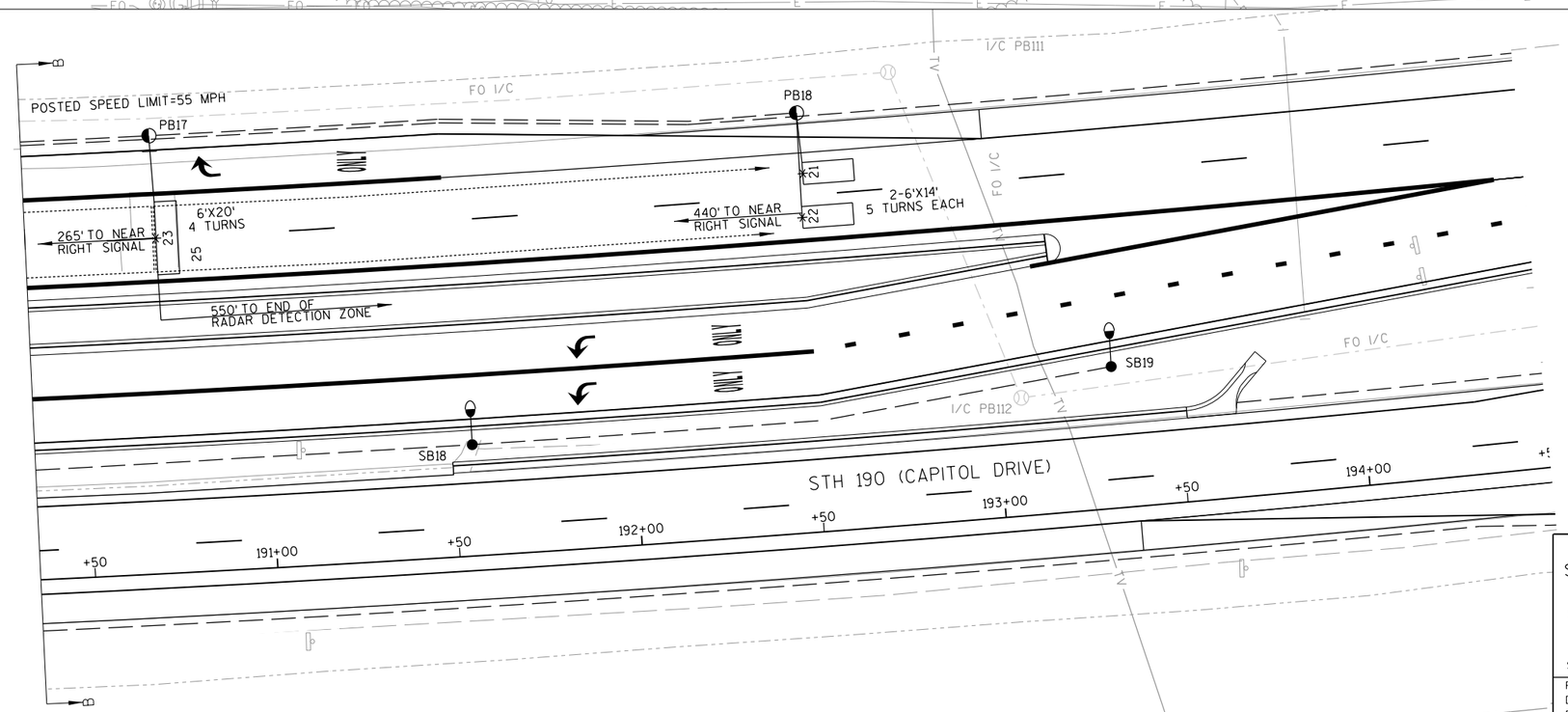

TRAFFIC CONTROL SIGNAL
STH 190 & CTH SR (SPRINGDALE ROAD)/
GUMINA ROAD
CITY OF BROOKFIELD/CITY OF PEWAUKEE
WAUKESHA COUNTY

SIGNAL NO. S67-0813

REGION CONTACT: P.VIRK
DESIGNED BY:
REVISED BY: GRAEF

PAGE 2 OF 4

PROJECT NO:2025-14-71	HWY:STH 190	COUNTY:WAUKESHA	TRAFFIC SIGNAL PLAN	SHEET 97	E

2

N

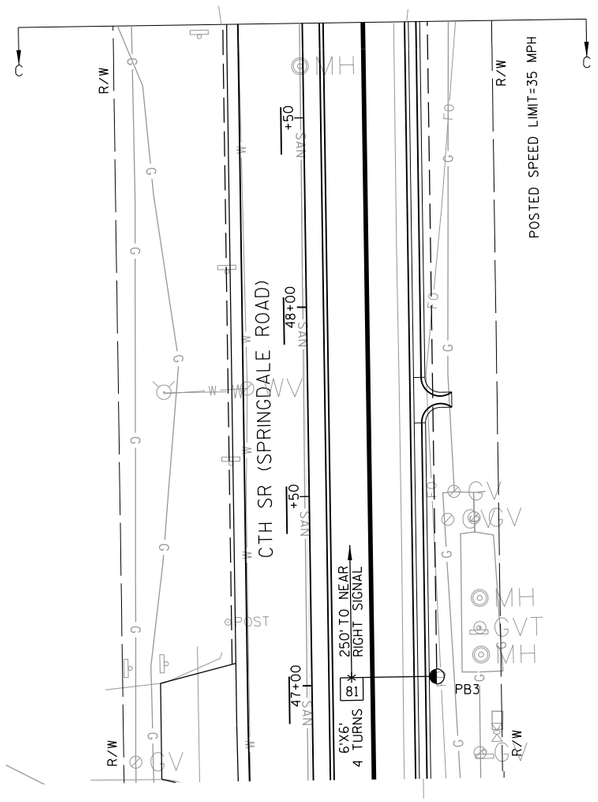

TRAFFIC CONTROL SIGNAL
STH 190 & CTH SR (SPRINGDALE ROAD)/
GUMINA ROAD
CITY OF BROOKFIELD/CITY OF PEWAUKEE
WAUKESHA COUNTY

SIGNAL NO. S67-0813

REGION CONTACT: P.VIRK
DESIGNED BY:
REVISED BY: GRAEF

PAGE 3 OF 4

PROJECT NO:2025-14-71	HWY:STH 190	COUNTY:WAUKESHA	TRAFFIC SIGNAL PLAN	SHEET 98	E

2

	HEAD NUMBERS	FLASH
Ø1	4,5,6	R
Ø2	7,8,9	R
Ø3		
Ø4	19,20,21	R
Ø5	10,11,12,16,17,18	R
Ø6	1,2,3	R
Ø7		
Ø8	13,14,15	R
Ø2P		
Ø4P		
Ø6P		
Ø8P		
OLC		
OLE	4,5,6	-
OLF		
OLG		
OLH		

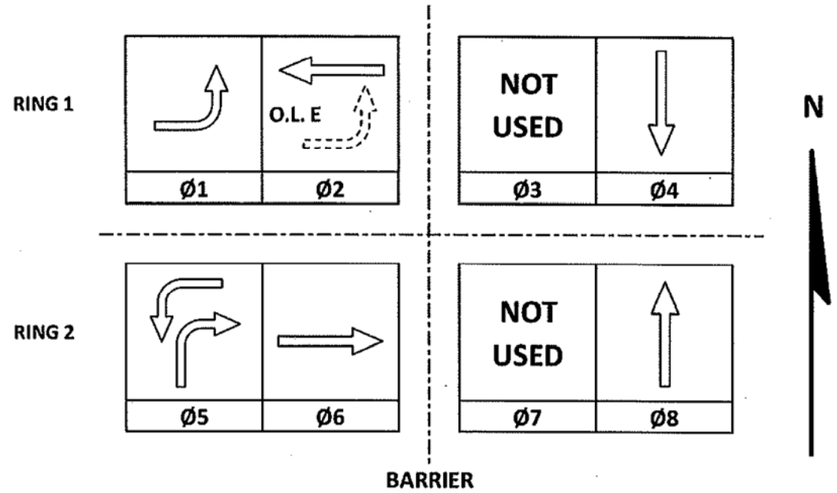

CONTROLLER LOGIC

PHASE NUMBER	PHASE LOCKING	DUAL ENTRY W / Ø	PHASE RECALL	PHASE ACTIVE
1		6		X
2	X	6	MIN	X
3				
4		8		X
5		2		X
6	X	2	MIN	X
7				
8		4		X

EMERGENCY VEHICLE PREEMPTION SEQUENCE

EMERGENCY VEHICLE PREEMPTOR	A	B	C	D
MOVEMENT				
PHASE	2+5	6+1	4+8	8+4

AFTER PREEMPTION SEQUENCE 2+5 OR 6+1, CONTROLLER SHALL RETURN TO PHASES 2+6.

AFTER PREEMPTION SEQUENCE 4+8 OR 8+4, CONTROLLER SHALL RETURN TO PHASES 4+8.

TYPE OF INTERCONNECT/COMMUNICATION	
NONE	
CLOSED LOOP	
TWISTED PAIR	
FIBER OPTIC*	
FIBER OPTIC (ETHERNET)	X
RADIO	
CELL MODEM	

TYPE OF COORDINATION	
NONE	X
TBC	
TRAFFIC RESPONSIVE	
ADAPTIVE	
*LOCATION OF MASTER CONTROLLER NO:	S-
SIGNAL SYSTEM NO:	SS-

TYPE OF LIGHTING	
BY OTHER AGENCY	
IN TRAFFIC CABINET	X
IN SEPARATE DOT LIGHTING CABINET	

TYPE OF PRE-EMPT	
NONE	
RAILROAD	
EMERGENCY VEHICLE	X
GTT	X
TOMAR	
HARDWIRE	
OTHER	
LIFT BRIDGE	
QUEUE DETECTION	

DETECTOR LOGIC

DETECTOR INPUT	3	1	7	5	11	9	15	13	19	17	23	21	27		33	35	DETECTOR INPUT
PLAN LOOP DETECTOR*(S)	11	21	23	42	44	46	52	54	56	62	81	83			24	64	PLAN LOOP DETECTOR*(S)
CALLED PHASE	1	2	2	4	4	4	5	5	5	6	8	8			2	6	CALLED PHASE
CALL OPTION	X	X	X	X	X	X	X	X	X	X		X			X	X	CALL OPTION
DELAY TIME				X		X			X								DELAY TIME
EXTENTION OPTION	X	X	X	X	X	X	X	X	X	X	X	X			X	X	EXTENTION OPTION
EXTEND TIME											X						EXTEND TIME
USE ADDED INITIAL		X	X							X							USE ADDED INITIAL
CROSS SWITCH PHASE	2																CROSS SWITCH PHASE

DETECTOR INPUT	4	2	8	6	12	10	16	14	20	18	24	22	28		34	36	DETECTOR INPUT
PLAN LOOP DETECTOR*(S)	12	22	41	43	45	51	53	55	61	63	82				25	65	PLAN LOOP DETECTOR*(S)
CALLED PHASE	1	2	4	4	4	5	5	5	6	6	8				2	6	CALLED PHASE
CALL OPTION	X	X		X	X	X	X	X	X	X	X						CALL OPTION
DELAY TIME				X				X									DELAY TIME
EXTENTION OPTION	X	X	X	X	X	X	X	X	X	X	X				X	X	EXTENTION OPTION
EXTEND TIME			X												X	X	EXTEND TIME
USE ADDED INITIAL		X							X	X							USE ADDED INITIAL
CROSS SWITCH PHASE	2																CROSS SWITCH PHASE

STH 190 & CTH SR (SPRINGDALE ROAD)/ GUMINA ROAD
CITY OF BROOKFIELD/ CITY OF PEWAUKEE
WAUKESHA COUNTY

SIGNAL NO: S67-0813 CABINET TYPE: TS2
CONTROLLER TYPE: ECONOLITE
DATE: 10/17 PAGE NO. 4 OF 4

PROJECT NO: 2025-14-71	HWY: STH 190	COUNTY: WAUKESHA	SEQUENCE OF OPERATIONS	SHEET NO: E

FILE NAME : PLOT DATE : PLOT BY : PLOT NAME : PLOT SCALE : 1:1

11/22/2017 RPJ

Exc 11/22/11

2

PROJECT ID:	2025-14-71
INTERSECTION:	STH 190 & CTH SR (SPRINGDALE ROAD)/ GUMINA ROAD

SIGNAL WIRE COLOR CODING	BLK-BLACK	RED-RED	GRN-GREEN
	WHT-WHITE	BLU-BLUE	ORG-ORANGE

CB1 TO	AWG14 # OF CONDUCTORS	HEAD NO.	SIGNAL INDICATION WIRE COLOR									PED BUTTON
			RED	YELLOW	GREEN	<RED>	<YELLOW>	<GREEN>	FLASHING <YELLOW>	D/WALK	WALK	
SB1	7											
		16	RED				ORG	GRN				
SB2	12											
		13	RED	ORG	GRN							
		20	RED/BLK	ORG/BLK	GRN/BLK							
SB3	7											
		21	RED	ORG	GRN							
SB4	12											
		1	RED	ORG	GRN							
SB5	7											
		11				RED	ORG	GRN				
SB6	7											
		12				RED	ORG	GRN				
SB7	12											
		4				RED	ORG	GRN	BLK/WHT			
		8	RED/BLK	ORG/BLK	GRN/BLK							
SB10	7											
		9	RED	ORG	GRN							
SB11	12											
		14	RED	ORG	GRN							
		19	RED/BLK	ORG/BLK	GRN/BLK							
SB12	7											
		15	RED	ORG	GRN							
SB13	12											
		5				RED	ORG	GRN	BLK/WHT			
		7	RED/BLK	ORG/BLK	GRN/BLK							
SB14	12											
		6				RED	ORG	GRN	BLK/WHT			
SB15	7											
		18	RED				ORG	GRN				
SB16	15											
		2	RED/BLK	ORG/BLK	GRN/BLK							
		10				RED/WHT	GRN/WHT	BLU/WHT				
		17	RED				ORG	GRN				
SB20	7											
		3	RED	ORG	GRN							

EQUIPMENT GROUNDING CONDUCTOR 10 AWG GRN XLP	
FROM	TO
CB1	SB1
SB1	SB2
SB2	SB3
SB3	SB4
SB4	SB5
SB5	SB6
SB6	SB7
SB7	SB10
SB10	SB11
SB11	SB12
SB12	SB13
SB13	SB14
SB14	SB15
SB15	SB16
SB16	SB20
SB20	CB1

PULL BOX BONDING JUMPER 10 AWG GRN XLP	
FROM	TO
PB1	SB1
PB2	SB1
PB4	SB2
PB5	SB3
PB6	SB4
PB9	SB6
PB10	SB7
PB11	SB10
PB12	SB11
PB14	SB12
PB16	SB13
PB19	SB14
PB20	SB15
PB22	CB1

EMERGENCY VEHICLE PREEMPTION	
FROM	TO
CB1	HEAD A (SB10)
CB1	HEAD B (SB20)
CB1	HEAD C (SB3)
CB1	HEAD D (SB12)

LIGHTING UF 10 AWG W/ GROUND	
FROM	TO
CB1	SB1
SB1	SB3
SB3	SB5
SB5	SB7
SB7	SB8
SB8	SB9
CB1	SB16
SB16	SB17
SB17	SB18
SB18	SB19
SB16	SB12

RADAR DETECTION	
FROM	TO
CB1	RA1 (SB10)
CB1	RA2 (SB16)

NOTES:
*USE WHITE CONDUCTOR IN THE SIGNAL CABLE AS THE GROUNDED CONDUCTOR FOR ALL TRAFFIC SIGNAL INDICATIONS.
*ENSURE THE GROUNDED CONDUCTOR IN THE FEEDER CABLE AND THE POLE CABLES ARE BOTH 18" LONGER THAN THE UNGROUNDED CONDUCTORS.
*RECONNECT THE GROUNDING CONDUCTORS WHENEVER THE CIRCUIT HAS BEEN INTERRUPTED TO ENSURE THE GROUNDING CIRCUIT IS COMPLETE.

TRAFFIC CONTROL SIGNAL
STH 190 & CTH SR (SPRINGDALE ROAD)/ GUMINA ROAD
CITY OF BROOKFIELD/CITY OF PEWAUKEE
WAUKESHA COUNTY

SIGNAL NO. S67-0813

REGION CONTACT: P. VIRK
DESIGNED BY:
REVISED BY: GRAEF

PAGE 1 OF 1

2

LEGEND

- WORK AREA
- SIGNAL HEAD, OVERHEAD MOUNT
- CLASS 4 WOOD POLE
- TEMPORARY SIGNAL POLE OR 4"X6" WOOD POST
- TEMPORARY LUMINAIRE
- CABLE - OVERHEAD
- SIGNAL HEAD NUMBER
- (R) RED CIRCULAR INDICATOR
- (Y) YELLOW CIRCULAR INDICATOR
- (G) GREEN CIRCULAR INDICATOR
- (R) RED ARROW
- (Y) YELLOW ARROW
- (G) GREEN ARROW
- (X) EVP DESIGNATOR
- EVP DETECTOR HEAD
- (S) STOP SIGN
- NON-INTRUSIVE DETECTION AREA
- TRAFFIC SIGNAL HEAD TO BE COVERED AND DE-ENERGIZED

NOTE: ALL LENSES ARE 12-INCH

SUMMARY OF TEMPORARY SIGNAL QUANTITES
INTERSECTION OF STH 190 & CTH Y (BARKER ROAD)

QUANTITY	UNIT	DESCRIPTION
1	EACH	4"X6" WOOD POST OR SKID
6	EACH	CLASS 4 WOOD POLE
540	FEET	SPAN WIRE
8	EACH	TEMPORARY LUMINAIRE 250W HPS / LED C
1	L.S.	NON-INTRUSIVE DETECTION SYSTEM
1	L.S.	INFRARED EVP SYSTEM

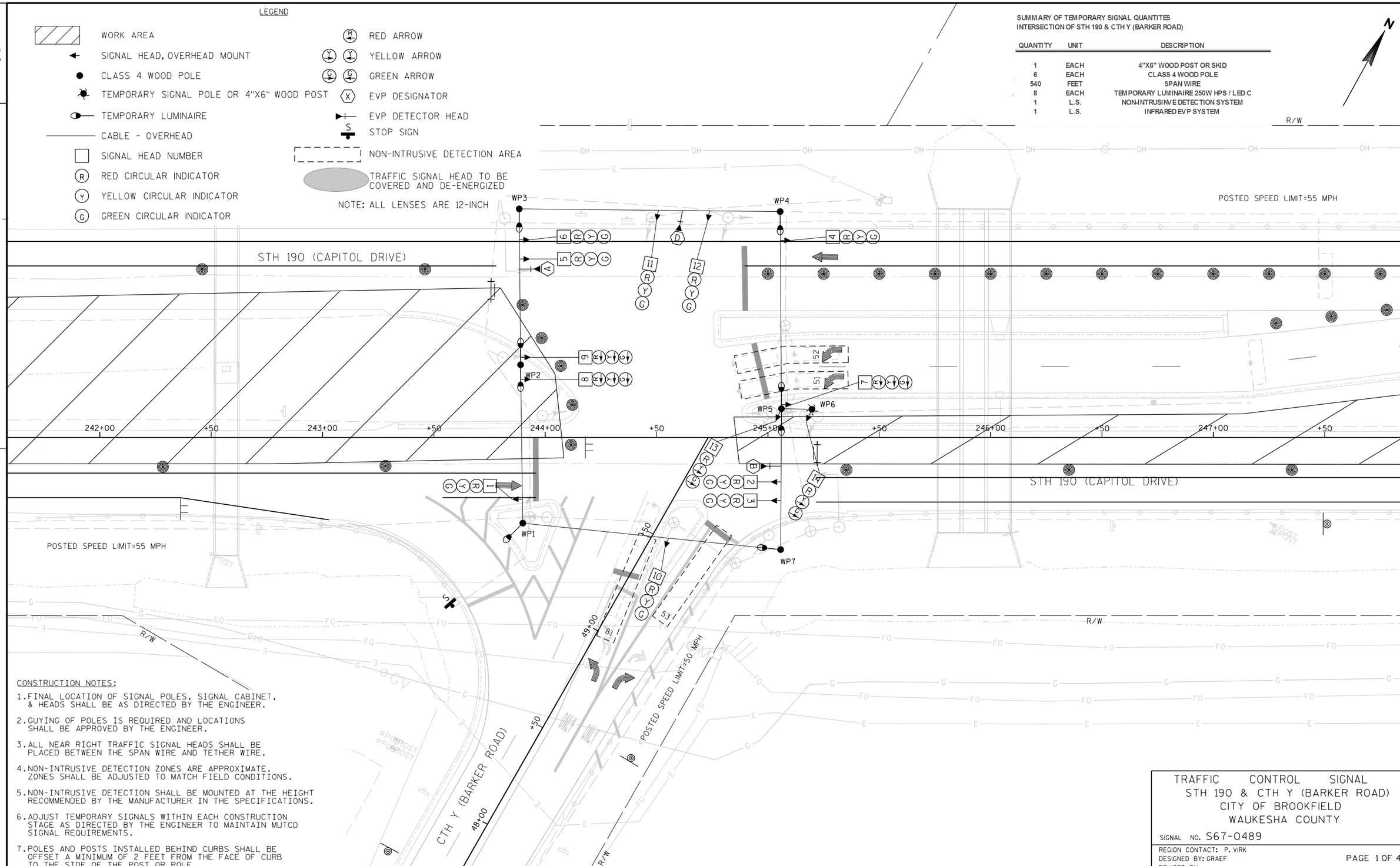

CONSTRUCTION NOTES:

1. FINAL LOCATION OF SIGNAL POLES, SIGNAL CABINET, & HEADS SHALL BE AS DIRECTED BY THE ENGINEER.
2. GUYING OF POLES IS REQUIRED AND LOCATIONS SHALL BE APPROVED BY THE ENGINEER.
3. ALL NEAR RIGHT TRAFFIC SIGNAL HEADS SHALL BE PLACED BETWEEN THE SPAN WIRE AND TETHER WIRE.
4. NON-INTRUSIVE DETECTION ZONES ARE APPROXIMATE. ZONES SHALL BE ADJUSTED TO MATCH FIELD CONDITIONS.
5. NON-INTRUSIVE DETECTION SHALL BE MOUNTED AT THE HEIGHT RECOMMENDED BY THE MANUFACTURER IN THE SPECIFICATIONS.
6. ADJUST TEMPORARY SIGNALS WITHIN EACH CONSTRUCTION STAGE AS DIRECTED BY THE ENGINEER TO MAINTAIN MUTCD SIGNAL REQUIREMENTS.
7. POLES AND POSTS INSTALLED BEHIND CURBS SHALL BE OFFSET A MINIMUM OF 2 FEET FROM THE FACE OF CURB TO THE SIDE OF THE POST OR POLE.

TRAFFIC CONTROL SIGNAL
STH 190 & CTH Y (BARKER ROAD)
CITY OF BROOKFIELD
WAUKESHA COUNTY

SIGNAL NO. S67-0489

REGION CONTACT: P. VIRK
DESIGNED BY: GRAEF
REVISED BY:

PAGE 1 OF 4

PROJECT NO:2025-14-71	HWY:STH 190	COUNTY:WAUKESHA	TEMPORARY TRAFFIC SIGNAL PLAN - STAGE 1	SHEET 101	E

2

LEGEND

- WORK AREA
- SIGNAL HEAD, OVERHEAD MOUNT
- CLASS 4 WOOD POLE
- TEMPORARY SIGNAL POLE OR 4"X6" WOOD POST
- TEMPORARY LUMINAIRE
- CABLE - OVERHEAD
- SIGNAL HEAD NUMBER
- (R) RED CIRCULAR INDICATOR
- (Y) YELLOW CIRCULAR INDICATOR
- (G) GREEN CIRCULAR INDICATOR
- (R) RED ARROW
- (Y) YELLOW ARROW
- (G) GREEN ARROW
- (X) EVP DESIGNATOR
- EVP DETECTOR HEAD
- (S) STOP SIGN
- NON-INTRUSIVE DETECTION AREA
- TRAFFIC SIGNAL HEAD TO BE COVERED AND DE-ENERGIZED

NOTE: ALL LENSES ARE 12-INCH

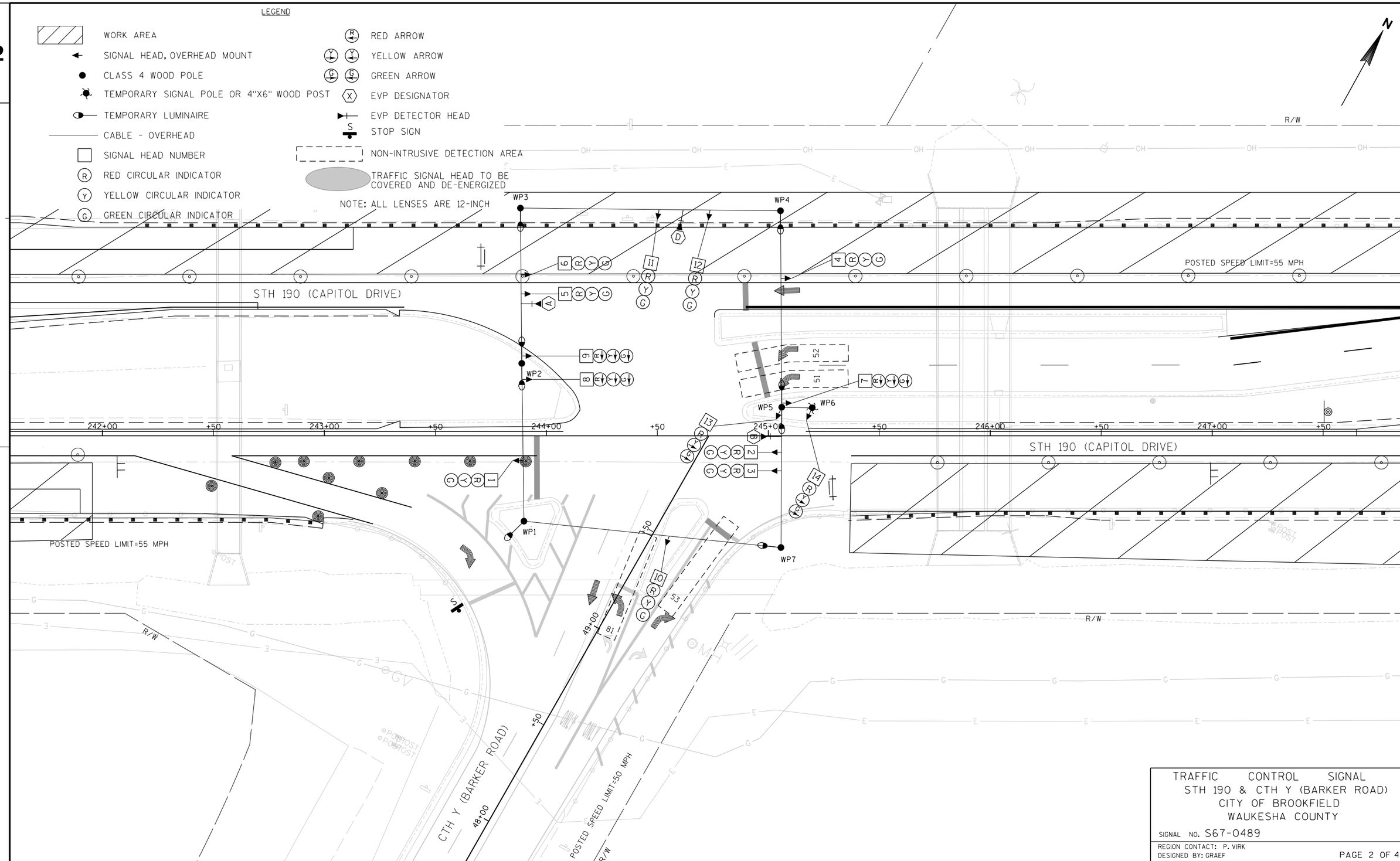

TRAFFIC CONTROL SIGNAL
STH 190 & CTH Y (BARKER ROAD)
CITY OF BROOKFIELD
WAUKESHA COUNTY

SIGNAL NO. S67-0489

REGION CONTACT: P. VIRK
DESIGNED BY: GRAEF
REVISED BY:

PAGE 2 OF 4

PROJECT NO:2025-14-71	HWY:STH 190	COUNTY:WAUKESHA	TEMPORARY TRAFFIC SIGNAL PLAN - STAGE 2	SHEET 102	E

2

LEGEND

- WORK AREA
- SIGNAL HEAD, OVERHEAD MOUNT
- CLASS 4 WOOD POLE
- TEMPORARY SIGNAL POLE OR 4"X6" WOOD POST
- TEMPORARY LUMINAIRE
- CABLE - OVERHEAD
- SIGNAL HEAD NUMBER
- (R) RED CIRCULAR INDICATOR
- (Y) YELLOW CIRCULAR INDICATOR
- (G) GREEN CIRCULAR INDICATOR
- (R) RED ARROW
- (Y) YELLOW ARROW
- (G) GREEN ARROW
- (X) EVP DESIGNATOR
- EVP DETECTOR HEAD
- (S) STOP SIGN
- NON-INTRUSIVE DETECTION AREA
- TRAFFIC SIGNAL HEAD TO BE COVERED AND DE-ENERGIZED

NOTE: ALL LENSES ARE 12-INCH

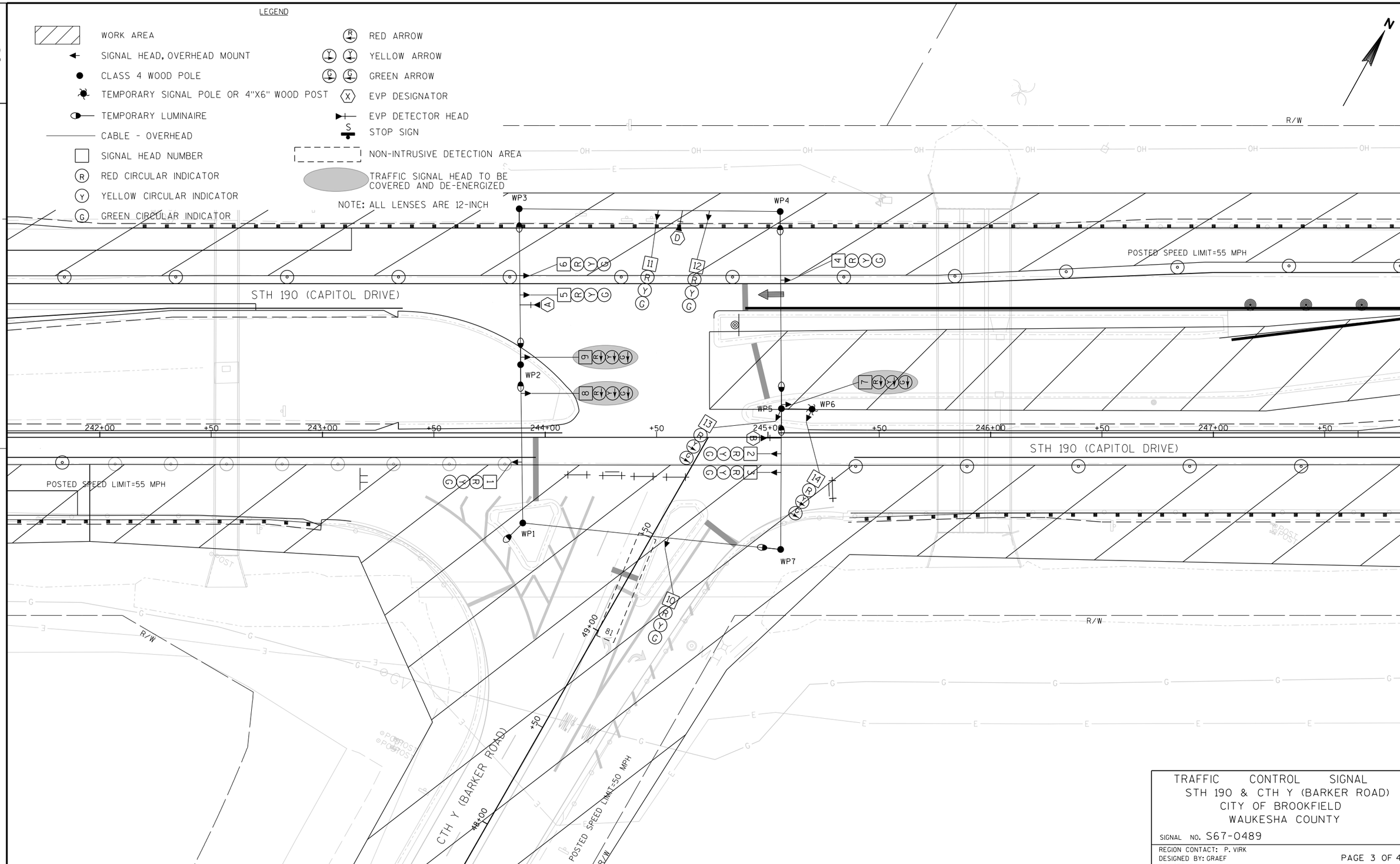

TRAFFIC CONTROL SIGNAL
STH 190 & CTH Y (BARKER ROAD)
CITY OF BROOKFIELD
WAUKESHA COUNTY

SIGNAL NO. S67-0489

REGION CONTACT: P. VIRK
DESIGNED BY: GRAEF
REVISED BY:

PAGE 3 OF 4

PROJECT NO:2025-14-71	HWY:STH 190	COUNTY:WAUKESHA	TEMPORARY TRAFFIC SIGNAL PLAN - STAGE 2B	SHEET 103	E

	HEAD NUMBERS	FLASH
Ø1		
Ø2	4,5,6	R
Ø3		
Ø4		
Ø5	7,8,9	R ←
Ø6	1,2,3	R
Ø7		
Ø8	10,11,12	R
Ø2P		
Ø4P		
Ø6P		
Ø8P		
OLC	13,14	R
OLF		
OLG		
OLH		

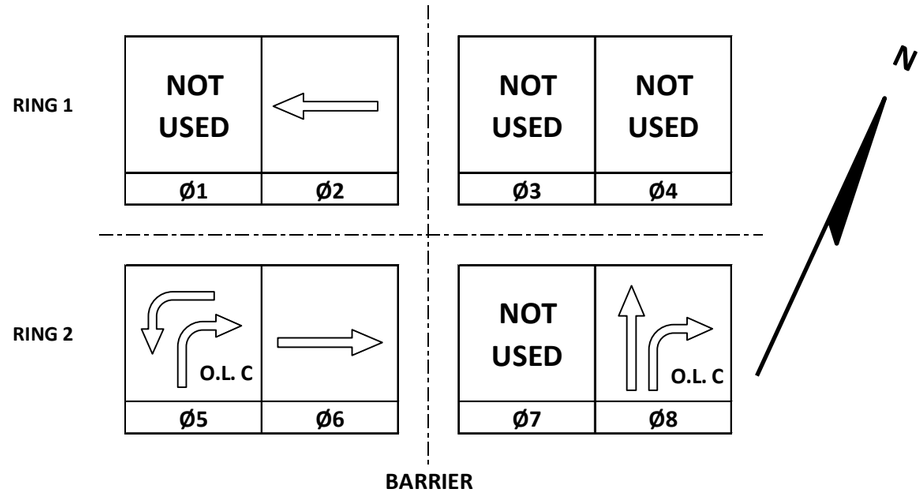

CONTROLLER LOGIC

PHASE NUMBER	PHASE LOCKING	DUAL ENTRY W / Ø	PHASE RECALL	PHASE ACTIVE
1				
2	X	6	MIN	X
3				
4				
5		2		X
6	X	2	MIN	X
7				
8				X

EMERGENCY VEHICLE PREEMPTION SEQUENCE

EMERGENCY VEHICLE PREEMPTOR	A	B	D
MOVEMENT			
PHASE	2+5	6+2	8

AFTER PREEMPTION SEQUENCE 2+5 OR 6+2, CONTROLLER SHALL RETURN TO PHASES 2+6.
AFTER PREEMPTION SEQUENCE 8, CONTROLLER SHALL RETURN TO PHASE 8.

TYPE OF INTERCONNECT/COMMUNICATION	
NONE	
CLOSED LOOP	
TWISTED PAIR	
FIBER OPTIC*	
FIBER OPTIC (ETHERNET)	
RADIO	
CELL MODEM	

TYPE OF COORDINATION	
NONE	X
TBC	
TRAFFIC RESPONSIVE	
ADAPTIVE	
*LOCATION OF MASTER CONTROLLER NO: S-	
SIGNAL SYSTEM NO: SS-	

TYPE OF LIGHTING	
BY OTHER AGENCY	
IN TRAFFIC CABINET	X
IN SEPARATE DOT LIGHTING CABINET	

TYPE OF PRE-EMPT	
NONE	
RAILROAD	
EMERGENCY VEHICLE	X
GTT	
TOMAR	
HARDWIRE	
OTHER	
LIFT BRIDGE	
QUEUE DETECTION	

DETECTOR LOGIC

DETECTOR INPUT	3	1	7	5	11	9	15	13	19	17	23	21	27	25	31	29	DETECTOR INPUT
PLAN LOOP DETECTOR*(S)	51	53															PLAN LOOP DETECTOR*(S)
CALLED PHASE	5	5															CALLED PHASE
CALL OPTION	X	X															CALL OPTION
DELAY TIME		X															DELAY TIME
EXTENTION OPTION	X	X															EXTENTION OPTION
EXTEND TIME																	EXTEND TIME
USE ADDED INITIAL																	USE ADDED INITIAL
CROSS SWITCH PHASE																	CROSS SWITCH PHASE

DETECTOR INPUT	4	2	8	6	12	10	16	14	20	18	24	22	28	26	32	30	DETECTOR INPUT
PLAN LOOP DETECTOR*(S)	52	81															PLAN LOOP DETECTOR*(S)
CALLED PHASE	5	8															CALLED PHASE
CALL OPTION	X	X															CALL OPTION
DELAY TIME																	DELAY TIME
EXTENTION OPTION	X	X															EXTENTION OPTION
EXTEND TIME																	EXTEND TIME
USE ADDED INITIAL																	USE ADDED INITIAL
CROSS SWITCH PHASE																	CROSS SWITCH PHASE

GENERAL NOTES:

1. CTH Y (BARKER ROAD) WILL BE CLOSED DURING STAGE 2B. SIGNAL SHALL FLASH YELLOW-RED DURING THIS STAGE.

STH 190 & CTH Y (BARKER ROAD)
CITY OF BROOKFIELD
WAUKESHA COUNTY

SIGNAL NO: S67-0489 CABINET TYPE: TEMP
CONTROLLER TYPE: TEMP
DATE: 10/17 PAGE NO. 4 OF 4

2

LEGEND

- NONMETALLIC CONDUIT 2", UNLESS OTHERWISE NOTED
- SIGNAL HEAD, TRAFFIC SIGNAL STANDARD, PEDESTAL BASE
- (XX) SIGNAL POLE, XX' ARM
- LUMINAIRE, TRAFFIC POLE, TRANSFORMER BASE
- LOOP DETECTOR CONDUIT 1" NONMETALLIC
- LOOP DETECTOR IN 1" NONMETALLIC CONDUIT
- PULL BOX, 24" X 36"
- CONTROL CABINET
- TRAFFIC SIGNAL HEAD
- SIGNAL HEAD NUMBER
- (R) RED CIRCULAR INDICATOR
- (Y) YELLOW CIRCULAR INDICATOR
- (G) GREEN CIRCULAR INDICATOR
- RED ARROW
- YELLOW ARROW
- GREEN ARROW
- (X) EVP DESIGNATOR
- EVP DETECTOR HEAD

NOTE: GRAYSHADE REPRESENTS EXISTING TO REMAIN. BOLD REPRESENTS EXISTING TO BE REMOVED.

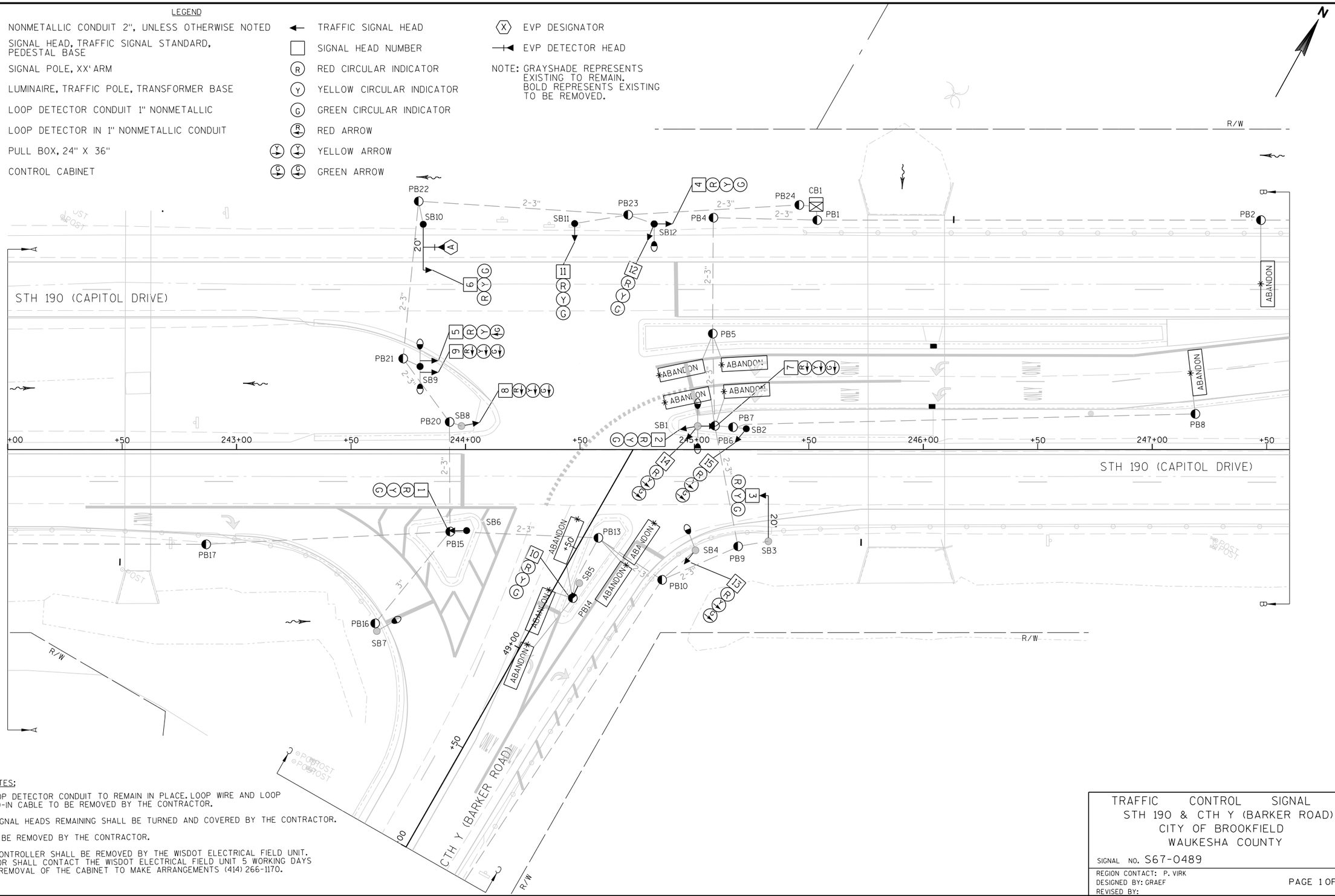

CONSTRUCTION NOTES:

1. ABANDONED LOOP DETECTOR CONDUIT TO REMAIN IN PLACE. LOOP WIRE AND LOOP DETECTOR LEAD-IN CABLE TO BE REMOVED BY THE CONTRACTOR.
2. ALL TRAFFIC SIGNAL HEADS REMAINING SHALL BE TURNED AND COVERED BY THE CONTRACTOR.
3. EVP CABLE TO BE REMOVED BY THE CONTRACTOR.
4. CABINET AND CONTROLLER SHALL BE REMOVED BY THE WISDOT ELECTRICAL FIELD UNIT. THE CONTRACTOR SHALL CONTACT THE WISDOT ELECTRICAL FIELD UNIT 5 WORKING DAYS PRIOR TO THE REMOVAL OF THE CABINET TO MAKE ARRANGEMENTS (414) 266-1170.

TRAFFIC CONTROL SIGNAL
STH 190 & CTH Y (BARKER ROAD)
CITY OF BROOKFIELD
WAUKESHA COUNTY

SIGNAL NO. S67-0489

REGION CONTACT: P. VIRK
DESIGNED BY: GRAEF
REVISED BY:

PAGE 1 OF 3

PROJECT NO: 2025-14-71	HWY: STH 190	COUNTY: WAUKESHA	TRAFFIC SIGNAL REMOVAL PLAN	SHEET 105	E

2

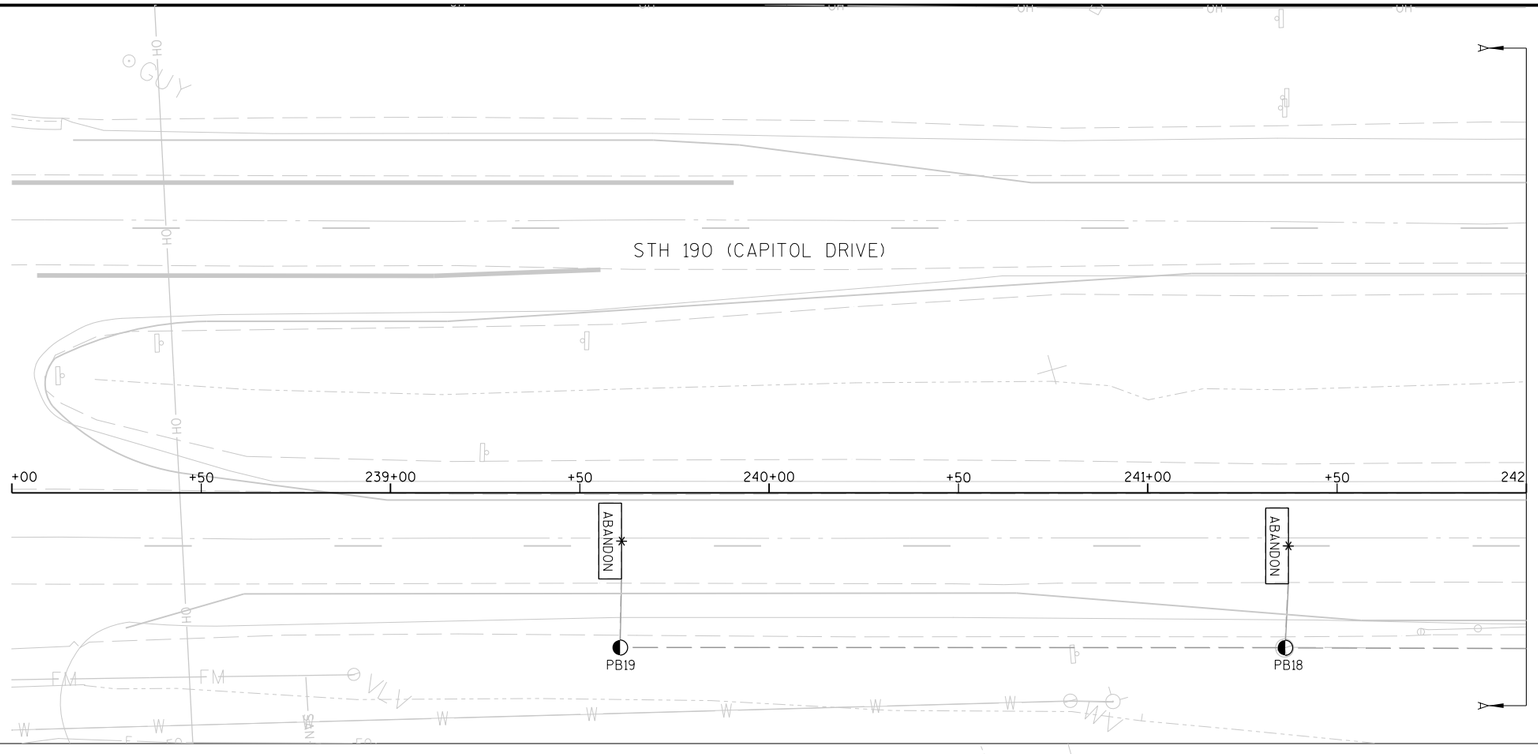

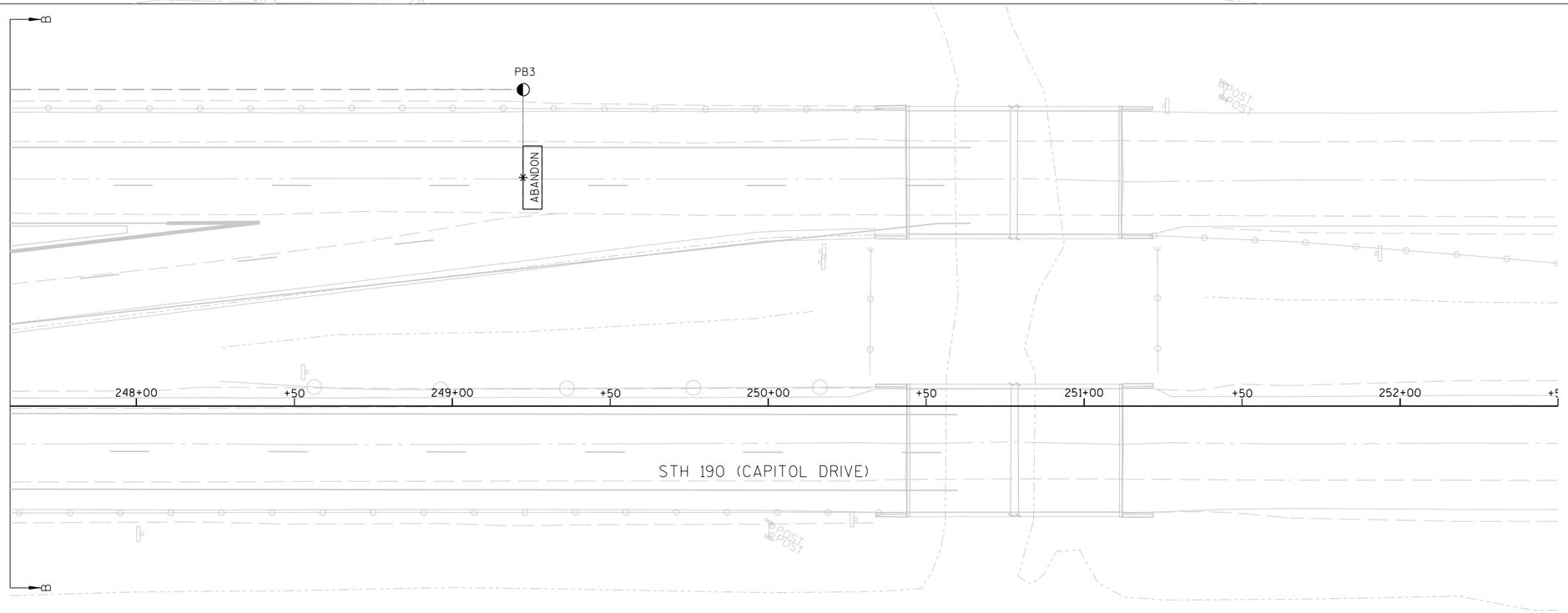

TRAFFIC CONTROL SIGNAL
STH 190 & CTH Y (BARKER ROAD)
CITY OF BROOKFIELD
WAUKESHA COUNTY

SIGNAL NO. S67-0489

REGION CONTACT: P. VIRK
DESIGNED BY: GRAEF
REVISED BY:

PAGE 2 OF 3

PROJECT NO:2025-14-71	HWY:STH 190	COUNTY:WAUKESHA	TRAFFIC SIGNAL REMOVAL PLAN	SHEET 106	E

2

2

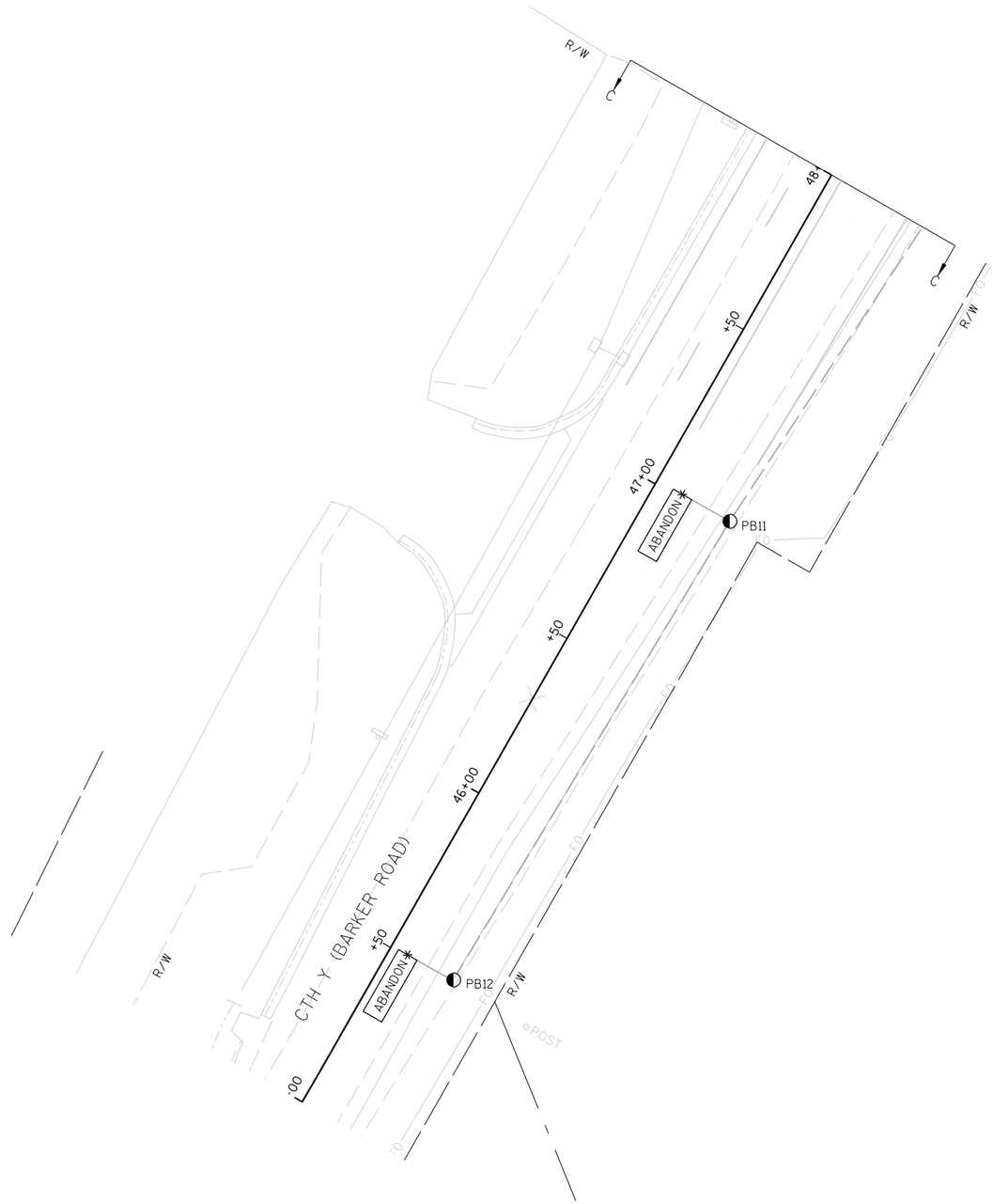

TRAFFIC CONTROL SIGNAL
STH 190 & CTH Y (BARKER ROAD)
CITY OF BROOKFIELD
WAUKESHA COUNTY

SIGNAL NO. S67-0489

REGION CONTACT: P. VIRK
DESIGNED BY: GRAEF
REVISED BY:

PAGE 3 OF 3

PROJECT NO:2025-14-71	HWY:STH 190	COUNTY:WAUKESHA	TRAFFIC SIGNAL REMOVAL PLAN	SHEET 107	E

2

NONMETALLIC CONDUIT 2", UNLESS OTHERWISE NOTED

SIGNAL HEAD, TRAFFIC SIGNAL STANDARD, PEDESTAL BASE

(XX) SIGNAL HEAD, TRAFFIC SIGNAL POLE TRANSFORMER BASE

LUMINAIRE, TRAFFIC POLE, TRANSFORMER BASE

LOOP DETECTOR CONDUIT 1" NONMETALLIC

LOOP DETECTOR IN 1" NONMETALLIC CONDUIT

RADAR DETECTION ZONE

LEGEND

PULL BOX, 24" X 36"

PULL BOX, 24" X 42"

CONTROL CABINET

TRAFFIC SIGNAL HEAD

SIGNAL HEAD NUMBER

(R) RED CIRCULAR INDICATOR

(Y) YELLOW CIRCULAR INDICATOR

(G) GREEN CIRCULAR INDICATOR

(R) RED ARROW

(Y) YELLOW ARROW

(G) GREEN ARROW

(X) EVP DESIGNATOR

EVP DETECTOR HEAD

EVP CONFIRMATION LIGHT

RADAR DETECTOR

(V) COMMUNICATIONS VAULT

NONMETALLIC INTERCONNECT CONDUIT

NOTE: ALL LENSES ARE 12-INCH
GRAYSHADE REPRESENTS EXISTING

EVP CONSTRUCTION NOTES:

1. INSTALL THE TRAFFIC SIGNAL EMERGENCY VEHICLE PRE-EMPTION DETECTOR CABLE TO RUN CONTINOUSLY (WITHOUT SPLICES) FROM THE CABINET TO THE DETECTOR HEADS. MOUNT THE EVP DETECTOR HEADS AND WIRE THEM PER MANUFACTURER INSTRUCTIONS.
2. THE DEPARTMENT WILL DETERMINE THE EXACT LOCATION OF THE EVP DETECTORS TO ENSURE THAT THE INSTALLATION DOES NOT CREATE A SIGHT OBSTURCTION.
3. ALL EVP DETECTOR CABLE SHALL BE ROUTED THROUGH EXISTING SIGNAL BASES, PULL BOXES, AND CONDUIT AS INDICATED. PROVIDE ENOUGH CABLE TO ALLOW 10 FEET OF SLACK IN THE CABINET, IN EACH PULL BOX, AND IN THE SIGNAL POLE HANDHOLE.
4. FOR A CABINET THAT IS NOT OPERATING THE SIGNAL, CABINET WIRING WILL BE DONE BY THE CONRACTOR. THE CONTRACOR SHALL INSTALL AND TERMINATE THE EVP CABLE AS DESCRIBED AND SHALL LABEL EACH CABLE AS NOTED ON THE PLAN SHEETS (I.E. A-B-C-D).

N

R/W

OH — OH

POSTED SPEED LIMIT=55 MPH

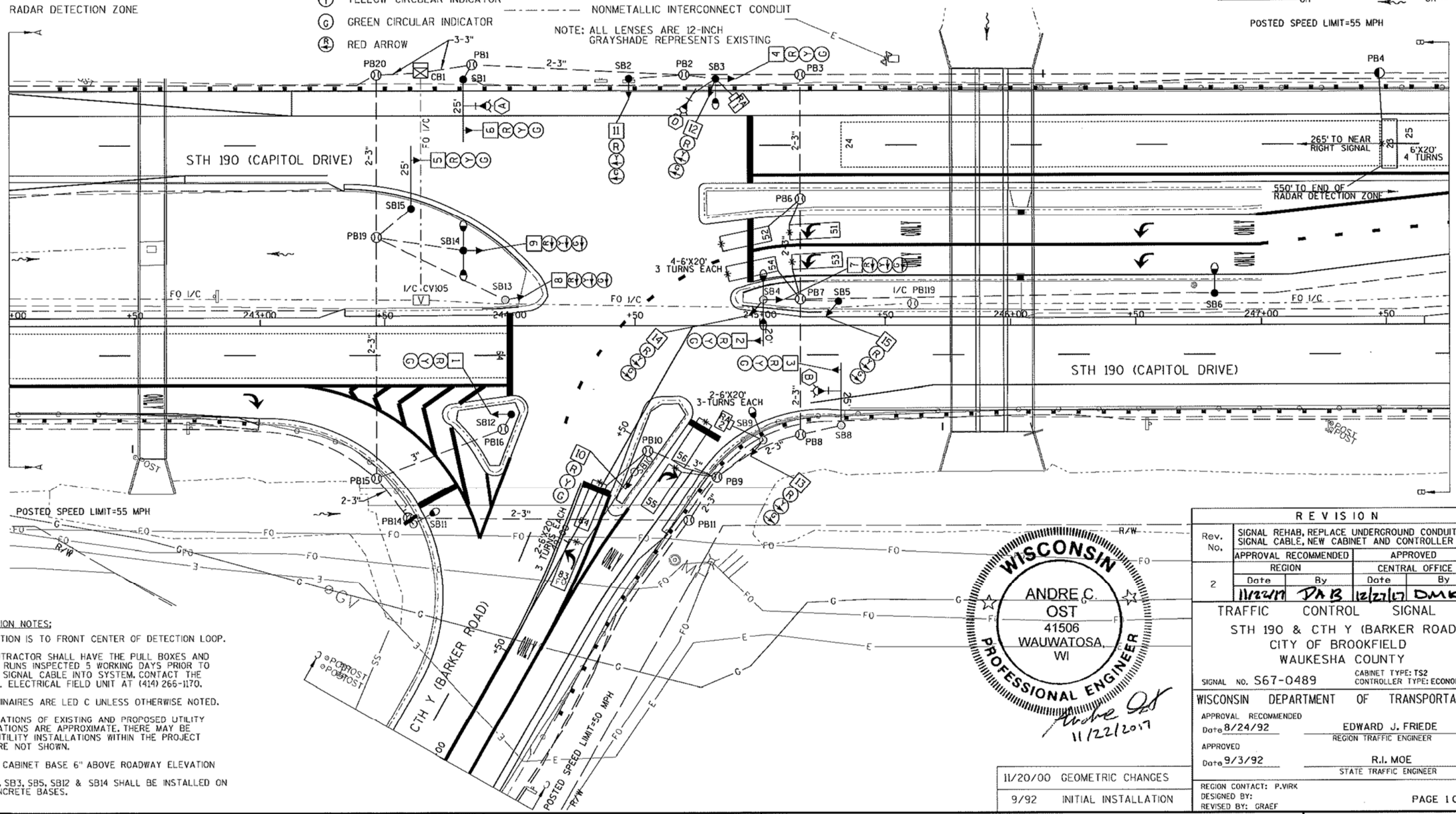

CONSTRUCTION NOTES:

1. * LOCATION IS TO FRONT CENTER OF DETECTION LOOP.
2. THE CONTRACTOR SHALL HAVE THE PULL BOXES AND CONDUIT RUNS INSPECTED 5 WORKING DAYS PRIOR TO PLACING SIGNAL CABLE INTO SYSTEM. CONTACT THE REGIONAL ELECTRICAL FIELD UNIT AT (414) 266-1170.
3. ALL LUMINAIRES ARE LED C UNLESS OTHERWISE NOTED.
4. THE LOCATIONS OF EXISTING AND PROPOSED UTILITY INSTALLATIONS ARE APPROXIMATE. THERE MAY BE OTHER UTILITY INSTALLATIONS WITHIN THE PROJECT WHICH ARE NOT SHOWN.
5. INSTALL CABINET BASE 6" ABOVE ROADWAY ELEVATION
6. SB1, SB2, SB3, SB5, SB12 & SB14 SHALL BE INSTALLED ON NEW CONCRETE BASES.

WISCONSIN
ANDRE C. OST
41506
WAUWATOSA, WI
PROFESSIONAL ENGINEER
11/22/2017

11/20/00	GEOMETRIC CHANGES
9/92	INITIAL INSTALLATION

REVISION

Rev. No.	SIGNAL REHAB, REPLACE UNDERGROUND CONDUIT & SIGNAL CABLE, NEW CABINET AND CONTROLLER			
	APPROVAL RECOMMENDED		APPROVED	
	REGION		CENTRAL OFFICE	
	Date	By	Date	By
2	11/22/17	DAB	12/22/17	DMK

TRAFFIC CONTROL SIGNAL
STH 190 & CTH Y (BARKER ROAD)
CITY OF BROOKFIELD
WAUKESHA COUNTY

SIGNAL NO. S67-0489

CABINET TYPE: TS2
CONTROLLER TYPE: ECONOLITE

WISCONSIN DEPARTMENT OF TRANSPORTATION

APPROVAL RECOMMENDED
Date 8/24/92 — EDWARD J. FRIEDE, REGION TRAFFIC ENGINEER

APPROVED
Date 9/3/92 — R.I. MOE, STATE TRAFFIC ENGINEER

REGION CONTACT: P.VIRK
DESIGNED BY:
REVISED BY: GRAEF

PAGE 1 OF 4

PROJECT NO: 2025-14-71	HWY: STH 190	COUNTY: WAUKESHA	TRAFFIC SIGNAL PLAN	SHEET 108	E

FILE NAME : X:\ML\2016\20160073\CAD\Transportation\dgn\00\02_Barker\024021_sp.dgn PLOT DATE : 11/22/2017 PLOT BY : $$...plotuser...$$ PLOT NAME : PLOT SCALE : $$.....plotscale.....$$ WISDOT/CADDS SHEET 42

11/22/2017 ASV

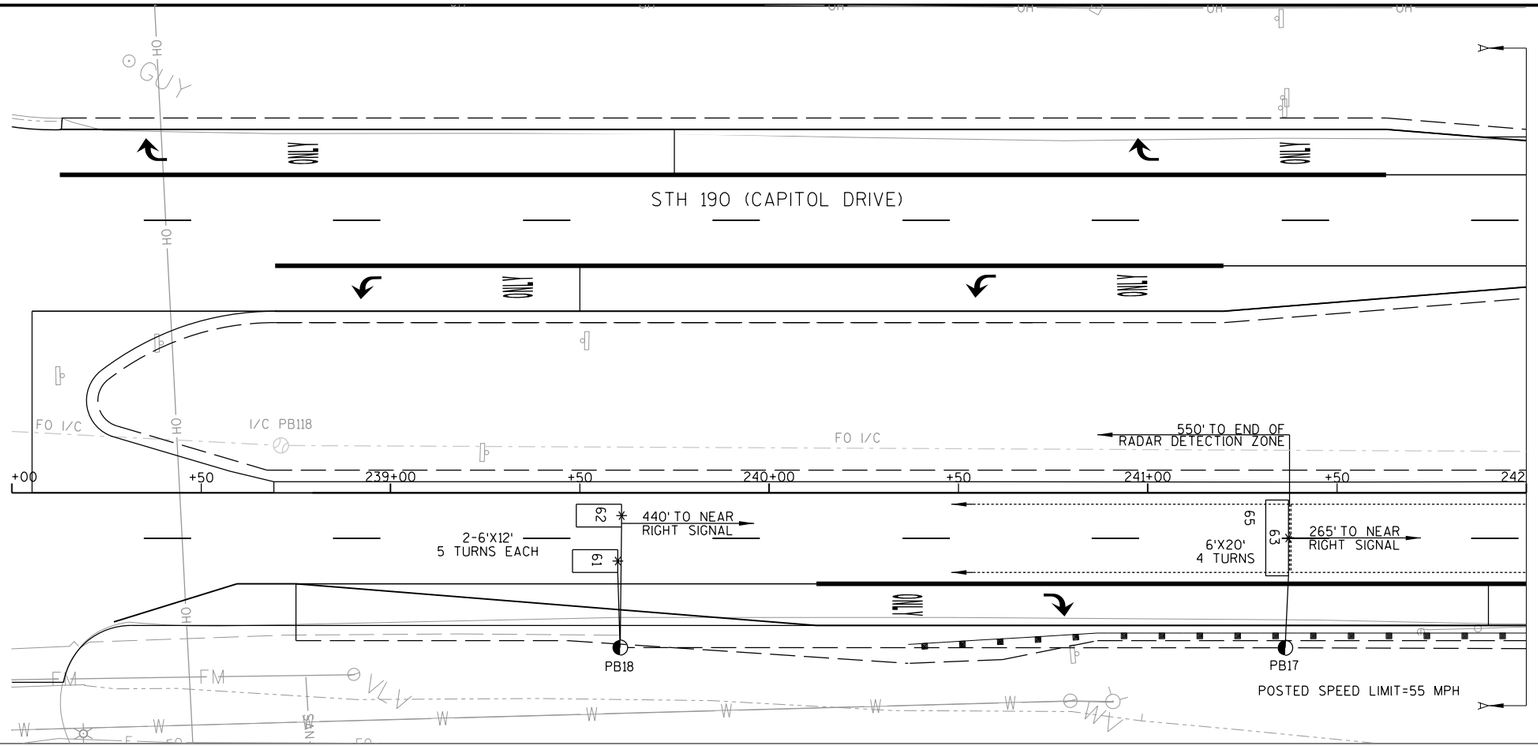

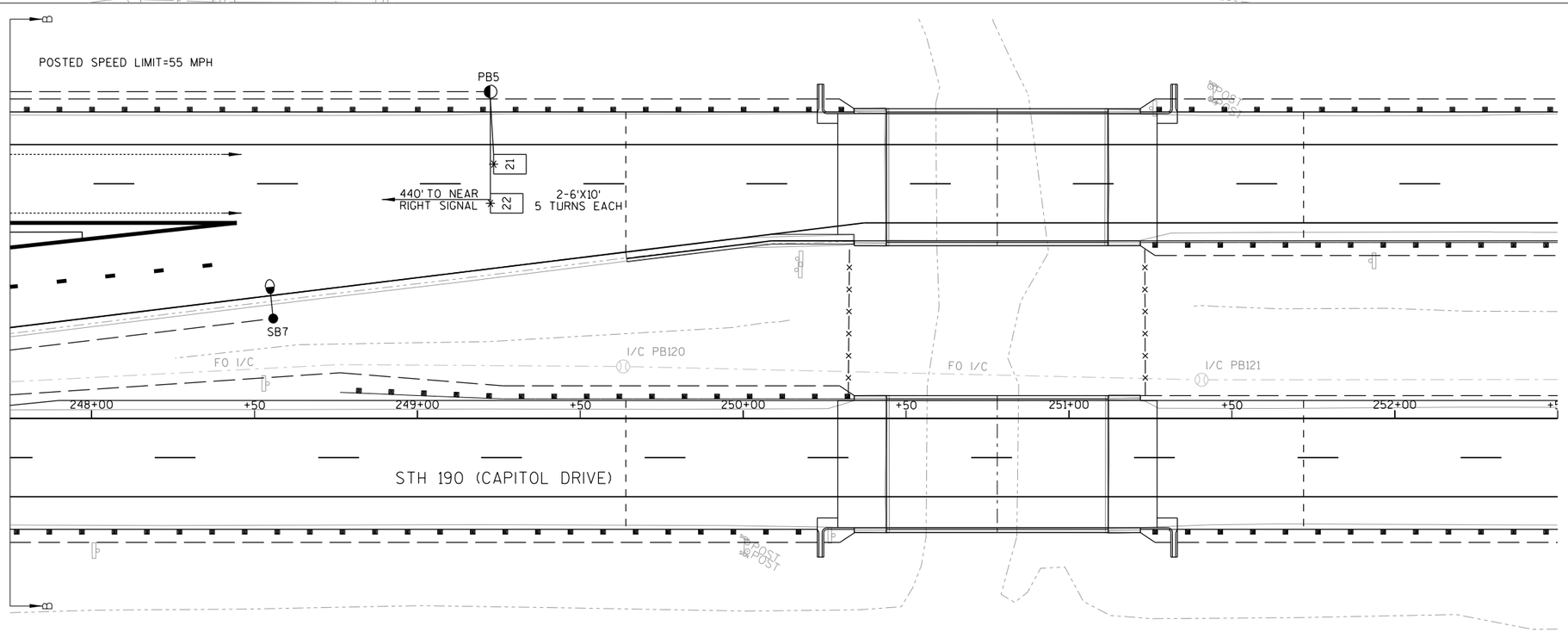

TRAFFIC CONTROL SIGNAL
STH 190 & CTH Y (BARKER ROAD)
CITY OF BROOKFIELD
WAUKESHA COUNTY

SIGNAL NO. S67-0489

REGION CONTACT: P.VIRK
DESIGNED BY:
REVISED BY: GRAEF

PAGE 2 OF 4

PROJECT NO:2025-14-71	HWY:STH 190	COUNTY:WAUKESHA	TRAFFIC SIGNAL PLAN	SHEET 109	E

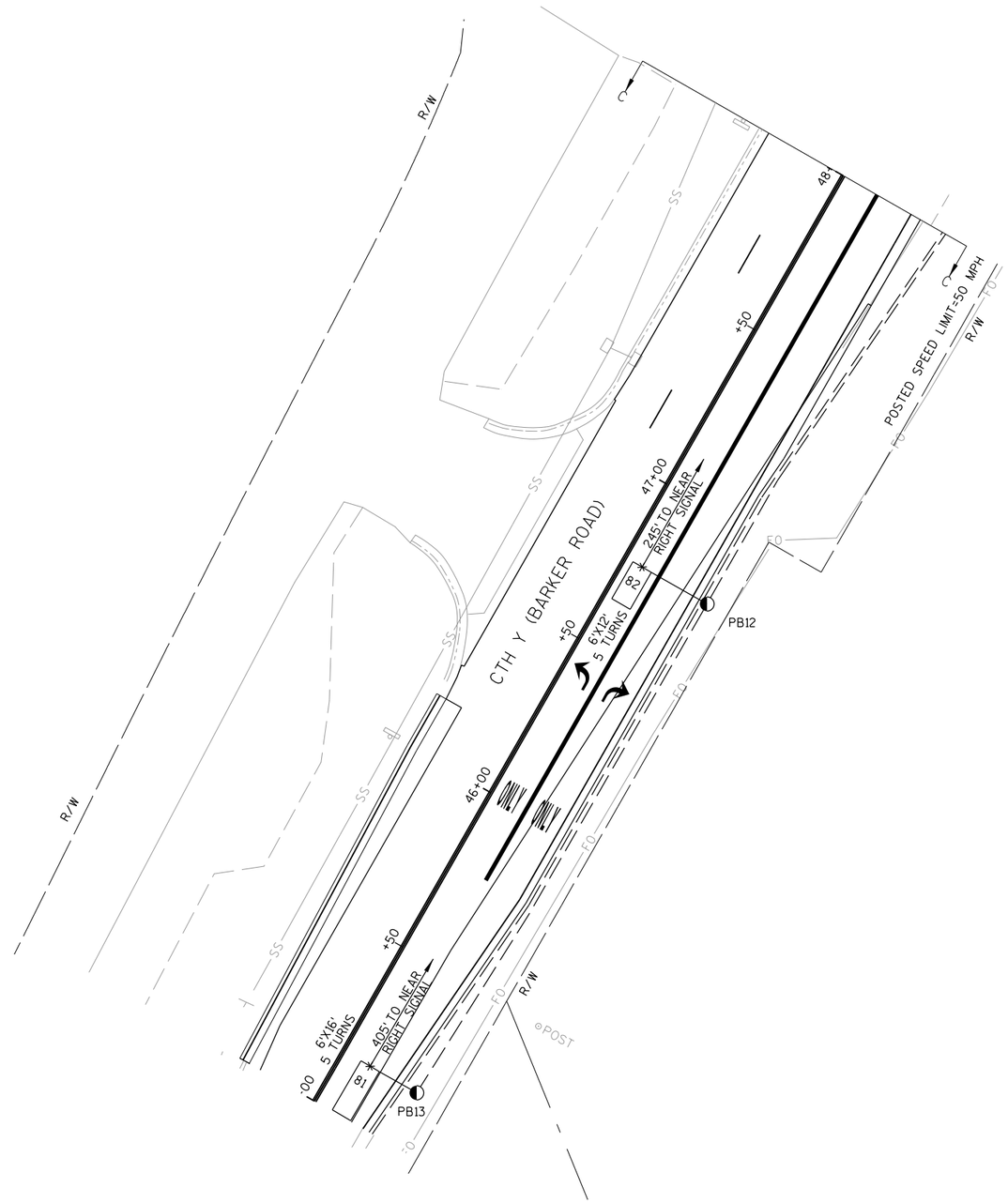

TRAFFIC CONTROL SIGNAL
STH 190 & CTH Y (BARKER ROAD)
CITY OF BROOKFIELD
WAUKESHA COUNTY

SIGNAL NO. S67-0489

REGION CONTACT: P.VIRK
DESIGNED BY:
REVISED BY: GRAEF

PAGE 3 OF 4

PROJECT NO:2025-14-71	HWY:STH 190	COUNTY:WAUKESHA	TRAFFIC SIGNAL PLAN	SHEET 110	E

2

	HEAD NUMBERS	FLASH
Ø1		
Ø2	4,5,6	R
Ø3		
Ø4		
Ø5	7,8,9	R ←
Ø6	1,2,3	R
Ø7		
Ø8	10,11,12	R
Ø2P		
Ø4P		
Ø6P		
Ø8P		
OLC	13,14,15	R
OLE		
OLF		
OLG		
OLH		

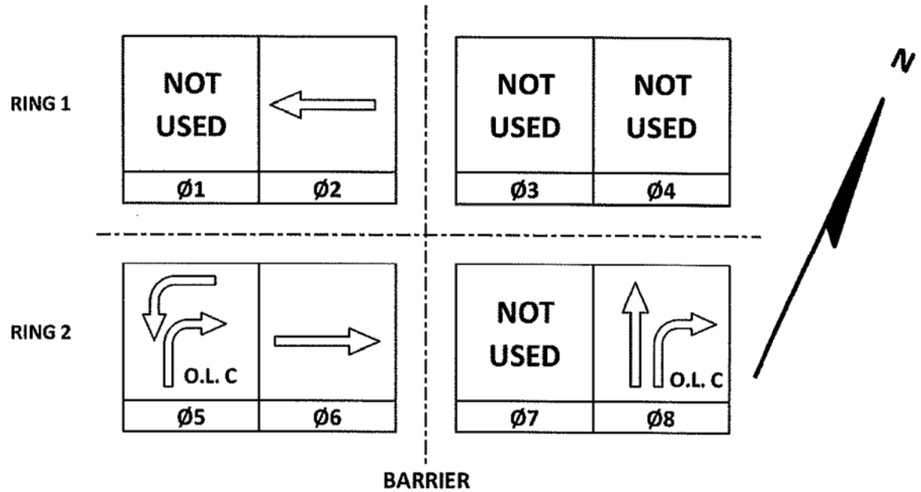

CONTROLLER LOGIC

PHASE NUMBER	PHASE LOCKING	DUAL ENTRY W / Ø	PHASE RECALL	PHASE ACTIVE
1				
2	X	6	MIN	X
3				
4				
5		2		X
6	X	2	MIN	X
7				
8				X

EMERGENCY VEHICLE PREEMPTION SEQUENCE

EMERGENCY VEHICLE PREEMPTOR	A	B	D
MOVEMENT			
PHASE	2+5	6+2	8

AFTER PREEMPTION SEQUENCE 2+5 OR 6+2, CONTROLLER SHALL RETURN TO PHASES 2+6.
AFTER PREEMPTION SEQUENCE 8, CONTROLLER SHALL RETURN TO PHASE 8.

TYPE OF INTERCONNECT/COMMUNICATION	
NONE	
CLOSED LOOP	
TWISTED PAIR	
FIBER OPTIC*	
FIBER OPTIC (ETHERNET)	X
RADIO	
CELL MODEM	

TYPE OF COORDINATION	
NONE	X
TBC	
TRAFFIC RESPONSIVE	
ADAPTIVE	
*LOCATION OF MASTER CONTROLLER NO: S-	
SIGNAL SYSTEM NO: SS-	

TYPE OF LIGHTING	
BY OTHER AGENCY	
IN TRAFFIC CABINET	X
IN SEPARATE DOT LIGHTING CABINET	

TYPE OF PRE-EMPT	
NONE	
RAILROAD	
EMERGENCY VEHICLE	X
GTT	X
TOMAR	
HARDWIRE	
OTHER	
LIFT BRIDGE	
QUEUE DETECTION	

DETECTOR LOGIC

DETECTOR INPUT	3	1	7	5	11	9	15	13
PLAN LOOP DETECTOR*(S)	21	23	52	54	56	62	81	83
CALLED PHASE	2	2	5	5	5	6	8	8
CALL OPTION	X	X	x	X	X	X		X
DELAY TIME					X			X
EXTENTION OPTION	X	X	X	X	X	X	X	X
EXTEND TIME							X	
USE ADDED INITIAL	X	X				X		
CROSS SWITCH PHASE								

DETECTOR INPUT	19	17	23	21	27	25	31	29
PLAN LOOP DETECTOR*(S)	24	64						
CALLED PHASE	2	6						
CALL OPTION	X	X						
DELAY TIME								
EXTENTION OPTION	X	X						
EXTEND TIME								
USE ADDED INITIAL	X	X						
CROSS SWITCH PHASE								

DETECTOR INPUT	4	2	8	6	12	10	16	14
PLAN LOOP DETECTOR*(S)	22	51	53	55	61	63	82	84
CALLED PHASE	2	5	5	5	6	6	8	8
CALL OPTION	X	X	X	X	X	X		X
DELAY TIME				X				X
EXTENTION OPTION	X	X	X	X	X	X	X	X
EXTEND TIME							X	
USE ADDED INITIAL	X				X	X		
CROSS SWITCH PHASE								

DETECTOR INPUT	20	18	24	22	28	26	32	30
PLAN LOOP DETECTOR*(S)	25	65						
CALLED PHASE	2	6						
CALL OPTION	X	X						
DELAY TIME								
EXTENTION OPTION	X	X						
EXTEND TIME								
USE ADDED INITIAL	X	X						
CROSS SWITCH PHASE								

STH 190 & CTH Y (BARKER ROAD)
CITY OF BROOKFIELD
WAUKESHA COUNTY
SIGNAL NO: S67-0489 CABINET TYPE: TS2
CONTROLLER TYPE: ECONOLITE
DATE: 10/17 PAGE NO. 4 OF 4

11/22/2017 ASD

11/22/17 DAS

PROJECT NO: 2025-14-71 | HWY: STH 190 | COUNTY: WAUKESHA | SEQUENCE OF OPERATIONS | SHEET NO: E

FILE NAME : PLOT DATE : PLOT BY : PLOT NAME : PLOT SCALE : 1:1

2

PROJECT ID:	2025-14-71
INTERSECTION:	STH 190 & CTH Y (BARKER ROAD)

SIGNAL WIRE COLOR CODING	BLK-BLACK	RED-RED	GRN-GREEN
	WHT-WHITE	BLU-BLUE	ORG-ORANGE

CB1 TO	AWG14 # OF CONDUCTORS	HEAD NO.	SIGNAL INDICATION WIRE COLOR									PED BUTTON
			RED	YELLOW	GREEN	<RED>	<YELLOW>	<GREEN>	FLASHING <YELLOW>	D/WALK	WALK	
SB1	7											
		6	RED	ORG	GRN							
SB2	7											
		11	RED				ORG	GRN				
SB3	12											
		4	RED/BLK	ORG/BLK	GRN/BLK							
		12	RED				ORG	GRN				
SB4	15											
		2	RED/BLK	ORG/BLK	GRN/BLK							
		7				RED/WHT	BLU/WHT	GRN/WHT				
		14	RED				ORG	GRN				
SB5	7											
		15	RED				ORG	GRN				
SB8	7											
		3	RED	ORG	GRN							
SB9	7											
		13	RED				ORG	GRN				
SB10	7											
		10	RED	ORG	GRN							
SB12	12											
		1	RED	ORG	GRN							
SB13	7											
		8				RED	ORG	GRN				
SB14	12											
		9				RED	ORG	GRN				
SB15	7											
		5	RED	ORG	GRN							

NOTES:
*USE WHITE CONDUCTOR IN THE SIGNAL CABLE AS THE GROUNDED CONDUCTOR FOR ALL TRAFFIC SIGNAL INDICATIONS.
*ENSURE THE GROUNDED CONDUCTOR IN THE FEEDER CABLE AND THE POLE CABLES ARE BOTH 18" LONGER THAN THE UNGROUNDED CONDUCTORS.
*RECONNECT THE GROUNDING CONDUCTORS WHENEVER THE CIRCUIT HAS BEEN INTERRUPTED TO ENSURE THE GROUNDING CIRCUIT IS COMPLETE.

EQUIPMENT GROUNDING CONDUCTOR 10 AWG GRN XLP

FROM	TO
CB1	SB1
SB1	SB2
SB2	SB3
SB3	SB4
SB4	SB5
SB5	SB8
SB8	SB9
SB9	SB10
SB10	SB12
SB12	SB13
SB13	SB14
SB14	SB15
SB15	CB2

PULL BOX BONDING JUMPER 10 AWG GRN XLP

FROM	TO
PB1	SB1
PB2	SB3
PB3	SB3
PB6	SB4
PB7	SB4
PB8	SB8
PB9	SB9
PB10	SB9
PB11	SB9
PB14	SB12
PB15	SB12
PB16	SB12
PB19	SB14
PB20	CB1

EMERGENCY VEHICLE PREEMPTION

FROM	TO
CB1	HEAD A (SB1)
CB1	HEAD B (SB8)
CB1	HEAD D (SB3)

LIGHTING UF 10 AWG W/ GROUND

FROM	TO
CB1	SB3
SB3	SB4
SB4	SB6
SB6	SB7
CB1	SB14
SB14	SB11
SB11	SB9

RADAR DETECTION

FROM	TO
CB1	RA1 (SB3)
CB1	RA2 (SB9)

TRAFFIC CONTROL SIGNAL
STH 190 & CTH Y (BARKER ROAD)
CITY OF BROOKFIELD
WAUKESHA COUNTY

SIGNAL NO. S67-0489

REGION CONTACT: P. VIRK
DESIGNED BY:
REVISED BY: GRAEF

PAGE 1 OF 1

NOTES:
1. MAXIMUM SPLICE LOSS SHALL BE 0.1dB.
2. NO INTERMEDIATE SPLICES ALLOWED.
3. ALL SPLICES SHALL BE FUSION SPLICES.
4. COORDINATE FIBER ASSIGNMENTS WITH THE STOC AT (414) 227-2166 BEFORE SPLICING FIBER OPTIC CABLE.
5. THE ENTIRE MAINLINE FIBER OPTIC CABLE SHALL NOT BE CUT AND/OR SPLICED IN THE VAULTS NEAREST THE TRAFFIC SIGNAL CABINET WHILE MAKING THE PIGTAIL CONNECTION. ONLY THE REQUIRED BUFFER TUBE SHALL BE CUT AND SPLICED WITH THE PIGTAIL CONNECTION.

LEGEND

- 36 — SM FIBER OPTIC CABLE (# STRANDS)
- SPLICE ENCLOSURE
- HARDENED ETHERNET SWITCH
- TRAFFIC SIGNAL CONTROLLER

N

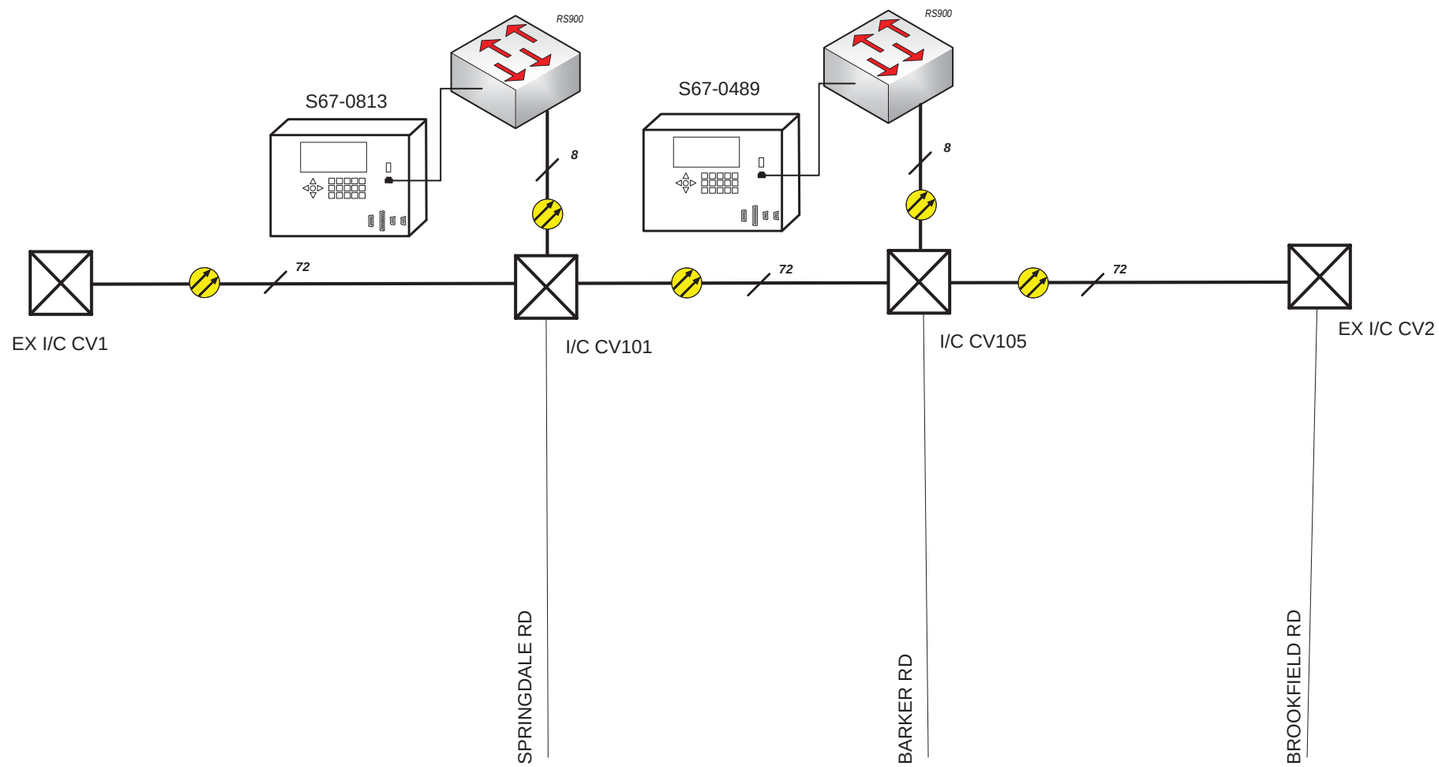

PROJECT NO: 2025-14-71	HWY: STH 190	COUNTY: WAUKESHA	TRAFFIC SIGNAL INTERCONNECT - OVERVIEW	SHEET 113	E

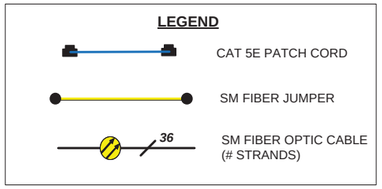
LEGEND
CAT 5E PATCH CORD
SM FIBER JUMPER
36
SM FIBER OPTIC CABLE
(# STRANDS)

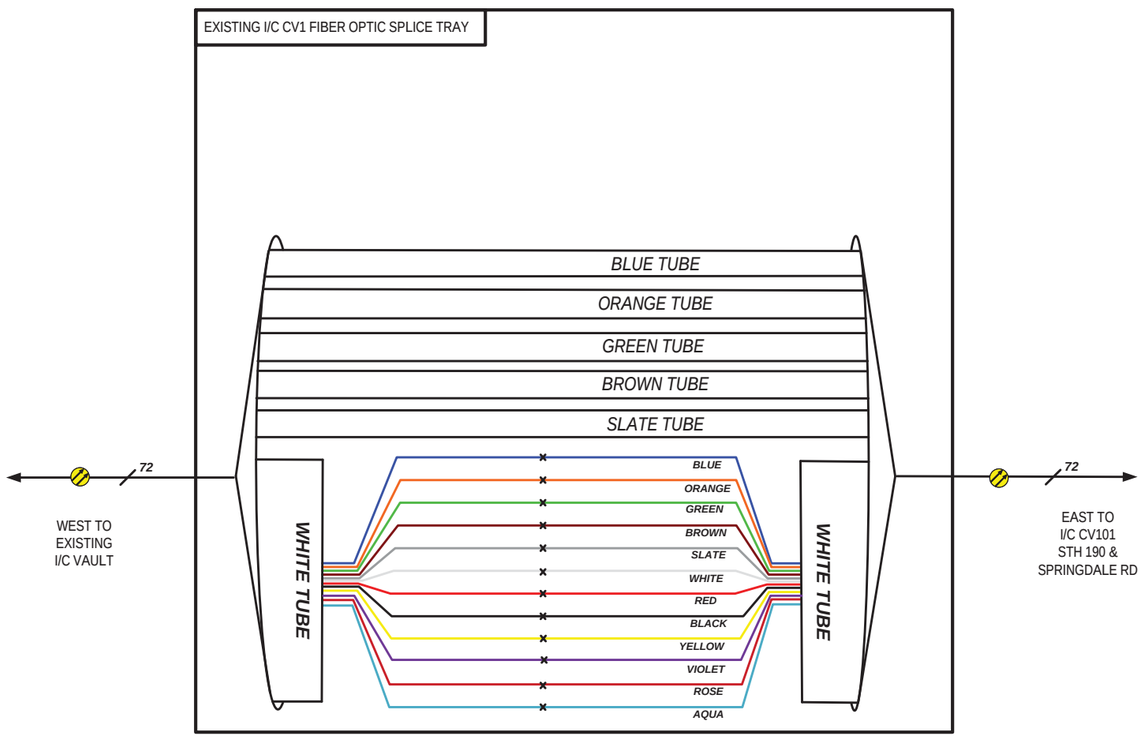
EXISTING I/C CV1 FIBER OPTIC SPLICE TRAY
BLUE TUBE
ORANGE TUBE
GREEN TUBE
BROWN TUBE
SLATE TUBE
72
WEST TO
EXISTING
I/C VAULT
WHITE TUBE
BLUE
ORANGE
GREEN
BROWN
SLATE
WHITE
RED
BLACK
YELLOW
VIOLET
ROSE
AQUA
WHITE TUBE
72
EAST TO
I/C CV101
STH 190 &
SPRINGDALE RD

2

TRAFFIC SIGNAL CABINET, CB1 (S67-0813)

STH 190 & SPRINGDALE RD

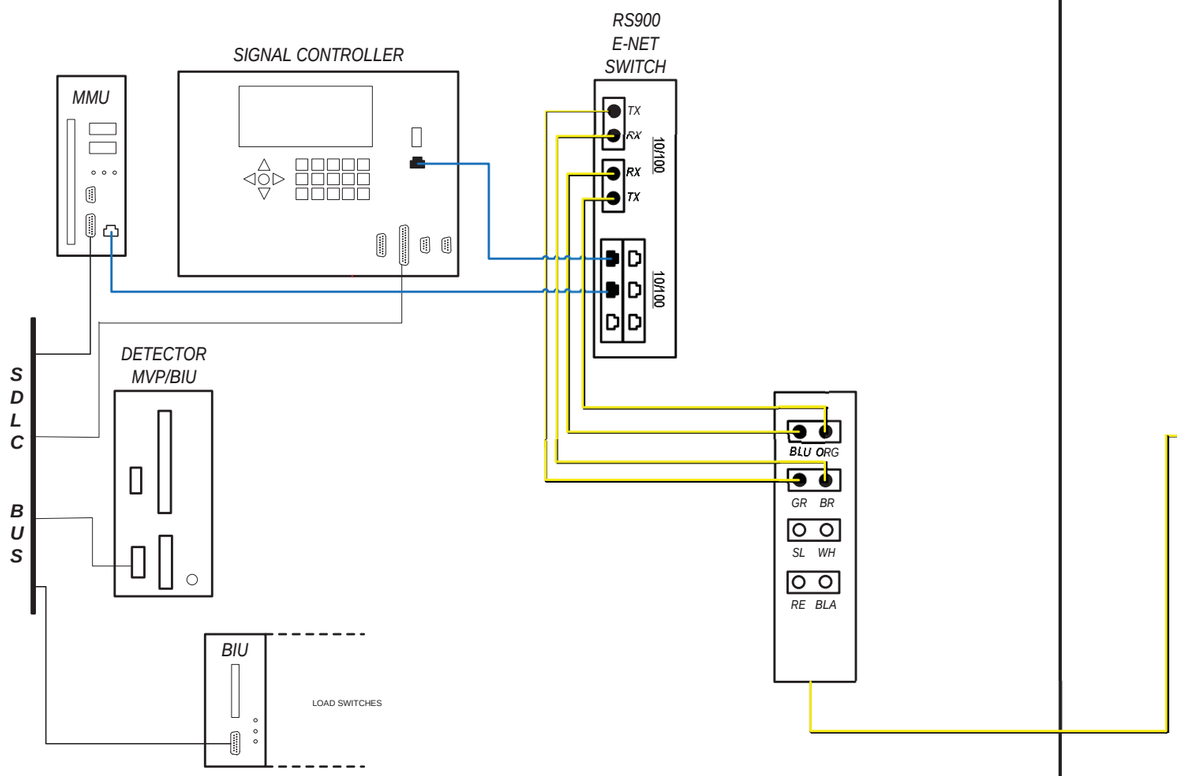

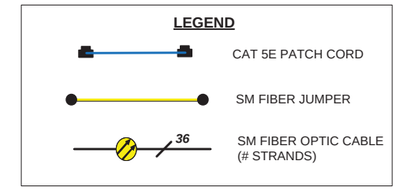

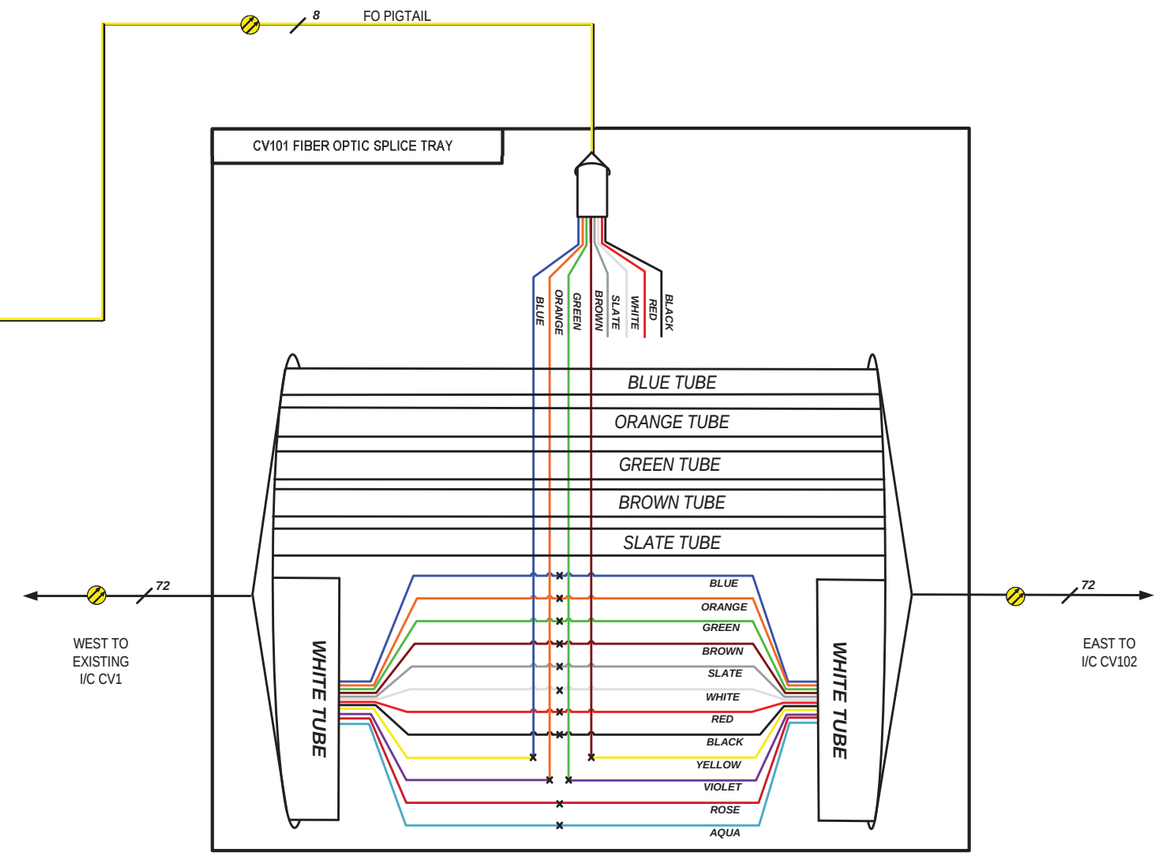

2

PROJECT NO: 2025-14-71	HWY: STH 190	COUNTY: WAUKESHA	TRAFFIC SIGNAL INTERCONNECT	SHEET 115	E

2

TRAFFIC SIGNAL CABINET, CB1 (S67-0489)

STH 190 & BARKER RD

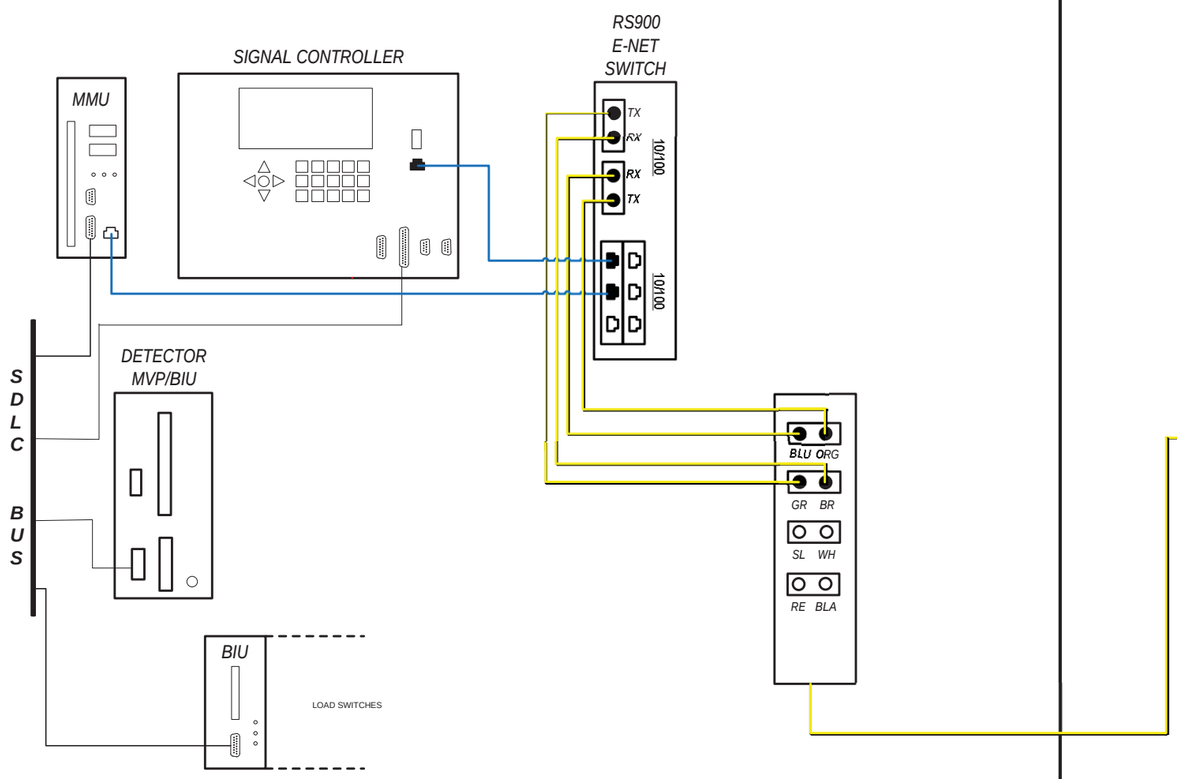

LEGEND

CAT 5E PATCH CORD

SM FIBER JUMPER

36 SM FIBER OPTIC CABLE (# STRANDS)

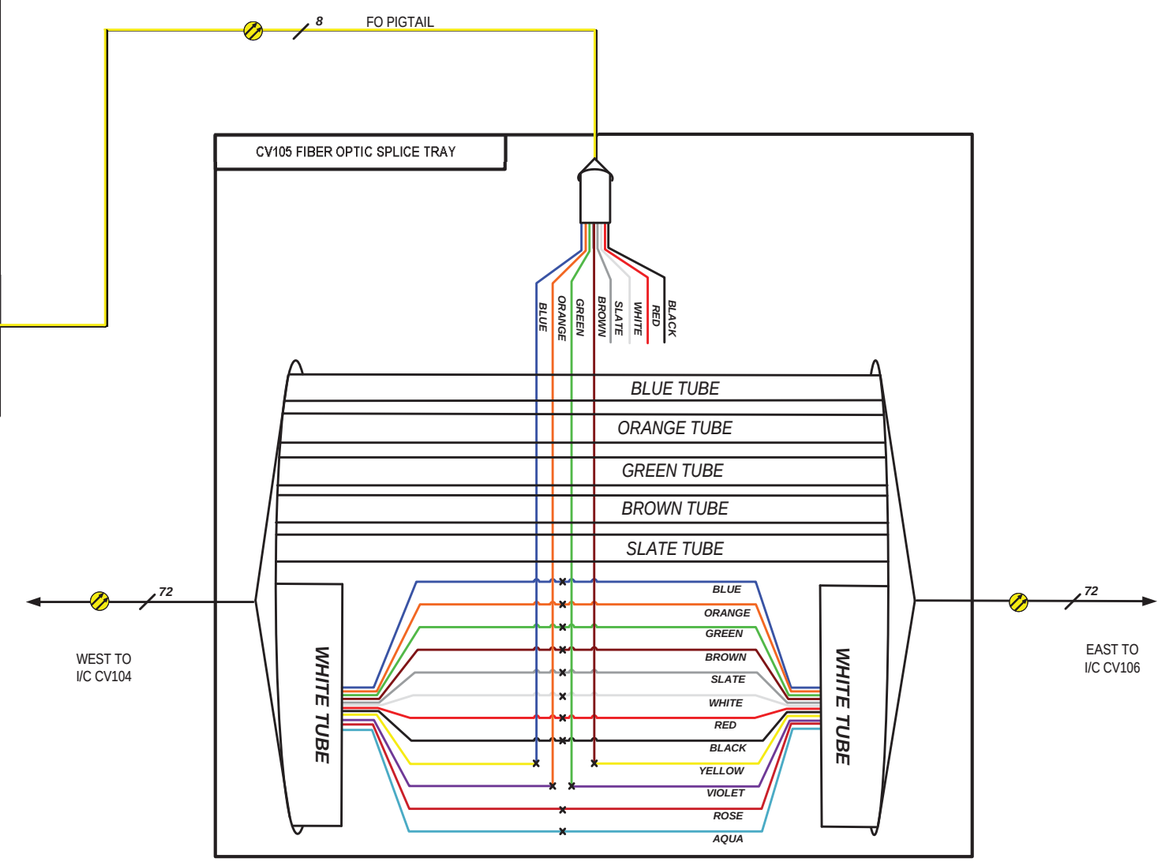

2

PROJECT NO: 2025-14-71	HWY: STH 190	COUNTY: WAUKESHA	TRAFFIC SIGNAL INTERCONNECT	SHEET 116	E

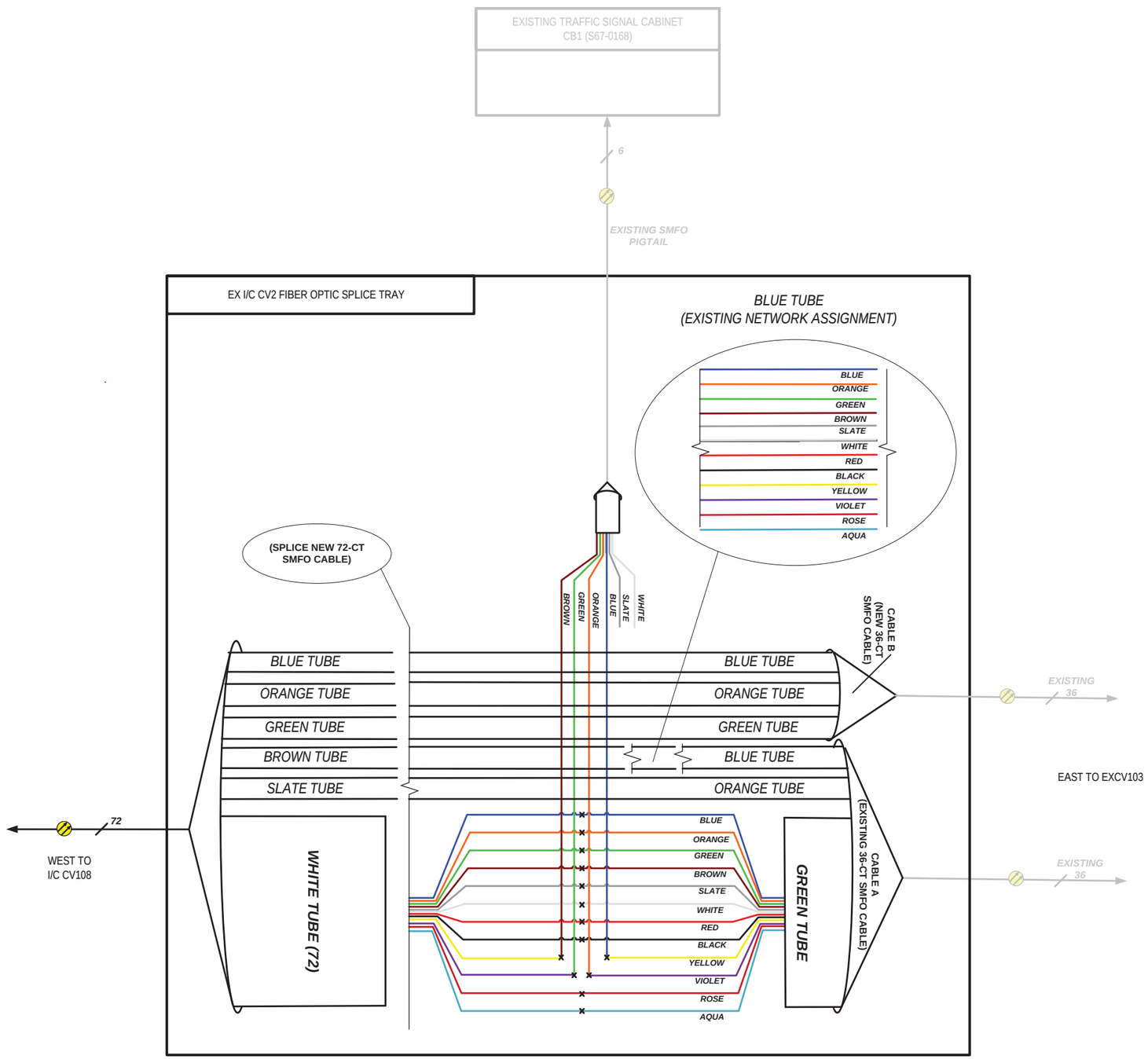

LEGEND

CAT 5E PATCH CORD

SM FIBER JUMPER

36 — SM FIBER OPTIC CABLE (# STRANDS)

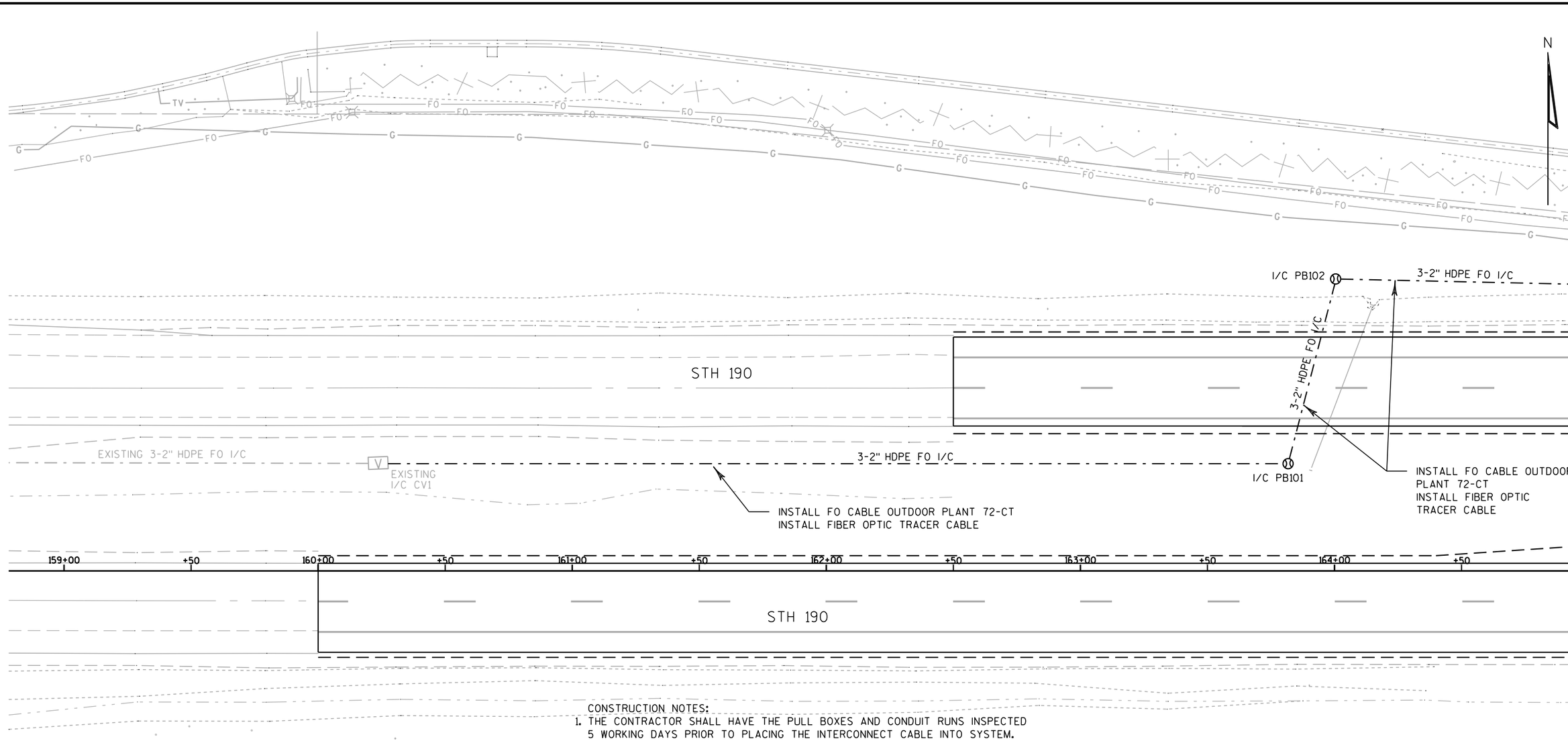

CONSTRUCTION NOTES:

1. THE CONTRACTOR SHALL HAVE THE PULL BOXES AND CONDUIT RUNS INSPECTED 5 WORKING DAYS PRIOR TO PLACING THE INTERCONNECT CABLE INTO SYSTEM. CONTACT THE WISDOT ELECTRICAL UNIT AT 414-266-1170 TO MAKE ARRANGEMENTS.

2. THE LOCATIONS OF EXISTING AND PROPOSED UTILITY INSTALLATIONS ARE APPROXIMATE. THERE MAY BE OTHER UTILITY INSTALLATIONS WITHIN THE PROJECT WHICH ARE NOT SHOWN.

3. LEAVE 100-FEET OF FIBER OPTIC INTERCONNECT PIGTAIL COILED IN EACH COMMUNICATIONS VAULT AND 30-FEET IN EACH PULL BOX.

4. THE ENTIRE MAINLINE FIBER OPTIC CABLE SHALL NOT BE CUT AND/OR SPLICED IN THE VAULTS NEAREST THE TRAFFIC SIGNAL CABINET WHILE MAKING THE PIGTAIL CONNECTION. ONLY THE REQUIRED BUFFER TUBE SHALL BE CUT AND SPLICED WITH THE PIGTAIL CONNECTION.

5. 12 AWG ELECTRICAL LIGHTING WIRE TO BE INSTALLED AS FIBER OPTIC TRACER WIRE IN INTERCONNECT CONDUIT.

6. PROPOSED PAVEMENT MARKINGS, PROPOSED TRAFFIC SIGNALS AND STORM SEWER SHOWN GRAYSHADED FOR PLAN CLARITY.

LEGEND

- CONTROL CABINET
- NONMETALLIC INTERCONNECT CONDUIT 2", UNLESS OTHERWISE NOTED
- PULL BOX, 24" X 42"
- COMMUNICATIONS VAULT

TRAFFIC CONTROL INTERCONNECT
STH 190 - CTH F TO BROOKFIELD RD
CITY OF PEWAUKEE & BROOKFIELD
WAUKESHA COUNTY

SIGNAL NO. S67-0813, S67-0489, S67-0168

REGION CONTACT: P. VIRK
DESIGNED BY: C. VANDE LEEST
REVISED BY:

PAGE 1 OF 24

PROJECT NO: 2025-14-71	HWY: STH 190	COUNTY: WAUKESHA	TRAFFIC SIGNAL INTERCONNECT PLAN	SHEET 118	E

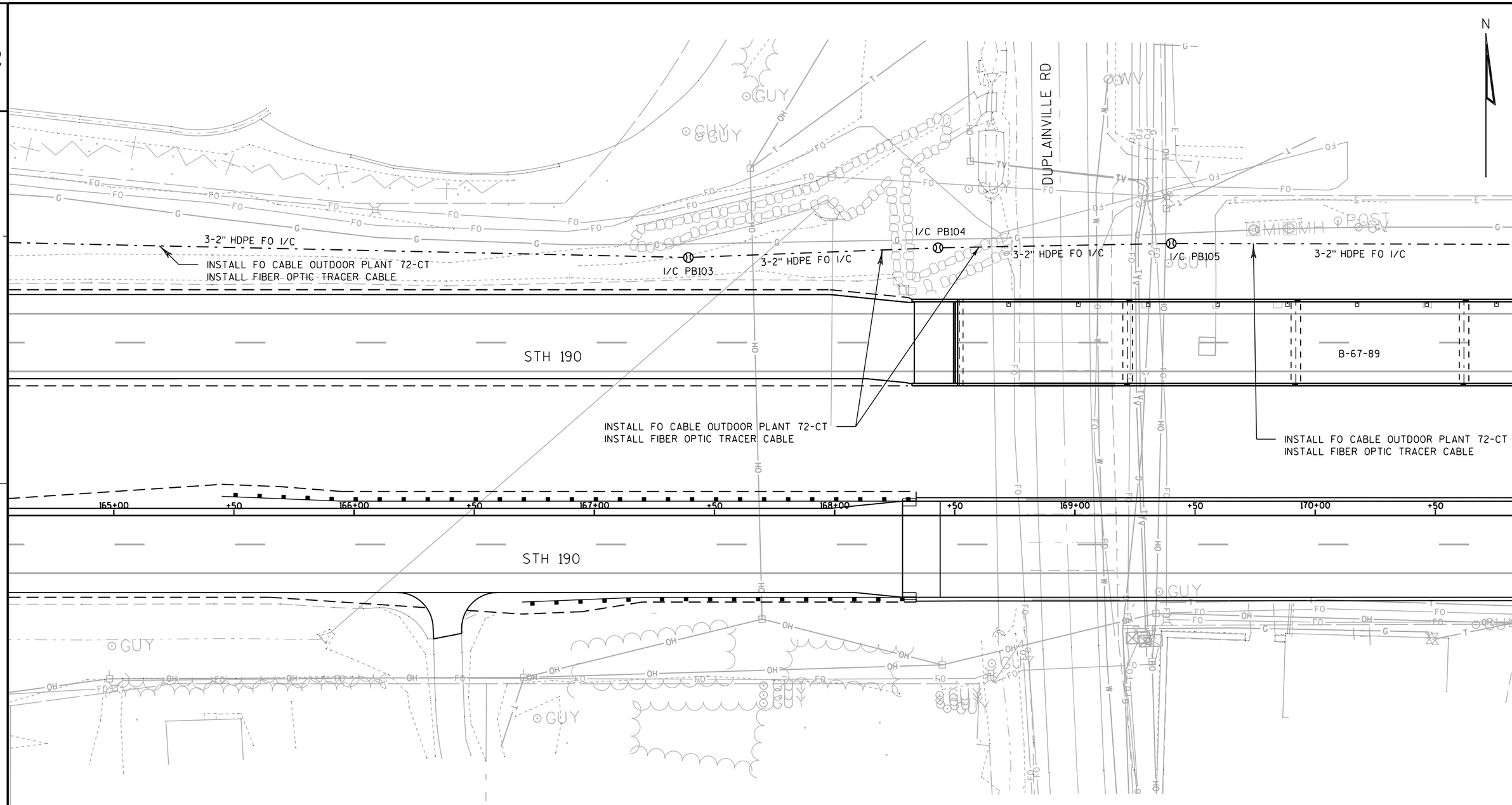

LEGEND

- CONTROL CABINET
- NONMETALLIC INTERCONNECT CONDUIT 2", UNLESS OTHERWISE NOTED
- PULL BOX, 24" X 42"
- COMMUNICATIONS VAULT

TRAFFIC CONTROL INTERCONNECT
STH 190 - CTH F TO BROOKFIELD RD
CITY OF PEWAUKEE & BROOKFIELD
WAUKESHA COUNTY

SIGNAL NO. S67-0813, S67-0489, S67-0168

REGION CONTACT: P. VIRK
DESIGNED BY: C. VANDE LEEST
REVISED BY:

PAGE 2 OF 24

PROJECT NO:2025-14-71	HWY:STH 190	COUNTY:WAUKESHA	TRAFFIC SIGNAL INTERCONNECT PLAN	SHEET 119	E

FILE NAME : J:\projects\D2_202514190\71\Interconnect\024202_sp.dgn PLOT DATE : 31-OCT-2017 13:08 PLOT BY : dotcmv PLOT NAME : PLOT SCALE : 40:1

WISDOT/CADDS SHEET 42

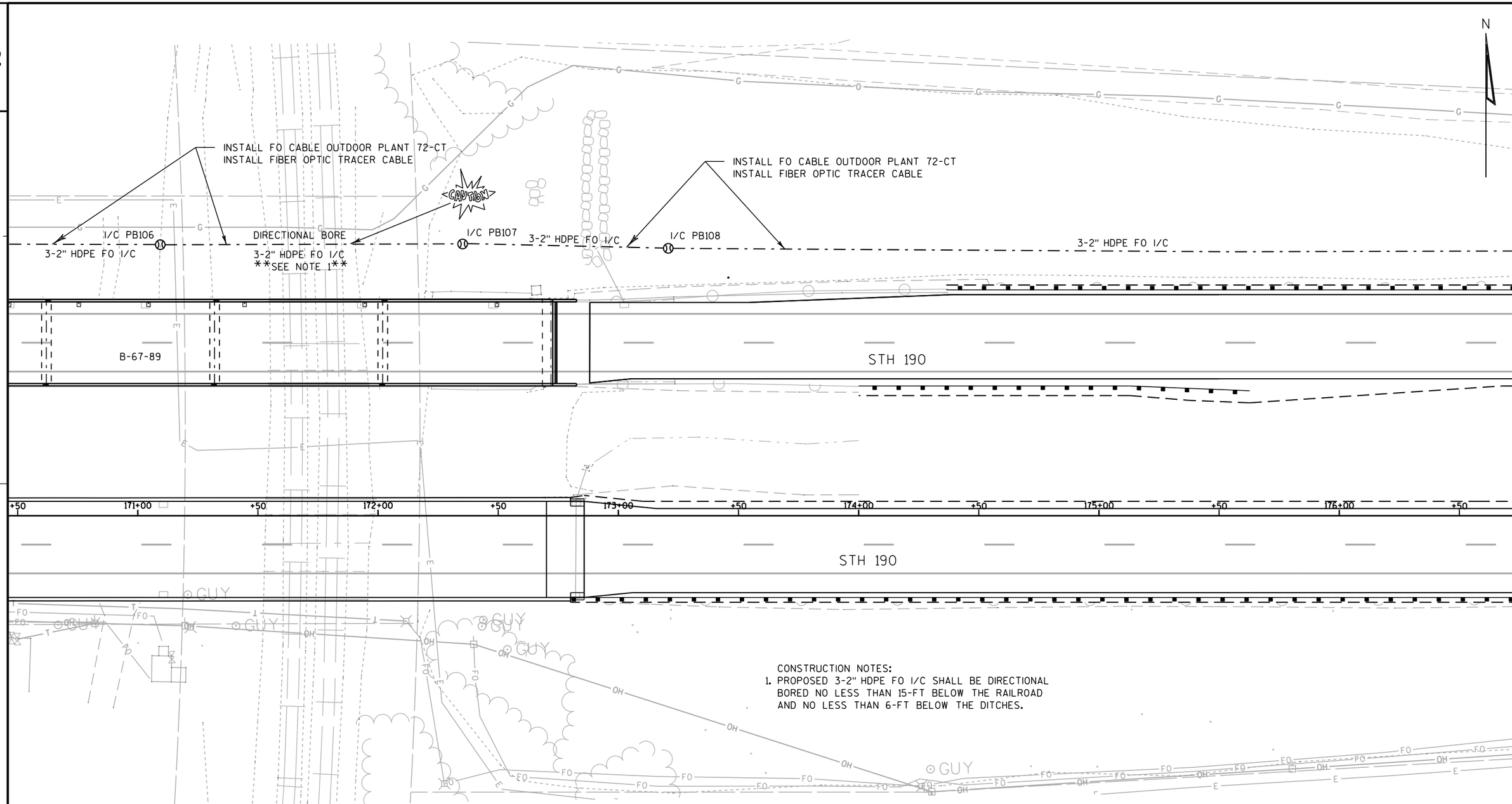

CONSTRUCTION NOTES:

1. PROPOSED 3-2" HDPE FO I/C SHALL BE DIRECTIONAL BORED NO LESS THAN 15-FT BELOW THE RAILROAD AND NO LESS THAN 6-FT BELOW THE DITCHES.

LEGEND

- CONTROL CABINET
- NONMETALLIC INTERCONNECT CONDUIT 2", UNLESS OTHERWISE NOTED
- PULL BOX, 24" X 42"
- COMMUNICATIONS VAULT

TRAFFIC CONTROL INTERCONNECT
STH 190 - CTH F TO BROOKFIELD RD
CITY OF PEWAUKEE & BROOKFIELD
WAUKESHA COUNTY

SIGNAL NO. S67-0813, S67-0489, S67-0168

REGION CONTACT: P. VIRK
DESIGNED BY: C. VANDE LEEST
REVISED BY:

PAGE 3 OF 24

PROJECT NO: 2025-14-71	HWY: STH 190	COUNTY: WAUKESHA	TRAFFIC SIGNAL INTERCONNECT PLAN	SHEET 120	E

FILE NAME : J:\projects\D2_202514190\71\Interconnect\024203_sp.dgn PLOT DATE : 31-OCT-2017 13:08 PLOT BY : dotcmv PLOT NAME : PLOT SCALE : 40:1

WISDOT/CADDS SHEET 42

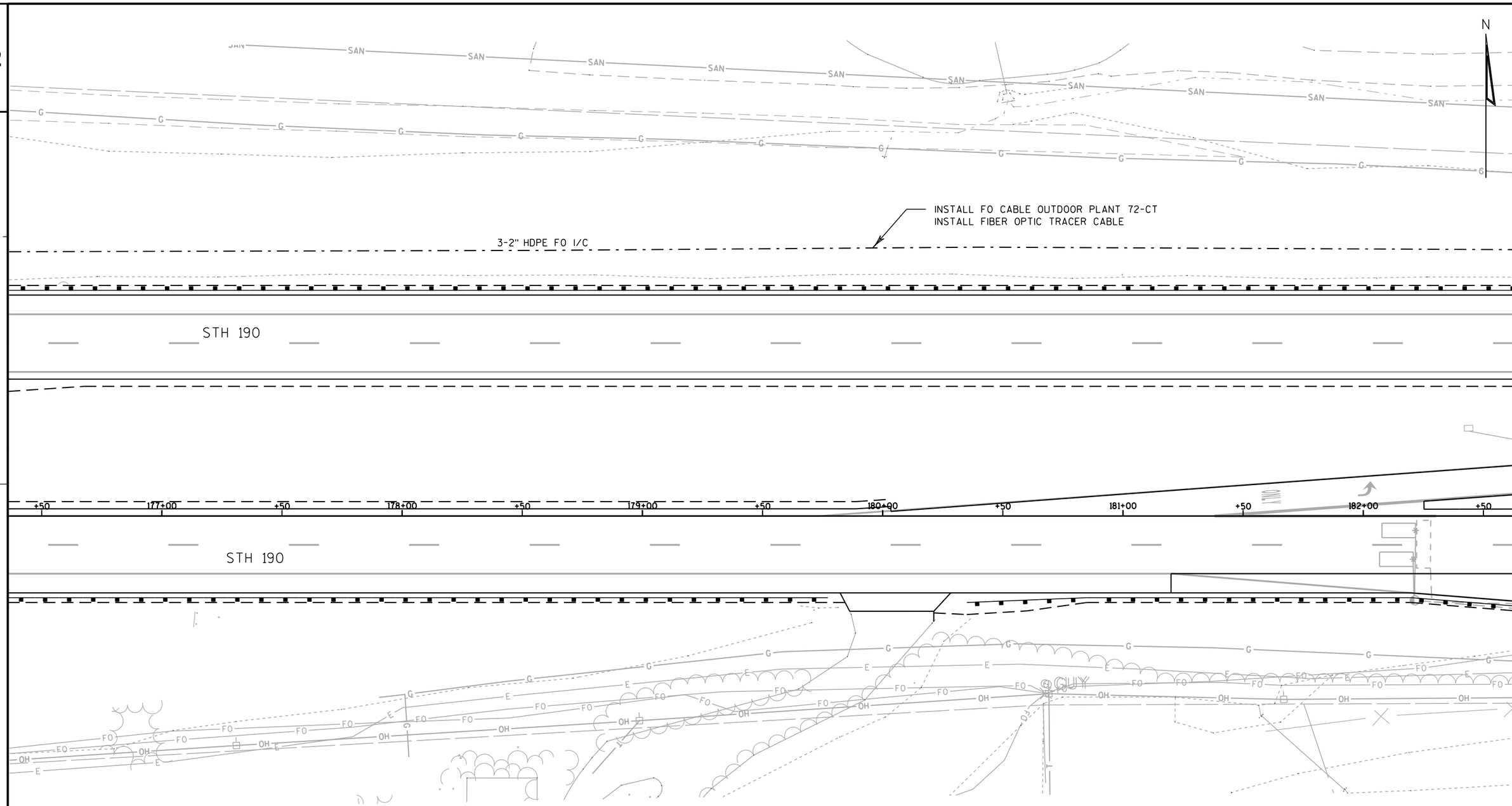

LEGEND

- CONTROL CABINET
- NONMETALLIC INTERCONNECT CONDUIT 2", UNLESS OTHERWISE NOTED
- PULL BOX, 24" X 42"
- COMMUNICATIONS VAULT

TRAFFIC CONTROL INTERCONNECT
STH 190 - CTH F TO BROOKFIELD RD
CITY OF PEWAUKEE & BROOKFIELD
WAUKESHA COUNTY

SIGNAL NO. S67-0813, S67-0489, S67-0168

REGION CONTACT: P. VIRK
DESIGNED BY: C. VANDE LEEST
REVISED BY:

PAGE 4 OF 24

PROJECT NO: 2025-14-71	HWY: STH 190	COUNTY: WAUKESHA	TRAFFIC SIGNAL INTERCONNECT PLAN	SHEET	E

FILE NAME : J:\projects\D2_202514190\71\Interconnect\024204_sp.dgn PLOT DATE : 31-OCT-2017 13:08 PLOT BY : dotcmv PLOT NAME : PLOT SCALE : 40:1

WISDOT/CADDS SHEET 42

2

INSTALL FO CABLE OUTDOOR PLANT 72-CT
INSTALL FIBER OPTIC TRACER CABLE

3-2" HDPE FO I/C

I/C PB109

3-2" HDPE FO I/C

I/C CV101

INSTALL FO CABLE OUTDOOR PLANT 72-CT
INSTALL FIBER OPTIC TRACER CABLE

STH 190

STH 190

GUMINA RD

SPRINGDALE RD

+50 183+00 +50 184+00 +50 185+00 +50 186+00 +50 187+00 +50 188+00 +50

50+00 +50 49+00

FO CABLE PIGTAIL 8-CT
FIBER OPTIC TRACER CABLE

I/C PB110

CB1
S67-0813

FO CABLE PIGTAIL 8-CT
FIBER OPTIC TRACER CABLE

N

LEGEND

- CONTROL CABINET
- NONMETALLIC INTERCONNECT CONDUIT 2", UNLESS OTHERWISE NOTED
- PULL BOX, 24" X 42"
- COMMUNICATIONS VAULT

TRAFFIC CONTROL INTERCONNECT
STH 190 - CTH F TO BROOKFIELD RD
CITY OF PEWAUKEE & BROOKFIELD
WAUKESHA COUNTY

SIGNAL NO. S67-0813, S67-0489, S67-0168

REGION CONTACT: P. VIRK
DESIGNED BY: C. VANDE LEEST
REVISED BY:

PAGE 5 OF 24

PROJECT NO: 2025-14-71	HWY: STH 190	COUNTY: WAUKESHA	TRAFFIC SIGNAL INTERCONNECT PLAN	SHEET 122	E

FILE NAME : J:\projects\D2_202514190\71\Interconnect\024205_sp.dgn PLOT DATE : 31-OCT-2017 13:08 PLOT BY : dotcmv PLOT NAME : PLOT SCALE : 40:1

WISDOT/CADDS SHEET 42

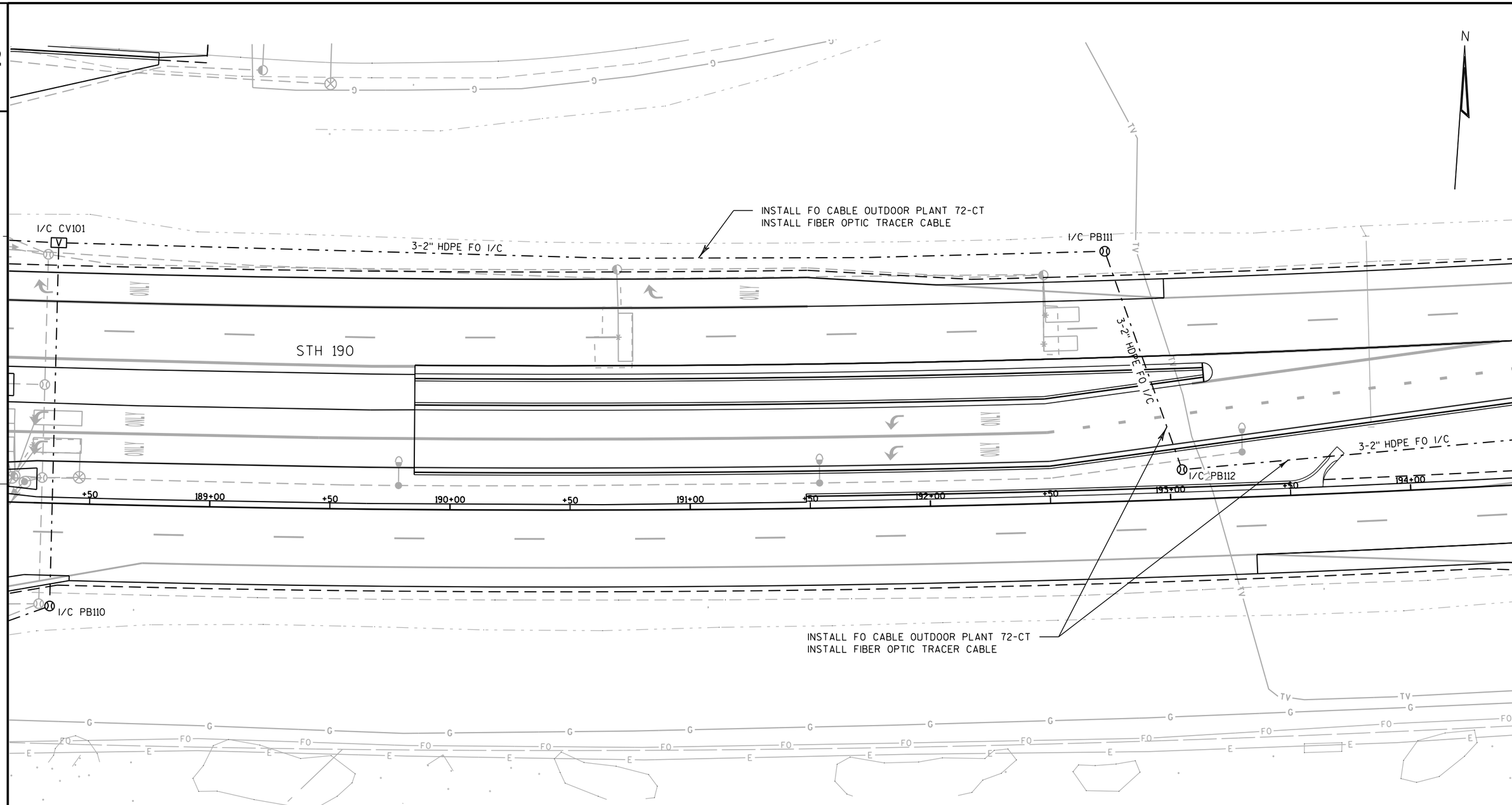

LEGEND

- CONTROL CABINET
- NONMETALLIC INTERCONNECT CONDUIT 2", UNLESS OTHERWISE NOTED
- PULL BOX, 24" X 42"
- COMMUNICATIONS VAULT

TRAFFIC CONTROL INTERCONNECT
STH 190 - CTH F TO BROOKFIELD RD
CITY OF PEWAUKEE & BROOKFIELD
WAUKESHA COUNTY

SIGNAL NO. S67-0813, S67-0489, S67-0168

REGION CONTACT: P. VIRK
DESIGNED BY: C. VANDE LEEST
REVISED BY:

PAGE 6 OF 24

PROJECT NO: 2025-14-71	HWY: STH 190	COUNTY: WAUKESHA	TRAFFIC SIGNAL INTERCONNECT PLAN	SHEET 123	E

FILE NAME : J:\projects\D2_202514190\71\Interconnect\024206_sp.dgn PLOT DATE : 31-OCT-2017 13:08 PLOT BY : dotcmv PLOT NAME : PLOT SCALE : 40:1

WISDOT/CADDS SHEET 42

2

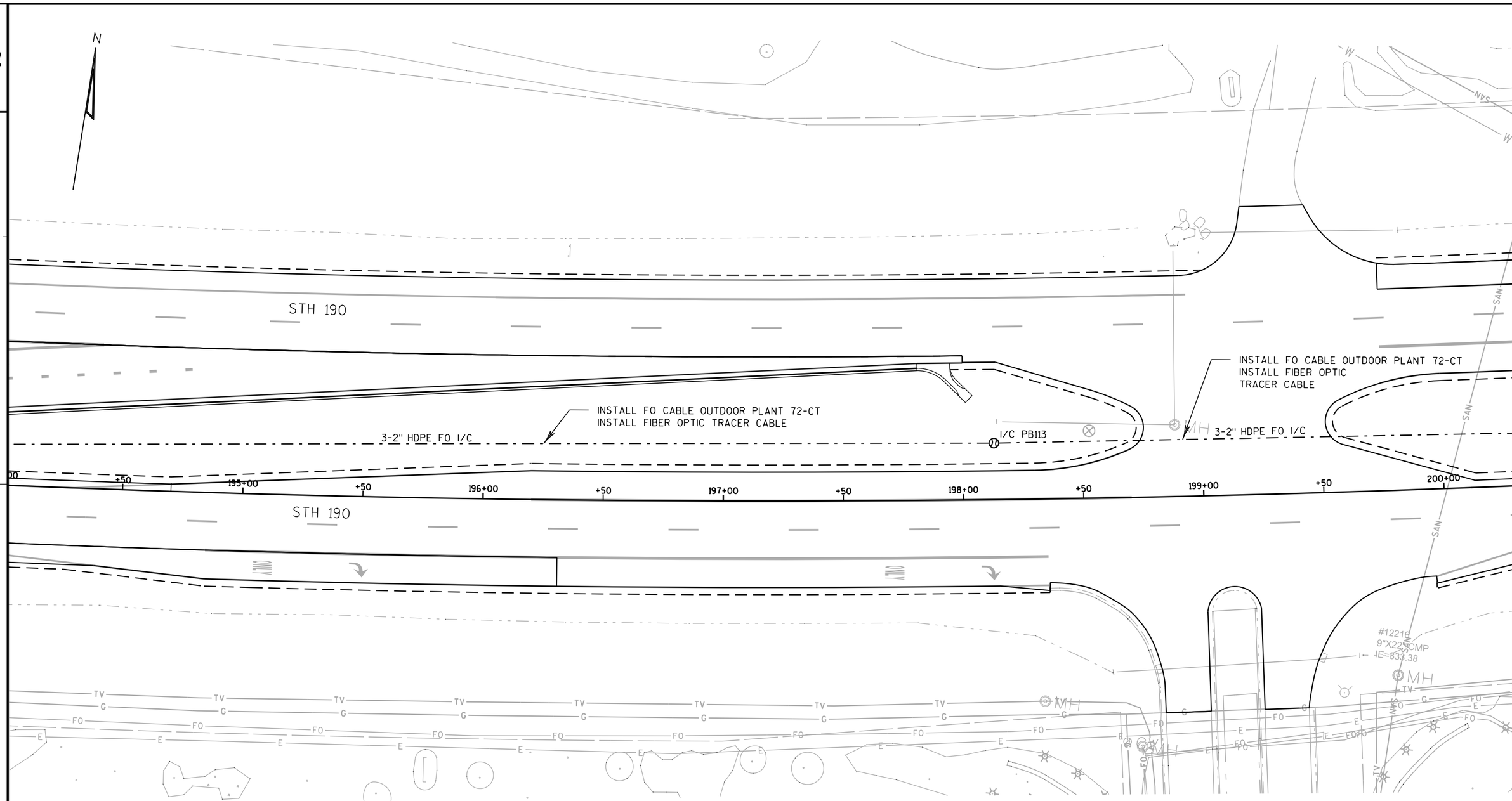

2

LEGEND

- CONTROL CABINET
- NONMETALLIC INTERCONNECT CONDUIT 2", UNLESS OTHERWISE NOTED
- PULL BOX, 24" X 42"
- COMMUNICATIONS VAULT

TRAFFIC CONTROL INTERCONNECT
STH 190 - CTH F TO BROOKFIELD RD
CITY OF PEWAUKEE & BROOKFIELD
WAUKESHA COUNTY

SIGNAL NO. S67-0813, S67-0489, S67-0168

REGION CONTACT: P. VIRK
DESIGNED BY: C. VANDE LEEST
REVISED BY:

PAGE 7 OF 24

PROJECT NO: 2025-14-71	HWY: STH 190	COUNTY: WAUKESHA	TRAFFIC SIGNAL INTERCONNECT PLAN	SHEET 124	E

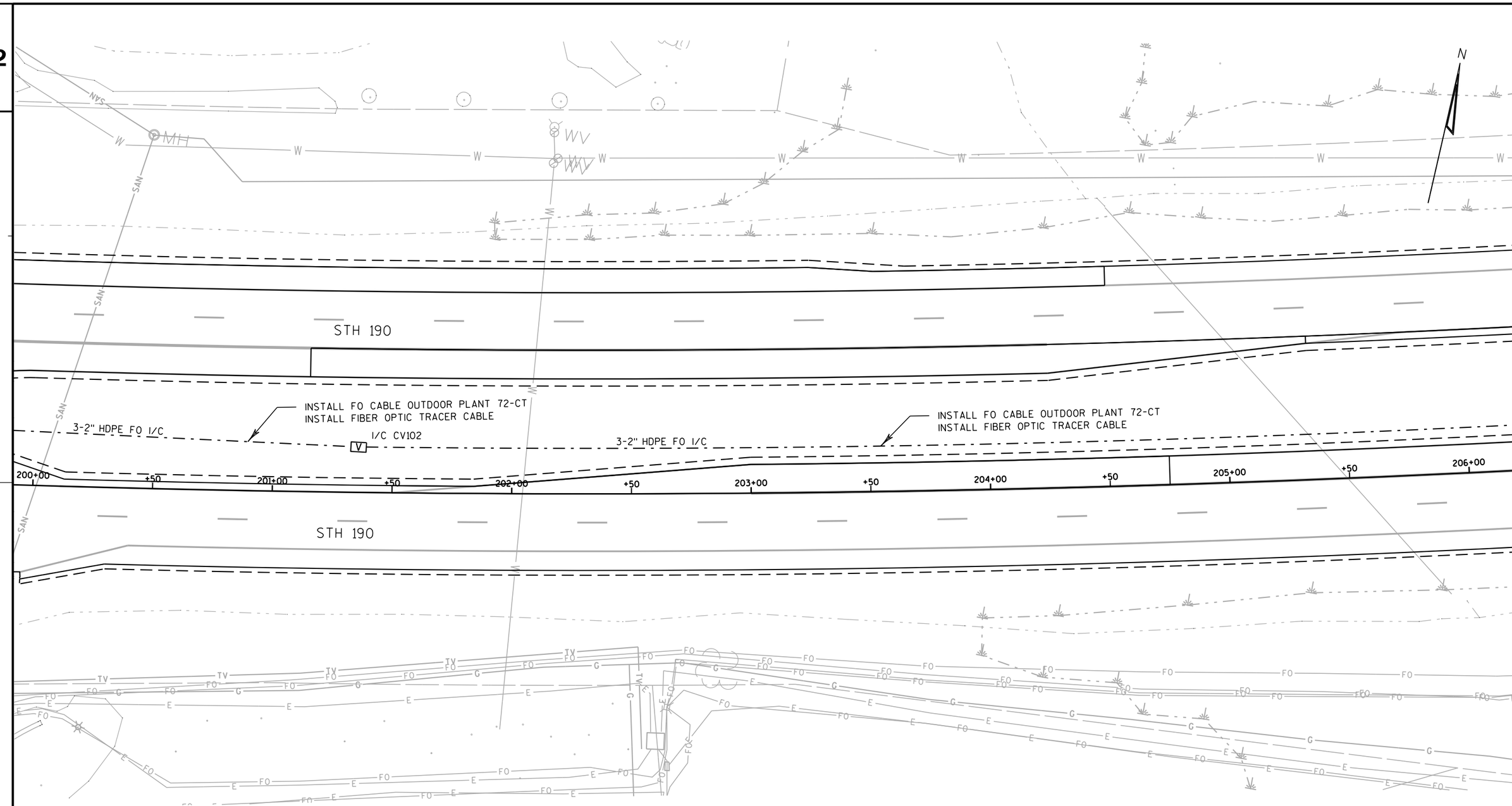

LEGEND

- CONTROL CABINET
- NONMETALLIC INTERCONNECT CONDUIT 2", UNLESS OTHERWISE NOTED
- PULL BOX, 24" X 42"
- COMMUNICATIONS VAULT

TRAFFIC CONTROL INTERCONNECT
STH 190 - CTH F TO BROOKFIELD RD
CITY OF PEWAUKEE & BROOKFIELD
WAUKESHA COUNTY

SIGNAL NO. S67-0813, S67-0489, S67-0168

REGION CONTACT: P. VIRK
DESIGNED BY: C. VANDE LEEST
REVISED BY:

PAGE 8 OF 24

PROJECT NO: 2025-14-71	HWY: STH 190	COUNTY: WAUKESHA	TRAFFIC SIGNAL INTERCONNECT PLAN	SHEET 125	E

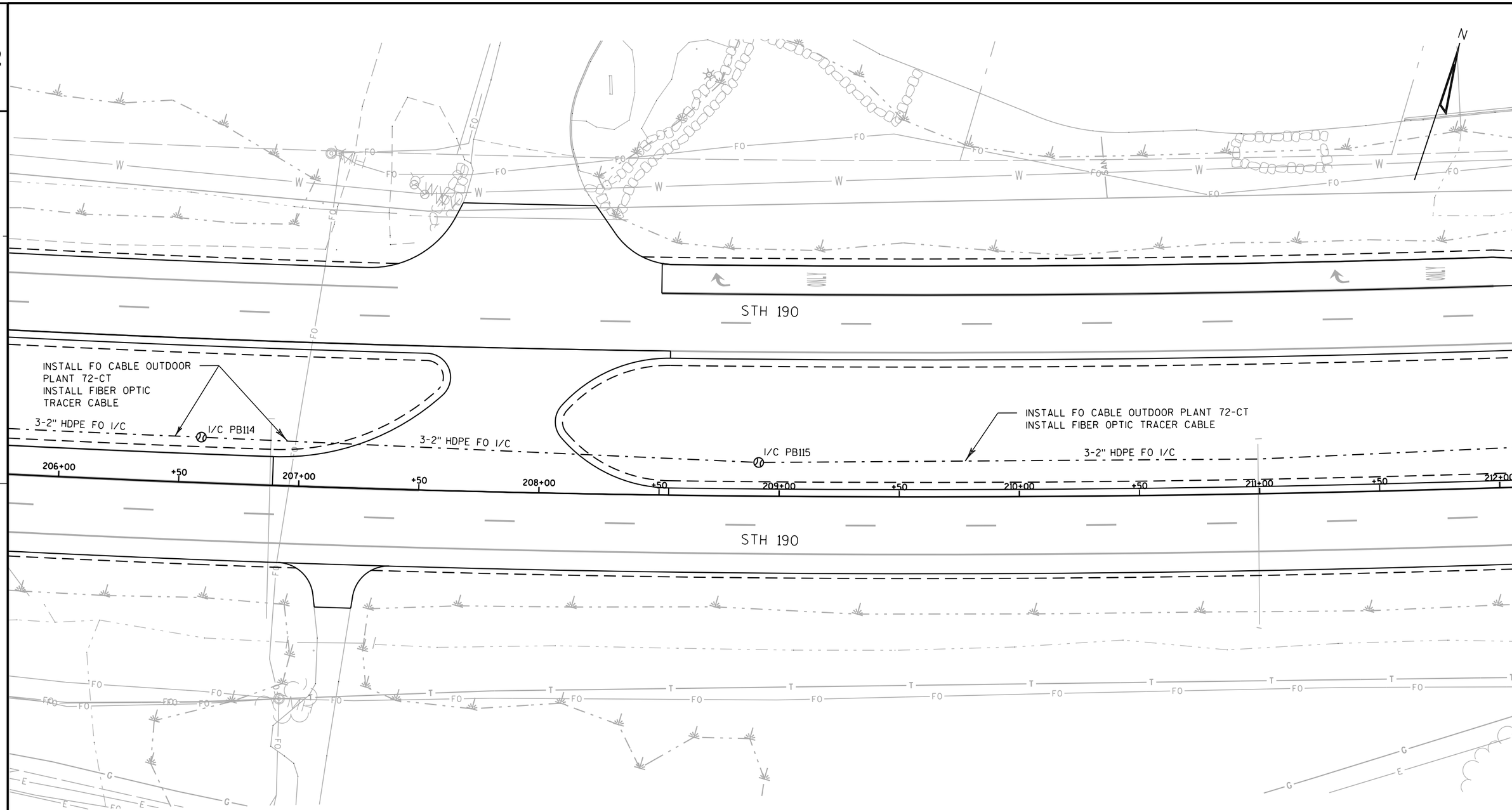

LEGEND

- CONTROL CABINET
- NONMETALLIC INTERCONNECT CONDUIT 2", UNLESS OTHERWISE NOTED
- PULL BOX, 24" X 42"
- COMMUNICATIONS VAULT

TRAFFIC CONTROL INTERCONNECT
STH 190 - CTH F TO BROOKFIELD RD
CITY OF PEWAUKEE & BROOKFIELD
WAUKESHA COUNTY

SIGNAL NO. S67-0813, S67-0489, S67-0168

REGION CONTACT: P. VIRK
DESIGNED BY: C. VANDE LEEST
REVISED BY:

PAGE 9 OF 24

PROJECT NO: 2025-14-71	HWY: STH 190	COUNTY: WAUKESHA	TRAFFIC SIGNAL INTERCONNECT PLAN	SHEET 126	E

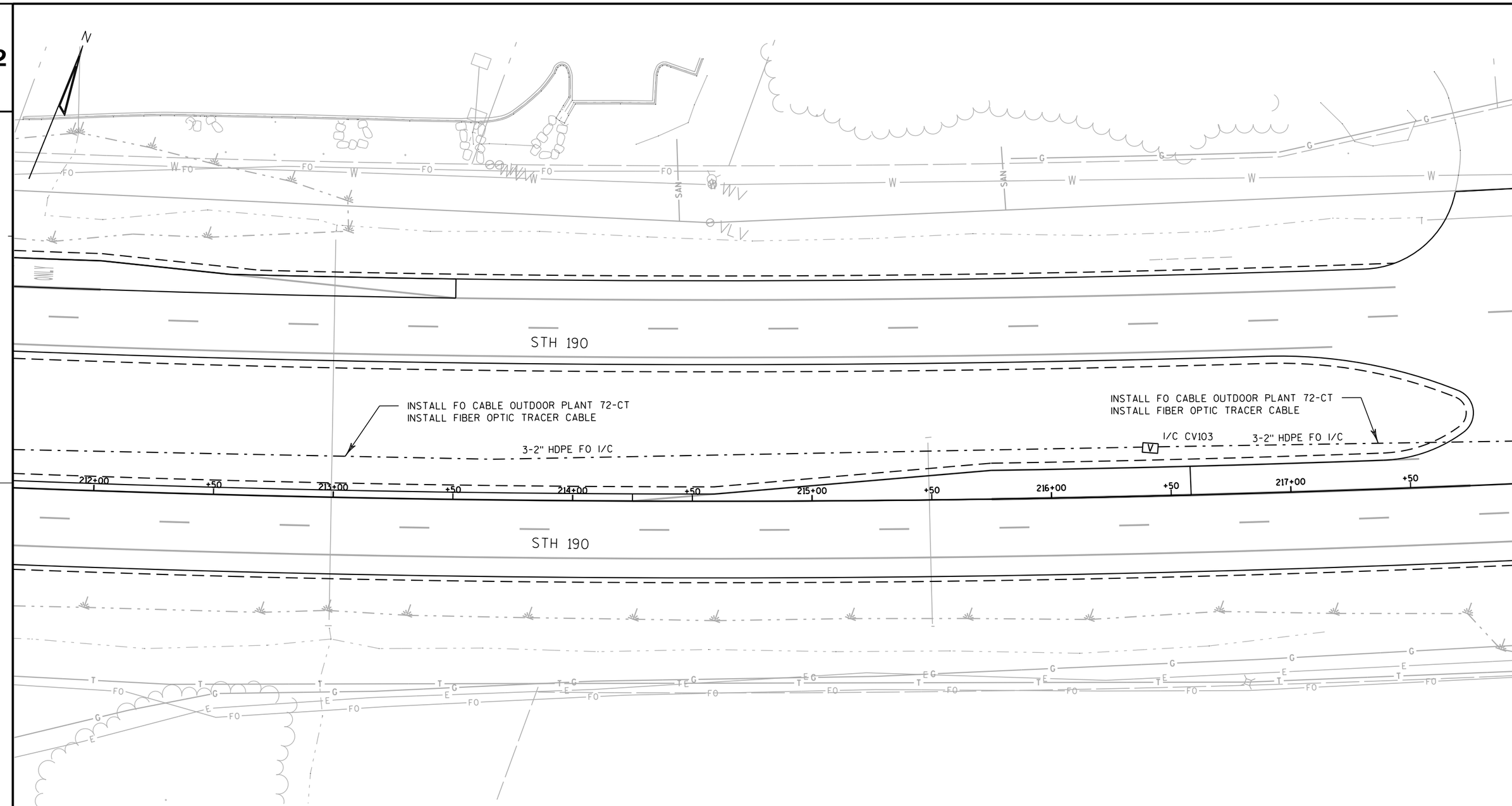

LEGEND

- CONTROL CABINET
- NONMETALLIC INTERCONNECT CONDUIT 2", UNLESS OTHERWISE NOTED
- PULL BOX, 24" X 42"
- COMMUNICATIONS VAULT

TRAFFIC CONTROL INTERCONNECT
STH 190 - CTH F TO BROOKFIELD RD
CITY OF PEWAUKEE & BROOKFIELD
WAUKESHA COUNTY

SIGNAL NO. S67-0813, S67-0489, S67-0168

REGION CONTACT: P. VIRK
DESIGNED BY: C. VANDE LEEST
REVISED BY:

PAGE 10 OF 24

PROJECT NO: 2025-14-71	HWY: STH 190	COUNTY: WAUKESHA	TRAFFIC SIGNAL INTERCONNECT PLAN	SHEET 127	E

FILE NAME : J:\projects\D2_202514190\71\Interconnect\024210_sp.dgn PLOT DATE : 31-OCT-2017 13:08 PLOT BY : dotcmv PLOT NAME : PLOT SCALE : 40:1

WISDOT/CADDS SHEET 42

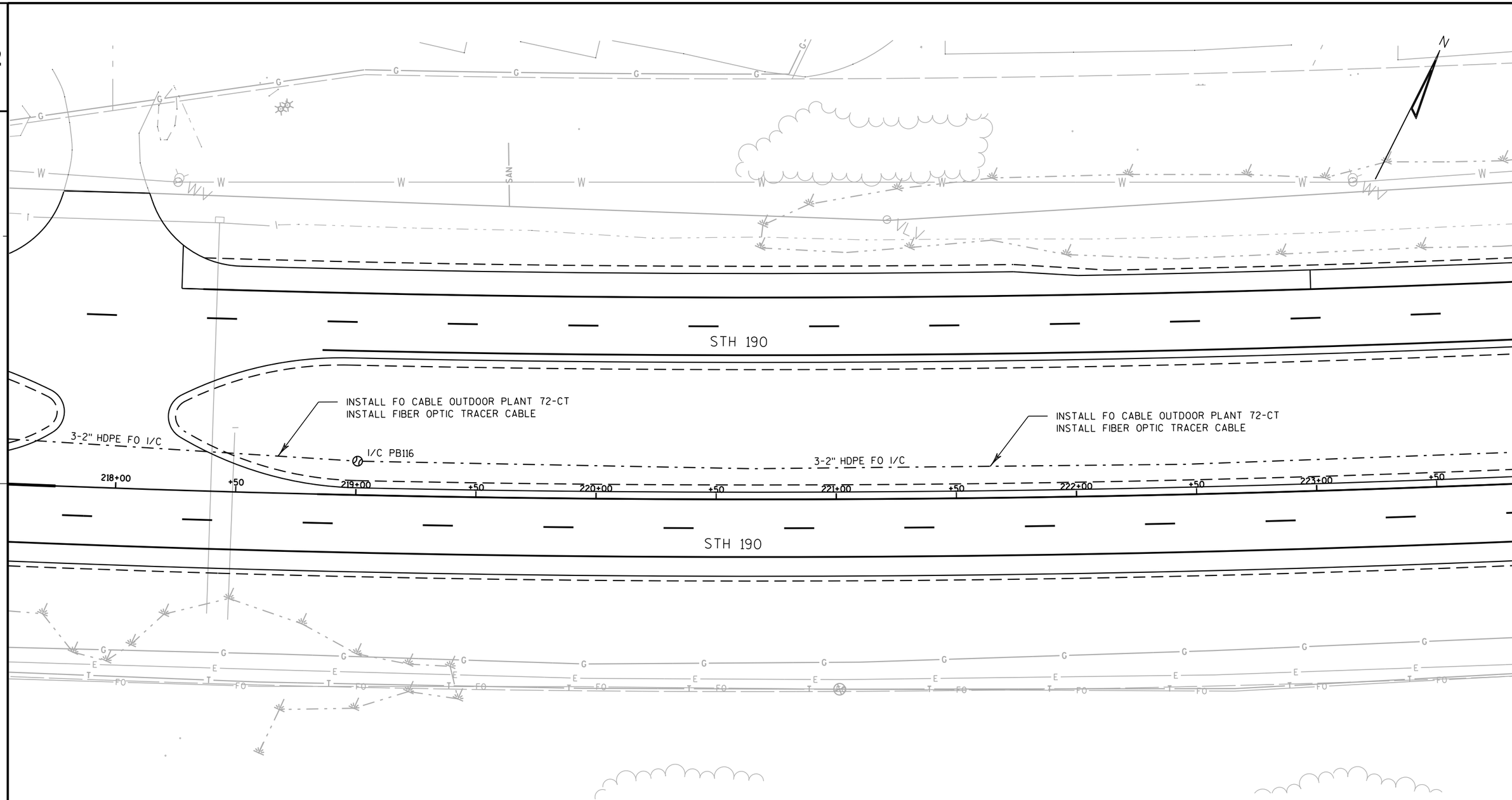

LEGEND

- CONTROL CABINET
- NONMETALLIC INTERCONNECT CONDUIT 2", UNLESS OTHERWISE NOTED
- PULL BOX, 24" X 42"
- COMMUNICATIONS VAULT

TRAFFIC CONTROL INTERCONNECT
STH 190 - CTH F TO BROOKFIELD RD
CITY OF PEWAUKEE & BROOKFIELD
WAUKESHA COUNTY

SIGNAL NO. S67-0813, S67-0489, S67-0168

REGION CONTACT: P. VIRK
DESIGNED BY: C. VANDE LEEST
REVISED BY:

PAGE 11 OF 24

PROJECT NO: 2025-14-71	HWY: STH 190	COUNTY: WAUKESHA	TRAFFIC SIGNAL INTERCONNECT PLAN	SHEET	E

FILE NAME : J:\projects\D2_202514190\71\Interconnect\024211_sp.dgn PLOT DATE : 31-OCT-2017 13:08 PLOT BY : dotcmv PLOT NAME : PLOT SCALE : 40:1

WISDOT/CADDS SHEET 42

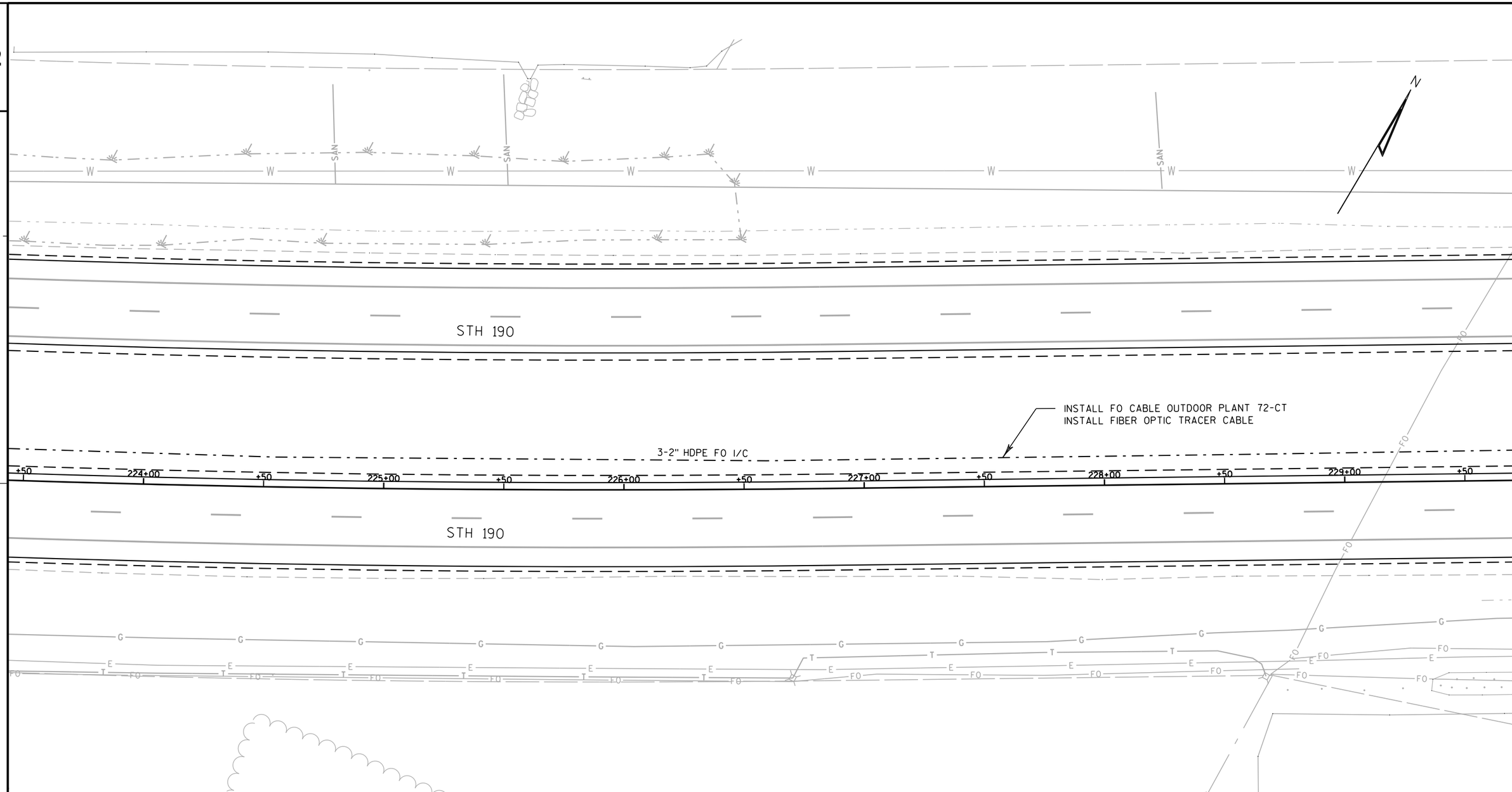

LEGEND

- CONTROL CABINET
- NONMETALLIC INTERCONNECT CONDUIT 2", UNLESS OTHERWISE NOTED
- PULL BOX, 24" X 42"
- COMMUNICATIONS VAULT

TRAFFIC CONTROL INTERCONNECT
STH 190 - CTH F TO BROOKFIELD RD
CITY OF PEWAUKEE & BROOKFIELD
WAUKESHA COUNTY

SIGNAL NO. S67-0813, S67-0489, S67-0168

REGION CONTACT: P. VIRK
DESIGNED BY: C. VANDE LEEST
REVISED BY:

PAGE 12 OF 24

PROJECT NO: 2025-14-71	HWY: STH 190	COUNTY: WAUKESHA	TRAFFIC SIGNAL INTERCONNECT PLAN	SHEET 129	E

2

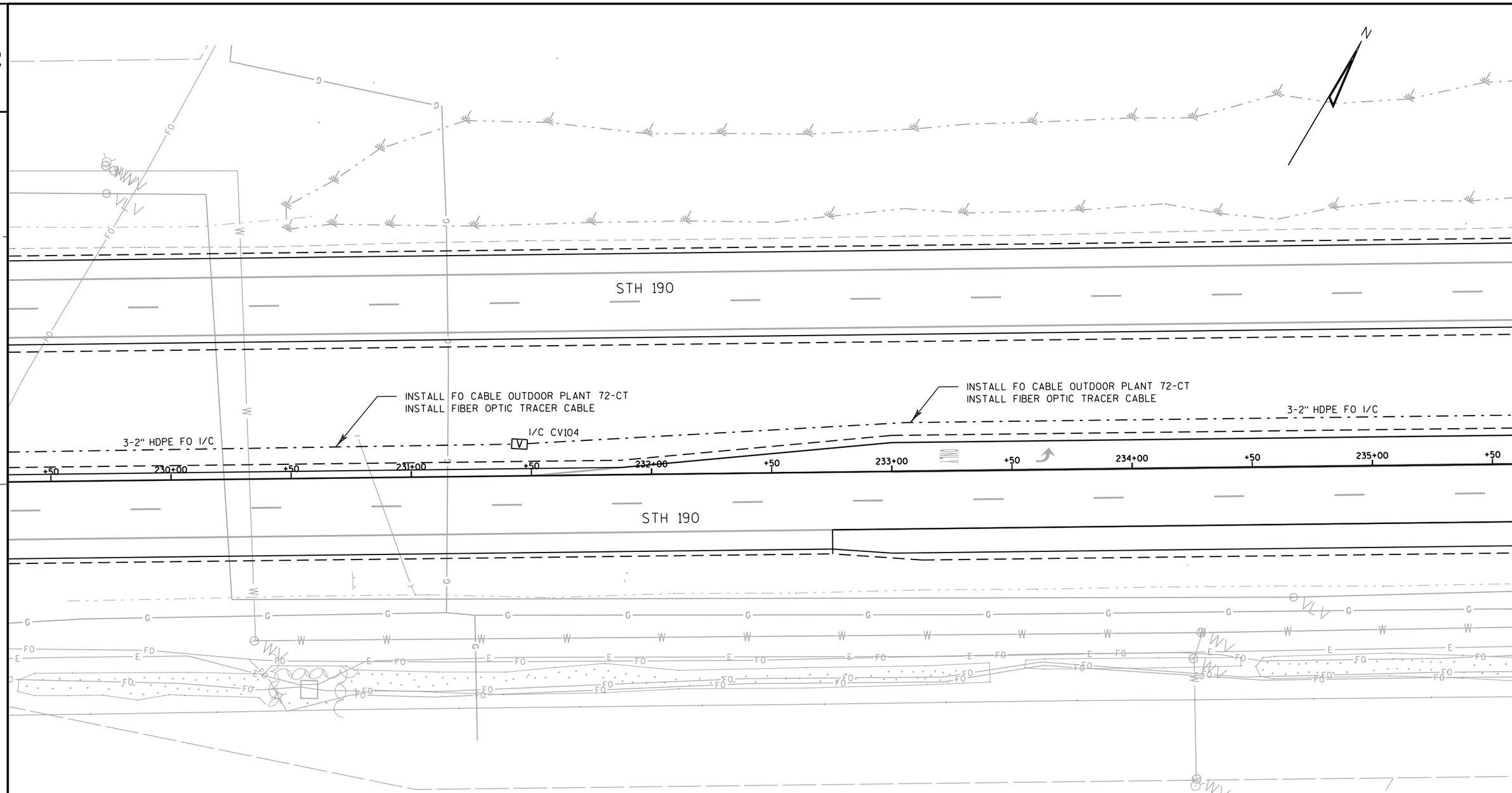

LEGEND

- CONTROL CABINET
- NONMETALLIC INTERCONNECT CONDUIT 2", UNLESS OTHERWISE NOTED
- PULL BOX, 24" X 42"
- COMMUNICATIONS VAULT

TRAFFIC CONTROL INTERCONNECT
STH 190 - CTH F TO BROOKFIELD RD
CITY OF PEWAUKEE & BROOKFIELD
WAUKESHA COUNTY

SIGNAL NO. S67-0813, S67-0489, S67-0168

REGION CONTACT: P. VIRK
DESIGNED BY: C. VANDE LEEST
REVISED BY:

PAGE 13 OF 24

PROJECT NO: 2025-14-71	HWY: STH 190	COUNTY: WAUKESHA	TRAFFIC SIGNAL INTERCONNECT PLAN	SHEET 130	E

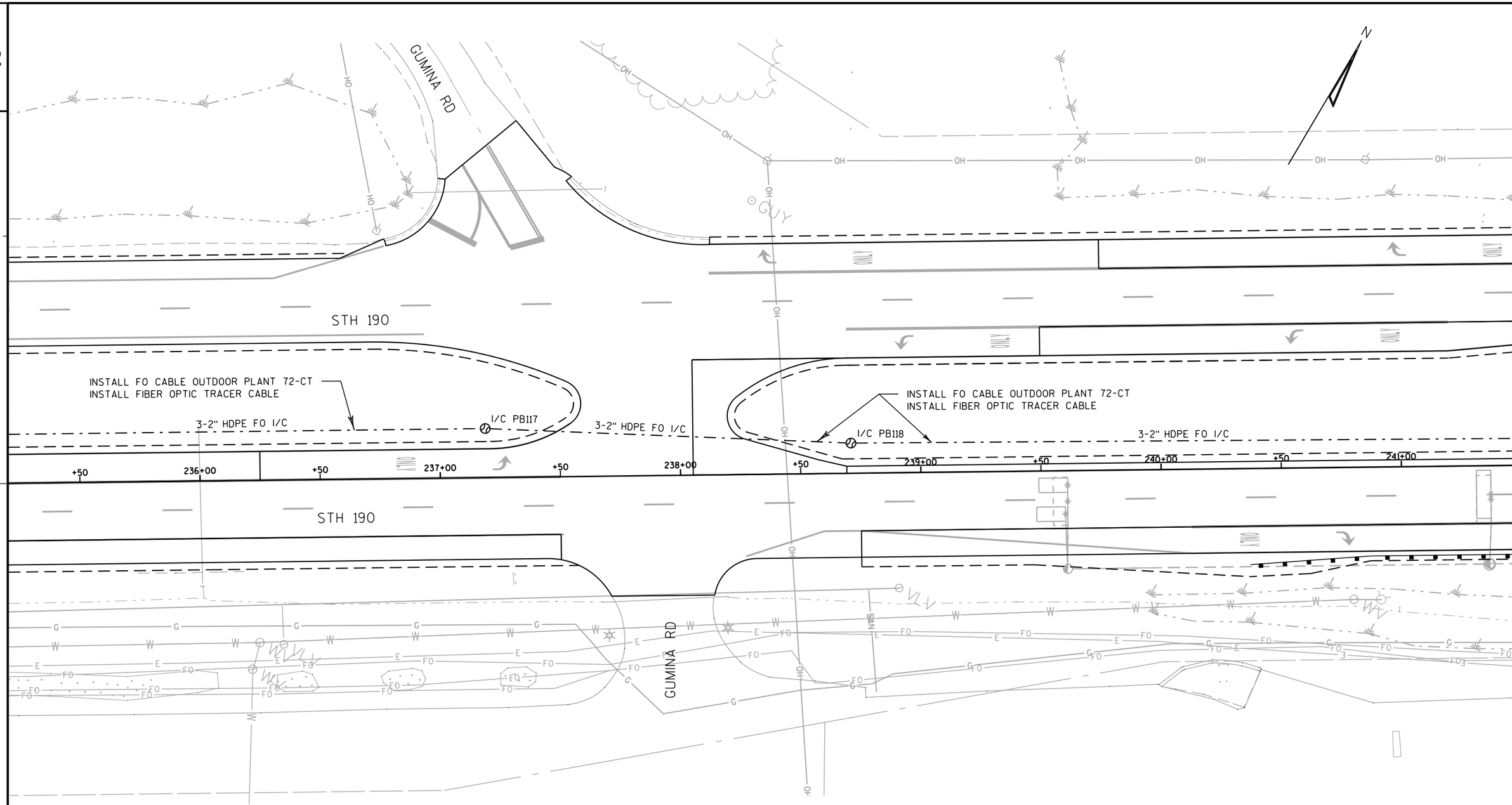

LEGEND

- CONTROL CABINET
- NONMETALLIC INTERCONNECT CONDUIT 2", UNLESS OTHERWISE NOTED
- PULL BOX, 24" X 42"
- COMMUNICATIONS VAULT

TRAFFIC CONTROL INTERCONNECT
STH 190 - CTH F TO BROOKFIELD RD
CITY OF PEWAUKEE & BROOKFIELD
WAUKESHA COUNTY

SIGNAL NO. S67-0813, S67-0489, S67-0168

REGION CONTACT: P. VIRK
DESIGNED BY: C. VANDE LEEST
REVISED BY:

PAGE 14 OF 24

PROJECT NO: 2025-14-71	HWY: STH 190	COUNTY: WAUKESHA	TRAFFIC SIGNAL INTERCONNECT PLAN	SHEET 131	E

2

2

CB1
S67-0489

FO CABLE PIGTAIL 8-CT
INSTALL FIBER OPTIC TRACER CABLE

STH 190

3-2" HDPE FO I/C

I/C CV105

3-2" HDPE FO I/C

I/C PB119

3-2" HDPE FO I/C

242+00 243+00 244+00 245+00 246+00 247+00

INSTALL FO CABLE OUTDOOR PLANT 72-CT
INSTALL FIBER OPTIC TRACER CABLE

STH 190

INSTALL FO CABLE OUTDOOR PLANT 72-CT
INSTALL FIBER OPTIC TRACER CABLE

N BARKER RD

49+00

LEGEND

- CONTROL CABINET
- NONMETALLIC INTERCONNECT CONDUIT 2", UNLESS OTHERWISE NOTED
- PULL BOX, 24" X 42"
- COMMUNICATIONS VAULT

TRAFFIC CONTROL INTERCONNECT
STH 190 - CTH F TO BROOKFIELD RD
CITY OF PEWAUKEE & BROOKFIELD
WAUKESHA COUNTY

SIGNAL NO. S67-0813, S67-0489, S67-0168

REGION CONTACT: P. VIRK
DESIGNED BY: C. VANDE LEEST
REVISED BY:

PAGE 15 OF 24

PROJECT NO: 2025-14-71	HWY: STH 190	COUNTY: WAUKESHA	TRAFFIC SIGNAL INTERCONNECT PLAN	SHEET 132	E

FILE NAME : J:\projects\D2_202514190\71\Interconnect\024215_sp.dgn PLOT DATE : 31-OCT-2017 13:08 PLOT BY : dotcmv PLOT NAME : PLOT SCALE : 40:1

WISDOT/CADDS SHEET 42

2

2

STH 190

INSTALL FO CABLE OUTDOOR PLANT 72-CT
INSTALL FIBER OPTIC TRACER CABLE

I/C PB120

3-2" HDPE FO I/C

248+00 +50 249+00 +50 250+00 +50 251+00 +50 252+00 +50 253+00

STH 190

INSTALL FO CABLE OUTDOOR PLANT 72-CT
INSTALL FIBER OPTIC TRACER CABLE

I/C PB121

3-2" HDPE FO I/C

LEGEND

- CONTROL CABINET
- NONMETALLIC INTERCONNECT CONDUIT 2", UNLESS OTHERWISE NOTED
- PULL BOX, 24" X 42"
- COMMUNICATIONS VAULT

TRAFFIC CONTROL INTERCONNECT
STH 190 - CTH F TO BROOKFIELD RD
CITY OF PEWAUKEE & BROOKFIELD
WAUKESHA COUNTY

SIGNAL NO. S67-0813, S67-0489, S67-0168

REGION CONTACT: P. VIRK
DESIGNED BY: C. VANDE LEEST
REVISED BY:

PAGE 16 OF 24

PROJECT NO: 2025-14-71	HWY: STH 190	COUNTY: WAUKESHA	TRAFFIC SIGNAL INTERCONNECT PLAN	SHEET 133	E

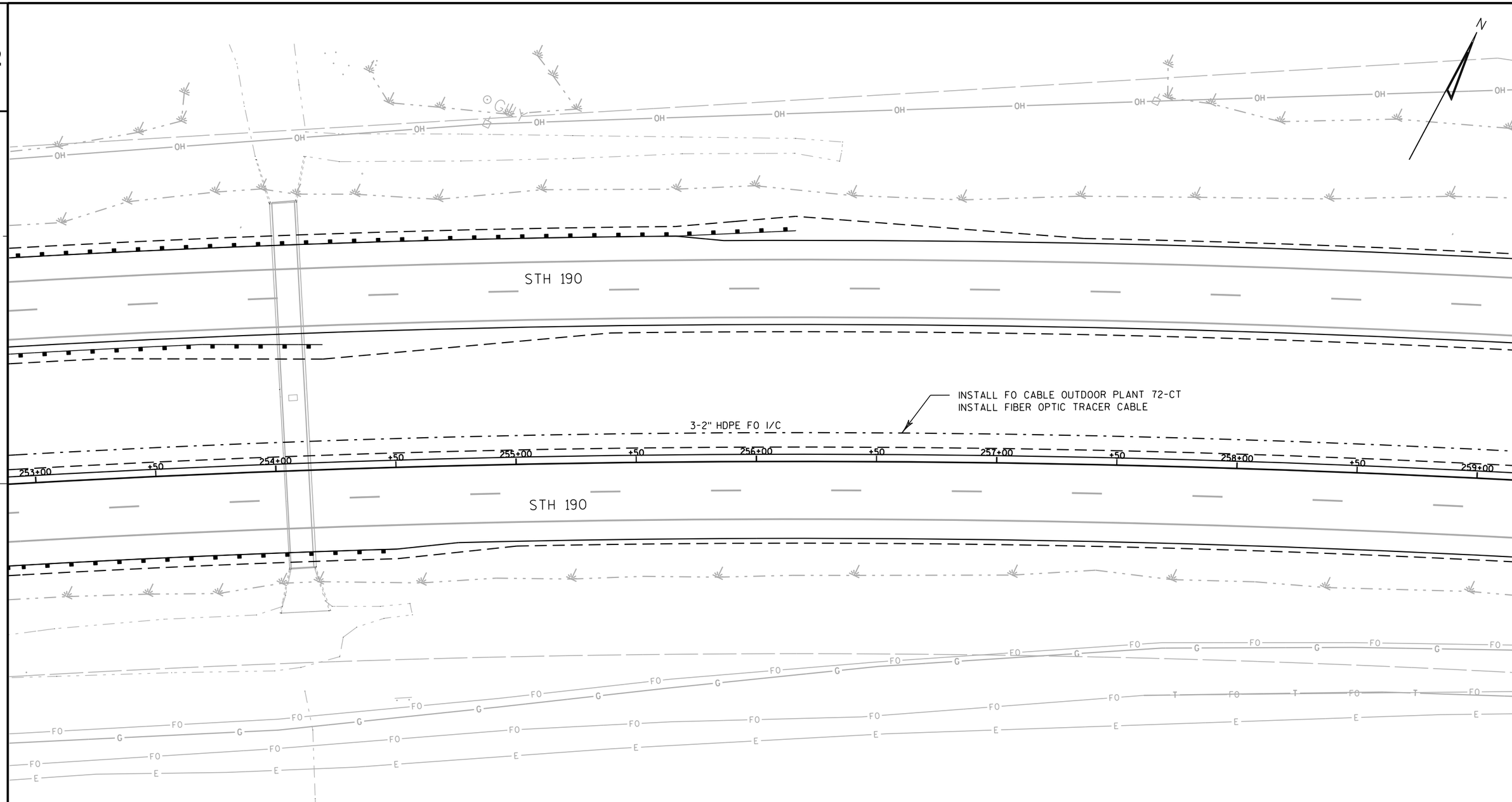

LEGEND

- CONTROL CABINET
- NONMETALLIC INTERCONNECT CONDUIT 2", UNLESS OTHERWISE NOTED
- PULL BOX, 24" X 42"
- COMMUNICATIONS VAULT

TRAFFIC CONTROL INTERCONNECT
STH 190 - CTH F TO BROOKFIELD RD
CITY OF PEWAUKEE & BROOKFIELD
WAUKESHA COUNTY

SIGNAL NO. S67-0813, S67-0489, S67-0168

REGION CONTACT: P. VIRK
DESIGNED BY: C. VANDE LEEST
REVISED BY:

PAGE 17 OF 24

PROJECT NO: 2025-14-71	HWY: STH 190	COUNTY: WAUKESHA	TRAFFIC SIGNAL INTERCONNECT PLAN	SHEET 134	E

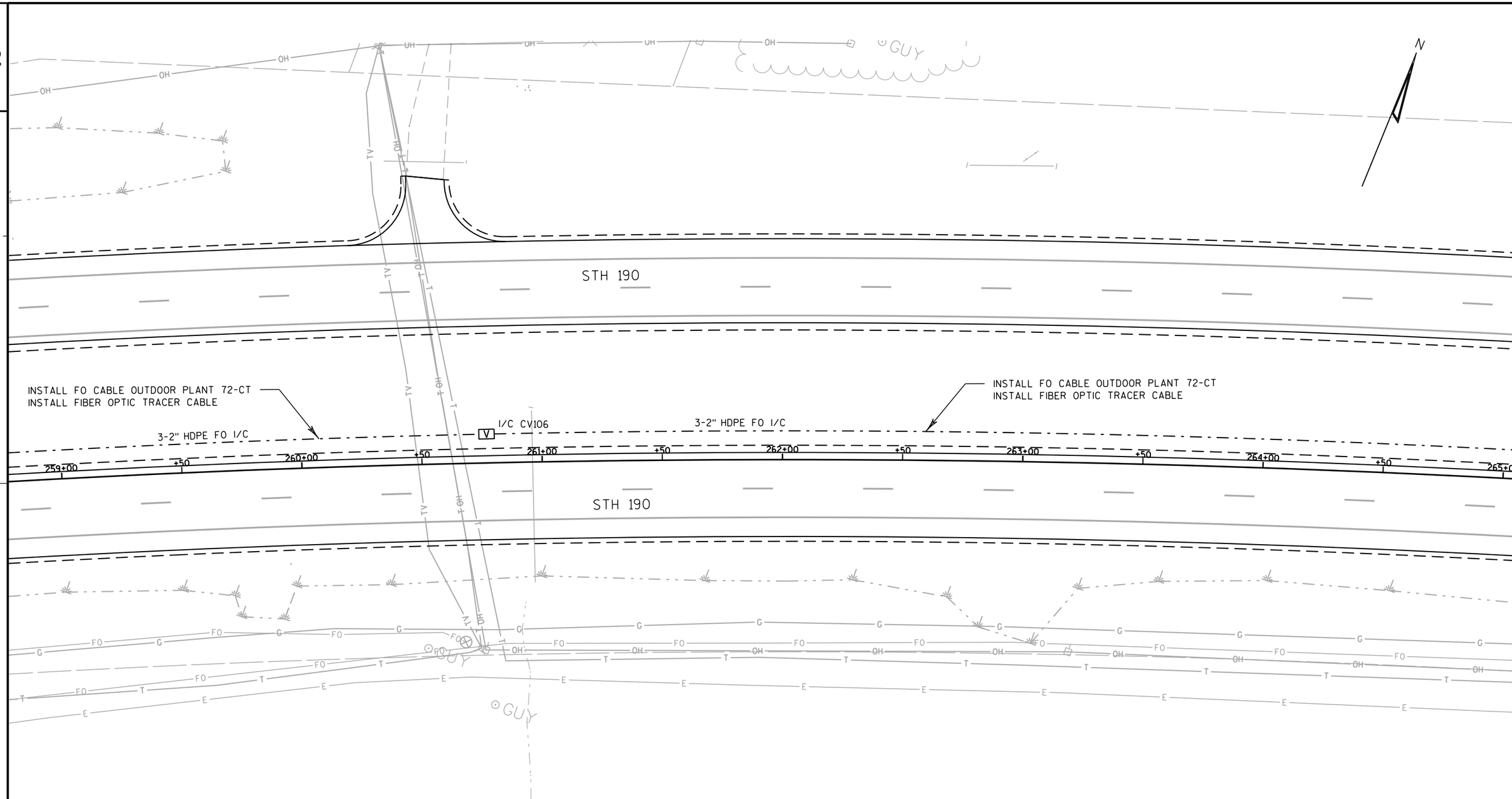

LEGEND

- CONTROL CABINET
- NONMETALLIC INTERCONNECT CONDUIT 2", UNLESS OTHERWISE NOTED
- PULL BOX, 24" X 42"
- COMMUNICATIONS VAULT

TRAFFIC CONTROL INTERCONNECT
STH 190 - CTH F TO BROOKFIELD RD
CITY OF PEWAUKEE & BROOKFIELD
WAUKESHA COUNTY

SIGNAL NO. S67-0813, S67-0489, S67-0168

REGION CONTACT: P. VIRK
DESIGNED BY: C. VANDE LEEST
REVISED BY:

PAGE 18 OF 24

PROJECT NO: 2025-14-71	HWY: STH 190	COUNTY: WAUKESHA	TRAFFIC SIGNAL INTERCONNECT PLAN	SHEET 135	E

2

2

N

POST

STH 190

30" HIGH PRESSURE
GAS MAIN

CAUTION

INSTALL FO CABLE OUTDOOR PLANT 72-CT
INSTALL FIBER OPTIC TRACER CABLE

3-2" HDPE FO I/C

265+00 +50 266+00 +50 267+00 +50 268+00 +50 269+00 +50 270+00 +50

STH 190

GUY

POST

GUY

LEGEND

- CONTROL CABINET
- NONMETALLIC INTERCONNECT CONDUIT 2", UNLESS OTHERWISE NOTED
- PULL BOX, 24" X 42"
- COMMUNICATIONS VAULT

TRAFFIC CONTROL INTERCONNECT
STH 190 - CTH F TO BROOKFIELD RD
CITY OF PEWAUKEE & BROOKFIELD
WAUKESHA COUNTY

SIGNAL NO. S67-0813, S67-0489, S67-0168

REGION CONTACT: P. VIRK
DESIGNED BY: C. VANDE LEEST
REVISED BY:

PAGE 19 OF 24

PROJECT NO: 2025-14-71	HWY: STH 190	COUNTY: WAUKESHA	TRAFFIC SIGNAL INTERCONNECT PLAN	SHEET 136	E

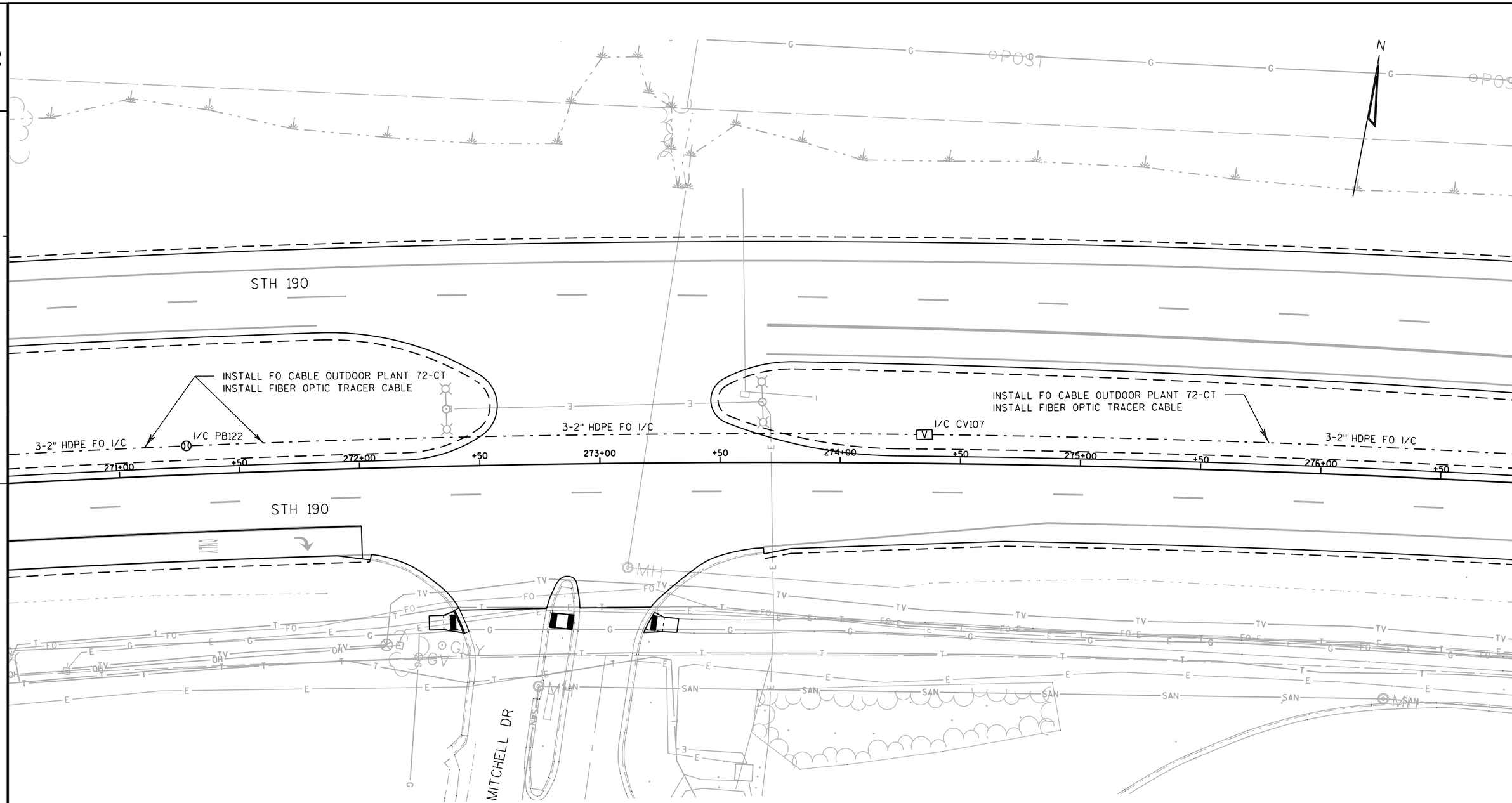

LEGEND

- CONTROL CABINET
- NONMETALLIC INTERCONNECT CONDUIT 2", UNLESS OTHERWISE NOTED
- PULL BOX, 24" X 42"
- COMMUNICATIONS VAULT

TRAFFIC CONTROL INTERCONNECT
STH 190 - CTH F TO BROOKFIELD RD
CITY OF PEWAUKEE & BROOKFIELD
WAUKESHA COUNTY

SIGNAL NO. S67-0813, S67-0489, S67-0168

REGION CONTACT: P. VIRK
DESIGNED BY: C. VANDE LEEST
REVISED BY:

PAGE 20 OF 24

PROJECT NO: 2025-14-71	HWY: STH 190	COUNTY: WAUKESHA	TRAFFIC SIGNAL INTERCONNECT PLAN	SHEET 137	E

FILE NAME : J:\projects\D2_202514190\71\Interconnect\024220_sp.dgn PLOT DATE : 31-OCT-2017 13:08 PLOT BY : dotcmv PLOT NAME : PLOT SCALE : 40:1

WISDOT/CADDS SHEET 42

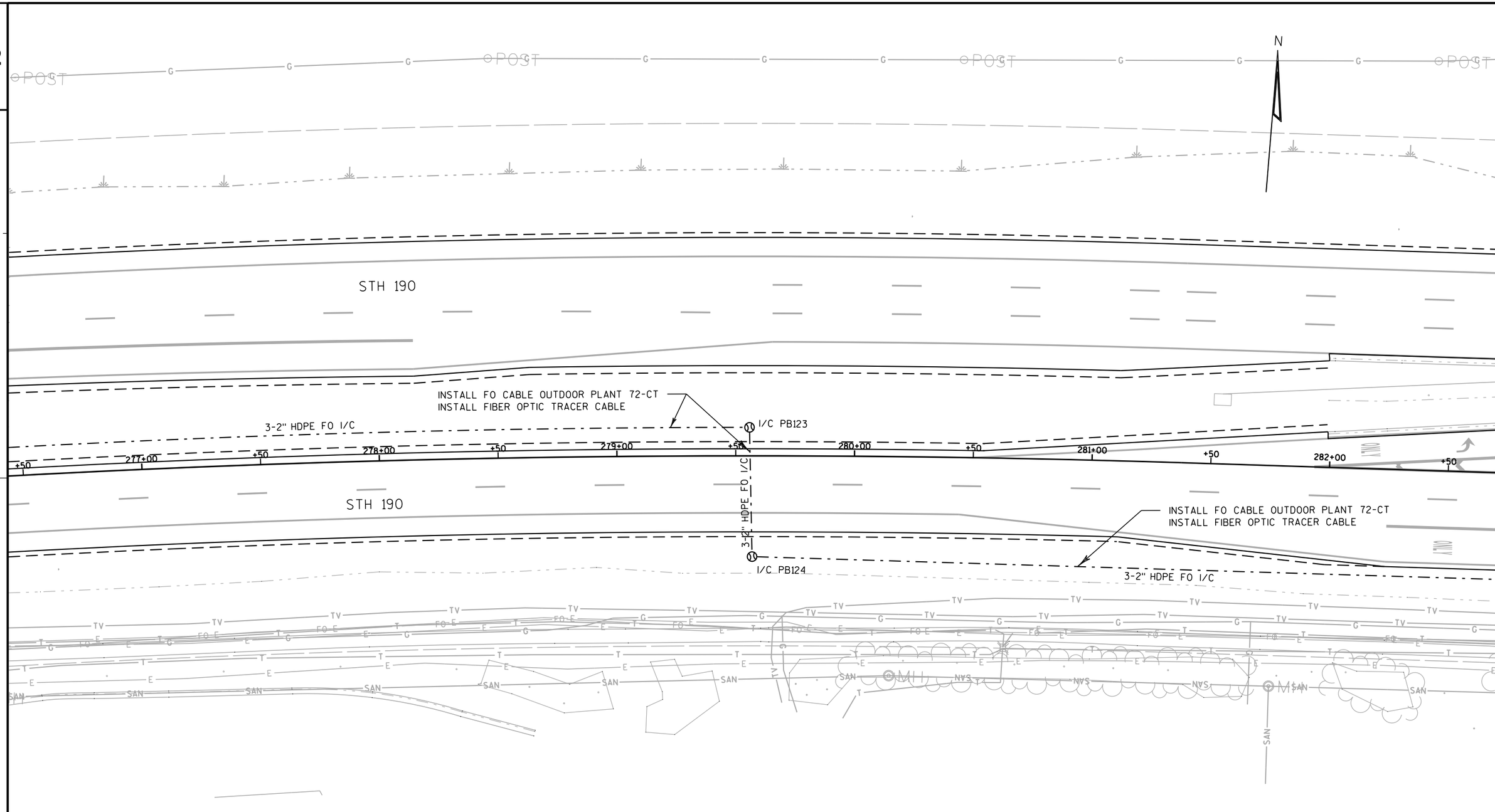

LEGEND

- CONTROL CABINET
- NONMETALLIC INTERCONNECT CONDUIT 2", UNLESS OTHERWISE NOTED
- PULL BOX, 24" X 42"
- COMMUNICATIONS VAULT

TRAFFIC CONTROL INTERCONNECT
STH 190 - CTH F TO BROOKFIELD RD
CITY OF PEWAUKEE & BROOKFIELD
WAUKESHA COUNTY

SIGNAL NO. S67-0813, S67-0489, S67-0168

REGION CONTACT: P. VIRK
DESIGNED BY: C. VANDE LEEST
REVISED BY:

PAGE 21 OF 24

PROJECT NO: 2025-14-71	HWY: STH 190	COUNTY: WAUKESHA	TRAFFIC SIGNAL INTERCONNECT PLAN	SHEET 138	E

FILE NAME : J:\projects\D2_202514190\71\Interconnect\024221_sp.dgn PLOT DATE : 31-OCT-2017 13:08 PLOT BY : dotcmv PLOT NAME : PLOT SCALE : 40:1

WISDOT/CADDS SHEET 42

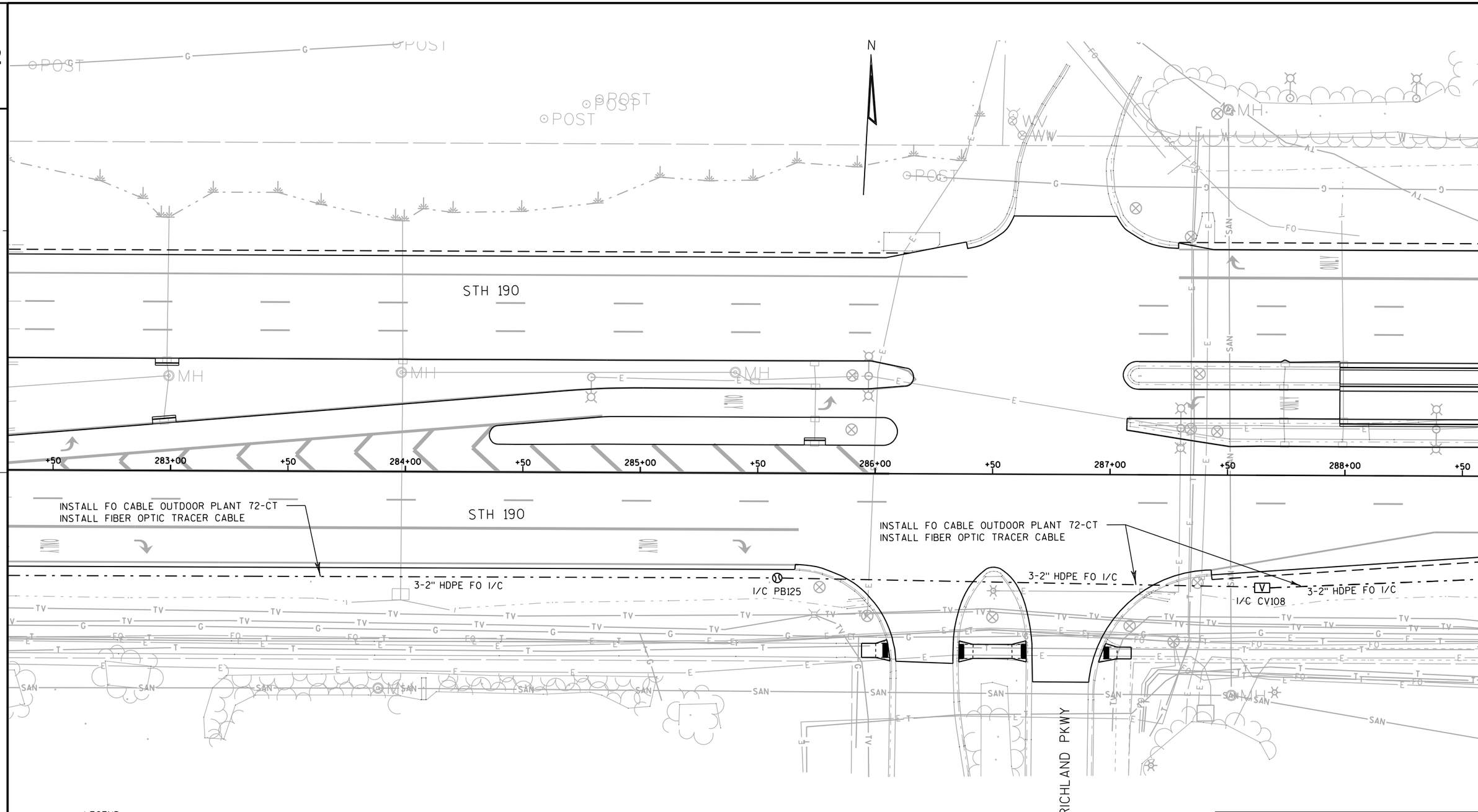

LEGEND

- CONTROL CABINET
- NONMETALLIC INTERCONNECT CONDUIT 2", UNLESS OTHERWISE NOTED
- PULL BOX, 24" X 42"
- COMMUNICATIONS VAULT

TRAFFIC CONTROL INTERCONNECT
STH 190 - CTH F TO BROOKFIELD RD
CITY OF PEWAUKEE & BROOKFIELD
WAUKESHA COUNTY

SIGNAL NO. S67-0813, S67-0489, S67-0168

REGION CONTACT: P. VIRK
DESIGNED BY: C. VANDE LEEST
REVISED BY:

PAGE 22 OF 24

PROJECT NO: 2025-14-71	HWY: STH 190	COUNTY: WAUKESHA	TRAFFIC SIGNAL INTERCONNECT PLAN	SHEET 139	E

FILE NAME : J:\projects\D2_202514190\71\Interconnect\024222_sp.dgn PLOT DATE : 31-OCT-2017 13:09 PLOT BY : dotcmv PLOT NAME : PLOT SCALE : 40:1

WISDOT/CADDS SHEET 42

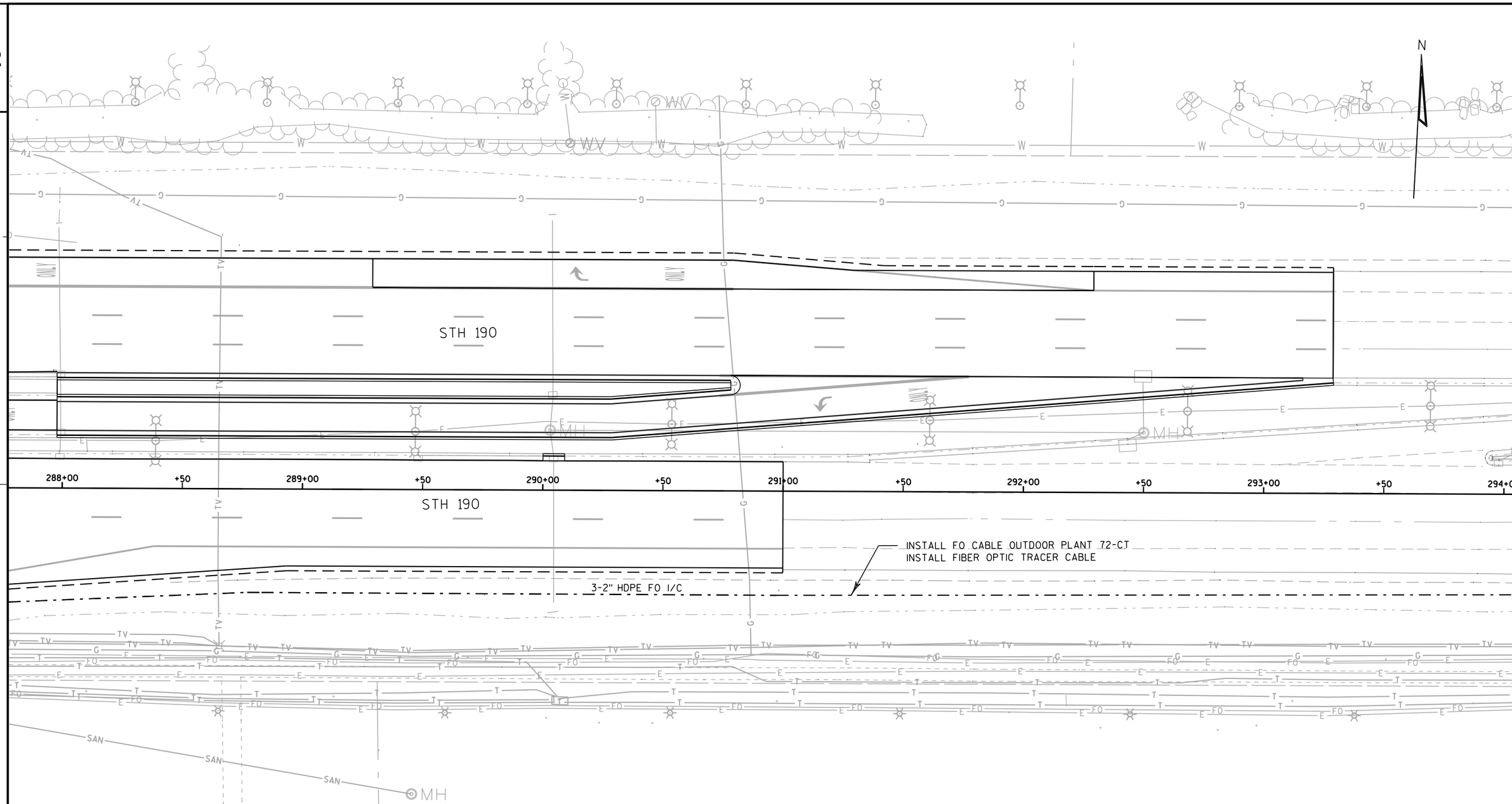

LEGEND

- CONTROL CABINET
- NONMETALLIC INTERCONNECT CONDUIT 2", UNLESS OTHERWISE NOTED
- PULL BOX, 24" X 42"
- COMMUNICATIONS VAULT

TRAFFIC CONTROL INTERCONNECT
STH 190 - CTH F TO BROOKFIELD RD
CITY OF PEWAUKEE & BROOKFIELD
WAUKESHA COUNTY

SIGNAL NO. S67-0813, S67-0489, S67-0168

REGION CONTACT: P. VIRK
DESIGNED BY: C. VANDE LEEST
REVISED BY:

PAGE 23 OF 24

PROJECT NO: 2025-14-71	HWY: STH 190	COUNTY: WAUKESHA	TRAFFIC SIGNAL INTERCONNECT PLAN	SHEET 140	E

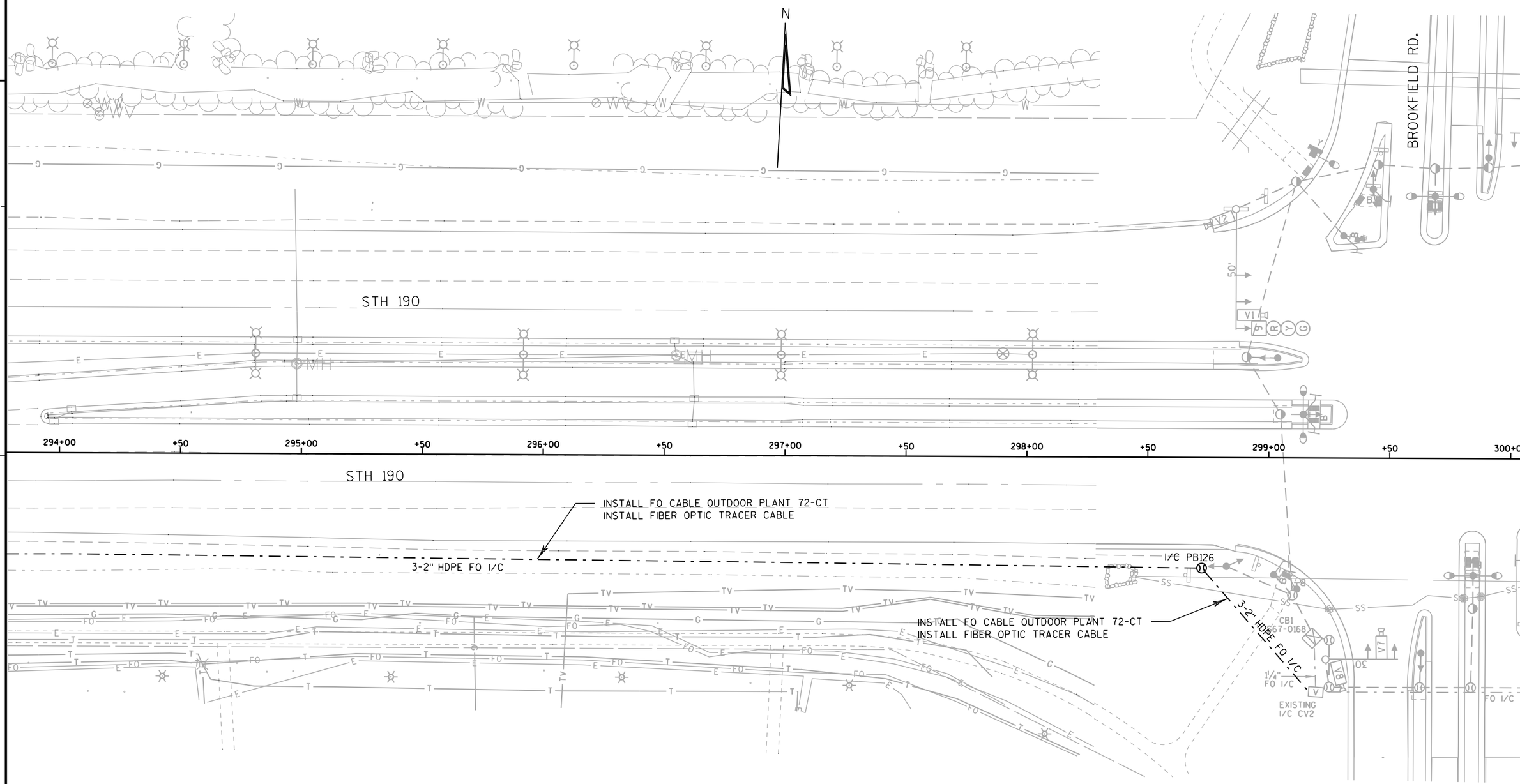

LEGEND

- CONTROL CABINET
- NONMETALLIC INTERCONNECT CONDUIT 2", UNLESS OTHERWISE NOTED
- PULL BOX, 24" X 42"
- COMMUNICATIONS VAULT

TRAFFIC CONTROL INTERCONNECT
STH 190 - CTH F TO BROOKFIELD RD
CITY OF PEWAUKEE & BROOKFIELD
WAUKESHA COUNTY

SIGNAL NO. S67-0813, S67-0489, S67-0168

REGION CONTACT: P. VIRK
DESIGNED BY: C. VANDE LEEST
REVISED BY:

PAGE 24 OF 24

PROJECT NO: 2025-14-71	HWY: STH 190	COUNTY: WAUKESHA	TRAFFIC SIGNAL INTERCONNECT PLAN	SHEET 141	E

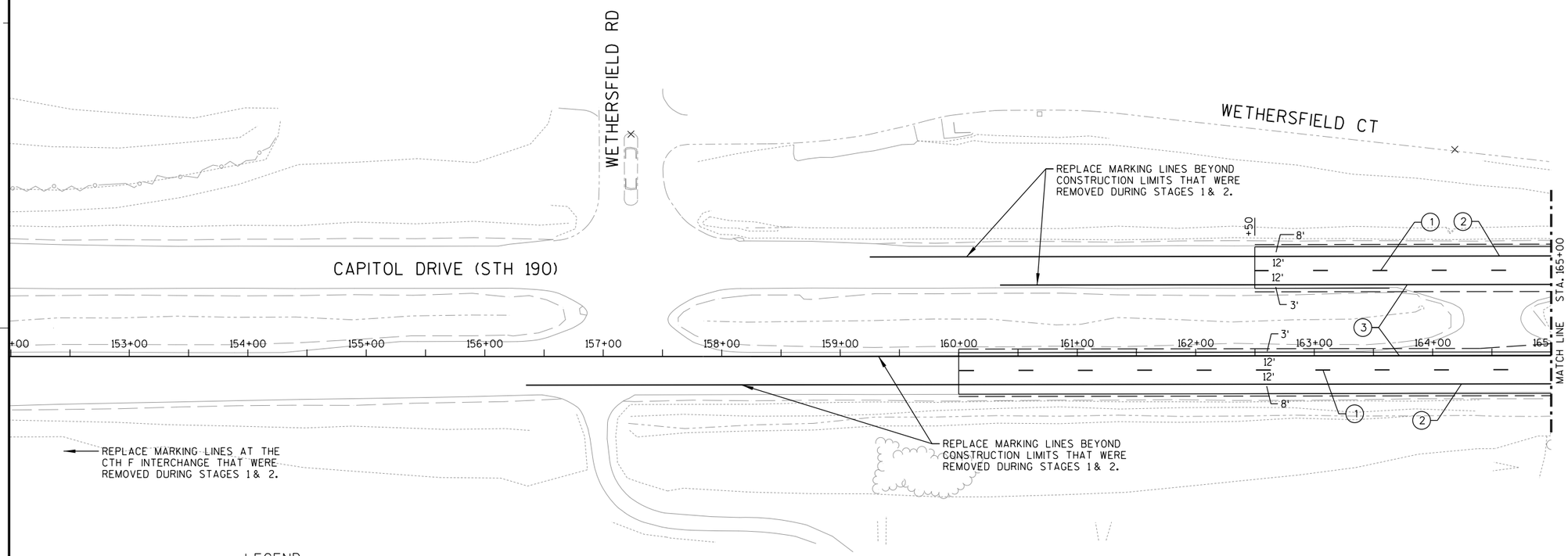

LEGEND

1. MARKING LINE GROOVED WET REF CONTRAST EPOXY 4-INCH, WHITE (12.5' LINE, 37.5' GAP)
2. MARKING LINE EPOXY 4-INCH, WHITE
3. MARKING LINE EPOXY 4-INCH, YELLOW
4. MARKING CROSSWALK EPOXY TRANSVERSE LINE 6-INCH, WHITE
5. MARKING LINE GROOVED WET REF CONTRAST EPOXY 8-INCH, WHITE
6. MARKING STOP LINE EPOXY 18-INCH, WHITE
7. MARKING LINE GROOVED WET REF CONTRAST EPOXY 8-INCH, WHITE (3' LINE, 9' GAP)
8. MARKING ISLAND NOSE EPOXY (YELLOW)
9. MARKING ARROW EPOXY
10. MARKING WORD EPOXY
11. MARKING CURB EPOXY (YELLOW)
12. MARKING LINE DIAGONAL EPOXY 12-INCH (WHITE)
13. MARKING LINE GROOVED WET REF CONTRAST EPOXY 8-INCH, WHITE (2' LINE, 6' GAP)
14. MARKING LINE DIAGONAL EPOXY 12-INCH (YELLOW)
15. MARKING LINE EPOXY 4-INCH, WHITE (12.5' LINE, 37.5' GAP)
16. MARKING LINE EPOXY 8-INCH, WHITE
17. MARKING LINE EPOXY 8-INCH, WHITE (3' LINE, 9' GAP)

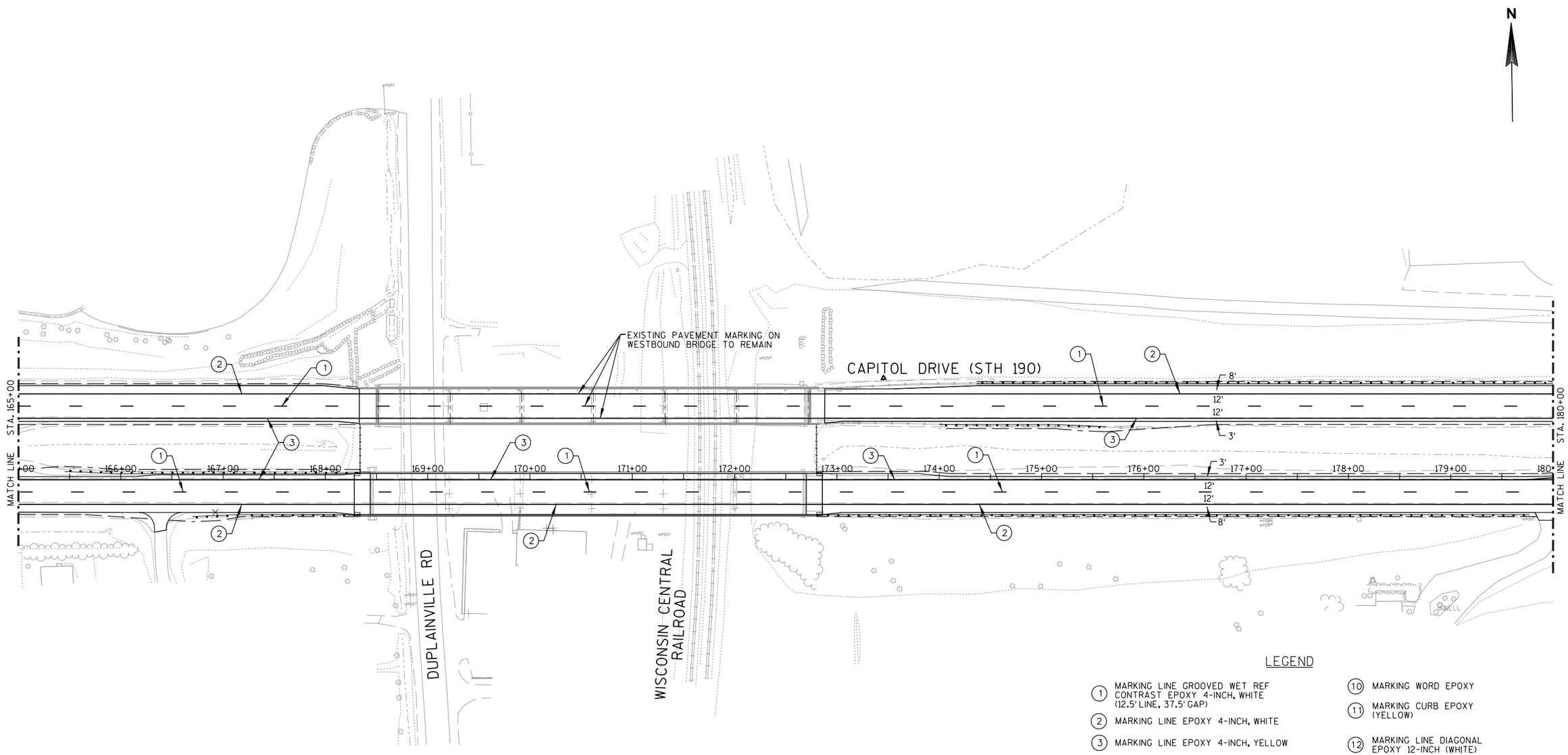

LEGEND

1. MARKING LINE GROOVED WET REF CONTRAST EPOXY 4-INCH, WHITE (12.5' LINE, 37.5' GAP)
2. MARKING LINE EPOXY 4-INCH, WHITE
3. MARKING LINE EPOXY 4-INCH, YELLOW
4. MARKING CROSSWALK EPOXY TRANSVERSE LINE 6-INCH, WHITE
5. MARKING LINE GROOVED WET REF CONTRAST EPOXY 8-INCH, WHITE
6. MARKING STOP LINE EPOXY 18-INCH, WHITE
7. MARKING LINE GROOVED WET REF CONTRAST EPOXY 8-INCH, WHITE (3' LINE, 9' GAP)
8. MARKING ISLAND NOSE EPOXY (YELLOW)
9. MARKING ARROW EPOXY
10. MARKING WORD EPOXY
11. MARKING CURB EPOXY (YELLOW)
12. MARKING LINE DIAGONAL EPOXY 12-INCH (WHITE)
13. MARKING LINE GROOVED WET REF CONTRAST EPOXY 8-INCH, WHITE (2' LINE, 6' GAP)
14. MARKING LINE DIAGONAL EPOXY 12-INCH (YELLOW)
15. MARKING LINE EPOXY 4-INCH, WHITE (12.5' LINE, 37.5' GAP)
16. MARKING LINE EPOXY 8-INCH, WHITE
17. MARKING LINE EPOXY 8-INCH, WHITE (3' LINE, 9' GAP)

PROJECT NO:2025-14-71	HWY:STH 190	COUNTY:WAUKESHA	PAVEMENT MARKING	SHEET 143	E

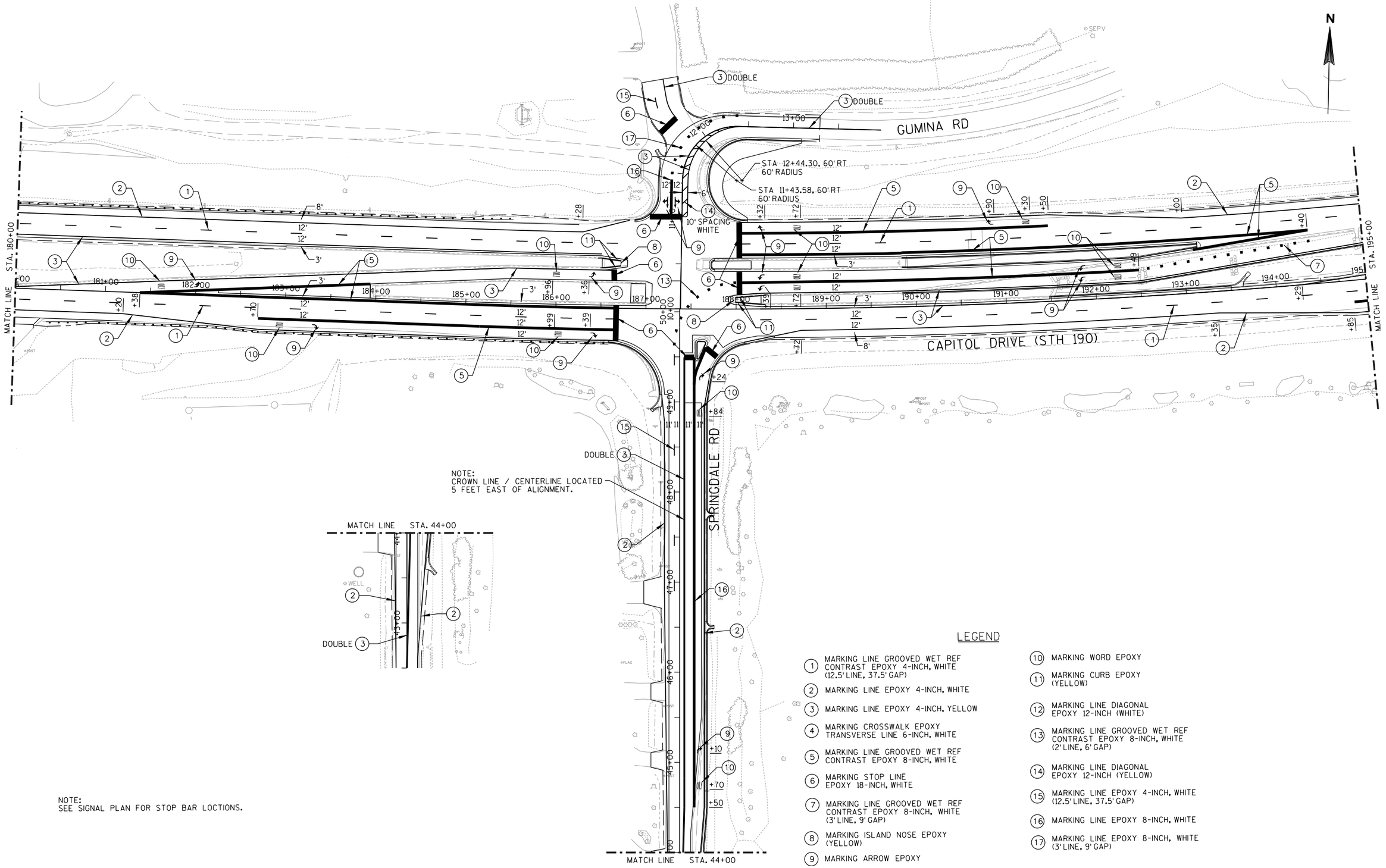

NOTE:
SEE SIGNAL PLAN FOR STOP BAR LOCTIONS.

LEGEND

1. MARKING LINE GROOVED WET REF CONTRAST EPOXY 4-INCH, WHITE (12.5' LINE, 37.5' GAP)
2. MARKING LINE EPOXY 4-INCH, WHITE
3. MARKING LINE EPOXY 4-INCH, YELLOW
4. MARKING CROSSWALK EPOXY TRANSVERSE LINE 6-INCH, WHITE
5. MARKING LINE GROOVED WET REF CONTRAST EPOXY 8-INCH, WHITE
6. MARKING STOP LINE EPOXY 18-INCH, WHITE
7. MARKING LINE GROOVED WET REF CONTRAST EPOXY 8-INCH, WHITE (3' LINE, 9' GAP)
8. MARKING ISLAND NOSE EPOXY (YELLOW)
9. MARKING ARROW EPOXY
10. MARKING WORD EPOXY
11. MARKING CURB EPOXY (YELLOW)
12. MARKING LINE DIAGONAL EPOXY 12-INCH (WHITE)
13. MARKING LINE GROOVED WET REF CONTRAST EPOXY 8-INCH, WHITE (2' LINE, 6' GAP)
14. MARKING LINE DIAGONAL EPOXY 12-INCH (YELLOW)
15. MARKING LINE EPOXY 4-INCH, WHITE (12.5' LINE, 37.5' GAP)
16. MARKING LINE EPOXY 8-INCH, WHITE
17. MARKING LINE EPOXY 8-INCH, WHITE (3' LINE, 9' GAP)

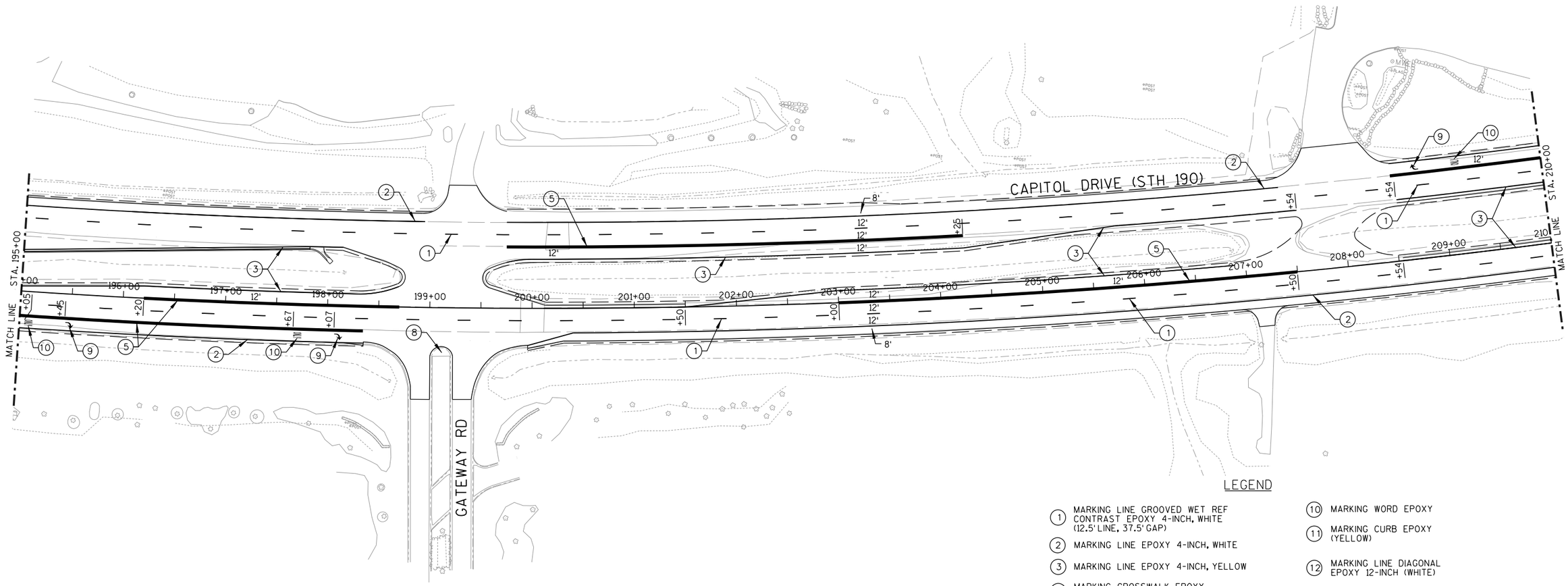

LEGEND

1. MARKING LINE GROOVED WET REF CONTRAST EPOXY 4-INCH, WHITE (12.5' LINE, 37.5' GAP)
2. MARKING LINE EPOXY 4-INCH, WHITE
3. MARKING LINE EPOXY 4-INCH, YELLOW
4. MARKING CROSSWALK EPOXY TRANSVERSE LINE 6-INCH, WHITE
5. MARKING LINE GROOVED WET REF CONTRAST EPOXY 8-INCH, WHITE
6. MARKING STOP LINE EPOXY 18-INCH, WHITE
7. MARKING LINE GROOVED WET REF CONTRAST EPOXY 8-INCH, WHITE (3' LINE, 9' GAP)
8. MARKING ISLAND NOSE EPOXY (YELLOW)
9. MARKING ARROW EPOXY
10. MARKING WORD EPOXY
11. MARKING CURB EPOXY (YELLOW)
12. MARKING LINE DIAGONAL EPOXY 12-INCH (WHITE)
13. MARKING LINE GROOVED WET REF CONTRAST EPOXY 8-INCH, WHITE (2' LINE, 6' GAP)
14. MARKING LINE DIAGONAL EPOXY 12-INCH (YELLOW)
15. MARKING LINE EPOXY 4-INCH, WHITE (12.5' LINE, 37.5' GAP)
16. MARKING LINE EPOXY 8-INCH, WHITE
17. MARKING LINE EPOXY 8-INCH, WHITE (3' LINE, 9' GAP)

PROJECT NO:2025-14-71	HWY:STH 190	COUNTY:WAUKESHA	PAVEMENT MARKING	SHEET 145	E

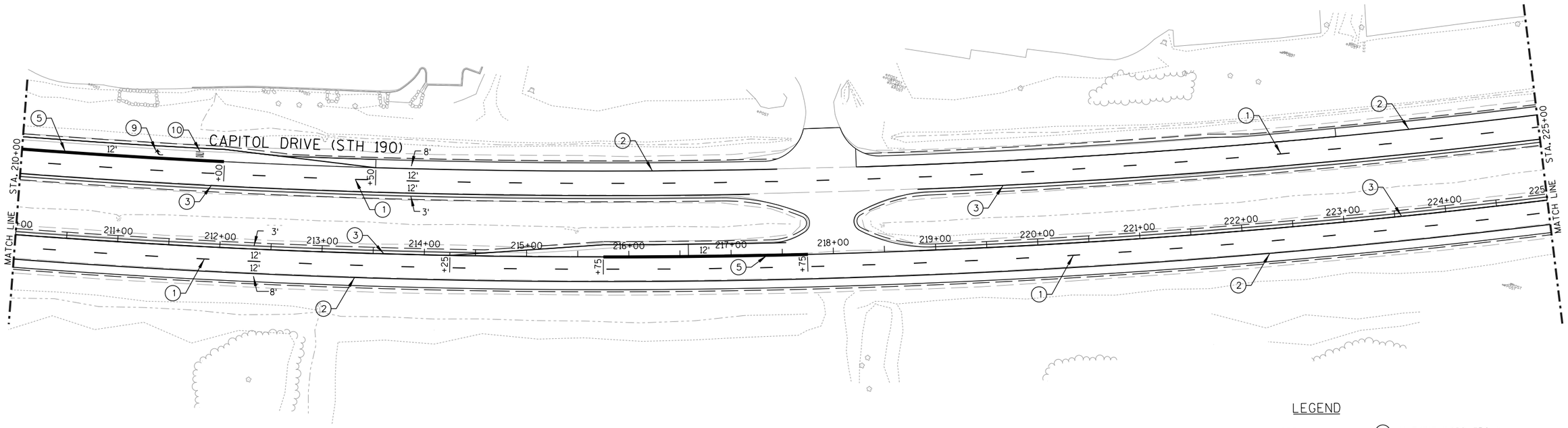

LEGEND

1. MARKING LINE GROOVED WET REF CONTRAST EPOXY 4-INCH, WHITE (12.5' LINE, 37.5' GAP)
2. MARKING LINE EPOXY 4-INCH, WHITE
3. MARKING LINE EPOXY 4-INCH, YELLOW
4. MARKING CROSSWALK EPOXY TRANSVERSE LINE 6-INCH, WHITE
5. MARKING LINE GROOVED WET REF CONTRAST EPOXY 8-INCH, WHITE
6. MARKING STOP LINE EPOXY 18-INCH, WHITE
7. MARKING LINE GROOVED WET REF CONTRAST EPOXY 8-INCH, WHITE (3' LINE, 9' GAP)
8. MARKING ISLAND NOSE EPOXY (YELLOW)
9. MARKING ARROW EPOXY
10. MARKING WORD EPOXY
11. MARKING CURB EPOXY (YELLOW)
12. MARKING LINE DIAGONAL EPOXY 12-INCH (WHITE)
13. MARKING LINE GROOVED WET REF CONTRAST EPOXY 8-INCH, WHITE (2' LINE, 6' GAP)
14. MARKING LINE DIAGONAL EPOXY 12-INCH (YELLOW)
15. MARKING LINE EPOXY 4-INCH, WHITE (12.5' LINE, 37.5' GAP)
16. MARKING LINE EPOXY 8-INCH, WHITE
17. MARKING LINE EPOXY 8-INCH, WHITE (3' LINE, 9' GAP)

PROJECT NO:2025-14-71	HWY:STH 190	COUNTY:WAUKESHA	PAVEMENT MARKING	SHEET 146	E

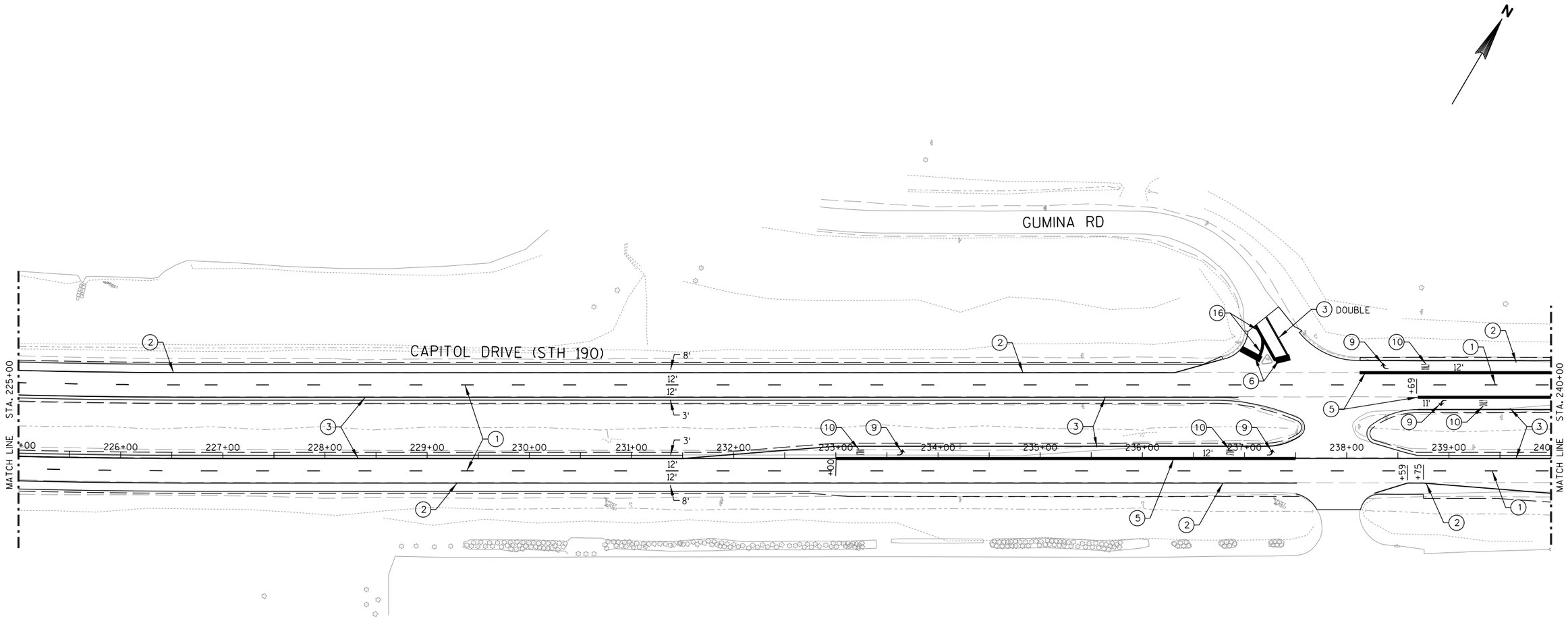

LEGEND

1. MARKING LINE GROOVED WET REF CONTRAST EPOXY 4-INCH, WHITE (12.5' LINE, 37.5' GAP)
2. MARKING LINE EPOXY 4-INCH, WHITE
3. MARKING LINE EPOXY 4-INCH, YELLOW
4. MARKING CROSSWALK EPOXY TRANSVERSE LINE 6-INCH, WHITE
5. MARKING LINE GROOVED WET REF CONTRAST EPOXY 8-INCH, WHITE
6. MARKING STOP LINE EPOXY 18-INCH, WHITE
7. MARKING LINE GROOVED WET REF CONTRAST EPOXY 8-INCH, WHITE (3' LINE, 9' GAP)
8. MARKING ISLAND NOSE EPOXY (YELLOW)
9. MARKING ARROW EPOXY
10. MARKING WORD EPOXY
11. MARKING CURB EPOXY (YELLOW)
12. MARKING LINE DIAGONAL EPOXY 12-INCH (WHITE)
13. MARKING LINE GROOVED WET REF CONTRAST EPOXY 8-INCH, WHITE (2' LINE, 6' GAP)
14. MARKING LINE DIAGONAL EPOXY 12-INCH (YELLOW)
15. MARKING LINE EPOXY 4-INCH, WHITE (12.5' LINE, 37.5' GAP)
16. MARKING LINE EPOXY 8-INCH, WHITE
17. MARKING LINE EPOXY 8-INCH, WHITE (3' LINE, 9' GAP)

PROJECT NO:2025-14-71	HWY:STH 190	COUNTY:WAUKESHA	PAVEMENT MARKING	SHEET 147	E

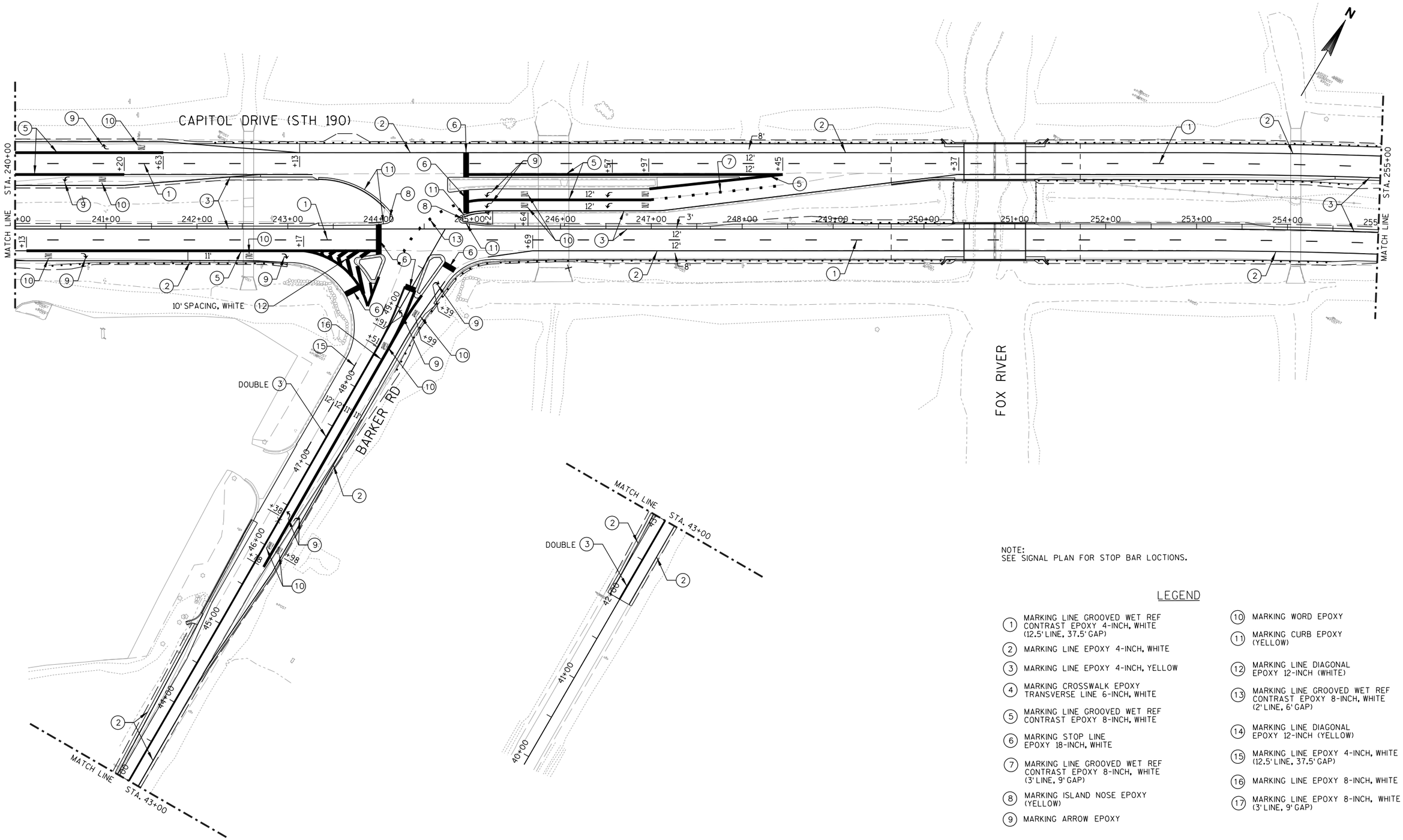

NOTE:
SEE SIGNAL PLAN FOR STOP BAR LOCTIONS.

LEGEND

1. MARKING LINE GROOVED WET REF CONTRAST EPOXY 4-INCH, WHITE (12.5' LINE, 37.5' GAP)
2. MARKING LINE EPOXY 4-INCH, WHITE
3. MARKING LINE EPOXY 4-INCH, YELLOW
4. MARKING CROSSWALK EPOXY TRANSVERSE LINE 6-INCH, WHITE
5. MARKING LINE GROOVED WET REF CONTRAST EPOXY 8-INCH, WHITE
6. MARKING STOP LINE EPOXY 18-INCH, WHITE
7. MARKING LINE GROOVED WET REF CONTRAST EPOXY 8-INCH, WHITE (3' LINE, 9' GAP)
8. MARKING ISLAND NOSE EPOXY (YELLOW)
9. MARKING ARROW EPOXY
10. MARKING WORD EPOXY
11. MARKING CURB EPOXY (YELLOW)
12. MARKING LINE DIAGONAL EPOXY 12-INCH (WHITE)
13. MARKING LINE GROOVED WET REF CONTRAST EPOXY 8-INCH, WHITE (2' LINE, 6' GAP)
14. MARKING LINE DIAGONAL EPOXY 12-INCH (YELLOW)
15. MARKING LINE EPOXY 4-INCH, WHITE (12.5' LINE, 37.5' GAP)
16. MARKING LINE EPOXY 8-INCH, WHITE
17. MARKING LINE EPOXY 8-INCH, WHITE (3' LINE, 9' GAP)

PROJECT NO: 2025-14-71	HWY: STH 190	COUNTY: WAUKESHA	PAVEMENT MARKING	SHEET 148	E

2

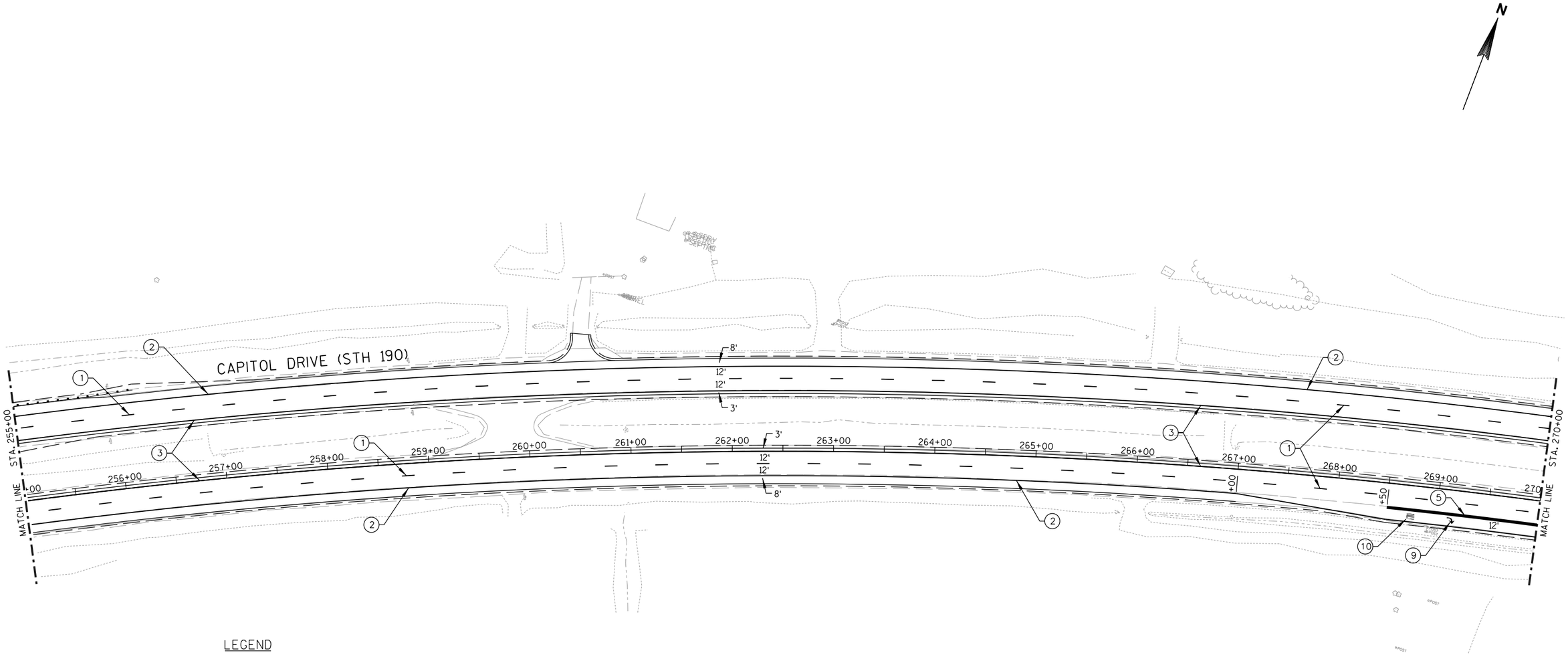

LEGEND

1. MARKING LINE GROOVED WET REF CONTRAST EPOXY 4-INCH, WHITE (12.5' LINE, 37.5' GAP)
2. MARKING LINE EPOXY 4-INCH, WHITE
3. MARKING LINE EPOXY 4-INCH, YELLOW
4. MARKING CROSSWALK EPOXY TRANSVERSE LINE 6-INCH, WHITE
5. MARKING LINE GROOVED WET REF CONTRAST EPOXY 8-INCH, WHITE
6. MARKING STOP LINE EPOXY 18-INCH, WHITE
7. MARKING LINE GROOVED WET REF CONTRAST EPOXY 8-INCH, WHITE (3' LINE, 9' GAP)
8. MARKING ISLAND NOSE EPOXY (YELLOW)
9. MARKING ARROW EPOXY
10. MARKING WORD EPOXY
11. MARKING CURB EPOXY (YELLOW)
12. MARKING LINE DIAGONAL EPOXY 12-INCH (WHITE)
13. MARKING LINE GROOVED WET REF CONTRAST EPOXY 8-INCH, WHITE (2' LINE, 6' GAP)
14. MARKING LINE DIAGONAL EPOXY 12-INCH (YELLOW)
15. MARKING LINE EPOXY 4-INCH, WHITE (12.5' LINE, 37.5' GAP)
16. MARKING LINE EPOXY 8-INCH, WHITE
17. MARKING LINE EPOXY 8-INCH, WHITE (3' LINE, 9' GAP)

PROJECT NO: 2025-14-71	HWY: STH 190	COUNTY: WAUKESHA	PAVEMENT MARKING	SHEET 149	E

LEGEND

1. MARKING LINE GROOVED WET REF CONTRAST EPOXY 4-INCH, WHITE (12.5' LINE, 37.5' GAP)
2. MARKING LINE EPOXY 4-INCH, WHITE
3. MARKING LINE EPOXY 4-INCH, YELLOW
4. MARKING CROSSWALK EPOXY TRANSVERSE LINE 6-INCH, WHITE
5. MARKING LINE GROOVED WET REF CONTRAST EPOXY 8-INCH, WHITE
6. MARKING STOP LINE EPOXY 18-INCH, WHITE
7. MARKING LINE GROOVED WET REF CONTRAST EPOXY 8-INCH, WHITE (3' LINE, 9' GAP)
8. MARKING ISLAND NOSE EPOXY (YELLOW)
9. MARKING ARROW EPOXY
10. MARKING WORD EPOXY
11. MARKING CURB EPOXY (YELLOW)
12. MARKING LINE DIAGONAL EPOXY 12-INCH (WHITE)
13. MARKING LINE GROOVED WET REF CONTRAST EPOXY 8-INCH, WHITE (2' LINE, 6' GAP)
14. MARKING LINE DIAGONAL EPOXY 12-INCH (YELLOW)
15. MARKING LINE EPOXY 4-INCH, WHITE (12.5' LINE, 37.5' GAP)
16. MARKING LINE EPOXY 8-INCH, WHITE
17. MARKING LINE EPOXY 8-INCH, WHITE (3' LINE, 9' GAP)

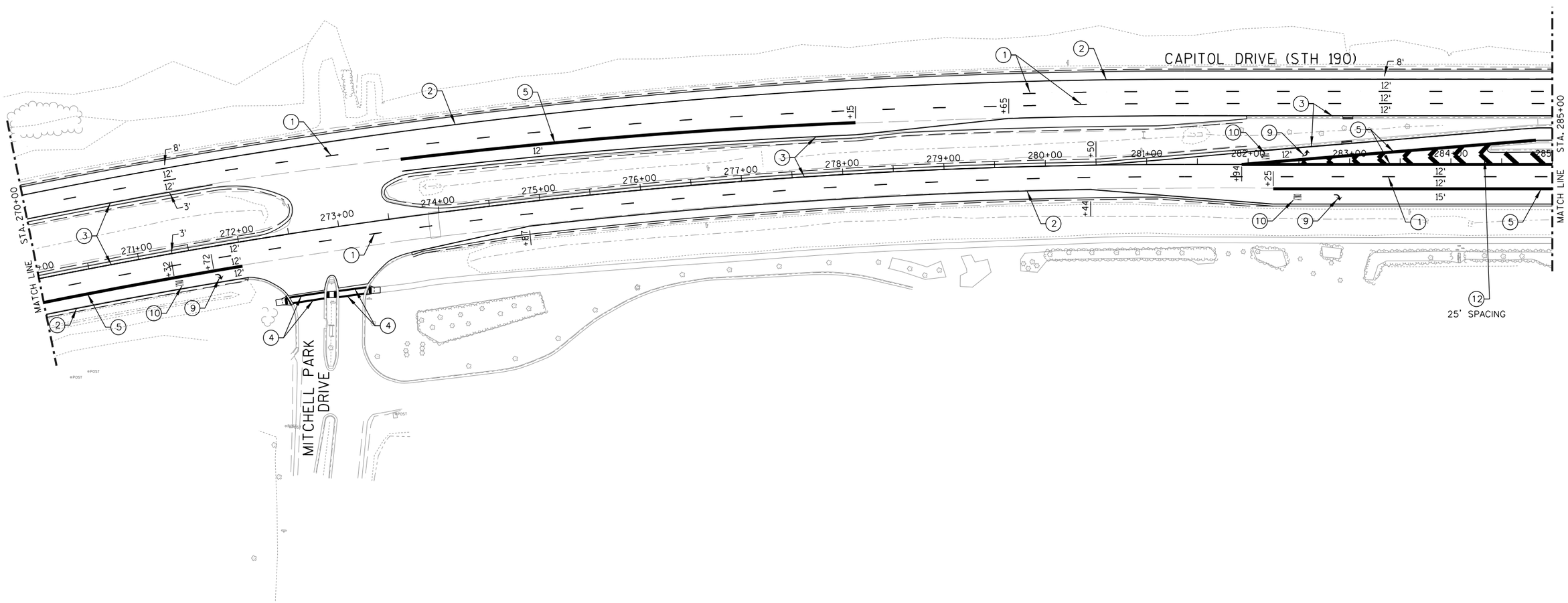

PROJECT NO:2025-14-71	HWY:STH 190	COUNTY:WAUKESHA	PAVEMENT MARKING	SHEET 150	E

LEGEND

1. MARKING LINE GROOVED WET REF CONTRAST EPOXY 4-INCH, WHITE (12.5' LINE, 37.5' GAP)
2. MARKING LINE EPOXY 4-INCH, WHITE
3. MARKING LINE EPOXY 4-INCH, YELLOW
4. MARKING CROSSWALK EPOXY TRANSVERSE LINE 6-INCH, WHITE
5. MARKING LINE GROOVED WET REF CONTRAST EPOXY 8-INCH, WHITE
6. MARKING STOP LINE EPOXY 18-INCH, WHITE
7. MARKING LINE GROOVED WET REF CONTRAST EPOXY 8-INCH, WHITE (3' LINE, 9' GAP)
8. MARKING ISLAND NOSE EPOXY (YELLOW)
9. MARKING ARROW EPOXY
10. MARKING WORD EPOXY
11. MARKING CURB EPOXY (YELLOW)
12. MARKING LINE DIAGONAL EPOXY 12-INCH (WHITE)
13. MARKING LINE GROOVED WET REF CONTRAST EPOXY 8-INCH, WHITE (2' LINE, 6' GAP)
14. MARKING LINE DIAGONAL EPOXY 12-INCH (YELLOW)
15. MARKING LINE EPOXY 4-INCH, WHITE (12.5' LINE, 37.5' GAP)
16. MARKING LINE EPOXY 8-INCH, WHITE
17. MARKING LINE EPOXY 8-INCH, WHITE (3' LINE, 9' GAP)

N

REPLACE MARKING LINES EAST OF BROOKFIELD ROAD THAT WERE REMOVED DURING STAGES 1 & 2.

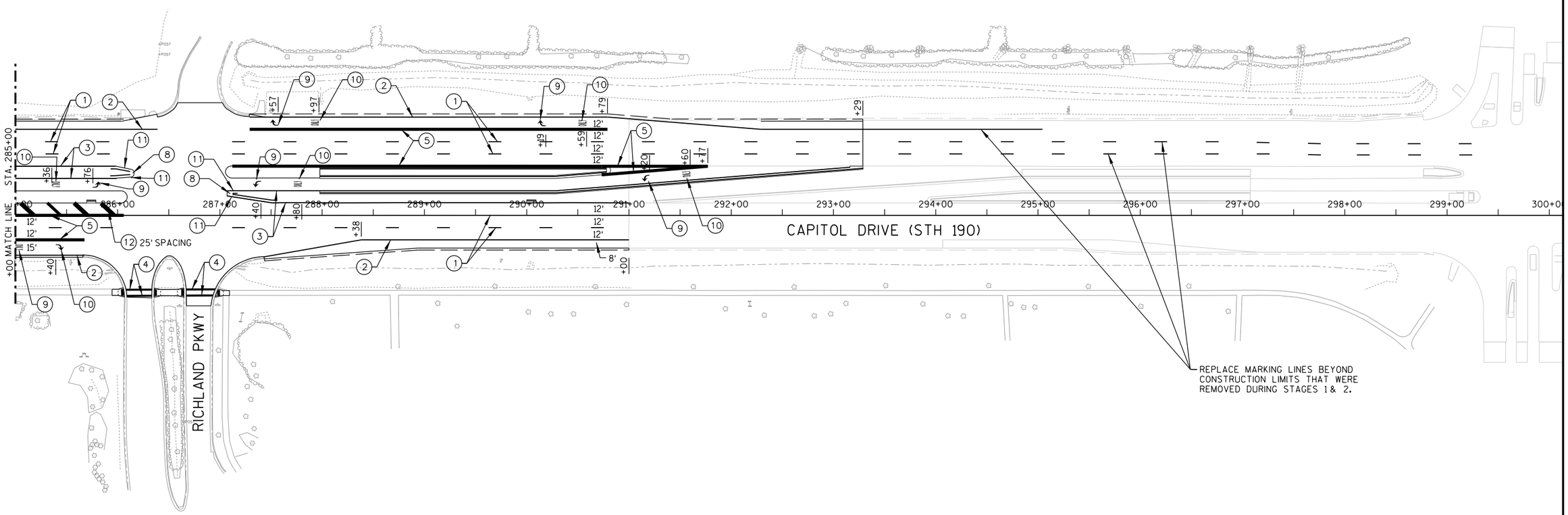

REPLACE MARKING LINES BEYOND CONSTRUCTION LIMITS THAT WERE REMOVED DURING STAGES 1 & 2.

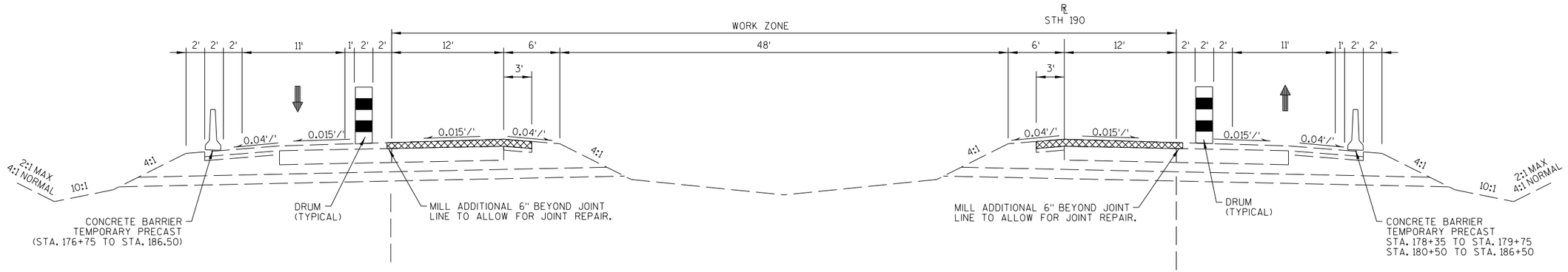

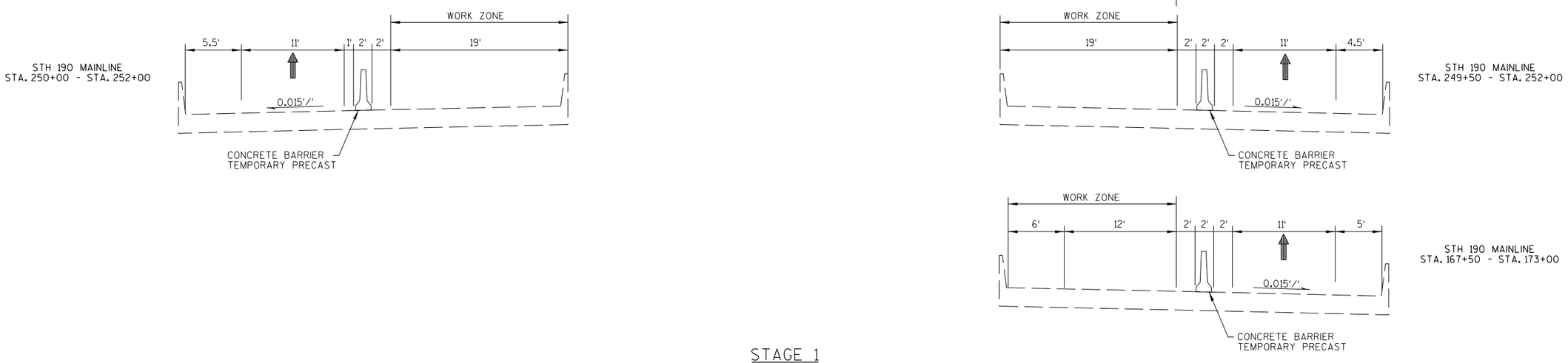

STAGE 1

STH 190 MAINLINE
STA.160+00 - STA. 281+00
(CTH F - MITCHELL PARK DRIVE)

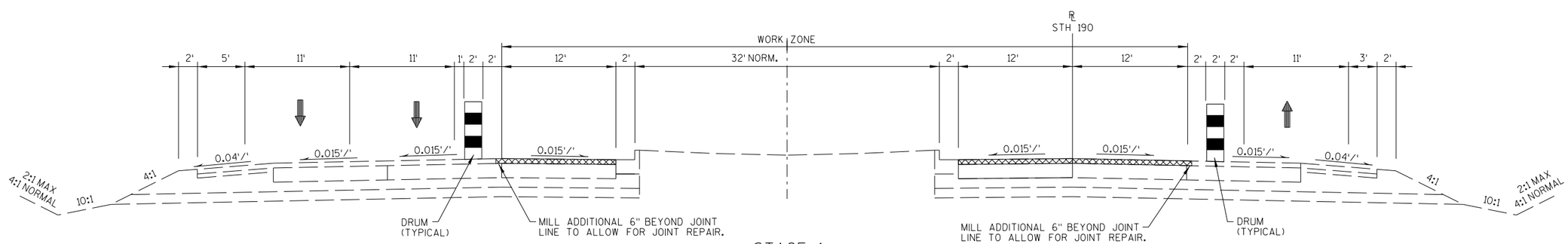

STAGE 1

STH 190 MAINLINE
STA. 281+00 - STA. 293+28.72
(MITCHELL PARK DRIVE - BROOKFIELD ROAD)

PROJECT NO:2025-14-71	HWY:STH 190	COUNTY:WAUKESHA	STAGE CONSTRUCTION - MAINLINE STAGE 1	SHEET 152	E

2

LEGEND

- WORK ZONE
- TRAFFIC CONTROL DRUM WITH LIGHT
- TRAFFIC CONTROL DRUM
- TRAFFIC FLOW
- SIGN ON PERMANANT SUPPORT
- SIGN ON TEMPORARY SUPPORT
- TYPE III BARRICADE WITH/WITHOUT ATTACHED SIGN
- FLASHING ARROW BOARD

STAGING NOTES

DO NOT CLOSE TWO CONSECUTIVE MEDIAN OPENINGS AT THE SAME TIME.

MILL PAVEMENT, CONSTRUCT MEDIAN MODIFICATIONS, BASE PATCH, AND OVERLAY INSIDE LANES.

ADD PERMANANT SIGNING IN MEDIAN.

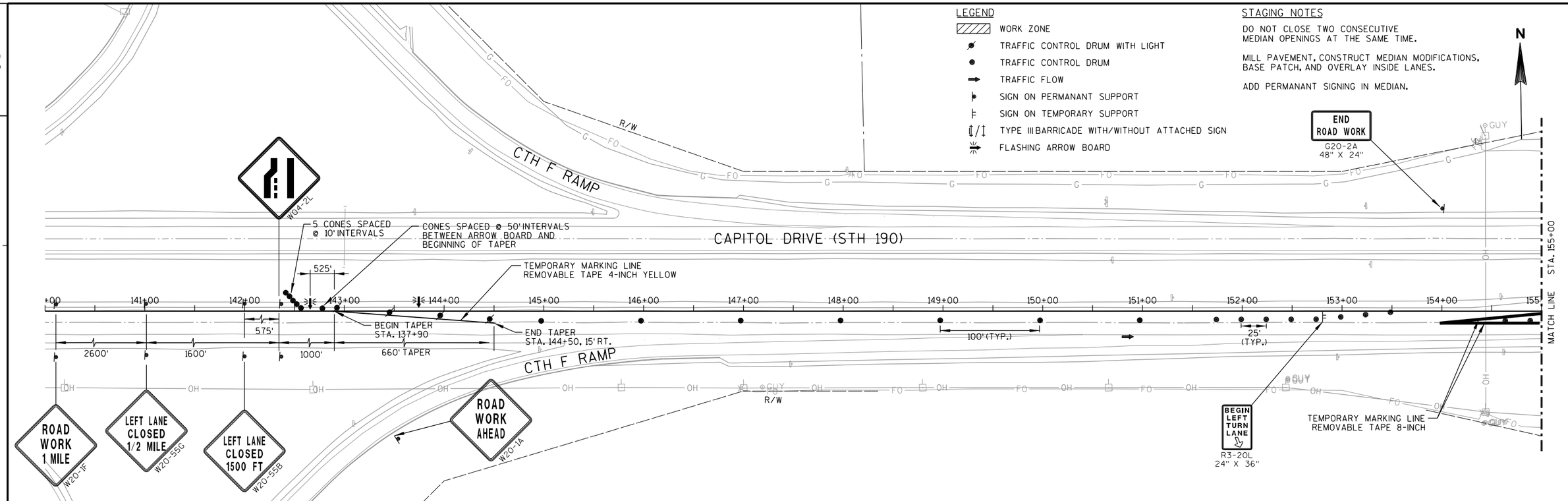

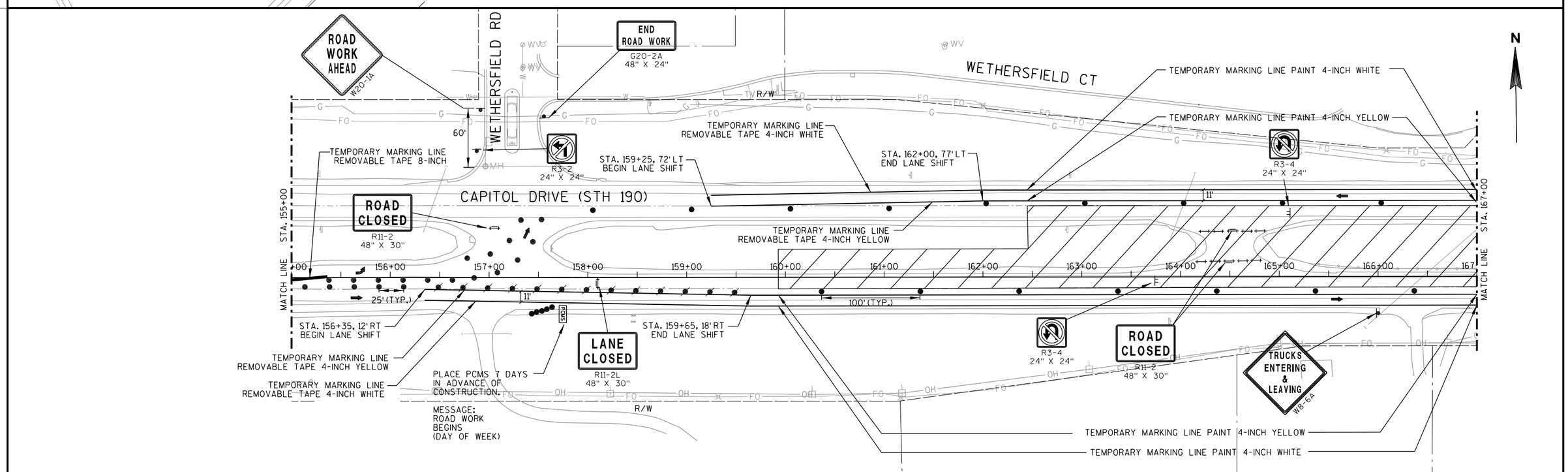

PROJECT NO:2025-14-71	HWY:STH 190	COUNTY:WAUKESHA	STAGE CONSTRUCTION-STAGE 1	SHEET 153	E

2

LANE CLOSED
R11-2L
48" X 30"

TEMPORARY MARKING LINE
PAINT 4-INCH WHITE

N

CONCRETE BARRIER
TEMPORARY PRECAST

TEMPORARY MARKING LINE
PAINT 4-INCH YELLOW

LANE CLOSED
R11-2L
48" X 30"

CAPITOL DRIVE (STH 190)

B-67-89

STA. 167+00
MATCH LINE
STA. 180+00
MATCH LINE

100' (TYP.)

CONCRETE BARRIER
TEMPORARY PRECAST

W05-52R
12" X 36"

B-67-201

STA. 167+50 CRASH
CUSHIONS TEMPORARY

DUPLAINVILLE RD

WISCONSIN CENTRAL
RAILROAD

R/W

LEGEND

- WORK ZONE
- TRAFFIC CONTROL DRUM WITH LIGHT
- TRAFFIC CONTROL DRUM
- TRAFFIC FLOW
- SIGN ON PERMANANT SUPPORT
- SIGN ON TEMPORARY SUPPORT
- TYPE III BARRICADE WITH/WITHOUT ATTACHED SIGN
- FLASHING ARROW BOARD

STAGING NOTES

DO NOT CLOSE TWO CONSECUTIVE
MEDIAN OPENINGS AT THE SAME TIME.

MILL PAVEMENT, CONSTRUCT MEDIAN MODIFICATIONS,
BASE PATCH, AND OVERLAY INSIDE LANES.

ADD PERMANANT SIGNING IN MEDIAN.

OVERLAY INSIDE LANE OF STRUCTURE
B-67-201

2

FOLLOW SDD 15D12 TO INTALL BARRIER
PRIOR TO CLOSING INSIDE LANE.

ROAD WORK AHEAD
W20-1A

W01-6
48" X 24"

ROAD WORK AHEAD
W20-1A

ONLY ONLY ONLY
R3-8W
54" X 30"

N

CONCRETE BARRIER
TEMPORARY PRECAST

GUMINA RD

350'

500'

STA. 186+50 CRASH
CUSHIONS TEMPORARY

BEGIN RIGHT TURN LANE
R3-20R
24" X 36"

END ROAD WORK
G20-2A
48" X 24"

BEGIN LEFT TURN LANE
R3-20L
24" X 36"

TEMPORARY MARKING LINE
PAINT 4-INCH WHITE

TEMPORARY MARKING LINE
PAINT 4-INCH YELLOW

TEMPORARY MARKING
LINE PAINT 8-INCH

BEGIN TAPER
STA. 189+60, 75' LT.

25'
(TYP.)

STA. 180+00
MATCH LINE

CAPITOL DRIVE (STH 190)

100' (TYP.)

STA. 195+00
MATCH LINE

25'
(TYP.)

END TAPER
STA. 190+70, 78' LT.

LANE CLOSED
R11-2L
48" X 30"

PLACE PCMS 7 DAYS IN
ADVANCE OF CONSTRUCTION.

PCMS MESSAGE:

ROAD WORK
BEGINS
(DAY OF WEEK)

END ROAD WORK
G20-2A
48" X 24"

W01-6
48" X 24"

ROAD WORK AHEAD
W20-1A

SPRINGDALE RD

STA. 180+50
CRASH
CUSHIONS
TEMPORARY

LANE CLOSED
R11-2L
48" X 30"

ONLY
R3-8A
36" X 30"

BEGIN LEFT TURN LANE
R3-20L
24" X 36"

CONCRETE BARRIER
TEMPORARY PRECAST

TEMPORARY MARKING LINE
PAINT 4-INCH YELLOW

LANE CLOSED
R11-2L
48" X 30"

PROJECT NO: 2025-14-71	HWY: STH 190	COUNTY: WAUKESHA	STAGE CONSTRUCTION-STAGE 1	SHEET 154	E

2

ROAD WORK AHEAD W20-1A

END ROAD WORK G20-2A 48" X 24"

BEGIN LEFT TURN LANE R3-20L 24" X 36"

TEMPORARY MARKING LINE PAINT 4-INCH YELLOW

TEMPORARY MARKING LINE PAINT 8-INCH

TEMPORARY MARKING LINE PAINT 4-INCH WHITE

W01-6 48" X 24"

R/W

70'

50'

CAPITOL DRIVE (STH 190)

STA. 195+00

MATCH LINE

196+00 197+00 198+00 199+00 200+00 201+00 202+00 203+00 204+00 205+00 206+00 207+00 208+00 209+00 210

STA. 210+00

11'

100' (TYP.)

150'

GATEWAY RD

N

LEGEND

- WORK ZONE
- TRAFFIC CONTROL DRUM WITH LIGHT
- TRAFFIC CONTROL DRUM
- TRAFFIC FLOW
- SIGN ON PERMANANT SUPPORT
- SIGN ON TEMPORARY SUPPORT
- TYPE III BARRICADE WITH/WITHOUT ATTACHED SIGN
- FLASHING ARROW BOARD

STAGING NOTES

DO NOT CLOSE TWO CONSECUTIVE MEDIAN OPENINGS AT THE SAME TIME.

MILL PAVEMENT, CONSTRUCT MEDIAN MODIFICATIONS, BASE PATCH, AND OVERLAY INSIDE LANES.

ADD PERMANANT SIGNING IN MEDIAN.

2

STA. 210+00

MATCH LINE

211+00 212+00 213+00 214+00 215+00 216+00 217+00 218+00 219+00 220+00 221+00 222+00 223+00 224+00 225

STA. 225+00

60'

TEMPORARY MARKING LINE PAINT 8-INCH

R/W

PROJECT NO:2025-14-71	HWY:STH 190	COUNTY:WAUKESHA	STAGE CONSTRUCTION-STAGE 1	SHEET 155	E

2

LANE CLOSED
R11-2L
48" X 30"

END ROAD WORK
G20-2A
48" X 24"

GUMINA RD

ROAD WORK AHEAD
W20-1A

W01-6
48" X 24"

TEMPORARY MARKING LINE
PAINT 4-INCH WHITE

TEMPORARY MARKING LINE
PAINT 4-INCH YELLOW

R/W

N

CAPITOL DRIVE (STH 190)

STA. 225+00 MATCH LINE

STA. 240+00 MATCH LINE

225+00 226+00 227+00 228+00 229+00 230+00 231+00 232+00 233+00 234+00 235+00 236+00 237+00 238+00 239+00 240

11' 11' 11' 11' 11' 11'

100' (TYP.)

40' 40'

TEMPORARY MARKING LINE
PAINT 8-INCH

BEGIN LEFT TURN LANE
R3-20L
24" X 36"

END ROAD WORK
G20-2A
48" X 24"

ROAD WORK AHEAD
W20-1A

W01-6
48" X 24"

LEGEND

- WORK ZONE
- TRAFFIC CONTROL DRUM WITH LIGHT
- TRAFFIC CONTROL DRUM
- TRAFFIC FLOW
- SIGN ON PERMANANT SUPPORT
- SIGN ON TEMPORARY SUPPORT
- TYPE III BARRICADE WITH/WITHOUT ATTACHED SIGN
- FLASHING ARROW BOARD

STAGING NOTES

DO NOT CLOSE TWO CONSECUTIVE MEDIAN OPENINGS AT THE SAME TIME.

MILL PAVEMENT, CONSTRUCT MEDIAN MODIFICATIONS, BASE PATCH, AND OVERLAY INSIDE LANES.

ADD PERMANANT SIGNING IN MEDIAN.

OVERLAY INSIDE LANE OF STRUCTURE B-67-87 AND B-67-88

2

BEGIN LEFT TURN LANE
R3-20L
24" X 36"

W01-6
48" X 24"

R3-4
24" X 24"

TEMPORARY MARKING LINE
PAINT 4-INCH YELLOW

TEMPORARY MARKING LINE
PAINT 8-INCH

LANE CLOSED
R11-2L
48" X 30"

W012-1D
24" X 24"

BEGIN LEFT TURN LANE
R3-20L
24" X 36"

STA. 252+00 CRASH CUSHIONS TEMPORARY

CONCRETE BARRIER TEMPORARY PRECAST

LANE CLOSED
R11-2L
48" X 30"

TRUCKS ENTERING & LEAVING
W8-6A

R/W

B-67-87

CAPITOL DRIVE (STH 190)

STA. 240+00 MATCH LINE

STA. 255+00 MATCH LINE

240 241+00 242+00 243+00 244+00 245+00 246+00 247+00 248+00 249+00 250+00 251+00 252+00 253+00 254+00 255

11' 11' 11' 11'

100' (TYP.)

END TAPER
STA. 241+40, 16' RT.

TEMPORARY MARKING LINE
PAINT 4-INCH WHITE

BEGIN TAPER
STA. 240+30, 18' RT.

BEGIN RIGHT TURN LANE
R3-20R
24" X 36"

TEMPORARY MARKING LINE
PAINT 4-INCH YELLOW

TEMPORARY MARKING LINE
PAINT 4-INCH WHITE

W01-4L

END ROAD WORK
G20-2A
48" X 24"

W01-6
48" X 24"

49+00

48+00

BARKER RD

200' 200'

ROAD WORK AHEAD
W20-1A

PLACE PCMS 7 DAYS IN ADVANCE OF CONSTRUCTION.

MESSAGE:
ROAD WORK
BEGINS
(DAY OF WEEK)

TRUCKS ENTERING & LEAVING
W8-6A

STA. 249+50 CRASH CUSHIONS TEMPORARY

LANE CLOSED
R11-2L
48" X 30"

B-67-88

R/W

FOX RIVER

TEMPORARY MARKING LINE
PAINT 4-INCH WHITE

TEMPORARY MARKING LINE
PAINT 4-INCH YELLOW

PROJECT NO:2025-14-71	HWY:STH 190	COUNTY:WAUKESHA	STAGE CONSTRUCTION-STAGE 1	SHEET 156	E

2

LEGEND

- WORK ZONE
- TRAFFIC CONTROL DRUM WITH LIGHT
- TRAFFIC CONTROL DRUM
- TRAFFIC FLOW
- SIGN ON PERMANANT SUPPORT
- SIGN ON TEMPORARY SUPPORT
- TYPE III BARRICADE WITH/WITHOUT ATTACHED SIGN
- FLASHING ARROW BOARD

STAGING NOTES

DO NOT CLOSE TWO CONSECUTIVE MEDIAN OPENINGS AT THE SAME TIME.

MILL PAVEMENT, CONSTRUCT MEDIAN MODIFICATIONS, BASE PATCH, AND OVERLAY INSIDE LANES.

ADD PERMANANT SIGNING IN MEDIAN.

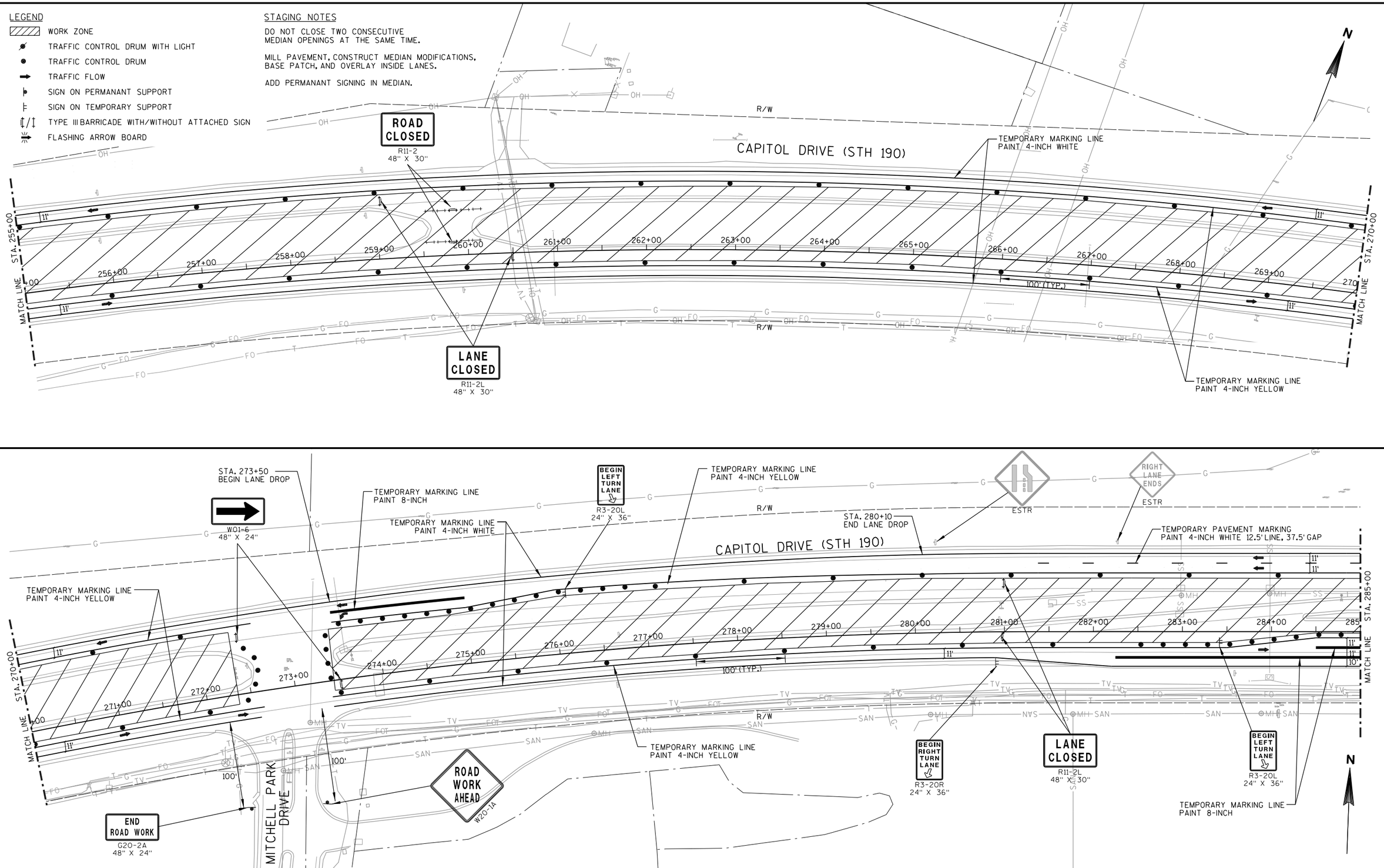

PROJECT NO:2025-14-71	HWY:STH 190	COUNTY:WAUKESHA	STAGE CONSTRUCTION-STAGE 1	SHEET 157	E

2

TEMPORARY MARKING LINE PAINT 8-INCH
TEMPORARY PAVEMENT MARKING PAINT 4-INCH WHITE 12.5' LINE, 37.5' GAP
TEMPORARY MARKING LINE PAINT 4-INCH WHITE
TEMPORARY MARKING LINE PAINT 4-INCH YELLOW
ROAD WORK AHEAD W20-1A
END ROAD WORK G20-2A 48" X 24"
TEMPORARY MARKING LINE PAINT 4-INCH WHITE
TEMPORARY PAVEMENT MARKING PAINT 4-INCH WHITE 12.5' LINE, 37.5' GAP
TEMPORARY MARKING LINE PAINT 4-INCH YELLOW
BEGIN LEFT TURN LANE R3-20L 24" X 36"
TEMPORARY MARKING LINE REMOVABLE TAPE 8-INCH
TEMPORARY MARKING LINE REMOVABLE TAPE 4-INCH WHITE
TEMPORARY MARKING LINE REMOVABLE TAPE 4-INCH YELLOW
BEGIN LANE SHIFT STA. 293+80, 66' LT.
LANE CLOSED R11-2L 48" X 30"
PLACE PCMS 7 DAYS IN ADVANCE OF CONSTRUCTION.
MESSAGE: ROAD WORK BEGINS (DAY OF WEEK)
LANE CLOSED R11-2L 48" X 30"
N
W1-4B 48" X 48"

CAPITOL DRIVE (STH 190)

50' 100' (TYP.) 11' 11' R/W

STA. 285+00 MATCH LINE 286+00 287+00 288+00 289+00 290+00 291+00 292+00 293+00 294+00 295+00 296+00 297+00 298+00 299 STA. 299+00 MATCH LINE

BEGIN LANE SHIFT STA. 291+50, 18' RT.
END LANE SHIFT STA. 294+80, 12' RT.
TEMPORARY MARKING LINE REMOVABLE TAPE 4-INCH WHITE 12.5' LINE, 37.5' GAP
TEMPORARY MARKING LINE REMOVABLE TAPE 4-INCH WHITE
END LANE SHIFT STA. 298+75, 48' LT.
TEMPORARY MARKING LINE REMOVABLE TAPE 4-INCH YELLOW
TEMPORARY MARKING LINE PAINT 4-INCH WHITE
TEMPORARY MARKING LINE PAINT 4-INCH YELLOW
TEMPORARY MARKING LINE PAINT 8-INCH
END ROAD WORK G20-2A 48" X 24"
W01-6 48" X 24"
ROAD WORK AHEAD W20-1A
BEGIN LEFT TURN LANE R3-20L 24" X 36"
200' 200' R/W
RICHLAND PKWY

2

END ROAD WORK G20-2A 48" X 24"
LANE CLOSED R11-2L 48" X 30"
W012-1D 24" X 24"
TEMPORARY MARKING LINE REMOVABLE TAPE 4-INCH WHITE
BEGIN RIGHT TURN LANE R3-20R 24" X 36"
LANE CLOSED R11-2L 48" X 30"
N
RIGHT LANE CLOSED 1500 FT W20-5B
RIGHT LANE CLOSED 1/2 MILE W20-5G
ROAD WORK 1 MILE W20-1F
200' 150' R/W
ROAD WORK AHEAD W20-1A
TEMPORARY MARKING LINE REMOVABLE TAPE 8-INCH
1000' 525' 1600' 2600' 575' 50' (TYP.) 100' 660' LANE DROP
5 DRUMS SPACED @10' INTERVALS

STA. 299+00 MATCH LINE 300+00 301+00 302+00 303+00 304+00 305+00 306+00 307+00 308+00 309+00 310+00 311+00

CAPITOL DRIVE (STH 190)

END ROAD WORK G20-2A 48" X 24"
END ROAD WORK G20-2A 48" X 24"
W04-2R
R/W 300' 300'
ROAD WORK AHEAD W20-1A
BROOKFIELD RD
ST. ANDREWS LN
3_234
2_238_14 860.43

LEGEND

- WORK ZONE
- TRAFFIC CONTROL DRUM WITH LIGHT
- TRAFFIC CONTROL DRUM
- TRAFFIC FLOW
- SIGN ON PERMANANT SUPPORT
- SIGN ON TEMPORARY SUPPORT
- TYPE III BARRICADE WITH/WITHOUT ATTACHED SIGN
- FLASHING ARROW BOARD

STAGING NOTES

DO NOT CLOSE TWO CONSECUTIVE MEDIAN OPENINGS AT THE SAME TIME.

MILL PAVEMENT, CONSTRUCT MEDIAN MODIFICATIONS, BASE PATCH, AND OVERLAY INSIDE LANES.

ADD PERMANANT SIGNING IN MEDIAN.

PROJECT NO: 2025-14-71	HWY: STH 190	COUNTY: WAUKESHA	STAGE CONSTRUCTION-STAGE 1	SHEET 158	E

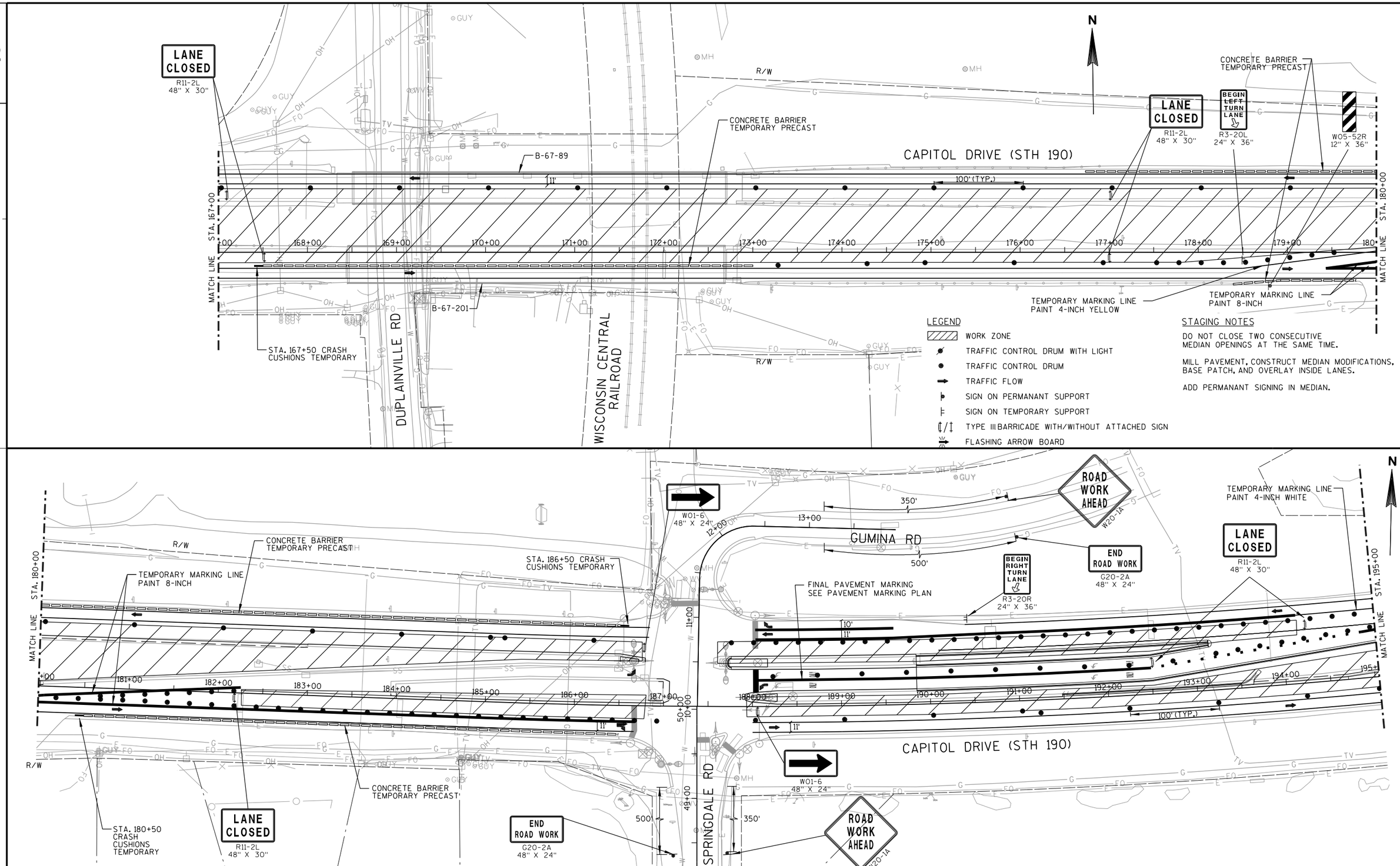
LANE CLOSED
R11-2L
48" X 30"
CONCRETE BARRIER TEMPORARY PRECAST
B-67-89
CAPITOL DRIVE (STH 190)
100' (TYP.)
STA. 167+00
MATCH LINE
168+00
169+00
170+00
171+00
172+00
173+00
174+00
175+00
176+00
177+00
178+00
179+00
180
STA. 180+00
BEGIN LEFT TURN LANE
R3-20L
24" X 36"
W05-52R
12" X 36"
TEMPORARY MARKING LINE PAINT 4-INCH YELLOW
TEMPORARY MARKING LINE PAINT 8-INCH
B-67-201
STA. 167+50 CRASH CUSHIONS TEMPORARY
DUPLAINVILLE RD
WISCONSIN CENTRAL RAILROAD
R/W
N
LEGEND
WORK ZONE
TRAFFIC CONTROL DRUM WITH LIGHT
TRAFFIC CONTROL DRUM
TRAFFIC FLOW
SIGN ON PERMANANT SUPPORT
SIGN ON TEMPORARY SUPPORT
TYPE III BARRICADE WITH/WITHOUT ATTACHED SIGN
FLASHING ARROW BOARD
STAGING NOTES
DO NOT CLOSE TWO CONSECUTIVE MEDIAN OPENINGS AT THE SAME TIME.
MILL PAVEMENT, CONSTRUCT MEDIAN MODIFICATIONS, BASE PATCH, AND OVERLAY INSIDE LANES.
ADD PERMANANT SIGNING IN MEDIAN.
W01-6
48" X 24"
ROAD WORK AHEAD
W20-1A
350'
500'
13+00
12+00
GUMINA RD
END ROAD WORK
G20-2A
48" X 24"
BEGIN RIGHT TURN LANE
R3-20R
24" X 36"
FINAL PAVEMENT MARKING SEE PAVEMENT MARKING PLAN
TEMPORARY MARKING LINE PAINT 4-INCH WHITE
STA. 186+50 CRASH CUSHIONS TEMPORARY
STA. 180+50 CRASH CUSHIONS TEMPORARY
181+00
182+00
183+00
184+00
185+00
186+00
187+00
188+00
189+00
190+00
191+00
192+00
193+00
194+00
195
STA. 195+00
11+00
10+00
50+00
49+00
SPRINGDALE RD
10'
11'

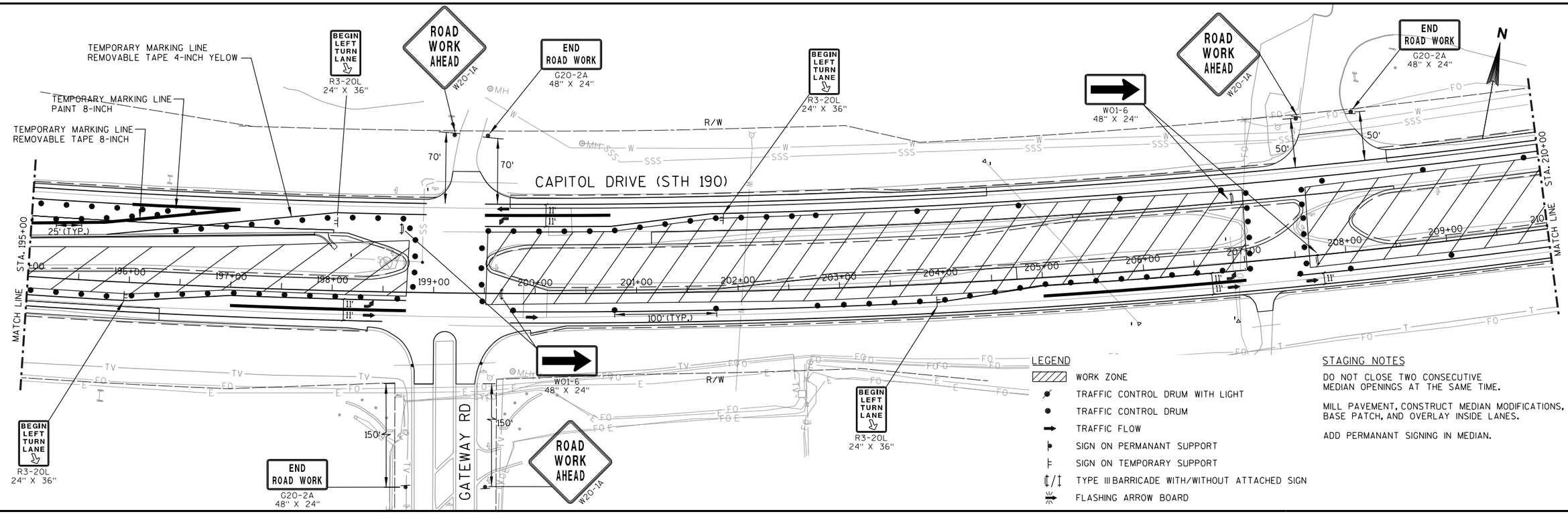

LEGEND

- WORK ZONE
- TRAFFIC CONTROL DRUM WITH LIGHT
- TRAFFIC CONTROL DRUM
- TRAFFIC FLOW
- SIGN ON PERMANANT SUPPORT
- SIGN ON TEMPORARY SUPPORT
- TYPE III BARRICADE WITH/WITHOUT ATTACHED SIGN
- FLASHING ARROW BOARD

STAGING NOTES

DO NOT CLOSE TWO CONSECUTIVE MEDIAN OPENINGS AT THE SAME TIME.

MILL PAVEMENT, CONSTRUCT MEDIAN MODIFICATIONS, BASE PATCH, AND OVERLAY INSIDE LANES.

ADD PERMANANT SIGNING IN MEDIAN.

2

2

LEGEND

- WORK ZONE
- TRAFFIC CONTROL DRUM WITH LIGHT
- TRAFFIC CONTROL DRUM
- TRAFFIC FLOW
- SIGN ON PERMANANT SUPPORT
- SIGN ON TEMPORARY SUPPORT
- TYPE III BARRICADE WITH/WITHOUT ATTACHED SIGN
- FLASHING ARROW BOARD

STAGING NOTES

DO NOT CLOSE TWO CONSECUTIVE MEDIAN OPENINGS AT THE SAME TIME.

MILL PAVEMENT, CONSTRUCT MEDIAN MODIFICATIONS, BASE PATCH, AND OVERLAY INSIDE LANES.

ADD PERMANANT SIGNING IN MEDIAN.

OVERLAY INSIDE LANE OF WESTBOUND BRIDGE PRIOR TO INITIATING STAGE 1A.

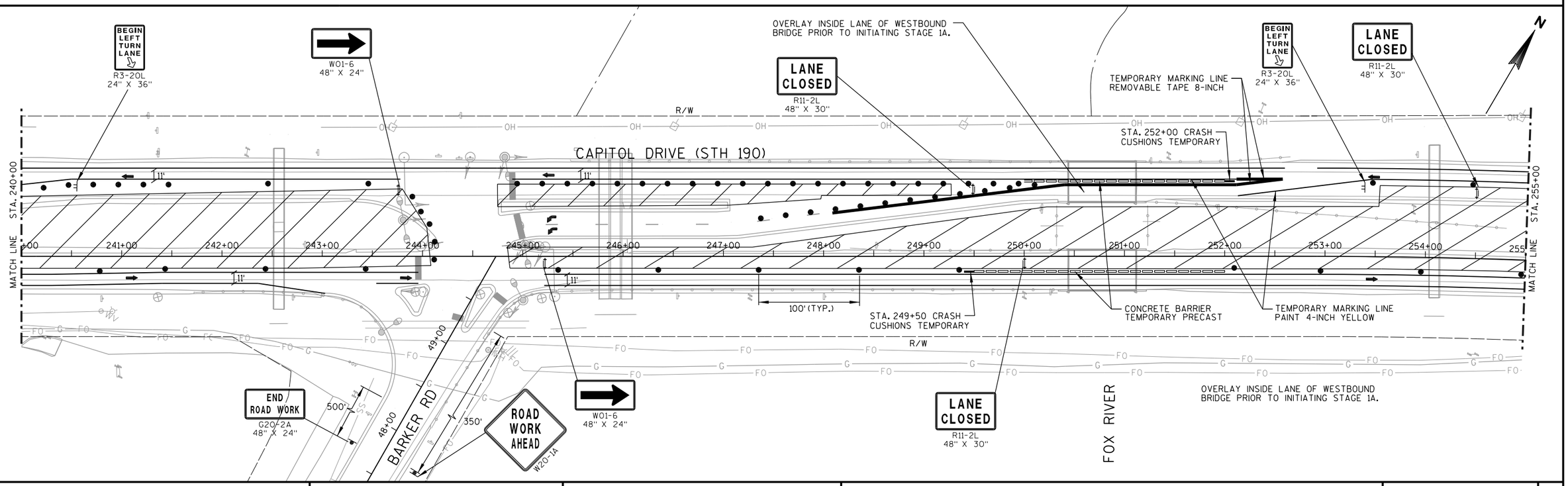

PROJECT NO:2025-14-71	HWY:STH 190	COUNTY:WAUKESHA	STAGE CONSTRUCTION-STAGE 1A (LEFT TURN LANE)	SHEET 161	E

2

LEGEND

- WORK ZONE
- TRAFFIC CONTROL DRUM WITH LIGHT
- TRAFFIC CONTROL DRUM
- TRAFFIC FLOW
- SIGN ON PERMANANT SUPPORT
- SIGN ON TEMPORARY SUPPORT
- TYPE III BARRICADE WITH/WITHOUT ATTACHED SIGN
- FLASHING ARROW BOARD

STAGING NOTES

DO NOT CLOSE TWO CONSECUTIVE MEDIAN OPENINGS AT THE SAME TIME.

MILL PAVEMENT, CONSTRUCT MEDIAN MODIFICATIONS, BASE PATCH, AND OVERLAY INSIDE LANES.

ADD PERMANANT SIGNING IN MEDIAN.

2

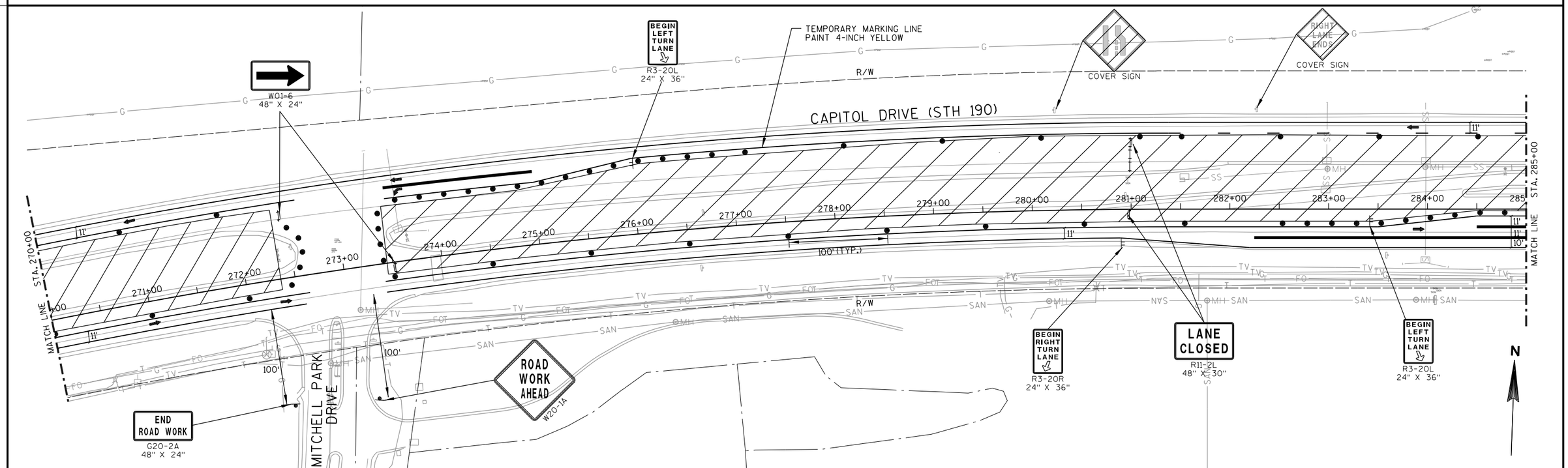

PROJECT NO:2025-14-71	HWY:STH 190	COUNTY:WAUKESHA	STAGE CONSTRUCTION-STAGE 1B	SHEET 162	E

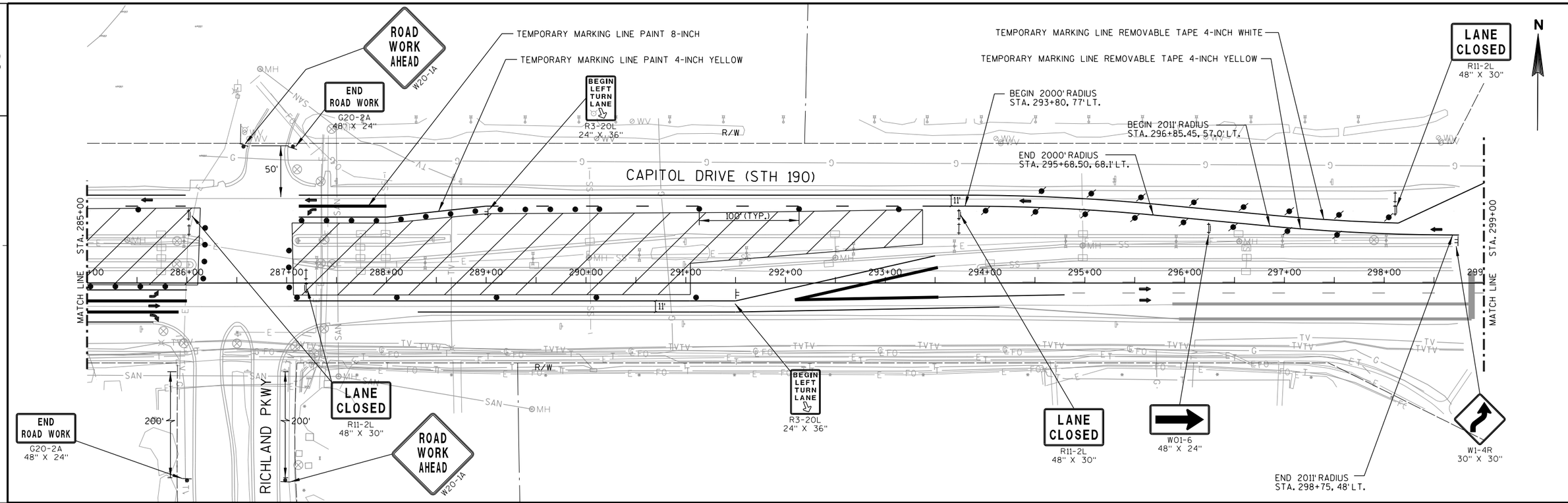

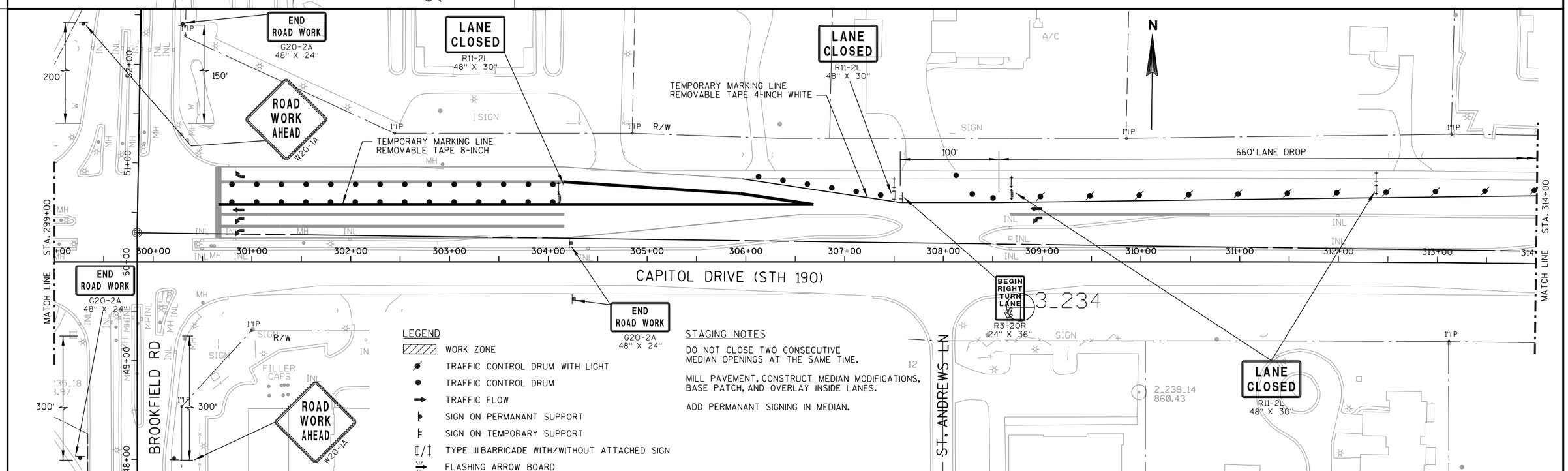

PROJECT NO:2025-14-71	HWY:STH 190	COUNTY:WAUKESHA	STAGE CONSTRUCTION-STAGE 1B	SHEET 163	E

2

LEGEND

- WORK ZONE
- TRAFFIC CONTROL DRUM WITH LIGHT
- TRAFFIC CONTROL DRUM
- TRAFFIC FLOW
- SIGN ON PERMANANT SUPPORT
- SIGN ON TEMPORARY SUPPORT
- TYPE III BARRICADE WITH/WITHOUT ATTACHED SIGN
- FLASHING ARROW BOARD

STAGING NOTES

DO NOT CLOSE TWO CONSECUTIVE MEDIAN OPENINGS AT THE SAME TIME.

MILL PAVEMENT, CONSTRUCT MEDIAN MODIFICATIONS, BASE PATCH, AND OVERLAY INSIDE LANES.

ADD PERMANANT SIGNING IN MEDIAN.

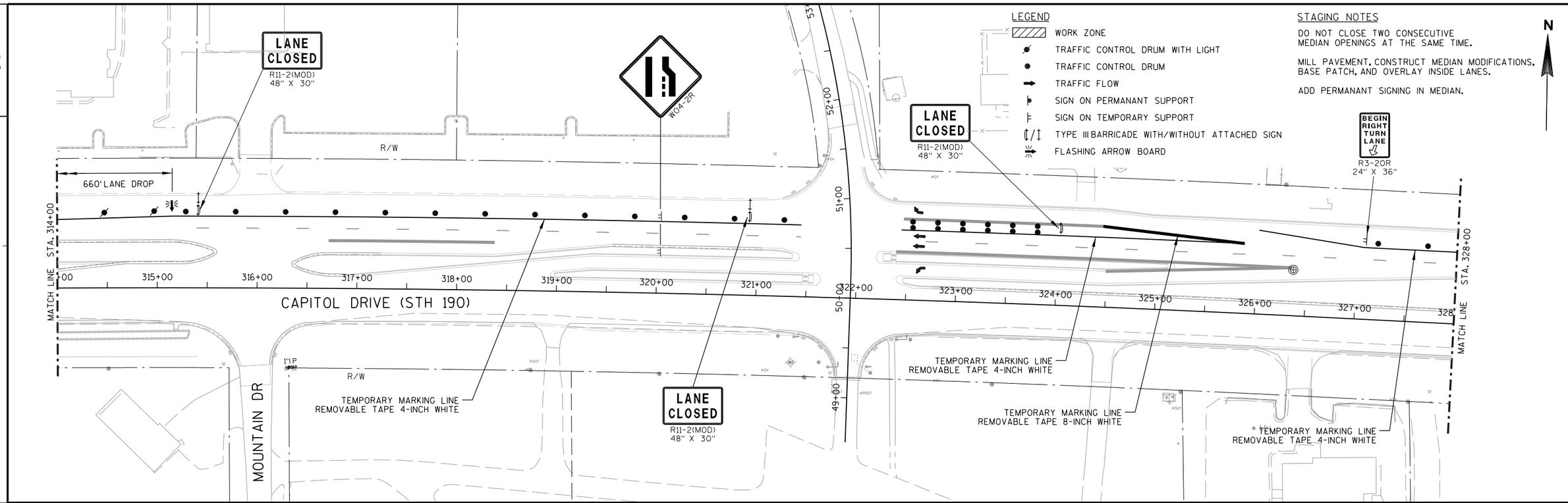

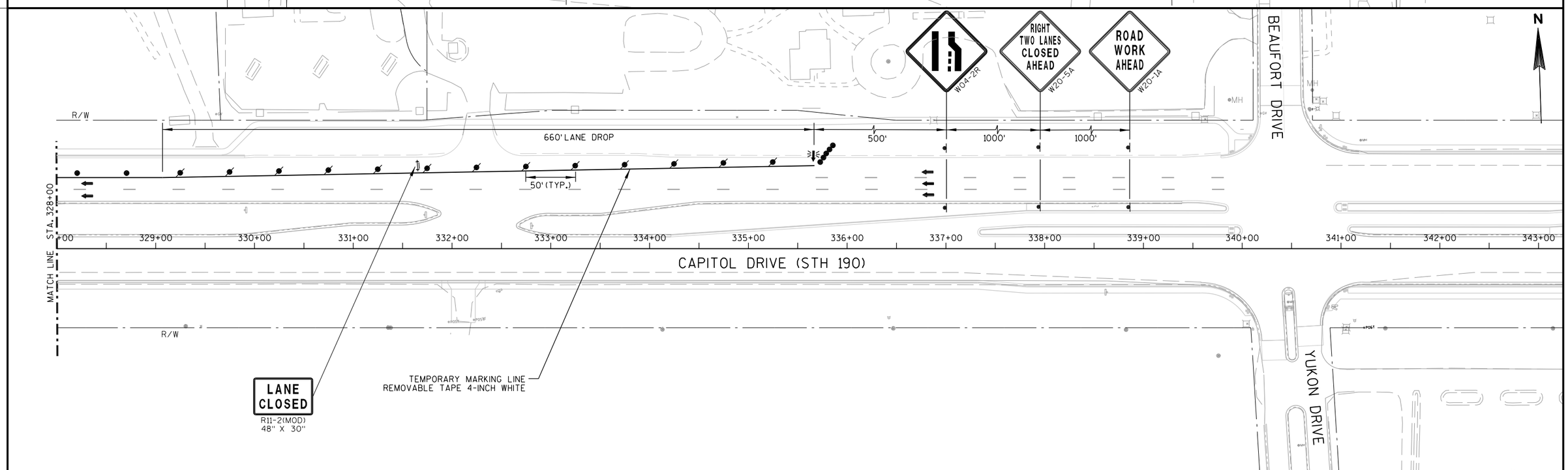

PROJECT NO:2025-14-71	HWY:STH 190	COUNTY:WAUKESHA	STAGE CONSTRUCTION-STAGE 1B	SHEET 164	E

2

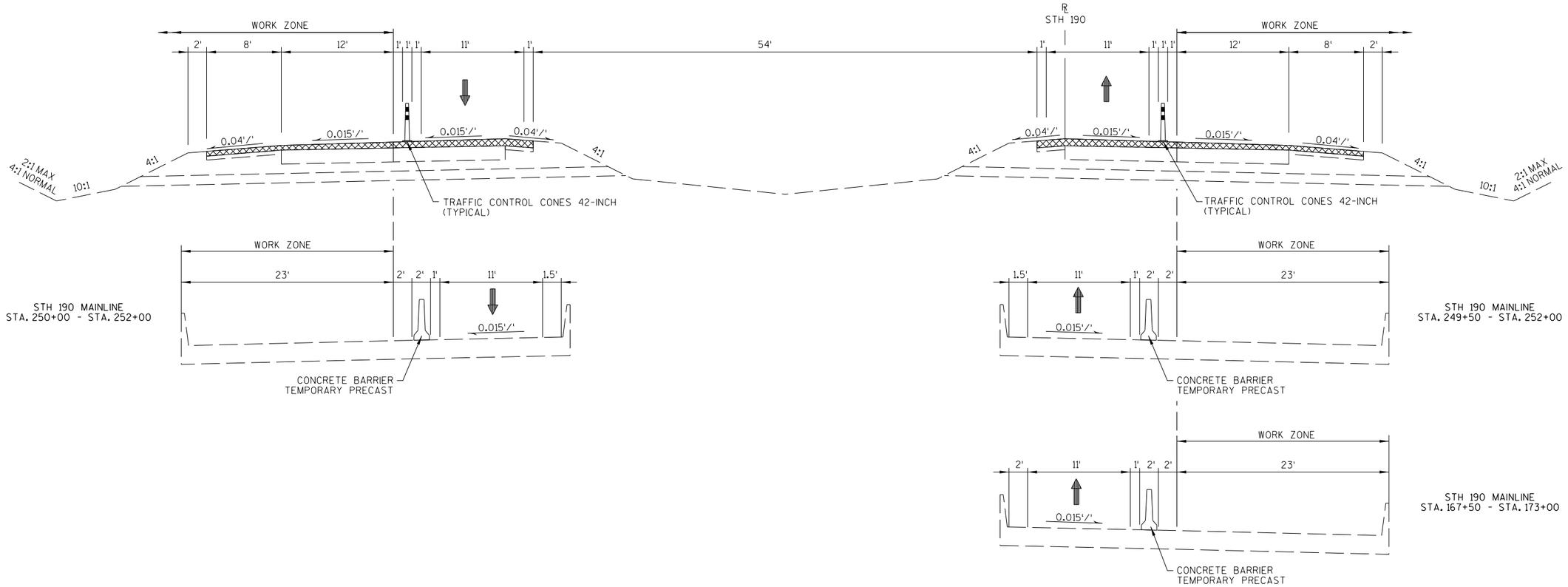

STAGE 2

STH 190 MAINLINE
STA. 148+00 - STA. 281+00
(CTH F - MITCHELL PARK DRIVE)

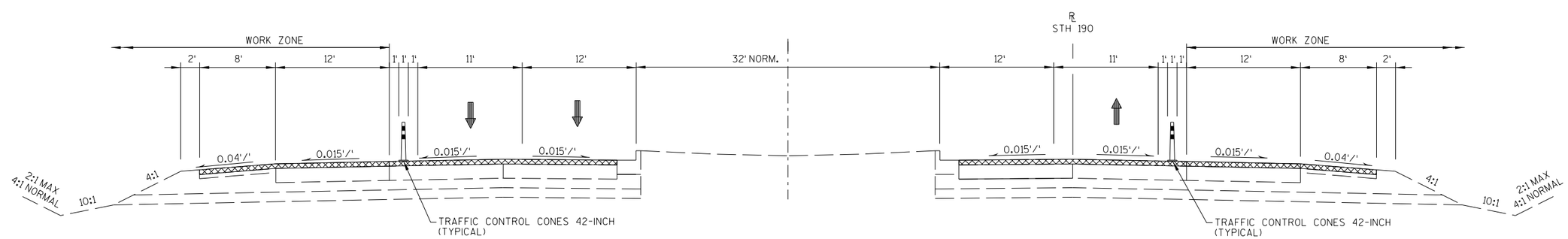

STAGE 2

STH 190 MAINLINE
STA. 281+00 - STA. 293+28.72
(MITCHELL PARK DRIVE - BROOKFIELD ROAD)

PROJECT NO:2025-14-71	HWY:STH 190	COUNTY:WAUKESHA	STAGE CONSTRUCTION - MAINLINE STAGE 2	SHEET 165	E

2

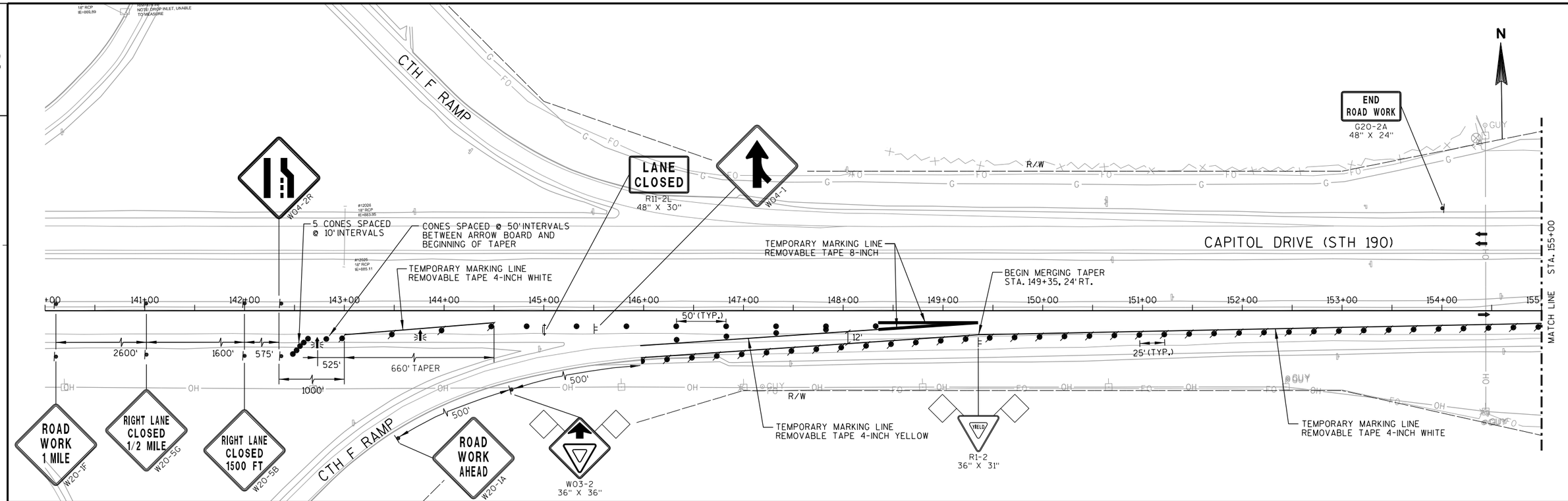

2

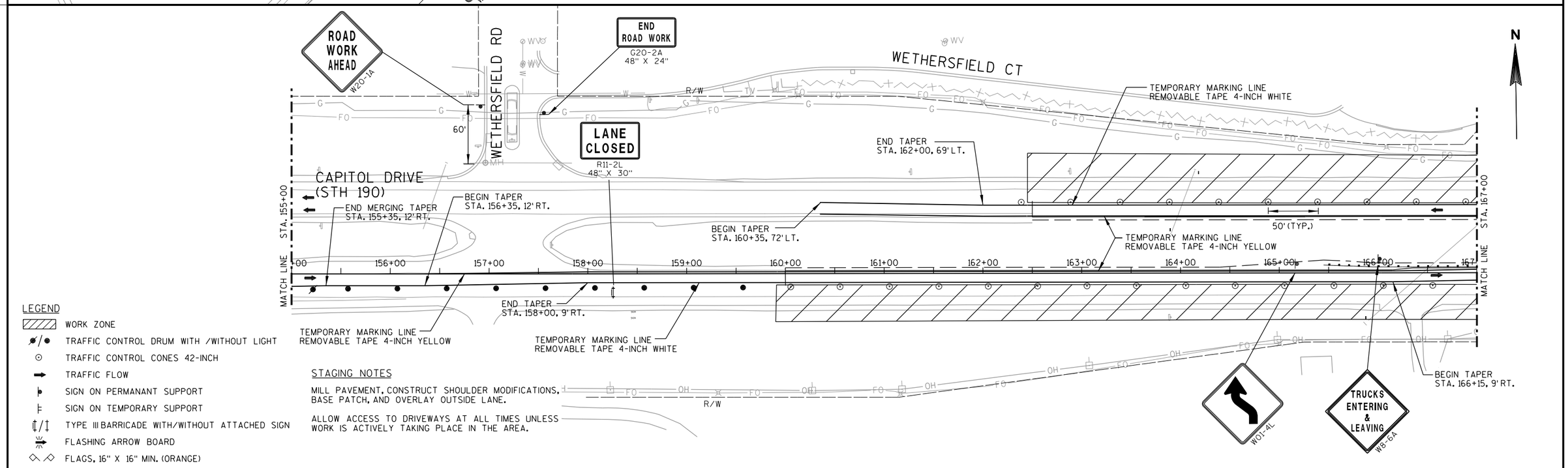

LEGEND

- WORK ZONE
- TRAFFIC CONTROL DRUM WITH /WITHOUT LIGHT
- TRAFFIC CONTROL CONES 42-INCH
- TRAFFIC FLOW
- SIGN ON PERMANANT SUPPORT
- SIGN ON TEMPORARY SUPPORT
- TYPE III BARRICADE WITH/WITHOUT ATTACHED SIGN
- FLASHING ARROW BOARD
- FLAGS, 16" X 16" MIN. (ORANGE)

STAGING NOTES

MILL PAVEMENT, CONSTRUCT SHOULDER MODIFICATIONS, BASE PATCH, AND OVERLAY OUTSIDE LANE.

ALLOW ACCESS TO DRIVEWAYS AT ALL TIMES UNLESS WORK IS ACTIVELY TAKING PLACE IN THE AREA.

PROJECT NO:2025-14-71	HWY:STH 190	COUNTY:WAUKESHA	STAGE CONSTRUCTION-STAGE 2	SHEET 166	E

2

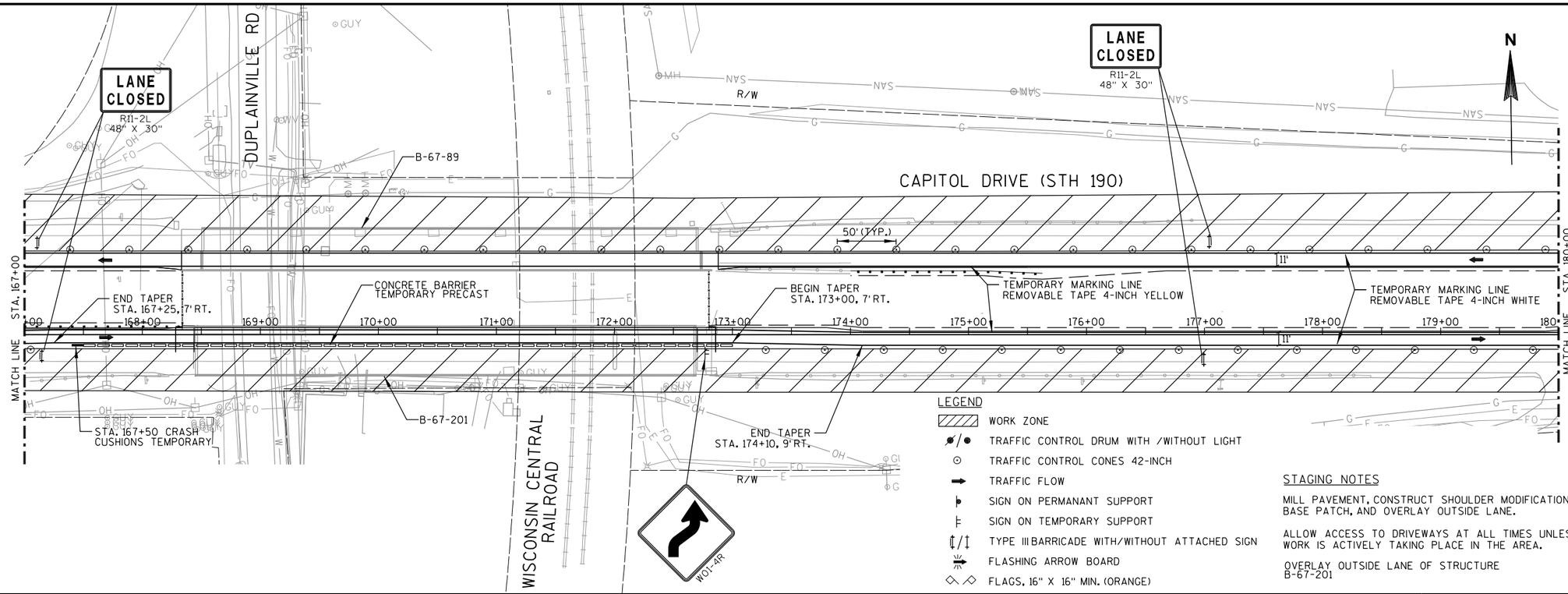

STAGING NOTES

MILL PAVEMENT, CONSTRUCT SHOULDER MODIFICATIONS, BASE PATCH, AND OVERLAY OUTSIDE LANE.

ALLOW ACCESS TO DRIVEWAYS AT ALL TIMES UNLESS WORK IS ACTIVELY TAKING PLACE IN THE AREA.

OVERLAY OUTSIDE LANE OF STRUCTURE B-67-201

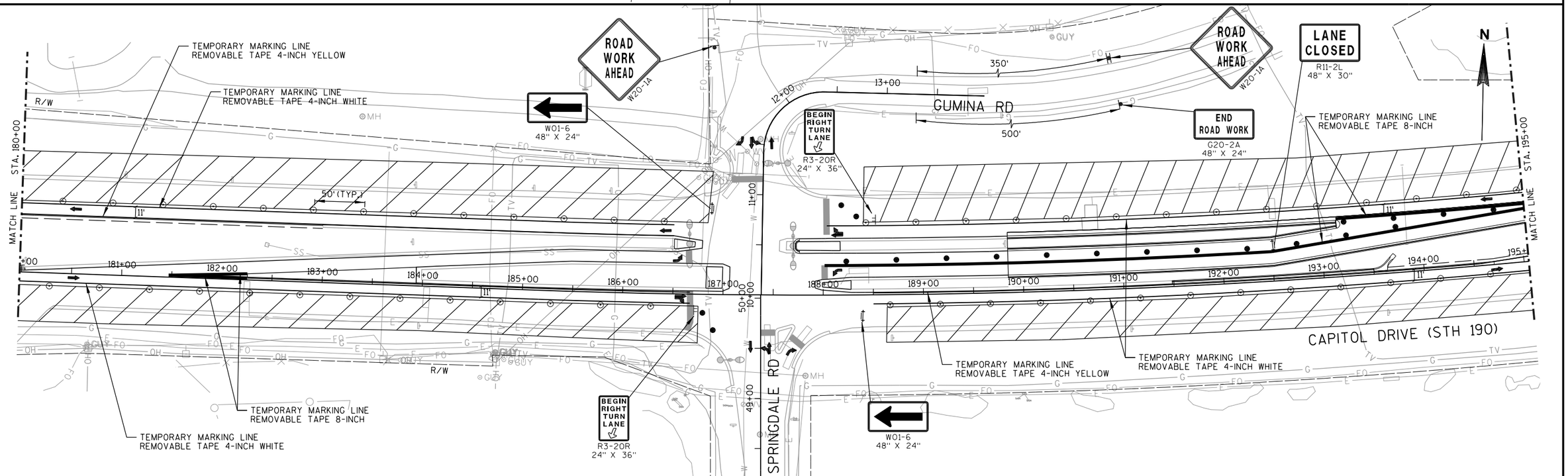

2

PROJECT NO:2025-14-71	HWY:STH 190	COUNTY:WAUKESHA	STAGE CONSTRUCTION-STAGE 2	SHEET 167	E

2

LANE CLOSED
R11-2L
48" X 30"

ROAD WORK AHEAD
W20-1A

END ROAD WORK
G20-2A
48" X 24"

TEMPORARY MARKING LINE
REMOVABLE TAPE 8-INCH

TEMPORARY MARKING LINE
REMOVABLE TAPE 4-INCH YELLOW

R/W

CAPITOL DRIVE (STH 190)

50'(TYP.)

STA. 195+00

MATCH LINE

195+00 196+00 197+00 198+00 199+00 200+00 201+00 202+00 203+00 204+00 205+00 206+00 207+00 208+00 209+00 210

STA. 210+00

TEMPORARY MARKING LINE
REMOVABLE TAPE 8-INCH

TEMPORARY MARKING LINE
REMOVABLE TAPE 4-INCH YELLOW

TEMPORARY MARKING LINE
REMOVABLE TAPE 8-INCH

TEMPORARY MARKING LINE
REMOVABLE TAPE 4-INCH WHITE

TEMPORARY MARKING LINE
REMOVABLE TAPE 4-INCH WHITE

GATEWAY RD

150'

W01-6
48" X 24"

N

LEGEND

- WORK ZONE
- TRAFFIC CONTROL DRUM WITH /WITHOUT LIGHT
- TRAFFIC CONTROL CONES 42-INCH
- TRAFFIC FLOW
- SIGN ON PERMANANT SUPPORT
- SIGN ON TEMPORARY SUPPORT
- TYPE III BARRICADE WITH/WITHOUT ATTACHED SIGN
- FLASHING ARROW BOARD
- FLAGS, 16" X 16" MIN. (ORANGE)

STAGING NOTES

MILL PAVEMENT, CONSTRUCT SHOULDER MODIFICATIONS, BASE PATCH, AND OVERLAY OUTSIDE LANE.

ALLOW ACCESS TO DRIVEWAYS AT ALL TIMES UNLESS WORK IS ACTIVELY TAKING PLACE IN THE AREA.

CAPITOL DRIVE (STH 190)

R/W

50'(TYP.)

STA. 210+00

MATCH LINE

211+00 212+00 213+00 214+00 215+00 216+00 217+00 218+00 219+00 220+00 221+00 222+00 223+00 224+00 225

STA. 225+00

TEMPORARY MARKING LINE
REMOVABLE TAPE 4-INCH YELLOW

TEMPORARY MARKING LINE
REMOVABLE TAPE 8-INCH

TEMPORARY MARKING LINE
REMOVABLE TAPE 4-INCH WHITE

N

2

PROJECT NO:2025-14-71	HWY:STH 190	COUNTY:WAUKESHA	STAGE CONSTRUCTION-STAGE 2	SHEET 168	E

2

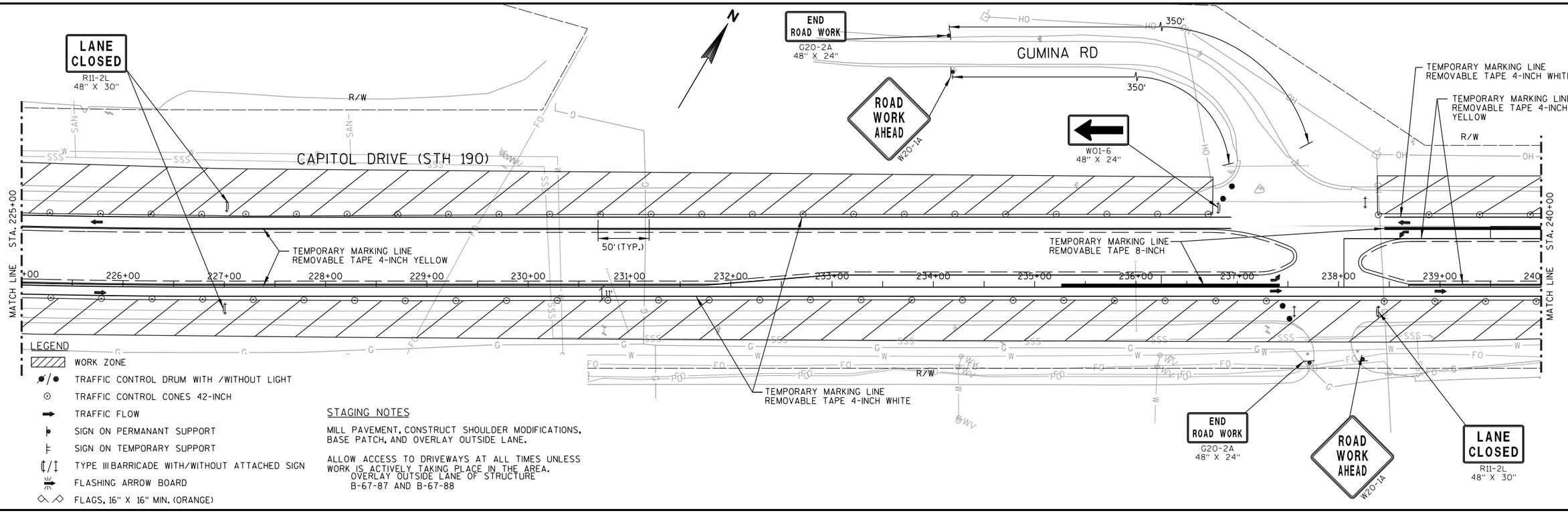

LEGEND

- WORK ZONE
- TRAFFIC CONTROL DRUM WITH /WITHOUT LIGHT
- TRAFFIC CONTROL CONES 42-INCH
- TRAFFIC FLOW
- SIGN ON PERMANANT SUPPORT
- SIGN ON TEMPORARY SUPPORT
- TYPE III BARRICADE WITH/WITHOUT ATTACHED SIGN
- FLASHING ARROW BOARD
- FLAGS, 16" X 16" MIN. (ORANGE)

STAGING NOTES

MILL PAVEMENT, CONSTRUCT SHOULDER MODIFICATIONS, BASE PATCH, AND OVERLAY OUTSIDE LANE.

ALLOW ACCESS TO DRIVEWAYS AT ALL TIMES UNLESS WORK IS ACTIVELY TAKING PLACE IN THE AREA.
OVERLAY OUTSIDE LANE OF STRUCTURE B-67-87 AND B-67-88

2

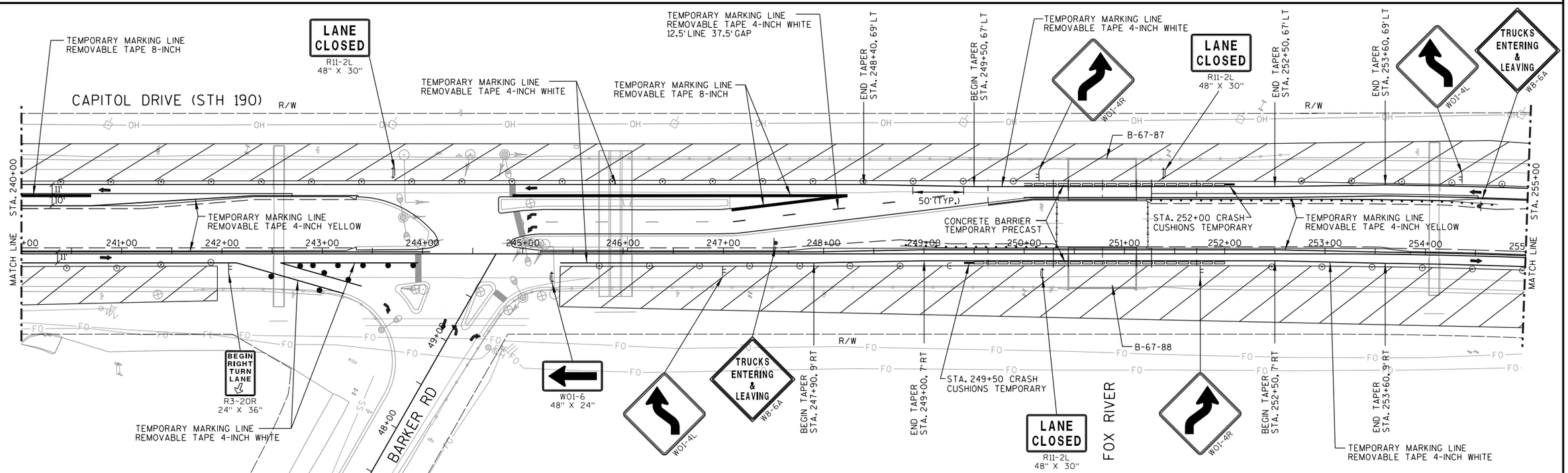

PROJECT NO: 2025-14-71	HWY: STH 190	COUNTY: WAUKESHA	STAGE CONSTRUCTION-STAGE 2	SHEET 169	E

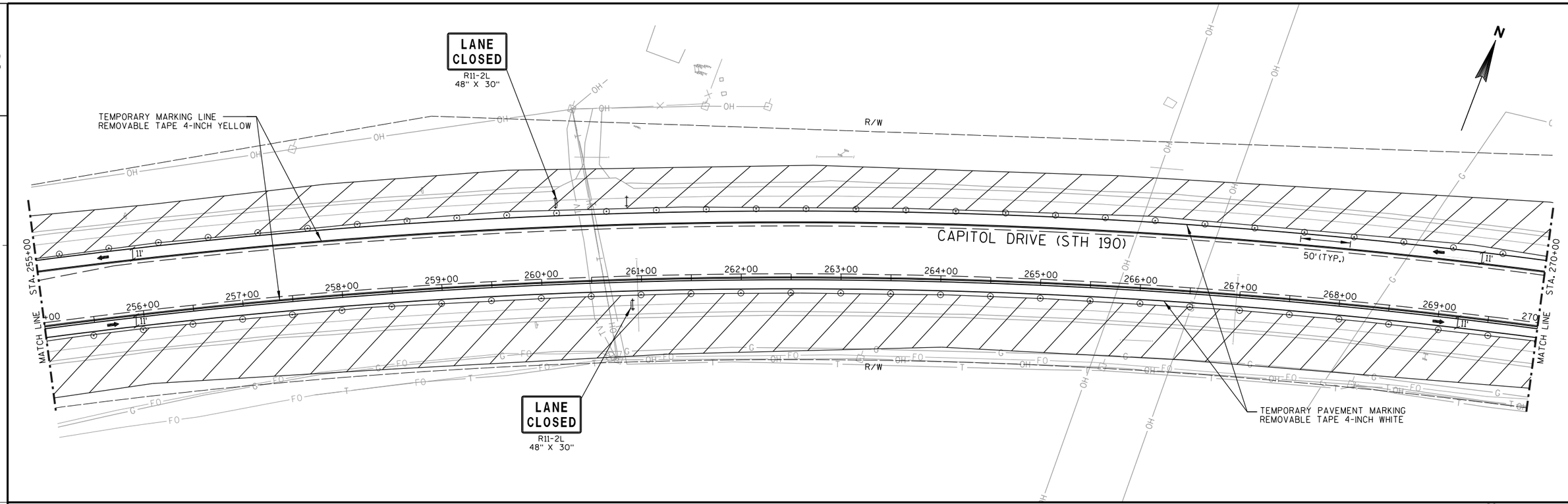

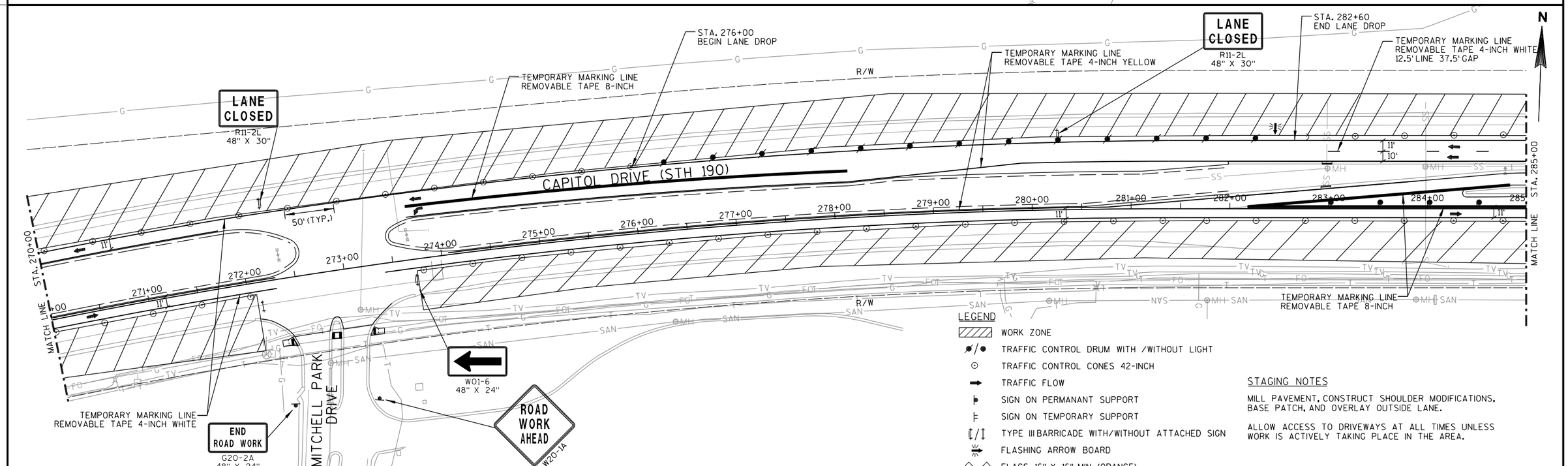

STAGING NOTES

MILL PAVEMENT, CONSTRUCT SHOULDER MODIFICATIONS, BASE PATCH, AND OVERLAY OUTSIDE LANE.

ALLOW ACCESS TO DRIVEWAYS AT ALL TIMES UNLESS WORK IS ACTIVELY TAKING PLACE IN THE AREA.

PROJECT NO:2025-14-71	HWY:STH 190	COUNTY:WAUKESHA	STAGE CONSTRUCTION-STAGE 2	SHEET 170	E

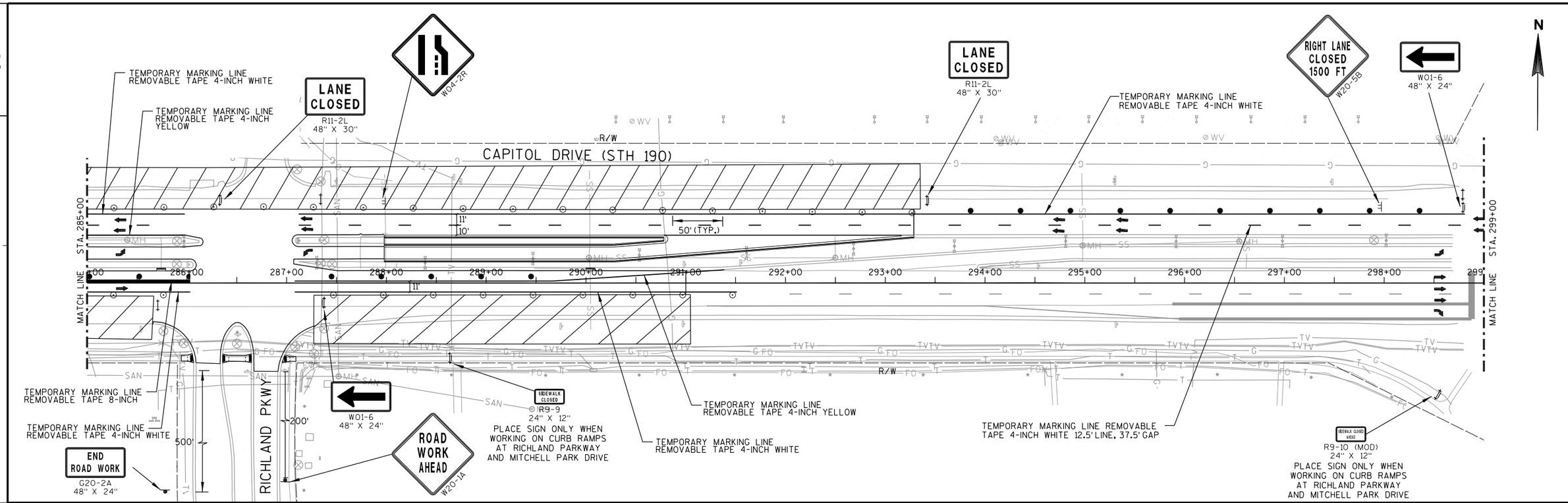

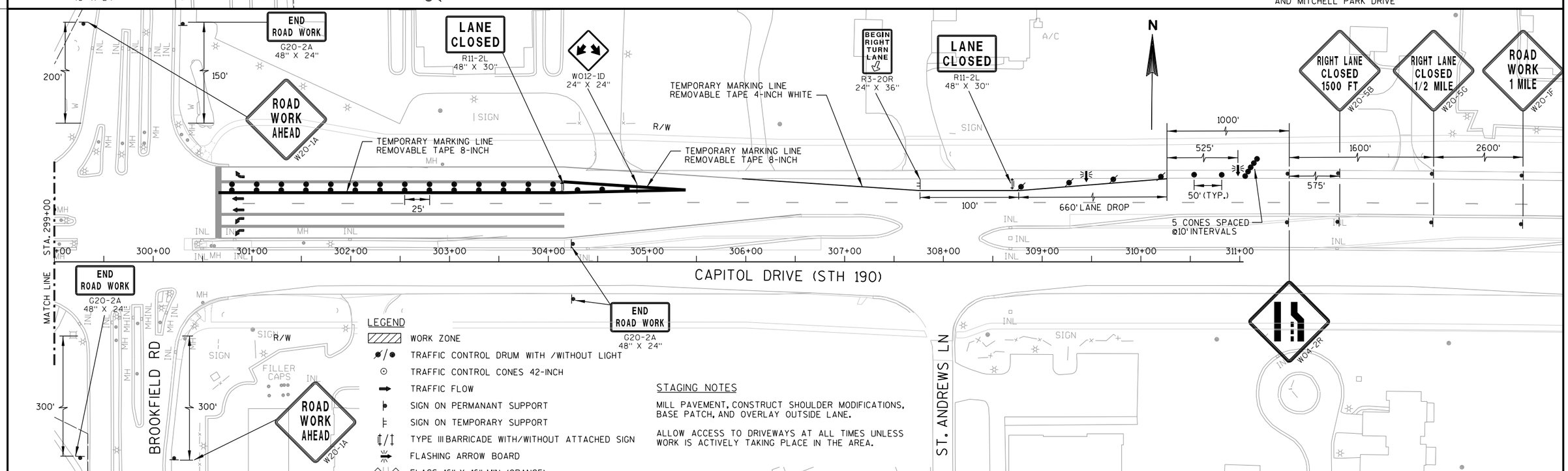

PROJECT NO: 2025-14-71	HWY: STH 190	COUNTY: WAUKESHA	STAGE CONSTRUCTION-STAGE 2	SHEET 171	E

2

LEGEND

- WORK ZONE
- TRAFFIC CONTROL DRUM WITH /WITHOUT LIGHT
- TRAFFIC CONTROL CONES 42-INCH
- TRAFFIC FLOW
- SIGN ON PERMANANT SUPPORT
- SIGN ON TEMPORARY SUPPORT
- TYPE III BARRICADE WITH/WITHOUT ATTACHED SIGN
- FLASHING ARROW BOARD
- FLAGS, 16" X 16" MIN. (ORANGE)

STAGING NOTES

CONSTRUCT SPRINGSDALE ROAD.

SEE DETOUR PLANS FOR ADDITIONAL SIGNING FOR THE ROAD CLOSURE.

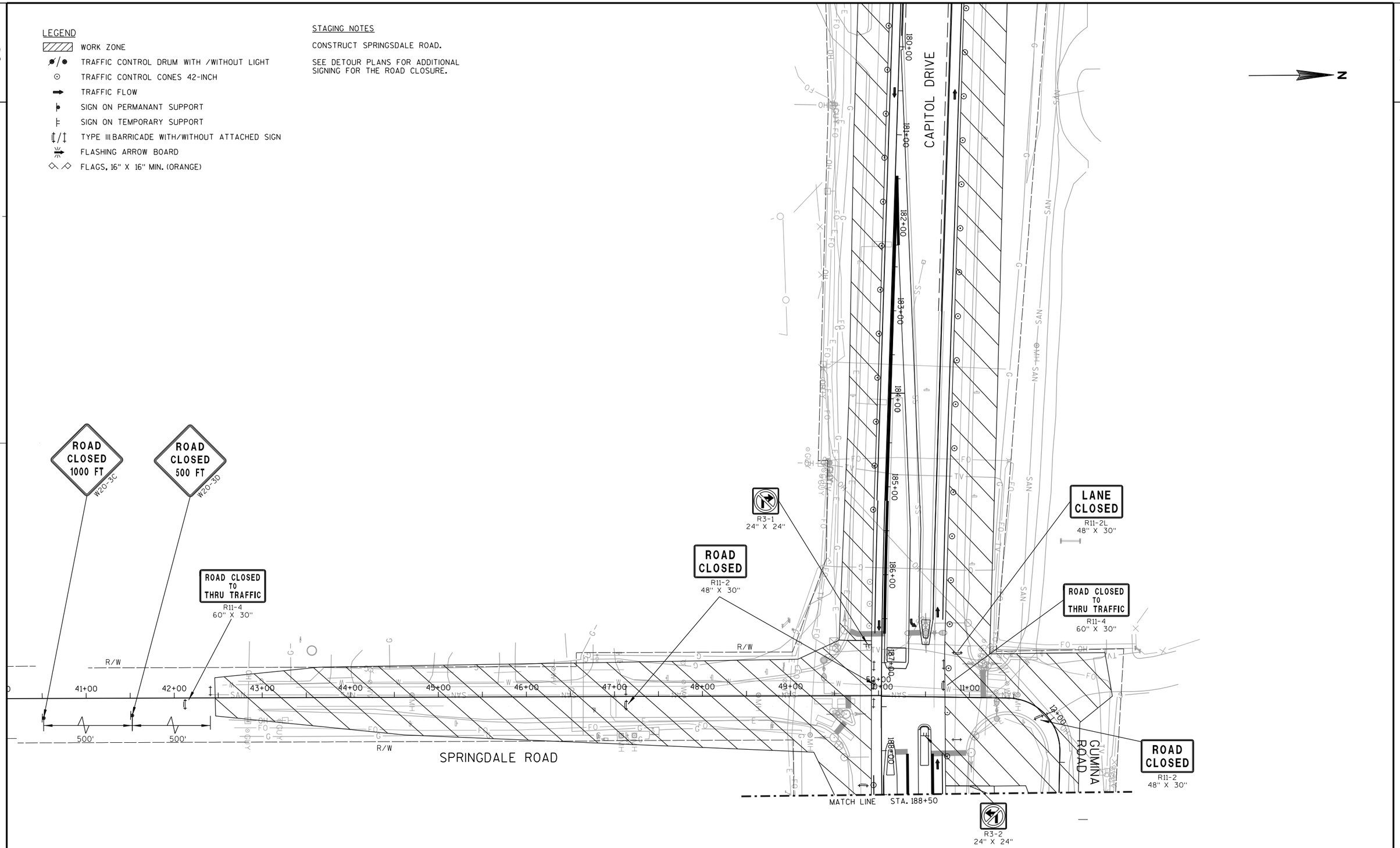

2

PROJECT NO:2025-14-71	HWY:STH 190	COUNTY:WAUKESHA	STAGE CONSTRUCTION-STAGE 2A - SPRINGDALE ROAD	SHEET 172	E

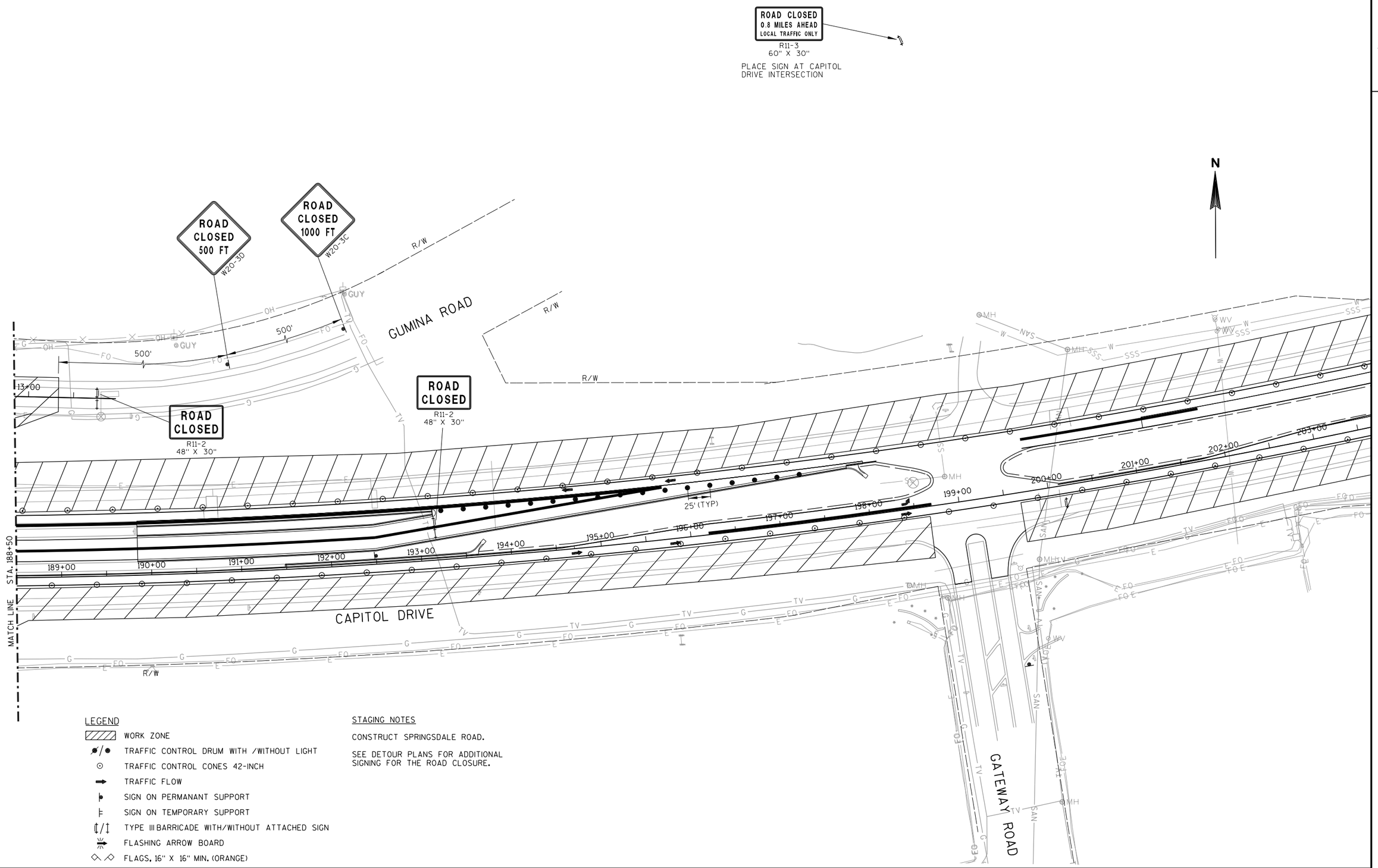

PROJECT NO:2025-14-71	HWY:STH 190	COUNTY:WAUKESHA	STAGE CONSTRUCTION-STAGE 2A - SPRINGDALE ROAD	SHEET 173	E

2

LEGEND

- WORK ZONE
- TRAFFIC CONTROL DRUM WITH /WITHOUT LIGHT
- TRAFFIC CONTROL CONES 42-INCH
- TRAFFIC FLOW
- SIGN ON PERMANANT SUPPORT
- SIGN ON TEMPORARY SUPPORT
- TYPE III BARRICADE WITH/WITHOUT ATTACHED SIGN
- FLASHING ARROW BOARD
- FLAGS, 16" X 16" MIN. (ORANGE)

STAGING NOTES

CONSTRUCT BARKER ROAD AND WB LEFT TURN LANES ON CAPITOL DRIVE.

SEE DETOUR PLANS FOR ADDITIONAL SIGNING FOR THE ROAD CLOSURE.

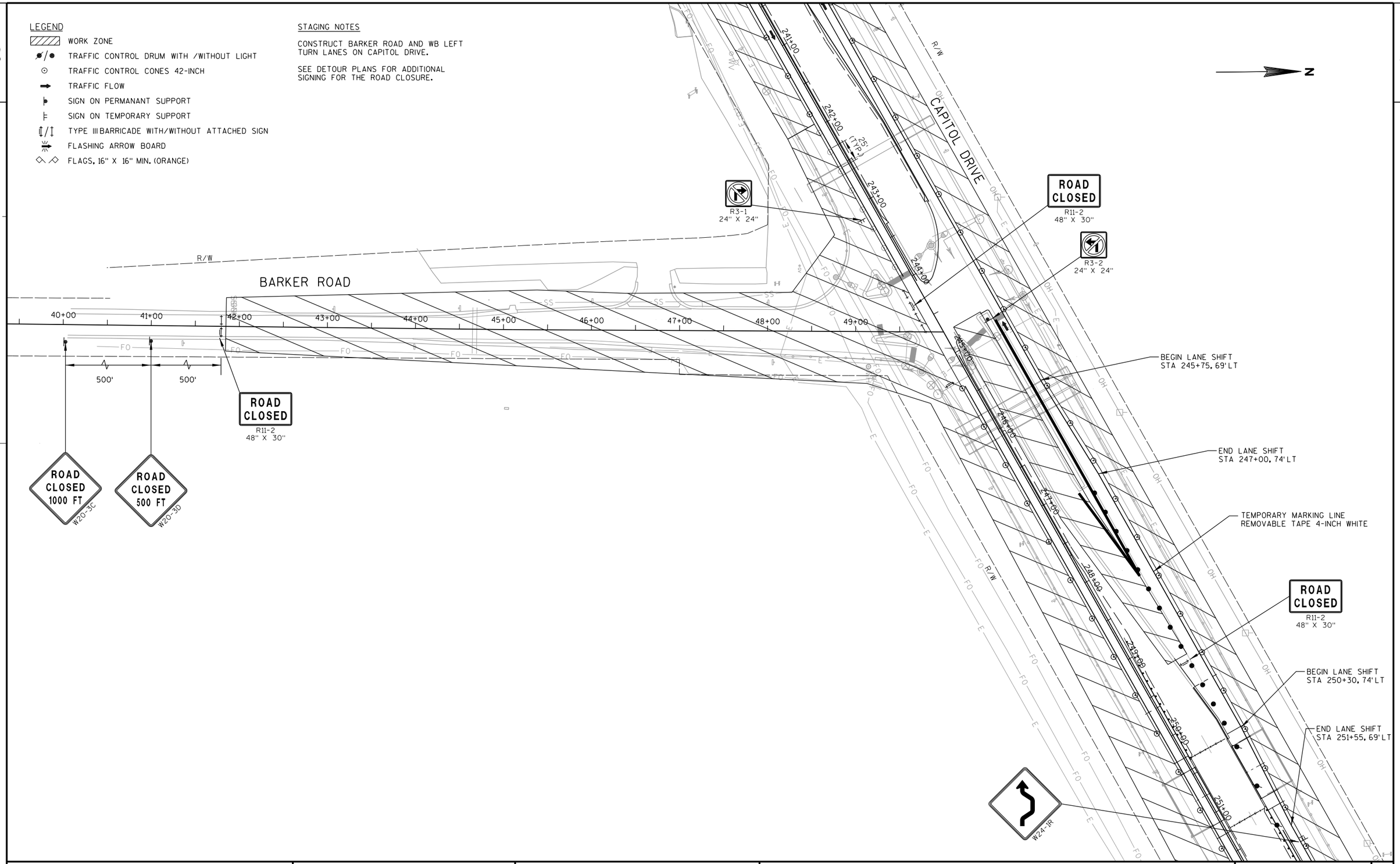

2

PROJECT NO:2025-14-71	HWY:STH 190	COUNTY:WAUKESHA	STAGE CONSTRUCTION-STAGE 2B - BARKER ROAD	SHEET 174	E

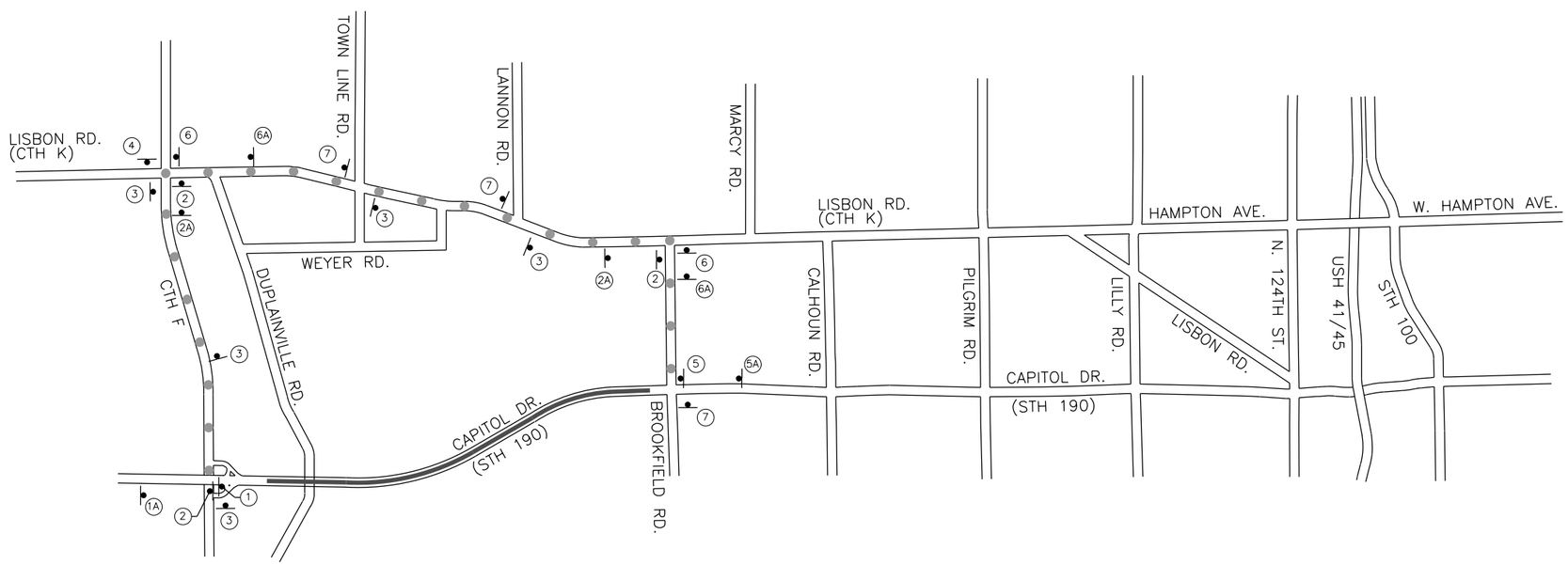

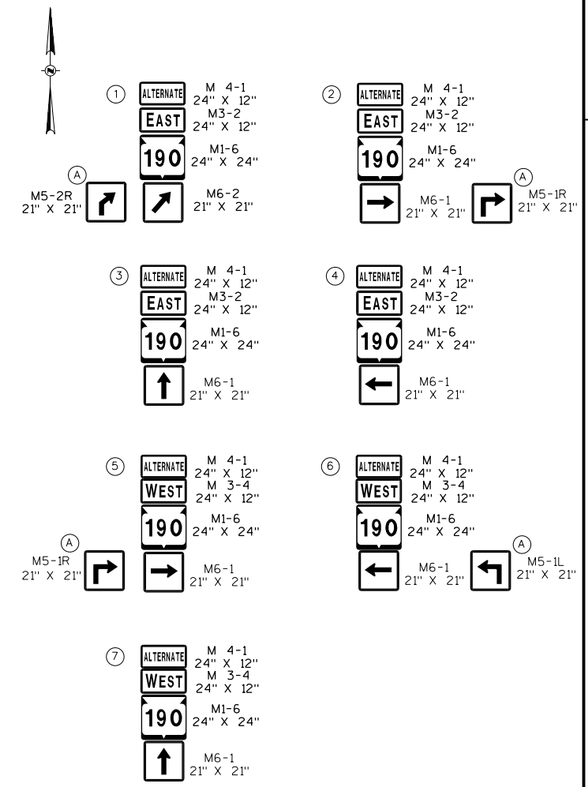

NOTE: PROVIDE A MINIMUM OF 100' SPACING BETWEEN ADVANCE DETOUR SIGNAGE.

LEGEND

- TEMPORARY TRAFFIC CONTROL SIGN POST
- WORK ZONE
- ALTERNATE ROUTE

PROJECT NO:2025-14-71	HWY:STH 190	COUNTY:WAUKESHA	ALTERNATE ROUTE	SHEET 175	E

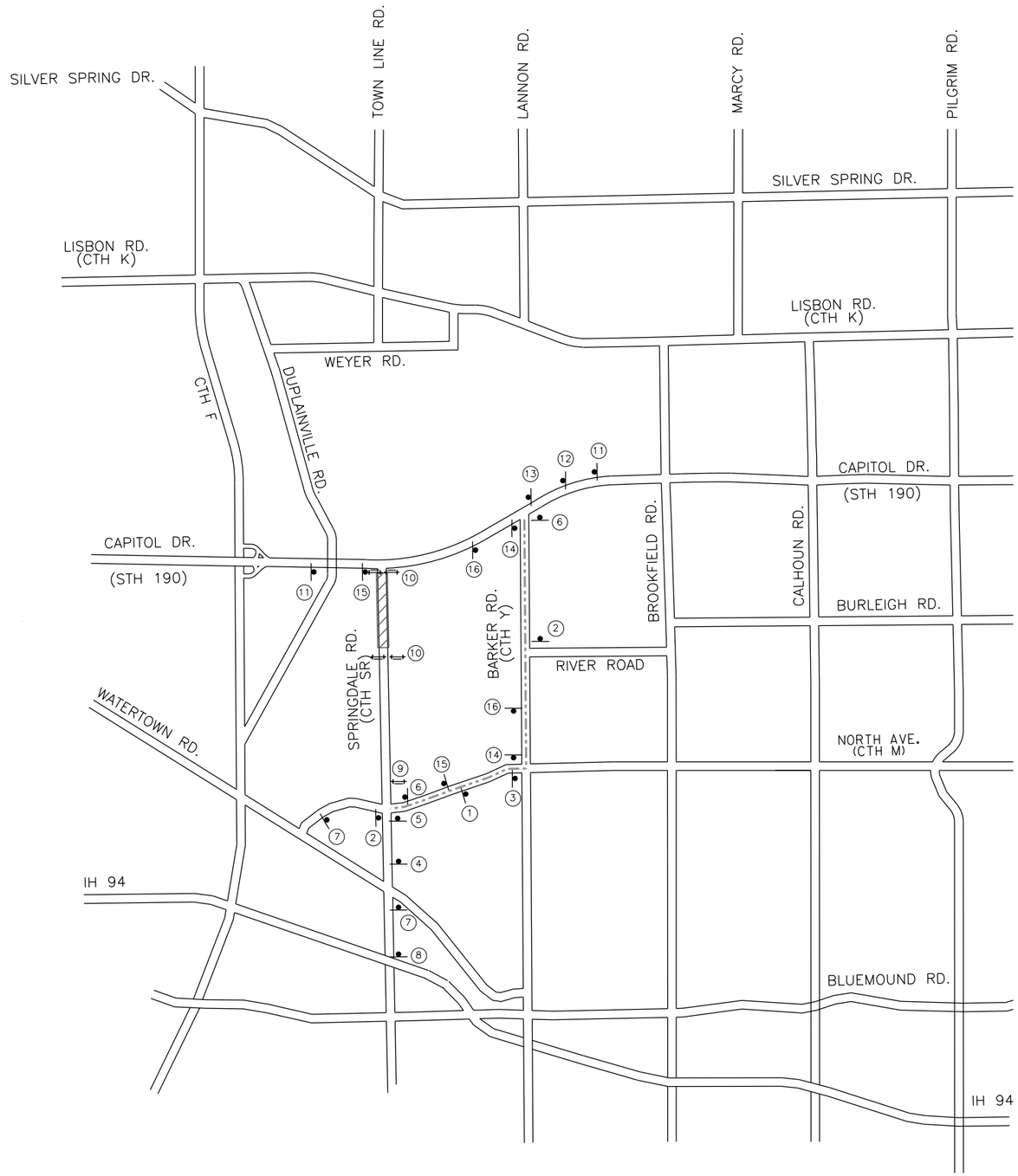

① DETOUR TO 190 — M4-8 24" X 12"; M 4-5 24" X 12"; M1-6 24" X 24"; M05-1L 21" X 21"

② DETOUR TO 190 — M4-8 24" X 12"; M 4-5 24" X 12"; 24" X 24" M1-6; M06-1 21" X 21"

③ DETOUR TO 190 — M4-8 24" X 12"; M 4-5 24" X 12"; M1-6 24" X 24"; M06-1 21" X 21"

④ DETOUR TO 190 — M4-8 24" X 12"; M 4-5 24" X 12"; M1-6 24" X 24"; M05-1R 21" X 21"

⑤ DETOUR TO 190 — M4-8 24" X 12"; M 4-5 24" X 12"; M1-6 24" X 24"; M06-1 21" X 21"

⑥ END DETOUR — M4-8A 24" X 18"

⑦ TO 190 — M 4-5 24" X 12"; M1-6 24" X 24"; DETOUR AHEAD W20-2

⑧ ROAD CLOSED AHEAD W20-3

⑨ ROAD CLOSED 1.0 MILES AHEAD LOCAL TRAFFIC ONLY — R11-3 60" X 30"

⑩ R11-2 48" X 30" — ROAD CLOSED — TYPE III BARRICADE

⑪ SPRINGDALE RD 36" x 24"; COUNTY SR M1-5A 24" X 24"; DETOUR AHEAD W20-2

⑫ DETOUR M4-8 24" X 12"; SPRINGDALE RD 36" x 24"; COUNTY SR M1-5A 24" X 24"; M05-1L 21" X 21"

⑬ DETOUR M4-8 24" X 12"; SPRINGDALE RD 36" x 24"; COUNTY SR M1-5A 24" X 24"; M06-1 21" X 21"

⑭ DETOUR M4-8 24" X 12"; SPRINGDALE RD 36" x 24"; COUNTY SR M1-5A 24" X 24"; M06-1 21" X 21"

⑮ DETOUR M4-8 24" X 12"; SPRINGDALE RD 36" x 24"; COUNTY SR M1-5A 24" X 24"; M06-1 21" X 21"

⑯ DETOUR M4-8 24" X 12"; SPRINGDALE RD 36" x 24"; COUNTY SR M1-5A 24" X 24"; M05-1R 21" X 21"

SPRINGDALE RD 36" x 24"
SEE SIGN DETAIL

LEGEND

- DETOUR ROUTE
- WORK ZONE AREA
- TEMPORARY TRAFFIC CONTROL SIGN POST
- TYPE III BARRICADE WITH SIGN AND 2 TYPE "A" WARNING LIGHTS (FLASHING)

NOTES

1. ALL TRAFFIC CONTROL SHALL BE IN ACCORDANCE WITH THE REQUIREMENTS OF PART 6 OF THE MANUAL OF UNIFORM TRAFFIC CONTROL DEVICES, 2003 EDITION THE CONTRACTOR SHALL BE RESPONSIBLE TO PROVIDE ADEQUATE BARRICADES, SIGNS, AND OTHER DEVICES NECESSARY TO PROTECT THE WORK ZONE AND TO PROTECT MOTORING PUBLIC.
2. THE EXACT LOCATION AND SPACING OF ALL SIGNS AND DEVICES SHALL BE ADJUSTED TO FIT CONDITIONS AS APPROVED BY THE ENGINEER.
3. ALL SIGNS SHALL BE 48" X 48" UNLESS OTHERWISE NOTED.
4. THE CONTRACTOR SHALL COVER ANY SIGN OR REMOVE ANY PAVEMENT MARKING CONFLICTING WITH THE TRAFFIC CONTROL IN OPERATION AS NEEDED OR AS DIRECTED BY THE ENGINEER. COVERING OF SIGNS AND REMOVAL OF PAVEMENT MARKINGS IS INCLUDED IN "TRAFFIC CONTROL" ITEM. RESTORE AFFECTED SIGNS AND PAVEMENT MARKINGS TO PRE-CONSTRUCTION CONDITION.

PROJECT NO:2025-14-71	HWY:STH 190	COUNTY:WAUKESHA	DETOUR ROUTE - SPRINGDALE ROAD	SHEET 176	E

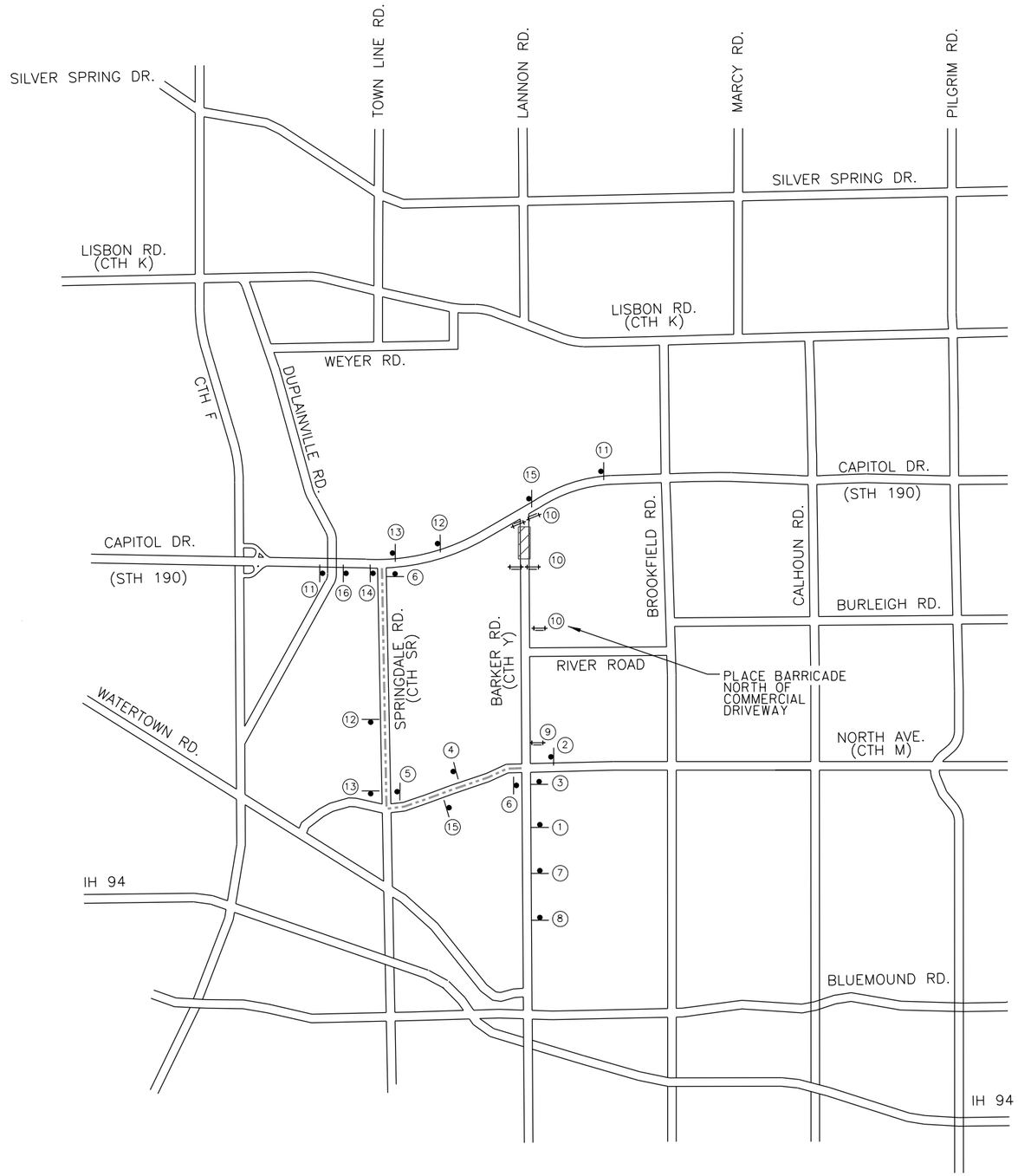

① DETOUR M4-8 24" X 12" / TO M 4-5 24" X 12" / 190 M1-6 24" X 24" / M05-1L 21" X 21"

② DETOUR M4-8 24" X 12" / TO M 4-5 24" X 12" / 190 24" X 24" M1-6 / M06-1 21" X 21"

③ DETOUR M4-8 24" X 12" / TO M 4-5 24" X 12" / 190 M1-6 24" X 24" / M06-1 21" X 21"

④ DETOUR M4-8 24" X 12" / TO M 4-5 24" X 12" / 190 M1-6 24" X 24" / M05-1R 21" X 21"

⑤ DETOUR M4-8 24" X 12" / TO M 4-5 24" X 12" / 190 M1-6 24" X 24" / M06-1 21" X 21"

⑥ END DETOUR M4-8A 24" X 18"

⑦ TO M 4-5 24" X 12" / 190 M1-6 24" X 24" / DETOUR AHEAD W20-2

⑧ ROAD CLOSED AHEAD W20-3

⑨ ROAD CLOSED 1.0 MILES AHEAD LOCAL TRAFFIC ONLY R11-3 60" X 30"

⑩ R11-2 48" X 30" ROAD CLOSED
TYPE III BARRICADE

⑪ BARKER RD 30" x 24" / COUNTY Y M1-5A 24" X 24" / DETOUR AHEAD W20-2

⑫ DETOUR M4-8 24" X 12" / BARKER RD 30" x 24" / COUNTY Y M1-5A 24" X 24" / M05-1L 21" X 21"

BARKER RD 30" x 24"
SEE SIGN DETAIL

LEGEND

- DETOUR ROUTE
- WORK ZONE AREA
- TEMPORARY TRAFFIC CONTROL SIGN POST
- TYPE III BARRICADE WITH SIGN AND 2 TYPE "A" WARNING LIGHTS (FLASHING)

⑬ DETOUR M4-8 24" X 12" / BARKER RD 30" x 24" / COUNTY Y M1-5A 24" X 24" / M06-1 21" X 21"

⑭ DETOUR M4-8 24" X 12" / BARKER RD 30" x 24" / COUNTY Y M1-5A 24" X 24" / M06-1 21" X 21"

⑮ DETOUR M4-8 24" X 12" / BARKER RD 30" x 24" / COUNTY Y M1-5A 24" X 24" / M06-1 21" X 21"

⑯ DETOUR M4-8 24" X 12" / BARKER RD 30" x 24" / COUNTY Y M1-5A 24" X 24" / M05-1R 21" X 21"

NOTES

1. ALL TRAFFIC CONTROL SHALL BE IN ACCORDANCE WITH THE REQUIREMENTS OF PART 6 OF THE MANUAL OF UNIFORM TRAFFIC CONTROL DEVICES, 2003 EDITION THE CONTRACTOR SHALL BE RESPONSIBLE TO PROVIDE ADEQUATE BARRICADES, SIGNS, AND OTHER DEVICES NECESSARY TO PROTECT THE WORK ZONE AND TO PROTECT MOTORING PUBLIC.
2. THE EXACT LOCATION AND SPACING OF ALL SIGNS AND DEVICES SHALL BE ADJUSTED TO FIT CONDITIONS AS APPROVED BY THE ENGINEER.
3. ALL SIGNS SHALL BE 48" X 48" UNLESS OTHERWISE NOTED.
4. THE CONTRACTOR SHALL COVER ANY SIGN OR REMOVE ANY PAVEMENT MARKING CONFLICTING WITH THE TRAFFIC CONTROL IN OPERATION AS NEEDED OR AS DIRECTED BY THE ENGINEER. COVERING OF SIGNS AND REMOVAL OF PAVEMENT MARKINGS IS INCLUDED IN "TRAFFIC CONTROL" ITEM. RESTORE AFFECTED SIGNS AND PAVEMENT MARKINGS TO PRE-CONSTRUCTION CONDITION.

CURVE 1
P.I. = 206+52.47
Y = 186,893.00
X = 697,375.94
DELTA = 31° 14' 51" (LT)
T = 2,136.39'
L = 4,166.34'
R = 7,639.44'
P.C. = 185+16.08
P.T. = 226+82.43

CURVE 17
P.I. = 12+04.05
Y = 187,176.82
X = 695,467.73
DELTA = 90° 26' 42" (RT)
T = 60.47'
L = 94.71'
R = 60.00'
P.C. = 11+43.58
P.T. = 12+38.30

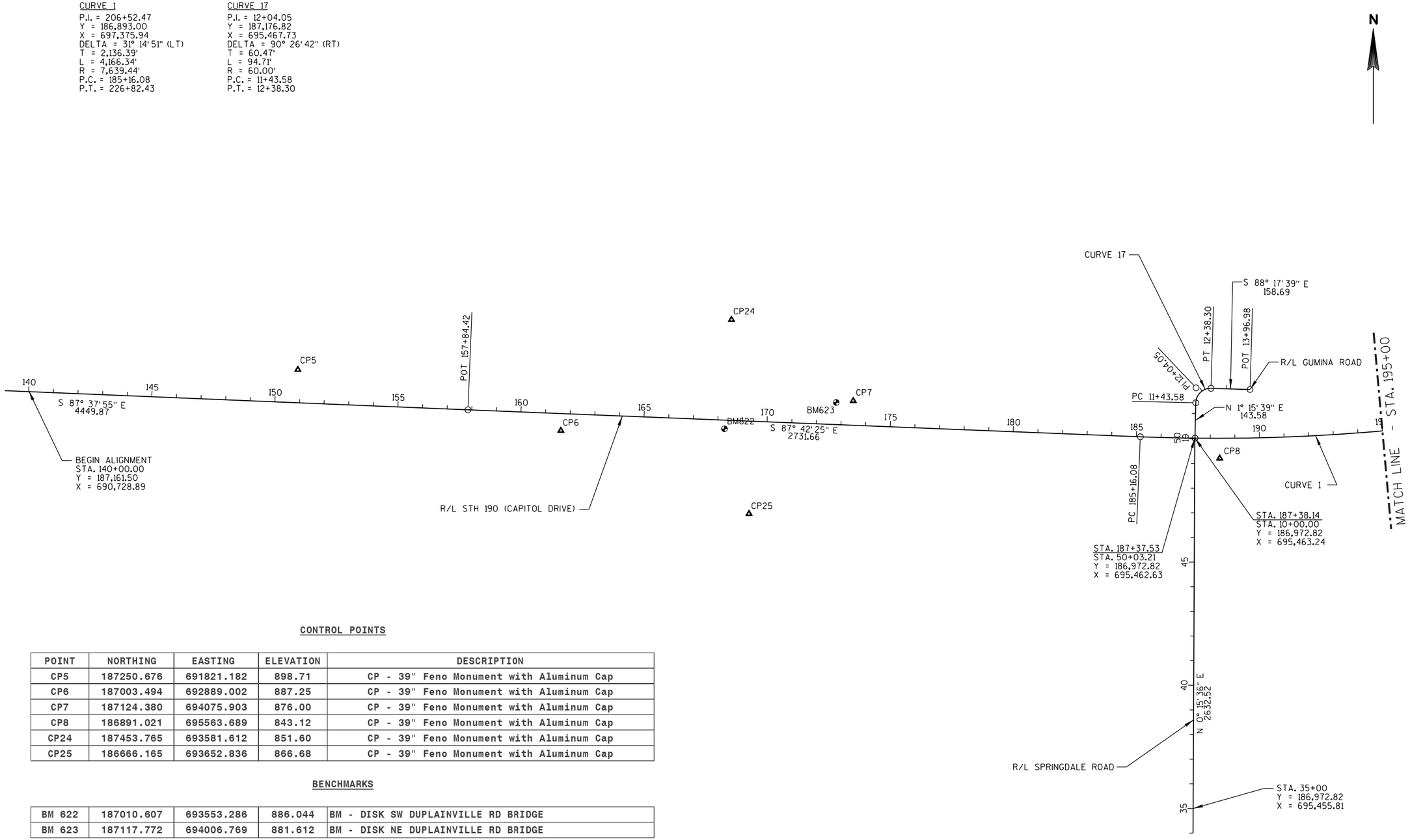

CONTROL POINTS

POINT	NORTHING	EASTING	ELEVATION	DESCRIPTION
CP5	187250.676	691821.182	898.71	CP - 39" Feno Monument with Aluminum Cap
CP6	187003.494	692889.002	887.25	CP - 39" Feno Monument with Aluminum Cap
CP7	187124.380	694075.903	876.00	CP - 39" Feno Monument with Aluminum Cap
CP8	186891.021	695563.689	843.12	CP - 39" Feno Monument with Aluminum Cap
CP24	187453.765	693581.612	851.60	CP - 39" Feno Monument with Aluminum Cap
CP25	186666.165	693652.836	866.68	CP - 39" Feno Monument with Aluminum Cap

BENCHMARKS

BM 622	187010.607	693553.286	886.044	BM - DISK SW DUPLAINVILLE RD BRIDGE
BM 623	187117.772	694006.769	881.612	BM - DISK NE DUPLAINVILLE RD BRIDGE

CURVE 1
P.I. = 206+52.47
Y = 186,893.00
X = 697,375.94
DELTA = 31° 14' 51" (LT)
T = 2,136.39'
L = 4,166.34'
R = 7,639.44'
P.C. = 185+16.08
P.T. = 226+82.43

CURVE 2
P.I. = 267+44.88
Y = 189,893.95
X = 702,799.95
DELTA = 28° 27' 16" (RT)
T = 1,452.70'
L = 2,845.44'
R = 5,729.58'
P.C. = 252+92.18
P.T. = 281+37.62

CONTROL POINTS

POINT	NORTHING	EASTING	ELEVATION	DESCRIPTION
CP9	186976.203	696642.970	838.65	CP - 39" Feno Monument with Aluminum Cap
CP10	187354.421	697407.898	831.59	CP - 39" Feno Monument with Aluminum Cap
CP11	187556.413	698688.748	828.98	CP - 39" Feno Monument with Aluminum Cap
CP12	188390.067	699640.099	845.79	CP - 39" Feno Monument with Aluminum Cap
CP13	188701.709	700919.640	826.66	CP - 39" Feno Monument with Aluminum Cap

BENCHMARKS

624	188645.347	700653.429	825.039	BM - CHIS + ON EAST SIDE OF 1ST BOX CULVERT WEST OF CTH Y ON SOUTH SIDE CAPITAL DR.
625	188822.517	700952.261	825.88	BM - CHIS T ON EAST SIDE OF 1ST BOX CULVERT EAST OF CTH Y ON SOUTH SIDE CAPITAL DR.
626	189212.683	701656.242	825.541	BM - CHIS T ON EAST SIDE OF 2ND BOX CULVERT EAST OF CTH Y ON SOUTH SIDE CAPITAL DR.

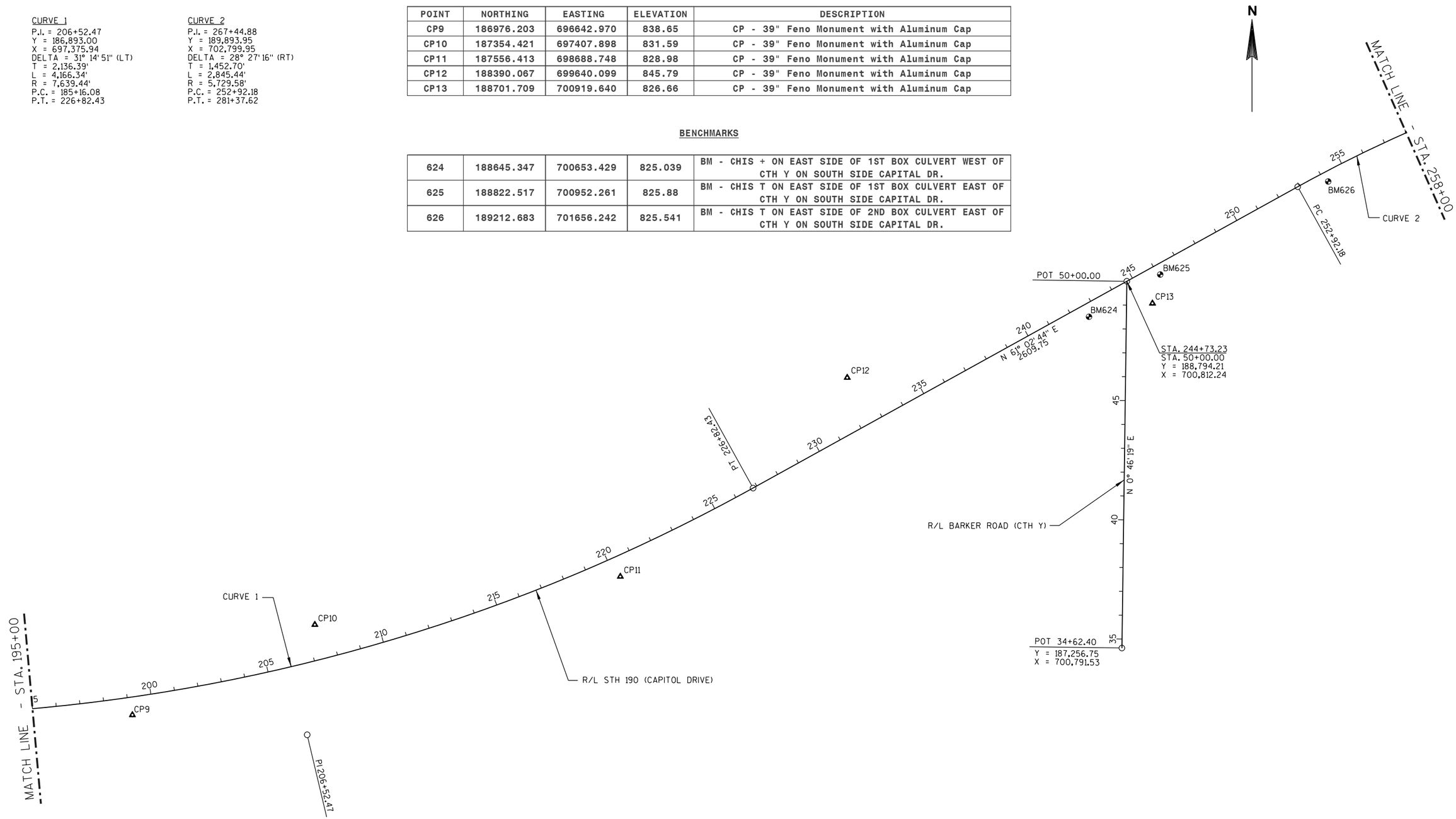

PROJECT NO: 2025-14-71	HWY: STH 190	COUNTY: WAUKESHA	ALIGNMENT PLAN	SHEET 179	E

2

CURVE 2
P.I. = 267+44.88
Y = 189,893.95
X = 702,799.95
DELTA = 28° 27' 16" (RT)
T = 1,452.70'
L = 2,845.44'
R = 5,729.58'
P.C. = 252+92.18
P.T. = 281+37.62

CONTROL POINTS

POINT	NORTHING	EASTING	ELEVATION	DESCRIPTION
CP14	189618.065	702111.972	828.39	CP - 39" Feno Monument with Aluminum Cap
CP15	189685.814	703086.597	828.95	CP - 39" Feno Monument with Aluminum Cap
CP16	189803.836	704076.555	834.70	CP - 39" Feno Monument with Aluminum Cap
CP17	189813.669	705240.821	834.93	CP - 39" Feno Monument with Aluminum Cap
CP18	189846.998	705994.068	838.01	CP - 39" Feno Monument with Aluminum Cap

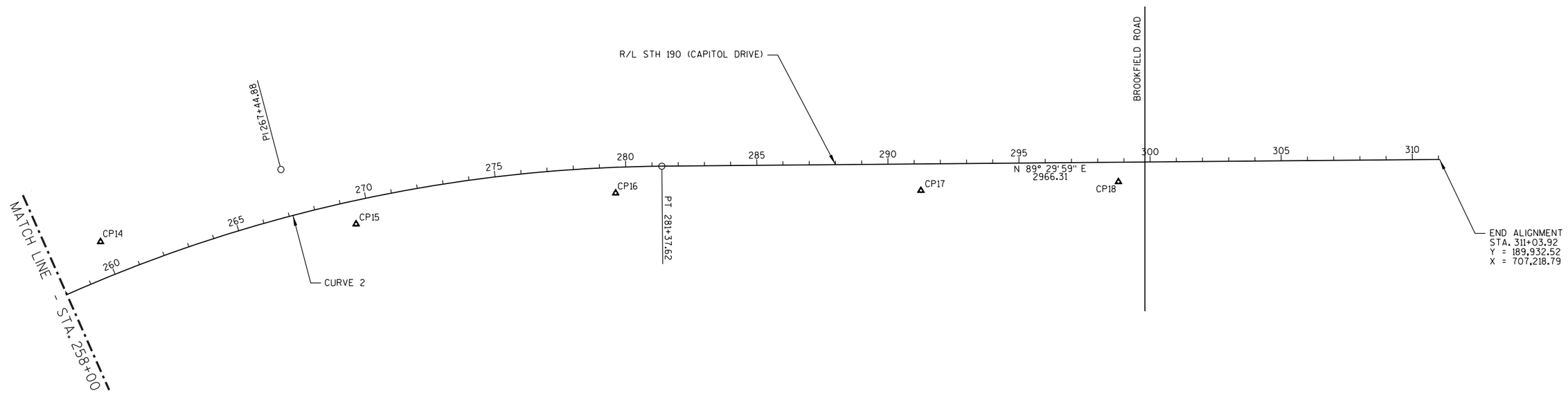

2

PROJECT NO:2025-14-71	HWY:STH 190	COUNTY:WAUKESHA	ALIGNMENT PLAN	SHEET 180	E

2025-14-71

Line	Item	Item Description	Unit	Total	Qty
0002	201.0105	Clearing	STA	2.000	2.000
0004	201.0120	Clearing	ID	25.000	25.000
0006	201.0205	Grubbing	STA	2.000	2.000
0008	201.0220	Grubbing	ID	25.000	25.000
0010	203.0100	Removing Small Pipe Culverts	EACH	4.000	4.000
0012	203.0210.S	Abatement of Asbestos Containing Material (structure) 01. B-67-87	LS	1.000	1.000
0014	203.0210.S	Abatement of Asbestos Containing Material (structure) 02. B-67-88	LS	1.000	1.000
0016	203.0600.S	Removing Old Structure Over Waterway With Minimal Debris (station) 01. 250+78.00 WB	LS	1.000	1.000
0018	203.0600.S	Removing Old Structure Over Waterway With Minimal Debris (station) 02. 250+78.00 EB	LS	1.000	1.000
0020	204.0100	Removing Pavement	SY	1,017.000	1,017.000
0022	204.0109.S	Removing Concrete Surface Partial Depth	SF	247,062.000	247,062.000
0024	204.0115	Removing Asphaltic Surface Butt Joints	SY	658.000	658.000
0026	204.0125	Removing Asphaltic Surface Milling	TON	26,001.000	26,001.000
0028	204.0150	Removing Curb & Gutter	LF	1,829.000	1,829.000
0030	204.0155	Removing Concrete Sidewalk	SY	44.000	44.000
0032	204.0165	Removing Guardrail	LF	3,509.000	3,509.000
0034	204.0195	Removing Concrete Bases	EACH	21.000	21.000
0036	204.0210	Removing Manholes	EACH	1.000	1.000
0038	204.0220	Removing Inlets	EACH	2.000	2.000
0040	204.0245	Removing Storm Sewer (size) 01. 12-Inch	LF	16.000	16.000
0042	204.0245	Removing Storm Sewer (size) 02. 18-Inch	LF	48.000	48.000
0044	204.0245	Removing Storm Sewer (size) 03. 30-Inch	LF	48.000	48.000
0046	204.9105.S	Removing (item description) 01. Overhead Sign Support Sta 191+00	LS	1.000	1.000
0048	204.9105.S	Removing (item description) 02. Overhead Sign Support Sta 249+50	LS	1.000	1.000
0050	204.9105.S	Removing (item description) 03. Traffic Signals STH 190 & CTH SR	LS	1.000	1.000
0052	204.9105.S	Removing (item description) 04. Traffic Signals STH 190 & CTH Y	LS	1.000	1.000
0054	204.9105.S	Removing (item description) 05. Loop Detector Wire and Lead-in Cable STH 190 & CTH SR	LS	1.000	1.000
0056	204.9105.S	Removing (item description) 06. Loop Detector Wire and Lead-in Cable STH 190 & CTH Y	LS	1.000	1.000
0058	205.0100	Excavation Common	CY	21,551.000	21,551.000
0060	206.1000	Excavation for Structures Bridges (structure) 01. B-67-87	LS	1.000	1.000
0062	206.1000	Excavation for Structures Bridges (structure) 02. B-67-	LS	1.000	1.000

2025-14-71

Line	Item	Item Description	Unit	Total	Qty
		88			
0064	209.1100	Backfill Granular Grade 1	CY	34.000	34.000
0066	213.0100	Finishing Roadway (project) 01. 2025-14-71	EACH	1.000	1.000
0068	305.0110	Base Aggregate Dense 3/4-Inch	TON	5,254.000	5,254.000
0070	305.0120	Base Aggregate Dense 1 1/4-Inch	TON	18,898.000	18,898.000
0072	311.0110	Breaker Run	TON	12,413.000	12,413.000
0074	312.0115	Select Crushed Material	CY	16.000	16.000
0076	320.0145	Concrete Base 8-Inch	SY	2,070.000	2,070.000
0078	390.0303	Base Patching Concrete	SY	5,202.000	5,202.000
0080	390.0403	Base Patching Concrete Shes	SY	106.000	106.000
0082	416.0160	Concrete Driveway 6-Inch	SY	249.000	249.000
0084	416.0610	Drilled Tie Bars	EACH	350.000	350.000
0086	416.0620	Drilled Dowel Bars	EACH	10,908.000	10,908.000
0088	416.1010	Concrete Surface Drains	CY	8.600	8.600
0090	416.1720	Concrete Pavement Replacement	SY	374.000	374.000
0092	440.4410	Incentive IRI Ride	DOL	20,600.000	20,600.000
0094	450.4000	HMA Cold Weather Paving	TON	7,161.000	7,161.000
0096	455.0605	Tack Coat	GAL	12,804.000	12,804.000
0098	460.2005	Incentive Density PWL HMA Pavement	DOL	18,910.000	18,910.000
0100	460.2010	Incentive Air Voids HMA Pavement	DOL	32,820.000	32,820.000
0102	460.4110.S	Reheating HMA Pavement Longitudinal Joints	LF	26,657.000	26,657.000
0104	460.6223	HMA Pavement 3 MT 58-28 S	TON	19,453.000	19,453.000
0106	460.6224	HMA Pavement 4 MT 58-28 S	TON	13,446.000	13,446.000
0108	465.0120	Asphaltic Surface Driveways and Field Entrances	TON	44.000	44.000
0110	465.0315	Asphaltic Flumes	SY	78.000	78.000
0112	495.1000.S	Cold patch	TON	25.000	25.000
0114	502.0100	Concrete Masonry Bridges	CY	30.000	30.000
0116	502.3100	Expansion Device (structure) 03. B-67-0201	LS	1.000	1.000
0118	502.3200	Protective Surface Treatment	SY	2,491.000	2,491.000
0120	502.3210	Pigmented Surface Sealer	SY	538.000	538.000
0122	502.4104	Adhesive Anchors 1/2-inch	EACH	8.000	8.000
0124	502.4204	Adhesive Anchors No. 4 Bar	EACH	1,968.000	1,968.000
0126	502.4205	Adhesive Anchors No. 5 Bar	EACH	86.000	86.000
0128	505.0600	Bar Steel Reinforcement HS Coated Structures	LB	15,219.000	15,219.000
0130	505.0905	Bar Couplers No. 5	EACH	6.000	6.000
0132	505.0906	Bar Couplers No. 6	EACH	20.000	20.000
0134	509.0301	Preparation Decks Type 1	SY	128.000	128.000
0136	509.0302	Preparation Decks Type 2	SY	79.000	79.000
0138	509.0500	Cleaning Decks	SY	1,863.000	1,863.000
0140	509.1000	Joint Repair	SY	39.000	39.000

2025-14-71

Line	Item	Item Description	Unit	Total	Qty
0142	509.1200	Curb Repair	LF	112.000	112.000
0144	509.1500	Concrete Surface Repair	SF	1,488.000	1,488.000
0146	509.2000	Full-Depth Deck Repair	SY	22.000	22.000
0148	509.2500	Concrete Masonry Overlay Decks	CY	247.000	247.000
0150	509.9005.S	Removing Concrete Masonry Deck Overlay (structure) 01. B-67-87	SY	296.000	296.000
0152	509.9005.S	Removing Concrete Masonry Deck Overlay (structure) 02. B-67-88	SY	296.000	296.000
0154	509.9050.S	Cleaning Parapets	LF	1,268.000	1,268.000
0156	512.0500	Piling Steel Sheet Permanent Delivered	SF	2,560.000	2,560.000
0158	512.0600	Piling Steel Sheet Permanent Driven	SF	2,560.000	2,560.000
0160	514.0900	Adjusting Floor Drains	EACH	6.000	6.000
0162	520.8000	Concrete Collars for Pipe	EACH	2.000	2.000
0164	520.8700	Cleaning Culvert Pipes	EACH	15.000	15.000
0166	521.1012	Apron Endwalls for Culvert Pipe Steel 12-Inch	EACH	4.000	4.000
0168	521.1503	Apron Endwalls for Culvert Pipe Sloped Side Drains Steel 18-Inch 4 to 1	EACH	4.000	4.000
0170	521.1505	Apron Endwalls for Culvert Pipe Sloped Side Drains Steel 24-Inch 4 to 1	EACH	1.000	1.000
0172	521.3112	Culvert Pipe Corrugated Steel 12-Inch	LF	54.000	54.000
0174	521.3118	Culvert Pipe Corrugated Steel 18-Inch	LF	76.000	76.000
0176	521.3124	Culvert Pipe Corrugated Steel 24-Inch	LF	26.000	26.000
0178	522.1012	Apron Endwalls for Culvert Pipe Reinforced Concrete 12-Inch	EACH	2.000	2.000
0180	522.1018	Apron Endwalls for Culvert Pipe Reinforced Concrete 18-Inch	EACH	9.000	9.000
0182	522.1024	Apron Endwalls for Culvert Pipe Reinforced Concrete 24-Inch	EACH	1.000	1.000
0184	522.1030	Apron Endwalls for Culvert Pipe Reinforced Concrete 30-Inch	EACH	6.000	6.000
0186	522.2614	Apron Endwalls for Culvert Pipe Reinforced Concrete Horizontal Elliptical 14x23-Inch	EACH	2.000	2.000
0188	524.0624	Apron Endwalls for Culvert Pipe Salvaged 24-Inch	EACH	1.000	1.000
0190	601.0409	Concrete Curb & Gutter 30-Inch Type A	LF	50.000	50.000
0192	601.0411	Concrete Curb & Gutter 30-Inch Type D	LF	11.000	11.000
0194	601.0551	Concrete Curb & Gutter 4-Inch Sloped 36-Inch Type A	LF	987.000	987.000
0196	601.0553	Concrete Curb & Gutter 4-Inch Sloped 36-Inch Type D	LF	3,078.000	3,078.000
0198	601.0555	Concrete Curb & Gutter 6-Inch Sloped 36-Inch Type A	LF	15.000	15.000
0200	601.0557	Concrete Curb & Gutter 6-Inch Sloped 36-Inch Type D	LF	1,079.000	1,079.000
0202	601.0590	Concrete Curb & Gutter 4-Inch Sloped 36-Inch Type TBTT	LF	24.000	24.000
0204	602.0410	Concrete Sidewalk 5-Inch	SF	2,471.000	2,471.000

2025-14-71

Line	Item	Item Description	Unit	Total	Qty
0206	602.0505	Curb Ramp Detectable Warning Field Yellow	SF	96.000	96.000
0208	603.8000	Concrete Barrier Temporary Precast Delivered	LF	2,710.000	2,710.000
0210	603.8125	Concrete Barrier Temporary Precast Installed	LF	3,710.000	3,710.000
0212	604.0500	Slope Paving Crushed Aggregate	SY	260.000	260.000
0214	606.0300	Riprap Heavy	CY	80.000	80.000
0216	608.0312	Storm Sewer Pipe Reinforced Concrete Class III 12-Inch	LF	162.000	162.000
0218	608.0315	Storm Sewer Pipe Reinforced Concrete Class III 15-Inch	LF	137.000	137.000
0220	608.0324	Storm Sewer Pipe Reinforced Concrete Class III 24-Inch	LF	24.000	24.000
0222	608.0330	Storm Sewer Pipe Reinforced Concrete Class III 30-Inch	LF	24.000	24.000
0224	608.0418	Storm Sewer Pipe Reinforced Concrete Class IV 18-Inch	LF	6.000	6.000
0226	608.2314	Storm Sewer Pipe Reinforced Concrete Horizontal Elliptical Class HE-III 14x23-Inch	LF	16.000	16.000
0228	611.0430	Reconstructing Inlets	EACH	6.000	6.000
0230	611.0530	Manhole Covers Type J	EACH	1.000	1.000
0232	611.0627	Inlet Covers Type HM	EACH	11.000	11.000
0234	611.0642	Inlet Covers Type MS	EACH	2.000	2.000
0236	611.0654	Inlet Covers Type V	EACH	2.000	2.000
0238	611.1005	Catch Basins 5-FT Diameter	EACH	3.000	3.000
0240	611.1230	Catch Basins 2x3-FT	EACH	8.000	8.000
0242	611.2005	Manholes 5-FT Diameter	EACH	1.000	1.000
0244	611.3220	Inlets 2x2-FT	EACH	2.000	2.000
0246	611.3902	Inlets Median 2 Grate	EACH	1.000	1.000
0248	611.8110	Adjusting Manhole Covers	EACH	1.000	1.000
0250	611.8115	Adjusting Inlet Covers	EACH	7.000	7.000
0252	611.8120.S	Cover Plates Temporary	EACH	3.000	3.000
0254	614.0150	Anchor Assemblies for Steel Plate Beam Guard	EACH	6.000	6.000
0256	614.0905	Crash Cushions Temporary	EACH	8.000	8.000
0258	614.2300	MGS Guardrail 3	LF	3,600.000	3,600.000
0260	614.2310	MGS Guardrail 3 HS	LF	1,900.000	1,900.000
0262	614.2500	MGS Thrie Beam Transition	LF	360.000	360.000
0264	614.2610	MGS Guardrail Terminal EAT	EACH	10.000	10.000
0266	614.2620	MGS Guardrail Terminal Type 2	EACH	7.000	7.000
0268	616.0100	Fence Woven Wire (height) 01. 4-FT	LF	184.000	184.000
0270	619.1000	Mobilization	EACH	1.000	1.000
0272	620.0300	Concrete Median Sloped Nose	SF	65.000	65.000
0274	621.0100	Landmark Reference Monuments	EACH	3.000	3.000

2025-14-71

Line	Item	Item Description	Unit	Total	Qty
0276	624.0100	Water	MGAL	189.000	189.000
0278	625.0100	Topsoil	SY	22,266.000	22,266.000
0280	627.0200	Mulching	SY	2,000.000	2,000.000
0282	628.1104	Erosion Bales	EACH	64.000	64.000
0284	628.1504	Silt Fence	LF	18,149.000	18,149.000
0286	628.1520	Silt Fence Maintenance	LF	18,149.000	18,149.000
0288	628.1905	Mobilizations Erosion Control	EACH	4.000	4.000
0290	628.1910	Mobilizations Emergency Erosion Control	EACH	6.000	6.000
0292	628.2002	Erosion Mat Class I Type A	SY	18,453.000	18,453.000
0294	628.2008	Erosion Mat Urban Class I Type B	SY	3,392.000	3,392.000
0296	628.7005	Inlet Protection Type A	EACH	1.000	1.000
0298	628.7010	Inlet Protection Type B	EACH	3.000	3.000
0300	628.7015	Inlet Protection Type C	EACH	42.000	42.000
0302	628.7020	Inlet Protection Type D	EACH	4.000	4.000
0304	628.7504	Temporary Ditch Checks	LF	285.000	285.000
0306	628.7555	Culvert Pipe Checks	EACH	36.000	36.000
0308	628.7570	Rock Bags	EACH	100.000	100.000
0310	629.0210	Fertilizer Type B	CWT	13.800	13.800
0312	630.0130	Seeding Mixture No. 30	LB	393.000	393.000
0314	630.0200	Seeding Temporary	LB	40.000	40.000
0316	631.0300	Sod Water	MGAL	12.000	12.000
0318	631.1000	Sod Lawn	SY	526.000	526.000
0320	633.5200	Markers Culvert End	EACH	52.000	52.000
0322	634.0618	Posts Wood 4x6-Inch X 18-FT	EACH	340.000	340.000
0324	637.2210	Signs Type II Reflective H	SF	1,647.960	1,647.960
0326	637.2215	Signs Type II Reflective H Folding	SF	82.060	82.060
0328	637.2230	Signs Type II Reflective F	SF	259.500	259.500
0330	638.2102	Moving Signs Type II	EACH	23.000	23.000
0332	638.2602	Removing Signs Type II	EACH	146.000	146.000
0334	638.3000	Removing Small Sign Supports	EACH	152.000	152.000
0336	643.0300	Traffic Control Drums	DAY	68,242.000	68,242.000
0338	643.0420	Traffic Control Barricades Type III	DAY	9,256.000	9,256.000
0340	643.0705	Traffic Control Warning Lights Type A	DAY	18,512.000	18,512.000
0342	643.0715	Traffic Control Warning Lights Type C	DAY	11,608.000	11,608.000
0344	643.0800	Traffic Control Arrow Boards	DAY	750.000	750.000
0346	643.0900	Traffic Control Signs	DAY	24,132.000	24,132.000
0348	643.0920	Traffic Control Covering Signs Type II	EACH	2.000	2.000
0350	643.1050	Traffic Control Signs PCMS	DAY	56.000	56.000
0352	643.1070	Traffic Control Cones 42-Inch	DAY	39,634.000	39,634.000
0354	643.5000	Traffic Control	EACH	1.000	1.000

2025-14-71

Line	Item	Item Description	Unit	Total	Qty
0356	645.0120	Geotextile Type HR	SY	241.000	241.000
0358	646.1020	Marking Line Epoxy 4-Inch	LF	54,884.000	54,884.000
0360	646.1545	Marking Line Grooved Wet Ref Contrast Epoxy 4-Inch	LF	7,282.000	7,282.000
0362	646.3020	Marking Line Epoxy 8-Inch	LF	1,091.000	1,091.000
0364	646.3545	Marking Line Grooved Wet Ref Contrast Epoxy 8-Inch	LF	10,699.000	10,699.000
0366	646.5020	Marking Arrow Epoxy	EACH	44.000	44.000
0368	646.5120	Marking Word Epoxy	EACH	42.000	42.000
0370	646.6120	Marking Stop Line Epoxy 18-Inch	LF	370.000	370.000
0372	646.7120	Marking Diagonal Epoxy 12-Inch	LF	461.000	461.000
0374	646.7420	Marking Crosswalk Epoxy Transverse Line 6-Inch	LF	223.000	223.000
0376	646.8120	Marking Curb Epoxy	LF	362.000	362.000
0378	646.8220	Marking Island Nose Epoxy	EACH	6.000	6.000
0380	646.9000	Marking Removal Line 4-Inch	LF	27,064.000	27,064.000
0382	646.9100	Marking Removal Line 8-Inch	LF	2,037.000	2,037.000
0384	646.9300	Marking Removal Special Marking	EACH	2.000	2.000
0386	649.0105	Temporary Marking Line Paint 4-Inch	LF	49,373.000	49,373.000
0388	649.0150	Temporary Marking Line Removable Tape 4-Inch	LF	60,869.000	60,869.000
0390	649.0205	Temporary Marking Line Paint 8-Inch	LF	3,674.000	3,674.000
0392	649.0250	Temporary Marking Line Removable Tape 8-Inch	LF	7,889.000	7,889.000
0394	650.4000	Construction Staking Storm Sewer	EACH	15.000	15.000
0396	650.4500	Construction Staking Subgrade	LF	9,072.000	9,072.000
0398	650.5000	Construction Staking Base	LF	9,072.000	9,072.000
0400	650.5500	Construction Staking Curb Gutter and Curb & Gutter	LF	5,244.000	5,244.000
0402	650.6000	Construction Staking Pipe Culverts	EACH	4.000	4.000
0404	650.8000	Construction Staking Resurfacing Reference	LF	14,749.000	14,749.000
0406	650.9000	Construction Staking Curb Ramps	EACH	8.000	8.000
0408	650.9910	Construction Staking Supplemental Control (project) 01. 2025-14-71	LS	1.000	1.000
0410	650.9920	Construction Staking Slope Stakes	LF	7,371.000	7,371.000
0412	652.0225	Conduit Rigid Nonmetallic Schedule 40 2-Inch	LF	4,672.000	4,672.000
0414	652.0235	Conduit Rigid Nonmetallic Schedule 40 3-Inch	LF	1,248.000	1,248.000
0416	652.0615	Conduit Special 3-Inch	LF	1,899.000	1,899.000
0418	652.0700.S	Install Conduit into Existing Item	EACH	2.000	2.000
0420	652.0800	Conduit Loop Detector	LF	3,192.000	3,192.000
0422	653.0135	Pull Boxes Steel 24x36-Inch	EACH	14.000	14.000
0424	653.0140	Pull Boxes Steel 24x42-Inch	EACH	54.000	54.000
0426	653.0905	Removing Pull Boxes	EACH	41.000	41.000
0428	654.0101	Concrete Bases Type 1	EACH	7.000	7.000
0430	654.0102	Concrete Bases Type 2	EACH	10.000	10.000
0432	654.0105	Concrete Bases Type 5	EACH	7.000	7.000

2025-14-71

Line	Item	Item Description	Unit	Total	Qty
0434	654.0217	Concrete Control Cabinet Bases Type 9 Special	EACH	2.000	2.000
0436	655.0230	Cable Traffic Signal 5-14 AWG	LF	950.000	950.000
0438	655.0240	Cable Traffic Signal 7-14 AWG	LF	4,204.000	4,204.000
0440	655.0260	Cable Traffic Signal 12-14 AWG	LF	2,492.000	2,492.000
0442	655.0270	Cable Traffic Signal 15-14 AWG	LF	512.000	512.000
0444	655.0320	Cable Type UF 2-10 AWG Grounded	LF	3,307.000	3,307.000
0446	655.0515	Electrical Wire Traffic Signals 10 AWG	LF	4,780.000	4,780.000
0448	655.0610	Electrical Wire Lighting 12 AWG	LF	16,811.000	16,811.000
0450	655.0625	Electrical Wire Lighting 6 AWG	LF	599.000	599.000
0452	655.0630	Electrical Wire Lighting 4 AWG	LF	1,797.000	1,797.000
0454	655.0700	Loop Detector Lead In Cable	LF	13,872.000	13,872.000
0456	655.0800	Loop Detector Wire	LF	12,228.000	12,228.000
0458	655.0900	Traffic Signal EVP Detector Cable	LF	1,985.000	1,985.000
0460	656.0200	Electrical Service Meter Breaker Pedestal (location) 01. STH 190 & CTH SR	LS	1.000	1.000
0462	656.0200	Electrical Service Meter Breaker Pedestal (location) 02. STH 190 & CTH Y	LS	1.000	1.000
0464	657.0100	Pedestal Bases	EACH	3.000	3.000
0466	657.0255	Transformer Bases Breakaway 11 1/2-Inch Bolt Circle	EACH	14.000	14.000
0468	657.0305	Poles Type 2	EACH	2.000	2.000
0470	657.0310	Poles Type 3	EACH	5.000	5.000
0472	657.0322	Poles Type 5-Aluminum	EACH	7.000	7.000
0474	657.0420	Traffic Signal Standards Aluminum 13-FT	EACH	2.000	2.000
0476	657.0425	Traffic Signal Standards Aluminum 15-FT	EACH	1.000	1.000
0478	657.0590	Trombone Arms 20-FT	EACH	4.000	4.000
0480	657.0595	Trombone Arms 25-FT	EACH	5.000	5.000
0482	657.0609	Luminaire Arms Single Member 4-Inch Clamp 6-FT	EACH	7.000	7.000
0484	657.0610	Luminaire Arms Single Member 4 1/2-Inch Clamp 6-FT	EACH	7.000	7.000
0486	658.0173	Traffic Signal Face 3S 12-Inch	EACH	34.000	34.000
0488	658.0174	Traffic Signal Face 4S 12-Inch	EACH	3.000	3.000
0490	658.5069	Signal Mounting Hardware (location) 01. STH 190 & CTH SR	LS	1.000	1.000
0492	658.5069	Signal Mounting Hardware (location) 02. STH 190 & CTH Y	LS	1.000	1.000
0494	659.1125	Luminaires Utility LED C	EACH	22.000	22.000
0496	661.0200	Temporary Traffic Signals for Intersections (location) 01. STH 190 & CTH SR	LS	1.000	1.000
0498	661.0200	Temporary Traffic Signals for Intersections (location) 02. STH 190 & CTH Y	LS	1.000	1.000
0500	661.0300	Generators	DAY	4.000	4.000
0502	670.0100	Field System Integrator	LS	1.000	1.000

2025-14-71

Line	Item	Item Description	Unit	Total	Qty
0504	670.0200	ITS Documentation	LS	1.000	1.000
0506	671.0132	Conduit HDPE 3-Duct 2-Inch	LF	11,410.000	11,410.000
0508	671.0232	Conduit HDPE Directional Bore 3-Duct 2-Inch	LF	2,672.000	2,672.000
0510	673.0105	Communication Vault Type 1	EACH	8.000	8.000
0512	678.0072	Install Fiber Optic Cable Outdoor Plant 72-CT	LF	18,437.000	18,437.000
0514	678.0200	Fiber Optic Splice Enclosure	EACH	4.000	4.000
0516	678.0300	Fiber Optic Splice	EACH	56.000	56.000
0518	678.0500	Communication System Testing	LS	1.000	1.000
0520	678.0600	Install Ethernet Switches	EACH	2.000	2.000
0522	690.0150	Sawing Asphalt	LF	2,840.000	2,840.000
0524	690.0250	Sawing Concrete	LF	9,902.000	9,902.000
0526	715.0502	Incentive Strength Concrete Structures	DOL	1,662.000	1,662.000
0528	801.0117	Railroad Flagging Reimbursment	DOL	7,800.000	7,800.000
0530	ASP.1T0A	On-the-Job Training Apprentice at $5.00/HR	HRS	600.000	600.000
0532	ASP.1T0G	On-the-Job Training Graduate at $5.00/HR	HRS	1,200.000	1,200.000
0534	SPV.0060	Special 01. Relocate Decorative Roadway Lighting Unit	EACH	4.000	4.000
0536	SPV.0060	Special 02. Adjusting Water Valve Boxes - City of Brookfield	EACH	1.000	1.000
0538	SPV.0060	Special 03. Adjusting Water Valve Boxes - City of Pewaukee	EACH	8.000	8.000
0540	SPV.0060	Special 04. Adjusting Sanitary Sewer Manhole	EACH	3.000	3.000
0542	SPV.0060	Special 05. Cleaning Pipe Inverts	EACH	19.000	19.000
0544	SPV.0060	Special 06. Embedded Galvanic Anodes	EACH	54.000	54.000
0546	SPV.0060	Special 07. Floor Drain Retrofit	EACH	2.000	2.000
0548	SPV.0060	Special 08. Relocate Existing Signal Pole	EACH	8.000	8.000
0550	SPV.0060	Special 09. HMA Percent Within Limits (PWL) Test Strip Volumetrics	EACH	2.000	2.000
0552	SPV.0060	Special 10. HMA Percent Within Limits (PWL) Test Strip Density	EACH	3.000	3.000
0554	SPV.0060	Special 11. Field Facilities Office Space	EACH	1.000	1.000
0556	SPV.0090	Special 01. Type UF Cable, 2 Conductor, No. 14	LF	1,985.000	1,985.000
0558	SPV.0090	Special 02. Joint and Crack Repair	LF	32,778.000	32,778.000
0560	SPV.0090	Special 03. Fiber Optic Warning Tape	LF	15,313.000	15,313.000
0562	SPV.0105	Special 01. Transport and Install State Furnished Signal Cabinet STH 190 & CTH SR	LS	1.000	1.000
0564	SPV.0105	Special 02. Transport and Install State Furnished Signal Cabinet STH 190 & CTH Y	LS	1.000	1.000
0566	SPV.0105	Special 03. Transport and Install State Furnished Radar Det. System STH 190 & CTH SR	LS	1.000	1.000
0568	SPV.0105	Special 04. Transport and Install State Furnished Radar Det. System STH 190 & CTH Y	LS	1.000	1.000

2025-14-71

Line	Item	Item Description	Unit	Total	Qty
0002	201.0105	Clearing	STA	2.000	2.000
0004	201.0120	Clearing	ID	25.000	25.000
0006	201.0205	Grubbing	STA	2.000	2.000
0008	201.0220	Grubbing	ID	25.000	25.000
0010	203.0100	Removing Small Pipe Culverts	EACH	4.000	4.000
0012	203.0210.S	Abatement of Asbestos Containing Material (structure) 01. B-67-87	LS	1.000	1.000
0014	203.0210.S	Abatement of Asbestos Containing Material (structure) 02. B-67-88	LS	1.000	1.000
0016	203.0600.S	Removing Old Structure Over Waterway With Minimal Debris (station) 01. 250+78.00 WB	LS	1.000	1.000
0018	203.0600.S	Removing Old Structure Over Waterway With Minimal Debris (station) 02. 250+78.00 EB	LS	1.000	1.000
0020	204.0100	Removing Pavement	SY	1,017.000	1,017.000
0022	204.0109.S	Removing Concrete Surface Partial Depth	SF	247,062.000	247,062.000
0024	204.0115	Removing Asphaltic Surface Butt Joints	SY	658.000	658.000
0026	204.0125	Removing Asphaltic Surface Milling	TON	26,001.000	26,001.000
0028	204.0150	Removing Curb & Gutter	LF	1,829.000	1,829.000
0030	204.0155	Removing Concrete Sidewalk	SY	44.000	44.000
0032	204.0165	Removing Guardrail	LF	3,509.000	3,509.000
0034	204.0195	Removing Concrete Bases	EACH	21.000	21.000
0036	204.0210	Removing Manholes	EACH	1.000	1.000
0038	204.0220	Removing Inlets	EACH	2.000	2.000
0040	204.0245	Removing Storm Sewer (size) 01. 12-Inch	LF	16.000	16.000
0042	204.0245	Removing Storm Sewer (size) 02. 18-Inch	LF	48.000	48.000
0044	204.0245	Removing Storm Sewer (size) 03. 30-Inch	LF	48.000	48.000
0046	204.9105.S	Removing (item description) 01. Overhead Sign Support Sta 191+00	LS	1.000	1.000
0048	204.9105.S	Removing (item description) 02. Overhead Sign Support Sta 249+50	LS	1.000	1.000
0050	204.9105.S	Removing (item description) 03. Traffic Signals STH 190 & CTH SR	LS	1.000	1.000
0052	204.9105.S	Removing (item description) 04. Traffic Signals STH 190 & CTH Y	LS	1.000	1.000
0054	204.9105.S	Removing (item description) 05. Loop Detector Wire and Lead-in Cable STH 190 & CTH SR	LS	1.000	1.000
0056	204.9105.S	Removing (item description) 06. Loop Detector Wire and Lead-in Cable STH 190 & CTH Y	LS	1.000	1.000
0058	205.0100	Excavation Common	CY	21,551.000	21,551.000
0060	206.1000	Excavation for Structures Bridges (structure) 01. B-67-87	LS	1.000	1.000
0062	206.1000	Excavation for Structures Bridges (structure) 02. B-67-	LS	1.000	1.000

3

CLEARING AND GRUBBING

STREET	FROM		TO	201.0105 CLEARING STA	201.0120 CLEARING ID	201.0205 GRUBBING STA	201.0220 GRUBBING ID
CAPITOL DRIVE	289+80	-	--	--	5	--	5
CAPITOL DRIVE	290+10	-	--	--	5	--	5
CAPITOL DRIVE	290+23	-	--	--	5	--	5
CAPITOL DRIVE	290+37	-	--	--	5	--	5
CAPITOL DRIVE	291+36	-	--	--	5	--	5
BARKER ROAD	43+00	-	45+00	2	--	2	--
		PROJECT TOTALS		2	25	2	25

REMOVING SMALL PIPE CULVERTS

STREET	STATION	LOCATION	TYPE	SIZE (IN)	LENGTH (FT)	203.0100 EACH
SPRINGDALE ROAD	43+89	LT	PCP	12	30	1
SPRINGDALE ROAD	45+02	LT	CMP	12	30	1
SPRINGDALE ROAD	45+80	LT	CMP	18	31	1
SPRINGDALE ROAD	46+88	LT	CMP	18	44	1
				PROJECT TOTALS		4

REMOVING PAVEMENT

STREET	FROM	TO	204.0100 SY
CAPITOL DRIVE	160+00	SPRINGDALE ROAD	0
CAPITOL DRIVE	SPRINGDALE ROAD	BARKER ROAD	199
CAPITOL DRIVE	BARKER ROAD	293+29	818
SPRINGDALE ROAD	42+50	49+70	0
GUMINA ROAD	10+94	13+29	0
BARKER ROAD	42+00	49+00	0
PROJECT TOTALS			1017

REMOVING CONCRETE SURFACE PARTIAL DEPTH

STREET	FROM		TO	204.0109.S SF
CAPITOL DRIVE	160+00	-	SPRINGDALE ROAD	76,326
CAPITOL DRIVE	SPRINGDALE ROAD	-	BARKER ROAD	77,386
CAPITOL DRIVE	BARKER ROAD	-	BROOKFIELD ROAD	93,350
PROJECT TOTAL				247,062

REMOVING ASPHALTIC SURFACE BUTT JOINTS

STREET	FROM		TO	204.0115 SY
CAPITOL DRIVE	160+00	-	SPRINGDALE ROAD	0
CAPITOL DRIVE	SPRINGDALE ROAD	-	BARKER ROAD	143
CAPITOL DRIVE	BARKER ROAD	-	BROOKFIELD ROAD	351
SPRINGDALE ROAD	42+50.00	-	4970	67
GUMINA ROAD	10+94.00	-	1329	37
BARKER ROAD	42+00.00	-	4900	60
PROJECT TOTAL				658

3

REMOVING ASPHALTIC SURFACE MILLING

STREET	FROM		TO	204.0125 TON
CAPITOL DRIVE	160+00	-	SPRINGDALE ROAD	3,999
CAPITOL DRIVE	SPRINGDALE ROAD	-	BARKER ROAD	10,624
CAPITOL DRIVE	BARKER ROAD	-	BROOKFIELD ROAD	10,145
SPRINGDALE ROAD	42+50	-	49+70	588
GUMINA ROAD	10+94	-	13+29	-
BARKER ROAD	42+00	-	49+00	645
PROJECT TOTAL				26,001

REMOVING CURB AND GUTTER

STREET	FROM	TO	204.0150 LF
CAPITOL DRIVE	160+00	SPRINGDALE ROAD	0
CAPITOL DRIVE	SPRINGDALE ROAD	BARKER ROAD	501
CAPITOL DRIVE	BARKER ROAD	293+29	727
SPRINGDALE ROAD	42+50	49+70	202
GUMINA ROAD	10+94	13+29	287
BARKER ROAD	42+00	49+00	112
PROJECT TOTALS			1,829

ALL CATEGORY 0010

3

3

OVERHEAD SIGN SUPPORTS - REMOVAL MISC QUANTITIES STH 190 2025-14-71

LOCATION	REMOVING OVERHEAD SIGN SUPPORT Station 191+00 L.S. 204.9105.S.01	REMOVING OVERHEAD SIGN SUPPORT Station 249+50 L.S. 204.9105.S.02
STH 190 Westbound at Springdale Road	1	
STH 190 westbound at Barker Road		1
TOTAL	1	1

SHEET 1 OF 1

3

REMOVING CONCRETE SIDEWALK

STREET	FROM		TO	204.0155 SY
CAPITOL DRIVE	160+00	-	SPRINGDALE ROAD	-
CAPITOL DRIVE	SPRINGDALE ROAD	-	BARKER ROAD	-
CAPITOL DRIVE	BARKER ROAD	-	BROOKFIELD ROAD	28
SPRINGDALE ROAD	42+50	-	49+70	16
GUMINA ROAD	10+94	-	13+29	-
BARKER ROAD	42+00	-	49+00	-
PROJECT TOTALS				44

REMOVALS

STREET	STATION	OFFSET	204.0210 REMOVING MANHOLES EACH	204.0220 REMOVING INLETS EACH	204.0245.01 REMOVING STORM SEWER 12-INCH LF	204.0245.03 REMOVING STORM SEWER 30-INCH LF
STH 190	290+03	25' LT	1	-	-	-
STH 190	290+04	40' LT	-	1	-	-
STH 190	292+50	46' LT	-	1	-	-
STH 190	290+03	LT & RT	-	-	16	-
STH 190	290+05	LT & RT	-	-	-	24
PROJECT TOTAL *			1	2	16	24

* ADDITIONAL QUANTITIES SHOWN ELSEWHERE

3

REMOVING CONCRETE BASES

EXISTING BASE NO.	204.0195 REMOVING CONCRETE BASES EACH
LP13	1
LP12	1
LP11	1
LP10	1
*** TOTAL	4

***ADDITIONAL QUANTITIES SHOWN ELSEWHERE

REMOVING GUARDRAIL

STREET	FROM STATION		TO STATION	204.0165 LF
CAPITOL DRIVE	160+00	-	SPRINGDALE ROAD	1,469
CAPITOL DRIVE	SPRINGDALE ROAD	-	BARKER ROAD	201
CAPITOL DRIVE	BARKER ROAD	-	293+29	1,708
BARKER ROAD	42+00	-	49+50	131
			PROJECT TOTAL	3,509

BACKFILL GRANULAR GRADE 1

STREET	LOCATION	209.1100 CY
STH 190	GUARDRAIL REMOVAL	24
STH 190	UNDISTRIBUTED	10
PROJECT TOTALS:		34

(USED FOR BACKFILL OF REMOVED GUARDRAIL POSTS AND GRUBBED AREAS BELOW SUBGRADE)

BASE AGGREGATE DENSE 3/4 INCH

STREET	FROM		TO	LOCATION	305.0110 TON
CAPITOL DRIVE	152+81	-	SPRINGDALE ROAD	SHOULDER	1,090
CAPITOL DRIVE	SPRINGDALE ROAD	-	BARKER ROAD	SHOULDER	2,220
CAPITOL DRIVE	BARKER ROAD	-	BROOKFIELD ROAD	SHOULDER	1,762
SPRINGDALE ROAD	44+05	-	49+30	SHOULDER	28
GUMINA ROAD	51+60	-	52+71	SHOULDER	25
BARKER ROAD	43+05	-	48+25	SHOULDER	129
PROJECT TOTALS:					5,254

FINISHING ROADWAY (2025-14-71)

LOCATION	213.0100 EACH
CAPITOL DRIVE	1
PROJECT TOTAL	1

ALL CATEGORY 0010

3

3

EARTHWORK SUMMARY - CATEGORY 0010

Stage	From/To Station	Location	Common Excavation (1)	Item 205.0100 *	Salvaged/ Unusable Pavement Material (4)	Available Material (5)	Unexpanded Fill	Expanded Fill (6)	Breaker Run (7)	Mass Ordinate +/- (8)	Waste	Borrow (9)	Comment:
			Cut (2)	EBS Excavation (3)				Factor 1.25				#208.0100)	
			CY	CY	CY	CY	CY	CY	TON	CY	CY	CY	
Stage 1	164+00 to 293+00	STH 190	6420	0	0	6420	944	1180	0	5240	5240	0	
Stage 2	164+00 to 293+00	STH 190	5929	0	0	5929	776	970	0	4959	4959	0	
Stage 2A	42+50 to 49+00	Springdale Road	925	0	229	696	129	161	0	535	535	0	
Stage 2A	11+00 to 13+25	Gumina Road	783	0	160	623	169	211	0	412	412	0	
Stage 2B	42+00 to 48+60	Barker Road	598	0	266	332	60	75	0	257	257	0	
	Undistributed	EBS		6896					12413		6896	0	SEE MQ SHEET
			14655	6896	655	14000	2077	2596	12413	11404	18300	0	
		Total Common Exc		21551									

* SEE BREAKER RUN MISCELLANEOUS QUANTITY SHEETS FOR ASSUMED LOCATIONS

1) Common Excavation is the sum of the Cut and EBS Excavation columns. Item number 205.0100
2) Salvaged/Unsuable Pavement Material is included in Cut.
3) EBS Excavation to be backfilled with Select Borrow material. Note: this is designers choice, can be backfilled with Borrow, or Cut as well.
4) Salvaged/Unusable Pavement Material
5) Available Material = Cut - Salvaged/Unusuable Pavement Material
6) Expanded Fill. Factor = 1.25
7) Breaker Run
8) The Mass Ordinate + or - Qty calculated for the Division. Plus quantity indicates an excess of material within the Division. Minus indicates a shortage of material within the Locat
9) Borrow Excavation

3

BASE AGGREGATE DENSE 1-1/4 INCH

STREET	FROM		TO	305.0120 TON
CAPITOL DRIVE	160+00	-	SPRINGDALE ROAD	1,281
CAPITOL DRIVE	SPRINGDALE ROAD	-	BARKER ROAD	10,920
CAPITOL DRIVE	BARKER ROAD	-	BROOKFIELD ROAD	2,953
SPRINGDALE ROAD	42+50	-	49+70	1,527
GUMINA ROAD	10+94	-	13+29	1,304
BARKER ROAD	42+00	-	49+00	913
PROJECT TOTALS:				18,898

BREAKER RUN

LOCATION	STATION	TO	STATION	EBS CY	311.0110 TON
CAPITOL DRIVE	152+81	-	SPRINGDALE ROAD	340	611
CAPITOL DRIVE	SPRINGDALE ROAD	-	BARKER ROAD	4,249	7,647
CAPITOL DRIVE	BARKER ROAD	-	291+00	802	1,444
SPRINGDALE ROAD	42+50	-	49+70	594	1,070
GUMINA ROAD	10+94	-	13+29	667	1,200
BARKER ROAD	42+00	-	49+00	245	440
PROJECT TOTAL					12,413

3

CONCRETE BASE 8-INCH

STREET	FROM	TO	320.0145 SY
CAPITOL DRIVE	160+00	SPRINGDALE ROAD	0
CAPITOL DRIVE	SPRINGDALE ROAD	BARKER ROAD	1,076
CAPITOL DRIVE	BARKER ROAD	293+29	994
PROJECT TOTAL:			2,070

CONCRETE SURFACE DRAINS

STREET	LOCATION		416.1010 CY
CAPITOL DRIVE	250+24	RT	1.5
CAPITOL DRIVE	250+24	LT	1.5
CAPITOL DRIVE	251+32	RT	1.5
CAPITOL DRIVE	251+32	LT	1.5
SPRINGDALE ROAD	46+50	RT	1.3
SPRINGDALE ROAD	47+75	RT	1.3
	PROJECT TOTAL		8.6

BASE PATCHING CONCRETE

STREET	FROM		TO	390.0303 BASE PATCHING CONCRETE SY	390.0403 BASE PATCHING CONCRETE SHES SY	416.0620 DRILLED DOWEL BARS EACH	416.1720 CONCRETE PAVEMENT REPLACEMENT SY
CAPITOL DRIVE	152+81	-	SPRINGDALE ROAD	533	11	1,224	80
CAPITOL DRIVE	SPRINGDALE ROAD	-	BARKER ROAD	2,406	49	5,328	147
CAPITOL DRIVE	BARKER ROAD	-	291+00	2,263	46	4,356	147
SPRINGDALE ROAD	42+50	-	49+70	0	0	0	0
GUMINA ROAD	10+94	-	13+29	0	0	0	0
BARKER ROAD	42+00	-	49+00	0	0	0	0
PROJECT TOTALS				5,202	106	10,908	374

DRILLED TIE BARS

STREET	FROM		TO	416.0610 EACH
CAPITOL DRIVE	160+00	-	SPRINGDALE ROAD	-
CAPITOL DRIVE	SPRINGDALE ROAD	-	BARKER ROAD	212
CAPITOL DRIVE	BARKER ROAD	-	BROOKFIELD ROAD	138
SPRINGDALE ROAD	42+50	-	49+70	-
GUMINA ROAD	10+94	-	13+29	-
BARKER ROAD	42+00	-	49+00	-
PROJECT TOTALS				350

REHEATING HMA PAVEMENT LONGITUDINAL JOINTS

LOCATION	FROM	TO	460.4110.S LF
CAPITOL DRIVE	160+00	293+29	26,657
PROJECT TOTAL			26,657

ALL CATEGORY 0010

3

ASPHALTIC PAVEMENT

ROADWAY	FROM		TO	LOCATION	CAT 0010 450.4000 HOT MIX ASPHALT (HMA) COLD WEATHER PAVING (TON)	CAT 0010 455.0605 TACK COAT (GAL)	CAT 0010 460.6223 HMA PAVEMENT 3 MT 58-28 S (TON)	CAT 0010 460.6224 HMA PAVEMENT 4 MT 58-28 S (TON)
CAPITOL DRIVE	160+00	-	SPRINGDALE ROAD	MAINLINE PAVEMENT	1,081	1,807	2,541	1,897
CAPITOL DRIVE	SPRINGDALE ROAD	-	BARKER ROAD	MAINLINE PAVEMENT	3,273	5,469	8,658	5,742
CAPITOL DRIVE	BARKER ROAD	-	291+00	MAINLINE PAVEMENT	2,807	4,691	6,672	4,925
SPRINGDALE ROAD	42+50	-	49+70	SIDEROAD	-	375	684	393
GUMINA ROAD	10+94	-	13+29	SIDEROAD	-	133	380	140
BARKER ROAD	42+00	-	49+00	SIDEROAD	-	329	518	349
PROJECT TOTALS					7,161	12,804	19,453	13,446

ASPHALTIC SURFACE DRIVEWAYS AND FIELD ENTRANCES

ROADWAY	FROM		TO	LOCATION	CAT 10 465.0120 (TON)
CAPITOL DRIVE	160+00	-	SPRINGDALE ROAD	DRIVEWAYS	8
CAPITOL DRIVE	SPRINGDALE ROAD	-	BARKER ROAD	DRIVEWAYS	5
CAPITOL DRIVE	BARKER ROAD	-	291+00	DRIVEWAYS	9
SPRINGDALE ROAD	42+50	-	49+70	DRIVEWAYS	22
GUMINA ROAD	10+94	-	13+29	DRIVEWAYS	-
BARKER ROAD	42+00	-	49+00	DRIVEWAYS	-
UNDISTRIBUTED	ASHPHALT WEDGING FOR ACCESS & DRIVEWAY				30
PROJECT TOTALS					74

ASPHALT FLUMES

ROADWAY	LOCATION		CAT 10 465.0315 SY
CAPITOL DRIVE	193+50	LT	13
CAPITOL DRIVE	197+80	LT	13
SPRINGDALE ROAD	43+60	RT	13
SPRINGDALE ROAD	49+00	LT	13
GUMINA ROAD	11+60	LT	13
BARKER ROAD	45+00	LT	13
PROJECT TOTALS			78

COLD PATCH

STREET	LOCATION	495.1000.S TON
STH 190	UNDISTRIBUTED	25
PROJECT TOTALS:		25

CONCRETE CURB & GUTTER

STREET	FROM		TO	601.0409 30-INCH TYPE A LF	601.0411 30-INCH TYPE D LF	601.0551 4-INCH SLOPED 36-INCH TYPE A LF	601.0553 4-INCH SLOPED 36-INCH TYPE D LF	601.0555 6-INCH SLOPED 36-INCH TYPE A LF	601.0557 6-INCH SLOPED 36-INCH TYPE D LF	601.0590 4-INCH SLOPED 36-INCH TYPE TBTT LF
CAPITOL DRIVE	160+00.00	-	SPRINGDALE ROAD	-	-	-	-	-	-	24
CAPITOL DRIVE	SPRINGDALE ROAD	-	BARKER ROAD	-	-	529	1,453	15	-	-
CAPITOL DRIVE	BARKER ROAD	-	BROOKFIELD ROAD	-	11	458	1,625	-	-	-
SPRINGDALE ROAD	42+50.00	-	49+70.00	50	-	-	-	-	676	-
GUMINA ROAD	10+94.00	-	13+29.00	-	-	-	-	-	286	-
BARKER ROAD	42+00.00	-	49+00.00	-	-	-	-	-	117	-
			PROJECT TOTALS	50	11	987	3,078	15	1,079	24

ALL CATEGORY 0010

3

PWL MIXTURE USE TABLE

THE FOLLOWING ACCEPTANCE CRITERIA ARE APPLICABLE FOR THIS PROJECT:

LOCATION	STATION	MIXTURE USE	UNDERLYING SURFACE	BID ITEM	TONS	THICKNESS	QUALITY MANAGEMENT PROGRAM TO BE USED FOR:	
							MIXTURE ACCEPTANCE	DENSITY ACCEPTANCE
24 FOOT EB DRIVING LANES	160+00 TO 291+00	UPPER LAYER	3 MT 58-28 S	4 MT 58-28 S	4,000	1 3/4"	PWL INCENTIVE AIR VOIDS HMA PAVEMENT 460.2010	INCENTIVE DENSITY PWL HMA PAVEMENT 460.2005
24 FOOT EB DRIVING LANES	160+00 TO 291+00	LOWER LAYER	EXISTING CONCRETE PAVEMENT	3 MT 58-28 S	5,100	2 1/4"	PWL INCENTIVE AIR VOIDS HMA PAVEMENT 460.2010	INCENTIVE DENSITY PWL HMA PAVEMENT 460.2005
12 FOOT EB INSIDE DRIVING LANES	284+00 TO 291+00	UPPER LAYER	3 MT 58-28 S	4 MT 58-28 S	150	1 3/4"	PWL INCENTIVE AIR VOIDS HMA PAVEMENT 460.2010	INCENTIVE DENSITY PWL HMA PAVEMENT 460.2005
12 FOOT EB INSIDE DRIVING LANES	284+00 TO 291+00	LOWER LAYER	EXISTING CONCRETE PAVEMENT	3 MT 58-28 S	200	2 1/4"	PWL INCENTIVE AIR VOIDS HMA PAVEMENT 460.2010	INCENTIVE DENSITY PWL HMA PAVEMENT 460.2005
24 FOOT WB DRIVING LANES	162+50 TO 293+28	UPPER LAYER	3 MT 58-28 S	4 MT 58-28 S	4,000	1 3/4"	PWL INCENTIVE AIR VOIDS HMA PAVEMENT 460.2010	INCENTIVE DENSITY PWL HMA PAVEMENT 460.2005
24 FOOT WB DRIVING LANES	162+50 TO 293+28	LOWER LAYER	EXISTING CONCRETE PAVEMENT	3 MT 58-28 S	5,100	2 1/4"	PWL INCENTIVE AIR VOIDS HMA PAVEMENT 460.2010	INCENTIVE DENSITY PWL HMA PAVEMENT 460.2005
12 FOOT WB OUTSIDE DRIVING LANES	279+50 TO 293+28	UPPER LAYER	3 MT 58-28 S	4 MT 58-28 S	160	1 3/4"	PWL INCENTIVE AIR VOIDS HMA PAVEMENT 460.2010	INCENTIVE DENSITY PWL HMA PAVEMENT 460.2005
12 FOOT WB OUTSIDE DRIVING LANES	279+50 TO 293+28	LOWER LAYER	EXISTING CONCRETE PAVEMENT	3 MT 58-28 S	200	2 1/4"	PWL INCENTIVE AIR VOIDS HMA PAVEMENT 460.2010	INCENTIVE DENSITY PWL HMA PAVEMENT 460.2005
TURN LANES - 4"	STH 190	UPPER LAYER	3 MT 58-28 S	4 MT 58-28 S	1,070	1 3/4"	PWL INCENTIVE AIR VOIDS HMA PAVEMENT 460.2010	ACCEPTANCE TESTING BY THE DEPARTMENT; NOT ELIGIBLE FOR INCENTIVE
TURN LANES - 4"	STH 190	LOWER LAYER	EXISTING CONCRETE PAVEMENT	3 MT 58-28 S	1,370	2 1/4"	PWL INCENTIVE AIR VOIDS HMA PAVEMENT 460.2010	ACCEPTANCE TESTING BY THE DEPARTMENT; NOT ELIGIBLE FOR INCENTIVE
TURN LANES - 6.5"	STH 190	UPPER LAYER	3 MT 58-28 S	4 MT 58-28 S	1,000	1 3/4"	PWL INCENTIVE AIR VOIDS HMA PAVEMENT 460.2010	ACCEPTANCE TESTING BY THE DEPARTMENT; NOT ELIGIBLE FOR INCENTIVE
TURN LANES - 6.5"	STH 190	LOWER LAYER	3 MT 58-28 S	3 MT 58-28 S	1,250	2 1/4"	PWL INCENTIVE AIR VOIDS HMA PAVEMENT 460.2010	ACCEPTANCE TESTING BY THE DEPARTMENT; NOT ELIGIBLE FOR INCENTIVE
TURN LANES - 6.5"	STH 190	LOWER LAYER	12" BASE AGGREGATE	3 MT 58-28 S	1,400	2 1/2"	PWL INCENTIVE AIR VOIDS HMA PAVEMENT 460.2010	ACCEPTANCE TESTING BY THE DEPARTMENT; NOT ELIGIBLE FOR INCENTIVE
OUTSIDE RURAL SHOULDERS	160+00 TO 293+28	UPPER LAYER	3 MT 58-28 S	4 MT 58-28 S	1,800	1 3/4"	PWL INCENTIVE AIR VOIDS HMA PAVEMENT 460.2010	ACCEPTANCE TESTING BY THE DEPARTMENT; NOT ELIGIBLE FOR INCENTIVE
OUTSIDE RURAL SHOULDERS	160+00 TO 293+28	LOWER LAYER	AGGREGATE	3 MT 58-28 S	2,200	2 1/4"	PWL INCENTIVE AIR VOIDS HMA PAVEMENT 460.2010	ACCEPTANCE TESTING BY THE DEPARTMENT; NOT ELIGIBLE FOR INCENTIVE
INSIDE RURAL SHOULDERS	160+00 TO 293+28	UPPER LAYER	3 MT 58-28 S	4 MT 58-28 S	550	2"	PWL INCENTIVE AIR VOIDS HMA PAVEMENT 460.2010	ACCEPTANCE TESTING BY THE DEPARTMENT; NOT ELIGIBLE FOR INCENTIVE
INSIDE RURAL SHOULDERS	160+00 TO 293+28	LOWER LAYER	AGGREGATE	3 MT 58-28 S	700	2 1/4"	PWL INCENTIVE AIR VOIDS HMA PAVEMENT 460.2010	ACCEPTANCE TESTING BY THE DEPARTMENT; NOT ELIGIBLE FOR INCENTIVE
SPRINGDALE ROAD & BARKER ROAD - 4"	42+50 TO 49+60 SR 42+00 TO 49+60 BR	UPPER LAYER	3 MT 58-28 S	4 MT 58-28 S	650	1 3/4"	PWL INCENTIVE AIR VOIDS HMA PAVEMENT 460.2010	ACCEPTANCE TESTING BY THE DEPARTMENT; NOT ELIGIBLE FOR INCENTIVE
SPRINGDALE ROAD & BARKER ROAD - 4"	42+50 TO 49+60 SR 42+00 TO 49+60 BR	LOWER LAYER	12" BASE AGGREGATE	3 MT 58-28 S	820	2 1/4"	PWL INCENTIVE AIR VOIDS HMA PAVEMENT 460.2010	ACCEPTANCE TESTING BY THE DEPARTMENT; NOT ELIGIBLE FOR INCENTIVE
SPRINGDALE ROAD, BARKER ROAD, & GUMINA ROAD- 6.5"	42+50 TO 49+60 SR 42+00 TO 49+60 BR	UPPER LAYER	3 MT 58-28 S	4 MT 58-28 S	300	1 3/4"	PWL INCENTIVE AIR VOIDS HMA PAVEMENT 460.2010	ACCEPTANCE TESTING BY THE DEPARTMENT; NOT ELIGIBLE FOR INCENTIVE
SPRINGDALE ROAD, BARKER ROAD, & GUMINA ROAD- 6.5"	42+50 TO 49+60 SR 42+00 TO 49+60 BR	LOWER LAYER	3 MT 58-28 S	3 MT 58-28 S	400	2 1/4"	PWL INCENTIVE AIR VOIDS HMA PAVEMENT 460.2010	ACCEPTANCE TESTING BY THE DEPARTMENT; NOT ELIGIBLE FOR INCENTIVE
SPRINGDALE ROAD, BARKER ROAD, & GUMINA ROAD- 6.5"	42+50 TO 49+60 SR 42+00 TO 49+60 BR	LOWER LAYER	12" BASE AGGREGATE	3 MT 58-28 S	400	2 1/2"	PWL INCENTIVE AIR VOIDS HMA PAVEMENT 460.2010	ACCEPTANCE TESTING BY THE DEPARTMENT; NOT ELIGIBLE FOR INCENTIVE

3

3

CONCRETE SIDEWALK AND DRIVEWAYS

STREET	FROM		TO	416.0160 CONCRETE DRIVEWAY 6-INCH SY	602.0410 CONCRETE SIDEWALK 5-INCH SF
CAPITOL DRIVE	152+81	-	SPRINGDALE ROAD	0	505
CAPITOL DRIVE	SPRINGDALE ROAD	-	BARKER ROAD	249	946
CAPITOL DRIVE	BARKER ROAD	-	291+00	0	918
SPRINGDALE ROAD	44+05	-	49+30	0	102
	PROJECT TOTALS			249	2,471

CURB RAMP DETECTABLE WARNING FIELD YELLOW

STREET	FROM		TO	602.0505 SF
CAPITOL DRIVE	BARKER ROAD	-	291+00	96
			PROJECT TOTALS	96

3

CONCRETE BARRIER TEMPORARY PRECAST AND CRASH CUSHIONS TEMPORARY

STREET	FROM STATION	TO STATION	LOCATION	CONCRETE BARRIER TEMPORARY PRECAST 603.8000 DELIVERED LF	603.8125 INSTALLED LF	CRASH CUSHIONS TEMPORARY 614.0905 EA
CAPITOL DRIVE	167+50 EB	173+00 EB	EB FOR STAGE 1 TRAFFIC CONTROL	550	550	1
CAPITOL DRIVE	167+50 EB	173+00 EB	EB FOR STAGE 2 TRAFFIC CONTROL	0	550	1
CAPITOL DRIVE	176+75 WB	186+50 WB	WB FOR STAGE 1 TRAFFIC CONTROL	975	975	1
CAPITOL DRIVE	178+40 EB	179+74 EB	EB FOR STAGE 1 TRAFFIC CONTROL	135	135	0
CAPITOL DRIVE	180+50 EB	186+50 EB	EB FOR STAGE 1 TRAFFIC CONTROL	600	600	1
CAPITOL DRIVE	249+50 EB	252+00 EB	EB FOR STAGE 1 TRAFFIC CONTROL	250	250	1
CAPITOL DRIVE	249+50 EB	252+00 EB	EB FOR STAGE 2 TRAFFIC CONTROL	0	250	1
CAPITOL DRIVE	250+00 WB	252+00 WB	WB FOR STAGE 1 TRAFFIC CONTROL	200	200	1
CAPITOL DRIVE	250+00 WB	252+00 WB	WB FOR STAGE 2 TRAFFIC CONTROL	0	200	1
			PROJECT TOTAL	2,710	3,710	8

ADDITIONAL TRAFFIC CONTROL QUANTITIES LISTED ELSEWHERE

STORM SEWER SUMMARY

ITEM NUMBER	ITEM	PROJECT TOTAL	
520.8000	Concrete Collars for Pipe	2	EACH
608.0312	Storm Sewer Pipe Reinforced Concrete Class III 12-Inch	162	LF
608.0315	Storm Sewer Pipe Reinforced Concrete Class III 15-Inch	137	LF
608.0324	Storm Sewer Pipe Reinforced Concrete Class III 24-Inch	24	LF
608.0330	Storm Sewer Pipe Reinforced Concrete Class III 30-Inch	24	LF
608.0418	Storm Sewer Pipe Reinforced Concrete Class IV 18-Inch	6	LF
608.2314	Storm Sewer Pipe Reinforced Concrete Horizontal Elliptical Class HE-III 14x23-Inch	16	LF
611.0530	Manhole Covers Type J	1	EACH
611.0627	Inlet Covers Type HM	11	EACH
611.0642	Inlet Covers Type MS	2	EACH
611.0654	Inlet Covers Type V	2	EACH
611.1005	Catch Basins 5 FT Diameter	3	EACH
611.1230	Catch Basins 2x3-FT	8	EACH
611.2005	Manholes 5-FT Diameter	1	EACH
611.3220	Inlets 2x2-FT	2	EACH
611.3902	Inlets Median 2 Grate	1	EACH

APRON ENDWALLS FOR CULVERT PIPE

STREET	STATION	OFFSET	521.1012 STEEL 12-INCH EACH	521.1503 SLOPED SIDE DRAINS STEEL 18-INCH 4 TO 1 EACH	521.1505 SLOPED SIDE DRAINS STEEL 24-INCH 4 TO 1 EACH	522.1012 REINFORCED CONCRETE 12-INCH EACH	522.1018 REINFORCED CONCRETE 18-INCH EACH	522.1024 REINFORCED CONCRETE 24-INCH EACH	522.1030 REINFORCED CONCRETE 30-INCH EACH	522.2614 REINFORCED CONCRETE HORIZONTAL ELLIPITCAL 14X23-INCH EACH	524.0624 CULVERT PIPE SALVAGED 24-INCH EACH	204.0245.02 REMOVING STORM SEWER 18-INCH LF	204.0245.03 REMOVING STORM SEWER 30-INCH LF
STH 190	172+86	15' LT	-	-	-	1	-	-	-	-	-	-	-
GUMINA ROAD	11+70	60' RT	-	-	-	1	-	-	-	-	-	-	-
STH 190	183+61	67' RT	-	-	-	-	-	-	-	-	1	-	-
STH 190	188+09	116' LT	-	-	1		-	-	-	-	-	-	-
STH 190	204+48	118' LT	-	-	-	-	-	-	1	-	-	-	-
STH 190	205+90	50' RT	-	-	-	-	-	-	1	-	-	-	-
STH 190	206+89	56' RT	-	-	-	-	1	-	-	-	-	6	-
STH 190	211+00	54' RT	-	-	-	-	1	-	-	-	-	6	-
STH 190	212+99	51' RT	-	-	-	-	-	-	1	-	-	-	6
STH 190	215+50	52' RT	-	-	-	-	1	-	-	-	-	6	-
STH 190	218+39	51' RT	-	-	-	-	-	-	1	-	-		6
STH 190	218+48	53' RT	-	-	-	-	1	-	-	-	-	6	-
STH 190	260+96	50' RT	-	-	-	-	1	-	-	-	-	6	-
STH 190	266+97	46' RT	-	-	-	-	1	-	-	-	-	6	-
STH 190	274+25	52' RT	-	-	-	-	1	-	-	-	-	-	-
STH 190	282+99	107' LT	-	-	-	-	1	-	-	-	-	6	-
STH 190	287+98	109' LT	-	-	-	-	1	-	-	-	-	6	-
STH 190	290+04	112' LT	-	-	-	-	-	-	1	-	-	-	6
STH 190	290+05	47' RT	-	-	-	-	-	-	1	-	-	-	6
SPRINGDALE ROAD	43+75	25' LT	1	-	-	-	-	-	-	-	-	-	-
SPRINGDALE ROAD	44+05	25' LT	1	-	-	-	-	-	-	-	-	-	-
SPRINGDALE ROAD	44+90	26' LT	1	-	-	-	-	-	-	-	-	-	-
SPRINGDALE ROAD	45+14	27' LT	1	-	-	-	-	-	-	-	-	-	-
SPRINGDALE ROAD	45+62	28' LT	-	1	-	-	-	-	-	-	-	-	-
SPRINGDALE ROAD	45+94	29' LT	-	1	-	-	-	-	-	-	-	-	-
SPRINGDALE ROAD	46+66	30' LT	-	1	-	-	-	-	-	-	-	-	-
SPRINGDALE ROAD	47+10	32' LT	-	1	-	-	-	-	-	-	-	-	-
BARKER ROAD	44+65	34' LT	-	-	-	-	-	-	-	1	-	-	-
BARKER ROAD	44+70	34' LT	-	-	-	-	-	-	-	1	-	-	-
BARKER ROAD	45+00	34' LT	-	-	-	-	-	1	-	-	-	-	-
PROJECT TOTAL *			4	4	1	2	9	1	6	2	1	48	24

* ADDITIONAL QUANTITIES SHOWN ELSEWHERE

3

CULVERT PIPE CORRUGATED STEEL

STREET	STATION	OFFSET	521.3112 12-INCH LF	521.3118 18-INCH LF	521.3124 24-INCH LF
STH 190	187+96	LT	-	-	26
SPRINGDALE ROAD	43+90	25' LT	30	-	-
SPRINGDALE ROAD	45+02	27' LT	24	-	-
SPRINGDALE ROAD	45+78	28' LT	-	32	-
SPRINGDALE ROAD	46+88	31' LT	-	44	-
BARKER ROAD	44+65	LT			
BARKER ROAD	44+70	34' LT			
PROJECT TOTAL			54	76	26

CLEANING CULVERT PIPES & PIPE INVERTS

STREET	FROM	TO	CLEANING CULVERT PIPES 520.8700 EACH	CLEANING PIPE INVERTS SPV.0060.05 EACH
CAPITOL DRIVE	160+00	SPRINGDALE ROAD	2	2
CAPITOL DRIVE	SPRINGDALE ROAD	BARKER ROAD	10	13
CAPITOL DRIVE	BARKER ROAD	291+00	3	4
SPRINGDALE ROAD	42+50	49+70	-	-
GUMINA ROAD	10+94	13+29	-	-
BARKER ROAD	42+00	49+00	-	-
PROJECT TOTALS			15	19

3

RECONSTRUCTING INLETS

STREET	STATION	OFFSET	611.0430 EACH
STH 190	198+79	72' RT	1
STH 190	199+48	69' RT	1
STH 190	246+04	46' LT	1
STH 190	246+04	18' LT	1
STH 190	285+74	14' LT	1
STH 190	290+03	22' LT	1
PROJECT TOTAL			6

ADJUSTING MANHOLES AND INLETS

STREET	STATION	OFFSET	611.8110 ADJUSTING MANHOLE COVERS EACH	611.8115 ADJUSTING INLET COVERS EACH
STH 190	186+49	55' LT	-	1
STH 190	186+49	45' LT	-	1
STH 190	186+92	5' LT	-	1
STH 190	198+89	30' LT	1	-
STH 190	282+98	46' LT	-	1
STH 190	282+97	22' LT	-	1
STH 190	287+99	22' LT	-	1
STH 190	287+99	12' LT	-	1
PROJECT TOTAL			1	7

ALL CATEGORY 0010

3

GUARDRAIL

STREET	FROM		TO	614.2300 MGS GUARDRAIL 3 LF	614.2310 MGS GUARDRAIL 3 HS LF	614.2500 MGS THRIE BEAM TRANSITION LF	614.2610 MGS GUARDRAIL TERMINAL EAT EACH	614.2620 MGS GUARDRAIL TERMINAL TYPE 2 EACH
CAPITOL DRIVE	152+81.00	-	SPRINGDALE ROAD	1,459	1,499	120	5	4
CAPITOL DRIVE	SPRINGDALE ROAD	-	BARKER ROAD	260	210	0	1	2
CAPITOL DRIVE	BARKER ROAD	-	291+00.00	1,881	191	240	4	1
			PROJECT TOTAL	3,600	1,900	360	10	7

FENCE WOVEN WIRE 4-FT

STREET	STATION	LOCATION	616.0100 LF
CAPITOL DRIVE	168+34	LT	46
CAPITOL DRIVE	172+80	LT	46
CAPITOL DRIVE	250+32	LT	46
CAPITOL DRIVE	251+23	LT	46
PROJECT TOTALS			184

CONCRETE MEDIAN SLOPED NOSE

STREET	FROM	TO	620.0300 SF
CAPITOL DRIVE	160+00	SPRINGDALE ROAD	-
CAPITOL DRIVE	SPRINGDALE ROAD	BARKER ROAD	-
CAPITOL DRIVE	BARKER ROAD	291+00	65
SPRINGDALE ROAD	42+50	49+70	-
GUMINA ROAD	10+94	13+29	-
BARKER ROAD	42+00	49+00	-
PROJECT TOTALS			65

MOBILIZATION

LOCATION	619.1000 EACH
PROJECT 2025-14-71	1
PROJECT TOTAL	1

TOPSOIL

STREET	FROM		TO	625.0100 SY
CAPITOL DRIVE	160+00	-	186+38	3,468
CAPITOL DRIVE	186+38	-	245+73	7,084
CAPITOL DRIVE	245+73	-	293+29	3,570
SPRINGDALE ROAD	42+50	-	49+50	2,186
GUMINA ROAD	11+00	-	13+30	764
BARKER ROAD	42+00	-	49+00	826
UNDISTRIBUTED				4,369
			PROJECT TOTAL	22,266

LANDMARK REFERENCE MONUMENTS

STATION	OFFSET	621.0100 EACH
161+12.95	12.60' RT	1
187+37.66	20.89' RT	1
273+25.00	73.29' LT	1
PROJECT TOTAL		3

ALL CATEGORY 0010

3

TEMPORARY SETTLING BASINS

STREET	628.1104 EROSION BALES EACH	645.0120 GEOTEXTILE TYPE HR* SY
UNDISTRIBUTED	64	89
PROJECT TOTALS	64	89

*ADDITIONAL QUANTITIES SHOWN ELSEWHERE IN PLANS

WATER

STREET	FROM		TO	624.0100 MGAL
CAPITOL DRIVE	160+00	-	186+38	13
CAPITOL DRIVE	186+38	-	245+73	109
CAPITOL DRIVE	245+73	-	293+29	30
SPRINGDALE ROAD	42+50	-	49+50	15
GUMINA ROAD	11+00	-	13+30	13
BARKER ROAD	42+00	-	49+00	9
PROJECT TOTAL				189

3

EROSION MAT

STREET	FROM		TO	628.2002 EROSION MAT CLASS I TYPE A SY	628.2008 EROSION MAT URBAN CLASS I TYPE B SY
CAPITOL DRIVE	160+00	-	186+38	3,468	-
CAPITOL DRIVE	186+38	-	245+73	6,594	490
CAPITOL DRIVE	245+73	-	293+29	1,751	1,398
SPRINGDALE ROAD	42+50	-	49+50	2,186	-
GUMINA ROAD	11+00	-	13+30	764	-
BARKER ROAD	42+00	-	49+00	-	826
UNDISTRIBUTED				3,691	678
PROJECT TOTAL				18,453	3,392

SILT FENCE

STREET	FROM		TO	628.1504 SILT FENCE LF	628.1520 SILT FENCE MAINTENANCE LF
CAPITOL DRIVE	160+00	-	186+38	2,938	2,938
CAPITOL DRIVE	186+38	-	245+73	5,267	5,267
CAPITOL DRIVE	245+73	-	293+29	5,246	5,246
SPRINGDALE ROAD	42+50	-	49+50	-	-
GUMINA ROAD	11+00	-	13+30	286	286
BARKER ROAD	42+00	-	49+00	782	782
UNDISTRIBUTED				3,630	3,630
PROJECT TOTALS				18,149	18,149

INLET PROTECTION

STREET	FROM	TO	628.7005 INLET PROTECTION TYPE A EACH	628.7010 INLET PROTECTION TYPE B EACH	628.7015 INLET PROTECTION TYPE C EACH	628.7020 INLET PROTECTION TYPE D EACH
CAPITOL DRIVE	160+00	186+38	-	1	12	-
CAPITOL DRIVE	186+38	245+73	-	1	7	-
CAPITOL DRIVE	245+73	293+29	1	1	17	4
SPRINGDALE ROAD	42+50	49+50	-	-	-	-
GUMINA ROAD	11+00	13+30	-	-	1	-
BARKER ROAD	42+00	49+00	-	-	2	-
UNDISTRIBUTED			-	-	3	-
PROJECT TOTAL			1	3	42	4

EROSION CONTROL MOBILIZATIONS

LOCATION	628.1905 MOBILIZATIONS EROSION CONTROL EACH	628.1910 MOBILIZATIONS EMERGENCY EROSION CONTROL EACH
PROJECT 2025-14-71	4	6
PROJECT TOTAL	4	6

ALL CATEGORY 0010

3

DITCH CHECKS

STREET	FROM		TO	628.7504 TEMPORARY DITCH CHECKS LF	628.7555 CULVERT PIPE CHECKS EACH	628.7570 ROCK BAGS EACH
CAPITOL DRIVE	160+00	-	186+38	48	3	-
CAPITOL DRIVE	186+38	-	245+73	96	13	-
CAPITOL DRIVE	245+73	-	293+29	24	8	50
SPRINGDALE ROAD	42+50	-	49+50	48	4	-
GUMINA ROAD	11+00	-	13+30	-	-	-
BARKER ROAD	42+00	-	49+00	12	1	-
UNDISTRIBUTED				57	7	50
			PROJECT TOTAL	285	36	100

SEEDING QUANTITIES

STREET				627.0200 MULCHING SY	629.0210 FERTILIZER TYPE B CWT	630.0130 SEEDING MIXTURE NO. 30 LB	630.0200 SEEDING TEMPORARY LB
CAPITOL DRIVE	160+00	-	186+38	-	2.2	62	-
CAPITOL DRIVE	186+38	-	245+73	-	4.5	128	-
CAPITOL DRIVE	245+73	-	293+29	-	2.0	57	-
SPRINGDALE ROAD	42+50	-	49+50	-	1.4	39	-
GUMINA ROAD	11+00	-	13+30	-	0.5	14	-
BARKER ROAD	42+00	-	49+00	-	0.5	15	-
UNDISTRIBUTED				2000	2.8	79	40
PROJECT TOTALS				2000	13.8	393	40

3

MARKERS CULVERT END

STREET	FROM		TO	633.5200 EACH
CAPITOL DRIVE	160+00	-	SPRINGDALE ROAD	9
CAPITOL DRIVE	SPRINGDALE ROAD	-	BARKER ROAD	24
CAPITOL DRIVE	BARKER ROAD	-	BROOKFIELD ROAD	17
BARKER ROAD	42+00	-	49+00	2
PROJECT TOTALS				52

SOD QUANTITIES

STREET				631.0300 SOD WATER MGAL	631.1000 SOD LAWN SY
CAPITOL DRIVE	160+00	-	186+38	-	-
CAPITOL DRIVE	186+38	-	245+73	-	-
CAPITOL DRIVE	245+73	-	293+29	9	420
SPRINGDALE ROAD	42+50	-	49+50	-	-
GUMINA ROAD	11+00	-	13+30	-	-
BARKER ROAD	42+00	-	49+00	-	-
UNDISTRIBUTED				2	105
PROJECT TOTAL				12	526

TRAFFIC CONTROL COVERING SIGNS TYPE II

STAGE	STREET	DAYS	NO.	CYCLES	643.0920 EACH
STAGE 1B	CAPITOL DRIVE	10	2	1	2
	PROJECT TOTAL				2

ALL CATEGORY 0010

3

SIGN NO.	SIGN CODE	SIGN MESSAGE	TYPE II SIGN SIZE W [IN.]	x	H [IN.]	637.2210 SIGNS TYPE II REFLC H [SF]	637.2230 SIGNS TYPE II REFLC F [SF]	637.2215 SIGNS TYPE II REFLC H FOLDING [SF]	638.2602 REM SIGNS TYPE II [EA]	638.3000 REM SMALL SIGN SUP [EA]	638.2102 MOVE SIGNS TYPE II [EA]	634.0618 WOOD POSTS 4"X 6"x18' [EA]	MOUNT ON SAME POST AS SIGN #	REMARKS
1	*NOT USED*		--	x	--	--	--	--	--	--	--	--	--	--
2	*NOT USED*		--	x	--	--	--	--	--	--	--	--	--	--
3	*NOT USED*		--	x	--	--	--	--	--	--	--	--	--	--
4	*NOT USED*		--	x	--	--	--	--	--	--	--	--	--	--
5	--	NO THRU TRAFFIC	--	x	--	--	--	--	--	1	1	1	--	--
6	*NOT USED*		--	x	--	--	--	--	--	--	--	--	--	--
7	R4-7(3)		36	x	48	12.000	--	--	--	--	--	1	--	--
8	R4-7(3)		36	x	48	12.000	--	--	--	--	--	1	--	--
9	*NOT USED*		--	x	--	--	--	--	--	--	--	--	--	--
10	*NOT USED*		--	x	--	--	--	--	--	--	--	--	--	--
11	J4-1(3)		--	x	--	--	--	--	--	1	1	1	--	--
12	R2-1(3)	SL 55	--	x	--	--	--	--	--	1	1	1	--	--
13	J4-1	EXISTING ASSEMBLY	--	x	--	--	--	--	--	1	1	1	--	--
14	*NOT USED*		--	x	--	--	--	--	--	--	--	--	--	--
15	*NOT USED*		--	x	--	--	--	--	--	--	--	--	--	--
16	*NOT USED*		--	x	--	--	--	--	--	--	--	--	--	--
17	*NOT USED*		--	x	--	--	--	--	--	--	--	--		
18	*NOT USED*		--	x	--	--	--	--	--	--	--	--	--	--
19	*NOT USED*		--	x	--	--	--	--	--	--	--	--	--	--
20	*NOT USED*		--	x	--	--	--	--	--	--	--	--	--	--
21	J1-1(3)		36	x	57	14.250	--	--	1	1	--	1	--	--
	M2-1		30	x	21									
	M1-5A		36	x	36									
22	J1-1(3)		36	x	57	14.250	--	--	--	--	--	1	--	--
	M2-1		30	x	21									
	M1-5A		36	x	36									
23	W5-52R(3)		18	x	54	--	6.750	--	1	1	--	1	--	4' MOUNTING HEIGHT
24	W5-52L(3)		18	x	54	--	6.750	--	1	1	--	1	--	4' MOUNTING HEIGHT
25	J2-1(3)		36	x	81	20.250	--	--	1	1	--	1	--	--
	M3-3		30	x	15									
	M1-5A		36	x	36									
	M5-1R		30	x	30									
26	J2-1(3)		36	x	81	20.250	--	--	--	--	--	1	--	--
	M3-3		30	x	15									
	M1-5A		36	x	36									
	M5-1R		30	x	30									
27	J1-1	EXISTING ASSEMBLY	--	x	--	--	--	--	--	1	1	1	--	--
28	W3-3(3)		36	x	36	--	9.000	--	1	1	--	1	--	--
29	W3-3(3)		36	x	36	--	9.000	--	1	1	--	1	--	--
30	M1-94(MOD)	SPRINGDALE RD [A]	120	x	21	17.500	--	--	1	2	--	2	--	--
31	--	NO ENGINE BRAKING	--	x	--	--	--	--	--	1	1	1	--	--
		WITHIN CITY LIMITS	--	x	--	--	--	--	--	--	--	--	--	--
32	I2-3	PEWAUKEE	66	x	24	11.000	--	--	1	2	--	2	--	--
		POPULATION 13,195		x										
33	M1-94	[A] GUMINA RD	102	x	21	14.875	--	--	1	2	--	2	--	--
34	--	NO THRU TRAFFIC	--	x	--	--	--	--	--	1	1	1	--	--
35	W5-52R(3)		18	x	54	--	6.750	--	1	1	--	1	--	4' MOUNTING HEIGHT
36	W5-52L(3)		18	x	54	--	6.750	--	1	1	--	1	--	4' MOUNTING HEIGHT

3

SIGN NO.	SIGN CODE	SIGN MESSAGE	TYPE II SIGN SIZE W [IN.]	x	H [IN.]	637.2210 SIGNS TYPE II REFLC H [SF]	637.2230 SIGNS TYPE II REFLC F [SF]	637.2215 SIGNS TYPE II REFLC H FOLDING [SF]	638.2602 REM SIGNS TYPE II [EA]	638.3000 REM SMALL SIGN SUP [EA]	638.2102 MOVE SIGNS TYPE II [EA]	634.0618 WOOD POSTS 4"X 6"x18' [EA]	MOUNT ON SAME POST AS SIGN #	REMARKS
37	*NOT USED*		--	x	--	--	--	--	--	--	--	--	--	--
38	*NOT USED*		--	x	--	--	--	--	--	--	--	--	--	--
39	R3-20L(3)		36	x	54	13.500	--	--	1	1	--	1	--	--
40	R5-1A(3)		42	x	30	8.750	--	--	1	--	--	--	#39	--
41	R3-20LL(3)		36	x	54	13.500	--	--	1	1	--	1	--	--
42	J3-1(3)		36	x	66	16.500	--	--	1	1	--	1	--	--
	M1-5A		36	x	36									
	M6-1		30	x	30									
43	R1-1F(3)		36	x	36	--	--	7.460	1	--	--	--	--	MOUNT ON SIGNAL POLE
44	R1-1F(3)		36	x	36	--	--	7.460	1	--	--	--	--	MOUNT ON SIGNAL POLE
45	J4-1(2S)		24	x	36	6.000	--	--	--	--	--	1	--	--
	M3-3		24	x	12									
	M1-5A		24	x	24									
46	--	--	--	x	--	--	--	--	--	1	1	1	--	--
47	R3-8(2)		36	x	30	7.500	--	--	1	1	--	1	--	--
48	J3-2(2S)		48	x	57	19.000	--	--	1	2	--	2	--	--
	M3-4		24	x	12									
	M1-6		24	x	24									
	M6-1		21	x	21									
	M3-2		24	x	12									
	M1-6		24	x	24									
	M6-1		21	x	21									
49	R1-1F(3)		36	x	36			7.460	1	--	--	--	--	MOUNT ON SIGNAL POLE
50	R1-1F(3)		36	x	36			7.460	1	--	--	--	--	MOUNT ON SIGNAL POLE
51	R4-7(3)		36	x	48	12.000	--	--	1	--	--	--	--	MOUNT ON SIGNAL POLE
52	--	ADOPT-A-HWY	--	x	--	--	--	--	--	1	1	1	--	--
53	R6-2L(2M)		30	x	36	7.500	--	--	--	--	--	--	--	MOUNT ON SIGNAL POLE
54	R2-1(3)	SPEED LIMIT 55	36	x	48	12.000	--	--	1	1	--	1	--	--
55	R2-1(3)	SPEED LIMIT 55	36	x	48	12.000	--	--	1	1	--	1	--	--
56	R3-20LL(2M)		24	x	36	6.000	--	--	1	1	--	1	--	--
57	J3-1(3)		36	x	66	16.500	--	--	1	1	--	1	--	--
	M1-5A		36	x	36									
	M6-1		30	x	30									
58	R1-1F(3)		36	x	36			7.460	1	--	--	--	--	MOUNT ON SIGNAL POLE
59	R1-1F(3)		36	x	36			7.460	1	--	--	--	--	MOUNT ON SIGNAL POLE
60	R5-1(3)		36	x	36	9.000	--	--	1	--	--	--	--	MOUNT ON SIGNAL POLE
61	R5-1(3)		36	x	36	9.000	--	--	1	--	--	--	--	MOUNT ON SIGNAL POLE
62	R5-1(3)		36	x	36	9.000	--	--	1	--	--	--	--	MOUNT ON SIGNAL POLE
63	R5-1(3)		36	x	36	9.000	--	--	1	--	--	--	--	MOUNT ON SIGNAL POLE
64	R1-1F(3)		36	x	36			7.460	1	--	--	--	--	MOUNT ON SIGNAL POLE
65	J3-2(2S)		48	x	57	19.000	--	--	1	2	--	2	--	--
	M3-3		24	x	12									
	M1-5A		24	x	24									
	M6-1		21	x	21									
	M1-6		24	x	24									
	M6-4		21	x	21									
66	R4-7(3)		36	x	48	12.000	--	--	1	--	--	--	--	MOUNT ON SIGNAL POLE
67	--	ADOPT-A-HWY	--	x	--	--	--	--	--	1	1	1	--	--

3

SIGN NO.	SIGN CODE	SIGN MESSAGE	TYPE II SIGN SIZE W [IN.]	x	H [IN.]	637.2210 SIGNS TYPE II REFLC H [SF]	637.2230 SIGNS TYPE II REFLC F [SF]	637.2215 SIGNS TYPE II REFLC H FOLDING [SF]	638.2602 REM SIGNS TYPE II [EA]	638.3000 REM SMALL SIGN SUP [EA]	638.2102 MOVE SIGNS TYPE II [EA]	634.0618 WOOD POSTS 4"X 6"x18' [EA]	MOUNT ON SAME POST AS SIGN #	REMARKS
68	J4-1(3)		36	x	51	12.750	--	--	1	1	--	1	--	--
	M3-4		30	x	15									
	M1-6		36	x	36									
69	R6-2L(2M)		30	x	36	7.500	--	--	--	--	--	--	--	MOUNT ON SIGNAL POLE
70	R2-1(3)	SPEED LIMIT 55	36	x	48	12.000	--	--	1	1	--	1	--	--
71	R2-1(3)	SPEED LIMIT 55	36	x	48	12.000	--	--	1	1	--	1	--	--
72	R5-1A(3)		42	x	30	8.750	--	--	--	--	--	1	--	--
73	J4-1(3)		36	x	51	12.750	--	--	1	1	--	1	--	--
	M3-2		30	x	15									
	M1-6		36	x	36									
74	M1-94(MOD)	[A] SPRINGDALE RD	120	x	21	17.500	--	--	1	2	--	2	--	--
75	R5-1(3)		36	x	36	9.000	--	--	--	--	--	1	--	--
76	R4-7(2S)		24	x	30	5.000	--	--	1	1	--	1		
77	R1-1(3)		36	x	36	7.460	--	--	1	1	--	1	--	--
78	R1-1(3)		36	x	36	7.460	--	--	1	1	--	1	--	--
79	R6-3A(2M)		30	x	24	5.000	--	--	--	--	--	--	#78	--
80	R4-7(3)		36	x	48	12.000	--	--	1	1	--	1	--	--
81	R4-7(3)		36	x	48	12.000	--	--	1	1	--	1	--	--
82	R6-2L(2M)		30	x	36	7.500	--	--	--	--	--	1	--	--
83	R5-1(3)		36	x	36	9.000	--	--	1	1	--	1	--	--
84	R6-2		--	x	--	--	--	--	1	1	--	--	--	--
85	J1-1(3)		36	x	57	14.250	--	--	1	1	--	1	--	--
	M2-1		30	x	21									
	M1-5A		36	x	36									
85A	J1-1(3)		36	x	57	14.250	--	--	--	--	--	1	--	--
	M2-1		30	x	21									
	M1-5A		36	x	36									
86	R4-7(3)		36	x	48	12.000	--	--	1	1	--	1	--	--
87	R4-7(3)		36	x	48	12.000	--	--	1	1	--	1	--	--
88	R6-2L(2M)		30	x	36	7.500	--	--	1	1	--	1	--	--
89	W3-3(2)		36	x	36	--	9.000	--	1	1	--	1	--	--
90	W3-3(2)		36	x	36	--	9.000	--	1	1	--	1	--	--
91	M1-94(MOD)	GUMINA RD [A]	102	x	21	14.875	--	--	1	2	--	2	--	--
92	J2-2(3)		72	x	81	40.500	--	--	1	1	--	1	--	--
	M3-3		30	x	15									
	M1-5A		36	x	36									
	M5-1L		30	x	30									
	M3-4		30	x	15									
	M1-6		36	x	36									
	M6-1		30	x	30									
93	R3-20L(3)		36	x	54	13.500	--	--	1	1	--	1	--	--
94	R4-7(3)		36	x	48	12.000	--	--	1	1	--	1	--	--
95	R4-7(3)		36	x	48	12.000	--	--	--	--	--	1	--	--
96	R6-2L(2M)		30	x	36	7.500	--	--	--	--	--	1	--	--
97	R5-1(3)		36	x	36	9.000	--	--	--	--	--	1	--	--
98	M1-94(MOD)	[A] GUMINA RD	102	x	21	14.875	--	--	1	2	--	2	--	--
99	J1-1(3)		36	x	57	14.250	--	--	1	1	--	1	--	--
	M2-1		30	x	21									
	M1-5A		36	x	36									

3

SIGN NO.	SIGN CODE	SIGN MESSAGE	TYPE II SIGN SIZE W [IN.]	x	H [IN.]	637.2210 SIGNS TYPE II REFLC H [SF]	637.2230 SIGNS TYPE II REFLC F [SF]	637.2215 SIGNS TYPE II REFLC H FOLDING [SF]	638.2602 REM SIGNS TYPE II [EA]	638.3000 REM SMALL SIGN SUP [EA]	638.2102 MOVE SIGNS TYPE II [EA]	634.0618 WOOD POSTS 4"X 6"x18' [EA]	MOUNT ON SAME POST AS SIGN #	REMARKS
100	J1-1(3)		36	x	57	14.250	--	--	1	1	--	1	--	--
	M2-1		30	x	21									
	M1-5A		36	x	36									
101	W3-3(3)		36	x	36	--	9.000	--	1	1	--	1	--	--
102	W3-3(3)		36	x	36	--	9.000	--	1	1	--	1	--	--
103	D2-2	[A] BARKER RD	96	x	30	20.000	--	--	1	2	--	2	--	--
		20400 W												
104	R5-1(3)		36	x	36	9.000	--	--	--	--	--	1	--	--
105	R6-2L(2S)		24	x	30	5.000	--	--	1	1	--	1	--	--
106	R4-7(3)		36	x	48	12.000	--	--	1	1	--	1	--	--
107	R4-7(3)		36	x	48	12.000	--	--	1	1	--	1	--	--
108	J2-1(3)		36	x	66	16.500	--	--	1	1	--	1	--	--
	M1-5A		36	x	36									
	M5-1R		30	x	30									
108A	J2-1(3)		36	x	66	16.500	--	--	1	1	--	1	--	--
	M1-5A		36	x	36									
	M5-1R		30	x	30									
109	R6-2L(2M)		30	x	36	7.500	--	--	--	--	--	1	--	--
110	R5-1A(3)		42	x	30	8.750	--	--	1	1	--	1	--	--
111	R5-1(3)		36	x	36	9.000	--	--	1	1	--	1	--	--
112	--	* NOT USED *	--	x	--	--	--	--	--	--	--	--	--	* NOT USED *
113	R1-1(3)		36	x	36	7.460	--	--	1	1	--	1	--	--
114	R1-1(3)		36	x	36	7.460	--	--	1	1	--	1	--	--
115	R6-2R		--	x	--	--	--	--	1	--	--	--	--	--
116	R2-1(3)	SPEED LIMIT 55	36	x	48	12.000	--	--	1	1	--	1	--	--
117	R2-1(3)	SPEED LIMIT 55	36	x	48	12.000	--	--	1	1	--	1	--	--
118	D9-2(3)		36	x	36	9.000	--	--	1	1	--	1	--	--
	MB6-1(3)		30	x	30	6.250	--	--						
119	R5-1A(3)		42	x	30	8.750	--	--	1	1	--	1	--	--
120	J3-1(3)		36	x	66	16.500	--	--	1	1	--	1	--	--
	M1-5A		36	x	36									
	M6-1		30	x	30									
121	R1-1(3)		36	x	36	7.460	--	--	1	--	--	--	--	MOUNT ON LIGHT POLE
122	W12-1D(2)		24	x	24	--	4.000	--	1	1	--	1	--	2' MOUNTING HEIGHT
123	J3-1(2S)		48	x	57	19.000	--	--	1	2	--	2	--	--
	M3-3		24	x	12									
	M1-5A		24	x	24									
	M6-1		21	x	21									
	M1-6		24	x	24									
	M6-4		21	x	21									
124	R3-8(2S)		36	x	30	7.500	--	--	1	1	--	1	--	--
125	--	STOP HERE ON RED	--	x	--	--	--	--	--	--	1	--	--	RE-MOUNT ON SIGNAL POLE
126	R1-1F(3)		36	x	36	--	--	7.460	1	--	--	--	--	MOUNT ON SIGNAL POLE
127	R1-1F(3)		36	x	36	--	--	7.460	1	--	--	--	--	MOUNT ON SIGNAL POLE
128	R1-1F(3)		36	x	36	--	--	7.460	1	--	--	--	--	MOUNT ON SIGNAL POLE
129	R4-7(3)		36	x	48	12.000	--	--	1	--	--	--	--	MOUNT ON SIGNAL POLE
130	J4-1(3)		36	x	51	12.750	--	--	1	1	--	1	--	--
	M3-2		30	x	15									
	M1-6		36	x	36									

3

SIGN NO.	SIGN CODE	SIGN MESSAGE	TYPE II SIGN SIZE W [IN.]	x	H [IN.]	637.2210 SIGNS TYPE II REFLC H [SF]	637.2230 SIGNS TYPE II REFLC F [SF]	637.2215 SIGNS TYPE II REFLC H FOLDING [SF]	638.2602 REM SIGNS TYPE II [EA]	638.3000 REM SMALL SIGN SUP [EA]	638.2102 MOVE SIGNS TYPE II [EA]	634.0618 WOOD POSTS 4"X 6"x18' [EA]	MOUNT ON SAME POST AS SIGN #	REMARKS
131	--	RIGHT TURN SIGNAL	--	x	--	--	--	--	--	--	1	--	--	RE-MOUNT ON SIGNAL POLE
132	R4-7(3)		36	x	48	12.000	--	--	1	--	--	--	--	MOUNT ON SIGNAL POLE
133	R2-1(3)	SPEED LIMIT 55	36	x	48	12.000	--	--	1	1	--	1	--	--
134	R2-1(3)	SPEED LIMIT 55	36	x	48	12.000	--	--	1	1	--	1	--	--
135	--	FOX RIVER	--	x	--	--	--	--	--	2	1	2	--	--
136	W5-52R(3)		18	x	54	--	6.750	--	1	1	--	1	--	4' MOUNTING HEIGHT
137	W5-52L(3)		18	x	54	--	6.750	--	1	1	--	1	--	4' MOUNTING HEIGHT
138	W11-3			x		--	--	--	1	1	--	--	--	--
139	J2-1(3)		36	x	66	16.500	--	--	1	1	--	1	--	--
	M1-5A		36	x	36									
	M5-1L		30	x	30									
140	M1-94(MOD)	BARKER RD [A]	96	x	30	20.000	--	--	1	2	--	2	--	--
		20400 W												
141	J2-1(3)		36	x	66	16.500	--	--	1	1	--	1	--	--
	M1-5A		36	x	36									
	M5-1L		30	x	30									
142	D9-2		--	x	--	--	--	--	1	1	--	--	--	--
	MB6-1		--	x	--	--	--	--						
143	--	FOX RIVER	--	x	--	--	--	--	--	2	1	2	--	--
144	W5-52R(3)		18	x	54	--	6.750	--	1	1	--	1	--	4' MOUNTING HEIGHT
145	W5-52L(3)		18	x	54	--	6.750	--	1	1	--	1	--	4' MOUNTING HEIGHT
146	J3-1(3)		36	x	66	16.500	--	--	1	1	--	1	--	--
	M1-5A		36	x	36									
	M6-1		30	x	30									
147	R3-55L		--	x	--	--	--	--	1	1	--	--	--	--
148	*NOT USED*		--	x	--	--	--	--	--	--	--	--	--	--
149	*NOT USED*		--	x	--	--	--	--	--	--	--	--	--	--
150	R3-20L(2M)		24	x	36	6.000	--	--	1	1	--	1	--	--
151	J3-1	EXISTING ASSEMBLY	--	x	--	--	--	--	1	1	--	--	--	--
152	R3-5L		--	x	--	--	--	--	1	--	--	--	--	MOUNT ON S-67-937
153	R3-5L		--	x	--	--	--	--	1	--	--	--	--	MOUNT ON S-67-937
154	R5-1(3)		36	x	36	9.000	--	--	1		--	155	--	--
155	R1-1F(3)		36	x	36		--	7.460	1	1	--	1	--	--
156	W1-6(3)		60	x	30	--	12.500	--	1	1	--	2	--	--
157	R6-2L(2M)		30	x	36	7.500	--	--	1	1	--	1	--	--
158	R5-1(3)		36	x	36	9.000	--	--	1	1	--	1	--	--
159	M1-94(MOD)	GUMINA RD [A]	102	x	21	14.875	--	--	1	2	--	2	--	--
160	J4-1(3)		36	x	51	12.750	--	--	1	1	--	1	--	--
	M3-4		30	x	15									
	M1-6		36	x	36									
161	D9-2(3)		36	x	36	9.000	--	--	--	--	--	1	--	--
	MB6-1(3)		30	x	30	6.250	--	--						
162	W3-3(3)		36	x	36	--	9.000	--	1	1	--	1	--	--
163	W3-3(3)		36	x	36	--	9.000	--	1	1	--	1	--	--
164	R6-2L		--	x	--	--	--	--	1	1	--	--	--	--
165	J1-1(3)		36	x	57	14.250	--	--	1	1	--	1	--	--
	M2-1		30	x	21									
	M1-5A		36	x	36									

3

SIGN NO.	SIGN CODE	SIGN MESSAGE	TYPE II SIGN SIZE W [IN.]	x	H [IN.]	637.2210 SIGNS TYPE II REFLC H [SF]	637.2230 SIGNS TYPE II REFLC F [SF]	637.2215 SIGNS TYPE II REFLC H FOLDING [SF]	638.2602 REM SIGNS TYPE II [EA]	638.3000 REM SMALL SIGN SUP [EA]	638.2102 MOVE SIGNS TYPE II [EA]	634.0618 WOOD POSTS 4"X 6"x18' [EA]	MOUNT ON SAME POST AS SIGN #	REMARKS
166	J1-1(3)		36	x	57	14.250	--	--	1	1	--	1	--	--
	M2-1		30	x	21									
	M1-5A		36	x	36									
167	R5-1(3)		36	x	36	9.000	--	--	--	--	--	1	--	--
168	*NOT USED*		--	x	--	--	--	--	--	--	--	--	--	--
169	R6-2R(2M)		30	x	36	7.500	--	--	--	--	--	1	--	--
170	M1-94(MOD)	MITCHELL PARK DRIVE [A]	138	x	21	20.125	--	--	--	--	--	2	--	--
171	R5-1A(3)		42	x	30	8.750	--	--	--	--	--	1	--	--
172	R5-1(3)		36	x	36	9.000	--	--	--	--	--	1	--	--
173	R6-2L(2M)		30	x	36	7.500	--	--	--	--	--	1	--	--
174	R4-7(3)		36	x	48	12.000	--	--	1	1	--	1	--	--
175	R1-1(3)		36	x	36	7.460	--	--	1	1	--	1	--	--
176	R1-1(3)		36	x	36	7.460	--	--	1	1	--	1	--	--
177	R4-7(2S)		24	x	30	5.000	--	--	1	1	--	1	--	--
178	R6-3A(2M)		30	x	24	5.000	--	--	--	--	--	--	#177	--
179	R4-7(3)		36	x	48	12.000	--	--	--	--	--	1	--	--
180	W3-5(3)	REDUCED SPEED 50	36	x	36	--	9.000	--	1	1	--	1	--	--
181	W3-5(3)	REDUCED SPEED 50	36	x	36	--	9.000	--	1	1	--	1	--	--
182	R3-20L(3)		36	x	54	13.500	--	--	1	1	--	1	--	--
183	R5-1A(3)		42	x	30	8.750	--	--	1	1	--	1	--	--
184	W9-1R(3)		36	x	36	--	9.000	--	1	1	--	1	--	--
185	W4-2R(2M)		36	x	36	--	9.000	--	1	1	--	1	--	--
186	R5-1(3)		36	x	36	9.000	--	--	1	1	--	1	--	--
186A	R5-1(3)		36	x	36	9.000	--	--	1	1	--	1	--	--
187	R4-7(3)		36	x	48	12.000	--	--	1	--	--	--	--	MOUNT ON SIGNAL POLE
188	R4-7(3)		36	x	48	12.000	--	--	1	--	--	--	--	MOUNT ON SIGNAL POLE
189	R1-1(3)		36	x	36	7.460	--	--	1	1	--	1	--	--
190	R1-1(3)		36	x	36	7.460	--	--	1	1	--	1	--	--
191	R6-3A(2M)		30	x	24	5.000	--	--	--	--	--	--	#189	--
192	R4-7(2S)		24	x	30	5.000	--	--	1	1	--	1	--	--
198	R3-20L(3)		36	x	54	13.500	--	--	1	1	--	1	--	--
199	*NOT USED*		--	x	--	--	--	--	--	--	--	--	--	--
200	R5-1A		--	x	--	--	--	--	1	--	--	--	--	--
201	R5-1(3)		36	x	36	9.000	--	--	--	--	--	1	--	--
202	R3-20LL(2M)		24	x	36	6.000	--	--	--	1	1	1	--	--
203	R6-2L(2M)		30	x	36	7.500	--	--	--	--	--	1	--	--
204	W9-62(4)		72	x	90	--	45.000	--	1	--	--	--	--	I BEAMS INCIDENTAL
205	R5-1(3)		36	x	36	9.000	--	--	1	--	--	--	--	MOUNT ON SIGNAL POLE
826	M1-94(MOD)	MITCHELL PARK [A] DRIVE	138	x	21	20.125	--	--	--	--	--	2	--	SHEET 11
831	R1-1(2S)		30	x	30	5.180	--	--	--	--	--	1	--	SHEET 4
832	R1-1(2S)		30	x	30	5.180	--	--	--	--	--	1	--	SHEET 4
840	R5-1(3)		36	x	36	9.000	--	--	1	1	--	1	--	MOUNT ON SIGNAL POLE. SHEET 9 OF 12
841	R1-1F(3)		36	x	36	7.460	--	--	1	1	--	1	--	MOUNT ON SIGNAL POLE. SHEET 9 OF 12
853	R3-4(2S)		24	x	24	4.000	--	--	--	--	--	--	--	SHEET 4 OF 12 ON SIGNAL POLE
854	R3-4(2S)		24	x	24	4.000	--	--	--	--	--	1	--	SHEET 9 OF 12
855	*NOT USED*		--	X	--	--	--	--	--	--	--	--	--	--
856	--	Wilson Center for the Arts	--	X	--	--	--	--	--	2	1	2	--	SHEET 11 OF 12
857	--	Wilson Center for the Arts	--	X	--	--	--	--	--	2	1	2	--	SHEET 10 OF 12

3

SIGN NO.	SIGN CODE	SIGN MESSAGE	TYPE II SIGN SIZE W [IN.]	x	H [IN.]	637.2210 SIGNS TYPE II REFLC H [SF]	637.2230 SIGNS TYPE II REFLC F [SF]	637.2215 SIGNS TYPE II REFLC H FOLDING [SF]	638.2602 REM SIGNS TYPE II [EA]	638.3000 REM SMALL SIGN SUP [EA]	638.2102 MOVE SIGNS TYPE II [EA]	634.0618 WOOD POSTS 4"X 6"x18' [EA]	MOUNT ON SAME POST AS SIGN #	REMARKS
858	R3-8Y(2M)		36	x	30	7.500	--	--	--	--	--	--	#54	SHEET 4 OF 12
859	W4-2R(2S)		36	x	36	--	9.000	--	--	--	--	1	--	SHEET 4 OF 12
860	R3-8M(2S)		54	x	30	11.250	--	--	--	--	--	1	--	SHEET 4 OF 12
861	J3-1		--	X	--	--	--	--	--	1	1	1	--	SHEET 2
862	R2-1	SPEED LIMIT 35	24	X	30	5.000	--	--	--	--	--	1	--	SHEET 4
863	W3-3		--	X	--	--	--	--	--	1	1	1	--	
864	J1-1		24	X	36	6.000	--	--	1	1	--	1	--	SHEET 4
	M2-1		24	X	12	--								
	M1-6		24	X	24	--								
865	R3-5L		--	X	--	--	--	--	1	--	--	--	--	MOUNT ON OVERHEAD, SHEET 4
866	R3-5L		--	X	--	--	--	--	1	--	--	--	--	MOUNT ON OVERHEAD, SHEET 4
867	J3-1		--	X	--	--	--	--	--	1	1	1	--	SHEET 7
868	J3-1		--	X	--	--	--	--	--	1	1	1	--	SHEET 8
869	R3-20LL(2M)		24	X	36	6.000	--	--	--	--	--	1	--	SHEET 8
870	R3-8Y		36	X	30	7.500	--	--	--	--	--	1	--	SHEET 8
871	J3-1		--	X	--	--	--	--	--	1	1	1	--	SHEET 8
872	W4-2R(2S)		36	X	36	--	9.000	--	--	--	--	--	--	
873	J1-1(2S)		24	x	36	6.000	--	--	1	1	--	1	--	SHEET 9
	M1-2		24	X	12	--								
	M1-6	STH 190	24	X	24	--								
874	J3-1		--	X	--	--	--	--	--	1	1	1	--	SHEET 9
875	R3-4(2S)		24	X	24	4.000	--	--	--	--	--	--	#132	SHEET 9
876	R3-20L(2M)		24	X	36	6.000	--	--	--	--	--	1	--	SHEET 12
877	W3-3(2M)		36	X	36	--	9.000	--	1	1	--	1	--	SHEET 12
878	W3-3(2M)		36	X	36	--	9.000	--	1	1	--	1	--	SHEET 12
879	D1-1(MOD)	BROOKFIELD R, 18700 W	96	X	42	28.000	--	--	--	--	--	2	--	SHEET 12
	TOTALS					1574.460 *	259.500	82.060	146	152	23	340		

* ADDITIONAL QUANTITIES SHOWN ELSEWHERE

3

SIGN NO.	SIGN CODE	SIGN MESSAGE	TYPE II SIGN SIZE W [IN.]	x	H [IN.]	637.2210 SIGNS TYPE II REFLC H [SF]	637.2215 SIGNS TYPE II REFLC H FOLDING [SF]	638.2602 REM SIGNS TYPE II [EA]	638.3000 REM SMALL SIGN SUP [EA]	638.2102 MOVE SIGNS TYPE II [EA]	634.0618 WOOD POSTS 4"X 6"x18' [EA]	MOUNT ON SAME POST AS SIGN #	REMARKS
1001	M1-94H	[A] SPRINGDALE RD GUMINA RD [A]	90	x	30	18.750	--	--	--	--	--	--	MOUNT ON MAST ARM SHEET 4 OF 12
1002	M1-94H	[A] GUMINA RD SPRINGDALE RD [A]	90	x	30	18.750	--	--	--	--	--	--	MOUNT ON MAST ARM SHEET 4 OF 12
1003	M1-94H	CAPITOL DR	60	X	18	7.500	--	--	--	--	--	--	MOUNT ON MAST ARM SHEET 4 OF 12
1004	M1-94H	CAPITOL DR	60	X	18	7.500	--	--	--	--	--	--	MOUNT ON MAST ARM SHEET 4 OF 12
1005	M1-94H	BARKER RD	54	X	18	6.750	--	--	--	--	--	--	MOUNT ON MAST ARM SHEET 9 OF 12
1006	M1-94H	BARKER RD	54	X	18	6.750	--	--	--	--	--	--	MOUNT ON MAST ARM SHEET 9 OF 12
1007	M1-94H	CAPITOL DR	60	X	18	7.500	--	--	--	--	--	--	MOUNT ON MAST ARM SHEET 9 OF 12
	TOTALS					73.500 *							

* ADDITIONAL QUANTITIES SHOWN ELSEWHERE

3

SHEET 1 OF 1

3

TRAFFIC CONTROL

LOCATION	643.0300 TRAFFIC CONTROL DRUMS DAYS	643.0300 EACH	643.0300 DAYS	643.1070 TRAFFIC CONTROL CONES 42-INCH EACH	643.1070 DAYS	643.0420 TRAFFIC CONTROL BARRICADES TYPE III EACH	643.0420 DAYS	643.0705 TRAFFIC CONTROL WARNING LIGHTS TYPE A EACH	643.0705 DAYS	643.0715 TRAFFIC CONTROL WARNING LIGHTS TYPE C EACH	643.0715 DAYS	643.0800 TRAFFIC CONTROL ARROW BOARDS EACH	643.0800 DAY	643.0900 TRAFFIC CONTROL SIGNS EACH	643.0900 DAYS	643.1050 TRAFFIC CONTROL SIGNS PCMS EACH	643.1050 DAYS	646.9000 MARKING REMOVAL LINE 4-INCH LF	646.9100 MARKING REMOVAL LINE 8-INCH LF	646.9300 MARKING REMOVAL SPECIAL MARKING EACH	649.0105 TEMPORARY MARKING LINE PAINT 4-INCH (WHITE) LF	649.0105 (YELLOW) LF	649.0150 TEMPORARY MARKING LINE REMOVABLE TAPE 4-INCH (WHITE) LF	649.0150 (YELLOW) LF	649.0205 TEMPORARY MARKING LINE PAINT 8-INCH (WHITE) LF	649.0250 TEMPORARY MARKING LINE REMOVABLE TAPE 8-INCH (WHITE) LF
STAGE 1	80	615	49,200	0	0	58	4,640	116	9,280	59	4,720	4	320	153	12,240	4	28	26,664	1,237	2	24,852	23,537	2,520	2,087	2,950	1,042
STAGE 1A	14	132	1,848	0	0	6	84	12	168	6	84	0	0	5	70	0	0	0	0	0	0	251	0	381	636	767
STAGE 1B	10	59	590	0	0	15	150	30	300	21	210	1	10	9	90	0	0	0	0	0	0	733	3,330	539	88	820
STAGE 2	84	195	16,380	467	39,228	48	4,032	96	8,064	78	6,552	5	420	120	10,080	4	28	400	800	0	0	0	27,516	24,041	0	5,260
STAGE 2A	14	0	0	21	294	16	224	32	448	0	0	0	0	61	854	0	0	0	0	0	0	0	0	0	0	0
STAGE 2B	14	16	224	8	112	9	126	18	252	3	42	0	0	57	798	0	0	0	0	0	0	0	455	0	0	0
PROJECT TOTALS	216	1,017	68,242	496	39,634	152	9,256	304	18,512	167	11,608	10	750	405	24,132	8	56	27,064	2,037	2	24,852	24,521	33,821	27,048	3,674	7,889
																					49,373		60,869			

PAVEMENT MARKING

ROADWAY	FROM		TO	646.1020 MARKING LINE EPOXY 4-INCH WHITE LF	646.1020 YELLOW LF	646.1545 MARKING LINE GROOVED WET REF CONTRAST EPOXY 4-INCH WHITE LF	646.3020 MARKING LINE EPOXY 8-INCH WHITE LF	646.3545 MARKING LINE GROOVED WET REF CONTRAST EPOXY 8-INCH WHITE LF	646.5020 MARKING ARROW EPOXY WHITE EACH	646.5120 MARKING WORD EPOXY WHITE EACH	646.6120 MARKING STOP LINE EPOXY 18-INCH WHITE LF	646.7120 MARKING DIAGONAL EPOXY 12-INCH WHITE LF	646.7120 YELLOW	646.7420 MARKING CROSSWALK EPOXY TRANSVERSE LINE 6-INCH WHITE EACH	646.8120 MARKING CURB EPOXY YELLOW EACH	646.8220 MARKING ISLAND NOSE EPOXY YELLOW EACH
CAPITOL DRIVE	CTH F	-	156+00	0	0	165	0	750	0	0	0	0	0	0	0	0
CAPITOL DRIVE	156+00	-	SPRINGDALE ROAD	5,364	5,029	1,168	0	1,182	4	4	52	0	0	0	49	1
CAPITOL DRIVE	SPRINGDALE ROAD	-	BARKER ROAD	10,514	10,009	2,768	61	5,266	18	18	153	135	0	0	164	2
CAPITOL DRIVE	BARKER ROAD	-	BROOKFIELD ROAD	9,189	8,875	3,016	0	3,501	14	14	52	253	0	223	149	3
CAPITOL DRIVE	BROOKFIELD ROAD	-	IMPERIAL DRIVE	0	0	165	0	0	0	0	0	0	0	0	0	0
SPRINGDALE ROAD	42+50	-	49+70	1,388	1,399	0	543	0	2	2	27	0	0	0	0	0
GUMINA ROAD	10+94	-	13+29	13	544	0	70	0	2	-	60	0	73	0	0	0
BARKER ROAD	42+00	-	49+00	1,113	1,447	0	417	0	4	4	26	0	0	0	0	0
PROJECT TOTALS				27,581	27,303	7,282	1,091	10,699	44	42	370	388	73	223	362	6
				54,884								461				

CONSTRUCTION STAKING ROADWAY ITEMS

ITEM	QUANTITY	UNIT	DESCRIPTION
650.4000	15	EACH	CONSTRUCTION STAKING STORM SEWER
650.4500	9,072	LF	CONSTRUCTION STAKING SUBGRADE
650.5000	9,072	LF	CONSTRUCTION STAKING BASE
650.5500	5,244	LF	CONSTRUCTION STAKING CURB GUTTER AND CURB & GUTTER
650.6000	4	EACH	CONSTRUCTION STAKING PIPE CULVERTS
650.8000	14,749	LF	CONSTRUCTION STAKING RESURFACING REFERENCE
650.9000	8	EACH	CONSTRUCTION STAKING CURB RAMPS
650.9910	1	LS	CONSTRUCTION STAKING SUPPLEMENTAL CONTROL (2025-14-71)
650.9920	7,371	LF	CONSTRUCTION STAKING SLOPE STAKES

CONDUIT RIGID NONMETALLIC SCHEDULE 40 2-INCH

FROM	TO	652.0225 CONDUIT RIGID NONMETALLIC SCHEDULE 40 2-INCH L.F.
EX. PB106	LP13	100
LP13	LP12	110
LP12	LP11	100
LP11	LP10	100
LP10	EX. LP9	108
	***TOTALS	518

***ADDITIONAL QUANTITIES SHOWN ELSEWHERE

ALL CATEGORY 0010

3

ELECTRICAL WIRE LIGHTING 6 AWG
ELECTRICAL WIRE LIGHTING 4 AWG

		655.0625 ELECTRICAL WIRE LIGHTING 6 AWG L.F.	655.0630 ELECTRICAL WIRE LIGHTING 4 AWG L.F.
EX. LP14	LP13	141	423
LP13	LP12	120	360
LP12	LP11	110	330
LP11	LP10	110	330
LP10	EX. LP9	118	354
		599	1,797

RELOCATE DECORATIVE ROADWAY LIGHTING UNIT

POLE NO.	STATION	OFFSET	SPV.0060.01 RELOCATE DECORATIVE ROADWAY LIGHTING UNIT EACH
LP13	288+45.00	18.2' LT	1
LP12	289+55.00	18.2' LT	1
LP11	290+53.62	19.1' LT	1
LP10	291+61.00	22.0' LT	1
		TOTAL	4

3

SAWING ASPHALT

STREET	STATION		TO STATION	690.0150 LF
CAPITOL DRIVE	152+81.00	-	SPRINGDALE ROAD	35
CAPITOL DRIVE	SPRINGDALE ROAD	-	BARKER ROAD	107
CAPITOL DRIVE	BARKER ROAD	-	291+00	158
SPRINGDALE ROAD	42+50.00	-	4970	1,518
GUMINA ROAD	10+94.00	-	1329	218
BARKER ROAD	42+00.00	-	4900	804
PROJECT TOTAL				2,840

ADJUSTING WATER VALVE BOXES - CITY OF BROOKFIELD

STREET	STATION	OFFSET	SPV.0060.02 EACH
STH 190	240+80	55' RT	1
	PROJECT TOTAL		1

SAWING CONCRETE

STREET	STATION		TO STATION	690.0250 LF
CAPITOL DRIVE	152+81.00	-	SPRINGDALE ROAD	1,100
CAPITOL DRIVE	SPRINGDALE ROAD	-	BARKER ROAD	6,965
CAPITOL DRIVE	BARKER ROAD	-	291+00	1,837
SPRINGDALE ROAD	42+50.00	-	4970	-
GUMINA ROAD	10+94.00	-	1329	-
BARKER ROAD	42+00.00	-	4900	-
PROJECT TOTAL				9,902

HMA PERCENT WITHIN LIMITS (PWL)

STREET	LOCATION	SPV.0060.09 TEST STRIP VOLUMETRICS EACH	SPV.0060.10 TEST STRIP DENSITY EACH
STH 190	UNDISTRIBUTED	2	3
PROJECT TOTALS:		2	3

MAINTAINING TEMPORARY DRAINAGE

LOCATION	STA 242+55 SPV.0105.17 LS	STA 245+95 SPV.00105.18 LS	STA 254+10 SPV.0105.19 LS
STH 190	1	1	1
PROJECT TOTAL	1	1	1

JOINT AND CRACK REPAIR

STREET	FROM		TO	SPV.0090.02 LF
CAPITOL DRIVE	152+81	-	SPRINGDALE ROAD	5,421
CAPITOL DRIVE	SPRINGDALE ROAD	-	BARKER ROAD	14,952
CAPITOL DRIVE	BARKER ROAD	-	291+00	12,405
SPRINGDALE ROAD	42+50	-	49+70	-
GUMINA ROAD	10+94	-	13+29	-
BARKER ROAD	42+00	-	49+00	-
	PROJECT TOTALS			32,778

ALL CATEGORY 0010

3

SUMMARY OF STATE FURNISHED MATERIALS - FOR INFORMATION ONLY

QUANTITY	UNIT	DESCRIPTION
1	LS	TRAFFIC SIGNAL CONTROLLER AND CABINET
1	LS	RADAR DETECTION SYSTEM
1	LS	EVP DETECTION SYSTEM

REMOVING CONCRETE BASES

EXISTING BASE NO.	204.0195 REMOVING CONCRETE BASES EACH
CB1	1
SB3	1
SB6	1
SB7	1
SB8	1
SB9	1
SB10	1
SB11	1
SB12	1
SB13	1
*** TOTAL	10

***ADDITIONAL QUANTITIES SHOWN ELSEWHERE

REMOVING PULL BOXES

PULL BOX NO.	653.0905 REMOVING PULL BOXES EACH
PB1	1
PB2	1
PB3	1
PB4	1
PB5	1
PB6	1
PB7	1
PB8	1
PB9	1
PB10	1
PB11	1
PB12	1
PB13	1
PB14	1
PB15	1
PB16	1
PB17	1
*** TOTAL	17

***ADDITIONAL QUANTITIES SHOWN ELSEWHERE

CONDUIT RIGID NONMETALLIC SCHEDULE 40 2-INCH
CONDUIT RIGID NONMETALLIC SCHEDULE 40 3-INCH
CONDUIT SPECIAL 3-INCH

FROM	TO	652.0225 CONDUIT RIGID NONMETALLIC SCHEDULE 40 2-INCH L.F.	652.0235 CONDUIT RIGID NONMETALLIC SCHEDULE 40 3-INCH L.F.	652.0615 CONDUIT SPECIAL 3-INCH L.F.
CB1	PB1		42	
PB1	PB2		50	
PB2	PB3	231		
PB2	PB4		32	
PB2	PB5			164
PB5	PB6		126	
PB6	PB7	244		
PB7	PB8	179		
PB6	PB9			114
PB9	PB10			66
PB10	PB11			98
PB11	PB12		136	
PB12	PB13	24		
PB12	PB14		168	
PB14	PB15	155		
PB14	PB16		88	
PB16	PB17	237		
PB17	PB18	178		
PB16	PB19			108
PB19	PB20			78
PB20	PB21	11		
PB20	PB22			106
PB22	CB1		42	
PB1	SB1	11		
PB4	SB2	7		
PB5	SB3	7		
PB6	SB4	19		
PB9	SB5	52		
PB9	SB6	54		
PB10	SB7	11		
PB10	SB8	113		
SB8	SB9	175		
PB11	SB10	11		
PB12	SB11	12		
PB14	SB12	9		
PB16	SB13	21		
PB19	SB14	51		
PB20	SB15	8		
PB21	SB16	15		
PB20	SB17	148		
SB17	SB18	175		
SB18	SB19	176		
PB22	SB20	23		
	***TOTALS	2357	684	734

***ADDITIONAL QUANTITIES SHOWN ELSEWHERE

TRAFFIC SIGNAL QUANTITIES
STH 190 & CTH SR (SPRINGDALE RD.)

ALL CATEGORY 0020

3

PAGE 1 OF 6

3

PULL BOXES STEEL 24X36 INCH
PULL BOXES STEEL 24X42-INCH

PULL BOX NO.	STATION	OFFSET	653.0135 PULL BOXES STEEL 24X36-INCH EACH	653.0140 PULL BOXES STEEL 24X42-INCH EACH
PB1	187+98.1	56.1' RT		1
PB2	187+78.9	71.3' RT		1
PB3	47+02.0	33.0' RT	1	
PB4	187+59.4	46.8' RT		1
PB5	186+98.0	70.8' RT		1
PB6	186+43.2	40.0' RT		1
PB7	184+00.3	39.0' RT	1	
PB8	182+21.3	35.1' RT	1	
PB9	186+43.1	16.5' LT		1
PB10	186+43.1	49.8' LT		1
PB11	186+43.0	99.1' LT		1
PB12	187+07.0	124.7' LT		1
PB13	11+46.6	32.2' LT	1	
PB14	187+92.5	125.0' LT		1
PB15	13+52.5	16.7' RT	1	
PB16	188+30.0	103.4' LT		1
PB17	190+69.7	100.0' LT	1	
PB18	192+49.5	95.0' LT	1	
PB19	188+30.0	49.2' LT		1
PB20	188+30.0	10.5' LT		1
PB21	188+18.7	11.1' LT	1	
PB22	188+30.0	41.9' RT		1
		***TOTALS	8	14

* FINAL LOCATION TO BE DETERMINED BY THE ENGINEER IN THE FIELD
*** ADDITIONAL QUANTITIES SHOWN ELSEWHERE

3

CONCRETE BASES TYPE 1
CONCRETE BASES TYPE 2
CONCRETE BASES TYPE 5
CONCRETE CONTROL CABINET BASE TYPE 9 SPECIAL

BASE NO.	STATION	OFFSET	654.0101 CONCRETE BASES TYPE 1 EACH	654.0102 CONCRETE BASES TYPE 2 EACH	654.0105 CONCRETE BASES TYPE 5 EACH	654.0217 CONCRETE CONTROL CABINET BASE TYPE 9 SPECIAL EACH
CB1	188+10.9	50.2' RT				1
SB1	187+87.0	54.5' RT	1			
SB2	187+60.3	39.8' RT		1		
SB6	186+94.0	23.8' LT	1			
SB7	186+54.4	50.0' LT		1		
SB8	185+29.9	50.0' LT			1	
SB9	183+55.4	34.9' LT			1	
SB12	187+87.6	132.4' LT		1		
SB13	188+09.4	106.2' LT	1			
SB14	187+78.8	49.0' LT		1		
SB15	188+22.7	8.7' LT	1			
SB16	188+03.2	10.2' LT		1		
SB17	189+78.5	10.0' LT			1	
SB18	191+54.0	10.5' LT			1	
SB19	193+30.4	18.8' LT			1	
SB20	188+07.4	42.8' RT		1		
		*** TOTALS	4	6	5	1

* FINAL LOCATION TO BE DETERMINED BY THE ENGINEER IN THE FIELD
*** ADDITIONAL QUANTITIES FOUND ELSEWHERE

3

CABLE TRAFFIC SIGNAL 5-14 AWG
CABLE TRAFFIC SIGNAL 7-14 AWG
CABLE TRAFFIC SIGNAL 12-14 AWG
CABLE TRAFFIC SIGNAL 15-14 AWG

FROM	TO	655.0230 CABLE TRAFFIC SIGNAL 5-14 AWG L.F.	655.0240 CABLE TRAFFIC SIGNAL 7-14 AWG L.F.	655.0260 CABLE TRAFFIC SIGNAL 12-14 AWG L.F.	655.0270 CABLE TRAFFIC SIGNAL 15-14 AWG L.F.
CB1	SB1		52		
SB1	HEAD 16	19			
CB1	SB2			118	
SB2	HEAD 13	19			
SB2	HEAD 20	50			
CB1	SB3		191		
SB3	HEAD 21	50			
CB1	SB4			283	
SB4	HEAD 1	19			
CB1	SB5		389		
SB5	HEAD 11	19			
CB1	SB6		388		
SB6	HEAD 12	19			
CB1	SB7			397	
SB7	HEAD 4		22		
SB7	HEAD 8	45			
CB1	SB10		462		
SB10	HEAD 9	50			
CB1	SB11			418	
SB11	HEAD 14	19			
SB11	HEAD 19	19			
CB1	SB12		315		
SB12	HEAD 15	50			
CB1	SB13			267	
SB13	HEAD 5		22		
SB13	HEAD 7	21			
CB1	SB14			227	
SB14	HEAD 6		22		
CB1	SB15		129		
SB15	HEAD 18	19			
CB1	SB16				163
SB16	HEAD 2	45			
SB16	HEAD 10	19			
SB16	HEAD 17	19			
CB1	SB20		75		
SB20	HEAD 3	50			
	*** TOTALS	551	2,067	1,710	163

*** ADDITIONAL QUANTITIES FOUND ELSEWHERE

CABLE TYPE UF 2-10 AWG GROUNDED
ELECTRICAL WIRE LIGHTING 12 AWG

		655.0320 CABLE TYPE UF 2-10 AWG GROUNDED L.F.	655.0610 ELECTRICAL WIRE LIGHTING 12 AWG L.F.
CB1	SB1	52	--
SB1	LUMIN	--	117
SB1	SB3	187	--
SB3	LUMIN	--	117
SB3	SB5	235	--
SB5	LUMIN (2)	--	234
SB5	SB7	136	--
SB7	LUMIN	--	117
SB7	SB8	148	--
SB8	LUMIN	--	117
SB8	SB9	183	--
SB9	LUMIN	--	117
CB1	SB16	156	--
SB16	LUMIN (2)	--	234
SB16	SB17	214	--
SB17	LUMIN	--	117
SB17	SB18	183	--
SB18	LUMIN	--	117
SB18	SB19	184	--
SB19	LUMIN	--	117
SB16	SB12	260	--
SB12	LUMIN	--	117
	***TOTALS	1938	1521

***ADDITIONAL QUANTITIES SHOWN ELSEWHERE

TRAFFIC SIGNAL EVP DETECTOR CABLE
TYPE UF CABLE 2-CONDUCTOR NO. 14

FROM	TO	655.0900 TRAFFIC SIGNAL EVP DETECTOR CABLE L.F.	SPV.0090.01 TYPE UF CABLE 2-CONDUCTOR NO. 14 L.F.
CB1	SB10 (HEAD A)	492	492
CB1	SB20 (HEAD B)	145	145
CB1	SB3 (HEAD C)	222	222
CB1	SB12 (HEAD D)	358	358
	*** TOTAL	1217	1217

*** ADDITIONAL QUANTITIES SHOWN ELSEWHERE

ELECTRICAL WIRE TRAFFIC SIGNALS 10 AWG

FROM	TO	655.0515 ELECTRICAL WIRE TRAFFIC SIGNALS 10 AWG L.F.
CB1	SB1	52
SB1	SB2	108
SB2	SB3	161
SB3	SB4	129
SB4	SB5	168
SB5	SB6	127
SB6	SB7	135
SB7	SB10	111
SB10	SB11	131
SB11	SB12	145
SB12	SB13	114
SB13	SB14	166
SB14	SB15	138
SB15	SB16	74
SB16	SB20	158
SB20	CB1	71
PB1	SB1	19
PB2	SB1	60
PB4	SB2	15
PB5	SB3	15
PB6	SB4	27
PB9	SB6	59
PB10	SB7	19
PB11	SB10	19
PB12	SB11	20
PB14	SB12	17
PB16	SB13	29
PB19	SB14	59
PB20	SB15	16
PB22	CB1	32
	***TOTAL	2394

***ADDITIONAL QUANTITIES SHOWN ELSEWHERE

3

CONDUIT LOOP DETECTOR
LOOP DETECTOR LEAD IN CABLE
LOOP DETECTOR WIRE

LOOP NO.	HOME RUN PB	STATION	LOCATION	SIZE	NO. OF TURNS	SDD INSTALLATION REFERENCE	652.0800 CONDUIT LOOP DETECTOR L.F.	655.0700 LOOP DETECTOR LEAD IN CABLE L.F.	655.0800 LOOP DETECTOR WIRE L.F.
11	PB10	186+39.12	36.3' LT	6'x20'	3	LOOP DETECTOR INSTALLED IN BASE COURSE WITH PULL (SPLICE) BOX OFF ROADWAY (OPTION 1)	74	291	232
12	PB10	186+67.26	36.3' LT	6'x20'	3	LOOP DETECTOR INSTALLED IN BASE COURSE WITH PULL (SPLICE) BOX OFF ROADWAY (OPTION 1)	74	291	232
21	PB18	192+49.96	78.3' LT	6'x14'	5	LOOP DETECTOR INSTALLED IN BASE COURSE WITH PULL (SPLICE) BOX OFF ROADWAY (OPTION 2)	68	599	350
22	PB18	192+48.95	66.3' LT	6'x14'	5	LOOP DETECTOR INSTALLED IN BASE COURSE WITH PULL (SPLICE) BOX OFF ROADWAY (OPTION 2)	92	599	470
23	PB17	190+70.30	71.8' LT	6'x20'	4	LOOP DETECTOR INSTALLED IN BASE COURSE WITH PULL (SPLICE) BOX OFF ROADWAY (OPTION 2)	88	480	362
41	PB15	13+52.2	5.3' LT	6'x6'	5	LOOP DETECTOR INSTALLED IN BASE COURSE WITH PULL (SPLICE) BOX OFF ROADWAY (OPTION 2)	68	383	350
42	PB13	11+23.2	18.0' LT	6'x20'	3	LOOP DETECTOR INSTALLED IN BASE COURSE WITH PULL (SPLICE) BOX OFF ROADWAY (OPTION 1)	76	336	238
43	PB12	10+95.1	18.0' LT	6'x20'	3	LOOP DETECTOR INSTALLED IN BASE COURSE WITH PULL (SPLICE) BOX OFF ROADWAY (OPTION 1)	82	324	256
44	PB13	11+23.4	6.0' LT	6'x20'	3	LOOP DETECTOR INSTALLED IN BASE COURSE WITH PULL (SPLICE) BOX OFF ROADWAY (OPTION 2)	100	336	310
45	PB12	10+95.3	6.0' LT	6'x20'	3	LOOP DETECTOR INSTALLED IN BASE COURSE WITH PULL (SPLICE) BOX OFF ROADWAY (OPTION 2)	102	324	316
46	PB12	10+95.7	29.6' LT	6'x10'	4	LOOP DETECTOR INSTALLED IN BASE COURSE WITH PULL (SPLICE) BOX OFF ROADWAY (OPTION 1)	70	324	290
51	PB21	188+25.8	35.5' LT	6'x20'	3	LOOP DETECTOR INSTALLED IN BASE COURSE WITH PULL (SPLICE) BOX OFF ROADWAY (OPTION 2)	98	102	304
52	PB21	187+97.70	35.6' LT	6'x20'	3	LOOP DETECTOR INSTALLED IN BASE COURSE WITH PULL (SPLICE) BOX OFF ROADWAY (OPTION 2)	96	102	298
53	PB21	188+25.86	24.0' LT	6'x20'	3	LOOP DETECTOR INSTALLED IN BASE COURSE WITH PULL (SPLICE) BOX OFF ROADWAY (OPTION 1)	76	102	238
54	PB21	187+97.77	23.9' LT	6'x20'	3	LOOP DETECTOR INSTALLED IN BASE COURSE WITH PULL (SPLICE) BOX OFF ROADWAY (OPTION 1)	72	102	226
55	PB2	49+31.04	26.4' RT	6'x20'	3	LOOP DETECTOR INSTALLED IN BASE COURSE WITH PULL (SPLICE) BOX OFF ROADWAY (OPTION 1)	56	56	178
56	PB2	49+56.88	37.8' RT	6'x20'	3	LOOP DETECTOR INSTALLED IN BASE COURSE WITH PULL (SPLICE) BOX OFF ROADWAY (OPTION 1)	58	56	184
61	PB8	182+20.78	18.0' RT	6'x14'	5	LOOP DETECTOR INSTALLED IN BASE COURSE WITH PULL (SPLICE) BOX OFF ROADWAY (OPTION 2)	68	624	350
62	PB8	182+21.78	6.0' RT	6'x14'	5	LOOP DETECTOR INSTALLED IN BASE COURSE WITH PULL (SPLICE) BOX OFF ROADWAY (OPTION 2)	92	624	470
63	PB7	184+00.77	12.0' RT	6'x20'	4	LOOP DETECTOR INSTALLED IN BASE COURSE WITH PULL (SPLICE) BOX OFF ROADWAY (OPTION 2)	124	445	506
81	PB3	47+01.99	10.5' RT	6'x6'	4	LOOP DETECTOR INSTALLED IN BASE COURSE WITH PULL (SPLICE) BOX OFF ROADWAY (OPTION 2)	64	287	266
82	PB4	49+24.45	10.5' RT	6'x20'	3	LOOP DETECTOR INSTALLED IN BASE COURSE WITH PULL (SPLICE) BOX OFF ROADWAY (OPTION 1)	118	94	364
83	PB4	49+52.45	10.5' RT	6'x20'	3	LOOP DETECTOR INSTALLED IN BASE COURSE WITH PULL (SPLICE) BOX OFF ROADWAY (OPTION 1)	70	94	220
						*** TOTALS	1886	6975	7010

* STATION AND LOCATION IS TO FRONT CENTER OF DETECTION LOOP
** FINAL LOCATION TO BE DETERMINED BY THE ENGINEER IN THE FIELD
*** ADDITIONAL QUANTITIES SHOWN ELSEWHERE

3

PEDESTAL BASES
TRANSFORMER BASES BREAKAWAY 11 1/2 INCH BOLT CIRCLE
POLES TYPE 2
POLES TYPE 3
POLES TYPE 5 ALUMINUM
TRAFFIC SIGNAL STANDARDS ALUMINUM 13-FT
TRAFFIC SIGNAL STANDARDS ALUMINUM 15-FT
TROMBONE ARMS 20-FT
TROMBONE ARMS 25-FT
LUMINAIRE ARMS SINGLE MEMBER 4-INCH CLAMP 6-FT
LUMINAIRE ARMS SINGLE MEMBER 4 1/2-INCH CLAMP 6-FT
RELOCATE EXISTING SIGNAL POLE
LUMINAIRES UTILITY LED CATEGORY C

SIGNAL BASE NO.	657.0100 PEDESTAL BASES EACH	657.0255 TRANSFORMER BASES BREAKAWAY 11 1/2 INCH BOLT CIRCLE EACH	657.0305 POLES TYPE 2 EACH	657.0310 POLES TYPE 3 EACH	657.0322 POLES TYPE 5 ALUMINUM EACH	657.0420 TRAFFIC SIGNAL STANDARDS ALUMINUM 13-FT EACH	657.0425 TRAFFIC SIGNAL STANDARDS ALUMINUM 15-FT EACH	657.0590 TROMBONE ARMS 20-FT EACH	657.0595 TROMBONE ARMS 25-FT EACH	657.0609 LUMINAIRE ARMS SINGLE MEMBER 4-INCH CLAMP 6-FT EACH	657.0610 LUMINAIRE ARMS SINGLE MEMBER 4 1/2-INCH CLAMP 6-FT EACH	SPV.0060.08 RELOCATE EXISTING SIGNAL POLE EACH	659.1125 LUMINAIRES UTILITY LED C EACH
SB1		1		1						1			1
SB2									1			1	
SB3									1				1
SB4	1					1							
SB5													2
SB6	1					1							
SB7		1		1				1		1			1
SB8		1			1						1		1
SB9		1			1						1		1
SB10													
SB12		1		1					1	1			1
SB13	1						1						
SB14		1	1										
SB15												1	
SB16		1		1				1		2			2
SB17		1			1						1		1
SB18		1			1						1		1
SB19		1			1						1		1
SB20													
***TOTALS	3	10	1	4	5	2	1	2	3	5	5	2	13

*** ADDITIONAL QUANTITIES FOUND ELSEWHERE

TRAFFIC SIGNAL QUANTITIES
STH 190 & CTH SR (SPRINGDALE RD.)

ALL CATEGORY 0020

3

TRAFFIC SIGNAL FACE 3S 12-INCH
TRAFFIC SIGNAL FACE 4S 12-INCH

SIGNAL HEAD NO.	SIGNAL BASE NO.	658.0173 TRAFFIC SIGNAL FACE 3S 12-INCH EACH	658.0174 TRAFFIC SIGNAL FACE 4S 12 INCH EACH
1	SB4	1	
2	SB16	1	
3	SB20	1	
4	SB7		1
5	SB13		1
6	SB14		1
7	SB13	1	
8	SB7	1	
9	SB10	1	
10	SB16	1	
11	SB4	1	
12	SB5	1	
13	SB6	1	
14	SB2	1	
15	SB11	1	
16	SB12	1	
17	SB1	1	
18	SB16	1	
19	SB15	1	
20	SB2	1	
21	SB2	1	
22	SB3	1	
	***TOTAL	19	3

*** ADDITIONAL QUANTITIES FOUND ELSEWHERE

SIGNAL MOUNTING HARDWARE

LOCATION	658.5069.01 L.S.
STH 190 & CTH SR	1
TOTAL	1

REMOVE TRAFFIC SIGNALS
REMOVE LOOP DETECTOR WITE AND LEAD-IN CABLE

LOCATION	204.9105.S.03 REMOVE TRAFFIC SIGNALS L.S.	204.9105.S.05 REMOVE LOOP DETECTOR WIRE AND LEAD-IN CABLE L.S.
STH 190 & CTH SR	1	1
TOTAL	1	1

3

TEMPORARY TRAFFIC SIGNALS FOR INTERSECTIONS
GENERATORS
TEMPORARY INFRARED EVP SYSTEM
TEMPORARY VEHICLE DETECTION SYSTEM

LOCATION	661.0200.01 TEMPORARY TRAFFIC SIGNALS FOR INTERSECTIONS L.S.	661.0300 GENERATORS DAYS	SPV.0105.13 TEMPORARY VEHICLE DETECTION SYSTEM L.S.	SPV.0105.15 TEMPORARY INFRARED EVP SYSTEM L.S.
STH 190 & CTH SR	1	2	1	1
*** TOTALS	1	2	1	1

***ADDITIONAL QUANTITIES SHOWN ELSEWHERE

ELECTRICAL SERVICE METER BREAKER PEDESTAL

LOCATION	656.0200.01 ELECTRICAL SERVICE METER BREAKER PEDESTAL L.S.
STH 190 & CTH SR	1
TOTAL	1

* FINAL LOCATION TO BE DETERMINED BY THE ENGINEER IN THE FIELD

TRANSPORT AND INSTALL STATE FURNISHED TRAFFIC SIGNAL CABINET
TRANSPORT AND INSTALL STATE FURNISHED RADAR DETECTION SYSTEM
TRANSPORT AND INSTALL STATE FURNISHED EVP DETECTOR HEADS

LOCATION	SPV.0105.01 TRANSPORT AND INSTALL STATE FURNISHED SIGNAL CABINET L.S.	SPV.0105.03 TRANSPORT AND INSTALL STATE FURNISHED RADAR DET. SYSTEM L.S.	SPV.0105.11 TRANSPORT AND INSTALL STATE FURNISHED EVP DETECTOR HEADS L.S.
STH 190 & CTH SR	1	1	1
TOTAL	1	1	1

3

SUMMARY OF STATE FURNISHED MATERIALS - FOR INFORMATION ONLY

QUANTITY	UNIT	DESCRIPTION
1	LS	TRAFFIC SIGNAL CONTROLLER AND CABINET
1	LS	RADAR DETECTION SYSTEM
1	LS	EVP DETECTION SYSTEM

REMOVING CONCRETE BASES

EXISTING BASE NO.	204.0195 REMOVING CONCRETE BASES EACH
CB1	1
SB2	1
SB6	1
SB9	1
SB10	1
SB11	1
SB12	1
*** TOTAL	7

***ADDITIONAL QUANTITIES SHOWN ELSEWHERE

REMOVING PULL BOXES

PULL BOX NO.	653.0905 REMOVING PULL BOXES EACH
PB1	1
PB2	1
PB3	1
PB4	1
PB5	1
PB6	1
PB7	1
PB8	1
PB9	1
PB10	1
PB11	1
PB12	1
PB13	1
PB14	1
PB15	1
PB16	1
PB17	1
PB18	1
PB19	1
PB20	1
PB21	1
PB22	1
PB23	1
PB24	1
*** TOTAL	24

***ADDITIONAL QUANTITIES SHOWN ELSEWHERE

CONDUIT RIGID NONMETALLIC SCHEDULE 40 2-INCH
CONDUIT RIGID NONMETALLIC SCHEDULE 40 3-INCH
CONDUIT SPECIAL 3-INCH

FROM	TO	652.0225 CONDUIT RIGID NONMETALLIC SCHEDULE 40 2-INCH L.F.	652.0235 CONDUIT RIGID NONMETALLIC SCHEDULE 40 3-INCH L.F.	652.0615 CONDUIT SPECIAL 3-INCH L.F.
CB1	PB1		63	
PB1	PB2		170	
PB2	PB3		94	
PB3	PB4	231		
PB4	PB5	175		
PB3	PB6			100
PB6	PB7			80
PB7	PB8			108
PB8	PB9		76	
PB9	PB10			30
PB9	PB11		42	
PB11	PB12	256		
PB12	PB13	161		
PB11	PB14			224
PB14	PB15		40	
PB15	PB16			54
PB15	PB17	215		
PB17	PB18	176		
PB15	PB19			192
PB19	PB20			130
PB20	CB1		54	
PB1	SB1	7		
PB2	SB2	22		
PB2	SB3	13		
PB7	SB4	15		
PB7	SB5	15		
PB7	SB6	165		
SB6	SB7	175		
PB8	SB8	17		
PB9	SB9	24		
PB10	SB10	10		
PB14	SB11	3		
PB16	SB12	7		
PB19	SB13	57		
PB19	SB14	35		
PB19	SB15	18		
	***TOTALS	1797	539	918

***ADDITIONAL QUANTITIES SHOWN ELSEWHERE

3

3

PULL BOXES STEEL 24X36 INCH
PULL BOXES STEEL 24X42-INCH

PULL BOX NO.	STATION	OFFSET	653.0135 PULL BOXES STEEL 24X36-INCH EACH	653.0140 PULL BOXES STEEL 24X42-INCH EACH
PB1	243+84.9	104.3' LT		1
PB2	244+69.7	100.2' LT		1
PB3	245+16.2	100.2' LT		1
PB4	247+47.4	100.2' LT	1	
PB5	249+22.4	100.2' LT	1	
PB6	245+16.2	50.7' LT		1
PB7	245+16.2	10.4' LT		1
PB8	245+16.2	43.7' RT		1
PB9	244+82.8	60.5' RT		1
PB10	244+55.1	50.1' RT		1
PB11	244+71.4	77.9' RT		1
PB12	46+76.3	26.5' RT	1	
PB13	45+16.3	23.8' RT	1	
PB14	243+59.3	76.7' RT		1
PB15	243+46.7	60.9' RT		1
PB16	243+97.3	41.4' RT		1
PB17	241+36.3	40.9' RT	1	
PB18	239+60.6	40.8' RT	1	
PB19	243+46.7	35.2' LT		1
PB20	243+46.7	100.2' LT		1
		***TOTALS	6	14

* FINAL LOCATION TO BE DETERMINED BY THE ENGINEER IN THE FIELD
*** ADDITIONAL QUANTITIES SHOWN ELSEWHERE

3

CONCRETE BASES TYPE 1
CONCRETE BASES TYPE 2
CONCRETE BASES TYPE 5
CONCRETE CONTROL CABINET BASE TYPE 9 SPECIAL

BASE NO.	STATION	OFFSET	654.0101 CONCRETE BASES TYPE 1 EACH	654.0102 CONCRETE BASES TYPE 2 EACH	654.0105 CONCRETE BASES TYPE 5 EACH	654.0217 CONCRETE CONTROL CABINET BASE TYPE 9 SPECIAL EACH
CB1	243+64.4	101.0' LT				1
SB1	243+81.5	98.4' LT		1		
SB2	244+47.7	98.7' LT	1			
SB3	244+82.4	98.6' LT		1		
SB5	245+31.3	9.6' LT	1			
SB6	246+81.4	12.5' LT			1	
SB7	248+55.8	30.7' LT			1	
SB12	244+00.5	35.4' RT	1			
SB14	243+80.1	30.0' LT		1		
SB15	243+60.4	46.9' LT		1		
		*** TOTALS	3	4	2	1

* FINAL LOCATION TO BE DETERMINED BY THE ENGINEER IN THE FIELD
*** ADDITIONAL QUANTITIES FOUND ELSEWHERE

3

CABLE TRAFFIC SIGNAL 5-14 AWG
CABLE TRAFFIC SIGNAL 7-14 AWG
CABLE TRAFFIC SIGNAL 12-14 AWG
CABLE TRAFFIC SIGNAL 15-14 AWG

FROM	TO	655.0230 CABLE TRAFFIC SIGNAL 5-14 AWG L.F.	655.0240 CABLE TRAFFIC SIGNAL 7-14 AWG L.F.	655.0260 CABLE TRAFFIC SIGNAL 12-14 AWG L.F.	655.0270 CABLE TRAFFIC SIGNAL 15-14 AWG L.F.
CB1	SB1		55		
SB1	HEAD 6	50			
CB1	SB2		171		
SB2	HEAD 11	19			
CB1	SB3			162	
SB3	HEAD 4	19			
SB3	HEAD 12	19			
CB1	SB4				349
SB4	HEAD 2	45			
SB4	HEAD 7	19			
SB4	HEAD 14	19			
CB1	SB5		349		
SB5	HEAD 15	19			
CB1	SB8		421		
SB8	HEAD 3	50			
CB1	SB9		463		
SB9	HEAD 13	19			
CB1	SB10		495		
SB10	HEAD 10	19			
CB1	SB12			315	
SB12	HEAD 1	19			
CB1	SB13		183		
SB13	HEAD 8	19			
CB1	SB14			161	
SB14	HEAD 9	19			
CB1	SB15			144	
SB15	HEAD 5	45			
	*** TOTALS	399	2,137	782	349

*** ADDITIONAL QUANTITIES FOUND ELSEWHERE

CABLE TYPE UF 2-10 AWG GROUNDED
ELECTRICAL WIRE LIGHTING 12 AWG

		655.0320 CABLE TYPE UF 2-10 AWG GROUNDED L.F.	655.0610 ELECTRICAL WIRE LIGHTING 12 AWG L.F.
CB1	SB3	162	--
SB3	LUMIN	--	117
SB3	SB4	237	--
SB4	LUMIN (2)	--	234
SB4	SB6	204	--
SB6	LUMIN	--	117
SB6	SB7	183	--
SB7	LUMIN	--	117
CB1	SB14	159	--
SB14	LUMIN	--	117
SB14	SB11	208	--
SB11	LUMIN	--	117
SB11	SB9	216	--
SB9	LUMIN	--	117
	***TOTALS	1369	936

***ADDITIONAL QUANTITIES SHOWN ELSEWHERE

TRAFFIC SIGNAL EVP DETECTOR CABLE
TYPE UF CABLE 2-CONDUCTOR NO. 14

FROM	TO	655.0900 TRAFFIC SIGNAL EVP DETECTOR CABLE L.F.	SPV.0090.01 TYPE UF CABLE 2-CONDUCTOR NO. 14 L.F.
CB1	SB1 (HEAD A)	105	105
CB1	SB8 (HEAD B)	471	471
CB1	SB3 (HEAD D)	192	192
	*** TOTAL	768	768

*** ADDITIONAL QUANTITIES SHOWN ELSEWHERE

3

ELECTRICAL WIRE TRAFFIC SIGNALS 10 AWG

FROM	TO	655.0515 L.F.
CB1	SB1	55
SB1	SB2	154
SB2	SB3	59
SB3	SB4	237
SB4	SB5	54
SB5	SB8	126
SB8	SB9	119
SB9	SB10	104
SB10	SB12	358
SB12	SB13	270
SB13	SB14	116
SB14	SB15	77
SB15	CB1	144
PB1	SB1	15
PB2	SB3	21
PB3	SB3	88
PB6	SB4	79
PB7	SB4	23
PB8	SB8	25
PB9	SB9	32
PB10	SB9	18
PB11	SB9	69
PB14	SB12	11
PB15	SB12	47
PB16	SB12	15
PB19	SB14	41
PB20	CB1	29
	***TOTAL	2386

3

3

CONDUIT LOOP DETECTOR
LOOP DETECTOR LEAD IN CABLE
LOOP DETECTOR WIRE

LOOP NO.	HOME RUN PB	STATION	LOCATION	SIZE	NO. OF TURNS	SDD INSTALLATION REFERENCE	652.0800 CONDUIT LOOP DETECTOR L.F.	655.0700 LOOP DETECTOR LEAD IN CABLE L.F.	655.0800 LOOP DETECTOR WIRE L.F.
21	PB5	249+23.42	78.0' LT	6'x10'	5	LOOP DETECTOR INSTALLED IN BASE COURSE WITH PULL (SPLICE) BOX OFF ROADWAY (OPTION 1)	70	576	360
22	PB5	249+22.42	66.0' LT	6'x10'	5	LOOP DETECTOR INSTALLED IN BASE COURSE WITH PULL (SPLICE) BOX OFF ROADWAY (OPTION 2)	94	576	480
23	PB4	247+48.42	72.0' LT	6'x20'	4	LOOP DETECTOR INSTALLED IN BASE COURSE WITH PULL (SPLICE) BOX OFF ROADWAY (OPTION 1)	90	401	370
51	PB6	245+11.89	37.0' LT	6'x20'	3	LOOP DETECTOR INSTALLED IN BASE COURSE WITH PULL (SPLICE) BOX OFF ROADWAY (OPTION 1)	76	220	238
52	PB6	244+84.59	32.5' LT	6'x20'	3	LOOP DETECTOR INSTALLED IN BASE COURSE WITH PULL (SPLICE) BOX OFF ROADWAY (OPTION 1)	86	220	268
53	PB7	245+12.88	25.3' LT	6'x20'	3	LOOP DETECTOR INSTALLED IN BASE COURSE WITH PULL (SPLICE) BOX OFF ROADWAY (OPTION 1)	78	260	244
54	PB7	244+87.07	20.6' LT	6'x20'	3	LOOP DETECTOR INSTALLED IN BASE COURSE WITH PULL (SPLICE) BOX OFF ROADWAY (OPTION 1)	82	260	256
55	PB9	244+66.0	56.9' RT	6'x20'	3	LOOP DETECTOR INSTALLED IN BASE COURSE WITH PULL (SPLICE) BOX OFF ROADWAY (OPTION 1)	82	352	256
56	PB9	244+78.2	38.5' RT	6'x20'	3	LOOP DETECTOR INSTALLED IN BASE COURSE WITH PULL (SPLICE) BOX OFF ROADWAY (OPTION 1)	80	352	250
61	PB18	239+60.04	18.0' RT	6'x12'	5	LOOP DETECTOR INSTALLED IN BASE COURSE WITH PULL (SPLICE) BOX OFF ROADWAY (OPTION 1)	76	587	390
62	PB18	239+61.04	6.0' RT	6'x12'	5	LOOP DETECTOR INSTALLED IN BASE COURSE WITH PULL (SPLICE) BOX OFF ROADWAY (OPTION 2)	100	587	510
63	PB17	241+37.16	11.9' RT	6'x20'	4	LOOP DETECTOR INSTALLED IN BASE COURSE WITH PULL (SPLICE) BOX OFF ROADWAY (OPTION 2)	90	411	370
81	PB13	45+16.31	8.7' RT	6'x16'	5	LOOP DETECTOR INSTALLED IN BASE COURSE WITH PULL (SPLICE) BOX OFF ROADWAY (OPTION 1)	68	746	350
82	PB12	46+76.28	5.5' RT	6'x12'	5	LOOP DETECTOR INSTALLED IN BASE COURSE WITH PULL (SPLICE) BOX OFF ROADWAY (OPTION 1)	72	585	370
83	PB10	49+01.8	2.3' RT	6'x20'	3	LOOP DETECTOR INSTALLED IN BASE COURSE WITH PULL (SPLICE) BOX OFF ROADWAY (OPTION 1)	82	382	256
84	PB10	49+27.2	1.4' LT	6'x20'	3	LOOP DETECTOR INSTALLED IN BASE COURSE WITH PULL (SPLICE) BOX OFF ROADWAY (OPTION 1)	80	382	250
						*** TOTALS	1306	6897	5218

* STATION AND LOCATION IS TO FRONT CENTER OF DETECTION LOOP
** FINAL LOCATION TO BE DETERMINED BY THE ENGINEER IN THE FIELD
*** ADDITIONAL QUANTITIES SHOWN ELSEWHERE

3

TRANSFORMER BASES BREAKAWAY 11 1/2 BOLT CIRCLE
POLES TYPE 2
POLES TYPE 3
POLES TYPE 5 ALUMINUM
TROMBONE ARMS 20-FT
TROMBONE ARMS 25-FT
LUMINAIRE ARMS SINGLE MEMBER 4-INCH CLAMP 6-FT
LUMINAIRE ARMS SINGLE MEMBER 4 1/2-INCH CLAMP 6-FT
RELOCATE EXISTING SIGNAL POLE
LUMINAIRES UTILITY LED CATEGORY C

SIGNAL BASE NO.	657.0255 TRANSFORMER BASES BREAKAWAY 11 1/2 INCH BOLT CIRCLE EACH	657.0305 POLES TYPE 2 EACH	657.0310 POLES TYPE 3 EACH	657.0322 POLES TYPE 5 ALUMINUM EACH	657.0590 TROMBONE ARMS 20-FT EACH	657.0595 TROMBONE ARMS 25-FT EACH	657.0609 LUMINAIRE ARMS SINGLE MEMBER 4-INCH CLAMP 6-FT EACH	657.0610 LUMINAIRE ARMS SINGLE MEMBER 4 1/2-INCH CLAMP 6-FT EACH	SPV.0060.08 RELOCATE EXISTING SIGNAL POLE EACH	659.1125 LUMINAIRES UTILITY LED C EACH
SB1						1			1	
SB2									1	
SB3									1	1
SB4	1		1		1		2			2
SB5									1	
SB6	1			1				1		1
SB7	1			1				1		1
SB8						1				
SB9										1
SB11										1
SB12									1	
SB14									1	2
SB15	1	1			1					
***TOTALS	4	1	1	2	2	2	2	2	6	9

*** ADDITIONAL QUANTITIES FOUND ELSEWHERE

TRAFFIC SIGNAL QUANTITIES
STH 190 & CTH Y (BARKER RD.)

ALL CATEGORY 0020

3

TRAFFIC SIGNAL FACE 3S 12-INCH

SIGNAL HEAD NO.	SIGNAL BASE NO.	658.0173 TRAFFIC SIGNAL FACE 3S 12-INCH EACH
1	SB12	1
2	SB4	1
3	SB8	1
4	SB3	1
5	SB15	1
6	SB1	1
7	SB4	1
8	SB13	1
9	SB14	1
10	SB10	1
11	SB2	1
12	SB3	1
13	SB9	1
14	SB4	1
15	SB5	1
	***TOTAL	15

*** ADDITIONAL QUANTITIES FOUND ELSEWHERE

SIGNAL MOUNTING HARDWARE

LOCATION	658.5069.02 L.S.
STH 190 & CTH Y	1
TOTAL	1

REMOVE TRAFFIC SIGNALS
REMOVE LOOP DETECTOR WITE AND LEAD-IN CABLE

LOCATION	204.9105.S.04 REMOVE TRAFFIC SIGNALS L.S.	204.9105.S.06 REMOVE LOOP DETECTOR WIRE AND LEAD-IN CABLE L.S.
STH 190 & CTH Y	1	1
TOTAL	1	1

3

TEMPORARY TRAFFIC SIGNALS FOR INTERSECTIONS
GENERATORS
TEMPORARY INFRARED EVP SYSTEM
TEMPORARY VEHICLE DETECTION SYSTEM

LOCATION	661.0200.02 TEMPORARY TRAFFIC SIGNALS FOR INTERSECTIONS L.S.	661.0300 GENERATORS DAYS	SPV.0105.14 TEMPORARY VEHICLE DETECTION SYSTEM L.S.	SPV.0105.16 TEMPORARY INFRARED EVP SYSTEM L.S.
STH 190 & CTH Y	1	2	1	1
*** TOTALS	1	2	1	1

***ADDITIONAL QUANTITIES SHOWN ELSEWHERE

ELECTRICAL SERVICE METER BREAKER PEDESTAL

LOCATION	656.0200.02 ELECTRICAL SERVICE METER BREAKER PEDESTAL L.S.
STH 190 & CTH Y	1
TOTAL	1

* FINAL LOCATION TO BE DETERMINED BY THE ENGINEER IN THE FIELD

TRANSPORT AND INSTALL STATE FURNISHED TRAFFIC SIGNAL CABINET
TRANSPORT AND INSTALL STATE FURNISHED RADAR DETECTION SYSTEM
TRANSPORT AND INSTALL STATE FURNISHED EVP DETECTOR HEADS

LOCATION	SPV.0105.02 TRANSPORT AND INSTALL STATE FURNISHED SIGNAL CABINET L.S.	SPV.0105.04 TRANSPORT AND INSTALL STATE FURNISHED RADAR DET. SYSTEM L.S.	SPV.0105.12 TRANSPORT AND INSTALL STATE FURNISHED EVP DETECTOR HEADS L.S.
STH 190 & CTH Y	1	1	1
TOTAL	1	1	1

STH 190 CORRIDOR
(CTH F TO BROOKFIELD RD)
WAUKESHA COUNTY
CATEGORY 0020
COMMUNICATIONS

3

CONDUIT

FROM	TO	671.0132 CONDUIT HDPE 3-DUCT 2-INCH L.F.	671.0232 CONDUIT HDPE DIRECTIONAL BORE 3-DUCT 2-INCH L.F.	652.0235 CONDUIT RIGID NONMETALLIC SCHEDULE 40 3-INCH L.F.	652.0615 CONDUIT SPECIAL 3-INCH L.F.	652.0700.S INSTALL CONDUIT INTO EXISTING ITEM EACH	655.0610 ELECTRICAL WIRE LIGHTING 12 AWG L.F.
EXIST I/C CV1	I/C PB101	358				1	358
I/C PB101	I/C PB102		75				75
I/C PB102	I/C PB103	339					339
I/C PB103	I/C PB104		104				104
I/C PB104	I/C PB105		97				97
I/C PB105	I/C PB106	169					169
I/C PB106	I/C PB107		126				126
I/C PB107	I/C PB108		86				86
I/C PB108	I/C PB109	1328					1328
I/C PB109	I/C CV101		182				182
I/C CV101	I/C PB110				151		151
I/C PB110	CB1 S67-0813			25			25
I/C CV101	I/C PB111	435					435
I/C PB111	I/C PB112		96				96
I/C PB112	I/C PB113	507					507
I/C PB113	I/C CV102		322				322
I/C CV102	I/C PB114	522					522
I/C PB114	I/C PB115		232				232
I/C PB115	I/C CV103	749					749
I/C CV103	I/C PB116		258				258
I/C PB116	I/C CV104	1245					1245
I/C CV104	I/C PB117	573					573
I/C PB117	I/C PB118		152				152
I/C PB118	I/C CV105	494					494
I/C CV105	CB1 S67-0489				96		96
I/C CV105	I/C PB119		196				196
I/C PB119	I/C PB120	402					402
I/C PB120	I/C PB121		177				177
I/C PB121	I/C CV106	939					939
I/C CV106	I/C PB122	1053					1053
I/C PB122	I/C CV107		307				307
I/C CV107	I/C PB123	522					522
I/C PB123	I/C PB124		55				55
I/C PB124	I/C PB125	600					600
I/C PB125	I/C CV108		207				207
I/C CV108	I/C PB126	1107					1107
I/C PB126	EXIST I/C CV2	68				1	68
	TOTAL	11410	2672	25 ***	247 ***	2	14354 ***

*** ADDITIONAL QUANTITIES SHOWN ELSEWHERE ON PLAN

3

I/C PULL BOXES & VAULTS

STRUCTURE NO.	LOCATION*	653.0140 PULL BOXES STEEL 24x42-INCH EACH	673.0105 COMMUNICATION VAULT TYPE 1 EACH
I/C PB101	163+81.7, 42.2'LT	1	
I/C PB102	164+00.5, 114.8'LT	1	
I/C PB103	167+39.1, 107.4'LT	1	
I/C PB104	168+43.0, 111.4'LT	1	
I/C PB105	169+40.0, 113.2'LT	1	
I/C PB106	171+09.3, 112.8'LT	1	
I/C PB107	172+35.2, 113.1'LT	1	
I/C PB108	173+20.7, 111.3'LT	1	
I/C PB109	186+50.0, 111.1'LT	1	
I/C CV101	188+34.2, 108.4'LT		1
I/C PB110	188+34.5, 42.8'RT	1	
I/C PB111	192+75.7, 104.2'LT	1	
I/C PB112	193+05.2, 12.4'LT	1	
I/C PB113	198+12.9, 23.5'LT	1	
I/C CV102	201+35.8, 18.9'LT		1
I/C PB114	206+58.7, 19.0'LT	1	
I/C PB115	208+91.4, 14.0'LT	1	
I/C CV103	216+41.7, 20.0'LT		1
I/C PB116	219+00.5, 14.1'LT	1	
I/C CV104	231+45.2, 13.3'LT		1
I/C PB117	237+18.9, 20.4'LT	1	
I/C PB118	238+71.1, 12.6'LT	1	
I/C CV105	243+64.5, 10.2'LT		1
I/C PB119	245+61.0, 8.6'LT	1	
I/C PB120	249+63.2, 16.0'LT	1	
I/C PB121	251+40.7, 11.9'LT	1	
I/C CV106	260+77.1, 12.0'LT		1
I/C PB122	271+28.3, 12.0'LT	1	
I/C CV107	274+35.0, 12.0'LT		1
I/C PB123	279+55.8, 12.0'LT	1	
I/C PB124	279+56.9, 42.4'RT	1	
I/C PB125	285+58.5, 44.6'RT	1	
I/C CV108	287+65.0, 47.9'RT		1
I/C PB126	298+72.4, 45.8'RT	1	
	TOTAL	26 ***	8

* FINAL LOCATION TO BE DETERMINED BY THE ENGINEER IN THE FIELD.
*** ADDITIONAL QUANTITIES SHOWN ELSEWHERE ON PLAN

SHEET 1 OF 3

STH 190 CORRIDOR
(CTH F TO BROOKFIELD RD)
WAUKESHA COUNTY
CATEGORY 0020
COMMUNICATIONS

3

FIELD SYSTEM INTEGRATOR

LOCATION	670.0100.01 FIELD SYSTEM INTEGRATOR L.S.	670.0200.01 ITS DOCUMENTATION L.S.	678.0500.01 COMMUNICATION SYSTEM TESTING L.S.
2025-14-71	1	1	1
TOTAL	1	1	1

FIBER OPTIC CABLE

FROM	TO	678.0072 INSTALL FIBER OPTIC CABLE OUTDOOR PLANT 72-CT L.F.	SPV.0090.03 FIBER OPTIC WARNING TAPE L.F.
EXIST I/C CV1	I/C CV101	3334	2194
I/C CV101	I/C CV102	1600	1264
I/C CV102	I/C CV103	1663	1503
I/C CV103	I/C CV104	1633	1503
I/C CV104	I/C CV105	1429	1219
I/C CV105	I/C CV106	1954	1714
I/C CV106	I/C CV107	1490	1360
I/C CV107	I/C CV108	1574	1384
I/C CV108	EXIST I/C CV2	1355	1175
15% CONTINGENCY		2405	1997
	TOTAL	18437	15313

FIBER OPTIC SPLICE

LOCATION	678.0200 FIBER OPTIC SPLICE ENCLOSURE EACH	678.0300 FIBER OPTIC SPLICE EACH
EXIST I/C CV1	1	14
I/C CV101	1	14
I/C CV105	1	14
EXIST I/C CV2	1	14
TOTAL	4	56

FIBER OPTIC COMMUNICATIONS EQUIPMENT

LOCATION	678.0600 INSTALL ETHERNET SWITCHES EACH	ST-ST SINGLE MODE FIBER JUMPER 4-FEET*** EACH	CAT-5E CABLE 5-FEET*** EACH
CB1 (S67-0813)	1	2	1
CB1 (S67-0489)	1	2	1
TOTAL	2	4	2

*** FOR INFORMATION ONLY

SHEET 2 OF 3

STH 190 CORRIDOR
(CTH F TO BROOKFIELD RD)
WAUKESHA COUNTY
CATEGORY 0020
COMMUNICATIONS

3

3

TRANSPORT AND INSTALL STATE FURNISHED
FIBER OPTIC COMMUNICATIONS EQUIPMENT

LOCATION	SPV.0105.20 TRANSPORT AND INSTALL STATE FURNISHED FO CABLE PIGTAIL 8-CT L.S.	SPV.0105.21 TRANSPORT AND INSTALL STATE FURNISHED FO CABLE PIGTAIL 8-CT L.S.
CB1 (S67-0813)	1	
CB1 (S67-0489)		1
TOTAL	1	1

STATE FURNISHED MATERIALS SUMMARY (FOR INFORMATION ONLY)

FROM	TO	PATCH PANEL WITH FIBER OPTIC CABLE PIGTAIL 8-CT EACH	PATCH PANEL WITH FIBER OPTIC CABLE PIGTAIL 8-CT L.F.	ETHERNET SWITCH EACH	FIBER OPTIC CABLE OUTDOOR PLANT 72-CT L.F.
I/C CV101	CB1 (S67-0813)	1	306	1	
I/C CV105	CB1 (S67-0489)	1	192	1	
EXIST I/C CV1	I/C CV101				3334
I/C CV101	I/C CV102				1600
I/C CV102	I/C CV103				1663
I/C CV103	I/C CV104				1633
I/C CV104	I/C CV105				1429
I/C CV105	I/C CV106				1954
I/C CV106	I/C CV107				1490
I/C CV107	I/C CV108				1574
I/C CV108	EXIST I/C CV2				1355
15% CONTINGENCY		--	--	--	2405
	TOTAL	2	498	2	18437

SHEET 3 OF 3

3

ADJUSTING SANITARY SEWER MANHOLE

STREET	STATION	OFFSET	CAT 0090 611.8120.S COVER PLATES TEMPORARY EACH	CAT 0090 SPV.0060.04 ADJUSTING SANITARY SEWER MANHOLE EACH
GUMINA	11+53	4' LT	1	1
SPRINGDALE	44+70	2' LT	1	1
SPRINGDALE	48+64	1' LT	1	1
	PROJECT TOTAL		3	3

ADJUSTING WATER VALVE BOXES - CITY OF PEWAUKEE

STREET	STATION	OFFSET	CAT 0090 SPV.0060.03 EACH
GUMINA	11+30	7' LT	1
GUMINA	11+43	16' LT	1
SPRINGDALE	43+50	30' LT	1
SPRINGDALE	44+23	17' LT	1
SPRINGDALE	44+23	26' LT	1
SPRINGDALE	44+63	31' LT	1
SPRINGDALE	46+31	32' LT	1
SPRINGDALE	47+49	16' LT	1
SPRINGDALE	47+79	16' LT	1
SPRINGDALE	48+94	17' LT	1
	PROJECT TOTAL		8

3

BENCH MARKS

NO.	STATION	DESCRIPTION	ELEV.
625	246+09	BM - CHIS T ON EAST SIDE OF 1ST BOX CULVERT EAST OF CTH Y ON SOUTH SIDE CAPITAL DR.	825.88

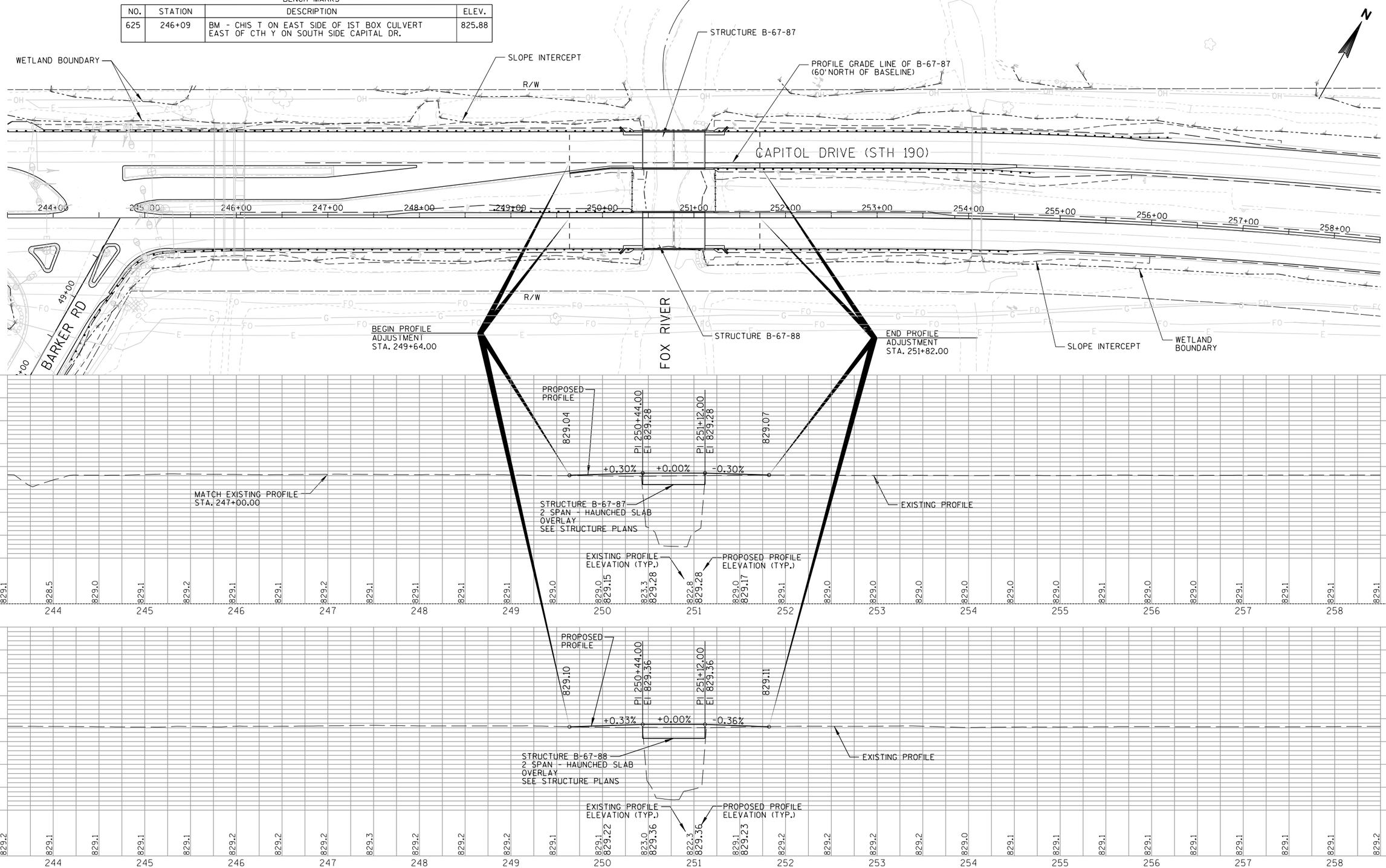

PROJECT NO:2025-14-71	HWY:STH 190	COUNTY:WAUKESHA	PLAN & PROFILE - STRUCTURES B-67-322 & B-67-323	SHEET 229	E

BENCH MARKS

NO.	STATION	DESCRIPTION	ELEV.
623	172+77	BM - DISK NE DUPLAINVILLE RD BRIDGE	881.61

* REFERS TO STH 190 MAINLINE STATIONING

NOTE:

SEE SPRINGDALE ROAD INTERSECTION DETAIL SHEETS FOR ADDITIONAL LAYOUT INFORMATION.

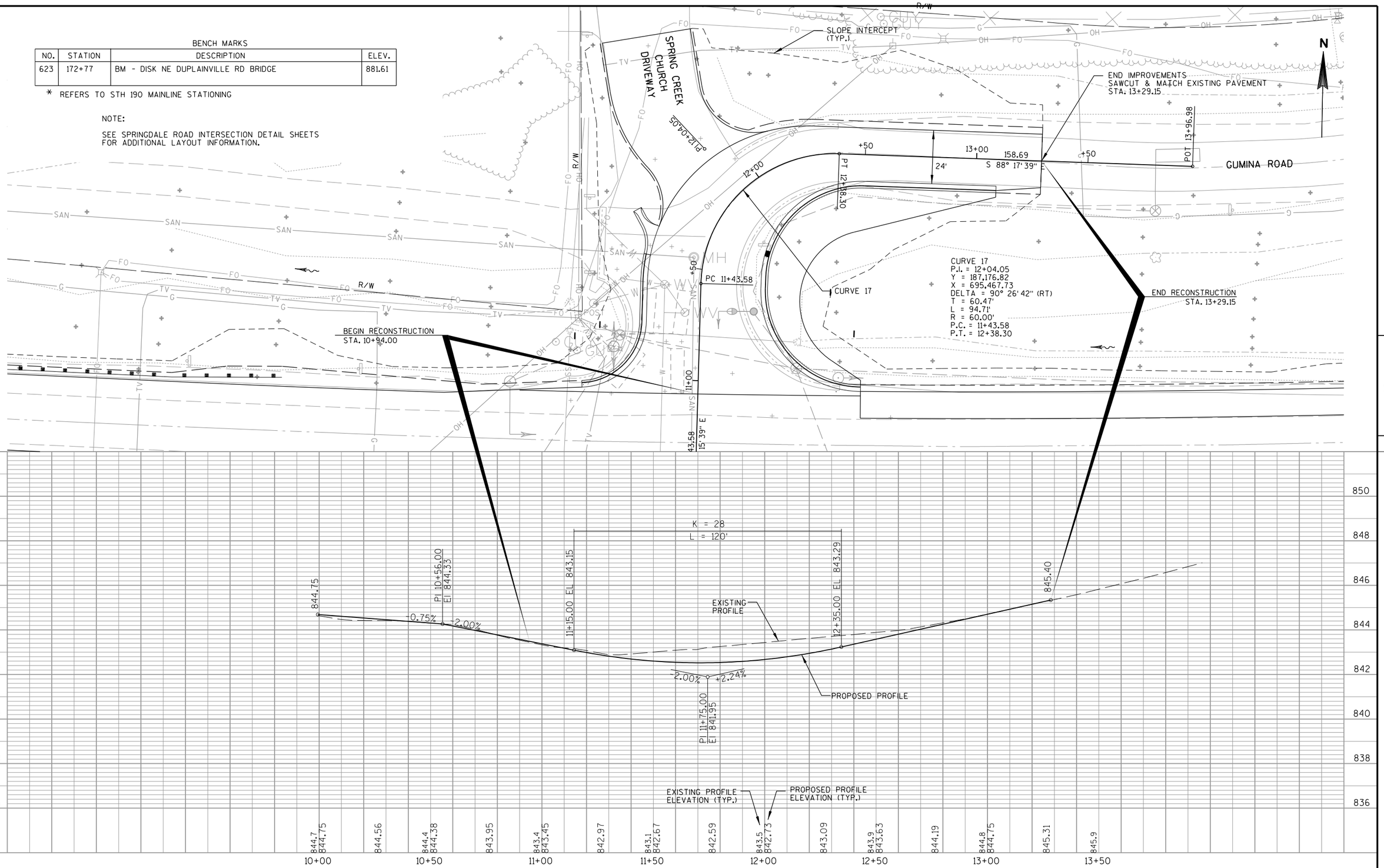

5

5

PROJECT NO: 2025-14-71	HWY: STH 190	COUNTY: WAUKESHA	PLAN & PROFILE - GUMINA ROAD	SHEET 230	E

Standard Detail Drawing List

08A05-19B	INLET COVERS TYPE B, B-A, C, MS, MS-A, & WM
08A05-19C	INLET COVERS TYPE F, HM, HM-S, S, T, V, HM-GJ, & HM-GJ-S
08A05-19D	INLET COVER TYPE BW, MANHOLE COVERS, TYPE K, J, J-S, L & M
08A08-02	CATCH BASINS 3-FT, 4-FT, 5-FT AND 6-FT DIAMETER
08A09-02	CATCH BASINS 2X3-FT AND 2.5X3-FT
08B09-02	MANHOLES 3-FT, 4-FT, 5-FT, 6-FT, 7-FT AND 8-FT DIAMETER
08C07-02	INLETS 2X2-FT, 2X2.5-FT, 2X3-FT AND 2.5X3-FT
08C08-02	INLETS MEDIAN 1 AND 2 GRATE
08D01-19	CONCRETE CURB, CONCRETE CURB AND GUTTER AND TIES
08D02-06	CONCRETE SURFACE DRAINS FLUME TYPE AT STRUCTURES
08D03-07	CONCRETE SURFACE DRAINS DROP INLET TYPE AT STRUCTURES
08D04-05	CONCRETE SURFACE DRAINS & ASPHALTIC FLUMES
08D05-19A	CURB RAMPS TYPES 1 AND 1-A
08D05-19B	CURB RAMPS TYPES 2 AND 3
08D05-19C	CURB RAMPS TYPES 4A AND 4A1
08D05-19D	CURB RAMPS TYPE 4B AND 4B1
08D05-19E	CURB RAMPS TYPES 5, 6, 7A, 7B & 8
08D22-01	DRIVEWAYS WITHOUT CURB & GUTTER RESURFACING PROJECTS RURAL
08E08-03	TYPICAL INSTALLATIONS OF EROSION BALES / TEMPORARY DITCH CHECKS
08E09-06	SILT FENCE
08E10-02	INLET PROTECTION TYPE A, B, C AND D
08F01-11	APRON ENDWALLS FOR CULVERT PIPE
08F02-01	APRON ENDWALLS FOR PIPE ARCH AND ELLIPTICAL PIPE
08F04-07	JOINT TIES FOR CONCRETE PIPE AND CONCRETE COLLAR DETAIL
08F07-05	STEEL APRON ENDWALLS FOR CULVERT PIPE AND PIPE ARCH SLOPED SIDE FRAINS
09B02-10	CONDUIT
09B04-11	PULL BOX
09C02-07	CONCRETE BASES, TYPES 1, 2, 5, & 6
09C03-04	TRANSFORMER/PEDESTAL BASES
09C06-07	CONCRETE CONTROL CABINET BASE, TYPE 9, SPECIAL
09D01-05	CABINET SERVICE INSTALLATION (METER BREAKER PEDESTAL)
09D02-03	SIGNAL CONTROL CABINET
09E01-14A	POLE MOUNTINGS FOR TRAFFIC SIGNALS TYPE 2
09E01-14B	POLE MOUNTINGS FOR TRAFFIC SIGNALS AND LIGHTING UNITS, TYPE 3 (HEAVY DUTY)
09E01-14D	POLE MOUNTINGS FOR LIGHTING UNITS, TYPE 5 (30 FEET)
09E01-14G	HARDWARE DETAILS FOR POLE MOUNTINGS
09E03-05	NON-FREEWAY LIGHTING UNIT POLE WIRING
09E06-05	TRAFFIC SIGNAL STANDARD POLY BRACKET MOUNTINGS (TYPICAL) 13 FT. OR 15 FT.
09E07-05	TRAFFIC SIGNAL STANDARD PEDESTRIAN AND FLASHER TYPICAL MOUNTING DETAILS
09E08-08B	TYPE 10 POLE 15'-30' MONOTUBE ARM
09E08-08C	TYPE 12 POLE 35'-55' MONOTUBE ARM
09E08-08D	TYPE 13 POLE 35'-55' MONOTUBE ARM
09E08-08E	GENERAL NOTES AND HARDWARE DETAILS FOR TYPE 9, 10, 12 & 13 POLES WITH MONOTUBE ARMS
09E12-01E	GENERAL NOTES AND HARDWARE DETAILS FOR OVER HEIGHT TYPE 9, 10, 12 & 13 POLES WITH MONOTUBE ARMS
09F15-04A	LOOP DETECTOR INSTALLED IN BASE COURSE WITH PULL (SPLICE) BOX OFF ROADWAY (OPTION 1)
09F15-04B	LOOP DETECTOR INSTALLED IN BASE COURSE WITH PULL (SPLICE) BOX OFF ROADWAY (OPTION 2)
09G01-04A	SPAN WIRE TEMPORARY TRAFFIC SIGNAL
09G01-04B	SPAN WIRE TEMPORARY TRAFFIC SIGNAL
09G01-04C	SPAN WIRE TEMPORARY TRAFFIC SIGNAL
09G01-04D	SPAN WIRE TEMPORARY TRAFFIC SIGNAL
09G01-04E	SPAN WIRE TEMPORARY TRAFFIC SIGNAL
09G01-04F	SPAN WIRE TEMPORARY TRAFFIC SIGNAL
09G01-04G	SPAN WIRE TEMPORARY TRAFFIC SIGNAL
09H09-01	COMMUNICATION VAULT
11B02-02	CONCRETE MEDIAN NOSE
12A03-10	NAME PLATE (STRUCTURES)
12A04-03	STRUCTURE IDENTIFICATION PLAQUES, RAMP GATES, SIGN BRIDGES & OVERHEAD SIGN SUPPORTS & TRAFFIC SIGNALS
13B02-08A	CONCRETE PAVEMENT APPROACH SLAB
13C01-18	CONCRETE PAVEMENT LONGITUDINAL JOINTS AND TIES
13C09-14A	CONCRETE PAVEMENT REPAIR AND REPLACEMENT
13C09-14B	CONCRETE PAVEMENT REPAIR AND REPLACEMENT
13C09-14C	CONCRETE PAVEMENT REPAIR AND REPLACEMENT
13C11-11A	RURAL DOWELED CONCRETE PAVEMENT
13C11-11B	RURAL DOWELED CONCRETE PAVEMENT
13C14-06A	BASE PATCHING CONCRETE
13C14-06B	BASE PATCHING CONCRETE
13C14-06C	BASE PATCHING CONCRETE

6

Standard Detail Drawing List

13C15-06A	CONCRETE BASE
13C15-06B	CONCRETE BASE
14B07-15A	CONCRETE BARRIER TEMPORARY PRECAST, 12'-6"
14B07-15B	CONCRETE BARRIER TEMPORARY PRECAST, 12'-6"
14B07-15C	CONCRETE BARRIER TEMPORARY PRECAST, 12'-6"
14B07-15D	CONCRETE BARRIER TEMPORARY PRECAST, 12'-6"
14B07-15E	CONCRETE BARRIER TEMPORARY PRECAST, 12'-6"
14B07-15F	CONCRETE BARRIER TEMPORARY PRECAST, 12'-6"
14B07-15G	CONCRETE BARRIER TEMPORARY PRECAST, 12'-6"
14B07-15H	CONCRETE BARRIER TEMPORARY PRECAST, 12'-6"
14B07-15I	CONCRETE BARRIER TEMPORARY PRECAST, 12'-6"
14B42-05A	MIDWEST GUARDRAIL SYSTEM (MGS) GUARDRAIL
14B42-05B	MIDWEST GUARDRAIL SYSTEM (MGS) GUARDRAIL
14B42-05C	MIDWEST GUARDRAIL SYSTEM (MGS) GUARDRAIL
14B42-05D	MIDWEST GUARDRAIL SYSTEM (MGS) GUARDRAIL
14B43-03A	MIDWEST GUARDRAIL SYSTEM LONG SPAN MGS (L)
14B43-03B	MIDWEST GUARDRAIL SYSTEM LONG SPAN MGS (L)
14B43-03C	MIDWEST GUARDRAIL SYSTEM LONG SPAN MGS (L)
14B44-03A	MIDWEST GUARDRAIL SYSTEM ENERGY ABSORBING TERMINAL (MGS)
14B44-03B	MIDWEST GUARDRAIL SYSTEM ENERGY ABSORBING TERMINAL (MGS)
14B44-03C	MIDWEST GUARDRAIL SYSTEM ENERGY ABSORBING TERMINAL (MGS)
14B45-04A	MIDWEST GUARDRAIL SYSTEM THRIE BEAM TRANSITION (MGS)
14B45-04B	MIDWEST GUARDRAIL SYSTEM THRIE BEAM TRANSITION (MGS)
14B45-04C	MIDWEST GUARDRAIL SYSTEM THRIE BEAM TRANSITION (MGS)
14B45-04D	MIDWEST GUARDRAIL SYSTEM THRIE BEAM TRANSITION (MGS)
14B45-04E	MIDWEST GUARDRAIL SYSTEM THRIE BEAM TRANSITION (MGS)
14B45-04F	MIDWEST GUARDRAIL SYSTEM THRIE BEAM TRANSITION (MGS)
14B47-02A	MIDWEST GUARDRAIL SYSTEM (MGS) TYPE 2 TERMINAL
14B47-02B	MIDWEST GUARDRAIL SYSTEM (MGS) TYPE 2 TERMINAL
14B47-02C	MIDWEST GUARDRAIL SYSTEM (MGS) TYPE 2 TERMINAL
15A03-02A	FLEXIBLE MARKER POST FOR CULVERT END
15A03-02B	FLEXIBLE MARKER POST FOR CULVERT END
15B01-08A	FENCE WOVEN WIRE
15B01-08B	FENCE WOVEN WIRE
15C02-06A	BARRICADES AND SIGNS FOR MAINLINE CLOSURES
15C02-06B	BARRICADES AND SIGNS FOR MAINLINE CLOSURES
15C02-06C	DETOUR SIGNING FOR MAINLINE CLOSURES
15C03-03	BARRICADES AND SIGNS FOR SIDEROAD CLOSURES
15C05-03	TRAFFIC CONTROL, ADVANCE WARNING SIGNS 40 M.P.H. OR LESS
15C07-14B	PAVEMENT MARKING WORDS
15C07-14C	PAVEMENT MARKING ARROWS
15C08-18A	LONGITUDINAL MARKING (MAINLINE)
15C08-18B	PAVEMENT MARKING (TURN LANES)
15C12-06	TRAFFIC CONTROL FOR LANE CLOSURE WITH FLAGGING OPERATION
15C18-04	MEDIAN ISLAND MARKING
15C27-02A	DOUBLE ARROW WARNING SIGN PLACEMENT
15C27-02B	PAVEMENT MARKING (ISLANDS)
15C33-02	STOP LINE AND CROSSWALK PAVEMENT MARKING
15C35-01A	PAVEMENT MARKING (INTERSECTIONS)
15D03-04	TRAFFIC CONTROL, LANE CLOSURE, SPEEDS GREATER THAN 40 M.P.H. WITH BARRIER
15D15-03C	TRAFFIC CONTROL, TAPERED ENTRANCE RAMP WITHIN LANE CLOSURE
15D15-03D	TRAFFIC CONTROL, TAPERED ENTRANCE RAMP WITHIN LANE CLOSURE
15D20-04	TRAFFIC CONTROL, SINGLE LANE CLOSURE, NON-FREEWAY/EXPRESSWAY
15D21-04	TRAFFIC CONTROL, INTERSECTION WITHIN SINGLE LANE CLOSURE
15D27-03	TRAFFIC CONTROL, SHOULDER CLOSURE ON DIVIDED ROADWAY, SPEEDS GREATER THAN 40 MPH
15D28-03	TRAFFIC CONTROL, WORK ON SHOULDER OR PARKING LANE, UNDIVIDED ROADWAY
15D38-02A	TEMPORARY TRAFFIC CONTROL SIGN MOUNTING
15D38-02B	ATTACHMENT OF SIGNS TO POSTS
15D39-01	TRAFFIC CONTROL, DROP-OFF SIGNING
16A01-06	LANDMARK REFERENCE MONUMENTS AND COVERS

6

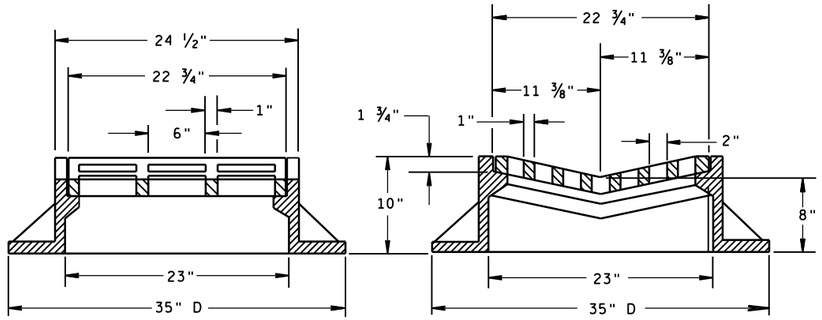

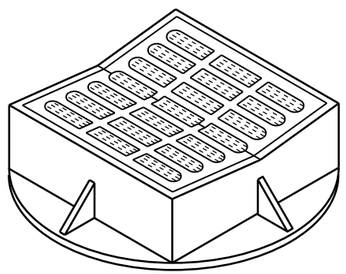

TYPE "B"

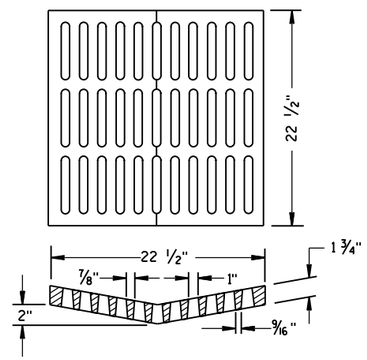

ALTERNATIVE GRATE FOR TYPE "B" COVER

USE WHERE PEDESTRIAN OR BICYCLE TRAFFIC IS POSSIBLE.

NOTED AS TYPE B-A ON THE DRAINAGE TABLE

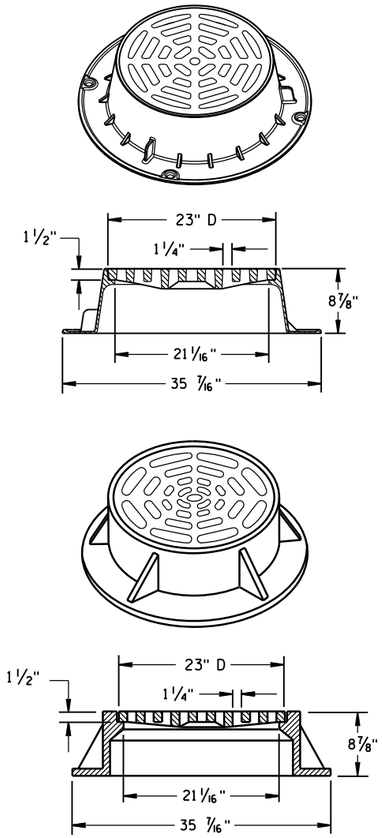

TYPE "C"

NOTE: EITHER CASTING IS ACCEPTABLE

GENERAL NOTES

DETAILS OF CONSTRUCTION, MATERIALS AND WORKMANSHIP NOT SHOWN ON THIS DRAWING SHALL CONFORM TO THE PERTINENT REQUIREMENTS OF THE STANDARD SPECIFICATIONS AND THE APPLICABLE SPECIAL PROVISIONS.

DETAIL DRAWINGS FOR PROPOSED ALTERNATE DESIGNS FOR CATCH BASIN, MANHOLE AND INLET COVERS SHALL BE SUBMITTED TO THE ENGINEER FOR APPROVAL PROVIDING THAT SUCH ALTERNATE DESIGNS MAKE PROVISION FOR EQUIVALENT CAPACITY AND STRENGTH.

ROUND FRAMES AND COVERS SHALL HAVE CONTINUOUSLY MACHINED BEARING SURFACES TO PREVENT ROCKING AND RATTLING.

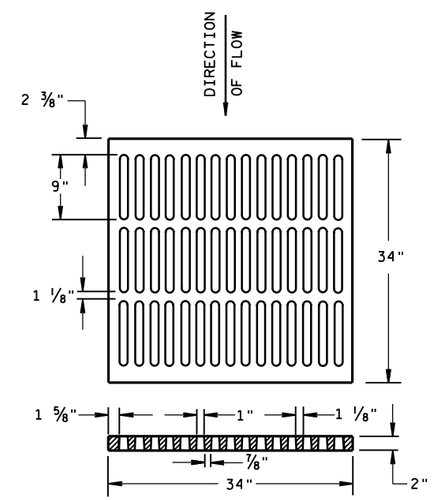

ALTERNATIVE TYPE "MS"

USE WHERE PEDESTRIAN OR BICYCLE TRAFFIC IS PERMITTED

NOTED AS TYPE MS-A ON THE DRAINAGE TABLE

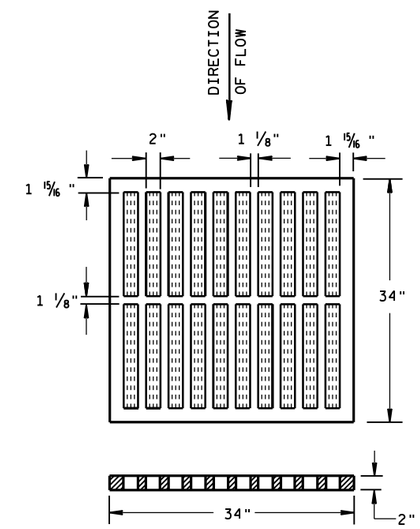

TYPE "MS"

USE ON FREEWAYS AND EXPRESSWAYS

NOTED AS TYPE MS ON DRAINAGE TABLE

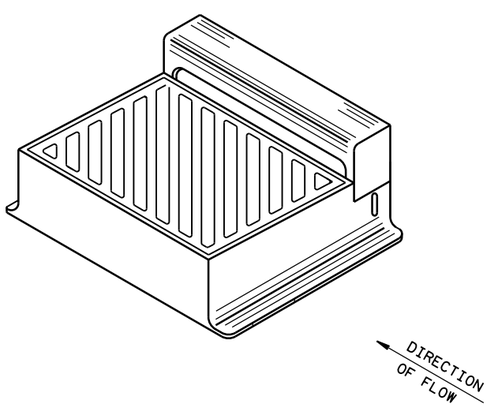

DIAGONAL SLOTS, SHALL BE ORIENTED TO THE DIRECTION OF FLOW AS ILLUSTRATED. GRATES ARE MANUFACTURED TO BE REVERSIBLE.

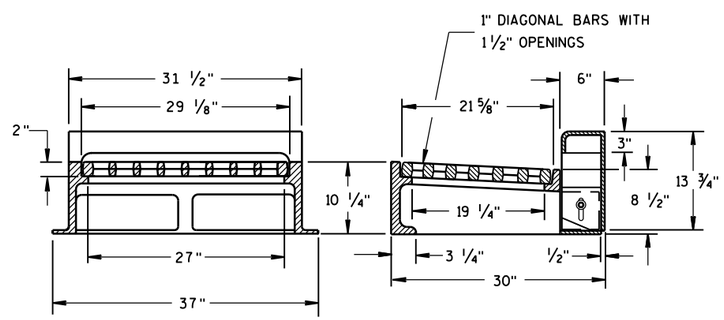

NOTE: CURB BOX HEIGHT ADJUSTABLE 6" TO 9"

TYPE "WM"

6

6

S.D.D. 8 A 5-19b

S.D.D. 8 A 5-19b

INLET COVERS
TYPE B, B-A, C,
MS, MS-A, & WM

STATE OF WISCONSIN
DEPARTMENT OF TRANSPORTATION

APPROVED

11/27/2013 — DATE

/S/ Jerry H. Zogg — ROADWAY STANDARDS DEVELOPMENT ENGINEER

FHWA

GENERAL NOTES

DETAILS OF CONSTRUCTION, MATERIALS AND WORKMANSHIP NOT SHOWN ON THIS DRAWING SHALL CONFORM TO THE PERTINENT REQUIREMENTS OF THE STANDARD SPECIFICATIONS AND THE APPLICABLE SPECIAL PROVISIONS.

DETAIL DRAWINGS FOR PROPOSED ALTERNATE DESIGNS FOR INLET COVERS SHALL BE SUBMITTED TO THE ENGINEER FOR APPROVAL PROVIDING THAT SUCH ALTERNATE DESIGNS MAKE PROVISION FOR EQUIVALENT CAPACITY AND STRENGTH.

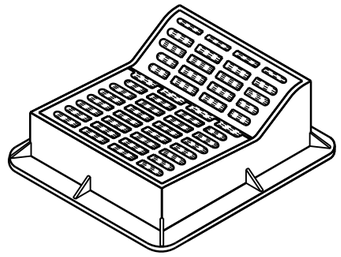

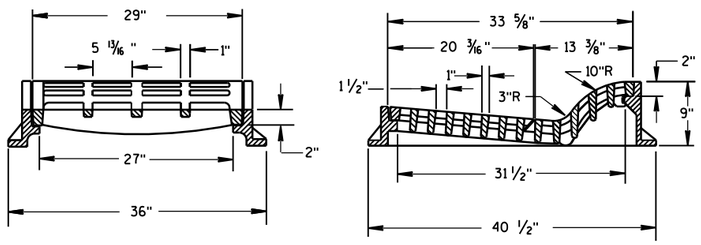

TYPE "F"

USE WITH TYPES A & D CONCRETE CURB & GUTTER, 36 INCH.

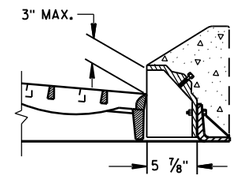

ALTERNATIVE CURB BOX FOR TYPE "HM" COVER

USE WITH TYPES G & J CONCRETE CURB & GUTTER, 30 INCH
NOTED AS TYPE HM-GJ ON DRAINAGE TABLE

NOTE:
SPECIAL GRATE FOR THE
TYPE "H" COVER MAY ALSO BE
USED FOR THE TYPE "HM-GJ" COVER
NOTED AS TYPE HM-GJ-S ON DRAINAGE TABLE

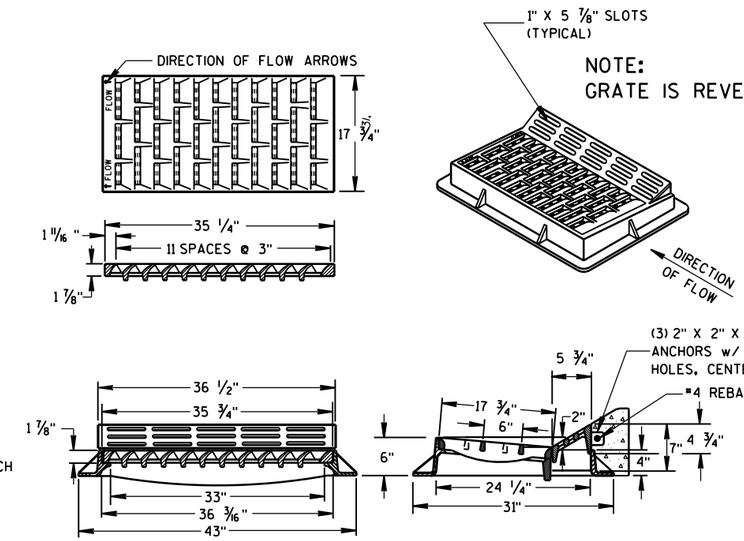

NOTE:
GRATE IS REVERSIBLE.

TYPE "HM"

USE WITH TYPES A & D CONCRETE CURB & GUTTER, 36 INCH.

NOTE:
SPECIAL GRATE FOR THE
TYPE "H" COVER MAY ALSO BE
USED FOR THE TYPE "HM" COVER
NOTED AS TYPE HM-S ON DRAINAGE TABLE

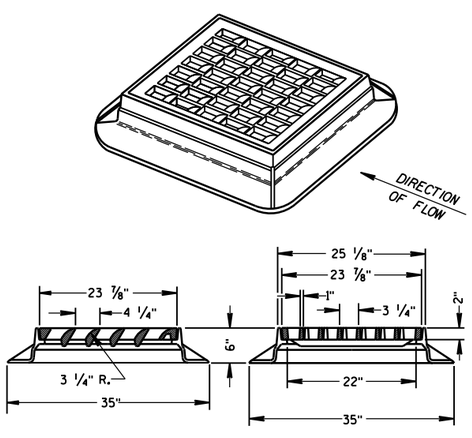

TYPE "S"

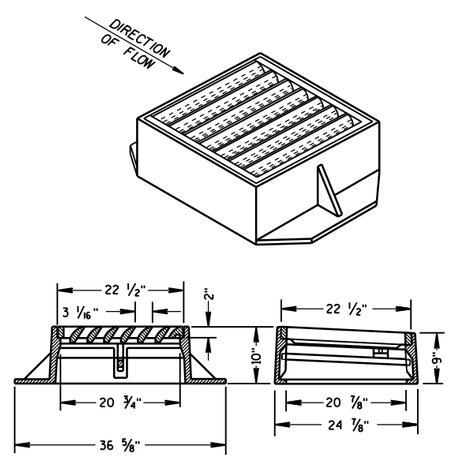

TYPE "V"

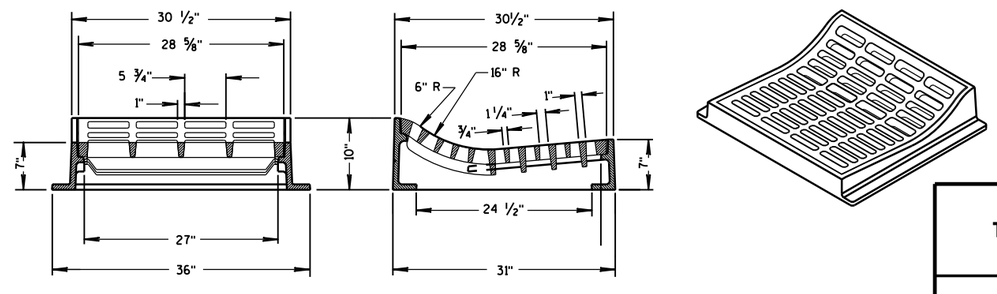

TYPE "T"

USE WITH TYPES R & T CONCRETE CURB & GUTTER, 36 INCH.

INLET COVERS
TYPE F, HM, HM-S, S, T, V, HM-GJ, & HM-GJ-S

STATE OF WISCONSIN
DEPARTMENT OF TRANSPORTATION

APPROVED
11/27/2013 — DATE
/S/ Jerry H. Zogg — ROADWAY STANDARDS DEVELOPMENT ENGINEER
FHWA

6

S.D.D. 8 A 5-19c

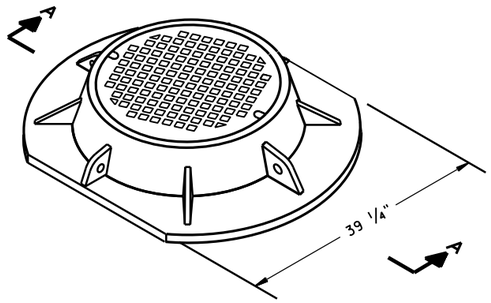

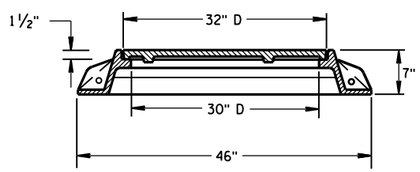

SECTION A-A
TYPE "K"

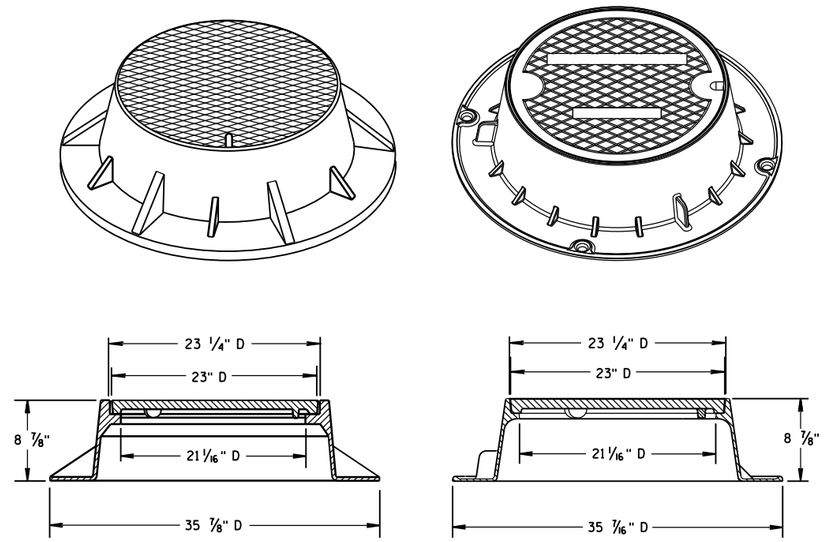

TYPE "J"
NOTE: EITHER CASTING IS ACCEPTABLE

GENERAL NOTES

DETAILS OF CONSTRUCTION, MATERIALS AND WORKMANSHIP NOT SHOWN ON THIS DRAWING SHALL CONFORM TO THE PERTINENT REQUIREMENTS OF THE STANDARD SPECIFICATIONS AND THE APPLICABLE SPECIAL PROVISIONS.

DETAIL DRAWINGS FOR PROPOSED ALTERNATE DESIGNS FOR MANHOLE COVERS SHALL BE SUBMITTED TO THE ENGINEER FOR APPROVAL PROVIDING THAT SUCH ALTERNATE DESIGNS MAKE PROVISION FOR EQUIVALENT CAPACITY AND STRENGTH.

ROUND FRAMES AND COVERS SHALL HAVE CONTINUOUSLY MACHINED BEARING SURFACES TO PREVENT ROCKING AND RATTLING.

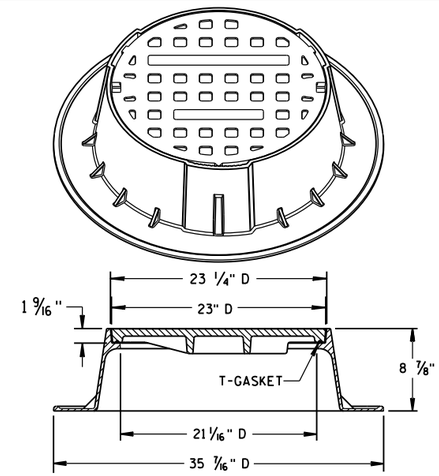

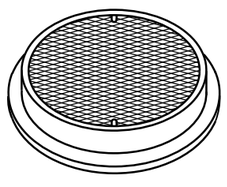

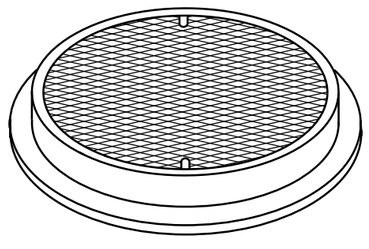

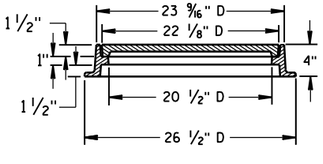

TYPE "L"

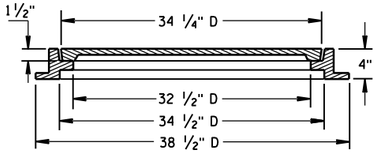

TYPE "M"

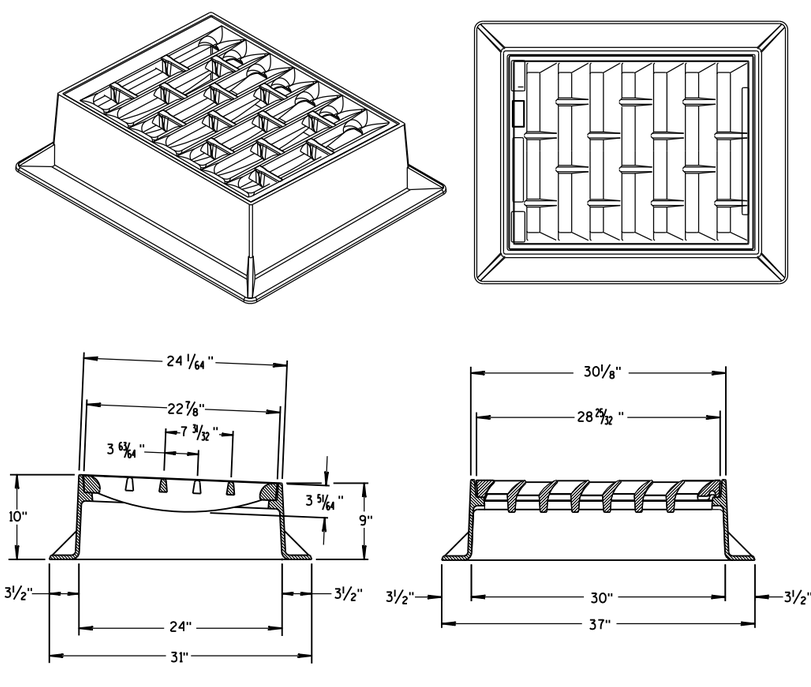

INLET COVER TYPE "BW"

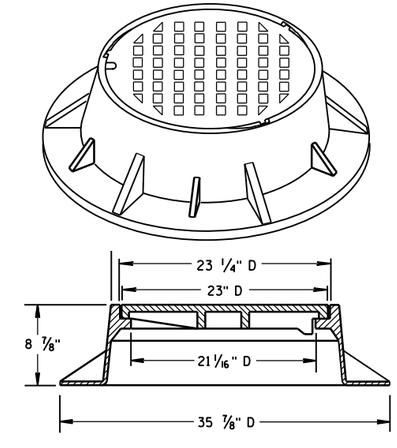

TYPE "J" SPECIAL
TYPE "B" NON-ROCKING SELF-SEAL LID
(NOTED AS TYPE J-S ON THE DRAINAGE TABLE)
NOTE: EITHER CASTING IS ACCEPTABLE

INLET COVER TYPE BW
MANHOLE COVERS, TYPE K, J, J-S, L & M

STATE OF WISCONSIN
DEPARTMENT OF TRANSPORTATION

APPROVED
11/27/2013 — DATE
/S/ Jerry H. Zogg — ROADWAY STANDARDS DEVELOPMENT ENGINEER
FHWA

6

S.D.D. 8 A 5-19d

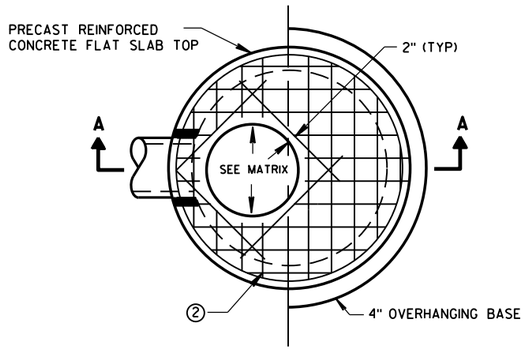

PLAN VIEW CIRCULAR OPENING

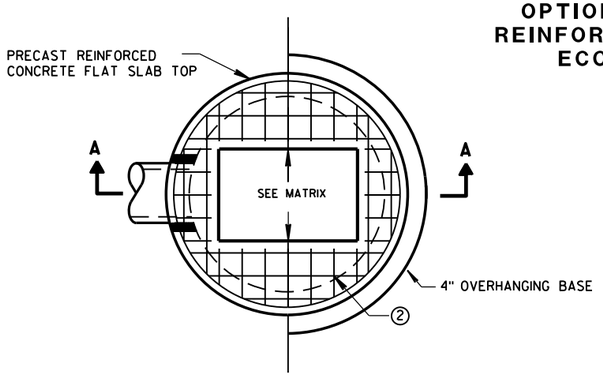

PLAN VIEW RECTANGULAR OPENING

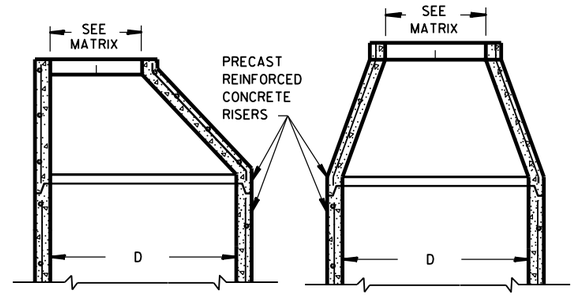

OPTIONAL PRECAST REINFORCED CONCRETE ECCENTRIC TOP

OPTIONAL PRECAST REINFORCED CONCRETE CONCENTRIC TOP

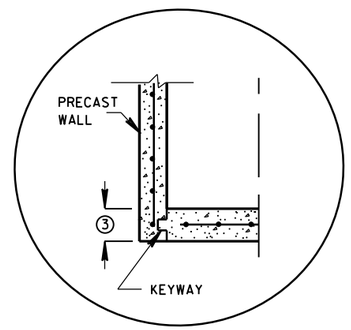

PRECAST REINFORCED CONCRETE WITH INTEGRAL BASE OPTION

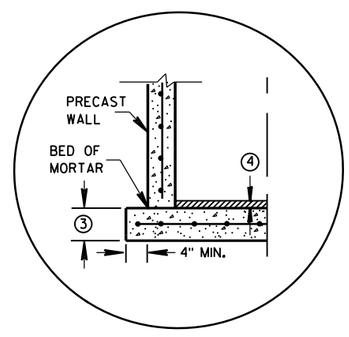

SEPARATE PRECAST REINFORCED CONCRETE BASE OPTION

DETAIL "A"

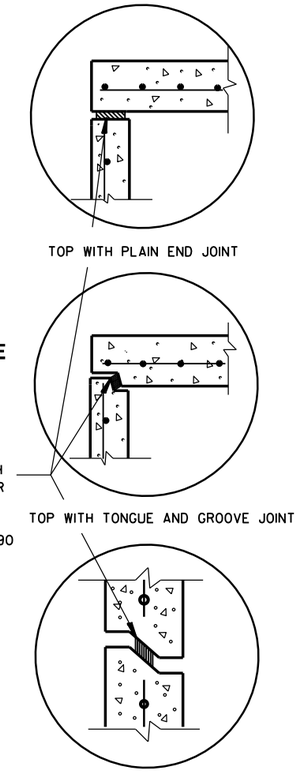

DETAIL "B"

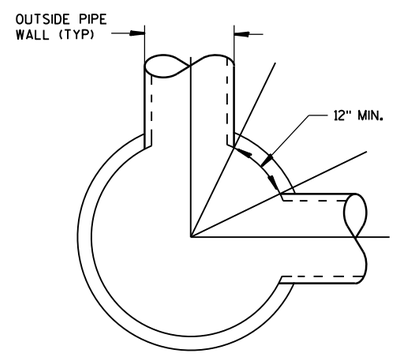

DETAIL "C"

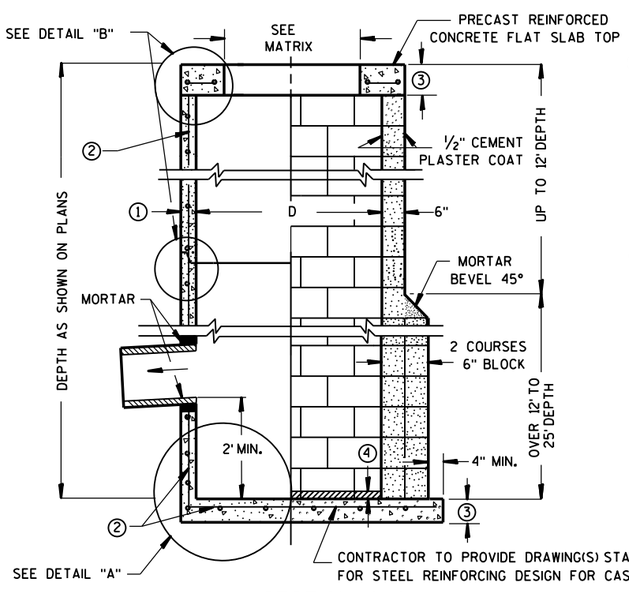

CONTRACTOR TO PROVIDE DRAWING(S) STAMPED BY A PROFESSIONAL ENGINEER FOR STEEL REINFORCING DESIGN FOR CAST-IN-PLACE STRUCTURES

SECTION A-A

PRECAST REINFORCED CONCRETE WITH MONOLITHIC BASE

CONCRETE BLOCK WITH CAST-IN-PLACE OR PRECAST REINFORCED CONCRETE BASE ②

GENERAL NOTES

DETAILS OF CONSTRUCTION, MATERIALS AND WORKMANSHIP NOT SHOWN ON THIS DRAWING SHALL CONFORM TO THE PERTINENT REQUIREMENTS OF THE STANDARD SPECIFICATIONS AND THE APPLICABLE SPECIAL PROVISIONS.

UNLESS OTHERWISE AUTHORIZED IN WRITING BY THE ENGINEER, THE CONTRACTOR SHALL NOT ORDER AND DELIVER PRECAST CATCH BASIN UNITS REQUIRED FOR THE PROJECT UNTIL A LIST OF SIZES IS FURNISHED BY THE ENGINEER.

DETAILED DRAWINGS FOR PROPOSED ALTERNATE DESIGNS FOR UNDERGROUND DRAINAGE STRUCTURES SHALL BE SUBMITTED TO THE ENGINEER FOR APPROVAL PROVIDING THAT SUCH ALTERNATE DESIGNS MAKE PROVISION FOR EQUIVALENT CAPACITY AND STRENGTH.

ALL DRAINAGE STRUCTURES ARE DESIGNATED ON THE PLANS AS "MANHOLES 3X3-L", "CATCH BASINS 4-B", "INLETS 2X3-H", ETC. THE FIRST NUMBERS DESIGNATE THE SIZE OF THE STRUCTURE, AND THE FOLLOWING LETTER DESIGNATES THE TYPE OF COVER TO BE USED TO COMPRISE THE COMPLETE UNIT.

BASES SHALL BE PLACED ON A BED OF MATERIAL AT LEAST 6 INCHES IN DEPTH, WHICH MEETS THE REQUIREMENTS OF FOUNDATION BACKFILL. THIS BEDDING SHALL BE COMPACTED AND PROVIDE UNIFORM SUPPORT FOR THE ENTIRE AREA OF THE BASE.

PRECAST REINFORCED CONCRETE CONE TOPS (ECCENTRIC OR CONCENTRIC) OR PRECAST REINFORCED CONCRETE FLAT SLAB TOPS MAY BE USED ON CONCRETE BLOCK STRUCTURES.

ECCENTRIC CONE TOPS MAY BE USED ON ALL STRUCTURES, AND CONCENTRIC CONE TOPS SHALL BE USED ONLY ON STRUCTURES 5 FEET OR LESS IN DEPTH, UNLESS OTHERWISE DIRECTED BY THE ENGINEER.

STEPS MEETING AASHTO M199 AND THE FOLLOWING REQUIREMENTS SHALL BE INSTALLED IN ALL STRUCTURES OVER 5 FEET IN DEPTH: 16 INCH C-C MAXIMUM SPACING; PROJECT A MINIMUM CLEAR DISTANCE OF 4 INCHES FROM THE WALL AT THE POINT OF EMBEDMENT; MINIMUM LENGTH OF 10 INCHES; MINIMUM WALL EMBEDMENT OF 3 INCHES. FERROUS METAL STEPS NOT PAINTED OR TREATED TO RESIST CORROSION SHALL HAVE A MINIMUM CROSS SECTIONAL DIMENSION OF 1 INCH.

STEPS OF APPROVED POLYPROPYLENE PLASTIC COATED REINFORCEMENT BAR ARE ACCEPTABLE. REINFORCING BAR MUST BE A MINIMUM OF ½ INCH AND MEET THE REQUIREMENTS OF ASTM A615.

CERTIFICATION SHALL BE PROVIDED THAT INSTALLED STEPS WHEN TESTED IN ACCORDANCE WITH SECTION 10 OF AASHTO T280 CAN WITHSTAND A VERTICAL LOAD OF 800 LBS. AND A HORIZONTAL LOAD OF 400 LBS.

ALL BAR STEEL REINFORCEMENT SHALL BE EMBEDDED 2 INCHES CLEAR UNLESS OTHERWISE SHOWN OR NOTED.

ALL PRECAST INLET UNITS SHALL CONFORM TO THE PERTINENT REQUIREMENTS OF AASHTO DESIGNATION M199.

PRECAST REINFORCED RISERS SHALL HAVE A TONGUE AND GROOVE JOINT WITH TONGUE UP OR DOWN.

CONCRETE BLOCK WILL NOT BE PERMITED FOR STRUCTURES GREATER THAN 4 FEET IN DIAMETER.

4" OVERHANGING BASES ARE REQUIRED FOR ALL CONCRETE BLOCK INSTALLATIONS. 4" OVERHANG IS REQUIRED WHEN SEPARATE PRECAST BASE IS PROVIDED. OVERHANG IS NOT REQUIRED ON PRECAST STRUCTURES WITH AN INTEGRAL OR MONOLITHIC BASE.

FOR ADDITIONAL CONFIGURATIONS, MAINTAIN A MINIMUM OF 12 INCHES AS MEASURED FROM THE INSIDE OF THE STRUCTURE WALL BETWEEN THE OUTSIDE PIPE WALLS OF ADJACENT PIPES. SEE DETAIL "C".

① MINIMUM WALL THICKNESS SHALL BE 4 INCHES FOR 3-FT, 5 INCHES FOR 4-FT, 6 INCHES FOR 5-FT AND 7 INCHES FOR 6-FT DIAMETER PRECAST CATCH BASINS.

② FOR PRECAST CATCH BASINS PROVIDE REINFORCING STEEL IN ACCORDANCE TO AASHTO M199.

③ PRECAST FLAT SLAB TOPS AND BASES WITH A DIAMETER OF 48" AND LESS SHALL HAVE A MINIMUM THICKNESS OF 6". PRECAST FLAT SLAB TOPS AND BASES WITH A DIAMETER LARGER THAN 48" SHALL HAVE A MINIMUM THICKNESS OF 8".

④ 1" CONCRETE KEY POURED AFTER INSTALLATION. 2' SUMP MEASURED FROM TOP OF KEY.

CATCH BASIN COVER OPENING MATRIX

CATCH BASIN SIZE	INLET COVER TYPE	ALL A'S	ALL B'S	BW	C	F	ALL H'S	S	T	V	WM	Z
	OPENING SIZE (FT)											
3-FT	2X2	X	X					X		X		
	2 DIA.				X							X
4-FT-6-FT	2X2	X	X					X		X		
	2X2.5			X				X	X	X	X	
	2 DIA.				X							X
	2X3						X					
	2.5X3					X						

PIPE MATRIX

CATCH BASIN SIZE	MAXIMUM INSIDE PIPE DIAMETER FOR TWO PIPES	
	180° SEPARATION (IN)	90° SEPARATION (IN)
3-FT	15	12
4-FT	24	18
5-FT	36	24
6-FT	42	30

CATCH BASINS 3-FT, 4-FT, 5-FT AND 6-FT DIAMETER

CATCH BASINS 3-FT, 4-FT, 5-FT AND 6-FT DIAMETER

STATE OF WISCONSIN
DEPARTMENT OF TRANSPORTATION

APPROVED
Sept., 2016 — DATE
/S/ Rodney Taylor — ROADWAY STANDARDS UNIT SUPERVI
FHWA

6

S.D.D. 8 A 8-2

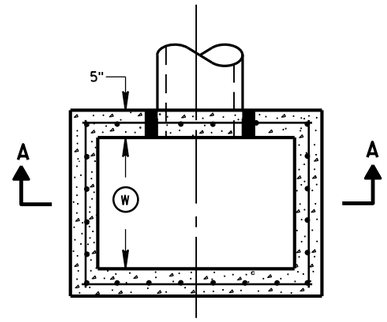

PLAN VIEW

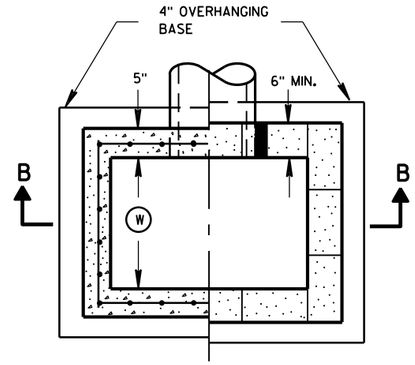

PLAN VIEW

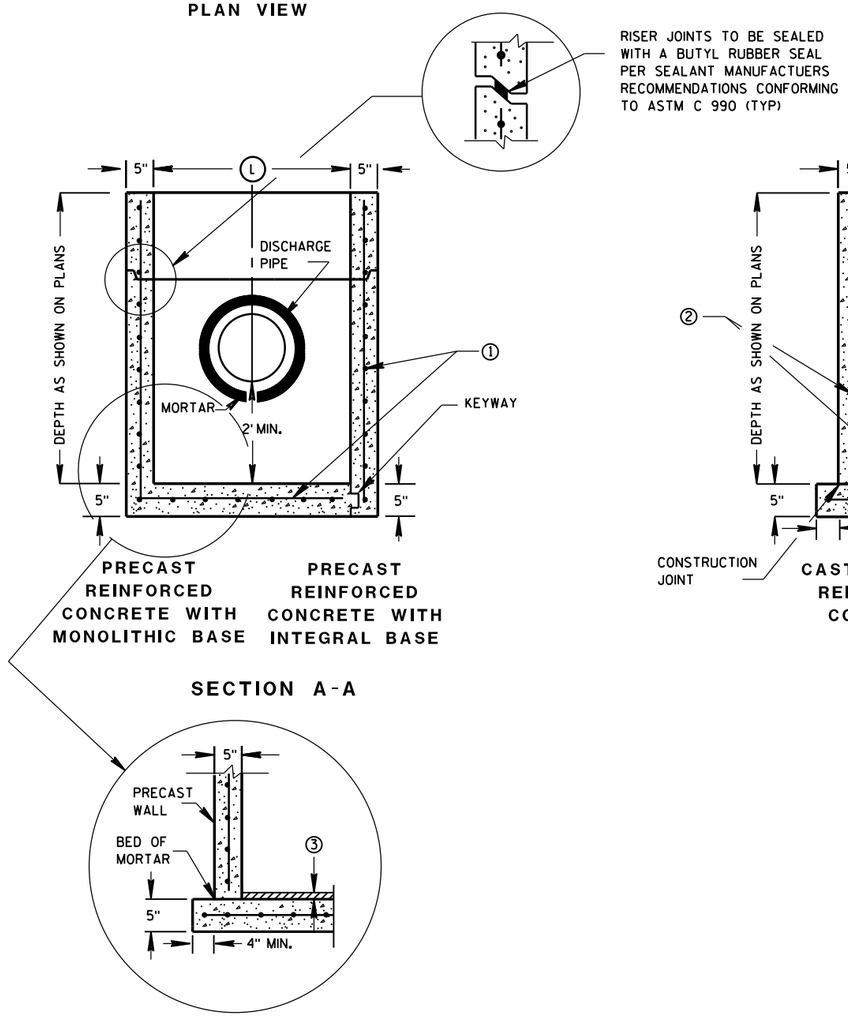

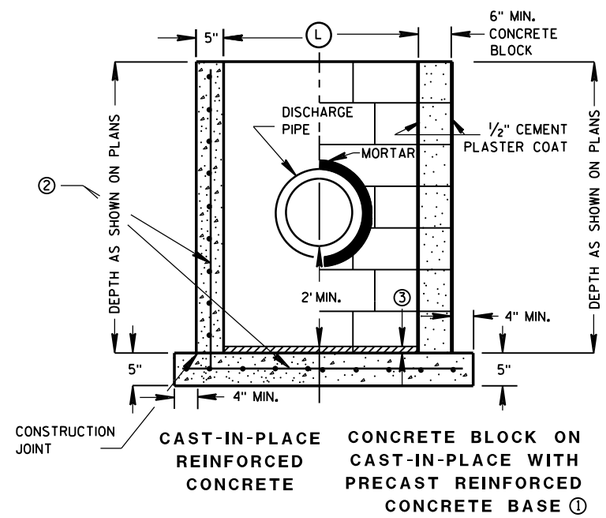

GENERAL NOTES

DETAILS OF CONSTRUCTION, MATERIALS AND WORKMANSHIP NOT SHOWN ON THIS DRAWING SHALL CONFORM TO THE PERTINENT REQUIREMENTS OF THE STANDARD SPECIFICATIONS AND THE APPLICABLE SPECIAL PROVISIONS.

UNLESS OTHERWISE AUTHORIZED IN WRITING BY THE ENGINEER, THE CONTRACTOR SHALL NOT ORDER AND DELIVER PRECAST CATCH BASIN UNITS REQUIRED FOR THE PROJECT UNTIL A LIST OF SIZES IS FURNISHED BY THE ENGINEER.

DETAILED DRAWINGS FOR PROPOSED ALTERNATE DESIGNS FOR UNDERGROUND DRAINAGE STRUCTURES SHALL BE SUBMITTED TO THE ENGINEER FOR APPROVAL PROVIDING THAT SUCH ALTERNATE DESIGNS MAKE PROVISION FOR EQUIVALENT CAPACITY AND STRENGTH.

ALL PRECAST CATCH BASIN UNITS SHALL CONFORM TO THE PERTINENT REQUIREMENTS OF ASTM C 913.

ALL DRAINAGE STRUCTURES ARE DESIGNATED ON THE PLANS AS "MANHOLES 3X3-L", "CATCH BASINS 4-B", "INLETS 2X3-H", ETC. THE FIRST NUMBERS DESIGNATES THE SIZE OF THE STRUCTURE, AND THE FOLLOWING LETTER DESIGNATES THE TYPE OF COVER TO BE USED TO COMPRISE THE COMPLETE UNIT.

BASES SHALL BE PLACED ON A BED OF MATERIAL AT LEAST 6 INCHES IN DEPTH, WHICH MEETS THE REQUIREMENTS OF FOUNDATION BACKFILL. THIS BEDDING SHALL BE COMPACTED AND PROVIDE UNIFORM SUPPORT FOR THE ENTIRE AREA OF THE BASE.

ALL BAR STEEL REINFORCEMENT SHALL BE EMBEDDED 2 INCHES CLEAR UNLESS OTHERWISE SHOWN OR NOTED.

PRECAST REINFORCED RISERS SHALL HAVE A TONGUE AND GROOVE JOINT WITH TONGUE UP OR DOWN.

4" OVERHANGING BASES ARE REQUIRED FOR CAST-IN-PLACE REINFORCED CONCRETE AND CONCRETE BLOCK INSTALLATIONS.
4" OVERHANG IS REQUIRED WHEN SEPARATE PRECAST BASE IS PROVIDED.
OVERHANG IS NOT REQUIRED ON PRECAST STRUCTURES WITH AN INTEGRAL OR MONOLITHIC BASE.

MAXIMUM INSIDE PIPE DIAMETER DETERMINED BY 3" CLEARANCE ON EACH SIDE OF THE OUTSIDE WALL OF THE PIPE. SEE DETAIL "A". ASSUMES PIPE ENTERS PERPENDICULAR TO THE STRUCTURE.

① FOR PRECAST CATCH BASINS PROVIDE REINFORCING STEEL IN ACCORDANCE TO ASTM C 913.

② CONTRACTOR TO PROVIDE DRAWING(S) STAMPED BY A PROFESSIONAL ENGINEER FOR STEEL REINFORCING DESIGN FOR CAST-IN-PLACE STRUCTURES.

③ 1" CONCRETE KEY POURED AFTER INSTALLATION. 2' SUMP MEASURED FROM TOP OF KEY.

CATCH BASIN COVER MATRIX

CATCH BASIN SIZE		INLET COVER TYPE	F	ALL H'S
	WIDTH (W) (FT)	LENGTH (L) (FT)		
2X3-FT	2	3		X
2.5X3-FT	2.5	3	X	

PIPE MATRIX

CATCH BASIN SIZE	MAXIMUM INSIDE PIPE DIAMETER FOR TWO PIPES	
	WIDTH (IN)	LENGTH (IN)
2X3-FT	12	24
2.5X3-FT	18	24

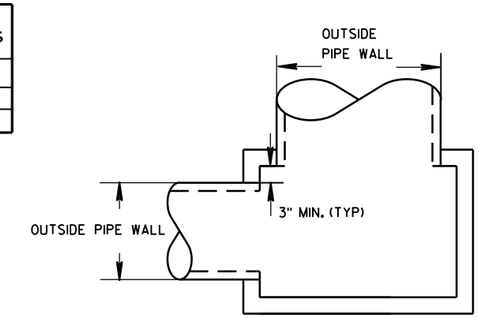

DETAIL "A"

CATCH BASINS 2X3-FT AND 2.5X3-FT

CATCH BASINS 2X3-FT AND 2.5X3-FT

STATE OF WISCONSIN
DEPARTMENT OF TRANSPORTATION

APPROVED
Sept., 2016 — DATE
/S/ Rodney Taylor — ROADWAY STANDARDS UNIT SUPERVISOR
FHWA

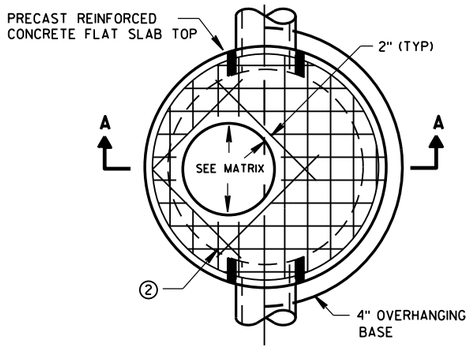

PLAN VIEW CIRCULAR OPENING

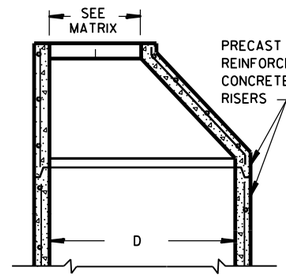

OPTIONAL PRECAST REINFORCED CONCRETE ECCENTRIC TOP

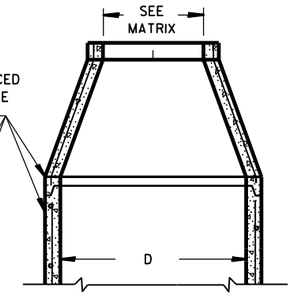

OPTIONAL PRECAST REINFORCED CONCRETE CONCENTRIC TOP

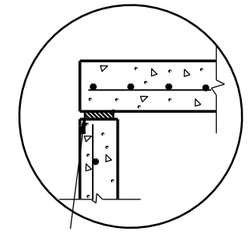

TOP WITH PLAIN END JOINT

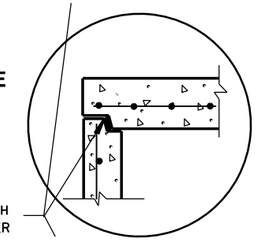

JOINTS TO BE SEALED WITH A BUTYL RUBBER SEAL PER SEALANT MANUFACTURERS RECOMMENDATIONS CONFORMING TO ASTM C990 (TYP)

TOP WITH TONGUE AND GROOVE JOINT

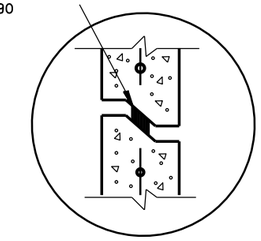

RISER WITH TONGUE AND GROOVE JOINT

DETAIL "B"

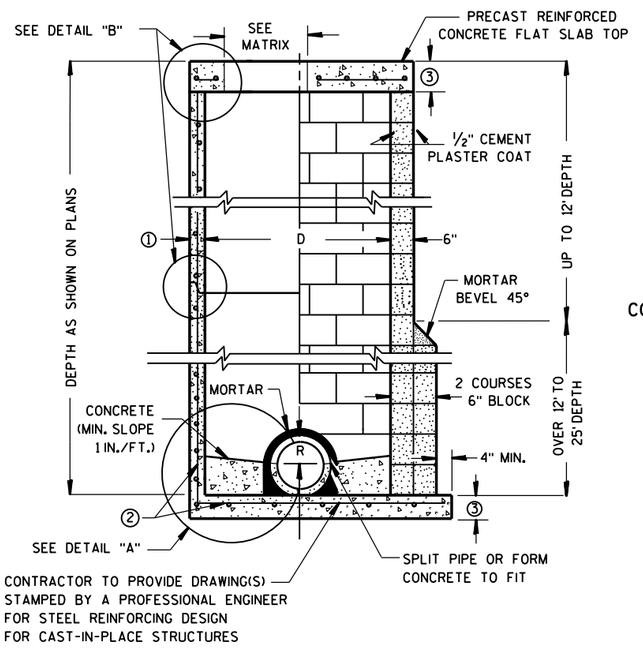

PRECAST REINFORCED CONCRETE WITH MONOLITHIC BASE

CONCRETE BLOCK WITH CAST-IN-PLACE OR PRECAST REINFORCED CONCRETE BASE ②

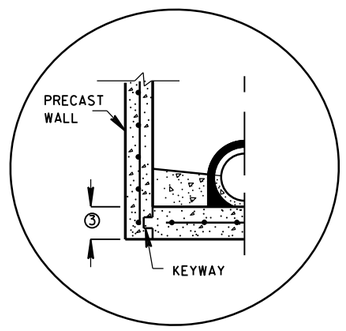

PRECAST REINFORCED CONCRETE WITH INTEGRAL BASE OPTION

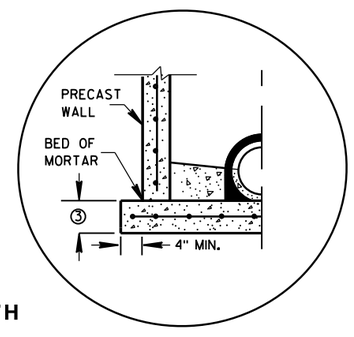

SEPARATE PRECAST REINFORCED CONCRETE BASE OPTION

DETAIL "A"

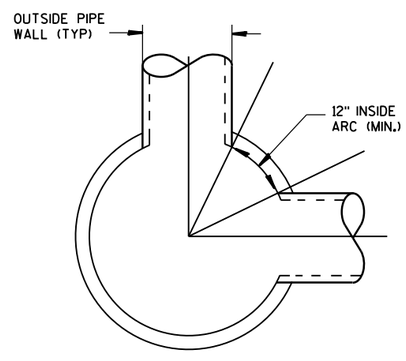

DETAIL "C"

GENERAL NOTES

DETAILS OF CONSTRUCTION, MATERIALS AND WORKMANSHIP NOT SHOWN ON THIS DRAWING SHALL CONFORM TO THE PERTINENT REQUIREMENTS OF THE STANDARD SPECIFICATIONS AND THE APPLICABLE SPECIAL PROVISIONS.

UNLESS OTHERWISE AUTHORIZED IN WRITING BY THE ENGINEER, THE CONTRACTOR SHALL NOT ORDER AND DELIVER PRECAST MANHOLE UNITS REQUIRED FOR THE PROJECT UNTIL A LIST OF SIZES IS FURNISHED BY THE ENGINEER.

DETAILED DRAWINGS FOR PROPOSED ALTERNATE DESIGNS FOR UNDERGROUND DRAINAGE STRUCTURES SHALL BE SUBMITTED TO THE ENGINEER FOR APPROVAL PROVIDING THAT SUCH ALTERNATE DESIGNS MAKE PROVISION FOR EQUIVALENT CAPACITY AND STRENGTH.

ALL DRAINAGE STRUCTURES ARE DESIGNATED ON THE PLANS AS "MANHOLES 3X3-L", "CATCH BASINS 4-B", "INLETS 2X3-H", ETC. THE FIRST NUMBERS DESIGNATE THE SIZE OF THE STRUCTURE, AND THE FOLLOWING LETTER DESIGNATES THE TYPE OF COVER TO BE USED TO COMPRISE THE COMPLETE UNIT.

BASES SHALL BE PLACED ON A BED OF MATERIAL AT LEAST 6 INCHES IN DEPTH, WHICH MEETS THE REQUIREMENTS OF FOUNDATION BACKFILL. THIS BEDDING SHALL BE COMPACTED AND PROVIDE UNIFORM SUPPORT FOR THE ENTIRE AREA OF THE BASE.

PRECAST REINFORCED CONE TOPS (ECCENTRIC OR CONCENTRIC) OR PRECAST REINFORCED FLAT SLAB TOPS MAY BE USED ON CONCRETE BLOCK STRUCTURES.

ECCENTRIC CONE TOPS MAY BE USED ON ALL STRUCTURES, AND CONCENTRIC CONE TOPS SHALL BE USED ONLY ON STRUCTURES 5 FEET OR LESS IN DEPTH, UNLESS OTHERWISE DIRECTED BY THE ENGINEER.

STEPS MEETING AASHTO M199 AND THE FOLLOWING REQUIREMENTS SHALL BE INSTALLED IN ALL STRUCTURES OVER 5 FEET IN DEPTH: 16 INCH C-C MAXIMUM SPACING; PROJECT A MINIMUM CLEAR DISTANCE OF 4 INCHES FROM THE WALL AT THE POINT OF EMBEDMENT; MINIMUM LENGTH OF 10 INCHES; MINIMUM WALL EMBEDMENT OF 3 INCHES. FERROUS METAL STEPS NOT PAINTED OR TREATED TO RESIST CORROSION SHALL HAVE A MINIMUM CROSS SECTIONAL DIMENSION OF 1 INCH.

STEPS OF APPROVED POLYPROPYLENE PLASTIC COATED REINFORCEMENT BAR ARE ACCEPTABLE. REINFORCING BAR MUST BE A MINIMUM OF ½" AND MEET THE REQUIREMENTS OF ASTM A615.

CERTIFICATION SHALL BE PROVIDED THAT INSTALLED STEPS WHEN TESTED IN ACCORDANCE WITH SECTION 10 OF AASHTO T280 CAN WITHSTAND A VERTICAL LOAD OF 800 LBS. AND A HORIZONTAL LOAD OF 400 LBS.

ALL BAR STEEL REINFORCEMENT SHALL BE EMBEDDED 2 INCHES CLEAR UNLESS OTHERWISE SHOWN OR NOTED.

CONCRETE BLOCK WILL NOT BE PERMITED FOR STRUCTURES GREATER THAN 4 FEET IN DIAMETER.

PRECAST REINFORCED RISERS SHALL HAVE A TONGUE AND GROOVE JOINT WITH TONGUE UP OR DOWN.

ALL PRECAST MANHOLE UNITS SHALL CONFORM TO THE PERTINENT REQUIREMENTS OF AASHTO DESIGNATION M 199.

4" OVERHANGING BASES ARE REQUIRED FOR ALL CONCRETE BLOCK INSTALLATIONS. 4" OVERHANG IS REQUIRED WHEN SEPARATE PRECAST BASE IS PROVIDED. OVERHANG IS NOT REQUIRED ON PRECAST STRUCTURES WITH AN INTEGRAL OR MONOLITHIC BASE.

FOR ADDITIONAL CONFIGURATIONS, MAINTAIN A MINIMUM OF 12 INCHES AS MEASURED FROM THE INSIDE OF THE STRUCTURE WALL BETWEEN THE OUTSIDE PIPE WALLS OF ADJACENT PIPES. SEE DETAIL "C".

① MINIMUM WALL THICKNESS SHALL BE 4 INCHES FOR 3-FT, 5 INCHES FOR 4-FT, 6 INCHES FOR 5-FT, 7 INCHES FOR 6-FT, 8 INCHES FOR 7-FT AND 9 INCHES FOR 8-FT DIAMETER PRECAST MANHOLES.

② FOR PRECAST MANHOLES PROVIDE REINFORCING STEEL IN ACCORDANCE TO AASHTO M199.

③ PRECAST FLAT SLAB TOPS AND BASES WITH A DIAMETER OF 48" AND LESS SHALL HAVE A MINIMUM THICKNESS OF 6". PRECAST FLAT SLAB TOPS AND BASES WITH A DIAMETER LARGER THAN 48" SHALL HAVE A MINIMUM THICKNESS OF 8".

MANHOLE COVER OPENING MATRIX

MANHOLE COVER TYPE	C	ALL J'S	K	L	M
OPENING SIZE (FT)					
2 DIA.	X	X		X	
3 DIA.			X		X

PIPE MATRIX

MANHOLE SIZE	MAXIMUM INSIDE PIPE DIAMETER FOR TWO PIPES	
	180° SEPARATION (IN)	90° SEPARATION (IN)
3-FT	15	12
4-FT	24	18
5-FT	36	24
6-FT	42	36
7-FT	48	36
8-FT	60	42

MANHOLES 3-FT, 4-FT, 5-FT, 6-FT, 7-FT AND 8-FT DIAMETER

STATE OF WISCONSIN
DEPARTMENT OF TRANSPORTATION

APPROVED
Sept., 2016 — DATE
/S/ Rodney Taylor — ROADWAY STANDARDS DEVELOPMENT UNIT SUPERV
FHWA

MANHOLES 3-FT, 4-FT, 5-FT, 6-FT, 7-FT AND 8-FT DIAMETER

6

S.D.D. 8 B 9-2

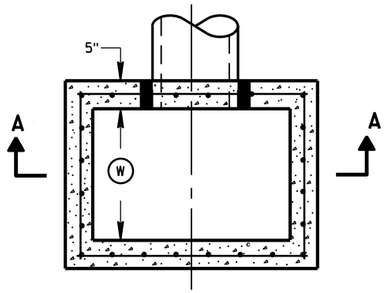

PLAN VIEW

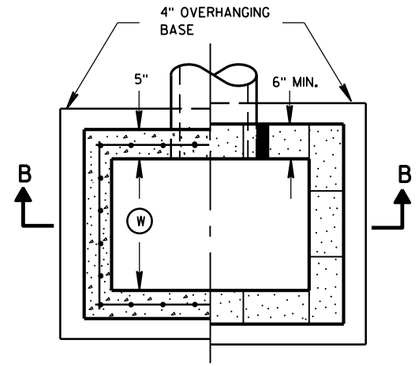

PLAN VIEW

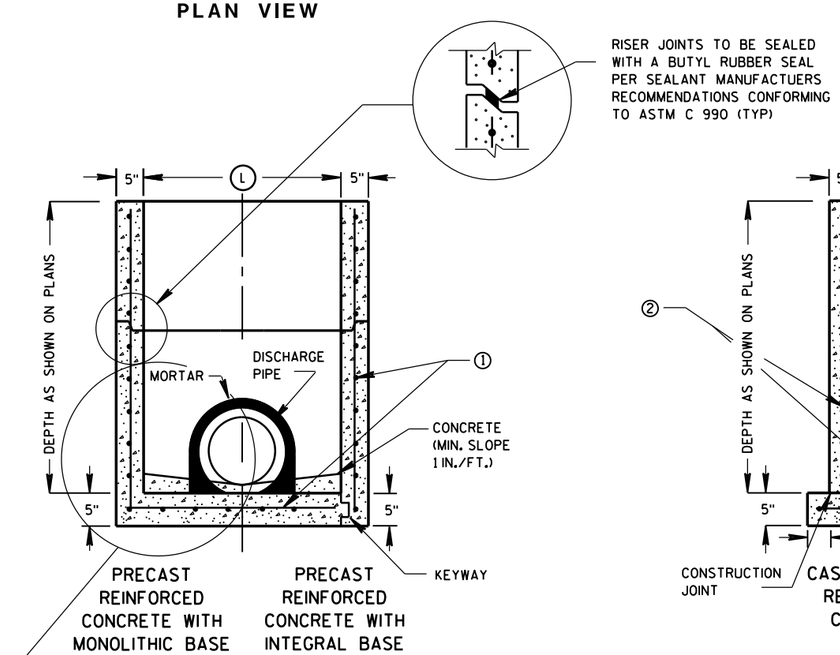

SECTION A-A

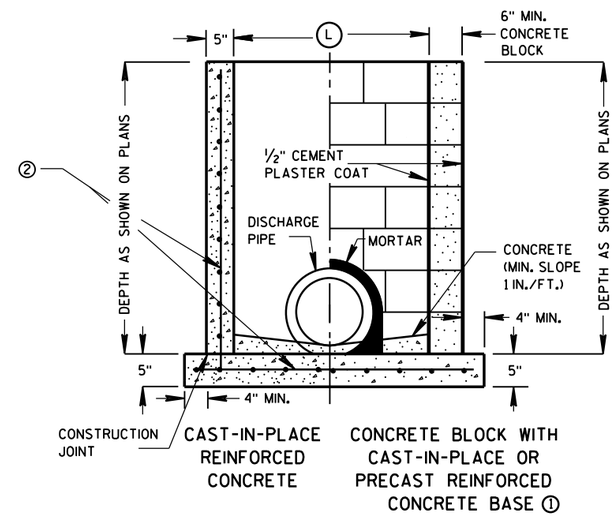

SECTION B-B

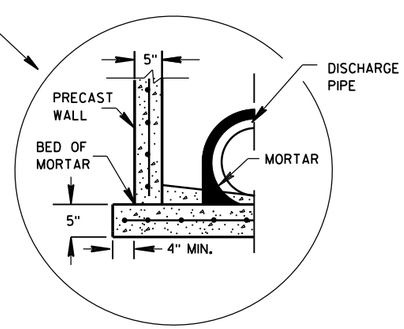

SEPARATE PRECAST REINFORCED CONCRETE BASE OPTION

GENERAL NOTES

DETAILS OF CONSTRUCTION, MATERIALS AND WORKMANSHIP NOT SHOWN ON THIS DRAWING SHALL CONFORM TO THE PERTINENT REQUIREMENTS OF THE STANDARD SPECIFICATIONS AND THE APPLICABLE SPECIAL PROVISIONS.

UNLESS OTHERWISE AUTHORIZED IN WRITING BY THE ENGINEER, THE CONTRACTOR SHALL NOT ORDER AND DELIVER PRECAST INLET UNITS REQUIRED FOR THE PROJECT UNTIL A LIST OF SIZES IS FURNISHED BY THE ENGINEER.

DETAILED DRAWINGS FOR PROPOSED ALTERNATE DESIGNS FOR UNDERGROUND DRAINAGE STRUCTURES SHALL BE SUBMITTED TO THE ENGINEER FOR APPROVAL PROVIDING THAT SUCH ALTERNATE DESIGNS MAKE PROVISION FOR EQUIVALENT CAPACITY AND STRENGTH.

ALL PRECAST INLET UNITS SHALL CONFORM TO THE PERTINENT REQUIREMENTS OF ASTM C 913.

ALL DRAINAGE STRUCTURES ARE DESIGNATED ON THE PLANS AS "MANHOLES 3X3-L", "CATCH BASINS 4-B", "INLETS 2X3-H", ETC. THE FIRST NUMBERS DESIGNATES THE SIZE OF THE STRUCTURE, AND THE FOLLOWING LETTER DESIGNATES THE TYPE OF COVER TO BE USED TO COMPRISE THE COMPLETE UNIT.

BASES SHALL BE PLACED ON A BED OF MATERIAL AT LEAST 6 INCHES IN DEPTH, WHICH MEETS THE REQUIREMENTS OF FOUNDATION BACKFILL. THIS BEDDING SHALL BE COMPACTED AND PROVIDE UNIFORM SUPPORT FOR THE ENTIRE AREA OF THE BASE.

ALL BAR STEEL REINFORCEMENT SHALL BE EMBEDDED 2 INCHES CLEAR UNLESS OTHERWISE SHOWN OR NOTED.

PRECAST REINFORCED RISERS SHALL HAVE A TONGUE AND GROOVE JOINT WITH TONGUE UP OR DOWN.

4" OVERHANGING BASES ARE REQUIRED FOR CAST-IN-PLACE REINFORCED CONCRETE AND CONCRETE BLOCK INSTALLATIONS.
4" OVERHANG IS REQUIRED WHEN SEPARATE PRECAST BASE IS PROVIDED.
OVERHANG IS NOT REQUIRED ON PRECAST STRUCTURES WITH AN INTEGRAL OR MONOLITHIC BASE.

MAXIMUM INSIDE PIPE DIAMETER DETERMINED BY 3 INCH CLEARANCE ON EACH SIDE OF THE OUTSIDE WALL OF THE PIPE. SEE DETAIL "A". ASSUMES PIPE ENTERS PERPENDICULAR TO THE STRUCTURE.

① FOR PRECAST INLETS PROVIDE REINFORCING STEEL IN ACCORDANCE TO ASTM C 913.

② CONTRACTOR TO PROVIDE DRAWING(S) STAMPED BY A PROFESSIONAL ENGINEER FOR STEEL REINFORCING DESIGN FOR CAST-IN-PLACE STRUCTURES.

INLET COVER MATRIX

INLET SIZE		INLET COVER TYPE	ALL A'S	ALL B'S	BW	F	ALL H'S	S	T	V	WM
	WIDTH (W) (FT)	LENGTH (L) (FT)									
2X2-FT	2	2	X	X				X		X	
2X2.5-FT	2	2.5			X			X	X	X	X
2X3-FT	2	3					X				
2.5X3-FT	2.5	3				X					

PIPE MATRIX

INLET SIZE	MAXIMUM INSIDE PIPE DIAMETER	
	WIDTH (IN)	LENGTH (IN)
2X2-FT	12	12
2X2.5-FT	12	18
2X3-FT	12	24
2.5X3-FT	18	24

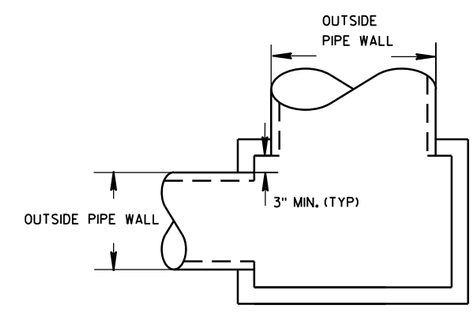

DETAIL "A"

INLETS 2X2-FT, 2X2.5-FT, 2X3-FT AND 2.5X3-FT

INLETS 2X2-FT, 2X2.5-FT, 2X3-FT AND 2.5X3-FT

STATE OF WISCONSIN
DEPARTMENT OF TRANSPORTATION

APPROVED
Sept., 2016 — DATE
/S/ Rodney Taylor
ROADWAY STANDARDS D IT
UNIT SUPERVIS
FHWA

6

6

S.D.D. 8 C 7-2

S.D.D. 8 C 7-2

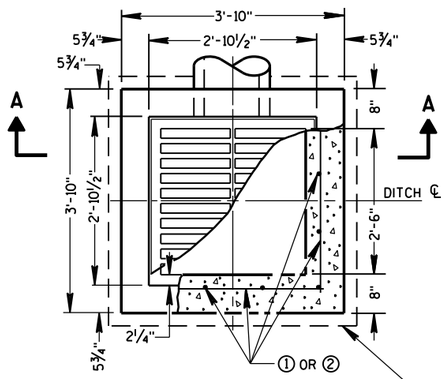

PLAN VIEW

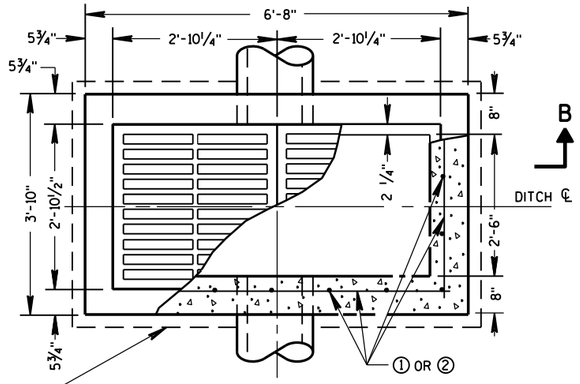

PLAN VIEW

4" OVERHANGING BASE ON REINFORCED CAST-IN-PLACE CONCRETE INLETS

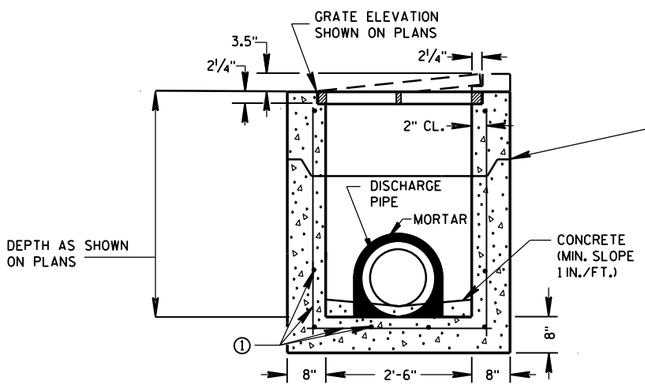

PRECAST REINFORCED CONCRETE SECTION A-A

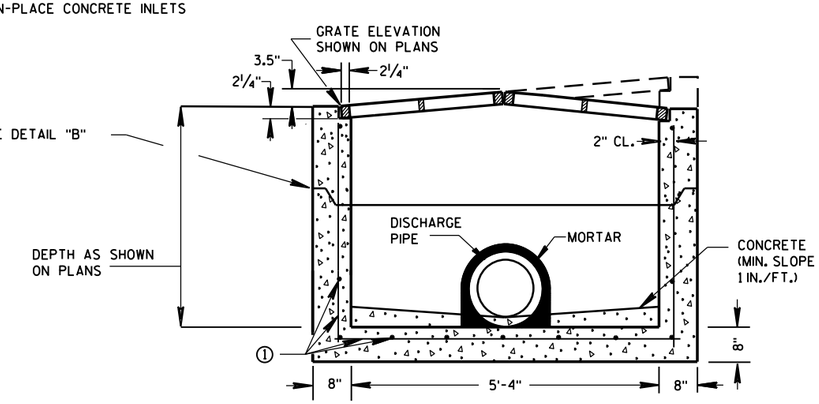

PRECAST REINFORCED CONCRETE SECTION B-B

GENERAL NOTES

DETAILS OF CONSTRUCTION, MATERIALS AND WORKMANSHIP NOT SHOWN ON THIS DRAWING SHALL CONFORM TO THE PERTINENT REQUIREMENTS OF THE STANDARD SPECIFICATIONS AND THE APPLICABLE SPECIAL PROVISIONS.

UNLESS OTHERWISE AUTHORIZED IN WRITING BY THE ENGINEER, THE CONTRACTOR SHALL NOT ORDER AND DELIVER PRECAST INLET UNITS REQUIRED FOR THE PROJECT UNTIL A LIST OF SIZES IS FURNISHED BY THE ENGINEER.

DETAILED DRAWINGS FOR PROPOSED ALTERNATE DESIGNS FOR INLETS WHICH MAY INCLUDE PRECAST REINFORCED CONCRETE INLETS, SHALL BE SUBMITTED TO THE ENGINEER FOR APPROVAL PROVIDING THAT SUCH ALTERNATE DESIGNS MAKE PROVISION FOR EQUIVALENT CAPACITY AND STRENGTH.

ALL MEDIAN INLETS ARE DESIGNATED ON THE PLANS AS "INLETS, 1G-MS", ETC. THE FIRST NUMBER AND LETTER DESIGNATE THE TYPE OF STRUCTURE, AND THE FOLLOWING LETTERS DESIGNATE THE TYPE OF COVER TO BE USED TO COMPRISE THE COMPLETE UNIT.

BASES SHALL BE PLACED ON A BED OF MATERIAL AT LEAST 6 INCHES IN DEPTH, WHICH MEETS THE REQUIREMENTS OF FOUNDATION BACKFILL. THIS BEDDING SHALL BE COMPACTED AND PROVIDE UNIFORM SUPPORT FOR THE ENTIRE AREA OF THE BASE.

ALL BAR STEEL REINFORCEMENT SHALL BE EMBEDDED 2 INCHES CLEAR UNLESS OTHERWISE SHOWN OR NOTED.

PRECAST REINFORCED RISERS SHALL HAVE A TONGUE AND GROOVE JOINT WITH TONGUE UP OR DOWN.

ALL PRECAST INLET UNITS SHALL CONFORM TO THE PERTINENT REQUIREMENTS OF ASTM C 913.

MAXIMUM INSIDE PIPE DIAMETER DETERMINED BY 3" CLEARANCE ON EACH SIDE OF THE OUTSIDE WALL OF THE PIPE. SEE DETAIL "A". ASSUMES PIPE ENTERS PERPENDICULAR TO THE STRUCTURE.

① FOR PRECAST INLETS PROVIDE REINFORCING STEEL IN ACCORDANCE TO ASTM C 913.

② CONTRACTOR TO PROVIDE DRAWING(S) STAMPED BY A PROFESSIONAL ENGINEER FOR STEEL REINFORCING DESIGN FOR CAST-IN-PLACE STRUCTURES.

PIPE MATRIX

	MAXIMUM INSIDE PIPE DIAMETER	
INLET SIZE	WIDTH (IN)	LENGTH (IN)
1 GRATE	18	18
2 GRATE	18	42

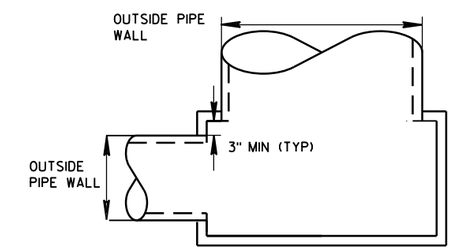

DETAIL "A"

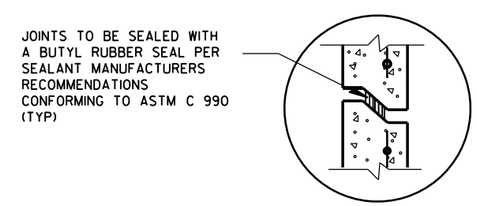

DETAIL "B"

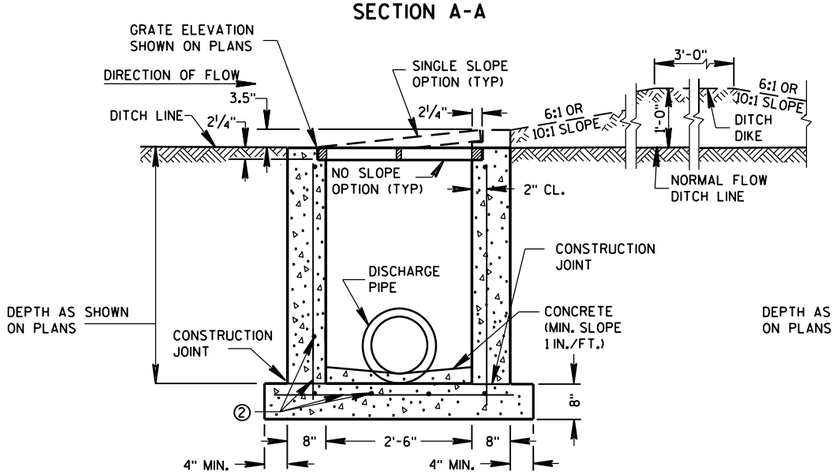

REINFORCED CAST-IN-PLACE CONCRETE SECTION A-A

INLETS MEDIAN 1 GRATE

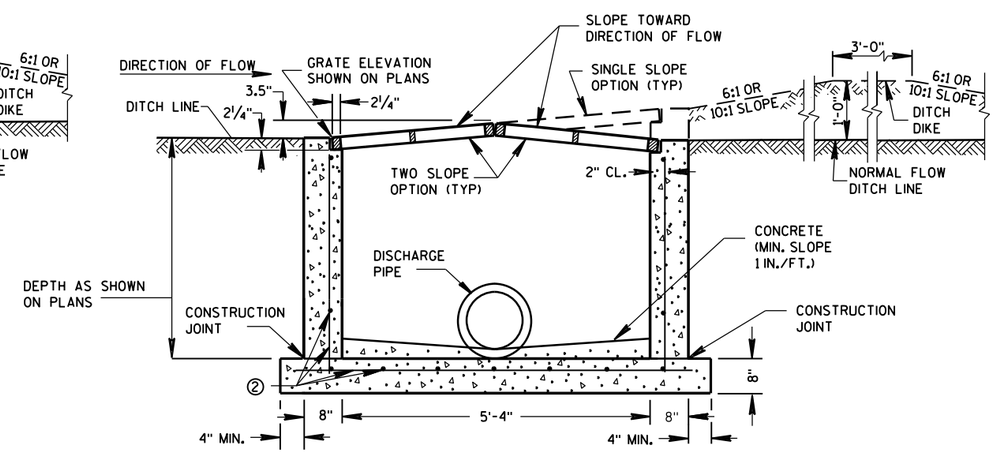

REINFORCED CAST-IN-PLACE CONCRETE SECTION B-B

INLETS MEDIAN 2 GRATE

INLETS MEDIAN 1 AND 2 GRATE

STATE OF WISCONSIN
DEPARTMENT OF TRANSPORTATION

APPROVED
Sept., 2016 — DATE
/S/ Rodney Taylor — ROADWAY STANDARDS UNIT SUPERVI
FHWA

6

S.D.D. 8 C 8-2

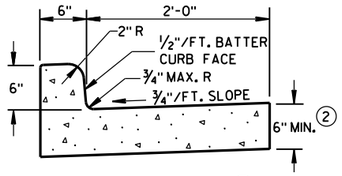

TYPES A & D ①

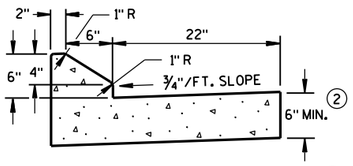

6" SLOPED CURB TYPES G & J ①

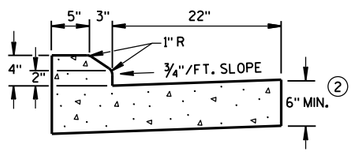

4" SLOPED CURB TYPES G & J ①

CONCRETE CURB & GUTTER 30"

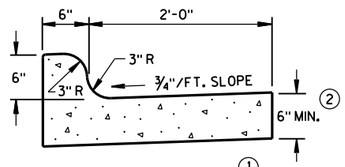

TYPES K & L ①

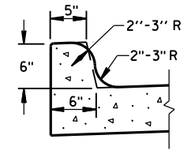

OPTIONAL CURB SHAPE
FOR TYPES K & L ①

CONCRETE CURB & GUTTER 30"

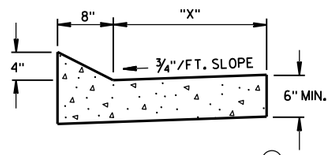

TYPES TBT & TBTT ①

CONCRETE CURB & GUTTER

TBT & TBTT	"X"
30"	22"
36"	28"

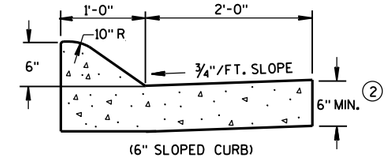

(6" SLOPED CURB)

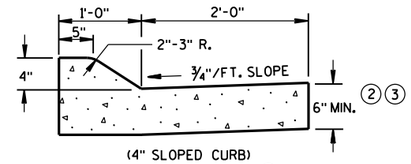

(4" SLOPED CURB)

TYPES A & D ①

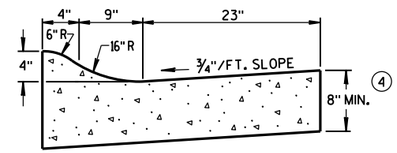

4" SLOPED CURB TYPES R & T ①⑤

CONCRETE CURB & GUTTER 36"

GENERAL NOTES

DETAILS OF CONSTRUCTION, MATERIALS AND WORKMANSHIP NOT SHOWN ON THIS DRAWING SHALL CONFORM TO THE PERTINENT REQUIREMENTS OF THE CONTRACT.

PAVEMENT TIES AND TIE BARS SHALL BE EPOXY COATED IN CONFORMANCE WITH SUBSECTION 505.2.6.2 OF THE STANDARD SPECIFICATIONS.

INTEGRAL CURB & GUTTER SHALL CONFORM TO THE DETAILS SHOWN FOR CONCRETE CURB & GUTTER INCLUDING THE TRANSVERSE GUTTER SLOPE. A LONGITUDINAL CONSTRUCTION JOINT IS NOT REQUIRED WITH INTEGRAL CURB AND GUTTER.

WHERE THE TRANSVERSE JOINTS IN THE PAVEMENT ARE REQUIRED TO BE SEALED, THE JOINTS IN THE INTEGRAL CURB AND GUTTER SHALL BE SEALED TO THE FACE OF CURB WITH THE SAME TYPE OF SEALANT. THE COST OF FURNISHING AND INSTALLING THIS SEALANT SHALL BE INCIDENTAL TO THE ITEM CONCRETE CURB AND GUTTER.

UNLESS OTHERWISE SHOWN ON THE TYPICAL CROSS SECTIONS, THE BASE AGGREGATE AND COMMON EXCAVATION LIMITS ARE 2'-0" BEHIND THE BACK OF CURBS.

① TIE BARS ARE REQUIRED FOR CURB AND GUTTER TYPES A, G, K, R AND TBTT.

② THE BOTTOM OF CURB AND GUTTER MAY BE CONSTRUCTED EITHER LEVEL OR PARALLEL TO THE SLOPE OF THE SUBGRADE OR BASE AGGREGATE PROVIDED A 6" MINIMUM GUTTER THICKNESS IS MAINTAINED.

③ USE 8" MINIMUM GUTTER THICKNESS WHEN USED WITH AN ADJACENT CONCRETE TRUCK APRON PLACED BEHIND BACK OF CURB.

④ THE BOTTOM OF CURB AND GUTTER MAY BE CONSTRUCTED EITHER LEVEL OR PARALLEL TO THE SLOPE OF THE SUBGRADE OR BASE AGGREGATE PROVIDED A 8" MINIMUM GUTTER THICKNESS IS MAINTAINED.

⑤ THE FACE OF CURB IS 6" FROM THE BACK OF CURB.

⑥ WHEN REVERSE SLOPE GUTTER IS REQUIRED, THE LOCATION(S) WILL BE SHOWN ELSEWHERE IN THE PLAN.

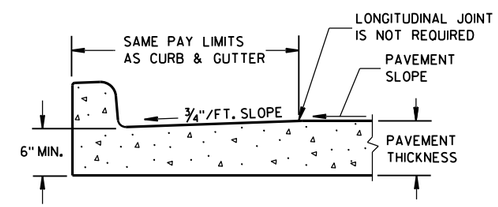

PARTIAL SECTION OF PAVEMENT
WITH INTEGRAL CURB & GUTTER

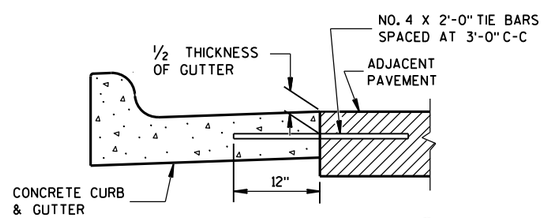

TYPICAL TIE BAR LOCATION ①

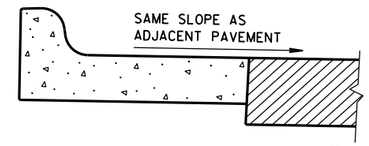

REVERSE SLOPE GUTTER ⑥
(TYPICAL FOR ALL CURB & GUTTER TYPES)

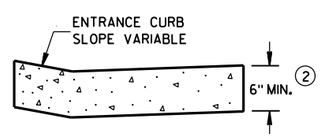

DRIVEWAY ENTRANCE CURB
(WHEN DIRECTED BY THE ENGINEER)

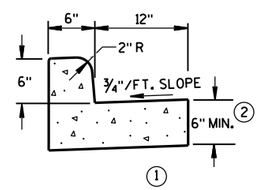

① TYPES A & D

CONCRETE CURB & GUTTER 18"

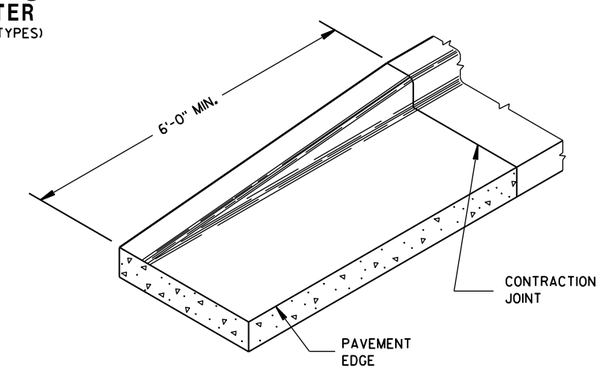

END SECTION CURB & GUTTER

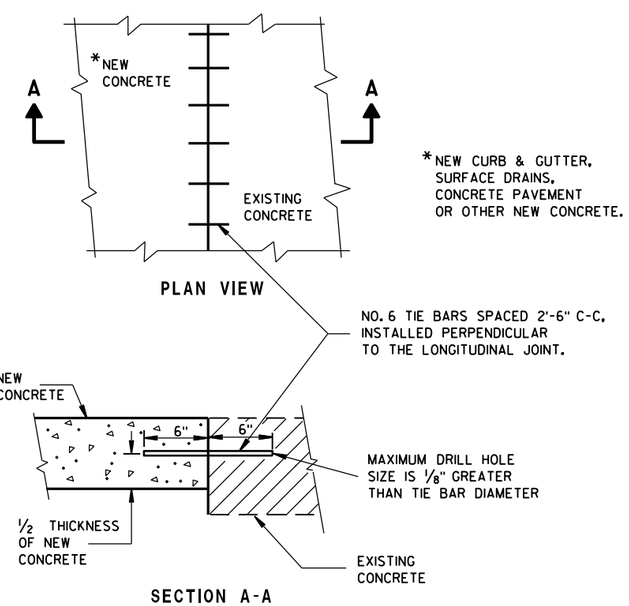

PLAN VIEW

SECTION A-A

TIE BARS DRILLED
INTO EXISTING PAVEMENT

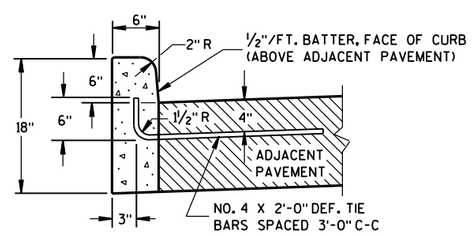

① TYPES A & D

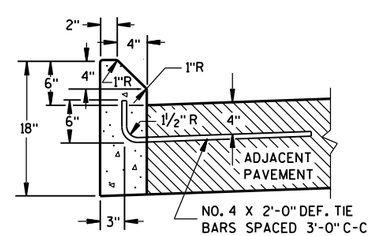

① TYPES G & J

CONCRETE CURB

CONCRETE CURB, CONCRETE CURB & GUTTER AND TIES

STATE OF WISCONSIN
DEPARTMENT OF TRANSPORTATION

APPROVED
June, 2016 — DATE
/S/ Jerry H. Zogg — ROADWAY STANDARDS DEVELOPMENT ENGINEER
FHWA

6

6

S.D.D. 8 D 1-19

S.D.D. 8 D 1-19

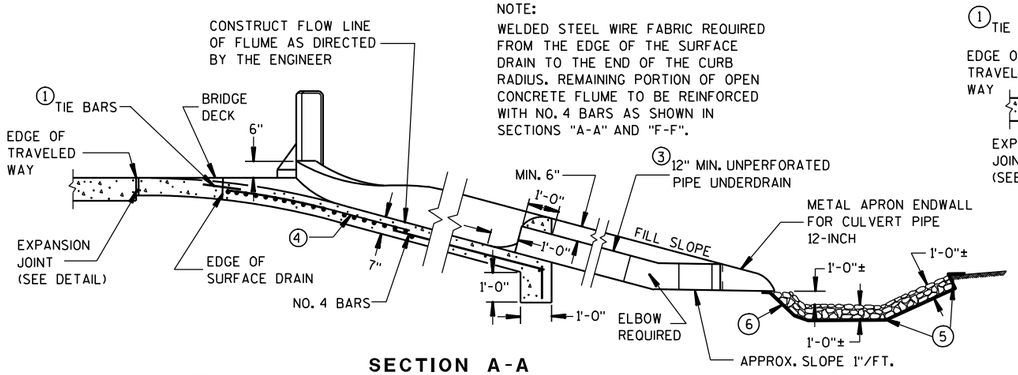

NOTE:
WELDED STEEL WIRE FABRIC REQUIRED FROM THE EDGE OF THE SURFACE DRAIN TO THE END OF THE CURB RADIUS. REMAINING PORTION OF OPEN CONCRETE FLUME TO BE REINFORCED WITH NO. 4 BARS AS SHOWN IN SECTIONS "A-A" AND "F-F".

SECTION A-A

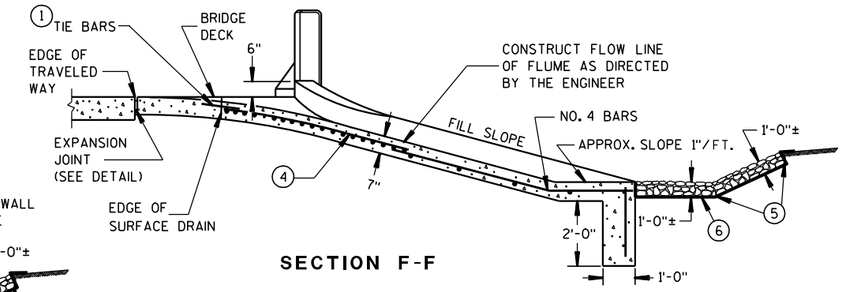

SECTION F-F

GENERAL NOTES

DETAILS OF CONSTRUCTION, MATERIALS, AND WORKMANSHIP NOT SHOWN ON THIS DRAWING SHALL CONFORM TO THE PERTINENT REQUIREMENTS OF THE STANDARD SPECIFICATIONS AND THE APPLICABLE SPECIAL PROVISIONS.

ALL STEEL REINFORCEMENT SHALL BE EMBEDDED 2 INCHES CLEAR UNLESS OTHERWISE SHOWN OR NOTED.

1. NO. 4 X 2'-0" TIE BARS SPACED AT 3'-0" CENTERS TO BE USED ONLY WHEN ADJACENT TO P.C. CONCRETE.
2. NO. 4 X 2'-0" TIE BARS SPACED AT 12" CENTERS TO BE PLACED BY BRIDGE CONTRACTOR, OR DRILLED TIE BARS PLACED AS DIRECTED BY THE ENGINEER.
3. PIPE UNDERDRAIN MAY BE ANY OF THE MATERIALS LISTED IN SECTION 612.2 OF THE STANDARD SPECIFICATIONS EXCEPT DRAIN TILE.
4. MINIMUM REINFORCEMENT SHALL BE 6" X 6" - W4.0 X W4.0 OR NO. 3 BARS LONGITUDINAL AND TRANSVERSE SPACING 12" C-C.
5. LIMITS OF ADDITIONAL RIPRAP WHEN SPECIAL DITCH IS REQUIRED.
6. GEOTEXTILE FABRIC, TYPE 'R'
7. HOT POURED SEALANT UNLESS OTHERWISE SPECIFIED.
8. THIS DIMENSION MAY VARY DEPENDING ON THE SPACING OF POSTS FOR THE STEEL PLATE BEAM GUARD. THE TYPICAL LOCATION FOR THE SURFACE DRAIN IS WHERE THE POST SPACING WIDENS TO 3'-1½".

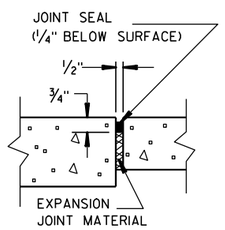

EXPANSION JOINT DETAIL

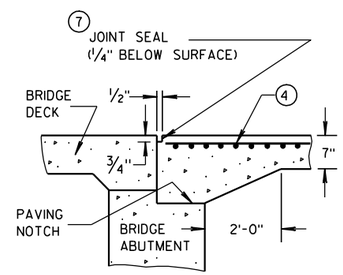

SECTION D-D

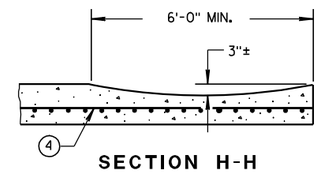

SECTION H-H

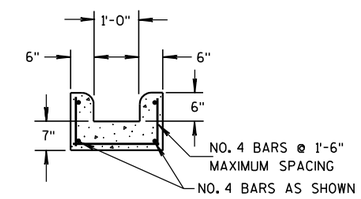

SECTION E-E

SECTION C-C

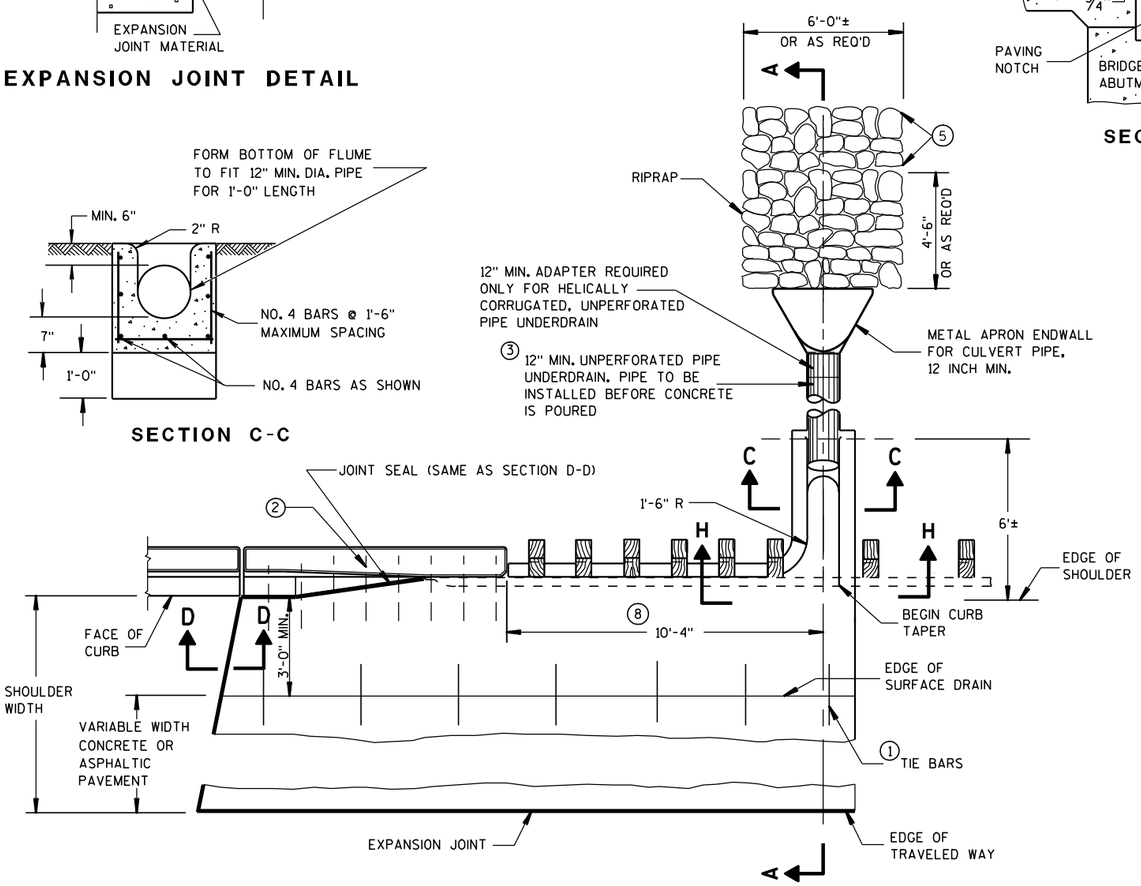

PLAN VIEW
SURFACE DRAIN WITH PIPE
TYPE "A"

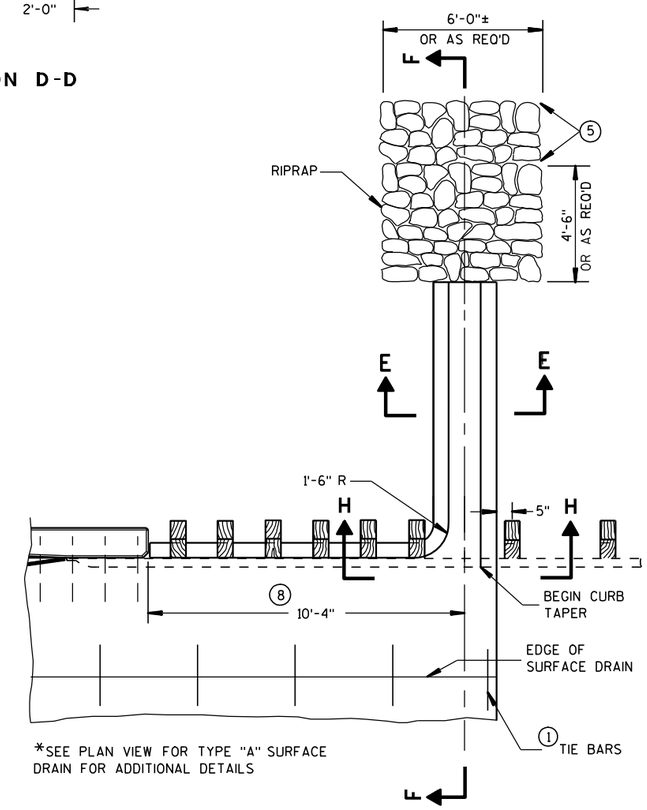

*SEE PLAN VIEW FOR TYPE "A" SURFACE DRAIN FOR ADDITIONAL DETAILS

*PARTIAL PLAN VIEW
SURFACE DRAIN WITHOUT PIPE
TYPE "B"

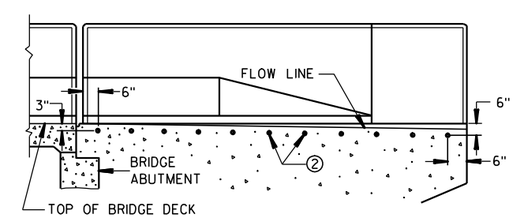

LOCATION OF
TIE BARS IN WINGWALL

CONCRETE SURFACE DRAINS
FLUME TYPE
AT STRUCTURES

STATE OF WISCONSIN
DEPARTMENT OF TRANSPORTATION

APPROVED
9/4/08 — DATE
/S/ Jerry H. Zogg — ROADWAY STANDARDS DEVELOPMENT ENGINEER
FHWA

6

6

S.D.D. 8 D 2-6

S.D.D. 8 D 2-6

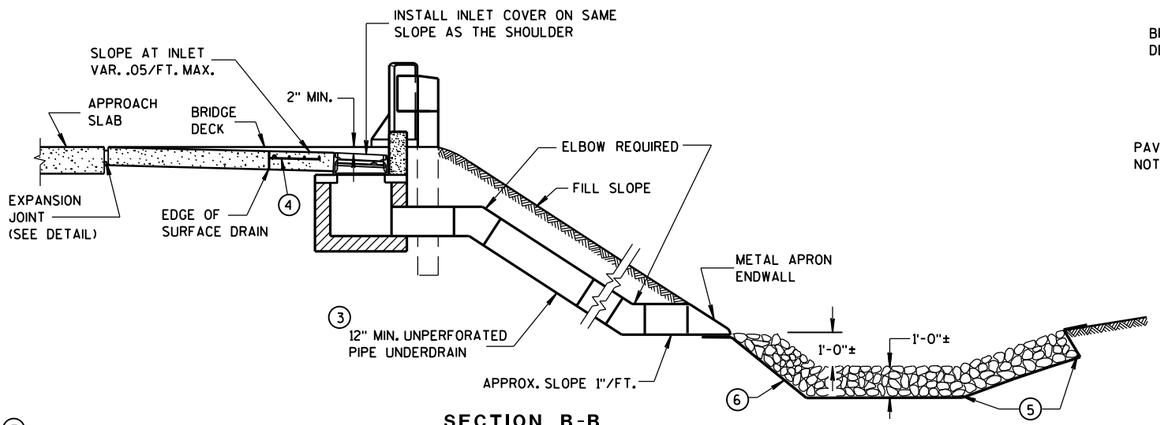

SECTION B-B

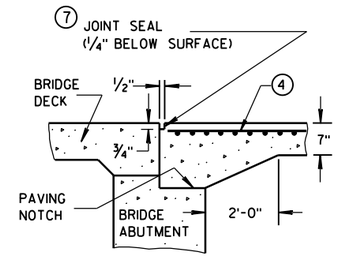

SECTION D-D

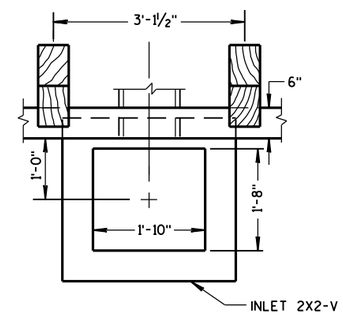

PLAN VIEW

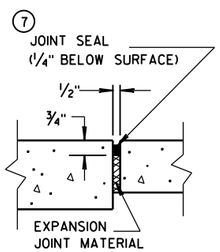

EXPANSION JOINT DETAIL

GENERAL NOTES

DETAILS OF CONSTRUCTION, MATERIALS, AND WORKMANSHIP NOT SHOWN ON THIS DRAWING SHALL CONFORM TO THE PERTINENT REQUIREMENTS OF THE STANDARD SPECIFICATIONS AND THE APPLICABLE SPECIAL PROVISIONS.

ALL STEEL REINFORCEMENT SHALL BE EMBEDDED 2 INCHES CLEAR UNLESS OTHERWISE SHOWN OR NOTED.

1. NO. 4 X 2'-0" TIE BARS SPACED AT 3'-0" CENTERS TO BE USED ONLY WHEN ADJACENT TO P.C. CONCRETE.
2. NO. 4 X 2'-0" TIE BARS SPACED AT 12" CENTERS TO BE PLACED BY BRIDGE CONTRACTOR, OR DRILLED TIE BARS PLACED AS DIRECTED BY THE ENGINEER.
3. THE PIPE UNDERDRAIN MAY BE ANY ONE OF THE SIX MATERIALS LISTED IN THE STANDARD SPECIFICATIONS SECTION 612.2 EXCEPT DRAIN TILE.
4. MINIMUM REINFORCEMENT SHALL BE 6" X 6" - W4.0 X W4.0 OR NO. 3 BARS LONGITUDINAL AND TRANSVERSE SPACING 12" C-C.
5. LIMITS OF ADDITIONAL RIPRAP WHEN SPECIAL DITCH IS REQUIRED.
6. GEOTEXTILE FABRIC.
7. HOT POURED SEALANT UNLESS OTHERWISE SPECIFIED.
8. THIS DIMENSION MAY VARY DEPENDING ON THE SPACING OF POSTS FOR THE STEEL PLATE BEAM GUARD. THE TYPICAL LOCATION FOR THE SURFACE DRAIN IS WHERE THE POST SPACING WIDENS TO 3'-1 1/2".
9. SEE CURRENT STANDARD DETAIL DRAWINGS 8A5 AND 8C7 FOR DETAILS.

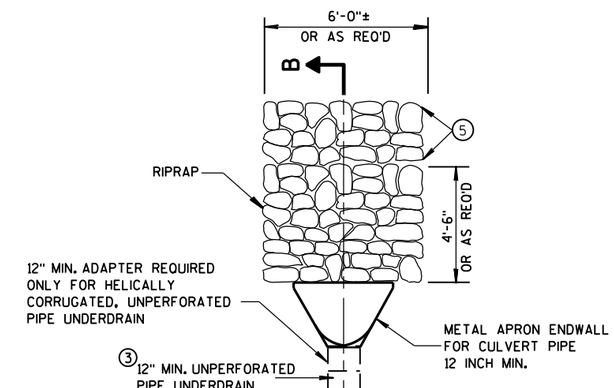

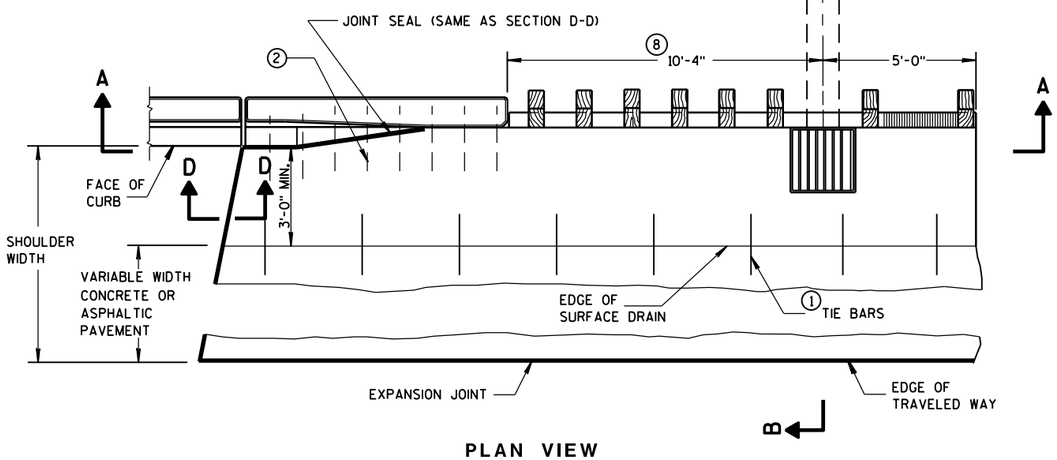

PLAN VIEW

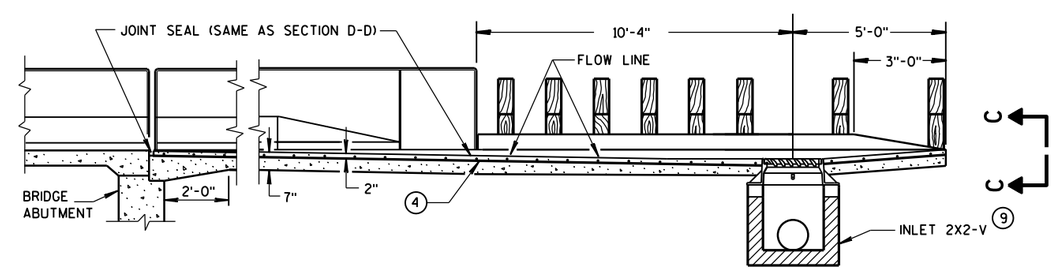

SECTION A-A

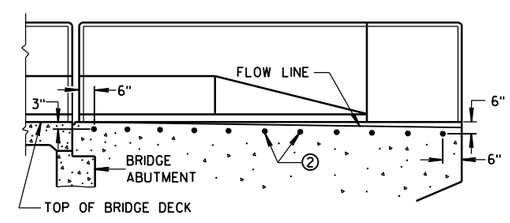

LOCATION OF TIE BARS IN WINGWALL

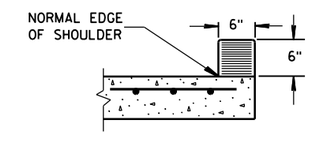

SECTION C-C

CONCRETE SURFACE DRAINS DROP INLET TYPE AT STRUCTURES	
STATE OF WISCONSIN DEPARTMENT OF TRANSPORTATION	
APPROVED June 2017 DATE	/S/ Rodney Taylor ROADWAY STANDARDS UNIT SUPERV... ...MENT
FHWA	

6

6

S.D.D. 8 D 3-7

S.D.D. 8 D 3-7

GENERAL NOTES

DETAILS OF CONSTRUCTION, MATERIALS AND WORKMANSHIP NOT SHOWN ON THIS DRAWING SHALL CONFORM TO PERTINENT REQUIREMENTS OF THE STANDARD SPECIFICATIONS AND APPLICABLE SPECIAL PROVISIONS.

WELDED STEEL WIRE FABRIC SHALL BE IN ACCORDANCE WITH AASHTO SPECIFICATION M55.

① JOINTS SHALL BE 1/8 TO 1/4 INCH WIDE BY 1 1/2 INCHES DEEP AND SPACED AT UNIFORM INTERVALS OF APPROXIMATELY 4 FEET.

② GEOTEXTILE FABRIC TYPE "R" SHALL UNDERLAY THE FULL LENGTH AND WIDTH OF THE CONCRETE SURFACE DRAIN AND RIPRAP.

③ CONCRETE SURFACE DRAIN WITHOUT CURB AND GUTTER MAY BE USED ON BACKSLOPES WHEN SPECIFIED

ASPHALTIC FLUME

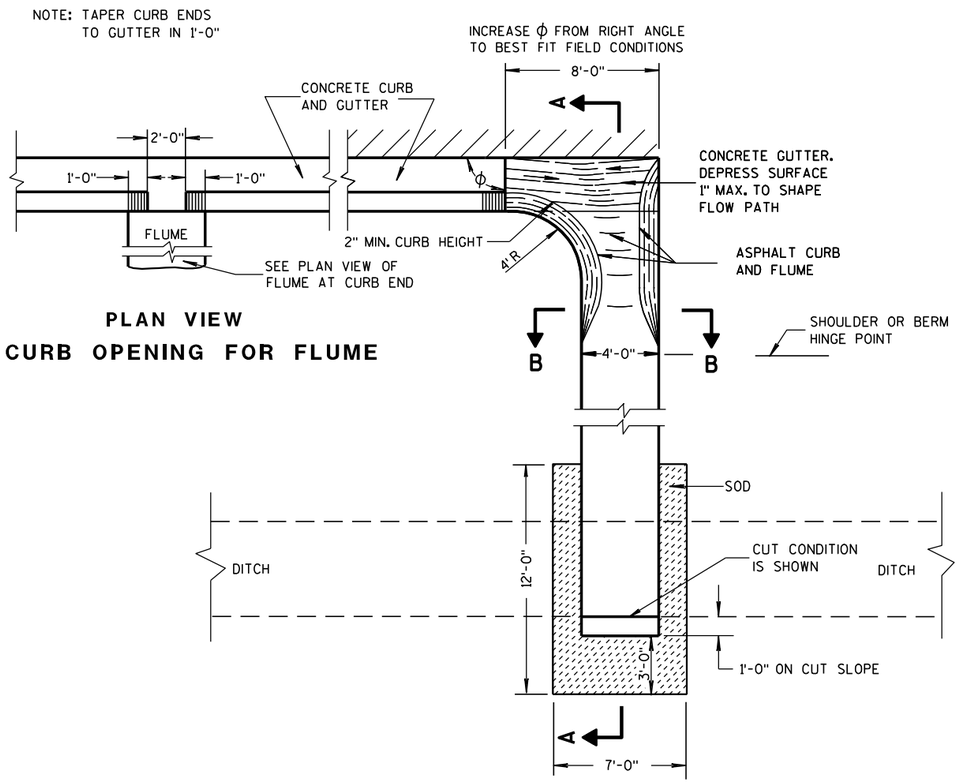

PLAN VIEW
CURB OPENING FOR FLUME

PLAN VIEW
FLUME AT CURB END

③ CONCRETE SURFACE DRAIN

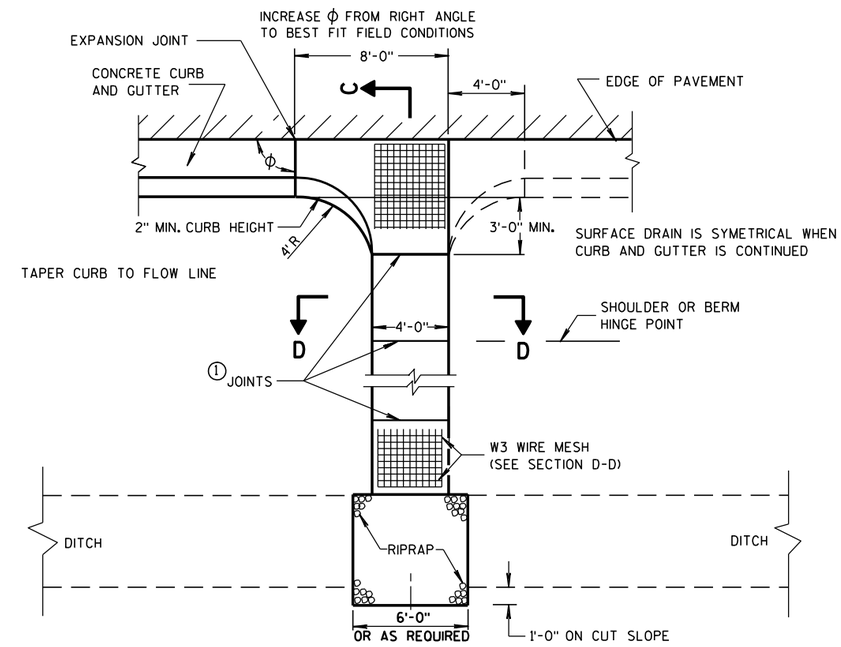

PLAN VIEW

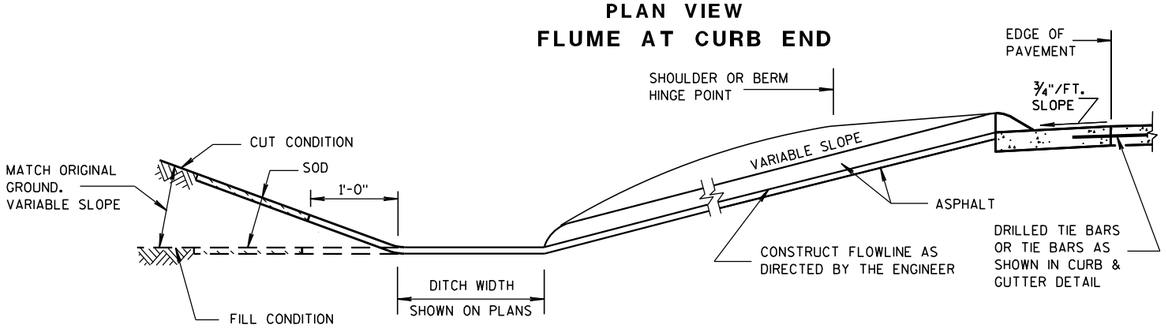

SECTION A-A

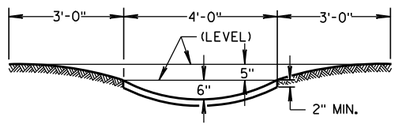

SECTION B-B

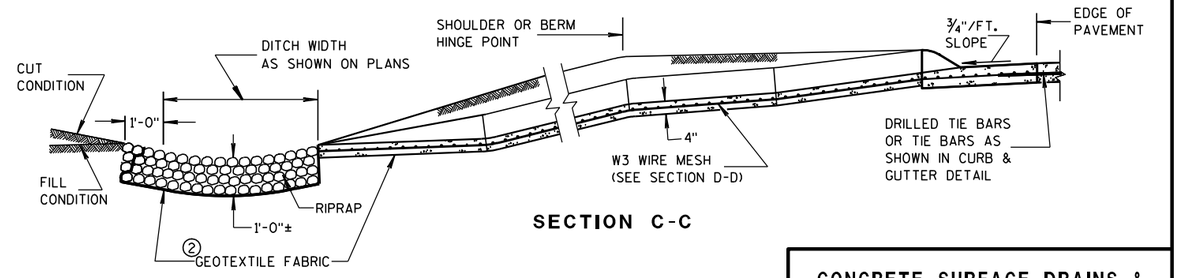

SECTION C-C

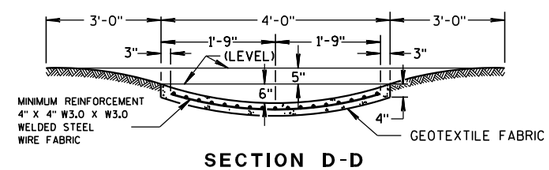

SECTION D-D

CONCRETE SURFACE DRAINS & ASPHALTIC FLUMES

STATE OF WISCONSIN
DEPARTMENT OF TRANSPORTATION

APPROVED
9-4-08 /S/ Jerry H. Zogg
DATE ROADWAY STANDARDS ENGINEER MENT
FHWA

6

S.D.D. 8 D 4-5

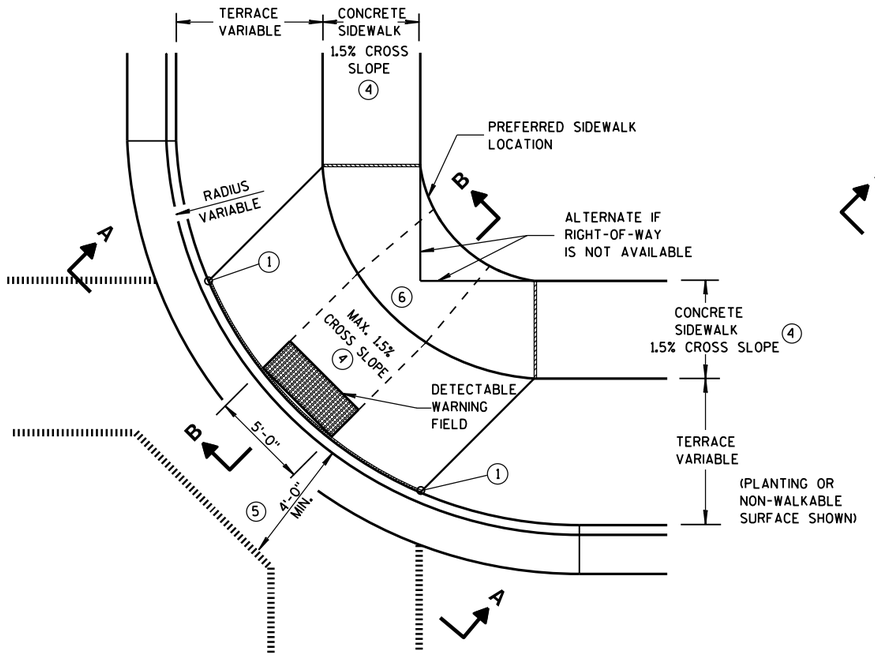

PLAN VIEW

TYPE 1 RAMP

(CENTER OF CORNER RADIUS)

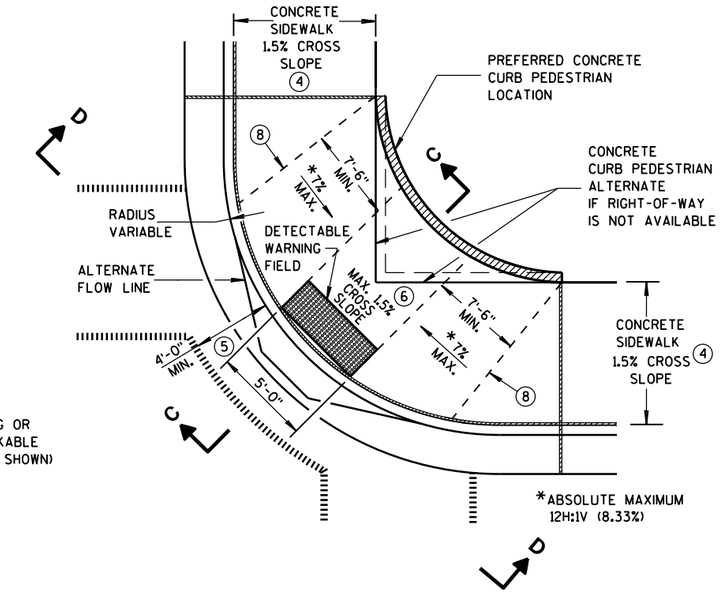

PLAN VIEW

TYPE 1-A RAMP

(NO TERRACE)

GENERAL NOTES

AVOID PLACING DRAINAGE STRUCTURES, JUNCTION BOXES OR OTHER OBSTRUCTIONS IN FRONT OF RAMP ACCESS AREAS.

DETAILS OF CONSTRUCTION, MATERIALS AND WORKMANSHIP NOT SHOWN ON THIS DRAWING SHALL CONFORM TO THE PERTINENT REQUIREMENTS OF THE STANDARD SPECIFICATIONS AND THE APPLICABLE SPECIAL PROVISIONS.

WHEN NECESSARY, THE SIDEWALK ELEVATION MAY BE LOWERED TO MEET THE HIGH POINT ON THE RAMP.

TYPE 1 RAMPS SHALL HAVE A NORMAL SIDEWALK APRON AND CURB ON BOTH SIDES OF RAMP.

DETECTABLE WARNING FIELD SHALL BE MEASURED AND PAID BY THE SQUARE FOOT AS "CURB RAMP DETECTABLE WARNING FIELD". THE CONCRETE PEDESTRIAN CURB, IF NEEDED, SHALL BE MEASURED AND PAID BY THE LINEAL FOOT AS "CONCRETE CURB PEDESTRIAN". CONCRETE SIDEWALK IN THE CURB RAMP AREA SHALL BE MEASURED AND PAID BY THE SQUARE FOOT AS CONCRETE SIDEWALK, INCLUDING THE AREA UNDER THE DETECTABLE WARNING FIELD.

SELECT CURB RAMP DETECTABLE WARNING FIELD MATERIALS AND DEVICES FROM THE DEPARTMENT'S APPROVED MATERIALS LIST. THE COLOR OF THE DETECTABLE WARNING FIELD IS SPECIFIED ELSEWHERE AND IS INCIDENTAL TO THE BID ITEM OF "CURB RAMP DETECTABLE WARNING FIELD".

DETECTABLE WARNING FIELDS THAT ARE INSTALLED AS A GROUP OR SIDE BY SIDE, SHALL BE FROM THE SAME MANUFACTURER.

SURFACE TEXTURE OF THE RAMP SHALL BE OBTAINED BY COARSE BROOMING TRANSVERSE TO THE SLOPE OF THE RAMP.

1. THIS POINT IS AN EXTENSION OF OUTSIDE EDGE OF APPROACHING SIDEWALK WHERE IT MEETS THE BACK OF CONCRETE CURB. POINT LOCATION MAY BE ADJUSTED TO ALIGN WITH BEGINNING OF FULL-HEIGHT CURB IF THIS DISTANCE IS SHORT.
2. GRADE CHANGE BETWEEN GUTTER FLAG SLOPE AND THE CURB RAMP SLOPE SHALL NOT EXCEED 11%. MAXIMUM GUTTER FLAG SLOPE IS 4%. PROVIDE LONGITUDINAL DRAINAGE AROUND CURB AND AWAY FROM CURB RAMP. NO VERTICAL LIPS OR DISCONTINUITIES GREATER THAN 1/4-INCH ARE ALLOWED. SLOPE OF CURB HEAD OPENING SHALL MATCH THE RAMP SLOPE, MINIMALLY 1.5% AND NOT TO EXCEED 7%. WHEN ADJACENT TO 1.5% LANDING, CONSTRUCT CURB HEAD OPENING AT 1.5% IN THE DIRECTION OF PEDESTRIAN TRAVEL.
3. ABSOLUTE MAXIMUM 12H:1V (8.33%) CURB RAMP SLOPE IS ALLOWABLE WITH FLATTENED GUTTER FLAG SLOPE AND NOT TO EXCEED 11% GRADE CHANGE.
4. ±0.5% CONSTRUCTION TOLERANCE IN SIDEWALK CROSS SLOPE. THE SIDEWALK CROSS SLOPE SHALL NOT EXCEED 2% WITHOUT PRIOR APPROVAL FROM THE ENGINEER.
5. PROVIDE A LEVEL LANDING IN THE STREET AND GUTTER AREA. (2% MAXIMUM SLOPE IN ANY DIRECTION). WHEN THE GUTTER SLOPE EXCEEDS 2%, CONSTRUCT THE LEVEL LANDING IN THE STREET AREA.
6. PROVIDE A LEVEL LANDING (MAXIMUM 2% SLOPE) IN ANY DIRECTION OF PEDESTRIAN TRAVEL. STANDARD LANDING SIZE IS 5 FEET X 5 FEET.
8. **PROVIDE GRADE BREAK PERPENDICULAR TO DIRECTION OF WHEELCHAIR TRAVEL.**

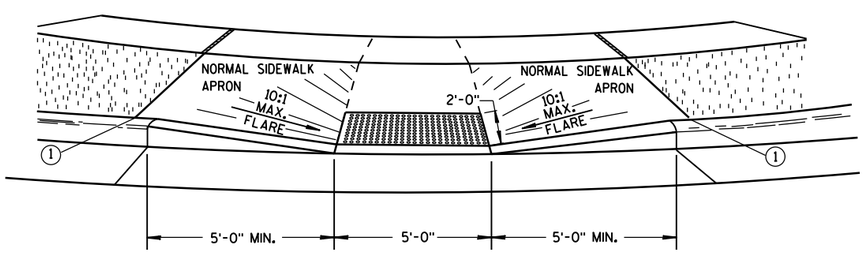

VIEW A-A

** WIDTH SHOWN ELSEWHERE IN THE PLANS

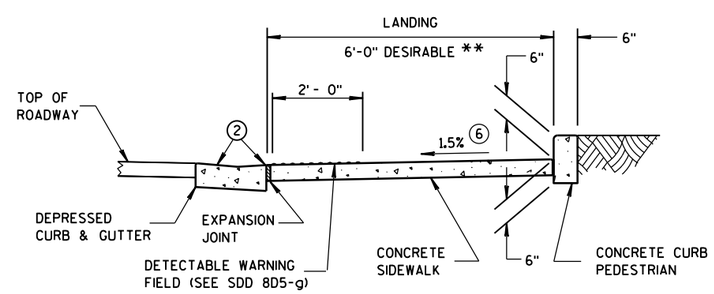

SECTION C-C

LEGEND

- ½" EXPANSION JOINT-SIDEWALK
- CONTRACTION JOINT FIELD LOCATED
- PAVEMENT MARKING CROSSWALK (WHITE)
- ALTERNATIVE LAYOUT

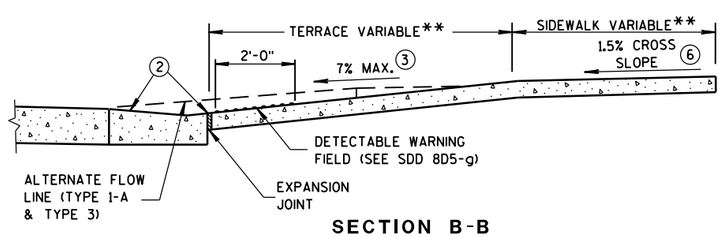

SECTION B-B

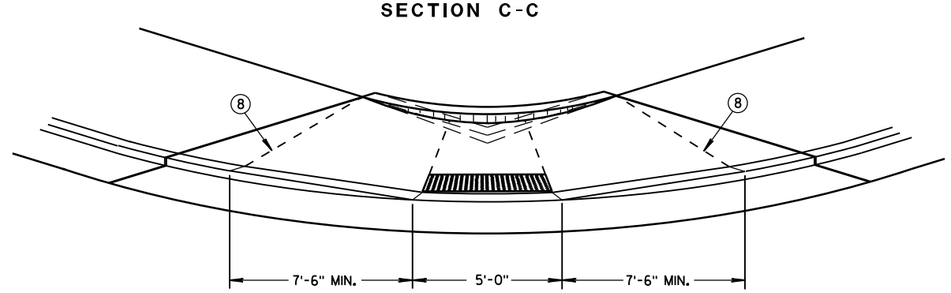

VIEW D-D

CURB RAMPS
TYPES 1 AND 1-A

STATE OF WISCONSIN
DEPARTMENT OF TRANSPORTATION

6

S.D.D. 8 D 5-19a

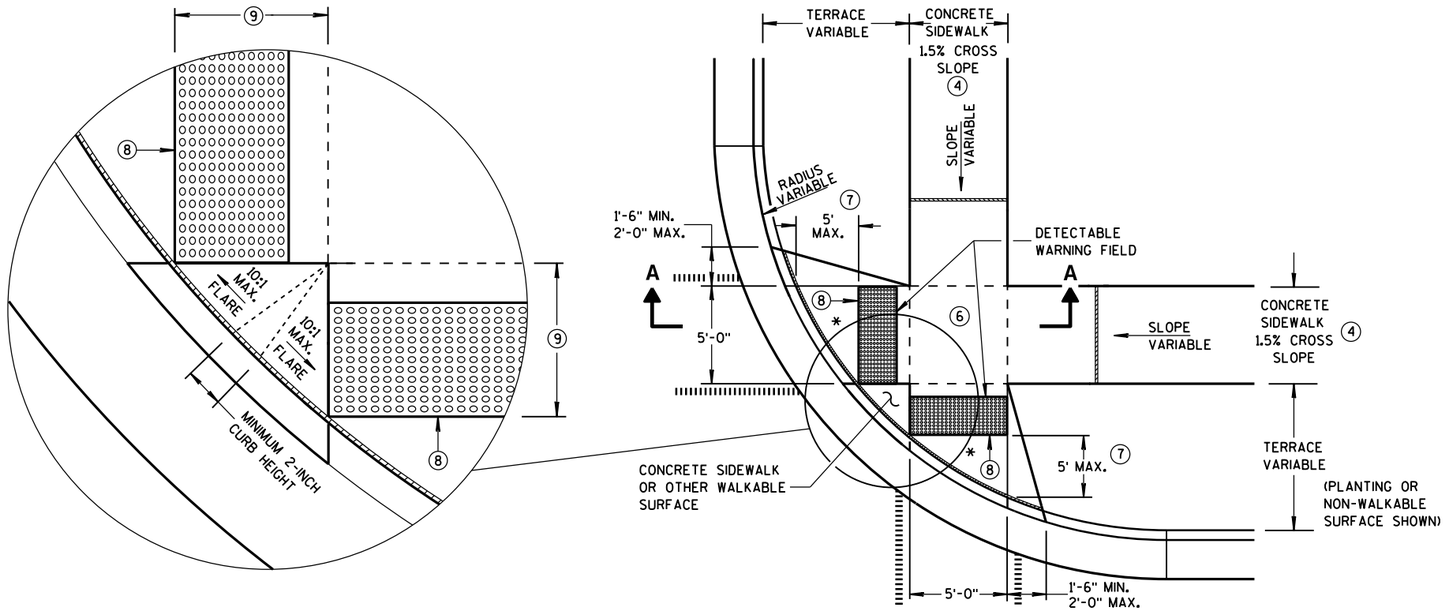

PLAN VIEW
TYPE 2 RAMP
(ON LINE WITH SIDEWALK)

GENERAL NOTES

AVOID PLACING DRAINAGE STRUCTURES, JUNCTION BOXES OR OTHER OBSTRUCTIONS IN FRONT OF RAMP ACCESS AREAS.

DETECTABLE WARNING FIELDS THAT ARE INSTALLED AS A GROUP OR SIDE BY SIDE, SHALL BE FROM THE SAME MANUFACTURER.

(2) GRADE CHANGE BETWEEN GUTTER FLAG SLOPE AND THE CURB RAMP SLOPE SHALL NOT EXCEED 11%. MAXIMUM GUTTER FLAG SLOPE IS 4%. PROVIDE LONGITUDINAL DRAINAGE AROUND CURB AND AWAY FROM CURB RAMP. NO VERTICAL LIPS OR DISCONTINUITIES GREATER THAN 1/4-INCH ARE ALLOWED. SLOPE OF CURB HEAD OPENING SHALL MATCH THE RAMP SLOPE, MINIMALLY 1.5% AND NOT TO EXCEED 7%. WHEN ADJACENT TO 1.5% LANDING, CONSTRUCT CURB HEAD OPENING AT 1.5% IN THE DIRECTION OF PEDESTRIAN TRAVEL.

(3) ABSOLUTE MAXIMUM 12H:1V (8.33%) CURB RAMP SLOPE IS ALLOWABLE WITH FLATTENED GUTTER FLAG SLOPE AND NOT TO EXCEED 11% GRADE CHANGE.

(4) ±0.5% CONSTRUCTION TOLERANCE IN SIDEWALK CROSS SLOPE. THE SIDEWALK CROSS SLOPE SHALL NOT EXCEED 2% WITHOUT PRIOR APPROVAL FROM THE ENGINEER.

(6) PROVIDE A LEVEL LANDING (MAXIMUM 2% SLOPE) IN ANY DIRECTION OF PEDESTRIAN TRAVEL. STANDARD LANDING SIZE IS 5 FEET X 5 FEET.

(7) WHEN THIS GRADE BREAK DISTANCE EXCEEDS 5 FEET, USE RADIAL DETECTABLE WARNING FIELD PER SDD 8D5-f.

(8) PROVIDE GRADE BREAK PERPENDICULAR TO DIRECTION OF WHEELCHAIR TRAVEL.

(9) WHEN THIS DISTANCE IS LESS THAN 6'-0", IT MAY BE DIFFICULT TO ACHIEVE A 7% SLOPE OR FLATTER ALONG THE RAMP. REDUCE CURB HEIGHT IN TRIANGLE AREA TO ACHIEVE 7% SLOPE OR FLATTER ON RAMP. CONSTRUCT 2-INCH MINIMUM CURB HEIGHT BETWEEN 10:1 FLARES.

LEGEND

- 1/2" EXPANSION JOINT-SIDEWALK
- CONTRACTION JOINT FIELD LOCATED
- PAVEMENT MARKING CROSSWALK (WHITE)
- ALTERNATIVE LAYOUT

* MAXIMUM 2.0% SLOPE IN ALL DIRECTIONS IN FRONT OF GRADE BREAK

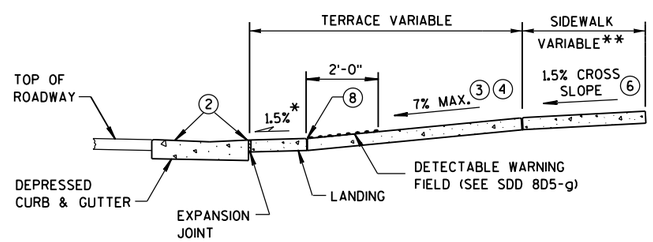

SECTION A-A

** WIDTH SHOWN ELSEWHERE IN THE PLANS

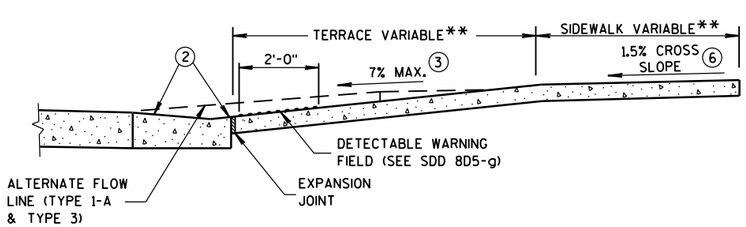

SECTION B-B

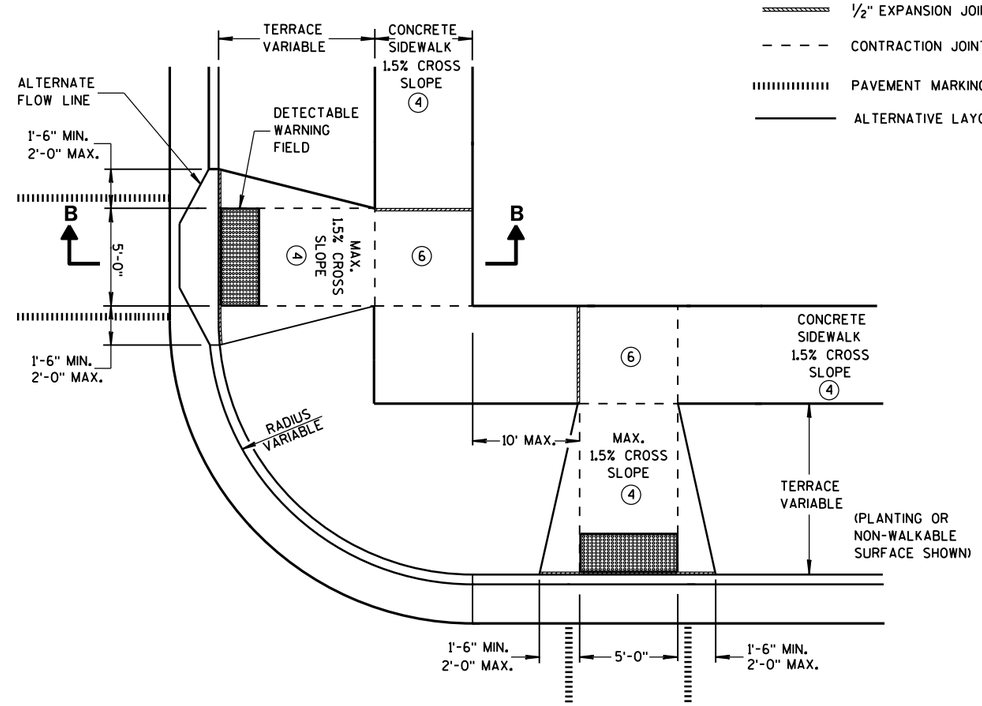

PLAN VIEW
TYPE 3 RAMP
(OUTSIDE OF CROSSWALK AREA)

CURB RAMPS TYPES 2 AND 3

STATE OF WISCONSIN
DEPARTMENT OF TRANSPO

6

S.D.D. 8 D 5-19b

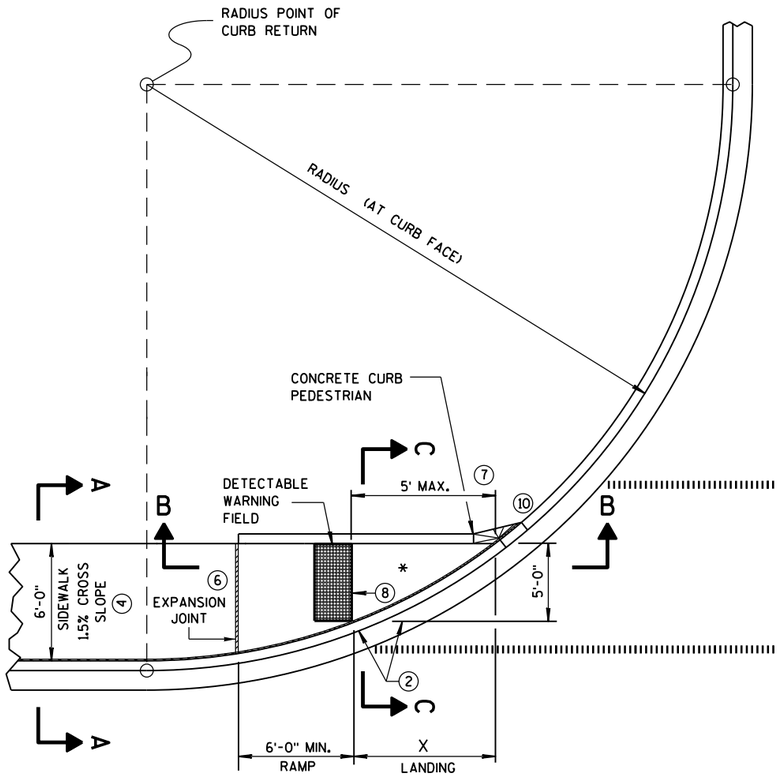

CURB RAMP TYPE 4A
PLAN VIEW

RADIUS (AT CURB FACE)	X
10 FEET	4'-7"
15 FEET	6'-5½"

INTERMEDIATE RADII CAN BE INTERPOLATED

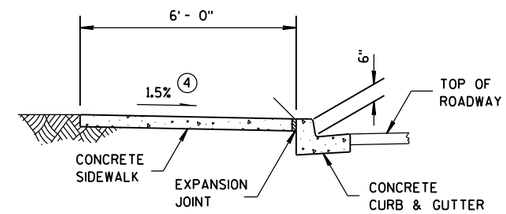

SECTION A-A FOR TYPE 4A

GENERAL NOTES

AVOID PLACING DRAINAGE STRUCTURES, JUNCTION BOXES OR OTHER OBSTRUCTIONS IN FRONT OF RAMP ACCESS AREAS.

DETECTABLE WARNING FIELDS THAT ARE INSTALLED AS A GROUP OR SIDE BY SIDE, SHALL BE FROM THE SAME MANUFACTURER.

(2) GRADE CHANGE BETWEEN GUTTER FLAG SLOPE AND THE CURB RAMP SLOPE SHALL NOT EXCEED 11%. MAXIMUM GUTTER FLAG SLOPE IS 4%. PROVIDE LONGITUDINAL DRAINAGE AROUND CURB AND AWAY FROM CURB RAMP. NO VERTICAL LIPS OR DISCONTINUITIES GREATER THAN ¼-INCH ARE ALLOWED. SLOPE OF CURB HEAD OPENING SHALL MATCH THE RAMP SLOPE, MINIMALLY 1.5% AND NOT TO EXCEED 7%. WHEN ADJACENT TO 1.5% LANDING, CONSTRUCT CURB HEAD OPENING AT 1.5% IN THE DIRECTION OF PEDESTRIAN TRAVEL.

(3) ABSOLUTE MAXIMUM 12H:1V (8.33%) CURB RAMP SLOPE IS ALLOWABLE WITH FLATTENED GUTTER FLAG SLOPE AND NOT TO EXCEED 11% GRADE CHANGE.

(4) ±0.5% CONSTRUCTION TOLERANCE IN SIDEWALK CROSS SLOPE. THE SIDEWALK CROSS SLOPE SHALL NOT EXCEED 2% WITHOUT PRIOR APPROVAL FROM THE ENGINEER.

(6) PROVIDE A LEVEL LANDING (MAXIMUM 2% SLOPE) IN ANY DIRECTION OF PEDESTRIAN TRAVEL. STANDARD LANDING SIZE IS 5 FEET X 5 FEET.

(7) WHEN THIS GRADE BREAK DISTANCE EXCEEDS 5 FEET, USE RADIAL DETECTABLE WARNING FIELD PER SDD 8D5-f.

(8) PROVIDE GRADE BREAK PERPENDICULAR TO DIRECTION OF WHEELCHAIR TRAVEL.

(10) INSTALL TRANSITION NOSE. (INCIDENTAL TO OTHER PAY ITEMS). DO NOT MARK TRANSITION NOSE.

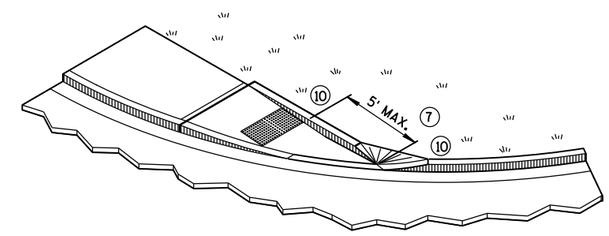

ISOMETRIC VIEW FOR TYPE 4A

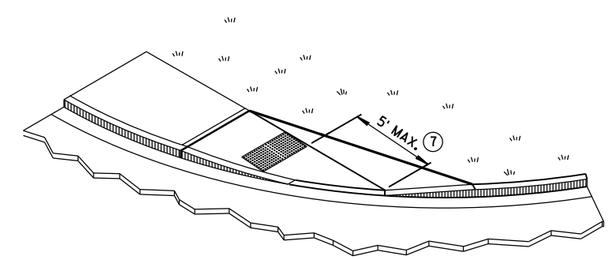

ISOMETRIC VIEW FOR TYPE 4A1

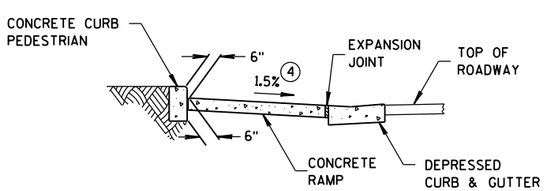

SECTION C-C FOR TYPE 4A

* MAXIMUM 2.0% SLOPE IN ALL DIRECTIONS IN FRONT OF GRADE BREAK

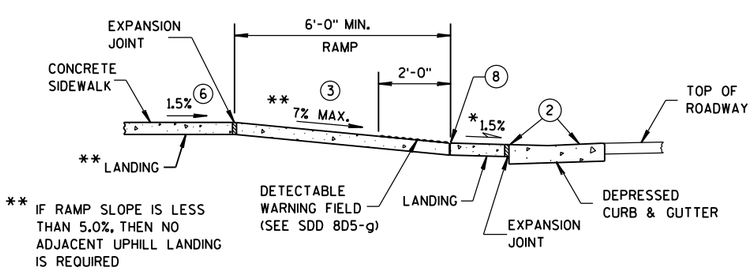

** IF RAMP SLOPE IS LESS THAN 5.0%, THEN NO ADJACENT UPHILL LANDING IS REQUIRED

SECTION B-B FOR TYPE 4A

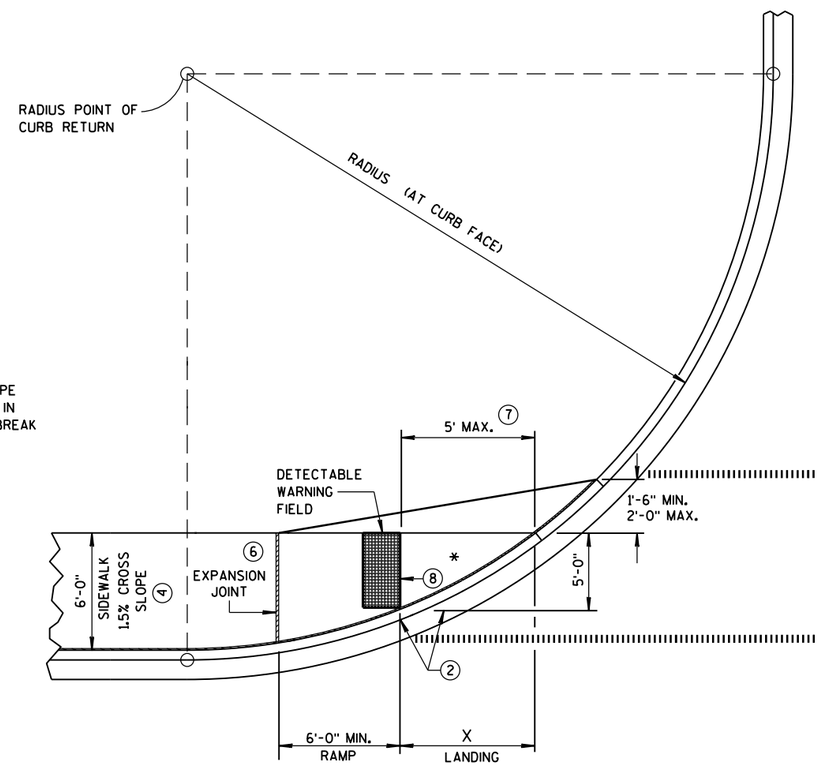

CURB RAMP TYPE 4A1
PLAN VIEW

LEGEND

½" EXPANSION JOINT-SIDEWALK

CONTRACTION JOINT FIELD LOCATED

PAVEMENT MARKING CROSSWALK (WHITE)

CURB RAMPS
TYPES 4A AND 4A1

STATE OF WISCONSIN
DEPARTMENT OF TRANSPO

6

S.D.D. 8 D 5-19c

RADIUS (AT CURB FACE)	W = 3' - 0"		W = 4' - 0"		W = 5' - 0"		W = 6' - 0"		W = 7' - 0"		W = 8' - 0"		W = 9' - 0"		W = 10' - 0"	
	X	Y	X	Y	X	Y	X	Y	X	Y	X	Y	X	Y	X	Y
10 FEET	2'-10¼"	0'-5"	2'-1"	1'-4½"	1'-5"	2'-1"	0'-10"	2'-7½"	0'-3¼"	3'-0¼"						
15 FEET	4'-6¾"	2'-1¾"	3'-9"	3'-5¼"	3'-1¼"	4'-6"	2'-6¾"	5'-4½"	2'-1"	6'-1"	1'-8"	6'-8½"	1'-3¼"	7'-2½"	0'-10¾"	7'-7¼"
20 FEET	5'-9¾"	3'-6½"	4'-11½"	5'-1¾"	4'-3¼"	6'-5½"	3'-8¾"	7'-7"	3'-3"	8'-6½"	2'-10"	9'-4½"	2'-5½"	10'-1¼"	2'-1¼"	10'-9"
30 FEET			6'-9¼"	7'-11¼"	6'-0¼"	9'-8"	5'-5"	11'-1¾"	4'-10¾"	12'-5¾"	4'-5½"	13'-7¾"	4'-0¾"	14'-8½"	3'-8½"	15'-8¼"
40 FEET									6'-1¾"	15'-8½"	5'-8"	17'-2"	5'-3"	18'-5¾"	4'-10¾"	19'-8¼"
50 FEET															5'-10¼"	23'-2"

INTERMEDIATE RADII CAN BE INTERPOLATED
DIMENSION "Y" IS CALCULATED BASED ON 6'-0" RAMP LENGTH
DIMENSION "X" IS CALCULATED BASED ON 5'-0" SIDEWALK WIDTH

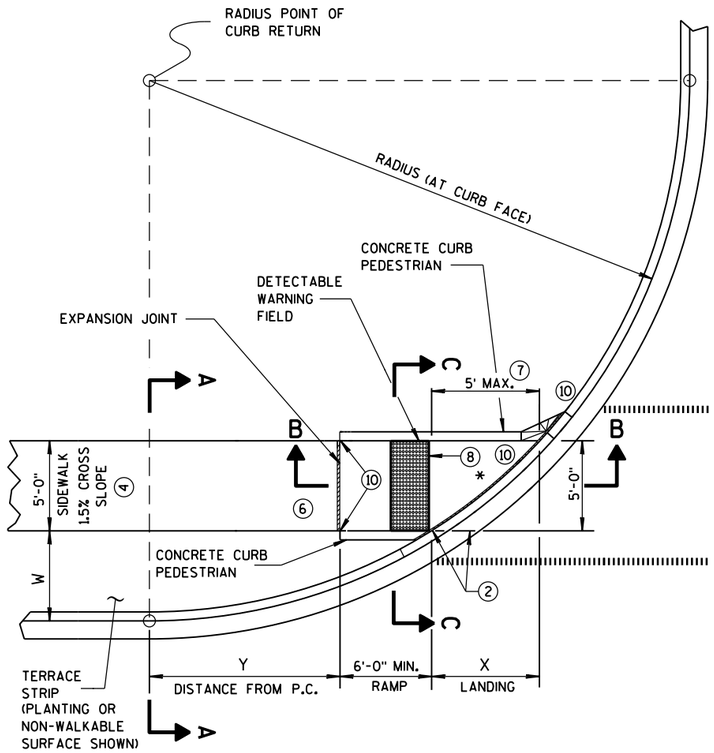

CURB RAMP TYPE 4B
PLAN VIEW

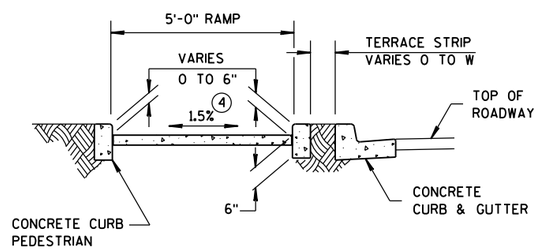

SECTION C-C FOR TYPE 4B

GENERAL NOTES

AVOID PLACING DRAINAGE STRUCTURES, JUNCTION BOXES OR OTHER OBSTRUCTIONS IN FRONT OF RAMP ACCESS AREAS.

DETECTABLE WARNING FIELDS THAT ARE INSTALLED AS A GROUP OR SIDE BY SIDE, SHALL BE FROM THE SAME MANUFACTURER.

(2) GRADE CHANGE BETWEEN GUTTER FLAG SLOPE AND THE CURB RAMP SLOPE SHALL NOT EXCEED 11%. MAXIMUM GUTTER FLAG SLOPE IS 4%. PROVIDE LONGITUDINAL DRAINAGE AROUND CURB AND AWAY FROM CURB RAMP. NO VERTICAL LIPS OR DISCONTINUITIES GREATER THAN ¼-INCH ARE ALLOWED. SLOPE OF CURB HEAD OPENING SHALL MATCH THE RAMP SLOPE, MINIMALLY 1.5% AND NOT TO EXCEED 7%. WHEN ADJACENT TO 1.5% LANDING, CONSTRUCT CURB HEAD OPENING AT 1.5% IN THE DIRECTION OF PEDESTRIAN TRAVEL.

(3) ABSOLUTE MAXIMUM 12H:1V (8.33%) CURB RAMP SLOPE IS ALLOWABLE WITH FLATTENED GUTTER FLAG SLOPE AND NOT TO EXCEED 11% GRADE CHANGE.

(4) ±0.5% CONSTRUCTION TOLERANCE IN SIDEWALK CROSS SLOPE. THE SIDEWALK CROSS SLOPE SHALL NOT EXCEED 2% WITHOUT PRIOR APPROVAL FROM THE ENGINEER.

(6) PROVIDE A LEVEL LANDING (MAXIMUM 2% SLOPE) IN ANY DIRECTION OF PEDESTRIAN TRAVEL. STANDARD LANDING SIZE IS 5 FEET X 5 FEET.

(7) WHEN THIS GRADE BREAK DISTANCE EXCEEDS 5 FEET, USE RADIAL DETECTABLE WARNING FIELD PER SDD 8D5-f.

(8) PROVIDE GRADE BREAK PERPENDICULAR TO DIRECTION OF WHEELCHAIR TRAVEL.

(10) INSTALL TRANSITION NOSE. (INCIDENTAL TO OTHER PAY ITEMS). DO NOT MARK TRANSITION NOSE.

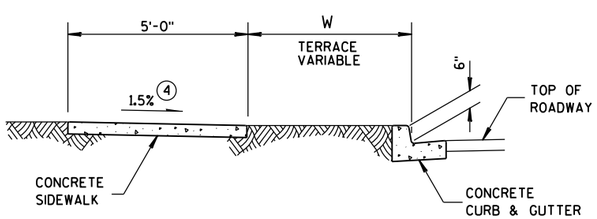

SECTION A-A FOR TYPE 4B

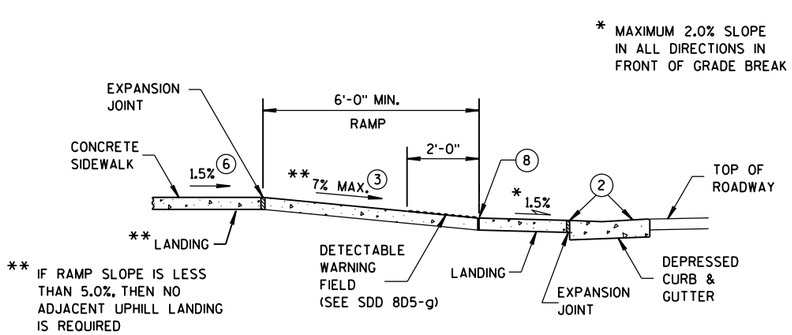

SECTION B-B FOR TYPE 4B

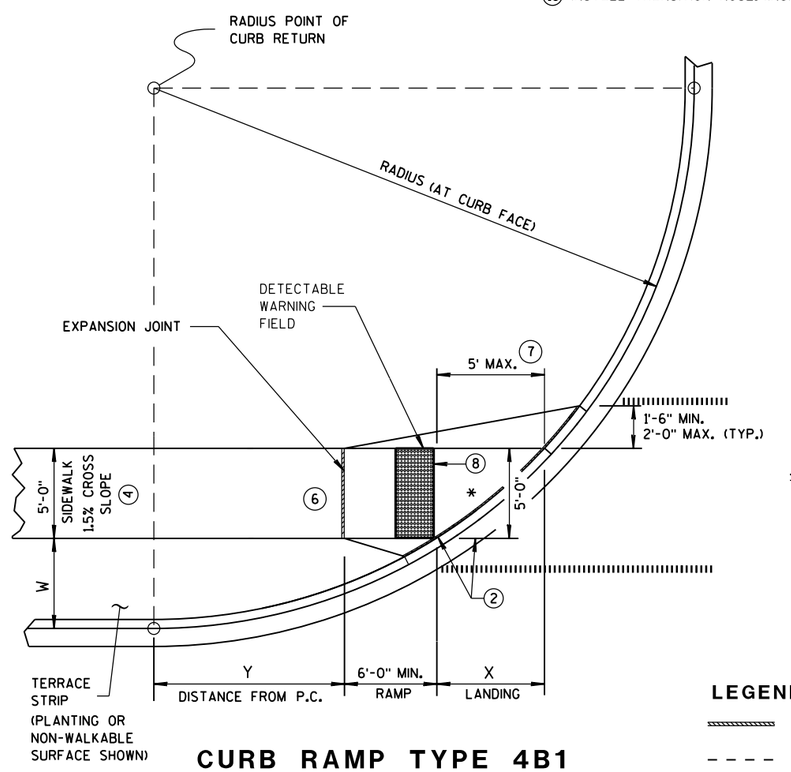

CURB RAMP TYPE 4B1
PLAN VIEW

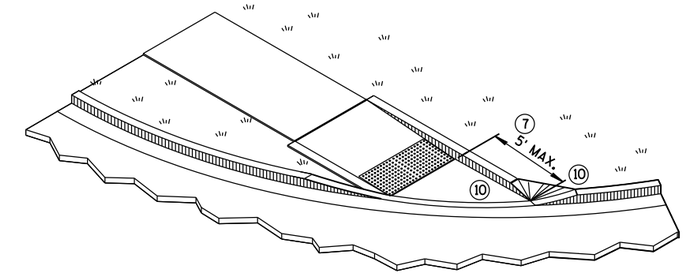

ISOMETRIC VIEW FOR TYPE 4B

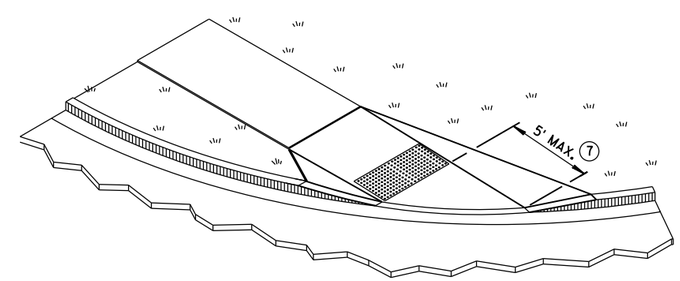

ISOMETRIC VIEW FOR TYPE 4B1

LEGEND

- ½" EXPANSION JOINT-SIDEWALK
- CONTRACTION JOINT FIELD LOCATED
- PAVEMENT MARKING CROSSWALK (WHITE)

CURB RAMPS
TYPE 4B AND 4B1

STATE OF WISCONSIN
DEPARTMENT OF TRANSPO

6

S.D.D. 8 D 5-19d

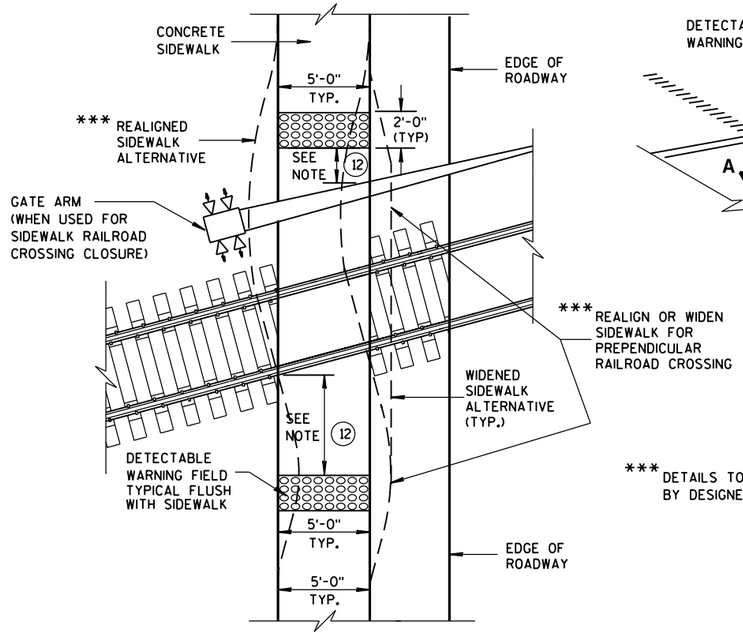

TYPE 8
DETECTABLE WARNINGS AT RAILROAD CROSSING

*** DETAILS TO BE DETERMINED BY DESIGNER

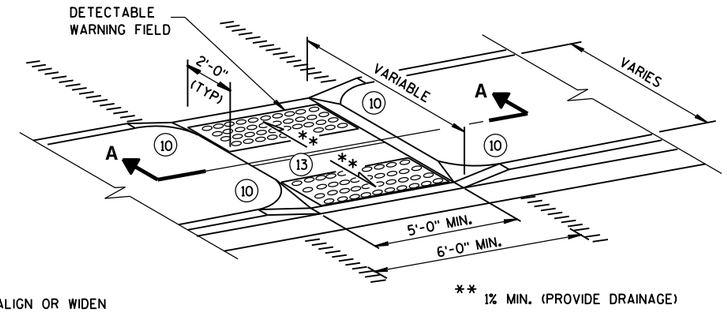

MEDIAN ISLAND
NON-ELEVATED PEDESTRIAN CROSSING
TYPE 5

GENERAL NOTES

AVOID PLACING DRAINAGE STRUCTURES, JUNCTION BOXES OR OTHER OBSTRUCTIONS IN FRONT OF RAMP ACCESS AREAS.

SIDEWALK CROSS SLOPE SHALL NOT EXCEED 2%.

DETECTABLE WARNING FIELDS THAT ARE INSTALLED AS A GROUP OR SIDE BY SIDE, SHALL BE FROM THE SAME MANUFACTURER.

(2) GRADE CHANGE BETWEEN GUTTER FLAG SLOPE AND THE CURB RAMP SLOPE SHALL NOT EXCEED 11%. MAXIMUM GUTTER FLAG SLOPE IS 4%. PROVIDE LONGITUDINAL DRAINAGE AROUND CURB AND AWAY FROM CURB RAMP. NO VERTICAL LIPS OR DISCONTINUITIES GREATER THAN 1/4-INCH ARE ALLOWED. SLOPE OF CURB HEAD OPENING SHALL MATCH THE RAMP SLOPE, MINIMALLY 1.5% AND NOT TO EXCEED 7%. WHEN ADJACENT TO 1.5% LANDING, CONSTRUCT CURB HEAD OPENING AT 1.5% IN THE DIRECTION OF PEDESTRIAN TRAVEL.

(3) ABSOLUTE MAXIMUM 12H:1V (8.33%) CURB RAMP SLOPE IS ALLOWABLE WITH FLATTENED GUTTER FLAG SLOPE AND NOT TO EXCEED 11% GRADE CHANGE.

(4) ±0.5% CONSTRUCTION TOLERANCE IN SIDEWALK CROSS SLOPE. THE SIDEWALK CROSS SLOPE SHALL NOT EXCEED 2% WITHOUT PRIOR APPROVAL FROM THE ENGINEER.

(6) PROVIDE A LEVEL LANDING (MAXIMUM 2% SLOPE) IN ANY DIRECTION OF PEDESTRIAN TRAVEL. STANDARD LANDING SIZE IS 5 FEET X 5 FEET.

(10) INSTALL TRANSITION NOSE. (INCIDENTAL TO OTHER PAY ITEMS). DO NOT MARK TRANSITION NOSE.

(11) SLOPE SIDEWALK TOWARD LANDING AS SHOWN WHERE THERE IS NO TERRACE OR WHERE THE TERRACE WIDTH IS LESS THAN 6 FEET WIDE.

(12) THE EDGE OF THE DETECTABLE WARNING FIELD NEAREST TO A RAILROAD CROSSING SHALL BE 1.5 FEET ± 0.1' FROM THE FACE OF THE GATE ARM IF THE GATE ARM EXTENDS ACROSS THE SIDEWALK. WHERE THERE IS NO PEDESTRIAN GATE, THE EDGE OF THE DETECTABLE WARNING FIELD NEAREST TO THE RAILROAD CROSSING SHALL BE 15 FEET FROM THE NEAREST RAIL.

(13) DO NOT INSTALL DETECTABLE WARNING FIELDS AT THE EDGES OF STREET-LEVEL PEDESTRIAN REFUGE ISLANDS IF A MINIMUM 2-FOOT CONCRETE SURFACE WITHOUT DETECTABLE WARNINGS (MEASURED IN THE DIRECTION OF PEDESTRIAN TRAVEL) CANNOT BE ACHIEVED.

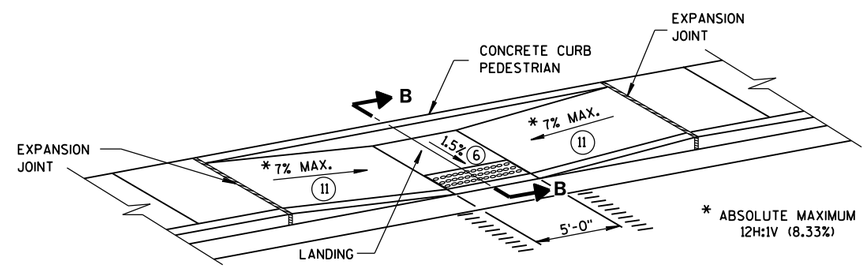

MID-BLOCK CROSSING
TYPE 7A

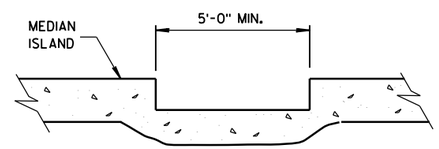

SECTION A-A

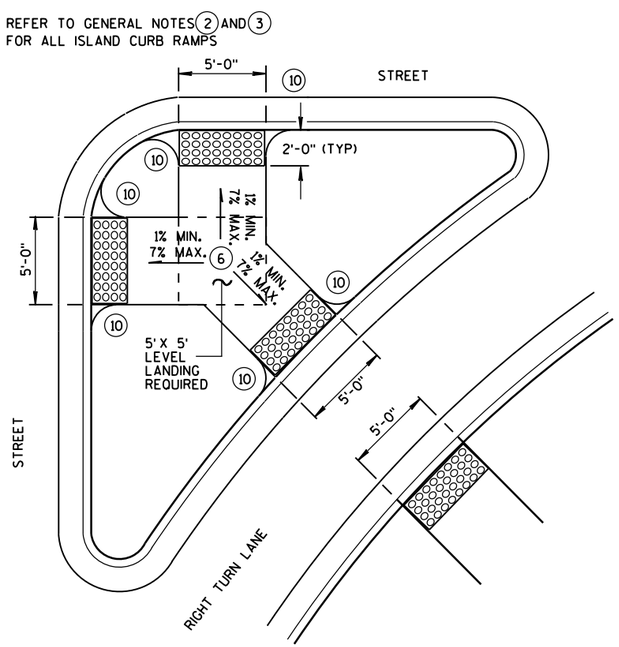

TYPE 6
DETECTABLE WARNING AT ISLANDS

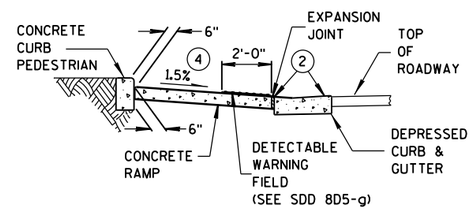

SECTION B-B

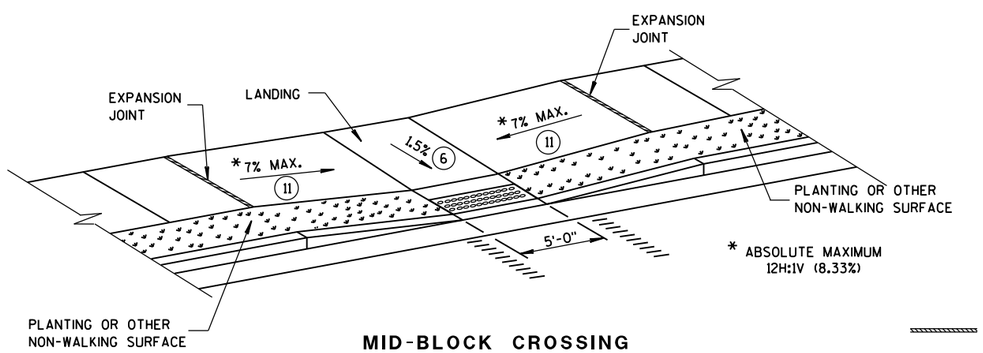

MID-BLOCK CROSSING
TYPE 7B

NOTE: THESE PARALLEL AND PARALLEL/PERPENDICULAR CURB RAMPS MAY BE USED AT INTERSECTIONS AND MID BLOCK LOCATIONS.

LEGEND

- ½" EXPANSION JOINT-SIDEWALK
- CONTRACTION JOINT FIELD LOCATED
- PAVEMENT MARKING CROSSWALK (WHITE)

CURB RAMPS
TYPES 5, 6, 7A, 7B & 8

STATE OF WISCONSIN
DEPARTMENT OF TRANSPOI

6

S.D.D. 8 D 5-19e

W MIN. = 16'
W MAX. = 24'

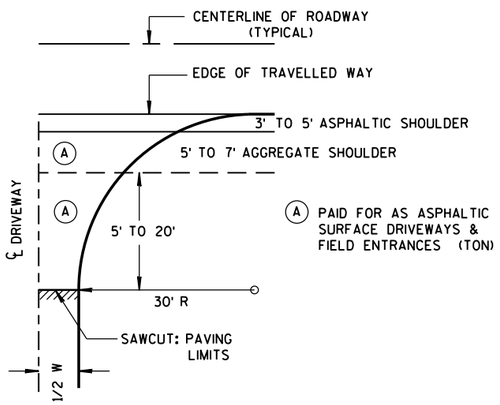

PLAN VIEW
HALF SECTION

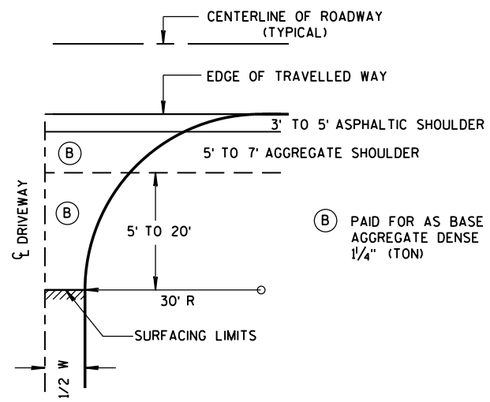

PLAN VIEW
HALF SECTION

GENERAL NOTES

1. DESIGN WILL DETERMINE FINAL DRIVEWAY ASPHALTIC THICKNESS BASED ON TYPE OF USAGE AND LOADINGS.

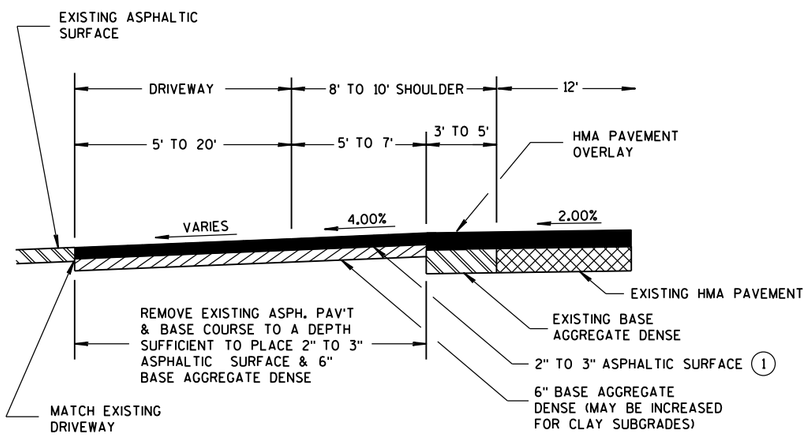

PROFILE VIEW

RURAL ENTRANCE WITH ASPHALTIC SURFACE

RESURFACING PROJECTS

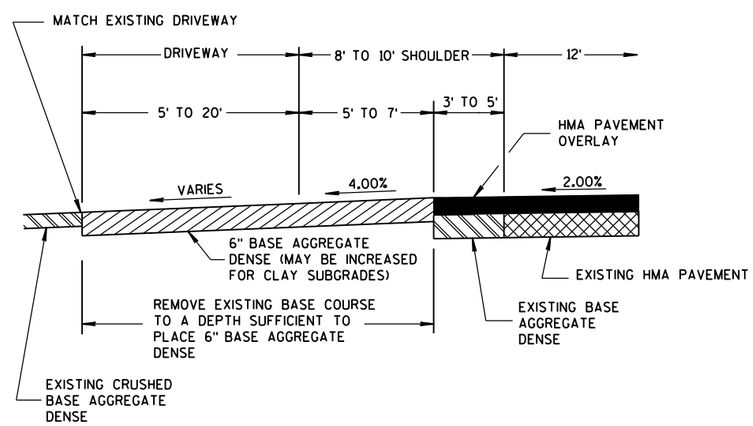

PROFILE VIEW

RURAL ENTRANCE WITH AGGREGATE SURFACE

6" BASE AGGREGATE DENSE
RESURFACING PROJECTS

6

6

S.D.D. 8 D 22-1

S.D.D. 8 D 22-1

DRIVEWAYS WITHOUT CURB & GUTTER RESURFACING PROJECTS RURAL

STATE OF WISCONSIN
DEPARTMENT OF TRANSPORTATION

APPROVED
December, 2016 /S/ Rodney Taylor
DATE ROADWAY STANDARDS UNIT SUPERV ENT
FHWA

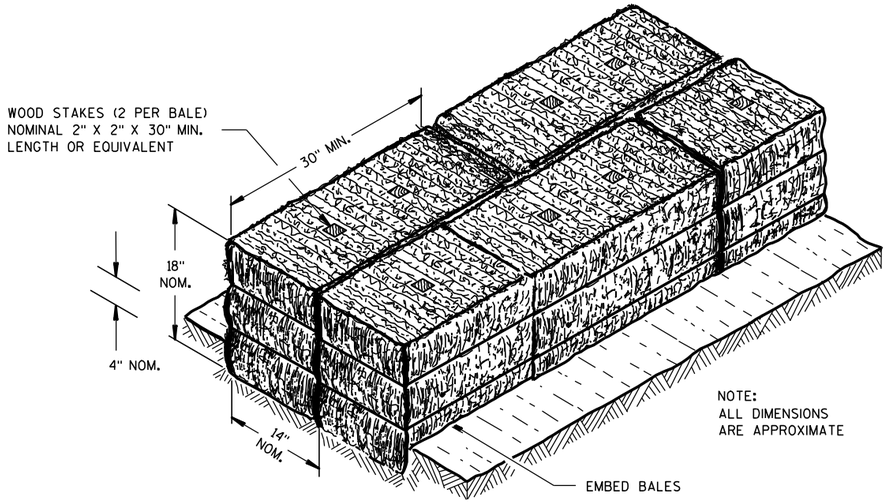

SECTION A-A

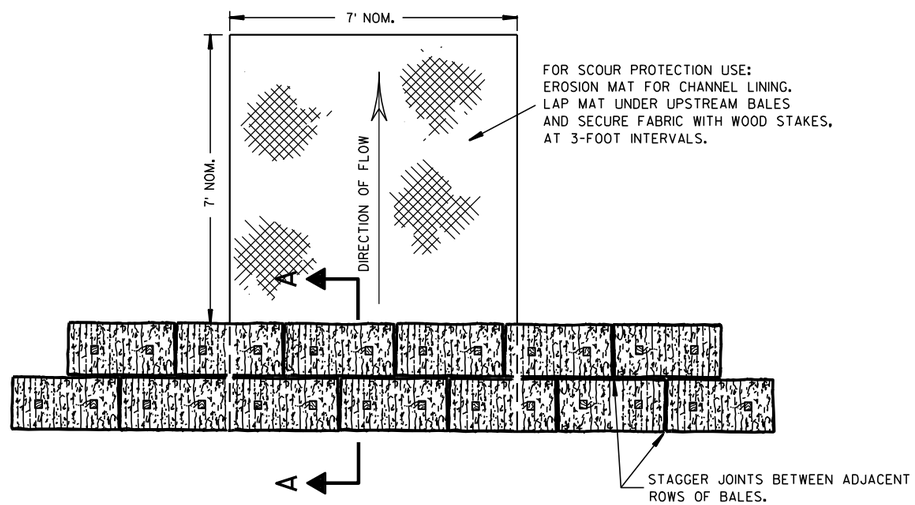

PLAN VIEW

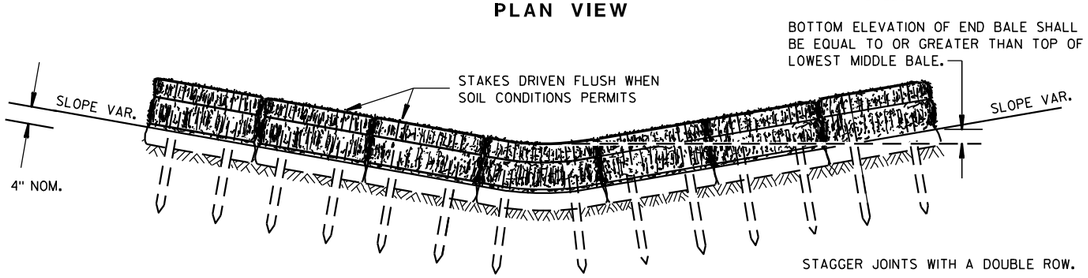

FRONT ELEVATION

TEMPORARY DITCH CHECK USING EROSION BALES ①

GENERAL NOTES

DETAILS OF CONSTRUCTION, MATERIALS AND WORKMANSHIP NOT SHOWN ON THIS DRAWING SHALL CONFORM TO THE PERTINENT REQUIREMENTS OF THE STANDARD SPECIFICATIONS AND THE APPLICABLE SPECIAL PROVISIONS.

① TEMPORARY DITCH CHECKS EITHER EROSION BALES OR MANUFACTURED SHALL BE PAID FOR UNDER THE BID ITEM OF TEMPORARY DITCH CHECK. THE DEPARTMENT WILL NOT PAY FOR TEMPORARY DITCH CHECKS CONSTRUCTED OF A SINGLE ROW OF EROSION BALES.

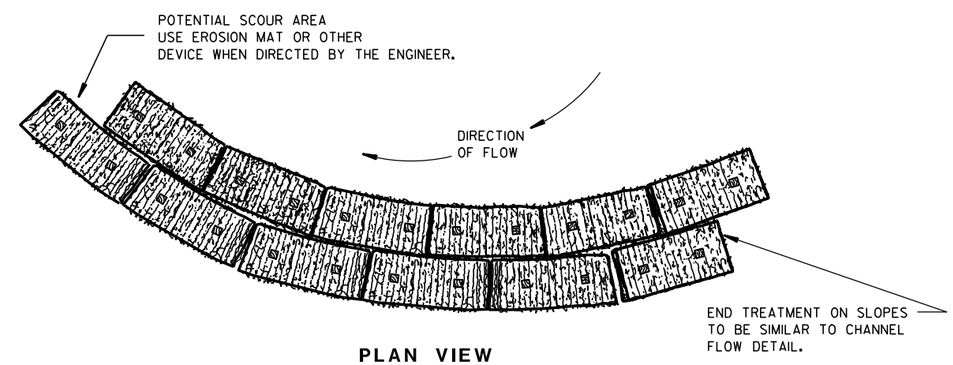

PLAN VIEW

WHEN ALTERING THE DIRECTION OF FLOW

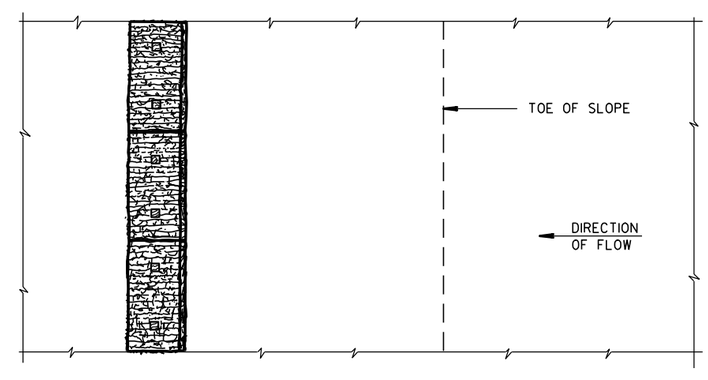

PLAN VIEW

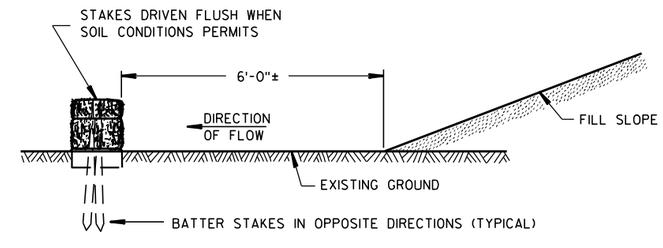

FRONT ELEVATION

WHEN EXISTING GROUND SLOPES AWAY FROM FILL SLOPE

EROSION BALES FOR SHEET FLOW

TYPICAL INSTALLATIONS OF EROSION BALES / TEMPORARY DITCH CHECKS

STATE OF WISCONSIN
DEPARTMENT OF TRANSPORTATION

APPROVED
6/04/02 — DATE
/S/ Beth Cann... — CHIEF ROADWAY DEVELOPMENT ENGINEER
FHWA

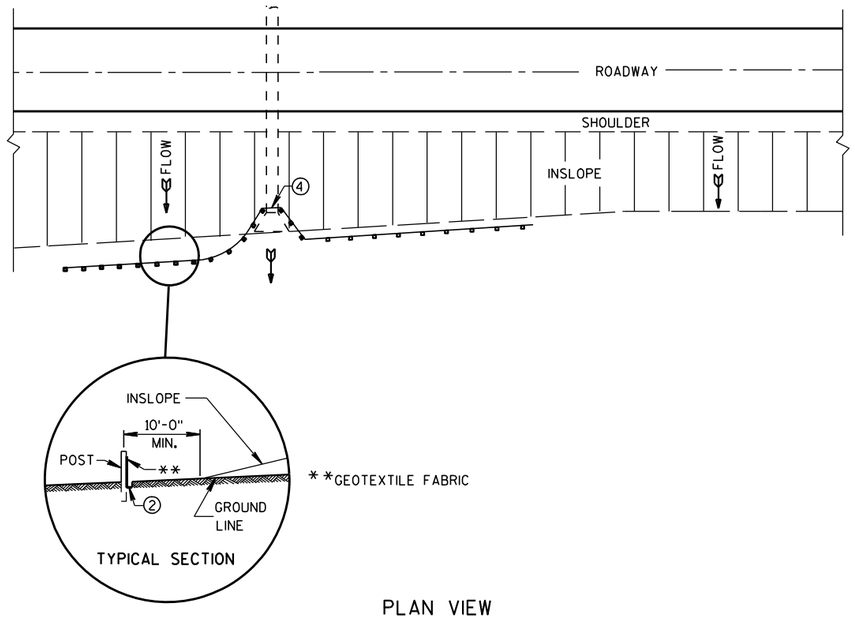

PLAN VIEW

TYPICAL APPLICATION OF SILT FENCE

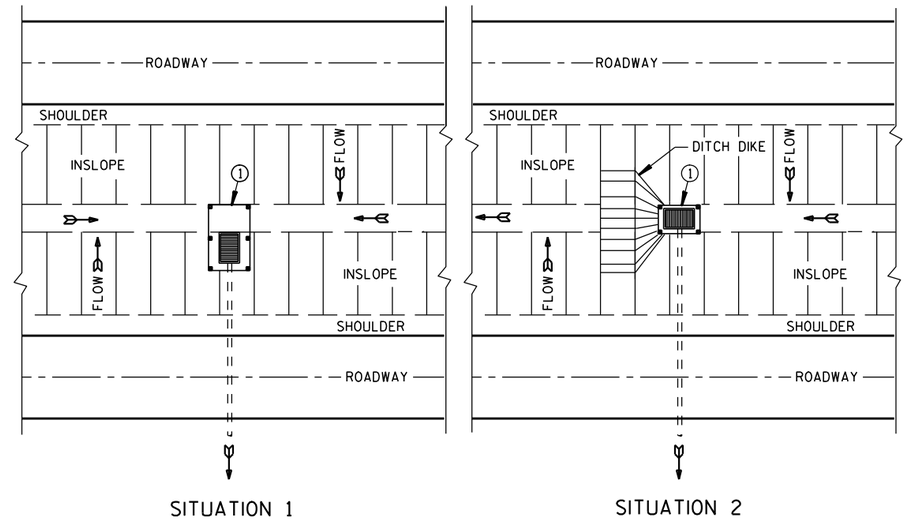

PLAN VIEW

SILT FENCE AT MEDIAN SURFACE DRAINS

GENERAL NOTES

DETAILS OF CONSTRUCTION NOT SHOWN ON THIS DRAWING SHALL CONFORM TO THE PERTINENT REQUIREMENTS OF THE STANDARD SPECIFICATIONS AND APPLICABLE SPECIAL PROVISIONS.

① HORIZONTAL BRACE REQUIRED WITH 2" X 4" WOODEN FRAME OR EQUIVALENT AT TOP OF POSTS.

② FOR MANUAL INSTALLATIONS THE TRENCH SHALL BE A MINIMUM OF 4" WIDE & 6" DEEP TO BURY AND ANCHOR THE GEOTEXTILE FABRIC. FOLD MATERIAL TO FIT TRENCH AND BACKFILL & COMPACT TRENCH WITH EXCAVATED SOIL.

③ WOOD POSTS SHALL BE A MINIMUM SIZE OF 1⅛" X 1⅛" OF OAK OR HICKORY.

④ SILT FENCE TO EXTEND ACROSS THE TOP OF THE PIPE.

⑤ CONSTRUCT SILT FENCE FROM A CONTINUOUS ROLL IF POSSIBLE BY CUTTING LENGTHS TO AVOID JOINTS. IF A JOINT IS NECESSARY USE ONE OF THE FOLLOWING TWO METHODS; A) OVERLAP THE END POSTS AND TWIST, OR ROTATE, AT LEAST 180 DEGREES. B) HOOK THE END OF EACH SILT FENCE LENGTH.

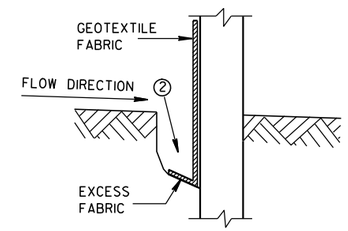

TRENCH DETAIL

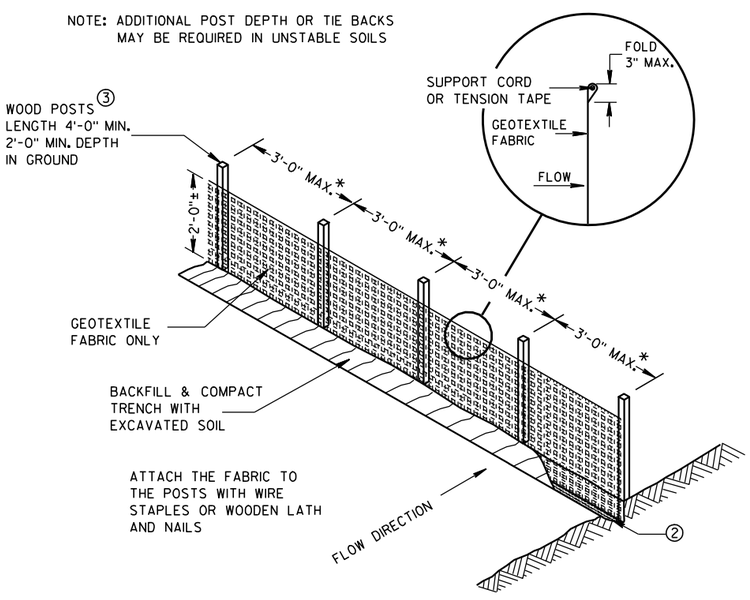

*NOTE: 8'-0" POST SPACING ALLOWED IF A WOVEN GEOTEXTILE FABRIC IS USED.

SILT FENCE

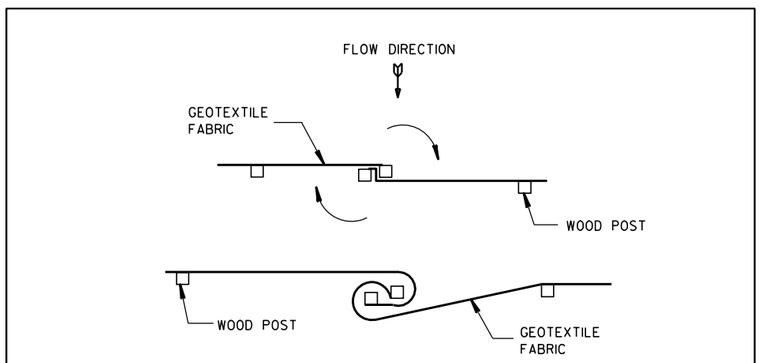

TWIST METHOD

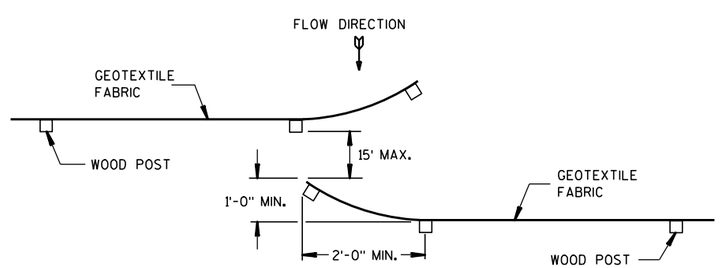

HOOK METHOD

JOINING TWO LENGTHS OF SILT FENCE ⑤

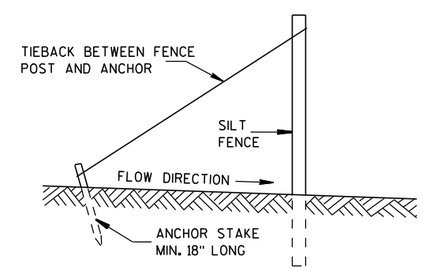

SILT FENCE TIE BACK

(WHEN REQUIRED BY THE ENGINEER)

SILT FENCE
STATE OF WISCONSIN DEPARTMENT OF TRANSPORTATION
APPROVED 4-29-05 DATE — /S/ Beth Cann-- CHIEF ROADWAY DEVELOP ENGINEER FHWA

6

6

S.D.D. 8 E 9-6

S.D.D. 8 E 9-6

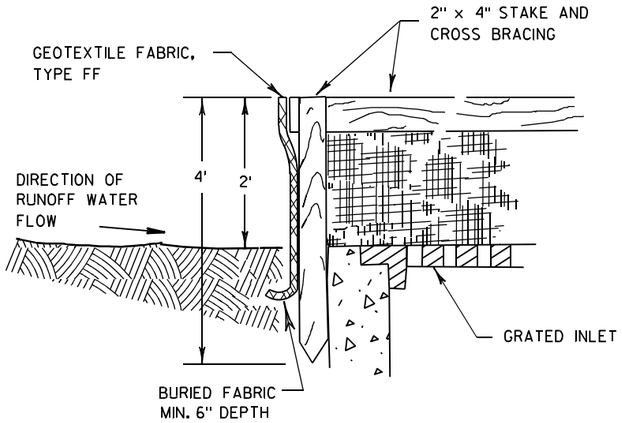

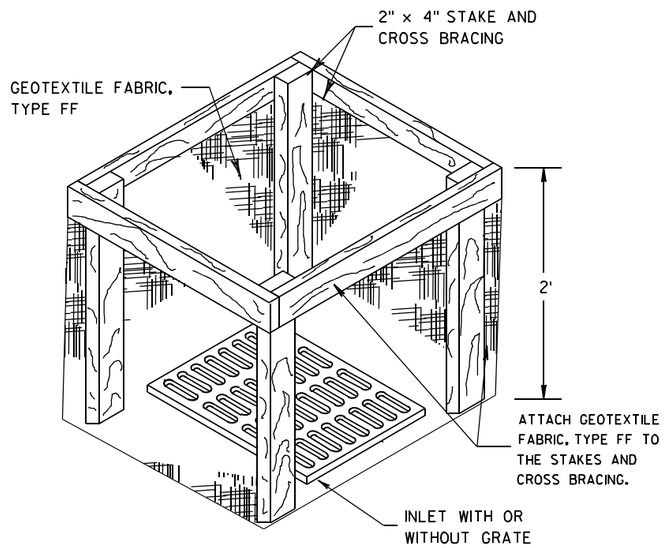

INLET PROTECTION, TYPE A

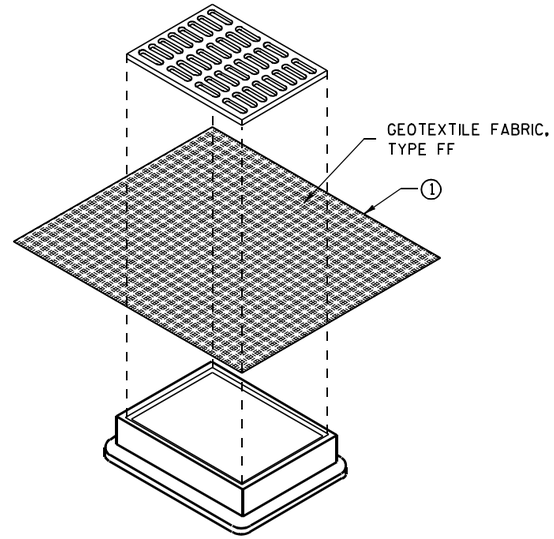

INLET PROTECTION, TYPE B (WITHOUT CURB BOX)

(CAN BE INSTALLED IN ANY INLET WITHOUT A CURB BOX)

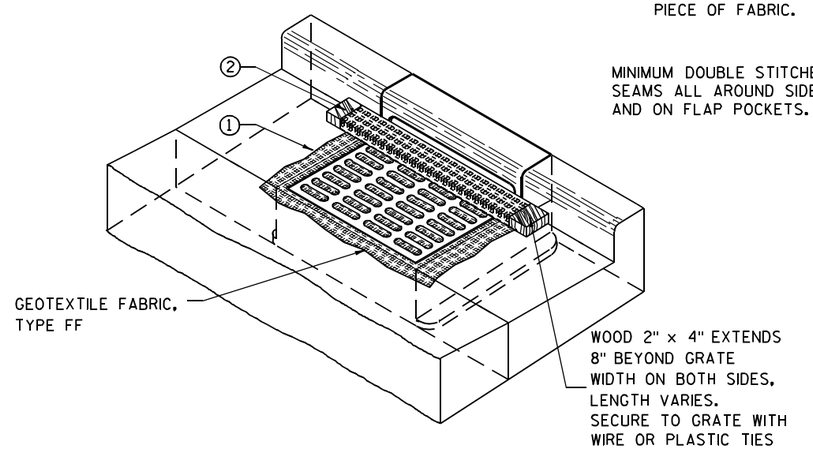

INLET PROTECTION, TYPE C (WITH CURB BOX)

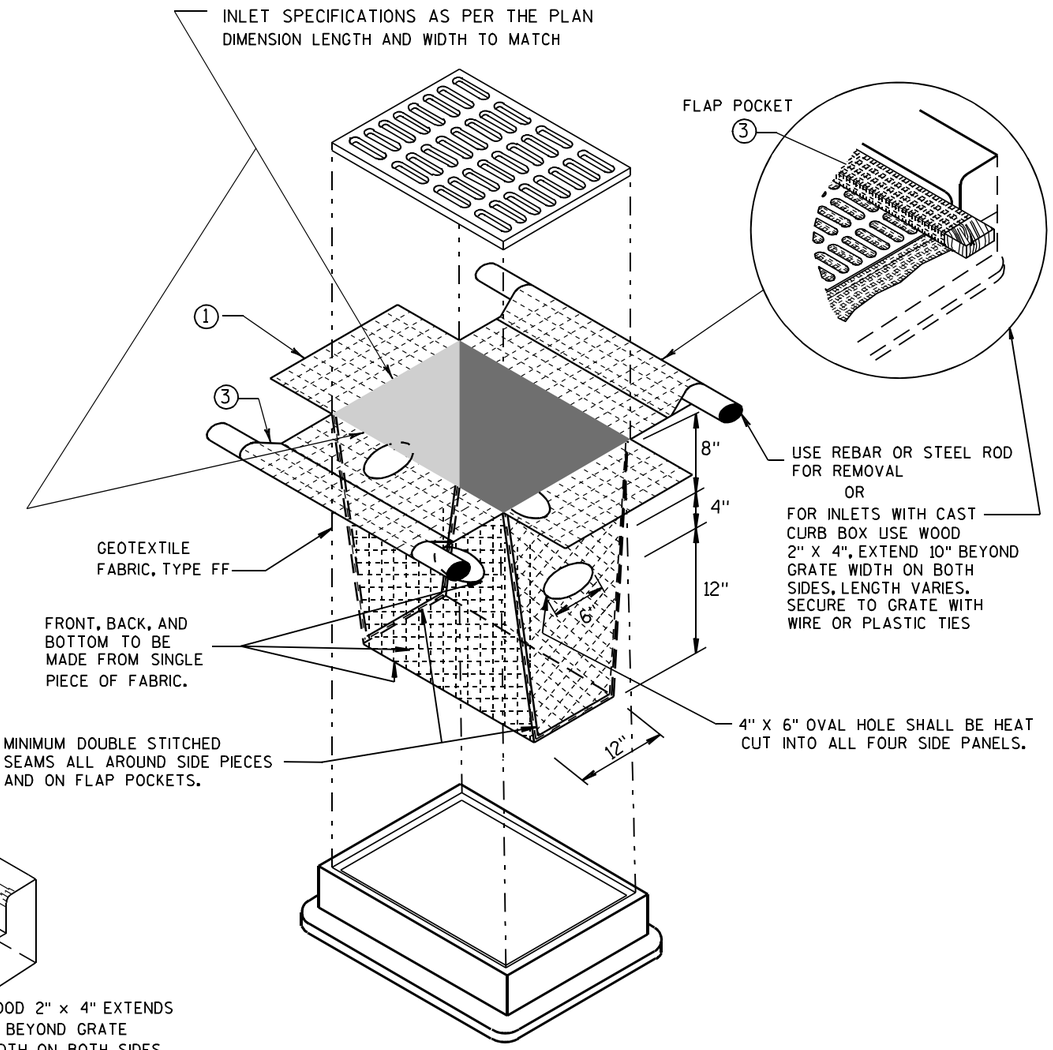

INLET PROTECTION, TYPE D

(CAN BE INSTALLED IN ANY INLET TYPE WITH OR WITHOUT A CURB BOX AS PER NOTE 2)

GENERAL NOTES

INLET PROTECTION DEVICES SHALL BE MAINTAINED OR REPLACED AT THE DIRECTION OF THE ENGINEER.

MANUFACTURED ALTERNATIVES APPROVED AND LISTED ON THE DEPARTMENT'S EROSION CONTROL PRODUCT ACCEPTABILITY LIST MAY BE SUBSTITUTED.

WHEN REMOVING OR MAINTAINING INLET PROTECTION, CARE SHALL BE TAKEN SO THAT THE SEDIMENT TRAPPED ON THE GEOTEXTILE FABRIC DOES NOT FALL INTO THE INLET. ANY MATERIAL FALLING INTO THE INLET SHALL BE REMOVED IMMEDIATELY.

1. FINISHED SIZE, INCLUDING FLAP POCKETS WHERE REQUIRED, SHALL EXTEND A MINIMUM OF 10" AROUND THE PERIMETER TO FACILITATE MAINTENANCE OR REMOVAL.
2. FOR INLET PROTECTION, TYPE C (WITH CURB BOX), AN ADDITIONAL 18" OF FABRIC IS WRAPPED AROUND THE WOOD AND SECURED WITH STAPLES. THE WOOD SHALL NOT BLOCK THE ENTIRE HEIGHT OF THE CURB BOX OPENING.
3. FLAP POCKETS SHALL BE LARGE ENOUGH TO ACCEPT WOOD 2X4.

INSTALLATION NOTES

TYPE B & C

TRIM EXCESS FABRIC IN THE FLOW LINE TO WITHIN 3" OF THE GRATE.

THE CONTRACTOR SHALL DEMONSTRATE A METHOD OF MAINTENANCE, USING A SEWN FLAP, HAND HOLDS OR OTHER METHOD TO PREVENT ACCUMULATED SEDIMENT FROM ENTERING THE INLET.

TYPE D

DO NOT INSTALL INLET PROTECTION TYPE D IN INLETS SHALLOWER THAN 30", MEASURED FROM THE BOTTOM OF THE INLET TO THE TOP OF THE GRATE.

TRIM EXCESS FABRIC IN THE FLOW LINE TO WITHIN 3" OF THE GRATE.

THE INSTALLED BAG SHALL HAVE A MINIMUM SIDE CLEARANCE, BETWEEN THE INLET WALLS AND THE BAG, MEASURED AT THE BOTTOM OF THE OVERFLOW HOLES, OF 3". WHERE NECESSARY THE CONTRACTOR SHALL CINCH THE BAG, USING PLASTIC ZIP TIES, TO ACHIEVE THE 3" CLEARANCE. THE TIES SHALL BE PLACED AT A MAXIMUM OF 4" FROM THE BOTTOM OF THE BAG.

INLET PROTECTION TYPE A, B, C, AND D

STATE OF WISCONSIN
DEPARTMENT OF TRANSPORTATION

APPROVED
10/16/02 — DATE
/S/ Beth Cannon — CHIEF ROADWAY DEVELOPMENT ENGINEER
FHWA

METAL APRON ENDWALLS

PIPE DIA. (IN.)	MIN. THICK. (Inches) STEEL	MIN. THICK. (Inches) ALUM.	DIMENSIONS (Inches) A (±1")	B (MAX.)	H (±1")	L (±1 1/2")	L1 ①	L2 ①	W (±2")	APPROX. SLOPE	BODY
12	.064	.060	6	6	6	21	12	17 1/2	24	2 1/2 to 1	1 Pc.
15	.064	.060	7	8	6	26	14	21 3/4	30	2 1/2 to 1	1 Pc.
18	.064	.060	8	10	6	31	15	28 1/4	36	2 1/2 to 1	1 Pc.
21	.064	.060	9	12	6	36	18	29 5/8	42	2 1/2 to 1	1 Pc.
24	.064	.075	10	13	6	41	18	37 1/4	48	2 1/2 to 1	1 Pc.
30	.079	.075	12	16	8	51	18	52 1/4	60	2 1/2 to 1	1 Pc.
36	.079	.105	14	19	9	60	24	59 3/4	72	2 1/2 to 1	2 Pc.
42	.109	.105	16	22	11	69	24	75 5/8	84	2 1/2 to 1	2 Pc.
48	.109	.105	18	27	12	78	24	81	90	2 1/4 to 1	3 Pc.
54	.109	.105	18	30	12	84	30	85 1/2	102	2 1/4 to 1	3 Pc.
60	.109×	.105×	18	33	12	87	—	—	114	2 to 1	3 Pc.
66	.109×	.105×	18	36	12	87	—	—	120	2 to 1	3 Pc.
72	.109×	.105×	18	39	12	87	—	—	126	2 to 1	3 Pc.
78	.109×	.105×	18	42	12	87	—	—	132	1 1/2 to 1	3 Pc.
84	.109×	.105×	18	45	12	87	—	—	138	1 1/2 to 1	3 Pc.
90	.109×	.105×	18	37	12	87	—	—	144	1 1/2 to 1	3 Pc.
96	.109×	.105×	18	35	12	87	—	—	150	1 1/2 to 1	3 Pc.

× EXCEPT CENTER PANEL
SEE GENERAL NOTES

REINFORCED CONCRETE APRON ENDWALLS

PIPE DIA. (IN.)	DIMENSIONS (Inches) T	A	B	C	D	E	G	APPROX. SLOPE
12	2	4	24	48 7/8	72 7/8	24	2	3 to 1
15	2 1/4	6	27	46	73	30	2 1/4	3 to 1
18	2 1/2	9	27	46	73	36	2 1/2	3 to 1
21	2 3/4	9	36	37 1/2	73 1/2	42	2 3/4	3 to 1
24	3	9 1/2	43 1/2	30	73 1/2	48	3	3 to 1
27	3 1/4	10 1/2	49 1/2	24	73 1/2	54	3 1/4	3 to 1
30	3 1/2	12	54	19 3/4	73 1/2	60	3 1/2	3 to 1
36	4	15	63	34 3/4	97 3/4	72	4	3 to 1
42	4 1/2	21	63	35	98	78	4 1/2	3 to 1
48	5	24	72	26	98	84	5	3 to 1
54	5 1/2	27	65	*33 1/4-**35	*98 1/4-**100	90	5 1/2	2 2/5 to 1
60	6	*30-**35	60	39	99	96	5	2 to 1
66	6 1/2	*24-**30	*72-**78	*21-**27	99	102	5 1/2	2 to 1
72	7	*24-**36	78	21	99	108	6	2 to 1
78	7 1/2	*24-**36	78	21	99	114	6 1/2	2 to 1
84	8	36	90 1/2	21	111 1/2	120	6 1/2	1 1/2 to 1
90	8 1/2	41	87 1/2	24	111 1/2	132	6 1/2	1 1/2 to 1

*MINIMUM
**MAXIMUM

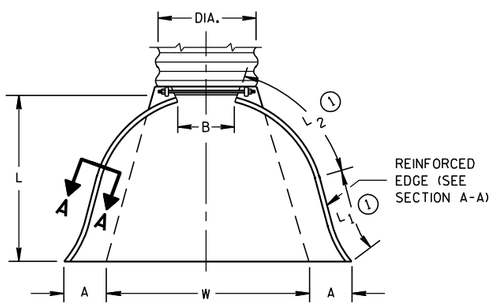

PLAN VIEW

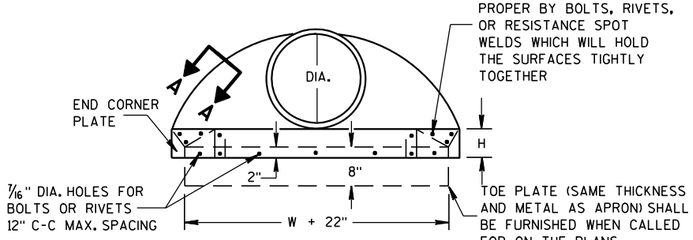

END VIEW

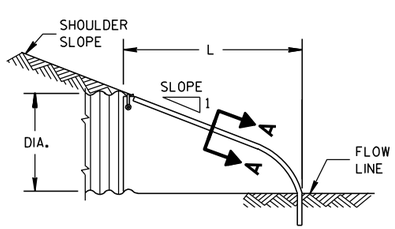

SIDE ELEVATION

METAL ENDWALLS

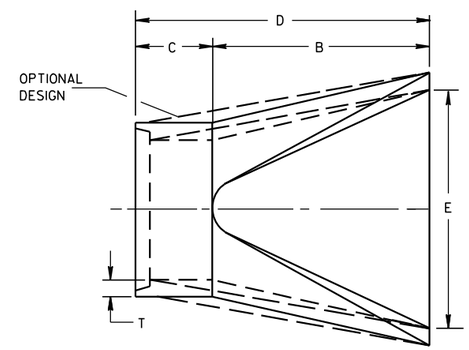

PLAN

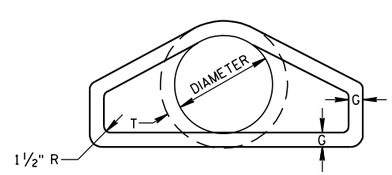

END VIEW

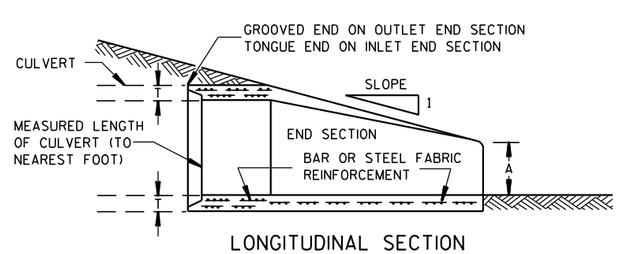

LONGITUDINAL SECTION

CONCRETE ENDWALLS

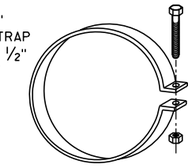

ALTERNATE FOR TYPE 1 CONNECTION

END SECTION CONNECTOR STRAP

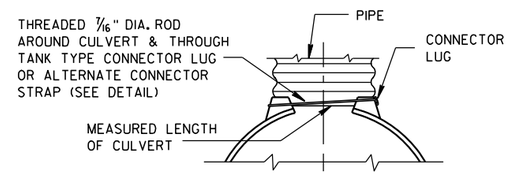

TYPE 1
FOR 12" THRU 24" CORR. PIPE

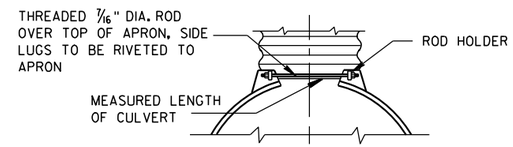

TYPE 2
FOR 30" THRU 96" CORR. PIPE

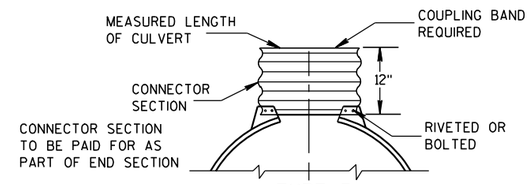

TYPE 3
FOR 42" THRU 96" CORR. PIPE

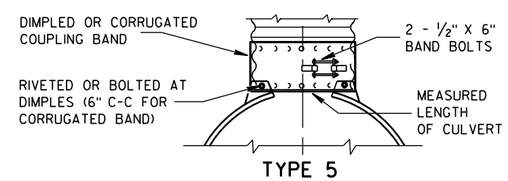

TYPE 5
ALTERNATE FOR:
ALL SIZES CORRUGATED CIRCULAR PIPE

NOTE: DIMPLED BAND FITS OVER OUTSIDE OF ENDWALL, AND CORRUGATED BAND FITS INSIDE ENDWALL. DIMPLED BAND MAY BE USED WITH HELICALLY CORRUGATED PIPE.

FOR CIRCUMFERENTIALLY CORRUGATED PIPE USE ENDWALL CONNECTION DETAILS 1, 2, 3 OR 5 AS APPLICABLE.

FOR HELICALLY CORRUGATED PIPE USE ENDWALL CONNECTION DETAILS 1, 2 OR 5.

FOR HELICALLY CORRUGATED PIPES WITH TWO CIRCUMFERENTIAL CORRUGATIONS AT EACH END USE ENDWALL CONNECTION DETAILS 1, 2 OR 3.

CONNECTION DETAILS

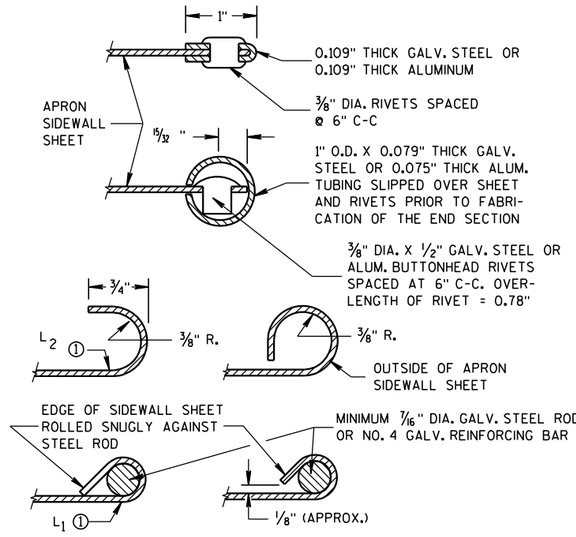

SECTION A-A

GENERAL NOTES

DETAILS OF CONSTRUCTION, MATERIALS AND WORKMANSHIP NOT SHOWN ON THIS DRAWING SHALL CONFORM TO THE PERTINENT REQUIREMENTS OF THE STANDARD SPECIFICATIONS AND THE APPLICABLE SPECIAL PROVISIONS.

CONCRETE CULVERT ENDWALLS MAY NOT BE USED WITH GALVANIZED STEEL OR ALUMINUM CULVERT PIPE OR VISE VERSA. GALVANIZED STEEL OR ALUMINUM ENDWALLS SHALL NORMALLY BE INSTALLED ON CULVERT PIPE OF THE SAME METAL.

ALL THREE PIECE STEEL APRON ENDWALLS FOR 60" DIAMETER PIPE AND LARGER SHALL HAVE 0.109" SIDES AND 0.138" CENTER PANELS. ALL THREE PIECE ALUMINUM APRON ENDWALLS FOR 60" DIAMETER PIPE AND LARGER SHALL HAVE 0.105" SIDES AND 0.134" CENTER PANELS. THE WIDTH OF CENTER PANELS SHALL BE GREATER THAN 20 PERCENT OF THE PIPE PERIMETER.

LAP SEAMS SHALL BE TIGHTLY JOINED BY GALVANIZED RIVETS OR BOLTS FOR STEEL UNITS AND ALUMINUM RIVETS AND BOLTS FOR ALUMINUM UNITS. FOR THE 60" THROUGH 96" DIAMETER APRON ENDWALL SIZES, THE REINFORCED EDGES AND CENTER PANEL SEAMS SHALL BE FURTHER REINFORCED WITH GALVANIZED STEEL OR ALUMINUM STIFFENER ANGLES. THE ANGLES SHALL BE ATTACHED BY GALVANIZED NUTS AND BOLTS FOR STEEL UNITS AND ALUMINUM NUTS AND BOLTS FOR ALUMINUM UNITS.

WHERE TWO OR MORE PIPES WITH APRON ENDWALLS ARE LAID ADJACENT TO EACH OTHER, THEY SHALL BE SEPARATED BY A DISTANCE SUFFICIENT TO PROVIDE A MINIMUM CLEARANCE OF 6 INCHES BETWEEN APRON ENDWALLS.

① FOR PIPE SIZES UP TO 60" DIAMETER, A 180° ROLLED EDGE MAY BE USED INSTEAD OF STEEL ROD REINFORCEMENT. SEE SECTION A-A.

APRON ENDWALLS FOR CULVERT PIPE

STATE OF WISCONSIN
DEPARTMENT OF TRANSPORTATION

APPROVED
11/30/94 — DATE
/S/ Rory L. Rhinesmith — CHIEF ROADWAY DEVELOPMENT ENGINEER
FHWA

6
S.D.D. 8 F 1-11

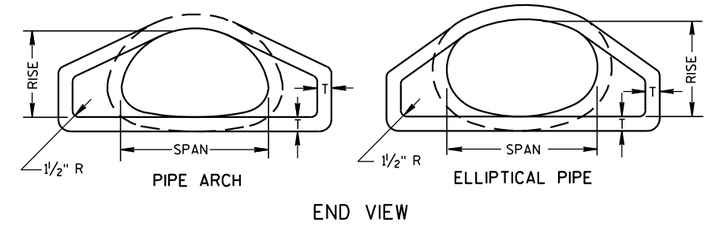

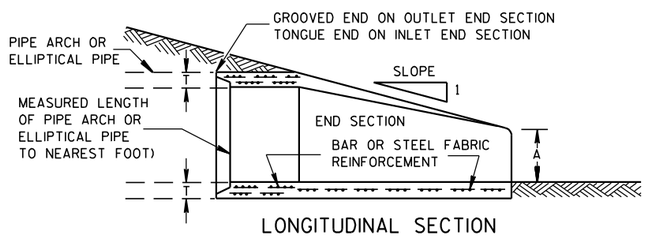

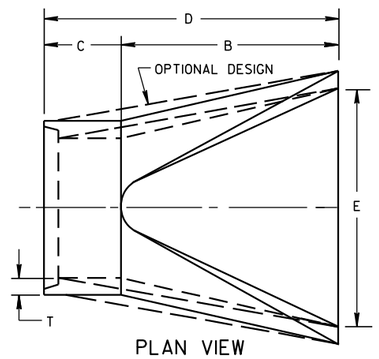

CONCRETE ENDWALLS

2- ⅔" X ½" CORRUGATIONS														
EQUIV. DIA. (Inches)	(Inches)		MIN. THICK. (Inches)		DIMENSIONS (Inches)							APPROX. SLOPE	BODY
	SPAN	RISE	STEEL	ALUM.	A (±1")	B (MAX.)	H (±1")	L (±1½")	L1 ①	L2 ①	W (±2")		
15	17	13	.064	.060	7	9	6	19	14	16	30	2½ to 1	1 Pc.
18	21	15	.064	.060	7	10	6	23	14	19⅜	36	2½ to 1	1 Pc.
21	24	18	.064	.060	8	12	6	28	18	21¾	42	2½ to 1	1 Pc.
24	28	20	.064	.060	9	14	6	32	18	27½	48	2½ to 1	1 Pc.
30	35	24	.079	.075	10	16	6	39	18	37⅝	60	2½ to 1	1 Pc.
36	42	29	.079	.075	12	18	8	46	24	45⅜	75	2½ to 1	1 Pc.
42	49	33	.109	.105	13	21	9	53	24	54¾	85	2½ to 1	2 Pc.
48	57	38	.109	.105	18	26	12	63	24	68	90	2½ to 1	3 Pc.
54	64	43	.109	.105	18	30	12	70	24	72¾	102	2¼ to 1	3 Pc.
60	71	47	.109*	.105*	18	33	12	77	30	82¼	114	2¼ to 1	3 Pc.
66	77	52	.109*	.105*	18	36	12	77	—	—	126	2 to 1	3 Pc.
72	83	57	.109*	.105*	18	39	12	77	—	—	138	2 to 1	3 Pc.

3" X 1" CORRUGATIONS														
EQUIV. DIA. (Inches)	(Inches)		MIN. THICK. (Inches)		DIMENSIONS (Inches)							APPROX. SLOPE	BODY
	SPAN	RISE	STEEL	ALUM.	A (±1")	B (MAX.)	H (±1")	L (±1½")	L1 ①	L2 ①	W (±2")		
48	53	41	.109	.105	18	26	12	63	24	72¾	90	2½ to 1	2 Pc.
54	60	46	.109	.105	18	30	12	70	30	82¼	102	2 to 1	2 Pc.
60	66	51	.109*	.105*	18	33	12	77	—	—	114	1½ to 1	3 Pc.
66	73	55	.109*	.105*	18	36	12	77	—	—	126	1½ to 1	3 Pc.
72	81	59	.109*	.105*	18	39	12	77	—	—	138	2 to 1	3 Pc.
78	87	63	.109*	.105*	22	38	12	77	—	—	148	1½ to 1	3 Pc.
84	95	67	.109*	.105*	22	34	12	77	—	—	162	1½ to 1	3 Pc.
90	103	71	.109*	.105*	22	38	12	77	—	—	174	1½ to 1	3 Pc.
96	112	75	.109*	.105*	24	40	12	77	—	—	174	1½ to 1	3 Pc.

NOTE: ALL SPLICES TO BE LAP RIVETED OR BOLTED.

* EXCEPT CENTER PANEL SEE GENERAL NOTES

REINFORCED CONCRETE PIPE ARCH									
EQUIV. DIA. (Inches)	DIMENSIONS (Inches)								APPROX. SLOPE
	** SPAN	** RISE	T	A	B	C	D	E	
24	29	18	3	8½	39	33	72	48	3 to 1
30	36	22	3½	9½	50	46	96	60	3 to 1
36	44	27	4	11⅛	60	36	96	72	3 to 1
42	51	31	4½	15 13/16	60	36	96	78	3 to 1
48	58	36	5	21	60	36	96	84	3 to 1
54	65	40	5½	25½	60	36	96	90	3 to 1
60	73	45	6	31	60	36	96	96	3 to 1
72	88	54	7	31	60	39	99	120	2 to 1
84	102	62	8	28½	83	19	102	144	2 to 1

REINFORCED CONCRETE ELLIPTICAL PIPE									
EQUIV. DIA. (Inches)	DIMENSIONS (Inches)								APPROX. SLOPE
	** SPAN	** RISE	T	A	B	C	D	E	
24	30	19	3¼	8½	39	33	72	48	3 to 1
30	38	24	3¾	9½	54	18	72	60	3 to 1
36	45	29	4½	11⅛	60	24	84	72	2½ to 1
42	53	34	5	15¾	60	36	96	78	2½ to 1
48	60	38	5½	21	60	36	96	84	2½ to 1
54	68	43	6	25½	60	36	96	90	2½ to 1
60	76	48	6½	30	60	36	96	96	2½ to 1

**NOMINAL SIZE

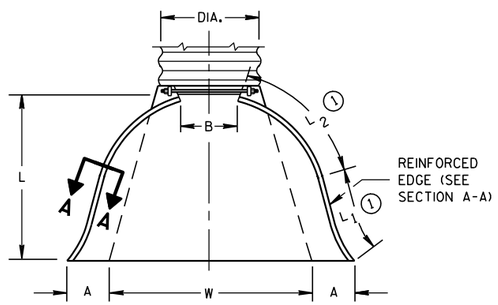

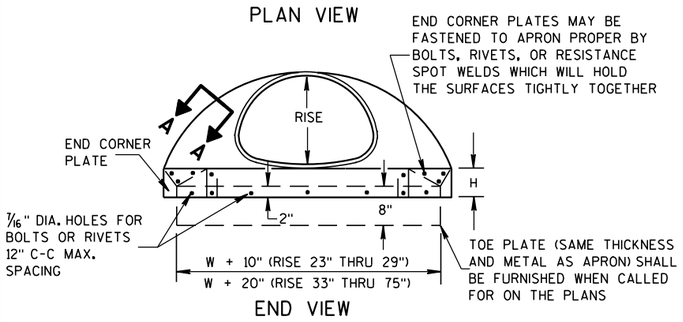

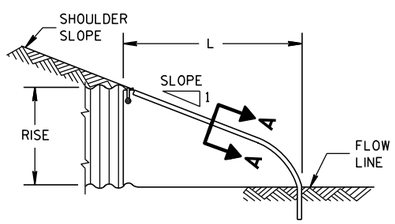

METAL ENDWALLS

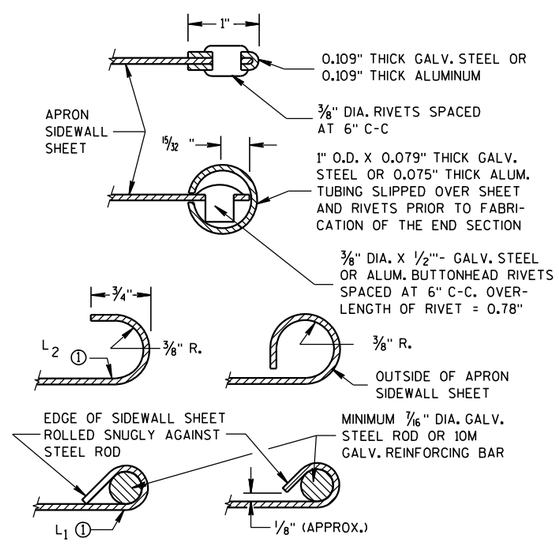

SECTION A-A

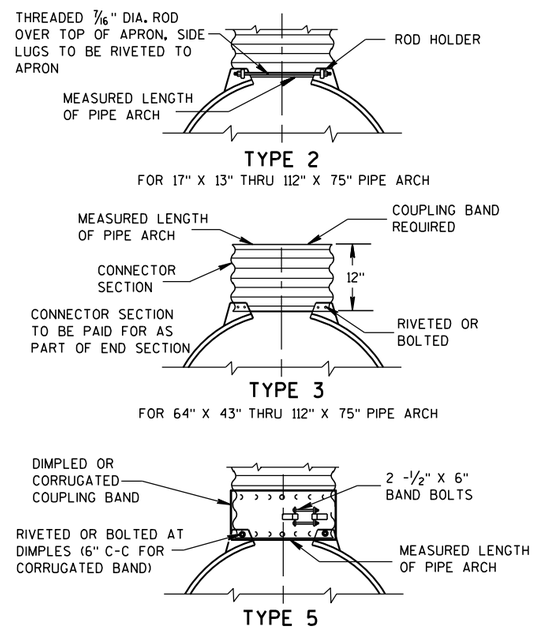

NOTE: DIMPLED BAND FITS OVER OUTSIDE OF ENDWALL, AND CORRUGATED BAND FITS INSIDE ENDWALL.

CONNECTION DETAILS

GENERAL NOTES

DETAILS OF CONSTRUCTION, MATERIALS AND WORKMANSHIP NOT SHOWN ON THIS DRAWING SHALL CONFORM TO THE PERTINENT REQUIREMENTS OF THE STANDARD SPECIFICATIONS AND THE APPLICABLE SPECIAL PROVISIONS.

CONCRETE APRON ENDWALLS MAY NOT BE USED WITH GALVANIZED STEEL OR ALUMINUM CULVERT PIPE OR VISE VERSA. GALVANIZED STEEL OR ALUMINUM APRON ENDWALLS SHALL NORMALLY BE INSTALLED ON CULVERT PIPE OF THE SAME METAL.

ALL THREE PIECE STEEL APRON ENDWALLS FOR 66" X 51" PIPE ARCH AND LARGER SHALL HAVE 0.109" SIDES AND 0.138" CENTER PANELS. ALL THREE PIECE ALUMINUM APRON ENDWALLS FOR 66" X 51" PIPE ARCH AND LARGER SHALL HAVE 0.105" SIDES AND 0.134" CENTER PANELS. THE WIDTH OF CENTER PANELS SHALL BE GREATER THAN 20 PERCENT OF THE PIPE ARCH PERIMETER.

LAP SEAMS SHALL BE TIGHTLY JOINED BY GALVANIZED RIVETS OR BOLTS FOR STEEL UNITS AND ALUMINUM RIVETS AND BOLTS FOR ALUMINUM UNITS. FOR THE 77" X 52" THROUGH 112" X 75" APRON ENDWALL SIZES, THE REINFORCED EDGES AND CENTER PANEL SEAMS SHALL BE FURTHER REINFORCED WITH GALVANIZED STEEL OR ALUMINUM STIFFENER ANGLES. THE ANGLES SHALL BE ATTACHED BY GALVANIZED NUTS AND BOLTS FOR STEEL UNITS AND ALUMINUM NUTS AND BOLTS FOR ALUMINUM UNITS.

WHERE TWO OR MORE PIPES WITH APRON ENDWALLS ARE LAID ADJACENT TO EACH OTHER, THEY SHALL BE SEPARATED BY A DISTANCE SUFFICIENT TO PROVIDE A MINIMUM CLEARANCE OF 6 INCHES BETWEEN APRON ENDWALLS.

① FOR PIPE ARCH SIZES UP TO 73" X 55" A 180° ROLLED EDGE MAY BE USED INSTEAD OF STEEL ROD REINFORCEMENT. SEE SECTION A-A.

APRON ENDWALLS FOR PIPE ARCH AND ELLIPTICAL PIPE

STATE OF WISCONSIN
DEPARTMENT OF TRANSPORTATION

APPROVED
11/30/94 — DATE
/S/ Rory L. Rhinesmith — CHIEF ROADWAY DEVELOPMENT ENGINEER
FHWA

6

S.D.D. 8 F 2-1

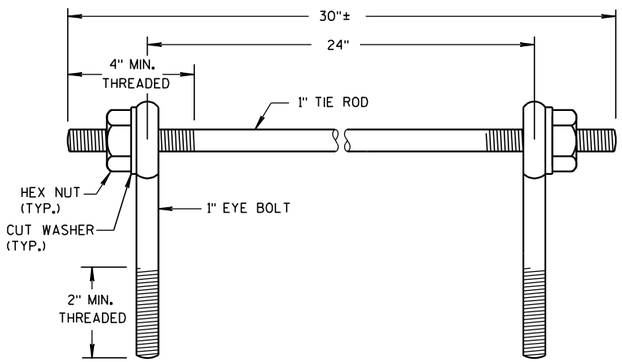

EYE BOLTS AND TIE ROD

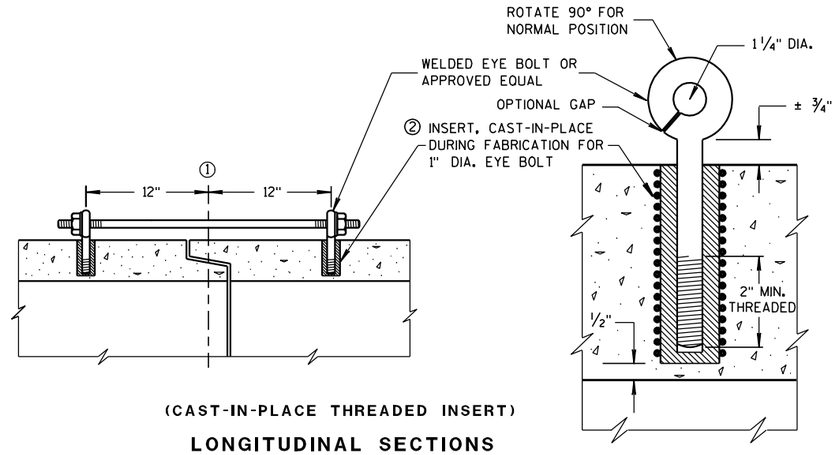

(CAST-IN-PLACE THREADED INSERT)

LONGITUDINAL SECTIONS

EYE BOLT AND TIE ROD ASSEMBLY (ALTERNATE NO. 1)

GENERAL NOTES

DETAILS OF CONSTRUCTION, MATERIALS, AND WORKMANSHIP NOT SHOWN ON THIS DRAWING SHALL CONFORM TO THE PERTINENT REQUIREMENTS OF THE STANDARD SPECIFICATIONS AND APPLICABLE SPECIAL PROVISIONS.

CONCRETE CULVERT AND STORM SEWER PIPE SHALL BE TIED TOGETHER IN THE MANNER ILLUSTRATED BY THIS DETAIL AT LOCATIONS DESIGNATED IN THE STANDARD SPECIFICATIONS AND THE PLAN. THE CONTRACTOR MAY USE EITHER ALTERNATE 1, 2 OR 3 FOR DRAINAGE STRUCTURES. ONLY ALTERNATE 1 AND 3 MAY BE USED FOR CATTLE PASSES, UNLESS OTHERWISE STATED IN THE CONTRACT. THE MATERIALS, FABRICATION AND WORK NECESSARY TO TIE THE PIPE BY THIS DETAIL WILL BE CONSIDERED INCIDENTAL TO THE PIPE AND APRON ENDWALLS IF REQUIRED.

DETAILED DRAWINGS FOR PROPOSED ALTERNATE DESIGNS FOR JOINT TIES SHALL BE SUBMITTED TO THE ENGINEER FOR APPROVAL.

JOINT TIES TO BE HOT-DIP GALVANIZED PER ASTM A 153.

① ℄ OF TONGUE AND GROOVE OR BELL AND SPIGOT JOINTS.

② THE INSIDE OF THE THREADED INSERTS SHALL BE CLEAN TO ALLOW THE INSERTION OF THREADED EYE BOLTS.

③ HOLES SHALL BE CAST-IN-PLACE OR DRILLED 12 INCHES FROM ℄ OF TONGUE AND GROOVE.

④ BOLT PROJECTION INSIDE OF PIPE SHALL NOT EXCEED 2 INCHES.

⑤ OPENING TO BE ROD DIAMETER PLUS 1 INCH.

⑥ LENGTH ADEQUATE TO EXTEND TO WITHIN 1/2 INCH OF THE INNER SURFACE OF THE PIPE.

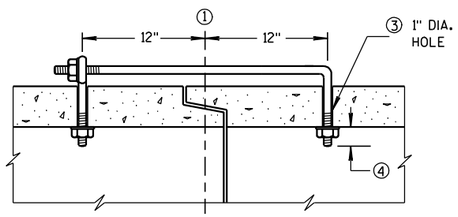

(TONGUE & GROOVE PIPE)

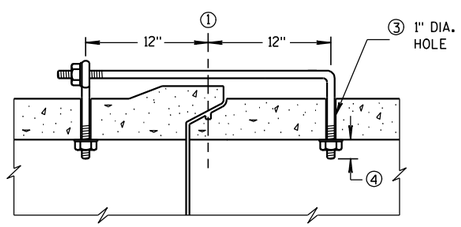

(MODIFIED BELL PIPE)

LONGITUDINAL SECTION

EYE BOLT DIMENSION TABLE

PIPE SIZE	L = LENGTH	
	TONGUE & GROOVE PIPE	MODIFIED BELL PIPE
18" TO 24"	4 1/2"	6 1/4"
30"	5"	7"
36"	5 1/2"	7"
42"	6"	
48"	6 1/2"	
60"	7 1/2"	
66"	8"	

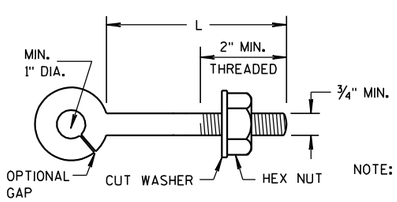

EYE BOLT

NOTE:

NOTE: TWO EYE BOLTS MAY BE USED WITH A 30" LONG THREADED ROD IN LIEU OF THE 90° BENT TIE ROD.

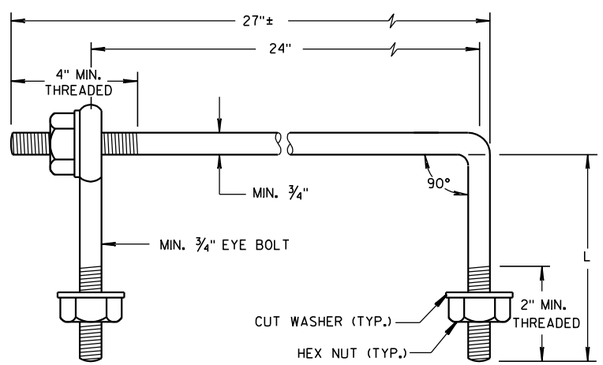

EYE BOLT AND TIE ROD

(JOINT TIES FOR 18" TO 66" DIA. CONCRETE PIPE)

EYE BOLT AND TIE ROD ASSEMBLY (ALTERNATE NO. 2)

ADJUSTABLE TIE ROD TABLE

PIPE DIAMETER	TIE ROD DIAMETER	D	L_1	N
12-60	5/8	5/8	5	1/2
66-84	3/4	3/4	5	1/2
90-108	1	1	7	1 7/16

DIMENSIONS SHOWN ARE IN INCHES

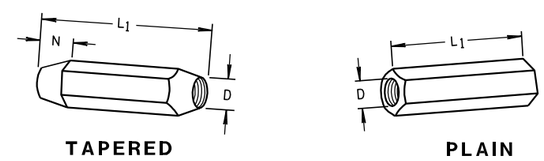

TAPERED PLAIN

RIGHT AND LEFT THREADS

SLEEVE NUTS

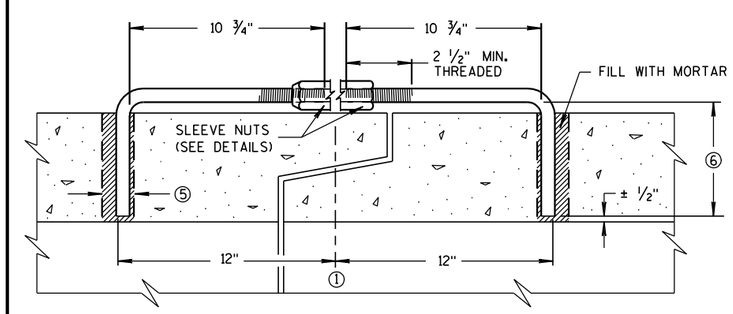

LONGITUDINAL SECTION

(JOINT TIES FOR 12" TO 108" DIA. CONCRETE PIPE)

ADJUSTABLE TIE ROD (ALTERNATE NO. 3)

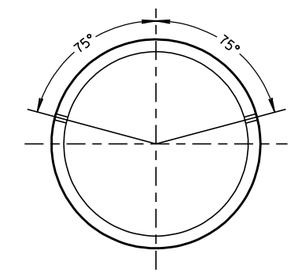

PLACEMENT OF (2) CAST-IN-PLACE INSERTS OR HOLES DURING FABRICATION FOR PIPE SECTIONS REQUIRING TIE RODS

TRANSVERSE SECTION

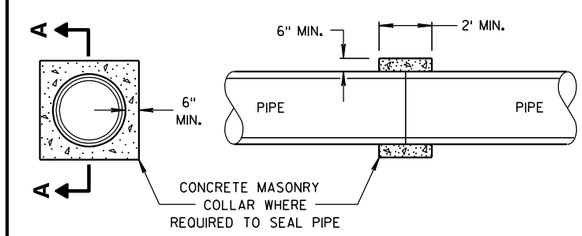

SECTION A-A

CONCRETE COLLAR DETAIL

JOINT TIES FOR CONCRETE PIPE AND CONCRETE COLLAR DETAIL

STATE OF WISCONSIN
DEPARTMENT OF TRANSPORTATION

APPROVED
6/5/2012 /S/ Jerry H. Zogg
DATE ROADWAY STANDARDS DEVELOPMENT ENGINEER
FHWA

6

6

S.D.D. 8 F 4-7

S.D.D. 8 F 4-7

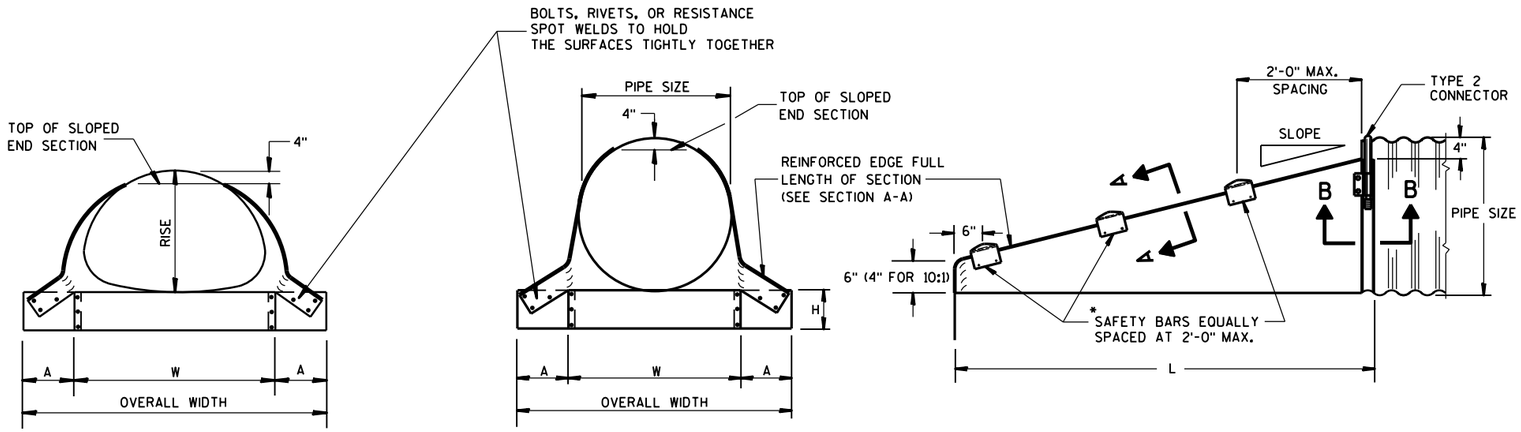

FRONT VIEW

FRONT VIEW

SIDE VIEW

GENERAL NOTES

DETAILS OF CONSTRUCTION, MATERIALS AND WORKMANSHIP NOT SHOWN ON THIS DRAWING SHALL CONFORM TO THE PERTINENT REQUIREMENTS OF THE STANDARD SPECIFICATIONS AND THE APPLICABLE SPECIAL PROVISIONS.

SLOPED END SECTIONS SHALL CONFORM TO THE REQUIREMENTS OF THE STANDARD SPECIFICATIONS, SECTION 521 FOR STEEL APRON ENDWALLS.

SAFETY BARS SHALL BE FABRICATED FROM GALVANIZED STEEL PIPE MEETING THE REQUIREMENTS OF ASTM A-53, GRADE B, SCHEDULE 40 OR APPROVED EQUAL.

STEEL APRON ENDWALLS FOR CULVERT PIPE SLOPED SIDE DRAINS

PIPE DIA. (IN.)	MIN. THICK. (Inches)	DIMENSIONS (Inches)				L DIMENSIONS					
		A	H	W	OVERALL WIDTH	SLOPE	LENGTH INCHES	SLOPE	LENGTH INCHES	SLOPE	LENGTH INCHES
15	.064	8	6	21	37	4:1	20	6:1	30	10:1	70
18	.064	8	6	24	40	4:1	32	6:1	48	10:1	100
21	.064	8	6	27	43	4:1	44	6:1	66	10:1	130
24	.064	8	6	30	46	4:1	56	6:1	84	10:1	160
30	.109	12	9	36	60	4:1	80	6:1	120	10:1	220
36	.109	12	9	42	66	4:1	104	6:1	156	10:1	280
42	.109	16	12	48	80	4:1	128	6:1	192	——	——
48	.109	16	12	54	86	4:1	152	6:1	228	——	——
54	.109	16	12	60	92	4:1	176	6:1	264	——	——
60	.109	16	12	66	98	4:1	200	6:1	300	——	——

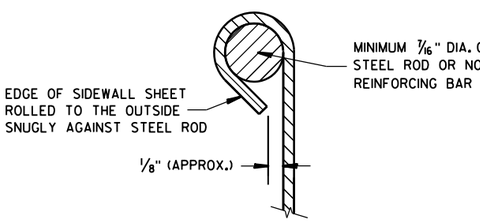

SECTION A-A

*NOTE:
THREE SAFETY BARS ARE SHOWN. ACTUAL NUMBER OF BARS REQUIRED AT A 2'-0" C-C MAX. SPACING WILL VARY DEPENDING ON THE LENGTH OF THE END SECTION.

3" GALVANIZED PIPE. FLATTEN ENDS, THEN BEND OUTSIDE 4" TO MATCH END SECTION SIDES.

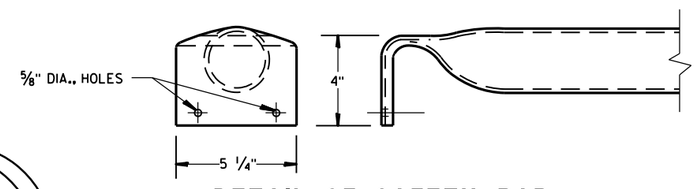

DETAIL OF SAFETY BAR

STEEL APRON ENDWALLS FOR PIPE ARCH SLOPED SIDE DRAINS

EQUIV. DIA. (Inches)	(Inches)		MIN. THICK. (Inches) ①	DIMENSIONS (Inches)				L DIMENSIONS					
	SPAN	RISE		A	H	W	OVERALL WIDTH	SLOPE	LENGTH INCHES	SLOPE	LENGTH INCHES	SLOPE	LENGTH INCHES
15	17	13	.064 *	7	6	30	44	4:1	19	6:1	30	10:1 ②	70
18	21	15	.064 *	8	6	27	43	4:1	20	6:1	30	10:1	70
21	24	18	.064 *	8	6	30	46	4:1	32	6:1	48	10:1	100
24	28	20	.064 *	8	6	34	50	4:1	40	6:1	60	10:1	120
30	35	24	.079 *	12	9	41	65	4:1	56	6:1	84	10:1	160
36	42	29	.109 *	12	9	48	72	4:1	76	6:1	114	10:1	210
42	49	33	.109	16	12	55	87	4:1	92	6:1	138	——	——
48	57	38	.109	16	12	63	95	4:1	112	6:1	168	——	——
54	64	43	.109	16	12	70	102	4:1	132	6:1	198	——	——

① * MINIMUM THICKNESS OF ALL 10:1 SLOPED SIDE DRAINS IS 0.109".
② ACTUAL SLOPE GREATER THAN 10:1.

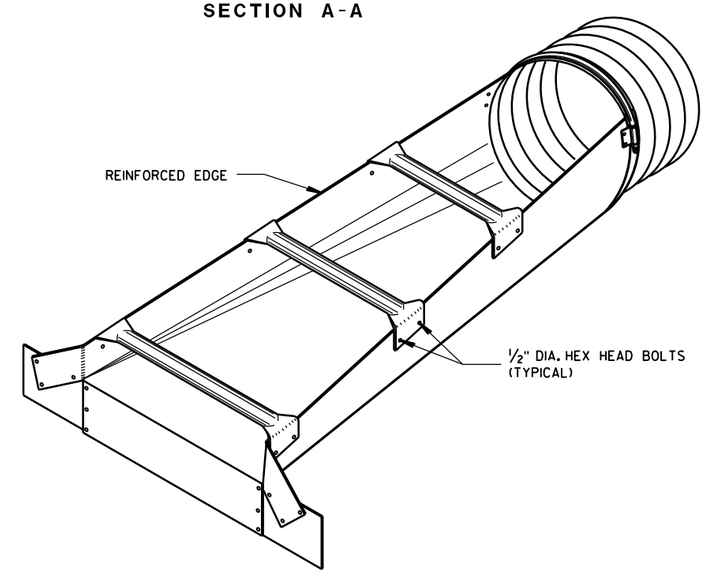

ISOMETRIC VIEW

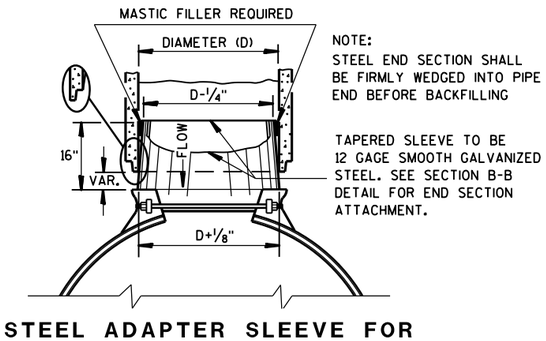

NOTE:
STEEL END SECTION SHALL BE FIRMLY WEDGED INTO PIPE END BEFORE BACKFILLING

TAPERED SLEEVE TO BE 12 GAGE SMOOTH GALVANIZED STEEL. SEE SECTION B-B DETAIL FOR END SECTION ATTACHMENT.

STEEL ADAPTER SLEEVE FOR CONCRETE PIPE

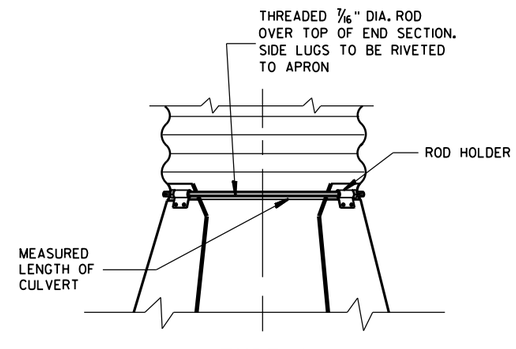

TYPE 2 CONNECTION DETAIL

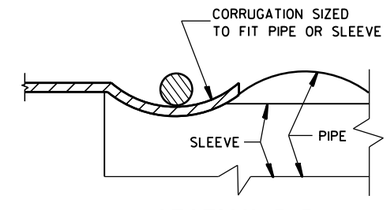

SECTION B-B

STEEL APRON ENDWALLS FOR CULVERT PIPE AND PIPE ARCH SLOPED SIDE DRAINS

STATE OF WISCONSIN
DEPARTMENT OF TRANSPORTATION

APPROVED
9/14/2012 — DATE
/S/ Jerry H. Zogg — ROADWAY STANDARDS DEVELOPMENT ENGINEER
FHWA

6

S.D.D. 8 F 7-5

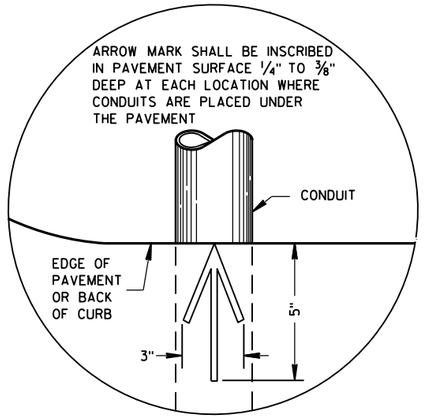

PLAN VIEW

ARROW MARK

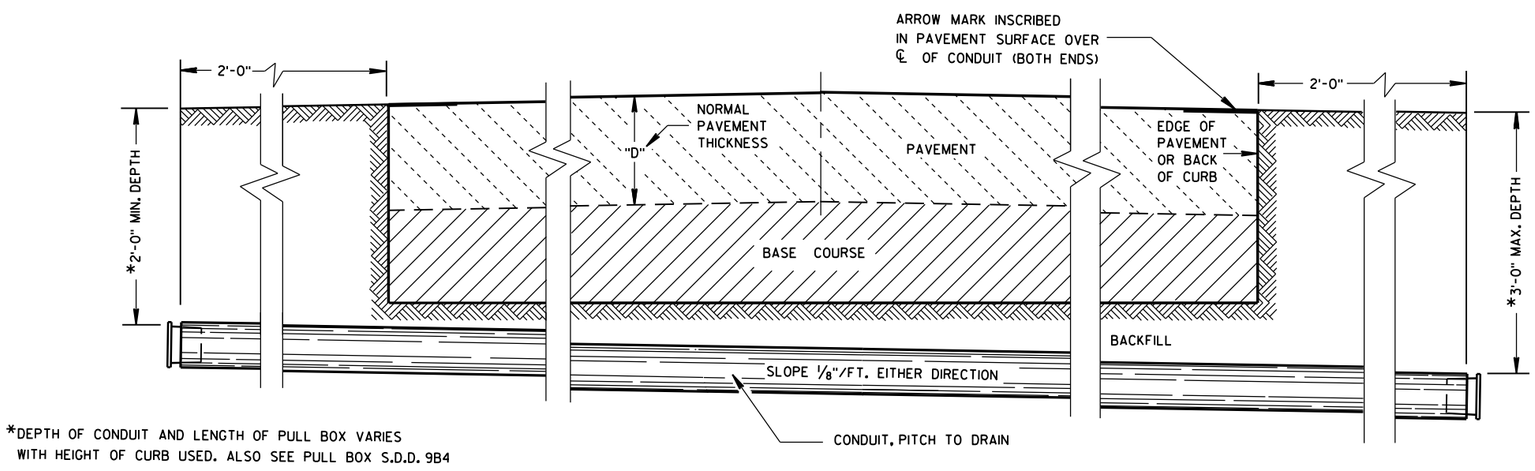

*DEPTH OF CONDUIT AND LENGTH OF PULL BOX VARIES WITH HEIGHT OF CURB USED. ALSO SEE PULL BOX S.D.D. 9B4

SIDE ELEVATION

DETAIL FOR CONDUIT UNDER PAVED HIGHWAYS

GENERAL NOTES

DETAILS OF CONSTRUCTION, MATERIALS AND WORKMANSHIP NOT SHOWN ON THIS DRAWING SHALL CONFORM TO THE PERTINENT REQUIREMENTS OF THE CONTRACT.

METALLIC (STANDARD SPECIFICATION 652.2.2) OR NONMETALLIC (STANDARD SPECIFICATION 652.2.3) CONDUIT SHALL BE FURNISHED AND PLACED AS SHOWN.

DEPTH OF CONDUIT INSTALLED BELOW THE TRAVELED WAY SHALL BE 24 INCHES MINIMUM AND 36 INCHES MAXIMUM.

DEPTH OF CONDUIT INSTALLED THAT IS NOT BELOW THE TRAVELED WAY SHALL BE 18 INCHES MINIMUM AND 36 INCHES MAXIMUM.

ANY EXCEPTION TO THE MAXIMUM DEPTH SHALL BE ONLY WITH THE WRITTEN APPROVAL OF THE ENGINEER.

THE TRENCH SHALL NOT BE BACKFILLED PRIOR TO INSPECTION OF THE CONDUIT.

ALL METALLIC CONDUIT RACEWAY ENDS SHALL BE REAMED AND THREADED.

ALL METALLIC CONDUIT IN WHICH WIRE OR CABLE IS TO BE INSTALLED SHALL BE BUSHED WITH APPROVED THREADED BUSHINGS BEFORE INSTALLATION OF THE WIRE OR CABLE.

ALL METALLIC CONDUITS IN WHICH WIRE OR CABLE IS NOT TO BE INSTALLED SHALL BE CAPPED WITH THREADED PROTECTIVE CAPS, AS APPROVED BY THE ENGINEER.

ALL NONMETALLIC CONDUIT SHALL BE CAPPED OR PLUGGED IMMEDIATELY AFTER INSTALLATION AND SHALL REMAIN CAPPED OR PLUGGED UNTIL WIRE/CABLES ARE INSTALLED.

NONMETALLIC CONDUITS IN WHICH WIRE OR CABLE IS NOT BEING INSTALLED SHALL REMAIN CAPPED OR PLUGGED.

BENDING OF PVC ELECTRICAL CONDUIT SHALL BE ACCOMPLISHED BY USING A BLANKET OR EMERSION TYPE TANK DESIGNED FOR THE PURPOSE OF BENDING PVC ELECTRICAL CONDUIT.

ALL CUT ENDS SHALL BE TRIMMED INSIDE AND OUTSIDE TO REMOVE ALL ROUGH EDGES ON NONMETALLIC CONDUIT. (SEE NEC 347.5)

WHEN REQUIRED TO CONNECT NONMETALLIC CONDUIT TO METALLIC CONDUIT, ONLY U.L. LISTED ADAPTER FITTINGS SHALL BE USED.

PRIOR TO CONDUIT ACCEPTANCE, CONDUIT CAPS OR PLUGS SHALL BE REMOVED, AND THE CAPS, PLUGS AND CONDUIT ENDS SHALL BE THOROUGHLY CLEANED AND THEN THE CAPS OR PLUGS REINSTALLED TO ENSURE THAT THE CAPS OR PLUGS CAN BE EASILY REMOVED IN THE FUTURE.

ALL CONDUIT BEING FURNISHED AND INSTALLED SHALL HAVE THE U.L. LABEL FIRMLY ATTACHED.

CONDUIT RUNS SHALL BE THE SAME SIZE OF CONDUIT FROM ONE END TO THE OTHER (FROM PULL BOX TO PULL BOX-OR-JUNCTION BOX TO JUNCTION BOX-OR-BASE TO BASE, ETC.).

TRACER WIRE SHALL BE INSTALLED AS STATED IN THE STANDARD SPECIFICATION, ITEM 652.3.1.1.

ALL CONDUIT RUNS SHALL BE STRAIGHT (WITHOUT BENDS) FROM PULL BOX TO PULL BOX, PULL BOX TO BASE AND BASE TO BASE AS SHOWN ON THE PLANS.

CONDUIT

STATE OF WISCONSIN
DEPARTMENT OF TRANSPORTATION

APPROVED
March, 2017 — /S/ Ahmet Demirbilek
DATE — STATE ELECTRICAL
FHWA

TABLE OF NOMINAL DIMENSIONS AND WEIGHTS

DIMENSION IN INCHES		CORRUGATED STEEL PIPE								
PIPE DIAMETER (INSIDE)	A	12	12	12	18	18	18	24	24	24
PIPE LENGTH **	B	24	30	36	24	30	36	36	42	48
WALL THICKNESS	C	0.064	0.064	0.064	0.064	0.064	0.064	0.064	0.064	0.064
COVER	D	10 1/4	10 1/4	10 1/4	16 1/4	16 1/4	16 1/4	22 1/4	22 1/4	22 1/4
FRAME	E	14 1/2	14 1/2	14 1/2	20 1/2	20 1/2	20 1/2	26 1/2	26 1/2	26 1/2
FRAME	F	8 1/2	8 1/2	8 1/2	14 1/2	14 1/2	14 1/2	20 1/2	20 1/2	20 1/2
FRAME	G	11 1/2	11 1/2	11 1/2	17 1/2	17 1/2	17 1/2	23 1/2	23 1/2	23 1/2
WEIGHT IN POUNDS *										
FRAME AND COVER		60	60	60	110	110	110	155	155	155

* THE ACTUAL WEIGHT OF THE MANHOLE FRAME AND COVER MAY VARY WITHIN 5 PERCENT PLUS OR MINUS OF THE WEIGHTS SHOWN.

** NORMALLY USED LENGTHS. THE PROJECT ENGINEER SHALL DETERMINE IF PIPE LENGTHS, OTHER THAN THOSE SPECIFIED, SHALL BE USED, TO A MAXIMUM OF 48" (CONTINUOUS LENGTH, NON-SPLICED). THE ADDITIONAL LENGTH SHALL BE INCIDENTAL TO THE PULL BOX BID PRICE.

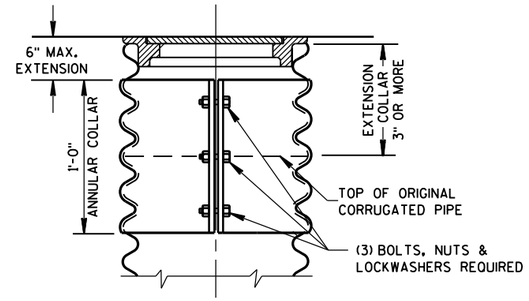

CORRUGATED PIPE EXTENDER

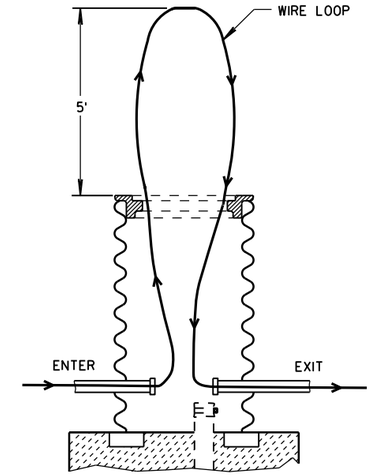

MEASUREMENT DETAIL FOR WIRE/CABLE IN THE PULL BOX

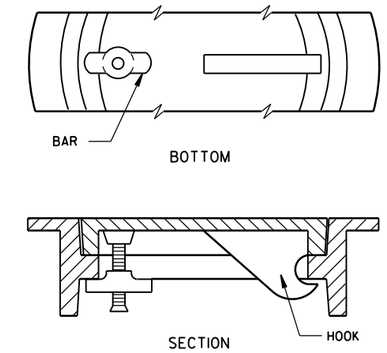

ALTERNATE COVER (LOCKING)

TIGHTENING BAR TYPE

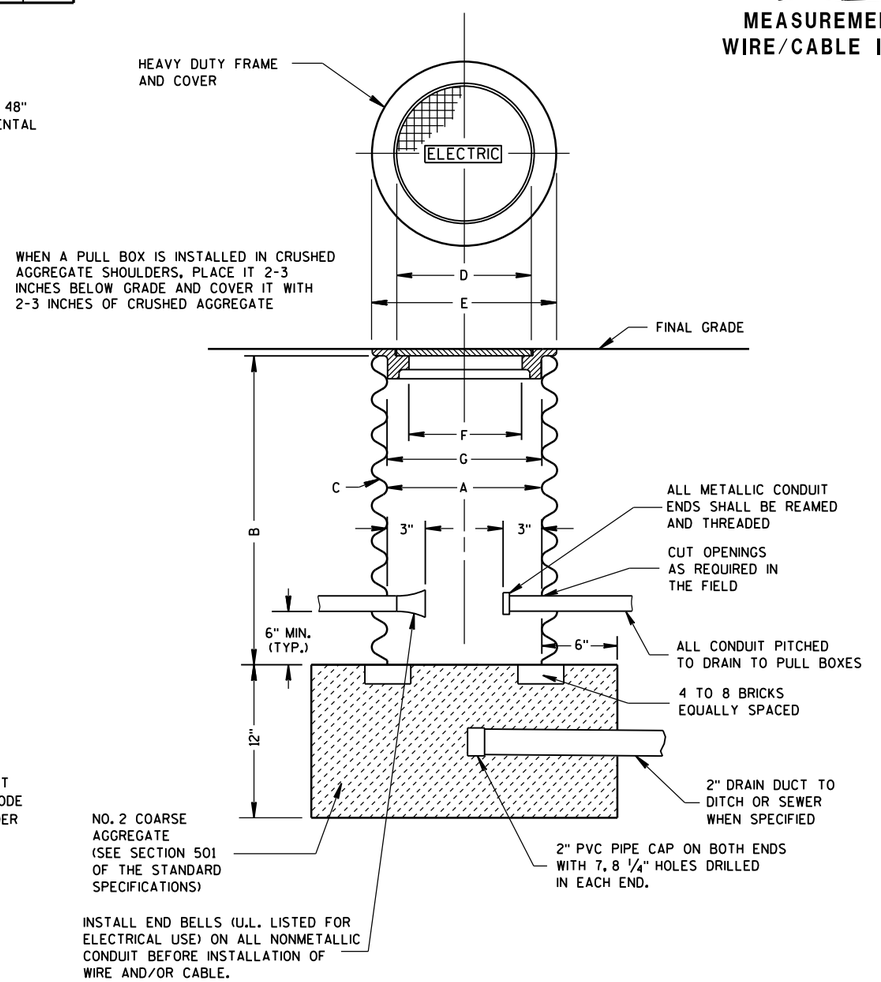

PULL BOX

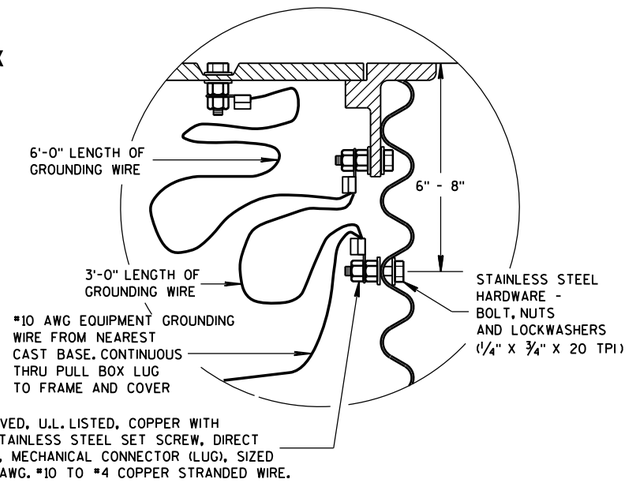

EQUIPMENT GROUNDING LUG AND LOCATION IN STEEL PULL BOXES

GENERAL NOTES

DETAILS OF CONSTRUCTION, MATERIALS AND WORKMANSHIP NOT SHOWN ON THIS DRAWING SHALL CONFORM TO THE PERTINENT REQUIREMENTS OF THE CONTRACT.

ALL FRAMES AND COVERS SHALL BE HEAVY DUTY TYPE, SUITABLE FOR VEHICULAR TRAFFIC LOADS.

PULL BOXES LOCATED IN THE ROADWAYS SHALL HAVE LOCKING COVERS.

ENTRANCE HOLES INTO PULL BOXES SHALL BE CUT WITH A CIRCULAR HOLE SAW OR HYDRAULIC CONDUIT PUNCH. HOLE SIZE SHALL BE THE OUTSIDE DIAMETER OF THE CONDUIT THAT IS TO FIT IN THE OPENING PLUS NO MORE THAN 1/4".

THE CONTRACTOR SHALL NOT INSTALL WIRE IN ANY PULL BOX UNTIL ITS INSTALLATION HAS BEEN INSPECTED AND ACCEPTED BY THE ENGINEER.

GROUNDING LUGS (MECHANICAL CONNECTORS) SHALL BE U.L. LISTED AND APPROVED FOR USE WITH COPPER WIRE.

ALL METALLIC CONDUIT IN WHICH WIRE AND/OR CABLE IS TO BE INSTALLED, SHALL BE BUSHED BEFORE INSTALLATION OF THE WIRE AND/OR CABLE.

WHEN PULL BOXES ARE INSTALLED FOR FUTURE USE, DO NOT INSTALL THE EQUIPMENT GROUNDING LUG. THE EQUIPMENT GROUNDING LUG, THE EQUIPMENT GROUNDING ELECTRODE AND THE EQUIPMENT GROUNDING CONDUCTOR SHALL BE REQUIRED AND INSTALLED UNDER A FUTURE WIRING CONTRACT.

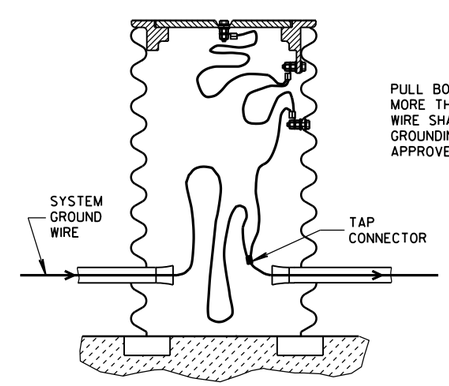

EQUIPMENT GROUNDING LUG AND LOCATION IN STEEL PULL BOXES

PULL BOX

STATE OF WISCONSIN
DEPARTMENT OF TRANSPORTATION

APPROVED
Sept. 2014 — DATE
/S/ Ahmet Demirbilek — STATE ELECTRICAL
FHWA

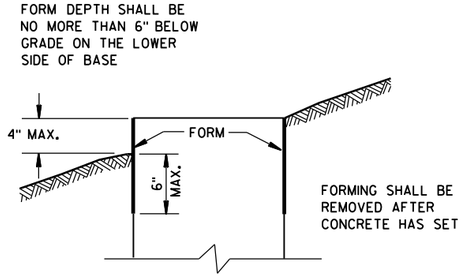

FORMING DETAIL

QUANTITY REQUIREMENTS	CONCRETE BASE TYPE		
	1	2	5 & 6
APPROX. CUBIC YARDS OF CONCRETE	0.40	0.57	0.40
LBS. OF HOOP BAR STEEL	NONE	23	16
LBS. OF VERTICAL BAR STEEL	NONE	60	18

GENERAL NOTES

DETAILS OF CONSTRUCTION, MATERIALS AND WORKMANSHIP NOT SHOWN ON THIS DRAWING SHALL CONFORM TO THE PERTINENT REQUIREMENTS OF THE CONTRACT.

BASES SHALL BE EXCAVATED BY USE OF A CIRCULAR AUGER.

TOP SURFACES OF CONCRETE BASES SHALL BE TROWEL FINISHED SMOOTH AND LEVEL.

CONDUIT SIZES AND LOCATIONS SHALL BE AS SHOWN ON THE PLANS.

THE FINAL OR TERMINATING CONCRETE BASE IN A CONDUIT RUN SHALL HAVE A 6" EXIT STUB INSTALLED FOR FUTURE CABLING USE. THE EXIT STUB SHALL BE SIZED AS USED THROUGHOUT THE CONDUIT RUN AS SHOWN AT THE ENTRANCE OF THE BASE.

MINIMUM BENDING RADIUS OF CONDUIT IS EQUAL TO 6 X THE DIAMETER.

CONDUIT HEIGHT ABOVE CONCRETE BASES SHALL BE 1 INCH. ALL METALLIC CONDUIT ENDS SHALL BE REAMED AND THREADED.

ALL CONDUIT ENDS AT THE TOP OF CONCRETE BASES SHALL BE CAPPED IF METALLIC OR PLUGGED IF NONMETALLIC IMMEDIATELY AFTER PLACEMENT AND BEFORE CONCRETE IS POURED. CONDUITS IN WHICH WIRE OR CABLE IS NOT INSTALLED SHALL REMAIN CAPPED OR PLUGGED.

GENERAL NOTES (CONTINUED)

BELL ENDS SHALL BE INSTALLED ON ALL PVC CONDUIT EXPOSED AT THE TOP OF CONCRETE BASES BEFORE INSTALLATION OF CABLE OR WIRE.

ENDS OF CONDUIT INSTALLED BELOW GRADE FOR FUTURE USE SHALL BE CAPPED IF METALLIC OR PLUGGED IF NONMETALLIC.

WHEN REQUIRED TO CONNECT NONMETALLIC CONDUIT TO METALLIC CONDUIT, ONLY ADAPTER FITTINGS, U.L. LISTED FOR ELECTRICAL USE, SHALL BE USED.

IF A BASE REQUIRES A DEEP FORM BECAUSE OF LOOSE DIRT OR FILL, THE FORM SHALL BE REMOVED BEFORE BACKFILLING AROUND THE BASE. BACKFILL SHALL BE TAMPED TIGHT AGAINST THE BARE CONCRETE BASE IN LAYERS OF 1 FOOT OR LESS.

A NO. 4 AWG, STRANDED COPPER EQUIPMENT GROUNDING CONDUCTOR SHALL BE EXOTHERMICALLY WELDED TO THE EQUIPMENT GROUNDING ELECTRODE (GROUND ROD) FOR TYPE 1, TYPE 2, TYPE 5, AND TYPE 6 BASES.

THE EQUIPMENT GROUNDING CONDUCTOR SHALL BE FURNISHED AND INSTALLED TO ENTER THE BASE OF THE TYPE 2 AND TYPE 5 BASES THROUGH A 1 INCH CONDUIT INSTALLED FOR GROUNDING PURPOSES, LEAVING A 4 FOOT COIL OF WIRE ABOVE THE CONCRETE BASE. THE EQUIPMENT GROUNDING CONDUCTOR SHALL BE NEATLY COILED AND THE COILS TIED TOGETHER.

ANCHOR RODS SHALL BE THREADED 12" IN LENGTH ON EACH END OF THE ROD. ANCHOR RODS SHALL BE MANUFACTURED IN ACCORDANCE WITH SECTION 654.2.1 OF THE STANDARD SPECIFICATIONS.

WASHERS AND LOCK WASHERS ARE REQUIRED ON ALL ANCHOR RODS.

WHEN ANCHOR RODS USING THE ALTERNATE "L" BEND ARE FURNISHED, THE 4" "L" BEND SHALL BE IN ADDITION TO THE SPECIFIED ANCHOR ROD BAR LENGTH. THE "L" BEND END SHALL NOT BE THREADED.

ANCHOR RODS SHALL BE INSTALLED WITH MISALIGNMENTS OF LESS THAN 1:40 FROM VERTICAL.

WELDING OF THE ANCHOR RODS TO THE CAGE IS UNACCEPTABLE. TIE WIRES SHALL BE USED.

BAR STEEL REINFORCEMENT SHALL BE COATED WITH POWDERED EPOXY RESIN IN ACCORDANCE WITH SECTION 505 OF THE STANDARD SPECIFICATIONS (LATEST EDITION).

(1) THE MINIMUM DEPTH OF CONDUIT EXITING THE CONCRETE BASE AND INSTALLED BELOW THE TRAVELED WAY SHALL BE 24 INCHES. THE MINIMUM DEPTH OF CONDUIT EXITING THE CONCRETE BASE THAT IS NOT INSTALLED BELOW THE TRAVELED WAY SHALL BE 18 INCHES. THE MAXIMUM DEPTH OF ALL CONDUIT SHALL BE 36 INCHES EXCEPT WITH WRITTEN APPROVAL BY THE ENGINEER.

(2) (4) 1" DIA. X 3'-6" ANCHOR RODS.

(3) (4) 1" DIA. X 5'-0" ANCHOR RODS.

(4) (6) NO. 6 X 6'-8" BAR STEEL REINFORCEMENT.

(5) (7) NO. 4 X 5'-1" BAR STEEL REINFORCEMENT @ 1'-0" C-C.

(6) (4) 1" DIA. X 3'-6" ANCHOR RODS.

(7) (6) NO.4 X 4'-8" BAR STEEL REINFORCEMENT.

(8) (5) NO. 4 X 5'-1" BAR STEEL REINFORCEMENT @ 1'-0" C-C.

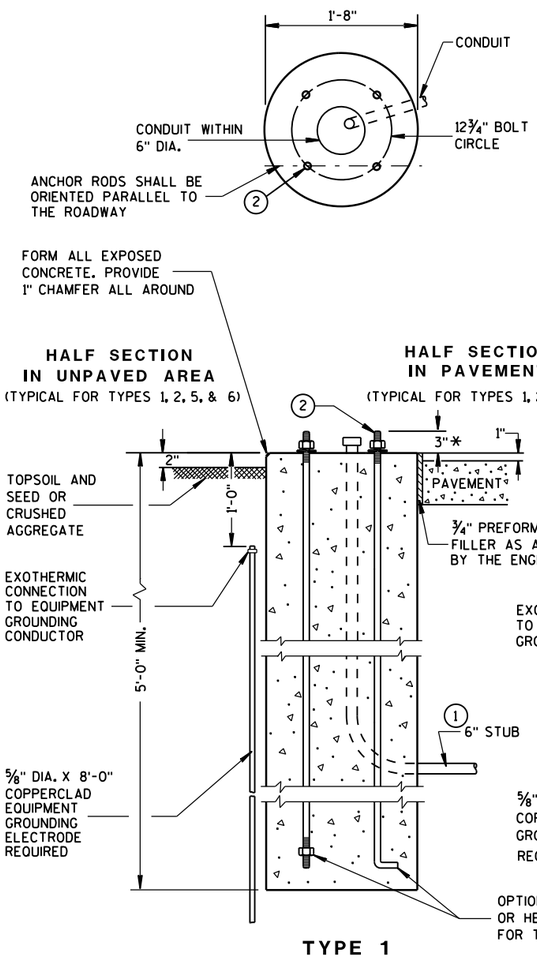

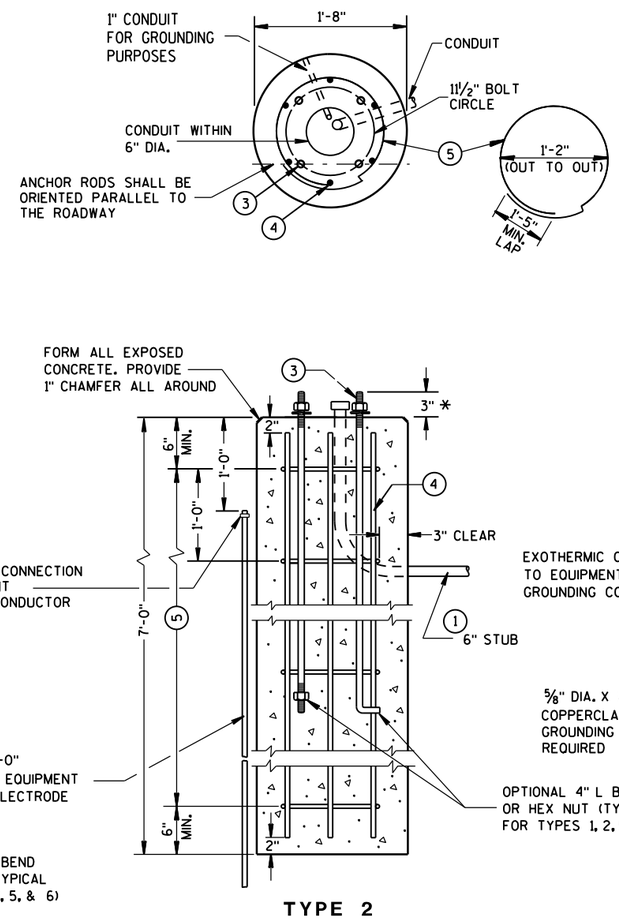

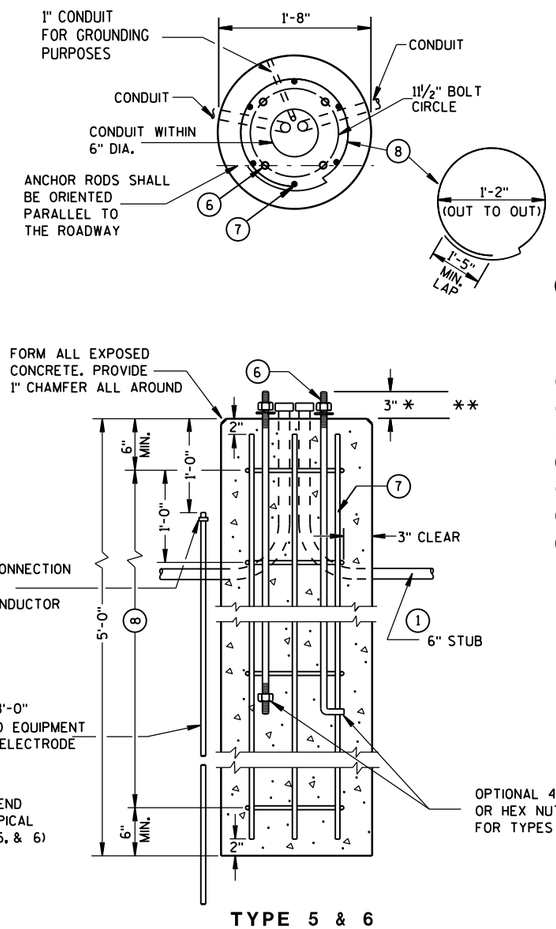

CONCRETE BASES

* ANY ANCHOR ROD PROJECTION SHORTER THAN 2¾" OR LONGER THAN 3¼" SHALL REQUIRE THE BASE TO BE REMOVED AND REPLACED AT THE CONTRACTORS EXPENSE.

** FOR NONBREAKAWAY INSTALLATIONS, 4½" ± ANCHOR ROD PROJECTION WITH THE USE OF LEVELING NUTS. RODENT SCREEN REQUIRED.

CONCRETE BASES, TYPES 1, 2, 5, & 6

STATE OF WISCONSIN
DEPARTMENT OF TRANSPORTATION

APPROVED
Sept. 2014 — DATE
/S/ Ahmet Demirbilek — STATE ELECTRICAL 260
FHWA

6

S.D.D. 9 C 2-7

GENERAL NOTES

DETAILS OF CONSTRUCTION, MATERIALS AND WORKMANSHIP NOT SHOWN ON THIS DRAWING SHALL CONFORM TO THE PERTINENT REQUIREMENTS OF THE CONTRACT.

FOUR (4) BOLTS SHALL BE FURNISHED WITH EACH TRANSFORMER BASE. BOLTS SHALL BE 1" DIAMETER, 4" IN LENGTH, WITH WASHERS, LOCK WASHERS AND NUTS. BOLTS, NUTS AND WASHERS SHALL BE MANUFACTURED IN ACCORDANCE WITH SECTION 641.2.2 OF THE STANDARD SPECIFICATIONS.

LEVELING SHIMS, IF NEEDED, SHALL BE DESIGNED FOR THE PURPOSE AND USED UNDER CAST BASES WHEN PLUMBING POLES OR STANDARDS DURING INSTALLATION. THE USE OF WASHERS IN LIEU OF PROPER LEVELING SHIMS IS NOT ACCEPTABLE.

SHIM LENGTH SHALL BE LONG ENOUGH TO COMPLETELY COVER THE AREA UNDER THE LENGTH AND WIDTH OF THE BASE MOUNTING FLANGE.

DOUBLE NUTTING IS NOT ACCEPTABLE FOR LEVELING OR MOUNTING PURPOSES.

A NEMA APPROVED, U.L. LISTED, COPPER WITH BRASS OR STAINLESS STEEL SET SCREW, DIRECT BURY RATED, MECHANICAL CONNECTOR (LUG), SIZED TO ACCEPT AWG. #10 TO #4 COPPER STRANDED WIRE SHALL BE FURNISHED AND INSTALLED IN THE PEDESTAL AND TRANSFORMER BASES.

THE MECHANICAL CONNECTOR SHALL BE INSTALLED USING A 1/4" - 20 (TPI) STAINLESS STEEL HEX HEAD BOLT OF SUFFICIENT LENGTH TO FIRMLY ATTACH THE LUG TO THE BASE.

SHOULD THE MANNER OF ATTACHMENT OF THE LUG REQUIRE WASHERS, HEX NUTS, LOCK WASHER - THEY SHALL BE STAINLESS STEEL AS IS THE BOLT. THE MANNER OF ATTACHMENT SHALL NOT BLOCK ACCESSIBILITY TO WIRE PLACEMENT IN THE CONNECTOR.

PEDESTAL BASE COLLAR THREADING SHALL BE TAPERED AND IN ACCORDANCE WITH NATIONAL PIPE THREADING DIMENSIONS.

BASE COLLAR THREADING SHALL EXTEND INTO THE BASE COLLAR WITH SUFFICIENT DEPTH TO ACCEPT THE INSTALLATION OF TRAFFIC SIGNAL STANDARDS TO A DEPTH OF 1 1/2", THEN TIGHTENING TO A POINT OF BEING IMMOVABLE.

THE ACCESS DOOR SHALL BE OF THE SAME MATERIAL AS THE BASE.

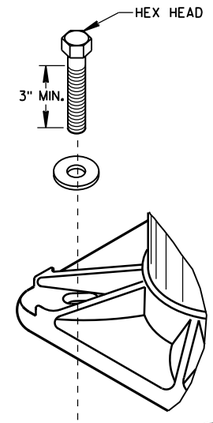

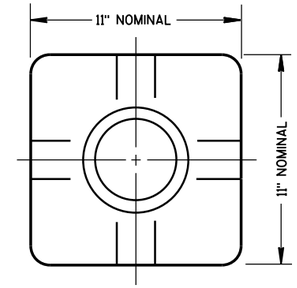

TOP VIEW
(PEDESTAL BASE)

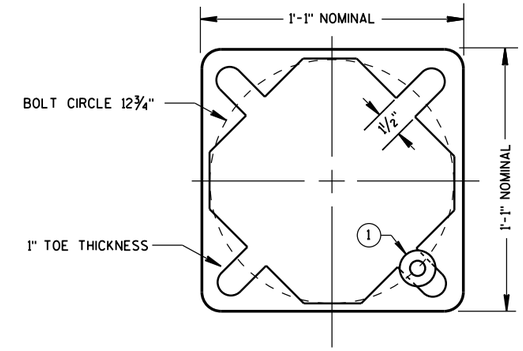

BOTTOM VIEW
(PEDESTAL BASE)

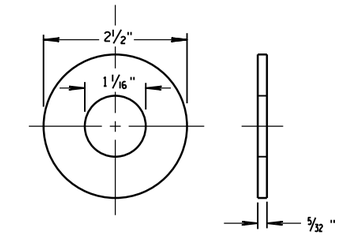

ZINC COATED STEEL WASHER
TO BE PROVIDED BY THE CONTRACTOR

PEDESTAL BASE WASHER (1)

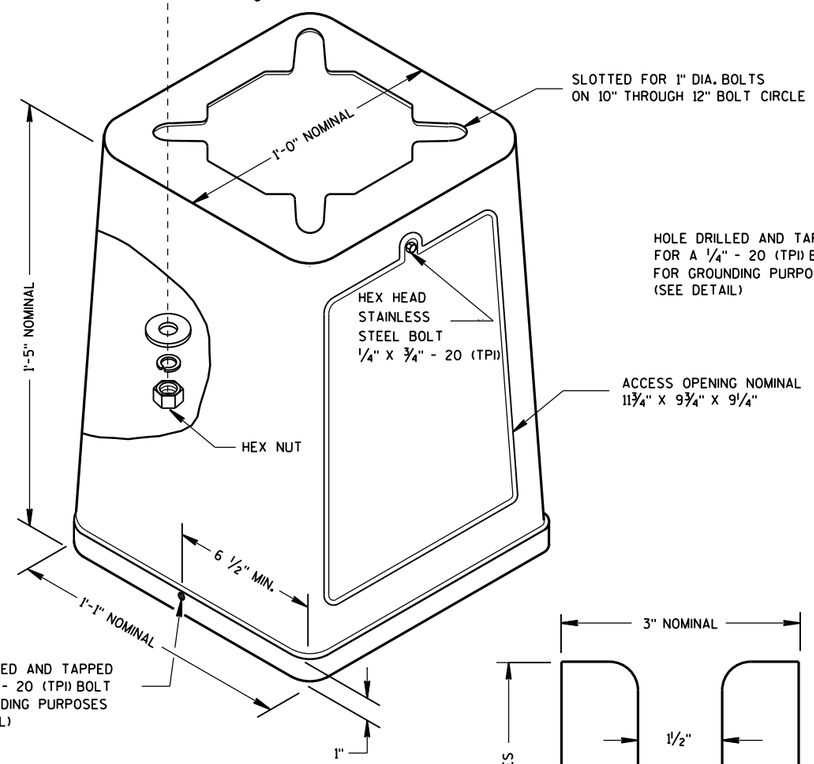

ISOMETRIC VIEW

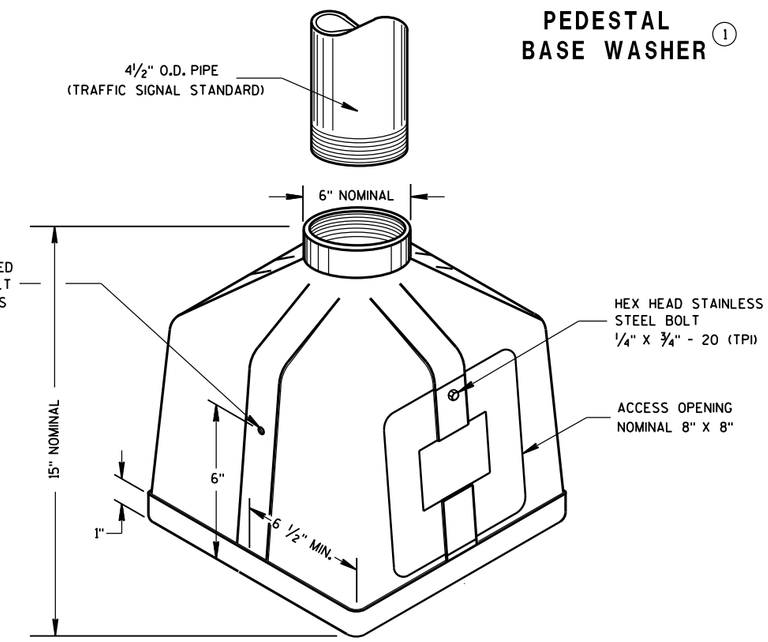

ISOMETRIC VIEW
PEDESTAL BASE

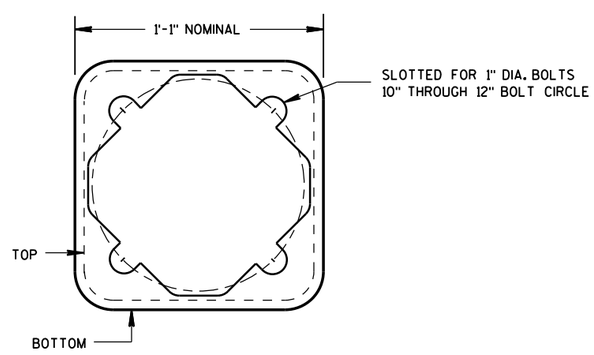

BOTTOM VIEW
(TRANSFORMER BASE)

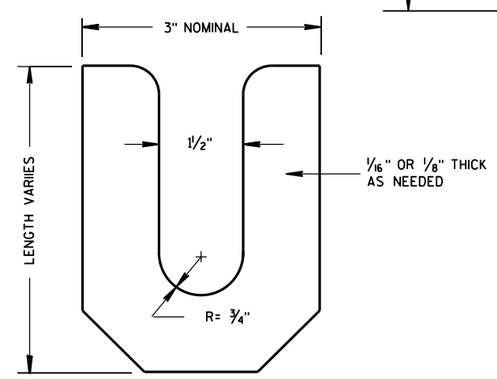

LEVELING SHIM

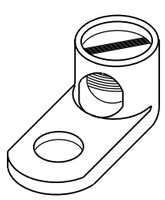

TYPICAL MECHANICAL CONNECTOR LUG

TO BE FURNISHED WITH EACH BASE

TRANSFORMER BASE

INTENDED FOR USE WITH TYPE 2, 3, 4, 5 & 6 POLES

TRANSFORMER/PEDESTAL BASES	
STATE OF WISCONSIN DEPARTMENT OF TRANSPORTATION	
APPROVED Sept. 2014 DATE	/S/ Ahmet Demirbilek STATE ELECTRICAL
FHWA	

6

6

S.D.D. 9 C 3-4

S.D.D. 9 C 3-4

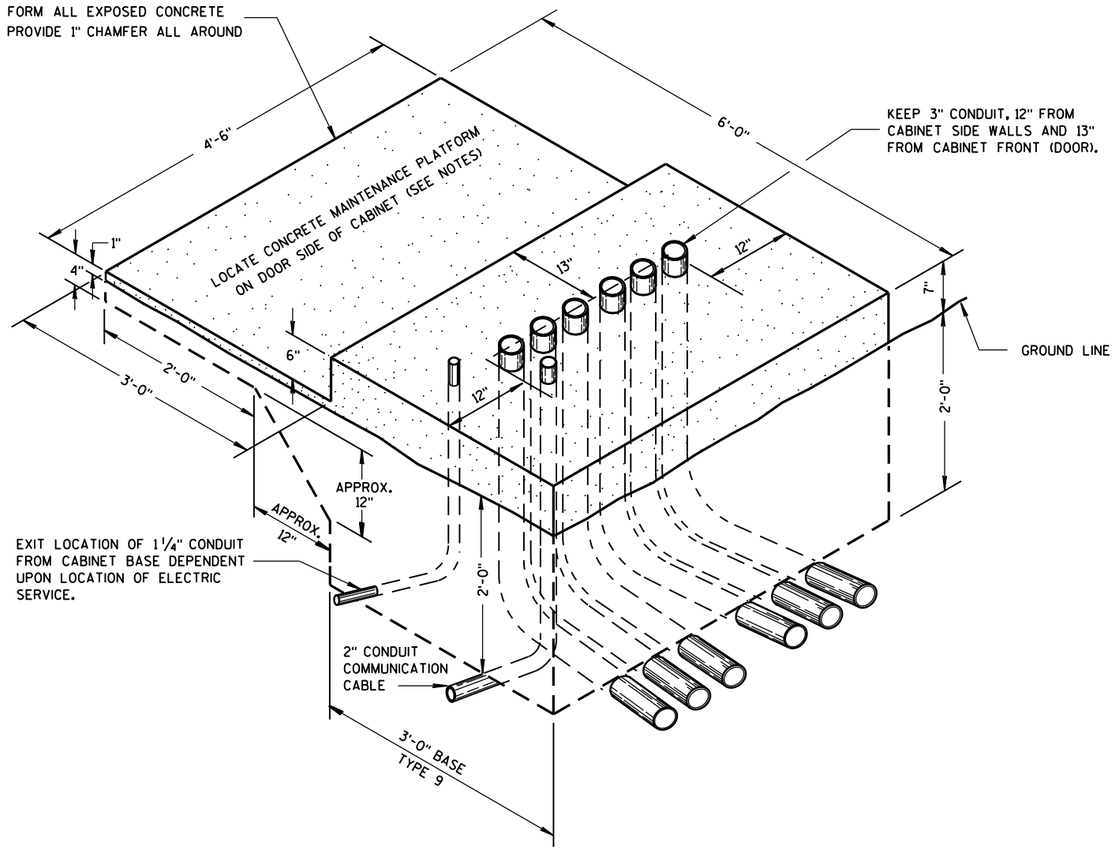

ISOMETRIC VIEW

TYPE 9, SPECIAL

(C.Y. CONCRETE = APPROX. 1.56)

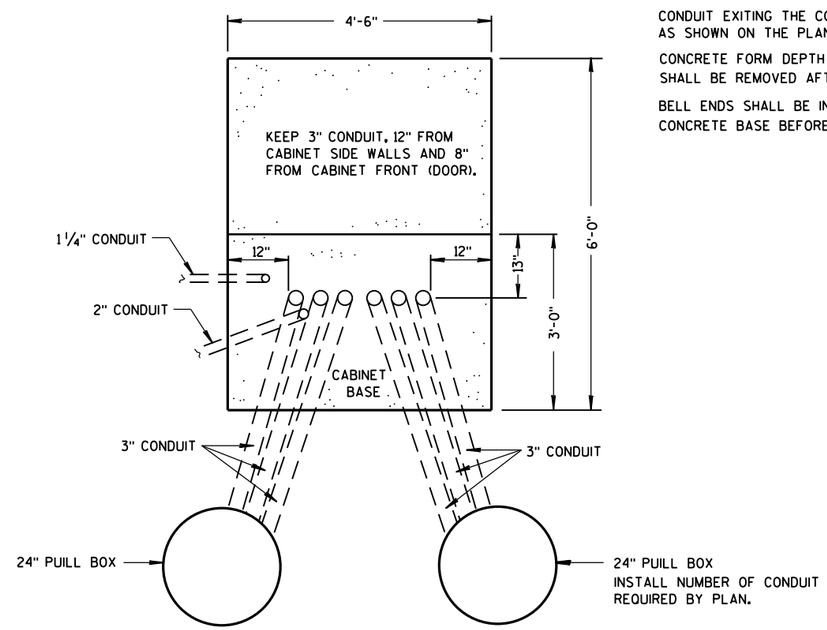

PLAN VIEW

CONCRETE CONTROL CABINET BASE, TYPE 9, SPECIAL

GENERAL NOTES

DETAILS OF CONSTRUCTION, MATERIALS AND WORKMANSHIP NOT SHOWN ON THIS DRAWING SHALL CONFORM TO THE PERTINENT REQUIREMENTS OF THE CONTRACT.

INSTALL FOUR 1/2 INCH MINIMUM DIAMETER X 4 INCH MINIMUM LENGTH STAINLESS STEEL APPROVED CONCRETE MASONRY ANCHORS WITH A PULLOUT STRENGTH OF 9,000 LBS. TO ANCHOR THE CABINET TO TYPE 6, 7, 8, AND 9 BASES. THE ANCHOR STUDS SHALL BE LOCATED AS DIRECTED BY THE ENGINEER TO PROPERLY ANCHOR THE CONTROL CABINET TO THE BASE.

WHEN REQUIRED TO CONNECT NONMETALLIC CONDUIT TO METALLIC CONDUIT, ONLY ADAPTER FITTINGS, U.L. LISTED FOR ELECTRICAL USE, SHALL BE USED.

CONDUIT HEIGHT ABOVE THE CONCRETE BASE SHALL BE 1 INCH.

DEPTH OF CONDUIT INSTALLED BELOW THE TRAVELED WAY SHALL BE 24 INCHES MINIMUM AND 36 INCHES MAXIMUM.

DEPTH OF CONDUIT INSTALLED THAT IS NOT BELOW THE TRAVELED WAY SHALL BE 18 INCHES MINIMUM AND 36 INCHES MAXIMUM.

ANY EXCEPTION TO THE MAXIMUM DEPTH SHALL BE ONLY WITH THE WRITTEN APPROVAL OF THE ENGINEER.

CONTROL CABINET BASE TOP SURFACE SHALL BE TROWEL FINISHED SMOOTH AND LEVEL.

MAINTENANCE PLATFORM SHALL BE FLOAT OR BROOM FINISHED AND BE LEVEL.

MAINTENANCE PLATFORMS ARE NOT REQUIRED WHEN THE SURROUNDING AREA IS PAVED.

MINIMUM BENDING RADIUS OF CONDUIT = 6 X THE DIAMETER.

ALL METALLIC CONDUIT ENDS SHALL BE REAMED AND THREADED.

CAP ALL BELOW GRADE METALLIC CONDUIT ENDS IN WHICH WIRE OR CABLE IS NOT BEING INSTALLED.

PLUG ALL BELOW GRADE NONMETALLIC CONDUIT ENDS IN WHICH WIRE OR CABLE IS NOT BEING INSTALLED.

ALL CONDUIT ENDS AT THE TOP OF CONCRETE BASES SHALL BE CAPPED IF METALLIC OR PLUGGED IF NONMETALLIC IMMEDIATELY AFTER PLACEMENT AND BEFORE CONCRETE IS POURED. CONDUITS IN WHICH WIRE OR CABLE IS NOT BEING INSTALLED SHALL REMAIN CAPPED OR PLUGGED.

CONDUIT EXITING THE CONCRETE BASE (SIX THREE INCH) SHALL TERMINATE IN PULL BOXES AS SHOWN ON THE PLANS.

CONCRETE FORM DEPTH BELOW FINISHED GRADE SHALL BE 6" MAXIMUM. CONCRETE FORMS SHALL BE REMOVED AFTER CONCRETE HAS SET.

BELL ENDS SHALL BE INSTALLED ON ALL PVC CONDUIT EXPOSED AT THE TOP OF THE CONCRETE BASE BEFORE INSTALLATION OF CABLE OR WIRE.

CONCRETE CONTROL CABINET BASE, TYPE 9, SPECIAL

STATE OF WISCONSIN
DEPARTMENT OF TRANSPORTATION

APPROVED
Sept. 2014 — /S/ Ahmet Demirbilek
DATE — STATE ELECTRICAL
FHWA

6

S.D.D. 9 C 6-7

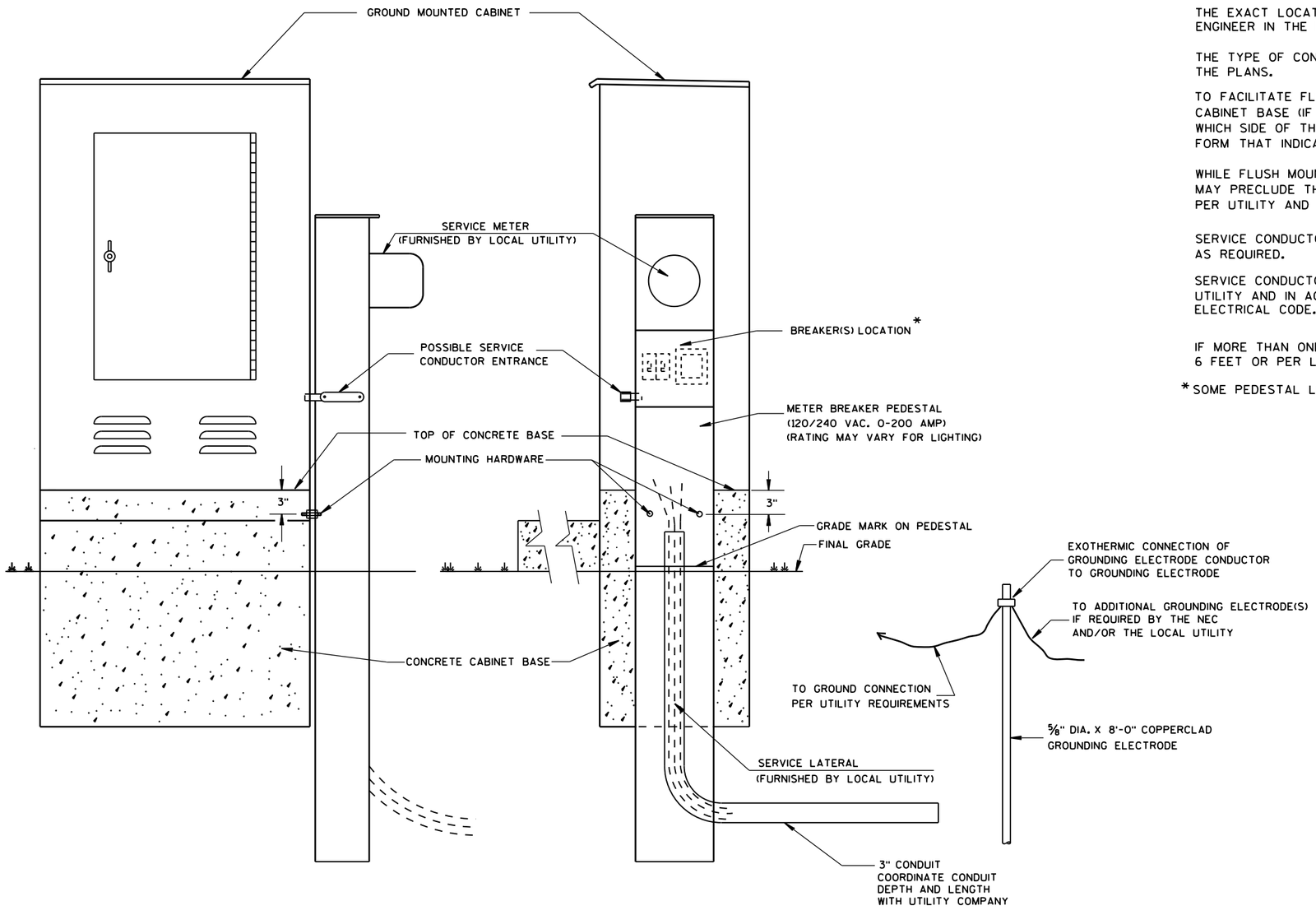

TYPICAL CABINET SERVICE INSTALLATION

GENERAL NOTES

DETAILS OF CONSTRUCTION, MATERIALS AND WORKMANSHIP NOT SHOWN ON THIS DRAWING SHALL CONFORM TO THE PERTINENT REQUIREMENTS OF THE CONTRACT.

THE EXACT LOCATION OF THE METER BREAKER PEDESTAL SHALL BE DETERMINED BY THE ENGINEER IN THE FIELD.

THE TYPE OF CONCRETE CABINET BASE TO BE INSTALLED SHALL BE AS CALLED FOR IN THE PLANS.

TO FACILITATE FLUSH MOUNTING OF THE METER BREAKER PEDESTAL AGAINST THE SIDE OF THE CABINET BASE (IF FLUSH MOUNTING POSSIBLE. CONFER WITH THE LOCAL UTILITY TO DETERMINE WHICH SIDE OF THE CONCRETE BASE THE ELECTRICAL SERVICE LATERAL WILL APPROACH. THEN FORM THAT INDICATED SIDE FOR FULL SIDE DEPTH.

WHILE FLUSH MOUNTING IS THE MOST DESIRABLE MOUNTING CONFIGURATION UTILITY REQUIREMENTS MAY PRECLUDE THIS OPTION. CONTRACTOR MUST PROVIDE UTILITY APPROVED PEDESTAL AND INSTALL PER UTILITY AND MANUFACTURERS REQUIREMENTS.

SERVICE CONDUCTOR ENTRANCES SHALL BE RIGID METALLIC CONDUIT, NIPPLES AND/OR CONDULETS AS REQUIRED.

SERVICE CONDUCTOR ENTRANCES SHALL BE SIZED AND LOCATED AS REQUIRED BY THE LOCAL UTILITY AND IN ACCORDANCE WITH APPROPRIATE ARTICLES OF THE LATEST ACCEPTED NATIONAL ELECTRICAL CODE.

IF MORE THAN ONE GROUNDING ELECTRODE IS REQUIRED, THE DISTANCE APART SHALL BE 6 FEET OR PER LOCAL UTILITY REGULATIONS.

*SOME PEDESTAL LIGHTING PLANS SHOW MAIN LUGS ONLY.

6

6

CABINET SERVICE INSTALLATION
(METER BREAKER PEDESTAL)

STATE OF WISCONSIN
DEPARTMENT OF TRANSPORTATION

APPROVED
Sept. 2014 — /S/ Ahmet Demirbilek
DATE — STATE ELECTRICAL
FHWA

S.D.D. 9 D 1-5

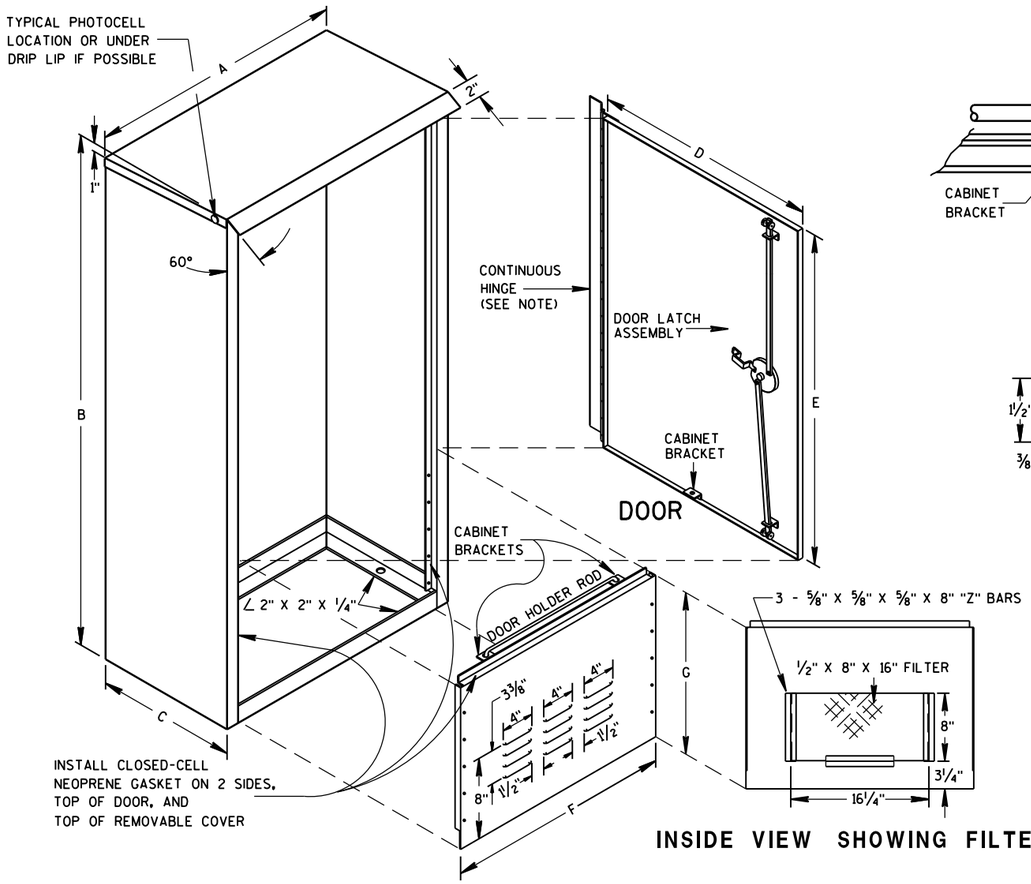

INSIDE VIEW SHOWING FILTER

REMOVABLE COVER

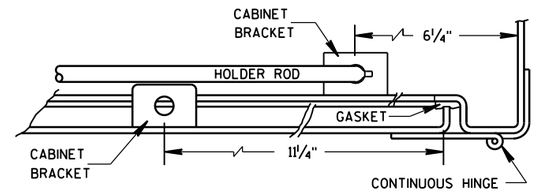

HINGE & DOOR HOLDER

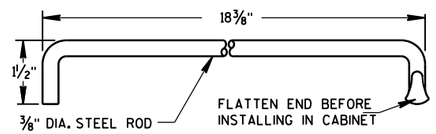

HOLDER ROD

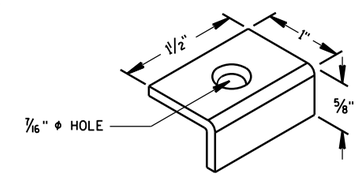

CABINET BRACKET

GENERAL NOTES

DETAILS OF CONSTRUCTION, MATERIALS AND WORKMANSHIP NOT SHOWN ON THIS DRAWING SHALL CONFORM TO THE PERTINENT REQUIREMENTS OF THE STANDARD SPECIFICATIONS AND APPLICABLE SPECIAL PROVISIONS.

PRIME WITH PHOSPHATE TREATMENT AND PRIMER.

FINISH EXTERIOR SURFACES WITH RUSTOLEUM #906 SILVER GRAY OR APPROVED EQUAL.

FINISH INTERIOR WITH RUSTOLEUM #2766 HIGH GLOSS WHITE ENAMEL OR APPROVED EQUAL.

ALL SHEET METAL PARTS SHALL BE .125 INCH THICK ALUMINUM.

ALL SEAMS SHALL BE CONTINUOUSLY WELDED.

ALUMINUM SHALL BE TYPE 5052-H32.

CONTINUOUS HINGE SHALL BE HEAVY GAUGE ALUMINUM WITH 1/4" DIAMETER STAINLESS STEEL HINGE PIN. HINGE IS SECURED WITH 1/4" X 20 TPI STAINLESS STEEL CARRIAGE BOLTS AND STAINLESS STEEL NYLOCK NUTS.

A SINGLE PHOTOCELL SHALL BE LOCATED ON THE NORTH-NORTHEAST SIDE OF THE CABINET UNLESS OTHERWISE CALLED FOR IN THE SPECIAL PROVISIONS. THE PHOTOCELL SHALL BE PLACED AS SHOWN AND SHALL BE LISTED ON THE DEPARTMENTS APPROVED PRODUCTS LIST.

DOOR LATCH ASSEMBLY TO BE PROVIDED WITH THREE-POINT LOCKING MECHANISM.

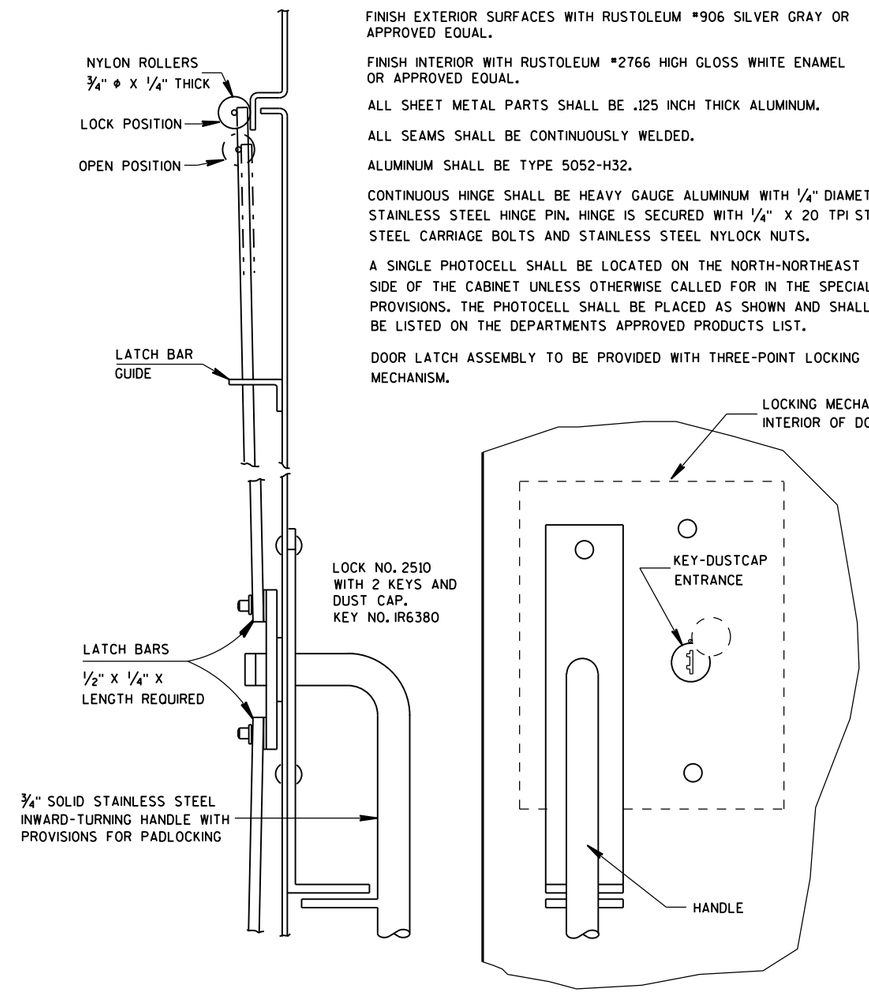

SIDE VIEW

FRONT VIEW

LATCH ASSEMBLY

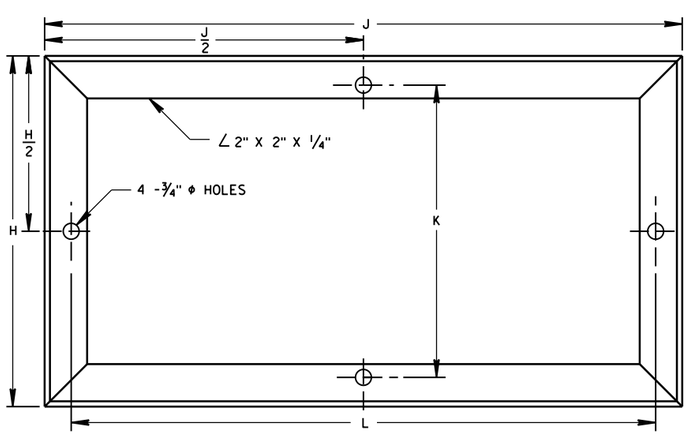

MOUNTING BASE

TABLE OF DIMENSIONS (INCHES)

MARK	CABINET TYPE		
	3060	3860	3866
A	30	38	38
B	60	60	66
C	16 1/2	16 1/2	24
D	26 1/2	34 3/4	33 3/4
E	38 3/4	38 3/4	38 3/4
F	26 1/2	34 3/4	33 3/4
G	19	19	25
H	16 1/2	16 1/2	24
H/2	8 1/4	8 1/4	12
J	30	38	38
J/2	15	19	19
K	13 3/4	13 3/4	21 1/4
L	27 1/2	35 1/2	35 1/2

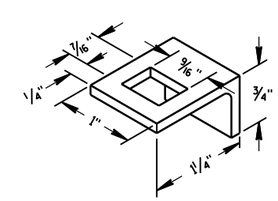

LATCH BAR GUIDE

SIGNAL CONTROL CABINET

STATE OF WISCONSIN
DEPARTMENT OF TRANSPORTATION

APPROVED
Sept. 2014 — DATE
/S/ Ahmet Demirbilek — STATE ELECTRICAL
FHWA

6

S.D.D. 9 D 2-3

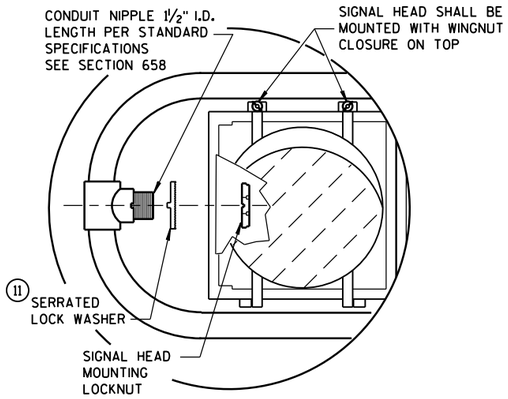

HORIZONTAL SIGNAL HEAD MOUNTING DETAIL *

* SIGNAL HEAD ATTACHMENT ALSO APPLYS TO MOUNTING AT CROSS BAR

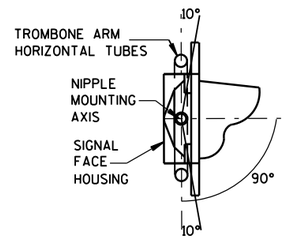

SECTION A-A

(10 DEGREES TILT REQUIREMENT OF FACE(S) IN THE TROMBONE MOUNTING)

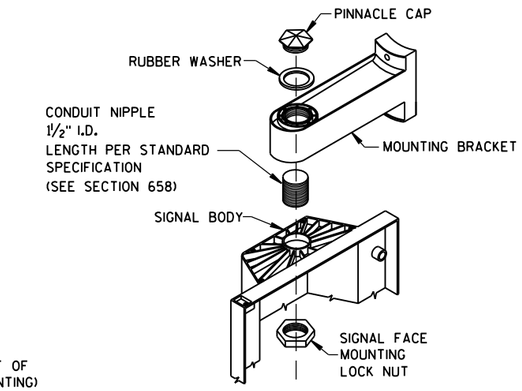

SIGNAL FACE MOUNTING DETAIL

(BANDED)

GENERAL NOTES

DETAILS OF CONSTRUCTION, MATERIALS AND WORKMANSHIP NOT SHOWN ON THIS DRAWING SHALL CONFORM TO THE PERTINENT REQUIREMENTS OF THE CONTRACT.

POLES SHALL BE EITHER ALUMINUM OR GALVANIZED STEEL AS CALLED FOR IN THE CONTRACT.

SECTION 657, POLES, OF THE STANDARD SPECIFICATIONS SHALL APPLY TO THIS DRAWING.

A PULL WIRE/ROPE IN ACCORDANCE WITH STANDARD SPECIFICATION 652 SHALL BE INSTALLED IN EACH TROMBONE ARM RACEWAY DURING THE MANUFACTURING PROCESS.

TYPE 2 ALUMINUM POLES SHALL BE CONSTRUCTED OF 6063-T6 ALUMINUM ALLOY. SLEEVING INSIDE THE POLE IS NOT ACCEPTABLE.

WHEN TRANSFORMER BASES ARE USED, WIRE CONNECTIONS SHALL BE MADE IN THE TRANSFORMER BASE.

1. 4" X 6" REINFORCED HANDHOLE & COVER ASSEMBLY WITH 2 (TWO) ¼" X ¾" - 20 TPI HEX HEAD STAINLESS STEEL BOLTS.
2. SIGNAL FACE MOUNTING BRACKETS. MOUNT WITH CAP SCREWS AND BANDING. (SEE STANDARD SPECIFICATIONS - SEC. 658)
3. GROMMETS, 1" CHASE NIPPLES OR 1" CLOSE CONDUIT NIPPLES WITH BUSHINGS SHALL BE PROVIDED FOR 1⅜" HOLE IN POLE SHAFT FOR WIRING.
4. SECURELY MOUNT DULL BLACK POLYCARBONATE BACKPLATES, PROJECTING 5" BEYOND ALL SIDES OF THE SIGNAL FACE HOUSING, PER MANUFACTURER'S RECOMMENDATIONS.
5. POLE MOUNTED SIGNAL FACES SHALL REQUIRE 1 OR MORE MOUNTING SPACERS UNDER THE TOP MOUNTING BRACKET(S) AS REQUIRED, TO PLUMB THE SIGNAL FACES.
6. CAST ALUMINUM TRANSFORMER BASE, WHEN REQUIRED.
7. MOUNTING BRACKET NIPPLES FOR THE SIGNAL FACE(S) SHALL BE 2 INCHES IN LENGTH AND 1½ INCHES IN DIAMETER. (SEE STANDARD SPECIFICATION - SECTION 658).
8. VERTICAL STRUT (ADJUSTABLE). ONE (1) SET SCREW (¼" X ¾" LONG-20 TPI, STAINLESS STEEL, HEX HEAD) INTO EACH ARM MEMBER IF STRUT IS THE SLIDING TYPE.
9. FURNISH AND INSTALL VENTILATED, CAST, METALLIC (ALUMINUM ALLOY) CAPS. FASTEN CAPS WITH ONE (1) ¼" X ¾" - 20 TPI STAINLESS STEEL, HEX HEAD BOLT.
10. SHIMMING, IF NEEDED, SHALL BE LOCATED BETWEEN THE CONCRETE FOUNDATION AND THE TRANSFORMER BASE.
11. USE SERRATED LOCK WASHERS WITH NOTCHES BETWEEN END TEE AND SIGNAL HEAD.

*MOUNTING HEIGHT LIMITATION DIMENSIONS OF THE TROMBONE MAST ARM WILL BE DEPENDENT UPON THE USE/NON-USE OF A TRANSFORMER BASE.

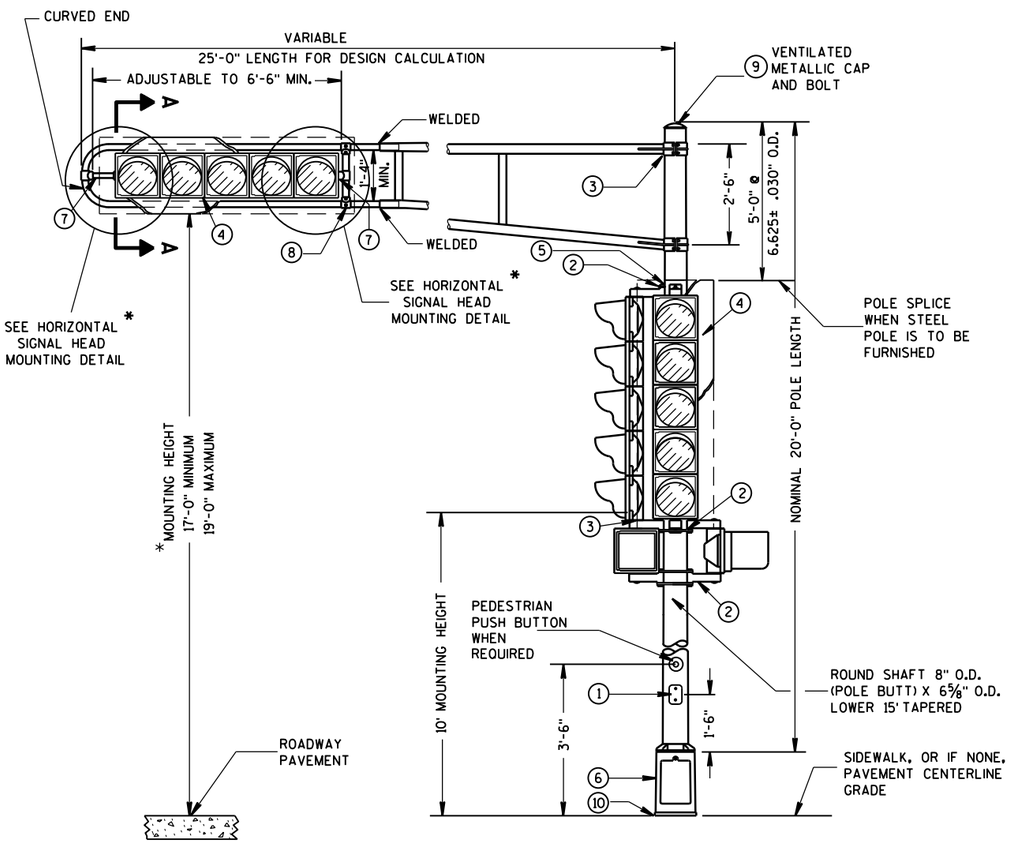

(MAXIMUM LOAD)

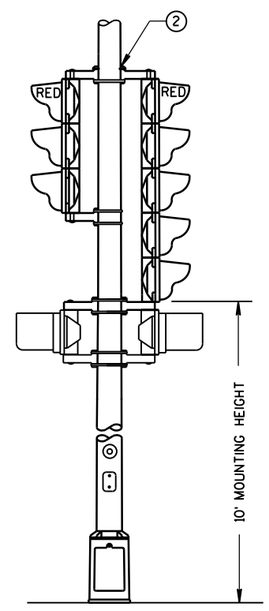

TYPICAL MOUNTING OF BACK TO BACK 3 AND 5 SECTION SIGNAL FACES

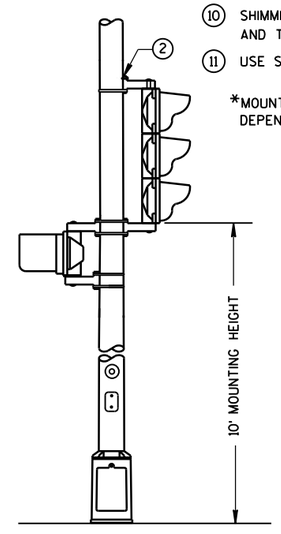

TYPICAL MOUNTING OF 3 SECTION SIGNAL FACE

TYPE 2 POLE MOUNTING CONFIGURATION

FOR MANUFACTURERS USE ONLY

WELD TO BE 100% R.T. OR U.T. TESTED AS PER THE REQUIREMENTS OF AWS D 1.5-88. RECORDS OF COMPLIANCE OF SUCH TESTING SHALL BE FURNISHED TO THE OFFICE OF DESIGN/BRIDGE FOR VERIFICATION AND APPROVAL.

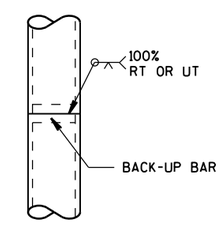

POLE SPLICE DETAIL

POLE MOUNTINGS FOR
TRAFFIC SIGNALS
TYPE 2

STATE OF WISCONSIN
DEPARTMENT OF TRANSPOR

FOR MANUFACTURERS USE ONLY

WELD TO BE 100% R.T. OR U.T. TESTED AS PER THE REQUIREMENTS OF AWS D 1.5-88. RECORDS OF COMPLIANCE OF SUCH TESTING SHALL BE FURNISHED TO THE OFFICE OF DESIGN/BRIDGE FOR VERIFICATION AND APPROVAL.

*RISE FOR 4' ARM SHALL BE 2'-0".

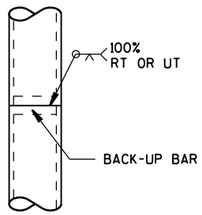

POLE SPLICE DETAIL

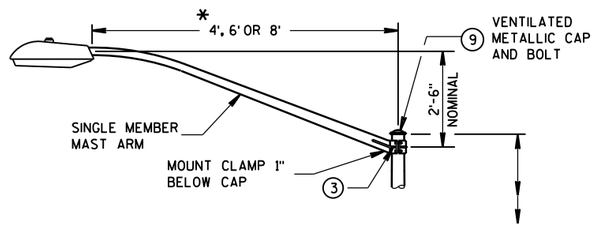

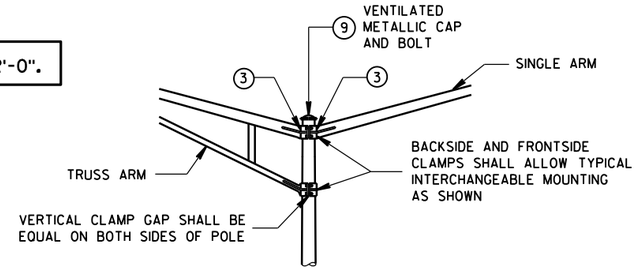

INTERCHANGEABLE MOUNTING DETAIL

LUMINAIRE
WT. - 50 LBS.
EFFECTIVE PROJECTED AREA FOR WIND LOADING = 1.5 SQ. FT.

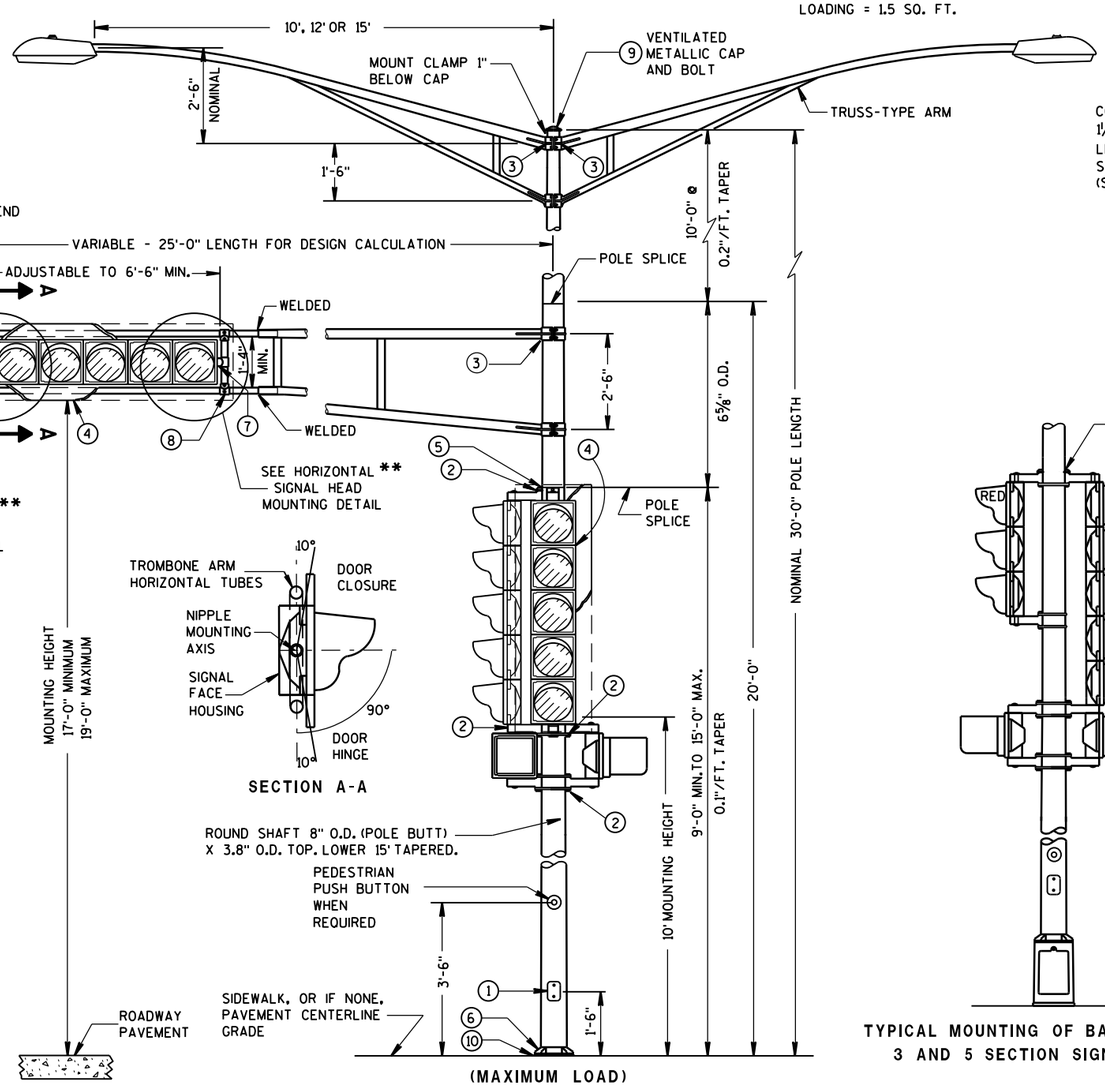

TYPE 3 POLE MOUNTING CONFIGURATION

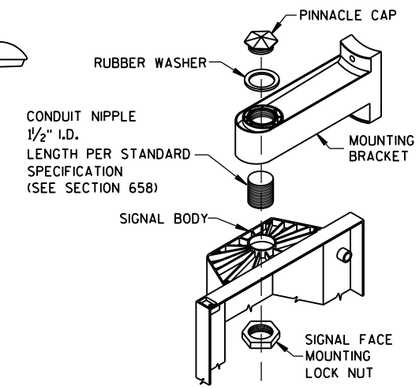

SIGNAL FACE MOUNTING DETAIL
(BANDED)

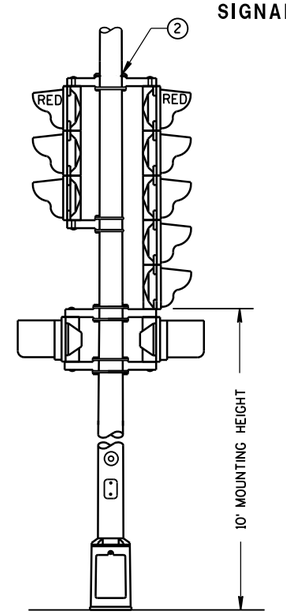

TYPICAL MOUNTING OF BACK TO BACK 3 AND 5 SECTION SIGNAL FACES

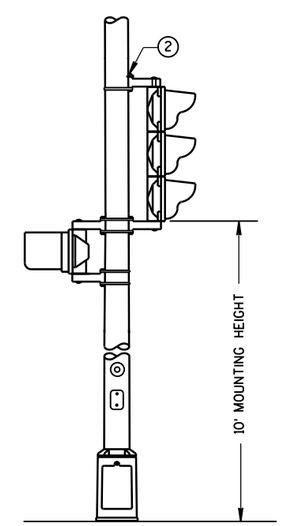

TYPICAL MOUNTING OF 3 SECTION SIGNAL FACE

GENERAL NOTES

DETAILS OF CONSTRUCTION, MATERIALS AND WORKMANSHIP NOT SHOWN ON THIS DRAWING SHALL CONFORM TO THE PERTINENT REQUIREMENTS OF THE CONTRACT.

ALL TYPE 3 POLE MOUNTINGS SHALL BE DESIGNED TO INCLUDE TWIN 15' ARMS WITH LUMINAIRES.

POLES SHALL BE GALVANIZED STEEL.

SECTION 657, POLES, OF THE STANDARD SPECIFICATIONS SHALL APPLY TO THIS DRAWING.

A PULL WIRE/ROPE IN ACCORDANCE WITH STANDARD SPECIFICATION 652, SHALL BE INSTALLED IN EACH TROMBONE ARM RACEWAY DURING THE MANUFACTURING PROCESS.

THE SLIPFITTER END OF THE LUMINAIRE MAST ARM SHALL BE A NOMINAL 2⅜ INCHES IN OUTSIDE DIAMETER. THE STRAIGHT PORTION OF THE SLIPFITTER END OF THE LUMINAIRE MAST ARM SHALL BE A NOMINAL 12 INCHES IN LENGTH.

WHEN TRANSFORMER BASES ARE USED, WIRE CONNECTIONS SHALL BE MADE IN THE TRANSFORMER BASE.

1. 4" X 6" REINFORCED HANDHOLE & COVER ASSEMBLY WITH 2 (TWO) ¼" X ¾" - 20 TPI HEX HEAD STAINLESS STEEL BOLTS.
2. SIGNAL FACE MOUNTING BRACKETS, MOUNT WITH CAP SCREWS AND BANDING. (SEE STANDARD SPECIFICATIONS - SEC. 658)
3. GROMMETS, 1" CHASE NIPPLES OR 1" CLOSE CONDUIT NIPPLES WITH BUSHINGS SHALL BE PROVIDED FOR 1⅜" HOLE IN POLE SHAFT FOR WIRING.
4. SECURELY MOUNT DULL BLACK POLYCARBONATE BACKPLATES, PROJECTING 5" BEYOND ALL SIDES OF THE SIGNAL FACE HOUSING, PER MANUFACTURER'S RECOMMENDATIONS.
5. POLE MOUNTED SIGNAL FACES SHALL REQUIRE 1 OR MORE MOUNTING SPACERS UNDER THE TOP MOUNTING BRACKET(S) AS REQUIRED, TO PLUMB THE SIGNAL FACE.
6. TYPE 3 POLE CONFIGURATIONS SHALL BE MOUNTED DIRECTLY TO THEIR CONCRETE BASES.
7. MOUNTING BRACKET NIPPLES FOR THE SIGNAL FACE(S) SHALL BE 2 INCHES IN LENGTH AND 1½ INCHES IN DIAMETER. (SEE STANDARD SPECIFICATION - SECTION 658)
8. VERTICAL STRUT (ADJUSTABLE). ONE (1) SET SCREW (1/4 " X ¾" -20 TPI, STAINLESS STEEL, HEX HEAD) INTO EACH ARM MEMBER IF STRUT IS THE SLIDING TYPE.
9. FURNISH AND INSTALL VENTILATED, CAST, METALLIC (ALUMINUM ALLOY) CAPS. FASTEN CAPS WITH ONE (1) ¼" X ¾" - 20 TPI STAINLESS STEEL, HEX HEAD BOLT.
10. SHIMMING, IF NEEDED, SHALL BE LOCATED BETWEEN THE CONCRETE FOUNDATION AND POLE.
11. USE SERRATED LOCK WASHERS WITH NOTCHES BETWEEN END TEE AND SIGNAL HEAD.

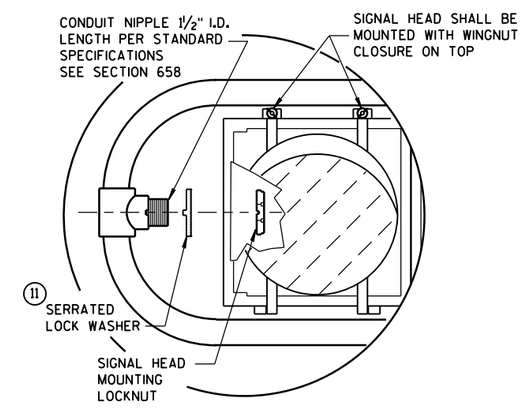

HORIZONTAL SIGNAL HEAD MOUNTING DETAIL **

** SIGNAL HEAD ATTACHMENT ALSO APPLYS TO MOUNTING AT CROSS BAR

POLE MOUNTINGS FOR TRAFFIC SIGNALS AND LIGHTING UNITS, TYPE 3 (HEAVY DUTY)

STATE OF WISCONSIN
DEPARTMENT OF TRANSPOI

*RISE FOR 4' ARM SHALL BE 2'-0".

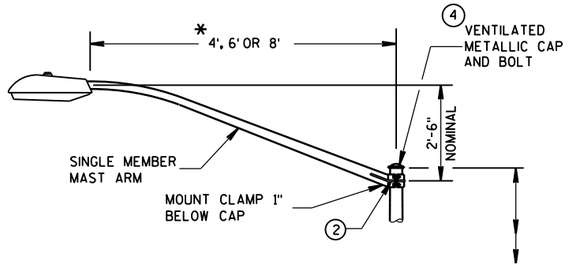

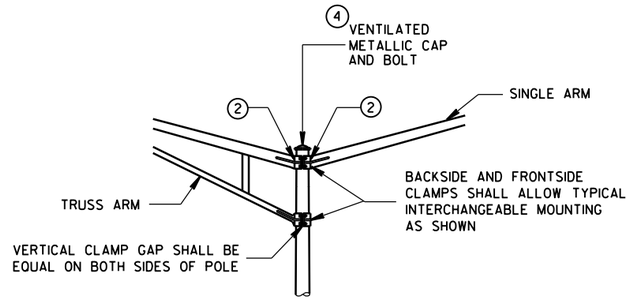

INTERCHANGEABLE MOUNTING DETAIL

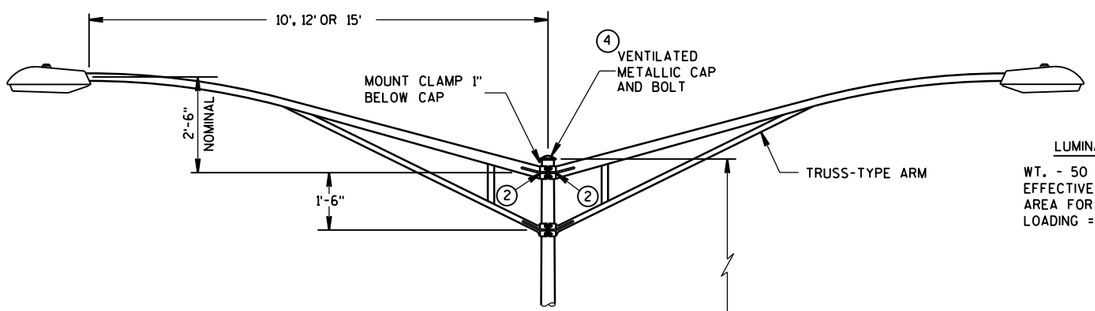

LUMINAIRE

WT. - 50 LBS.
EFFECTIVE PROJECTED
AREA FOR WIND
LOADING = 1.5 SQ. FT.

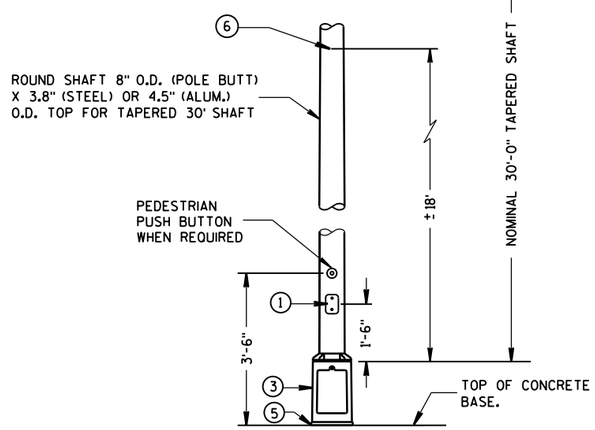

TYPE 5 POLE MOUNTING CONFIGURATION

(MAXIMUM LOAD)

LIGHTING ONLY

GENERAL NOTES

DETAILS OF CONSTRUCTION, MATERIALS AND WORKMANSHIP NOT SHOWN ON THIS DRAWING SHALL CONFORM TO THE PERTINENT REQUIREMENTS OF THE CONTRACT.

ALL TYPE 5 POLE MOUNTINGS SHALL BE DESIGNED TO INCLUDE TWIN 15' ARMS WITH LUMINAIRES.

POLES SHALL BE GALVANIZED STEEL OR ALUMINUM, AS CALLED FOR IN THE CONTRACT.

TYPE 5 ALUMINUM POLES SHALL BE CONSTRUCTED OF 6063-T6 ALUMINUM ALLOY. SLEEVING INSIDE THE POLE IS NOT ACCEPTABLE.

THE TYPE 5 ALUMINUM POLES SHALL HAVE A MINIMUM WALL THICKNESS OF 0.188".

TYPE 5 STEEL POLES SHALL HAVE A MINIMUM WALL THICKNESS OF U.S. STANDARD 11 GAGE (.1196").

THE SLIPFITTER END OF THE LUMINAIRE MAST ARM SHALL BE A NOMINAL 2⅜ INCHES IN OUTSIDE DIAMETER. THE STRAIGHT PORTION OF THE SLIPFITTER END OF THE LUMINAIRE ARM SHALL BE A NOMINAL 12 INCHES IN LENGTH.

WHEN TRANSFORMER BASES ARE USED, WIRE CONEECTIONS SHALL BE MADE IN THE TRANSFORMER BASE.

1. 4" x 6" REINFORCED HANDHOLE & COVER ASSEMBLY WITH 2 (TWO) ¼" X ¾" - 20 TPI HEX HEAD STAINLESS STEEL BOLTS.
2. GROMMETS, 1" CHASE NIPPLES OR 1" CLOSE CONDUIT NIPPLES WITH BUSHINGS SHALL BE PROVIDED FOR 1⅜" HOLE IN POLE SHAFT FOR WIRING.
3. CAST ALUMINUM TRANSFORMER BASE, WHEN REQUIRED.
4. FURNISH AND INSTALL VENTILATED, CAST, METALLIC (ALUMINUM ALLOY) CAPS. FASTEN CAPS WITH ONE (1) ¼" X ¾" - 20 TPI STAINLESS STEEL, HEX HEAD BOLT.
5. SHIMMING, IF NEEDED, SHALL BE LOCATED BETWEEN THE CONCRETE FOUNDATION AND THE TRANSFORMER BASE.
6. INTERNAL DUMBBELL-TYPE VIBRATION DAMPER.

POLE MONTINGS FOR
LIGHTING UNITS, TYPE 5
(30 FEET)

STATE OF WISCONSIN
DEPARTMENT OF TRANSPO

6

S.D.D. 9 E 1-14d

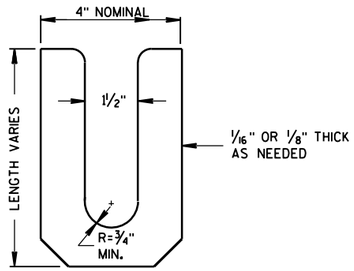

LEVELING SHIM (13)

SHALL BE ALUMINUM

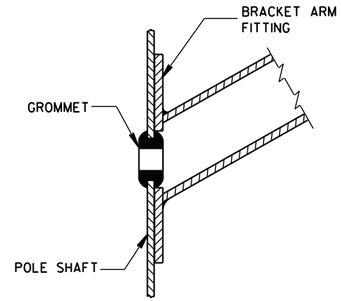

TYPICAL APPLICATION OF GROMMET IN POLE SHAFT

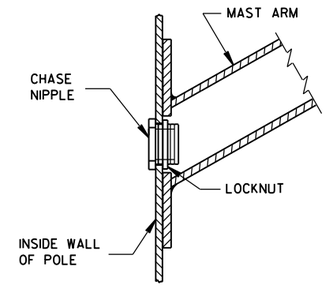

TYPICAL APPLICATION OF CHASE NIPPLE IN POLE SHAFT

GENERAL NOTES

CLAMP BOLT-NUT TIGHTENING TORQUE SHALL BE INDICATED BY INDENT STAMPING (1/2 INCH NUMERALS AND LETTERS) OR WEATHERPROOF PRINTING ON THE INSIDE OF THE CLAMP THAT IS WELDED TO THE ARM MEMBER.

(10) 4.5" I.D. FOR LUMINAIRE MAST ARM CLAMP.
6.625" I.D. FOR TROMBONE MAST ARM CLAMP.

(11) INDIVIDUAL BASE PLATE ANCHOR ROD COVERS. (4 REQUIRED)

(12) BASE PLATE SLOTTED TO ACCEPT 11" THROUGH 12" BOLT CIRCLE USING 1" DIAMETER ANCHOR RODS.

(13) LEVELING SHIMS, DESIGNED FOR THE PURPOSE, SHALL BE USED WHEN PLUMBING POLES. THE USE OF WASHERS IN LIEU OF PROPER LEVELING SHIMS IS NOT ACCEPTABLE. LEVELING SHIMS SHALL BE USED ONLY BETWEEN THE TOP OF THE CONCRETE BASE AND A METALLIC BASE PLATE.

SHIMS SHALL BE LONG ENOUGH AND WIDE ENOUGH TO COMPLETELY COVER THE AREA UNDER THE LENGTH AND WIDTH OF THE BASE MOUNTING FLANGE.

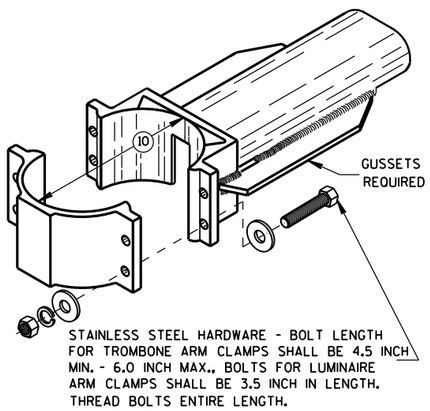

TYPICAL TROMBONE MAST ARM AND SINGLE LUMINAIRE MAST ARM MOUNTING CLAMP

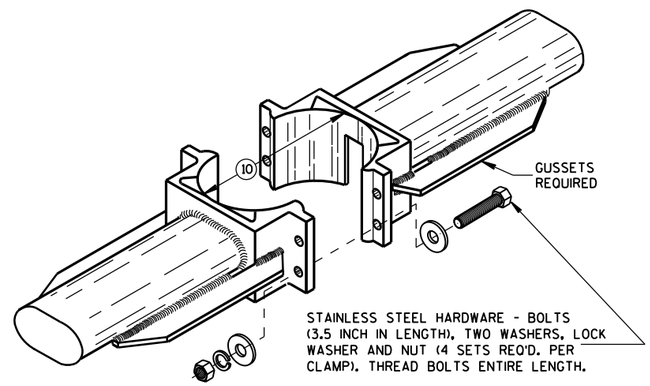

TYPICAL LUMINAIRE MAST ARM (DOUBLE) MOUNTING BRACKETS

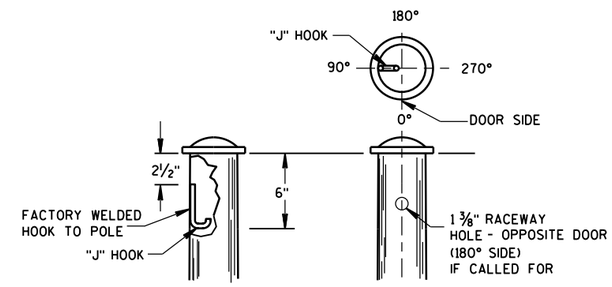

TYPICAL "J" HOOK LOCATION

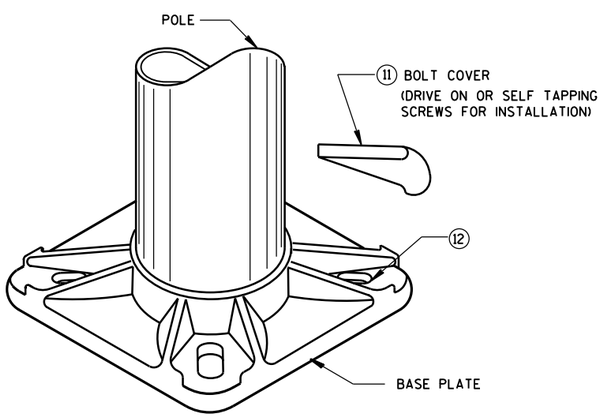

BASE PLATE

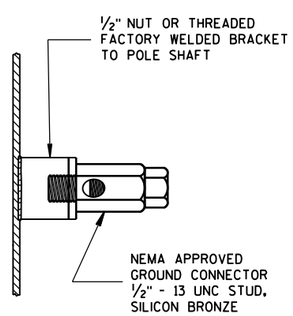

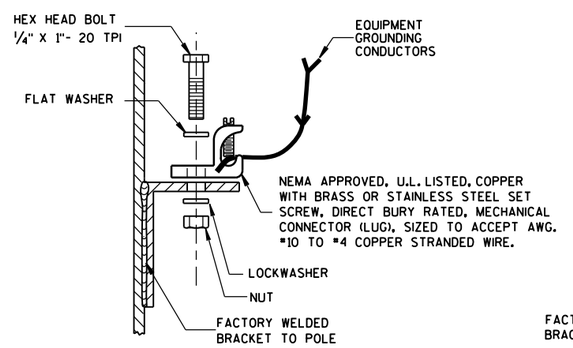

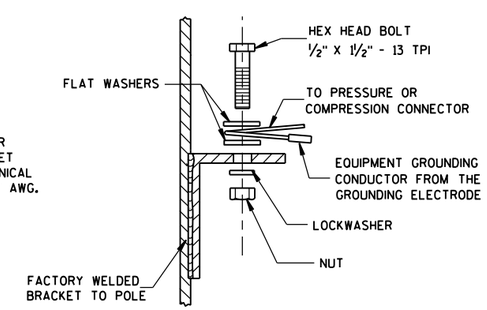

TYPICAL GROUNDING CONNECTIONS

NUT, BOLT AND WASHERS SHALL BE STAINLESS STEEL

HARDWARE DETAILS FOR POLE MOUNTINGS

STATE OF WISCONSIN
DEPARTMENT OF TRANSPORTATION

APPROVED
Feb. 2015 — DATE
/S/ Ahmet Demirbilek — STATE ELECTRICAL
FHWA

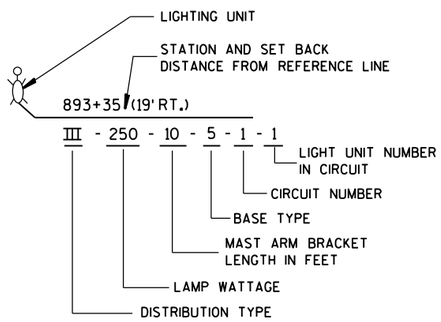

LIGHTING UNIT CODE
(TYPICAL)

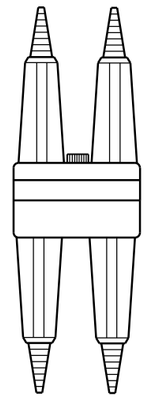

DETAIL "A"
BREAKAWY DOUBLE POLE WITH WATERPROOF INSULATING BOOT

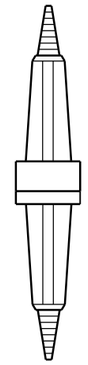

DETAIL "B"
BREAKAWY SINGLE POLE WITH WATERPROOF INSULATING BOOT

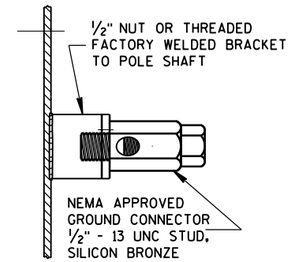

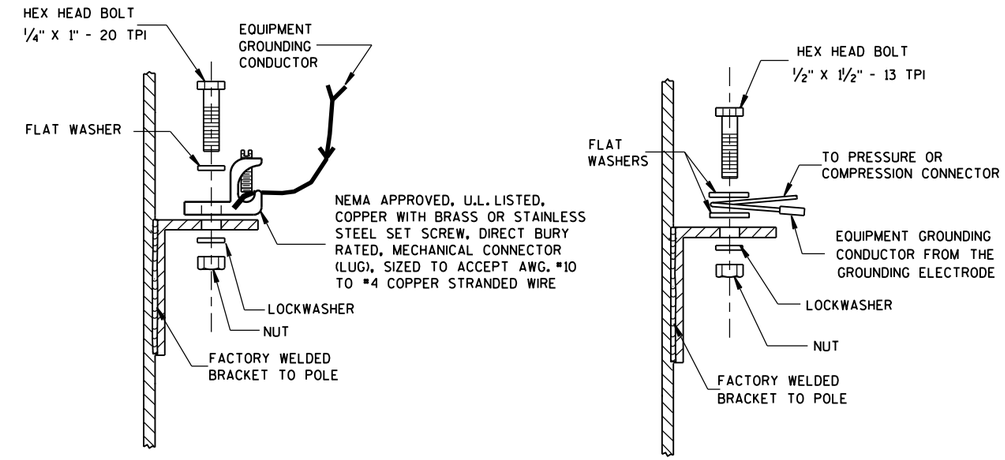

TYPICAL GROUNDING CONNECTIONS
NUT, BOLT, WASHERS AND LOCKWASHERS SHALL BE STAINLESS STEEL

GENERAL NOTES
DETAILS OF CONSTRUCTION, MATERIALS AND WORKMANSHIP NOT SHOWN ON THIS DRAWING SHALL CONFORM TO THE PERTINENT REQUIREMENTS OF THE CONTRACT.

THE EQUIPMENT GROUNDING CONNECTOR SHALL BE TAPED WITH 3 WRAPS (MINIMUM) OF APPROVED RUBBER TAPE AND THEN 3 WRAPS (MINIMUM) OF APPROVED VINYL TAPE TO COVER SHARP WIRE ENDS AFTER THE CONNECTION IS COMPLETED.

WHEN TRANSFORMER BASES ARE USED, ALL WIRING CONNECTIONS SHALL OCCUR WITHIN THE TRANSFORMER BASES.

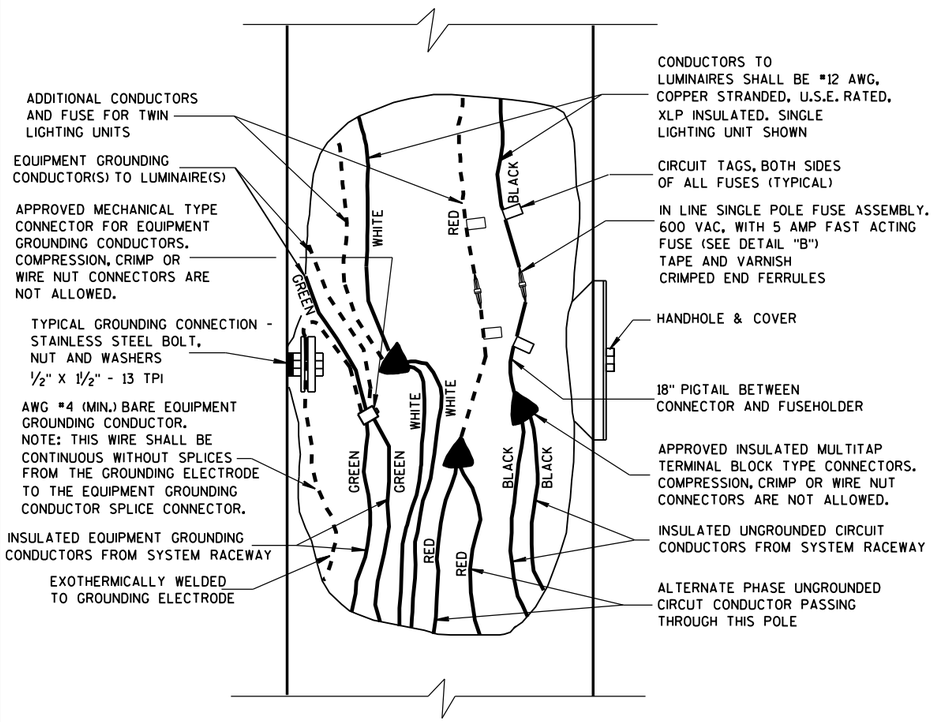

3 WIRE - 120, 240 OR 480 VAC (UNGROUNDED CONDUCTOR) WITH GROUNDED CONDUCTOR AND WITH EQUIPMENT GROUNDING CONDUCTOR

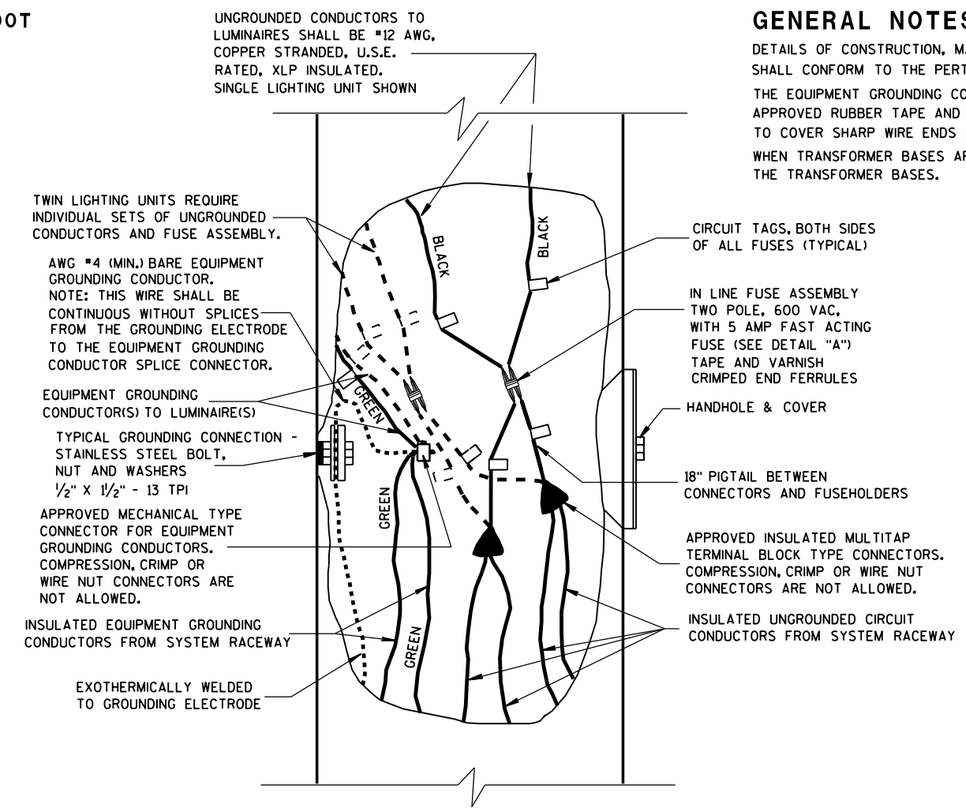

2 WIRE - 240 OR 480 VAC (UNGROUNDED CONDUCTORS) WITH EQUIPMENT GROUNDING CONDUCTOR

NON-FREEWAY LIGHTING UNIT POLE WIRING	
STATE OF WISCONSIN DEPARTMENT OF TRANSPORTATION	
APPROVED Sept. 2014 DATE	/S/ Ahmet Demirbilek STATE ELECTRICAL
FHWA	

6

6

S.D.D. 9 E 3-5

S.D.D. 9 E 3-5

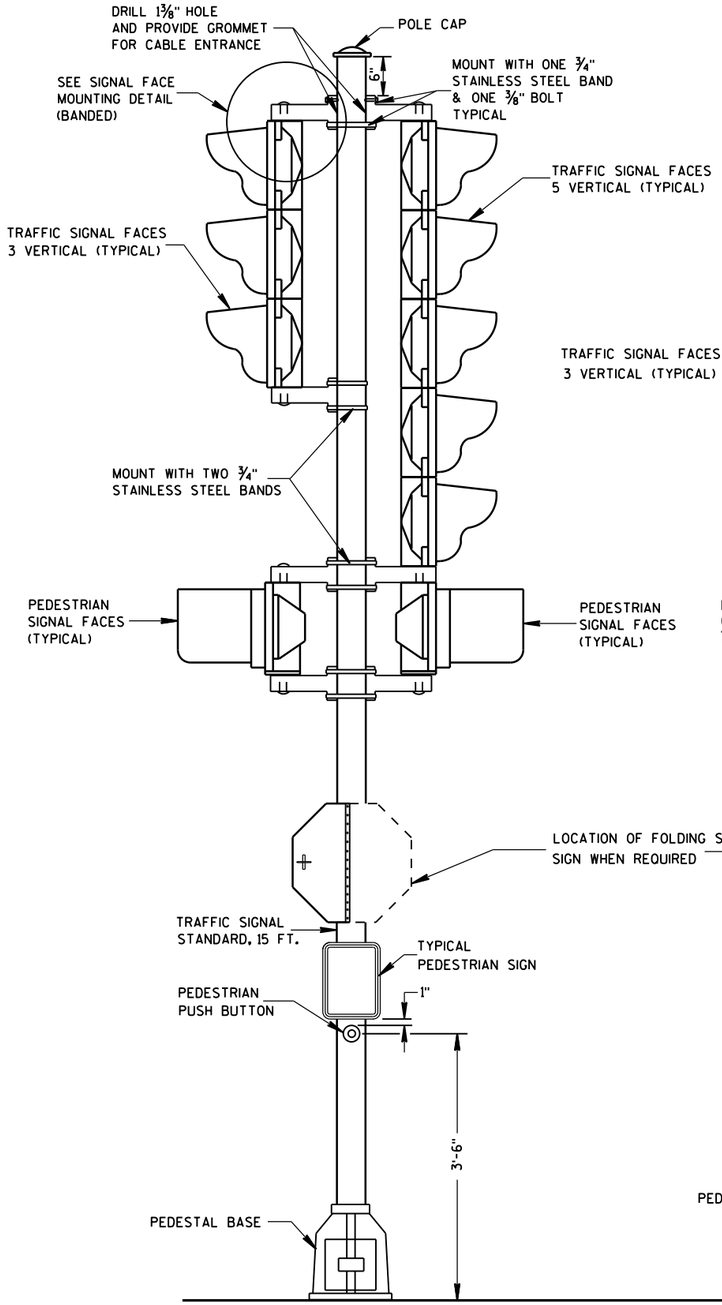

TRAFFIC SIGNAL STANDARD-15 FT.

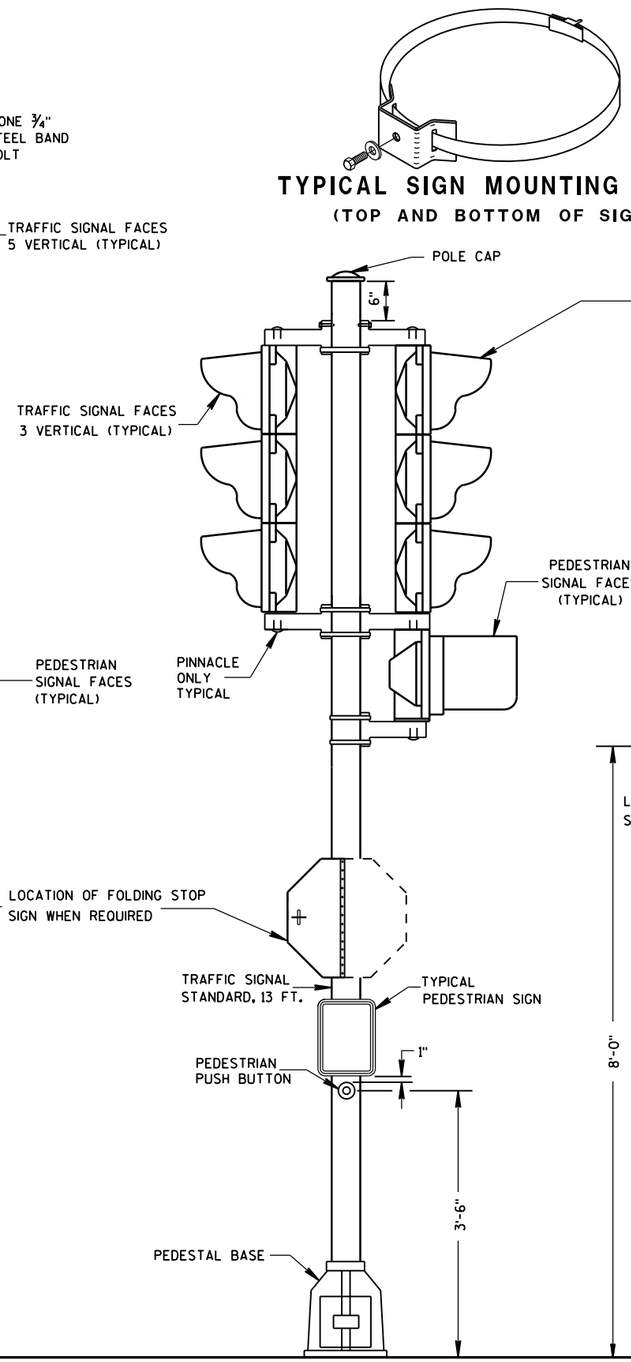

TRAFFIC SIGNAL STANDARD-13 FT.

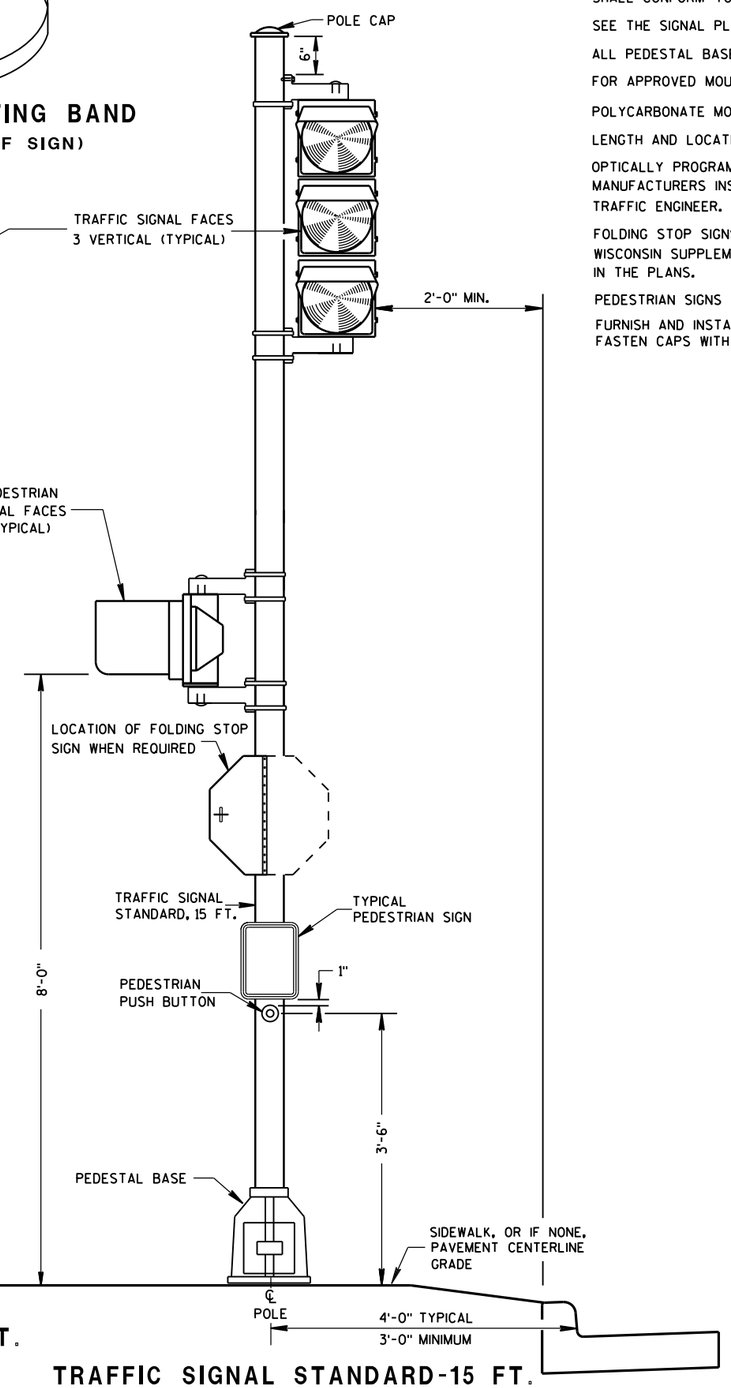

TRAFFIC SIGNAL STANDARD-15 FT.
3M MOUNTING (TYPICAL)

GENERAL NOTES

DETAILS OF CONSTRUCTION, MATERIALS AND WORKMANSHIP NOT SHOWN ON THIS DRAWING SHALL CONFORM TO THE PERTINENT REQUIREMENTS OF THE CONTRACT.

SEE THE SIGNAL PLAN FOR REQUIRED SIGNAL FACE SIZES.

ALL PEDESTAL BASES SHALL BE MOUNTED ON CONCRETE BASE - TYPE 1.

FOR APPROVED MOUNTING HARDWARE, SEE THE CONTRACT SPECIAL PROVISIONS.

POLYCARBONATE MOUNTING BRACKETS SHALL BE USED.

LENGTH AND LOCATION OF TRAFFIC SIGNAL STANDARDS SHALL BE AS SHOWN ON THE PLANS.

OPTICALLY PROGRAMMED SIGNAL FACES SHALL BE MASKED IN ACCORDANCE WITH MANUFACTURERS INSTRUCTIONS, AND UNDER THE DIRECTIONS OF THE REGION TRAFFIC ENGINEER.

FOLDING STOP SIGNS SHALL BE IN ACCORDANCE WITH THE MUTCD AND/OR THE LATEST WISCONSIN SUPPLEMENT. THE SIGNS SHALL BE SIZED AND LOCATED AS CALLED FOR IN IN THE PLANS.

PEDESTRIAN SIGNS SHALL BE AS DESIGNATED IN THE PLANS.

FURNISH AND INSTALL VENTILATED, CAST, METALLIC (ALUMINUM ALLOY) CAPS. FASTEN CAPS WITH ONE (1) ¼" X ¾" - 20 TPI STAINLESS STEEL, HEX HEAD BOLT.

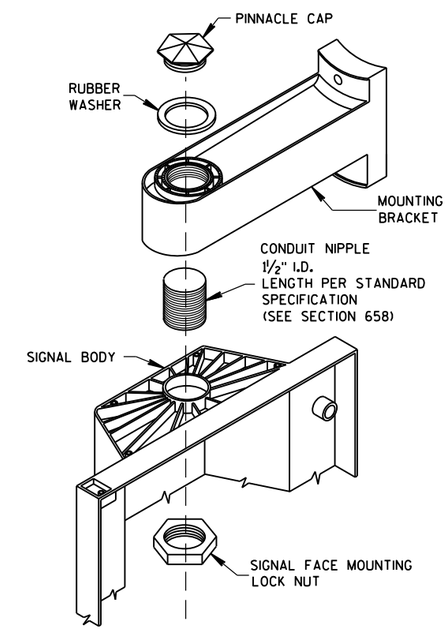

SIGNAL FACE MOUNTING DETAIL
(BANDED)

TRAFFIC SIGNAL STANDARD POLY BRACKET MOUNTINGS (TYPICAL) 13 FT. OR 15 FT.	
STATE OF WISCONSIN DEPARTMENT OF TRANSPORTATION	
APPROVED 2/28/2013 DATE	/S/ Ahmet Demirbilek STATE ELECTRICAL
FHWA	

6

6

S.D.D. 9 E 6-5

S.D.D. 9 E 6-5

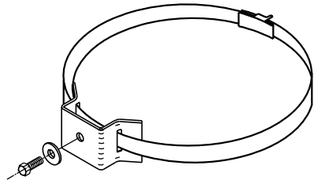

TYPICAL SIGN MOUNTING BAND

(TOP AND BOTTOM OF SIGN)

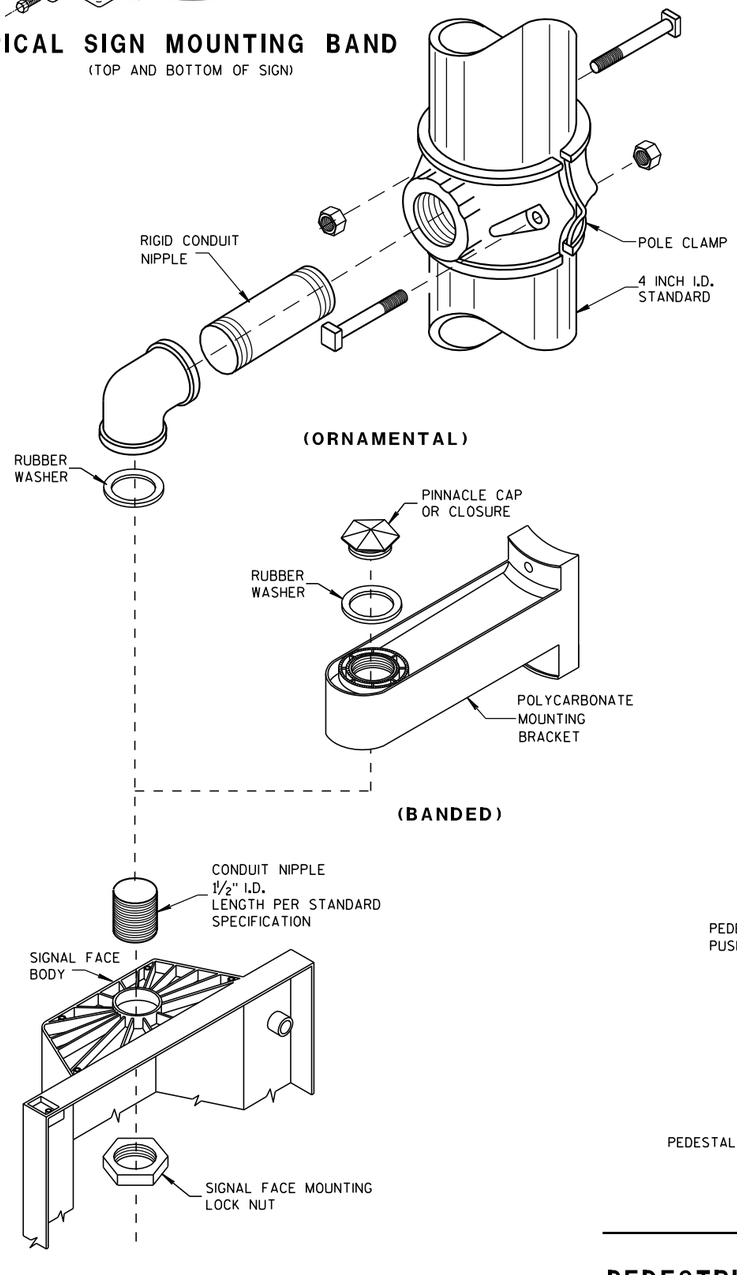

SIGNAL FACE MOUNTING DETAILS

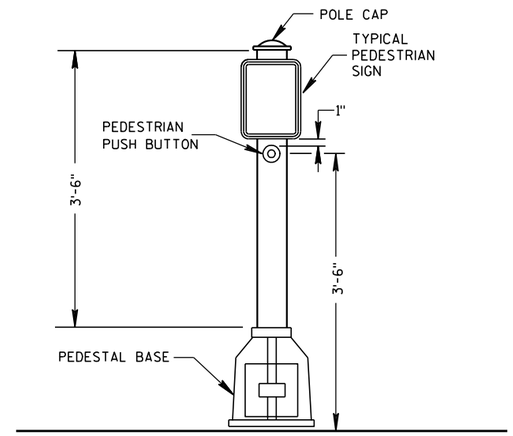

PEDESTRIAN PUSH BUTTON TYPICAL MOUNTING

GENERAL NOTES

DETAILS OF CONSTRUCTION, MATERIALS AND WORKMANSHIP NOT SHOWN ON THIS DRAWING SHALL CONFORM TO THE PERTINENT REQUIREMENTS OF THE CONTRACT.

SEE THE SIGNAL PLAN FOR REQUIRED SIGNAL FACE SIZES.

LOCATIONS SHALL BE AS SHOWN ON THE PLANS.

ALL PEDESTAL BASES SHALL BE MOUNTED ON CONCRETE BASE - TYPE 1.

FOR APPROVED MOUNTING HARDWARE, SEE THE CONTRACT SPECIFICATIONS.

POLYCARBONATE SIGNAL FACE MOUNTING BRACKETS SHALL BE USED UNLESS ORNAMENTAL POLE CLAMPS ARE SPECIFIED.

LENGTH OF TRAFFIC STANDARDS SHALL BE AS SHOWN ON THE PLANS.

MOUNTINGS AND BRACKETS SHALL BE AS SHOWN ON THE PLANS OR DESCRIBED IN THE SPECIAL PROVISIONS (BY THE DISTRICT TRAFFIC ENGINEER).

PEDESTRIAN SIGNS SHALL BE AS DESIGNATED IN THE PLANS.

FURNISH AND INSTALL VENTILATED, CAST, METALLIC (ALUMINUM ALLOY) CAPS. FASTEN CAPS WITH ONE (1) ¼" X ¾" - 20 TPI STAINLESS STEEL, HEX HEAD BOLT.

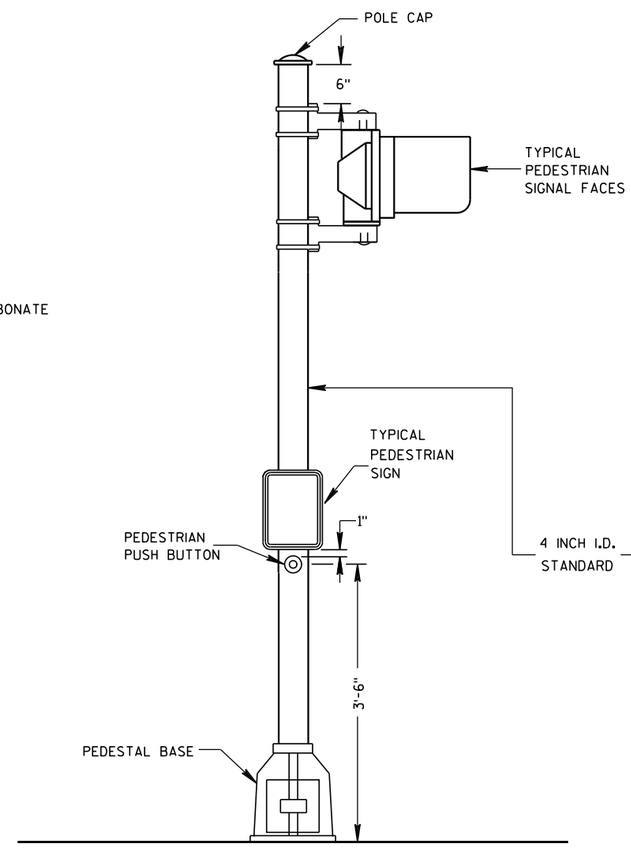

PEDESTRIAN FACE STANDARD-10 FT.

(WALK-DON'T WALK)

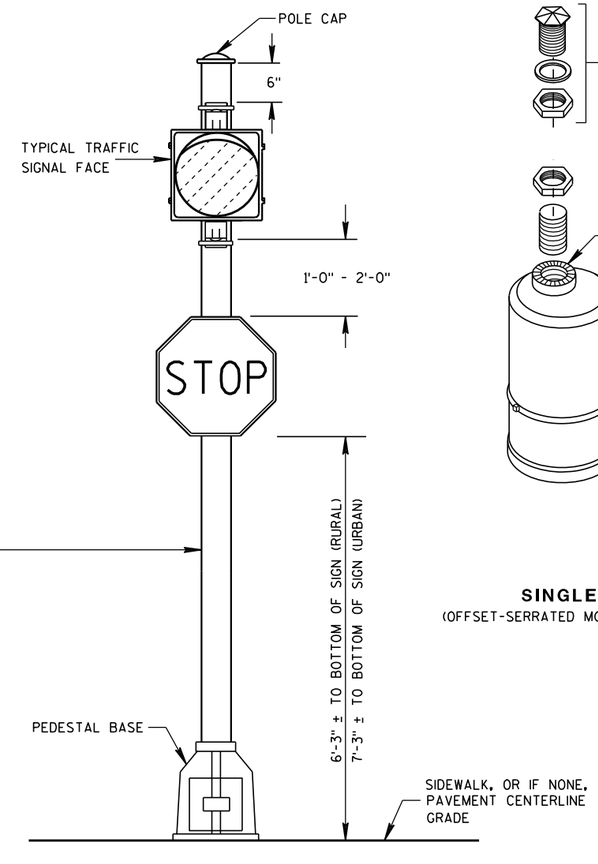

STANDARD FLASHER.

10 FOOT, 13 FOOT OR 15 FOOT AS REQUIRED

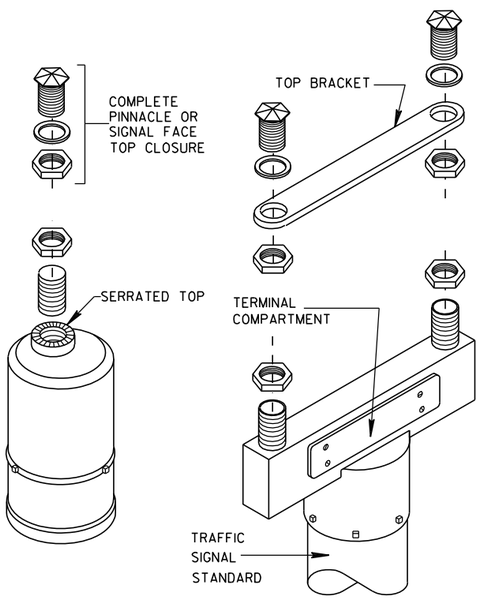

SINGLE
(OFFSET-SERRATED MOUNTING)

DOUBLE
(SERRATED MOUNTING)

SLIPFITTERS

TRAFFIC SIGNAL STANDARD PEDESTRIAN AND FLASHER TYPICAL MOUNTING DETAILS

STATE OF WISCONSIN
DEPARTMENT OF TRANSPORTATION

APPROVED

5/11/10 — DATE
/S/ John Corbin — STATE ELECTRICAL ENGI
FHWA — HWYS

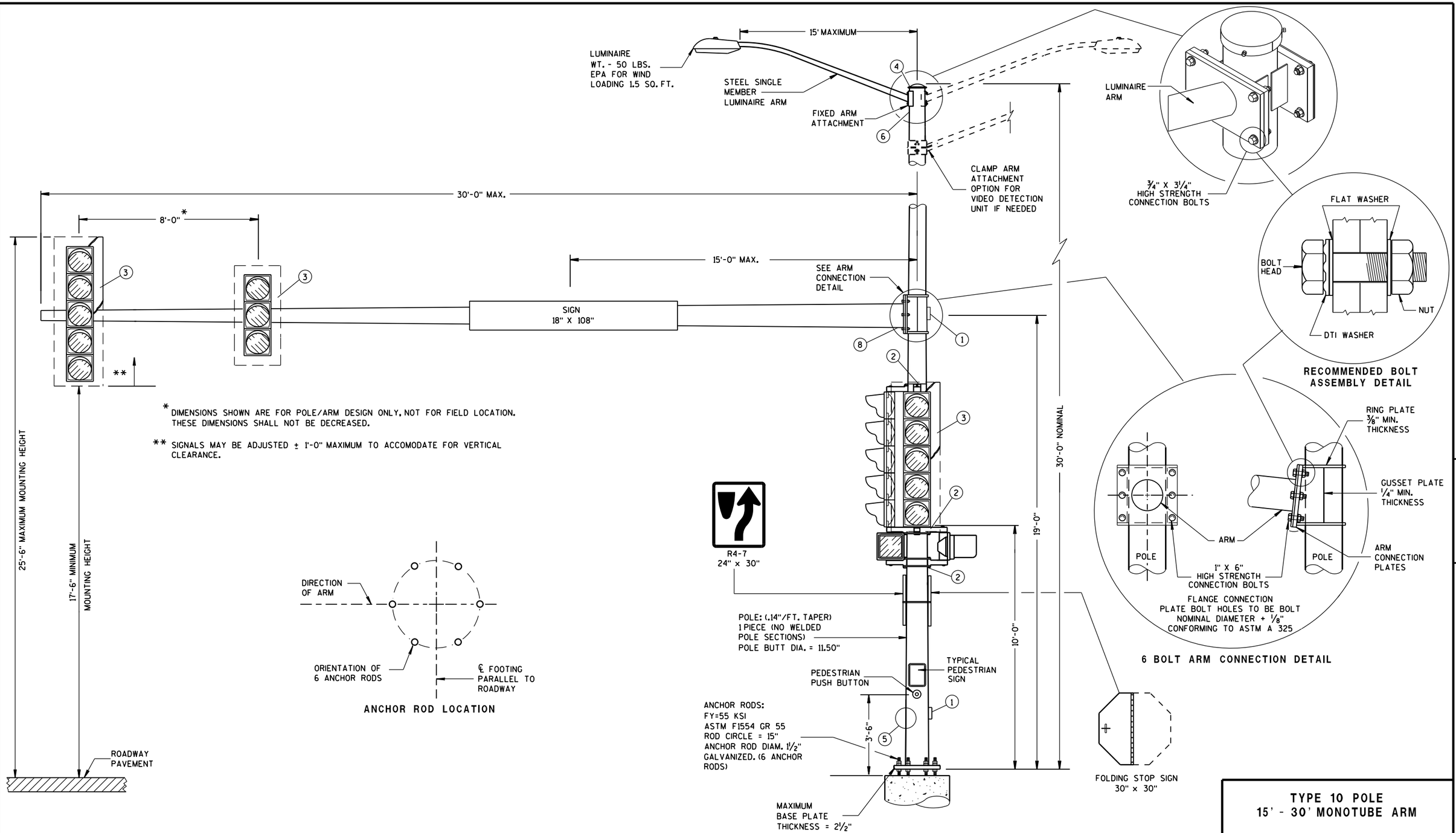

(MAXIMUM LOAD)

TYPE 10 POLE
15'- 30' MONOTUBE ARM

TYPE 10 POLE 15' - 30' MONOTUBE ARM
STATE OF WISCONSIN DEPARTMENT OF TRANSPORTATION
APPROVED May, 2016 — DATE /S/ Ahmet Demirbilek — STATE ELECTRICAL FHWA

6

6

S.D.D. 9 E 8-8b

S.D.D. 9 E 8-8b

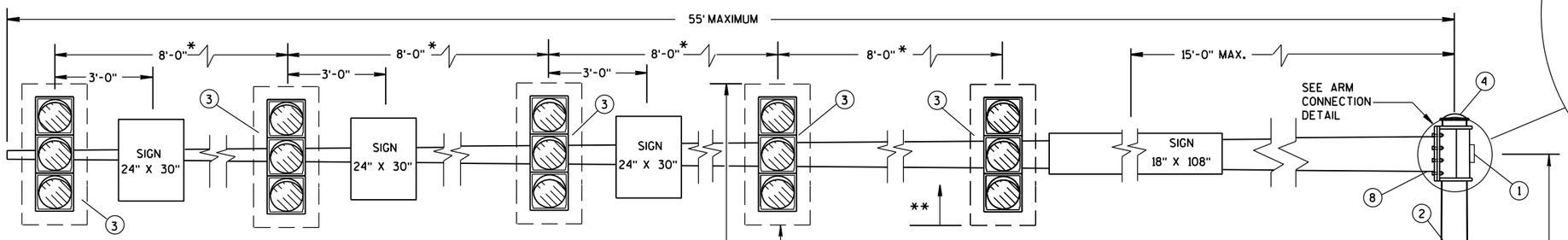

* DIMENSIONS SHOWN ARE FOR POLE/ARM DESIGN ONLY, NOT FOR FIELD LOCATION. THESE DIMENSIONS SHALL NOT BE DECREASED.

** SIGNALS MAY BE ADJUSTED ± 1'-0" MAXIMUM TO ACCOMODATE FOR VERTICAL CLEARANCE.

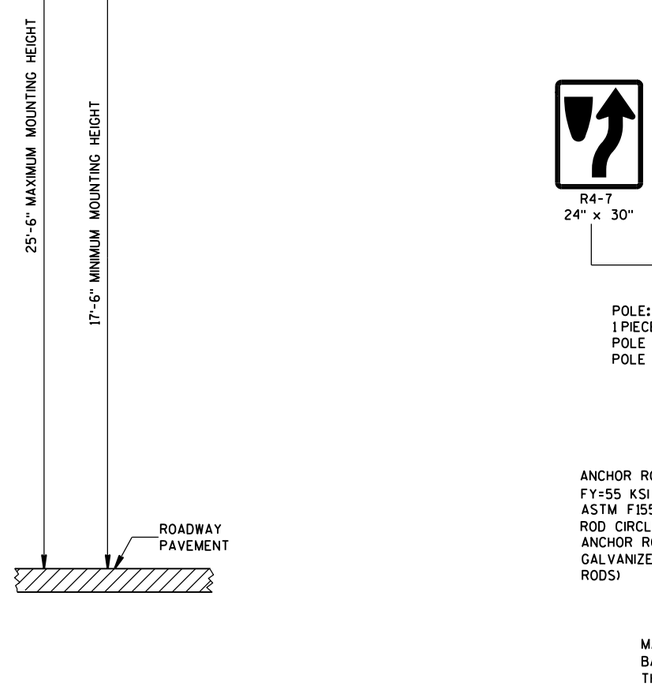

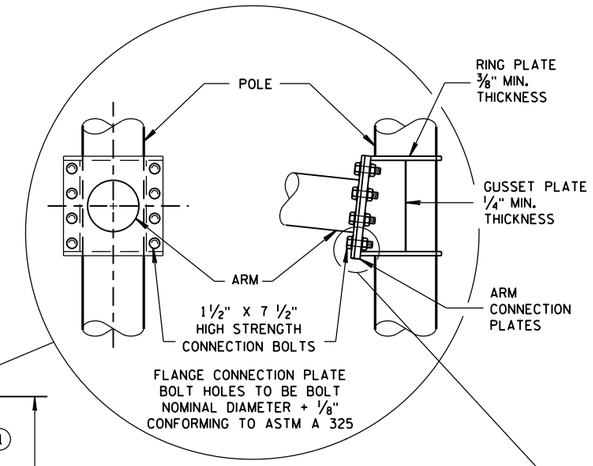

8 BOLT ARM CONNECTION DETAIL

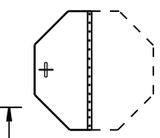

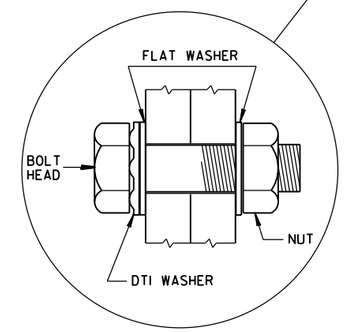

RECOMMENDED BOLT ASSEMBLY DETAIL

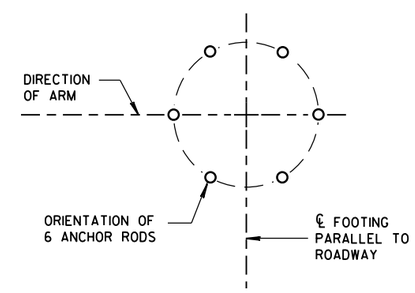

ANCHOR ROD LOCATION

(MAXIMUM LOAD)

TYPE 12 POLE 35'- 55' MONOTUBE ARM

TYPE 12 POLE
35' - 55' MONOTUBE ARM

STATE OF WISCONSIN
DEPARTMENT OF TRANSPORTATION

APPROVED
May, 2015
DATE

/S/ Ahmet Demirbilek
STATE ELECTRICAL

FHWA

6

S.D.D. 9 E 8-8c

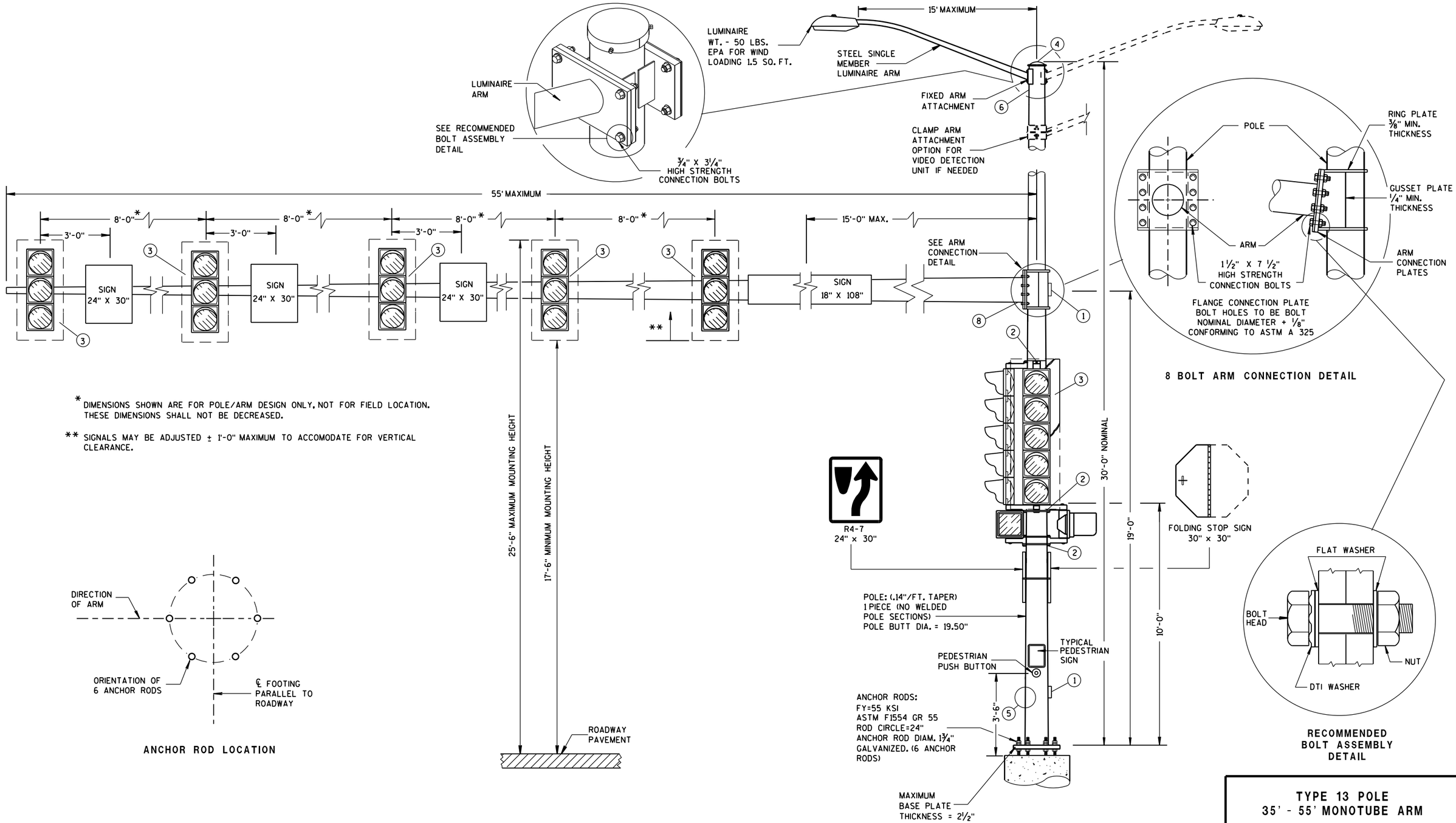

(MAXIMUM LOAD)

TYPE 13 POLE 35'- 55' MONOTUBE ARM

TYPE 13 POLE 35' - 55' MONOTUBE ARM
STATE OF WISCONSIN DEPARTMENT OF TRANSPORTATION
APPROVED May 2016 — DATE /S/ Ahmet Demirbilek — STATE ELECTRICAL FHWA

GENERAL NOTES

DETAILS OF CONSTRUCTION, MATERIALS AND WORKMANSHIP NOT SHOWN ON THIS DRAWING SHALL CONFORM TO THE PERTINENT REQUIREMENTS OF THE CONTRACT.

POLE TYPES 9 AND 10 ARE FOR ARM LENGTHS 15-FOOT TO 30-FOOT.

POLE TYPES 12 AND 13 ARE FOR ARM LENGTHS 35-FOOT TO 55-FOOT.

MONOTUBE POLE AND ARM SHALL BE GALVANIZED STEEL.

RING-STIFFENED BUILT-UP BOX TYPE OF ATTACHMENT FOR TRAFFIC SIGNAL ARM.

ONE (1) PIECE POLE CONSTRUCTION (NO WELDED POLE SECTIONS).

STANDARD STRAIGHT ARM DESIGN (3 % ± RISE).

SECTION 657, POLES OF THE STANDARD SPECIFICATIONS SHALL APPLY TO THIS DRAWING.

PROVIDE WIREWAY THRU POLE WALL AND ARM CONNECTION PLATES. PROVIDE ROUND, SMOOTH INSIDE SURFACE.

MANUFACTURER'S SUBMITTED POLE DESIGNS AND DRAWINGS SHALL BE SIGNED AND STAMPED BY A REGISTERED PROFESSIONAL ENGINEER AND CERTIFIED AS BEING IN COMPLIANCE WITH THE AASHTO 2013 6TH EDITION AND ALL PERTINENT WISDOT SPECIFICATIONS AND DRAWINGS FOR TRAFFIC AND LIGHTING STRUCTURES AND AS FOLLOWS:

- CATEGORY III FATIGUE LOADS OF GALLOPING, TRUCK GUSTS (AT 45 MPH VEHICLE VELOCITY) AND NATURAL WIND GUSTS FOR DESIGN OF TYPE 9 AND TYPE 10 STRUCTURES.
- CATEGORY II FATIGUE LOADS OF GALLOPING, TRUCK GUSTS (AT 45 MPH VEHICLE VELOCITY) AND NATURAL WIND GUSTS FOR DESIGN OF TYPE 12 AND TYPE 13 STRUCTURES.
- 90 MPH (3-SECOND GUST) WIND SPEED AND A 50 YEAR DESIGN LIFE.

SECURE THE OPENING BELOW THE BASE PLATE WITH STAINLESS STEEL OR GALVANIZED STEEL MESH AND SECURE THE MESH WITH ¾" S.S. BANDING AROUND THE LEVELING NUTS.

INDENT PRINT (NOMINAL ½" HIGH) THE POLE LENGTH AND FIRST TWO LETTERS OF THE MANUFACTURERS NAME ON TWO SIDES OF THE BASE PLATE 180 DEGREES APART, BEFORE GALVANIZING. THE ARM SHALL BE IDENTIFIED WITH THE SAME INFORMATION BY INDENT PRINT.

SIGNAL FACE SHALL BE MOUNTED 6 INCHES (NOMINAL) FROM THE END OF THE MONOTUBE ARM OR AS SHOWN ON THE PLAN CONSTRUCTION DETAIL OR AS DIRECTED BY THE PROJECT ENGINEER/ELECTRICAL OPERATIONS PERSONNEL. MOUNT ALL LIKE HEADS AT SAME ELEVATION.

SIGN MOUNTING BRACKETS SHALL BE FURNISHED IN ACCORDANCE WITH SECTION 637 OF THE STANDARD SPECIFICATIONS FOR HIGHWAY AND STRUCTURE CONSTRUCTION.

(1) DESIGN FOR MAXIMUM ALLOWABLE HANDHOLE WITH COVER ASSEMBLY WITH TWO ¼" X ¾" - 20 TPI STAINLESS STEEL HEX HEAD BOLTS.

(2) SIGNAL MOUNTING BRACKETS FOR POLE MOUNTING, MOUNT WITH CAP SCREW AND BANDING. (SEE SPECIFICATIONS SEC. 658).

(3) SECURELY MOUNT BACKPLATES, PROJECTING 5" BEYOND ALL SIDES OF THE SIGNAL FACE HOUSING, PER MANUFACTURERS RECOMMENDATIONS.

(4) THE TOP OF THE POLE SHAFT AND THE END OF THE MONOTUBE ARM SHALL BE EQUIPPED WITH A REMOVABLE, VENTILATED CAP HELD SECURELY IN PLACE WITH SET SCREWS.

(5) FACTORY-WELDED BRACKET FOR GROUNDING LUG, OPPOSITE HANDHOLE. (LUG AND HARDWARE PAID UNDER SEPARATE ITEM). PROVIDE HOLE IN BRACKET FOR ¼" X ¾" - 20 TPI STAINLESS STEEL HEX HEAD BOLT.

(6) FACTORY-WELDED "J" HOOK FOR STRAIN RELIEF FOR POLE LUMINAIRE WIRE.

(7) INSTALL STRUCTURAL IDENTIFICATION PLAQUES.

STRUCTURAL IDENTIFICATION PLAQUES SHALL BE PLACED ON THE POLES IN THE SAME DIRECTION AS THE ARM.

MOUNTING HEIGHT SHALL BE 6'-0" ABOVE THE CURB OR SHOULDER. ADJUST IF IT IS KNOWN THAT REQUIRED TRAFFIC SIGNS WILL BE OBSTRUCTED.

(8) FACTORY DRILLED ½" DRAIN HOLE 2" FROM FLANGE CONNECTION PLATE.

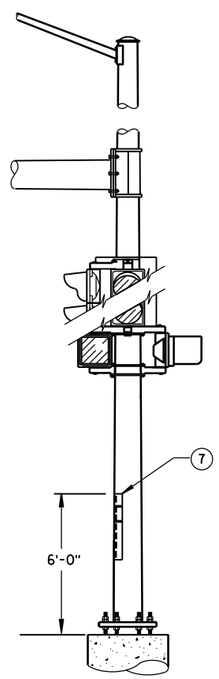

STRUCTURAL IDENTIFICATION PLAQUE PLACEMENT

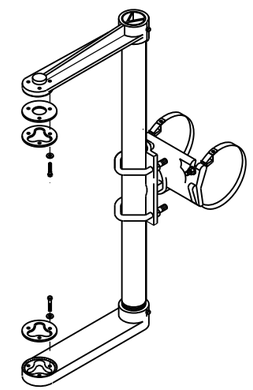

SIGNAL FACE MOUNTING BRACKET DETAIL FOR MONOTUBE ARM

(MOUNT PER MANUFACTURER'S RECOMMENDATION)

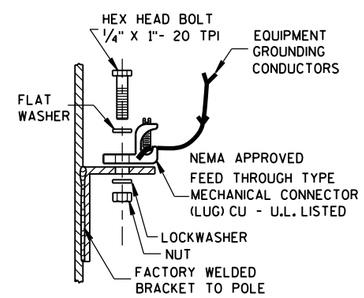

TYPICAL GROUNDING CONNECTIONS (5)

NUT, BOLT AND WASHERS SHALL BE STAINLESS STEEL

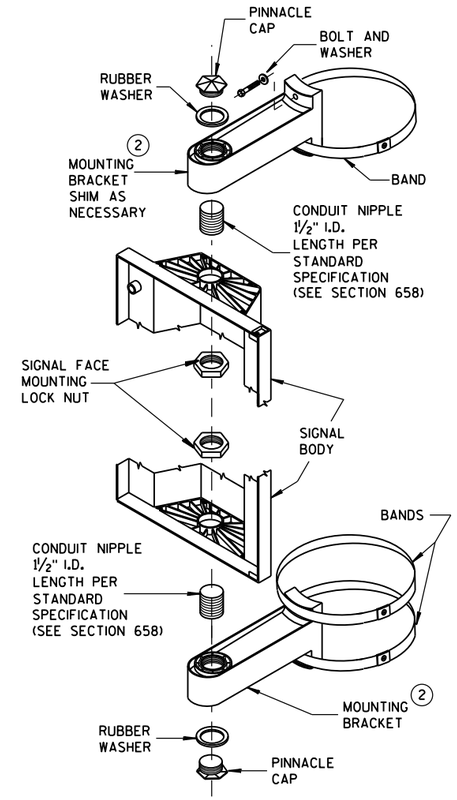

SIGNAL FACE VERTICAL MOUNTING DETAIL

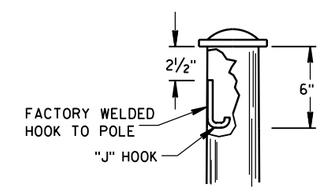

"J" HOOK WIRE SUPPORT (6)

GENERAL NOTES AND HARDWARE DETAILS FOR TYPE 9, 10, 12 & 13 POLES WITH MONOTUBE ARMS

STATE OF WISCONSIN
DEPARTMENT OF TRANSPORTATION

APPROVED
May 2016 — /S/ Ahmet Demirbilek
DATE — STATE ELECTRICAL
FHWA

GENERAL NOTES

DETAILS OF CONSTRUCTION, MATERIALS AND WORKMANSHIP NOT SHOWN ON THIS DRAWING SHALL CONFORM TO THE PERTINENT REQUIREMENTS OF THE CONTRACT.

OVER HEIGHT POLE TYPES 9 AND 10 ARE FOR ARM LENGTHS 15-FOOT TO 30-FOOT.

OVER HEIGHT POLE TYPES 12 AND 13 ARE FOR ARM LENGTHS 35-FOOT TO 55-FOOT.

MONOTUBE POLE AND ARM SHALL BE GALVANIZED STEEL.

RING-STIFFENED BUILT-UP BOX TYPE OF ATTACHMENT FOR TRAFFIC SIGNAL ARM.

ONE (1) PIECE POLE CONSTRUCTION (NO WELDED POLE SECTIONS).

STANDARD STRAIGHT ARM DESIGN (3 % ± RISE).

SECTION 657, POLES OF THE STANDARD SPECIFICATIONS SHALL APPLY TO THIS DRAWING.

PROVIDE WIREWAY THRU POLE WALL AND ARM CONNECTION PLATES. PROVIDE ROUND, SMOOTH INSIDE SURFACE.

MANUFACTURER'S SUBMITTED POLE DESIGNS AND DRAWINGS SHALL BE SIGNED AND STAMPED BY A REGISTERED PROFESSIONAL ENGINEER AND CERTIFIED AS BEING IN COMPLIANCE WITH THE AASHTO LRFD SPECIFICATIONS FOR STRUCTURAL SUPPORTS FOR HIGHWAY SIGNS, LUMINAIRES, AND TRAFFIC SIGNAL 2015 1ST EDITION (INCLUDING 2017 INTERIM REVISIONS) AND ALL PERTINENT WISDOT SPECIFICATIONS AND DRAWINGS FOR TRAFFIC AND LIGHTING STRUCTURES AND AS FOLLOWS:

- CATEGORY III FATIGUE LOADS OF GALLOPING, TRUCK GUSTS (AT 45 MPH VEHICLE VELOCITY) AND NATURAL WIND GUSTS FOR DESIGN OF TYPE 9 AND TYPE 10 STRUCTURES.
- CATEGORY II FATIGUE LOADS OF GALLOPING, TRUCK GUSTS (AT 45 MPH VEHICLE VELOCITY) AND NATURAL WIND GUSTS FOR DESIGN OF TYPE 12 AND TYPE 13 STRUCTURES.
- 90 MPH (3-SECOND GUST) WIND SPEED AND A 50 YEAR DESIGN LIFE.

SECURE THE OPENING BELOW THE BASE PLATE WITH STAINLESS STEEL OR GALVANIZED STEEL MESH AND SECURE THE MESH WITH 3/4" S.S. BANDING AROUND THE LEVELING NUTS.

INDENT PRINT (NOMINAL 1/2" HIGH) THE POLE LENGTH AND FIRST TWO LETTERS OF THE MANUFACTURERS NAME ON TWO SIDES OF THE BASE PLATE 180 DEGREES APART, BEFORE GALVANIZING. THE ARM SHALL BE IDENTIFIED WITH THE SAME INFORMATION BY INDENT PRINT.

SIGNAL FACE SHALL BE MOUNTED 6 INCHES (NOMINAL) FROM THE END OF THE MONOTUBE ARM OR AS SHOWN ON THE PLAN CONSTRUCTION DETAIL OR AS DIRECTED BY THE PROJECT ENGINEER/ELECTRICAL OPERATIONS PERSONNEL. MOUNT ALL LIKE HEADS AT SAME ELEVATION.

SIGN MOUNTING BRACKETS SHALL BE FURNISHED IN ACCORDANCE WITH SECTION 637 OF THE STANDARD SPECIFICATIONS FOR HIGHWAY AND STRUCTURE CONSTRUCTION.

6

(1) DESIGN FOR MAXIMUM ALLOWABLE HANDHOLE WITH COVER ASSEMBLY WITH TWO 1/4" X 3/4" - 20 TPI STAINLESS STEEL HEX HEAD BOLTS.

(2) SIGNAL MOUNTING BRACKETS FOR POLE MOUNTING, MOUNT WITH CAP SCREW AND BANDING, (SEE SPECIFICATIONS SEC. 658).

(3) SECURELY MOUNT BACKPLATES, PROJECTING 5" BEYOND ALL SIDES OF THE SIGNAL FACE HOUSING, PER MANUFACTURERS RECOMMENDATIONS.

(4) THE TOP OF THE POLE SHAFT AND THE END OF THE MONOTUBE ARM SHALL BE EQUIPPED WITH A REMOVABLE, VENTILATED CAP HELD SECURELY IN PLACE WITH SET SCREWS.

(5) FACTORY-WELDED BRACKET FOR GROUNDING LUG, OPPOSITE HANDHOLE, (LUG AND HARDWARE PAID UNDER SEPARATE ITEM). PROVIDE HOLE IN BRACKET FOR 1/4" X 3/4" - 20 TPI STAINLESS STEEL HEX HEAD BOLT.

(6) FACTORY-WELDED "J" HOOK FOR STRAIN RELIEF FOR POLE LUMINAIRE WIRE.

(7) INSTALL STRUCTURAL IDENTIFICATION PLAQUES.

STRUCTURAL IDENTIFICATION PLAQUES SHALL BE PLACED ON THE POLES IN THE SAME DIRECTION AS THE ARM.

MOUNTING HEIGHT SHALL BE 6'-0" ABOVE THE CURB OR SHOULDER. ADJUST IF IT IS KNOWN THAT REQUIRED TRAFFIC SIGNS WILL BE OBSTRUCTED.

(8) FACTORY DRILLED 1/2" DRAIN HOLE 2" FROM FLANGE CONNECTION PLATE.

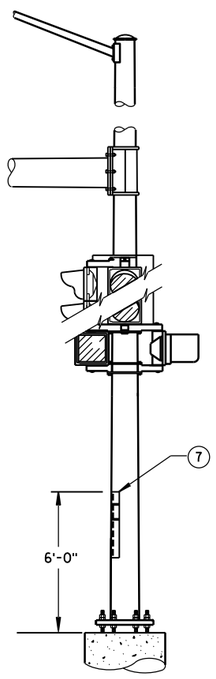

STRUCTURAL IDENTIFICATION PLAQUE PLACEMENT

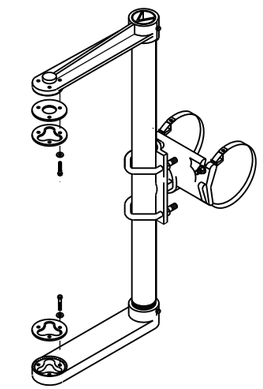

SIGNAL FACE MOUNTING BRACKET DETAIL FOR MONOTUBE ARM

(MOUNT PER MANUFACTURER'S RECOMMENDATION)

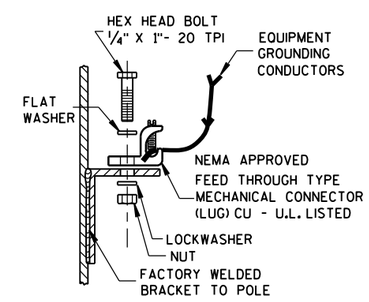

TYPICAL GROUNDING CONNECTIONS (5)

NUT, BOLT AND WASHERS SHALL BE STAINLESS STEEL

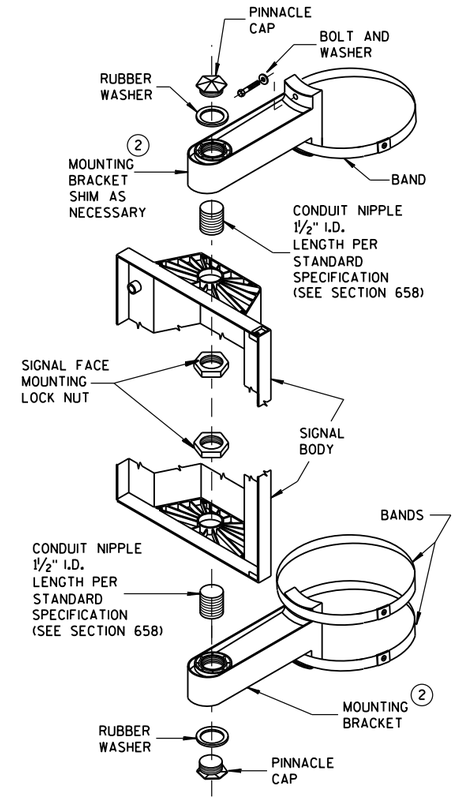

SIGNAL FACE VERTICAL MOUNTING DETAIL

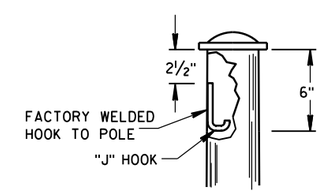

"J" HOOK WIRE SUPPORT (6)

6

GENERAL NOTES AND HARDWARE DETAILS FOR OVER HEIGHT TYPE 9, 10, 12 & 13 POLES WITH MONOTUBE ARMS	
STATE OF WISCONSIN DEPARTMENT OF TRANSPORTATION	
APPROVED May 2017 DATE	/S/ Ahmet Demirbilek STATE ELECTRICAL
FHWA	

S.D.D. 9 E 12-1e

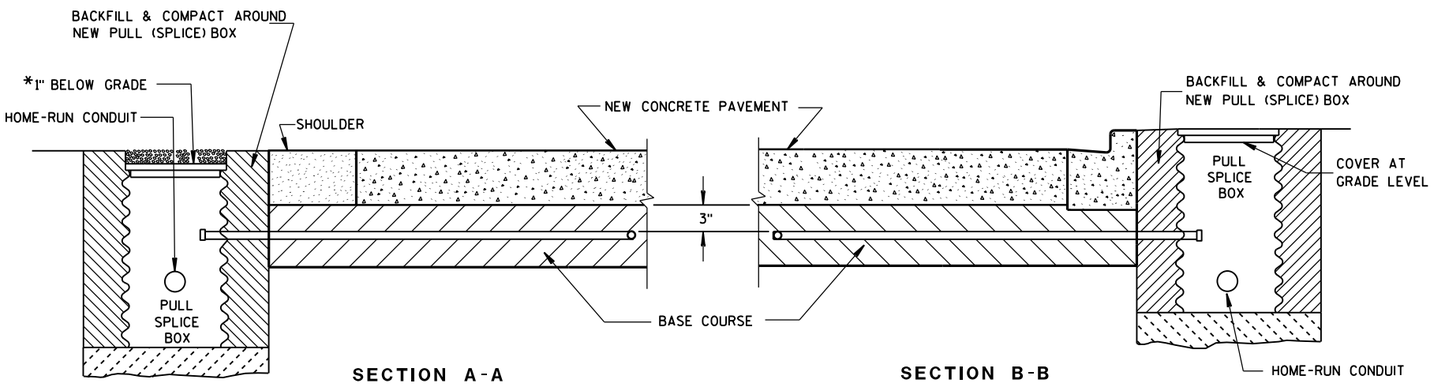

SECTION A-A
NO CURB & GUTTER

SECTION B-B
CURB & GUTTER

*RECESS PULL (SPLICE) BOX SO THAT THE COVER IS 3" BELOW GRADE IN SHOULDER AREAS OF CRUSHED AGGREGATE. BACKFILL OVER COVER WITH THE CRUSHED AGGREGATE TO BRING THE AREA TO GRADE LEVEL.

LOOP DETECTOR INSTALLATION DETAIL

GENERAL NOTES

DETAILS OF CONSTRUCTION, MATERIALS AND WORKMANSHIP NOT SHOWN ON THIS DRAWING SHALL CONFORM TO THE PERTINENT REQUIREMENTS OF THE CONTRACT.

LOOP SIZE, CONFIGURATION LOCATION, NUMBER OF TURNS OF WIRE AND ASSOCIATED SIGNAL PHASE SHALL BE AS SHOWN ON THE PLANS.

PITCH LEAD OUT CONDUIT TO DRAIN TO ROADSIDE PULL (SPLICE) BOX.

SPLICES SHALL BE INSTALLED BY USING CAST IN PLACE SPLICE KITS LISTED ON THE DEPARTMENTS APPROVED PRODUCTS LIST OR AN ENGINEER APPROVED EQUAL. NON-INSULATED BUTT SPLICES TO FIT #12 AWG STRANDED WIRE SHALL BE USED. SPLICES SHALL BE SOLDERED AND INSULATED FROM EACH OTHER AS PER INSTRUCTIONS INCLUDED IN THE SPLICE KIT.

MEASURE GROUND RESISTANCE USING A MEGGER. REPLACE LOOP WIRE NOT ATTAINING A READING OF INFINITY TO GROUND.

AFTER SPLICING THE LOOP WIRE TO THE LOOP LEAD-IN CABLE, THE CONTRACTOR SHALL MEASURE INDUCTANCE, GROUND RESISTANCE AND WIRE RESISTANCE AT THE CABINET END OF THE LEAD-IN CABLE AND FURNISH A COPY OF THE READINGS TO THE PROJECT ENGINEER FOR EVALUATION.

LOOP DETECTOR LEADS SHALL BE IDENTIFIED WITH THEIR ASSOCIATED LOOP BY USE OF WATERPROOF TAGS AT BOTH ENDS OF THE CABLE. A LISTING OF THE CABLE IDENTIFICATION PER INDIVIDUAL LOOP LEAD-IN SHALL BE PLACED IN THE CABINET.

THE #12 AWG. LOOP WIRE IN THE PULL (SPLICE) BOX SHALL BE HAND TWISTED AT LEAST 3 TWISTS PER FOOT BEFORE BEING SPLICED TO THE LOOP LEAD-IN CABLE.

SPLICES OF LOOP WIRE TO LEAD-IN CABLE SHALL BE MADE ONLY IN PULL (SPLICE) BOXES AT THE SIDE OF THE ROAD.

THE #12 AWG LOOP WIRE SHALL BE INSTALLED FROM THE ROADSIDE PULL (SPLICE) BOX THROUGH THE LOOP CONDUIT, BACK TO THE ROADSIDE PULL (SPLICE) BOX, AND BE INSTALLED IN ONE, NON-SPLICE CONTINUOUS LENGTH.

PROTECTION OF THE CONDUIT IN THE BASE COURSE, SHALL BE REQUIRED AFTER INSTALLATION AND BEFORE NEW PAVEMENT IS INSTALLED.

SHOULD INSTALLATION REPAIR BE REQUIRED, IT SHALL BE DONE UNDER THE DIRECTION OF THE PROJECT ENGINEER.

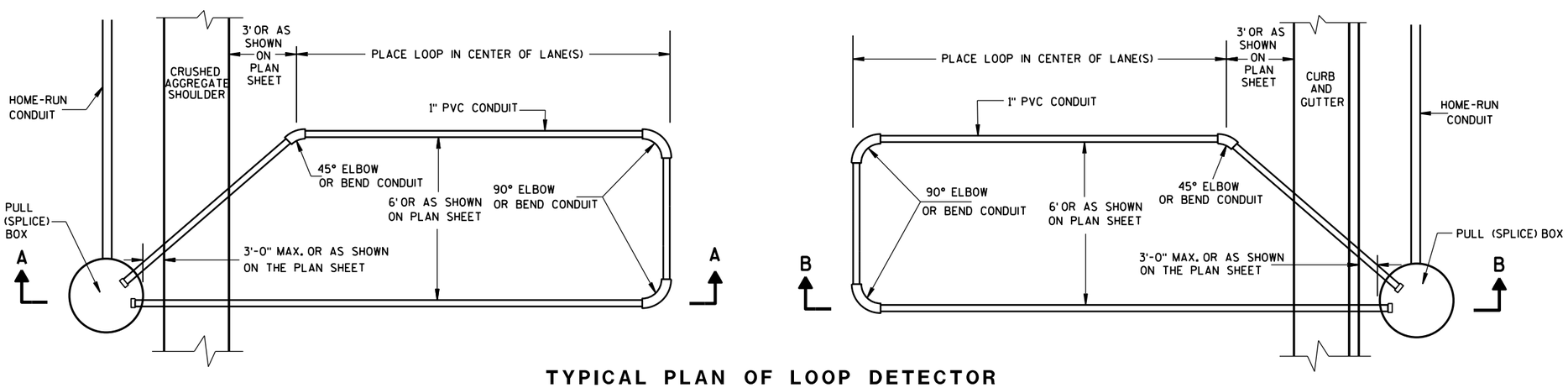

TYPICAL PLAN OF LOOP DETECTOR WITH 18" OR 24" PULL (SPLICE) BOX

LOOP DETECTOR INSTALLED IN BASE COURSE WITH PULL (SPLICE) BOX OFF ROADWAY (OPTION 1)
STATE OF WISCONSIN DEPARTMENT OF TRANSPORTATION
APPROVED Sept. 2014 DATE — /S/ Ahmet Demirbilek STATE ELECTRICAL — FHWA

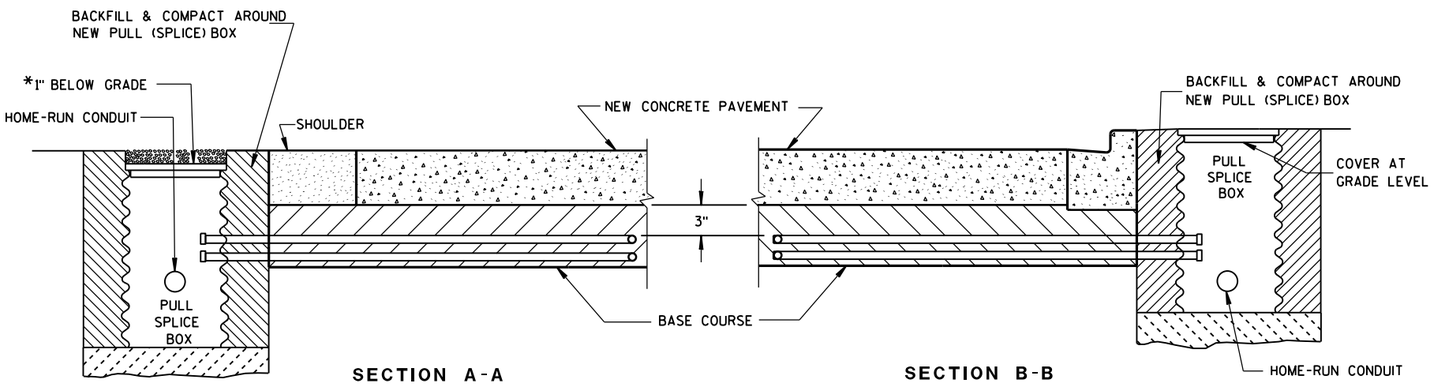

SECTION A-A
NO CURB & GUTTER

SECTION B-B
CURB & GUTTER

*RECESS PULL (SPLICE) BOX SO THAT THE COVER IS 3" BELOW GRADE IN SHOULDER AREAS OF CRUSHED AGGREGATE. BACKFILL OVER COVER WITH THE CRUSHED AGGREGATE TO BRING THE AREA TO GRADE LEVEL.

LOOP DETECTOR INSTALLATION DETAIL

GENERAL NOTES

DETAILS OF CONSTRUCTION, MATERIALS AND WORKMANSHIP NOT SHOWN ON THIS DRAWING SHALL CONFORM TO THE PERTINENT REQUIREMENTS OF THE CONTRACT.

LOOP SIZE, CONFIGURATION LOCATION, NUMBER OF TURNS OF WIRE AND ASSOCIATED SIGNAL PHASE SHALL BE AS SHOWN ON THE PLANS.

PITCH LEAD OUT CONDUIT TO DRAIN TO ROADSIDE PULL (SPLICE) BOX.

SPLICES SHALL BE INSTALLED BY USING CAST IN PLACE SPLICE KITS LISTED ON THE DEPARTMENTS APPROVED PRODUCTS LIST OR AN ENGINEER APPROVED EQUAL. NON-INSULATED BUTT SPLICES TO FIT #12 AWG STRANDED WIRE SHALL BE USED. SPLICES SHALL BE SOLDERED AND INSULATED FROM EACH OTHER AS PER INSTRUCTIONS INCLUDED IN THE SPLICE KIT.

MEASURE GROUND RESISTANCE USING A MEGGER. REPLACE LOOP WIRE NOT ATTAINING A READING OF INFINITY TO GROUND.

AFTER SPLICING THE LOOP WIRE TO THE LOOP LEAD-IN CABLE, THE CONTRACTOR SHALL MEASURE INDUCTANCE, GROUND RESISTANCE AND WIRE RESISTANCE AT THE CABINET END OF THE LEAD-IN CABLE AND FURNISH A COPY OF THE READINGS TO THE PROJECT ENGINEER FOR EVALUATION.

LOOP DETECTOR LEADS SHALL BE IDENTIFIED WITH THEIR ASSOCIATED LOOP BY USE OF WATERPROOF TAGS AT BOTH ENDS OF THE CABLE. A LISTING OF THE CABLE IDENTIFICATION PER INDIVIDUAL LOOP LEAD-IN SHALL BE PLACED IN THE CABINET.

THE #12 AWG. LOOP WIRE IN THE PULL (SPLICE) BOX SHALL BE HAND TWISTED AT LEAST 3 TWISTS PER FOOT BEFORE BEING SPLICED TO THE LOOP LEAD-IN CABLE.

SPLICES OF LOOP WIRE TO LEAD-IN CABLE SHALL BE MADE ONLY IN PULL (SPLICE) BOXES AT THE SIDE OF THE ROAD.

THE #12 AWG LOOP WIRE SHALL BE INSTALLED FROM THE ROADSIDE PULL (SPLICE) BOX, THROUGH THE LOOP CONDUIT, BACK TO THE ROADSIDE PULL (SPLICE) BOX, AND BE INSTALLED IN ONE, NON-SPLICED CONTINUOUS LENGTH.

PROTECTION OF THE CONDUITS IN THE BASE COURSE SHALL BE REQUIRED AFTER INSTALLATION AND BEFORE NEW PAVEMENT IS INSTALLED.

SHOULD INSTALLATION REPAIR BE REQUIRED, IT SHALL BE DONE UNDER THE DIRECTION OF THE PROJECT ENGINEER.

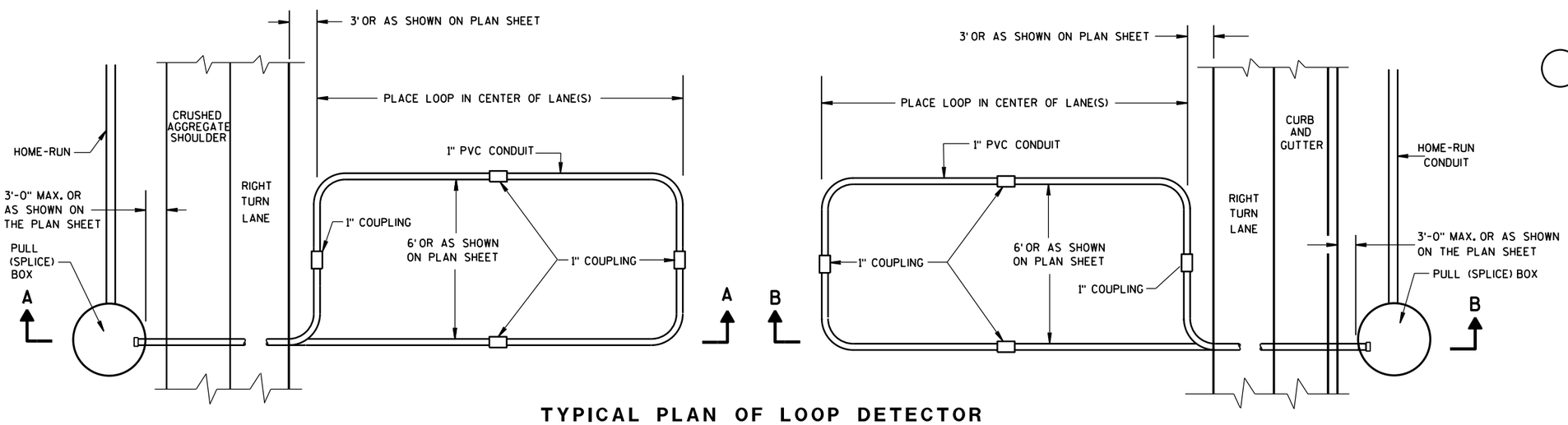

TYPICAL PLAN OF LOOP DETECTOR WITH 24" PULL (SPLICE) BOX

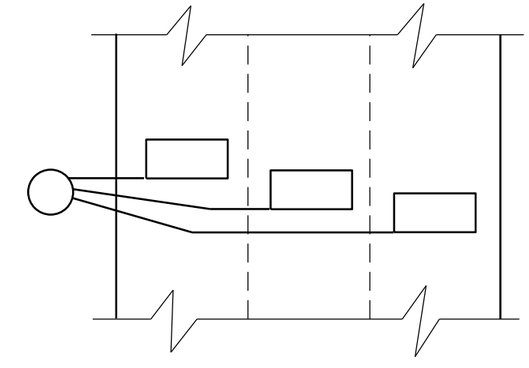

MULTI-LANE INSTALLATION

LOOP DETECTOR INSTALLED IN BASE COURSE WITH PULL (SPLICE) BOX OFF ROADWAY (OPTION 2)
STATE OF WISCONSIN DEPARTMENT OF TRANSPORTATION
APPROVED Sept. 2014 DATE — /S/ Ahmet Demirbilek STATE ELECTRICAL — FHWA

6

6

S.D.D. 9 F 15-4b

S.D.D. 9 F 15-4b

GENERAL NOTES

DETAILS OF CONSTRUCTION, MATERIALS AND WORKMANSHIP NOT SHOWN ON THIS DRAWING SHALL CONFORM TO THE PERTINENT REQUIREMENTS OF THE CONTRACT.

1. WOOD POLES SHALL BE CLASS 4. LENGTH DETERMINED BY SIGNAL PLAN.

2. SIGNAL FACES:
   A. ALL SECTIONS SHALL BE 12" AND POLYCARBONATE.
   B. EACH SHALL CONTAIN A 5" WIDE DULL BLACK POLYCARBONATE BACKPLATE.
   C. EACH SHALL BE WIRED FROM THE TOP SIGNAL MOUNTING BRACKET.
   D. NEAR RIGHT SIGNAL FACE SUSPENDED ON THE TETHER (NO BACKPLATE) SHALL NOT BE OVER THE TRAVELED WAY. IF THE POLE IS WITHIN 5 FEET OF THE TRAVELED WAY MOUNT THE SIGNAL FACE ON THE WOOD POLE WITH BACKPLATE.

3. SPAN WIRE:
   A. EACH SPAN WIRE SHALL BE INDIVIDUALLY DOWN GUYED.
   B. SIGNAL AND LIGHTING CABLES SHALL ONLY BE ATTACHED TO THE UPPER SPAN WIRE.
   C. THE SIGNAL ASSEMBY SHALL HAVE A 17' MIN. HEIGHT ABOVE THE ROADWAY. THIS SHALL BE MEASURED AFTER THE SPAN WIRE INSTALLATION IS COMPLETED WITH ALL CABLES AND SIGNAL FACES IN PLACE. MAINTAIN MINIMUM AND MAXIMUM HEIGHTS AS ROADWAY WORK PROGRESSES.

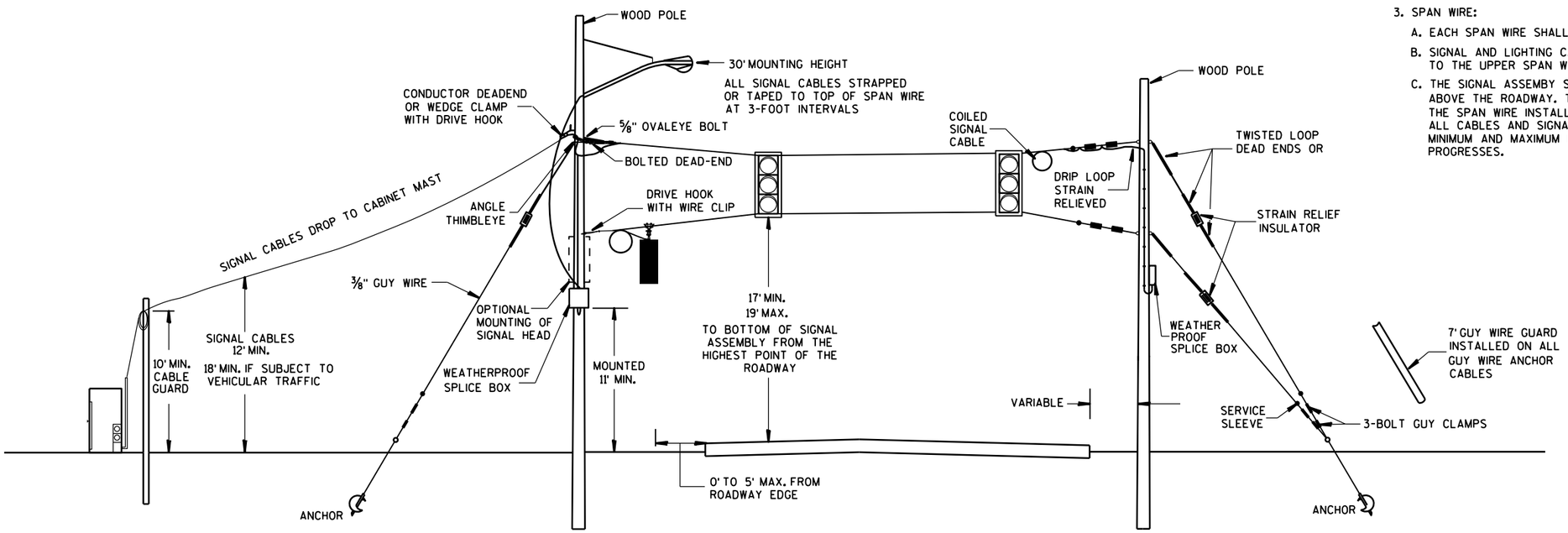

SPAN WIRE
TEMPORARY SIGNALS

MINIMUM POLE LENGTHS	POLE BURIEL DEPTHS
25'	5'
30'	6'
35'	7'
40'	8'
45'	9'

SPAN WIRE
TEMPORARY TRAFFIC SIGNAL

STATE OF WISCONSIN
DEPARTMENT OF TRANSPORTATION

APPROVED
June, 2015 — DATE
/S/ Ahmet Demirbilek — STATE ELECTRICAL
FHWA

6

S.D.D. 9 G 1-4a

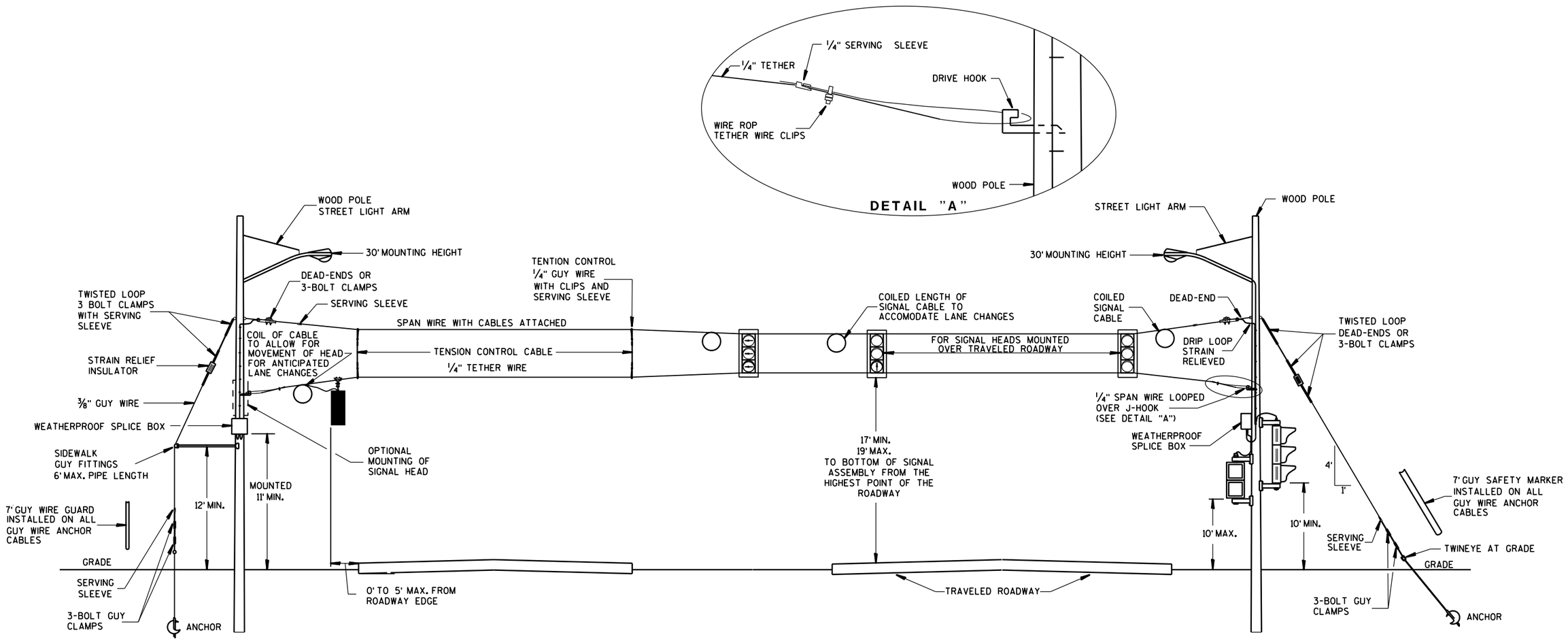

GENERAL NOTES

DETAILS OF CONSTRUCTION, MATERIALS AND WORKMANSHIP NOT SHOWN ON THIS DRAWING SHALL CONFORM TO THE PERTINENT REQUIREMENTS OF THE CONTRACT.

1. WOOD POLES SHALL BE CLASS 4. LENGTH DETERMINED BY SIGNAL PLAN.
2. SIGNAL FACES:
   - A. ALL SECTIONS SHALL BE 12" AND POLYCARBONATE.
   - B. EACH SHALL CONTAIN A 5" WIDE DULL BLACK POLYCARBONATE BACKPLATE.
   - C. EACH SHALL BE WIRED FROM THE TOP SIGNAL MOUNTING BRACKET.
   - D. NEAR RIGHT SIGNAL FACE SUSPENDED ON THE TETHER (NO BACKPLATE) SHALL NOT BE OVER THE TRAVELED WAY. IF THE POLE IS WITHIN 5 FEET OF THE TRAVELED WAY MOUNT THE SIGNAL FACE ON THE WOOD POLE WITH BACKPLATE.
   - E. FAR INDICATION SHALL BE MAINTAINED OVER CENTER OF TRAFFIC LANE.
3. SPAN WIRE:
   - A. EACH SPAN WIRE SHALL BE INDIVIDUALLY DOWN GUYED.
   - B. SIGNAL AND LIGHTING CABLES SHALL ONLY BE ATTACHED TO THE UPPER SPAN WIRE.
   - C. THE SIGNAL ASSEMBY SHALL HAVE A 17' MIN. HEIGHT ABOVE THE ROADWAY. THIS SHALL BE MEASURED AFTER THE SPAN WIRE INSTALLATION IS COMPLETED WITH ALL CABLES AND SIGNAL FACES IN PLACE. MAINTAIN MINIMUM AND MAXIMUM HEIGHTS AS ROADWAY WORK PROGRESSES.

SPAN WIRE
TEMPORARY SIGNALS
4 LANE ROADWAYS

MINIMUM POLE LENGTHS	CLASS	MIN. BURIAL DEPTHS
25'	V	5'
30'	V	6'
35'	IV	7'
40'	IV	8'
45'	IV	9'

SPAN WIRE
TEMPORARY TRAFFIC SIGNAL

STATE OF WISCONSIN
DEPARTMENT OF TRANSPORTATION

APPROVED
June, 2015 — DATE
/S/ Ahmet Demirbilek — STATE ELECTRICAL
FHWA

6

S.D.D. 9 G 1-4b

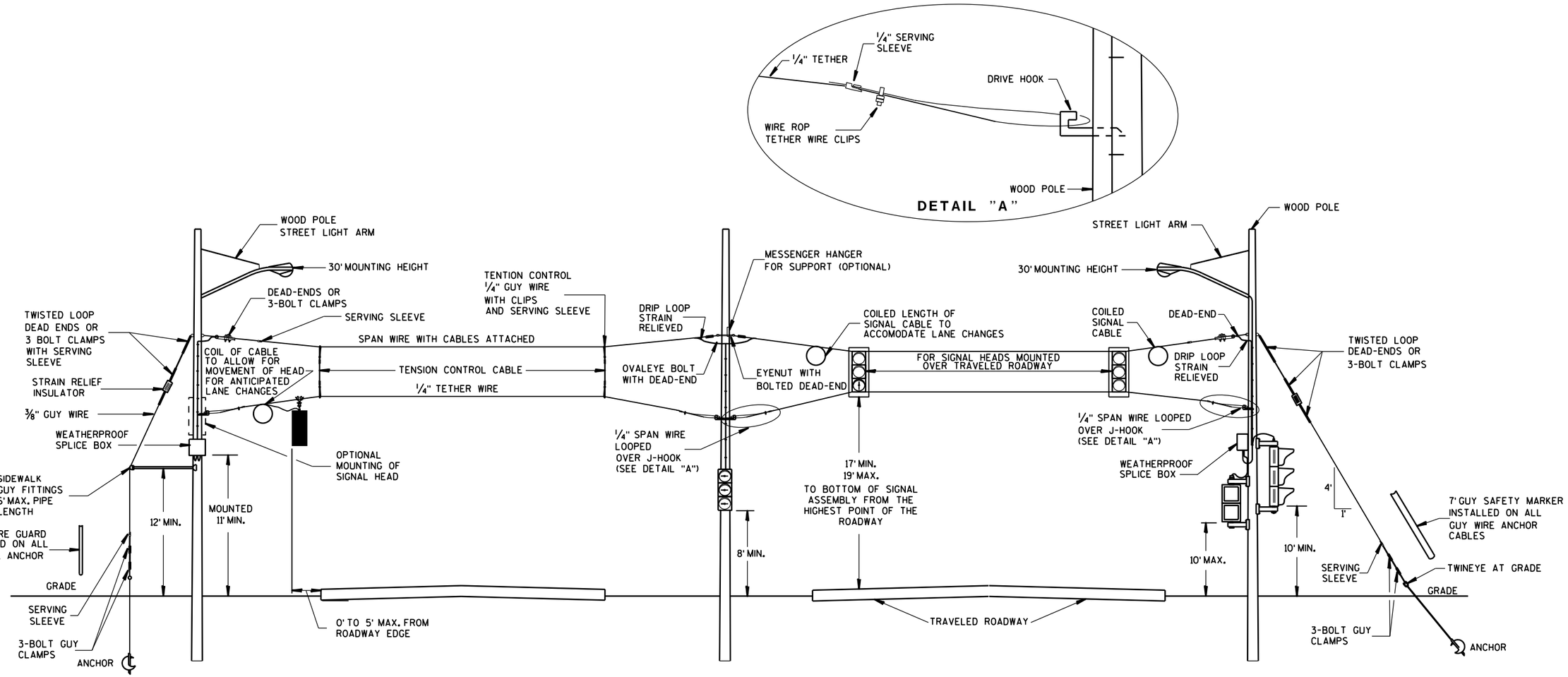

SPAN WIRE
TEMPORARY SIGNALS
4 LANE ROADWAYS

GENERAL NOTES

DETAILS OF CONSTRUCTION, MATERIALS AND WORKMANSHIP NOT SHOWN ON THIS DRAWING SHALL CONFORM TO THE PERTINENT REQUIREMENTS OF THE CONTRACT.

1. WOOD POLES SHALL BE CLASS 4. LENGTH DETERMINED BY SIGNAL PLAN.

2. SIGNAL FACES:
   A. ALL SECTIONS SHALL BE 12" AND POLYCARBONATE.
   B. EACH SHALL CONTAIN A 5" WIDE DULL BLACK POLYCARBONATE BACKPLATE.
   C. EACH SHALL BE WIRED FROM THE TOP SIGNAL MOUNTING BRACKET.
   D. NEAR RIGHT SIGNAL FACE SUSPENDED ON THE TETHER (NO BACKPLATE) SHALL NOT BE OVER THE TRAVELED WAY. IF THE POLE IS WITHIN 5 FEET OF THE TRAVELED WAY MOUNT THE SIGNAL FACE ON THE WOOD POLE WITH BACKPLATE.
   E. FAR INDICATION SHALL BE MAINTAINED OVER CENTER OF TRAFFIC LANE.

3. SPAN WIRE:
   A. EACH SPAN WIRE SHALL BE INDIVIDUALLY DOWN GUYED.
   B. SIGNAL AND LIGHTING CABLES SHALL ONLY BE ATTACHED TO THE UPPER SPAN WIRE.
   C. THE SIGNAL ASSEMBY SHALL HAVE A 17' MIN. HEIGHT ABOVE THE ROADWAY. THIS SHALL BE MEASURED AFTER THE SPAN WIRE INSTALLATION IS COMPLETED WITH ALL CABLES AND SIGNAL FACES IN PLACE. MAINTAIN MINIMUM AND MAXIMUM HEIGHTS AS ROADWAY WORK PROGRESSES.

MINIMUM POLE LENGTHS	CLASS	MIN. BURIAL DEPTHS
25'	V	5'
30'	V	6'
35'	IV	7'
40'	IV	8'
45'	IV	9'

SPAN WIRE
TEMPORARY TRAFFIC SIGNAL

STATE OF WISCONSIN
DEPARTMENT OF TRANSPORTATION

APPROVED
June, 2015 — DATE
/S/ Ahmet Demirbilek — STATE ELECTRICAL
FHWA

6

S.D.D. 9 G 1-4c

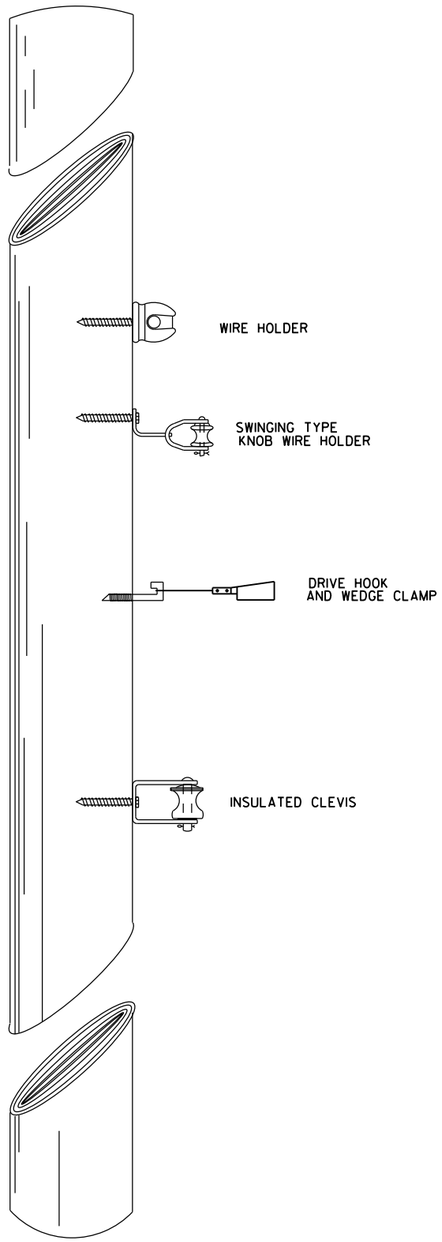

TYPICAL CABLE HANGERS

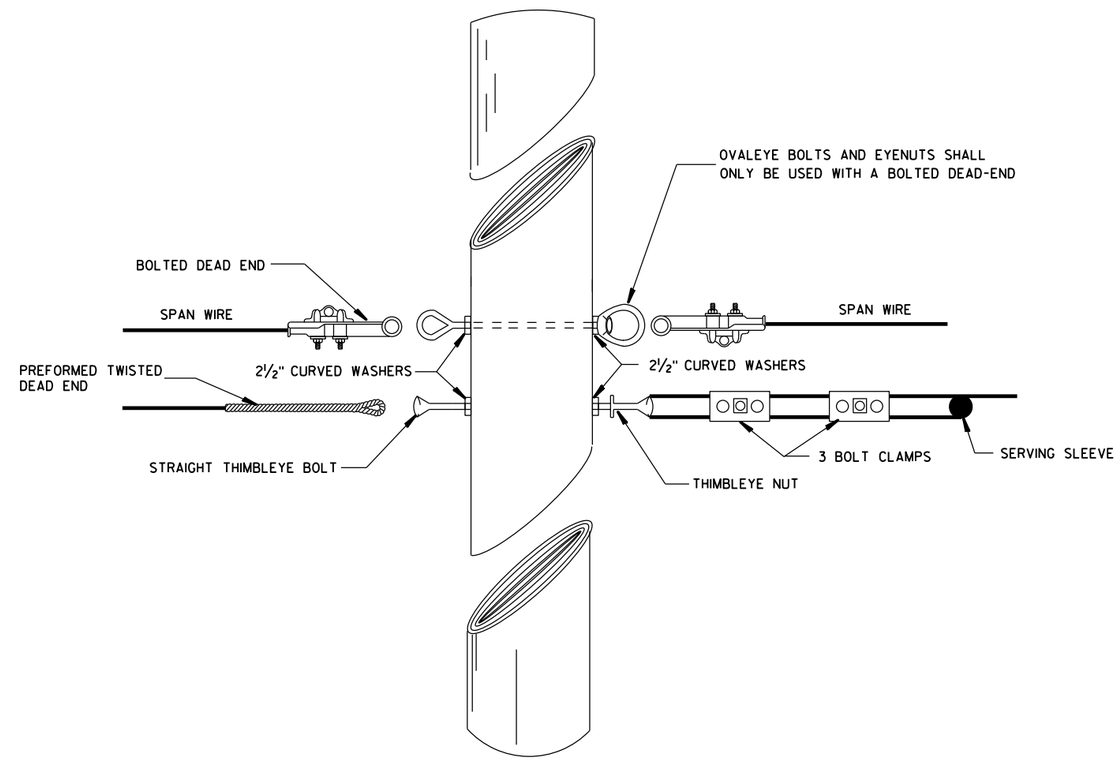

TYPICAL DEAD-ENDING

6

6

SPAN WIRE
TEMPORARY TRAFFIC SIGNAL

STATE OF WISCONSIN
DEPARTMENT OF TRANSPORTATION

APPROVED
June, 2015 — DATE
/S/ Ahmet Demirbilek — STATE ELECTRICAL
FHWA

S.D.D. 9 G 1-4d

S.D.D. 9 G 1-4d

GENERAL NOTES

1. USE ¾" DRILL IN WOOD POLE TO PROVIDE HOLE FOR ⅝" BOLTS.
2. SAFTY LOOP REQUIRED ON EACH END OF ALL SPAN WIRES.

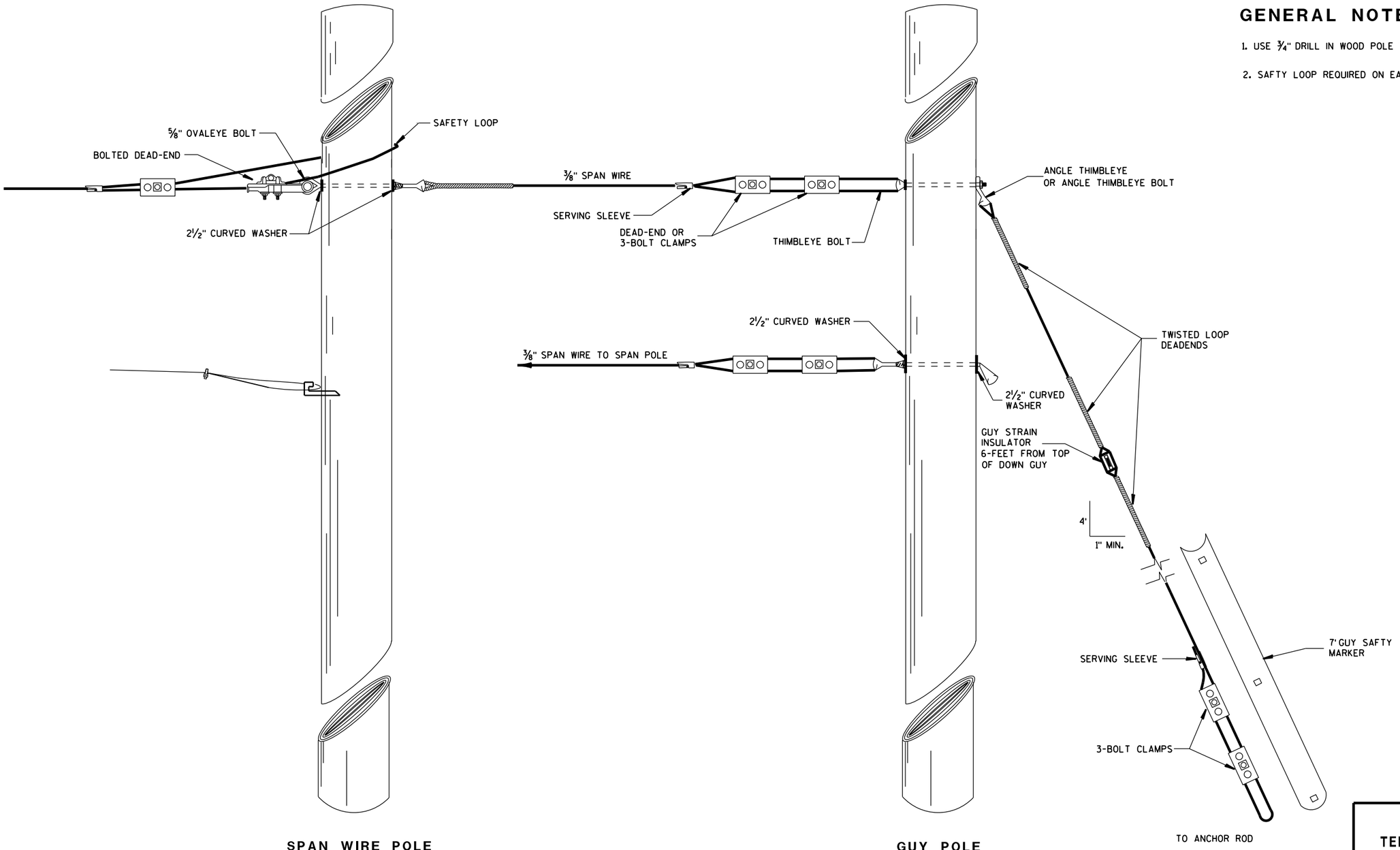

TYPICAL DEAD-ENDINGS OR GUYING

SPAN WIRE TEMPORARY TRAFFIC SIGNAL
STATE OF WISCONSIN DEPARTMENT OF TRANSPORTATION
APPROVED June, 2015 DATE — /S/ Ahmet Demirbilek STATE ELECTRICAL — FHWA

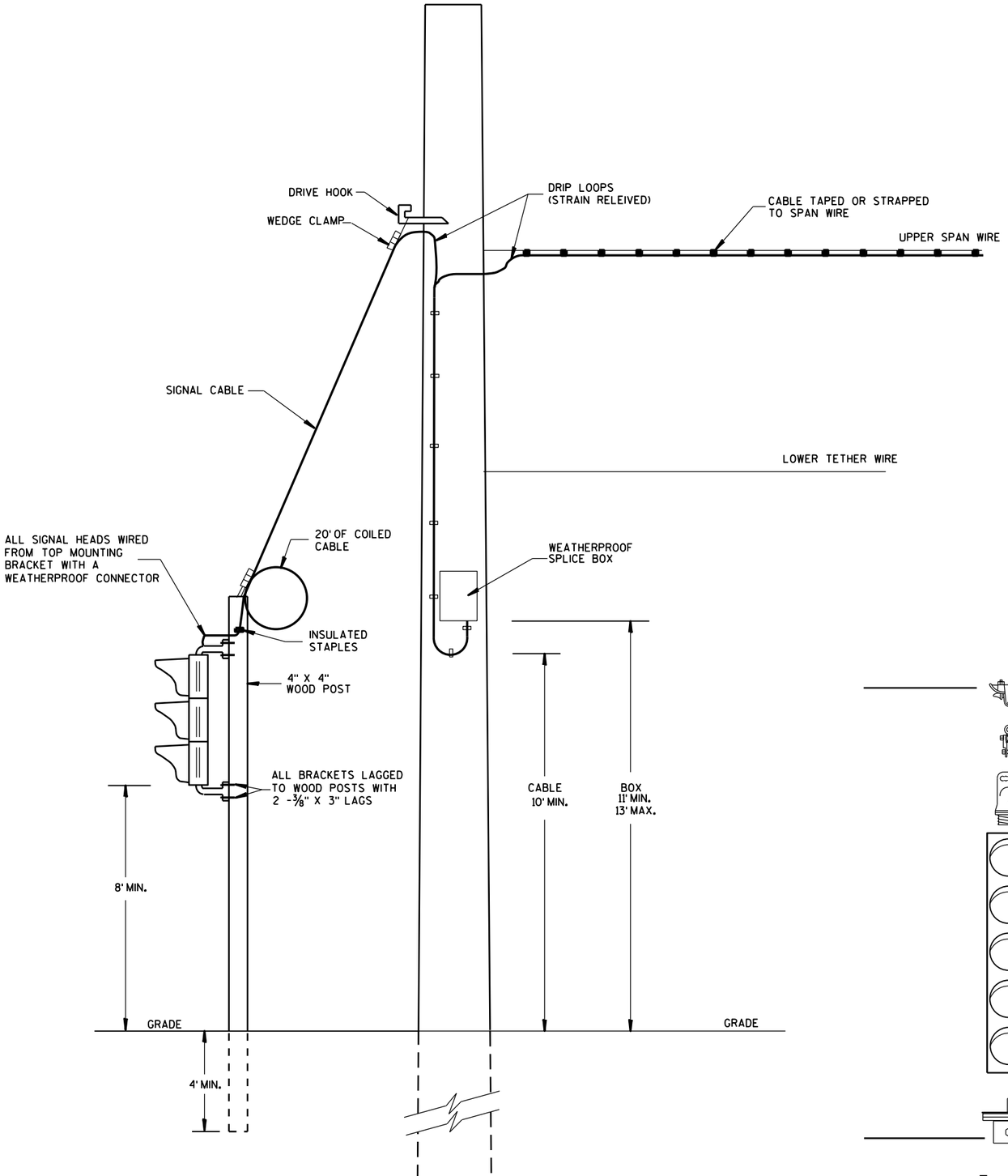

TYPICAL DROP TO TEMPORARY MOVEABLE SIGNAL

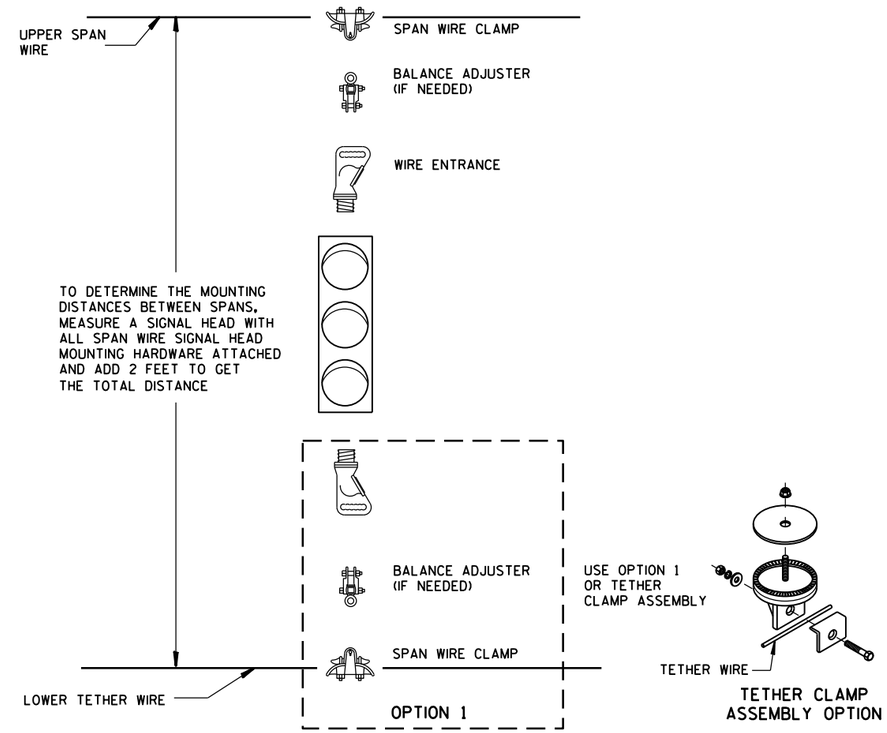

TYPICAL SPAN WIRE MOUNTING HARDWARE

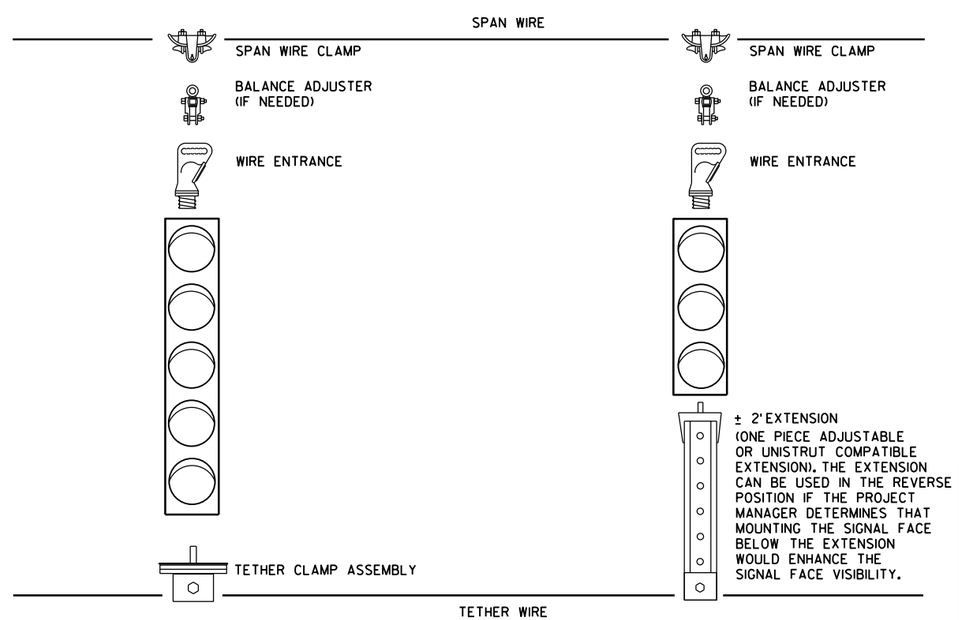

5 SECTION VERTICAL WITH 3 SECTION VERTICAL ON ONE SPAN WIRE

SPAN WIRE
TEMPORARY TRAFFIC SIGNAL

STATE OF WISCONSIN
DEPARTMENT OF TRANSPORTATION

APPROVED
June, 2015 — DATE
/S/ Ahmet Demirbilek — STATE ELECTRICAL
FHWA

6

6

S.D.D. 9 G 1-4f

S.D.D. 9 G 1-4f

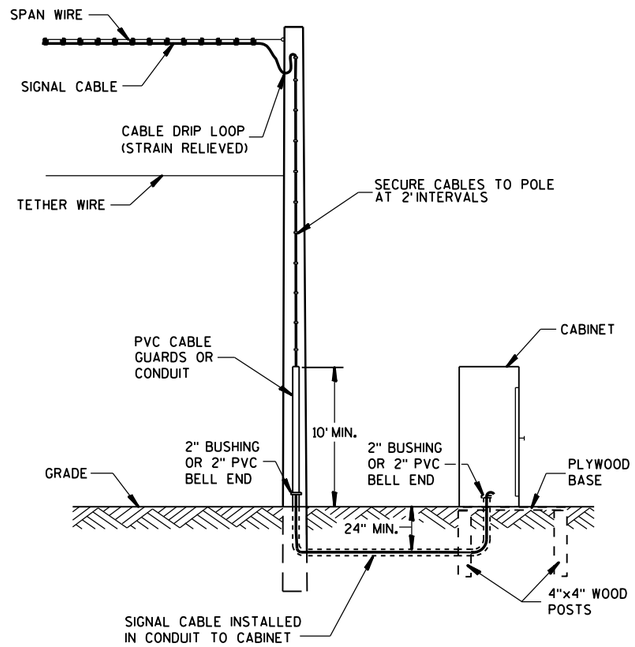

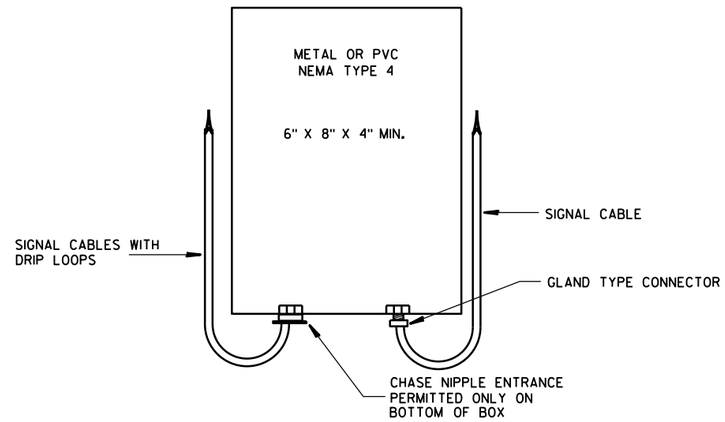

SPLICE BOX

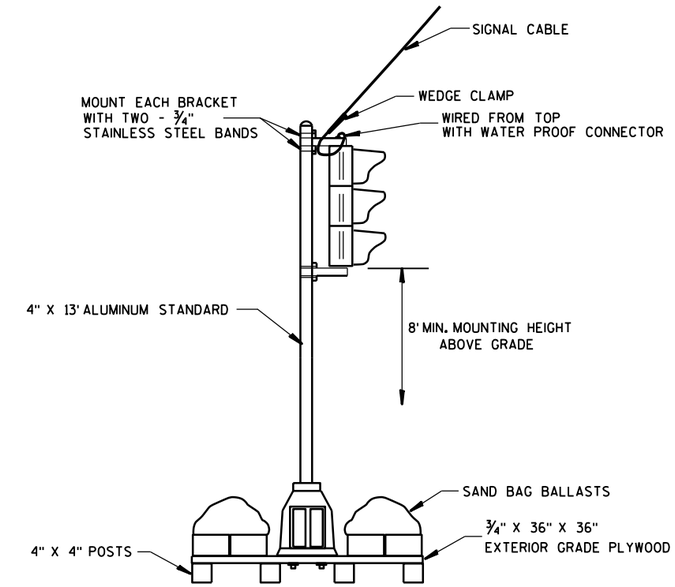

TYPICAL SKID TYPE TEMPORARY

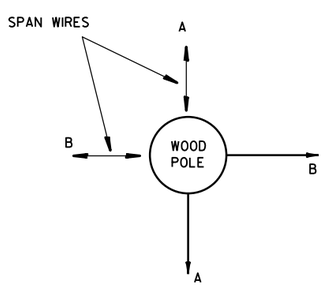

ALL DOWN OR SIDEWALK GUYS SHALL BE INSTALLED IN THE OPPOSITE DIRECTION OF THE STRAIN OF THE SPAN WIRE

CORNER POLES

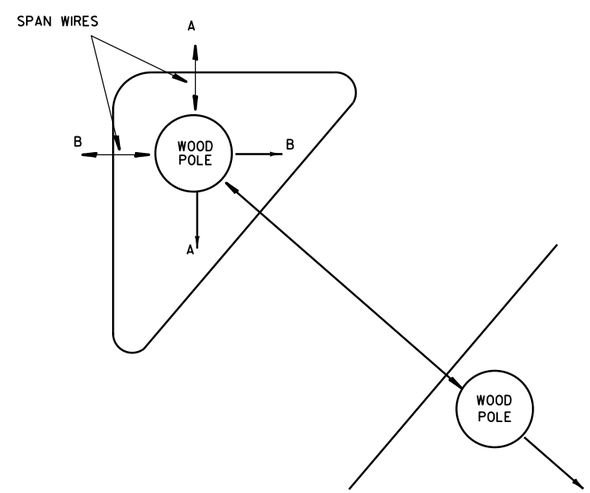

ISLAND POLES

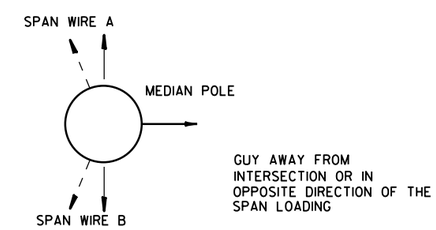

GUY AWAY FROM INTERSECTION OR IN OPPOSITE DIRECTION OF THE SPAN LOADING

MEDIAN POLES

SPAN WIRE
TEMPORARY TRAFFIC SIGNAL

STATE OF WISCONSIN
DEPARTMENT OF TRANSPORTATION

APPROVED
June, 2015 — DATE
/S/ Ahmet Demirbilek — STATE ELECTRICAL
FHWA

6

6

S.D.D. 9 G 1-4g

S.D.D. 9 G 1-4g

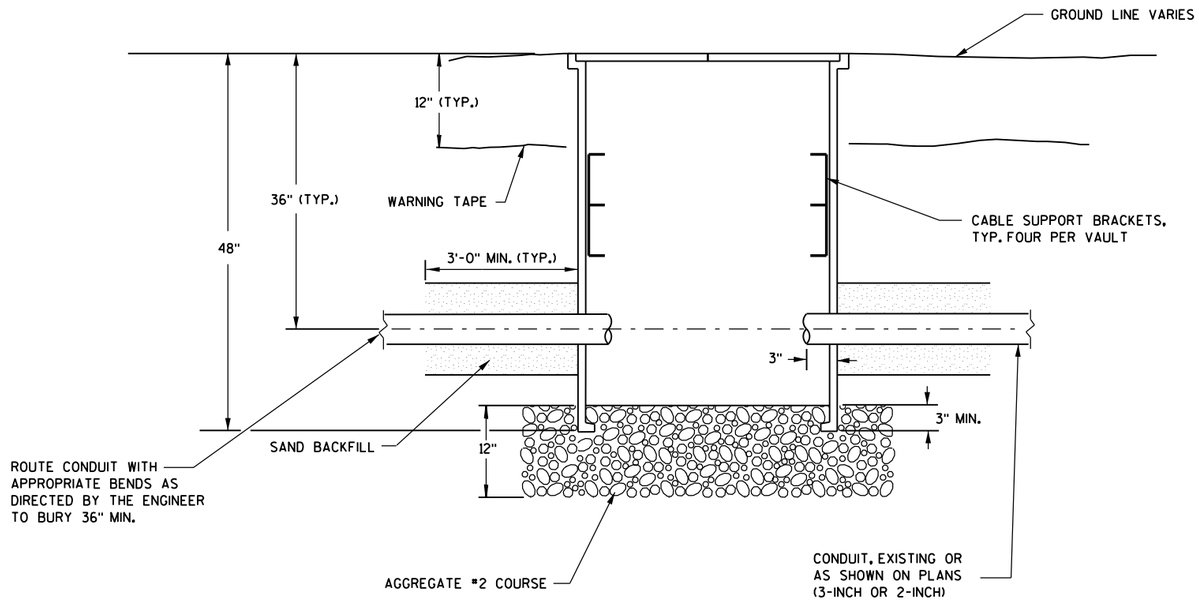

SECTION A-A

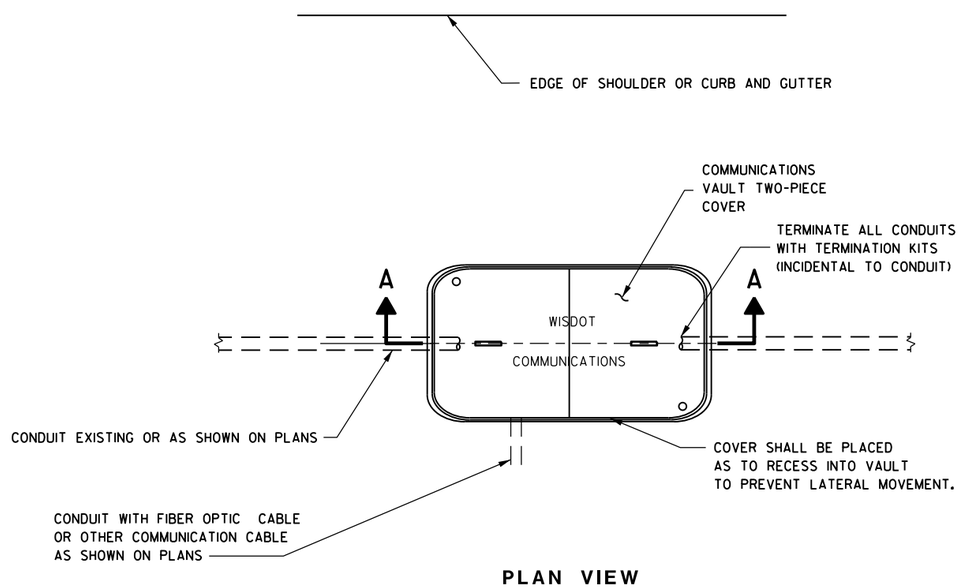

PLAN VIEW

COMMUNICATIONS VAULT

GENERAL NOTES

BOX SHALL HAVE AN OPEN BASE.

COVER SHALL BE DETECTABLE, AND HAVE A MINIMUM DESIGN LOAD OF 15,000 LBS AND SHALL LOCK.

ALL OPENINGS IN STRUCTURE MUST BE MACHINED AT TIME OF FABRICATION, OR PUNCH DRIVEN AT TIME OF PLACEMENT.

VAULTS SHALL BE OF ONE-PIECE CONSTRUCTION. TWO-PIECE/STACKABLE VAULTS WILL NOT BE PERMITTED.

FIELD PLACEMENT OF COMMUNICATIONS VAULTS SHALL BE AS DIRECTED BY THE ENGINEER.

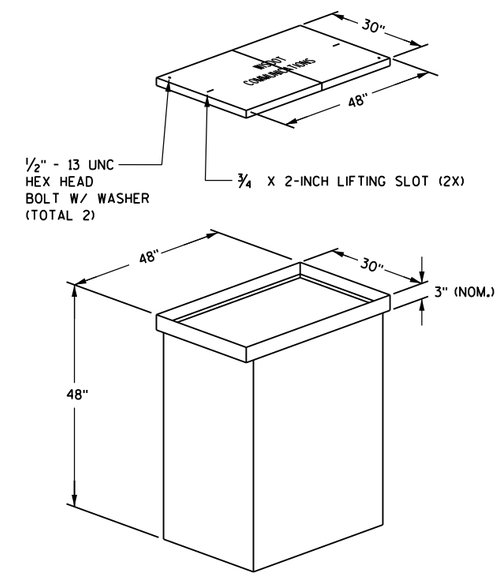

ISOMETRIC VIEW

COMMUNICATION VAULT

STATE OF WISCONSIN
DEPARTMENT OF TRANSPORTATION

APPROVED
Sept. 2014 — /S/ Ahmet Demirbilek
DATE — STATE ELECTRICAL
FHWA

6

S.D.D. 9 H 9-1

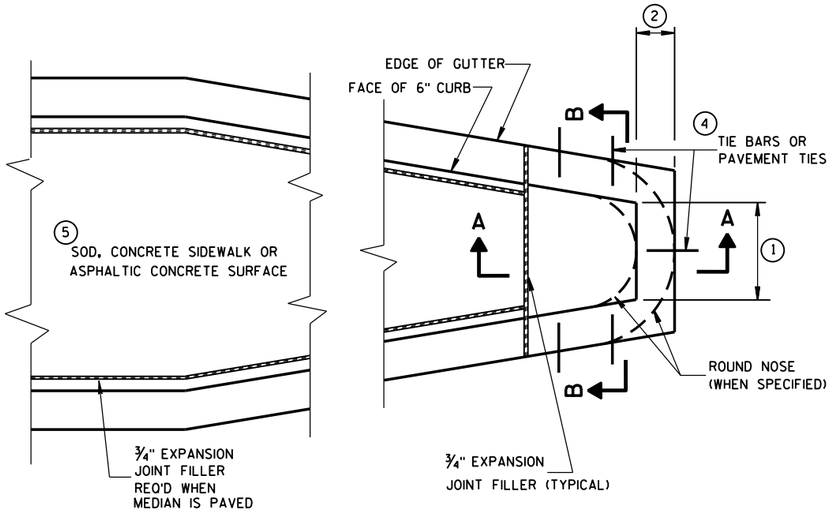

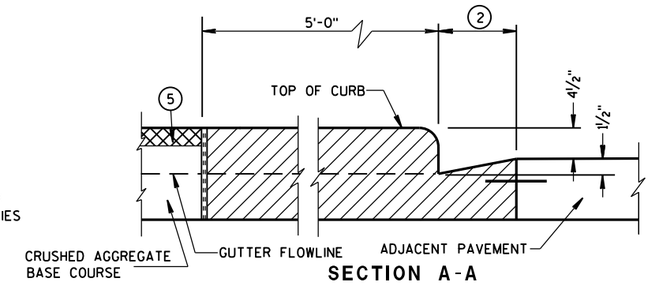

SECTION A-A

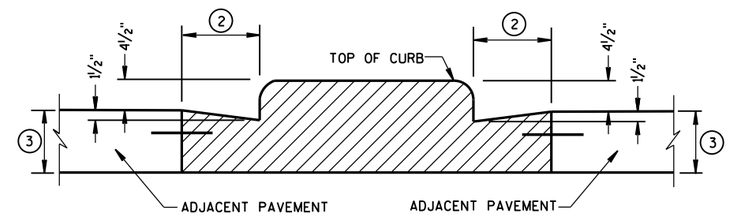

SECTION B-B

CONCRETE MEDIAN BLUNT NOSE DETAIL

GENERAL NOTES

DETAILS OF CONSTRUCTION, MATERIALS AND WORKMANSHIP NOT SHOWN ON THIS DRAWING SHALL CONFORM TO THE PERTINENT REQUIREMENTS OF THE STANDARD SPECIFICATIONS AND THE APPLICABLE SPECIAL PROVISIONS.

1. SEE PLAN FOR MEDIAN NOSE WIDTH AND RADIUS (FOR ROUND NOSE ALTERNATE).
2. WIDTH OF GUTTER TO MATCH EXISTING ADJACENT GUTTER OR AS SPECIFIED ELSEWHERE IN THE PLAN.
3. DEPTH EQUAL TO ADJACENT PAVEMENT. ADJACENT PAVEMENT STRUCTURE DETAILS ARE SHOWN ON THE PLAN. TYPICAL OPTIONS ARE:
   (1) NEW OR EXISTING CONCRETE PAVEMENT.
   (2) ASPHALTIC CONCRETE PAVEMENT OVER NEW OR EXISTING CONCRETE BASE COURSE.
   (3) ASPHALTIC CONCRETE PAVEMENT OVER CRUSHED AGGREGATE BASE COURSE.
4. TIE BARS OR PAVEMENT TIES REQUIRED IN NEW CONCRETE PAVEMENT OR CONCRETE BASE COURSE. TIE BARS SHALL BE NO. 4 X 2'-0" SPACED AT 2'-0" C-C.

   PAVEMENT TIES REQUIRED IN EXISTING CONCRETE BASE COURSE. PAVEMENT TIES SHALL BE NO. 6 X 1'-0" SPACED AT 3'-0" C-C INSTALLED ON A HORIZONTAL SKEW OF 6:1. THE DIRECTION OF SKEW SHALL ALTERNATE AFTER EVERY ONE OR TWO BARS.
5. SURFACE TYPE AND DETAILS ARE SHOWN ELSEWHERE IN THE PLAN.

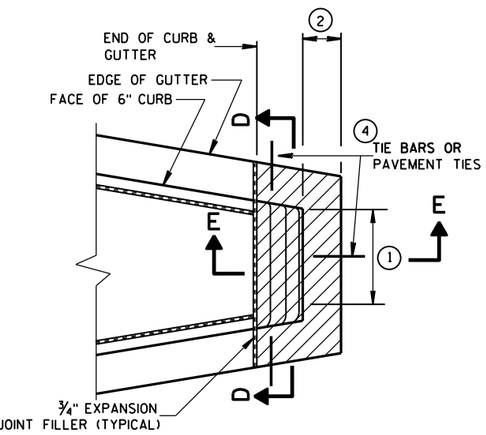

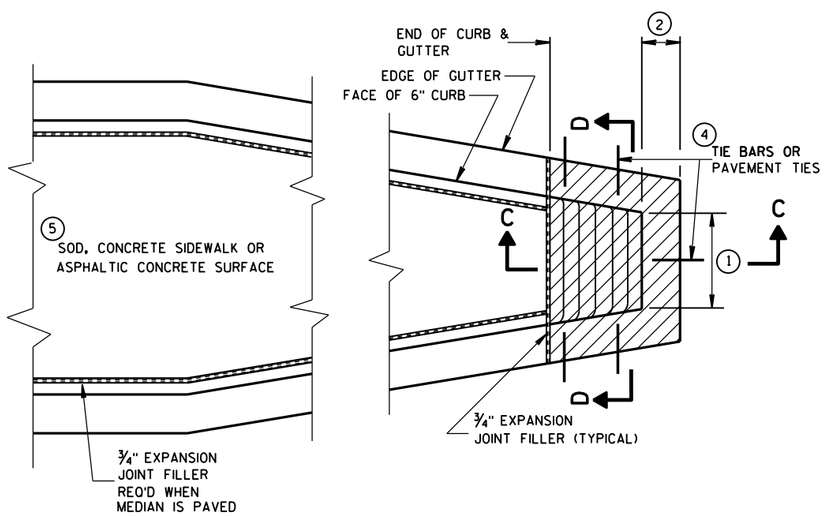

CONCRETE MEDIAN SLOPED NOSE TYPE 1

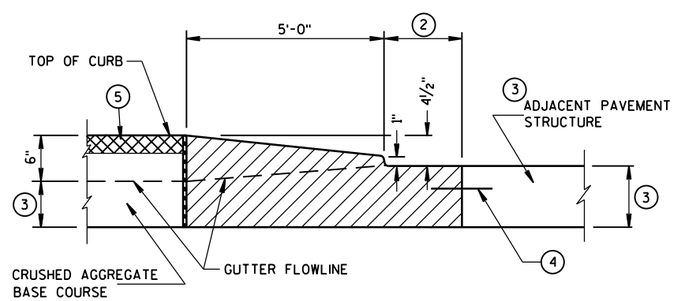

SECTION C-C

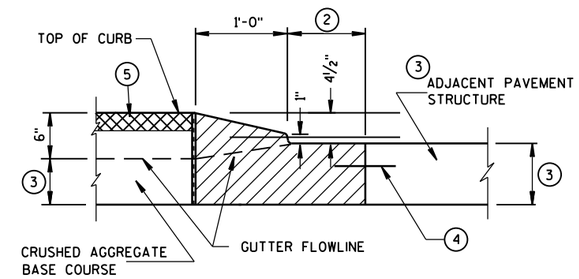

SECTION E-E

CONCRETE MEDIAN SLOPED NOSE TYPE 2

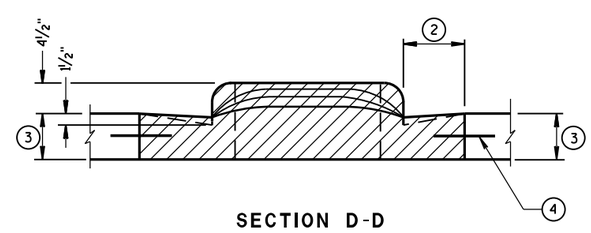

SECTION D-D

CONCRETE MEDIAN NOSE	
STATE OF WISCONSIN DEPARTMENT OF TRANSPORTATION	
APPROVED 6/8/2006 DATE	/S/ Jerry H. Zogg ROADWAY STANDARDS DEVELOPMENT ENGINEER
FHWA	

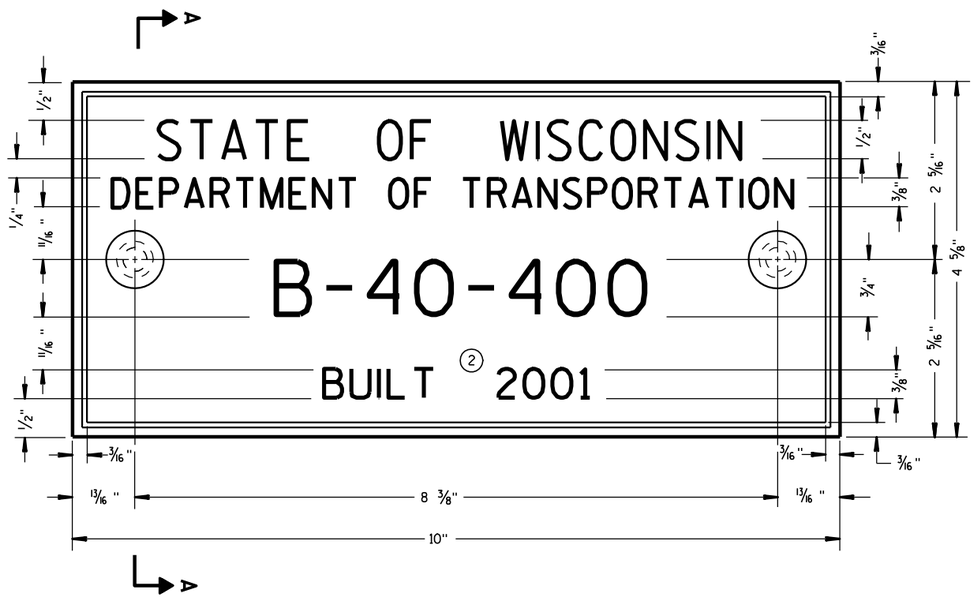

TYPICAL NAME PLATE

(BRIDGES, CULVERTS, AND RETAINING WALLS)

GENERAL NOTES

NAME PLATES TO BE INSTALLED ON BRIDGES, CULVERTS, AND RETAINING WALLS SHALL CONFORM TO THE REQUIREMENTS OF SECTION 502.3.11 OF THE STANDARD SPECIFICATIONS.

THE BRIDGE NUMBER AND YEAR BUILT SHOWN ON THIS DRAWING ARE EXAMPLES ONLY. SEE CONSTRUCTION PLANS FOR INDIVIDUAL NUMBERING AND YEAR BUILT.

① EPOXY RESIN SHALL BE FROM AN APPROVED MANUFACTURER AND USED IN ACCORDANCE WITH MANUFACTURER'S RECOMMENDATIONS.

② REHABILITATION OF AN EXISTING STRUCTURE SHOULD USE THE DATE OF ORIGINAL STRUCTURE CONSTRUCTION.

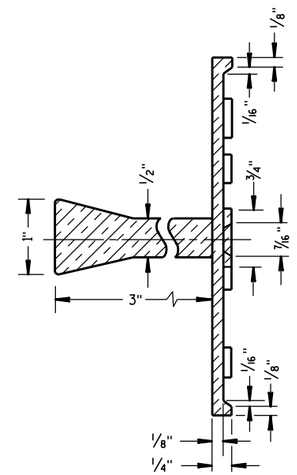

SECTION A-A

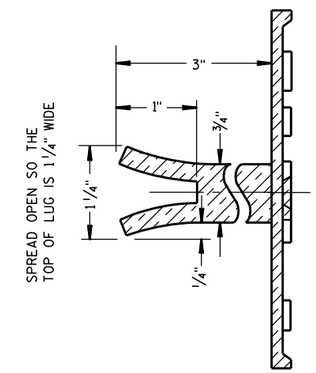

ALTERNATE LUG

6

FOR MULTI-UNIT STRUCTURES
LINE 3 ABOVE SHALL READ

B = BRIDGE
C = CULVERT
R = RETAINING WALL

COUNTY NO.

BRIDGE NO.

UNIT NO. FOR MULTIPLE
UNIT BRIDGE

B-40-400-1A

NUMBERING DESIGNATION
MULTI-UNIT STRUCTURES

① ADHERE ANCHOR LUG TO
PRECAST RETAINING WALL
WITH EPOXY RESIN.

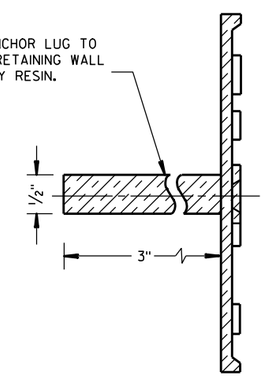

ALTERNATE LUG

(FOR ATTACHMENT TO PRECAST STRUCTURES)

NAME PLATE (STRUCTURES)	
STATE OF WISCONSIN DEPARTMENT OF TRANSPORTATION	
APPROVED	
3/26/10 DATE	/S/ Scot Beck-- CHIEF STRUCTURAL DEVELOPER
FHWA	

S.D.D. 12 A 3-10

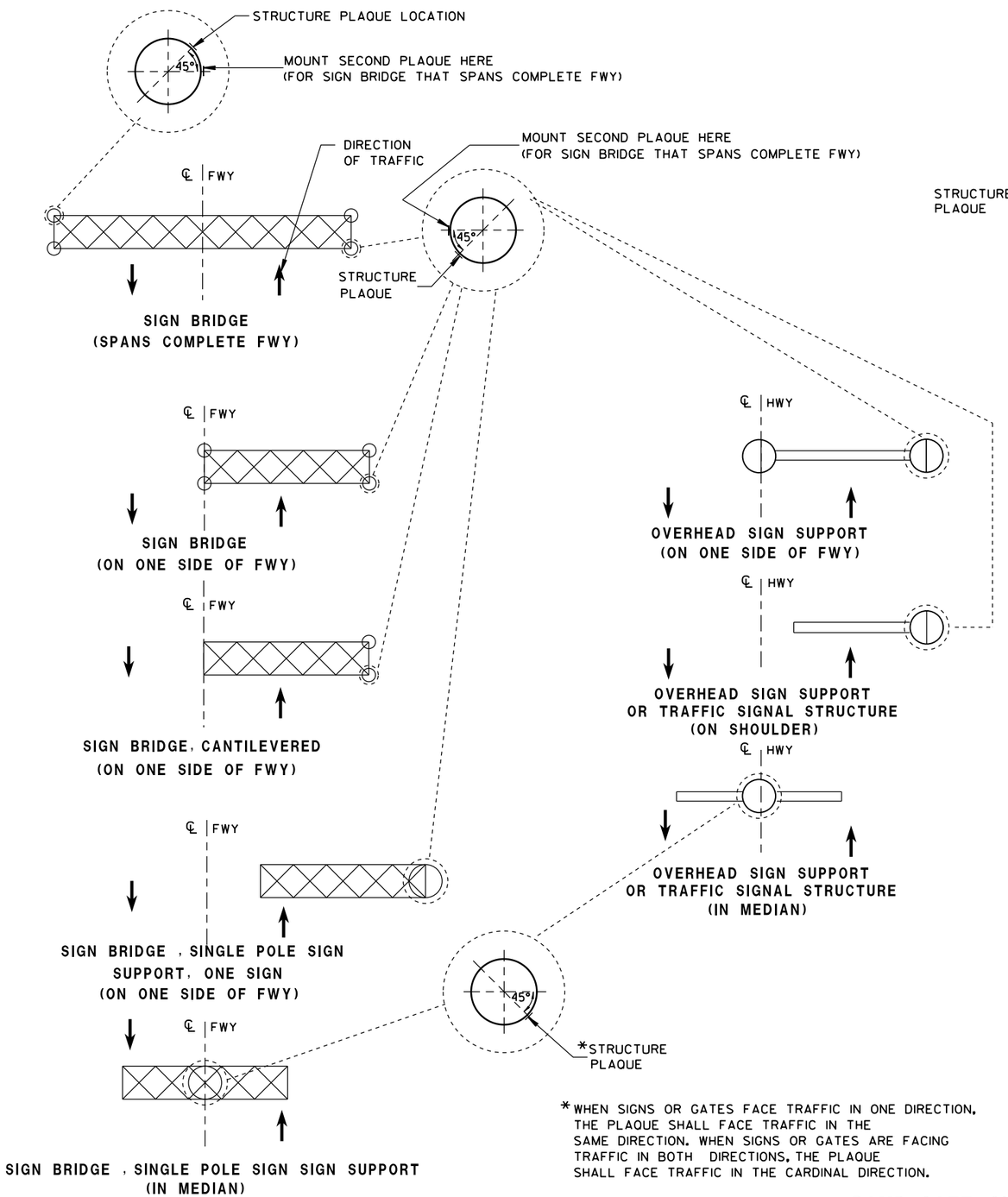

LOCATION OF RAMP GATE, SIGN BRIDGE, OVERHEAD SIGN SUPPORT & TRAFFIC SIGNAL STRUCTURE PLAQUES

* WHEN SIGNS OR GATES FACE TRAFFIC IN ONE DIRECTION, THE PLAQUE SHALL FACE TRAFFIC IN THE SAME DIRECTION. WHEN SIGNS OR GATES ARE FACING TRAFFIC IN BOTH DIRECTIONS, THE PLAQUE SHALL FACE TRAFFIC IN THE CARDINAL DIRECTION.

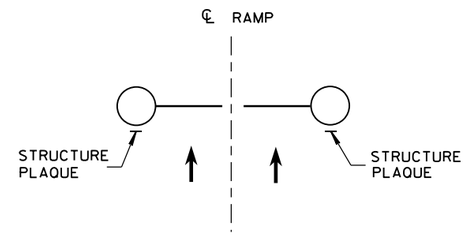

RAMP GATE
(ACROSS FWY ON-RAMP)

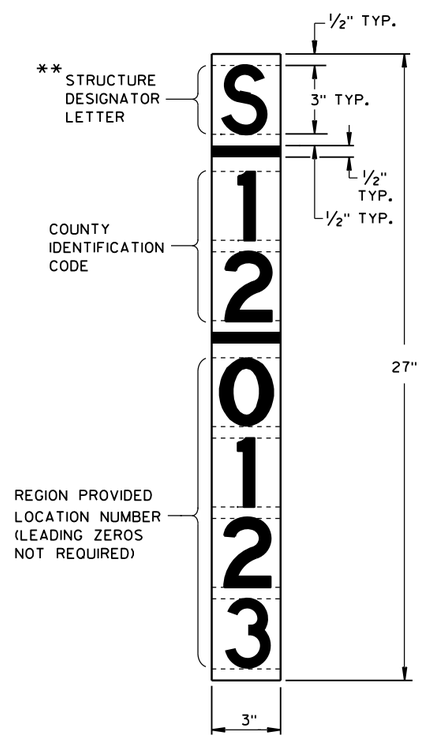

** LETTER "G" UTILIZED FOR RAMP GATES. LETTER "S" UTILIZED FOR SIGN BRIDGES, OVERHEAD SIGN SUPPORTS, AND TRAFFIC SIGNALS.

RAMP GATE, SIGN BRIDGE, OVERHEAD SIGN SUPPORT AND TRAFFIC SIGNAL STRUCTURE PLAQUE FOR SIGN BRIDGES AND OVERHEAD SIGN SUPPORT WHICH ARE NOT STRUCTURE MOUNTED

GENERAL NOTES

DETAILS OF CONSTRUCTION AND WORKMANSHIP NOT SHOWN IN THIS DRAWING SHALL CONFORM TO THE PERTINENT REQUIREMENTS OF THE CONTRACT.

PLAQUES SHALL BE INCIDENTAL TO ALL NEW INSTALLATIONS.

IF THE PROPOSED SIGN BRIDGE OR OVERHEAD SIGN SUPPORT IS REPLACING AN EXISTING SIGN BRIDGE OR OVERHEAD SIGN SUPPORT, A NEW IDENTIFICATION PLAQUE WILL BE REQUIRED.

FASTEN TOP, CENTER AND BOTTOM OF PLAQUE TO POLE OR OTHER LOCATION AS FOLLOWS:

GALVANIZED STEEL SHAFT - 3 STAINLESS STEEL POP RIVETS

A588 STEEL SHAFT - SHIM FOR DRAINAGE WITH STAINLESS WASHERS; FASTEN WITH STAINLESS SELF-TAPPING SCREWS

ALUMINUM SHAFTS - 3 ALUMINUM POP RIVETS

MOUNTING HEIGHT SHALL BE APPROXIMATELY 5.0' ABOVE CURB OR SHOULDER. ADJUST IF IT IS KNOWN THAT REQUIRED TRAFFIC SIGNS WILL OBSTRUCT.

PLAQUE MATERIALS:

BASE - SHEET ALUMINUM, 0.060" THICK.

FACE - WHITE, SELF-ADHESIVE VINYL SHEETING, NON-RETROREFLECTIVE

LINES - BLACK, 1/2" WIDE, SELF-ADHESIVE

CHARACTERS:- BLACK, SELF ADHESIVE, SERIES "D", SIZE AS SHOWN.

FOR SIGN BRIDGES, STRUCTURE MOUNTED, THE STRUCTURE PLAQUE SHALL BE MOUNTED HORIZONTALLY AS SHOWN ON THE DRAWING. THE STRUCTURE PLAQUE SHALL BE MOUNTED HORIZONTALLY TO THE BACK OF THE SIGN, BETWEEN THE ALUMINUM EXTRUSIONS, NEAR THE TOP LEFT HAND CORNER OF THE SIGN. THE BASE MATERIAL SHALL BE OMITTED AND THE FACE ADHERED DIRECTLY TO THE ALUMINUM SURFACE. PRIOR TO ADHERING THE MATERIAL, THE ALUMINUM SURFACE SHALL BE SMOOTH, CLEAN AND DRY.

WHERE SIGN BRIDGE ILLUMINATION IS PROVIDED, THE STRUCTURE MUST ALSO HAVE A SIGN BRIDGE CIRCUIT PLAQUE AS SHOWN IN THE ELECTRICAL DETAILS.

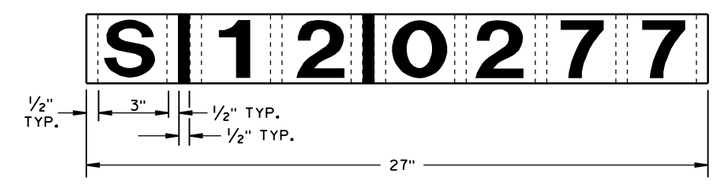

IDENTIFICATION PLAQUE FOR SIGN BRIDGE, STRUCTURE MOUNTED

STRUCTURE IDENTIFICATION PLAQUES, RAMP GATES, SIGN BRIDGES, OVERHEAD SIGN SUPPORTS, & TRAFFIC SIGNALS

STATE OF WISCONSIN
DEPARTMENT OF TRANSPORTATION

APPROVED
12/4/2012 — DATE
/S/ Travis Feltes — STATE TRAFFIC ENGINEER
FHWA

6

S.D.D. 12 A 4-3

*(RS) = REINFORCED CONCRETE SLAB
*(PS) = PAVED CONCRETE SHOULDER OR CONCRETE DRAINAGE SLAB (SEE DETAILS ELSEWHERE IN THE PLAN)
*(NRS) = NON-REINFORCED CONCRETE SLAB

***STANDARD DOWEL BAR DIAMETER (SEE SDD 13C11, & SDD 13C13)

Ⓐ STANDARD CONTRACTION JOINT NORMAL TO ℄ OR ℄

Ⓑ STANDARD LONGITUDINAL JOINT WITH TIE BARS.

Ⓒ 1½" EXPANSION JOINT WITH DOWEL BARS NORMAL TO ℄ OR ℄

GENERAL NOTES

THE CONTRACTOR MAY SPLICE NO. 6 BARS IN THE APPROACH SLAB FOR SKEWED STRUCTURES ONLY. STAGGER SPLICES WITH A MAXIMUM OF ONE SPLICE PER BAR. THE LENGTH OF LAP IS 20 INCHES.

TACK WELD DOWEL BARS TO THE BASKETS ON ALTERNATE ENDS.

① THE CONTRACTOR MAY USE NO. 4 BARS SPACED AT 2'-0" C-C IN BOTH THE LONGITUDINAL AND TRANSVERSE DIRECTIONS FOR TOP REINFORCEMENT AS AN ALTERNATIVE TO THE WELDED WIRE FABRIC.

② THE CONTRACTOR MAY OMIT TIE BARS BETWEEN REINFORCED SLABS WHERE SLAB REINFORCEMENT BARS EXTEND ACROSS THE CENTERLINE OR REFERENCE LINE.

③ DO NOT CONSTRUCT AN EXPANSION JOINT OR INSTALL DOWEL BARS WHEN ABUTTING AN HMA PAVEMENT.

④ USE A JOINT SEALANT MEETING THE REQUIREMENTS OF ASTM D6690.

⑤ PLACE EXPANSION CAP ON THE END OF THE DOWEL THAT IS NOT TACK WELDED TO THE BASKET. DO NOT FORCE DOWEL BAR PAST THE DOWEL STOP.

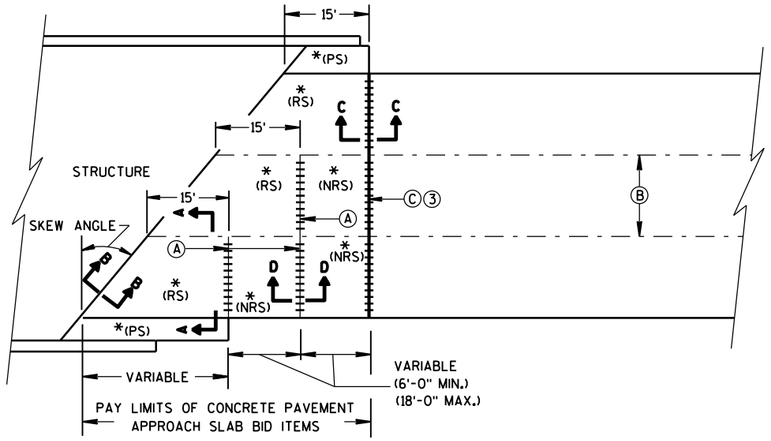

SKEWED APPROACH
(PAVEMENT MORE THAN 2 LANES)

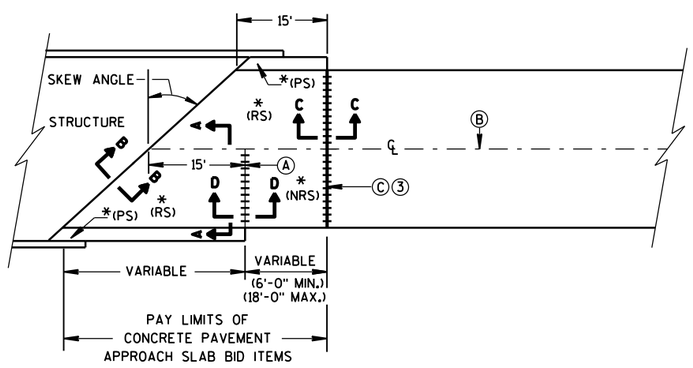

SKEWS >20°
(PAVEMENT WIDTH ≤30')

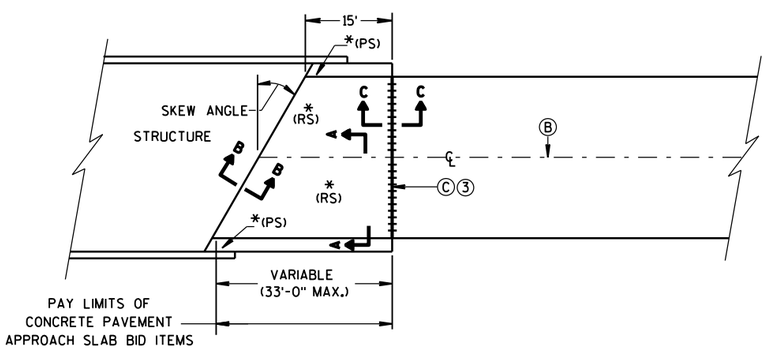

SKEWS ≤20°
(PAVEMENT WIDTH ≤30')

APPROACH SLAB AND ADJACENT PAVEMENT

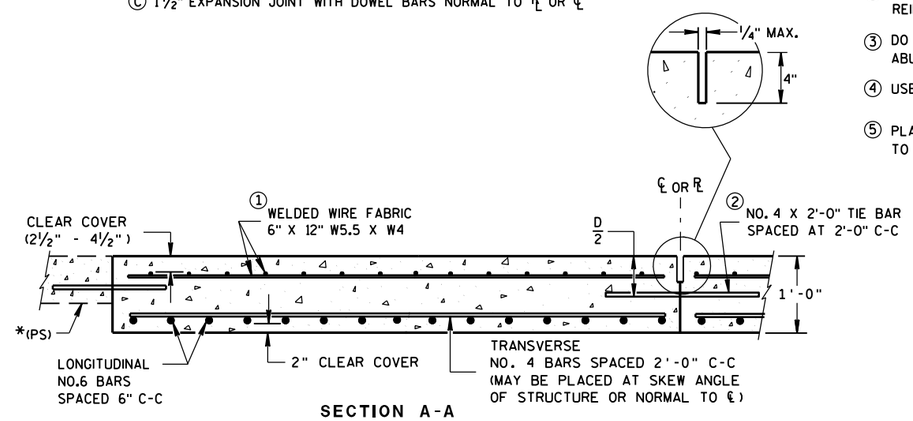

SECTION A-A
REINFORCEMENT POSITIONING DETAIL

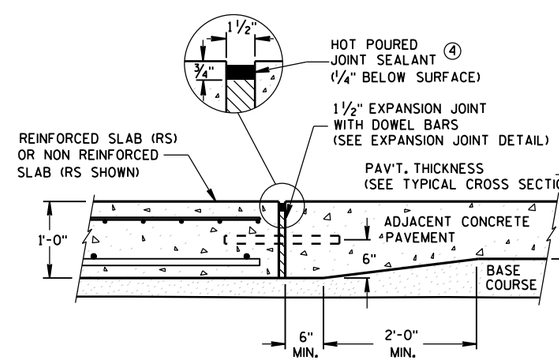

SECTION C-C
TRANSITION DETAIL
APPROACH SLAB TO ADJACENT PAVEMENT

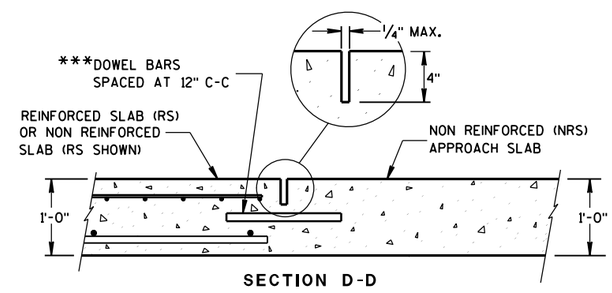

SECTION D-D
CONTRACTION JOINT

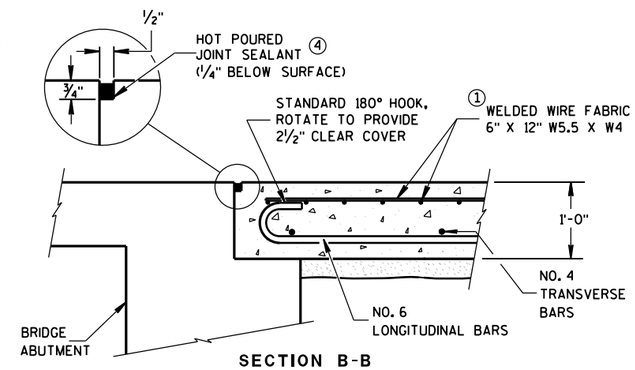

SECTION B-B
BEND DETAIL
BOTTOM REINFORCEMENT

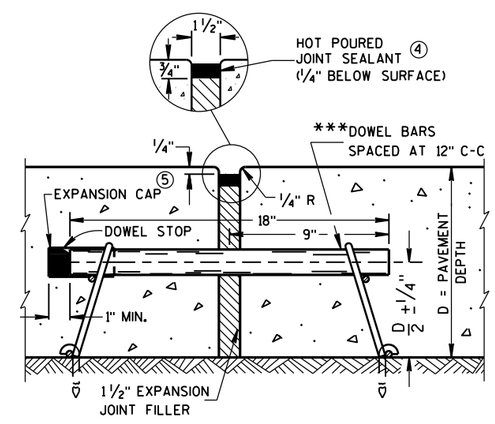

EXPANSION JOINT DETAIL

CONCRETE PAVEMENT APPROACH SLAB
STATE OF WISCONSIN DEPARTMENT OF TRANSPORTATION
APPROVED June, 2015 DATE — /S/ Peter Kemp, P.E. PAVEMENT SUPER — FHWA

6

6

S.D.D. 13 B 2-8a

S.D.D. 13 B 2-8a

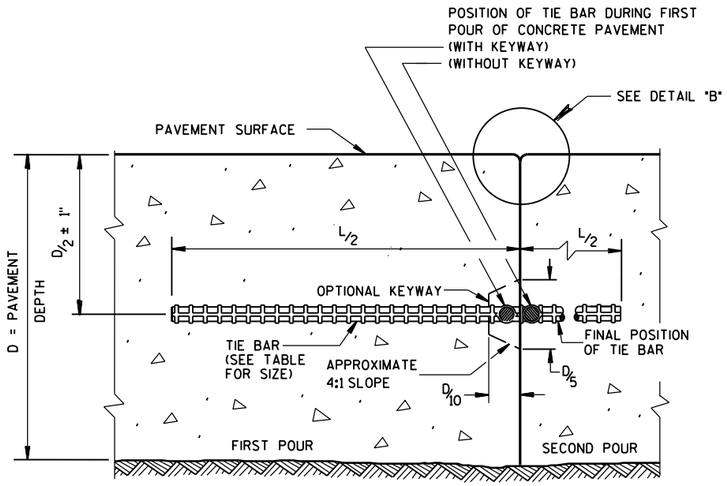

CONSTRUCTION JOINT

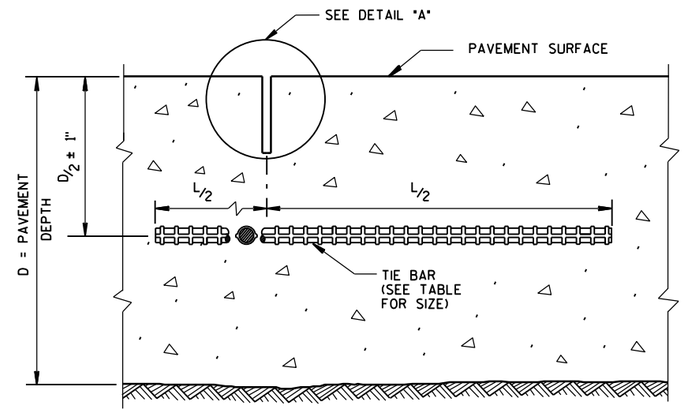

SAWED JOINT

GENERAL NOTES

DO NOT SEAL OR FILL LONGITUDINAL JOINTS.

CREATE A LONGITUDINAL JOINT FOR PAVEMENT WIDTHS GREATER THAN 15 FEET.

CORRELATE LONGITUDINAL JOINTS WITH LANE LINES WHEN POSSIBLE.

(1) ANCHOR TIE BARS INTO DRILLED HOLES WITH AN EPOXY.

(2) PAVEMENT THAT WAS IN PLACE PRIOR TO THE CONTRACT.

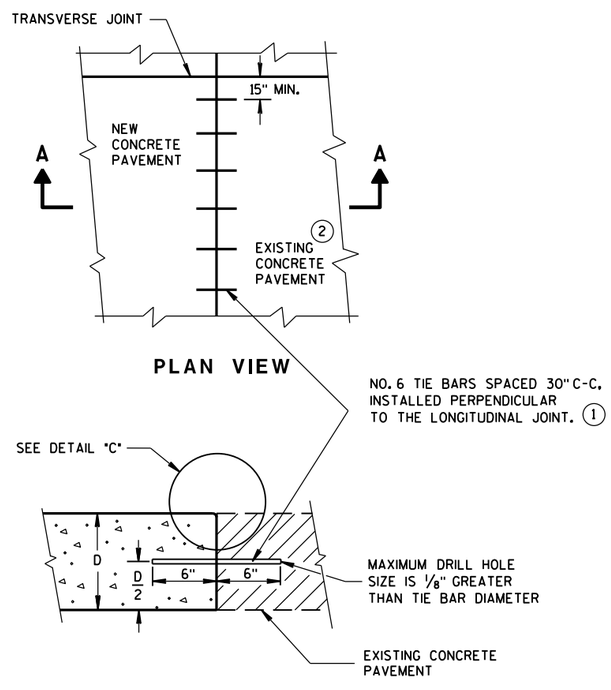

PLAN VIEW

SECTION A-A
LONGITUDINAL CONSTRUCTION JOINT TIE BARS ANCHORED INTO EXISTING PAVEMENT

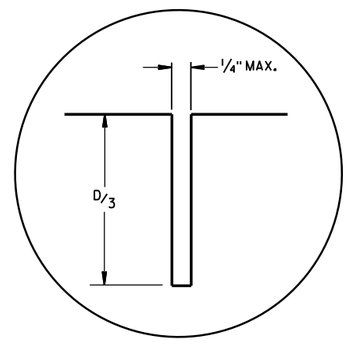

DETAIL "A"

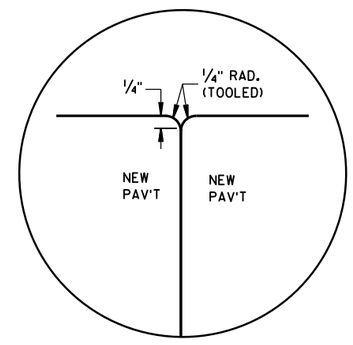

DETAIL "B"

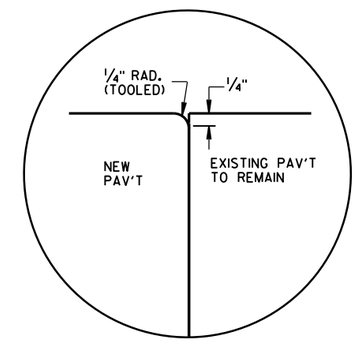

DETAIL "C"

TIE BAR TABLE

PAVEMENT DEPTH (D)	TIE BAR SIZE	TIE BAR LENGTH (L)	MAX. TIE BAR SPACING
< 10 1/2"	NO. 4	30"	36"
≥ 10 1/2"	NO. 5	36"	36"
	NO. 4 *	30"	24" **

* SUBSTITUTE BENT BARS AT LONGITUDINAL JOINTS WHEN EQUIPMENT LIMITATIONS DURING CONSTRUCTION WARRANT (e.g. AUXILIARY LANES OR TURN LANES)

** CONFORM TO 15" MINUMUM SPACING FROM TRANSVERSE JOINTS; SPACING BETWEEN TIE BARS WILL BE 30" AT TRANSVERSE JOINTS.

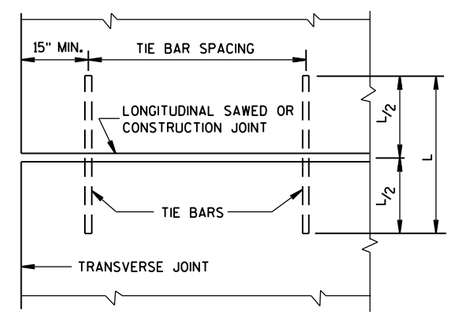

PLAN VIEW
SHOWING LOCATION OF TIE BARS

CONCRETE PAVEMENT
LONGITUDINAL JOINTS AND TIES

STATE OF WISCONSIN
DEPARTMENT OF TRANSPORTATION

APPROVED
June, 2015 — DATE
/S/ Peter Kemp, P.E. — PAVEMENT SUPER
FHWA

6

6

S.D.D. 13 C 1-18

S.D.D. 13 C 1-18

GENERAL NOTES

SAW CUT, DRILL, AND LIFT OUT EXISTING CONCRETE PAVEMENT WITHIN THE BOUNDARIES OF CONCRETE REPAIR AREAS. THE CONTRACTOR MAY MAKE ADDITIONAL SAW CUTS INSIDE THE REPAIR LIMITS TO REDUCE WEIGHT AND SIZE OF CONCRETE PIECES.

PROVIDE A 6-FOOT MINIMUM DISTANCE FROM BOUNDARIES OF CONCRETE REPAIR AREAS TO ADJACENT TRANSVERSE JOINT OR CRACK IN THE SAME LANE.

THE LENGTH OF THE REPAIRS MAY VARY FROM THE DIMENSIONS SHOWN IF THE EXISTING CONCRETE PAVEMENT IS NONDOWELED AND THE PAVEMENT IS TO BE OVERLAID AFTER REPAIRING.

(1) DOWEL BARS MIGHT NOT EXIST.

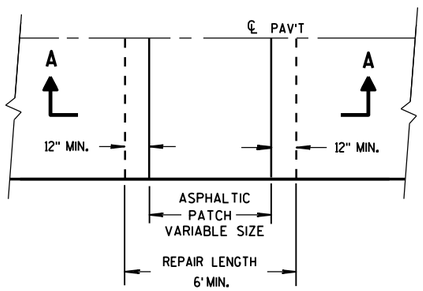

PLAN VIEW

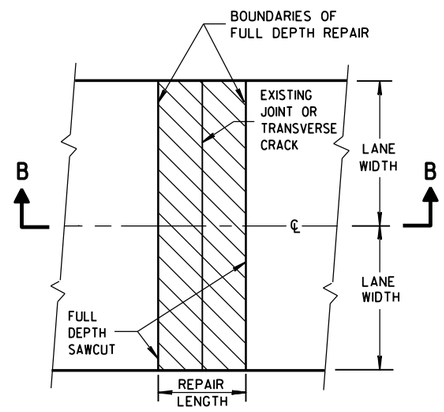

PLAN VIEW
(DOUBLE LANE REPAIR)

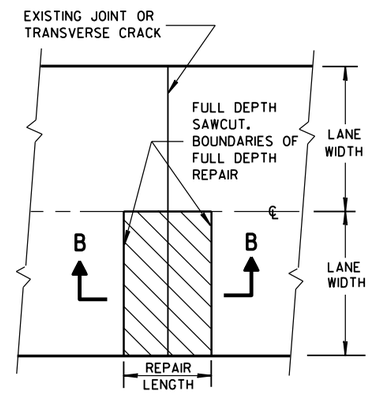

PLAN VIEW
(SINGLE LANE REPAIR)

FULL DEPTH CONCRETE PAVEMENT REMOVAL

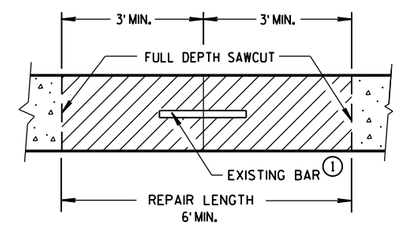

SECTION B-B

CONCRETE REMOVAL

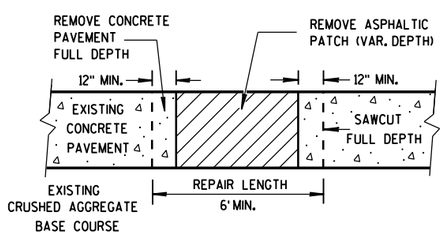

SECTION A-A

HMA PATCH REMOVAL

6

6

CONCRETE PAVEMENT REPAIR AND REPLACEMENT

STATE OF WISCONSIN
DEPARTMENT OF TRANSPO

S.D.D. 13 C 9-14a

S.D.D. 13 C 9-14a

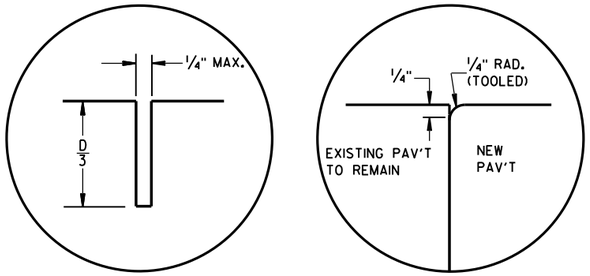

C1 C2

TRANSVERSE JOINTS

TIE BAR TABLE

PAVEMENT DEPTH (D)	TIE BAR SIZE	TIE BAR LENGTH (L)	MAX. TIE BAR SPACING
< 10 1/2"	NO. 4	30"	36"
≥ 10 1/2"	NO. 5	36"	36"
	NO. 4 *	30"	24" **

* SUBSTITUTE BENT BARS AT LONGITUDINAL JOINTS WHEN EQUIPMENT LIMITATIONS DURING CONSTRUCTION WARRANT (e.g. AUXILIARY LANES OR TURN LANES)

** CONFORM TO 15" MINUMUM SPACING FROM TRANSVERSE JOINTS; SPACING BETWEEN TIE BARS WILL BE 30" AT TRANSVERSE JOINTS.

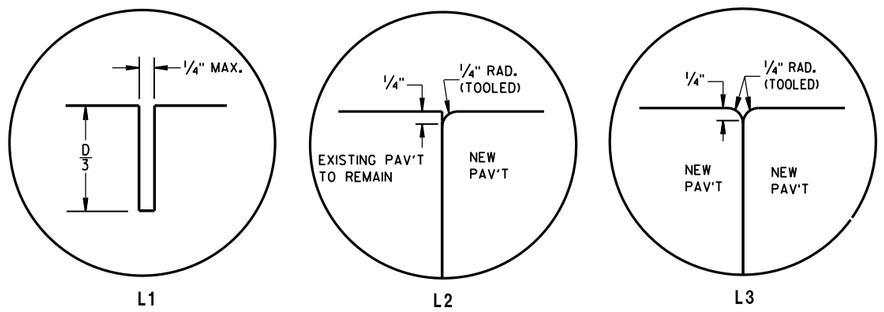

L1 L2 L3

LONGITUDINAL JOINTS

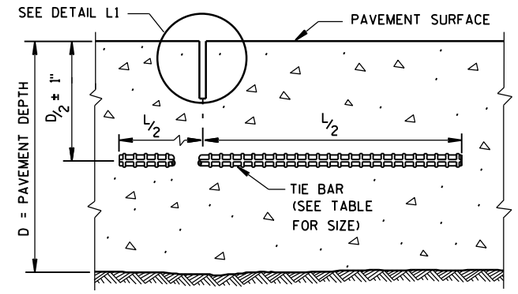

SECTION C-C

SAWED LONGITUDINAL JOINT

GENERAL NOTES

INSTALL DOWEL BARS PARALLEL TO THE PAVEMENT CENTERLINE AND PAVEMENT SURFACE.

CONCRETE PAVEMENT REPAIRS OF EXISTING NONDOWELED CONCRETE PAVEMENTS DO NOT NEED TO BE DOWELED.

DO NOT SEAL OR FILL JOINTS.

ANCHOR DOWEL BARS AND TIE BARS INTO DRILLED HOLES WITH AN EPOXY.

FOR MULTI-LANE CONCRETE PAVEMENT REPLACEMENTS, PROVIDE A MINIMUM DISTANCE OF 15 INCHES FROM ALL TRANSVERSE JOINTS OR EDGES OF REPLACEMENT TO THE CENTER OF THE TIE BAR NEAREST THAT JOINT OR EDGE.

(1) APPLY A THIN UNIFORM COATING OF SURFACE TREATMENT TO THE FREE END OF DOWEL BARS TO PREVENT BONDING.

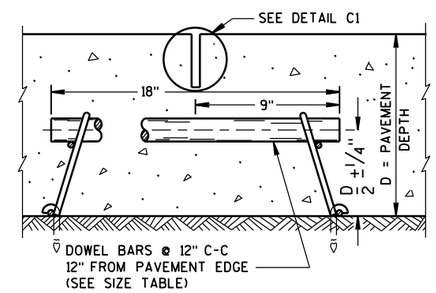

SECTION F-F

CONTRACTION JOINT

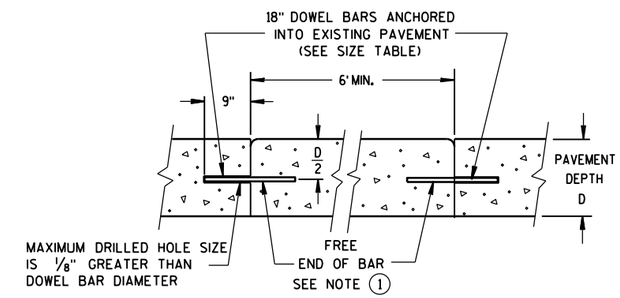

SECTION D-D

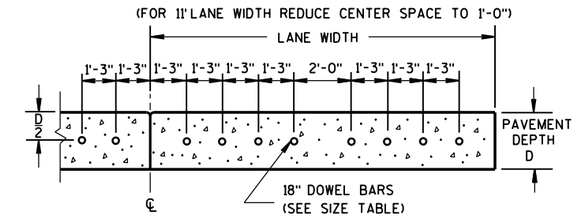

SECTION E-E

DRILLED DOWEL BAR CONSTRUCTION JOINT

PAVEMENT DEPTH, DOWEL BAR SIZE AND JOINT SPACING TABLE

PAVEMENT DEPTH (D)	DOWEL BAR DIAMETER	DRILLED DOWEL BAR DIAMETER	CONTRACTION JOINT SPACING
5 1/2", 6", 6 1/2"	NONE	NONE	12'
7", 7 1/2"	1"	1"	14'
8", 8 1/2"	1 1/4"	1 1/4"	15'
9", 9 1/2"	1 1/4"	1 1/4"	15'
10" & ABOVE	1 1/2"	1 1/4"	15'

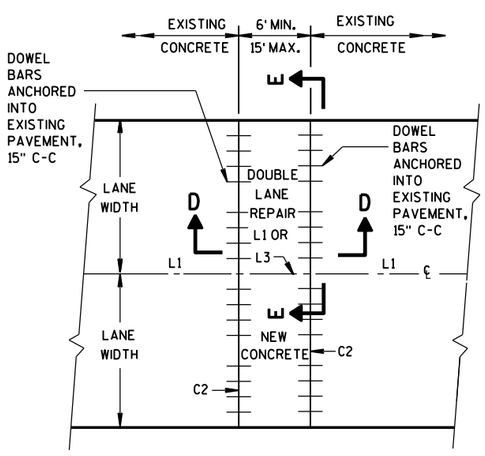

PLAN VIEW

MULTI-LANE CONCRETE PAVEMENT REPAIR

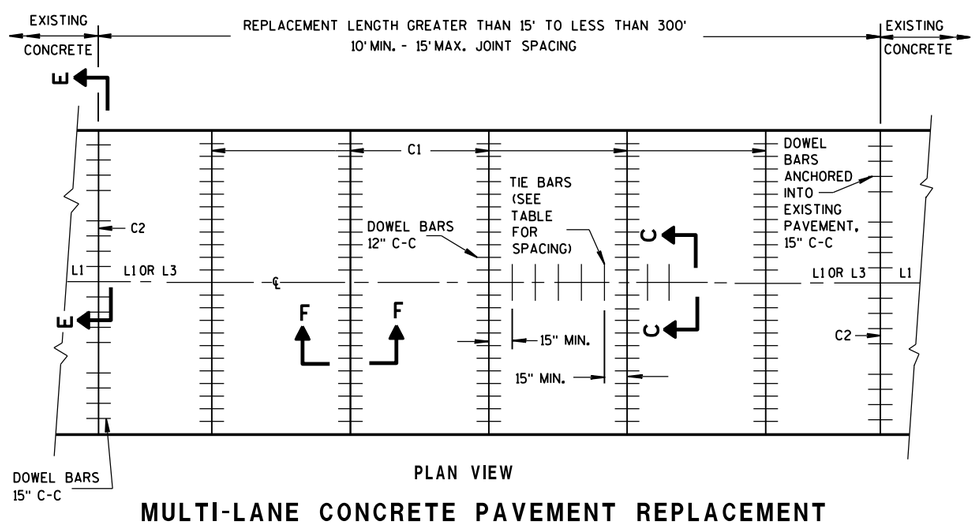

PLAN VIEW

MULTI-LANE CONCRETE PAVEMENT REPLACEMENT

CONCRETE PAVEMENT REPAIR AND REPLACEMENT

STATE OF WISCONSIN
DEPARTMENT OF TRANSPOR

GENERAL NOTES

1. WITH THE APPROVAL OF THE ENGINEER, FOR SINGLE LANE PAVEMENT REPLACEMENTS LESS THAN 30 FEET IN LENGTH, THE CONTRACTOR MAY INSTALL DRILLED TIE BARS ON 6:1 SKEW HORIZONTALLY, DIRECTION OF SKEW ALTERNATING WITH EACH SUCCESSIVE BAR. DRIVE SKEWED TIE BARS TO A DEPTH OF 6 INCHES IN A HOLE OF SUCH A DIAMETER AS TO PROVIDE A TIGHT DRIVEN FIT.
2. USE AN ENGINEER-APPROVED BOND BREAKER (E.G. RELEASE AGENT, CURING COMPOUND) FOR SINGLE LANE REPAIRS UP TO 15 FEET IN LENGTH.
3. ANCHOR TIE BARS INTO DRILLED HOLES WITH AN EPOXY.

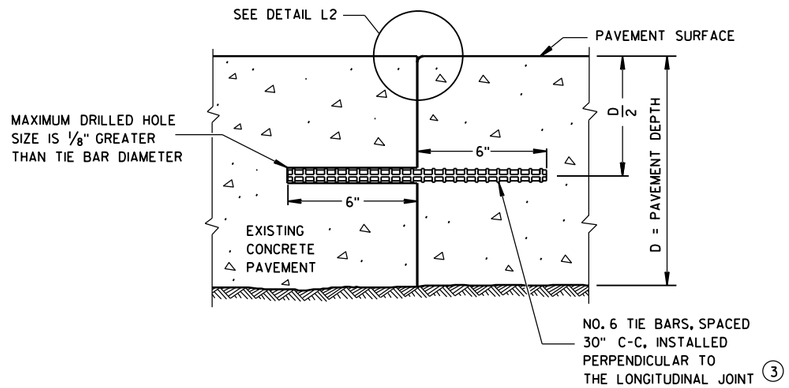

SECTION G-G

TIE BARS ANCHORED INTO EXISTING PAVEMENT

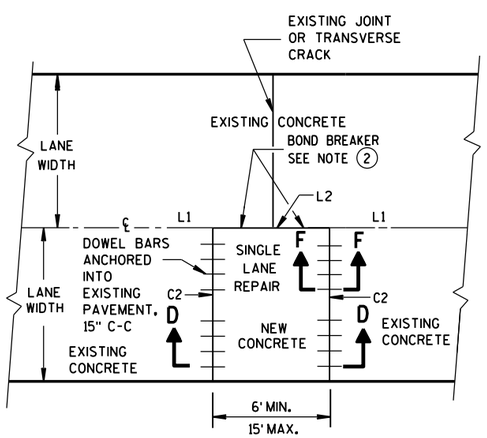

PLAN VIEW

SINGLE LANE CONCRETE PAVEMENT REPAIR

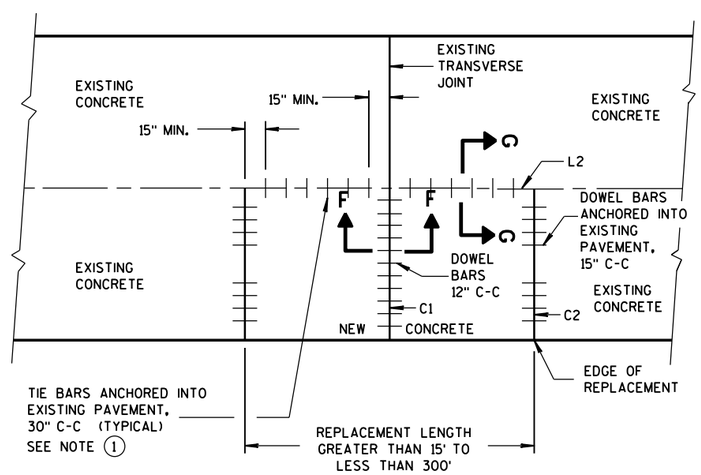

PLAN VIEW

SINGLE LANE CONCRETE PAVEMENT REPLACEMENT

CONCRETE PAVEMENT REPAIR AND REPLACEMENT

STATE OF WISCONSIN
DEPARTMENT OF TRANSPORTATION

APPROVED
March, 2017 — DATE
/S/ Peter Kemp, P.E. — PAVEMENT SUPER
FHWA

S.D.D. 13 C 9-14c
6

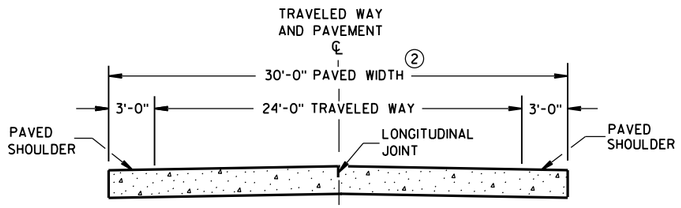

SECTION A-A ①
TWO-LANE TWO-WAY HIGHWAY

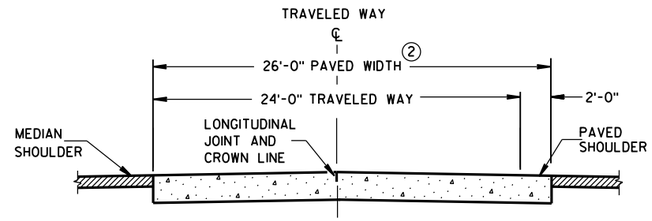

SECTION B-B

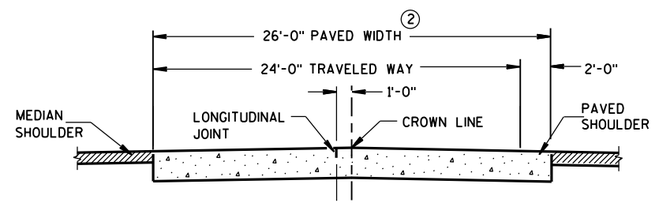

ALTERNATIVE SECTION B-B ①
DIVIDED HIGHWAY

GENERAL NOTES

CONTRACTION JOINTS

CONSTRUCT TRANSVERSE CONTRACTION JOINTS NORMAL TO THE CENTERLINE. SHOW THE LOCATION OF CONTRACTION JOINTS THROUGH INTERSECTIONS ON THE PLANS OR AS DIRECTED BY THE ENGINEER.

DO NOT SEAL OR FILL CONTRACTION JOINTS.

INSTALL DOWEL BARS PARALLEL TO THE PAVEMENT CENTERLINE AND PAVEMENT SURFACE.

FOR PAVEMENT SLABS OF VARYING WIDTHS, LOCATE THE OUTER MOST DOWEL BAR SO THAT THE CENTER OF THE BAR IS A MINIMUM OF 6 INCHES AND A MAXIMUM OF 18 INCHES FROM THE FREE EDGE OF PAVEMENT.

CONSTRUCTION JOINTS

LOCATE CONSTRUCTION JOINTS A MINIMUM OF 6 FEET FROM THE NEAREST CONTRACTION JOINT AND ALIGN PARALLEL TO CONTRACTION JOINTS.

① REFER TO TYPICAL CROSS SECTIONS FOR ADDITIONAL DETAILS.

② MEASURE THE ENTIRE PAVED WIDTH INCLUDING THE PORTION(S) LABELED PAVED SHOULDER AS CONCRETE PAVEMENT.

PAVEMENT DEPTH, DOWEL BAR SIZE AND JOINT SPACING TABLE

PAVEMENT DEPTH (D)	DOWEL BAR DIAMETER	CONTRACTION JOINT SPACING
5 ½", 6", 6 ½"	NONE	12'
7", 7 ½"	1"	14'
8", 8 ½"	1 ¼"	15'
9", 9 ½"	1 ¼"	15'
10" & ABOVE	1 ½"	15'

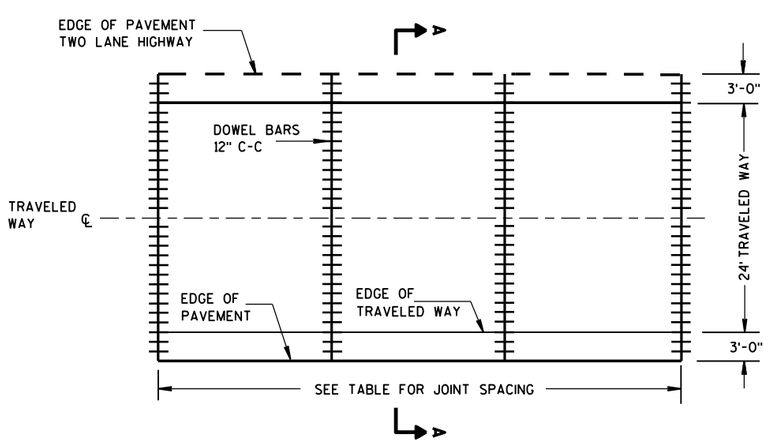

CONTRACTION JOINT LAYOUT
FOR TWO-LANE TWO-WAY HIGHWAY

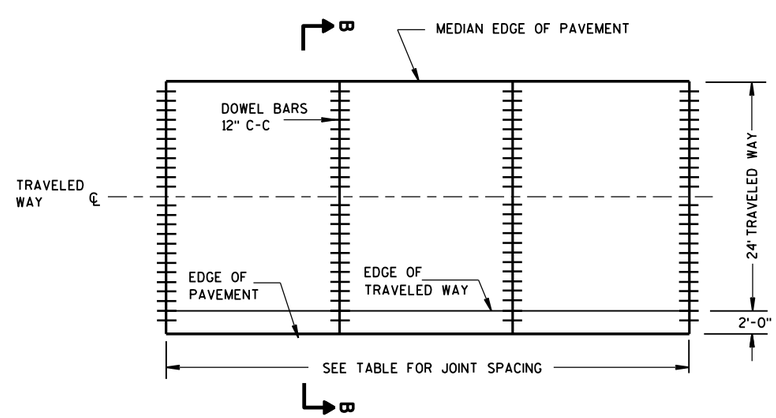

CONTRACTION JOINT LAYOUT
FOR DIVIDED HIGHWAY

RURAL DOWELED
CONCRETE PAVEMENT

STATE OF WISCONSIN
DEPARTMENT OF TRANSPOR

6

S.D.D. 13 C 11-11a

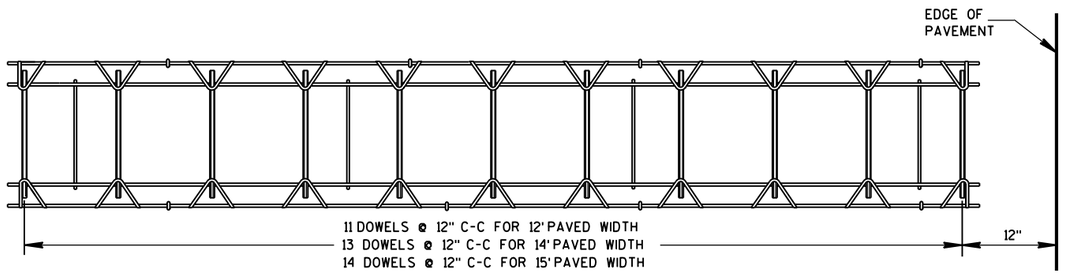

PLAN VIEW

② SIDE VIEW

(NORMAL TO CENTERLINE)

CONTRACTION JOINT DOWEL ASSEMBLY ①

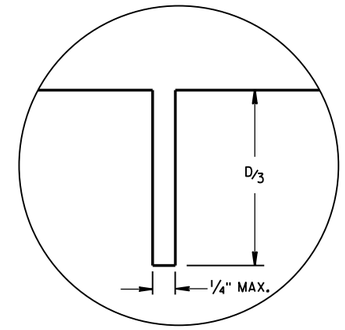

JOINT DETAIL

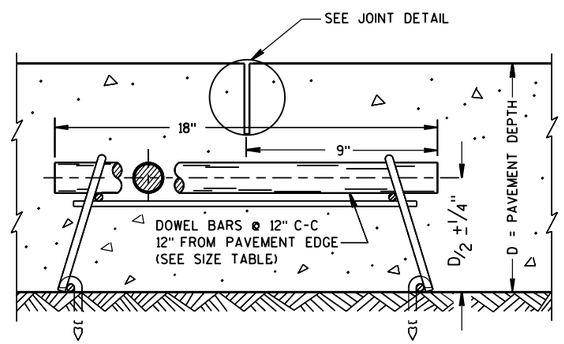

DOWELED CONTRACTION JOINT

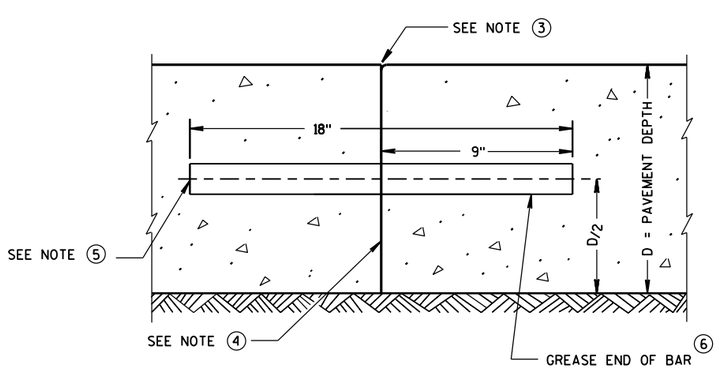

TRANSVERSE CONSTRUCTION JOINT

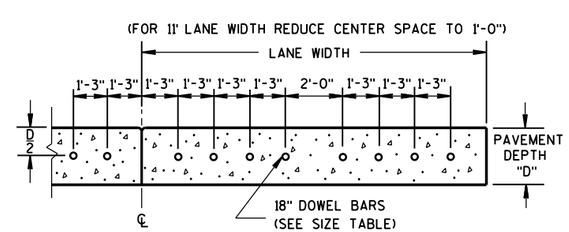

DRILLED DOWEL BAR CONSTRUCTION JOINT ⑦

GENERAL NOTES

① OBTAIN THE ENGINEER'S APPROVAL FOR THE USE OF ALTERNATIVE DESIGNS OF THE DOWEL ASSEMBLY. USE MECHANICAL DOWEL BAR INSERTERS OR DOWEL ASSEMBLIES WHEN CONSTRUCTING CONTRACTION JOINTS.

② SECURE BASKETS WITH ANCHORS TO HOLD DOWEL BARS IN THE CORRECT POSITION AND ALIGNMENT. TYPE, LOCATION, NUMBER AND LENGTH OF ANCHORS ARE DEPENDENT UPON FIELD CONDITIONS.

③ FORM OR SAW CONSTRUCTION JOINTS. PROVIDE A 1/4-INCH RADIUS AT FORMED JOINTS.

④ PROVIDE A SMOOTH VERTICAL FACE FOR THE ENTIRE DEPTH OF THE PAVEMENT WHEN FORMING CONSTRUCTION JOINTS.

⑤ INSTALL DOWEL BARS AT CONSTRUCTION JOINTS BY FORMING OR DRILLING. INSTALL FORMED DOWEL BARS 12 INCHES C-C AND 12 INCHES FROM PAVEMENT EDGE. REMOVE EXCESS CONCRETE FROM THE FREE END OF THE DOWEL BAR IF DOWEL BARS ARE FORMED THROUGH A HEADER BOARD. INSTALL DRILLED DOWEL BARS ACCORDING TO *DRILLED DOWEL BAR CONSTRUCTION JOINT* DETAIL.

⑥ APPLY A THIN UNIFORM COATING OF SURFACE TREATMENT TO THE FREE END OF DOWEL BARS TO PREVENT BONDING.

⑦ ANCHOR DOWEL BARS INTO DRILLED HOLES WITH AN EPOXY. MAXIMUM DRILLED HOLE SIZE IS 1/8-INCH GREATER THAN DOWEL BAR DIAMETER, 9 INCHES IN LENGTH.

RURAL DOWELED CONCRETE PAVEMENT

STATE OF WISCONSIN
DEPARTMENT OF TRANSPORTATION

APPROVED
5/3/2013 — DATE
/S/ Deb Bischoff — PAVEMENT POLICY & DE ... NEER
FHWA

GENERAL NOTES

SAW CUT, DRILL, AND LIFT OUT EXISTING CONCRETE PAVEMENT WITHIN THE BOUNDARIES OF CONCRETE REPAIR AREAS. THE CONTRACTOR MAY MAKE ADDITIONAL SAW CUTS INSIDE THE REPAIR LIMITS TO REDUCE WEIGHT AND SIZE OF CONCRETE PIECES.

PROVIDE 6-FOOT MINIMUM DISTANCE FROM BOUNDARIES OF CONCRETE REPAIR AREAS TO ADJACENT TRANSVERSE JOINT OR CRACK.

THE LENGTH OF THE REPAIRS MAY VARY FROM THE DIMENSIONS SHOWN IF THE EXISTING CONCRETE PAVEMENT IS NONDOWELED AND THE PAVEMENT IS TO BE OVERLAID AFTER REPAIRING.

(1) DOWEL BARS MIGHT NOT EXIST.

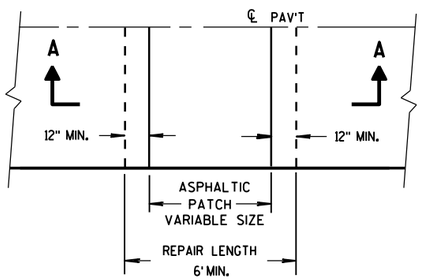

PLAN VIEW

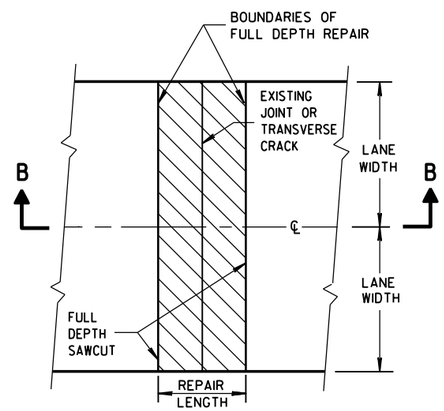

PLAN VIEW
(DOUBLE LANE REPAIR)

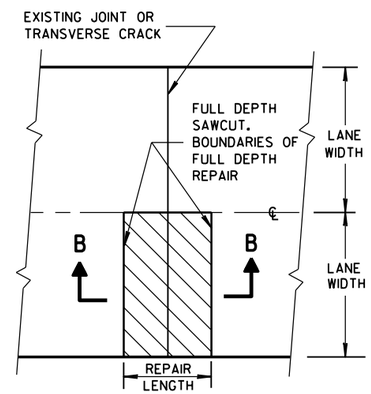

PLAN VIEW
(SINGLE LANE REPAIR)

FULL DEPTH CONCRETE PAVEMENT REMOVAL

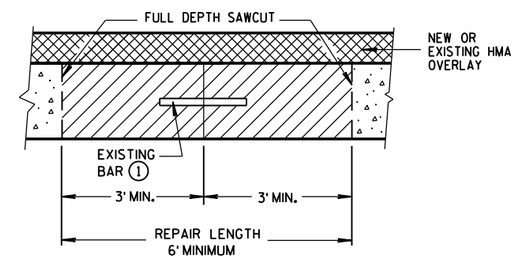

SECTION B-B

CONCRETE REMOVAL

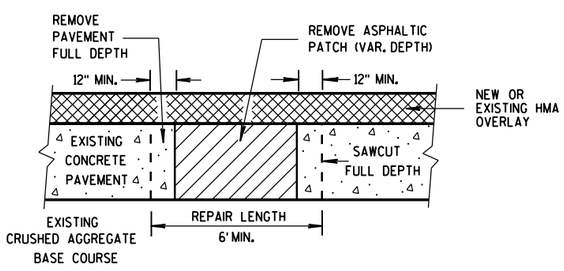

SECTION A-A

HMA PATCH REMOVAL

6

6

BASE PATCHING CONCRETE

STATE OF WISCONSIN
DEPARTMENT OF TRANSPO

S.D.D. 13 C 14-6a

S.D.D. 13 C 14-6a

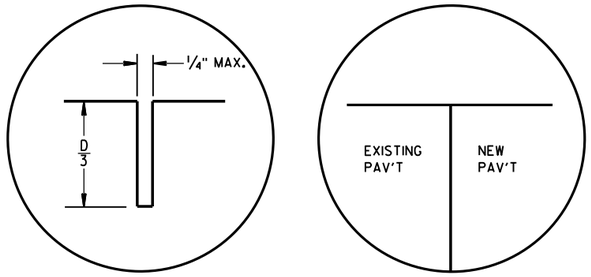

C1 C2

TRANSVERSE JOINTS

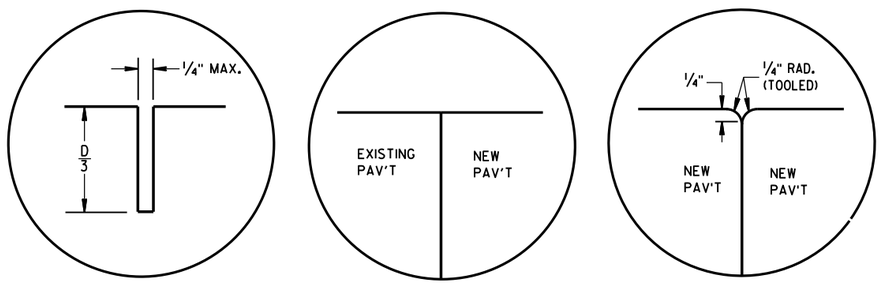

L1 L2 L3

LONGITUDINAL JOINTS

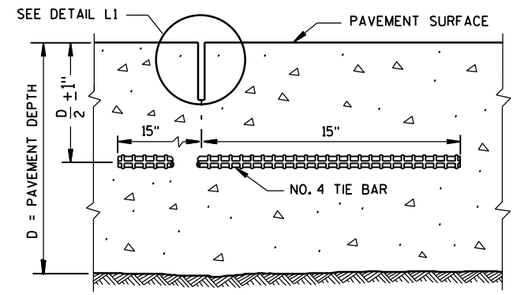

SECTION C-C

SAWED LONGITUDINAL JOINT

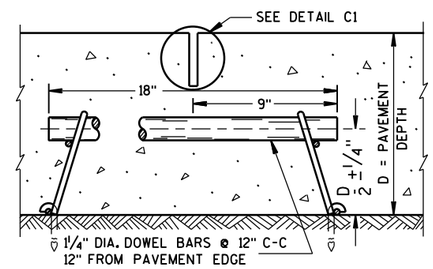

SECTION F-F

CONTRACTION JOINT

GENERAL NOTES

INSTALL DOWEL BARS PARALLEL TO THE PAVEMENT CENTERLINE AND PAVEMENT SURFACE.

CONCRETE BASE PATCHES OF EXISTING NONDOWELED CONCRETE PAVEMENTS DO NOT NEED TO BE DOWELED.

DO NOT SEAL OR FILL JOINTS.

ANCHOR DOWEL BARS AND TIE BARS INTO DRILLED HOLES WITH AN EPOXY.

PROVIDE A MINIMUM DISTANCE OF 15 INCHES FROM AN EXISTING TRANSVERSE JOINT OR THE EDGE OF REPLACEMENT TO THE CENTER OF THE TIE BAR NEAREST THAT JOINT OR EDGE.

(1) APPLY A THIN UNIFORM COATING OF SURFACE TREATMENT TO THE FREE END OF DOWEL BARS TO PREVENT BONDING.

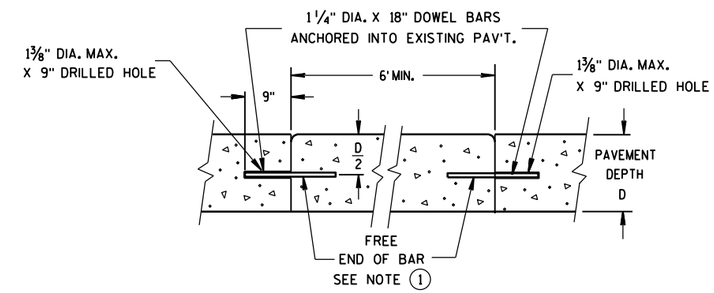

SECTION D-D

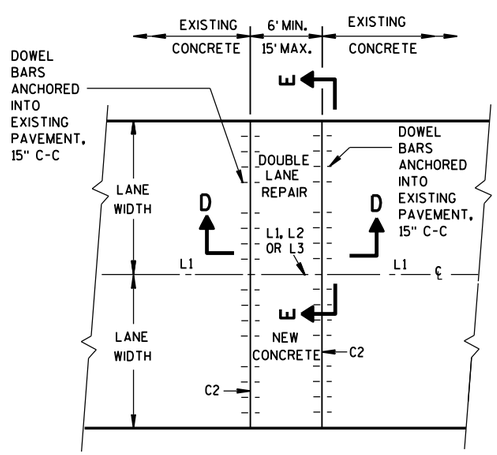

PLAN VIEW

MULTI-LANE CONCRETE BASE PATCH 15' MAXIMUM LENGTH

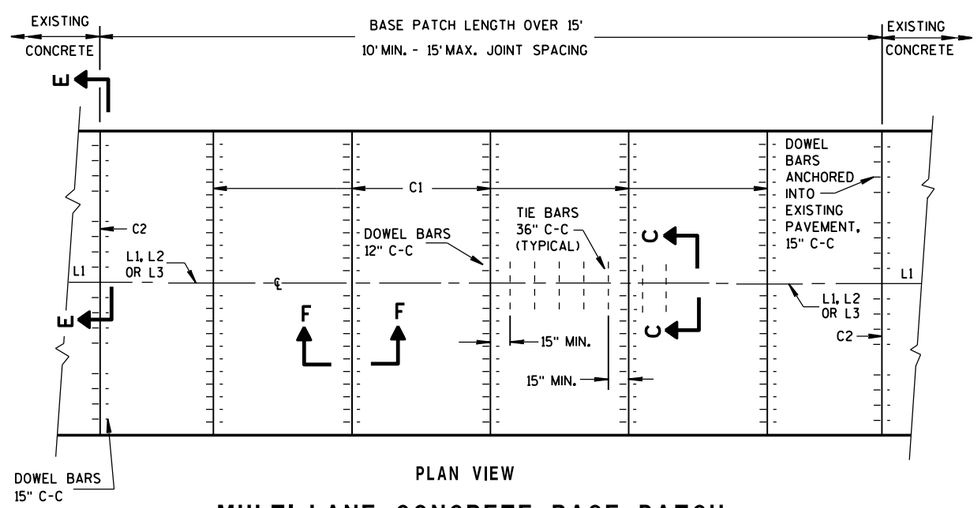

PLAN VIEW

MULTI-LANE CONCRETE BASE PATCH GREATER THAN 15' IN LENGTH

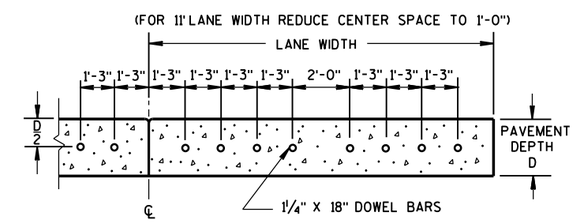

SECTION E-E

SPACING OF DOWEL BARS ANCHORED INTO EXISTING PAVEMENT

BASE PATCHING CONCRETE

STATE OF WISCONSIN
DEPARTMENT OF TRANSPOI

GENERAL NOTES

1. USE AN ENGINEER-APPROVED BOND BREAKER (E.G. RELEASE AGENT, CURING COMPOUND) FOR SINGLE LANE BASE PATCHES UP TO 15 FEET IN LENGTH.

2. WITH THE APPROVAL OF THE ENGINEER, FOR SINGLE LANE PAVEMENT REPLACEMENTS LESS THAN 30 FEET IN LENGTH, DRILLED TIE BARS MAY BE INSTALLED ON 6:1 SKEW HORIZONTALLY, DIRECTION OF SKEW ALTERNATING WITH EACH SUCCESSIVE BAR. DRIVE SKEWED TIE BARS TO A DEPTH OF 6 INCHES IN A HOLE OF SUCH A DIAMETER AS TO PROVIDE A TIGHT DRIVEN FIT.

3. ANCHOR TIE BARS INTO DRILLED HOLES WITH AN EPOXY.

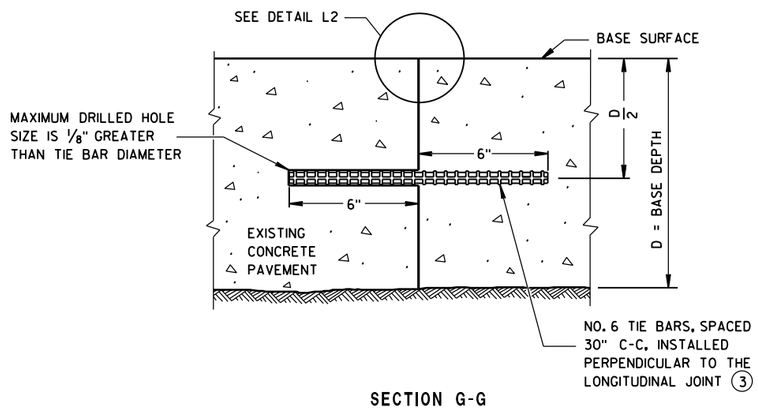

SECTION G-G

TIE BARS ANCHORED INTO EXISTING PAVEMENT

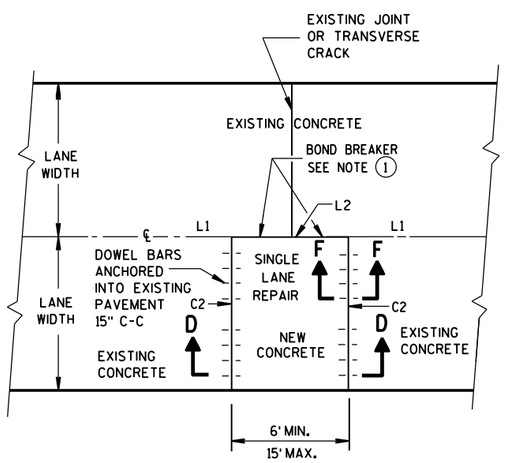

PLAN VIEW

SINGLE LANE CONCRETE BASE PATCH 15' MAXIMUM LENGTH

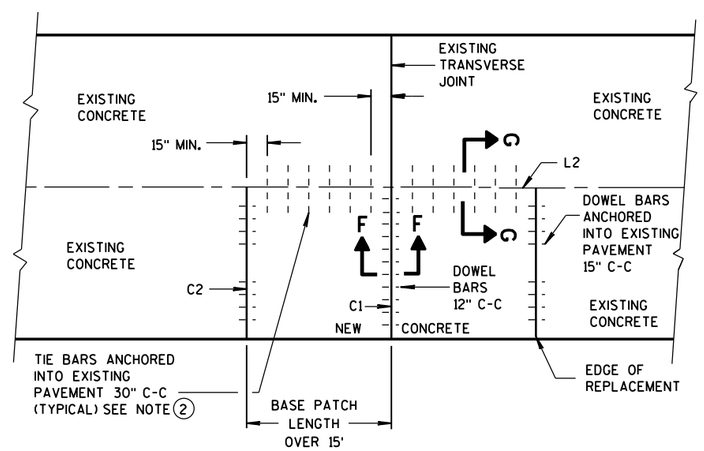

PLAN VIEW

SINGLE LANE CONCRETE BASE PATCH GREATER THAN 15' IN LENGTH

BASE PATCHING CONCRETE

STATE OF WISCONSIN
DEPARTMENT OF TRANSPORTATION

APPROVED
Sept., 2015 — DATE
/S/ Peter Kemp, P.E. — PAVEMENT SUPER
FHWA

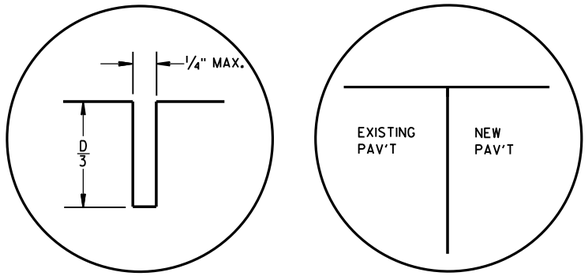

C1 C2

TRANSVERSE JOINTS

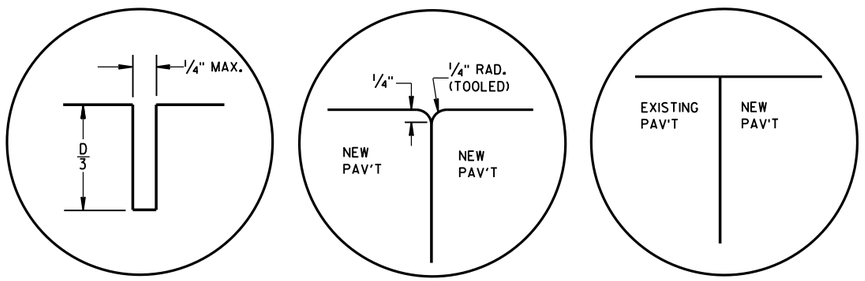

L1 L2 L3

LONGITUDINAL JOINTS

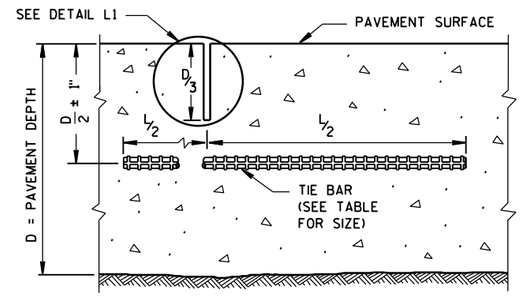

SECTION C-C

SAWED JOINT

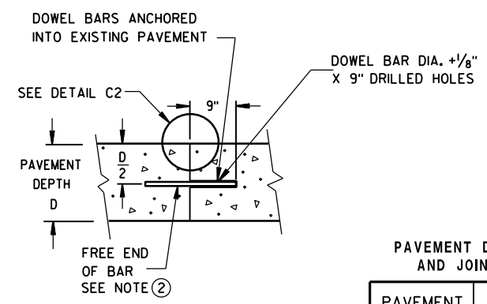

SECTION D-D

GENERAL NOTES

ANCHOR TIE BARS AND DOWEL BARS INTO DRILLED HOLES WITH AN EPOXY.

PROVIDE A MINIMUM DISTANCE OF 15 INCHES FROM AN EXISTING TRANSVERSE JOINT OR THE EDGE OF REPLACEMENT TO THE CENTER OF THE TIE BAR NEAREST THAT JOINT OR EDGE.

1. INSTALL DOWEL BARS PARALLEL TO THE PAVEMENT CENTERLINE AND PAVEMENT SURFACE.
2. APPLY A THIN UNIFORM COATING OF SURFACE TREATMENT TO THE FREE END OF DOWEL BARS TO PREVENT BONDING.

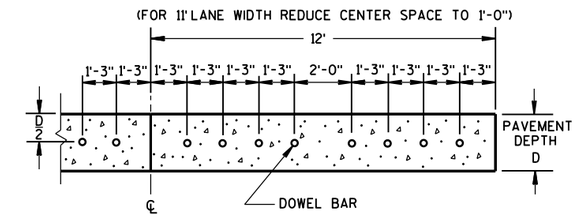

SECTION E-E

SPACING OF DOWEL BARS ANCHORED INTO EXISTING PAVEMENT

PAVEMENT DEPTH, DOWEL BAR SIZE AND JOINT SPACING TABLE

PAVEMENT DEPTH (D)	DOWEL BAR DIAMETER	CONTRACTION JOINT SPACING
5½", 6, 6 ½"	NONE	12'
7, 7 ½"	1"	14'
8, 8 ½"	1¼"	15'
9, 9 ½"	1¼"	15'
10" & ABOVE	1½"	15'

TIE BAR TABLE

PAVEMENT DEPTH (D)	TIE BAR SIZE	TIE BAR LENGTH (L)	MAX. TIE BAR SPACING
< 10 ½"	NO. 4	30"	36"
≥ 10 ½"	NO. 5	36"	36"
	NO. 4 *	30"	24" **

* SUBSTITUTE BENT BARS AT LONGITUDINAL JOINTS WHEN EQUIPMENT LIMITATIONS DURING CONSTRUCTION WARRANT (e.g. AUXILIARY LANES OR TURN LANES)

** CONFORM TO 15" MINUMUM SPACING FROM TRANSVERSE JOINTS; SPACING BETWEEN TIE BARS WILL BE 30" AT TRANSVERSE JOINTS.

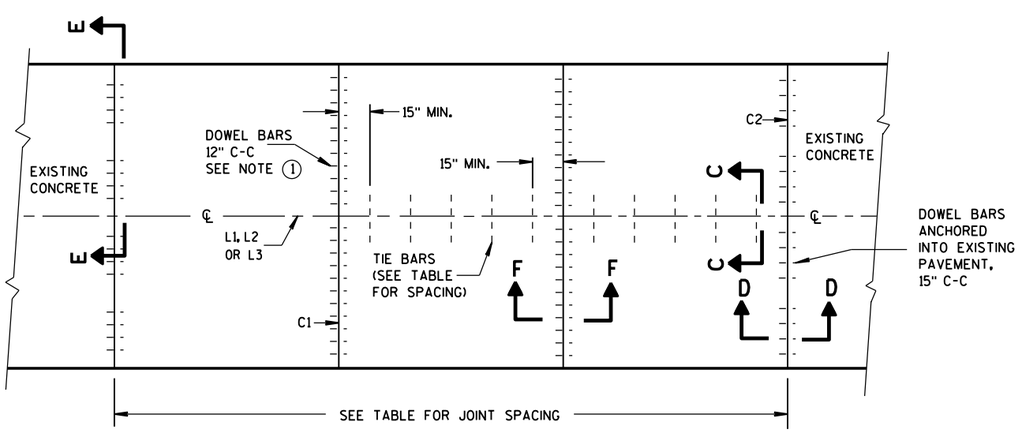

PLAN VIEW

CONCRETE BASE CONTRACTION JOINT LOCATIONS

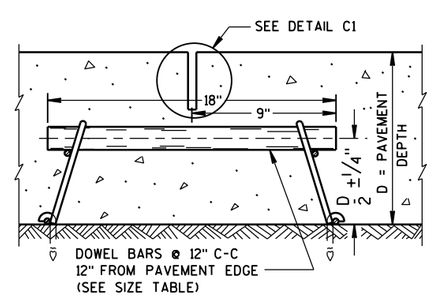

SECTION F-F

CONTRACTION JOINT

CONCRETE BASE

STATE OF WISCONSIN
DEPARTMENT OF TRANSPO

6

S.D.D. 13 C 15-6a

GENERAL NOTES

1. USE AN ENGINEER-APPROVED BOND BREAKER (E.G. RELEASE AGENT, CURING COMPOUND) AT THE LONGITUDINAL JOINT IN LIEU OF TIE BARS FOR SINGLE LANE CONCRETE BASE REPAIRS UP TO 15 FEET IN LENGTH.

2. ANCHOR TIE BARS INTO DRILLED HOLES WITH AN EPOXY.

3. PAVEMENT THAT WAS IN PLACE PRIOR TO THE CONTRACT.

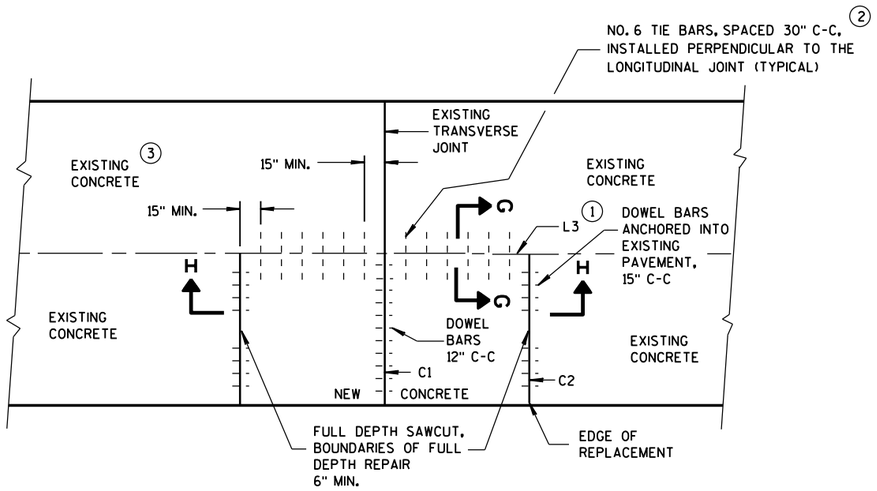

PLAN VIEW

SINGLE LANE CONCRETE BASE REPAIR

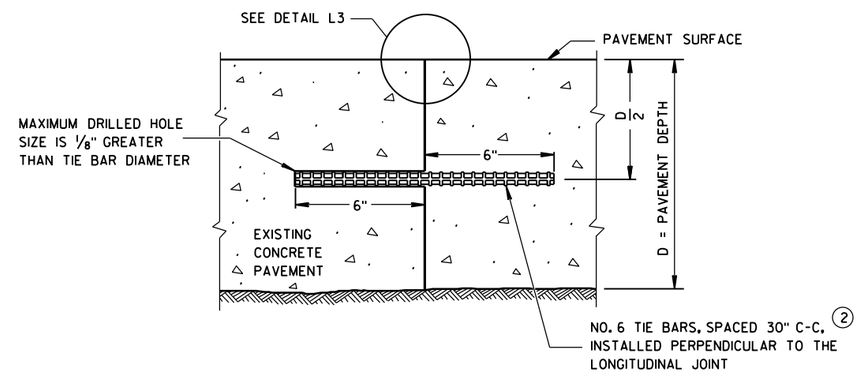

SECTION G-G

TIE BARS ANCHORED INTO EXISTING PAVEMENT

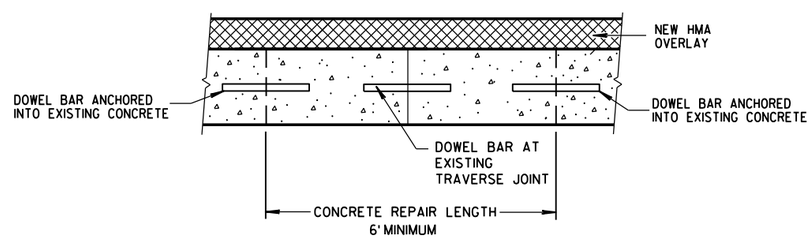

SECTION H-H

CONCRETE BASE

STATE OF WISCONSIN
DEPARTMENT OF TRANSPORTATION

APPROVED
June, 2015 — DATE
/S/ Peter Kemp, P.E. — PAVEMENT SUPEI
FHWA

6

S.D.D. 13 C 15-6b

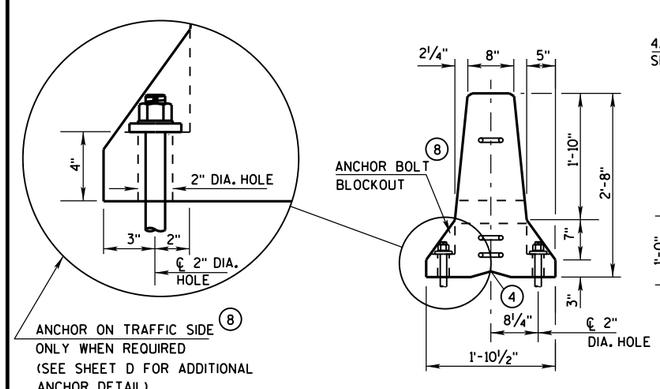

END VIEW

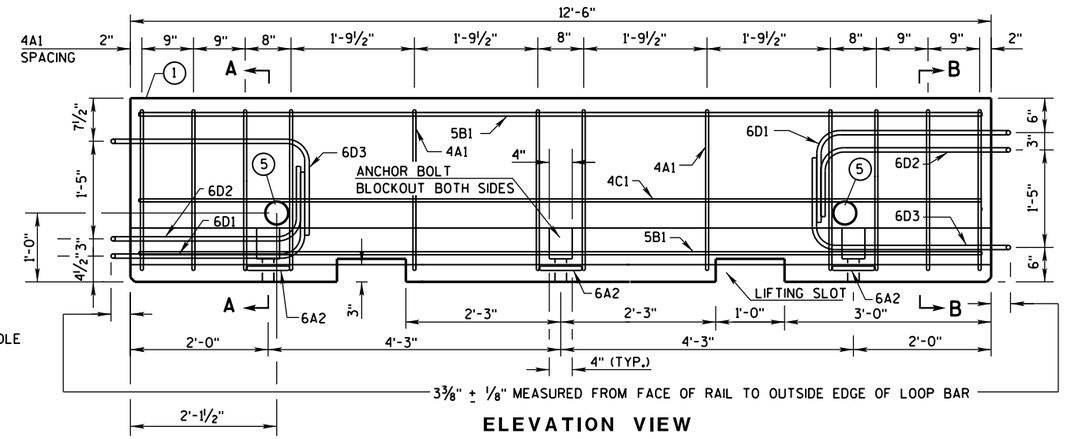

ELEVATION VIEW

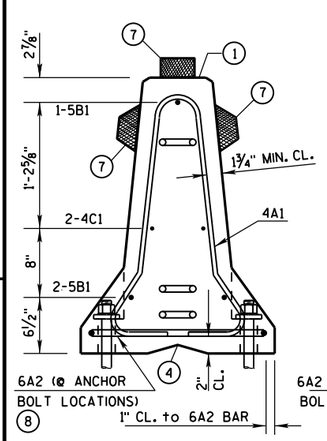

SECTION A-A
(STIRRUP PLACEMENT)

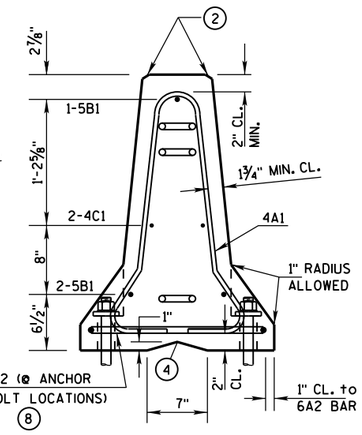

SECTION B-B
(STIRRUP PLACEMENT)

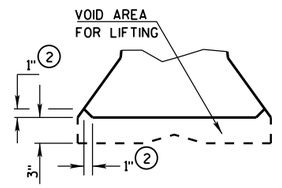

DETAIL "B"
LIFTING SLOT DETAIL

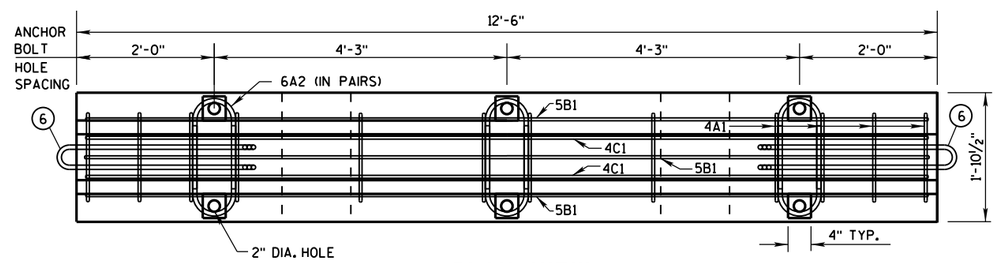

PLAN VIEW

DETAILS OF BARRIER SECTION

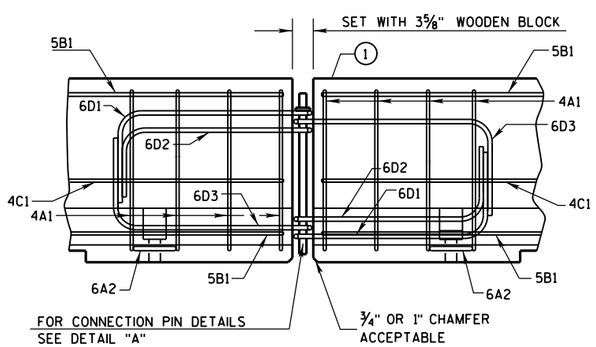

DETAILS OF BARRIER CONNECTION

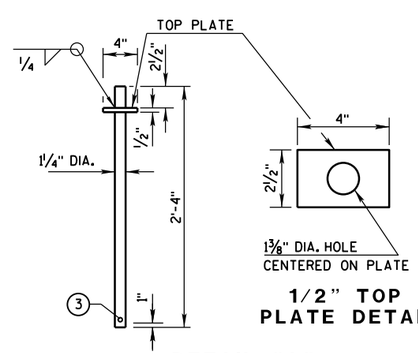

1/2" TOP PLATE DETAIL

DETAIL "A"
CONNECTION PIN
(A36 STEEL (10.9 LB EACH))

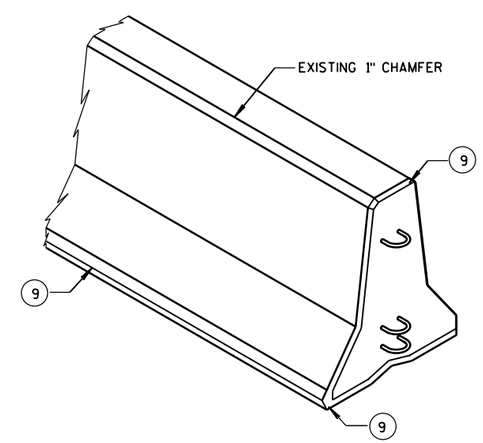

GENERAL NOTES

THESE GENERAL NOTES APPLY TO SHEETS 14B7-15(a) THRU 14B7-15(i).

DO NOT INTERMIX CONCRETE BARRIER TEMPORARY PRCAST, 12'-6" (CBTP12.5) WITH OTHER TEMPORARY CONCRETE BARRIERS.

USE ASTM A-615, GRADE 60, DEFORMED STEEL BARS FOR BARS 4A1, 6A2, 5B1 AND 4C1 IN THE BARRIER SECTION AND FOR 4V1, 4V2, 4V3, 4V4, 4V5, 4V6, 4F1, 4F2 AND 5F3 IN THE BARRIER TAPER SECTION.

LOOP BARS 6D1, 6D2 AND 6D3 SHALL BE ¾" SMOOTH STEEL BARS WITH A MINIMUM YIELD STRENGTH OF 60 KSI, A TENSILE STRENGTH OF NOT LESS THAN 1.25 TIMES THE YIELD STRENGTH BUT A MINIMUM OF 80 KSI, A MINIMUM 14% ELONGATION IN 8 INCHES AND PASSING A 180 DEGREE BEND TEST USING A 3-½" PIN BEND DIAMETER FOR BEND TESTS. THE LOOPS SHALL BE INSTALLED WITHIN ⅛" OF THE PLAN DIMENSION.

CONSTRUCT LIFTING SLOTS AS SPECIFIED ON THE PLANS TO FACILITATE THE DRAINAGE OF WATER AFTER INSTALLATION.

PLACE BARRIER ON A PAVED SURFACE. REMOVE ALL LOOSE DIRT AND SAND FROM THE ROADWAY SURFACE PRIOR TO PLACEMENT OF THE BARRIER.

INSTALL MECHANICAL OR ADHESIVE ANCHORS PER MANUFACTURER'S RECOMMENDATIONS. PROVIDE MANUFACTURER'S INFORMATION TO PROJECT ENGINEER.

1. MARK ONE END OF EACH BARRIER PERMANENTLY BY FORMING INTO THE BARRIER THE FOLLOWING INFORMATION:
   a. TYPE: WI CBTP
   b. MANUFACTURER
   c. DATE MANUFACTURED (MONTH AND YEAR)
2. 1" CHAMFER TO PREVENT SPALLING.
3. A ⅜" HOLE IN THE CONNECTION PIN, AT THE LOCATION SHOWN, IS ACCEPTABLE, BUT NOT REQUIRED..
4. "V" NOTCH IS OPTIONAL.
5. THE 4" DIAMETER, 11 GAUGE STEEL, ROUND MECHANICAL TUBING SLEEVE FOR LIFTING (OPTIONAL).
6. NEVER USE LOOP BARS (6D1, 6D2 OR 6D3) TO LIFT, MOVE OR REPOSITION THE BARRIER.
7. USE DELINEATORS CONFORMING TO SECTION 633 OF THE STANDARD SPECIFICATIONS. CONTRACTOR MAY USE ALTERNATE SHAPES AND HOUSING. INSTALL DELINEATORS ACCORDING TO MANUFACTURES INSTRUCTION. INSTALL YELLOW REFLECTORS WHEN BARRIER IS LOCATED TO THE LEFT OF TRAFFIC AND WHITE REFLECTORS WHEN BARRIER IS LOCATED TO THE RIGHT OF TRAFFIC. SPACE DELINEATORS A MAXIMUM OF 25 FEET APART. PROVIDE TOP MOUNTED DELINEATORS IN ADDITION TO THE SIDE MOUNTED DELINEATORS ON ALL BARRIER INSTALLATIONS LOCATED ON A CURVED ALIGNMENT LONGER THAN 200 FEET AND ON BARRIERS USED TO SEPARATE OPPOSING TRAFFIC.
8. SEE SHEET D FOR HOW TO ANCHOR BARRIER. SEE SHEET E FOR WHEN TO ANCHOR BARRIER.
9. 1" CHAMFER OPTIONAL.

f'c = 4,000 psi

CONCRETE BARRIER
TEMPORARY PRECAST, 12'-6"

STATE OF WISCONSIN
DEPARTMENT OF TRANSPOR

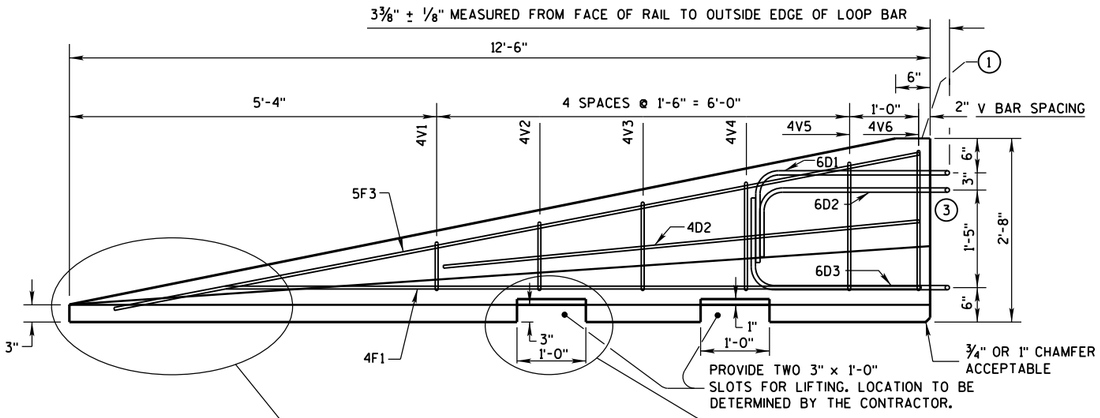

SIDE ELEVATION

(FOR CONNECTION TO LEFT END OF BARRIER)

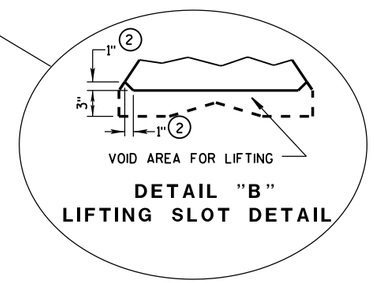

DETAIL "B"
LIFTING SLOT DETAIL

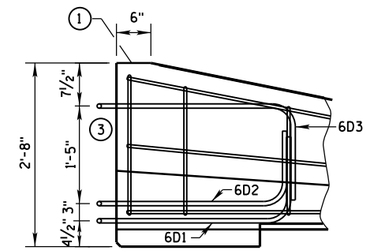

SIDE ELEVATION

LOOP BAR ASSEMBLY INVERTED
FOR OPPOSITE END.
(FOR CONNECTION TO RIGHT END OF BARRIER)

GENERAL NOTES

1. MARK ONE END OF EACH BARRIER PERMANENTLY BY FORMING INTO THE BARRIER THE FOLLOWING INFORMATION:
   a. TYPE WICBTP
   b. MANUFACTURER
   c. DATE MANUFACTURED (MONTH AND YEAR)
2. 1" CHAMFER TO PREVENT SPALLING.
3. NEVER USE LOOP BARS (6D1, 6D2 OR 6D3) TO LIFT, MOVE OR REPOSITION THE BARRIER.

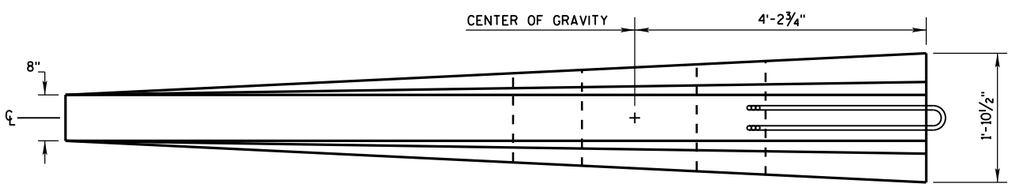

PLAN VIEW

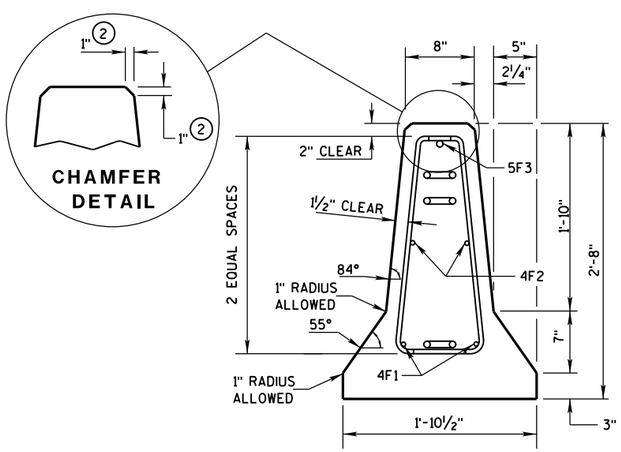

END SECTION

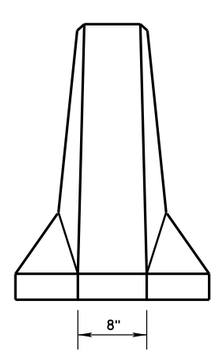

FRONT ELEVATION

DETAILS OF BARRIER TAPER SECTION

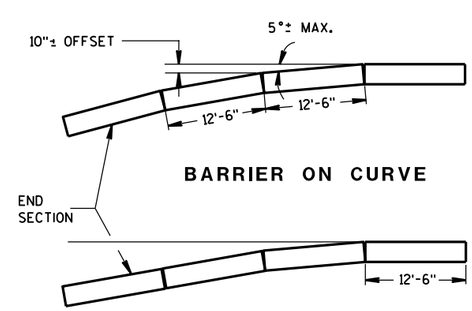

BARRIER ON CURVE

FLARE AT BARRIER END

POSTED SPEED, (MPH)	FLARE RATE
40 OR LESS	6:1
45 OR GREATER	8:1

CONCRETE BARRIER
TEMPORARY PRECAST, 12'-6"

STATE OF WISCONSIN
DEPARTMENT OF TRANSPORTATION

6

S.D.D. 14 B 7-15b

GENERAL NOTES

(1) NEVER USE LOOP BARS (6D1, 6D2 OR 6D3) TO LIFT, MOVE OR REPOSITION THE BARRIER.

BARRIER TAPER SECTION BILL OF MATERIALS

(PER 12'-6" BARRIER TAPER SECTION)

BAR	BAR SIZE	NO. OF BARS	LENGTH FT.
4V1	4	2	1'-11"
4V2	4	2	2'-2"
4V3	4	2	2'-6"
4V4	4	2	2'-9"
4V5	4	2	3'-2"
4V6	4	2	3'-4"
4F1	4	2	12'-0"
4F2	4	2	7'-6"
5F3	5	1	11'-9"
LOOP ASSEMBLY			
6D1	6	1	8'-5"
6D2	6	1	7'-7"
6D3	6	1	8'-6"

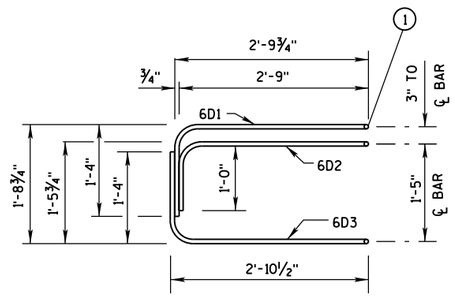

ELEVATION
LOOP BAR ASSEMBLY

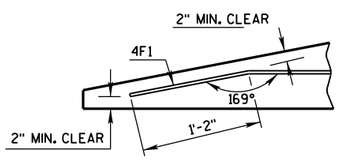

DETAIL "C"
BENT BAR DETAIL

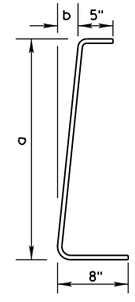

BAR	a	b
V1	10"	1"
V2	1'-1"	1¼"
V3	1'-5"	1⅝"
V4	1'-8"	1⅞"
V5	2'-0½"	2⅜"
V6	2'-3"	2¾"

4V BARS
2 AT EACH SIZE REQUIRED
FOR STIRRUP ASSEMBLY

TAPER BARRIER SECTION

BARRIER SECTION BILL OF MATERIALS

(PER 12'-6" BARRIER SECTION)

BAR	BAR SIZE	NO. OF BARS	LENGTH FT.
4A1	4	12	6'-0"
6A2	6	6	2'-11"
5B1	5	3	12'-2"
4C1	4	2	12'-2"
LOOP ASSEMBLY			
6D1	6	2	8'-5"
6D2	6	2	7'-7"
6D3	6	2	8'-6"

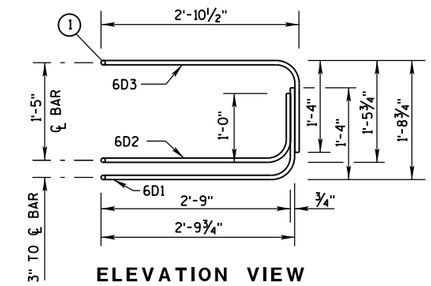

ELEVATION VIEW

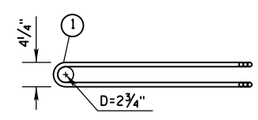

PLAN VIEW
LOOP BAR ASSEMBLY
(MARKED END SHOWN, INVERT FOR OTHER END)

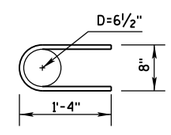

6A2

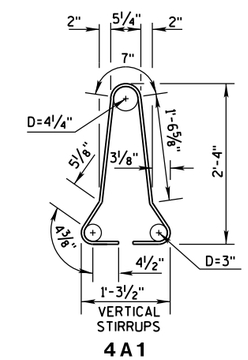

4A1

BARRIER SECTION

6

6

S.D.D. 14 B 7-15c

S.D.D. 14 B 7-15c

CONCRETE BARRIER
TEMPORARY PRECAST, 12'-6"

STATE OF WISCONSIN
DEPARTMENT OF TRANSPOR

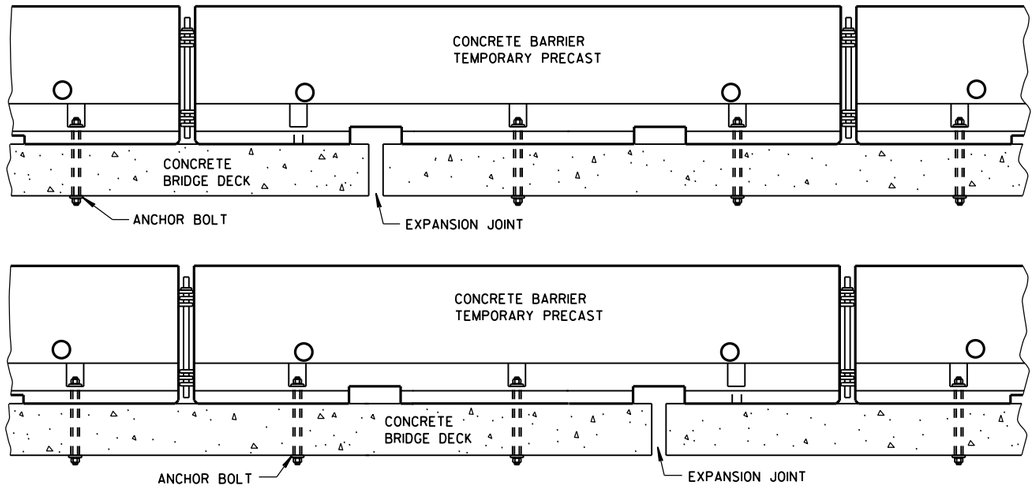

TREATMENT AT BRIDGE DECK EXPANSION JOINTS

(NO SINGLE CONCRETE BARRIER SECTION SHALL BE ANCHORED TO BOTH THE BRIDGE DECK AND THE APPROACH SLAB. ALL ANCHOR BOLT LOCATIONS SHALL BE ANCHORED TO THE DECK IN ACCORDANCE WITH THE DETAIL. NO MORE THAN ONE ANCHOR BOLT SHALL BE ELIMINATED FROM A BARRIER SECTION WHEN SPANNING AN EXPANSION JOINT.)

GENERAL NOTES

SEE SHEET E FOR WHEN TO ANCHOR. OTHER PARTS OF THE PLAN MAY SHOW ADDITIONAL LOCATIONS REQUIRING ANCHORING.

REMOVE ALL ANCHORS WHEN NO LONGER NEEDED. FILL CONCRETE PAVEMENTS, DECKS AND APPROACH SLABS WITH NON-SHRINK COMMERICAL GROUT FROM THE APPROVED PRODUCT LIST. FILL ASPHALT PAVEMENTS WITH ASTM D6690 TYPE II RUBBERIZED CRACK FILLER.

1. 1⅛" DIAMENTER A307 THREADED ROD, ½" X 3" X 3" SQUARE PLATE WASHER WITH ASTM A36 STEEL. ASTM A563A HEAVY HEX NUT.
2. ADHESIVE ANCHORS WITH A MINIMUM BOND STRENGTH OF 1,800 PSI AND 5¼" EMBEDMENT. SEE 603.2 AND 603.3.1.2 OF THE WISCONSIN STANDARD SPECIFICATIONS FOR MORE INFORMATION ON ADHESIVE ANCHORS.
3. ASPHALT SURFACE SHOWN. CONTRACTOR MAY DRILL THROUGH CONCRETE PAVEMENT AND THAN DRIVE ASPHALT ANCHOR PIN.

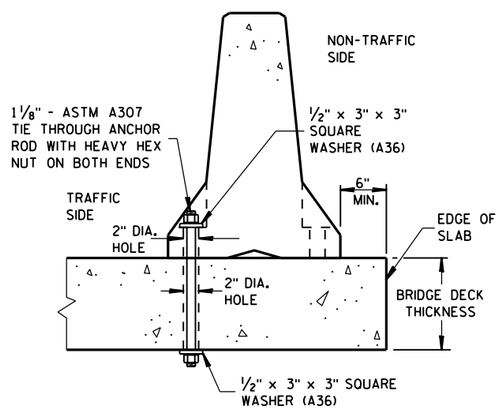

THROUGH BOLTED ANCHOR INSTALLATION ON BRIDGE DECK

(DO NOTUSE ON CONCRETE BRIDGE DECK WITH ASPHALT OVERLAY)

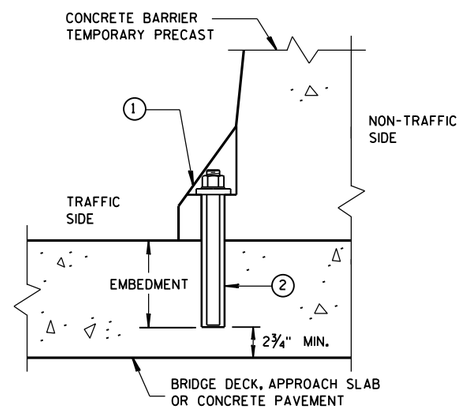

REMOVABLE ADHESIVE ANCHOR INSTALLATION ON CONCRETE BRIDGE DECK, CONCRETE APPROACH SLAB, OR CONCRETE PAVEMENT

(DO NOT USE ON CONCRETE WITH AN ASPHALTIC OVERLAY)

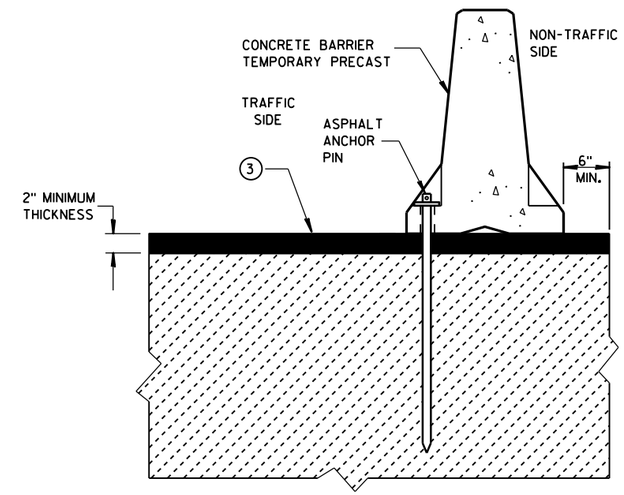

STAKE DOWN INSTALLATION FOR ASPHALTIC SURFACE

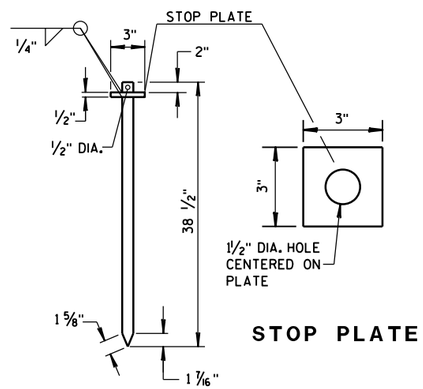

STOP PLATE

ASPHALT ANCHOR PIN

(ASTM A36 STEEL)

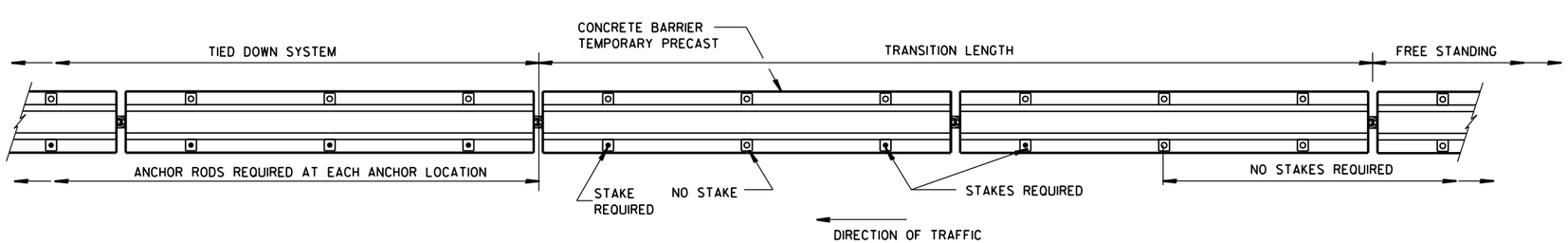

PLAN VIEW

FREE STANDING TRANSITION TO TIED-DOWN SYSTEM

(PLACE TRANSITION IN A TANGENT SECTION OF BARRIER PARALLEL TO THE ROADWAY. IF TRANSITION OCCURS ON STRUCTURAL SLAB, ANCHOR AS SHOWN.)

CONCRETE BARRIER
TEMPORARY PRECAST, 12'-6"

STATE OF WISCONSIN
DEPARTMENT OF TRANSPO

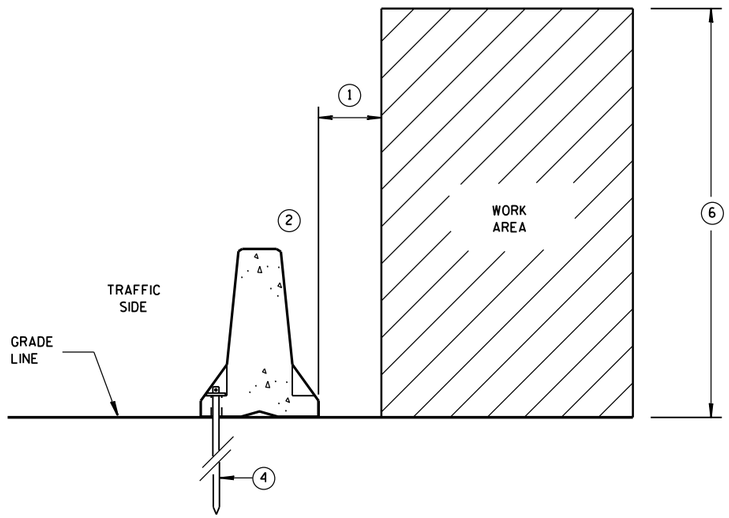

ANCHORED BARRIER SPACE REQUIREMENTS FOR HAZARDS EXTENDED ABOVE THE GRADE LINE

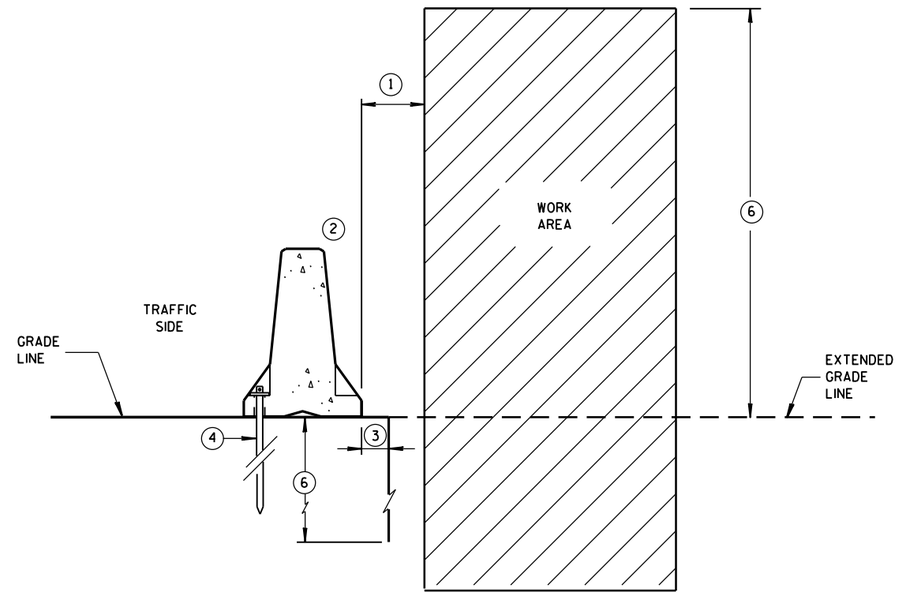

ANCHORED BARRIER SPACE REQUIREMENTS ON VERTICAL DROP OFFS

GENERAL NOTES

1. WHEN OBJECTS EXTEND ABOVE THE GRADE, A MINIMUM OF 1 FOOT IS REQUIRED FROM BACK OF BARRIER TO OBJECT. SEE OTHER DETAILS FOR FOR THE MINIMUM OFFSET FROM BACK OF BARRIER TO SLOPES OR VERTICAL DROPS.
2. OBJECTS ARE NOT TO BE PLACED ON, MOUNTED TO, OR LEANED AGAINST THE BARRIER WITHOUT PERMISSION OF THE PROJECT ENGINEER.
3. SEE OTHER DETAIL ON SHEET "D" FOR SPACE REQUIREMENTS.
4. SEE BOLT THROUGH DECK, REMOVABLE ADHESIVE ANCHOR, OR A STAKE DOWN FOR ASPHALTIC SURFACE TREATMENT DETAILS. ASPHALTIC ANCHOR SHOWN.
5. DEPTH OF 3 FEET OR MORE.
6. Y = 6'-6".

POSTED SPEED MPH	X
45 OR GREATER	4'
40 OR LESS	2'

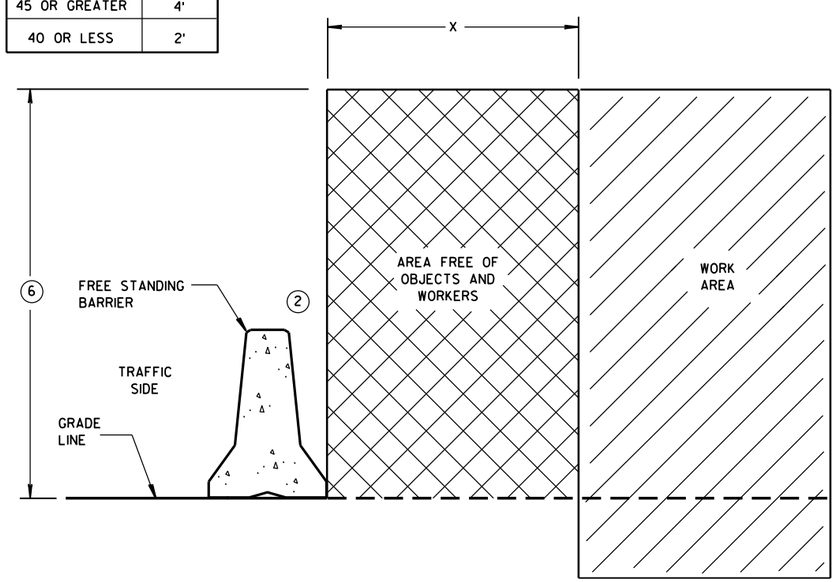

FREE STANDING BARRIER SPACE REQUIREMENTS

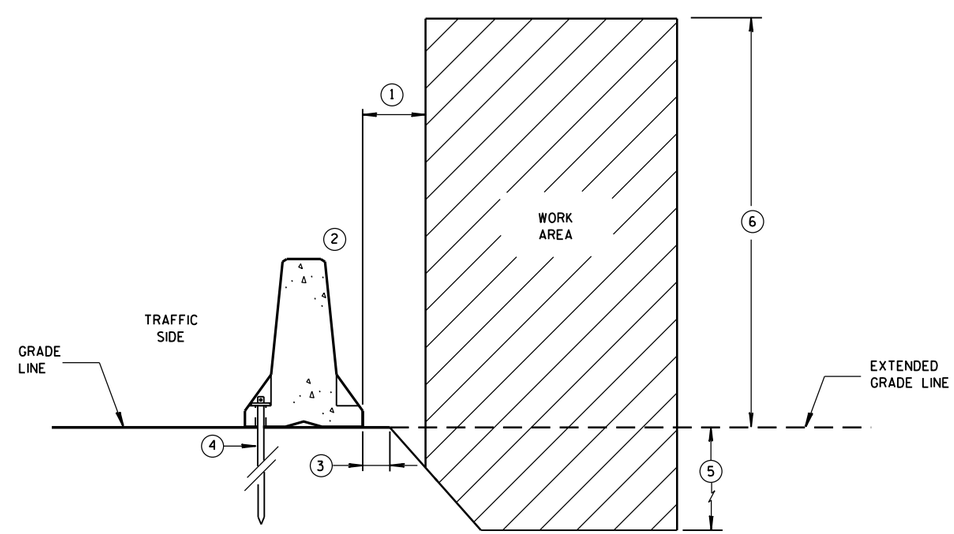

ANCHORED BARRIER SPACE REQUIREMENTS ON SLOPES

CONCRETE BARRIER
TEMPORARY PRECAST, 12'-6"

STATE OF WISCONSIN
DEPARTMENT OF TRANSPOI

6

S.D.D. 14 B 7-15e

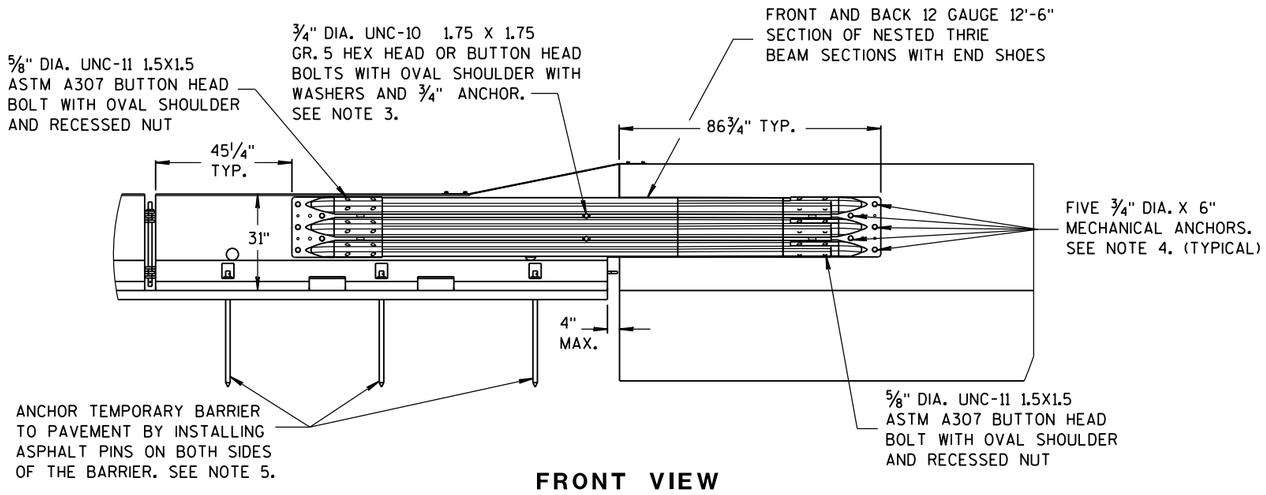

FRONT VIEW

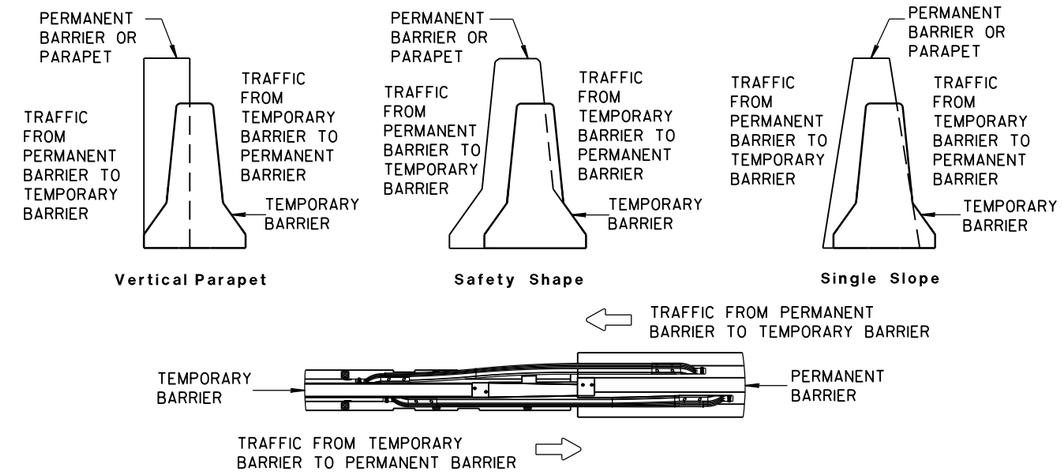

TEMPORARY BARRIER PLACEMENT FOR BI-DIRECTIONAL TRANSITION TO TIED-DOWN SYSTEM

NOTES

NESTED THRIE BEAM IS REQUIRED ON BOTH SIDES OF THE TEMPORARY BARRIER FOR ALL INSTALLATIONS REGARDLESS OF TRAFFIC.

1. CAP END PLATE PLACED FLUSH WITH UPSTREAM END OF PERMANENT BARRIER OR PARAPET.
2. THRIE BEAM PIECES ARE OFFSET 15 1/4" TO PREVENT INTERFERENCE FROM THE ANCHORS ON OPPOSING SIDES.
3. MINIMUM MECHANICAL OR ADHESIVE ANCHOR STRENGTH REQUIREMENTS: ULTIMATE TENSILE LOAD 9.48 KIPS AND ULTIMATE SHEAR LOAD 10.48 KIPS.
4. MINIMUM MECHANICAL OR ADHESIVE ANCHOR STRENGTH REQUIREMENTS: ULTIMATE TENSILE LOAD 17.9 KIPS AND ULTIMATE SHEAR LOAD 21.96 KIPS.
5. MAY BE USED ON CONCRETE OR ASPHALT PAVEMENTS. ASPHALT OPTION SHOWN. FOR CONCRETE OPTION SEE OTHER DETAILS.
6. MINIMUM MECHANICAL OR ADHESIVE ANCHOR STRENGTH REQUIREMENTS: ULTIMATE TENSILE LOAD 12.14 KIPS AND ULTIMATE SHEAR LOAD 17.5 KIPS.

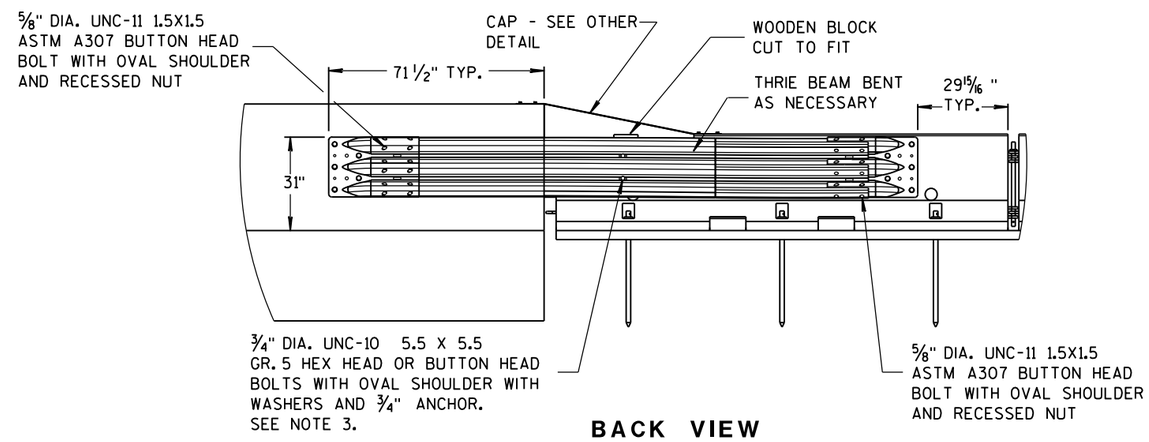

BACK VIEW

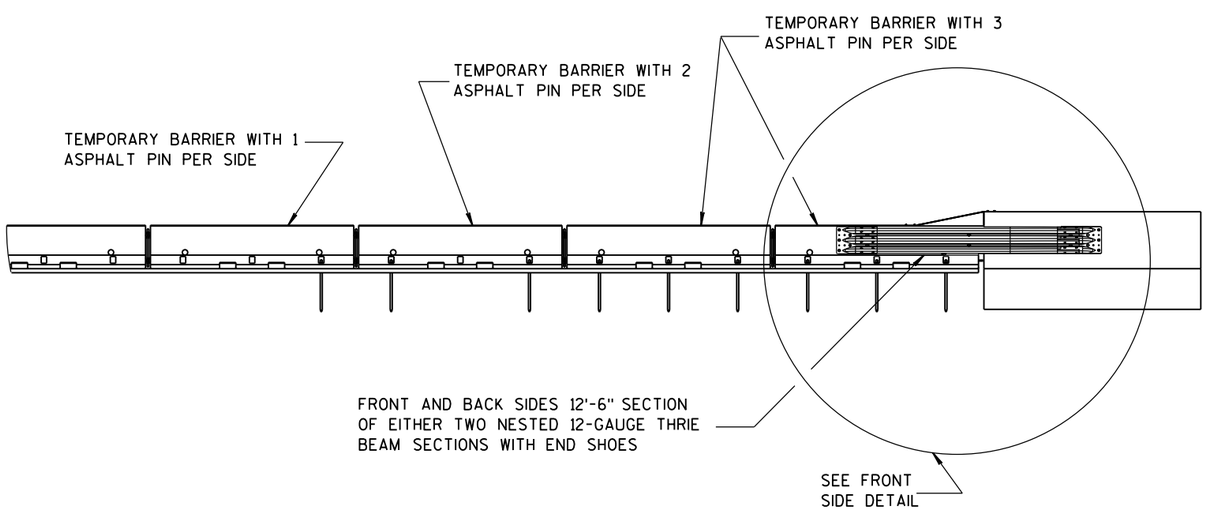

FRONT VIEW

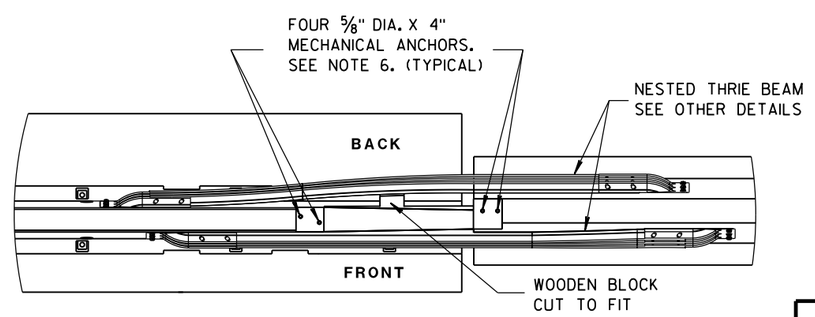

PLAN VIEW

BI-DIRECTIONAL TRANSITION TO TIED-DOWN SYSTEM

CONCRETE BARRIER
TEMPORARY PRECAST, 12'-6"

STATE OF WISCONSIN
DEPARTMENT OF TRANSPO

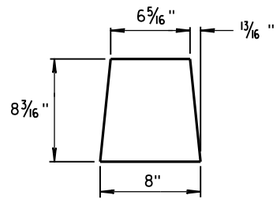

GUSSET 1

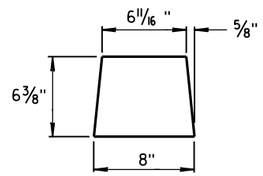

GUSSET 2

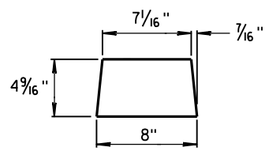

GUSSET 3

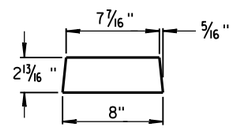

GUSSET 4

GUSSETS

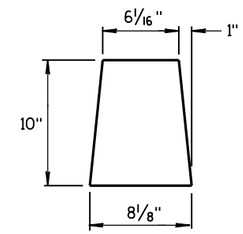

END PLATE

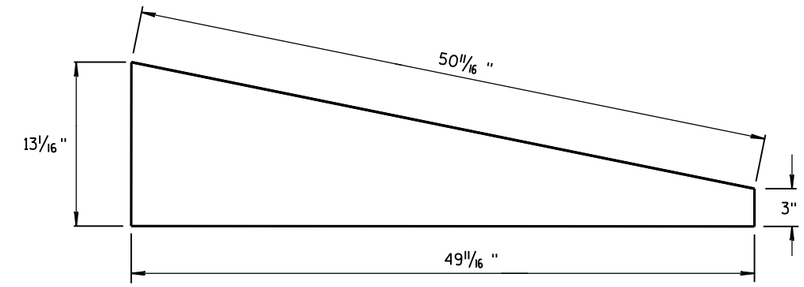

SIDE PLATE

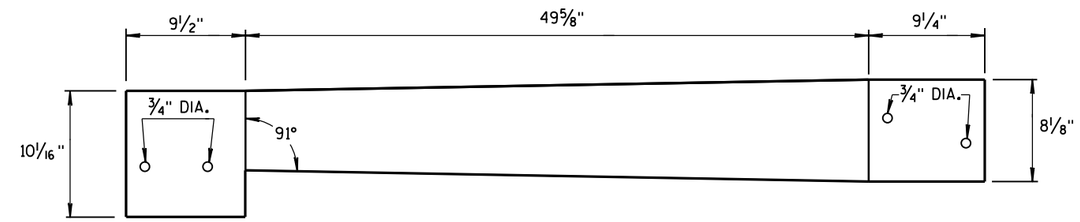

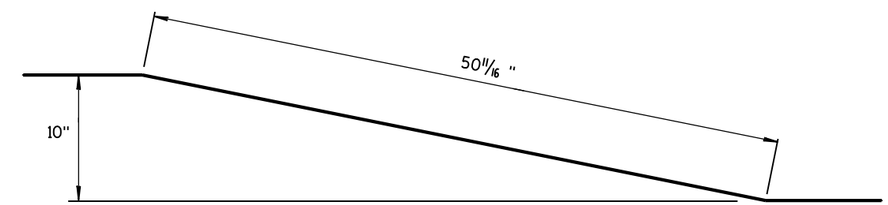

TOP PLATE

SIDE, TOP AND END PLATES FOR CAP FROM TEMPORARY CONCRETE BARRIER TO 42" PERMANENT CONCRETE BARRIER

SIDE PLATES, TOP PLATE, END PLATE AND GUSSETS ARE 12 GAUGE ASTM A36 GALVANIZED STEEL.

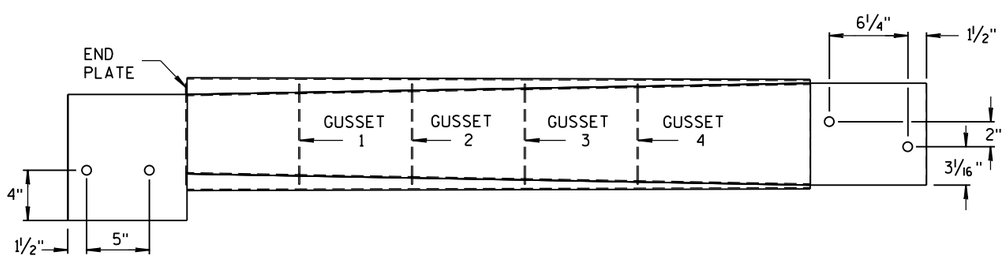

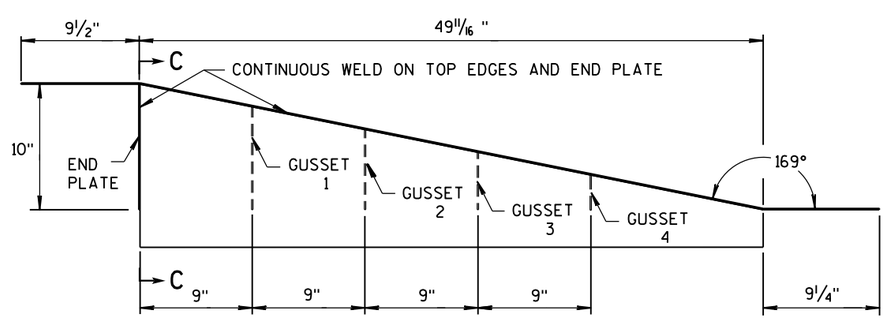

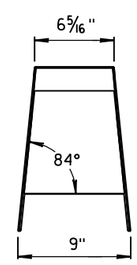

SECTION C-C

NOTES

1. FOUR GUSSETS AND END PLATE ARE STITCH WELDED ON THREE SIDES.
2. TWO TRIANGULAR SIDE PLATES ARE STITCH WELDED TO TOP PLATE, END PLATE, AND GUSSETS.

CAP DETAILS FOR TEMPORARY CONCRETE BARRIER TO 42" PERMANENT CONCRETE BARRIER

CONCRETE BARRIER
TEMPORARY PRECAST, 12'-6"

STATE OF WISCONSIN
DEPARTMENT OF TRANSPOR

6

S.D.D. 14 B 7-15g

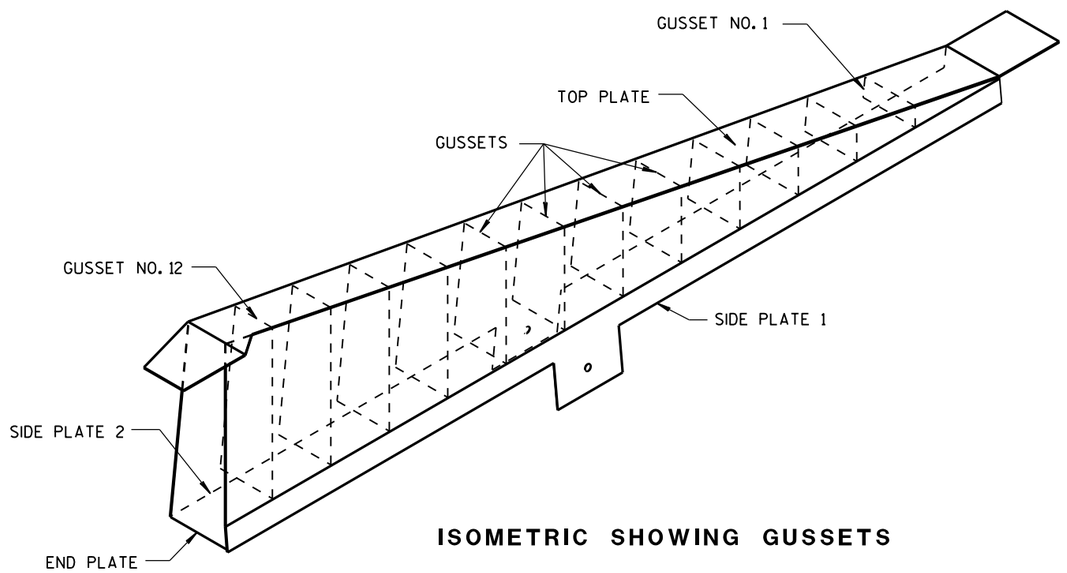

ISOMETRIC SHOWING GUSSETS

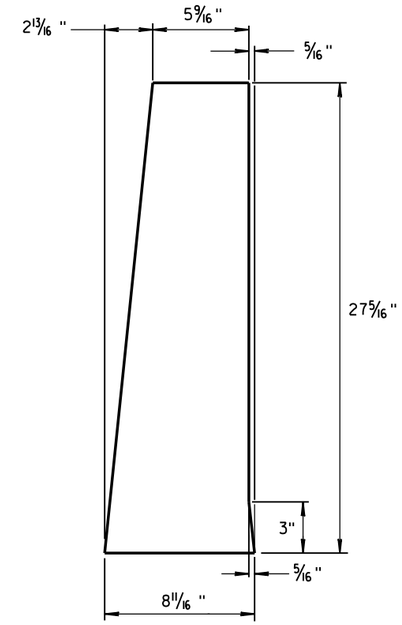

END PLATE

1/8" STEEL PLATE

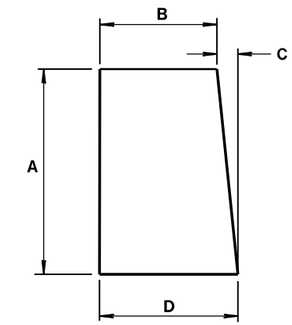

GUSSETS 1 - 12

ALL GUSSETS 1/8" STEEL PLATE

GUSSET DIMENSIONS				
GUSSET NO.	A	B	C	D
1	2 7/8"	7 3/4"	1/4"	8
2	4 11/16 "	7 9/16 "	1/2"	8
3	6 1/2"	7 3/8"	11/16 "	8 1/16 "
4	8 5/16 "	7 3/16 "	7/8"	8 1/16 "
5	10 1/8"	7"	1 1/16 "	8 1/16 "
6	11 15/16 "	6 13/16 "	1 1/4"	8 1/16 "
7	13 3/4"	6 5/8"	1 7/16 "	8 1/16 "
8	15 9/16 "	6 7/16 "	1 9/16 "	8 1/16 "
9	17 3/8"	6 1/4"	1 13/16 "	8 1/16 "
10	19 3/16 "	6 1/16 "	1 15/16 "	8 1/16 "
11	21"	5 7/8"	2 3/16 "	8 1/16 "
12	22 13/16 "	5 11/16 "	2 5/16 "	8 1/16 "

SIDE PLATES, TOP PLATE, END PLATE AND GUSSETS ARE 12 GAUGE ASTM A36 STEEL AND GALVANIZED.

GUSSETS AND END PLATE ARE STITCH WELDED ON 3 SIDES. TWO TRIANGULAR SIDE PLATES ARE STITCH WELDED TO TOP PLATE, END PLATE AND GUSSETS.

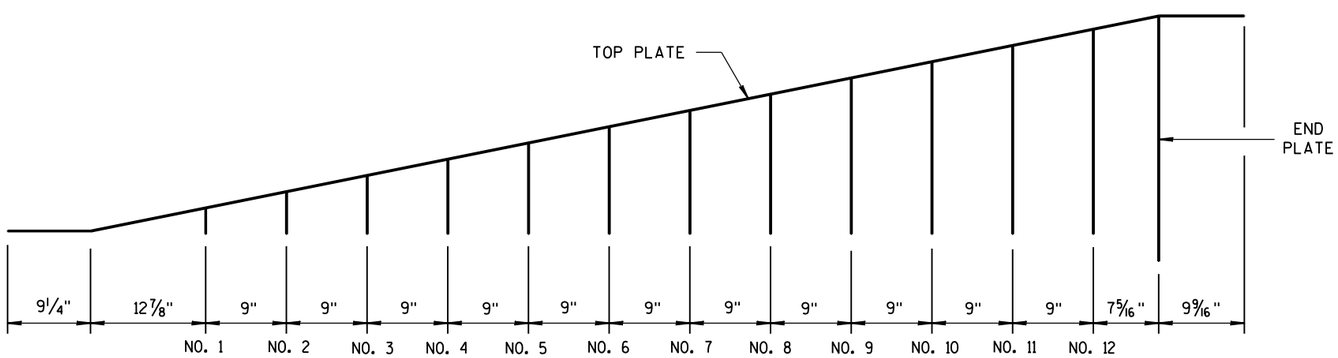

GUSSET LOCATION

CAP DETAILS FOR TEMPORARY CONCRETE BARRIER TO 56" PERMANENT CONCRETE BARRIER

CONCRETE BARRIER
TEMPORARY PRECAST, 12'-6"

STATE OF WISCONSIN
DEPARTMENT OF TRANSPOI

6

S.D.D. 14 B 7-15h

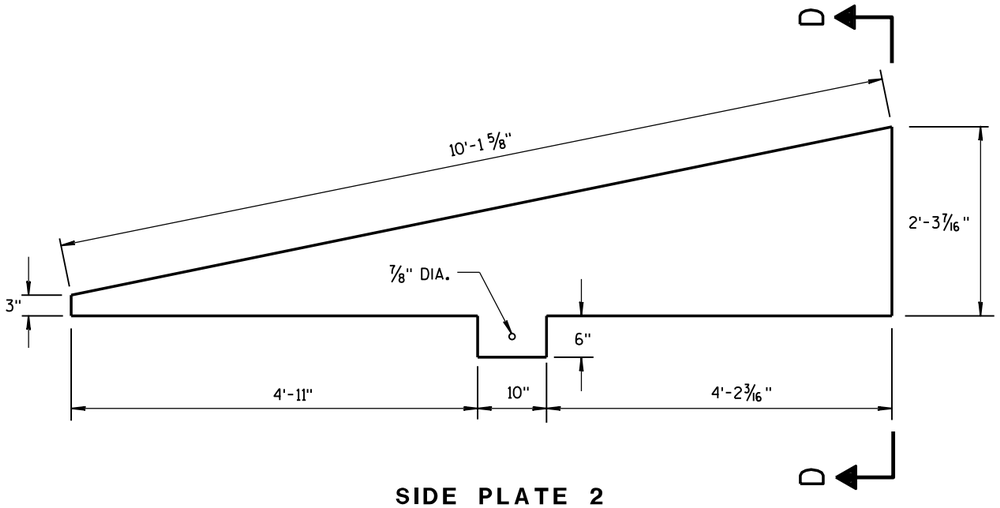

SIDE PLATE 2

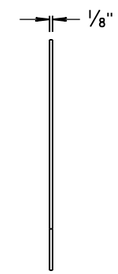

END VIEW

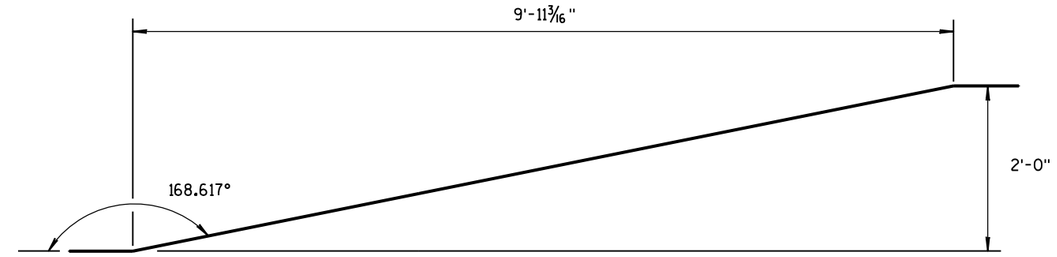

SIDE VIEW

TOP PLATE

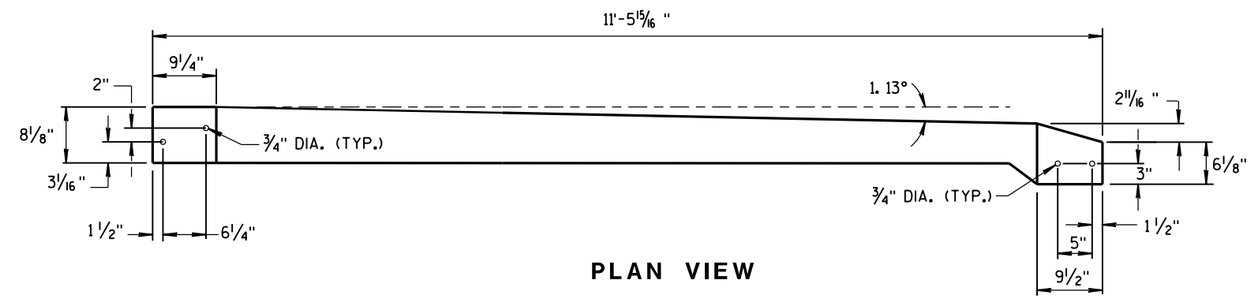

PLAN VIEW

TOP PLATE

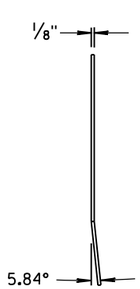

END VIEW

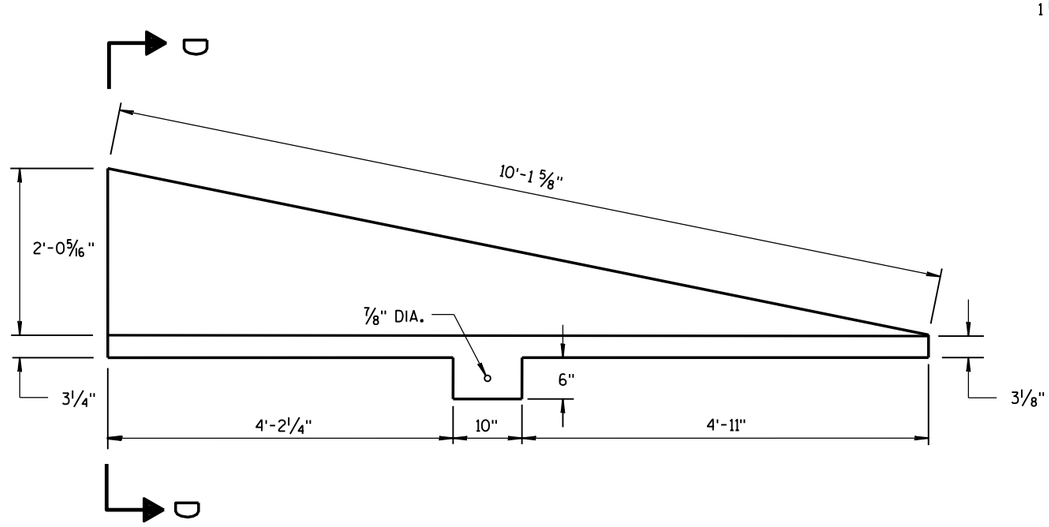

SIDE PLATE 1

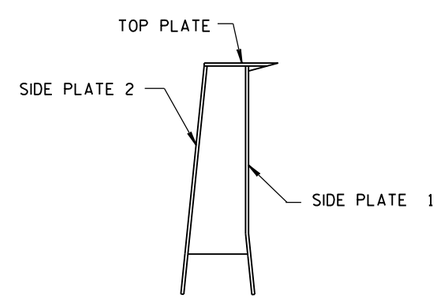

SECTION D-D

CAP DETAILS FOR TEMPORARY CONCRETE BARRIER TO 56" PERMANENT CONCRETE BARRIER

CONCRETE BARRIER
TEMPORARY PRECAST, 12'-6"

STATE OF WISCONSIN
DEPARTMENT OF TRANSPORTATION

APPROVED
June 2017 — DATE
/S/ Rodney Taylor — ROADWAY STANDARD UNIT SUPERV
FHWA

1. WOOD OR STEEL POSTS (w6X9 OR w6X8.5) MAY BE USED. DO NOT INTERMIX WOOD AND STEEL POSTS. INSTALL STEEL POSTS WITH HOLES ON APPROACHING TRAFFIC SIDE.

2. USE WOOD OR APPROVED PLASTIC BLOCKOUTS. WOOD BLOCKOUTS MAY BE CONSTRUCTED OUT OF TWO OR MORE WOOD BLOCKOUTS. SEE ALTERNATE WOOD BLOCKOUT DETAIL. DIMENSIONS OF APPROVED PLASTIC BLOCKOUTS MAY VARY.

3. IF ROCK IS ENCOUNTERED DURING EXCAVATION, PROVIDE A HOLE 12 INCHES IN DIAMETER EXTENDING 20 INCHES DEEP INTO THE ROCK. PLACE APPROXIMATELY 2½ INCHES OF GRANULAR MATERIAL IN THE BOTTOM OF THE HOLE. CUT THE POSTS THE TO LENGTH AMD INSTALL. BACKFILL WITH EXCAVATED MATERIAL AND COMPACT. BACKFILL IS TO BE FREE OF LARGE ROCKS.

4. WHEN THE DISTANCE FROM BACK OF POST TO SHOULDER HINGE POINT IS LESS THAN 2 FEET INSTALL LONGER POST AT HALF POST SPACING (K).

5. FOR NEW MGS INSTALLATION TOP OF W-BEAM RAIL TOLERANCE IS ± 1". FOR EXISTING MGS INSTALLATION TOP OF W-BEAM IS BETWEEN 27¾" TO 32".

6. WHEN USING STEEL POST AND WOOD BLOCKOUTS INSTALL FOUR 16D GALVANIZED NAILS. INSTALL NAILS AT THE BACK CORNERS OF THE BLOCK AND BEND THE NAILS OVER THE FLANGE OF THE STEEL POST.

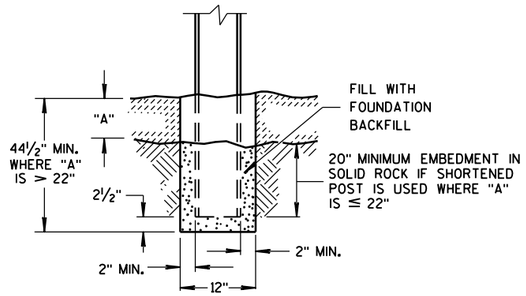

END VIEW
SETTING STEEL OR WOOD POST IN ROCK (3)

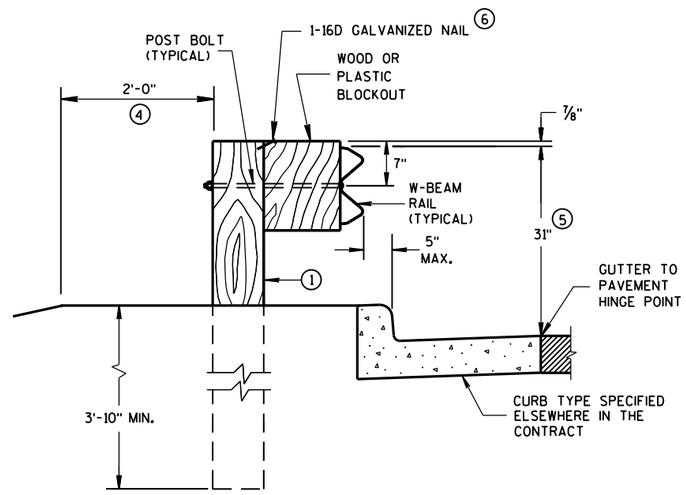

END VIEW
LOCATED ALONG A CURBED ROADWAY

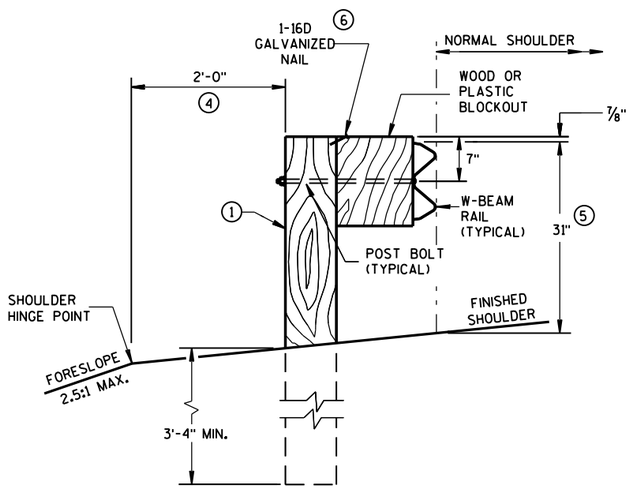

END VIEW
LOCATED ALONG A ROADWAY SHOULDER
STANDARD INSTALLATION

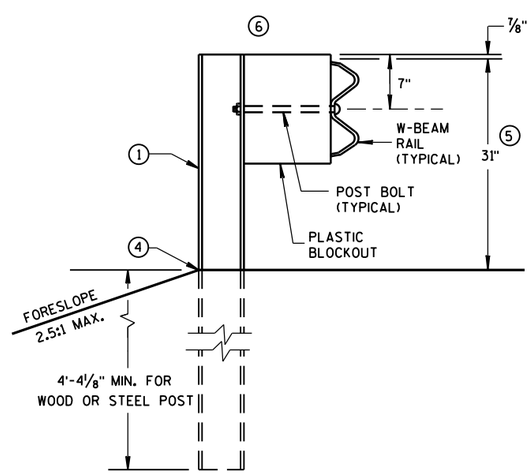

END VIEW
MGS LONGER POST AT HALFPOST SPACING W BEAM (K)

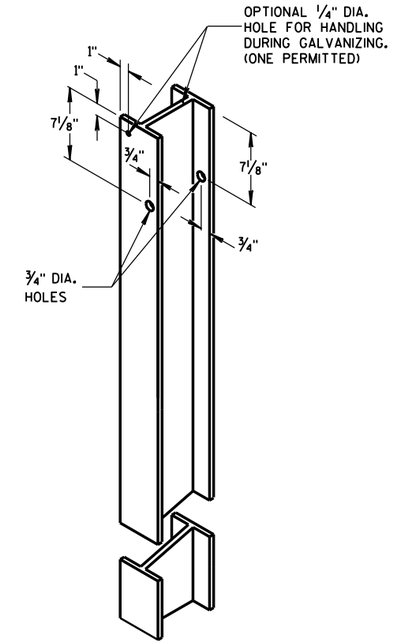

STEEL POST &
HOLE PUNCHING DETAIL
(w6X9) (1)

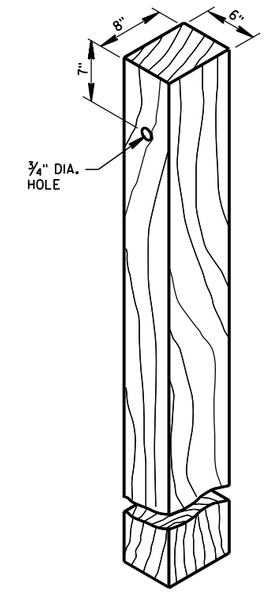

WOOD POST
(6" X 8") NOMINAL (1)

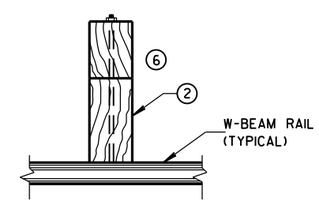

PLAN VIEW
WOOD POST,
BLOCKOUT & BEAM

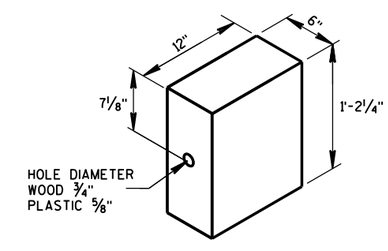

WOOD OR
PLASTIC BLOCKOUT (2)

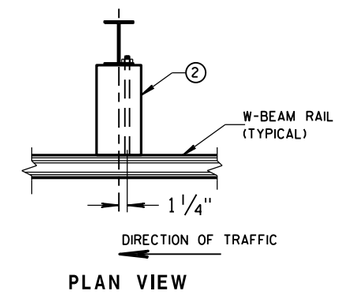

PLAN VIEW
STEEL POST,
PLASTIC BLOCKOUT & BEAM

MIDWEST GUARDRAIL SYSTEM
(MGS) GUARDRAIL

STATE OF WISCONSIN
DEPARTMENT OF TRANSPOI

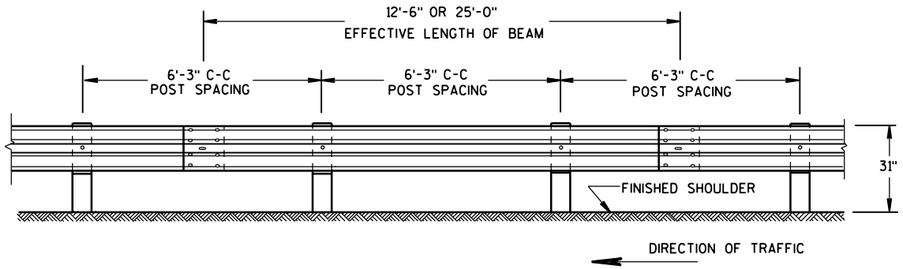

FRONT VIEW

POST SPACING STANDARD INSTALLATION

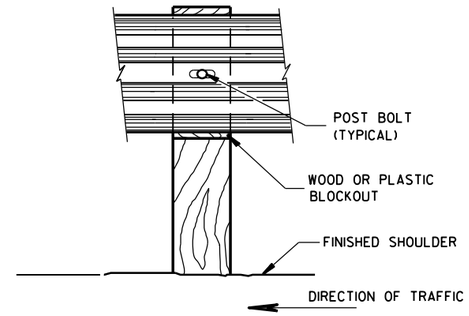

FRONT VIEW AT WOOD POST

GENERAL NOTES

(8) DO NOT INSTALL REFLECTORS ON THE FIRST 50 FEET OF THE APPROACH END OF THE ENERGY ABSORBING TERMINAL. RAIL SPLICE LOCATIONS ARE THE ONLY ACCEPTABLE LOCATIONS FOR REFLECTORS.

(11) 25 FEET OF HALF POST SPACING IS REQUIRED ON APPROACH AND DEPARTURE ENDS OF QUARTER POST SPACING.

POST BOLTS ARE A 5/8" DIAMETER ASTM A307 GUARDRAIL BOLT. A POST BOLT REQUIRES 5/8" DIAMETER A563A DOUBLE RECESSED (DR) HEAVY HEX NUT AND 5/8" DIAMETER F844 FLAT WASHER. POST BOLTS MAY BE LONGER IF MULTIPLE BLOCKOUTS ARE BEING USED.

GUARD RAIL SPLICE BOLTS ARE A 5/8" DIAMETER ASTM A307 GUARDRAIL HEAD BOLT. A GUARDRAIL SPLICE BOLT REQUIRES 5/8" DIAMETER A563A DOUBLE RECESSED (DR) HEAVY HEX NUT.

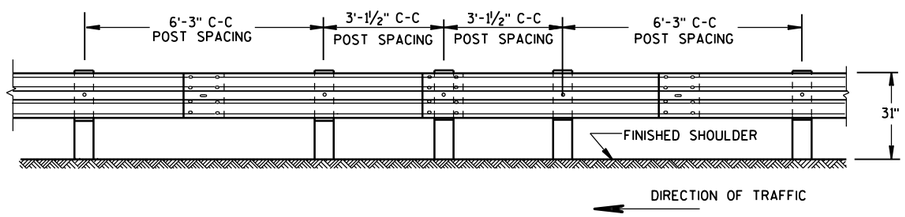

FRONT VIEW

HALF POST SPACING (HS) AND HALF POST SPACING WITH LONGER POSTS (K)

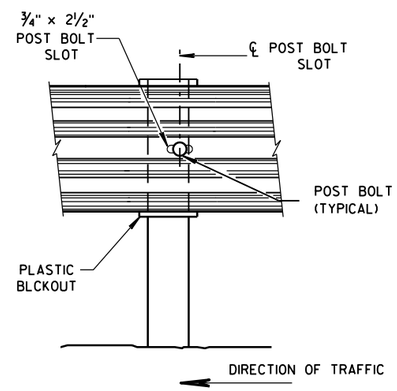

FRONT VIEW AT STEEL POST

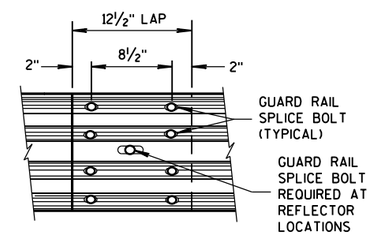

FRONT VIEW

MID-SPAN BEAM SPLICE

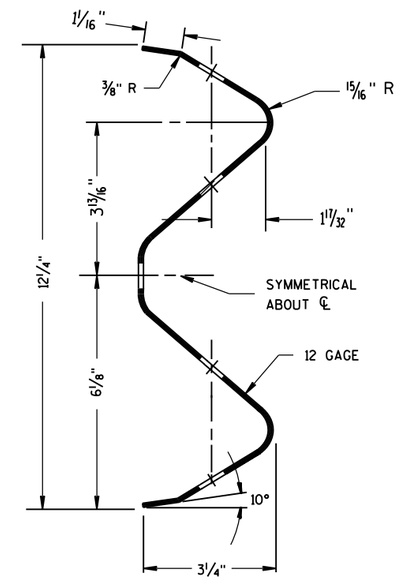

SECTION THRU W-BEAM RAIL

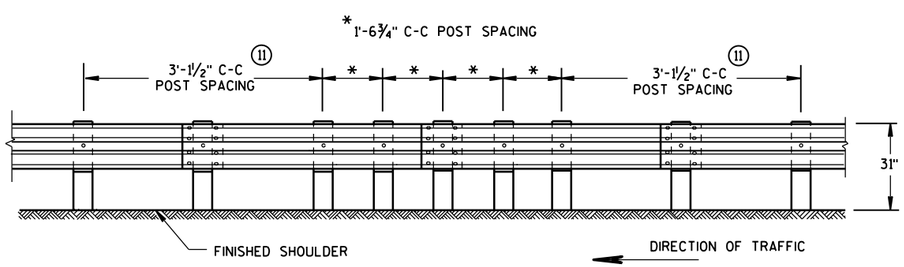

FRONT VIEW

QUARTER POST SPACING (QS)

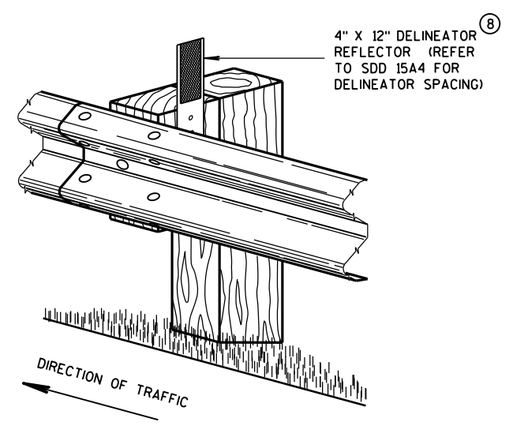

ONE SIDED REFLECTOR DETAIL AND TYPICAL INSTALLATION

MIDWEST GUARDRAIL SYSTEM
(MGS) GUARDRAIL

STATE OF WISCONSIN
DEPARTMENT OF TRANSPO

6

6

S.D.D. 14 B 42-5b

S.D.D. 14 B 42-5b

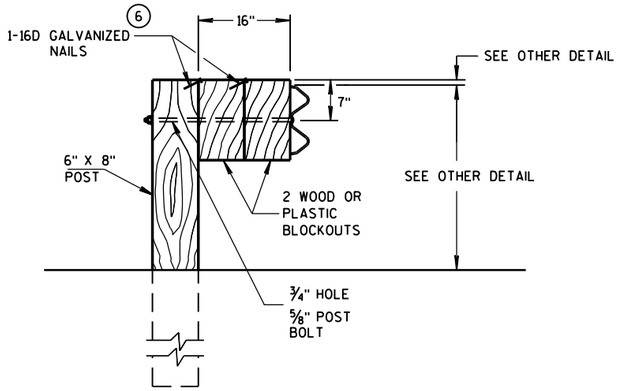

DETAIL FOR 16" BLOCKOUT DEPTH

IT IS ACCEPTABLE TO USE BLOCKOUTS UP TO 16" DEEP TO INCREASE THE POST OFFSET TO AVOID UNDERGROUND OBSTACLES. THERE IS NO LIMIT TO THE NUMBER OF POSTS THAT CAN HAVE ADDITIONAL BLOCKOUTS UP TO 16" DEEP.

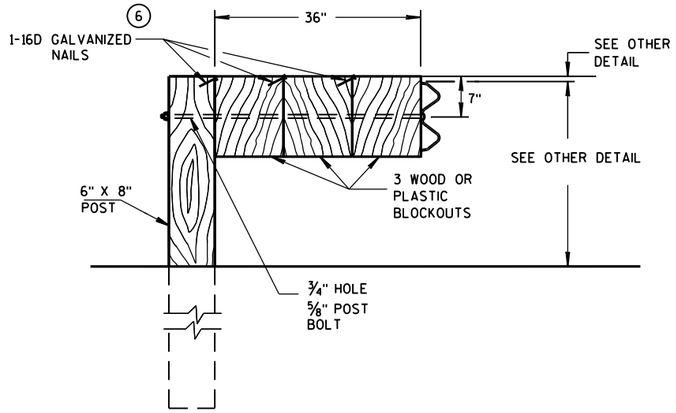

DETAIL FOR 36" BLOCKOUT DEPTH

NOTES: UNDER SPECIAL CIRCUMSTANCES, SUCH AS AVOIDING OBSTACLES THAT ARE NOT RELOCATED, IT IS ACCEPTABLE TO INSTALL ADDITIONAL BLOCKOUTS TO OBTAIN UP TO 36" DEPTH FOR ONE OR TWO POSTS IN A SECTION OF GUARDRAIL.

DO NOT USE 16" OR 36" BLOCKOUTS IF IT CAUSES THE POST TO BE DRIVEN BEYOND SHOULDER HINGE POINT OR CAUSES A FIXED OBJECT TO BE WITHIN THE DEFLECTION DISTANCE OF THE BARRIER.

NOTE: 1. ALL FILLETS SHALL HAVE A MINIMUM RADIUS OF 1/16".
2. IF THE BOLT EXTENDS MORE THAN 1/4" FROM THE NUT THE BOLT SHOULD BE TRIMMED BACK.

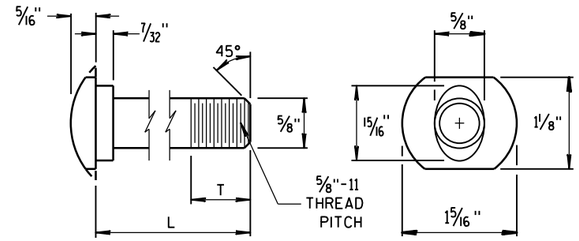

POST BOLT TABLE

L	T (MIN.)
1 1/4"	1 1/8"
2"	1 3/4"
10"	4"
14"	4 1/16"
18"	4"
21"	4 1/16"
25"	4"

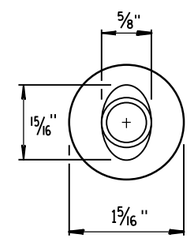

ALTERNATE BOLT HEAD

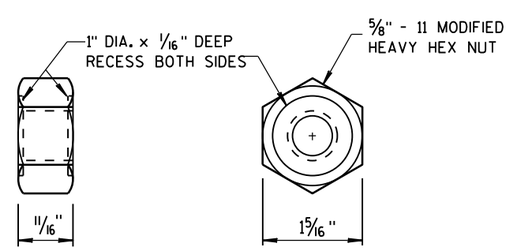

POST BOLT, SPLICE BOLT AND RECESS NUT

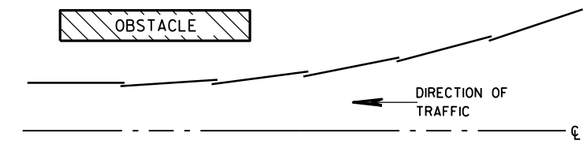

PLAN VIEW

BEAM LAPPING DETAIL

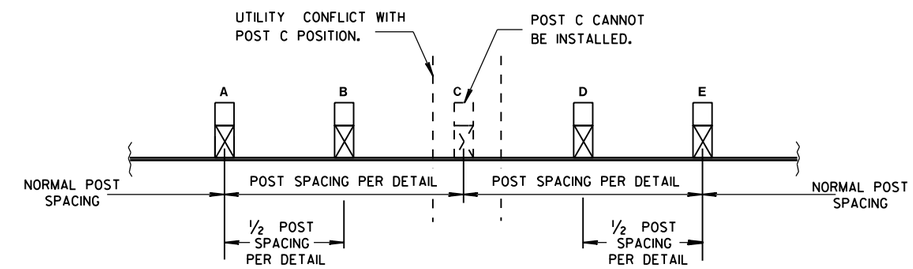

POST DRIVING FOR CONTINUOUS UNDERGROUND OBSTRUCTION

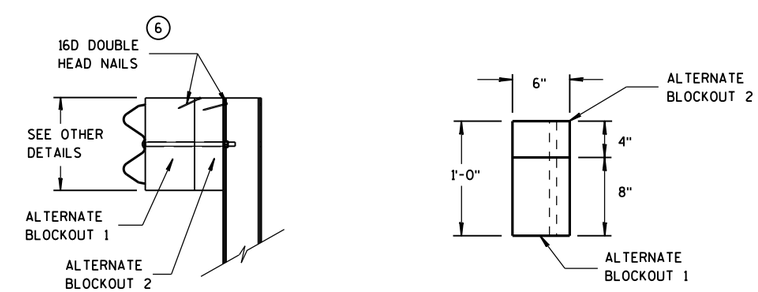

SIDE VIEW TOP VIEW

ALTERNATE WOOD BLOCKOUT DETAIL

MIDWEST GUARDRAIL SYSTEM (MGS) GUARDRAIL

STATE OF WISCONSIN
DEPARTMENT OF TRANSPORTATION

6

S.D.D. 14 B 42-5c

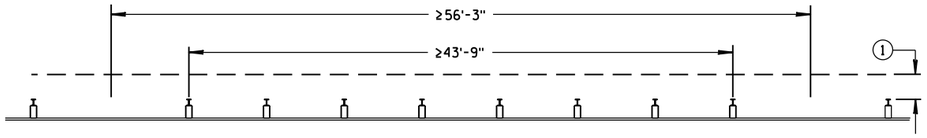

MISSING POST IN NORMAL BEAM GUARD RUN

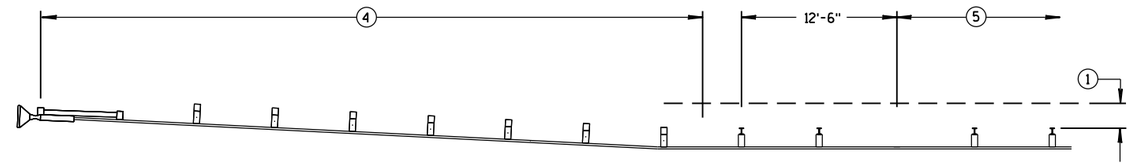

MISSING POST IN NORMAL BEAM GUARD RUN NEAR EAT

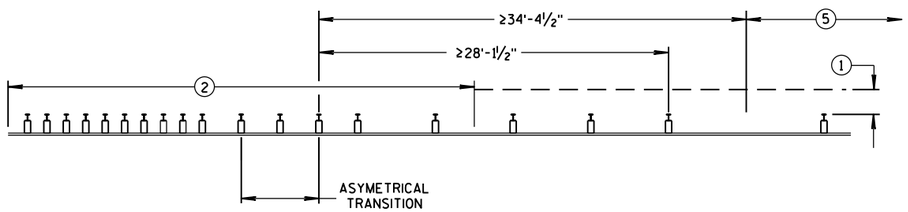

MISSING POST NEAR APPROACH THRIE BEAM TRANSITION

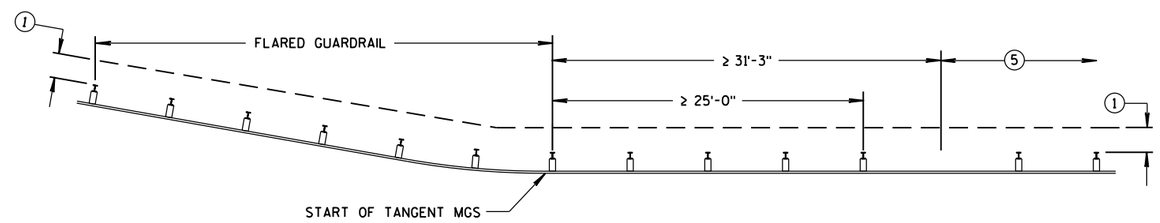

MISSING POST IN NORMAL BEAM GUARD RUN
NEAR FLARED BEAM GUARD

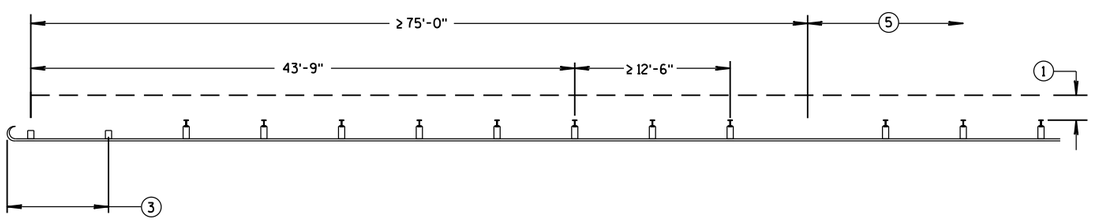

MISSING POST IN NORMAL BEAM GUARD RUN
NEAR TYPE 2 TERMINAL

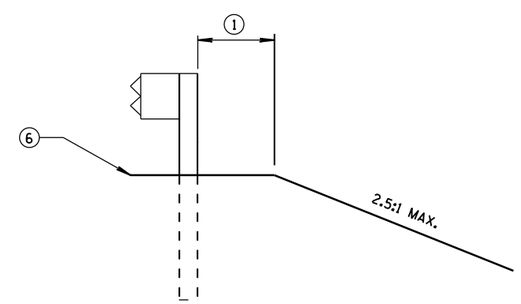

CROSS SECTION VIEW

1. MINIMUM OF 2 FEET OF GRADING BEHIND POST.
2. SEE SDD 14B45 FOR MORE DETAILS.
3. SEE SDD 14B47 FOR MORE DETAILS.
4. SEE SDD 14B44 FOR MORE DETAILS.
5. SEE MISSING POST IN NORMAL BEAM GUARD RUN FOR DISTANCE TO NEXT MISSING POST AND AREA FOR WELL DRAINED, COMPACTED SOILS.
6. SEE PLAN FOR SHOULDER DESIGN.

MIDWEST GUARDRAIL SYSTEM
(MGS) GUARDRAIL

STATE OF WISCONSIN
DEPARTMENT OF TRANSPORTATION

APPROVED
June 2017 — /S/ Rodney Taylor
DATE — ROADWAY STANDARDS DEVELOPMENT UNIT SUPERVISOR
FHWA

6

S.D.D. 14 B 42-5d

GENERAL NOTES

POSTS 1 THROUGH 3 ARE CRT POSTS.
ALL OTHER POSTS SHALL BE WOOD OR STEEL.

SEE SDD 14 B 42 FOR MORE DETAILS.

(A) FLARE FOR MGS EAT SHOWN. IF INSTALLING MGS NO FLARE NEEDED.

(B) VALUES SHOWN ON DRAWING REPRESENT THE MAXIMUM LENGTH. SHORTER DIMENSIONS ARE POSSIBLE. SEE OTHER SECTION OF PLAN FOR MORE INFORMATION.

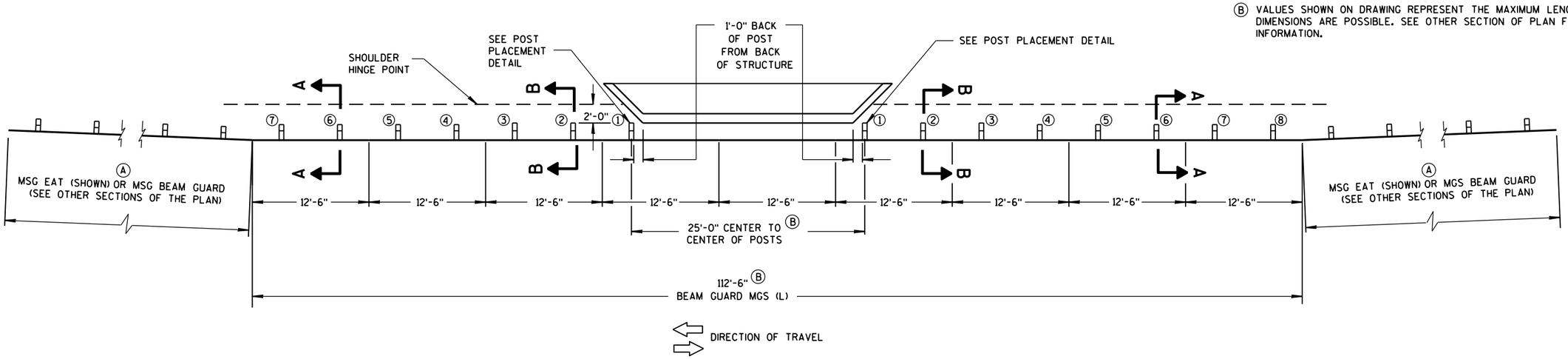

PLAN VIEW

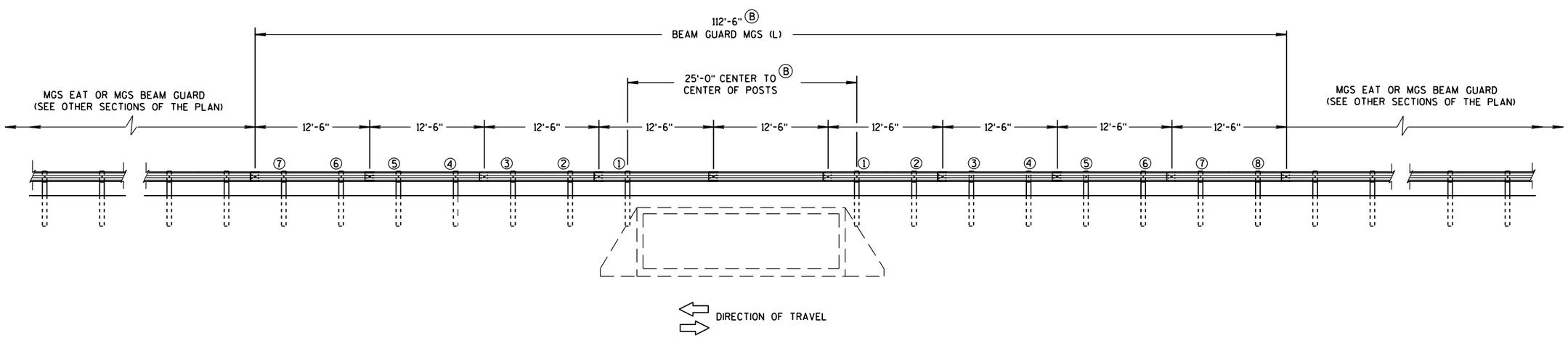

ELEVATION VIEW

MIDWEST GUARDRAIL SYSTEM LONG SPAN MGS (L) TWO-WAY TRAFFIC

MIDWEST GUARDRAIL SYSTEM
LONG SPAN MGS (L)

STATE OF WISCONSIN
DEPARTMENT OF TRANSPOI

6

S.D.D. 14 B 43-3a

GENERAL NOTES

POSTS 1 THROUGH 3 ARE CRT POSTS.
ALL OTHER POSTS SHALL BE WOOD OR STEEL.

SEE SDD 14 B 42 FOR MORE DETAILS.

(A) FLARE FOR MGS EAT SHOWN. IF INSTALLING MGS NO FLARE NEEDED.

(B) VALUES SHOWN ON DRAWING REPRESENT THE MAXIMUM LENGTH. SHORTER DIMENSIONS ARE POSSIBLE. SEE OTHER SECTION OF PLAN FOR MORE INFORMATION.

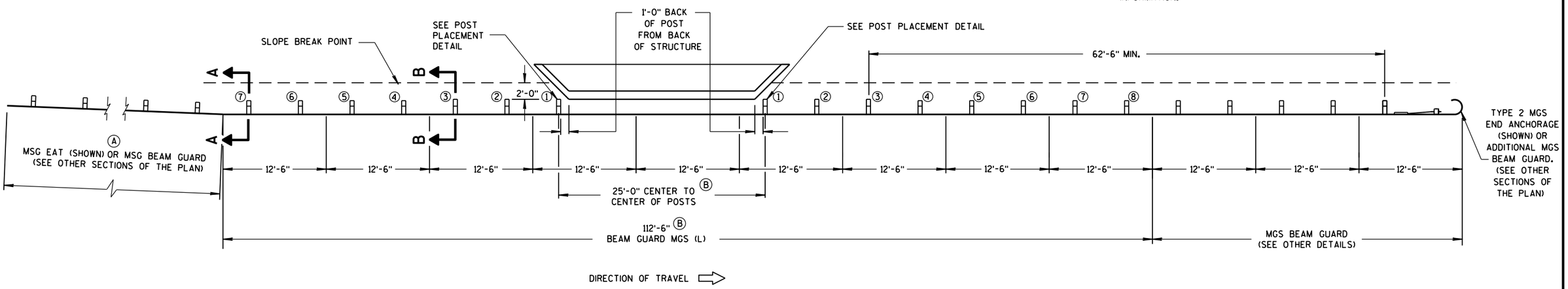

PLAN VIEW

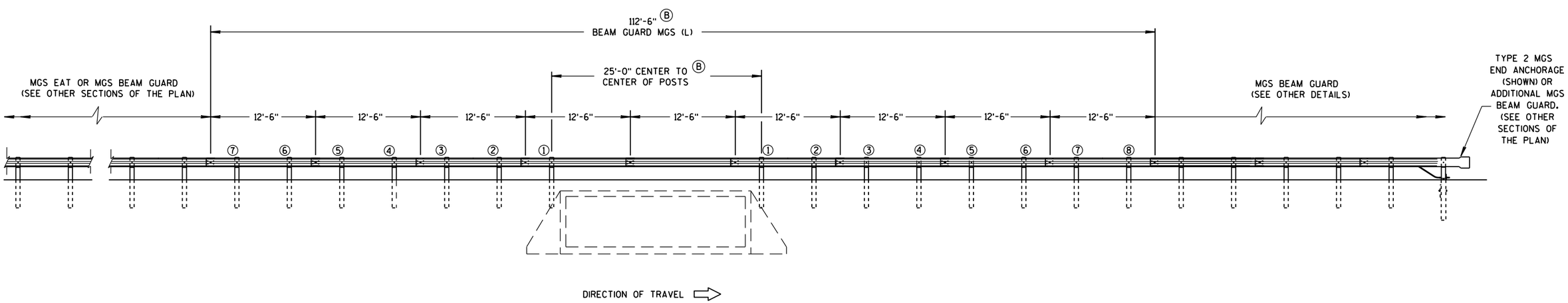

ELEVATION VIEW

MIDWEST GUARDRAIL SYSTEM LONG SPAN MGS (L) ONE-WAY TRAFFIC

MIDWEST GUARDRAIL SYSTEM
LONG SPAN MGS (L)

STATE OF WISCONSIN
DEPARTMENT OF TRANSPOR

6

S.D.D. 14 B 43-3b

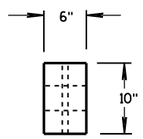

PLAN VIEW

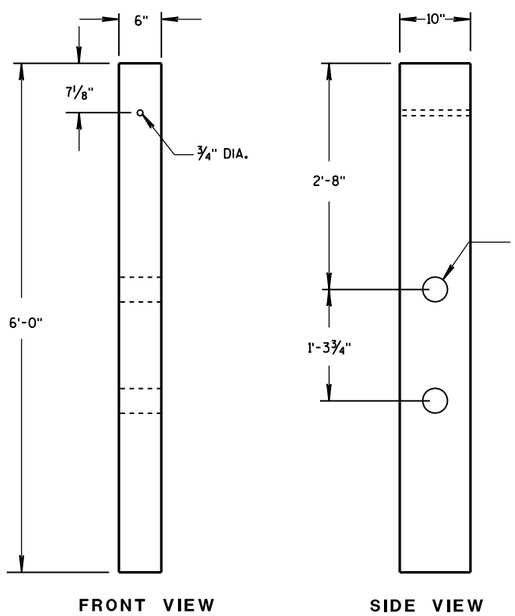

CRT WOOD POST

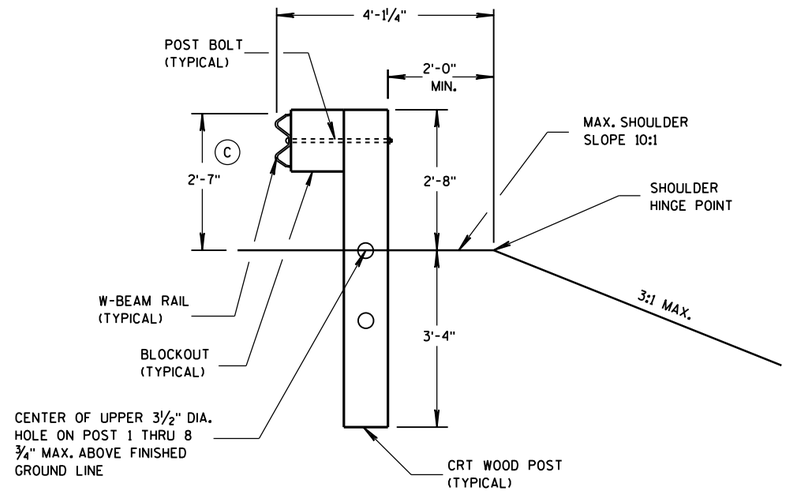

SECTION B-B

POSTS NO. 1-3

SEE OTHER DETAILS

GENERAL NOTES

(C) TOLERANCE FOR TOP OF W-BEAM RAIL IS ± 1".

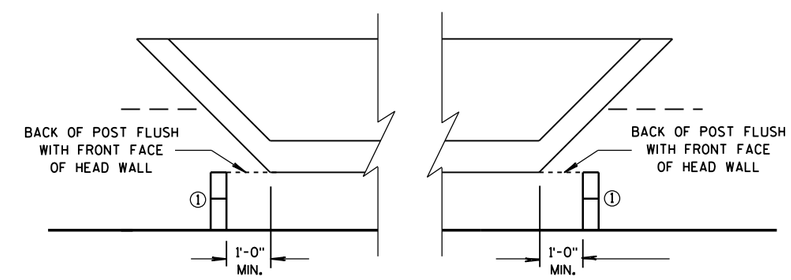

POST PLACEMENT DETAIL

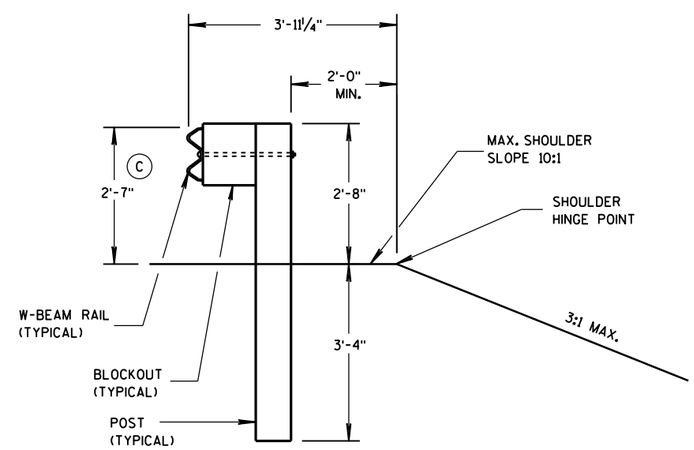

SECTION A-A

POSTS NO. 4-8

SEE OTHER DETAILS

6

6

S.D.D. 14 B 43-3c

S.D.D. 14 B 43-3c

MIDWEST GUARDRAIL SYSTEM
LONG SPAN MGS (L)

STATE OF WISCONSIN
DEPARTMENT OF TRANSPORTATION

APPROVED

5/10/2013 — DATE

/S/ Jerry H. Zogg — ROADWAY STANDARDS DEVELOPMENT ENGINEER

FHWA

GENERAL NOTES

(A) THE SLOPE IN THE AREA BOUNDED BY THE GRADELINE, THE HINGE POINT LINE (HPL), AND THE CLEAR ZONE LIMITS (CZL) SHALL BE 4:1 OR FLATTER.

(B) AFTER FINAL ASSEMBLY, RECHECK CABLE TO BE SURE IT IS TAUT AND HAS NOT RELAXED.

(C) DIFFERENT MANUFACTURES REQUIRE DIFFERENT PERFORATED W-BEAM RAIL END PANELS. SEE MANUFACTURES INFORMATION.

(F) ATTACH ALUMINUM SHEET TO E.A.T. HEAD USING 4 STAINLESS STEEL SELF-TAPPING SCREWS. ONE SCREW PER CORNER.

(H) HARDWARE VARIES BETWEEN DIFFERENT MANUFACTURES. SEE MANUFACTURE'S DRAWING FOR INFORMATION.

SEE SDD 14B42 FOR MORE INFORMATION.

* DO NOT ATTACH BLOCKOUTS TO POSTS 1 AND 2.

DO NOT INSTALL REFLECTORS ON THE FIRST 50 FEET OF THE APPROACH END OF THE ENERGY ABSORBING TERMINAL.

SEE MANUFACTURER'S DRAWING FOR SPLICE LOCATION, HARDWARE DIMENSIONS AND INSTALLATION INSTRUCTIONS.

THE CENTER OF THE UPPER 3½" DIAMETER HOLE ON POST NUMBER 3 THROUGH POST 9 IS TO BE FLUSH WITH THE GROUND LINE UP TO A MAXIMUM OF 2" ABOVE GROUND LINE.

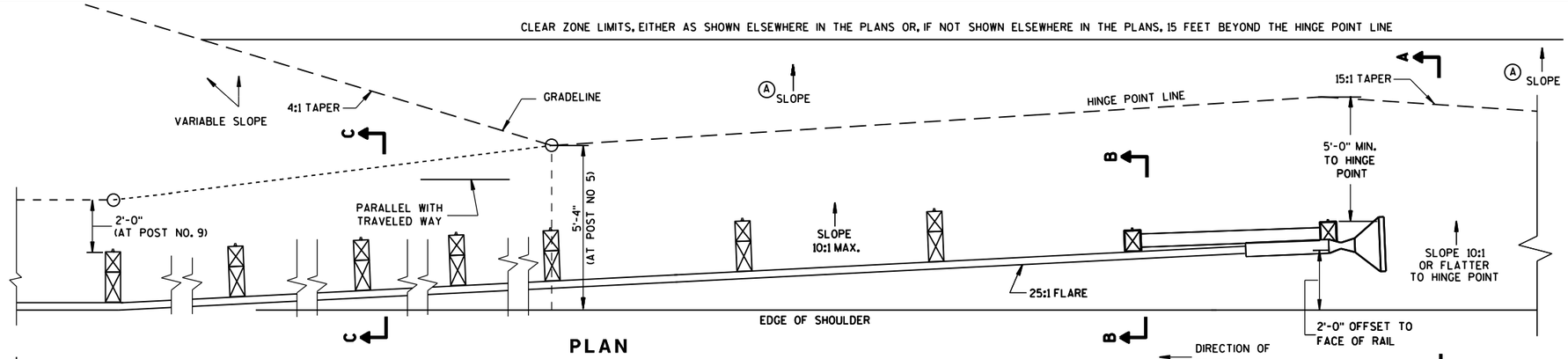

PLAN

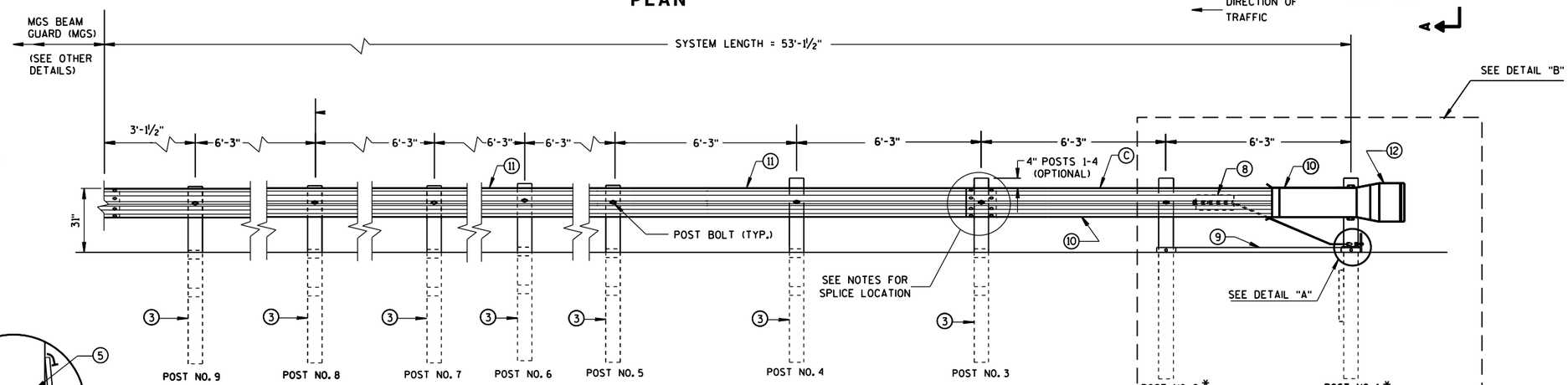

ELEVATION

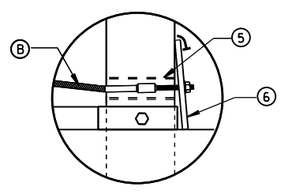

DETAIL "A"

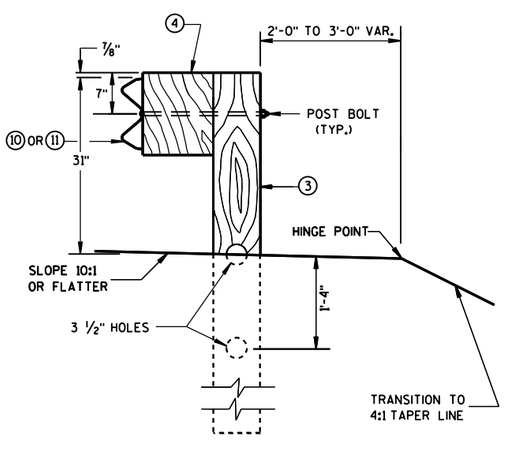

SECTION C-C
TYPICAL AT POST NOS. 3-9

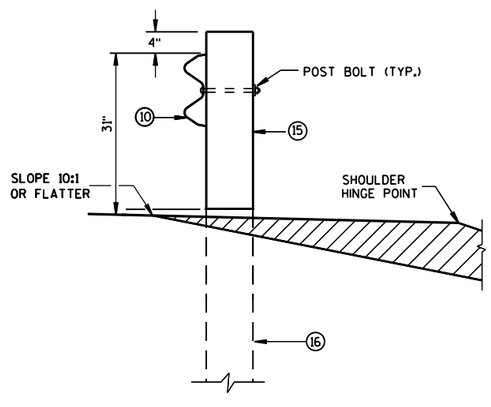

SECTION B-B
TYPICAL AT POST NO. 2*

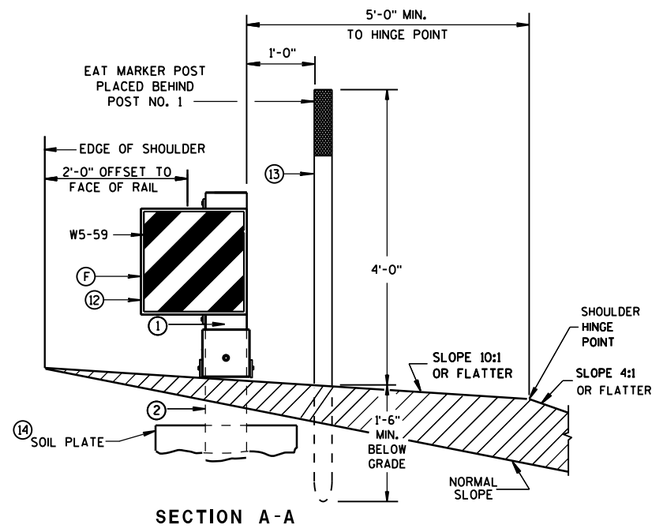

SECTION A-A
TYPICAL AT POST NO. 1*

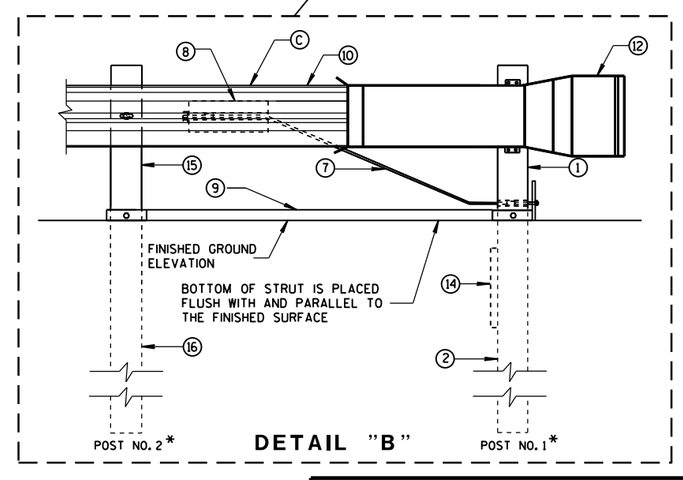

DETAIL "B"

MIDWEST GUARDRAIL SYSTEM ENERGY ABSORBING TERMINAL (MGS)

STATE OF WISCONSIN
DEPARTMENT OF TRANSPOR

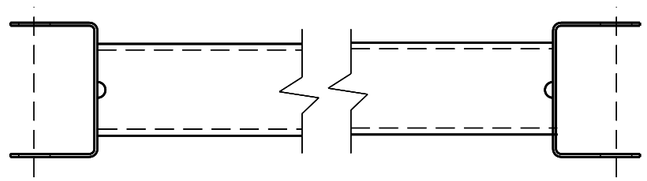

GENERIC GROUND STRUT (9) (H)

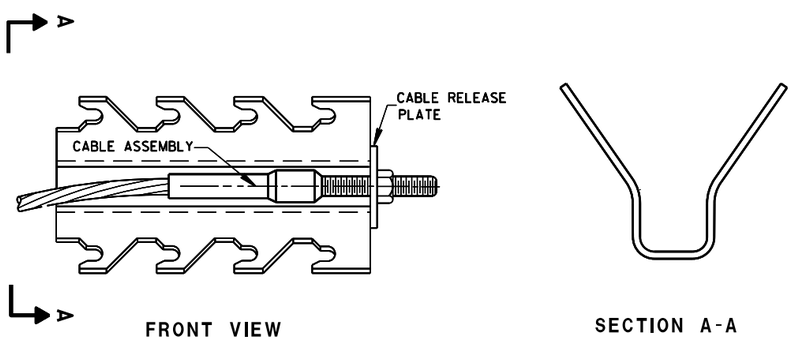

FRONT VIEW

SECTION A-A

GENERIC ANCHOR CABLE BOX (8) (H)

BILL OF MATERIALS

PART NO.	DESCRIPTION MATERIALS PROVIDED BY MGS EAT MANUFACTURER. SEE MANUFACTURER'S DETAILS FOR MORE INFORMATION.
1	UPPER POST NO. 1 6" X 6" TUBE
2	LOWER POST NO. 1
3	WOOD CRT
4	WOOD BLOCKOUT
5	PIPE SLEEVE
6	BEARING PLATE
7	BCT CABLE ASSEMBLY
8	ANCHOR CABLE BOX
9	GROUND STRUT
10	PERFORATED W-BEAM RAIL END PANEL, 12'-6" LONG.
11	STANDARD W-BEAM RAIL. MULTIPLE SECTIONS REQUIRED. SECTIONS VARY IN LENGTH.
12	IMPACT HEAD
13	EAT MARKER POST - YELLOW (SEE APPROVED PRODUCTS LIST)
14	SOIL PLATE
15	UPPER POST NO. 2
16	LOWER POST NO. 2

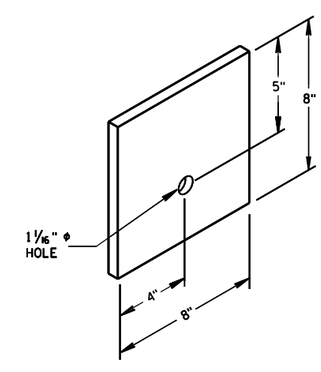

BEARING PLATE (6)

MIDWEST GUARDRAIL SYSTEM
ENERGY ABSORBING TERMINAL
(MGS)

STATE OF WISCONSIN
DEPARTMENT OF TRANSPOR

6

S.D.D. 14 B 44-3b

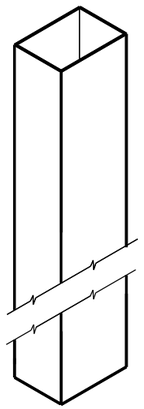

UPPER POST NO. 1 (1)

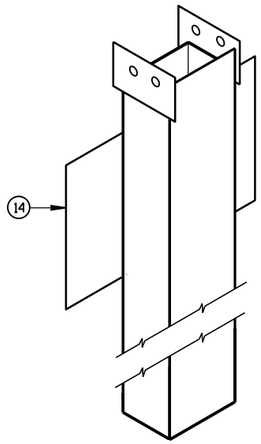

LOWER POST NO. 1 (2)

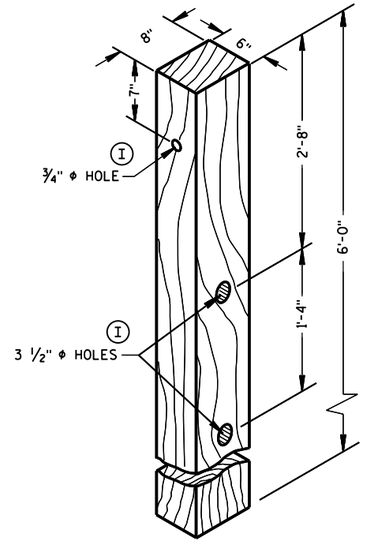

POSTS NUMBER 3-9

WOOD CRT POST (3)

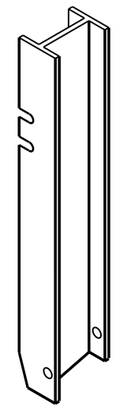

UPPER POST NO. 2 (15)

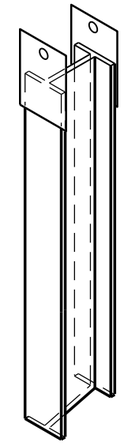

LOWER POST NO. 2 (16)

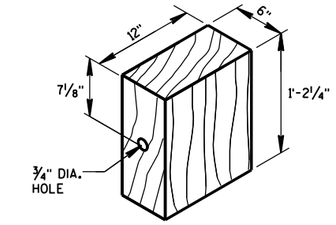

WOOD BLOCKOUT (4)

REQ'D. AT ALL POSTS EXCEPT POST NO'S 1 & 2

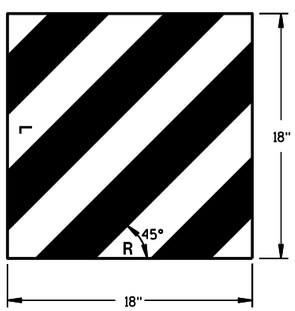

W5-59

REFLECTIVE SHEETING DETAIL (H)

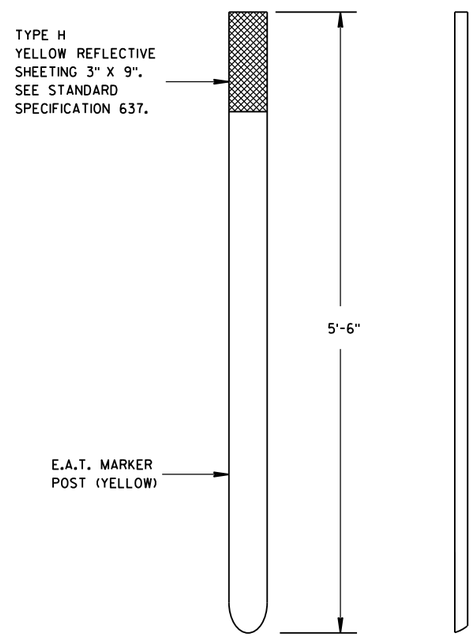

FRONT VIEW SIDE VIEW

E.A.T. MARKER POST (13)

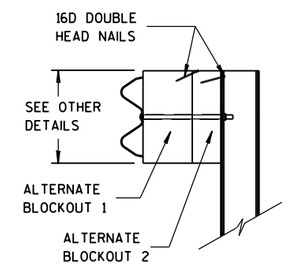

SIDE VIEW

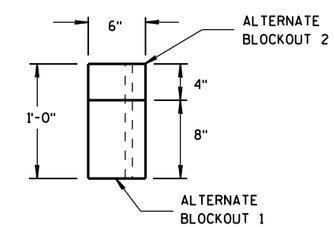

TOP VIEW

ALTERNATE WOOD BLOCKOUT DETAIL

MIDWEST GUARDRAIL SYSTEM ENERGY ABSORBING TERMINAL (MGS)

STATE OF WISCONSIN
DEPARTMENT OF TRANSPORTATION

APPROVED

June 2017
DATE

/S/ Rodney Taylor
ROADWAY STANDARDS DEVELOPMENT
UNIT SUPERVISOR

FHWA

6

S.D.D. 14 B 44-3c

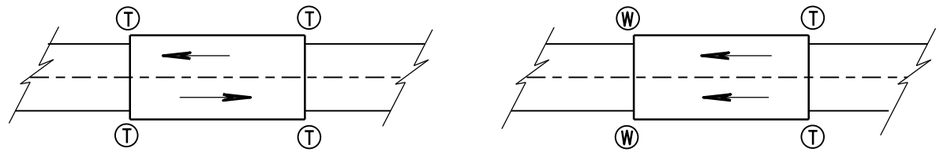

TWO WAY TRAFFIC

ONE WAY TRAFFIC

(T) THRIE BEAM CONNECTION

(W) W-BEAM CONNECTION WHEN REQUIRED

TYPICAL LOCATIONS OF THRIE BEAM AND W-BEAM CONNECTIONS TO BRIDGE

GENERAL NOTES

IF ROCK IS ENCOUNTERED, REMOVE ROCK TO FULL DEPTH OF POST PLUS 2½", AND 12" DIAMETER AROUND POST. SEE 14B42 FOR MORE DETAILS.

TRANSITION USES STEEL POSTS ONLY.

SEE STANDARD DETAIL DRAWING 14 B 42 FOR MORE INFORMATION.

(1) BRIDGE RAILING TYPE "W" DOES NOT REQUIRE A TERMINAL CONNECTOR.

(2) OPTIONAL CURB AND GUTTER OR DRAINAGE FEATURE SEE PLAN FOR INFORMATION.

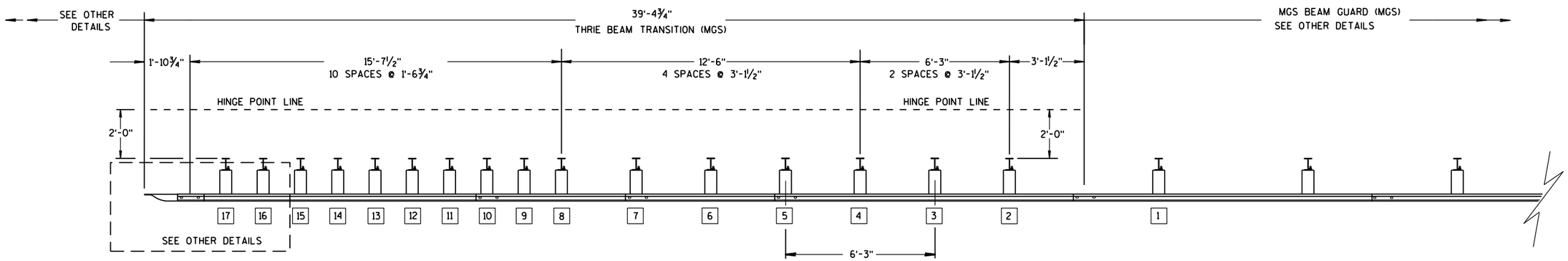

PLAN VIEW

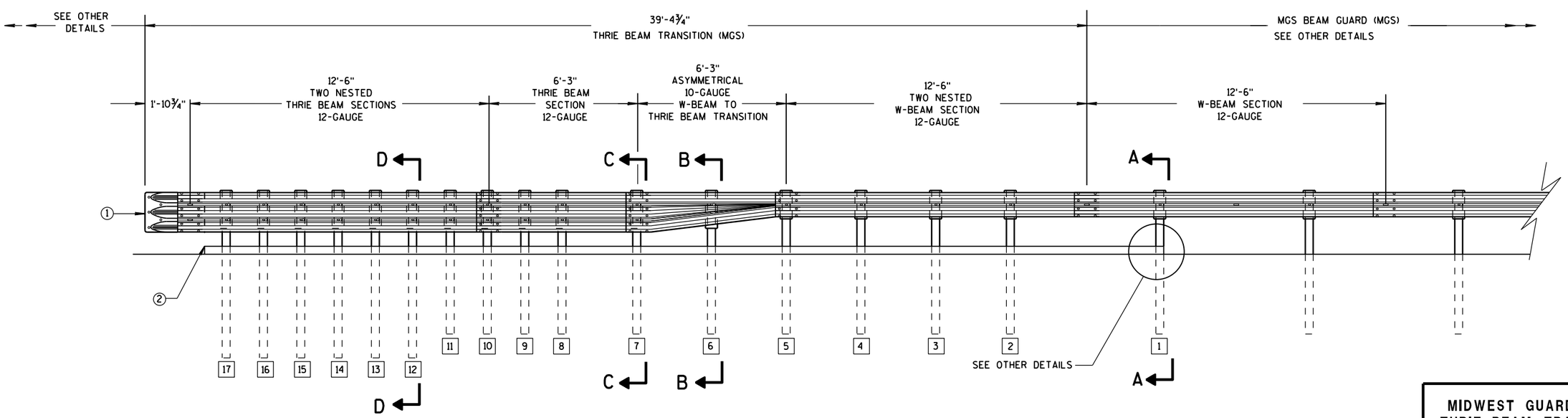

ELEVATION VIEW

MIDWEST GUARDRAIL SYSTEM THRIE BEAM TRANSITION

MIDWEST GUARDRAIL SYSTEM
THRIE BEAM TRANSITION (MGS)

STATE OF WISCONSIN
DEPARTMENT OF TRANSPORTATION

6

6

S.D.D. 14 B 45-4a

S.D.D. 14 B 45-4a

GENERAL NOTES

(2) OPTIONAL CURB AND GUTTER OR DRAINAGE_FEATURE SEE PLAN FOR INFORMATION.

(3) WHEN USING STEEL POSTS AND WOOD BLOCKOUTS INSTALL FOUR 10D GALVANIZED NAILS. INSTALL NAILS AT THE BACK CORNERS OF THE BLOCK AND BEND THE NAILS OVER THE FLANGE OF THE STEEL POST.

(4) TOLERANCE FOR TOP OF W-BEAM RAIL IS ± 1".

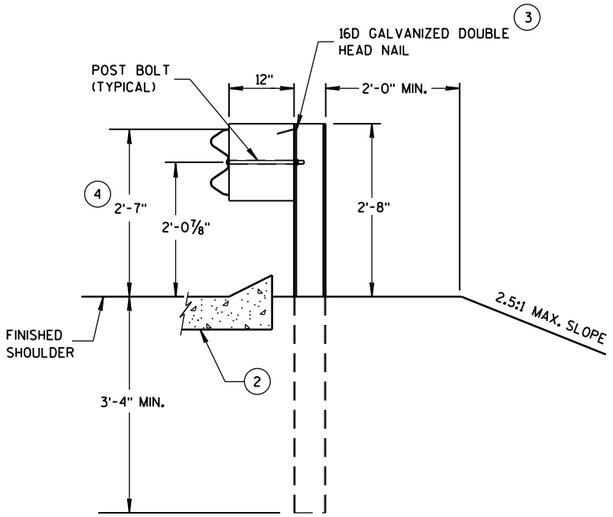

SECTION A-A
POSTS 1-5

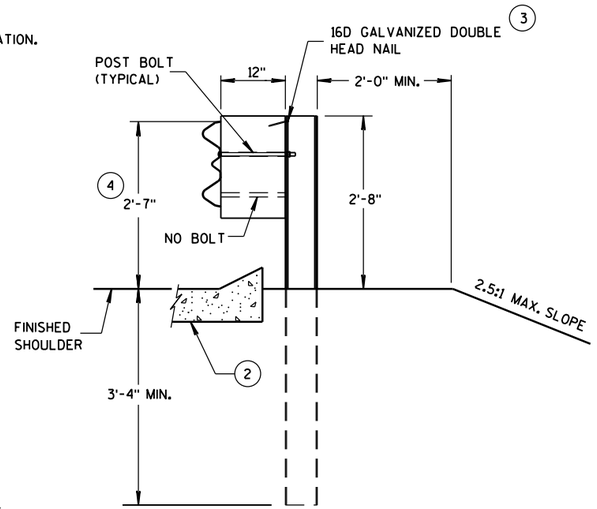

SECTION B-B
POST 6

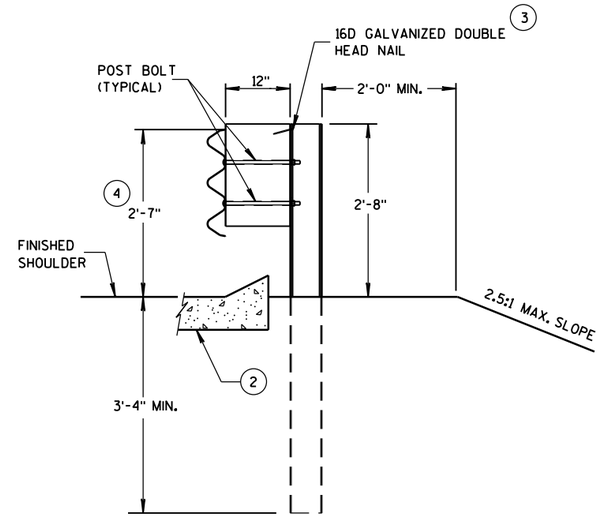

SECTION C-C
POSTS 7-11

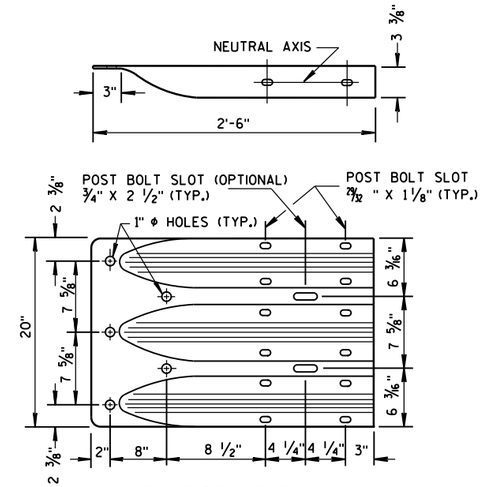

THRIE BEAM
TERMINAL CONNECTOR

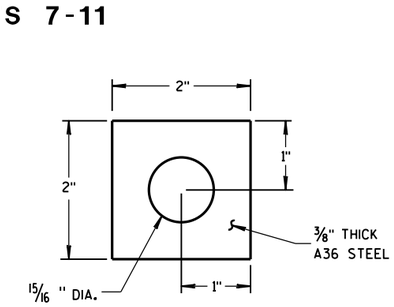

PLATE WASHER DETAIL

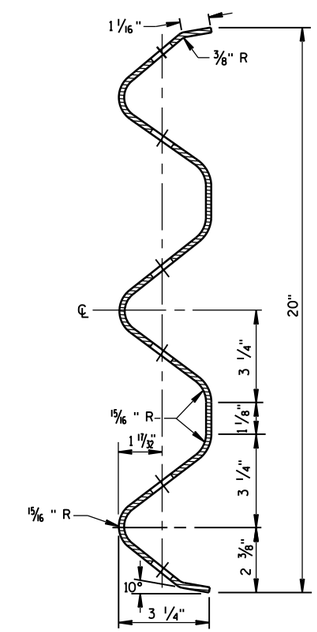

SECTION THRU THRIE
BEAM RAIL ELEMENT

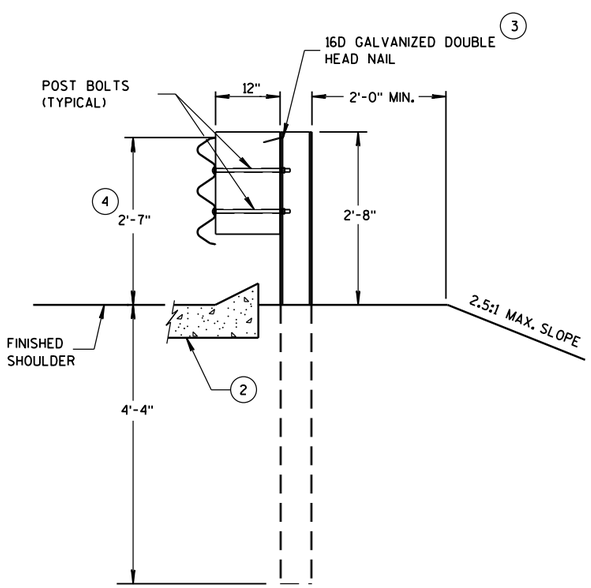

SECTION D-D
POSTS 12-17

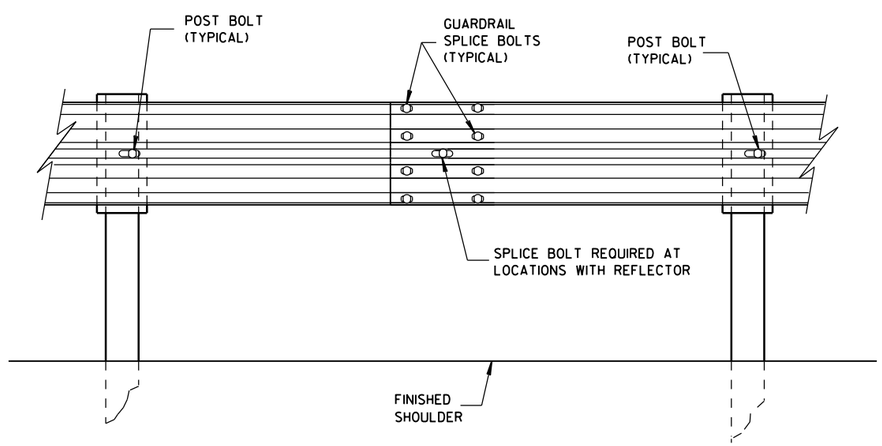

SPLICE DETAIL

MIDWEST GUARDRAIL SYSTEM
THRIE BEAM TRANSITION (MGS)

STATE OF WISCONSIN
DEPARTMENT OF TRANSPO

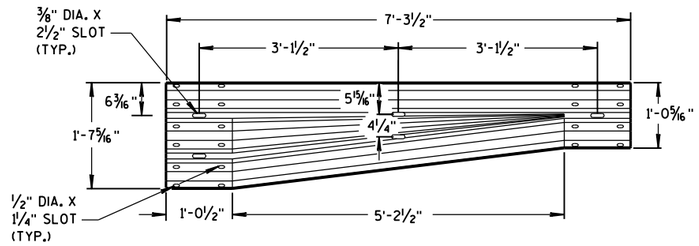

W-BEAM TO THRIE BEAM TRANSITION SECTION

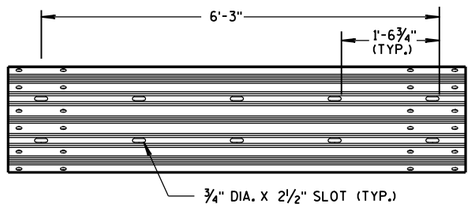

6'-3" THRIE BEAM SECTION

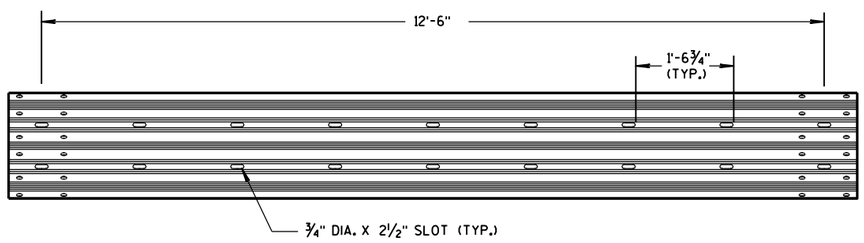

12'-6" THRIE BEAM SECTION

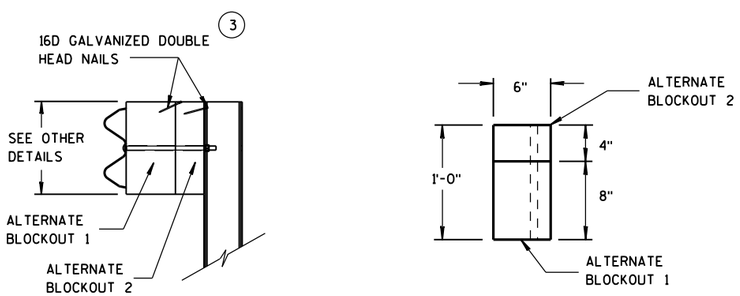

SIDE VIEW TOP VIEW

ALTERNATE WOOD BLOCKOUT DETAIL

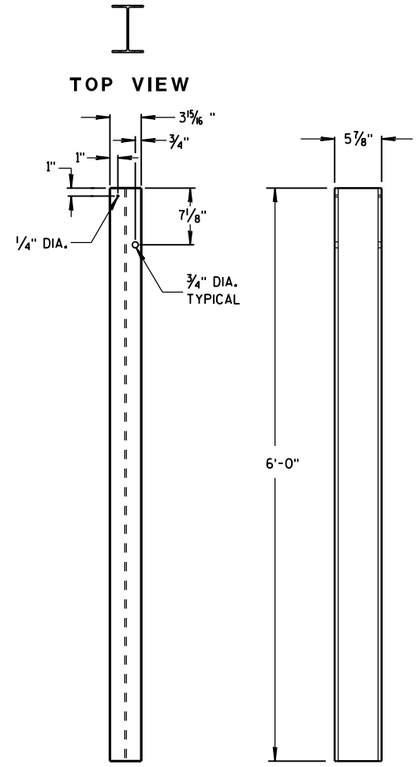

STEEL POSTS 1-5

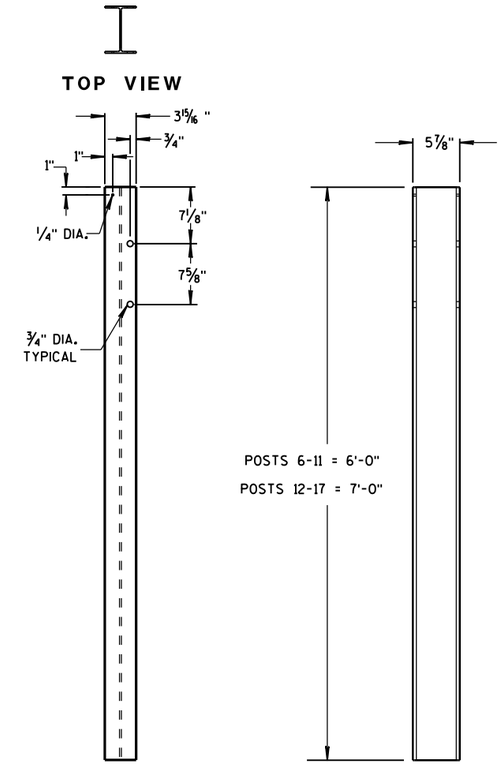

STEEL POSTS 6-17

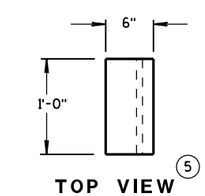

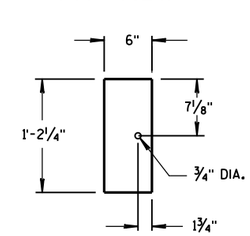

BLOCKOUT POSTS 1-5

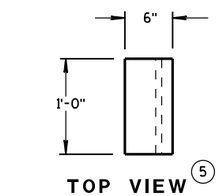

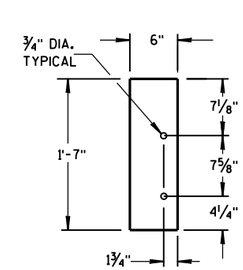

BLOCKOUT POSTS 6-17

GENERAL NOTES

STEEL POSTS ARE W6X9 OR W6X8.5.

BOLT HOLES FOR POST ARE ON FRONT AND OF SIDE OF POST.

3 WHEN USING STEEL POSTS AND WOOD BLOCKOUTS INSTALL FOUR 16D GALVANIZED NAILS. INSTALL NAILS AT THE BACK CORNERS OF THE BLOCK AND BEND THE NAILS OVER THE FLANGE OF THE STEEL POST.

5 WOOD BLOCKS MAY BE CONSTRUCTED OUT OF 2 WOOD BLOCKS. SEE ALTERNATE WOOD BLOCK DETAIL.

MIDWEST GUARDRAIL SYSTEM
THRIE BEAM TRANSITION (MGS)

STATE OF WISCONSIN
DEPARTMENT OF TRANSPOR

6

6

S.D.D. 14 B 45-4c

S.D.D. 14 B 45-4c

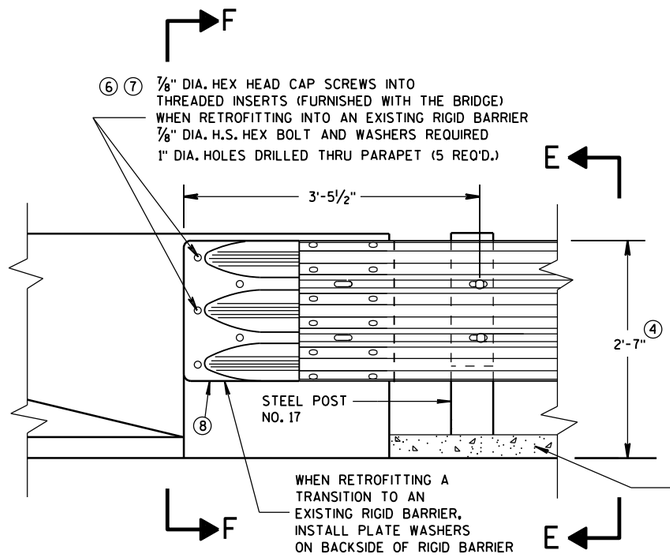

FRONT VIEW

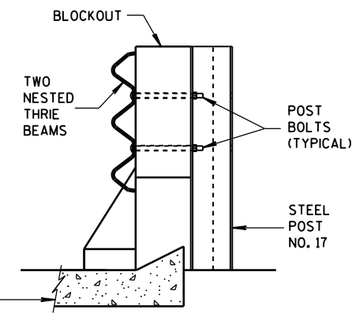

SECTION E-E

THRIE BEAM CONNECTION TO BRIDGE PARAPET WITH SQUARE ENDS

GENERAL NOTES

THESE ARE TYPICAL CONNECTION DETAILS. ADJUST THE POSTION OF CONNECTIONS TO EXISTING BRIDGES TO FIT THE ACTUAL BRIDGE AND SITE DIMENSIONS.

② OPTIONAL CURB AND GUTTER OR DRAINAGE FEATURE SEE PLAN FOR INFORMATION.

④ TOLERANCE FOR TOP OF BEAM IS ± 1".

⑥ DRILLING BOLT HOLES THROUGH THE PARAPET, BOLTS, NUTS, WASHERS AND REPAIRING DAMAGED CONCRETE ARE INCIDENTAL TO THE CONTRACT.

⑦ BOLTS MAY BE A325 BOLTS OR A449 BOLTS. BOLT LENGTH AND THREADING LENGTH ARE TO ALLOW FOR A TIGHT CONNECTION BETWEEN RIGID BARRIER AND THRIE BEAM CONNECTION PLATE. CONTRACTOR IS TO FIELD VERIFY BOLT LENGTH AND THREAD LENGTH. ONE ROUND WASHER REQUIRED BETWEEN BOLT HEAD AND THRIE BEAM CONNECTOR PLATE. BOLTS THAT EXTEND THROUGH THE PARAPET AND OUT THE BACK FACE REQUIRE A HARDENED ROUND STEEL WASHER THAT IS 2" O.D. X 5/8" THICK AND ONE PLATE WASHER. REPAIR ANY DAMAGED CONCRETE FROM BOLT INSTALLATION.

⑧ THE RECESS FOR A W-BEAM CONNECTION, WHICH EXISTS ON SOME PARAPETS OF THIS TYPE, SHALL BE FILLED WITH A TREATED TIMBER BLOCKOUT. BLOCKOUT SIZE IS 1'-6" X 2'-0" X 3 1/2".

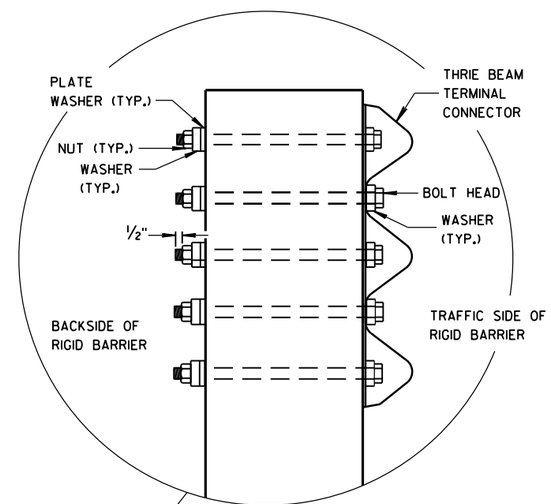

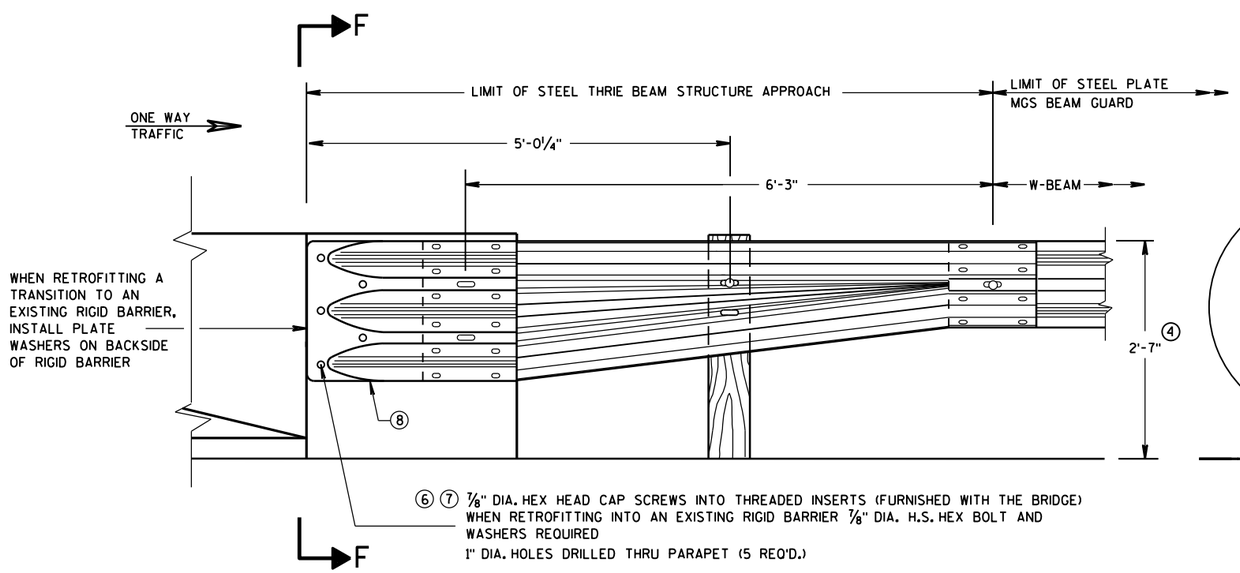

FRONT VIEW

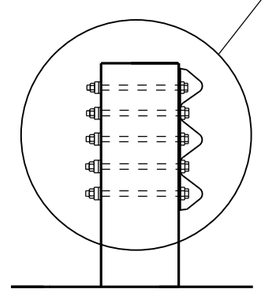

SECTION F-F

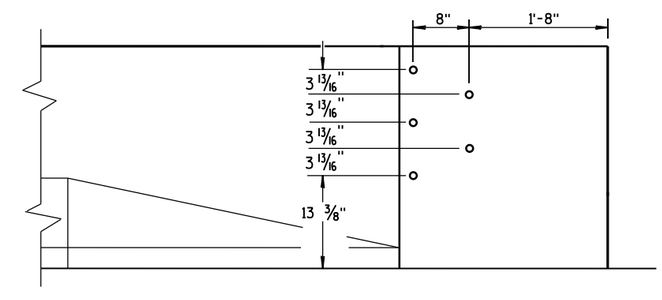

DRILL HOLE LOCATION

W BEAM TRANSITION AND CONNECTION TO BRIDGE PARAPETS WITH SQUARE ENDS

(USE ONLY ON THE TRAFFIC EXIT END OF ONE WAY BRIDGES)

MIDWEST GUARDRAIL SYSTEM
THRIE BEAM TRANSITION (MGS)

STATE OF WISCONSIN
DEPARTMENT OF TRANSPORTATION

APPROVED
June, 2015 — DATE
/S/ Jerry H. Zogg — ROADWAY STANDARDS DEVELOPMENT ENGINEER
FHWA
NT

6

6

S.D.D. 14 B 45-4d

S.D.D. 14 B 45-4d

GENERAL NOTES

THESE ARE TYPICAL CONNECTION DETAILS. ADJUST THE POSTION OF CONNECTIONS TO EXISTING BRIDGES TO FIT THE ACTUAL BRIDGE AND SITE DIMENSIONS.

(2) OPTIONAL CURB AND GUTTER OR DRAINAGE FEATURE SEE PLAN FOR INFORMATION.

(4) TOLERANCE FOR TOP OF BEAM IS ± 1".

(6) DRILLING BOLT HOLES THROUGH THE PARAPET, BOLTS, NUTS, WASHERS AND REPAIRING DAMAGED CONCRETE ARE INCIDENTAL TO THE CONTRACT.

(7) BOLTS MAY BE A325 BOLTS OR A449 BOLTS. BOLT LENGTH AND THREADING LENGTH ARE TO ALLOW FOR A TIGHT CONNECTION BETWEEN RIGID BARRIER AND THRIE BEAM CONNECTION PLATE. CONTRACTOR IS TO FIELD VERIFY BOLT LENGTH AND THREAD LENGTH. ONE ROUND WASHER REQUIRED BETWEEN BOLT HEAD AND THRIE BEAM CONNECTOR PLATE. BOLTS THAT EXTEND THROUGH THE PARAPET AND OUT THE BACK FACE REQUIRE A HARDENED ROUND STEEL WASHER THAT IS 2" O.D. X 5/8" THICK AND ONE PLATE WASHER. REPAIR ANY DAMAGED CONCRETE FROM BOLT INSTALLATION.

(8) THE RECESS FOR A W-BEAM CONNECTION, WHICH EXISTS ON SOME PARAPETS OF THIS TYPE, SHALL BE FILLED WITH A TREATED TIMBER BLOCKOUT. BLOCKOUT SIZE IS 1'-6" X 2'-0" X 3 1/2".

(9) BOLT, NUT AND WASHERS NOT REQUIRED FOR THIS LOCATION WHEN RETROFITTING AN EXISTING PAPAPET AND THE HOLE IS EITHER ABOVE PARAPET OR WITHIN 4 INCHES OF THE EDGE OF PARAPET.

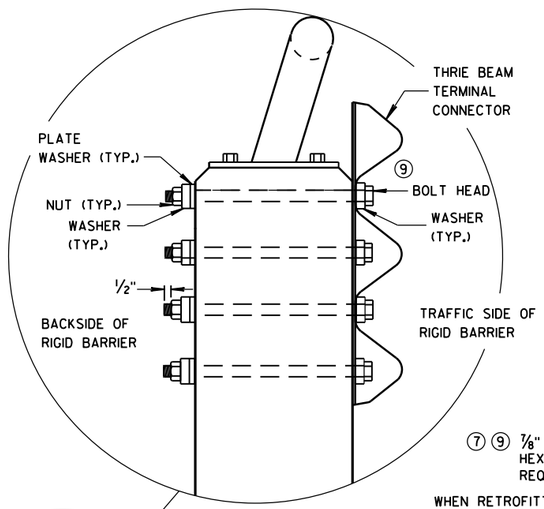

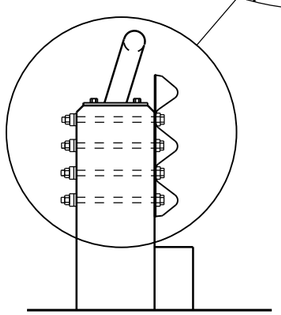

SECTION G-G

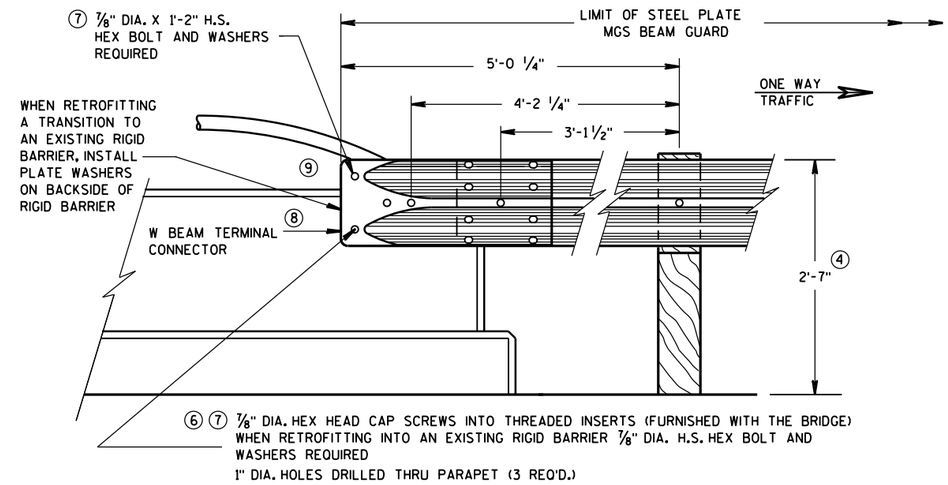

FRONT VIEW

W BEAM CONNECTION TO VERTICAL FACE PARAPET

(USE ONLY ON THE TRAFFIC EXIT END OF ONE WAY BRIDGES)

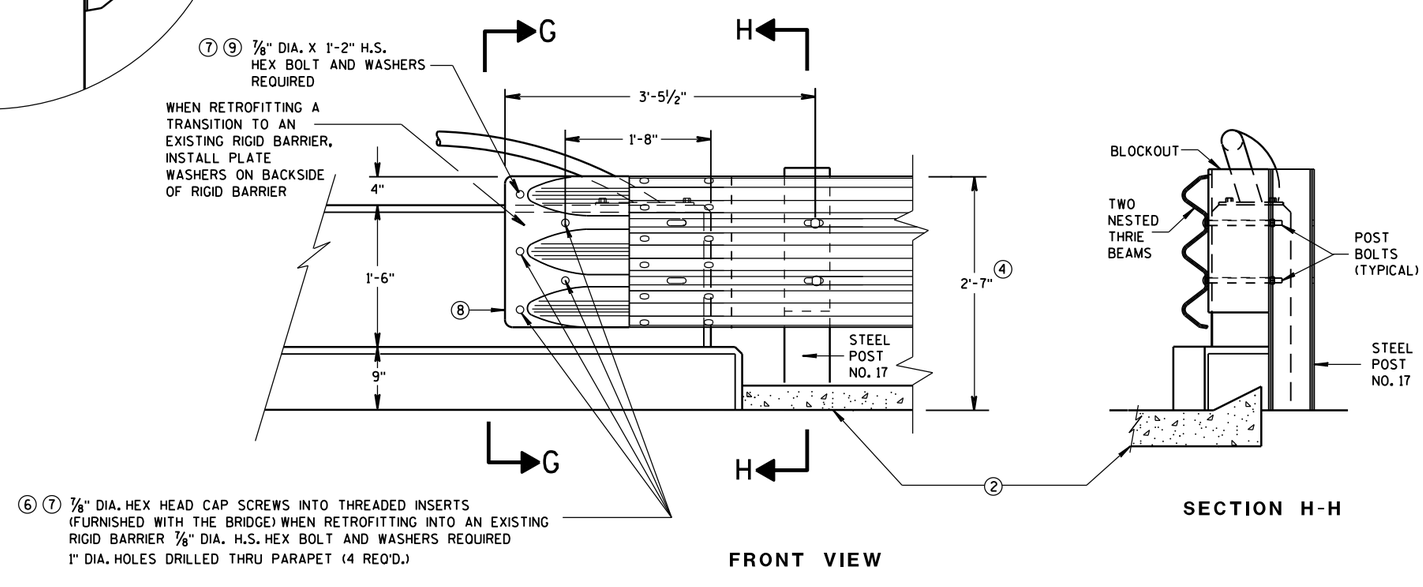

FRONT VIEW

SECTION H-H

THRIE BEAM CONNECTION TO VERTICAL FACED PARAPETS

MIDWEST GUARDRAIL SYSTEM
THRIE BEAM TRANSITION (MGS)

STATE OF WISCONSIN
DEPARTMENT OF TRANSPORTATION

APPROVED
June, 2015 — DATE
/S/ Jerry H. Zogg — ROADWAY STANDARDS DEVELOPMENT ENGINEER
FHWA
NT

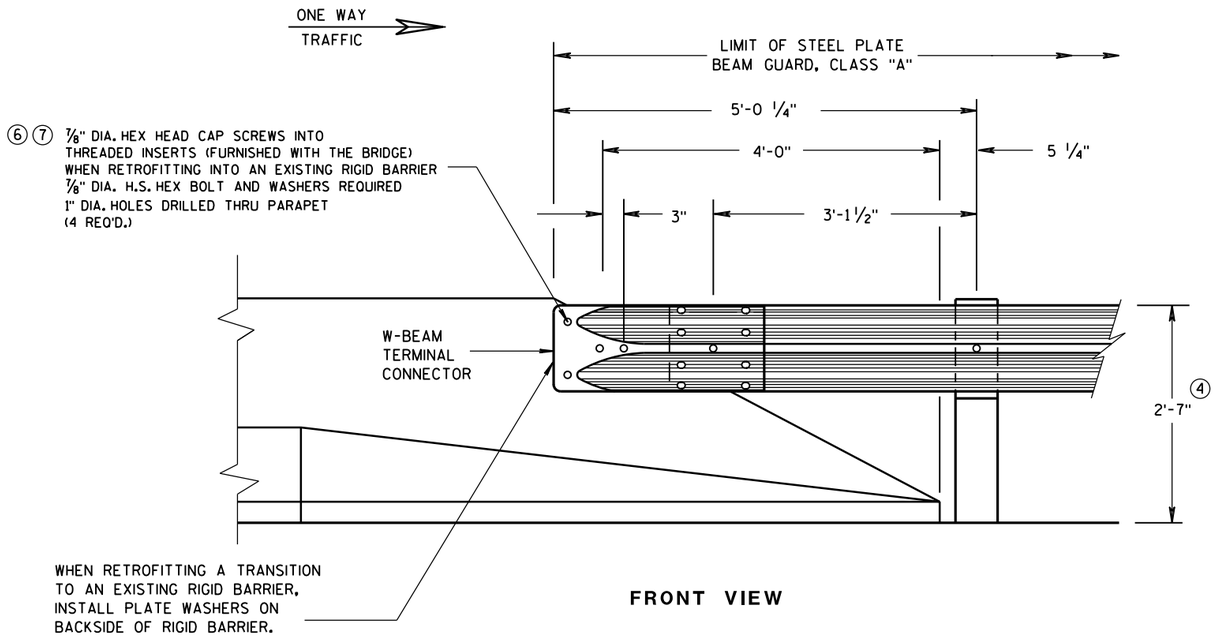

FRONT VIEW

W BEAM CONNECTION TO PARAPETS WITH SLOPED ENDS

(USE ONLY AT TRAFFIC EXIT END OF ONE WAY BRIDGE)

GENERAL NOTES

② OPTIONAL CURB AND GUTTER OR DRAINAGE FEATURE SEE PLAN FOR INFORMATION.

④ TOLERANCE FOR TOP OF BEAM IS ± 1".

⑥ DRILLING BOLT HOLES THROUGH THE PARAPET, BOLTS, NUTS, WASHERS AND REPAIRING DAMAGED CONCRETE ARE INCIDENTAL TO THE CONTRACT.

⑦ BOLTS MAY BE A325 BOLTS OR A449 BOLTS. BOLT LENGTH AND THREADING LENGTH ARE TO ALLOW FOR A TIGHT CONNECTION BETWEEN RIGID BARRIER AND THRIE BEAM CONNECTION PLATE. CONTRACTOR IS TO FIELD VERIFY BOLT LENGTH AND THREAD LENGTH. ONE ROUND WASHER REQUIRED BETWEEN BOLT HEAD AND THRIE BEAM CONNECTOR PLATE. BOLTS THAT EXTEND THROUGH THE PARAPET AND OUT THE BACK FACE REQUIRE A HARDENED ROUND STEEL WASHER THAT IS 2" O.D. X 5/8" THICK AND ONE PLATE WASHER. REPAIR ANY DAMAGED CONCRETE FROM BOLT INSTALLATION.

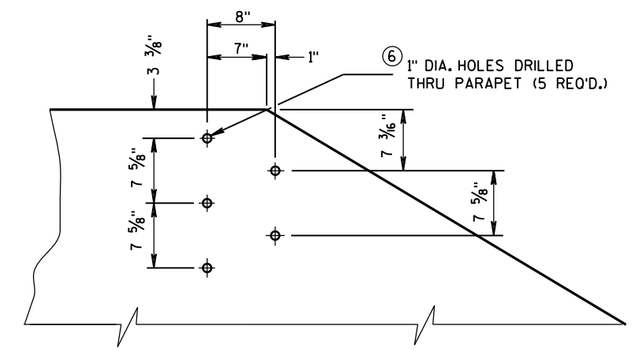

DRILL HOLE LOCATION AND PATTERN
FOR THRIE BEAM CONNECTION

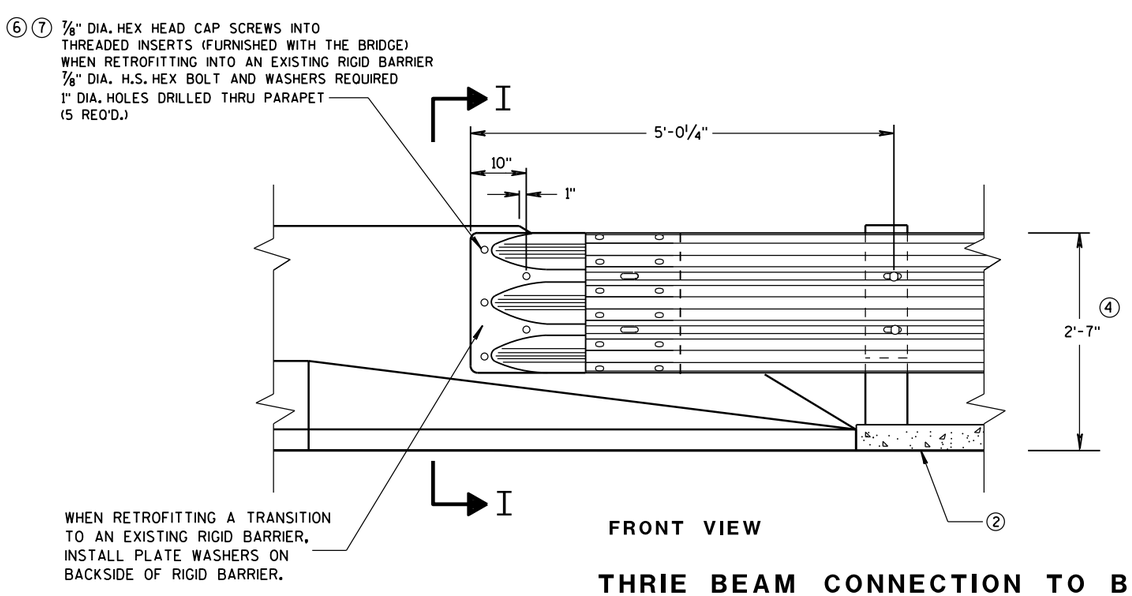

FRONT VIEW

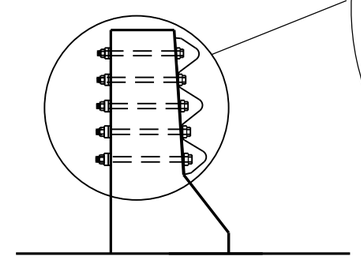

SECTION I-I

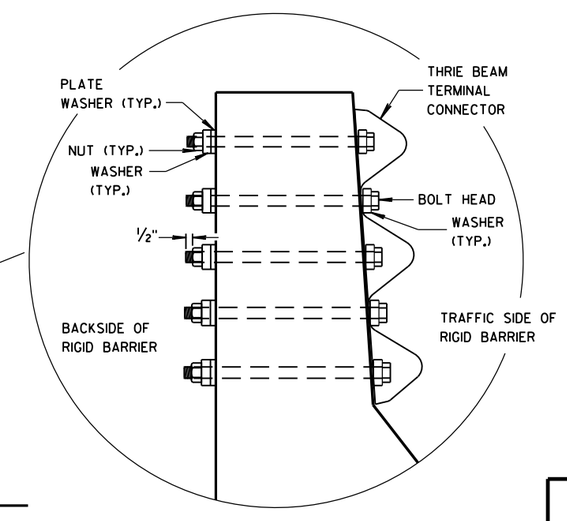

THRIE BEAM CONNECTION TO BRIDGE PARAPETS WITH SLOPED ENDS

MIDWEST GUARDRAIL SYSTEM
THRIE BEAM TRANSITION (MGS)

STATE OF WISCONSIN
DEPARTMENT OF TRANSPORTATION

APPROVED
June, 2015 — DATE
/S/ Jerry H. Zogg — ROADWAY STANDARDS DEVELOPMENT ENGINEER
FHWA

6

6

S.D.D. 14 B 45-4f

S.D.D. 14 B 45-4f

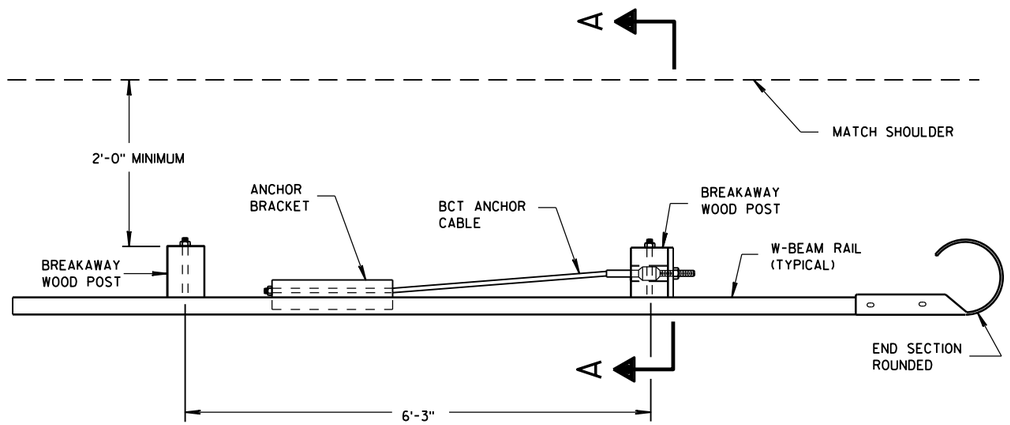

PLAN VIEW

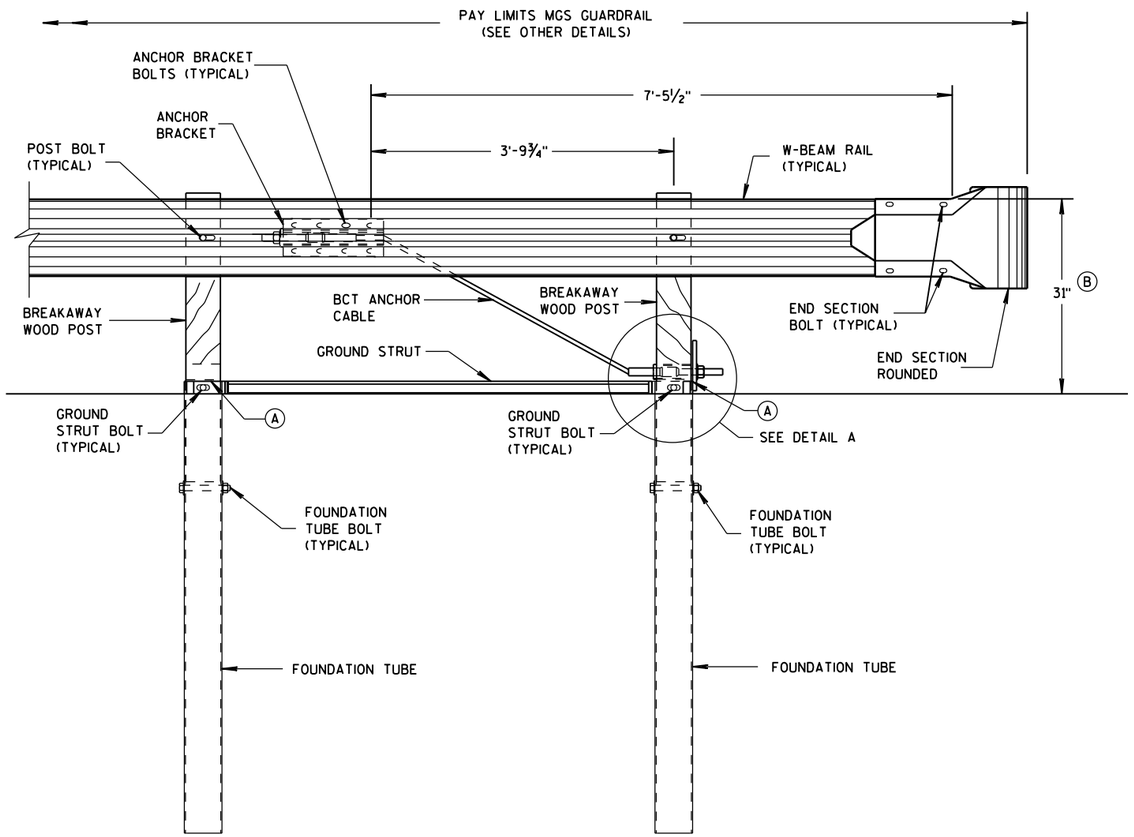

FRONT VIEW

END RAIL DETAIL

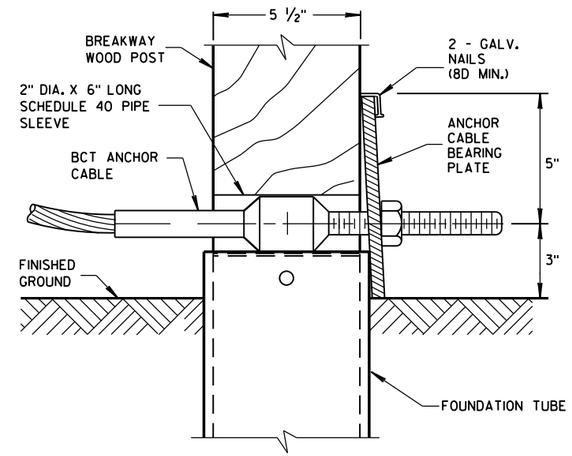

DETAIL A

POST NO. 1

GROUNG STRUT NOT SHOWN FOR CLARITY.

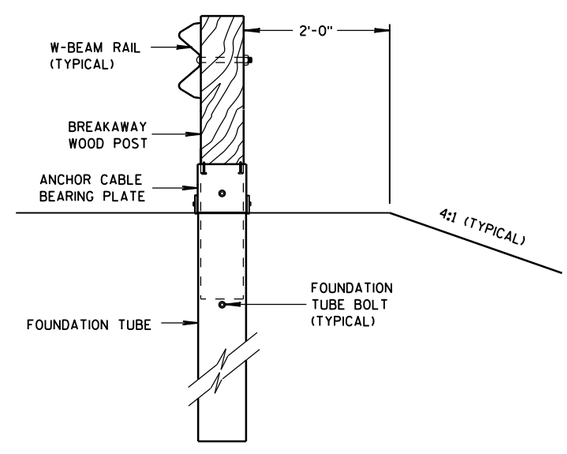

SECTION A-A

GENERAL NOTES

SEE SDD 14 B 42 FOR MORE INFORMATION.

END SECTION BOLTS AND NUTS HAVE THE SAME MATERIAL REQUIREMENTS AS SPLICE BOLTS.

FOUNDATION TUBE BOLTS ARE ⅞" DIAMETER ASTM A307 HEX HEAD BOLT. FOUNDATION TUBE BOLTS REQUIRE ASTM A563 A NUT AND TWO ASTM F844 ⅞" DIAMETER FLAT WASHERS. INSTALL ONE WASHER UNDER BOLT HEAD AND ONE WASHER UNDER NUT.

ANCHOR BRACKET AND GROUND STRUT BOLTS ARE A ⅝" DIAMETER ASTM A307 HEX HEAD BOLT. ANCHOR BRACKET BOLTS REQUIRE ASTM A563 A NUT AND TWO ASTM F844 ⅝" DIAMETER FLAT WASHERS. INSTALL ONE WASHER UNDER BOLT HEAD AND ONE WASHER UNDER NUT.

W-BEAM END SECTION ROUNDED HAS THE SAME MATERIAL PROPERTIES AS STANDARD STEEL RAIL.

(A) TOP OF FOUNDATION TUBE SHALL BE NO MORE THAN 3" ABOVE FINISHED GROUND.

(B) FOR NEW CONSTRUCTION TOP OF RAIL IS 31" ± 1".
FOR EXISTING INSTALLATIONS TOP OF RAIL IS BETWEEN 27¾" TO 32" ± 1".

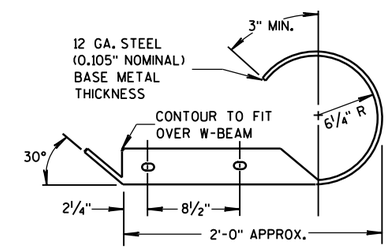

PLAN VIEW

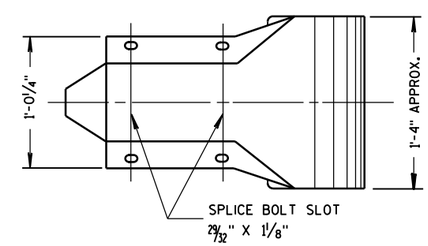

FRONT VIEW

W BEAM END SECTION ROUNDED

MIDWEST GUARDRAIL SYSTEM (MGS) TYPE 2 TERMINAL

STATE OF WISCONSIN
DEPARTMENT OF TRANSPO

6

S.D.D. 14 B 47-2a

GENERAL NOTES

BCT ANCHOR CABLE IS A ¾" DIAMETER 6X19 IWRC IPS GALVANIZED WIRE ROPE. THE SWAGED FITTINGS AND STUD ARE REQUIRED. END FITTING SHALL BE MACHINED FROM HOT-ROLLED CARBON STEEL CONFORMING TO ASTM A576 GRADE 1035 AND GALVANIZED ACCORDING TO ASTM A123. TREADED STUD SHALL CONFORM TO ASTM A325 OR SAE GRADE 5. MINIMUM BREAKING STRENGTH OF WIRE ROPE IS 43,000 LB. WIRE ROPE IS TO BE TAUT.

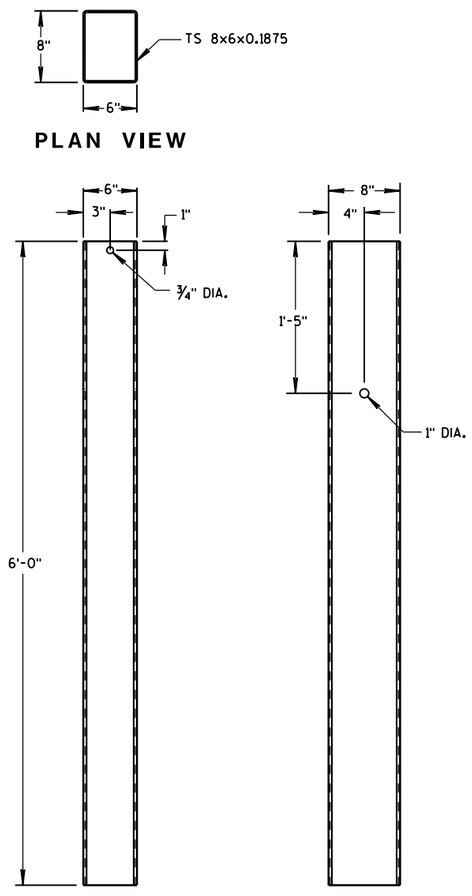

FOUNDATION TUBE

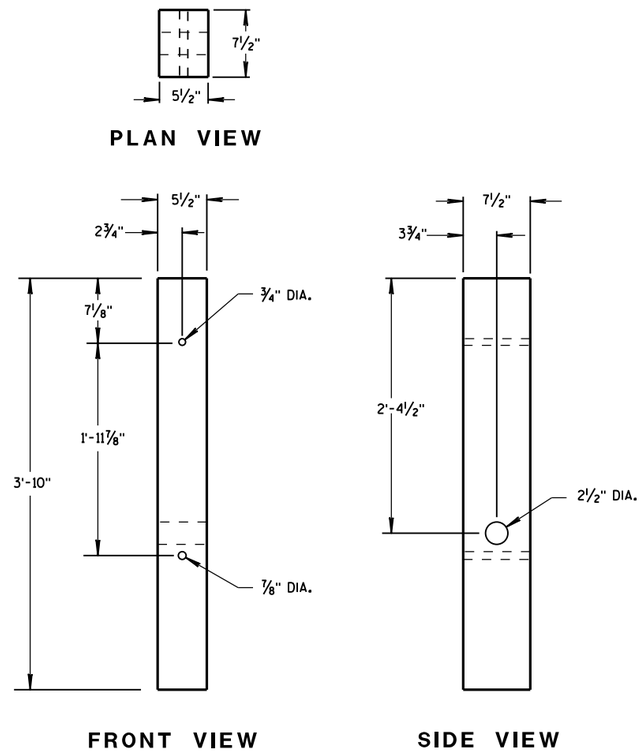

BREAKAWAY WOOD POST

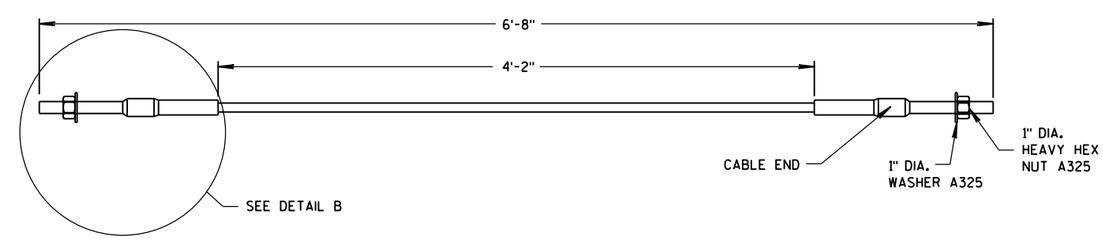

BCT ANCHOR CABLE

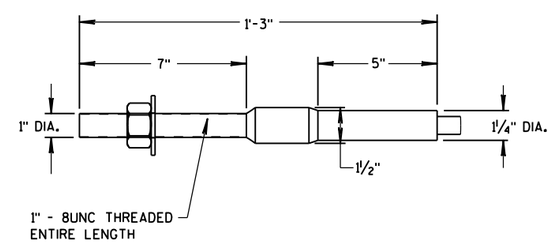

DETAIL B

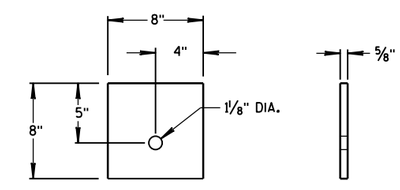

ANCHOR CABLE BEARING PLATE

MIDWEST GUARDRAIL SYSTEM (MGS) TYPE 2 TERMINAL

STATE OF WISCONSIN
DEPARTMENT OF TRANSPO

6

S.D.D. 14 B 47-2b

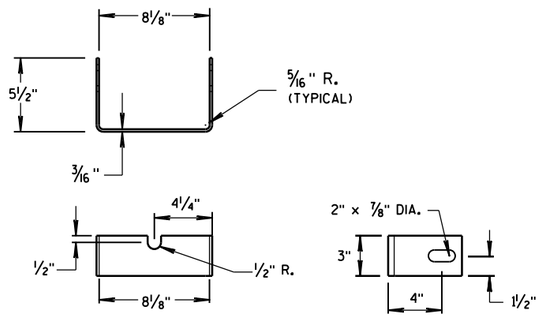

YOKE DETAIL

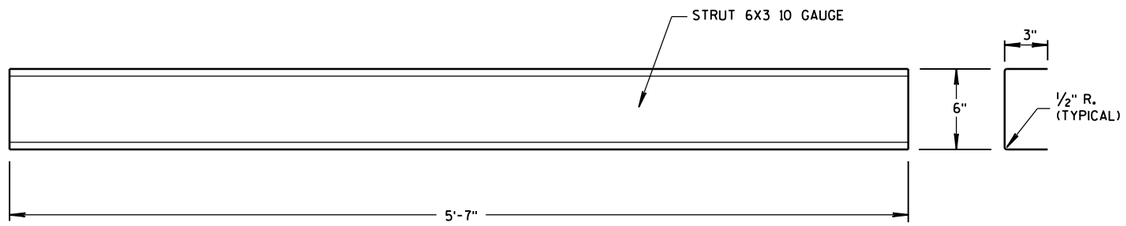

STRUT DETAIL

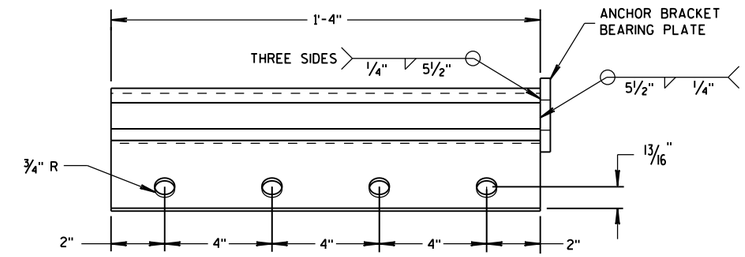

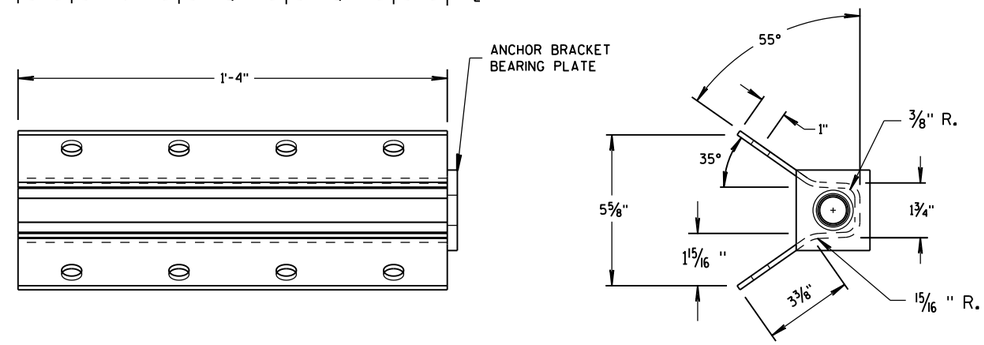

ANCHOR BRACKET

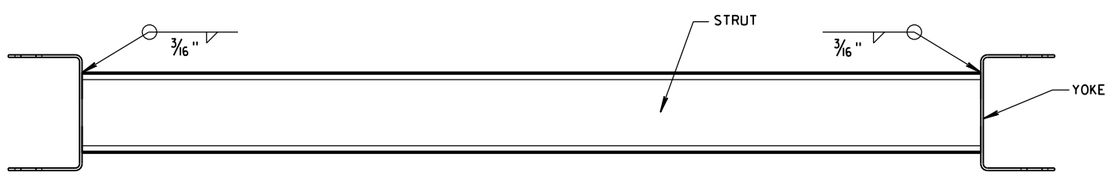

PLAN VIEW

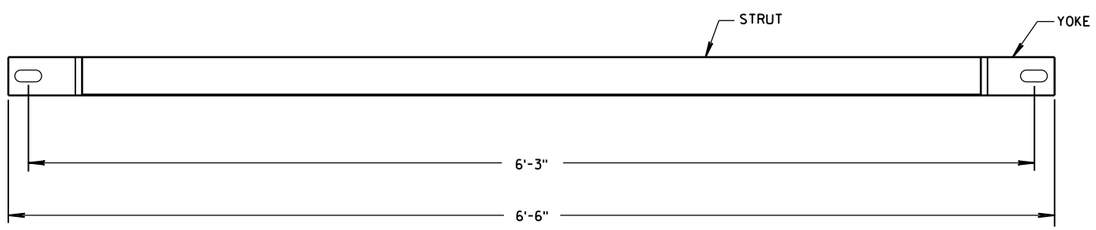

FRONT VIEW

GROUND STRUT DETAIL

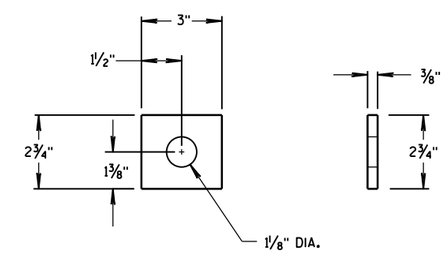

ANCHOR BRACKET
BEARING PLATE

MIDWEST GUARDRAIL SYSTEM (MGS) TYPE 2 TERMINAL
STATE OF WISCONSIN DEPARTMENT OF TRANSPORTATION
APPROVED June 2014 DATE — /S/ Jerry H. Zogg ROADWAY STANDARDS ENGINEER — FHWA

6

6

S.D.D. 14 B 47-2c

S.D.D. 14 B 47-2c

GENERAL NOTES

DETAILS OF CONSTRUCTION, MATERIALS AND WORKMANSHIP NOT SHOWN ON THIS DRAWING SHALL CONFORM TO THE PERTINENT REQUIREMENTS OF THE STANDARD SPECIFICATIONS AND THE APPLICABLE SPECIAL PROVISIONS.

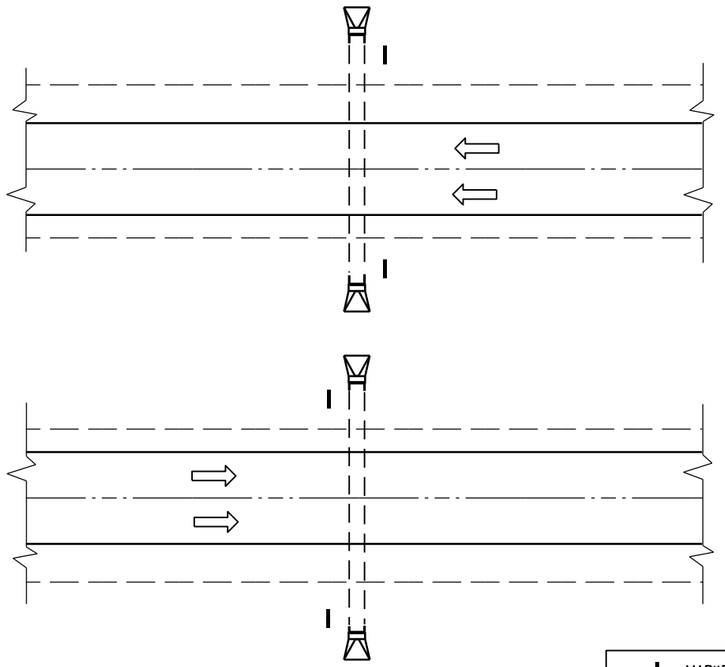

PLAN VIEW

DIVIDED HIGHWAY

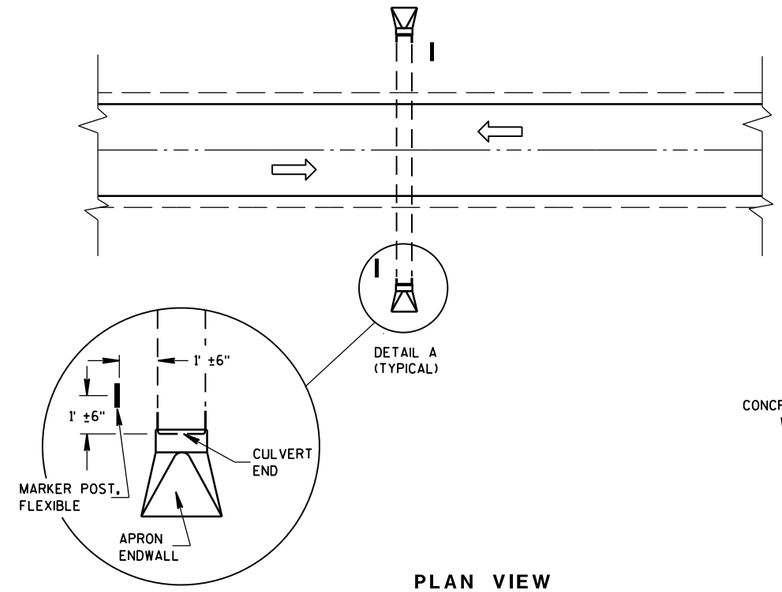

DETAIL A
(TYPICAL)

PLAN VIEW

UNDIVIDED HIGHWAY

MARKER POST, FLEXIBLE

DIRECTION OF TRAFFIC FLOW

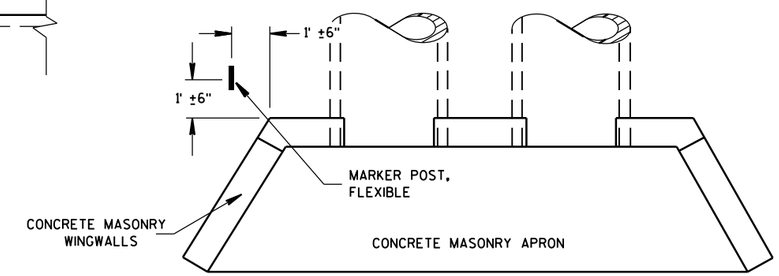

PLAN VIEW

CONCRETE MASONRY ENDWALLS FOR CULVERT PIPE AND PIPE ARCH

FLEXIBLE MARKER POST LOCATION

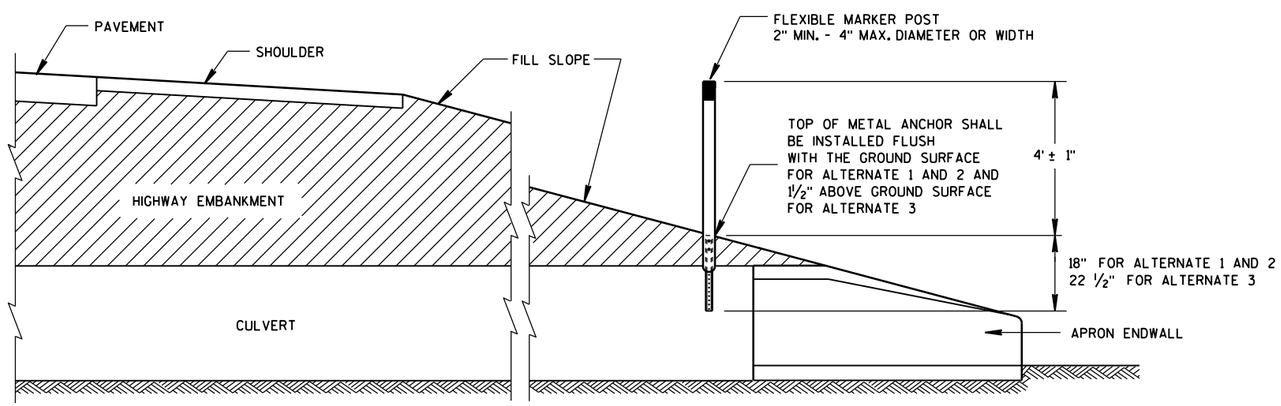

CROSS SECTION

FLEXIBLE MARKER POST

FLEXIBLE MARKER POST FOR CULVERT END

STATE OF WISCONSIN
DEPARTMENT OF TRANSPOR

6

S.D.D. 15 A 3-2a

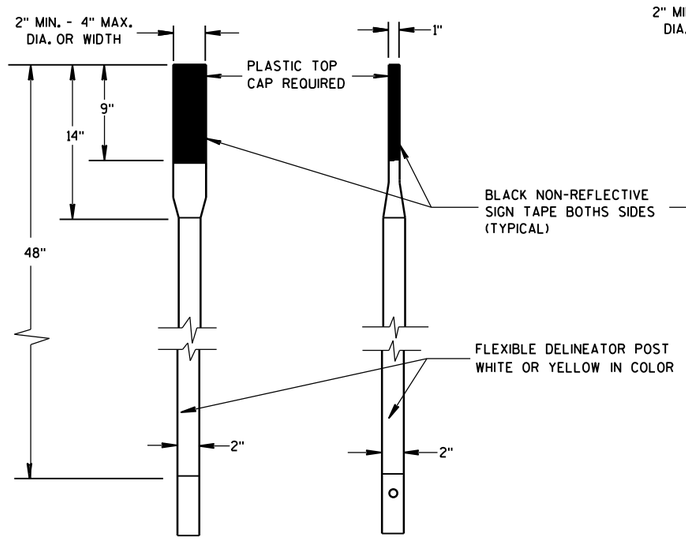

FRONT VIEW SIDE VIEW

ALTERNATE 1

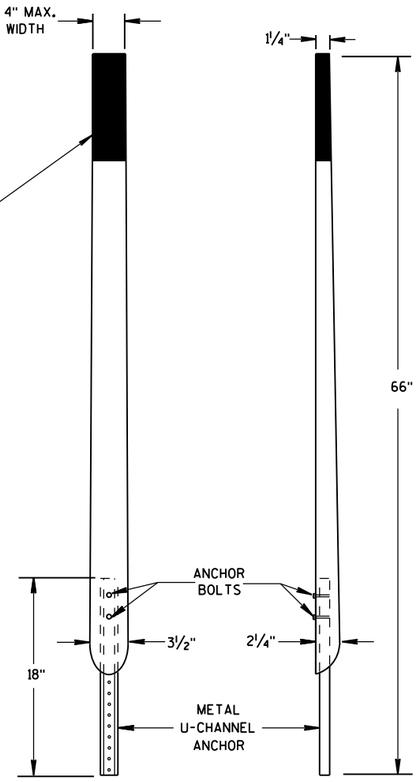

FRONT VIEW SIDE VIEW

ALTERNATE 2

FLEXIBLE MARKER POSTS

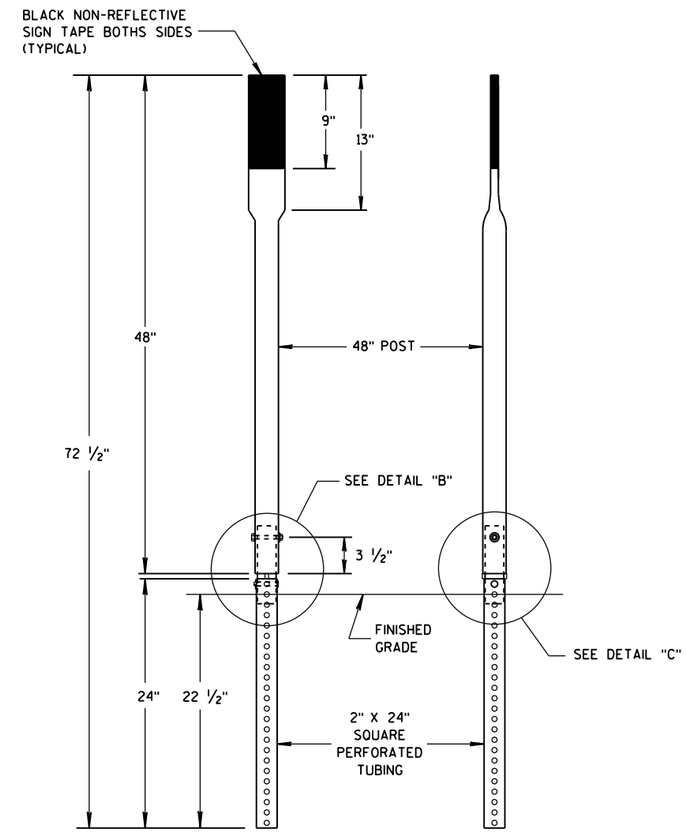

FRONT VIEW SIDE VIEW

ALTERNATE 3

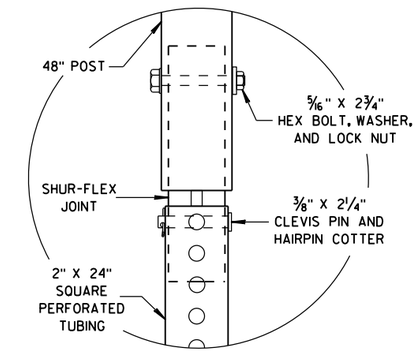

DETAIL B

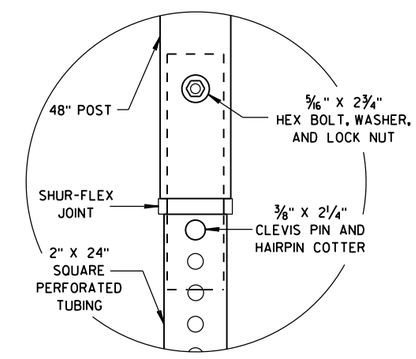

DETAIL C

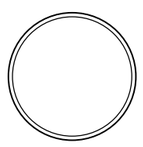

SECTION A-A

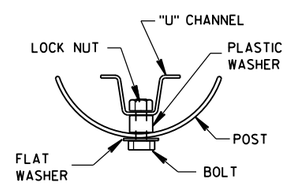

SECTION B-B

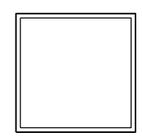

SECTION C-C

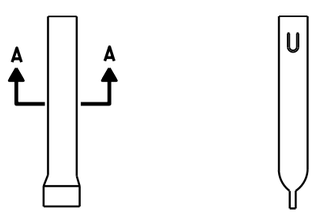

FRONT VIEW SIDE VIEW

ALTERNATE 1

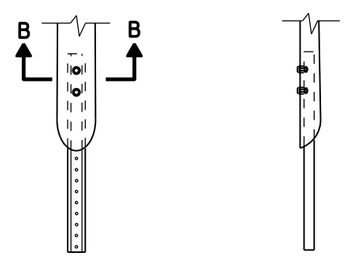

FRONT VIEW SIDE VIEW

ALTERNATE 2

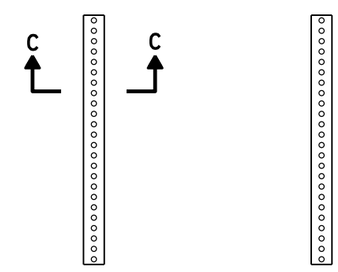

FRONT VIEW SIDE VIEW

ALTERNATE 3

FLEXIBLE MARKER POST ANCHORS

FLEXIBLE MARKER POST
FOR CULVERT END

STATE OF WISCONSIN
DEPARTMENT OF TRANSPORTATION

APPROVED
10/1/2012 /S/ Travis Feltes
DATE STATE TRAFFIC ENGINEER
FHWA

6

6

S.D.D. 15 A 3-2b

S.D.D. 15 A 3-2b

NOTE: PULL OR STRETCHER POST ASSEMBLIES SHALL BE PLACED MIDWAY BETWEEN END POSTS AND CORNER POSTS WHERE A RUN OF FENCE EXCEEDS 660' BUT IS LESS THAN 1,320'. FOR RUNS OF FENCE IN EXCESS OF 1,320' MAXIMUM SPACING OF PULL OR STRETCHER POST ASSEMBLIES SHALL BE 660'± C-C.

ILLUSTRATION SHOWS POSITION OF STANDARD STEEL BRACE, DOUBLE STRAND GALVANIZED WIRE, AND THE POST TO BE EMBEDDED IN CONCRETE WHEN WIRE FENCE IS INSTALLED FROM LEFT TO RIGHT. THE BRACES SHALL BE POSITIONED ON THE OPPOSITE DIAGONALS AND THE OPPOSITE POST SHALL BE EMBEDDED IN CONCRETE WHEN WIRE FENCE IS INSTALLED FROM RIGHT TO LEFT.

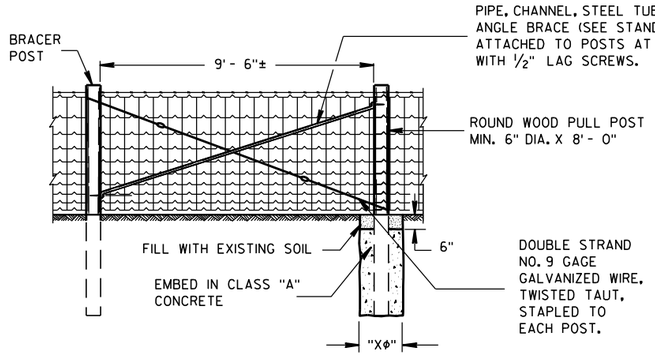

PULL OR STRETCHER POSTS ASSEMBLY

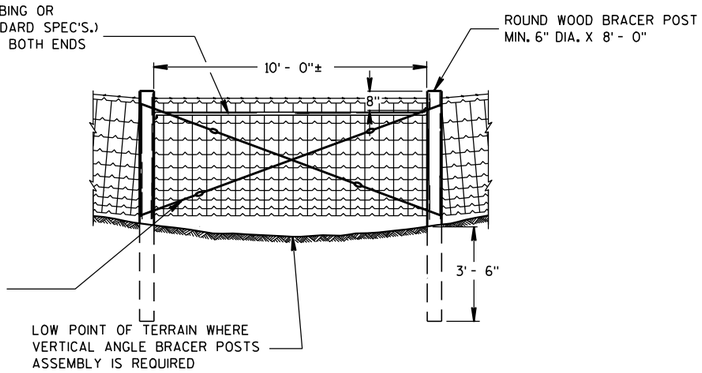

VERTICAL ANGLE BRACER POSTS ASSEMBLY

GENERAL NOTES

"XΦ" = DIAMETER OF THE POST PLUS 12".

FENCE STAPLES SHOULD NEVER BE DRIVEN VERTICALLY INTO WOOD POSTS (WITH BOTH LEGS PARALLEL WITH THE WOOD GRAIN). DOING SO CAN SEPARATE THE GRAIN AND SIGNIFICANTLY REDUCE THE HOLDING POWER. ROTATING THE STAPLES SLIGHTLY OFF VERTICAL STRADDLES THE GRAIN AND PROVIDES MORE RESISTANCE TO PULL-OUT.

DO NOT STAPLE WIRE TIGHT TO THE LINE POSTS. ALLOW MOVEMENT OF WIRE FOR EXPANSION AND CONTRACTION. STAPLE ARRANGEMENT SHALL BE THE SAME FOR ALL OTHER POSTS EXCEPT THAT THEY SHALL BE DRIVEN TIGHT TO POSTS. ALL STAPLES SHALL BE 2" X 9 GAGE AND SHALL BE MANUFACTURED FROM GALVANIZED WIRE OR HOT DIP GALVANIZED AFTER FORMING. STAPLES SHALL HAVE SLASH-CUT POINTS.

FENCE SHALL BE LOCATED 3'-0" INSIDE THE RIGHT OF WAY LINE UNLESS OTHERWISE INDICATED ON THE PLANS.

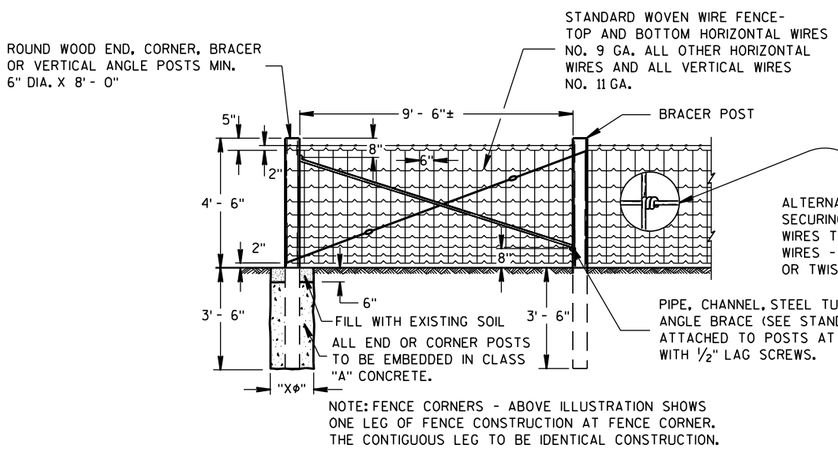

END OR CORNER POSTS ASSEMBLY

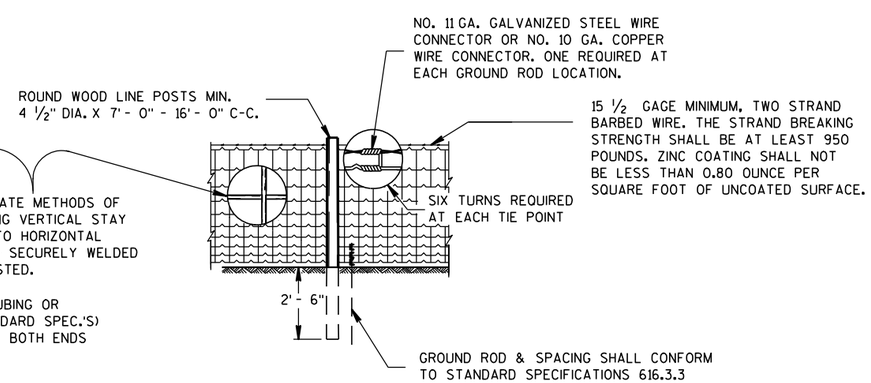

LINE FENCE CONSTRUCTION

GENERAL ROADSIDE VIEW OF WOVEN WIRE FENCE

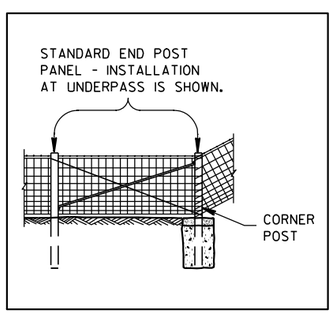

ALTERNATE FENCE DESIGN AT STRUCTURE

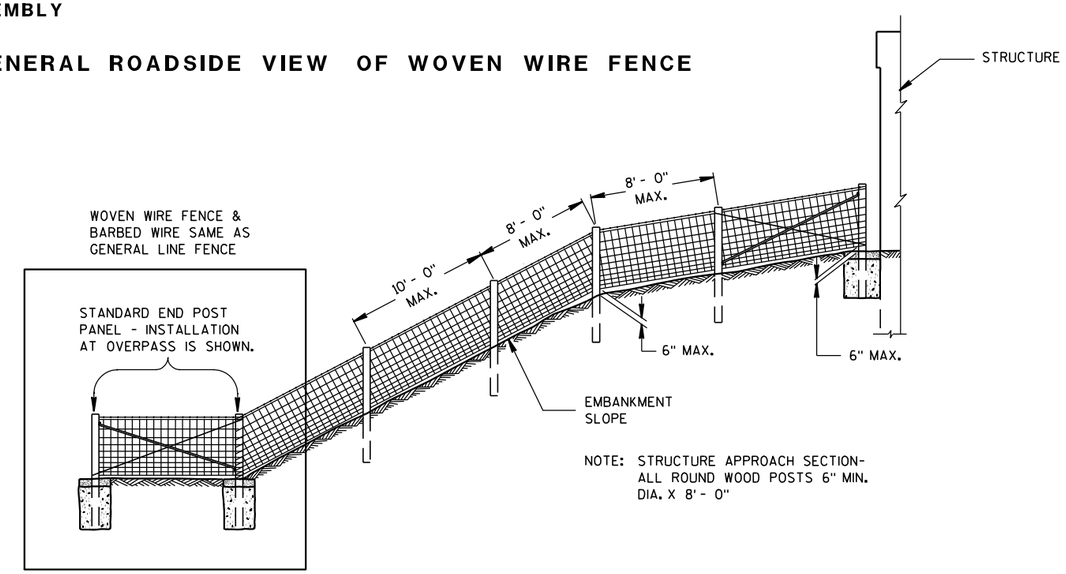

FENCE DESIGN AT STRUCTURE APPROACH

FENCE WOVEN WIRE

STATE OF WISCONSIN
DEPARTMENT OF TRANSPORTATION

6

6

S.D.D. 15 B 1-8a

S.D.D. 15 B 1-8a

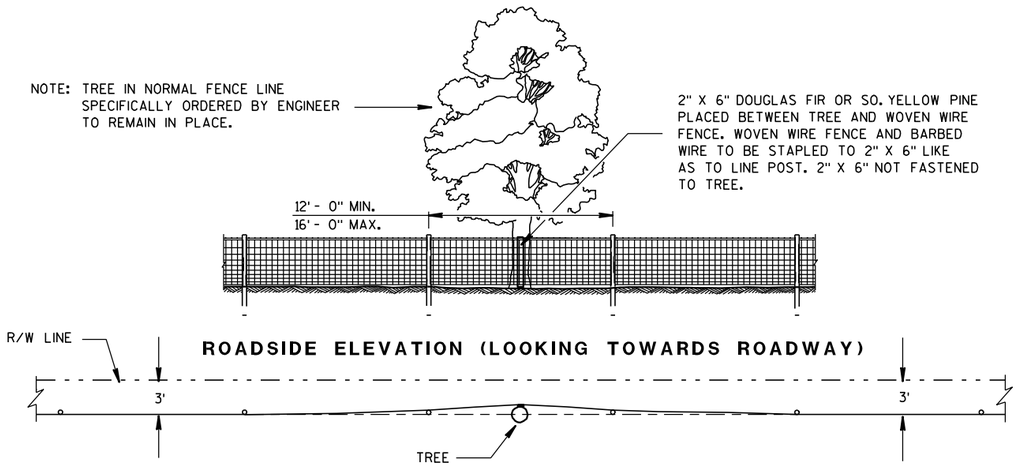

PLAN VIEW

FENCE DESIGN AT TREES REMAINING IN NORMAL FENCE LINE

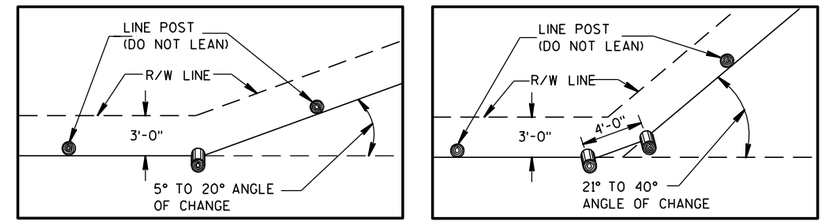

PLAN VIEW
SINGLE POST CORNER

PLAN VIEW
DOUBLE POST CORNER

RIGHT OF WAY LINE CHANGE 40° AND LESS

NOTE: SINGLE AND DOUBLE POSTS SHALL BE A MIN. 6" DIA. X 8'-0" WITH A LEAN OF 4" TOWARD THE OUTSIDE OF THE CURVE.

WHEN THE RIGHT OF WAY LINE CHANGE IS MORE THAN 40° USE THE CORNER OR STRETCHER POSTS ASSEMBLY.

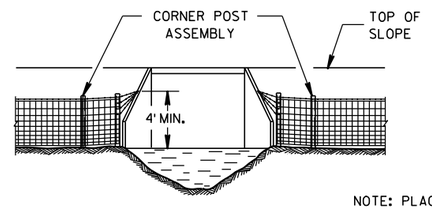

NOTE: PLACE A MINIMUM OF 4 STRANDS OF BARBED WIRE, 6" MAXIMUM CENTERS IN FAN SHAPE CONNECTED TO AN EYE BOLT ON WINGWALL OR SET A LONE POST WHEN NECESSARY TO CONNECT BARBED WIRE.

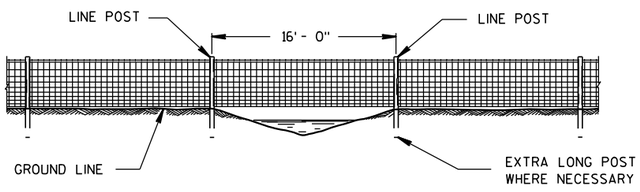

FENCE CONSTRUCTION OVER STREAM COURSES OF 15 FT. OR LESS IN WIDTH

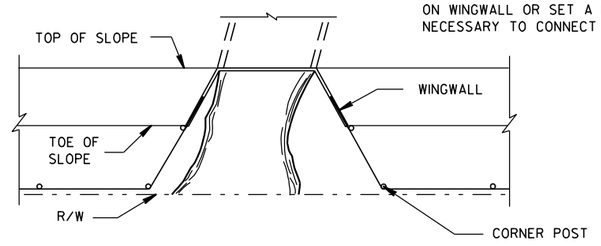

FENCE INSTALLATION TO WINGWALLS

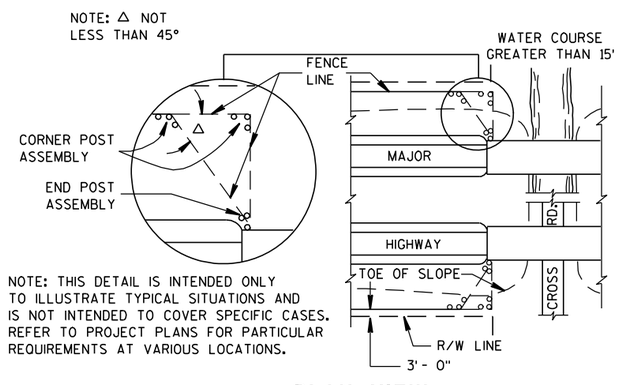

NOTE: THIS DETAIL IS INTENDED ONLY TO ILLUSTRATE TYPICAL SITUATIONS AND IS NOT INTENDED TO COVER SPECIFIC CASES. REFER TO PROJECT PLANS FOR PARTICULAR REQUIREMENTS AT VARIOUS LOCATIONS.

PLAN VIEW

MAJOR HIGHWAY OVERPASS OR STREAM COURSE CROSSING OF GREATER THAN 15 FT. IN WIDTH

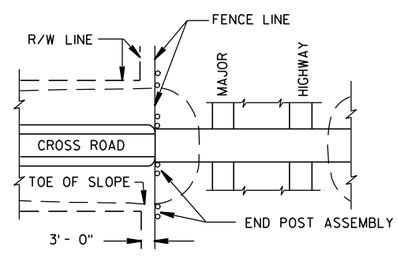

PLAN VIEW

MAJOR HIGHWAY UNDERPASS

FENCE LOCATION AT STRUCTURES

NOTE: WHEN POSTS ARE DRIVEN THE SMALL END SHALL BE DOWN.

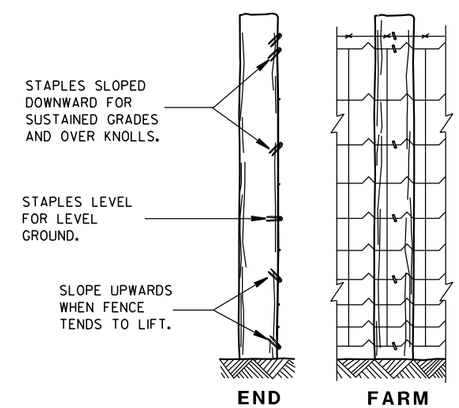

END ELEVATION

FARM SIDE ELEVATION

FENCE MOUNTING DETAIL

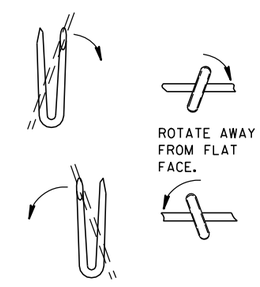

LINE POST

FENCE WOVEN WIRE

STATE OF WISCONSIN
DEPARTMENT OF TRANSPORTATION

APPROVED
4/4/2008 /S/ Jerry H. 7---
DATE ROADWAY STANDARDS DEVELOPMENT ENGINEER
FHWA

6

S.D.D. 15 B 1-8b

6

S.D.D. 15 B 1-8b

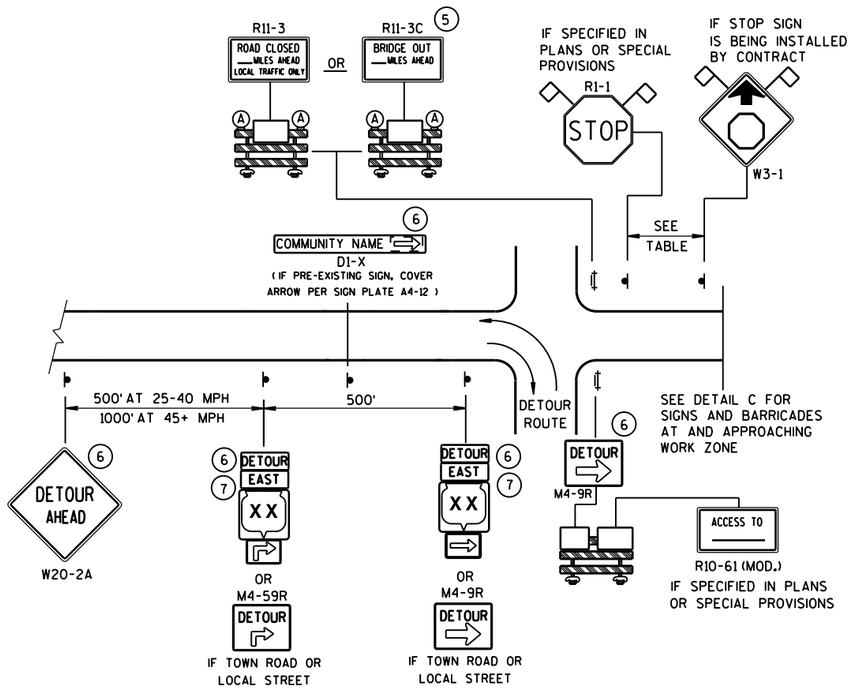

DETAIL A

MAINLINE CLOSURE WITH POSTED DETOUR

WORK ZONE GREATER THAN ½ MILE FROM DETOUR ROUTE (1000 FEET IF URBAN)

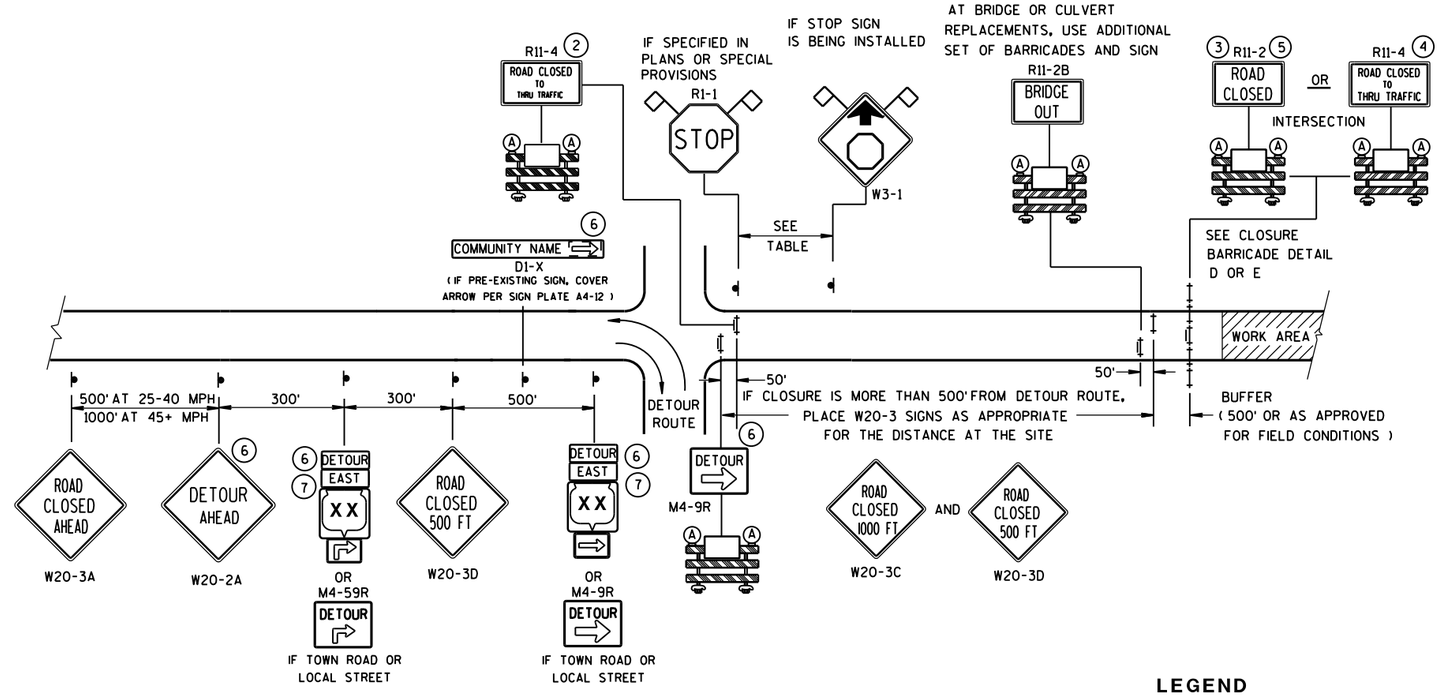

DETAIL B

MAINLINE CLOSURE WITH POSTED DETOUR

WORK ZONE LESS THAN ½ MILE FROM DETOUR ROUTE (1000 FEET IF URBAN)

LEGEND

- SIGN ON PERMANENT SUPPORT
- TYPE III BARRICADE
- TYPE III BARRICADE WITH ATTACHED SIGN
- TYPE "A" WARNING LIGHT (FLASHING)
- WORK AREA
- DETOUR / EAST — M4-8 / M3-X
- XX — M1-4; COUNTY XX — M1-5A; XX — M1-6
- M05-1 OR M06-1
- FLAGS, 16" X 16" MIN., (ORANGE)

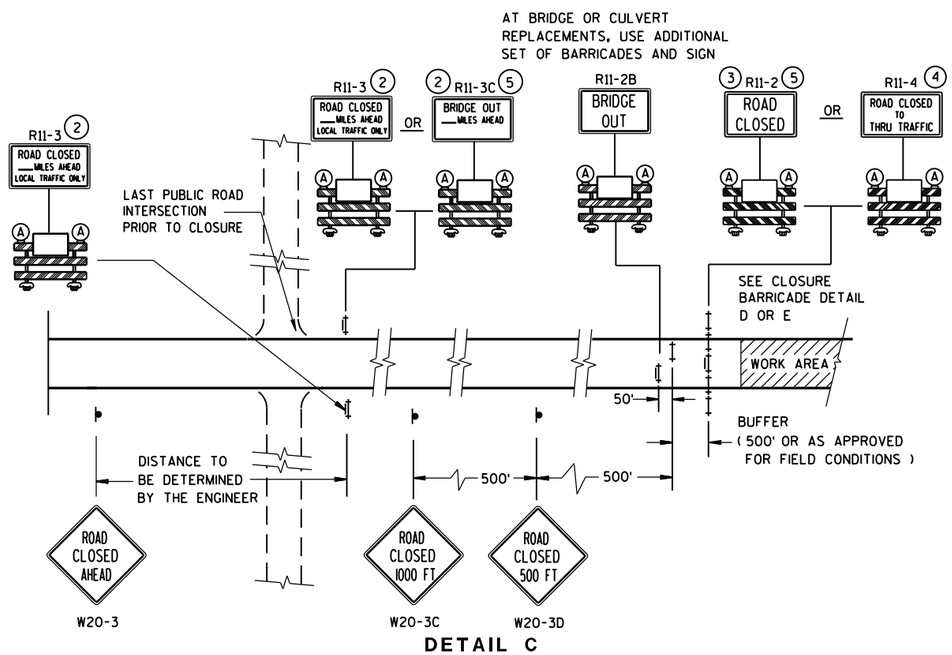

DETAIL C

MAINLINE CLOSURE, NO POSTED DETOUR

SPEED LIMIT (MPH)	"STOP AHEAD" ADVANCE WARNING DISTANCE (FT)
25	200
30	200
35	350
40	350
45	500
50	550
55	750

SEE SDD 15C2-SHEET "**b**" FOR GENERAL NOTES AND FOOTNOTES 1 THROUGH 7

BARRICADES AND SIGNS FOR MAINLINE CLOSURES

STATE OF WISCONSIN
DEPARTMENT OF TRANSPORTATION

Sept. 2015 — DATE
/S/ Peter Amakobe Atepe — STATEWIDE WORK ZONE TRAFFIC SAFETY ENGINEER
FHWA

6

6

S.D.D. 15 C 2-6a

S.D.D. 15 C 2-6a

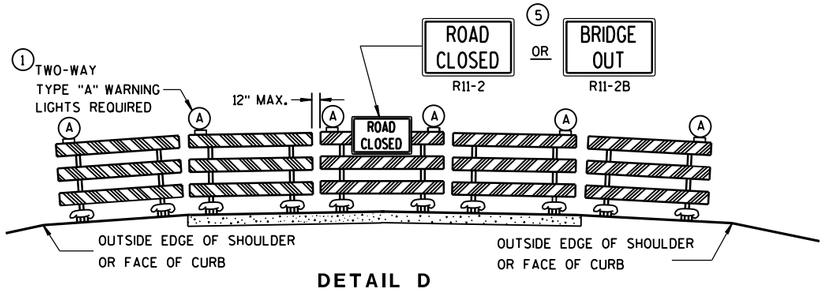

DETAIL D

ROAD CLOSURE BARRICADE DETAIL

APPROACH VIEW

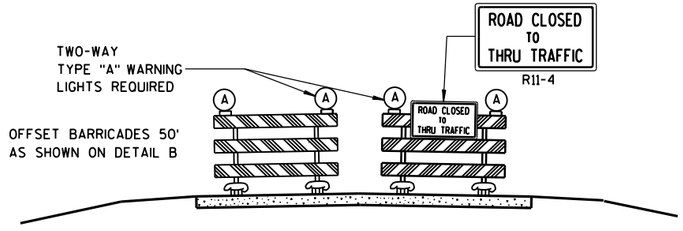

DETAIL E

LANE CLOSURE BARRICADE DETAIL

APPROACH VIEW

SEE SDD 15C2-SHEET "**a**" FOR LEGEND

GENERAL NOTES

THE EXACT NUMBER, LOCATION, AND SPACING OF ALL SIGNS AND BARRICADES SHALL BE ADJUSTED TO FIT FIELD CONDITIONS AS APPROVED BY THE ENGINEER.

ANY SIGNS TEMPORARY OR EXISTING, WHICH CONFLICT WITH TRAFFIC CONTROL "IN USE" SHALL BE REMOVED OR COVERED AS NEEDED AND AS APPROVED BY THE ENGINEER.

THE SPACING BETWEEN TRAFFIC CONTROL SIGNS SHOULD BE ADJUSTED TO NOT CONFLICT WITH AND SHOULD PROVIDE A DESIRABLE MINIMUM OF 200 FEET CLEARANCE TO EXISTING SIGNS THAT WILL REMAIN IN PLACE.

BARRICADES THAT MUST BE MOVED FOR A WORK OPERATION SHALL BE IMMEDIATELY RE-ESTABLISHED UPON COMPLETION OF THE OPERATION OR, FOR CONTINUING OPERATIONS, AT THE END OF EACH WORKING DAY.

SIGNS THAT WILL BE IN PLACE LESS THAN 7 CONTINUOUS DAYS AND NIGHTS MAY BE MOUNTED ON PORTABLE SUPPORTS.

ALL TYPE III BARRICADES SHALL HAVE RAILS REFLECTORIZED ON BOTH FACES. STRIPES SHALL BE PROPERLY SLOPED DOWN TOWARD THE TRAFFIC SIDE OR AS SHOWN IN THE ROAD CLOSURE BARRICADE DETAIL D FOR FULL ROAD CLOSURES.

TYPE "A" LOW-INTENSITY FLASHING WARNING LIGHTS SHALL BE VISIBLE ON BOTH SIDES OF THE BARRICADE.

THE R11-2, R11-3, M4-9, R11-4 AND R10-61 SIGNS PLACED ON BARRICADES SHALL COVER NO MORE THAN THE TOP RAIL. THE SIGNS SHALL NOT COVER ANY PORTION OF THE MIDDLE OR BOTTOM RAILS.

"WO AND "MO" SIGNS ARE THE SAME AS "W" AND "M" SIGNS EXCEPT THE BACKGROUND IS ORANGE.

ALL SIGNS SHALL BE 48" X 48" UNLESS OTHERWISE NOTED BELOW:

R11-2 SHALL BE 48" X 30".
R11-3, R11-4 AND R10-61 SHALL BE 60" X 30".
M4-9 SHALL BE 30" X 24".
M3-X SHALL BE 24" X 12". (36" X 18" IF NEEDED TO MATCH EXISTING SIGNS.)
M4-8 SHALL BE 24" X 12". (30" X 15" IF NEEDED TO MATCH EXISTING SIGNS.)
M1-4, M1-5A, AND M1-6 SHALL BE 24" X 24". (36" X 36" IF NEEDED TO MATCH EXISTING SIGNS.)
M05-1 AND M06-1 SHALL BE 21" X 21". (30" X 30" IF NEEDED TO MATCH EXISTING SIGNS.)
D1-X SHALL BE AS SHOWN ON SPECIFIC PROJECT SIGNING DETAIL SHEETS.
R1-1 SHALL BE 36" X 36".

1. TWO WARNING LIGHTS SHALL BE PROVIDED ON THE CENTER BARRICADE AND A MINIMUM OF ONE WARNING LIGHT SHALL BE PROVIDED ON EACH OF THE OTHER BARRICADES WITHIN THE ROADWAY LIMITS. SPACING OF THE WARNING LIGHTS SHALL BE UNIFORM TO THE EDGE OF ROADWAY AS SHOWN (APPROX. 8-FOOT LIGHT SPACING).
2. THESE SIGNS AND BARRICADES ARE NOT REQUIRED IF ROAD CLOSURE BEGINS AT INTERSECTION.
3. FOR ROAD CLOSURE WITHOUT LOCAL ACCESS TO PROJECT, SEE ROAD CLOSURE BARRICADE DETAIL D.
4. FOR ROAD CLOSURE WITH LOCAL ACCESS TO PROJECT, SEE LANE CLOSURE BARRICADE DETAIL E.
5. FOR BRIDGE OR CULVERT REPLACEMENTS, SUBSTITUTE "BRIDGE OUT" INSTEAD OF "ROAD CLOSED" ON R11-2 AND R11-3 SIGNS.
6. INSTALL DETOUR AND COMMUNITY GUIDE SIGNS AND ARROWS ONLY IF SPECIFIED IN THE CONTRACT. IF THERE ARE EXISTING ROUTE MARKER ASSEMBLIES THAT WILL REMAIN IN PLACE, ADJUST THE LOCATION OF THE DETOUR ROUTE SIGNS TO CORRESPOND WITH THE EXISTING ASSEMBLIES. MODIFY EXISTING SIGNS WHERE POSSIBLE. SEE SPECIFIC PROJECT DETOUR SIGNING DETAIL SHEETS. IF DETOUR SIGNS ARE BEING INSTALLED BY OTHERS, PLACE THE CONTRACTED TRAFFIC CONTROL SIGNS TO ALLOW FOR PLACEMENT OF ALL WARNING, DETOUR AND GUIDE SIGNS AS SHOWN.
7. "EAST" CARDINAL DIRECTION MARKERS AND RIGHT TURN ARROWS ARE SHOWN. USE OTHER CARDINAL DIRECTIONS AND ARROWS AS APPROPRIATE.

BARRICADES AND SIGNS FOR MAINLINE CLOSURES

STATE OF WISCONSIN
DEPARTMENT OF TRANSPORTATION

Sept. 2015 — DATE
/S/ Peter Amakobe Atepe — STATEWIDE WORK ZONE TRAFFIC SAFETY ENGINEER
FHWA

THIS DRAWING PROVIDES GENERAL GUIDANCE ON TYPICAL DETOUR SIGN LAYOUT AND SPACING. SEE PROJECT DETOUR SIGNING SHEETS FOR SPECIFIC DETAILS FOR EACH PROJECT.

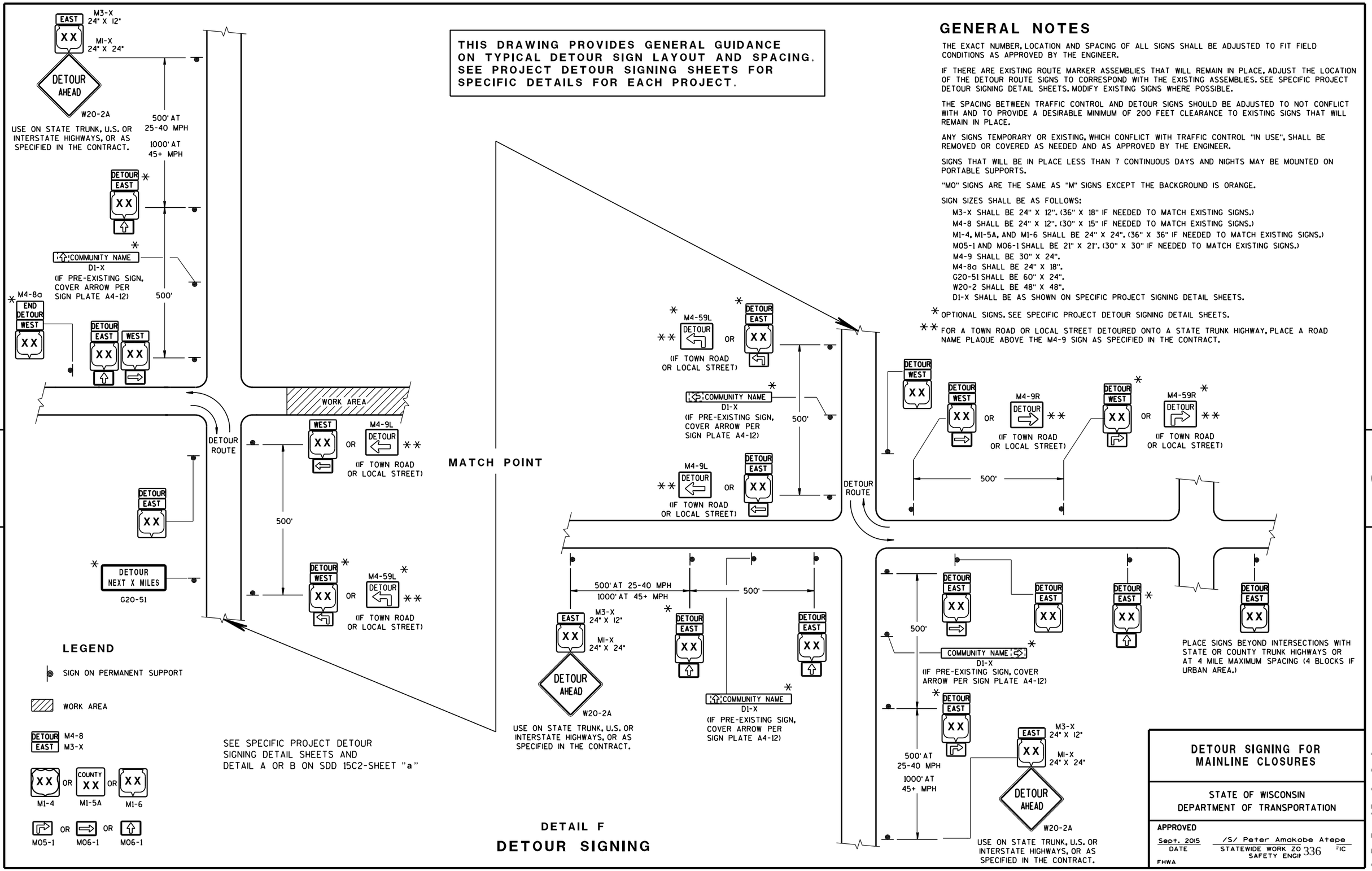

GENERAL NOTES

THE EXACT NUMBER, LOCATION AND SPACING OF ALL SIGNS SHALL BE ADJUSTED TO FIT FIELD CONDITIONS AS APPROVED BY THE ENGINEER.

IF THERE ARE EXISTING ROUTE MARKER ASSEMBLIES THAT WILL REMAIN IN PLACE, ADJUST THE LOCATION OF THE DETOUR ROUTE SIGNS TO CORRESPOND WITH THE EXISTING ASSEMBLIES. SEE SPECIFIC PROJECT DETOUR SIGNING DETAIL SHEETS. MODIFY EXISTING SIGNS WHERE POSSIBLE.

THE SPACING BETWEEN TRAFFIC CONTROL AND DETOUR SIGNS SHOULD BE ADJUSTED TO NOT CONFLICT WITH AND TO PROVIDE A DESIRABLE MINIMUM OF 200 FEET CLEARANCE TO EXISTING SIGNS THAT WILL REMAIN IN PLACE.

ANY SIGNS TEMPORARY OR EXISTING, WHICH CONFLICT WITH TRAFFIC CONTROL "IN USE", SHALL BE REMOVED OR COVERED AS NEEDED AND AS APPROVED BY THE ENGINEER.

SIGNS THAT WILL BE IN PLACE LESS THAN 7 CONTINUOUS DAYS AND NIGHTS MAY BE MOUNTED ON PORTABLE SUPPORTS.

"MO" SIGNS ARE THE SAME AS "M" SIGNS EXCEPT THE BACKGROUND IS ORANGE.

SIGN SIZES SHALL BE AS FOLLOWS:

- M3-X SHALL BE 24" X 12". (36" X 18" IF NEEDED TO MATCH EXISTING SIGNS.)
- M4-8 SHALL BE 24" X 12". (30" X 15" IF NEEDED TO MATCH EXISTING SIGNS.)
- M1-4, M1-5A, AND M1-6 SHALL BE 24" X 24". (36" X 36" IF NEEDED TO MATCH EXISTING SIGNS.)
- M05-1 AND M06-1 SHALL BE 21" X 21". (30" X 30" IF NEEDED TO MATCH EXISTING SIGNS.)
- M4-9 SHALL BE 30" X 24".
- M4-8a SHALL BE 24" X 18".
- G20-51 SHALL BE 60" X 24".
- W20-2 SHALL BE 48" X 48".
- D1-X SHALL BE AS SHOWN ON SPECIFIC PROJECT SIGNING DETAIL SHEETS.

* OPTIONAL SIGNS. SEE SPECIFIC PROJECT DETOUR SIGNING DETAIL SHEETS.

** FOR A TOWN ROAD OR LOCAL STREET DETOURED ONTO A STATE TRUNK HIGHWAY, PLACE A ROAD NAME PLAQUE ABOVE THE M4-9 SIGN AS SPECIFIED IN THE CONTRACT.

DETOUR SIGNING FOR MAINLINE CLOSURES

STATE OF WISCONSIN
DEPARTMENT OF TRANSPORTATION

APPROVED
Sept. 2015 — DATE
/S/ Peter Amakobe Atepe — STATEWIDE WORK ZONE TRAFFIC SAFETY ENGINEER
FHWA

6

S.D.D. 15 C 2-6c

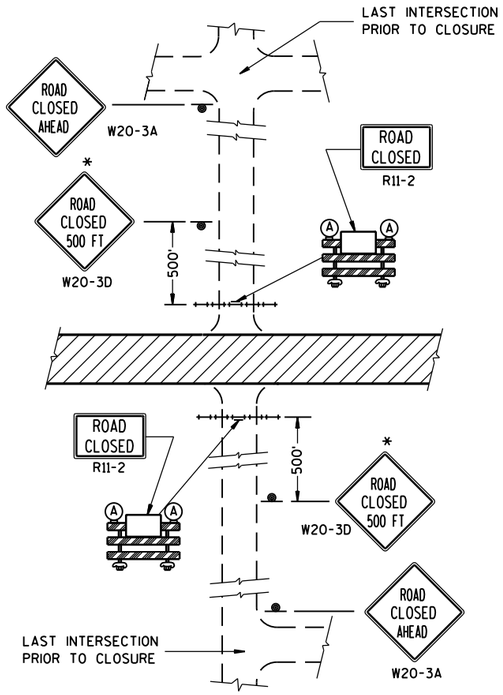

DETAIL 1

(NO ACCESS TO PROJECT)

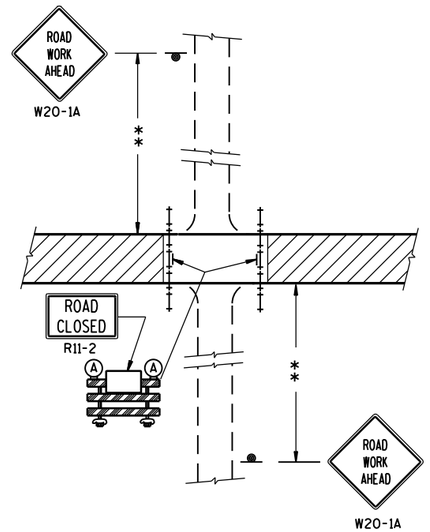

DETAIL 2

(PUBLIC CROSS-TRAFFIC MAINTAINED.
NO ACCESS TO PROJECT).

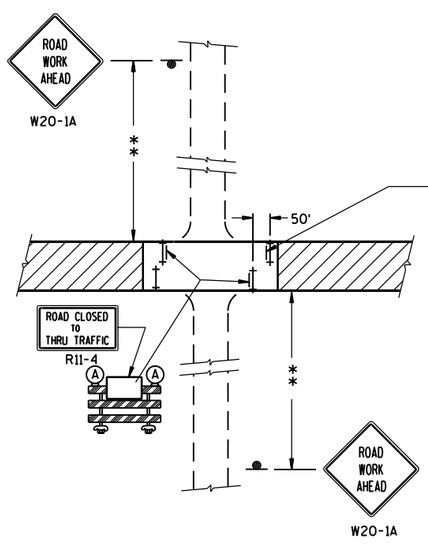

DETAIL 3

(PUBLIC CROSS-TRAFFIC MAINTAINED. CONTRACTOR,
LOCAL BUSINESS AND RESIDENT ACCESS).

FOR BRIDGE OR CULVERT
REPLACEMENT, USE ADDITIONAL
SIGN ON BARRICADE

BRIDGE OUT
XX MILES AHEAD
R11-3C

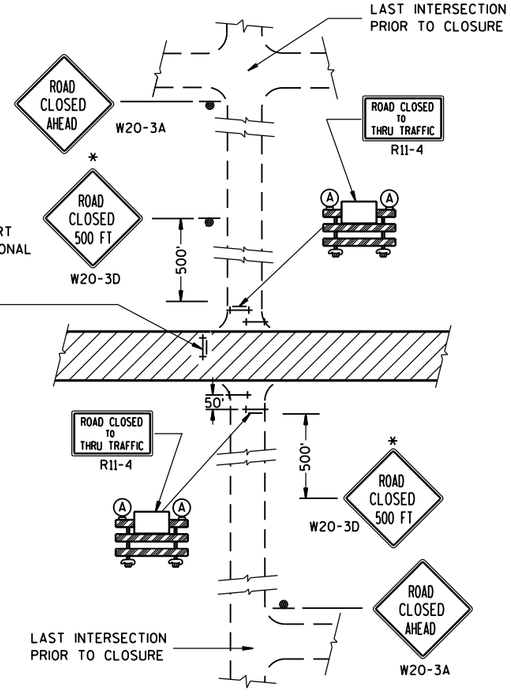

DETAIL 4

(CONTRACTOR, LOCAL BUSINESS AND
RESIDENT ACCESS TO PROJECT)

GENERAL NOTES

THE EXACT NUMBER, LOCATION, AND SPACING OF ALL SIGNS AND BARRICADES SHALL BE ADJUSTED TO FIT FIELD CONDITIONS AS APPROVED BY THE ENGINEER.

ANY SIGNS TEMPORARY OR EXISTING, WHICH CONFLICT WITH TRAFFIC CONTROL "IN USE" SHALL BE REMOVED OR COVERED AS NEEDED AND AS APPROVED BY THE ENGINEER.

THE SPACING BETWEEN TRAFFIC CONTROL SIGNS SHOULD BE ADJUSTED TO NOT CONFLICT WITH AND SHOULD PROVIDE A DESIRABLE MINIMUM OF 200 FEET CLEARANCE TO EXISTING SIGNS THAT WILL REMAIN IN PLACE.

IF A "STOP" SIGN MUST BE REMOVED FOR A WORK OPERATION, A TEMPORARY "STOP" SIGN SHALL BE PLACED PRIOR TO THE SIGN REMOVAL, OR A FLAGGER SHALL BE PROVIDED UNTIL THE SIGN IS RE-ESTABLISHED.

BARRICADES THAT MUST BE MOVED FOR A WORK OPERATION SHALL BE IMMEDIATELY RE-ESTABLISHED UPON COMPLETION OF THE OPERATION OR, FOR CONTINUING OPERATIONS, AT THE END OF EACH WORKING DAY.

SIGNS THAT WILL BE IN PLACE LESS THAN 7 CONTINUOUS DAYS AND NIGHTS MAY BE MOUNTED ON PORTABLE SUPPORTS.

ALL TYPE III BARRICADES SHALL HAVE RAILS REFLECTORIZED ON BOTH FACES. STRIPES SHALL BE PROPERLY SLOPED DOWN TOWARD THE TRAFFIC SIDE OR AS SHOWN IN THE ROAD CLOSURE BARRICADE DETAIL D FOR FULL ROAD CLOSURES.

TYPE "A" LOW-INTENSITY FLASHING WARNING LIGHTS SHALL BE VISIBLE ON BOTH SIDES OF THE BARRICADE.

THE R11-2, R11-3 AND R11-4 SIGNS PLACED ON BARRICADES SHALL COVER NO MORE THAN THE TOP RAIL. THE SIGNS SHALL NOT COVER ANY PORTION OF THE MIDDLE OR BOTTOM RAILS.

ALL SIGNS SHALL BE 48" X 48" UNLESS OTHERWISE NOTED BELOW:
R11-2 SHALL BE 48" X 30".
R11-4 AND R11-3 SHALL BE 60" X 30".

*OMIT THE "ROAD CLOSED 500 FT." SIGN IF THE LAST INTERSECTION IS 500 FT. OR LESS FROM THE WORK ZONE.

**500' MAX. OR AT LAST INTERSECTION WHICHEVER IS CLOSER.

LEGEND

- SIGN ON PERMANENT SUPPORT
- TYPE III BARRICADE
- TYPE III BARRICADE WITH ATTACHED SIGN
- (A) TYPE "A" WARNING LIGHT (FLASHING)
- WORK AREA

BARRICADES AND SIGNS FOR SIDEROAD CLOSURES

STATE OF WISCONSIN
DEPARTMENT OF TRANSPORTATION

APPROVED
Sept. 2015 — DATE
/S/ Peter Amakobe Atepe
STATEWIDE WORK ZONE TRAFFIC SAFETY ENGINEER
FHWA

6

S.D.D. 15 C 3-3

TYPICAL SIDEROAD APPROACH WARNING SIGN DETAIL

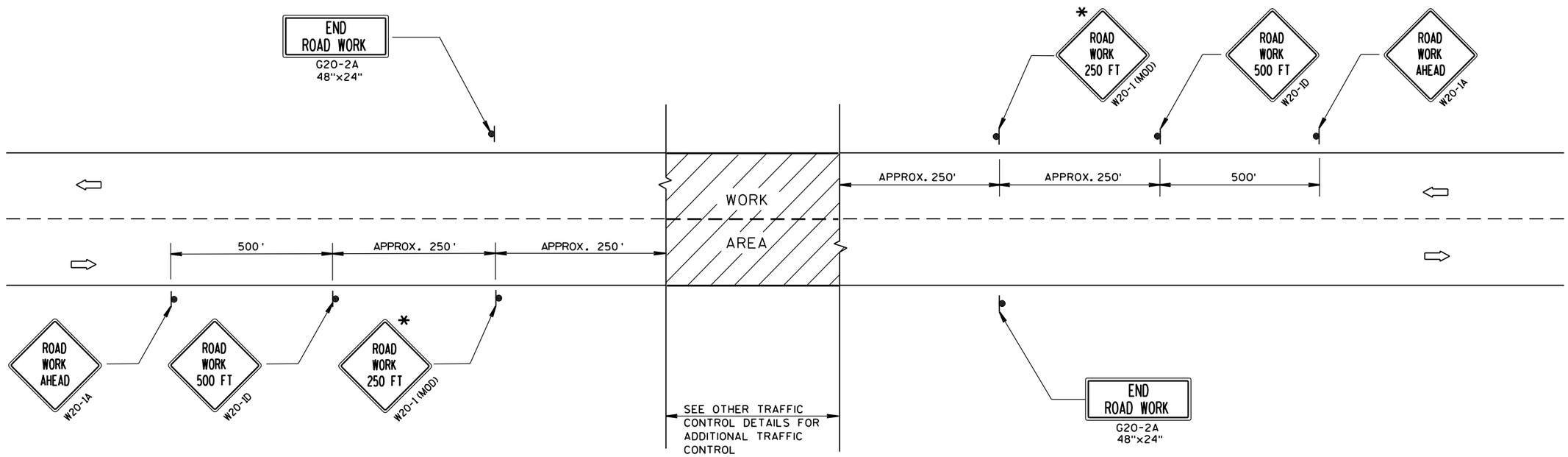

GENERAL NOTES

THE EXACT NUMBER, LOCATION, AND SPACING OF ALL SIGNS AND DEVICES SHALL BE ADJUSTED TO FIT FIELD CONDITIONS.

THE SPACING BETWEEN TRAFFIC CONTROL SIGNS SHOULD BE ADJUSTED TO NOT CONFLICT WITH AND SHOULD PROVIDE A DESIRABLE MINIMUM OF 200 FEET CLEARANCE TO EXISTING SIGNS THAT WILL REMAIN IN PLACE.

ALL SIGNS ARE 48"x48" UNLESS OTHERWISE NOTED. IF NECESSARY DUE TO SPACE CONSTRAINTS, 36"x36" SIGNS MAY BE USED INSTEAD OF 48"x48" SIGNS.

SIGNS THAT WILL BE IN PLACE LESS THAN 7 CONTINUOUS DAYS AND NIGHTS MAY BE MOUNTED ON PORTABLE SUPPORTS.

IF A "STOP" SIGN MUST BE REMOVED FOR A WORK OPERATION, A TEMPORARY "STOP" SIGN SHALL BE PLACED PRIOR TO THE SIGN REMOVAL, OR A FLAGGER SHALL BE PROVIDED UNTIL THE SIGN IS RE-ESTABLISHED.

* THE THIRD W20-1 SIGN IS REQUIRED ONLY IF THERE IS AN INTERSECTION BETWEEN THE "ROAD WORK 500 FT" SIGN AND THE WORK ZONE. ADJUST THE PLACEMENT OF THIS SIGN BASED ON INTERSECTION LOCATION AND OTHER FIELD CONDITIONS.

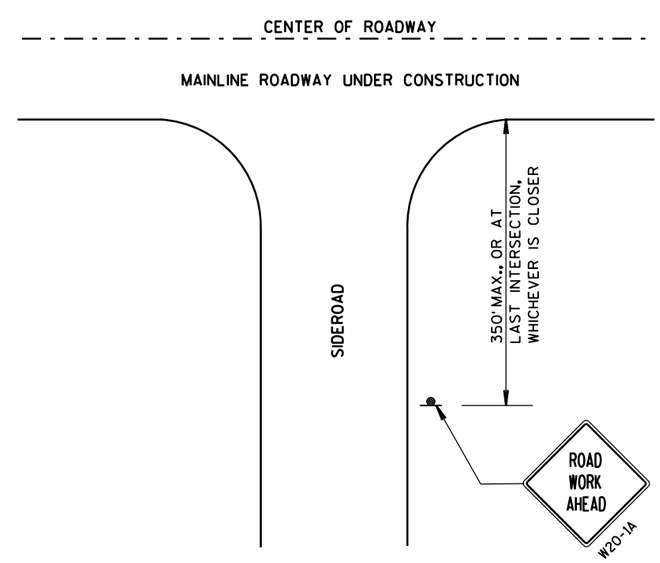

LEGEND

- SIGN ON PERMANENT SUPPORT
- DIRECTION OF TRAFFIC
- WORK AREA

TRAFFIC CONTROL, ADVANCE WARNING SIGNS 40 M.P.H. OR LESS TWO-WAY UNDIVIDED ROAD OPEN TO TRAFFIC

STATE OF WISCONSIN
DEPARTMENT OF TRANSPORTATION

APPROVED
Sept. 2015 — DATE
/S/ Peter Amakobe Atepe — STATEWIDE WORK ZONE SAFETY ENGIN — IC
FHWA

S.D.D. 15 C 5-3
6

GENERAL NOTES

DETAILS OF INSTALLATION, MATERIALS AND WORKMANSHIP NOT SHOWN ON THIS DRAWING SHALL CONFORM TO THE PERTINENT REQUIREMENTS OF THE STANDARD SPECIFICATIONS AND APPLICABLE SPECIAL PROVISIONS.

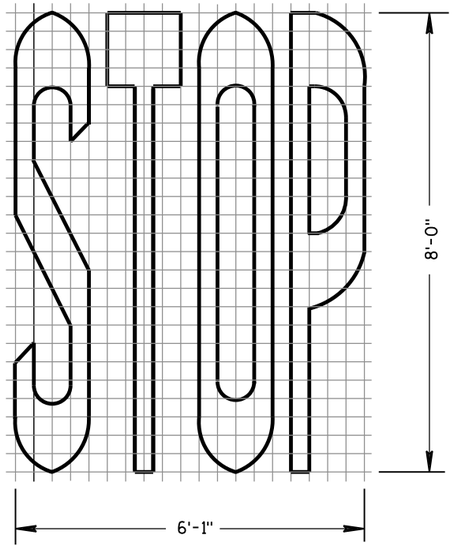

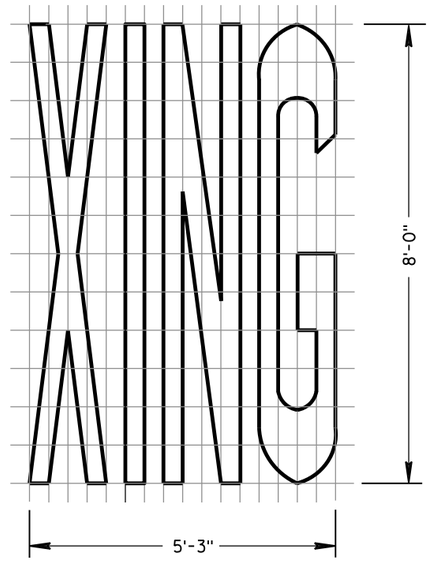

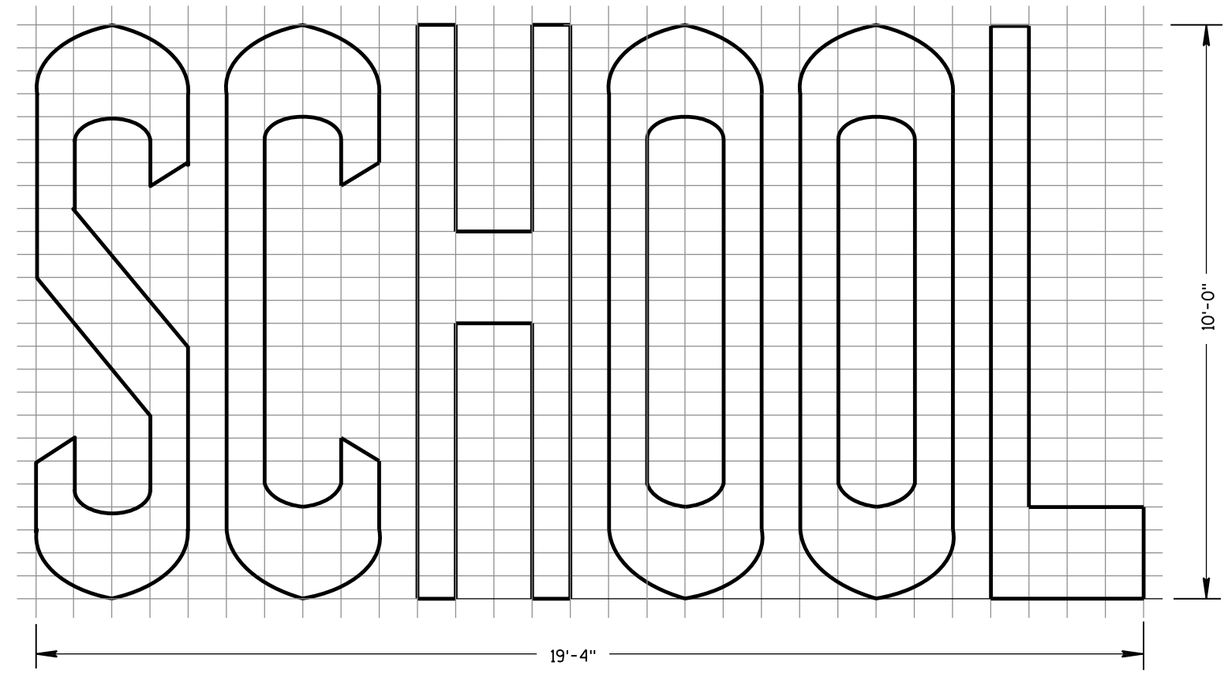

TWO-LANE

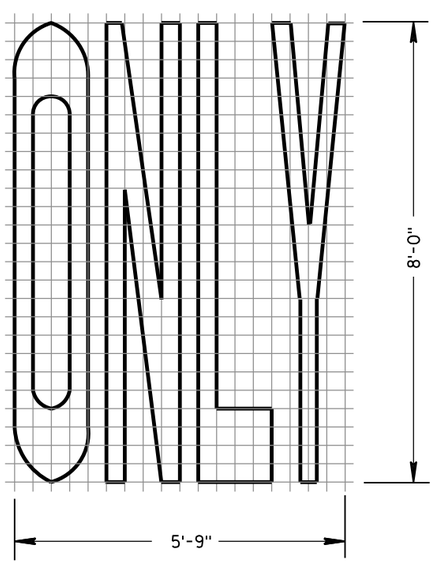

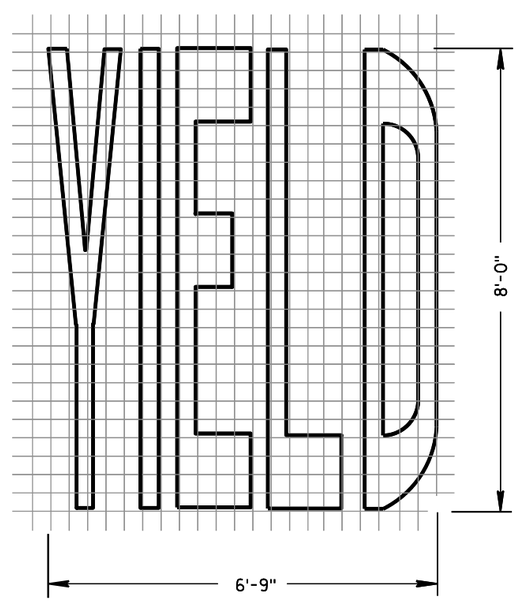

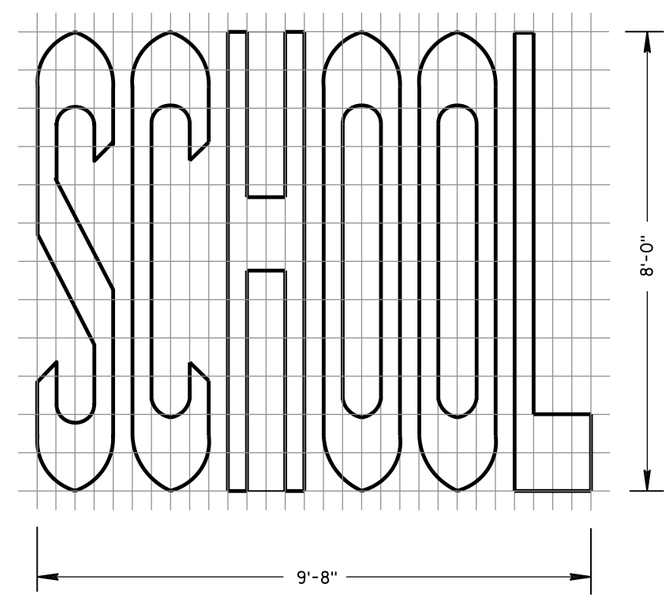

SINGLE-LANE

PAVEMENT MARKING WORDS	
STATE OF WISCONSIN DEPARTMENT OF TRANSPORTATION	
APPROVED June 2017 /S/ Matthew R. Rauch DATE STATE SIGNING AND MARK EER FHWA	

6

6

S.D.D. 15 C 7-14b

S.D.D. 15 C 7-14b

GENERAL NOTES

DETAILS OF INSTALLATION, MATERIALS AND WORKMANSHIP NOT SHOWN ON THIS DRAWING SHALL CONFORM TO THE PERTINENT REQUIREMENTS OF THE STANDARD SPECIFICATIONS AND APPLICABLE SPECIAL PROVISIONS.

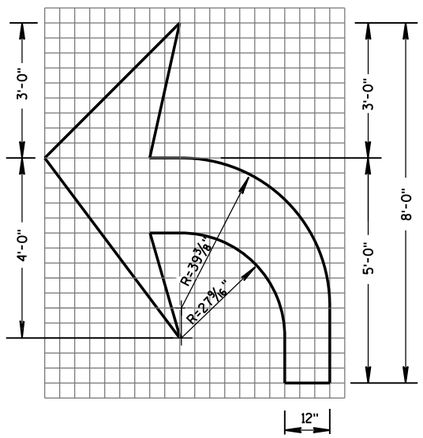

TYPE 2

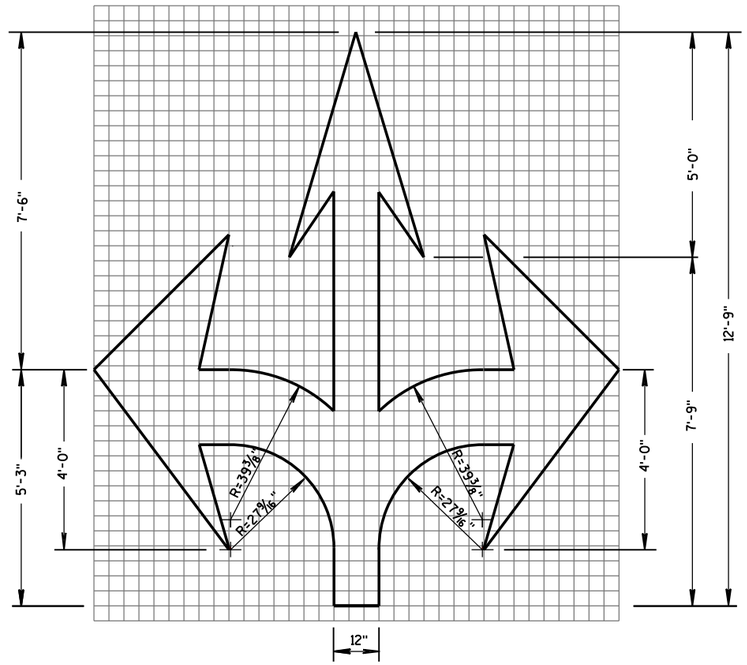

TYPE 6

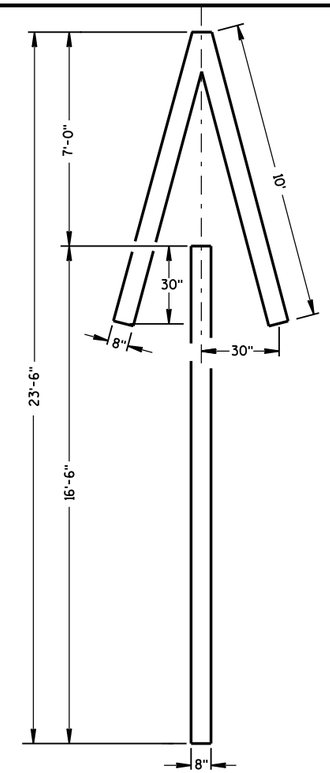

TYPE 4

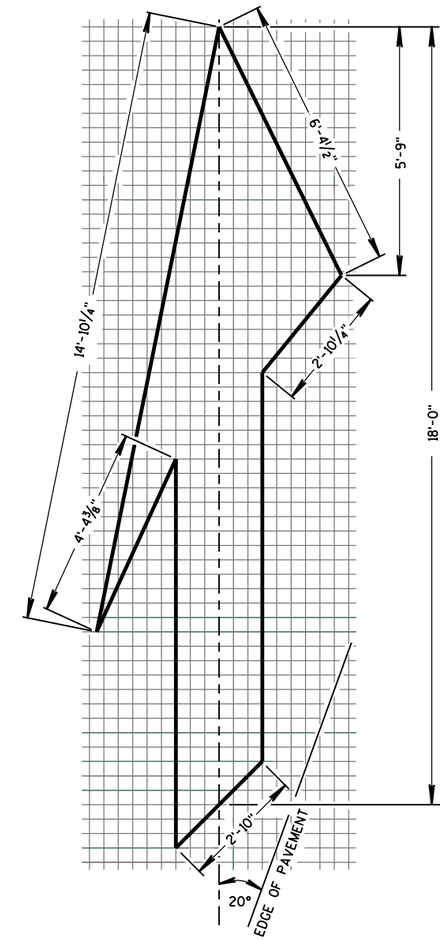

TYPE 5 LANE DROP ARROW

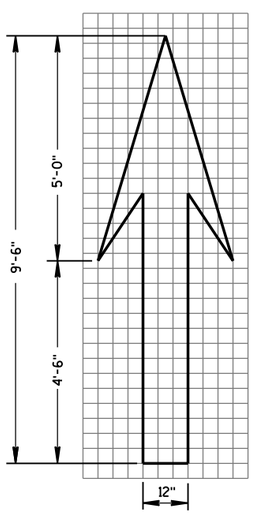

TYPE 1

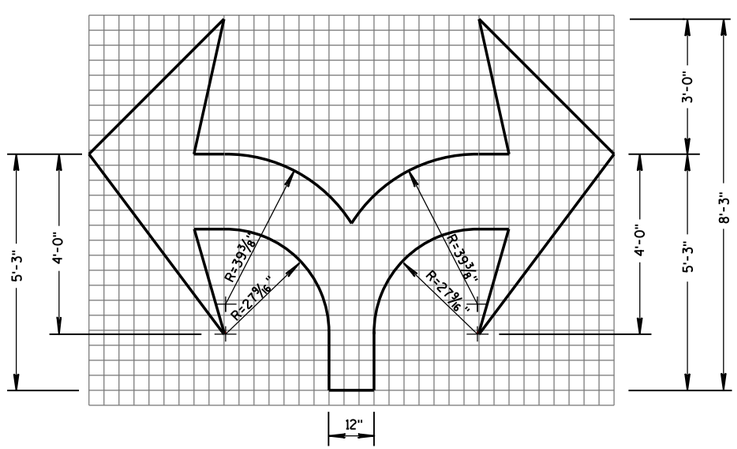

TYPE 7

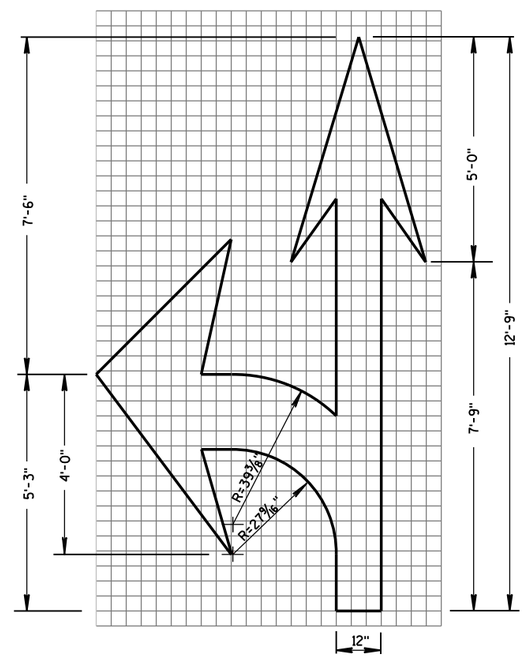

TYPE 3

PAVEMENT MARKING ARROWS

STATE OF WISCONSIN
DEPARTMENT OF TRANSPORTATION

APPROVED
June 2017 — DATE
/S/ Matthew R. Rauch
STATE SIGNING AND MAR ... NEER
FHWA

6

S.D.D. 15 C 7-14c

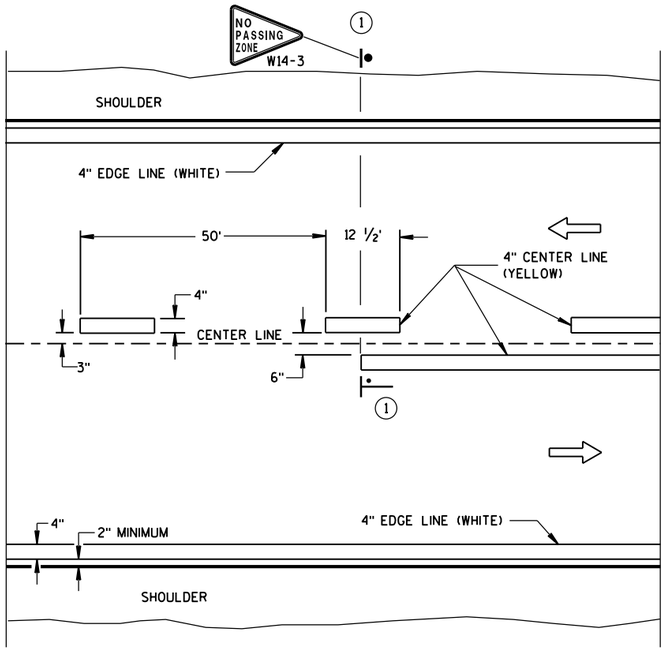

TWO WAY TRAFFIC

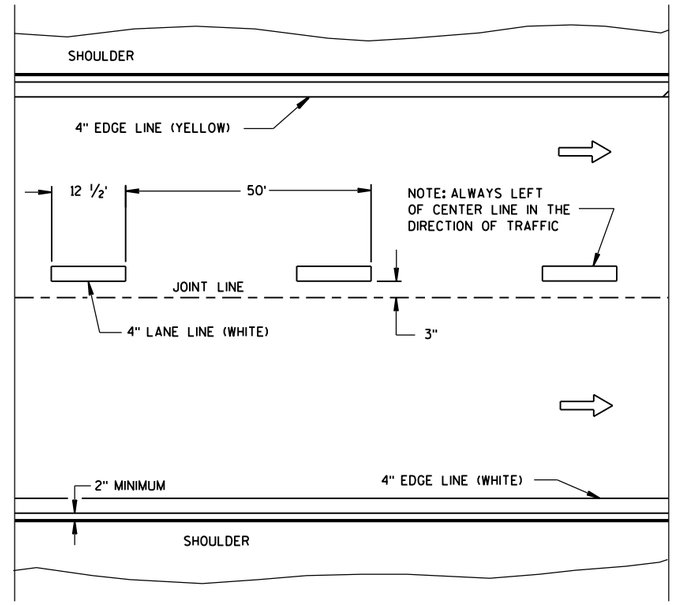

ONE WAY TRAFFIC

PERMANENT PAVEMENT MARKING

GENERAL NOTES

DETAILS OF CONSTRUCTION NOT SHOWN ON THIS DRAWING SHALL CONFORM TO STANDARD SPECIFICATIONS AND SPECIAL PROVISIONS.

(1) LOCATE THE NO PASSING ZONE W14-3 SIGN WITHIN 50 FEET OF THE "T" MARKING.

NOTE

ARROW SYMBOL (⇨) SHOWS DIRECTION OF TRAVEL

LEGEND

"T" MARKING

POST MOUNTED SIGN

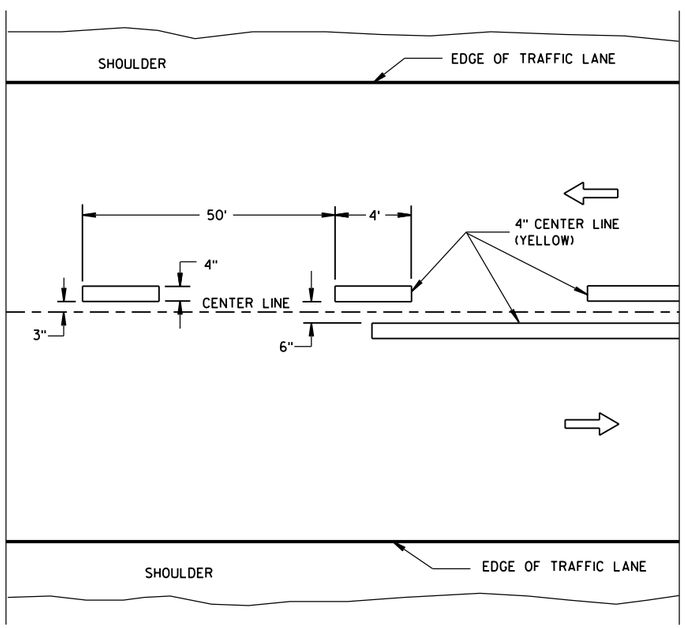

TWO WAY TRAFFIC

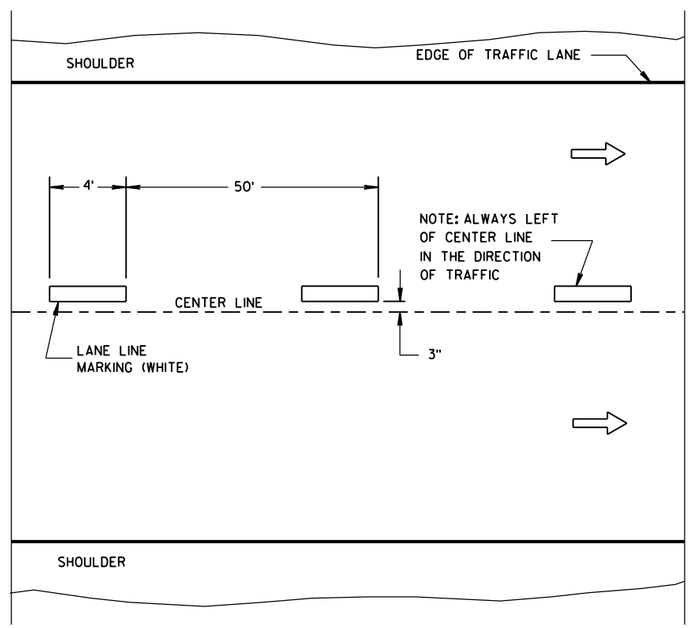

ONE WAY TRAFFIC

TEMPORARY PAVEMENT MARKING

6

6

S.D.D. 15 C 8-18a

S.D.D. 15 C 8-18a

LONGITUDINAL MARKING (MAINLINE)

STATE OF WISCONSIN
DEPARTMENT OF TRANSPORTATION

APPROVED
June 2017 /S/ Matthew R. Rauch
DATE STATE SIGNING AND MAR ;INEER
FHWA

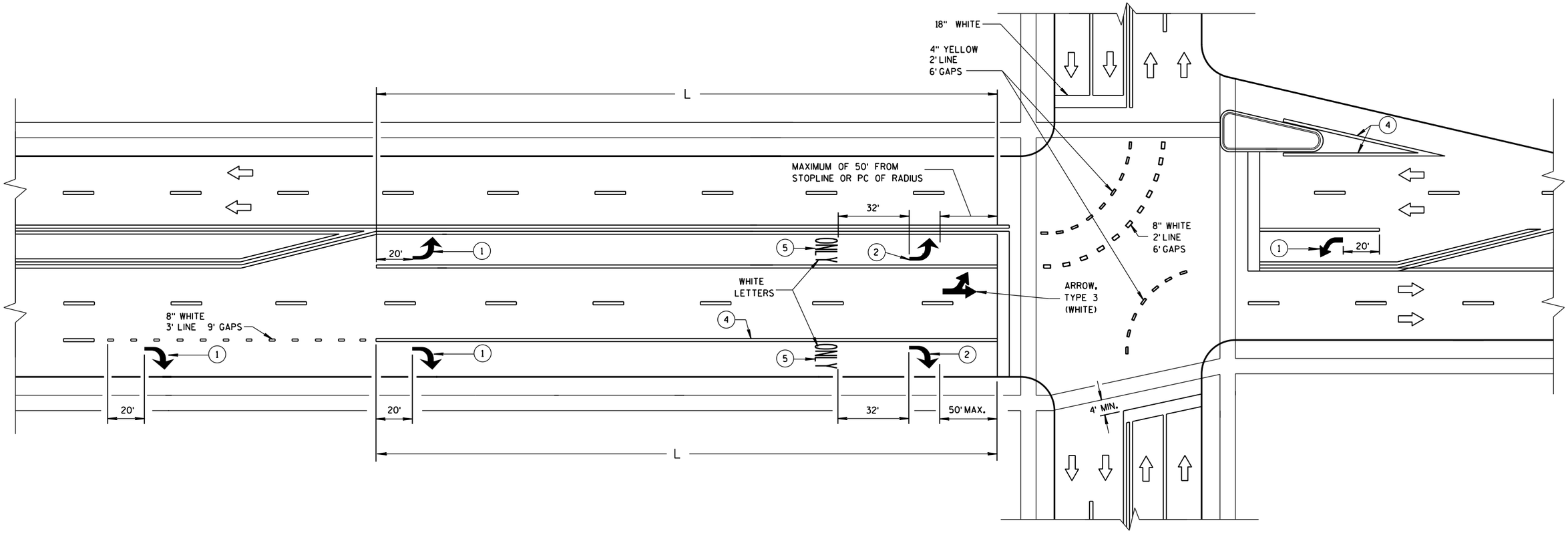

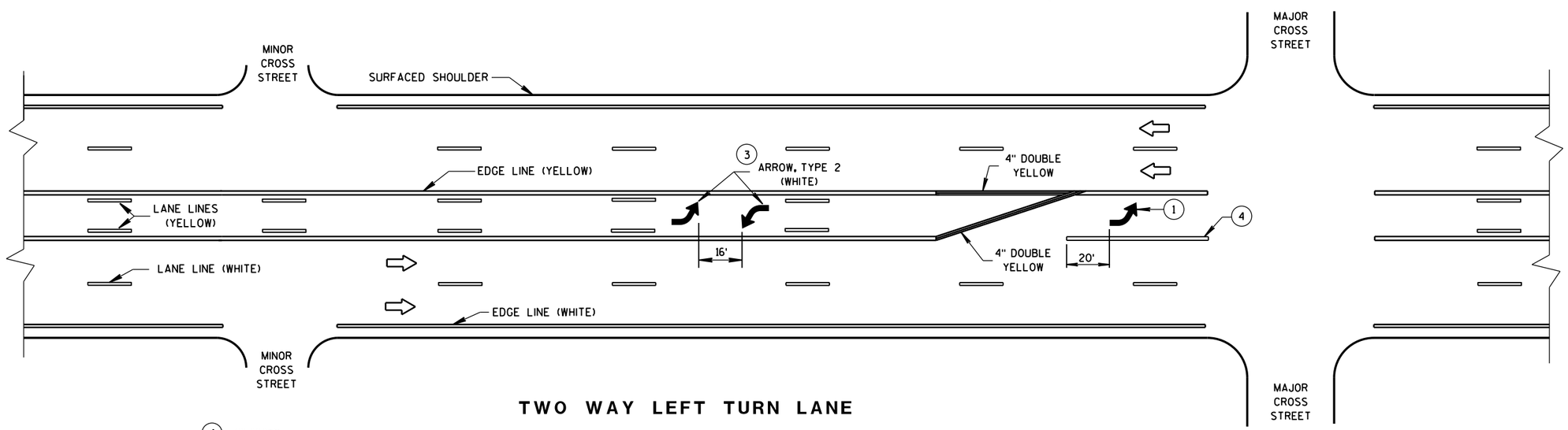

TWO WAY LEFT TURN LANE

GENERAL NOTES

1. REQUIRED ARROW, TYPE 2 (WHITE).
2. REQUIRED ARROW, TYPE 2 (WHITE) WHEN L IS GREATER THAN 78 FEET AND LESS THAN OR EQUAL TO 166 FEET.
3. A SET OF ARROWS IS REQUIRED EVERY 400 FEET OR NEAR INTERSECTIONS OR DRIVEWAYS WITH TURNING TRAFFIC.
4. 8" WHITE
5. REQUIRED WORD ONLY WHEN L IS GREATER THAN 166 FEET.

NOTE:
ARROW SYMBOL (⇨)
SHOWS DIRECTION OF TRAVEL

L = LENGTH OF TURN BAY

PAVEMENT MARKING
(TURN LANES)

STATE OF WISCONSIN
DEPARTMENT OF TRANSPO

6

S.D.D. 15 C 8-18b

LEGEND

- SIGN ON PORTABLE OR PERMANENT SUPPORT
- DIRECTION OF TRAFFIC
- WORK AREA
- FLAGGER, EQUIPPED WITH STOP/SLOW PADDLE FASTENED ON SUPPORT STAFF

SIGN AND TEMPORARY RUMBLE STRIP ARRAY SPACING TABLE

SPEED LIMIT	SPACING A
25-35 MPH	200'
35-40 MPH	350'
45-55 MPH	500'

USE OF THE "BE PREPARED TO STOP" SIGN IS OPTIONAL. WHEN USED, THIS SIGN SHALL BE LOCATED BETWEEN THE W20-7A AND W20-4A SIGNS, USING SPACING A.

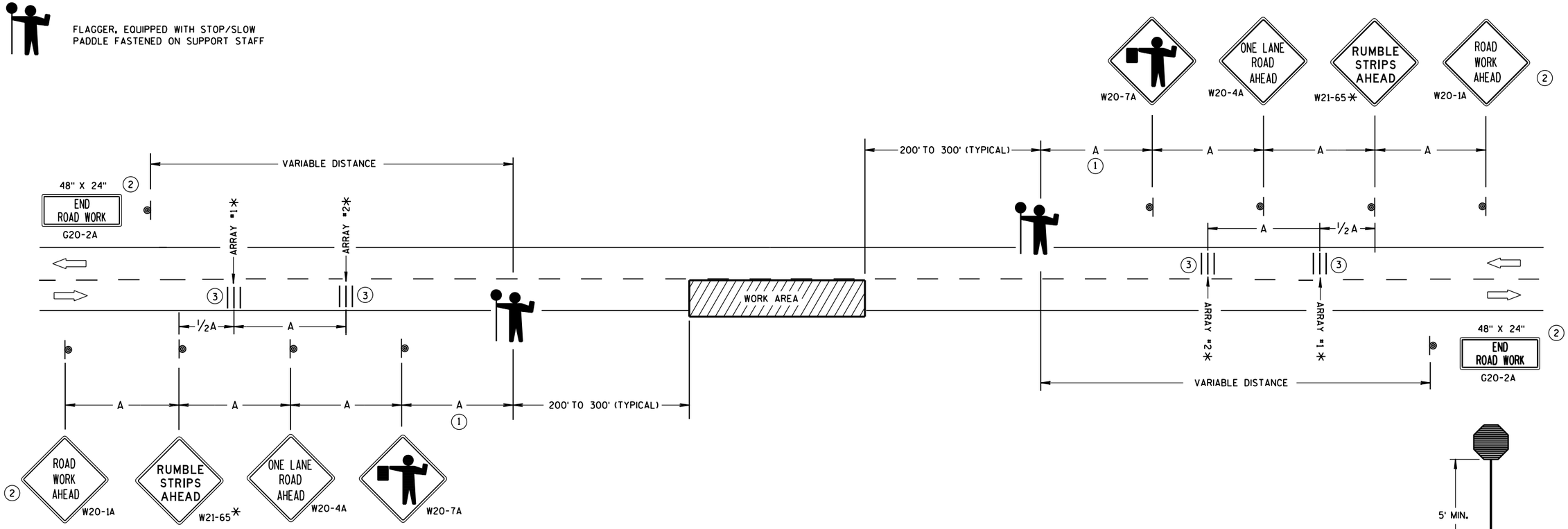

TRAFFIC CONTROL FOR LANE CLOSURE WITH FLAGGING OPERATION

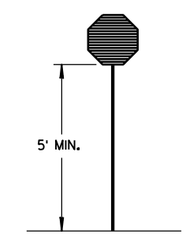

STOP/SLOW PADDLE ON SUPPORT STAFF

GENERAL NOTES

DETAILS OF TRAFFIC CONTROL DEVICES AND INSTALLATION NOT SHOWN ON THIS DRAWING SHALL CONFORM TO THE PERTINENT REQUIREMENTS OF THE STANDARD SPECIFICATIONS, THE SPECIAL PROVISIONS, AND THE MANUAL ON UNIFORM TRAFFIC CONTROL DEVICES.

THE EXACT NUMBER, LOCATION AND SPACING OF ALL SIGNS AND DEVICES (AND THE LOCATION OF ALL FLAGGERS) SHALL BE ADJUSTED TO FIT FIELD CONDITIONS AS APPROVED BY THE ENGINEER.

THE FIRST ADVANCE WARNING SIGN SHOULD TYPICALLY BE LOCATED IN ADVANCE OF THE ANTICIPATED TRAFFIC BACKUP OR QUEUE.

"WO" SIGNS ARE THE SAME AS "W" SIGNS EXCEPT THE BACKGROUND IS ORANGE.

WHEN A SIDE ROAD OR RAMP INTERSECTS THE FACILITY ON WHICH THE WORK IS BEING PERFORMED, ADDITIONAL TRAFFIC CONTROLS SHALL BE PROVIDED AS SPECIFIED IN THE PLANS AND/OR THE SPECIAL PROVISIONS OR AS APPROVED BY THE ENGINEER.

INSTALL TEMPORARY RUMBLE STRIPS PER MANUFACTURER'S RECOMMENDATIONS.

PLACE ADVANCE SIGNING PRIOR TO INSTALLING TEMPORARY RUMBLE STRIPS.

ALL SIGNS ARE 48" X 48" UNLESS OTHERWISE NOTED.

FLAGGERS SHALL BE IN SIGHT OF EACH OTHER OR IN DIRECT COMMUNICATION AT ALL TIMES. THEY SHALL BE EQUIPPED WITH STOP/SLOW PADDLES FASTENED ON SUPPORT STAFFS. WHEN THE FLAGGING OPERATION IS NOT IN EFFECT, REMOVE TEMPORARY RUMBLE STRIPS PRIOR TO COVERING OR REMOVING ALL ADVANCE SIGNING.

* UTILIZE TEMPORARY RUMBLE STRIPS WHEN FLAGGING OPERATION IS ANTICIPATED TO BE STATIONARY IN EXCESS OF TWO HOURS.

1. FOR A MOVING WORK OPERATION, SIGNING AND TEMPORARY RUMBLE STRIPS (IF USED) SHALL BE REESTABLISHED (AS SIMULTANEOUSLY AS PRACTICAL) AT APPROXIMATELY 3,500 FOOT INTERVALS IN THE MOVING WORK OPERATION OR AS APPROVED BY THE ENGINEER.
2. SIGN NOT REQUIRED IF FLAGGING OPERATION OCCURS WITHIN A SIGNED ROAD WORK ZONE AREA.
3. EACH TEMPORARY RUMBLE STRIP ARRAY CONSISTS OF THREE RUMBLE STRIPS SPACED ACCORDING TO MANUFACTURER'S RECOMMENDATION, PLACED TRANSVERSE ACROSS THE LANE AT LOCATIONS SHOWN.

TRAFFIC CONTROL FOR LANE CLOSURE WITH FLAGGING OPERATION

STATE OF WISCONSIN
DEPARTMENT OF TRANSPORTATION

APPROVED
June 2017 — DATE
/S/ Andrew Heldtke — WORK ZONE ENG
FHWA

6

S.D.D. 15 C 12-6

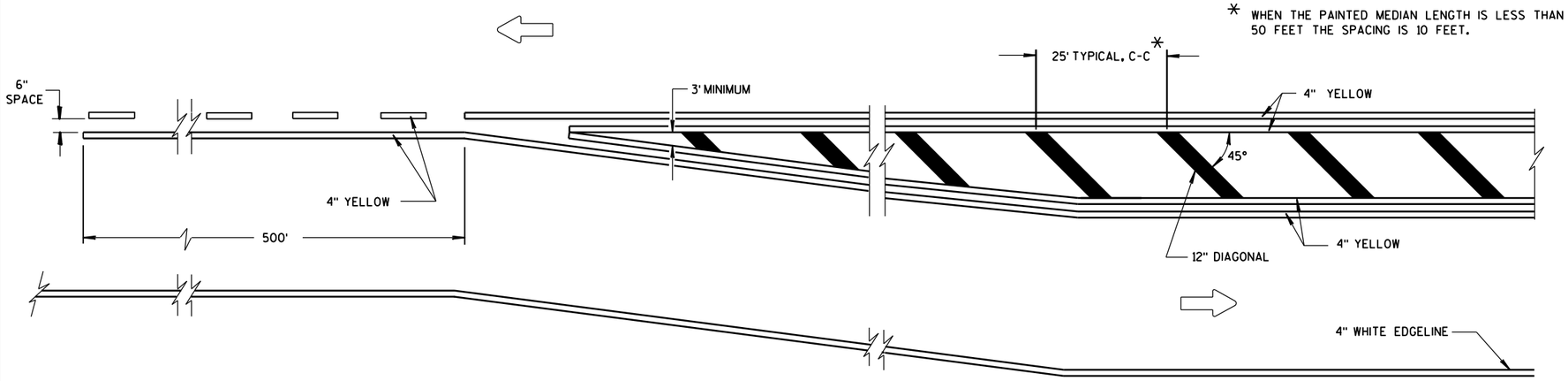

MEDIAN ISLAND DETAIL

GENERAL NOTE

DIAGONALS ARE OPTIONAL WHEN PAINTED ISLAND IS LESS THAN 6 FEET AT WIDEST POINT.

DIRECTION OF TRAVEL

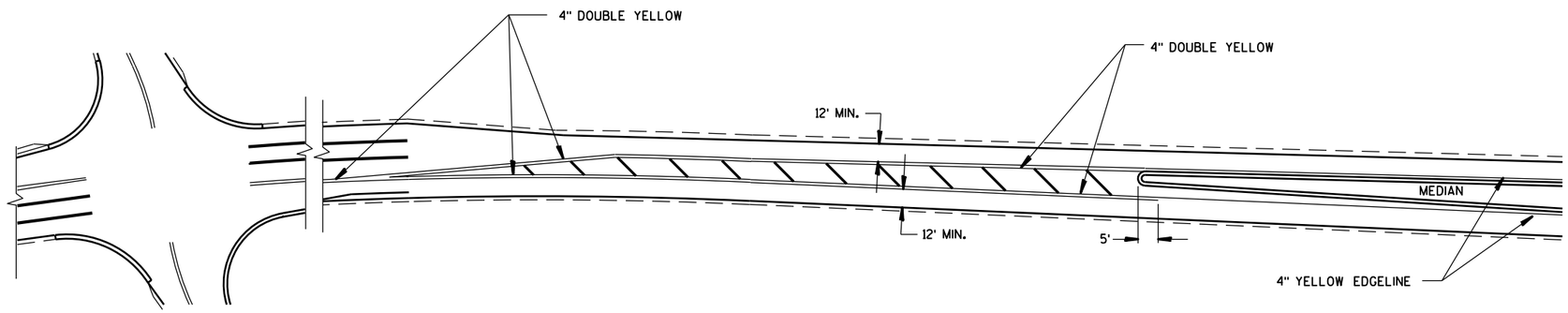

APPROACH MARKINGS FOR OTHER MEDIAN TYPES

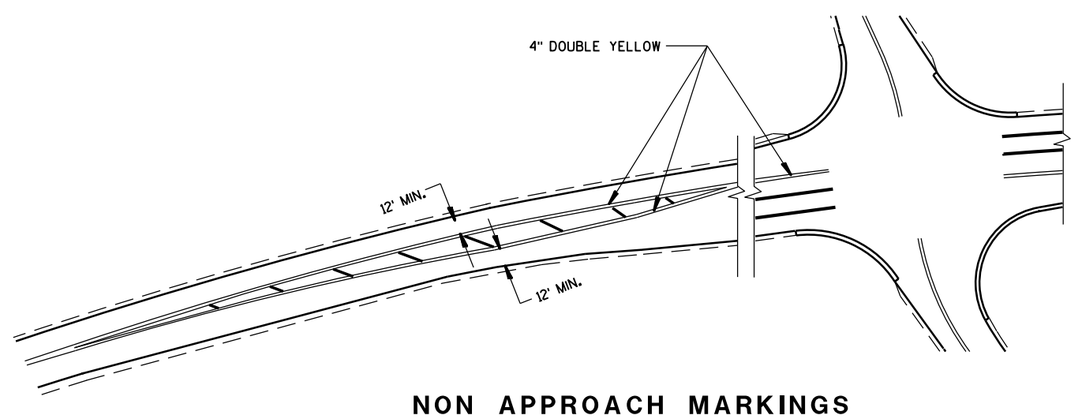

NON APPROACH MARKINGS

MEDIAN ISLAND MARKING

STATE OF WISCONSIN
DEPARTMENT OF TRANSPORTATION

APPROVED
June 2017 /S/ Matthew Rauch
DATE STATE SIGNING AND MARKING ENGINEER
FHWA

GENERAL NOTE

APPLIES TO ISLANDS AT LEFT TURNS AT ONE WAY ROADWAYS AS WELL.

SEE MISCELLANEOUS QUANTITIES FOR SIGN SIZE.

DIRECTION OF TRAVEL

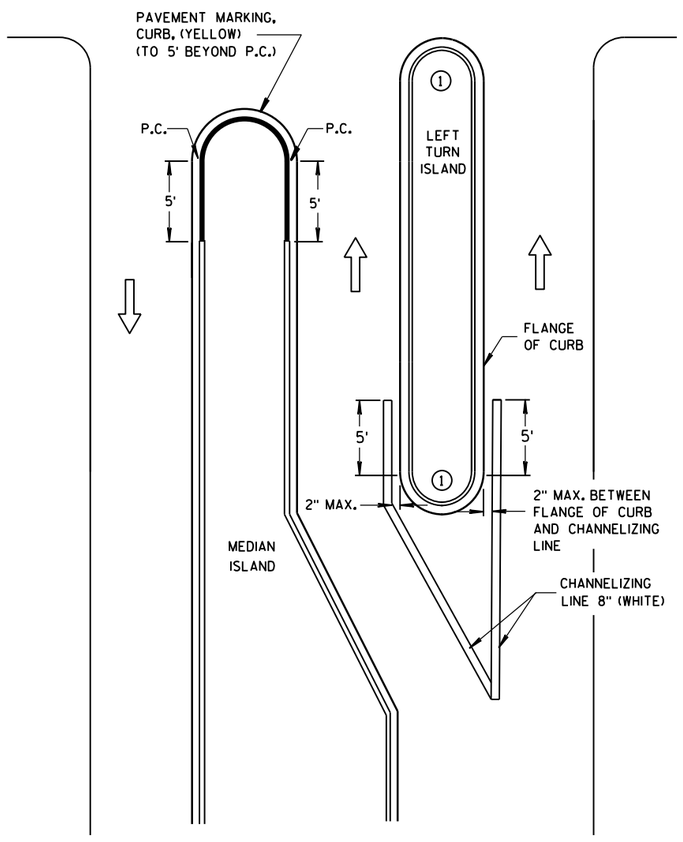

LEFT TURN & MEDIAN ISLAND

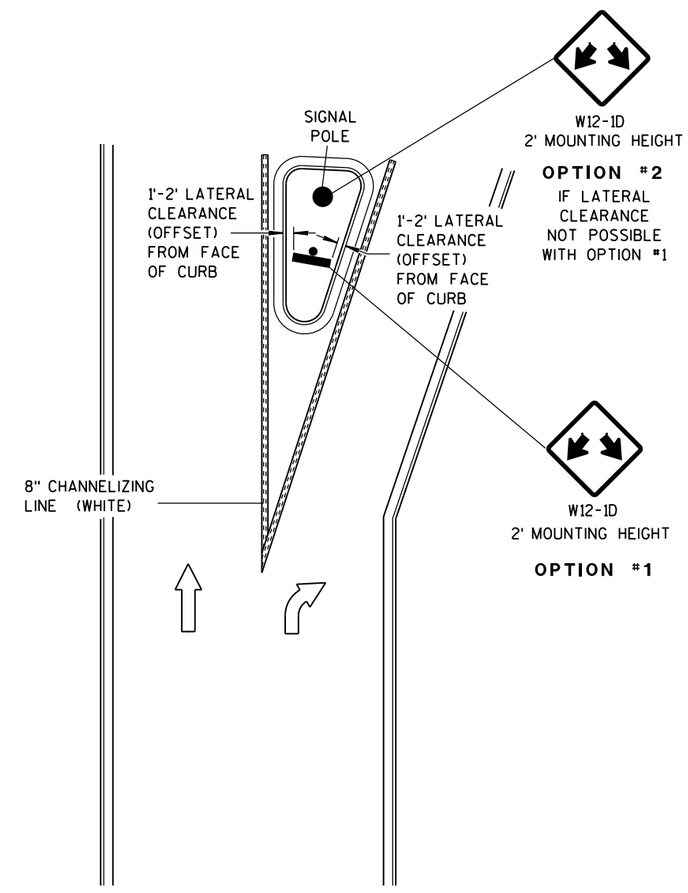

RIGHT TURN ISLAND

DOUBLE ARROW WARNING SIGN PLACEMENT	
STATE OF WISCONSIN DEPARTMENT OF TRANSPORTATION	
APPROVED June 2017 DATE	/S/ Matthew Rauch STATE SIGNING AND MARKING ENGINEER
FHWA	

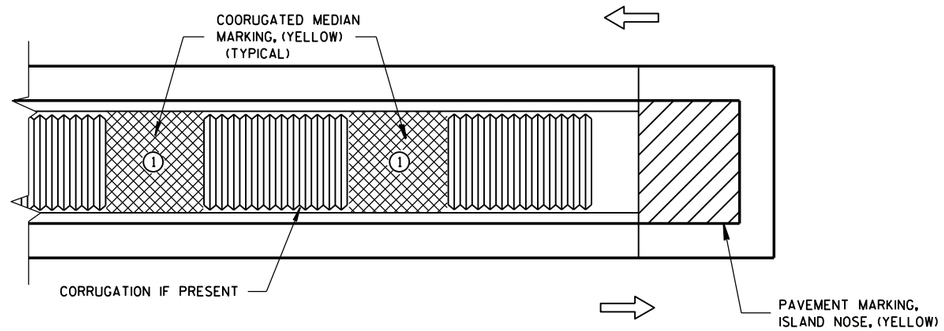

MEDIAN ISLAND WITH SQUARE BLUNT NOSE

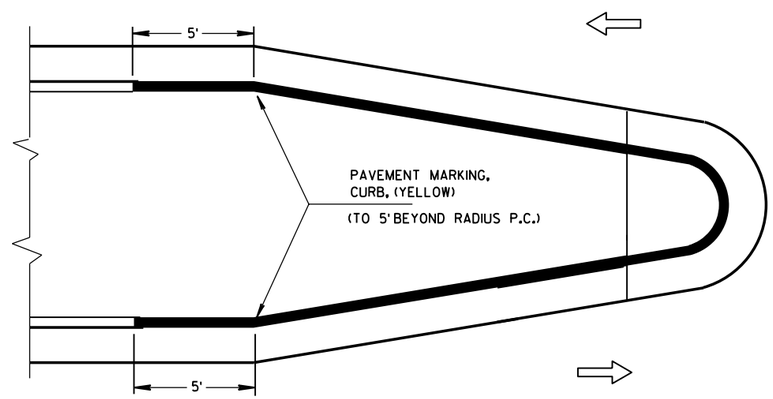

MEDIAN ISLAND WITH ROUND BLUNT NOSE

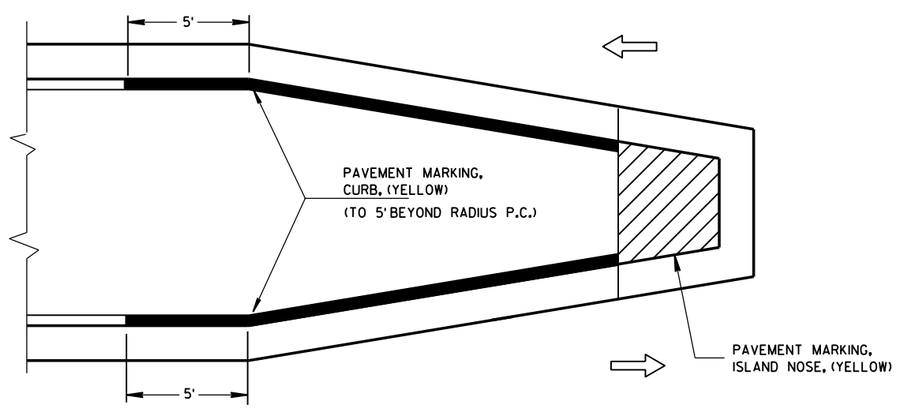

MEDIAN ISLAND WITH SLOPED NOSE

TYPICAL PLACEMENT OF PAVEMENT MARKING ON MEDIAN ISLANDS

GENERAL NOTES

1. WHEN CONCRETE CORRUGATED MEDIAN IS CONSTRUCTED TO SEPARATE TRAFFIC OPERATING IN THE OPPOSING DIRECTION YELLOW PAVEMENT MARKING SHALL BE APPLIED TO THE FLAT PORTION OF THE CONCRETE CORRUGATED MEDIAN. THE ITEM OF PAVEMENT MARKING, CONCRETE CORRUGATED MEDIAN, WILL BE MEASURED IN PLACE AND AND ACCEPTED IN ACCORDANCE WITH THE CONTRACT AND PAID FOR AT THE CONTRACT UNIT PRICE PER SQUARE FOOT.

ISLAND NOSE MARKING

CURB MARKING

CORRUGATED MEDIAN MARKING

DIRECTION OF TRAVEL

PAVEMENT MARKING
(ISLANDS)

STATE OF WISCONSIN
DEPARTMENT OF TRANSPORTATION

APPROVED

June 2017 — DATE

/S/ Matthew Rauch — STATE SIGNING AND MARK EER

FHWA

6

S.D.D. 15 C 27-2b

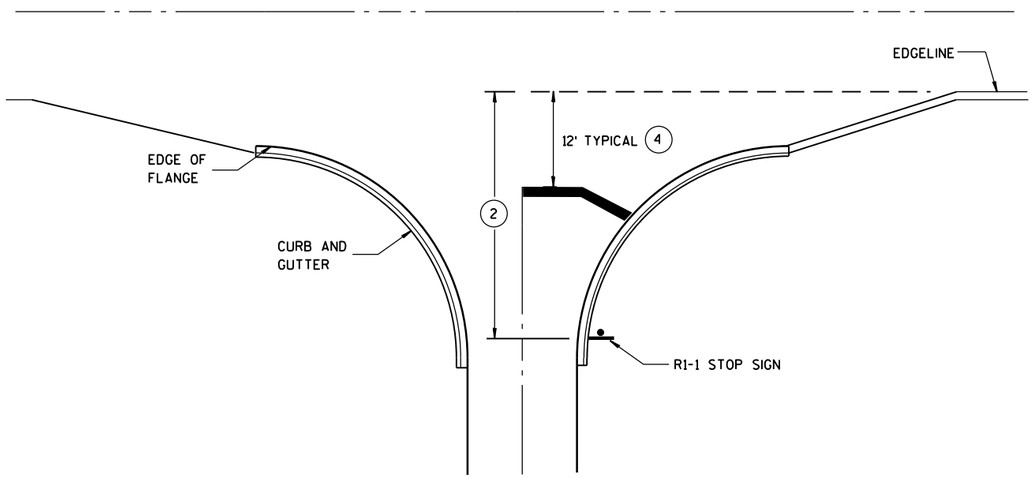

TYPICAL STOP LINE PAVEMENT MARKING WITH CURB AND GUTTER

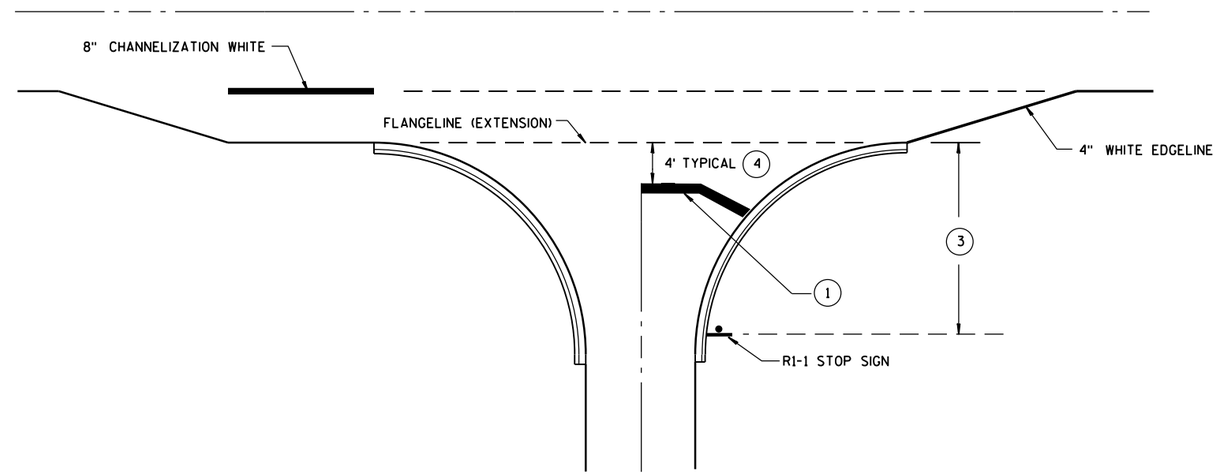

TYPICAL STOP LINE PAVEMENT MARKING FOR SIDEROADS WITH RIGHT TURN LANE

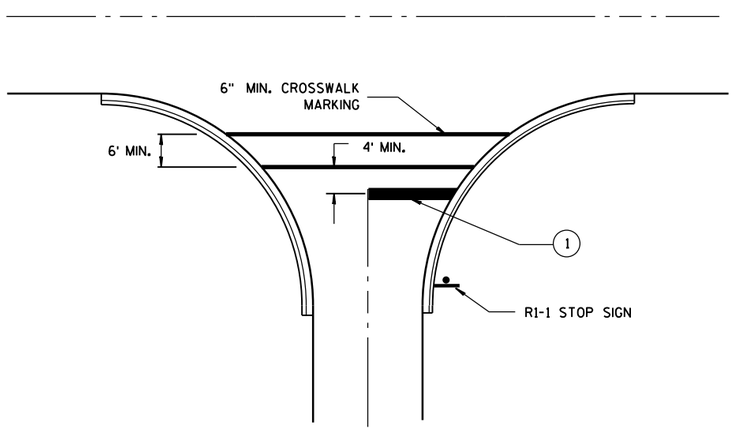

TYPICAL STOP LINE PAVEMENT MARKING FOR SIDEROADS WITH CROSSWALK MARKING

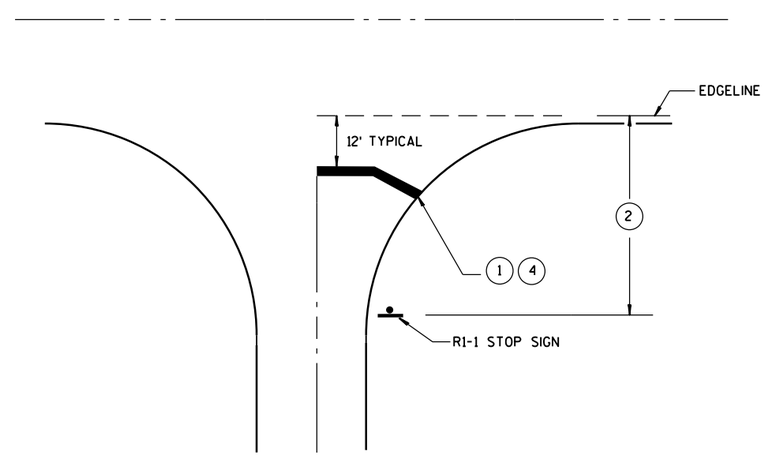

TYPICAL STOP LINE PAVEMENT MARKING WITHOUT CURB AND GUTTER

GENERAL NOTES

1. 18-INCH STOP LINES MAY BE DELETED OR ADDED BY THE PROJECT ENGINEER BASED ON VISIBILITY AND SIGHT LINES.
2. IF STOP SIGN IS LESS THAN OR EQUAL TO 40 FEET FROM THE EDGELINE THAN NO STOP LINE IS REQUIRED.
3. IF STOP SIGN IS LESS THAN OR EQUAL TO 30 FEET FROM THE FLANGELINE EXTENSION THAN NO STOP LINE IS REQUIRED.
4. MOVE CLOSER TO EDGE OF TRAVEL LANE AS NEEDED FOR VISIBILITY AND SIGHT LINES. (NO CLOSER THAN 4 FEET).

STOP LINE AND CROSSWALK PAVEMENT MARKING

STATE OF WISCONSIN
DEPARTMENT OF TRANSPORTATION

APPROVED

4-18-2016 — DATE

/S/ Matthew R. Rauch — STATE SIGNING AND MAR[illegible]NEER

FHWA

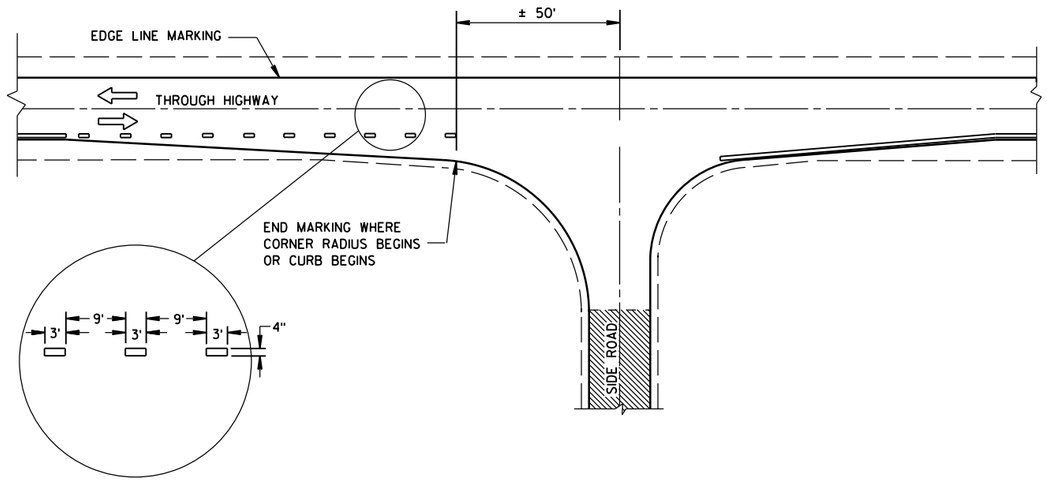

MINOR INTERSECTION WITHOUT CURBS

GENERAL NOTES

EDGE LINES SHALL BE OMITTED THROUGH INTERSECTIONS. EDGE LINES SHALL BE CONTINUED THROUGH DRIVEWAYS.

1. WHEN DISTANCE "A" IS LESS THAN 250 FEET, OMIT LANE LINE.
2. WHEN DISTANCE "B" IS LESS THAN 100 FEET, OMIT CHANNELIZING LANE LINE.
3. BARRIER LINE ENDS AT SIDE ROAD PAVEMENT/SURFACE EDGE EXTENSION.
4. BARRIER LINE STARTS 500 FEET PRIOR TO THE BYPASS TAPER.

ARROW SYMBOL (⇨) SHOWS DIRECTION OF TRAVEL

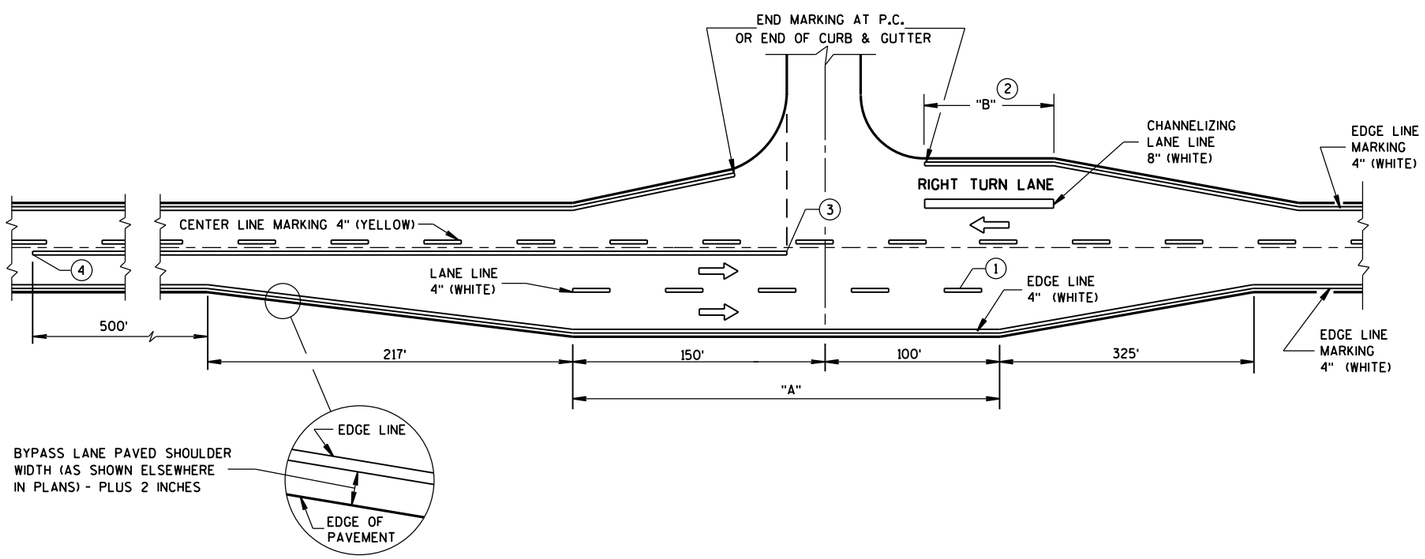

MAJOR INTERSECTIONS

(INTERSECTION WITH FULL RIGHT TURN LANE OR BYPASS LANES)

PAVEMENT MARKING
(INTERSECTIONS)

STATE OF WISCONSIN
DEPARTMENT OF TRANSPOR

6

S.D.D. 15 C 35-1a

LEGEND

- SIGN ON PERMANENT SUPPORT
- TRAFFIC CONTROL DRUM WITH TYPE "C" STEADY BURN LIGHT
- TRAFFIC CONTROL DRUM
- FLASHING ARROW BOARD
- REMOVING PAVEMENT MARKING
- CONCRETE BARRIER TEMPORARY PRECAST
- DIRECTION OF TRAFFIC
- WORK AREA

L, TAPER LENGTH (MPH)							
SPEED (MPH)	W, LATERAL OFFSET (FT)						
	10	11	12	13	14	15	16
45	450	495	540	585	630	675	720
50	500	550	600	650	700	750	800
55	550	605	660	715	770	825	880
60	600	660	720	780	840	900	960
65	650	715	780	845	910	975	1040
70	700	770	840	910	980	1050	1120

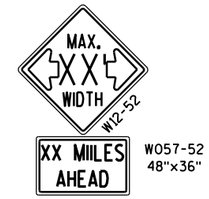

W057-52
48"x36"

INSTALL ON EACH APPROACH AT THE CLOSEST INTERSECTION WITH A STATE OR COUNTY TRUNK HIGHWAY, OR AS DIRECTED BY THE ENGINEER. WIDTH ON SIGN TO BE APPROX. 1 FOOT LESS THAN AVAILABLE WIDTH (OMIT IF AVAILABLE WIDTH IS MORE THAN 16 FEET).

OR

LOCATED 2600 FEET IN ADVANCE OF R2-1 SIGN AND 500 FEET BEYOND THE "ROAD WORK 1 MILE" SIGN.

OR

R2-1
48"x60"
(BLACK AND WHITE)

LOCATED 500 FEET BEYOND W20-5G SIGN.

IF THE REGULATORY SPEED HAS BEEN REDUCED, A SPEED LIMIT SIGN SHALL BE LOCATED 1500 FEET BEYOND THE END OF THE ACCELERATION LANE OF EACH ENTRANCE RAMP. THERE SHOULD BE A SPEED LIMIT SIGN INCORPORATED A MINIMUM OF EVERY 2 OR 3 MILES.

* INCLUDE RESUME SPEED LIMIT SIGN A MINIMUM OF 200 FEET (500 FEET DESIRABLE) AFTER END ROAD WORK SIGNS.

GENERAL NOTES

THIS LANE CLOSURE IS TYPICAL FOR CLOSING RIGHT LANE - REVERSE FOR CLOSING LEFT LANE.

THE EXACT NUMBER, LOCATION, AND SPACING OF ALL SIGNS AND DEVICES SHALL BE ADJUSTED TO FIT FIELD CONDITIONS AS APPROVED BY THE ENGINEER.

THE SPACING BETWEEN SIGNS SHOULD BE ADJUSTED TO NOT CONFLICT WITH AND TO PROVIDE A MINIMUM OF 200 FEET (500 FEET DESIRABLE) CLEARANCE TO EXISTING SIGNS.

ALL SIGNS ARE 48"x48" UNLESS OTHERWISE NOTED.

"WO" IS THE SAME AS "W" EXCEPT THE BACKGROUND IS ORANGE.

ANY SIGNS TEMPORARY OR EXISTING, WHICH CONFLICT WITH TRAFFIC CONTROL "IN USE" SHALL BE REMOVED OR COVERED AS NEEDED OR AS APPROVED BY THE ENGINEER.

(1) CONSIDER ROADWAY GEOMETRICS WHEN LOCATING SIGNS AND ARROW BOARD SO THE DRIVER HAS A CLEAR VIEW OF THE ARROW BOARD AND LANE CLOSURE DRUMS FOR A MINIMUM 1500 FEET IN FRONT OF DRUM TAPER.

FOR A LANE CLOSURE THAT IS IN PLACE LESS THAN 7 CONTINUOUS DAYS AND NIGHTS, THE ADVANCED WARNING SIGNS MAY BE MOUNTED ON PORTABLE SUPPORTS.

REMOVE PAVEMENT MARKINGS IF LANE CLOSURE IS TO BE IN PLACE FOR 4 OR MORE CONTINUOUS DAYS AND NIGHTS.

IF THE HORIZONTAL ALIGNMENT IS SUCH THAT A CURVE MAY REQUIRE ADDITIONAL DELINEATION, THE DEVICE SPACING MAY BE DECREASED TO 50 FEET.

ADJUSTMENTS IN BUFFER SPACE NEED TO BE INCORPORATED WHEN THE LANE CLOSURE OCCURS NEAR AN INTERCHANGE EXIT OR ENTRANCE RAMP OR INTERSECTION. THE LANE CLOSURE MUST TAKE PLACE FAR ENOUGH IN ADVANCE OF AN EXIT OR ENTRANCE RAMP TO STILL ALLOW FOR ADEQUATE BUFFER SPACE. THE MINIMUM LENGTH OF THE BUFFER SPACE BEFORE AN EXIT RAMP SHOULD BE 1/2 THE LENGTH OF THE TRANSITION AREA. THE ENTRANCE RAMP SHOULD BE FOLLOWED BY THE ORIGINAL BUFFER SPACE LENGTH OF 800 FEET DESIRABLE PRIOR TO ANOTHER TRAFFIC CONTROL CHANGE SUCH AS A CROSSOVER MANEUVER.

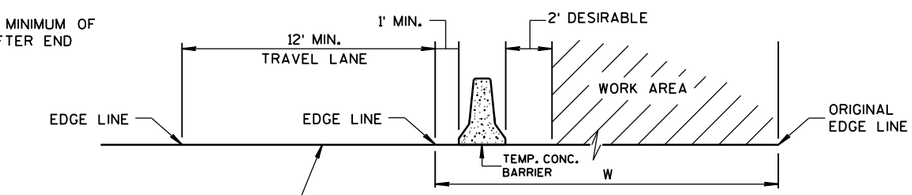

TYPICAL SECTION

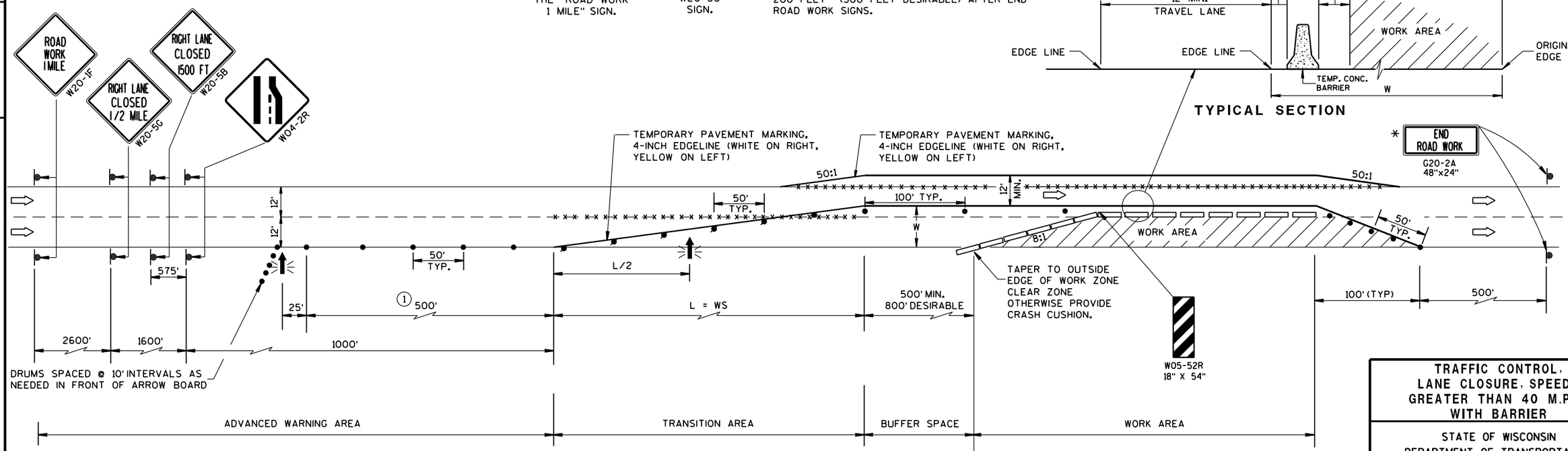

* END ROAD WORK
G20-2A
48"x24"

TRAFFIC CONTROL, LANE CLOSURE, SPEEDS GREATER THAN 40 M.P.H. WITH BARRIER	
STATE OF WISCONSIN DEPARTMENT OF TRANSPORTATION	
APPROVED Sept., 2016 DATE	/S/ Peter Amakobe Atepe STATEWIDE WORK ZONE SAFETY ENGIN IC
FHWA	

6

S.D.D. 15 D 3-4

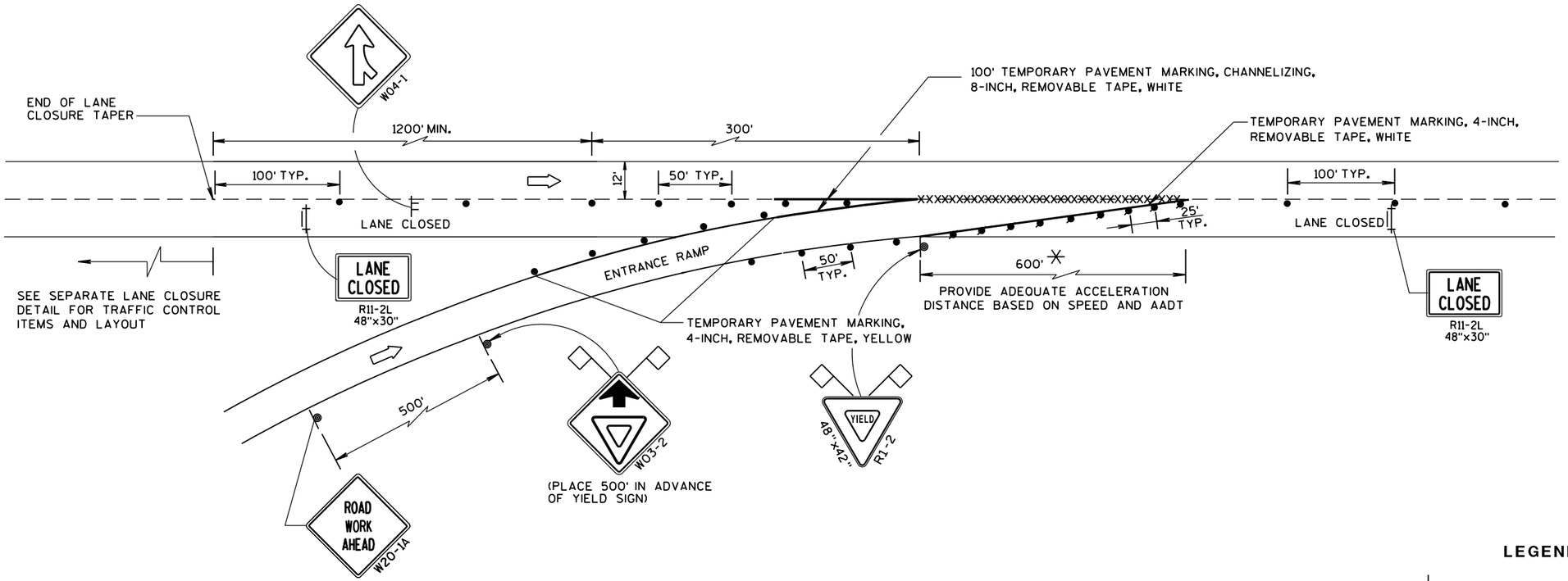

TAPERED ENTRANCE RAMP WITHIN RIGHT LANE CLOSURE

LEGEND

- SIGN ON PERMANENT SUPPORT
- SIGN ON TEMPORARY SUPPORT
- TRAFFIC CONTROL DRUM
- TRAFFIC CONTROL DRUM WITH TYPE "C" STEADY BURN LIGHT
- REMOVING PAVEMENT MARKING (SEE GENERAL NOTES)
- TYPE III BARRICADE WITH ATTACHED SIGN
- FLAGS, 16" × 16" MIN., (ORANGE)
- DIRECTION OF TRAFFIC

GENERAL NOTES

THE INSTALLATIONS SHOWN ON THIS SHEET ARE TYPICAL EXAMPLES AND ARE NOT INTENDED TO REPRESENT ANY PARTICULAR RAMP. AT SPECIFIC FIELD LOCATIONS, SIMILAR INSTALLATIONS SHALL BE USED AND ADJUSTED TO THE GEOMETRICS OF THE RAMP AS COORDINATED WITH THE ENGINEER.

THE EXACT NUMBER, LOCATION, AND SPACING OF ALL SIGNS AND DEVICES SHALL BE ADJUSTED TO FIT FIELD CONDITIONS AS APPROVED BY THE ENGINEER.

THE SPACING BETWEEN TRAFFIC CONTROL SIGNS SHOULD BE ADJUSTED TO NOT CONFLICT WITH AND SHOULD PROVIDE A MINIMUM OF 200 FEET, (500 FEET DESIRABLE) CLEARANCE TO EXISTING SIGNS THAT WILL REMAIN IN PLACE.

ALL SIGNS ARE 48"x48" UNLESS OTHERWISE NOTED.

"WO" IS THE SAME AS "W" EXCEPT THE BACKGROUND IS ORANGE.

SEE SEPARATE LANE CLOSURE DETAIL FOR TYPICAL SPACING OF TYPE III BARRICADES AND R11-2L "LANE CLOSED" SIGNS.

YIELD SIGN AND WARNING SIGNS ON ENTRANCE RAMP ARE ALSO APPROPRIATE FOR CLOSURE OF THE MAINLINE LEFT LANE. OMIT THE YIELD SIGN IF MORE THAN ONE LANE REMAINS OPEN ON THE MAINLINE AND THE RAMP TAPER IS AT LEAST AS LONG AS THE NORMAL ENTRANCE RAMP TAPER AT THE SITE.

SIGNS THAT WILL BE IN PLACE LESS THAN 7 CONTINUOUS DAYS AND NIGHTS, OR THAT WILL BE PLACED IN A CLOSED LANE, MAY BE MOUNTED ON PORTABLE SUPPORTS.

IF INDICATED IN MISCELLANEOUS QUANTITIES, SUBSTITUTE FLEXIBLE TUBULAR MARKERS FOR DRUMS IN THE GORE BETWEEN THE ENTRANCE RAMP AND MAINLINE TRAFFIC.

ANY SIGNS TEMPORARY OR EXISTING, WHICH CONFLICT WITH TRAFFIC CONTROL "IN USE" SHALL BE REMOVED OR COVERED AS NEEDED AND AS APPROVED BY THE ENGINEER.

REMOVE PAVEMENT MARKINGS AND PLACE TEMPORARY PAVEMENT MARKING, REMOVABLE TAPE IF LANE CLOSURE IS TO BE IN PLACE FOR 7 OR MORE CONTINUOUS DAYS AND NIGHTS.

WARNING LIGHTS ARE NOT REQUIRED IF THE LANE CLOSURE IS A DAYTIME ONLY OPERATION.

* CONSULT WITH REGIONAL WORK ZONE ENGINEER IF NEED TO REDUCE LENGTH EXISTS.

TRAFFIC CONTROL, TAPERED ENTRANCE RAMP WITHIN LANE CLOSURE

STATE OF WISCONSIN
DEPARTMENT OF TRANSPORTATION

APPROVED
March, 2017 — DATE
/S/ Andrew Heldtke — WORK ZONE ENG
FHWA

6

S.D.D. 15 D 15-3c

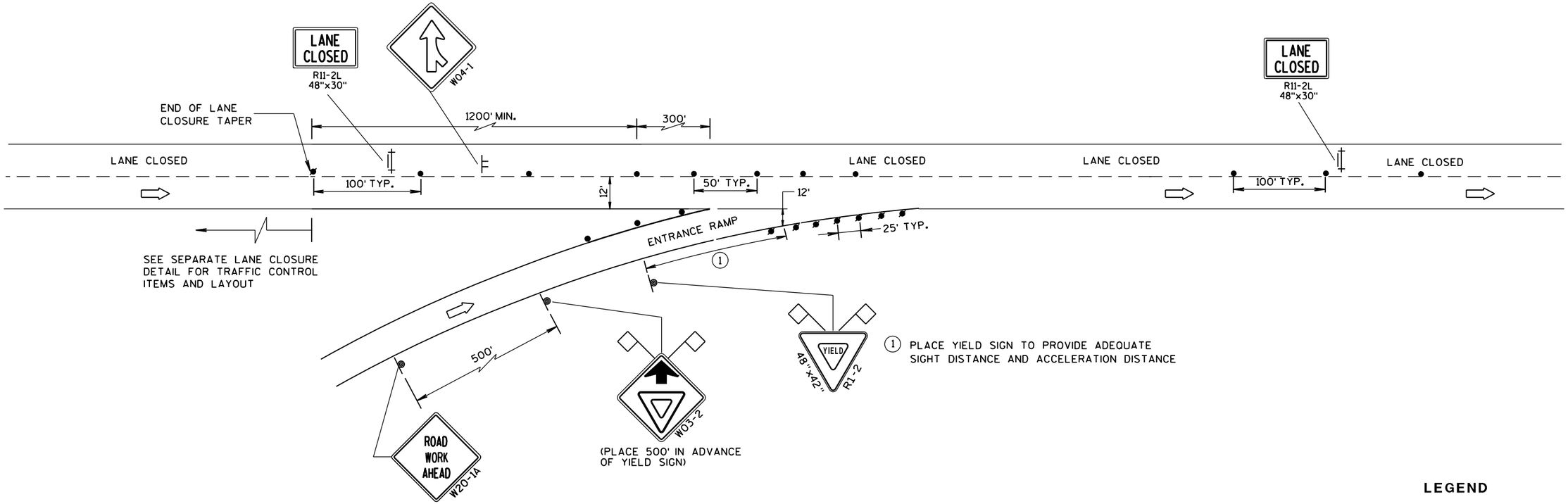

6

TAPERED ENTRANCE RAMP WITHIN LEFT LANE CLOSURE

LEGEND

- SIGN ON PERMANENT SUPPORT
- SIGN ON TEMPORARY SUPPORT
- TRAFFIC CONTROL DRUM
- TRAFFIC CONTROL DRUM WITH TYPE "C" STEADY BURN LIGHT
- REMOVING PAVEMENT MARKING (SEE GENERAL NOTES)
- TYPE III BARRICADE WITH ATTACHED SIGN
- FLAGS, 16" x 16" MIN., (ORANGE)
- DIRECTION OF TRAFFIC

GENERAL NOTES

THE INSTALLATIONS SHOWN ON THIS SHEET ARE TYPICAL EXAMPLES AND ARE NOT INTENDED TO REPRESENT ANY PARTICULAR RAMP. AT SPECIFIC FIELD LOCATIONS, SIMILAR INSTALLATIONS SHALL BE USED AND ADJUSTED TO THE GEOMETRICS OF THE RAMP AS COORDINATED WITH THE ENGINEER.

THE EXACT NUMBER, LOCATION, AND SPACING OF ALL SIGNS AND DEVICES SHALL BE ADJUSTED TO FIT FIELD CONDITIONS AS APPROVED BY THE ENGINEER.

THE SPACING BETWEEN TRAFFIC CONTROL SIGNS SHOULD BE ADJUSTED TO NOT CONFLICT WITH AND SHOULD PROVIDE A MINIMUM OF 200 FEET, (500 FEET DESIRABLE) CLEARANCE TO EXISTING SIGNS THAT WILL REMAIN IN PLACE.

ALL SIGNS ARE 48"x48" UNLESS OTHERWISE NOTED.

"WO" IS THE SAME AS "W" EXCEPT THE BACKGROUND IS ORANGE.

SEE SEPARATE LANE CLOSURE DETAIL FOR TYPICAL SPACING OF TYPE III BARRICADES AND R11-2L "LANE CLOSED" SIGNS.

YIELD SIGN AND WARNING SIGNS ON ENTRANCE RAMP ARE ALSO APPROPRIATE FOR CLOSURE OF THE MAINLINE LEFT LANE. OMIT THE YIELD SIGN IF MORE THAN ONE LANE REMAINS OPEN ON THE MAINLINE AND THE RAMP TAPER IS AT LEAST AS LONG AS THE NORMAL ENTRANCE RAMP TAPER AT THE SITE.

SIGNS THAT WILL BE IN PLACE LESS THAN 7 CONTINUOUS DAYS AND NIGHTS, OR THAT WILL BE PLACED IN A CLOSED LANE, MAY BE MOUNTED ON PORTABLE SUPPORTS.

IF INDICATED IN MISCELLANEOUS QUANTITIES, SUBSTITUTE FLEXIBLE TUBULAR MARKERS FOR DRUMS IN THE GORE BETWEEN THE ENTRANCE RAMP AND MAINLINE TRAFFIC.

ANY SIGNS TEMPORARY OR EXISTING, WHICH CONFLICT WITH TRAFFIC CONTROL "IN USE" SHALL BE REMOVED OR COVERED AS NEEDED AND AS APPROVED BY THE ENGINEER.

REMOVE PAVEMENT MARKINGS AND PLACE TEMPORARY PAVEMENT MARKING, REMOVABLE TAPE IF LANE CLOSURE IS TO BE IN PLACE FOR 7 OR MORE CONTINUOUS DAYS AND NIGHTS.

WARNING LIGHTS ARE NOT REQUIRED IF THE LANE CLOSURE IS A DAYTIME ONLY OPERATION.

TRAFFIC CONTROL, TAPERED ENTRANCE RAMP WITHIN LANE CLOSURE

STATE OF WISCONSIN
DEPARTMENT OF TRANSPORTATION

APPROVED
March, 2017 — DATE
/S/ Andrew Heldtke — WORK ZONE ENG
FHWA

6

S.D.D. 15 D 15-3d

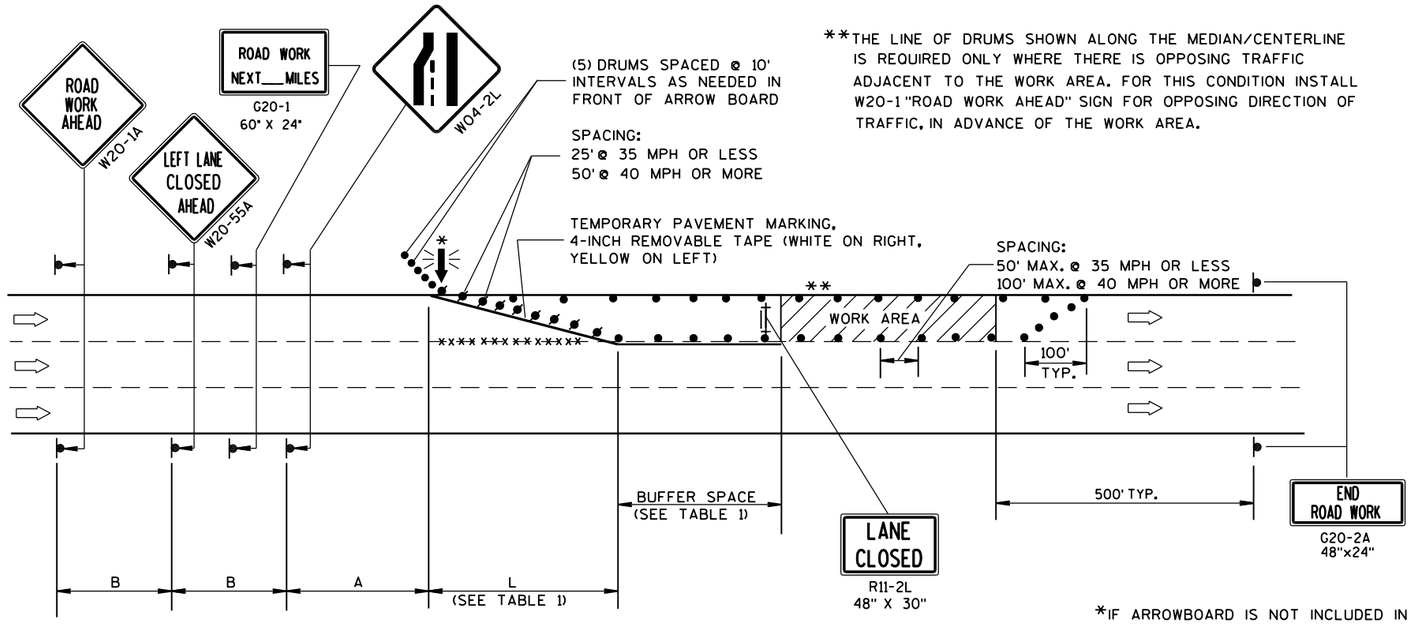

**THE LINE OF DRUMS SHOWN ALONG THE MEDIAN/CENTERLINE IS REQUIRED ONLY WHERE THERE IS OPPOSING TRAFFIC ADJACENT TO THE WORK AREA. FOR THIS CONDITION INSTALL W20-1 "ROAD WORK AHEAD" SIGN FOR OPPOSING DIRECTION OF TRAFFIC, IN ADVANCE OF THE WORK AREA.

B=400' AT 25-30 MPH
700' AT 35-40 MPH
1000' AT 45-55 MPH

A=200' AT 25-30 MPH
350' AT 35-40 MPH
500' AT 45-55 MPH

(PLACE BARRICADE AND SIGN APPROX. EVERY 1000' ACROSS THE CLOSED LANE)

*IF ARROWBOARD IS NOT INCLUDED IN MISCELLANEOUS QUANTITIES, SUBSTITUTE A TYPE III BARRICADE WITH W01-6 SIGN IN THE LANE CLOSURE TAPER.

W01-6
48"x24"

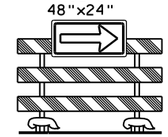

GENERAL NOTES

THIS LANE CLOSURE DETAIL IS TYPICAL FOR CLOSING THE LEFT LANE. FOR A RIGHT LANE CLOSURE, REVERSE THE TRAFFIC CONTROL.

THIS DETAIL MAY BE USED FOR ROADWAYS WITH EITHER TWO OR THREE LANES IN EACH DIRECTION.

THE EXACT NUMBER, LOCATION, AND SPACING OF ALL SIGNS AND DEVICES SHALL BE ADJUSTED TO FIT FIELD CONDITIONS AS APPROVED BY THE ENGINEER.

THE SPACING BETWEEN TRAFFIC CONTROL SIGNS SHOULD BE ADJUSTED TO NOT CONFLICT WITH AND SHOULD PROVIDE A DESIRABLE MINIMUM OF 200 FEET CLEARANCE TO EXISTING SIGNS THAT WILL REMAIN IN PLACE.

ALL SIGNS ARE 48"x48" UNLESS OTHERWISE NOTED. IF NECESSARY DUE TO SPACE CONSTRAINTS IN URBAN AREAS, 36" X 36" SIGNS MAY BE USED IF APPROVED BY DISTRICT TRAFFIC UNIT.

"WO" SIGNS ARE THE SAME AS "W" SIGNS EXCEPT THE BACKGROUND IS ORANGE.

SIGNS THAT WILL BE IN PLACE LESS THAN 7 CONTINUOUS DAYS AND NIGHTS, OR THAT WILL BE PLACED IN A CLOSED LANE, MAY BE MOUNTED ON PORTABLE SUPPORTS.

ANY SIGNS TEMPORARY OR EXISTING, WHICH CONFLICT WITH TRAFFIC CONTROL "IN USE" SHALL BE REMOVED OR COVERED AS NEEDED AND AS APPROVED BY THE ENGINEER.

REMOVE PAVEMENT MARKINGS AND PLACE TEMPORARY PAVEMENT MARKING, REMOVABLE TAPE IF LANE CLOSURE IS TO BE IN PLACE FOR 4 OR MORE CONTINUOUS DAYS AND NIGHTS.

ON UNDIVIDED ROADWAYS, OMIT THE SIGNS SHOWN ON LEFT SIDE OF ROAD.

W20-1A, G20-1 AND G20-2A SIGNS ARE NOT REQUIRED IF THE LANE CLOSURE IS WITHIN A LARGER WORK ZONE WHERE THESE SIGNS ARE ALREADY PRESENT.

OMIT G20-1 SIGNS IF LENGTH OF WORK AREA IS 2 MILES OR LESS.

CONSIDER GEOMETRICS WHEN LOCATING SIGNS AND ARROWBOARDS SO THE APPROACHING DRIVER HAS A CLEAR VIEW OF THE ARROWBOARDS AND LANE CLOSURE DRUMS.

PLACE THE ARROWBOARD AS CLOSE AS POSSIBLE TO THE BEGINNING OF THE LANE CLOSURE TAPER, PREFERABLY ON THE SHOULDER OR TERRACE.

CHANNELIZING DEVICES PLACED ADJACENT TO WORK AREA SHALL BE PULLED BACK FROM THE TRAVEL LANE WHEN WORK IS NOT IN PROGRESS.

BARRICADES IN A CLOSED LANE THAT MUST BE MOVED FOR A WORK OPERATION SHALL BE IMMEDIATELY RE-ESTABLISHED UPON COMPLETION OF THE OPERATION OR, FOR CONTINUING OPERATIONS, AT THE END OF EACH WORKING DAY.

WARNING LIGHTS ARE NOT REQUIRED IF THE LANE CLOSURE IS A DAYTIME ONLY OPERATION.

TABLE 1
TAPER AND BUFFER SPACE
FOR 12' LANE WIDTH

S	L	BUFFER SPACE
25	125'	55'
30	180'	85'
35	245'	120'
40	320'	170'
45	540'	220'
50	600'	280'
55	660'	335'

FOR LANE WIDTH OTHER THAN 12':

L = WS AT 45 MPH OR GREATER

$L = \frac{WS^2}{60}$ AT 40 MPH OR LESS

L = TAPER LENGTH IN FEET

S = NON-CONSTRUCTION SPEED LIMIT (MPH)

W = WIDTH OF LANE CLOSURE

LEGEND

TYPE III BARRICADE WITH ATTACHED SIGN

SIGN ON PERMANENT SUPPORT

TRAFFIC CONTROL DRUM WITH TYPE "C" STEADY BURN LIGHT

TRAFFIC CONTROL DRUM

FLASHING ARROW BOARD

DIRECTION OF TRAFFIC

REMOVING PAVEMENT MARKING (SEE GENERAL NOTES)

WORK AREA

TRAFFIC CONTROL, SINGLE LANE CLOSURE, NON-FREEWAY/EXPRESSWAY

STATE OF WISCONSIN
DEPARTMENT OF TRANSPORTATION

APPROVED
June 2016 — DATE
/S/ Peter Amakobe Atepe
STATEWIDE WORK ZONE SAFETY ENGINEER
FHWA

6

S.D.D. 15 D 20-4

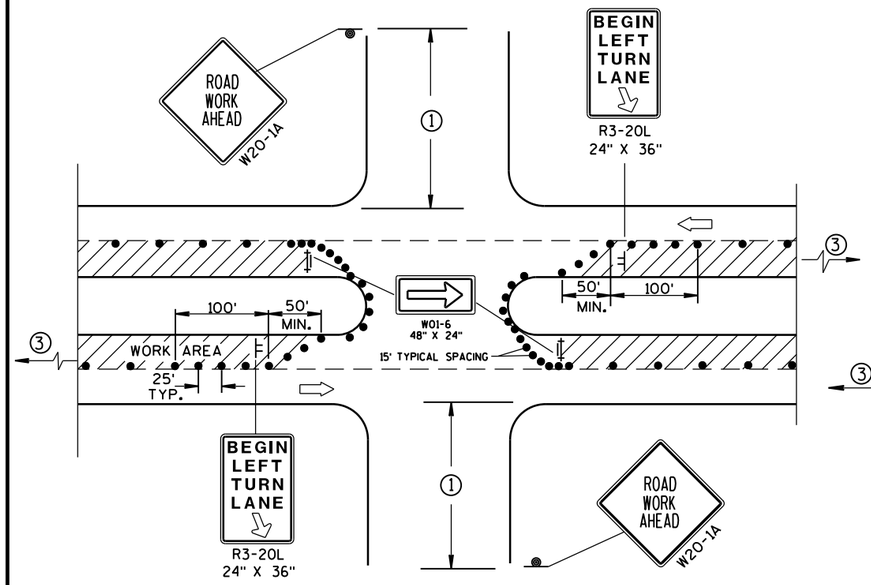

DETAIL A

FOR LEFT LANE CLOSURE AT INTERSECTION OR MEDIAN OPENING

PROVIDE TURN LANES AT INTERSECTIONS WHENEVER STAGING OF WORK ALLOWS. TAPER AND TURN LANE LENGTHS BASED ON FIELD CONDITIONS AS APPROVED BY THE ENGINEER.

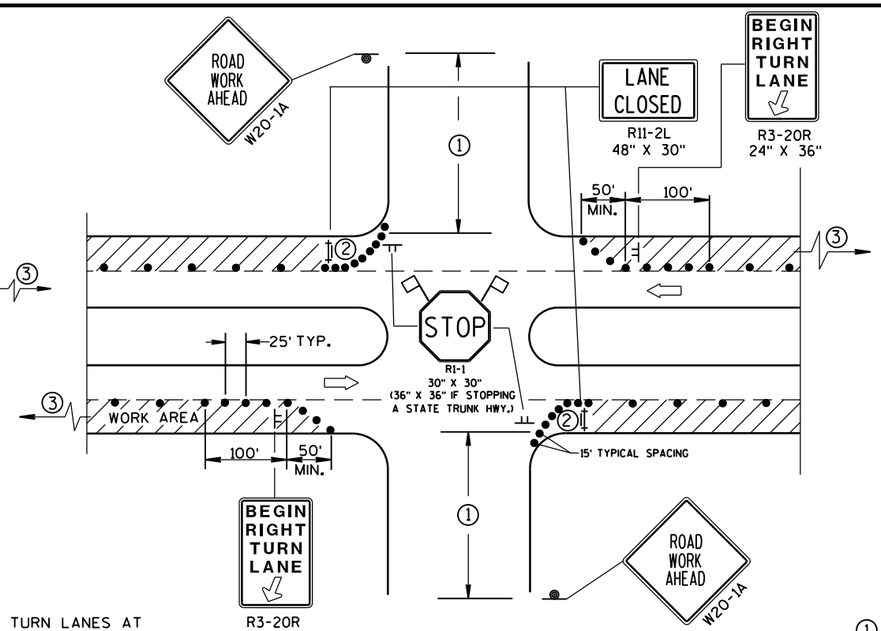

DETAIL B

FOR RIGHT LANE CLOSURE AT INTERSECTION

GENERAL NOTES

THE EXACT NUMBER, LOCATION, AND SPACING OF ALL SIGNS AND DEVICES SHALL BE ADJUSTED TO FIT FIELD CONDITIONS AS APPROVED BY THE ENGINEER.

THE SPACING BETWEEN SIGNS SHOULD BE ADJUSTED TO NOT CONFLICT WITH AND SHOULD PROVIDE A DESIRABLE MINIMUM OF 200 FEET CLEARANCE TO EXISTING SIGNS THAT WILL REMAIN IN PLACE.

ALL SIGNS ARE 48"x48" UNLESS OTHERWISE NOTED. IF NECESSARY DUE TO SPACE CONSTRAINTS IN URBAN AREAS, 36" X 36" SIGNS MAY BE USED IF APPROVED BY DISTRICT TRAFFIC UNIT.

"WO" SIGNS ARE THE SAME AS "W" SIGNS EXCEPT THE BACKGROUND IS ORANGE.

SIGN LAYOUTS SHALL BE IN ACCORDANCE WITH THE FHWA'S MANUAL OF STANDARD HIGHWAY SIGNS OR THE WISCONSIN STANDARD SIGN PLATES.

SIGNS THAT WILL BE IN PLACE LESS THAN 7 CONTINUOUS DAYS AND NIGHTS, OR THAT WILL BE PLACED IN A CLOSED LANE, MAY BE MOUNTED ON PORTABLE SUPPORTS.

ANY SIGNS TEMPORARY OR EXISTING, WHICH CONFLICT WITH TRAFFIC CONTROL "IN USE" SHALL BE REMOVED OR COVERED AS NEEDED AND AS APPROVED BY THE ENGINEER.

CHANNELIZING DEVICES PLACED ADJACENT TO WORK AREA SHALL BE PULLED BACK FROM THE TRAVEL LANE WHEN WORK IS NOT IN PROGRESS.

BARRICADES IN A CLOSED LANE THAT MUST BE MOVED FOR A WORK OPERATION SHALL BE IMMEDIATELY RE-ESTABLISHED UPON COMPLETION OF THE OPERATION OR, FOR CONTINUING OPERATIONS, AT THE END OF EACH WORKING DAY.

① 500' TYPICAL OR AT LAST INTERSECTION, WHICHEVER IS CLOSER.
350' IF 35-40 MPH.
200' IF 25-30 MPH.

② ALSO USE BARRICADE AND 15-FOOT TYPICAL DRUM SPACING AT COMMERCIAL DRIVEWAYS.

③ SEE SEPARATE LANE CLOSURE DETAIL FOR ADDITIONAL TRAFFIC CONTROL.

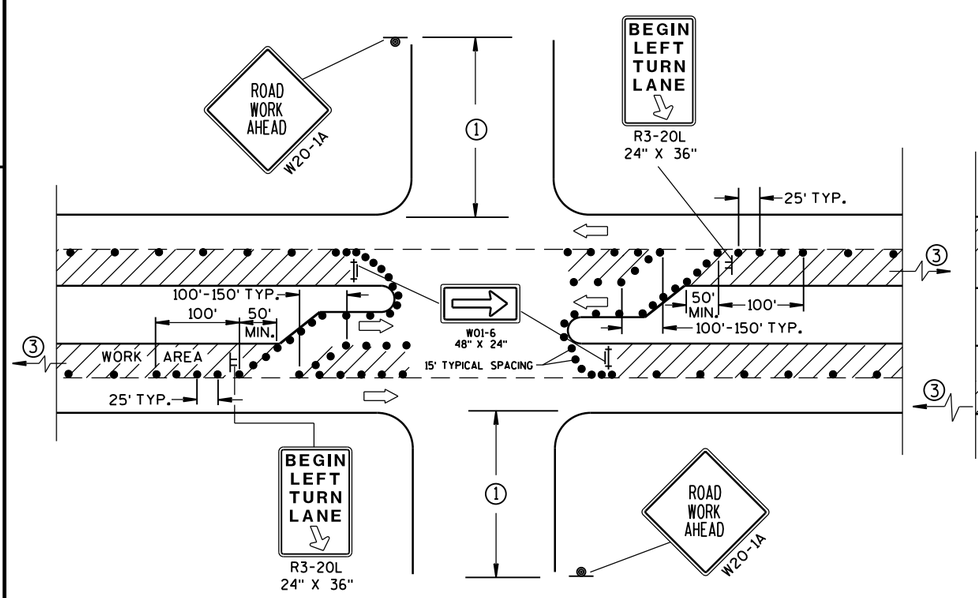

DETAIL C

FOR LEFT LANE CLOSURE AT INTERSECTION OR MEDIAN OPENING (WITH LEFT TURN BAY OPEN)

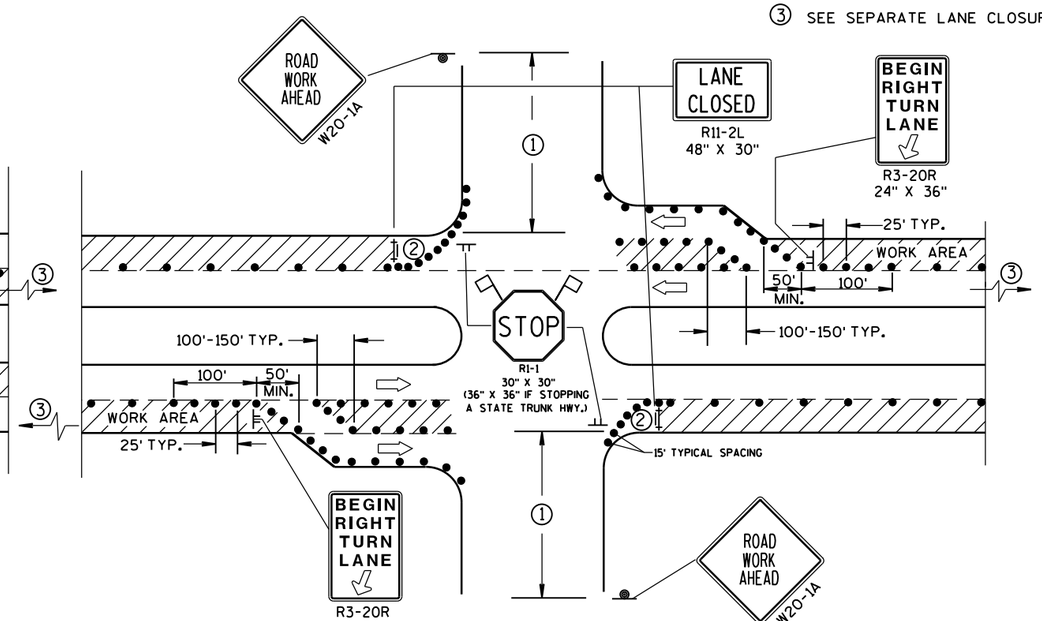

DETAIL D

FOR RIGHT LANE CLOSURE AT INTERSECTION (WITH RIGHT TURN BAY OPEN)

LEGEND

- TRAFFIC CONTROL DRUM
- SIGN ON PERMANENT SUPPORT
- SIGN ON TEMPORARY SUPPORT (5' MIN. MOUNTING HEIGHT)
- TYPE III BARRICADE WITH ATTACHED SIGN AND TYPE "A" WARNING LIGHT (FLASHING)
- DIRECTION OF TRAFFIC
- FLAGS, 16" X 16" MIN., (ORANGE)
- WORK AREA

TRAFFIC CONTROL, INTERSECTION WITHIN SINGLE LANE CLOSURE

STATE OF WISCONSIN
DEPARTMENT OF TRANSPORTATION

APPROVED

June 2016 — DATE

/S/ Peter Anakobe Atepe — STATEWIDE WORK ZONE TRAFFIC SAFETY ENGINEER

FHWA

LEGEND

- TRAFFIC CONTROL DRUM
- SIGN ON PERMANENT SUPPORT
- DIRECTION OF TRAFFIC
- FLASHING ARROW BOARD
- WORK AREA

GENERAL NOTES

THIS DETAIL IS TYPICAL FOR CLOSING THE RIGHT SHOULDER. FOR CLOSING THE LEFT SHOULDER, REVERSE THE TRAFFIC CONTROL.

THIS DETAIL MAY BE USED FOR DIVIDED ROADWAYS WITH ANY NUMBER OF TRAVEL LANES.

THE EXACT NUMBER, LOCATION AND SPACING OF ALL SIGNS AND DEVICES SHALL BE ADJUSTED TO FIT FIELD CONDITIONS AS APPROVED BY THE ENGINEER.

ALL SIGNS ARE 48" X 48" UNLESS OTHERWISE NOTED.

SIGN LAYOUTS SHALL BE IN ACCORDANCE WITH THE FHWA'S MANUAL OF STANDARD HIGHWAY SIGNS OR THE WISCONSIN STANDARD SIGN PLATES.

SIGNS THAT WILL BE IN PLACE LESS THAN 7 CONTINUOUS DAYS AND NIGHTS MAY BE MOUNTED ON PORTABLE SUPPORTS.

ANY SIGNS TEMPORARY OR EXISTING, WHICH CONFLICT WITH TRAFFIC CONTROL "IN USE" SHALL BE REMOVED OR COVERED AS NEEDED AND AS APPROVED BY THE ENGINEER.

CHANNELIZING DEVICES PLACED ADJACENT TO THE WORK AREA SHALL BE PULLED BACK FROM THE TRAVEL LANE WHEN WORK IS NOT IN PROGRESS.

WHEN A RAMP INTERSECTS THE FACILITY ON WHICH THE WORK IS BEING PERFORMED, ADDITIONAL TRAFFIC CONTROLS SHALL BE PROVIDED AS SPECIFIED IN THE PLANS AND/OR THE SPECIAL PROVISIONS OR AS APPROVED BY THE ENGINEER.

*FOR SHORT DURATION SHOULDER WORK OF LESS THAN ONE HOUR, THE W21-5a SIGN MAY BE OMITTED.

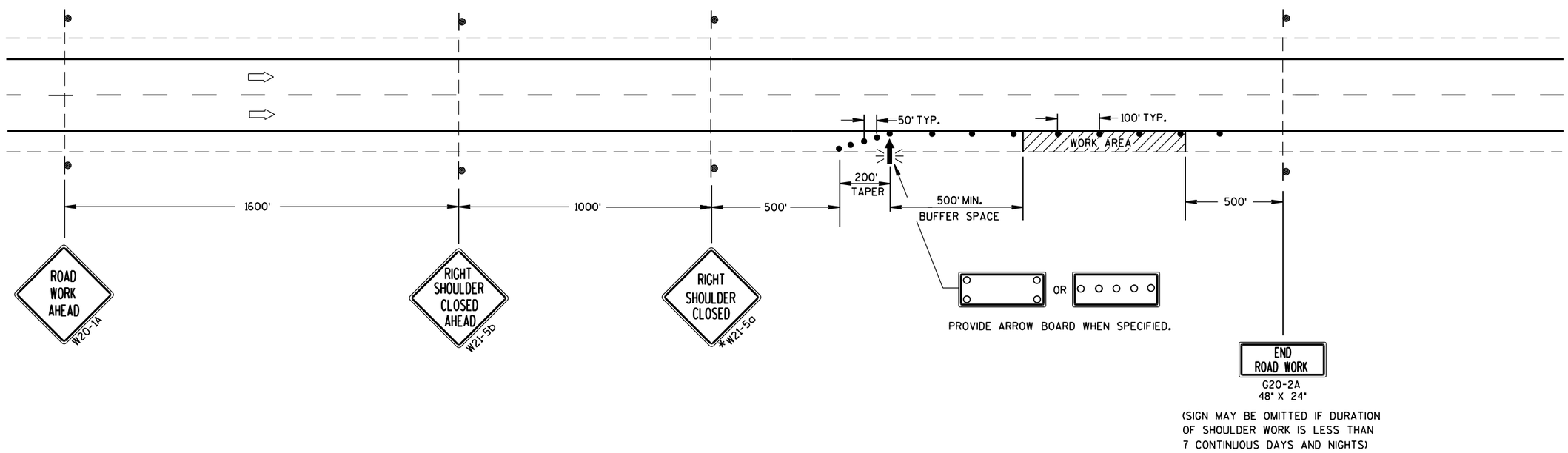

TRAFFIC CONTROL SHOULDER CLOSURE ON DIVIDED ROADWAY, SPEEDS GREATER THAN 40 MPH

STATE OF WISCONSIN
DEPARTMENT OF TRANSPORTATION

APPROVED

June 2016 — DATE

/S/ Peter Amakobe Atepe — STATEWIDE WORK ZONE TRAFFIC SAFETY ENGINEER

FHWA

GENERAL NOTES

THE EXACT NUMBER, LOCATION AND SPACING OF ALL SIGNS AND DEVICES SHALL BE ADJUSTED TO FIT FIELD CONDITIONS AS APPROVED BY THE ENGINEER.

ALL SIGNS ARE 48" X 48" UNLESS OTHERWISE NOTED. IF NECESSARY DUE TO SPACE CONSTRAINTS IN URBAN AREAS, 36" X 36" SIGNS MAY BE USED IF APPROVED BY DISTRICT TRAFFIC UNIT.

"WO" SIGNS ARE THE SAME AS "W" SIGNS EXCEPT THE BACKGROUND IS ORANGE.

SIGNS THAT WILL BE IN PLACE LESS THAN 7 CONTINUOUS DAYS AND NIGHTS MAY BE MOUNTED ON PORTABLE SUPPORTS.

ANY SIGNS TEMPORARY OR EXISTING, WHICH CONFLICT WITH TRAFFIC CONTROL "IN USE" SHALL BE REMOVED OR COVERED AS NEEDED AND AS APPROVED BY THE ENGINEER.

W20-1A AND G20-2A SIGNS ARE NOT REQUIRED IF THE WORK AREA IS WITHIN A LARGER WORK ZONE WHERE THESE SIGNS ARE ALREADY PRESENT. G20-2A SIGNS MAY ALSO BE OMITTED IF DURATION OF WORK IS LESS THAN 7 CONTINUOUS DAYS AND NIGHTS.

CHANNELIZING DEVICES PLACED ADJACENT TO THE WORK AREA SHALL BE PULLED BACK FROM THE TRAVEL LANE WHEN WORK IS NOT IN PROGRESS.

TABLE A

S \ W	SHOULDER TAPER LENGTH (FEET) 4	6	8	10	BUFFER SPACE (FEET)
30	20	30	40	50	200
35	30	45	55	70	250
40	40	55	75	90	305
45	60	90	120	150	360
50	70	100	135	170	425
55	75	110	150	185	495

SHOULDER TAPER LENGTH = $\frac{1}{3}L$

W = SHOULDER WIDTH (FEET)
S = NON-CONSTRUCTION SPEED LIMIT (MPH)

TAPER LENGTH

$L = WS$ AT 45 MPH OR GREATER

$L = \frac{WS^2}{60}$ AT 40 MPH OR LESS

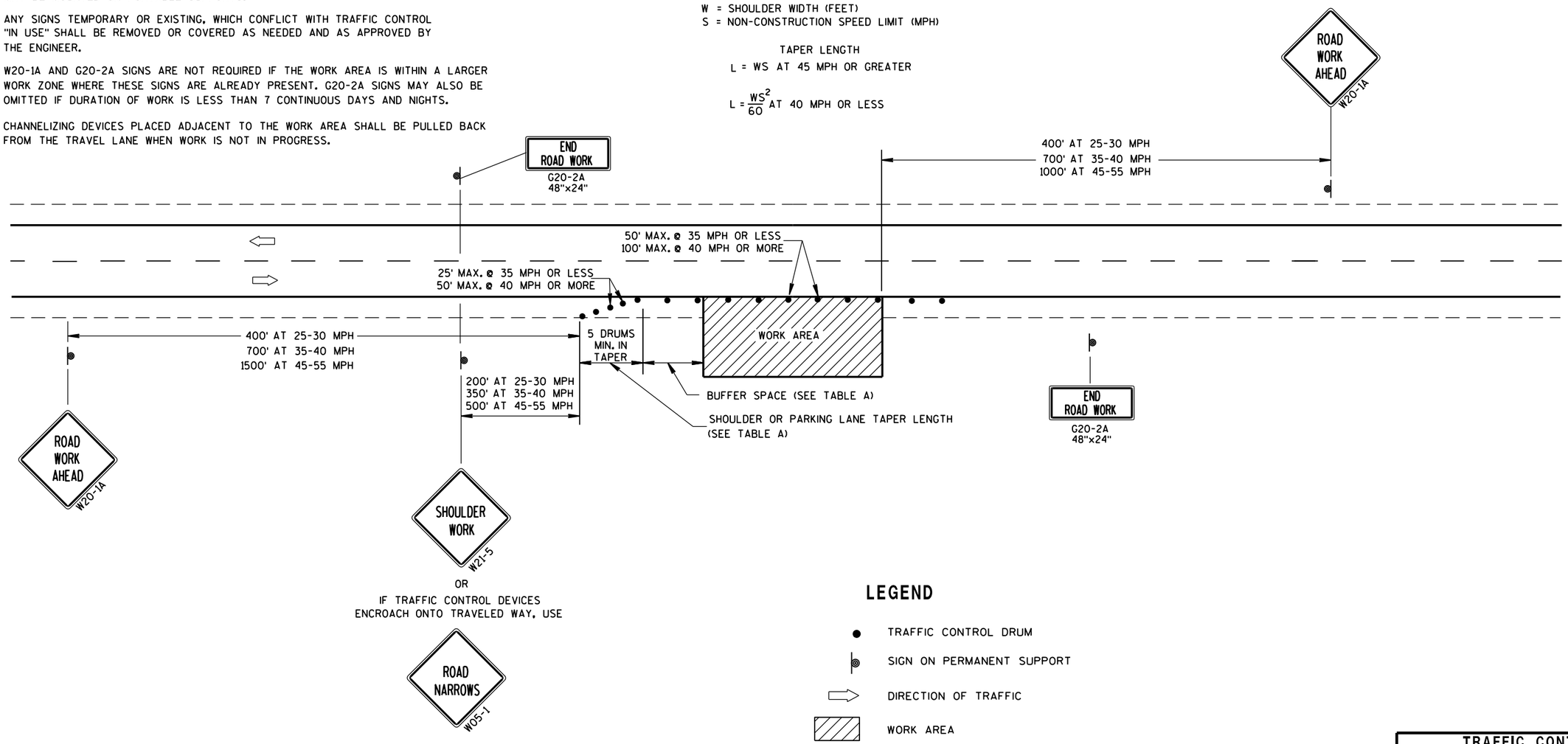

LEGEND

- TRAFFIC CONTROL DRUM
- SIGN ON PERMANENT SUPPORT
- DIRECTION OF TRAFFIC
- WORK AREA

TRAFFIC CONTROL, WORK ON SHOULDER OR PARKING LANE, UNDIVIDED ROADWAY

STATE OF WISCONSIN
DEPARTMENT OF TRANSPORTATION

APPROVED

July 14, 2015 — DATE

/S/ Peter Amakobe Atepe — STATEWIDE WORK ZONE TRAFFIC SAFETY ENGIN

FHWA

6

S.D.D. 15 D 28-3

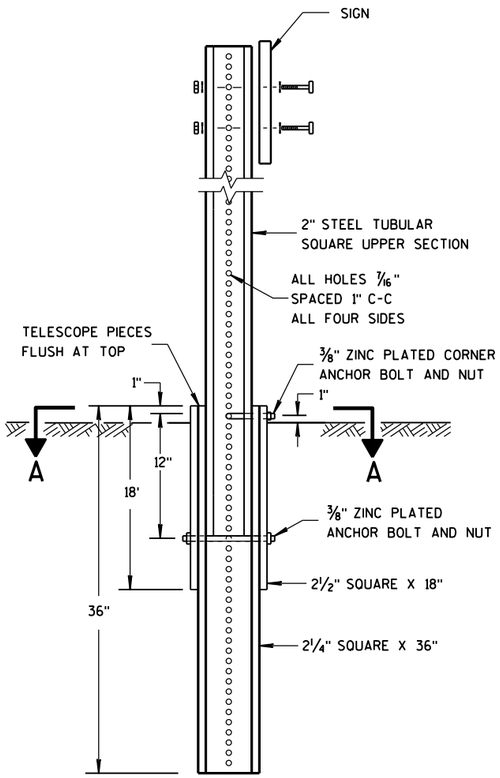

DETAIL OF TUBULAR STEEL SIGN POST

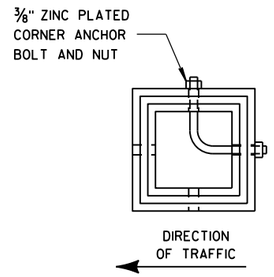

SECTION A-A

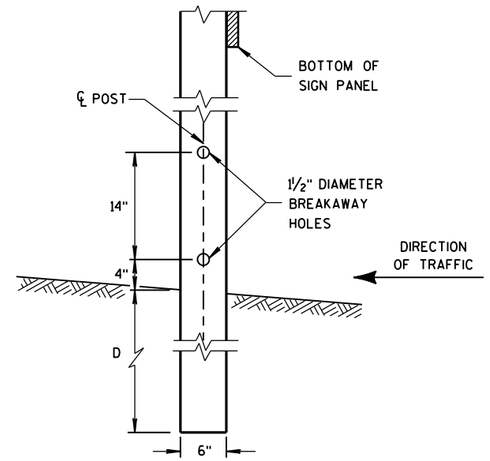

4"x6" WOOD POST MODIFICATION

GENERAL NOTES

1. 6 FEET FROM THE EDGE OF PAVEMENT (EDGE LINE LOCATION) UNLESS OTHERWISE DIRECTED BY THE PROJECT ENGINEER. LATERAL OFFSET SHOULD BE ADJUSTED TO AVOID THE DITCH FLOWLINE.
2. THE EXISTENCE OF CURB AND GUTTER DOES NOT IN ITSELF MANDATE THE VERTICAL CLEARANCE ILLUSTRATED. THAT HEIGHT IS TYPICALLY MEASURED WHERE THERE IS SIDEWALK ADJACENT TO THE ROADWAY OR PARKING IS PERMITTED. IN THE ABSENCE OF SIDEWALK, VERTICAL CLEARANCE IS MEASURED FROM THE TOP OF THE CURB. IF NO SIDEWALK AND NO PARKING, VERTICAL CLEARANCE MAY BE REDUCED TO 5 FOOT MINIMUM. OFFSET OF SIGNS IS MEASURED FROM THE CURB FLOWLINE.
3. FOR SIGNS REQUIRING 4 POSTS, SPACE INTERMEDIATE POSTS EVENLY.

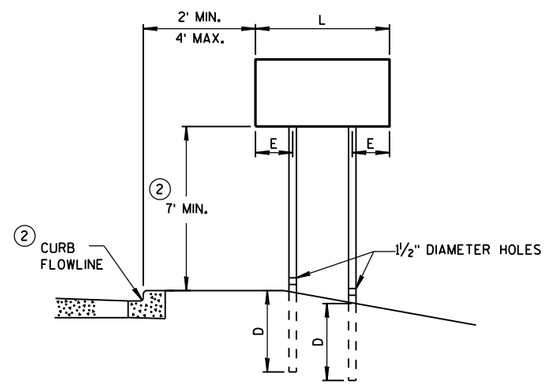

URBAN AREA

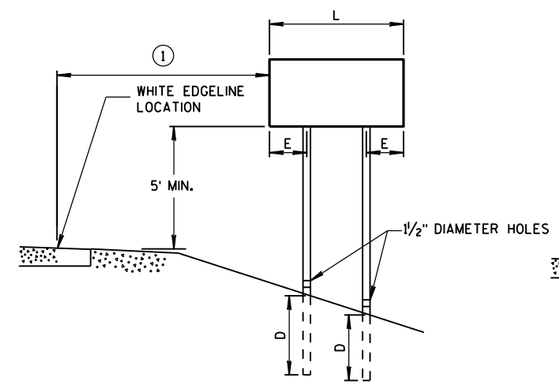

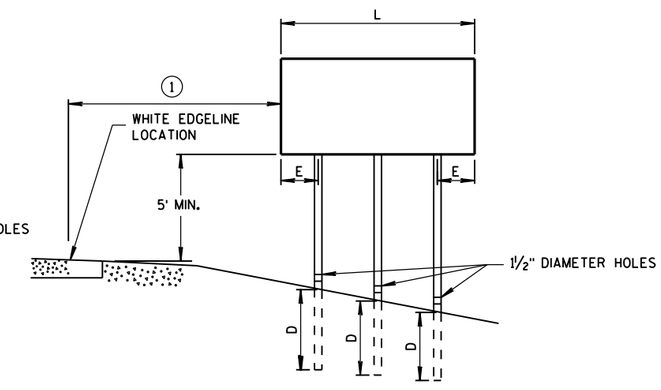

RURAL AREA

POST MOUNTING DETAIL FOR TEMPORARY TRAFFIC CONTROL FIXED MESSAGE SIGNS

TUBULAR STEEL POSTS

AREA OF SIGN INSTALLATION (SQ. FT.)	NUMBER OF REQUIRED TUBULAR STEEL POSTS
9 OR LESS	1
GREATER THAN 9 LESS THAN OR EQUAL TO 18	2
GREATER THAN 18 LESS THAN OR EQUAL TO 27	3

SIGNS WIDER THAN 3 FEET OR LARGER THAN 9 SQ. FT. SHALL BE MOUNTED ON MULTIPLE POSTS (SEE ABOVE TABLE).

SIGNS LARGER THAN 27 SQ. FT. SHALL NOT BE MOUNTED ON TUBULAR STEEL POSTS.

WOOD POST EMBEDMENT DEPTH

AREA OF SIGN INSTALLATION (SQ. FT.)	D (MIN)
20 OR LESS	4'
GREATER THAN 20	5'

4" X 6" WOOD POST

POST SPACING REQUIREMENTS		NUMBER OF WOOD POSTS REQUIRED
L	E	
48" OR LESS AND LESS THAN 20 SQ. FT.	-	1
LESS THAN 60"	12"	2
60" TO 120"	L/5	2
GREATER THAN 120" LESS THAN 168"	12"	3
168" AND GREATER	12"	4

SEE NOTE 3

TEMPORARY TRAFFIC CONTROL SIGN MOUNTING

STATE OF WISCONSIN
DEPARTMENT OF TRANSPO

6

S.D.D. 15 D 38-2a

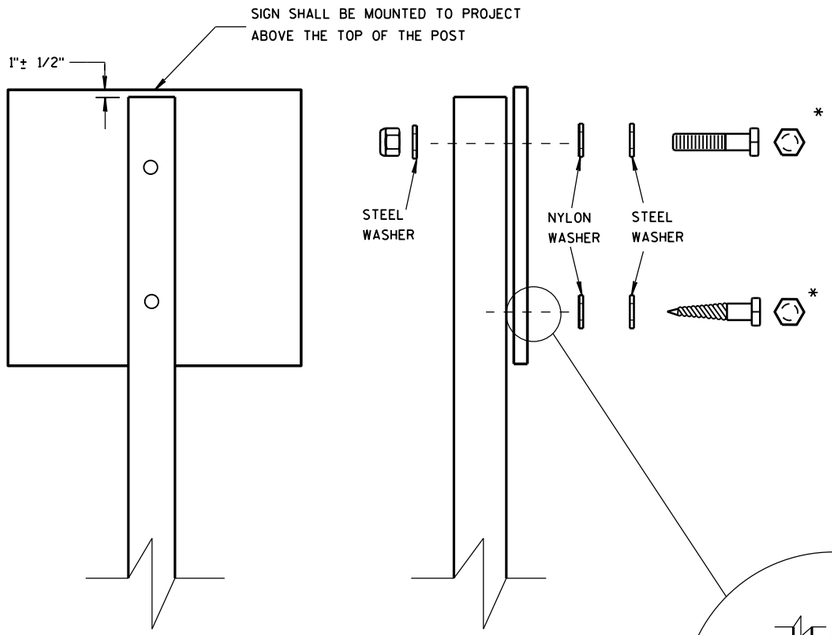

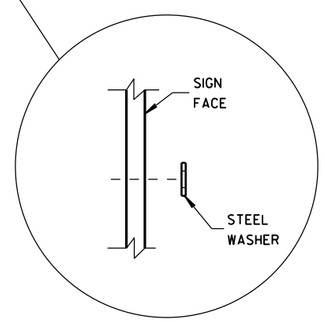

WASHER PLACEMENT WHEN SIGN HAS OTHER THAN TYPE H OR TYPE F FACE

NUTS, BOLTS AND LAGS USED FOR MOUNTING SIGNS SHALL HAVE HEXAGONAL HEADS AND SHALL BE EITHER:

A. HOT DIP GALVANIZED IN ACCORDANCE WITH ASTM DESIGNATION: A 153, CLASS D, OR SC 3

B. ELECTRO-GALVANIZED IN ACCORDANCE WITH ASTM DESIGNATION: B 633, TYPE III, SC 3

THREADS ON BOLTS AND NUTS SHALL BE MANUFACTURED WITH SUFFICIENT ALLOWANCE FOR THE CADMIUM PLATE OR GALVANIZED COATING TO PERMIT THE NUTS TO RUN FREELY ON THE BOLTS.

WOOD POSTS (4" x 4" or 4" x 6")

LAG SCREWS - 3/8" X 3"

MACHINE BOLTS - 5/16" X 6-1/2" OR 7" LENGTH W/ NUTS

SQUARE STEEL POSTS (2" x 2")

MACHINE BOLTS - 3/8" X 3-1/4" LENGTH W/ NUTS

RIVETS - 9/32" (6605-9-6) BULB-TITE, TRI-FOLD, ALUMINUM BODY/MANDREL O.D. FLANGE .720-.765 INCH, GRIP RANGE .042-.375 INCH

WASHERS (ALL POSTS) -

1-1/4" O.D. X 3/8" I.D. X 1/16" STEEL

1-1/4" O.D. X 3/8" I.D. X .080 NYLON FOR ALL TYPE H SIGNS

* TWO DIFFERENT FASTENING SYSTEMS ARE SHOWN FOR ILLUSTRATION PURPOSES. ON ANY INDIVIDUAL SIGN, EITHER ONE OR THE OTHER SYSTEM SHALL BE USED. ACTUAL NUMBER OF FASTENERS PER SIGN VARIES WITH THE SIGN AREA. FOR A SINGLE POST INSTALLATION, ALL SIGNS GREATER THAN 9 SQ. FT. REQUIRE THE USE OF 3 FASTENERS.

6

6

S.D.D. 15 D 38-2b

S.D.D. 15 D 38-2b

ATTACHMENT OF SIGNS TO POSTS

STATE OF WISCONSIN
DEPARTMENT OF TRANSPORTATION

APPROVED

June 2017 — DATE

/S/ Andrew Heldtke — WORK ZONE ENG

FHWA

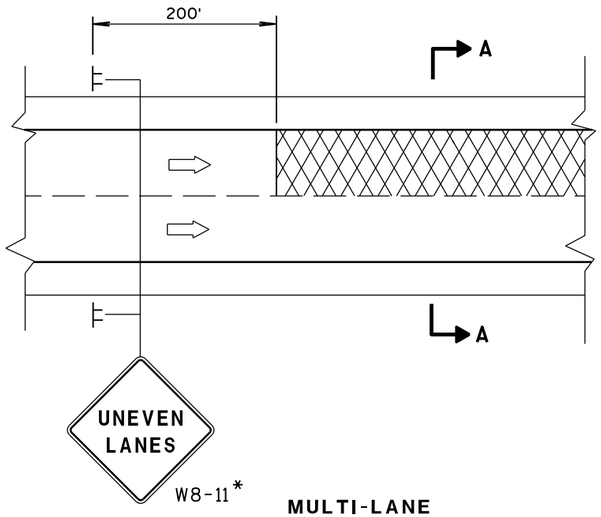

MULTI-LANE

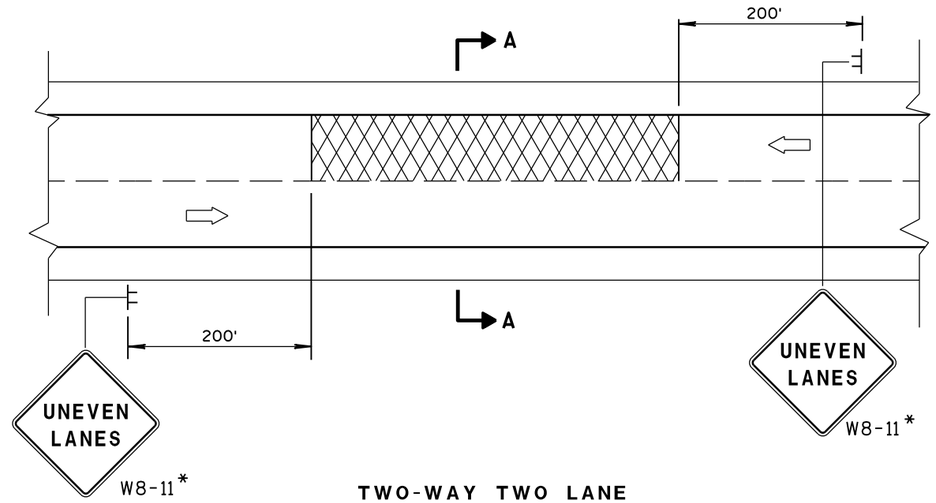

TWO-WAY TWO LANE

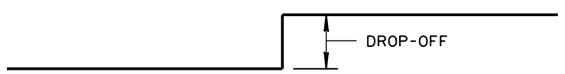

SECTION A-A

OR

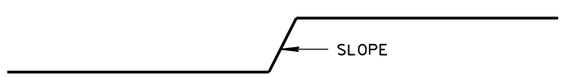

SECTION A-A

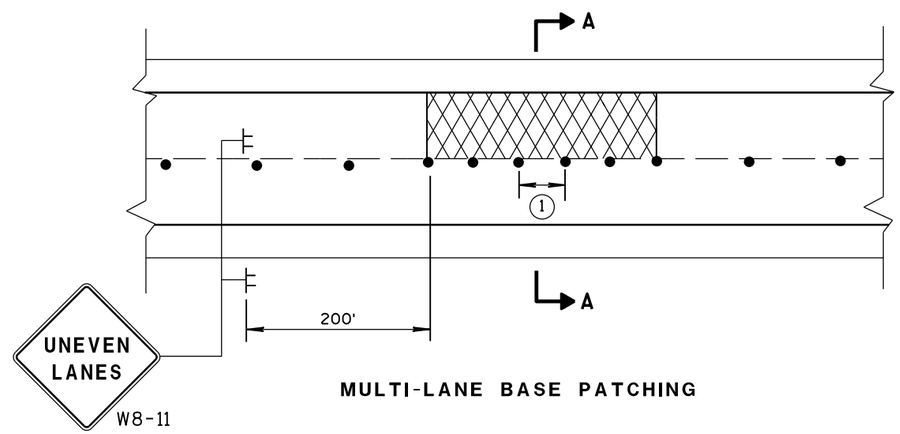

MULTI-LANE BASE PATCHING

ADJACENT LANE DROP-OFFS

GENERAL NOTES

FOR SPOT LOCATIONS USE ENGINEERING JUDGEMENT WHEN PLACING ADDITIONAL SIGNS.

ALL SIGNS ARE 48" X 48" UNLESS OTHERWISE NOTED.

"WO" SIGNS ARE THE SAME AS "W" SIGNS EXCEPT THE BACKGROUND IS ORANGE.

* IF THE DROP-OFF IS CONTINUOUS ALONG THE PROJECT, PLACE ADDITIONAL SIGNS EVERY 1/2 MILE.

(1) USE CLOSER SPACING WHEN DELINEATING DROP-OFF.

LEGEND

- SIGN ON TEMPORARY SUPPORT
- TRAFFIC CONTROL DRUM
- DIRECTION OF TRAFFIC
- WORK AREA WITH DROP-OFF

D	SIGN (C)
< 2" WITH A SLOPE STEEPER THAN 3:1	LOW SHOULDER W08-9
2" < 6" WITH A SLOPE STEEPER THAN 3:1	SHOULDER DROP-OFF W8-9A PROVIDE A 3:1 OR FLATTER SLOPE OF MATERIAL ADJACENT TO THE PAVEMENT

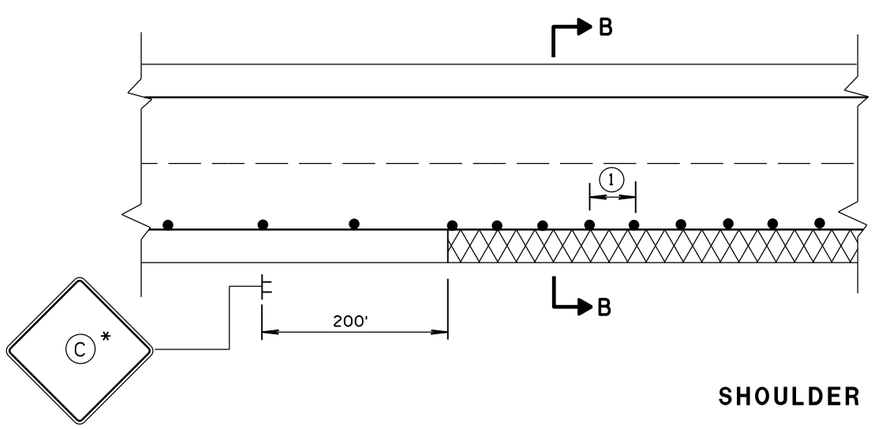

SHOULDER DROP-OFFS

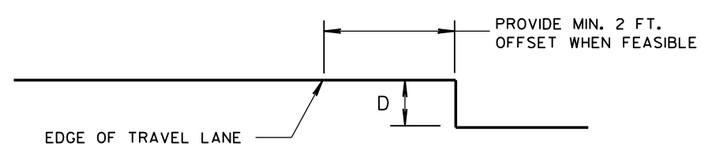

SECTION B-B

TRAFFIC CONTROL, DROP-OFF SIGNING

STATE OF WISCONSIN
DEPARTMENT OF TRANSPORTATION

APPROVED
March, 2017 /S/ Andrew Heldtke
DATE WORK ZONE ENGI
FHWA

6

S.D.D. 15 D 39-1

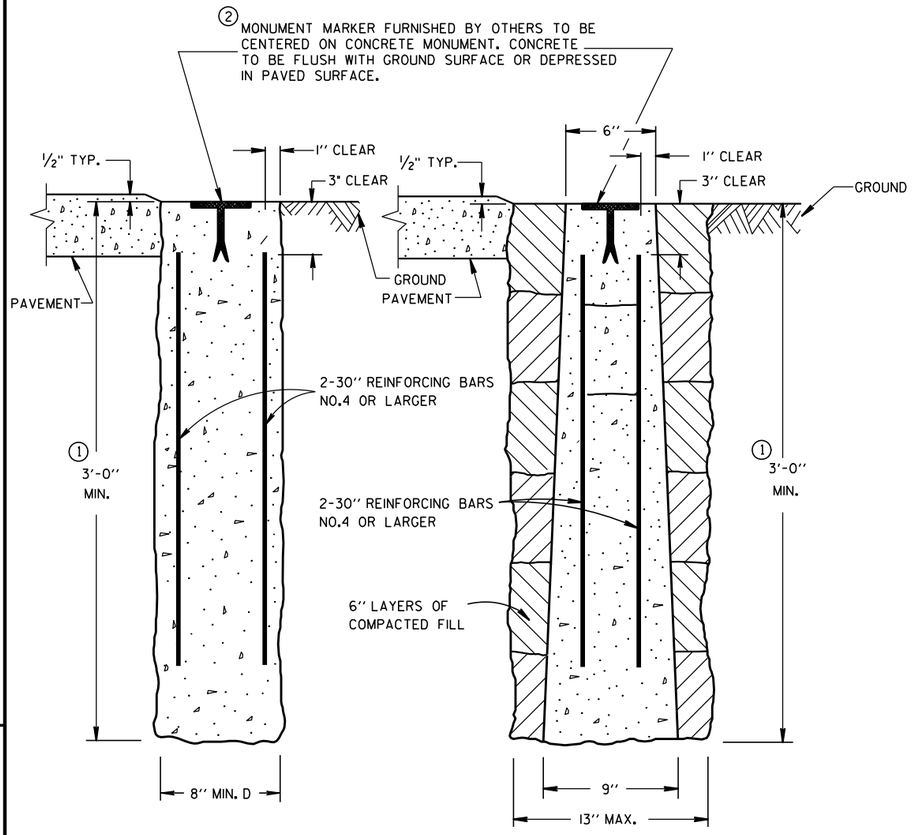

CAST-IN-PLACE PRECAST

CONCRETE MONUMENTS

TYPE A

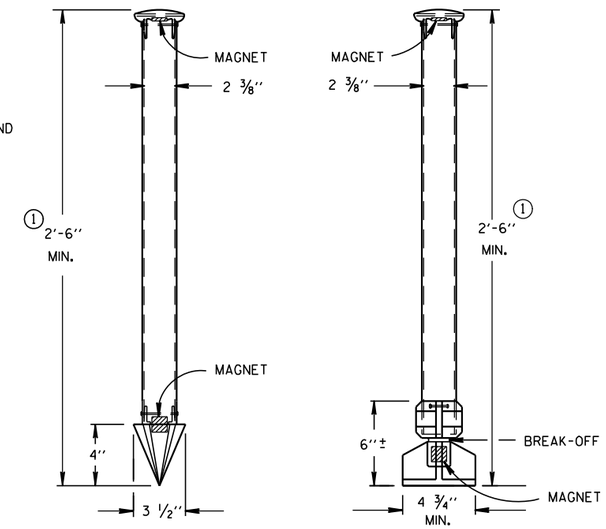

TYPE C TYPE D

DRIVE-IN MONUMENT BREAK-OFF MONUMENT

ALUMINUM MONUMENTS

(INCLUDES MARKER)

GENERAL NOTES

DETAILS OF CONSTRUCTION, MATERIALS AND WORKMANSHIP NOT SHOWN ON THIS DRAWING SHALL CONFORM TO THE PERTINENT REQUIREMENTS OF THE STANDARD SPECIFICATIONS AND THE APPLICABLE SPECIAL PROVISIONS.

DETAILED DRAWINGS OF PROPOSED ALTERNATE DESIGNS FOR METAL MONUMENTS OR MONUMENT COVERS SHALL BE SUBMITTED TO THE ENGINEER FOR APPROVAL.

INSTALLED METAL MONUMENTS MUST BE EASILY DETECTED WITH A DIP NEEDLE. INSERT PERMANENT MAGNETS SHALL BE ATTACHED NEAR THE TOP AND BOTTOM OF THOSE MONUMENTS CONSTRUCTED OF A METAL ALLOY WHICH IS NOT ATTRACTIVE TO A DIP NEEDLE.

THE CAST IRON MONUMENT COVER SHALL BE A "NON-ROCKING" TYPE. ADJUSTMENT OF THE COVER TO GRADE MAY BE ACCOMPLISHED BY THE USE OF MORTAR AND BRICK, OR BY EITHER PRECAST OR CAST-IN-PLACE REINFORCED CONCRETE GRADE RINGS.

MONUMENTS SHALL BE LOCATED AND PLACED AT THE DIRECTION OF THE ENGINEER.

ALUMINUM MONUMENTS AND MONUMENT COVERS SHALL BE MADE FROM AN ALUMINUM AND MAGNESIUM ALLOY AS DETERMINED BY THE MANUFACTURER.

THE MONUMENT COVERS DETAILED ON THIS DRAWING ARE NOT EQUAL ALTERNATES. MONUMENT COVERS SHALL BE CAST IRON UNLESS ALUMINUM IS SPECIFIED ELSEWHERE IN THE CONTRACT.

MONUMENT SHALL BE CAST-IN-PLACE CONCRETE UNLESS PRECAST CONCRETE OR ALUMINUM MONUMENTS ARE SPECIFIED IN THE CONTRACT OR PERMITTED BY THE ENGINEER.

① MINIMUM LENGTH SHALL BE 4'-0" FOR MONUMENTS INSTALLED IN PAVED AREAS.

② AN OFFICIAL COUNTY MONUMENT MARKER SUPPLIED BY A COUNTY MAY BE REQUIRED FOR SOME SECTION CORNERS AND WITNESS MONUMENTS INSTEAD OF THIS WIS DOT MARKER.

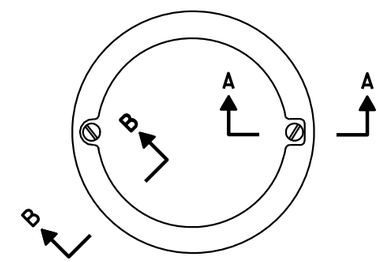

TOP VIEW

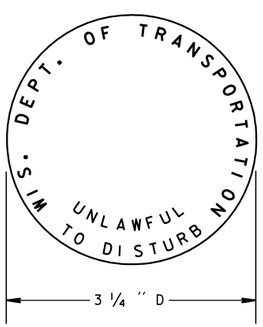

② WIS DOT MONUMENT MARKER LOGO

FOR TYPES "A", "C" & "D"

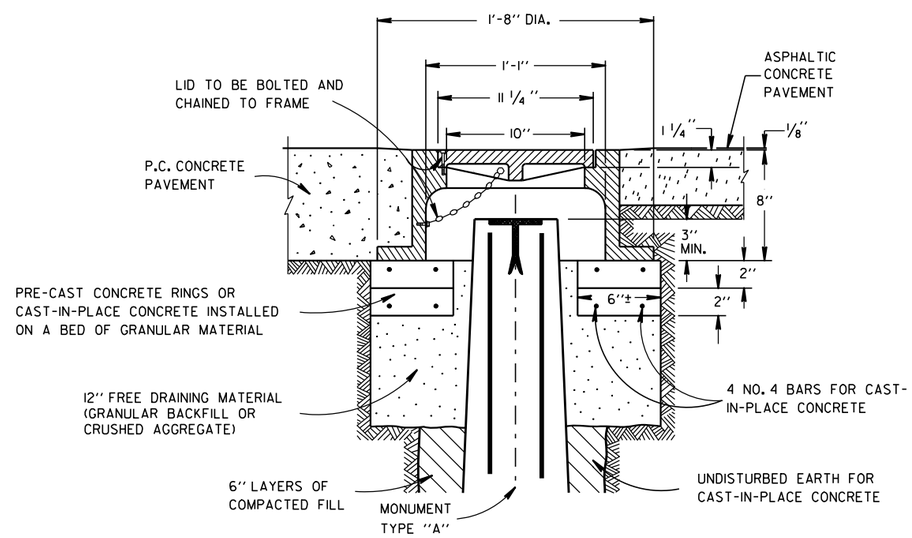

CAST IRON MONUMENT COVER

(APPROXIMATE WEIGHT - 95 LBS.)

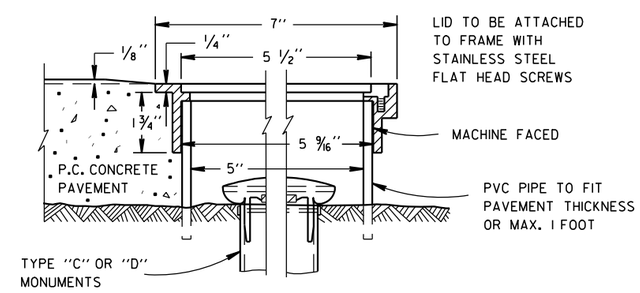

SECTION B-B SECTION A-A

ALUMINUM MONUMENT COVER

(APPROXIMATE WEIGHT 2 LBS)

(FOR CONCRETE PAVEMENT ONLY)

LANDMARK REFERENCE MOUNMENTS AND COVERS

STATE OF WISCONSIN
DEPARTMENT OF TRANSPORTATION

APPROVED

9/22/1999 /S/ Rory L. Rhinesmith

DATE CHIEF ROADWAY DEVELOPMENT ENGINEER

FHWA

359

6

6

S.D.D. 16 A 1-6

S.D.D. 16 A 1-6

NOTES

1. All Signs Type II - Type H Reflective
2. Color:
   Background - Green
   Message - White
3. Message Series - E

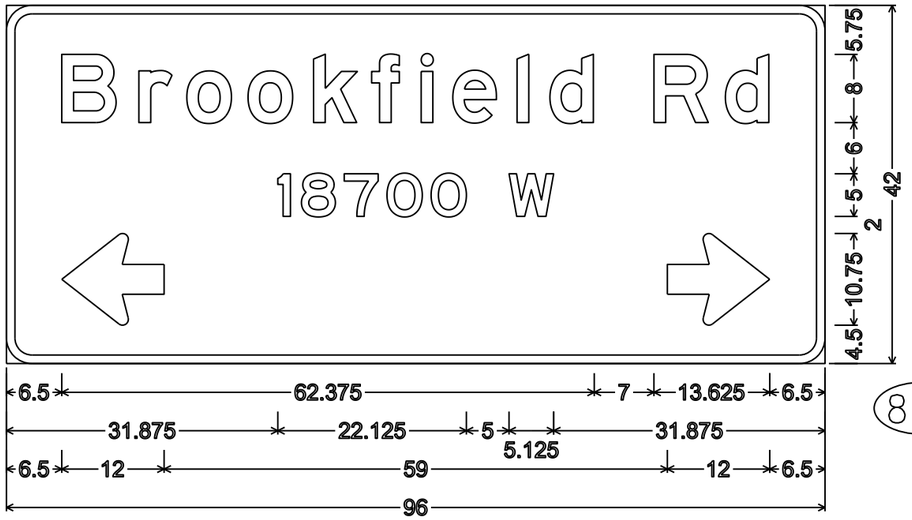

879

D1-61; 3.000" Radius, 1.000" Border

33

98

D1-1; 3.000" Radius, 1.000" Border

91

159

D1-1; 3.000" Radius, 1.000" Border

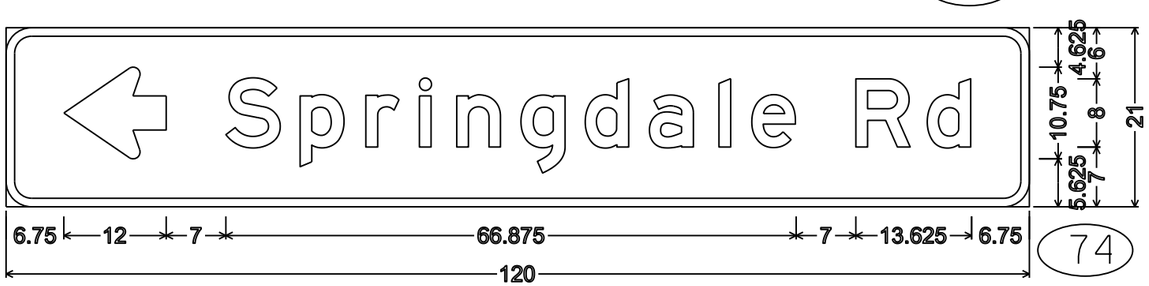

74

D1-1; 3.000" Radius, 1.000" Border

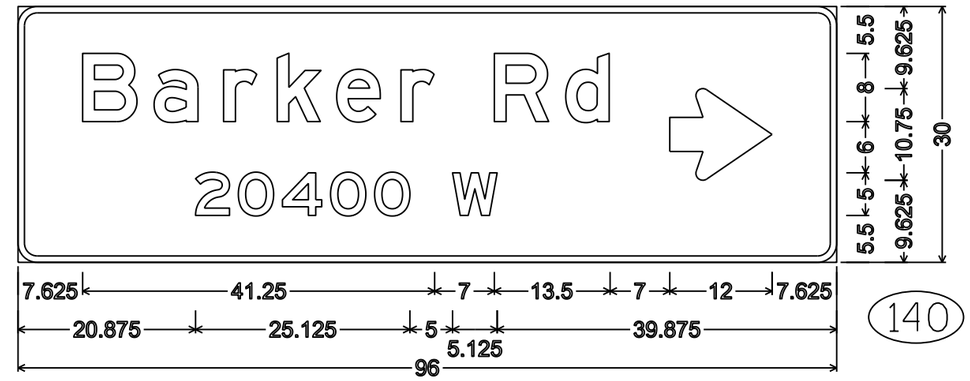

140

D1-1; 2.250" Radius, 0.750" Border

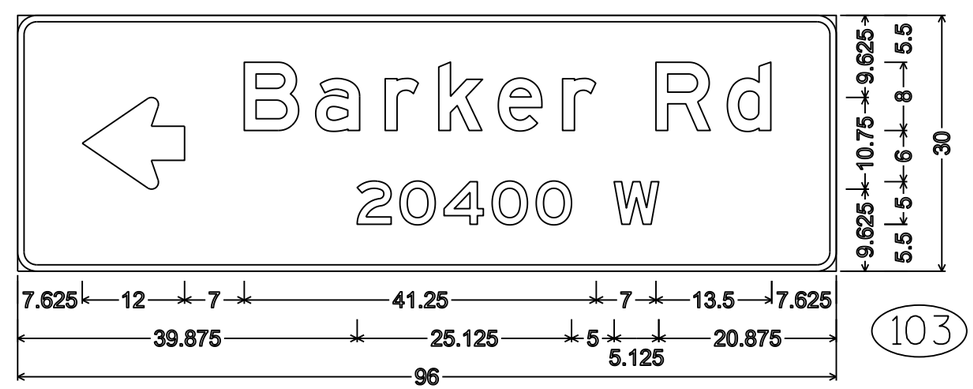

103

D1-1; 2.250" Radius, 0.750" Border

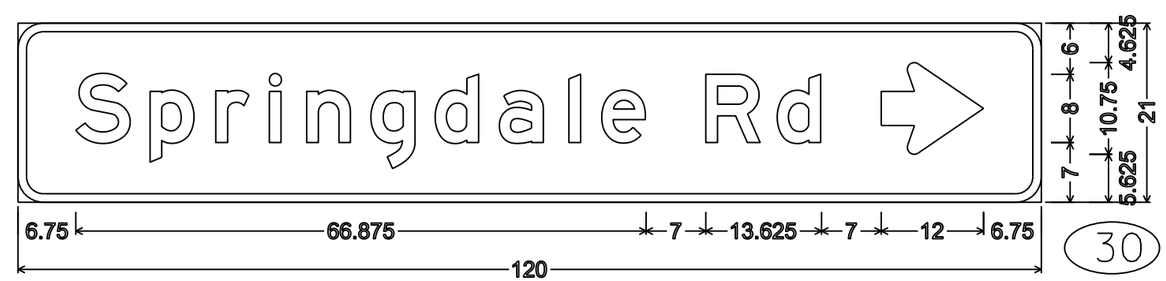

30

D1-1; 3.000" Radius, 1.000" Border

7

7

PROJECT NO: 2025-14-71	HWY: STH 190	COUNTY: WAUKESHA	PERMANENT SIGNING	SHEET NO: 360	E

NOTES

1. All Signs Type II - Type H Reflective
2. Color:
   Background - Green
   Message - White
3. Message Series - E except as noted
4. M1-94H base material is .125" aluminum

D1-1; 3.000" Radius, 1.000" Border

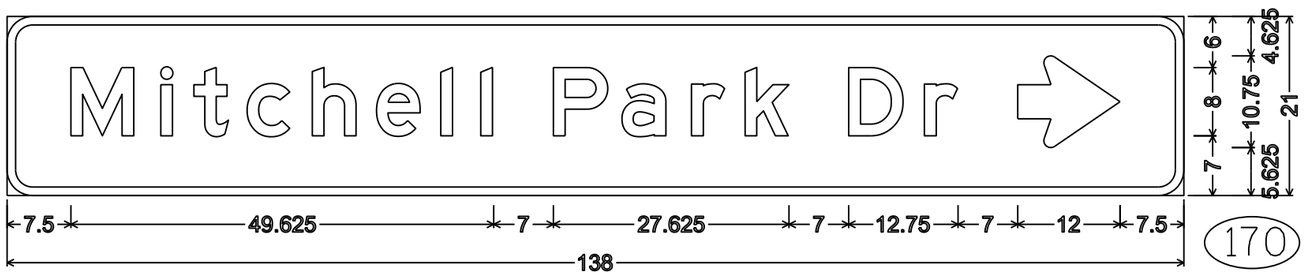

D1-1; 3.000" Radius, 1.000" Border

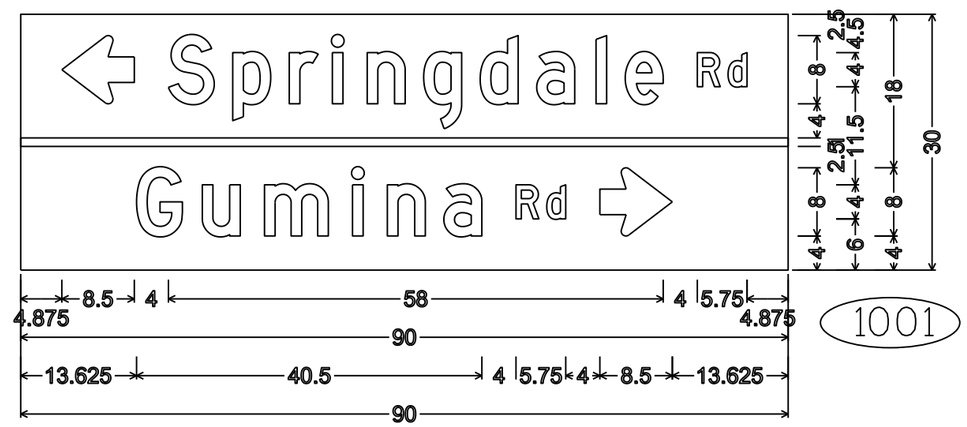

M1-94H; No border,
"Springdale" D; "Rd" D; "Gumina" D; "Rd" D

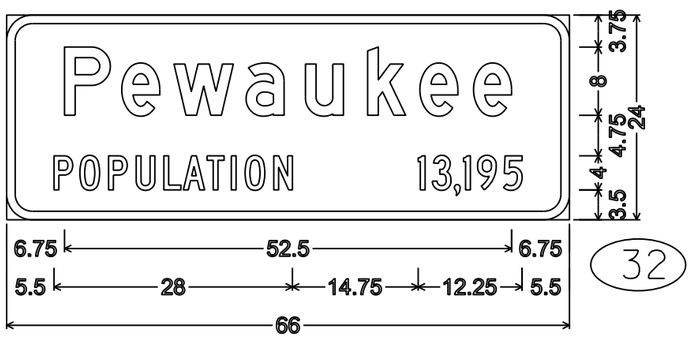

I2-3; 3.000" Radius, 1.000" Border,
"Pewaukee" D; "POPULATION" C; "13,195" C

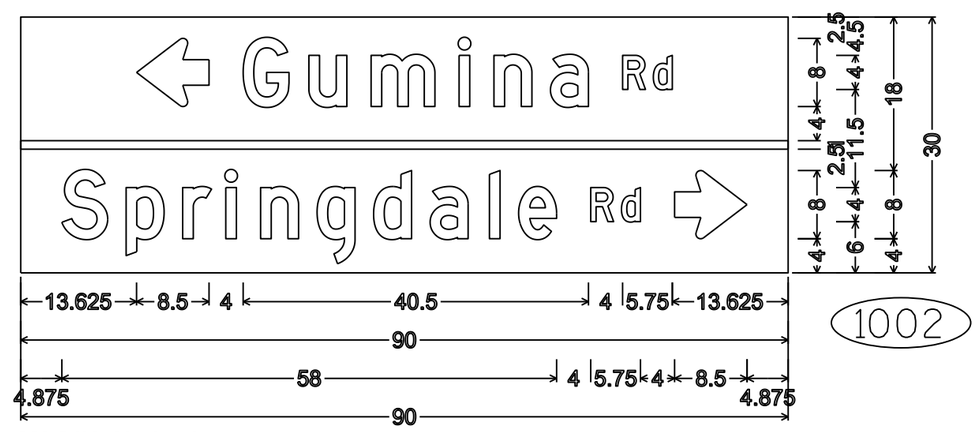

M1-94H; No border,
"Gumina" D; "Rd" D; "Springdale" D; "Rd" D

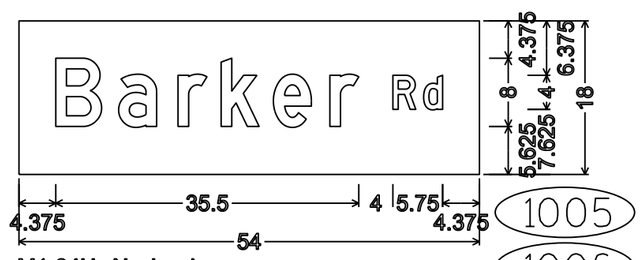

M1-94H; No border,
"Barker" D; "Rd" D

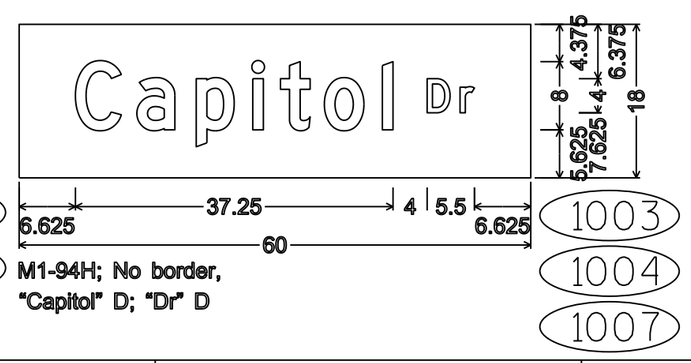

M1-94H; No border,
"Capitol" D; "Dr" D

NOTES

1. Fixed Message Type II Signs - Type F Reflective
2. Color:
   - Background - Orange
   - Message - Black
3. Message Series - C except as noted

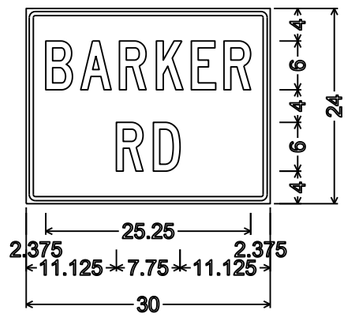

1.125" Radius, 0.500" Border, 0.375" Indent
"BARKER" C; "RD" C;

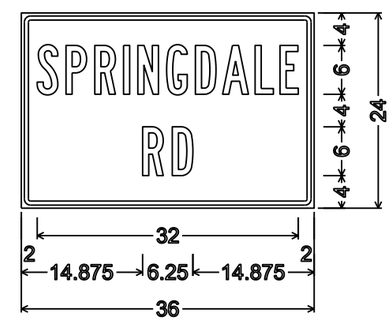

1.125" Radius, 0.500" Border, 0.375" Indent,
"SPRINGDALE" B; "RD" B

7

7

TYPICAL ASSEMBLIES

J1-1

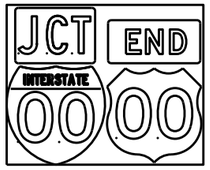

J1-2

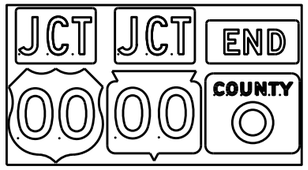

J1-3

J2-1

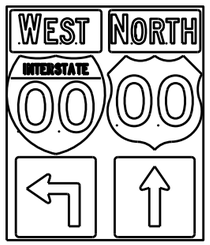

J2-2

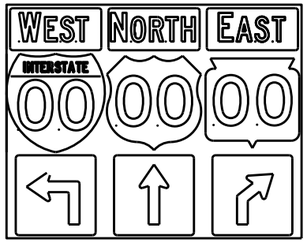

J2-3

JV

(Typical Vertical J-Assembly
See Note 10 and 11)

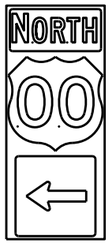

J3-1

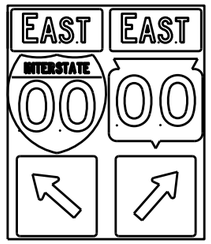

J3-2

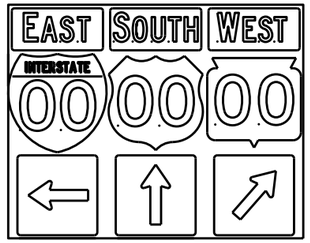

J3-3

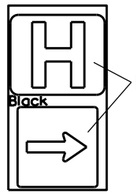

Blue Background

JH-1

J4-1

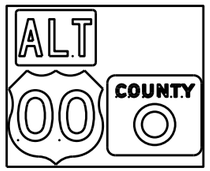

J4-2

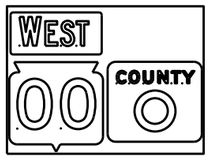

J4-2

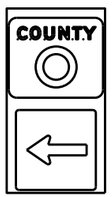

J13-1

J12-1

J32-1

J33-1

J23-1

J22-1

blue background
with interstate

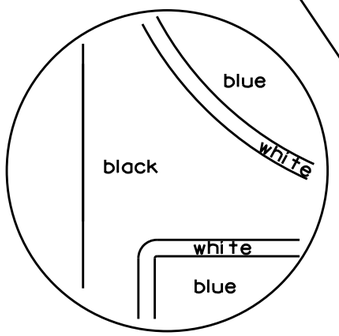

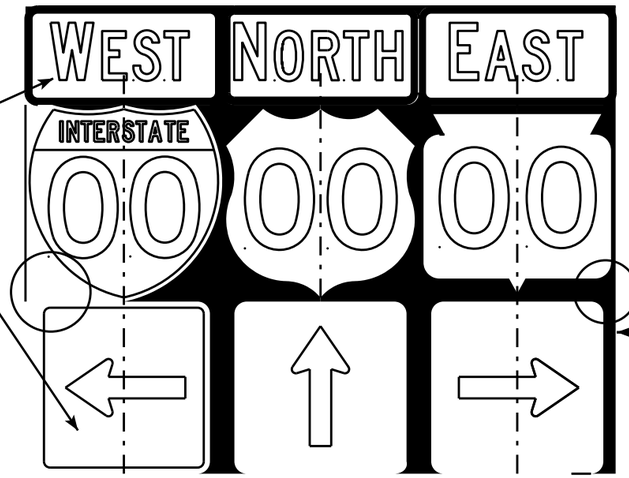

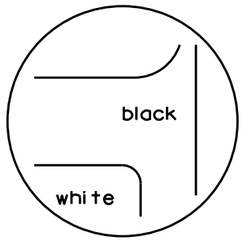

black background

NOTES

1. Signs are Type II - Type H Reflective - reference WIS DOT Standard Specification for HIGHWAY and STRUCTURE CONSTRUCTION latest edition.
2. Color:
   Background - Black Non-reflective
   Message - see Note 5
3. Message Series - See Note 5
4. Corners shall be square or rounded if base material is plywood. If base material is metal the corners shall be rounded.
5. The colors and message spacing on each marker shall be according to the applicable route marker panel specifications.
6. Certain marker heads require the component pieces to be the same color. As an example, all the components used with an M1-1 Interstate marker shall be blue.
7. Single panel j-assemblies shall only be used with route marker shields that are same size. If the route marker shields are different size use multiple piece component.
8. Route assemblies that have 24 inch route shields and have dimensions greater than 48 inches (both vertical and horizontal) shall have one horizontal splice between the arrows and route shields. Vertical splices shall not be used on route assemblies with a horizontal dimension of 144 inches or less. The contractor shall not use more than one vertical joint per sign and the joint shall be between route shields.
9. Route assemblies that have 36 inch shields and have dimensions greater than 48 inchs (both vertical and horizontal) shall have two horizontal splices. One horizontal splice shall be between the cardinal direction and route shields and the other horizontal splice shall be between the arrows and route shields. Vertical splices shall not be used on route assemblies with a horizontal dimension of 144 or less. The contractor shall not use more than one vertical joint per sign and the joint shall be between route shields.
10. All Vertical J Assemblies are given a Sign Code of JV
11. For JV Assemblies that have a mixture of Interstate and non Interstate shields, arrows and cardinals shall be white on blue.

ROUTE MARKERS & COMPONENTS
IN TYPICAL ASSEMBLIES

WISCONSIN DEPT OF TRANSPORTATION

APPROVED Matthew R Rauch
for State Traffic Engineer

DATE 2/06/14 PLATE A2-1S.8

PROJECT NO: | SHEET NO: E

URBAN AREA

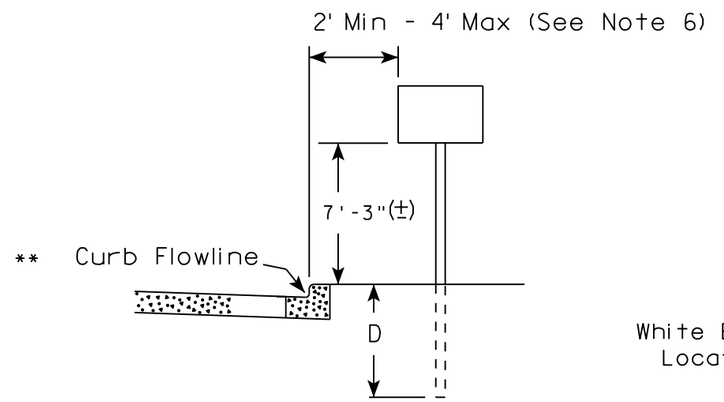

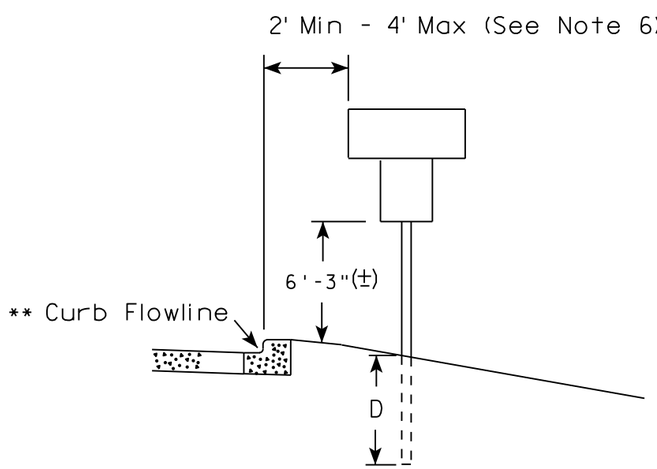

RURAL AREA (See Note 2)

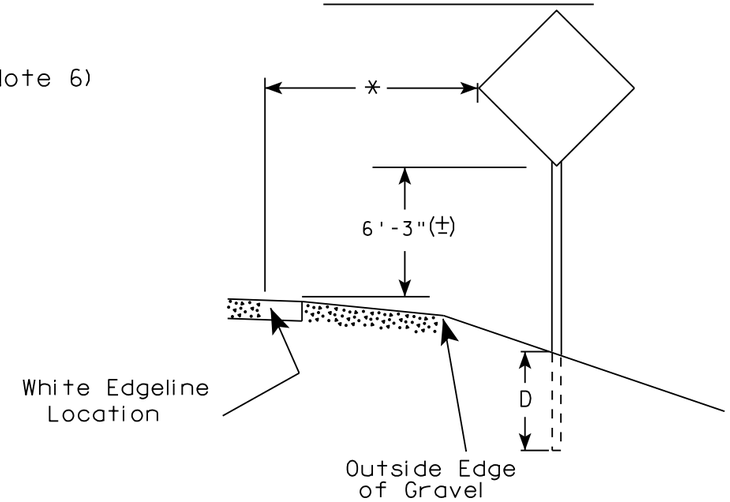

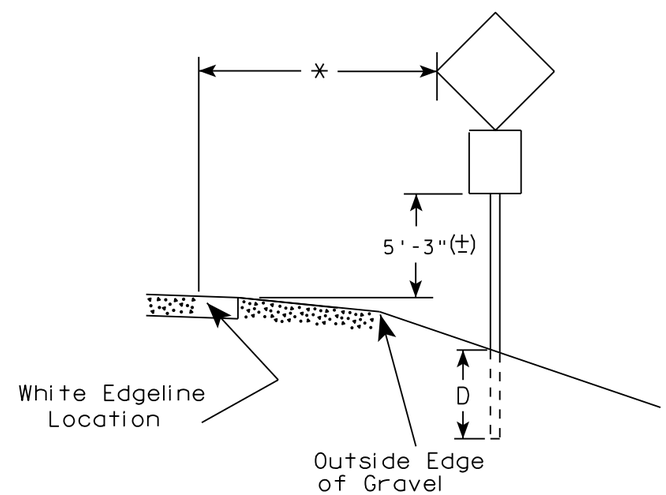

** The existence of curb and gutter does not in itself mandate the vertical clearance illustrated. That height is typically measured where there is sidewalk adjacent to the roadway or parking is permitted. In the absence of sidewalk vertical clearance is measured from the top of the curb. Offset of signs is measured from the flow line.

* 6 feet from edge of a paved shoulder or 12 feet from the edge of pavement (edge line location) or 2 feet from outside edge of gravel, whichever is greater unless directed by project engineer.

GENERAL NOTES

1. Signs wider than 4 feet or 20 sq.ft or larger, shall be mounted on multiple posts. Refer to plate A4-4.
2. If signs are mounted on barrier wall, see A4-10 sign plate.
3. For expressways and freeways, mounting height is 7'- 3" (±) or 6'-3" (±) depending upon existence of a sub-sign.
4. J-Assemblies are considered to be one sign for mounting height.
5. Minimum mounting height for signs mounted on traffic signal poles is 5'- 3" (±).
6. Offset distance shall be consistent with existing signs or consistent throughout length of project.
7. The (±) tolerance for mounting height is 3 inches.
8. Folding signs shall be mounted at a height of 5'-3" (±) or as directd by the Engineer.
9. The Double Arrow sign (W12-1) shall be mounted at a height of 2'-3" (±). The Chevron sign (W1-8), Roundabout Chevron panel (R6-4B), Enhanced Reference Markers, Clearance Markers (W5-52), Mile Markers (D10 series), In Road Object Markers (W5-54) & End of Road Markers (W5-56) shall be mounted at a height of 4'-3" (±).

POST EMBEDMENT DEPTH

Area of Sign Installation (Sq. Ft.)	D (Min)
20 or Less	4'
Greater than 20	5'

TYPICAL INSTALLATION OF PERMANENT TYPE II SIGNS ON SINGLE POSTS

WISCONSIN DEPT OF TRANSPORTATION

APPROVED Matthew R Rauch for State Traffic Engineer

DATE 8/21/17 PLATE NO. A4-3.21

7 7

PROJECT NO:	HWY:	COUNTY:		SHEET NO: 364	E

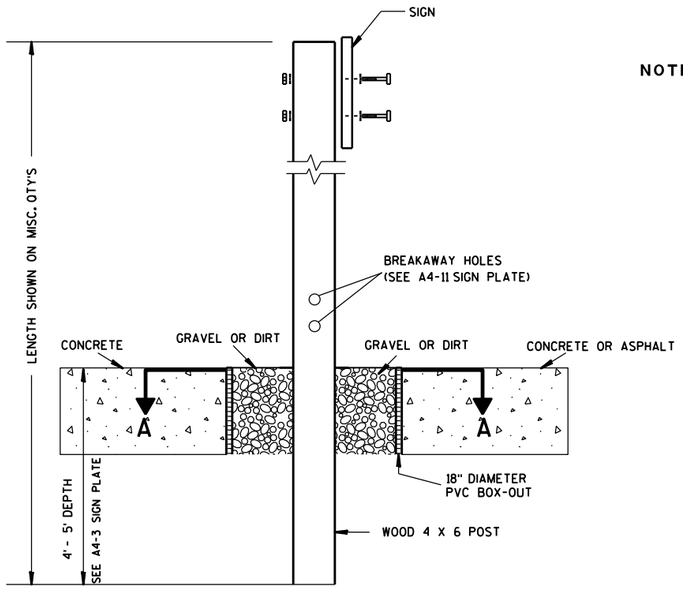

ELEVATION VIEW

DETAIL OF WOOD 4 X 6 SIGN POST IN BOX-OUT

NOTES:
1. ALL MATERIAL TO BE APPROVED BY ENGINEER PRIOR TO INSTALLATION
2. SEE SIGN PLATE A4-8 FOR SIGN HARDWARE REQUIREMENTS
3. 18 INCH X 18 INCH SQUARE BOX-OUTS MAY BE USED FOR INSTALLATIONS IN EXISTING CONCRETE OR ASPHALT LOCATIONS.

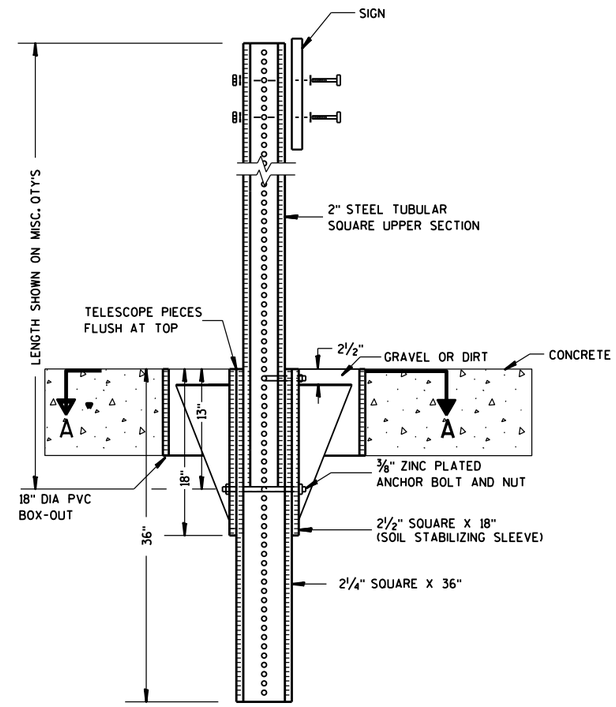

ELEVATION VIEW

DETAIL OF STEEL 2 X 2 SIGN POST IN BOX-OUT

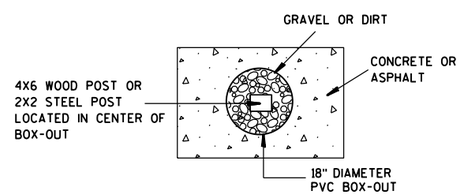

PLAN VIEW

FOR NEW CONCRETE/ASPHALT INSTALLATIONS

SIGN POST
BOX-OUTS
A4-3B

WISCONSIN DEPT OF TRANSPORTATION

APPROVED Matthew R Rauch
for State Traffic Engineer

DATE 1/27/14 PLATE NO. A4-3B.1

365

PROJECT NO:	HWY:	COUNTY:		SHEET NO:	E

FILE NAME : C:\CAEFiles\Projects\tr_stdplate\A43B.DGN PLOT DATE : 27-JAN-2014 09:48 PLOT BY : mscsja PLOT NAME : PLOT SCALE : 13.659812:1.000000 WISDOT/CADDS SHEET 42

URBAN AREA

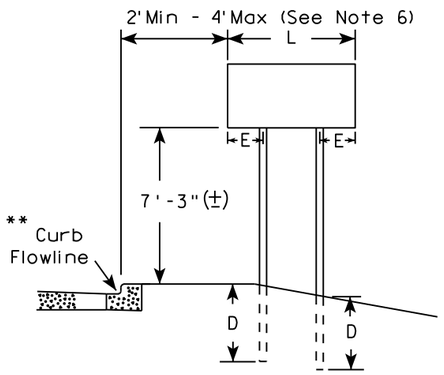

RURAL AREA (See Note 3)

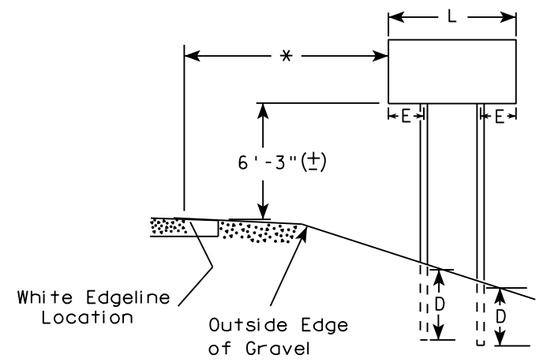

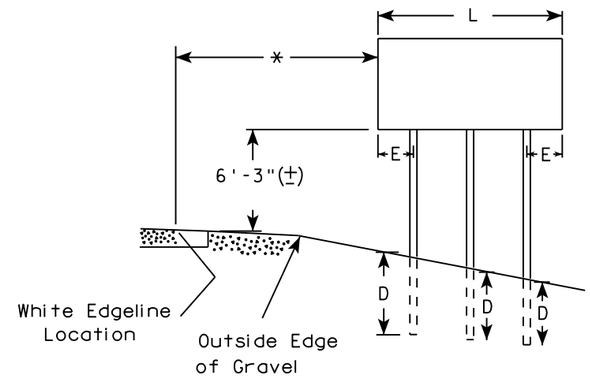

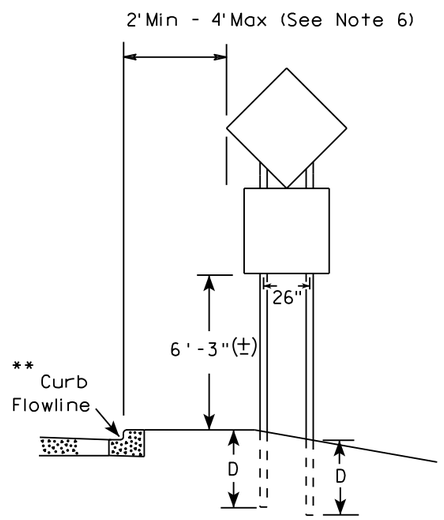

48" DIAMOND WARNING SIGN

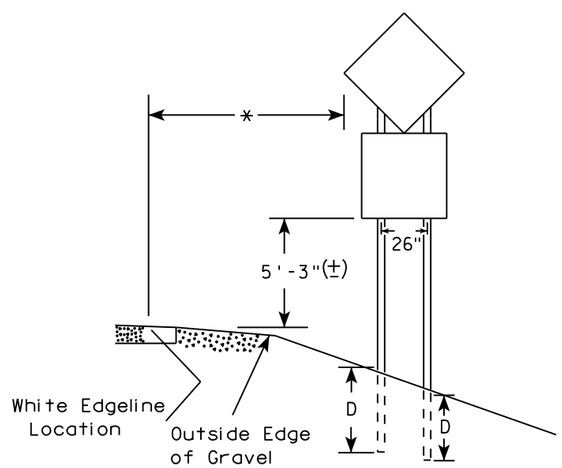

48" DIAMOND WARNING SIGN

SIGN SHAPE OTHER THAN DIAMOND (TWO POSTS REQUIRED)	
L	E
*** Greater than 48" Less than 60"	12"
60" to 108"	L/5

SIGN SHAPE OTHER THAN DIAMOND (THREE POSTS REQUIRED)	
L	E
Greater than 108" to 144"	12"

GENERAL NOTES

1. For 3 or 4 post installations, individual post spacing shall be greater than 3'-6".
2. See tables below for required number of posts.
3. For expressways and freeways, mounting height is 7'-3" (±) or 6'-3" (±) depending upon existence of sub-sign.
4. The (±) tolerance for mounting height is 3 inches.
5. J-Assemblies are considered to be one sign for mounting height.
6. Offset distance shall be consistent with existing signs or consistent throughout length of project.
7. Folding signs shall be mounted at a height of 5'-3" (±) or as directed by the engineer.
8. The Double Arrow sign (W12-1) shall be mounted at a height of 2'-3" (±). The Chevron sign (W1-8), Roundabout Chevron panel (R6-4B), Clearance Markers (W5-52), Mile Markers (D10 series), In Road Object Markers (W5-54) & End of Road Markers (W5-56) shall be mounted at a height of 4"-3" (±).

* 6 feet from edge of a paved shoulder or 12 feet from the edge of pavement (edge line location) or 2 feet from outside edge of gravel, whichever is greater unless directed by project engineer.

** The existence of curb and gutter does not in itself mandate the vertical clearance illustrated. That height is typically measured where there is sidewalk adjacent to the roadway or parking is permitted. In the absence of sidewalk vertical clearance is measured from the top of the curb. Offset of signs is measured from the flow line.

*** See A4-3 sign plate for signs 4' or less in width and less than 20 S.F. in area.

POST EMBEDMENT DEPTH

Area of Sign Installation (Sq. Ft.)	D (Min)
20 or Less	4'
Greater than 20	5'

TYPICAL INSTALLATION OF TYPE II SIGNS ON MULTIPLE POSTS

WISCONSIN DEPT OF TRANSPORTATION

APPROVED Matthew R Rauch
For State Traffic Engineer

DATE 8/21/17 PLATE NO. A4-4.15

7

7

PROJECT NO:	HWY:	COUNTY:		SHEET NO: 366	E

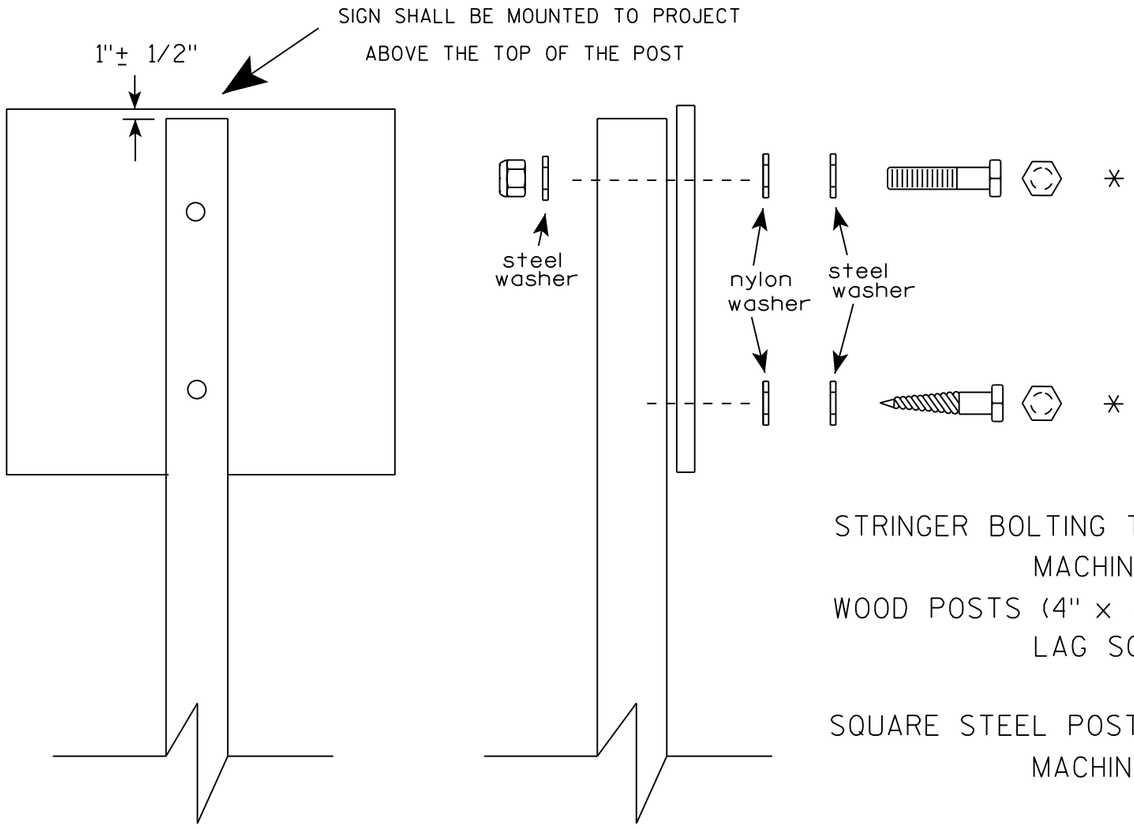

Nuts, bolts and lags used for mounting signs shall have hexagonal heads and shall be either :

a. Hot dip galvanized in accordance with ASTM Designation: A 153, Class D, or SC 3

b. Electro-galvanized in accordance with ASTM Designation : B 633, TYPE III, SC 3.

Threads on bolts and nuts shall be manufactured with sufficient allowance for the cadmium plate or galvanized coating to permit the nuts to run freely on the bolts.

STRINGER BOLTING TO ALUMINUM SIGNS (SEE SIGN PLATE A4-18)

MACHINE BOLTS - 5/16" X 1-3/4" Length w/ lock nuts

WOOD POSTS (4" x 4" or 4" x 6")

LAG SCREWS - 3/8" X 3" (NO STRINGERS ON BACK OF SIGN)

3/8" X 4" (STRINGERS ON BACK OF SIGN)

SQUARE STEEL POSTS (2" x 2")

MACHINE BOLTS - 3/8" X 3-1/4" Length w/ nuts (NO STRINGER ON BACK OF SIGN)

3/8" X 5" Length w/ nuts (STRINGERS ON BACK OF SIGN)

RIVETS - 9/32 " (6605-9-6) BULB-TITE, TRI-FOLD, ALUMINUM BODY/MANDREL

O.D. FLANGE .720-.765 INCH, GRIP RANGE .042-.375 INCH

WASHERS (ALL POSTS) -

1-1/4" O.D. X 3/8" I.D. X 1/16" STEEL

1-1/4" O.D. X 3/8" I.D. X .080 NYLON

* Two different fastening systems are shown for illustration purposes. On any individual sign, either one or the other system shall be used. Actual number of fasteners per sign varies with the sign area, but normally there are two. For a single post installation, all signs greater than 9 sq. ft. require the use of 3 fasteners.

ATTACHMENT OF SIGNS TO POSTS

WISCONSIN DEPT OF TRANSPORTATION

APPROVED Matthew R Rauch
for State Traffic Engineer

DATE 8/11/16 PLATE NO. A4-8.8

PROJECT NO: SHEET NO: E

TELESCOPIC TUBING ANCHORS
TWO PIECE SYSTEM

2 1/4" SQUARE
12 GAUGE
PERFORATED
GALVANIZED FINISH

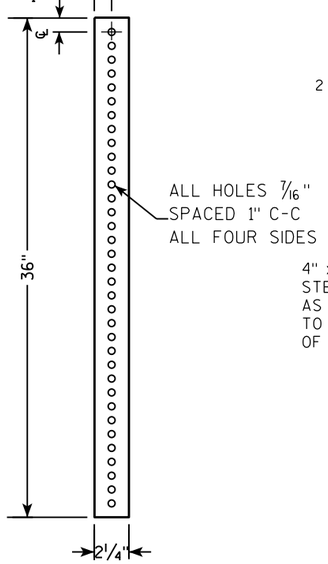

2 1/2" SQUARE
12 GAUGE
OMNI-DIRECTIONAL
PERFORATED
SOIL STABILIZING SLEEVE
GALVANIZED FINISH

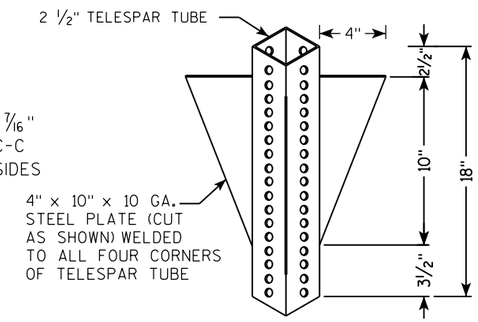

DETAIL OF TUBULAR STEEL SIGN POST
(IN POURED CONCRETE OR ASPHALT)

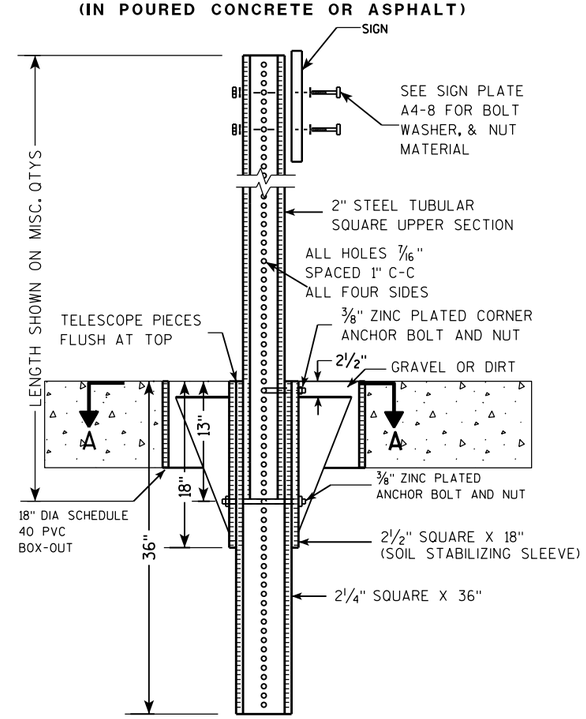

DETAIL OF TUBULAR STEEL SIGN POST
(IN LOCATIONS OTHER THAN POURED CONCRETE OR ASPHALT)

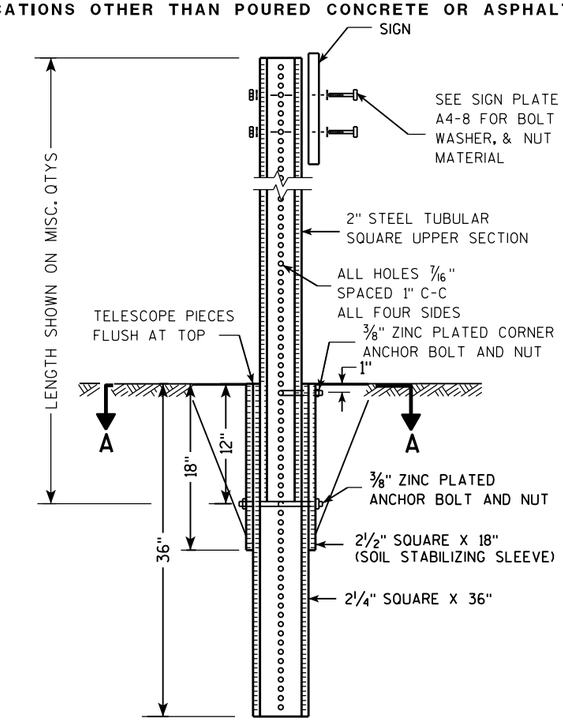

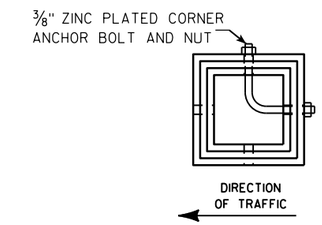

SECTION A-A

Area of Sign Installation (Sq. Ft.)	Number of Required Posts
9 or less	1
Greater than 9 less than or equal to 18	2
Greater than 18 less than or equal to 27	3

Signs wider than 3 feet or larger than 9 sq. ft shall be mounted on multiple posts (see above table).

TUBULAR STEEL
SIGN POST
A4-9

WISCONSIN DEPT OF TRANSPORTATION

APPROVED Matthew R Rauch
for State Traffic Engineer

DATE 2/05/15 PLATE A4-9.9

368

PROJECT NO:	HWY:	COUNTY:		SHEET NO:	E

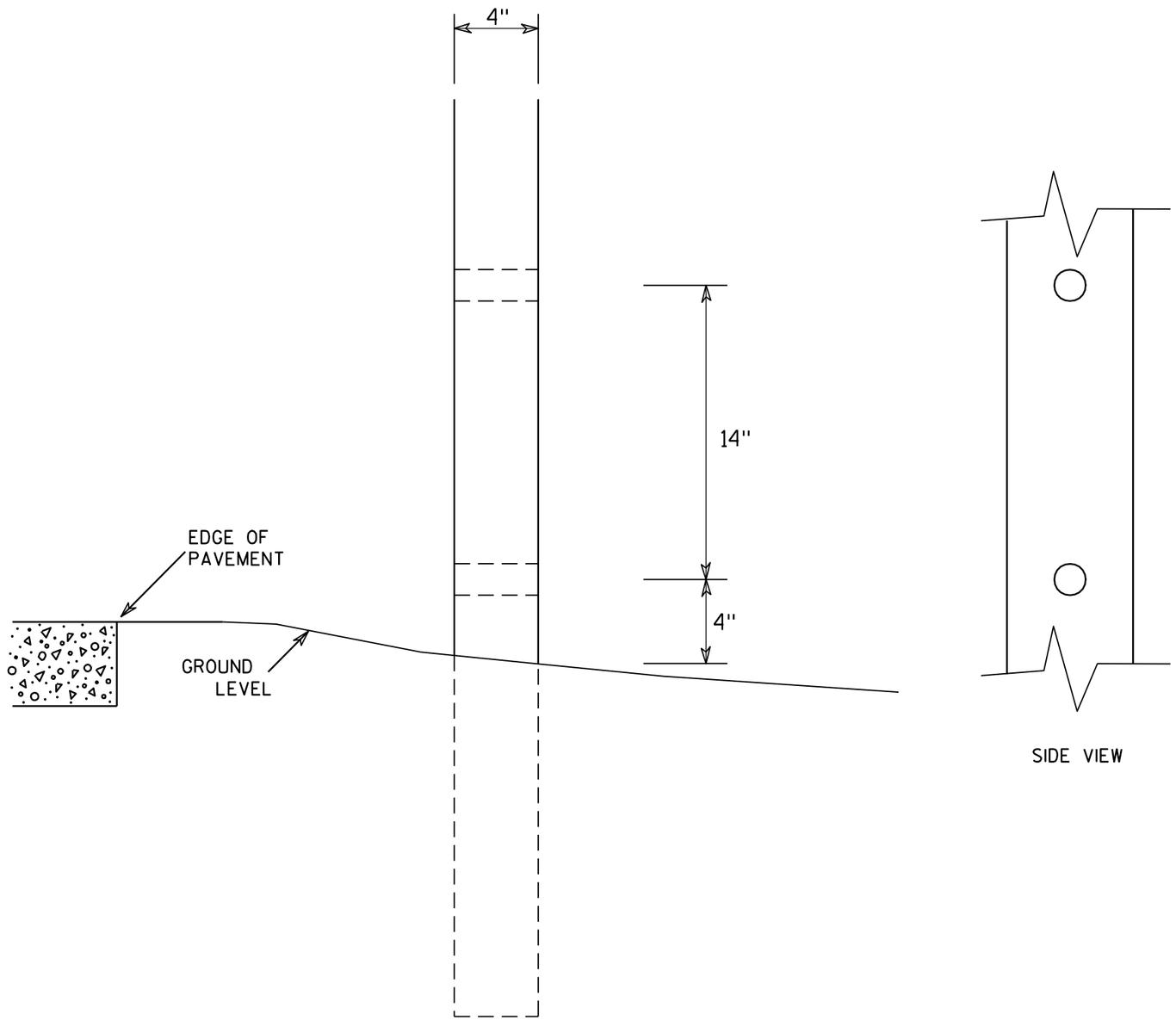

GENERAL NOTES

1. All 4 x 6 Wood Posts shall be modified by having two 1½" diameter holes drilled perpendicular to the roadway centerline.

4 X 6 WOOD POST MODIFICATIONS

WISCONSIN DEPT OF TRANSPORTATION

APPROVED Chester J Spang for State Traffic Engineer

DATE 3/27/97 PLATE NO. A4-11.2

PROJECT NO:	HWY:	COUNTY:		SHEET NO: 369	E

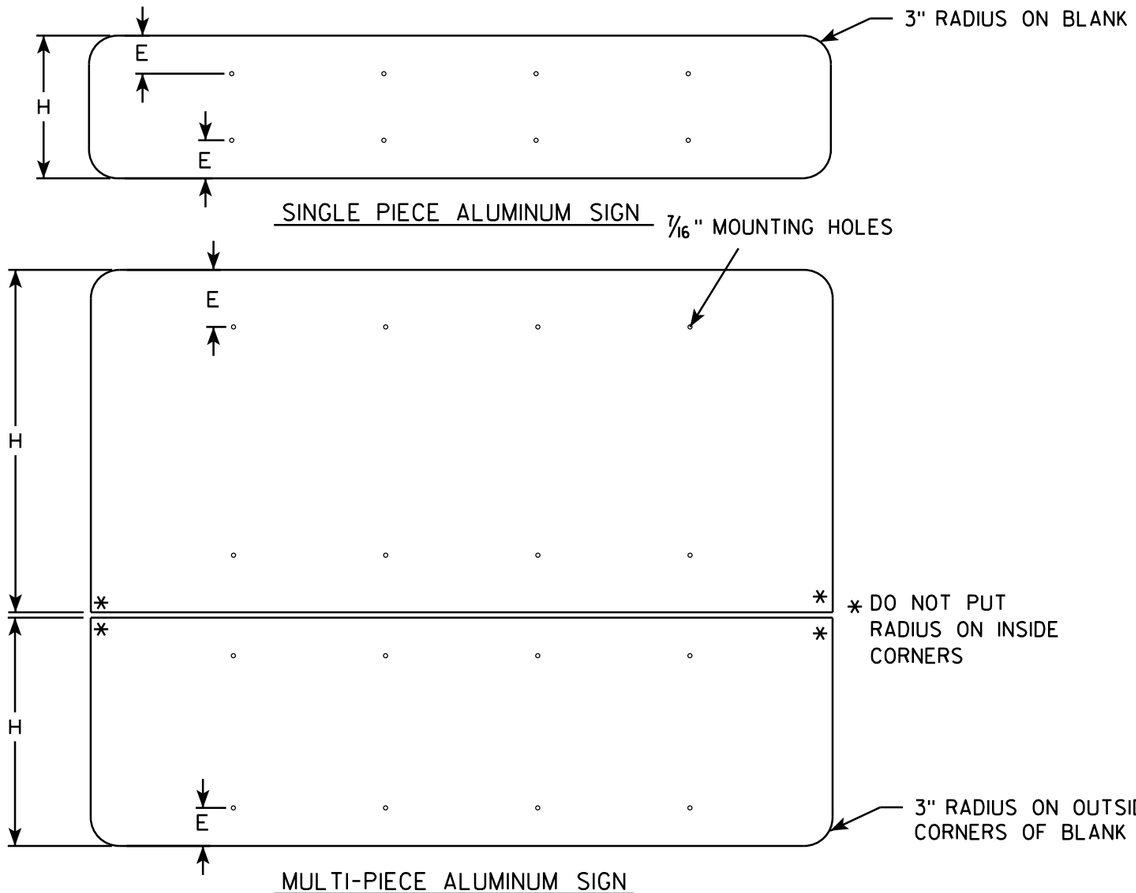

GENERAL NOTES

- ALL SIGNS OVER 60" IN WIDTH SHALL HAVE A 3" RADIUS ON THE OUTSIDE CORNERS OF THE ALUMINUM BLANK.
- MOUNTING HOLES SHALL BE 7/16" DIAMETER.
- SEE CHART FOR HOLE SPACING REQUIREMENTS
- FOR SIGN PANELS WITH DIMENSION (H) 36" AND OVER, DIMENSION E SHALL BE 6"
- FOR SIGN PANELS WITH DIMENSION (H) UNDER 36", DIMENSION E SHALL BE 4"
- SIGN STRINGER MATERIAL SHALL CONSIST OF STEEL CHANNEL POST SECTIONS, WEIGHING 1.12 LBS/FT IN ACCORDANCE WITH SECTION 633.2.1 OF THE STANDARD SPECIFICATIONS FOR HIGHWAY AND STRUCTURE CONSTRUCTION.
- SEE SIGN PLATE A4-8 FOR SIGN STRINGER BOLTING REQUIREMENTS.

SIGN WIDTH	STRINGER WIDTH	POSTS	HOLE SPACING	MOUNTING HOLES						
78"	72"	2	16"	15"	31"	47"	63"			
84"	72"	2	17"	16 1/2"	33 1/2"	50 1/2"	67 1/2"			
90"	72"	2	18"	18"	36"	54"	72"			
96"	90"	2	19"	19 1/2"	38 1/2"	57 1/2"	76 1/2"			
102"	90"	2	20"	21"	41"	61"	81"			
108"	90"	2	21"	22 1/2"	43 1/2"	64 1/2"	85 1/2"			
114"	108"	3	15"	12"	27"	42"	57"	72"	87"	102"
120"	108"	3	16"	12"	28"	44"	60"	76"	92"	108"
126"	108"	3	17"	12"	29"	46"	63"	80"	97"	114"
132"	126"	3	18"	12"	30"	48"	66"	84"	102"	120"
138"	126"	3	19"	12"	31"	50"	69"	88"	107"	126"
144"	126"	3	20"	12"	32"	52"	72"	92"	112"	132"

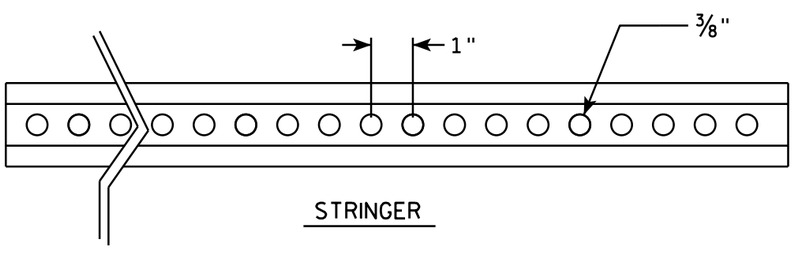

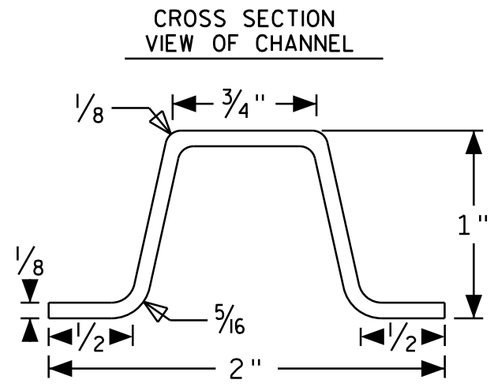

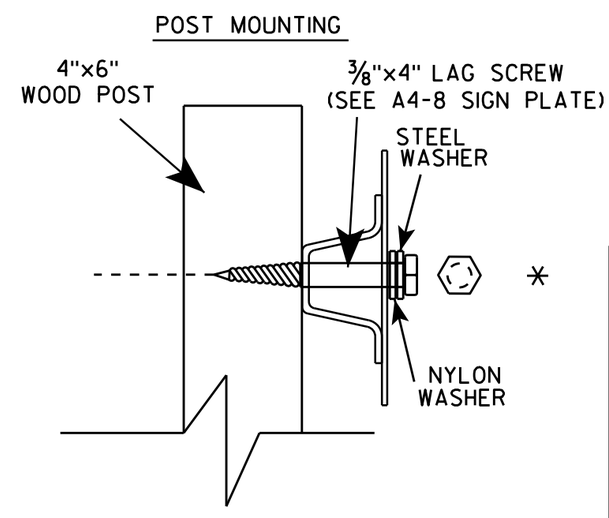

SIGN STRINGER MOUNTING REQUIREMENTS

WISCONSIN DEPT OF TRANSPORTATION

APPROVED Matthew R Rauch
for State Traffic Engineer

DATE 4/26/16 PLATE NO A4-18.1

PROJECT NO:	HWY:	COUNTY:		SHEET NO:	E

BANDING

SINGLE SIGN

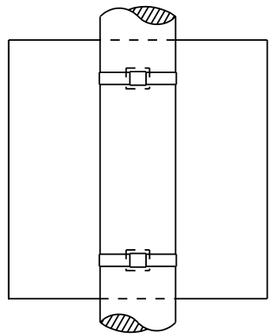

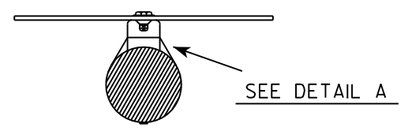

"J" ASSEMBLY

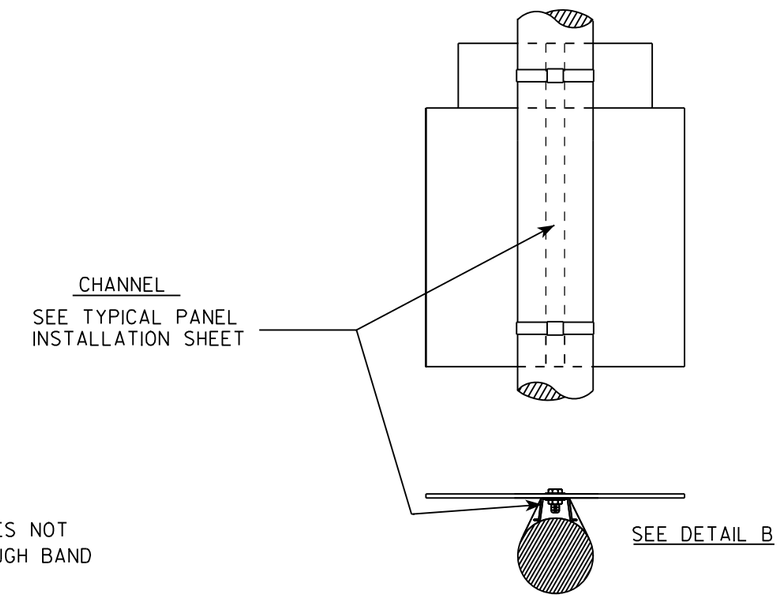

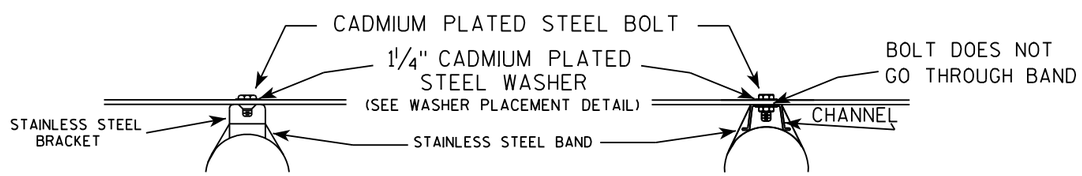

WASHER PLACEMENT

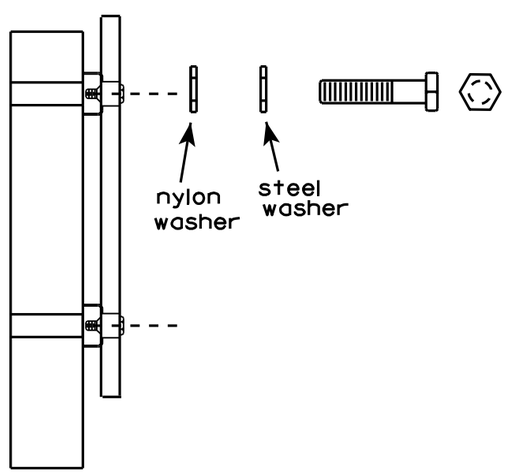

WASHERS (ALL POSTS) -

1-1/4" O.D. X 3/8" I.D. X 1/16" STEEL

1-1/4" O.D. X 3/8" I.D. X .080 NYLON

FOR ALL TYPE H SIGNS

GENERAL NOTES

1. Any sign over 3 feet in width shall use the V-Block banding method. See A5-10 standard plate.
2. Signs 3 feet or greater in height shall have three bracket bands installed. Signs less than 3 feet in height shall have two bracket bands installed.
3. Banding and assembly bracket shall be stainless steel. All bands shall be ¾" in width and 0.025" thickness.

STANDARD SIGN

SIGN BANDING DETAILS

WISCONSIN DEPT OF TRANSPORTATION

APPROVED Matthew R Rauch for State Traffic Engineer

DATE 8/16/13 PLATE NO. A5-9.3

PROJECT NO:	HWY:	COUNTY:		SHEET NO: 371	E

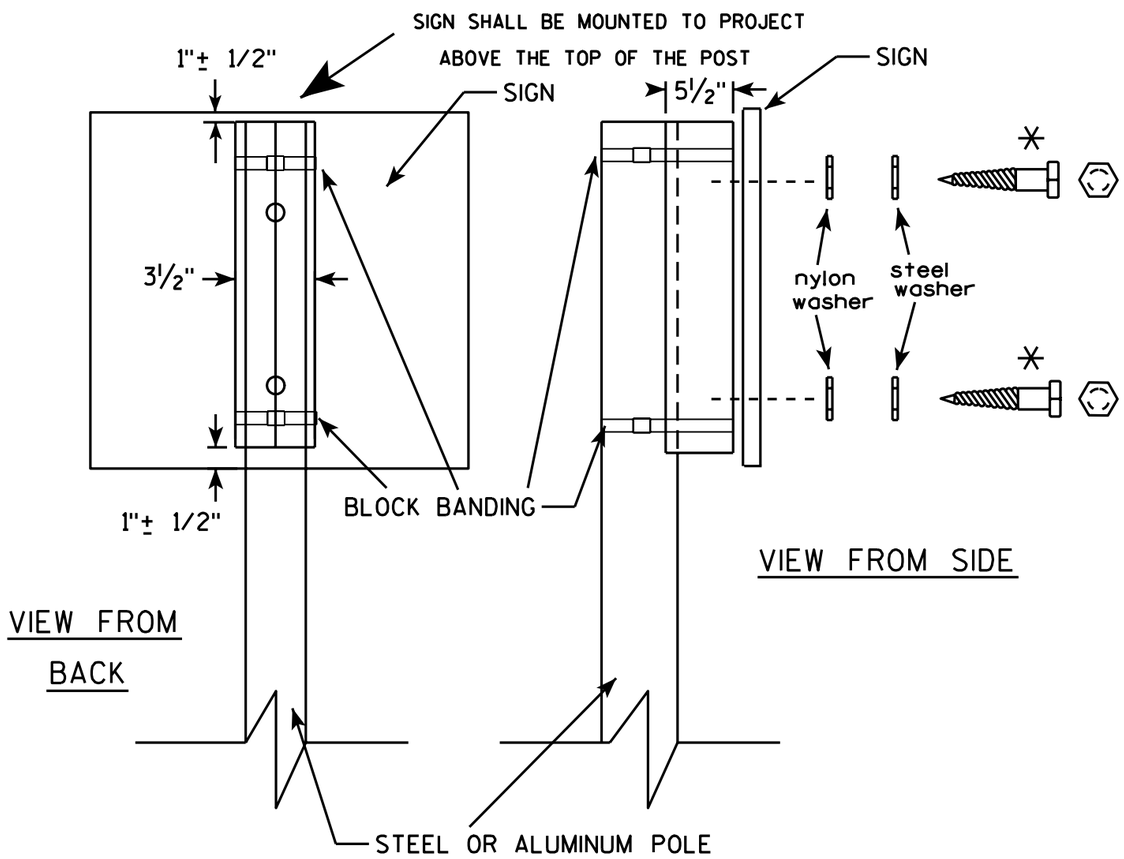

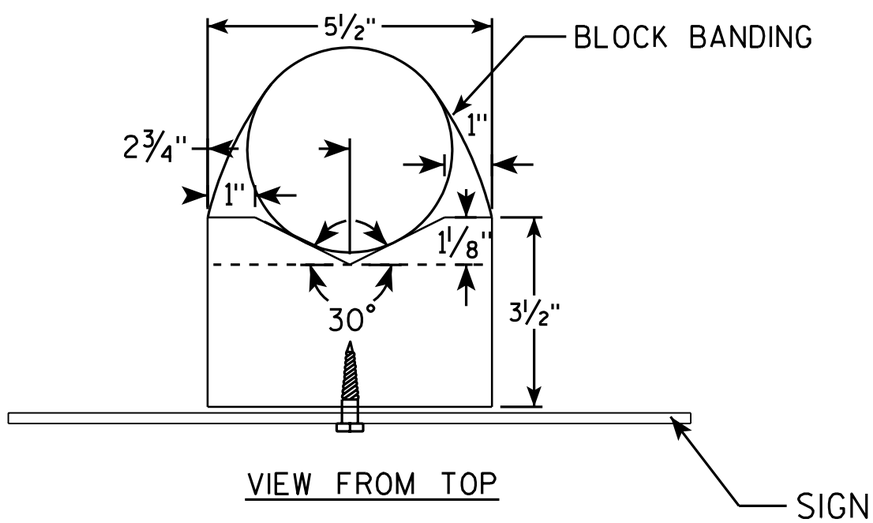

GENERAL NOTES

1. WOOD 4"X6" POST MATERIAL SHALL CONFORM TO 507.2.2 OF THE WisDOT STANDARD SPECIFICATIONS
2. BLOCK BANDING AND CLIPS SHALL BE STAINLESS STEEL, ¾" WIDTH AND 0.025" THICKNESS
3. SIGNS 3' OR GREATER IN HEIGHT SHALL UTILIZE 3 BLOCK BANDS. SIGNS UNDER 3' IN HEIGHT SHALL UTILIZE 2 BLOCK BANDS
4. ACTUAL NUMBER OF FASTENERS PER SIGN VARIES WITH THE SIGN AREA, BUT NORNALLY THERE ARE TWO. FOR SIGNS GREATER THAN 9 S.F. 3 FASTENERS SHALL BE USED.
5. ALL SIGN MOUNTING BOLTS AND WASHERS SHALL BE EITHER:
   a. Hot dip or mechanically galvanized in accordance with ASTM Designation: A 153, Class D, or
   b. Cadmium plated in accordance with ASTM Designation : B 766 TYPE 3, Class 12, or
   c. Electro-galvanized in accordance with ASTM Designation : B 633, TYPE III, SC 3.
6. ALL BOLTS SHALL HAVE HEXAGONAL HEADS.
7. STEEL WASHERS SHALL BE 1¼" O.D. X ⅜" I.D. X 1/16"
8. NYLON WASHERS SHALL BE 1¼" O.D. X ⅜" I.D. X .080 FOR TYPE H OR TYPE F FACE SIGN

✳ LAG BOLTS SHALL BE ⅜" X 2½"

BLOCK BANDING DETAIL
(V-BLOCK OPTION)

WISCONSIN DEPT OF TRANSPORTATION

APPROVED Matthew R Rauch
for State Traffic Engineer

DATE 7/12/07 PLATE NO. A5-10.1

PROJECT NO:				SHEET NO: 372	E

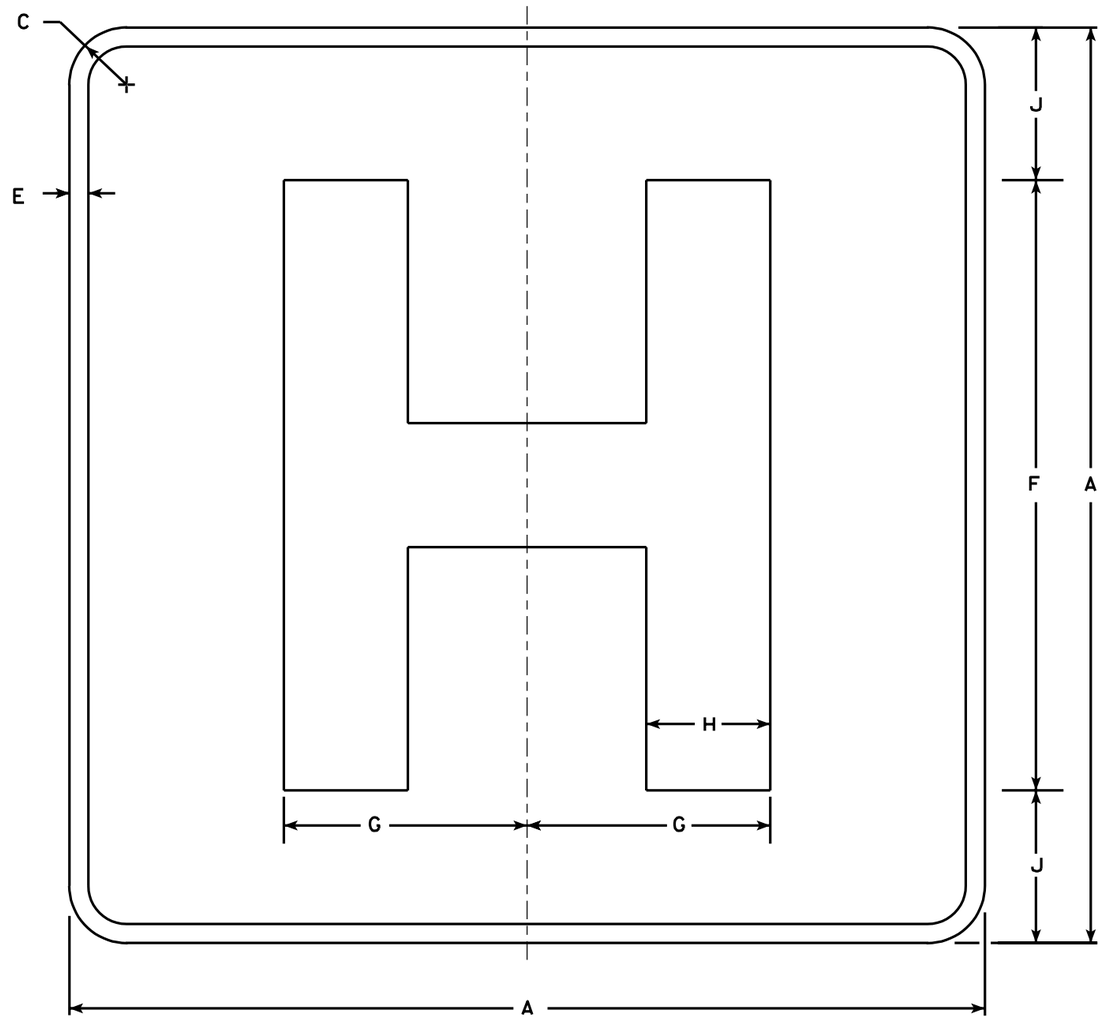

D9-2

NOTES

1. Sign is Type II - Type H Reflective - reference WIS DOT Standard Specification for HIGHWAY and STRUCTURE CONSTRUCTION latest edition.
2. Color:
   Background - Blue
   Message - White - Type H Reflective
3. Message Series - E Modified
4. Corners may be square or rounded when base material is plywood but borders shall be rounded as shown. When base material is metal, the corners and borders shall be rounded.

Metric equivalent for this sign is:

SIZE	
1	450 mmX 450 mm
2	600 mmX 600 mm
3	900 mmX 900 mm
4	X
5	X

SIZE	A	B	C	D	E	F	G	H	I	J	K	L	M	N	O	P	Q	R	S	T	U	V	W	X	Y	Z	Area sq. ft.
1	18		1 1/8		1/2	12	4 3/4	2 3/8		3																	4.0
2	24		1 1/2		1/2	16	6 3/8	3 1/4		4																	4.0
3	36		2 1/4		3/4	24	9 1/2	4 7/8		6																	9.0
4																											
5																											

STANDARD SIGN
D9-2

WISCONSIN DEPT OF TRANSPORTATION

APPROVED Chester J Spang
for State Traffic Engineer

DATE 1/15/02 PLATE NO. D9-2.4

PROJECT NO:

SHEET NO: 373 E

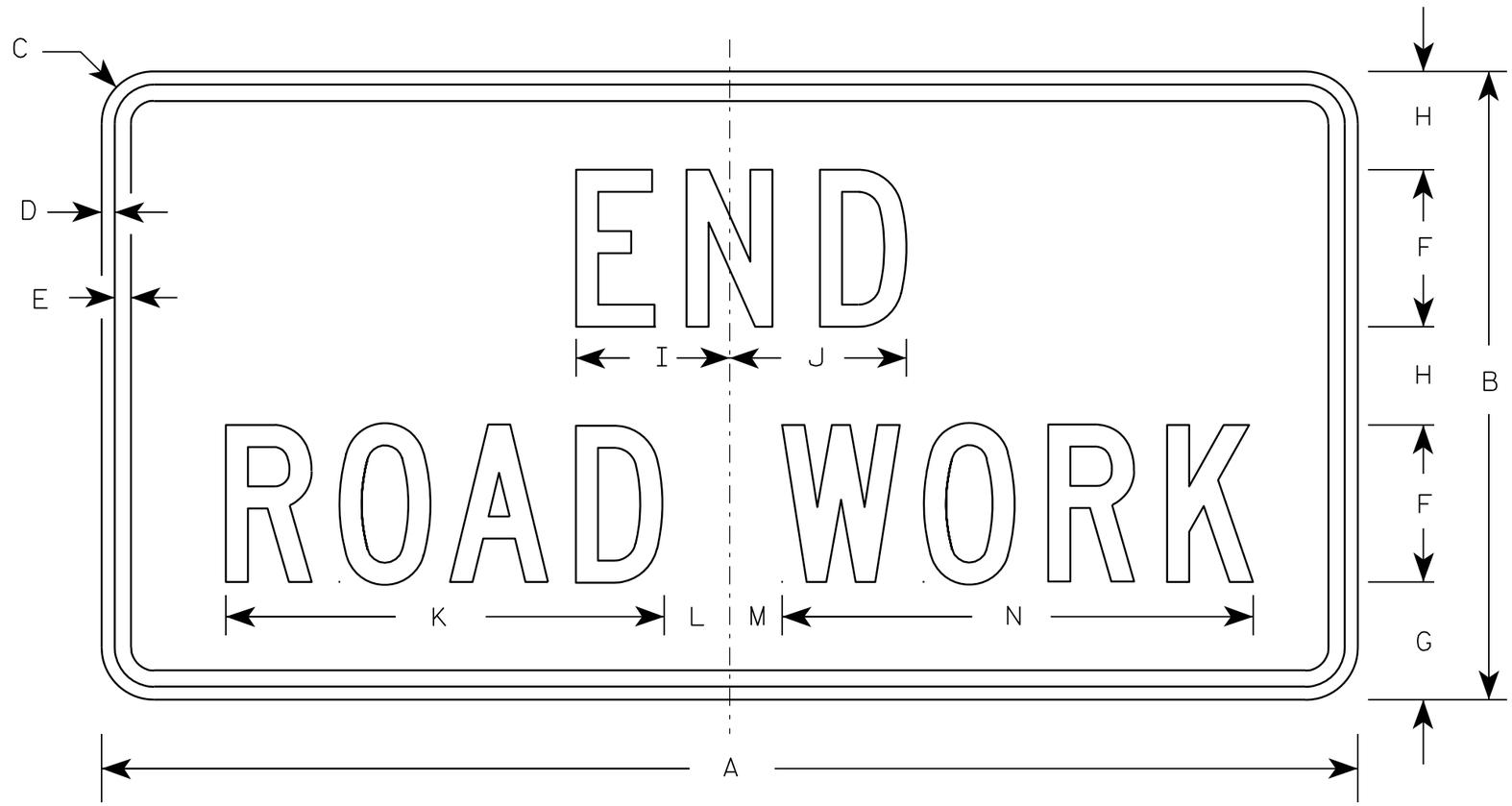

G20-2A

NOTES

1. Sign is Type II - Type F Reflective - reference WIS DOT Standard Specification for HIGHWAY and STRUCTURE CONSTRUCTION latest edition.
2. Color:
   Background - Orange
   Message - Black
3. Message Series - C
4. Corners may be square or rounded when base material is plywood but borders shall be rounded as shown. When base material is metal, the corners and borders shall be rounded.

Metric equivalent for this sign is:

SIZE	
1	900 mm X 450 mm
2	1200 mm X 600 mm
3	1200 mm X 600 mm
4	1200 mm X 600 mm
5	1200 mm X 600 mm

SIZE	A	B	C	D	E	F	G	H	I	J	K	L	M	N	O	P	Q	R	S	T	U	V	W	X	Y	Z	Area sq. ft.	Area m2
1	36	18	1 1/8	3/8	1/2	4	3 3/4	2 1/2	4 1/8	4 1/8	11 1/8	2	1	12 1/8													4.5	0.41
2	48	24	1 1/2	1/2	5/8	6	4 1/2	3 3/4	5 7/8	6 3/4	16 3/4	2 1/2	1 3/4	18 1/2													8.0	0.72
3	48	24	1 1/2	1/2	5/8	6	4 1/2	3 3/4	5 7/8	6 3/4	16 3/4	2 1/2	1 3/4	18 1/2													8.0	0.72
4	48	24	1 1/2	1/2	5/8	6	4 1/2	3 3/4	5 7/8	6 3/4	16 3/4	2 1/2	1 3/4	18 1/2													8.0	0.72
5	48	24	1 1/2	1/2	5/8	6	4 1/2	3 3/4	5 7/8	6 3/4	16 3/4	2 1/2	1 3/4	18 1/2													8.0	0.72

STANDARD SIGN

G20-2A

WISCONSIN DEPT OF TRANSPORTATION

APPROVED Matthew R Rauch
for State Traffic Engineer

DATE 9/30/09 PLATE NO. G20-2A.8

PROJECT NO:	HWY:	COUNTY:		SHEET NO: 374	E

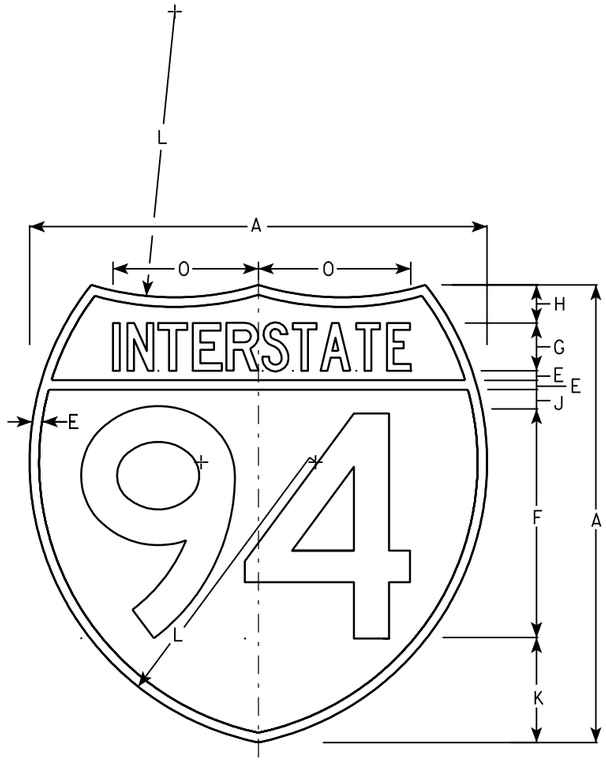

M1-1

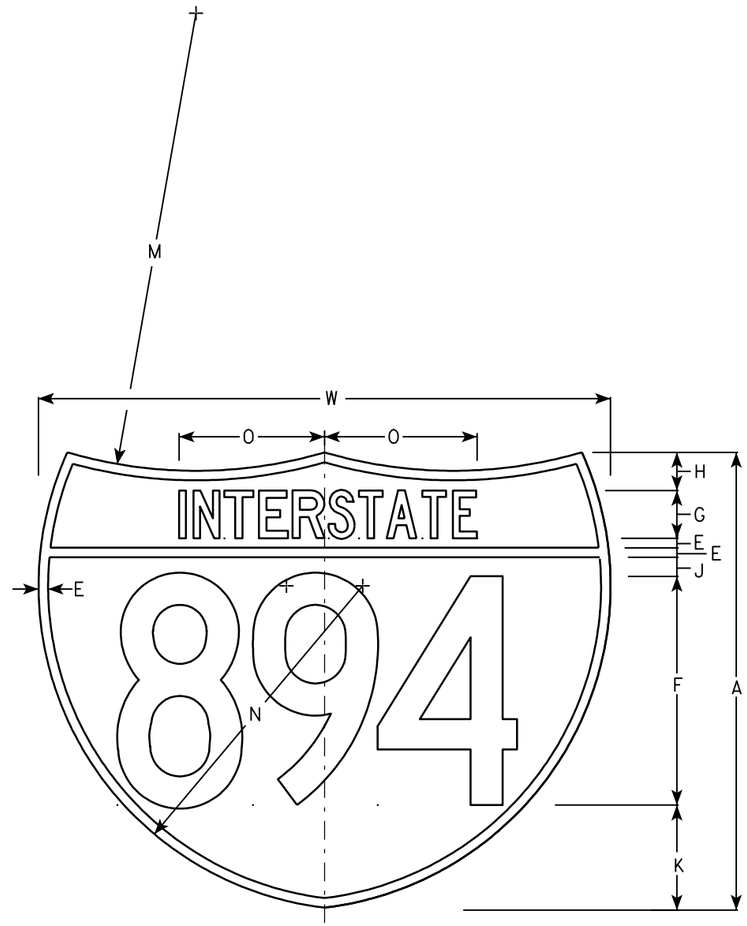

M1-1A

NOTES

1. Sign is Type II - See Note 6 - reference WIS DOT Standard Specification for HIGHWAY and STRUCTURE CONSTRUCTION latest edition.
2. Color:
   Background - Top Red - Bottom Blue (See Note 6)
   Message - White - See Note 6
3. Message Series - See note 5
4. Substitute appropriate numerals & ajust spacing as per plate A10-1.
5. M1-1 - Numerals - D
   Interstate - C
   M1-1A - All copy - C
6. Permanent Signs
   Message - Type H Reflective
   Detour or other temporary signs
   Background - Reflective
   Message - Reflective

Metric equivalent for these signs are:

SIZE	M1-1	SIZE	M1-1A
1			
2	600 mm X 600 mm	2	600 mm X 750 mm
3	900 mm X 900 mm	3	900 mm X 1125 mm
4	900 mm X 900 mm	4	900 mm X 1125 mm
5	900 mm X 900 mm	5	900 mm X 1125 mm

SIZE	A	B	C	D	E	F	G	H	I	J	K	L	M	N	O	P	Q	R	S	T	U	V	W	X	Y	M1-1 Area sq. ft.	M1-1A Area sq. ft.	M1-1 Area m2	M1-1A Area m2
1																													
2	24				1/2	12	2 1/2	2		1	5 1/2	15	24	17	7 7/8								30			3.13	3.91	.36	.46
3	36				3/4	18	3 3/4	3		1 1/2	8 1/4	22 1/2	36	25 1/2	11 3/4								45			7.03	8.79	.81	1.05
4	36				3/4	18	3 3/4	3		1 1/2	8 1/4	22 1/2	36	25 1/2	11 3/4								45			7.03	8.79	.81	1.05
5	36				3/4	18	3 3/4	3		1 1/2	8 1/4	22 1/2	36	25 1/2	11 3/4								45			7.03	8.79	.81	1.05

INTERSTATE ROUTE MARKER
M1-1 FOR ASSEMBLIES

WISCONSIN DEPT OF TRANSPORTATION

APPROVED Matthew R Rauch
for State Traffic Engineer

DATE 08/23/05 PLATE NO. M1-1.8

PROJECT NO:	HWY:	COUNTY:		SHEET NO: 375	E

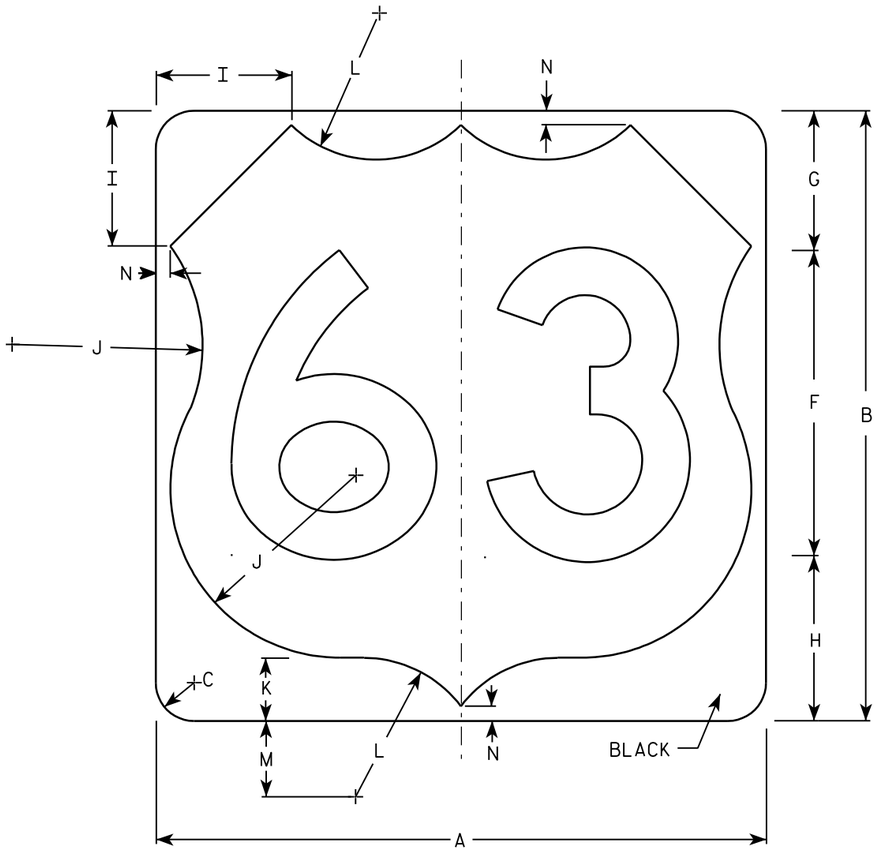

M1-4

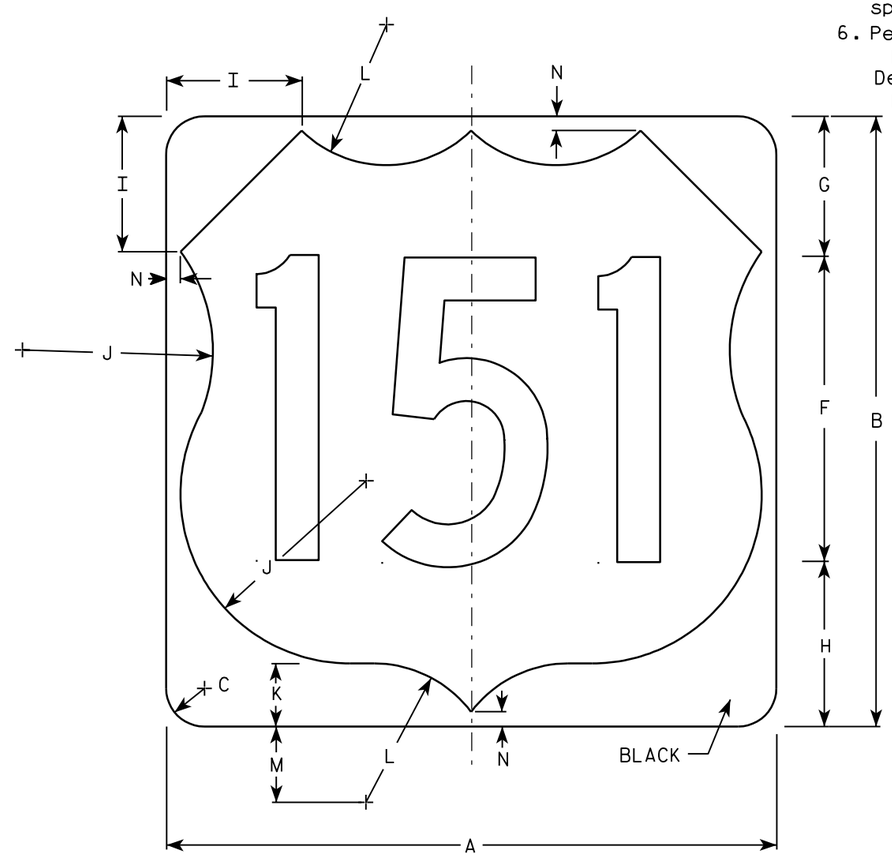

M1-4

NOTES

1. Sign is Type II - See Note 6 - reference WIS DOT Standard Specification for HIGHWAY and STRUCTURE CONSTRUCTION latest edition.
2. Color:
   Background - White & Black - See Note 6
   Message - Black
3. Message Series - See note 5
4. Corners may be square or rounded when base material is plywood but borders shall be rounded as shown. When base material is metal, the corners and borders shall be rounded.
5. Substitute appropriate numerals and adjust spacing as per Plate A10-1.
6. Permanent Signs
   Background - Type H Reflective
   Detour or other temporary signs
   Background - Reflective

Metric equivalent for this sign is:

SIZE	
1	
2	600 mm X 600 mm
3	900 mm X 900 mm
4	900 mm X 900 mm
5	900 mm X 900 mm

SIZE	A	B	C	D	E	F	G	H	I	J	K	L	M	N	O	P	Q	R	S	T	U	V	W	X	Y	Z	Area sq. ft.	Area m2
1																												
2	24	24	1 1/2			12	5 1/2	6 1/2	5	7 1/2	2 1/2	5 1/2	3	1/2													4.0	.36
3	36	36	2 1/4			18	8 1/4	9 1/4	7 1/4	11 1/4	3 3/4	8 1/4	4 1/2	3/4													9.0	.81
4	36	36	2 1/4			18	8 1/4	9 1/4	7 1/4	11 1/4	3 3/4	8 1/4	4 1/2	3/4													9.0	.81
5	36	36	2 1/4			18	8 1/4	9 1/4	7 1/4	11 1/4	3 3/4	8 1/4	4 1/2	3/4													9.0	.81

USH MARKER
M1-4 FOR ASSEMBLIES

WISCONSIN DEPT OF TRANSPORTATION

APPROVED Matthew R Rauch
for State Traffic Engineer

DATE 08/25/05 PLATE NO. M1-4.9

PROJECT NO: | HWY: | COUNTY: | SHEET NO: 376 | E

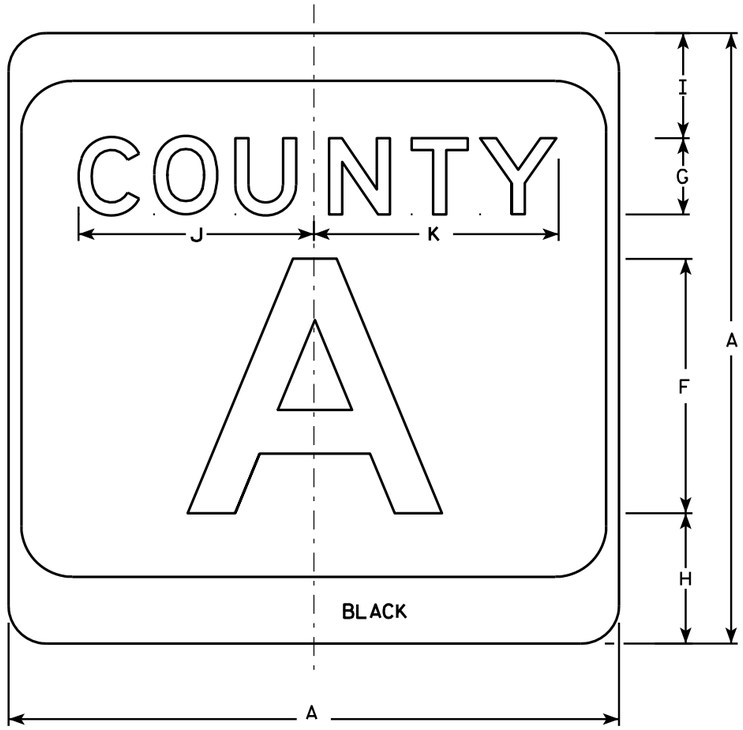

M1-5A

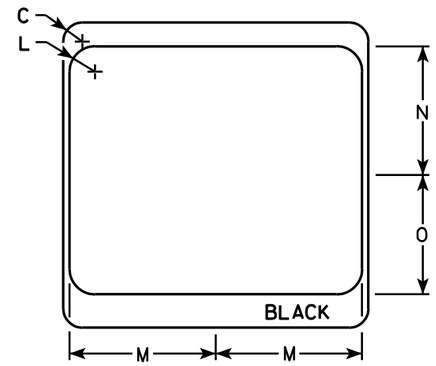

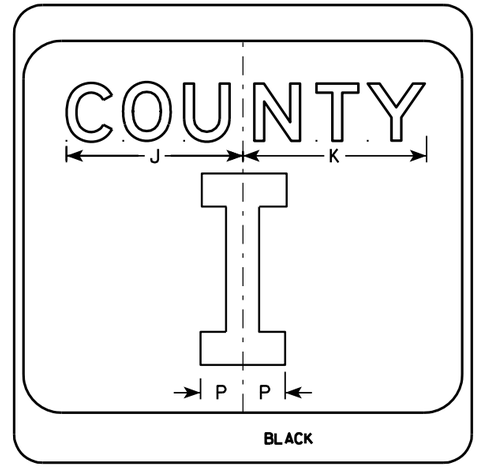

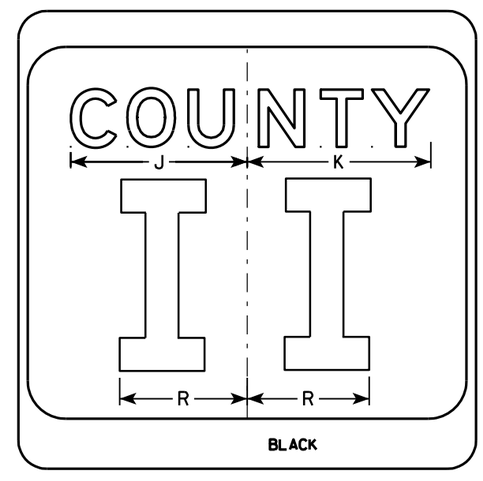

NOTES

1. Sign is Type II - see Note 7 - reference WIS DOT Standard Specification for HIGHWAY and STRUCTURE CONSTRUCTION latest edition.
2. Color:
   Background - White & Black - See Note 7
   Message - Black
3. Message Series - see Note 5
4. Corners may be square or rounded when base material is plywood but borders shall be rounded as shown. When base material is metal, the corners and borders shall be rounded.
5. Message Series E for 1 letter.
   Message Series D for 2 letters unless message is too big then Series C.
   Message Series C for 3 letters unless message is too big then Series B.
6. Substitute appropriate letters & optically center to achieve proper balance.
7. Permanent Signs
   Background - Type H Reflective
   Detour or temporary Signs
   Background - Reflective

SIZE	A	B	C	D	E	F	G	H	I	J	K	L	M	N	O	P	Q	R	S	T	U	V	W	X	Y	Z	Area sq. ft.
1																											
2	24		1 1/2			10	3	5 1/8	4 1/8	9 1/4	9 5/8	2	11 1/2	10 1/8	9 3/8	2 1/4		6 5/8									4.0
3	36		2 1/4			16	4	7 5/8	5 5/8	12 1/4	12 7/8	3	17 1/8	15 1/4	14	3 3/8		10									9.0
4	36		2 1/4			16	4	7 5/8	5 5/8	12 1/4	12 7/8	3	17 1/8	15 1/4	14	3 3/8		10									9.0
5	36		2 1/4			16	4	7 5/8	5 5/8	12 1/4	12 7/8	3	17 1/8	15 1/4	14	3 3/8		10									9.0

CTH MARKER
M1-5A FOR ASSEMBLIES

WISCONSIN DEPT OF TRANSPORTATION

APPROVED Matthew R Rauch
for State Traffic Engineer

DATE 9/27/11 PLATE NO. M1-5A.8

PROJECT NO: | HWY: | COUNTY: | SHEET NO: 377 | E

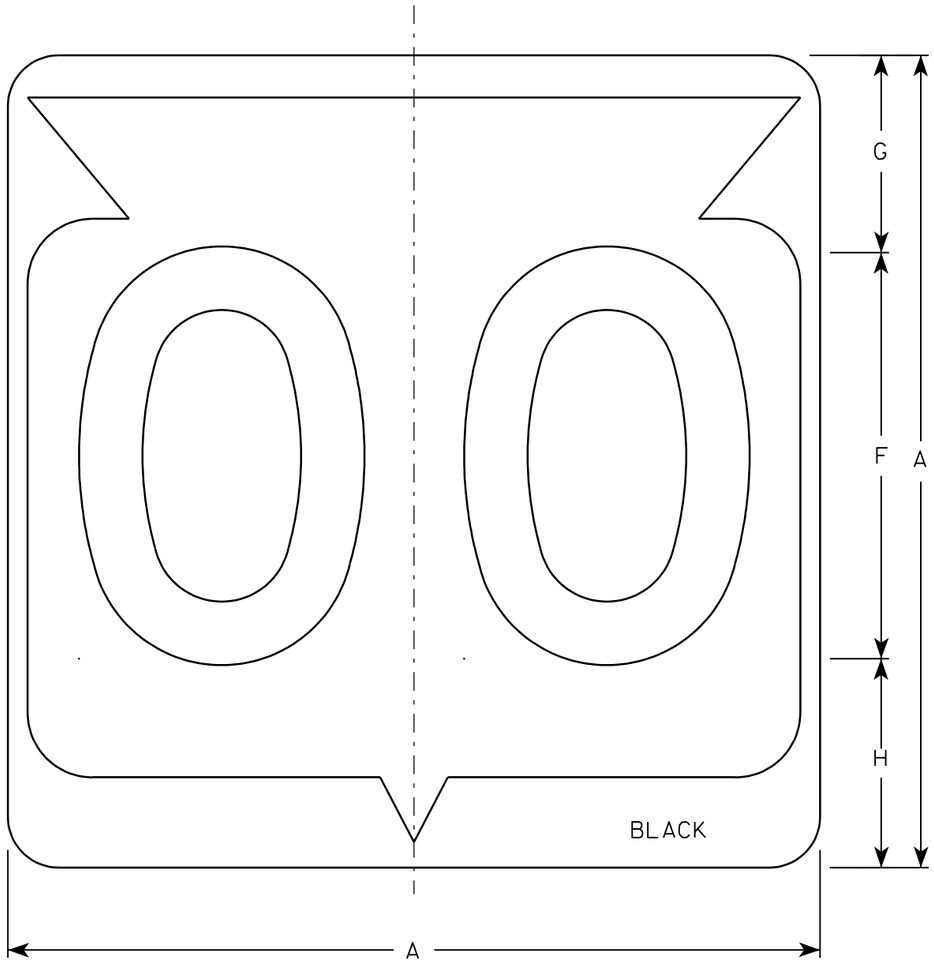

M1-6

NOTES

1. Sign is Type II - See Note 6 - reference WIS DOT Standard Specification for HIGHWAY and STRUCTURE CONSTRUCTION latest edition.
2. Color:
   Background - White & Black - See Note 6
   Message - Black
3. Message Series - See note 5
4. Corners may be square or rounded when base material is plywood but borders shall be rounded as shown. When base material is metal, the corners and borders shall be rounded.
5. Substitute appropriate Series numerals and adjust spacing as per plate A10-1.
6. Permanent Signs
   Background - Type H Reflective
   Detour or temporary Signs
   Background - Reflective

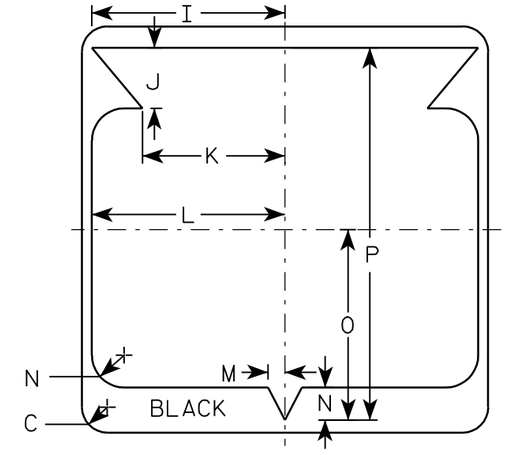

Metric equivalent for this sign is:

SIZE	
1	
2	600 mm X 600 mm
3	900 mm X 900 mm
4	900 mm X 900 mm
5	900 mm X 900 mm

SIZE	A	B	C	D	E	F	G	H	I	J	K	L	M	N	O	P	Q	R	S	T	U	V	W	X	Y	Z	Area sq. ft.	Area m2
1																												
2	24		1 1/2			12	5 1/2	6 1/2	10 1/4	2 1/2	8 7/8	11 1/2	1	1 7/8	11 1/4	21 7/8											4.0	.36
3	36		2 1/4			18	8 3/4	9 1/4	15 3/8	5 3/8	12 5/8	17 1/8	1 1/2	2 7/8	16 7/8	33											9.0	.81
4	36		2 1/4			18	8 3/4	9 1/4	15 3/8	5 3/8	12 5/8	17 1/8	1 1/2	2 7/8	16 7/8	33											9.0	.81
5	36		2 1/4			18	8 3/4	9 1/4	15 3/8	5 3/8	12 5/8	17 1/8	1 1/2	2 7/8	16 7/8	33											9.0	.81

STATE ROUTE MARKER
M1-6 FOR ASSEMBLIES

WISCONSIN DEPT OF TRANSPORTATION

APPROVED Chester J Spang
for State Traffic Engineer

DATE 3/20/02 PLATE NO. M1-6.9

PROJECT NO: | HWY: | COUNTY: | SHEET NO: 378 | E

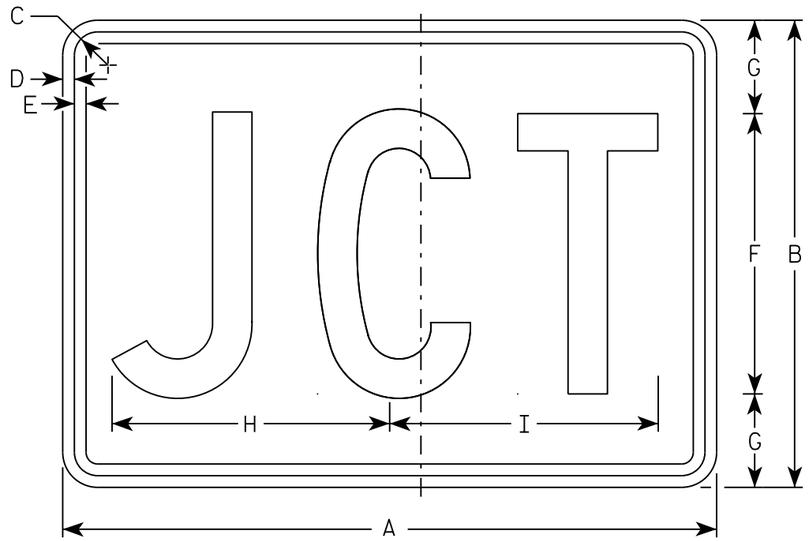

M2-1
MM2-1
MP2-1

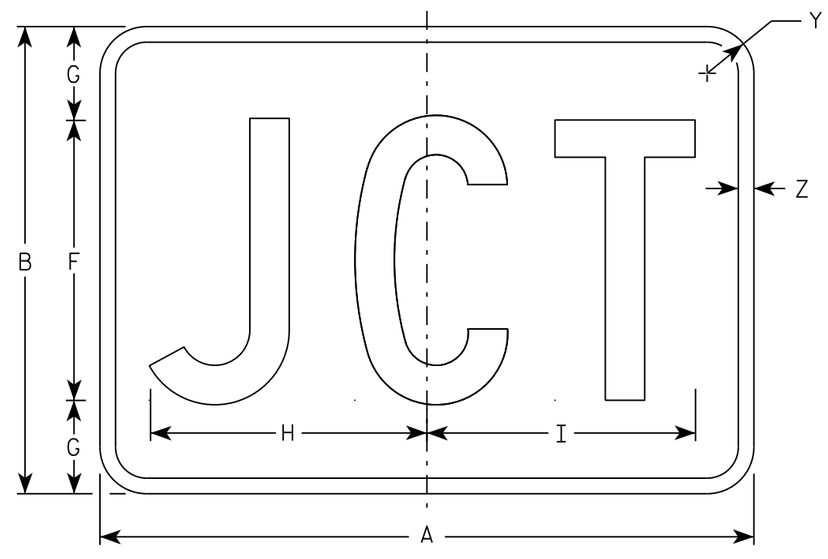

MB2-1
MK2-1
MN2-1
MR2-1

NOTES

1. Sign is Type II - Type H
2. Color:
   Background - See note 5
   Message - See note 5
3. Message Series - C
4. Corners may be square or rounded when base material is plywood but borders shall be rounded as shown. When base material is metal, the corners and borders shall be rounded.
5. M2-1 Background - White
   Message - Black
   MB2-1 Background - Blue
   Message - White
   MK2-1 Background - Green
   Message - White
   MM2-1 Background - White
   Message - Green
   MN2-1 Background - Brown
   Message - White
   MP2-1 Background - White
   Message - Blue
   MR2-1 Background - Brown
   Message - Yellow

SIZE	A	B	C	D	E	F	G	H	I	J	K	L	M	N	O	P	Q	R	S	T	U	V	W	X	Y	Z	Area sq. ft.
1																											
2	21	15	1 1/8	3/8	3/8	9	3	8 7/8	8 5/8																1 1/2	1/2	2.20
3	30	21	1 1/8	3/8	3/8	13	4	12 7/8	12 3/8																1 1/2	1/2	4.40
4	30	21	1 1/8	3/8	3/8	13	4	12 7/8	12 3/8																1 1/2	1/2	4.40
5	30	21	1 1/8	3/8	3/8	13	4	12 7/8	12 3/8																1 1/2	1/2	4.40

STANDARD SIGN
M2-1

WISCONSIN DEPT OF TRANSPORTATION

APPROVED Matthew R Rauch
for State Traffic Engineer

DATE 10/15/15 PLATE 379 M2-1.12

PROJECT NO: | HWY: | COUNTY: | SHEET NO: | E

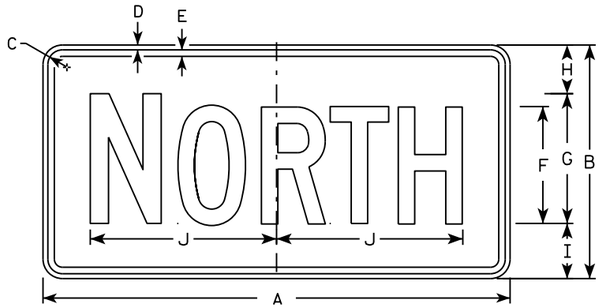

M3-1
MM3-1
MP3-1

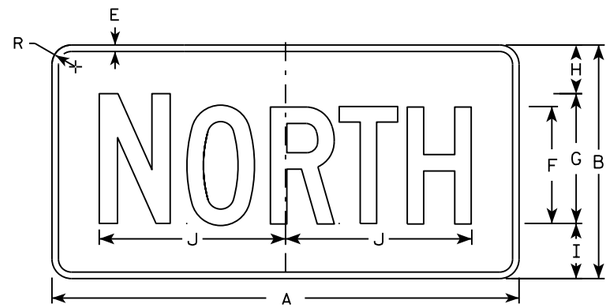

MB3-1
MK3-1
MN3-1

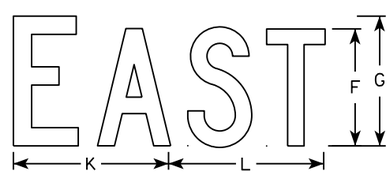

M3-2
MM3-2
MP3-2

MB3-2
MK3-2
MN3-2

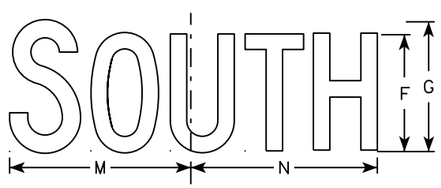

M3-3
MM3-3
MP3-3

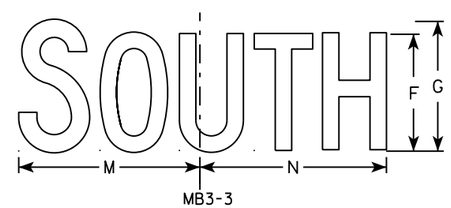

MB3-3
MK3-3
MN3-3

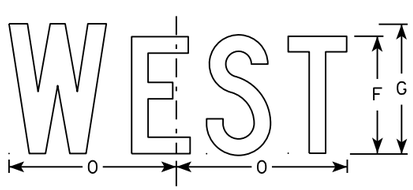

M3-4
MM3-4
MP3-4

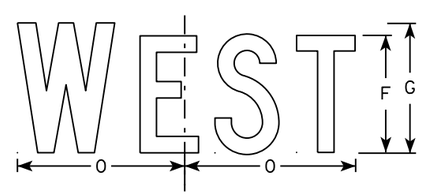

MB3-4
MK3-4
MN3-4

NOTES

1. All Signs Type II - Type H
2. Color:
   Background - See note 5
   Message - See note 5
3. Message Series - C
4. Corners may be square or rounded when base material is plywood but borders shall be rounded as shown. When base material is metal, the corners and borders shall be rounded.
5. M3-1 thru M3-4 Background - White
   Message - Black
   MB3-1 thru MB3-4 Background - Blue
   Message - White
   MK3-1 thru MK3-4 Background - Green
   Message - White
   MM3-1 thru MM3-4 Background - White
   Message - Green
   MN3-1 thru MN3-4 Background - Brown
   Message - White
   MP3-1 thru MP3-4 Background - White
   Message - Blue
6. Note the first letter of each direction is larger than the remainder of the message.

SIZE	A	B	C	D	E	F	G	H	I	J	K	L	M	N	O	P	Q	R	S	T	U	V	W	X	Y	Z	Area sq. ft.
1																											
2	24	12	1 1/8	3/8	3/8	6	7	2 1/4	2 3/4	10 1/4	7 7/8	8 3/8	10 1/4	9 3/4	8 3/4			1 1/2									2.00
3	36	18	1 1/8	3/8	1/2	9	10	3 3/4	4 1/4	14 3/8	12	12 1/8	14	14 1/8	13			1 1/2									4.5
4	36	18	1 1/8	3/8	1/2	9	10	3 3/4	4 1/4	14 3/8	12	12 1/8	14	14 1/8	13			1 1/2									4.5
5	36	18	1 1/8	3/8	1/2	9	10	3 3/4	4 1/4	14 3/8	12	12 1/8	14	14 1/8	13			1 1/2									4.5

STANDARD SIGNS
M3-1 thur M3-4
SERIES

WISCONSIN DEPT OF TRANSPORTATION

APPROVED Matthew R Rauch
for State Traffic Engineer

DATE 10/15/15 PLATE NO M3-1.14

380

PROJECT NO: | HWY: | COUNTY: | SHEET NO: | E

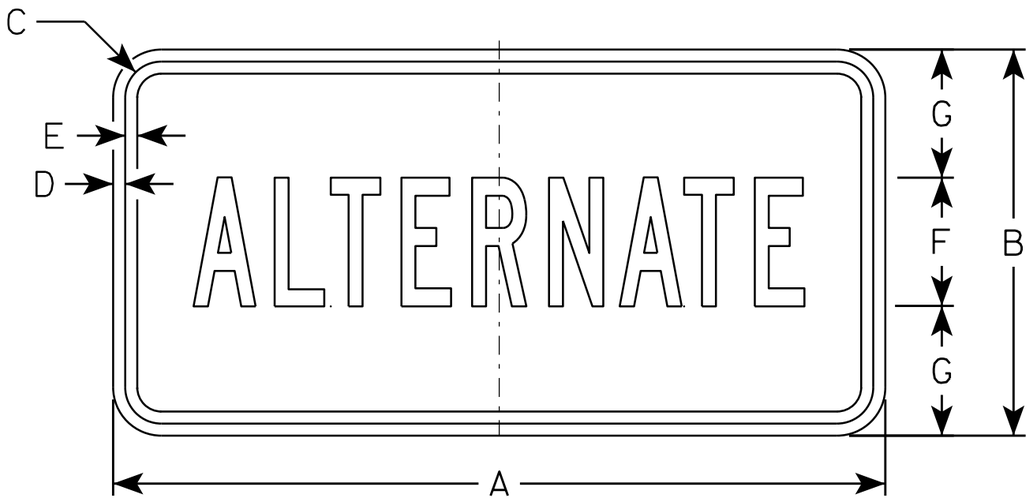

M4 - 1
M04 - 1

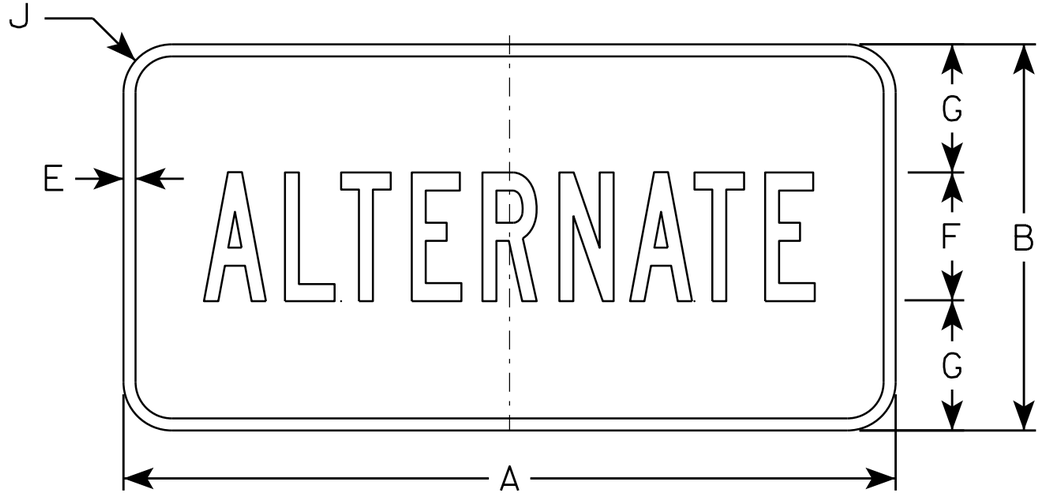

MB4 - 1

NOTES

1. Sign is Type II - Type H except as Shown
2. Color:
   Background - See Note 5
   Message - See note 5
3. Message Series - B
4. Corners may be square or rounded when base material is plywood but borders shall be rounded as shown. When base material is metal, the corners and borders shall be rounded.
5. M4-1 Background - White
   Message - Black

   MB4-1 Background - Blue
   Message - White

   M04-1 Background - Orange - Type F
   Message - Black

SIZE	A	B	C	D	E	F	G	H	I	J	K	L	M	N	O	P	Q	R	S	T	U	V	W	X	Y	Z	Area sq. ft.
1																											
2	24	12	1 1/8	3/8	3/8	4	4	9 3/4	9 1/2	1 1/2																	2.00
3	36	18	1 1/8	3/8	1/2	7	5 1/2	16 3/8	16 1/2	1 1/2																	4.5
4	36	18	1 1/8	3/8	1/2	7	5 1/2	16 3/8	16 1/2	1 1/2																	4.5
5	36	18	1 1/8	3/8	1/2	7	5 1/2	16 3/8	16 1/2	1 1/2																	4.5

STANDARD SIGN
M4 - 1

WISCONSIN DEPT OF TRANSPORTATION

APPROVED Matthew R Rauch
for State Traffic Engineer

DATE 6/30/14 PLATE 381 '14-1.8

PROJECT NO: | HWY: | COUNTY: | SHEET NO: | E

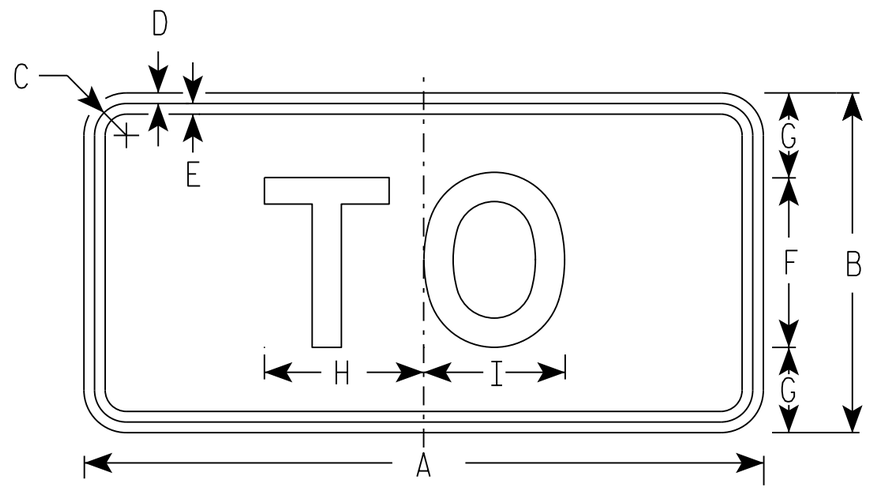

M4-5
MM4-5
MP4-5

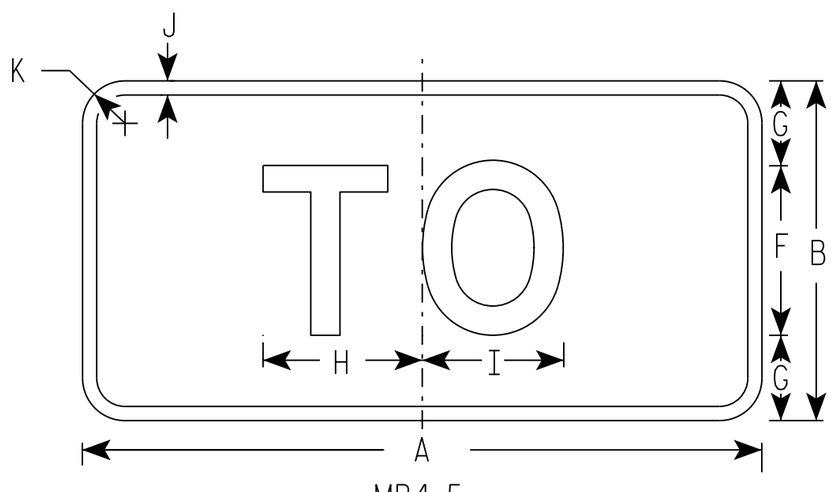

MB4-5
MK4-5
MN4-5

NOTES

1. Sign is Type II - Type H
2. Color:
   Background - See note 5
   Message - See note 5
3. Message Series - E
4. Corners may be square or rounded when base material is plywood but borders shall be rounded as shown. When base material is metal, the corners and borders shall be rounded.
5. M4-5 Background - White
   Message - Black
   MB4-5 Background - Blue
   Message - White
   MK4-5 Background - Green
   Message - White
   MM4-5 Background - White
   Message - Green
   MN4-5 Background - Brown
   Message - White
   MP4-5 Background - White
   Message - Blue

SIZE	A	B	C	D	E	F	G	H	I	J	K	L	M	N	O	P	Q	R	S	T	U	V	W	X	Y	Z	Area sq. ft.
1																											
2	24	12	1 1/8	3/8	3/8	6	3	5 3/8	5 1/4	1/2	1 1/2																2.00
3	36	18	1 3/8	3/8	1/2	9	4 1/2	8 1/4	8 3/8	1/2	1 1/2																4.5
4	36	18	1 3/8	3/8	1/2	9	4 1/2	8 1/4	8 3/8	1/2	1 1/2																4.5
5	36	18	1 3/8	3/8	1/2	9	4 1/2	8 1/4	8 3/8	1/2	1 1/2																4.5

STANDARD SIGN
M4-5

WISCONSIN DEPT OF TRANSPORTATION

APPROVED Matthew R Rauch
for State Traffic Engineer

DATE 10/15/15 PLATE 382 M4-5.8

PROJECT NO: | HWY: | COUNTY: | SHEET NO: E

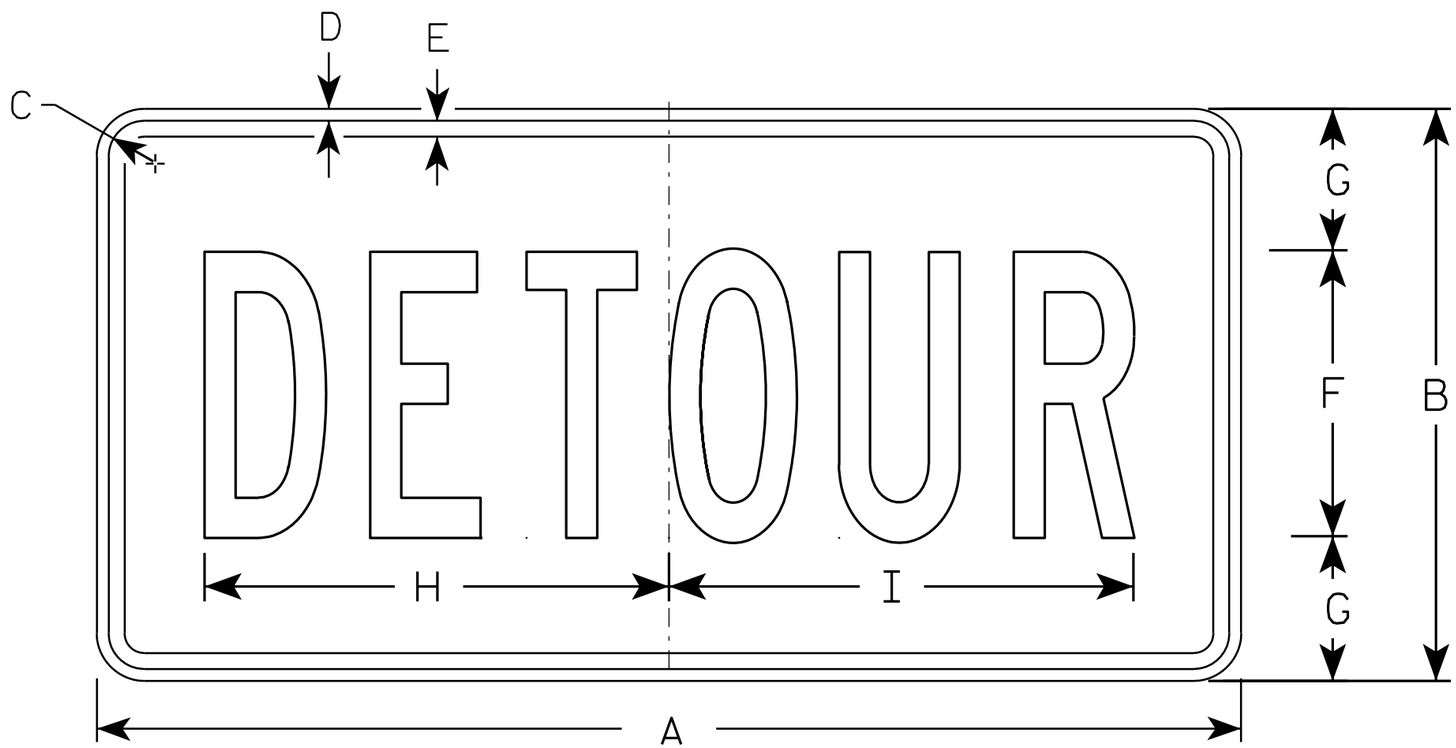

M4-8

NOTES

1. Sign is Type II - Type F Reflective - reference WIS DOT Standard Specification for HIGHWAY and STRUCTURE CONSTRUCTION latest edition.
2. Color:
   Background - Orange
   Message - Black
3. Message Series - B
4. Corners may be square or rounded when base material is plywood but borders shall be rounded as shown. When base material is metal, the corners and borders shall be rounded.

SIZE	A	B	C	D	E	F	G	H	I	J	K	L	M	N	O	P	Q	R	S	T	U	V	W	X	Y	Z	Area sq. ft.
1																											
2	24	12	1 1/8	3/8	3/8	6	3	10	10 1/4																		2.0
3	36	18	1 1/8	3/8	1/2	9	4 1/2	14 5/8	14 1/2																		4.5
4																											
5																											

STANDARD SIGN
M4-8

WISCONSIN DEPT OF TRANSPORTATION

APPROVED Matthew R Rauch
for State Traffic Engineer

DATE 11/10/10 PLATE NO. M4-8.2

PROJECT NO: | HWY: | COUNTY: | SHEET NO: 383 | E

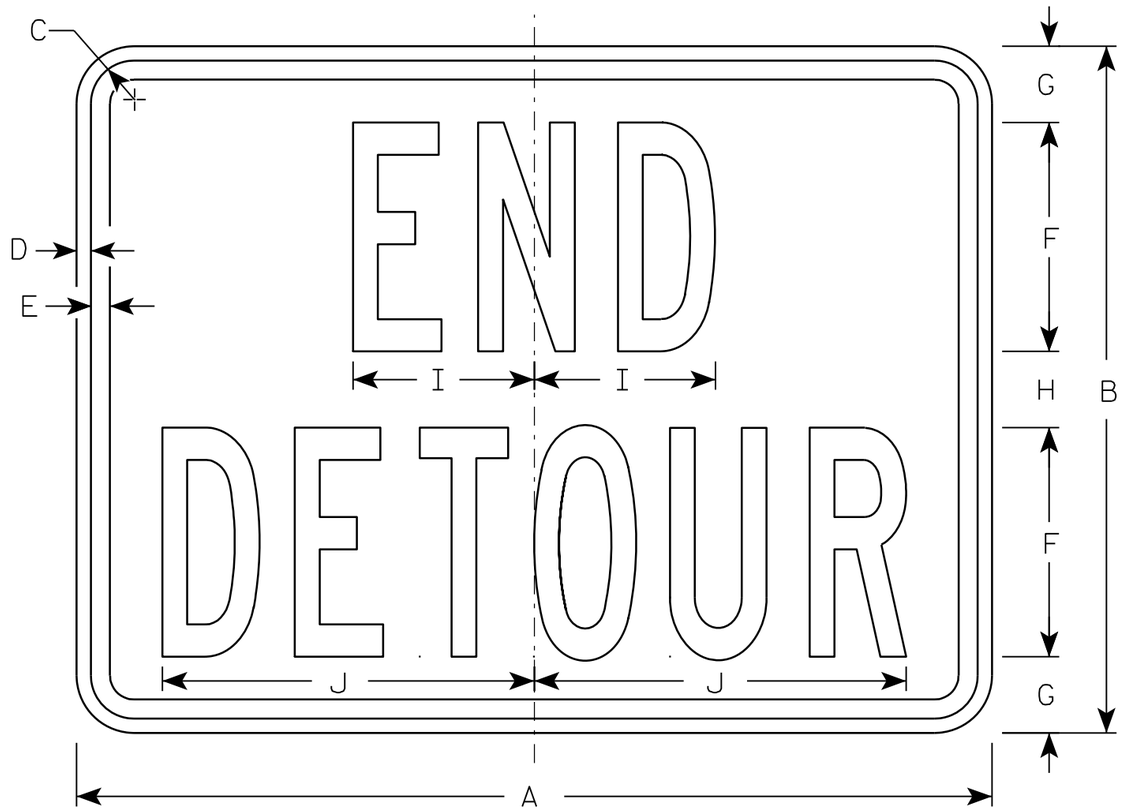

M4-8A

NOTES

1. Sign is Type II - Type F Reflective - reference WIS DOT Standard Specification for HIGHWAY and STRUCTURE CONSTRUCTION latest edition.
2. Color:
   Background - Orange
   Message - Black
3. Message Series - B
4. Corners may be square or rounded when base material is plywood but borders shall be rounded as shown. When base material is metal, the corners and borders shall be rounded.

SIZE	A	B	C	D	E	F	G	H	I	J	K	L	M	N	O	P	Q	R	S	T	U	V	W	X	Y	Z	Area sq. ft.
1																											
2	24	18	1 1/8	3/8	1/2	6	2	2	4 3/4	9 3/4																	3.0
3	30	24	1 1/8	3/8	1/2	8	2 1/2	3	6 3/4	13																	5.0
4																											
5																											

STANDARD SIGN
M4-8A

WISCONSIN DEPT OF TRANSPORTATION

APPROVED Matthew R Rauch
for State Traffic Engineer

DATE 3/9/11 PLATE NO. M4-8A.2

PROJECT NO: | HWY: | COUNTY: | SHEET NO: 384 | E

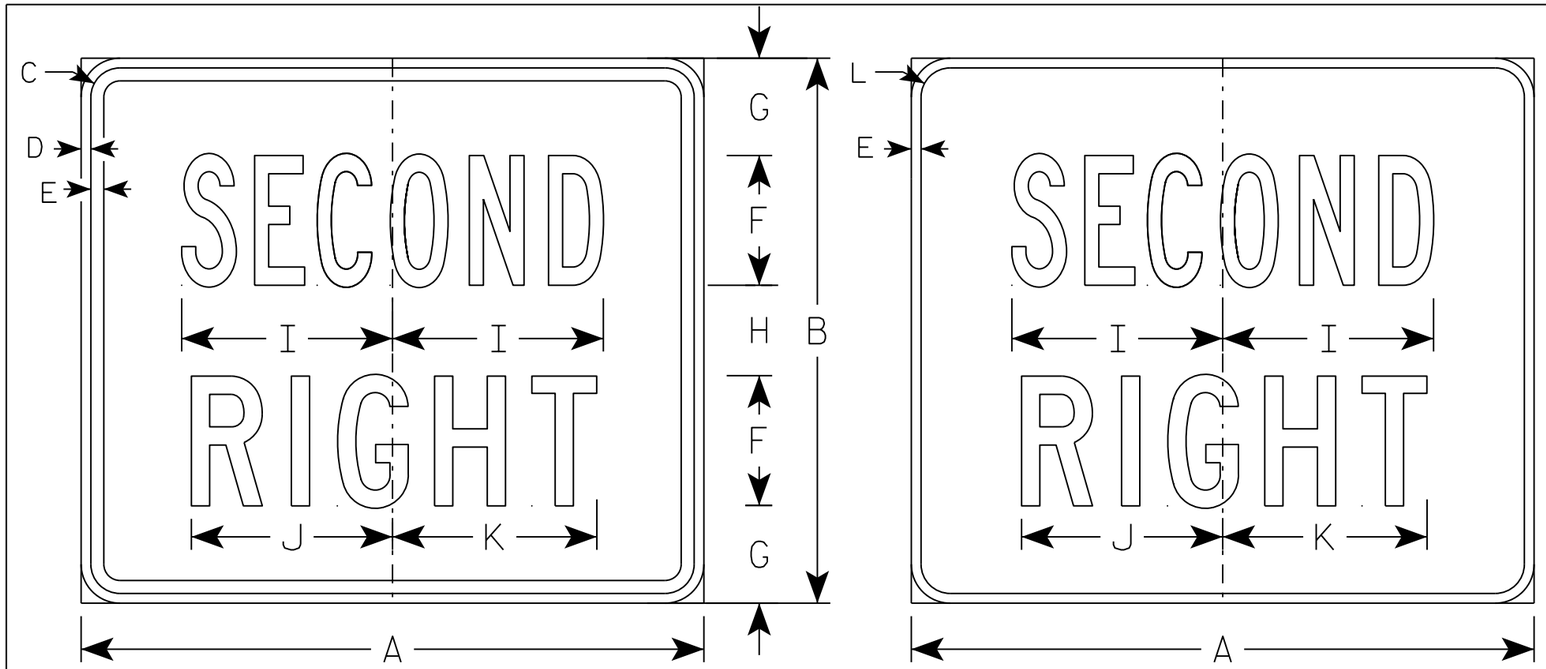

M4-22R
MM4-22R
M04-22R
MP4-22R

MB4-22R
MK4-22R
MN4-22R
MR4-22R

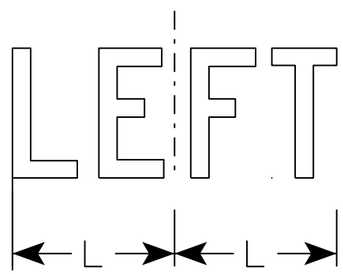

M4-22L
MB4-22L
MK4-22L
MM4-22L
MN4-22L
M04-22L
MP4-22L
MR4-22L

NOTES

1. Sign is Type II - Type H except as Shown
2. Color:
   Background - See note 5
   Message - See note 5
3. Message Series - C
4. Corners may be square or rounded when base material is plywood but borders shall be rounded as shown. When base material is metal, the corners and borders shall be rounded.
5. M4-22 Background - White
   Message - Black
   MB4-22 Background - Blue
   Message - White
   MK4-22 Background - Green
   Message - White
   MM4-22 Background - White
   Message - Green
   MN4-22 Background - Brown
   Message - White
   M04-22 Background - Orange - Type F Reflective
   Message - Black
   MP4-22 Background - White
   Message - Blue
   MR4-22 Background - Brown
   Message - Yellow

SIZE	A	B	C	D	E	F	G	H	I	J	K	L	M	N	O	P	Q	R	S	T	U	V	W	X	Y	Z	Area sq. ft.
1																											
2	24	21	1 1/8	3/8	1/2	5	3 3/4	3 1/2	8 1/8	7 3/4	7 7/8	1 1/2															3.5
3	36	30	1 5/8	5/8	3/4	8	4 3/4	4 1/2	13 1/8	12 5/8	12 1/2	1 7/8															7.5
4																											
5																											

STANDARD SIGN
M4-22

WISCONSIN DEPT OF TRANSPORTATION

APPROVED Matthew R Rauch
For State Traffic Engineer

DATE 10/15/15 PLATE NO. M4-22.4

PROJECT NO: | HWY: | COUNTY: | SHEET NO: | E

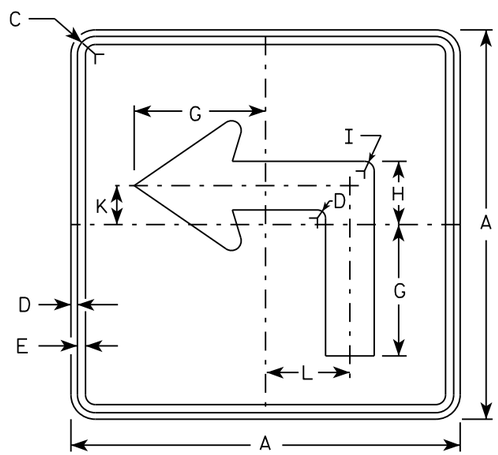

M5-1L
MM5-1L
MO5-1L
MP5-1L

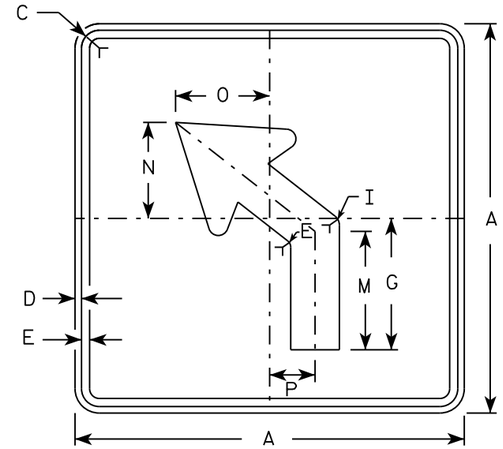

M5-2L
MM5-2L
MO5-2L
MP5-2L

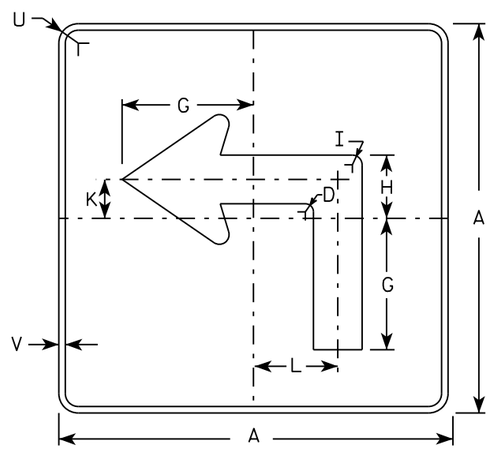

MB5-1L
MK5-1L
MN5-1L
MR5-1L

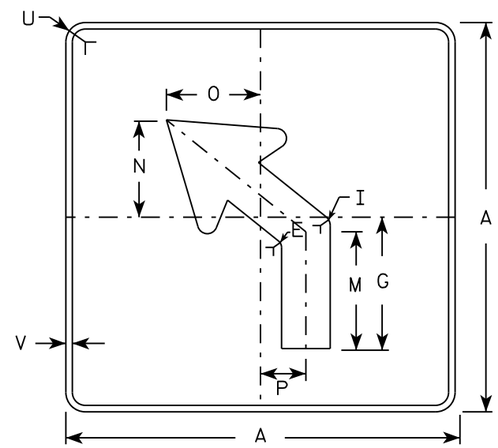

MB5-2L
MK5-2L
MN5-2L
MR5-2L

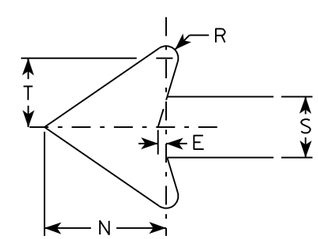

NOTES

1. Signs are Type II - Type H reflective except as shown
2. Color:
   Background - See note 4
   Message - See note 4
3. Corners may be square or rounded when base material is plywood but borders shall be rounded as shown. When base material is metal, the corners and borders shall be rounded.
4. M5-1 and M5-2 Background - White
   Message - Black
   MB5-1 and MB5-2 Background - Blue
   Message - White
   MK5-1 and MK5-2 Background - Green
   Message - White
   MM5-1 and MM5-2 Background - White
   Message - Green
   MN5-1 and MN5-2 Background - Brown
   Message - White
   MO5-1 and MO5-2 Background - Orange - Type F Reflective
   Message - Black
   MP5-1 and MP5-2 Background - White - Type H Reflective
   Message - Blue
   MR5-1 and MR5-2 Background - Brown
   Message - Yellow
5. M5-1R same as M5-1L except arrow points right.
6. M5-2R same as M5-2L except arrow tilts right.

SIZE	A	B	C	D	E	F	G	H	I	J	K	L	M	N	O	P	Q	R	S	T	U	V	W	X	Y	Z	Area sq. ft.
1																											
2	21		1 1/8	3/8	3/8		7	3 3/8	5/8		2 1/8	4 1/2	6 3/8	5 1/4	5	2 1/2		1/2	2 5/8	3	1 1/2	1/2					3.06
3	30		1 3/8	1/2	5/8		10 1/8	4 7/8	7/8		3	6 1/2	9 1/8	7 1/2	7 1/4	3 1/2		3/4	3 3/4	4 1/4	1 7/8	1/2					6.25
4	30		1 3/8	1/2	5/8		10 1/8	4 7/8	7/8		3	6 1/2	9 1/8	7 1/2	7 1/4	3 1/2		3/4	3 3/4	4 1/4	1 7/8	1/2					6.25
5	30		1 3/8	1/2	5/8		10 1/8	4 7/8	7/8		3	6 1/2	9 1/8	7 1/2	7 1/4	3 1/2		3/4	3 3/4	4 1/4	1 7/8	1/2					6.25

STANDARD SIGN
M5-1 & M5-2

WISCONSIN DEPT OF TRANSPORTATION

APPROVED Matthew R Rauch
for State Traffic Engineer

DATE 10/15/15 PLATE NO. M5-1.13

PROJECT NO:	HWY:	COUNTY:		SHEET NO:	E

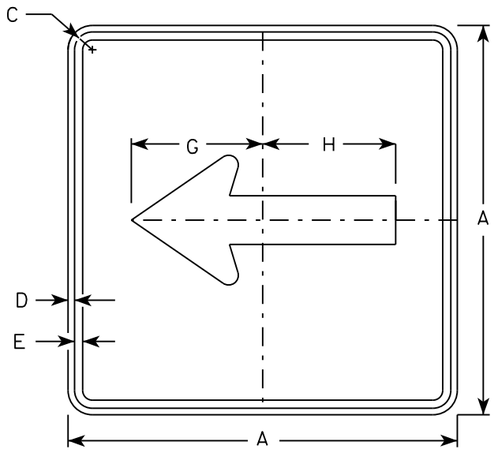

M6-1
MM6-1
MO6-1
MP6-1

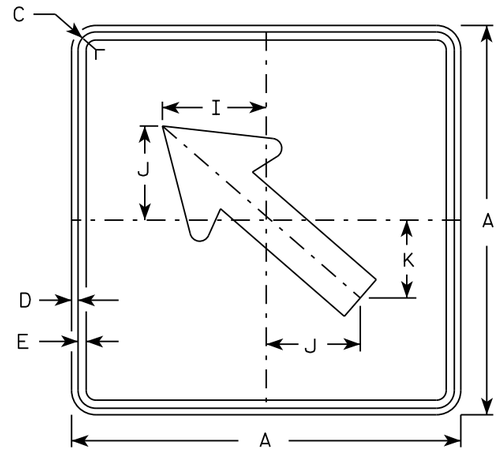

M6-2
MM6-2
MO6-2
MP6-2

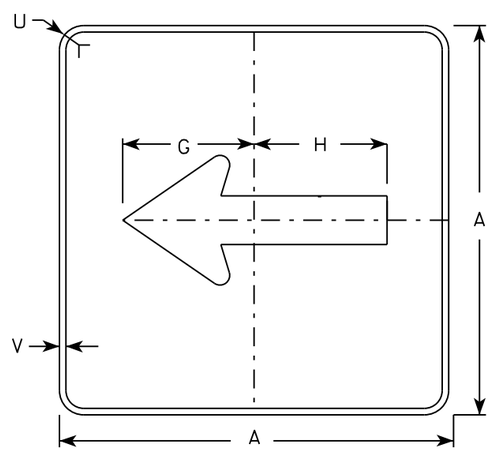

MB6-1
MK6-1
MN6-1
MR6-1

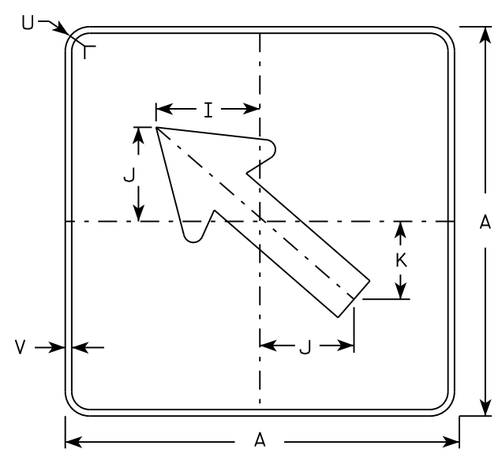

MB6-2
MK6-2
MN6-2
MR6-2

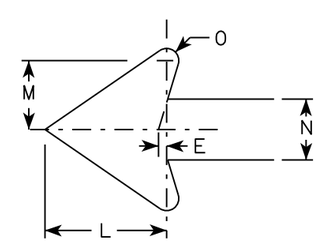

NOTES

1. Signs are Type II - Type H except as Shown
2. Color:
   Background - See note 4
   Message - See note 4
3. Corners may be square or rounded when base material is plywood but borders shall be rounded as shown. When base material is metal, the corners and borders shall be rounded.
4. M6-1 and M6-2 Background - White
   Message - Black
   MB6-1 and MB6-2 Background - Blue
   Message - White
   MK6-1 and MK6-2 Background - Green
   Message - White
   MM6-1 and MM6-2 Background - White
   Message - Green
   MN6-1 and MN6-2 Background - Brown
   Message - White
   MO6-1 and MO6-2 Background - Orange - Type F Reflective
   Message - Black
   MP6-1 and MP6-2 Background - White
   Message - Blue
   MR6-1 and MR6-2 Background - Brown
   Message - Yellow

SIZE	A	B	C	D	E	F	G	H	I	J	K	L	M	N	O	P	Q	R	S	T	U	V	W	X	Y	Z	Area sq. ft.
1																											
2	21		1 1/8	3/8	3/8		7 1/2	7 1/8	5 5/8	5	4 1/4	5 1/4	3	2 5/8	1/2						1 1/2	1/2					3.06
3	30		1 3/8	1/2	5/8		10 3/4	10 1/4	8	7 1/4	6	7 1/2	4 1/4	3 3/4	3/4						1 7/8	1/2					6.25
4	30		1 3/8	1/2	5/8		10 3/4	10 1/4	8	7 1/4	6	7 1/2	4 1/4	3 3/4	3/4						1 7/8	1/2					6.25
5	30		1 3/8	1/2	5/8		10 3/4	10 1/4	8	7 1/4	6	7 1/2	4 1/4	3 3/4	3/4						1 7/8	1/2					6.25

STANDARD SIGN
M6-1 & M6-2
SERIES

WISCONSIN DEPT OF TRANSPORTATION

APPROVED Matthew R Rauch
for State Traffic Engineer

DATE 10/15/15 PLATE 387 M6-1.15

PROJECT NO: | HWY: | COUNTY: | SHEET NO: | E

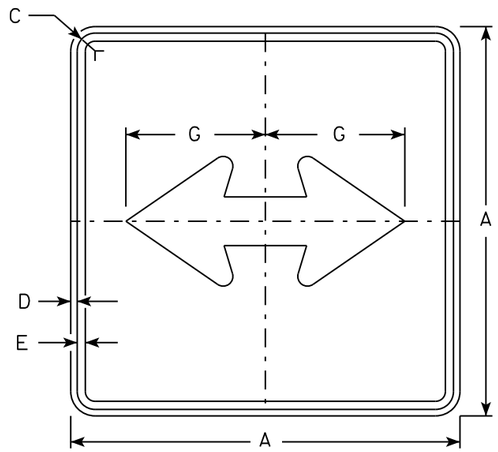

M6-4
MM6-4
MO6-4
MP6-4

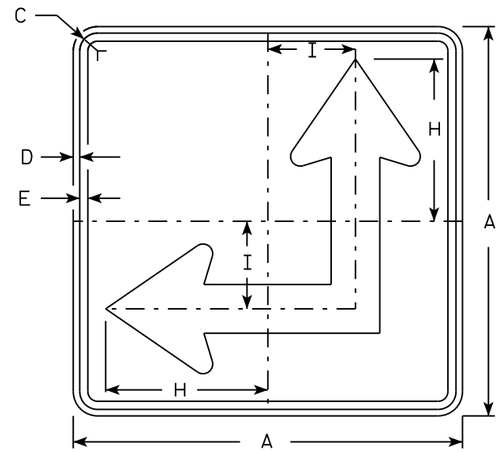

M6-6
MM6-6
MO6-6
MP6-6

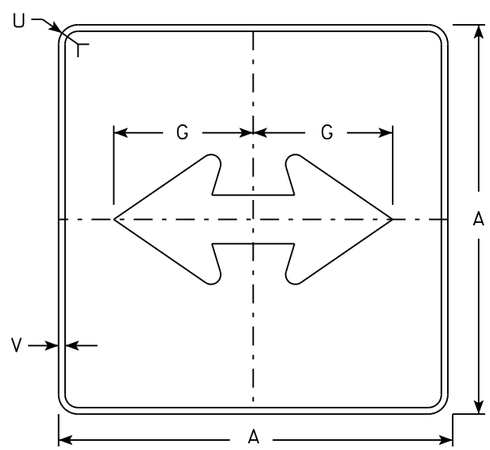

MB6-4
MK6-4
MN6-4
MR6-4

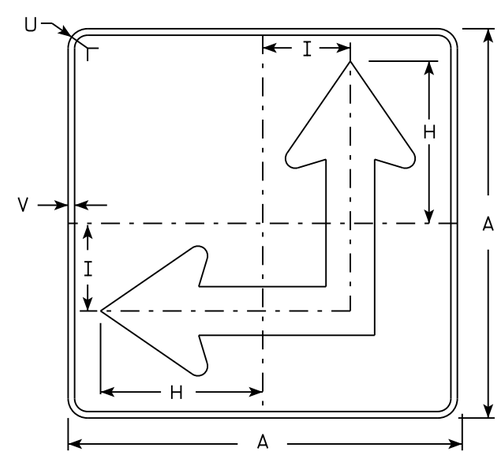

MB6-6
MK6-6
MN6-6
MR6-6

NOTES

1. Signs are Type II - Type H except as Shown
2. Color:
   Background - See Note 4
   Message - See Note 4
3. Corners may be square or rounded when base material is plywood but borders shall be rounded as shown. When base material is metal, the corners and borders shall be rounded.
4. M6-4 and M6-6 Background - White
   Message - Black
   MB6-4 and MB6-6 Background - Blue
   Message - White
   MK6-4 and MK6-6 Background - Green
   Message - White
   MM6-4 and MM6-6 Background - White
   Message - Green
   MN6-4 and MN6-6 Background - Brown
   Message - White
   MO6-4 and MO6-6 Background - Orange - Type F Reflective
   Message - Black
   MP6-4 and MP6-6 Background - White
   Message - Blue
   MR6-4 and MR6-6 Background - Brown
   Message - Yellow
5. M6-6R same as M6-6L except arrow points ahead and right.

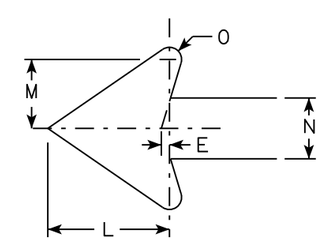

SIZE	A	B	C	D	E	F	G	H	I	J	K	L	M	N	O	P	Q	R	S	T	U	V	W	X	Y	Z	Area sq. ft.
1																											
2	21		1 1/8	3/8	3/8		7 1/2	8 3/4	4 1/4			5 1/4	3	2 5/8	1/2						1 1/2	1/2					3.06
3	30		1 3/8	1/2	5/8		10 3/4	12 1/2	6 3/4			7 1/2	4 1/4	3 3/4	3/4						1 7/8	1/2					6.25
4	30		1 3/8	1/2	5/8		10 3/4	12 1/2	6 3/4			7 1/2	4 1/4	3 3/4	3/4						1 7/8	1/2					6.25
5	30		1 3/8	1/2	5/8		10 3/4	12 1/2	6 3/4			7 1/2	4 1/4	3 3/4	3/4						1 7/8	1/2					6.25

STANDARD SIGN
M6-4 & M6-6
SERIES

WISCONSIN DEPT OF TRANSPORTATION

APPROVED Matthew R Rauch
for State Traffic Engineer

DATE 10/15/15 PLATE 388 M6-4.10

PROJECT NO: HWY: COUNTY: SHEET NO: E

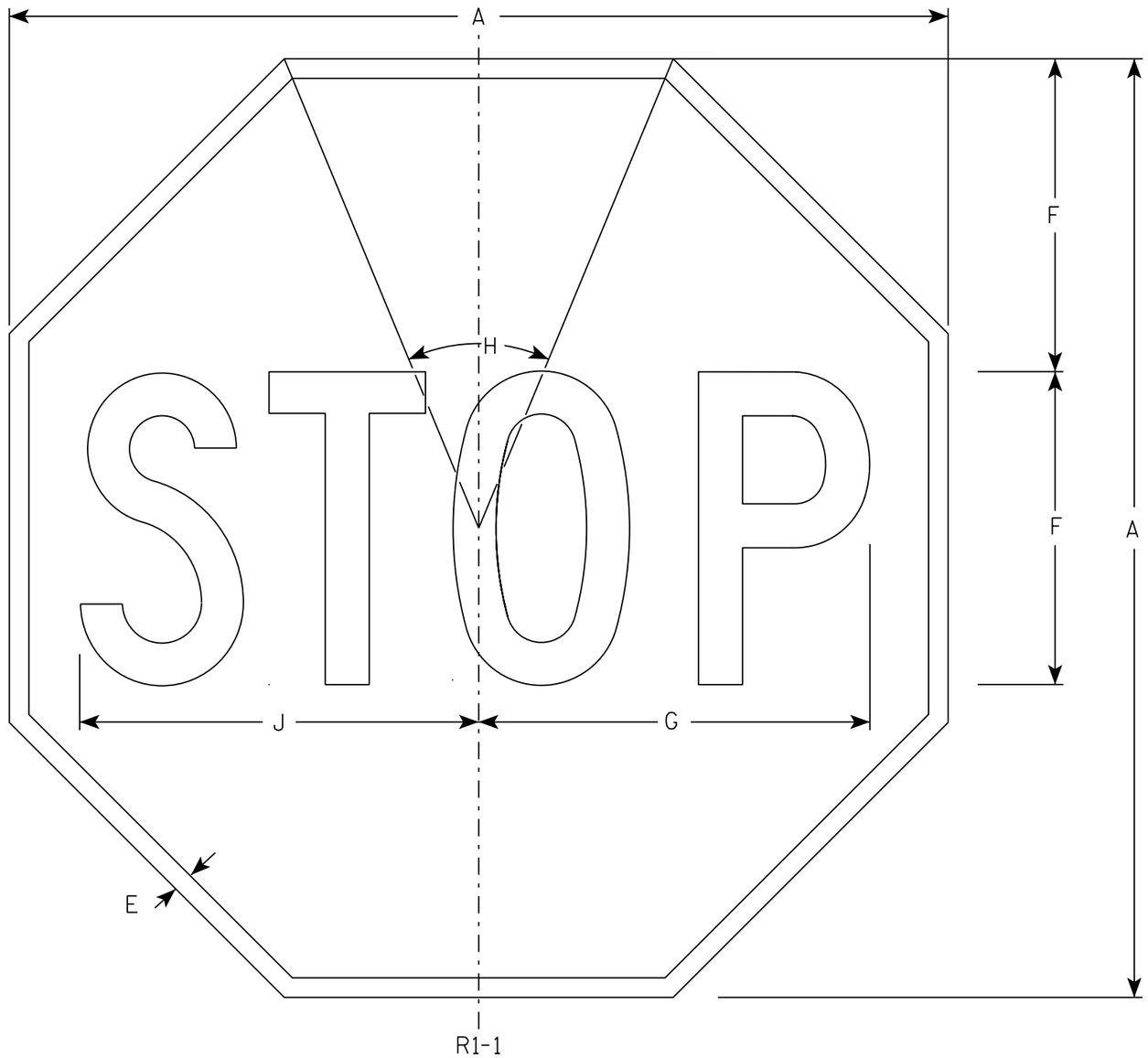

NOTES

1. Sign is Type II - Type H Reflective - reference WIS DOT Standard Specification for HIGHWAY and STRUCTURE CONSTRUCTION latest edition.
2. Color:
   Background - Red
   Message - White
3. Message Series - C

SIZE	A	B	C	D	E	F	G	H	I	J	K	L	M	N	O	P	Q	R	S	T	U	V	W	X	Y	Z	Area sq. ft.
1	30				5/8	10	12 1/2	45°		12 3/4																	5.18
2S	30				5/8	10	12 1/2	45°		12 3/4																	5.18
2M	36				3/4	12	15	45°		15 3/8																	7.46
3	36				3/4	12	15	45°		15 3/8																	7.46
4	48				1	16	20	45°		20 1/2																	13.25
5	48				1	16	20	45°		20 1/2																	13.25
6	18				3/8	6	7 3/4	45°		7 3/4																	1.86
7	12				1/4	4	5	45°		5 1/8																	0.78

STANDARD SIGN
R1-1

WISCONSIN DEPT OF TRANSPORTATION

APPROVED Matthew R Rauch
for State Traffic Engineer

DATE 11/12/15 PLATE NO. R1-1.13

PROJECT NO: | HWY: | COUNTY: | SHEET NO: 389 | E

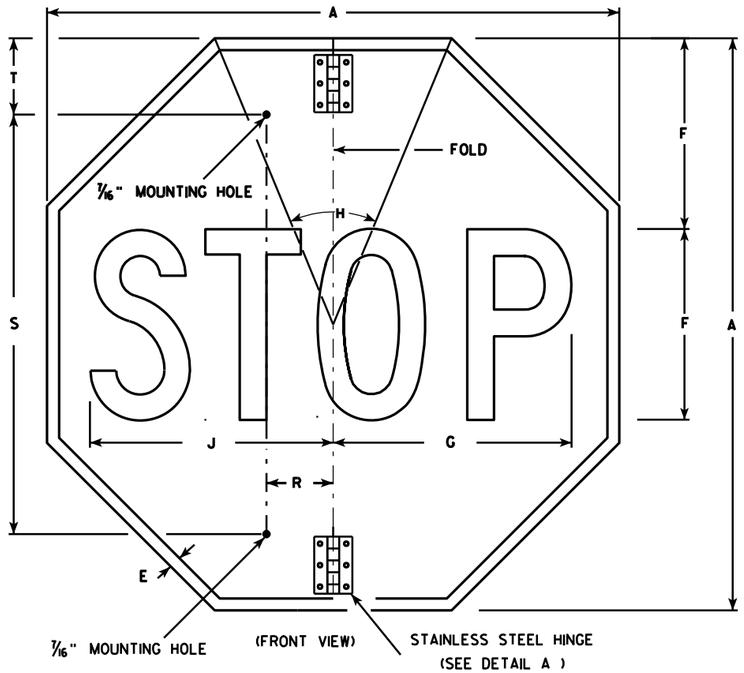

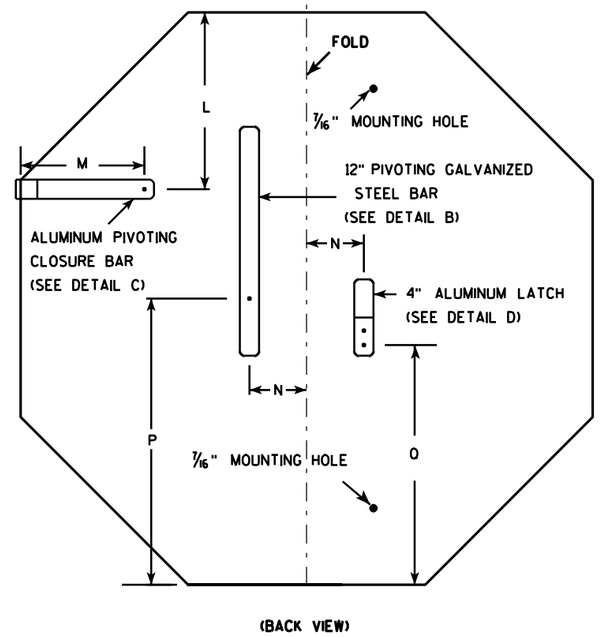

NOTES

1. Sign is Type II - Type H Reflective - reference WIS DOT Standard Specification for HIGHWAY and STRUCTURE CONSTRUCTION latest edition.
2. Color:
   Background - Red
   Message - White
3. Message Series - C
4. All hardware used on the folding STOP sign installation shall conform to 637.2.4 of the WIS DOT Standard Specification.

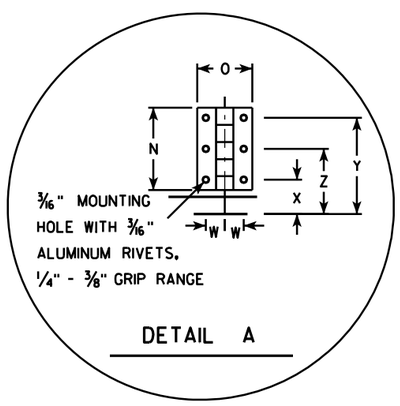

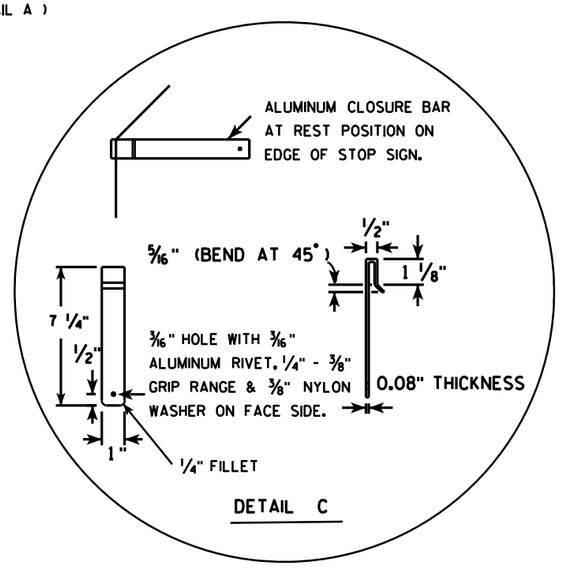

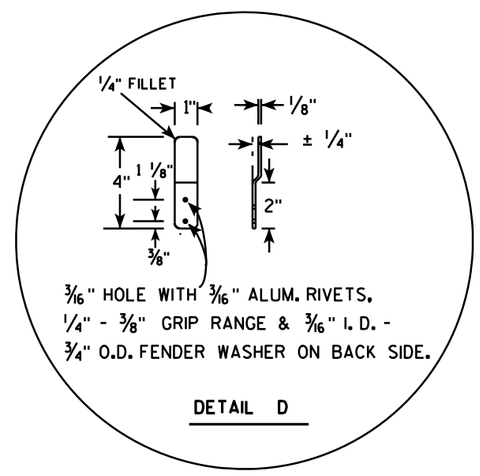

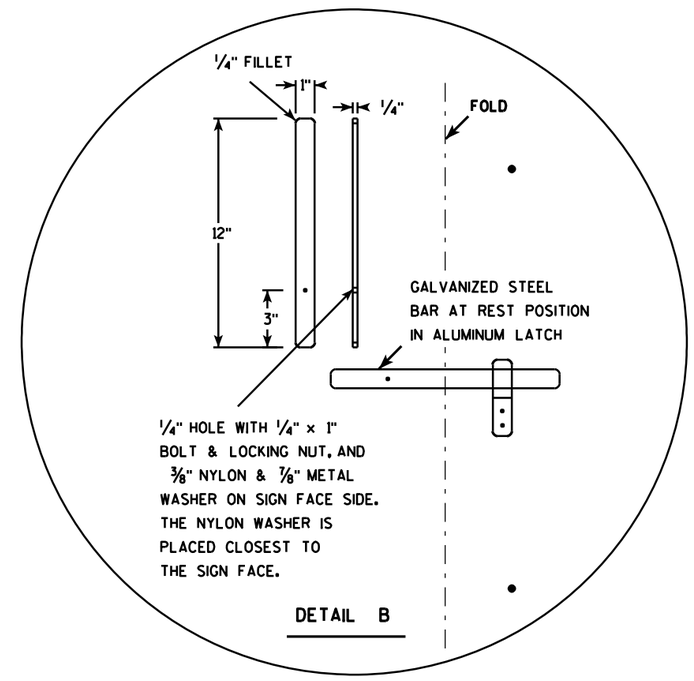

SIZE	A	B	C	D	E	F	G	H	I	J	K	L	M	N	O	P	Q	R	S	T	U	V	W	X	Y	Z	Area sq. ft.
1																											
2S	30				5/8	10	12 1/2	45		12 3/4		9 1/4	6 1/2	3	2	15	12 3/8	2 1/2	22	5			11/16	1 1/4	3 1/2	2 3/8	5.18
2M	36				3/4	12	15	45		15 3/8		11	6 1/2	3	2	18	15 3/8	2 1/2	26	5			11/16	1 1/4	3 1/2	2 3/8	7.46
3	36				3/4	12	15	45		15 3/8		11	6 1/2	3	2	18	15 3/8	2 1/2	26	5			11/16	1 1/4	3 1/2	2 3/8	7.46
4																											
5																											

STANDARD SIGN
R1-1F

WISCONSIN DEPT OF TRANSPORTATION

APPROVED Matthew R Rauch
for State Traffic Engineer

DATE 12/03/10 PLATE NO. R1-1F.3

PROJECT NO: | HWY: | COUNTY: | SHEET NO: 390 | E

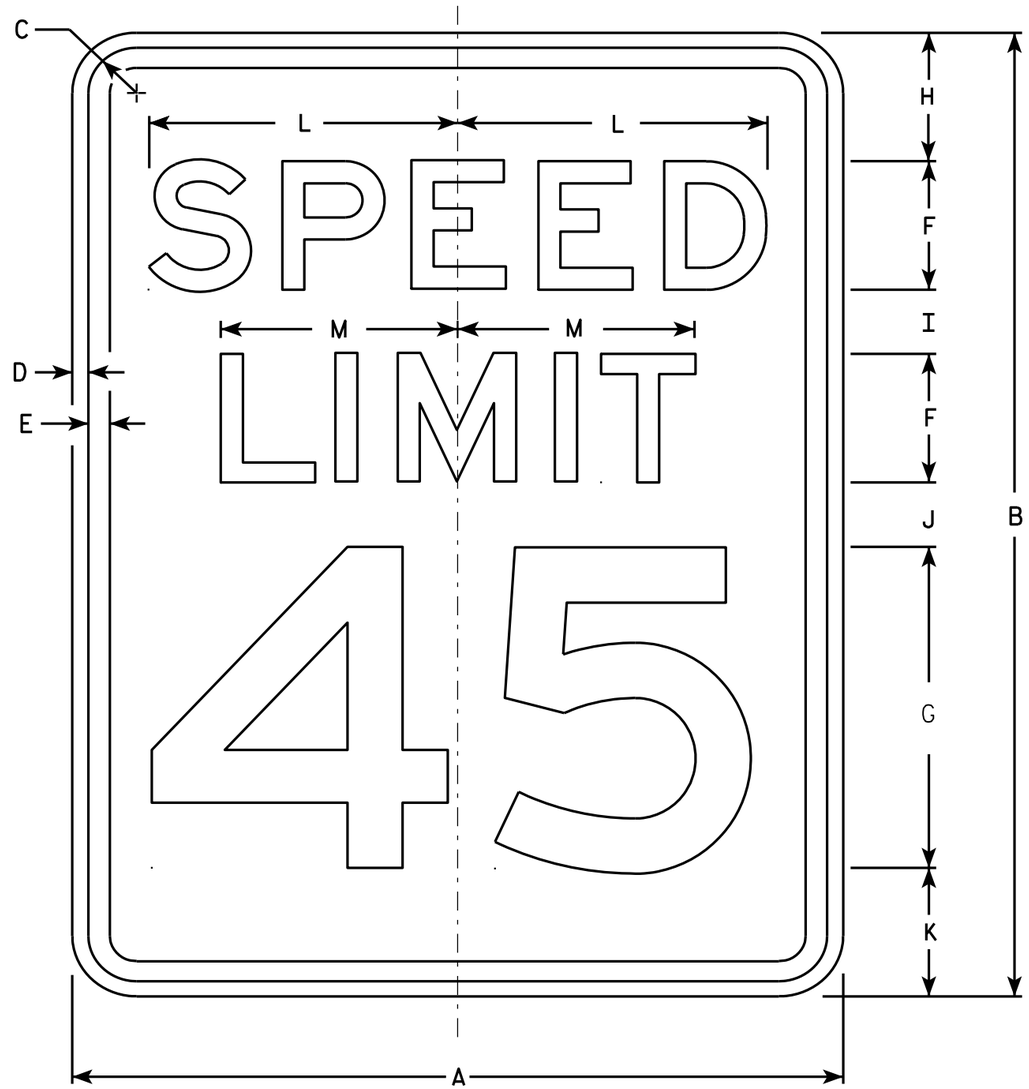

R2-1

NOTES

1. Sign is Type II - Type H Reflective - reference WIS DOT Standard Specification for HIGHWAY and STRUCTURE CONSTRUCTION latest edition.
2. Color:
   Background - White
   Message - Black
3. Message Series - E
4. Corners may be square or rounded when base material is plywood but borders shall be rounded as shown. When base material is metal, the corners and borders shall be rounded.
5. Substitute appropriate numerals and optically adjust spacing to achieve proper balance.

SIZE	A	B	C	D	E	F	G	H	I	J	K	L	M	N	O	P	Q	R	S	T	U	V	W	X	Y	Z	Area sq. ft.
1	18	24	1 1/8	3/8	1/2	3	8	3	2	2	3	7 1/4	5 1/2														3.0
2S	24	30	1 1/8	3/8	1/2	4	10	3	2 1/4	3 3/8	3 3/8	9 5/8	7 3/8														5.0
2M	30	36	1 3/8	1/2	5/8	5	12	5	2 1/2	2 1/2	4	12	9 1/4														7.5
3	36	48	1 3/8	1/2	5/8	6	14	6	5	5	6	14 3/8	11														12.0
4	36	48	1 3/8	1/2	5/8	6	14	6	5	5	6	14 3/8	11														12.0
5	48	60	2 1/4	3/4	1	8	20	6	4 1/2	6 3/4	6 3/4	19 1/4	14 5/8														20.0

STANDARD SIGN
R2-1

WISCONSIN DEPT OF TRANSPORTATION

APPROVED Matthew R Rauch
for State Traffic Engineer

DATE 5/26/10 PLATE NO. R2-1.13

PROJECT NO: | HWY: | COUNTY: | SHEET NO: 391 | E

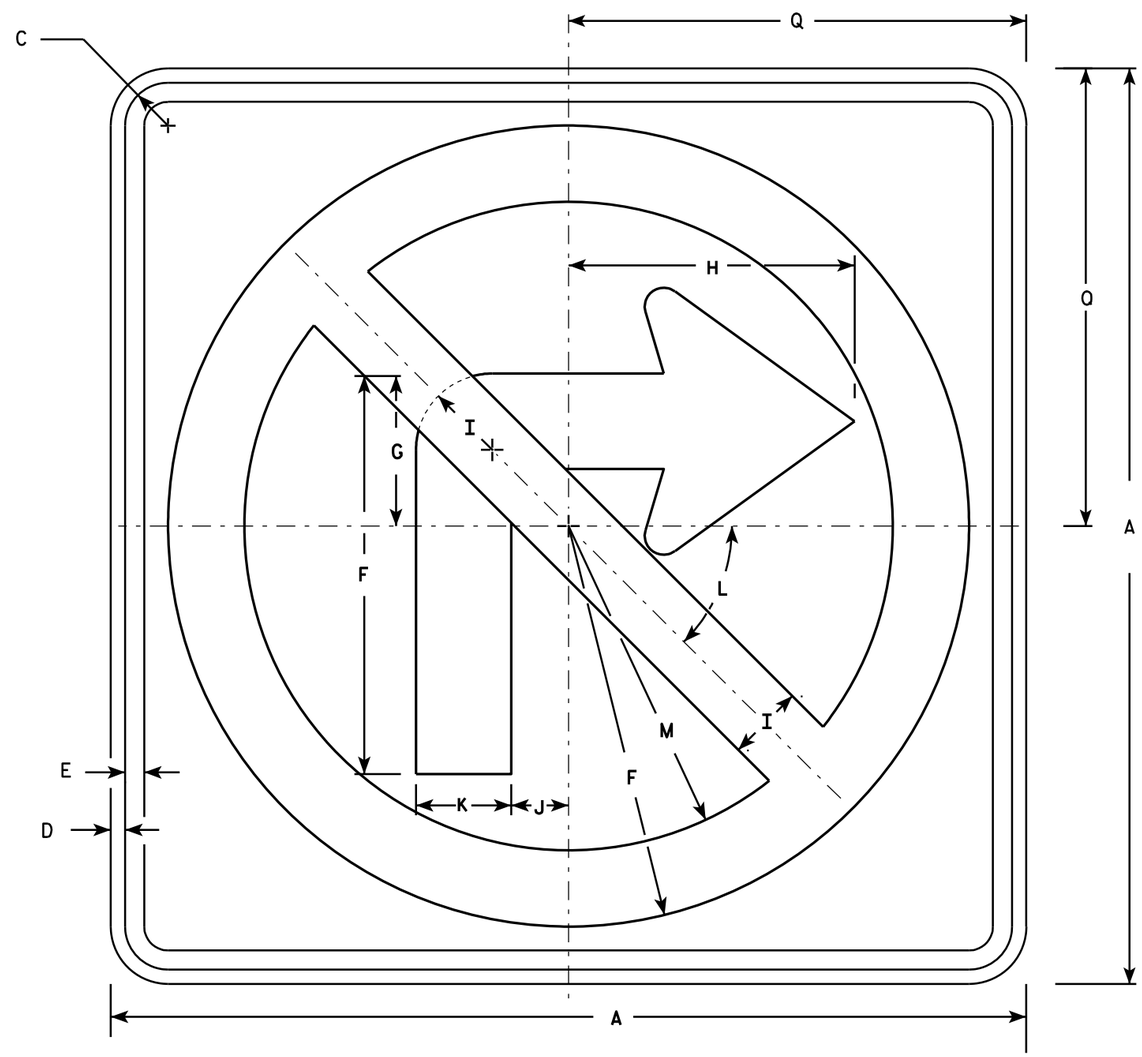

R3-1

NOTES

1. Sign is Type II - Type H Reflective - reference WIS DOT Standard Specification for HIGHWAY and STRUCTURE CONSTRUCTION latest edition.
2. Color:
   Background - White
   Message - See note 4
3. Corners may be square or rounded when base material is plywood but borders shall be rounded as shown. When base material is metal, the corners and borders shall be rounded.
4. Border & Arrow are non reflective black, the circle with diagonal bar is reflective red.

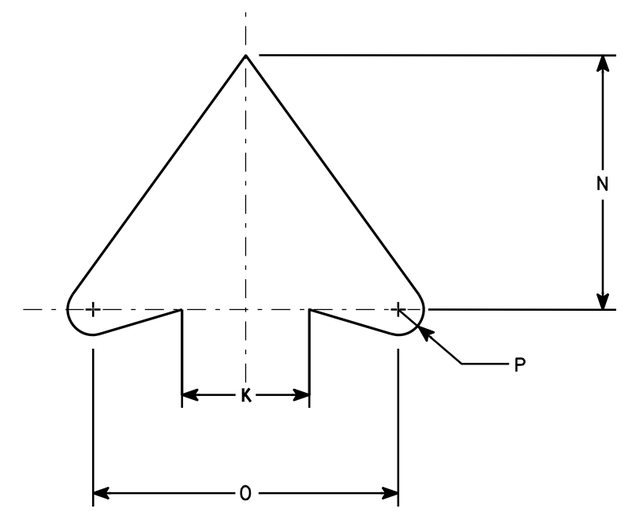

ARROW DETAIL

SIZE	A	B	C	D	E	F	G	H	I	J	K	L	M	N	O	P	Q	R	S	T	U	V	W	X	Y	Z	Area sq. ft.
1	24		1 1/8	3/8	1/2	10 1/2	4	7 1/2	2	1 1/2	2 1/2	45	8 1/2	5	6	1/2	12										4.0
2S	24		1 1/8	3/8	1/2	10 1/2	4	7 1/2	2	1 1/2	2 1/2	45°	8 1/2	5	6	1/2	12										4.0
2M	36		1 5/8	5/8	3/4	15 3/4	6	11 1/4	3	2 1/4	3 3/4	45	12 3/4	7 1/2	9	3/4	18										9.0
3	36		1 5/8	5/8	3/4	15 3/4	6	11 1/4	3	2 1/4	3 3/4	45	12 3/4	7 1/2	9	3/4	18										9.0
4	36		1 5/8	5/8	3/4	15 3/4	6	11 1/4	3	2 1/4	3 3/4	45°	12 3/4	7 1/2	9	3/4	18										9.0
5	48		2 1/4	3/4	1	21	8	15	4	3	5	45°	17	10	12	1	24										16.0

STANDARD SIGN
R3-1

WISCONSIN DEPT OF TRANSPORTATION

APPROVED Matthew R Rauch
for State Traffic Engineer

DATE 12/08/10 PLATE NO. R3-1.5

PROJECT NO:	HWY:	COUNTY:		SHEET NO: 392	E

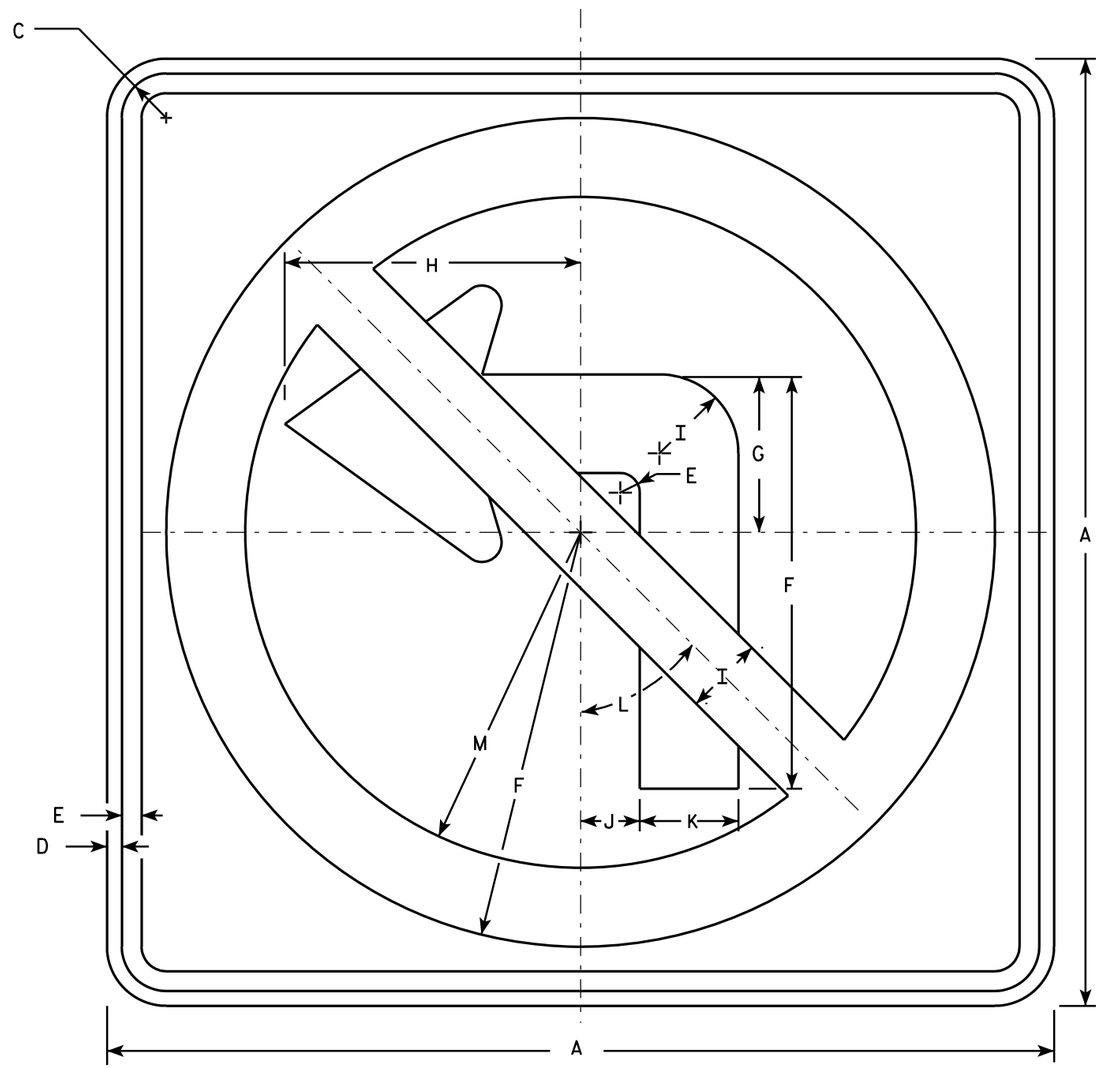

R3-2

NOTES

1. Sign is Type II - Type H Reflective - reference WIS DOT Standard Specification for HIGHWAY and STRUCTURE CONSTRUCTION latest edition.
2. Color:
   Background - White
   Message - See note 4
3. Corners may be square or rounded when base material is plywood but borders shall be rounded as shown. When base material is metal, the corners and borders shall be rounded.
4. Border & Arrow are non reflective black, the circle with diagonal bar is reflective red.

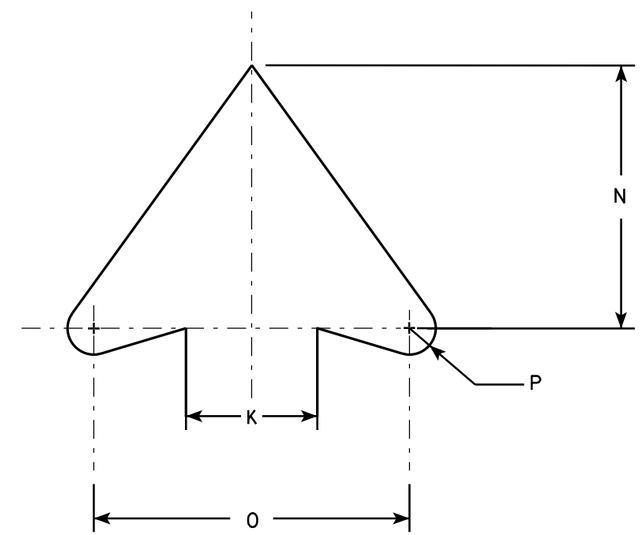

ARROW DETAIL

SIZE	A	B	C	D	E	F	G	H	I	J	K	L	M	N	O	P	Q	R	S	T	U	V	W	X	Y	Z	Area sq. ft.
1	24		1 1/8	3/8	1/2	10 1/2	4	7 1/2	2	1 1/2	2 1/2	45°	8 1/2	5	6	1/2											4.0
2S	24		1 1/8	3/8	1/2	10 1/2	4	7 1/2	2	1 1/2	2 1/2	45°	8 1/2	5	6	1/2											4.0
2M	36		1 5/8	5/8	3/4	15 3/4	6	11 1/4	3	2 1/4	3 3/4	45°	12 3/4	7 1/2	9	3/4											9.0
3	36		1 5/8	5/8	3/4	15 3/4	6	11 1/4	3	2 1/4	3 3/4	45°	12 3/4	7 1/2	9	3/4											9.0
4	36		1 5/8	5/8	3/4	15 3/4	6	11 1/4	3	2 1/4	3 3/4	45°	12 3/4	7 1/2	9	3/4											9.0
5	48		2 1/4	3/4	1	21	8	15	4	3	5	45°	17	10	12	1											16.0

STANDARD SIGN
R3-2

WISCONSIN DEPT OF TRANSPORTATION

APPROVED Matthew R Rauch
for State Traffic Engineer

DATE 12/08/10 PLATE NO. R3-2.10

PROJECT NO:	HWY:	COUNTY:		SHEET NO: 393	E

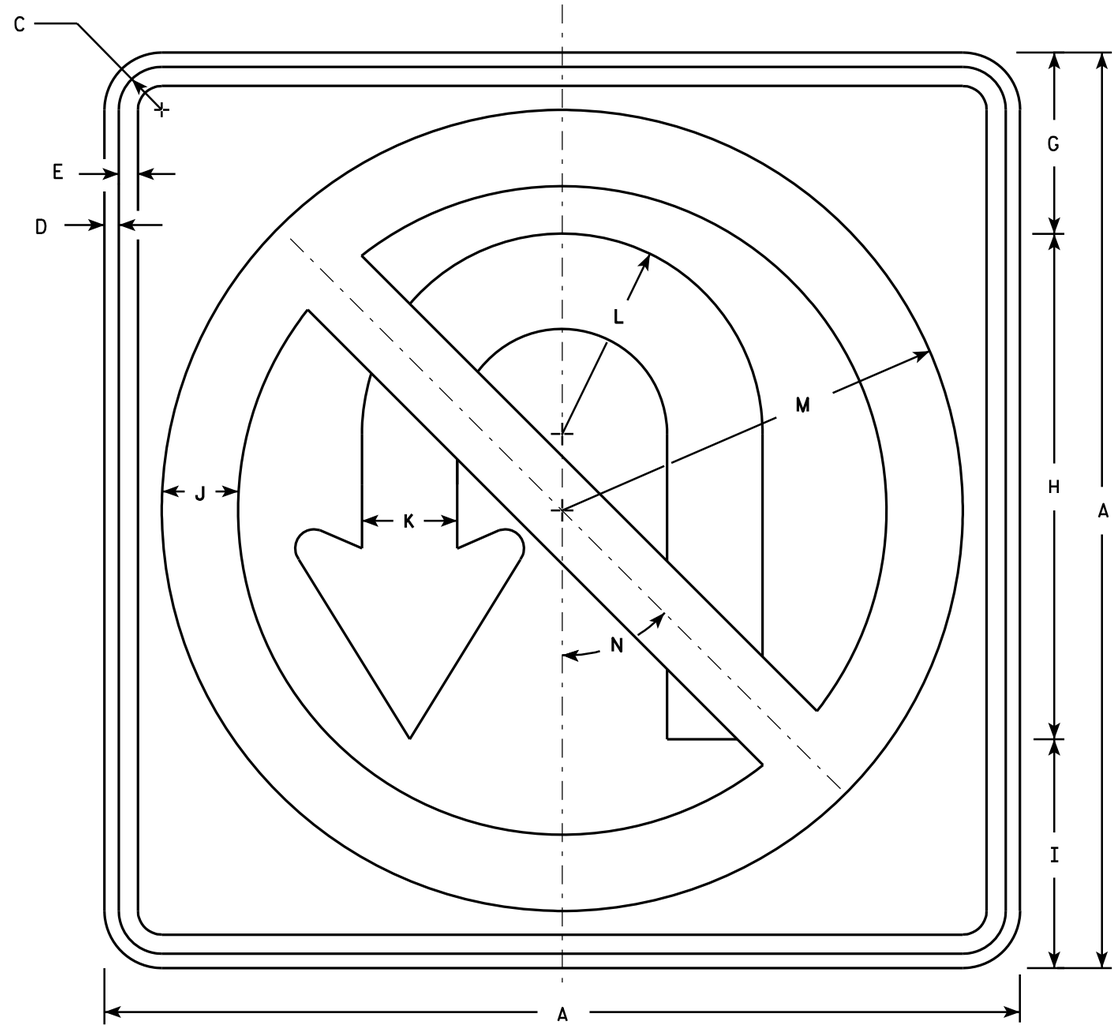

R3-4

NOTES

1. Sign is Type II - Type H Reflective - reference WIS DOT Standard Specification for HIGHWAY and STRUCTURE CONSTRUCTION latest edition.
2. Color:
   Background - White
   Message - See note 4
3. Corners may be square or rounded when base material is plywood but borders shall be rounded as shown. When base material is metal, the corners and borders shall be rounded.
4. Border & Arrow are non reflective black, the circle with diagonal bar is reflective red.

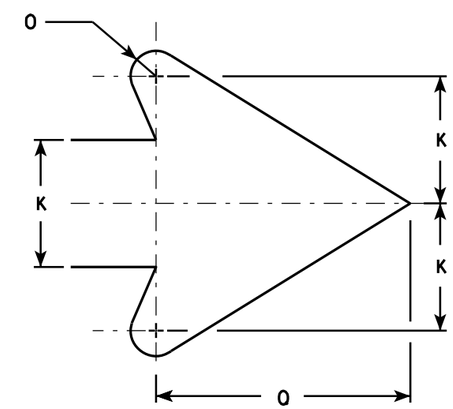

ARROW DETAIL

SIZE	A	B	C	D	E	F	G	H	I	J	K	L	M	N	O	P	Q	R	S	T	U	V	W	X	Y	Z	Area sq. ft.
1																											
2S	24		1 1/8	3/8	1/2		4 3/4	13 1/4	6	2	2 1/2	5 1/4	10 1/2	45°	1/2		5										4.0
2M	36		1 5/8	5/8	3/4		7 1/8	19 7/8	9	3	3 3/4	7 7/8	15 3/4	45°	3/4		7 5/8										9.0
3	36		1 5/8	5/8	3/4		7 1/8	19 7/8	9	3	3 3/4	7 7/8	15 3/4	45°	3/4		7 5/8										9.0
4	36		1 5/8	5/8	3/4		7 1/8	19 7/8	9	3	3 3/4	7 7/8	15 3/4	45°	3/4		7 5/8										9.0
5	36		1 5/8	5/8	3/4		7 1/8	19 7/8	9	3	3 3/4	7 7/8	15 3/4	45°	3/4		7 5/8										9.0

STANDARD SIGN
R3-4

WISCONSIN DEPT OF TRANSPORTATION

APPROVED Matthew R Rauch
for State Traffic Engineer

DATE 12/08/10 PLATE NO. R3-4.11

PROJECT NO: | HWY: | COUNTY: | SHEET NO: 394 | E

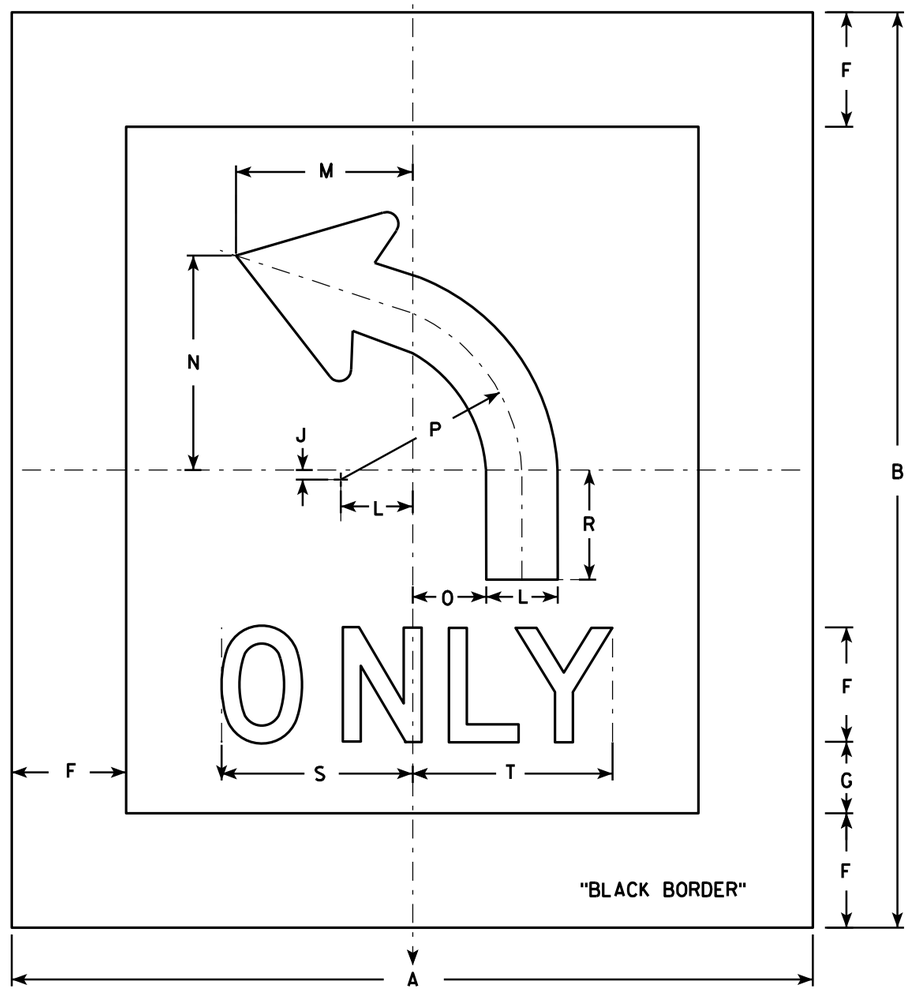

R3-5L

NOTES

1. Sign is Type II - Type H Reflective - reference WIS DOT Standard Specification for HIGHWAY and STRUCTURE CONSTRUCTION latest edition.
2. Color:
   Background - White
   Message - Black
3. Message Series - D
4. Corners may be square or rounded when base material is plywood. When base material is metal, the corners shall be rounded.
5. R3-5R is the same as R3-5L except curved portion of arrow points right.
6. The 6" border is non-reflective black.

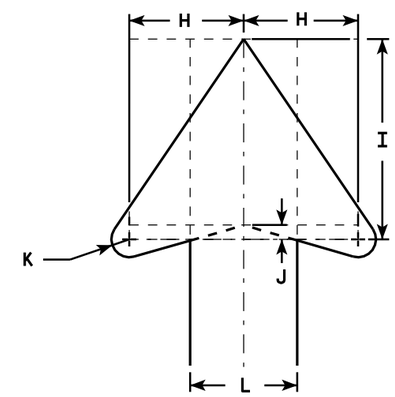

ARROW DETAIL

SIZE	A	B	C	D	E	F	G	H	I	J	K	L	M	N	O	P	Q	R	S	T	U	V	W	X	Y	Z	Area sq. ft.
1																											
2S	42	48				6	3 3/4	4	7	1/2	5/8	3 3/4	9 1/4	11 1/4	3 7/8	9 1/2		5 3/4	10	10 1/2							1.26
2M	42	48				6	3 3/4	4	7	1/2	5/8	3 3/4	9 1/4	11 1/4	3 7/8	9 1/2		5 3/4	10	10 1/2							1.26
3																											
4																											
5																											

STANDARD SIGN
R3-5

WISCONSIN DEPT OF TRANSPORTATION

APPROVED Matthew R Rauch
for State Traffic Engineer

DATE 2/24/11 PLATE NO. R3-5.6

PROJECT NO:	HWY:	COUNTY:		SHEET NO: 395	E

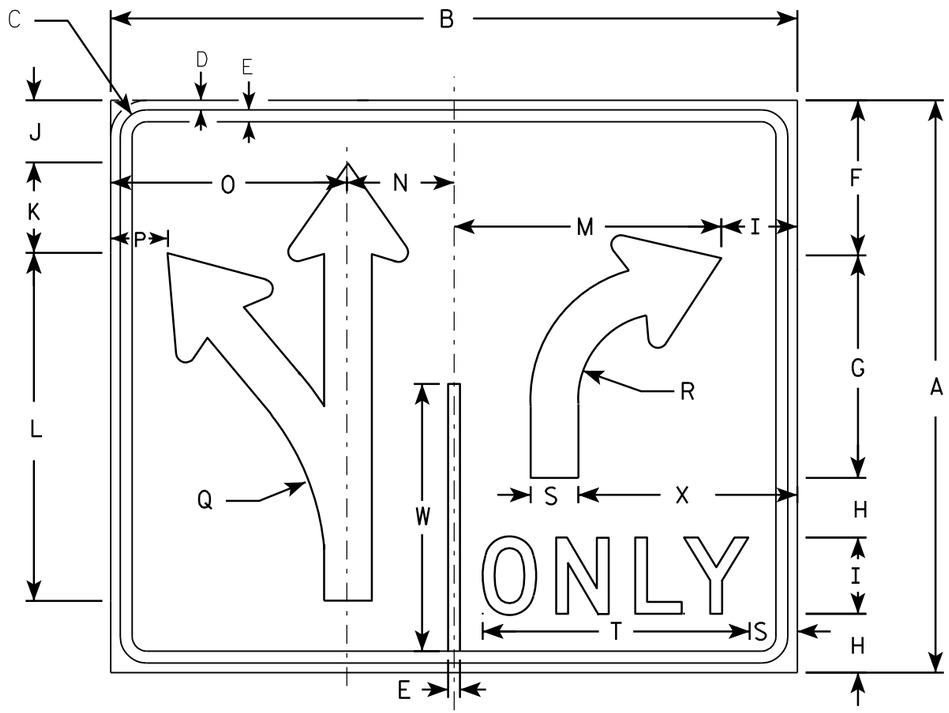

R3-8

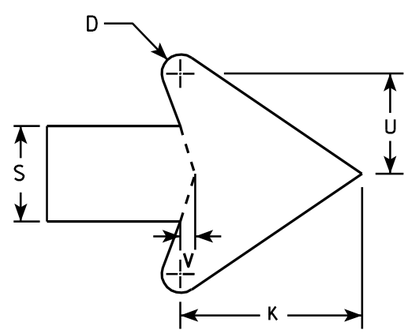

ARROW DETAIL

NOTES

1. Sign is Type II - Type H Reflective - reference WIS DOT Standard Specification for HIGHWAY and STRUCTURE CONSTRUCTION latest edition.
2. Color:
   Background - WHITE
   Message - BLACK
3. Message Series - D
4. Corners may be square or rounded when base material is plywood but borders shall be rounded as shown. When base material is metal, the corners and borders shall be rounded.

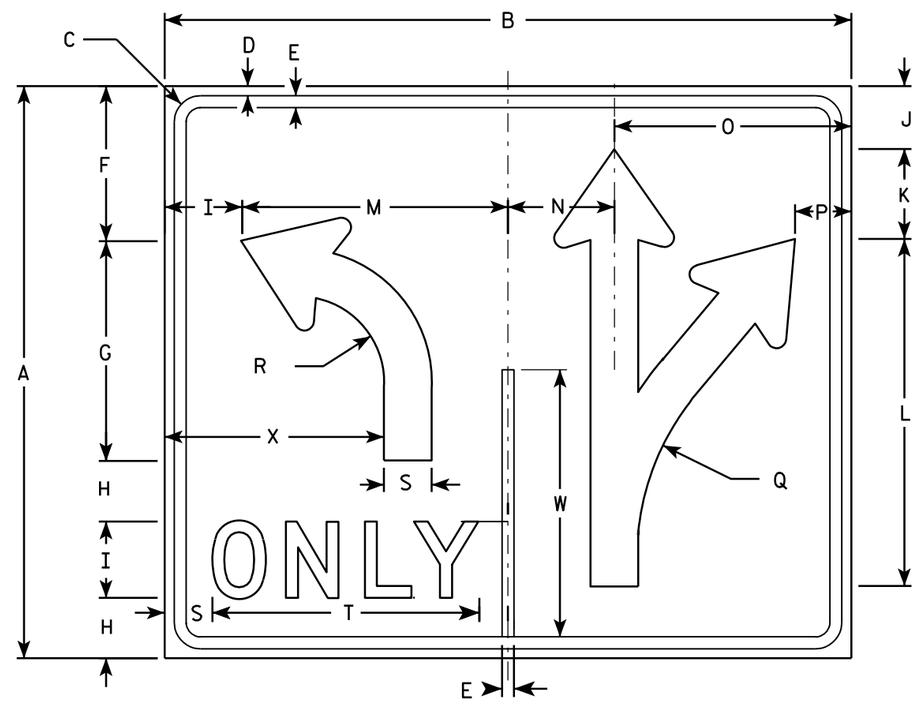

R3-8A

SIZE	A	B	C	D	E	F	G	H	I	J	K	L	M	N	O	P	Q	R	S	T	U	V	W	X	Y	Z	Area sq. ft.
1																											
2S	30	36	1 3/8	1/2	5/8	8 1/8	11 5/8	3 1/8	4	3 1/4	4 3/4	18 1/4	14	5 5/8	12 3/8	3	13 1/4	4 1/2	2 1/2	14	2 5/8	3/8	14	11 1/2			7.5
2M	30	36	1 3/8	1/2	5/8	8 1/8	11 5/8	3 1/8	4	3 1/4	4 3/4	18 1/4	14	5 5/8	12 3/8	3	13 1/4	4 1/2	2 1/2	14	2 5/8	3/8	14	11 1/2			7.5
3																											
4	48	54	2 1/4	3/4	1	13 1/4	18 1/2	5 1/8	6	5 1/4	7 1/8	29 1/8	21	8 3/8	18 5/8	4 3/8	21 7/8	7 1/4	3 3/4	20 5/8	4	5/8	22 3/8	17 1/4			18.0
5	48	54	2 1/4	3/4	1	13 1/4	18 1/2	5 1/8	6	5 1/4	7 1/8	29 1/8	21	8 3/8	18 5/8	4 3/8	21 7/8	7 1/4	3 3/4	20 5/8	4	5/8	22 3/8	17 1/4			18.0

STANDARD SIGN
R3-8 & R3-8A

WISCONSIN DEPT OF TRANSPORTATION

APPROVED Matthew R Rauch
for State Traffic Engineer

DATE 3/18/2011 PLATE NO. R3-8.5

PROJECT NO: | HWY: | COUNTY: | SHEET NO: 396 | E

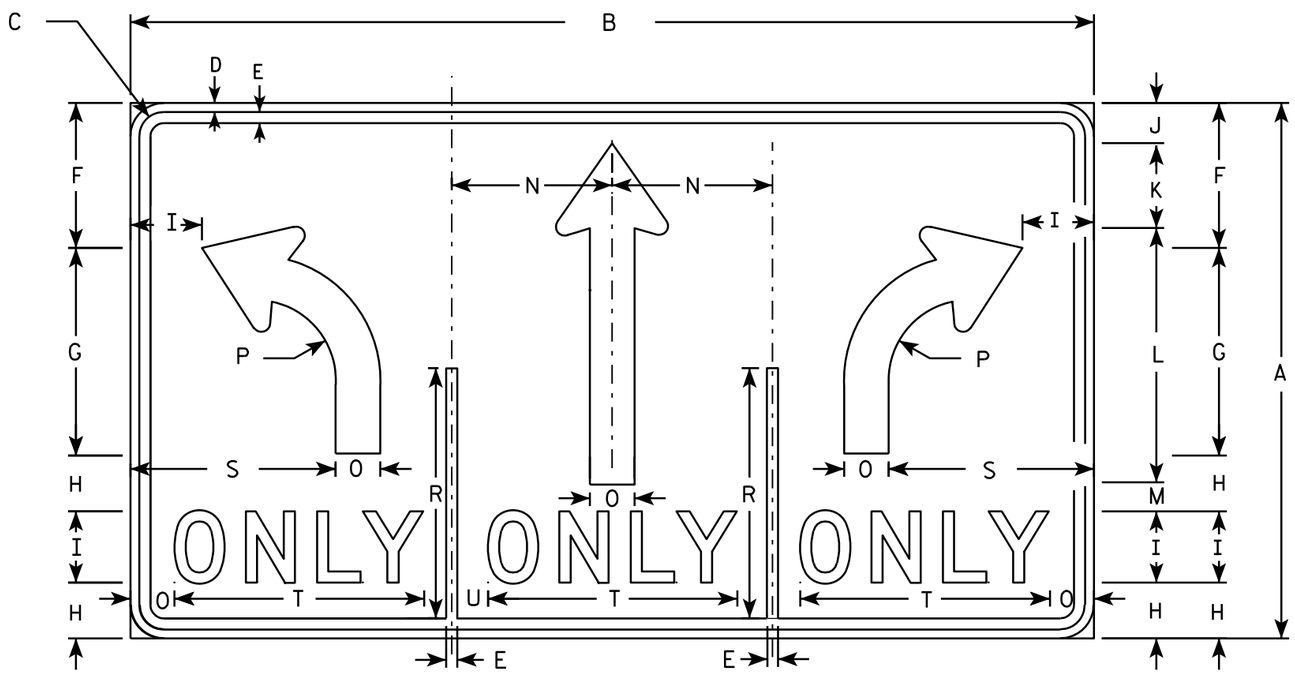

R3-8W

NOTES

1. Sign is Type II - Type H Reflective - reference WIS DOT Standard Specification for HIGHWAY and STRUCTURE CONSTRUCTION latest edition.
2. Color:
   Background - WHITE
   Message - BLACK
3. Message Series - D
4. Corners may be square or rounded when base material is plywood but borders shall be rounded as shown. When base material is metal, the corners and borders shall be rounded.

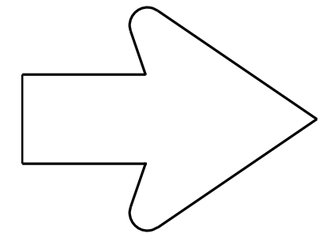

SEE R3-8 FOR ARROW DETAIL

SIZE	A	B	C	D	E	F	G	H	I	J	K	L	M	N	O	P	Q	R	S	T	U	V	W	X	Y	Z	Area sq. ft.
1																											
2S	30	54	1 3/8	1/2	5/8	8 1/8	11 5/8	3 1/8	4	2 1/4	4 3/4	14 1/4	1 5/8	9	2 1/2	4 1/2		14	11 1/2	14	2						11.25
2M	30	54	1 3/8	1/2	5/8	8 1/8	11 5/8	3 1/8	4	2 1/4	4 3/4	14 1/4	1 5/8	9	2 1/2	4 1/2		14	11 1/2	14	2						11.25
3																											
4	48	84	2 1/4	3/4	1	13	18 1/2	5 1/4	6	3 3/4	7	29 1/8	2 3/8	14	3 3/4	7 1/4		22 3/8	17 1/4	20 1/2	3 1/4						28.0
5	48	84	2 1/4	3/4	1	13	18 1/2	5 1/4	6	3 3/4	7	29 1/8	2 7/8	14	3 3/4	7 1/4		22 3/8	17 1/4	20 1/2	3 1/4						28.0

STANDARD SIGN
R3-8W

WISCONSIN DEPT OF TRANSPORTATION

APPROVED Matthew R Rauch
for State Traffic Engineer

DATE 3/24/2011 PLATE NO. R3-8W.4

PROJECT NO:

SHEET NO: 397 E

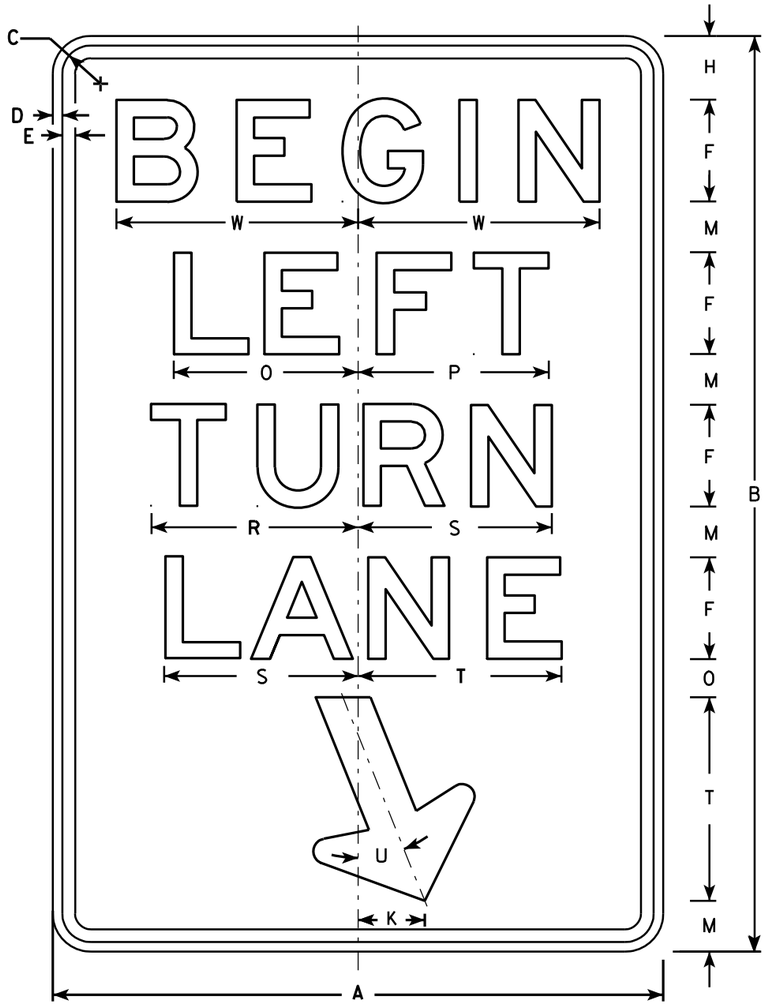

R3-20L

NOTES

1. Sign is Type II - Type H Reflective - reference WIS DOT Standard Specification for HIGHWAY and STRUCTURE CONSTRUCTION latest edition.
2. Color:
   Background - White
   Message - Black
3. Message Series - E
4. Corners may be square or rounded when base material is plywood but borders shall be rounded as shown. When base material is metal, the corners and borders shall be rounded.

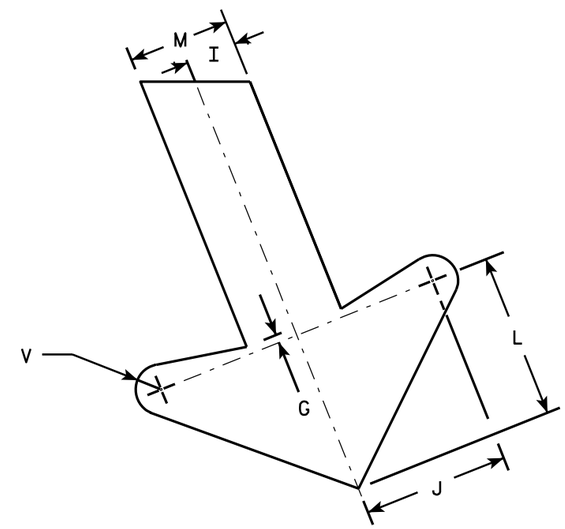

ARROW DETAIL

SIZE	A	B	C	D	E	F	G	H	I	J	K	L	M	N	O	P	Q	R	S	T	U	V	W	X	Y	Z	Area sq. ft.
1																											
2S	24	36	1 1/8	3/8	1/2	4	1/4	2 1/2	1	2 7/8	2 5/8	3 1/4	2	1 1/2	7 1/4	7 1/2		8 1/8	7 5/8	8	22°	1/2	9 1/2				6.0
2M	24	36	1 1/8	3/8	1/2	4	1/4	2 1/2	1	2 7/8	2 5/8	3 1/4	2	1 1/2	7 1/4	7 1/2		8 1/8	7 5/8	8	22°	1/2	9 1/2				6.0
3	36	54	1 3/4	1/2	5/8	6	3/8	3 3/4	1 1/2	4 1/4	4	4 7/8	3	2 1/4	10 7/8	11 1/4		12 1/4	11 1/2	12	22°	3/4	13 1/4				13.5
4																											
5																											

STANDARD SIGN
R3-20L

WISCONSIN DEPT OF TRANSPORTATION

APPROVED Matthew R Rauch
for State Traffic Engineer

DATE 10/18/10 PLATE NO. R3-20L.7

PROJECT NO: | HWY: | COUNTY: | SHEET NO: 398 | E

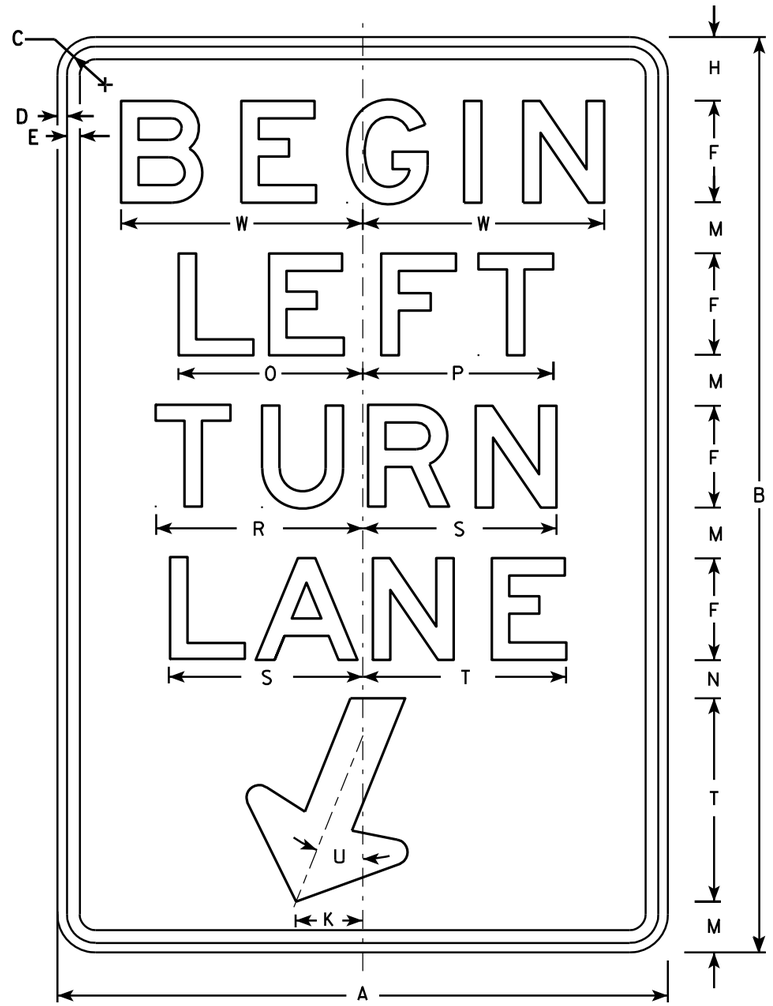

R3-20LL

NOTES

1. Sign is Type II - Type H Reflective - reference WIS DOT Standard Specification for HIGHWAY and STRUCTURE CONSTRUCTION latest edition.
2. Color:
   Background - White
   Message - Black
3. Message Series - E
4. Corners may be square or rounded when base material is plywood but borders shall be rounded as shown. When base material is metal, the corners and borders shall be rounded.

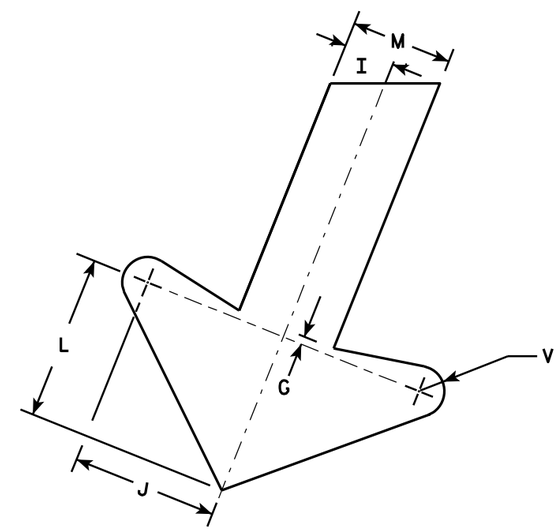

ARROW DETAIL

SIZE	A	B	C	D	E	F	G	H	I	J	K	L	M	N	O	P	Q	R	S	T	U	V	W	X	Y	Z	Area sq. ft.
1																											
2S	24	36	1 1/8	3/8	1/2	4	1/4	2 1/2	1	2 7/8	2 5/8	3 1/4	2	1 1/2	7 1/4	7 1/2		8 1/8	7 5/8	8	22°	1/2	9 1/2				6.0
2M	24	36	1 1/8	3/8	1/2	4	1/4	2 1/2	1	2 7/8	2 5/8	3 1/4	2	1 1/2	7 1/4	7 1/2		8 1/8	7 5/8	8	22°	1/2	9 1/2				6.0
3	36	54	1 3/4	1/2	5/8	6	3/8	3 3/4	1 1/2	4 1/4	4	4 7/8	3	2 1/4	10 7/8	11 1/4		12 1/4	11 1/2	12	22°	3/4	13 1/4				13.5
4																											
5																											

STANDARD SIGN
R3-20LL

WISCONSIN DEPT OF TRANSPORTATION

APPROVED Matthew R Rauch
for State Traffic Engineer

DATE 10/18/10 PLATE NO. R3-20LL.1

PROJECT NO:	HWY:	COUNTY:		SHEET NO: 399	E

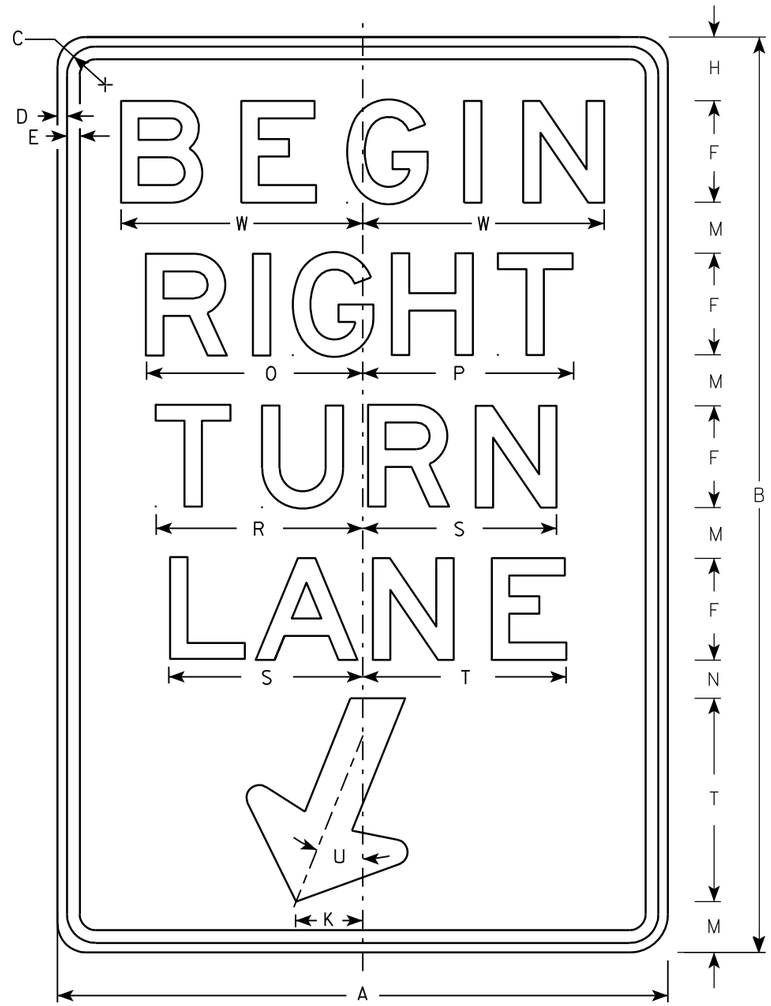

R3-20R

NOTES

1. Sign is Type II - Type H Reflective - reference WIS DOT Standard Specification for HIGHWAY and STRUCTURE CONSTRUCTION latest edition.
2. Color:
   Background - White
   Message - Black
3. Message Series - E
4. Corners may be square or rounded when base material is plywood but borders shall be rounded as shown. When base material is metal, the corners and borders shall be rounded.

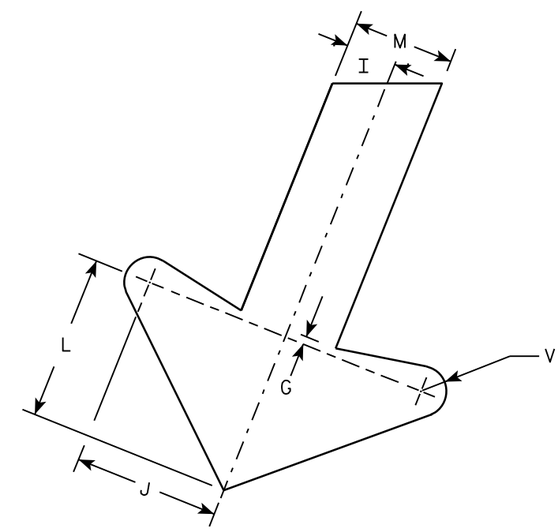

ARROW DETAIL

SIZE	A	B	C	D	E	F	G	H	I	J	K	L	M	N	O	P	Q	R	S	T	U	V	W	X	Y	Z	Area sq. ft.
1																											
2S	24	36	1 1/8	3/8	1/2	4	1/4	2 1/2	1	2 7/8	2 5/8	3 1/4	2	1 1/2	8 1/2	8 1/4		8 1/8	7 5/8	8	22°	1/2	9 1/2				6.0
2M	24	36	1 1/8	3/8	1/2	4	1/4	2 1/2	1	2 7/8	2 5/8	3 1/4	2	1 1/2	8 1/2	8 1/4		8 1/8	7 5/8	8	22°	1/2	9 1/2				6.0
3	36	54	1 3/4	1/2	5/8	6	3/8	3 3/4	1 1/2	4 1/4	4	4 7/8	3	2 1/4	12 3/4	12 1/2		12 1/4	11 1/2	12	22°	3/4	13 1/4				13.5
4																											
5																											

STANDARD SIGN
R3-20R

WISCONSIN DEPT OF TRANSPORTATION

APPROVED Matthew R Rauch
for State Traffic Engineer

DATE 10/18/10 PLATE NO. R3-20R.6

PROJECT NO:	HWY:	COUNTY:		SHEET NO: 400	E

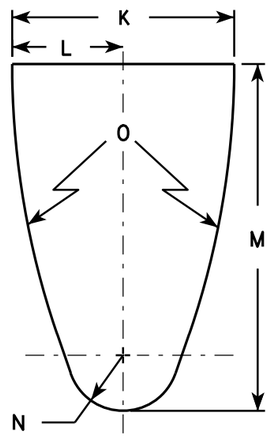

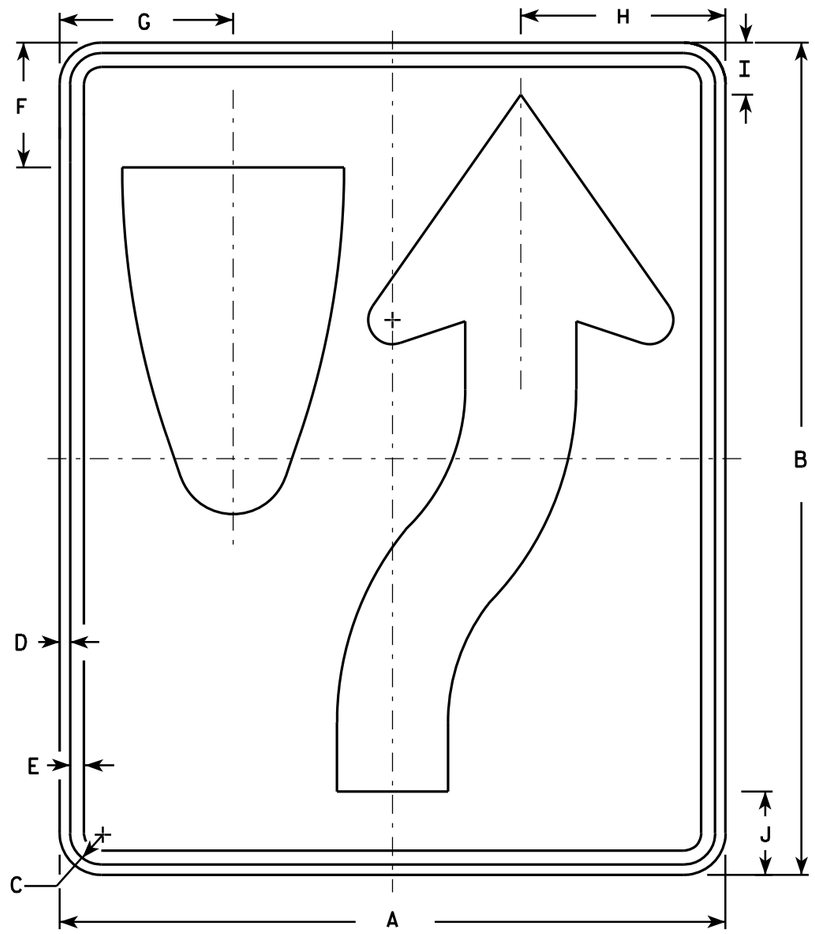

R4-7

NOTES

1. Sign is Type II - Type H Reflective - reference WIS DOT Standard Specification for HIGHWAY and STRUCTURE CONSTRUCTION latest edition. material is plywood but borders shall be rounded
2. Color:
   Background - White
   Message - Black
3. Corners may be square or rounded when base as shown. When base material is metal, the corners and borders shall be rounded.
4. R4-8 is the same as R4-7 except Legend is reversed.

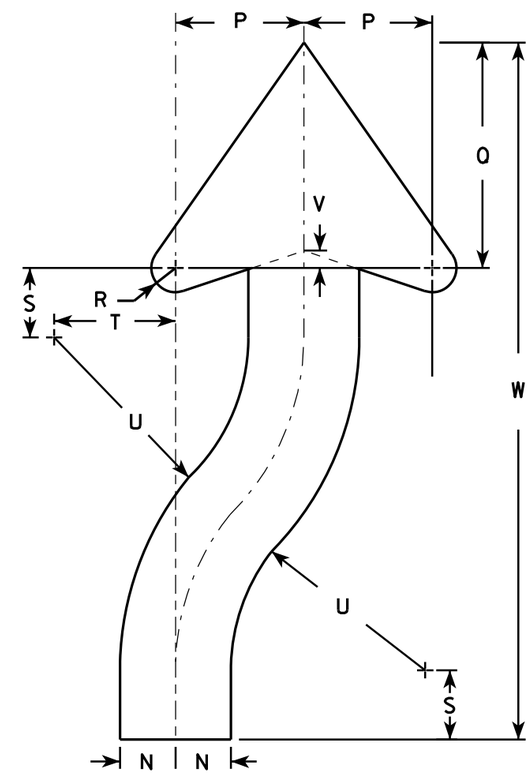

ARROW DETAIL

SIZE	A	B	C	D	E	F	G	H	I	J	K	L	M	N	O	P	Q	R	S	T	U	V	W	X	Y	Z	Area sq. ft.
1	18	24	1 1/8	3/8	1/2	3 3/8	4 3/4	5 1/2	1 3/8	2 1/4	6	3	9 3/8	1 1/2	22 1/2	3 1/2	6 1/8	5/8	1 7/8	3 1/4	6 3/4	1/2	20 3/8				3.0
2S	24	30	1 1/8	3/8	1/2	4 1/2	6 1/4	7 3/8	1 7/8	3	8	4	12 1/2	2	30	4 5/8	8 1/8	7/8	2 1/2	4 3/8	9	5/8	25 1/8				5.0
2M	24	30	1 1/8	3/8	1/2	4 1/2	6 1/4	7 3/8	1 7/8	3	8	4	12 1/2	2	30	4 5/8	8 1/8	7/8	2 1/2	4 3/8	9	5/8	25 1/8				5.0
3	36	48	1 3/4	1/2	5/8	6 3/4	9 3/8	11 1/8	2 7/8	4 1/2	12	6	18 3/4	3	45	6 7/8	12 1/4	1 1/4	3 3/4	6 5/8	13 1/2	1	40 3/4				12.0
4	36	48	1 3/4	1/2	5/8	6 3/4	9 3/8	11 1/8	2 7/8	4 1/2	12	6	18 3/4	3	45	6 7/8	12 1/4	1 1/4	3 3/4	6 5/8	13 1/2	1	40 3/4				12.0
5	48	60	2 1/4	3/4	1	9	12 1/2	14 3/4	3 3/4	6	16	8	25	4	60	9 1/4	16 1/4	1 5/8	5	8 3/4	18	1 1/4	50 1/4				20.0

STANDARD SIGN
R4-7 & R4-8

WISCONSIN DEPT OF TRANSPORTATION

APPROVED Matthew R Rauch for State Traffic Engineer

DATE 3/25/2011 PLATE NO. R4-7.8

PROJECT NO:	HWY:	COUNTY:		SHEET NO: 401	E

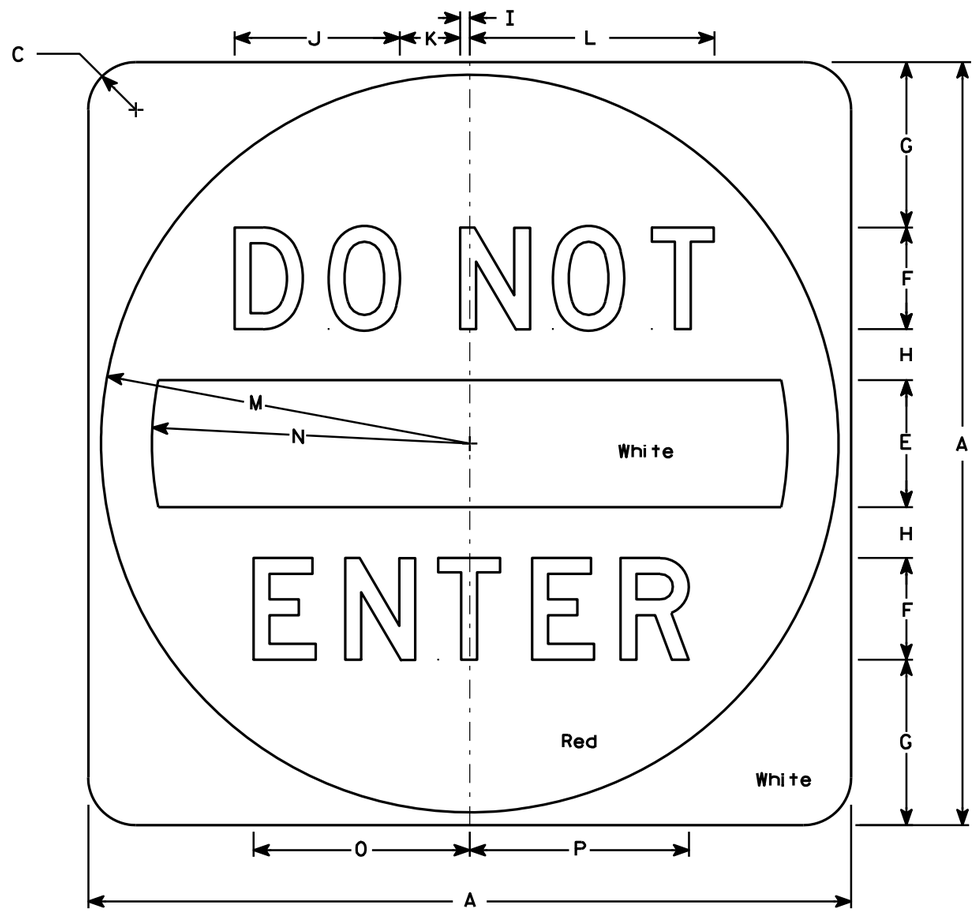

R5-1

NOTES

1. Sign is Type II - Type H Reflective - reference WIS DOT Standard Specification for HIGHWAY and STRUCTURE CONSTRUCTION latest edition.
2. Color:
   Background - See detail
   Message - White - Type H Reflective
3. Message Series - D
4. Corners may be square or rounded when base material is plywood but when base material is metal, the cornors shall be rounded.

SIZE	A	B	C	D	E	F	G	H	I	J	K	L	M	N	O	P	Q	R	S	T	U	V	W	X	Y	Z	Area sq. ft.
1																											
2S	30		1 7/8		5	4	6 1/2	2	3/8	6 1/2	2 3/8	9 5/8	14 1/2	12 1/2	8 1/2	8 5/8											6.26
2M	36		2 1/4		6	5	7 1/2	2 1/2	1/2	8 1/8	3	12 1/8	17 1/2	15	10 5/8	10 3/4											9.0
3	36		2 1/4		6	5	7 1/2	2 1/2	1/2	8 1/8	3	12 1/8	17 1/2	15	10 5/8	10 3/4											9.0
4	36		2 1/4		6	5	7 1/2	2 1/2	1/2	8 1/8	3	12 1/8	17 1/2	15	10 5/8	10 3/4											9.0
5	48		3		8	6	11	3	5/8	9 3/4	3 5/8	14 1/2	23 1/2	20	12 3/4	12 7/8											16.0

STANDARD SIGN
R5-1

WISCONSIN DEPT OF TRANSPORTATION

APPROVED Matthew R Rauch
for State Traffic Engineer

DATE 12/17/10 PLATE NO. R5-1.15

PROJECT NO: | HWY: | COUNTY: | SHEET NO: 402 | E

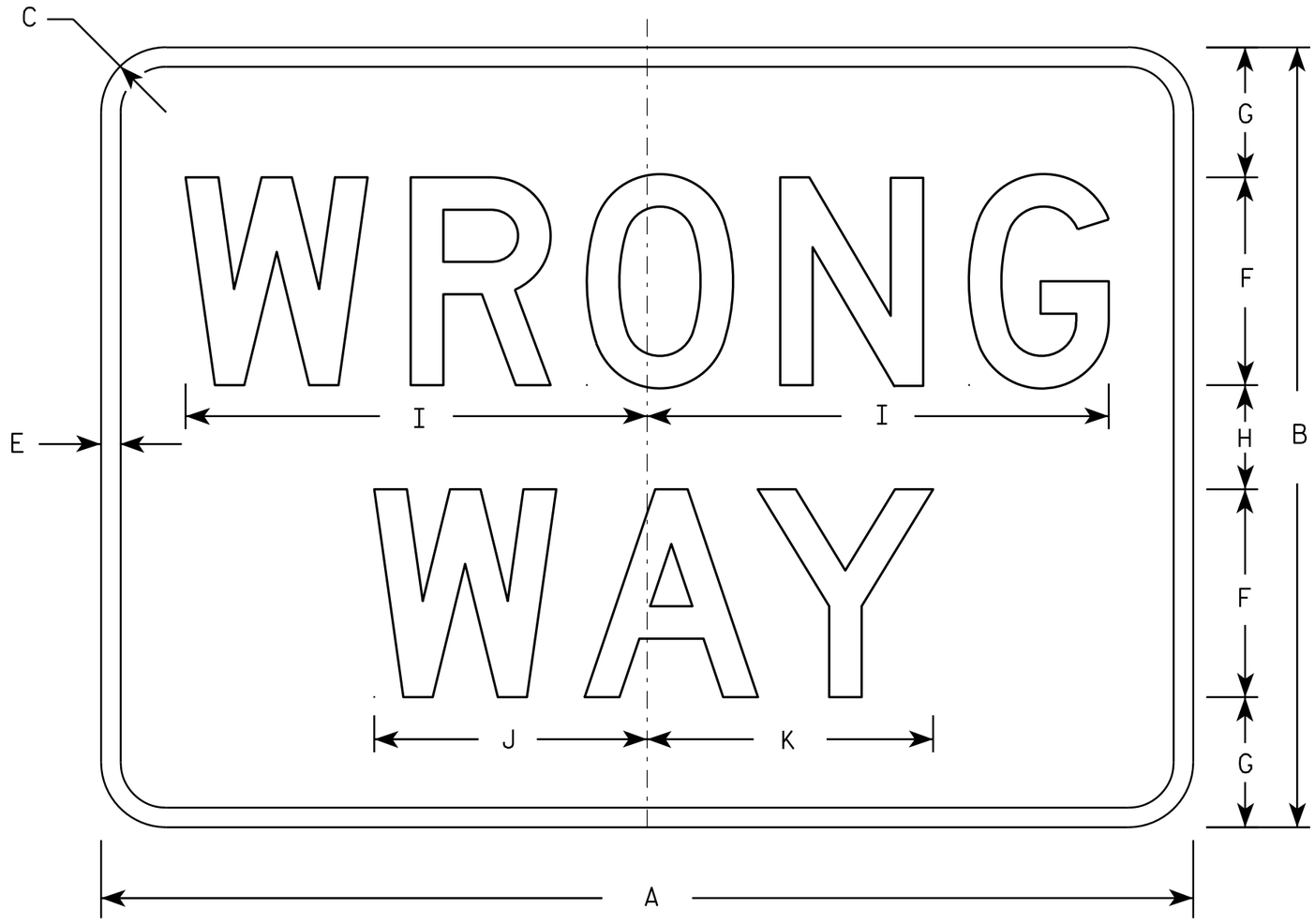

R5-1A

NOTES

1. Sign is Type II - Type H Reflective - reference WIS DOT Standard Specification for HIGHWAY and STRUCTURE CONSTRUCTION latest edition.
2. Color:
   Background - Red
   Message - White
3. Message Series - D
4. Corners may be square or rounded when base material is plywood but borders shall be rounded as shown. When base material is metal, the corners and borders shall be rounded.

SIZE	A	B	C	D	E	F	G	H	I	J	K	L	M	N	O	P	Q	R	S	T	U	V	W	X	Y	Z	Area sq. ft.
1	30	18	1 1/2		1/2	5	3	2	11	6 1/2	6 7/8																3.75
2S	36	24	2		5/8	6	4 1/2	3	13 1/4	7 7/8	8 1/4																6.00
2M	42	30	2 1/2		3/4	8	5	4	17 3/4	10 1/2	11																8.75
3	42	30	2 1/2		3/4	8	5	4	17 3/4	10 1/2	11																8.75
4	42	30	2 1/2		3/4	8	5	4	17 3/4	10 1/2	11																8.75
5	42	30	2 1/2		3/4	8	5	4	17 3/4	10 1/2	11																8.75

STANDARD SIGN
R5-1A

WISCONSIN DEPT OF TRANSPORTATION

APPROVED Matthew R Rauch
for State Traffic Engineer

DATE 12/17/10 PLATE NO. R5-1A.2

PROJECT NO: | HWY: | COUNTY: | SHEET NO: 403 | E

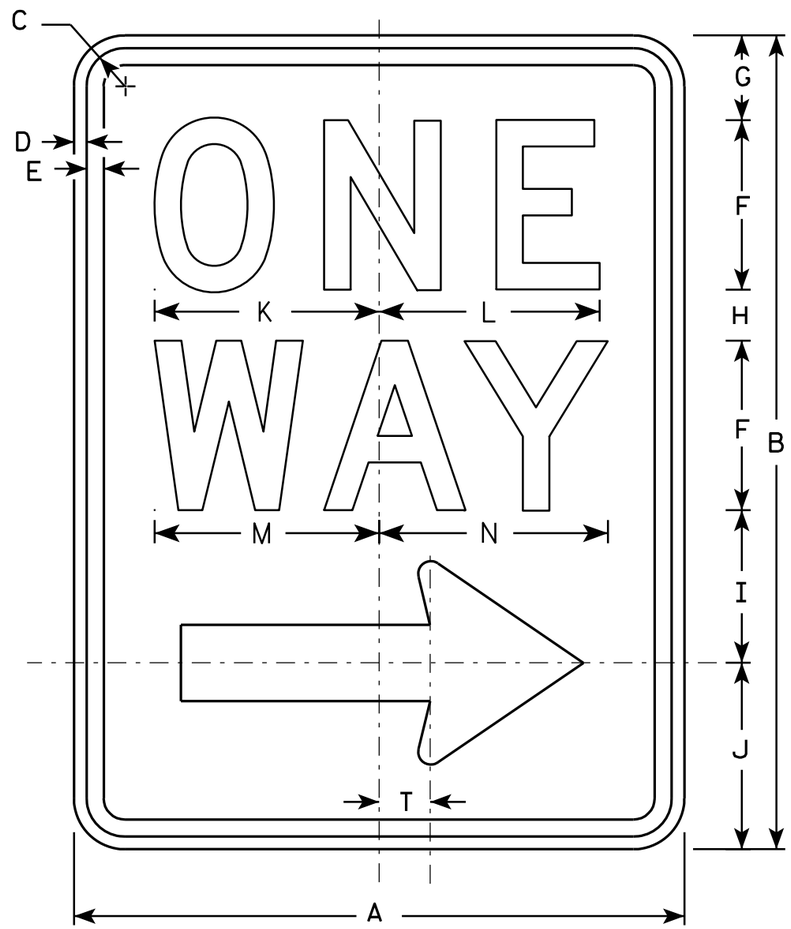

R6-2R

NOTES

1. Sign is Type II - Type H Reflective - reference WIS DOT Standard Specification for HIGHWAY and STRUCTURE CONSTRUCTION latest edition.
2. Color:
   Background - White
   Message - Black
3. Message Series - D
4. Corners may be square or rounded when base material is plywood but borders shall be rounded as shown. When base material is metal, the corners and borders shall be rounded.
5. R6-2L same as R6-2R except arrow points to the left.

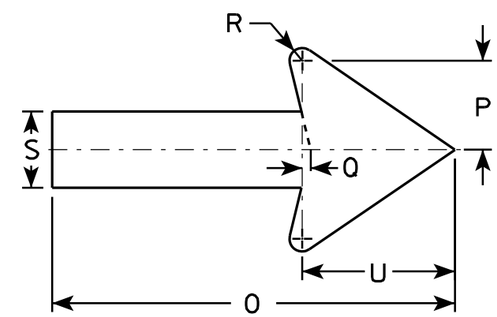

SIZE	A	B	C	D	E	F	G	H	I	J	K	L	M	N	O	P	Q	R	S	T	U	V	W	X	Y	Z
1	18	24	1 1/8	3/8	1/2	5	2 1/2	1 1/2	4 1/2	5 1/2	6 5/8	6 1/2	6 5/8	6 3/4	11 7/8	2 5/8	1/4	3/8	2 1/4	1 1/2	4 1/2					
2S	24	30	1 1/8	3/8	1/2	6	3	2 1/2	5 1/2	7	8 1/8	8 1/8	8 1/2	8 5/8	16	3 1/2	3/8	1/2	3	2	6					
2M	30	36	1 3/8	1/2	5/8	8	2 1/2	2 5/8	6 7/8	8	10 1/2	10 1/2	11 1/4	11 1/4	20	4 3/8	1/2	5/8	3 3/4	2 1/2	7 1/2					
3	36	48	1 7/8	1/2	5/8	10	5 1/4	3 1/4	9	10 1/2	12 3/4	12 3/4	13 1/4	13 1/2	24	5 5/8	1/2	3/4	4 3/4	3	9					
4	36	48	1 7/8	1/2	5/8	10	5 1/4	3 1/4	9	10 1/2	12 3/4	12 3/4	13 1/4	13 1/2	24	5 5/8	1/2	3/4	4 3/4	3	9					
5																										

STANDARD SIGN
R6-2 R&L

WISCONSIN DEPT OF TRANSPORTATION

APPROVED Matthew R Rauch
for State Traffic Engineer

DATE 11/2/10 PLATE NO. R6-2.8

PROJECT NO:	HWY:	COUNTY:		SHEET NO: 404	E

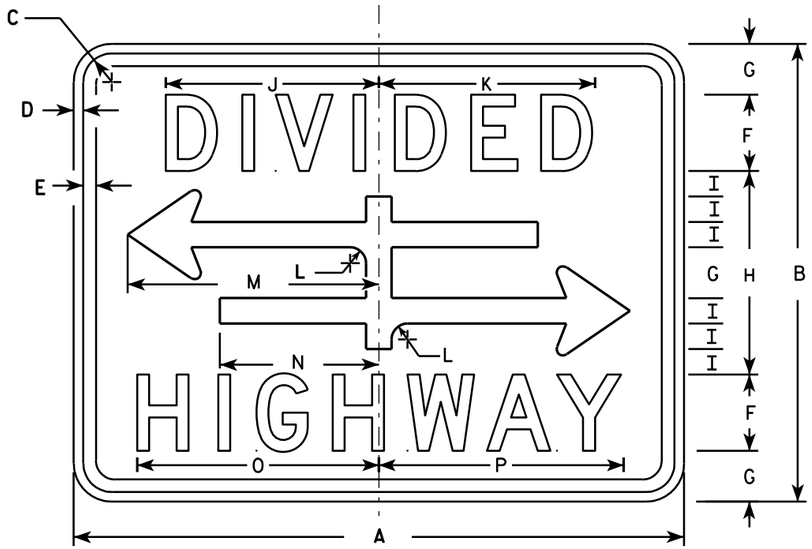

R6-3

NOTES

1. Sign is Type II - Type H Reflective - reference WIS DOT Standard Specification for HIGHWAY and STRUCTURE CONSTRUCTION latest edition.
2. Color:
   Background - White
   Message - Black
3. Message Series - D
4. Corners may be square or rounded when base material is plywood but borders shall be rounded as shown. When base material is metal, the corners and borders shall be rounded.

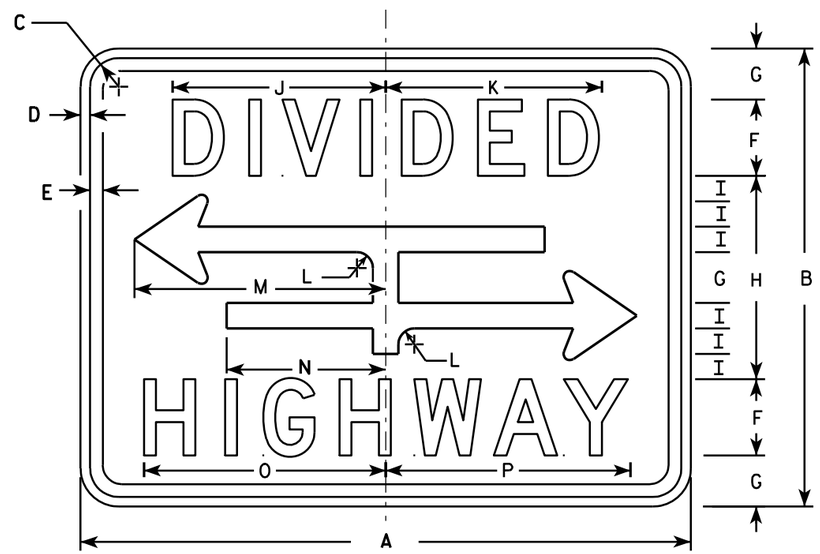

R6-3A

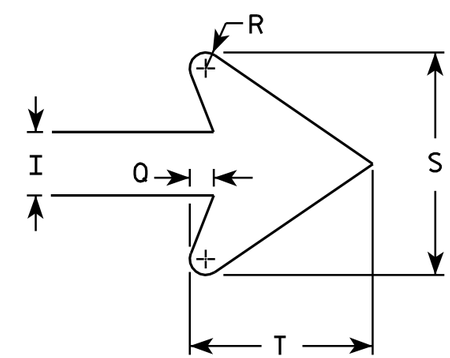

ARROW DETAIL

SIZE	A	B	C	D	E	F	G	H	I	J	K	L	M	N	O	P	Q	R	S	T	U	V	W	X	Y	Z	Area sq. ft.
1	24	18	1 1/8	3/8	3/8	3	2	8	1	8 3/8	8 1/2	5/8	9 7/8	6 1/4	9 1/2	9 5/8	3/8	1/4	3 1/2	2 3/4							3.0
2S	30	24	1 1/8	3/8	1/2	4	2 5/8	10 3/4	1 3/8	10 1/2	10 5/8	7/8	12 1/2	7 7/8	12 1/4	12 3/8	1/2	3/8	4 5/8	3 5/8							5.0
2M	30	24	1 1/8	3/8	1/2	4	2 5/8	10 3/4	1 3/8	10 1/2	10 5/8	7/8	12 1/2	7 7/8	12 1/4	12 3/8	1/2	3/8	4 5/8	3 5/8							5.0
3																											
4																											
5																											

STANDARD SIGN
R6-3 & R6-3A

WISCONSIN DEPT OF TRANSPORTATION

APPROVED Matthew R Rauch
for State Traffic Engineer

DATE 3/31/2011 PLATE NO. R6-3.5

PROJECT NO:

SHEET NO: 405 E

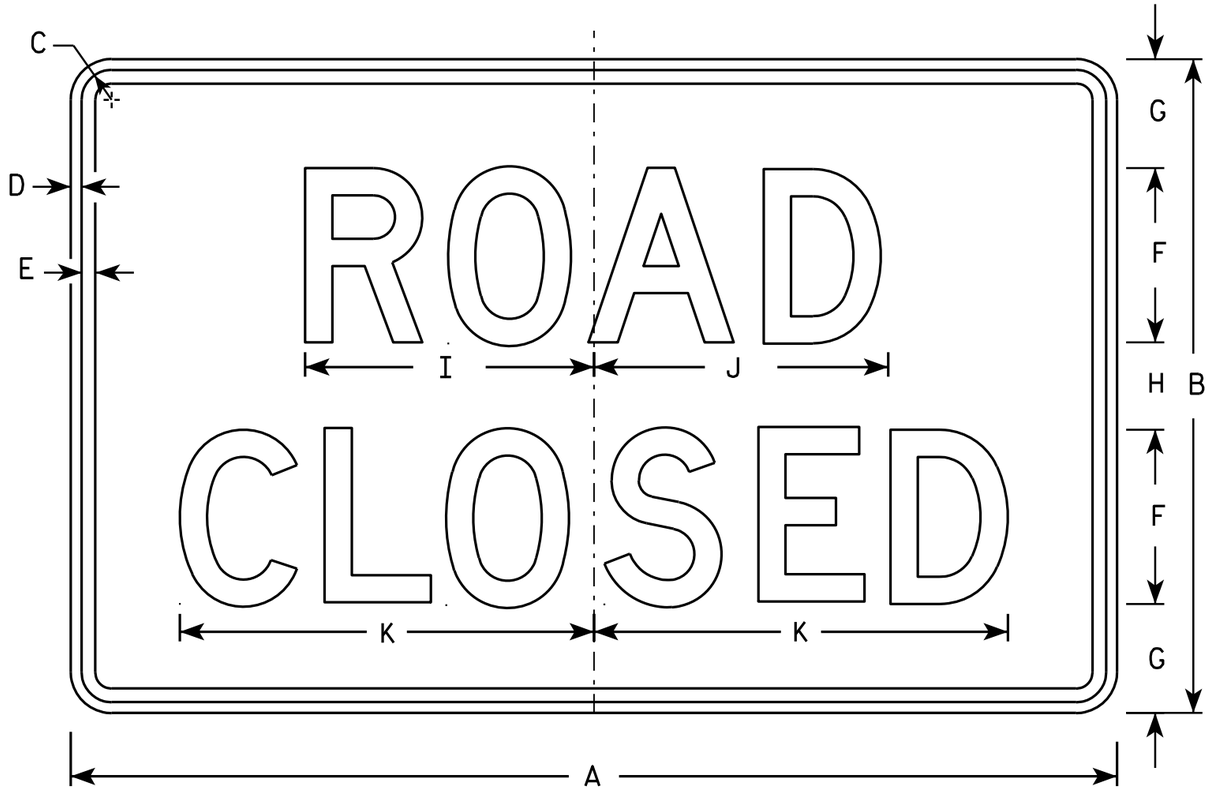

R11-2

NOTES

1. Sign is Type II - Type H Reflective - reference WIS DOT Standard Specification for HIGHWAY and STRUCTURE CONSTRUCTION latest edition.
2. Color:
   Background - White
   Message - Black
3. Message Series - D
4. Corners may be square or rounded when base material is plywood but borders shall be rounded as shown. When base material is metal, the corners and borders shall be rounded.
5. Modify the message as required.

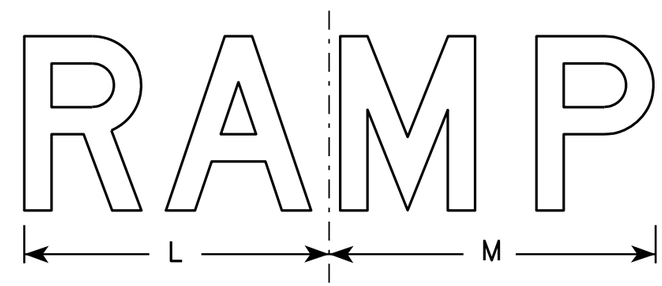

R11-2R

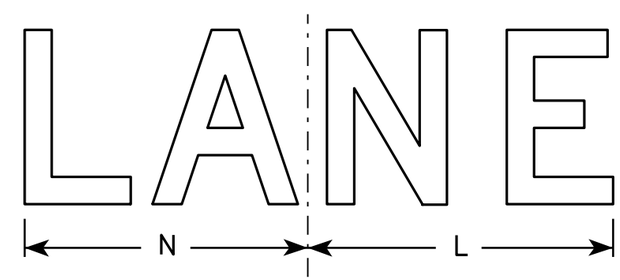

R11-2L

SIZE	A	B	C	D	E	F	G	H	I	J	K	L	M	N	O	P	Q	R	S	T	U	V	W	X	Y	Z	Area sq. ft.
1																											
2S	48	30	1 3/8	1/2	5/8	8	5	4	13 1/4	13 1/2	19	14	15	13													10.0
2M	48	30	1 3/8	1/2	5/8	8	5	4	13 1/4	13 1/2	19	14	15	13													10.0
3	48	30	1 3/8	1/2	5/8	8	5	4	13 1/4	13 1/2	19	14	15	13													10.0
4	48	30	1 3/8	1/2	5/8	8	5	4	13 1/4	13 1/2	19	14	15	13													10.0
5	48	30	1 3/8	1/2	5/8	8	5	4	13 1/4	13 1/2	19	14	15	13													10.0

STANDARD SIGN
R11-2

WISCONSIN DEPT OF TRANSPORTATION

APPROVED Matthew R Rauch
for State Traffic Engineer

DATE 4/1/11 PLATE NO. R11-2.10

PROJECT NO:	HWY:	COUNTY:		SHEET NO: 406	E

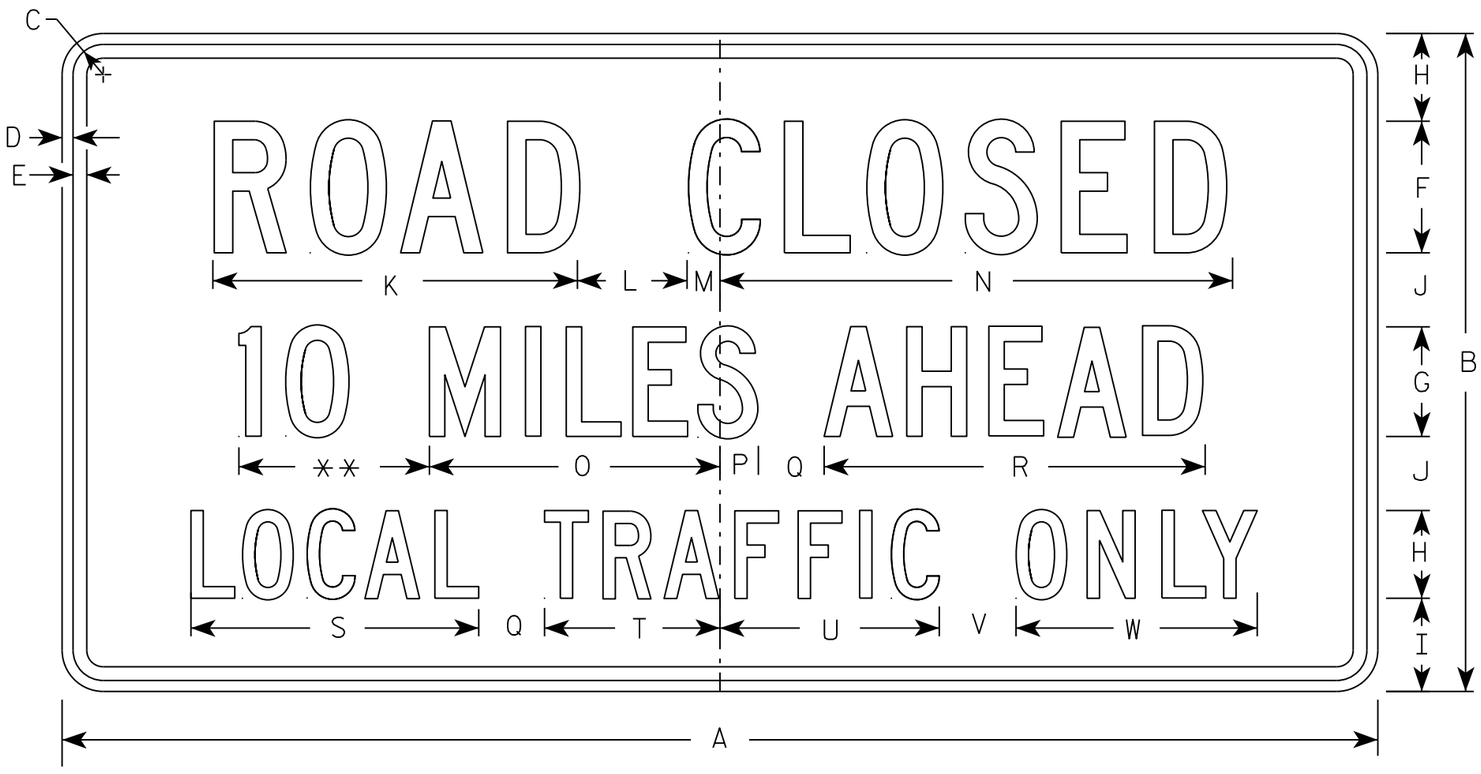

R11-3

** See Note 5

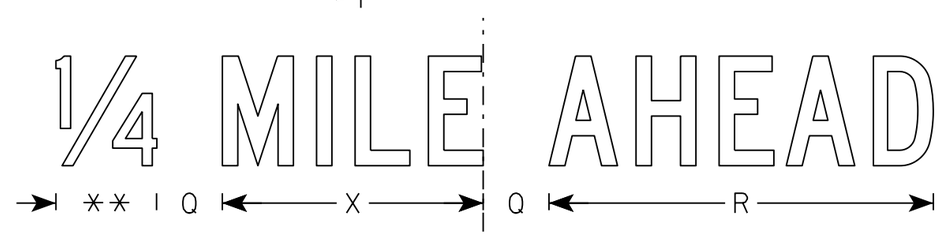

NOTES

1. Sign is Type II - Type H Reflective
2. Color:
   Background - White
   Message - Black
3. Message Series - C
4. Corners may be square or rounded when base material is plywood but borders shall be rounded as shown. When base material is metal, the corners and borders shall be rounded.
5. Substitute appropriate numerals to nearest quarter mile and optically adjust spacing to achieve proper balance.

SIZE	A	B	C	D	E	F	G	H	I	J	K	L	M	N	O	P	Q	R	S	T	U	V	W	X	Y	Z	Area sq. ft.
1	36	18	1 3/8	1/2	5/8	4	3	2 1/2	2	2	11 1/8	3	1 1/8	15 1/4	8	1 1/2	2	10 3/4	8 3/8	4 3/4	6 1/2	2	6 3/4	7 1/8			4.5
2S	60	30	1 3/8	1/2	5/8	6	5	4	4 1/4	3 3/8	16 5/8	5	1 1/2	23	13 1/4	1 3/4	3	17 3/8	13 1/8	8	10	3 1/2	11	11 7/8			12.5
2M	60	30	1 3/8	1/2	5/8	6	5	4	4 1/4	3 3/8	16 5/8	5	1 1/2	23	13 1/4	1 3/4	3	17 3/8	13 1/8	8	10	3 1/2	11	11 7/8			12.5
3																											
4																											
5																											

STANDARD SIGN
R11-3

WISCONSIN DEPT OF TRANSPORTATION

APPROVED Matthew R Rauch
for State Traffic Engineer

DATE 3/15/17 PLATE NO. R11-3.8

PROJECT NO: | HWY: | COUNTY: | SHEET NO: 407 | E

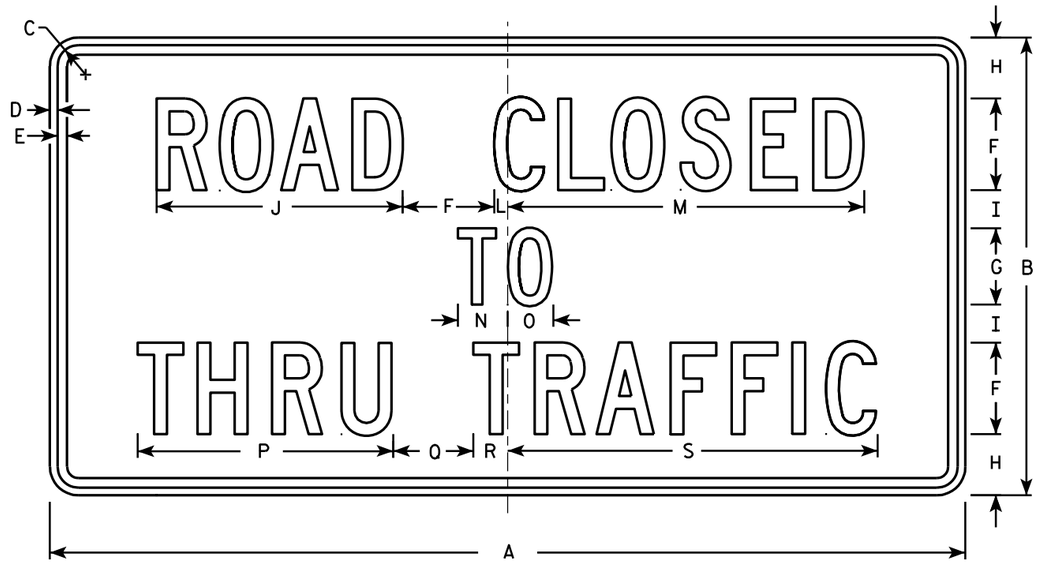

R11-4

NOTES

1. Sign is Type II - Type H Reflective - reference WIS DOT Standard Specification for HIGHWAY and STRUCTURE CONSTRUCTION latest edition.
2. Color:
   Background - White
   Message - Black
3. Message Series - C
4. Corners may be square or rounded when base material is plywood but borders shall be rounded as shown. When base material is metal, the corners and borders shall be rounded.

SIZE	A	B	C	D	E	F	G	H	I	J	K	L	M	N	O	P	Q	R	S	T	U	V	W	X	Y	Z	Area sq. ft.
1																											
2S	60	30	1 3/8	1/2	5/8	6	5	4	2 1/2	16 1/8		7/8	23 3/8	3 1/4	3	16 3/4	5 1/4	2 1/4	24 1/4								12.5
2M	60	30	1 3/8	1/2	5/8	6	5	4	2 1/2	16 1/8		7/8	23 3/8	3 1/4	3	16 3/4	5 1/4	2 1/4	24 1/4								12.5
3																											
4																											
5																											

STANDARD SIGN
R11 - 4

WISCONSIN DEPT OF TRANSPORTATION

APPROVED Matthew R Rauch for State Traffic Engineer

DATE 4/1/11 PLATE NO. R11-4.3

PROJECT NO: | HWY: | COUNTY: | SHEET NO: 408 | E

NOTES

1. Sign is Type II - Type F Reflective - reference WIS DOT Standard Specification for HIGHWAY and STRUCTURE CONSTRUCTION latest edition.
2. Color:
   Background - Yellow
   Message - Black
3. Corners may be square or rounded when base material is plywood but borders shall be rounded as shown. When base material is metal, the corners and borders shall be rounded.

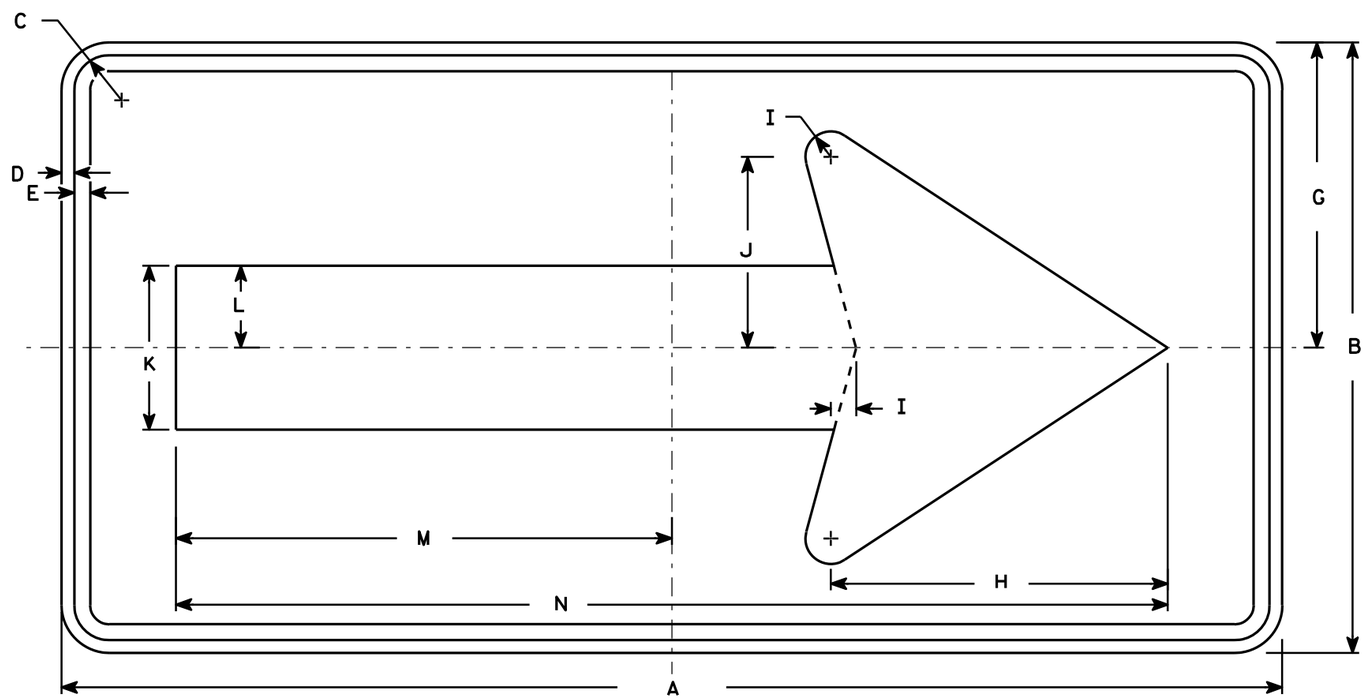

W1-6

SIZE	A	B	C	D	E	F	G	H	I	J	K	L	M	N	O	P	Q	R	S	T	U	V	W	X	Y	Z	Area sq. ft.
1	36	18	1 1/8	3/8	3/8		9	10	3/4	5 5/8	4 3/4	2 3/8	14 5/8	29 1/4													4.5
2S	48	24	1 3/8	1/2	5/8		12	13 1/4	1	7 1/2	6 1/2	3 1/4	19 1/2	39													8.0
2M	48	24	1 3/8	1/2	5/8		12	13 1/4	1	7 1/2	6 1/2	3 1/4	19 1/2	39													8.0
3	60	30	1 3/8	1/2	5/8		15	16 1/4	1 1/4	9 1/4	8	4	24 3/8	48 3/4													12.5
4	60	30	1 3/8	1/2	5/8		15	16 1/4	1 1/4	9 1/4	8	4	24 3/8	48 3/4													12.5
5	96	48	2 1/4	3/4	1		24	26 1/2	2	15	13	6 1/2	39	78													32.0

STANDARD SIGN
W1-6

WISCONSIN DEPT OF TRANSPORTATION

APPROVED Matthew R Rauch
for State Traffic Engineer

DATE 6/7/10 PLATE NO. W1-6.8

PROJECT NO:	HWY:	COUNTY:		SHEET NO: 409	E

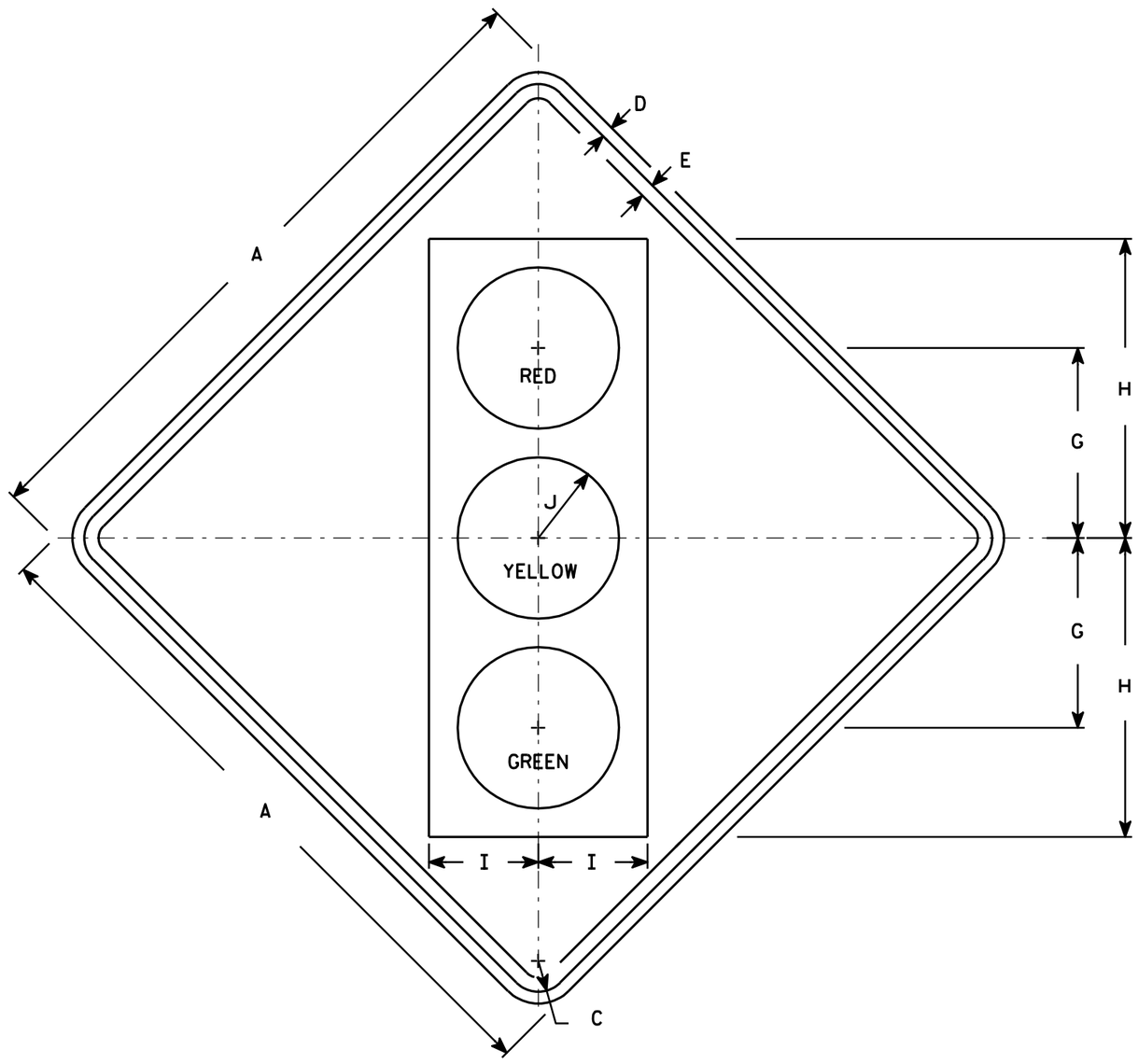

W3-3

NOTES

1. Sign is Type II - Type F Reflective - reference WIS DOT Standard Specification for HIGHWAY and STRUCTURE CONSTRUCTION latest edition.
2. Color:
   Background - Yellow
   Message - See Note 4
3. Corners may be square or rounded when base material is plywood but borders shall be rounded as shown. When base material is metal, the corners and borders shall be rounded.
4. Symbol and border are non-reflective black.
   Top circle - Type H Reflectorized Red
   Center circle - Same as background
   Bottom circle - Type H Reflectorized Green

SIZE	A	B	C	D	E	F	G	H	I	J	K	L	M	N	O	P	Q	R	S	T	U	V	W	X	Y	Z	Area sq. ft.
1	30		1 3/8	1/2	5/8		8 3/4	13 3/4	5	3 3/4																	6.25
2S	36		1 5/8	5/8	3/4		10	15 3/4	5 3/4	4 1/4																	9.0
2M	36		1 5/8	5/8	3/4		10	15 3/4	5 3/4	4 1/4																	9.0
3	36		1 5/8	5/8	3/4		10	15 3/4	5 3/4	4 1/4																	9.0
4	48		2 1/4	3/4	1		12 1/2	20	7 1/2	5																	16.0
5	48		2 1/4	3/4	1		12 1/2	20	7 1/2	5																	16.0

STANDARD SIGN
W3-3

WISCONSIN DEPT OF TRANSPORTATION

APPROVED Matthew R Rauch
for State Traffic Engineer

DATE 6/7/10 PLATE NO. W3-3.11

PROJECT NO: | HWY: | COUNTY: | SHEET NO: 410 | E

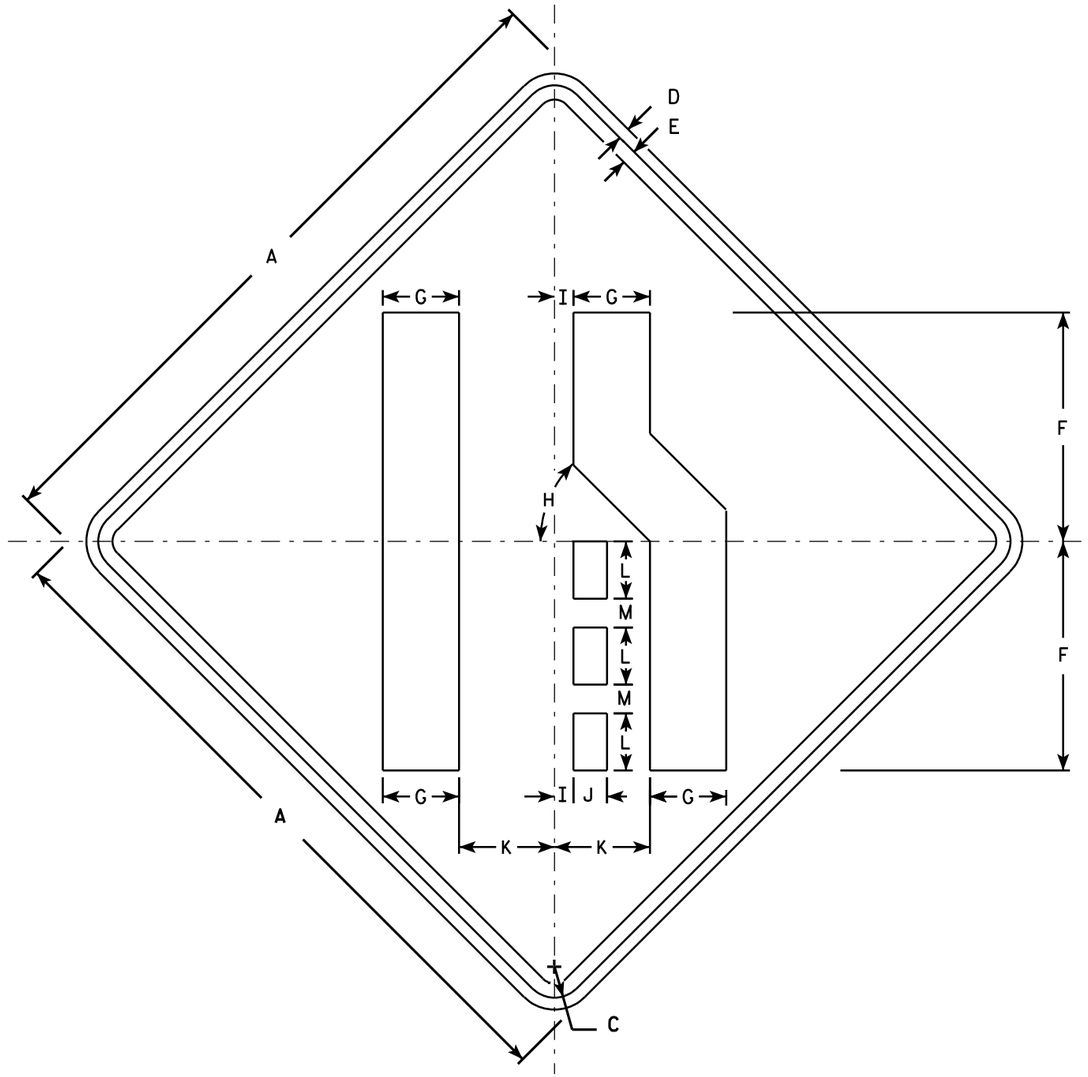

W4-2R

NOTES

1. Sign is Type II - Type F Reflective - reference WIS DOT Standard Specification for HIGHWAY and STRUCTURE CONSTRUCTION latest edition.
2. Color:
   Background - Yellow
   Message - Black
3. Corners may be square or rounded when base material is plywood but borders shall be rounded as shown. When base material is metal, the corners and borders shall be rounded.
4. W4-2L is the same as W4-2R except the symbol is reversed along the vertical centerline.

SIZE	A	B	C	D	E	F	G	H	I	J	K	L	M	N	O	P	Q	R	S	T	U	V	W	X	Y	Z	Area sq. ft.
1	30		1 3/8	1/2	5/8	10	3 3/8	45°	7/8	1 1/2	4 1/4	2 1/2	1 1/4														6.25
2S	36		1 5/8	5/8	3/4	12	4	45°	1	1 3/4	5	3	1 1/2														9.0
2M	36		1 5/8	5/8	3/4	12	4	45°	1	1 3/4	5	3	1 1/2														9.0
3	36		1 5/8	5/8	3/4	12	4	45°	1	1 3/4	5	3	1 1/2														9.0
4	48		2 1/4	3/4	1	16	5 3/8	45°	1 1/4	2 3/8	6 3/4	4	2														16.0
5	48		2 1/4	3/4	1	16	5 3/8	45°	1 1/4	2 3/8	6 3/4	4	2														16.0

STANDARD SIGN
W4-2

WISCONSIN DEPT OF TRANSPORTATION

APPROVED Matthew R Rauch
for State Traffic Engineer

DATE 3/12/13 PLATE NO. W4-2.14

PROJECT NO:

SHEET NO: 411 E

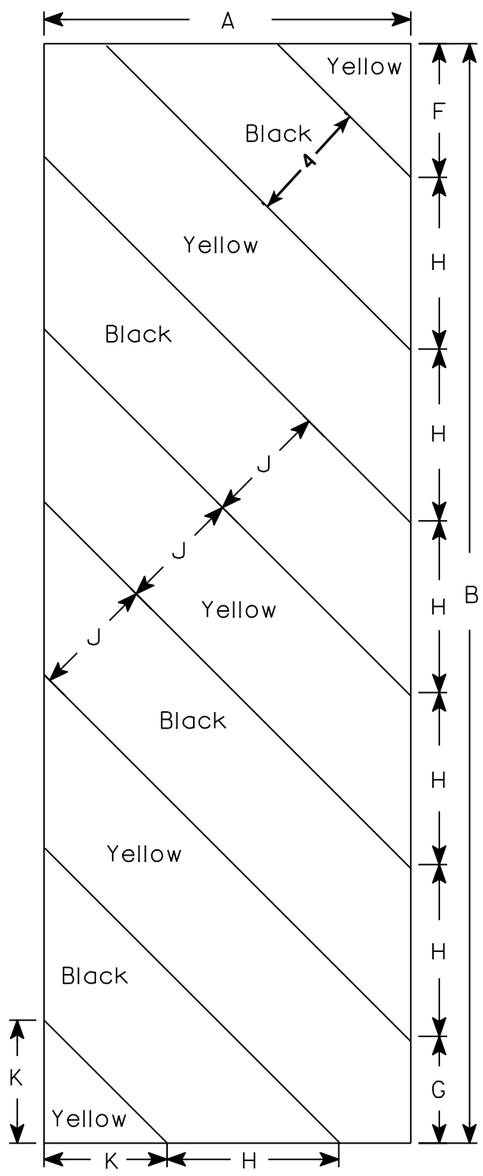

W5-52L

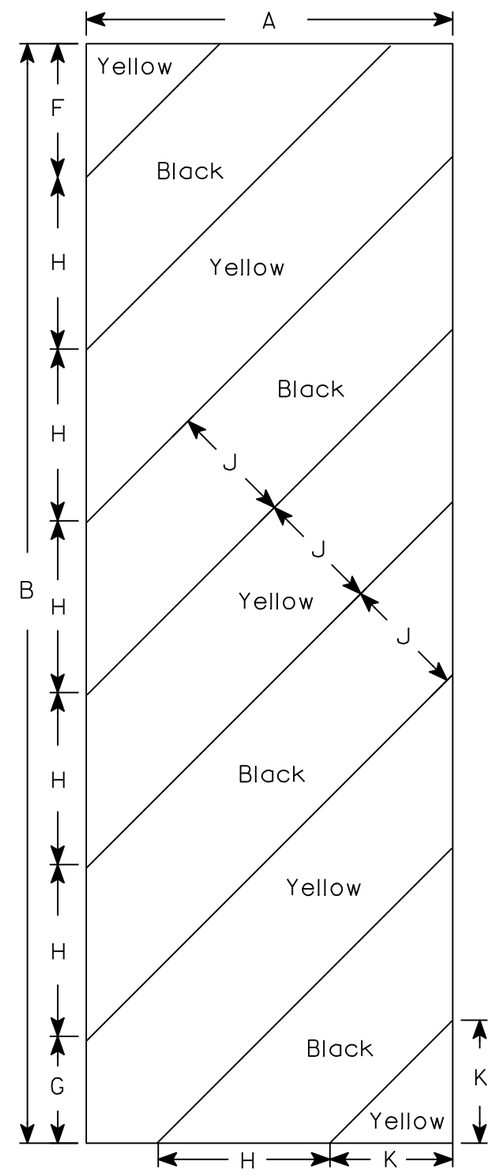

W5-52R

NOTES

1. Sign is Type II - Type F Reflective - reference WIS DOT Standard Specification for HIGHWAY and STRUCTURE CONSTRUCTION latest edition.
2. Color:
   Background - Yellow
   Message - Black
3. Corners may be square or rounded when base material is plywood but borders shall be rounded as shown. When base material is metal, the corners and borders shall be rounded.
4. Alternate colors of stripes as shown.

SIZE	A	B	C	D	E	F	G	H	I	J	K	L	M	N	O	P	Q	R	S	T	U	V	W	X	Y	Z	Area sq. ft.
1																											
2S	12	36				4 3/8	3 1/2	5 5/8	45°	4	4																3.0
2M	12	36				4 3/8	3 1/2	5 5/8	45°	4	4																3.0
3	18	54				6	5 1/2	8 1/2	45°	6	6 9/16																6.75
4																											
5																											

STANDARD SIGN
W5-52L & W5-52R

WISCONSIN DEPT OF TRANSPORTATION

APPROVED Matthew R Rauch
for State Traffic Engineer

DATE 5/29/12 PLATE NO. W5-52.9

PROJECT NO: | HWY: | COUNTY: | SHEET NO: 412 | E

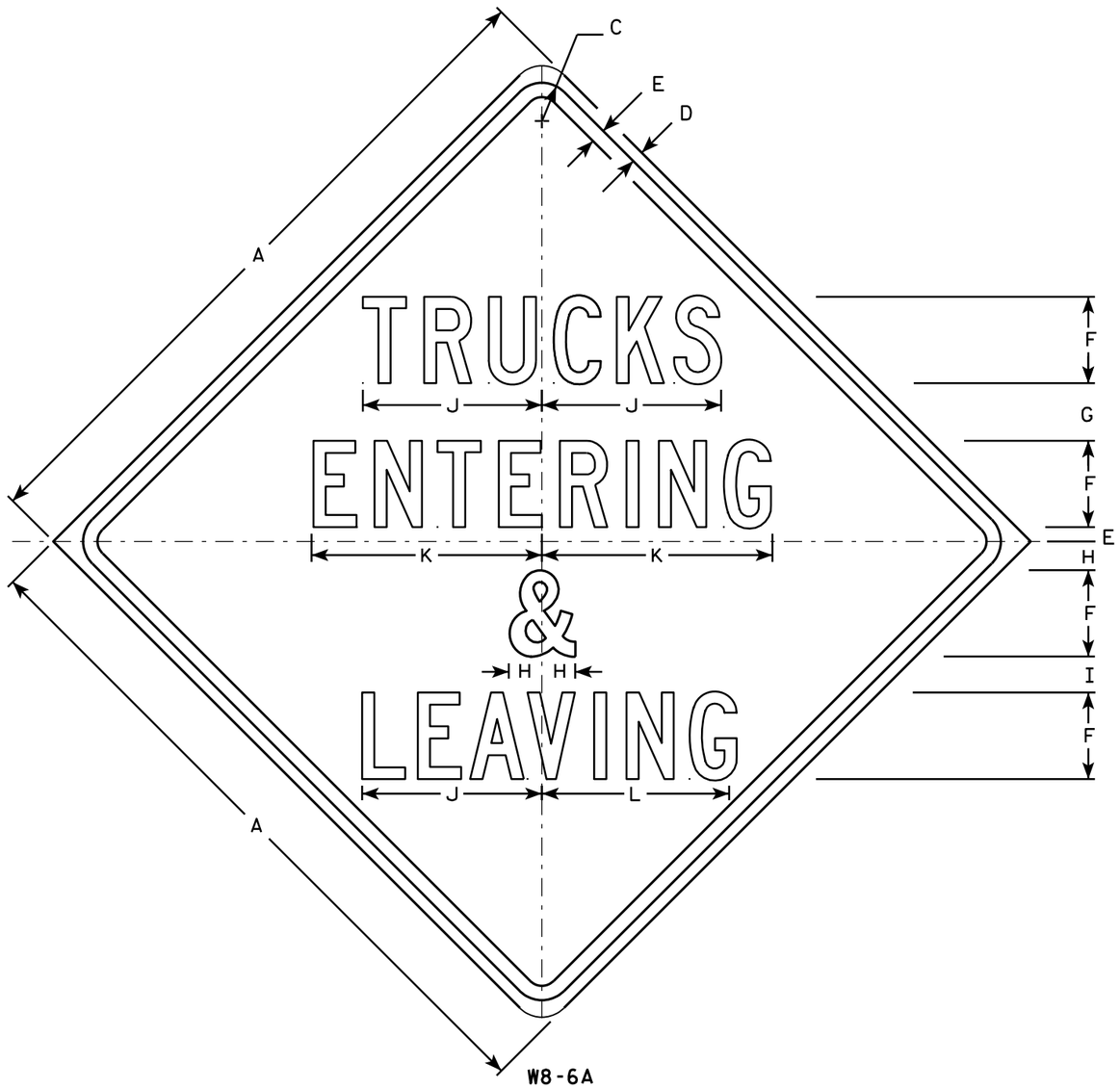

NOTES

1. Sign is Type II - Type F Reflective - reference WIS DOT Standard Specification for HIGHWAY and STRUCTURE CONSTRUCTION latest edition.
2. Color:
   Background - Orange
   Message - Black
3. Message Series - C
4. Corners may be square or rounded when base material is plywood but borders shall be rounded as shown. When base material is metal, the corners and borders shall be rounded.

SIZE	A	B	C	D	E	F	G	H	I	J	K	L	M	N	O	P	Q	R	S	T	U	V	W	X	Y	Z	Area sq. ft.
1	36		1 3/8	1/2	5/8	4 1/2	3	1 1/2	1 7/8	9 3/8	12	9 3/4															9
2S	48		2 1/4	3/4	1	6	4	2	2 1/2	12 1/2	16	13															16
2M	48		2 1/4	3/4	1	6	4	2	2 1/2	12 1/2	16	13															16
3	48		2 1/4	3/4	1	6	4	2	2 1/2	12 1/2	16	13															16
4	48		2 1/4	3/4	1	6	4	2	2 1/2	12 1/2	16	13															16
5	48		2 1/4	3/4	1	6	4	2	2 1/2	12 1/2	16	13															16

STANDARD SIGN
W8-6A

WISCONSIN DEPT OF TRANSPORTATION

APPROVED Matthew R Rauch
for State Traffic Engineer
DATE 3/23/11 PLATE NO. W8-6A.2

PROJECT NO: | HWY: | COUNTY: | SHEET NO: 413 | E

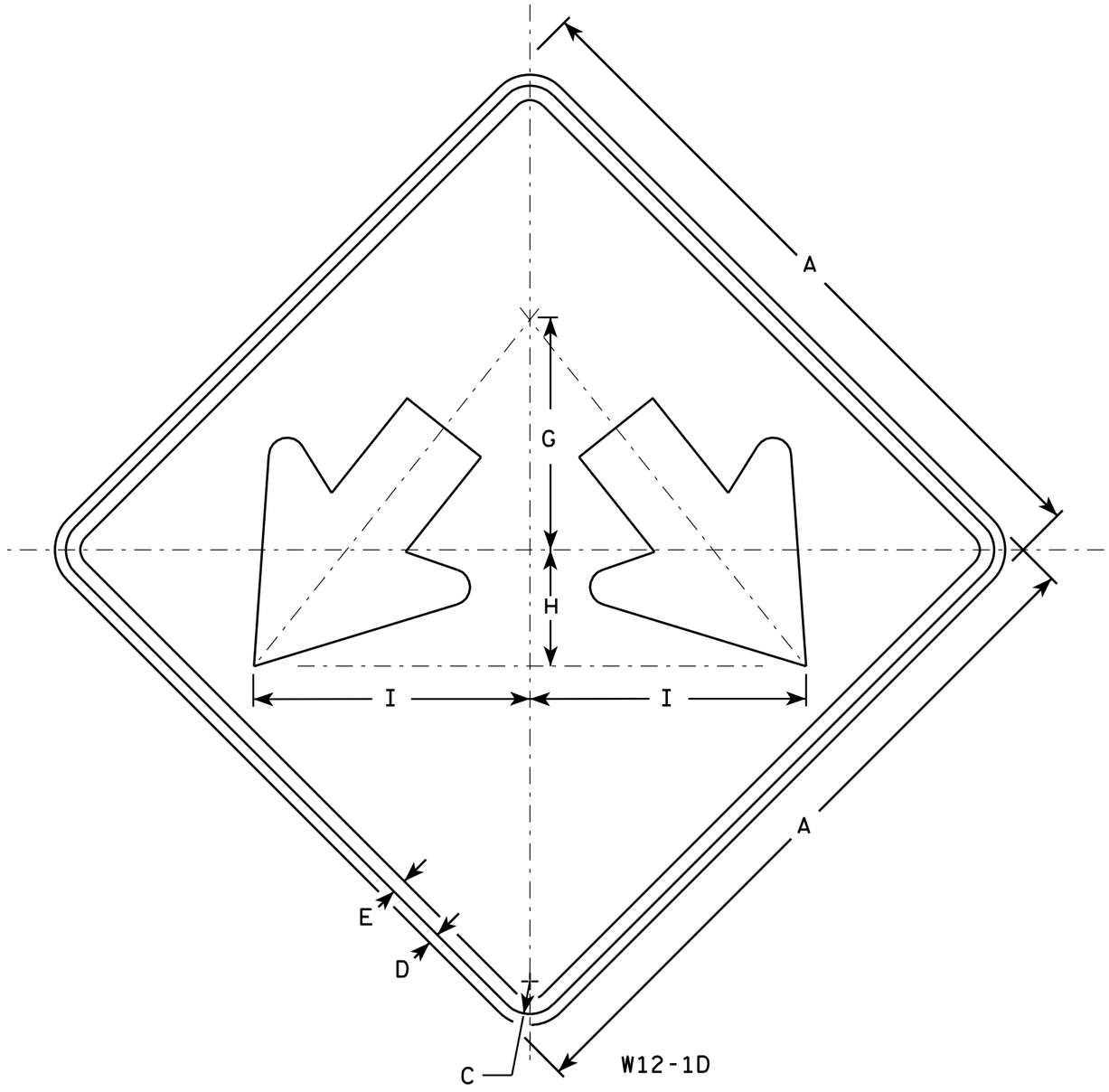

NOTES

1. Sign is Type II - Type F Reflective - reference WIS DOT Standard Specification for HIGHWAY and STRUCTURE CONSTRUCTION latest edition.
2. Color:
   Background - Yellow
   Message - Black
3. Corners may be square or rounded when base material is plywood but borders shall be rounded as shown. When base material is metal, the corners and borders shall be rounded.

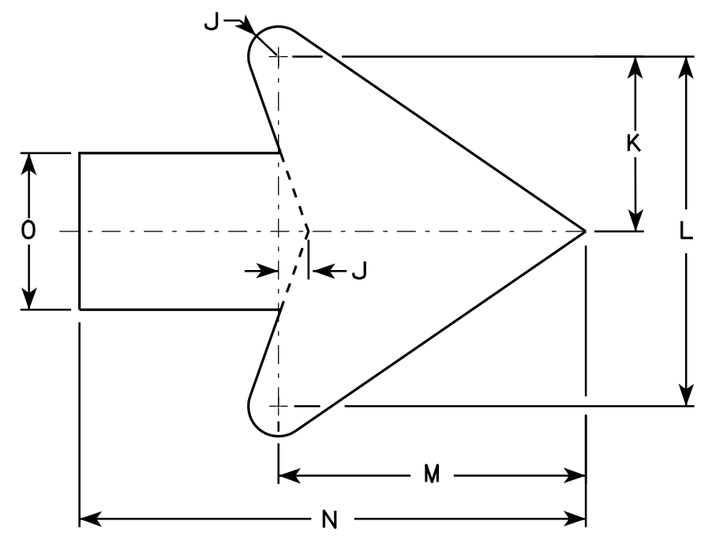

Arrow Detail

SIZE	A	B	C	D	E	F	G	H	I	J	K	L	M	N	O	P	Q	R	S	T	U	V	W	X	Y	Z	Area sq. ft.
1																											
2S	24		1 1/8	1/2	3/8		8	4	9 1/2	3/8	3 3/8	7 1/4	6 3/8	10 3/8	3 1/4												4.0
2M	24		1 1/8	1/2	3/8		8	4	9 1/2	3/8	3 3/8	7 1/4	6 3/8	10 3/8	3 1/4												4.0
3	30		1 3/8	1/2	5/8		10	5	11 7/8	3/4	4 1/2	9	7 7/8	13	4												6.25
4	36		1 3/8	1/2	5/8		12	6	14 1/4	1	5 1/2	10 7/8	9 5/8	15 3/4	4 3/4												9.0
5	48		2 1/4	3/4	1		16	8	19	1 1/4	7 1/4	14 1/2	12 3/4	21	6 1/4												16.0

STANDARD SIGN
W12-1D

WISCONSIN DEPT OF TRANSPORTATION

APPROVED Matthew R Rauch
for State Traffic Engineer

DATE 3/13/13 PLATE NO. W12-1D.15

PROJECT NO: | HWY: | COUNTY: | SHEET NO: 414 | E

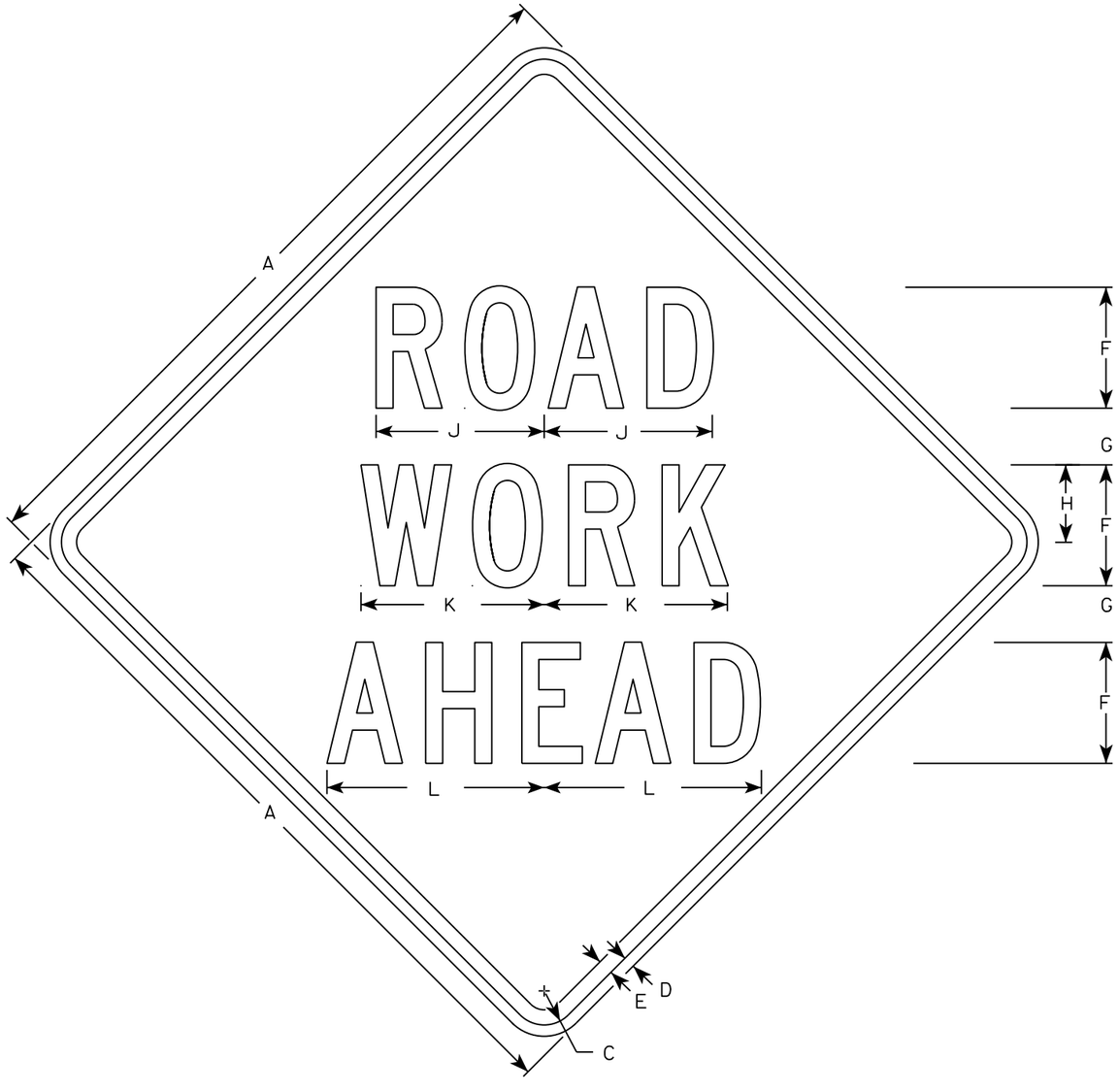

W20-1A

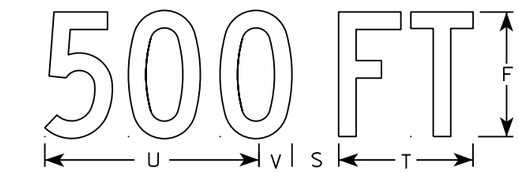

W20-1D

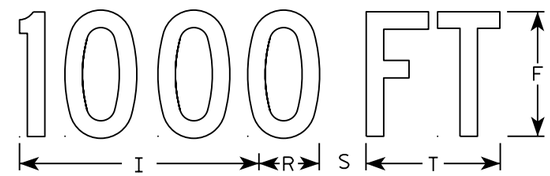

W20-1C

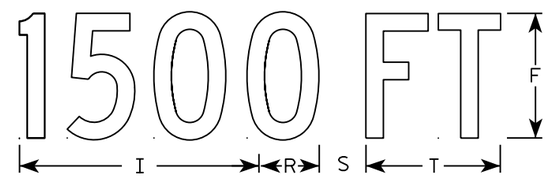

W20-1B

W20-1G

W20-1F

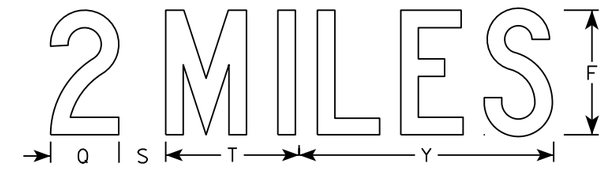

W20-1E

NOTES

1. Sign is Type II - Type F Reflective
2. Color:
   Background - Orange
   Message - Black
3. Message Series - C
4. Corners may be square or rounded when base material is plywood but borders shall be rounded as shown. When base material is metal, the corners and borders shall be rounded.

SIZE	A	B	C	D	E	F	G	H	I	J	K	L	M	N	O	P	Q	R	S	T	U	V	W	X	Y	Z	Area sq. ft.
1	36		1 3/8	1/2	5/8	5	2 5/8	3 1/4	10 1/8	7	7 5/8	8 7/8	1 1/8	4 1/2	3 1/2	9		2 1/2	2 1/4	5 5/8	9	1 3/8	8	1 3/4	10 3/4	6	9.0
2S	48		2 1/4	3/4	1	8	3 3/4	5 1/8	15 3/8	11 1/8	12 1/8	14 3/8	1 5/8	6 7/8	5 3/8	13 7/8	4 3/8	3 7/8	3	8 5/8	13 3/4	2 1/8	11 7/8	2 3/4	16 3/8	9	16.0
2M	48		2 1/4	3/4	1	8	3 3/4	5 1/8	15 3/8	11 1/8	12 1/8	14 3/8	1 5/8	6 7/8	5 3/8	13 7/8	4 3/8	3 7/8	3	8 5/8	13 3/4	2 1/8	11 7/8	2 3/4	16 3/8	9	16.0
3	48		2 1/4	3/4	1	8	3 3/4	5 1/8	15 3/8	11 1/8	12 1/8	14 3/8	1 5/8	6 7/8	5 3/8	13 7/8	4 3/8	3 7/8	3	8 5/8	13 3/4	2 1/8	11 7/8	2 3/4	16 3/8	9	16.0
4	48		2 1/4	3/4	1	8	3 3/4	5 1/8	15 3/8	11 1/8	12 1/8	14 3/8	1 5/8	6 7/8	5 3/8	13 7/8	4 3/8	3 7/8	3	8 5/8	13 3/4	2 1/8	11 7/8	2 3/4	16 3/8	9	16.0
5	48		2 1/4	3/4	1	8	3 3/4	5 1/8	15 3/8	11 1/8	12 1/8	14 3/8	1 5/8	6 7/8	5 3/8	13 7/8	4 3/8	3 7/8	3	8 5/8	13 3/4	2 1/8	11 7/8	2 3/4	16 3/8	9	16.0

STANDARD SIGN
W20-1A, B, C, D, F & G

WISCONSIN DEPT OF TRANSPORTATION

APPROVED Matthew R Rauch
for State Traffic Engineer

DATE 5/07/15 PLATE NO. W20-1.10

PROJECT NO:

SHEET NO: E

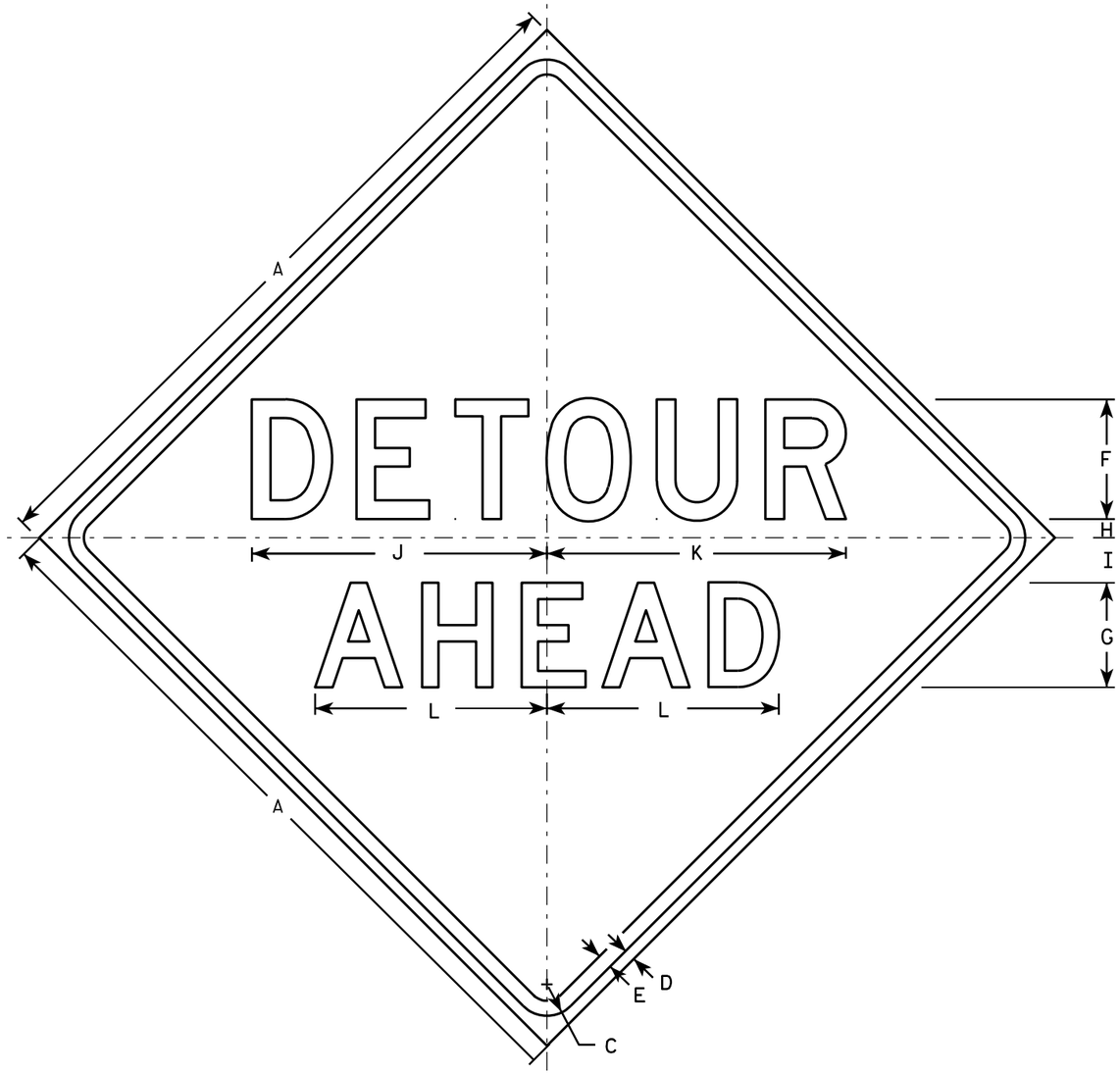

W20-2A

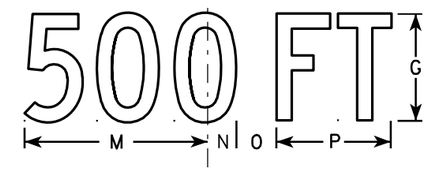

W20-2D

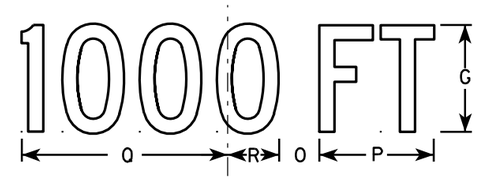

W20-2C

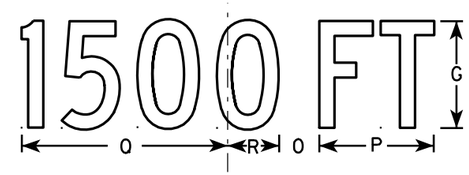

W20-2B

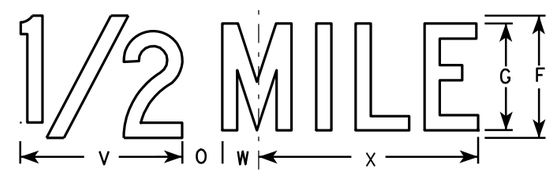

W20-2G

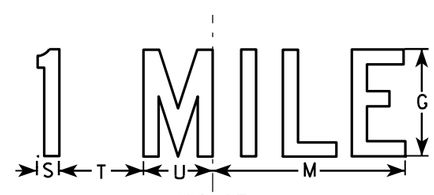

W20-2F

NOTES

1. Sign is Type II - Type F Reflective - reference WIS DOT Standard Specification for HIGHWAY and STRUCTURE CONSTRUCTION latest edition.
2. Color:
   Background - Orange
   Message - Black
3. Message Series - See note 5
4. Corners may be square or rounded when base material is plywood but borders shall be rounded as shown. When base material is metal, the corners and borders shall be rounded.
5. Line 1 is Series D.
   Line 2 is Series D for AHEAD and Series C for all other distances.

SIZE	A	B	C	D	E	F	G	H	I	J	K	L	M	N	O	P	Q	R	S	T	U	V	W	X	Y	Z	Area sq. ft.
1	36		1 5/8	5/8	3/4	6	5	1	2 1/4	14 3/4	15	11 5/8	9	1 3/8	1 7/8	5 5/8	10 1/8	2 1/2	1 1/8	4 1/2	3 1/2	8	1 3/4	10 3/4			9.0
2S	48		2 1/4	3/4	1	8	7	1 1/4	3	19 3/4	20	15 1/2	12	1 7/8	2 5/8	7 1/2	13 1/2	3 3/8	1 1/2	6	4 5/8	10 5/8	2 3/8	14 3/8			16.0
2M	48		2 1/4	3/4	1	8	7	1 1/4	3	19 3/4	20	15 1/2	12	1 7/8	2 5/8	7 1/2	13 1/2	3 3/8	1 1/2	6	4 5/8	10 5/8	2 3/8	14 3/8			16.0
3	48		2 1/4	3/4	1	8	7	1 1/4	3	19 3/4	20	15 1/2	12	1 7/8	2 5/8	7 1/2	13 1/2	3 3/8	1 1/2	6	4 5/8	10 5/8	2 3/8	14 3/8			16.0
4	48		2 1/4	3/4	1	8	7	1 1/4	3	19 3/4	20	15 1/2	12	1 7/8	2 5/8	7 1/2	13 1/2	3 3/8	1 1/2	6	4 5/8	10 5/8	2 3/8	14 3/8			16.0
5	48		2 1/4	3/4	1	8	7	1 1/4	3	19 3/4	20	15 1/2	12	1 7/8	2 5/8	7 1/2	13 1/2	3 3/8	1 1/2	6	4 5/8	10 5/8	2 3/8	14 3/8			16.0

STANDARD SIGN
W20-2A,B,C,D,F & G

WISCONSIN DEPT OF TRANSPORTATION

APPROVED Matthew R Rauch
for State Traffic Engineer
DATE 3/18/11 PLATE NO. W20-2.6

PROJECT NO:	HWY:	COUNTY:		SHEET NO: 416	E

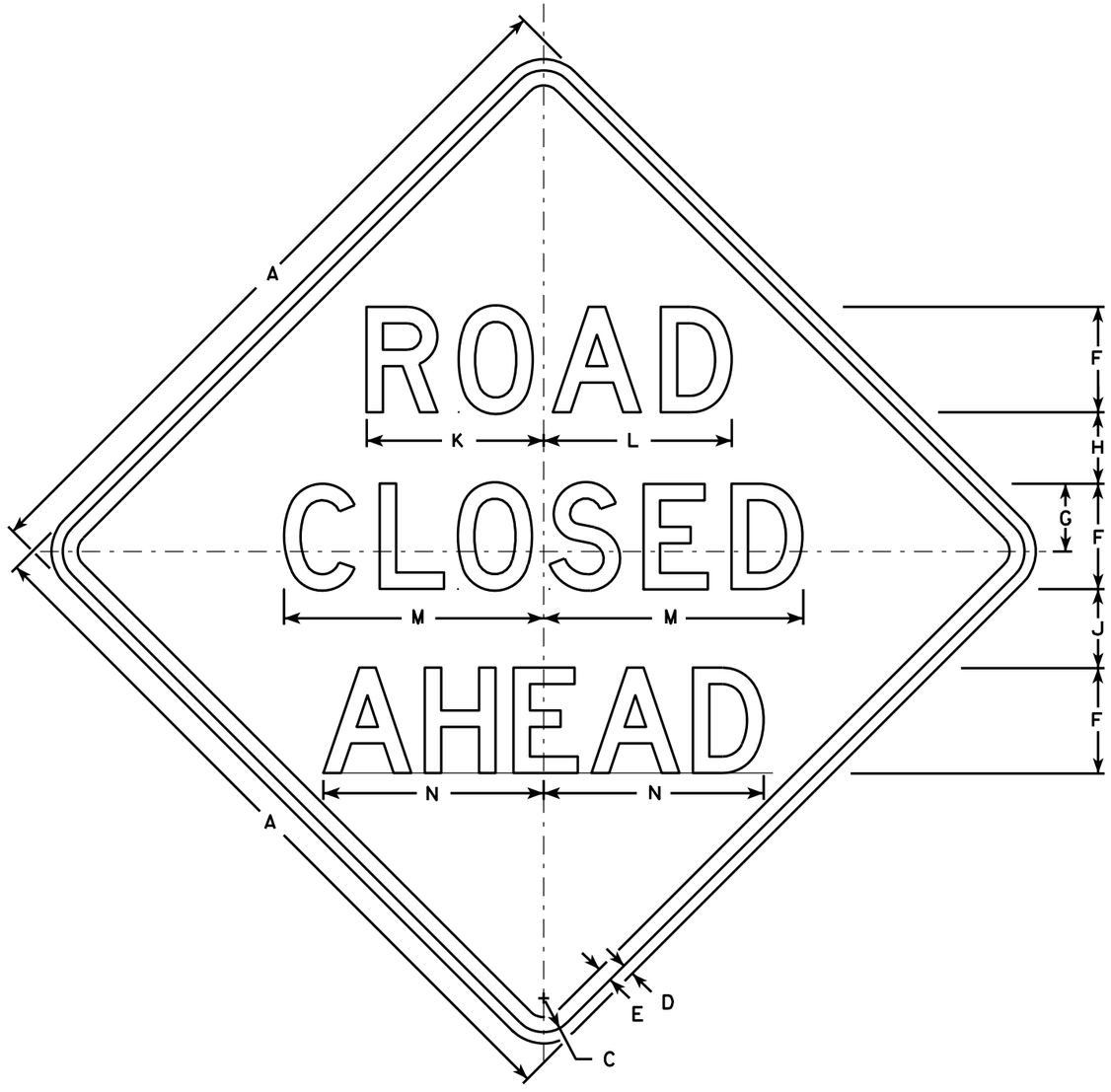

W20-3A

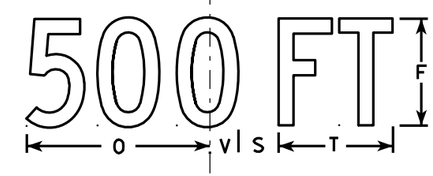

W20-3D

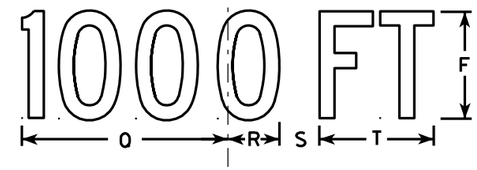

W20-3C

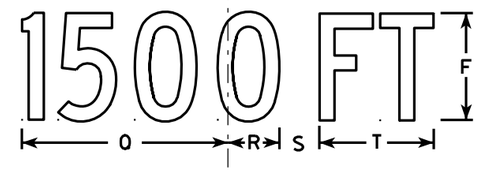

W20-3B

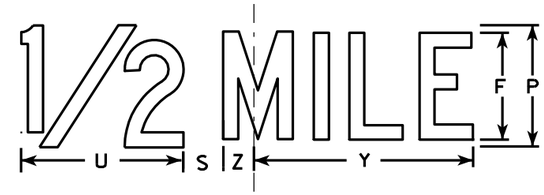

W20-3G

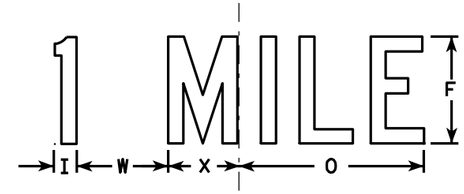

W20-3F

NOTES

1. Sign is Type II - Type F Reflective - reference WIS DOT Standard Specification for HIGHWAY and STRUCTURE CONSTRUCTION latest edition.
2. Color:
   Background - Orange
   Message - Black
3. Message Series - see note 5
4. Corners may be square or rounded when base material is plywood but borders shall be rounded as shown. When base material is metal, the corners and borders shall be rounded.
5. Lines 1 and 2 are Series D.
   Line 3 is Series D for AHEAD and Series C for all other distances.

SIZE	A	B	C	D	E	F	G	H	I	J	K	L	M	N	O	P	Q	R	S	T	U	V	W	X	Y	Z	Area sq. ft.
1	36		1 5/8	5/8	3/4	5	3 3/8	3 1/2	1 1/8	4	8 3/8	8 7/8	12 1/2	11	9	6	10 1/8	2 1/2	1 7/8	5 5/8	8	1 3/8	4 1/2	3 1/2	10 3/4	1 3/4	9.0
2S	48		2 1/4	3/4	1	7	4 1/2	4 3/4	1 1/2	5 1/4	11 3/4	12 1/2	17 1/4	14 5/8	12	8	13 1/2	3 3/8	2 5/8	7 1/2	10 5/8	1 7/8	6	4 5/8	14 3/8	2 3/8	16.0
2M	48		2 1/4	3/4	1	7	4 1/2	4 3/4	1 1/2	5 1/4	11 3/4	12 1/2	17 1/4	14 5/8	12	8	13 1/2	3 3/8	2 5/8	7 1/2	10 5/8	1 7/8	6	4 5/8	14 3/8	2 3/8	16.0
3	48		2 1/4	3/4	1	7	4 1/2	4 3/4	1 1/2	5 1/4	11 3/4	12 1/2	17 1/4	14 5/8	12	8	13 1/2	3 3/8	2 5/8	7 1/2	10 5/8	1 7/8	6	4 5/8	14 3/8	2 3/8	16.0
4	48		2 1/4	3/4	1	7	4 1/2	4 3/4	1 1/2	5 1/4	11 3/4	12 1/2	17 1/4	14 5/8	12	8	13 1/2	3 3/8	2 5/8	7 1/2	10 5/8	1 7/8	6	4 5/8	14 3/8	2 3/8	16.0
5	48		2 1/4	3/4	1	7	4 1/2	4 3/4	1 1/2	5 1/4	11 3/4	12 1/2	17 1/4	14 5/8	12	8	13 1/2	3 3/8	2 5/8	7 1/2	10 5/8	1 7/8	6	4 5/8	14 3/8	2 3/8	16.0

STANDARD SIGN
W20-3A, B, C, D, F & G

WISCONSIN DEPT OF TRANSPORTATION

APPROVED Matthew R Rauch
for State Traffic Engineer
DATE 3/18/11 PLATE NO. W20-3.7

PROJECT NO:	HWY:	COUNTY:		SHEET NO: 417	E

W20-56A

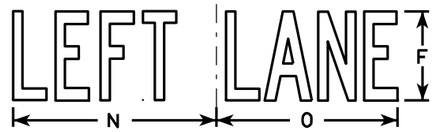

W20-55A

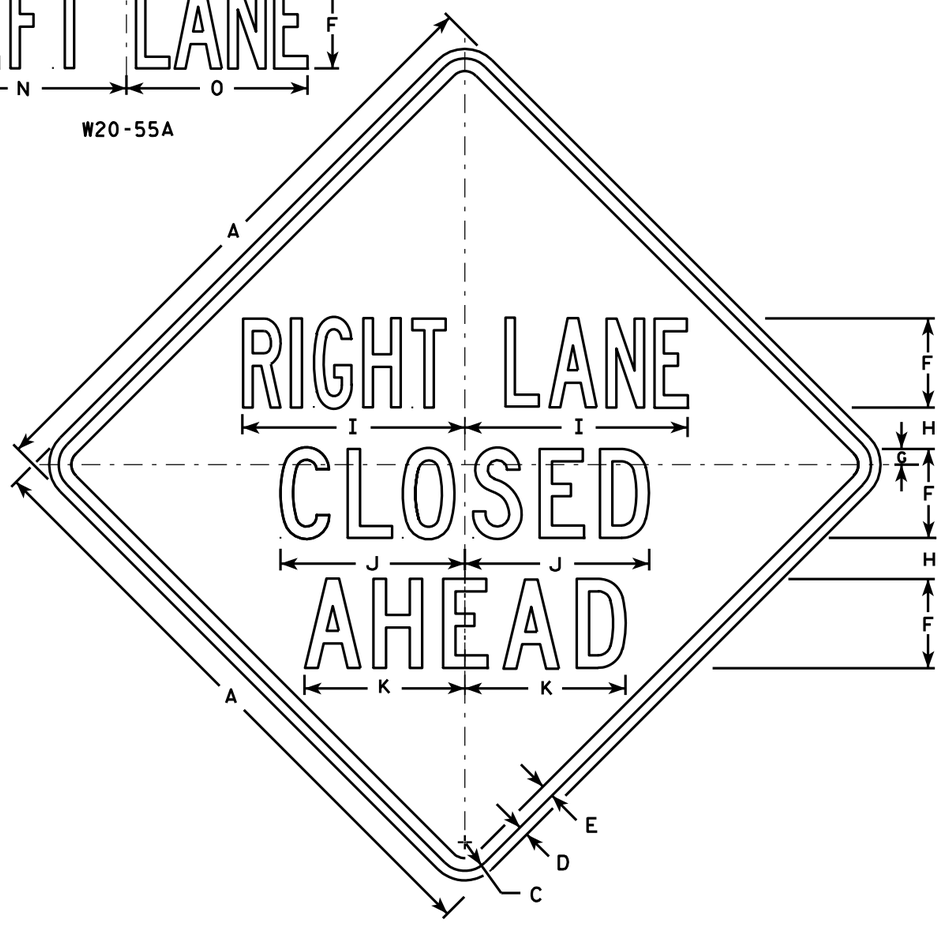

W20-5A

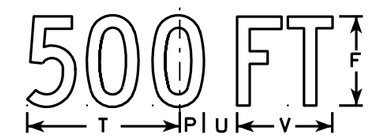

W20-5D

W20-5C

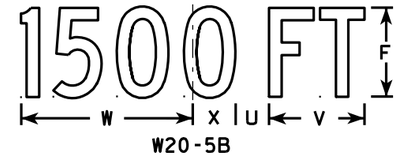

W20-5B

W20-5G

W20-5F

NOTES

1. Sign is Type II - Type F Reflective - reference WIS DOT Standard Specification for HIGHWAY and STRUCTURE CONSTRUCTION latest edition.
2. Color:
   Background - Orange
   Message - Black
3. Message Series - See Note 5
4. Corners may be square or rounded when base material is plywood but borders shall be rounded as shown. When base material is metal, the corners and borders shall be rounded.
5. " ------- LANE" is Series B.
   All other copy is Series C.

SIZE	A	B	C	D	E	F	G	H	I	J	K	L	M	N	O	P	Q	R	S	T	U	V	W	X	Y	Z	Area sq. ft.
1	36	6	1 5/8	5/8	3/4	5	7/8	2 1/2	13 1/8	10 3/4	9 1/2	14 1/4	13 5/8	12	12	1 3/8	1 1/8	4 1/2	3 1/2	9	1 7/8	5 5/8	10 1/8	2 1/2	1 3/4	8	9.0
2S	48	8	2 1/4	3/4	1	7	1 1/4	3 1/4	17 1/2	14 3/8	12 5/8	19	18 3/8	16	14 1/4	1 7/8	1 1/2	6	4 5/8	12	2 5/8	7 1/2	13 1/2	3 3/8	2 3/8	10 5/8	16.0
2M	48	8	2 1/4	3/4	1	7	1 1/4	3 1/4	17 1/2	14 3/8	12 5/8	19	18 3/8	16	14 1/4	1 7/8	1 1/2	6	4 5/8	12	2 5/8	7 1/2	13 1/2	3 3/8	2 3/8	10 5/8	16.0
3	48	8	2 1/4	3/4	1	7	1 1/4	3 1/4	17 1/2	14 3/8	12 5/8	19	18 3/8	16	14 1/4	1 7/8	1 1/2	6	4 5/8	12	2 5/8	7 1/2	13 1/2	3 3/8	2 3/8	10 5/8	16.0
4	48	8	2 1/4	3/4	1	7	1 1/4	3 1/4	17 1/2	14 3/8	12 5/8	19	18 3/8	16	14 1/4	1 7/8	1 1/2	6	4 5/8	12	2 5/8	7 1/2	13 1/2	3 3/8	2 3/8	10 5/8	16.0
5	48	8	2 1/4	3/4	1	7	1 1/4	3 1/4	17 1/2	14 3/8	12 5/8	19	18 3/8	16	14 1/4	1 7/8	1 1/2	6	4 5/8	12	2 5/8	7 1/2	13 1/2	3 3/8	2 3/8	10 5/8	16.0

STANDARD SIGN
W20-5A, B, C, D, F & G

WISCONSIN DEPT OF TRANSPORTATION

APPROVED Matthew R Rauch
for State Traffic Engineer

DATE 3/18/11 PLATE NO. W20-5.11

PROJECT NO:	HWY:	COUNTY:		SHEET NO: 418	E

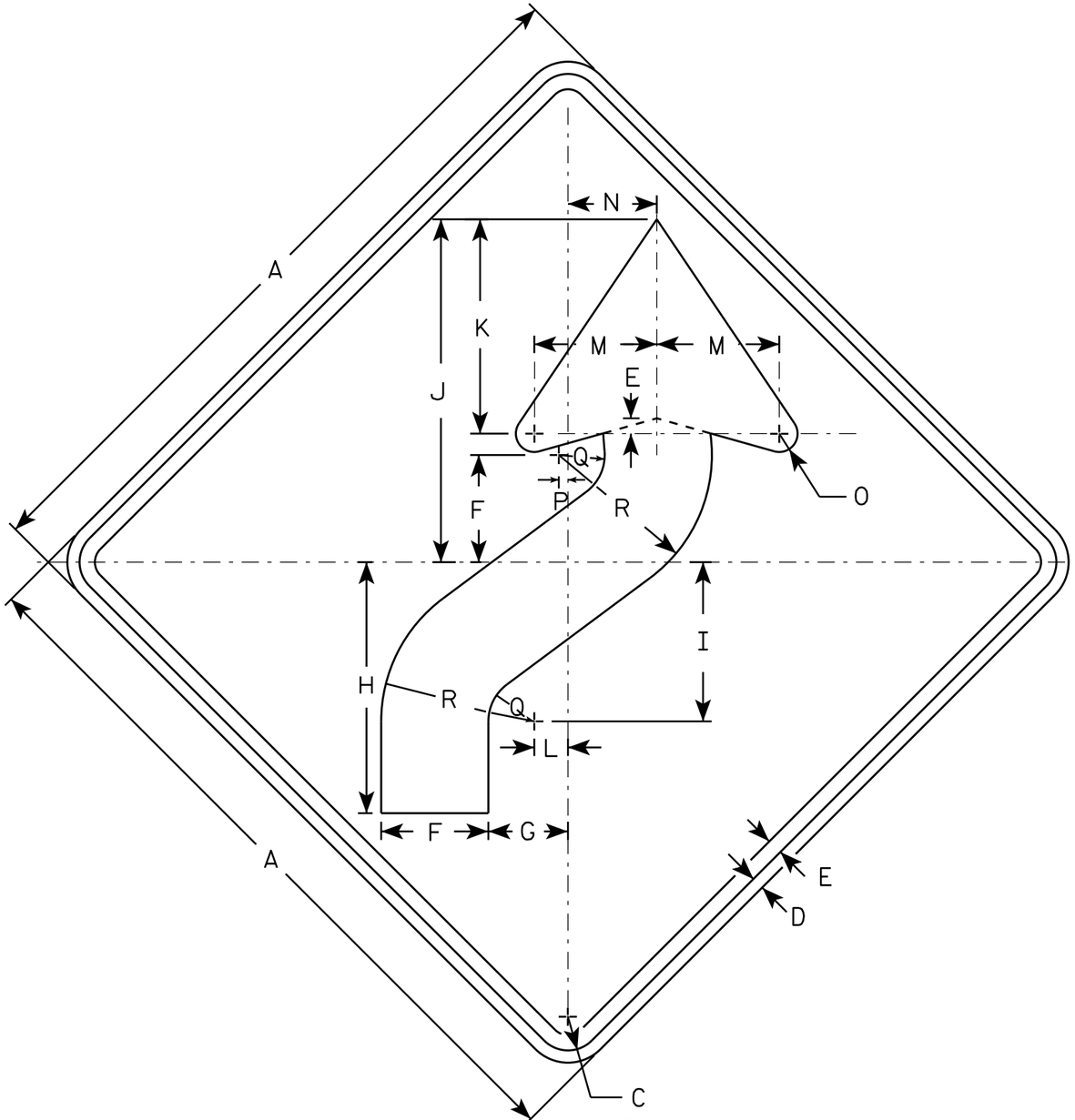

W01-4R

NOTES

1. Sign is Type II - Type F Reflective - reference WIS DOT Standard Specification for HIGHWAY and STRUCTURE CONSTRUCTION latest edition.
2. Color:
   Background - Orange
   Message - Black
3. Corners may be square or rounded when base material is plywood but borders shall be rounded as shown. When base material is metal, the corners and borders shall be rounded.
4. W01-4L is the same as W01-4R except the arrow is reversed along the vertical centerline.

SIZE	A	B	C	D	E	F	G	H	I	J	K	L	M	N	O	P	Q	R	S	T	U	V	W	X	Y	Z	Area sq. ft.
1	36		1 5/8	5/8	3/4	5 1/4	4	12 3/8	7 7/8	16 7/8	10 1/2	1 5/8	6	4 1/2	1	1/2	2 1/4	7 1/2									9.0
2S	48		2 1/4	3/4	1	7	5 1/4	16 1/2	10 1/2	22 1/2	14	2 1/4	8	6	1 1/4	5/8	3	10									16.0
2M	48		2 1/4	3/4	1	7	5 1/4	16 1/2	10 1/2	22 1/2	14	2 1/4	8	6	1 1/4	5/8	3	10									16.0
3	48		2 1/4	3/4	1	7	5 1/4	16 1/2	10 1/2	22 1/2	14	2 1/4	8	6	1 1/4	5/8	3	10									16.0
4	48		2 1/4	3/4	1	7	5 1/4	16 1/2	10 1/2	22 1/2	14	2 1/4	8	6	1 1/4	5/8	3	10									16.0
5	48		2 1/4	3/4	1	7	5 1/4	16 1/2	10 1/2	22 1/2	14	2 1/4	8	6	1 1/4	5/8	3	10									16.0

STANDARD SIGN
W01-4

WISCONSIN DEPT OF TRANSPORTATION

APPROVED Matthew R Rauch
for State Traffic Engineer

DATE 11/18/13 PLATE NO W01-4.1

PROJECT NO:	HWY:	COUNTY:		SHEET NO:	E

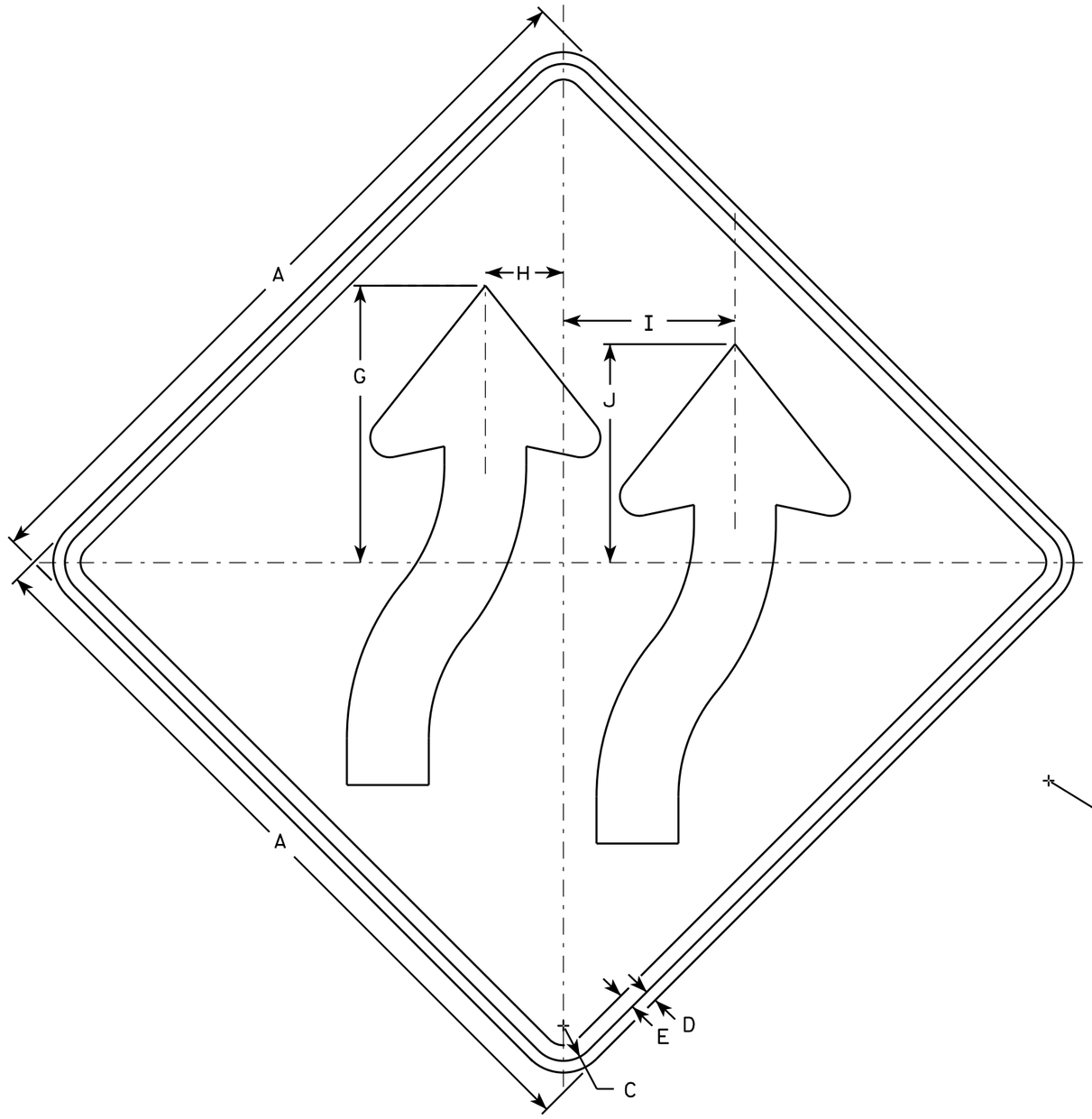

W01-4bR

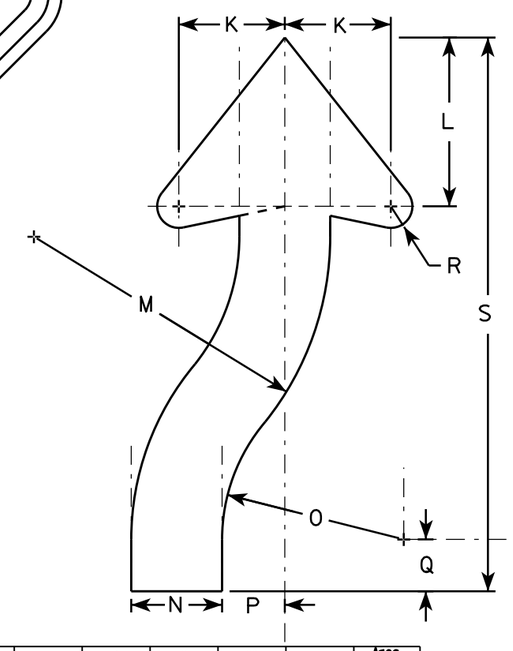

NOTES

1. Sign is Type II - Type F Reflective - reference WIS DOT Standard Specification for HIGHWAY and STRUCTURE CONSTRUCTION latest edition.
2. Color:
   Background - Orange
   Message - Black
3. Corners may be square or rounded when base material is plywood but borders shall be rounded as shown. When base material is metal, the corners and borders shall be rounded.
4. W01-4bL is the same as W014-bR exept arrows are reversed along the vertical centerline

SIZE	A	B	C	D	E	F	G	H	I	J	K	L	M	N	O	P	Q	R	S	T	U	V	W	X	Y	Z	Area sq. ft.
1	36		1 5/8	5/8	3/4		13 3/8	3 3/4	8 1/4	10 1/2	4 5/8	7 3/8	12 7/8	3 7/8	7 7/8	2 3/4	2 1/4	7/8	24								9.0
2S	48		2 1/4	3/4	1		17 3/4	5	11	14	6 1/8	9 3/4	17 1/8	5 1/4	10 1/2	3 5/8	3	1 1/4	32								16.0
2M	48		2 1/4	3/4	1		17 3/4	5	11	14	6 1/8	9 3/4	17 1/8	5 1/4	10 1/2	3 5/8	3	1 1/4	32								16.0
3	48		2 1/4	3/4	1		17 3/4	5	11	14	6 1/8	9 3/4	17 1/8	5 1/4	10 1/2	3 5/8	3	1 1/4	32								16.0
4	48		2 1/4	3/4	1		17 3/4	5	11	14	6 1/8	9 3/4	17 1/8	5 1/4	10 1/2	3 5/8	3	1 1/4	32								16.0
5	48		2 1/4	3/4	1		17 3/4	5	11	14	6 1/8	9 3/4	17 1/8	5 1/4	10 1/2	3 5/8	3	1 1/4	32								16.0

STANDARD SIGN
W01-4b

WISCONSIN DEPT OF TRANSPORTATION

APPROVED Matthew R Rauch
for State Traffic Engineer

DATE 11/18/13 PLATE NO. W01-4b.1

PROJECT NO: | HWY: | COUNTY: | SHEET NO: E

NOTES

1. Sign is Type II - Type F Reflective - reference WIS DOT Standard Specification for HIGHWAY and STRUCTURE CONSTRUCTION latest edition.
2. Color:
   Background - Orange
   Message - Black
3. Corners may be square or rounded when base material is plywood but borders shall be rounded as shown. When base material is metal, the corners and borders shall be rounded.

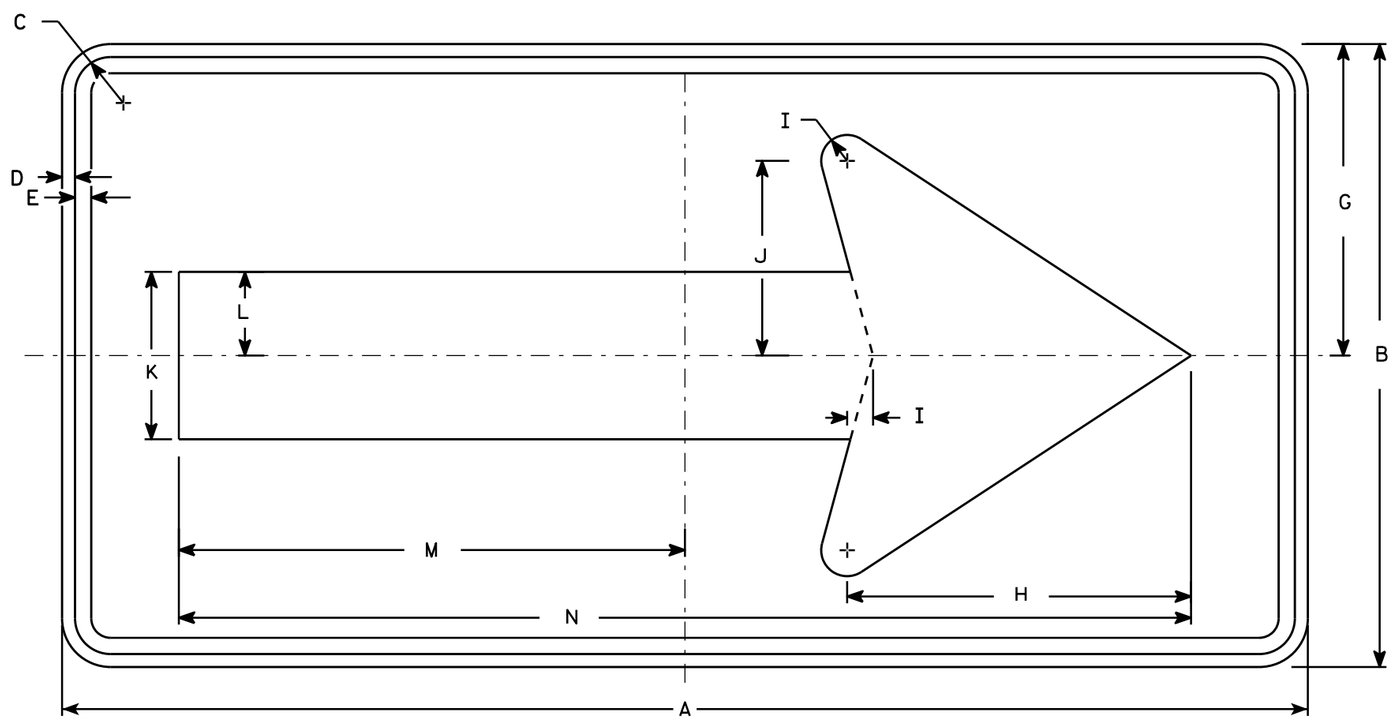

W01-6

SIZE	A	B	C	D	E	F	G	H	I	J	K	L	M	N	O	P	Q	R	S	T	U	V	W	X	Y	Z	Area sq. ft.
1																											
2S	48	24	1 3/8	1/2	5/8		12	13 1/4	1	7 1/2	6 1/2	3 1/4	19 1/2	39													8.0
2M	48	24	1 3/8	1/2	5/8		12	13 1/4	1	7 1/2	6 1/2	3 1/4	19 1/2	39													8.0
3	60	30	1 3/8	1/2	5/8		15	16 1/4	1 1/4	9 1/4	8	4	24 3/8	48 3/4													12.5
4	60	30	1 3/8	1/2	5/8		15	16 1/4	1 1/4	9 1/4	8	4	24 3/8	48 3/4													12.5
5	60	30	1 3/8	1/2	5/8		15	16 1/4	1 1/4	9 1/4	8	4	24 3/8	48 3/4													12.5

STANDARD SIGN
W01-6

WISCONSIN DEPT OF TRANSPORTATION

APPROVED Matthew R Rauch
for State Traffic Engineer

DATE 11/18/13 PLATE NO. W01-6.1

PROJECT NO: | HWY: | COUNTY: | SHEET NO: | E

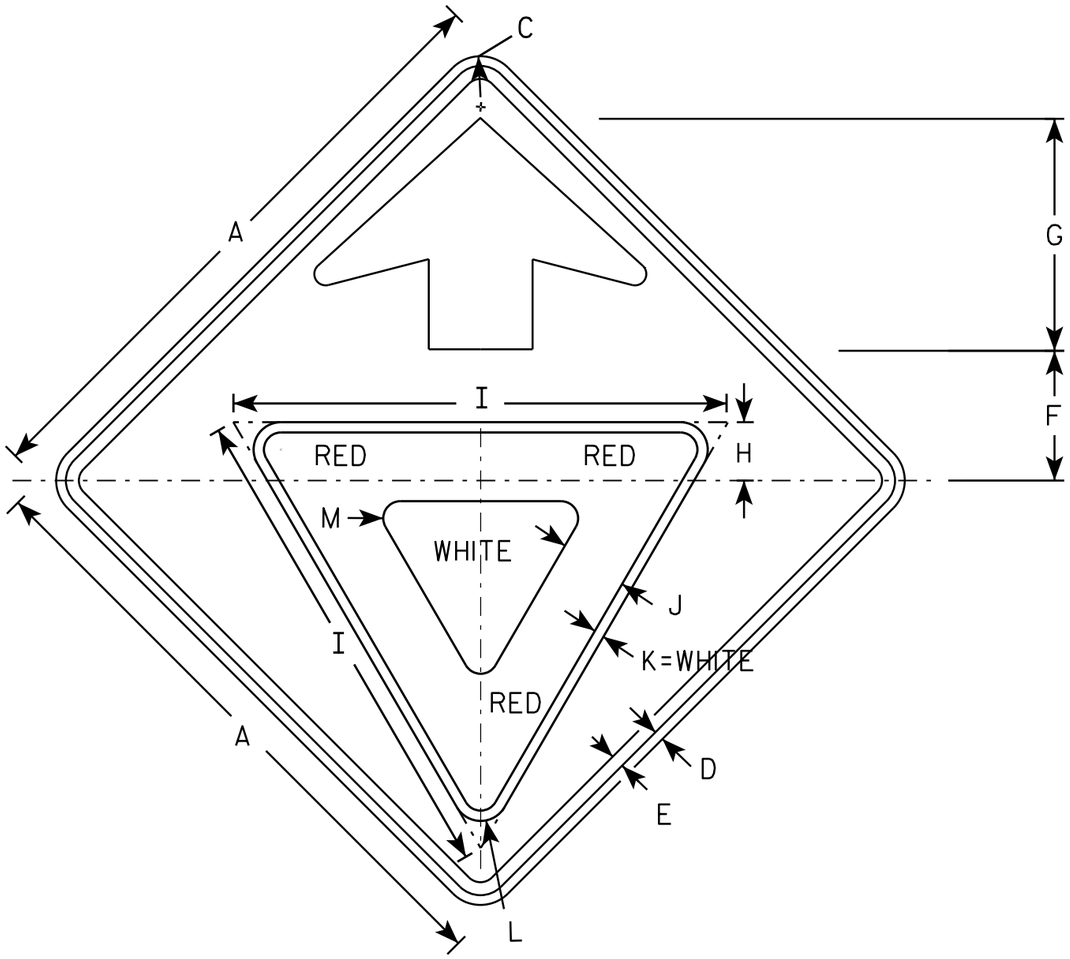

W03-2

NOTES

1. All Signs Type II - Type F Reflective - reference WIS DOT Standard Specification for HIGHWAY and STRUCTURE CONSTRUCTION latest edition.
2. Color:
   Background - ORANGE
   Arrow & Border - BLACK
   Yield Symbol - WHITE BORDER ON RED BACKGROUND

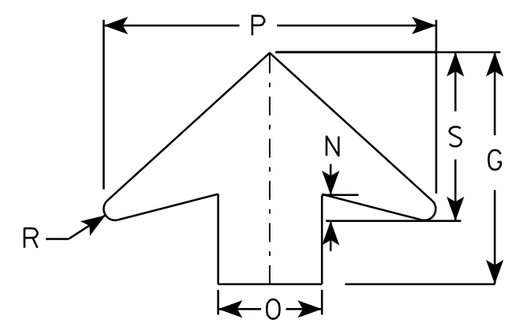

ARROW DETAIL

SIZE	A	B	C	D	E	F	G	H	I	J	K	L	M	N	O	P	Q	R	S	T	U	V	W	X	Y	Z	Area sq. ft.
1	36		1 5/8	5/8	3/4	7 1/2	13 1/2	3 3/8	28	3 3/4	5/8	1 1/2	1	1 5/8	6	19 1/4		5/8	9 3/4								9.0
2S	48		2 1/4	3/4	1	10	17 7/8	4 1/2	38	5	3/4	2 1/8	1 3/8	2	8	25 5/8		7/8	13								16.0
2M	48		2 1/4	3/4	1	10	17 7/8	4 1/2	38	5	3/4	2 1/8	1 3/8	2	8	25 5/8		7/8	13								16.0
3	48		2 1/4	3/4	1	10	17 7/8	4 1/2	38	5	3/4	2 1/8	1 3/8	2	8	25 5/8		7/8	13								16.0
4	48		2 1/4	3/4	1	10	17 7/8	4 1/2	38	5	3/4	2 1/8	1 3/8	2	8	25 5/8		7/8	13								16.0
5	48		2 1/4	3/4	1	10	17 7/8	4 1/2	38	5	3/4	2 1/8	1 3/8	2	8	25 5/8		7/8	13								16.0

STANDARD SIGN
W03-2

WISCONSIN DEPT OF TRANSPORTATION

APPROVED Matthew R Rauch
for State Traffic Engineer

DATE 11/20/13 PLATE NO. W03-2.1

PROJECT NO:

SHEET NO: E

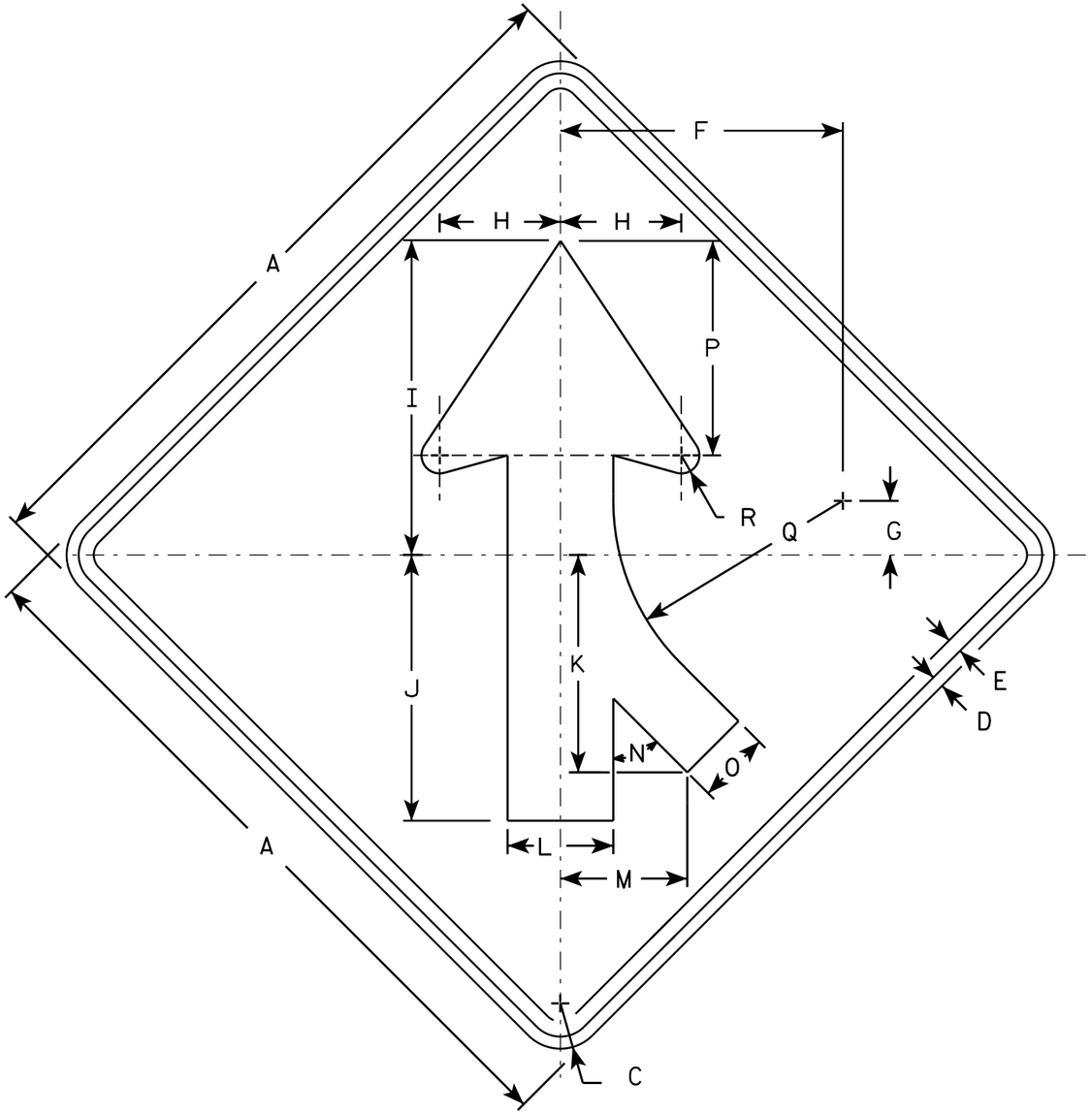

W04-1R

NOTES

1. Sign is Type II - Type F Reflective - reference WIS DOT Standard Specification for HIGHWAY and STRUCTURE CONSTRUCTION latest edition.
2. Color:
   Background - Orange
   Message - Black
3. Corners may be square or rounded when base material is plywood but borders shall be rounded as shown. When base material is metal, the corners and borders shall be rounded.
4. W4-1L is the same as W4-1R except the arrow is reversed along the vertical centerline.

SIZE	A	B	C	D	E	F	G	H	I	J	K	L	M	N	O	P	Q	R	S	T	U	V	W	X	Y	Z	Area sq. ft.
1	36		1 5/8	5/8	3/4	14	2 3/4	6	15 3/4	13 1/4	10 1/4	5 1/4	6 3/8	45°	3 5/8	10 5/8	11 3/8	7/8									9.0
2S	48		2 1/4	3/4	1	18 3/4	3 5/8	8	20 1/2	17 1/2	14 3/8	7	8 3/8	45°	4 3/4	14 1/4	15 1/4	1 1/4									16.0
2M	48		2 1/4	3/4	1	18 3/4	3 5/8	8	20 1/2	17 1/2	14 3/8	7	8 3/8	45°	4 3/4	14 1/4	15 1/4	1 1/4									16.0
3	48		2 1/4	3/4	1	18 3/4	3 5/8	8	20 1/2	17 1/2	14 3/8	7	8 3/8	45°	4 3/4	14 1/4	15 1/4	1 1/4									16.0
4	48		2 1/4	3/4	1	18 3/4	3 5/8	8	20 1/2	17 1/2	14 3/8	7	8 3/8	45°	4 3/4	14 1/4	15 1/4	1 1/4									16.0
5	48		2 1/4	3/4	1	18 3/4	3 5/8	8	20 1/2	17 1/2	14 3/8	7	8 3/8	45°	4 3/4	14 1/4	15 1/4	1 1/4									16.0

STANDARD SIGN
W04-1

WISCONSIN DEPT OF TRANSPORTATION

APPROVED Matthew R Rauch
for State Traffic Engineer

DATE 11/20/13 PLATE NO. W04-1.1

PROJECT NO: | HWY: | COUNTY: | SHEET NO: | E

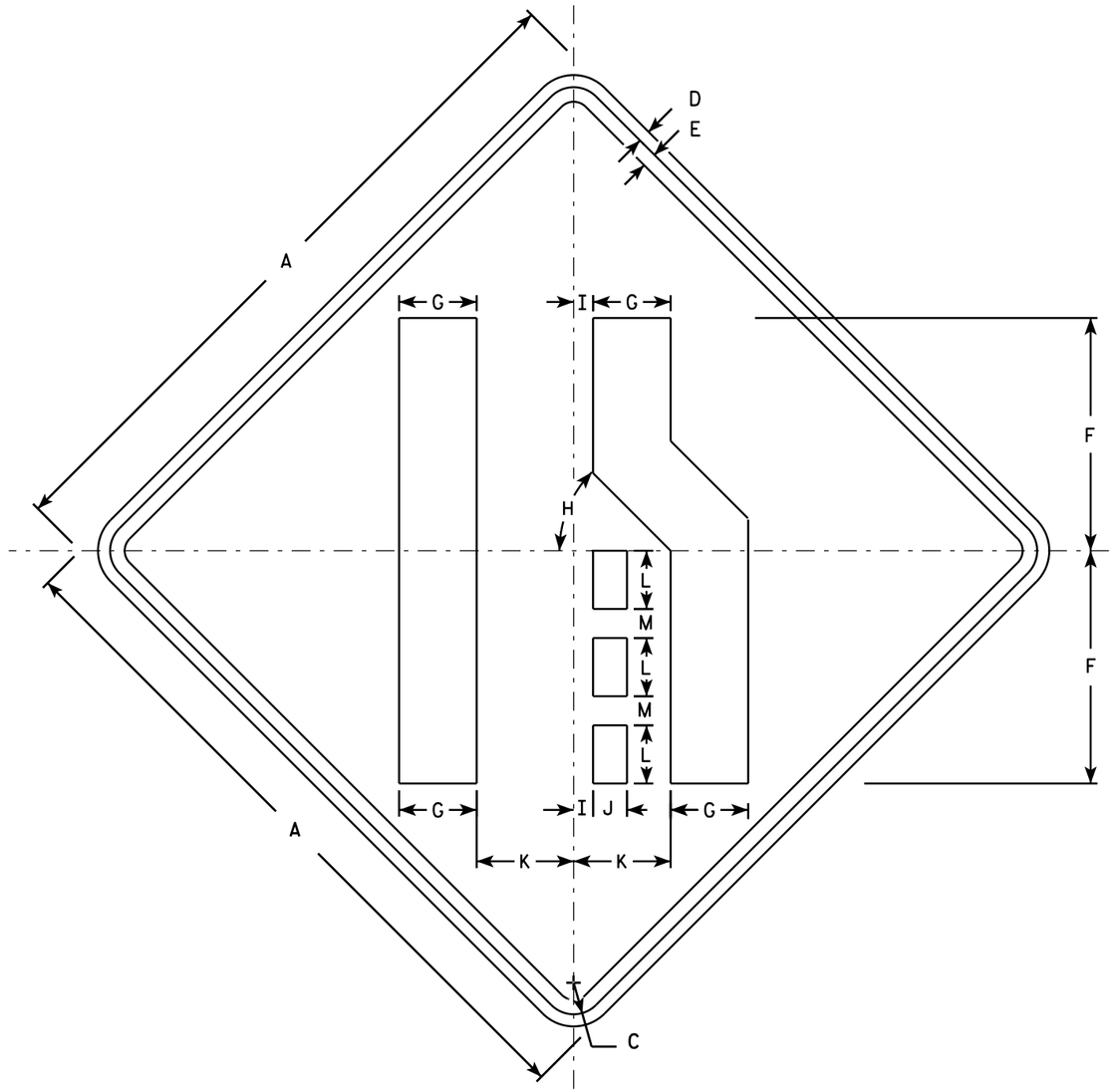

W04-2R

NOTES

1. Sign is Type II - Type F Reflective - reference WIS DOT Standard Specification for HIGHWAY and STRUCTURE CONSTRUCTION latest edition.
2. Color:
   Background - Orange
   Message - Black
3. Corners may be square or rounded when base material is plywood but borders shall be rounded as shown. When base material is metal, the corners and borders shall be rounded.
4. W04-2L is the same as W04-2R except the symbol is reversed along the vertical centerline.

SIZE	A	B	C	D	E	F	G	H	I	J	K	L	M	N	O	P	Q	R	S	T	U	V	W	X	Y	Z	Area sq. ft.
1	36		1 5/8	5/8	3/4	12	4	45°	1	1 3/4	5	3	1 1/2														9.0
2S	48		2 1/4	3/4	1	16	5 3/8	45°	1 1/4	2 3/8	6 3/4	4	2														16.0
2M	48		2 1/4	3/4	1	16	5 3/8	45°	1 1/4	2 3/8	6 3/4	4	2														16.0
3	48		2 1/4	3/4	1	16	5 3/8	45°	1 1/4	2 3/8	6 3/4	4	2														16.0
4	48		2 1/4	3/4	1	16	5 3/8	45°	1 1/4	2 3/8	6 3/4	4	2														16.0
5	48		2 1/4	3/4	1	16	5 3/8	45°	1 1/4	2 3/8	6 3/4	4	2														16.0

STANDARD SIGN
W04-2

WISCONSIN DEPT OF TRANSPORTATION

APPROVED Matthew R Rauch
for State Traffic Engineer

DATE 11/20/13 PLATE 424 W04-2.1

PROJECT NO:

SHEET NO: E

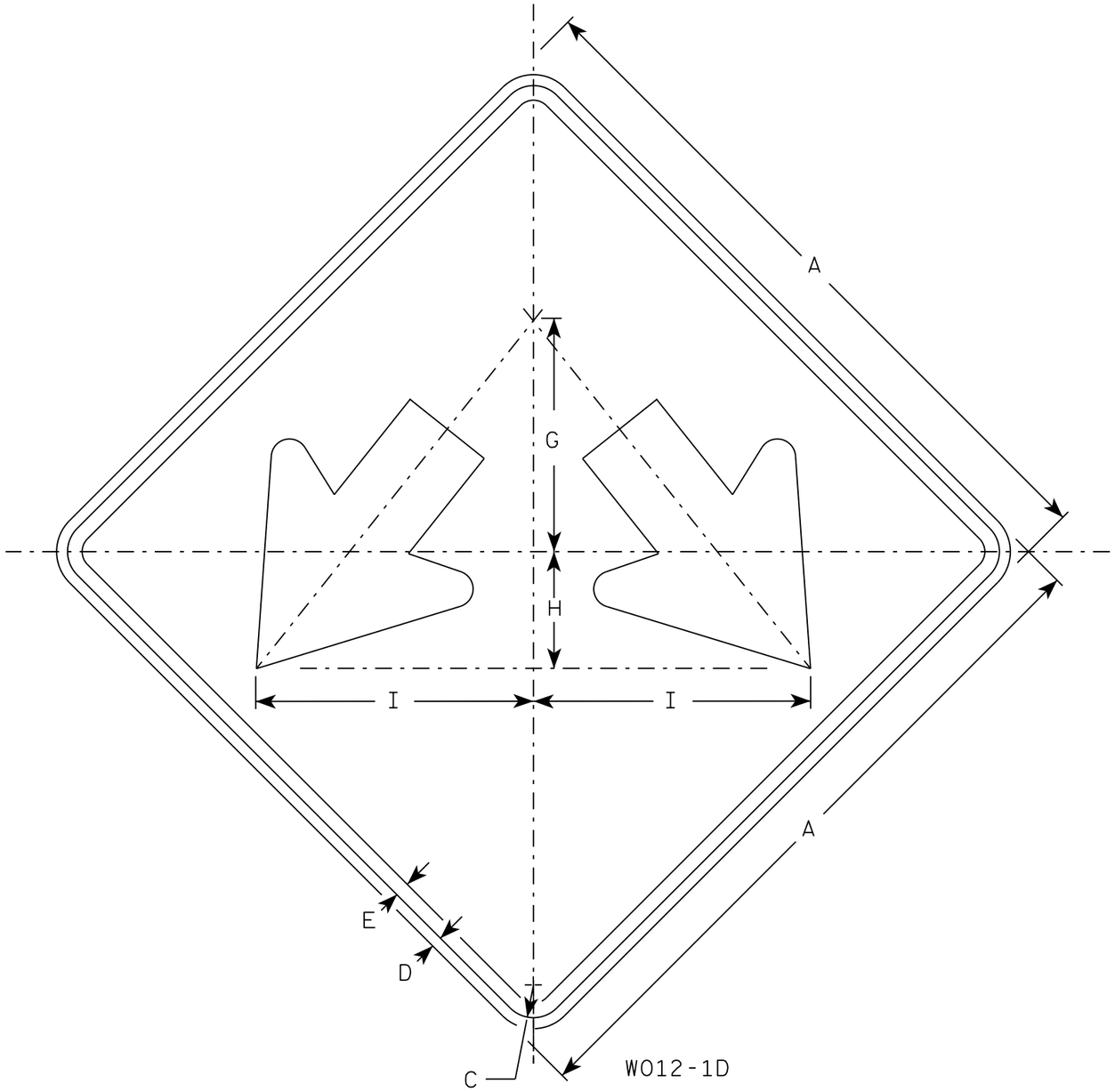

NOTES

1. Sign is Type II - Type F Reflective
2. Color:
   Background - Orange
   Message - Black
3. Corners may be square or rounded when base material is plywood but borders shall be rounded as shown. When base material is metal, the corners and borders shall be rounded.

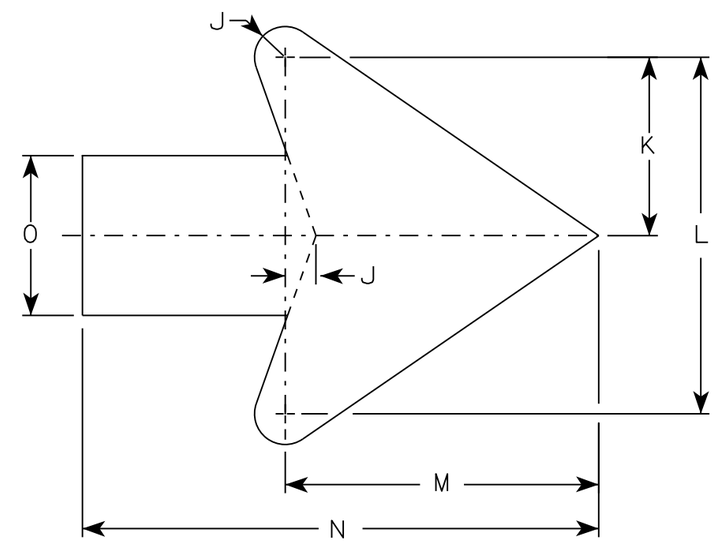

Arrow Detail

SIZE	A	B	C	D	E	F	G	H	I	J	K	L	M	N	O	P	Q	R	S	T	U	V	W	X	Y	Z	Area sq. ft.
1	24		1 1/8	1/2	3/8		8	4	9 1/2	3/8	3 3/8	7 1/4	6 3/8	10 3/8	3 1/4												4.0
2S	24		1 1/8	1/2	3/8		8	4	9 1/2	3/8	3 3/8	7 1/4	6 3/8	10 3/8	3 1/4												4.0
2M	24		1 1/8	1/2	3/8		8	4	9 1/2	3/8	3 3/8	7 1/4	6 3/8	10 3/8	3 1/4												4.0
3	30		1 3/8	1/2	5/8		10	5	11 7/8	3/4	4 1/2	9	7 7/8	13	4												6.25
4	36		1 3/8	1/2	5/8		12	6	14 1/4	1	5 1/2	10 7/8	9 5/8	15 3/4	4 3/4												9.0
5	36		1 3/8	1/2	5/8		12	6	14 1/4	1	5 1/2	10 7/8	9 5/8	15 3/4	4 3/4												9.0

STANDARD SIGN
W012-1D

WISCONSIN DEPT OF TRANSPORTATION

APPROVED Matthew R Rauch
for State Traffic Engineer

DATE 7/28/16 PLATE NO W012-1D.2
425

PROJECT NO: | HWY: | COUNTY: | SHEET NO: E

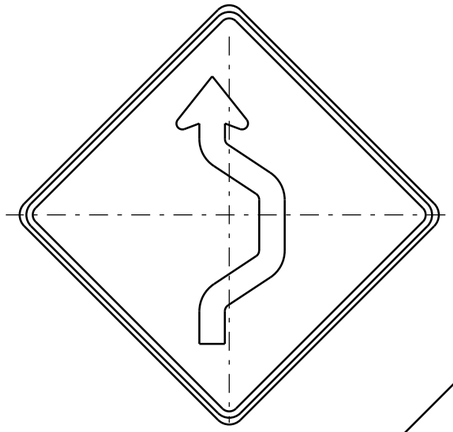

W024-1R

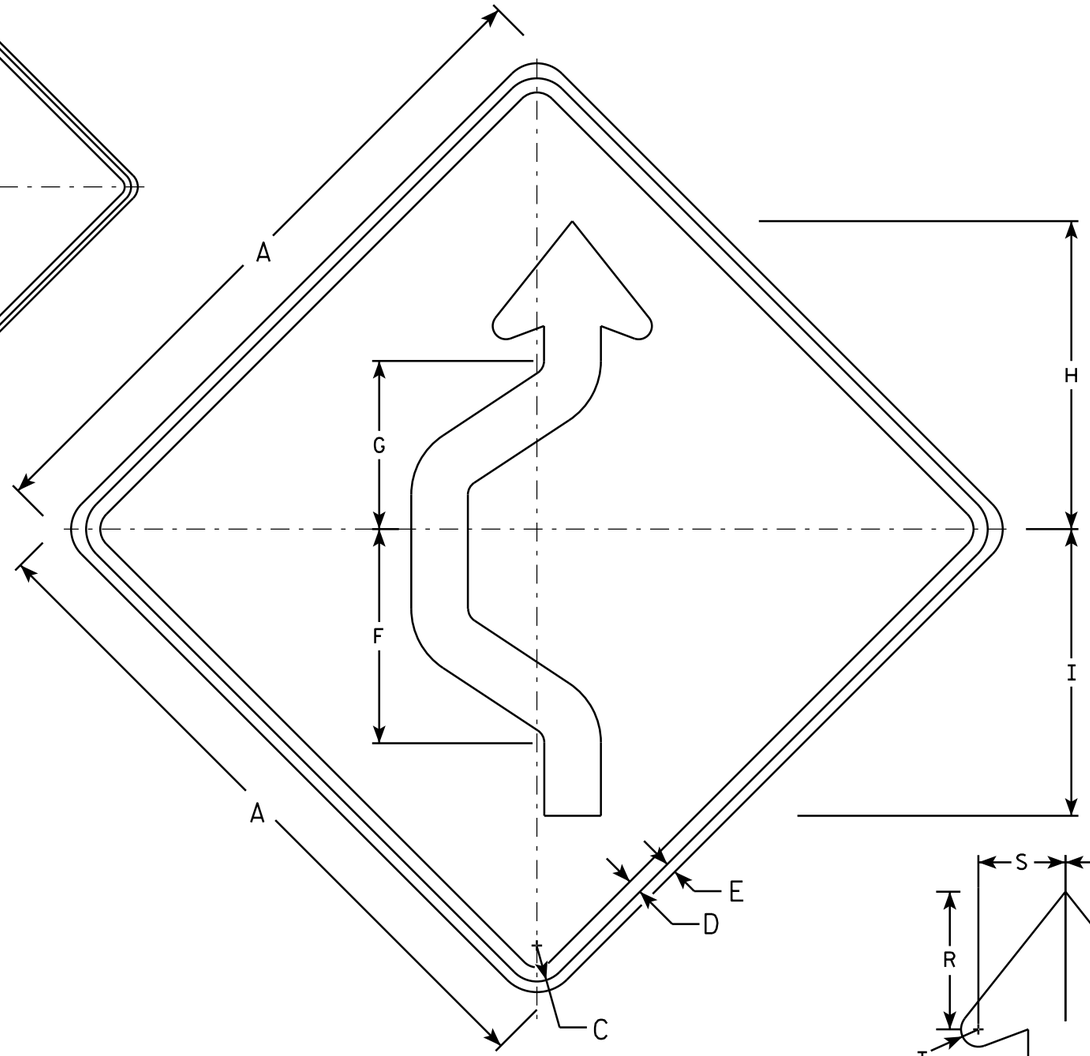

W024-1L

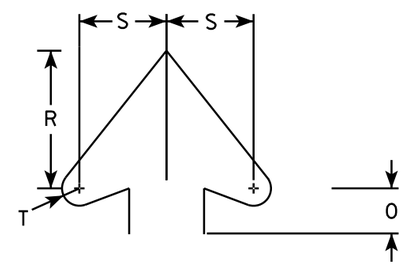

Arrowhead Detail

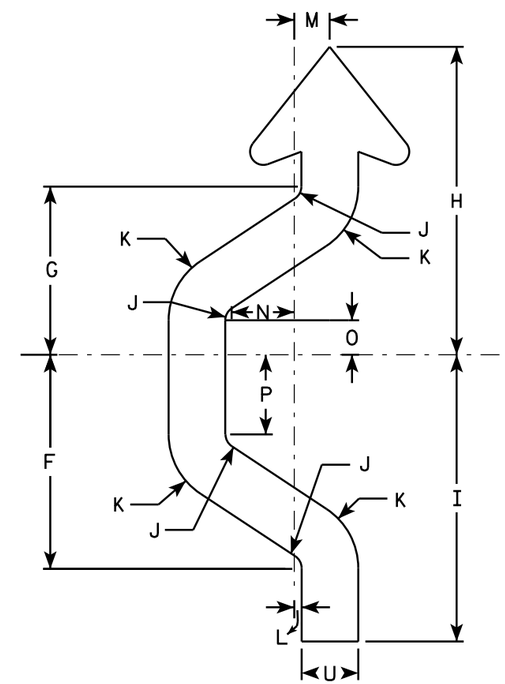

Arrow Detail

NOTES

1. Sign is Type II - Type F Reflective - reference WIS DOT Standard Specification for HIGHWAY and STRUCTURE CONSTRUCTION latest edition.
2. Color:
   Background - Orange
   Message - Black
3. Corners may be square or rounded when base material is plywood but borders shall be rounded as shown. When base material is metal, the corners and borders shall be rounded.
4. W024-1R is the same as W024-1L except reversed along the vertical centerline.

SIZE	A	B	C	D	E	F	G	H	I	J	K	L	M	N	O	P	Q	R	S	T	U	V	W	X	Y	Z	Area sq. ft.
1	36		1 3/8	5/8	1/2	11 3/8	8 7/8	16 3/8	15 1/4	3/4	3 3/4	3/8	2	3 3/8	1 7/8	4 1/4		5 1/2	3 1/2	5/8	3						9
2S	48		2 1/4	1	3/4	15 1/8	11 7/8	21 3/4	20 1/4	1	5	1/2	2 1/2	4 3/8	2 3/8	5 5/8		7 3/8	4 3/4	7/8	4						16
2M	48		2 1/4	1	3/4	15 1/8	11 7/8	21 3/4	20 1/4	1	5	1/2	2 1/2	4 3/8	2 3/8	5 5/8		7 3/8	4 3/4	7/8	4						16
3	48		2 1/4	1	3/4	15 1/8	11 7/8	21 3/4	20 1/4	1	5	1/2	2 1/2	4 3/8	2 3/8	5 5/8		7 3/8	4 3/4	7/8	4						16
4	48		2 1/4	1	3/4	15 1/8	11 7/8	21 3/4	20 1/4	1	5	1/2	2 1/2	4 3/8	2 3/8	5 5/8		7 3/8	4 3/4	7/8	4						16
5	48		2 1/4	1	3/4	15 1/8	11 7/8	21 3/4	20 1/4	1	5	1/2	2 1/2	4 3/8	2 3/8	5 5/8		7 3/8	4 3/4	7/8	4						16

STANDARD SIGN
W024-1 L & R

WISCONSIN DEPT OF TRANSPORTATION

APPROVED Matthew R Rauch
for State Traffic Engineer

DATE 9/25/2013 PLATE NO. W024-1.1

PROJECT NO: | HWY: | COUNTY: | SHEET NO: E

* PROVIDE FOR THRIE BEAM GUARD RAIL ATTACHMENT

(X) INDICATES WING NUMBER

▲ THE WISCONSIN DEPARTMENT OF TRANSPORTATION WILL FURNISH THE CONTRACTOR WITH A BENCHMARK CAP TO BE INSTALLED AS SHOWN ON THE PLANS.

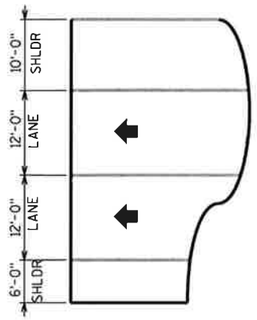

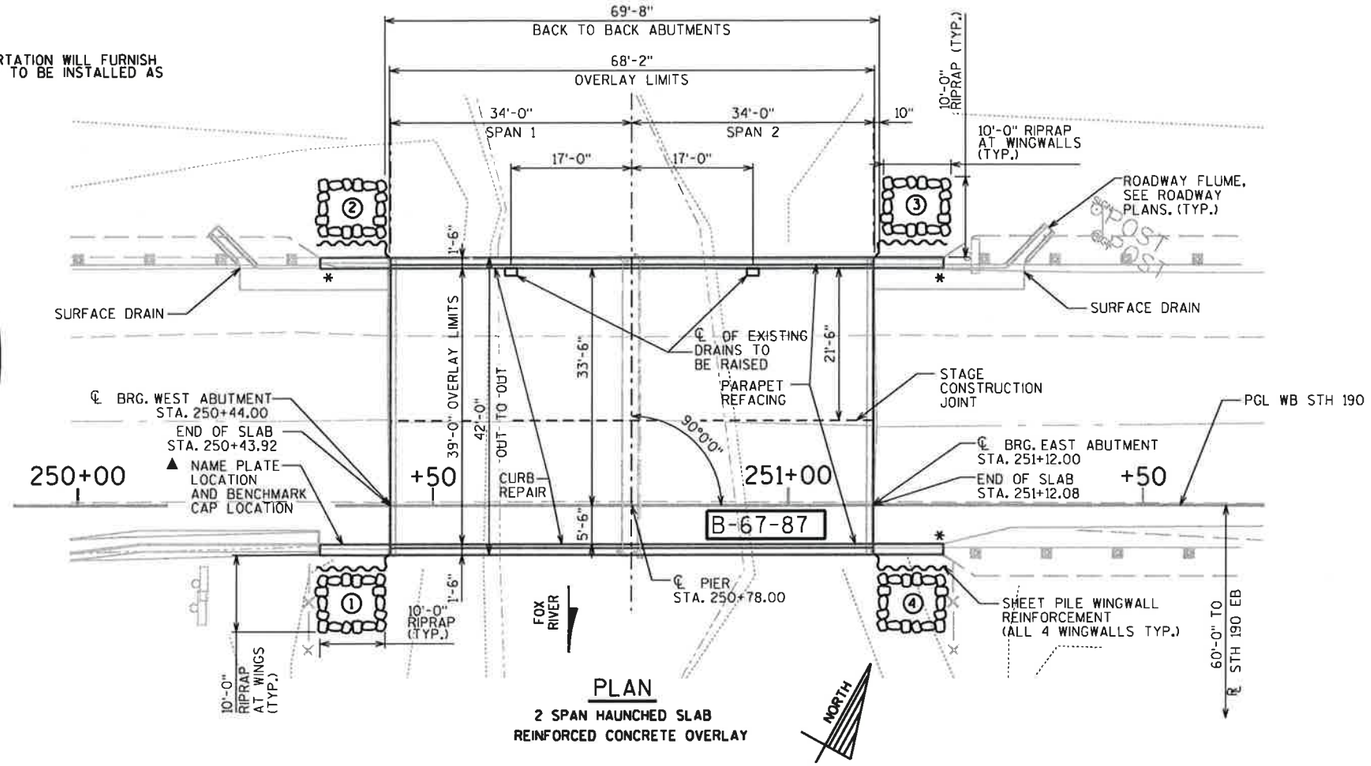

PLAN

2 SPAN HAUNCHED SLAB REINFORCED CONCRETE OVERLAY

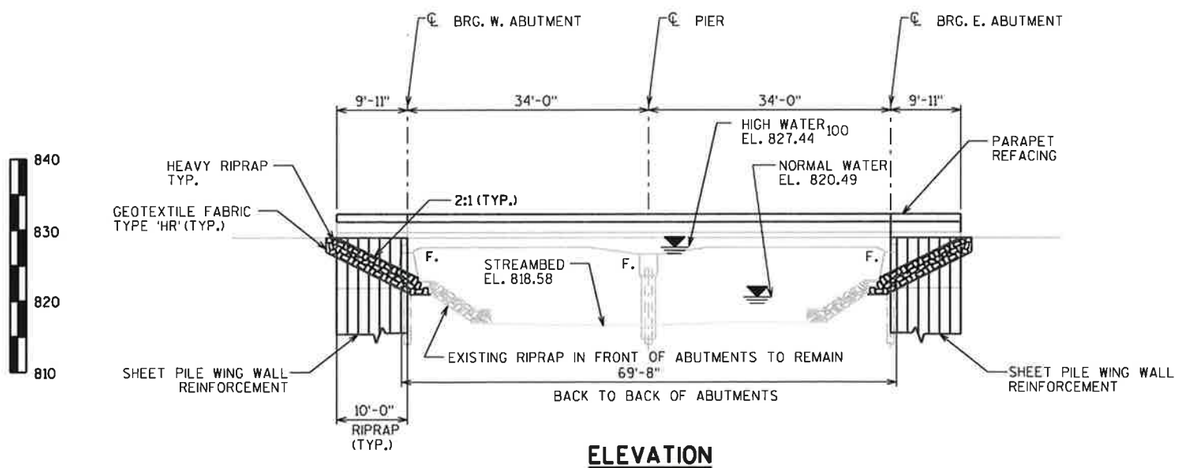

ELEVATION

LOOKING NORTH

STATE PROJECT NUMBER

2025-14-71

DESIGN DATA

LIVE LOAD:
- DESIGN LOADING HS-20
- INVENTORY RATING HS-19
- OPERATING RATING HS-33
- WIS. STD. PERMIT VEHICLE (WIS-SPV)= 250 KIPS

MATERIAL PROPERTIES:
- CONCRETE MASONRY SUPERSTRUCTURE ..... f'c = 4,000 psi
- ALL OTHER ..... f'c = 3,500 psi
- HIGH STRENGTH BAR STEEL
- REINFORCEMENT GRADE 60 ..... fy = 60,000 psi
- STEEL SHEET PILING ASTM A328..... fy = 39,000 psi
- MIN. SECTION MODULUS..... Sx = 310 in^3/ft

SCOPE OF WORK B-67-87

1. PLACE REINFORCED CONCRETE OVERLAY ON SLAB
2. DRIVE SHEET PILE WING WALL REINFORCEMENT (ALL WINGS)
3. REFACE ALL PARAPETS
4. CURB REPAIR
5. CONCRETE SURFACE REPAIR
6. RAISE FLOOR DRAINS AND REUSE EXISTING GRATES

TRAFFIC DATA-STH 190

ADT = 36,500 (2019)
44,400 (2039)

RDS = 60 M.P.H.

LIST OF DRAWINGS

WISCONSIN KEVIN G. WOOD E-32070 MILWAUKEE, WI PROFESSIONAL ENGINEER

1-3-2018

BUREAU OF STRUCTURES CONTACT:
WILLIAM DREHER (608) 266-8489

CONSULTANT CONTACT:
KEVIN WOOD (414) 259-1500

NO.	DATE	REVISION	BY

PLANS PREPARED BY: GRÄEF
One Honey Creek Corporate Center
125 South 84th Street,
Suite 401
Milwaukee, WI 53214-1470
414 / 259 1500
414 / 259 0037 fax
www.graefusa.com

STATE OF WISCONSIN
DEPARTMENT OF TRANSPORTATION

ACCEPTED William C. Dreher SDR 01/17/18
CHIEF STRUCTURES DESIGN ENGINEER DATE

STRUCTURE B-67-87

WB STH 190 OVER THE FOX RIVER

COUNTY	WAUKESHA	TOWN	BROOKFIELD
DESIGN SPEC.	REHABILITATION N/A		
DESIGNED BY WAR	DESIGN CK'D. KGW	DRAWN BY WAR	PLANS CK'D. KGW

GENERAL PLAN

SHEET 1 OF 8

FILE=
SCALE =

8

8

X:\WI\2015\20150231\CAD\Transportation\dgn\001B-67-87_S01.dgn 1/2/2018 3:21:25 PM

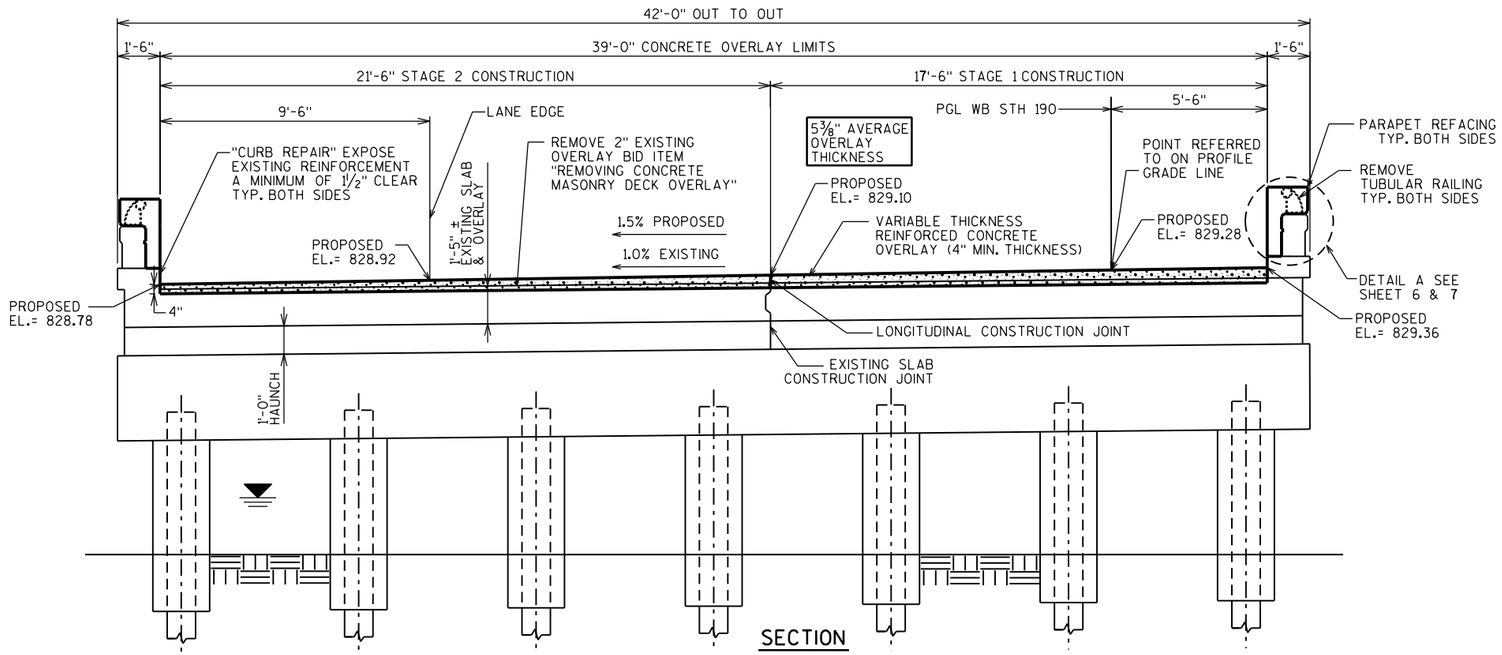

SECTION
LOOKING EAST

GENERAL NOTES

DRAWINGS SHALL NOT BE SCALED.

DIMENSIONS SHOWN ARE BASED ON THE ORIGINAL STRUCTURE PLANS.

PROTECTIVE SURFACE TREATMENT SHALL BE APPLIED TO THE ENTIRE TOP SURFACE OF THE NEW CONCRETE OVERLAY.

PREPARATION DECKS TYPE 1, PREPARATION DECKS TYPE 2, AND FULL -DEPTH DECK REPAIR AREAS ARE BASED ON THE PLANS AND AS DETERMINED BY THE ENGINEER. DECK PREPARATION AND FULL-DEPTH DECK REPAIRS SHALL BE FILLED WITH "CONCRETE MASONRY OVERLAY DECKS".

ANY EXCAVATION REQUIRED TO COMPLETE THE OVERLAY AT THE ABUTMENTS TO BE CONSIDERED INCIDENTIAL TO THE BID ITEM "CONCRETE MASONRY OVERLAY DECKS".

PROFILE GRADE LINE SHALL BE DETERMINED IN THE FIELD BASED ON A MINIMUM OVERLAY THICKNESS OF 4" PLACED ABOVE THE DECK SURFACE AFTER SURFACE PREPARATION. EXPECTED AVERAGE OVERLAY THICKNESS IS 5⅜". IF EXPECTED AVERAGE OVERLAY THICKNESS IS EXCEEDED BY ½", CONTACT THE STRUCTURES DESIGN SECTION.

BAR STEEL REINFORCEMENT SHALL BE EMBEDDED 2" CLEAR UNLESS SHOWN OR NOTED OTHERWISE.

THE FIRST DIGIT OF A THREE DIGIT AND THE FIRST TWO DIGITS OF A FOUR DIGIT BAR MARK SIGNIFIES THE BAR SIZE. BEVEL ALL EXPOSED EDGES OF CONCRETE ¾" UNLESS OTHERWISE NOTED.

THE CONTRACTOR SHALL SUPPLY A NEW NAME PLATE, IN ACCORDANCE WITH SECTION 502.3.11 OF THE STANDARD SPECIFICATIONS AND THE STANDARD DETAIL DRAWINGS. NAME PLATE TO SHOW ORIGINAL CONSTRUCTION YEAR OF 1965.

ALL CONCRETE REMOVAL NOT COVERED WITH A CONCRETE OVERLAY SHALL BE DEFINED BY A 1" DEEP SAW CUT.

UTILIZE EXISTING BAR STEEL REINFORCEMENT WHERE SHOWN AND EXTEND 24 BAR DIAMETERS INTO NEW WORK, UNLESS SPECIFIED OTHERWISE.

PIGMENTED SURFACE SEALER TO BE APPLIED TO THE INSIDE FACE AND THE TOP OF PARAPETS, INCLUDING PARAPETS ON ABUTMENT WINGS.

TOP OF EXISTING DECK ELEVATIONS SHALL BE DETERMINED FROM A FIELD SURVEY AT LOCATIONS DEEMED NECESSARY FOR ESTABLISHING OVERLAY THICKNESS FOR ACCURATE RATINGS AND POINT OF MINIMUM THICKNESS.

EXISTING FLOOR DRAINS TO REMAIN IN PLACE. REMOVE TOP OF DECK IN DRAIN AREA AS DIRECTED BY THE FIELD ENGINEER TO ALLOW PLACING AND SLOPING THE TOP 1½" OF CONCRETE OVERLAY AROUND THE RIM OF THE DRAIN.

THE FRAMES AROUND THE EXISTING FLOOR DRAINS SHALL BE REMOVED AND REPLACED WITH BID ITEM "ADJUSTING FLOOR DRAINS".

TOTAL ESTIMATED QUANTITIES

ALL ITEMS ARE CATEGORY 0030

ITEM NO.	BID - ITEM	UNIT	WEST ABUT.	PIER	EAST ABUT.	SUPER	TOTAL
203.0600.S.01	REMOVING OLD STRUCTURE OVER WATERWAY WITH MINIMAL DEBRIS STA. 250+78.00 WB	LS	-	-	-	-	1
203.0210.S.01	ABATEMENT OF ASBESTOS CONTAINING MATERIAL B-67-87	LS	-	-	-	-	1
206.1000	EXCAVATION FOR STRUCTURES BRIDGES B-67-87	LS	-	-	-	-	1
312.0115	SELECT CRUSHED MATERIAL	CY	4	-	4	-	8
502.0100	CONCRETE MASONRY BRIDGES	CY	2	-	2	11	15
502.3200	PROTECTIVE SURFACE TREATMENT	SY	-	-	-	296	296
502.3210	PIGMENTED SURFACE SEALER	SY	10	-	10	65	85
502.4204	ADHESIVE ANCHORS NO. 4 BAR	EACH	56	-	56	872	984
505.0600	BAR STEEL REINFORCEMENT HS COATED STRUCTURES	LB	220	-	220	5,710	6,150
509.0301	PREPARATION DECKS TYPE 1	SY	-	-	-	80	80
509.0302	PREPARATION DECKS TYPE 2	SY	-	-	-	60	60
509.1200	CURB REPAIR	LF	-	-	3	45	48
509.1500	CONCRETE SURFACE REPAIR	SF	10	8	11	129	158
509.2000	FULL-DEPTH DECK REPAIR	SY	-	-	-	12	12
509.2500	CONCRETE MASONRY OVERLAY DECKS	CY	-	-	-	58	58
509.9005.S.01	REMOVING CONCRETE MASONRY DECK OVERLAY B-67-87	SY	-	-	-	296	296
509.9050.S	CLEANING PARAPETS	LF	20	-	20	136	176
512.0500	PILING STEEL SHEET PERMANENT DELIVERED	SF	640	-	640	-	1280
512.0600	PILING STEEL SHEET PERMANENT DRIVEN	SF	640	-	640	-	1280
514.0900	ADJUSTING FLOOR DRAINS	EACH	-	-	-	2	2
606.0300	RIPRAP HEAVY	CY	20	-	20	-	40
614.0150	ANCHOR ASSEMBLIES FOR STEEL PLATE BEAM GUARD	EACH	1	-	2	-	3
645.0120	GEOTEXTILE TYPE HR	SY	38	-	38	-	76
SPV.0060.06	EMBEDDED GALVANIC ANODES	EACH	6	9	12	-	27
SPV.0060.07	FLOOR DRAIN RETROFIT	EACH	-	-	-	2	2

NON-BID - ITEM

	FILLER	SIZE	-	-	-	-	½"

BENCH MARKS - NAVD88(91)

NO.	STATION	DESCRIPTION	ELEVATION
11	250+46	BRASS CAP AT SW. CORNER OF B-67-88 EB STH 190 +/- 500' EAST BARKER ROAD	829.30

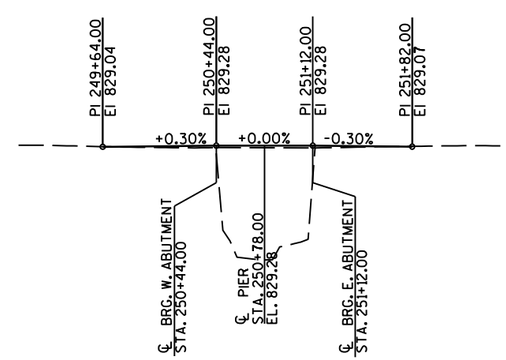

PROFILE GRADE LINE, STH 190 WB

NO.	DATE	REVISION	BY

STATE OF WISCONSIN
DEPARTMENT OF TRANSPORTATION

STRUCTURE B-67-87

DRAWN BY WAR | PLANS CK'D. KGW

CROSS SECTION & QUANTITIES

SHEET 2 OF 8

FILE =
SCALE =

8

8

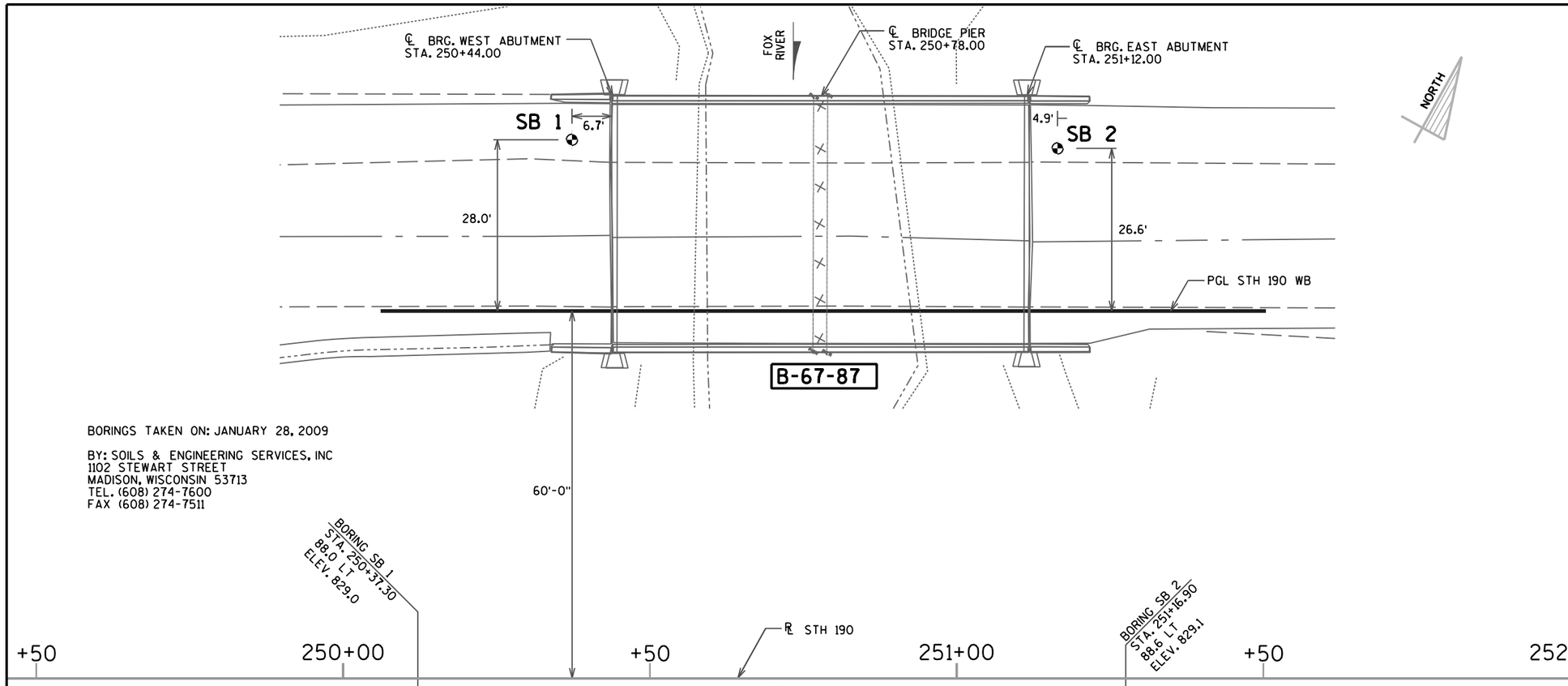

STATE PROJECT NUMBER

2025-14-71

ABBREVIATIONS

F — FINE M — MEDIUM C — COARSE
WS — WEATHERED SO — SOUND

MATERIAL SYMBOLS

TOPSOIL, SILT, SANDSTONE, SAND, PEAT, LIMESTONE, GRAVEL, CLAY, IGNEOUS ROCK

LEGEND OF PROBING

PROBING NO.
STA.
ELEVATION
7 AVERAGE BLOWS PER FOOT
REFUSAL 95/6

95/6=95 BLOWS FOR 6" PENETRATION
PROBING TAKEN WITH A 350# WT. FALLING 18" ON A 2" O.D. POINT.

LEGEND OF BORING

BORING NO.
ELEV.
STA.
UNCONFINED STRENGTH → 7.7
7
SANDY GRAVEL
BLOWS PER FT. USING 140# WT. FALLING 30"
F. BOULDERS OR COBBLES
WASH SAMPLE
SAND
SHELBY TUBE — S.T.
GROUND WATER ELEVATION
SILTY CLAY
NO GROUND WATER OBSERVED ABOVE THIS ELEVATION
SO
LIMESTONE

UNLESS OTHERWISE SPECIFIED, THE BLOWS PER FOOT AT THE LOCATIONS INDICATED ARE BASED ON DRIVING A 2" O.D. X 1.4" I.D. SPLIT SPOON SAMPLER WITH A 140# HAMMER HAVING A FREE FALL OF 30". THE BLOW COUNT IS TAKEN IN UNDISTURBED SOIL IMMEDIATELY BELOW A CASED OR OPEN HOLE ELIMINATING SIDE FRICTION ON THE DRIVE PIPE.

SUBSURFACE EXPLORATION FOR FOUNDATION DESIGN AND BIDDERS INFORMATION

TO OBTAIN RELATIVE DATA CONCERNING THE CHARACTER OF MATERIAL IN AND UPON WHICH THE FOUNDATION MIGHT BE BUILT, BORINGS AND/OR SOUNDINGS WERE MADE AT POINTS APPROXIMATELY AS INDICATED ON THIS DRAWING. THE DATA PRESENTED HEREIN REPRESENTS THE FINDINGS OF THE SUBSURFACE EXPLORATIONS MADE. HOWEVER, BECAUSE THE DEPTHS INVESTIGATED ARE LIMITED AND THE AREA OF THE BORINGS AND/OR SOUNDINGS IS VERY SMALL IN RELATION TO THE ENTIRE AREA, THE WISCONSIN DEPARTMENT OF TRANSPORTATION DOES NOT WARRANT CONDITIONS BELOW THE DEPTHS INVESTIGATED OR THAT THE CLASSIFICATION OF MATERIAL ENCOUNTERED IN THESE INVESTIGATIONS IS NECESSARILY TYPICAL OF THE ENTIRE SITE.

NO.	DATE	REVISION	BY

STATE OF WISCONSIN
DEPARTMENT OF TRANSPORTATION
STRUCTURES DESIGN SECTION

STRUCTURE B-67-87

DRAWN BY SLH PLANS CK'D. KGW

SUBSURFACE EXPLORATION

SHEET 3 OF 8
429

8

FILE =
SCALE =

STATE PROJECT NUMBER

2025-14-71

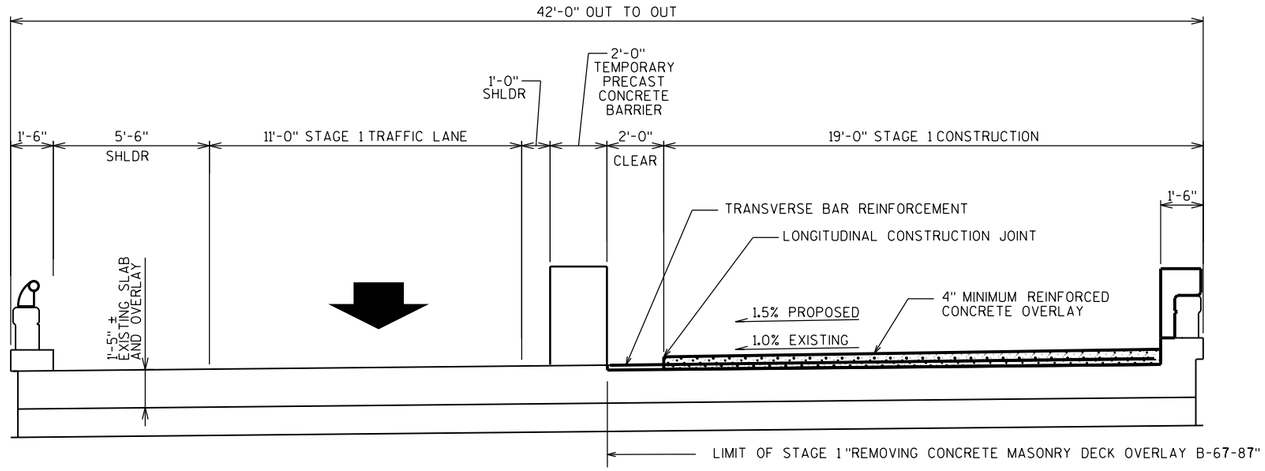

STAGE 1 CONSTRUCTION

LOOKING EAST

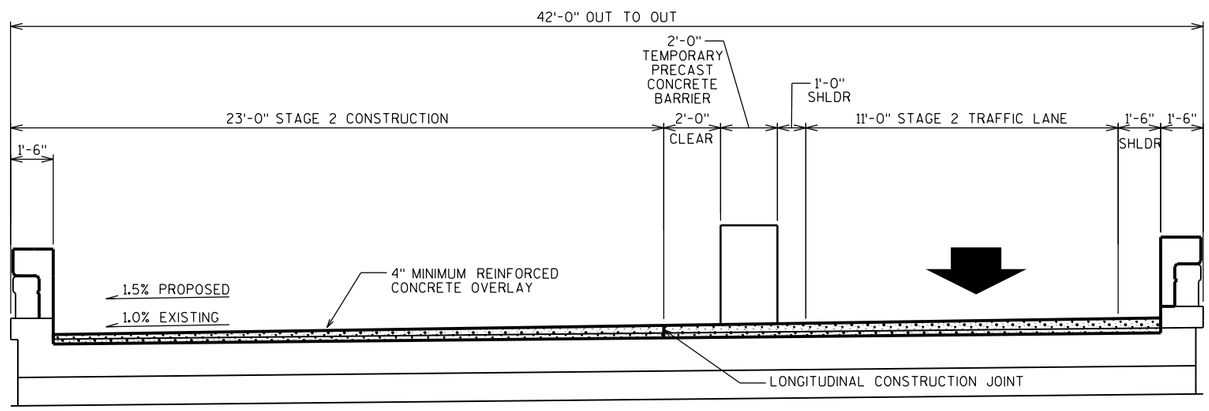

STAGE 2 CONSTRUCTION

LOOKING EAST

8

8

NO.	DATE	REVISION	BY

STATE OF WISCONSIN
DEPARTMENT OF TRANSPORTATION

STRUCTURE B-67-87

DRAWN BY WAR | PLANS CK'D. KGW

CONSTRUCTION STAGING

SHEET 4 OF 8

430

FILE=
SCALE =

X:\ML\2016\20160073\CAD\Transportation\dgn\00\B-67-87_S04.dgn 1/3/2018 2:18:08 PM

STATE PROJECT NUMBER

2025-14-71

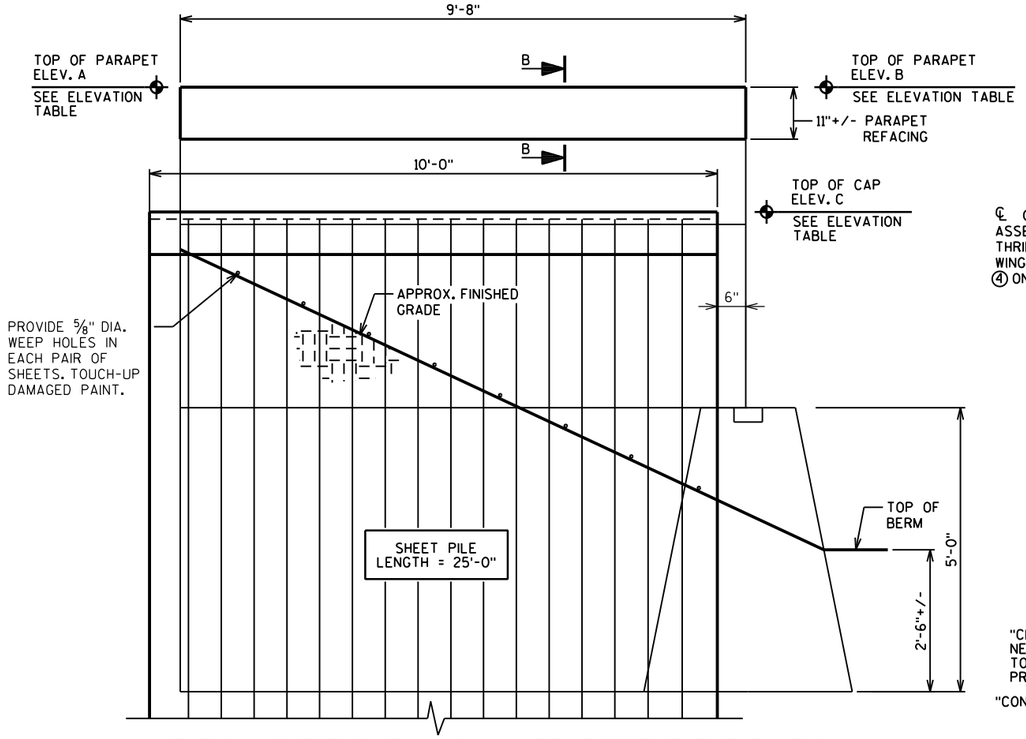

TYPICAL SHEET PILE WINGWALL REINFORCEMENT ELEVATION

WINGS 1 AND 3 SHOWN, WINGS 2 AND 4 SIM. OPP. HAND

ELEVATION TABLE

	TOP OF PARAPET EL. A	TOP OF PARAPET EL. B	SHEET PILE CAP EL. C
WINGWALL 1	832.00	832.03	829.36
WINGWALL 2	831.42	831.45	828.78
WINGWALL 3	831.42	831.45	828.78
WINGWALL 4	832.00	832.03	829.36

ALL ELEVATIONS ARE IN FEET

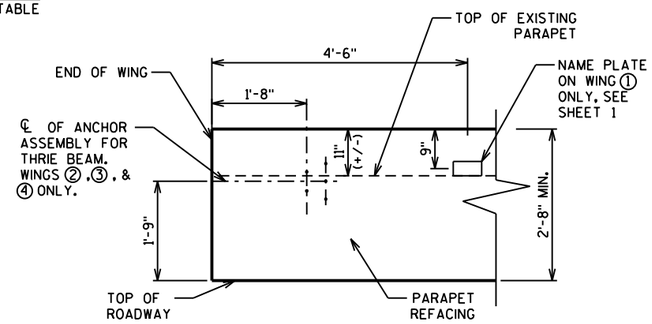

INSIDE FACE OF PARAPET ELEVATION

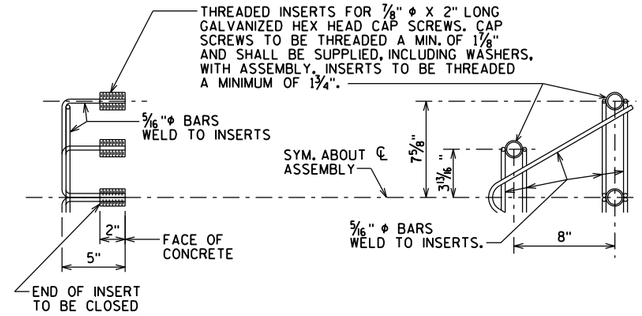

DETAIL OF ANCHOR ASSEMBLY

NOTE: HEX HEAD CAP SCREWS & WASHERS TO BE GALVANIZED IN ACCORDANCE WITH AASHTO M232 CLASS C.

ASSEMBLY SHALL BE BID ITEM "ANCHOR ASSEMBLIES FOR STEEL PLATE BEAM GUARD", EACH.

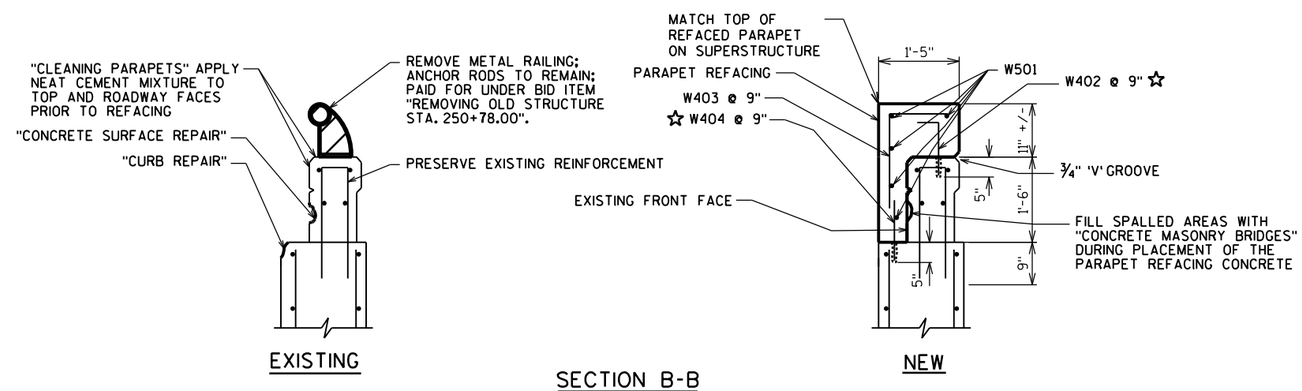

SECTION B-B
REFACING OF PARAPET AT WINGWALLS ■

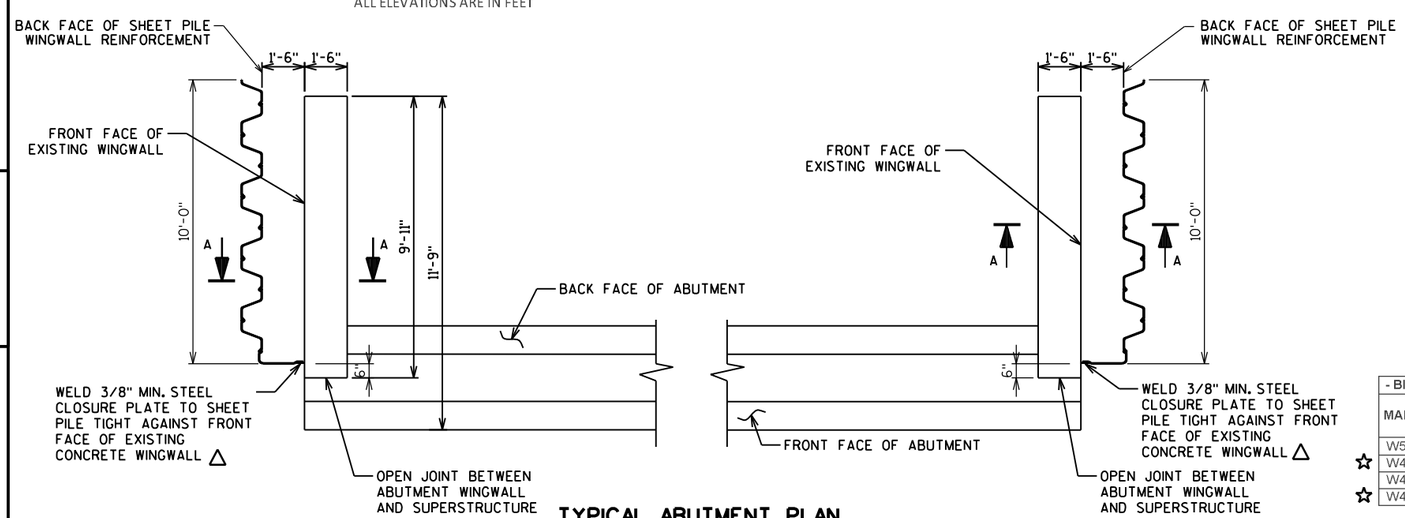

TYPICAL ABUTMENT PLAN

SUPERSTRUCTURE NOT SHOWN FOR CLARITY

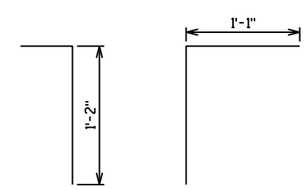

W402 W403

NOTES

FOR SECTION A-A SEE SHEET 6

LEGEND

■ CONCRETE FOR REFACING TO BE PAID FOR UNDER "CONCRETE MASONRY BRIDGES", REINFORCEMENT FOR REFACING TO BE PAID FOR UNDER BID ITEM "BAR STEEL REINFORCEMENT HS COATED STRUCTURES".

☆ "ADHESIVE ANCHORS NO. 4 BAR" EMBED 5" IN CONCRETE.

△ INCIDENTAL TO "PILING STEEL SHEET PERMANENT DRIVEN"

- BILL OF BARS

	MARK	COATED	NO. REQ'D	LENGTH	BAR SERIES	BENT	LOCATION
	W501	X	20	9'-4"			REHAB PARAPET LONGITUDNAL
☆	W402	X	60	1'-9"		X	TOP OF PARAPET DOWEL
	W403	X	60	3'-1"		X	PARAPET HOOKED
☆	W404	X	60	1'-3"			TOP OF CURB

THE FIRST DIGIT OR FIRST TWO DIGITS OF A BAR MARK INDICATES THE BAR SIZE.
ALL DIMENSIONS IN THE BAR BENDS ARE OUT TO OUT.

NO.	DATE	REVISION	BY

STATE OF WISCONSIN
DEPARTMENT OF TRANSPORTATION

STRUCTURE B-67-87

DRAWN BY WAR | PLANS CK'D. KGW

WINGWALL DETAILS

SHEET 5 OF 8
431

8

8

FILE =
SCALE =

STATE PROJECT NUMBER

2025-14-71

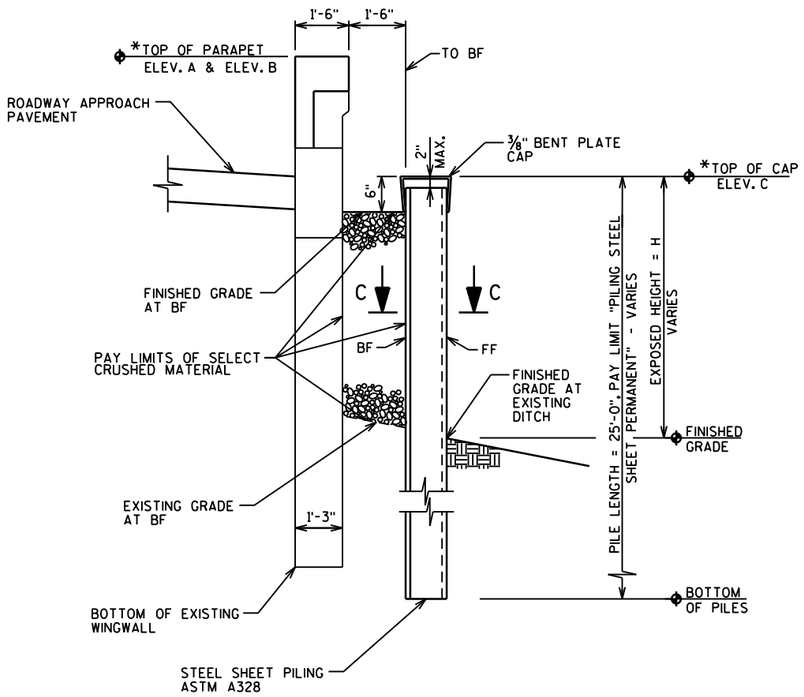

SECTION A-A

* WORK WITH ELEVATION TABLE (SHEET 5)

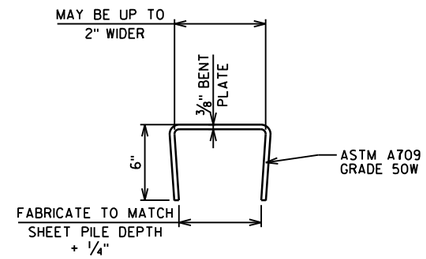

CAP DETAIL

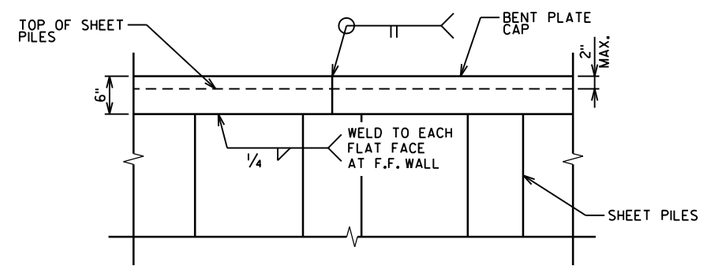

CAP ELEVATION

(LOOKING AT FRONT FACE)

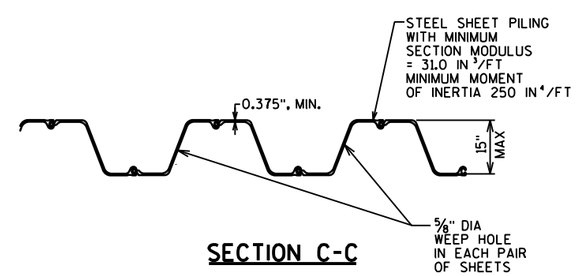

SECTION C-C

LEGEND

FF = FRONT FACE

BF = BACK FACE

SHEET PILE WALL NOTES

BACKFILL ALL SPACES EXCAVATED AT THE BACK FACE OF THE SHEET PILE WALL AND NOT OCCUPIED BY THE NEW STRUCTURE WITH STRUCTURE BACKFILL.

COLD ROLLED STEEL SHEETING WITH EQUIVALENT SECTION MODULUS, DEPTH AND THICKNESS MAY BE USED.

DO NOT FURNISH PREVIOUSLY USED MATERIAL.

8

8

NO.	DATE	REVISION	BY

STATE OF WISCONSIN
DEPARTMENT OF TRANSPORTATION

STRUCTURE B-67-87

DRAWN BY WAR | PLANS CK'D. KGW

SHEET PILE WINGWALL REINFORCEMENT DETAILS

FILE =
SCALE =

STATE PROJECT NUMBER

2025-14-71

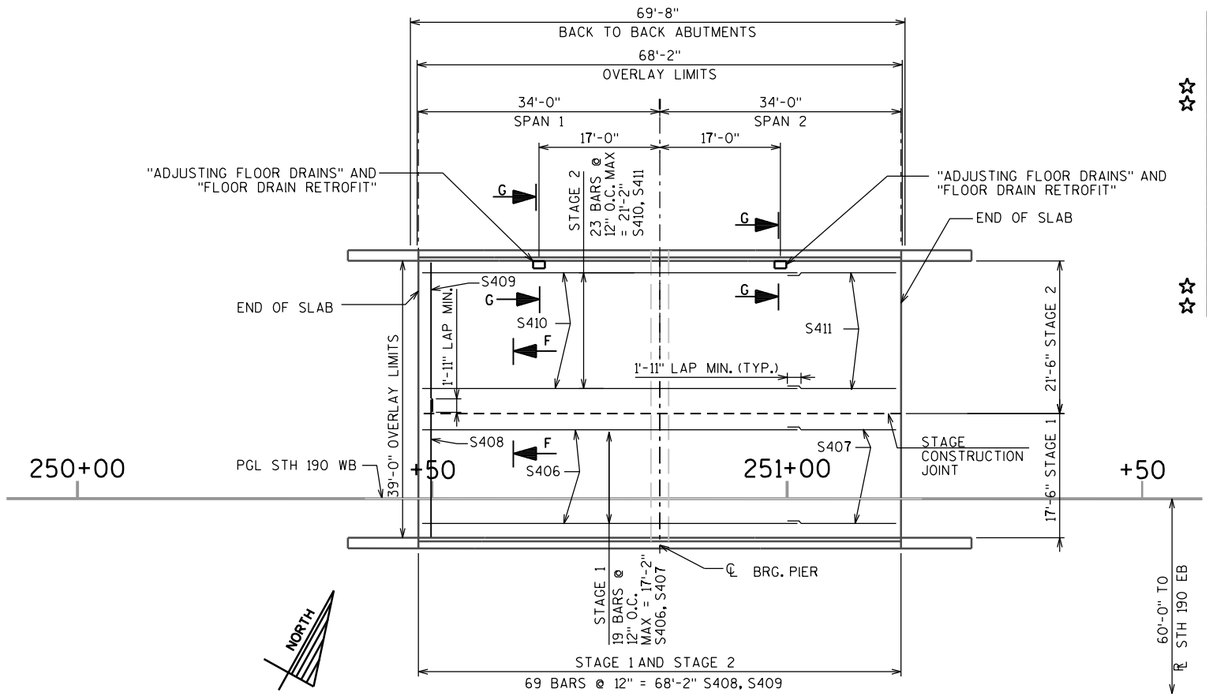

PLAN

- BILL OF BARS						
MARK	COATED	NO. REQ'D	LENGTH	BAR SERIES	BENT	LOCATION
☆ S401	X	184	1'-9"		X	TOP OF PARAPET DOWEL
☆ S402	X	184	1'-3"			CURB DOWEL
S403	X	184	3'-1"		X	PARAPET VERTICAL
S504	X	10	60'-0"			PARAPET LONGITUDINAL
S505	X	10	10'-0"			PARAPET LONGITUDINAL
S406	X	19	60'-0"			OVERLAY LONGITUDINAL STAGE 1
S407	X	19	11'-3"			OVERLAY LONGITUDINAL STAGE 1
S408	X	69	19'-3"			OVERLAY TRANSVERSE STAGE 1
S409	X	69	21'-4"			OVERLAY TRANSVERSE STAGE 2
S410	X	23	60'-0"			OVERLAY LONGITUDINAL STAGE 2
S411	X	23	11'-3"			OVERLAY LONGITUDINAL STAGE 2
☆ S412	X	224	1'-1"		X	DECK DOWELS STAGE 1
☆ S413	X	280	1'-1"		X	DECK DOWELS STAGE 2

ALL DIMENSIONS IN THE BAR BENDS ARE OUT TO OUT.

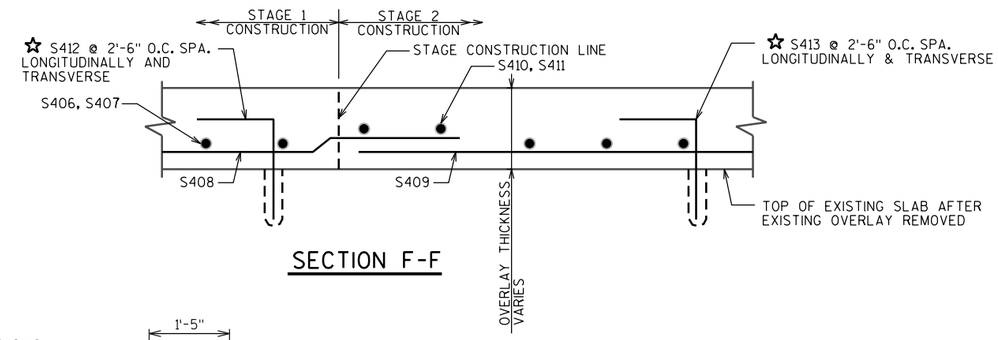

SECTION F-F

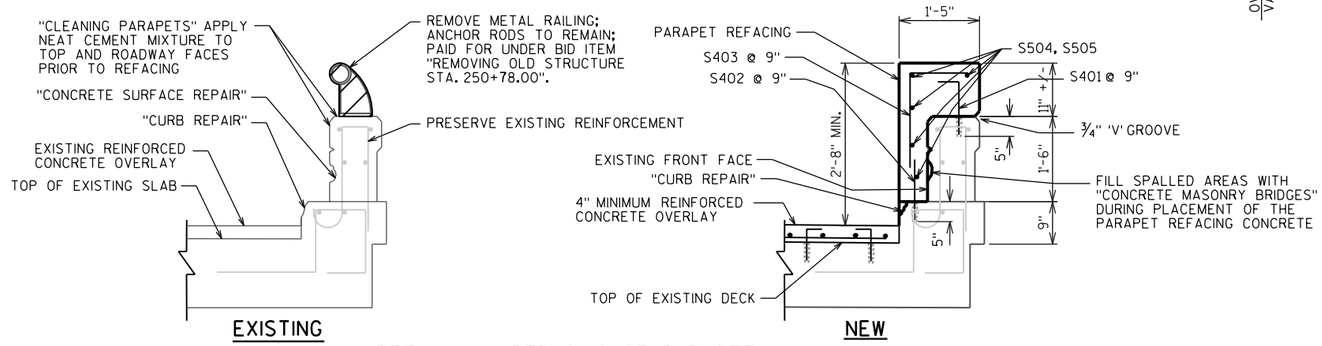

EXISTING

NEW

DETAIL A - REFACING OF PARAPET ■

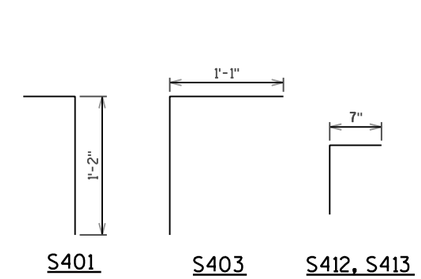

S401 S403 S412, S413

LEGEND

▨ LIMITS OF REMOVAL

■ CONCRETE FOR REFACING TO BE PAID FOR UNDER "CONCRETE MASONRY BRIDGES", REINFORCEMENT FOR REFACING TO BE PAID FOR UNDER BID ITEM "BAR STEEL REINFORCEMENT HS COATED STRUCTURES".

☆ "ADHESIVE ANCHORS NO. 4 BAR" EMBED 5" IN CONCRETE.

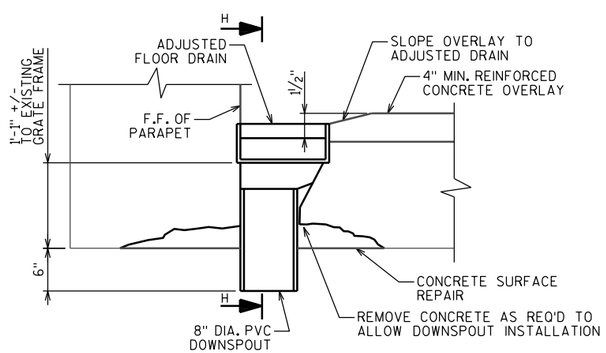

SECTION G-G DRAIN RETROFIT

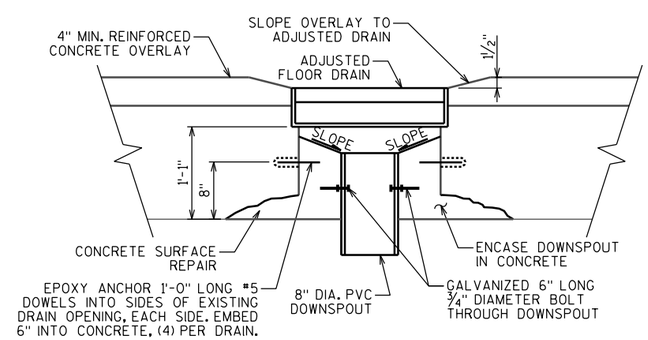

SECTION H-H

NO.	DATE	REVISION	BY

STATE OF WISCONSIN
DEPARTMENT OF TRANSPORTATION

STRUCTURE B-67-87

DRAWN BY WAR | PLANS CK'D. KGW

OVERLAY AND BILL OF BARS

SHEET 7 OF 8
433

8

8

FILE=
SCALE =

X:\ML\2016\20160073\CAD\Transportation\dgn\00\B-67-87_S07.dgn 1/3/2018 2:20:10 PM

STATE PROJECT NUMBER

2025-14-71

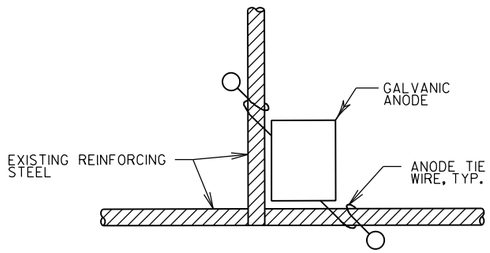

TYPICAL ANODE INSTALLATION AT BAR STEEL INTERSECTION

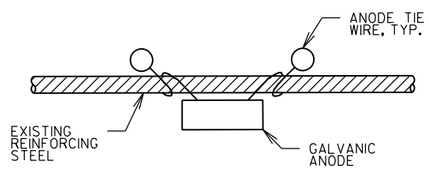

TYPICAL ANODE INSTALLATION FOR BAR STEEL

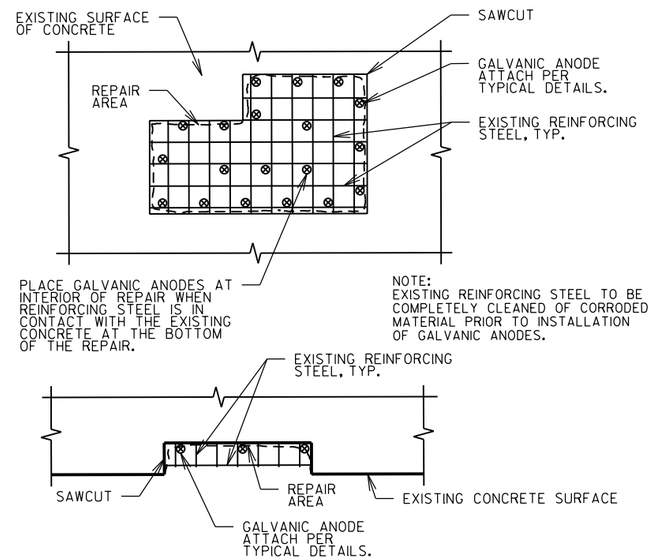

PART. PLAN TYPICAL REPAIR DETAIL

NOTES

AREAS FOR CONCRETE SURFACE REPAIR ARE APPROXIMATE. PERFORM REPAIRS AS DIRECTED BY THE FIELD ENGINEER.

THE FINISHED CONCRETE SURFACE SHALL MATCH THE SHAPE AND FINISH OF THE ORIGINAL CONCRETE SURFACE, UNLESS OTHERWISE DIRECTED BY THE ENGINEER TO PROVIDE ADDITIONAL CONCRETE.

SEE SPECIAL PROVISION "EMBEDDED GALVANIC ANODES" FOR DESCRIPTION, MATERIALS, CONSTRUCTION, MEASUREMENT, AND PAYMENT INFORMATION.

ANODES NEAREST TO THE EDGE OF REPAIR TO BE WITHIN 6" OF EDGE.

AFTER PLACEMENT, GALVANIC ANODES SHOULD MAINTAIN A MINIMUM TOP COVER OF 1½" AND A MINIMUM BOTTOM COVER OF ¾".

GALVANIC ANODES ARE TO BE INSTALLED IN THE ABUTMENTS AND PIERS ONLY.

ENSURE ALL EXPOSED REINFORCING STEEL IS SECURELY FASTENED TOGETHER WITH TIE WIRE TO PROVIDE GOOD CONTINUITY. SEE SPECIAL PROVISIONS

GALVANIC ANODES SHALL BE PLACED PER SPECIAL PROVISIONS "EMBEDDED GALVANIC ANODES". GALVANIC ANODES ESTIMATED QUANTITIES ON PLANS ARE BASED ON A MAXIMUM SPACING OF 24 INCHES IN EACH DIRECTION OF THE ESTIMATED "CONCRETE SURFACE REPAIR" AREA.

EXISTING REINFORCING BARS MAY BE CORRODED AND/OR DAMAGED DURING CONCRETE REMOVAL. PRESERVE AND INCORPORATE EXISTING REINFORCEMENT.

8

8

NO.	DATE	REVISION	BY

STATE OF WISCONSIN
DEPARTMENT OF TRANSPORTATION

STRUCTURE B-67-87

DRAWN BY WAR | PLANS CK'D. KGW

ANODE DETAILS

SHEET 8 OF 8
434

FILE =
SCALE =

STATE PROJECT NUMBER
2025-14-71

* PROVIDE FOR THRIE BEAM GUARD RAIL ATTACHMENT

(X) INDICATES WING NUMBER

▲ THE WISCONSIN DEPARTMENT OF TRANSPORTATION WILL FURNISH THE CONTRACTOR WITH A BENCHMARK CAP TO BE INSTALLED AS SHOWN ON THE PLANS.

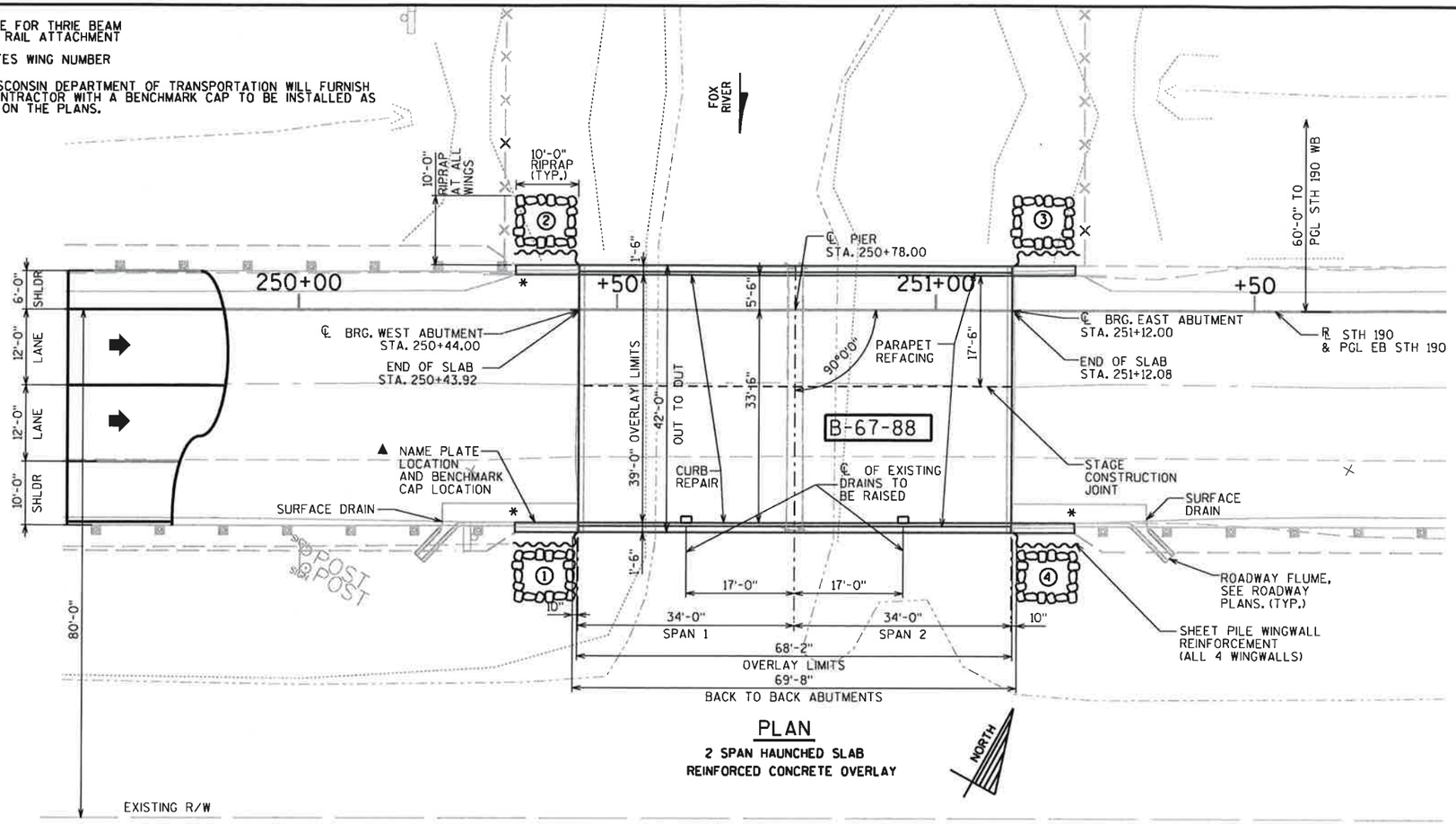

PLAN

2 SPAN HAUNCHED SLAB REINFORCED CONCRETE OVERLAY

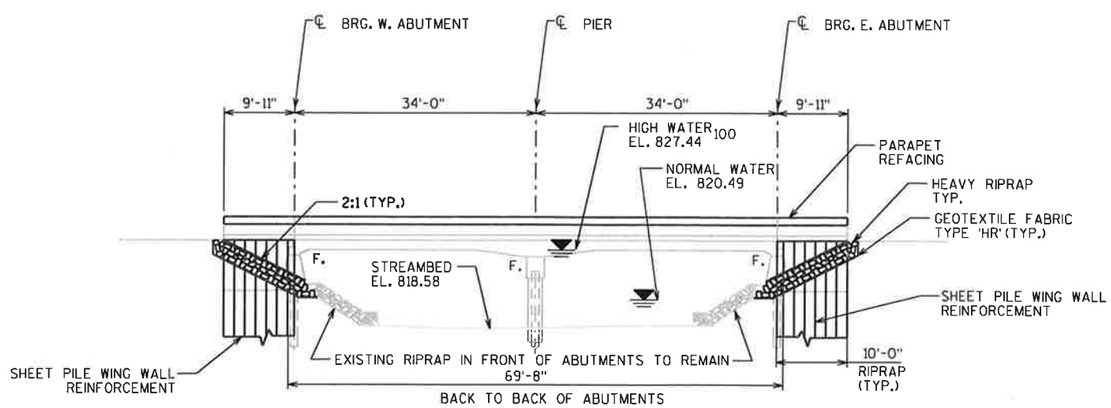

ELEVATION

LOOKING NORTH

DESIGN DATA

LIVE LOAD:
- DESIGN LOADING HS-20
- INVENTORY RATING HS-19
- OPERATING RATING HS-33
- WIS. STD. PERMIT VEHICLE (WIS-SPV)= 250 KIPS

MATERIAL PROPERTIES:
- CONCRETE MASONRY SUPERSTRUCTURE ..... f'c = 4,000 psi
- ALL OTHER ..... f'c = 3,500 psi
- HIGH STRENGTH BAR STEEL
- REINFORCEMENT GRADE 60 ..... fy = 60,000 psi
- STEEL SHEET PILING ASTM A328..... fy = 39,000 psi
- MIN. SECTION MODULUS..... Sx = 31.0 in^3/ft

SCOPE OF WORK B-67-88

1. PLACE REINFORCED CONCRETE OVERLAY ON SLAB
2. DRIVE WINGWALL SHEET PILE REINFORCEMENT
3. REFACE ALL PARAPETS
4. CURB REPAIR
5. CONCRETE SURFACE REPAIR
6. RAISE FLOOR DRAINS AND REUSE EXISTING GRATES

TRAFFIC DATA-STH 190

ADT = 36,500 (2019)
44,400 (2039)

RDS = 60 M.P.H.

LIST OF DRAWINGS

WISCONSIN PROFESSIONAL ENGINEER KEVIN G. WOOD E-32070 MILWAUKEE, WI

1-3-2018

BUREAU OF STRUCTURES CONTACT:
WILLIAM DREHER (608) 266-8489

CONSULTANT CONTACT:
KEVIN WOOD (414) 259-1500

NO.	DATE	REVISION	BY

PLANS PREPARED BY: GRAEF
One Honey Creek Corporate Center
125 South 84th Street, Suite 401
Milwaukee, WI 53214-1470
414 / 259 1500
414 / 259 0037 fax
www.graef-usa.com

STATE OF WISCONSIN
DEPARTMENT OF TRANSPORTATION

ACCEPTED William C. Dreher SDR 01/17/18
CHIEF STRUCTURES DESIGN ENGINEER DATE

STRUCTURE B-67-88

EB STH 190 OVER THE FOX RIVER

COUNTY	TOWN
WAUKESHA	BROOKFIELD

DESIGN SPEC. REHABILITATION N/A

DESIGNED BY	DESIGN CK'D.	DRAWN BY	PLANS CK'D.
WAR	KGW	WAR	KGW

GENERAL PLAN

SHEET 1 OF 8

435

8

8

FILE=
SCALE =

STATE PROJECT NUMBER

2025-14-71

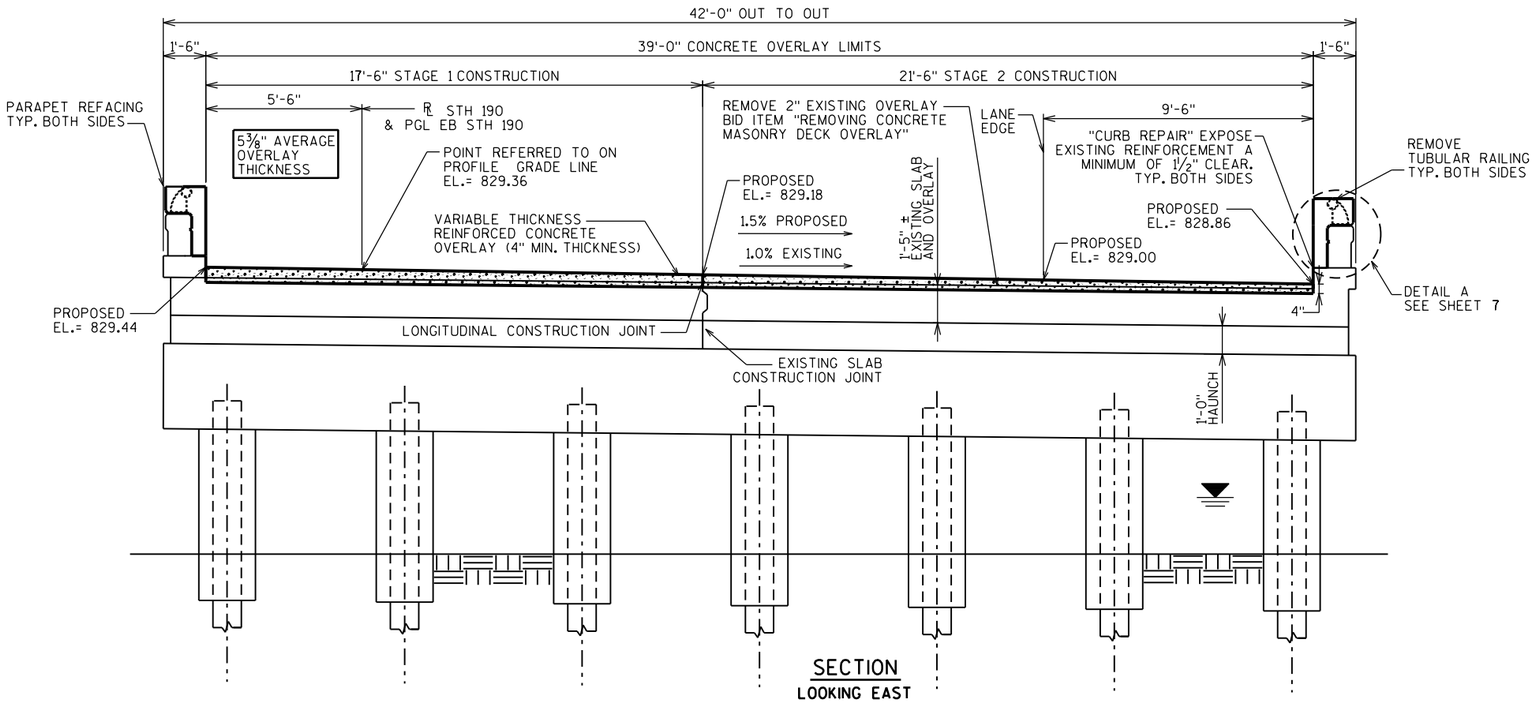

SECTION
LOOKING EAST

GENERAL NOTES

DRAWINGS SHALL NOT BE SCALED.

DIMENSIONS SHOWN ARE BASED ON THE ORIGINAL STRUCTURE PLANS.

PROTECTIVE SURFACE TREATMENT SHALL BE APPLIED TO THE ENTIRE TOP SURFACE OF THE NEW CONCRETE OVERLAY.

PREPARATION DECKS TYPE 1, PREPARATION DECKS TYPE 2, AND FULL -DEPTH DECK REPAIR AREAS ARE BASED ON THE PLANS AND AS DETERMINED BY THE ENGINEER. DECK PREPARATION AND FULL-DEPTH DECK REPAIRS SHALL BE FILLED WITH "CONCRETE MASONRY OVERLAY DECKS".

ANY EXCAVATION REQUIRED TO COMPLETE THE OVERLAY AT THE ABUTMENTS TO BE CONSIDERED INCIDENTIAL TO THE BID ITEM "CONCRETE MASONRY OVERLAY DECKS".

PROFILE GRADE LINE SHALL BE DETERMINED IN THE FIELD BASED ON A MINIMUM OVERLAY THICKNESS OF 4" PLACED ABOVE THE DECK SURFACE AFTER SURFACE PREPARATION. EXPECTED AVERAGE OVERLAY THICKNESS IS 5⅜". IF EXPECTED AVERAGE OVERLAY THICKNESS IS EXCEEDED BY ½", CONTACT THE STRUCTURES DESIGN SECTION.

BAR STEEL REINFORCEMENT SHALL BE EMBEDDED 2" CLEAR UNLESS SHOWN OR NOTED OTHERWISE.

THE FIRST DIGIT OF A THREE DIGIT AND THE FIRST TWO DIGITS OF A FOUR DIGIT BAR MARK SIGNIFIES THE BAR SIZE. BEVEL ALL EXPOSED EDGES OF CONCRETE ¾" UNLESS OTHERWISE NOTED.

THE CONTRACTOR SHALL SUPPLY A NEW NAME PLATE, IN ACCORDANCE WITH SECTION 502.3.11 OF THE STANDARD SPECIFICATIONS AND THE STANDARD DETAIL DRAWINGS. NAME PLATE TO SHOW ORIGINAL CONSTRUCTION YEAR OF 1965.

ALL CONCRETE REMOVAL NOT COVERED WITH A CONCRETE OVERLAY SHALL BE DEFINED BY A 1" DEEP SAW CUT.

UTILIZE EXISTING BAR STEEL REINFORCEMENT WHERE SHOWN AND EXTEND 24 BAR DIAMETERS INTO NEW WORK, UNLESS SPECIFIED OTHERWISE.

PIGMENTED SURFACE SEALER TO BE APPLIED TO THE INSIDE FACE AND THE TOP OF PARAPETS, INCLUDING PARAPETS ON ABUTMENT WINGS.

TOP OF EXISTING DECK ELEVATIONS SHALL BE DETERMINED FROM A FIELD SURVEY AT LOCATIONS DEEMED NECESSARY FOR ESTABLISHING OVERLAY THICKNESS FOR ACCURATE RATINGS AND POINT OF MINIMUM THICKNESS.

EXISTING FLOOR DRAINS TO REMAIN IN PLACE. REMOVE TOP OF DECK IN DRAIN AREA AS DIRECTED BY THE FIELD ENGINEER TO ALLOW PLACING AND SLOPING THE TOP 1½" OF CONCRETE OVERLAY AROUND THE RIM OF THE DRAIN.

THE FRAMES AROUND THE EXISTING FLOOR DRAINS SHALL BE REMOVED AND REPLACED WITH BID ITEM "ADJUSTING FLOOR DRAINS".

TOTAL ESTIMATED QUANTITIES

ALL ITEMS ARE CATEGORY 0040

ITEM NO.	BID - ITEM	UNIT	WEST ABUT.	PIER	EAST ABUT.	SUPER	TOTAL
203.0600.S.02	REMOVING OLD STRUCTURE OVER WATERWAY WITH MINIMAL DEBRIS STA. 250+78.00 EB	LS	-	-	-	-	1
203.0210.S.02	ABATEMENT OF ASBESTOS CONTAINING MATERIAL B-67-88	LS	-	-	-	-	1
206.1000	EXCAVATION FOR STRUCTURES BRIDGES B-67-88	LS	-	-	-	-	1
312.0115	SELECT CRUSHED MATERIAL	CY	4	-	4	-	8
502.0100	CONCRETE MASONRY BRIDGES	CY	2	-	2	11	15
502.3200	PROTECTIVE SURFACE TREATMENT	SY	-	-	-	296	296
502.3210	PIGMENTED SURFACE SEALER	SY	10	-	10	65	85
502.4204	ADHESIVE ANCHORS NO. 4 BAR	EACH	56	-	56	872	984
505.0600	BAR STEEL REINFORCEMENT HS COATED STRUCTURES	LB	220	-	220	5,710	6,150
509.0301	PREPARATION DECKS TYPE 1	SY	-	-	-	34	34
509.0302	PREPARATION DECKS TYPE 2	SY	-	-	-	17	17
509.1200	CURB REPAIR	LF	1	-	-	63	64
509.1500	CONCRETE SURFACE REPAIR	SF	3	8	13	136	160
509.2000	FULL-DEPTH DECK REPAIR	SY	-	-	-	9	9
509.2500	CONCRETE MASONRY OVERLAY DECKS	CY	-	-	-	52	52
509.9005.S.02	REMOVING CONCRETE MASONRY DECK OVERLAY B-67-88	SY	-	-	-	296	296
509.9050.S	CLEANING PARAPETS	LF	20	-	20	136	176
512.0500	PILING STEEL SHEET PERMANENT DELIVERED	SF	640	-	640	-	1280
512.0600	PILING STEEL SHEET PERMANENT DRIVEN	SF	640	-	640	-	1280
514.0900	ADJUSTING FLOOR DRAINS	EACH	-	-	-	2	2
606.0300	RIPRAP HEAVY	CY	20	-	20	-	40
614.0150	ANCHOR ASSEMBLIES FOR STEEL PLATE BEAM GUARD	EACH	2	-	1	-	3
645.0120	GEOTEXTILE TYPE HR	SY	38	-	38	-	76
SPV.0060.06	EMBEDDED GALVANIC ANODES	EACH	6	9	12	-	27

NON-BID - ITEM

	FILLER	SIZE	-	-	-	-	½"

BENCH MARKS - NAVD88(91)

NO.	STATION	DESCRIPTION	ELEVATION
11	250+46	BRASS CAP AT SW. CORNER OF B-67-88 EB STH 190 +/- 500' EAST BARKER ROAD	829.30

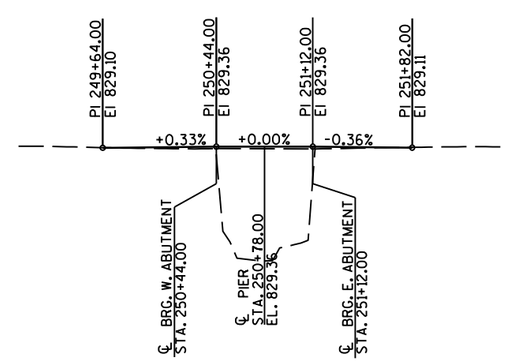

PROFILE GRADE LINE, STH 190 EB

NO.	DATE	REVISION	BY

STATE OF WISCONSIN
DEPARTMENT OF TRANSPORTATION

STRUCTURE B-67-88

DRAWN BY WAR | PLANS CK'D. KGW

CROSS SECTION & QUANTITIES

SHEET 2 OF 8

FILE=
SCALE =

8

8

BORINGS TAKEN ON: JANUARY 29, 2009

BY: SOILS & ENGINEERING SERVICES, INC
1102 STEWART STREET
MADISON, WISCONSIN 53713
TEL. (608) 274-7600
FAX (608) 274-7511

ADDITIONAL RETAINING WALL DESIGN BASED ON SOIL PARAMETERS PROVIDED IN SOILS & ENGINEERING SERVICES, INC. REPORT DATED AUGUST 29, 2011

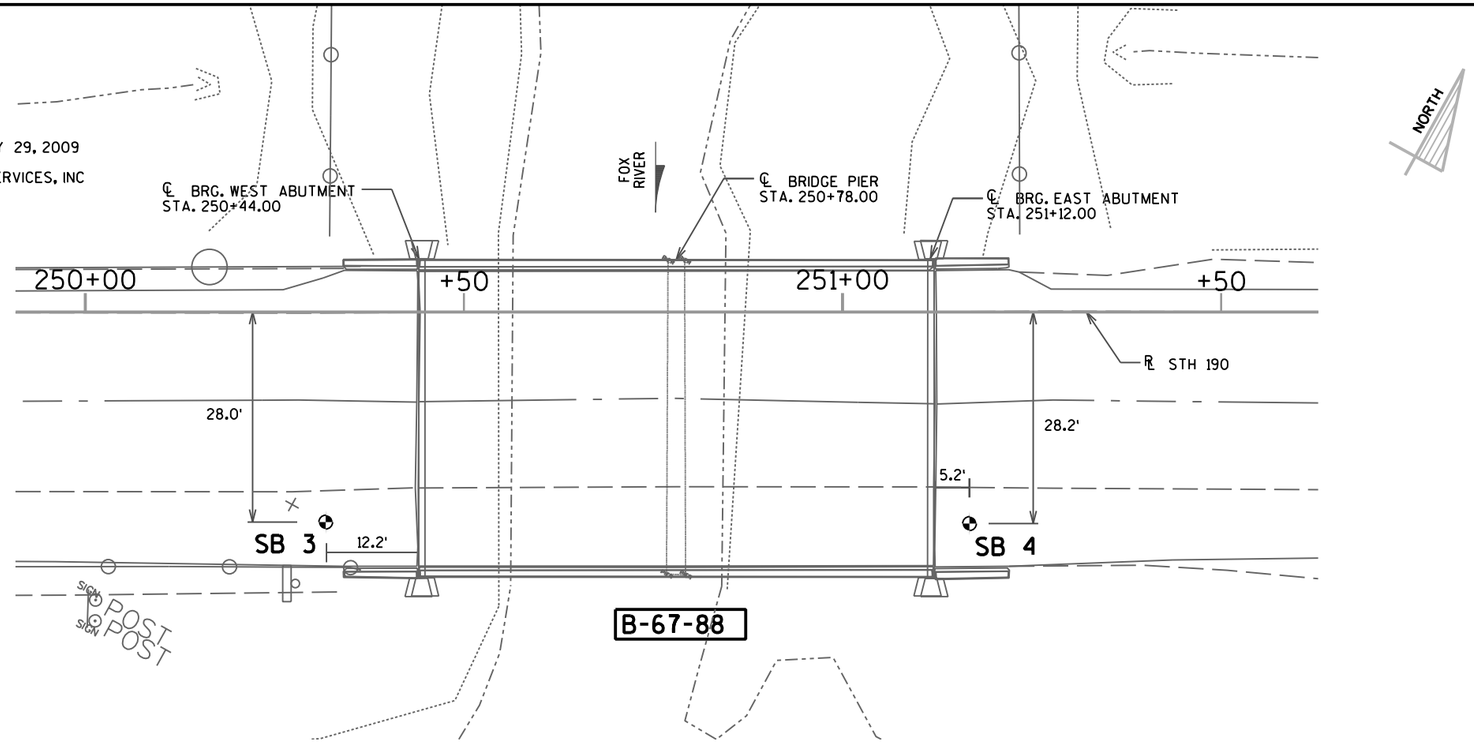

PLAN

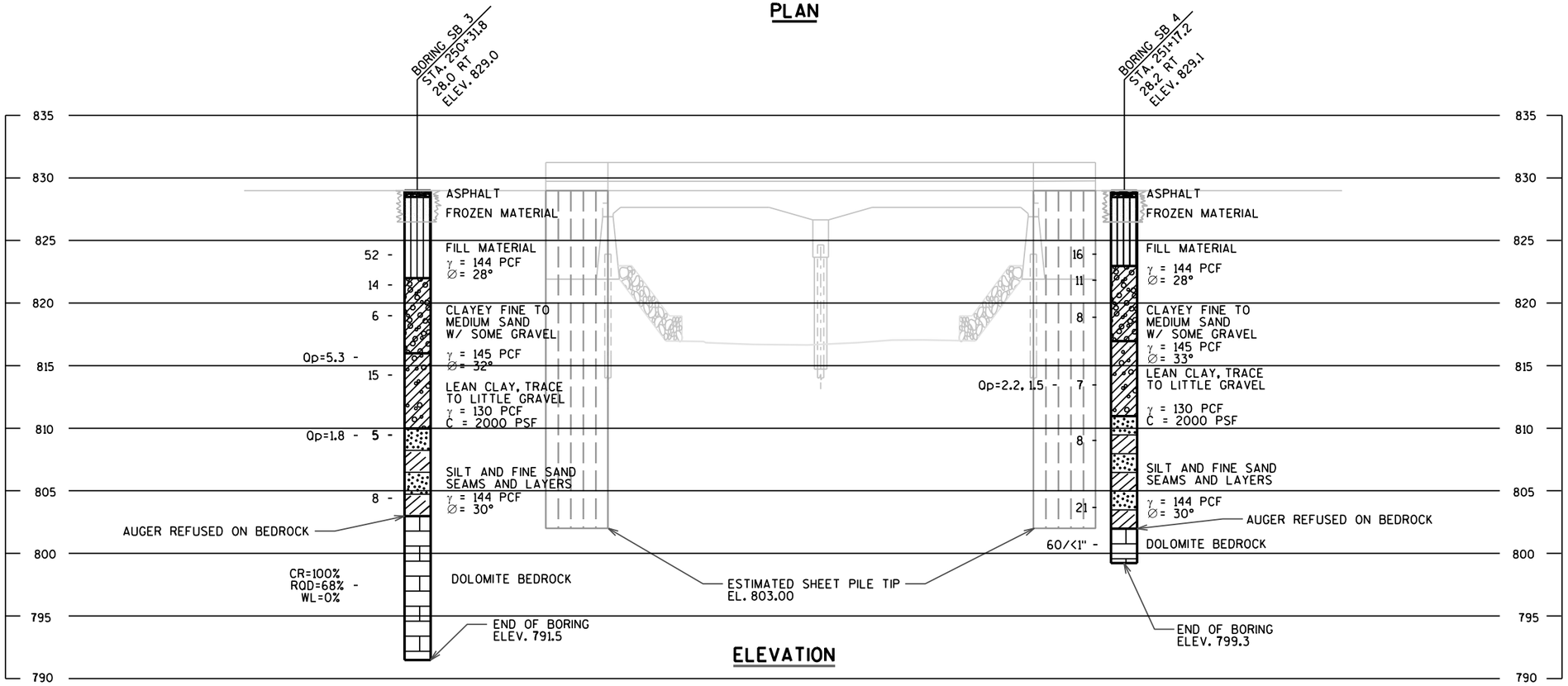

ELEVATION

STATE PROJECT NUMBER

2025-14-71

ABBREVIATIONS

F — FINE M — MEDIUM C — COARSE
WS — WEATHERED SO — SOUND

MATERIAL SYMBOLS

TOPSOIL, SILT, SANDSTONE, SAND, PEAT, LIMESTONE, GRAVEL, CLAY, IGNEOUS ROCK

LEGEND OF PROBING

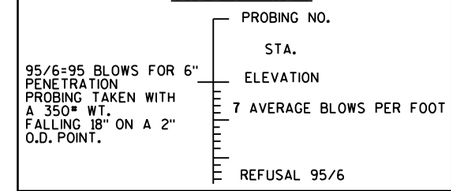

LEGEND OF BORING

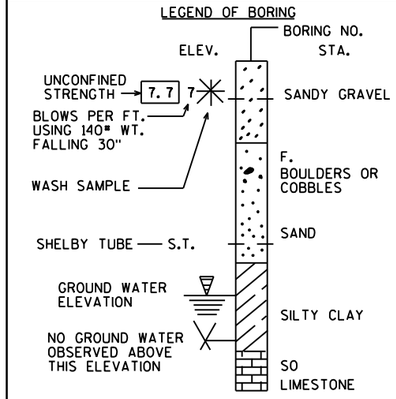

UNLESS OTHERWISE SPECIFIED, THE BLOWS PER FOOT AT THE LOCATIONS INDICATED ARE BASED ON DRIVING A 2" O.D. X 1.4" I.D. SPLIT SPOON SAMPLER WITH A 140# HAMMER HAVING A FREE FALL OF 30". THE BLOW COUNT IS TAKEN IN UNDISTURBED SOIL IMMEDIATELY BELOW A CASED OR OPEN HOLE ELIMINATING SIDE FRICTION ON THE DRIVE PIPE.

SUBSURFACE EXPLORATION FOR FOUNDATION DESIGN AND BIDDERS INFORMATION

TO OBTAIN RELATIVE DATA CONCERNING THE CHARACTER OF MATERIAL IN AND UPON WHICH THE FOUNDATION MIGHT BE BUILT, BORINGS AND/OR SOUNDINGS WERE MADE AT POINTS APPROXIMATELY AS INDICATED ON THIS DRAWING. THE DATA PRESENTED HEREIN REPRESENTS THE FINDINGS OF THE SUBSURFACE EXPLORATIONS MADE. HOWEVER, BECAUSE THE DEPTHS INVESTIGATED ARE LIMITED AND THE AREA OF THE BORINGS AND/OR SOUNDINGS IS VERY SMALL IN RELATION TO THE ENTIRE AREA, THE WISCONSIN DEPARTMENT OF TRANSPORTATION DOES NOT WARRANT CONDITIONS BELOW THE DEPTHS INVESTIGATED OR THAT THE CLASSIFICATION OF MATERIAL ENCOUNTERED IN THESE INVESTIGATIONS IS NECESSARILY TYPICAL OF THE ENTIRE SITE.

NO.	DATE	REVISION	BY

STATE OF WISCONSIN
DEPARTMENT OF TRANSPORTATION
STRUCTURES DESIGN SECTION

STRUCTURE B-67-88

DRAWN BY SLH PLANS CK'D. KGW

SUBSURFACE EXPLORATION

SHEET 3 OF 8
437

8

8

FILE =
SCALE =

X:±ML±2016±20160073±CAD±TRANSPORTATION±DGN±00±B-67-88_S03.DGN 1/3/2018 2:21:44 PM

STATE PROJECT NUMBER

2025-14-71

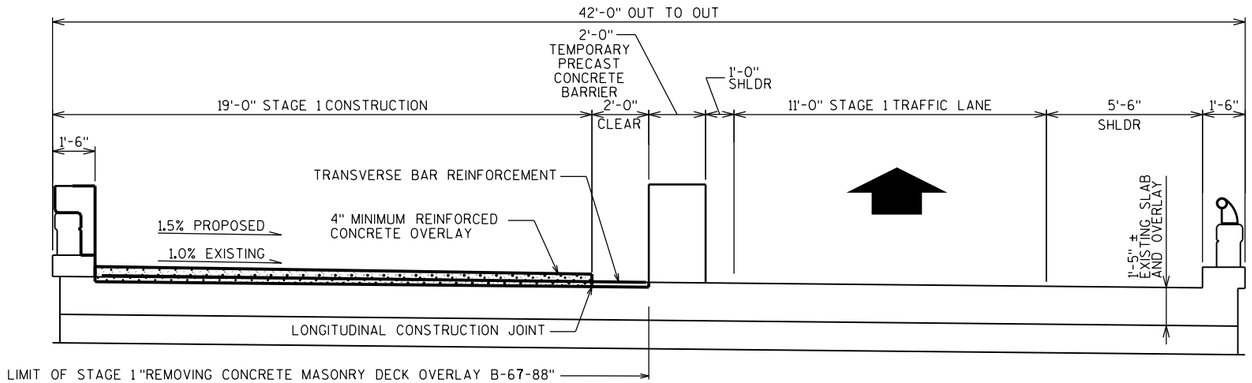

STAGE 1 CONSTRUCTION

LOOKING EAST

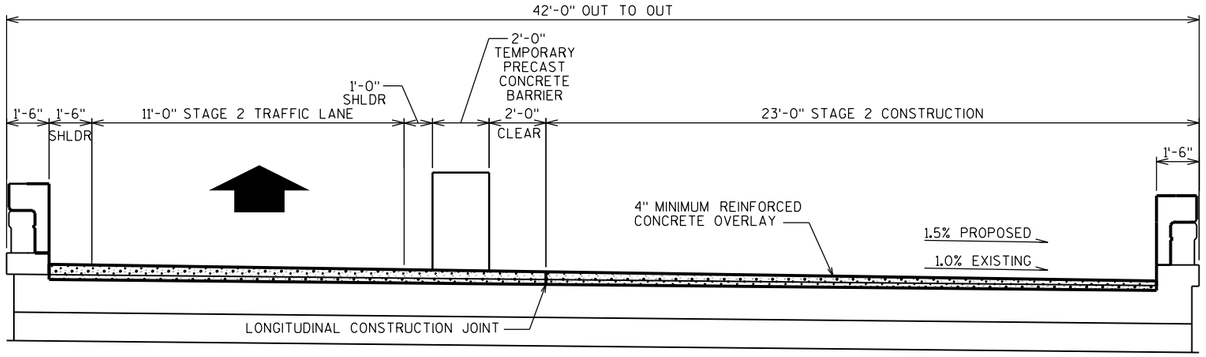

STAGE 2 CONSTRUCTION

LOOKING EAST

8

8

NO.	DATE	REVISION	BY

STATE OF WISCONSIN
DEPARTMENT OF TRANSPORTATION

STRUCTURE B-67-88

DRAWN BY WAR | PLANS CK'D. KGW

CONSTRUCTION STAGING

SHEET 4 OF 8

438

FILE=
SCALE =

X:\ML\2016\20160073\CAD\Transportation\dgn\00\B-67-88_S04.dgn 1/3/2018 2:22:06 PM

STATE PROJECT NUMBER

2025-14-71

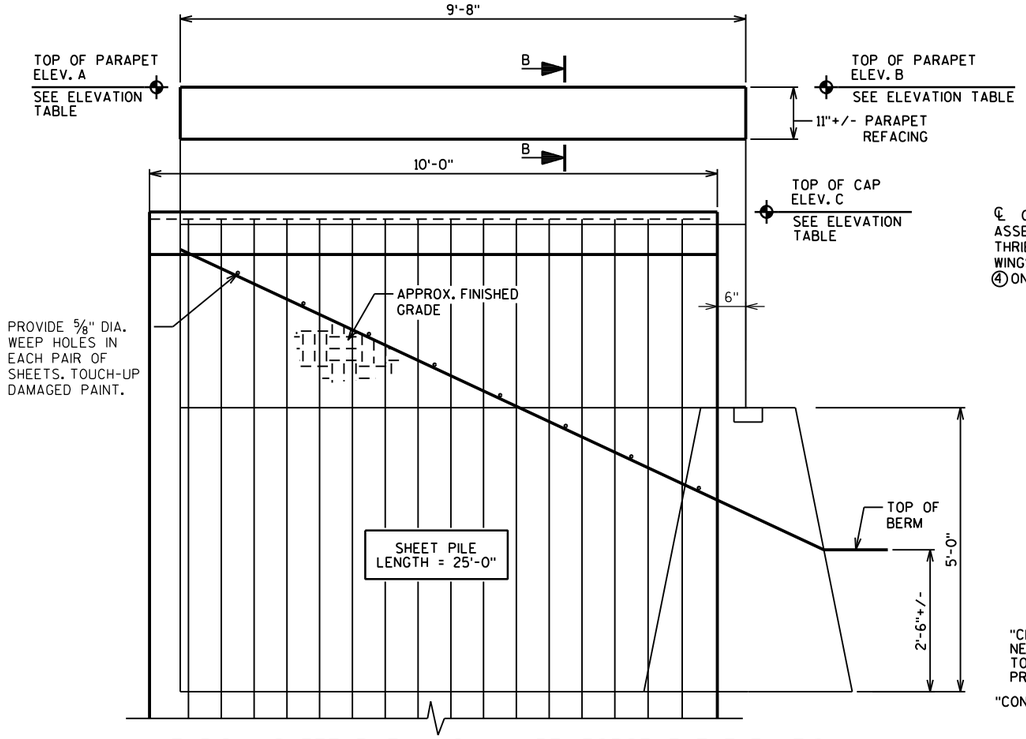

TYPICAL SHEET PILE WINGWALL REINFORCEMENT ELEVATION

WINGS 1 AND 3 SHOWN, WINGS 2 AND 4 SIM. OPP. HAND

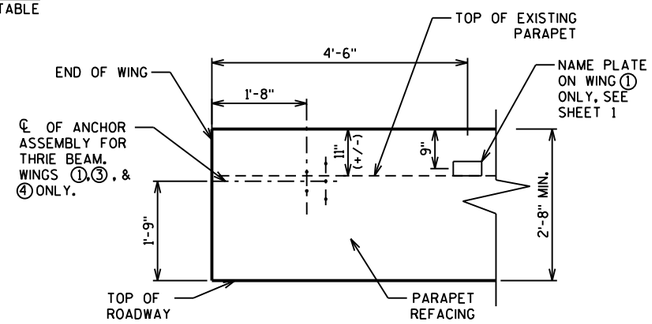

INSIDE FACE OF PARAPET ELEVATION

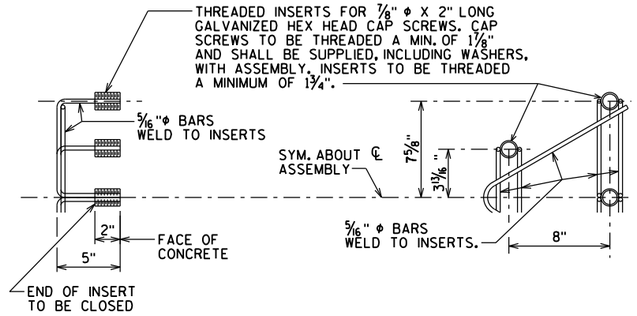

DETAIL OF ANCHOR ASSEMBLY

NOTE: HEX HEAD CAP SCREWS & WASHERS TO BE GALVANIZED IN ACCORDANCE WITH AASHTO M232 CLASS C.

ASSEMBLY SHALL BE BID ITEM "ANCHOR ASSEMBLIES FOR STEEL PLATE BEAM GUARD", EACH.

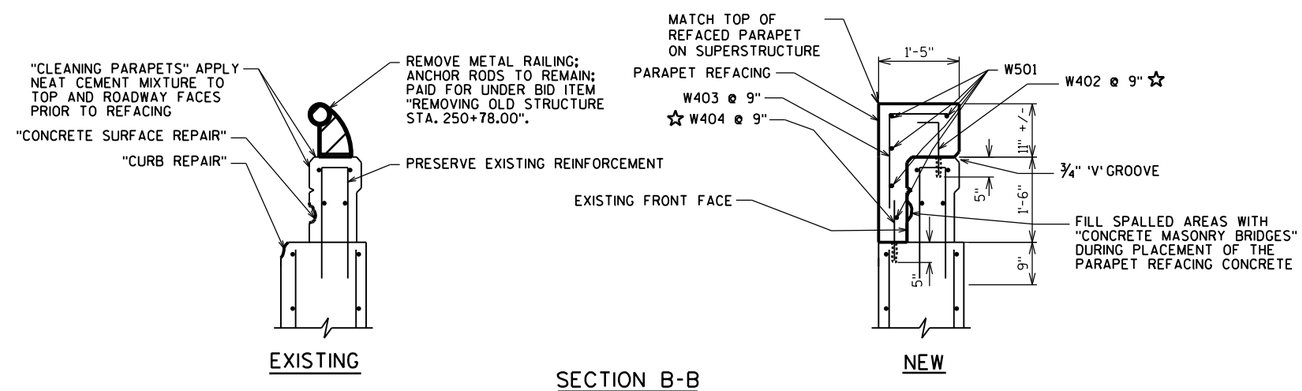

SECTION B-B
REFACING OF PARAPET AT WINGWALLS ■

B-67-88 EB

ELEVATION TABLE

	TOP OF PARAPET EL. A	TOP OF PARAPET EL. B	SHEET PILE CAP EL. C
WINGWALL 1	831.50	831.53	828.86
WINGWALL 2	832.08	832.11	829.44
WINGWALL 3	832.08	832.11	829.44
WINGWALL 4	831.53	831.53	828.86

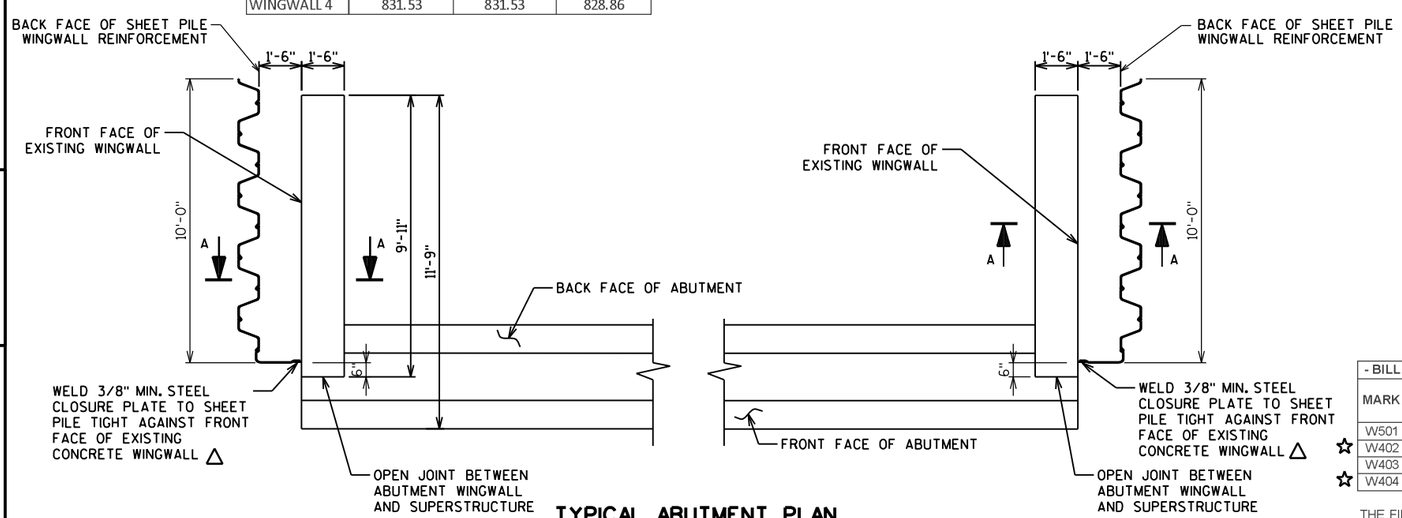

TYPICAL ABUTMENT PLAN

SUPERSTRUCTURE NOT SHOWN FOR CLARITY

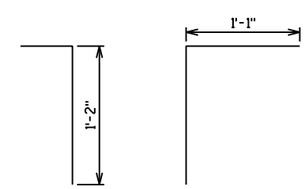

W402 W403

NOTES

FOR SECTION A-A SEE SHEET 6

LEGEND

■ CONCRETE FOR REFACING TO BE PAID FOR UNDER "CONCRETE MASONRY BRIDGES", REINFORCEMENT FOR REFACING TO BE PAID FOR UNDER BID ITEM "BAR STEEL REINFORCEMENT HS COATED STRUCTURES".

☆ "ADHESIVE ANCHORS NO. 4 BAR" EMBED 5" IN CONCRETE.

△ INCIDENTAL TO "PILING STEEL SHEET PERMANENT DRIVEN"

- BILL OF BARS

	MARK	COATED	NO. REQ'D	LENGTH	BAR SERIES	BENT	LOCATION
	W501	X	20	9'-4"			REHAB PARAPET LONGITUDINAL
☆	W402	X	60	1'-9"		X	TOP OF PARAPET DOWEL
	W403	X	60	3'-1"		X	PARAPET HOOKED
☆	W404	X	60	1'-3"			TOP OF CURB

THE FIRST DIGIT OR FIRST TWO DIGITS OF A BAR MARK INDICATES THE BAR SIZE.
ALL DIMENSIONS IN THE BAR BENDS ARE OUT TO OUT.

NO.	DATE	REVISION	BY

STATE OF WISCONSIN
DEPARTMENT OF TRANSPORTATION

STRUCTURE B-67-88

DRAWN BY WAR | PLANS CK'D. KGW

WINGWALL DETAILS

SHEET 5 OF 8

439

8

8

FILE =
SCALE =

STATE PROJECT NUMBER

2025-14-71

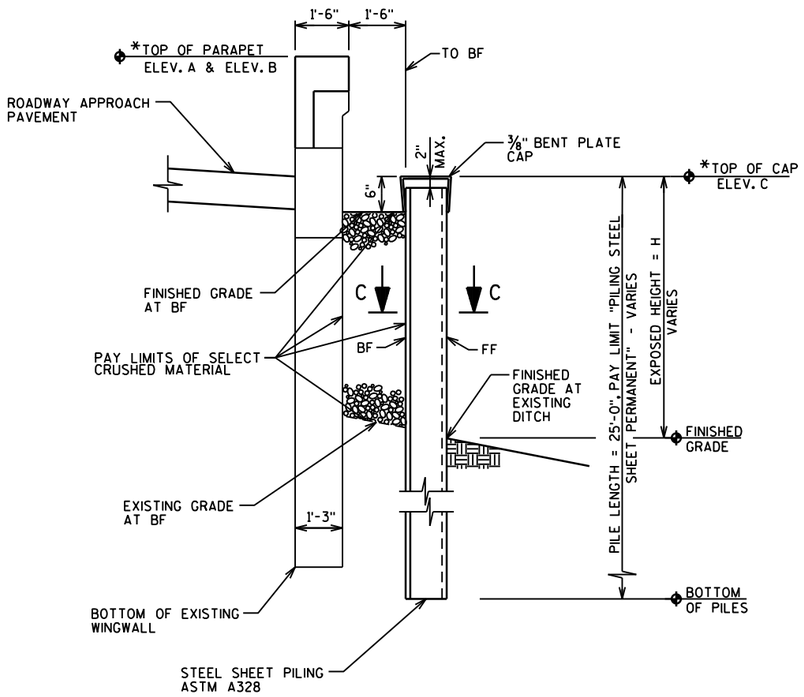

SECTION A-A

* WORK WITH ELEVATION TABLE (SHEET 5)

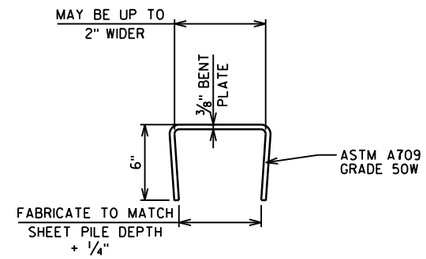

CAP DETAIL

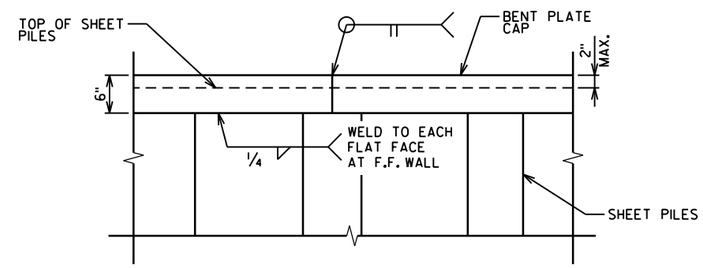

CAP ELEVATION

(LOOKING AT FRONT FACE)

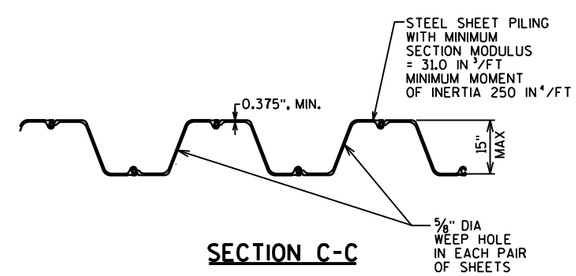

SECTION C-C

LEGEND

FF = FRONT FACE

BF = BACK FACE

SHEET PILE WALL NOTES

BACKFILL ALL SPACES EXCAVATED AT THE BACK FACE OF THE SHEET PILE WALL AND NOT OCCUPIED BY THE NEW STRUCTURE WITH STRUCTURE BACKFILL.

COLD ROLLED STEEL SHEETING WITH EQUIVALENT SECTION MODULUS, DEPTH AND THICKNESS MAY BE USED.

DO NOT FURNISH PREVIOUSLY USED MATERIAL.

8

8

NO.	DATE	REVISION	BY

STATE OF WISCONSIN
DEPARTMENT OF TRANSPORTATION

STRUCTURE B-67-88

DRAWN BY WAR | PLANS CK'D. KGW

SHEET PILE WINGWALL REINFORCEMENT DETAILS

SHEET 6 OF 8

440

FILE =
SCALE =

STATE PROJECT NUMBER

2025-14-71

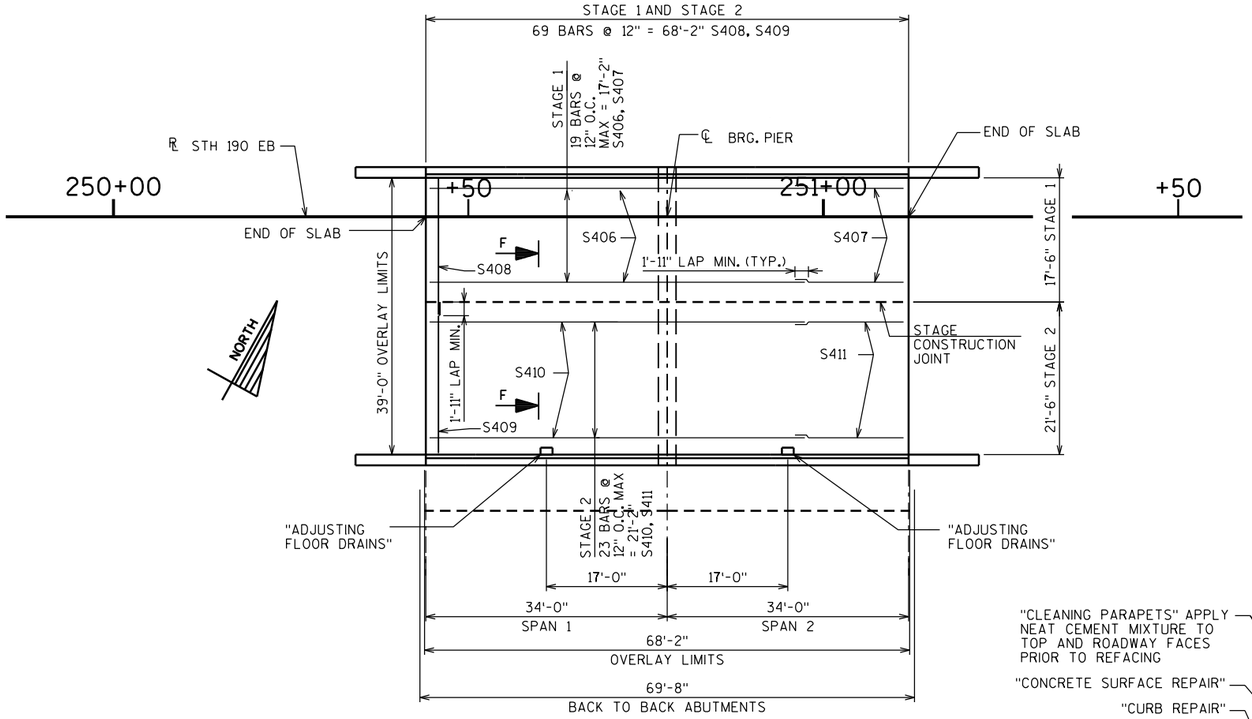

PLAN

- BILL OF BARS						
MARK	COATED	NO. REQ'D	LENGTH	BAR SERIES	BENT	LOCATION
☆ S401	X	184	1'-9"		X	TOP OF PARAPET DOWEL
☆ S402	X	184	1'-3"			CURB DOWEL
S403	X	184	3'-1"		X	PARAPET VERTICAL
S504	X	10	60'-0"			PARAPET LONGITUDINAL
S505	X	10	10'-0"			PARAPET LONGITUDINAL
S406	X	19	60'-0"			OVERLAY LONGITUDINAL STAGE 1
S407	X	19	11'-3"			OVERLAY LONGITUDINAL STAGE 1
S408	X	69	19'-3"			OVERLAY TRANSVERSE STAGE 1
S409	X	69	21'-4"			OVERLAY TRANSVERSE STAGE 2
S410	X	23	60'-0"			OVERLAY LONGITUDINAL STAGE 2
S411	X	23	11'-3"			OVERLAY LONGITUDINAL STAGE 2
☆ S412	X	224	1'-1"		X	DECK DOWELS STAGE 1
☆ S413	X	280	1'-1"		X	DECK DOWELS STAGE 2

ALL DIMENSIONS IN THE BAR BENDS ARE OUT TO OUT.

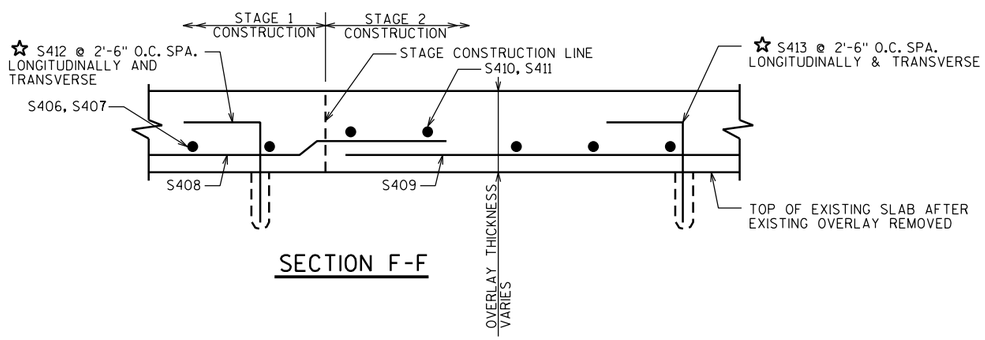

SECTION F-F

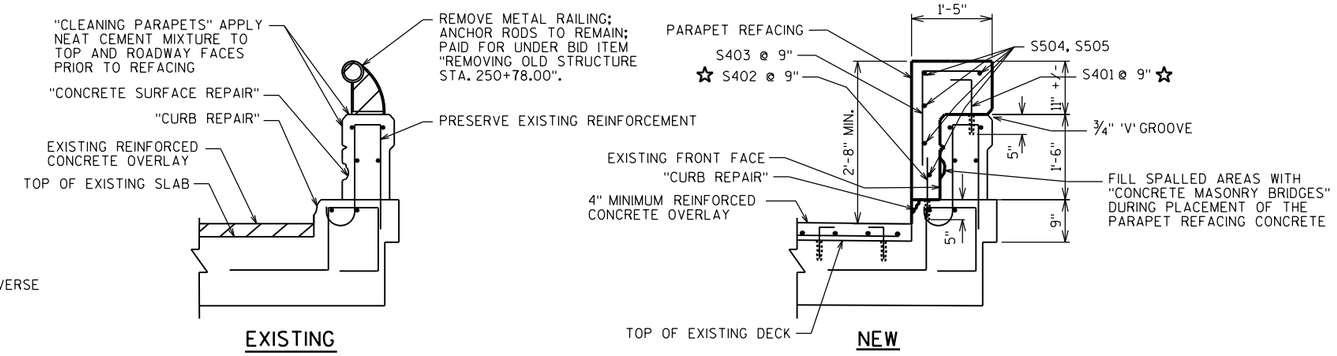

DETAIL A - REFACING OF PARAPET ■

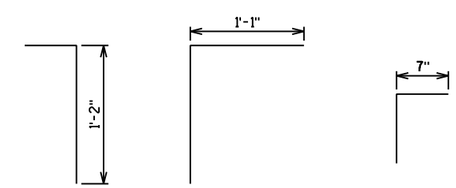

S401 S403 S412, S413

LEGEND

▨ LIMITS OF REMOVAL

■ CONCRETE FOR REFACING TO BE PAID FOR UNDER "CONCRETE MASONRY BRIDGES", REINFORCEMENT FOR REFACING TO BE PAID FOR UNDER BID ITEM "BAR STEEL REINFORCEMENT HS COATED STRUCTURES".

☆ "ADHESIVE ANCHORS NO. 4 BAR" EMBED 5" IN CONCRETE.

NO.	DATE	REVISION	BY

STATE OF WISCONSIN
DEPARTMENT OF TRANSPORTATION

STRUCTURE B-67-88

DRAWN BY WAR | PLANS CK'D. KGW

OVERLAY AND BILL OF BARS

SHEET 7 OF 8
441

8

8

FILE =
SCALE =

STATE PROJECT NUMBER

2025-14-71

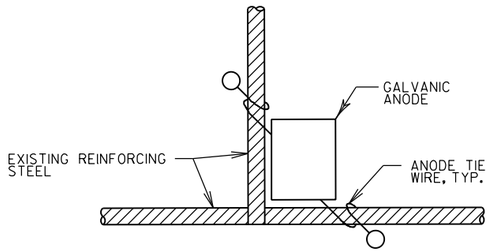

TYPICAL ANODE INSTALLATION AT BAR STEEL INTERSECTION

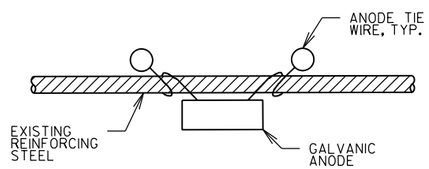

TYPICAL ANODE INSTALLATION FOR BAR STEEL

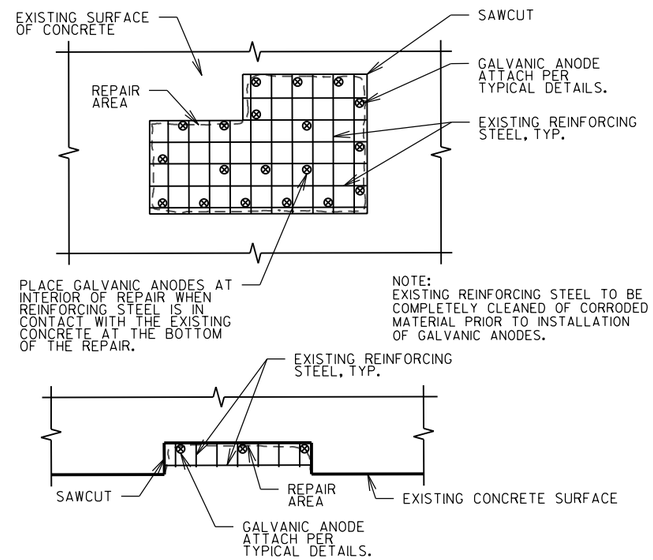

PART. PLAN TYPICAL REPAIR DETAIL

NOTES

AREAS FOR CONCRETE SURFACE REPAIR ARE APPROXIMATE. PERFORM REPAIRS AS DIRECTED BY THE FIELD ENGINEER.

THE FINISHED CONCRETE SURFACE SHALL MATCH THE SHAPE AND FINISH OF THE ORIGINAL CONCRETE SURFACE, UNLESS OTHERWISE DIRECTED BY THE ENGINEER TO PROVIDE ADDITIONAL CONCRETE.

SEE SPECIAL PROVISION "EMBEDDED GALVANIC ANODES" FOR DESCRIPTION, MATERIALS, CONSTRUCTION, MEASUREMENT, AND PAYMENT INFORMATION.

ANODES NEAREST TO THE EDGE OF REPAIR TO BE WITHIN 6" OF EDGE.

AFTER PLACEMENT, GALVANIC ANODES SHOULD MAINTAIN A MINIMUM TOP COVER OF 1½" AND A MINIMUM BOTTOM COVER OF ¾".

GALVANIC ANODES ARE TO BE INSTALLED IN THE ABUTMENTS AND PIERS ONLY.

ENSURE ALL EXPOSED REINFORCING STEEL IS SECURELY FASTENED TOGETHER WITH TIE WIRE TO PROVIDE GOOD CONTINUITY. SEE SPECIAL PROVISIONS

GALVANIC ANODES SHALL BE PLACED PER SPECIAL PROVISIONS "EMBEDDED GALVANIC ANODES". GALVANIC ANODES ESTIMATED QUANTITIES ON PLANS ARE BASED ON A MAXIMUM SPACING OF 24 INCHES IN EACH DIRECTION OF THE ESTIMATED "CONCRETE SURFACE REPAIR" AREA.

EXISTING REINFORCING BARS MAY BE CORRODED AND/OR DAMAGED DURING CONCRETE REMOVAL. PRESERVE AND INCORPORATE EXISTING REINFORCEMENT.

8

8

NO.	DATE	REVISION	BY

STATE OF WISCONSIN
DEPARTMENT OF TRANSPORTATION

STRUCTURE B-67-88

DRAWN BY WAR | PLANS CK'D. KGW

ANODE DETAILS

SHEET 8 OF 8
442

FILE =
SCALE =

STATE PROJECT NUMBER

2025-14-71

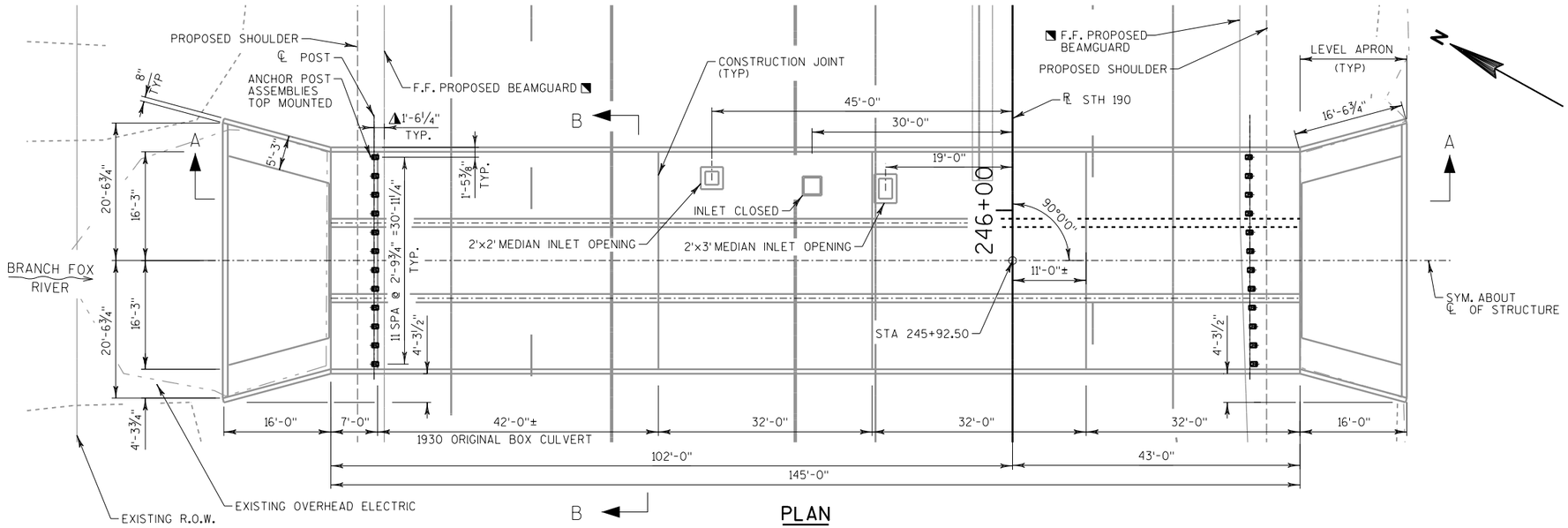

PLAN

3-CELL BOX CULVERT REHABILITATION

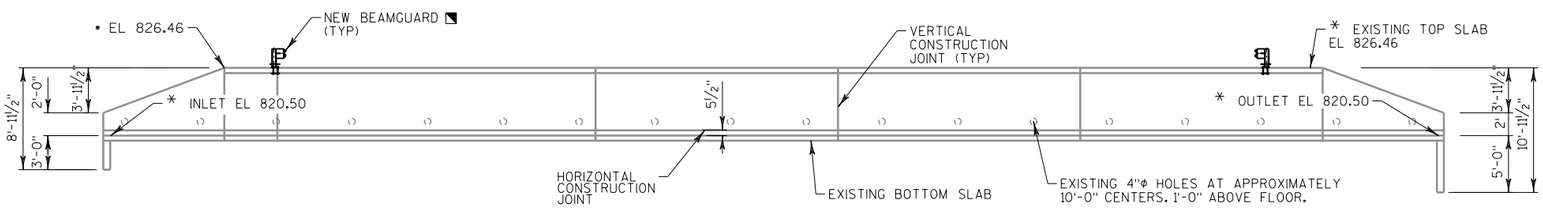

SECTION A-A

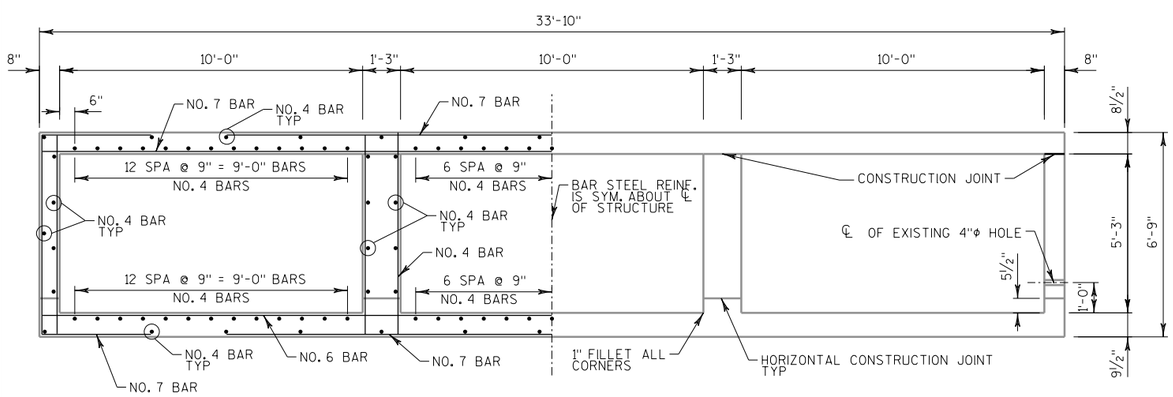

SECTION B-B

EXISTING BOX CULVERT SECTION SHOWING EXISTING REINFORCEMENT

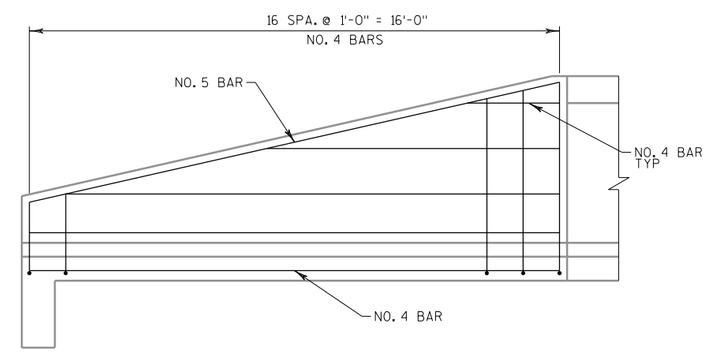

TYPICAL WINGWALL

EXISTING WINGWALL SHOWING EXISTING REINFORCEMENT

GENERAL NOTES

DRAWINGS SHALL NOT BE SCALED.

DIMENSIONS AND REINFORCEMENT BARS SHOWN ARE BASED ON THE ORIGINAL BOX CULVERT STRUCTURE PLANS DATED 1930 AND THE BOX CULVERT EXTENSION PLANS DATED 1966.

REPAIR CONCRETE AS DETAILED ON SHEETS 2 THROUGH 4 AND AS DIRECTED BY THE FIELD ENGINEER.

TRAFFIC WILL BE MAINTAINED OVER THE STRUCTURE DURING CONSTRUCTION. SEE ROADWAY PLANS FOR DETAILS.

◥ NEW MGS HS GUARDRAIL WILL UTILIZE BOLT THROUGH ANCHORAGE. SEE SHEET 5 OF 5. SEE ROADWAY PLANS FOR BID ITEMS. PRESERVE AND PROTECT EXISTING BOX CULVERT DURING REMOVAL OF EXISTING GUARDRAIL AND ATTACHMENTS. DAMAGE TO EXISTING BOX CULVERT DUE TO REMOVAL OPERATIONS WILL BE REPAIRED AT NO ADDITIONAL COST TO THE OWNER.

◭ DIMENSION FOLLOWS BEAMGUARD CURVE ON EAST SHOULDER. SEE ROADWAY PLANS FOR GUARDRAIL CONFIGURATION. DIMENSION ASSUMES 3¼" W-BEAM RAIL AND 1'-0" GUARDRAIL BLOCK.

* ELEVATIONS GIVEN ARE TAKEN DIRECTLY FROM 1966 EXISTING STRUCTURE REHABILITATION PLANS. CONTRACTOR MUST FIELD VERIFY PRIOR TO FABRICATION OF "ANCHOR POST ASSEMBLIES TOP MOUNTED". HEIGHT OF ANCHOR POSTS IS DEPENDENT ON DEPTH OF FILL ON TOP OF BOX CULVERT. POST HEIGHT "H" SHOWN ON SHEET 5 OF 5 IS AN ESTIMATE.

MATERIAL PROPERTIES

CONCRETE MASONRY _____ f'c = 3,500 psi

WISCONSIN MICHAEL D. RADTKE 40967 Elm Grove WI PROFESSIONAL ENGINEER 11/3/2017

LIST OF DRAWINGS

QUANTITIES

BID ITEM NO.	BID ITEMS	UNIT	TOTAL
509.1500	CONCRETE SURFACE REPAIR	SF	370

STRUCTURES DESIGN CONTACTS

BUREAU OF STRUCTURES: WILLIAM DREHER (608) 266-8489

CONSULTANT: MICHAEL RADTKE (414) 347-1607

NO.	DATE	REVISION	BY

emcs inc
1300 W. Canal Street, Suite 200
Milwaukee, WI 53233
414.347.1607 Fax 414.347.1347

STATE OF WISCONSIN
DEPARTMENT OF TRANSPORTATION

ACCEPTED William C. Dreher SCR 11/08/17
CHIEF STRUCTURES DESIGN ENGINEER DATE

STRUCTURE B-67-96

CAPITOL DRIVE OVER BRANCH FOX RIVER

COUNTY	WAUKESHA	TOWN	BROOKFIELD
DESIGN SPEC.	REHABILITATION N/A		

DESIGNED BY	MDR	DESIGN CK'D.	AJC	DRAWN BY	MDR	PLANS CK'D.	AJC

GENERAL PLAN

SHEET 1 OF 5

443

8

8

STATE PROJECT NUMBER

2025-14-71

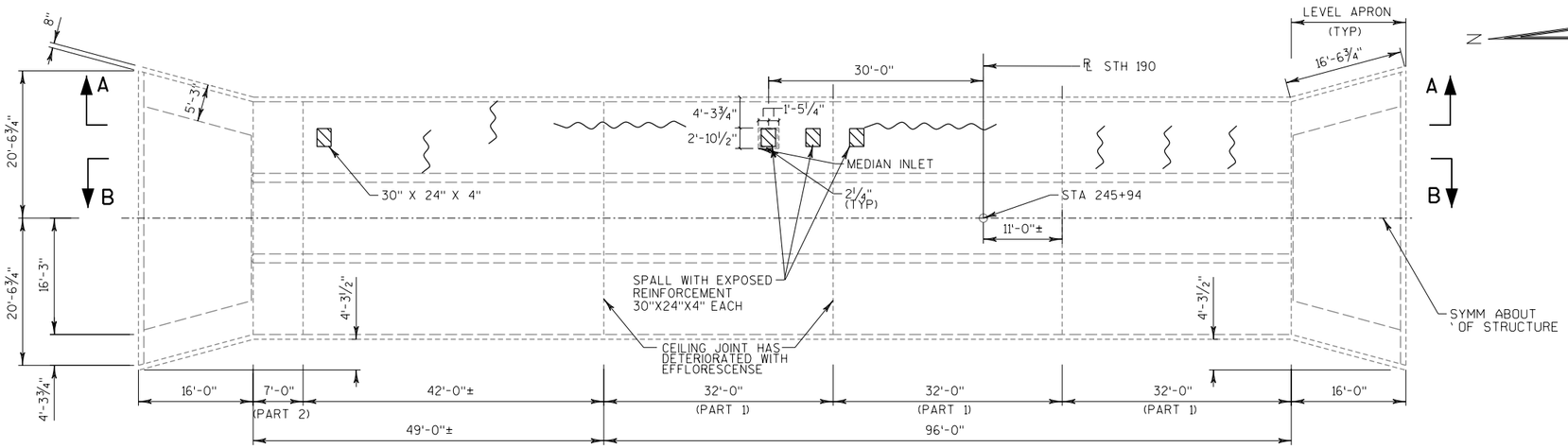

PLAN OF CEILING

NOTES

CONCRETE SURFACE REPAIRS WILL BE PERFORMED ALONG THE INTERIOR WALLS AND CEILING OF EACH CELL WHERE NEEDED.

CRACKS ARE DELINEATED ON THIS PLAN FOR INFORMATIONAL PURPOSES ONLY. CRACK REPAIR WILL BE PERFORMED AT THE DIRECTION OF THE ENGINEER. CRACKS WILL BE REMOVED TO SOUND CONCRETE AND REPAIRED UNDER BID ITEM "CONCRETE SURFACE REPAIR".

ALL DEFICIENT AREAS TO BE DETERMINED IN FIELD BY ENGINEER.

LEGEND

- SPALL
- CRACK
- SCALE

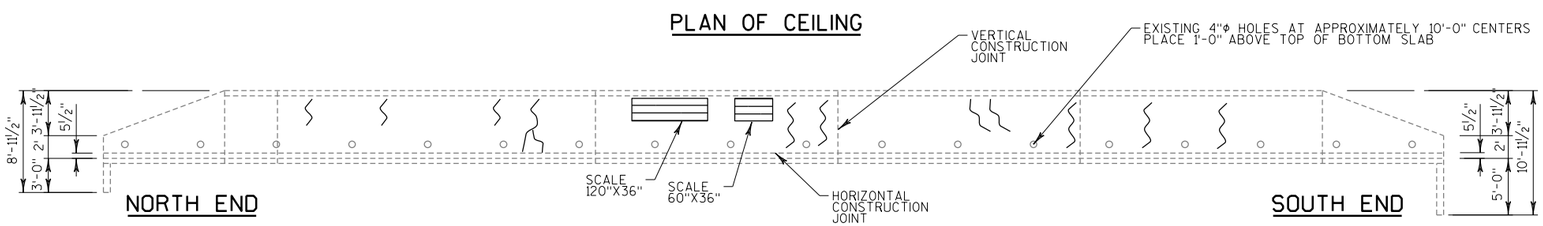

NORTH END

SOUTH END

SECTION A-A

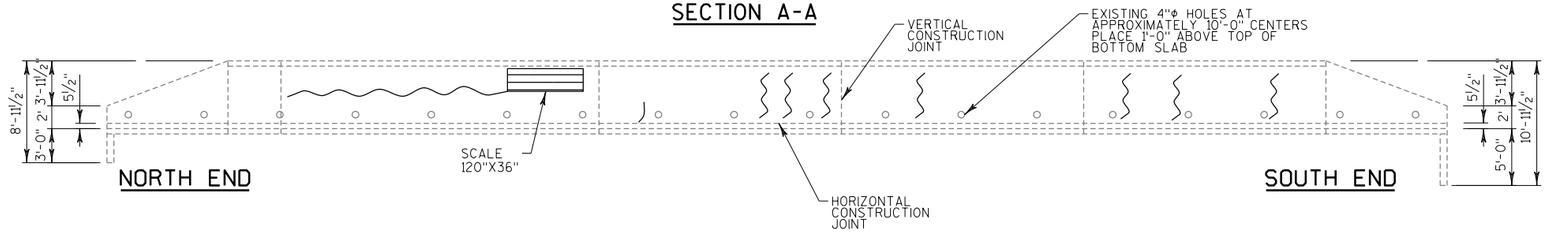

NORTH END

SOUTH END

SECTION B-B

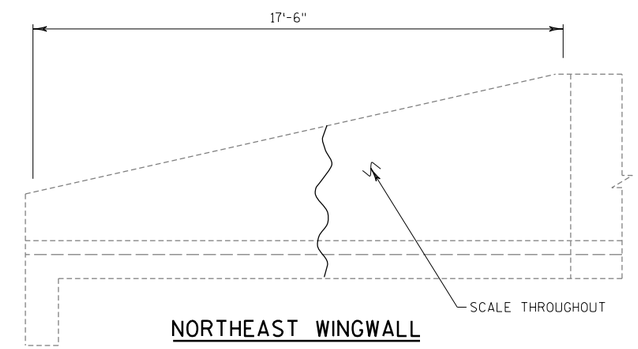

NORTHEAST WINGWALL

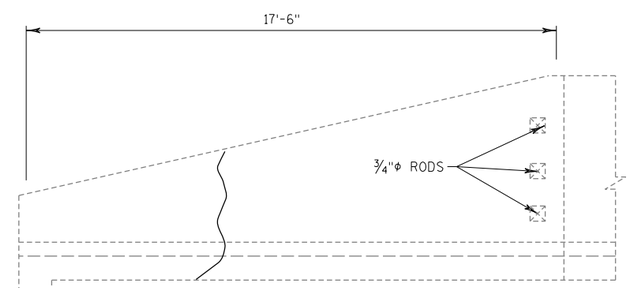

NORTHWEST WINGWALL

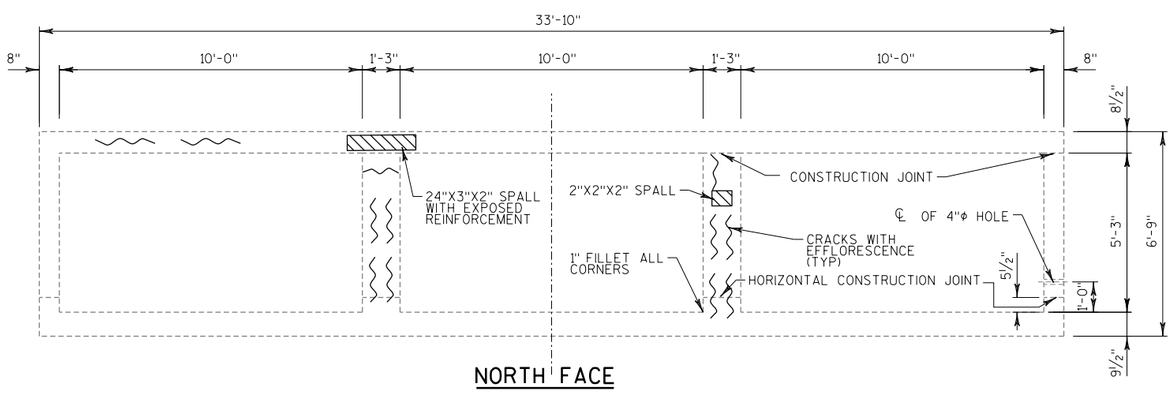

NORTH FACE

NO.	DATE	REVISION	BY

STATE OF WISCONSIN
DEPARTMENT OF TRANSPORTATION

STRUCTURE B-67-96

DRAWN BY MDR | PLANS CK'D. AJC

REPAIR LIMITS 1

SHEET 2 OF 5

STATE PROJECT NUMBER

2025-14-71

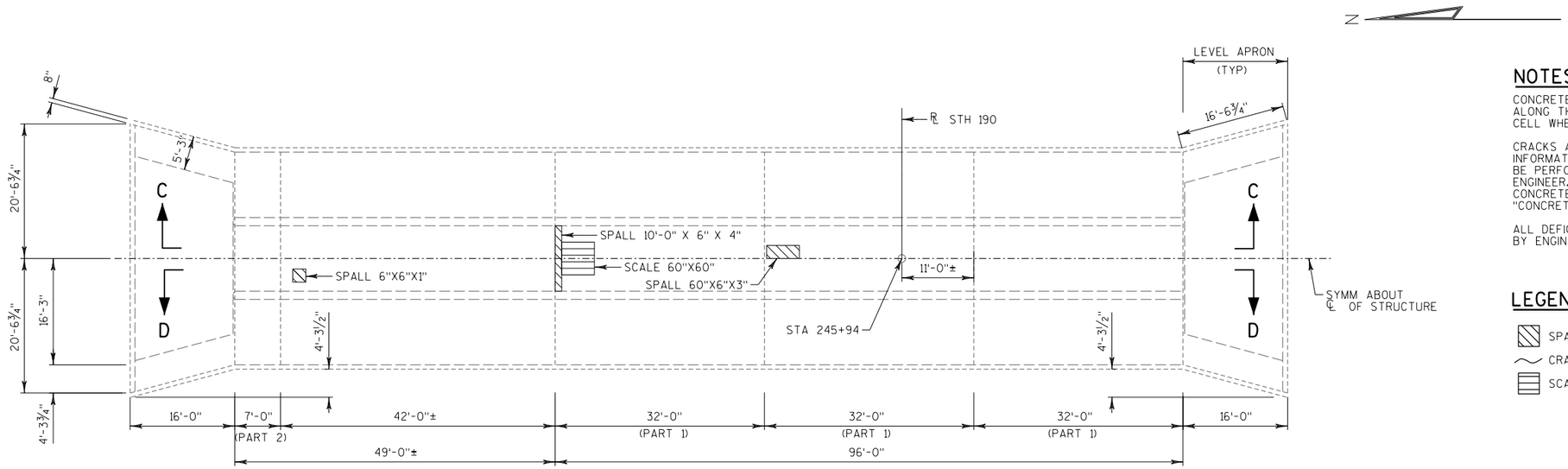

PLAN OF CEILING

NOTES

CONCRETE SURFACE REPAIRS WILL BE PERFORMED ALONG THE INTERIOR WALLS AND CEILING OF EACH CELL WHERE NEEDED.

CRACKS ARE DELINEATED ON THIS PLAN FOR INFORMATIONAL PURPOSES ONLY. CRACK REPAIR WILL BE PERFORMED AT THE DIRECTION OF THE ENGINEER. CRACKS WILL BE REMOVED TO SOUND CONCRETE AND REPAIRED UNDER BID ITEM "CONCRETE SURFACE REPAIR".

ALL DEFICIENT AREAS TO BE DETERMINED IN FIELD BY ENGINEER.

LEGEND

- SPALL
- CRACK
- SCALE

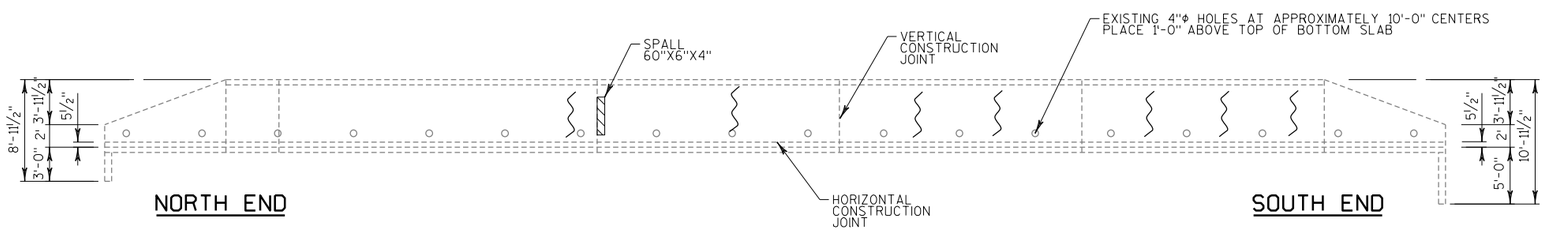

SECTION C-C

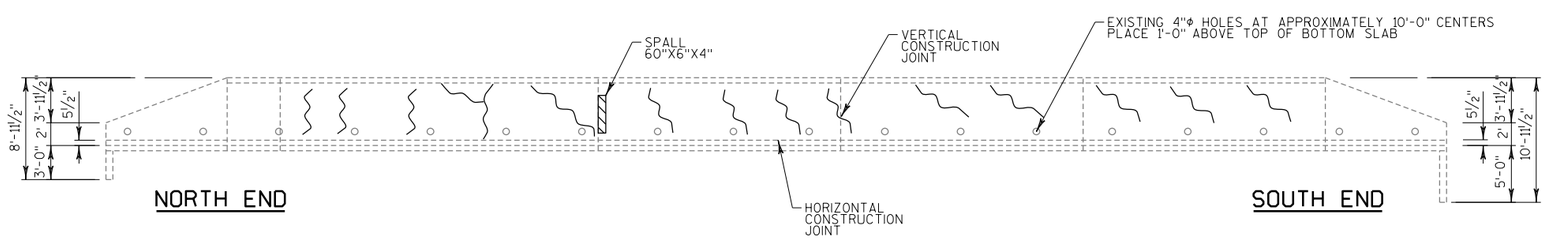

SECTION D-D

8

8

NO.	DATE	REVISION	BY

STATE OF WISCONSIN
DEPARTMENT OF TRANSPORTATION

STRUCTURE B-67-96

DRAWN BY MDR | PLANS CK'D. AJC

REPAIR LIMITS 2

SHEET 3 OF 5

STATE PROJECT NUMBER

2025-14-71

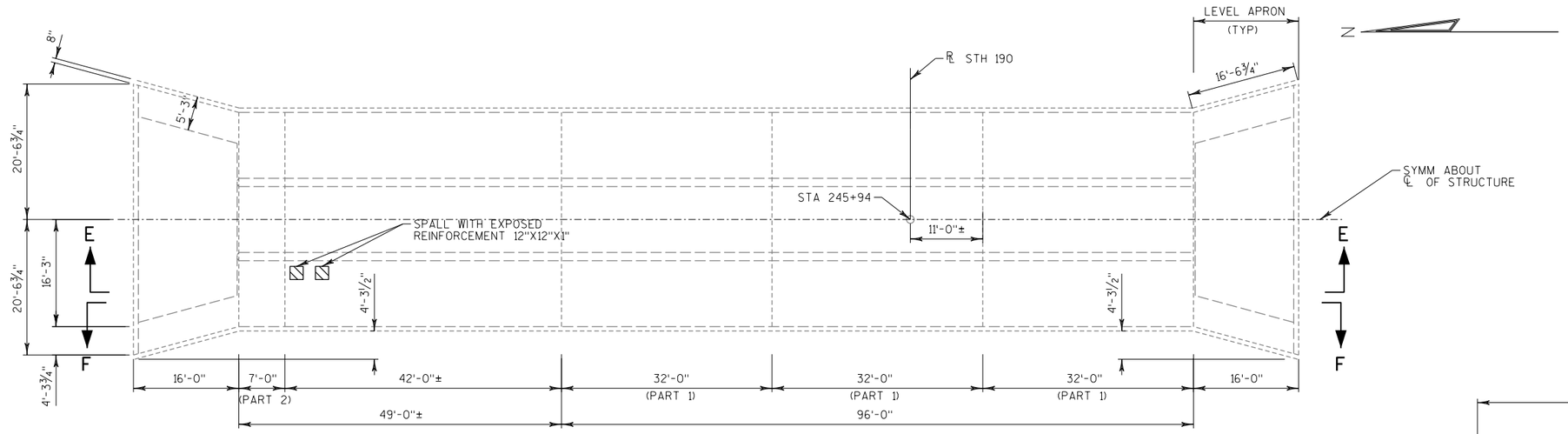

PLAN OF CEILING

NOTES

CONCRETE SURFACE REPAIRS WILL BE PERFORMED ALONG THE INTERIOR WALLS AND CEILING OF EACH CELL WHERE NEEDED.

CRACKS ARE DELINEATED ON THIS PLAN FOR INFORMATIONAL PURPOSES ONLY. CRACK REPAIR WILL BE PERFORMED AT THE DIRECTION OF THE ENGINEER. CRACKS WILL BE REMOVED TO SOUND CONCRETE AND REPAIRED UNDER BID ITEM "CONCRETE SURFACE REPAIR".

ALL DEFICIENT AREAS TO BE DETERMINED IN FIELD BY ENGINEER.

LEGEND

- SPALL
- CRACK
- SCALE

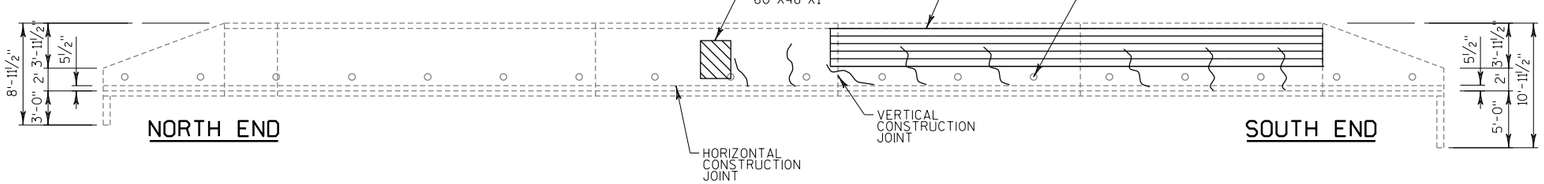

NORTH END

SOUTH END

SECTION E-E

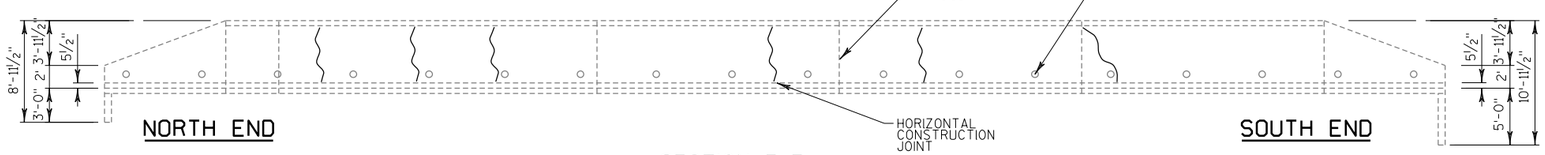

NORTH END

SOUTH END

SECTION F-F

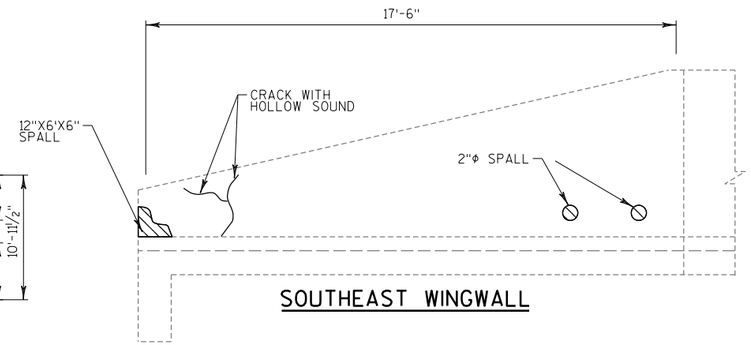

SOUTHEAST WINGWALL

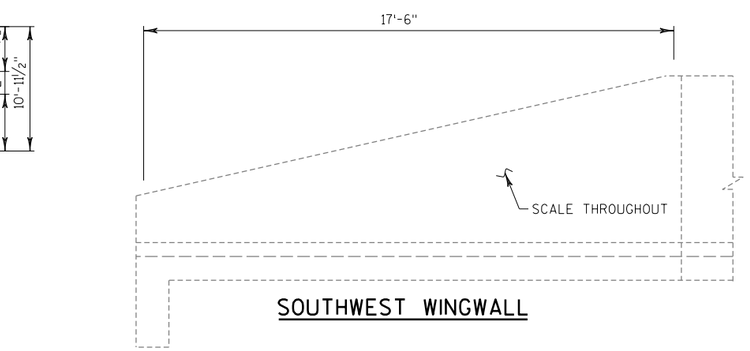

SOUTHWEST WINGWALL

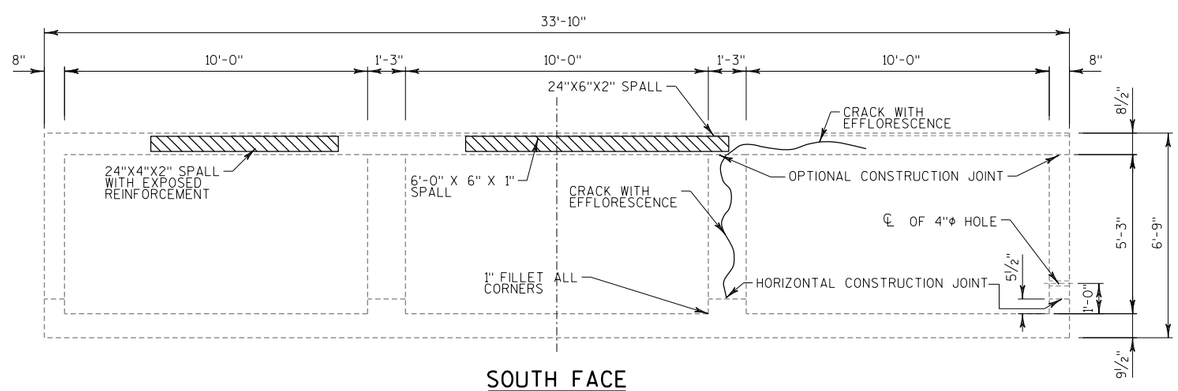

SOUTH FACE

8

8

NO.	DATE	REVISION	BY

STATE OF WISCONSIN
DEPARTMENT OF TRANSPORTATION

STRUCTURE B-67-96

DRAWN BY MDR | PLANS CK'D. AJC

REPAIR LIMITS 3

SHEET 4 OF 5

STATE PROJECT NUMBER

2025-14-71

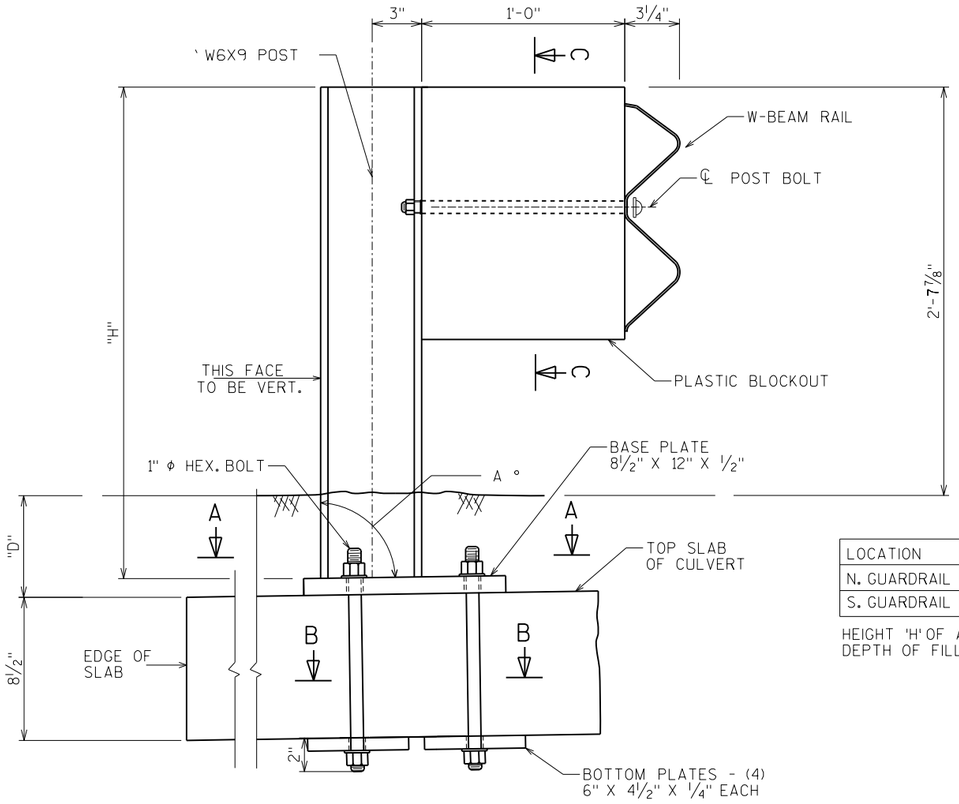

LOCATION	ESTIMATED "D"	ESTIMATED "H"	ANGLE "A"
N. GUARDRAIL	2'-6"	5'-1⅜"	90 DEG
S. GUARDRAIL	2'-6"	5'-1⅜"	90 DEG

HEIGHT 'H' OF ANCHOR POSTS IS DEPENDENT ON DEPTH OF FILL 'D' ON TOP OF BOX CULVERT.

ELEVATION
GUARDRAIL POST ANCHORS TYPE 2

NOTES

DETAILS SHOWN FOR POSTS, PLATES, ANCHORAGE SYSTEM AND INSTALLATION , BLOCKS, AND GUARD RAIL ARE NOT PART OF THE STRUCTURE CONTRACT BUT ARE BID PER THE ROADWAY DESIGN PLANS.

POST BASE PLATES AND BOTTOM PLATES SHALL BE FLAT WITH ALL SURFACES SMOOTH AND FREE FROM WARP AND ALL EDGES SMOOTH, STRAIGHT AND VERTICAL. ALL PLATE CUTS SHALL BE MACHINE OR MACHINE FLAME CUTS.

CUT BOTTOM OF POSTS SO THAT POST WILL BE VERTICAL WHEN POST ASSEMBLY IS PLACED ON TOP OF THE CULVERT. ALONG THE ROADWAY THE POSTS WILL BE NORMAL TO GRADE LINE. HEX BOLTS AND THREADED RODS ARE TO BE PLACED PERPENDICULAR TO THE BASE PLATE.

POST, BASE PLATE, BOTTOM PLATES, AND SHIMS SHALL BE GALVANIZED AFTER FABRICATION.

PRIOR TO GALVANIZING, ALL STEEL RAILING POSTS AND PLATES SHALL BE GIVEN A NO. 6 COMMERCIAL BLAST CLEANING BY SSPC SPECS.

ALL MATERIAL USED IN FABRICATION SHALL BE MADE FROM MATERIALS CONFORMING TO ASTM DESIGNATION A709 GRADE 50 OR 50S.

HEX BOLTS, THREADED RODS, HEX NUTS AND WASHERS SHALL CONFORM TO THE REQUIREMENTS OF ASTM F1554 GRADE 36, AND SHALL BE GALVANIZED. RODS ARE TO BE FULLY THREADED AND BOLTS TO BE THREADED 3". CHAMFER TOP OF BOLTS AND RODS BEFORE THREADING

STEEL SHIMS MAY BE USED BETWEEN PLATES AND SLAB WHERE REQ'D. FOR ALIGNMENT.

HOLES DRILLED IN CONCRETE ARE 1⅛" IN DIAMETER.

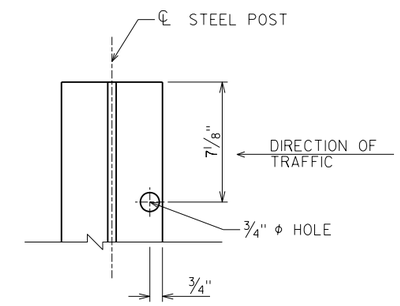

SECTION C-C

HOLE IN POST FLANGE ON APPROACHING TRAFFIC SIDE

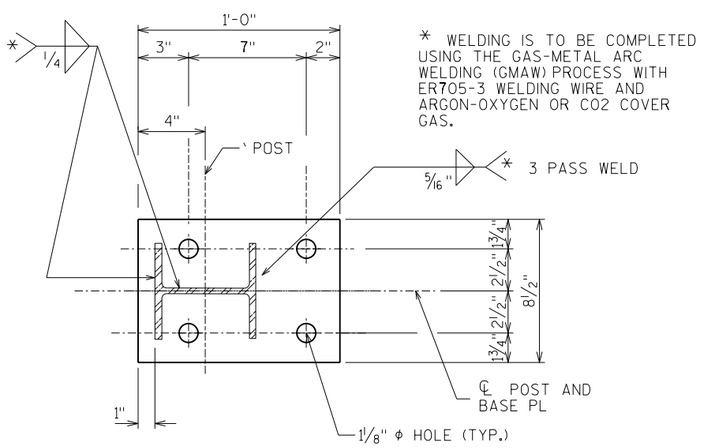

SECTION A-A

POST AND BASE PLATE

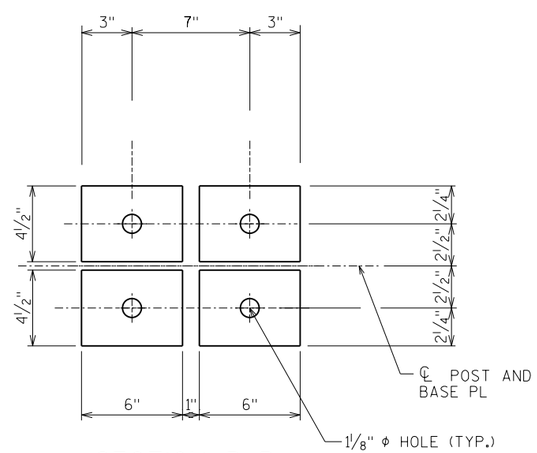

SECTION B-B

(4) BOTTOM PLATES

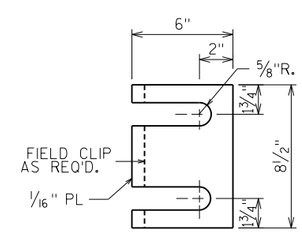

POST SHIM DETAIL

(4 PER POST)

NO.	DATE	REVISION	BY

STATE OF WISCONSIN
DEPARTMENT OF TRANSPORTATION

STRUCTURE B-67-96

DRAWN BY MDR | PLANS CK'D. AJC

GUARDRAIL DETAILS

SHEET 5 OF 5

447

8

8

STATE PROJECT NUMBER

2025-14-71

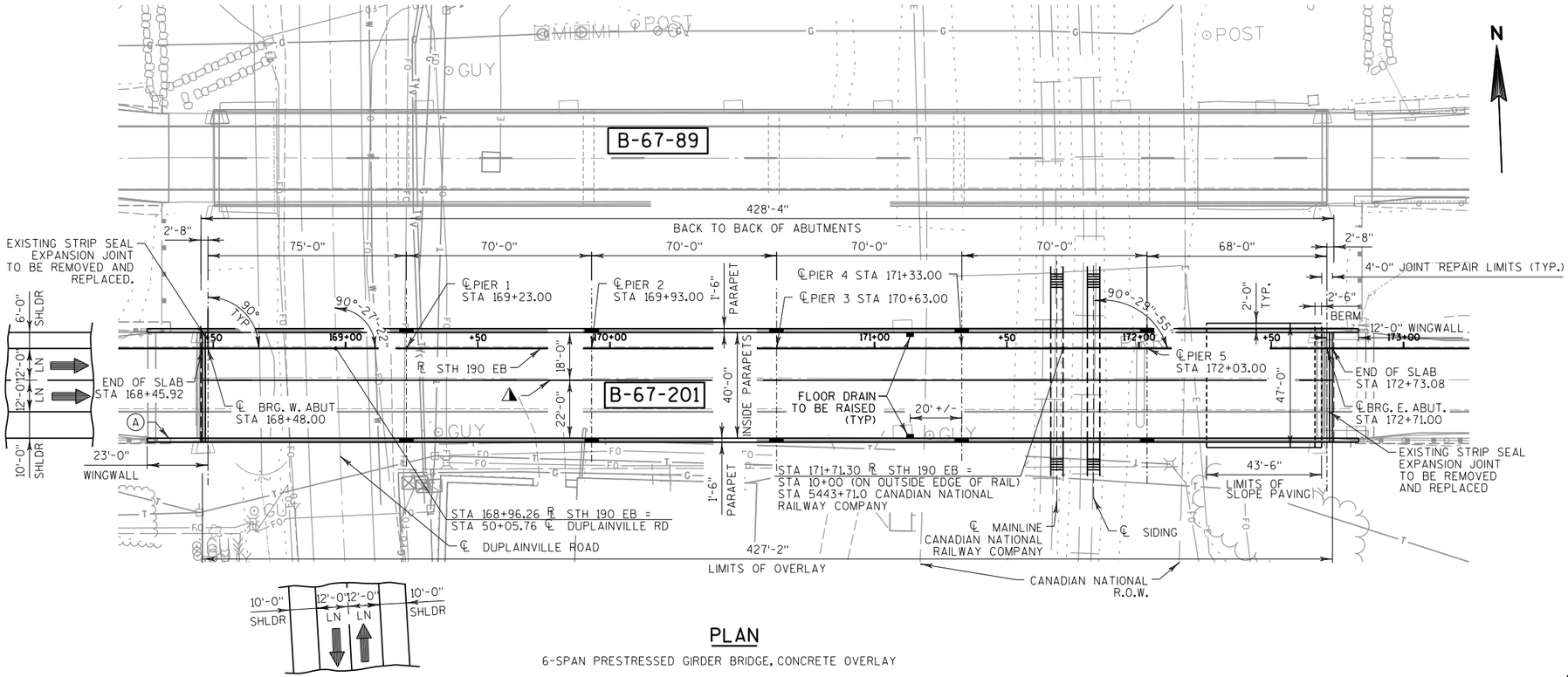

PLAN

6-SPAN PRESTRESSED GIRDER BRIDGE, CONCRETE OVERLAY

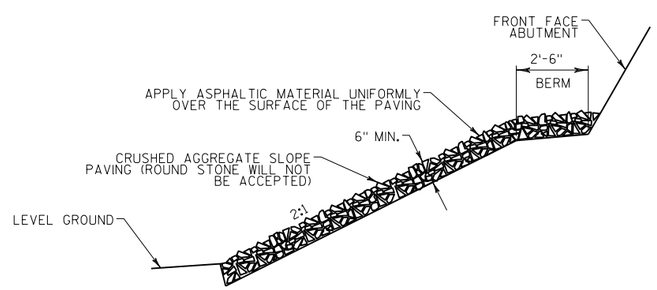

CROSS SECTION THRU SLOPE PAVING AT EAST ABUTMENT

DESIGN DATA

LIVE LOAD:

DESIGN LOADING: HS-20
INVENTORY RATING: HS-20
OPERATING RATING: HS-33
WISCONSIN STANDARD PERMIT VEHICLE (WIS-SPV): 184 KIPS

MATERIAL PROPERTIES:

CONCRETE MASONRY
OVERLAY DECKS ..... f'c = 4,000 psi

BAR STEEL REINFORCEMENT,
HIGH STRENGTH, GRADE 60 ..... fy = 60,000 psi

TRAFFIC DATA:

STH 190:
ADT = 36,500 (2019)
ADT = 44,400 (2039)
RDS = 60 MPH

DUPLAINVILLE ROAD:
ADT = 2,100 (2019)
ADT = 2,400 (2039)
RDS = 40 MPH

NOTES

CONCRETE SURFACE REPAIR SHALL BE USED FOR NEEDED REPAIRS ON EXISTING ABUTMENTS AND PIERS. LOCATION AND LIMITS OF REPAIR SHALL BE DETERMINED IN THE FIELD BY THE ENGINEER.

(A) NAME PLATE LOCATION

◭ LONGITUDINAL STAGING JOINT.

WISCONSIN MICHAEL D. RADTKE 40987 Elm Grove WI PROFESSIONAL ENGINEER
10/13/2017

BENCH MARK

DESCRIPTION	ELEV.
CHISELED SQUARE ON SE CORNER OF CONTROL BOX AT SW CORNER OF STH 190 AND SPRINGDALE ROAD	842.99

LIST OF DRAWINGS

1. GENERAL PLAN & ELEVATION
2. CROSS SECTION AND QUANTITIES
3. CONSTRUCTION STAGING
4. SUPERSTRUCTURE DETAILS
5. EXPANSION JOINT (1)
6. EXPANSION JOINT (2)

STRUCTURE DESIGN CONTACTS

BRIDGE OFFICE: WILLIAM DREHER (608) 266-8489
CONSULTANT: MIKE RADTKE (414) 347-1607

NO.	DATE	REVISION	BY

emcs inc
1300 W. Canal Street, Suite 200
Milwaukee, WI 53233
414.347.1607 Fax 414.347.1347

STATE OF WISCONSIN
DEPARTMENT OF TRANSPORTATION
ACCEPTED William C. Dreher SDR 11/07/17
CHIEF STRUCTURES DESIGN ENGINEER DATE

STRUCTURE B-67-201

STH 190 OVER DUPLAINVILLE ROAD AND CNRR

COUNTY WAUKESHA | CITY PEWAUKEE
DESIGN SPEC. REHABILITATION N/A
DESIGNED BY MDR | DESIGN CK'D. AJC | DRAWN BY MDR | PLANS CK'D. AJC

GENERAL PLAN & ELEVATION

SHEET 1 OF 6
448

8

8

STATE PROJECT NUMBER

2025-14-71

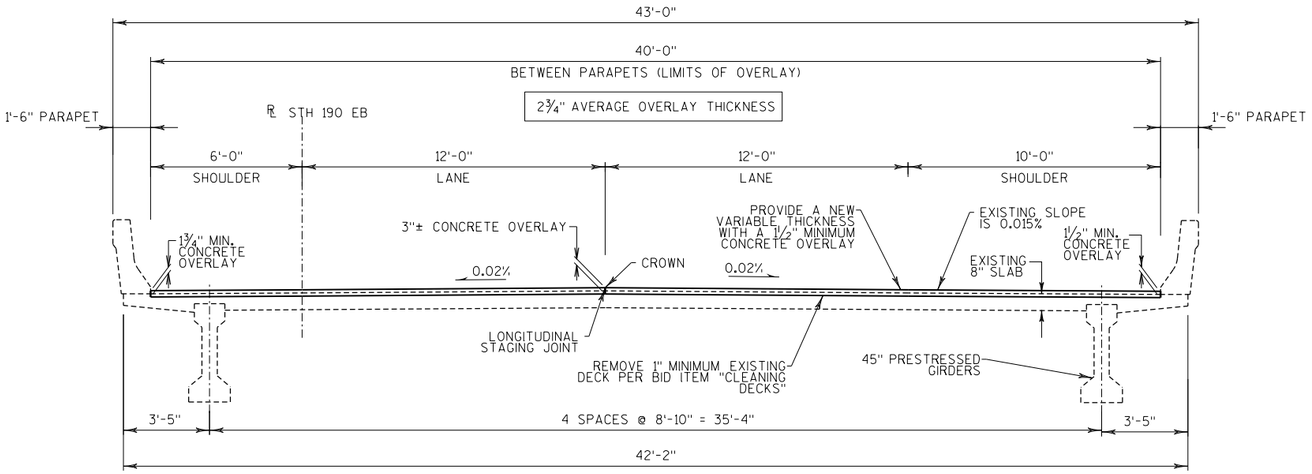

CROSS SECTION THRU ROADWAY

LOOKING EAST

TOTAL ESTIMATED QUANTITIES

BID ITEM NO.	BID ITEMS	UNIT	TOTAL
502.3100	EXPANSION DEVICE B-67-201	LS	1
502.3200	PROTECTIVE SURFACE TREATMENT	SY	1899
502.3210	PIGMENTED SURFACE SEALER	SY	368
502.4104	ADHESIVE ANCHORS 1/2-INCH	EACH	8
502.4205	ADHESIVE ANCHORS NO. 5 BAR	EACH	86
505.0600	BAR STEEL REINFORCEMENT HS COATED STRUCTURES	LB	2919
505.0905	BAR COUPLERS NO. 5	EACH	6
505.0906	BAR COUPLERS NO. 6	EACH	20
509.0301	PREPARATION DECKS TYPE 1	SY	14
509.0302	PREPARATION DECKS TYPE 2	SY	2
509.0500	CLEANING DECKS	SY	1863
509.1000	JOINT REPAIR	SY	39
509.1500	CONCRETE SURFACE REPAIR	SF	200
509.2000	FULL-DEPTH DECK REPAIR	SY	1
509.2500	CONCRETE MASONRY OVERLAY DECKS	CY	137
509.9050.S	CLEANING PARAPETS	LF	916
514.0900	ADJUSTING FLOOR DRAINS	EACH	2
604.0500	SLOPE PAVING CRUSHED AGGREGATE	SY	260

BILL OF BARS

BAR	COAT	NO.	LENGTH	BENT	BAR	LOCATION
S501	X	18	8'-4"			PAVING BLOCK LONGITUDINAL STAGE 2
S402	X	84	3'-4"	X		PAVING BLOCK STIRRUP
S403	X	160	4'-7"	X		DIAPHRAGM BLOCK STIRRUPS BETWEEN GIRDERS
S604	X	20	7'-2"			DIAPHRAGM BLOCK HORIZ BETWEEN GIRDERS
S605	X	20	18'-9"			DIAPHRAGM BLOCK HORIZ. STAGE 1
S406	X	16	7'-2"			EXPANSION DEVICE BETWEEN GIRDERS
S407	X	8	4'-7"	X		PARAPET VERT.
S408	X	28	4'-10"	X		PARAPET VERT.
S409	X	20	4'-4"	X		PARAPET VERT.
S610	X	20	22'-9"			DIAPHRAGM BLOCK HORIZ. STAGE 2
S511	X	84	2'-9"	X		PAVING BLOCK VERT. DOWEL
S512	X	18	7'-1"	X		PAVING BLOCK LONGITUDINAL STAGE 1

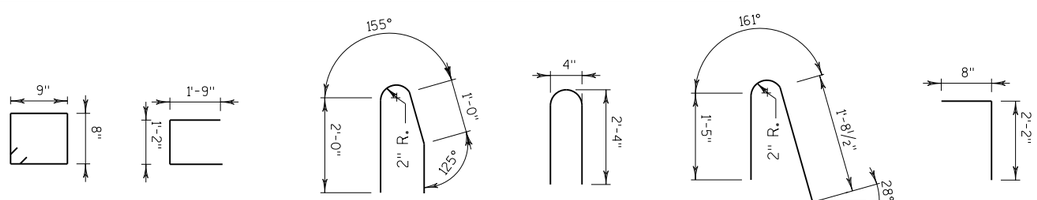

S402 S403 S407 S408 S409 S511

S511 IS AN ADHESIVE ANCHOR. SEE SHEET 5 FOR DETAILS.

GENERAL NOTES

DRAWINGS SHALL NOT BE SCALED.

BAR STEEL REINFORCEMENT SHALL BE EMBEDDED 2 INCHES CLEAR UNLESS OTHERWISE SHOWN OR NOTED.

THE FIRST OR FIRST TWO DIGITS OF A BAR MARK SIGNIFIES THE BAR SIZE.

DIMENSIONS SHOWN ARE BASED ON THE ORIGINAL STRUCTURE PLANS.

APPLY PROTECTIVE SURFACE TREATMENT TO THE ENTIRE TOP SURFACE OF THE NEW CONCRETE OVERLAY.

APPLY PIGMENTED SURFACE SEALER TO THE INSIDE FACE AND TOP OF THE PARAPETS.

REMOVE A MINIMUM OF 1-INCH OF CONCRETE FROM THE ENTIRE BRIDGE DECK UNDER BID ITEM "CLEANING DECKS".

PREPARATION DECKS TYPE 1, PREPARATION DECKS TYPE 2, AND FULL-DEPTH DECK REPAIR AREAS ARE BASED ON THE PLANS AND AS DETERMINED BY THE ENGINEER. FILL THE DECK PREPARATION AND FULL-DEPTH REPAIRS WITH "CONCRETE MASONRY OVERLAY DECKS".

ALL CONCRETE REMOVAL NOT COVERED WITH A CONCRETE OVERLAY SHALL BE DEFINED BY A 1-INCH DEEP SAW CUT.

ANY EXCAVATION REQUIRED TO COMPLETE THE OVERLAY OR JOINT REPAIRS AT THE ABUTMENTS IS CONSIDERED INCLUDED IN THE BID ITEM, "CONCRETE MASONRY OVERLAY DECKS".

AT THE ABUTMENTS, ALL SPACES EXCAVATED AND NOT OCCUPIED BY THE NEW STRUCTURE SHALL BE BACKFILLED WITH STRUCTURE BACKFILL TYPE A . STRUCTURE BACKFILL TYPE A IS CONSIDERED INCLUDED IN THE BID ITEM "CONCRETE MASONRY OVERLAY DECKS".

PROFILE GRADE LINE SHALL BE DETERMINED IN THE FIELD BASED ON A MINIMUM OVERLAY THICKNESS OF 1½" PLACED ABOVE THE DECK SURFACE AFTER SURFACE PREPARATION. EXPECTED AVERAGE OVERLAY THICKESS IS 2¾". IF EXPECTED AVERAGE OVERLAY THICKNESS IS EXCEEDED BY MORE THAN ½" CONTACT THE STRUCTURES DESIGN SECTION.

THE EXISTING STRUCTURE, B-67-201, IS A 6 SPAN, PRESTRESSED CONCRETE GIRDER STRUCTURE WITH AN OVERALL WIDTH OF 43'-0" AND AN OVERALL LENGTH OF 428'-4".

CONCRETE SURFACE REPAIR AREAS AS DETERMINED BY THE ENGINEER.

USE EXISTING BAR STEEL REINFORCEMENT WHERE SHOWN AND EXTEND 24 BAR DIAMETERS INTO NEW WORK.

RAISE THE EXISTING FLOOR DRAINS. REMOVE TOP OF DECK IN DRAIN AREA AS DIRECTED BY THE FIELD ENGINEER TO ALLOW PLACING AND SLOPING OF 1½" CONCRETE OVERLAY.

STRIP SEAL EXPANSION JOINT ASSEMBLY, INCLUDING ANCHOR STUDS AND HARDWARE IS INCLUDED IN THE COST OF BID ITEM "EXPANSION DEVICE B-67-201".

UNDER THE BID ITEM "ADHESIVE ANCHORS NO. 5 BAR" AND "ADHESIVE ANCHORS 1/2-INCH", THE ANCHORED REINFORCING STEEL WILL BE PAID FOR SEPARATELY AS PROVIDED IN SECTION 505 OF THE STANDARD SPECIFICATIONS FOR BAR STEEL REINFORCEMENT.

PROVIDE CRUSHED AGGREGATE SLOPE PAVING AT THE SLOPE IN FRONT OF THE EAST ABUTMENT TO THE EXTENT SHOWN ON THE GENERAL PLAN SHEET.

8

8

NO.	DATE	REVISION	BY

STATE OF WISCONSIN
DEPARTMENT OF TRANSPORTATION

STRUCTURE B-67-201

DRAWN BY MDR | PLANS CK'D. AJC

CROSS SECTION AND QUANTITIES

SHEET 2 OF 6

449

STATE PROJECT NUMBER

2025-14-71

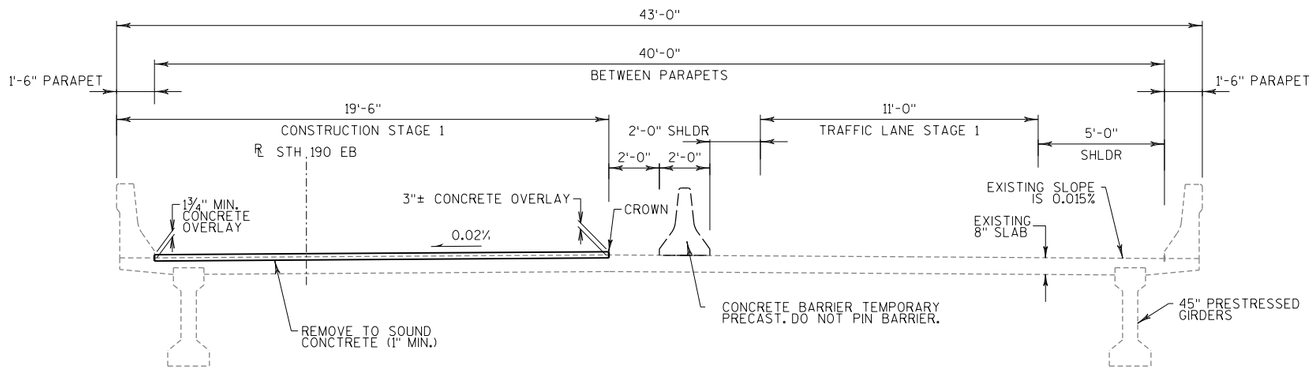

STAGE 1

(LOOKING EAST)

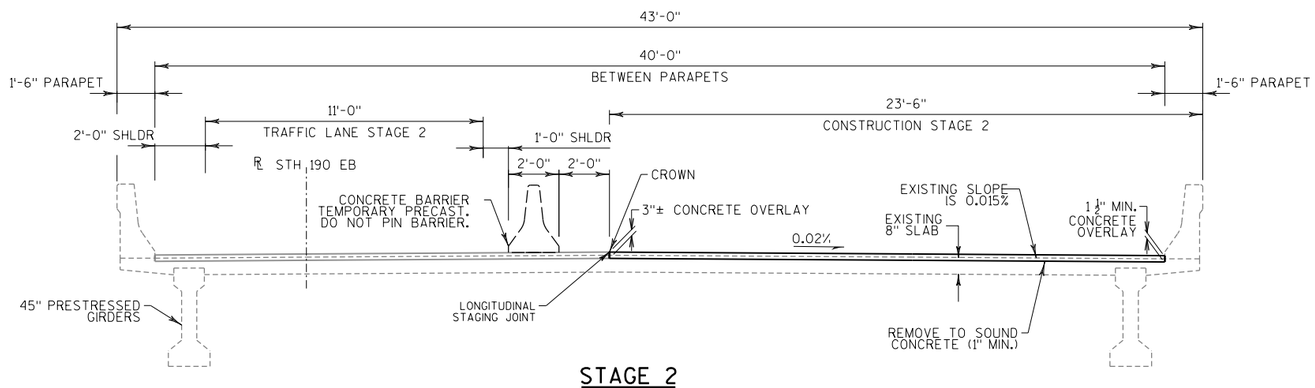

STAGE 2

(LOOKING EAST)

NOTES

SEE ROADWAY PLANS FOR TRAFFIC STAGING DETAILS

8

8

NO.	DATE	REVISION	BY

STATE OF WISCONSIN
DEPARTMENT OF TRANSPORTATION

STRUCTURE B-67-201

DRAWN BY MDR | PLANS CK'D. AJC

CONSTRUCTION STAGING

SHEET 3 OF 6

450

STATE PROJECT NUMBER

2025-14-71

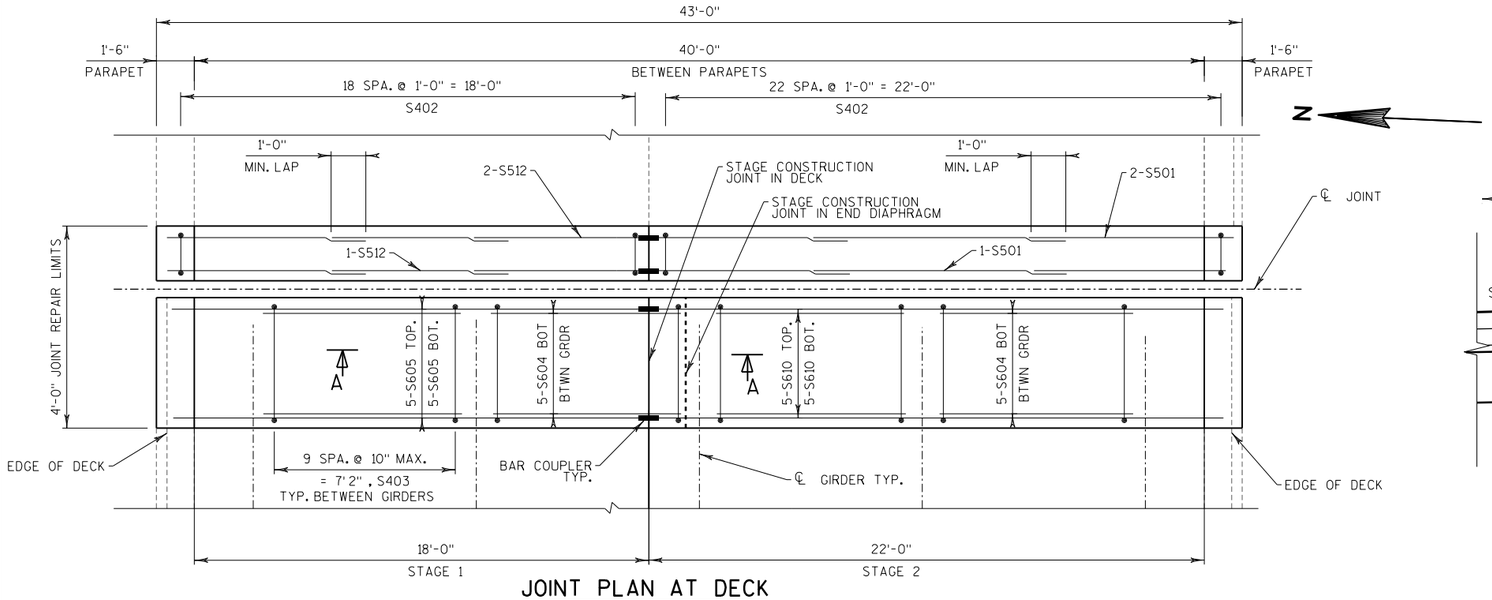

JOINT PLAN AT DECK

EAST ABUTMENT SHOWN. (W. ABUT. SIMILAR)

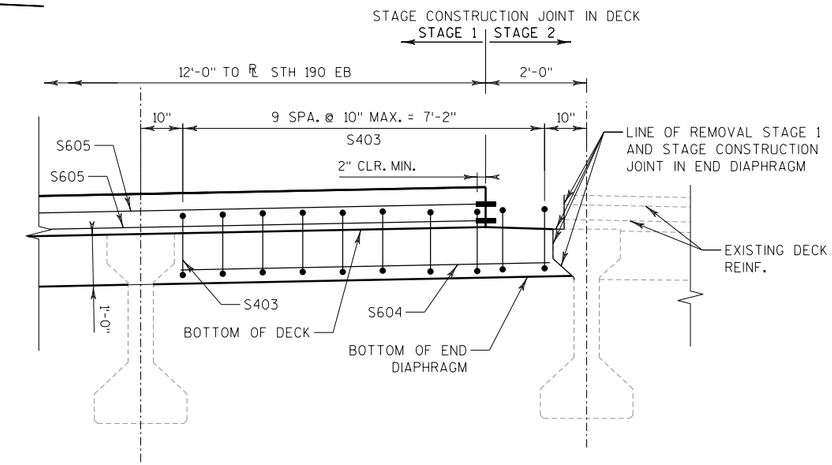

PARTIAL TRANSVERSE SECTION A-A AT EAST ABUTMENT END DIAPHRAGM

(WEST ABUTMENT DIAPHRAGM SIMILAR)

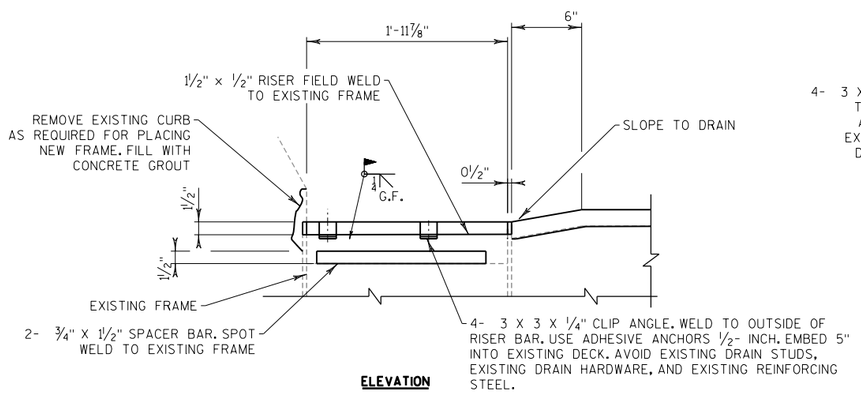

ELEVATION

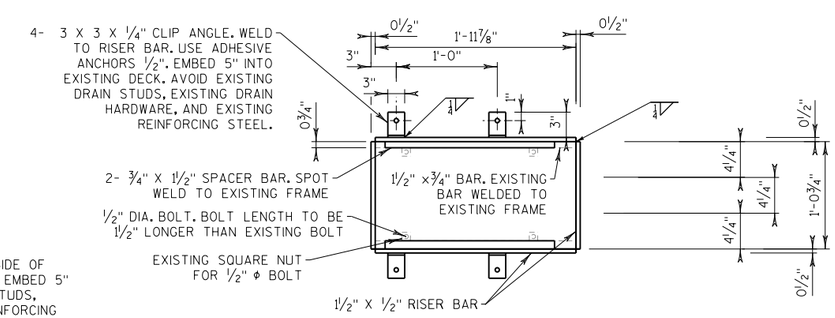

PLAN

DRAIN RAISING DETAIL

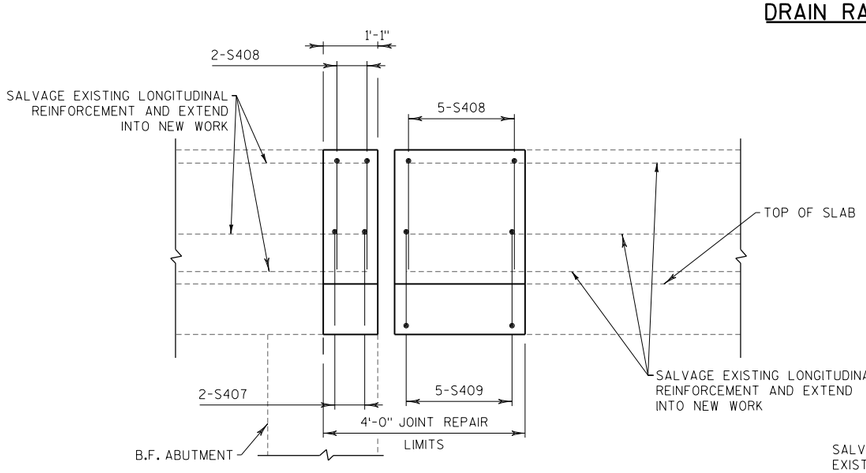

PARAPET ELEVATION

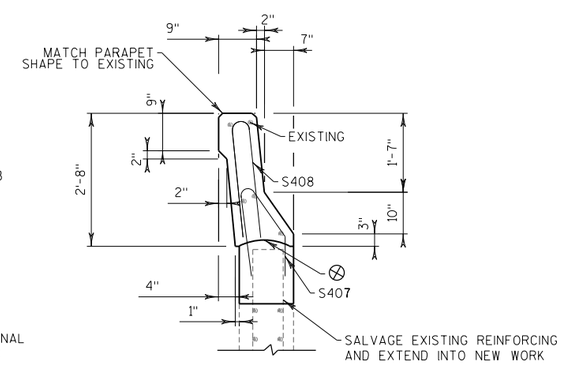

PARAPET SECTION AT PAVING BLOCK

SALVAGE AND REUSE EXISTING REINFORCEMENT WHERE NOTED. DAMAGED EXISTING REINFORCEMENT WILL BE REPLACED AT NO COST TO THE OWNER. IF EXISTING REINFORCEMENT IS DAMAGED BY CONTRACTOR THE CONTRACTOR MUST PROVIDE REINFORCEMENT DESIGN TO CONNECT EXISTING STRUCTURE WITH NEW STRUCTURE FOR APPROVAL BY ENGINEER.

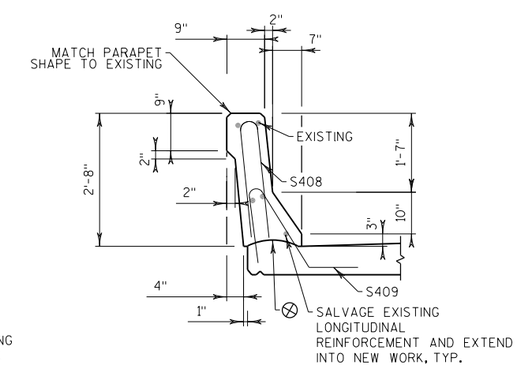

PARAPET SECTION AT BRIDGE

⊗ CONSTRUCTION JOINT - STRIKE OFF AS SHOWN AND LEAVE ROUGH.

NOTES

SALVAGE AND REUSE EXISTING DRAIN GRATE. NEW DRAIN MATERIALS TO BE PAID FOR AS "ADJUSTING FLOOR DRAINS." ANCHORS TO BE PAID FOR AS "ADHESIVE ANCHORS 1/2-INCH"

SPRAY GALVANIZE AFTER FIELD WELDING

SALVAGE AND REUSE EXISTING REINFORCEMENT WHERE NOTED. DAMAGED EXISTING REINFORCEMENT WILL BE REPLACED AT NO COST TO THE OWNER. IF EXISTING REINFORCEMENT IS DAMAGED BY CONTRACTOR THE CONTRACTOR MUST PROVIDE REINFORCEMENT DESIGN TO CONNECT EXISTING STRUCTURE WITH NEW STRUCTURE FOR APPROVAL BY ENGINEER.

NO.	DATE	REVISION	BY

STATE OF WISCONSIN
DEPARTMENT OF TRANSPORTATION

STRUCTURE B-67-201

DRAWN BY MDR | PLANS CK'D. AJC

SUPERSTRUCTURE DETAILS

SHEET 4 OF 6

451

8

8

STATE PROJECT NUMBER

2025-14-71

◒ TEMPERATURE TABLE

SHADED UNDERSIDE OF DECK TEMP	JT. OPENING
90	1⅞"
80	2"
70	2¼"
60	2½"
50	2⅝"
40	2⅞"
30	3"

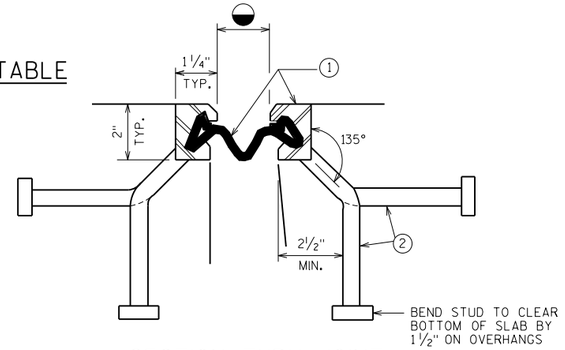

SECTION THRU JOINT

EXTERIOR GIRDER TO EDGE OF SLAB & AT PARAPETS

NOTES

ONE FIELD SPLICE PERMITTED IN STEEL EXTRUSIONS, UNLESS MORE ARE REQUIRED FOR STAGED CONSTRUCTION, HANDLING, OR GALVANIZING REQUIREMENTS. IF USED, DETAILS SHALL BE SUBMITTED FOR APPROVAL. NO SPLICING PERMITTED IN NEOPRENE STRIP SEAL.

AFTER FABRICATION, BUT BEFORE SHIPMENT, STRAIGHTEN STEEL EXTRUSIONS SUCH THAT THEY SHALL BE FREE FROM WARP, TWIST & SWEEP.

FABRICATOR SHALL PROVIDE MEANS OF KEEPING GALVANIZED EXTRUSIONS CLEAN AND SMOOTH DURING SHIPMENT AND PRIOR TO APPLYING LUBRICANT ADHESIVE FOR NEOPRENE GLAND INSTALLATION.

SANDBLAST PLATES, SUPPORTS, AND EXTRUSIONS AFTER FABRICATION IN ACCORDANCE WITH SSPC SP. #6 "COMMERCIAL BLAST CLEANING". AFTER BLAST CLEANING, THE PLATES, SUPPORTS, AND EXTRUSIONS SHALL BE HOT DIPPED GALVANIZED.

ANCHOR SYSTEM NO. 8 & NO. 9 SHALL CONFORM TO ASTM A307 & SHALL BE GALVANIZED IN ACCORDANCE WITH ASTM A153 CLASS C & D.

STRIP SEAL EXPANSION JOINT ASSEMBLY, INCLUDING ANCHOR STUDS & HARDWARE WILL BE PAID FOR AT THE LUMP SUM PRICE BID FOR "EXPANSION DEVICE B-67-201".

LEGEND

1. NEOPRENE STRIP SEAL (4-INCH) & STEEL EXTRUSIONS.
2. STUDS ⅝" Φ × 6⅜" LONG AT 6" ALTERNATE CENTERS. WELD TO EXTRUSIONS & BEND AS SHOWN AFTER WELDING.

2A. ½" THICK ANCHOR PLATE WITH ⅝" Φ ROD (OR ALTERNATE STRIP SEAL ANCHOR). WELD ROD TO ANCHOR PLATE, WELD ANCHOR PL. TO NO. 1 AT 1'-6" CTRS. BETWEEN GIRDERS.

3. ¾" Φ THREADED ROD WITH 2 NUTS AND WASHERS. FOR PRESTRESSED GIRDERS GROUT THREADED ROD INTO FIELD DRILLED HOLES ON ℄ OF GIRDER. FOR STEEL GIRDERS, WELD THREADED ROD TO TOP FLANGE OR ATTACH BY BOLTING THRU FLANGE. ON ABUTMENT SIDE GROUT THREADED ROD INTO FIELD DRILLED HOLES IN ABUTMENT BACKWALL AS SHOWN.
4. ¾" Φ THREADED ROD WITH NUT. TACK WELD NUT TO NO. 5.
5. FABRICATE SUPPORT FROM 3" × ½" BAR AS SHOWN OR EQUIVALENT. ONE PER GIRDER PER SIDE. SHOP OR FIELD WELD TO NO. 1. IF FIELD WELDED, COVER WELDED AREAS WITH EPOXY-COATING MATERIAL. PROVIDE 1½" Φ HOLE FOR NO. 3 & 1" Φ HOLE FOR NO. 4.

\+ PRESERVE AND PROTECT EXISTING REINFORCEMENT. IF
\+ EXISTING BARS ARE SEVERELY CORRODED SEE ENGINEER FOR REPLACEMENT OPTIONS. IF EXISTING BARS ARE DAMAGED DURING CONCRETE REMOVAL OPERATIONS THE CONTRACTOR WILL REPLACE REINFORCEMENT AT THE DIRECTION OF THE ENGINEER AT NO ADDITIONAL EXPENSE TO THE OWNER.

▲ DIMENSIONS GIVEN ARE NORMAL TO ℄ OF SUBSTRUCTURE UNIT. UTILIZE EXISTING REINFORCEMENT.

◒ TEMPERATURE TABLE IS TAKEN FROM EXISTING PLANS. JOINT OPENINGS ARE MEASURED PERPENDICULAR TO JOINT. SMALL JOINT OPENINGS DUE TO HIGH TEMPERATURE AT TIME OF CONSTRUCTION MAY REQUIRE NEOPRENE STRIP SEAL INSTALLATION INTO STEEL EXTRUSTION PRIOR TO SETTING THE EXPANSION JOINT.

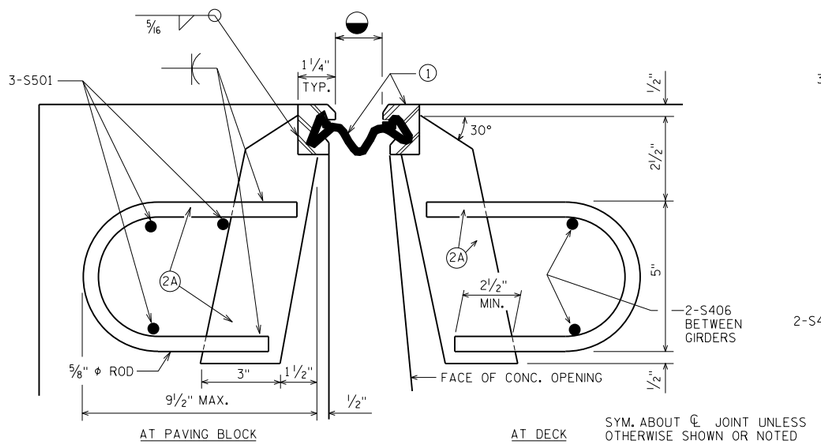

SECTION THRU JOINT

ROADWAY TRAFFIC AREA BETWEEN EXTERIOR GIRDERS.

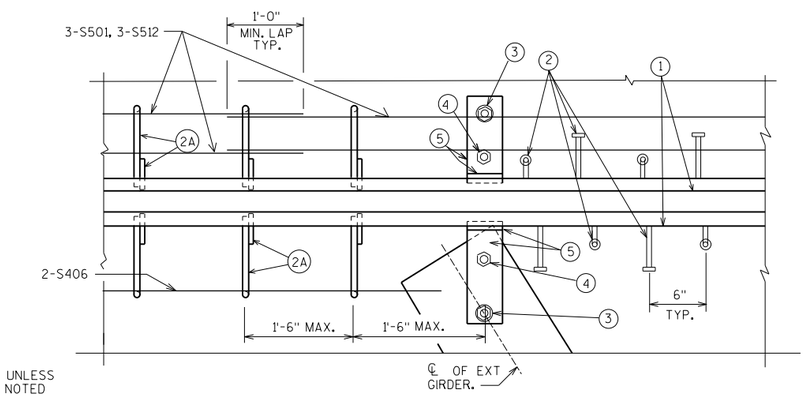

PART PLAN

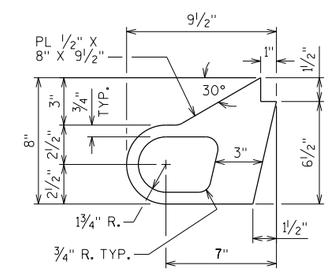

ALTERNATE STRIP SEAL ANCHOR

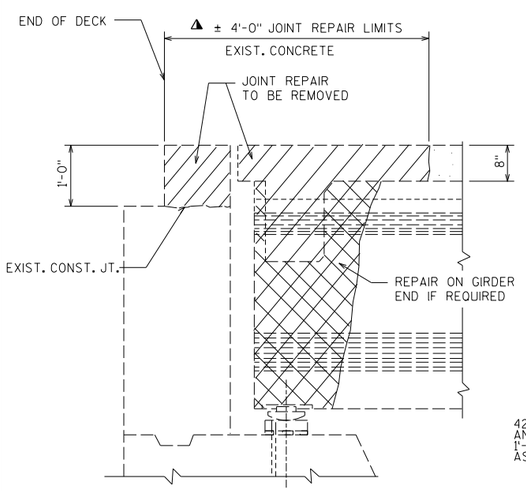

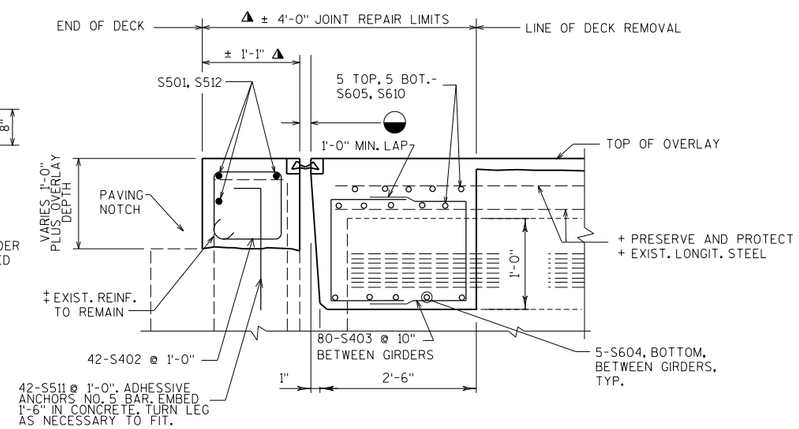

JOINT REPAIR-REMOVAL

SECTION THRU JOINT-PRESTRESSED GIRDER

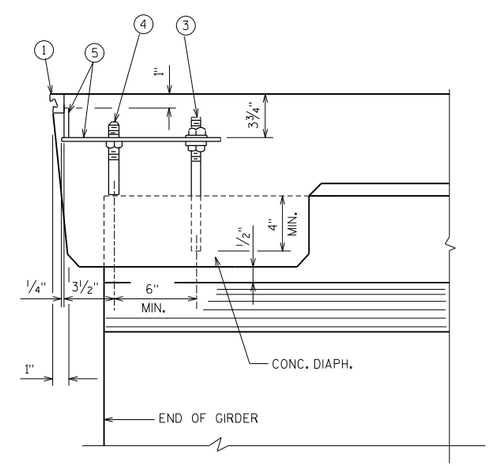

PART SECTION THRU JOINT AT PRESTRESSED GIRDERS

NORMAL TO ℄ SUBSTRUCTURE

8

8

NO.	DATE	REVISION	BY

STATE OF WISCONSIN
DEPARTMENT OF TRANSPORTATION

STRUCTURE B-67-201

DRAWN BY MDR | PLANS CK'D. AJC

EXPANSION JOINT (1)

SHEET 5 OF 6
452

STATE PROJECT NUMBER

2025-14-71

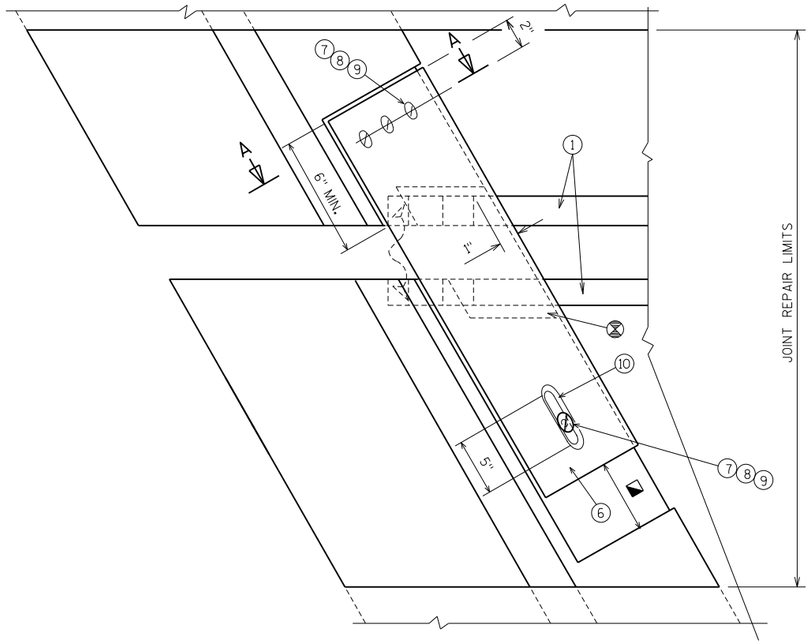

PLAN

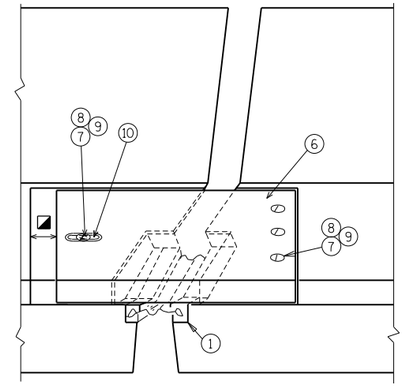

VIEW OF PARAPET PLATES FROM ROADWAY

LEGEND

1. NEOPRENE STRIP SEAL (4-INCH) & STEEL EXTRUSIONS.

2. STUDS 5/8" Φ x 6 3/8" LONG AT 6" ALTERNATE CENTERS. WELD TO EXTRUSIONS & BEND AS SHOWN AFTER WELDING.

6. GALVANIZED PLATE 3/8" x 1'-2 1/2" x (2'-2" LONG FOR SKEWS TO 45° & 3'-0" LONG FOR SKEWS > 45°) WITH HOLES FOR NO. 7. BEND AS SHOWN.

7. 3/4" Φ x 1 1/2" STAINLESS STEEL SOCKET FLAT HEAD SCREWS WITH ANTI-SEIZE LUBRICANT. PLACE IN COUNTERSUNK HOLE. RECESS 1/16" BELOW PLATE SURFACE.

8. 3/4" Φ x 4" GALVANIZED HEX HEAD BOLT. BEND 45°.

9. 3/4" Φ x 2 1/4" GALVANIZED THREADED COUPLING.

10. 1" x 5" SLOTTED CSK. HOLE FOR NO. 7. SLOT PARALLEL TO DIRECTION OF MOVEMENT.

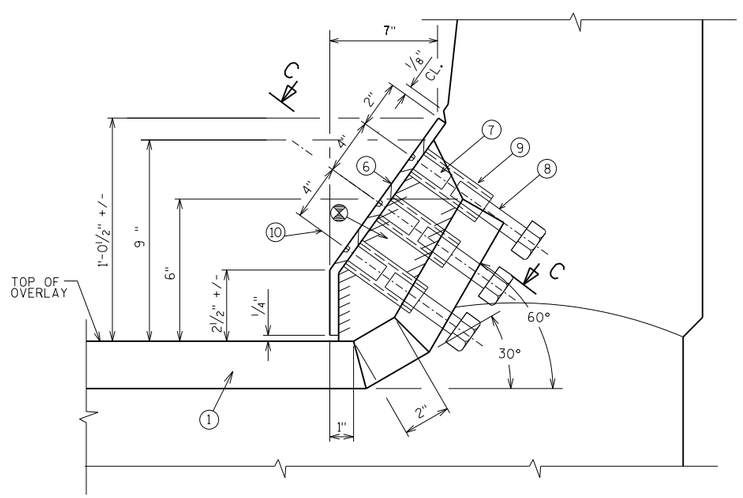

SECTION A-A

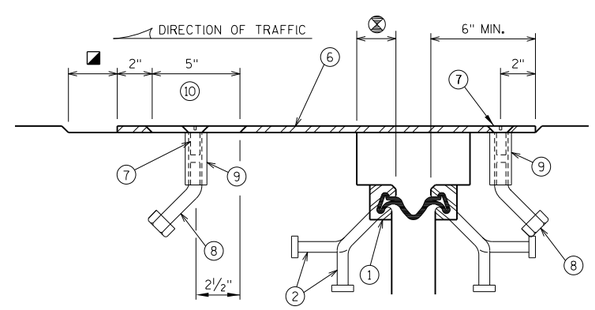

SECTION C-C

BLOCK OUT CONCRETE 2" EACH SIDE FOR JOINT OPENING

JOINT OPENING DIM. ALONG SKEW PLUS 1/2"

NO.	DATE	REVISION	BY

STATE OF WISCONSIN
DEPARTMENT OF TRANSPORTATION

STRUCTURE B-67-201

DRAWN BY MDR | PLANS CK'D. AJC

EXPANSION JOINT (2)

SHEET 6 OF 6

453

8

8

STATE PROJECT NUMBER

2025-14-71

◯ - INDICATES WING NUMBER

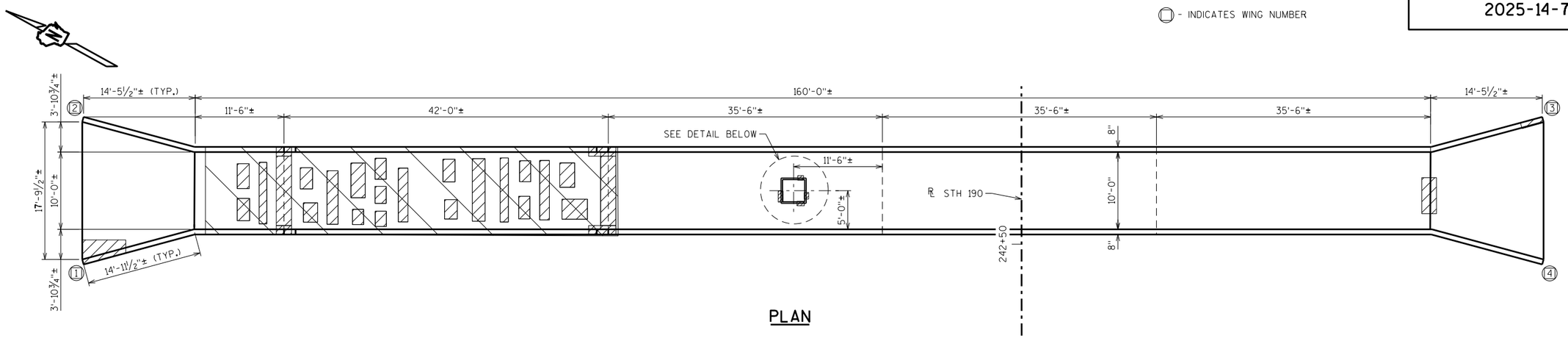

PLAN

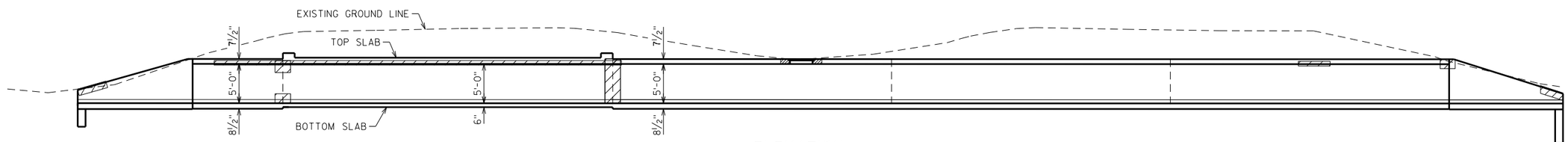

INLET

ELEVATION

OUTLET

GENERAL NOTES

DRAWINGS SHALL NOT BE SCALED.

WORK TO BE DONE IN DRY CONDITIONS.

INCREASE TOP SLAB THICKNESS AT REPAIR AREAS AS NECESSARY TO MAINTAIN MIN 2" CLEAR OVER EXISTING REBAR.

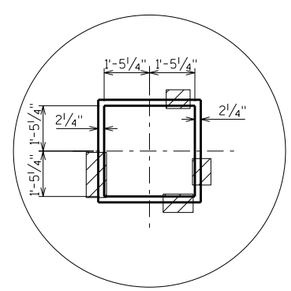

MEDIAN INLET DETAIL

EXTENSIVE SHALLOW SPALLING AND OR CRACKING

EXTENSIVE SHALLOW SPALLING IN SOFFIT (OVERHEAD), PATCHING AREAS SHOWN FOR REPRESENTATIVE PURPOSES ONLY. LOCATIONS OF WORK TO BE DETERMINED BY FIELD ENGINEER.

TOTAL ESTIMATED QUANTITIES

BID ITEM NUMBER	BID ITEMS	UNIT	TOTALS
509.1500	CONCRETE SURFACE REPAIR	SF	300

TRAFFIC VOLUME

CAPITOL DRIVE (STH 190)
ADT = 38,000 (2022)
R.D.S. = 60 M.P.H.

LIST OF DRAWINGS

1. GENERAL PLAN & QUANTITIES

STRUCTURE DESIGN CONTACTS:
JOHN SENDOR (608) 266-5163
AARON BONK (608) 261-0261

NO.	DATE	REVISION	BY

WISCONSIN DEPARTMENT OF TRANSPORTATION
BUREAU OF STRUCTURES

ACCEPTED William C. Dreher 11/6/17
CHIEF STRUCTURES DESIGN ENGINEER DATE

STRUCTURE C-67-31

CAPITOL DRIVE STH 190 OVER UNNAMED CREEK

COUNTY WAUKESHA | CITY BROOKFIELD

DESIGN SPEC. AASHTO LRFD BRIDGE DESIGN SPECIFICATIONS

DESIGNED BY JJS | DESIGNED CK'D. SAD | DRAWN BY JJS | PLANS CK'D. SAD

GENERAL PLAN & QUANTITIES

SHEET 1 OF 1

454

8

8

SCALE = 7.00

I.D. 2025-14-00D DATE: JUNE 2017

STATE PROJECT NUMBER

2025-14-71

(□) - INDICATES WING NUMBER

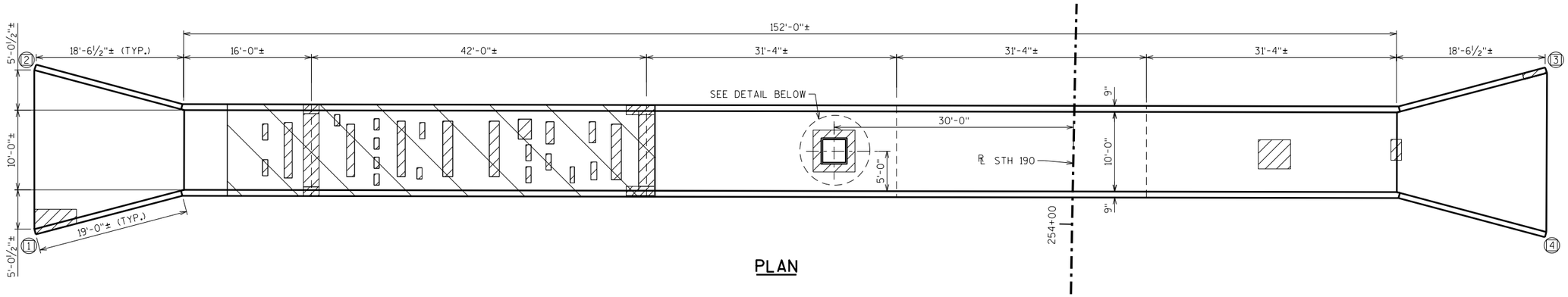

PLAN

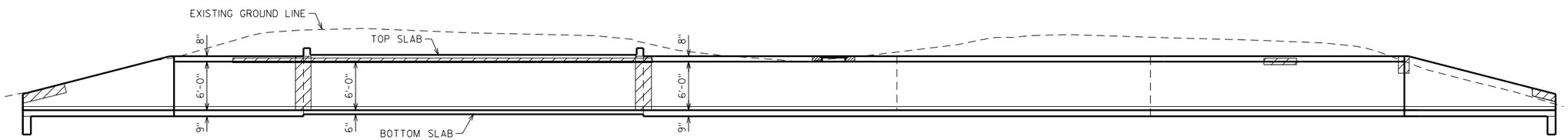

INLET

ELEVATION

OUTLET

GENERAL NOTES

DRAWINGS SHALL NOT BE SCALED.

INCREASE TOP SLAB THICKNESS AT REPAIR AREAS AS NECESSARY TO MAINTAIN MIN 2" CLEAR OVER EXISTING REBAR.

WORK TO BE DONE IN DRY CONDITIONS

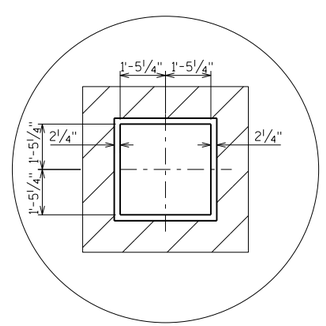

MEDIAN INLET DETAIL

TOTAL ESTIMATED QUANTITIES

BID ITEM NUMBER	BID ITEMS	UNIT	TOTALS
509.1500	CONCRETE SURFACE REPAIR	SF	300

EXTENSIVE SHALLOW SPALLING AND OR CRACKING

EXTENSIVE SHALLOW SPALLING IN SOFFIT (OVERHEAD). PATCHING AREAS SHOWN FOR REPRESENTATIVE PURPOSES ONLY. LOCATIONS OF WORK TO BE DETERMINED BY FIELD ENGINEER.

TRAFFIC VOLUME

CAPITOL DRIVE (STH 190)

ADT = 38,000 (2022)

R.D.S. = 60 M.P.H.

LIST OF DRAWINGS

1. GENERAL PLAN & QUANTITIES

STRUCTURE DESIGN CONTACTS:

JOHN SENDOR (608) 266-5163

AARON BONK (608) 261-0261

NO.	DATE	REVISION	BY

BUREAU OF STRUCTURES

ACCEPTED William C. Dreher AMB 11/6/17

CHIEF STRUCTURES DESIGN ENGINEER DATE

STRUCTURE C-67-33

CAPITOL DRIVE STH 190 OVER FOX RIVER BRANCH

COUNTY WAUKESHA | CITY BROOKFIELD

DESIGN SPEC. AASHTO LRFD BRIDGE DESIGN SPECIFICATIONS

DESIGNED BY JJS | DESIGNED CK'D. SAD | DRAWN BY JJS | PLANS CK'D. SAD

GENERAL PLAN & QUANTITIES

SHEET 1 OF 1

455

8

8

SCALE = 7.00

I.D. 2025-14-00E DATE: JUNE 2017

STH 190 - STAGE 1

STATION	DISTANCE	AREA (SF) Cut	AREA (SF) Salvaged/Unusable Pavement Material	AREA (SF) Fill	Incremental Vol (CY) (Unadjusted) Cut	Incremental Vol (CY) (Unadjusted) Salvaged/Unusable Pavement Material	Incremental Vol (CY) (Unadjusted) Fill	Cumulative Vol (CY) Cut 1.00	Cumulative Vol (CY) Expanded Fill 1.25	Mass Ordinate
164+00.00	0	57	0	0	0	0	0	0	0	0
164+50.00	50	98	0	0	144	0	0	144	0	144
165+00.00	50	62	0	0	149	0	0	293	0	293
165+44.91	45	13	0	19	62	0	16	355	20	335
165+69.91	25	9	0	18	10	0	17	365	42	323
165+94.91	25	1	0	4	5	0	10	369	54	316
166+00.00	5	1	0	3	0	0	1	370	54	315
166+69.95	70	1	0	4	4	0	9	373	66	307
166+94.95	25	1	0	4	1	0	4	375	71	304
167+00.00	5	1	0	4	0	0	1	375	72	303
167+19.95	20	1	0	4	1	0	3	376	76	300
168+00.00	80	1	0	3	4	0	11	380	90	290
173+00.00	500	0	0	0	13	0	29	393	125	268
174+00.00	100	1	0	12	2	0	23	395	153	242
175+00.00	100	1	0	9	4	0	40	399	203	196
175+12.72	13	9	0	6	2	0	4	402	208	194
175+37.72	25	9	0	16	8	0	11	410	221	189
175+62.72	25	9	0	23	8	0	18	418	244	174
176+00.00	37	8	0	12	12	0	24	430	274	156
176+75.00	75	0	0	0	12	0	16	442	294	147
177+00.00	25	0	0	0	0	0	0	442	294	147
178+00.00	100	0	0	0	0	0	0	442	294	147
179+00.00	100	0	0	0	0	0	0	442	294	147
180+00.00	100	0	0	0	0	0	0	442	294	147
180+35.03	35	0	0	0	0	0	0	442	294	147
180+60.03	25	0	0	0	0	0	0	442	294	147
180+85.03	25	0	0	0	0	0	0	442	294	147
181+00.00	15	0	0	0	0	0	0	442	294	147
181+50.00	50	0	0	0	0	0	0	442	294	147
182+00.00	50	0	0	0	0	0	0	442	294	147
183+00.00	100	0	0	0	0	0	0	442	294	147
184+00.00	100	0	0	0	0	0	0	442	294	147
185+00.00	100	0	0	0	0	0	0	442	294	147
185+25.00	25	0	0	0	0	0	0	442	294	147
185+50.00	25	0	0	0	0	0	0	442	294	147
186+00.00	50	0	0	0	0	0	0	442	294	147
186+50.00	50	0	0	0	0	0	0	442	294	147
188+00.00	150	0	0	0	0	0	0	442	294	147
188+50.00	50	0	0	0	0	0	0	442	294	147
189+00.00	50	0	0	0	0	0	0	442	294	147
189+50.00	50	0	0	0	0	0	0	442	294	147
190+00.00	50	59	0	2	55	0	2	496	297	200
191+00.00	100	57	0	3	216	0	9	712	308	404
191+50.00	50	51	0	5	101	0	7	813	316	497
192+00.00	50	39	0	8	84	0	12	897	331	566
192+50.00	50	32	0	13	66	0	19	963	355	608
193+00.00	50	38	0	24	65	0	33	1027	397	631
193+50.00	50	39	0	29	71	0	49	1098	457	641
194+00.00	50	32	0	14	65	0	40	1164	507	656
195+00.00	100	12	0	24	82	0	69	1246	594	652

STH 190 - STAGE 1

STATION	DISTANCE	AREA (SF) Cut	AREA (SF) Salvaged/Unusable Pavement Material	AREA (SF) Fill	Incremental Vol (CY) (Unadjusted) Cut	Incremental Vol (CY) (Unadjusted) Salvaged/Unusable Pavement Material	Incremental Vol (CY) (Unadjusted) Fill	Cumulative Vol (CY) Cut 1.00	Cumulative Vol (CY) Expanded Fill 1.25	Mass Ordinate
196+00.00	100	13	0	19	47	0	79	1292	692	600
197+00.00	100	12	0	13	46	0	58	1338	765	573
197+75.00	75	11	0	3	32	0	21	1370	792	578
200+00.00	225	0	0	0	46	0	12	1415	807	609
201+00.00	100	0	0	0	0	0	0	1415	807	609
201+50.00	50	36	0	2	33	0	2	1448	809	639
202+00.00	50	31	0	4	61	0	6	1509	817	692
203+00.00	100	27	0	12	106	0	30	1616	855	761
204+00.00	100	28	0	15	101	0	50	1717	917	800
204+50.00	50	36	0	5	59	0	19	1776	940	836
205+00.00	50	13	0	0	45	0	5	1821	946	875
205+50.00	50	13	0	0	24	0	0	1845	947	899
206+00.00	50	12	0	0	23	0	0	1869	947	922
207+00.00	100	72	0	0	157	0	0	2025	947	1079
207+50.00	50	88	0	0	149	0	0	2174	947	1227
208+00.00	50	41	0	8	120	0	7	2294	956	1338
208+50.00	50	29	0	0	65	0	7	2358	965	1393
209+00.00	50	0	0	0	27	0	0	2385	965	1420
210+00.00	100	0	0	0	0	0	0	2385	965	1420
211+00.00	100	0	0	0	0	0	0	2385	965	1420
212+00.00	100	0	0	0	0	0	0	2385	965	1420
213+00.00	100	0	0	0	0	0	0	2385	965	1420
214+50.00	150	12	0	0	32	0	0	2417	965	1452
215+00.00	50	13	0	1	23	0	1	2440	967	1474
216+00.00	100	21	0	6	63	0	13	2503	982	1521
216+50.00	50	23	0	3	40	0	8	2543	993	1550
218+50.00	200	0	0	0	83	0	13	2627	1009	1618
219+00.00	50	0	0	0	0	0	0	2627	1009	1618
220+00.00	100	0	0	0	0	0	0	2627	1009	1618
221+00.00	100	0	0	0	0	0	0	2627	1009	1618
222+00.00	100	0	0	0	0	0	0	2627	1009	1618
223+00.00	100	0	0	0	0	0	0	2627	1009	1618
231+50.00	850	11	0	0	180	0	0	2806	1009	1797
232+00.00	50	12	0	0	22	0	0	2828	1009	1819
233+00.00	100	11	0	7	43	0	13	2871	1025	1846
234+00.00	100	12	0	5	42	0	22	2913	1053	1860
235+00.00	100	14	0	5	48	0	19	2961	1076	1884
236+00.00	100	24	0	0	70	0	9	3030	1088	1942
236+50.00	50	0	0	0	22	0	0	3052	1088	1964
237+00.00	50	0	0	0	0	0	0	3052	1088	1964
237+50.00	50	0	0	0	0	0	0	3052	1088	1964
239+00.00	150	0	0	0	0	0	0	3052	1088	1964
239+50.00	50	0	0	0	0	0	0	3052	1088	1964
240+00.00	50	23	0	0	21	0	0	3074	1088	1985
240+36.72	37	19	0	1	29	0	1	3102	1089	2013
240+61.72	25	17	0	3	17	0	2	3119	1091	2028
240+86.72	25	16	0	4	15	0	3	3134	1096	2039
241+00.00	13	16	0	4	8	0	2	3142	1098	2044
241+50.00	50	15	0	1	28	0	5	3170	1104	2066
242+00.00	50	14	0	0	27	0	1	3197	1105	2092

STH 190 - STAGE 1

STATION	DISTANCE	AREA (SF) Cut	AREA (SF) Salvaged/Unusable Pavement Material	AREA (SF) Fill	Incremental Vol (CY) (Unadjusted) Cut	Incremental Vol (CY) (Unadjusted) Salvaged/Unusable Pavement Material	Incremental Vol (CY) (Unadjusted) Fill	Cumulative Vol (CY) Cut 1.00	Cumulative Vol (CY) Expanded Fill 1.25	Mass Ordinate
242+50.00	50	14	0	0	25	0	0	3223	1105	2117
243+00.00	50	0	0	0	13	0	0	3235	1105	2130
243+65.00	65	0	0	0	0	0	0	3235	1105	2130
245+00.00	135	0	0	0	0	0	0	3235	1105	2130
246+00.00	100	0	0	0	0	0	0	3235	1105	2130
247+00.00	100	0	0	0	0	0	0	3235	1105	2130
247+50.00	50	3	0	0	3	0	0	3238	1105	2133
248+00.00	50	4	0	0	6	0	0	3244	1105	2139
248+76.25	76	4	0	0	11	0	0	3255	1105	2150
249+01.25	25	4	0	0	4	0	0	3259	1105	2154
249+26.25	25	5	0	0	4	0	0	3264	1105	2159
249+50.00	24	4	0	0	4	0	0	3268	1105	2162
250+00.00	50	4	0	3	8	0	3	3275	1109	2166
251+50.00	150	8	0	3	33	0	16	3308	1129	2179
252+00.00	50	8	0	4	15	0	6	3323	1137	2186
252+50.00	50	9	0	2	16	0	6	3339	1144	2195
253+00.00	50	8	0	1	16	0	3	3354	1147	2207
253+50.00	50	7	0	1	14	0	2	3369	1150	2219
254+00.00	50	4	0	5	10	0	6	3379	1157	2222
254+21.19	21	0	0	0	2	0	2	3380	1159	2221
254+45.94	25	0	0	0	0	0	0	3380	1159	2221
254+50.00	4	8	0	4	1	0	0	3381	1160	2221
254+70.70	21	0	0	0	3	0	2	3384	1162	2222
255+00.00	29	9	0	2	5	0	1	3389	1163	2226
255+67.24	67	1	0	0	12	0	3	3400	1166	2234
255+91.81	25	1	0	0	1	0	0	3401	1166	2235
256+16.38	25	0	0	0	0	0	0	3401	1166	2235
257+00.00	84	1	0	0	1	0	0	3403	1166	2236
259+00.00	200	25	0	0	95	0	0	3497	1166	2331
259+50.00	50	95	0	0	110	0	0	3608	1166	2441
260+00.00	50	104	0	0	184	0	0	3791	1166	2625
260+50.00	50	39	0	0	132	0	0	3923	1166	2757
267+00.00	650	0	0	0	469	0	0	4392	1166	3225
268+00.00	100	0	0	0	0	0	0	4392	1166	3225
269+00.00	100	0	0	0	0	0	0	4392	1166	3225
270+00.00	100	0	0	0	0	0	0	4392	1166	3225
271+00.00	100	0	0	0	0	0	0	4392	1166	3225
272+00.00	100	0	0	0	0	0	0	4392	1166	3225
288+00.00	1600	41	0	0	1204	0	0	5596	1166	4430
288+50.00	50	40	0	0	74	0	0	5670	1166	4504
289+00.00	50	39	0	2	73	0	2	5743	1169	4574
289+50.00	50	41	0	2	74	0	4	5817	1174	4642
290+00.00	50	54	0	1	88	0	3	5905	1178	4726
290+50.00	50	64	0	0	110	0	1	6014	1180	4835
291+00.00	50	71	0	0	125	0	0	6140	1180	4960
291+50.00	50	47	0	0	109	0	0	6249	1180	5069
292+00.00	50	38	0	0	78	0	0	6327	1180	5147
292+50.00	50	25	0	0	58	0	0	6385	1180	5205
293+00.00	50	13	0	0	35	0	0	6420	1180	5240
					6420	0	944			

9

9

PROJECT NO: 2025-14-71	HWY: STH 190	COUNTY: WAUKESHA	EARTHWORK DATA	SHEET: 458	E

FILE NAME : _____ PLOT DATE : _____ PLOT BY : _____ PLOT NAME : _____ PLOT SCALE : 1:1

STH 190 - STAGE 2

STATION	DISTANCE	AREA (SF) Cut	AREA (SF) Salvaged/Unusable Pavement Material	AREA (SF) Fill	Incremental Vol (CY) (Unadjusted) Cut	Incremental Vol (CY) (Unadjusted) Salvaged/Unusable Pavement Material	Incremental Vol (CY) (Unadjusted) Fill	Cumulative Vol (CY) Cut 1.00	Cumulative Vol (CY) Expanded Fill 1.25	Mass Ordinate
164+00.00		0	0	0	0	0	0	0	0	0
164+50.00	50	0	0	0	0	0	0	0	0	0
165+00.00	50	0	0	0	0	0	0	0	0	0
165+44.91	45	0	0	0	0	0	0	0	0	0
165+69.91	25	0	0	0	0	0	0	0	0	0
165+94.91	25	0	0	0	0	0	0	0	0	0
166+00.00	5	0	0	0	0	0	0	0	0	0
166+69.95	70	13	0	0	17	0	0	17	0	17
166+94.95	25	9	0	13	10	0	6	27	7	19
167+00.00	5	9	0	1	2	0	1	28	9	19
167+19.95	20	9	0	0	7	0	0	35	9	26
168+00.00	80	1	0	0	15	0	0	50	9	41
173+00.00	500	2	0	0	26	0	0	76	9	67
174+00.00	100	1	0	1	4	0	1	80	10	70
175+00.00	100	2	0	2	5	0	4	85	15	70
175+12.72	13	2	0	1	1	0	1	86	16	70
175+37.72	25	2	0	1	2	0	1	88	17	70
175+62.72	25	2	0	1	1	0	1	89	19	70
176+00.00	37	2	0	1	2	0	1	91	21	71
176+75.00	75	2	0	1	4	0	3	96	24	71
177+00.00	25	2	0	1	2	0	1	97	26	72
178+00.00	100	2	0	1	7	0	4	104	31	73
179+00.00	100	2	0	0	7	0	3	111	34	76
180+00.00	100	4	0	0	10	0	1	121	35	85
180+35.03	35	19	0	0	14	0	0	135	36	99
180+60.03	25	10	0	2	13	0	1	148	37	111
180+85.03	25	9	0	0	9	0	1	157	38	119
181+00.00	15	2	0	1	3	0	0	160	38	121
181+50.00	50	20	0	0	20	0	1	180	39	140
182+00.00	50	21	0	0	38	0	0	218	40	178
183+00.00	100	27	0	0	88	0	0	306	40	266
184+00.00	100	23	0	23	92	0	43	398	93	305
185+00.00	100	32	0	14	102	0	69	500	179	321
185+25.00	25	33	0	20	30	0	16	530	198	332
185+50.00	25	34	0	23	31	0	20	562	223	338
186+00.00	50	28	0	1	57	0	23	619	251	368
186+50.00	50	29	0	0	53	0	1	672	253	418
188+00.00	150	14	0	40	119	0	111	790	392	399
188+50.00	50	29	0	0	39	0	37	830	438	392
189+00.00	50	29	0	0	54	0	0	884	438	446
189+50.00	50	28	0	0	53	0	0	937	438	499
190+00.00	50	26	0	0	50	0	0	986	438	548
191+00.00	100	21	0	1	87	0	2	1073	441	632
191+50.00	50	20	0	2	38	0	3	1111	445	666
192+00.00	50	20	0	0	37	0	2	1147	447	700
192+50.00	50	19	0	0	36	0	0	1184	447	736
193+00.00	50	18	0	0	34	0	0	1218	447	771
193+50.00	50	25	0	0	40	0	0	1258	447	810
194+00.00	50	25	0	0	47	0	0	1305	447	857
195+00.00	100	25	0	0	93	0	0	1398	447	950

STH 190 - STAGE 2

STATION	DISTANCE	AREA (SF) Cut	AREA (SF) Salvaged/Unusable Pavement Material	AREA (SF) Fill	Incremental Vol (CY) (Unadjusted) Cut	Incremental Vol (CY) (Unadjusted) Salvaged/Unusable Pavement Material	Incremental Vol (CY) (Unadjusted) Fill	Cumulative Vol (CY) Cut 1.00	Cumulative Vol (CY) Expanded Fill 1.25	Mass Ordinate
196+00.00	100	28	0	0	98	0	0	1496	447	1048
197+00.00	100	0	0	0	51	0	0	1547	447	1100
197+75.00	75	0	0	0	0	0	0	1547	447	1100
200+00.00	225	23	0	0	97	0	0	1644	447	1197
201+00.00	100	19	0	3	79	0	6	1723	455	1268
201+50.00	50	19	0	4	35	0	7	1758	464	1294
202+00.00	50	19	0	6	35	0	9	1792	475	1317
203+00.00	100	18	0	6	69	0	21	1861	501	1360
204+00.00	100	19	0	0	68	0	10	1929	513	1416
204+50.00	50	19	0	0	35	0	0	1964	513	1450
205+00.00	50	0	0	0	17	0	0	1981	513	1468
205+50.00	50	0	0	0	0	0	0	1981	513	1468
206+00.00	50	0	0	0	0	0	0	1981	513	1468
207+00.00	100	0	0	0	0	0	0	1981	513	1468
207+50.00	50	0	0	0	0	0	0	1981	513	1468
208+00.00	50	0	0	0	0	0	0	1981	513	1468
208+50.00	50	0	0	0	0	0	0	1981	513	1468
209+00.00	50	18	0	3	17	0	3	1998	517	1481
210+00.00	100	20	0	3	71	0	11	2069	532	1537
211+00.00	100	20	0	2	73	0	9	2142	543	1599
212+00.00	100	20	0	3	73	0	10	2215	556	1660
213+00.00	100	21	0	0	75	0	6	2290	563	1727
214+50.00	150	0	0	0	58	0	0	2348	563	1785
215+00.00	50	0	0	0	0	0	0	2348	563	1785
216+00.00	100	0	0	0	0	0	0	2348	563	1785
216+50.00	50	0	0	0	0	0	0	2348	563	1785
218+50.00	200	19	0	0	71	0	1	2419	564	1855
219+00.00	50	23	0	0	39	0	0	2458	564	1894
220+00.00	100	20	0	0	80	0	1	2538	565	1973
221+00.00	100	20	0	0	75	0	1	2613	566	2047
222+00.00	100	21	0	0	75	0	1	2688	567	2121
223+00.00	100	21	0	0	76	0	0	2764	567	2198
231+50.00	850	0	0	0	326	0	0	3090	567	2524
232+00.00	50	0	0	0	0	0	0	3090	567	2524
233+00.00	100	21	0	0	40	0	0	3130	567	2563
234+00.00	100	21	0	0	78	0	0	3208	567	2642
235+00.00	100	21	0	0	78	0	0	3286	567	2720
236+00.00	100	22	0	0	79	0	0	3365	567	2799
236+50.00	50	21	0	0	39	0	0	3405	567	2838
237+00.00	50	21	0	0	38	0	0	3443	567	2876
237+50.00	50	23	0	0	40	0	0	3483	567	2916
239+00.00	150	20	0	3	119	0	7	3603	576	3027
239+50.00	50	19	0	6	37	0	8	3639	587	3053
240+00.00	50	52	0	28	66	0	31	3706	626	3080
240+36.72	37	43	0	32	65	0	40	3770	676	3094
240+61.72	25	45	0	30	41	0	28	3811	712	3099
240+86.72	25	46	0	9	42	0	18	3853	734	3119
241+00.00	13	47	0	5	23	0	3	3876	739	3137
241+50.00	50	49	0	6	88	0	10	3964	751	3213
242+00.00	50	24	0	0	67	0	5	4031	758	3274

STH 190 - STAGE 2

STATION	DISTANCE	AREA (SF) Cut	AREA (SF) Salvaged/Unusable Pavement Material	AREA (SF) Fill	Incremental Vol (CY) (Unadjusted) Cut	Incremental Vol (CY) (Unadjusted) Salvaged/Unusable Pavement Material	Incremental Vol (CY) (Unadjusted) Fill	Cumulative Vol (CY) Cut 1.00	Cumulative Vol (CY) Expanded Fill 1.25	Mass Ordinate
242+50.00	50	23	0	0	43	0	1	4075	758	3316
243+00.00	50	23	0	0	42	0	0	4117	759	3358
243+65.00	65	2	0	0	29	0	0	4146	759	3388
245+00.00	135	2	0	0	9	0	0	4155	759	3396
246+00.00	100	2	0	1	6	0	2	4161	762	3399
247+00.00	100	4	0	5	10	0	11	4170	775	3395
247+50.00	50	4	0	3	7	0	8	4178	785	3393
248+00.00	50	4	0	2	8	0	5	4185	791	3395
248+76.25	76	2	0	3	9	0	6	4195	798	3396
249+01.25	25	3	0	2	2	0	2	4197	801	3396
249+26.25	25	2	0	1	2	0	2	4199	803	3396
249+50.00	24	4	0	5	3	0	3	4202	807	3395
250+00.00	50	2	0	10	6	0	14	4207	824	3383
251+50.00	150	3	0	8	13	0	52	4221	889	3332
252+00.00	50	3	0	6	5	0	13	4226	905	3321
252+50.00	50	4	0	3	6	0	7	4232	914	3318
253+00.00	50	4	0	2	7	0	4	4239	919	3320
253+50.00	50	4	0	1	8	0	2	4246	921	3325
253+71.65	22	4	0	3	3	0	1	4250	923	3327
253+96.40	25	2	0	0	3	0	1	4252	924	3328
254+00.00	4	2	0	0	0	0	0	4252	924	3328
254+21.15	21	3	0	2	2	0	1	4254	926	3329
254+50.00	29	2	0	1	3	0	2	4257	928	3329
255+00.00	50	3	0	0	5	0	0	4261	928	3333
255+67.24	67	2	0	0	6	0	0	4268	929	3339
255+91.81	25	2	0	5	1	0	2	4269	932	3337
256+16.38	25	2	0	12	1	0	8	4270	941	3329
257+00.00	84	2	0	0	6	0	18	4276	963	3313
259+00.00	200	0	0	0	8	0	0	4284	963	3321
259+50.00	50	0	0	0	0	0	0	4284	963	3321
260+00.00	50	0	0	0	0	0	0	4284	963	3321
260+50.00	50	0	0	0	0	0	0	4284	963	3321
267+00.00	650	23	0	0	274	0	0	4558	963	3595
268+00.00	100	20	0	0	80	0	0	4638	963	3675
269+00.00	100	24	0	0	83	0	1	4721	964	3757
270+00.00	100	25	0	0	91	0	1	4813	966	3847
271+00.00	100	25	0	1	92	0	2	4904	968	3936
272+00.00	100	23	0	0	87	0	1	4992	969	4022
288+00.00	1600	0	0	0	673	0	0	5664	969	4695
288+50.00	50	0	0	0	0	0	0	5664	969	4695
289+00.00	50	0	0	0	0	0	0	5664	969	4695
289+50.00	50	34	0	0	31	0	0	5696	969	4726
290+00.00	50	27	0	0	56	0	0	5752	969	4783
290+50.00	50	23	0	0	47	0	0	5799	969	4830
291+00.00	50	20	0	0	40	0	0	5839	970	4869
291+50.00	50	19	0	0	36	0	0	5875	970	4905
292+00.00	50	20	0	0	36	0	0	5911	970	4941
292+50.00	50	0	0	0	18	0	0	5929	970	4959
293+00.00	50	0	0	0	0	0	0	5929	970	4959
					5929	0	776			

SPRINGDALE ROAD

STATION	Distance	AREA (SF) Cut	AREA (SF) Salvaged/Unusable Pavement Material	AREA (SF) Fill	Incremental Vol (CY) (Unadjusted) Cut	Incremental Vol (CY) (Unadjusted) Salvaged/Unusable Pavement Material	Incremental Vol (CY) (Unadjusted) Fill	Cumulative Vol (CY) Cut 1.00	Cumulative Vol (CY) Expanded Fill 1.25	Mass Ordinate
42+50.00		26.5	11.1	2	0	0	0	0	0	0
43+00.00	50	24.4	9.5	1.9	47	19	4	47	5	24
43+50.00	50	36.3	12.3	0.4	56	20	2	103	7	57
44+00.00	50	39.6	8.3	5.8	70	19	6	174	14	101
44+50.00	50	43.1	6.3	0.1	77	14	5	250	21	157
45+00.00	50	48.2	7.9	0.0	85	13	0	335	21	228
45+50.00	50	32.3	8.1	1.6	75	15	1	409	23	286
46+00.00	50	25.8	7.0	6.0	54	14	7	463	32	317
46+50.00	50	26.8	8.7	6.7	49	15	12	512	47	337
46+75.00	25	35.9	8.4	4.7	29	8	5	541	53	351
47+00.00	25	39.9	7.9	5.5	35	8	5	576	59	373
47+50.00	50	34.4	9.4	12.5	69	16	17	645	80	405
48+00.00	50	44.2	10.2	13.0	73	18	24	717	109	430
48+50.00	50	48.8	11.3	11.3	86	20	23	804	138	468
49+00.00	50	82.8	22.7	8.7	122	31	19	925	161	535
					925	229	129			

GUMINA ROAD

STATION	Real Station	Distance	AREA (SF) Cut	AREA (SF) Salvaged/Unusable Pavement Material	AREA (SF) Fill	Incremental Vol (CY) (Unadjusted) Cut	Incremental Vol (CY) (Unadjusted) Salvaged/Unusable Pavement Material	Incremental Vol (CY) (Unadjusted) Fill	Cumulative Vol (CY) Cut 1.00	Cumulative Vol (CY) Expanded Fill 1.25	Mass Ordinate
11+00.00	1100		150	51	12	0	0	0	0	0	0
11+25.00	1125	25	94	26	44	113	36	26	113	32	45
11+50.00	1150	25	88	24	39	84	23	38	197	80	58
11+75.00	1175	25	113	27	20	93	23	27	290	114	95
12+00.00	1200	25	182	16	15	137	20	16	427	134	192
12+25.00	1225	25	88	15	18	125	15	15	552	153	283
12+50.00	1250	25	64	12	21	71	13	18	623	176	319
12+75.00	1275	25	54	11	16	55	11	17	678	197	341
13+00.00	1300	25	60	11	3	52	10	9	730	208	372
13+25.00	1325	25	55	11	1	53	10	2	783	211	412
						783	160	169			

BARKER ROAD

STATION	Distance	AREA (SF) Cut	AREA (SF) Salvaged/Unusable Pavement Material	AREA (SF) Fill	Incremental Vol (CY) (Unadjusted) Cut Note 1	Incremental Vol (CY) (Unadjusted) Salvaged/Unusable Pavement Material Note 2	Incremental Vol (CY) (Unadjusted) Fill Note 3	Cumulative Vol (CY) Cut 1.00 Note 1	Cumulative Vol (CY) Expanded Fill 1.25	Mass Ordinate Note 8
42+00.00		19	9	3	0	0	0	0	0	0
42+50.00	50	22	9	1	38	16	3	38	4	17
43+00.00	50	23	9	2	42	17	2	79	6	40
43+50.00	50	23	9	2	43	16	3	122	10	62
44+00.00	50	23	7	2	43	15	4	165	15	86
44+50.00	50	29	10	2	48	16	4	213	20	113
45+00.00	50	27	11	11	52	20	12	265	35	130
45+50.00	50	33	11	2	55	21	12	321	50	150
46+00.00	50	32	12	1	60	21	2	381	52	186
46+50.00	50	19	10	1	48	20	2	429	54	212
47+00.00	50	21	13	1	37	21	1	466	56	227
47+50.00	50	24	16	1	41	26	1	507	57	241
48+00.00	50	19	12	2	40	25	3	547	60	252
48+35.00	35	24	15	6	28	17	6	575	67	256
48+50.00	15	26	17	7	14	9	4	588	72	256
48+60.00	10	26	16	5	10	6	2	598	75	257
					598	266	60			

9

9

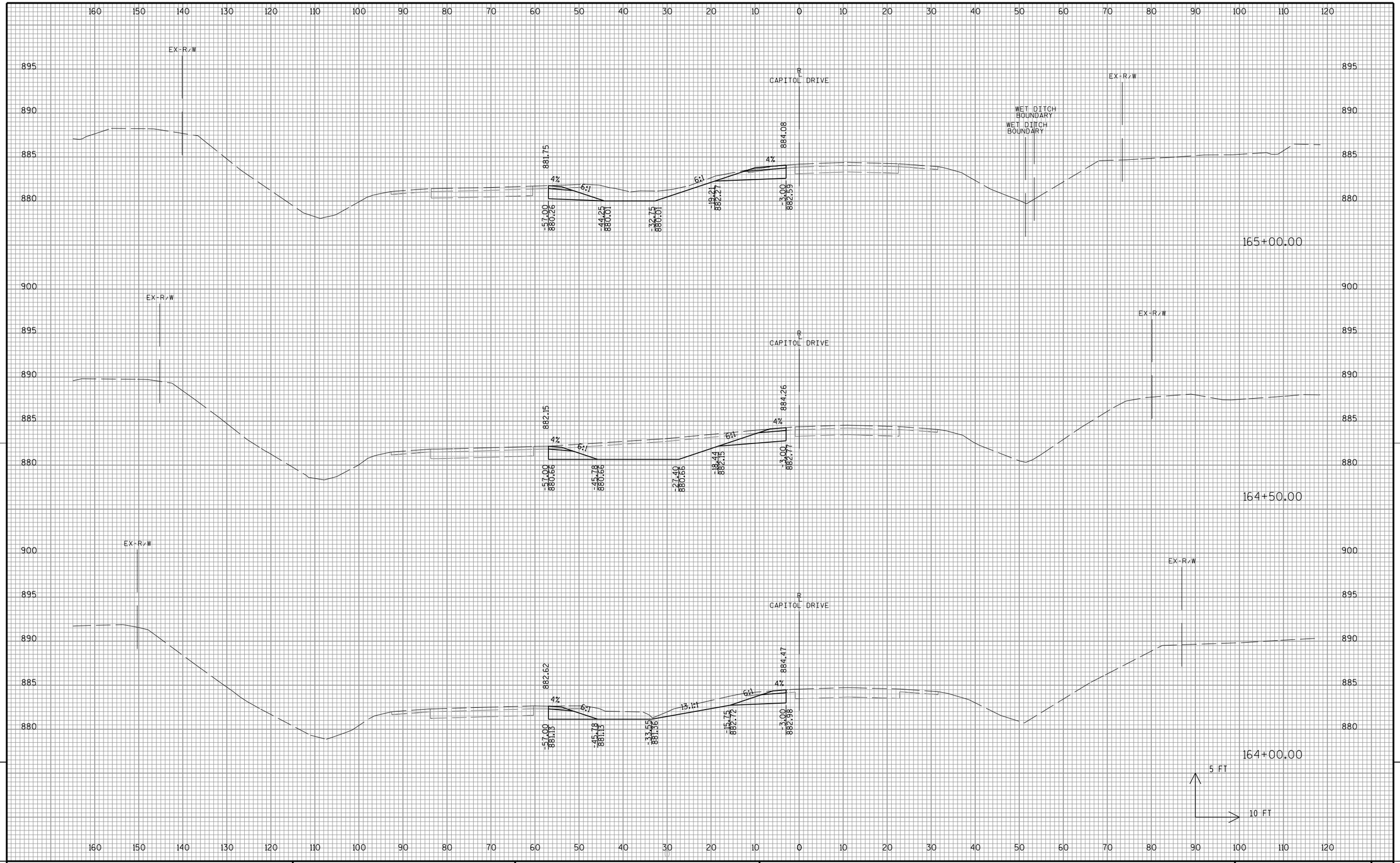

PROJECT NO:2025-14-71	HWY:STH 190	COUNTY:WAUKESHA	CROSS SECTIONS: STH 190 (W. CAPITOL DRIVE)	SHEET 464	E

FILE NAME : X:\ML\2016\20160073\CAD\Transportation\dgn\00\090201_xs_CAPITOL.dgn PLOT DATE : 11/28/2017 PLOT BY : $$...plotuser...$$ PLOT NAME : PLOT SCALE : $$.....plotscale.....$$ WISDOT/CADDS SHEET 21

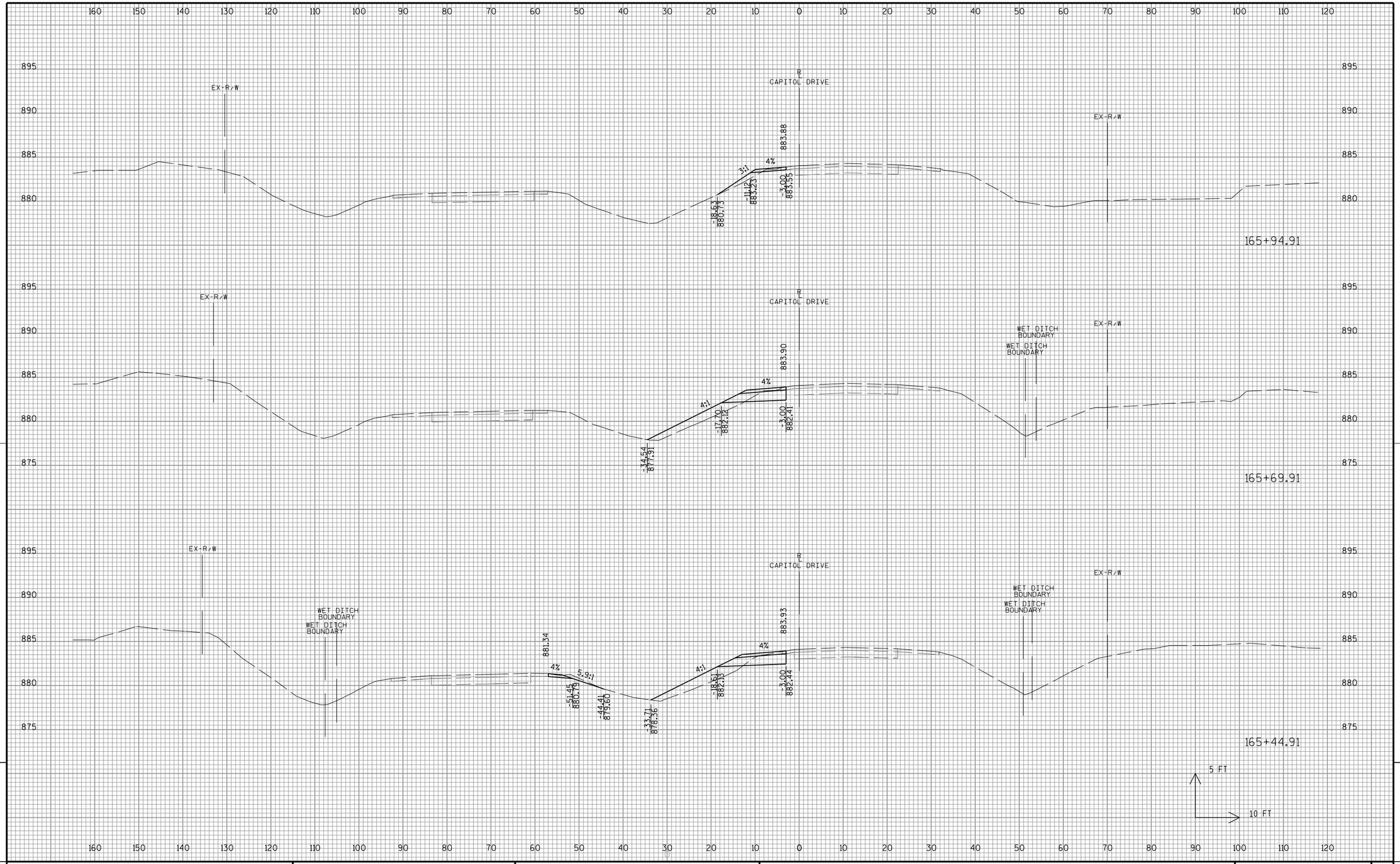

PROJECT NO:2025-14-71	HWY:STH 190	COUNTY:WAUKESHA	CROSS SECTIONS: STH 190 (W. CAPITOL DRIVE)	SHEET 465	E

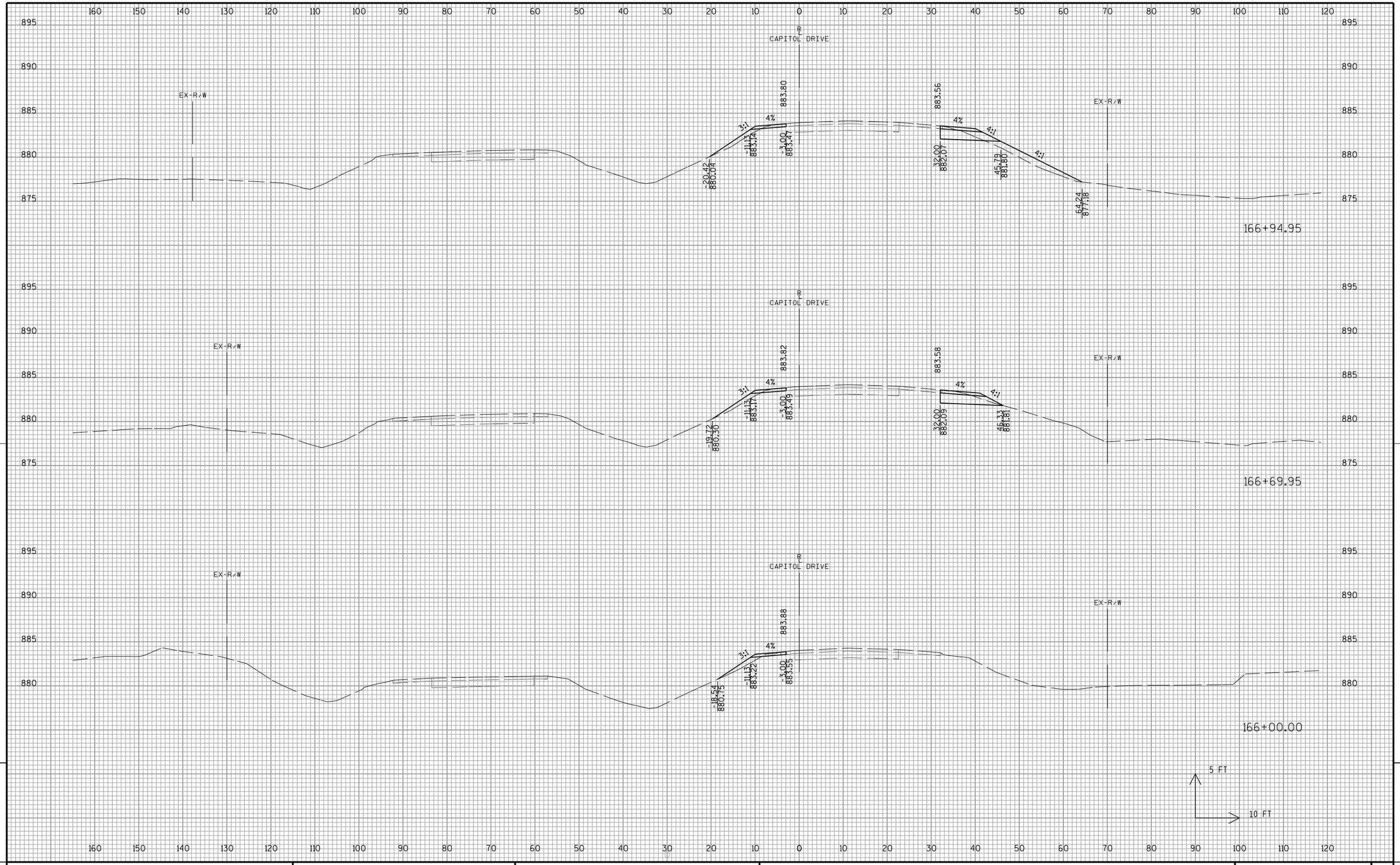

9

9

PROJECT NO:2025-14-71	HWY:STH 190	COUNTY:WAUKESHA	CROSS SECTIONS: STH 190 (W. CAPITOL DRIVE)	SHEET 466	E

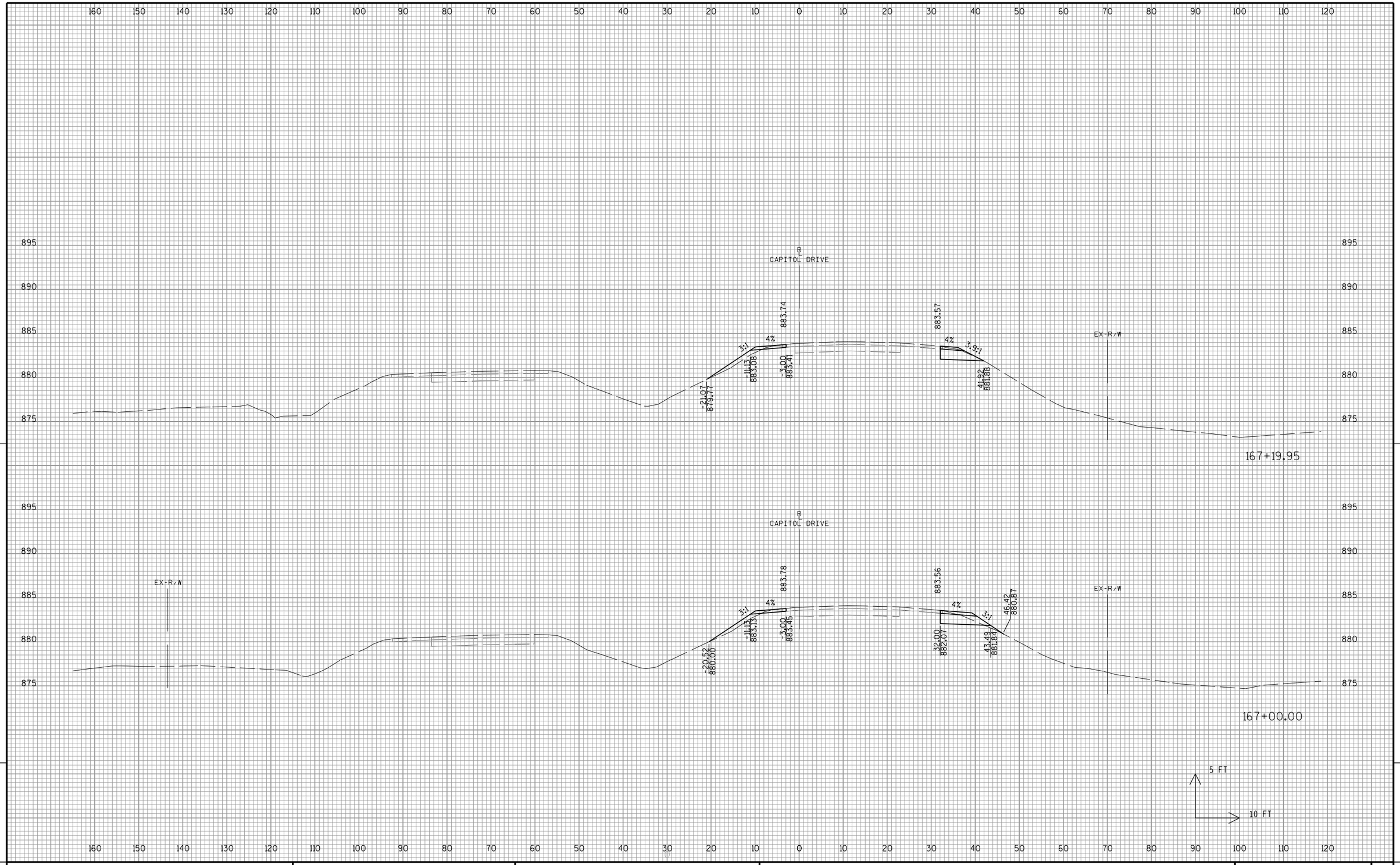

9

9

PROJECT NO:2025-14-71	HWY:STH 190	COUNTY:WAUKESHA	CROSS SECTIONS: STH 190 (W. CAPITOL DRIVE)	SHEET 467	E

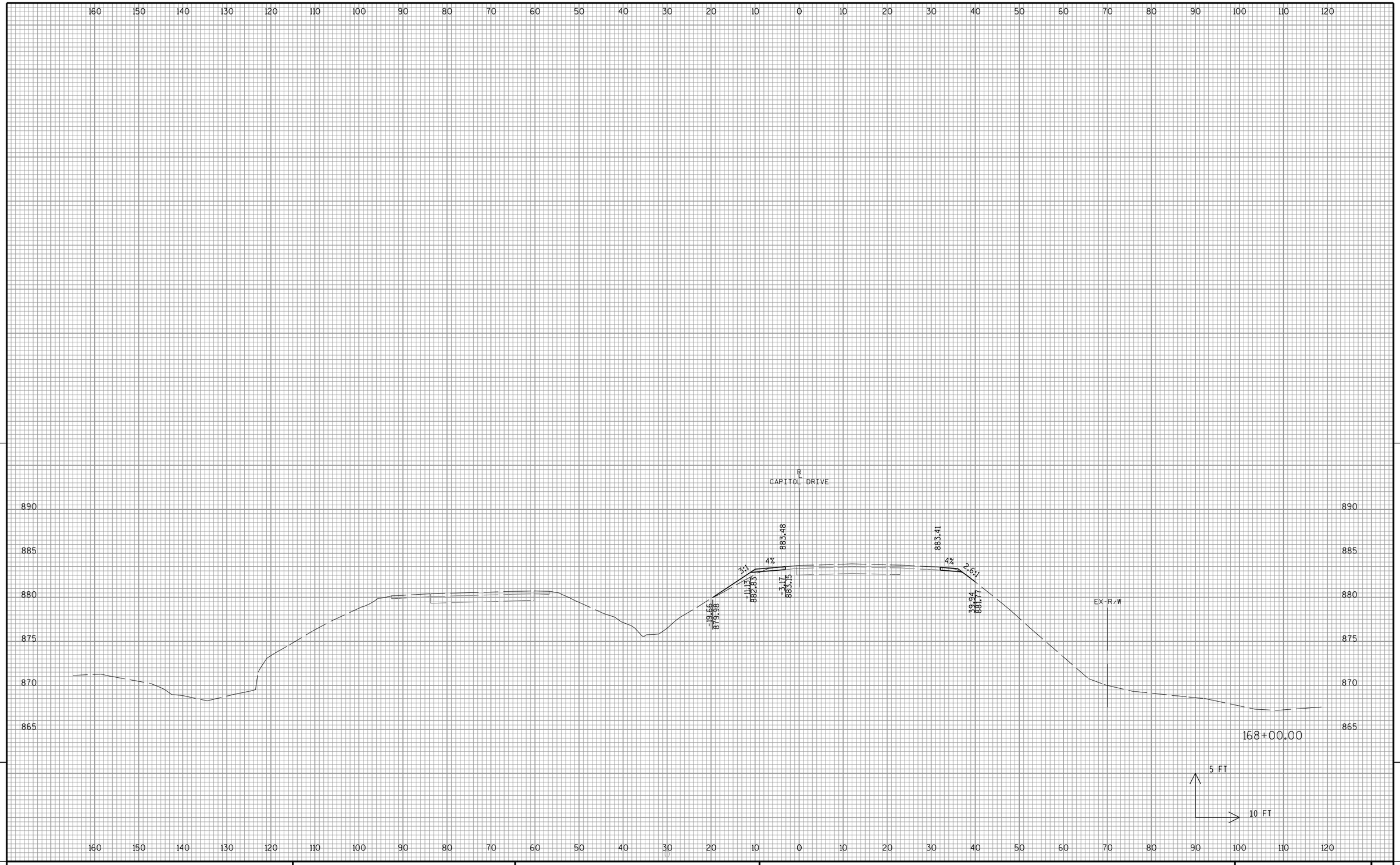

PROJECT NO:2025-14-71	HWY:STH 190	COUNTY:WAUKESHA	CROSS SECTIONS: STH 190 (W. CAPITOL DRIVE)	SHEET 468	E

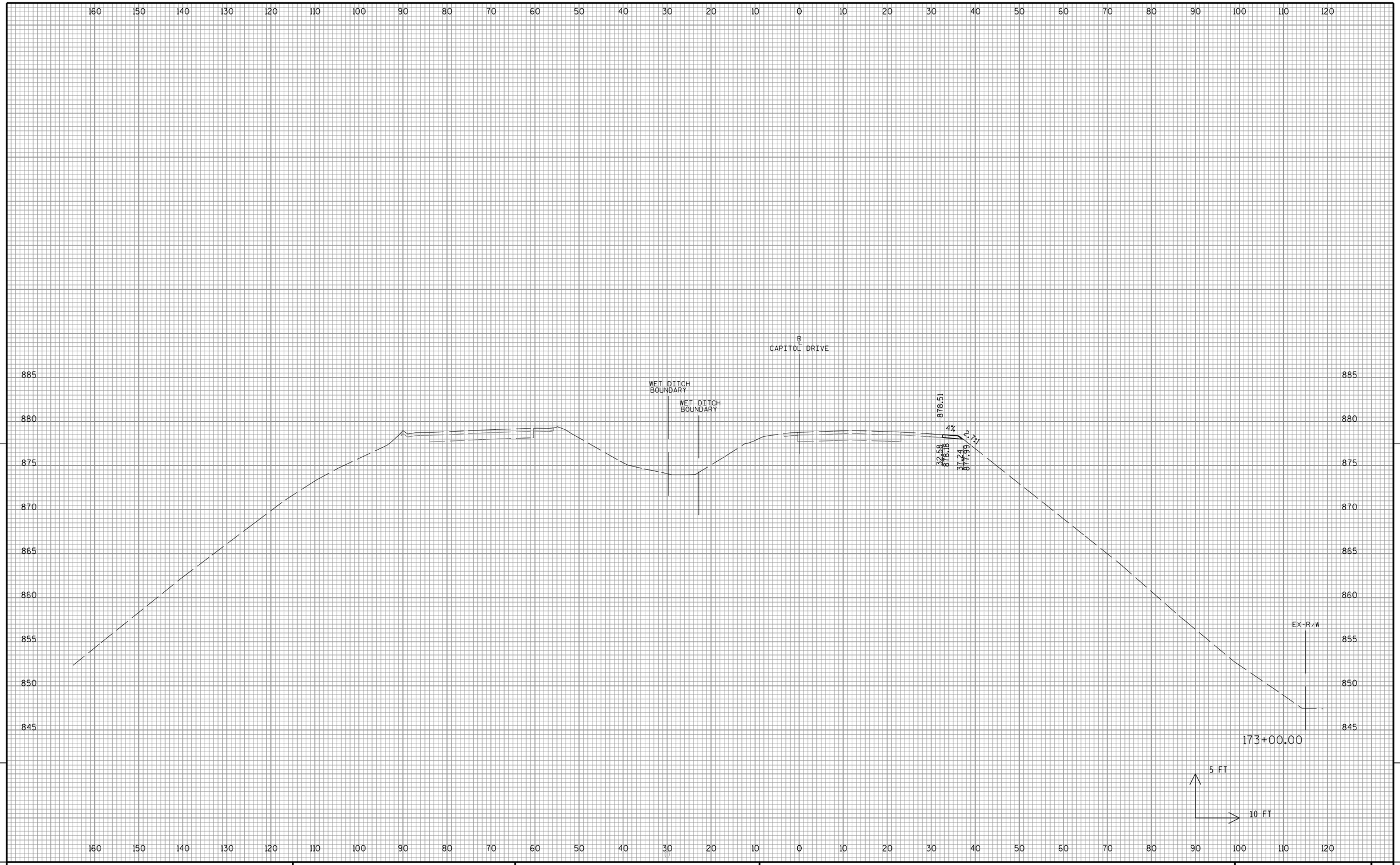

9

9

PROJECT NO:2025-14-71	HWY:STH 190	COUNTY:WAUKESHA	CROSS SECTIONS: STH 190 (W. CAPITOL DRIVE)	SHEET 469	E

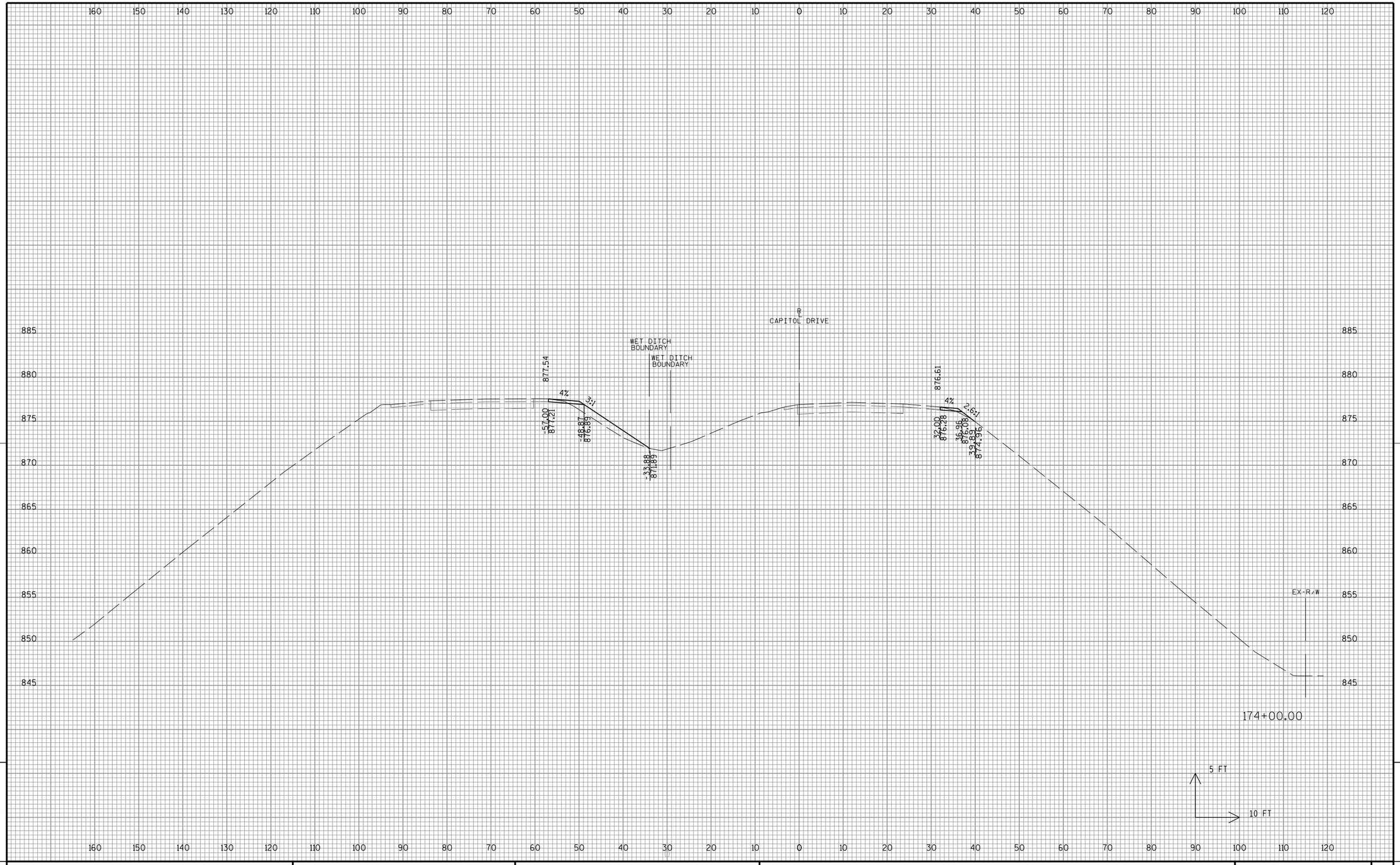

9

9

PROJECT NO:2025-14-71	HWY:STH 190	COUNTY:WAUKESHA	CROSS SECTIONS: STH 190 (W. CAPITOL DRIVE)	SHEET 470	E

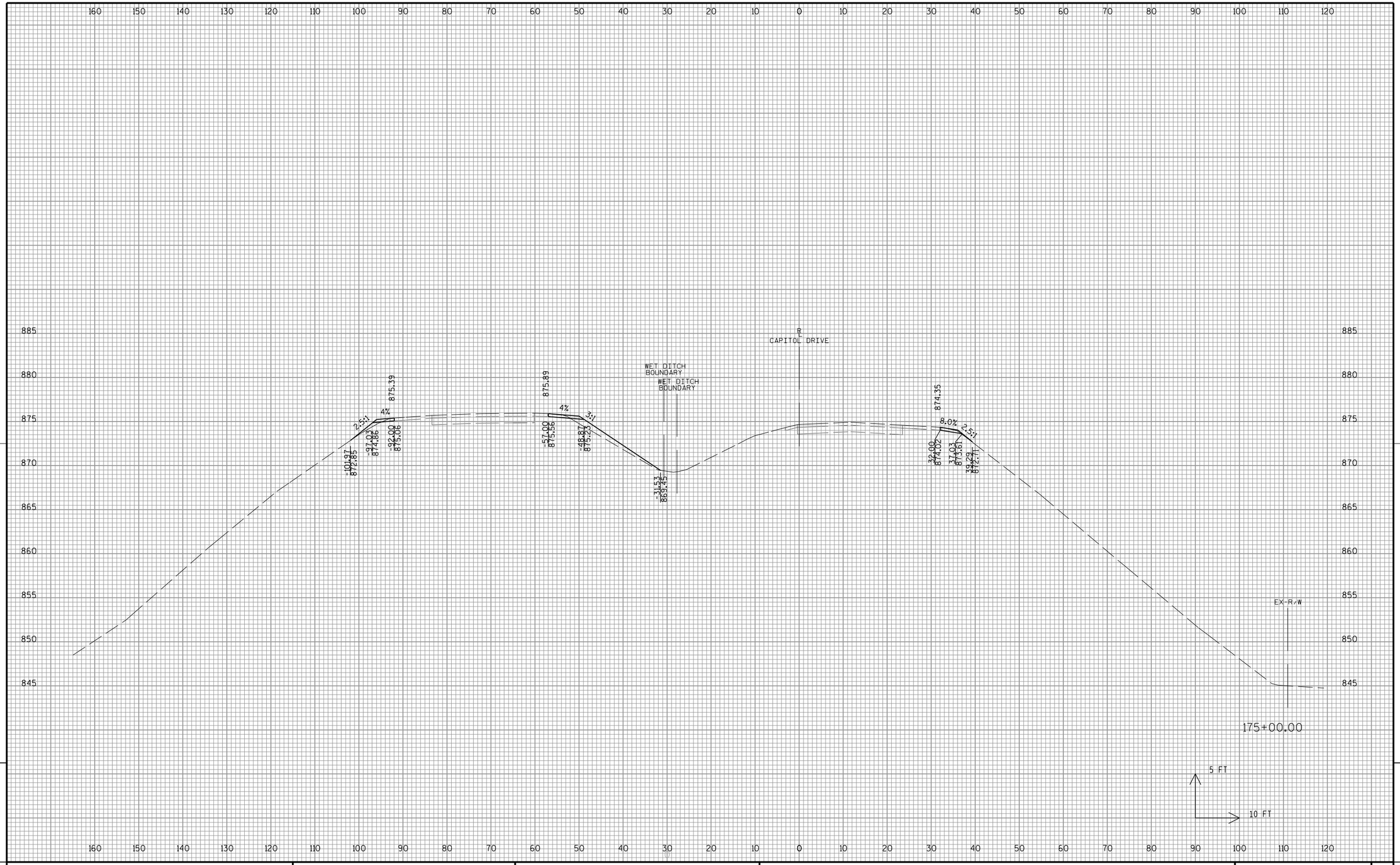

9

9

PROJECT NO:2025-14-71	HWY:STH 190	COUNTY:WAUKESHA	CROSS SECTIONS: STH 190 (W. CAPITOL DRIVE)	SHEET 471	E

FILE NAME : X:\ML\2016\20160073\CAD\Transportation\dgn\00\090201_xs_CAPITOL.dgn PLOT DATE : 11/28/2017 PLOT BY : $$...plotuser...$$ PLOT NAME : PLOT SCALE : $$.....plotscale.....$$ WISDOT/CADDS SHEET 21

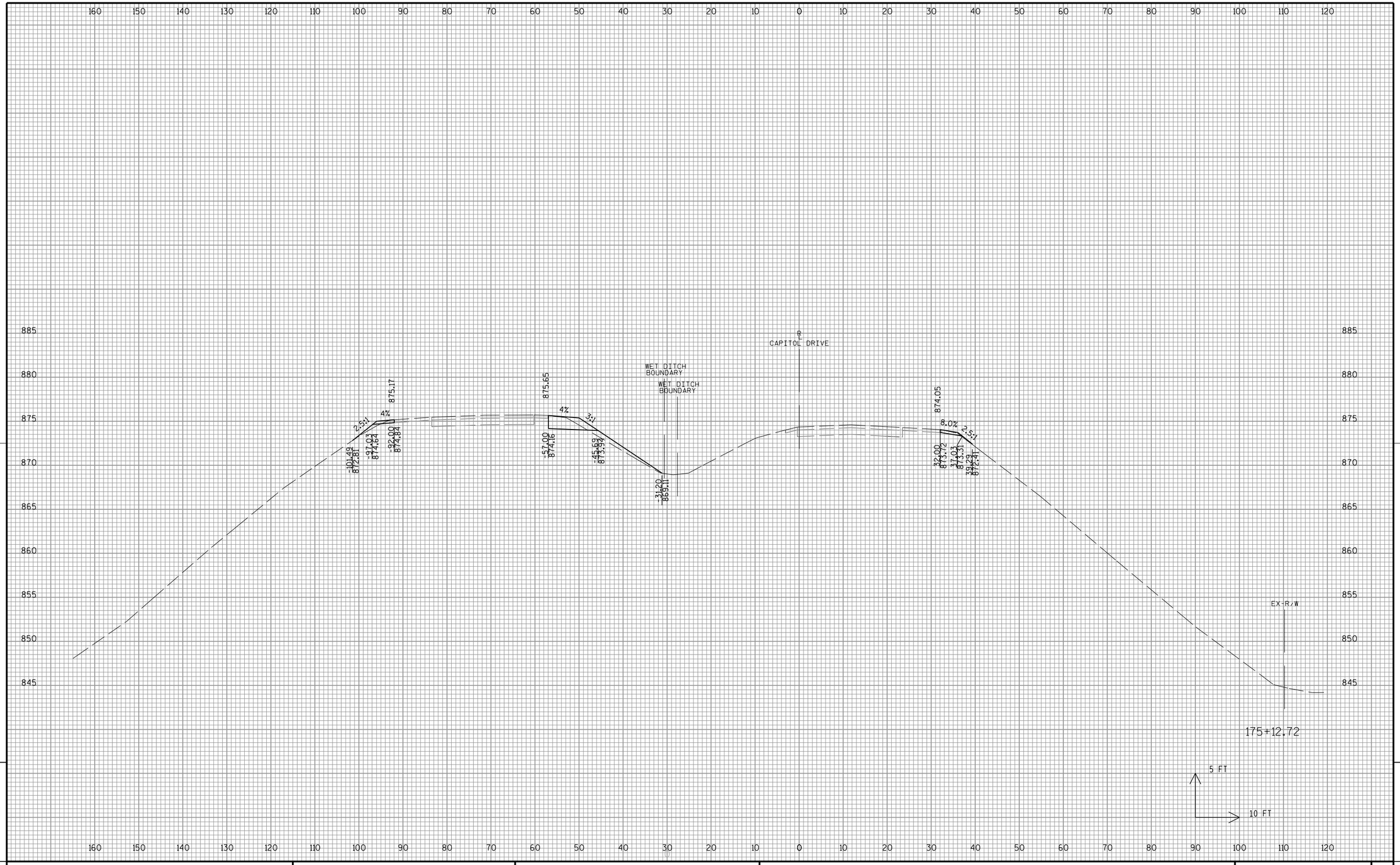

9

9

PROJECT NO:2025-14-71	HWY:STH 190	COUNTY:WAUKESHA	CROSS SECTIONS: STH 190 (W. CAPITOL DRIVE)	SHEET 472	E

FILE NAME : X:\ML\2016\20160073\CAD\Transportation\dgn\00\090201_xs_CAPITOL.dgn PLOT DATE : 11/28/2017 PLOT BY : $$...plotuser...$$ PLOT NAME : PLOT SCALE : $$.....plotscale.....$$ WISDOT/CADDS SHEET 21

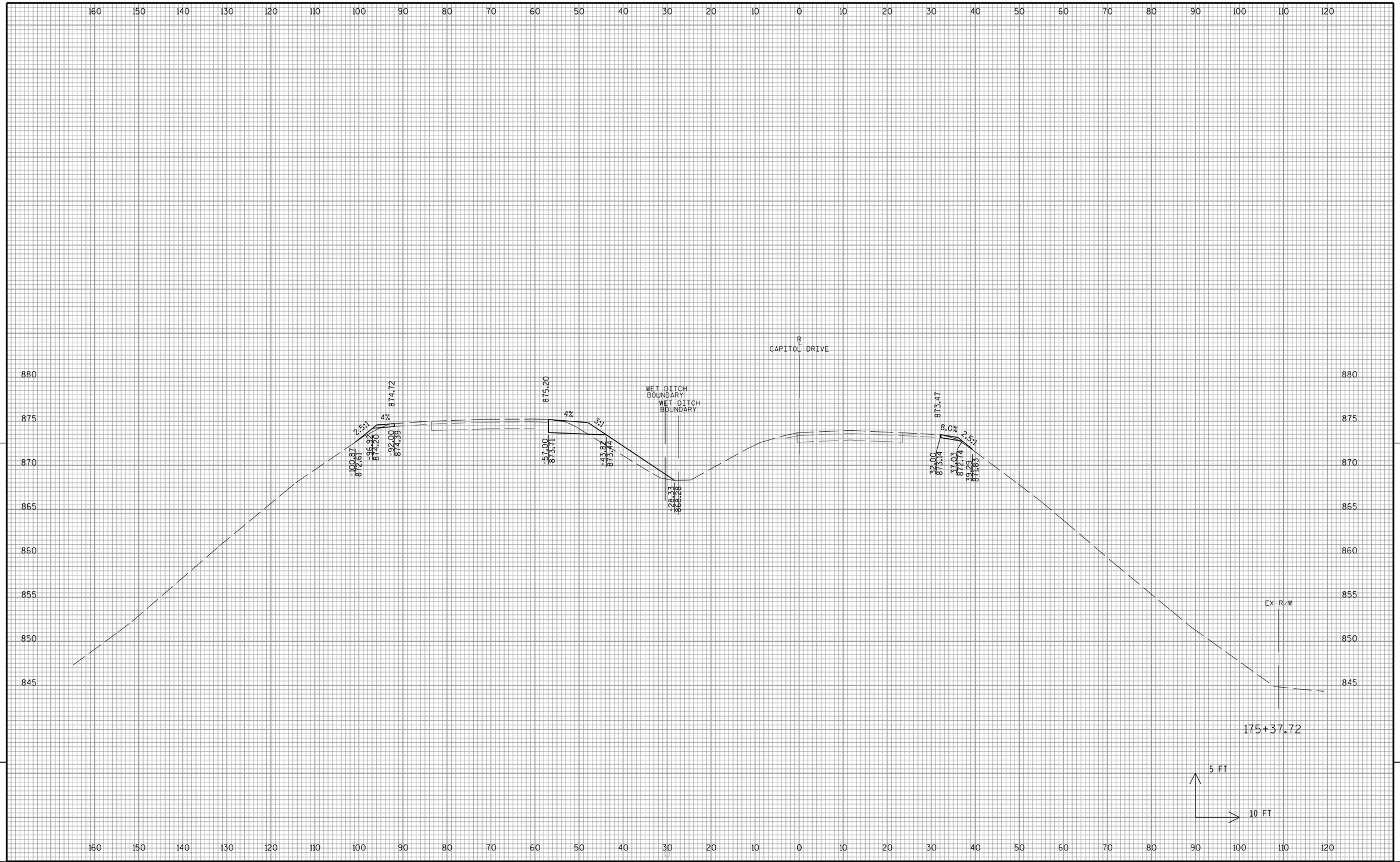

PROJECT NO:2025-14-71	HWY:STH 190	COUNTY:WAUKESHA	CROSS SECTIONS: STH 190 (W. CAPITOL DRIVE)	SHEET 473	E

FILE NAME : X:\ML\2016\20160073\CAD\Transportation\dgn\00\090201_xs_CAPITOL.dgn PLOT DATE : 11/28/2017 PLOT BY : $$...plotuser...$$ PLOT NAME : PLOT SCALE : $$.....plotscale.....$$ WISDOT/CADDS SHEET 21

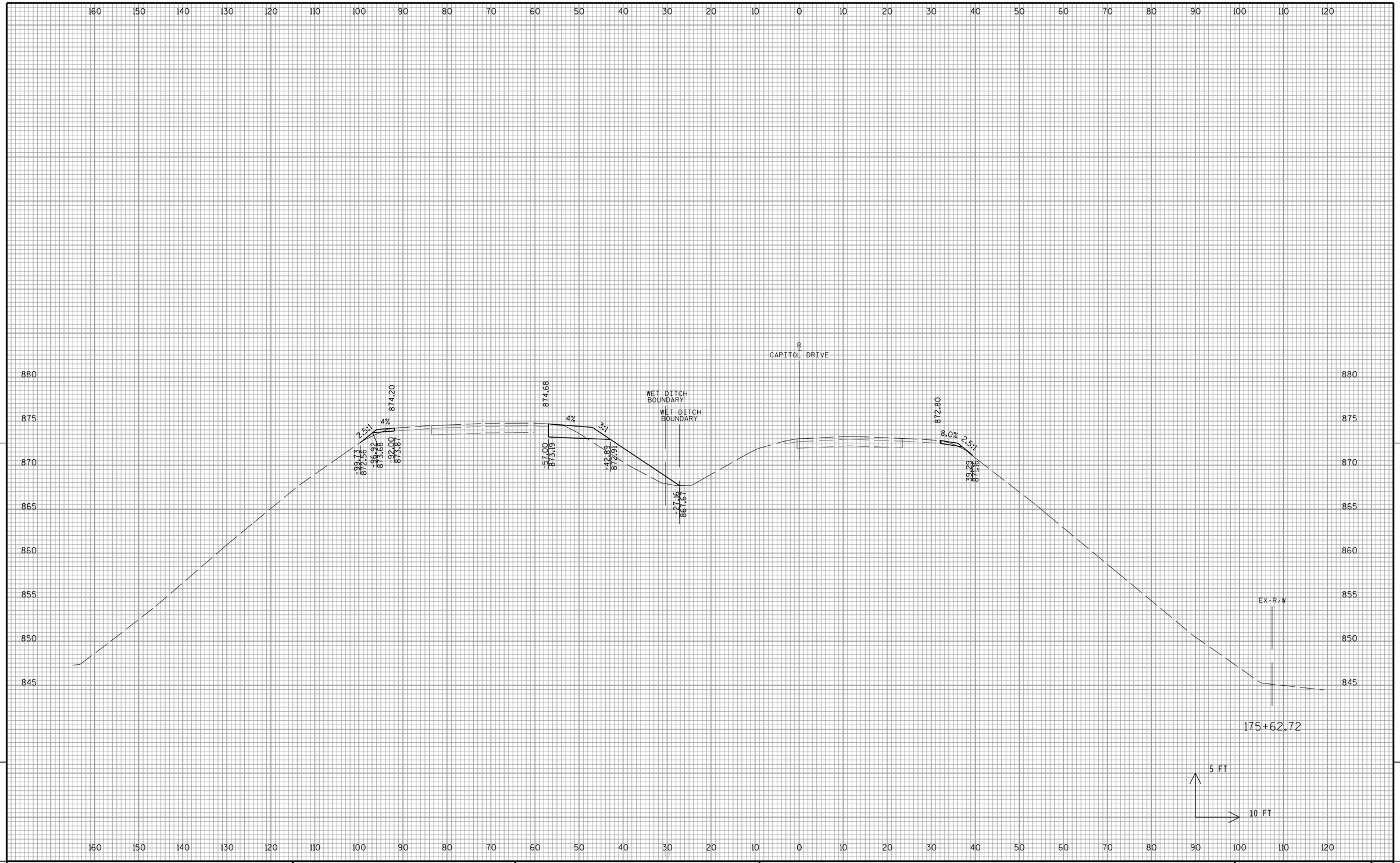

9

9

PROJECT NO:2025-14-71	HWY:STH 190	COUNTY:WAUKESHA	CROSS SECTIONS: STH 190 (W. CAPITOL DRIVE)	SHEET 474	E

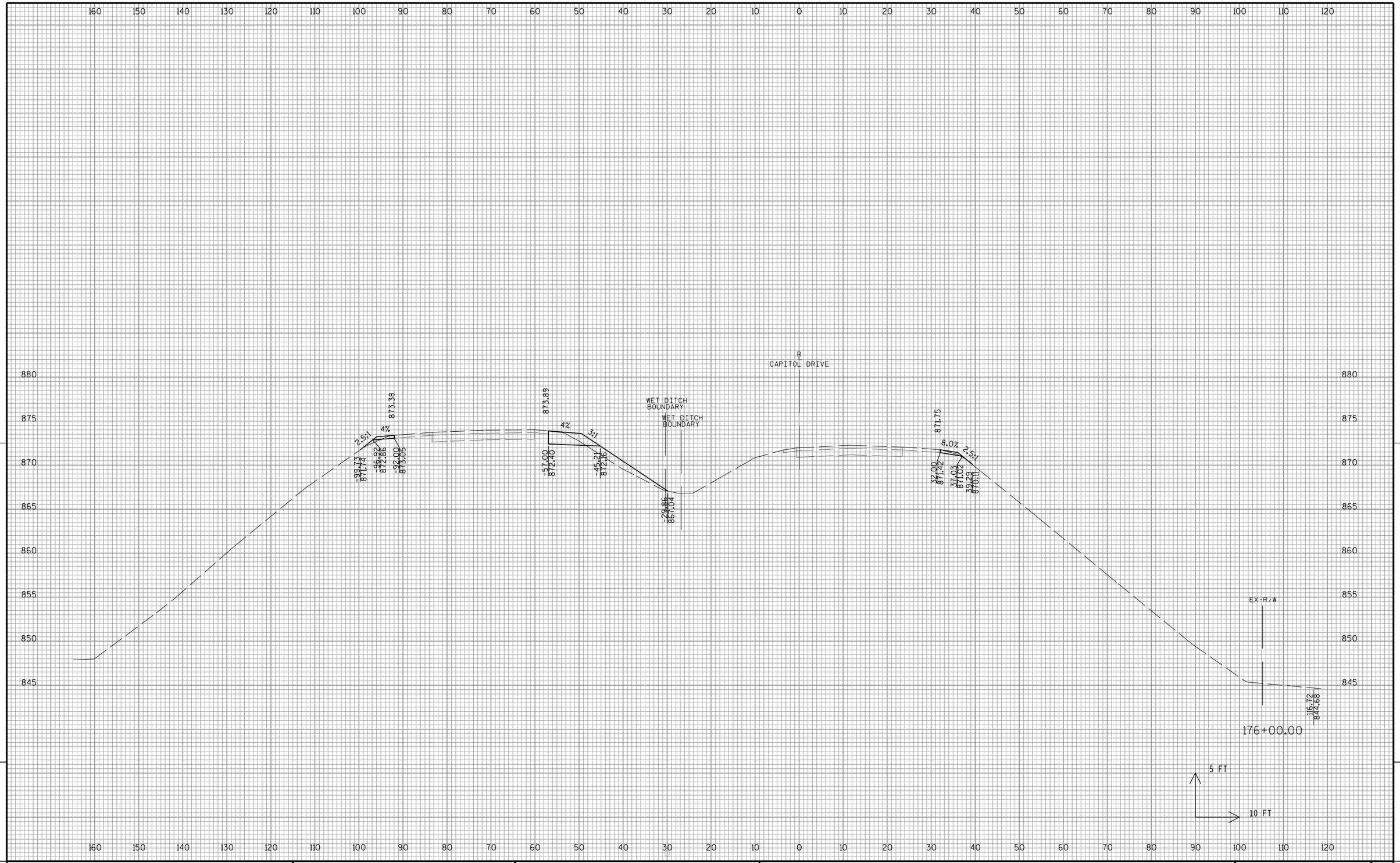

9

9

PROJECT NO:2025-14-71	HWY:STH 190	COUNTY:WAUKESHA	CROSS SECTIONS: STH 190 (W. CAPITOL DRIVE)	SHEET 475	E

FILE NAME : X:\ML\2016\20160073\CAD\Transportation\dgn\00\090201_xs_CAPITOL.dgn PLOT DATE : 11/28/2017 PLOT BY : $$...plotuser...$$ PLOT NAME : PLOT SCALE : $$.....plotscale.....$$ WISDOT/CADDS SHEET 21

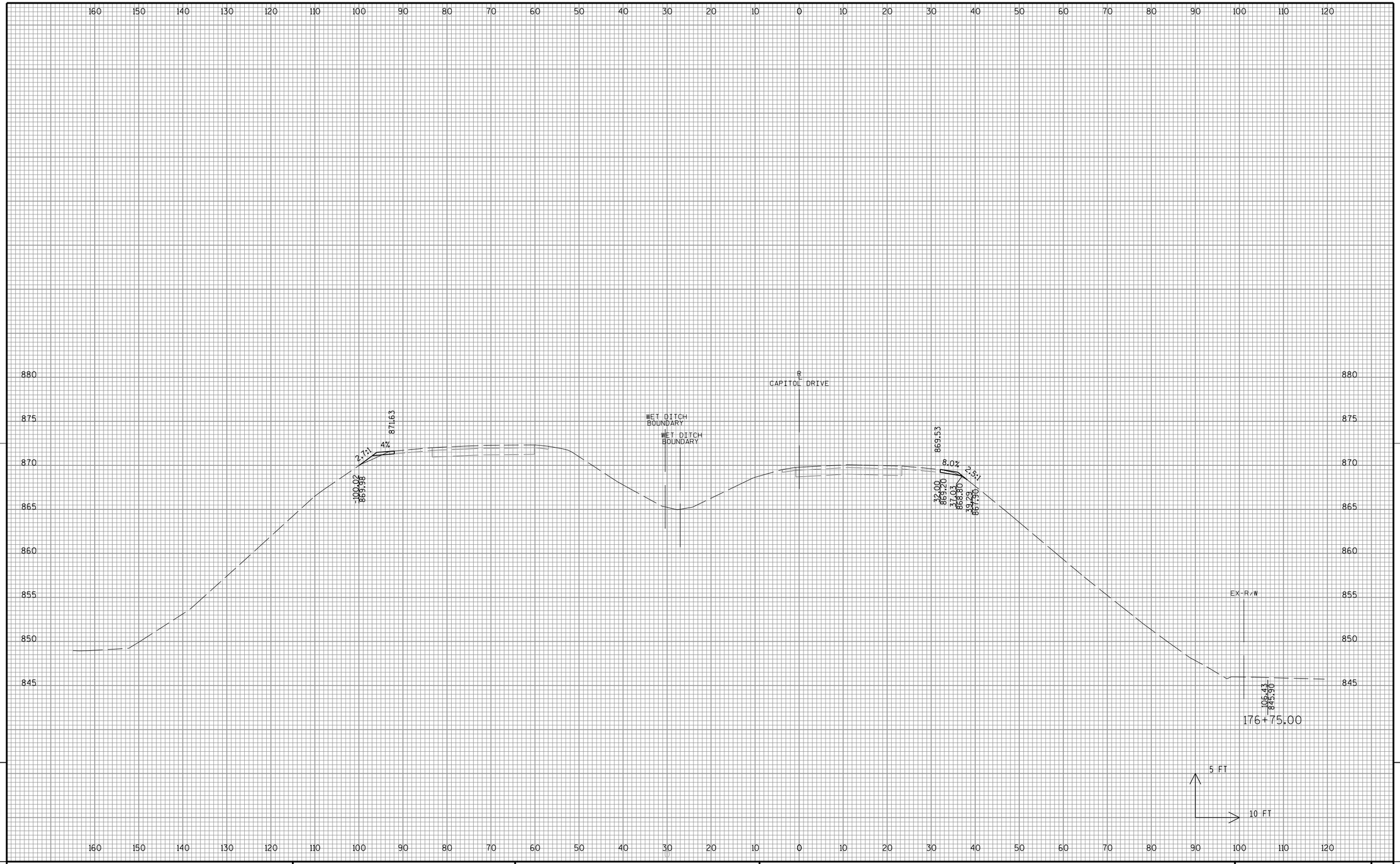

9

9

PROJECT NO:2025-14-71	HWY:STH 190	COUNTY:WAUKESHA	CROSS SECTIONS: STH 190 (W. CAPITOL DRIVE)	SHEET 476	E

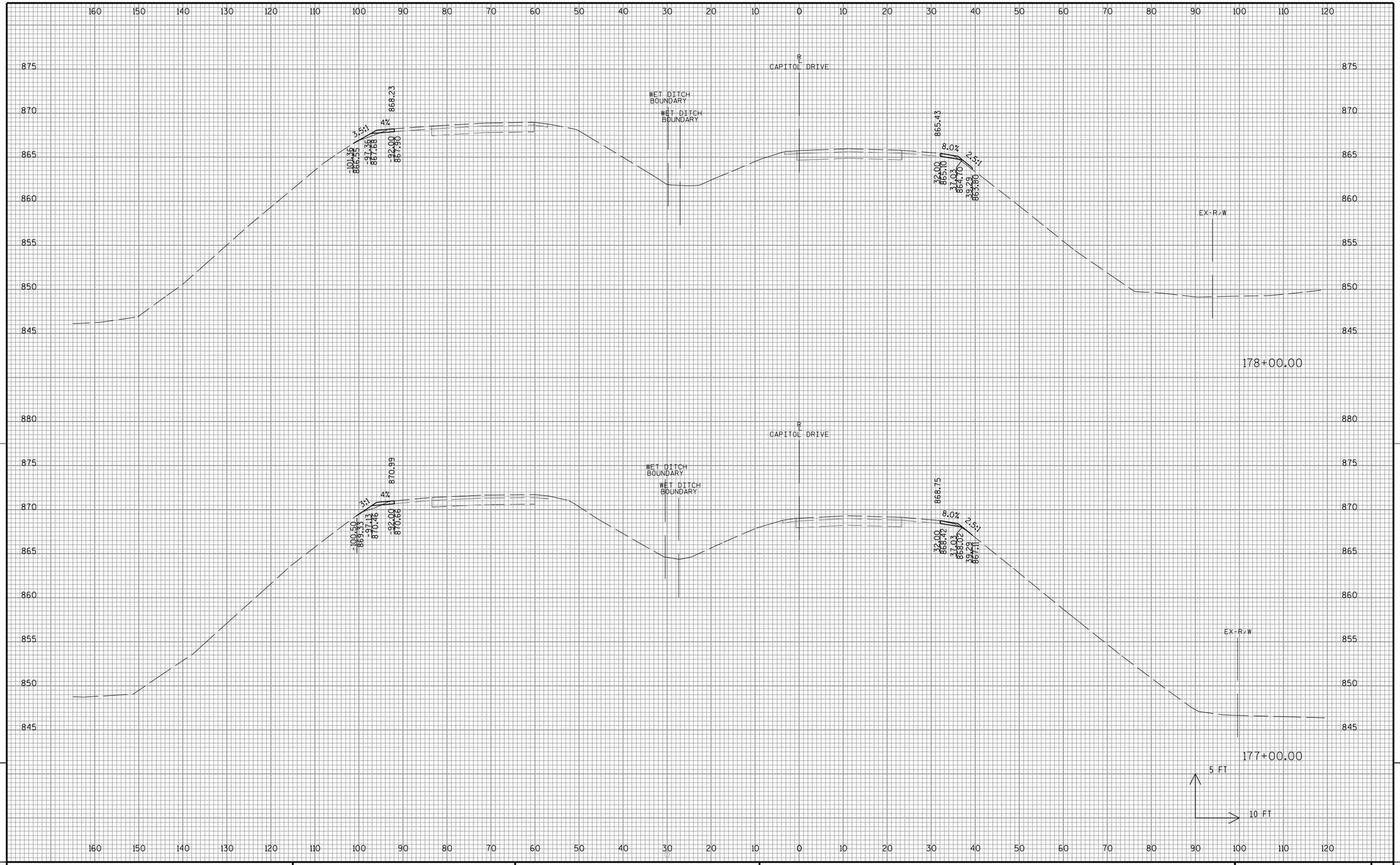

PROJECT NO:2025-14-71	HWY:STH 190	COUNTY:WAUKESHA	CROSS SECTIONS: STH 190 (W. CAPITOL DRIVE)	SHEET 477	E

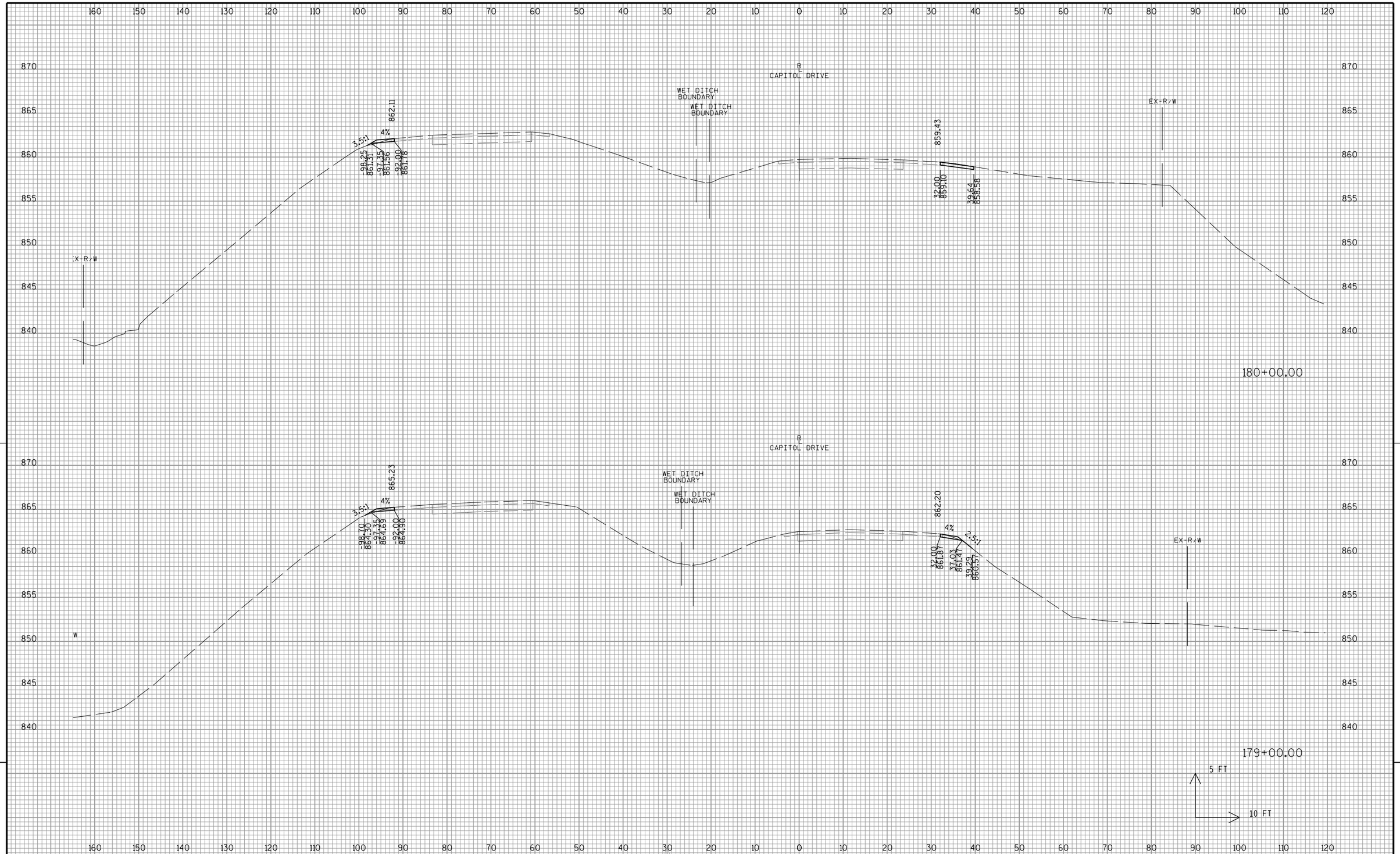

9

9

PROJECT NO:2025-14-71	HWY:STH 190	COUNTY:WAUKESHA	CROSS SECTIONS: STH 190 (W. CAPITOL DRIVE)	SHEET 478	E

FILE NAME : X:\ML\2016\20160073\CAD\Transportation\dgn\00\090201_xs_CAPITOL.dgn PLOT DATE : 11/28/2017 PLOT BY : $$...plotuser...$$ PLOT NAME : PLOT SCALE : $$.....plotscale.....$$ WISDOT/CADDS SHEET 21

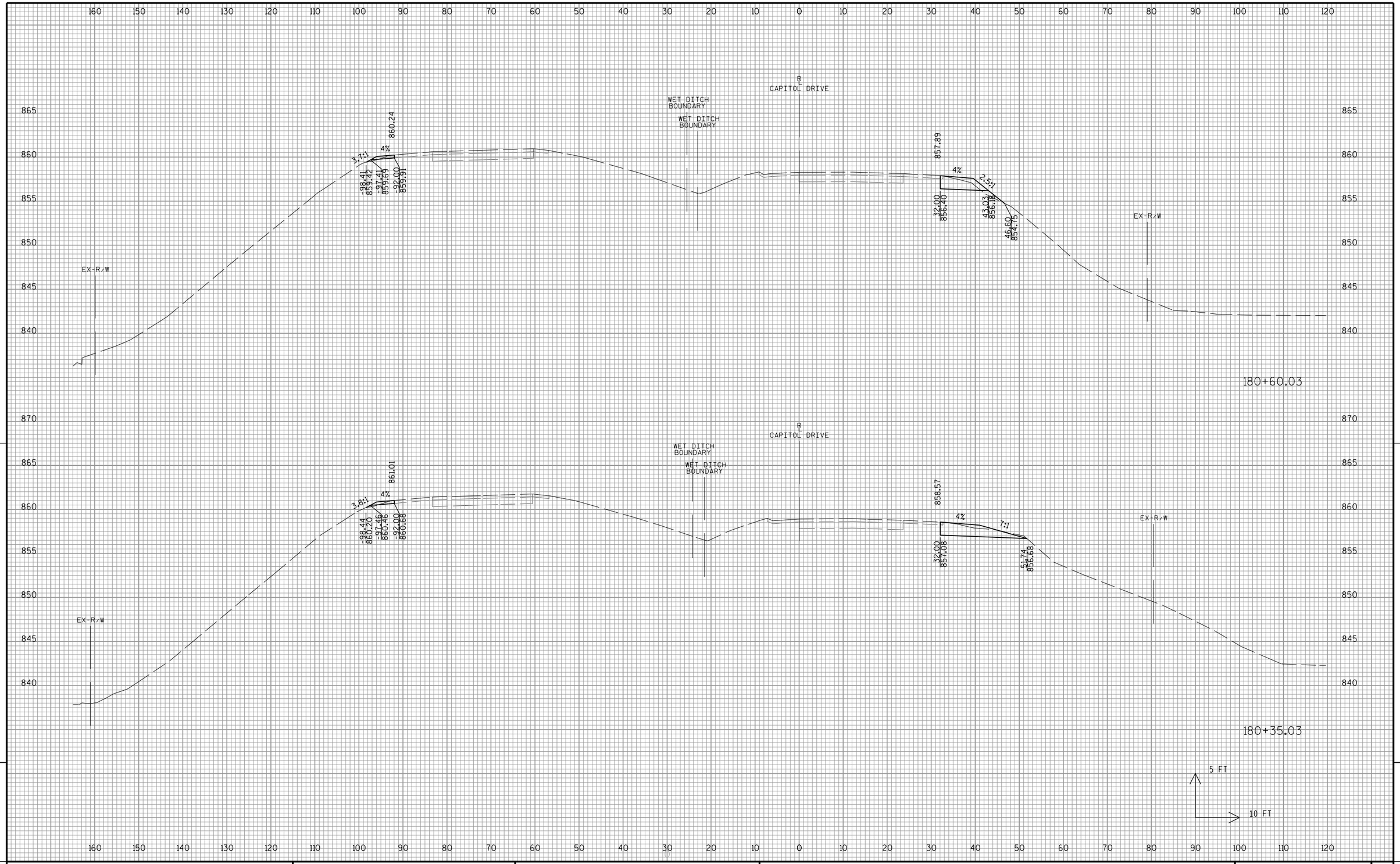

9

9

PROJECT NO:2025-14-71	HWY:STH 190	COUNTY:WAUKESHA	CROSS SECTIONS: STH 190 (W. CAPITOL DRIVE)	SHEET 479	E

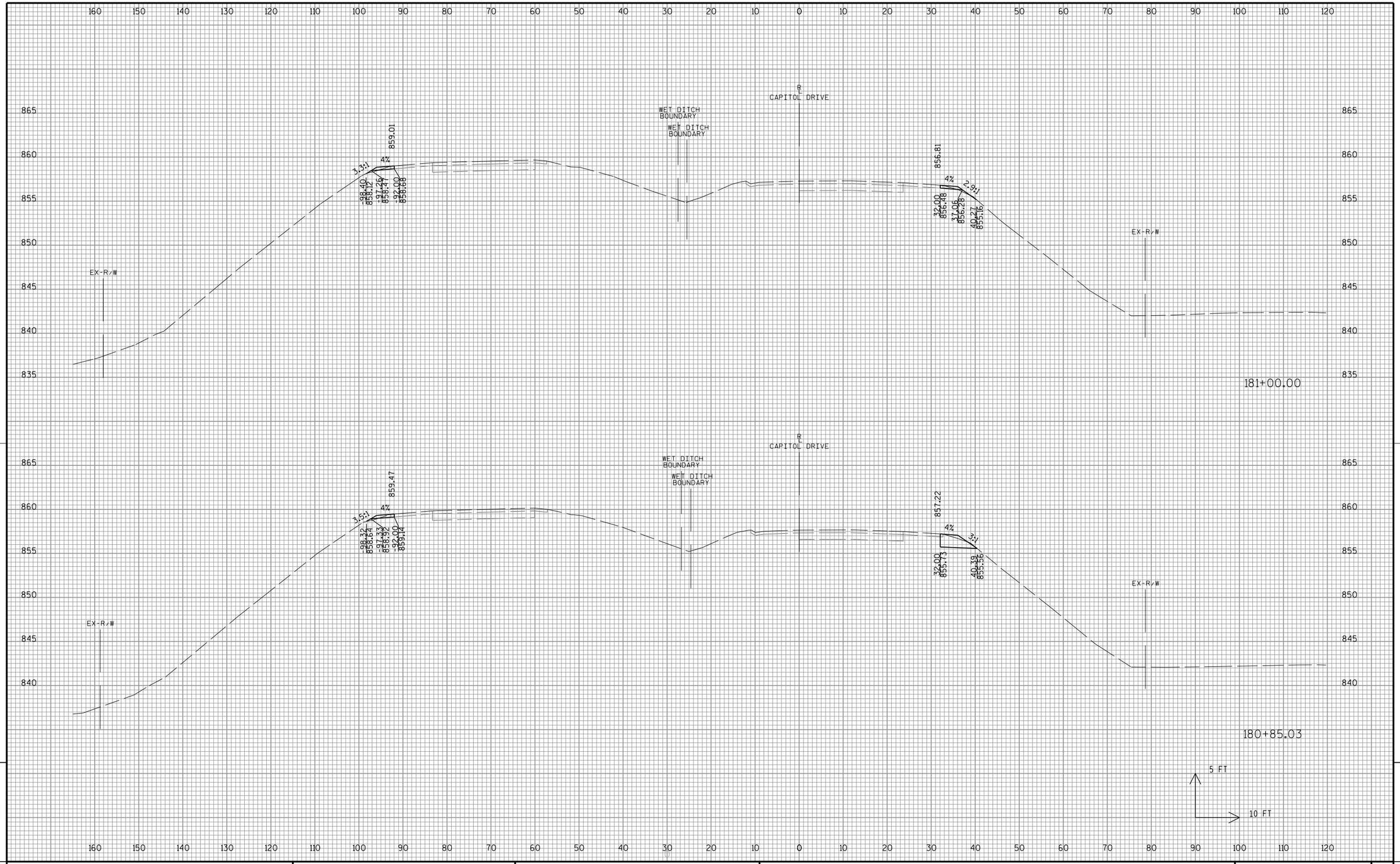

9

9

PROJECT NO:2025-14-71	HWY:STH 190	COUNTY:WAUKESHA	CROSS SECTIONS: STH 190 (W. CAPITOL DRIVE)	SHEET 480	E

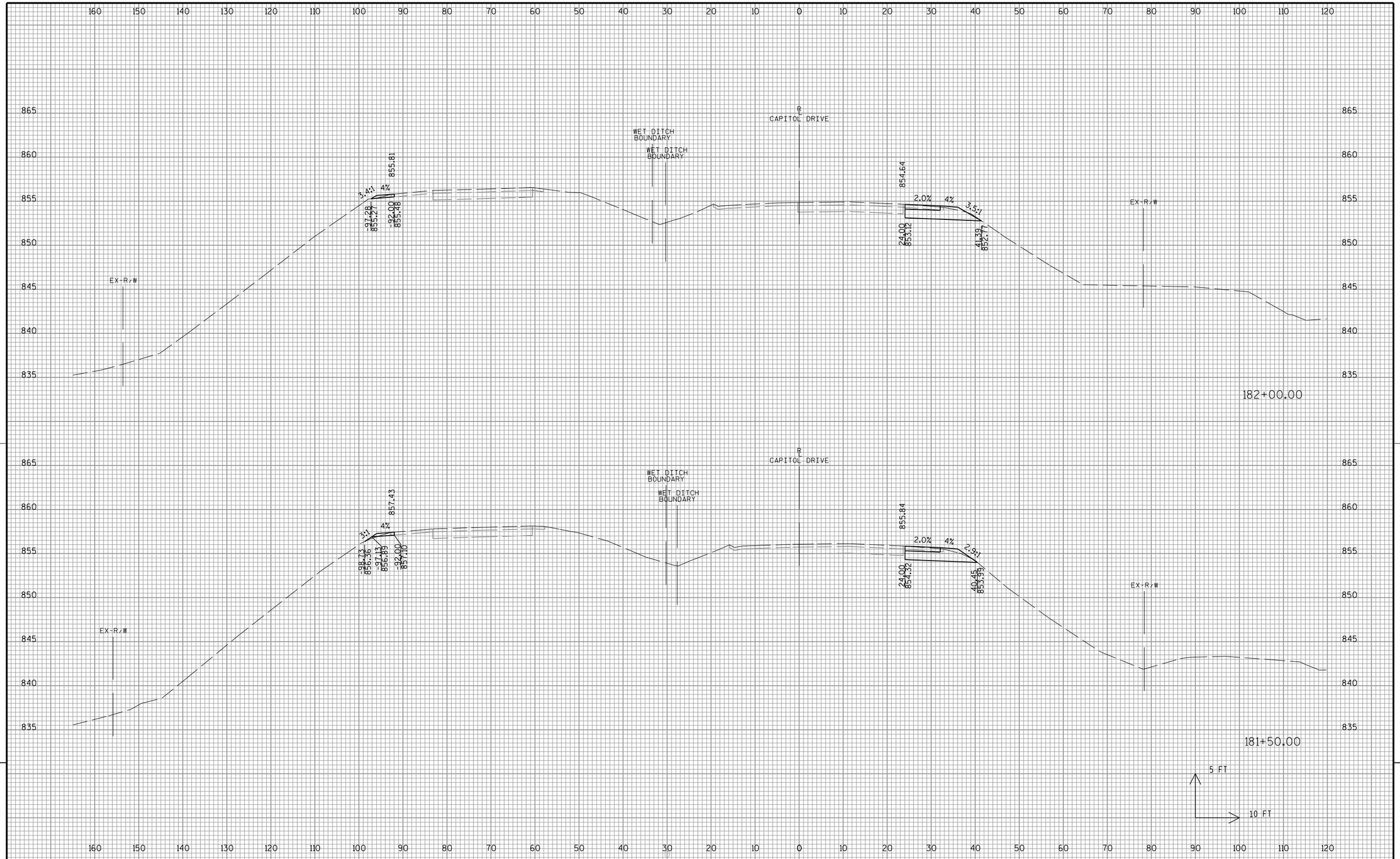

9

9

PROJECT NO:2025-14-71	HWY:STH 190	COUNTY:WAUKESHA	CROSS SECTIONS: STH 190 (W. CAPITOL DRIVE)	SHEET 481	E

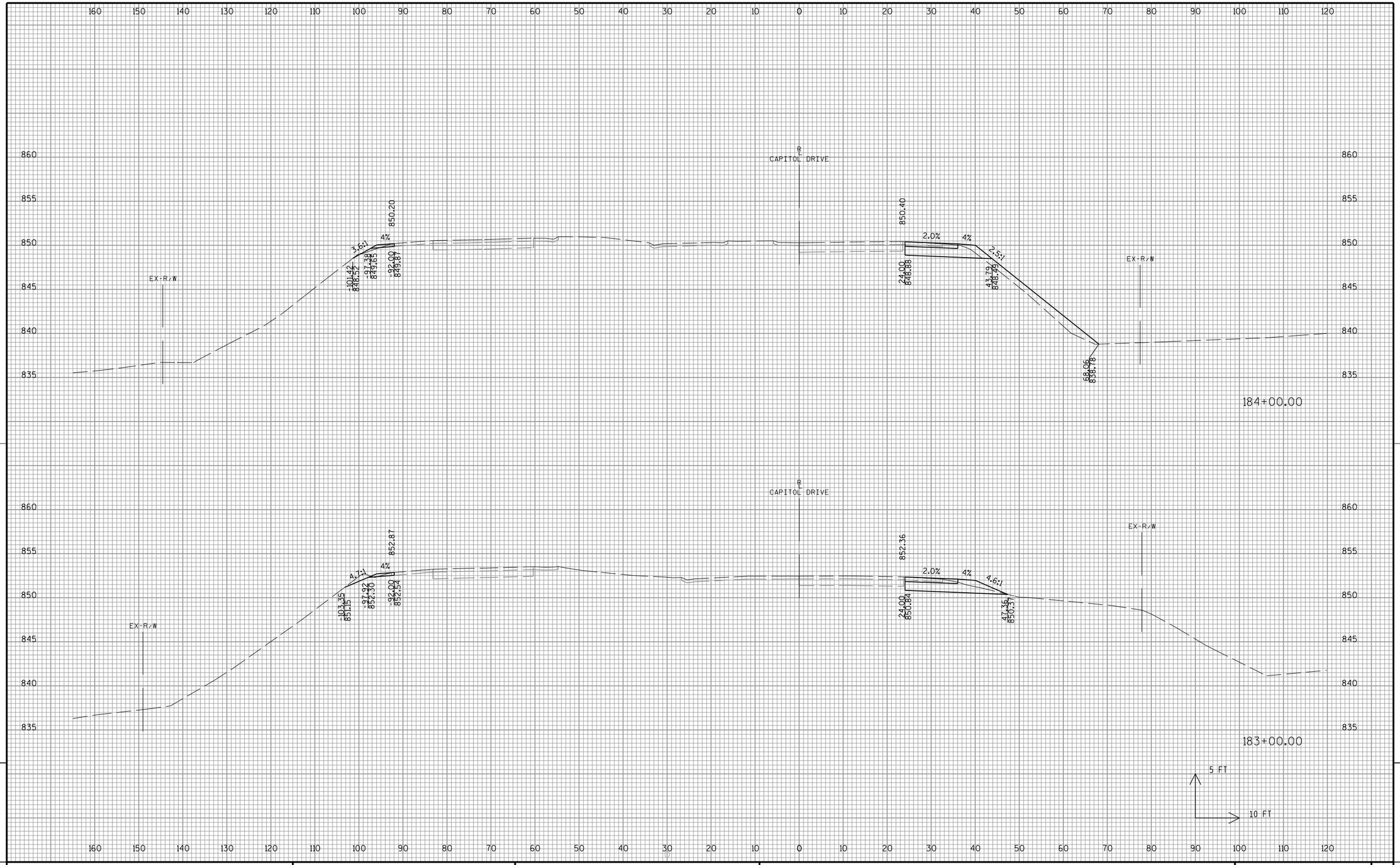

9

9

PROJECT NO:2025-14-71	HWY:STH 190	COUNTY:WAUKESHA	CROSS SECTIONS: STH 190 (W. CAPITOL DRIVE)	SHEET 482	E

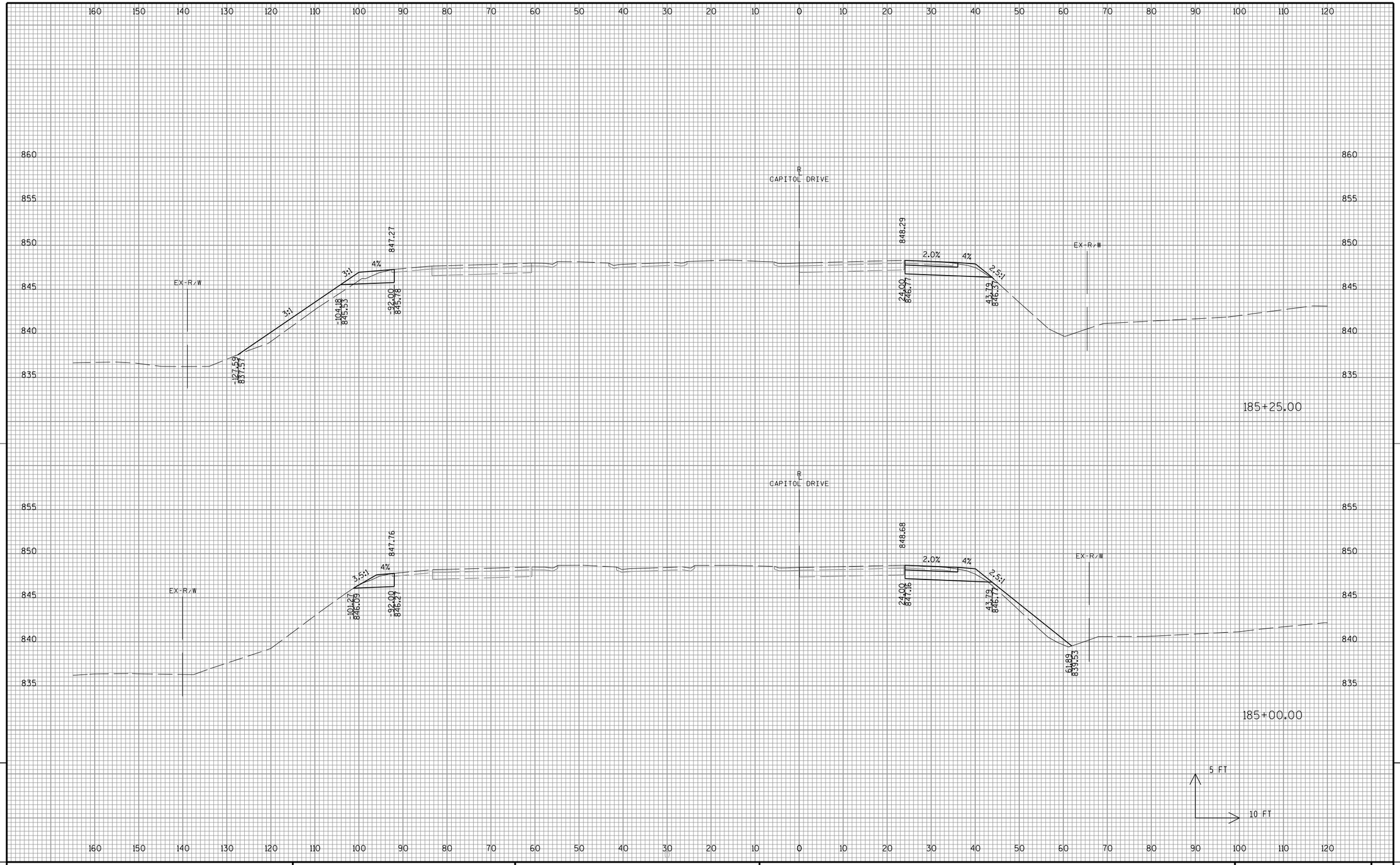

9

9

PROJECT NO:2025-14-71	HWY:STH 190	COUNTY:WAUKESHA	CROSS SECTIONS: STH 190 (W. CAPITOL DRIVE)	SHEET 483	E

FILE NAME : X:\ML\2016\20160073\CAD\Transportation\dgn\00\090201_xs_CAPITOL.dgn PLOT DATE : 11/28/2017 PLOT BY : $$...plotuser...$$ PLOT NAME : PLOT SCALE : $$.....plotscale.....$$ WISDOT/CADDS SHEET 21

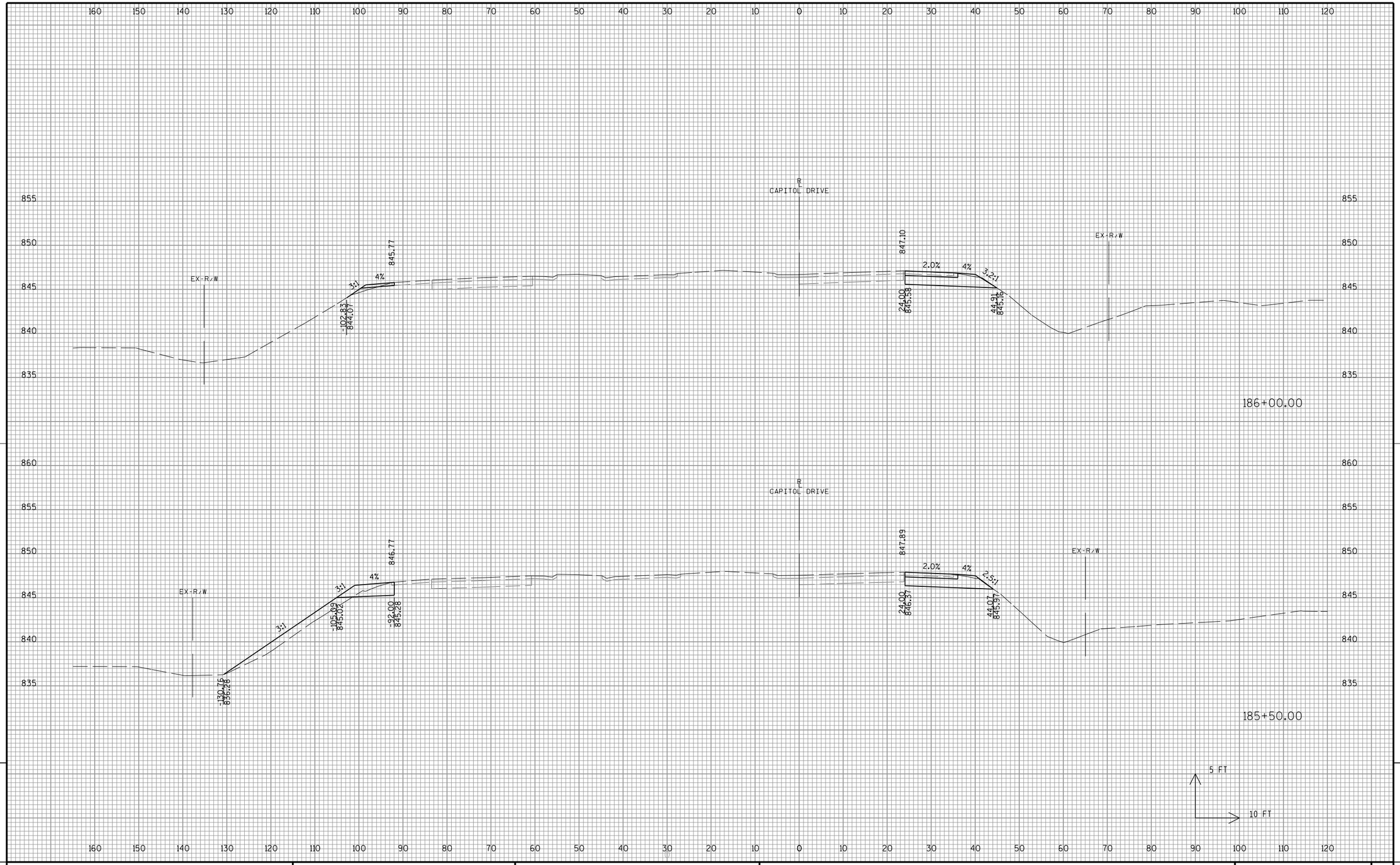

9

9

PROJECT NO:2025-14-71	HWY:STH 190	COUNTY:WAUKESHA	CROSS SECTIONS: STH 190 (W. CAPITOL DRIVE)	SHEET 484	E

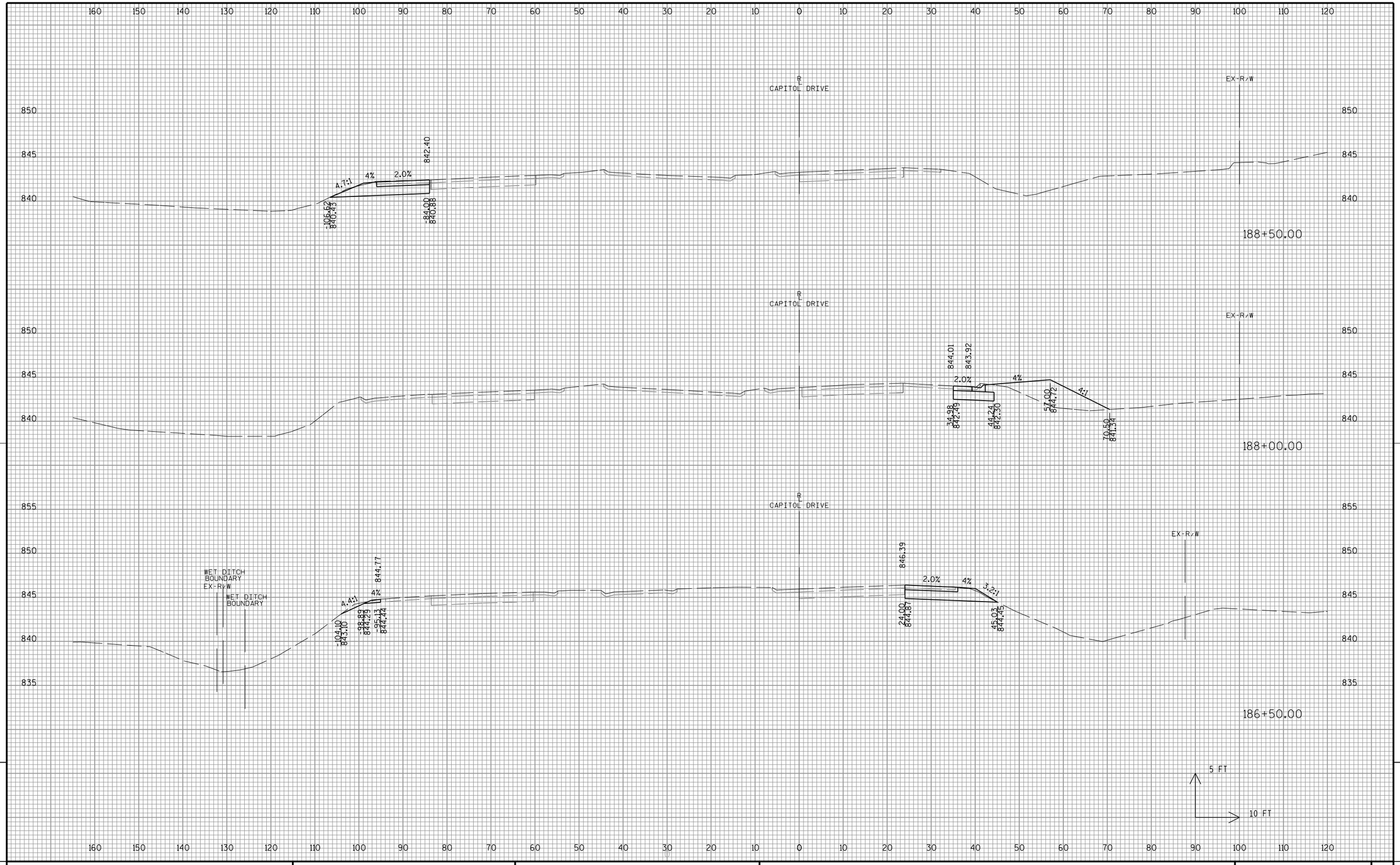

9

9

PROJECT NO:2025-14-71	HWY:STH 190	COUNTY:WAUKESHA	CROSS SECTIONS: STH 190 (W. CAPITOL DRIVE)	SHEET 485	E

FILE NAME : X:\ML\2016\20160073\CAD\Transportation\dgn\00\090201_xs_CAPITOL.dgn PLOT DATE : 11/28/2017 PLOT BY : $$...plotuser...$$ PLOT NAME : PLOT SCALE : $$.....plotscale.....$$ WISDOT/CADDS SHEET 21

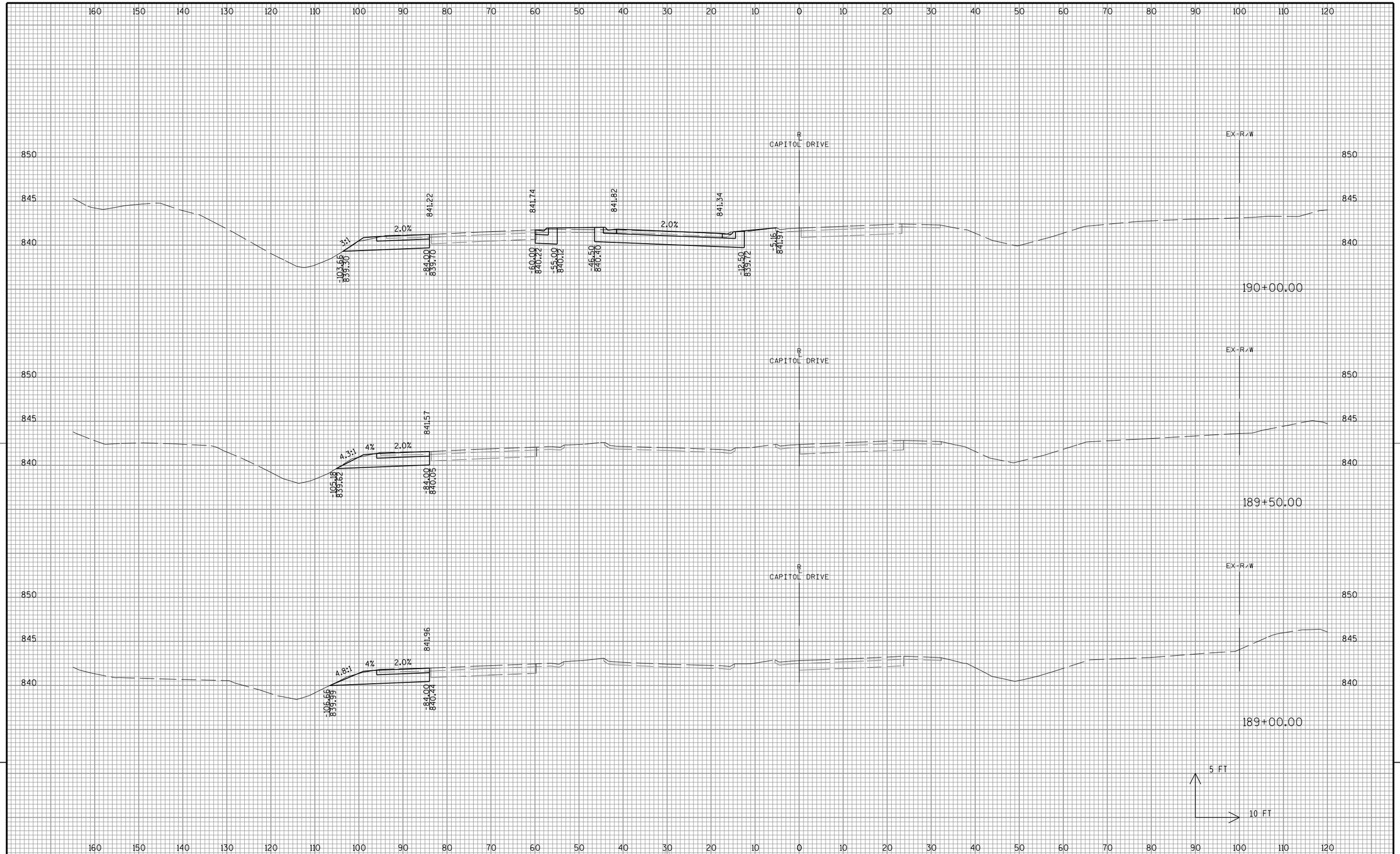

9

9

PROJECT NO:2025-14-71	HWY:STH 190	COUNTY:WAUKESHA	CROSS SECTIONS: STH 190 (W. CAPITOL DRIVE)	SHEET 486	E

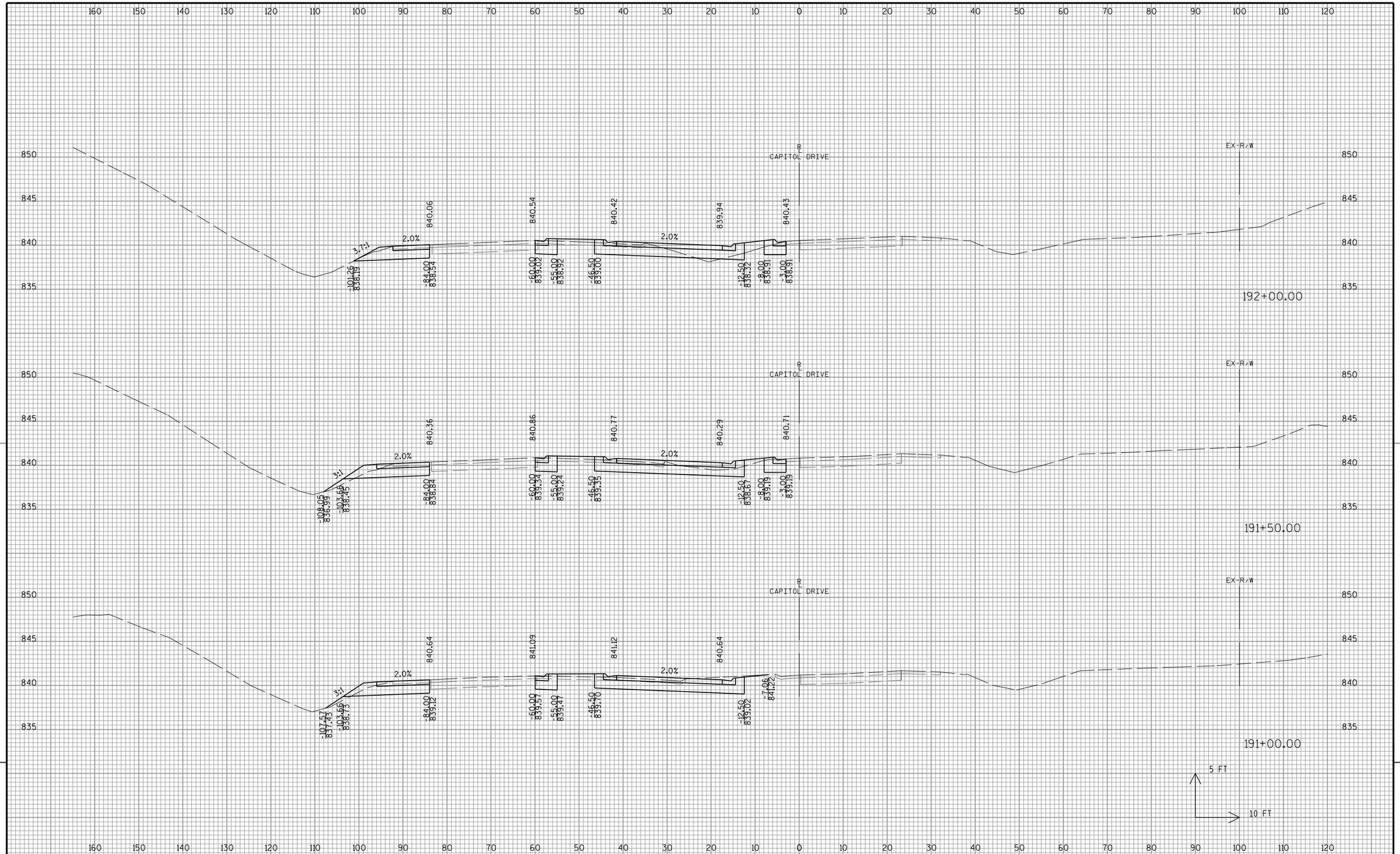

PROJECT NO:2025-14-71	HWY:STH 190	COUNTY:WAUKESHA	CROSS SECTIONS: STH 190 (W. CAPITOL DRIVE)	SHEET 487	E

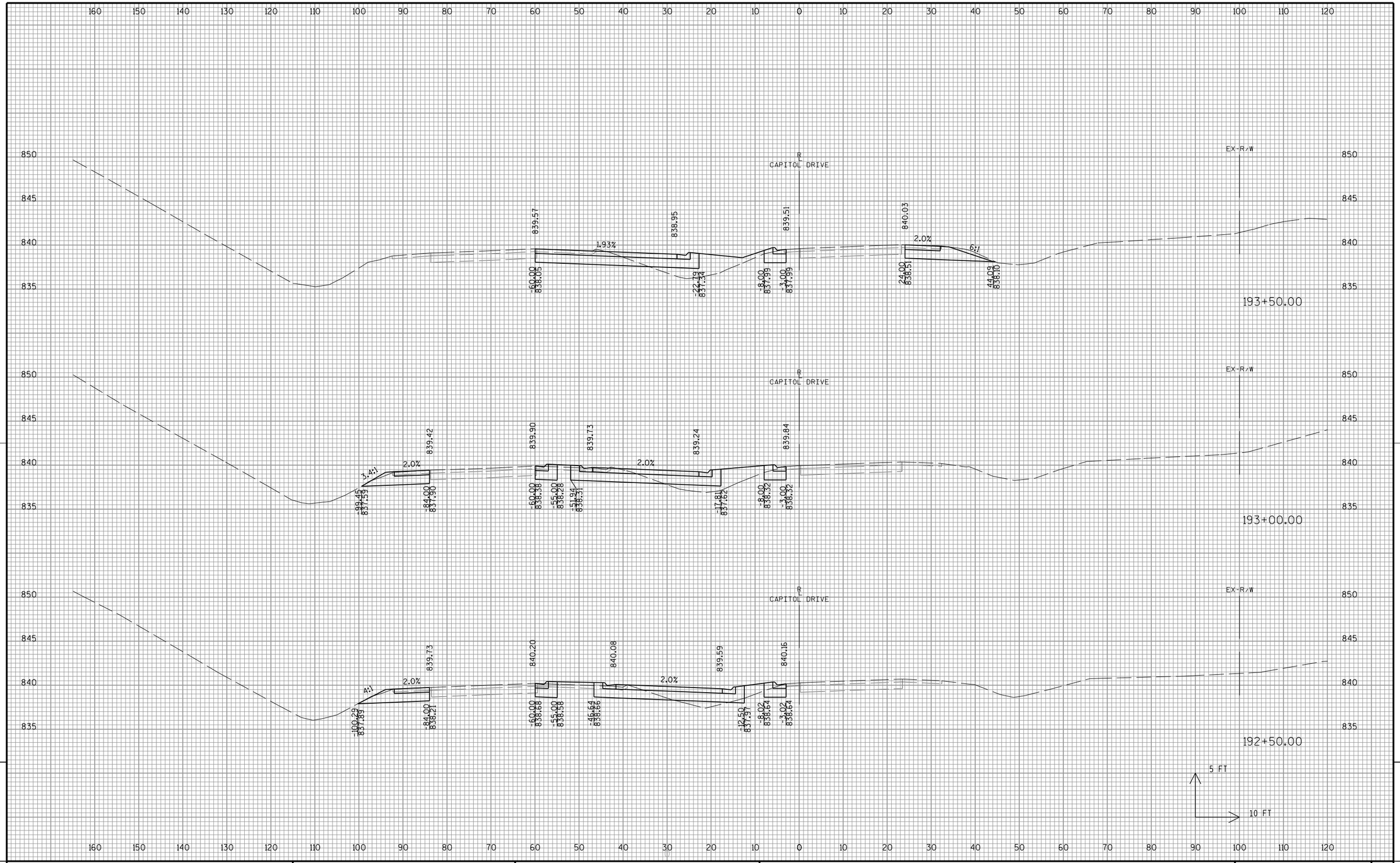

9

9

PROJECT NO:2025-14-71	HWY:STH 190	COUNTY:WAUKESHA	CROSS SECTIONS: STH 190 (W. CAPITOL DRIVE)	SHEET 488	E

FILE NAME : X:\ML\2016\20160073\CAD\Transportation\dgn\00\090201_xs_CAPITOL.dgn PLOT DATE : 11/28/2017 PLOT BY : $$...plotuser...$$ PLOT NAME : PLOT SCALE : $$.....plotscale.....$$ WISDOT/CADDS SHEET 21

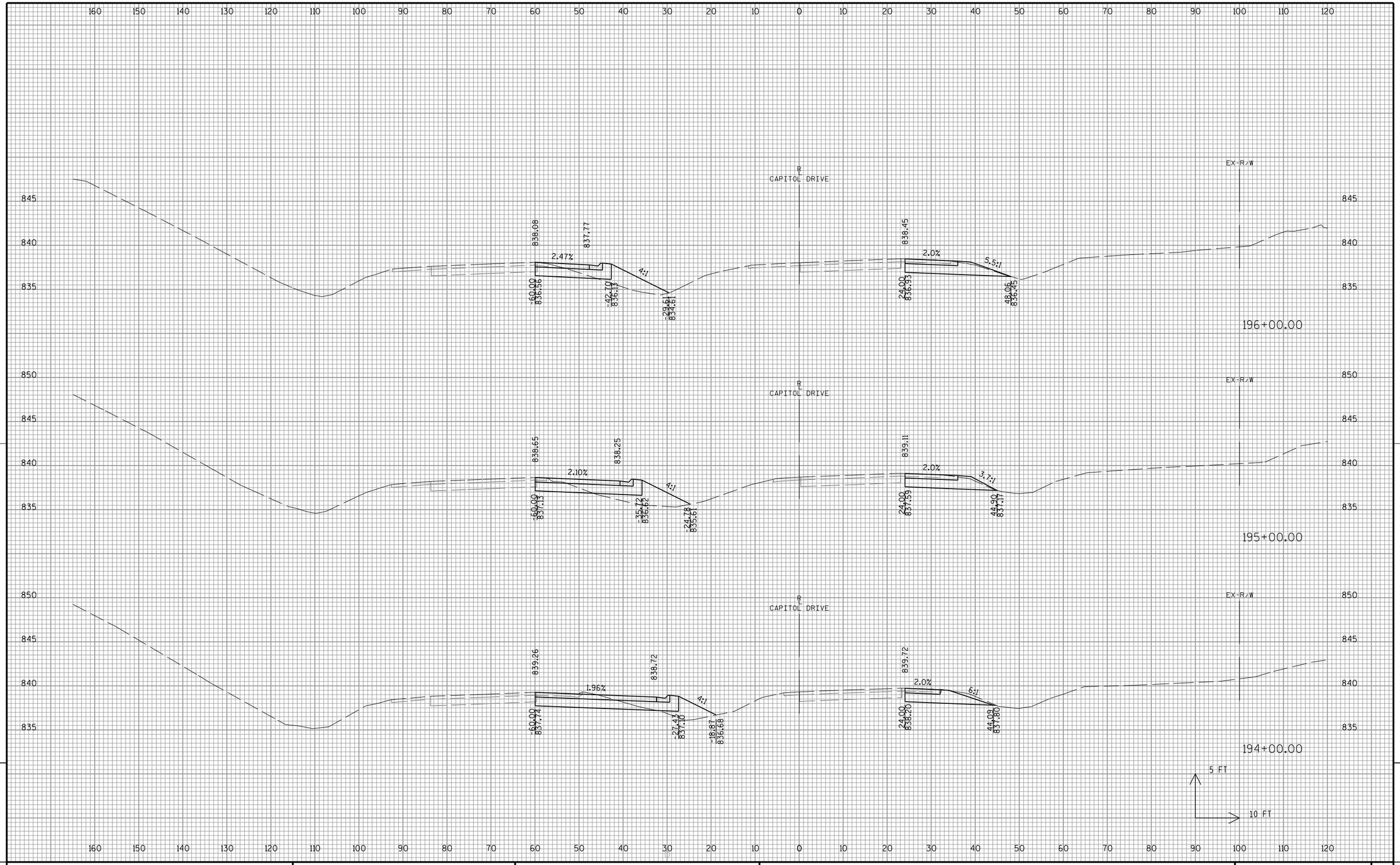

PROJECT NO:2025-14-71	HWY:STH 190	COUNTY:WAUKESHA	CROSS SECTIONS: STH 190 (W. CAPITOL DRIVE)	SHEET 489	E

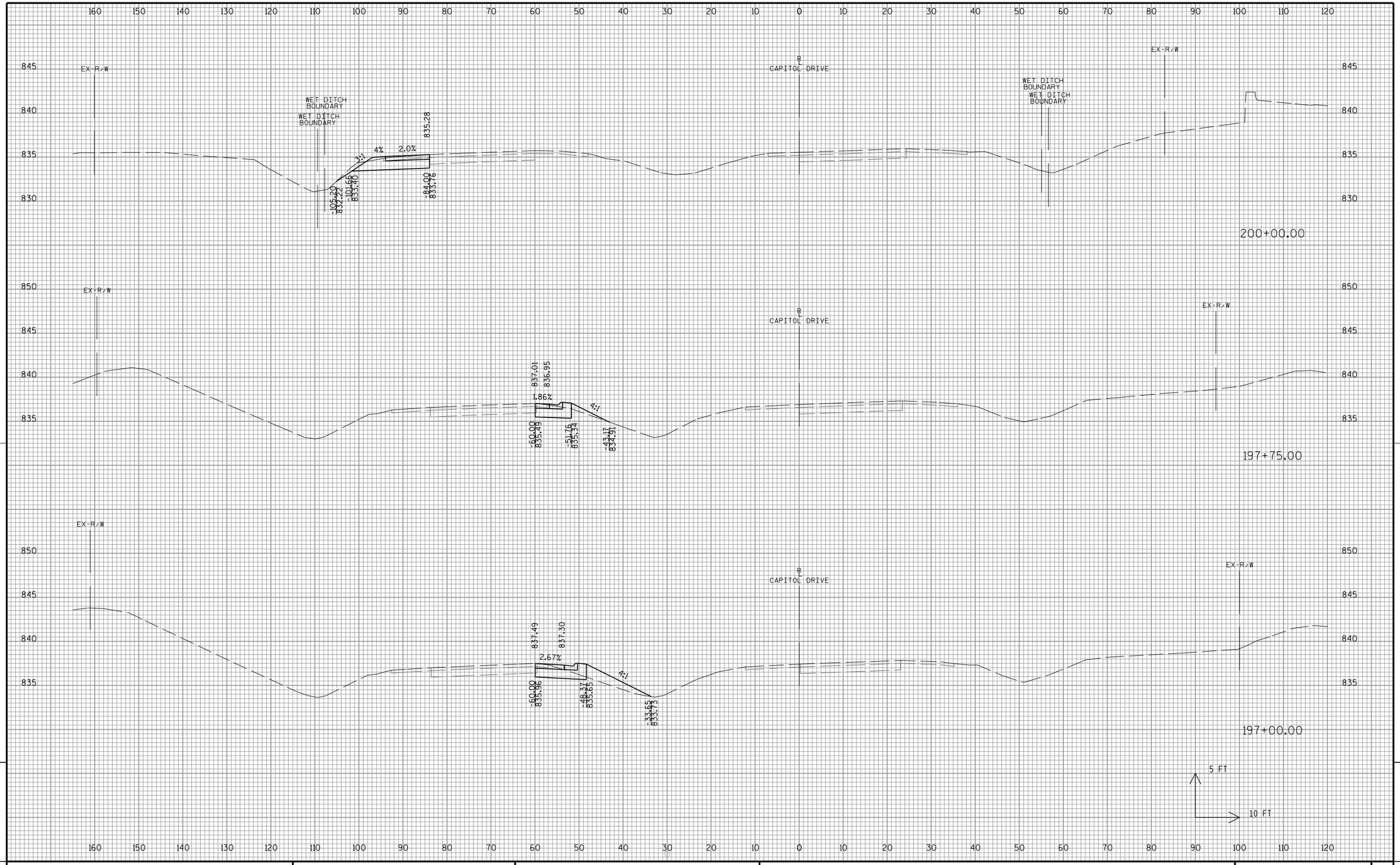

9

9

PROJECT NO:2025-14-71	HWY:STH 190	COUNTY:WAUKESHA	CROSS SECTIONS: STH 190 (W. CAPITOL DRIVE)	SHEET 490	E

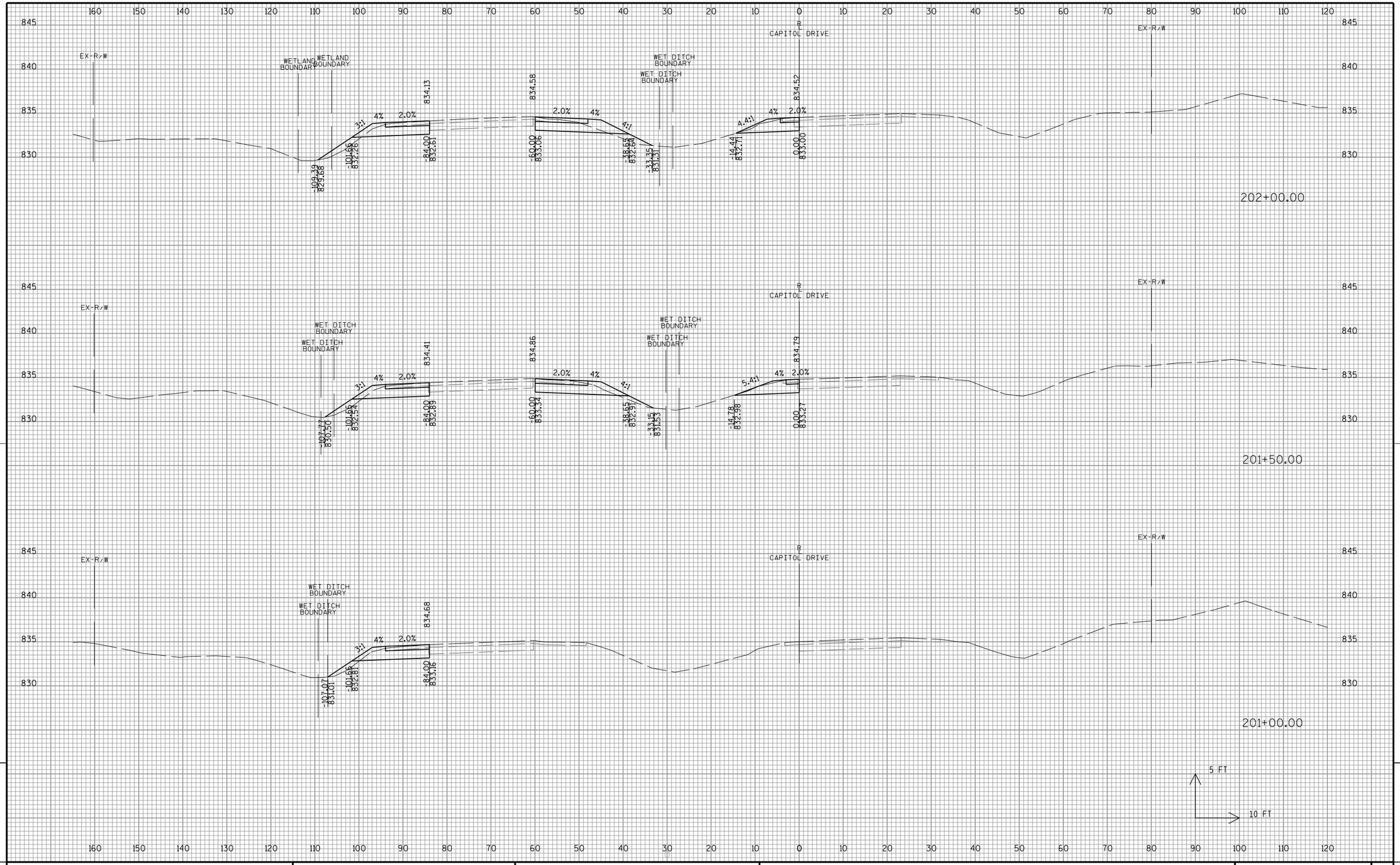

PROJECT NO:2025-14-71	HWY:STH 190	COUNTY:WAUKESHA	CROSS SECTIONS: STH 190 (W. CAPITOL DRIVE)	SHEET 491	E

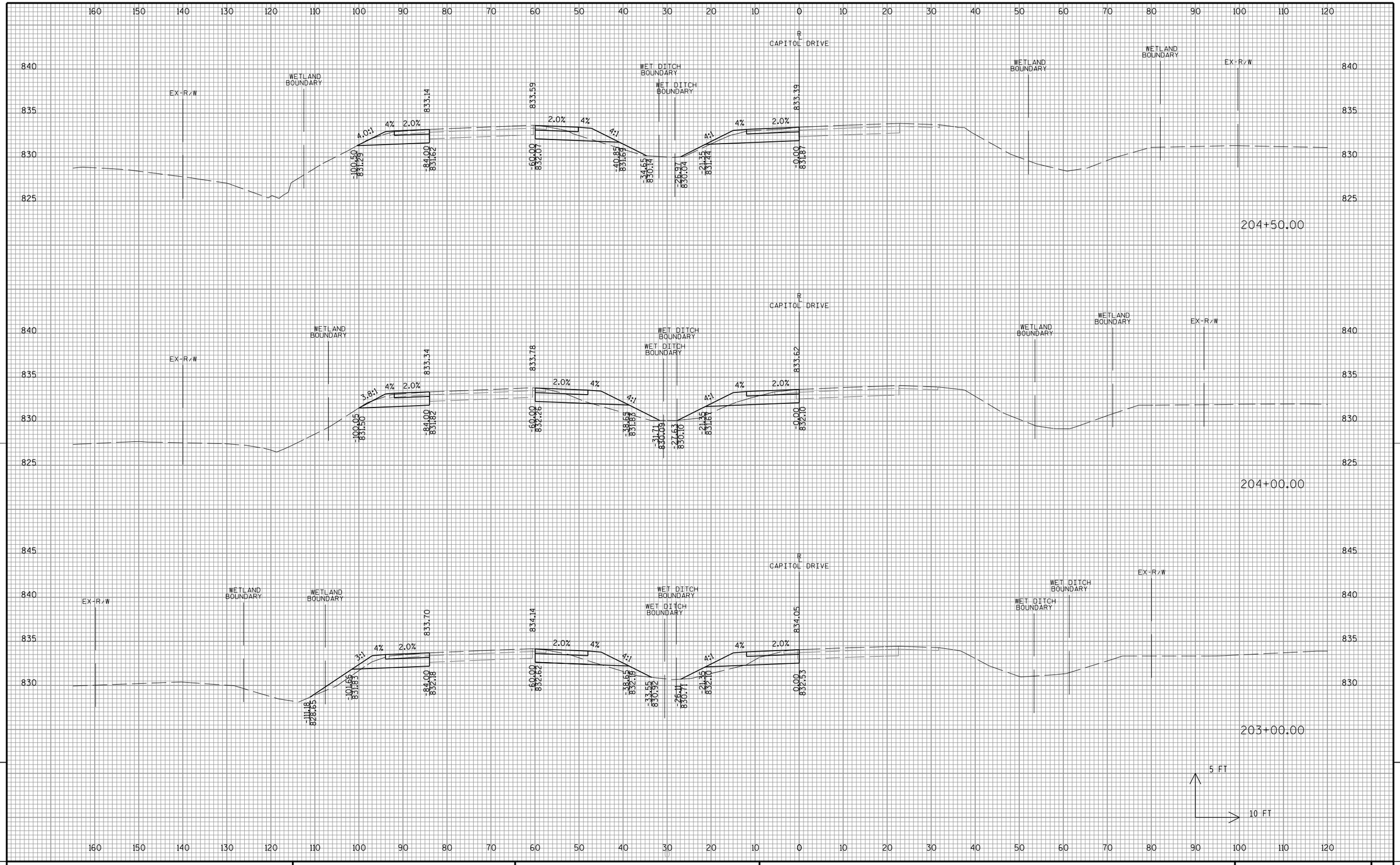

PROJECT NO:2025-14-71	HWY:STH 190	COUNTY:WAUKESHA	CROSS SECTIONS: STH 190 (W. CAPITOL DRIVE)	SHEET 492	E

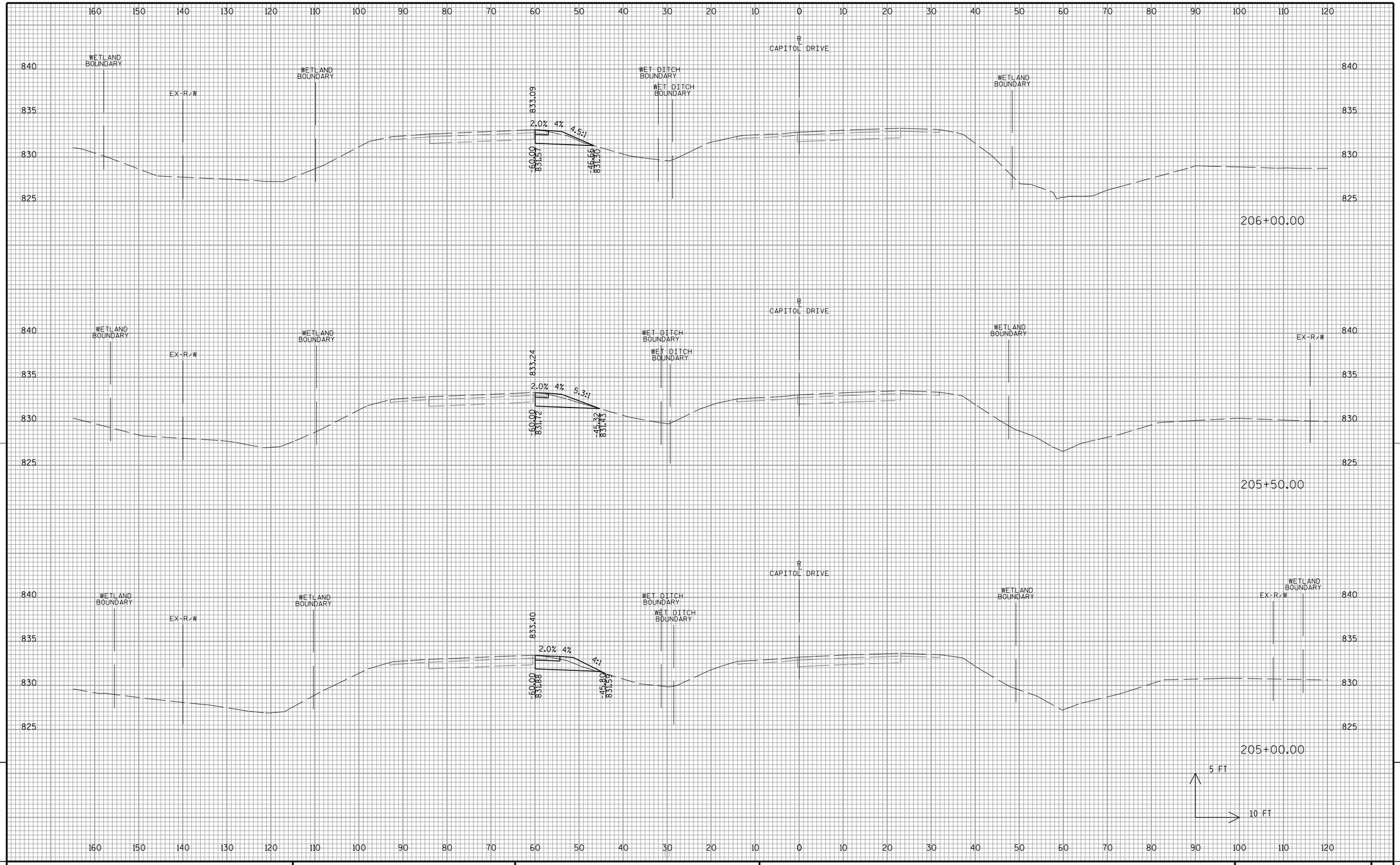

PROJECT NO:2025-14-71	HWY:STH 190	COUNTY:WAUKESHA	CROSS SECTIONS: STH 190 (W. CAPITOL DRIVE)	SHEET 493	E

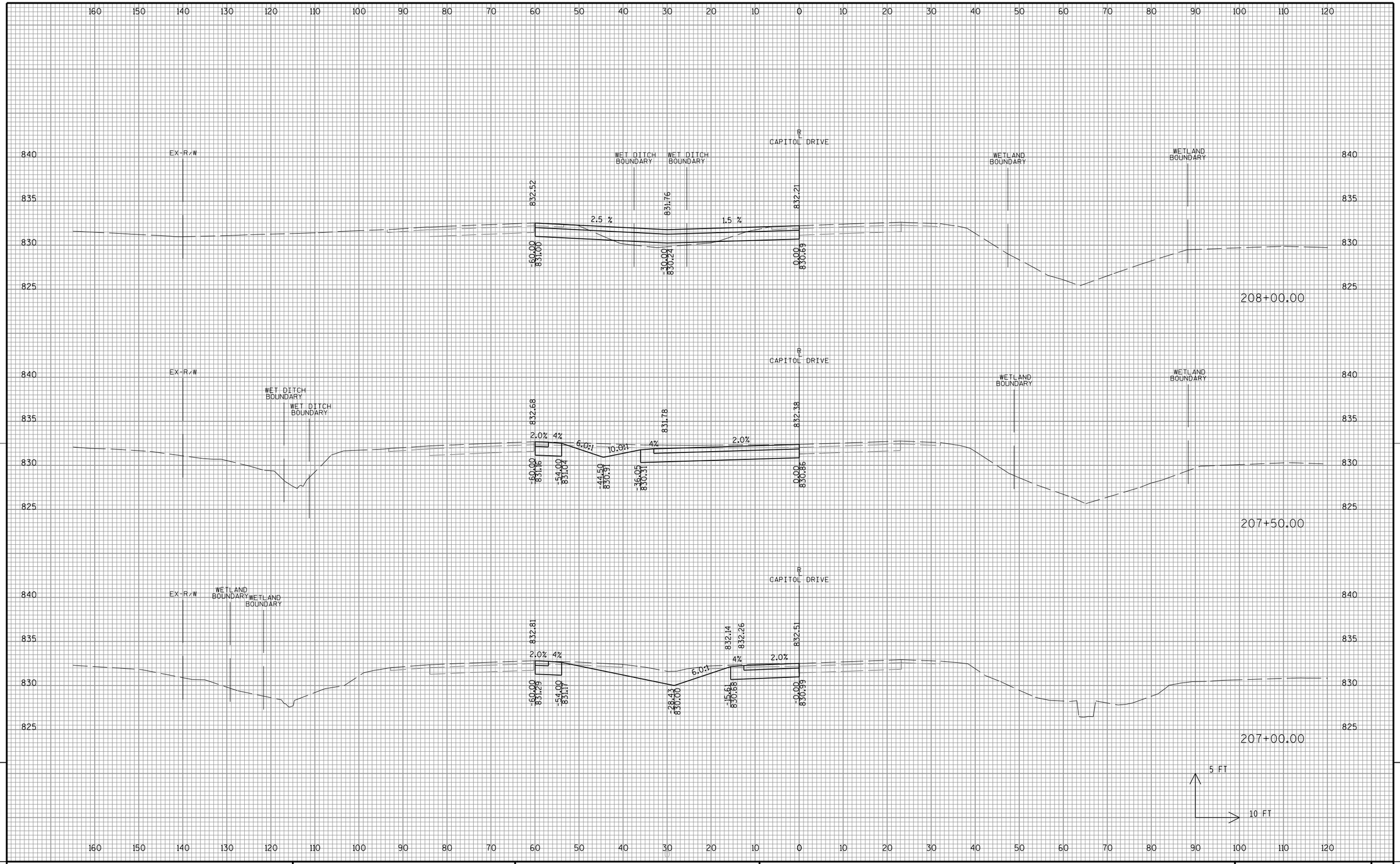

9

9

PROJECT NO:2025-14-71	HWY:STH 190	COUNTY:WAUKESHA	CROSS SECTIONS: STH 190 (W. CAPITOL DRIVE)	SHEET 494	E

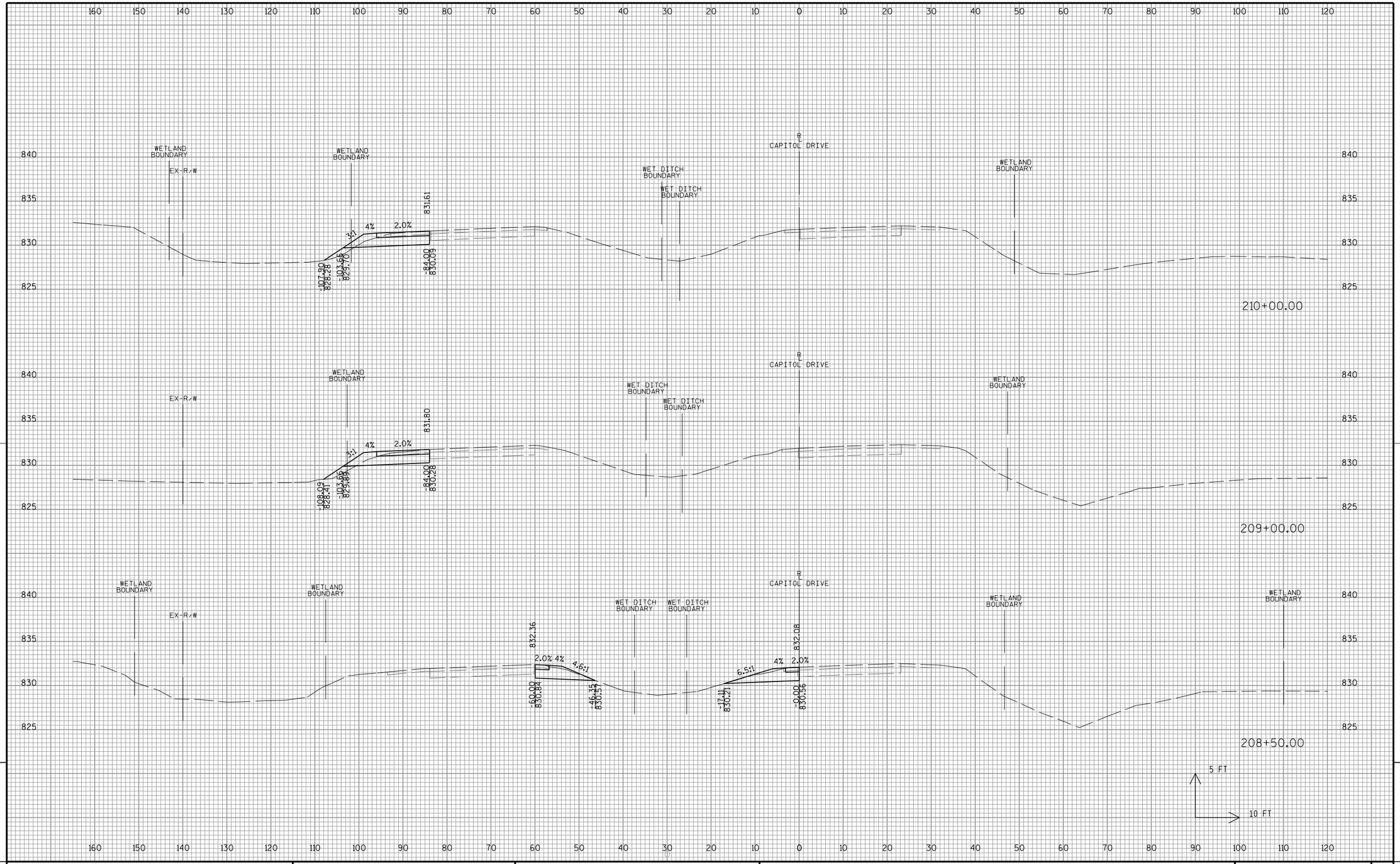

PROJECT NO:2025-14-71	HWY:STH 190	COUNTY:WAUKESHA	CROSS SECTIONS: STH 190 (W. CAPITOL DRIVE)	SHEET 495	E

FILE NAME : X:\ML\2016\20160073\CAD\Transportation\dgn\00\090201_xs_CAPITOL.dgn PLOT DATE : 11/28/2017 PLOT BY : $$...plotuser...$$ PLOT NAME : PLOT SCALE : $$.....plotscale.....$$ WISDOT/CADDS SHEET 21

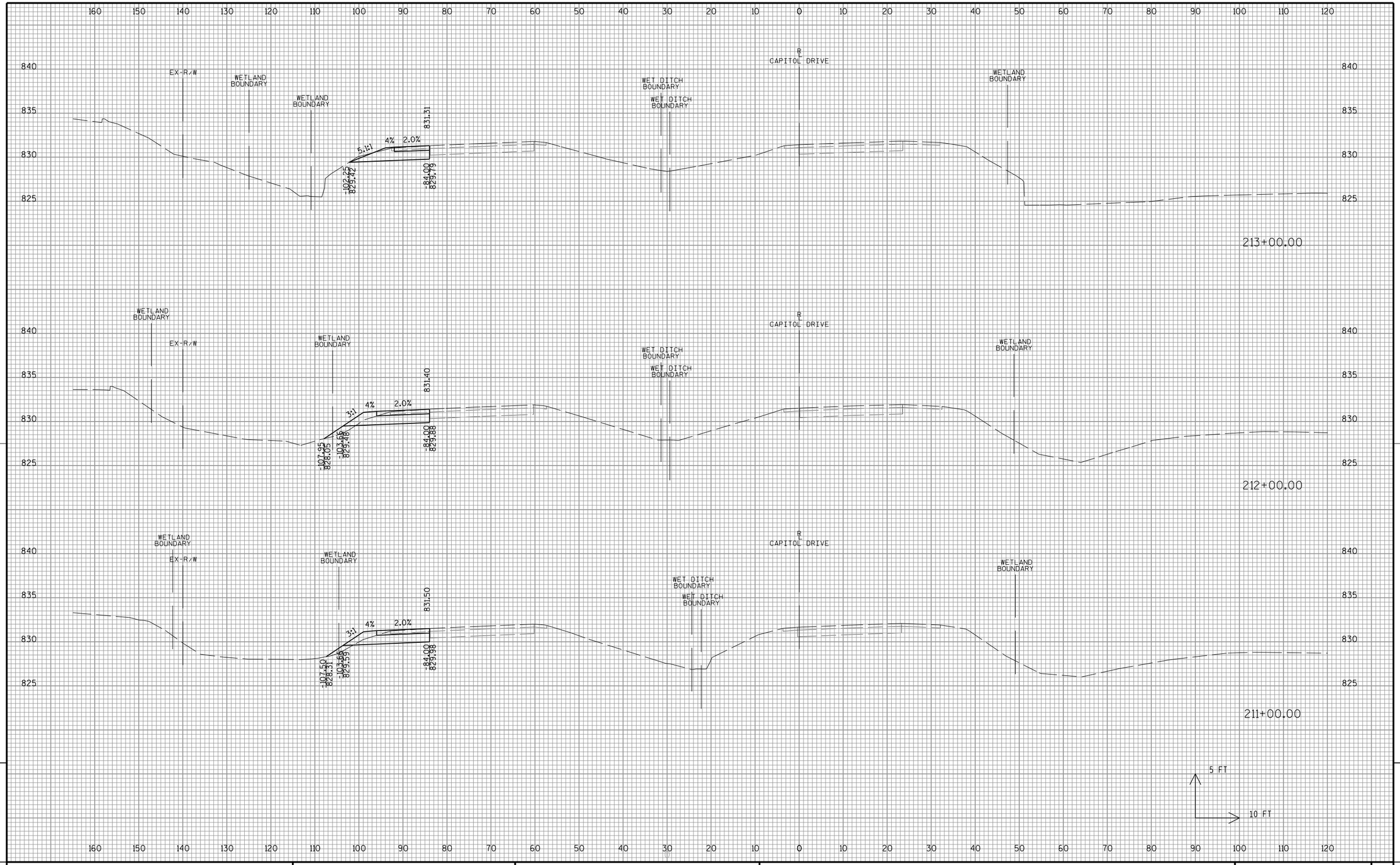

9

9

PROJECT NO:2025-14-71	HWY:STH 190	COUNTY:WAUKESHA	CROSS SECTIONS: STH 190 (W. CAPITOL DRIVE)	SHEET 496	E

FILE NAME : X:\ML\2016\20160073\CAD\Transportation\dgn\00\090201_xs_CAPITOL.dgn PLOT DATE : 11/28/2017 PLOT BY : $$...plotuser...$$ PLOT NAME : PLOT SCALE : $$.....plotscale.....$$ WISDOT/CADDS SHEET 21

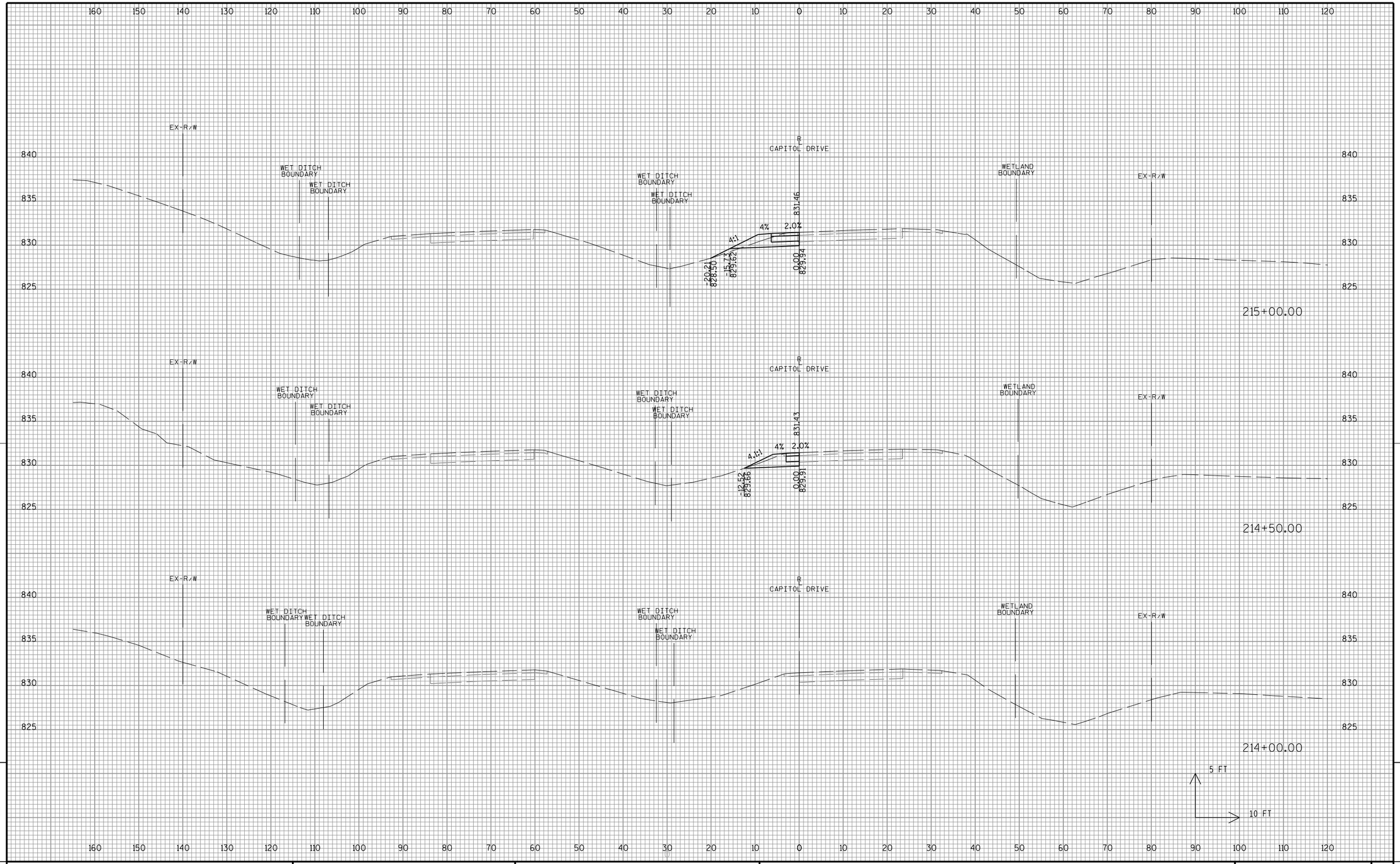

9

9

PROJECT NO:2025-14-71	HWY:STH 190	COUNTY:WAUKESHA	CROSS SECTIONS: STH 190 (W. CAPITOL DRIVE)	SHEET 497	E

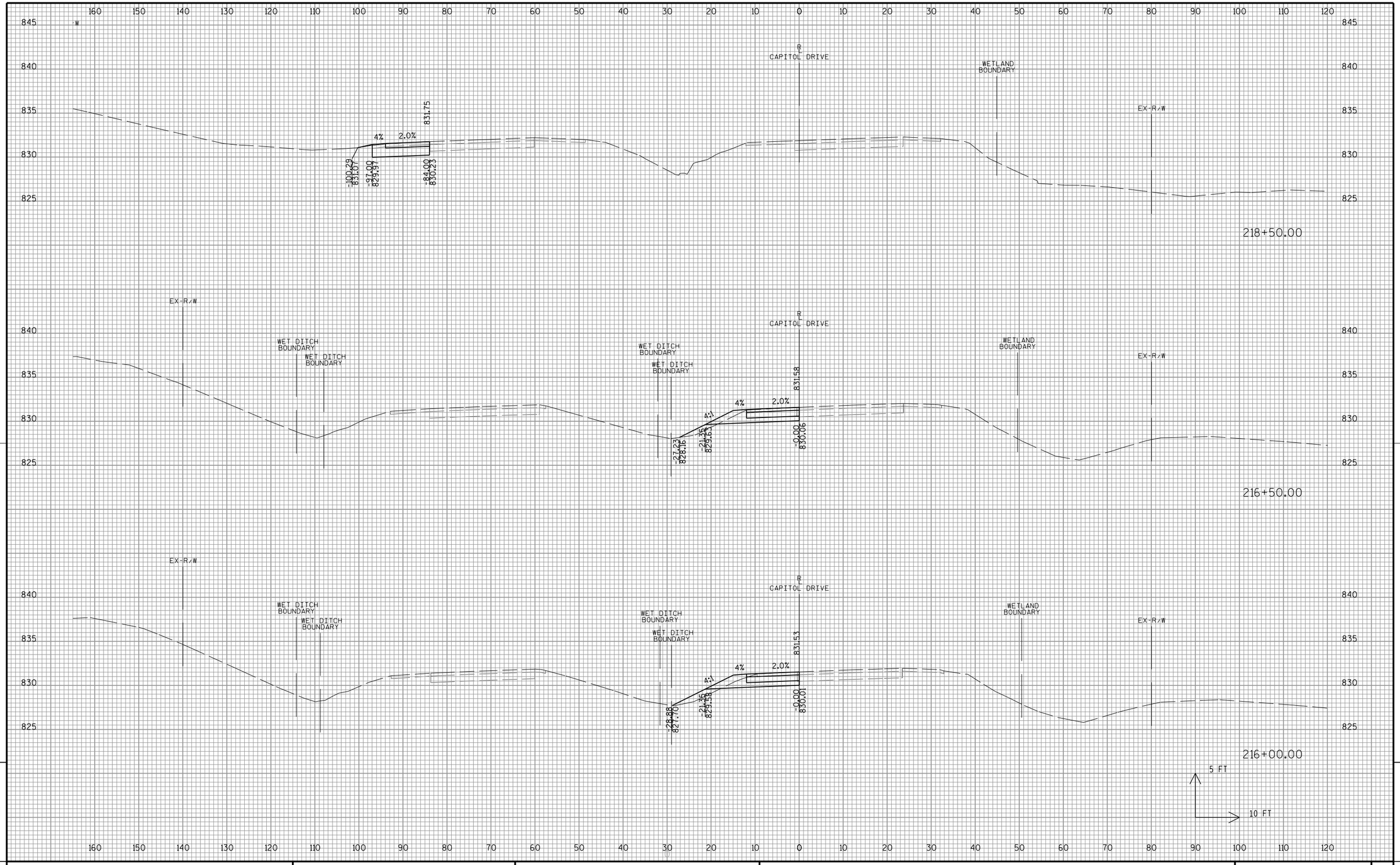

PROJECT NO:2025-14-71	HWY:STH 190	COUNTY:WAUKESHA	CROSS SECTIONS: STH 190 (W. CAPITOL DRIVE)	SHEET 498	E

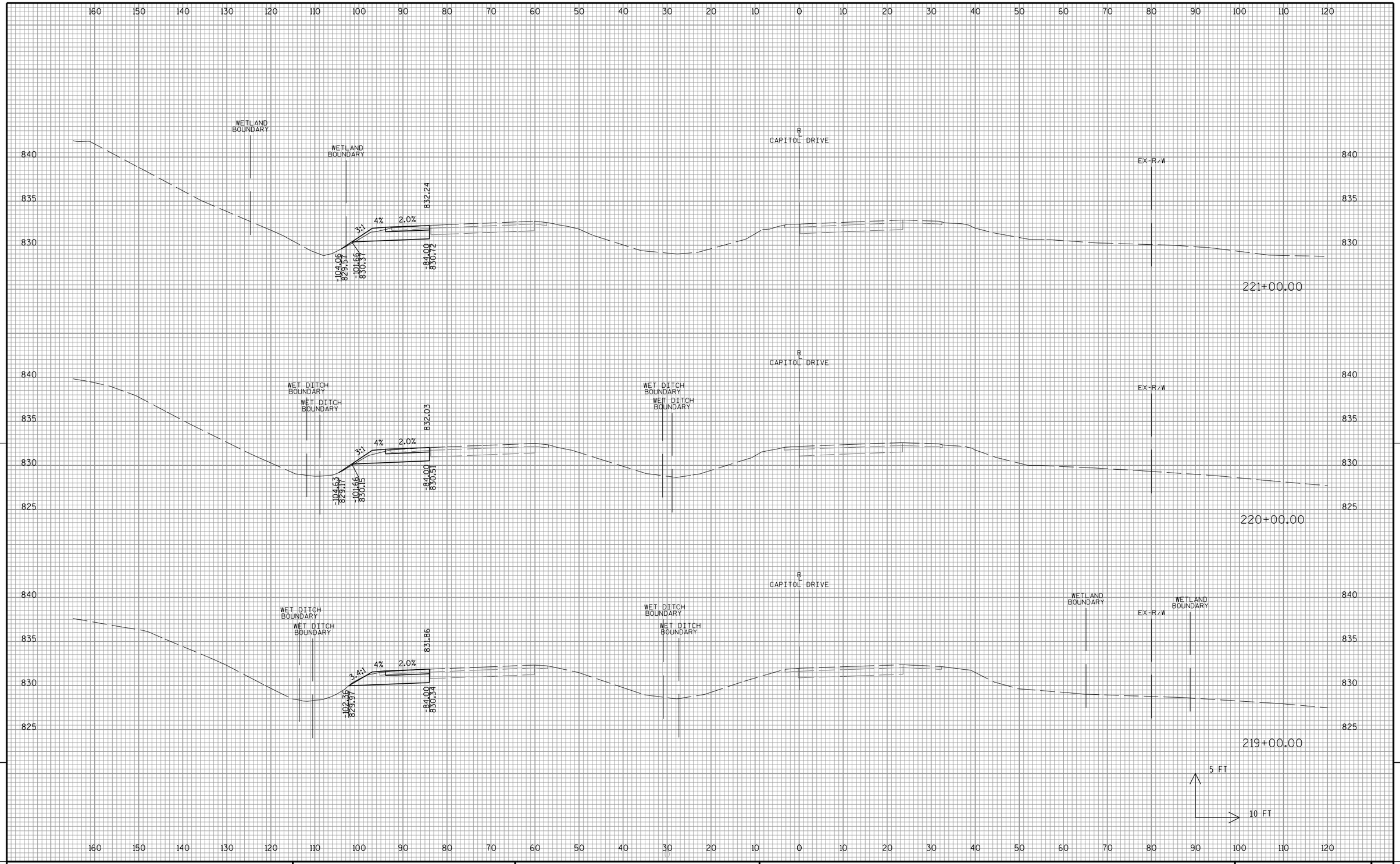

9

9

PROJECT NO:2025-14-71	HWY:STH 190	COUNTY:WAUKESHA	CROSS SECTIONS: STH 190 (W. CAPITOL DRIVE)	SHEET 499	E

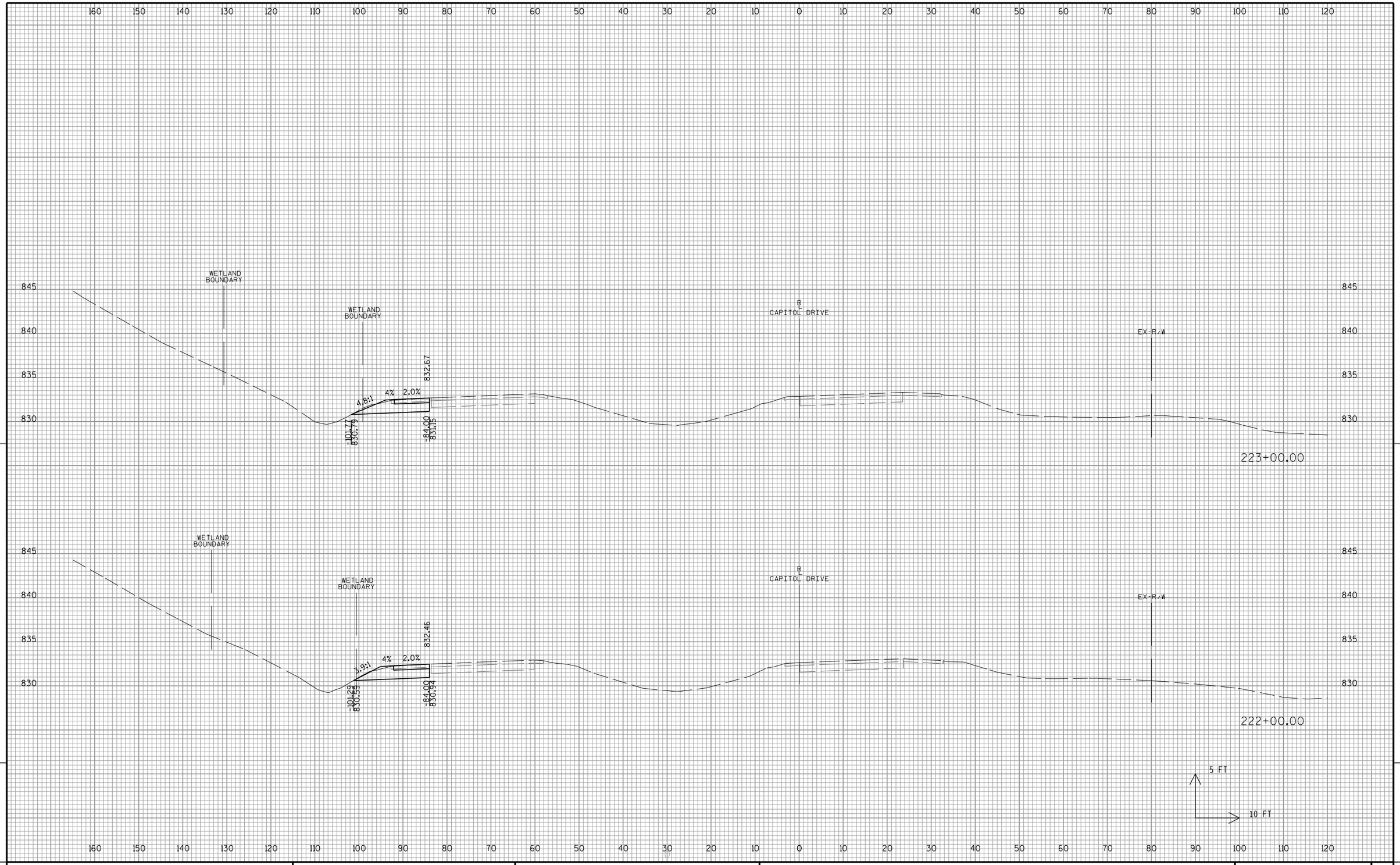

PROJECT NO:2025-14-71	HWY:STH 190	COUNTY:WAUKESHA	CROSS SECTIONS: STH 190 (W. CAPITOL DRIVE)	SHEET 500	E

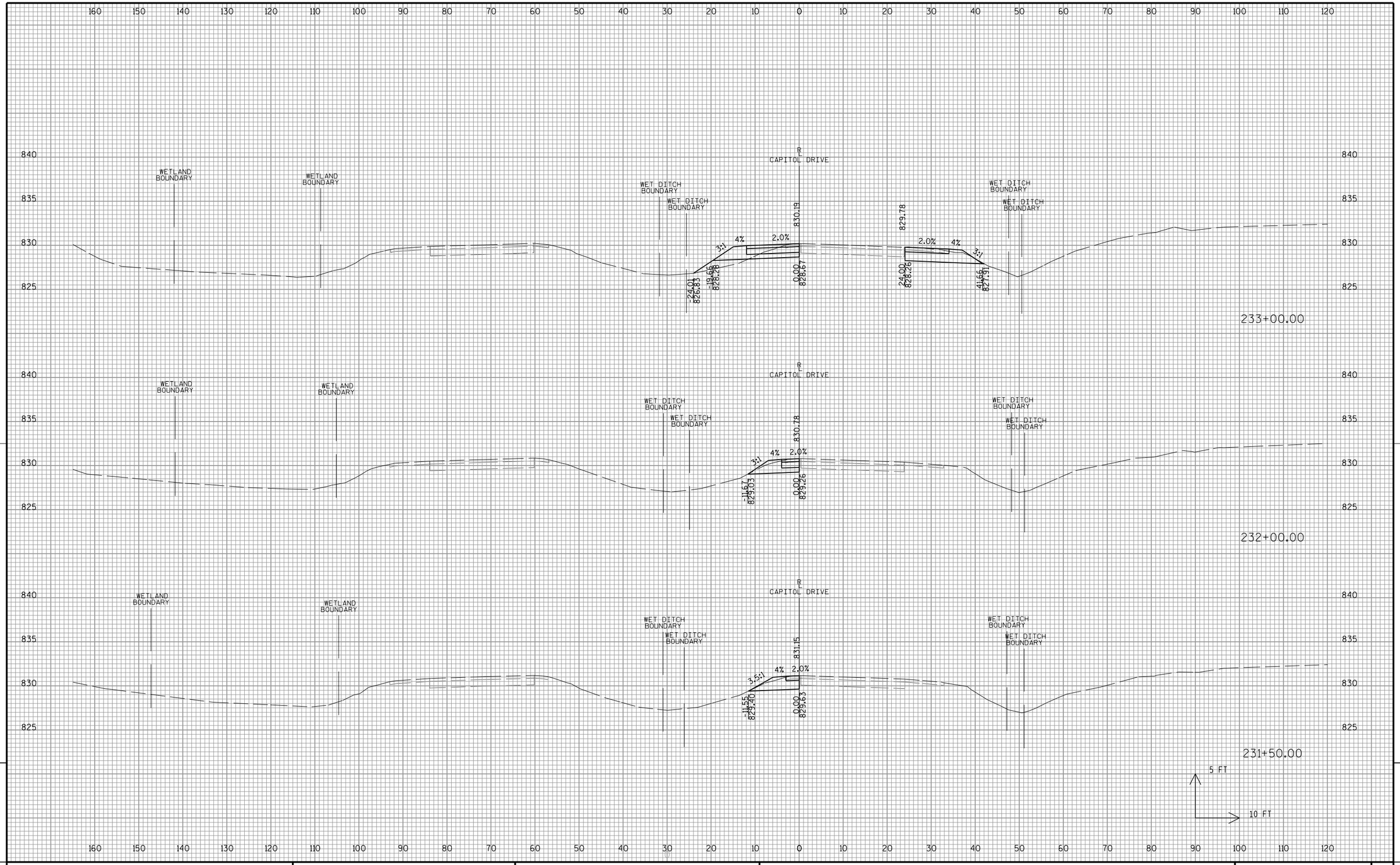

9

9

PROJECT NO:2025-14-71	HWY:STH 190	COUNTY:WAUKESHA	CROSS SECTIONS: STH 190 (W. CAPITOL DRIVE)	SHEET 501	E

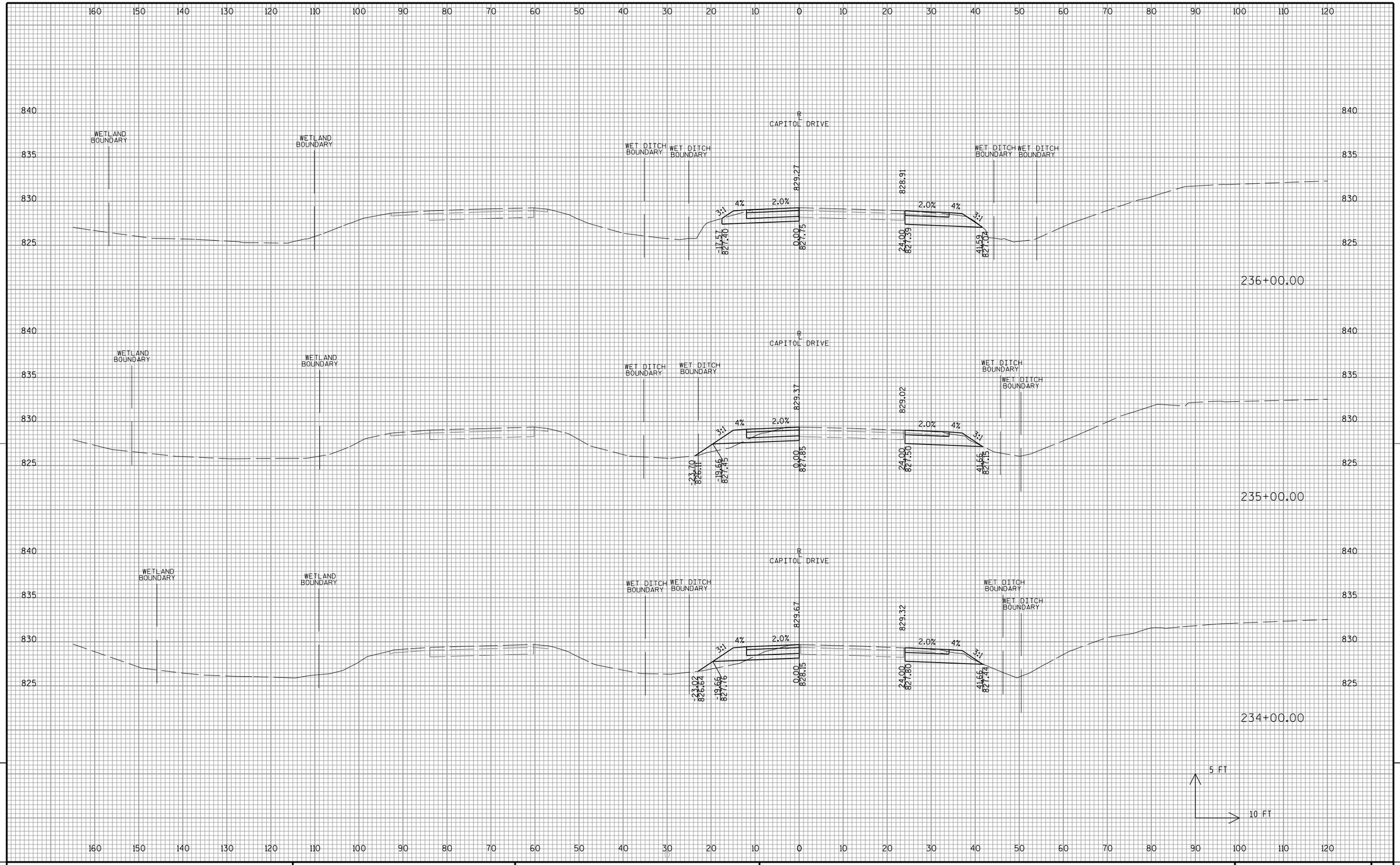

9

9

PROJECT NO:2025-14-71	HWY:STH 190	COUNTY:WAUKESHA	CROSS SECTIONS: STH 190 (W. CAPITOL DRIVE)	SHEET 502	E

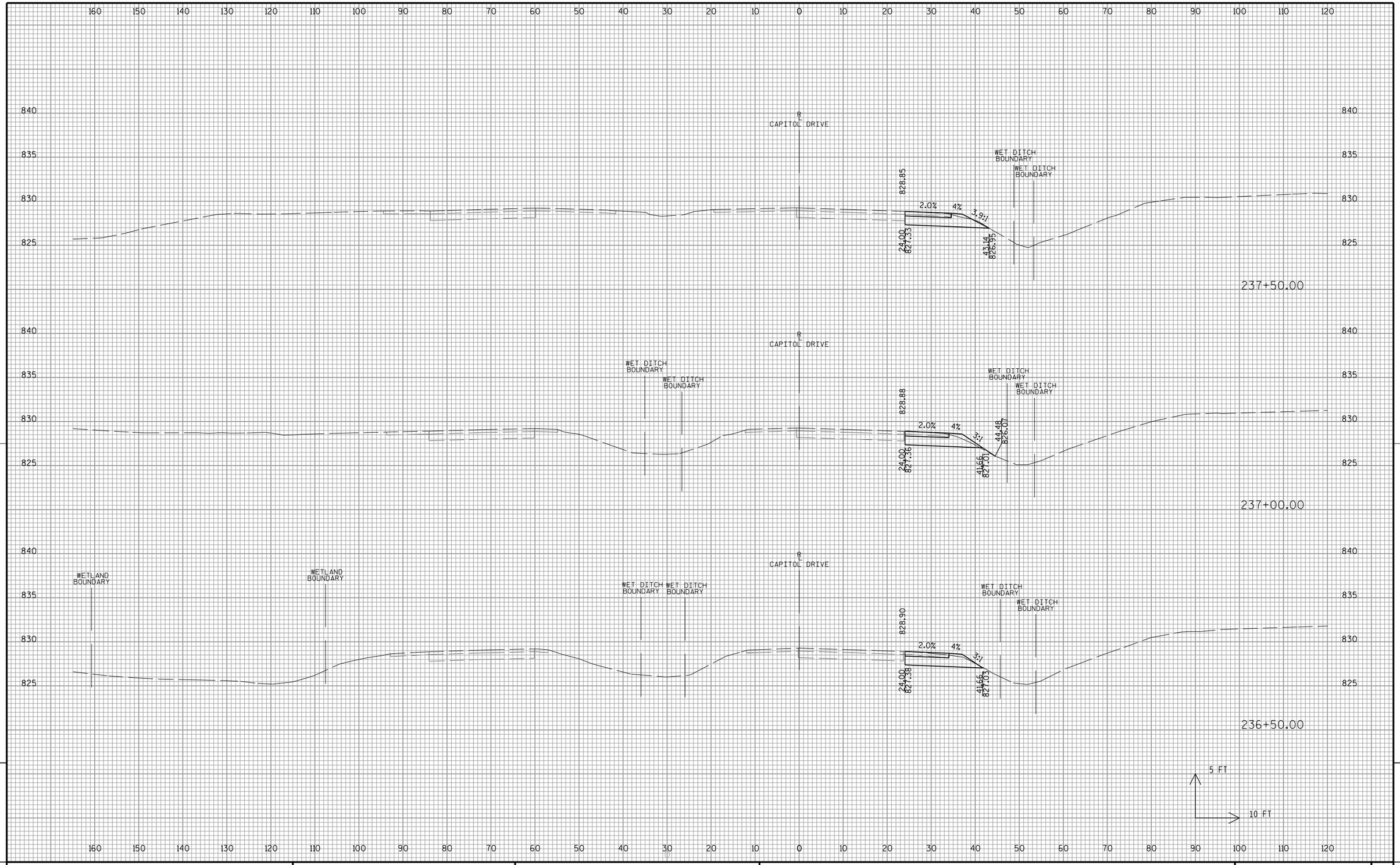

9

9

PROJECT NO:2025-14-71	HWY:STH 190	COUNTY:WAUKESHA	CROSS SECTIONS: STH 190 (W. CAPITOL DRIVE)	SHEET 503	E

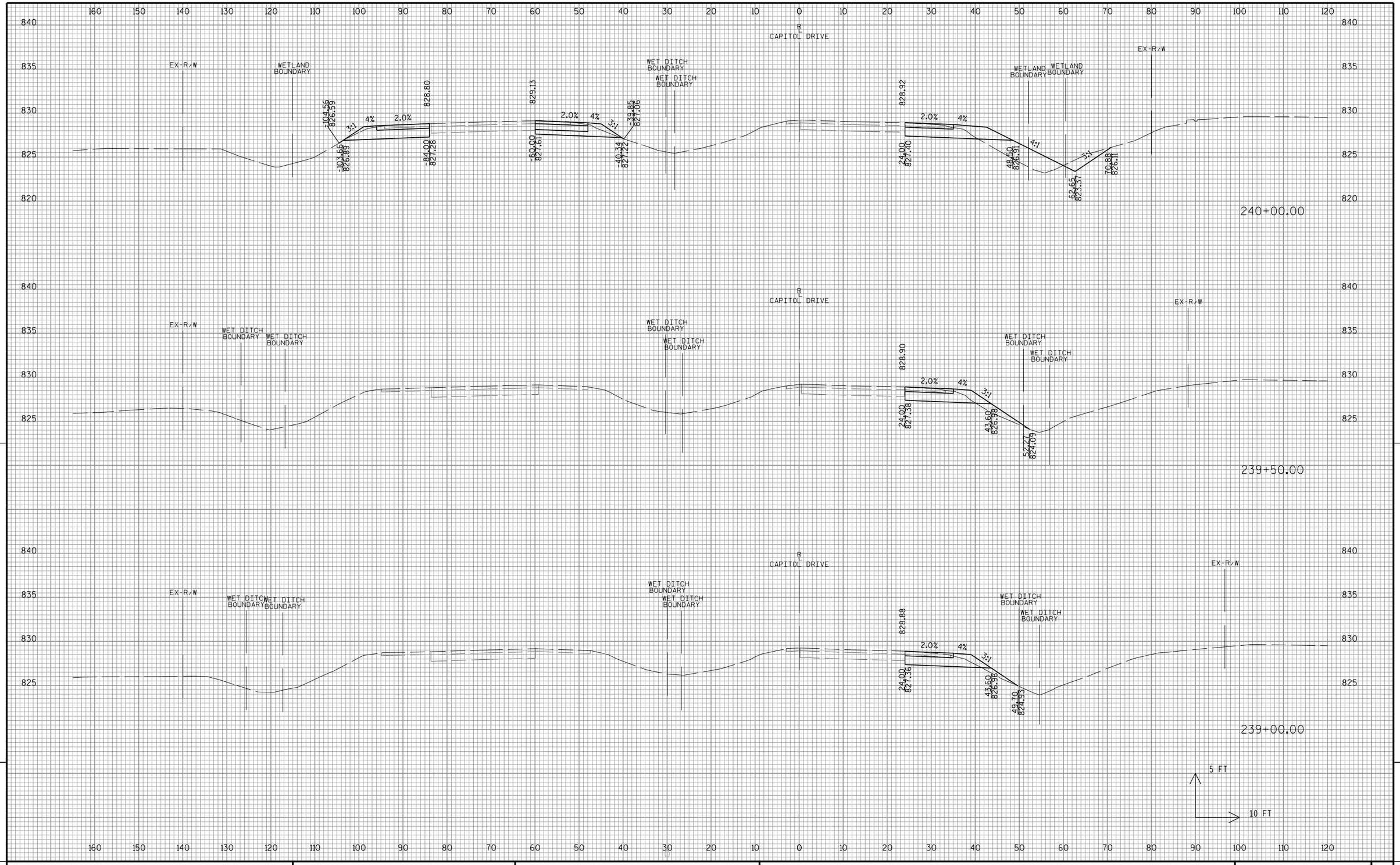

PROJECT NO:2025-14-71	HWY:STH 190	COUNTY:WAUKESHA	CROSS SECTIONS: STH 190 (W. CAPITOL DRIVE)	SHEET 504	E

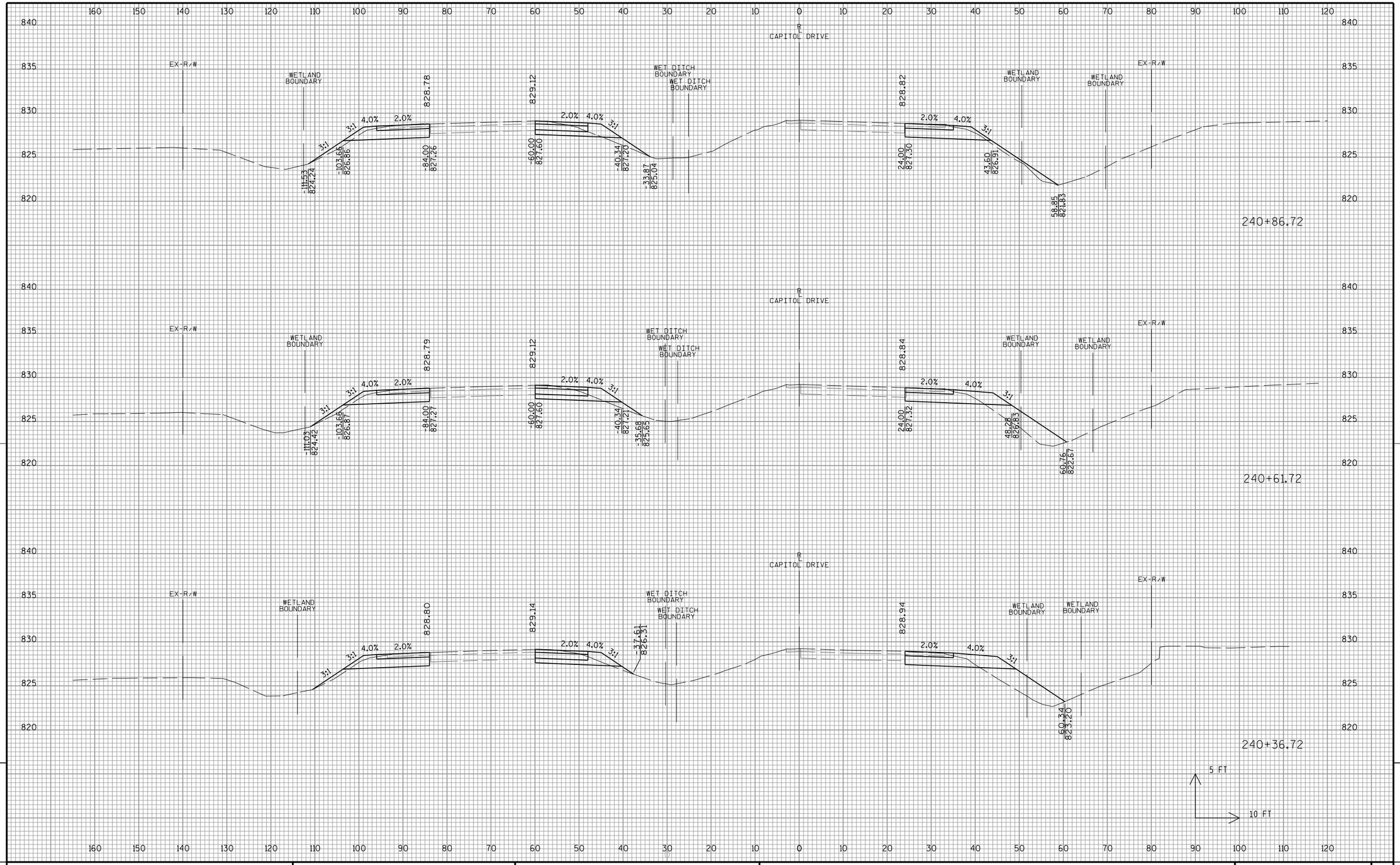

9

9

PROJECT NO:2025-14-71	HWY:STH 190	COUNTY:WAUKESHA	CROSS SECTIONS: STH 190 (W. CAPITOL DRIVE)	SHEET 505	E

FILE NAME : X:\ML\2016\20160073\CAD\Transportation\dgn\00\090201_xs_CAPITOL.dgn PLOT DATE : 11/28/2017 PLOT BY : $$...plotuser...$$ PLOT NAME : PLOT SCALE : $$.....plotscale.....$$ WISDOT/CADDS SHEET 21

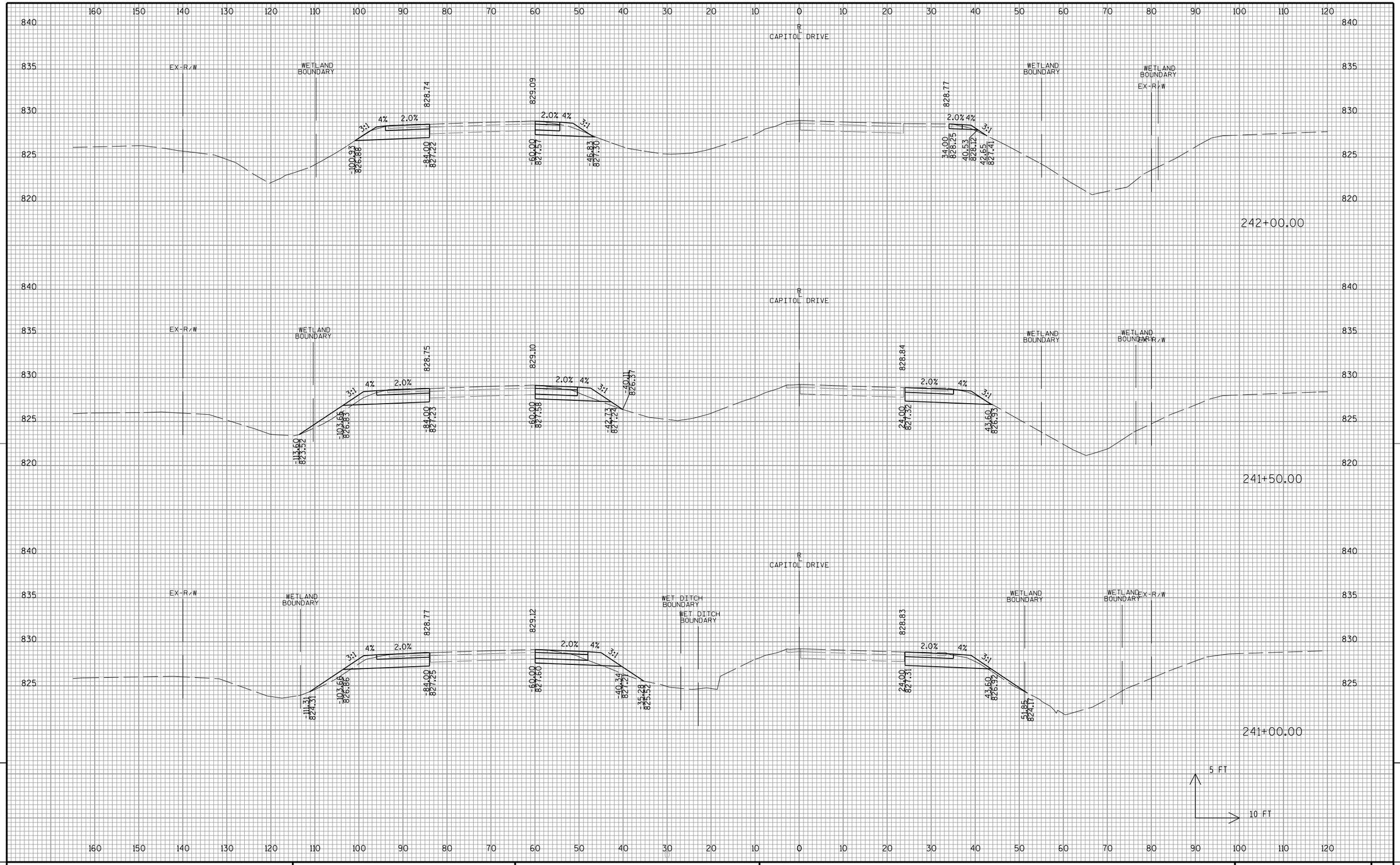

9

9

PROJECT NO:2025-14-71	HWY:STH 190	COUNTY:WAUKESHA	CROSS SECTIONS: STH 190 (W. CAPITOL DRIVE)	SHEET 506	E

FILE NAME : X:\ML\2016\20160073\CAD\Transportation\dgn\00\090201_xs_CAPITOL.dgn PLOT DATE : 11/28/2017 PLOT BY : $$...plotuser...$$ PLOT NAME : PLOT SCALE : $$.....plotscale.....$$ WISDOT/CADDS SHEET 21

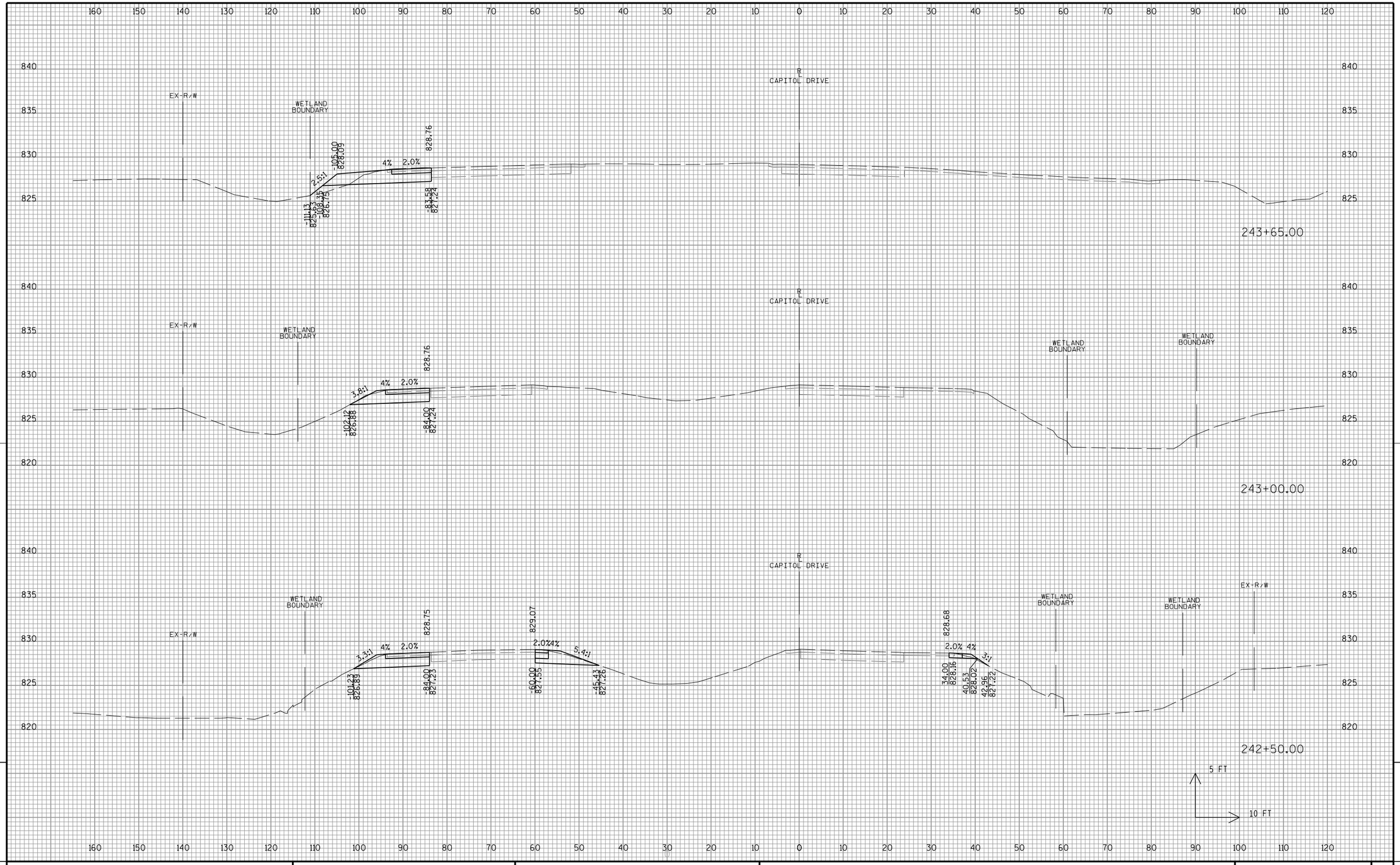

PROJECT NO:2025-14-71	HWY:STH 190	COUNTY:WAUKESHA	CROSS SECTIONS: STH 190 (W. CAPITOL DRIVE)	SHEET 507	E

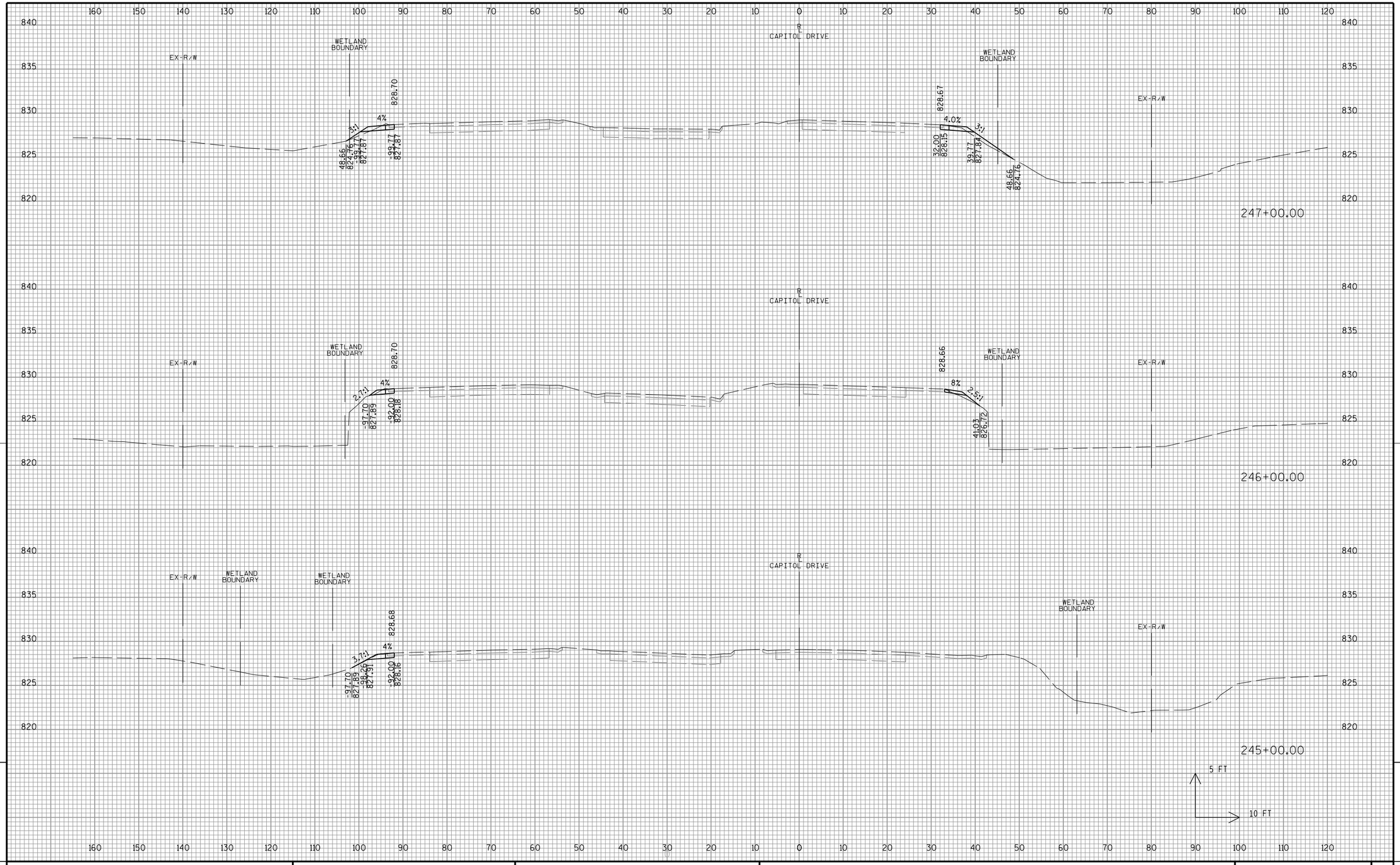

9

9

PROJECT NO:2025-14-71	HWY:STH 190	COUNTY:WAUKESHA	CROSS SECTIONS: STH 190 (W. CAPITOL DRIVE)	SHEET 508	E

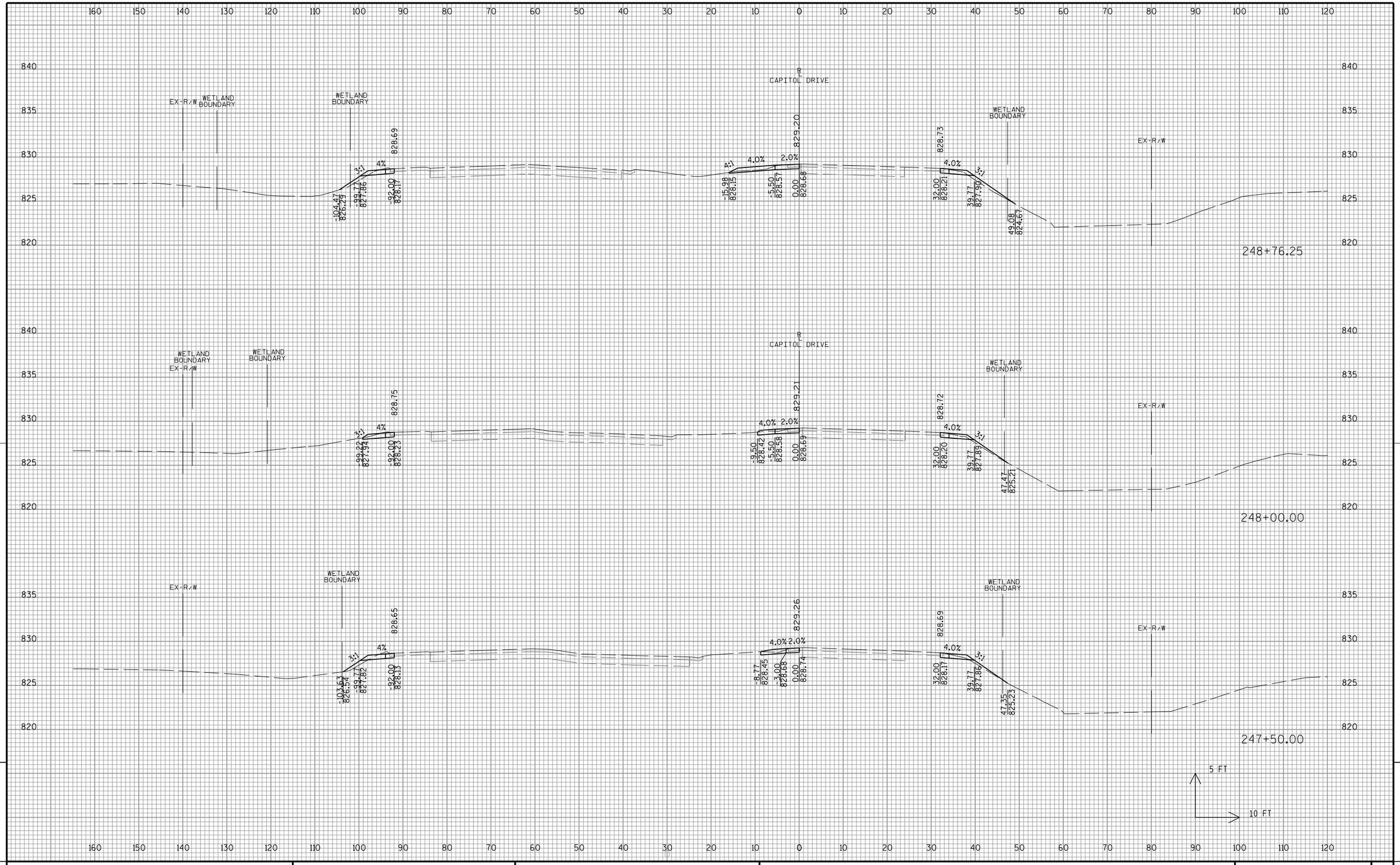

PROJECT NO:2025-14-71	HWY:STH 190	COUNTY:WAUKESHA	CROSS SECTIONS: STH 190 (W. CAPITOL DRIVE)	SHEET 509	E

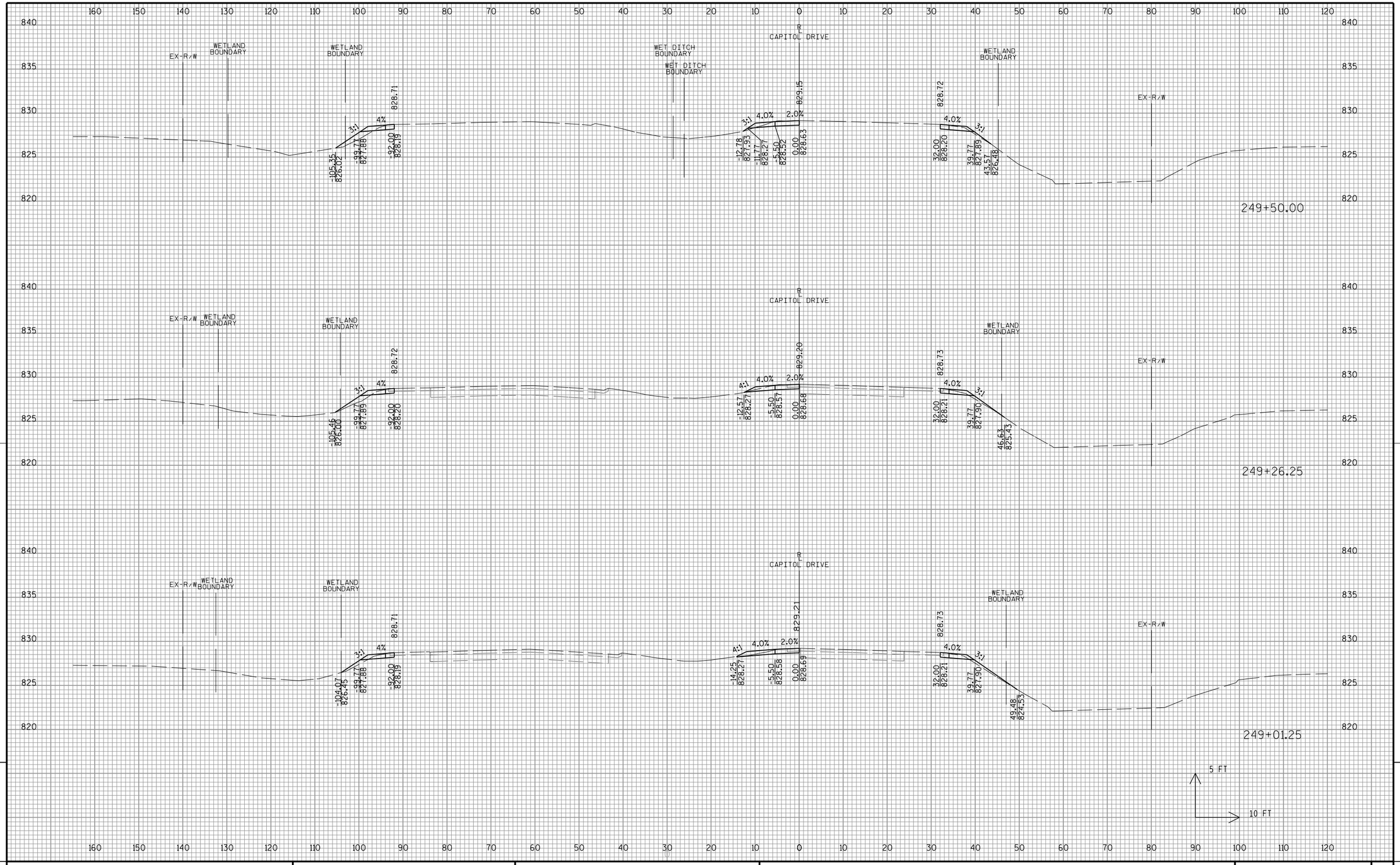

9

9

PROJECT NO:2025-14-71	HWY:STH 190	COUNTY:WAUKESHA	CROSS SECTIONS: STH 190 (W. CAPITOL DRIVE)	SHEET 510	E

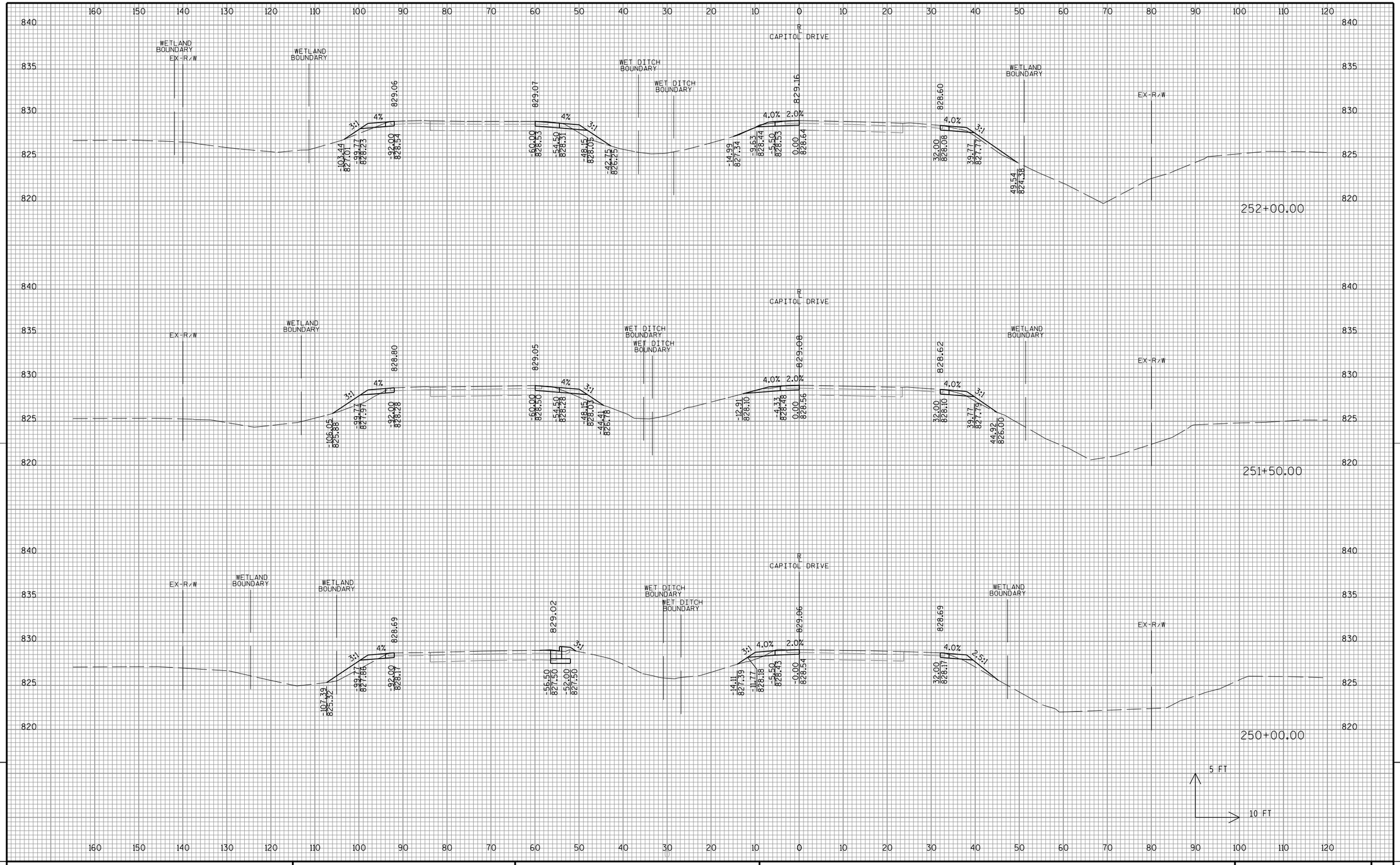

PROJECT NO:2025-14-71	HWY:STH 190	COUNTY:WAUKESHA	CROSS SECTIONS: STH 190 (W. CAPITOL DRIVE)	SHEET 511	E

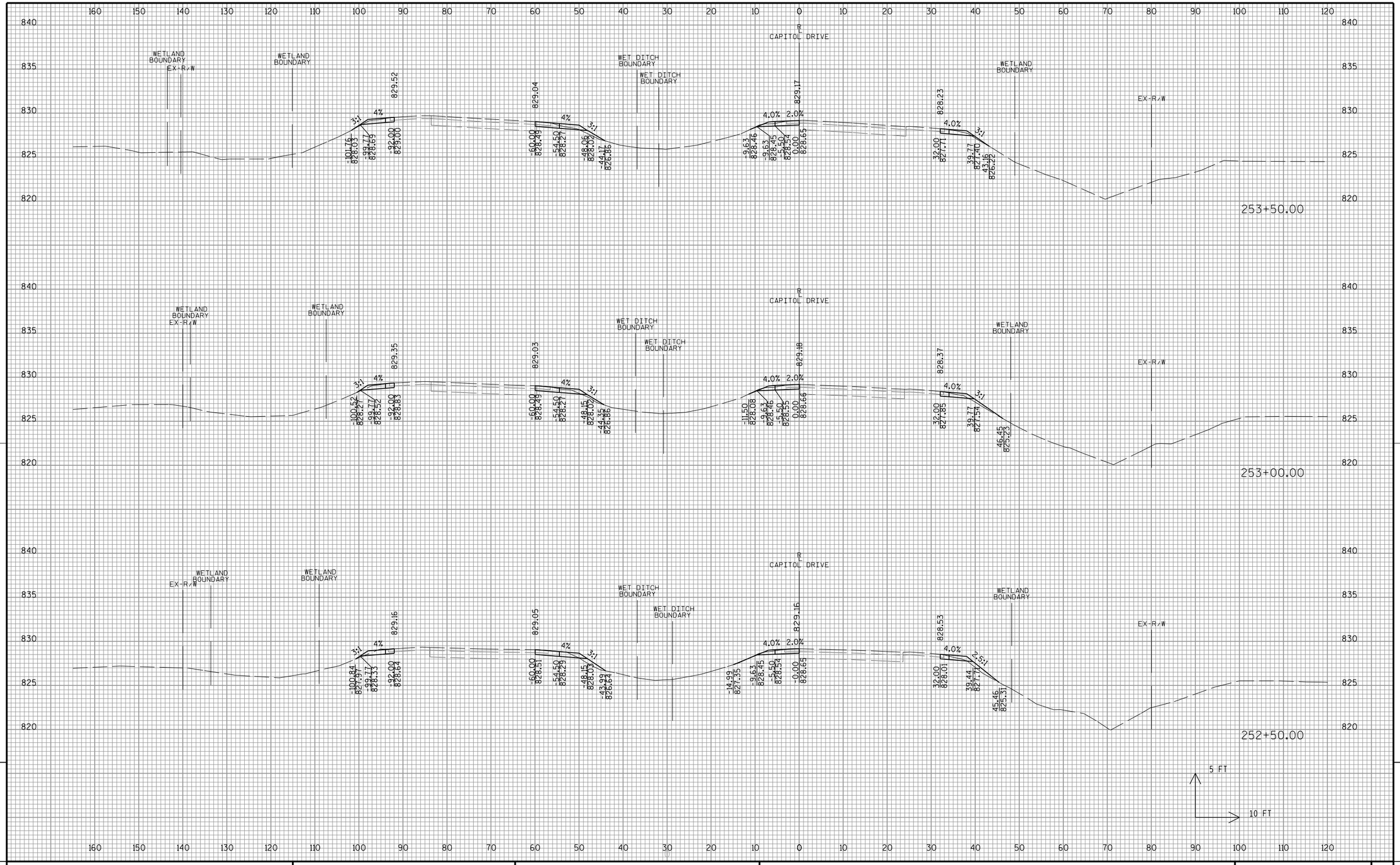

PROJECT NO:2025-14-71	HWY:STH 190	COUNTY:WAUKESHA	CROSS SECTIONS: STH 190 (W. CAPITOL DRIVE)	SHEET 512	E

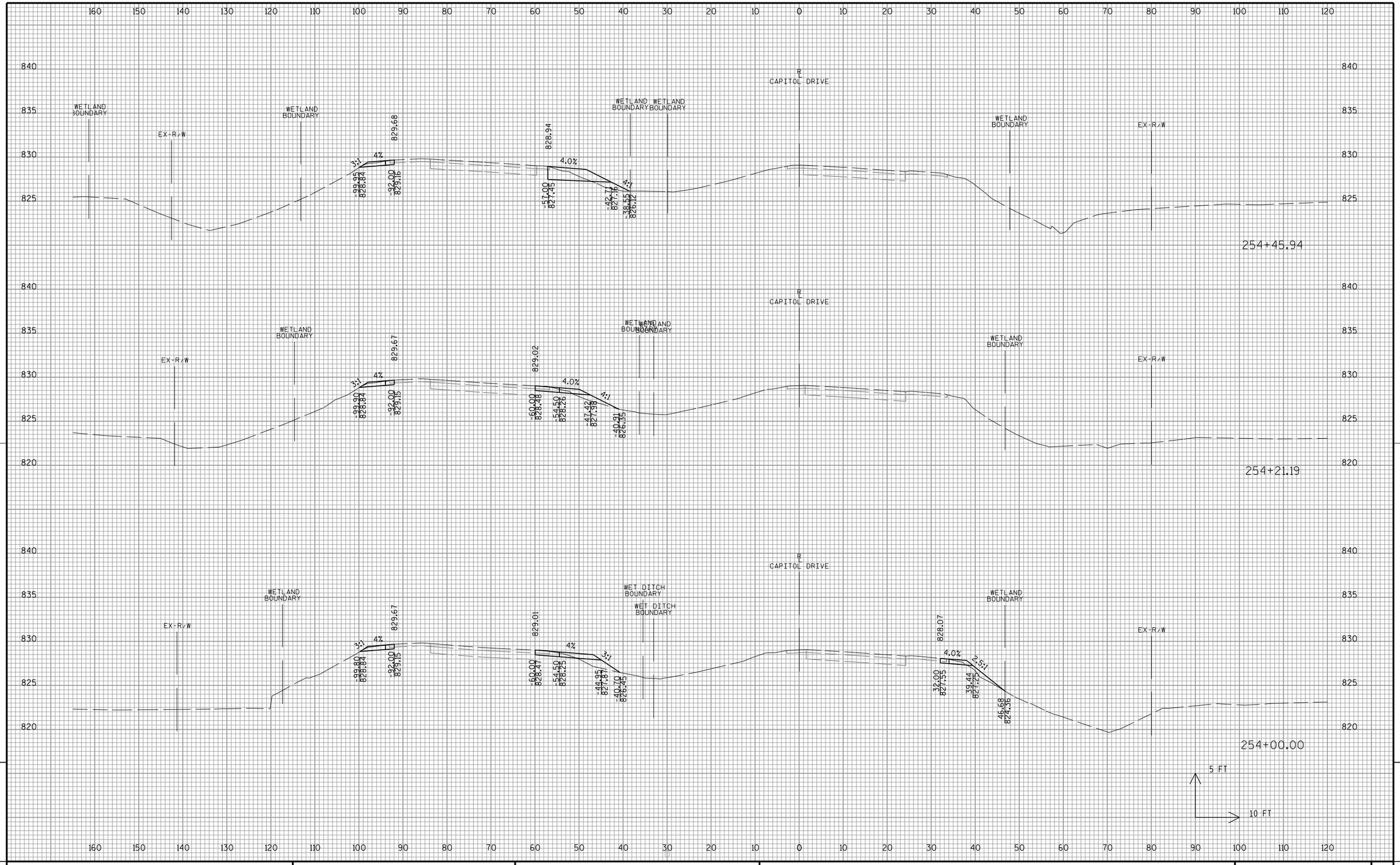

9

9

PROJECT NO:2025-14-71	HWY:STH 190	COUNTY:WAUKESHA	CROSS SECTIONS: STH 190 (W. CAPITOL DRIVE)	SHEET 513	E

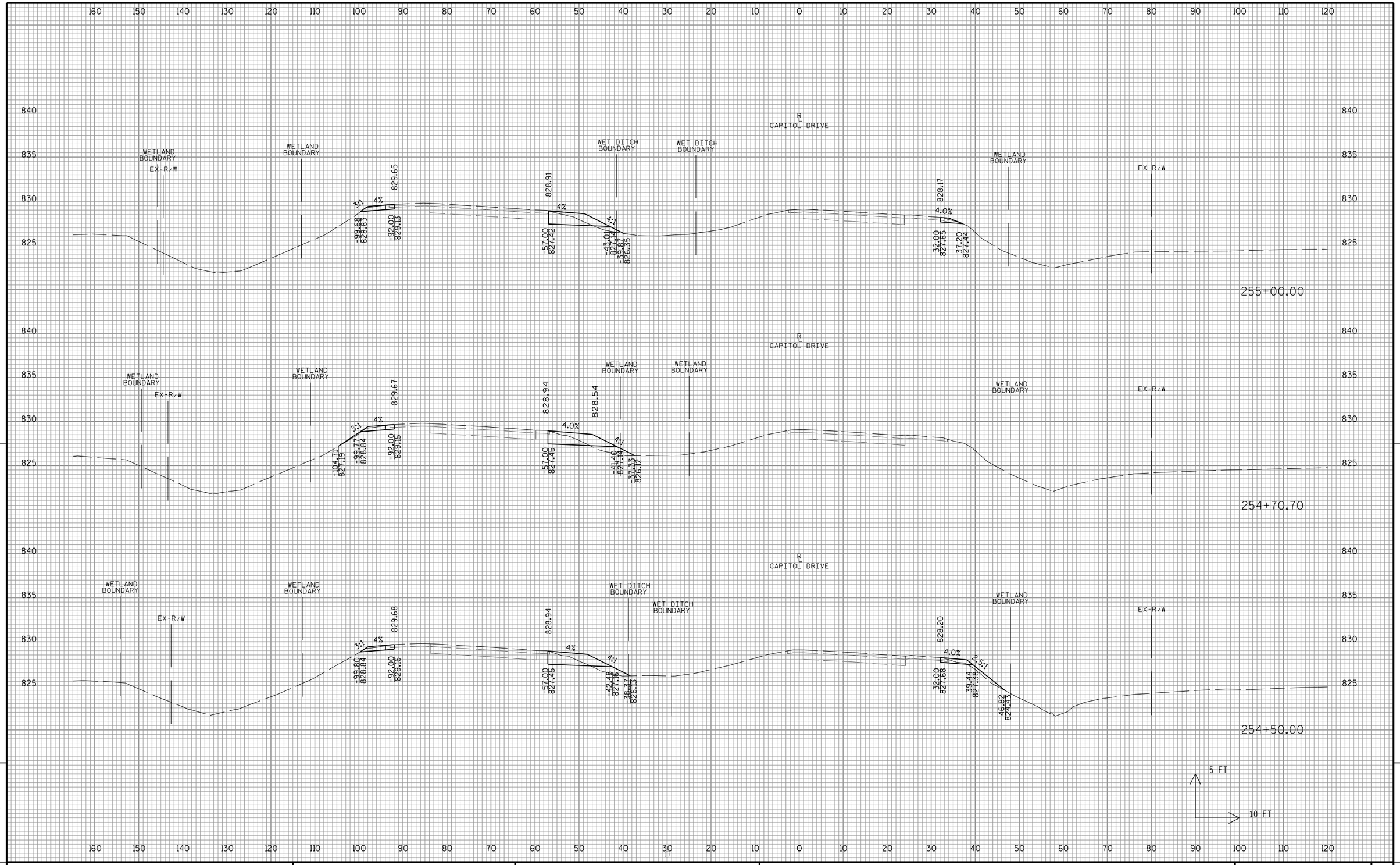

PROJECT NO:2025-14-71	HWY:STH 190	COUNTY:WAUKESHA	CROSS SECTIONS: STH 190 (W. CAPITOL DRIVE)	SHEET 514	E

FILE NAME : X:\ML\2016\20160073\CAD\Transportation\dgn\00\090201_xs_CAPITOL.dgn PLOT DATE : 11/28/2017 PLOT BY : $$...plotuser...$$ PLOT NAME : PLOT SCALE : $$.....plotscale.....$$ WISDOT/CADDS SHEET 21

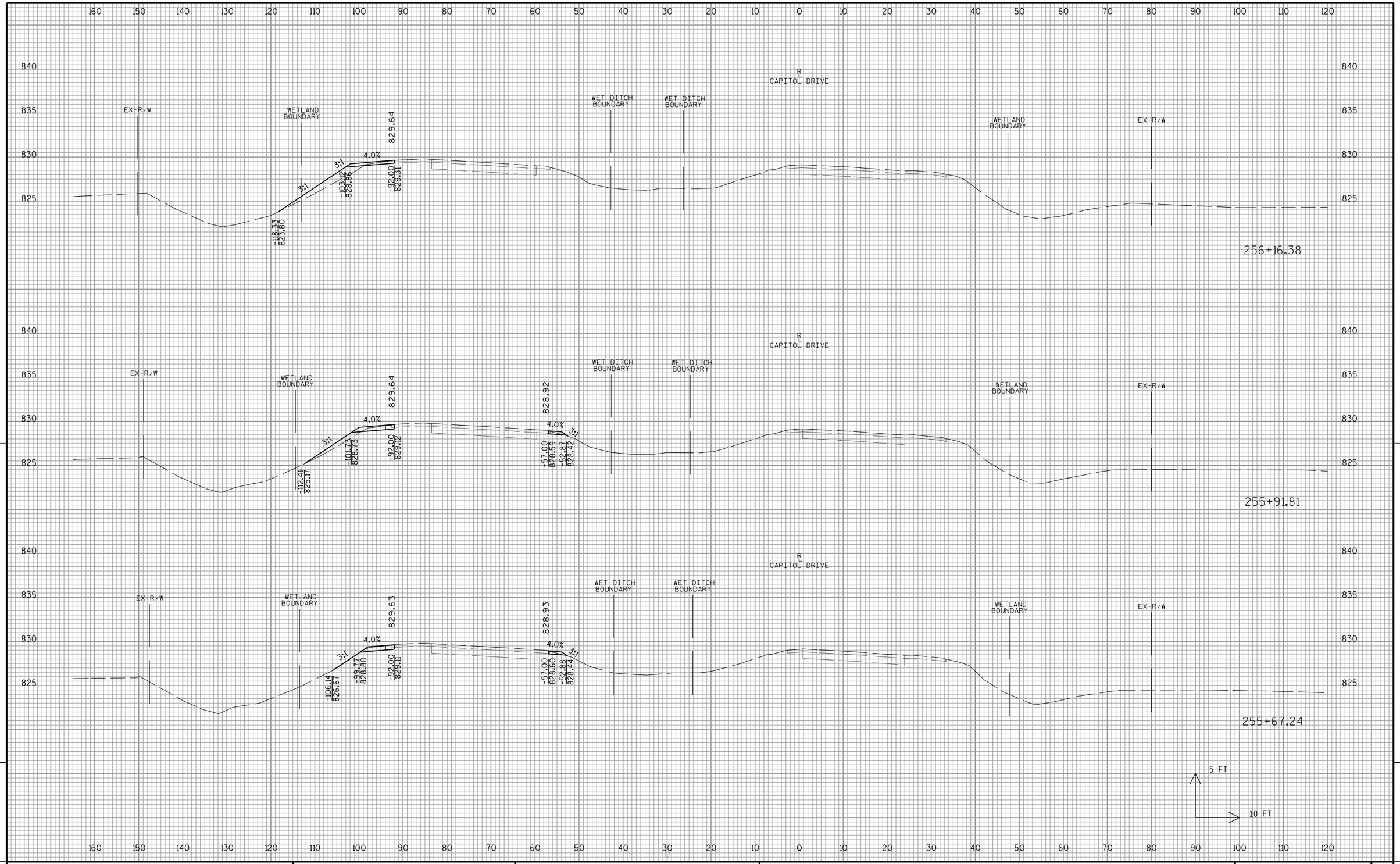

PROJECT NO:2025-14-71	HWY:STH 190	COUNTY:WAUKESHA	CROSS SECTIONS: STH 190 (W. CAPITOL DRIVE)	SHEET 515	E

FILE NAME : X:\ML\2016\20160073\CAD\Transportation\dgn\00\090201_xs_CAPITOL.dgn PLOT DATE : 11/28/2017 PLOT BY : $$...plotuser...$$ PLOT NAME : PLOT SCALE : $$.....plotscale.....$$ WISDOT/CADDS SHEET 21

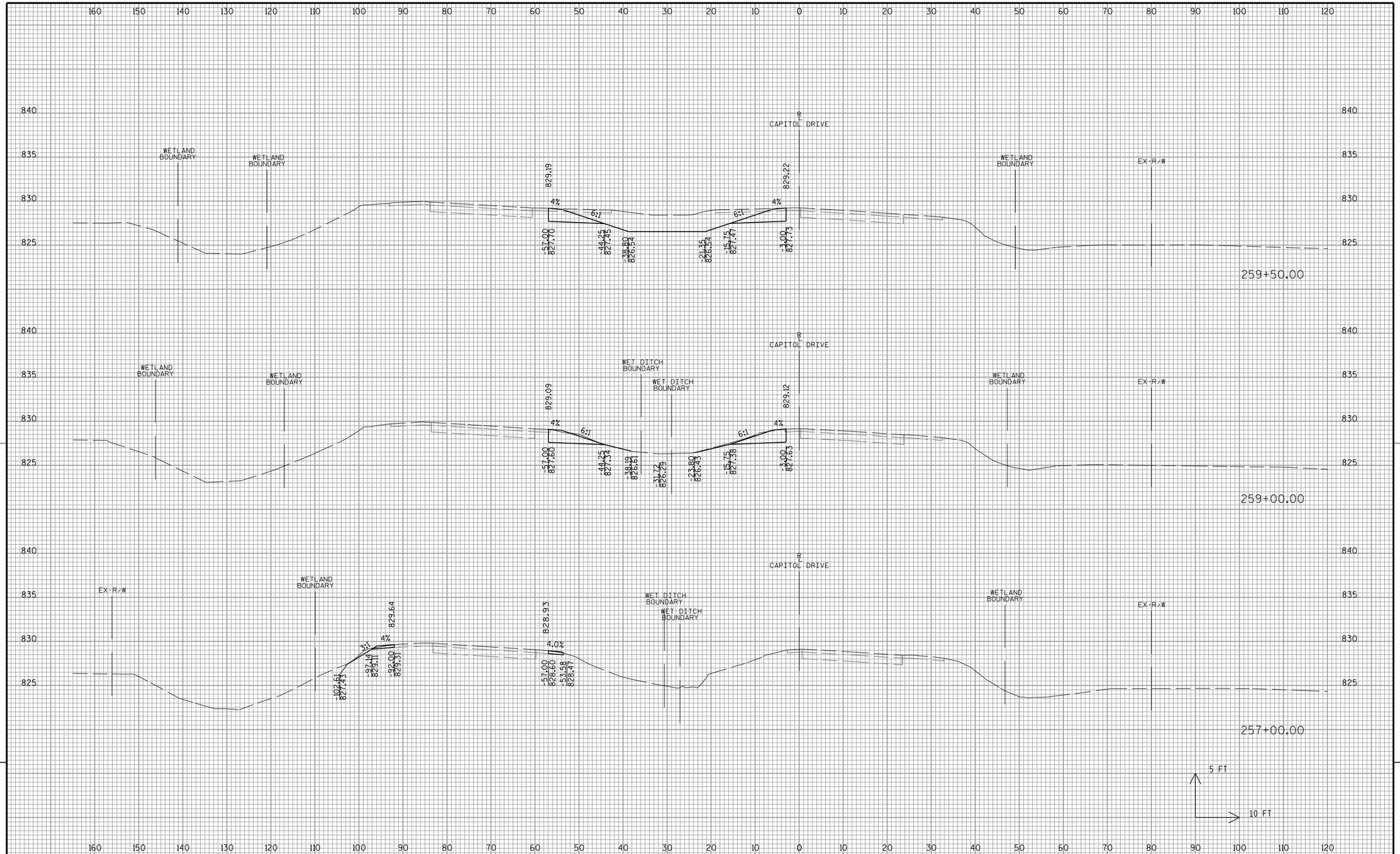

PROJECT NO:2025-14-71	HWY:STH 190	COUNTY:WAUKESHA	CROSS SECTIONS: STH 190 (W. CAPITOL DRIVE)	SHEET 516	E

FILE NAME : X:\ML\2016\20160073\CAD\Transportation\dgn\00\090201_xs_CAPITOL.dgn PLOT DATE : 11/28/2017 PLOT BY : $$...plotuser...$$ PLOT NAME : PLOT SCALE : $$.....plotscale.....$$ WISDOT/CADDS SHEET 21

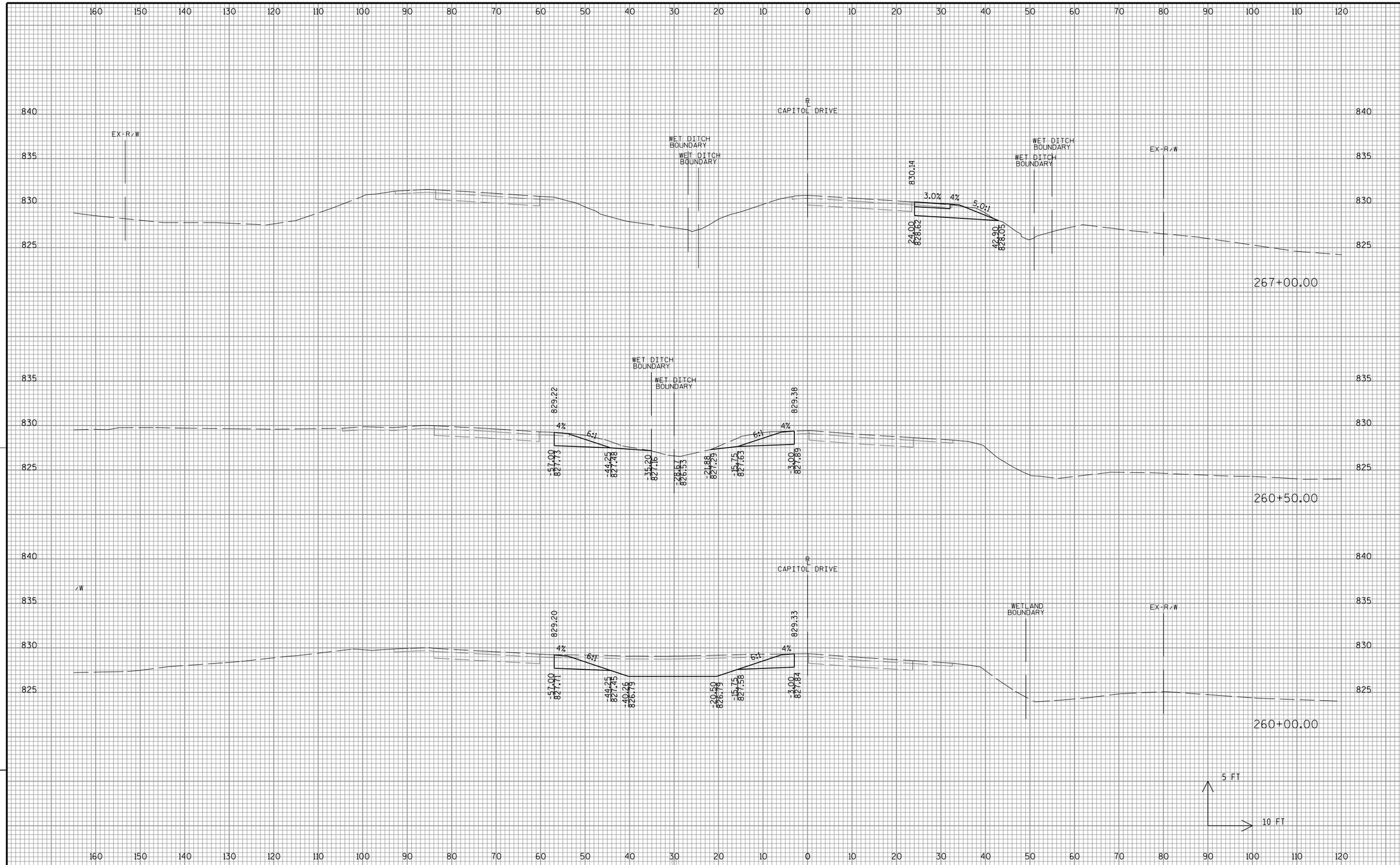

9

9

PROJECT NO:2025-14-71	HWY:STH 190	COUNTY:WAUKESHA	CROSS SECTIONS: STH 190 (W. CAPITOL DRIVE)	SHEET 517	E

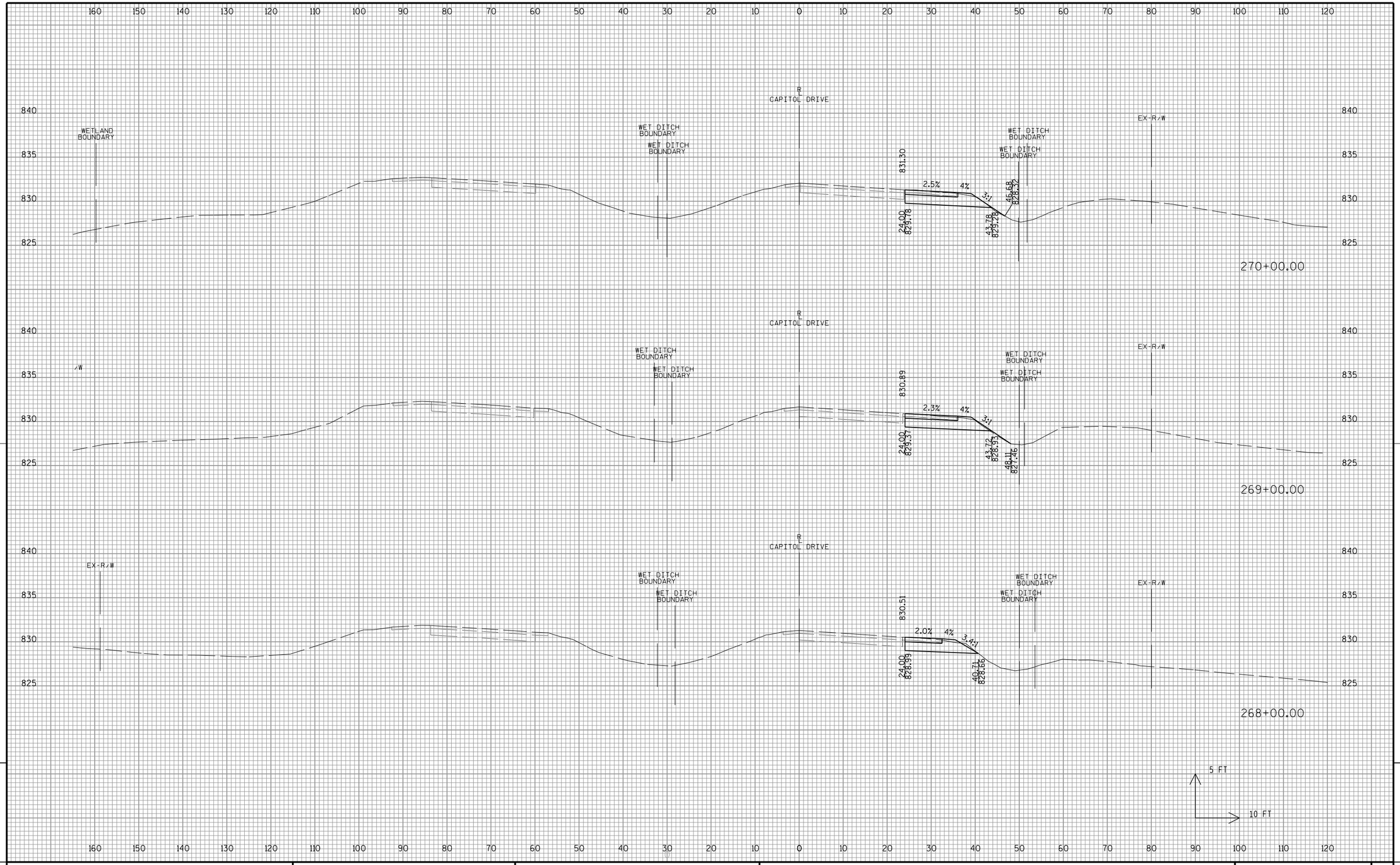

9

9

PROJECT NO:2025-14-71	HWY:STH 190	COUNTY:WAUKESHA	CROSS SECTIONS: STH 190 (W. CAPITOL DRIVE)	SHEET 518	E

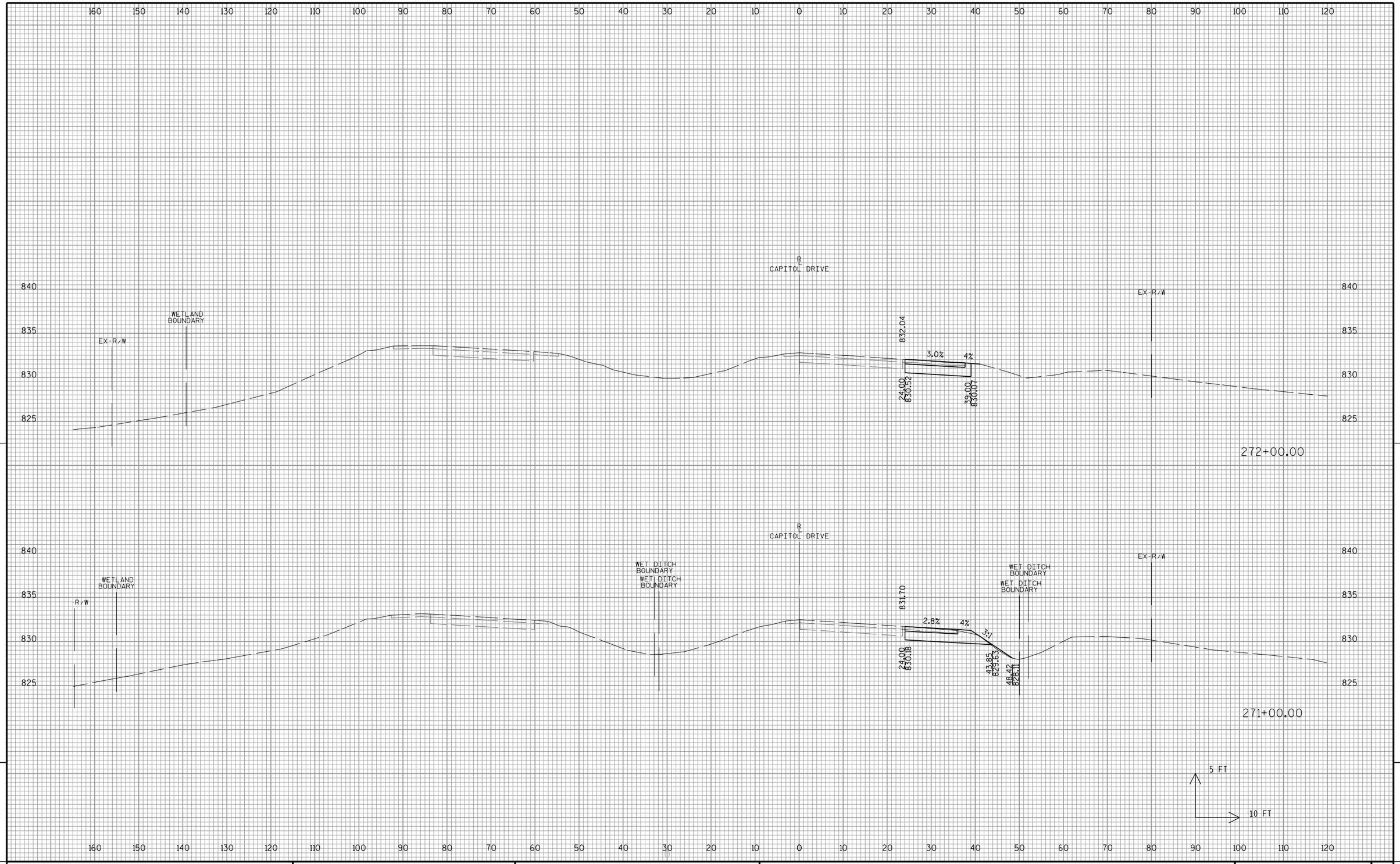

PROJECT NO:2025-14-71	HWY:STH 190	COUNTY:WAUKESHA	CROSS SECTIONS: STH 190 (W. CAPITOL DRIVE)	SHEET 519	E

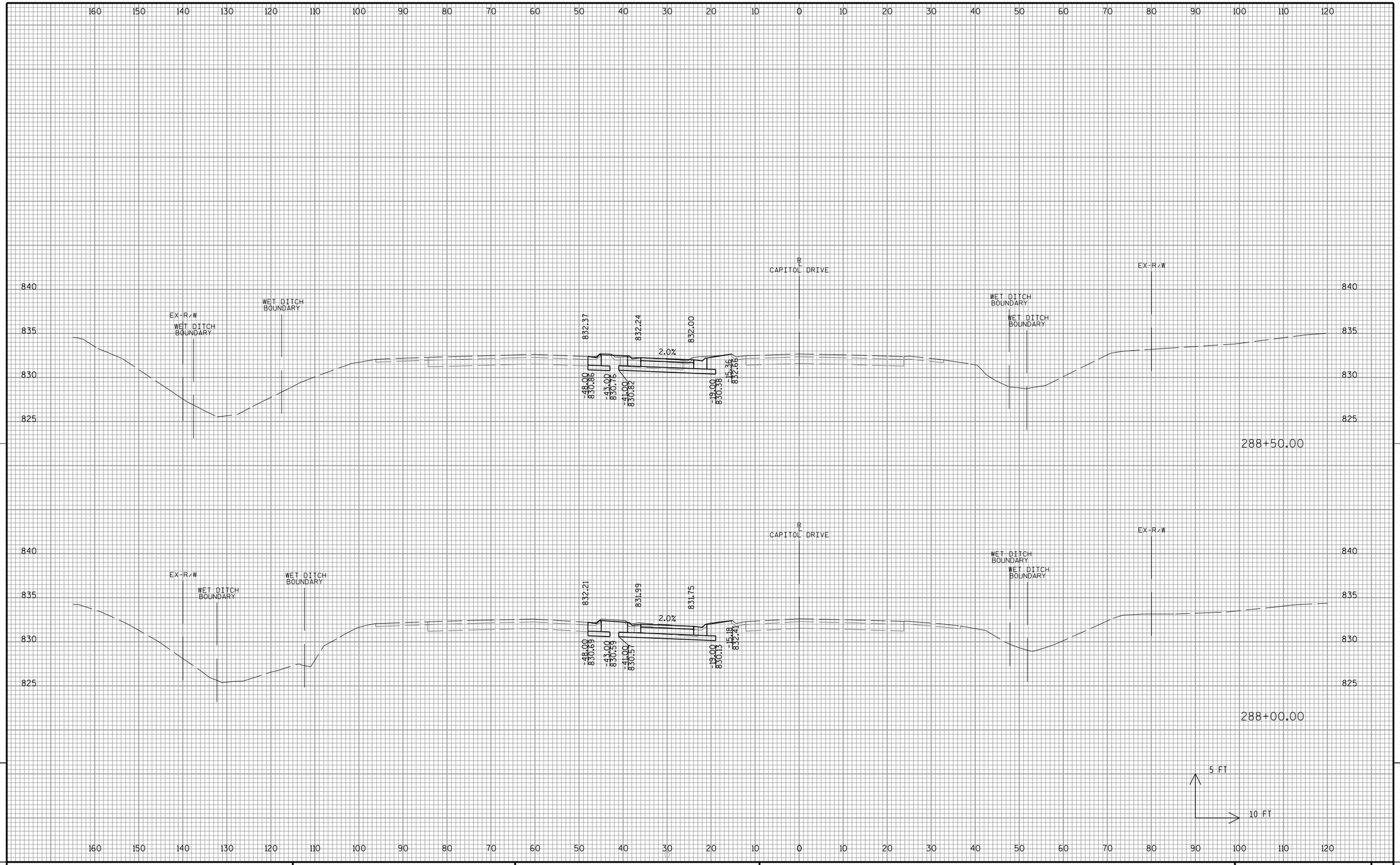

PROJECT NO:2025-14-71	HWY:STH 190	COUNTY:WAUKESHA	CROSS SECTIONS: STH 190 (W. CAPITOL DRIVE)	SHEET 520	E

FILE NAME : X:\ML\2016\20160073\CAD\Transportation\dgn\00\090201_xs_CAPITOL.dgn PLOT DATE : 11/28/2017 PLOT BY : $$...plotuser...$$ PLOT NAME : PLOT SCALE : $$.....plotscale.....$$ WISDOT/CADDS SHEET 21

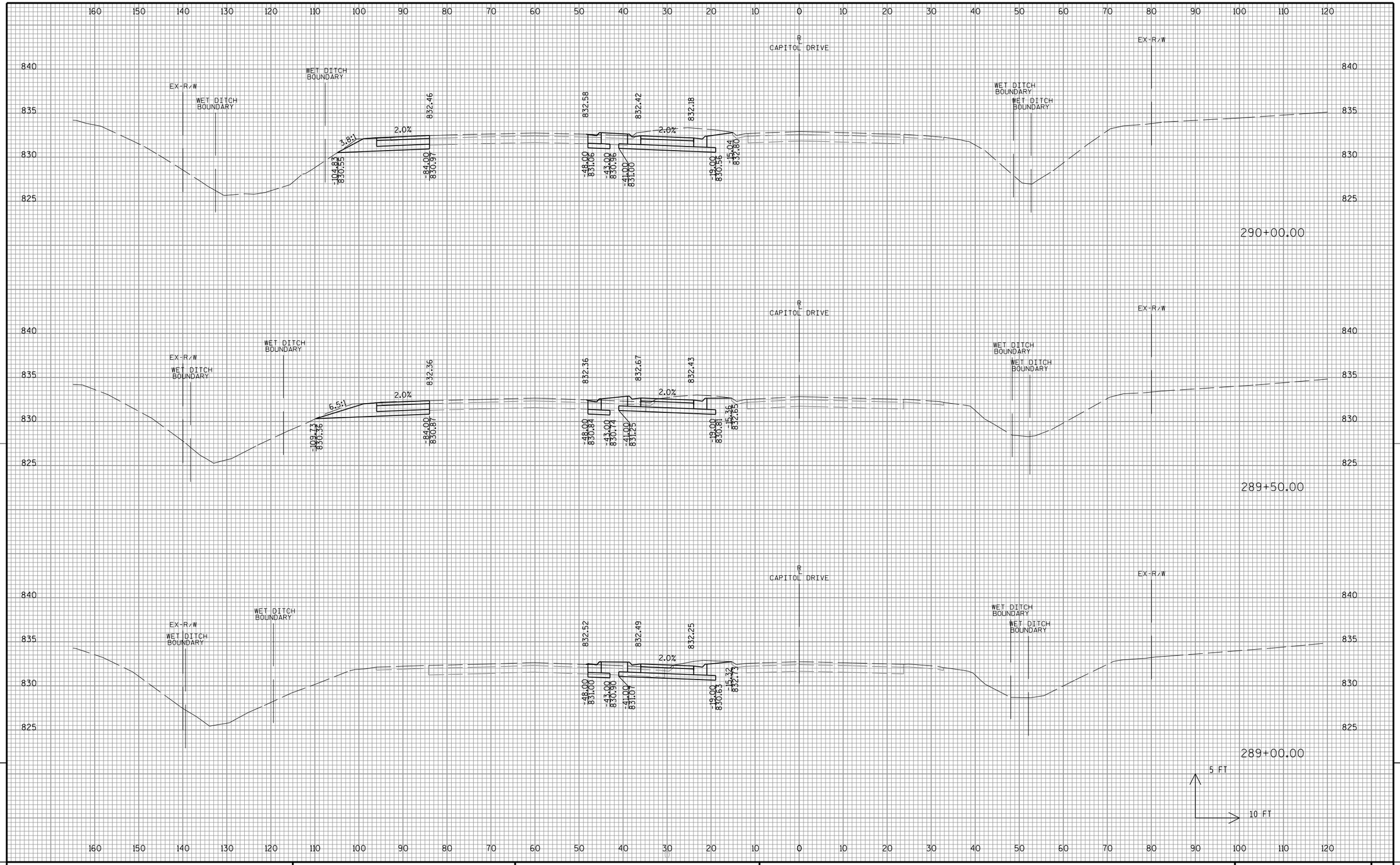

PROJECT NO:2025-14-71	HWY:STH 190	COUNTY:WAUKESHA	CROSS SECTIONS: STH 190 (W. CAPITOL DRIVE)	SHEET 521	E

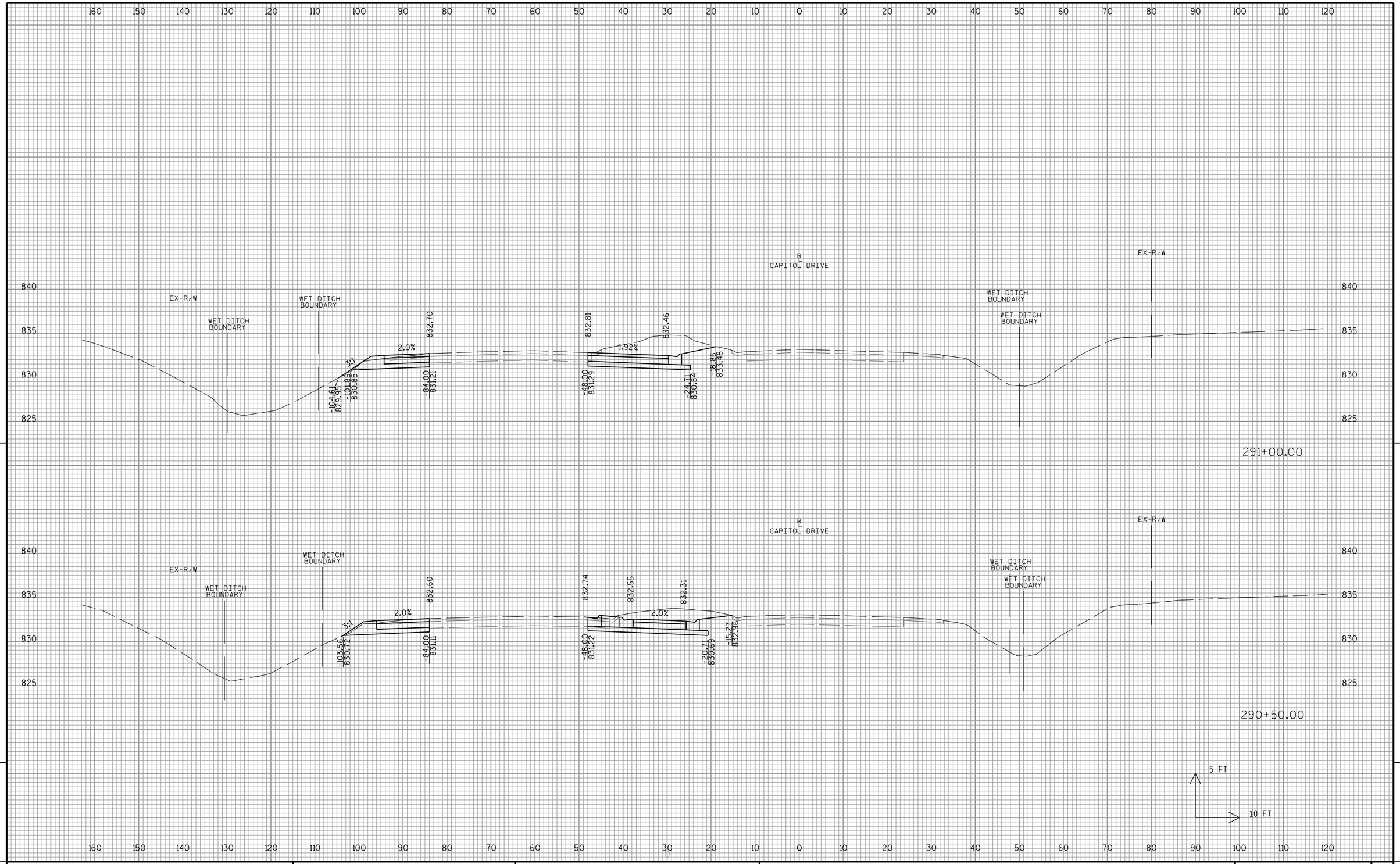

PROJECT NO:2025-14-71	HWY:STH 190	COUNTY:WAUKESHA	CROSS SECTIONS: STH 190 (W. CAPITOL DRIVE)	SHEET 522	E

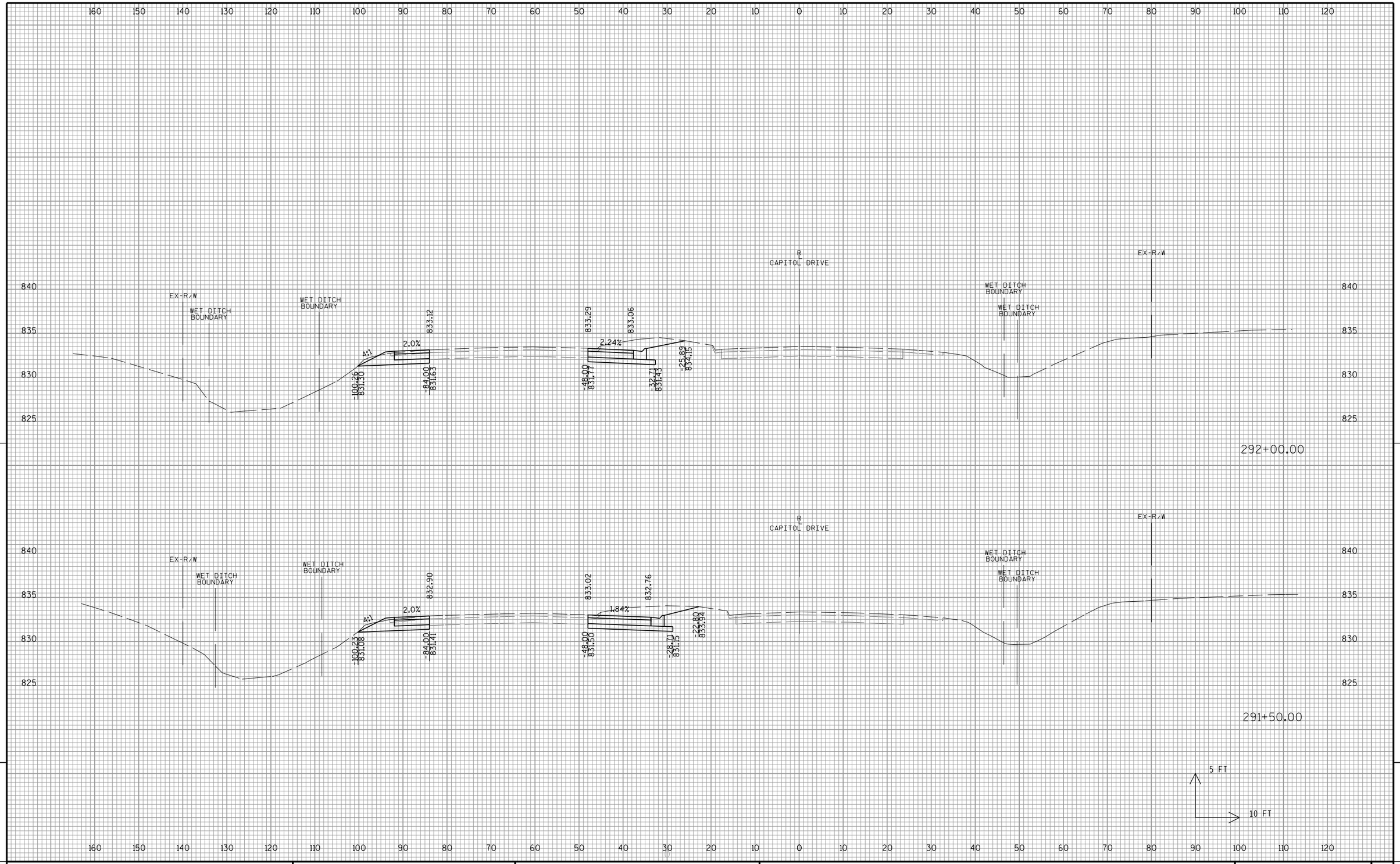

PROJECT NO:2025-14-71	HWY:STH 190	COUNTY:WAUKESHA	CROSS SECTIONS: STH 190 (W. CAPITOL DRIVE)	SHEET 523	E

FILE NAME : X:\ML\2016\20160073\CAD\Transportation\dgn\00\090201_xs_CAPITOL.dgn PLOT DATE : 11/28/2017 PLOT BY : $$...plotuser...$$ PLOT NAME : PLOT SCALE : $$.....plotscale.....$$ WISDOT/CADDS SHEET 21

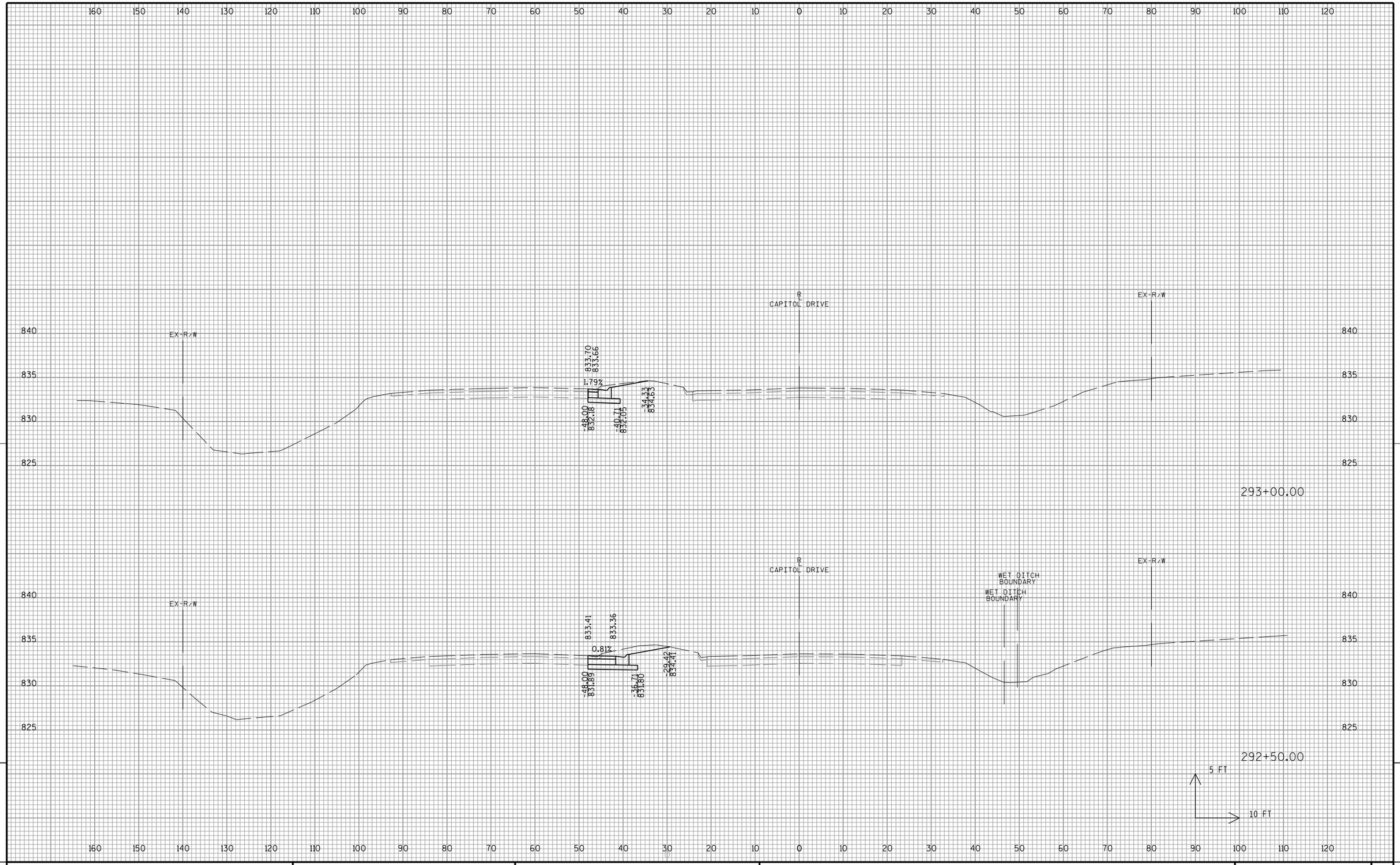

9

9

PROJECT NO:2025-14-71	HWY:STH 190	COUNTY:WAUKESHA	CROSS SECTIONS: STH 190 (W. CAPITOL DRIVE)	SHEET 524	E

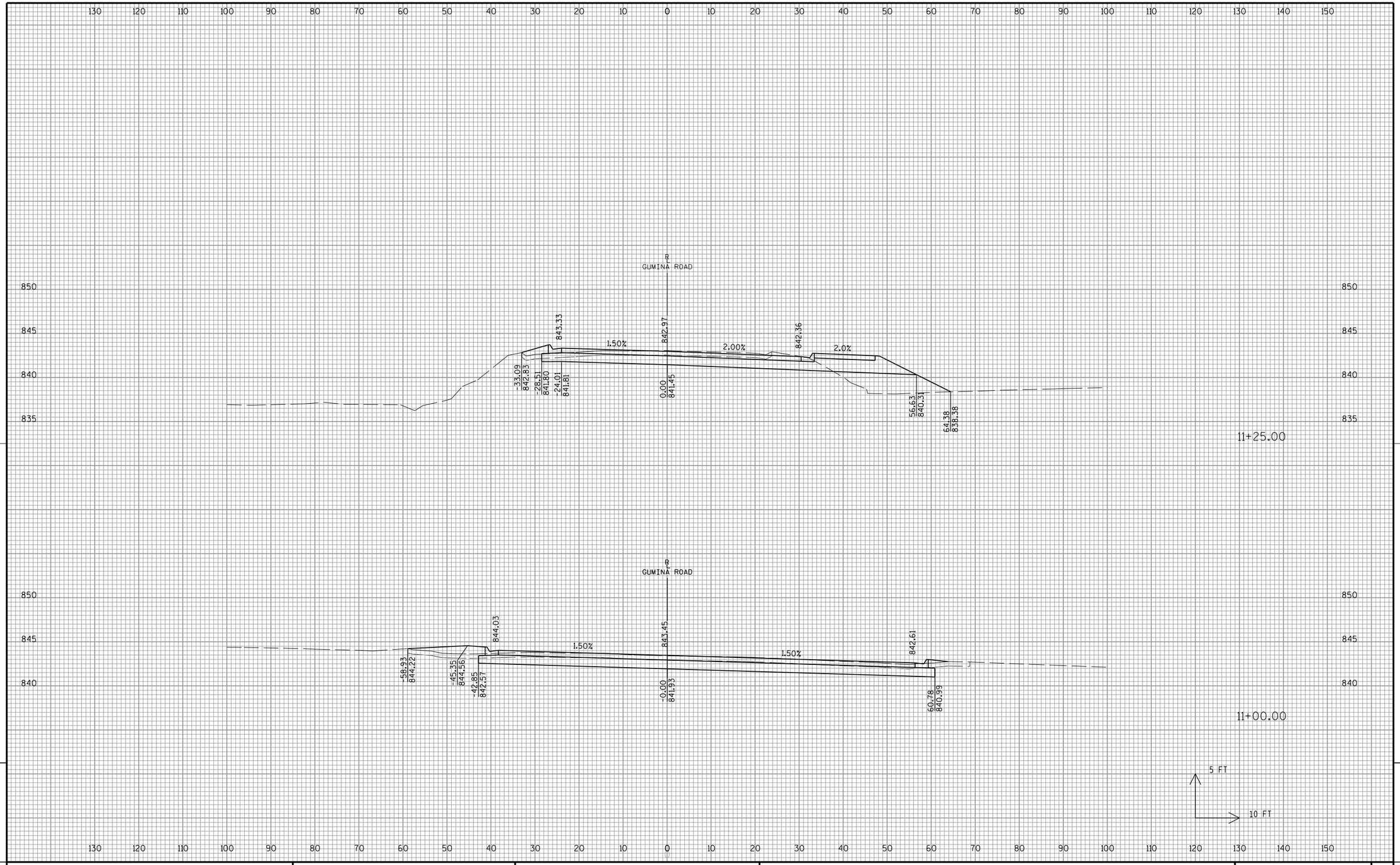

9

9

PROJECT NO:2025-14-70	HWY:STH 190	COUNTY:WAUKESHA	CROSS SECTIONS:GUMINA ROAD	SHEET 525	E

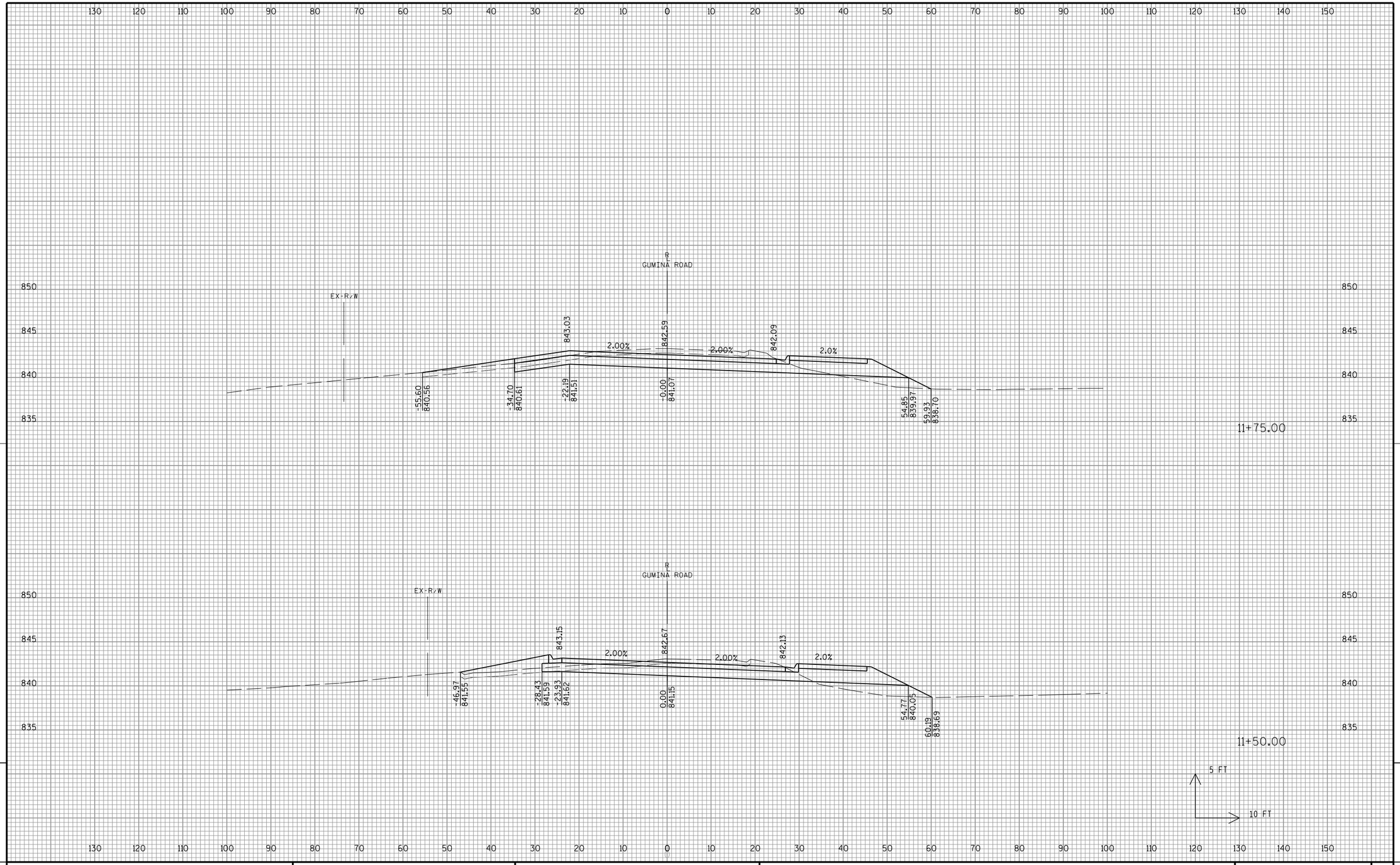

9

9

PROJECT NO:2025-14-70	HWY:STH 190	COUNTY:WAUKESHA	CROSS SECTIONS:GUMINA ROAD	SHEET 526	E

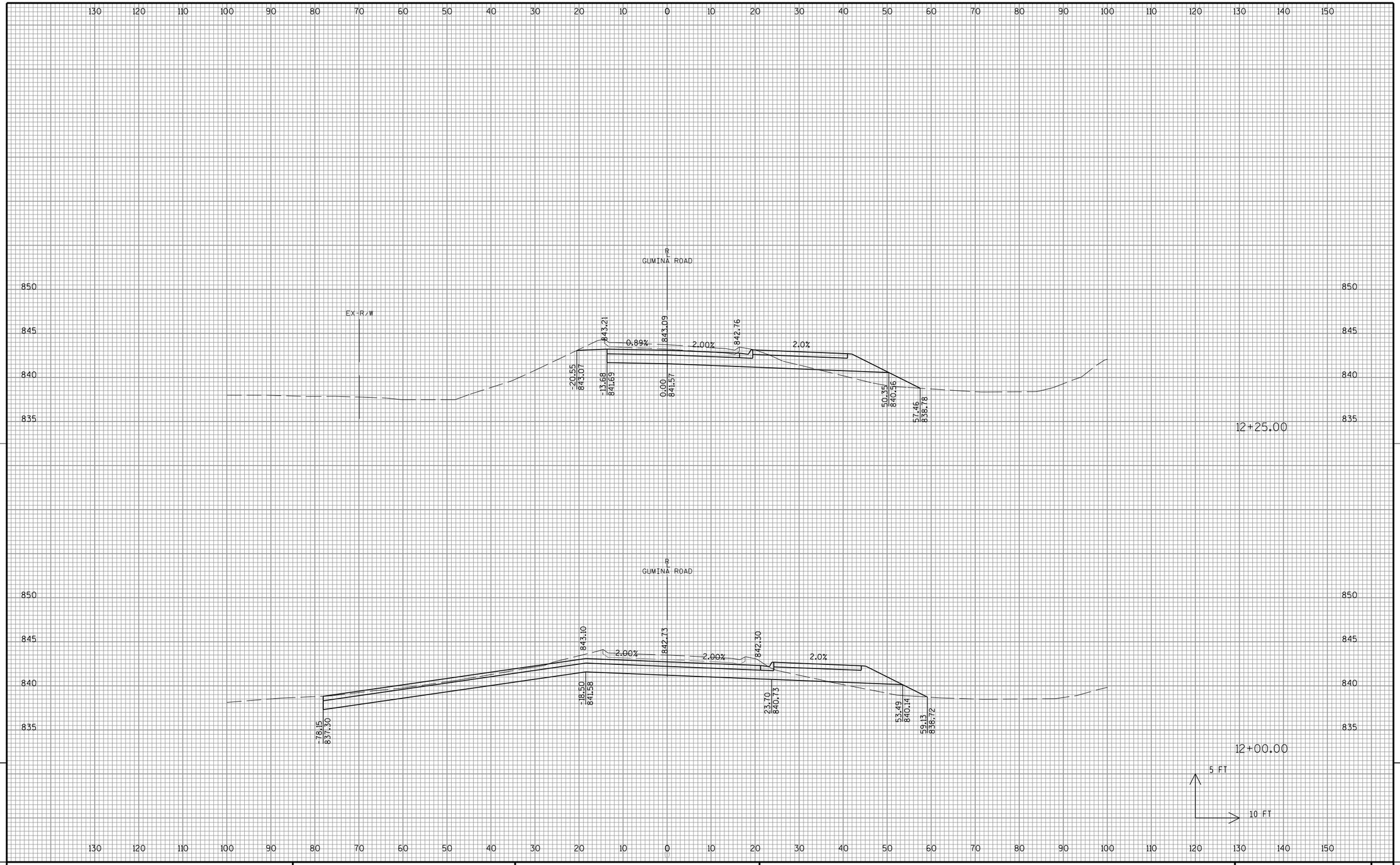

9

9

PROJECT NO:2025-14-70	HWY:STH 190	COUNTY:WAUKESHA	CROSS SECTIONS:GUMINA ROAD	SHEET 527	E

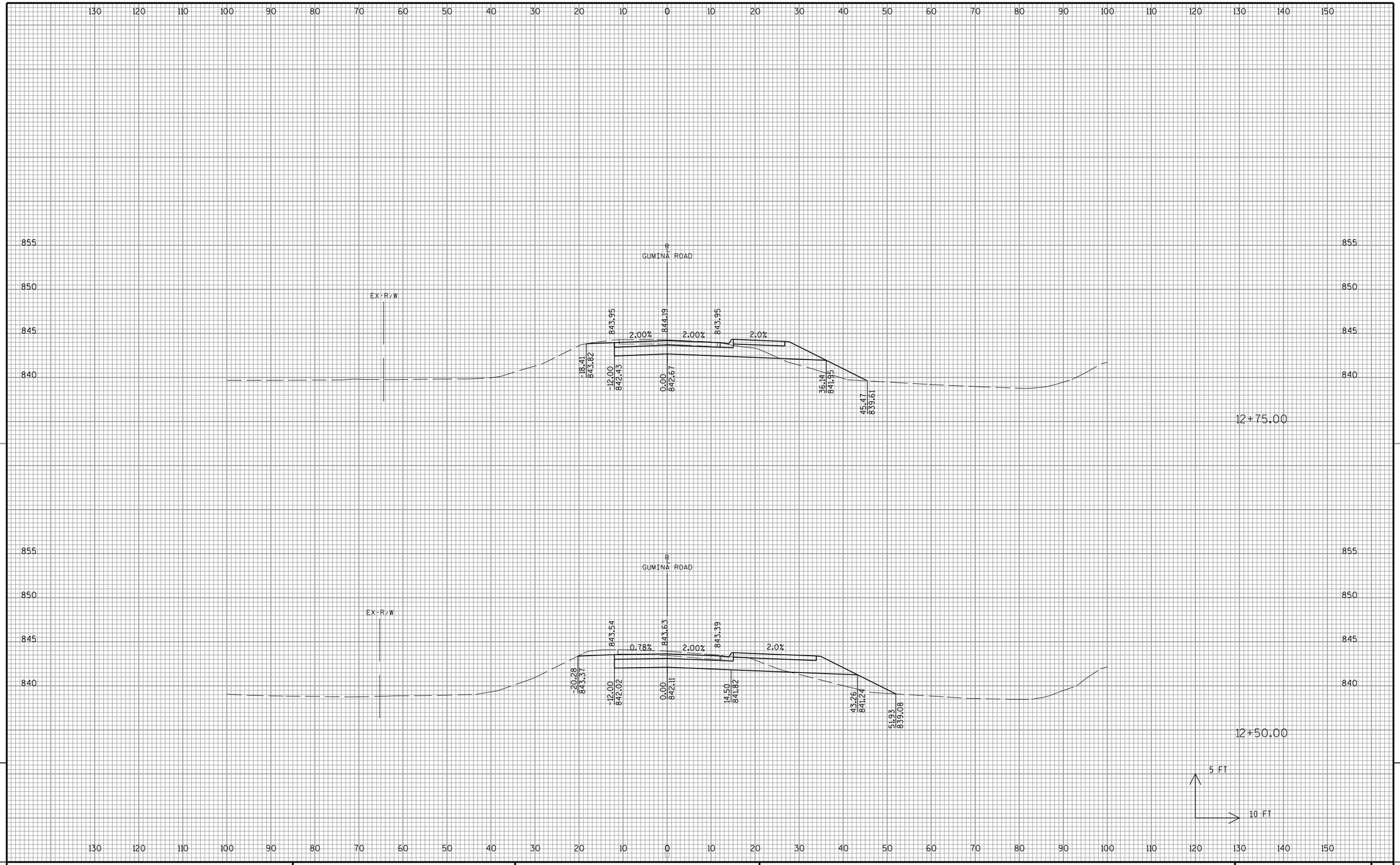

9

9

PROJECT NO:2025-14-70	HWY:STH 190	COUNTY:WAUKESHA	CROSS SECTIONS:GUMINA ROAD	SHEET 528	E

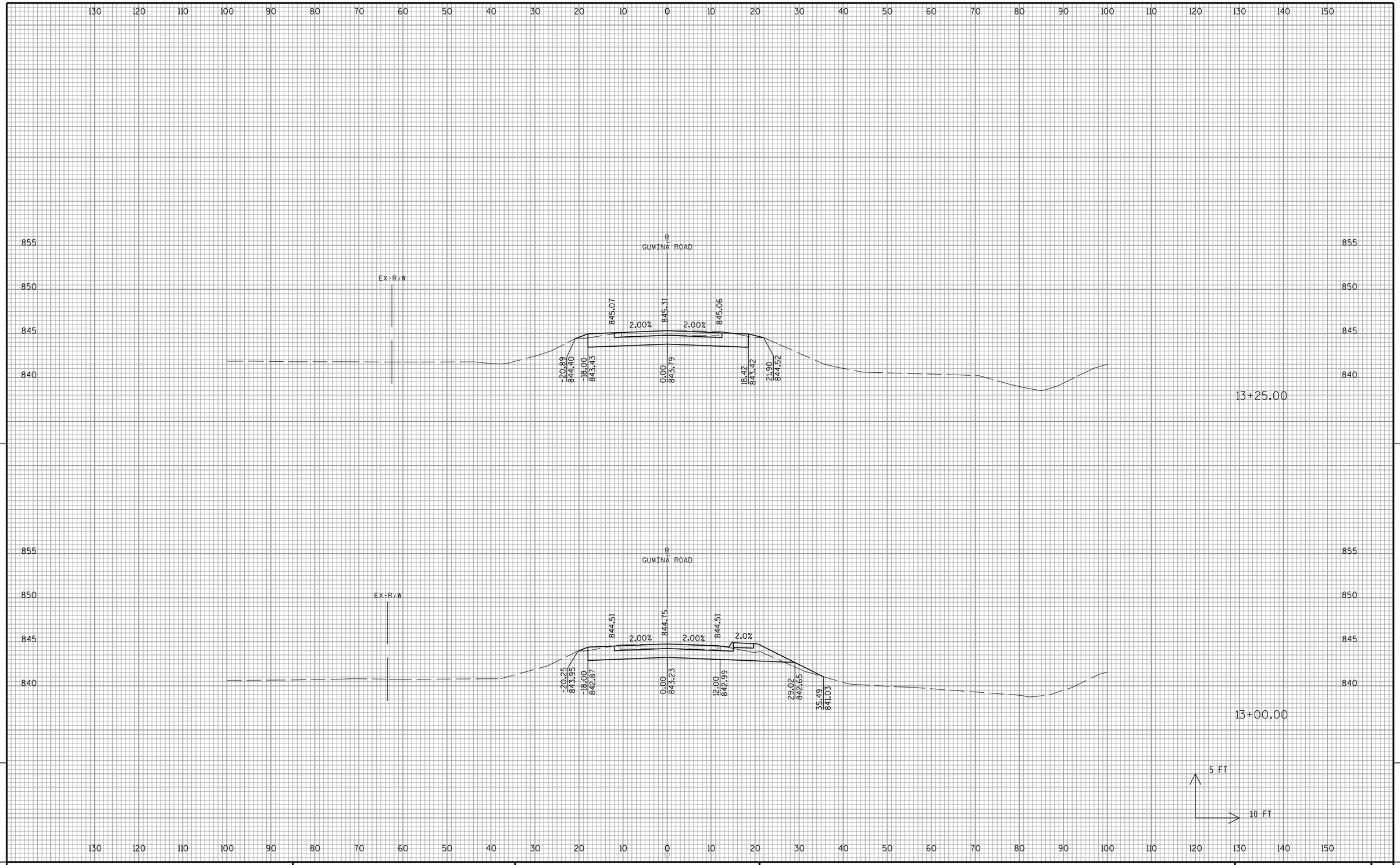

9

9

PROJECT NO:2025-14-70	HWY:STH 190	COUNTY:WAUKESHA	CROSS SECTIONS:GUMINA ROAD	SHEET 529	E

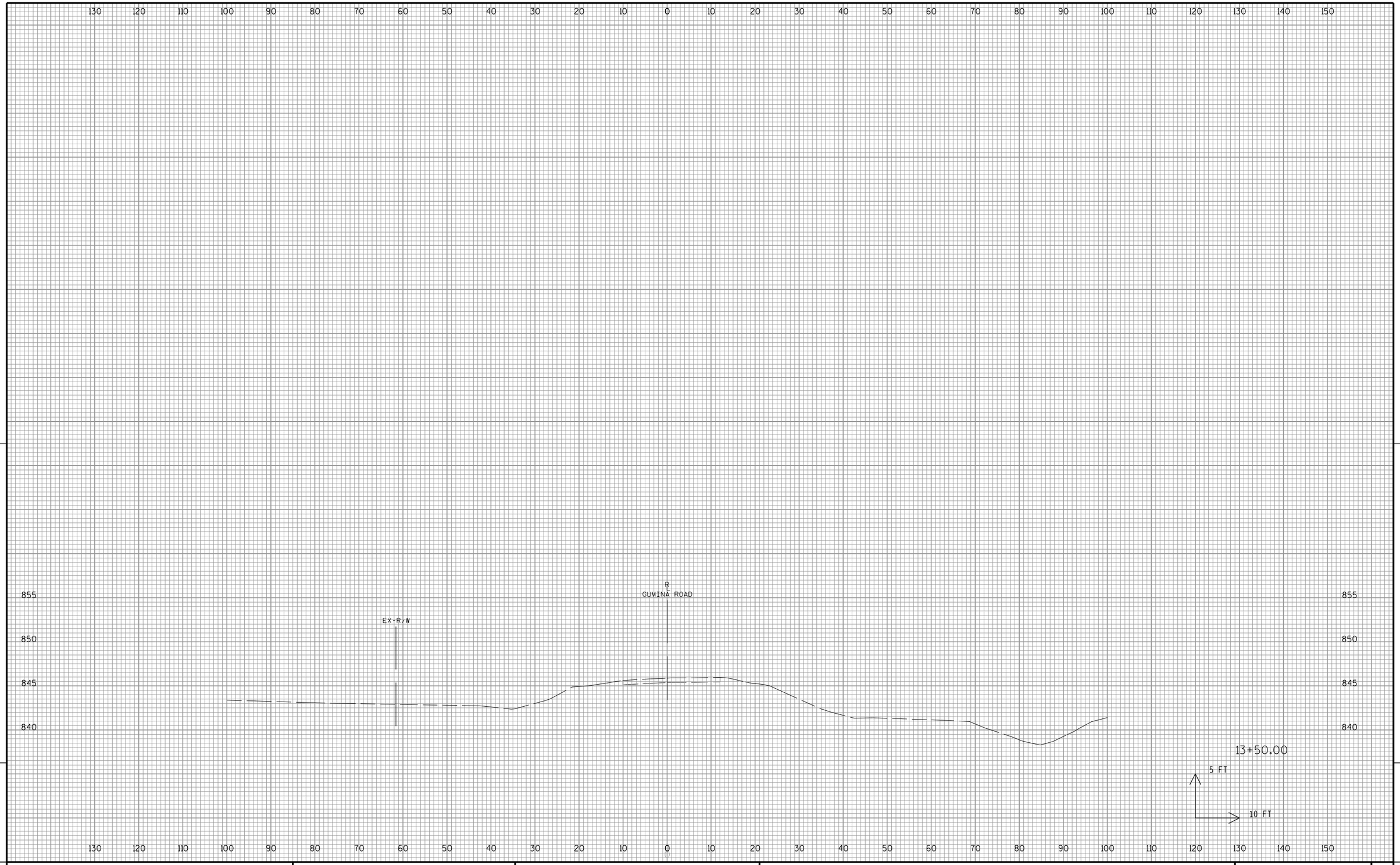

9

9

PROJECT NO:2025-14-70	HWY:STH 190	COUNTY:WAUKESHA	CROSS SECTIONS:GUMINA ROAD	SHEET 530	E

FILE NAME : X:\ML\2016\20160073\CAD\Transportation\dgn\00\090202b_xs_GUMINA.dgn PLOT DATE : 10/31/2017 PLOT BY : $$...plotuser...$$ PLOT NAME : PLOT SCALE : $$.....plotscale.....$$ WISDOT/CADDS SHEET 21

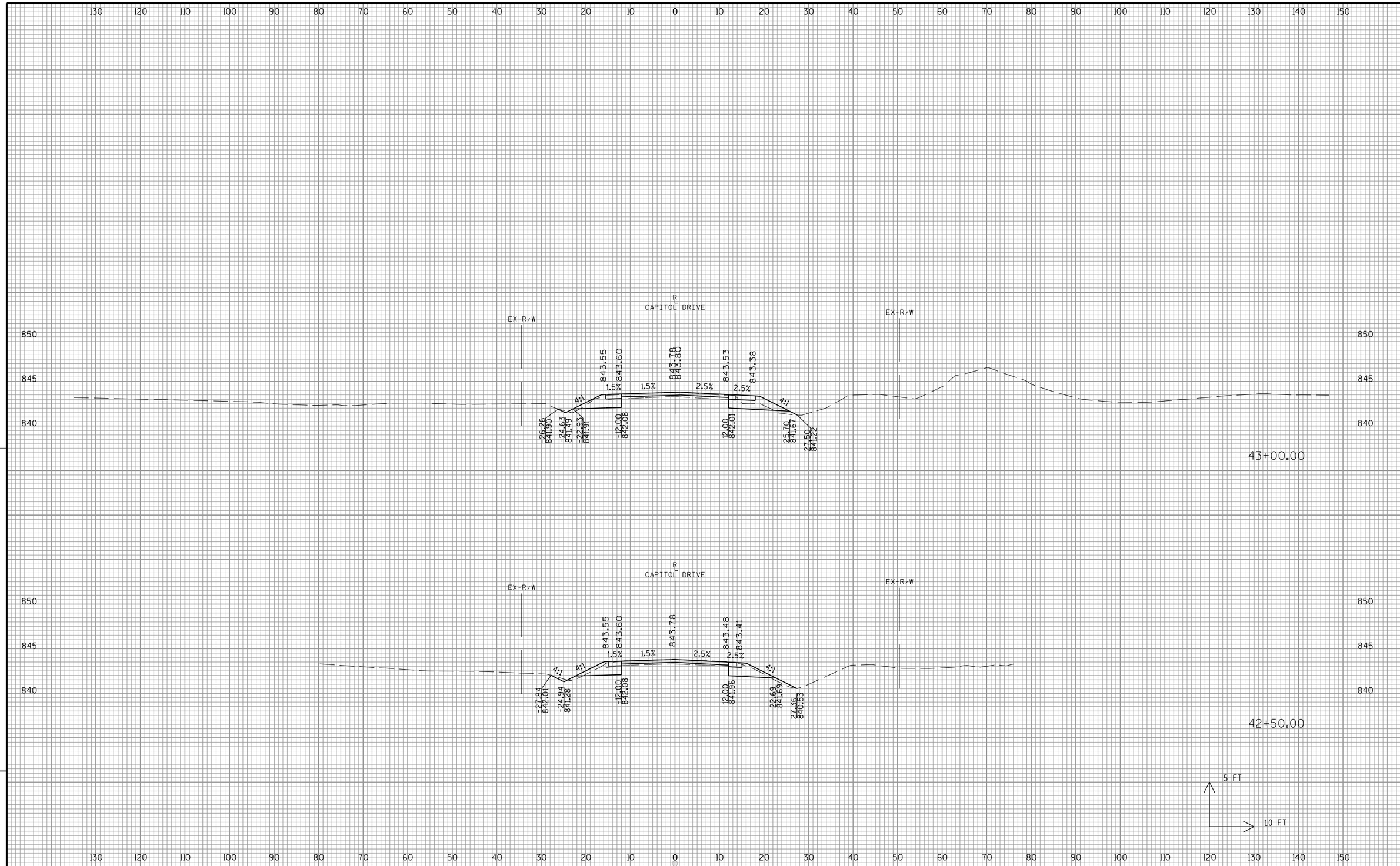

9

9

PROJECT NO:2025-14-70	HWY:STH 190	COUNTY:WAUKESHA	CROSS SECTIONS:SPRINGDALE ROAD	SHEET 531	E

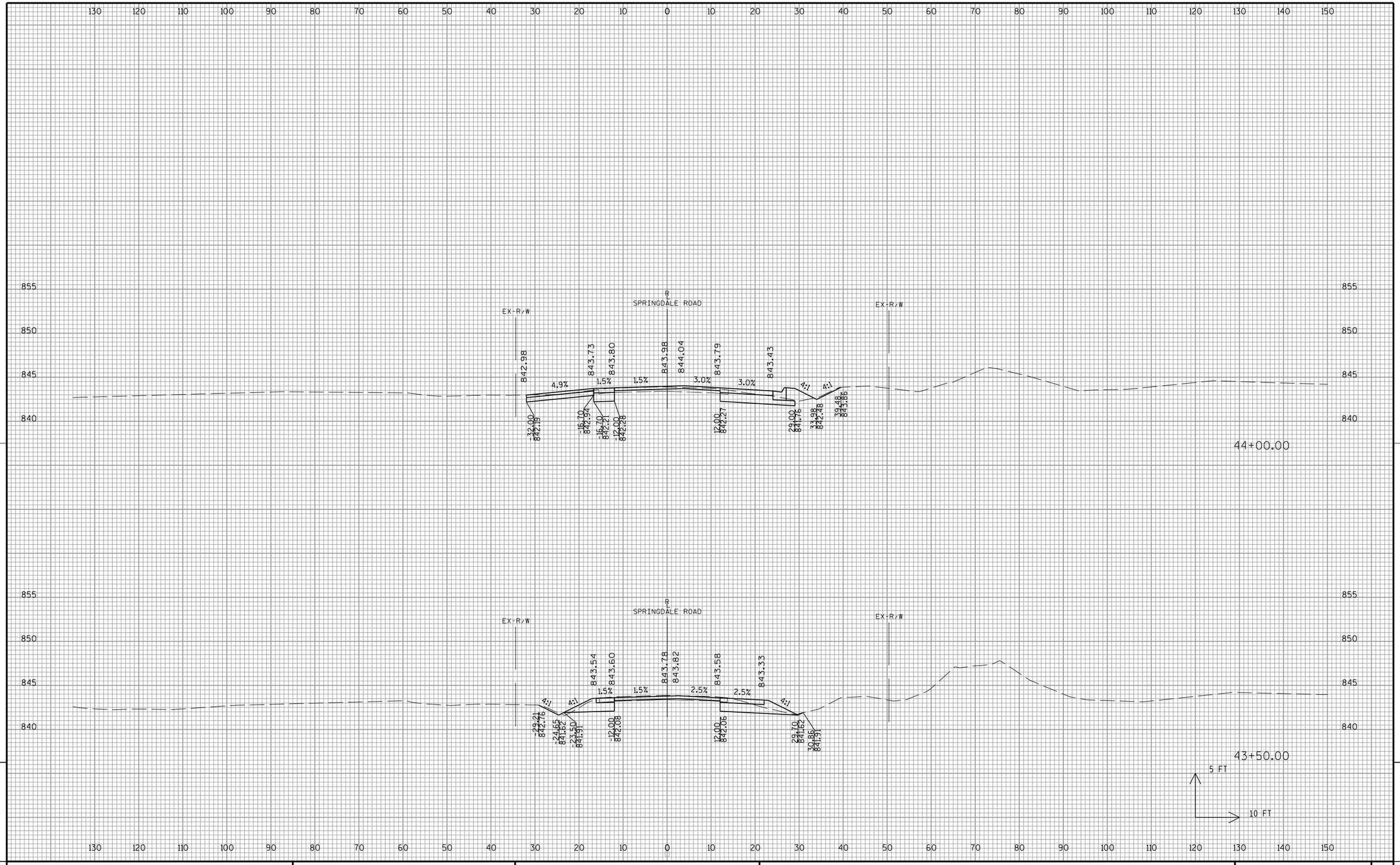

PROJECT NO:2025-14-70	HWY:STH 190	COUNTY:WAUKESHA	CROSS SECTIONS:SPRINGDALE ROAD	SHEET 532	E

FILE NAME : X:\ML\2016\20160073\CAD\Transportation\dgn\00\090202_xs_SPRING.dgn PLOT DATE : 10/31/2017 PLOT BY : $$...plotuser...$$ PLOT NAME : PLOT SCALE : $$.....plotscale.....$$ WISDOT/CADDS SHEET 21

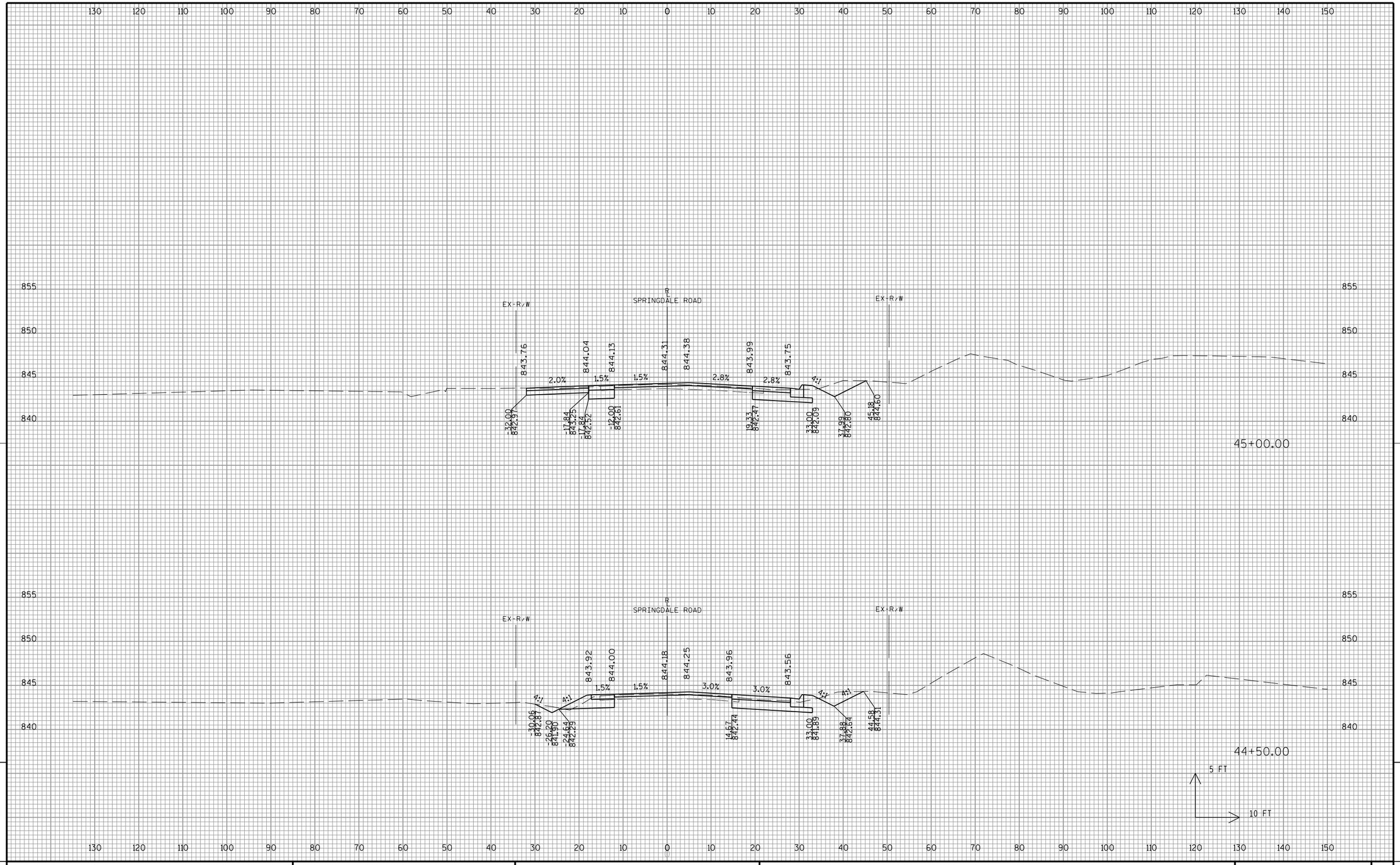

PROJECT NO:2025-14-70	HWY:STH 190	COUNTY:WAUKESHA	CROSS SECTIONS:SPRINGDALE ROAD	SHEET 533	E

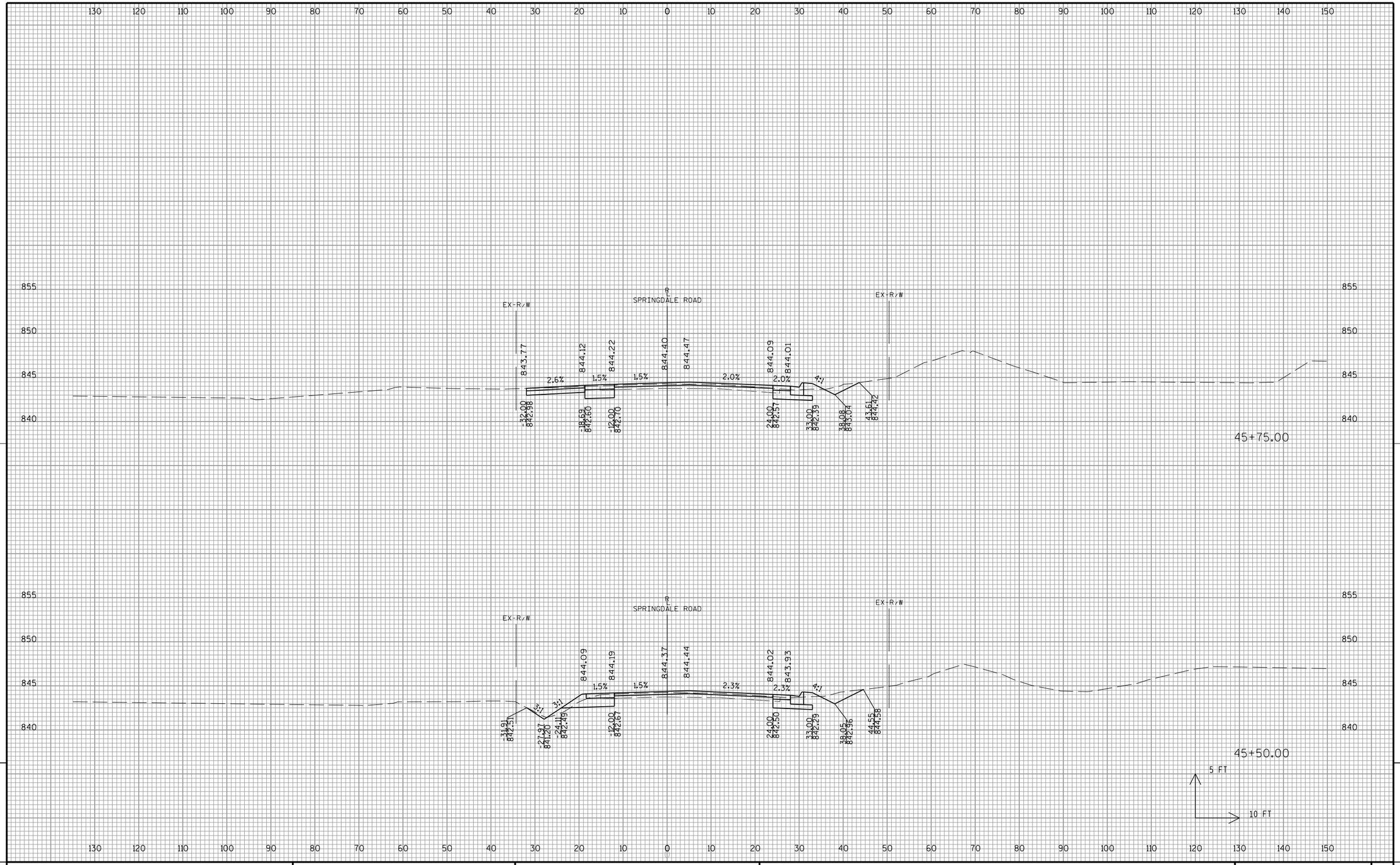

9

9

PROJECT NO:2025-14-70	HWY:STH 190	COUNTY:WAUKESHA	CROSS SECTIONS:SPRINGDALE ROAD	SHEET 534	E

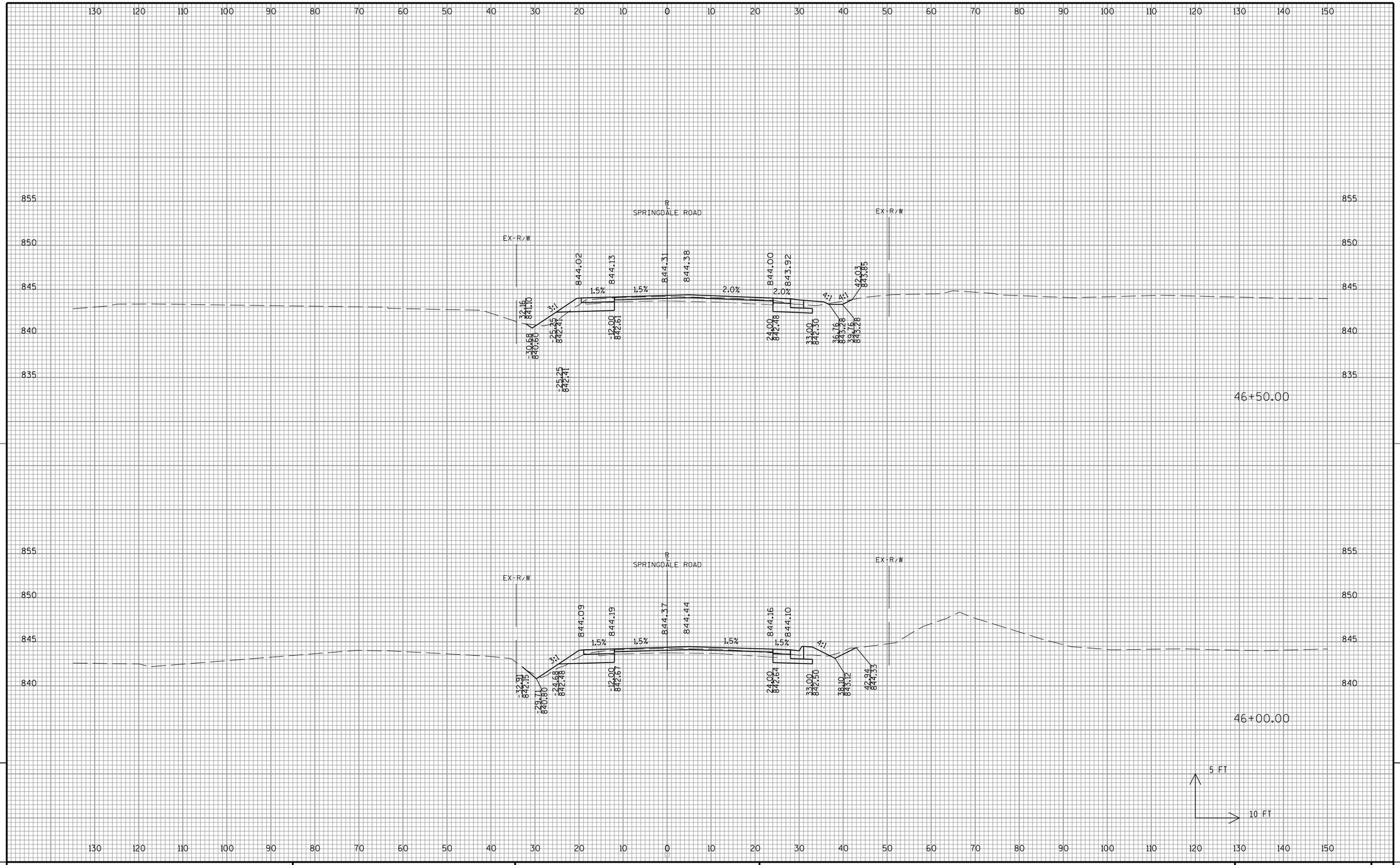

9

9

PROJECT NO:2025-14-70	HWY:STH 190	COUNTY:WAUKESHA	CROSS SECTIONS:SPRINGDALE ROAD	SHEET 535	E

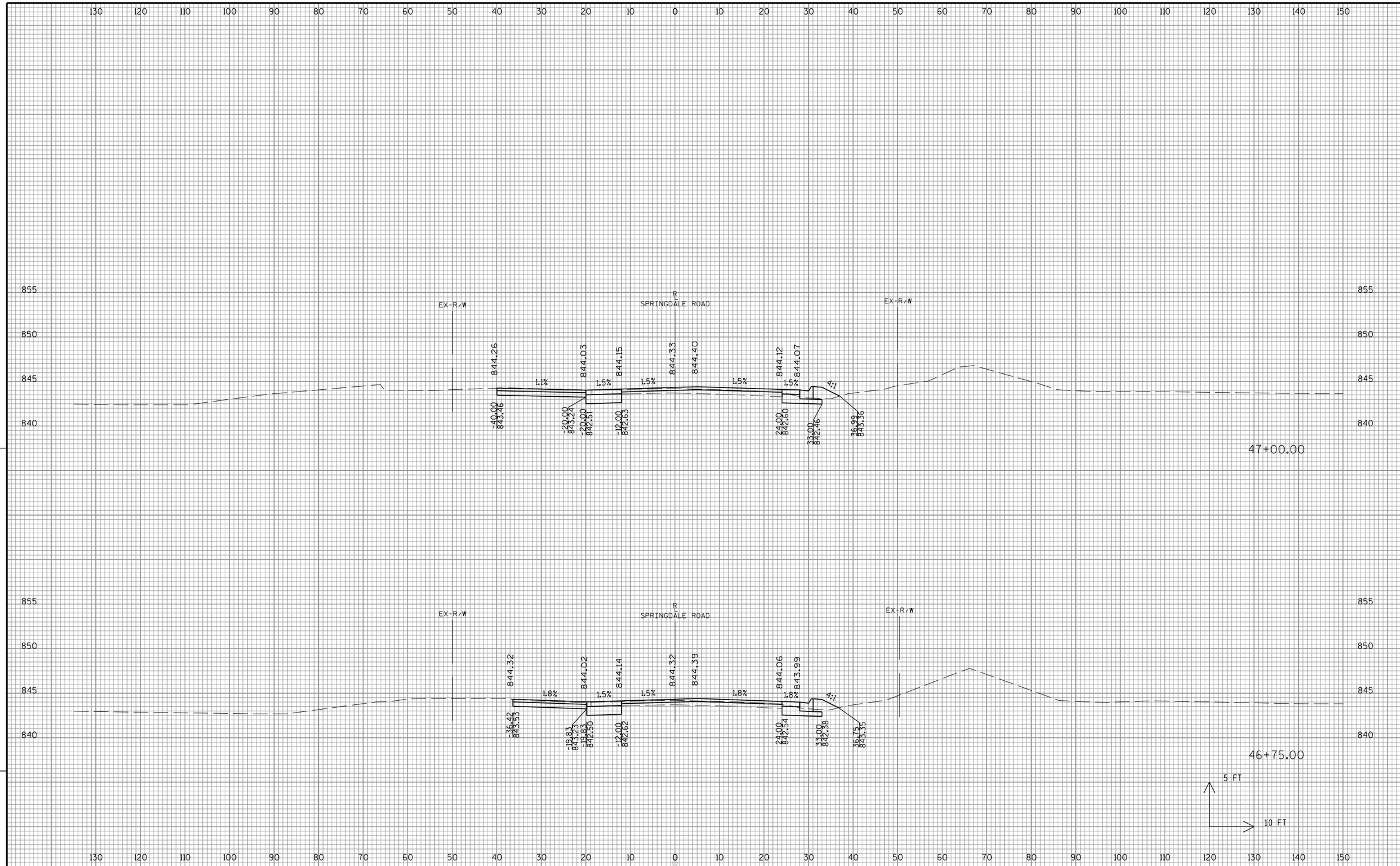

9

9

PROJECT NO:2025-14-70	HWY:STH 190	COUNTY:WAUKESHA	CROSS SECTIONS:SPRINGDALE ROAD	SHEET 536	E

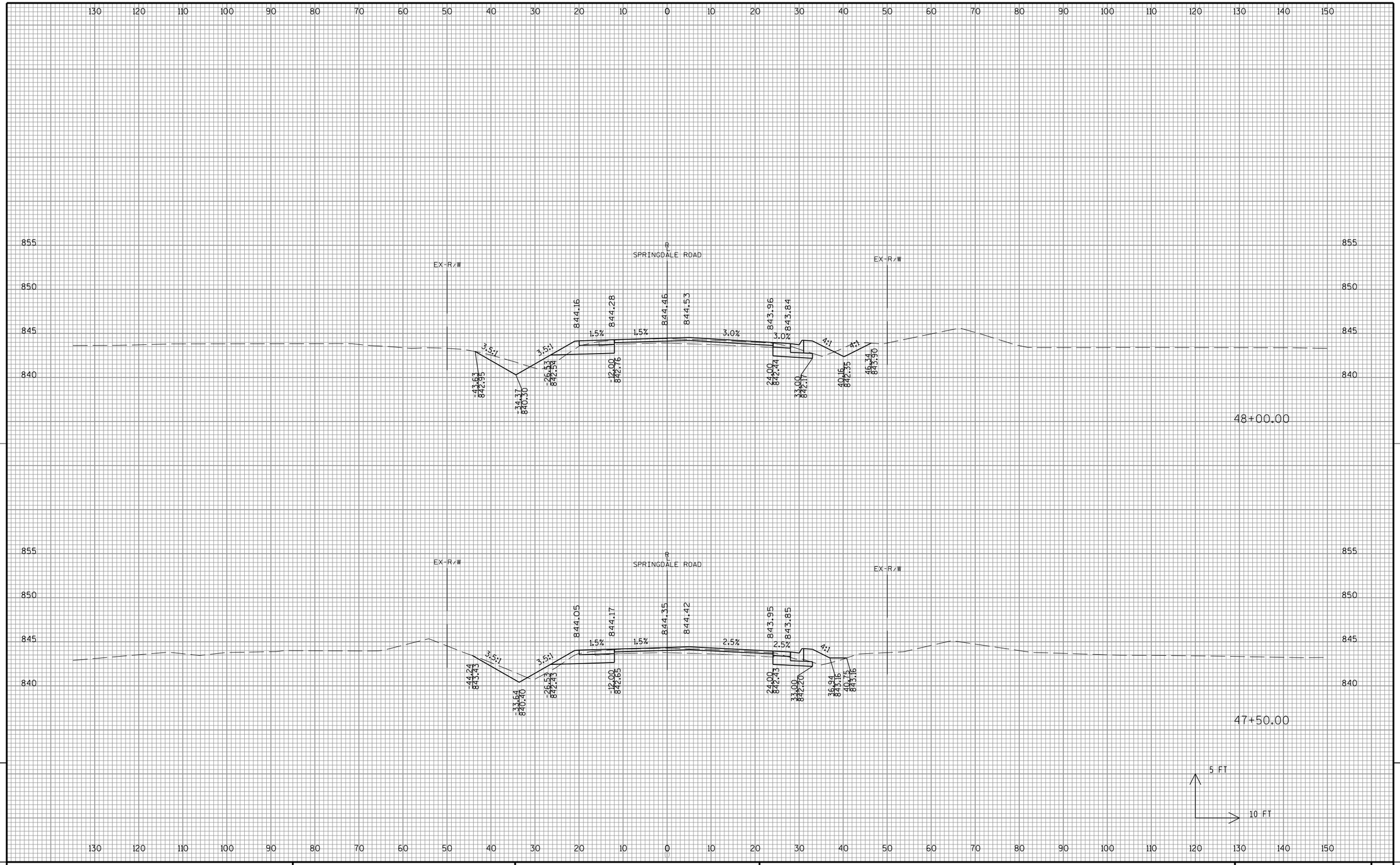

PROJECT NO:2025-14-70	HWY:STH 190	COUNTY:WAUKESHA	CROSS SECTIONS:SPRINGDALE ROAD	SHEET 537	E

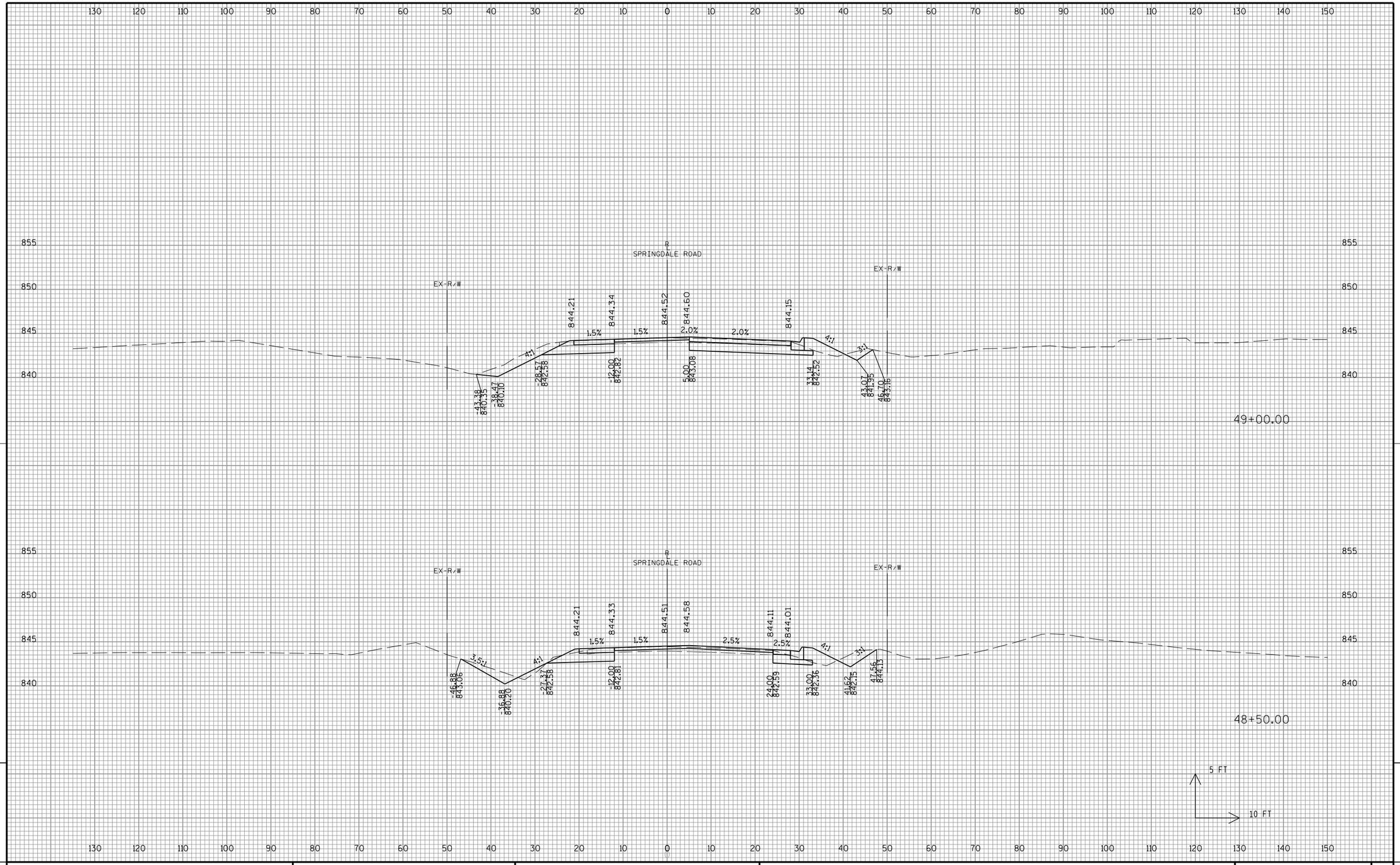

9

9

PROJECT NO:2025-14-70	HWY:STH 190	COUNTY:WAUKESHA	CROSS SECTIONS:SPRINGDALE ROAD	SHEET 538	E

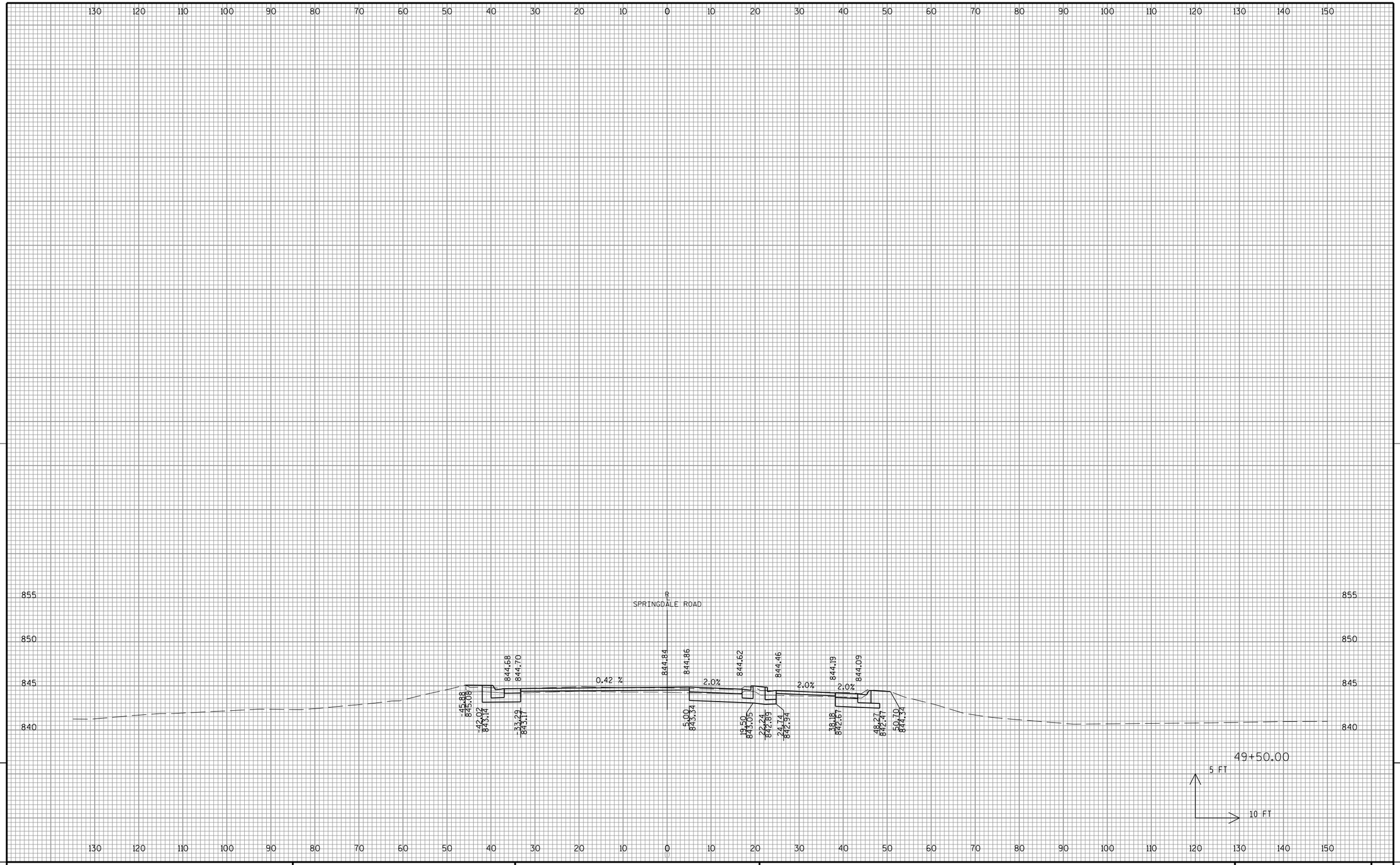

9

9

PROJECT NO:2025-14-70	HWY:STH 190	COUNTY:WAUKESHA	CROSS SECTIONS:SPRINGDALE ROAD	SHEET 539	E

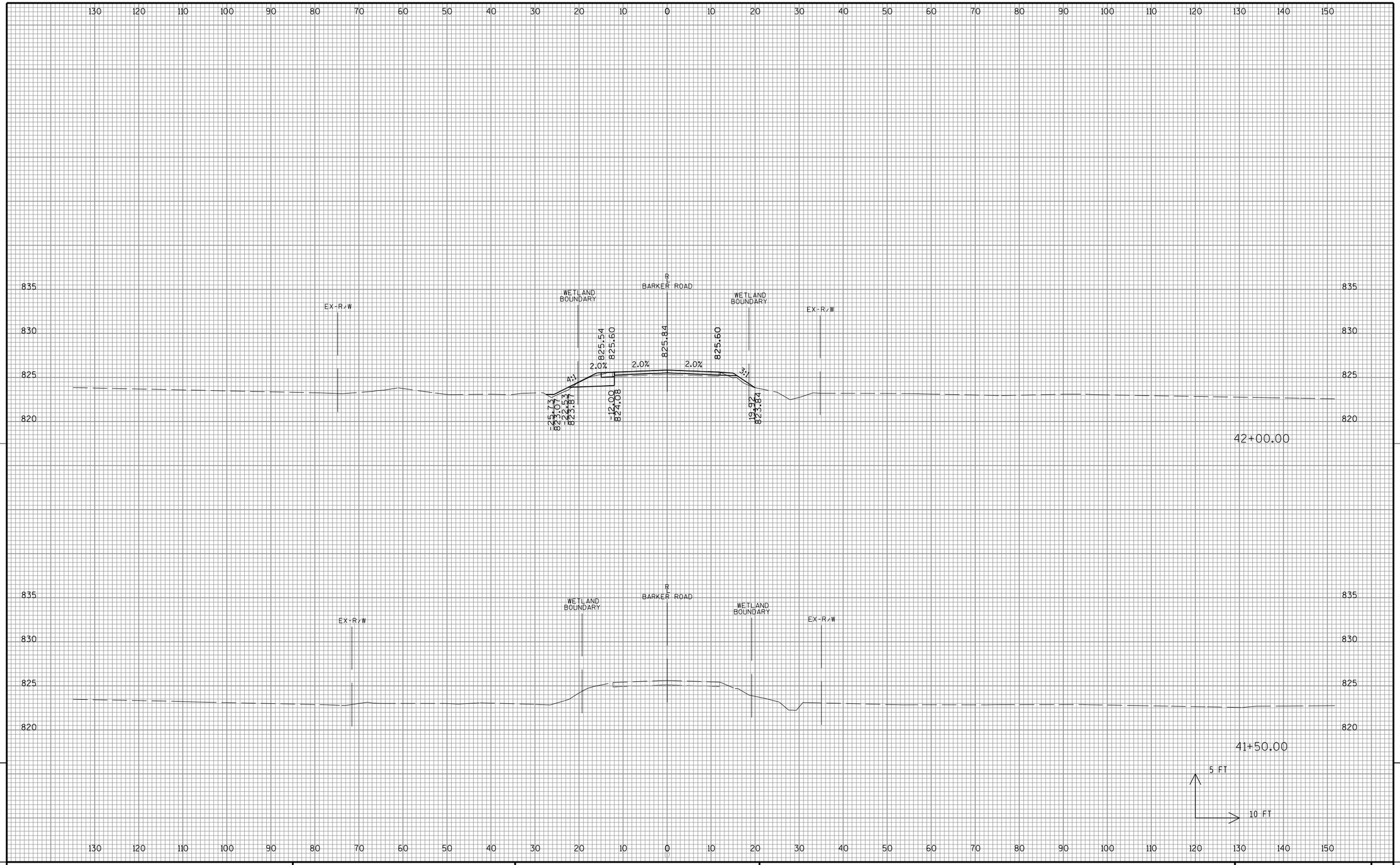

9

9

PROJECT NO:2025-14-70	HWY:STH 190	COUNTY:WAUKESHA	CROSS SECTIONS:BARKER ROAD	SHEET 540	E

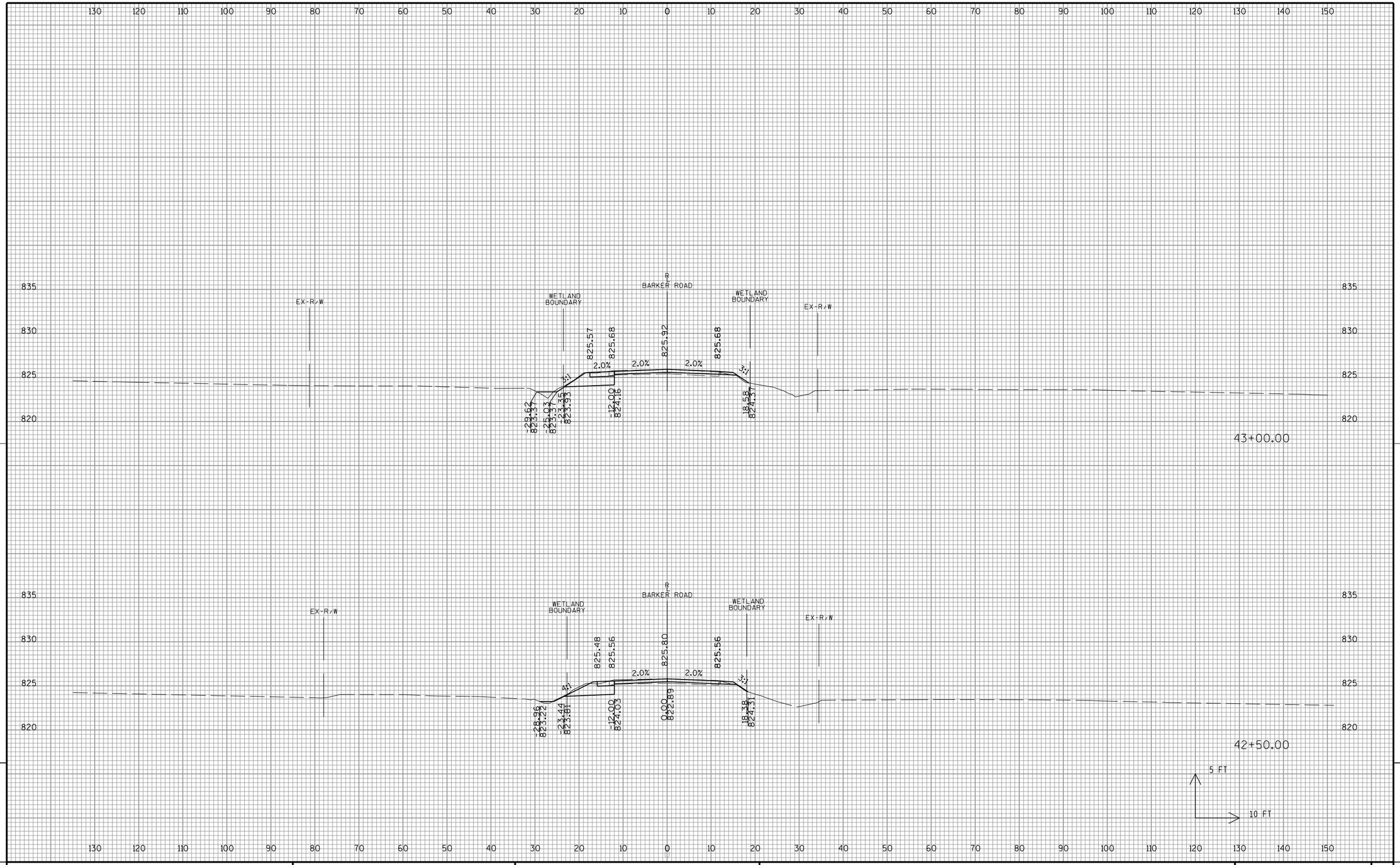

9

9

PROJECT NO:2025-14-70	HWY:STH 190	COUNTY:WAUKESHA	CROSS SECTIONS:BARKER ROAD	SHEET 541	E

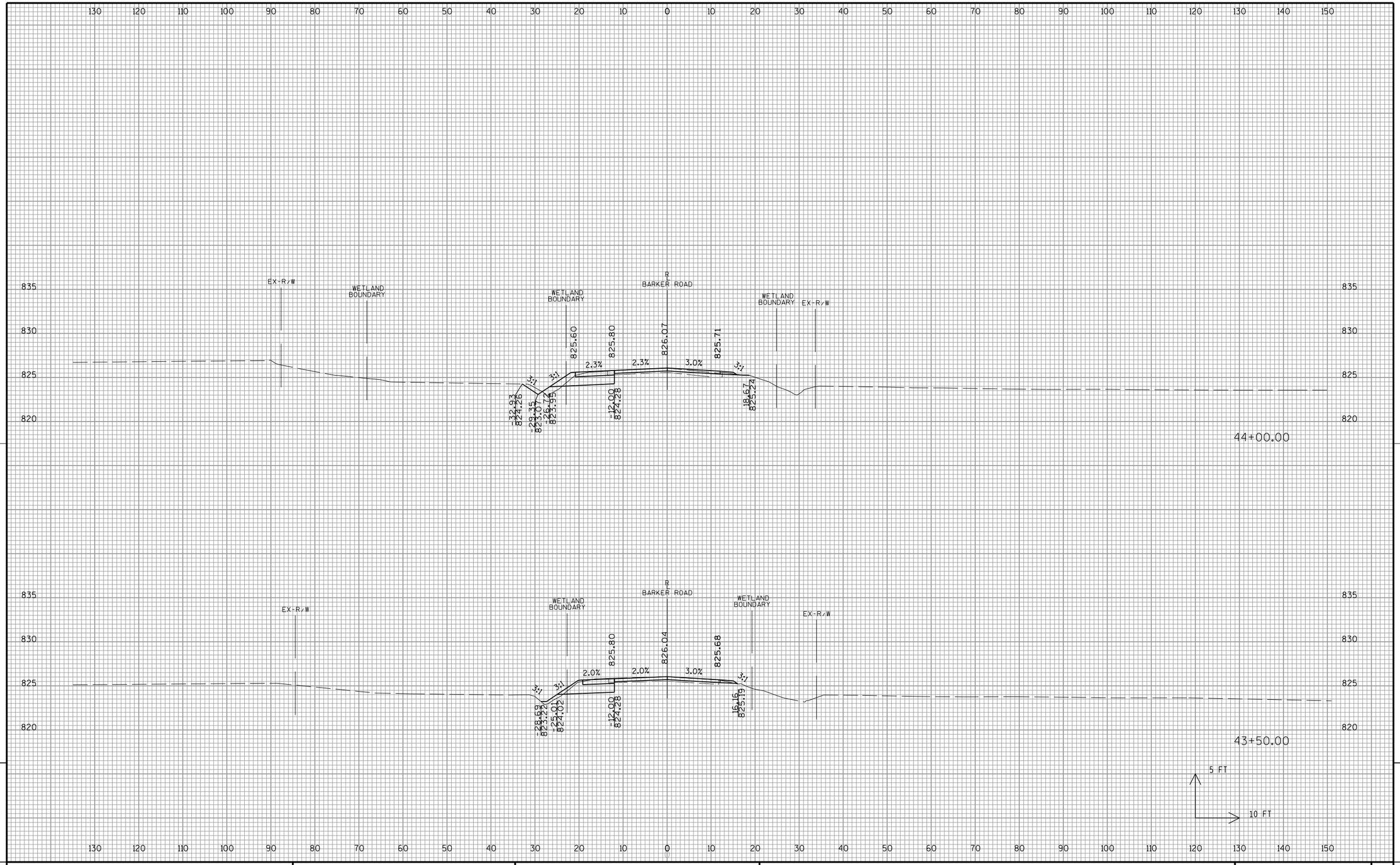

9

9

PROJECT NO:2025-14-70	HWY:STH 190	COUNTY:WAUKESHA	CROSS SECTIONS:BARKER ROAD	SHEET 542	E

FILE NAME : X:\ML\2016\20160073\CAD\Transportation\dgn\00\090203_xs_BARKER.dgn PLOT DATE : 10/31/2017 PLOT BY : $$...plotuser...$$ PLOT NAME : PLOT SCALE : $$.....plotscale.....$$ WISDOT/CADDS SHEET 21

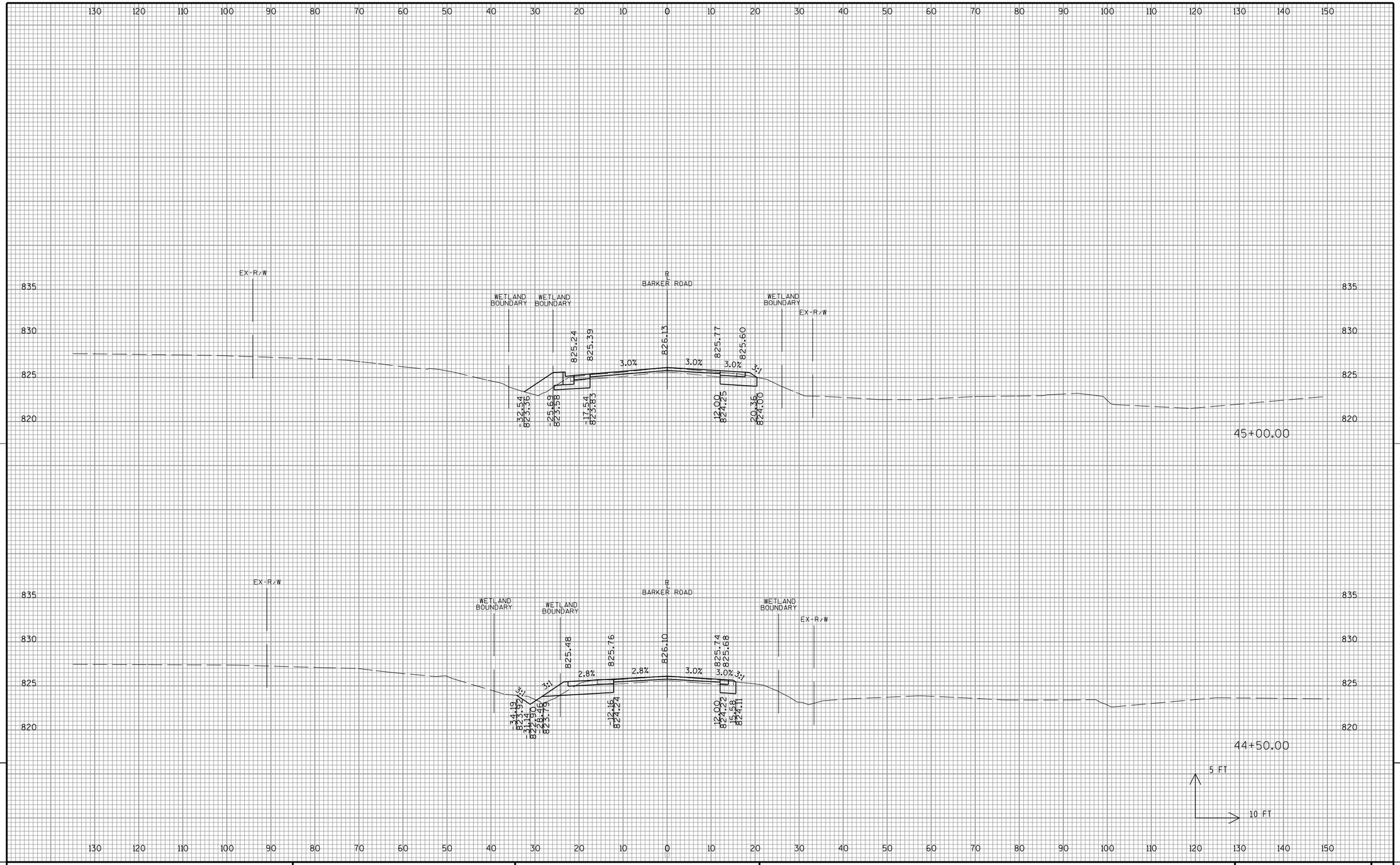

9

9

PROJECT NO:2025-14-70	HWY:STH 190	COUNTY:WAUKESHA	CROSS SECTIONS:BARKER ROAD	SHEET 543	E

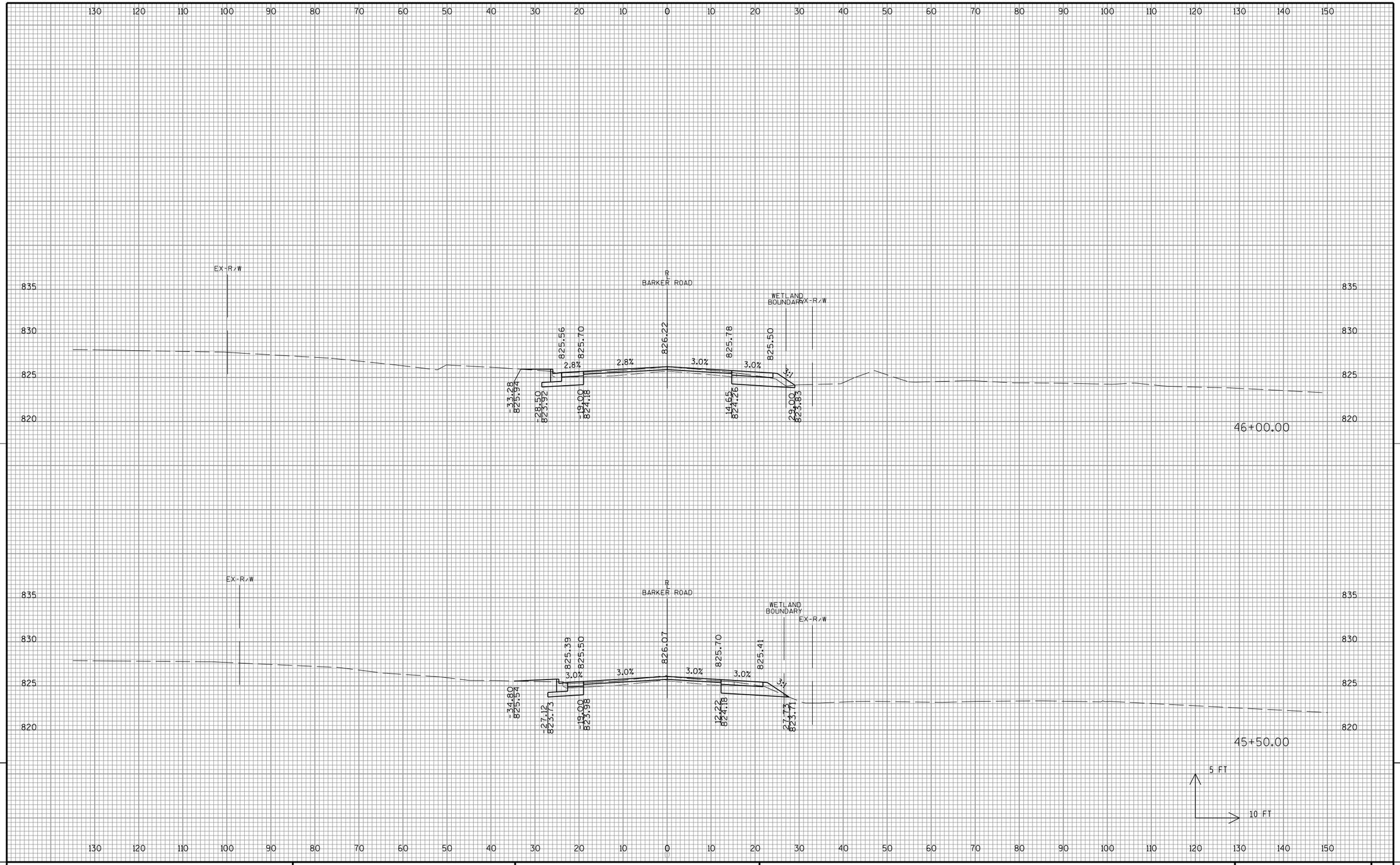

9

9

PROJECT NO:2025-14-70	HWY:STH 190	COUNTY:WAUKESHA	CROSS SECTIONS:BARKER ROAD	SHEET 544	E

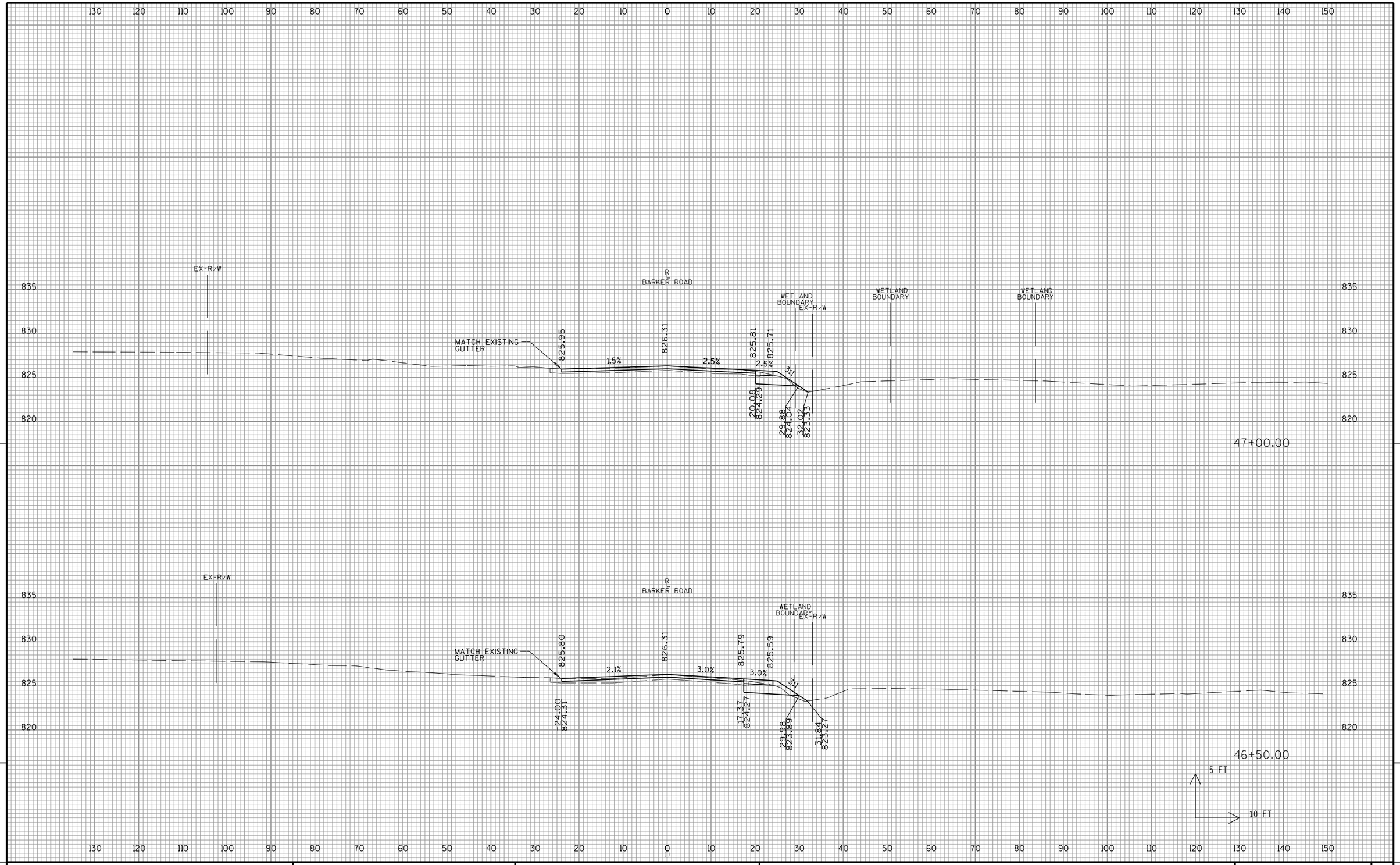

9

9

PROJECT NO:2025-14-70	HWY:STH 190	COUNTY:WAUKESHA	CROSS SECTIONS:BARKER ROAD	SHEET 545	E

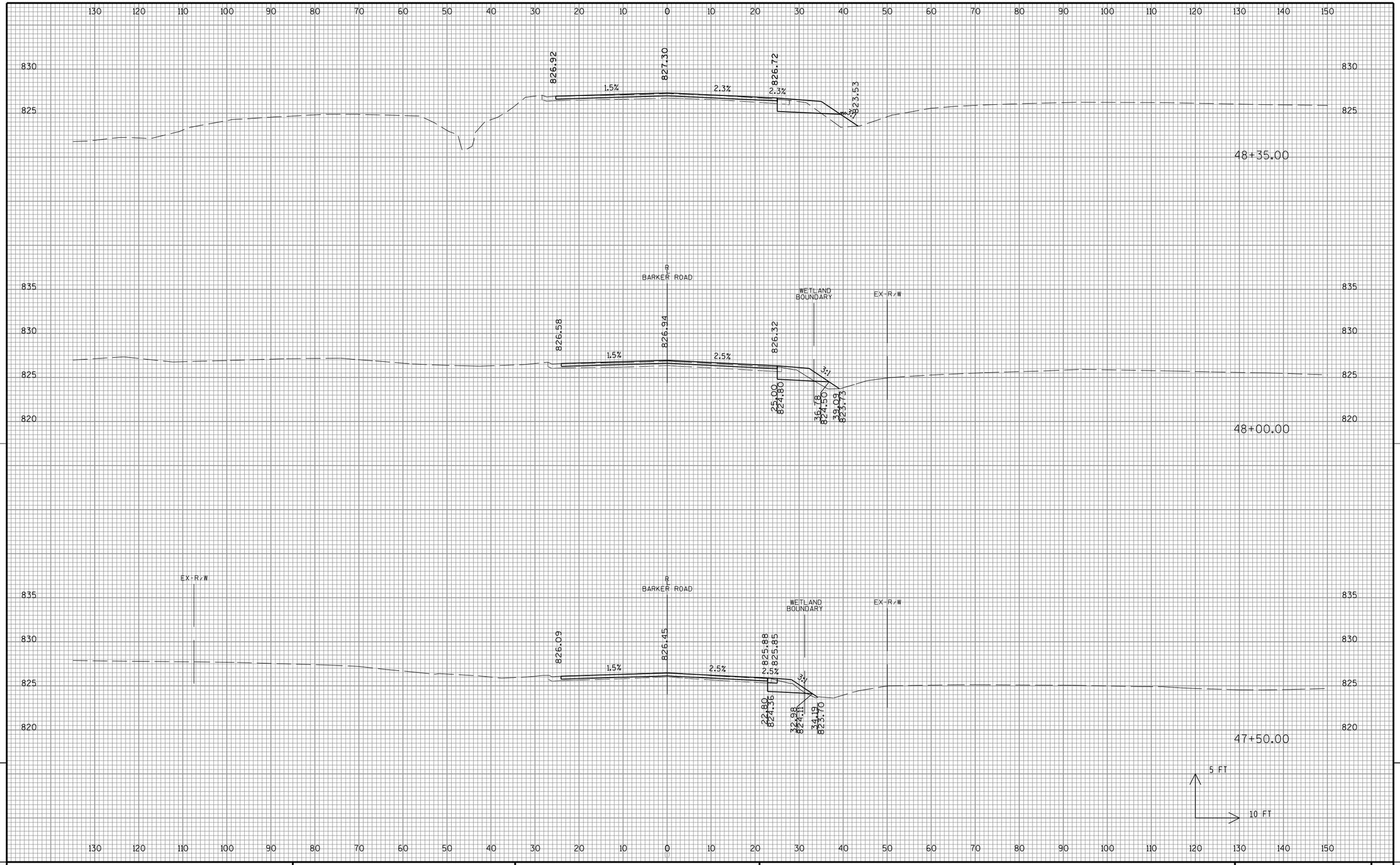

9

9

PROJECT NO:2025-14-70	HWY:STH 190	COUNTY:WAUKESHA	CROSS SECTIONS:BARKER ROAD	SHEET 546	E

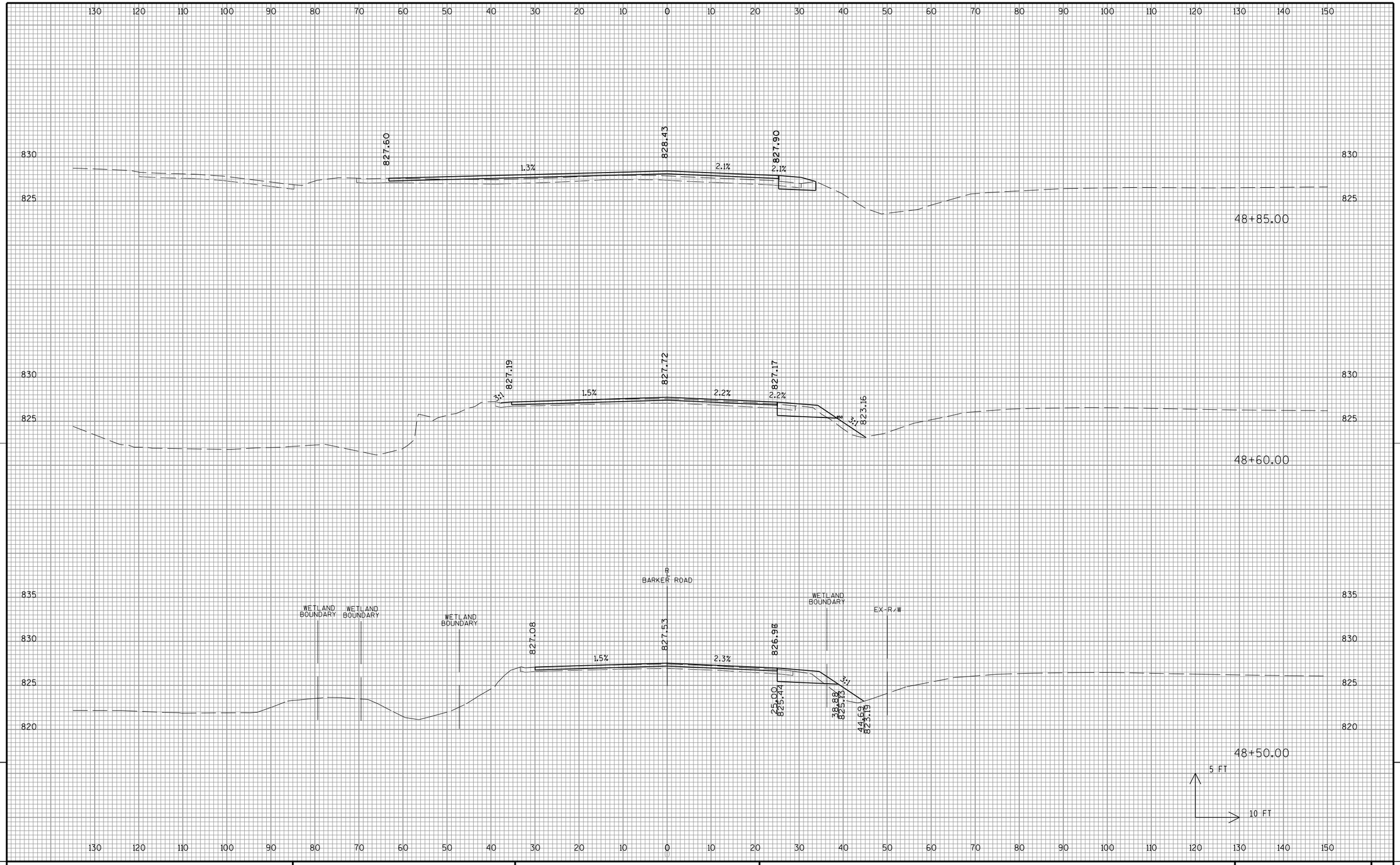

9

9

PROJECT NO:2025-14-70	HWY:STH 190	COUNTY:WAUKESHA	CROSS SECTIONS:BARKER ROAD	SHEET 547	E

FILE NAME : X:\ML\2016\20160073\CAD\Transportation\dgn\00\090203_xs_BARKER.dgn PLOT DATE : 10/31/2017 PLOT BY : $$...plotuser...$$ PLOT NAME : PLOT SCALE : $$.....plotscale.....$$ WISDOT/CADDS SHEET 21

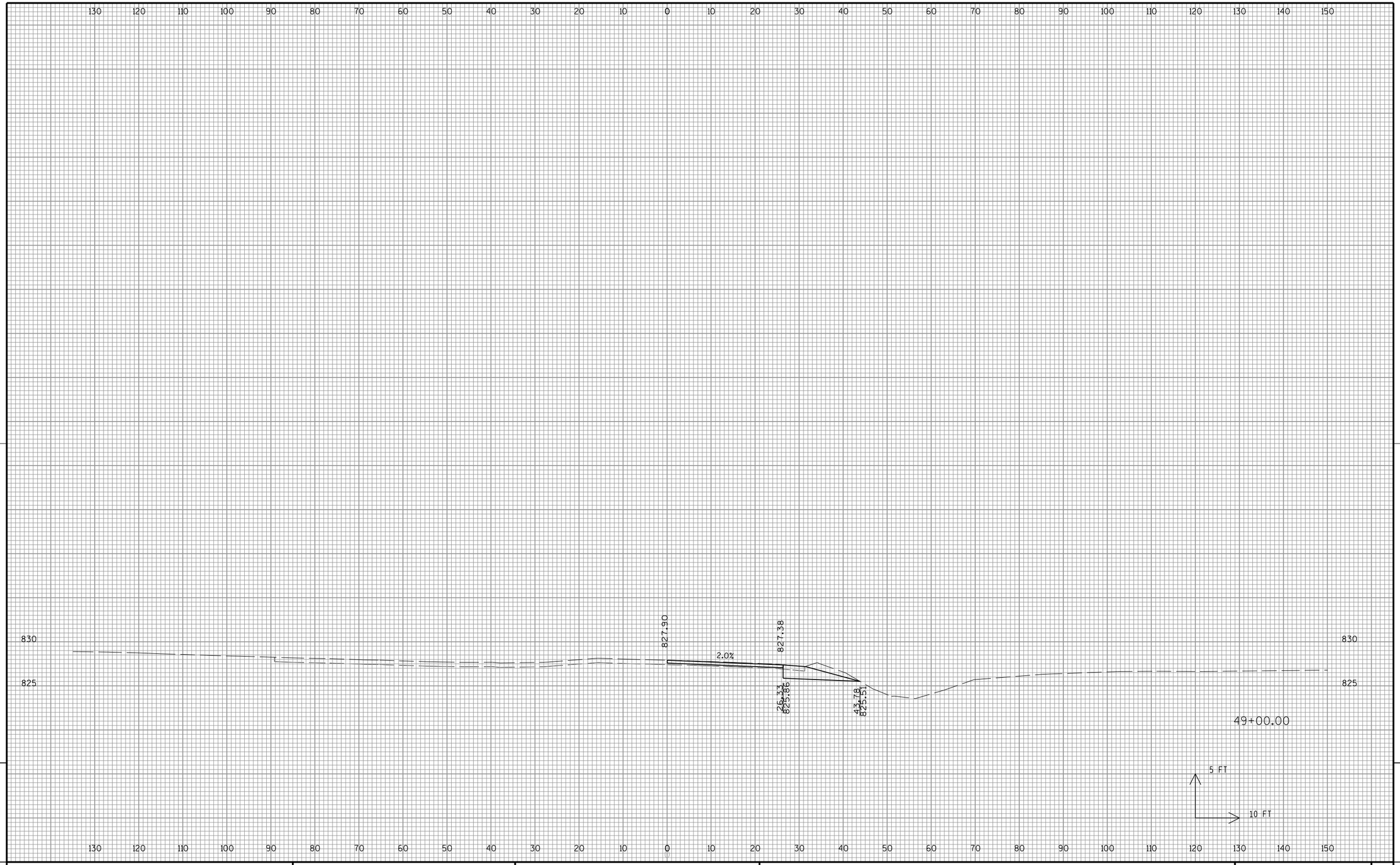

9

9

PROJECT NO:2025-14-70	HWY:STH 190	COUNTY:WAUKESHA	CROSS SECTIONS:BARKER ROAD	SHEET 548	E

Notes

Wisconsin Department of Transportation

Dedicated people creating transportation solutions through innovation and exceptional service.

http://www.dot.wisconsin.gov