WKE

MAR 2018

PROJECT ID: 1693-32-74

WITH: N/A

COUNTY: MILWAUKEE

ORDER OF SHEETS

TOTAL SHEETS = 150

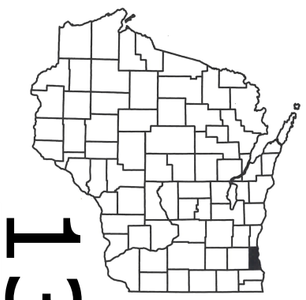

13

N

STATE OF WISCONSIN
DEPARTMENT OF TRANSPORTATION

PLAN OF PROPOSED IMPROVEMENT

CROSS-TOWN CONNECTOR BRIDGE

OVER STH 100

(NON-HWY)
MILWAUKEE COUNTY

STATE PROJECT NUMBER
1693-32-74

STATE PROJECT	FEDERAL PROJECT	
	PROJECT	CONTRACT
1693-32-74	WISC 2018143	1

DESIGN DESIGNATION

A.A.D.T.	=	N/A
A.A.D.T.	=	N/A
D.H.V.	=	N/A
D.D.	=	N/A
T.	=	N/A
DESIGN SPEED	=	20 MPH
ESALS	=	N/A

CONVENTIONAL SYMBOLS

PLAN

CORPORATE LIMITS
PROPERTY LINE
LOT LINE
LIMITED HIGHWAY EASEMENT
EXISTING RIGHT OF WAY
PROPOSED OR NEW R/W LINE
SLOPE INTERCEPT
REFERENCE LINE (300'EB')
EXISTING CULVERT
PROPOSED CULVERT (Box or Pipe)
COMBUSTIBLE FLUIDS (CAUTION)
MARSH AREA
WOODED OR SHRUB AREA

PROFILE

GRADE LINE
ORIGINAL GROUND
MARSH OR ROCK PROFILE (To be noted as such) (ROCK)
SPECIAL DITCH (LABEL)
GRADE ELEVATION (95.36)
CULVERT (Profile View)

UTILITIES

ELECTRIC — E —
FIBER OPTIC — FO —
GAS — G —
SANITARY SEWER — SAN —
STORM SEWER — SS —
TELEPHONE — T —
WATER — W —
UTILITY PEDESTAL
POWER POLE
TELEPHONE POLE

R-21-E

T-6-N

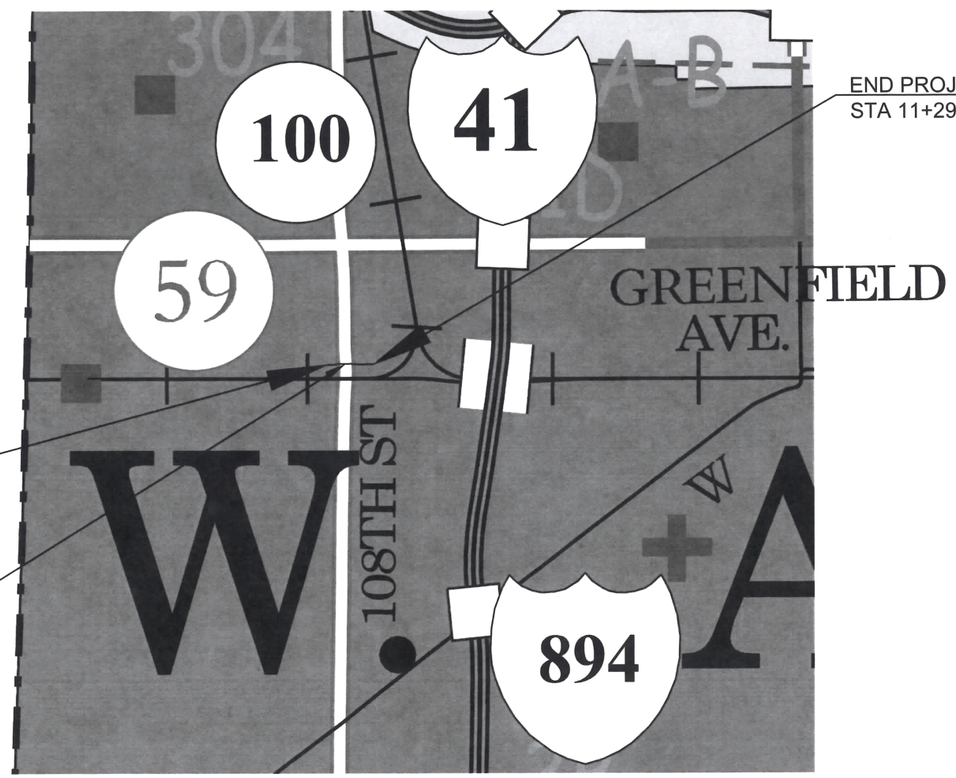

END PROJECT
STA 11+29.02

BEGIN PROJECT
STA 2+39.68
Y = 289,261.73
X = 568,990.13

STRUCTURE B-40-926
STA 4+66 - STA 6+19

LAYOUT

SCALE 0 — 1/2 MI

TOTAL NET LENGTH OF CENTERLINE = 0.152 MI.

HORIZONTAL POSITIONS SHOWN ON THIS PLAN ARE WISCONSIN COUNTY COORDINATES, MILWAUKEE COUNTY, NAD83 (2007), IN U.S. SURVEY FEET. VALUES ARE GRID COORDINATES, GRID BEARINGS, AND GRID DISTANCES. GRID DISTANCES MAY BE USED AS GROUND DISTANCES.

ELEVATIONS SHOWN ON THIS PLAN ARE REFERENCED TO THE NORTH AMERICAN VERTICAL DATUM, NAVD88 (2007).

ACCEPTED FOR

City of West Allis

Date 10/24/2017 — (Signature and Title of Official) Dpty City Engineer

ORIGINAL PLANS PREPARED BY

KSingh — Engineers Scientists Consultants

WISCONSIN PROFESSIONAL ENGINEER — MICHAEL C. GASPER — E-39041 — PORT WASHINGTON, WISCONSIN — 20 October 2017

DATE: _____ (Professional Engineer Signature)

STATE OF WISCONSIN
DEPARTMENT OF TRANSPORTATION

PREPARED BY

Surveyor	KSINGH
Designer	KSINGH
Management Consultant	DAAR CORPORATION

APPROVED FOR THE DEPARTMENT

DATE: 10/25/17 (Mangement Consultant Signature)

E

2

GENERAL NOTES

1. THE LOCATIONS OF EXISTING AND PROPOSED UTILITY INSTALLATIONS AS SHOWN ON THE PLANS ARE APPROXIMATE. THERE MAY BE OTHER UTILITY INSTALLATIONS WITHIN THE PROJECT AREA THAT ARE NOT SHOWN.
2. THE CONTRACTOR SHALL NOTIFY DIGGERS HOTLINE AND AFFECTED UTILITIES PRIOR TO THE START OF WORK. ANY LOCAL MUNICIPAL UTILITY WHICH IS NOT A MEMBER OF THE DIGGERS HOTLINE MUST BE CONTACTED SEPARATELY.
3. TRAFFIC CONTROL DEVICES SHALL BE ADJUSTED TO FIT FIELD CONDITIONS AS DIRECTED BY THE ENGINEER.
4. NO TREES OR SHRUBS SHALL BE REMOVED WITHOUT APPROVAL OF THE ENGINEER.
5. ALL HOLES OR OPENINGS BELOW SUBGRADE RESULTING FROM ABANDONMENT OR REMOVAL OF EXISTING STRUCTURES SHALL BE FILLED WITH GRANULAR BACKFILL, WHICH SHALL BE INCLUDED IN THE COST OF THE RESPECTIVE ABANDONMENT OR REMOVAL ITEM.
6. PRIOR TO ORDERING DRAINAGE PIPES AND STRUCTURES, THE CONTRACTOR SHALL VERIFY RELATED DRAINAGE INFORMATION IN THE PLAN WITH THE ENGINEER. INLET AND DISCHARGE ELEVATIONS FOR DRAINAGE STRUCTURES SHOWN ON THE PLAN MAY BE ADJUSTED BY THE ENGINEER TO FIT FIELD CONDITIONS.
7. A SAWED JOINT IS REQUIRED WHERE NEW ASPHALTIC CONCRETE SURFACE MEETS EXISTING ASPHALTIC CONCRETE SURFACE.
8. THE EROSION CONTROL FEATURES AS SHOWN IN THE PLANS ARE AT SUGGESTED LOCATIONS. EXACT LOCATIONS WILL BE DETERMINED BY THE ENGINEER IN THE FIELD.
9. INLET PROTECTION SHALL BE PLACED AT ALL INLET LOCATIONS ACCEPTING STORM WATER FROM THE PROJECT AREA OR AS DIRECTED BY THE ENGINEER IN THE FIELD.
10. STATIONING, DISTANCES AND OFFSETS FOR SIGNS SHOWN ON THE PLANS ARE APPROXIMATE AND THE LOCATIONS OF SIGNS ARE TO BE DETERMINED BY THE ENGINEER IN THE FIELD.
11. ALL SIGNS, TEMPORARY OR EXISTING, WHICH CONFLICT WITH THE TRAFFIC CONTROL "IN USE" SHALL BE REMOVED AS NEEDED AND/OR DIRECTED BY THE ENGINEER.
12. NO WORKING LIGHTS SHALL BE VISIBLE ON A LAID DOWN SIGN.
13. DISTURBED AREAS WITHIN THE RIGHT OF WAY, EXCEPT THE AREAS WITHIN THE FINISHED SHOULDER POINTS, SHALL BE TOPSOILED, FERTILIZED AND SEEDED AS DIRECTED BY THE ENGINEER IN THE FIELD. RESTORE EXPOSED SLOPES AND DITCHES WITHIN 7 CALENDAR DAYS AFTER GRADING IS COMPLETE.

DIGGERS HOTLINE

Dial 811 or (800)242-8511

www.DiggersHotline.com

TO OBTAIN LOCATION OF PARTICIPANTS' UNDERGROUND FACILITIES BEFORE YOU DIG IN WISCONSIN

WIS. STATUTE 182.0175 (1974) REQUIRES MIN. OF 3 WORK DAYS NOTICE BEFORE YOU EXCAVATE

ORDER OF SECTION 2 DETAIL SHEETS

STANDARD ABBREVIATIONS

AC	ACRE
AECPRC	APRON ENDWALL CULVERT PIPE REINFORCED CONCRETE
AEW	APRON END WALL
AGG	AGGREGATE
AH	AHEAD
ASPH	ASPHALTIC
B/C	BACK OF CURB
BK	BACK
BM	BENCH MARK
CE	COMMERCIAL ENTRANCE
CONC	CONCRETE
CL OR C/L	CENTER OR CONSTRUCTION LINE
CP	CULVERT PIPE
CPCM	CULVERT PIPE CORRUGATED METAL
CPRC	CULVERT PIPE REINFORCED CONCRETE
CPT	CULVERT PIPE TEMPORARY
CY	CUBIC-YARD
D	DEGREE OF CURVE
Δ	DELTA
DIA	DIAMETER
DISCH	DISCHARGE
DWY	DRIVEWAY
EL OR ELEV	ELEVATION
EW	END WALL
EBS	EXCAVATION BELOW SUBGRADE
EX	EXISTING
FF	FACE TO FACE
FE	FIELD ENTRANCE
FT	FOOT
INV	INVERT
LT	LEFT
LHF	LEFT HAND FORWARD
L	LENGTH OF CURVE
LF	LINEAR FOOT
MIN	MINIMUM
ML OR M/L	MATCHLINE
NOR	NORMAL
NC	NORMAL CROWN
PAVT	PAVEMENT
PCC	POINT OF COMPOUND CURVE
PC	POINT-OF CURVE
PE	PRIVATE ENTRANCE
PGL	PROFILE GRADE LINE
PI	POINT OF INTERSECTION
PL	PROPERTY LINE
PLE	PERMANENT LIMITED EASMENT
PRC	POINT OF REVERSE CURVATURE
PROP	PROPOSED
PT	POINT OF TANGENT
R	RADIUS OF CURVE
RL OR R/L	REFERENCE LINE
REINF	REINFORCED
REQ'D OR REQD	REQUIRED
RC	REVERSE CROWN
RT	RIGHT
RHF	RIGHT HAND FORWARD
R/W	RIGHT OF WAY
SALV	SALVAGED
SF	SQUARE FOOT
SY	SQUARE YARD
SDD	STANDARD DETAIL DRAWING
STA	STATION
SSPRC	STORM SEWER PIPE REINFORCED CONCRETE
SE	SUPER ELEVATION
T	TANGENT
TEMP	TEMPORARY
TLE	TEMPORARY LIMITED EASEMENT
TYP	TYPICAL
VPCC	VERTICAL POINT OF COMPOUND CURVATURE
VPC	VERTICAL POINT OF CURVE
VPI	VERTICAL POINT OF INTERSECTION
VPRC	VERTICAL OPINT OF REVERSE CURVATURE
VPT	VERTICAL POINT OF TANGENCY

DESIGN CONTACTS

K. SINGH & ASSOCIATES, INC.
MS. TRACI GENGLER
3636 N. 124TH STREET
WAUWATOSA, WI 53222
PHONE: (262) 821-1171 EXT. 107
FAX: (262) 821-1174
tgengler@ksinghengineering.com

WISDOT PROJECT MANAGER
MS. KATHLEEN KRAMER
141 NW BARSTOW STREET
WAUKESHA, WI 53187
PHONE: (262) 548-8772
kathleen1.kramer@dot.wi.gov

CITY OF WEST ALLIS DPW
MR. PETER DANIELS
PRINCIPAL ENGINEER
7525 W. GREENFIELD AVENUE
WEST ALLIS, WI 53214
PHONE: (414) 302-8374
pdaniels@westalliswi.gov

DEPT. OF NATURAL RESOURCES
MS. KRISTINA BETZOLD
2300 N. DR. MARTIN LUTHER KING JR. DR.
MILWAUKEE, WI 53212
PHONE: (414) 263-8517
CELL: (414) 507-4946
kristina.betzold@wisconsin.gov

MILWAUKEE COUNTY PARKS
MR. JAMES KEEGAN
INTERIM DIRECTOR
9480 WATERTOWN PLANK ROAD
WAUWATOSA, WI 53226
PHONE: (414) 257-4775
james.keegan@milwcnty.com

MILWAUKEE COUNTY
MS. ANDREA WEDDLE-HENNING
TRANSPORTATION ENGR MANAGER
2711 WEST WELLS STREET, SUITE 300
MILWAUKEE, WI 53208
PHONE: (414) 278-4934
andrea.weddle-henning@milwcnty.com

WE ENERGIES PROPERTY MANAGEMENT
MS. JULIE SIMMONS
RIGHT OF WAY AGENT
231 W. MICHIGAN STREET, A252
MILWAUKEE, WI 53203
PHONE: (414) 221-2715
FAX: (414) 221-2713
julie.simmons@we-energies.com

MILWAUKEE COUNTY SHERIFF
MR. MICHAEL BABICH
821 W. STATE STREET - SAFETY BLDG.
MILWAUKEE, WI 53233
PHONE: (414) 278-4788

CITY OF WEST ALLIS POLICE DEPT
MR. CHARLES PADGETT
CHIEF OF POLICE
11301 W. LINCOLN AVENUE
WEST ALLIS, WI 53227
PHONE: (414) 302-8000

MILWAUKEE COUNTY TRANSIT SYSTEM
MS. MELANIE FLYNN
1942 NORTH 17TH STREET
MILWAUKEE, WI 53205
PHONE: (414) 343-1764
FAX: (414) 343-2122
mflynn@mcts.org

UNION PACIFIC RAILROAD
JIM FISHER
4823 N. 119TH ST., RM. 122
MILWAUKEE, WI 53225
PHONE: (414) 267-4219
FAX: (414) 267-4156

UTILITY CONTACTS

ATC MANAGEMENT
CHRIS DAILEY
W234 N2000 RIDGEVIEW PKWY CT.
WAUKESHA, WI 53187
PHONE: (262) 506-6884
FAX: (262) 832-8650
cdailey@atcllc.com

CITY OF WEST ALLIS WATER
CHRIS ST. CLAIR
7525 W. GREENFIELD AVENUE
WEST ALLIS, WI 53214
PHONE: (414) 302-8378
CELL: (414) 940-1380

LEVEL 3 COMMUNICATIONS/MI-TECH
SHAD GARCIA
4125 N. 124TH ST, SUITE D
BROOKFIELD, WI 53005
PHONE: (262) 938-6070 Ext. 3047
CELL: (262) 894-9433
sgarcia@mi-tech.us

MIDWEST FIBER NETWORKS
CHERI GRAINGER
6070 N. FLINT ROAD
GLENDALE, WI 53209
PHONE: (414) 459-3550
CELL: (414) 349-0750

MILWAUKEE METRO SEWERAGE DIST. (MMSD)
MICKI KLAPPA-SULLIVAN
260 W. SEEBOTH STREET
MILWAUKEE, WI 53204-1446
PHONE: (414) 225-2178
MKlappaSullivan@mmsd.com

WINDSTREAM
MARY BETH FISHER
13935 BISHOPS DRIVE
BROOKFIELD, WI 53005
PHONE: (262) 792-7938
CELL: (414) 313-9032
MARY.B.FISHER@WINDSTREAM.COM

WE ENERGIES (ELECTRIC)
KENNETH FRANECKI
500 SOUTH 116TH STREET
WEST ALLIS, WI 53214
PHONE: (414) 944-5531
CELL: (262) 939-1039
kenneth.franecki@we-energies.com

WE ENERGIES (GAS)
ALEX DANTINNE
500 116TH STREET
WEST ALLIS, WI 53212
PHONE: (920) 621-6903
FAX: (414) 221-2336
alex.dantinne@we-energies.com

WISDOT STOC
JOHN MITTELSTADT
433 W. ST. PAUL AVE., STE. 300
MILWAUKEE, WI 53203-3007
PHONE: (414) 227-4665
CELL: (608) 205-7859

2

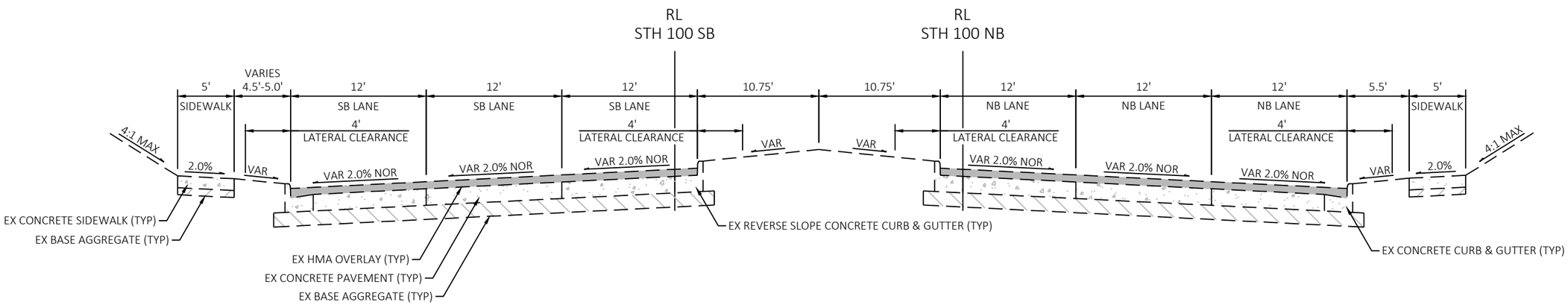

TYPICAL EXISTING SECTION
STH 100 (S 108TH STREET)

PROJECT NO: 1693-32-74	HWY: NON-HWY	COUNTY: MILWAUKEE COUNTY	PLAN: EXISTING TYPICAL SECTIONS	SHEET 3	E

FILE NAME : P:\8516 WEST ALLIS CROSS CONNECTOR BRIDGE\TRANSPORTATION\CADD\8516 WAX\SHEETSPLAN\020301-TS.DWG
LAYOUT NAME - 01
PLOT DATE : 1/24/2018 2:54 PM PLOT BY : MICHAEL GASPER PLOT NAME : PLOT SCALE : #########
WISDOT/CADDS SHEET 42

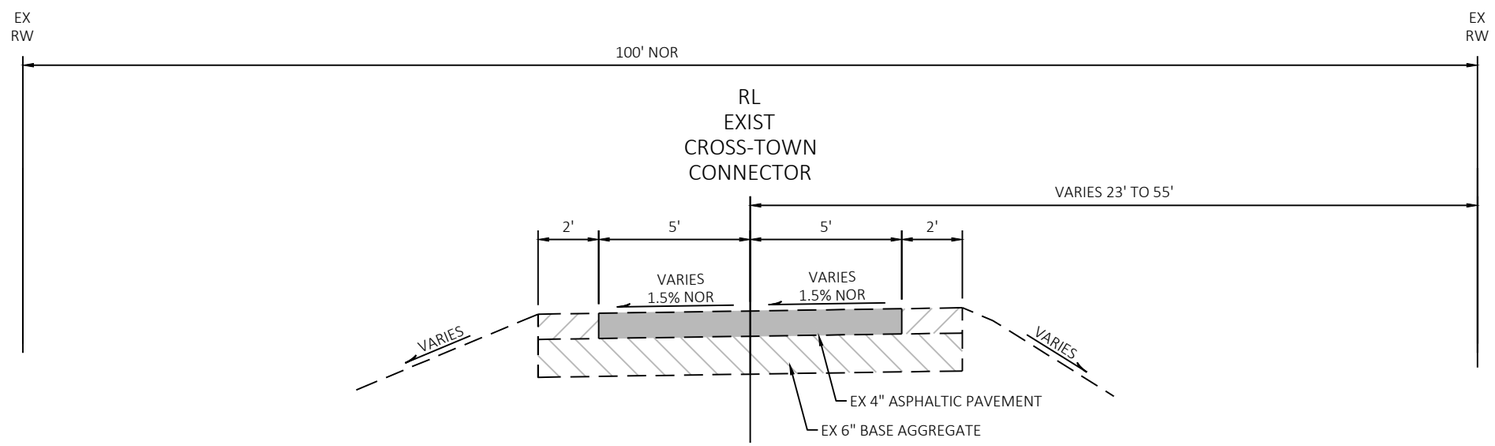

TYPICAL EXISTING SECTION
CROSS-TOWN CONNECTOR TRAIL
NORTH OF PROJECT LIMITS

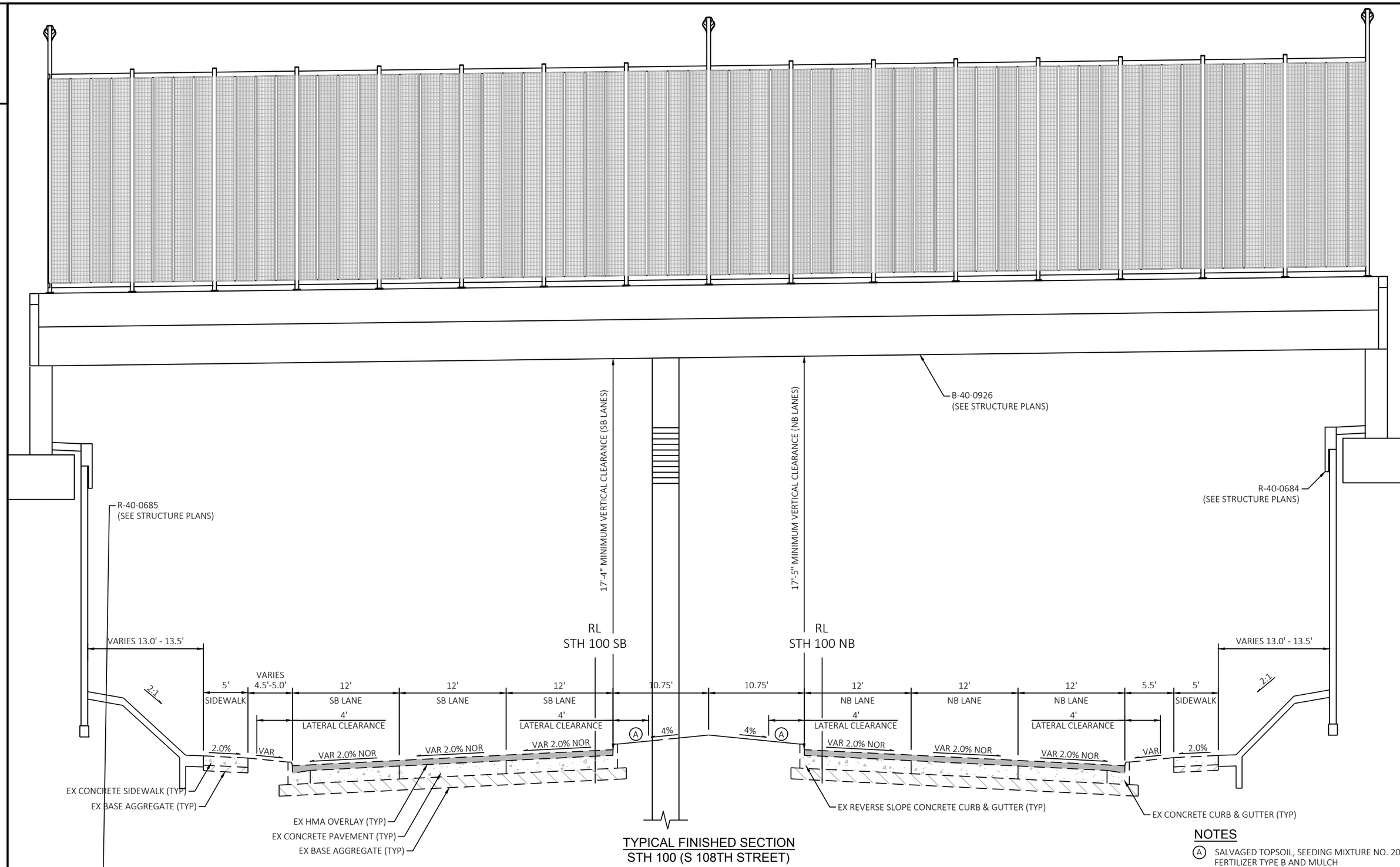

TYPICAL FINISHED SECTION
STH 100 (S 108TH STREET)

NOTES

(A) SALVAGED TOPSOIL, SEEDING MIXTURE NO. 20, FERTILIZER TYPE B AND MULCH

PROJECT NO: 1693-32-74	HWY: NON-HWY	COUNTY: MILWAUKEE COUNTY	PLAN: FINISHED TYPICAL SECTIONS	SHEET 5	E

FILE NAME : P:\8516 WEST ALLIS CROSS CONNECTOR BRIDGE\TRANSPORTATION\CADD\8516 WAX\SHEETSPLAN\020301-TS.DWG
LAYOUT NAME - 03
PLOT DATE : 1/24/2018 2:54 PM PLOT BY : MICHAEL GASPER PLOT NAME : PLOT SCALE : #########

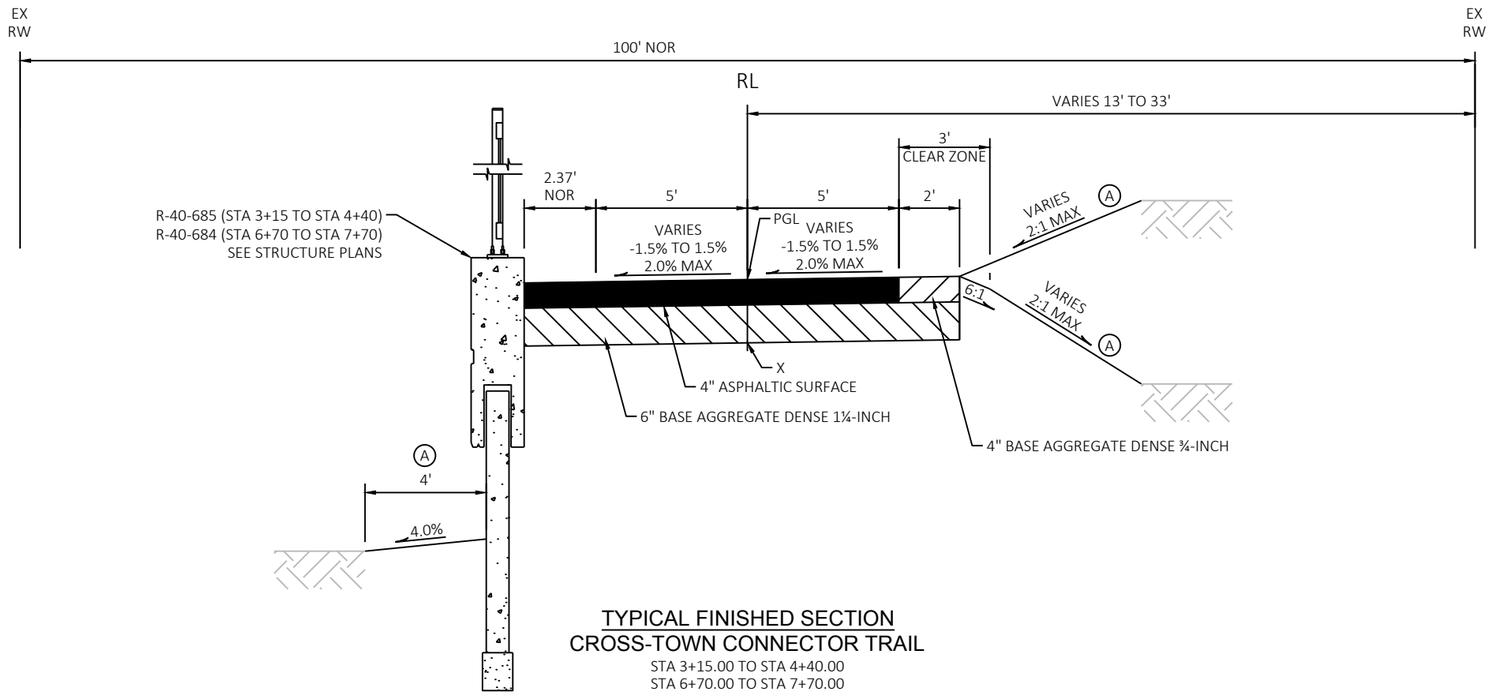

TYPICAL FINISHED SECTION
CROSS-TOWN CONNECTOR TRAIL
STA 3+15.00 TO STA 4+40.00
STA 6+70.00 TO STA 7+70.00

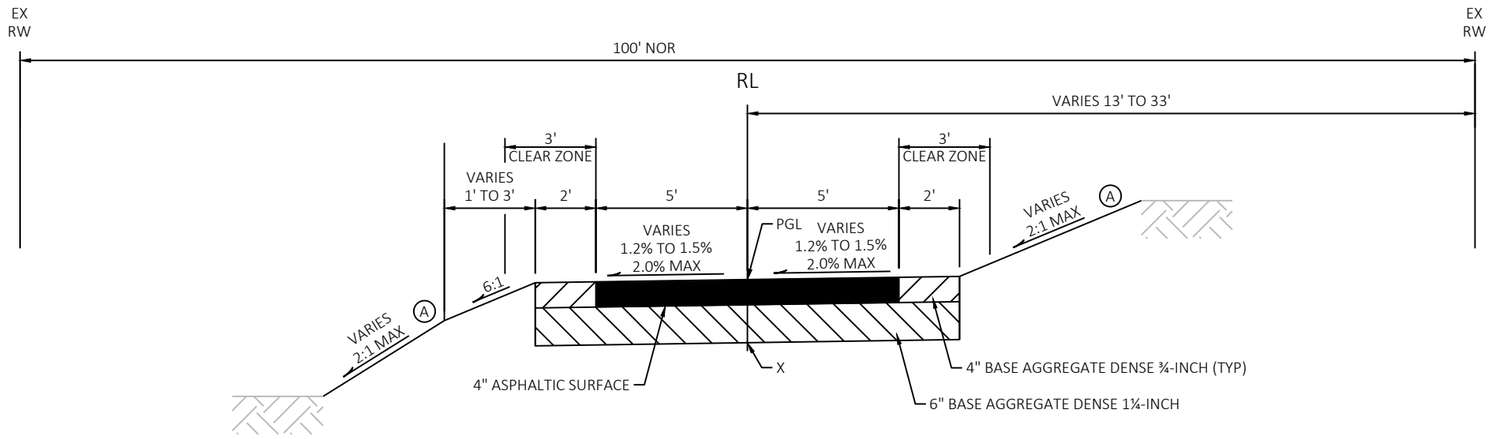

TYPICAL FINISHED SECTION
CROSS-TOWN CONNECTOR TRAIL
STA 2+39.68 TO STA 3+15.00
STA 7+70.00 TO STA 11+29.02

NOTES

(A) SALVAGED TOPSOIL, SEEDING MIXTURE NO. 20, FERTILIZER TYPE B AND MULCH

SEE CROSS SECTIONS FOR TRAIL CROSS SLOPES

PGL = POINT REFERRED TO ON PROFILE
X = POINT REFERRED TO ON CROSS SECTIONS

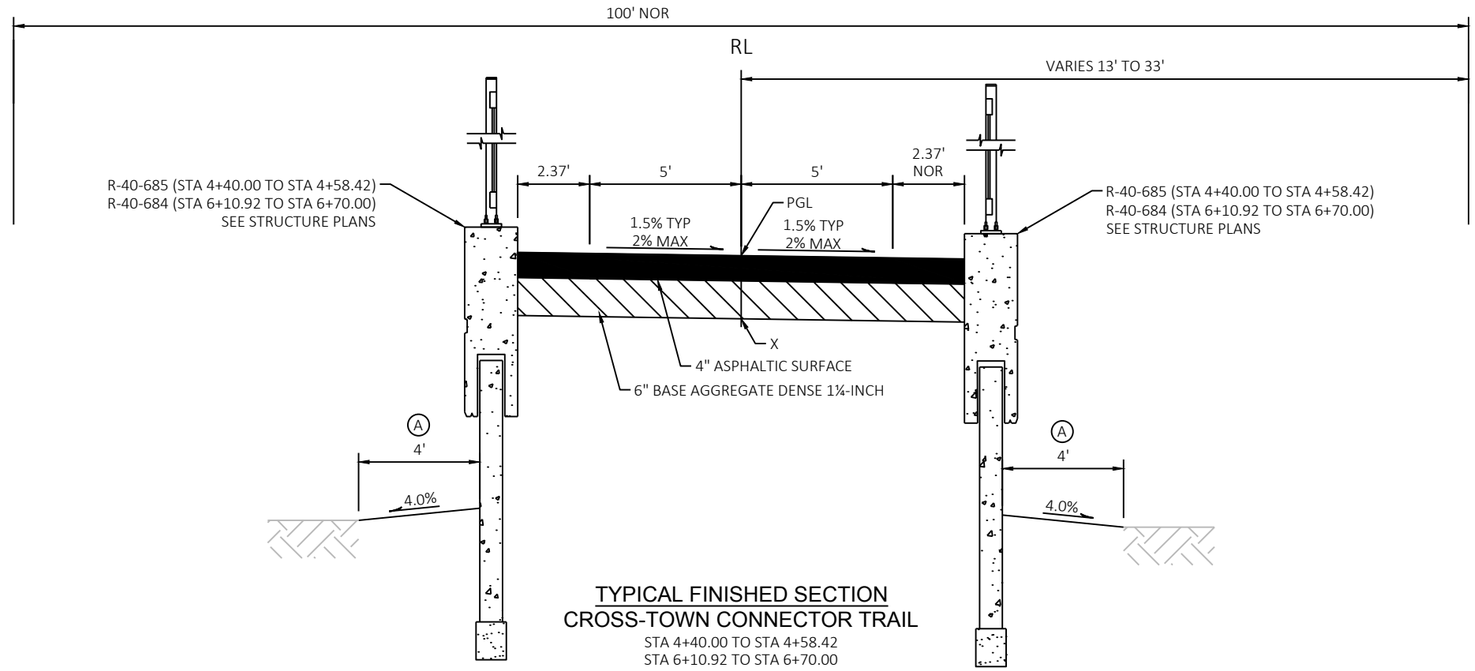

TYPICAL FINISHED SECTION
CROSS-TOWN CONNECTOR TRAIL
STA 4+40.00 TO STA 4+58.42
STA 6+10.92 TO STA 6+70.00

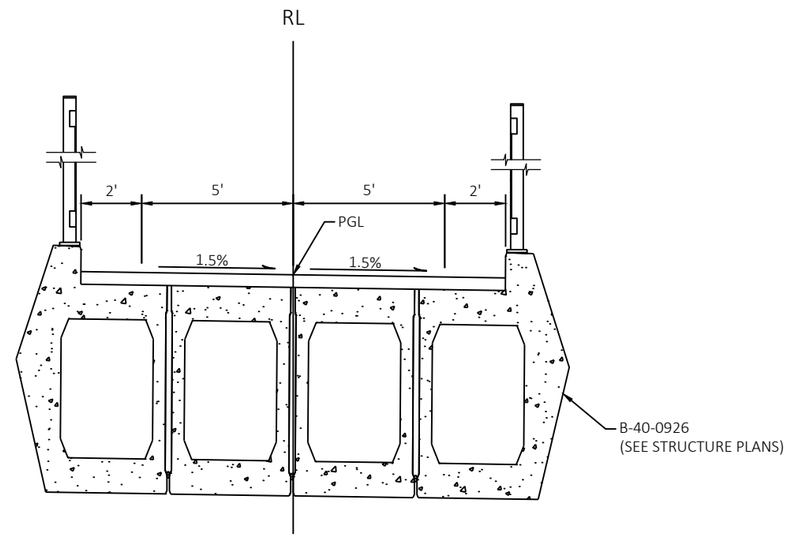

TYPICAL FINISHED SECTION
CROSS-TOWN CONNECTOR TRAIL
STA 4+58.42 TO STA 6+10.92

NOTES

(A) SALVAGED TOPSOIL, SEEDING MIXTURE NO. 20, FERTILIZER TYPE B AND MULCH

SEE CROSS SECTIONS FOR TRAIL CROSS SLOPES

PGL = POINT REFERRED TO ON PROFILE
X = POINT REFERRED TO ON CROSS SECTIONS

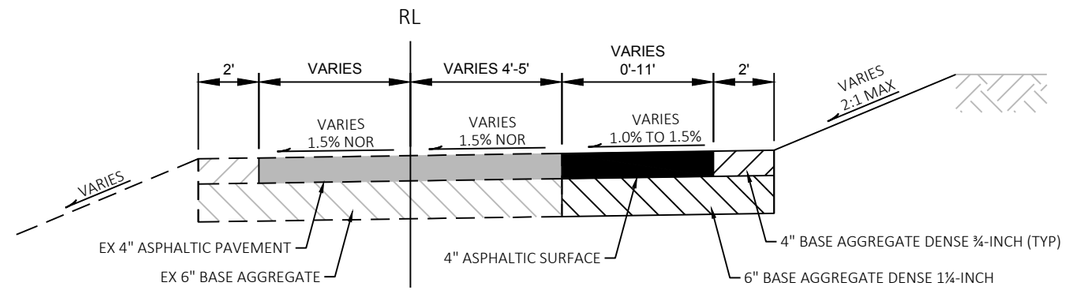

SECTION A–A

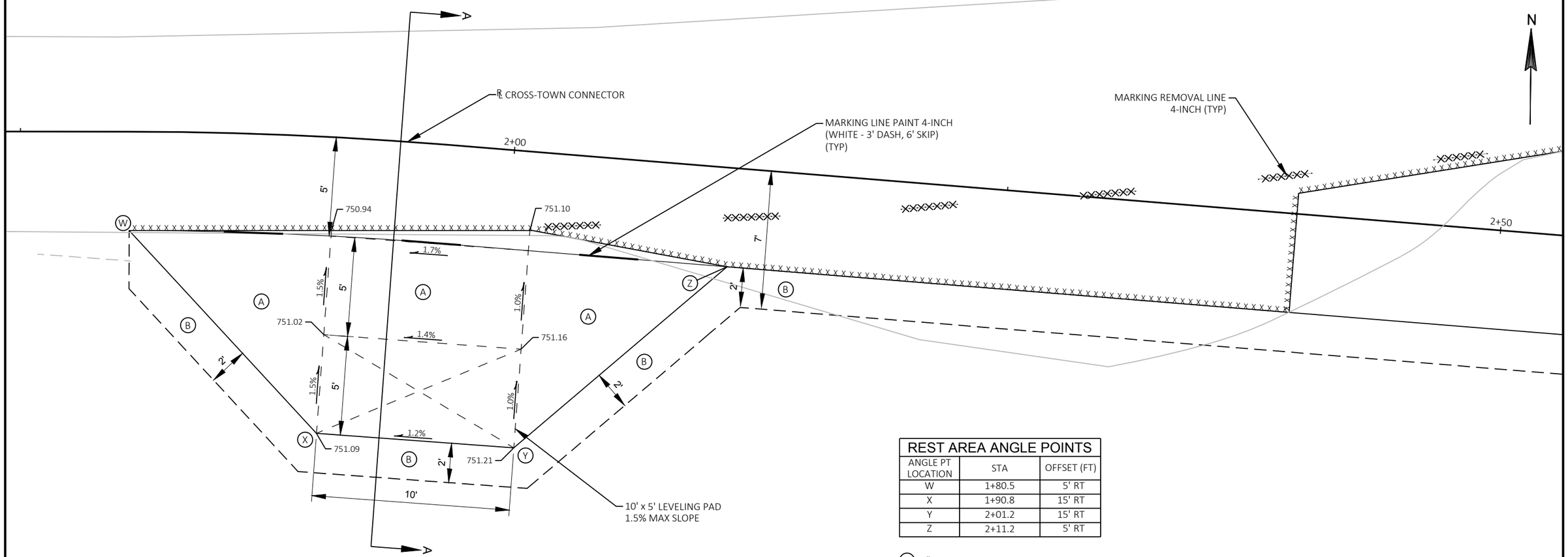

REST AREA DETAIL

CENTERED AT STA 1+96 RT

REST AREA ANGLE POINTS		
ANGLE PT LOCATION	STA	OFFSET (FT)
W	1+80.5	5' RT
X	1+90.8	15' RT
Y	2+01.2	15' RT
Z	2+11.2	5' RT

(A) 4" ASPHALTIC SURFACE
6" BASE AGGREGATE DENSE 1¼-INCH

(B) 4" BASE AGGREGATE DENSE ¾-INCH
6" BASE AGGREGATE DENSE 1¼-INCH

PROJECT NO: 1693-32-74	HWY: NON-HWY	COUNTY: MILWAUKEE	PLAN: CONSTRUCTION DETAILS	SHEET 8	E

FILE NAME : P:\8516 WEST ALLIS CROSS CONNECTOR BRIDGE\TRANSPORTATION\CADD\8516 WAX\SHEETSPLAN\021001-CD.DWG
LAYOUT NAME - 01
PLOT DATE : 1/24/2018 2:55 PM PLOT BY : MICHAEL GASPER PLOT NAME : PLOT SCALE : 1 IN:5 FT

WISDOT/CADDS SHEET 42

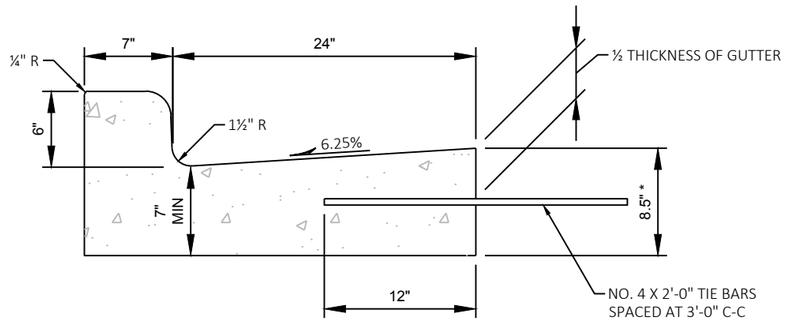

NOTES

1. TIE BARS ARE REQUIRED FOR CURB AND GUTTER ADJACENT TO NEW CONCRETE PAVEMENT
2. OMIT TIE BARS WHERE INTEGRAL CURB AND GUTTER IS REQUIRED.
3. SEE STANDARD DETAIL DRAWING FOR DETAILS NOT SHOWN HERE.

* IF BOTTOM OF CURB AND GUTTER IS CONSTRUCTED LEVEL

CONCRETE CURB AND GUTTER 31-INCH

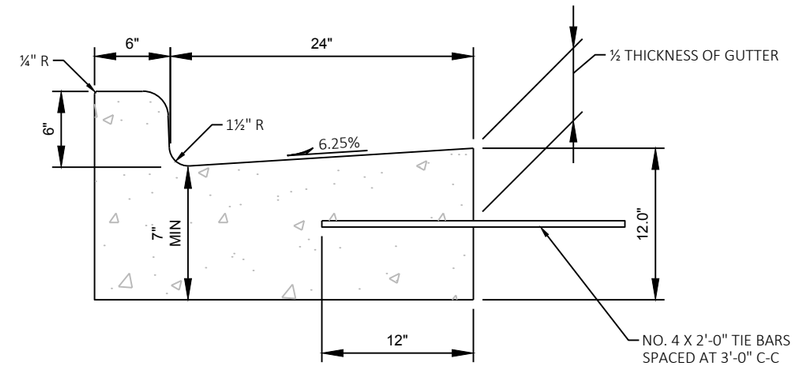

NOTES

1. TIE BARS ARE REQUIRED FOR CURB AND GUTTER ADJACENT TO NEW CONCRETE PAVEMENT
2. OMIT TIE BARS WHERE INTEGRAL CURB AND GUTTER IS REQUIRED.
3. SEE STANDARD DETAIL DRAWING FOR DETAILS NOT SHOWN HERE.

CONCRETE CURB AND GUTTER 30-INCH TYPE A 12-INCH FLANGE

2

LEGEND

- AG4 — 4" BASE AGGREGATE DENSE 3/4-INCH
- AP4 — 4" ASPHALTIC SURFACE
- CG29 — CONCRETE CURB & GUTTER INTEGRAL 30-INCH TYPE D
- CG30 — CONCRETE CURB & GUTTER 30-INCH TYPE A 12-INCH FLANGE (REVERSE SLOPE GUTTER)
- CG31 — CONCRETE CURB & GUTTER INTEGRAL 31-INCH TYPE D
- CM1 — CONCRETE MEDIAN SLOPED NOSE TYPE A
- CP12 — CONCRETE PAVEMENT 12-INCH
- CS5 — CONCRETE SIDEWALK 5-INCH
- xxxx — SAWING CONCRETE PAVEMENT
- x x x x — SAWING ASPHALT

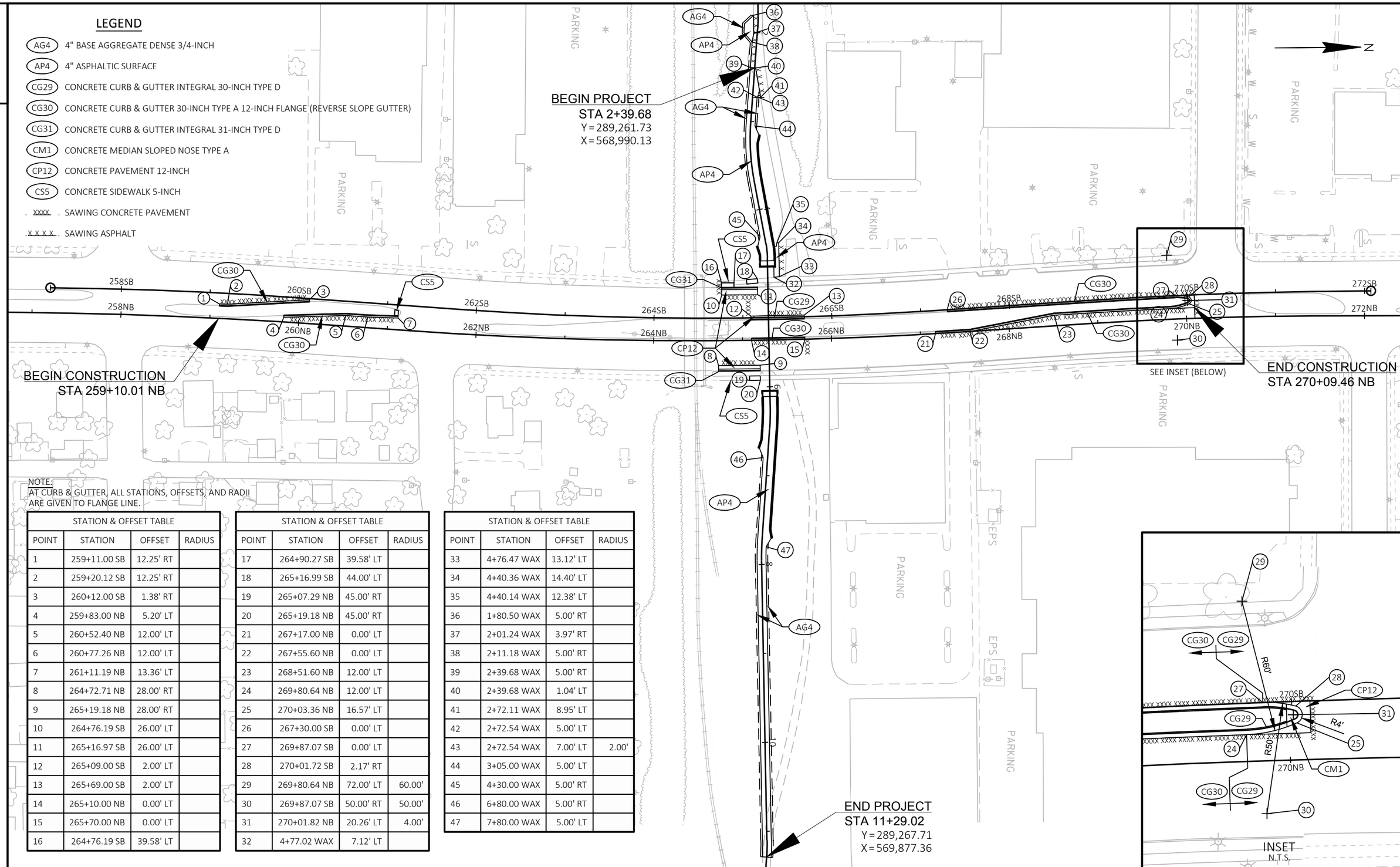

NOTE:
AT CURB & GUTTER, ALL STATIONS, OFFSETS, AND RADII ARE GIVEN TO FLANGE LINE.

STATION & OFFSET TABLE

POINT	STATION	OFFSET	RADIUS
1	259+11.00 SB	12.25' RT	
2	259+20.12 SB	12.25' RT	
3	260+12.00 SB	1.38' RT	
4	259+83.00 NB	5.20' LT	
5	260+52.40 NB	12.00' LT	
6	260+77.26 NB	12.00' LT	
7	261+11.19 NB	13.36' LT	
8	264+72.71 NB	28.00' RT	
9	265+19.18 NB	28.00' RT	
10	264+76.19 SB	26.00' LT	
11	265+16.97 SB	26.00' LT	
12	265+09.00 SB	2.00' LT	
13	265+69.00 SB	2.00' LT	
14	265+10.00 NB	0.00' LT	
15	265+70.00 NB	0.00' LT	
16	264+76.19 SB	39.58' LT	

STATION & OFFSET TABLE

POINT	STATION	OFFSET	RADIUS
17	264+90.27 SB	39.58' LT	
18	265+16.99 SB	44.00' LT	
19	265+07.29 NB	45.00' RT	
20	265+19.18 NB	45.00' RT	
21	267+17.00 NB	0.00' LT	
22	267+55.60 NB	0.00' LT	
23	268+51.60 NB	12.00' LT	
24	269+80.64 NB	12.00' LT	
25	270+03.36 NB	16.57' LT	
26	267+30.00 SB	0.00' LT	
27	269+87.07 SB	0.00' LT	
28	270+01.72 SB	2.17' RT	
29	269+80.64 NB	72.00' LT	60.00'
30	269+87.07 SB	50.00' RT	50.00'
31	270+01.82 NB	20.26' LT	4.00'
32	4+77.02 WAX	7.12' LT	

STATION & OFFSET TABLE

POINT	STATION	OFFSET	RADIUS
33	4+76.47 WAX	13.12' LT	
34	4+40.36 WAX	14.40' LT	
35	4+40.14 WAX	12.38' LT	
36	1+80.50 WAX	5.00' RT	
37	2+01.24 WAX	3.97' RT	
38	2+11.18 WAX	5.00' RT	
39	2+39.68 WAX	5.00' RT	
40	2+39.68 WAX	1.04' LT	
41	2+72.11 WAX	8.95' LT	
42	2+72.54 WAX	5.00' LT	
43	2+72.54 WAX	7.00' LT	2.00'
44	3+05.00 WAX	5.00' LT	
45	4+30.00 WAX	5.00' RT	
46	6+80.00 WAX	5.00' RT	
47	7+80.00 WAX	5.00' LT	

PROJECT NO: 1693-32-74	HWY: NON-HWY	COUNTY: MILWAUKEE COUNTY	PLAN DETAILS	SHEET 10	E

FILE NAME : P:\8516 WEST ALLIS CROSS CONNECTOR BRIDGE\TRANSPORTATION\CADD\8516 WAX\SHEETSPLAN\021201-PD.DWG
LAYOUT NAME - 021201
PLOT DATE : 1/24/2018 2:55 PM PLOT BY : MICHAEL GASPER PLOT NAME : PLOT SCALE : 1 IN:100 FT

2

EXISTING R/W

BEGIN PROJECT
STA 2+39.68
Y = 289,261.73
X = 568,990.13

CROSS-TOWN CONNECTOR TRAIL R/L

EXISTING PHASE I TRAIL

SLOPE INTERCEPT (TYP.)

EXISTING R/W

(D)

(A,B)

266SB

266NB

R/L STH 100 NB

STH 100 (SB)

STH 100 (NB)

R/L STH 100 SB

STRUCTURE B-40-926

EXISTING GRAVEL PATH & FUTURE PHASE III TRAIL

265SB

265NB

MATCHLINE STA 7+00

UNION PACIFIC RAILROAD

N

2

LEGEND

(X)	INLET PROTECTION (TYPE)
	SEEDING/MULCH
	RIPRAP MEDIUM
	SILT FENCE
	TEMPORARY DITCH CHECKS

EXISTING GRAVEL PATH & FUTURE PHASE III TRAIL

CROSS-TOWN CONNECTOR TRAIL R/L

MATCHLINE STA 7+00

SLOPE INTERCEPT (TYP.)

EXISTING R/W

UNION PACIFIC RAILROAD

END PROJECT
STA 11+29.02
Y = 289,267.71
X = 569,877.36

PROJECT NO: 1693-32-74	HWY: NON-HWY	COUNTY: MILWAUKEE	EROSION CONTROL PLAN	SHEET 11	E

FILE NAME : P:\8516 WEST ALLIS CROSS CONNECTOR BRIDGE\TRANSPORTATION\CADD\8516 WAX\SHEETSPLAN\022001_EC.DWG
LAYOUT NAME - 022001
PLOT DATE : 1/24/2018 2:56 PM
PLOT BY : MICHAEL GASPER
PLOT NAME :
PLOT SCALE : 1 IN:40 FT
WISDOT/CADDS SHEET 42

2

W MANOR PARK DRIVE

W MITCHELL STREET

W ROGERS STREET

ARKING

N

R/L STH 100 SB

R/L STH 100 NB

STH 100 (SB)

STH 100 (NB)

261SB

261NB

260SB

260NB

259SB

259NB

270SB

270NB

269SB

269NB

268SB

268NB

267SB

267NB

EXISTING R/W

BEGIN CONSTRUCTION
STA 259+10.01 NB

END CONSTRUCTION
STA 270+09.46 NB

(D)

MH

GV

LEGEND

(X)	INLET PROTECTION (TYPE)
	SEEDING/MULCH
	RIPRAP MEDIUM
	SILT FENCE
	TEMPORARY DITCH CHECKS

2

PROJECT NO: 1693-32-74	HWY: NON-HWY	COUNTY: MILWAUKEE	EROSION CONTROL PLAN - CROSSOVERS	SHEET 12	E

FILE NAME : P:\8516 WEST ALLIS CROSS CONNECTOR BRIDGE\TRANSPORTATION\CADD\8516 WAX\SHEETSPLAN\022001_EC.DWG
LAYOUT NAME - 022002

PLOT DATE : 1/24/2018 2:56 PM PLOT BY : MICHAEL GASPER PLOT NAME : PLOT SCALE : 1 IN:40 FT

WISDOT/CADDS SHEET 42

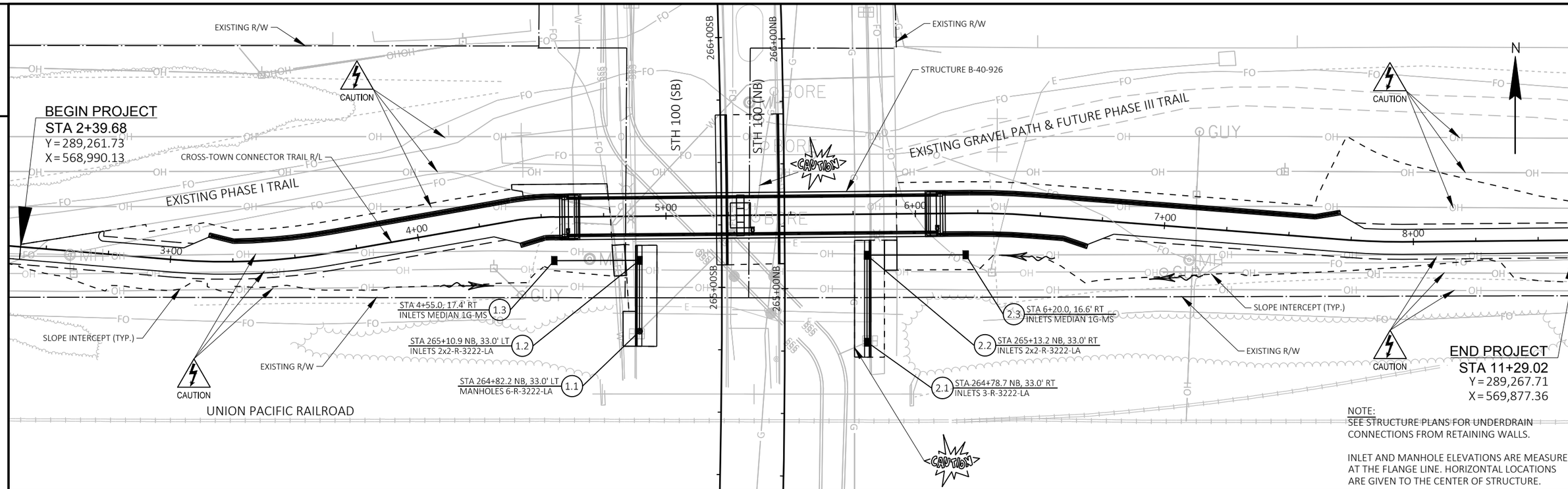

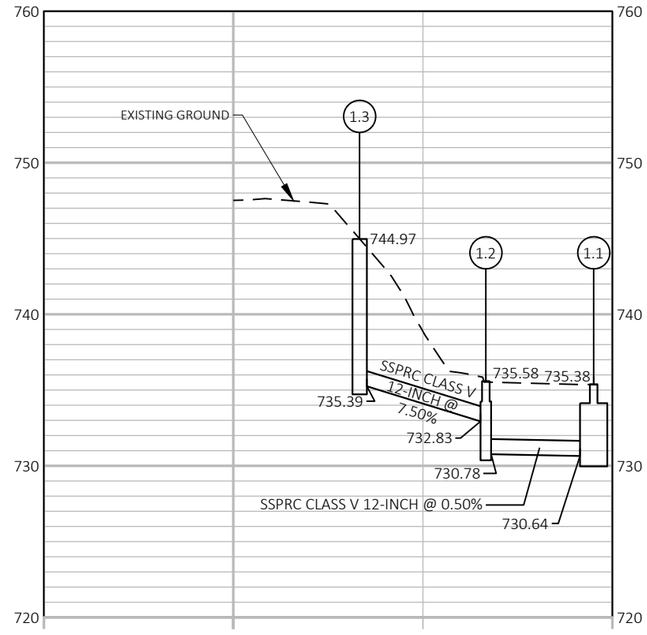

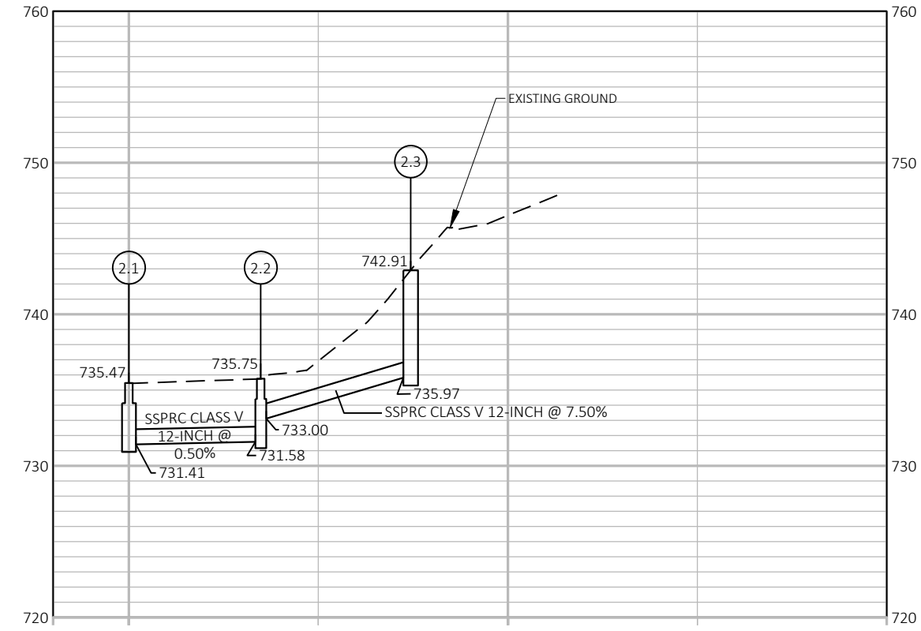

PROJECT NO: 1693-32-74	HWY: NON-HWY	COUNTY: MILWAUKEE COUNTY	STORM SEWER	SHEET 13	E

FILE NAME : P:\8516 WEST ALLIS CROSS CONNECTOR BRIDGE\TRANSPORTATION\CADD\8516 WAX\SHEETSPLAN\022501_SS.DWG
LAYOUT NAME - 022501-ss
PLOT DATE : 1/24/2018 2:57 PM PLOT BY : MICHAEL GASPER PLOT NAME : PLOT SCALE : ##########
WISDOT/CADDS SHEET 42

2

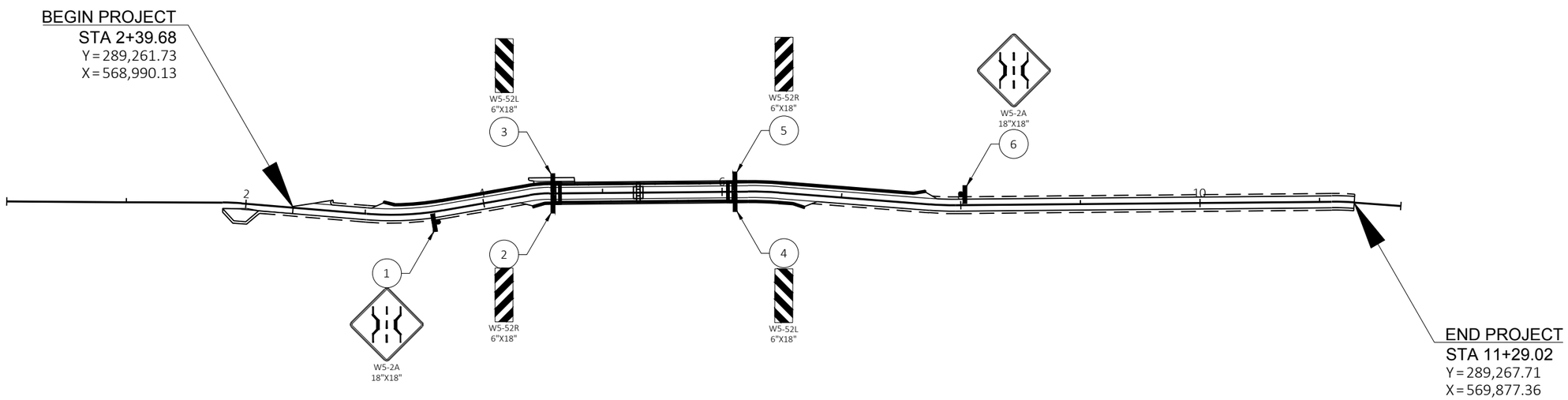

LEGEND

PROPOSED SIGN MOUNTED ON POST(S)

PROPOSED SIGN MOUNTED ON BRIDGE OR SIGN BRIDGE

(XXX) DENOTES SIGN NUMBER

PROJECT NO: 1693-32-74	HWY: NON-HWY	COUNTY: MILWAUKEE COUNTY	PERMANENT SIGNING	SHEET 14	E

2

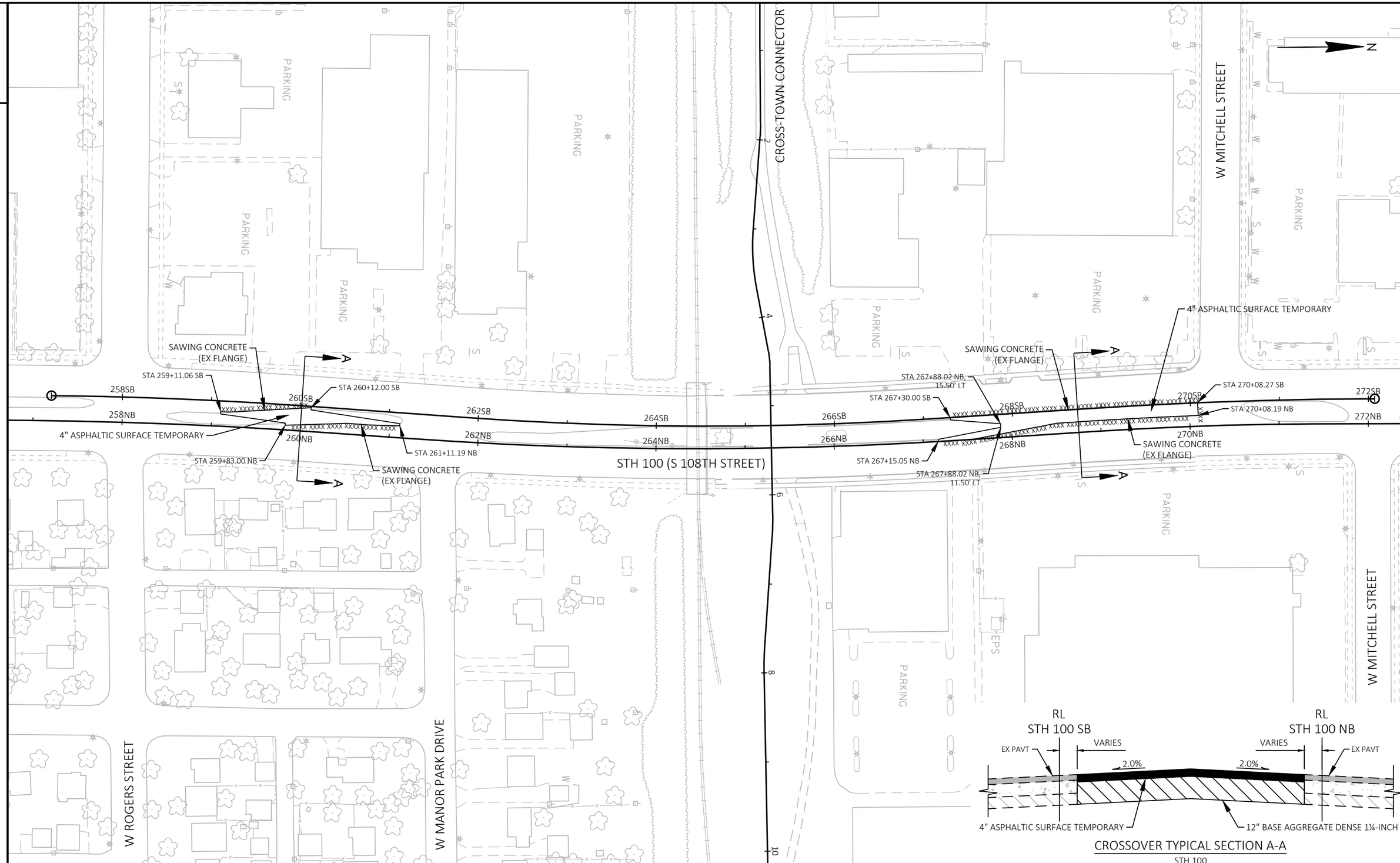

PROJECT NO: 1693-32-74	HWY: NON-HWY	COUNTY: MILWAUKEE COUNTY	TRAFFIC CONTROL - CROSSOVER DETAIL	SHEET 15	E

FILE NAME : P:\8516 WEST ALLIS CROSS CONNECTOR BRIDGE\TRANSPORTATION\CADD\8516 WAX\SHEETSPLAN\025001-TC.DWG
LAYOUT NAME - 025001
PLOT DATE : 1/24/2018 2:57 PM PLOT BY : MICHAEL GASPER PLOT NAME : PLOT SCALE : 1 IN:100 FT

WISDOT/CADDS SHEET 42

PROJECT NO: 1693-32-74	HWY: NON-HWY	COUNTY: MILWAUKEE COUNTY	TRAFFIC CONTROL - STAGE 1	SHEET 16	E

FILE NAME : P:\8516 WEST ALLIS CROSS CONNECTOR BRIDGE\TRANSPORTATION\CADD\8516 WAX\SHEETSPLAN\026101-S1.DWG
LAYOUT NAME - 026101
PLOT DATE : 1/24/2018 2:58 PM PLOT BY : MICHAEL GASPER PLOT NAME : PLOT SCALE : 1 IN:100 FT

2

LEGEND

- TYPE III BARRICADE
- TYPE III BARRICADE WTH ATTACHED SIGN
- TRAFFIC CONTROL DRUM
- TRAFFIC CONTROL DRUM WITH TYPE C STEADY BURN LIGHT
- FLASHING ARROW BOARD
- SIGN ON PERMANENT SUPPORT
- SIGN ON TEMPORARY SUPPORT
- CONCRETE BARRIER TEMPORARY PRECAST
- WORK AREA
- TEMPORARY PAVEMENT (TO BE USED IN FUTURE STAGES)
- TEMPORARY PAVEMENT
- DIRECTION OF TRAFFIC
- MB PORTABLE CHANGEABLE MESSAGE BOARD
- TEMPORARY MARKING REMOVABLE MASK OUT TAPE 6-INCH
- TEMPORARY MARKING REMOVABLE MASK OUT TAPE 10-INCH
- TEMPORARY PEDESTRIAN SAFETY FENCE

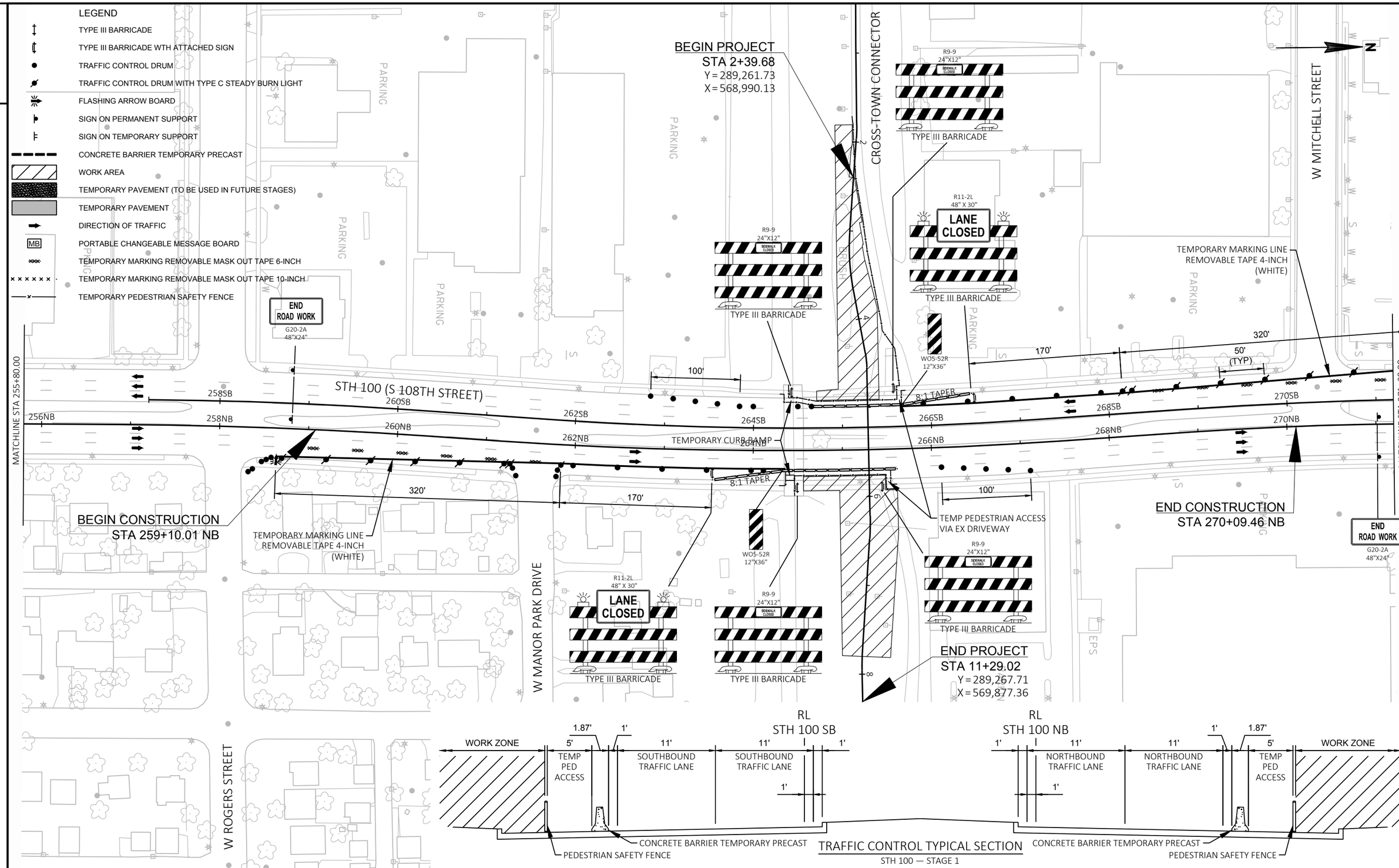

TRAFFIC CONTROL TYPICAL SECTION

STH 100 — STAGE 1

PROJECT NO: 1693-32-74	HWY: NON-HWY	COUNTY: MILWAUKEE COUNTY	TRAFFIC CONTROL - STAGE 1	SHEET 17	E

FILE NAME : P:\8516 WEST ALLIS CROSS CONNECTOR BRIDGE\TRANSPORTATION\CADD\8516 WAX\SHEETSPLAN\026101-S1.DWG
LAYOUT NAME - 026102

PLOT DATE : 1/24/2018 2:58 PM PLOT BY : MICHAEL GASPER PLOT NAME : PLOT SCALE : 1 IN:100 FT

WISDOT/CADDS SHEET 42

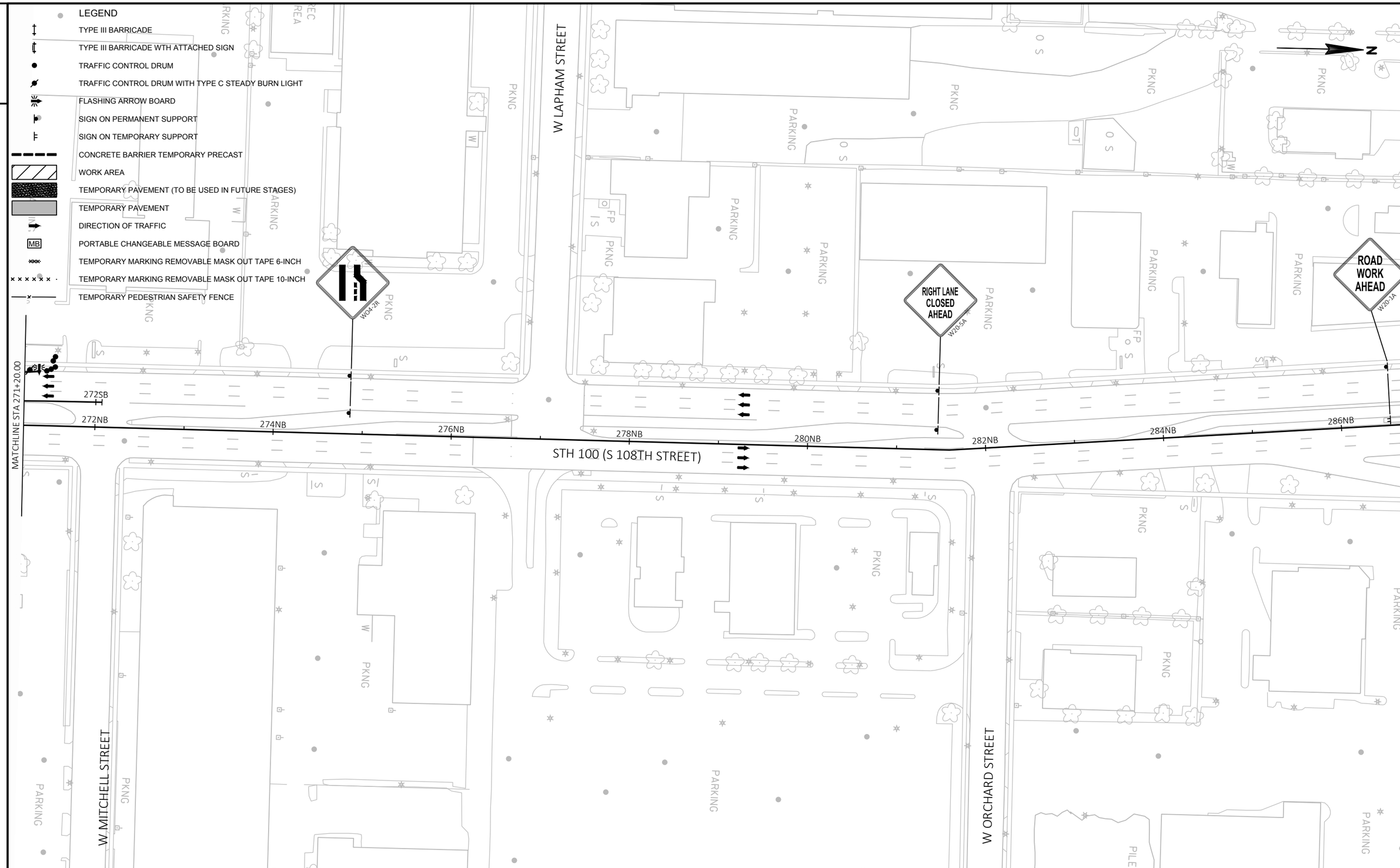

PROJECT NO: 1693-32-74	HWY: NON-HWY	COUNTY: MILWAUKEE COUNTY	TRAFFIC CONTROL - STAGE 1	SHEET 18	E

FILE NAME : P:\8516 WEST ALLIS CROSS CONNECTOR BRIDGE\TRANSPORTATION\CADD\8516 WAX\SHEETSPLAN\026101-S1.DWG
LAYOUT NAME - 026103
PLOT DATE : 1/24/2018 2:58 PM
PLOT BY : MICHAEL GASPER
PLOT NAME :
PLOT SCALE : 1 IN:100 FT

2

LEGEND

- TYPE III BARRICADE
- TYPE III BARRICADE WTH ATTACHED SIGN
- TRAFFIC CONTROL DRUM
- TRAFFIC CONTROL DRUM WITH TYPE C STEADY BURN LIGHT
- FLASHING ARROW BOARD
- SIGN ON PERMANENT SUPPORT
- SIGN ON TEMPORARY SUPPORT
- CONCRETE BARRIER TEMPORARY PRECAST
- WORK AREA
- TEMPORARY PAVEMENT (TO BE USED IN FUTURE STAGES)
- TEMPORARY PAVEMENT
- DIRECTION OF TRAFFIC
- MB PORTABLE CHANGEABLE MESSAGE BOARD
- TEMPORARY MARKING REMOVABLE MASK OUT TAPE 6-INCH
- TEMPORARY MARKING REMOVABLE MASK OUT TAPE 10-INCH
- TEMPORARY PEDESTRIAN SAFETY FENCE

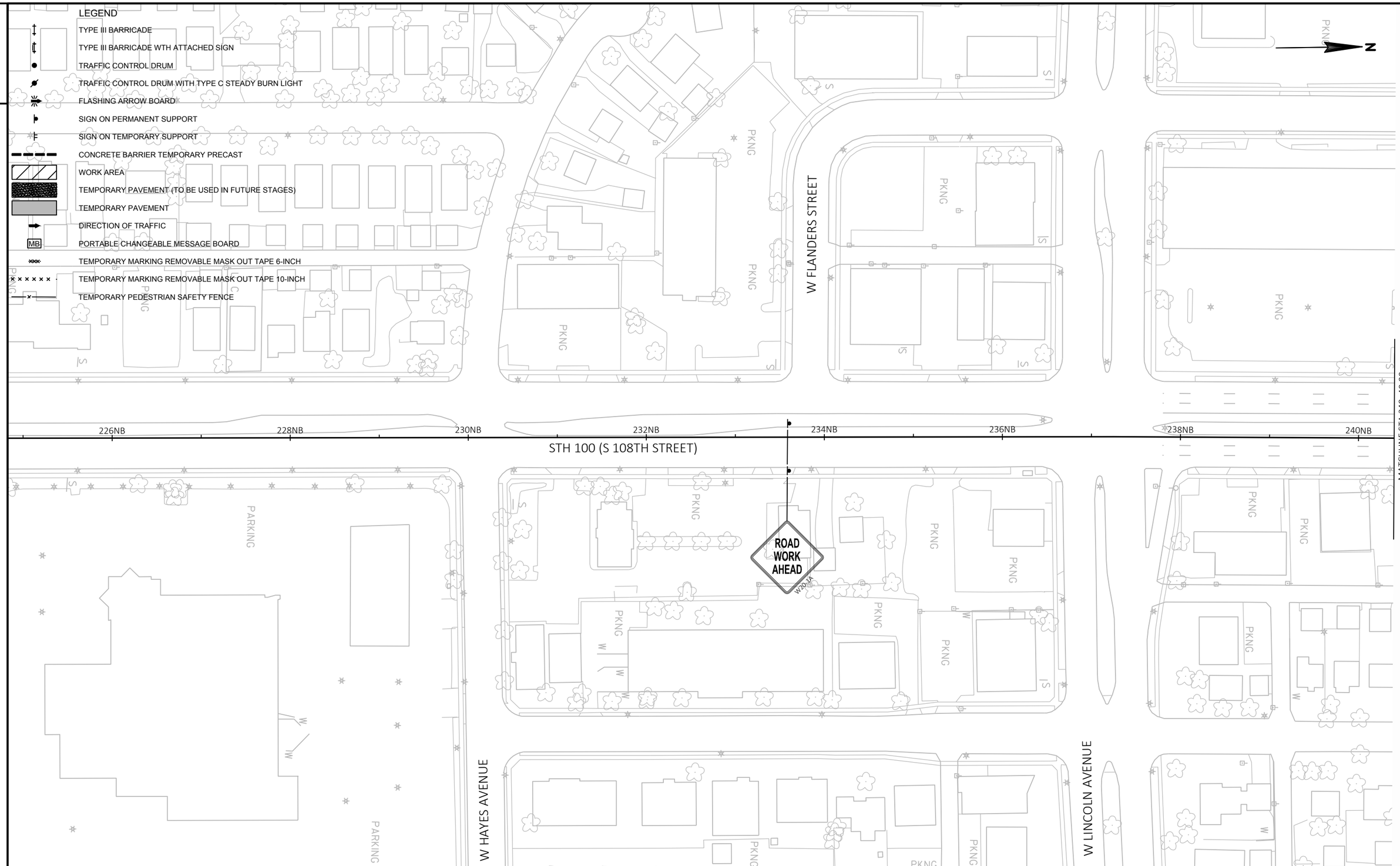

2

PROJECT NO: 1693-32-74	HWY: NON-HWY	COUNTY: MILWAUKEE COUNTY	TRAFFIC CONTROL - STAGE 2	SHEET 19	E

FILE NAME : P:\8516 WEST ALLIS CROSS CONNECTOR BRIDGE\TRANSPORTATION\CADD\8516 WAX\SHEETSPLAN\026201-S2.DWG
LAYOUT NAME - 026201
PLOT DATE : 1/24/2018 2:58 PM
PLOT BY : MICHAEL GASPER
PLOT NAME :
PLOT SCALE : 1 IN:100 FT
WISDOT/CADDS SHEET 42

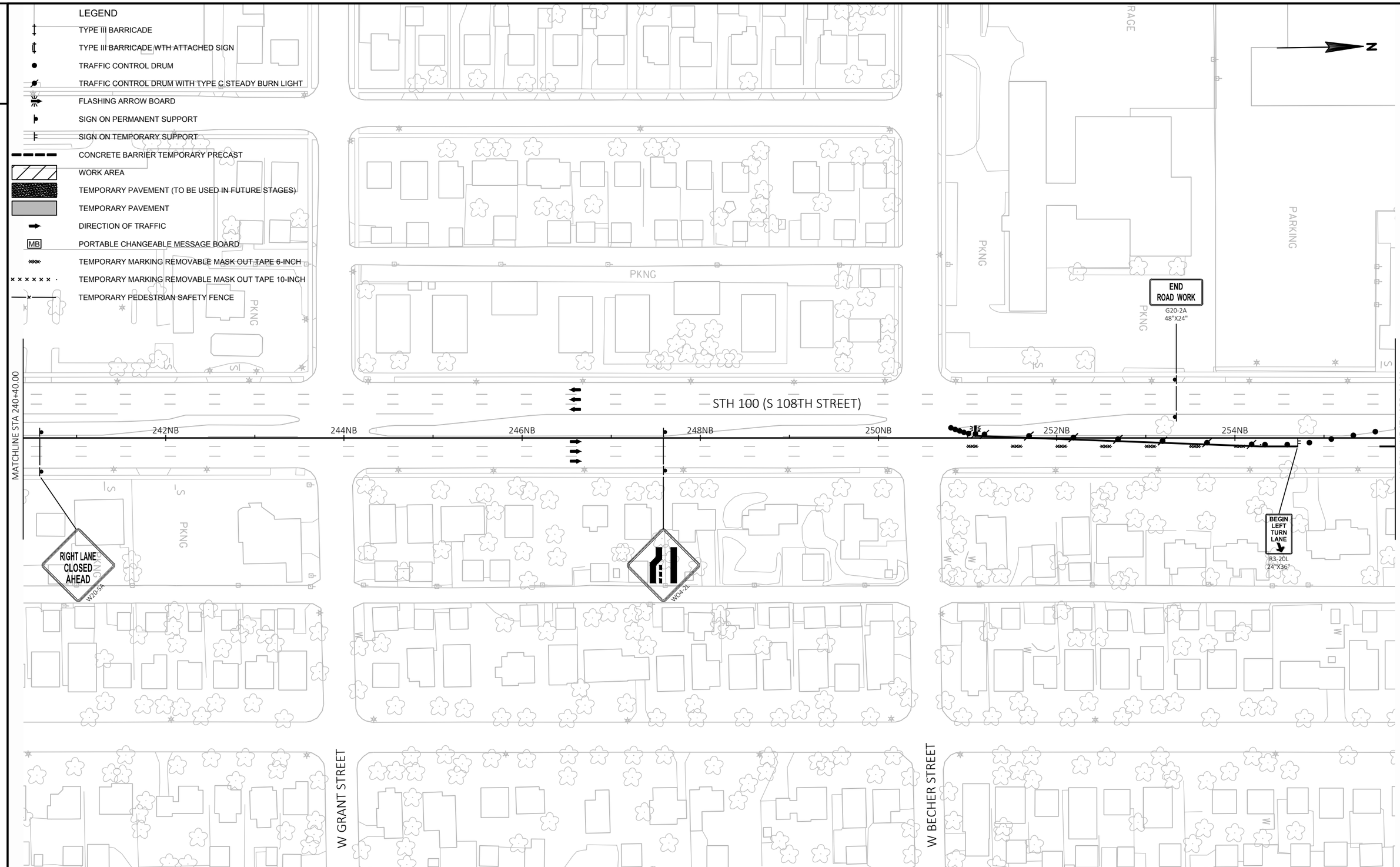

PROJECT NO: 1693-32-74	HWY: NON-HWY	COUNTY: MILWAUKEE COUNTY	TRAFFIC CONTROL - STAGE 2	SHEET 20	E

FILE NAME : P:\8516 WEST ALLIS CROSS CONNECTOR BRIDGE\TRANSPORTATION\CADD\8516 WAX\SHEETSPLAN\026201-S2.DWG
LAYOUT NAME - 026202
PLOT DATE : 1/24/2018 2:58 PM
PLOT BY : MICHAEL GASPER
PLOT NAME :
PLOT SCALE : 1 IN:100 FT

2

LEGEND

- TYPE III BARRICADE
- TYPE III BARRICADE WTH ATTACHED SIGN
- TRAFFIC CONTROL DRUM
- TRAFFIC CONTROL DRUM WITH TYPE C STEADY BURN LIGHT
- FLASHING ARROW BOARD
- SIGN ON PERMANENT SUPPORT
- SIGN ON TEMPORARY SUPPORT
- CONCRETE BARRIER TEMPORARY PRECAST
- WORK AREA
- TEMPORARY PAVEMENT (TO BE USED IN FUTURE STAGES)
- TEMPORARY PAVEMENT
- DIRECTION OF TRAFFIC
- PORTABLE CHANGEABLE MESSAGE BOARD
- TEMPORARY MARKING REMOVABLE MASK OUT TAPE 6-INCH
- TEMPORARY MARKING REMOVABLE MASK OUT TAPE 10-INCH
- TEMPORARY PEDESTRIAN SAFETY FENCE

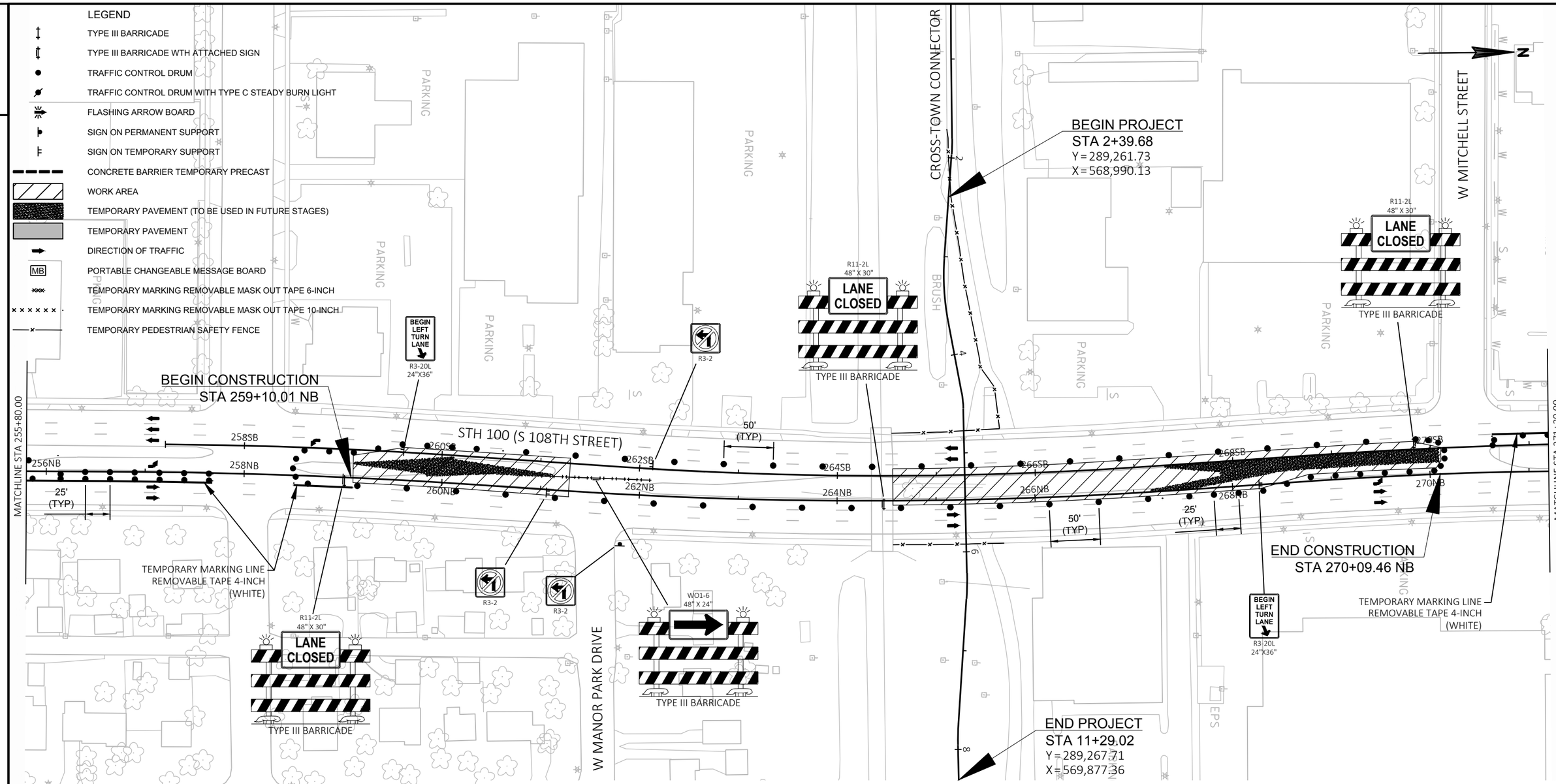

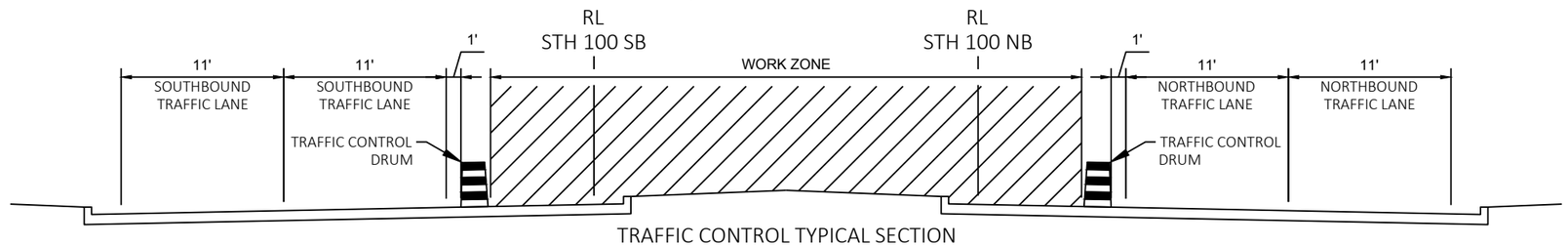

TRAFFIC CONTROL TYPICAL SECTION

STH 100 — STAGE 2

PROJECT NO: 1693-32-74	HWY: NON-HWY	COUNTY: MILWAUKEE COUNTY	TRAFFIC CONTROL - STAGE 2	SHEET 21	E

FILE NAME : P:\8516 WEST ALLIS CROSS CONNECTOR BRIDGE\TRANSPORTATION\CADD\8516 WAX\SHEETSPLAN\026201-S2.DWG
LAYOUT NAME - 026203
PLOT DATE : 1/24/2018 2:58 PM PLOT BY : MICHAEL GASPER PLOT NAME : PLOT SCALE : 1 IN:100 FT

2

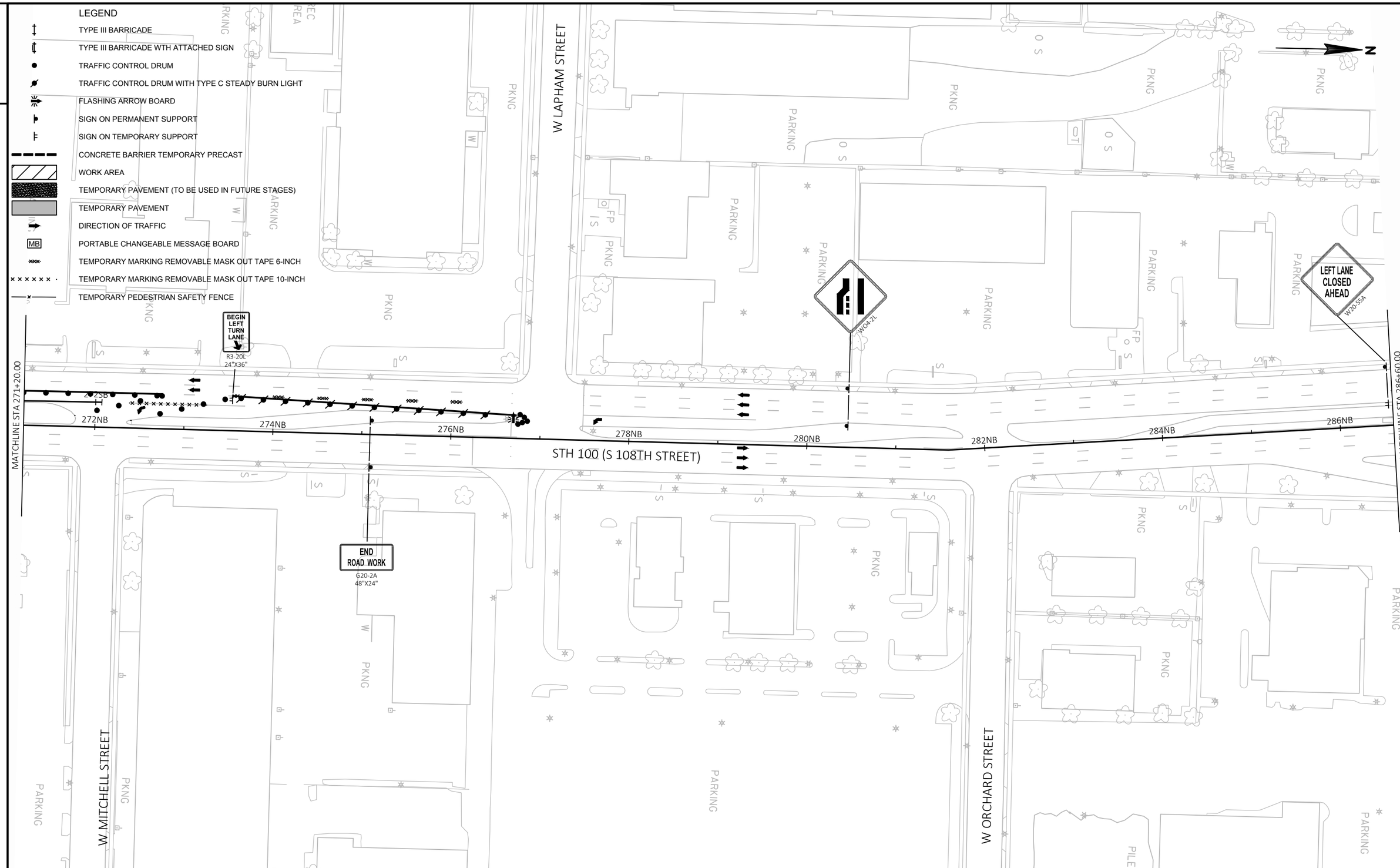

2

PROJECT NO: 1693-32-74	HWY: NON-HWY	COUNTY: MILWAUKEE COUNTY	TRAFFIC CONTROL - STAGE 2	SHEET 22	E

FILE NAME : P:\8516 WEST ALLIS CROSS CONNECTOR BRIDGE\TRANSPORTATION\CADD\8516 WAX\SHEETSPLAN\026201-S2.DWG
LAYOUT NAME - 026204
PLOT DATE : 1/24/2018 2:59 PM PLOT BY : MICHAEL GASPER PLOT NAME : PLOT SCALE : 1 IN:100 FT

PROJECT NO: 1693-32-74	HWY: NON-HWY	COUNTY: MILWAUKEE COUNTY	TRAFFIC CONTROL - STAGE 2	SHEET 23	E

FILE NAME : P:\8516 WEST ALLIS CROSS CONNECTOR BRIDGE\TRANSPORTATION\CADD\8516 WAX\SHEETSPLAN\026201-S2.DWG
LAYOUT NAME - 026205
PLOT DATE : 1/24/2018 2:59 PM
PLOT BY : MICHAEL GASPER
PLOT NAME :
PLOT SCALE : 1 IN:100 FT

2

LEGEND

- TYPE III BARRICADE
- TYPE III BARRICADE WTH ATTACHED SIGN
- TRAFFIC CONTROL DRUM
- TRAFFIC CONTROL DRUM WITH TYPE C STEADY BURN LIGHT
- FLASHING ARROW BOARD
- SIGN ON PERMANENT SUPPORT
- SIGN ON TEMPORARY SUPPORT
- CONCRETE BARRIER TEMPORARY PRECAST
- WORK AREA
- TEMPORARY PAVEMENT (TO BE USED IN FUTURE STAGES)
- TEMPORARY PAVEMENT
- DIRECTION OF TRAFFIC
- MB PORTABLE CHANGEABLE MESSAGE BOARD
- TEMPORARY MARKING REMOVABLE MASK OUT TAPE 6-INCH
- TEMPORARY MARKING REMOVABLE MASK OUT TAPE 10-INCH
- TEMPORARY PEDESTRIAN SAFETY FENCE

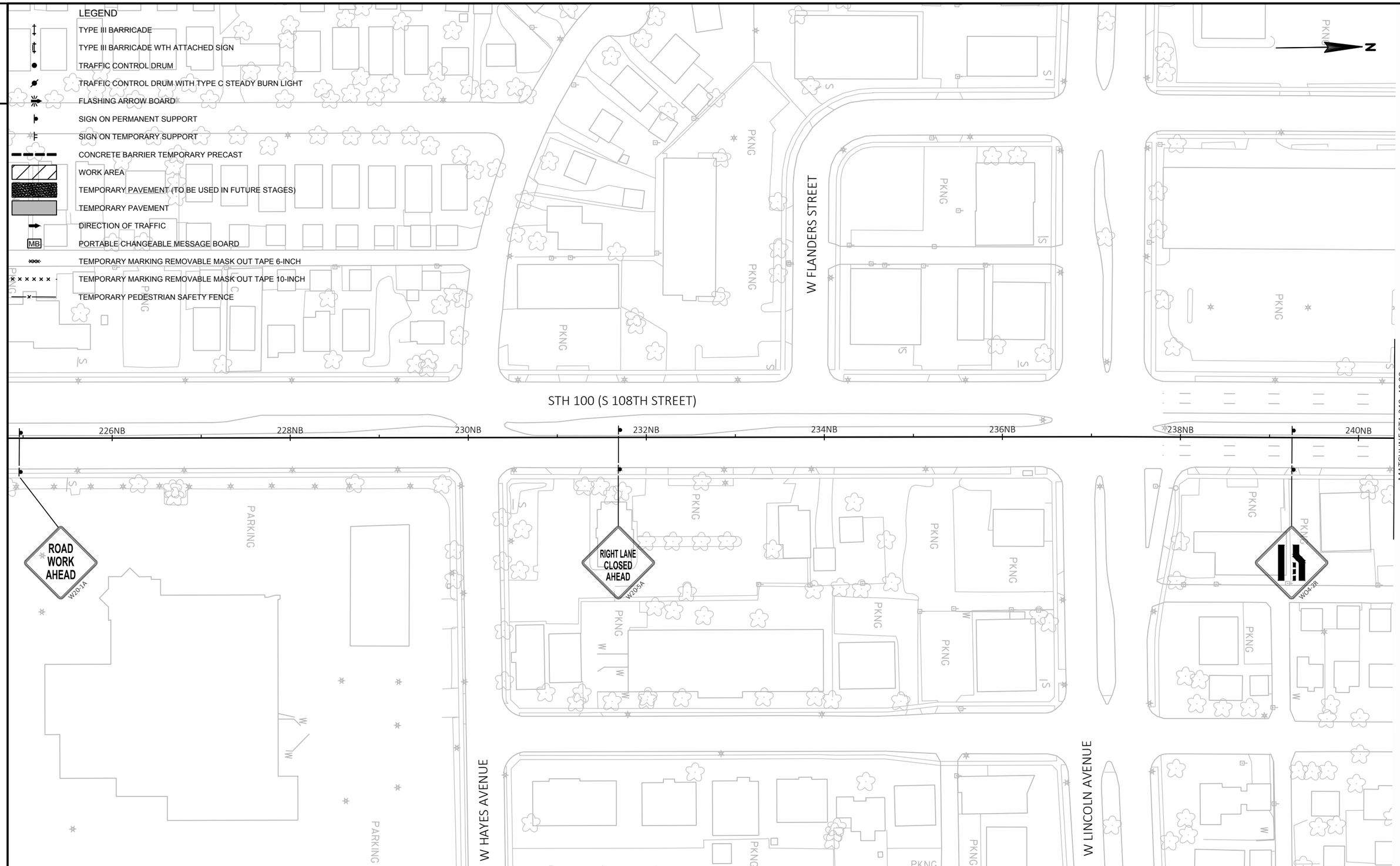

2

PROJECT NO: 1693-32-74	HWY: NON-HWY	COUNTY: MILWAUKEE COUNTY	TRAFFIC CONTROL - STAGE 3A	SHEET 24	E

FILE NAME : P:\8516 WEST ALLIS CROSS CONNECTOR BRIDGE\TRANSPORTATION\CADD\8516 WAX\SHEETSPLAN\026301-S3A.DWG
LAYOUT NAME - 026301
PLOT DATE : 1/24/2018 2:59 PM PLOT BY : MICHAEL GASPER PLOT NAME : PLOT SCALE : 1 IN:100 FT

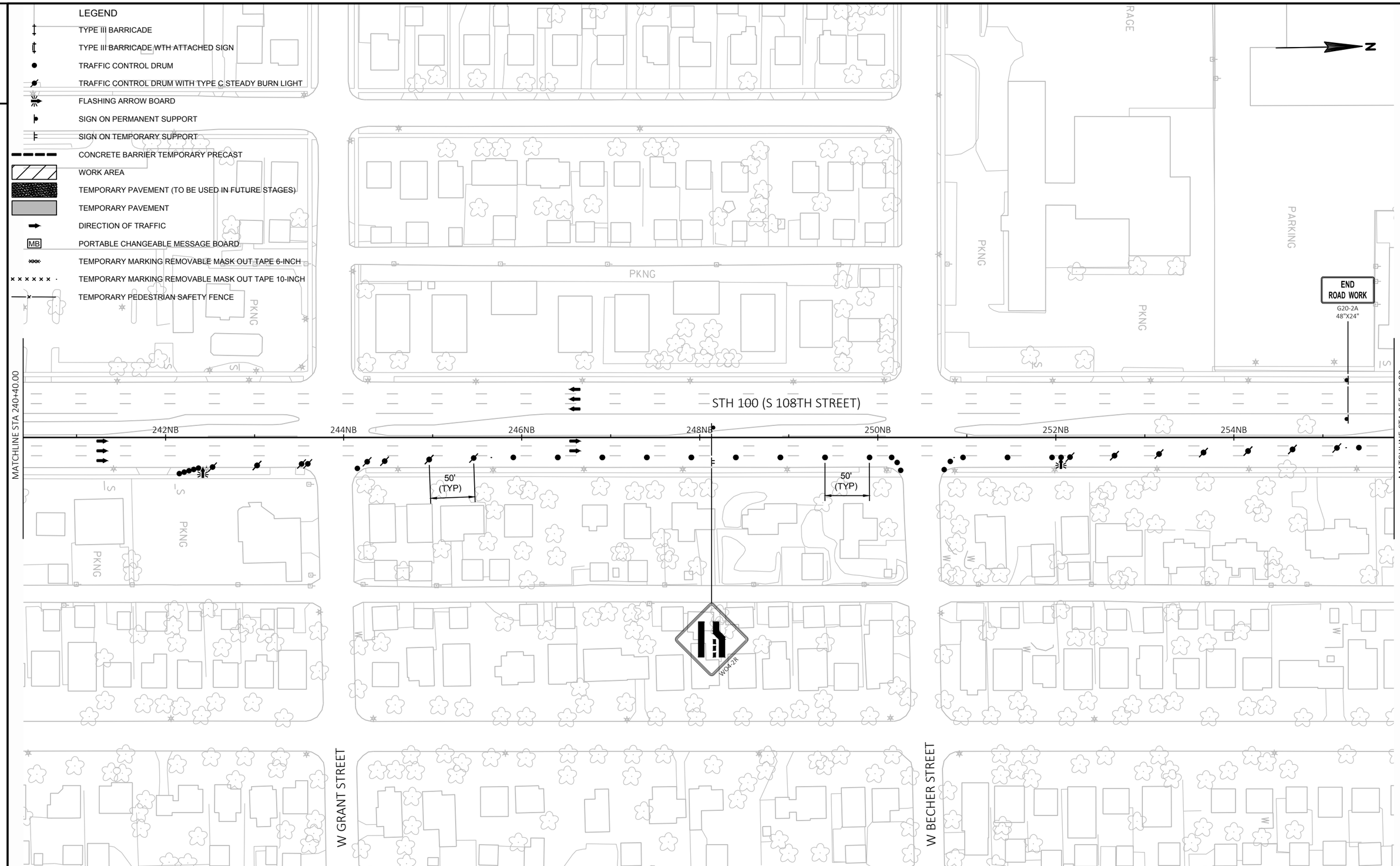

PROJECT NO: 1693-32-74	HWY: NON-HWY	COUNTY: MILWAUKEE COUNTY	TRAFFIC CONTROL - STAGE 3A	SHEET 25	E

FILE NAME : P:\8516 WEST ALLIS CROSS CONNECTOR BRIDGE\TRANSPORTATION\CADD\8516 WAX\SHEETSPLAN\026301-S3A.DWG
LAYOUT NAME - 026302
PLOT DATE : 1/24/2018 2:59 PM PLOT BY : MICHAEL GASPER PLOT NAME : PLOT SCALE : 1 IN:100 FT

LEGEND

- TYPE III BARRICADE
- TYPE III BARRICADE WTH ATTACHED SIGN
- TRAFFIC CONTROL DRUM
- TRAFFIC CONTROL DRUM WITH TYPE C STEADY BURN LIGHT
- FLASHING ARROW BOARD
- SIGN ON PERMANENT SUPPORT
- SIGN ON TEMPORARY SUPPORT
- CONCRETE BARRIER TEMPORARY PRECAST
- WORK AREA
- TEMPORARY PAVEMENT (TO BE USED IN FUTURE STAGES)
- TEMPORARY PAVEMENT
- DIRECTION OF TRAFFIC
- MB PORTABLE CHANGEABLE MESSAGE BOARD
- TEMPORARY MARKING REMOVABLE MASK OUT TAPE 6-INCH
- TEMPORARY MARKING REMOVABLE MASK OUT TAPE 10-INCH
- TEMPORARY PEDESTRIAN SAFETY FENCE

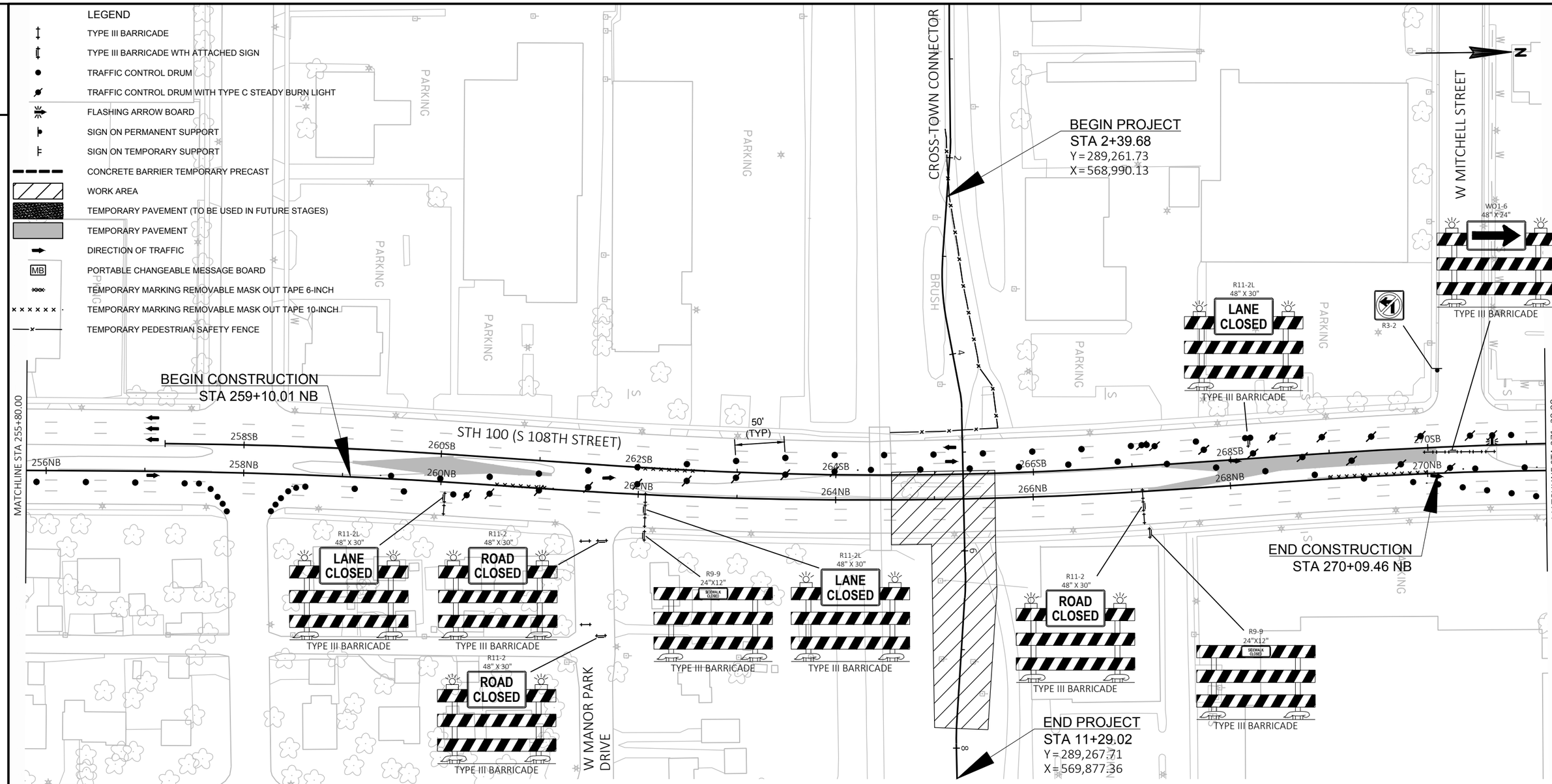

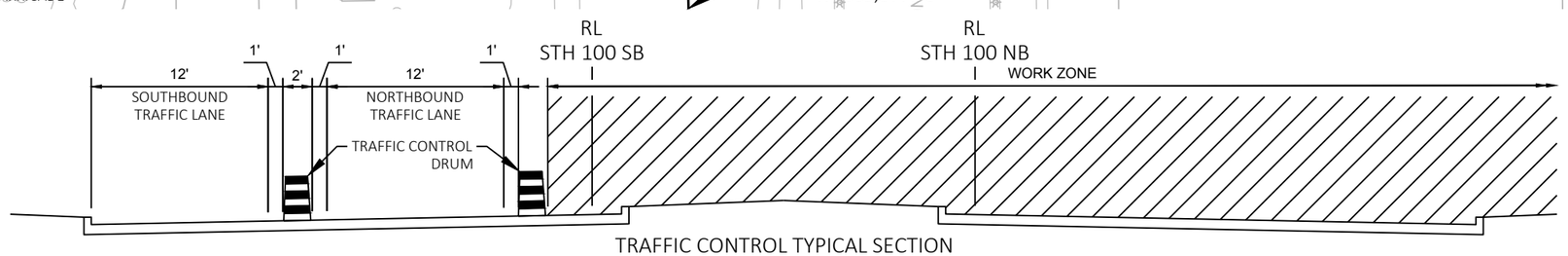

TRAFFIC CONTROL TYPICAL SECTION

STH 100 — STAGE 3A

PROJECT NO: 1693-32-74	HWY: NON-HWY	COUNTY: MILWAUKEE COUNTY	TRAFFIC CONTROL - STAGE 3A	SHEET 26	E

FILE NAME : P:\8516 WEST ALLIS CROSS CONNECTOR BRIDGE\TRANSPORTATION\CADD\8516 WAX\SHEETSPLAN\026301-S3A.DWG
LAYOUT NAME - 026303
PLOT DATE : 1/24/2018 2:59 PM PLOT BY : MICHAEL GASPER PLOT NAME : PLOT SCALE : 1 IN:100 FT

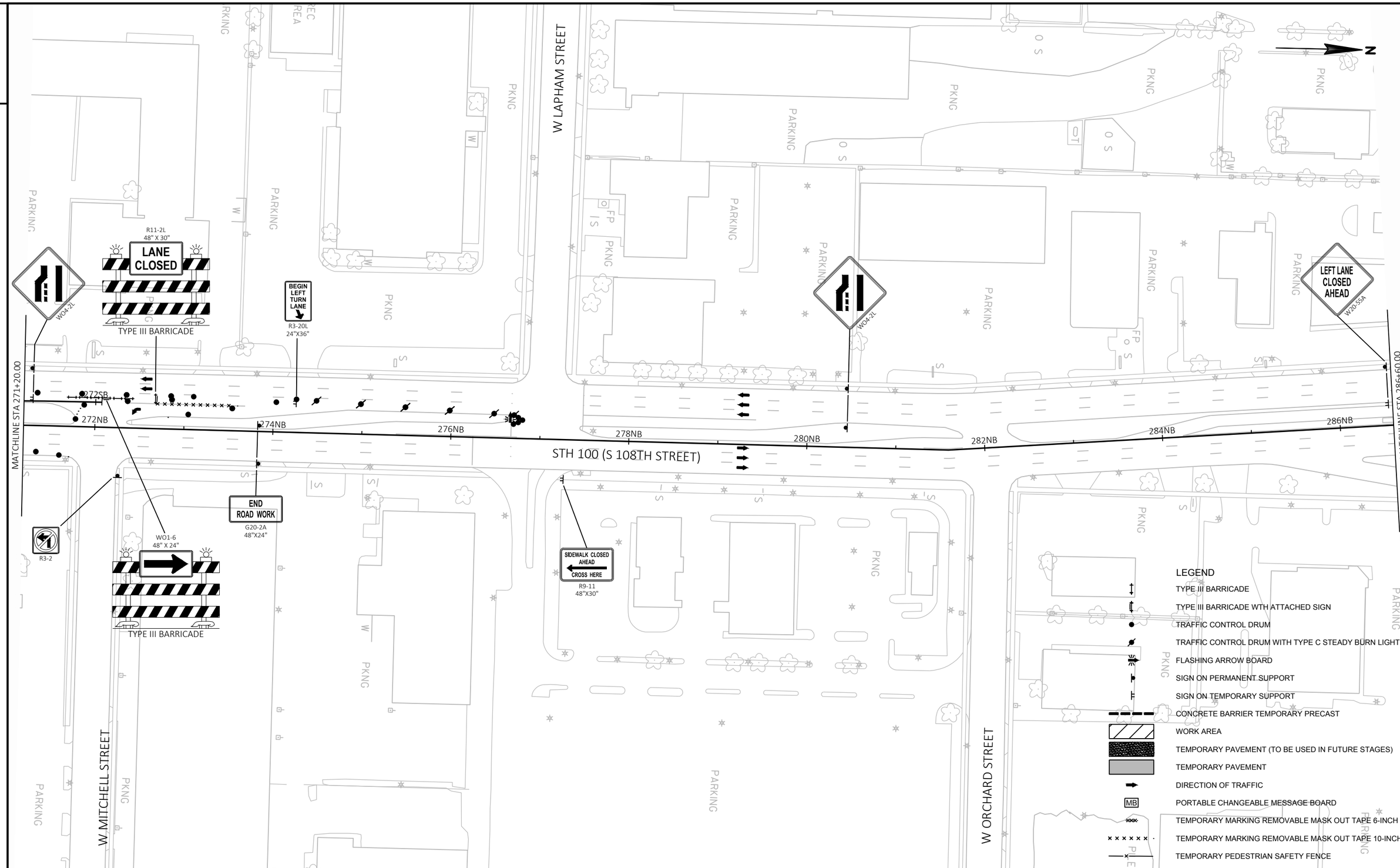

PROJECT NO: 1693-32-74	HWY: NON-HWY	COUNTY: MILWAUKEE COUNTY	TRAFFIC CONTROL - STAGE 3A	SHEET 27	E

FILE NAME : P:\8516 WEST ALLIS CROSS CONNECTOR BRIDGE\TRANSPORTATION\CADD\8516 WAX\SHEETSPLAN\026301-S3A.DWG
LAYOUT NAME - 026304
PLOT DATE : 1/24/2018 2:59 PM PLOT BY : MICHAEL GASPER PLOT NAME : PLOT SCALE : 1 IN:100 FT

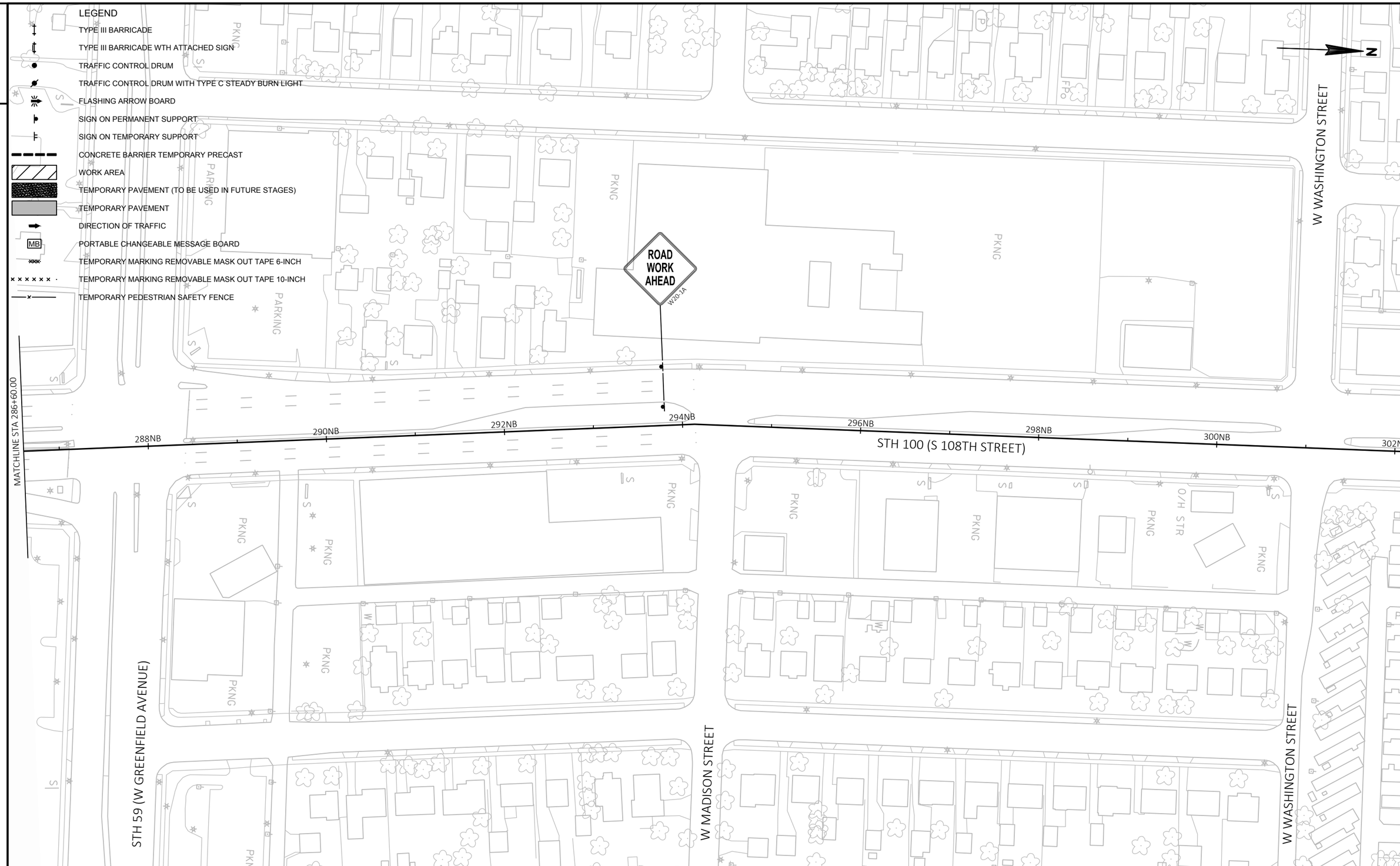

PROJECT NO: 1693-32-74	HWY: NON-HWY	COUNTY: MILWAUKEE COUNTY	TRAFFIC CONTROL - STAGE 3A	SHEET 28	E

FILE NAME : P:\8516 WEST ALLIS CROSS CONNECTOR BRIDGE\TRANSPORTATION\CADD\8516 WAX\SHEETSPLAN\026301-S3A.DWG
LAYOUT NAME - 026305
PLOT DATE : 1/24/2018 2:59 PM
PLOT BY : MICHAEL GASPER
PLOT NAME :
PLOT SCALE : 1 IN:100 FT

2

LEGEND

- TYPE III BARRICADE
- TYPE III BARRICADE WTH ATTACHED SIGN
- TRAFFIC CONTROL DRUM
- TRAFFIC CONTROL DRUM WITH TYPE C STEADY BURN LIGHT
- FLASHING ARROW BOARD
- SIGN ON PERMANENT SUPPORT
- SIGN ON TEMPORARY SUPPORT
- CONCRETE BARRIER TEMPORARY PRECAST
- WORK AREA
- TEMPORARY PAVEMENT (TO BE USED IN FUTURE STAGES)
- TEMPORARY PAVEMENT
- DIRECTION OF TRAFFIC
- MB PORTABLE CHANGEABLE MESSAGE BOARD
- TEMPORARY MARKING REMOVABLE MASK OUT TAPE 6-INCH
- TEMPORARY MARKING REMOVABLE MASK OUT TAPE 10-INCH
- TEMPORARY PEDESTRIAN SAFETY FENCE

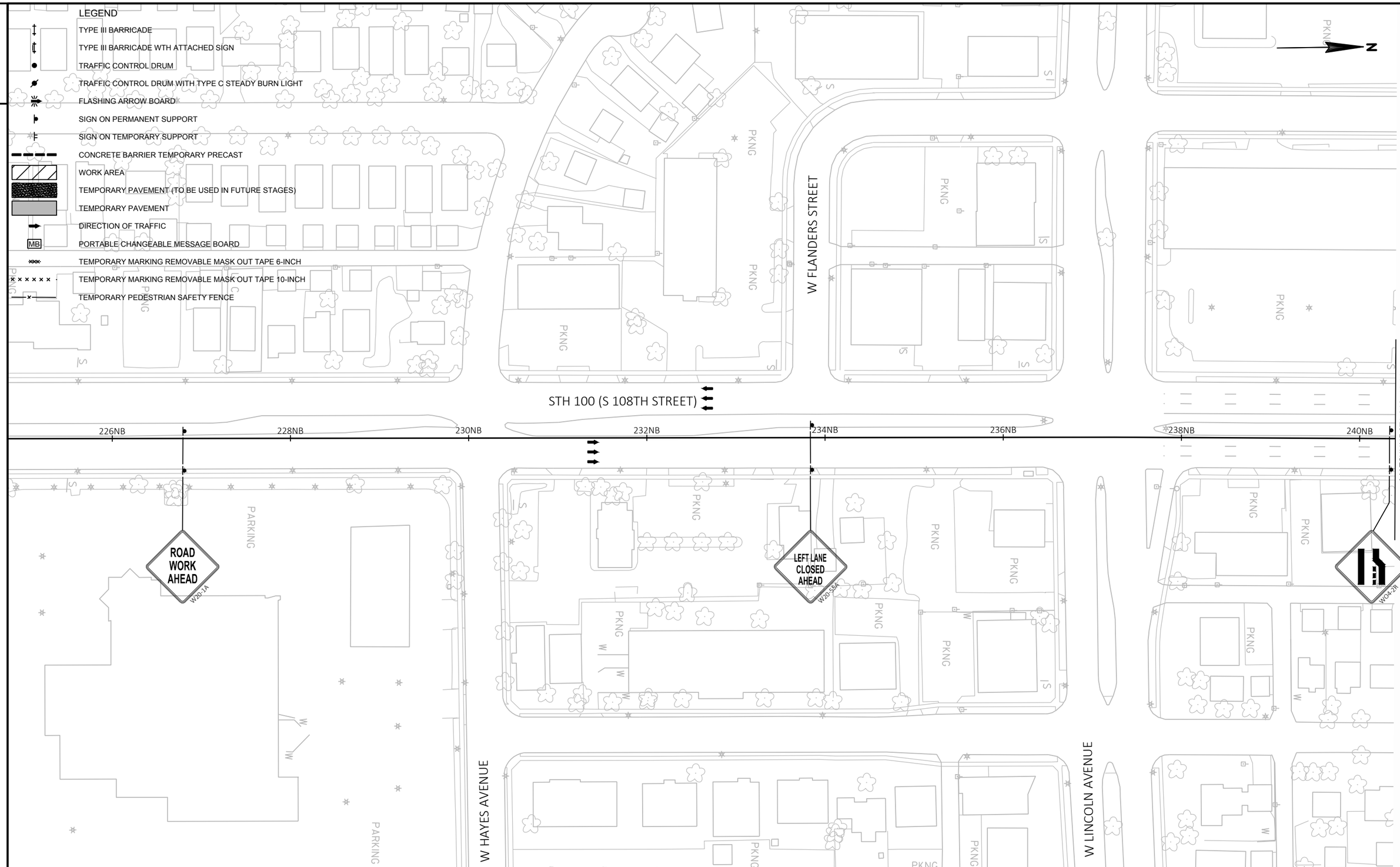

2

PROJECT NO: 1693-32-74	HWY: NON-HWY	COUNTY: MILWAUKEE COUNTY	TRAFFIC CONTROL - STAGE 3B	SHEET 29	E

FILE NAME : P:\8516 WEST ALLIS CROSS CONNECTOR BRIDGE\TRANSPORTATION\CADD\8516 WAX\SHEETSPLAN\026311-S3B.DWG
LAYOUT NAME - 026311
PLOT DATE : 1/24/2018 3:00 PM PLOT BY : MICHAEL GASPER PLOT NAME : PLOT SCALE : 1 IN:100 FT

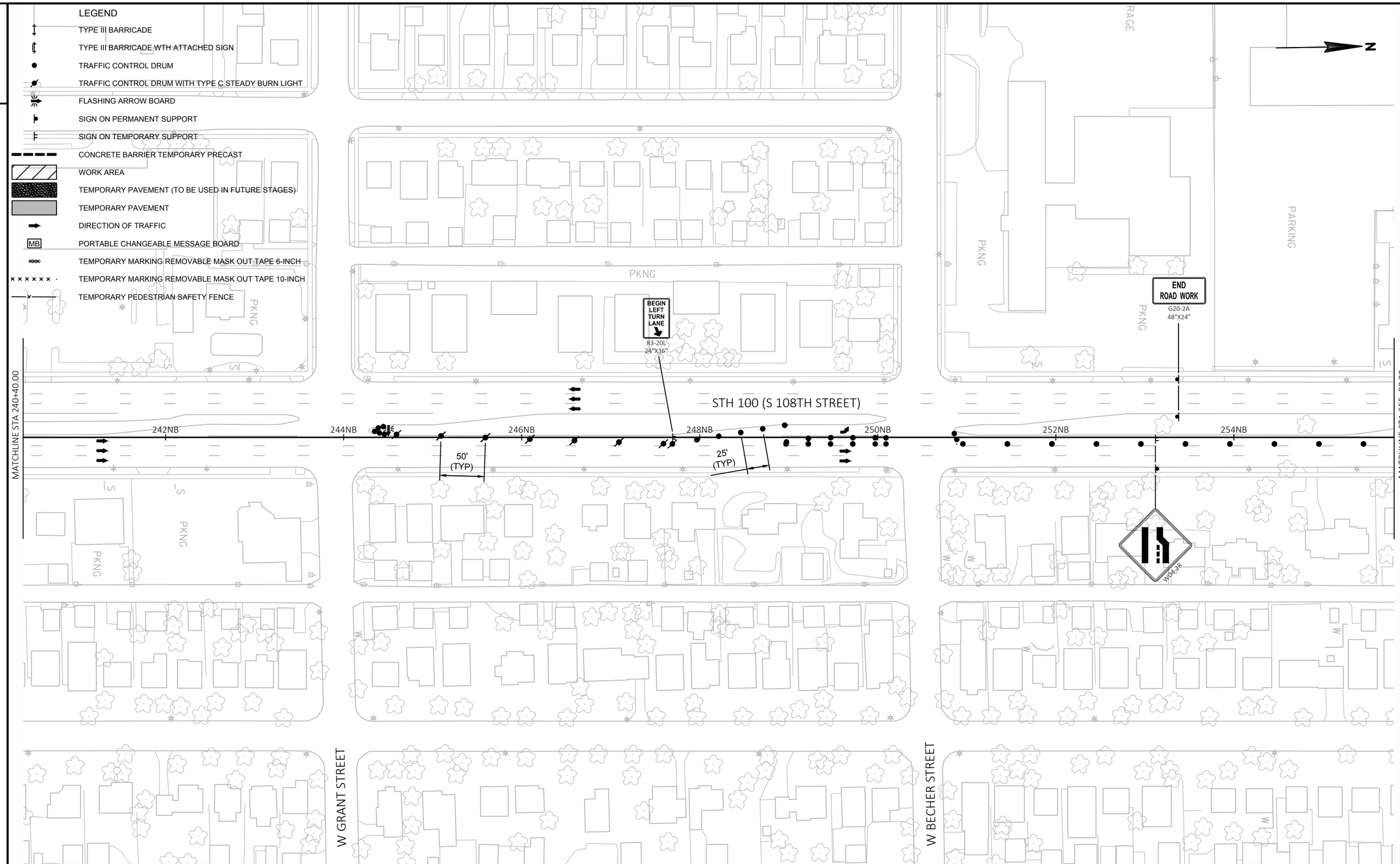

PROJECT NO: 1693-32-74	HWY: NON-HWY	COUNTY: MILWAUKEE COUNTY	TRAFFIC CONTROL - STAGE 3B	SHEET 30	E

FILE NAME : P:\8516 WEST ALLIS CROSS CONNECTOR BRIDGE\TRANSPORTATION\CADD\8516 WAX\SHEETSPLAN\026311-S3B.DWG
LAYOUT NAME - 026312
PLOT DATE : 1/24/2018 3:00 PM PLOT BY : MICHAEL GASPER PLOT NAME : PLOT SCALE : 1 IN:100 FT

LEGEND

- TYPE III BARRICADE
- TYPE III BARRICADE WTH ATTACHED SIGN
- TRAFFIC CONTROL DRUM
- TRAFFIC CONTROL DRUM WITH TYPE C STEADY BURN LIGHT
- FLASHING ARROW BOARD
- SIGN ON PERMANENT SUPPORT
- SIGN ON TEMPORARY SUPPORT
- CONCRETE BARRIER TEMPORARY PRECAST
- WORK AREA
- TEMPORARY PAVEMENT (TO BE USED IN FUTURE STAGES)
- TEMPORARY PAVEMENT
- DIRECTION OF TRAFFIC
- PORTABLE CHANGEABLE MESSAGE BOARD
- TEMPORARY MARKING REMOVABLE MASK OUT TAPE 6-INCH
- TEMPORARY MARKING REMOVABLE MASK OUT TAPE 10-INCH
- TEMPORARY PEDESTRIAN SAFETY FENCE

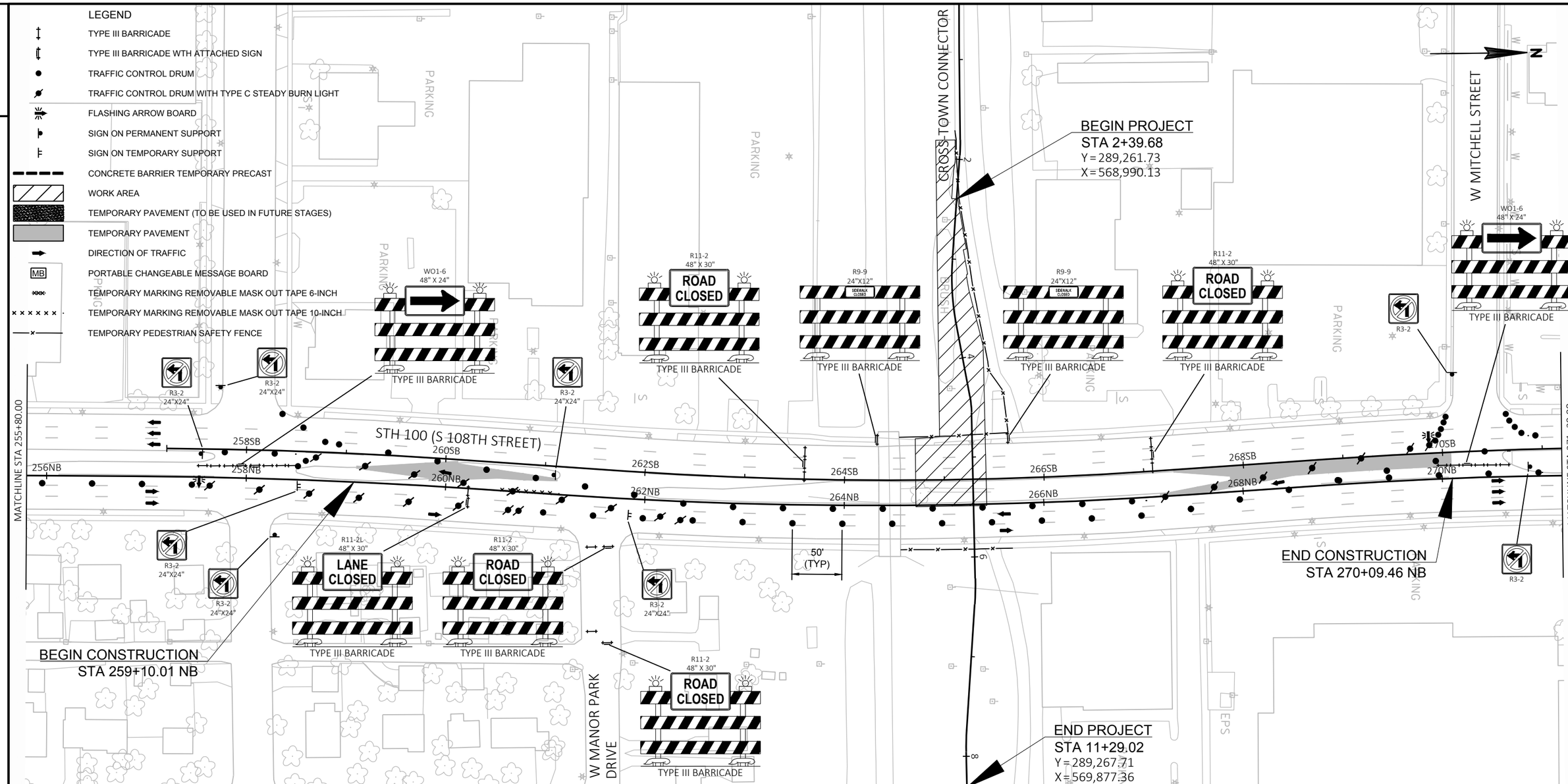

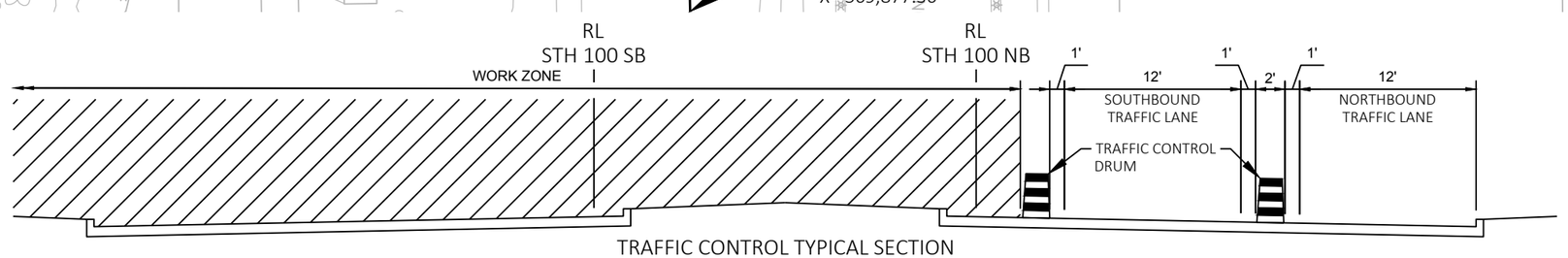

TRAFFIC CONTROL TYPICAL SECTION

STH 100 — STAGE 3B

PROJECT NO: 1693-32-74	HWY: NON-HWY	COUNTY: MILWAUKEE COUNTY	TRAFFIC CONTROL - STAGE 3B	SHEET 31	E

FILE NAME : P:\8516 WEST ALLIS CROSS CONNECTOR BRIDGE\TRANSPORTATION\CADD\8516 WAX\SHEETSPLAN\026311-S3B.DWG
LAYOUT NAME - 026313
PLOT DATE : 1/24/2018 3:00 PM PLOT BY : MICHAEL GASPER PLOT NAME : PLOT SCALE : 1 IN:100 FT

2

LEGEND

- TYPE III BARRICADE
- TYPE III BARRICADE WTH ATTACHED SIGN
- TRAFFIC CONTROL DRUM
- TRAFFIC CONTROL DRUM WITH TYPE C STEADY BURN LIGHT
- FLASHING ARROW BOARD
- SIGN ON PERMANENT SUPPORT
- SIGN ON TEMPORARY SUPPORT
- CONCRETE BARRIER TEMPORARY PRECAST
- WORK AREA
- TEMPORARY PAVEMENT (TO BE USED IN FUTURE STAGES)
- TEMPORARY PAVEMENT
- DIRECTION OF TRAFFIC
- PORTABLE CHANGEABLE MESSAGE BOARD
- TEMPORARY MARKING REMOVABLE MASK OUT TAPE 6-INCH
- TEMPORARY MARKING REMOVABLE MASK OUT TAPE 10-INCH
- TEMPORARY PEDESTRIAN SAFETY FENCE

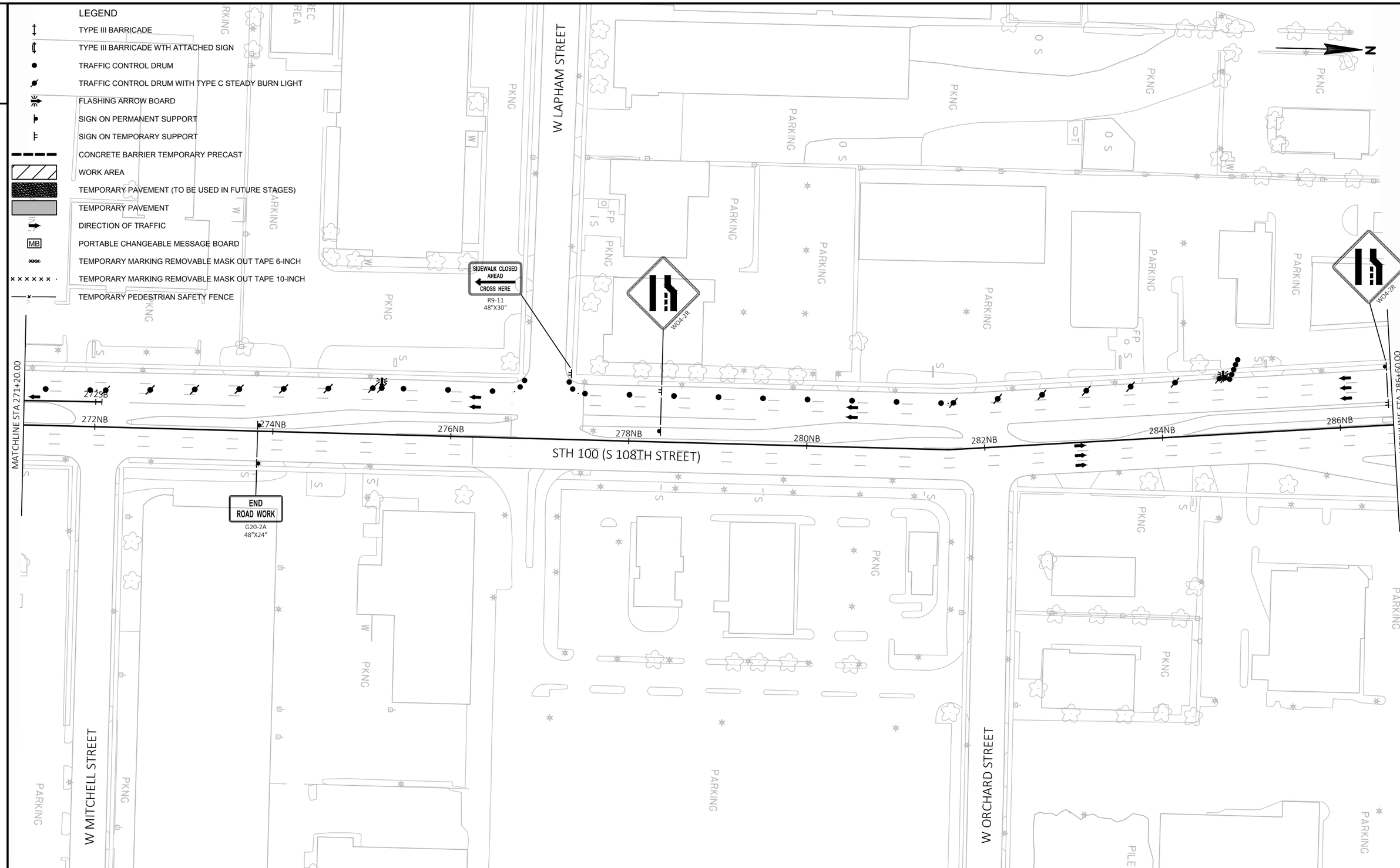

2

PROJECT NO: 1693-32-74	HWY: NON-HWY	COUNTY: MILWAUKEE COUNTY	TRAFFIC CONTROL - STAGE 3B	SHEET 32	E

FILE NAME : P:\8516 WEST ALLIS CROSS CONNECTOR BRIDGE\TRANSPORTATION\CADD\8516 WAX\SHEETSPLAN\026311-S3B.DWG
LAYOUT NAME - 026314
PLOT DATE : 1/24/2018 3:00 PM PLOT BY : MICHAEL GASPER PLOT NAME : PLOT SCALE : 1 IN:100 FT

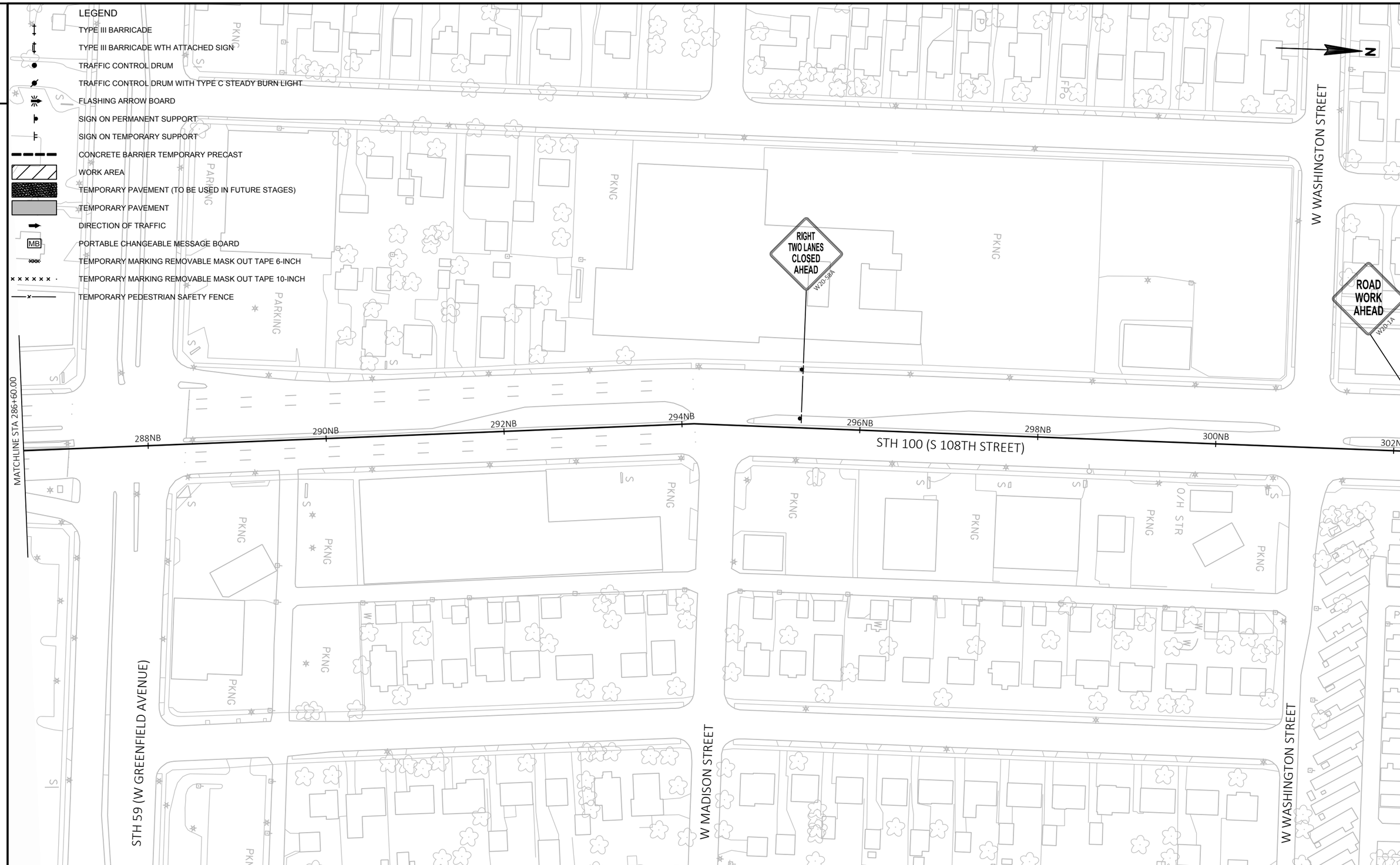

PROJECT NO: 1693-32-74	HWY: NON-HWY	COUNTY: MILWAUKEE COUNTY	TRAFFIC CONTROL - STAGE 3B	SHEET 33	E

FILE NAME : P:\8516 WEST ALLIS CROSS CONNECTOR BRIDGE\TRANSPORTATION\CADD\8516 WAX\SHEETSPLAN\026311-S3B.DWG
LAYOUT NAME - 026315
PLOT DATE : 1/24/2018 3:00 PM
PLOT BY : MICHAEL GASPER
PLOT NAME :
PLOT SCALE : 1 IN:100 FT

2

LEGEND

- TYPE III BARRICADE
- TYPE III BARRICADE WTH ATTACHED SIGN
- TRAFFIC CONTROL DRUM
- TRAFFIC CONTROL DRUM WITH TYPE C STEADY BURN LIGHT
- FLASHING ARROW BOARD
- SIGN ON PERMANENT SUPPORT
- SIGN ON TEMPORARY SUPPORT
- CONCRETE BARRIER TEMPORARY PRECAST
- WORK AREA
- TEMPORARY PAVEMENT (TO BE USED IN FUTURE STAGES)
- TEMPORARY PAVEMENT
- DIRECTION OF TRAFFIC
- MB PORTABLE CHANGEABLE MESSAGE BOARD
- TEMPORARY MARKING REMOVABLE MASK OUT TAPE 6-INCH
- TEMPORARY MARKING REMOVABLE MASK OUT TAPE 10-INCH
- TEMPORARY PEDESTRIAN SAFETY FENCE

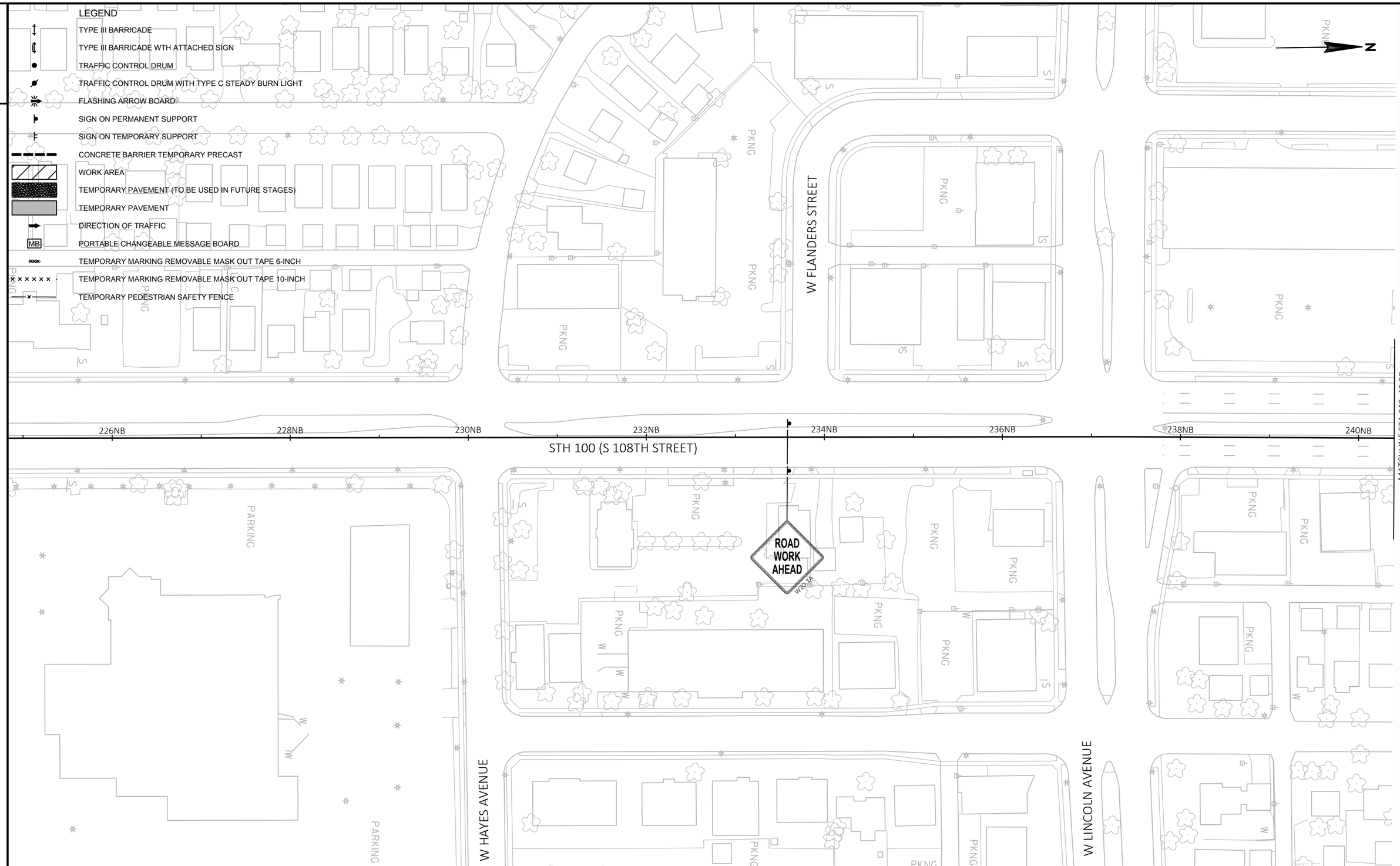

2

PROJECT NO: 1693-32-74	HWY: NON-HWY	COUNTY: MILWAUKEE COUNTY	TRAFFIC CONTROL - STAGE 4	SHEET 34	E

FILE NAME : P:\8516 WEST ALLIS CROSS CONNECTOR BRIDGE\TRANSPORTATION\CADD\8516 WAX\SHEETSPLAN\026401-S4.DWG
LAYOUT NAME - 026401
PLOT DATE : 1/24/2018 3:01 PM PLOT BY : MICHAEL GASPER PLOT NAME : PLOT SCALE : 1 IN:100 FT

WISDOT/CADDS SHEET 42

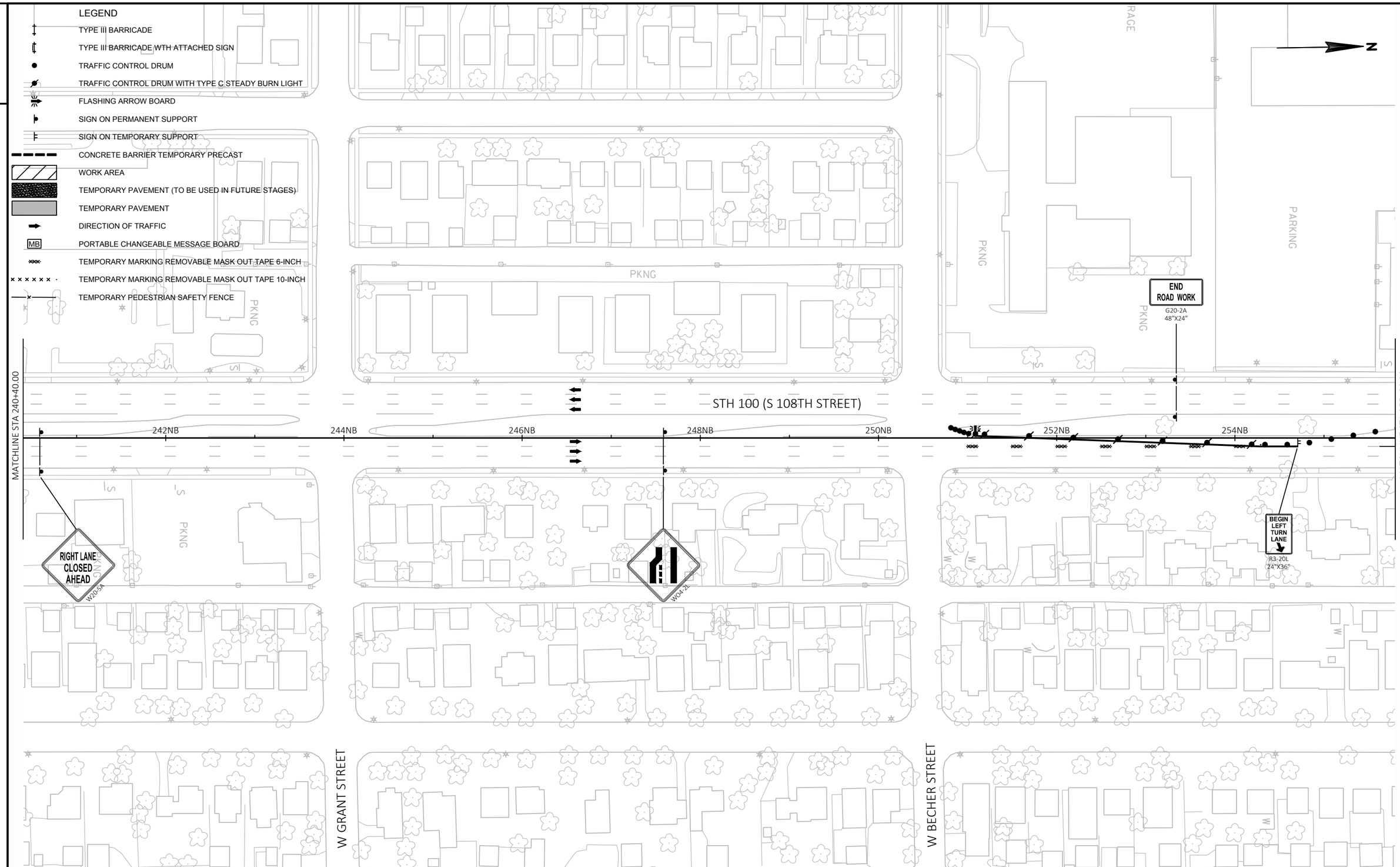

PROJECT NO: 1693-32-74	HWY: NON-HWY	COUNTY: MILWAUKEE COUNTY	TRAFFIC CONTROL - STAGE 4	SHEET 35	E

FILE NAME : P:\8516 WEST ALLIS CROSS CONNECTOR BRIDGE\TRANSPORTATION\CADD\8516 WAX\SHEETSPLAN\026401-S4.DWG
LAYOUT NAME - 026402
PLOT DATE : 1/24/2018 3:01 PM
PLOT BY : MICHAEL GASPER
PLOT NAME :
PLOT SCALE : 1 IN:100 FT

2

LEGEND

- TYPE III BARRICADE
- TYPE III BARRICADE WTH ATTACHED SIGN
- TRAFFIC CONTROL DRUM
- TRAFFIC CONTROL DRUM WITH TYPE C STEADY BURN LIGHT
- FLASHING ARROW BOARD
- SIGN ON PERMANENT SUPPORT
- SIGN ON TEMPORARY SUPPORT
- CONCRETE BARRIER TEMPORARY PRECAST
- WORK AREA
- TEMPORARY PAVEMENT (TO BE USED IN FUTURE STAGES)
- TEMPORARY PAVEMENT
- DIRECTION OF TRAFFIC
- MB PORTABLE CHANGEABLE MESSAGE BOARD
- TEMPORARY MARKING REMOVABLE MASK OUT TAPE 6-INCH
- TEMPORARY MARKING REMOVABLE MASK OUT TAPE 10-INCH
- TEMPORARY PEDESTRIAN SAFETY FENCE

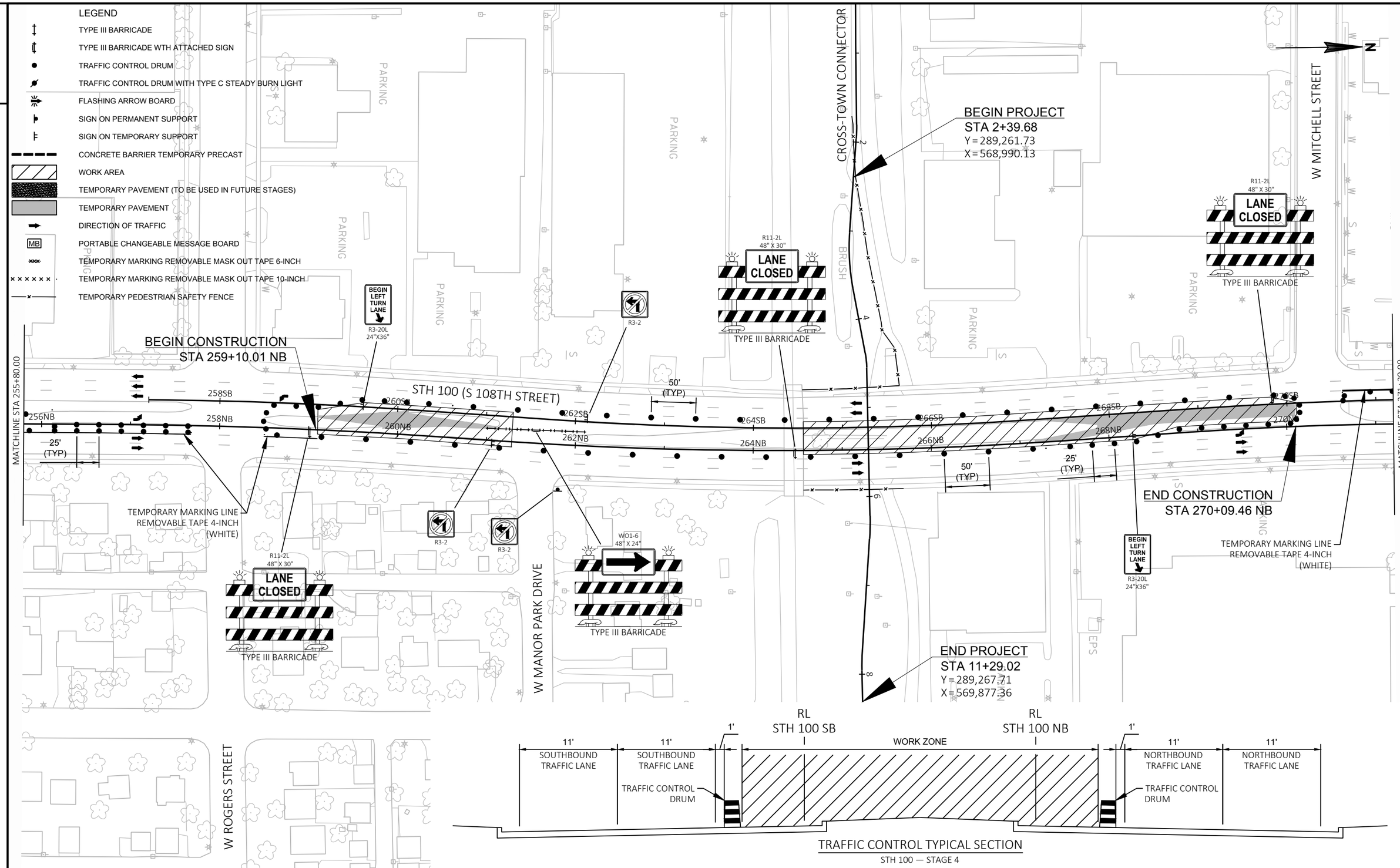

TRAFFIC CONTROL TYPICAL SECTION

STH 100 — STAGE 4

PROJECT NO: 1693-32-74	HWY: NON-HWY	COUNTY: MILWAUKEE COUNTY	TRAFFIC CONTROL - STAGE 4	SHEET 36	E

FILE NAME : P:\8516 WEST ALLIS CROSS CONNECTOR BRIDGE\TRANSPORTATION\CADD\8516 WAX\SHEETSPLAN\026401-S4.DWG
LAYOUT NAME - 026403
PLOT DATE : 1/24/2018 3:01 PM PLOT BY : MICHAEL GASPER PLOT NAME : PLOT SCALE : 1 IN:100 FT

WISDOT/CADDS SHEET 42

2

LEGEND

- TYPE III BARRICADE
- TYPE III BARRICADE WTH ATTACHED SIGN
- TRAFFIC CONTROL DRUM
- TRAFFIC CONTROL DRUM WITH TYPE C STEADY BURN LIGHT
- FLASHING ARROW BOARD
- SIGN ON PERMANENT SUPPORT
- SIGN ON TEMPORARY SUPPORT
- CONCRETE BARRIER TEMPORARY PRECAST
- WORK AREA
- TEMPORARY PAVEMENT (TO BE USED IN FUTURE STAGES)
- TEMPORARY PAVEMENT
- DIRECTION OF TRAFFIC
- PORTABLE CHANGEABLE MESSAGE BOARD
- TEMPORARY MARKING REMOVABLE MASK OUT TAPE 6-INCH
- TEMPORARY MARKING REMOVABLE MASK OUT TAPE 10-INCH
- TEMPORARY PEDESTRIAN SAFETY FENCE

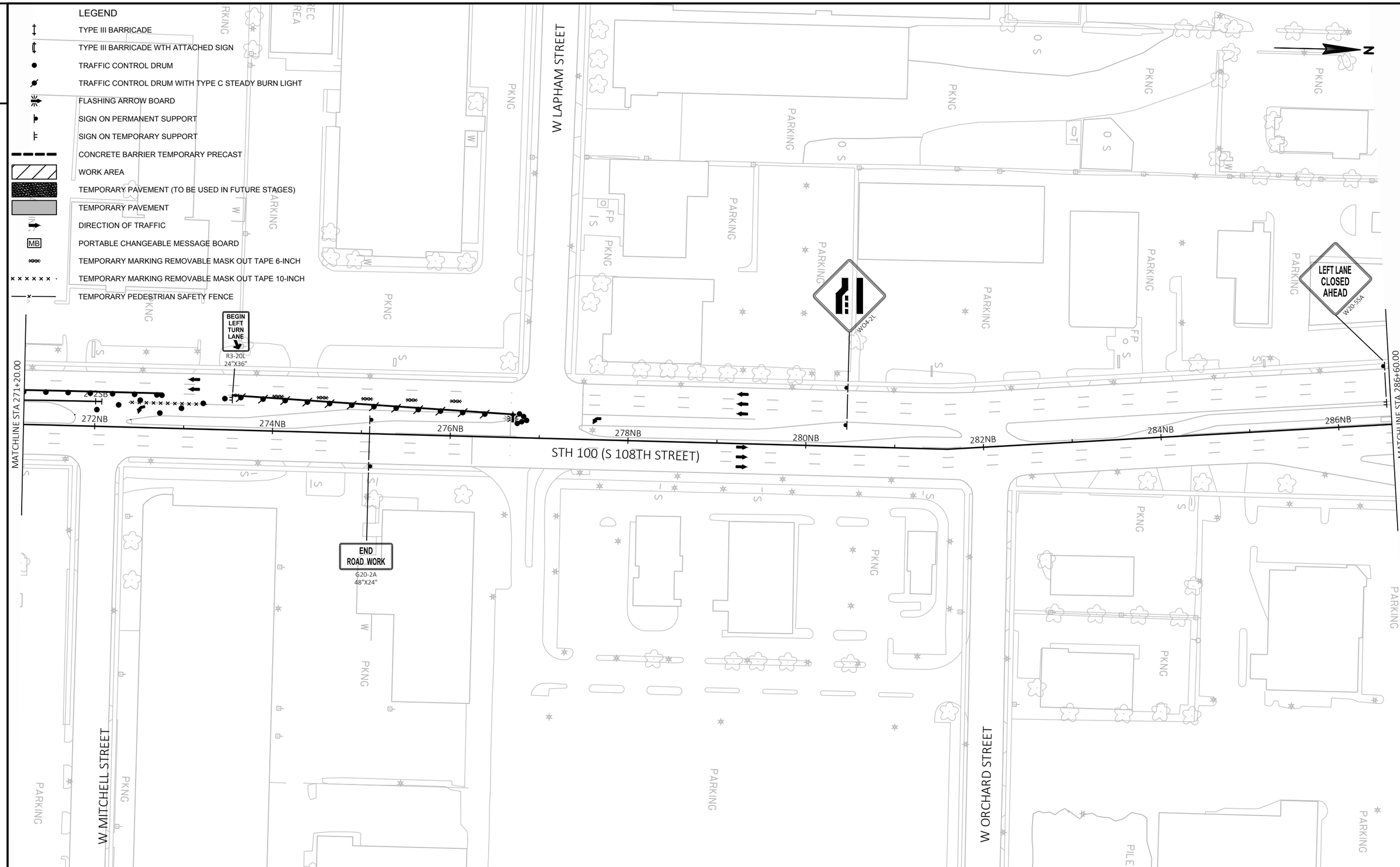

2

PROJECT NO: 1693-32-74	HWY: NON-HWY	COUNTY: MILWAUKEE COUNTY	TRAFFIC CONTROL - STAGE 4	SHEET 37	E

FILE NAME : P:\8516 WEST ALLIS CROSS CONNECTOR BRIDGE\TRANSPORTATION\CADD\8516 WAX\SHEETSPLAN\026401-S4.DWG
LAYOUT NAME - 026404
PLOT DATE : 1/24/2018 3:01 PM PLOT BY : MICHAEL GASPER PLOT NAME : PLOT SCALE : 1 IN:100 FT

PROJECT NO: 1693-32-74	HWY: NON-HWY	COUNTY: MILWAUKEE COUNTY	TRAFFIC CONTROL - STAGE 4	SHEET 38	E

FILE NAME : P:\8516 WEST ALLIS CROSS CONNECTOR BRIDGE\TRANSPORTATION\CADD\8516 WAX\SHEETSPLAN\026401-S4.DWG
LAYOUT NAME - 026405
PLOT DATE : 1/24/2018 3:01 PM
PLOT BY : MICHAEL GASPER
PLOT NAME :
PLOT SCALE : 1 IN:100 FT

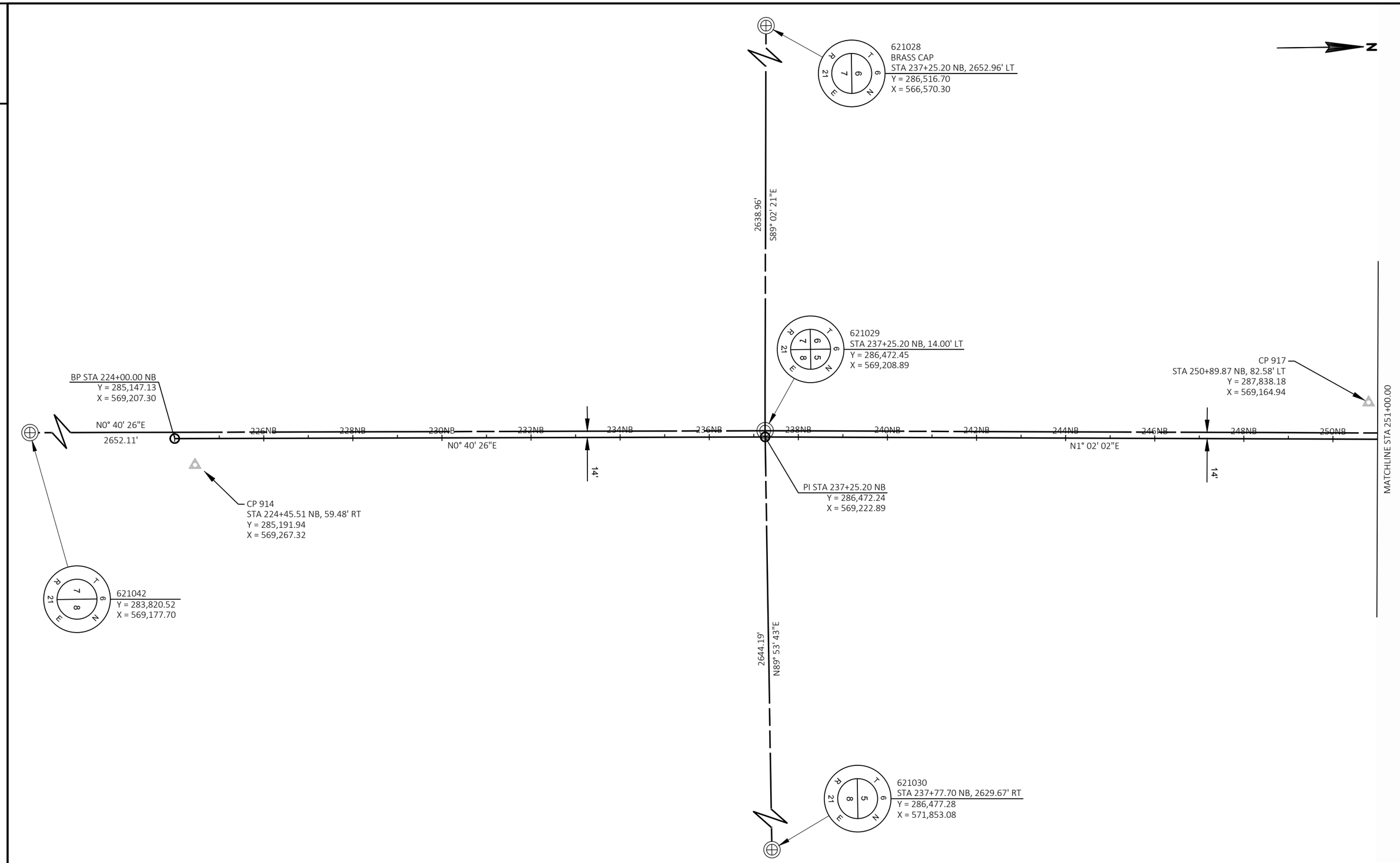

PROJECT NO: 1693-32-74	HWY: NON-HWY	COUNTY: MILWAUKEE COUNTY	ALIGNMENT PLAN	SHEET 39	E

FILE NAME : P:\8516 WEST ALLIS CROSS CONNECTOR BRIDGE\TRANSPORTATION\CADD\8516 WAX\SHEETSPLAN\027201_AD.DWG
LAYOUT NAME - 027201_ad
PLOT DATE : 1/24/2018 3:01 PM PLOT BY : MICHAEL GASPER PLOT NAME : PLOT SCALE : 1 IN:200 FT

2

CURVE WAX-1
PI STA = 1+88.48
Y = 289,265.877
X = 568,939.092
DELTA = 4°34'26"
D = 28°38'52"
T = 7.99'
L = 15.97'
R = 200.00'
PC STA = 1+80.50
Y = 289,265.886
X = 568,931.105
PT STA = 1+96.46
Y = 289,265.230
X = 568,947.053
BK = S89°55'46.1"E
AH = S85°21'20.0"E

CURVE WAX-2
PI STA = 3+33.56
Y = 289,254.129
X = 569,083.696
DELTA = 14°41'24"
D = 22°55'06"
T = 32.23'
L = 64.10'
R = 250.00'
PC STA = 3+01.33
Y = 289,256.738
X = 569,051.577
PT STA = 3+65.43
Y = 289,259.750
X = 569,115.427
BK = S85°21'20.0"E
AH = N79°57'16.1"E

CURVE WAX-3
PI STA = 4+47.14
Y = 289,274.003
X = 569,195.887
DELTA = 9°24'59"
D = 57°17'45"
T = 8.24'
L = 16.43'
R = 100.00'
PC STA = 4+38.91
Y = 289,272.567
X = 569,187.777
PT STA = 4+55.34
Y = 289,274.094
X = 569,204.122
BK = N79°57'16.1"E
AH = N89°22'14.8"E

CURVE SB-1
PI STA = 258+62.52 SB
Y = 288,609.872
X = 569,233.458
DELTA = 3°32'43"
D = 1°14'44"
T = 142.37'
L = 284.64'
R = 4600.00'
PC STA = 257+20.15 SB
Y = 288,467.530
X = 569,230.890
PT STA = 260+04.79 SB
Y = 288,751.783
X = 569,244.824
BK = N01°02'01.7"E
AH = N04°34'45.0"E

CURVE SB-2
PI STA = 264+46.51 SB
Y = 289,192.089
X = 569,280.090
DELTA = 7°50'57"
D = 1°29'04"
T = 264.81'
L = 528.79'
R = 3860.00'
PC STA = 261+81.70 SB
Y = 288,928.125
X = 569,258.948
PT STA = 267+10.49 SB
Y = 289,456.468
X = 569,264.985
BK = N04°34'45.0"E
AH = N03°16'11.7"W

CURVE SB-3
PI STA = 270+46.35 SB
Y = 289,791.780
X = 569,245.828
DELTA = 3°32'26"
D = 1°06'07"
T = 160.72'
L = 321.33'
R = 5200.00'
PC STA = 268+85.63 SB
Y = 289,631.325
X = 569,254.995
PT STA = 272+06.96 SB
Y = 289,952.496
X = 569,246.587
BK = N03°16'11.7"W
AH = N00°16'14.4"E

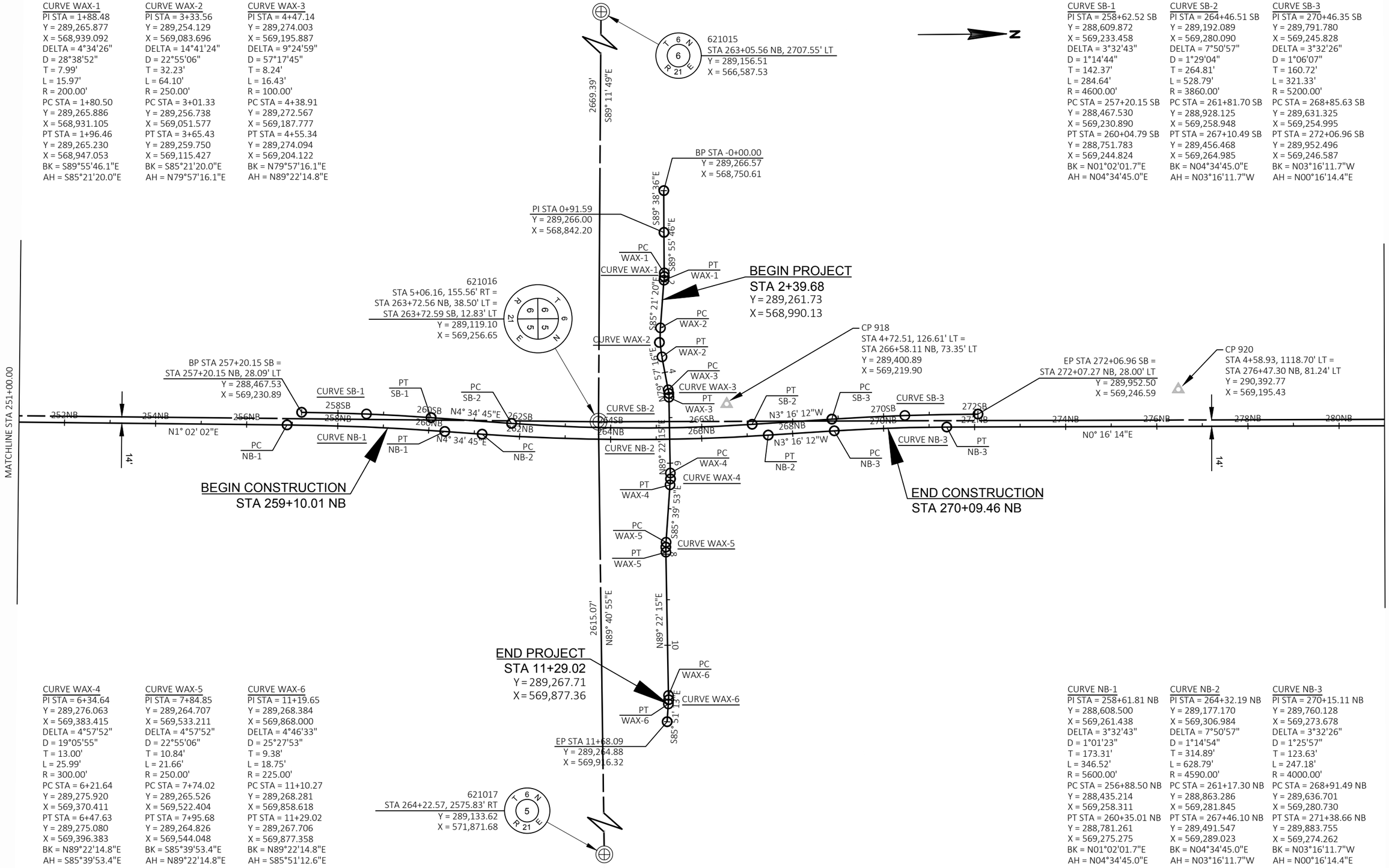

CURVE WAX-4
PI STA = 6+34.64
Y = 289,276.063
X = 569,383.415
DELTA = 4°57'52"
D = 19°05'55"
T = 13.00'
L = 25.99'
R = 300.00'
PC STA = 6+21.64
Y = 289,275.920
X = 569,370.411
PT STA = 6+47.63
Y = 289,275.080
X = 569,396.383
BK = N89°22'14.8"E
AH = S85°39'53.4"E

CURVE WAX-5
PI STA = 7+84.85
Y = 289,264.707
X = 569,533.211
DELTA = 4°57'52"
D = 22°55'06"
T = 10.84'
L = 21.66'
R = 250.00'
PC STA = 7+74.02
Y = 289,265.526
X = 569,522.404
PT STA = 7+95.68
Y = 289,264.826
X = 569,544.048
BK = S85°39'53.4"E
AH = N89°22'14.8"E

CURVE WAX-6
PI STA = 11+19.65
Y = 289,268.384
X = 569,868.000
DELTA = 4°46'33"
D = 25°27'53"
T = 9.38'
L = 18.75'
R = 225.00'
PC STA = 11+10.27
Y = 289,268.281
X = 569,858.618
PT STA = 11+29.02
Y = 289,267.706
X = 569,877.358
BK = N89°22'14.8"E
AH = S85°51'12.6"E

CURVE NB-1
PI STA = 258+61.81 NB
Y = 288,608.500
X = 569,261.438
DELTA = 3°32'43"
D = 1°01'23"
T = 173.31'
L = 346.52'
R = 5600.00'
PC STA = 256+88.50 NB
Y = 288,435.214
X = 569,258.311
PT STA = 260+35.01 NB
Y = 288,781.261
X = 569,275.275
BK = N01°02'01.7"E
AH = N04°34'45.0"E

CURVE NB-2
PI STA = 264+32.19 NB
Y = 289,177.170
X = 569,306.984
DELTA = 7°50'57"
D = 1°14'54"
T = 314.89'
L = 628.79'
R = 4590.00'
PC STA = 261+17.30 NB
Y = 288,863.286
X = 569,281.845
PT STA = 267+46.10 NB
Y = 289,491.547
X = 569,289.023
BK = N04°34'45.0"E
AH = N03°16'11.7"W

CURVE NB-3
PI STA = 270+15.11 NB
Y = 289,760.128
X = 569,273.678
DELTA = 3°32'26"
D = 1°25'57"
T = 123.63'
L = 247.18'
R = 4000.00'
PC STA = 268+91.49 NB
Y = 289,636.701
X = 569,280.730
PT STA = 271+38.66 NB
Y = 289,883.755
X = 569,274.262
BK = N03°16'11.7"W
AH = N00°16'14.4"E

PROJECT NO: 1693-32-74	HWY: NON-HWY	COUNTY: MILWAUKEE COUNTY	ALIGNMENT PLAN	SHEET 40	E

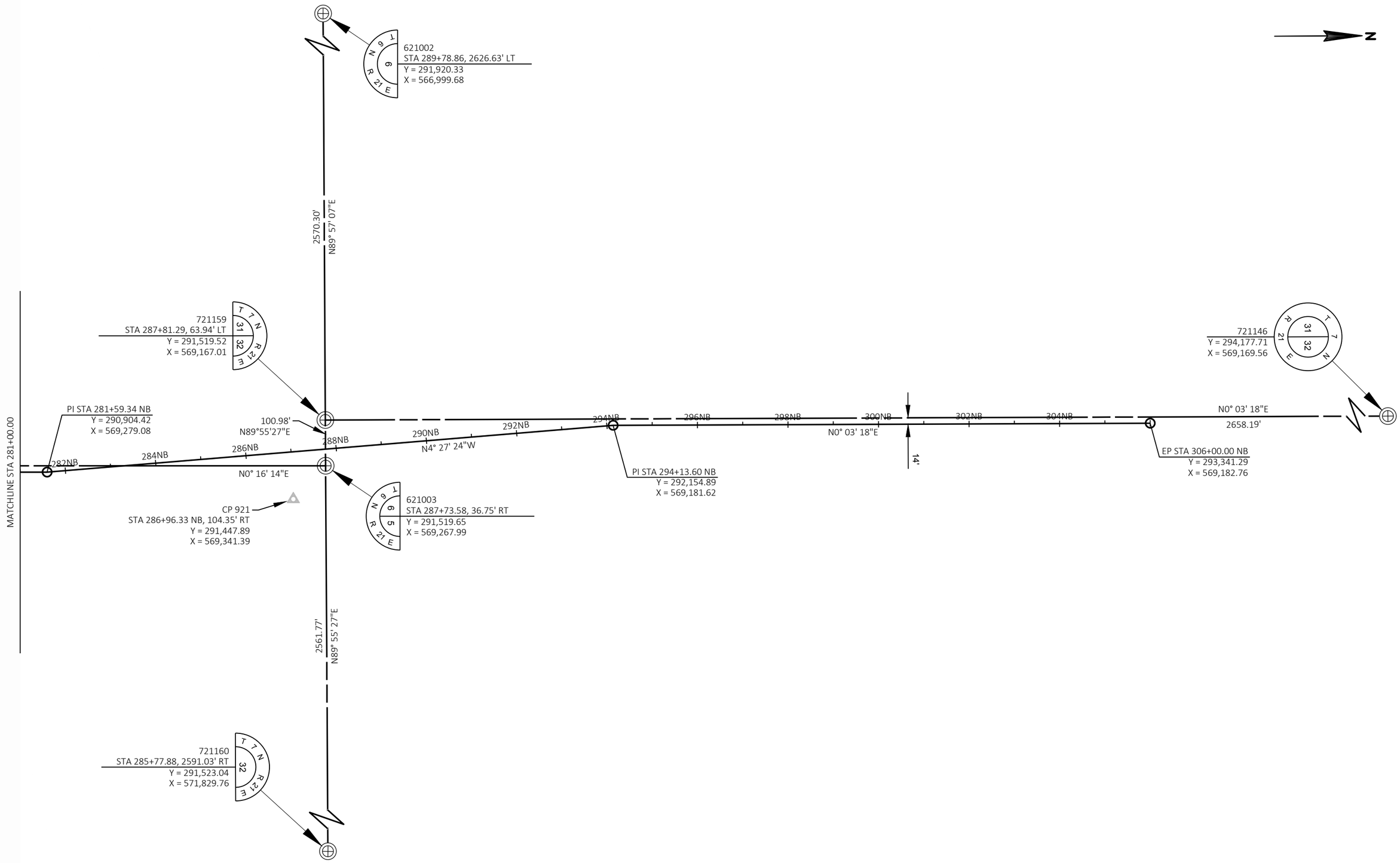
N
621002
STA 289+78.86, 2626.63' LT
Y = 291,920.33
X = 566,999.68
2570.30'
N89° 57' 07"E
721159
STA 287+81.29, 63.94' LT
Y = 291,519.52
X = 569,167.01
721146
Y = 294,177.71
X = 569,169.56
PI STA 281+59.34 NB
Y = 290,904.42
X = 569,279.08
100.98'
N89°55'27"E
282NB
284NB
286NB
288NB
290NB
292NB
294NB
296NB
298NB
300NB
302NB
304NB
N0° 16' 14"E
N4° 27' 24"W
N0° 03' 18"E
N0° 03' 18"E
2658.19'
14'
MATCHLINE STA 281+00.00
PI STA 294+13.60 NB
Y = 292,154.89
X = 569,181.62
EP STA 306+00.00 NB
Y = 293,341.29
X = 569,182.76
CP 921
STA 286+96.33 NB, 104.35' RT
Y = 291,447.89
X = 569,341.39
621003
STA 287+73.58, 36.75' RT
Y = 291,519.65
X = 569,267.99
2561.77'
N89° 55' 27"E
721160
STA 285+77.88, 2591.03' RT
Y = 291,523.04
X = 571,829.76

Estimate Of Quantities

1693-32-74

Line	Item	Item Description	Unit	Total	Qty
0002	201.0105	Clearing	STA	9.000	9.000
0004	201.0205	Grubbing	STA	9.000	9.000
0006	204.0100	Removing Pavement	SY	123.000	123.000
0008	204.0150	Removing Curb & Gutter	LF	812.000	812.000
0010	204.0155	Removing Concrete Sidewalk	SY	24.000	24.000
0012	204.0215	Removing Catch Basins	EACH	2.000	2.000
0014	205.0100	Excavation Common	CY	1,093.000	1,093.000
0016	206.1000	Excavation for Structures Bridges (structure) 01. B-40-0926	LS	1.000	1.000
0018	208.0100	Borrow	CY	660.000	660.000
0020	210.1500	Backfill Structure Type A	TON	36.000	36.000
0022	213.0100	Finishing Roadway (project) 01. 1693-32-74	EACH	1.000	1.000
0024	305.0110	Base Aggregate Dense 3/4-Inch	TON	56.000	56.000
0026	305.0120	Base Aggregate Dense 1 1/4-Inch	TON	1,057.000	1,057.000
0028	415.0120	Concrete Pavement 12-Inch	SY	75.000	75.000
0030	416.0610	Drilled Tie Bars	EACH	404.000	404.000
0032	416.0620	Drilled Dowel Bars	EACH	43.000	43.000
0034	465.0105	Asphaltic Surface	TON	214.000	214.000
0036	465.0125	Asphaltic Surface Temporary	TON	151.000	151.000
0038	502.0100	Concrete Masonry Bridges	CY	73.000	73.000
0040	502.3200	Protective Surface Treatment	SY	238.000	238.000
0042	502.3210	Pigmented Surface Sealer	SY	148.000	148.000
0044	505.0400	Bar Steel Reinforcement HS Structures	LB	4,360.000	4,360.000
0046	505.0600	Bar Steel Reinforcement HS Coated Structures	LB	4,390.000	4,390.000
0048	506.2605	Bearing Pads Elastomeric Non-Laminated	EACH	16.000	16.000
0050	509.2500	Concrete Masonry Overlay Decks	CY	23.000	23.000
0052	511.1200	Temporary Shoring (structure) 01. B-40-0926	SF	760.000	760.000
0054	516.0500	Rubberized Membrane Waterproofing	SY	30.000	30.000
0056	517.1010.S	Concrete Staining (structure) 01. B-40-0926	SF	3,213.000	3,213.000
0058	517.1010.S	Concrete Staining (structure) 02. R-40-0684	SF	2,835.000	2,835.000
0060	517.1010.S	Concrete Staining (structure) 03. R-40-0685	SF	2,060.000	2,060.000
0062	601.0452	Concrete Curb & Gutter Integral 30-Inch Type D	LF	120.000	120.000
0064	602.0410	Concrete Sidewalk 5-Inch	SF	217.000	217.000
0066	603.8000	Concrete Barrier Temporary Precast Delivered	LF	375.000	375.000
0068	603.8125	Concrete Barrier Temporary Precast Installed	LF	375.000	375.000
0070	604.0400	Slope Paving Concrete	SY	72.000	72.000
0072	606.0200	Riprap Medium	CY	4.000	4.000
0074	608.0512	Storm Sewer Pipe Reinforced Concrete Class V 12-Inch	LF	137.000	137.000
0076	611.0642	Inlet Covers Type MS	EACH	2.000	2.000
0078	611.2006	Manholes 6-FT Diameter	EACH	1.000	1.000

1693-32-74

Line	Item	Item Description	Unit	Total	Qty
0080	611.3003	Inlets 3-FT Diameter	EACH	1.000	1.000
0082	611.3220	Inlets 2x2-FT	EACH	2.000	2.000
0084	611.3901	Inlets Median 1 Grate	EACH	2.000	2.000
0086	612.0406	Pipe Underdrain Wrapped 6-Inch	LF	713.000	713.000
0088	618.0100	Maintenance And Repair of Haul Roads (project) 01. 1693-32-74	EACH	1.000	1.000
0090	619.1000	Mobilization	EACH	1.000	1.000
0092	620.0300	Concrete Median Sloped Nose	SF	54.000	54.000
0094	625.0500	Salvaged Topsoil	SY	2,209.000	2,209.000
0096	627.0200	Mulching	SY	2,209.000	2,209.000
0098	628.1504	Silt Fence	LF	895.000	895.000
0100	628.1520	Silt Fence Maintenance	LF	895.000	895.000
0102	628.1905	Mobilizations Erosion Control	EACH	5.000	5.000
0104	628.1910	Mobilizations Emergency Erosion Control	EACH	5.000	5.000
0106	628.7005	Inlet Protection Type A	EACH	2.000	2.000
0108	628.7010	Inlet Protection Type B	EACH	4.000	4.000
0110	628.7020	Inlet Protection Type D	EACH	18.000	18.000
0112	628.7504	Temporary Ditch Checks	LF	20.000	20.000
0114	629.0210	Fertilizer Type B	CWT	1.400	1.400
0116	630.0120	Seeding Mixture No. 20	LB	60.000	60.000
0118	630.0300	Seeding Borrow Pit	LB	4.000	4.000
0120	634.0410	Posts Wood 4x4-Inch X 10-FT	EACH	2.000	2.000
0122	637.2210	Signs Type II Reflective H	SF	7.500	7.500
0124	642.5001	Field Office Type B	EACH	1.000	1.000
0126	643.0300	Traffic Control Drums	DAY	12,520.000	12,520.000
0128	643.0420	Traffic Control Barricades Type III	DAY	1,308.000	1,308.000
0130	643.0715	Traffic Control Warning Lights Type C	DAY	3,808.000	3,808.000
0132	643.0800	Traffic Control Arrow Boards	DAY	230.000	230.000
0134	643.0900	Traffic Control Signs	DAY	2,778.000	2,778.000
0136	643.5000	Traffic Control	EACH	1.000	1.000
0138	644.1601.S	Temporary Curb Ramp	EACH	2.000	2.000
0140	644.1616.S	Temporary Pedestrian Safety Fence	LF	1,015.000	1,015.000
0142	645.0120	Geotextile Type HR	SY	6.000	6.000
0144	646.1005	Marking Line Paint 4-Inch	LF	9.000	9.000
0146	646.9010	Marking Removal Line Water Blasting 4-Inch	LF	18.000	18.000
0148	649.0150	Temporary Marking Line Removable Tape 4-Inch	LF	3,464.000	3,464.000
0150	649.0960	Temporary Marking Removable Mask Out Tape 6-Inch	LF	476.000	476.000
0152	649.0970	Temporary Marking Removable Mask Out Tape 10-Inch	LF	549.000	549.000
0154	650.4000	Construction Staking Storm Sewer	EACH	6.000	6.000
0156	650.4500	Construction Staking Subgrade	LF	796.000	796.000

1693-32-74

Line	Item	Item Description	Unit	Total	Qty
0158	650.5000	Construction Staking Base	LF	796.000	796.000
0160	650.6500	Construction Staking Structure Layout (structure) 01. B-40-0926	LS	1.000	1.000
0162	650.6500	Construction Staking Structure Layout (structure) 02. R-40-0684	LS	1.000	1.000
0164	650.6500	Construction Staking Structure Layout (structure) 03. R-40-0685	LS	1.000	1.000
0166	650.8500	Construction Staking Electrical Installations (project) 01. 1693-32-74	LS	1.000	1.000
0168	650.9910	Construction Staking Supplemental Control (project) 01. 1693-32-74	LS	1.000	1.000
0170	650.9920	Construction Staking Slope Stakes	LF	796.000	796.000
0172	652.0115	Conduit Rigid Metallic 1 1/4-Inch	LF	10.000	10.000
0174	652.0215	Conduit Rigid Nonmetallic Schedule 40 1 1/4-Inch	LF	714.000	714.000
0176	653.0135	Pull Boxes Steel 24x36-Inch	EACH	2.000	2.000
0178	654.0224	Concrete Control Cabinet Bases Type L24	EACH	1.000	1.000
0180	655.0610	Electrical Wire Lighting 12 AWG	LF	192.000	192.000
0182	655.0615	Electrical Wire Lighting 10 AWG	LF	2,856.000	2,856.000
0184	655.0640	Electrical Wire Lighting 1 AWG	LF	20.000	20.000
0186	656.0200	Electrical Service Meter Breaker Pedestal (location) 01. 1693-32-74	LS	1.000	1.000
0188	659.2124	Lighting Control Cabinets 120/240 24-Inch	EACH	1.000	1.000
0190	690.0150	Sawing Asphalt	LF	140.000	140.000
0192	690.0250	Sawing Concrete	LF	1,124.000	1,124.000
0194	ASP.1T0A	On-the-Job Training Apprentice at $5.00/HR	HRS	900.000	900.000
0196	ASP.1T0G	On-the-Job Training Graduate at $5.00/HR	HRS	850.000	850.000
0198	SPV.0060	Special 02. Luminaires Special, LED	EACH	3.000	3.000
0200	SPV.0060	Special 06. Inlet covers Type R-3222-LA	EACH	4.000	4.000
0202	SPV.0090	Special 01. Micropiles	LF	600.000	600.000
0204	SPV.0090	Special 02. Piling Sleeves Micropiles	LF	120.000	120.000
0206	SPV.0090	Special 03. Prestressed Girder Box Type 33-Inch	LF	598.000	598.000
0208	SPV.0090	Special 04. Railing Tubular Screening Special B-40-0926	LF	307.000	307.000
0210	SPV.0090	Special 05. Railing Steel Pedestrian R-40-0684	LF	224.000	224.000
0212	SPV.0090	Special 06. Railing Steel Pedestrian R-40-0685	LF	166.000	166.000
0214	SPV.0090	Special 07. Concrete Curb & Gutter Integral 31-Inch	LF	87.000	87.000
0216	SPV.0090	Special 08. Concrete Curb & Gutter 30-Inch Type A 12-Inch Flange	LF	812.000	812.000
0218	SPV.0165	Special 01. Wall Concrete Panel Mechanically Stabilized Earth R-40-0684	SF	2,850.000	2,850.000
0220	SPV.0165	Special 02. Wall Concrete Planel Mechanically Stabilized Earth R-40-0685	SF	2,065.000	2,065.000

					1693-32-74
0222	SPV.0195	Special 01. Management of Solid Waste	TON	161.000	161.000

3

CLEARING AND GRUBBING

LOCATION	201.0105 CLEARING STA	201.0205 GRUBBING STA
STA 1+80.50 TO STA 4+58.42	4	4
STA 6+10.92 TO STA 10+42.09	5	5
TOTAL	9	9

FINISHING ROADWAY 1693-32-74

PROJECT ID	213.0100 EACH
1693-32-74	1
TOTALS	1

STORM SEWER

STRUCT ID	ALIGNMENT	STA	OFFSET	RIM ELEV	STRUCT DEPTH	204.0215 REMOVING CATCH BASINS EACH	611.0642 COVERS INLET TYPE MS EACH	SPV.0060.06 COVERS INLET R-3222-LA EACH	611.2006 MANHOLES 6-FT DIAMETER EACH	611.3003 INLETS 3-FT DIAMETER EACH	611.3220 INLETS 2x2-FT EACH	611.3901 INLETS MEDIAN 1 GRATE EACH	PIPE ID	STRUCTURE FROM	STRUCTURE TO	ELEVATION INLET	ELEVATION DISCH	SLOPE	608.0512 STORM SEWER REINFORCED CONCRETE CLASS V 12-INCH LF	650.4000 CONSTRUCTION STAKING STORM SEWER EACH
1.1	100 SB	264+82.2	33.0' LT	735.38	3.76	1	--	1	1	--	--	--	EXP1.1	1.1	CULVERT	730.54	--	--	--	1
1.2	100 SB	265+10.9	33.0' LT	735.58	3.72	--	--	1	--	--	1	--	P1.2	1.2	1.1	730.78	730.64	0.50%	28	1
1.3	WAX	4+55.0	17.4' RT	744.97	9.66	--	1	--	--	--	--	1	P1.3	1.3	1.2	735.39	732.83	7.50%	34	1
2.1	100 NB	264+78.7	33.0' RT	735.47	3.08	1	--	1	--	1	--	--	EXP2.1	2.1	CULVERT	731.31	--	--	--	1
2.2	100 NB	265+13.2	33.0' RT	735.75	3.09	--	--	1	--	--	1	--	P2.2	2.2	2.1	731.58	731.41	0.50%	35	1
2.3	WAX	6+20.0	16.6' RT	742.91	7.02	--	1	--	--	--	--	1	P2.3	2.3	2.2	735.97	733.00	7.50%	40	1
						2	2	4	1	1	2	2							137	6

NOTE:
ALL RIM ELEVATIONS ARE GIVEN AT THE FLANGE LINE.

3

REMOVAL ITEMS

CATEGORY	LOCATION	STA	TO	STA	204.0100 REMOVING PAVEMENT SY	204.0150 REMOVING CURB & GUTTER LF	204.0155 REMOVING CONCRETE SIDEWALK SY
0010	STH 100 NB	259+83.00	TO	270+09.46	34	453	7
	STH 100 SB	259+11.00	TO	270+08.27	89	359	17
				TOTALS	123	812	24

TOPSOIL, MULCHING, FERTILIZER & SEEDING

LOCATION	625.0500 SALVAGED TOPSOIL SY	627.0200 MULCHING SY	629.0210 FERTILIZER TYPE B CWT	630.0120 SEEDING MIXTURE NO. 20 LB	630.0300 SEEDING BORROW PIT LB
STA 1+80.50 TO STA 4+58.42	316	316	0.2	9	--
STA 6+10.92 TO STA 10+42.09	1126	1126	0.7	30	--
SOUTH CROSSOVER	256	256	0.2	7	--
BRIDGE PIER	133	133	0.1	4	--
NORTH CROSSOVER	378	378	0.2	10	--
BORROW PIT	--	--	0.0	--	4
TOTALS	2209	2209	1.4	60	4

PERMANENT SIGNING

CATEGORY	SIGN NO.	SIGN CODE & SIZE	SIGN MESSAGE	SIGN SIZE W IN	X	SIGN SIZE H IN	637.2210 SIGNS TYPE II REFLECTIVE H SF	634.0410 POSTS WOOD 4x4-INCH x 10-FT EACH	REMARKS
0010	1	W5-2A	- -	18	X	18	2.25	1	
	2	W5-52R	- -	6	X	18	0.75	--	MOUNT ON STRUCTURE
	3	W5-52L	- -	6	X	18	0.75	--	MOUNT ON STRUCTURE
	4	W5-52L	- -	6	X	18	0.75	--	MOUNT ON STRUCTURE
	5	W5-52R	- -	6	X	18	0.75	--	MOUNT ON STRUCTURE
	6	W5-2A	- -	18	X	18	2.25	1	
						TOTALS	7.50	2	

EARTHWORK SUMMARY

DIVISION	FROM/TO STATION	LOCATION	205.0100 COMMON EXCAVATION (1) CUT (2) CY	EBS EXCAVATION (3) CY	SALVAGED/ UNUSABLE PAVEMENT (4) CY	AVAILABLE MATERIAL (5) CY	UNEXPANDED FILL CY	EXPANDED FILL (13) FACTOR 1.25 CY	MASS ORDINATE +/- (14) CY	WASTE CY	208.0100 BORROW CY	COMMENT: CY
1	1+80.50 TO 4+58.42	WEST APPROACH	69	0	1	68	338	422	-354	0	354	
2	6+10.92 TO 11+29.02	EAST APPROACH	258	0	2	256	450	562	-306	0	306	
3		SOUTH CROSSOVER	292	0	38	254	169	211	43	43	0	
4		NORTH CROSSOVER	474	0	103	371	250	313	59	59	0	
Grand Total			1093	0	144	949	1206	1508	-559	102	660	
		TOTAL COMMON EXCAVATION		1093								

1) Common Excavation is the sum of the Cut and EBS Excavation columns. Item number 205.0100
2) Salvaged/Unsuable Pavement Material is included in Cut.
3) EBS Excavation to be backfilled with Cut material.
4) Salvaged/Unusable Pavement Material
5) Available Material = Cut - Salvaged/Unusuable Pavement Material
13) Expanded Fill. Factor = 1.25
14) The Mass Ordinate + or - Qty calculated for the Division. Plus quantity indicates an excess of material within the Division. Minus indicates a shortage of material within the Division.

MOBILIZATION

PROJECT ID	619.1000 EACH
1693-32-74	1
TOTALS	1

FIELD OFFICE TYPE B

PROJECT ID	642.5001 EACH
1693-32-74	1
TOTALS	1

ALL ITEMS ON THIS SHEET ARE CATEGORY 0010 UNLESS OTHERWISE NOTED

3

PAVING ITEMS

CATEGORY	LOCATION	STA	TO	STA	305.0110 BASE AGGREGATE DENSE ¾-INCH TON	305.0120 BASE AGGREGATE DENSE 1¼-INCH TON	415.0120 CONCRETE PAVEMENT 12-INCH SY	416.0610 DRILLED BARS TIE EACH	416.0620 DRILLED BARS DOWEL EACH	465.0105 ASPHALTIC SURFACE TON	465.0125 ASPHALTIC SURFACE TEMPORARY TON	601.0452 CONCRETE CURB & GUTTER INTEGRAL 30-INCH TYPE D LF	SPV.0090.07 CONCRETE CURB & GUTTER INTEGRAL 31-INCH LF	SPV.0090.08 CONCRETE CURB & GUTTER 30-INCH TYPE A 12-INCH FLANGE LF	602.0410 CONCRETE SIDEWALK 5-INCH SF	620.0300 CONCRETE MEDIAN SLOPED NOSE SF
0010	CROSS-TOWN CONNECTOR															
		1+80.50	TO	4+58.42	14	131	--	--	--	73	--	--	--	--	--	--
		6+10.92	TO	11+29.02	42	273	--	--	--	141	--	--	--	--	--	--
	STH 100 NB	259+83.00	TO	270+09.46	--	100	21	212	11	--	--	60	47	453	60	--
	STH 100 SB	259+11.00	TO	270+08.27	--	95	54	192	32	--	--	60	40	359	157	54
	SOUTH TEMPORARY CROSSOVER				--	149	--	--	--	--	49	--	--	--	--	--
	NORTH TEMPORARY CROSSOVER				--	309	--	--	--	--	102	--	--	--	--	--
				TOTALS	56	1,057	75	404	43	214	151	120	87	812	217	54

PAVEMENT MARKING

CATEGORY	LOCATION	STA	TO	STA	646.1005 MARKING LINE PAINT 4-INCH (WHITE) LF	646.9010 MARKING REMOVAL LINE WATER BLASTING 4-INCH LF
0010	CROSS-TOWN CONNECTOR					
		1+85	TO	2+50	9	18
				TOTALS	9	18

3

TRAFFIC CONTROL

STAGE	603.8000 CONCRETE BARRIER TEMPORARY PRECAST DELIVERED LF	603.8125 CONCRETE BARRIER TEMPORARY PRECAST INSTALLED LF	643.0300 DRUMS EACH	643.0300 DRUMS DAY	643.0420 BARRICADES TYPE III EACH	643.0420 BARRICADES TYPE III DAY	643.0715 WARNING LIGHTS TYPE C EACH	643.0715 WARNING LIGHTS TYPE C DAY	643.0800 ARROW BOARDS EACH	643.0800 ARROW BOARDS DAY	643.0900 SIGNS EACH	643.0900 SIGNS DAY	643.5000 TRAFFIC CONTROL EA	644.1601.S TEMPORARY CURB RAMP EACH	644.1616.S TEMPORARY PEDESTRIAN SAFETY FENCE LF	649.0150 TEMPORARY MARKING REMOVABLE TAPE LINE 4-INCH LF	649.0960 TEMPORARY MARKING REMOVABLE TAPE MASK OUT 6-INCH LF	649.0970 TEMPORARY MARKING REMOVABLE TAPE MASK OUT 10-INCH LF
STAGE 1	375.0	375.0	54	756	6	84	20	280	2	28	24	336	--	2	736	1,142	150	--
STAGE 2	--	--	134	4,690	12	420	36	1,260	2	70	27	945	--	--	167	1,161	163	87
STAGE 3A	--	--	141	846	28	168	79	474	4	24	35	210	--	--	--	--	--	317
STAGE 3B	--	--	167	1,002	28	168	65	390	5	30	39	234	--	--	112	--	--	58
STAGE 4	--	--	134	5,226	12	468	36	1,404	2	78	27	1,053	--	--	--	1,161	163	87
UNDISTRIBUTED	--	--	--	--	--	--	--	--	--	--	--	--	1	--	--	--	--	--
TOTALS	375.0	375.0		12,520		1,308		3,808		230		2,778	1	2	1,015	3,464	476	549

SAWCUTS

CATEGORY	LOCATION	STA	TO	STA	690.0150 SAWING ASPHALT LF	690.0250 SAWING CONCRETE LF
0010	CROSS-TOWN CONNECTOR					
		1+80.50	TO	4+58.42	140	--
		6+10.92	TO	11+29.02	--	--
	STH 100					
		259+10.01 NB	TO	270+09.46 NB	--	1,124
				TOTALS	140	1,124

EROSION CONTROL ITEMS

LOCATION	606.0200 RIPRAP MEDIUM CY	645.0120 GEOTEXTILE TYPE HR SY	628.1504 SILT FENCE LF	628.1520 SILT FENCE MAINTENANCE LF	628.1905 EROSION CONTROL MOBILIZATIONS EACH	628.1910 EROSION CONTROL EMERGENCY MOBILIZATIONS EACH	628.7005 INLET PROTECTION TYPE A EACH	628.7010 INLET PROTECTION TYPE B EACH	628.7020 INLET PROTECTION TYPE D EACH	628.7504 TEMPORARY DITCH CHECKS LF
STA 1+80.50 TO STA 4+58.42 RT & LT	2	3	260	260	--	--	1	1	3	10
STA 6+10.92 TO STA 10+42.09 RT & LT	2	3	635	635	--	--	1	1	3	10
SOUTH CROSSOVER	--	--	--	--	--	--	--	--	--	--
NORTH CROSSOVER	--	--	--	--	--	--	--	--	5	--
UNDISTRIBUTED	--	--	--	--	5	5	--	2	7	--
TOTALS	4	6	895	895	5	5	2	4	18	20

CONSTRUCTION STAKING

LOCATION	650.4500 SUBGRADE LF	650.5000 BASE LF	650.6500.01 STRUCTURE LAYOUT B-40-0926 LS	650.6500.02 STRUCTURE LAYOUT R-40-0684 LS	650.6500.03 STRUCTURE LAYOUT R-40-0685 LS	650.9910 SUPPLEMENTAL CONTROL 1693-32-74 LS	650.9920 SLOPE STAKES LF
STA 1+80.50 TO STA 4+58.42	278	278	--	--	--	--	278
STA 6+10.92 TO STA 11+29.02	518	518	--	--	--	--	518
UNDISTRIBUTED	--	--	1	1	1	1	--
TOTALS	796	796	1	1	1	1	796

MANAGEMENT OF SOLID WASTE

CATEGORY	LOCATION	STA	TO	STA	OFFSET	TO	OFFSET	SPV.0195.01 TONS
0010	CROSS-TOWN CONNECTOR	4+00	TO	4+50	0' RT	TO	20' RT	--
		4+25	TO	7+50	20' LT	TO	0' LT	4
		6+30	TO	6+65	0' RT	TO	40' RT	--
							TOTALS	4

ALL ITEMS ON THIS SHEET ARE CATEGORY 0010 UNLESS OTHERWISE NOTED

3

CONDUIT SCHEDULE
(CONTROLLER #1)

ROUTED FROM	TO	HORIZONTAL LENGTH LF	NO.	652.0215 CONDUIT RIGID NONMETALLIC SCHEDULE 40 1 1/4-INCH LF	NOTES
Controller #1	LPB1	45	1	45	
LPB1	STUB	5	1	5	
LBP1	LPB2	408	1	408	
LPB2	B-40-926	62	1	62	1
TOTAL				520	

NOTES:

1. PROVIDE 1-1/4" DEFLECTION COUPLING AS REQUIRED. DEFLECTION COUPLING, ANGLES, CONDUIT TRANSITIONING, AND ADAPTER FITTINGS TO BE INCIDENTAL TO "CONDUIT RIGID NONMETALLIC SCHEDULE 40 1 1/4-INCH" ITEMS. APPROVED MANUFACTURER OR EQUIVALENT EATON XD DEFLECTION COUPLING. INSTALL PER NEC AND MANUFACTURER'S REQUIREMENTS WHERE SHOWN ON PLANS.

HORIZONTAL ELECTRICAL WIRE SCHEDULE
(CONTROLLER #1)

SYSTEM	NETWORK	LOCATION TO LOCATION	DISTANCE LF	NO. WIRES	655.0615 ELECTRICAL WIRE LIGHTING 10 AWG LF
CONTROLLER #1	1/3/GND/CTL	LIGHTING CABINET (CONTROLLER #1) TO LPB1 TO LPB2 TO L1	546	4	2184
CONTROLLER #1	1/3/GND/CTL	L1 TO L2	84	4	336
CONTROLLER #1	1/3/GND/CTL	L2 TO L3	84	4	336
TOTAL					2,856

3

LIGHTING SYSTEM

SYSTEM	LOCATION	650.8500 CONSTRUCTION STAKING ELECTRICAL INSTALLATIONS (I.D. 1693-32-74) LS	654.0224 CONCRETE CONTROL CABINET BASES TYPE L24 EACH	659.2124 LIGHTING CONTROL CABINETS 120/240 24-INCH EACH	655.0640 ELECTRICAL WIRE LIGHTING 1 AWG LF	656.0200 ELECTRICAL SERVICE METER BREAKER PEDESTAL (I.D. 1693-32-74) LS
CONTROLLER #1	11+11.0, 14.0' RT	1	1	1	20	1
	TOTAL	1	1	1	20	1

PULL BOXES STEEL 24X36-INCH
(CONTROLLER #1)

ITEM	STATION	OFFSET	653.0135 PULL BOX STEEL 24x36-INCH EACH	LOCATION
LPB1	11+10.75	6.5RT	1	SE of STH100
LPB2	7+2.00	6.0RT	1	SE of STH100
TOTAL			2	

ALL ITEMS ON THIS SHEET ARE CATEGORY 0010 UNLESS OTHERWISE NOTED

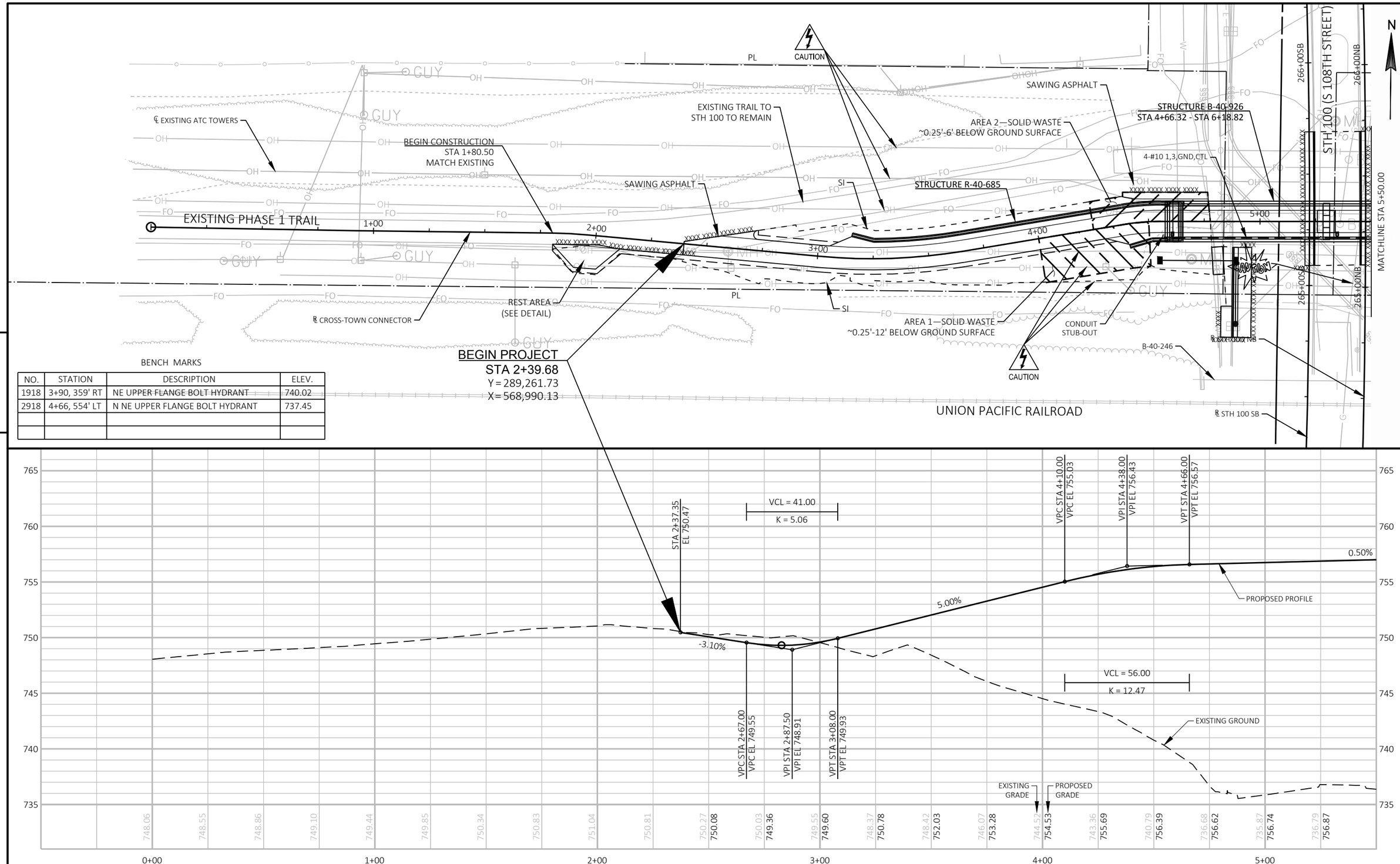

BENCH MARKS

NO.	STATION	DESCRIPTION	ELEV.
1918	3+90, 359' RT	NE UPPER FLANGE BOLT HYDRANT	740.02
2918	4+66, 554' LT	N NE UPPER FLANGE BOLT HYDRANT	737.45

PROJECT NO: 1693-32-74	HWY: NON-HWY	COUNTY: MILWAUKEE COUNTY	PLAN AND PROFILE: STA 2+39.68 - STA 5+50.00	SHEET 49	E

FILE NAME : P:\8516 WEST ALLIS CROSS CONNECTOR BRIDGE\TRANSPORTATION\CADD\8516 WAX\SHEETSPLAN\050101_PP.DWG
LAYOUT NAME - 050101
PLOT DATE : 1/24/2018 3:02 PM
PLOT BY : MICHAEL GASPER
PLOT NAME :
PLOT SCALE : ##########

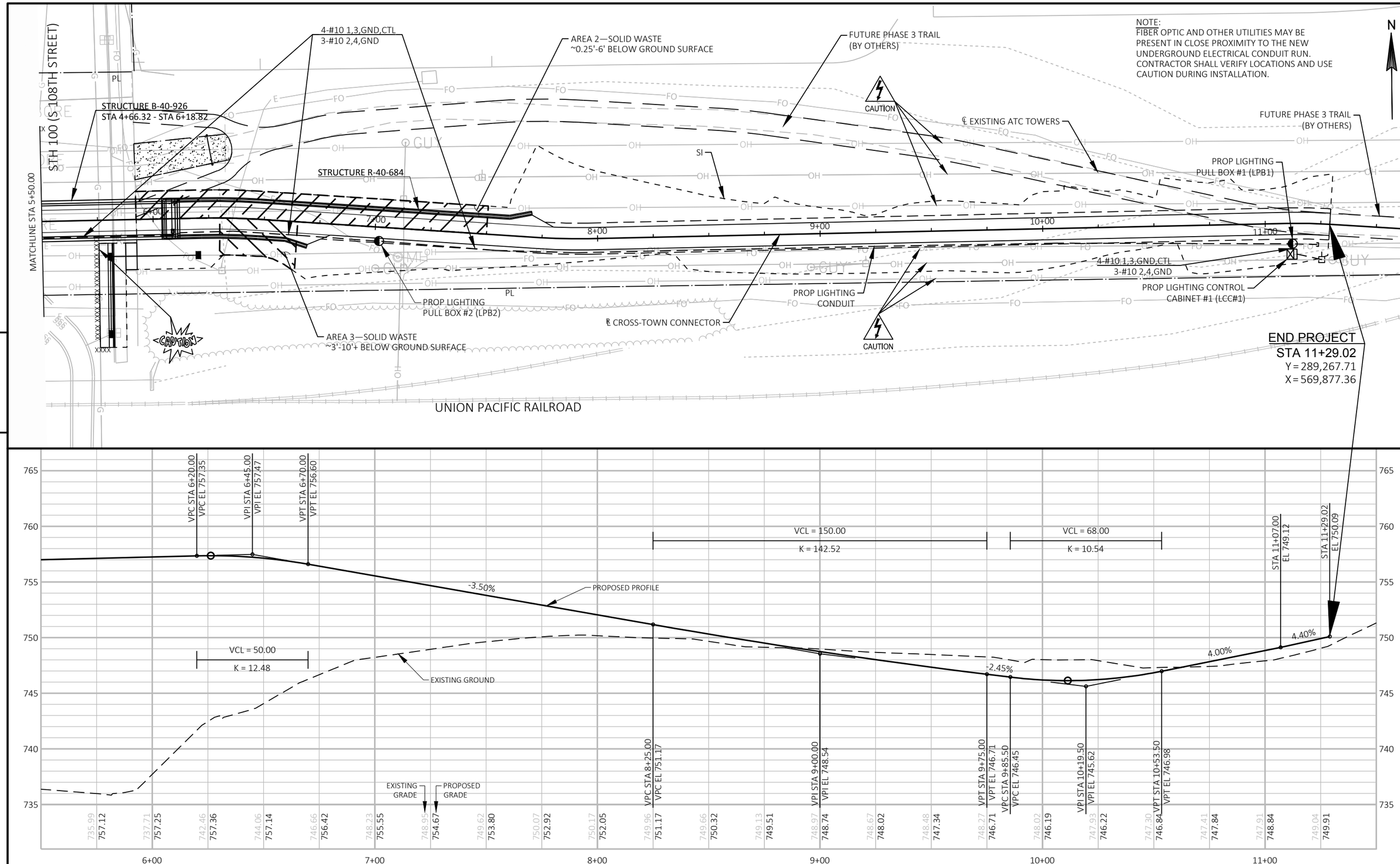

PROJECT NO: 1693-32-74	HWY: NON-HWY	COUNTY: MILWAUKEE COUNTY	PLAN AND PROFILE: STA 5+50.00 - STA 10+42.09	SHEET 50	E

FILE NAME : P:\8516 WEST ALLIS CROSS CONNECTOR BRIDGE\TRANSPORTATION\CADD\8516 WAX\SHEETSPLAN\050101_PP.DWG
LAYOUT NAME - 050102
PLOT DATE : 1/24/2018 3:03 PM
PLOT BY : MICHAEL GASPER
PLOT NAME :
PLOT SCALE : ##########

Standard Detail Drawing List

08A05-19B	INLET COVERS TYPE B, B-A, C, MS, MS-A, & WM
08A05-19D	INLET COVER TYPE BW, MANHOLE COVERS, TYPE K, J, J-S, L & M
08B09-02	MANHOLES 3-FT, 4-FT, 5-FT, 6-FT, 7-FT AND 8-FT DIAMETER
08C06-02	INLETS 3-FT AND 4-FT DIAMETER
08C07-02	INLETS 2X2-FT, 2X2.5-FT, 2X3-FT AND 2.5X3-FT
08C08-02	INLETS MEDIAN 1 AND 2 GRATE
08D01-20A	CONCRETE CURB & GUTTER
08D01-20B	CONCRETE CURB, TIES AND CURB AND GUTTER APPLICATIONS
08D16-10	CONCRETE GUTTER, CURB AND GUTTER AND PAVEMENT TIES
08E08-03	TYPICAL INSTALLATIONS OF EROSION BALES / TEMPORARY DITCH CHECKS
08E09-06	SILT FENCE
08E10-02	INLET PROTECTION TYPE A, B, C AND D
09B02-10	CONDUIT
09C14-02	CONCRETE CONTROL CABINET BASE, TYPE L
09D01-05	CABINET SERVICE INSTALLATION (METER BREAKER PEDESTAL)
09D04-02	LIGHTING CONTROL CABINET 120/240 VOLT
10A01-03	ELECTRICAL HANDHOLE WIRING
11B02-02	CONCRETE MEDIAN NOSE
12A03-10	NAME PLATE (STRUCTURES)
13C09-14A	CONCRETE PAVEMENT REPAIR AND REPLACEMENT
13C09-14B	CONCRETE PAVEMENT REPAIR AND REPLACEMENT
13C09-14C	CONCRETE PAVEMENT REPAIR AND REPLACEMENT
14B07-15A	CONCRETE BARRIER TEMPORARY PRECAST, 12'-6"
14B07-15B	CONCRETE BARRIER TEMPORARY PRECAST, 12'-6"
14B07-15C	CONCRETE BARRIER TEMPORARY PRECAST, 12'-6"
14B07-15D	CONCRETE BARRIER TEMPORARY PRECAST, 12'-6"
14B07-15E	CONCRETE BARRIER TEMPORARY PRECAST, 12'-6"
14B07-15F	CONCRETE BARRIER TEMPORARY PRECAST, 12'-6"
14B07-15G	CONCRETE BARRIER TEMPORARY PRECAST, 12'-6"
14B07-15H	CONCRETE BARRIER TEMPORARY PRECAST, 12'-6"
14B07-15I	CONCRETE BARRIER TEMPORARY PRECAST, 12'-6"
15C05-04	TRAFFIC CONTROL, ADVANCE WARNING SIGNS 40 M.P.H. OR LESS
15C18-04	MEDIAN ISLAND MARKING
15D20-04	TRAFFIC CONTROL, SINGLE LANE CLOSURE, NON-FREEWAY/EXPRESSWAY
15D21-05	TRAFFIC CONTROL, INTERSECTION WITHIN SINGLE LANE CLOSURE
15D30-03A	TRAFFIC CONTROL, PEDESTRIAN ACCOMMODATION
15D30-03B	TRAFFIC CONTROL, TEMPORARY ADA COMPLIANT PEDESTRIAN ACCOMMODATION
15D30-03C	TRAFFIC CONTROL, PEDESTRIAN ACCOMMODATION
15D38-02A	TEMPORARY TRAFFIC CONTROL SIGN MOUNTING
15D38-02B	ATTACHMENT OF SIGNS TO POSTS

6

6

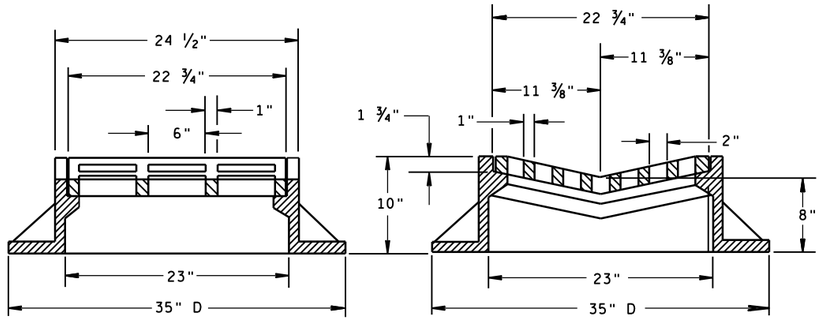

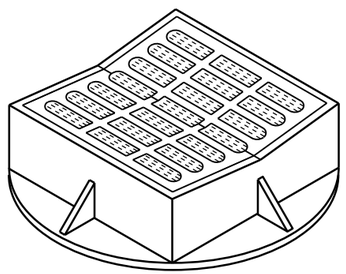

TYPE "B"

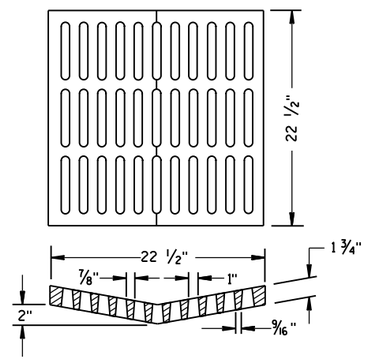

ALTERNATIVE GRATE FOR TYPE "B" COVER

USE WHERE PEDESTRIAN OR BICYCLE TRAFFIC IS POSSIBLE.

NOTED AS TYPE B-A ON THE DRAINAGE TABLE

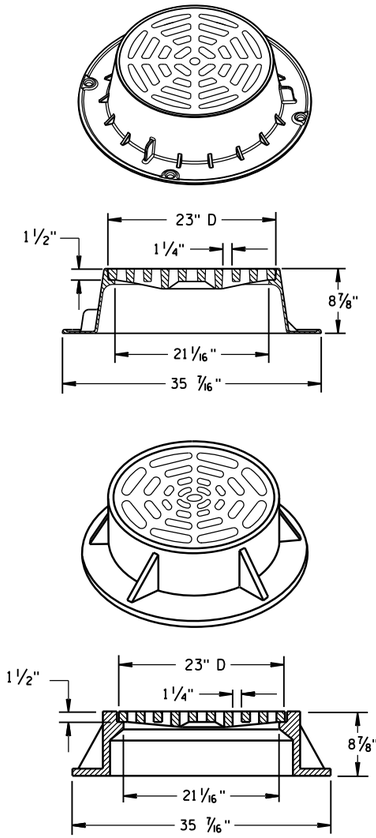

TYPE "C"

NOTE: EITHER CASTING IS ACCEPTABLE

GENERAL NOTES

DETAILS OF CONSTRUCTION, MATERIALS AND WORKMANSHIP NOT SHOWN ON THIS DRAWING SHALL CONFORM TO THE PERTINENT REQUIREMENTS OF THE STANDARD SPECIFICATIONS AND THE APPLICABLE SPECIAL PROVISIONS.

DETAIL DRAWINGS FOR PROPOSED ALTERNATE DESIGNS FOR CATCH BASIN, MANHOLE AND INLET COVERS SHALL BE SUBMITTED TO THE ENGINEER FOR APPROVAL PROVIDING THAT SUCH ALTERNATE DESIGNS MAKE PROVISION FOR EQUIVALENT CAPACITY AND STRENGTH.

ROUND FRAMES AND COVERS SHALL HAVE CONTINUOUSLY MACHINED BEARING SURFACES TO PREVENT ROCKING AND RATTLING.

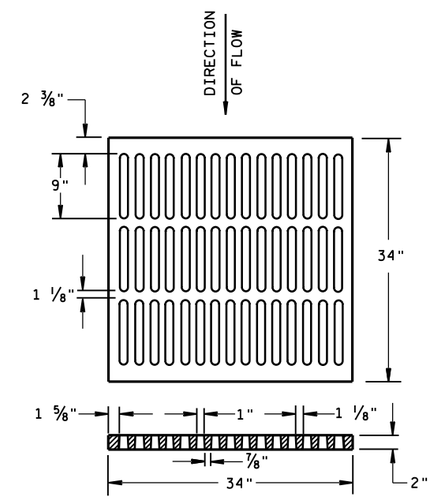

ALTERNATIVE TYPE "MS"

USE WHERE PEDESTRIAN OR BICYCLE TRAFFIC IS PERMITTED

NOTED AS TYPE MS-A ON THE DRAINAGE TABLE

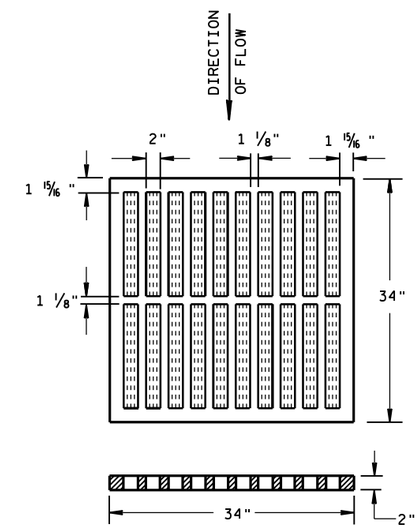

TYPE "MS"

USE ON FREEWAYS AND EXPRESSWAYS

NOTED AS TYPE MS ON DRAINAGE TABLE

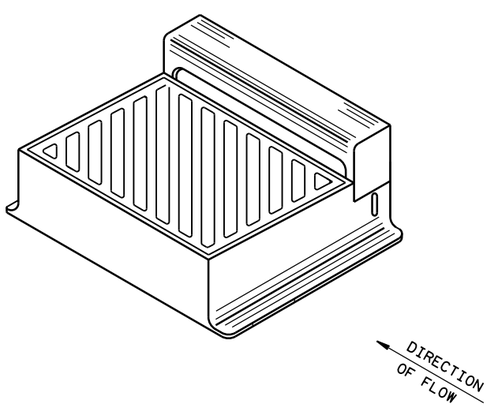

DIAGONAL SLOTS, SHALL BE ORIENTED TO THE DIRECTION OF FLOW AS ILLUSTRATED. GRATES ARE MANUFACTURED TO BE REVERSIBLE.

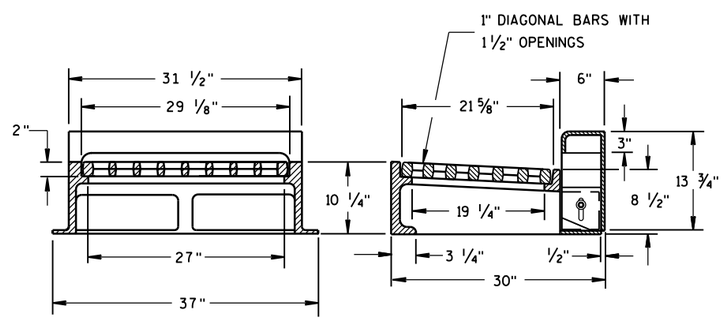

NOTE: CURB BOX HEIGHT ADJUSTABLE 6" TO 9"

TYPE "WM"

6

6

S.D.D. 8 A 5-19b

S.D.D. 8 A 5-19b

INLET COVERS
TYPE B, B-A, C, MS, MS-A, & WM

STATE OF WISCONSIN
DEPARTMENT OF TRANSPORTATION

APPROVED

11/27/2013 — DATE

/S/ Jerry H. Zogg — ROADWAY STANDARDS DEVELOPMENT ENGINEER

FHWA

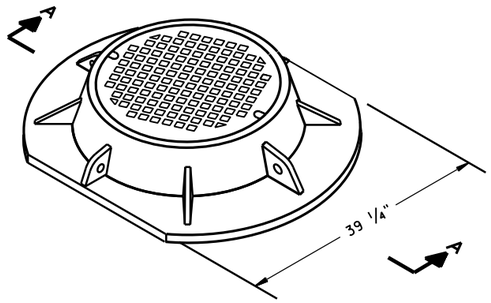

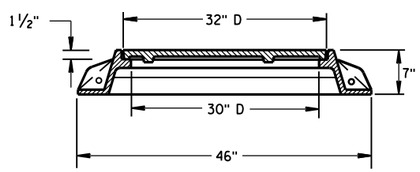

SECTION A-A
TYPE "K"

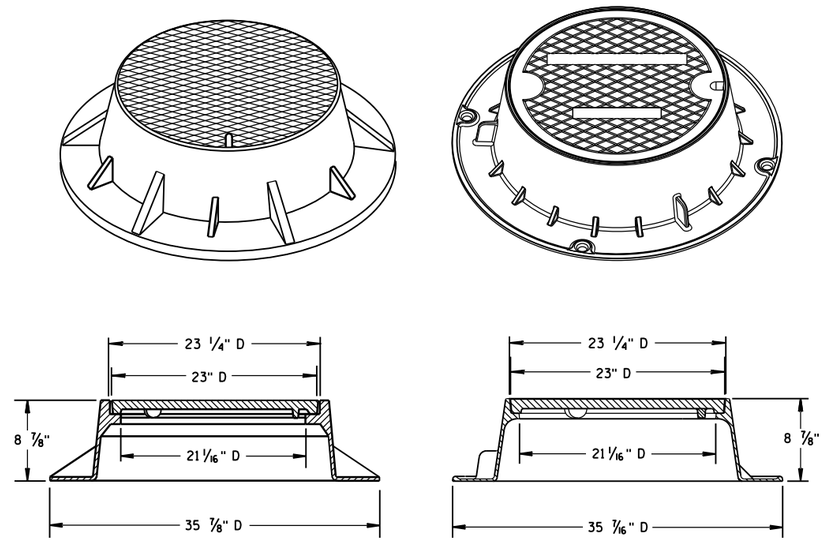

TYPE "J"
NOTE: EITHER CASTING IS ACCEPTABLE

GENERAL NOTES

DETAILS OF CONSTRUCTION, MATERIALS AND WORKMANSHIP NOT SHOWN ON THIS DRAWING SHALL CONFORM TO THE PERTINENT REQUIREMENTS OF THE STANDARD SPECIFICATIONS AND THE APPLICABLE SPECIAL PROVISIONS.

DETAIL DRAWINGS FOR PROPOSED ALTERNATE DESIGNS FOR MANHOLE COVERS SHALL BE SUBMITTED TO THE ENGINEER FOR APPROVAL PROVIDING THAT SUCH ALTERNATE DESIGNS MAKE PROVISION FOR EQUIVALENT CAPACITY AND STRENGTH.

ROUND FRAMES AND COVERS SHALL HAVE CONTINUOUSLY MACHINED BEARING SURFACES TO PREVENT ROCKING AND RATTLING.

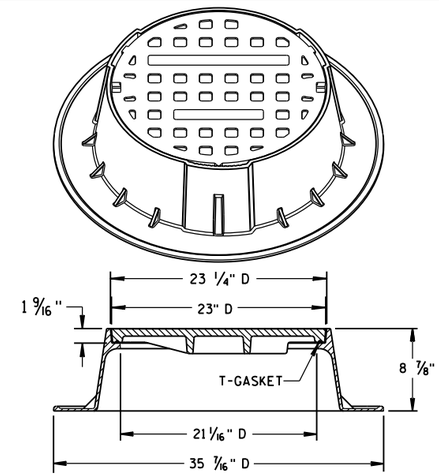

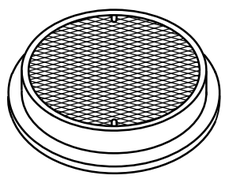

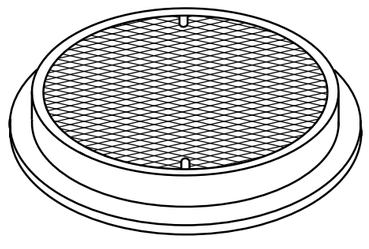

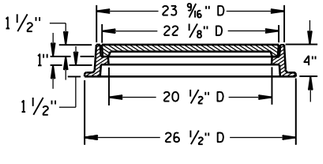

TYPE "L"

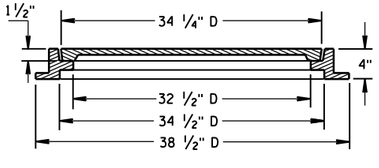

TYPE "M"

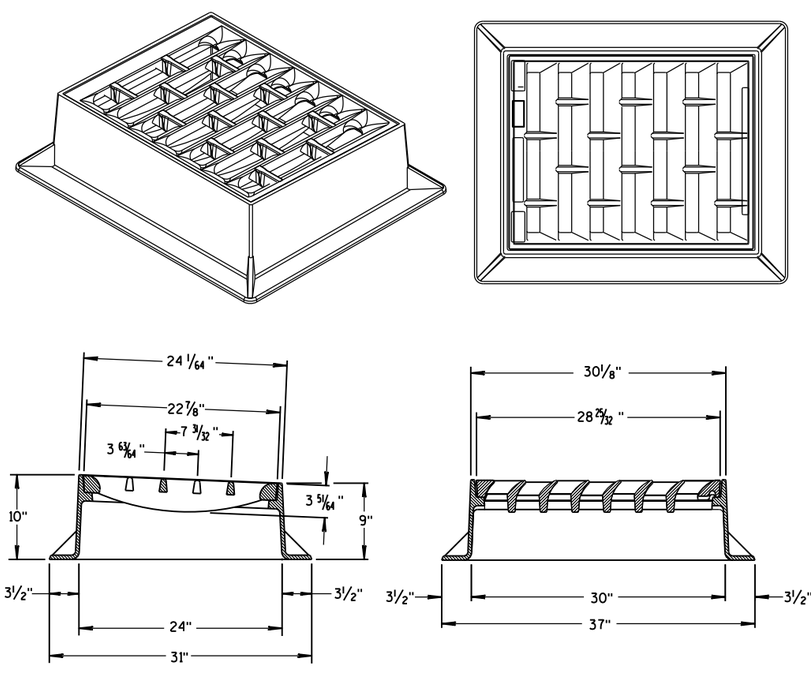

INLET COVER TYPE "BW"

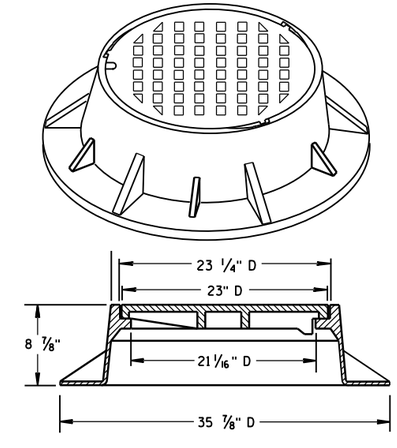

TYPE "J" SPECIAL
TYPE "B" NON-ROCKING SELF-SEAL LID
(NOTED AS TYPE J-S ON THE DRAINAGE TABLE)
NOTE: EITHER CASTING IS ACCEPTABLE

INLET COVER TYPE BW MANHOLE COVERS, TYPE K, J, J-S, L & M	
STATE OF WISCONSIN DEPARTMENT OF TRANSPORTATION	
APPROVED 11/27/2013 DATE FHWA	/S/ Jerry H. Zogg ROADWAY STANDARDS DEVELOPMENT ENGINEER

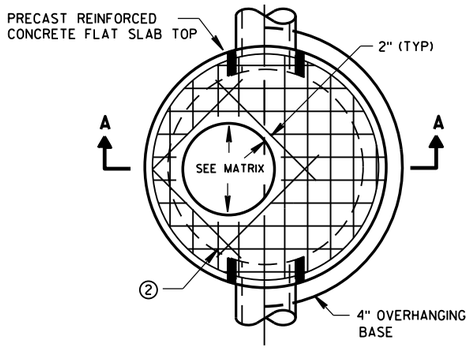

PLAN VIEW CIRCULAR OPENING

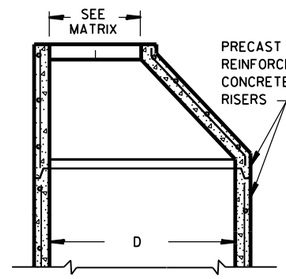

OPTIONAL PRECAST REINFORCED CONCRETE ECCENTRIC TOP

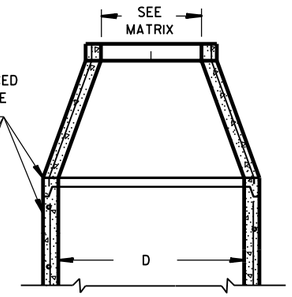

OPTIONAL PRECAST REINFORCED CONCRETE CONCENTRIC TOP

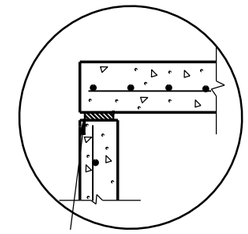

TOP WITH PLAIN END JOINT

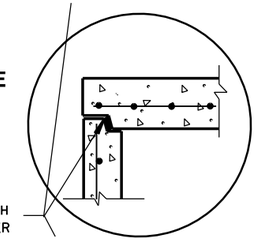

JOINTS TO BE SEALED WITH A BUTYL RUBBER SEAL PER SEALANT MANUFACTURERS RECOMMENDATIONS CONFORMING TO ASTM C990 (TYP)

TOP WITH TONGUE AND GROOVE JOINT

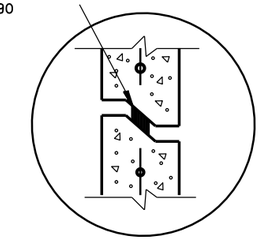

RISER WITH TONGUE AND GROOVE JOINT

DETAIL "B"

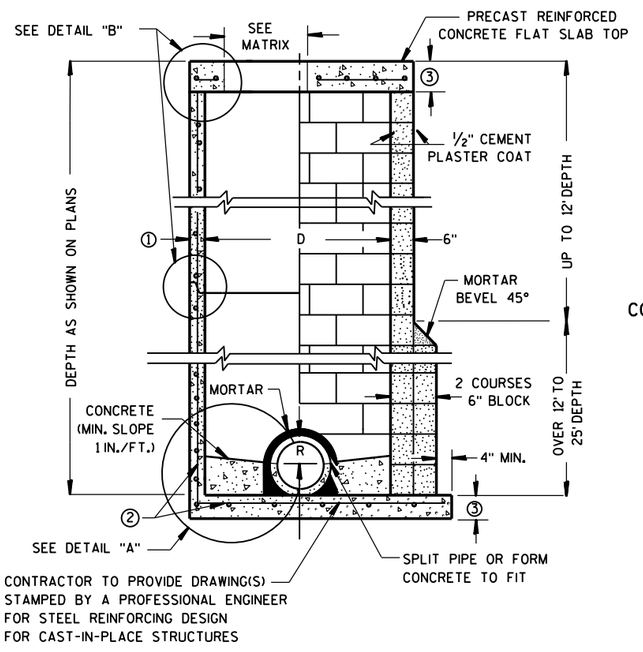

PRECAST REINFORCED CONCRETE WITH MONOLITHIC BASE

CONCRETE BLOCK WITH CAST-IN-PLACE OR PRECAST REINFORCED CONCRETE BASE ②

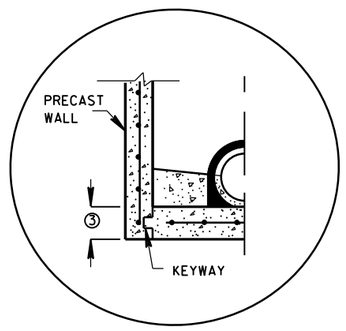

PRECAST REINFORCED CONCRETE WITH INTEGRAL BASE OPTION

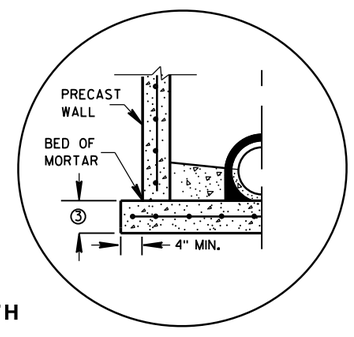

SEPARATE PRECAST REINFORCED CONCRETE BASE OPTION

DETAIL "A"

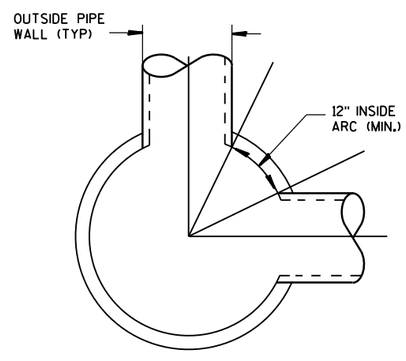

DETAIL "C"

GENERAL NOTES

DETAILS OF CONSTRUCTION, MATERIALS AND WORKMANSHIP NOT SHOWN ON THIS DRAWING SHALL CONFORM TO THE PERTINENT REQUIREMENTS OF THE STANDARD SPECIFICATIONS AND THE APPLICABLE SPECIAL PROVISIONS.

UNLESS OTHERWISE AUTHORIZED IN WRITING BY THE ENGINEER, THE CONTRACTOR SHALL NOT ORDER AND DELIVER PRECAST MANHOLE UNITS REQUIRED FOR THE PROJECT UNTIL A LIST OF SIZES IS FURNISHED BY THE ENGINEER.

DETAILED DRAWINGS FOR PROPOSED ALTERNATE DESIGNS FOR UNDERGROUND DRAINAGE STRUCTURES SHALL BE SUBMITTED TO THE ENGINEER FOR APPROVAL PROVIDING THAT SUCH ALTERNATE DESIGNS MAKE PROVISION FOR EQUIVALENT CAPACITY AND STRENGTH.

ALL DRAINAGE STRUCTURES ARE DESIGNATED ON THE PLANS AS "MANHOLES 3X3-L", "CATCH BASINS 4-B", "INLETS 2X3-H", ETC. THE FIRST NUMBERS DESIGNATE THE SIZE OF THE STRUCTURE, AND THE FOLLOWING LETTER DESIGNATES THE TYPE OF COVER TO BE USED TO COMPRISE THE COMPLETE UNIT.

BASES SHALL BE PLACED ON A BED OF MATERIAL AT LEAST 6 INCHES IN DEPTH, WHICH MEETS THE REQUIREMENTS OF FOUNDATION BACKFILL. THIS BEDDING SHALL BE COMPACTED AND PROVIDE UNIFORM SUPPORT FOR THE ENTIRE AREA OF THE BASE.

PRECAST REINFORCED CONE TOPS (ECCENTRIC OR CONCENTRIC) OR PRECAST REINFORCED FLAT SLAB TOPS MAY BE USED ON CONCRETE BLOCK STRUCTURES.

ECCENTRIC CONE TOPS MAY BE USED ON ALL STRUCTURES, AND CONCENTRIC CONE TOPS SHALL BE USED ONLY ON STRUCTURES 5 FEET OR LESS IN DEPTH, UNLESS OTHERWISE DIRECTED BY THE ENGINEER.

STEPS MEETING AASHTO M199 AND THE FOLLOWING REQUIREMENTS SHALL BE INSTALLED IN ALL STRUCTURES OVER 5 FEET IN DEPTH: 16 INCH C-C MAXIMUM SPACING; PROJECT A MINIMUM CLEAR DISTANCE OF 4 INCHES FROM THE WALL AT THE POINT OF EMBEDMENT; MINIMUM LENGTH OF 10 INCHES; MINIMUM WALL EMBEDMENT OF 3 INCHES. FERROUS METAL STEPS NOT PAINTED OR TREATED TO RESIST CORROSION SHALL HAVE A MINIMUM CROSS SECTIONAL DIMENSION OF 1 INCH.

STEPS OF APPROVED POLYPROPYLENE PLASTIC COATED REINFORCEMENT BAR ARE ACCEPTABLE. REINFORCING BAR MUST BE A MINIMUM OF 1/2" AND MEET THE REQUIREMENTS OF ASTM A615.

CERTIFICATION SHALL BE PROVIDED THAT INSTALLED STEPS WHEN TESTED IN ACCORDANCE WITH SECTION 10 OF AASHTO T280 CAN WITHSTAND A VERTICAL LOAD OF 800 LBS. AND A HORIZONTAL LOAD OF 400 LBS.

ALL BAR STEEL REINFORCEMENT SHALL BE EMBEDDED 2 INCHES CLEAR UNLESS OTHERWISE SHOWN OR NOTED.

CONCRETE BLOCK WILL NOT BE PERMITED FOR STRUCTURES GREATER THAN 4 FEET IN DIAMETER.

PRECAST REINFORCED RISERS SHALL HAVE A TONGUE AND GROOVE JOINT WITH TONGUE UP OR DOWN.

ALL PRECAST MANHOLE UNITS SHALL CONFORM TO THE PERTINENT REQUIREMENTS OF AASHTO DESIGNATION M 199.

4" OVERHANGING BASES ARE REQUIRED FOR ALL CONCRETE BLOCK INSTALLATIONS. 4" OVERHANG IS REQUIRED WHEN SEPARATE PRECAST BASE IS PROVIDED. OVERHANG IS NOT REQUIRED ON PRECAST STRUCTURES WITH AN INTEGRAL OR MONOLITHIC BASE.

FOR ADDITIONAL CONFIGURATIONS, MAINTAIN A MINIMUM OF 12 INCHES AS MEASURED FROM THE INSIDE OF THE STRUCTURE WALL BETWEEN THE OUTSIDE PIPE WALLS OF ADJACENT PIPES. SEE DETAIL "C".

① MINIMUM WALL THICKNESS SHALL BE 4 INCHES FOR 3-FT, 5 INCHES FOR 4-FT, 6 INCHES FOR 5-FT, 7 INCHES FOR 6-FT, 8 INCHES FOR 7-FT AND 9 INCHES FOR 8-FT DIAMETER PRECAST MANHOLES.

② FOR PRECAST MANHOLES PROVIDE REINFORCING STEEL IN ACCORDANCE TO AASHTO M199.

③ PRECAST FLAT SLAB TOPS AND BASES WITH A DIAMETER OF 48" AND LESS SHALL HAVE A MINIMUM THICKNESS OF 6". PRECAST FLAT SLAB TOPS AND BASES WITH A DIAMETER LARGER THAN 48" SHALL HAVE A MINIMUM THICKNESS OF 8".

MANHOLE COVER OPENING MATRIX

MANHOLE COVER TYPE	C	ALL J'S	K	L	M
OPENING SIZE (FT)					
2 DIA.	X	X		X	
3 DIA.			X		X

PIPE MATRIX

MANHOLE SIZE	MAXIMUM INSIDE PIPE DIAMETER FOR TWO PIPES	
	180° SEPARATION (IN)	90° SEPARATION (IN)
3-FT	15	12
4-FT	24	18
5-FT	36	24
6-FT	42	36
7-FT	48	36
8-FT	60	42

MANHOLES 3-FT, 4-FT, 5-FT, 6-FT, 7-FT AND 8-FT DIAMETER

STATE OF WISCONSIN
DEPARTMENT OF TRANSPORTATION

APPROVED
Sept., 2016 — DATE
/S/ Rodney Taylor
ROADWAY STANDARDS DEVELOPMENT UNIT SUPERV
FHWA

6

S.D.D. 8 B 9-2

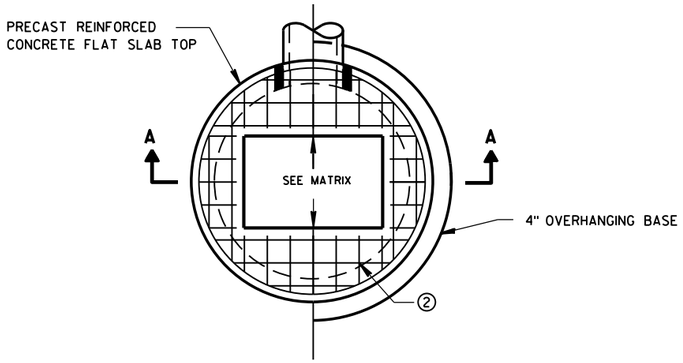

PLAN VIEW RECTANGULAR OPENING

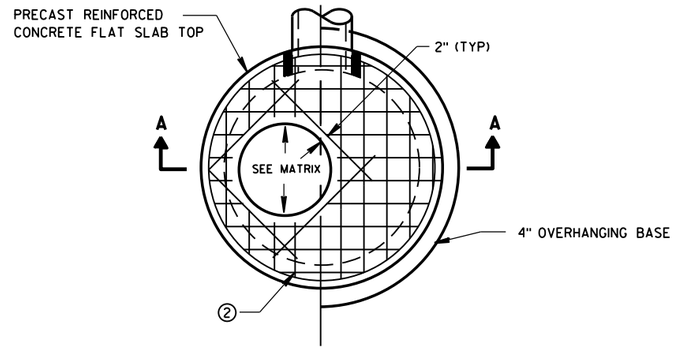

PLAN VIEW CIRCULAR OPENING

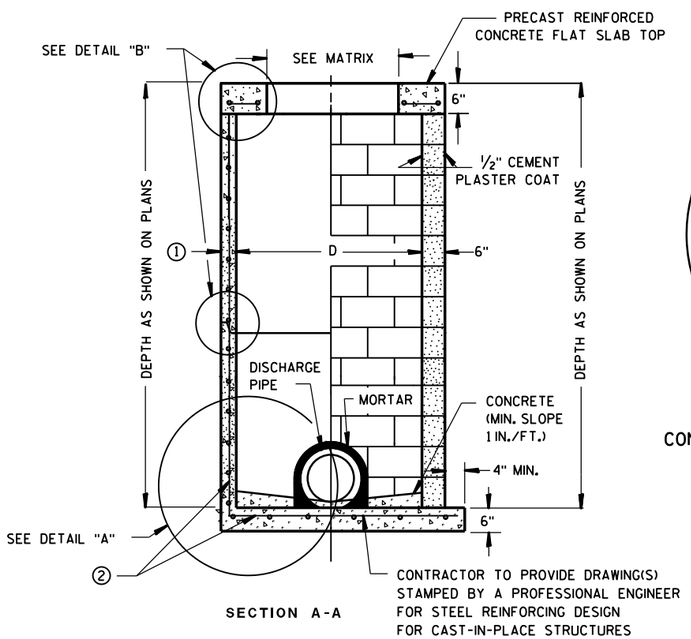

SECTION A-A

PRECAST REINFORCED CONCRETE WITH MONOLITHIC BASE

CONCRETE BLOCK WITH CAST-IN-PLACE OR PRECAST REINFORCED CONCRETE BASE ②

CIRCULAR INLETS W/ FLAT TOP

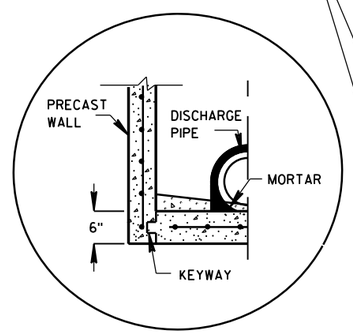

PRECAST REINFORCED CONCRETE WITH INTEGRAL BASE OPTION

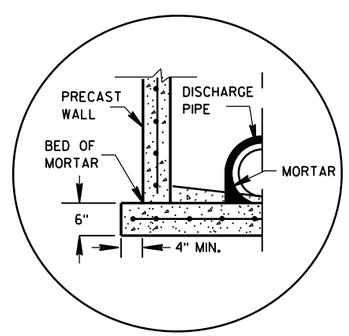

SEPARATE PRECAST REINFORCED CONCRETE BASE OPTION

DETAIL "A"

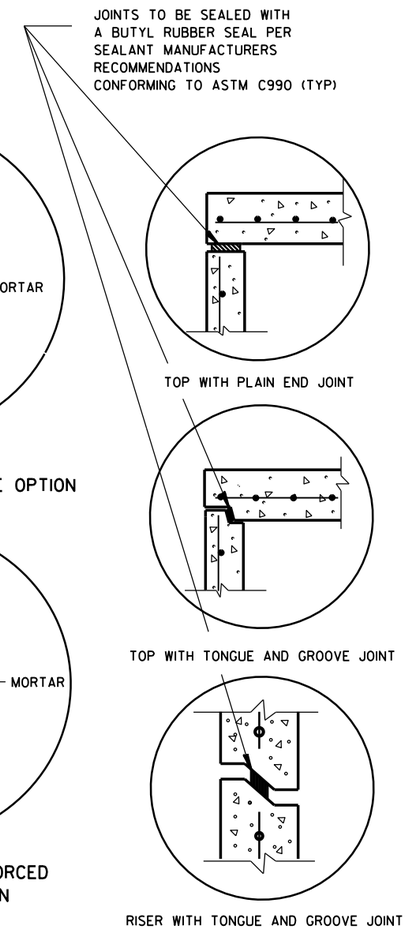

DETAIL "B"

GENERAL NOTES

DETAILS OF CONSTRUCTION, MATERIALS AND WORKMANSHIP NOT SHOWN ON THIS DRAWING SHALL CONFORM TO THE PERTINENT REQUIREMENTS OF THE STANDARD SPECIFICATIONS AND THE APPLICABLE SPECIAL PROVISIONS.

UNLESS OTHERWISE AUTHORIZED IN WRITING BY THE ENGINEER, THE CONTRACTOR SHALL NOT ORDER AND DELIVER PRECAST INLET UNITS REQUIRED FOR THE PROJECT UNTIL A LIST OF SIZES IS FURNISHED BY THE ENGINEER.

DETAILED DRAWINGS FOR PROPOSED ALTERNATE DESIGNS FOR UNDERGROUND DRAINAGE STRUCTURES SHALL BE SUBMITTED TO THE ENGINEER FOR APPROVAL PROVIDING THAT SUCH ALTERNATE DESIGNS MAKE PROVISION FOR EQUIVALENT CAPACITY AND STRENGTH.

ALL DRAINAGE STRUCTURES ARE DESIGNATED ON THE PLANS AS "MANHOLES 3X3-L", "CATCH BASINS 4-B", "INLETS 2X3-H", ETC. THE FIRST NUMBERS DESIGNATE THE SIZE OF THE STRUCTURE, AND THE FOLLOWING LETTER DESIGNATES THE TYPE OF COVER TO BE USED TO COMPRISE THE COMPLETE UNIT.

BASES SHALL BE PLACED ON A BED OF MATERIAL AT LEAST 6 INCHES IN DEPTH, WHICH MEETS THE REQUIREMENTS OF FOUNDATION BACKFILL. THIS BEDDING SHALL BE COMPACTED AND PROVIDE UNIFORM SUPPORT FOR THE ENTIRE AREA OF THE BASE.

ALL BAR STEEL REINFORCEMENT SHALL BE EMBEDDED 2 INCHES CLEAR UNLESS OTHERWISE SHOWN OR NOTED.

ALL PRECAST INLET UNITS SHALL CONFORM TO THE PERTINENT REQUIREMENTS OF AASHTO DESIGNATION M199.

PRECAST REINFORCED RISERS SHALL HAVE A TONGUE AND GROOVE JOINT WITH TONGUE UP OR DOWN.

4" OVERHANGING BASES ARE REQUIRED FOR ALL CONCRETE BLOCK INSTALLATIONS. 4" OVERHANG IS REQUIRED WHEN SEPARATE PRECAST BASE IS PROVIDED. OVERHANG IS NOT REQUIRED ON PRECAST STRUCTURES WITH AN INTEGRAL OR MONOLITHIC BASE.

FOR ADDITIONAL CONFIGURATIONS, MAINTAIN A MINIMUM OF 12 INCHES AS MEASURED FROM THE INSIDE OF THE STRUCTURE WALL BETWEEN THE OUTSIDE PIPE WALLS OF ADJACENT PIPES. SEE DETAIL "C".

① MINIMUM WALL THICKNESS SHALL BE 4-IN FOR 3-FT DIAMETER AND 5-IN FOR 4-FT DIAMETER PRECAST INLETS.

② FOR PRECAST CATCH BASINS PROVIDE REINFORCING STEEL IN ACCORDANCE TO AASHTO M199.

INLET COVER OPENING MATRIX

	INLET COVER TYPE	ALL A'S	ALL B'S	BW	C	F	ALL H'S	S	T	V	WM	Z
INLET SIZE	OPENING SIZE (FT)											
3-FT	2 DIA.				X							X
	2X2	X	X					X		X		
4-FT	2 DIA.				X							X
	2X2	X	X					X		X		
	2X2.5			X				X	X	X	X	
	2X3						X					
	2.5X3					X						

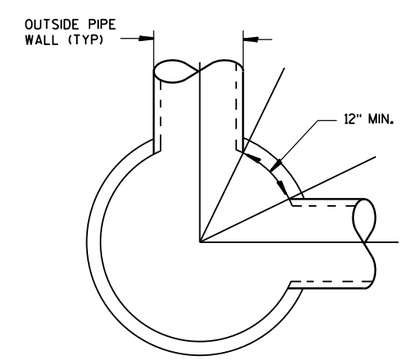

DETAIL "C"

PIPE MATRIX

INLET SIZE	MAXIMUM INSIDE PIPE DIAMETER FOR TWO PIPES	
	180° SEPARATION (IN)	90° SEPARATION (IN)
3-FT	15	12
4-FT	24	18

INLETS 3-FT AND 4-FT DIAMETER

INLETS 3-FT
AND 4-FT DIAMETER

STATE OF WISCONSIN
DEPARTMENT OF TRANSPORTATION

APPROVED
Sept., 2016 — /S/ Rodney Taylor
DATE — ROADWAY STANDARDS DEVELOPMENT UNIT SUPERVISOR
FHWA

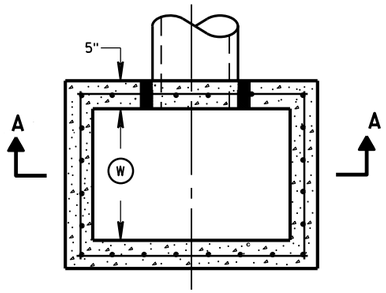

PLAN VIEW

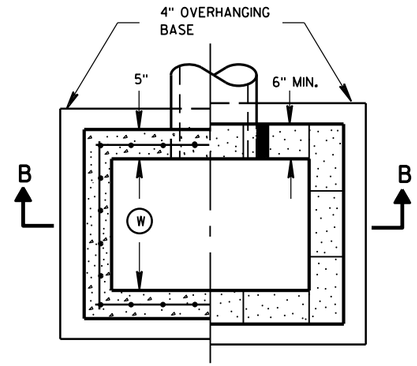

PLAN VIEW

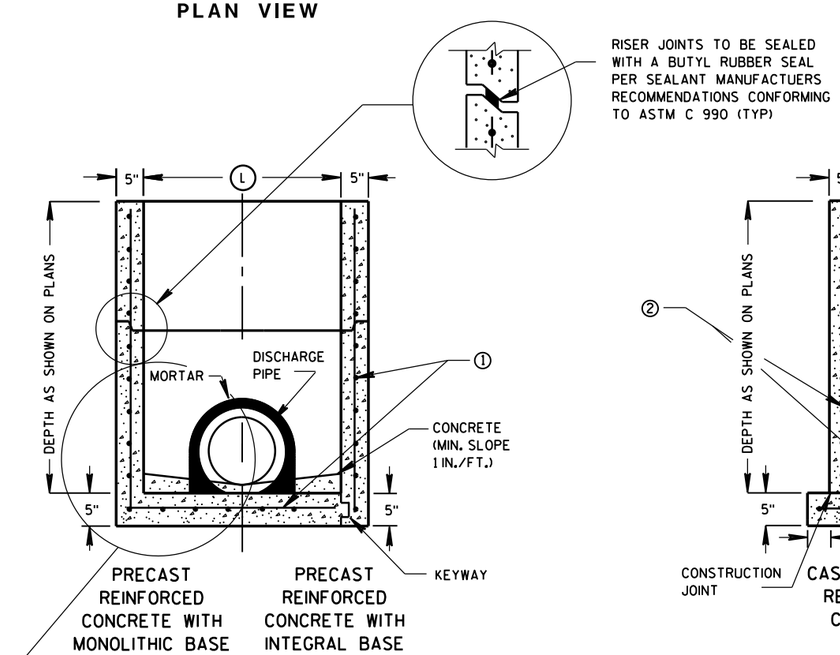

SECTION A-A

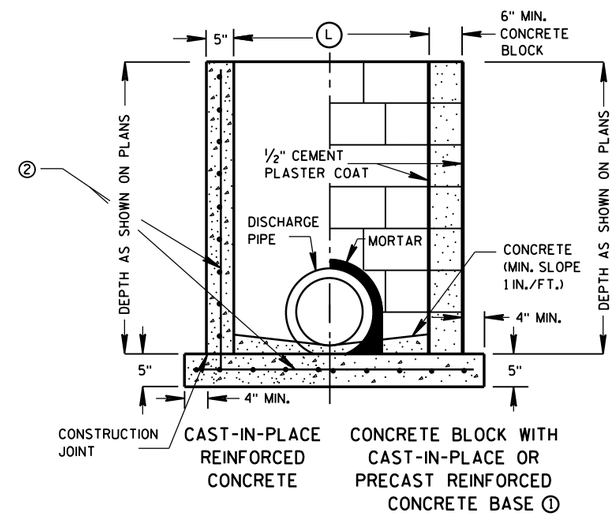

SECTION B-B

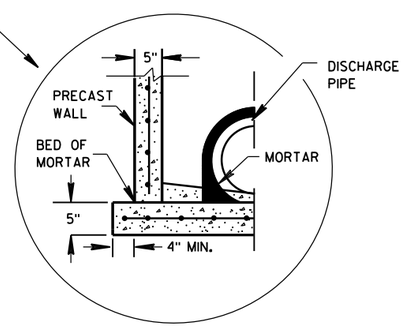

SEPARATE PRECAST REINFORCED CONCRETE BASE OPTION

GENERAL NOTES

DETAILS OF CONSTRUCTION, MATERIALS AND WORKMANSHIP NOT SHOWN ON THIS DRAWING SHALL CONFORM TO THE PERTINENT REQUIREMENTS OF THE STANDARD SPECIFICATIONS AND THE APPLICABLE SPECIAL PROVISIONS.

UNLESS OTHERWISE AUTHORIZED IN WRITING BY THE ENGINEER, THE CONTRACTOR SHALL NOT ORDER AND DELIVER PRECAST INLET UNITS REQUIRED FOR THE PROJECT UNTIL A LIST OF SIZES IS FURNISHED BY THE ENGINEER.

DETAILED DRAWINGS FOR PROPOSED ALTERNATE DESIGNS FOR UNDERGROUND DRAINAGE STRUCTURES SHALL BE SUBMITTED TO THE ENGINEER FOR APPROVAL PROVIDING THAT SUCH ALTERNATE DESIGNS MAKE PROVISION FOR EQUIVALENT CAPACITY AND STRENGTH.

ALL PRECAST INLET UNITS SHALL CONFORM TO THE PERTINENT REQUIREMENTS OF ASTM C 913.

ALL DRAINAGE STRUCTURES ARE DESIGNATED ON THE PLANS AS "MANHOLES 3X3-L", "CATCH BASINS 4-B", "INLETS 2X3-H", ETC. THE FIRST NUMBERS DESIGNATES THE SIZE OF THE STRUCTURE, AND THE FOLLOWING LETTER DESIGNATES THE TYPE OF COVER TO BE USED TO COMPRISE THE COMPLETE UNIT.

BASES SHALL BE PLACED ON A BED OF MATERIAL AT LEAST 6 INCHES IN DEPTH, WHICH MEETS THE REQUIREMENTS OF FOUNDATION BACKFILL. THIS BEDDING SHALL BE COMPACTED AND PROVIDE UNIFORM SUPPORT FOR THE ENTIRE AREA OF THE BASE.

ALL BAR STEEL REINFORCEMENT SHALL BE EMBEDDED 2 INCHES CLEAR UNLESS OTHERWISE SHOWN OR NOTED.

PRECAST REINFORCED RISERS SHALL HAVE A TONGUE AND GROOVE JOINT WITH TONGUE UP OR DOWN.

4" OVERHANGING BASES ARE REQUIRED FOR CAST-IN-PLACE REINFORCED CONCRETE AND CONCRETE BLOCK INSTALLATIONS.
4" OVERHANG IS REQUIRED WHEN SEPARATE PRECAST BASE IS PROVIDED.
OVERHANG IS NOT REQUIRED ON PRECAST STRUCTURES WITH AN INTEGRAL OR MONOLITHIC BASE.

MAXIMUM INSIDE PIPE DIAMETER DETERMINED BY 3 INCH CLEARANCE ON EACH SIDE OF THE OUTSIDE WALL OF THE PIPE. SEE DETAIL "A". ASSUMES PIPE ENTERS PERPENDICULAR TO THE STRUCTURE.

① FOR PRECAST INLETS PROVIDE REINFORCING STEEL IN ACCORDANCE TO ASTM C 913.

② CONTRACTOR TO PROVIDE DRAWING(S) STAMPED BY A PROFESSIONAL ENGINEER FOR STEEL REINFORCING DESIGN FOR CAST-IN-PLACE STRUCTURES.

INLET COVER MATRIX

INLET SIZE		INLET COVER TYPE	ALL A'S	ALL B'S	BW	F	ALL H'S	S	T	V	WM
	WIDTH (W) (FT)	LENGTH (L) (FT)									
2X2-FT	2	2	X	X				X		X	
2X2.5-FT	2	2.5			X			X	X	X	X
2X3-FT	2	3					X				
2.5X3-FT	2.5	3				X					

PIPE MATRIX

INLET SIZE	MAXIMUM INSIDE PIPE DIAMETER	
	WIDTH (IN)	LENGTH (IN)
2X2-FT	12	12
2X2.5-FT	12	18
2X3-FT	12	24
2.5X3-FT	18	24

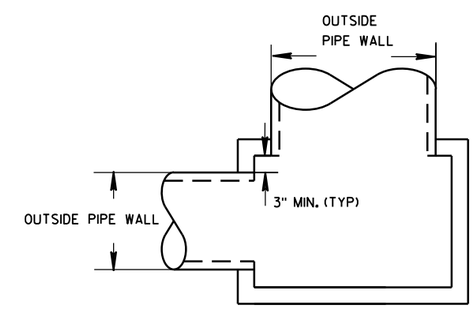

DETAIL "A"

INLETS 2X2-FT, 2X2.5-FT, 2X3-FT AND 2.5X3-FT

INLETS 2X2-FT, 2X2.5-FT, 2X3-FT AND 2.5X3-FT

STATE OF WISCONSIN
DEPARTMENT OF TRANSPORTATION

APPROVED
Sept., 2016 — DATE
/S/ Rodney Taylor — ROADWAY STANDARDS DEVELOPMENT UNIT SUPERVISOR
FHWA

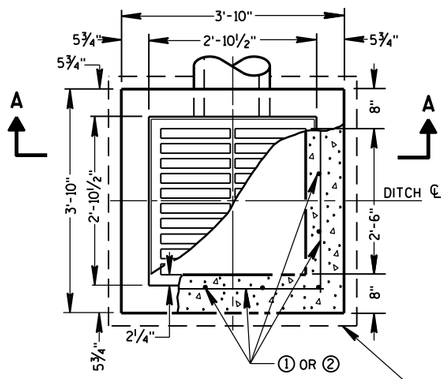

PLAN VIEW

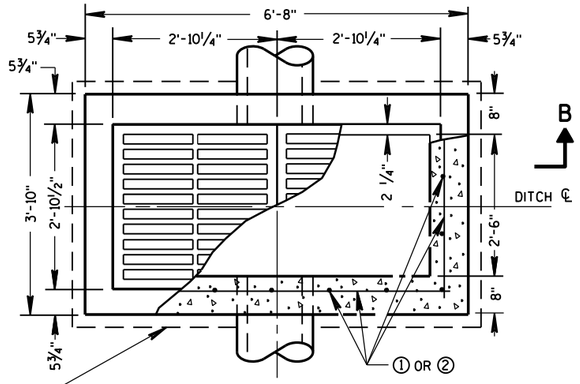

PLAN VIEW

4" OVERHANGING BASE ON REINFORCED CAST-IN-PLACE CONCRETE INLETS

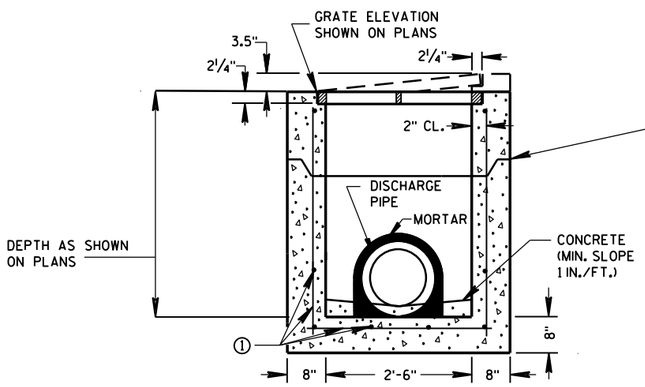

PRECAST REINFORCED CONCRETE SECTION A-A

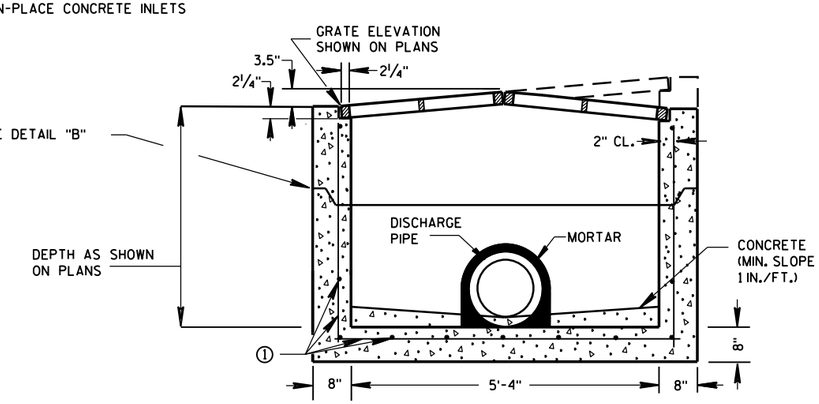

PRECAST REINFORCED CONCRETE SECTION B-B

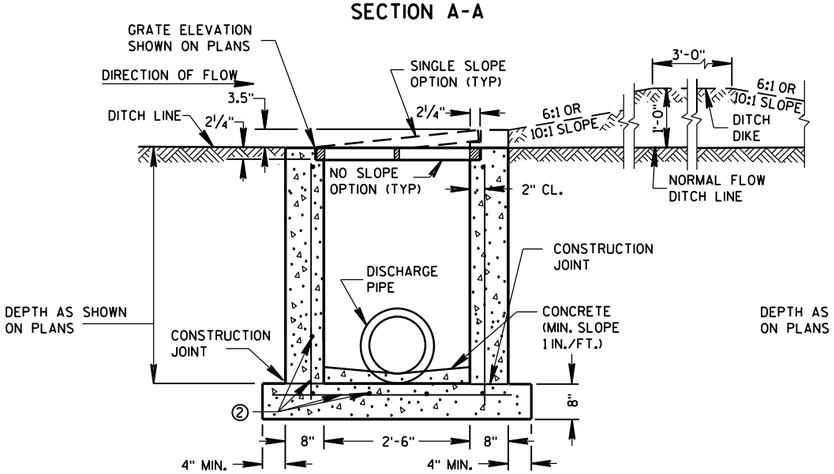

REINFORCED CAST-IN-PLACE CONCRETE SECTION A-A

INLETS MEDIAN 1 GRATE

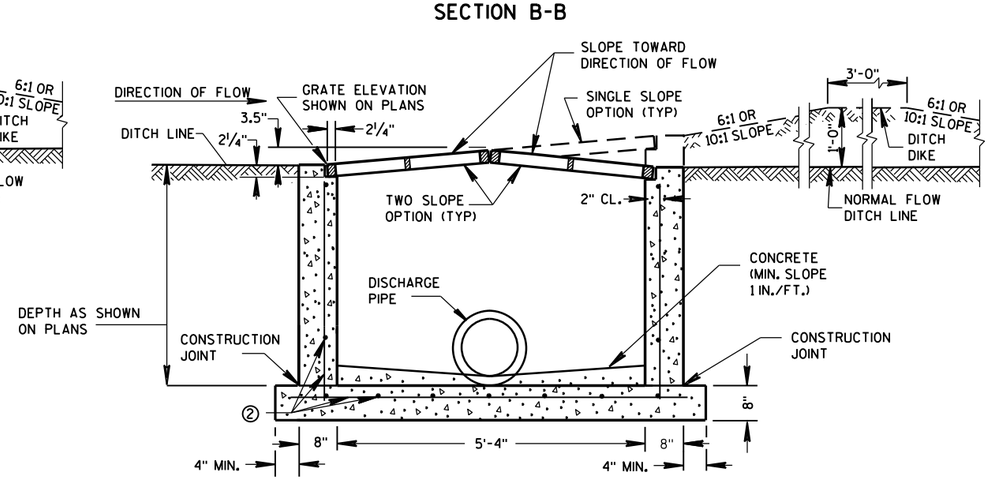

REINFORCED CAST-IN-PLACE CONCRETE SECTION B-B

INLETS MEDIAN 2 GRATE

GENERAL NOTES

DETAILS OF CONSTRUCTION, MATERIALS AND WORKMANSHIP NOT SHOWN ON THIS DRAWING SHALL CONFORM TO THE PERTINENT REQUIREMENTS OF THE STANDARD SPECIFICATIONS AND THE APPLICABLE SPECIAL PROVISIONS.

UNLESS OTHERWISE AUTHORIZED IN WRITING BY THE ENGINEER, THE CONTRACTOR SHALL NOT ORDER AND DELIVER PRECAST INLET UNITS REQUIRED FOR THE PROJECT UNTIL A LIST OF SIZES IS FURNISHED BY THE ENGINEER.

DETAILED DRAWINGS FOR PROPOSED ALTERNATE DESIGNS FOR INLETS WHICH MAY INCLUDE PRECAST REINFORCED CONCRETE INLETS, SHALL BE SUBMITTED TO THE ENGINEER FOR APPROVAL PROVIDING THAT SUCH ALTERNATE DESIGNS MAKE PROVISION FOR EQUIVALENT CAPACITY AND STRENGTH.

ALL MEDIAN INLETS ARE DESIGNATED ON THE PLANS AS "INLETS, 1G-MS", ETC. THE FIRST NUMBER AND LETTER DESIGNATE THE TYPE OF STRUCTURE, AND THE FOLLOWING LETTERS DESIGNATE THE TYPE OF COVER TO BE USED TO COMPRISE THE COMPLETE UNIT.

BASES SHALL BE PLACED ON A BED OF MATERIAL AT LEAST 6 INCHES IN DEPTH, WHICH MEETS THE REQUIREMENTS OF FOUNDATION BACKFILL. THIS BEDDING SHALL BE COMPACTED AND PROVIDE UNIFORM SUPPORT FOR THE ENTIRE AREA OF THE BASE.

ALL BAR STEEL REINFORCEMENT SHALL BE EMBEDDED 2 INCHES CLEAR UNLESS OTHERWISE SHOWN OR NOTED.

PRECAST REINFORCED RISERS SHALL HAVE A TONGUE AND GROOVE JOINT WITH TONGUE UP OR DOWN.

ALL PRECAST INLET UNITS SHALL CONFORM TO THE PERTINENT REQUIREMENTS OF ASTM C 913.

MAXIMUM INSIDE PIPE DIAMETER DETERMINED BY 3" CLEARANCE ON EACH SIDE OF THE OUTSIDE WALL OF THE PIPE. SEE DETAIL "A". ASSUMES PIPE ENTERS PERPENDICULAR TO THE STRUCTURE.

① FOR PRECAST INLETS PROVIDE REINFORCING STEEL IN ACCORDANCE TO ASTM C 913.

② CONTRACTOR TO PROVIDE DRAWING(S) STAMPED BY A PROFESSIONAL ENGINEER FOR STEEL REINFORCING DESIGN FOR CAST-IN-PLACE STRUCTURES.

PIPE MATRIX

	MAXIMUM INSIDE PIPE DIAMETER	
INLET SIZE	WIDTH (IN)	LENGTH (IN)
1 GRATE	18	18
2 GRATE	18	42

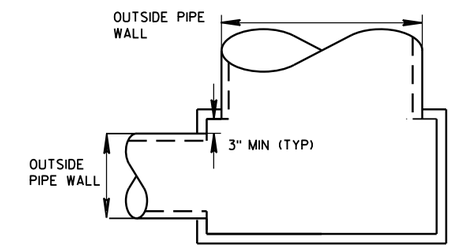

DETAIL "A"

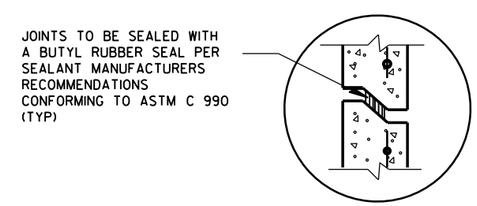

DETAIL "B"

INLETS MEDIAN 1 AND 2 GRATE

STATE OF WISCONSIN
DEPARTMENT OF TRANSPORTATION

APPROVED
Sept., 2016 — DATE
/S/ Rodney Taylor — ROADWAY STANDARDS UNIT SUPERVI
FHWA
ENT

6

S.D.D. 8 C 8-2

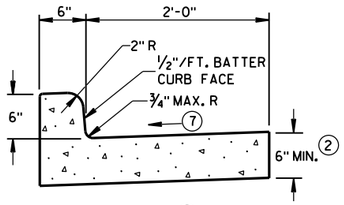

TYPES A[1] & D

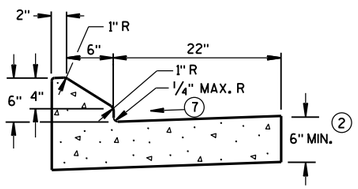

6" SLOPED CURB TYPES G[1] & J

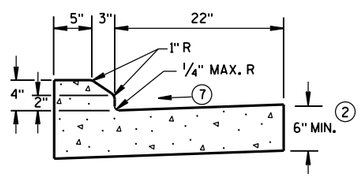

4" SLOPED CURB TYPES G[1] & J

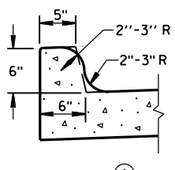

TYPES K[1] & L
(OPTIONAL CURB SHAPE)

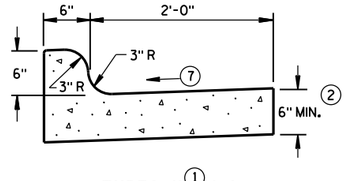

TYPES K[1] & L

CONCRETE CURB & GUTTER 30"

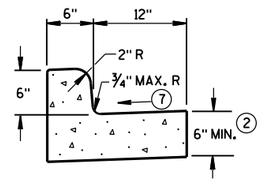

TYPES A[1] & D

CONCRETE CURB & GUTTER 18"

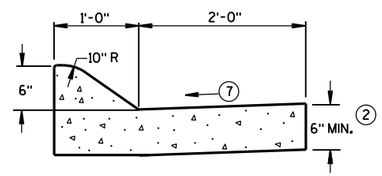

6" SLOPED CURB TYPES A[1] & D

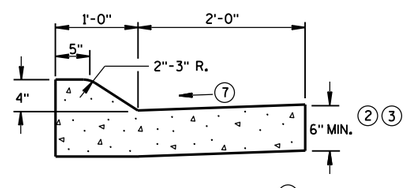

4" SLOPED CURB TYPES A[1] & D

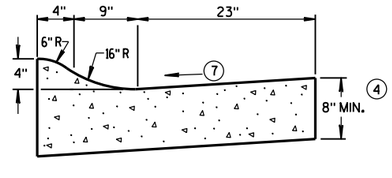

4" SLOPED CURB TYPES R[1] & T[5]

CONCRETE CURB & GUTTER 36"

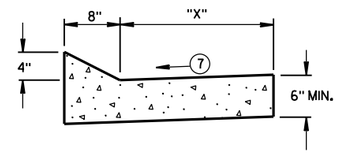

TYPES TBT & TBTT[1]

CONCRETE CURB & GUTTER

TBT & TBTT	"X"
30"	22"
36"	28"

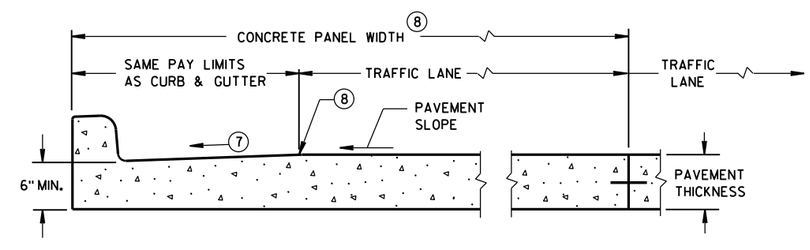

PARTIAL SECTION OF PAVEMENT*
WITH INTEGRAL CURB & GUTTER

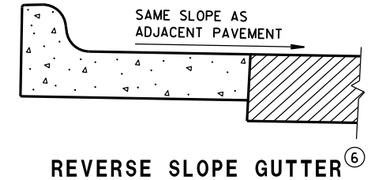

REVERSE SLOPE GUTTER[6]
(TYPICAL FOR ALL CURB & GUTTER TYPES)

GENERAL NOTES

DETAILS OF CONSTRUCTION, MATERIALS AND WORKMANSHIP NOT SHOWN ON THIS DRAWING SHALL CONFORM TO THE PERTINENT REQUIREMENTS OF THE CONTRACT.

PAVEMENT TIES AND TIE BARS SHALL BE EPOXY COATED IN CONFORMANCE WITH SUBSECTION 505.2.6.2 OF THE STANDARD SPECIFICATIONS.

INTEGRAL CURB & GUTTER SHALL CONFORM TO THE DETAILS SHOWN FOR CONCRETE CURB & GUTTER INCLUDING THE TRANSVERSE GUTTER SLOPE.

WHERE THE TRANSVERSE JOINTS IN THE PAVEMENT ARE REQUIRED TO BE SEALED, THE JOINTS IN THE INTEGRAL CURB AND GUTTER SHALL BE SEALED TO THE FACE OF CURB WITH THE SAME TYPE OF SEALANT. THE COST OF FURNISHING AND INSTALLING THIS SEALANT SHALL BE INCIDENTAL TO THE ITEM CONCRETE CURB AND GUTTER.

UNLESS OTHERWISE SHOWN ON THE TYPICAL CROSS SECTIONS, THE BASE AGGREGATE AND COMMON EXCAVATION LIMITS ARE 2'-0" BEHIND THE BACK OF CURBS.

1. TIE BARS ARE REQUIRED FOR CURB AND GUTTER TYPES A, G, K, R AND TBTT.
2. THE BOTTOM OF CURB AND GUTTER MAY BE CONSTRUCTED EITHER LEVEL OR PARALLEL TO THE SLOPE OF THE SUBGRADE OR BASE AGGREGATE PROVIDED A 6" MINIMUM GUTTER THICKNESS IS MAINTAINED.
3. USE 8" MINIMUM GUTTER THICKNESS WHEN USED WITH AN ADJACENT CONCRETE TRUCK APRON PLACED BEHIND BACK OF CURB.
4. THE BOTTOM OF CURB AND GUTTER MAY BE CONSTRUCTED EITHER LEVEL OR PARALLEL TO THE SLOPE OF THE SUBGRADE OR BASE AGGREGATE PROVIDED A 8" MINIMUM GUTTER THICKNESS IS MAINTAINED.
5. THE FACE OF CURB IS 6" FROM THE BACK OF CURB.
6. WHEN REVERSE SLOPE GUTTER IS REQUIRED, THE LOCATION(S) WILL BE SHOWN ELSEWHERE IN THE PLAN.
7. USE 4% GUTTER CROSS SLOPE UNLESS OTHERWISE NOTED IN THE PLANS.
8. INCLUDE LONGITUDINAL JOINT AND TIE BARS ALONG LANE EDGE WHEN CONCRETE PANEL WIDTH EXCEEDS THE MAXIMUM WIDTH PER TABLE BELOW. LONGITUDINAL JOINT(S) ARE NOT ALLOWED WITHIN TRAFFIC LANES AND BIKE LANES. LONGITUDINAL JOINT MAY BE SAWED.

PAVEMENT THICKNESS AND MAXIMUM CONCRETE PANEL WIDTH TABLE

PAVEMENT THICKNESS	MAXIMUM PANEL WIDTH
LESS THAN 10"	12'
10" & ABOVE	15'

* BIKE LANE IS NOT SHOWN.

CONCRETE CURB & GUTTER

STATE OF WISCONSIN
DEPARTMENT OF TRANSPORTATION

GENERAL NOTES

DETAILS OF CONSTRUCTION, MATERIALS AND WORKMANSHIP NOT SHOWN ON THIS DRAWING SHALL CONFORM TO THE PERTINENT REQUIREMENTS OF THE CONTRACT.

PAVEMENT TIES AND TIE BARS SHALL BE EPOXY COATED IN CONFORMANCE WITH SUBSECTION 505.2.6.2 OF THE STANDARD SPECIFICATIONS.

UNLESS OTHERWISE SHOWN ON THE TYPICAL CROSS SECTIONS, THE BASE AGGREGATE AND COMMON EXCAVATION LIMITS ARE 2'-0" BEHIND THE BACK OF CURBS.

(1) TIE BARS ARE REQUIRED FOR CURB AND GUTTER TYPES A, G, K, R AND TBTT.

(2) THE BOTTOM OF CURB AND GUTTER MAY BE CONSTRUCTED EITHER LEVEL OR PARALLEL TO THE SLOPE OF THE SUBGRADE OR BASE AGGREGATE PROVIDED A 6" MINIMUM GUTTER THICKNESS IS MAINTAINED.

(9) REFER TO SDD 8D18 AND SDD 8D19 FOR ADDITIONAL DRIVEWAY ENTRANCE CURB DETAILS.

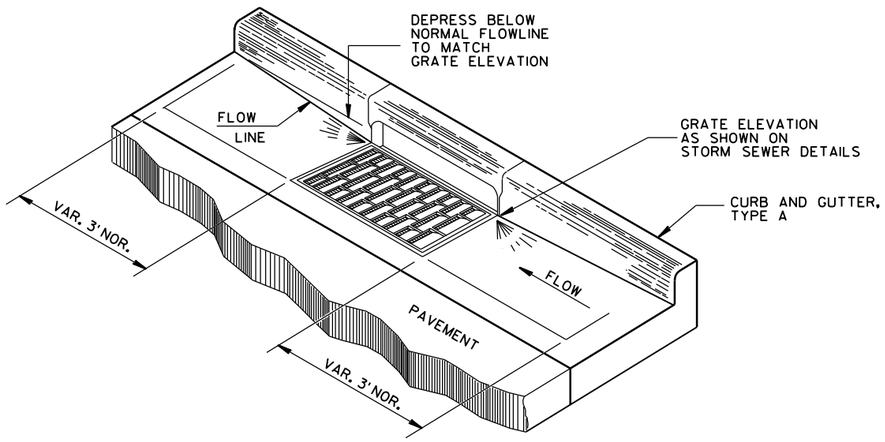

DETAIL OF CURB AND GUTTER AT INLETS

(TYPE H INLET COVER SHOWN)

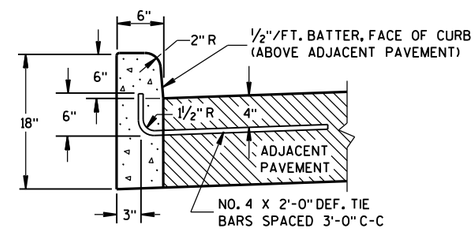

TYPES A(1) & D

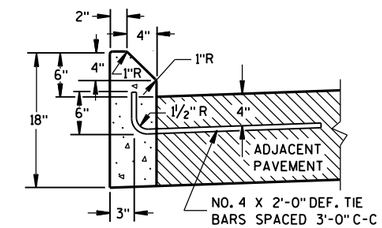

TYPES G(1) & J

CONCRETE CURB

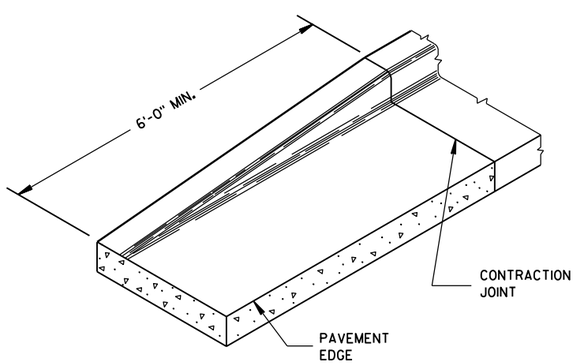

END SECTION CURB & GUTTER

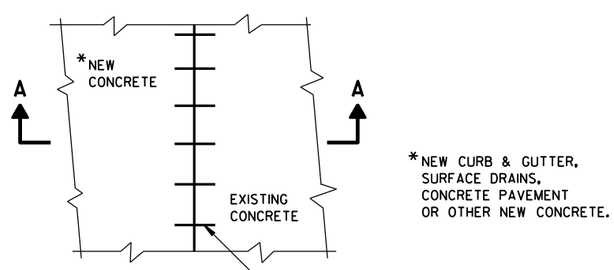

PLAN VIEW

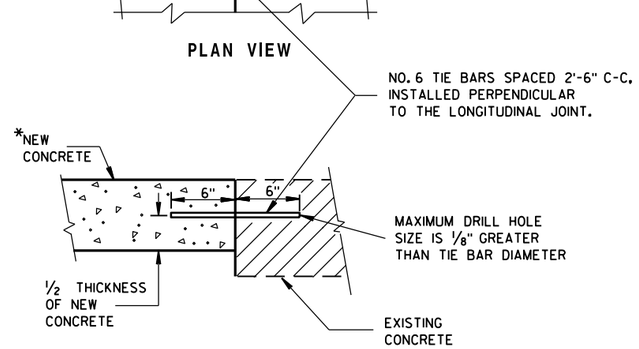

SECTION A-A

TIE BARS DRILLED INTO EXISTING PAVEMENT

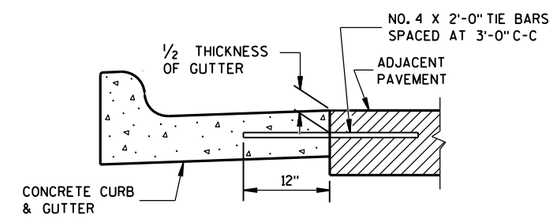

TYPICAL TIE BAR LOCATION (1)

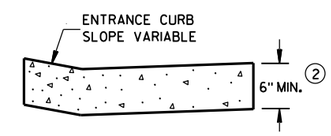

DRIVEWAY ENTRANCE CURB (9)

(WHEN DIRECTED BY THE ENGINEER)

CONCRETE CURB, TIES AND CURB AND GUTTER APPLICATIONS

STATE OF WISCONSIN
DEPARTMENT OF TRANSPORTATION

APPROVED
June, 2017 — DATE
/S/ Rodney Taylor — ROADWAY STANDARDS UNIT SUPERVISOR
ENT
FHWA

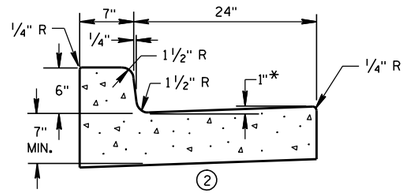

1 CONCRETE CURB & GUTTER 31"

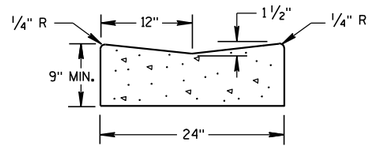

1 CONCRETE GUTTER 24"

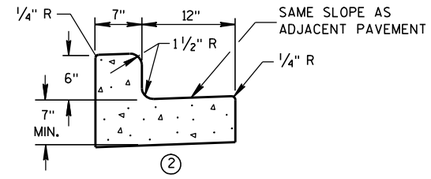

1 CONCRETE CURB & GUTTER 19"

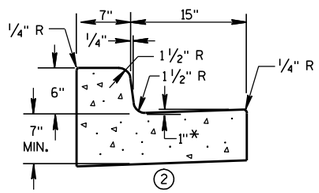

1 CONCRETE CURB & GUTTER 22"

* TO BE MEASURED TO A MAXIMUM OF 3" WHERE DRAINAGE PROBLEMS EXIST.

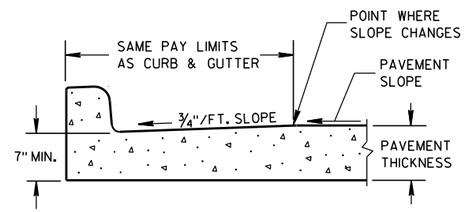

PARTIAL SECTION OF PAVEMENT WITH INTEGRAL CURB & GUTTER

GENERAL NOTES

DETAILS OF CONSTRUCTION, MATERIALS AND WORKMANSHIP NOT SHOWN ON THIS DRAWING SHALL CONFORM TO THE PERTINENT REQUIREMENTS OF THE CONTRACT.

PAVEMENT TIES AND TIE BARS SHALL BE EPOXY COATED IN CONFORMANCE WITH SUBSECTION 505.2.6.2 OF THE STANDARD SPECIFICATIONS.

INTEGRAL CURB & GUTTER SHALL CONFORM TO THE DETAILS SHOWN FOR CONCRETE CURB & GUTTER INCLUDING THE TRANSVERSE GUTTER SLOPE. A LONGITUDINAL CONSTRUCTION JOINT IS NOT REQUIRED WITH INTEGRAL CURB AND GUTTER.

WHERE THE TRANSVERSE JOINTS IN THE PAVEMENT ARE REQUIRED TO BE SEALED, THE JOINTS IN THE INTEGRAL CURB AND GUTTER SHALL BE SEALED TO THE FACE OF CURB WITH THE SAME TYPE OF SEALANT. THE COST OF FURNISHING AND INSTALLING THIS SEALANT SHALL BE INCIDENTAL TO THE ITEM CONCRETE CURB AND GUTTER.

UNLESS OTHERWISE SHOWN ON THE TYPICAL CROSS SECTIONS, THE BASE COURSE AND UNCLASSIFIED EXCAVATION LIMITS ARE 2'-0" BEHIND THE BACK OF CURB.

1 WHEN PLACED ADJACENT TO NEW CONCRETE, TIE BARS ARE REQUIRED FOR CURB AND GUTTER 31", 22", 19" AND CONCRETE GUTTER 24".

2 THE BOTTOM OF CURB AND GUTTER MAY BE CONSTRUCTED EITHER LEVEL OR PARALLEL TO THE SLOPE OF THE SUBGRADE OR BASE COURSE PROVIDED A 7" MIMIMUM GUTTER THICKNESS IS MAINTAINED.

3 WHEN HIGH SIDE CURB SECTION IS REQUIRED, THE LOCATION(S) WILL BE NOTED ON THE PLAN.

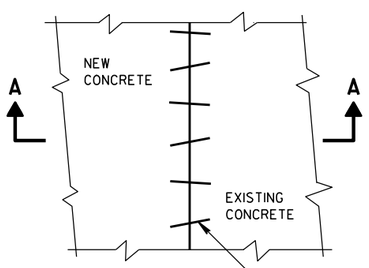

PLAN VIEW

EXISTING AND NEW CONCRETE MAY BE CURB & GUTTER, SURFACE DRAIN, PAVEMENT OR OTHER CONCRETE STRUCTURE.

NO. 6 X 12" DEF. BARS SPACED 3'-0" C-C, INSTALLED ON 6:1 SKEW HORIZONTALLY. DIRECTION OF SKEW ALTERNATING AFTER EVERY ONE OR TWO BARS.

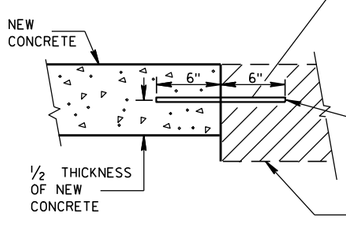

THE HOLE FOR THE BAR SHALL BE DRILLED TO A DEPTH OF 7" AND TO A DIAMETER TO PROVIDE A TIGHT DRIVEN FIT.

SECTION A-A

PAVEMENT TIES

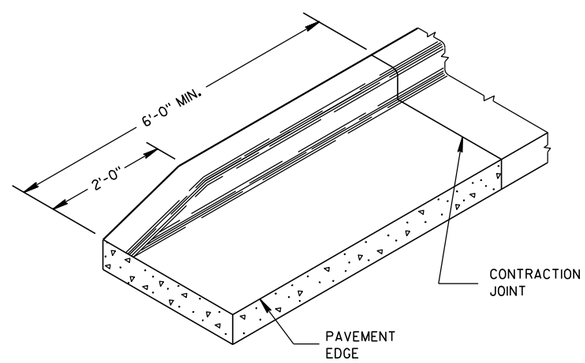

END SECTION CURB & GUTTER

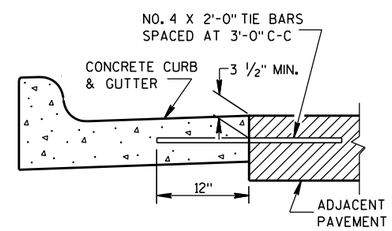

1 TYPICAL TIE BAR LOCATION

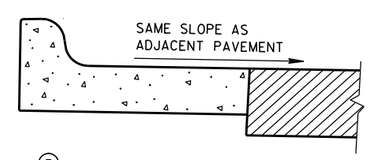

3 HIGH SIDE SECTION

(TYPICAL FOR ALL CURB & GUTTER)

CONCRETE GUTTER, CURB AND GUTTER AND PAVEMENT TIES

(For Optional Use in Milwaukee Co. Only)

STATE OF WISCONSIN
DEPARTMENT OF TRANSPORTATION

APPROVED

11/2/2010	/S/ Jerry Zogg	
DATE	ROADWAY STANDARDS ENGINEER	ENT

FHWA

6

S.D.D. 8 D 16-10

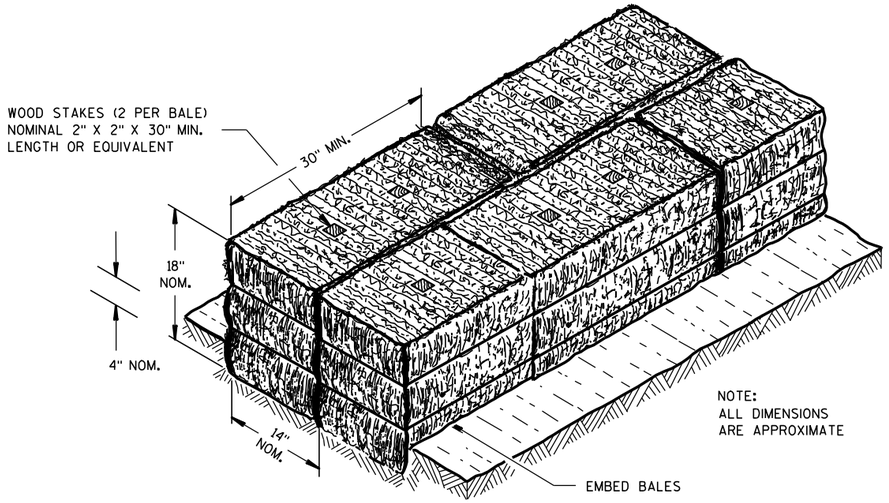

SECTION A-A

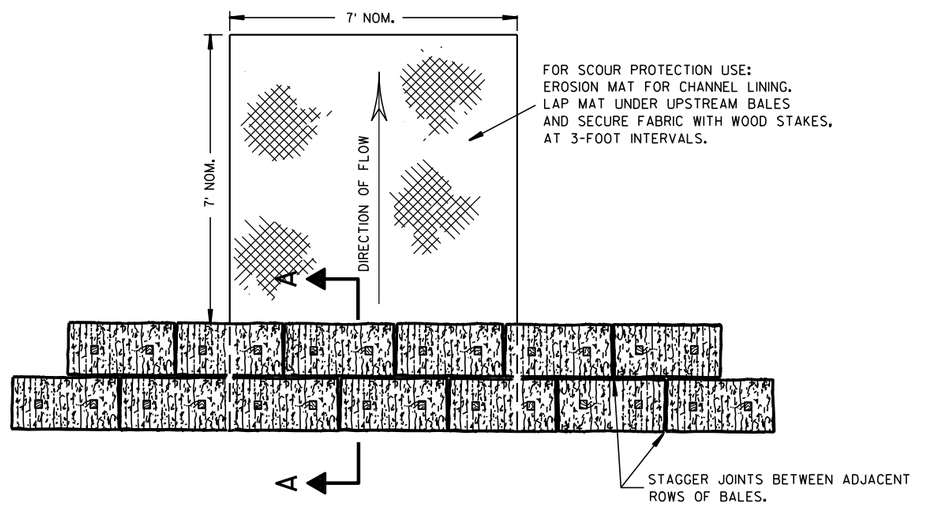

PLAN VIEW

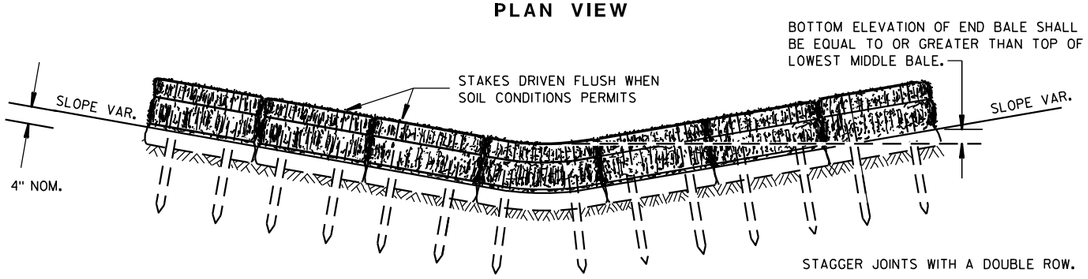

FRONT ELEVATION

TEMPORARY DITCH CHECK USING EROSION BALES ①

GENERAL NOTES

DETAILS OF CONSTRUCTION, MATERIALS AND WORKMANSHIP NOT SHOWN ON THIS DRAWING SHALL CONFORM TO THE PERTINENT REQUIREMENTS OF THE STANDARD SPECIFICATIONS AND THE APPLICABLE SPECIAL PROVISIONS.

① TEMPORARY DITCH CHECKS EITHER EROSION BALES OR MANUFACTURED SHALL BE PAID FOR UNDER THE BID ITEM OF TEMPORARY DITCH CHECK. THE DEPARTMENT WILL NOT PAY FOR TEMPORARY DITCH CHECKS CONSTRUCTED OF A SINGLE ROW OF EROSION BALES.

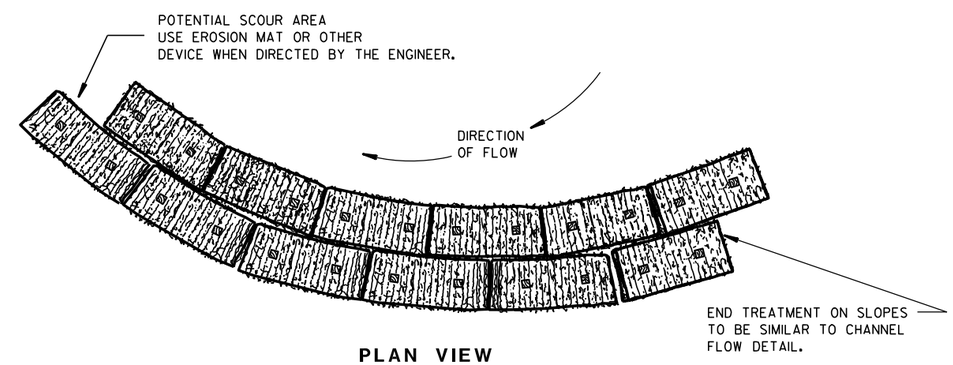

PLAN VIEW

WHEN ALTERING THE DIRECTION OF FLOW

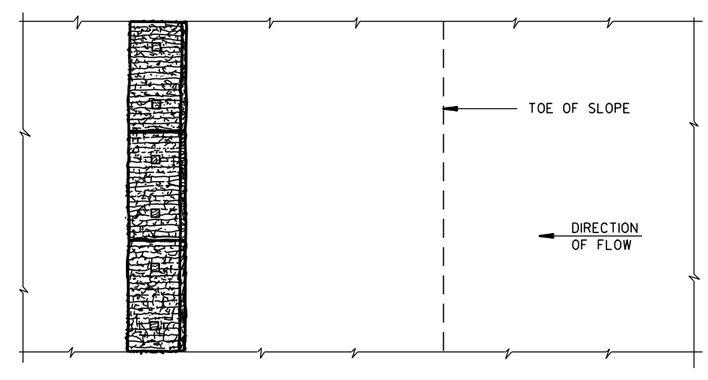

PLAN VIEW

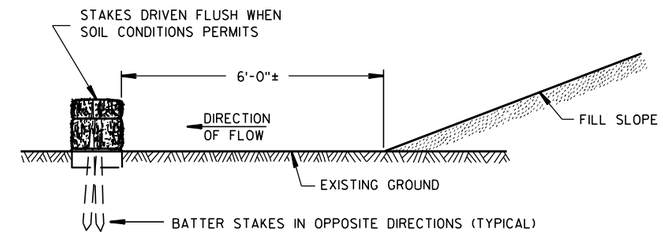

FRONT ELEVATION

WHEN EXISTING GROUND SLOPES AWAY FROM FILL SLOPE

EROSION BALES FOR SHEET FLOW

TYPICAL INSTALLATIONS OF EROSION BALES / TEMPORARY DITCH CHECKS

STATE OF WISCONSIN
DEPARTMENT OF TRANSPORTATION

APPROVED

6/04/02 — DATE

/S/ Beth Cann — CHIEF ROADWAY DEVELOPMENT ENGINEER

FHWA

6

6

S.D.D. 8 E 8-3

S.D.D. 8 E 8-3

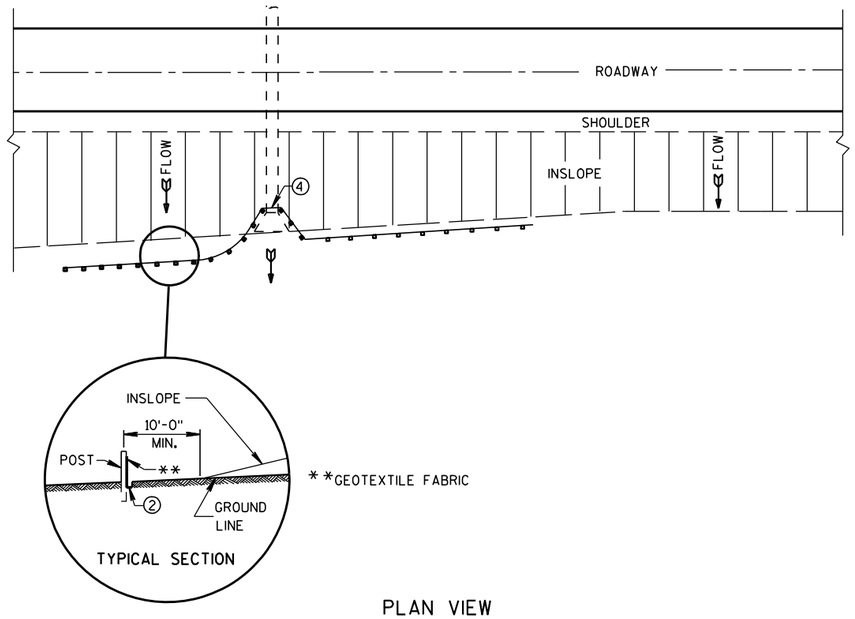

PLAN VIEW

TYPICAL APPLICATION OF SILT FENCE

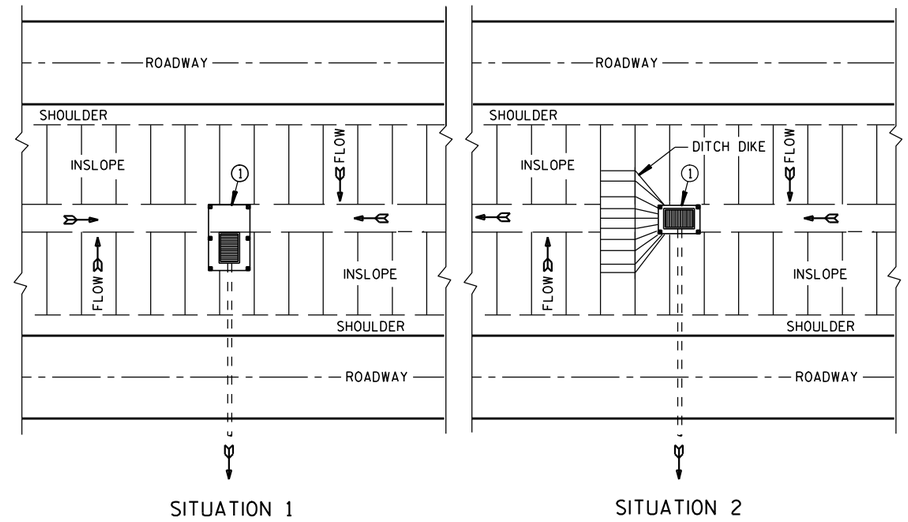

PLAN VIEW

SILT FENCE AT MEDIAN SURFACE DRAINS

GENERAL NOTES

DETAILS OF CONSTRUCTION NOT SHOWN ON THIS DRAWING SHALL CONFORM TO THE PERTINENT REQUIREMENTS OF THE STANDARD SPECIFICATIONS AND APPLICABLE SPECIAL PROVISIONS.

① HORIZONTAL BRACE REQUIRED WITH 2" X 4" WOODEN FRAME OR EQUIVALENT AT TOP OF POSTS.

② FOR MANUAL INSTALLATIONS THE TRENCH SHALL BE A MINIMUM OF 4" WIDE & 6" DEEP TO BURY AND ANCHOR THE GEOTEXTILE FABRIC. FOLD MATERIAL TO FIT TRENCH AND BACKFILL & COMPACT TRENCH WITH EXCAVATED SOIL.

③ WOOD POSTS SHALL BE A MINIMUM SIZE OF 1⅛" X 1⅛" OF OAK OR HICKORY.

④ SILT FENCE TO EXTEND ACROSS THE TOP OF THE PIPE.

⑤ CONSTRUCT SILT FENCE FROM A CONTINUOUS ROLL IF POSSIBLE BY CUTTING LENGTHS TO AVOID JOINTS. IF A JOINT IS NECESSARY USE ONE OF THE FOLLOWING TWO METHODS; A) OVERLAP THE END POSTS AND TWIST, OR ROTATE, AT LEAST 180 DEGREES. B) HOOK THE END OF EACH SILT FENCE LENGTH.

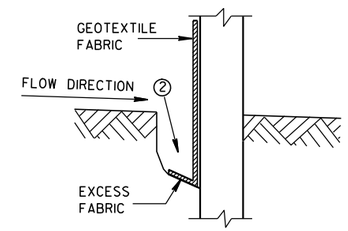

TRENCH DETAIL

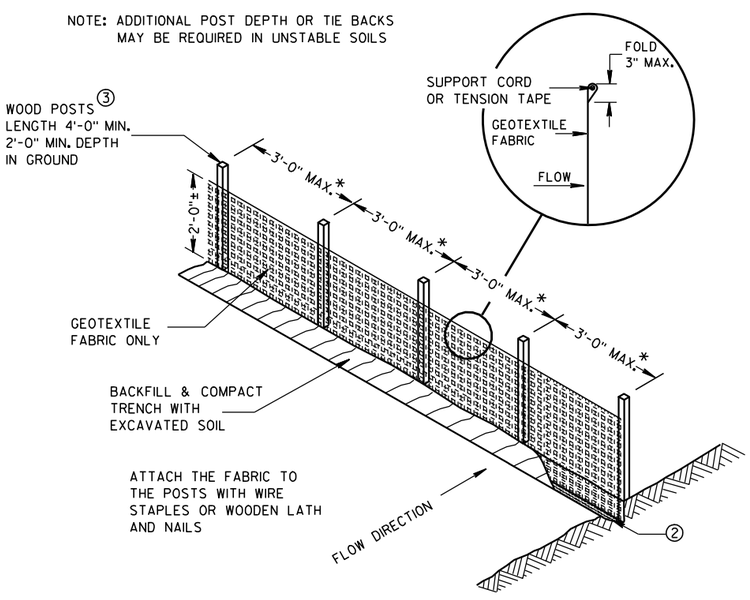

*NOTE: 8'-0" POST SPACING ALLOWED IF A WOVEN GEOTEXTILE FABRIC IS USED.

SILT FENCE

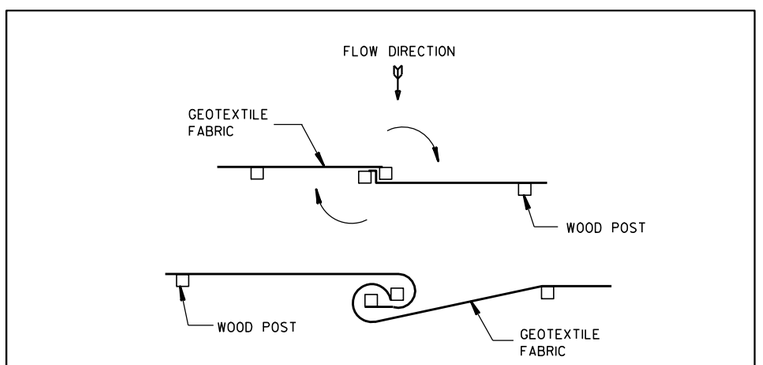

TWIST METHOD

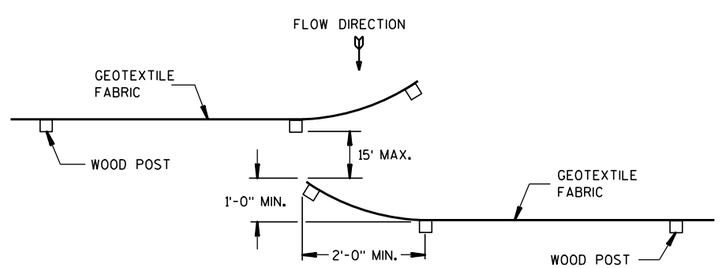

HOOK METHOD

JOINING TWO LENGTHS OF SILT FENCE ⑤

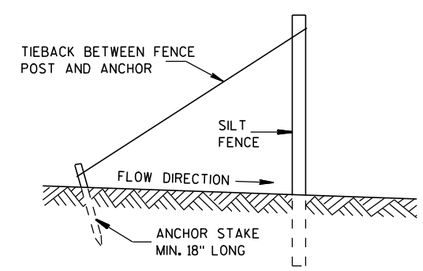

SILT FENCE TIE BACK

(WHEN REQUIRED BY THE ENGINEER)

SILT FENCE
STATE OF WISCONSIN DEPARTMENT OF TRANSPORTATION
APPROVED 4-29-05 /S/ Beth Cann----- DATE CHIEF ROADWAY DEVELOP ENGINEER FHWA

6

6

S.D.D. 8 E 9-6

S.D.D. 8 E 9-6

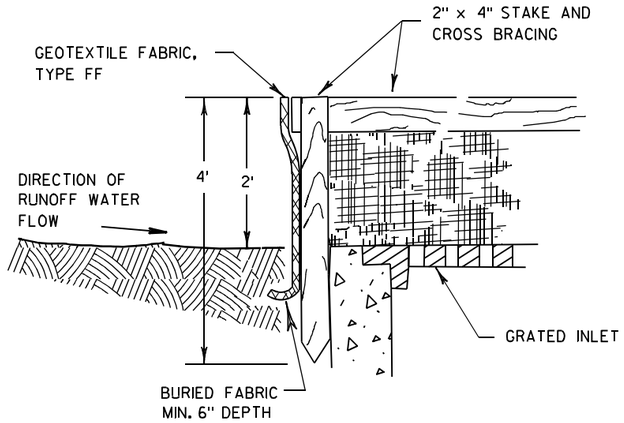

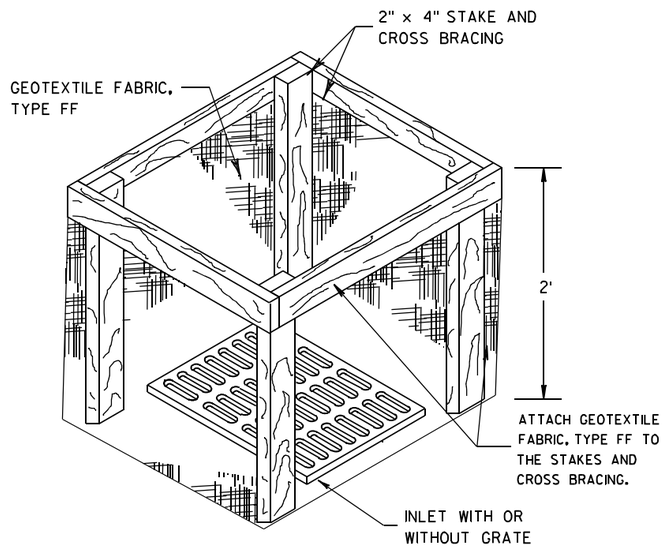

INLET PROTECTION, TYPE A

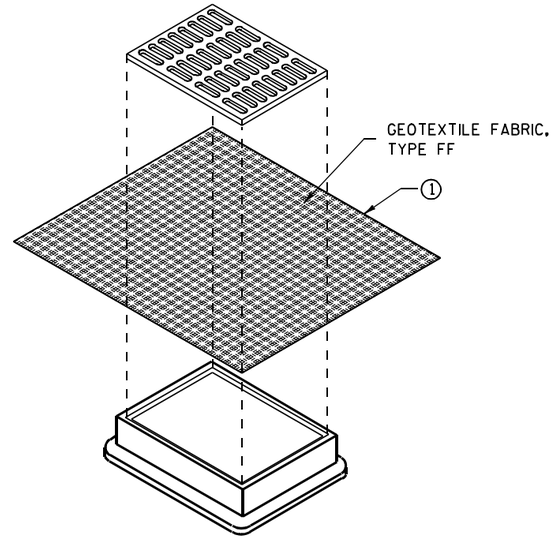

INLET PROTECTION, TYPE B
(WITHOUT CURB BOX)

(CAN BE INSTALLED IN ANY INLET WITHOUT A CURB BOX)

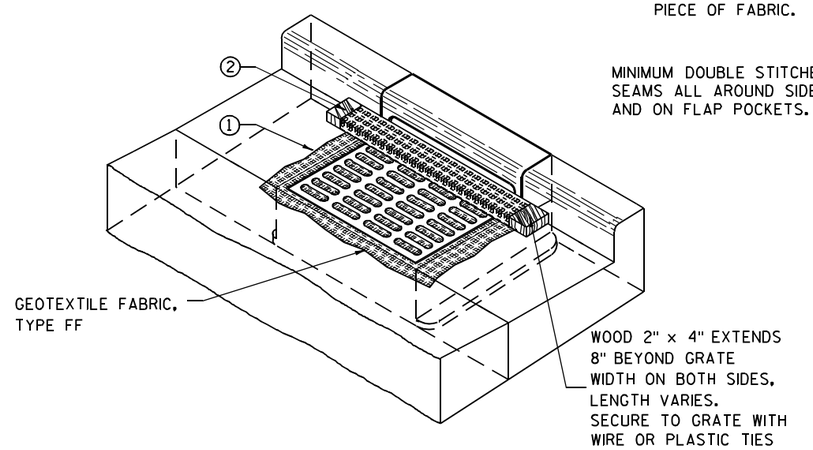

INLET PROTECTION, TYPE C (WITH CURB BOX)

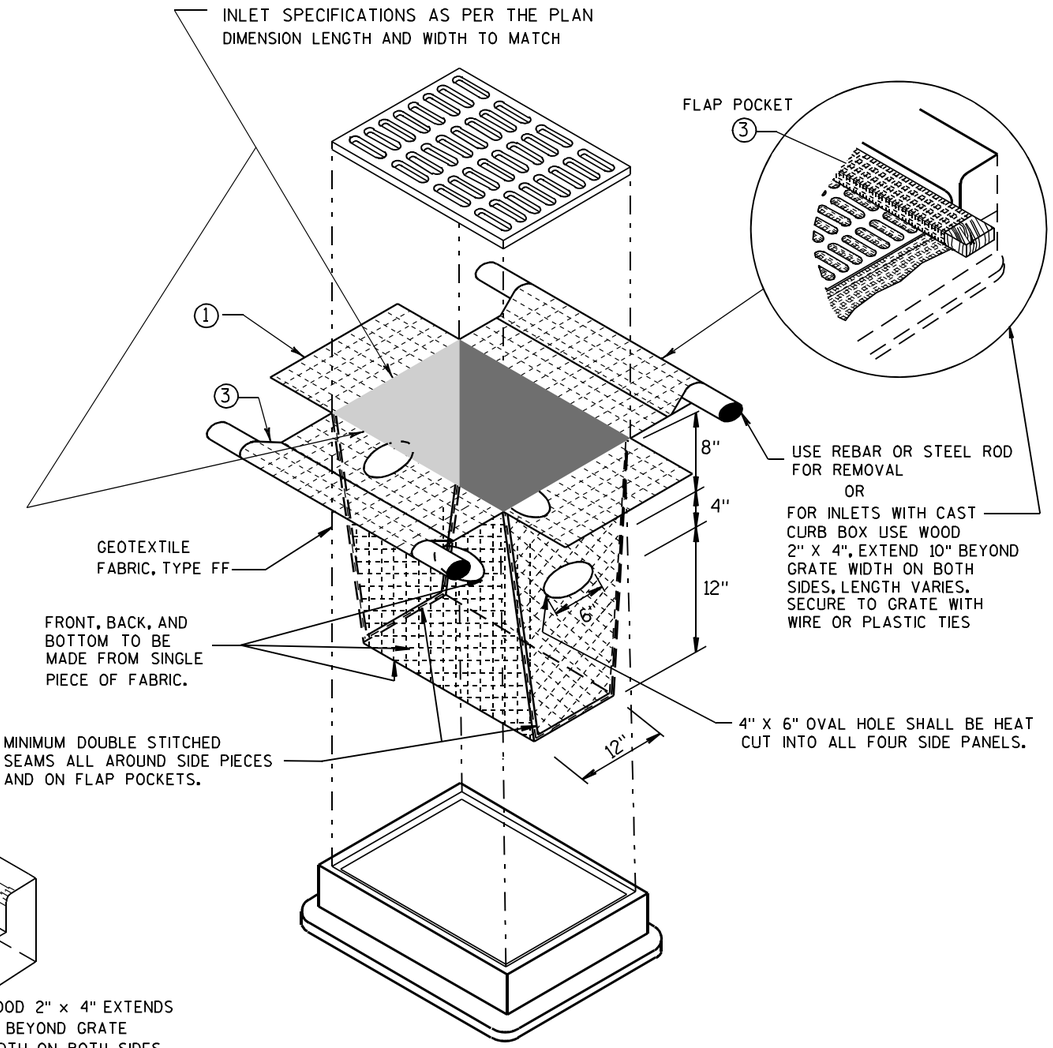

INLET PROTECTION, TYPE D

(CAN BE INSTALLED IN ANY INLET TYPE WITH
OR WITHOUT A CURB BOX AS PER NOTE ②)

GENERAL NOTES

INLET PROTECTION DEVICES SHALL BE MAINTAINED OR REPLACED AT THE DIRECTION OF THE ENGINEER.

MANUFACTURED ALTERNATIVES APPROVED AND LISTED ON THE DEPARTMENT'S EROSION CONTROL PRODUCT ACCEPTABILITY LIST MAY BE SUBSTITUTED.

WHEN REMOVING OR MAINTAINING INLET PROTECTION, CARE SHALL BE TAKEN SO THAT THE SEDIMENT TRAPPED ON THE GEOTEXTILE FABRIC DOES NOT FALL INTO THE INLET. ANY MATERIAL FALLING INTO THE INLET SHALL BE REMOVED IMMEDIATELY.

① FINISHED SIZE, INCLUDING FLAP POCKETS WHERE REQUIRED, SHALL EXTEND A MINIMUM OF 10" AROUND THE PERIMETER TO FACILITATE MAINTENANCE OR REMOVAL.

② FOR INLET PROTECTION, TYPE C (WITH CURB BOX), AN ADDITIONAL 18" OF FABRIC IS WRAPPED AROUND THE WOOD AND SECURED WITH STAPLES. THE WOOD SHALL NOT BLOCK THE ENTIRE HEIGHT OF THE CURB BOX OPENING.

③ FLAP POCKETS SHALL BE LARGE ENOUGH TO ACCEPT WOOD 2X4.

INSTALLATION NOTES

TYPE B & C

TRIM EXCESS FABRIC IN THE FLOW LINE TO WITHIN 3" OF THE GRATE.

THE CONTRACTOR SHALL DEMONSTRATE A METHOD OF MAINTENANCE, USING A SEWN FLAP, HAND HOLDS OR OTHER METHOD TO PREVENT ACCUMULATED SEDIMENT FROM ENTERING THE INLET.

TYPE D

DO NOT INSTALL INLET PROTECTION TYPE D IN INLETS SHALLOWER THAN 30", MEASURED FROM THE BOTTOM OF THE INLET TO THE TOP OF THE GRATE.

TRIM EXCESS FABRIC IN THE FLOW LINE TO WITHIN 3" OF THE GRATE.

THE INSTALLED BAG SHALL HAVE A MINIMUM SIDE CLEARANCE, BETWEEN THE INLET WALLS AND THE BAG, MEASURED AT THE BOTTOM OF THE OVERFLOW HOLES, OF 3". WHERE NECESSARY THE CONTRACTOR SHALL CINCH THE BAG, USING PLASTIC ZIP TIES, TO ACHIEVE THE 3" CLEARANCE. THE TIES SHALL BE PLACED AT A MAXIMUM OF 4" FROM THE BOTTOM OF THE BAG.

INLET PROTECTION
TYPE A, B, C, AND D

STATE OF WISCONSIN
DEPARTMENT OF TRANSPORTATION

APPROVED
10/16/02 — DATE
/S/ Beth Cannestra
CHIEF ROADWAY DEVELOPMENT ENGINEER
FHWA

6

S.D.D. 8 E 10-2

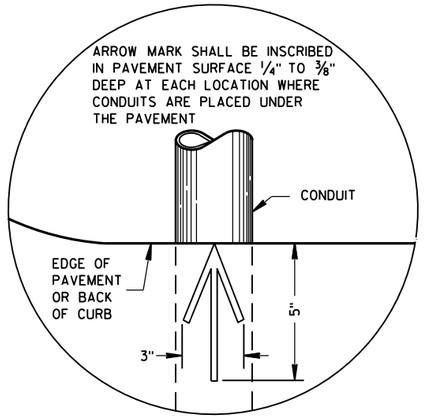

PLAN VIEW

ARROW MARK

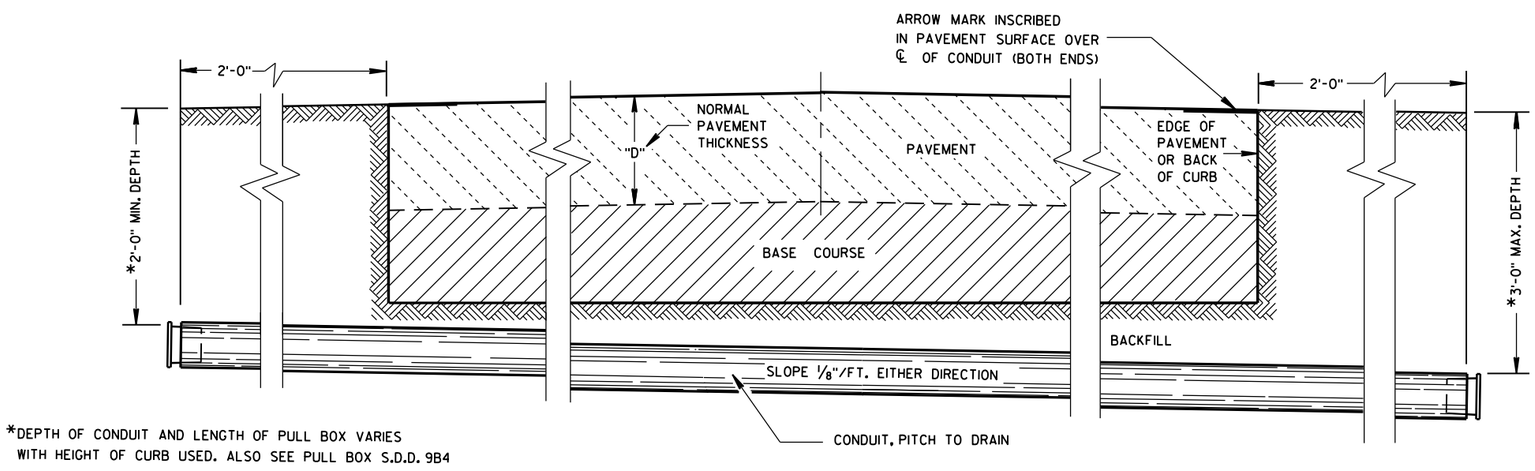

*DEPTH OF CONDUIT AND LENGTH OF PULL BOX VARIES WITH HEIGHT OF CURB USED. ALSO SEE PULL BOX S.D.D. 9B4

SIDE ELEVATION

DETAIL FOR CONDUIT UNDER PAVED HIGHWAYS

GENERAL NOTES

DETAILS OF CONSTRUCTION, MATERIALS AND WORKMANSHIP NOT SHOWN ON THIS DRAWING SHALL CONFORM TO THE PERTINENT REQUIREMENTS OF THE CONTRACT.

METALLIC (STANDARD SPECIFICATION 652.2.2) OR NONMETALLIC (STANDARD SPECIFICATION 652.2.3) CONDUIT SHALL BE FURNISHED AND PLACED AS SHOWN.

DEPTH OF CONDUIT INSTALLED BELOW THE TRAVELED WAY SHALL BE 24 INCHES MINIMUM AND 36 INCHES MAXIMUM.

DEPTH OF CONDUIT INSTALLED THAT IS NOT BELOW THE TRAVELED WAY SHALL BE 18 INCHES MINIMUM AND 36 INCHES MAXIMUM.

ANY EXCEPTION TO THE MAXIMUM DEPTH SHALL BE ONLY WITH THE WRITTEN APPROVAL OF THE ENGINEER.

THE TRENCH SHALL NOT BE BACKFILLED PRIOR TO INSPECTION OF THE CONDUIT.

ALL METALLIC CONDUIT RACEWAY ENDS SHALL BE REAMED AND THREADED.

ALL METALLIC CONDUIT IN WHICH WIRE OR CABLE IS TO BE INSTALLED SHALL BE BUSHED WITH APPROVED THREADED BUSHINGS BEFORE INSTALLATION OF THE WIRE OR CABLE.

ALL METALLIC CONDUITS IN WHICH WIRE OR CABLE IS NOT TO BE INSTALLED SHALL BE CAPPED WITH THREADED PROTECTIVE CAPS, AS APPROVED BY THE ENGINEER.

ALL NONMETALLIC CONDUIT SHALL BE CAPPED OR PLUGGED IMMEDIATELY AFTER INSTALLATION AND SHALL REMAIN CAPPED OR PLUGGED UNTIL WIRE/CABLES ARE INSTALLED.

NONMETALLIC CONDUITS IN WHICH WIRE OR CABLE IS NOT BEING INSTALLED SHALL REMAIN CAPPED OR PLUGGED.

BENDING OF PVC ELECTRICAL CONDUIT SHALL BE ACCOMPLISHED BY USING A BLANKET OR EMERSION TYPE TANK DESIGNED FOR THE PURPOSE OF BENDING PVC ELECTRICAL CONDUIT.

ALL CUT ENDS SHALL BE TRIMMED INSIDE AND OUTSIDE TO REMOVE ALL ROUGH EDGES ON NONMETALLIC CONDUIT. (SEE NEC 347.5)

WHEN REQUIRED TO CONNECT NONMETALLIC CONDUIT TO METALLIC CONDUIT, ONLY U.L. LISTED ADAPTER FITTINGS SHALL BE USED.

PRIOR TO CONDUIT ACCEPTANCE, CONDUIT CAPS OR PLUGS SHALL BE REMOVED, AND THE CAPS, PLUGS AND CONDUIT ENDS SHALL BE THOROUGHLY CLEANED AND THEN THE CAPS OR PLUGS REINSTALLED TO ENSURE THAT THE CAPS OR PLUGS CAN BE EASILY REMOVED IN THE FUTURE.

ALL CONDUIT BEING FURNISHED AND INSTALLED SHALL HAVE THE U.L. LABEL FIRMLY ATTACHED.

CONDUIT RUNS SHALL BE THE SAME SIZE OF CONDUIT FROM ONE END TO THE OTHER (FROM PULL BOX TO PULL BOX-OR-JUNCTION BOX TO JUNCTION BOX-OR-BASE TO BASE, ETC.).

TRACER WIRE SHALL BE INSTALLED AS STATED IN THE STANDARD SPECIFICATION, ITEM 652.3.1.1.

ALL CONDUIT RUNS SHALL BE STRAIGHT (WITHOUT BENDS) FROM PULL BOX TO PULL BOX, PULL BOX TO BASE AND BASE TO BASE AS SHOWN ON THE PLANS.

CONDUIT

STATE OF WISCONSIN
DEPARTMENT OF TRANSPORTATION

APPROVED
March, 2017 — DATE
/S/ Ahmet Demirbilek — STATE ELECTRICAL
FHWA

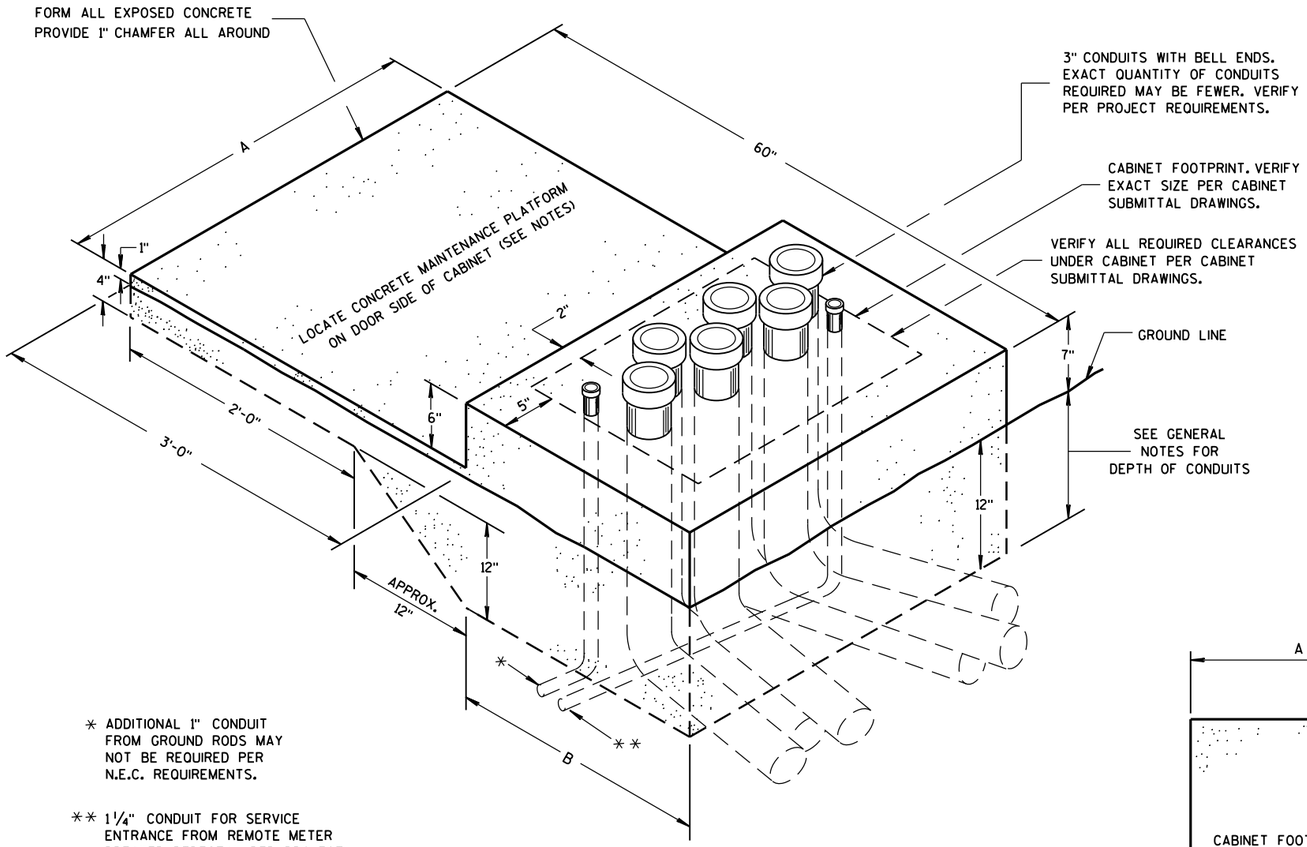

* ADDITIONAL 1" CONDUIT FROM GROUND RODS MAY NOT BE REQUIRED PER N.E.C. REQUIREMENTS.

** 1¼" CONDUIT FOR SERVICE ENTRANCE FROM REMOTE METER BREAKER PEDESTAL PER PROJECT REQUIREMENTS. VERIFY LOCATION OF CONDUIT DEPENDENT UPON LOCATION OF INCOMING FEEDER AND FOR EASE OF CONNECTION TO LOAD CENTER.

ISOMETRIC VIEW

CONCRETE CONTROL CABINET BASE, TYPE L

(C.Y. CONCRETE = APPROX. 0.4)

CONCRETE BASE TYPE	CABINET WIDTH	DIMENSIONS		MAXIMUM 3" CONDUITS
		A	B	
L24	24"	34"	24"	4
L30	30"	40"	24"	6

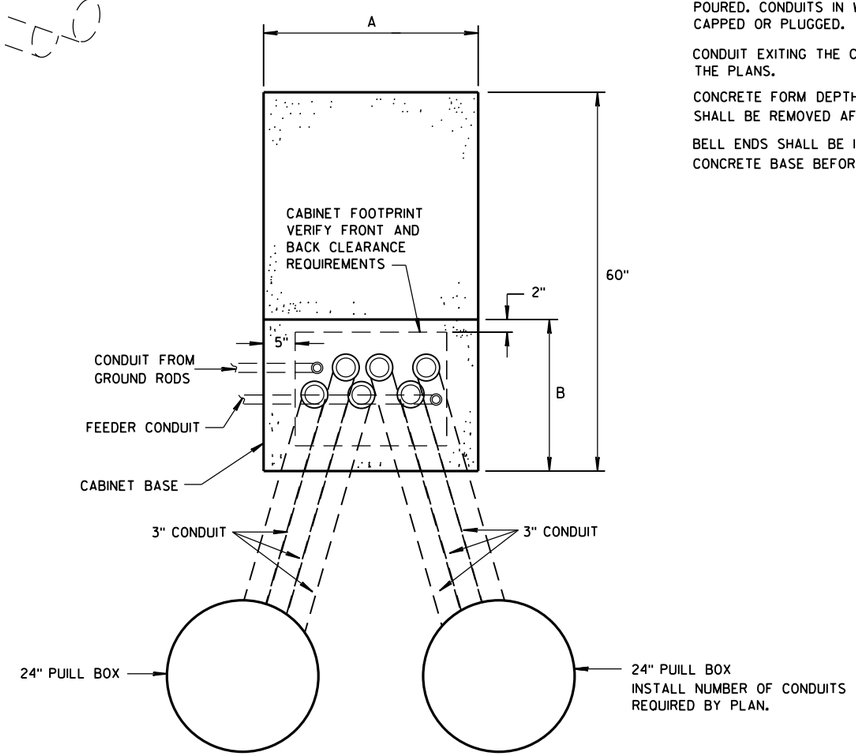

PLAN VIEW

CONCRETE CONTROL CABINET BASE, TYPE L

GENERAL NOTES

DETAILS OF CONSTRUCTION, MATERIALS AND WORKMANSHIP NOT SHOWN ON THIS DRAWING SHALL CONFORM TO THE PERTINENT REQUIREMENTS OF THE CONTRACT.

INSTALL FOUR STAINLESS STEEL APPROVED CONCRETE MASONRY ANCHORS TO ANCHOR THE CABINET BASES. THE ANCHORS SHALL BE LOCATED AS DIRECTED BY THE ENGINEER TO PROPERLY ANCHOR THE CONTROL CABINET TO THE BASE.

WHEN REQUIRED TO CONNECT NONMETALLIC CONDUIT TO METALLIC CONDUIT, ONLY ADAPTER FITTINGS, U.L. LISTED FOR ELECTRICAL USE, SHALL BE USED.

CONDUIT HEIGHT ABOVE THE CONCRETE BASE SHALL BE 1 INCH.

DEPTH OF CONDUIT INSTALLED BELOW THE TRAVELED WAY SHALL BE 24 INCHES MINIMUM AND 36 INCHES MAXIMUM.

DEPTH OF CONDUIT INSTALLED THAT IS NOT BELOW THE TRAVELED WAY SHALL BE 18 INCHES MINIMUM AND 36 INCHES MAXIMUM.

ANY EXCEPTION TO THE MAXIMUM DEPTH SHALL BE ONLY WITH THE WRITTEN APPROVAL OF THE ENGINEER.

CONTROL CABINET BASE TOP SURFACE SHALL BE TROWEL FINISHED SMOOTH AND LEVEL.

MAINTENANCE PLATFORM SHALL BE FLOAT OR BROOM FINISHED AND BE LEVEL.

MAINTENANCE PLATFORMS ARE NOT REQUIRED WHEN THE SURROUNDING AREA IS PAVED.

MINIMUM BENDING RADIUS OF CONDUIT = 6 X THE DIAMETER.

ALL METALLIC CONDUIT ENDS SHALL BE REAMED AND THREADED.

CAP ALL BELOW GRADE METALLIC CONDUIT ENDS IN WHICH WIRE OR CABLE IS NOT BEING INSTALLED.

PLUG ALL BELOW GRADE NONMETALLIC CONDUIT ENDS IN WHICH WIRE OR CABLE IS NOT BEING INSTALLED.

ALL CONDUIT ENDS AT THE TOP OF CONCRETE BASES SHALL BE CAPPED IF METALLIC OR PLUGGED IF NONMETALLIC IMMEDIATELY AFTER PLACEMENT AND BEFORE CONCRETE IS POURED. CONDUITS IN WHICH WIRE OR CABLE IS NOT BEING INSTALLED SHALL REMAIN CAPPED OR PLUGGED.

CONDUIT EXITING THE CONCRETE BASE SHALL TERMINATE IN PULL BOXES AS SHOWN ON THE PLANS.

CONCRETE FORM DEPTH BELOW FINISHED GRADE SHALL BE 6" MAXIMUM. CONCRETE FORMS SHALL BE REMOVED AFTER CONCRETE HAS SET.

BELL ENDS SHALL BE INSTALLED ON ALL PVC CONDUIT EXPOSED AT THE TOP OF THE CONCRETE BASE BEFORE INSTALLATION OF CABLE OR WIRE.

CONCRETE CONTROL CABINET BASE, TYPE L

STATE OF WISCONSIN
DEPARTMENT OF TRANSPORTATION

APPROVED
Nov. 2014 — DATE
/S/ Thomas Gonring — STATE LIGHTING ENGINE — WYS
FHWA

6

S.D.D. 9 C 14-2

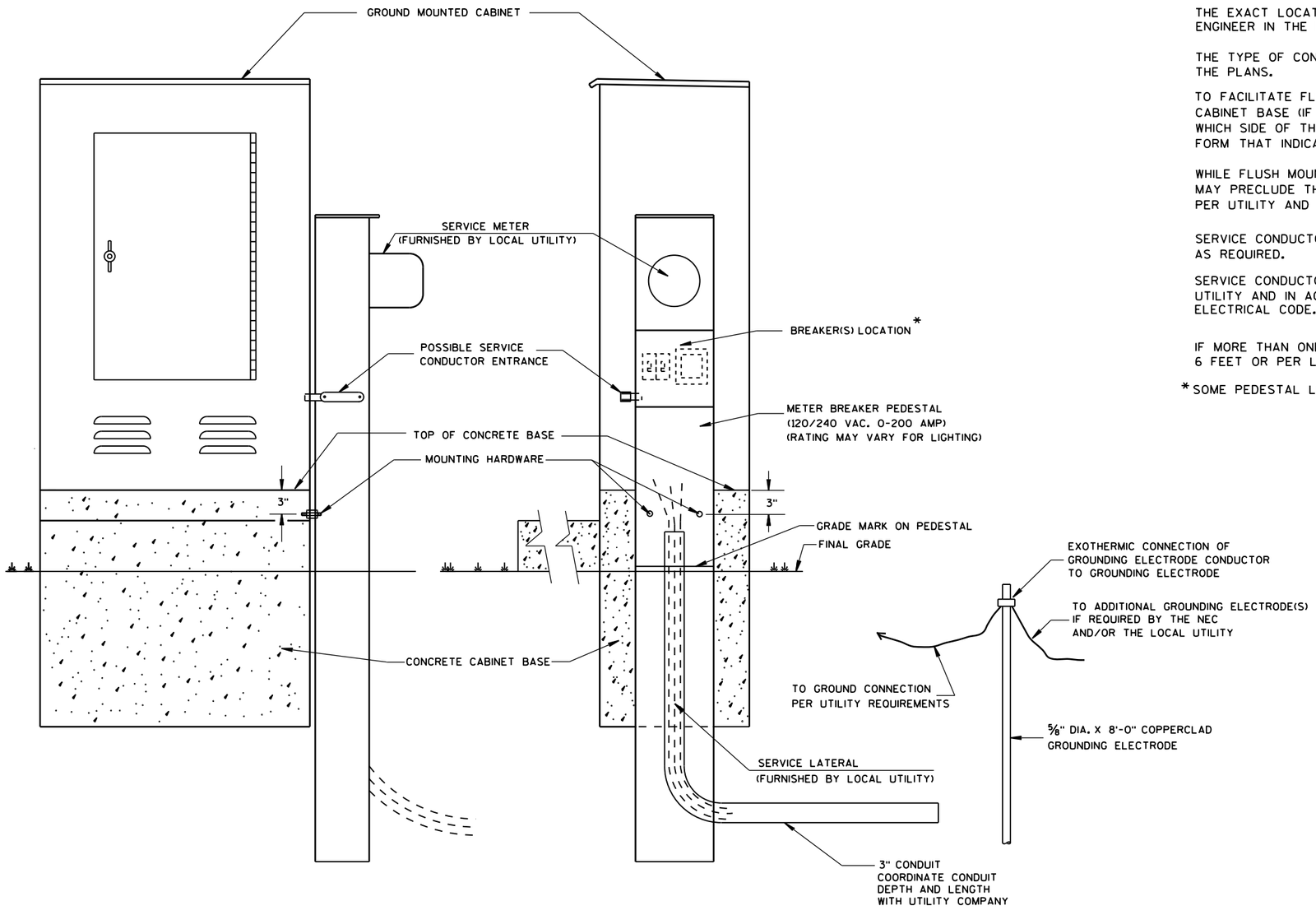

TYPICAL CABINET SERVICE INSTALLATION

GENERAL NOTES

DETAILS OF CONSTRUCTION, MATERIALS AND WORKMANSHIP NOT SHOWN ON THIS DRAWING SHALL CONFORM TO THE PERTINENT REQUIREMENTS OF THE CONTRACT.

THE EXACT LOCATION OF THE METER BREAKER PEDESTAL SHALL BE DETERMINED BY THE ENGINEER IN THE FIELD.

THE TYPE OF CONCRETE CABINET BASE TO BE INSTALLED SHALL BE AS CALLED FOR IN THE PLANS.

TO FACILITATE FLUSH MOUNTING OF THE METER BREAKER PEDESTAL AGAINST THE SIDE OF THE CABINET BASE (IF FLUSH MOUNTING POSSIBLE. CONFER WITH THE LOCAL UTILITY TO DETERMINE WHICH SIDE OF THE CONCRETE BASE THE ELECTRICAL SERVICE LATERAL WILL APPROACH. THEN FORM THAT INDICATED SIDE FOR FULL SIDE DEPTH.

WHILE FLUSH MOUNTING IS THE MOST DESIRABLE MOUNTING CONFIGURATION UTILITY REQUIREMENTS MAY PRECLUDE THIS OPTION. CONTRACTOR MUST PROVIDE UTILITY APPROVED PEDESTAL AND INSTALL PER UTILITY AND MANUFACTURERS REQUIREMENTS.

SERVICE CONDUCTOR ENTRANCES SHALL BE RIGID METALLIC CONDUIT, NIPPLES AND/OR CONDULETS AS REQUIRED.

SERVICE CONDUCTOR ENTRANCES SHALL BE SIZED AND LOCATED AS REQUIRED BY THE LOCAL UTILITY AND IN ACCORDANCE WITH APPROPRIATE ARTICLES OF THE LATEST ACCEPTED NATIONAL ELECTRICAL CODE.

IF MORE THAN ONE GROUNDING ELECTRODE IS REQUIRED, THE DISTANCE APART SHALL BE 6 FEET OR PER LOCAL UTILITY REGULATIONS.

*SOME PEDESTAL LIGHTING PLANS SHOW MAIN LUGS ONLY.

CABINET SERVICE INSTALLATION (METER BREAKER PEDESTAL)
STATE OF WISCONSIN DEPARTMENT OF TRANSPORTATION
APPROVED Sept. 2014 DATE — /S/ Ahmet Demirbilek STATE ELECTRICAL — FHWA

GENERAL NOTES

DETAILS OF CONSTRUCTION, MATERIALS AND WORKMANSHIP NOT SHOWN ON THIS DRAWING SHALL CONFORM TO THE PERTINENT REQUIREMENTS OF THE STANDARD SPECIFICATIONS AND APPLICABLE SPECIAL PROVISIONS.

ALL INTERNAL ELECTRICAL COMPONENTS WILL BE PRE-WIRED BY THE CABINET FABRICATOR.

ALL CONDUIT ENTRIES SHALL BE SEALED WITH AN APPROPRIATE DUCT SEALING COMPOUND.

ORIENT PHOTOCELL AWAY FROM AMBIENT LIGHT SOURCES AND ONCOMING TRAFFIC HEADLIGHTS.

THE CONTRACTOR SHALL TOUCH UP ANY DAMAGE TO THE ANODIZED FINISH CAUSED BY THE INSTALLATION PROCESS. COLOR MATCH PAINT SHALL BE USED.

A COMPLETE LIGHTING OR ELECTRICAL PLAN SHALL BE SECURELY PLACED IN THE DOCUMENT HOLDER ATTACHED TO THE DOOR.

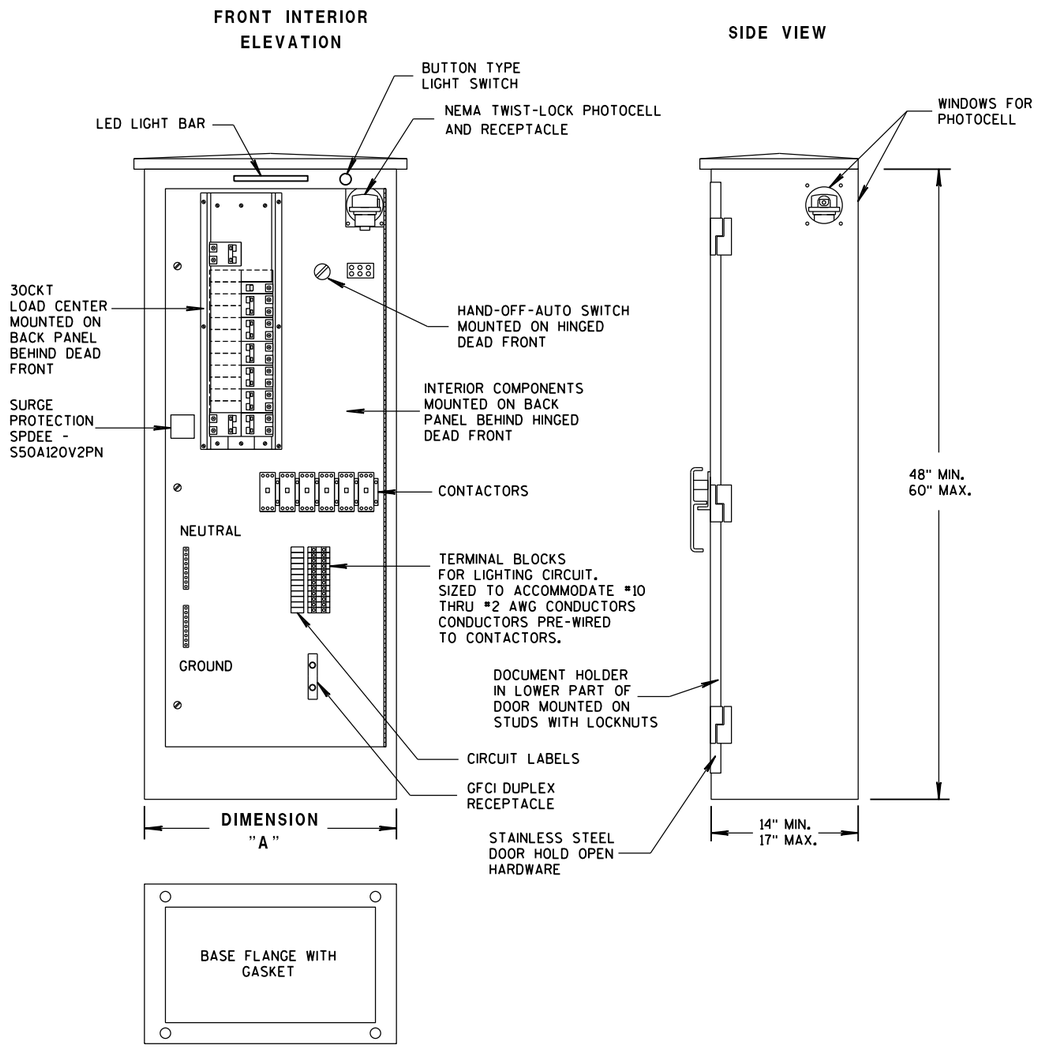

TABLE OF DIMENSIONS (INCHES)

CONCRETE BASE TYPE	CABINET WIDTH	DIMENSION "A"
L24	24"	24"
L30	30"	30"

LIGHTING CONTROL CABINET

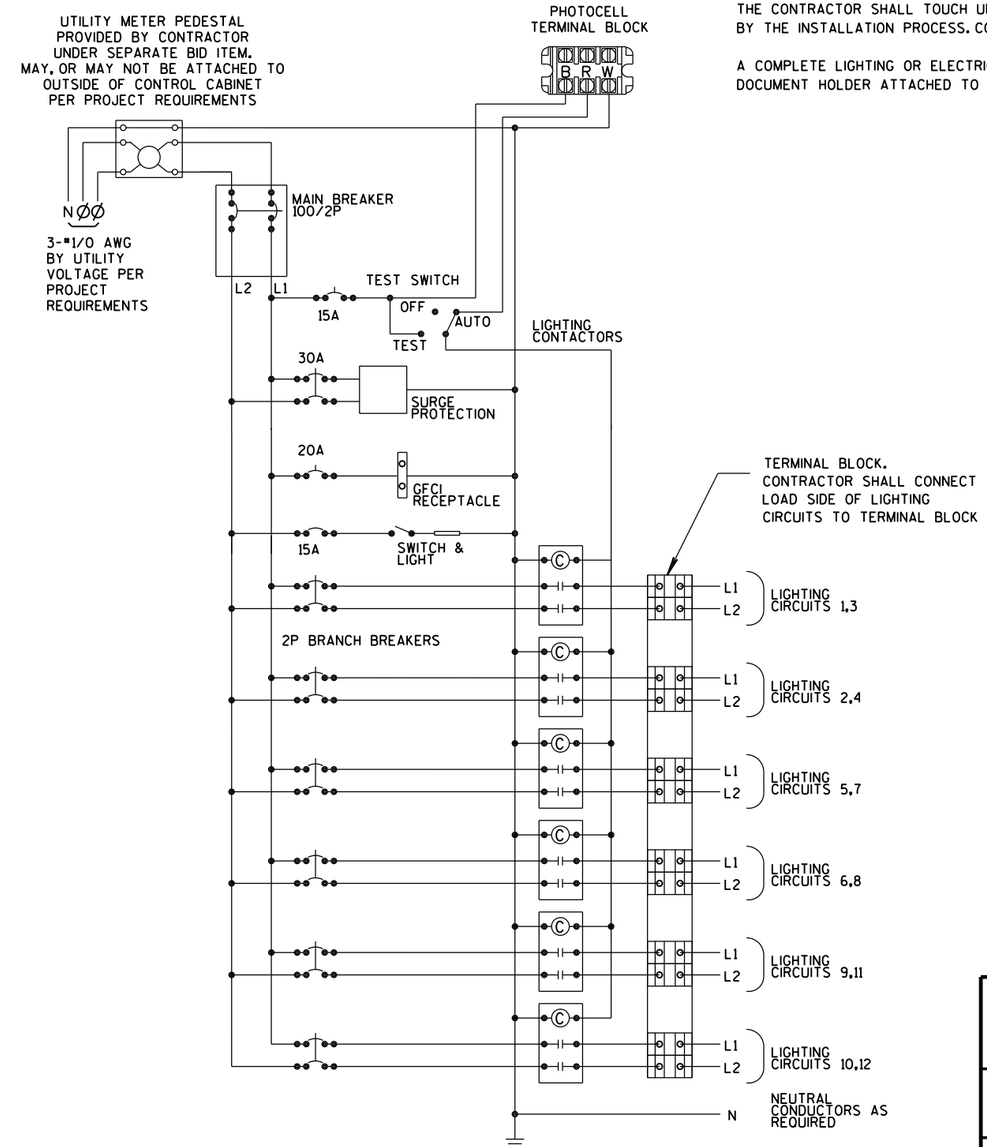

CONTROL CABINET SCHEMATIC

LIGHTING CONTROL CABINET
120/240 VOLT

STATE OF WISCONSIN
DEPARTMENT OF TRANSPORTATION

APPROVED
Sept. 2014 — DATE
/S/ Thomas Gonring — STATE LIGHTING ENGINEER
NYS.
FHWA

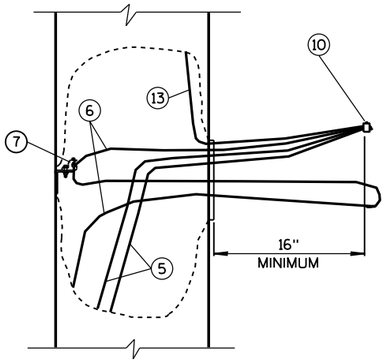

EQUIPMENT GROUNDING CONDUCTOR SLACK

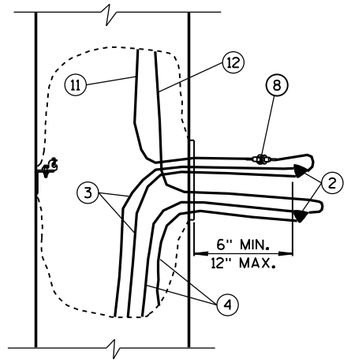

UNGROUNDED CONDUCTOR SLACK (AND GROUNDED NEUTRAL SLACK IN GROUNDED NEUTRAL SYSTEM)

TYPICAL CONDUCTOR SLACK AT HANDHOLES

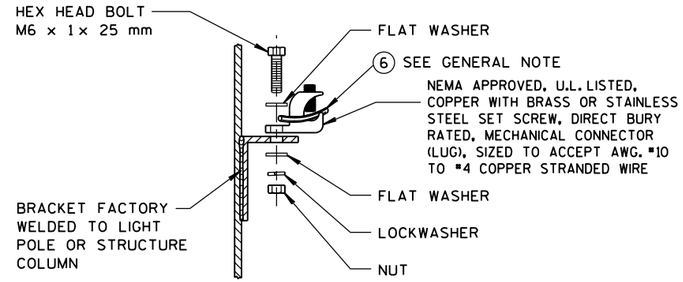

HANDHOLE GROUNDING LUG

(NUT, BOLT, WASHERS, AND LOCK WASHERS SHALL BE STAINLESS STEEL)

CONDUCTOR COLOR CODES

KEY	CONDUCTOR	COLOR
3	UNGROUNDED LINE WIRE	*
4	GROUNDED LINE WIRE	WHITE
5	SYSTEM GROUNDING LINE WIRE	GREEN
6	GROUNDING ELECTRODE CONDUCTOR	BARE
11	UNGROUNDED POLE WIRE	*
12	GROUNDED POLE WIRE	WHITE
13	EQUIPMENT GROUNDING POLE WIRE	GREEN

* FOLLOW COLOR CODING SHOWN IN THE PLANS. WHERE THE PLANS DO NOT SHOW COLOR CODING, USE BLACK FOR SINGLE LUMINAIRE POLES; BLACK AND RED FOR TWIN LUMINAIRE POLES.

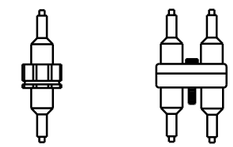

1 POLE (1P) 2 POLE (2P)

FUSE ASSEMBLIES

GENERAL NOTES

DETAILS OF CONSTRUCTION AND WORKMANSHIP NOT SHOWN IN THIS DRAWING SHALL CONFORM TO THE PERTINENT REQUIREMENTS OF THE CONTRACT.

USE THIS DETAIL IN CONJUNCTION WITH THE ELECTRICAL DETAILS FOR THE APPLICATION, WHICH MAY BE A LIGHT POLE, SIGN BRIDGE, ETC.

THE GROUNDING ELECTRODE CONDUCTOR SHALL BE CONTINUOUS WITHOUT SPLICES FROM THE GROUNDING ELECTRODE THROUGH THE HANDHOLE GROUNDING LUG TO THE CONNECTOR.

THREE POLE WIRES ARE SHOWN FOR A SINGLE LUMINAIRE LIGHT POLE. THREE ADDITIONAL POLE WIRES REQUIRED FOR TWIN LUMINAIRE LIGHT POLES ARE OMITTED FROM THE DRAWING FOR CLARITY. IN THE TWIN POLE CASE, BUNDLE EACH SET OF THREE WIRES WITH A NYLON CABLE TIE.

IN 3-PHASE SYSTEMS, THERE WILL BE ONE MORE UNGROUNDED LINE WIRE, WHICH IS OMITTED FROM THE DRAWING FOR CLARITY.

CIRCUIT TAGS SHALL BE INSTALLED ONLY WHERE REQUIRED IN THE SPECIAL PROVISIONS.

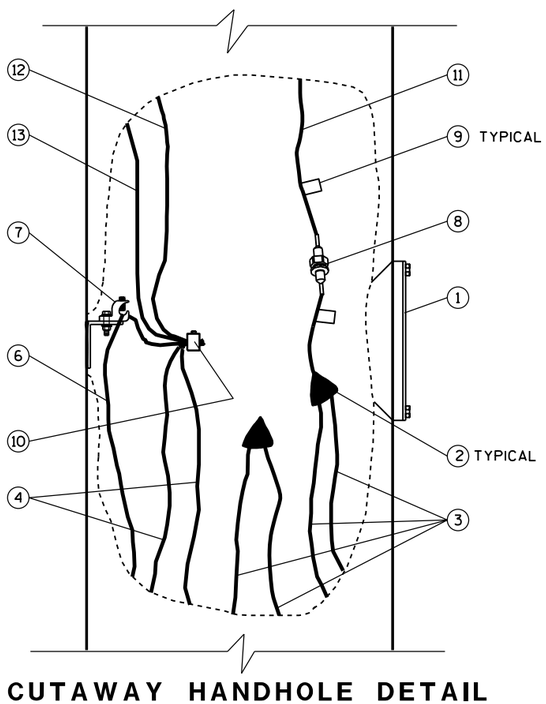

CUTAWAY HANDHOLE DETAIL

GROUNDED NEUTRAL SYSTEMS
1-Φ

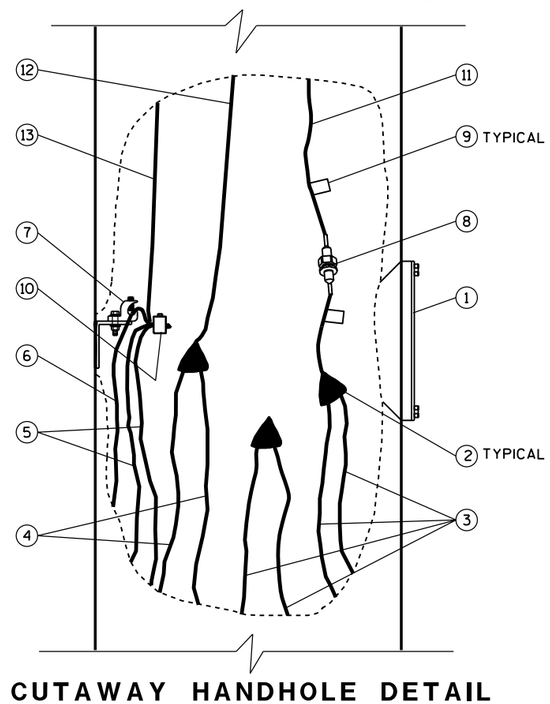

CUTAWAY HANDHOLE DETAIL

ISOLATED NEUTRAL SYSTEMS
1-Φ SHOWN; 3-Φ WYE SIMILAR
(SEE GENERAL NOTE)

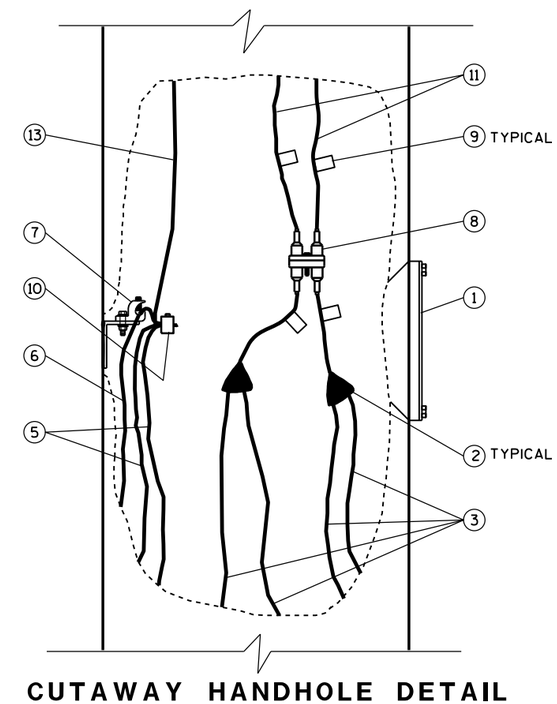

CUTAWAY HANDHOLE DETAIL

PHASE-TO-PHASE SYSTEMS
1-Φ SHOWN; 3-Φ DELTA SIMILAR
(SEE GENERAL NOTE)

1. HANDHOLE AND COVER
2. INSULATED SPLICE
3. UNGROUNDED LINE WIRE
4. GROUNDED LINE WIRE
5. SYSTEM GROUNDING LINE WIRE
6. GROUNDING ELECTRODE CONDUCTOR
7. HANDHOLE GROUNDING LUG
8. FUSE ASSEMBLY, 1P OR 2P AS REQUIRED
9. CIRCUIT TAG (SEE GENERAL NOTE)
10. REVERSIBLE PRESSURE OR COMPRESSION GROUNDING CONNECTOR (NOT INSULATED)
11. UNGROUNDED POLE WIRE
12. GROUNDED POLE WIRE
13. EQUIPMENT GROUNDING POLE WIRE

NOTE: REQUIRED CONDUCTOR SLACK NOT SHOWN ON "CUTAWAY HAND HOLE" DETAILS FOR DRAWING CLARITY, SEE "TYPICAL CONDUCTOR SLACK AT HANDHOLES" ON THIS SHEET.

ELECTRICAL HANDHOLE WIRING

STATE OF WISCONSIN
DEPARTMENT OF TRANSPORTATION

APPROVED
Sept. 2014 — DATE
/S/ Ahmet Demirbilek — STATE ELECTRICAL
FHWA

6
S.D.D. 10 A 1-3

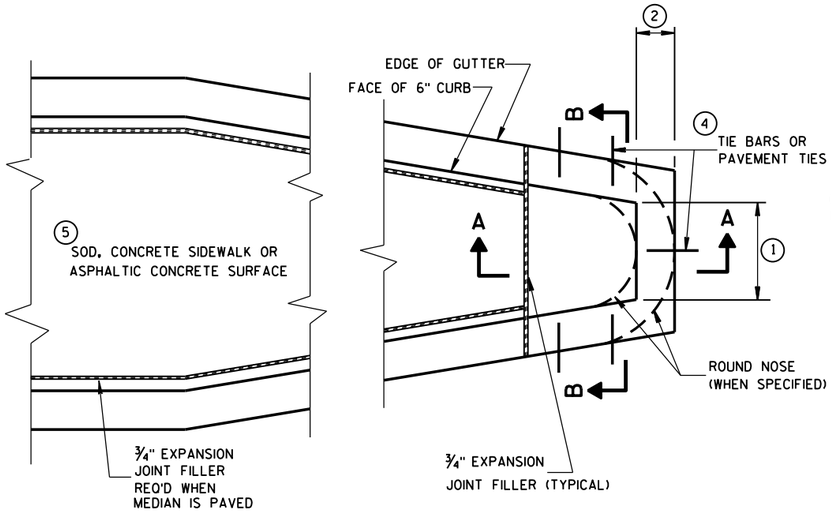

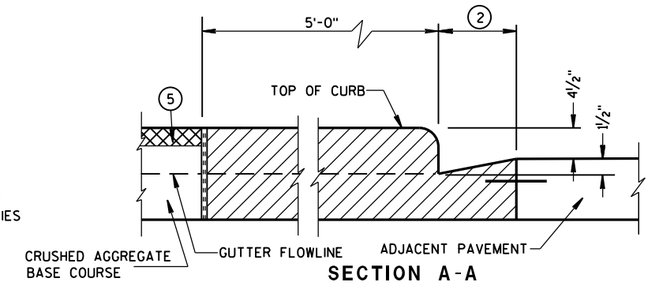

SECTION A-A

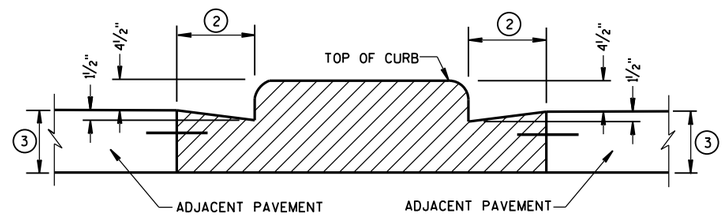

SECTION B-B

CONCRETE MEDIAN BLUNT NOSE DETAIL

GENERAL NOTES

DETAILS OF CONSTRUCTION, MATERIALS AND WORKMANSHIP NOT SHOWN ON THIS DRAWING SHALL CONFORM TO THE PERTINENT REQUIREMENTS OF THE STANDARD SPECIFICATIONS AND THE APPLICABLE SPECIAL PROVISIONS.

1. SEE PLAN FOR MEDIAN NOSE WIDTH AND RADIUS (FOR ROUND NOSE ALTERNATE).
2. WIDTH OF GUTTER TO MATCH EXISTING ADJACENT GUTTER OR AS SPECIFIED ELSEWHERE IN THE PLAN.
3. DEPTH EQUAL TO ADJACENT PAVEMENT. ADJACENT PAVEMENT STRUCTURE DETAILS ARE SHOWN ON THE PLAN. TYPICAL OPTIONS ARE:
   (1) NEW OR EXISTING CONCRETE PAVEMENT.
   (2) ASPHALTIC CONCRETE PAVEMENT OVER NEW OR EXISTING CONCRETE BASE COURSE.
   (3) ASPHALTIC CONCRETE PAVEMENT OVER CRUSHED AGGREGATE BASE COURSE.
4. TIE BARS OR PAVEMENT TIES REQUIRED IN NEW CONCRETE PAVEMENT OR CONCRETE BASE COURSE. TIE BARS SHALL BE NO. 4 X 2'-0" SPACED AT 2'-0" C-C.

   PAVEMENT TIES REQUIRED IN EXISTING CONCRETE BASE COURSE. PAVEMENT TIES SHALL BE NO. 6 X 1'-0" SPACED AT 3'-0" C-C INSTALLED ON A HORIZONTAL SKEW OF 6:1. THE DIRECTION OF SKEW SHALL ALTERNATE AFTER EVERY ONE OR TWO BARS.
5. SURFACE TYPE AND DETAILS ARE SHOWN ELSEWHERE IN THE PLAN.

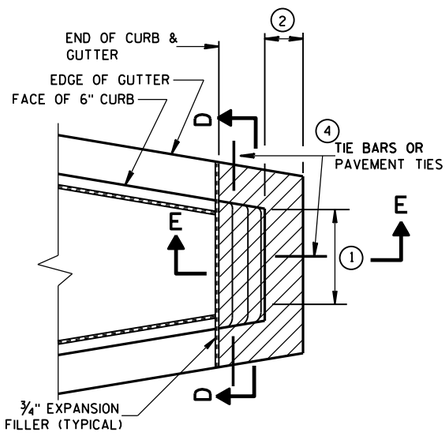

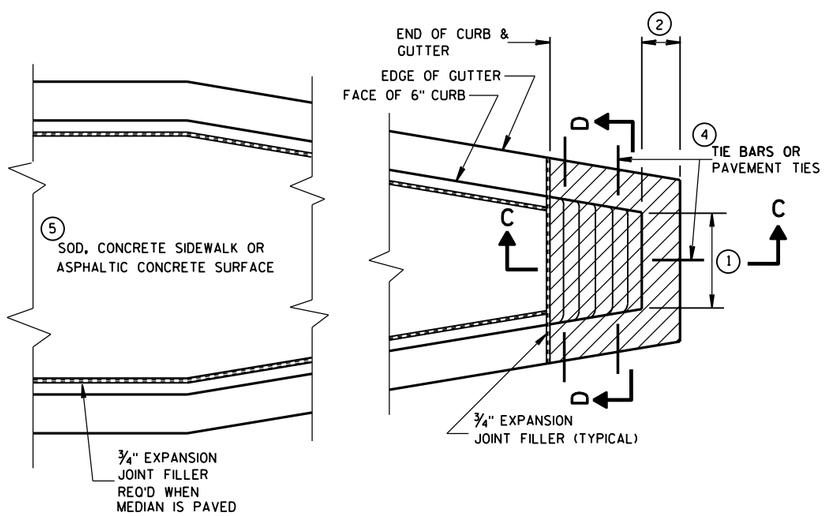

CONCRETE MEDIAN SLOPED NOSE TYPE 1

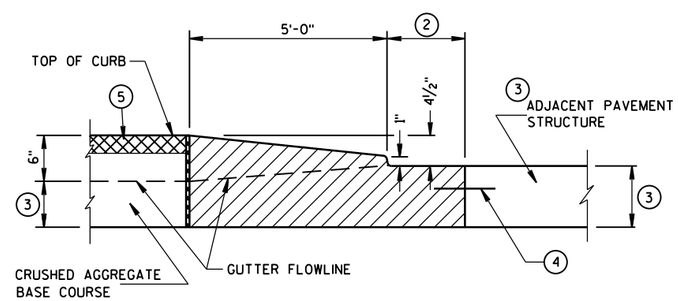

SECTION C-C

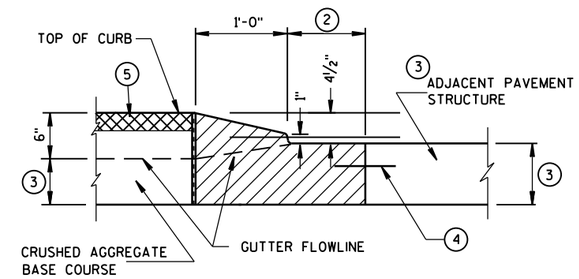

SECTION E-E

CONCRETE MEDIAN SLOPED NOSE TYPE 2

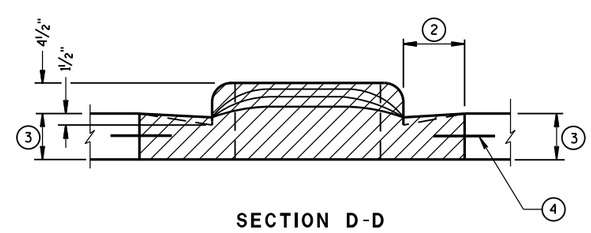

SECTION D-D

CONCRETE MEDIAN NOSE	
STATE OF WISCONSIN DEPARTMENT OF TRANSPORTATION	
APPROVED 6/8/2006 DATE	/S/ Jerry H. Zogg ROADWAY STANDARDS DEVELOPMENT ENGINEER
FHWA	

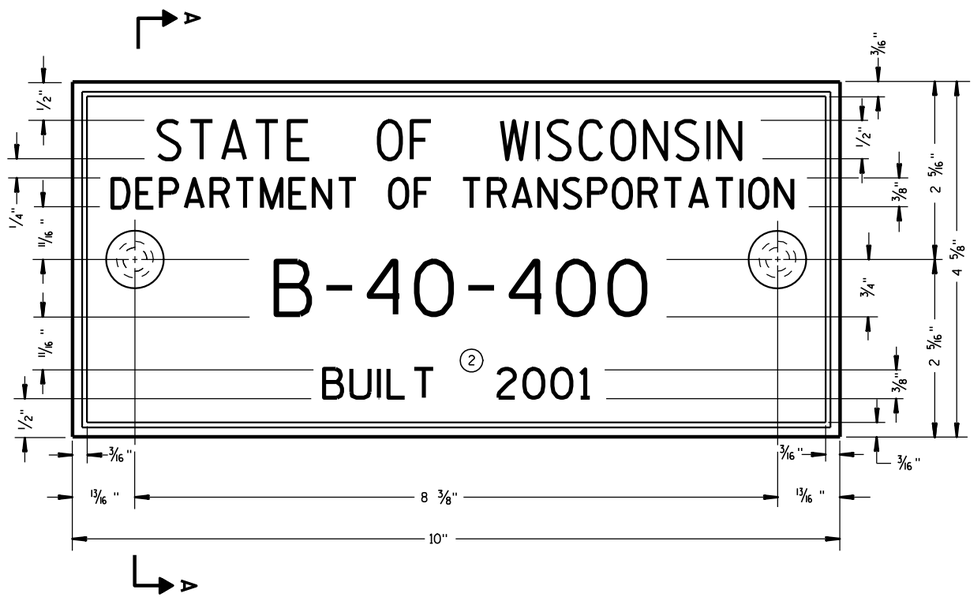

TYPICAL NAME PLATE

(BRIDGES, CULVERTS, AND RETAINING WALLS)

GENERAL NOTES

NAME PLATES TO BE INSTALLED ON BRIDGES, CULVERTS, AND RETAINING WALLS SHALL CONFORM TO THE REQUIREMENTS OF SECTION 502.3.11 OF THE STANDARD SPECIFICATIONS.

THE BRIDGE NUMBER AND YEAR BUILT SHOWN ON THIS DRAWING ARE EXAMPLES ONLY. SEE CONSTRUCTION PLANS FOR INDIVIDUAL NUMBERING AND YEAR BUILT.

① EPOXY RESIN SHALL BE FROM AN APPROVED MANUFACTURER AND USED IN ACCORDANCE WITH MANUFACTURER'S RECOMMENDATIONS.

② REHABILITATION OF AN EXISTING STRUCTURE SHOULD USE THE DATE OF ORIGINAL STRUCTURE CONSTRUCTION.

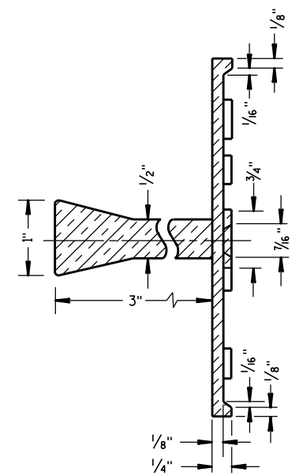

SECTION A-A

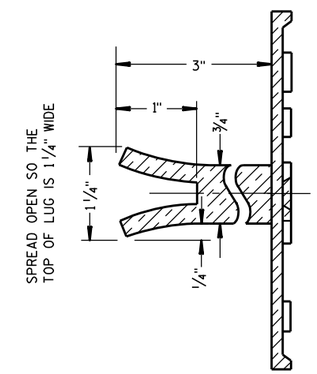

ALTERNATE LUG

6

FOR MULTI-UNIT STRUCTURES
LINE 3 ABOVE SHALL READ

B = BRIDGE
C = CULVERT
R = RETAINING WALL

COUNTY NO.

BRIDGE NO.

UNIT NO. FOR MULTIPLE
UNIT BRIDGE

B-40-400-1A

NUMBERING DESIGNATION
MULTI-UNIT STRUCTURES

① ADHERE ANCHOR LUG TO
PRECAST RETAINING WALL
WITH EPOXY RESIN.

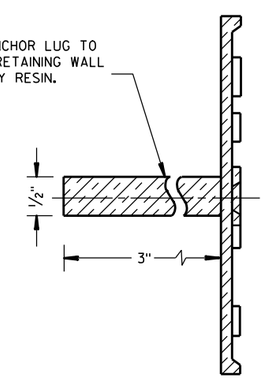

ALTERNATE LUG

(FOR ATTACHMENT TO PRECAST STRUCTURES)

NAME PLATE (STRUCTURES)		
STATE OF WISCONSIN DEPARTMENT OF TRANSPORTATION		
APPROVED		
3/26/10 DATE	/S/ Scot Beck-- CHIEF STRUCTURAL DEVELOP	ENGINEER
FHWA		

GENERAL NOTES

SAW CUT, DRILL, AND LIFT OUT EXISTING CONCRETE PAVEMENT WITHIN THE BOUNDARIES OF CONCRETE REPAIR AREAS. THE CONTRACTOR MAY MAKE ADDITIONAL SAW CUTS INSIDE THE REPAIR LIMITS TO REDUCE WEIGHT AND SIZE OF CONCRETE PIECES.

PROVIDE A 6-FOOT MINIMUM DISTANCE FROM BOUNDARIES OF CONCRETE REPAIR AREAS TO ADJACENT TRANSVERSE JOINT OR CRACK IN THE SAME LANE.

THE LENGTH OF THE REPAIRS MAY VARY FROM THE DIMENSIONS SHOWN IF THE EXISTING CONCRETE PAVEMENT IS NONDOWELED AND THE PAVEMENT IS TO BE OVERLAID AFTER REPAIRING.

(1) DOWEL BARS MIGHT NOT EXIST.

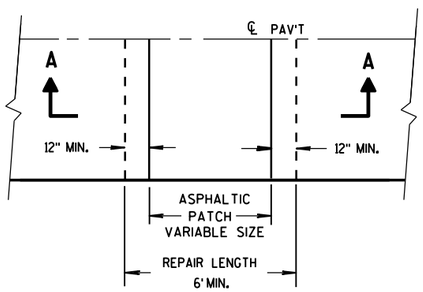

PLAN VIEW

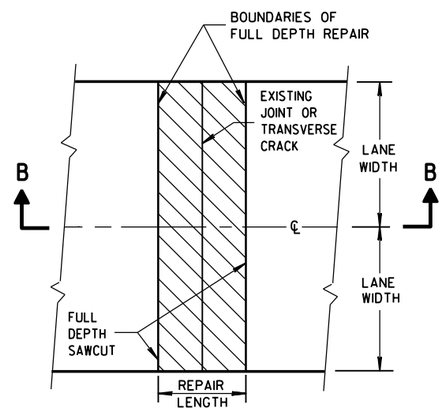

PLAN VIEW
(DOUBLE LANE REPAIR)

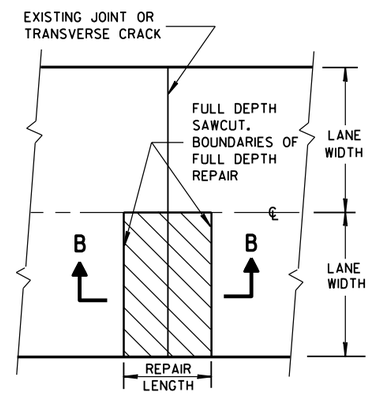

PLAN VIEW
(SINGLE LANE REPAIR)

FULL DEPTH CONCRETE PAVEMENT REMOVAL

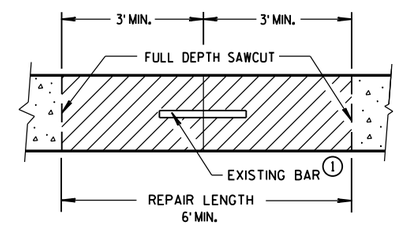

SECTION B-B

CONCRETE REMOVAL

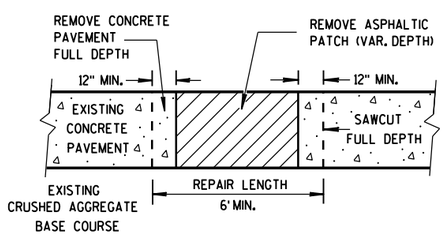

SECTION A-A

HMA PATCH REMOVAL

CONCRETE PAVEMENT REPAIR AND REPLACEMENT

STATE OF WISCONSIN
DEPARTMENT OF TRANSPOR

6

S.D.D. 13 C 9-14a

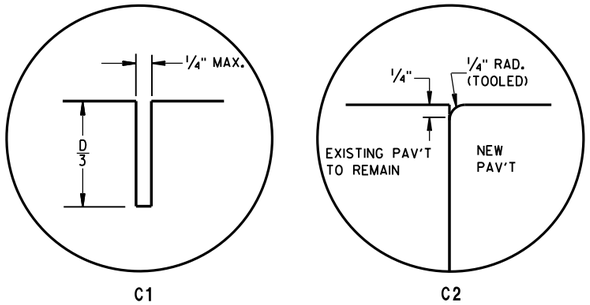

TRANSVERSE JOINTS

TIE BAR TABLE

PAVEMENT DEPTH (D)	TIE BAR SIZE	TIE BAR LENGTH (L)	MAX. TIE BAR SPACING
< 10 1/2"	NO. 4	30"	36"
≥ 10 1/2"	NO. 5	36"	36"
	NO. 4 *	30"	24" **

* SUBSTITUTE BENT BARS AT LONGITUDINAL JOINTS WHEN EQUIPMENT LIMITATIONS DURING CONSTRUCTION WARRANT (e.g. AUXILIARY LANES OR TURN LANES)

** CONFORM TO 15" MINUMUM SPACING FROM TRANSVERSE JOINTS; SPACING BETWEEN TIE BARS WILL BE 30" AT TRANSVERSE JOINTS.

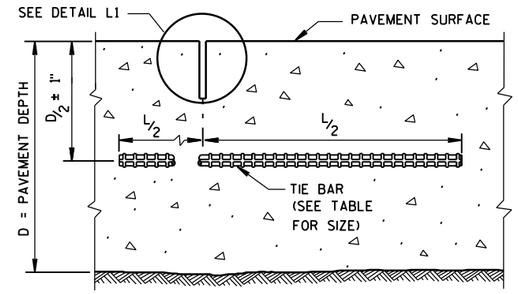

SECTION C-C

SAWED LONGITUDINAL JOINT

GENERAL NOTES

INSTALL DOWEL BARS PARALLEL TO THE PAVEMENT CENTERLINE AND PAVEMENT SURFACE.

CONCRETE PAVEMENT REPAIRS OF EXISTING NONDOWELED CONCRETE PAVEMENTS DO NOT NEED TO BE DOWELED.

DO NOT SEAL OR FILL JOINTS.

ANCHOR DOWEL BARS AND TIE BARS INTO DRILLED HOLES WITH AN EPOXY.

FOR MULTI-LANE CONCRETE PAVEMENT REPLACEMENTS, PROVIDE A MINIMUM DISTANCE OF 15 INCHES FROM ALL TRANSVERSE JOINTS OR EDGES OF REPLACEMENT TO THE CENTER OF THE TIE BAR NEAREST THAT JOINT OR EDGE.

(1) APPLY A THIN UNIFORM COATING OF SURFACE TREATMENT TO THE FREE END OF DOWEL BARS TO PREVENT BONDING.

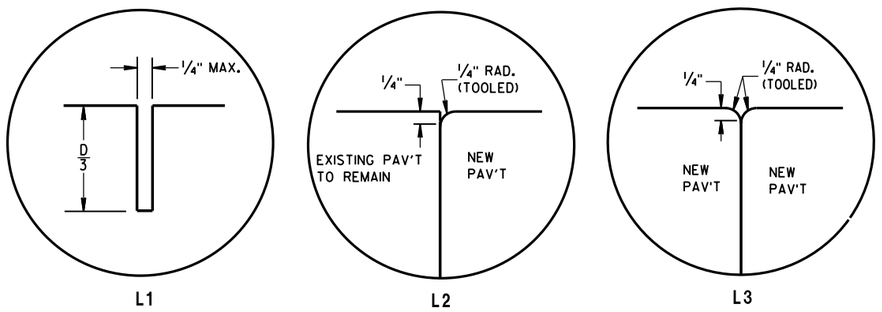

LONGITUDINAL JOINTS

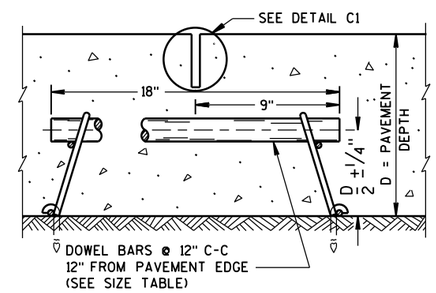

SECTION F-F

CONTRACTION JOINT

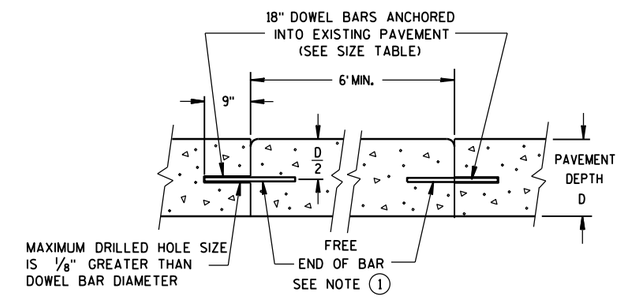

SECTION D-D

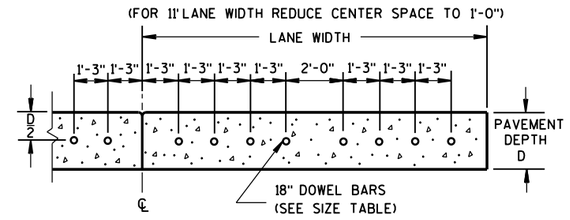

SECTION E-E

DRILLED DOWEL BAR CONSTRUCTION JOINT

PAVEMENT DEPTH, DOWEL BAR SIZE AND JOINT SPACING TABLE

PAVEMENT DEPTH (D)	DOWEL BAR DIAMETER	DRILLED DOWEL BAR DIAMETER	CONTRACTION JOINT SPACING
5 1/2", 6", 6 1/2"	NONE	NONE	12'
7", 7 1/2"	1"	1"	14'
8", 8 1/2"	1 1/4"	1 1/4"	15'
9", 9 1/2"	1 1/4"	1 1/4"	15'
10" & ABOVE	1 1/2"	1 1/4"	15'

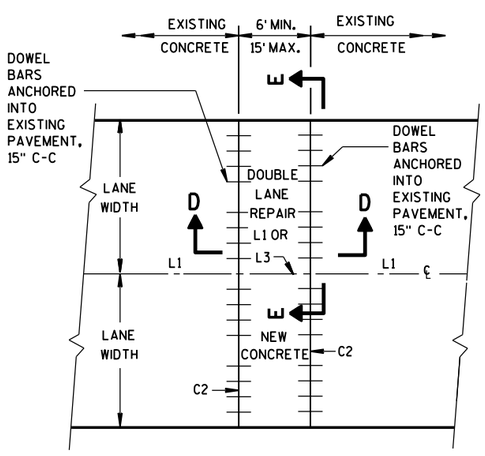

PLAN VIEW

MULTI-LANE CONCRETE PAVEMENT REPAIR

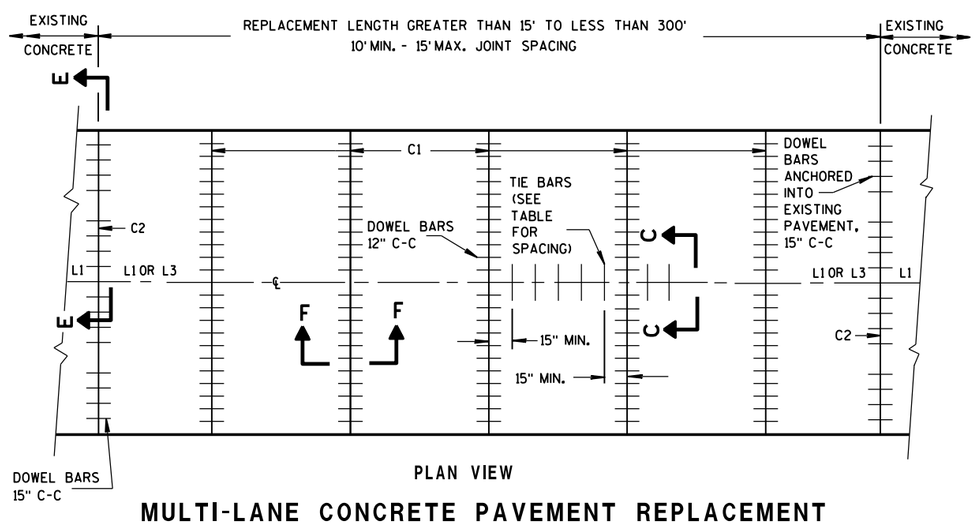

PLAN VIEW

MULTI-LANE CONCRETE PAVEMENT REPLACEMENT

CONCRETE PAVEMENT REPAIR AND REPLACEMENT

STATE OF WISCONSIN
DEPARTMENT OF TRANSPOR

GENERAL NOTES

1. WITH THE APPROVAL OF THE ENGINEER, FOR SINGLE LANE PAVEMENT REPLACEMENTS LESS THAN 30 FEET IN LENGTH, THE CONTRACTOR MAY INSTALL DRILLED TIE BARS ON 6:1 SKEW HORIZONTALLY, DIRECTION OF SKEW ALTERNATING WITH EACH SUCCESSIVE BAR. DRIVE SKEWED TIE BARS TO A DEPTH OF 6 INCHES IN A HOLE OF SUCH A DIAMETER AS TO PROVIDE A TIGHT DRIVEN FIT.
2. USE AN ENGINEER-APPROVED BOND BREAKER (E.G. RELEASE AGENT, CURING COMPOUND) FOR SINGLE LANE REPAIRS UP TO 15 FEET IN LENGTH.
3. ANCHOR TIE BARS INTO DRILLED HOLES WITH AN EPOXY.

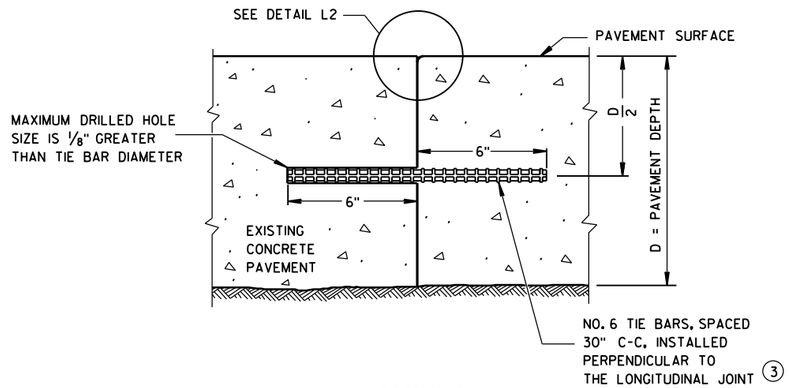

SECTION G-G

TIE BARS ANCHORED INTO EXISTING PAVEMENT

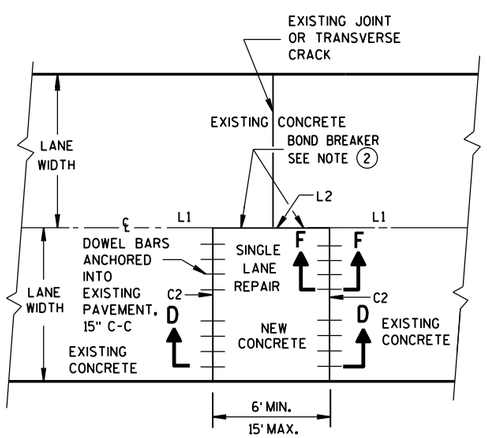

PLAN VIEW

SINGLE LANE CONCRETE PAVEMENT REPAIR

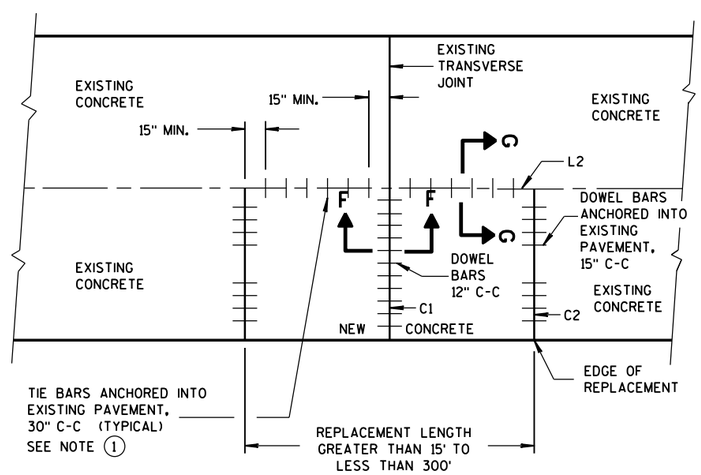

PLAN VIEW

SINGLE LANE CONCRETE PAVEMENT REPLACEMENT

CONCRETE PAVEMENT REPAIR AND REPLACEMENT	
STATE OF WISCONSIN DEPARTMENT OF TRANSPORTATION	
APPROVED March, 2017 DATE	/S/ Peter Kemp, P.E. PAVEMENT SUPER
FHWA	

6
S.D.D. 13 C 9-14c

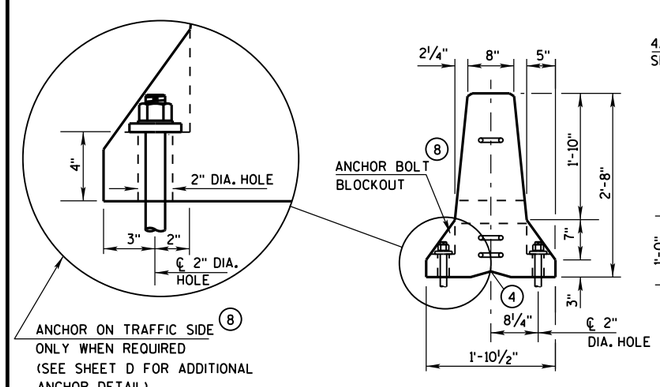

END VIEW

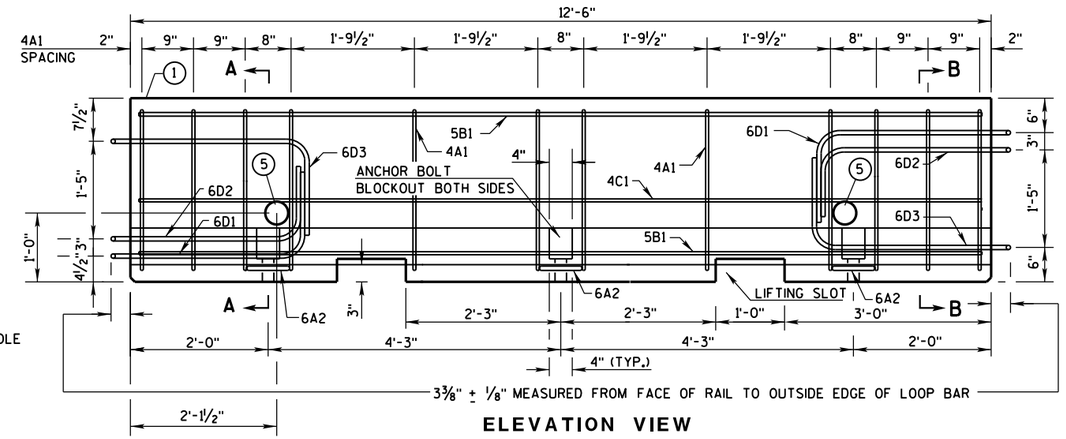

ELEVATION VIEW

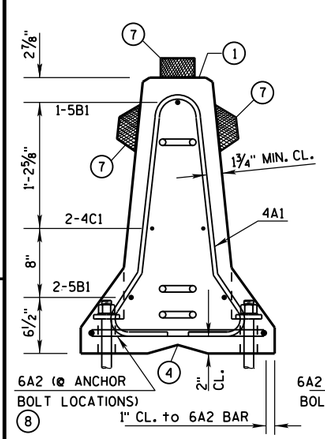

SECTION A-A
(STIRRUP PLACEMENT)

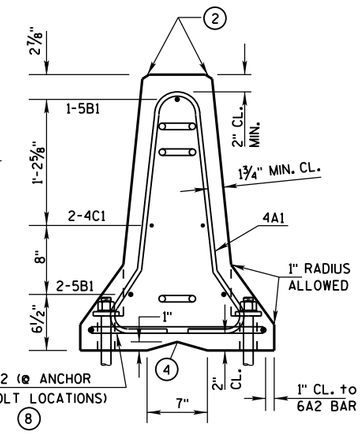

SECTION B-B
(STIRRUP PLACEMENT)

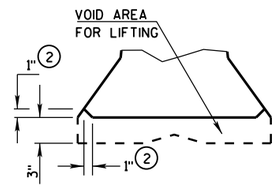

DETAIL "B"
LIFTING SLOT DETAIL

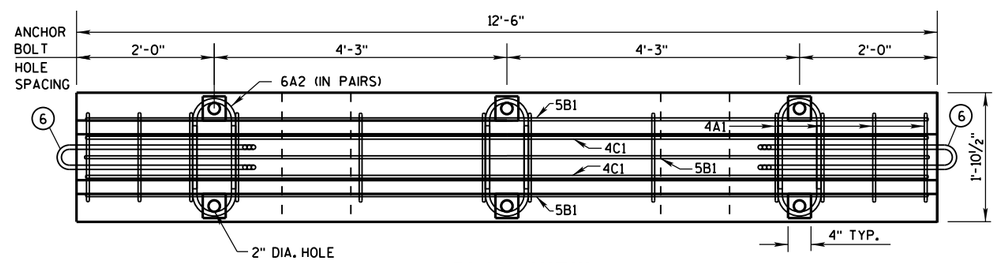

PLAN VIEW

DETAILS OF BARRIER SECTION

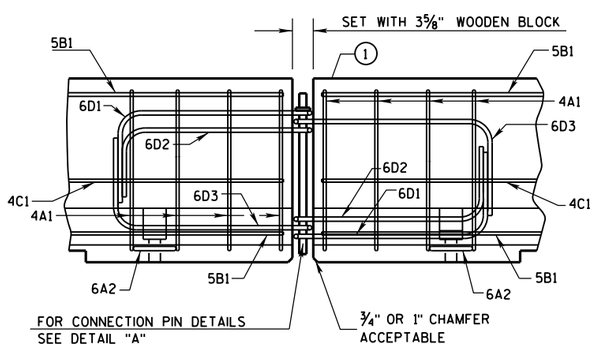

DETAILS OF BARRIER CONNECTION

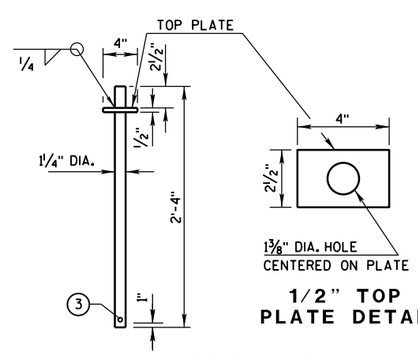

1/2" TOP PLATE DETAIL

DETAIL "A"
CONNECTION PIN
(A36 STEEL (10.9 LB EACH))

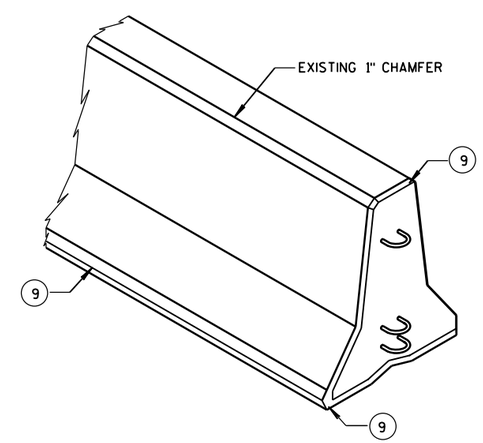

GENERAL NOTES

THESE GENERAL NOTES APPLY TO SHEETS 14B7-15(a) THRU 14B7-15(i).

DO NOT INTERMIX CONCRETE BARRIER TEMPORARY PRCAST, 12'-6" (CBTP12.5) WITH OTHER TEMPORARY CONCRETE BARRIERS.

USE ASTM A-615, GRADE 60, DEFORMED STEEL BARS FOR BARS 4A1, 6A2, 5B1 AND 4C1 IN THE BARRIER SECTION AND FOR 4V1, 4V2, 4V3, 4V4, 4V5, 4V6, 4F1, 4F2 AND 5F3 IN THE BARRIER TAPER SECTION.

LOOP BARS 6D1, 6D2 AND 6D3 SHALL BE ¾" SMOOTH STEEL BARS WITH A MINIMUM YIELD STRENGTH OF 60 KSI, A TENSILE STRENGTH OF NOT LESS THAN 1.25 TIMES THE YIELD STRENGTH BUT A MINIMUM OF 80 KSI, A MINIMUM 14% ELONGATION IN 8 INCHES AND PASSING A 180 DEGREE BEND TEST USING A 3-½" PIN BEND DIAMETER FOR BEND TESTS. THE LOOPS SHALL BE INSTALLED WITHIN ⅛" OF THE PLAN DIMENSION.

CONSTRUCT LIFTING SLOTS AS SPECIFIED ON THE PLANS TO FACILITATE THE DRAINAGE OF WATER AFTER INSTALLATION.

PLACE BARRIER ON A PAVED SURFACE. REMOVE ALL LOOSE DIRT AND SAND FROM THE ROADWAY SURFACE PRIOR TO PLACEMENT OF THE BARRIER.

INSTALL MECHANICAL OR ADHESIVE ANCHORS PER MANUFACTURER'S RECOMMENDATIONS. PROVIDE MANUFACTURER'S INFORMATION TO PROJECT ENGINEER.

1. MARK ONE END OF EACH BARRIER PERMANENTLY BY FORMING INTO THE BARRIER THE FOLLOWING INFORMATION:
   a. TYPE: WI CBTP
   b. MANUFACTURER
   c. DATE MANUFACTURED (MONTH AND YEAR)
2. 1" CHAMFER TO PREVENT SPALLING.
3. A ⅜" HOLE IN THE CONNECTION PIN, AT THE LOCATION SHOWN, IS ACCEPTABLE, BUT NOT REQUIRED..
4. "V" NOTCH IS OPTIONAL.
5. THE 4" DIAMETER, 11 GAUGE STEEL, ROUND MECHANICAL TUBING SLEEVE FOR LIFTING (OPTIONAL).
6. NEVER USE LOOP BARS (6D1, 6D2 OR 6D3) TO LIFT, MOVE OR REPOSITION THE BARRIER.
7. USE DELINEATORS CONFORMING TO SECTION 633 OF THE STANDARD SPECIFICATIONS. CONTRACTOR MAY USE ALTERNATE SHAPES AND HOUSING. INSTALL DELINEATORS ACCORDING TO MANUFACTURES INSTRUCTION. INSTALL YELLOW REFLECTORS WHEN BARRIER IS LOCATED TO THE LEFT OF TRAFFIC AND WHITE REFLECTORS WHEN BARRIER IS LOCATED TO THE RIGHT OF TRAFFIC. SPACE DELINEATORS A MAXIMUM OF 25 FEET APART. PROVIDE TOP MOUNTED DELINEATORS IN ADDITION TO THE SIDE MOUNTED DELINEATORS ON ALL BARRIER INSTALLATIONS LOCATED ON A CURVED ALIGNMENT LONGER THAN 200 FEET AND ON BARRIERS USED TO SEPARATE OPPOSING TRAFFIC.
8. SEE SHEET D FOR HOW TO ANCHOR BARRIER. SEE SHEET E FOR WHEN TO ANCHOR BARRIER.
9. 1" CHAMFER OPTIONAL.

f'c = 4,000 psi

CONCRETE BARRIER
TEMPORARY PRECAST, 12'-6"

STATE OF WISCONSIN
DEPARTMENT OF TRANSPOI

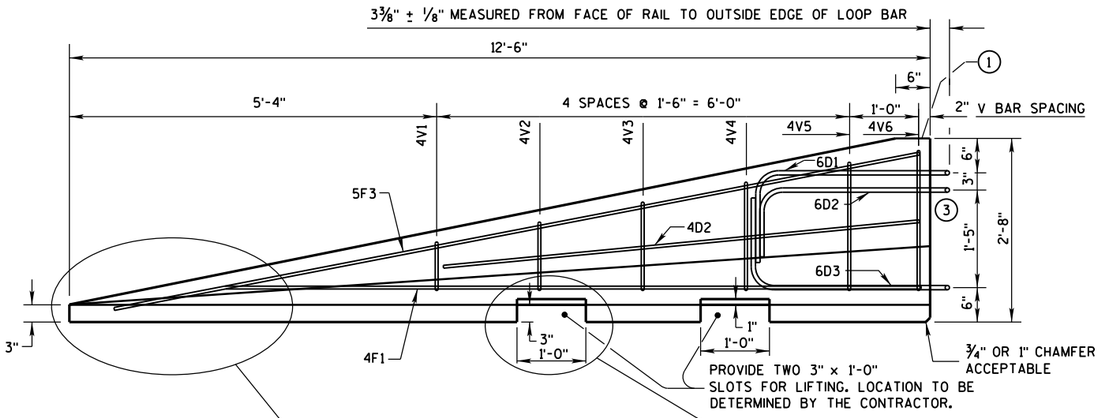

SIDE ELEVATION

(FOR CONNECTION TO LEFT END OF BARRIER)

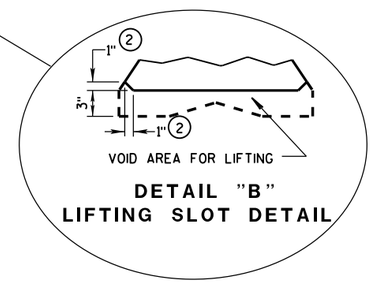

DETAIL "B"
LIFTING SLOT DETAIL

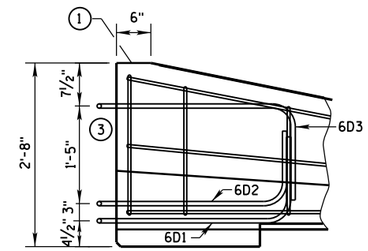

SIDE ELEVATION

LOOP BAR ASSEMBLY INVERTED
FOR OPPOSITE END.
(FOR CONNECTION TO RIGHT END OF BARRIER)

GENERAL NOTES

1. MARK ONE END OF EACH BARRIER PERMANENTLY BY FORMING INTO THE BARRIER THE FOLLOWING INFORMATION:
   a. TYPE WICBTP
   b. MANUFACTURER
   c. DATE MANUFACTURED (MONTH AND YEAR)
2. 1" CHAMFER TO PREVENT SPALLING.
3. NEVER USE LOOP BARS (6D1, 6D2 OR 6D3) TO LIFT, MOVE OR REPOSITION THE BARRIER.

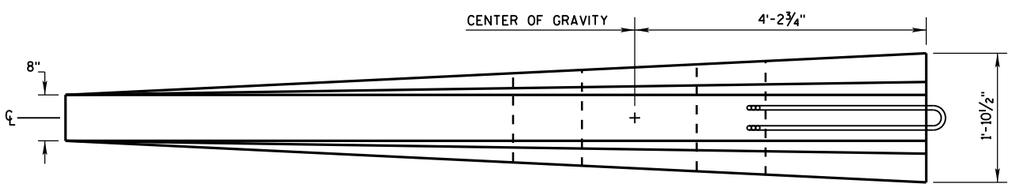

PLAN VIEW

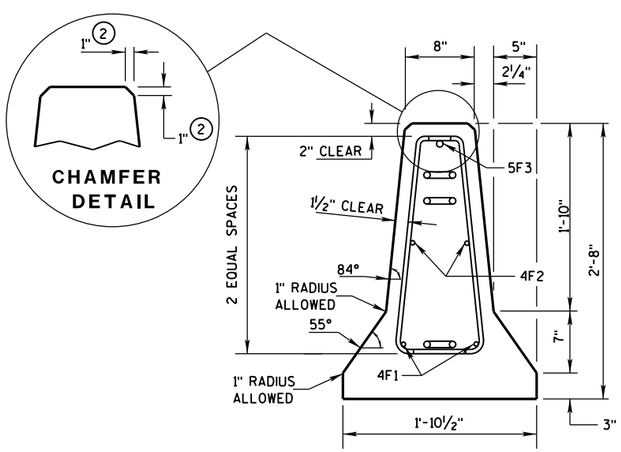

END SECTION

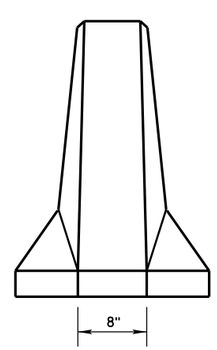

FRONT ELEVATION

DETAILS OF BARRIER TAPER SECTION

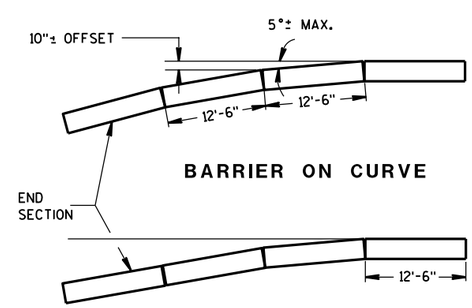

BARRIER ON CURVE

FLARE AT BARRIER END

POSTED SPEED, (MPH)	FLARE RATE
40 OR LESS	6:1
45 OR GREATER	8:1

CONCRETE BARRIER
TEMPORARY PRECAST, 12'-6"

STATE OF WISCONSIN
DEPARTMENT OF TRANSPORTATION

6

S.D.D. 14 B 7-15b

GENERAL NOTES

(1) NEVER USE LOOP BARS (6D1, 6D2 OR 6D3) TO LIFT, MOVE OR REPOSITION THE BARRIER.

BARRIER TAPER SECTION BILL OF MATERIALS

(PER 12'-6" BARRIER TAPER SECTION)

BAR	BAR SIZE	NO. OF BARS	LENGTH FT.
4V1	4	2	1'-11"
4V2	4	2	2'-2"
4V3	4	2	2'-6"
4V4	4	2	2'-9"
4V5	4	2	3'-2"
4V6	4	2	3'-4"
4F1	4	2	12'-0"
4F2	4	2	7'-6"
5F3	5	1	11'-9"
LOOP ASSEMBLY			
6D1	6	1	8'-5"
6D2	6	1	7'-7"
6D3	6	1	8'-6"

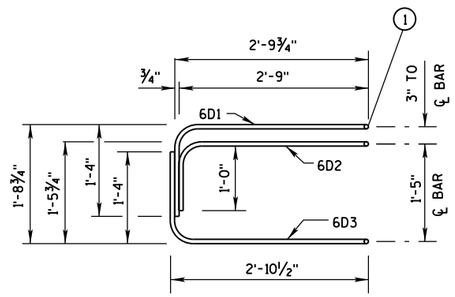

ELEVATION
LOOP BAR ASSEMBLY

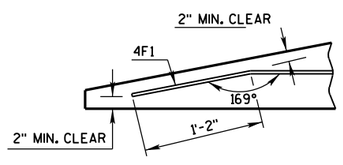

DETAIL "C"
BENT BAR DETAIL

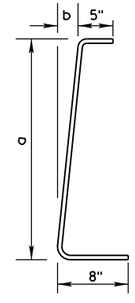

BAR	a	b
V1	10"	1"
V2	1'-1"	1¼"
V3	1'-5"	1⅝"
V4	1'-8"	1⅞"
V5	2'-0½"	2⅜"
V6	2'-3"	2¾"

4V BARS
2 AT EACH SIZE REQUIRED
FOR STIRRUP ASSEMBLY

TAPER BARRIER SECTION

BARRIER SECTION BILL OF MATERIALS

(PER 12'-6" BARRIER SECTION)

BAR	BAR SIZE	NO. OF BARS	LENGTH FT.
4A1	4	12	6'-0"
6A2	6	6	2'-11"
5B1	5	3	12'-2"
4C1	4	2	12'-2"
LOOP ASSEMBLY			
6D1	6	2	8'-5"
6D2	6	2	7'-7"
6D3	6	2	8'-6"

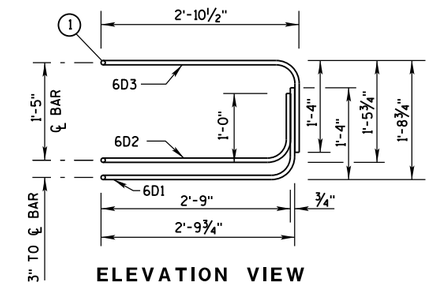

ELEVATION VIEW

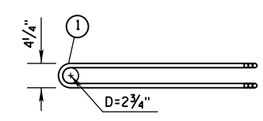

PLAN VIEW
LOOP BAR ASSEMBLY
(MARKED END SHOWN, INVERT FOR OTHER END)

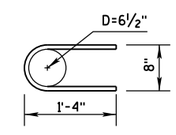

6A2

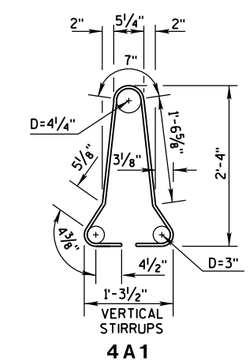

VERTICAL STIRRUPS
4A1

BARRIER SECTION

6

6

S.D.D. 14 B 7-15c

S.D.D. 14 B 7-15c

CONCRETE BARRIER
TEMPORARY PRECAST, 12'-6"

STATE OF WISCONSIN
DEPARTMENT OF TRANSPOR

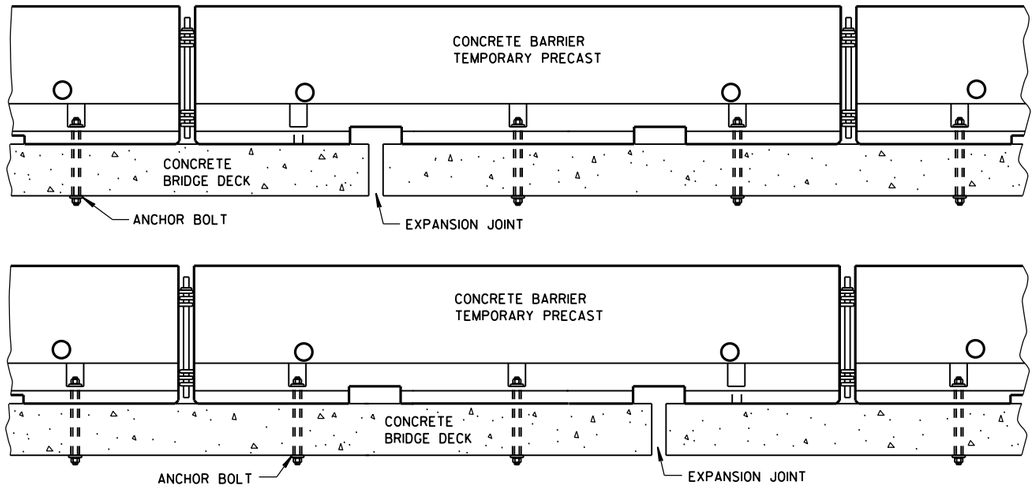

TREATMENT AT BRIDGE DECK EXPANSION JOINTS

(NO SINGLE CONCRETE BARRIER SECTION SHALL BE ANCHORED TO BOTH THE BRIDGE DECK AND THE APPROACH SLAB. ALL ANCHOR BOLT LOCATIONS SHALL BE ANCHORED TO THE DECK IN ACCORDANCE WITH THE DETAIL. NO MORE THAN ONE ANCHOR BOLT SHALL BE ELIMINATED FROM A BARRIER SECTION WHEN SPANNING AN EXPANSION JOINT.)

GENERAL NOTES

SEE SHEET E FOR WHEN TO ANCHOR. OTHER PARTS OF THE PLAN MAY SHOW ADDITIONAL LOCATIONS REQUIRING ANCHORING.

REMOVE ALL ANCHORS WHEN NO LONGER NEEDED. FILL CONCRETE PAVEMENTS, DECKS AND APPROACH SLABS WITH NON-SHRINK COMMERICAL GROUT FROM THE APPROVED PRODUCT LIST. FILL ASPHALT PAVEMENTS WITH ASTM D6690 TYPE II RUBBERIZED CRACK FILLER.

1. 1⅛" DIAMENTER A307 THREADED ROD, ½" X 3" X 3" SQUARE PLATE WASHER WITH ASTM A36 STEEL. ASTM A563A HEAVY HEX NUT.
2. ADHESIVE ANCHORS WITH A MINIMUM BOND STRENGTH OF 1,800 PSI AND 5¼" EMBEDMENT. SEE 603.2 AND 603.3.1.2 OF THE WISCONSIN STANDARD SPECIFICATIONS FOR MORE INFORMATION ON ADHESIVE ANCHORS.
3. ASPHALT SURFACE SHOWN. CONTRACTOR MAY DRILL THROUGH CONCRETE PAVEMENT AND THAN DRIVE ASPHALT ANCHOR PIN.

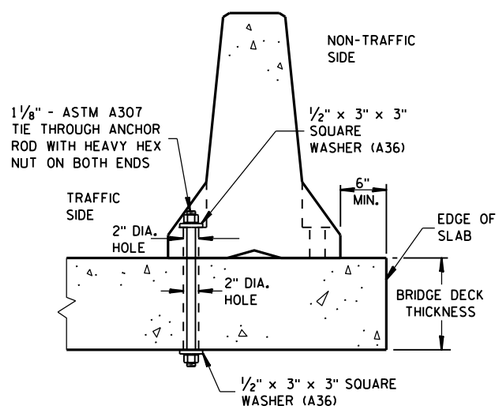

THROUGH BOLTED ANCHOR INSTALLATION ON BRIDGE DECK

(DO NOTUSE ON CONCRETE BRIDGE DECK WITH ASPHALT OVERLAY)

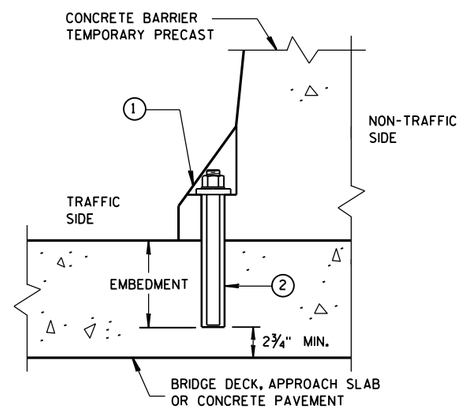

REMOVABLE ADHESIVE ANCHOR INSTALLATION ON CONCRETE BRIDGE DECK, CONCRETE APPROACH SLAB, OR CONCRETE PAVEMENT

(DO NOT USE ON CONCRETE WITH AN ASPHALTIC OVERLAY)

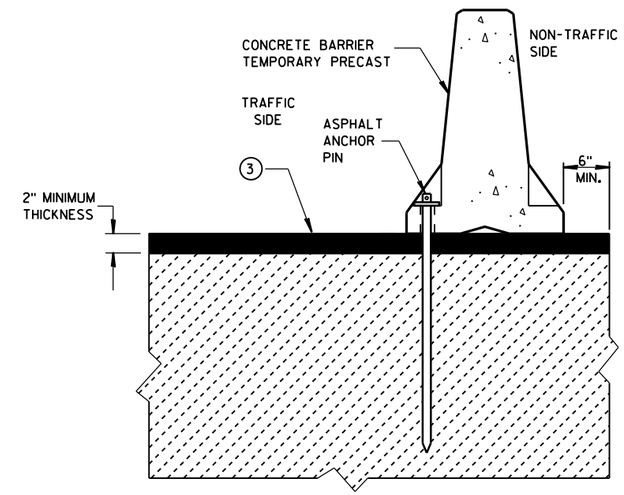

STAKE DOWN INSTALLATION FOR ASPHALTIC SURFACE

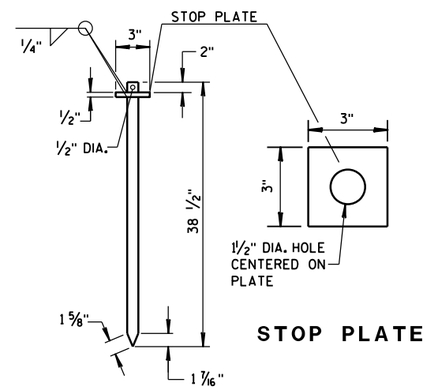

ASPHALT ANCHOR PIN

(ASTM A36 STEEL)

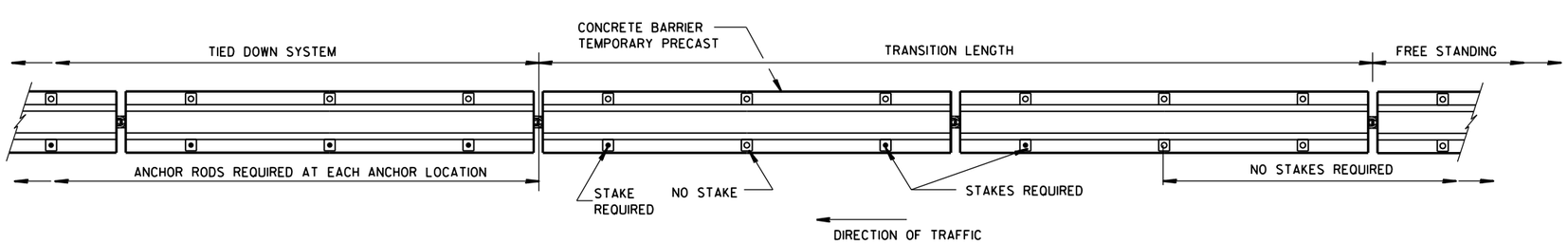

PLAN VIEW

FREE STANDING TRANSITION TO TIED-DOWN SYSTEM

(PLACE TRANSITION IN A TANGENT SECTION OF BARRIER PARALLEL TO THE ROADWAY. IF TRANSITION OCCURS ON STRUCTURAL SLAB, ANCHOR AS SHOWN.)

CONCRETE BARRIER
TEMPORARY PRECAST, 12'-6"

STATE OF WISCONSIN
DEPARTMENT OF TRANSPOI

6

S.D.D. 14 B 7-15d

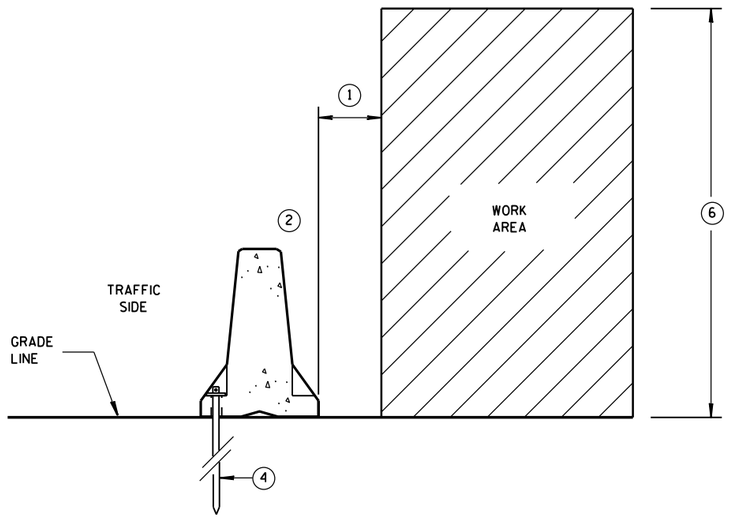

ANCHORED BARRIER SPACE REQUIREMENTS FOR HAZARDS EXTENDED ABOVE THE GRADE LINE

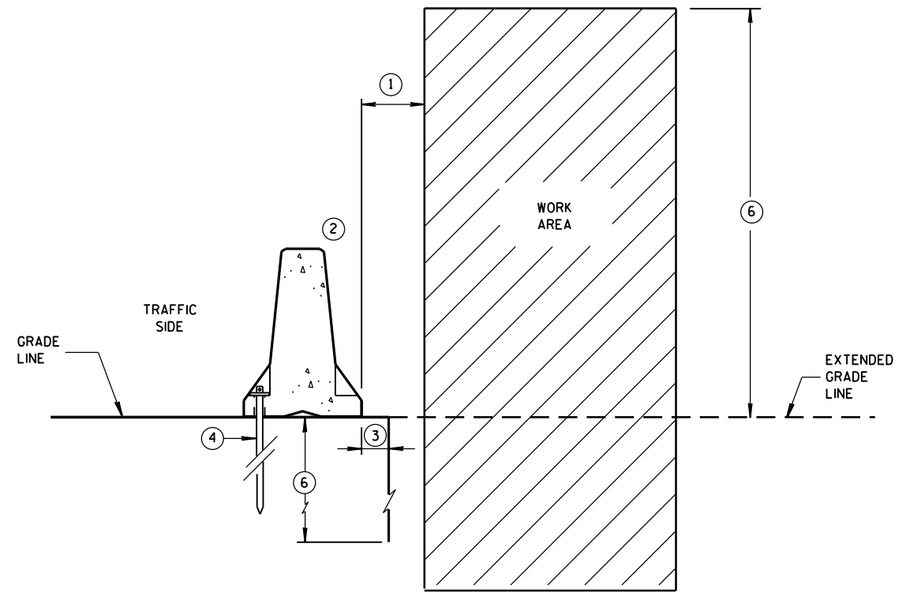

ANCHORED BARRIER SPACE REQUIREMENTS ON VERTICAL DROP OFFS

GENERAL NOTES

1. WHEN OBJECTS EXTEND ABOVE THE GRADE, A MINIMUM OF 1 FOOT IS REQUIRED FROM BACK OF BARRIER TO OBJECT. SEE OTHER DETAILS FOR FOR THE MINIMUM OFFSET FROM BACK OF BARRIER TO SLOPES OR VERTICAL DROPS.
2. OBJECTS ARE NOT TO BE PLACED ON, MOUNTED TO, OR LEANED AGAINST THE BARRIER WITHOUT PERMISSION OF THE PROJECT ENGINEER.
3. SEE OTHER DETAIL ON SHEET "D" FOR SPACE REQUIREMENTS.
4. SEE BOLT THROUGH DECK, REMOVABLE ADHESIVE ANCHOR, OR A STAKE DOWN FOR ASPHALTIC SURFACE TREATMENT DETAILS. ASPHALTIC ANCHOR SHOWN.
5. DEPTH OF 3 FEET OR MORE.
6. Y = 6'-6".

POSTED SPEED MPH	X
45 OR GREATER	4'
40 OR LESS	2'

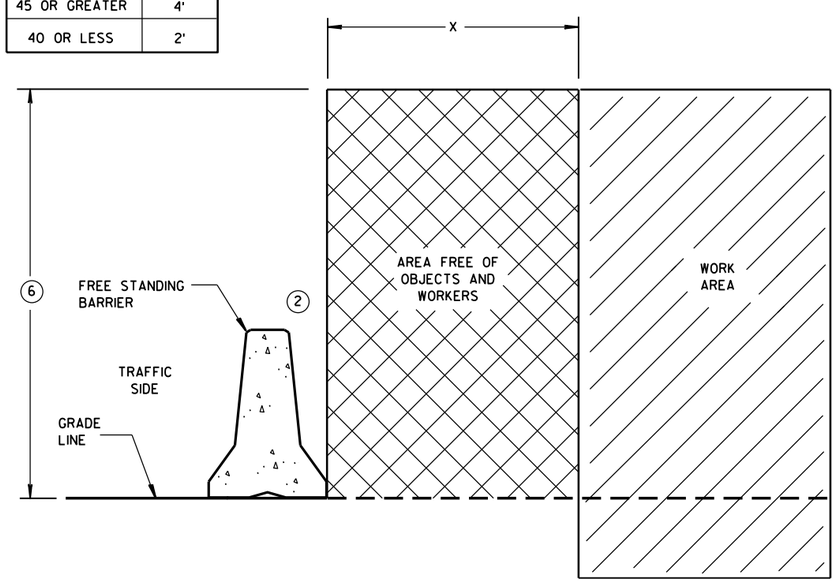

FREE STANDING BARRIER SPACE REQUIREMENTS

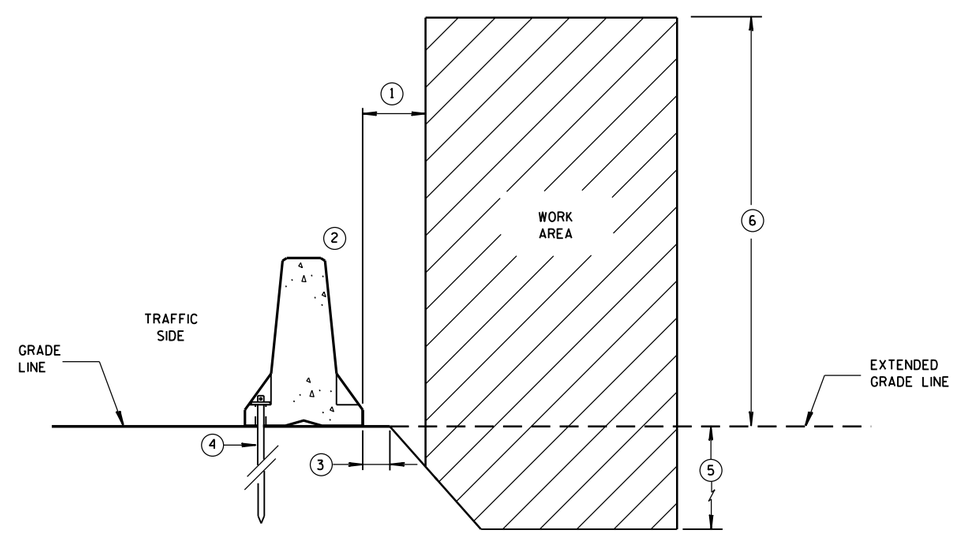

ANCHORED BARRIER SPACE REQUIREMENTS ON SLOPES

CONCRETE BARRIER
TEMPORARY PRECAST, 12'-6"

STATE OF WISCONSIN
DEPARTMENT OF TRANSPOR

6

S.D.D. 14 B 7-15e

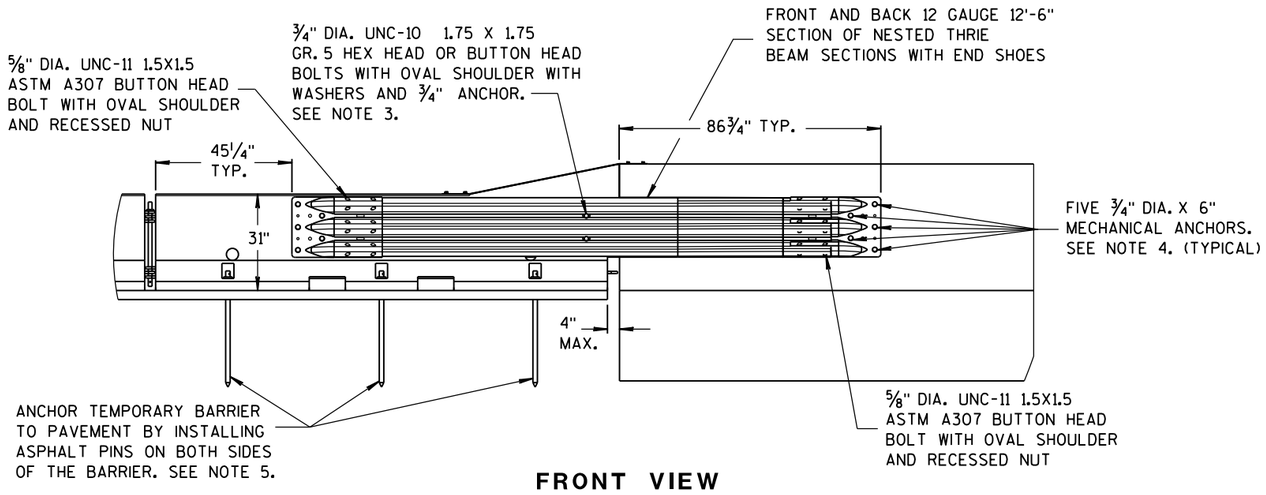

FRONT VIEW

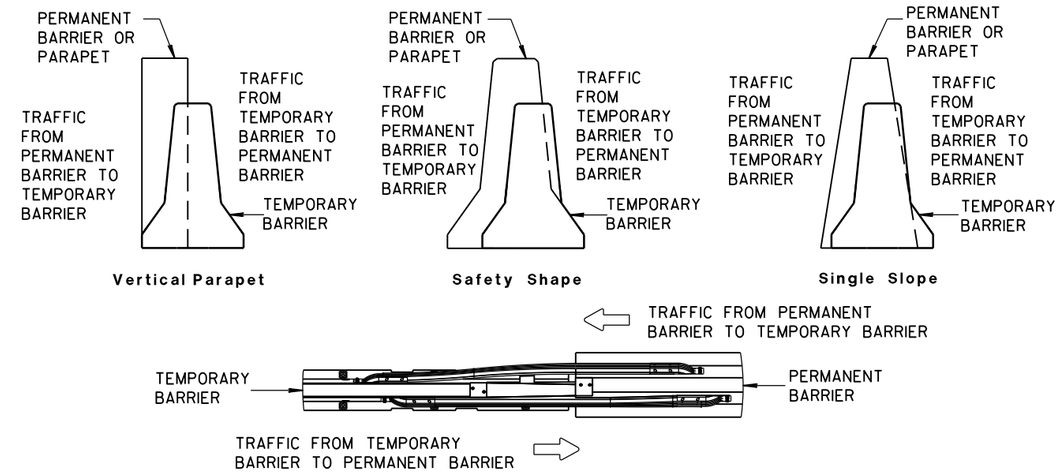

TEMPORARY BARRIER PLACEMENT FOR BI-DIRECTIONAL TRANSITION TO TIED-DOWN SYSTEM

NOTES

NESTED THRIE BEAM IS REQUIRED ON BOTH SIDES OF THE TEMPORARY BARRIER FOR ALL INSTALLATIONS REGARDLESS OF TRAFFIC.

1. CAP END PLATE PLACED FLUSH WITH UPSTREAM END OF PERMANENT BARRIER OR PARAPET.
2. THRIE BEAM PIECES ARE OFFSET 15 1/4" TO PREVENT INTERFERENCE FROM THE ANCHORS ON OPPOSING SIDES.
3. MINIMUM MECHANICAL OR ADHESIVE ANCHOR STRENGTH REQUIREMENTS: ULTIMATE TENSILE LOAD 9.48 KIPS AND ULTIMATE SHEAR LOAD 10.48 KIPS.
4. MINIMUM MECHANICAL OR ADHESIVE ANCHOR STRENGTH REQUIREMENTS: ULTIMATE TENSILE LOAD 17.9 KIPS AND ULTIMATE SHEAR LOAD 21.96 KIPS.
5. MAY BE USED ON CONCRETE OR ASPHALT PAVEMENTS. ASPHALT OPTION SHOWN. FOR CONCRETE OPTION SEE OTHER DETAILS.
6. MINIMUM MECHANICAL OR ADHESIVE ANCHOR STRENGTH REQUIREMENTS: ULTIMATE TENSILE LOAD 12.14 KIPS AND ULTIMATE SHEAR LOAD 17.5 KIPS.

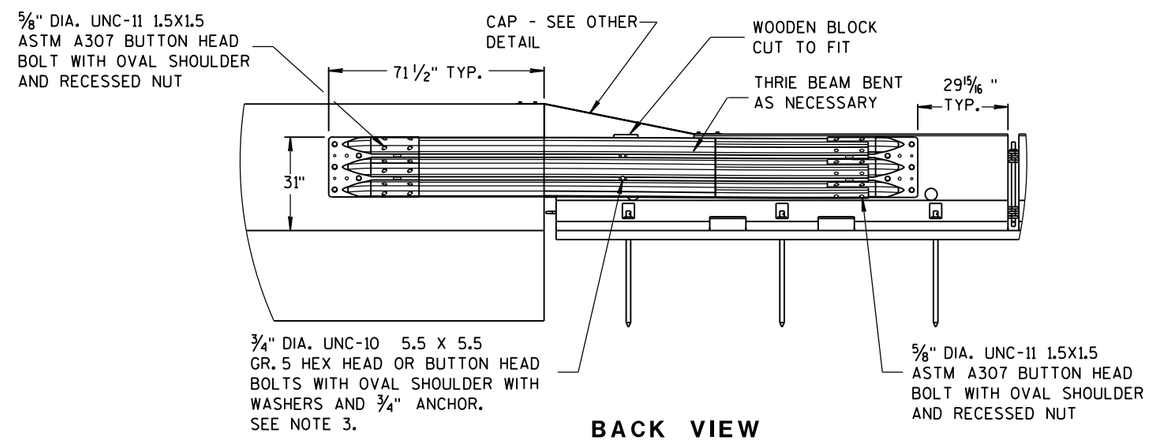

BACK VIEW

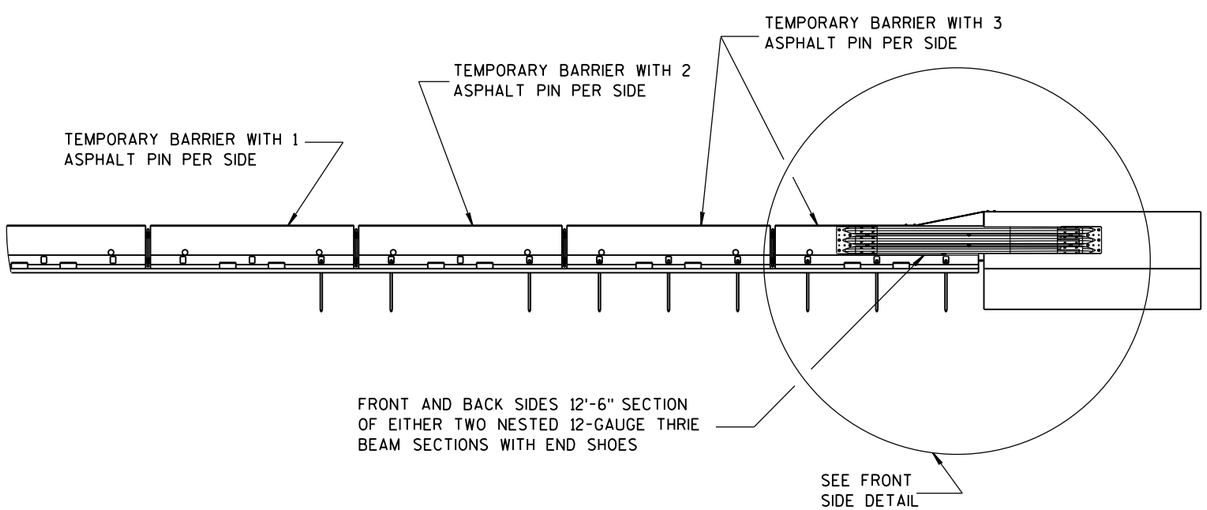

FRONT VIEW

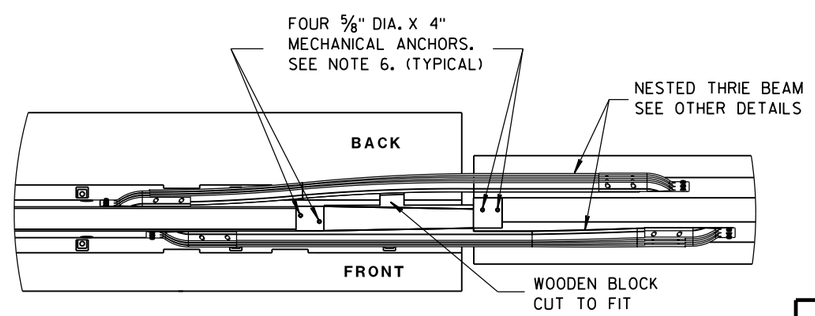

PLAN VIEW

BI-DIRECTIONAL TRANSITION TO TIED-DOWN SYSTEM

CONCRETE BARRIER
TEMPORARY PRECAST, 12'-6"

STATE OF WISCONSIN
DEPARTMENT OF TRANSPO

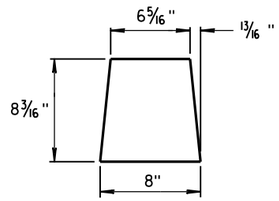

GUSSET 1

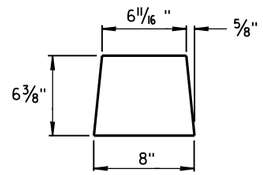

GUSSET 2

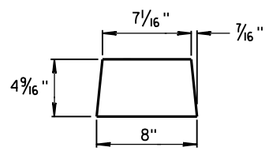

GUSSET 3

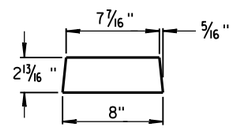

GUSSET 4

GUSSETS

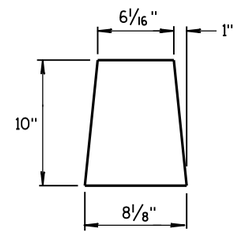

END PLATE

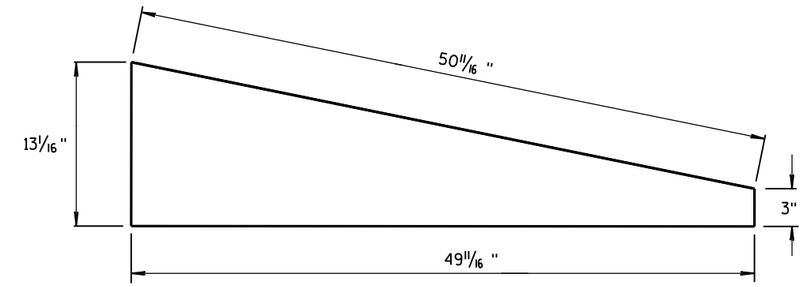

SIDE PLATE

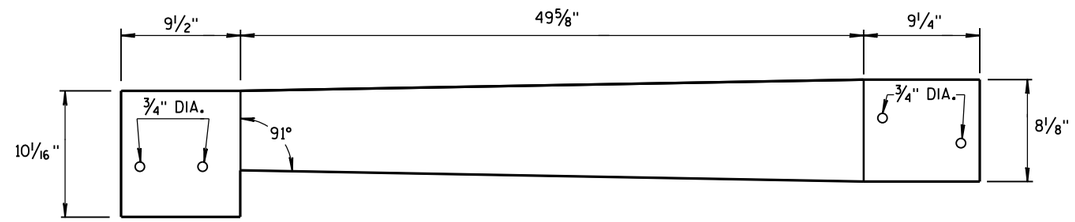

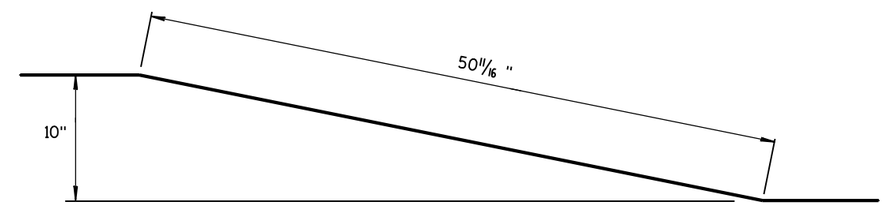

TOP PLATE

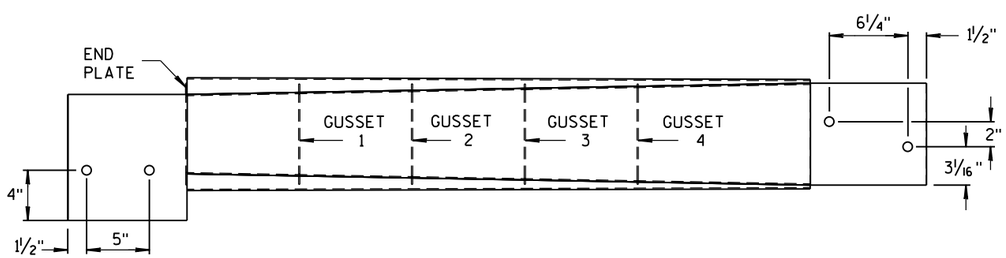

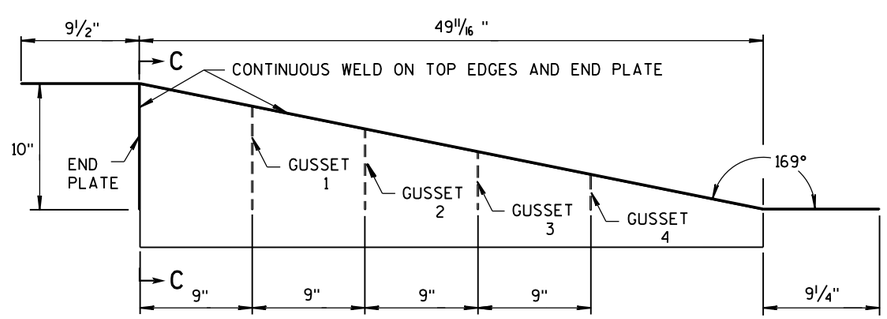

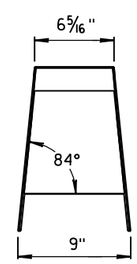

SECTION C-C

SIDE, TOP AND END PLATES FOR CAP FROM TEMPORARY CONCRETE BARRIER TO 42" PERMANENT CONCRETE BARRIER

SIDE PLATES, TOP PLATE, END PLATE AND GUSSETS ARE 12 GAUGE ASTM A36 GALVANIZED STEEL.

NOTES

1. FOUR GUSSETS AND END PLATE ARE STITCH WELDED ON THREE SIDES.
2. TWO TRIANGULAR SIDE PLATES ARE STITCH WELDED TO TOP PLATE, END PLATE, AND GUSSETS.

CAP DETAILS FOR TEMPORARY CONCRETE BARRIER TO 42" PERMANENT CONCRETE BARRIER

CONCRETE BARRIER
TEMPORARY PRECAST, 12'-6"

STATE OF WISCONSIN
DEPARTMENT OF TRANSPOR

6

S.D.D. 14 B 7-15g

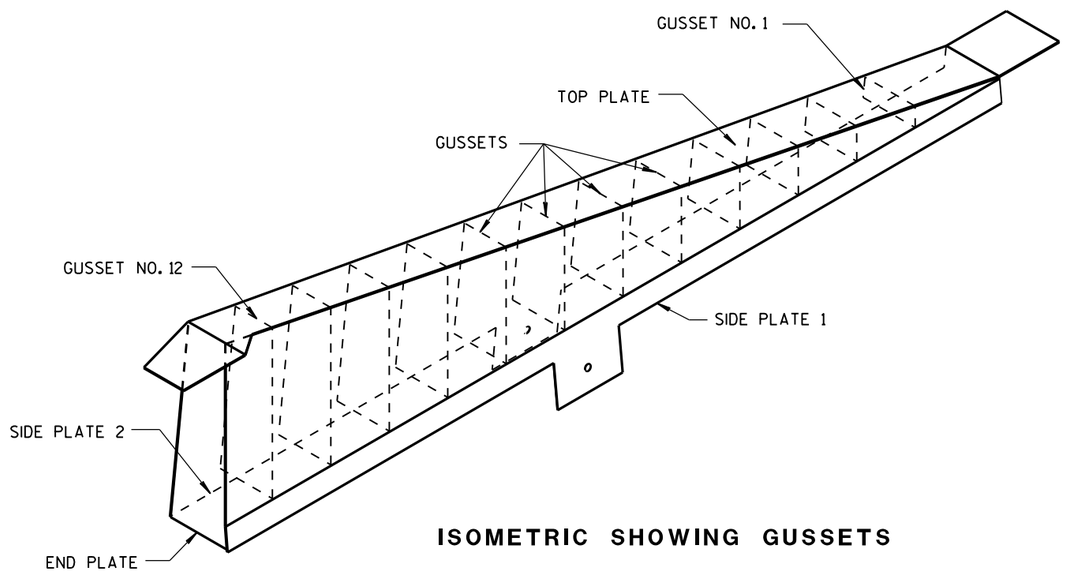

ISOMETRIC SHOWING GUSSETS

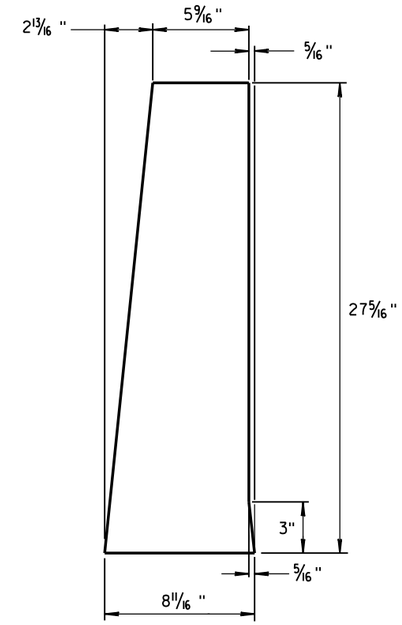

END PLATE

1/8" STEEL PLATE

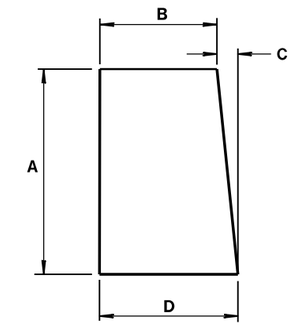

GUSSETS 1 - 12

ALL GUSSETS 1/8" STEEL PLATE

GUSSET DIMENSIONS				
GUSSET NO.	A	B	C	D
1	2 7/8"	7 3/4"	1/4"	8
2	4 11/16 "	7 9/16 "	1/2"	8
3	6 1/2"	7 3/8"	11/16 "	8 1/16 "
4	8 5/16 "	7 3/16 "	7/8"	8 1/16 "
5	10 1/8"	7"	1 1/16 "	8 1/16 "
6	11 15/16 "	6 13/16 "	1 1/4"	8 1/16 "
7	13 3/4"	6 5/8"	1 7/16 "	8 1/16 "
8	15 9/16 "	6 7/16 "	1 9/16 "	8 1/16 "
9	17 3/8"	6 1/4"	1 13/16 "	8 1/16 "
10	19 3/16 "	6 1/16 "	1 15/16 "	8 1/16 "
11	21"	5 7/8"	2 3/16 "	8 1/16 "
12	22 13/16 "	5 11/16 "	2 5/16 "	8 1/16 "

SIDE PLATES, TOP PLATE, END PLATE AND GUSSETS ARE 12 GAUGE ASTM A36 STEEL AND GALVANIZED.

GUSSETS AND END PLATE ARE STITCH WELDED ON 3 SIDES. TWO TRIANGULAR SIDE PLATES ARE STITCH WELDED TO TOP PLATE, END PLATE AND GUSSETS.

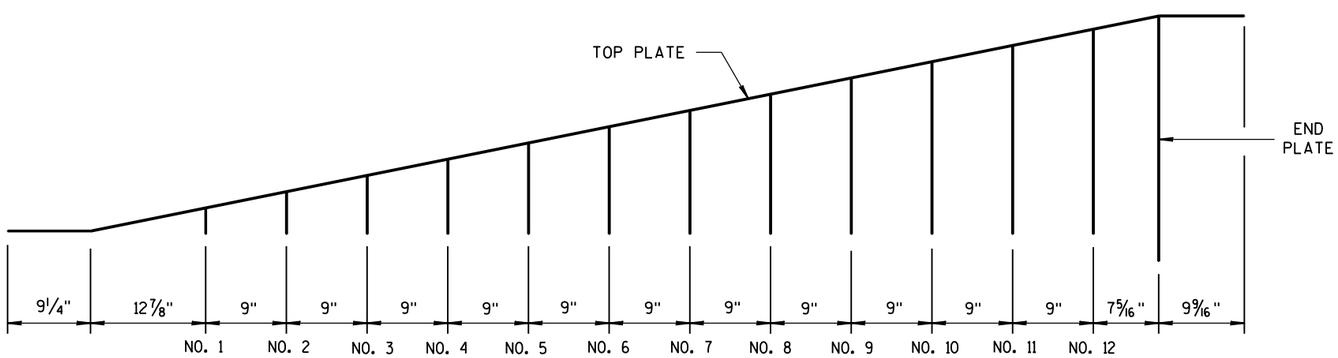

GUSSET LOCATION

CAP DETAILS FOR TEMPORARY CONCRETE BARRIER TO 56" PERMANENT CONCRETE BARRIER

CONCRETE BARRIER
TEMPORARY PRECAST, 12'-6"

STATE OF WISCONSIN
DEPARTMENT OF TRANSPOR

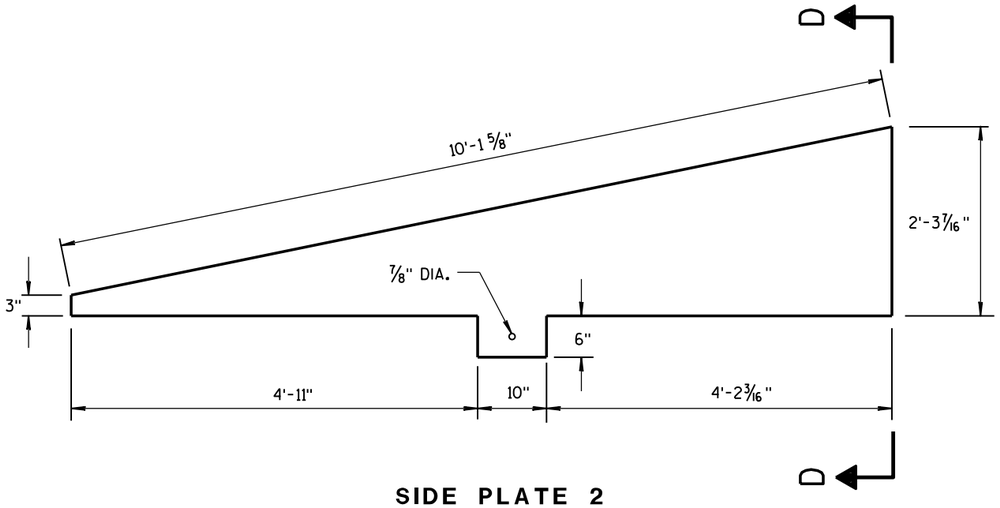

SIDE PLATE 2

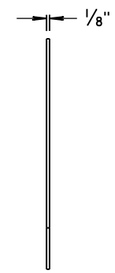

END VIEW

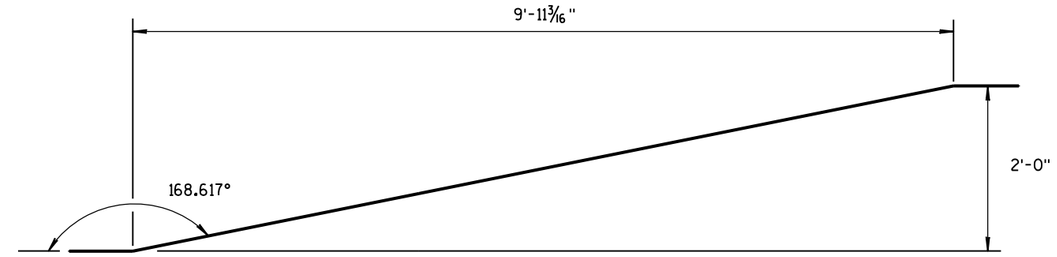

SIDE VIEW

TOP PLATE

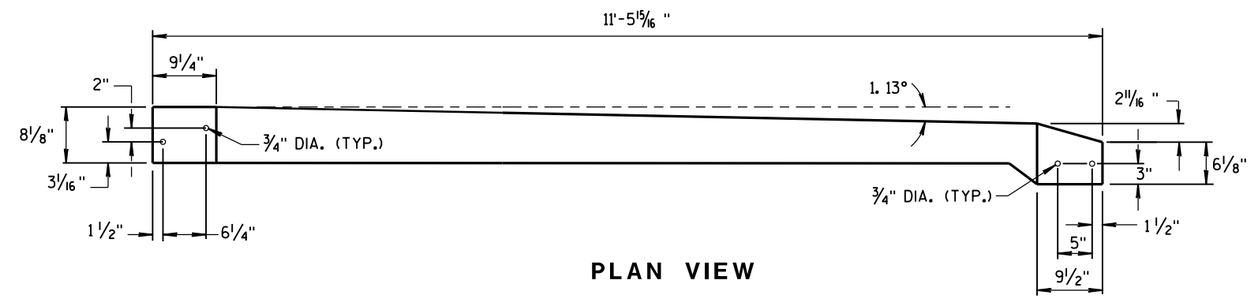

PLAN VIEW

TOP PLATE

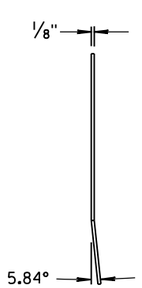

END VIEW

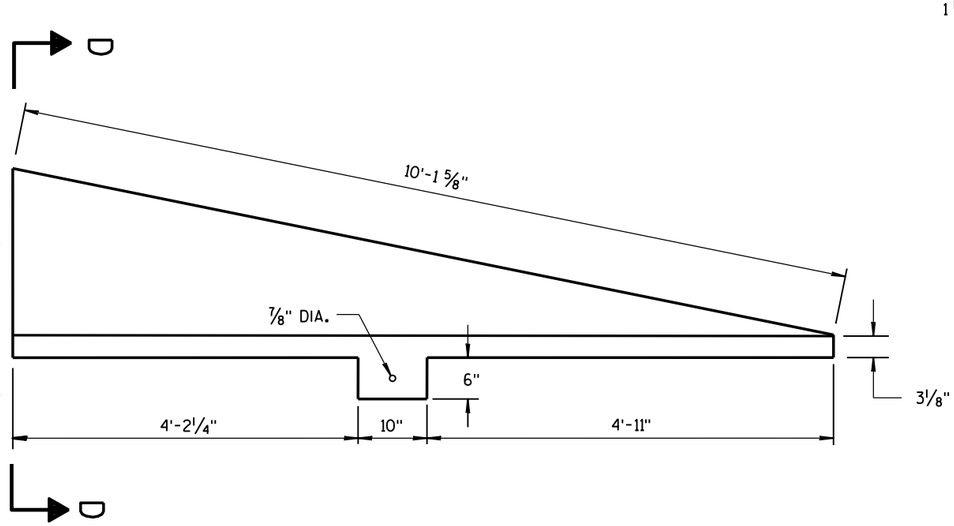

SIDE PLATE 1

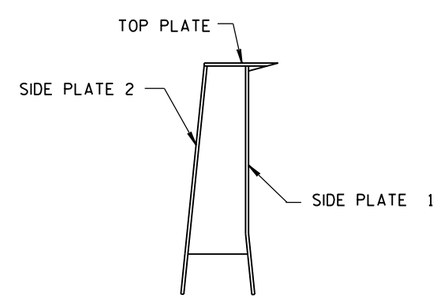

SECTION D-D

CAP DETAILS FOR TEMPORARY CONCRETE BARRIER TO 56" PERMANENT CONCRETE BARRIER

CONCRETE BARRIER
TEMPORARY PRECAST, 12'-6"

STATE OF WISCONSIN
DEPARTMENT OF TRANSPORTATION

APPROVED
June 2017 — DATE
/S/ Rodney Taylor — ROADWAY STANDARD UNIT SUPERV
FHWA

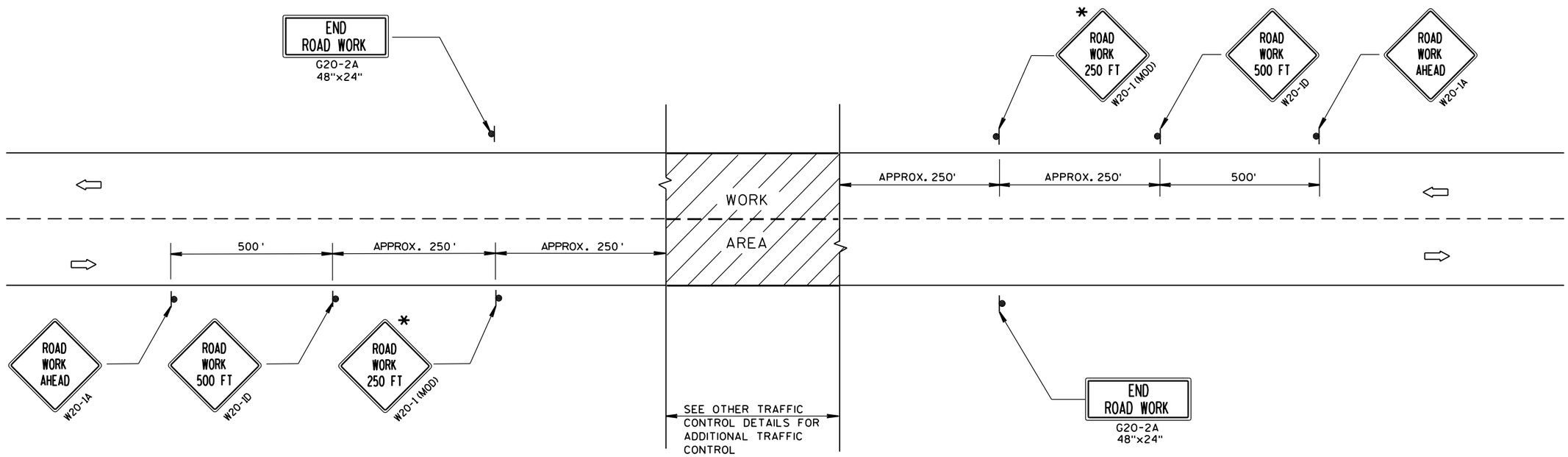

TYPICAL SIDEROAD APPROACH WARNING SIGN DETAIL

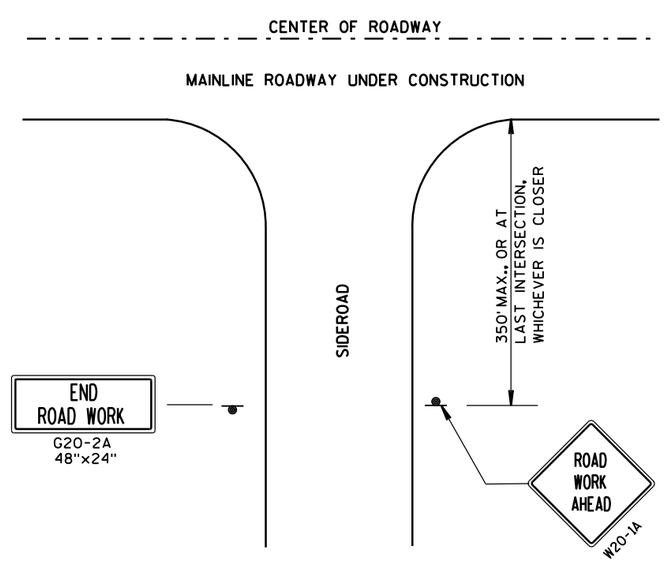

LEGEND

- SIGN ON PERMANENT SUPPORT
- DIRECTION OF TRAFFIC
- WORK AREA

GENERAL NOTES

THE EXACT NUMBER, LOCATION, AND SPACING OF ALL SIGNS AND DEVICES SHALL BE ADJUSTED TO FIT FIELD CONDITIONS.

THE SPACING BETWEEN TRAFFIC CONTROL SIGNS SHOULD BE ADJUSTED TO NOT CONFLICT WITH AND SHOULD PROVIDE A DESIRABLE MINIMUM OF 200 FEET CLEARANCE TO EXISTING SIGNS THAT WILL REMAIN IN PLACE.

ALL SIGNS ARE 48"x48" UNLESS OTHERWISE NOTED. IF NECESSARY DUE TO SPACE CONSTRAINTS, 36"x36" SIGNS MAY BE USED INSTEAD OF 48"x48" SIGNS.

SIGNS THAT WILL BE IN PLACE LESS THAN 7 CONTINUOUS DAYS AND NIGHTS MAY BE MOUNTED ON PORTABLE SUPPORTS.

IF A "STOP" SIGN MUST BE REMOVED FOR A WORK OPERATION, A TEMPORARY "STOP" SIGN SHALL BE PLACED PRIOR TO THE SIGN REMOVAL, OR A FLAGGER SHALL BE PROVIDED UNTIL THE SIGN IS RE-ESTABLISHED.

* THE THIRD W20-1 SIGN IS REQUIRED ONLY IF THERE IS AN INTERSECTION BETWEEN THE "ROAD WORK 500 FT" SIGN AND THE WORK ZONE. ADJUST THE PLACEMENT OF THIS SIGN BASED ON INTERSECTION LOCATION AND OTHER FIELD CONDITIONS.

TRAFFIC CONTROL, ADVANCE WARNING SIGNS 40 M.P.H. OR LESS TWO-WAY UNDIVIDED ROAD OPEN TO TRAFFIC

STATE OF WISCONSIN
DEPARTMENT OF TRANSPORTATION

APPROVED
Sept. 2017 — DATE
/S/ Andrew Heldtke — WORK ZONE ENG
FHWA

6

S.D.D. 15 C 5-4

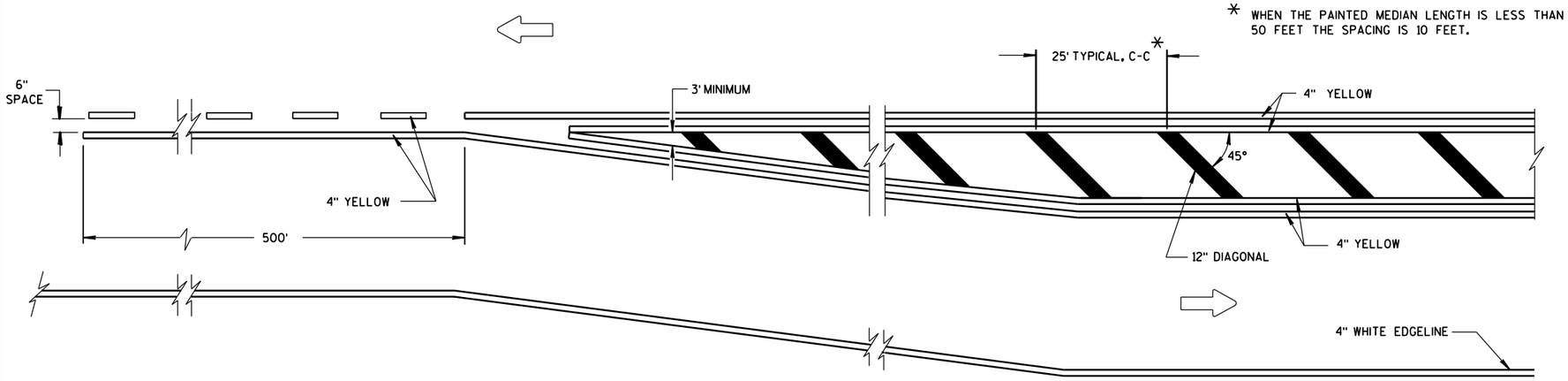

MEDIAN ISLAND DETAIL

GENERAL NOTE

DIAGONALS ARE OPTIONAL WHEN PAINTED ISLAND IS LESS THAN 6 FEET AT WIDEST POINT.

DIRECTION OF TRAVEL

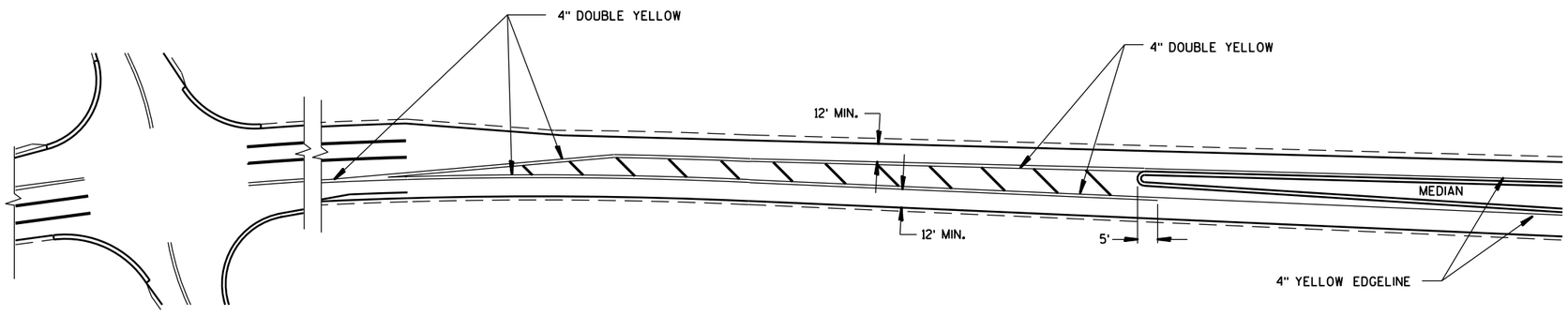

APPROACH MARKINGS FOR OTHER MEDIAN TYPES

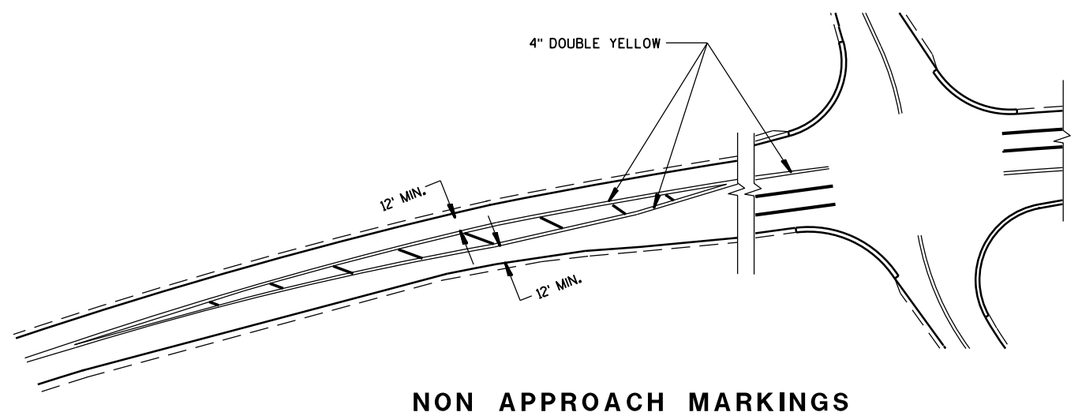

NON APPROACH MARKINGS

MEDIAN ISLAND MARKING

STATE OF WISCONSIN
DEPARTMENT OF TRANSPORTATION

APPROVED
June 2017 /S/ Matthew Rauch
DATE STATE SIGNING AND MARK ER
FHWA

6

6

S.D.D. 15 C 18-4

S.D.D. 15 C 18-4

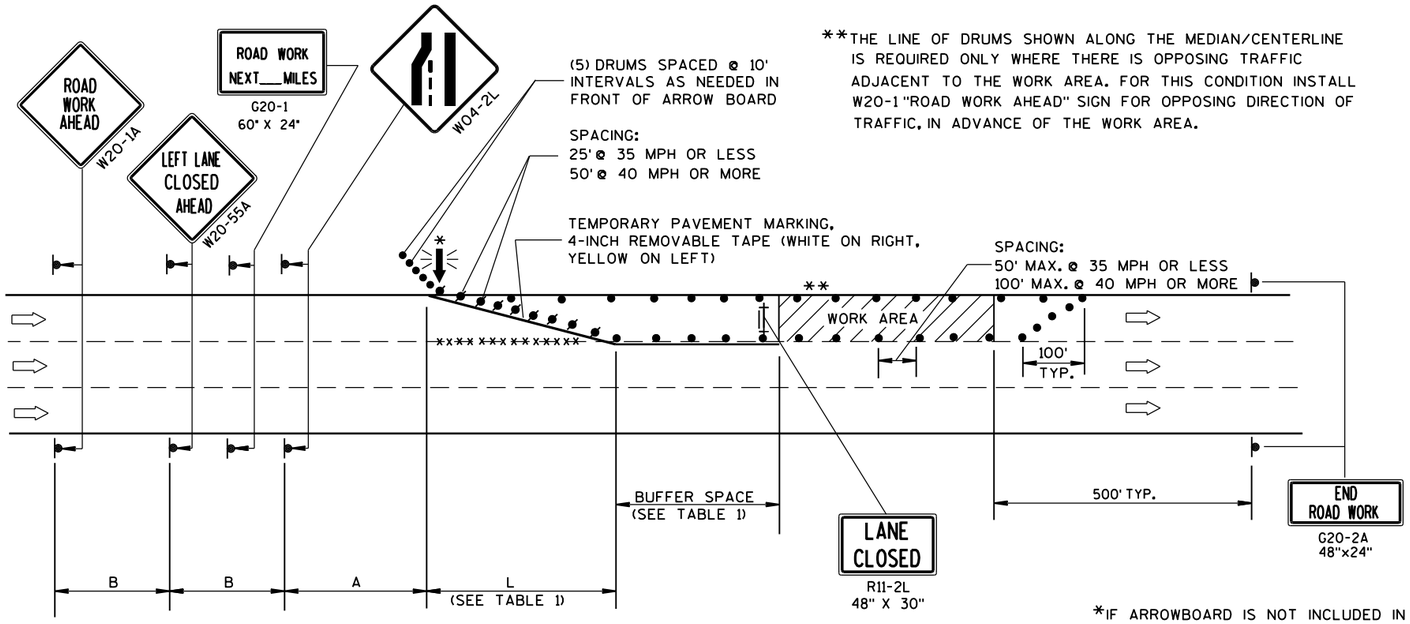

**THE LINE OF DRUMS SHOWN ALONG THE MEDIAN/CENTERLINE IS REQUIRED ONLY WHERE THERE IS OPPOSING TRAFFIC ADJACENT TO THE WORK AREA. FOR THIS CONDITION INSTALL W20-1 "ROAD WORK AHEAD" SIGN FOR OPPOSING DIRECTION OF TRAFFIC, IN ADVANCE OF THE WORK AREA.

B=400' AT 25-30 MPH
700' AT 35-40 MPH
1000' AT 45-55 MPH

A=200' AT 25-30 MPH
350' AT 35-40 MPH
500' AT 45-55 MPH

(PLACE BARRICADE AND SIGN APPROX. EVERY 1000' ACROSS THE CLOSED LANE)

*IF ARROWBOARD IS NOT INCLUDED IN MISCELLANEOUS QUANTITIES, SUBSTITUTE A TYPE III BARRICADE WITH W01-6 SIGN IN THE LANE CLOSURE TAPER.

W01-6
48"x24"

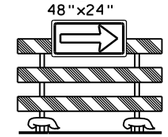

GENERAL NOTES

THIS LANE CLOSURE DETAIL IS TYPICAL FOR CLOSING THE LEFT LANE. FOR A RIGHT LANE CLOSURE, REVERSE THE TRAFFIC CONTROL.

THIS DETAIL MAY BE USED FOR ROADWAYS WITH EITHER TWO OR THREE LANES IN EACH DIRECTION.

THE EXACT NUMBER, LOCATION, AND SPACING OF ALL SIGNS AND DEVICES SHALL BE ADJUSTED TO FIT FIELD CONDITIONS AS APPROVED BY THE ENGINEER.

THE SPACING BETWEEN TRAFFIC CONTROL SIGNS SHOULD BE ADJUSTED TO NOT CONFLICT WITH AND SHOULD PROVIDE A DESIRABLE MINIMUM OF 200 FEET CLEARANCE TO EXISTING SIGNS THAT WILL REMAIN IN PLACE.

ALL SIGNS ARE 48"x48" UNLESS OTHERWISE NOTED. IF NECESSARY DUE TO SPACE CONSTRAINTS IN URBAN AREAS, 36" X 36" SIGNS MAY BE USED IF APPROVED BY DISTRICT TRAFFIC UNIT.

"WO" SIGNS ARE THE SAME AS "W" SIGNS EXCEPT THE BACKGROUND IS ORANGE.

SIGNS THAT WILL BE IN PLACE LESS THAN 7 CONTINUOUS DAYS AND NIGHTS, OR THAT WILL BE PLACED IN A CLOSED LANE, MAY BE MOUNTED ON PORTABLE SUPPORTS.

ANY SIGNS TEMPORARY OR EXISTING, WHICH CONFLICT WITH TRAFFIC CONTROL "IN USE" SHALL BE REMOVED OR COVERED AS NEEDED AND AS APPROVED BY THE ENGINEER.

REMOVE PAVEMENT MARKINGS AND PLACE TEMPORARY PAVEMENT MARKING, REMOVABLE TAPE IF LANE CLOSURE IS TO BE IN PLACE FOR 4 OR MORE CONTINUOUS DAYS AND NIGHTS.

ON UNDIVIDED ROADWAYS, OMIT THE SIGNS SHOWN ON LEFT SIDE OF ROAD.

W20-1A, G20-1 AND G20-2A SIGNS ARE NOT REQUIRED IF THE LANE CLOSURE IS WITHIN A LARGER WORK ZONE WHERE THESE SIGNS ARE ALREADY PRESENT.

OMIT G20-1 SIGNS IF LENGTH OF WORK AREA IS 2 MILES OR LESS.

CONSIDER GEOMETRICS WHEN LOCATING SIGNS AND ARROWBOARDS SO THE APPROACHING DRIVER HAS A CLEAR VIEW OF THE ARROWBOARDS AND LANE CLOSURE DRUMS.

PLACE THE ARROWBOARD AS CLOSE AS POSSIBLE TO THE BEGINNING OF THE LANE CLOSURE TAPER, PREFERABLY ON THE SHOULDER OR TERRACE.

CHANNELIZING DEVICES PLACED ADJACENT TO WORK AREA SHALL BE PULLED BACK FROM THE TRAVEL LANE WHEN WORK IS NOT IN PROGRESS.

BARRICADES IN A CLOSED LANE THAT MUST BE MOVED FOR A WORK OPERATION SHALL BE IMMEDIATELY RE-ESTABLISHED UPON COMPLETION OF THE OPERATION OR, FOR CONTINUING OPERATIONS, AT THE END OF EACH WORKING DAY.

WARNING LIGHTS ARE NOT REQUIRED IF THE LANE CLOSURE IS A DAYTIME ONLY OPERATION.

TABLE 1
TAPER AND BUFFER SPACE
FOR 12' LANE WIDTH

S	L	BUFFER SPACE
25	125'	55'
30	180'	85'
35	245'	120'
40	320'	170'
45	540'	220'
50	600'	280'
55	660'	335'

FOR LANE WIDTH OTHER THAN 12':

L = WS AT 45 MPH OR GREATER

$L = \frac{WS^2}{60}$ AT 40 MPH OR LESS

L = TAPER LENGTH IN FEET

S = NON-CONSTRUCTION SPEED LIMIT (MPH)

W = WIDTH OF LANE CLOSURE

LEGEND

- TYPE III BARRICADE WITH ATTACHED SIGN
- SIGN ON PERMANENT SUPPORT
- TRAFFIC CONTROL DRUM WITH TYPE "C" STEADY BURN LIGHT
- TRAFFIC CONTROL DRUM
- FLASHING ARROW BOARD
- DIRECTION OF TRAFFIC
- REMOVING PAVEMENT MARKING (SEE GENERAL NOTES)
- WORK AREA

TRAFFIC CONTROL, SINGLE LANE CLOSURE, NON-FREEWAY/EXPRESSWAY

STATE OF WISCONSIN
DEPARTMENT OF TRANSPORTATION

APPROVED
June 2016 — DATE
/S/ Peter Amakobe Atepe — STATEWIDE WORK ZONE SAFETY ENGINEER
FHWA

6

S.D.D. 15 D 20-4

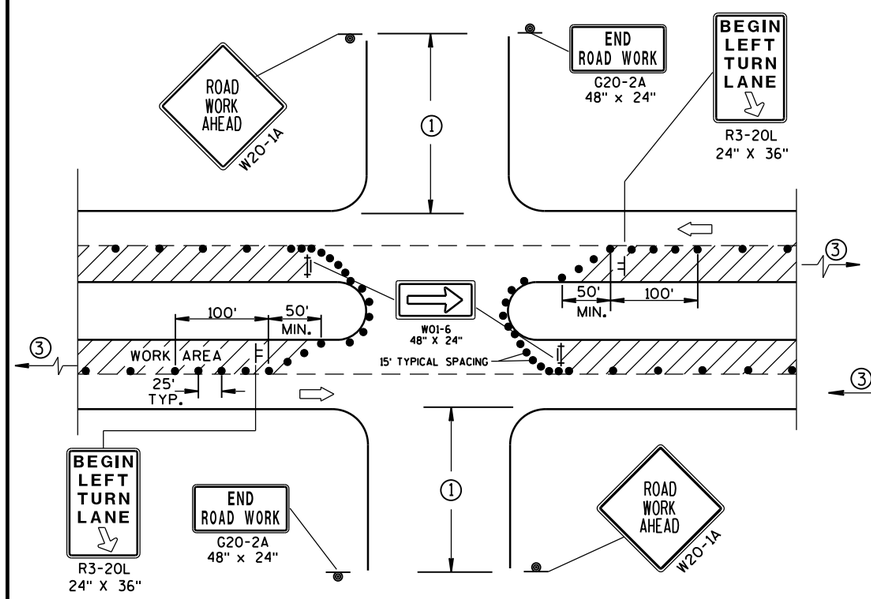

DETAIL A

FOR LEFT LANE CLOSURE AT INTERSECTION OR MEDIAN OPENING

PROVIDE TURN LANES AT INTERSECTIONS WHENEVER STAGING OF WORK ALLOWS. TAPER AND TURN LANE LENGTHS BASED ON FIELD CONDITIONS AS APPROVED BY THE ENGINEER.

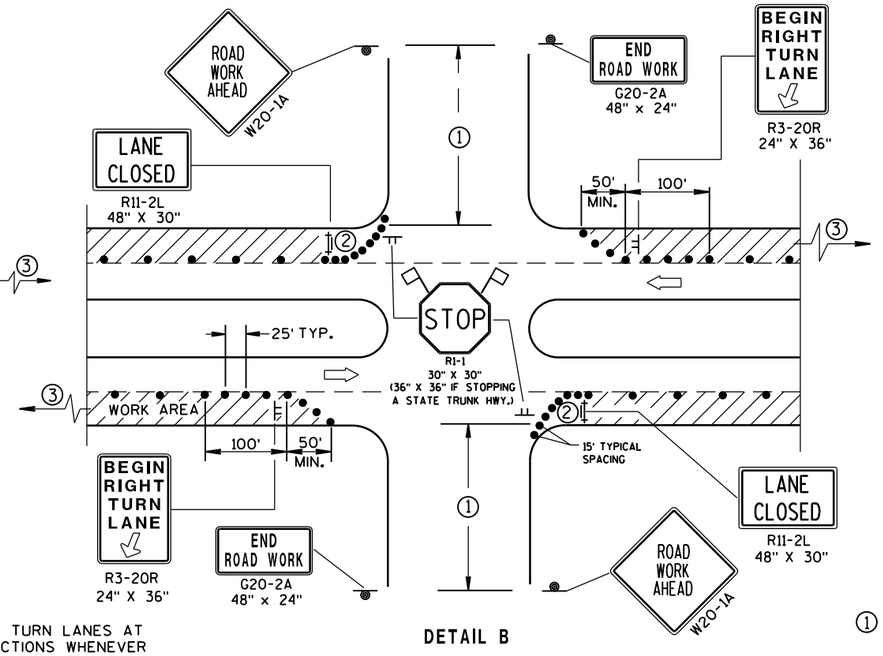

DETAIL B

FOR RIGHT LANE CLOSURE AT INTERSECTION

GENERAL NOTES

THE EXACT NUMBER, LOCATION, AND SPACING OF ALL SIGNS AND DEVICES SHALL BE ADJUSTED TO FIT FIELD CONDITIONS AS APPROVED BY THE ENGINEER.

THE SPACING BETWEEN SIGNS SHOULD BE ADJUSTED TO NOT CONFLICT WITH AND SHOULD PROVIDE A DESIRABLE MINIMUM OF 200 FEET CLEARANCE TO EXISTING SIGNS THAT WILL REMAIN IN PLACE.

ALL SIGNS ARE 48"x48" UNLESS OTHERWISE NOTED. IF NECESSARY DUE TO SPACE CONSTRAINTS IN URBAN AREAS, 36" X 36" SIGNS MAY BE USED IF APPROVED BY DISTRICT TRAFFIC UNIT.

"WO" SIGNS ARE THE SAME AS "W" SIGNS EXCEPT THE BACKGROUND IS ORANGE.

SIGN LAYOUTS SHALL BE IN ACCORDANCE WITH THE FHWA'S MANUAL OF STANDARD HIGHWAY SIGNS OR THE WISCONSIN STANDARD SIGN PLATES.

SIGNS THAT WILL BE IN PLACE LESS THAN 7 CONTINUOUS DAYS AND NIGHTS, OR THAT WILL BE PLACED IN A CLOSED LANE, MAY BE MOUNTED ON PORTABLE SUPPORTS.

ANY SIGNS TEMPORARY OR EXISTING, WHICH CONFLICT WITH TRAFFIC CONTROL "IN USE" SHALL BE REMOVED OR COVERED AS NEEDED AND AS APPROVED BY THE ENGINEER.

CHANNELIZING DEVICES PLACED ADJACENT TO WORK AREA SHALL BE PULLED BACK FROM THE TRAVEL LANE WHEN WORK IS NOT IN PROGRESS.

BARRICADES IN A CLOSED LANE THAT MUST BE MOVED FOR A WORK OPERATION SHALL BE IMMEDIATELY RE-ESTABLISHED UPON COMPLETION OF THE OPERATION OR, FOR CONTINUING OPERATIONS, AT THE END OF EACH WORKING DAY.

① 500' TYPICAL OR AT LAST INTERSECTION, WHICHEVER IS CLOSER.
350' IF 35-40 MPH.
200' IF 25-30 MPH.

② ALSO USE BARRICADE AND 15-FOOT TYPICAL DRUM SPACING AT COMMERCIAL DRIVEWAYS.

③ SEE SEPARATE LANE CLOSURE DETAIL FOR ADDITIONAL TRAFFIC CONTROL.

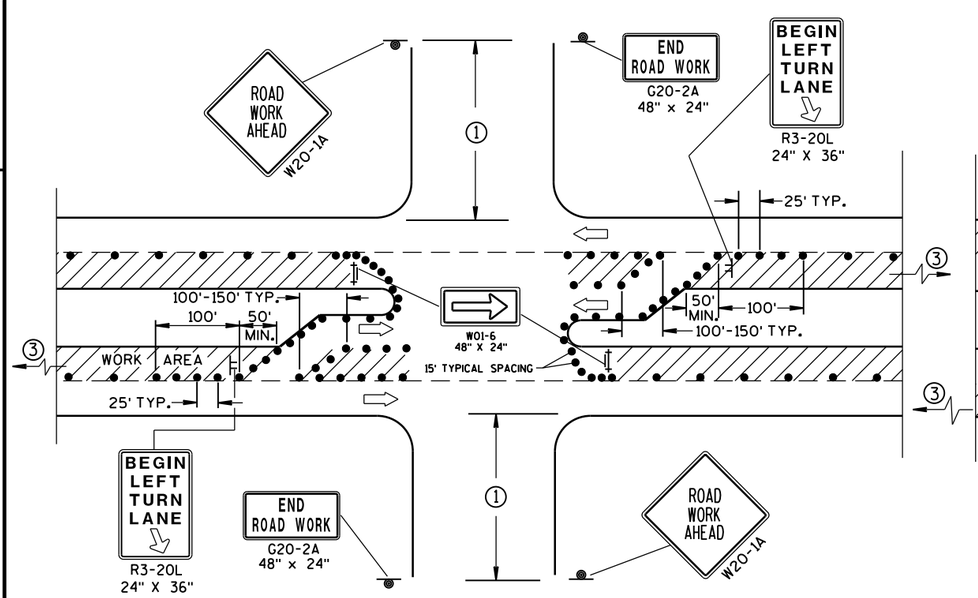

DETAIL C

FOR LEFT LANE CLOSURE AT INTERSECTION OR MEDIAN OPENING (WITH LEFT TURN BAY OPEN)

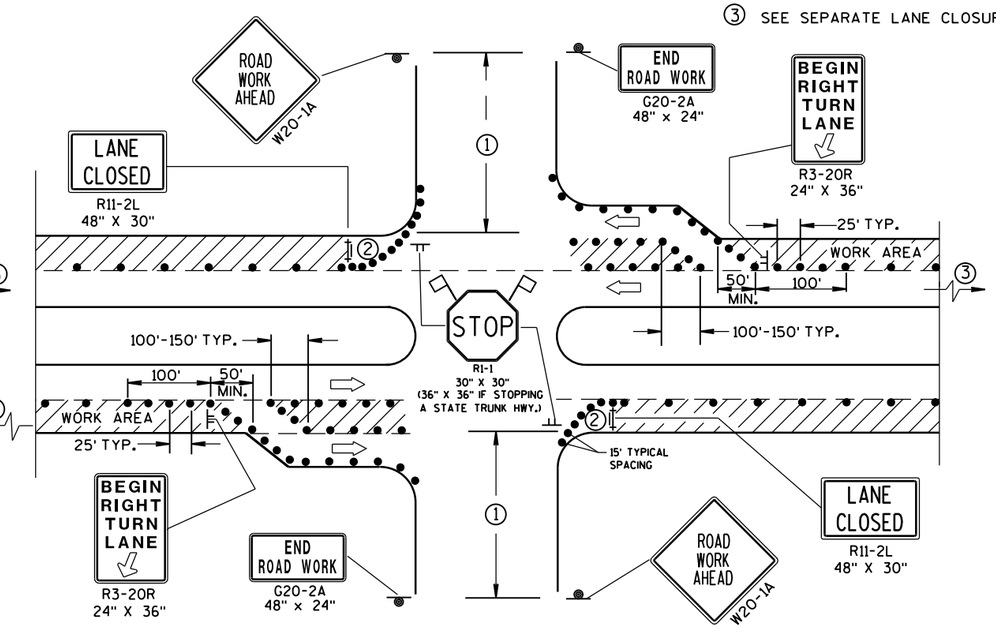

DETAIL D

FOR RIGHT LANE CLOSURE AT INTERSECTION (WITH RIGHT TURN BAY OPEN)

LEGEND

- TRAFFIC CONTROL DRUM
- SIGN ON PERMANENT SUPPORT
- SIGN ON TEMPORARY SUPPORT (5' MIN. MOUNTING HEIGHT)
- TYPE III BARRICADE WITH ATTACHED SIGN AND TYPE "A" WARNING LIGHT (FLASHING)
- DIRECTION OF TRAFFIC
- FLAGS, 16" X 16" MIN., (ORANGE)
- WORK AREA

TRAFFIC CONTROL, INTERSECTION WITHIN SINGLE LANE CLOSURE

STATE OF WISCONSIN
DEPARTMENT OF TRANSPORTATION

APPROVED
Sept., 2017 — DATE
/S/ Andrew Heidtke — WORK ZONE ENG
FHWA

NOTE: MAY BE USED ON ROADWAY WITH POSTED SPEED OF LESS THAN 40 MPH.

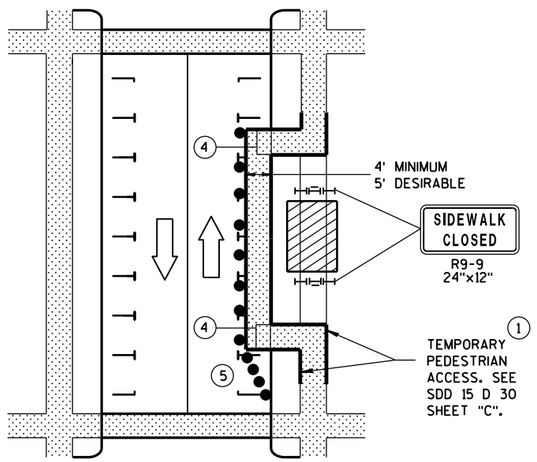

MID-BLOCK SIDEWALK CLOSURE IN PARKING LANE

NOTE: LAYOUT SAME AS ABOVE.

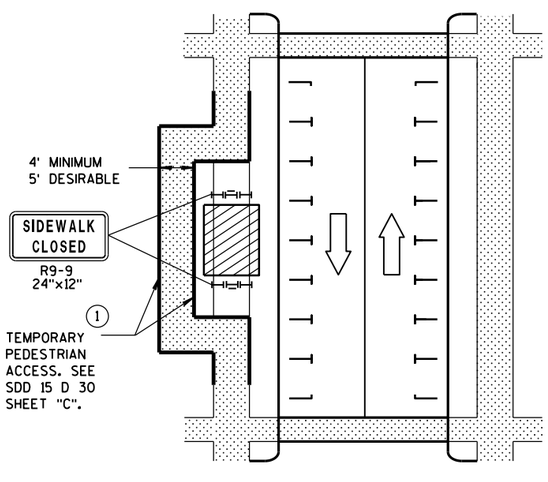

SIDEWALK DIVERSION

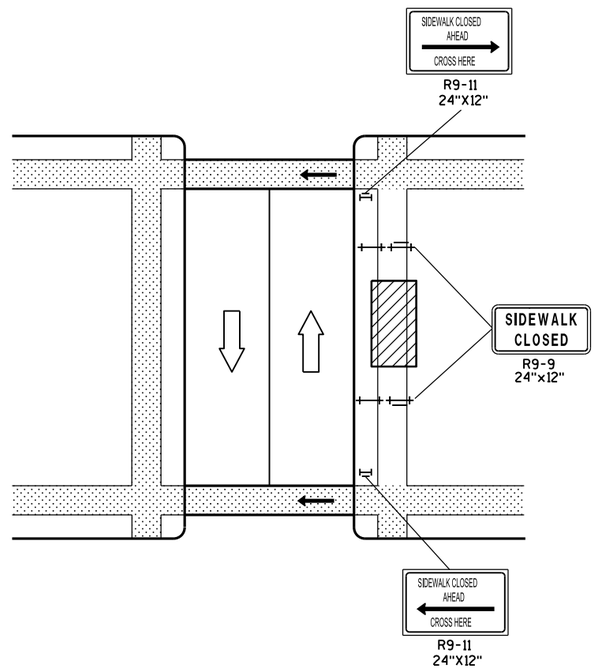

MID-BLOCK SIDEWALK CLOSURE

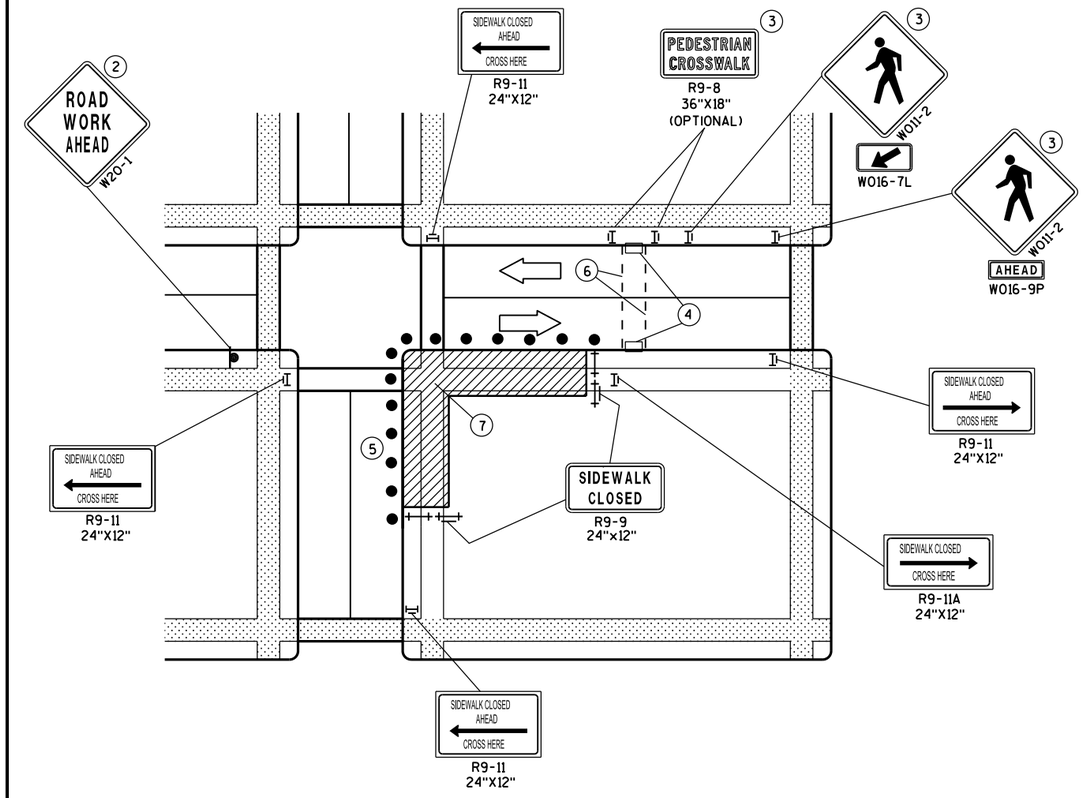

CORNER SIDEWALK CLOSURE WITH TEMPORARY CROSSWALK

GENERAL NOTES

WHEN CLOSING OR RELOCATING CROSSWALKS OR SIDEWALKS, PROVIDE DETECABLE TEMPORARY FACILITIES AND INCLUDE ACCESSIBILITY FEATURES CONSISTENT WITH EXISTING PEDESTRIAN FACILITIES.

TEMPORARY TRAFFIC CONTROL DEVICES FOR PEDESTRIANS ARE SHOWN. OTHER DEVICES MAY BE NECESSARY TO CONTROL VEHICULAR TRAFFIC. STAGE WORK, AS NECESSARY, TO PROVIDE A TEMPORARY PEDESTRIAN ACCESS ROUTE AT ALL TIMES. FOR ROADWAYS WITH NO AVAILABLE DETOURS, MAINTAIN ONE OPEN SIDEWALK AT ALL TIMES.

"WO" SIGN IS THE SAME AS "W" SIGN EXCEPT THE BACKGROUND IS ORANGE.

FOR NIGHTTIME CLOSURE USE TYPE "A" FLASHING WARNING LIGHTS ON BARRICADES, SUPPORTING SIGNS AND CLOSING SIDEWALK. USE TYPE "C" STEADY BURN LIGHTS ON CHANNELIZING DEVICES SEPARATING THE WORK AREA FROM VEHICULAR TRAFFIC.

PEDESTRIAN TRAFFIC SIGNAL DISPLAY CONTROLLING CLOSED CROSSWALK SHALL BE COVERED OR DEACTIVATED.

POST MOUNTED SIGNS LOCATED ADJACENT TO A SIDEWALK SHALL HAVE A 7 FOOT MINIMUM CLEARANCE FROM THE BOTTOM OF THE SIGN TO THE SIDEWALK SURFACE.

ALTERNATE SIDEWALK WORK BETWEEN LEFT AND RIGHT SIDE OF ROADWAY TO MAINTAIN PEDESTRIAN ACCESS.

1. IF SIDEWALK CLOSURE AFFECTS AN ACCESSIBLE AND DETECTABLE FACILITY, MAINTAIN ACCESSIBILITY AND DETECTABILITY ALONG THE ALTERNATE PEDESTRIAN ROUTE.
2. "ROAD WORK AHEAD" SIGNS ARE NOT REQUIRED IF THE SIDEWALK CLOSURE OCCURS WITHIN A LARGER WORK ZONE WHERE ADVANCE WARNING SIGNS ARE ALREADY PRESENT, OR IF THE WORK AREA AND EQUIPMENT ARE MORE THAN 2 FEET BEHIND THE CURB.
3. IF TEMPORARY PEDESTRIAN CROSSWALK IS NOT PROVIDED, OMIT R9-8 AND W011-2 SIGN ASSEMBLIES. IF PROVIDED INCLUDE ON BOTH SIDES OF THE CROSSWALK.
4. TEMPORARY CURB RAMPS. SEE SDD 15 D 30 SHEET "B".
5. DRUMS OR BARRICADES AT 25 FOOT SPACING. STREET PARKING SHALL BE PROHIBITED FOR AT LEAST 50 FEET IN ADVANCE OF THE MID-BLOCK CROSSWALK.
6. TEMPORARY PAVEMENT MARKING FOR CROSSWALK LINES.
7. LIMIT WORK TO ONE QUADRANT AT A TIME TO MINIMIZE PEDESTRIAN DISRUPTION.

LEGEND

- SIGN ON PERMANENT SUPPORT
- UNDER PEDESTRIAN TRAFFIC
- WORK AREA
- PEDESTRIAN CHANNELIZATION DEVICE
- TYPE II BARRICADE WITH/WITHOUT SIGN (ALL WITH ONE WARNING LIGHT, TYPE A, LOW-INTENSITY FLASHING)
- TYPE III BARRICADE WITH/WITHOUT SIGN (ALL WITH ONE WARNING LIGHT, TYPE A, LOW-INTENSITY FLASHING)
- DIRECTION OF TRAFFIC
- TRAFFIC CONTOL DRUM

TRAFFIC CONTROL, PEDESTRIAN ACCOMMODATION

STATE OF WISCONSIN
DEPARTMENT OF TRANSPOI

6

S.D.D. 15 D 30-3a

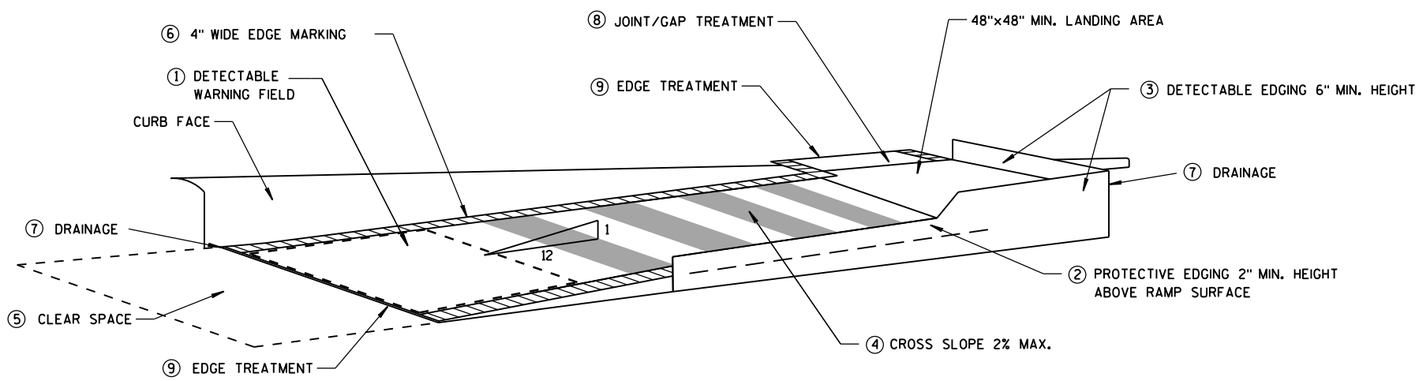

TEMPORARY CURB RAMP PARALLEL TO CURB

GENERAL NOTES

NOTIFY THE BUS COMPANY 7 DAYS IN ADVANCE OF THE BUS STOP RELOCATION.

ALTERNATE SIDEWALK WORK BETWEEN LEFT AND RIGHT SIDE OF ROADWAY TO MAINTAIN PEDESTRIAN ACCESS.

① CURB RAMPS SHALL BE 48" MIN. WIDTH WITH A FIRM, STABLE AND SLIP RESISTANT SURFACE. INSTALL CONTRASTING DETECTABLE WARNING FIELD AT PEDESTRIAN STREET CROSSINGS. REFER TO SDD 8D5 SHEET "E".

② PROTECTIVE EDGING WITH A 2" MIN. HEIGHT SHALL BE INSTALLED WHEN A CURB RAMP OR LANDING PLATFORM HAS A VERTICAL DROP OF 6" OR GREATER OR HAS A SIDE APRON SLOPE STEEPER THAN 1:3 (33%). PROTECTIVE EDGING SHOULD BE CONSIDERED WHEN CURB RAMPS OR LANDING PLATFORMS HAVE A VERTICAL DROP OF 3" OR MORE.

③ DETECTABLE EDGING WITH 6" MIN. HEIGHT AND CONTRASTING COLOR SHALL BE INSTALLED ON ALL CURB RAMP LANDINGS WHERE THE WALKWAY CHANGES DIRECTION (TURNS).

④ CURB RAMPS AND LANDINGS SHALL HAVE A 1:50 (2%) MAX. CROSS-SLOPE.

⑤ CLEAR SPACE OF 48"X48" MIN. SHALL BE PROVIDED ABOVE AND BELOW THE CURB RAMP.

⑥ THE CURB RAMP WALKWAY EDGE SHALL BE MARKED WITH A YELLOW COLOR, 4" WIDE MARKING, UNLESS A CONTRASTING DETECTABLE WARNING FIELD IS PROVIDED.

⑦ DO NOT RESTRICT WATER FLOW IN THE GUTTER SYSTEM.

⑧ LATERAL JOINTS OR GAPS BETWEEN SURFACES SHALL BE LESS THAN 1/2" WIDTH.

⑨ CHANGES BETWEEN SURFACE HEIGHTS SHALL NOT EXCEED 1/2". LATERAL EDGES SHALL BE VERTICAL UP TO 1/4" HIGH, AND BEVELED AT 1:2 BETWEEN 1/4" AND 1/2".

⑩ 5' WIDE MIN. WITH PEDSETRIAN SAFETY FENCE, 10' WIDE MIN. WITHOUT PEDESTRIAN SAFETY FENCE.

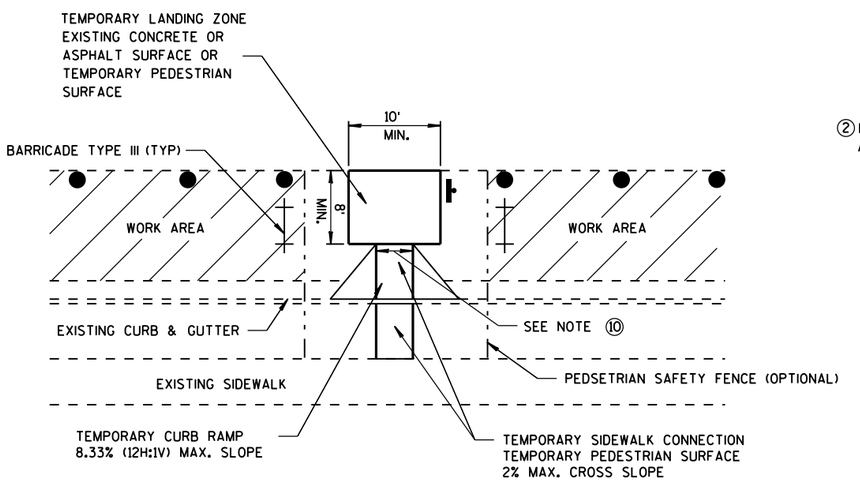

TEMPORARY BUS STOP PAD

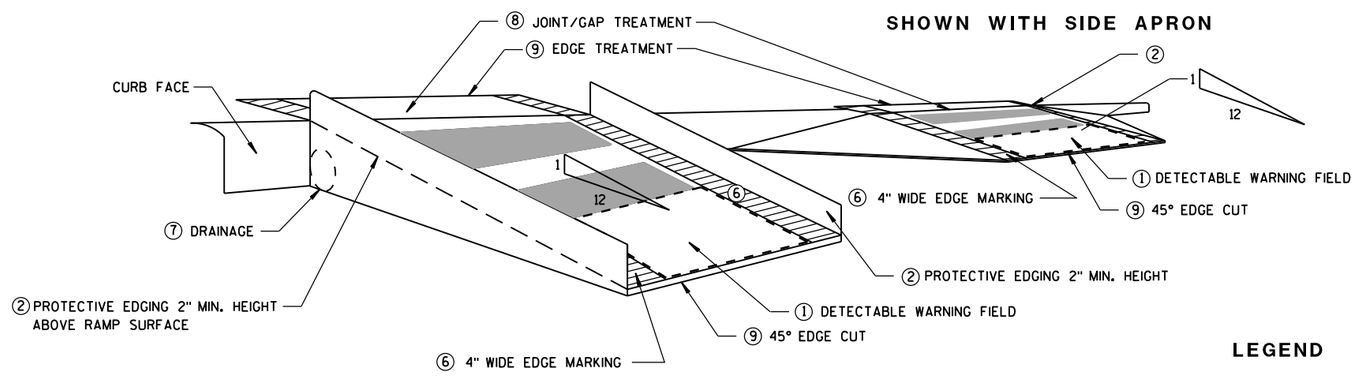

SHOWN WITH PROTECTIVE EDGE

TEMPORARY CURB RAMP PERPENDICULAR TO CURB

LEGEND

WORK AREA

TYPE III BARRICADE

TRAFFIC CONTOL DRUM

TRAFFIC CONTROL, TEMPORARY ADA COMPLIANT PEDESTRIAN ACCOMMODATION

STATE OF WISCONSIN
DEPARTMENT OF TRANSPORTATION

APPROVED
June 2016 — DATE
/S/ Peter Amakobe Atepe — STATEWIDE WORK ZONE SAFETY ENGINEER
FHWA

6

S.D.D. 15 D 30-3b

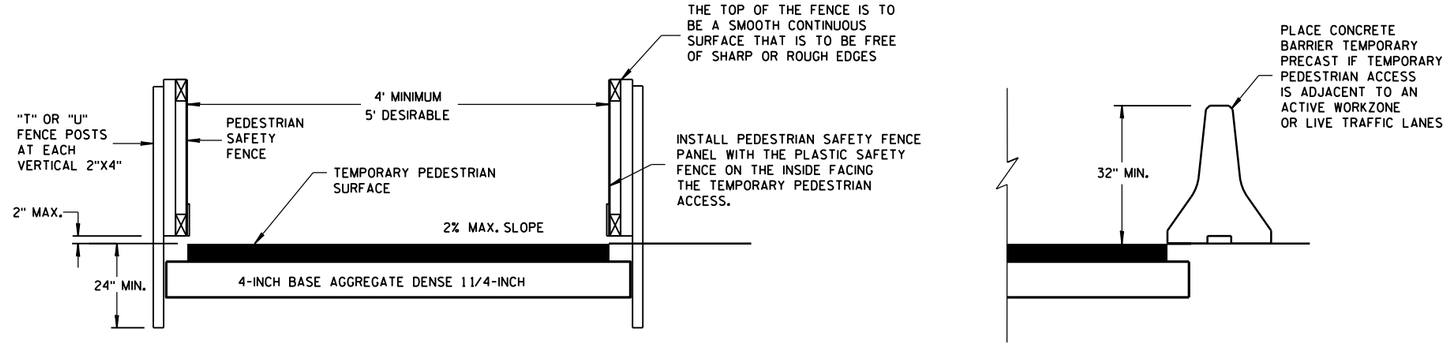

TEMPORARY PEDESTRIAN ACCESS

GENERAL NOTES

1. INTERCHANGEABLE WITH THE PEDESTRIAN SAFETY FENCE.

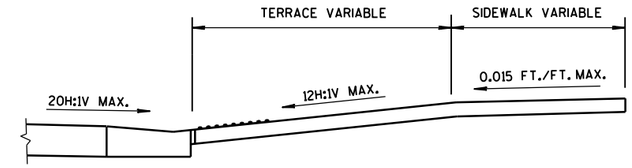

SECTION A-A

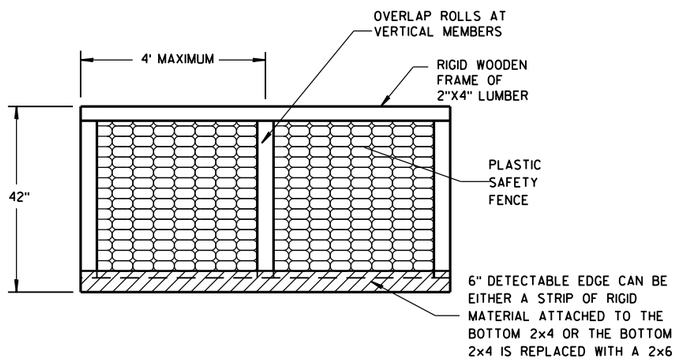

PEDESTRIAN SAFETY FENCE

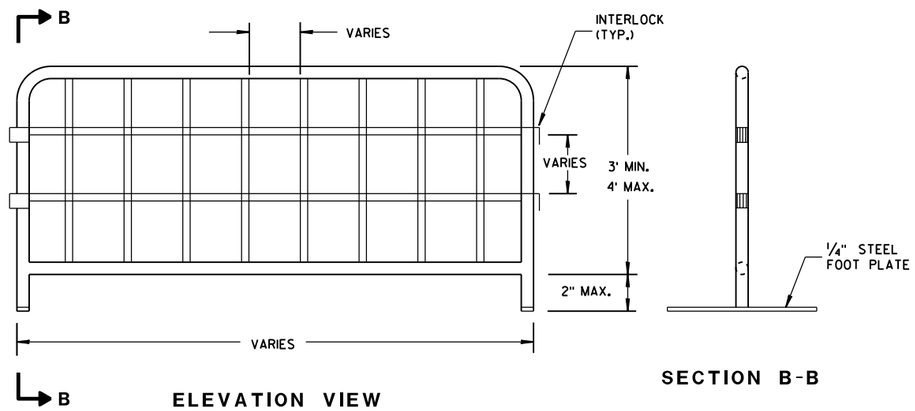

ELEVATION VIEW

SECTION B-B

TEMPORARY PEDESTRIAN STEEL BARRICADE (1)

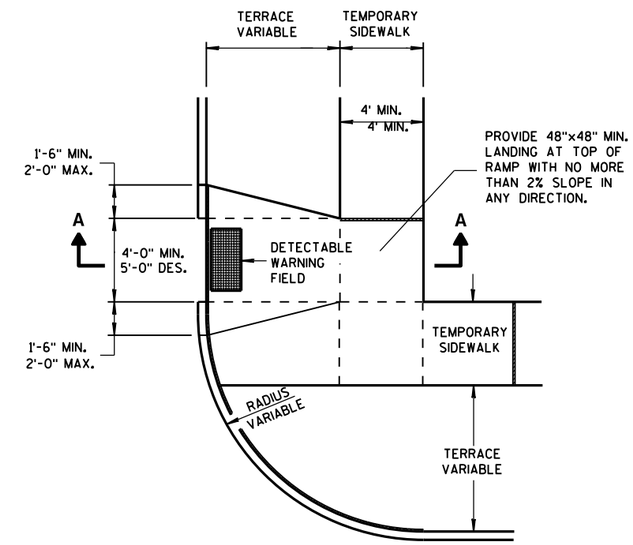

PLAN VIEW

TEMPORARY TYPE 3 RAMP

(OUTSIDE OF CROSSWALK AREA)

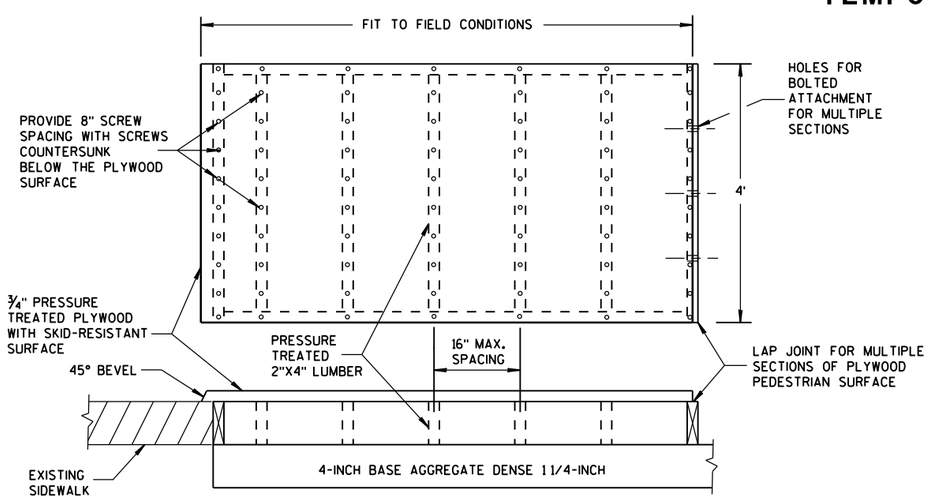

TEMPORARY PEDESTRIAN SURFACE PLYWOOD

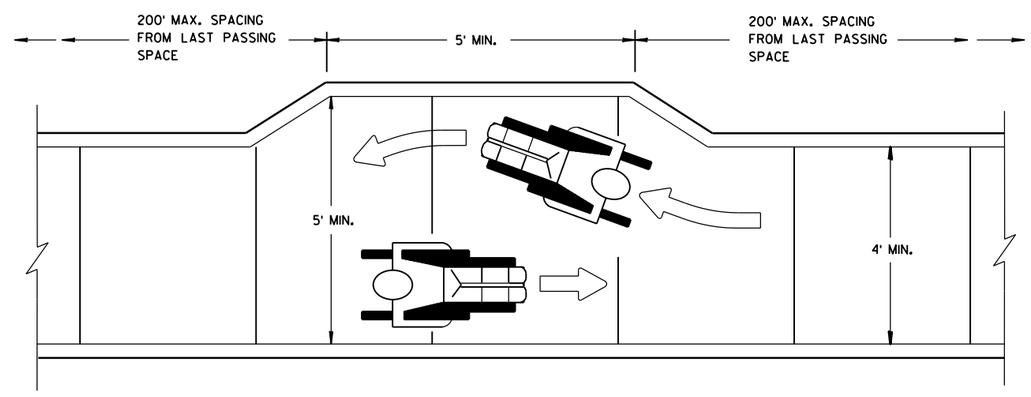

NARROW SIDEWALK PASSING DETAIL

TRAFFIC CONTROL, PEDESTRIAN ACCOMMODATION

STATE OF WISCONSIN
DEPARTMENT OF TRANSPORTATION

APPROVED
June 2016 — DATE
/S/ Peter Amakobe Atepe
STATEWIDE WORK ZONE SAFETY ENGINEER
FHWA

6

S.D.D. 15 D 30-3c

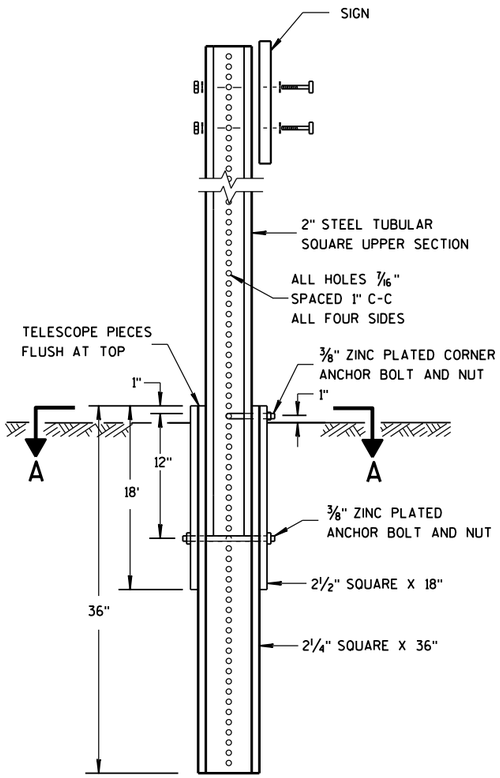

DETAIL OF TUBULAR STEEL SIGN POST

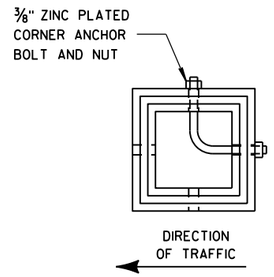

SECTION A-A

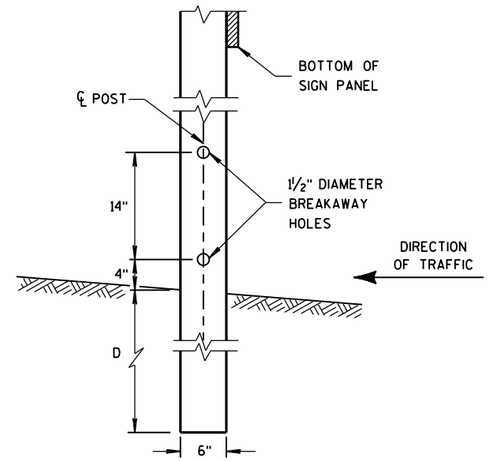

4"x6" WOOD POST MODIFICATION

GENERAL NOTES

1. 6 FEET FROM THE EDGE OF PAVEMENT (EDGE LINE LOCATION) UNLESS OTHERWISE DIRECTED BY THE PROJECT ENGINEER. LATERAL OFFSET SHOULD BE ADJUSTED TO AVOID THE DITCH FLOWLINE.
2. THE EXISTENCE OF CURB AND GUTTER DOES NOT IN ITSELF MANDATE THE VERTICAL CLEARANCE ILLUSTRATED. THAT HEIGHT IS TYPICALLY MEASURED WHERE THERE IS SIDEWALK ADJACENT TO THE ROADWAY OR PARKING IS PERMITTED. IN THE ABSENCE OF SIDEWALK, VERTICAL CLEARANCE IS MEASURED FROM THE TOP OF THE CURB. IF NO SIDEWALK AND NO PARKING, VERTICAL CLEARANCE MAY BE REDUCED TO 5 FOOT MINIMUM. OFFSET OF SIGNS IS MEASURED FROM THE CURB FLOWLINE.
3. FOR SIGNS REQUIRING 4 POSTS, SPACE INTERMEDIATE POSTS EVENLY.

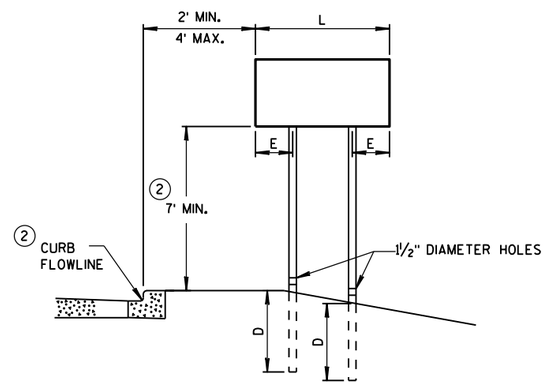

URBAN AREA

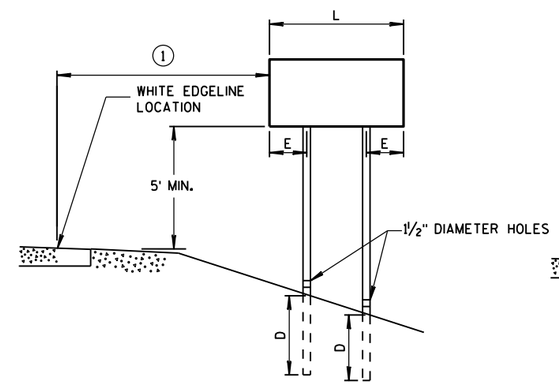

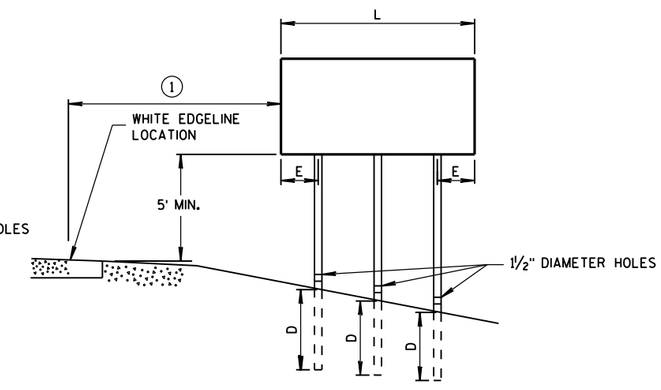

RURAL AREA

POST MOUNTING DETAIL FOR TEMPORARY TRAFFIC CONTROL FIXED MESSAGE SIGNS

TUBULAR STEEL POSTS

AREA OF SIGN INSTALLATION (SQ. FT.)	NUMBER OF REQUIRED TUBULAR STEEL POSTS
9 OR LESS	1
GREATER THAN 9 LESS THAN OR EQUAL TO 18	2
GREATER THAN 18 LESS THAN OR EQUAL TO 27	3

SIGNS WIDER THAN 3 FEET OR LARGER THAN 9 SQ. FT. SHALL BE MOUNTED ON MULTIPLE POSTS (SEE ABOVE TABLE).

SIGNS LARGER THAN 27 SQ. FT. SHALL NOT BE MOUNTED ON TUBULAR STEEL POSTS.

WOOD POST EMBEDMENT DEPTH

AREA OF SIGN INSTALLATION (SQ. FT.)	D (MIN)
20 OR LESS	4'
GREATER THAN 20	5'

4" X 6" WOOD POST

POST SPACING REQUIREMENTS		NUMBER OF WOOD POSTS REQUIRED
L	E	
48" OR LESS AND LESS THAN 20 SQ. FT.	-	1
LESS THAN 60"	12"	2
60" TO 120"	L/5	2
GREATER THAN 120" LESS THAN 168"	12"	3
168" AND GREATER	12"	4

SEE NOTE 3

TEMPORARY TRAFFIC CONTROL SIGN MOUNTING

STATE OF WISCONSIN
DEPARTMENT OF TRANSPO

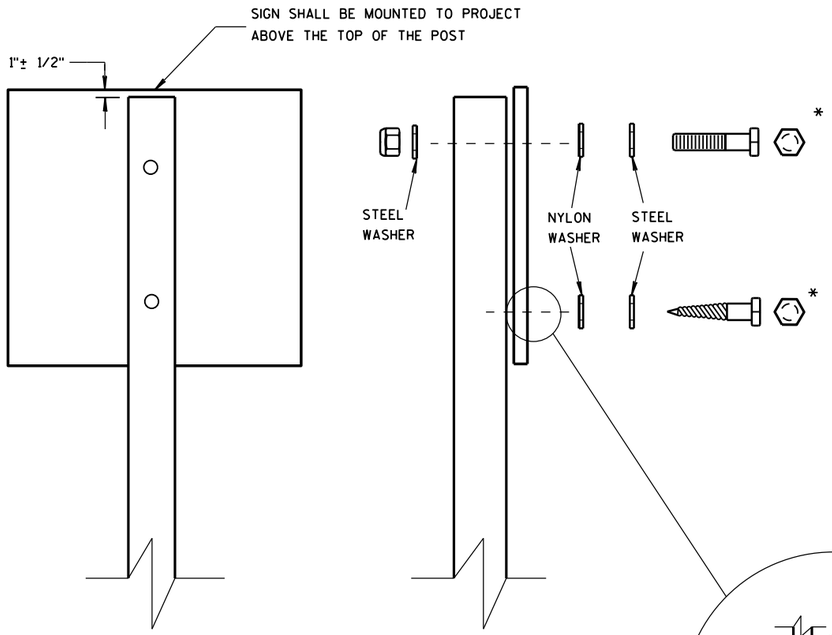

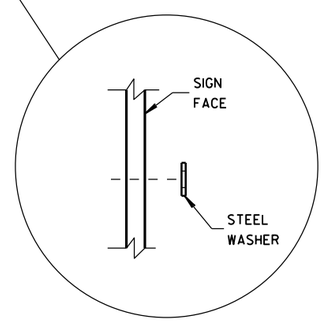

WASHER PLACEMENT WHEN SIGN HAS OTHER THAN TYPE H OR TYPE F FACE

NUTS, BOLTS AND LAGS USED FOR MOUNTING SIGNS SHALL HAVE HEXAGONAL HEADS AND SHALL BE EITHER:

A. HOT DIP GALVANIZED IN ACCORDANCE WITH ASTM DESIGNATION: A 153, CLASS D, OR SC 3

B. ELECTRO-GALVANIZED IN ACCORDANCE WITH ASTM DESIGNATION: B 633, TYPE III, SC 3

THREADS ON BOLTS AND NUTS SHALL BE MANUFACTURED WITH SUFFICIENT ALLOWANCE FOR THE CADMIUM PLATE OR GALVANIZED COATING TO PERMIT THE NUTS TO RUN FREELY ON THE BOLTS.

WOOD POSTS (4" x 4" or 4" x 6")

LAG SCREWS - 3/8" X 3"

MACHINE BOLTS - 5/16" X 6-1/2" OR 7" LENGTH W/ NUTS

SQUARE STEEL POSTS (2" x 2")

MACHINE BOLTS - 3/8" X 3-1/4" LENGTH W/ NUTS

RIVETS - 9/32" (6605-9-6) BULB-TITE, TRI-FOLD, ALUMINUM BODY/MANDREL O.D. FLANGE .720-.765 INCH, GRIP RANGE .042-.375 INCH

WASHERS (ALL POSTS) -

1-1/4" O.D. X 3/8" I.D. X 1/16" STEEL

1-1/4" O.D. X 3/8" I.D. X .080 NYLON FOR ALL TYPE H SIGNS

* TWO DIFFERENT FASTENING SYSTEMS ARE SHOWN FOR ILLUSTRATION PURPOSES. ON ANY INDIVIDUAL SIGN, EITHER ONE OR THE OTHER SYSTEM SHALL BE USED. ACTUAL NUMBER OF FASTENERS PER SIGN VARIES WITH THE SIGN AREA. FOR A SINGLE POST INSTALLATION, ALL SIGNS GREATER THAN 9 SQ. FT. REQUIRE THE USE OF 3 FASTENERS.

6

6

S.D.D. 15 D 38-2b

S.D.D. 15 D 38-2b

ATTACHMENT OF SIGNS TO POSTS

STATE OF WISCONSIN
DEPARTMENT OF TRANSPORTATION

APPROVED

June 2017 — /S/ Andrew Heldtke
DATE — WORK ZONE ENG

FHWA

STATE PROJECT NUMBER
1693-32-74

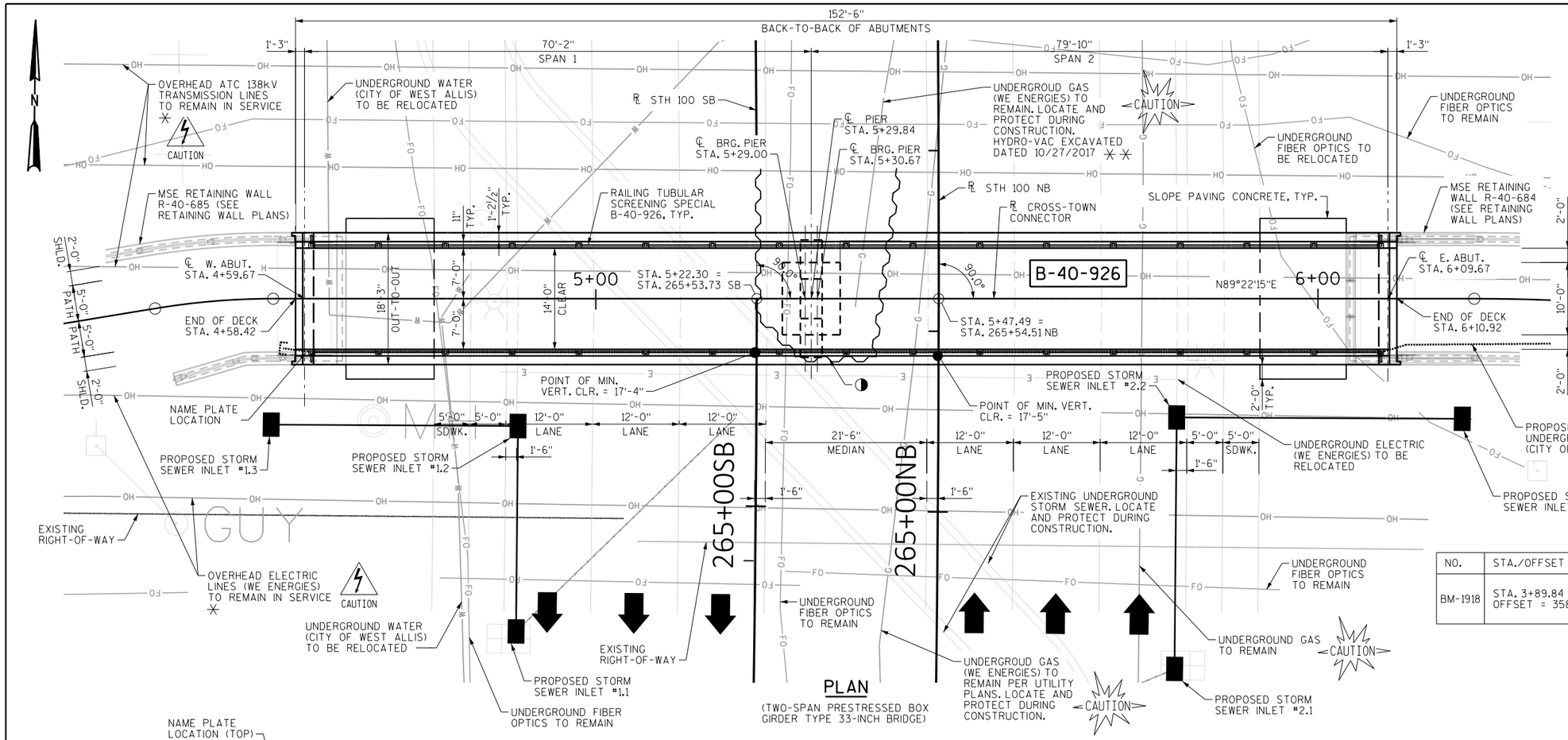

PLAN

(TWO-SPAN PRESTRESSED BOX GIRDER TYPE 33-INCH BRIDGE)

LIST OF DRAWINGS

BENCHMARK

NO.	STA./OFFSET	DESCRIPTION	ELEV.
BM-1918	STA. 3+89.84 OFFSET = 358.50 RT	IRON PIPE, SET JUST EAST OF SIDEWALK	740.02

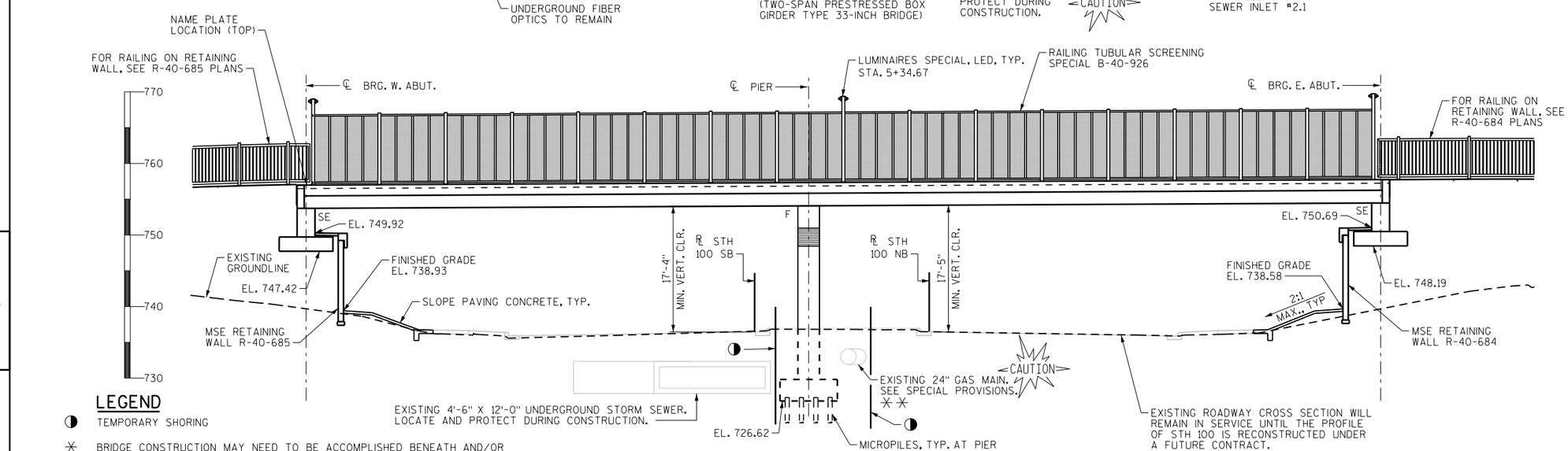

ELEVATION

(LOOKING NORTH)

LEGEND

◑ TEMPORARY SHORING

✳ BRIDGE CONSTRUCTION MAY NEED TO BE ACCOMPLISHED BENEATH AND/OR ADJACENT TO ENERGIZED OVERHEAD TRANSMISSION LINES. THE HORIZONTAL AND VERTICAL LOCATION OF THESE LINES CAN VARY WITH WIND, AMBIENT TEMPERATURE, AND POWER LOADING. THE CONTRACTOR IS ADVISED THAT LOW OVERHEAD EQUIPMENT AND INSTALLATION TECHNIQUES MAY BE REQUIRED TO MAINTAIN SAFE CLEARANCES FROM THESE LINES.

✳✳ 24" UNDERGROUND GAS MAIN EXTENDS TO THE SOUTH AND SHALL BE PROTECTED DURING TEMPORARY SHORING INSTALLATION.

WISCONSIN
STEVEN W SCHMITT
E-37333
FRANKLIN, WI
PROFESSIONAL ENGINEER
1/25/2018

NO.	DATE	REVISION	BY

KSingh Engineers Scientists Consultants

STATE OF WISCONSIN
DEPARTMENT OF TRANSPORTATION

ACCEPTED William C. Dreher SDR 01/25/18
CHIEF STRUCTURES DESIGN ENGINEER DATE

STRUCTURE B-40-926

WEST ALLIS CROSS TOWN TRAIL OVER STH 100

COUNTY	CITY
MILWAUKEE	WEST ALLIS

DESIGN SPEC.
AASHTO LRFD BRIDGE DESIGN SPECIFICATIONS

DESIGNED BY NLD	DESIGN CK'D. SWS	DRAWN BY NLD	PLANS CK'D. SWS

GENERAL PLAN AND ELEVATION

SHEET 1 OF 22
92

STRUCTURES DESIGN CONTACTS
BRIDGE OFFICE:
WILLIAM DREHER, P.E. (608) 266-8489
CONSULTANT:
STEVEN SCHMITT, P.E. (262) 821-1171

8

STATE PROJECT NUMBER
1693-32-74

DESIGN LOADS

LIVE LOADS:

DESIGN TRUCK LOADING: H10
INVENTORY RATING FACTOR: RF = 1.97
OPERATING RATING FACTOR: RF = 2.55

PEDESTRIAN LOADING: 90 PSF
NOTE: DYNAMIC LOAD ALLOWANCE NOT REQUIRED FOR PEDESTRIAN LOADING.

STRUCTURE IS NOT DESIGNED FOR EQUESTRIAN OR SNOWMOBILE LIVE LOADS.

WIND LOADS:

WIND LOADS SHALL BE IN ACCORDANCE WITH AASHTO LRFD GUIDE SPECIFICATIONS FOR THE DESIGN OF PEDESTRIAN BRIDGES.

WIND VELOCITY - 90 MPH (3-SECOND GUST SPEED) TO SIGN AREA, EXPOSED RAILING MEMBERS. AND SUPERSTRUCTURE.

DECORATIVE SIGN LOADS:

DESIGN SIGN AREA = 175 SF
MAX. SIGN DEPTH = 10'-0"
DEAD LOAD = 3 PSF

MATERIAL PROPERTIES

CONCRETE:

CONCRETE MASONRY, SUPERSTRUCTURE.....f'c = 4,000 P.S.I.
CONCRETE MASONRY, SUBSTRUCTURE.....f'c = 3,500 P.S.I.

REINFORCING STEEL:

HIGH STRENGTH BAR STEEL REINFORCEMENT GRADE 60.....fy = 60,000 P.S.I.

POST-TENSIONING STRANDS:

ALL STRANDS SHALL CONFORM TO THE REQUIREMENTS OF ASTM A416 GRADE 270 FOR LOW RELAXATION, WELDLESS STRANDS.

0.5" DIA. POST-TENSIONED STRANDS.....f's = 270,000 P.S.I.

STRANDS SHALL BE PLACED INSIDE A POLYETHYLENE (PE) DUCT.

33-INCH PRESTRESSED BOX GIRDERS

CONCRETE MASONRY, 33-INCH PRESTRESSED BOX GIRDER.....f'c = 5,000 P.S.I.

0.6" DIA. STRANDS: ULTIMATE TENSILE STRENGTH OF fy = 270,000 P.S.I.

FOUNDATION DATA

ABUTMENTS WITH SPREAD FOOTINGS TO BE SUPPORTED ON MECHANICALLY STABILIZED EARTH WITH A REQUIRED FACTORED BEARING RESISTANCE OF 4000 PSF *. A GEOTECHNICAL ENGINEER, WITH THREE DAYS NOTICE, WILL DETERMINE THE FACTORED BEARING RESISTANCE BY VISUAL INSPECTION PRIOR TO CONSTRUCTION OF THE ABUTMENT FOOTINGS.

* THE FACTORED BEARING RESISTANCE IS THE VALUE USED FOR DESIGN.

PIER TO BE SUPPORTED ON MICROPILES. MICROPILES SHALL BE DESIGNED BY THE CONTRACTOR USING THE LRFD DESIGN APPROACH IN ACCORDANCE WITH FHWA PUBLICATION NHI-05-039, "MICROPILE DESIGN AND CONSTRUCTION REFERENCE MANUAL", AND BASED ON THE SERVICE LOADS PROVIDED BELOW (CALCULATED AT THE TOP OF THE PROPOSED FOOTING):

SERVICE LOADS

LOAD CASE	Fz (KIP)	Fy (KIP)	Fx (KIP)	Mz (K-FT)	My (K-FT)	Mx (K-FT)
DC	-	427.4	-	-	-	15.4
DW	-	5.6	-	-	-	-
LL	-	23.9	-	47.8	-	19.9
PL	-	118.2	-	-	-	-
TU	9.0	-	-	-	-	217.6
BR	6.0	-	-	-	-	145.2
EV	-	68.6	-	-	-	-
WS (STR III)	13.2	27.4	13.6	415.2	-	262.6
WS (STR V)	6.7	-	6.5	138.8	-	134.7
WS (SERV I)	4.9	-	5.2	111.9	-	96.5
WL	1.2	-	2.8	18.0	-	27.1

PEDESTRIAN LOAD (PL) APPLIED SERPARATELY FROM LL, WL, AND BR.

X = AXIS NORMAL TO REFERENCE LINE
Y = VERTICAL AXIS
Z = AXIS PARALLEL TO REFERENCE LINE

GENERAL NOTES

DRAWINGS SHALL NOT BE SCALED.

BEVEL ALL EXPOSED EDGES ¾" UNLESS NOTED OTHERWISE.

COORDINATES ON THIS PLAN ARE REFERENCED TO MILWAUKEE COUNTY COORDINATE SYSTEM NAD 83 (2007). ALL STATIONS AND ELEVATIONS ARE IN FEET. ELEVATIONS ARE REFERENCED TO THE NAVD 88 (2007) DATUM.

THE CONTRACTOR MUST COORDINATE THE CONSTRUCTION OF THE BRIDGE B-40-926 ABUTMENTS WITH MSE RETAINING WALLS R-40-684 AND R-40-685.

THE UTILITY INFORMATION SHOWN ON THESE DRAWINGS CONCERNING TYPE AND LOCATION OF UNDERGROUND AND OVERHEAD UTILITIES IS NOT GUARANTEED TO BE ACCURATE OR ALL INCLUSIVE. THE CONTRACTOR IS RESPONSIBLE FOR MAKING THEIR OWN DETERMINATIONS AS TO TYPE AND LOCATION OF UNDERGROUND AND OVERHEAD UTILITIES AS MAY BE NECESSARY TO AVOID DAMAGE.

THE FIRST DIGIT OF A THREE DIGIT AND THE FIRST TWO DIGITS OF A FOUR DIGIT BAR MARK SIGNIFIES THE BAR SIZE.

BAR STEEL REINFORCEMENT SHALL BE EMBEDDED 2 INCHES CLEAR UNLESS OTHERWISE SHOWN OR NOTED.

THE UPPER LIMITS OF "EXCAVATION FOR STRUCTURES BRIDGES B-40-926" SHALL BE THE EXISTING GROUNDLINE.

SOIL EXCAVATION ON SITE MAY BE CONTAMINATED. APPROXIMATE LOCATIONS AND LIMITS OF CONTAMINATED SOIL CAN BE FOUND IN THE SPECIAL PROVISIONS UNDER BID ITEM "MANAGEMENT OF SOLID WASTE".

BACKFILL BEYOND PAY LIMITS SHALL BE INCIDENTAL TO EXCAVATION FOR STRUCTURES. LIMITS OF EXCAVATION SHALL BE DETERMINED BY THE CONTRACTOR.

AT THE BACK FACE OF ABUTMENT, ALL VOLUME WHICH CANNOT BE PLACED BEFORE ABUTMENT CONSTRUCTION AND IS NOT OCCUPIED BY THE NEW STRUCTURE SHALL BE BACKFILLED WITH MSE FILL.

THE GRADATION OF THE STRUCTURE BACKFILL TYPE A SHALL MEET THE REQUIREMENTS OF SECTION 210.2.2 OF THE STANDARD SPECIFICATIONS.

ELASTOMERIC BEARING PADS NEED NOT BE INDIVIDUALLY MOLDED PROVIDED THE CUT EDGES ARE SMOOTH AND TRUE.

PROTECTIVE SURFACE TREATMENT SHALL BE APPLIED TO THE TOP OF THE 2" CONCRETE OVERLAY.

PIGMENTED SURFACE SEALER SHALL BE APPLIED TO THE INSIDE AND TOP FACE OF THE CURB.

IF TOUCH UP STAINING OR PAINTING IS REQUIRED AFTER INSTALLATION IS COMPLETE, ALL TOUCH UP STAINING IS TO BE DONE TO THE SATISFACTION OF THE FIELD ENGINEER AT NO ADDITIONAL COST.

THE SLOPE PAVING IN FRONT OF THE ABUTMENT AND IN FRONT OF THE MSE WALLS SHALL BE COVERED WITH SLOPE PAVING MATERIAL TO THE EXTENT SHOWN IN THE "GENERAL PLAN", "WEST ABUTMENT", "EAST ABUTMENT" AND "SLOPE PAVING CONCRETE" SHEETS.

TRAFFIC VOLUME

STH 100

A.D.T. = 37,700 (2011)
A.D.T. = 44,100 (2045)
R.D.S. = 40 MPH

TOTAL ESTIMATED QUANTITIES

ITEM NO.	BID ITEM	UNIT	WEST ABUT.	PIER	EAST ABUT.	SUPER	TOTAL
206.1000	EXCAVATION FOR STRUCTURES BRIDGES B-40-926	LS	-	-	-	-	1
210.1500	BACKFILL STRUCTURE TYPE A	TON	2	32	2	-	36
502.0100	CONCRETE MASONRY BRIDGES	CY	19	30	19	5	73
502.3200	PROTECTIVE SURFACE TREATMENT	SY	-	-	-	238	238
502.3210	PIGMENTED SURFACE SEALER	SY	-	-	-	43	43
505.0400	BAR STEEL REINFORCEMENT HS STRUCTURES	LB	1,820	880	1,820	-	4,360
505.0600	BAR STEEL REINFORCEMENT HS COATED STRUCTURES	LB	70	3,570	70	810	4,390
506.2605	BEARING PADS ELASTOMERIC NON-LAMINATED	EACH	4	8	4	-	16
509.2500	CONCRETE MASONRY OVERLAY DECKS	CY	-	-	-	23	23
511.1200	TEMPORARY SHORING B-40-926	SF	-	760	-	-	760
516.0500	RUBBERIZED MEMBRANE WATERPROOFING	SY	4	-	4	-	8
517.1010.S.01	CONCRETE STAINING B-40-926	SF	105	320	105	2,683	3,213
604.0400	SLOPE PAVING CONCRETE	SY	36	-	36	-	72
612.0406	PIPE UNDERDRAIN WRAPPED 6-INCH	LF	104	-	104	-	208
652.0115	CONDUIT RIGID METALLIC 1 1/4-INCH	LF	5	-	5	-	10
652.0215	CONDUIT RIGID NONMETALLIC SCHEDULE 40 1 1/4-INCH	LF	10	-	10	158	194
655.0610	ELECTRICAL WIRE LIGHTING 12 AWG	LF	-	-	-	192	192
SPV.0060.02	LUMINAIRES SPECIAL, LED	EACH	-	-	-	3	3
SPV.0090.01	MICROPILES	LF	-	600	-	-	600
SPV.0090.02	PILING SLEEVES MICROPILES	LF	-	120	-	-	120
SPV.0090.03	PRESTRESSED GIRDERS BOX TYPE 33-INCH	LF	-	-	-	598	598
SPV.0090.04	RAILING TUBULAR SCREENING SPECIAL B-40-926	LF	-	-	-	307	307
SPV.0195.01	MANAGEMENT OF SOLID WASTE	TON	-	70	-	-	70
	NON BID ITEMS						
	PREFORMED JOINT FILLER	SIZE	-	-	-	-	¾", 1½"
	EXPANDED POLYSTYRENE	SIZE	-	-	-	-	1"
	NON-STAINING, NON-BITUMINOUS JOINT SEALER	SIZE	-	-	-	-	1"
	NAME PLATE	EACH	-	-	-	-	1

ALL ITEMS ARE CATEGORY 0020.

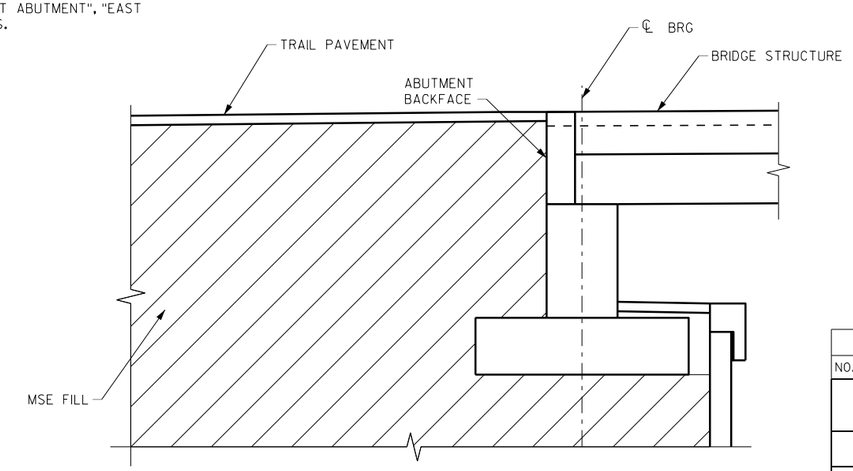

BACKFILL PAY LIMITS

NO.	DATE	REVISION	BY

STATE OF WISCONSIN
DEPARTMENT OF TRANSPORTATION

STRUCTURE B-40-926

DRAWN BY NLD | PLANS CK'D. SWS

GENERAL NOTES, QUANTITIES, AND DESIGN DATA

SHEET 2 OF 22

STATE PROJECT NUMBER

1693-32-74

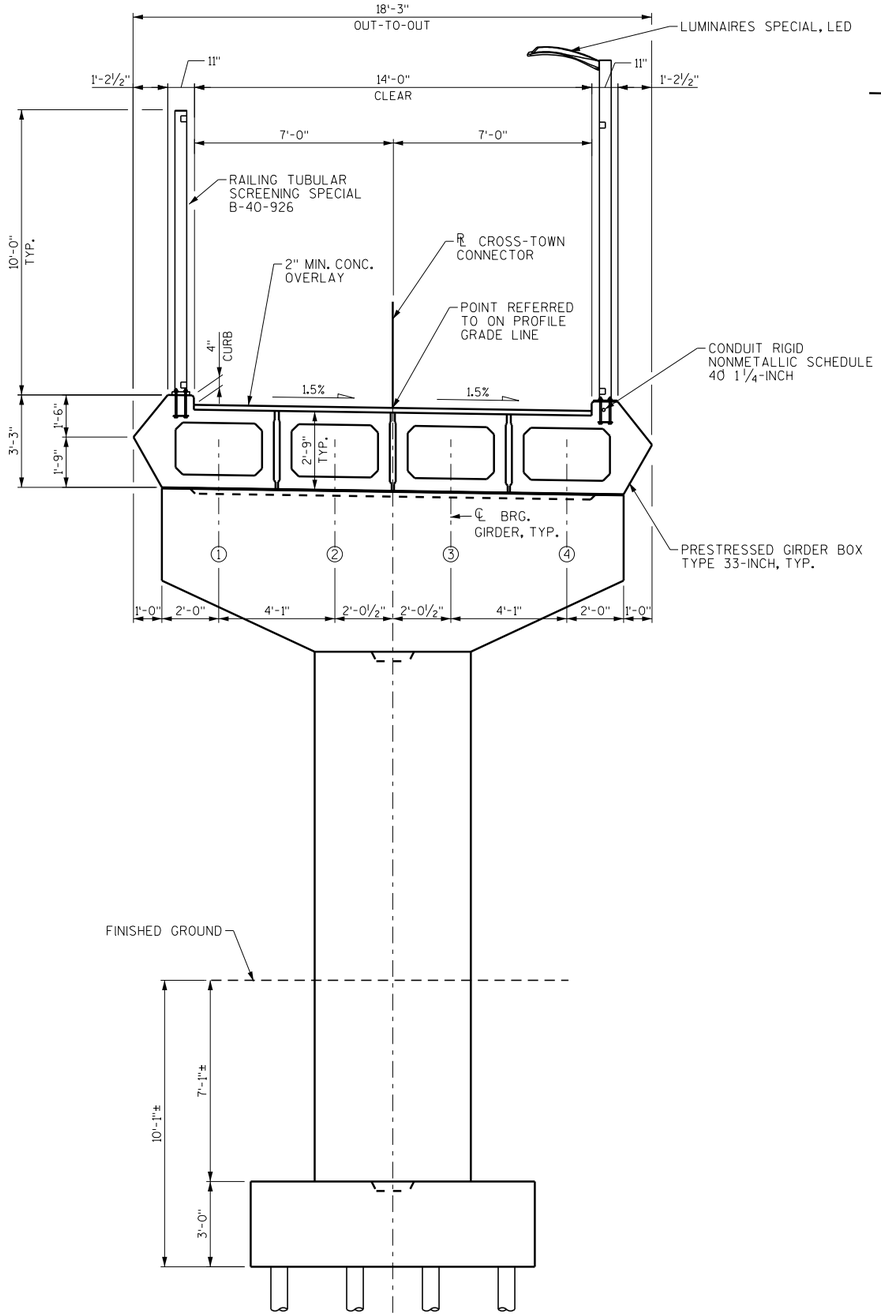

TYPICAL CROSS SECTION AT PIER

(LOOKING EAST)

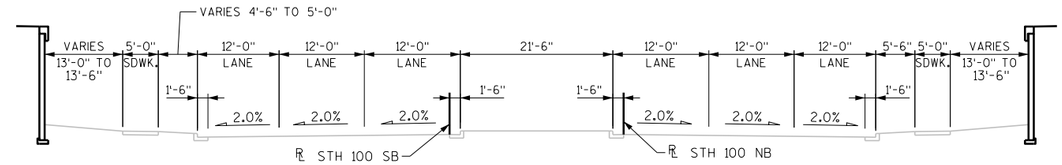

EXISTING CROSS SECTION - STH 100

(LOOKING NORTH)

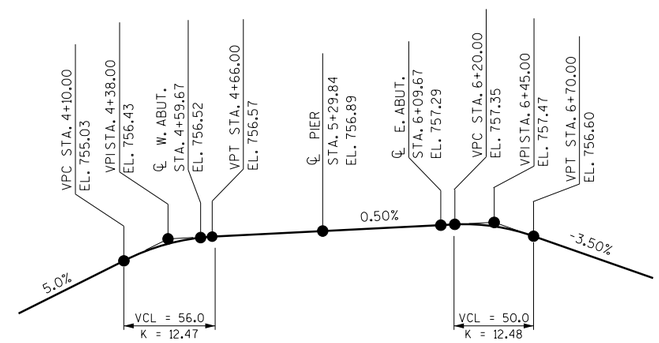

PROFILE GRADE LINE - ℄ CROSS-TOWN CONNECTOR

EXISTING PROFILE GRADE LINE - ℄ STH 100 NB

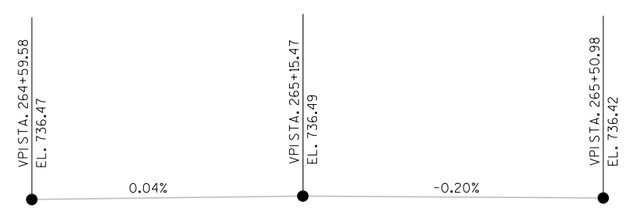

EXISTING PROFILE GRADE LINE - ℄ STH 100 SB

8

8

NO.	DATE	REVISION	BY

STATE OF WISCONSIN
DEPARTMENT OF TRANSPORTATION

STRUCTURE B-40-926

DRAWN BY NLD | PLANS CK'D. SWS

TYPICAL SECTION & PROFILES

SHEET 3 OF 22

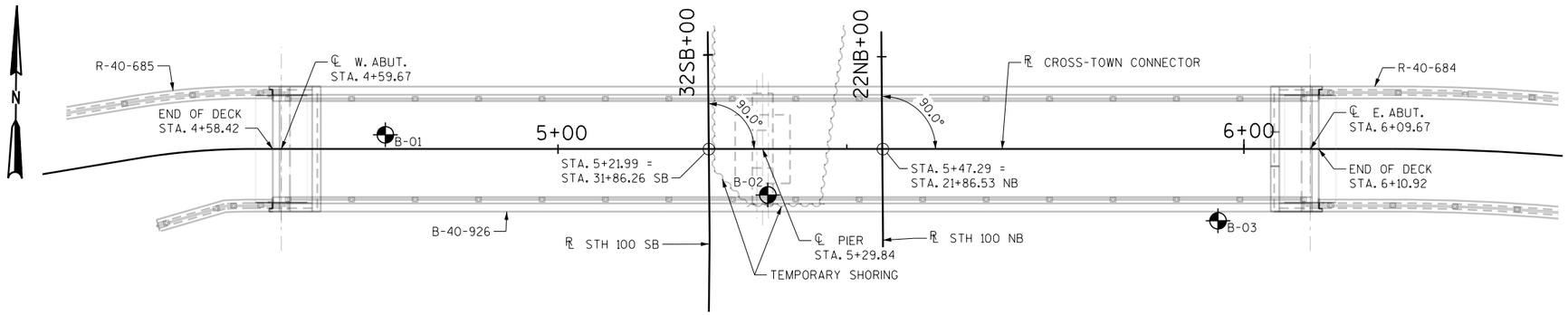

NOTE:

THE SUBSURFACE INFORMATION PRESENTED HEREIN IS AN ABBREVIATED VERSION OF THE INFORMATION PRESENTED IN THE GEOTECHNICAL ENGINEERING REPORT. REVIEW THE APPROPRIATE GEOTECHNICAL REPORT AND SOIL BORING LOGS FOR ADDITIONAL SUBSURFACE INFORMATION.

BORING STATIONS AND OFFSETS ARE BASED ON ℞ CROSS TOWN CONNECTOR TRAIL.

LEGEND

DENOTES SOIL BORING LOCATION

BORING #	DATE COMPLETED	NORTHING (FT.)	EASTING (FT.)
B-01	6/21/2016	289276.392	569223.586
B-02	6/21/2016	289268.236	569279.442
B-03	6/22/2016	289265.189	569345.115
BORINGS COMPLETED BY: SOILS & ENGINEERING SERVICES, INC.			
REPORT COMPLETED BY: K. SINGH & ASSOCIATES, INC.			
ALL COORDINATES REFERENCED TO WCCS NAD 83(91) MILWAUKEE COUNTY			

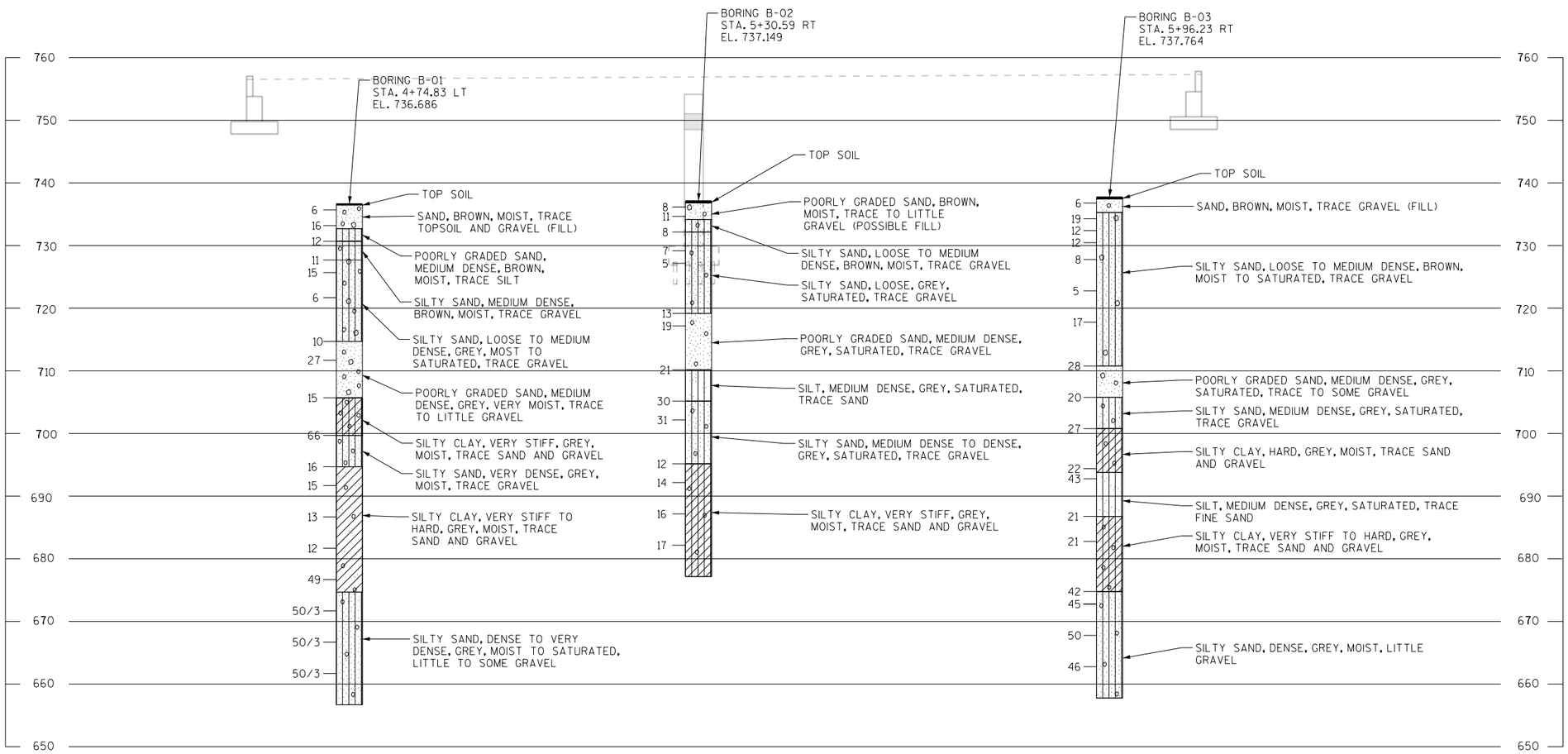

STATE PROJECT NUMBER

1693-32-74

MATERIAL SYMBOLS

ASPHALT	TOPSOIL	PEAT
CONCRETE	FILL	GRAVEL
SAND	CLAY	SILT
BOULDERS OR COBBLES	LIMESTONE	BEDROCK (UNKNOWN)
SHALE	SANDSTONE	IGNEOUS/ META

LEGEND OF BORING

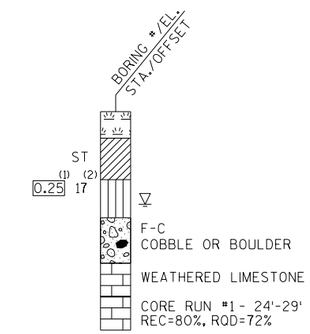

(1) UNCONFINED STRENGTH, AS DETERMINED BY A POCKET PENETROMETER (TSF)

(2) UNLESS OTHERWISE, SPECIFIED THE SPT 'N' VALUE IS BASED ON AASHTO T-206, STANDARD PENETRATION TEST. THE SPT 'N' VALUE PRESENTED HAS NOT BEEN CORRECTED FOR OVERBURDEN PRESSURE OR HAMMER EFFICIENCY.

GROUND WATER ELEVATION

- AT TIME OF DRILLING
- END OF DRILLING
- AFTER DRILLING

ABBREVIATIONS

F-FINE M-MEDIUM C-COARSE ST-SHELBY TUBE

SUBSURFACE EXPLORATION FOR FOUNDATION DESIGN AND BIDDERS INFORMATION

BORINGS WERE COMPLETED AT POINTS APPROXIMATELY AS INDICATED ON THIS DRAWING TO OBTAIN INFORMATION CONCERNING THE CHARACTER OF SUBSURFACE MATERIALS FOUND AT THE SITE. BECAUSE THE INVESTIGATED DEPTHS ARE LIMITED AND THE AREA OF THE BORINGS IS VERY SMALL IN RELATION TO THE ENTIRE SITE, THE WISCONSIN DEPARTMENT OF TRANSPORTATION DOES NOT WARRANT SIMILAR SUBSURFACE CONDITIONS BELOW, BETWEEN, OR BEYOND THESE BORINGS. VARIATIONS IN SOIL CONDITIONS SHOULD BE EXPECTED AND FLUCTUATIONS IN GROUNDWATER LEVELS MAY OCCUR.

8

8

NO.	DATE	REVISION	BY

STATE OF WISCONSIN
DEPARTMENT OF TRANSPORTATION

STRUCTURE B-40-926

DRAWN BY NLD | PLANS CK'D. SWS

SUBSURFACE EXPLORATION

SHEET 4 OF 22

STATE PROJECT NUMBER

1693-32-74

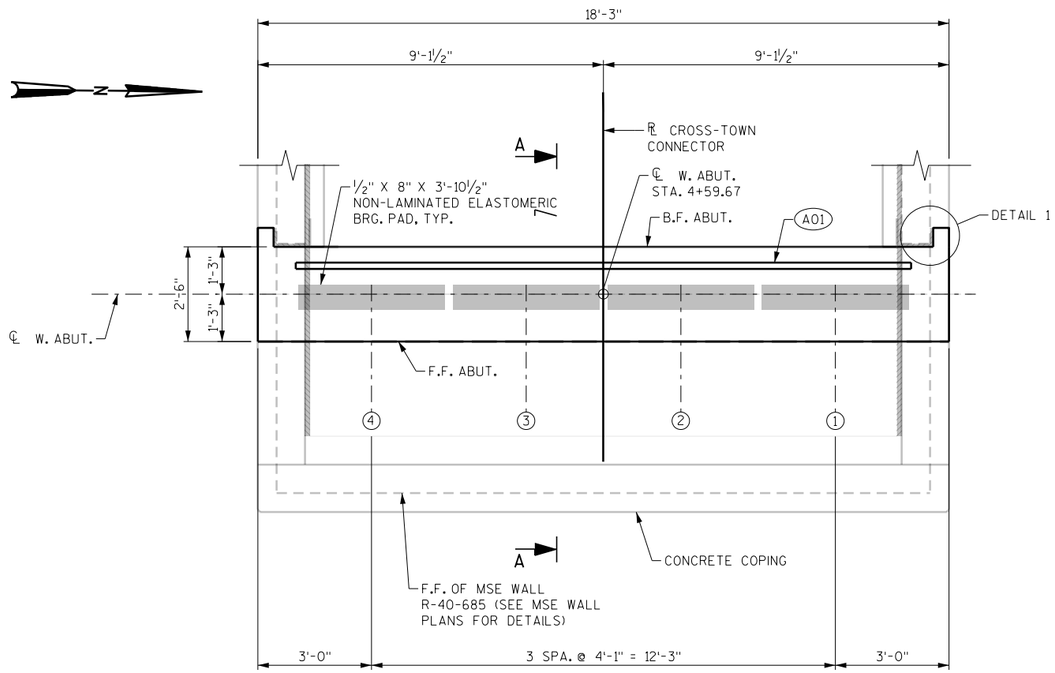

PLAN

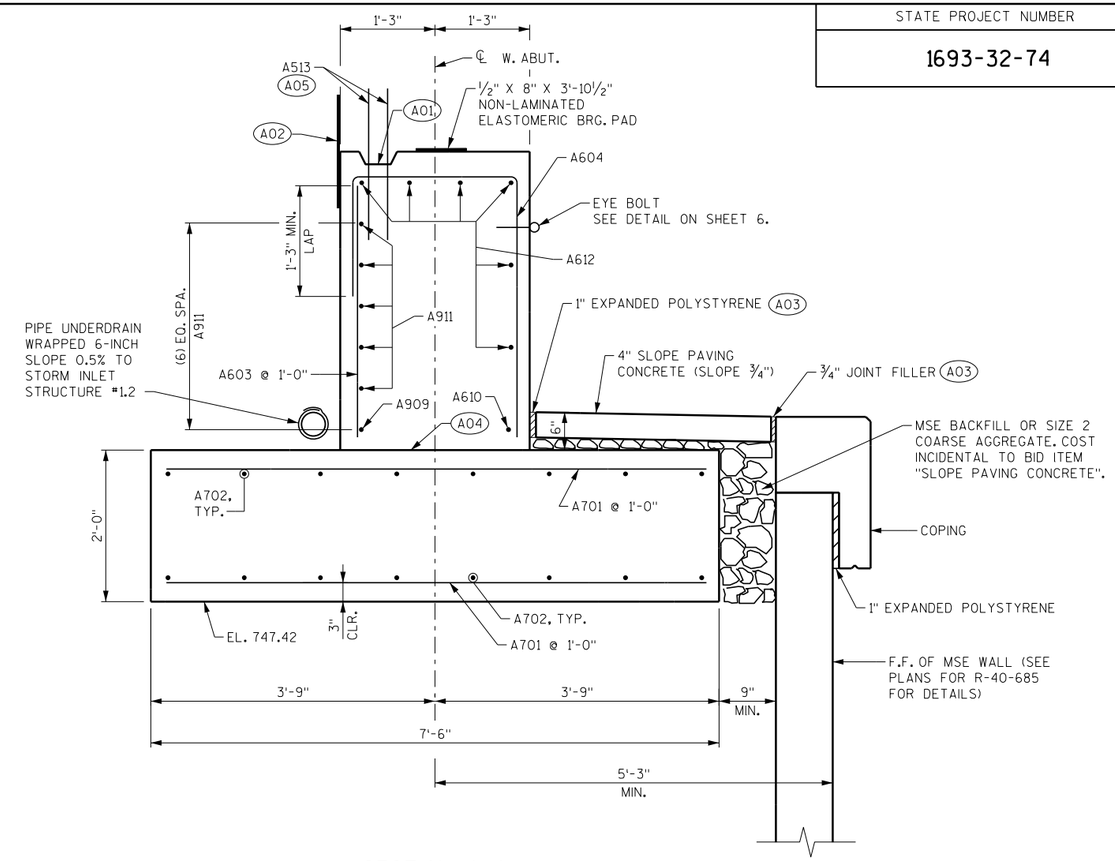

SECTION A-A

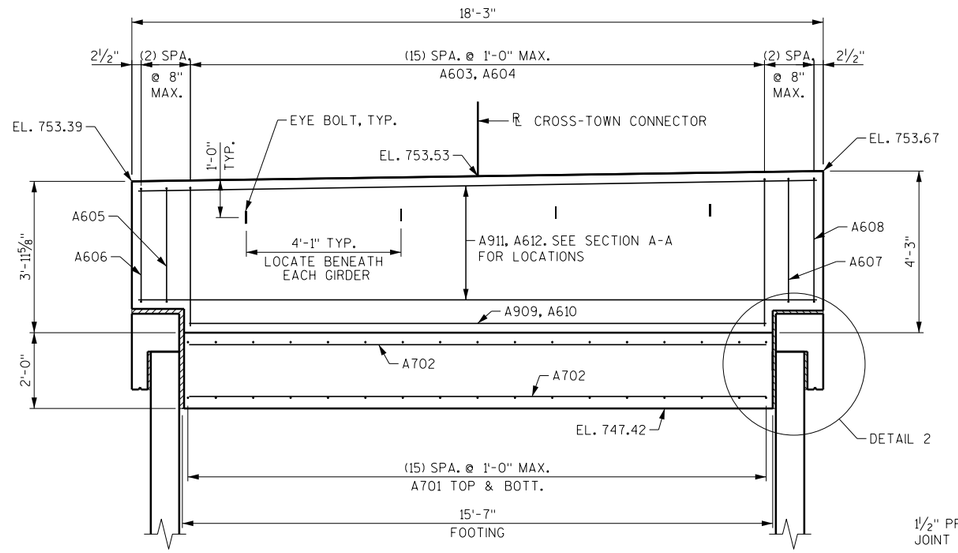

ELEVATION

(LOOKING WEST AT FRONT FACE OF ABUTMENT)

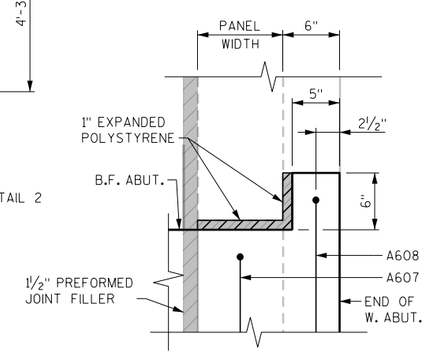

DETAIL 1

(NORTH END OF ABUT. SHOWN. SOUTH END SIMILAR)

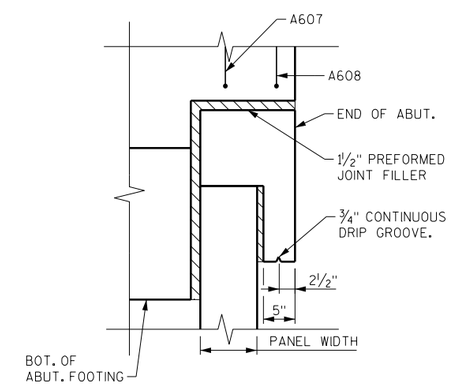

DETAIL 2

(NORTH END OF ABUT. SHOWN. SOUTH END SIMILAR)

LEGEND

- (A01) KEYED CONSTRUCTION JOINT FORMED BY BEVELED 2" X 6".
- (A02) 18" RUBBERIZED MEMBRANE WATERPROOFING. SEAL ALL HORIZONTAL AND VERTICAL JOINTS ON BACKFACE.
- (A03) SEAL ALL EXPOSED HORIZONTAL AND VERTICAL SURFACES OF FILLER AND EXPANDED POLYSTYRENE WITH NON-STAINING, GRAY NON-BITUMINOUS JOINT SEALER (1" DEEP AND HOLD ⅛" BELOW SURFACE OF CONRETE).
- (A04) STEEL TROWEL TOP SURFACE OF FOOTING. PLACE MULTIPLE LAYERS OF POLYETHYLENE SHEETS OVER ENTIRE ABUTMENT BODY WIDTH ON TOP OF FOOTING BEFORE PLACING ABUTMENT BODY. TOTAL THICKNESS OF SHEETS SHALL BE AT LEAST 0.03".
- (A05) A513 @ 1'-0" MAX. SPA., TYP. THESE BARS MAY BE PLACED AFTER CONCRETE IS POURED BUT BEFORE INITIAL SET HAS TAKEN PLACE.

NO.	DATE	REVISION	BY

STATE OF WISCONSIN
DEPARTMENT OF TRANSPORTATION

STRUCTURE B-40-926

DRAWN BY NLD | PLANS CK'D. SWS

WEST ABUTMENT

SHEET 5 OF 22

8

8

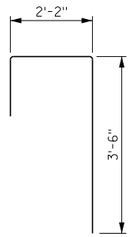

A604

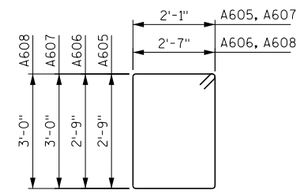

A605, A606, A607, A608

BILL OF BARS

NOTE:
BAR DIMENSIONS ARE OUT TO OUT OF BAR.
THE FIRST OR FIRST TWO DIGITS
OF A BAR MARK SIGNIFIES THE BAR SIZE

BAR MARK	COAT	NO. REQ'D	LENGTH	BENT	BAR SERIES	LOCATION
A701		32	7'-2"			W. ABUT. FOOTING - TRANSVERSE
A702		16	15'-3"			W. ABUT. FOOTING - LONGITUDINAL
A603		16	3'-4"			W. ABUT. BODY - VERTICAL - B.F.
A604		16	6'-10"	X		W. ABUT. BODY - VERTICAL
A605		1	10'-2"	X		W. ABUT. BODY - STIRRUP - SOUTH END
A606		1	11'-2"	X		W. ABUT. BODY - STIRRUP - SOUTH END
A607		1	10'-8"	X		W. ABUT. BODY - STIRRUP - NORTH END
A608		1	11'-8"	X		W. ABUT. BODY - STIRRUP - NORTH END
A909		1	15'-3"	X		W. ABUT. BODY - HORIZONTAL
A610		1	15'-3"			W. ABUT. BODY - HORIZONTAL
A911		5	17'-10"			W. ABUT. BODY - HORIZONTAL
A612		6	17'-10"			W. ABUT. BODY - HORIZONTAL
A513	X	34	2'-0"			W. ABUT. BODY - VERTICAL DOWEL

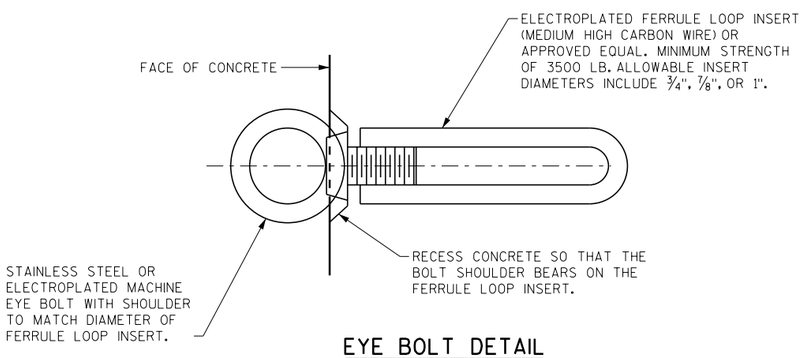

EYE BOLT DETAIL

COST INCIDENTAL TO BID ITEM
"CONCRETE MASONRY BRIDGES"

8

8

NO.	DATE	REVISION	BY

STATE OF WISCONSIN
DEPARTMENT OF TRANSPORTATION

STRUCTURE B-40-926

DRAWN BY NLD | PLANS CK'D. SWS

WEST ABUTMENT DETAILS

SHEET 6 OF 22
97

STATE PROJECT NUMBER

1693-32-74

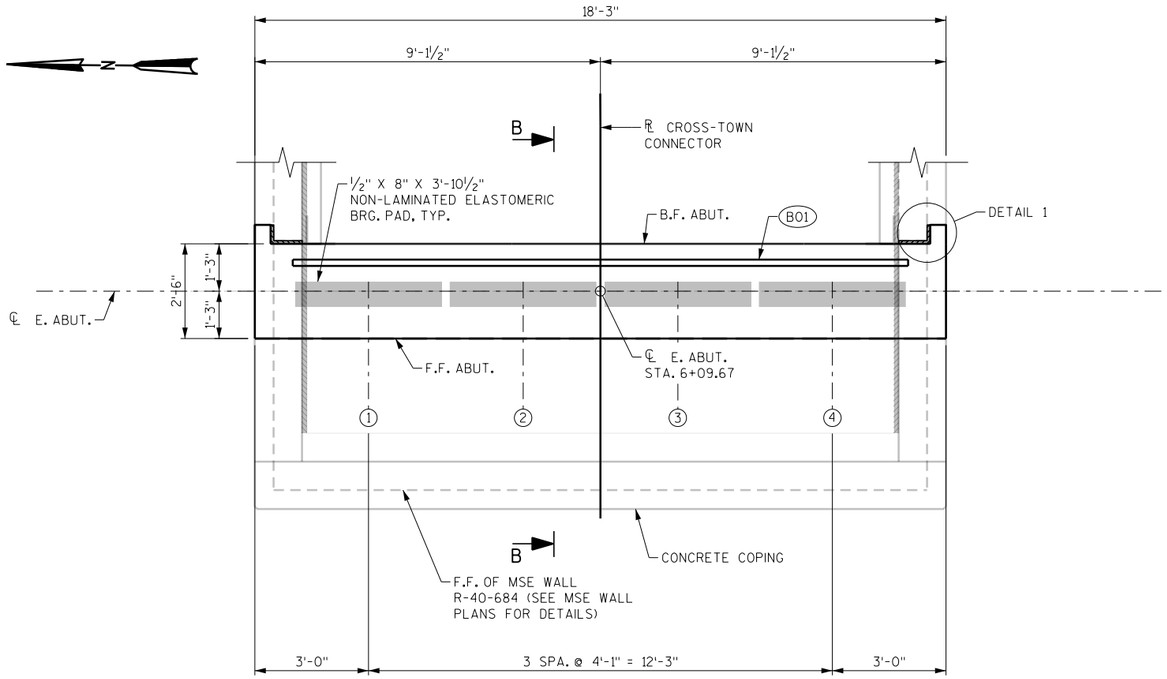

PLAN

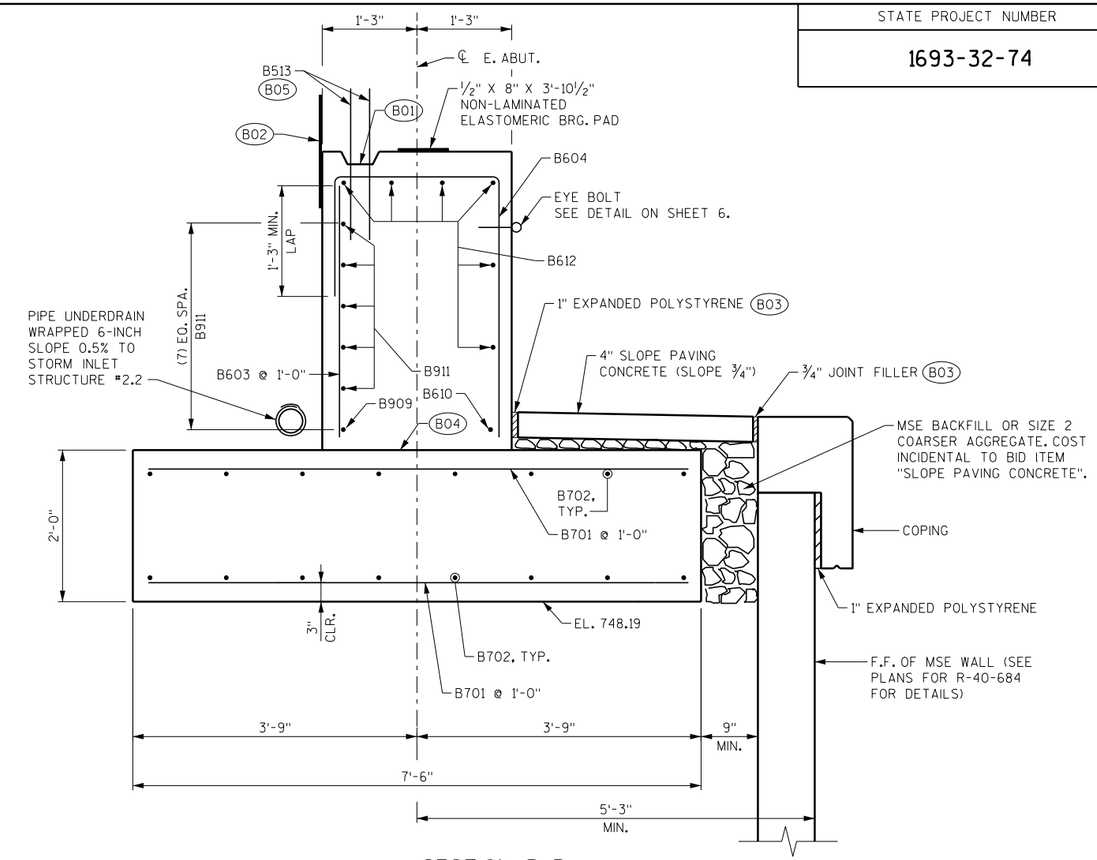

SECTION B-B

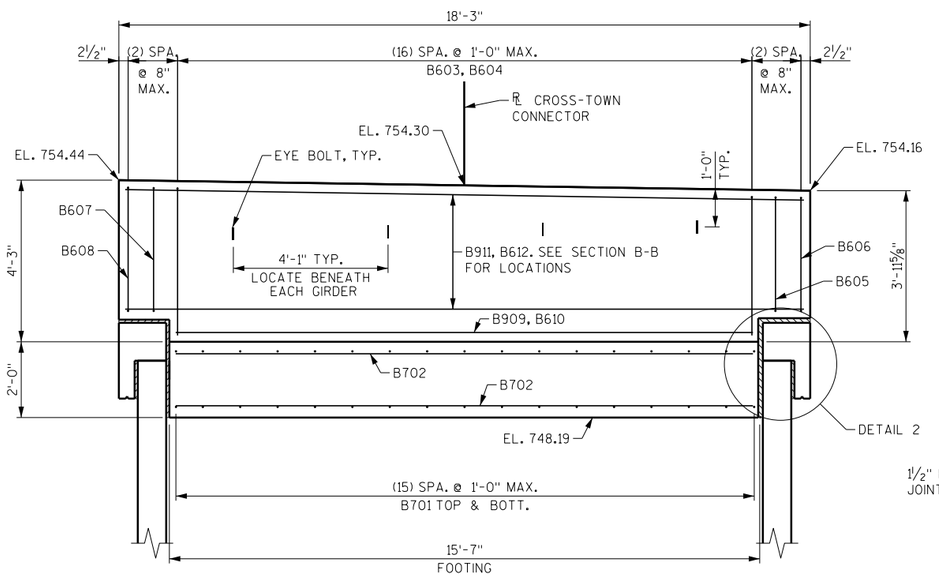

ELEVATION

(LOOKING EAST AT FRONT FACE OF ABUTMENT

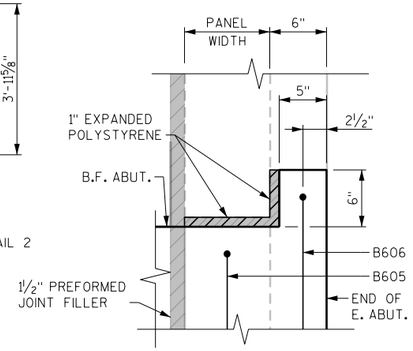

DETAIL 1

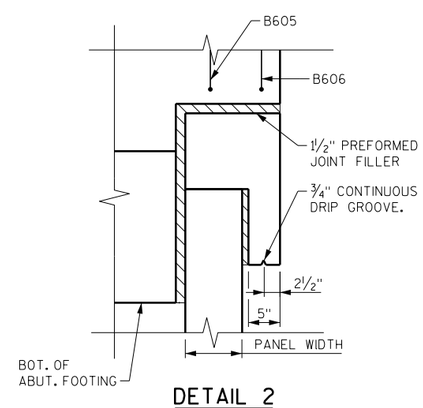

DETAIL 2

LEGEND

B01 KEYED CONSTRUCTION JOINT FORMED BY BEVELED 2" X 6".

B02 18" RUBBERIZED MEMBRANE WATERPROOFING. SEAL ALL HORIZONTAL AND VERTICAL JOINTS ON BACKFACE.

B03 SEAL ALL EXPOSED HORIZONTAL AND VERTICAL SURFACES OF FILLER AND EXPANDED POLYSTYRENE WITH NON-STAINING, GRAY NON-BITUMINOUS JOINT SEALER (1" DEEP AND HOLD ⅛" BELOW SURFACE OF CONRETE).

B04 STEEL TROWEL TOP SURFACE OF FOOTING. PLACE MULTIPLE LAYERS OF POLYETHYLENE SHEETS OVER ENTIRE ABUTMENT BODY WIDTH ON TOP OF FOOTING BEFORE PLACING ABUTMENT BODY. TOTAL THICKNESS OF SHEETS SHALL BE AT LEAST 0.03".

B05 B513 @ 1'-0" MAX. SPA., TYP. THESE BARS MAY BE PLACED AFTER CONCRETE IS POURED BUT BEFORE INITIAL SET HAS TAKEN PLACE.

NO.	DATE	REVISION	BY

STATE OF WISCONSIN
DEPARTMENT OF TRANSPORTATION

STRUCTURE B-40-926

DRAWN BY NLD | PLANS CK'D. SWS

EAST ABUTMENT

SHEET 7 OF 22

98

8

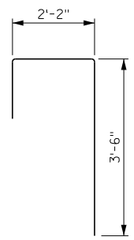

B604

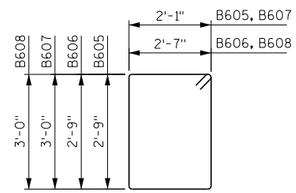

B605, B606, B607, B608

BILL OF BARS

NOTE:
BAR DIMENSIONS ARE OUT TO OUT OF BAR.
THE FIRST OR FIRST TWO DIGITS
OF A BAR MARK SIGNIFIES THE BAR SIZE

BAR MARK	COAT	NO. REQ'D	LENGTH	BENT	BAR SERIES	LOCATION
B701		32	7'-2"			E. ABUT. FOOTING - TRANSVERSE
B702		16	15'-3"			E. ABUT. FOOTING - LONGITUDINAL
B603		16	3'-4"			E. ABUT. BODY - VERTICAL - B.F.
B604		16	6'-10"	X		E. ABUT. BODY - VERTICAL
B605		1	10'-2"	X		E. ABUT. BODY - STIRRUP - SOUTH END
B606		1	11'-2"	X		E. ABUT. BODY - STIRRUP - SOUTH END
B607		1	10'-8"	X		E. ABUT. BODY - STIRRUP - NORTH END
B608		1	11'-8"	X		E. ABUT. BODY - STIRRUP - NORTH END
B909		1	15'-3"	X		E. ABUT. BODY - HORIZONTAL
B610		1	15'-3"			E. ABUT. BODY - HORIZONTAL
B911		5	17'-10"			E. ABUT. BODY - HORIZONTAL
B612		6	17'-10"			E. ABUT. BODY - HORIZONTAL
B513	X	34	2'-0"			E. ABUT. BODY - VERTICAL DOWEL

8

8

NO.	DATE	REVISION	BY

STATE OF WISCONSIN
DEPARTMENT OF TRANSPORTATION

STRUCTURE B-40-926

DRAWN BY NLD | PLANS CK'D. SWS

EAST ABUTMENT DETAILS

SHEET 8 OF 22
99

STATE PROJECT NUMBER

1693-32-74

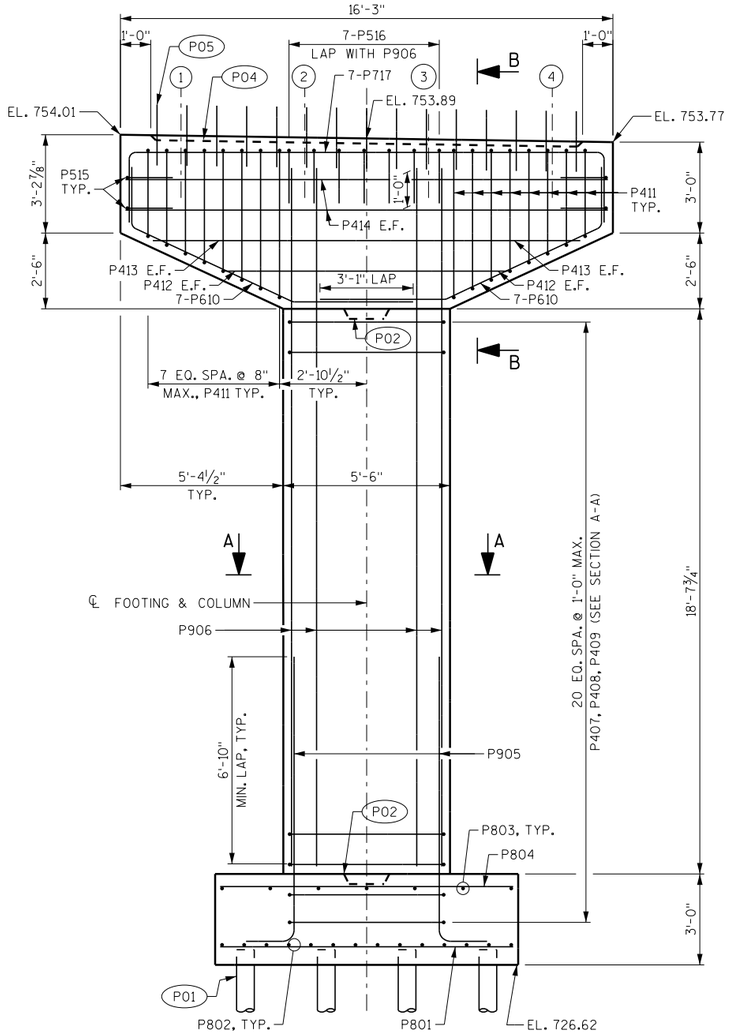

ELEVATION

LOOKING EAST

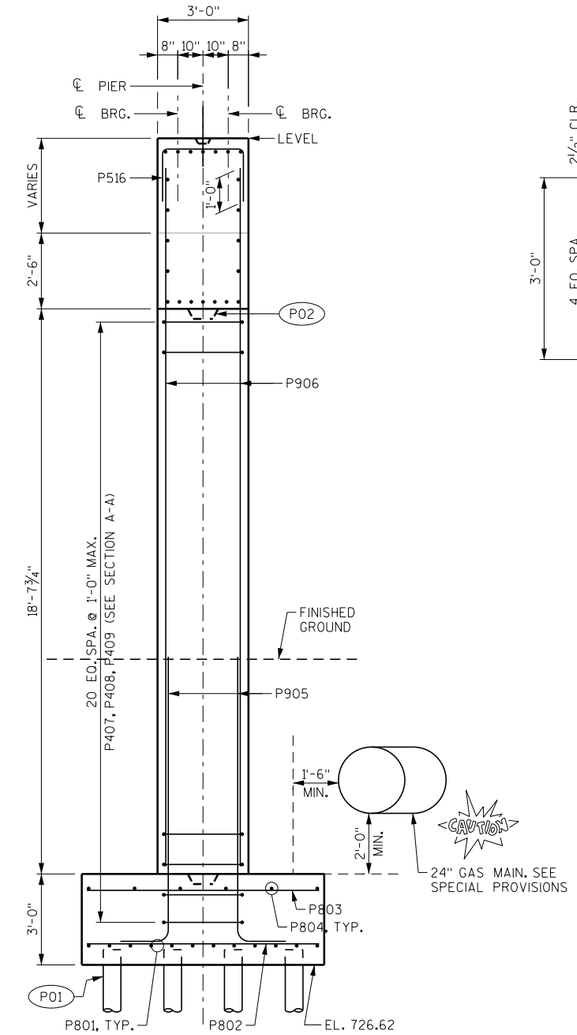

END VIEW

SHOWING REINFORCEMENT THRU ℄ PIER

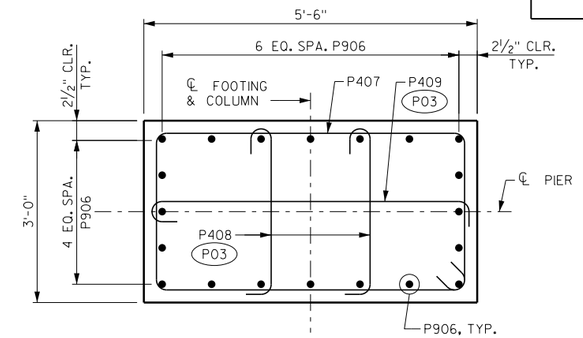

SECTION A-A

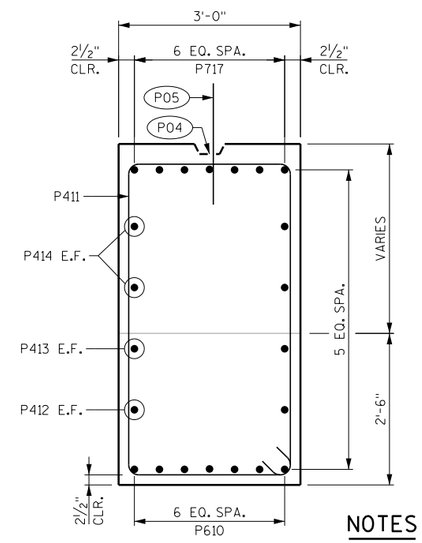

SECTION B-B

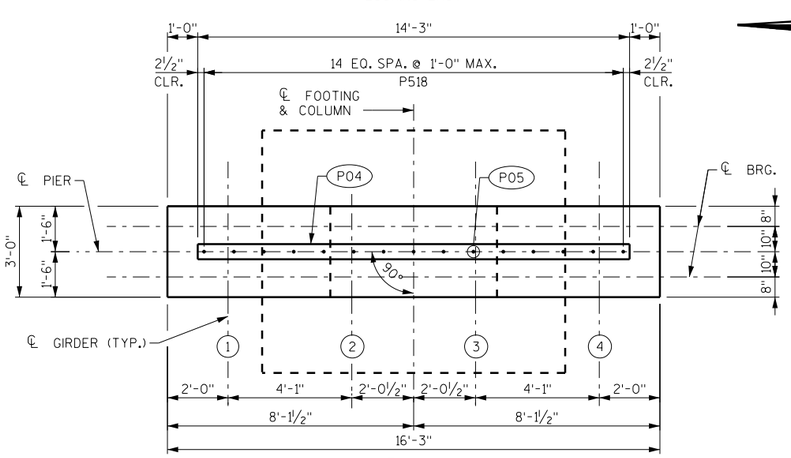

PLAN

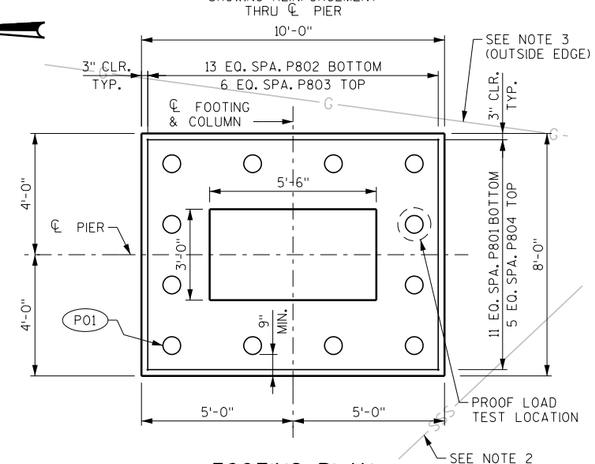

FOOTING PLAN

LEGEND

- (P01) MICROPILES TO BE DESIGNED BY THE CONTRACTOR, AND ARE SHOWN FOR INFORMATIONAL PURPOSES ONLY. SEE SHEET 2 FOR DESIGN PARAMETERS.
- (P02) KEYED CONSTRUCTION JOINT FORMED BY BEVELED 4" X 1'-0" X 1'-6".
- (P03) ALTERNATE POSITION OF 90° AND 180° HOOKS AT EACH TIE SPACING.
- (P04) KEYED CONSTRUCTION JOINT FORMED BY BEVELED 2" X 6".
- (P05) P518 @ 1'-0" MAX. SPA., TYP. THESE BARS MAY BE PLACED AFTER CONCRETE IS POURED BUT BEFORE INITIAL SET HAS TAKEN PLACE.
- E.F. EACH FACE

NOTES

1. SEE SHEET 10 FOR BILL OF BARS AND BAR BEND DETAILS.
2. THE CITY OF WEST ALLIS HAS AN UNDERGROUND STORM SEWER SOUTH OF THE PROPOSED PIER FOOTING. NO INTERFERENCE OF CONFLICT WITH PILE CONSTRUCTION IS ANTICIPATED. CONTRACTOR TO VERIFY LOCATION AND DEPTH OF UNDERGROUND STORM SEWER PRIOR TO CONSTRUCTION IN THE AREA OF THE PIER FOOTING. SEE SHEET 1 FOR GENERAL PLAN.
3. WE ENERGIES HAS AN UNDERGROUND GAS MAIN EAST OF THE PROPOSED PIER FOOTING. NO INTERFERENCE OF CONFLICT WITH PILE CONSTRUCTION IS ANTICIPATED. CONTRACTOR TO VERIFY LOCATION AND DEPTH OF UNDERGROUND GAS MAIN PRIOR TO CONSTRUCTION IN THE AREA OF THE PIER FOOTING. SEE SHEET 1 FOR GENERAL PLAN.
4. PROOF LOAD TEST TO BE INCIDENTAL TO THE BID ITEM "MICROPILES".

NO.	DATE	REVISION	BY

STATE OF WISCONSIN
DEPARTMENT OF TRANSPORTATION

STRUCTURE B-40-926

DRAWN BY VJD | PLANS CK'D. SWS

PIER

SHEET 9 OF 22

100

8

8

STATE PROJECT NUMBER

1693-32-74

BILL OF BARS

NOTE:
BAR DIMENSIONS ARE OUT TO OUT OF BAR.
THE FIRST OR FIRST TWO DIGITS
OF A BAR MARK SIGNIFIES THE BAR SIZE

BAR MARK	COAT	NO. REQ'D	LENGTH	BENT	BAR SERIES	LOCATION
P801		12	9'-6"			FOOTING - BOTTOM
P802		14	7'-6"			FOOTING - BOTTOM
P803		7	7'-6"			FOOTING - TOP
P804		6	9'-6"			FOOTING - TOP
P905	X	20	10'-9"	X		COLUMN - VERTICAL
P906	X	20	23'-1"			COLUMN - VERTICAL
P407	X	21	15'-6"	X		COLUMN - HORIZ. - TIES
P408	X	42	3'-7"	X		COLUMN - HORIZ. - TIES
P409	X	21	6'-1"	X		COLUMN - HORIZ. - TIES
P610	X	14	11'-10"	X		CAP - BOTTOM
P411	X	16	13'-4"	X	X	CAP - VERTICAL - TIES
P412	X	2	9'-6"			CAP - HORIZ.
P413	X	2	14'-1"			CAP - HORIZ.
P414	X	4	15'-9"			CAP - HORIZ.
P515	X	4	5'-6"	X		CAP - HORIZ. - EDGE
P516	X	7	6'-0"	X		CAP - VERTICAL - TOP
P717	X	7	20'-3"	X		CAP - HORIZ. - TOP
P518	X	15	2'-0"			CAP - VERTICAL DOWELS

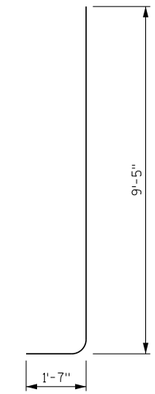

P905

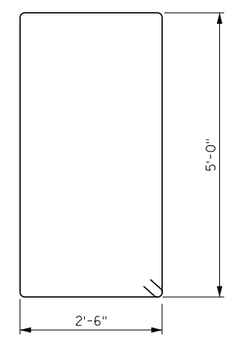

P407

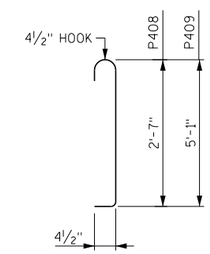

P408, P409

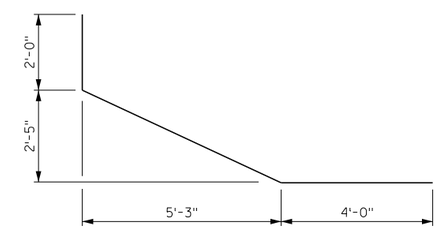

P610

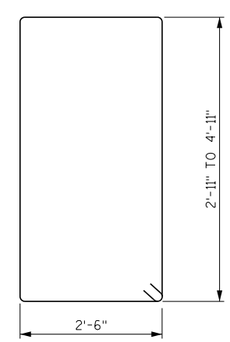

P411

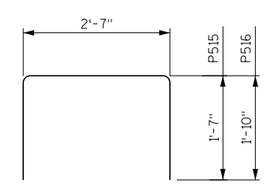

P515, P516

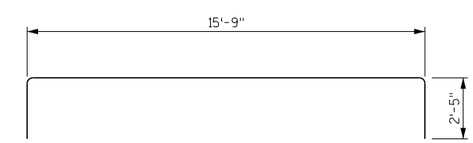

P717

BAR SERIES TABLE

BAR MARK	NO. REQ'D	LENGTH
P411	2 SERIES OF 8	11'-4" TO 15'-4"

NO.	DATE	REVISION	BY

STATE OF WISCONSIN
DEPARTMENT OF TRANSPORTATION

STRUCTURE B-40-926

DRAWN BY VJD | PLANS CK'D. SWS

PIER DETAILS

SHEET 10 OF 22
101

8

8

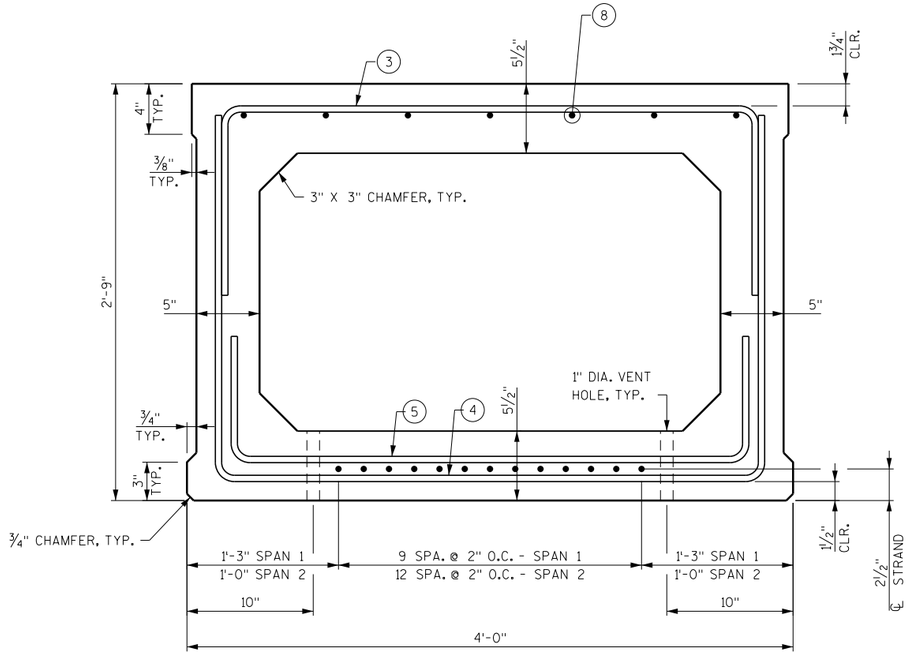

TYPICAL SECTION IN SPAN

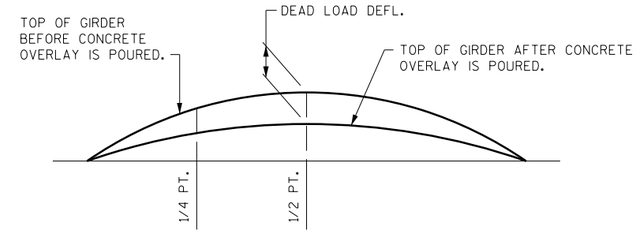

DEAD LOAD DEFLECTION DIAGRAM

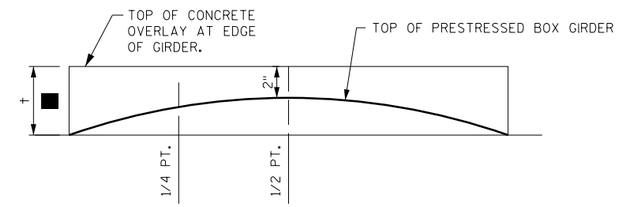

CONCRETE OVERLAY THICKNESS DIAGRAM

■ TO DETERMINE DECK THICKNESS AT GIRDER ENDS, FOLLOW THIS PROCESS:

2" MIN. CONCRETE OVERLAY THICKNESS
+ FIELD MEASURED GIRDER CAMBER (AT MID SPAN)
- DEAD LOAD DEFLECTION (AT MID SPAN)
= CONCRETE OVERLAY THICKNESS, †

NOTE: PLAN CONCRETE OVERLAY THICKNESS IS BASED ON THE THEORETICAL INITIAL CAMBER VALUE. ¼ PT. MAY BE INTERPOLATED. USE FIELD MEASURED GIRDER CAMBER FOR ACTUAL DECK THICKNESS. THE ¼ PT. IS INTERPOLATED BETWEEN CONCRETE OVERLAY THICKNESS AT THE END OF DECK AND MIDSPAN.

NOTES

THE CONCRETE MIX FOR THE PRESTRESSED BOX GIRDERS SHALL CONFORM TO SECTION 503.2.2 OF THE STANDARD SPECIFICATIONS.

AN APPROVED CONCRETE SEALER SHALL BE APPLIED TO THE BOTTOM OF THE GIRDERS AND THE EXTERIOR FACE OF THE EXTERIOR GIRDERS. DO NOT APPLY CONCRETE SEALER OR EPOXY TO THE SHEAR KEY OR THE TOP OF THE GIRDERS.

STRANDS SHALL BE FLUSH WITH THE END OF THE GIRDER. END OF STRANDS SHALL BE COATED WITH NON-BITUMINOUS JOINT SEALER.

VOIDS SHALL BE VENTED AND DRAINED BY CASTING (2)-1" DIA. TUBES AT EACH END OF VOID SEGMENT. LOCATE TUBES AT BOTTOM EDGES OF THE CORNER FILLETS, AVOID STRAND LOCATIONS.

FOUR WAY SLING MUST BE USED TO ENGAGE ALL 4 LIFTING DEVICES ON BOTH ENDS OF UNITS.

POST-TENSIONING OF THE TRANSVERSE TENDONS SHALL NOT BEGIN UNTIL THE GROUT BETWEEN THE PRECAST BOX GIRDERS HAS BEEN ALLOWED TO CURE FOR 48 HOURS AND GROUT HAS REACHED A COMPRESSIVE STRENGTH OF 3,000 PSI.

SEAL WASHER SHALL BE SPONGE NEOPRENE GASKET 3¼" MIN. THICK. STRESS POCKETS SHALL BE FILLED WITH CHLORIDE FREE NON-SHRINK GROUT AFTER POST-TENSIONING.

TRANSITION BETWEEN CHANGING SLOPES OF POST-TENSIONING DUCTS SHALL BE PROVIDED BY EITHER A CIRCULAR OR PARABOLIC CURVE WITH A MINIMUM LENGTH OF 3'-0".

AN AVERAGE DECK THICKNESS OF 3⅜" WAS USED IN THE QUANTITY "CONCRETE MASONRY BRIDGES".

VARIATIONS TO THE GRADE LINE OVER ¼" MUST BE SUBMITTED BY THE FIELD ENGINEER TO THE STRUCTURES DESIGN SECTION FOR REVIEW.

BAR BEND DETAILS

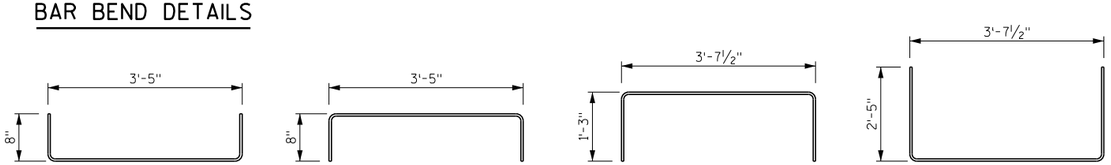

① BOTTOM ABUTMENT BAR
EPOXY COAT BARS (5)
#4 BARS

② TOP ABUTMENT BAR
EPOXY COAT BARS
(5) #4 BARS

③ TOP STIRRUP
#5 AT 1'-0" MAX

④ BOTTOM STIRRUP
#4 @ 1'-0" MAX.

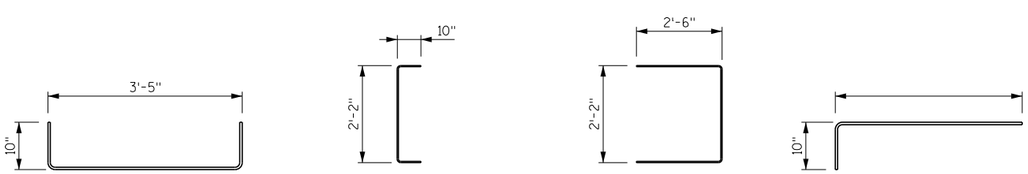

⑤ END BLOCK BOTTOM STIRRUP
#4 AND #5 BARS.
SEE ELEVATION ON SHEET 14
FOR SPACING

⑥ DUCT STIRRUP
#4 @ 9" MAX.
(6) EACH GIRDER END
(12) EACH GIRDER DUCT

⑦ END DUCT STIRRUP
#4 @ 9" MAX.
(6) EACH GIRDER END

⑧ LONGITUDINAL BAR
(7) #4 BARS MIN.

GIRDER DATA

SPAN	GIRDER	GIRDER LENGTH "L"	DEAD LOAD DEFL. (IN.)		CONC. STRENGTH f'c (PSI)	DIA. OF STRAND (IN.)	UNDRAPED PATTERN		
			¼ PT.	½ PT.			TOTAL NO. OF STRANDS	TOTAL INITIAL PRESTRESS FORCE (KIPS)	f'ci (PSI) *
1	2, 3	69'-11"	1⅛	1⅝	5,000	0.6	10	440	3,750
2	2, 3	79'-7"	1⅞	2⅝	5,000	0.6	13	571	3,750

* MINIMUM CYLINDER STRENGTH OF CONCRETE AT TIME OF TRANSFER OF PRESTRESS FORCE

CAMBER TABLE

SPAN	GIRDER	CAMBER (IN.)**
1	2	1⅞
1	3	1⅞
2	2	3⅛
2	3	3⅛

** THE THEORETICAL INITIAL CAMBER VALUE AT THE TIME OF STRAND RELEASE AT MIDSPAN MULTIPLIED BY A FACTOR OF 1.4 TO ACCOUNT FOR CAMBER GROWTH FROM THE TIME OF STRAND RELASE TO JOBSITE PLACEMENT

THESE VALUES ARE NOT TO BE USED IN DETERMINING "†". USE FIELD MEASURED GIRDER CAMBER.

THESE VALUES ARE FOR INFORMATIONAL PURPOSED ONLY.

NO.	DATE	REVISION	BY

STATE OF WISCONSIN
DEPARTMENT OF TRANSPORTATION

STRUCTURE B-40-926

DRAWN BY NLD | PLANS CK'D. SWS

PRESTRESSED GIRDER BOX INTERIOR

8

STATE PROJECT NUMBER

1693-32-74

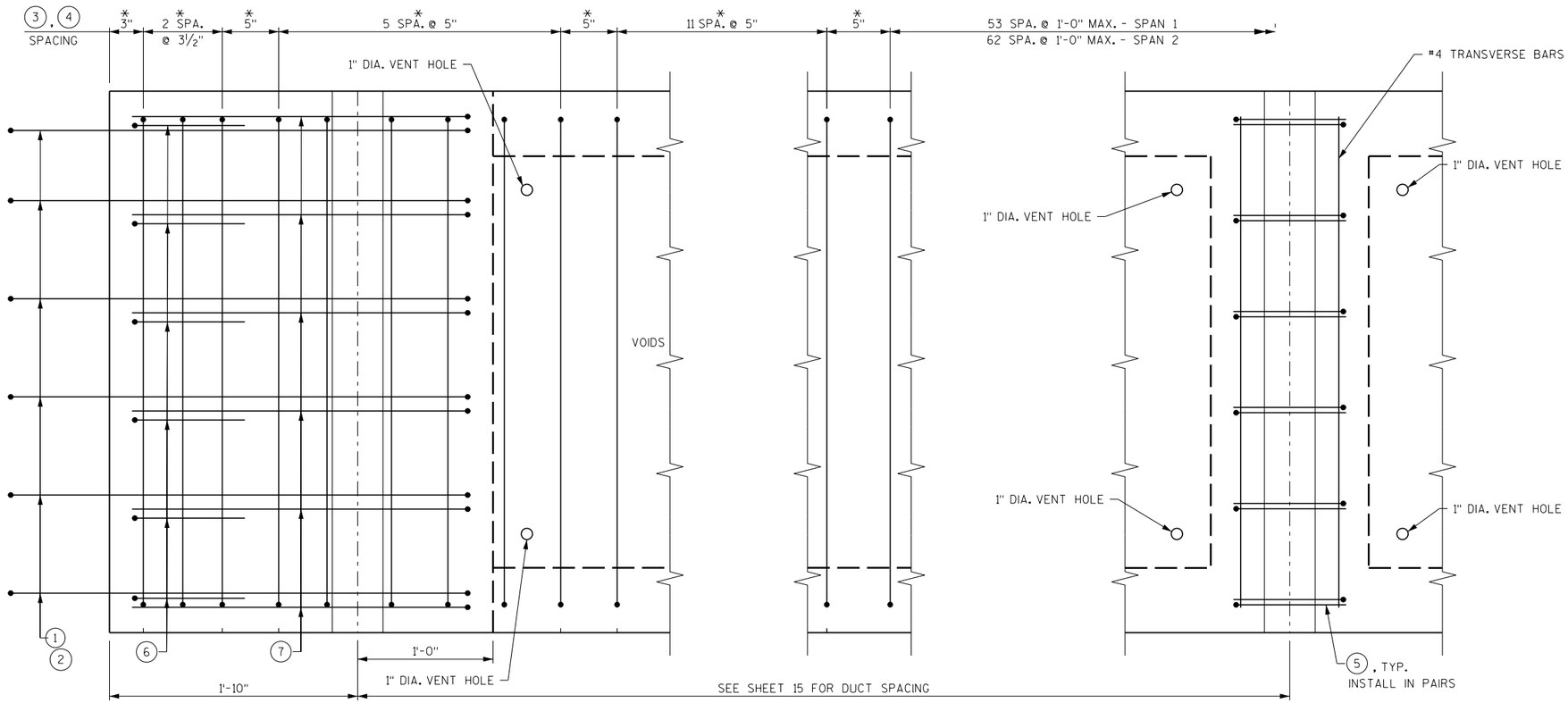

PART INTERIOR GIRDER PLAN

INTERIOR GIRDER DUCT PLAN

NOTES

WELDED PLATE DETAIL OR LOOP INSERT MAY BE SUBSTITUTED FOR 1 & 2 PROVIDED THEIR PULLOUT CAPACITY IS APPROXIMATELY EQUAL TO THE YIELD STRENGTH OF THE #4 BARS.

FOR BAR BEND DETAILS, SEE SHEET 11.

LEGEND

* STIRRUP SPACING TYPICAL AT EACH END OF GIRDER.

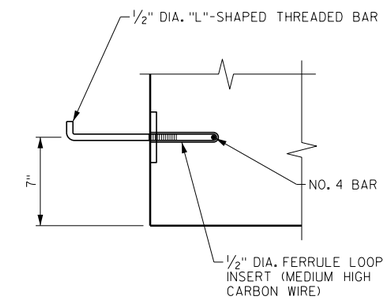

LOOP INSERT DETAIL

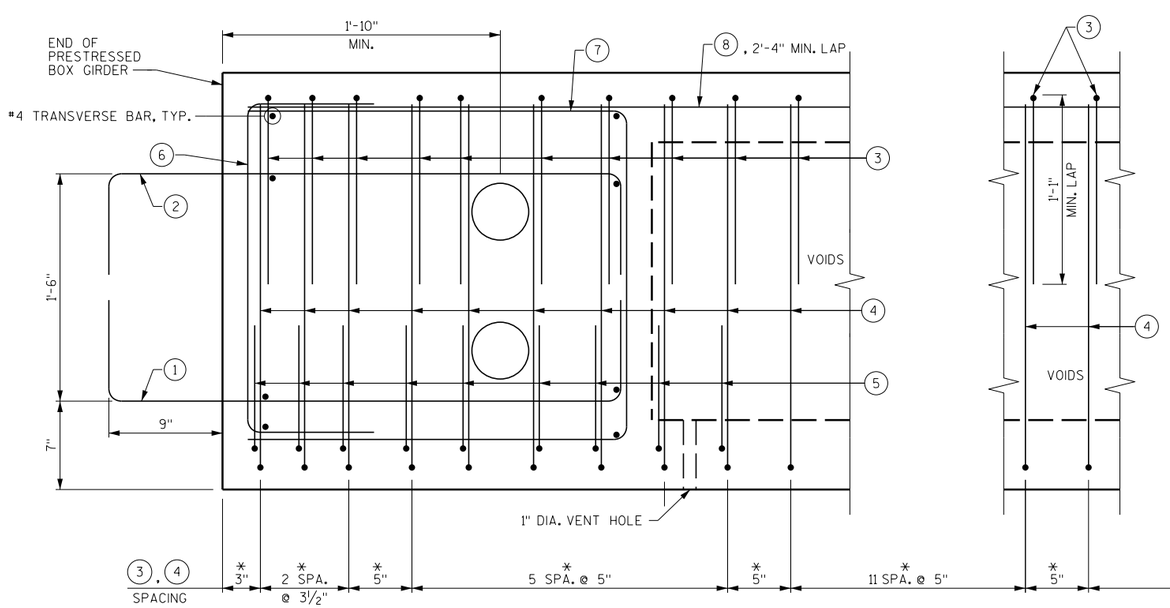

PART GIRDER ELEVATION

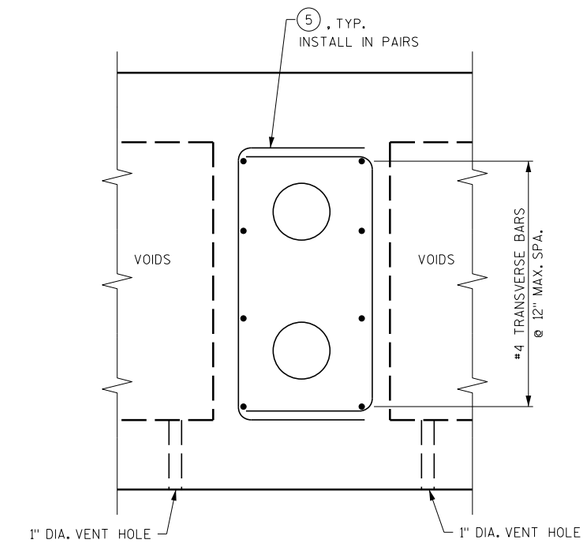

INTERIOR GIRDER DUCT ELEVATION

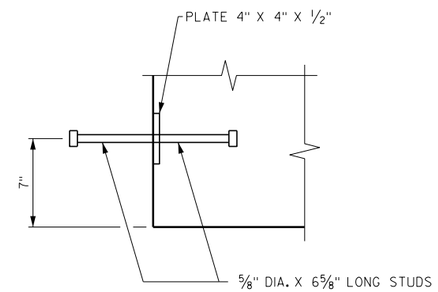

WELDED PLATE DETAIL

NO.	DATE	REVISION	BY

STATE OF WISCONSIN
DEPARTMENT OF TRANSPORTATION

STRUCTURE B-40-926

DRAWN BY NLD | PLANS CK'D. SWS

PRESTRESSED GIRDER BOX DETAILS I

SHEET 12 OF 22

103

8

8

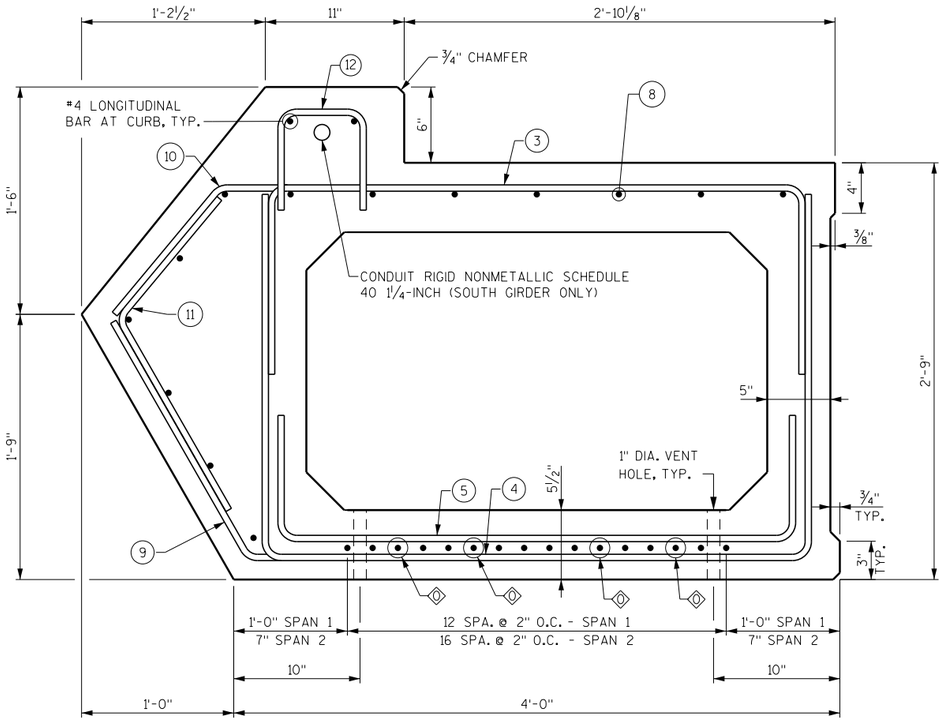

TYPICAL SECTION IN SPAN

◇ DEBOND LENGTH = 2'-0" (2 STRANDS) AT BOTH ENDS, SPAN 2 ONLY

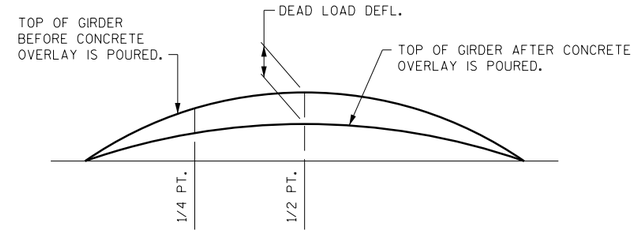

DEAD LOAD DEFLECTION DIAGRAM

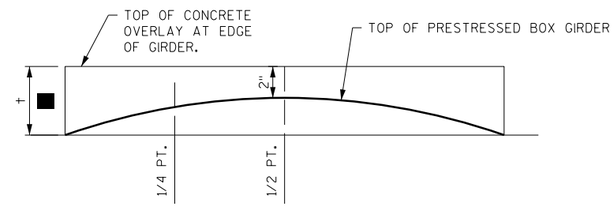

CONCRETE OVERLAY THICKNESS DIAGRAM

■ TO DETERMINE OVERLAY THICKNESS AT GIRDER ENDS, FOLLOW THIS PROCESS:

2" MIN. CONCRETE OVERLAY THICKNESS
+ FIELD MEASURED GIRDER CAMBER (AT MID SPAN)
- DEAD LOAD DEFLECTION (AT MID SPAN)
= CONCRETE OVERLAY THICKNESS, †

NOTE: PLAN CONCRETE OVERLAY THICKNESS IS BASED ON THE THEORETICAL INITIAL CAMBER VALUE. 1/4 PT. MAY BE INTERPOLATED. USE FIELD MEASURED GIRDER CAMBER FOR ACTUAL DECK THICKNESS. THE 1/4 PT. IS INTERPOLATED BETWEEN CONCRETE OVERLAY THICKNESS AT THE END OF DECK AND MIDSPAN.

NOTES

THE CONCRETE MIX FOR THE PRESTRESSED BOX GIRDERS SHALL CONFORM TO SECTION 503.2.2 OF THE STANDARD SPECIFICATIONS.

AN APPROVED CONCRETE SEALER SHALL BE APPLIED TO THE BOTTOM OF THE GIRDERS AND THE EXTERIOR FACE OF THE EXTERIOR GIRDERS. DO NOT APPLY CONCRETE SEALER OR EPOXY TO THE SHEAR KEY OR THE TOP OF THE GIRDERS.

STRANDS SHALL BE FLUSH WITH THE END OF THE GIRDER. END OF STRANDS SHALL BE COATED WITH NON-BITUMINOUS JOINT SEALER.

VOIDS SHALL BE VENTED AND DRAINED BY CASTING (2)-1" DIA. TUBES AT EACH END OF VOID SEGMENT. LOCATE TUBES AT BOTTOM EDGES OF THE CORNER FILLETS, AVOID STRAND LOCATIONS.

FOUR WAY SLING MUST BE USED TO ENGAGE ALL 4 LIFTING DEVICES ON BOTH ENDS OF UNITS.

POST-TENSIONING OF THE TRANSVERSE TENDONS SHALL NOT BEGIN UNTIL THE GROUT BETWEEN THE PRECAST BOX GIRDERS HAS BEEN ALLOWED TO CURE FOR 48 HOURS AND GROUT HAS REACHED A COMPRESSIVE STRENGTH OF 3,000 PSI.

SEAL WASHER SHALL BE SPONGE NEOPRENE GASKET 3 1/4" MIN. THICK. STRESS POCKETS SHALL BE FILLED WITH CHLORIDE FREE NON-SHRINK GROUT AFTER POST-TENSIONING.

TRANSITION BETWEEN CHANGING SLOPES OF POST-TENSIONING DUCTS SHALL BE PROVIDED BY EITHER A CIRCULAR OR PARABOLIC CURVE WITH A MINIMUM LENGTH OF 3'-0".

AN AVERAGE DECK THICKNESS OF 3 3/8" WAS USED IN THE QUANTITY "CONCRETE MASONRY BRIDGES".

VARIATIONS TO THE GRADE LINE OVER 1/4" MUST BE SUBMITTED BY THE FIELD ENGINEER TO THE STRUCTURES DESIGN SECTION FOR REVIEW.

BAR BEND DETAILS

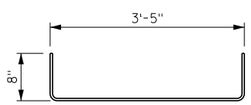

① BOTTOM ABUTMENT BAR
EPOXY COAT BARS (5)
#4 BARS

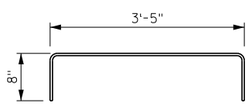

② TOP ABUTMENT BAR
EPOXY COAT BARS
(5) #4 BARS

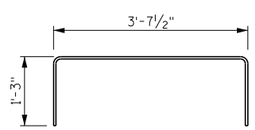

③ TOP STIRRUP
#5 AT 1'-0" MAX

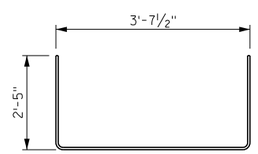

④ BOTTOM STIRRUP
#4 @ 1'-0" MAX.

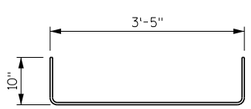

⑤ END BLOCK BOTTOM STIRRUP
#4 AND #5 BARS.
SEE ELEVATION ON SHEET 16
FOR SPACING

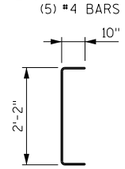

⑥ DUCT STIRRUP
#4 @ 9" MAX.
(6) EACH GIRDER END
(12) EACH GIRDER DUCT

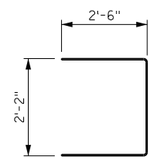

⑦ END DUCT STIRRUP
#4 @ 9" MAX.
(6) EACH GIRDER END

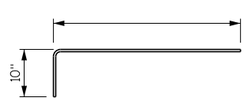

⑧ LONGITUDINAL BAR
(7) #4 BARS MIN.

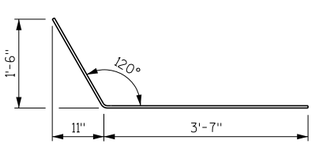

⑨ TRANSVERSE BAR
AT EDGE
#4 @ 1'-0"

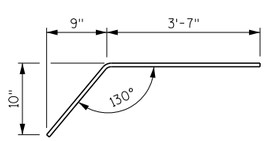

⑩ TRANSVERSE BAR
AT EDGE
#4 @ 1'-0"

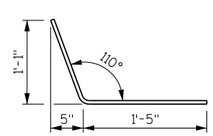

⑪ TRANSVERSE BAR
AT EDGE
#4 @ 1'-0"

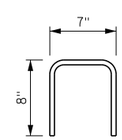

⑫ DOWEL AT CURB
#4 @ 1'-0"

GIRDER DATA

SPAN	GIRDER	GIRDER LENGTH "L"	DEAD LOAD DEFL. (IN.)		CONC. STRENGTH f'c (PSI)	DIA. OF STRAND (IN.)	UNDRAPED PATTERN			
			1/4 PT.	1/2 PT.			TOTAL NO. OF STRANDS	TOTAL INITIAL PRESTRESS FORCE (KIPS)	f'ci (PSI) *	NO. OF DEBONDED STRANDS
1	1, 4	69'-11"	1	1 1/2	5,000	0.6	13	571	3,750	0
2	1, 4	79'-7"	1 3/4	2 1/2	5,000	0.6	17	747	3,750	4

* MINIMUM CYLINDER STRENGTH OF CONCRETE AT TIME OF TRANSFER OF PRESTRESS FORCE

CAMBER TABLE

SPAN	GIRDER	CAMBER (IN.)**
1	2	1 7/8
1	3	1 7/8
2	2	3
2	3	3

** THE THEORETICAL INITIAL CAMBER VALUE AT THE TIME OF STRAND RELEASE AT MIDSPAN MULTIPLIED BY A FACTOR OF 1.4 TO ACCOUNT FOR CAMBER GROWTH FROM THE TIME OF STRAND RELASE TO JOBSITE PLACEMENT

THESE VALUES ARE NOT TO BE USED IN DETERMINING "†". USE FIELD MEASURED GIRDER CAMBER.

THESE VALUES ARE FOR INFORMATIONAL PURPOSED ONLY.

NO.	DATE	REVISION	BY

STATE OF WISCONSIN
DEPARTMENT OF TRANSPORTATION

STRUCTURE B-40-926

DRAWN BY NLD | PLANS CK'D. SWS

PRESTRESSED GIRDER BOX EXTERIOR

SHEET 13 OF 22
104

8

STATE PROJECT NUMBER

1693-32-74

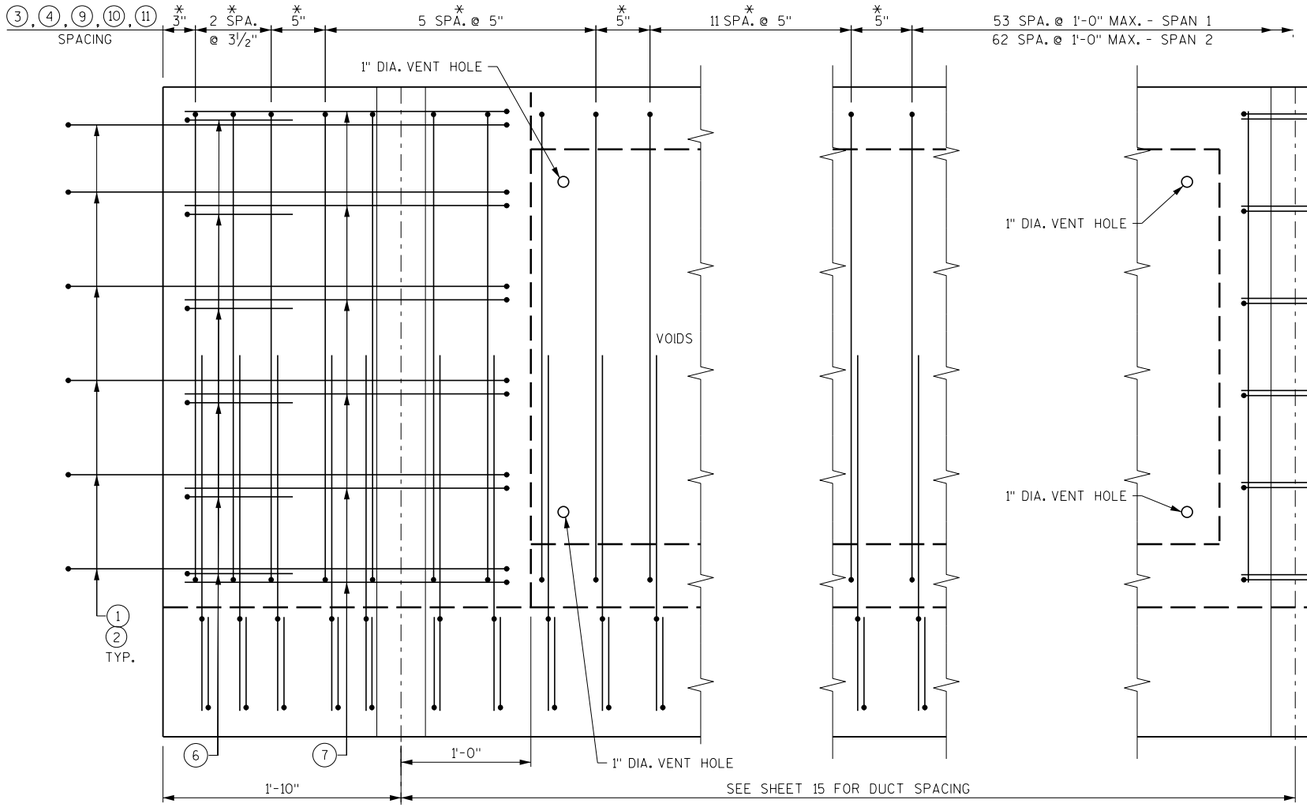

PART EXTERIOR GIRDER PLAN

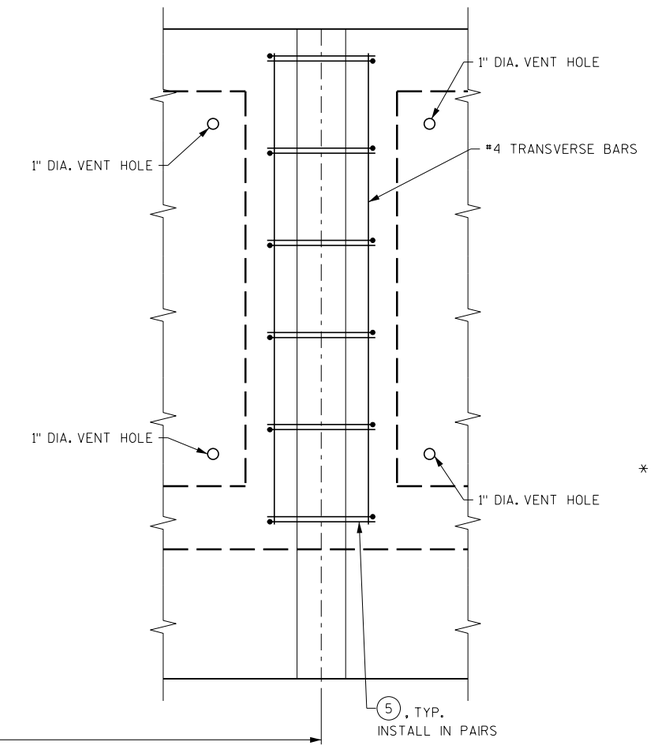

EXTERIOR GIRDER DUCT PLAN

NOTES

WELDED PLATE DETAIL OR LOOP INSERT MAY BE SUBSTITUTED FOR ① & ② PROVIDED THEIR PULLOUT CAPACITY IS APPROXIMATELY EQUAL TO THE YIELD STRENGTH OF THE #4 BARS. SEE DETAILS ON SHEET 12.

FOR BAR BEND DETAILS, SEE SHEET 13.

LEGEND

* STIRRUP SPACING TYPICAL AT EACH END OF GIRDER.

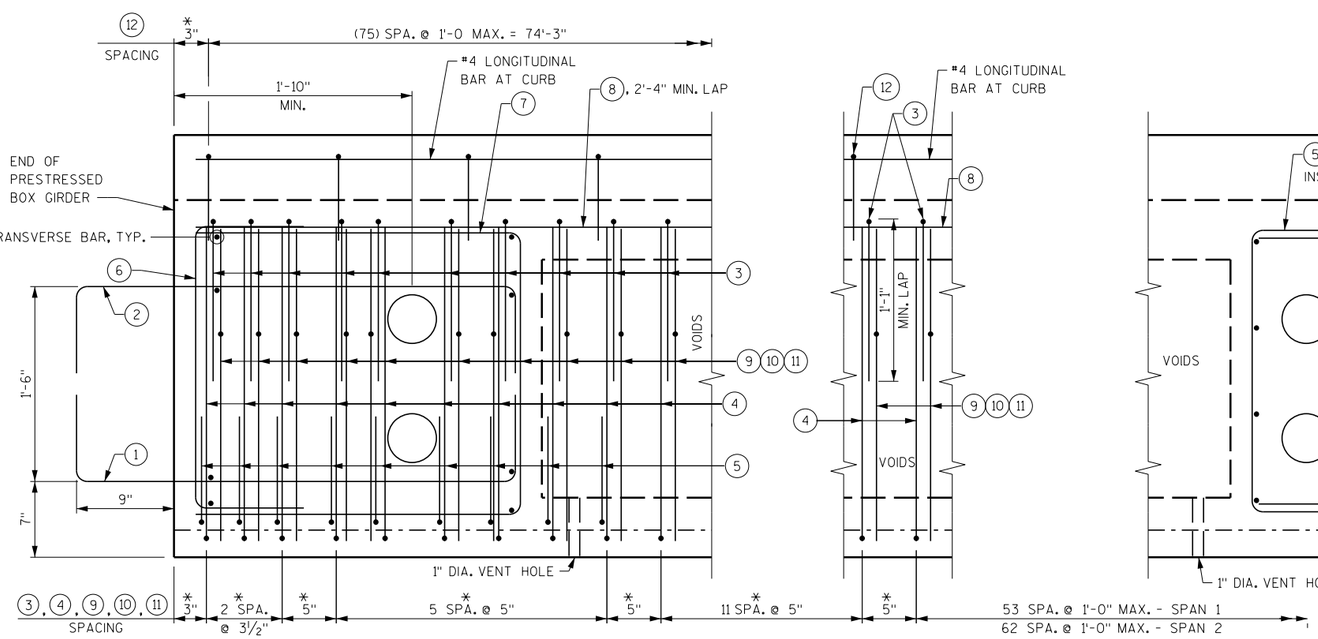

PART GIRDER ELEVATION

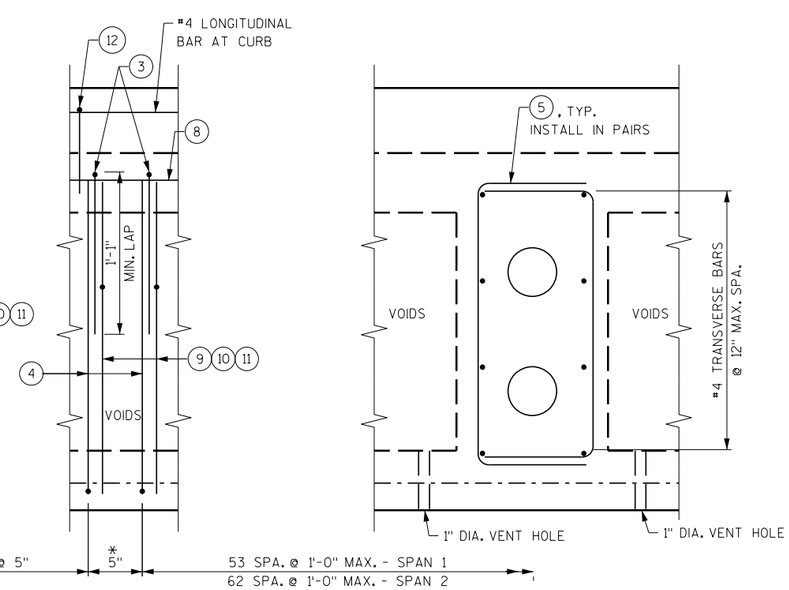

EXTERIOR GIRDER DUCT ELEVATION

NO.	DATE	REVISION	BY

STATE OF WISCONSIN
DEPARTMENT OF TRANSPORTATION

STRUCTURE B-40-926

DRAWN BY NLD | PLANS CK'D. SWS

PRESTRESSED GIRDER BOX DETAILS II

SHEET 14 OF 22

105

8

8

STATE PROJECT NUMBER
1693-32-74

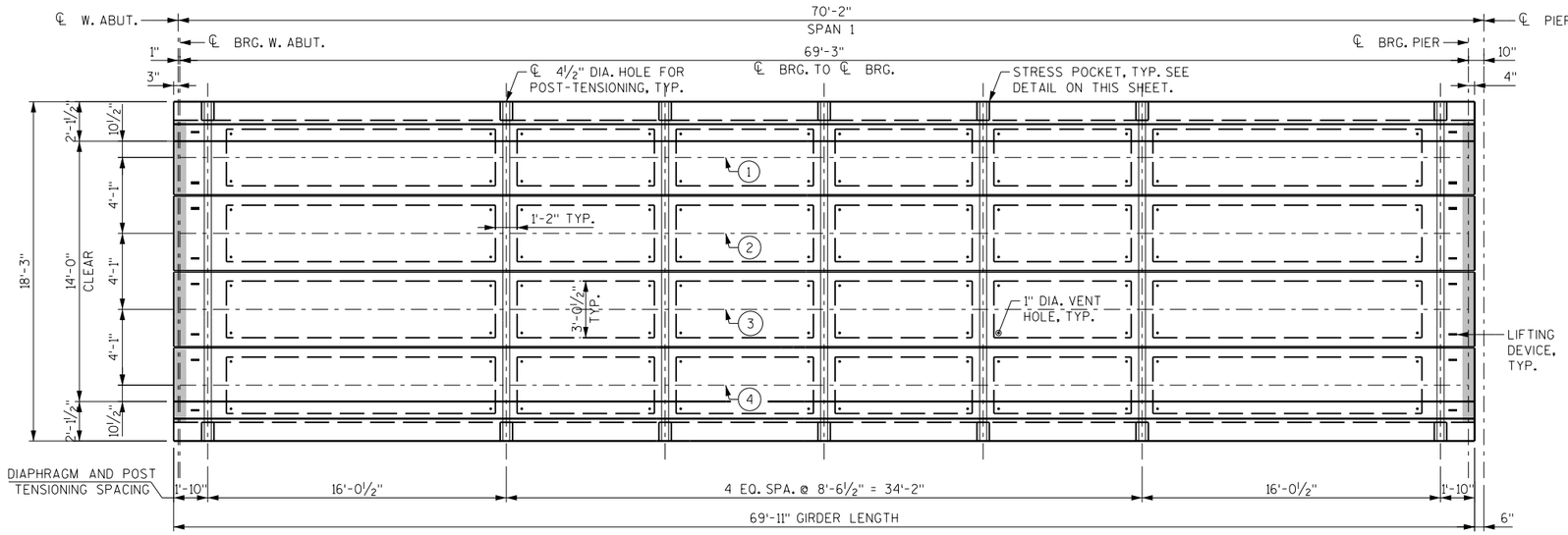

PLAN

(SHOWING SPAN 1)

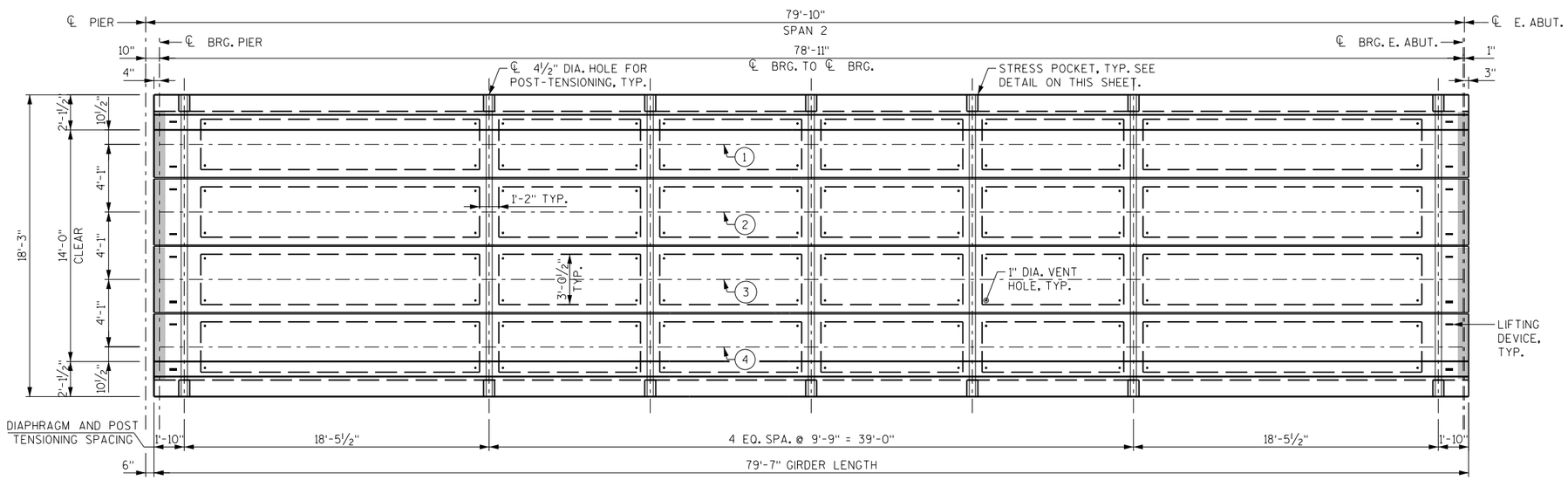

PLAN

(SHOWING SPAN 2)

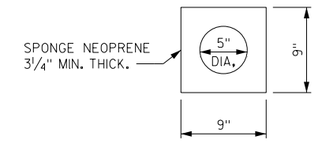

SEAL WASHER

(MAY ALSO BE ROUND)

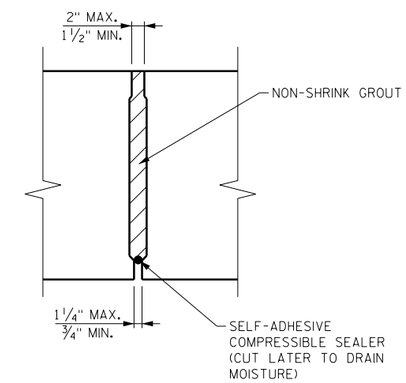

SHEAR KEY DETAIL

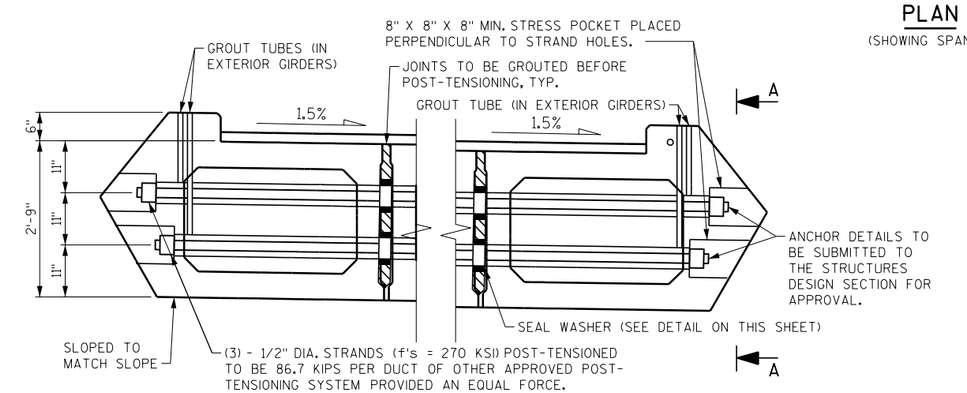

POST-TENSIONING DETAILS

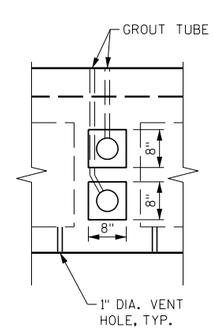

SECTION A-A

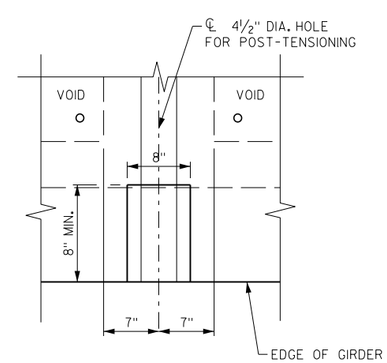

STRESS POCKET DETAIL

NO.	DATE	REVISION	BY

STATE OF WISCONSIN
DEPARTMENT OF TRANSPORTATION

STRUCTURE B-40-926

DRAWN BY VJD | PLANS CK'D. SWS

CONCRETE DIAPHRAGM

SHEET 15 OF 22

106

8

8

STATE PROJECT NUMBER

1693-32-74

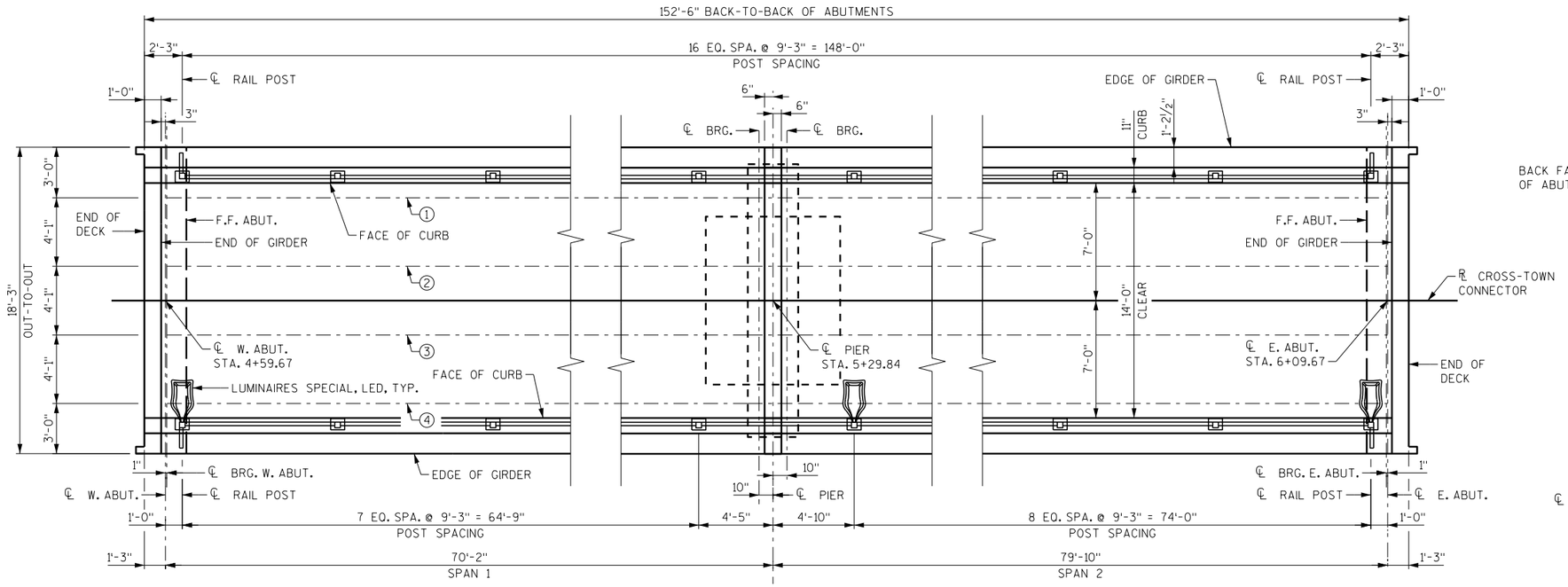

PLAN

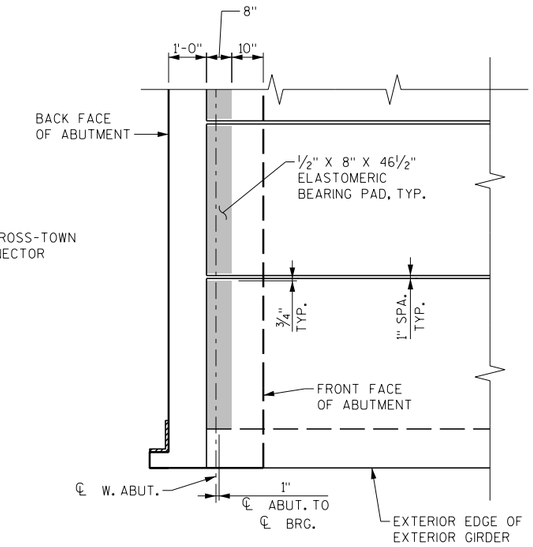

BEARING PAD PLAN AT ABUTMENT

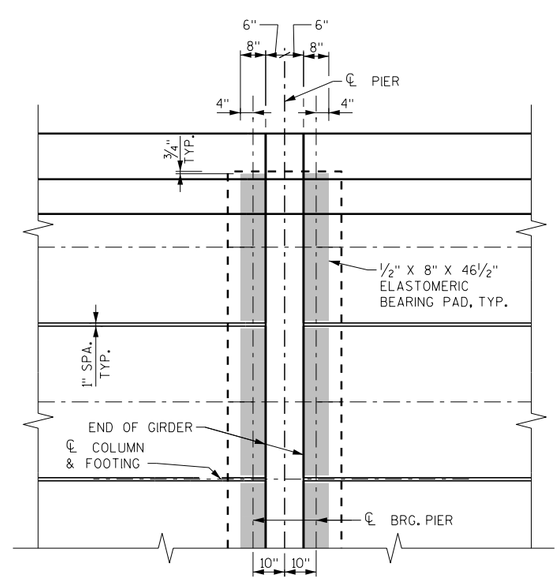

BEARING PAD PLAN AT PIER

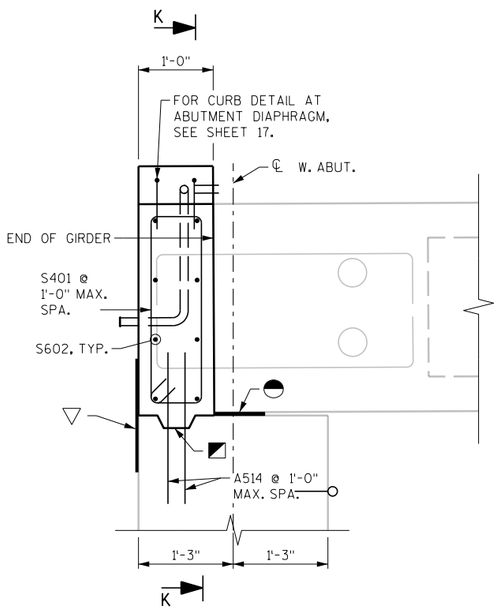

ABUTMENT DIAPHRAGM

SHOWING W. ABUT. REINFORCEMENT
E. ABUT. SIMILAR
SEE ABUTMENT SHEETS

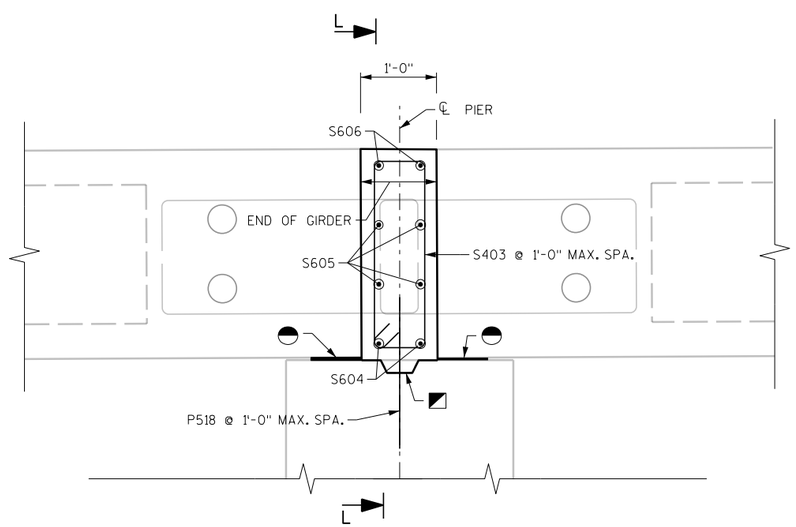

PIER DIAPHRAGM

NOTES

FOR SECTION K-K & L-L, SEE SHEET 17.

FOR BILL OF BARS, SEE SHEET 17.

LEGEND

- ½" X 8" X 46½" ELASTOMERIC BEARING PAD, TYP. AT INTERIOR GIRDERS AND EXTERIOR GIRDERS.
- 18" RUBBERIZED MEMBRANE WATERPROOFING. SEAL ALL HORIZONTAL AND VERTICAL JOINTS ON BACKFACE.
- KEYED CONSTRUCTION JOINT FORMED BY BEVELED 2" X 6".

NO.	DATE	REVISION	BY

STATE OF WISCONSIN
DEPARTMENT OF TRANSPORTATION

STRUCTURE B-40-926

DRAWN BY NLD | PLANS CK'D. SWS

SUPERSTRUCTURE

SHEET 16 OF 22

107

8

8

TOP OF CONCRETE OVERLAY ELEVATIONS

LOCATION	℄ BRG. W. ABUT.	$0.1L_1$	$0.2L_1$	$0.3L_1$	$0.4L_1$	$0.5L_1$	$0.6L_1$	$0.7L_1$	$0.8L_1$	$0.9L_1$	℄ PIER
STATION	04+59.67	04+66.69	04+73.70	04+80.72	04+87.74	04+94.76	05+01.77	05+08.79	05+15.81	05+22.82	05+29.84
N. CURB	756.63	756.68	756.71	756.75	756.78	756.82	756.85	756.89	756.92	756.96	756.99
℄ TRAIL	756.52	756.57	756.61	756.64	756.68	756.71	756.75	756.78	756.82	756.85	756.89
S. CURB	756.42	756.47	756.50	756.54	756.57	756.61	756.64	756.68	756.71	756.75	756.78

LOCATION	℄ PIER	$0.1L_2$	$0.2L_2$	$0.3L_2$	$0.4L_2$	$0.5L_2$	$0.6L_2$	$0.7L_2$	$0.8L_2$	$0.9L_2$	℄ BRG. E. ABUT.
STATION	05+29.84	05+37.82	05+45.81	05+53.79	05+61.77	05+69.76	05+77.74	05+85.72	05+93.70	06+01.69	06+09.67
N. CURB	756.99	757.03	757.07	757.11	757.15	757.19	757.23	757.27	757.31	757.35	757.39
℄ TRAIL	756.89	756.93	756.97	757.01	757.05	757.09	757.13	757.17	757.21	757.25	757.29
S. CURB	756.78	756.82	756.86	756.90	756.94	756.98	757.02	757.06	757.10	757.14	757.18

BILL OF BARS

NOTE:
BAR DIMENSIONS ARE OUT TO OUT OF BAR.
THE FIRST OR FIRST TWO DIGITS
OF A BAR MARK SIGNIFIES THE BAR SIZE

BAR MARK	COAT	NO. REQ'D	LENGTH	BENT	BAR SERIES	LOCATION
S401	X	19	6'-8"	X		W. ABUT. DIAPHRAGM VERTICAL
S602	X	8	17'-10"			W. ABUT. DIAPHRAGM HORIZONTAL
S403	X	2	1'-9"	X		W. ABUT. DIAPHRAGM CURB
S404	X	4	2'-10"	X		W. ABUT. DIAPHRAGM CURB
S405	X	2	2'-4"	X		W. ABUT. DIAPHRAGM CURB
S406	X	15	6'-8"	X		PIER DIAPHRAGM VERTICAL
S607	X	2	18'-9"	X		PIER DIAPHRAGM HORIZONTAL BOTTOM
S608	X	4	16'-10"			PIER DIAPHRAGM HORIZONTAL
S609	X	2	17'-9"	X		PIER DIAPHRAGM HORIZONTAL TOP
S610	X	4	2'-4"	X		PIER DIAPHRAGM AT EDGE
S411	X	4	1'-9"	X		PIER DIAPHRAGM AT CURB
S412	X	19	6'-8"	X		E. ABUT. DIAPHRAGM VERTICAL
S613	X	8	17'-10"			E. ABUT. DIAPHRAGM HORIZONTAL
S414	X	2	1'-9"	X		E. ABUT. DIAPHRAGM CURB
S415	X	4	2'-10"	X		E. ABUT. DIAPHRAGM CURB
S416	X	2	2'-4"	X		E. ABUT. DIAPHRAGM CURB

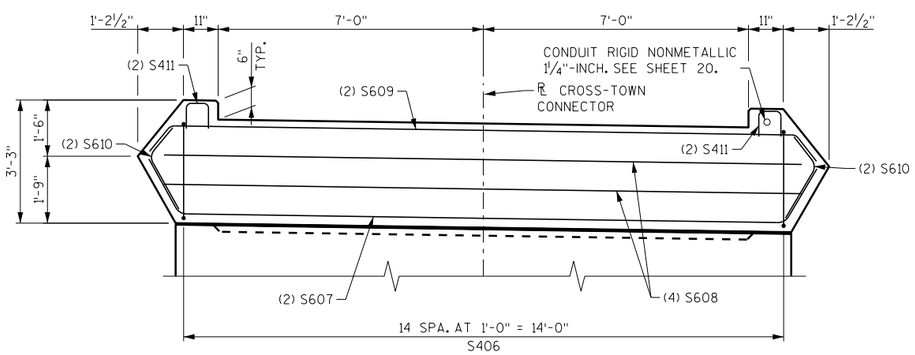

SECTION L-L
REFER TO SHEET 16

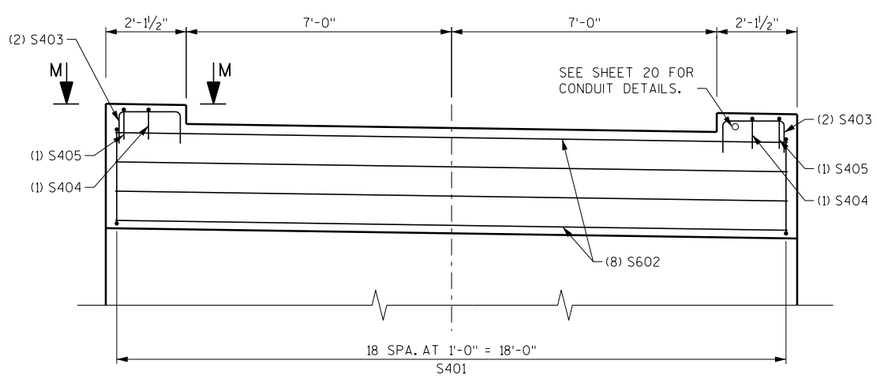

SECTION K-K
REFER TO SHEET 16
LOOKING EAST AT F.F.E. ABUT.
(W. ABUT. SIMILAR)

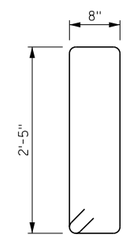

S401, S406, S412

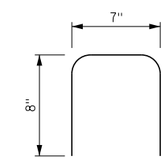

S403, S411, S414

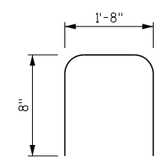

S404, S415

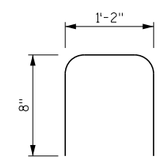

S405, S416

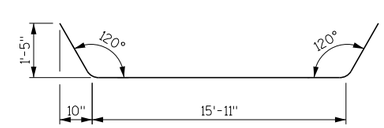

S607

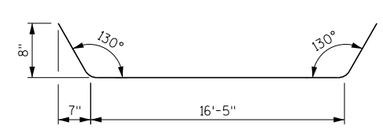

S609

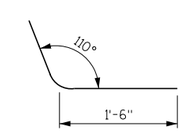

S610

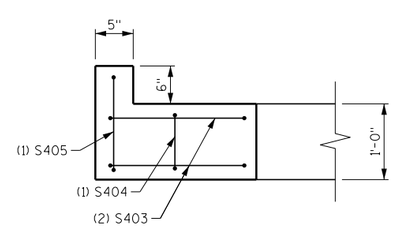

SECTION M-M

NOTES

FOR ADDITIONAL CONDUIT DETAILS, SEE SHEET 20.

NO.	DATE	REVISION	BY

STATE OF WISCONSIN
DEPARTMENT OF TRANSPORTATION

STRUCTURE B-40-926

DRAWN BY NLD | PLANS CK'D. SWS

SUPERSTRUCTURE DETAILS

8

8

STATE PROJECT NUMBER
1693-32-74

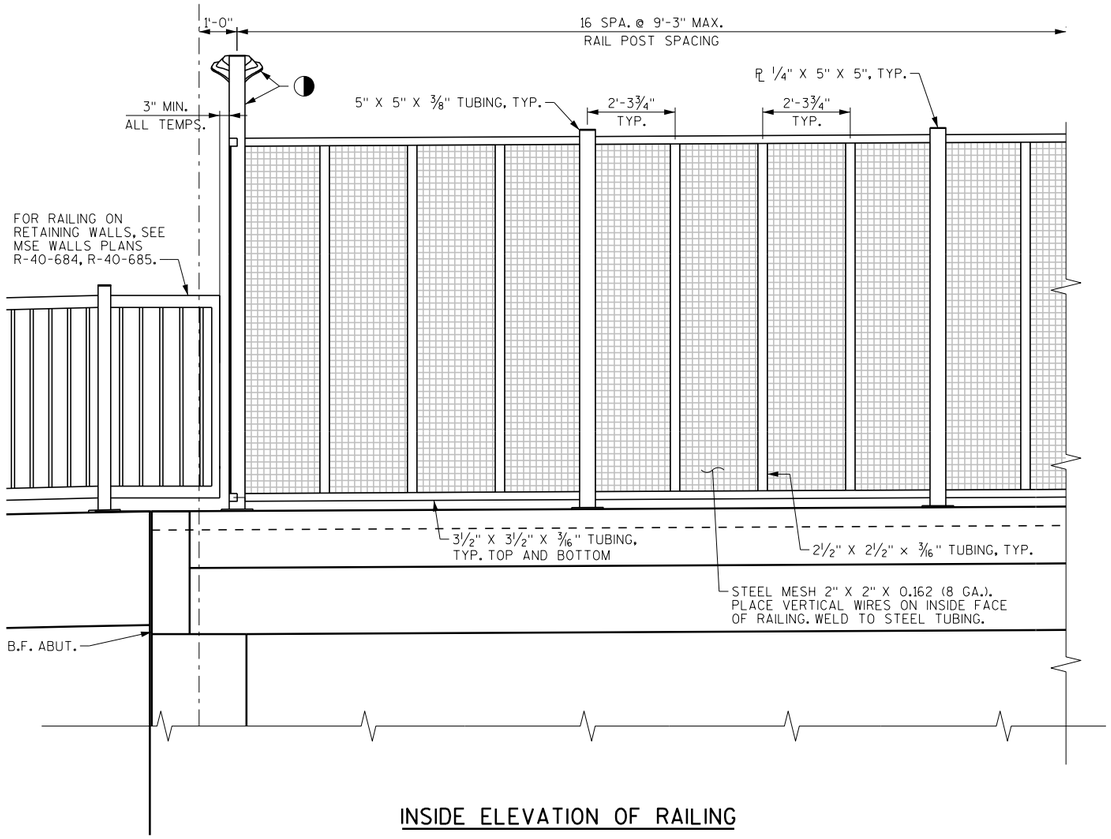

INSIDE ELEVATION OF RAILING

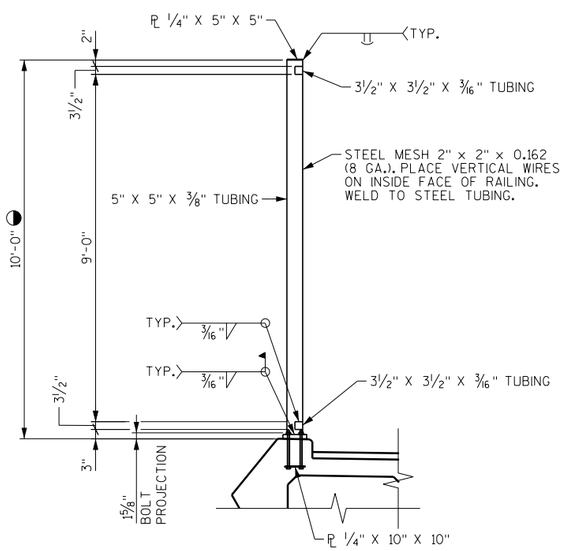

SECTION THRU RAILING

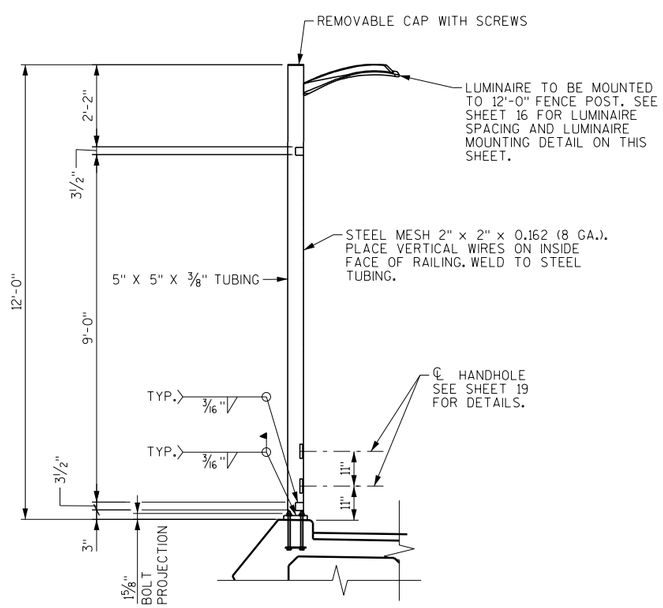

SECTION THRU RAILING AT LUMINAIRE

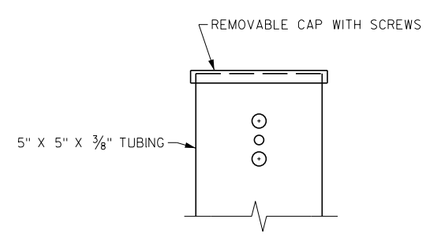

LUMINAIRE MOUNTING DETAIL

LUMINAIRE MOUNTING TO BE DESIGNED BY THE CONTRACTOR AND APPROVED BY THE ENGINEER. THE MINIMUM ALLOWABLE DISTANCE FROM THE LUMINAIRE TO THE DECK IS 12'-0".

NOTES

BID ITEM SHALL BE "RAILING TUBULAR SCREENING SPECIAL B-40-926" WHICH SHALL INCLUDE ALL ITEMS SHOWN.

POST BASE PLATES SHALL BE FLAT WITH ALL SURFACES SMOOTH AND FREE FROM WARP AND ALL EDGES SMOOTH, STRAIGHT, AND VERTICAL. ALL PLATE CUTS SHALL BE MACHINE OR MACHINE FLAME CUT.

RAILS AND POSTS TO BE ASTM A500, GRADE C. BASE PLATES AND SHIMS TO BE ASTM A709, GRADE 36. ALL RAILS, POSTS, PLATES, AND SHIMS SHALL BE GALVANIZED AFTER FABRICATION.

ANCHORAGES SHALL BE ACCURATELY PLACED TO PROVIDE CORRECT ALIGNMENT OF RAILING. SET POSTS NORMAL TO GRADE.

ALL POST SPA. ARE TAKEN HORIZ. ALONG CENTER LINE OF RAILING AT BASE OF POST.

STEEL SHIMS SHALL BE PROVIDED AND USED UNDER BASE PLATES WHERE REQUIRED FOR ALIGNMENT, AND SHALL BE GALVANIZED.

CAULK AROUND PERIMETER OF BASE PLATES AND FILL PORTION OF SLOTTED HOLES AROUND ANCHOR BOLTS WITH NON-STAINING, NON-BITUMINOUS JOINT SEALER, GRAY.

CUT BOTTOM OF POST TO MAKE VERTICAL IN TRANSVERSE DIRECTION.

ANCHOR BOLTS, NUTS, AND WASHERS SHALL BE EITHER STAINLESS STEEL OR ASTM 307. IF 307 IS USED, ANCHOR BOLTS, NUTS, AND WASHERS SHALL BE GALVANIZED.

RAILING SHALL BE FABRICATED IN LENGTHS THAT INCLUDE NOT MORE THAN 3 POSTS.

VENT HOLES SHALL BE DRILLED IN MEMBERS AS REQUIRED TO FACILITATE GALVANIZING AND DRAINAGE.

AFTER FABRICATION AND PRIOR TO ASSEMBLING STEEL MESH COMPONENTS, STEEL SHALL BE BLAST CLEANED PER SSPC-SP 6 AND GALVANIZED ACCORDING TO ASTM A 123. REPAIR ZINC COATING DAMAGED DURING STEEL MESH ASSEMBLAGE AS SPECIFIED IN 513.3.3(3).

PRIOR TO FINAL ASSEMBLY OF THE STEEL MESH, PAINT THE GALVANIZED STEEL RAILING AND RAIL COMPONENTS WITH A TWO COAT SYSTEM SPECIFICALLY INTENDED FOR PAINTING OF GALVANIZED SURFACES PER THE SPECIAL PROVISIONS. THE FINISH COLOR SHALL BE FEDERAL COLOR NO. 27038 (BLACK), SEMI-GLOSS.

COVER THE 2" X 2" STEEL MESH WITH A COLORED POLYMER COATING. THE FINISH COLOR SHALL BE FEDERAL COLOR NO. 27038 (BLACK), SEMI-GLOSS.

PAINT TOUCH-UP TO BE DONE AT COMPLETION OF STEEL RAILING INSTALLATION TO THE SATIDFACTION OF THE ENGINEER AT NO EXTRA COST.

LEGEND

◑ LUMINAIRES TO BE LOCATED ON 12'-0" TALL LIGHT POSTS. SEE SHEET 16 FOR LOCATIONS.

8

8

NO.	DATE	REVISION	BY

STATE OF WISCONSIN
DEPARTMENT OF TRANSPORTATION

STRUCTURE B-40-926

DRAWN BY NLD | PLANS CK'D. SWS

RAILING TUBULAR SCREENING SPECIAL

SHEET 18 OF 22

STATE PROJECT NUMBER

1693-32-74

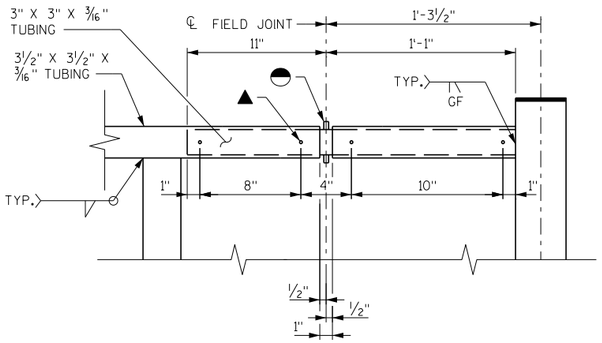

RAILING EXPANSION JOINT DETAIL

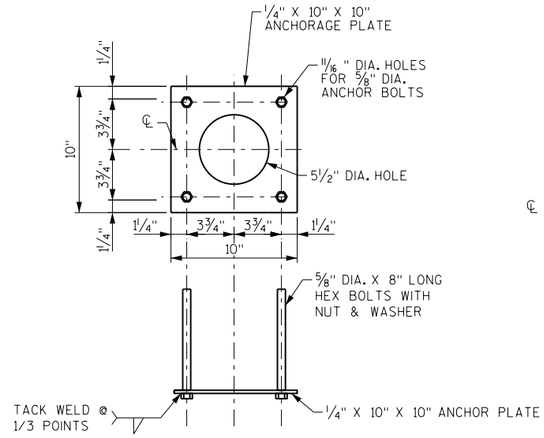

ANCHORAGE DETAIL

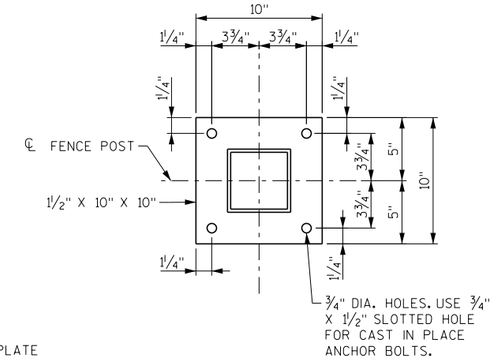

BASE PLATE

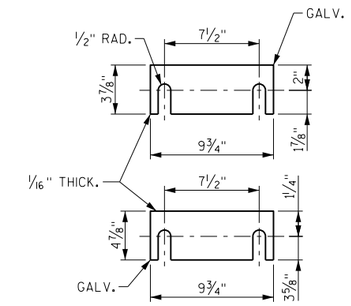

SHIM PLATE DETAILS

TWO SHIMS OF EACH SIZE REQUIRED PER POST.

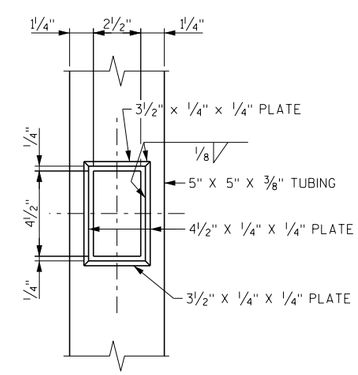

REINFORCEMENT

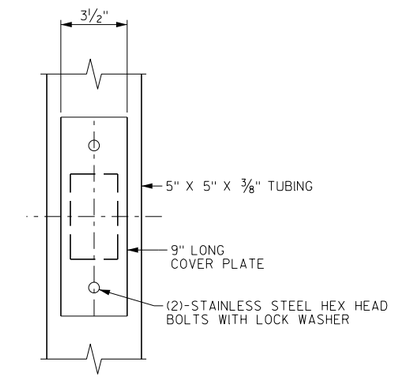

COVER PLATE

HAND HOLE DETAILS

2 1/2" X 4 1/2" REINFORCED HANDHOLE AND COVER ASSEMBLY SECURED BY (2)-STAINLESS STEEL HEX HEAD BOLTS AT ALL LIGHT POSTS.

LEGEND

5/16"X3/8" WELDED STUDS

WELD BEAD ON EACH SIDE OF TUBE. GRIND BEADS SO THAT SLEEVE FITS FREELY INSIDE THE 3 1/2"x3 1/2" TUBE.

NO.	DATE	REVISION	BY

STATE OF WISCONSIN
DEPARTMENT OF TRANSPORTATION

STRUCTURE B-40-926

DRAWN BY NLD | PLANS CK'D. SWS

RAILING DETAILS

SHEET 19 OF 22

8

8

STATE PROJECT NUMBER

1693-32-74

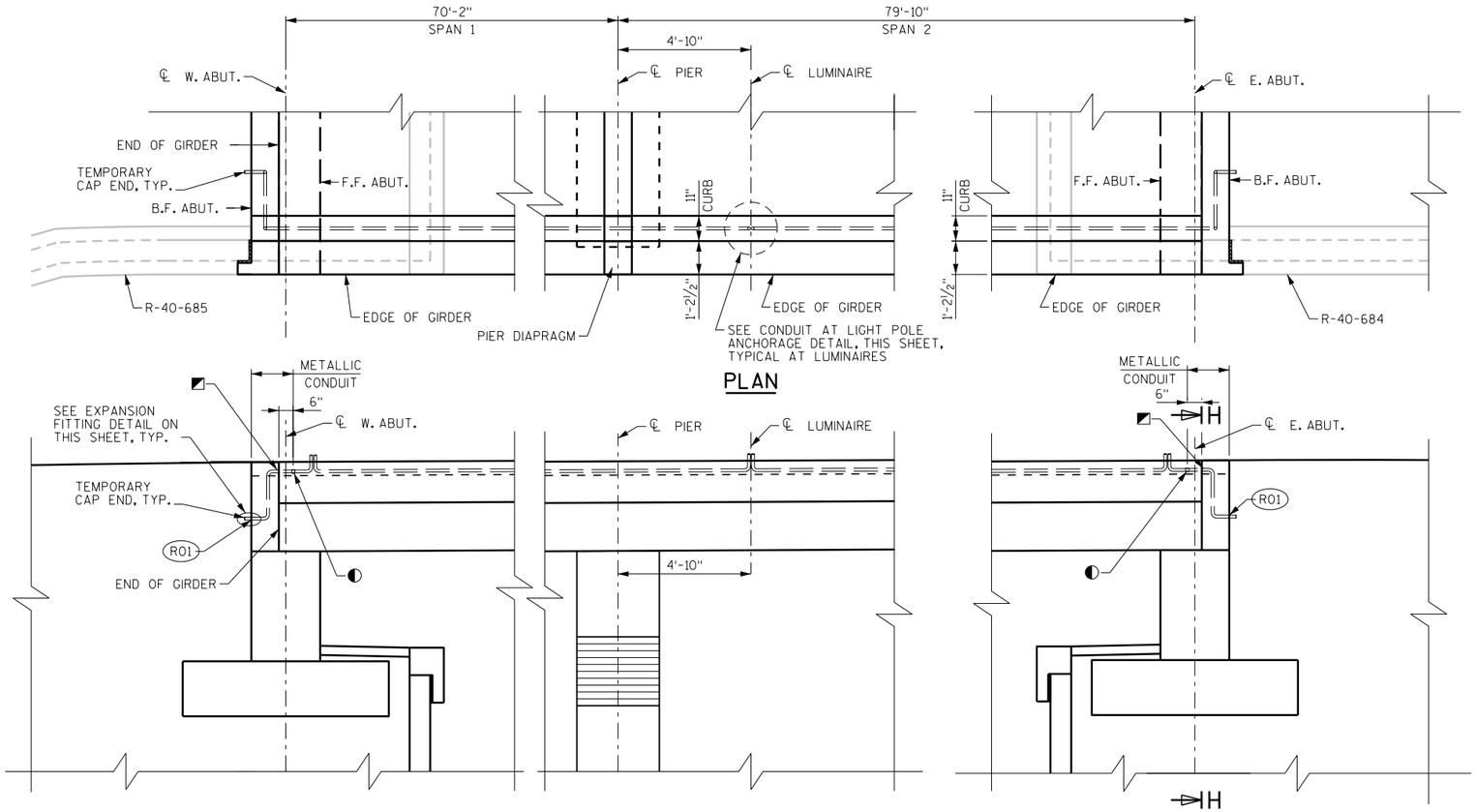

PLAN

ELEVATION

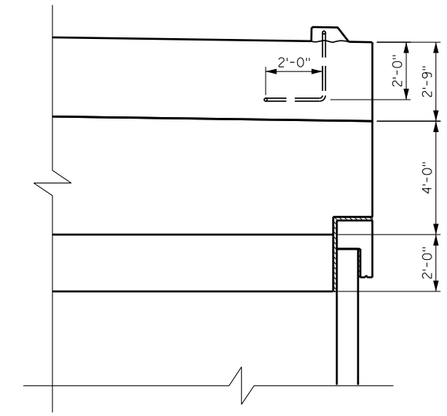

SECTION H-H

LEGEND

◪ PROVIDE APPROVED DEFLECTION COUPLING PER CONDUIT AND ELECTRICAL WIRE SCHEDULE

◐ NONMETALLIC CONDUIT TO METALLIC CONDUIT ADAPTER FITTING (UL OR NRTL LISTED FOR ELECTRICAL USE SHALL BE USED)

(R01) METALLIC CONDUIT EXPANSION FITTING (O-Z/GEDNEY TYP AX-200 & BONDING JUMPER) WITH 4" TOTAL CONDUIT MOVEMENT. EXPANSION FITTINGS TO BE INCLUDED IN THE BID ITEM "CONDUIT RIGID METALLIC 1¼-INCH".

(R02) WRAP EXPANSION FITTING WITH SPONGE RUBBER. SPONGE RUBBER WRAP TO BE AASHTO M153 TYPE 1 OR EQUIVALENT. 1¼" MINIMUM THICKNESS. SPONGE RUBBER WRAP TO BE INCIDENTAL TO "CONDUIT RIGID METALLIC 1¼-INCH".

NOTES

FOR SECTION THRU CONCRETE DIAPHRAGM AND ADDITIONAL CONDUIT DETAILS, SEE SHEET 17.

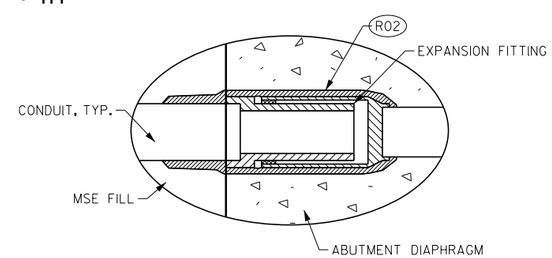

EXPANSION FITTING DETAIL

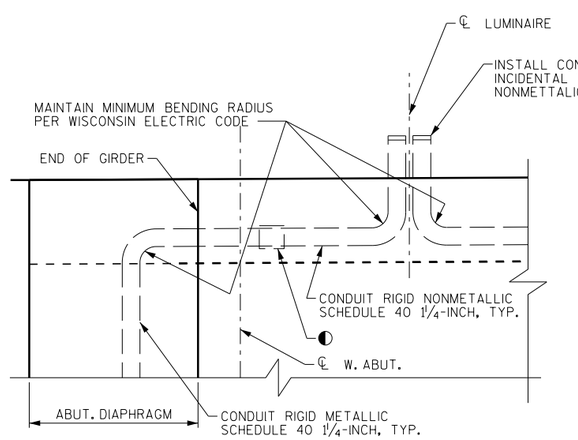

ELEVATION AT W. ABUT.

(E. ABUT. SIMILAR)

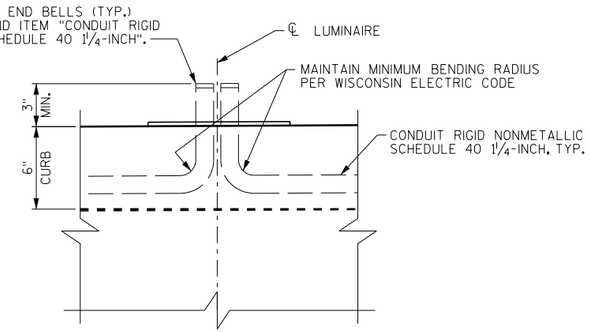

ELEVATION AT LUMINAIRE

(IN SPAN)

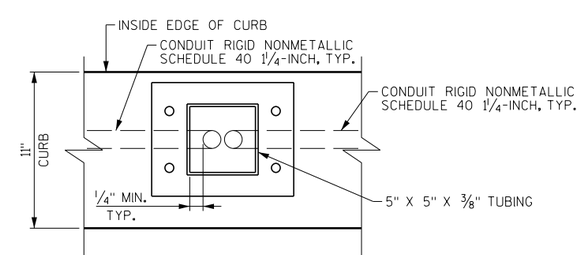

PLAN

CONDUIT AT LIGHT POLE ANCHORAGE DETAILS

NO.	DATE	REVISION	BY

STATE OF WISCONSIN
DEPARTMENT OF TRANSPORTATION

STRUCTURE B-40-926

DRAWN BY NLD | PLANS CK'D. SWS

CONDUIT DETAILS

SHEET 20 OF 22

8

8

STATE PROJECT NUMBER

1693-32-74

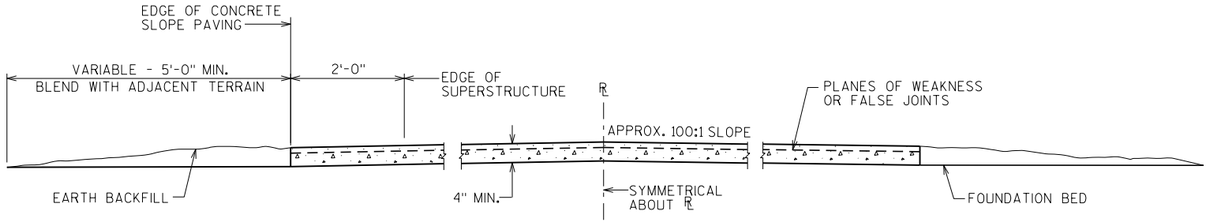

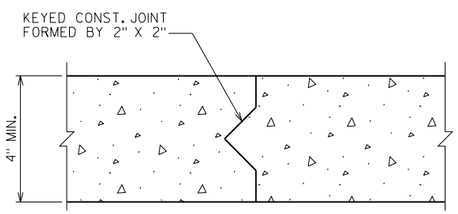

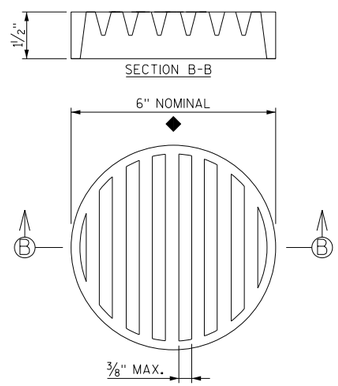

RODENT SHIELD DETAIL

◆ DIMENSIONS ARE APPROXIMATE. THE GRATE IS SIZED TO FIT INTO A PIPE COUPLING. ORIENT SO SLOTS ARE VERTICAL.

THE RODENT SHIELD, PIPE COUPLING AND SCREWS SHALL BE CONSIDERED INCIDENTAL TO THE BID ITEM "PIPE UNDERDRAIN WRAPPED 6-INCH."

THE RODENT SHIELD SHALL BE A PVC GRATE SIMILAR TO THIS DETAIL. THE GRATE IS COMMERCIALLY AVAILABLE AS A FLOOR STRAINER. A PIPE COUPLING IS REQUIRED FOR THE ATTACHMENT OF THIS SHIELD TO THE EXPOSED END OF THE PIPE UNDERDRAIN. THE SHIELD SHALL BE FASTENED TO THE PIPE COUPLING WITH TWO OR MORE NO. 10 X 1-INCH STAINLESS STEEL SHEET METAL SCREWS.

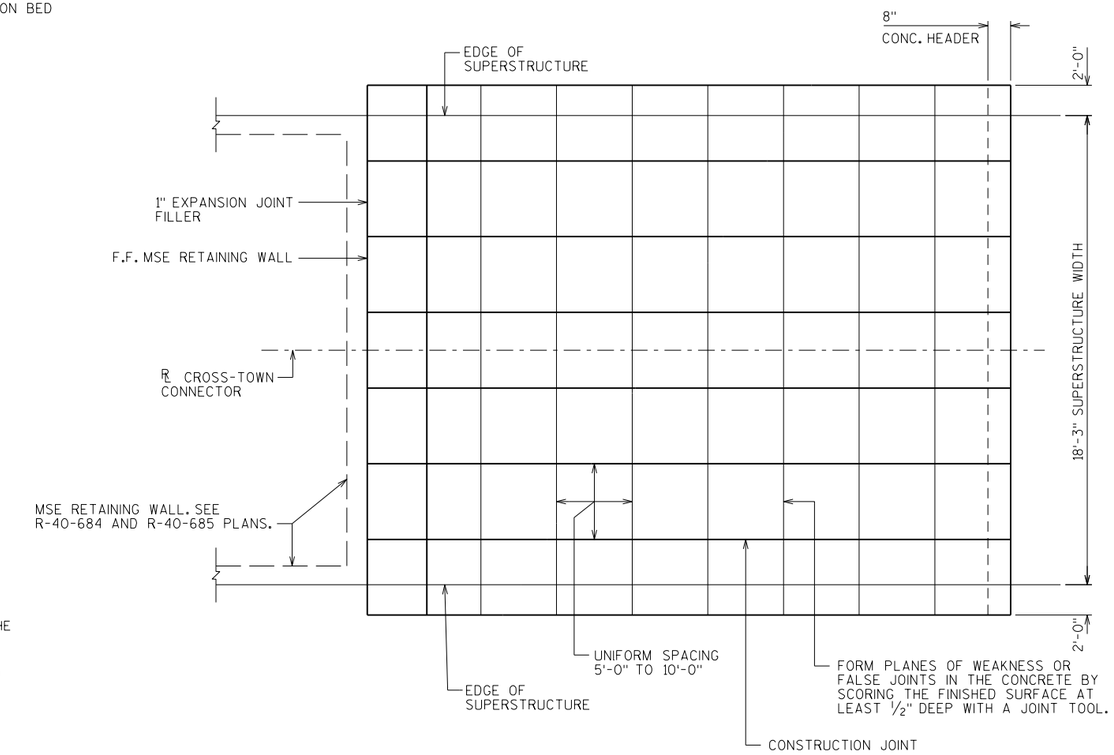

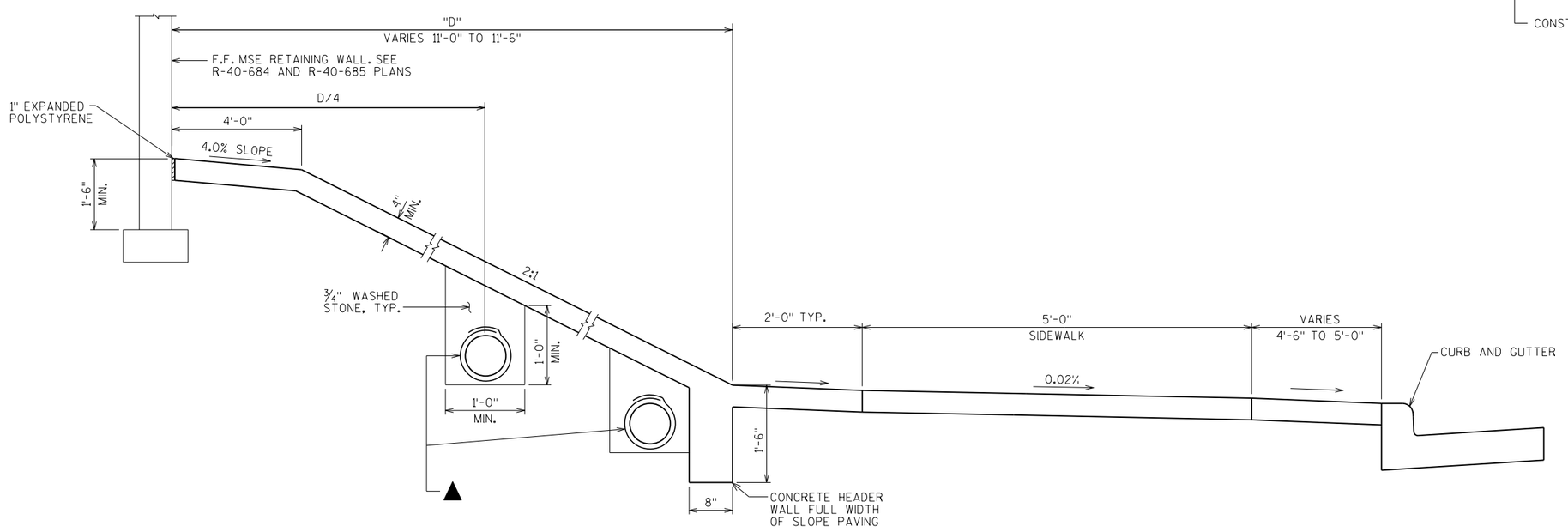

DETAILS OF CONSTRUCTION NOT SHOWN HEREIN SHALL CONFORM TO THE PERTINENT REQUIREMENTS OF THE STANDARD SPECIFICATIONS.

SEE SHEETS 5 AND 7 FOR ADDITIONAL SLOPE PAVING CONCRETE IN FRONT OF ABUTMENTS.

▲ PIPE UNDERDRAIN WRAPPED 6-INCH. SLOPE 0.5% MIN. TO SUITABLE DRAINAGE. ATTACH RODENT SHIELD AT ENDS OF PIPE UNDERDRAIN. COORDINATE PLACEMENT WITH R-40-684 AND R-40-685 CONSTRUCTION.

NO.	DATE	REVISION	BY

STATE OF WISCONSIN
DEPARTMENT OF TRANSPORTATION

STRUCTURE B-40-926

DRAWN BY NLD | PLANS CK'D. SWS

SLOPE PAVING CONCRETE

SHEET 21 OF 22

8

8

STATE PROJECT NUMBER
1693-32-74

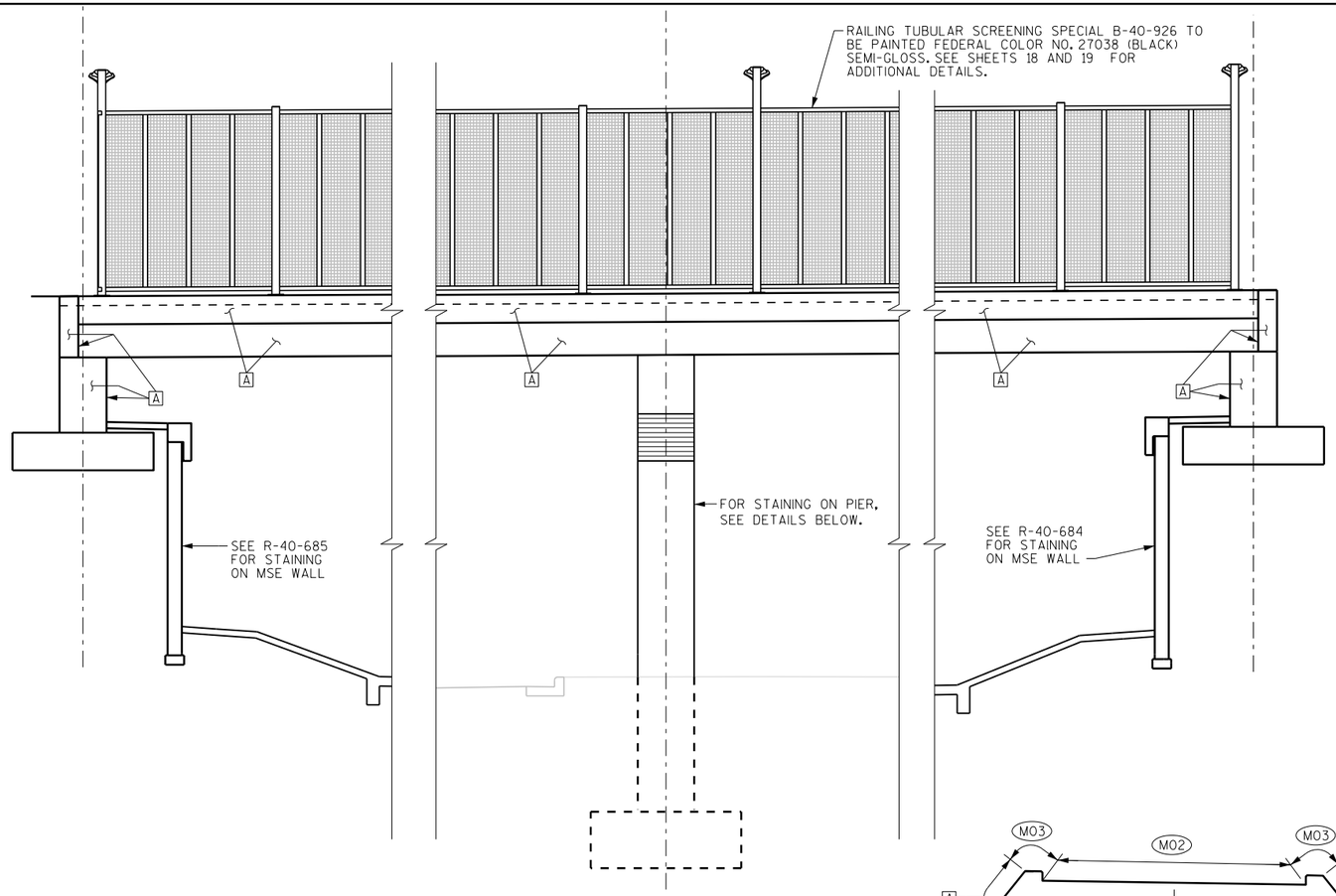

ELEVATION

NOTES AND LEGEND

(M01) STAIN 1'-0" BELOW FINISHED GRADE.

(M02) PROTECTIVE SURFACE TREATMENT SHALL BE APPLIED TO THE SURFACE OF THE CONCRETE OVERLAY. TREATMENT LIMITS APPLY TO ABUTMENT AND PIER DIAPHRAGMS.

(M03) PIGMENTED SURFACE SEALER SHALL BE APPLIED TO THE TOP AND INSIDE FACE OF THE CURB. TREATMENT LIMITS APPLY TO ABUTMENT AND PIER DIAHPRAGMS.

CONCRETE STAINING SCHEDULE

MARK	FEDERAL COLOR NO.	LOCATION
A	33564	ABUTMENT, DIAPHRAGMS, BOX GIRDERS, PIER

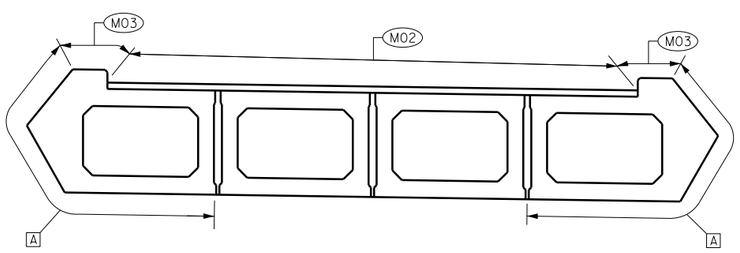

CROSS SECTION IN SPAN

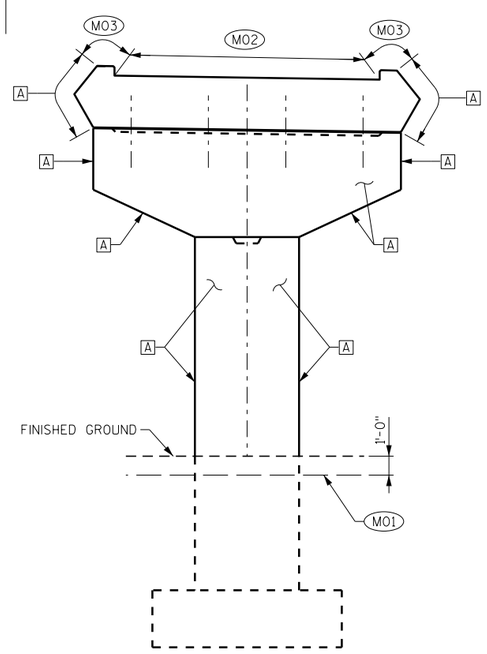

PIER ELEVATION

(SHOWING PIER DIAPHRAGM)

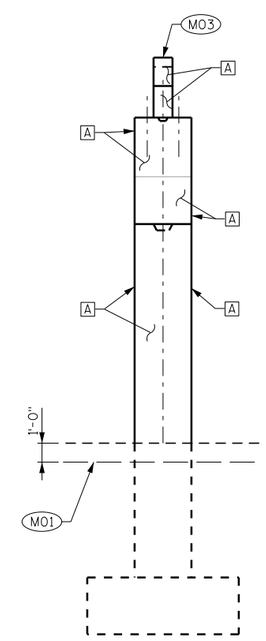

PIER END VIEW

(SHOWING PIER DIAPHRAGM)

NO.	DATE	REVISION	BY

STATE OF WISCONSIN
DEPARTMENT OF TRANSPORTATION

STRUCTURE B-40-926

DRAWN BY NLD | PLANS CK'D. SWS

AESTHETIC DETAILS

SHEET 22 OF 22

8

8

STATE PROJECT NUMBER
1693-32-74

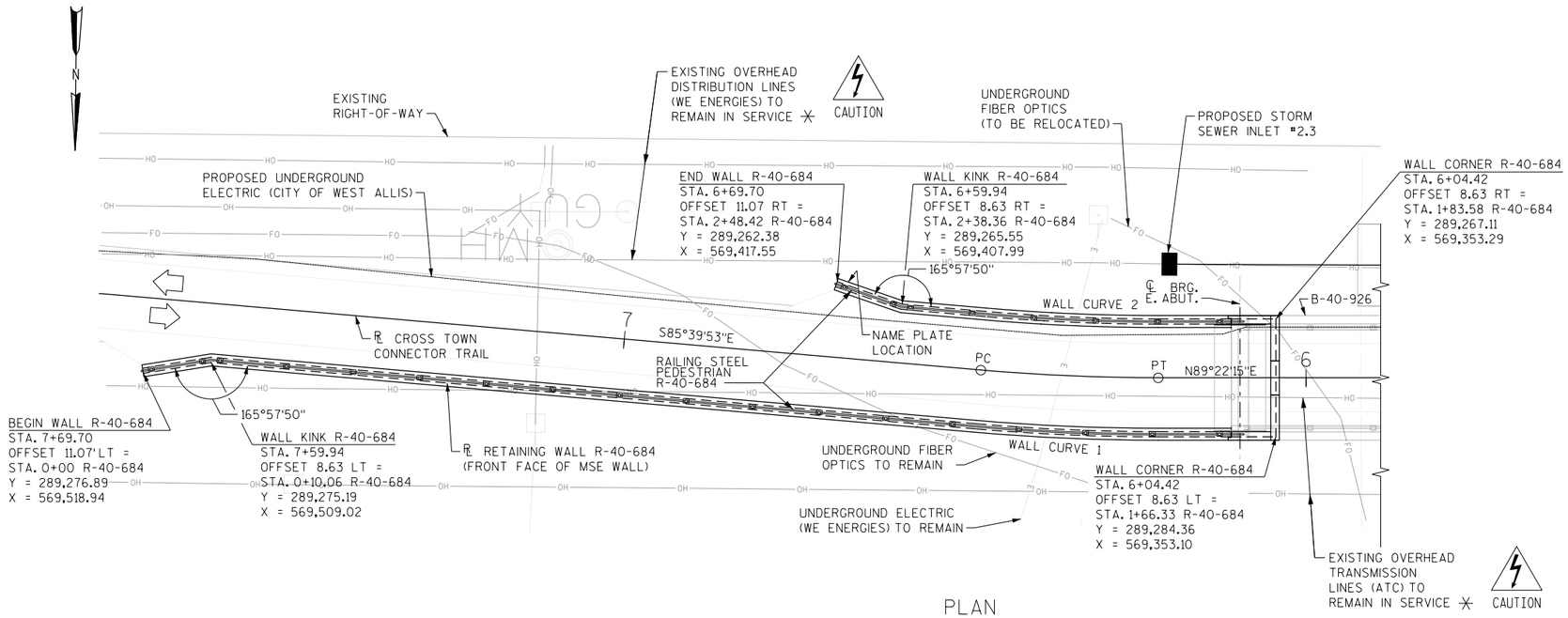

PLAN

(MSE RETAINING WALL)

DESIGN DATA

LIVE LOAD

LIVE LOAD SURCHARGE (ROADWAY)..... 100 PSF

MATERIAL PROPERTIES

CONCRETE MASONRY.....f'c = 3,500 PSI
PRECAST CONCRETE WALL PANELS.....f'c = 4,000 PSI
HIGH STRENGTH BAR STEEL
REINFORCEMENT GRADE 60.....fy = 60,000 PSI

FOUNDATION DATA

ULTIMATE SOIL BEARING CAPACITY:
MSE WALL PANEL..... SEE TABLE ON SHEET 2
NOTE: THE WALL HAS BEEN DESIGNED FOR TRAFFIC LOADING ONLY. IF DURING CONSTRUCTION HEAVY EQUIPMENT IS OPERATING IN CLOSE PROXIMITY TO THE WALL OR IF MATERIAL IS STOCKPILED NEAR THE WALL, THE SAFETY FACTOR FOR THIS WALL WILL SIGNIFICANTLY DECREASE.

ALLOWABLE (UNFACTORED) BEARING PRESSURE ON ENGINEERED FILL: 4.0 KSF
REDUCTION FACTOR USED FOR LRFD DESIGN: 0.65

ABUTMENT VERTICAL LOADS FOR DESIGN OF MSE WALL
DL: 12.9 KLF
LL: 2.3 KLF

UNFACTORED LRFD LOADS DISTRIBUTED ALONG LENGTH OF ABUMTMENT, PERPENDICULAR TO PATH.

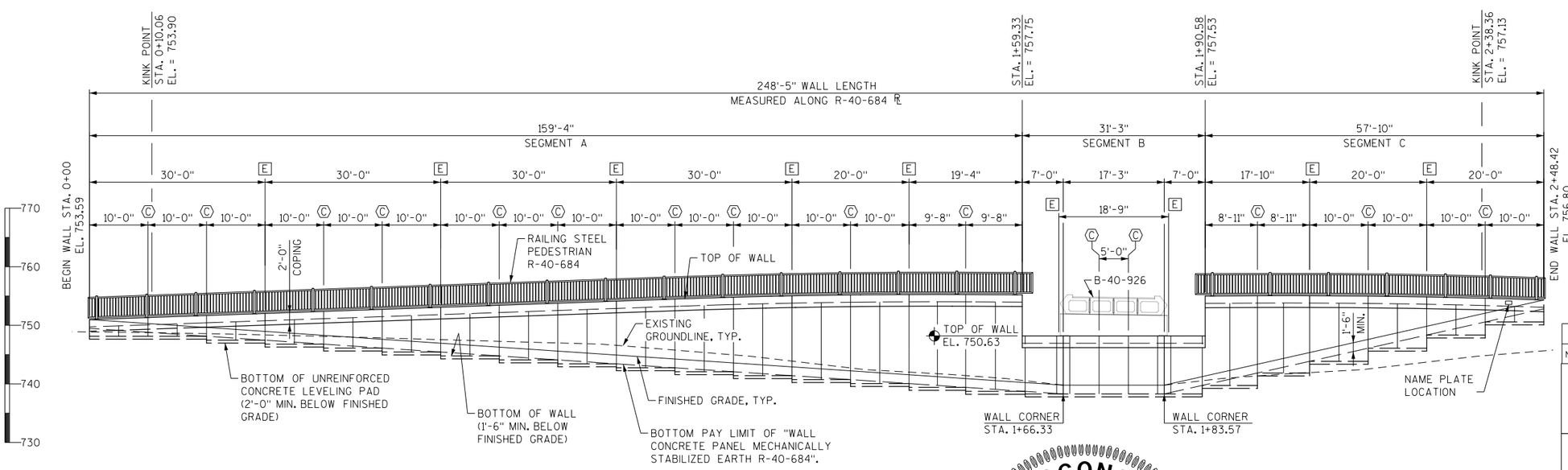

ELEVATION

(LOOKING AT F.F. OF WALL)

LEGEND

[E] EXPANSION JOINT. SEE SHEET 4 FOR DETAILS.

(C) CONTRACTION JOINT. SEE SHEET 4 FOR DETAILS.

DIRECTION OF TRAFFIC

✳ CONSTRUCTION OF RETAINING WALL R-40-684 MAY NEED TO BE ACCOMPLISHED BENEATH AND/OR ADJACENT TO ENERGIZED OVERHEAD TRANSMISSION LINES. THE HORIZONTAL AND VERTICAL LOCATION OF THESE LINES CAN VARY WITH WIND, AMBIENT TEMPERATURE, AND POWER LOADING. THE CONTRACTOR IS ADVISED THAT LOW OVERHEAD EQUIPMENT AND INSTALLATION TECHNIQUES MAY BE REQUIRED TO MAINTAIN SAFE CLEARANCES FROM THESE LINES.

CURVE DATA - RETAINING WALL R-40-684 ℄

WALL CURVE 1

PC STA. 1+22.36
Y = 289,283.68
X = 569,397.04
Δ = 4°57'52"
D = 18°33'58"
T = 13.38'
R = 308.62'
L = 26.74'

WALL CURVE 2

PC STA. 2+00.80
Y = 289,267.30
X = 569,370.51
Δ = 4°57'52"
D = 19°39'49"
T = 12.63'
R = 291.37'
L = 25.25'

WISCONSIN
STEVEN W. SCHMITT
E-37333
FRANKLIN, WI
PROFESSIONAL ENGINEER

LIST OF DRAWINGS

STRUCTURES DESIGN CONTACTS

BRIDGE OFFICE:
WILLIAM DREHER, P.E. (608) 266-8489
CONSULTANT:
STEVEN SCHMITT, P.E. (262) 821-1171

NO.	DATE	REVISION	BY

KSingh Engineers Scientists Consultants

STATE OF WISCONSIN
DEPARTMENT OF TRANSPORTATION

ACCEPTED William C. Dreher SDR 01/16/18
CHIEF STRUCTURES DESIGN ENGINEER DATE

STRUCTURE R-40-684

WEST ALLIS CROSS TOWN TRAIL OVER STH 100

COUNTY	CITY
MILWAUKEE	WEST ALLIS

DESIGN SPEC.
AASHTO LRFD BRIDGE DESIGN SPECIFICATIONS

DESIGNED BY VJD	DESIGN CK'D. SWS	DRAWN BY VJD	PLANS CK'D. SWS

GENERAL PLAN AND ELEVATION

SHEET 1 OF 7

STATE PROJECT NUMBER
1693-32-74

GENERAL NOTES

DRAWINGS SHALL NOT BE SCALED.

BEVEL EXPOSED EDGES OF CONCRETE ¾" UNLESS NOTED OTHERWISE.

COORDINATES ON THIS PLAN ARE REFERENCED TO MILWAUKEE COUNTY COORDINATE SYSTEM NAD 83 (2007). ALL STATIONS AND ELEVATIONS ARE IN FEET. ELEVATIONS ARE REFERENCED TO THE NAVD 88 (2007) DATUM.

THE CONTRACTOR MUST COORDINATE THE CONSTRUCTION OF WALL R-40-684 WITH THE EAST ABUTMENT OF BRIDGE B-40-926.

THE UTILITY INFORMATION SHOWN ON THESE DRAWINGS CONCERNING TYPE AND LOCATION OF UNDERGROUND AND OVERHEAD UTILITIES IS NOT GUARANTEED TO BE ACCURATE OR ALL INCLUSIVE. THE CONTRACTOR IS RESPONSIBLE FOR MAKING THEIR OWN DETERMINATIONS AS TO TYPE AND LOCATION OF UNDERGROUND AND OVERHEAD UTILITIES AS MAY BE NECESSARY TO AVOID DAMAGE.

BAR STEEL REINFORCEMENT SHALL BE EMBEDDED 2" CLEAR UNLESS SHOWN OR NOTED OTHERWISE.

ALL BAR STEEL REINFORCEMENT IN CAST-IN-PLACE CONCRETE TO BE EPOXY COATED.

THE PLAN QUANTITY FOR THE ITEM "WALL CONCRETE PANEL MECHANICALLY STABILIZED EARTH R-40-684" IS BASED ON A WALL HEIGHT MEASURED FROM THE TOP OF LEVELING PAD TO THE TOP OF THE WALL AS SHOWN ON THE PLANS. THE TOP OF THE LEVELING PAD IS ASSUMED TO BE AT LEAST 1'-6" BELOW FINISHED GRADE.

THE EXISTING GROUNDLINE SHALL BE THE UPPER LIMITS OF WALL EXCAVATION AND THE VOLUME OF EARTHWORK IS INCLUDED IN THE BID ITEM "WALL CONCRETE PANEL MECHANICALLY STABILIZED EARTH R-40-684".

SOIL EXCAVATION ON SITE MAY BE CONTAMINATED. APPROXIMATE LOCATIONS AND LIMITS OF CONTAMINATED SOIL CAN BE FOUND IN THE SPECIAL PROVISIONS UNDER BID ITEM "MANAGEMENT OF SOLID WASTE".

THE COST OF FURNISHING AND PLACING MSE BACKFILL WITHIN THE SOIL REINFORCED ZONE IS TO BE INCLUDED IN THE BID ITEM "WALL CONCRETE PANEL MECHANICALLY STABILIZED EARTH R-40-684".

THE COST OF FURNISHING AND PLACING THE UNREINFORCED CONCRETE LEVELING PAD UNDER THE MSE PRECAST WALL PANELS IS INCLUDED IN THE BID ITEM "WALL CONCRETE PANEL MECHANICALLY STABILIZED EARTH R-40-684".

THE CONTRACTOR SHALL PROVIDE COMPLETE DESIGN, PLANS, DETAILS, SPECIFICATIONS, AND SHOP DRAWINGS FOR THE RETAINING WALL, AND MSE WALL REINFORCEMENT IN ACCORDANCE WITH THE SPECIAL PROVISIONS. THE RETAINING WALL MANUFACTURER SHALL PROVIDE TECHNICAL ASSISTANCE TO THE CONTRACTOR DURING CONSTRUCTION. THE COST OF FURNISHING THESE ITEMS SHALL BE INCLUDED IN THE BID ITEM "WALL CONCRETE PANEL MECHANICALLY STABILIZED EARTH R-40-684".

PLANS, ELEVATIONS, AND DETAILS SHOWN ON THESE DRAWINGS ARE INTENDED TO INDICATE WALL LOCATIONS, LENGTHS, HEIGHTS, AND DETAILS COMMON TO THE WALL SYSTEM SELECTED. THE CONTRACTOR SHALL VERIFY THAT THE WALL SYSTEM SELECTED WILL CONFORM TO THE REQURIED ALIGNMENTS AND DETAILS.

THE RETAINING WALL IS TO BE DESIGNED USING THE ELEVATIONS GIVEN IN THE GEOMETRY TABLE.

DESIGN FOR RETAINING WALL TO PROVIDE FOR A FINISHED GRADE SLOPE BEHIND THE WALL AS SHOWN IN THE ROADWAY CROSS SECTIONS.

THE FIRST DIGIT OF A THREE DIGIT BAR NO. AND THE FIRST TWO DIGITS OF A FOUR DIGIT BAR NO. SIGNIFIES THE BAR SIZE.

JOINT FILLER SHALL CONFORM TO THE REQUIREMENTS OF AASHTO DESIGNATION M 153, TYPE I, II, OR III OR AASHTO DESIGNATION M 213.

THE MAXIMUM VALUE OF THE ANGLE OF INTERNAL FRICTION OF THE WALL BACKFILL MATERIAL IN THE REINFORCED ZONE SHALL BE ASSUMED TO BE 30° WITHOUT CERTIFIED TEST VALUES.

PROVIDE A RUBBED SURFACE TREATMENT IN ACCORDANCE WITH SECTION 502.3.7.3 TO ALL PERMANENTLY EXPOSED SURFACES OF CONCRETE MASONRY RETAINING WALLS.

THE SUBSURFACE CONDITIONS AT THE BASE OF THE WALL SHALL BE REVIEWED BY THE SOUTHEAST REGION SOILS ENGINEER TO DETERMINE IF THE MATERIALS HAVE ADEQUATE STRENGTH TO SUPPORT THE MSE WALL.

APPLY PIGMENTED SURFACE SEALER TO THE TOP AND INSIDE FACE CURB/COPING.

THE QUANTITY OF CONCRETE MASONRY AND REINFORCEMENT FOR THE CAST-IN-PLACE COPING AND LEVELING PAD IS PAID FOR UNDER THE ITEM "WALL CONCRETE PANEL MECHANICALLY STABILIZED EARTH R-40-684".

ALL STATIONS AND DIMENSIONS ARE ALONG THE ℞ FOR R-40-684 UNLESS SHOWN OR NOTED OTHERWISE.

DESIGN THE MSE RETAINING WALL IN FRONT OF THE ABUTMENT TO RESIST THE FORCE FROM ALL HORIZONTAL EARTH PRESSURE, INCLUDING LIVE LOAD, ACTING ON THE BACK OF THE ABUTMENT BODY AND FOOTING FROM 2 FEET BELOW THE BEAM SEATS.

BENCHMARK

NO.	STA./OFFSET	DESCRIPTION	ELEVATION
BM-1918	STA. 3+89.84, OFFSET = 358.50 RT	IRON PIPE, SET JUST EAST OF SIDEWALK	740.02

SOIL PARAMETERS

BORING B-03, STA. 5+96.23			
STATUM LOCATIONS & SOIL DESCRIPTION	UNIT WEIGHT (PCF)	FRICTION ANGLE (DEGREES)	COHESION (TSF)
EL. 735.14' TO EL. 737.76' (FILL)	120	30	--
EL. 712.64' TO EL. 735.14' (SM)	102	30	--
EL. 711.14' TO EL. 712.64' (SP)	102	30	--
EL. 709.64' TO EL. 711.14' (SM)	102	30	--
EL. 697.64' TO EL. 709.64' (CL)	110	--	0.4
EL. 687.64' TO EL. 697.64' (ML)	110	--	0.4
EL. 677.64' TO EL. 687.64' (CL)	110	--	0.4
EL. 657.64' TO EL. 677.64' (SM)	102	--	0.4
GRANULAR BACKFILL (WITHIN THE WALL REINFORCING ZONE)	135	30	--
FILL (BEHIND AND BELOW THE REINFORCING ZONE)	135	30	--

GEOMETRY TABLE

WALL STATION	RL STATION	DESCRIPTION	RL ELEV	TOP OF WALL	FINISHED GRADE
00+00.00	07+69.70	Begin Wall	753.11	753.59	753.59
00+10.06	07+59.94	Kink Point	753.45	753.90	752.68
00+25.00	07+45.00		753.98	754.42	751.33
00+50.00	07+20.00		754.85	755.29	749.08
00+75.00	06+95.00		755.73	756.17	746.82
01+00.00	06+70.00		756.60	757.04	744.57
01+22.36	06+47.63	PC	757.18	757.63	742.55
01+25.00	06+45.07		757.22	757.67	742.31
01+49.10	06+21.64	PT	757.36	757.80	740.13
01+50.00	06+20.65		757.35	757.80	740.05
01+59.33	06+11.42	Height Transition	757.31	757.75	739.21
01+66.33	06+04.42	Wall Corner	--	750.63	738.58
01+75.00	06+04.42	FF Abut	--	750.63	738.58
01+83.58	06+04.42	Wall Corner	--	750.63	738.58
01+90.58	06+11.42	Height Transition	757.31	757.53	740.55
02+00.00	06+20.84		757.35	757.58	743.19
02+00.80	06+21.64	PC	757.36	757.58	743.42
02+25.00	06+46.55		757.20	757.42	750.22
02+26.05	06+47.63	PT	757.18	757.41	750.51
02+38.36	06+59.94	Kink Point	756.91	757.13	753.97
02+48.42	06+69.70	End Wall	756.61	756.80	756.80

WALL EXTERNAL AND OVERALL STABILITY EVALUATION

DIMENSIONS	EVALUATED LOCATION	EVALUATED LOCATION
WALL HEIGHT (FT.)*	19.7	20.4
EXPOSED WALL HEIGHT (FT).	18.2	18.9
■ MIN. LENGTH OF REINFORCEMENT (FT.)	17.5	18.0
WALL STATION	1+90.58	1+59.33
BORING USED	B-03	B-03
CAPACITY TO DEMAND RATIO (CDR)		
SLIDING (CDR > 1.0)	1.01	1.00
ECCENTRICITY (CDR > 1.0)	1.82	1.80
OVERALL STABILITY (CDR > 1.0)	1.41	1.35
BEARING RESISTANCE (CDR > 1.0)	1.71	2.1
FACTORED BEARING RESISTANCE (PSF)	10,800	10,750

* INCLUDES 1'-6" EMBEDMENT DEPTH

■ THE LENGTHS PROVIDED IN THE TABLE ARE THE MINIMUM REQUIRED REINFORCEMENT LENGTHS BASED UPON THE MINIMUM DESCRIBED IN THE WALL SYSTEM SPECIAL PROVISIONS FOR EXTERNAL AND OVERALL STABILITY AT THE DESIGNATED LOCATIONS. THESE DESIGNATED LOCATIONS REPRESENT TYPICAL AND CRITICAL WALL LOCATIONS, BUT SHALL NOT BE CONSIDERED ALL INCLUSIVE. THE CONTRACTOR DESIGN LENGTHS SHALL MEET OR EXCEED THE MINIMUM VALUES REPRESENTED IN THE TABLE AT THESE DESIGNATED LOCATIONS. THE MINIMUM LENGTH DOES NOT APPLY WHEN BOTH ENDS OF SOIL REINFORCEMENT ARE CONNECTED TO PANELS.

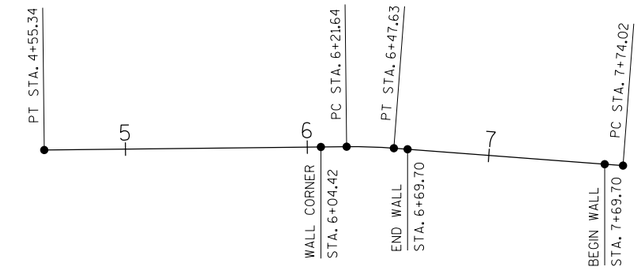

HORIZONTAL ALIGNMENT - CROSS TOWN CONNECTOR TRAIL

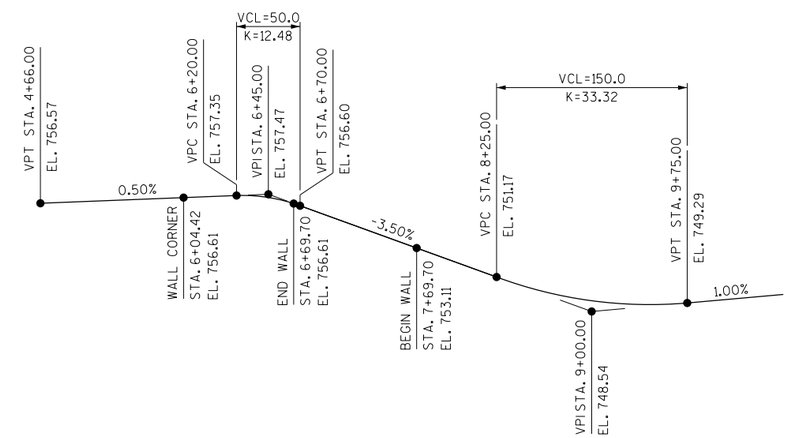

PROFILE GRADE LINE - CROSS TOWN CONNECTOR TRAIL

TOTAL ESTIMATED QUANTITIES

ITEM NO.	BID ITEM	UNIT	TOTAL
502.3210	PIGMENTED SURFACE SEALER	SY	60
516.0500	RUBBERIZED MEMBRANE WATERPROOFING	SY	12
517.1010.S.02	CONCRETE STAINING R-40-684	SF	2,835
612.0406	PIPE UNDERDRAIN WRAPPED 6-INCH	LF	280
SPV.0090.05	RAILING STEEL PEDESTRIAN R-40-684	LF	224
SPV.0165.01	WALL CONCRETE PANEL MECHANICALLY STABILIZED EARTH R-40-684	SF	2,850
SPV.0195.01	MANAGEMENT OF SOLID WASTE	TON	61
	NON-BID ITEMS		
	PREFORMED JOINT FILLER	SIZE	3/4" & 1-1/2"
	EXPANDED POLYSTYRENE	SIZE	1"
	NAME PLATE	EACH	1

ALL ITEMS ARE CATEGORY 0020.

HORIZONTAL CURVE DATA - CROSS TOWN CONNECTOR TRAIL

PI STA. 6+34.64
Y = 289,276.06
X = 569,383.42
Δ = 4°57'52"
D = 19°05'55"
T = 13.00'
R = 300.00'
L = 25.99'

PC STA. 6+21.64
Y = 289,275.92
X = 569,370.41

PT STA. 6+47.63
Y = 289,275.08
X = 569,396.38

8

8

NO.	DATE	REVISION	BY

STATE OF WISCONSIN
DEPARTMENT OF TRANSPORTATION

STRUCTURE R-40-684

DRAWN BY NLD | PLANS CK'D. SWS

GENERAL NOTES, QUANTITIES, AND DESIGN DATA

SHEET 2 OF 7

STATE PROJECT NUMBER
1693-32-74

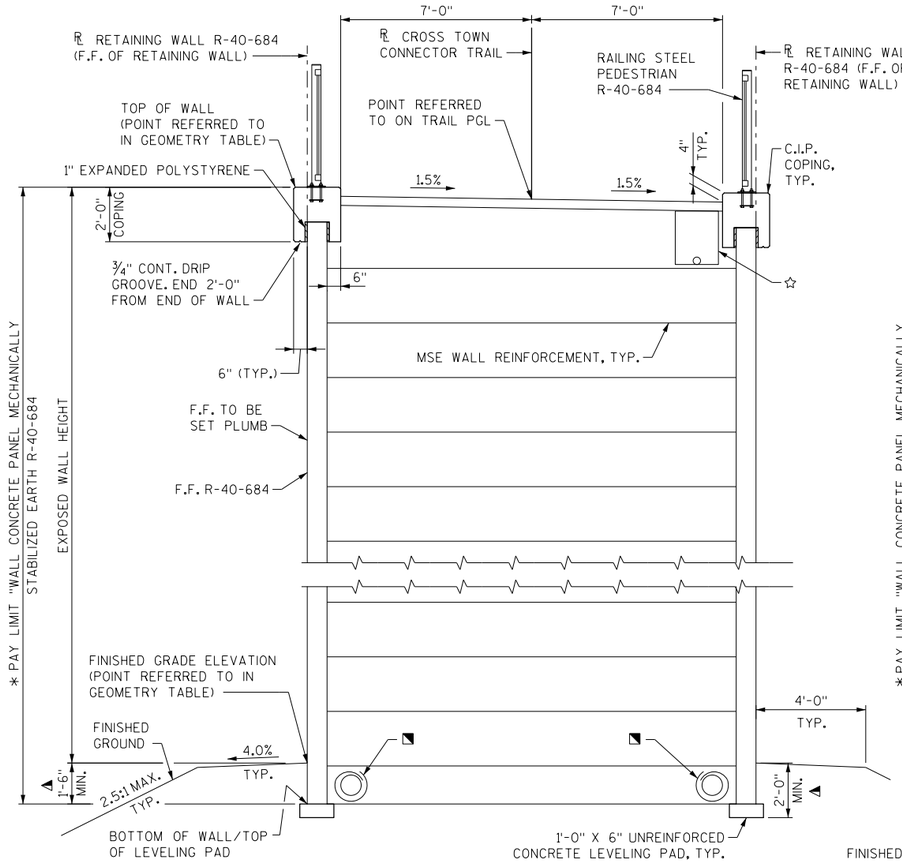

TYPICAL WALL SECTION BEHIND ABUTMENT

(STA. 6+04.42 - STA. 6+69.70; LOOKING UPSTATION)

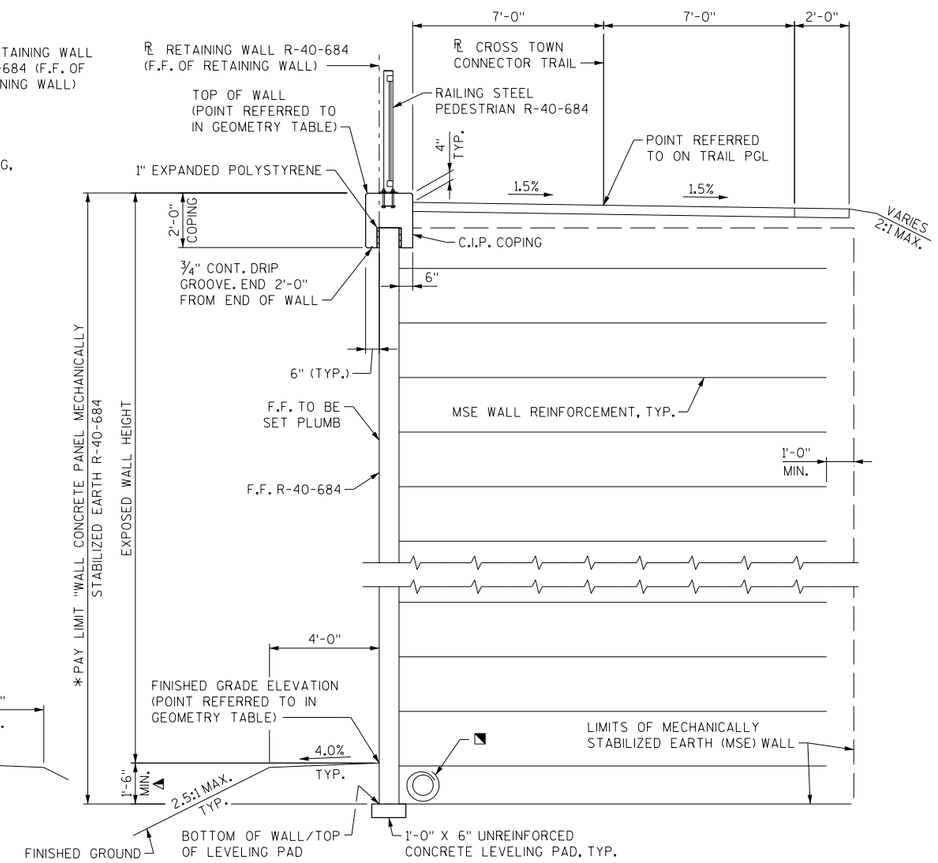

TYPICAL WALL SECTION

(STA. 6+69.70 - STA. 7+69.70; LOOKING UPSTATION)

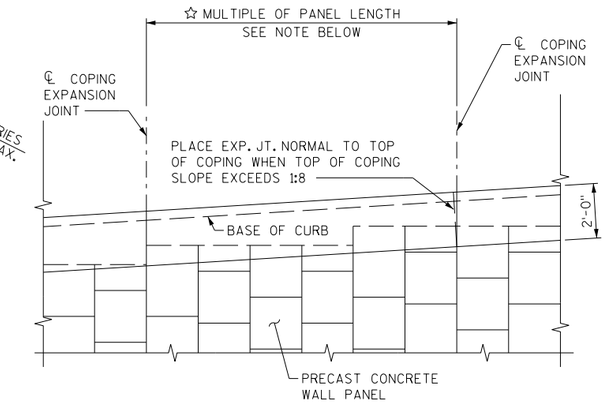

C.I.P. COPING PARTIAL ELEVATION

☆ ALL JOINTS SHALL COINCIDE WITH PANEL JOINT ON FRONT FACE

LEGEND

* THE PLAN QUANTITY FOR THE BID ITEM "WALL CONCRETE PANEL MECHANICALLY STABILIZED EARTH R-40-684" IS BASED ON A WALL HEIGHT MEASURED FROM THE TOP OF LEVELING PAD TO THE TOP OF THE WALL AS SHOWN. LEVELING PAD AND C.I.P. COPING CONCRETE TO BE INCLUDED IN THE BID ITEM "WALL CONCRETE PANEL MECHANICALLY STABILIZED EARTH R-40-684". REINFORCING STEEL TO BE PAID FOR UNDER BID ITEM "WALL CONCRETE PANEL MECHANICALLY STABILIZED EARTH R-40-684".

◥ CONNECT PIPE UNDERDRAIN WRAPPED (6-INCH) SLOPE 0.5% MIN. TO INLET STRUCTURE #2.3. MAY BE NECESSARY TO RUN UNDER WALL PANEL FOOTING. SEE DRAINAGE PLANS.

◭ MINIMUM EMBEDMENT BASED ON SITE SPECIFIC PARAMETERS. FIELD EMBEDMENTS SHALL MEET OR EXCEED THE MINIMUM EMBEDMENT. FIELD EMBEDMENTS BELOW MINIMUM EMBEDMENT SHALL NOT BE INCLUDED IN THE PAY LIMITS.

◑ SEE "WALL EXTERNAL AND OVERALL STABILITY EVALUATION" TABLE ON SHEET 2 FOR SOIL REINFORCEMENT LENGTH.

LEGEND (CONT'D)

△ SEAL ALL EXPOSED HORIZONTAL AND VERTICAL SURFACES OF FILLER AND EXPANDED POLYSTYRENE WITH NON-STAINING, GRAY NON-BITUMINOUS JOINT SEALER. (1" DEEP AND HOLD 1/8" BELOW SURFACE OF CONCRETE).

☆ COORDINATE LOCATION OF THE PROPOSED UNDERGROUND ELECTRIC UTILITY TO AVOID CONFLICTS WITH THE MSE STRAP PLACEMENT.

F.F = FRONT FACE
B.F. = BACK FACE

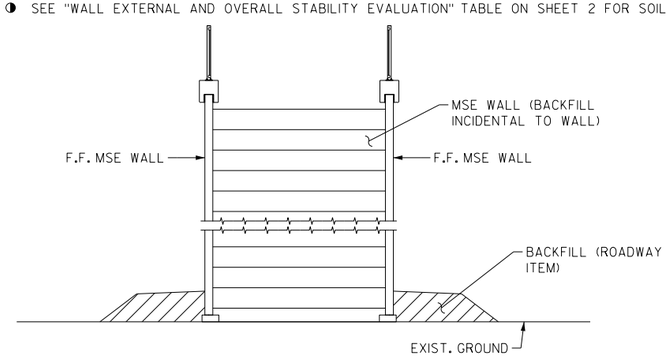

EXCAVATION/BACKFILL DETAIL

(STA. 6+04.42 - STA. 6+69.70)

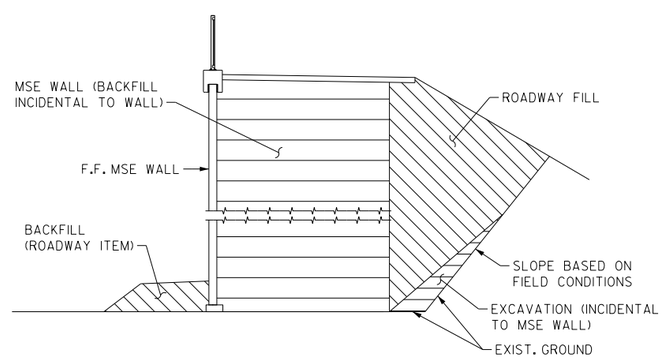

EXCAVATION/BACKFILL DETAIL

(STA. 6+69.70 - STA. 7+69.70)

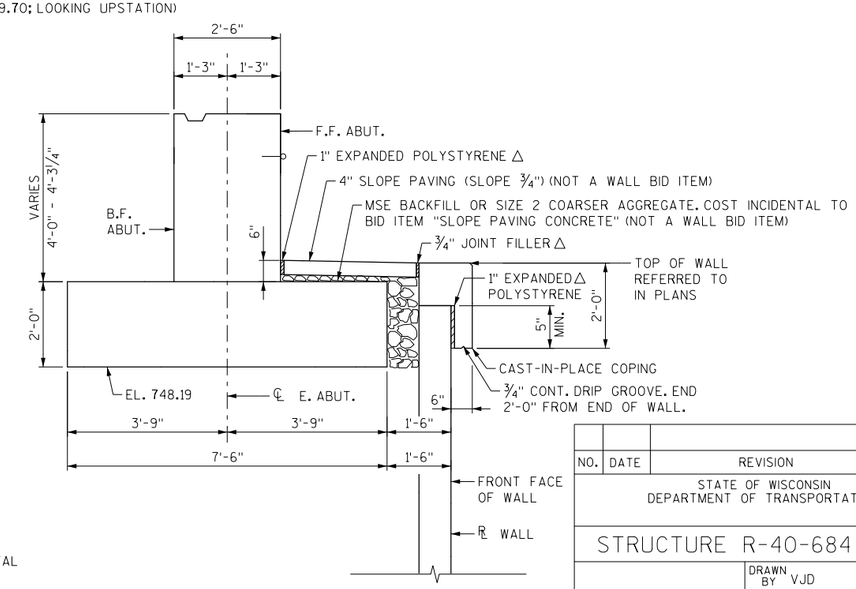

SECTION THRU WALL IN FRONT OF ABUTMENT

SEE B-40-926 PLANS FOR ABUTMENT DETAILS

NO.	DATE	REVISION	BY

STATE OF WISCONSIN
DEPARTMENT OF TRANSPORTATION

STRUCTURE R-40-684

DRAWN BY VJD | PLANS CK'D. SWS

WALL DETAILS I

SHEET 3 OF 7

116

8

8

STATE PROJECT NUMBER

1693-32-74

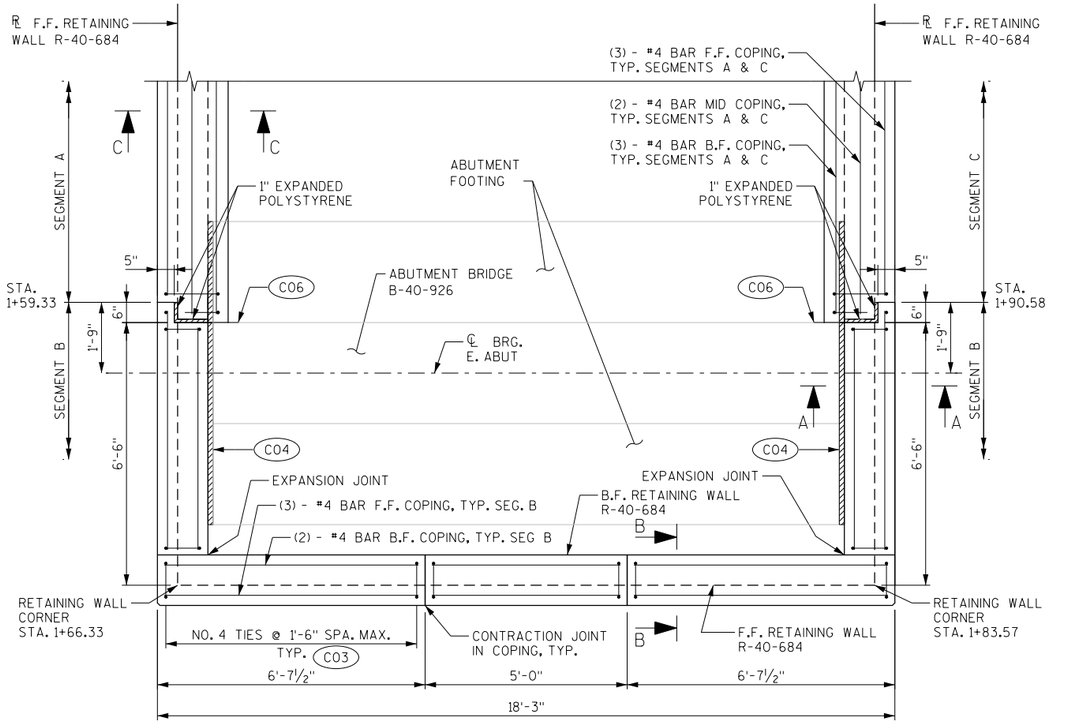

PLAN

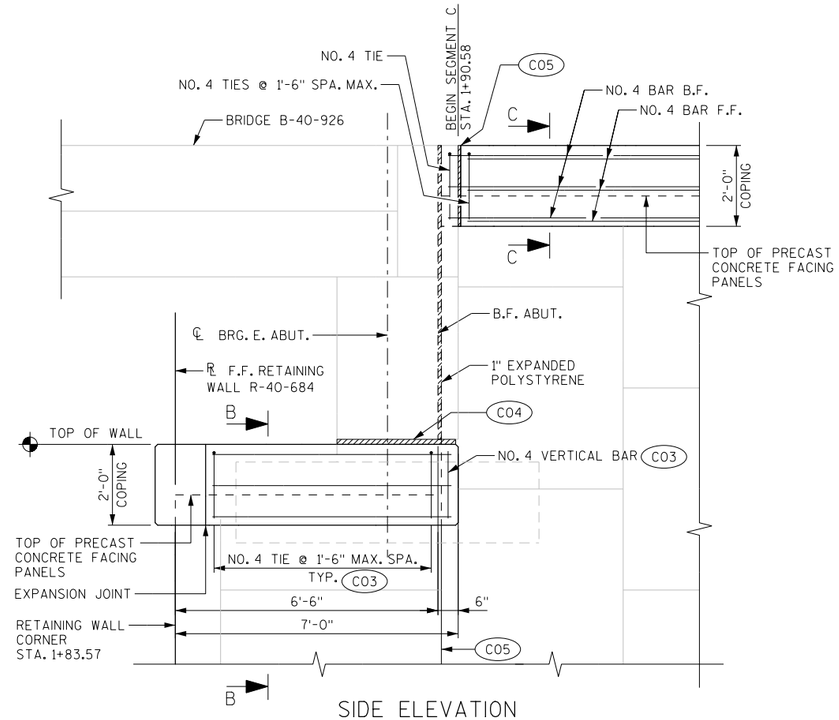

SIDE ELEVATION

LOOKING NORTH
(ELEVATION LOOKING SOUTH SIMILAR, MIRROR IMAGE)

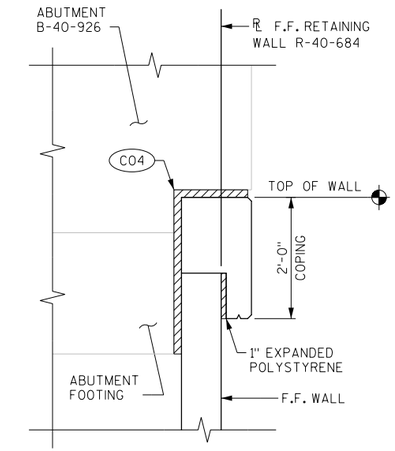

SECTION A-A

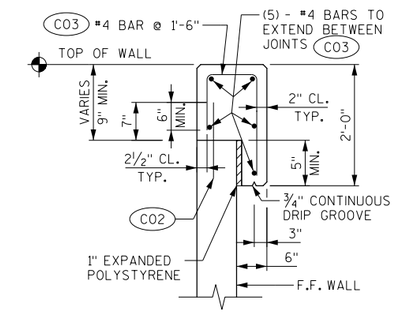

SECTION B-B

SHOWING REINFORCEMENT
SEGMENT B

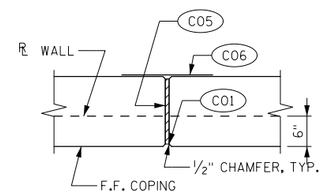

COPING EXPANSION JOINT

SEGMENT B
DO NOT RUN BAR STEEL THRU JOINT

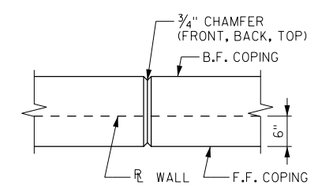

COPING CONTRACTION JOINT

SEGMENT B
DO NOT RUN BAR STEEL THRU JOINT

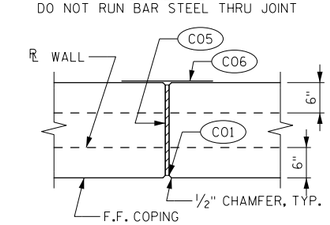

COPING EXPANSION JOINT

SEGMENTS A & C
DO NOT RUN BAR STEEL THRU JOINT

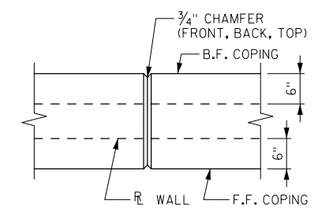

COPING CONTRACTION JOINT

SEGMENTS A & C
DO NOT RUN BAR STEEL THRU JOINT

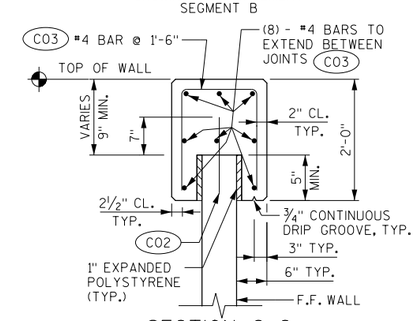

SECTION C-C

SHOWING REINFORCEMENT
SEGMENTS A & C

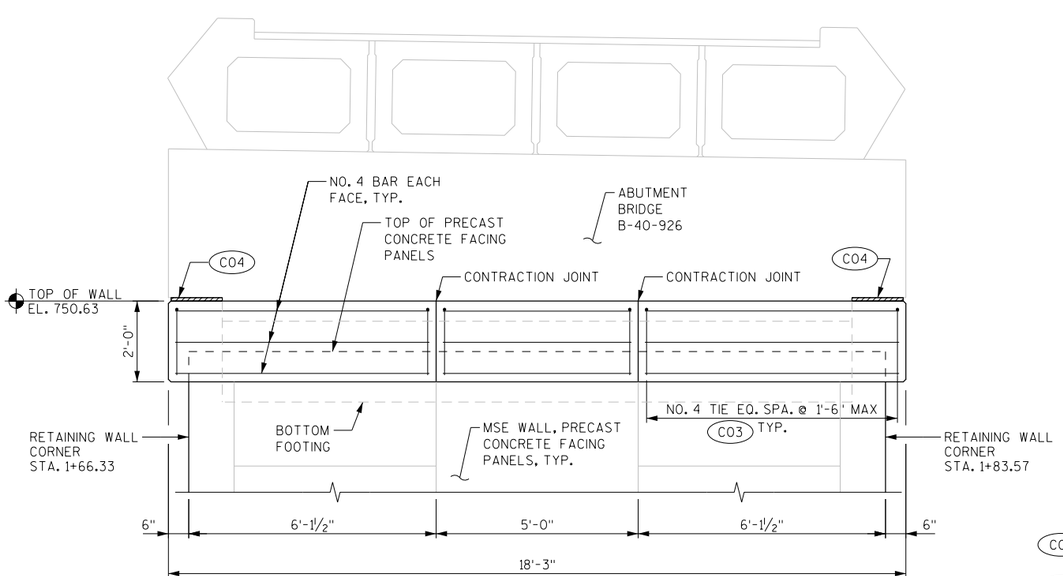

OUTSIDE ELEVATION

LOOKING EAST AT F.F. ABUTMENT

LEGEND

- C01 NON-BITUMINOUS JOINT SEALER. 1" DEEP AND HOLD ⅛" BELOW SURFACE OF CONCRETE.
- C02 #4 DOWELS X 1'-3" LONG AT 2'-0" MAX. SPACING. INCLUDED IN BID ITEM "WALL CONCRETE PANEL MECHANICALLY STABILIZED EARTH R-40-684".
- C03 COPING EPOXY COATED REINFORCEMENT IS INCLUDED IN BID ITEM "WALL CONCRETE PANEL MECHANICALLY STABILIZED EARTH R-40-684".
- C04 1½" PREFORMED JOINT FILLER WITH NON-BITUMINOUS JOINT SEALER.
- C05 ¾" PREFORMED JOINT FILLER.
- C06 18" RUBBERIZED MEMBRANE WATERPROOFING TO EXTEND FROM TOP OF COPING TO 6" BELOW TOP OF PANELS.

F.F. = FRONT FACE

B.F. = BACK FACE

NO.	DATE	REVISION	BY

STATE OF WISCONSIN
DEPARTMENT OF TRANSPORTATION

STRUCTURE R-40-684

DRAWN BY VJD | PLANS CK'D. SWS

WALL DETAILS II

SHEET 4 OF 7

8

STATE PROJECT NUMBER
1693-32-74

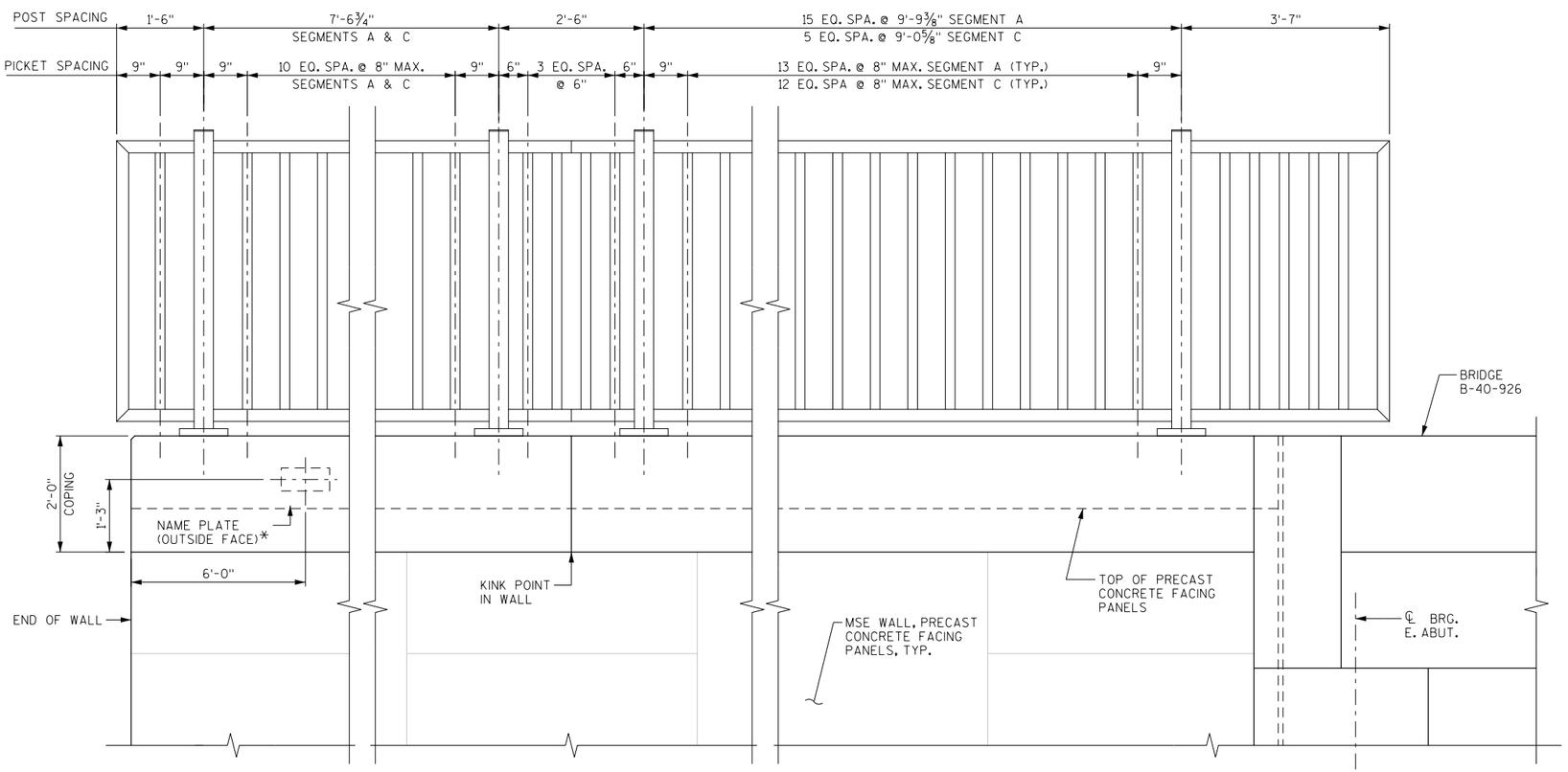

RAILING ELEVATION

RAILING INSTALLED ON SEGMENTS A & C ONLY
ALL DIMENSIONS ARE TAKEN ALONG ℄ WALL

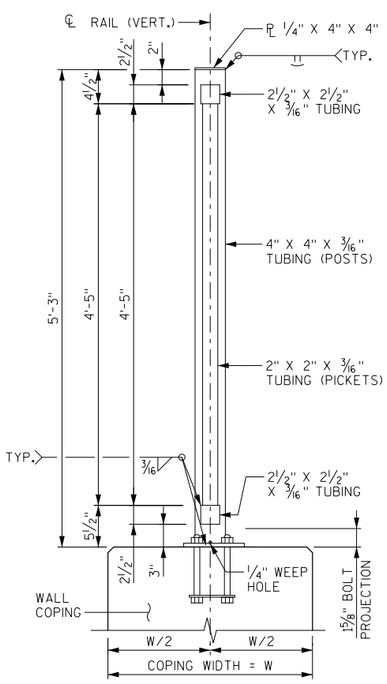

SECTION THRU RAILING

SEGMENTS A & C ONLY

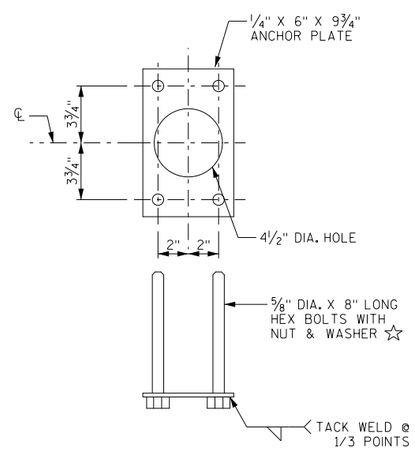

ANCHORAGE DETAIL

☆ ALTERNATIVE ANCHORAGE: ADHESIVE ANCHORS ⅝-INCH. EMBED 7" IN CONCRETE. ADHESIVE ANCHORS SHALL CONFORM TO SECTION 502.2.12 OF THE STANDARD SPECIFICATIONS.

NOTE: ANCHOR PLATE NOT REQUIRED WHEN ADHESIVE ANCHORS ARE USED.

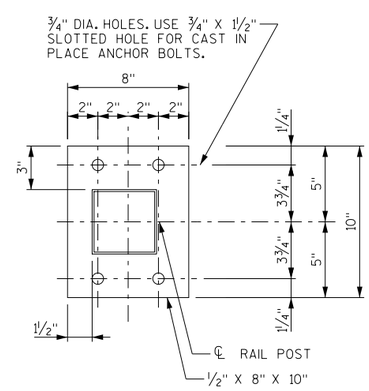

BASE PLATE

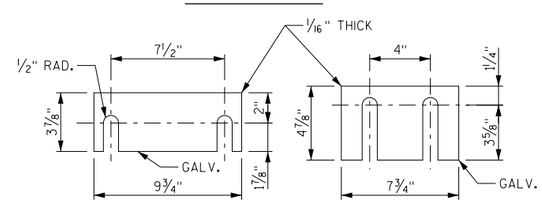

SHIM PLATE DETAILS

TWO SHIMS OF EACH SIZE REQUIRED PER POST

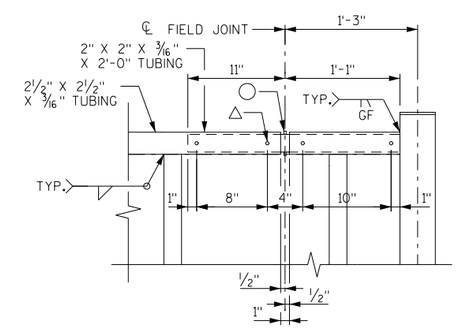

RAILING EXPANSION JOINT DETAIL

NOTES

BID ITEM SHALL BE "RAILING STEEL PEDESTRIAN R-40-684" WHICH SHALL INCLUDE ALL ITEMS SHOWN, GALVANIZING AND PAINTING.

POST BASE PLATES SHALL BE FLAT WITH ALL SURFACES SMOOTH AND FREE FROM WARP AND ALL EDGES SMOOTH, STRAIGHT, AND VERTICAL. ALL PLATE CUTS SHALL BE MACHINE OR MACHINE FLAME CUT.

RAILS AND POSTS TO BE ASTM A500, GRADE C. BASE PLATES AND SHIMS TO BE ASTM A709, GRADE 36. ALL RAILS, POSTS, PLATES, AND SHIMS SHALL BE GALVANIZED AFTER FABRICATION.

ANCHORAGES SHALL BE ACCURATELY PLACED TO PROVIDE CORRECT ALIGNMENT OF RAILING. SET POSTS NORMAL TO GRADE.

ALL POST SPA. ARE TAKEN HORIZ. ALONG REFERENCE LINE OF RETAINING WALL R-40-684 AT BASE OF POST.

SHIMS SHALL BE USED UNDER BASE PLATES WHERE REQUIRED FOR ALIGNMENT. STANDARD WASHERS SHALL BE USED TO SHIM BASE PLATES IF REQUIRED. ALL WASHERS SHALL BE GALVANIZED.

CAULK AROUND PERIMETER OF BASE PLATES AND FILL PORTION OF SLOTTED HOLES AROUND ANCHOR BOLTS WITH NON-STAINING, NON-BITUMINOUS JOINT SEALER, COLOR TO MATCH STAIN.

CUT BOTTOM OF POST TO MAKE VERTICAL IN TRANSVERSE DIRECTION.

ANCHOR BOLTS, NUTS, AND WASHERS SHALL BE EITHER STAINLESS STEEL OR ASTM 307. IF 307 IS USED, ANCHOR BOLTS, NUTS, AND WASHERS SHALL BE GALVANIZED.

RAILING TO BE PAINTED BLACK, FEDERAL COLOR NO. 27038 (BLACK), SEMI-GLOSS.

RAILING SHALL BE FABRICATED IN LENGTHS THAT INCLUDE NOT MORE THAN 3 POSTS.

VENT HOLES SHALL BE DRILLED IN MEMBERS AS REQUIRED TO FACILITATE GALVANIZING AND DRAINAGE.

AFTER FABRICATION, STEEL SHALL BE BLAST CLEANED PER SSPC-SP 6 AND GALVANIZED ACCORDING TO ASTM A 123. REPAIR ZINC COATING DAMAGED DURING STEEL MESH ASSEMBLAGE AS SPECIFIED IN 513.3.3(3).

PAINT THE GALVANIZED STEEL RAILING COMPONENTS WITH A TWO COAT SYSTEM SPECIFICALLY INTENDED FOR PAINTING OF GALVANIZED SURFACES PER THE SPECIAL PROVISIONS. THE FINISH COLOR SHALL BE FEDERAL COLOR NO. 27038 (BLACK), SEMI-GLOSS.

LEGEND

○ 5/16" X 3/8" WELDED STUDS

△ WELD BEAD ON EACH SIDE OF TUBE. GRIND BEADS SO THAT SLEEVE FITS FREELY INSIDE THE 2½" X 2½" TUBE.

* FOR NAME PLATE LOCATION, SEE "GENERAL PLAN" ON SHEET 1.

8

8

NO.	DATE	REVISION	BY

STATE OF WISCONSIN
DEPARTMENT OF TRANSPORTATION

STRUCTURE R-40-684

DRAWN BY VJD | PLANS CK'D. SWS

RAILING STEEL PEDESTRIAN

SHEET 5 OF 7

STATE PROJECT NUMBER
1693-32-74

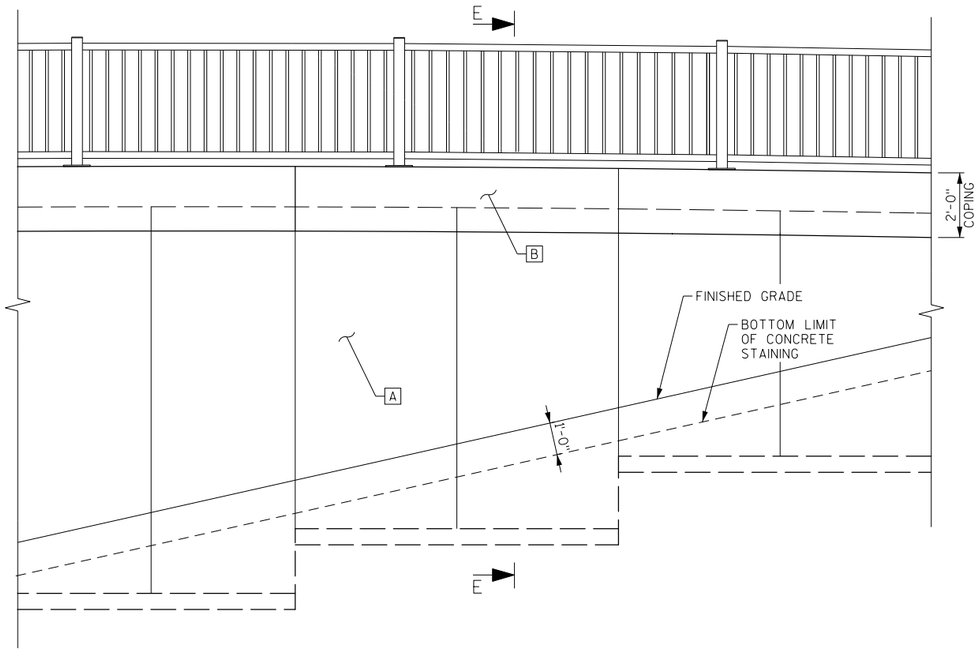

WALL STAINING ELEVATION

(LOOKING AT FRONT FACE OF WALL)
TYPICAL AT SEGMENTS A & C

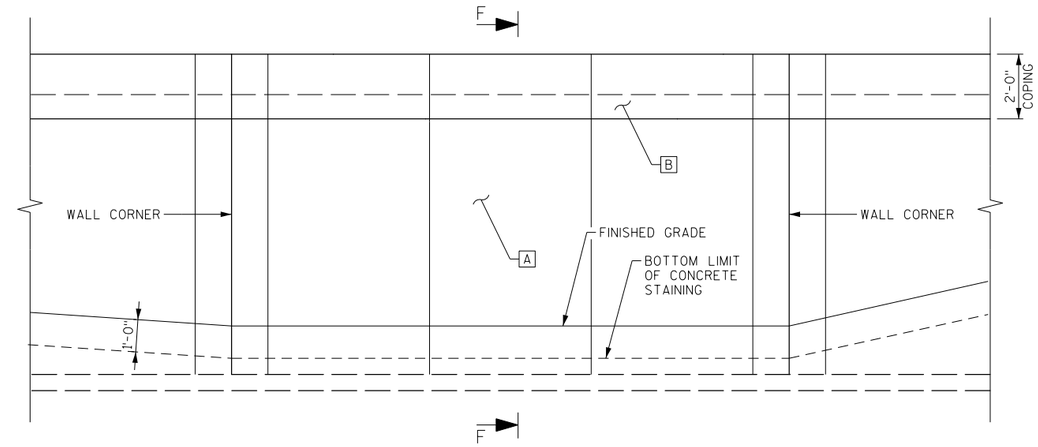

WALL STAINING ELEVATION

(LOOKING AT FRONT FACE OF WALL)
TYPICAL AT SEGMENT B

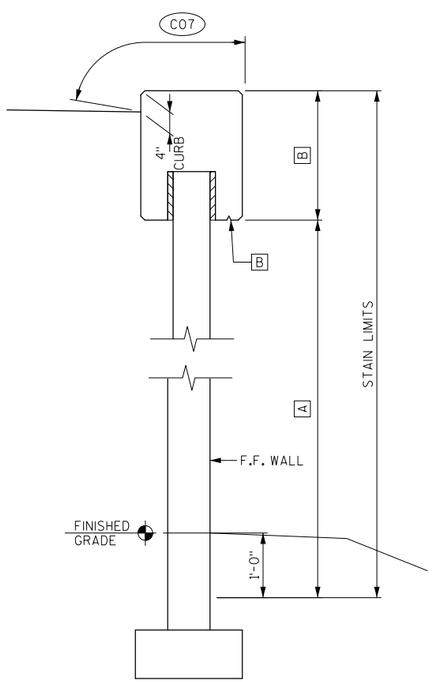

SECTION E-E

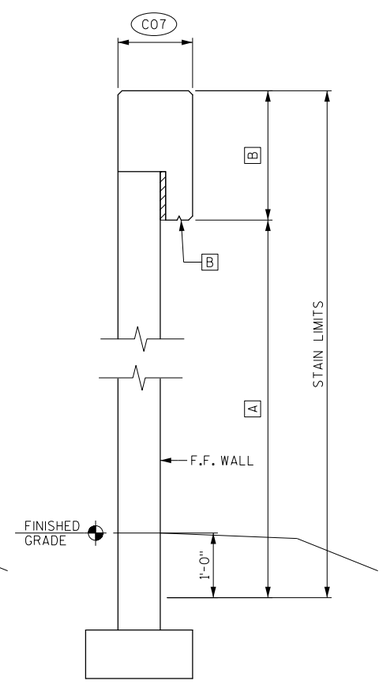

SECTION F-F

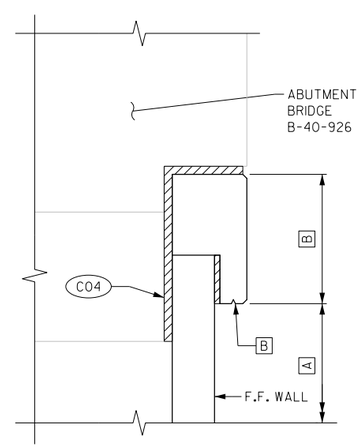

SECTION AT ABUTMENT

CONCRETE STAINING SCHEDULE

MARK	COLOR	LOCATION	NOTES
A	#33564	MSE PANELS	EXPOSED FACE TO 1'-0" BELOW GRADE
B	#33105	COPING	OUTSIDE FACE AND UNDERSIDE

THE FINAL COLOR OF THE CONCRETE FOLLOWING APPLICATION OF THE STAIN SYSTEM SHALL MATCH THE FEDERAL STANDARD COLOR NUMBERS INDICATED IN THE TABLE ABOVE.

LEGEND

C04 1½" PREFORMED JOINT FILLER WITH NON-BITUMINOUS JOINT SEALER.

C07 COAT WITH PIGMENTED SURFACE SEALER AS PER THE STANDARD SPECIFICATIONS. APPLY TO TOP FACES OF COPING AND CURB FACES AS SHOWN.

NO.	DATE	REVISION	BY

STATE OF WISCONSIN
DEPARTMENT OF TRANSPORTATION

STRUCTURE R-40-684

DRAWN BY VJD | PLANS CK'D. SWS

AESTHETIC DETAILS

SHEET 6 OF 7

8

8

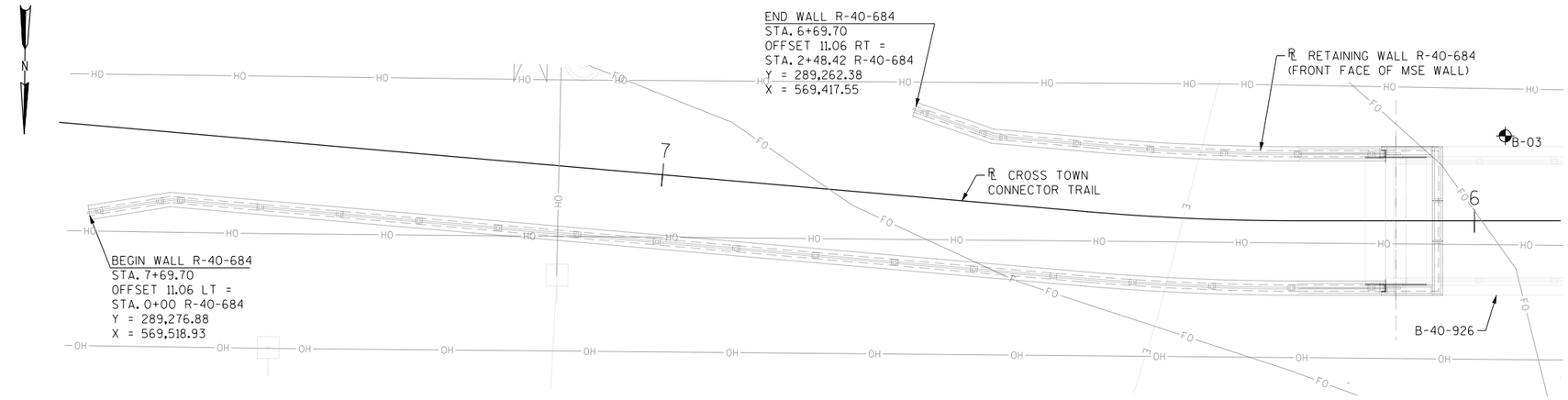

BORING #	DATE COMPLETED	NORTHING (FT.)	EASTING (FT.)
B-03	6/22/2016	289265.189	569345.115
BORINGS COMPLETED BY: SOILS & ENGINEERING SERVICES, INC.			
REPORT COMPLETED BY: K. SINGH & ASSOCIATES, INC.			
ALL COORDINATES REFERENCED TO WCCS NAD 83(91) MILWAUKEE COUNTY			

NOTE:

THE SUBSURFACE INFORMATION PRESENTED HEREIN IS AN ABBREVIATED VERSION OF THE INFORMATION PRESENTED IN THE GEOTECHNICAL ENGINEERING REPORT. REVIEW THE APPROPRIATE GEOTECHNICAL REPORT AND SOIL BORING LOGS FOR ADDITIONAL SUBSURFACE INFORMATION.

BORING STATIONS AND OFFSETS ARE BASED ON ℄ CROSS TOWN CONNECTOR TRAIL.

LEGEND

DENOTES SOIL BORING LOCATION

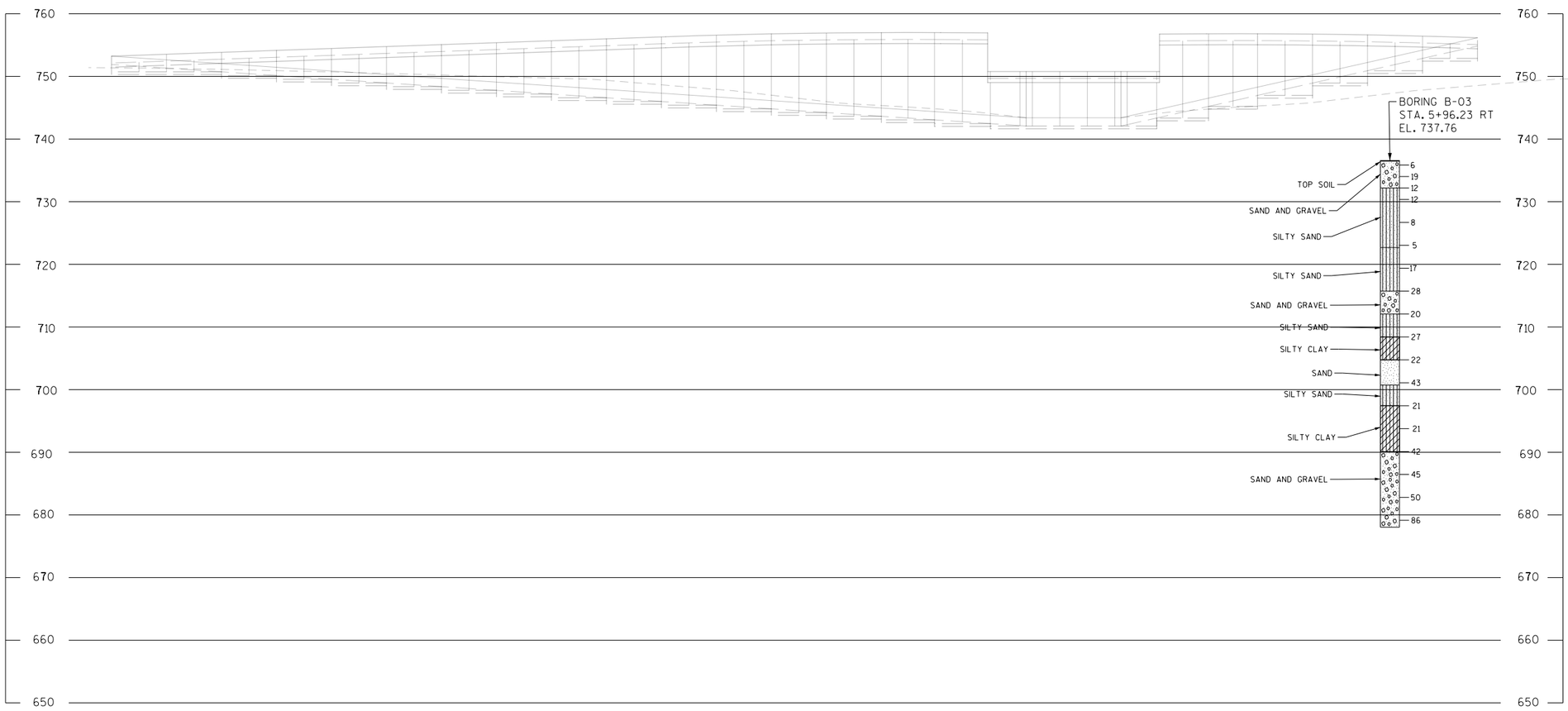

STATE PROJECT NUMBER

1693-32-74

MATERIAL SYMBOLS

ASPHALT	TOPSOIL	PEAT
CONCRETE	FILL	GRAVEL
SAND	CLAY	SILT
BOULDERS OR COBBLES	LIMESTONE	BEDROCK (UNKNOWN)
SHALE	SANDSTONE	IGNEOUS/ META

LEGEND OF BORING

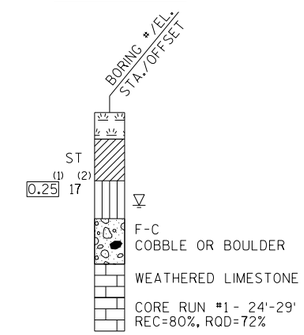

(1) UNCONFINED STRENGTH, AS DETERMINED BY A POCKET PENETROMETER (TSF)

(2) UNLESS OTHERWISE, SPECIFIED THE SPT 'N' VALUE IS BASED ON AASHTO T-206, STANDARD PENETRATION TEST. THE SPT 'N' VALUE PRESENTED HAS NOT BEEN CORRECTED FOR OVERBURDEN PRESSURE OR HAMMER EFFICIENCY.

GROUND WATER ELEVATION

- AT TIME OF DRILLING
- END OF DRILLING
- AFTER DRILLING

ABBREVIATIONS

F-FINE M-MEDIUM C-COARSE ST-SHELBY TUBE

SUBSURFACE EXPLORATION FOR FOUNDATION DESIGN AND BIDDERS INFORMATION

BORINGS WERE COMPLETED AT POINTS APPROXIMATELY AS INDICATED ON THIS DRAWING TO OBTAIN INFORMATION CONCERNING THE CHARACTER OF SUBSURFACE MATERIALS FOUND AT THE SITE. BECAUSE THE INVESTIGATED DEPTHS ARE LIMITED AND THE AREA OF THE BORINGS IS VERY SMALL IN RELATION TO THE ENTIRE SITE, THE WISCONSIN DEPARTMENT OF TRANSPORTATION DOES NOT WARRANT SIMILAR SUBSURFACE CONDITIONS BELOW, BETWEEN, OR BEYOND THESE BORINGS. VARIATIONS IN SOIL CONDITIONS SHOULD BE EXPECTED AND FLUCTUATIONS IN GROUNDWATER LEVELS MAY OCCUR.

8

NO.	DATE	REVISION	BY

STATE OF WISCONSIN
DEPARTMENT OF TRANSPORTATION

STRUCTURE R-40-684

DRAWN BY VJD | PLANS CK'D. SWS

SUBSURFACE EXPLORATION

STATE PROJECT NUMBER

1693-32-74

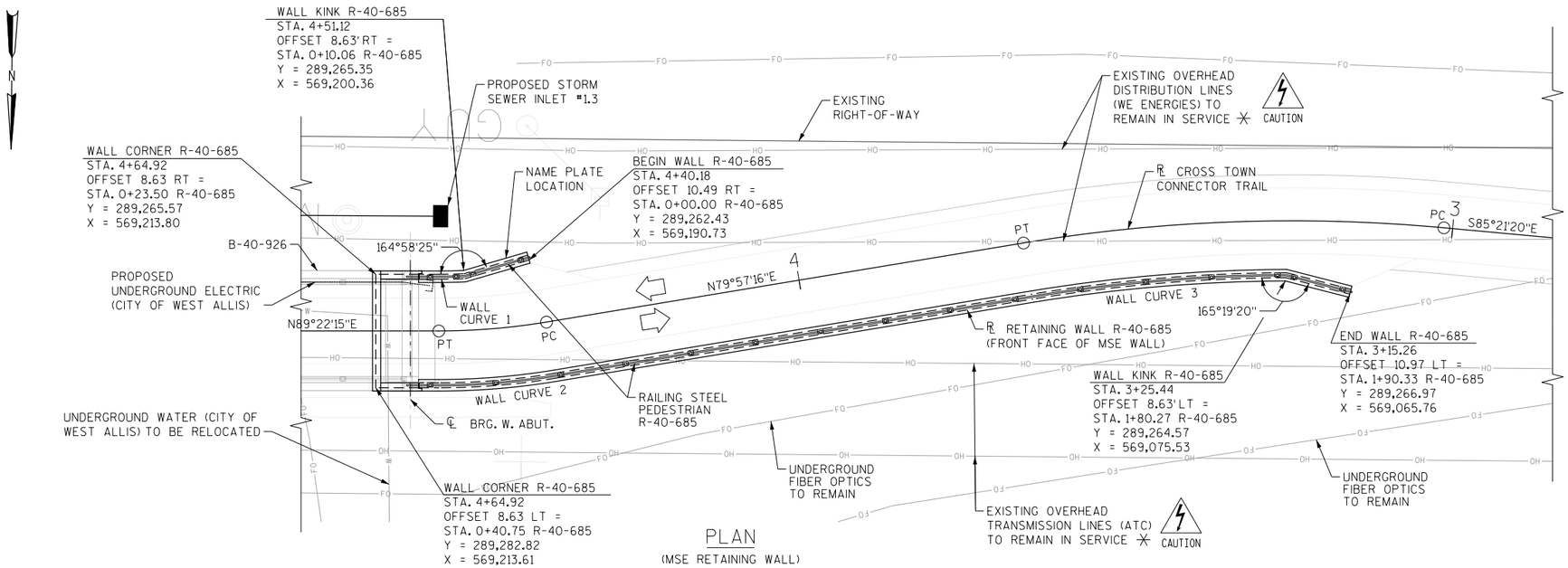

PLAN

(MSE RETAINING WALL)

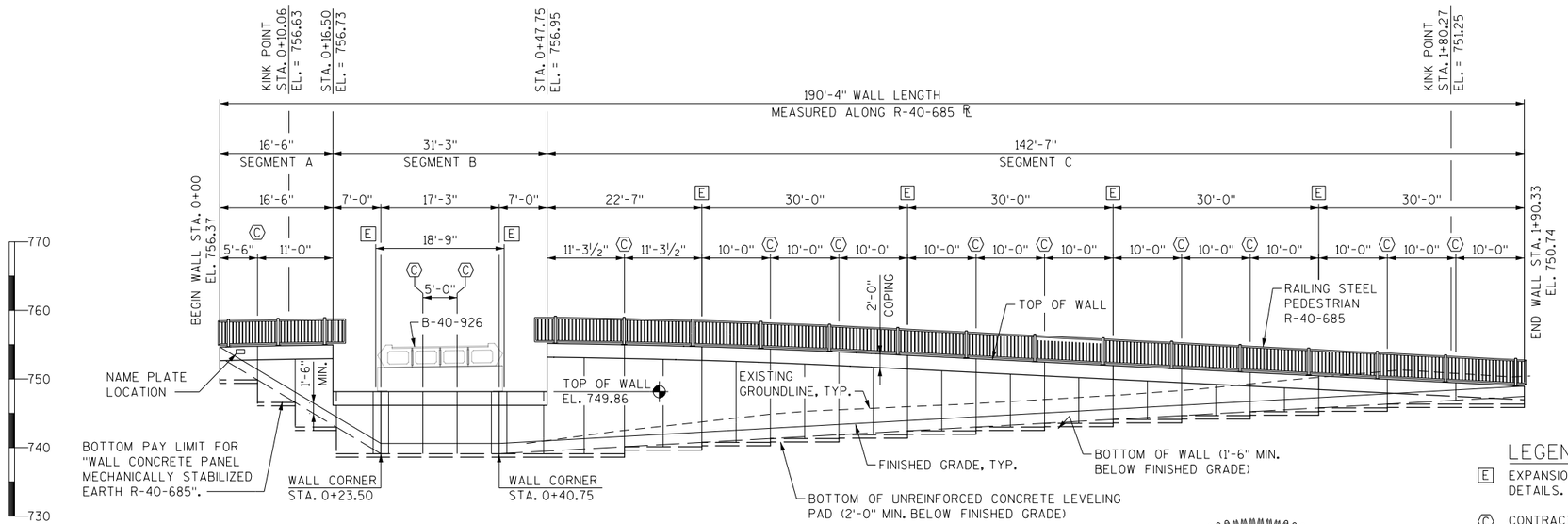

ELEVATION

(LOOKING AT F.F. OF WALL)

CURVE DATA - RETAINING WALL R-40-685 ℞

WALL CURVE 1	WALL CURVE 2	WALL CURVE 3
PC STA. 0+10.06	PC STA. 0+50.33	PC STA. 1+41.66
Y = 289,265.35	Y = 289,282.72	Y = 289,268.24
X = 569,200.36	X = 569,204.03	X = 569,113.92
Δ = 2°25'10"	Δ = 9°24'59"	Δ = 9°9'33"
D = 62°42'6"	D = 52°44'52"	D = 23°44'13"
T = 1.93'	T = 8.95'	T = 19.33'
R = 91.38'	R = 108.63'	R = 241.37'
L = 3.86'	L = 17.85'	L = 38.61'

DESIGN DATA

LIVE LOAD

LIVE LOAD SURCHARGE (ROADWAY)..... 100 PSF

MATERIAL PROPERTIES

CONCRETE MASONRY.....f'c = 3,500 PSI
PRECAST CONCRETE WALL PANELS.....f'c = 4,000 PSI
HIGH STRENGTH BAR STEEL
REINFORCEMENT GRADE 60.....fy = 60,000 PSI

FOUNDATION DATA

ULTIMATE SOIL BEARING CAPACITY:
MSE WALL PANEL..... SEE TABLE ON SHEET 2

NOTE: THE WALL HAS BEEN DESIGNED FOR TRAFFIC LOADING ONLY. IF DURING CONSTRUCTION HEAVY EQUIPMENT IS OPERATING IN CLOSE PROXIMITY TO THE WALL OR IF MATERIAL IS STOCKPILED NEAR THE WALL, THE SAFETY FACTOR FOR THIS WALL WILL SIGNIFICANTLY DECREASE.

ALLOWABLE (UNFACTORED) BEARING PRESSURE ON ENGINEERED FILL:	4.0 KSF
REDUCTION FACTOR USED FOR LRFD DESIGN:	0.65

ABUTMENT VERTICAL LOADS FOR DESIGN OF MSE WALL

DL:	12.9 KLF
LL:	2.3 KLF

UNFACTORED LRFD LOADS DISTRIBUTED ALONG LENGTH OF ABUMTMENT, PERPENDICULAR TO PATH.

LIST OF DRAWINGS

LEGEND

[E] EXPANSION JOINT. SEE SHEET 4 FOR DETAILS.

(C) CONTRACTION JOINT. SEE SHEET 4 FOR DETAILS.

DIRECTION OF TRAFFIC

✳ CONSTRUCTION OF RETAINING WALL R-40-685 MAY NEED TO BE ACCOMPLISHED BENEATH AND/OR ADJACENT TO ENERGIZED OVERHEAD TRANSMISSION LINES. THE HORIZONTAL AND VERTICAL LOCATION OF THESE LINES CAN VARY WITH WIND, AMBIENT TEMPERATURE, AND POWER LOADING. THE CONTRACTOR IS ADVISED THAT LOW OVERHEAD EQUIPMENT AND INSTALLATION TECHNIQUES MAY BE REQUIRED TO MAINTAIN SAFE CLEARANCES FROM THESE LINES.

STRUCTURES DESIGN CONTACTS

BRIDGE OFFICE:
WILLIAM DREHER, P.E. (608) 266-8489
CONSULTANT:
STEVEN SCHMITT, P.E. (262) 821-1171

WISCONSIN PROFESSIONAL ENGINEER
STEVEN W. SCHMITT
E-37333
FRANKLIN, WI
11/1/2017

NO.	DATE	REVISION	BY

KSingh Engineers Scientists Consultants

STATE OF WISCONSIN
DEPARTMENT OF TRANSPORTATION

ACCEPTED William C. Dreher SDR 01/16/18
CHIEF STRUCTURES DESIGN ENGINEER DATE

STRUCTURE R-40-685

WEST ALLIS CROSS TOWN TRAIL OVER STH 100

COUNTY	CITY
MILWAUKEE	WEST ALLIS

DESIGN SPEC.
AASHTO LRFD BRIDGE DESIGN SPECIFICATIONS

DESIGNED BY VJD	DESIGN CK'D. SWS	DRAWN BY VJD	PLANS CK'D. SWS

GENERAL PLAN AND ELEVATION

SHEET 1 OF 7

STATE PROJECT NUMBER
1693-32-74

GENERAL NOTES

DRAWINGS SHALL NOT BE SCALED.

BEVEL EXPOSED EDGES OF CONCRETE ¾" UNLESS NOTED OTHERWISE.

COORDINATES ON THIS PLAN ARE REFERENCED TO MILWAUKEE COUNTY COORDINATE SYSTEM NAD 83 (2007). ALL STATIONS AND ELEVATIONS ARE IN FEET. ELEVATIONS ARE REFERENCED TO THE NAVD 88 (2007) DATUM.

THE CONTRACTOR MUST COORDINATE THE CONSTRUCTION OF WALL R-40-685 WITH THE WEST ABUTMENT OF BRIDGE B-40-926.

THE UTILITY INFORMATION SHOWN ON THESE DRAWINGS CONCERNING TYPE AND LOCATION OF UNDERGROUND AND OVERHEAD UTILITIES IS NOT GUARANTEED TO BE ACCURATE OR ALL INCLUSIVE. THE CONTRACTOR IS RESPONSIBLE FOR MAKING THEIR OWN DETERMINATIONS AS TO TYPE AND LOCATION OF UNDERGROUND AND OVERHEAD UTILITIES AS MAY BE NECESSARY TO AVOID DAMAGE.

BAR STEEL REINFORCEMENT SHALL BE EMBEDDED 2" CLEAR UNLESS SHOWN OR NOTED OTHERWISE.

ALL BAR STEEL REINFORCEMENT IN CAST-IN-PLACE CONCRETE TO BE EPOXY COATED.

THE PLAN QUANTITY FOR THE ITEM "WALL CONCRETE PANEL MECHANICALLY STABILIZED EARTH R-40-685" IS BASED ON A WALL HEIGHT MEASURED FROM THE TOP OF LEVELING PAD TO THE TOP OF THE WALL AS SHOWN ON THE PLANS. THE TOP OF THE LEVELING PAD IS ASSUMED TO BE AT LEAST 1'-6" BELOW FINISHED GRADE.

THE EXISTING GROUNDLINE SHALL BE THE UPPER LIMITS OF WALL EXCAVATION AND THE VOLUME OF EARTHWORK IS INCLUDED IN THE BID ITEM "WALL CONCRETE PANEL MECHANICALLY STABILIZED EARTH R-40-685".

SOIL EXCAVATED ON SITE MAY BE CONTAMINATED. APPROXIMATE LOCATIONS AND LIMITS OF CONTAMINATED SOIL CAN BE FOUND IN THE SPECIAL PROVISIONS UNDER BID ITEM "MANAGEMENT OF SOLID WASTE".

THE COST OF FURNISHING AND PLACING MSE BACKFILL WITHIN THE SOIL REINFORCED ZONE IS TO BE INCLUDED IN THE BID ITEM "WALL CONCRETE PANEL MECHANICALLY STABILIZED EARTH R-40-685".

THE COST OF FURNISHING AND PLACING THE UNREINFORCED CONCRETE LEVELING PAD UNDER THE MSE PRECAST WALL PANELS IS INCLUDED IN THE BID ITEM "WALL CONCRETE PANEL MECHANICALLY STABILIZED EARTH R-40-685".

THE CONTRACTOR SHALL PROVIDE COMPLETE DESIGN, PLANS, DETAILS, SPECIFICATIONS, AND SHOP DRAWINGS FOR THE RETAINING WALL, AND MSE WALL REINFORCEMENT IN ACCORDANCE WITH THE SPECIAL PROVISIONS. THE RETAINING WALL MANUFACTURER SHALL PROVIDE TECHNICAL ASSISTANCE TO THE CONTRACTOR DURING CONSTRUCTION. THE COST OF FURNISHING THESE ITEMS SHALL BE INCLUDED IN THE BID ITEM "WALL CONCRETE PANEL MECHANICALLY STABILIZED EARTH R-40-685".

PLANS, ELEVATIONS, AND DETAILS SHOWN ON THESE DRAWINGS ARE INTENDED TO INDICATE WALL LOCATIONS, LENGTHS, HEIGHTS, AND DETAILS COMMON TO THE WALL SYSTEM SELECTED. THE CONTRACTOR SHALL VERIFY THAT THE WALL SYSTEM SELECTED WILL CONFORM TO THE REQURIED ALIGNMENTS AND DETAILS.

THE RETAINING WALL IS TO BE DESIGNED USING THE ELEVATIONS GIVEN IN THE GEOMETRY TABLE.

DESIGN FOR RETAINING WALL TO PROVIDE FOR A FINISHED GRADE SLOPE BEHIND THE WALL AS SHOWN IN THE ROADWAY CROSS SECTIONS.

THE FIRST DIGIT OF A THREE DIGIT BAR NO. AND THE FIRST TWO DIGITS OF A FOUR DIGIT BAR NO. SIGNIFIES THE BAR SIZE.

JOINT FILLER SHALL CONFORM TO THE REQUIREMENTS OF AASHTO DESIGNATION M 153, TYPE I, II, OR III OR AASHTO DESIGNATION M 213.

THE MAXIMUM VALUE OF THE ANGLE OF INTERNAL FRICTION OF THE WALL BACKFILL MATERIAL IN THE REINFORCED ZONE SHALL BE ASSUMED TO BE 30° WITHOUT CERTIFIED TEST VALUES.

PROVIDE A RUBBED SURFACE TREATMENT IN ACCORDANCE WITH SECTION 502.3.7.3 TO ALL PERMANENTLY EXPOSED SURFACES OF CONCRETE MASONRY RETAINING WALLS.

THE SUBSURFACE CONDITIONS AT THE BASE OF THE WALL SHALL BE REVIEWED BY THE SOUTHEAST REGION SOILS ENGINEER TO DETERMINE IF THE MATERIALS HAVE ADEQUATE STRENGTH TO SUPPORT THE MSE WALL.

APPLY PIGMENTED SURFACE SEALER TO THE TOP AND INSIDE FACE CURB/COPING.

THE QUANTITY OF CONCRETE MASONRY AND REINFORCEMENT FOR THE CAST-IN-PLACE COPING AND LEVELING PAD IS PAID FOR UNDER THE ITEM "WALL CONCRETE PANEL MECHANICALLY STABILIZED EARTH R-40-685".

ALL STATIONS AND DIMENSIONS ARE ALONG THE ℞ FOR R-40-685 UNLESS SHOWN OR NOTED OTHERWISE.

DESIGN THE MSE RETAINING WALL IN FRONT OF THE ABUTMENT TO RESIST THE FORCE FROM ALL HORIZONTAL EARTH PRESSURE, INCLUDING LIVE LOAD, ACTING ON THE BACK OF THE ABUTMENT BODY AND FOOTING FROM 2 FEET BELOW THE BEAM SEATS.

BENCHMARK

NO.	STA./OFFSET	DESCRIPTION	ELEVATION
BM-1918	STA. 3+89.84, OFFSET = 358.50 RT	IRON PIPE, SET JUST EAST OF SIDEWALK	740.02

SOIL PARAMETERS

BORING B-01, STA. 4+74.83			
STATUM LOCATIONS & SOIL DESCRIPTION	UNIT WEIGHT (PCF)	FRICTION ANGLE (DEGREES)	COHESION (TSF)
EL. 734.19' TO EL. 736.69' (TO)	120	30	--
EL. 731.69' TO EL. 734.19' (FILL)	120	30	--
EL. 716.69' TO EL. 731.69' (SM)	102	30	--
EL. 706.69' TO EL. 716.69' (SP)	102	30	--
EL. 701.69' TO EL. 706.69' (CL)	110	--	0.4
EL. 696.69' TO EL. 701.69' (SM)	102	30	--
EL. 676.69' TO EL. 696.69' (CL)	110	--	0.4
EL. 656.69' TO EL. 676.69' (SM)	102	30	--
GRANULAR BACKFILL (WITHIN THE WALL REINFORCING ZONE)	135	30	--
FILL (BEHIND AND BELOW THE REINFORCING ZONE)	135	30	--

GEOMETRY TABLE

WALL STATION	RL STATION	DESCRIPTION	RL ELEV	TOP OF WALL	FINISHED GRADE
00+00.00	04+40.18	Begin Wall	756.17	756.37	756.37
00+10.06	04+51.12	Kink Point/PC	756.41	756.63	748.90
00+13.92	04+55.34	PT	756.47	756.69	746.04
00+16.50	04+57.92	Height Transition	756.50	756.73	744.12
00+23.50	04+64.92	Wall Corner	--	749.86	738.93
00+25.00	04+64.92	FF Abut	--	749.86	738.93
00+40.75	04+64.92	Wall Corner	--	749.86	738.93
00+47.75	04+57.92	Height Transition	756.50	756.95	739.48
00+50.33	04+55.34	PC	756.47	756.92	739.69
00+68.18	04+38.91	PT	756.14	756.58	741.10
00+75.00	04+32.12		755.94	756.38	741.63
01+00.00	04+07.12		754.89	755.33	743.61
01+25.00	03+82.12		753.64	754.08	745.58
01+41.66	03+65.43	PC	752.80	753.25	746.90
01+50.00	03+56.79		752.37	752.81	747.55
01+75.00	03+30.90		751.08	751.52	749.53
01+80.27	03+25.44	Kink Point/PT	750.80	751.25	749.94
01+90.33	03+15.26	End Wall	750.29	750.74	750.74

WALL EXTERNAL AND OVERALL STABILITY EVALUATION

DIMENSIONS	EVALUATED LOCATION	EVALUATED LOCATION
WALL HEIGHT (FT.)*	18.9	19.7
EXPOSED WALL HEIGHT (FT).	17.4	18.2
■ MIN. LENGTH OF REINFORCEMENT (FT.)	17.4	18.4
WALL STATION	0+16.50	0+47.75
BORING USED	B-01	B-01
CAPACITY TO DEMAND RATIO (CDR)		
SLIDING (CDR > 1.0)	1.01	1.04
ECCENTRICITY (CDR > 1.0)	1.61	2.19
OVERALL STABILITY (CDR > 1.0)	1.44	1.39
BEARING RESISTANCE (CDR > 1.0)	1.36	1.73
FACTORED BEARING RESISTANCE (PSF)	9,000	10,000

* INCLUDES 1'-6" EMBEDMENT DEPTH

■ THE LENGTHS PROVIDED IN THE TABLE ARE THE MINIMUM REQUIRED REINFORCEMENT LENGTHS BASED UPON THE MINIMUM DESCRIBED IN THE WALL SYSTEM SPECIAL PROVISIONS FOR EXTERNAL AND OVERALL STABILITY AT THE DESIGNATED LOCATIONS. THESE DESIGNATED LOCATIONS REPRESENT TYPICAL AND CRITICAL WALL LOCATIONS, BUT SHALL NOT BE CONSIDERED ALL INCLUSIVE. THE CONTRACTOR DESIGN LENGTHS SHALL MEET OR EXCEED THE MINIMUM VALUES REPRESENTED IN THE TABLE AT THESE DESIGNATED LOCATIONS. THE MINIMUM LENGTH DOES NOT APPLY WHEN BOTH ENDS OF SOIL REINFORCEMENT ARE CONNECTED TO PANELS.

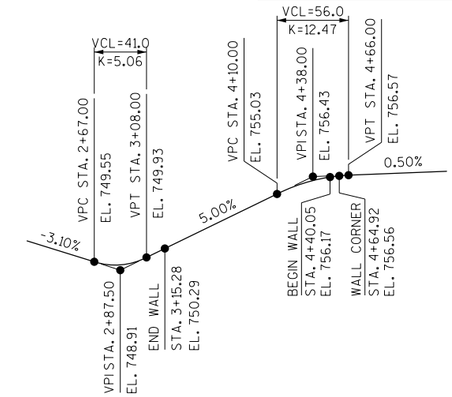

PROFILE GRADE LINE - CROSS TOWN CONNECTOR TRAIL

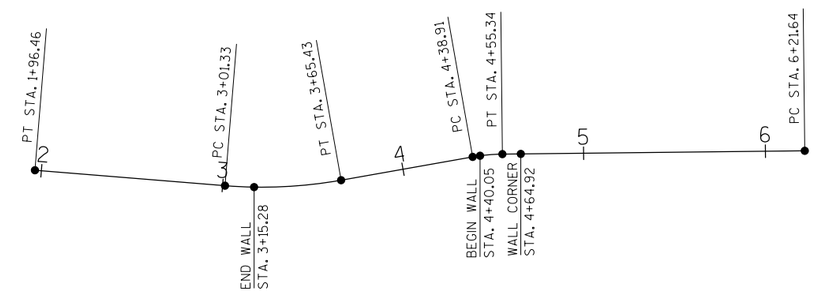

HORIZONTAL ALIGNMENT - CROSS TOWN CONNECTOR TRAIL

TOTAL ESTIMATED QUANTITIES

ITEM NO.	BID ITEM	UNIT	TOTAL
502.3210	PIGMENTED SURFACE SEALER	SY	45
516.0500	RUBBERIZED MEMBRANE WATERPROOFING	SY	10
517.1010.S.02	CONCRETE STAINING R-40-685	SF	2,060
612.0406	PIPE UNDERDRAIN WRAPPED 6-INCH	LF	225
SPV.0090.06	RAILING STEEL PEDESTRIAN R-40-685	LF	166
SPV.0165.01	WALL CONCRETE PANEL MECHANICALLY STABILIZED EARTH R-40-685	SF	2,065
SPV.0195.01	MANAGEMENT OF SOLID WASTE	TON	26
	NON-BID ITEMS		
	PREFORMED JOINT FILLER	SIZE	3/4" & 1-1/2"
	EXPANDED POLYSTYRENE	SIZE	1"
	NAME PLATE	EACH	1

ALL ITEMS ARE CATEGORY 0020.

HORIZONTAL CURVE DATA - CROSS TOWN CONNECTOR TRAIL

PI STA. 1+88.48
Y = 289,265.88
X = 568,939.09
Δ = 4°34'26"
D = 28°38'52"
T = 7.99'
R = 200.00'
L = 15.97'

PC STA. 1+80.50
Y = 289,265.89
X = 569,931.11

PT STA. 1+96.46
Y = 289,265.23
X = 568,947.05

PI STA. 3+33.56
Y = 289,254.13
X = 569,083.70
Δ = 14°41'24"
D = 22°55'06"
T = 32.23'
R = 250.00'
L = 64.10'

PC STA. 3+01.33
Y = 289,256.74
X = 569,051.58

PT STA. 3+65.43
Y = 289,259.75
X = 569,115.43

PI STA. 4+47.14
Y = 289,274.00
X = 569,195.89
Δ = 9°24'59"
D = 57°17'45"
T = 8.24'
R = 100.00'
L = 16.43'

PC STA. 4+38.91
Y = 289,272.57
X = 569,187.78

PT STA. 4+55.34
Y = 289,274.09
X = 569,204.12

NO.	DATE	REVISION	BY

STATE OF WISCONSIN
DEPARTMENT OF TRANSPORTATION

STRUCTURE R-40-685

DRAWN BY VJD | PLANS CK'D. SWS

GENERAL NOTES, QUANTITIES, AND DESIGN DATA

SHEET 2 OF 7
122

8

8

STATE PROJECT NUMBER
1693-32-74

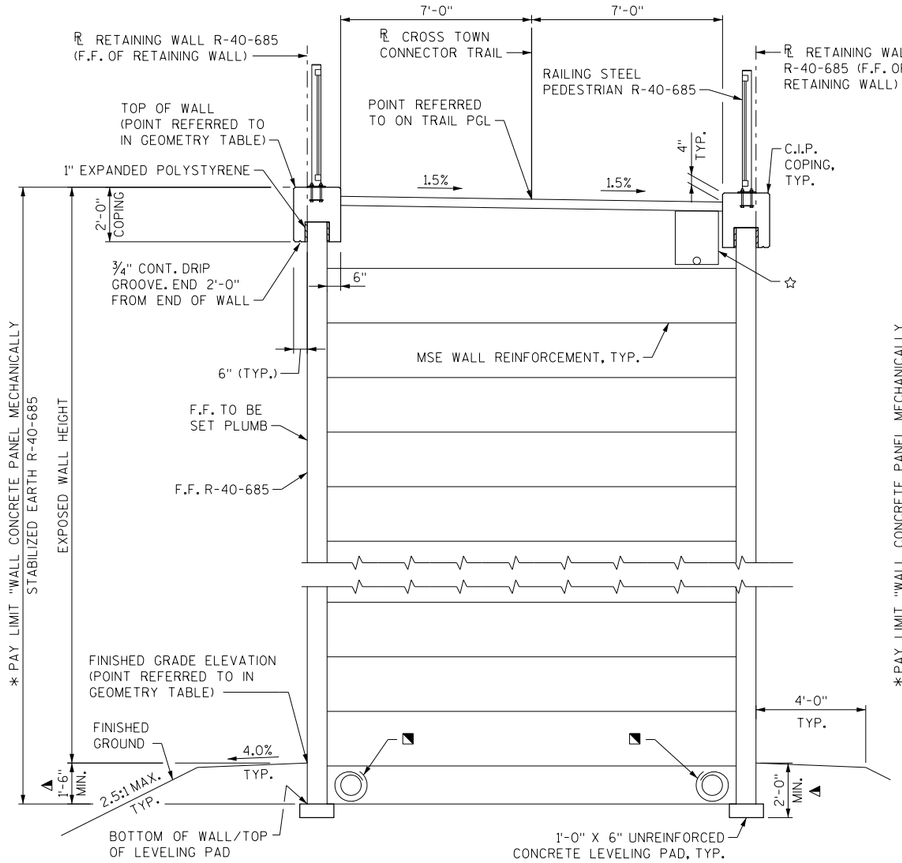

TYPICAL WALL SECTION BEHIND ABUTMENT

(STA. 4+40.05 - STA. 4+64.92; LOOKING UPSTATION)

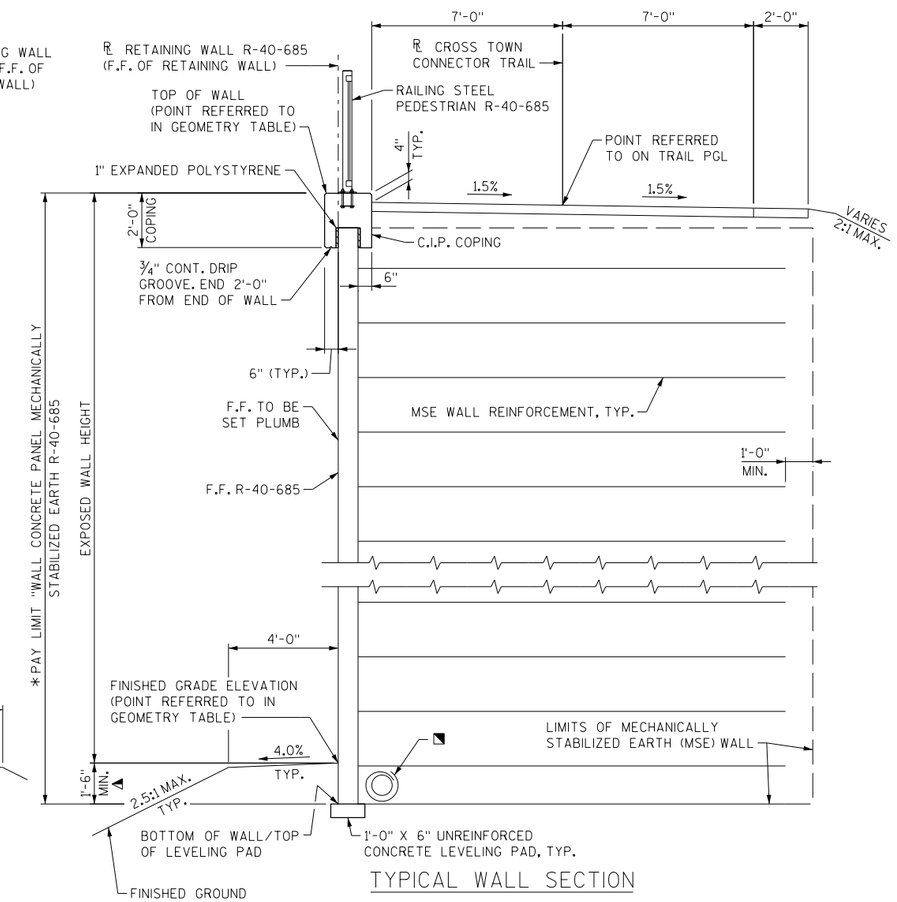

TYPICAL WALL SECTION

(STA. 3+15.28 - STA. 4+40.05; LOOKING UPSTATION)

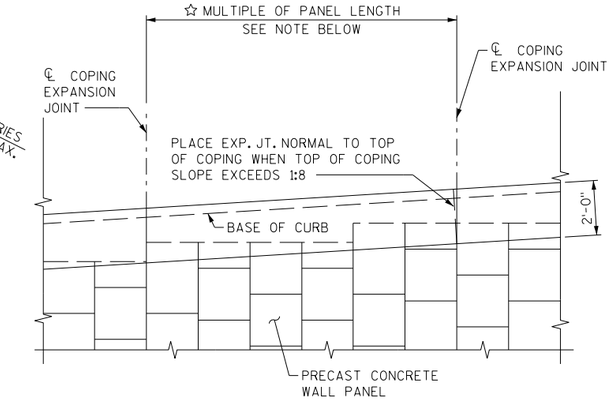

C.I.P. COPING PARTIAL ELEVATION

☆ ALL JOINTS SHALL COINCIDE WITH PANEL JOINT ON FRONT FACE

LEGEND

* THE PLAN QUANTITY FOR THE BID ITEM "WALL CONCRETE PANEL MECHANICALLY STABILIZED EARTH R-40-685" IS BASED ON A WALL HEIGHT MEASURED FROM THE TOP OF LEVELING PAD TO THE TOP OF THE WALL AS SHOWN. LEVELING PAD AND C.I.P. COPING CONCRETE TO BE INCLUDED IN THE BID ITEM "WALL CONCRETE PANEL MECHANICALLY STABILIZED EARTH R-40-685". REINFORCING STEEL TO BE PAID FOR UNDER BID ITEM "WALL CONCRETE PANEL MECHANICALLY STABILIZED EARTH R-40-685".

◥ CONNECT PIPE UNDERDRAIN WRAPPED (6-INCH) SLOPE 0.5% MIN. TO PROPOSED INLET STRUCTURE #1.3. MAY BE NECESSARY TO RUN UNDER WALL PANEL FOOTING. SEE DRAINAGE PLANS.

◭ MINIMUM EMBEDMENT BASED ON SITE SPECIFIC PARAMETERS. FIELD EMBEDMENTS SHALL MEET OR EXCEED THE MINIMUM EMBEDMENT. FIELD EMBEDMENTS BELOW MINIMUM EMBEDMENT SHALL NOT BE INCLUDED IN THE PAY LIMITS.

◑ SEE "WALL EXTERNAL AND OVERALL STABILITY EVALUATION" TABLE ON SHEET 2 FOR SOIL REINFORCEMENT LENGTH.

LEGEND (CONT'D)

△ SEAL ALL EXPOSED HORIZONTAL AND VERTICAL SURFACES OF FILLER AND EXPANDED POLYSTYRENE WITH NON-STAINING, GRAY NON-BITUMINOUS JOINT SEALER. (1" DEEP AND HOLD 1/8" BELOW SURFACE OF CONCRETE).

☆ COORDINATE LOCATION OF THE PROPOSED UNDERGROUND ELECTRIC UTILITY TO AVOID CONFLICTS WITH THE MSE STRAP PLACEMENT.

F.F = FRONT FACE
B.F. = BACK FACE

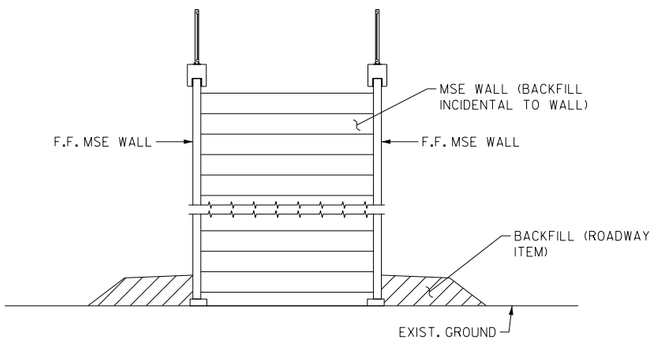

EXCAVATION/BACKFILL DETAIL

(STA. 4+40.05 - STA. 4+64.92)

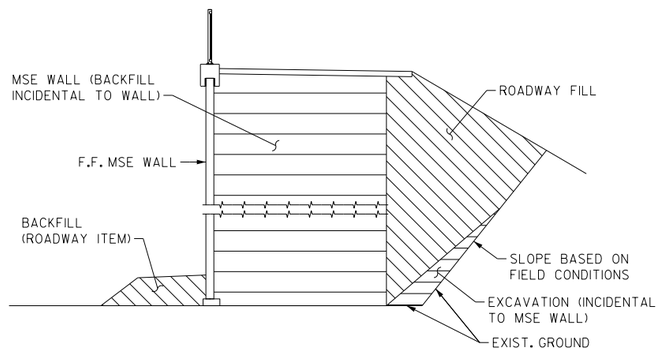

EXCAVATION/BACKFILL DETAIL

(STA. 3+15.28 - STA. 4+40.05)

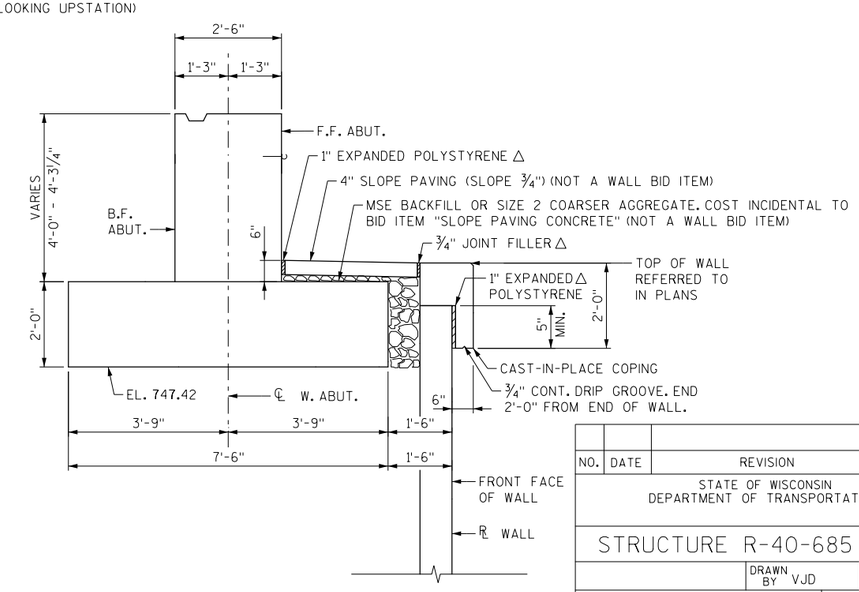

SECTION THRU WALL IN FRONT OF ABUTMENT

SEE B-40-926 PLANS FOR ABUTMENT DETAILS

NO.	DATE	REVISION	BY

STATE OF WISCONSIN
DEPARTMENT OF TRANSPORTATION

STRUCTURE R-40-685

DRAWN BY VJD | PLANS CK'D. SWS

WALL DETAILS I

SHEET 3 OF 7

8

8

STATE PROJECT NUMBER

1693-32-74

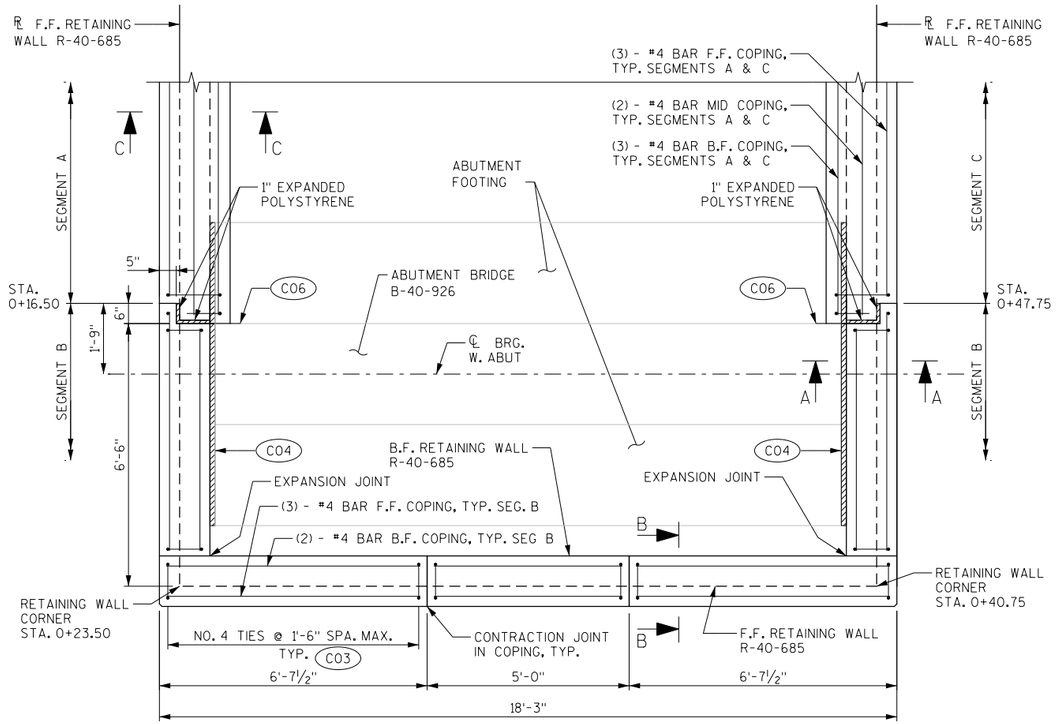

PLAN

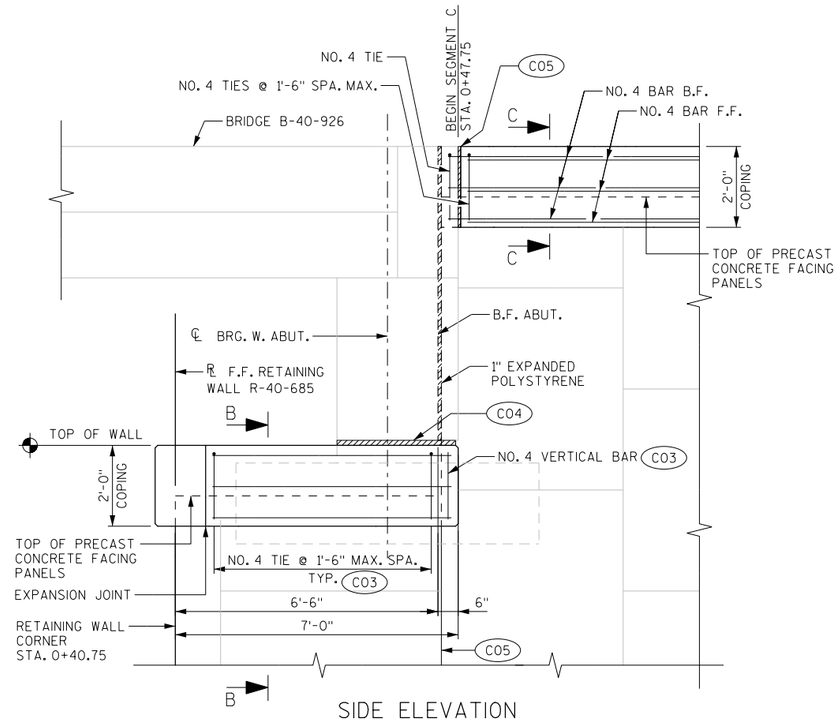

SIDE ELEVATION

LOOKING SOUTH
(ELEVATION LOOKING NORTH SIMILAR, MIRROR IMAGE)

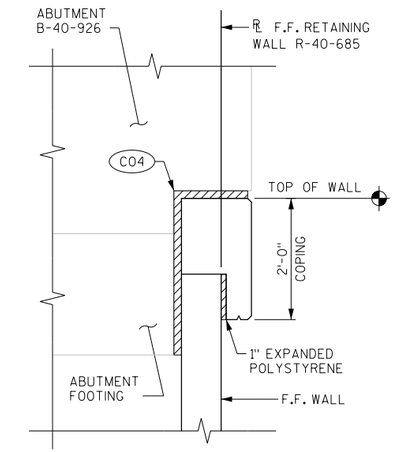

SECTION A-A

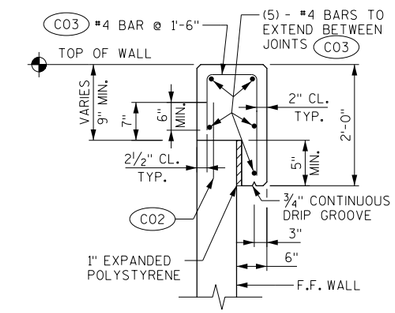

SECTION B-B

SHOWING REINFORCEMENT
SEGMENT B

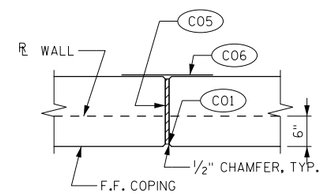

COPING EXPANSION JOINT

SEGMENT B
DO NOT RUN BAR STEEL THRU JOINT

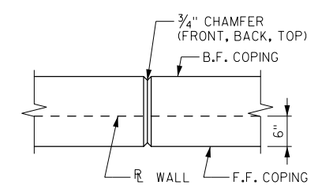

COPING CONTRACTION JOINT

SEGMENT B
DO NOT RUN BAR STEEL THRU JOINT

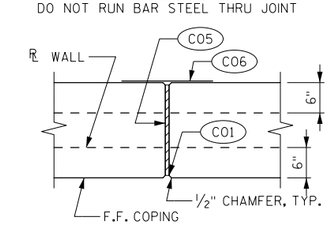

COPING EXPANSION JOINT

SEGMENTS A & C
DO NOT RUN BAR STEEL THRU JOINT

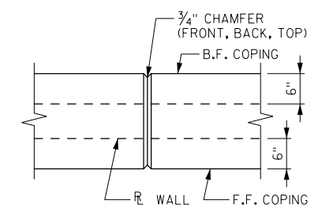

COPING CONTRACTION JOINT

SEGMENTS A & C
DO NOT RUN BAR STEEL THRU JOINT

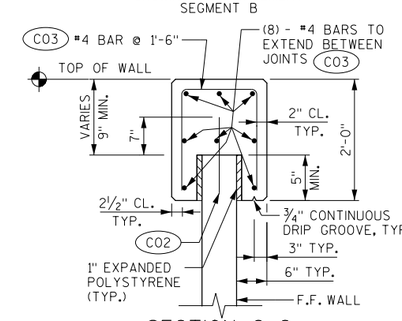

SECTION C-C

SHOWING REINFORCEMENT
SEGMENTS A & C

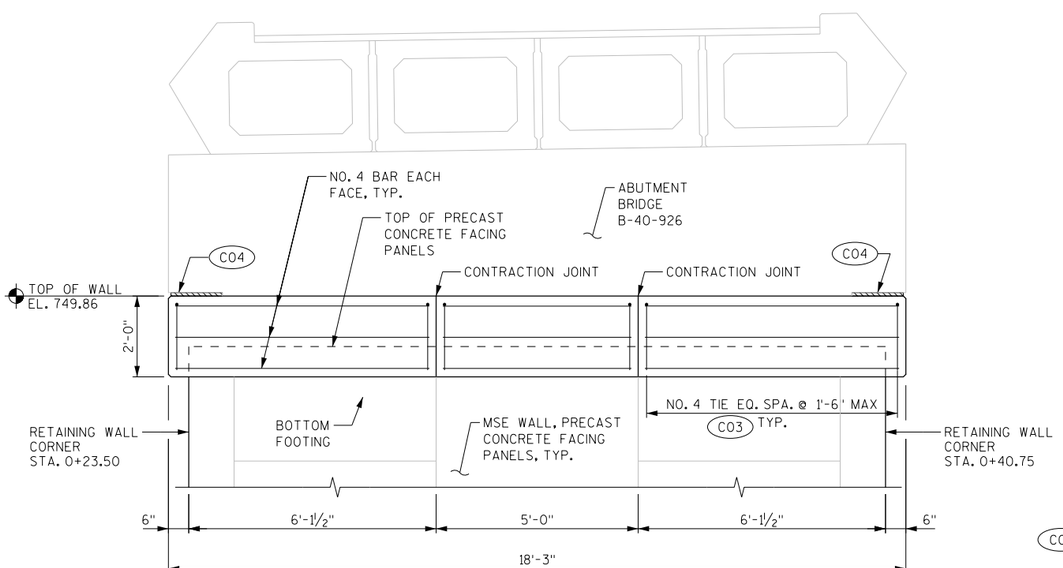

OUTSIDE ELEVATION

LOOKING WEST AT F.F. ABUTMENT

LEGEND

- C01 NON-BITUMINOUS JOINT SEALER. 1" DEEP AND HOLD ⅛" BELOW SURFACE OF CONCRETE.
- C02 #4 DOWELS X 1'-3" LONG AT 2'-0" MAX. SPACING. INCLUDED IN BID ITEM "WALL CONCRETE PANEL MECHANICALLY STABILIZED EARTH R-40-685".
- C03 COPING EPOXY COATED REINFORCEMENT IS INCLUDED IN BID ITEM "WALL CONCRETE PANEL MECHANICALLY STABILIZED EARTH R-40-685".
- C04 1½" PREFORMED JOINT FILLER WITH NON-BITUMINOUS JOINT SEALER.
- C05 ¾" PREFORMED JOINT FILLER.
- C06 18" RUBBERIZED MEMBRANE WATERPROOFING TO EXTEND FROM TOP OF COPING TO 6" BELOW TOP OF PANELS.

F.F. = FRONT FACE

B.F. = BACK FACE

NO.	DATE	REVISION	BY

STATE OF WISCONSIN
DEPARTMENT OF TRANSPORTATION

STRUCTURE R-40-685

DRAWN BY VJD | PLANS CK'D. SWS

WALL DETAILS II

SHEET 4 OF 7

8

STATE PROJECT NUMBER
1693-32-74

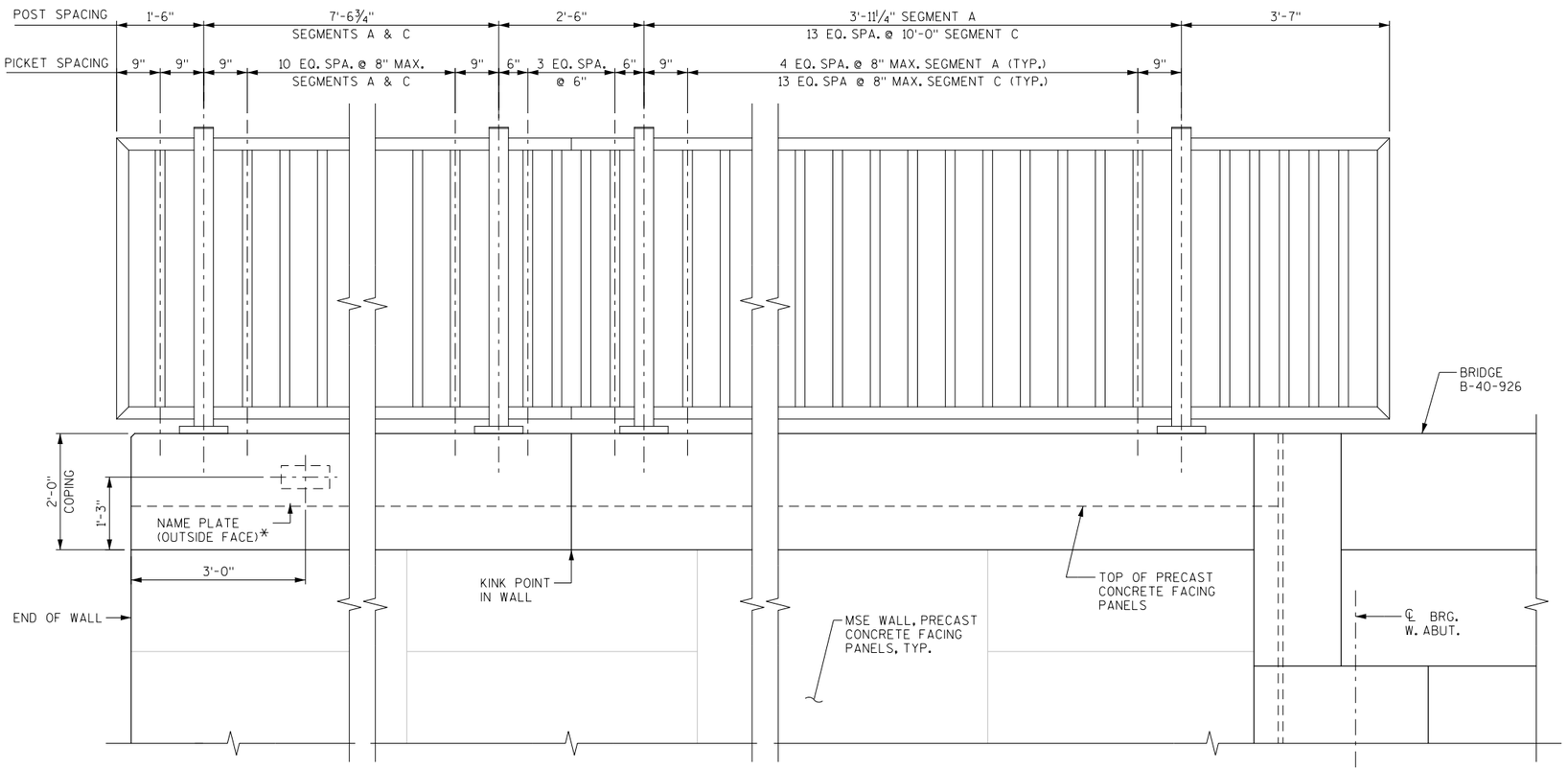

RAILING ELEVATION

RAILING INSTALLED ON SEGMENTS A & C ONLY
ALL DIMENSIONS ARE TAKEN ALONG ℄ WALL

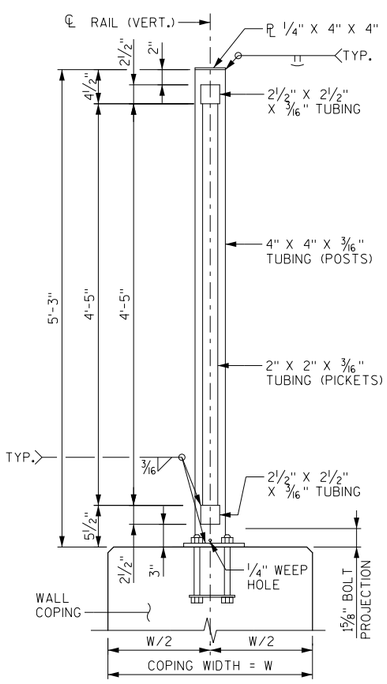

SECTION THRU RAILING

SEGMENTS A & C ONLY

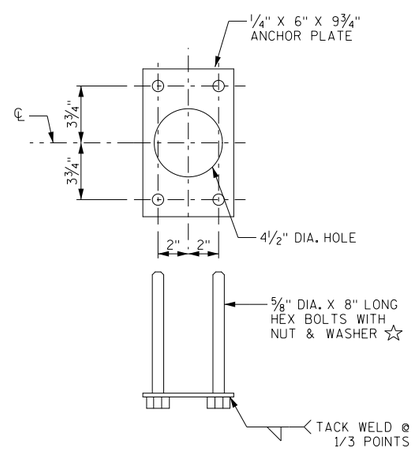

ANCHORAGE DETAIL

☆ ALTERNATIVE ANCHORAGE: ADHESIVE ANCHORS ⅝-INCH. EMBED 7" IN CONCRETE. ADHESIVE ANCHORS SHALL CONFORM TO SECTION 502.2.12 OF THE STANDARD SPECIFICATIONS.

NOTE: ANCHOR PLATE NOT REQUIRED WHEN ADHESIVE ANCHORS ARE USED.

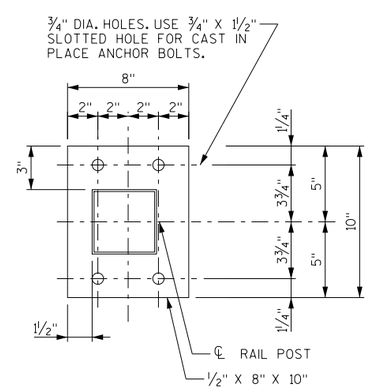

BASE PLATE

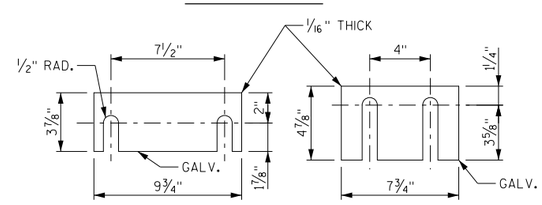

SHIM PLATE DETAILS

TWO SHIMS OF EACH SIZE REQUIRED PER POST

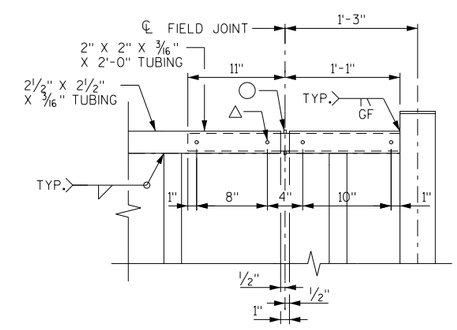

RAILING EXPANSION JOINT DETAIL

NOTES

BID ITEM SHALL BE "RAILING STEEL PEDESTRIAN R-40-685" WHICH SHALL INCLUDE ALL ITEMS SHOWN, GALVANIZING AND PAINTING.

POST BASE PLATES SHALL BE FLAT WITH ALL SURFACES SMOOTH AND FREE FROM WARP AND ALL EDGES SMOOTH, STRAIGHT, AND VERTICAL. ALL PLATE CUTS SHALL BE MACHINE OR MACHINE FLAME CUT.

RAILS AND POSTS TO BE ASTM A500, GRADE C. BASE PLATES AND SHIMS TO BE ASTM A709, GRADE 36. ALL RAILS, POSTS, PLATES, AND SHIMS SHALL BE GALVANIZED AFTER FABRICATION.

ANCHORAGES SHALL BE ACCURATELY PLACED TO PROVIDE CORRECT ALIGNMENT OF RAILING. SET POSTS NORMAL TO GRADE.

ALL POST SPA. ARE TAKEN HORIZ. ALONG REFERENCE LINE OF RETAINING WALL R-40-685 AT BASE OF POST.

SHIMS SHALL BE USED UNDER BASE PLATES WHERE REQUIRED FOR ALIGNMENT. STANDARD WASHERS SHALL BE USED TO SHIM BASE PLATES IF REQUIRED. ALL WASHERS SHALL BE GALVANIZED.

CAULK AROUND PERIMETER OF BASE PLATES AND FILL PORTION OF SLOTTED HOLES AROUND ANCHOR BOLTS WITH NON-STAINING, NON-BITUMINOUS JOINT SEALER, COLOR TO MATCH STAIN.

CUT BOTTOM OF POST TO MAKE VERTICAL IN TRANSVERSE DIRECTION.

ANCHOR BOLTS, NUTS, AND WASHERS SHALL BE EITHER STAINLESS STEEL OR ASTM 307. IF 307 IS USED, ANCHOR BOLTS, NUTS, AND WASHERS SHALL BE GALVANIZED.

RAILING TO BE PAINTED BLACK, FEDERAL COLOR NO. 27038 (BLACK), SEMI-GLOSS.

RAILING SHALL BE FABRICATED IN LENGTHS THAT INCLUDE NOT MORE THAN 3 POSTS.

VENT HOLES SHALL BE DRILLED IN MEMBERS AS REQUIRED TO FACILITATE GALVANIZING AND DRAINAGE.

AFTER FABRICATION, STEEL SHALL BE BLAST CLEANED PER SSPC-SP 6 AND GALVANIZED ACCORDING TO ASTM A 123. REPAIR ZINC COATING DAMAGED DURING STEEL MESH ASSEMBLAGE AS SPECIFIED IN 513.3.3(3).

PAINT THE GALVANIZED STEEL RAILING COMPONENTS WITH A TWO COAT SYSTEM SPECIFICALLY INTENDED FOR PAINTING OF GALVANIZED SURFACES PER THE SPECIAL PROVISIONS. THE FINISH COLOR SHALL BE FEDERAL COLOR NO. 27038 (BLACK), SEMI-GLOSS.

LEGEND

○ 5/16" X 3/8" WELDED STUDS

△ WELD BEAD ON EACH SIDE OF TUBE. GRIND BEADS SO THAT SLEEVE FITS FREELY INSIDE THE 2½" X 2½" TUBE.

* FOR NAME PLATE LOCATION, SEE "GENERAL PLAN" ON SHEET 1.

NO.	DATE	REVISION	BY

STATE OF WISCONSIN
DEPARTMENT OF TRANSPORTATION

STRUCTURE R-40-685

DRAWN BY VJD | PLANS CK'D. SWS

RAILING STEEL PEDESTRIAN

SHEET 5 OF 7

8

8

STATE PROJECT NUMBER
1693-32-74

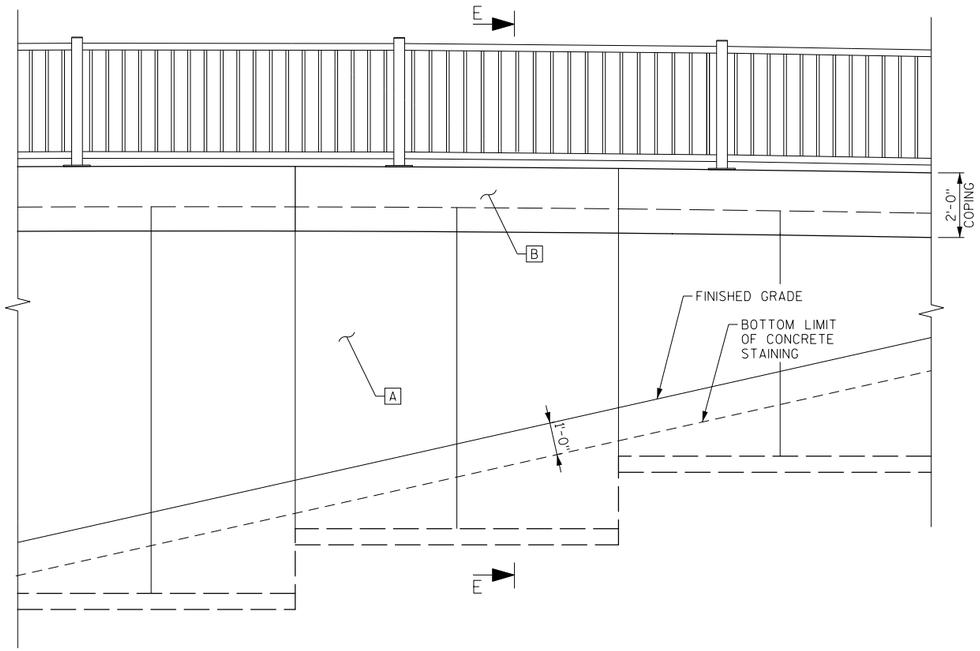

WALL STAINING ELEVATION

(LOOKING AT FRONT FACE OF WALL)
TYPICAL AT SEGMENTS A & C

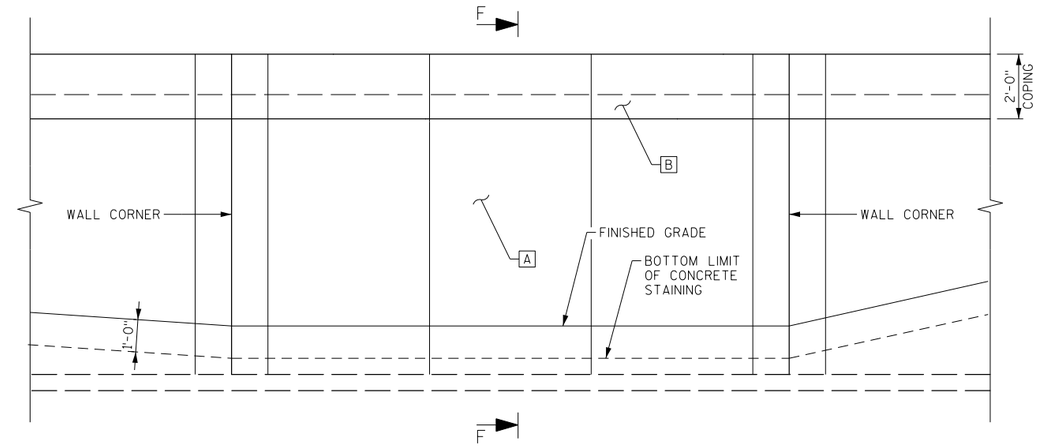

WALL STAINING ELEVATION

(LOOKING AT FRONT FACE OF WALL)
TYPICAL AT SEGMENT B

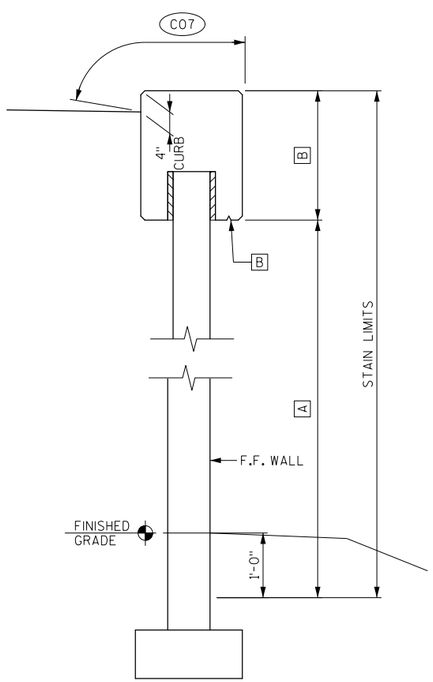

SECTION E-E

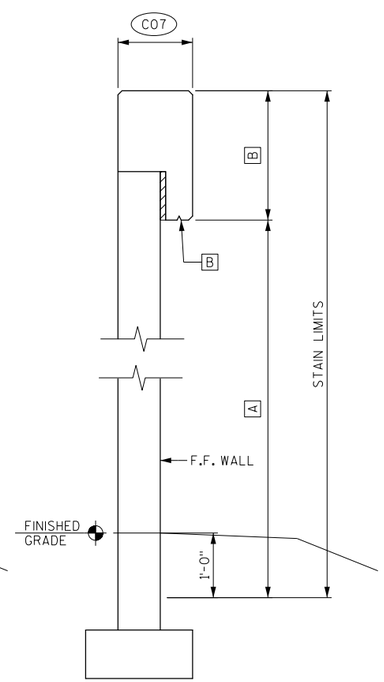

SECTION F-F

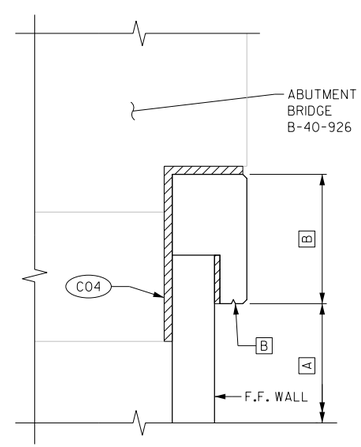

SECTION AT ABUTMENT

CONCRETE STAINING SCHEDULE

MARK	COLOR	LOCATION	NOTES
A	#33564	MSE PANELS	EXPOSED FACE TO 1'-0" BELOW GRADE
B	#33105	COPING	OUTSIDE FACE AND UNDERSIDE

THE FINAL COLOR OF THE CONCRETE FOLLOWING APPLICATION OF THE STAIN SYSTEM SHALL MATCH THE FEDERAL STANDARD COLOR NUMBERS INDICATED IN THE TABLE ABOVE.

LEGEND

C04 1½" PREFORMED JOINT FILLER WITH NON-BITUMINOUS JOINT SEALER.

C07 COAT WITH PIGMENTED SURFACE SEALER AS PER THE STANDARD SPECIFICATIONS. APPLY TO TOP FACES OF COPING AND CURB FACES AS SHOWN.

8

8

NO.	DATE	REVISION	BY

STATE OF WISCONSIN
DEPARTMENT OF TRANSPORTATION

STRUCTURE R-40-685

DRAWN BY VJD | PLANS CK'D. SWS

AESTHETIC DETAILS

SHEET 6 OF 7

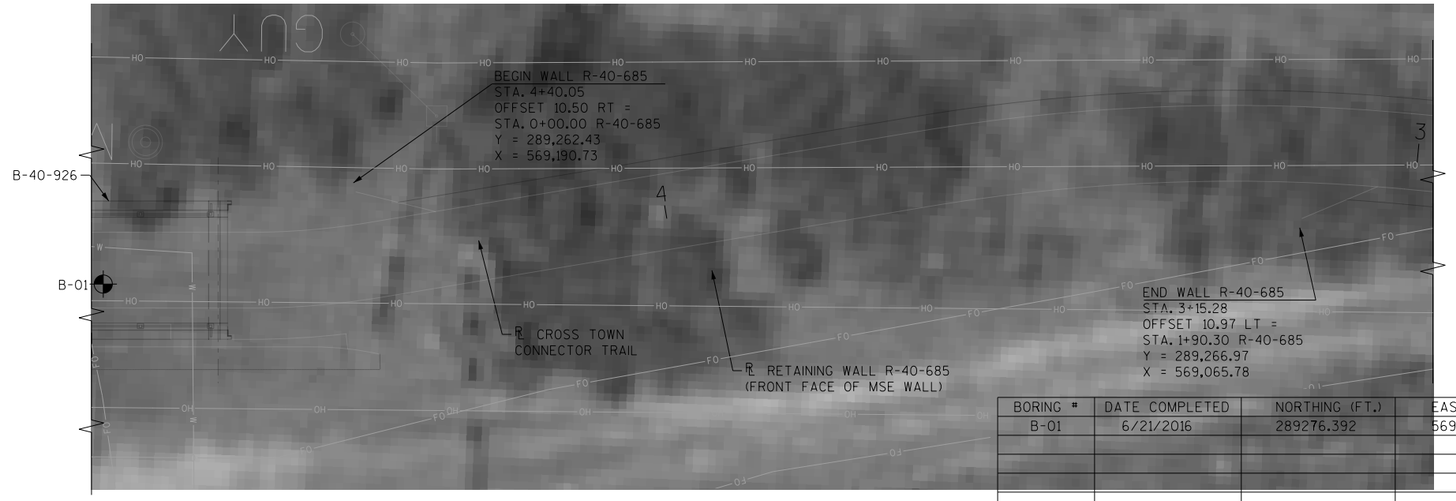

BORING #	DATE COMPLETED	NORTHING (FT.)	EASTING (FT.)
B-01	6/21/2016	289276.392	569223.586

BORINGS COMPLETED BY: SOILS & ENGINEERING SERVICES, INC.
REPORT COMPLETED BY: K. SINGH & ASSOCIATES, INC.
ALL COORDINATES REFERENCED TO WCCS NAD 83(91) MILWAUKEE COUNTY

NOTE:

THE SUBSURFACE INFORMATION PRESENTED HEREIN IS AN ABBREVIATED VERSION OF THE INFORMATION PRESENTED IN THE GEOTECHNICAL ENGINEERING REPORT. REVIEW THE APPROPRIATE GEOTECHNICAL REPORT AND SOIL BORING LOGS FOR ADDITIONAL SUBSURFACE INFORMATION.

BORING STATIONS AND OFFSETS ARE BASED ON ℄ CROSS TOWN CONNECTOR TRAIL.

LEGEND

DENOTES SOIL BORING LOCATION

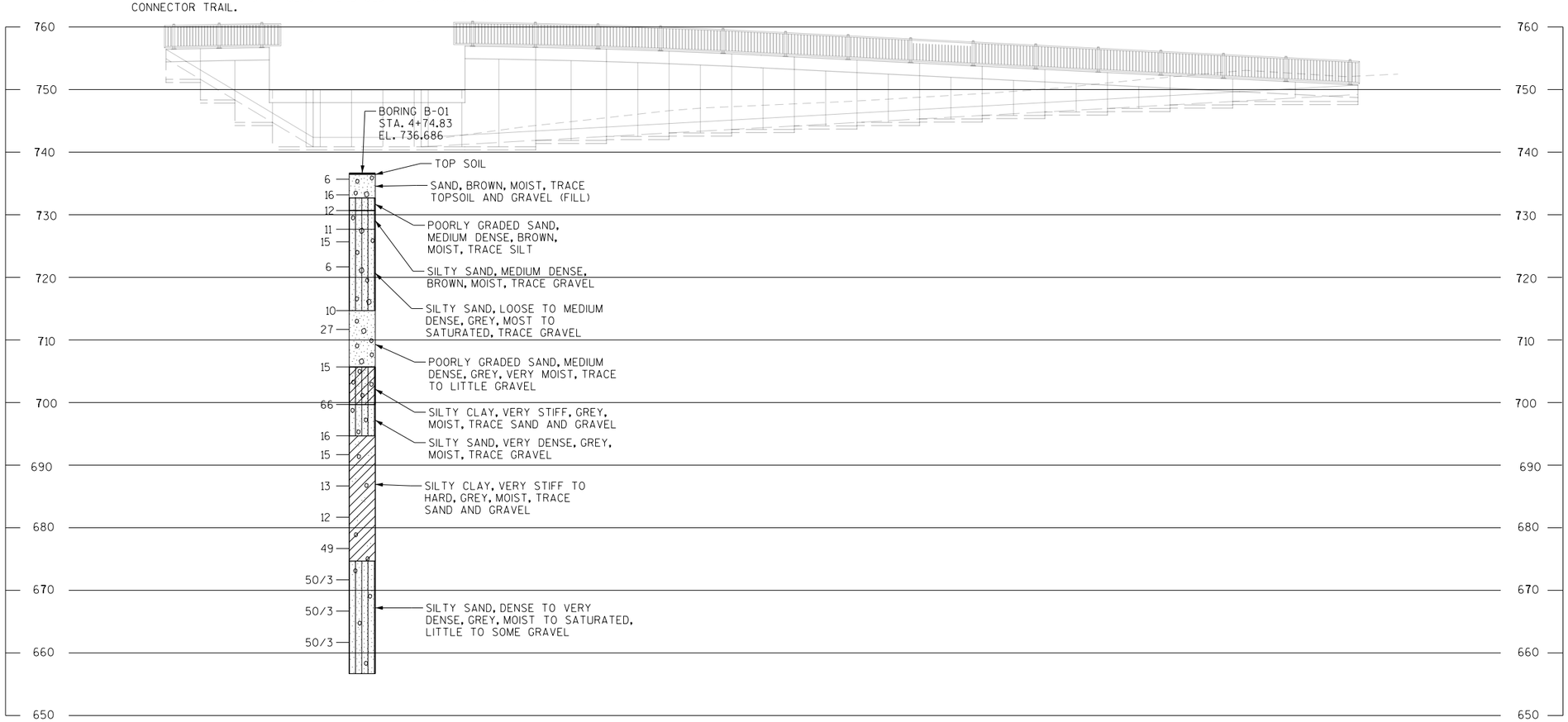

STATE PROJECT NUMBER

1693-32-74

MATERIAL SYMBOLS

ASPHALT, TOPSOIL, PEAT, CONCRETE, FILL, GRAVEL, SAND, CLAY, SILT, BOULDERS OR COBBLES, LIMESTONE, BEDROCK (UNKNOWN), SHALE, SANDSTONE, IGNEOUS/META

LEGEND OF BORING

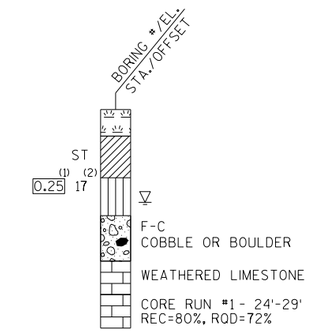

(1) UNCONFINED STRENGTH, AS DETERMINED BY A POCKET PENETROMETER (TSF)

(2) UNLESS OTHERWISE, SPECIFIED THE SPT 'N' VALUE IS BASED ON AASHTO T-206, STANDARD PENETRATION TEST. THE SPT 'N' VALUE PRESENTED HAS NOT BEEN CORRECTED FOR OVERBURDEN PRESSURE OR HAMMER EFFICIENCY.

GROUND WATER ELEVATION

AT TIME OF DRILLING
END OF DRILLING
AFTER DRILLING

ABBREVIATIONS

F-FINE M-MEDIUM C-COARSE ST-SHELBY TUBE

SUBSURFACE EXPLORATION FOR FOUNDATION DESIGN AND BIDDERS INFORMATION

BORINGS WERE COMPLETED AT POINTS APPROXIMATELY AS INDICATED ON THIS DRAWING TO OBTAIN INFORMATION CONCERNING THE CHARACTER OF SUBSURFACE MATERIALS FOUND AT THE SITE. BECAUSE THE INVESTIGATED DEPTHS ARE LIMITED AND THE AREA OF THE BORINGS IS VERY SMALL IN RELATION TO THE ENTIRE SITE, THE WISCONSIN DEPARTMENT OF TRANSPORTATION DOES NOT WARRANT SIMILAR SUBSURFACE CONDITIONS BELOW, BETWEEN, OR BEYOND THESE BORINGS. VARIATIONS IN SOIL CONDITIONS SHOULD BE EXPECTED AND FLUCTUATIONS IN GROUNDWATER LEVELS MAY OCCUR.

NO.	DATE	REVISION	BY

STATE OF WISCONSIN
DEPARTMENT OF TRANSPORTATION

STRUCTURE R-40-685

DRAWN BY VJD PLANS CK'D. SWS

SUBSURFACE EXPLORATION

SHEET 7 OF 7

8

8

STATION	DISTANCE	AREA (SF) CUT	AREA (SF) SALVAGED/ UNUSABLE PAVEMENT MATERIAL	AREA (SF) FILL	INCREMENTAL VOLUME (CY) (Unadjusted) CUT Note 1	INCREMENTAL VOLUME (CY) (Unadjusted) SALVAGED/ UNUSABLE PAVEMENT MATERIAL Note 2	INCREMENTAL VOLUME (CY) (Unadjusted) FILL Note 3	CUMULATIVE VOLUME (CY) CUT 1.00 Note 1	CUMULATIVE VOLUME (CY) EXPANDED FILL 1.25	MASS ORDINATE Note 8
1+80.50		0.00	0.00	0.00	0.00	0.00	0.00	0.00	0.00	0.00
2+00.00	20	10.32	0.00	0.00	3.73	0.00	0.00	3.73	0.00	3.73
2+25.00	25	5.37	0.00	0.00	7.26	0.00	0.00	10.99	0.00	10.99
2+39.68	15	6.77	0.00	0.00	3.30	0.00	0.00	14.29	0.00	14.29
2+39.68	0	11.66	0.00	0.00	0.00	0.00	0.00	14.29	0.00	14.29
2+50.00	10	11.66	0.00	0.00	4.46	0.00	0.00	18.75	0.00	18.75
2+75.00	25	26.63	0.00	0.00	17.73	0.00	0.00	36.47	0.00	36.47
3+00.00	25	14.07	0.00	3.38	18.84	0.00	1.56	55.32	1.96	53.36
3+15.00	15	14.07	0.00	3.38	7.82	0.00	1.88	63.13	4.30	58.83
3+15.00	0	0.89	0.00	17.36	0.00	0.00	0.00	63.13	4.30	58.83
3+25.00	10	0.89	0.00	17.36	0.33	0.00	6.43	63.46	12.34	51.12
3+50.00	25	1.21	0.00	26.52	0.97	0.00	20.31	64.44	37.73	26.70
3+75.00	25	1.09	0.00	69.33	1.06	0.00	44.38	65.50	93.20	-27.70
4+00.00	25	1.20	0.00	94.08	1.06	0.00	75.65	66.56	187.77	-121.21
4+25.00	25	1.43	0.61	120.81	1.22	0.28	99.49	67.78	312.13	-244.63
4+40.00	15	1.43	0.61	120.81	0.79	0.34	67.12	68.57	396.02	-328.07
4+40.00	0	0.00	0.00	34.92	0.00	0.00	0.00	68.57	396.02	-328.07
4+50.00	10	0.00	0.00	34.92	0.00	0.00	12.93	68.57	412.19	-344.24
4+58.42	8	0.00	0.00	16.87	0.00	0.00	8.08	68.57	422.29	-354.34
						0.00				
						0.00				
					68.57	0.62	337.83			

Notes:		
1 - Cut	Cut includes Salvaged/Unusable Pavement material	
2 - Salvaged/Unusable Pavement Material	This does not show up in cross sections	
3 - Fill	Does not include Unusable Pavement Exc volume	
4 - Expanded Marsh Backfill	Will be backfilled with Granular Backfill (or Cut, or Borrow)	Note 4 - Select one based on input dialog selection
5 - Expanded EBS	Will be backfilled with Granular Backfill (or Cut, or Borrow)	Note 5 - Select one based on input dialog selection
6 - Reduced Marsh in Fill	Reduced Marsh Excavation that can be used in Fill	Note 6 - If excavated Marsh can be used in Fill
7 - Reduced EBS in Fill	Reduced EBS Excavation that can be used in Fill	Note 7 - If excavated EBS can be used in Fill
8 - Mass Ordinate	If Marsh or EBS to be backfilled with Cut or Borrow: [(Cut + Marsh Exc + EBS) - ((Fill - Reduced Marsh in Fill) - (Reduced EBS in Fill) - Expanded Rock) * Fill Factor)]	Note 8 - Select one based on mass haul input dialog selection. EBS and Marsh Exc used outside 1:1 in fill slopes

STATION	DISTANCE	AREA (SF) CUT	AREA (SF) SALVAGED/ UNUSABLE PAVEMENT MATERIAL	AREA (SF) FILL	INCREMENTAL VOLUME (CY) (Unadjusted) CUT Note 1	INCREMENTAL VOLUME (CY) (Unadjusted) SALVAGED/ UNUSABLE PAVEMENT MATERIAL Note 2	INCREMENTAL VOLUME (CY) (Unadjusted) FILL Note 3	CUMULATIVE VOLUME (CY) CUT 1.00 Note 1	CUMULATIVE VOLUME (CY) EXPANDED FILL 1.25	MASS ORDINATE Note 8
6+10.92		0.91	0.18	2.99	0.00	0.00	0.00	0.00	0.00	0.00
6+25.00	14	1.23	0.43	7.39	0.56	0.16	2.71	0.56	3.38	-2.98
6+50.00	25	1.07	0.31	13.18	1.06	0.34	9.52	1.62	15.29	-14.17
6+70.00	20	1.07	0.31	13.18	0.79	0.23	9.76	2.42	27.49	-25.81
6+70.00	0	1.19	0.40	117.71	0.00	0.00	0.00	2.42	27.49	-25.81
6+75.00	5	1.19	0.40	117.71	0.22	0.07	21.80	2.64	54.74	-52.91
7+00.00	25	1.23	0.43	86.27	1.12	0.38	94.44	3.76	172.78	-170.22
7+25.00	25	1.20	0.41	61.57	1.13	0.39	68.44	4.88	258.34	-255.04
7+50.00	25	1.02	0.23	41.60	1.03	0.30	47.76	5.91	318.04	-314.01
7+70.00	20	1.02	0.00	41.60	0.76	0.09	30.81	6.66	356.56	-351.86
7+70.00	0	0.00	0.00	94.90	0.00	0.00	0.00	6.66	356.56	-351.86
7+75.00	5	0.00	0.00	94.90	0.00	0.00	17.57	6.66	378.53	-373.82
8+00.00	25	0.00	0.00	48.26	0.00	0.00	66.28	6.66	461.38	-456.67
8+25.00	25	1.42	0.00	24.91	0.66	0.00	33.88	7.32	503.72	-498.36
8+50.00	25	4.67	0.00	10.74	2.82	0.00	16.50	10.14	524.35	-516.17
8+75.00	25	7.49	0.00	3.66	5.63	0.00	6.67	15.77	532.68	-518.87
9+00.00	25	20.30	0.00	0.37	12.87	0.00	1.87	28.64	535.02	-508.34
9+25.00	25	27.98	0.00	0.00	22.35	0.00	0.17	50.99	535.23	-486.20
9+50.00	25	37.92	0.00	0.00	30.51	0.00	0.00	81.50	535.23	-455.69
9+75.00	25	45.35	0.00	0.00	38.55	0.00	0.00	120.05	535.23	-417.14
10+00.00	25	54.35	0.00	0.00	46.16	0.00	0.00	166.21	535.23	-370.98
10+25.00	25	44.88	0.00	0.00	45.94	0.00	0.00	212.15	535.23	-325.04
10+50.00	25	18.90	0.00	0.00	29.53	0.00	0.00	241.67	535.23	-295.52
10+75.00	25	8.13	0.00	3.57	12.51	0.00	1.65	254.19	537.30	-285.07
11+00.00	25	0.00	0.00	9.52	3.76	0.00	6.06	257.95	544.87	-288.88
11+25.00	25	0.43	0.00	15.47	0.20	0.00	11.57	258.15	559.33	-303.14
11+29.02	4	1.30	0.00	14.13	0.13	0.00	2.20	258.28	562.09	-305.77
						0.00				
						0.00				
					258.28	1.96	450			

Notes:		
1 - Cut	Cut includes Salvaged/Unusable Pavement material	
2 - Salvaged/Unusable Pavement Material	This does not show up in cross sections	
3 - Fill	Does not include Unusable Pavement Exc volume	
4 - Expanded Marsh Backfill	Will be backfilled with Granular Backfill (or Cut, or Borrow)	Note 4 - Select one based on input dialog selection
5 - Expanded EBS	Will be backfilled with Granular Backfill (or Cut, or Borrow)	Note 5 - Select one based on input dialog selection
6 - Reduced Marsh in Fill	Reduced Marsh Excavation that can be used in Fill	Note 6 - If excavated Marsh can be used in Fill
7 - Reduced EBS in Fill	Reduced EBS Excavation that can be used in Fill	Note 7 - If excavated EBS can be used in Fill
8 - Mass Ordinate	If Marsh or EBS to be backfilled with Cut or Borrow: [(Cut + Marsh Exc + EBS) - ((Fill - Reduced Marsh in Fill) - (Reduced EBS in Fill) - Expanded Rock) * Fill Factor)]	Note 8 - Select one based on mass haul input dialog selection. EBS and Marsh Exc used outside 1:1 in fill slopes

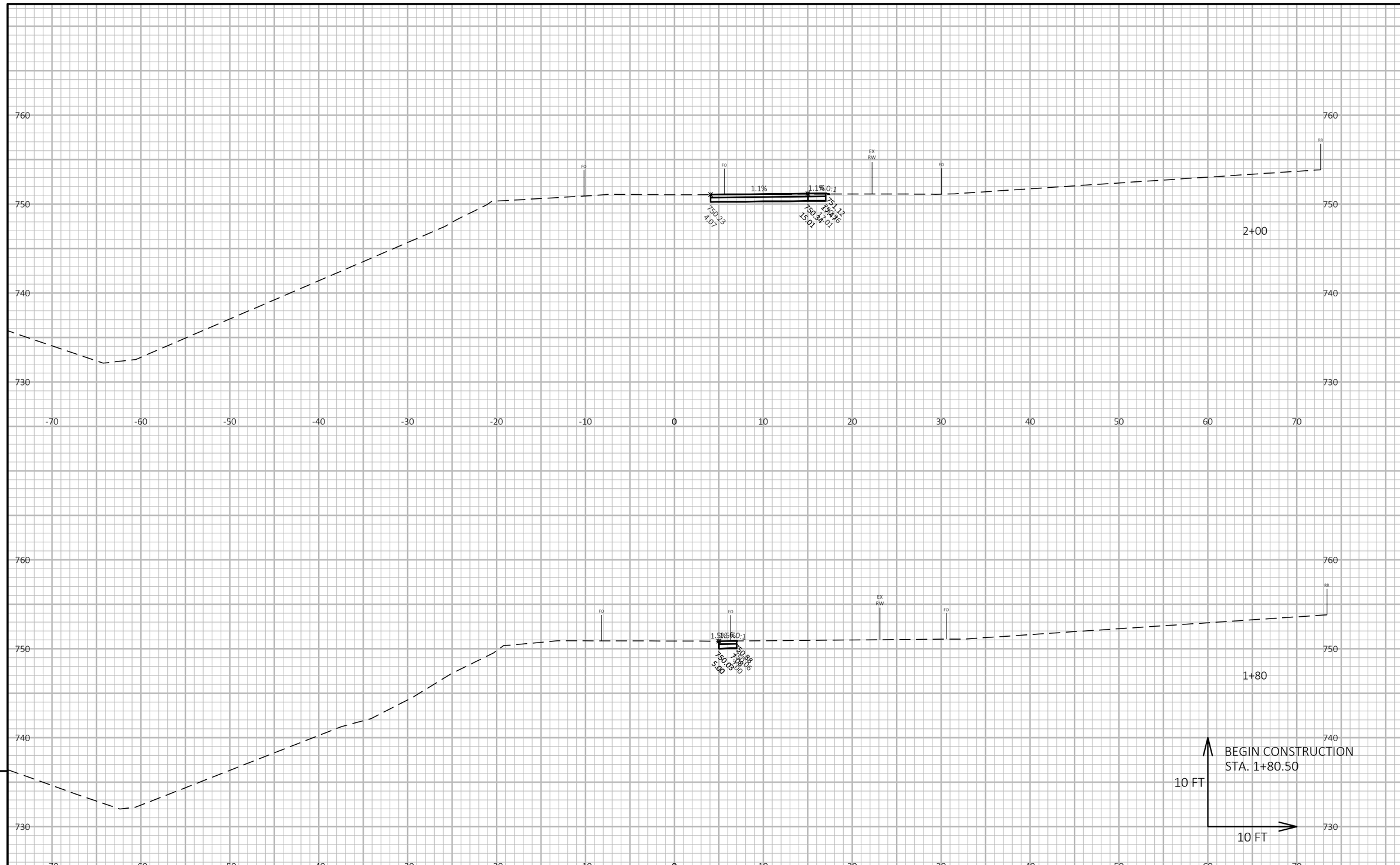

PROJECT NO: 1693-32-74	HWY: NON-HWY	COUNTY: MILWAUKEE COUNTY	CROSS SECTIONS: 090	SHEET 130	E

FILE NAME : P:\8516 WEST ALLIS CROSS CONNECTOR BRIDGE\TRANSPORTATION\CADD\8516 WAX\SHEETSPLAN\090201-XS.DWG
LAYOUT NAME - 090201-xs
PLOT DATE : 11/1/2017 9:44 AM PLOT BY : MICHAEL GASPER PLOT NAME : PLOT SCALE : 1 IN:10 FT HORZ. / 1 IN:10 FT VERT.

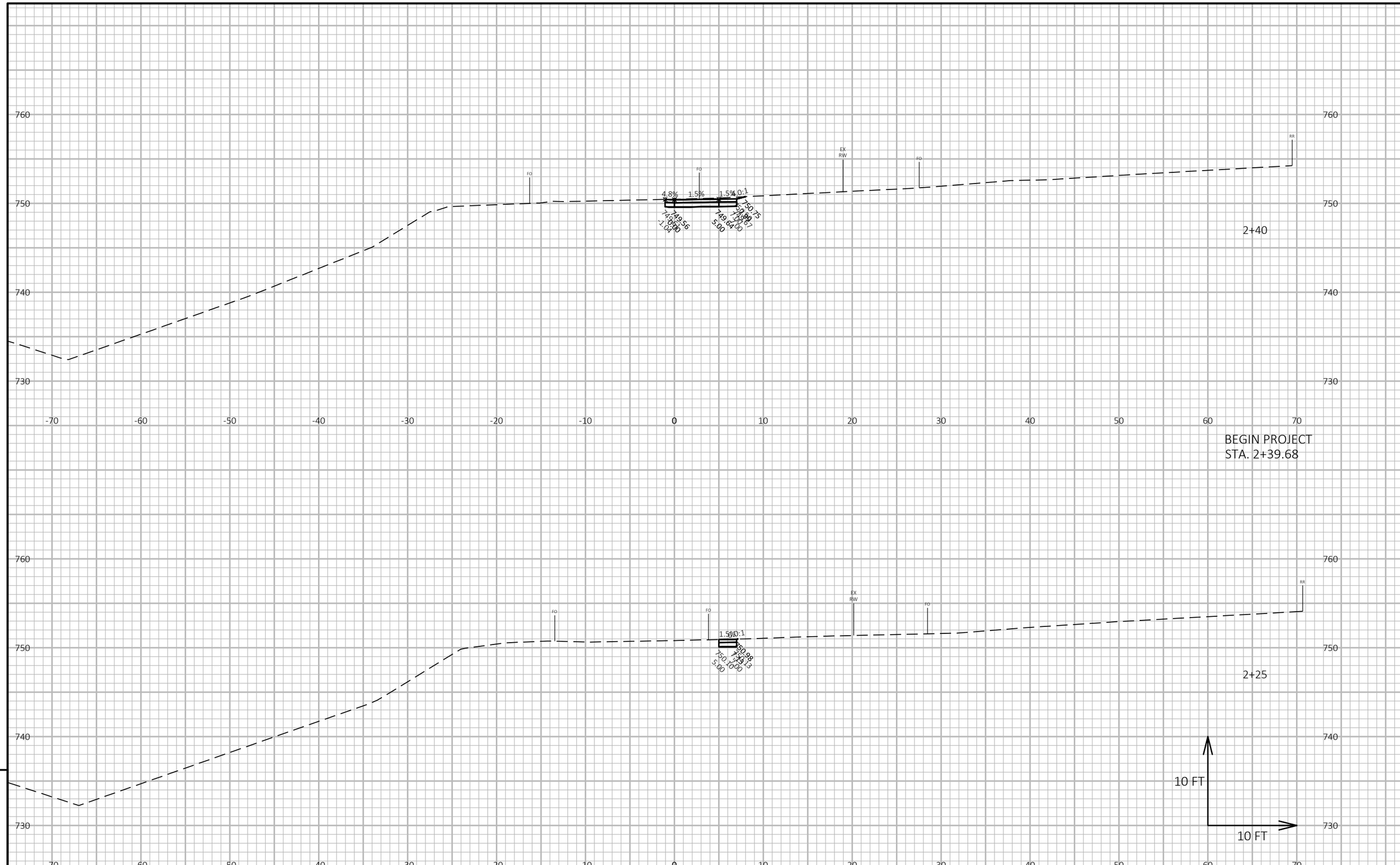

9

9

PROJECT NO: 1693-32-74	HWY: NON-HWY	COUNTY: MILWAUKEE COUNTY	CROSS SECTIONS: 090	SHEET 131	E

FILE NAME : P:\8516 WEST ALLIS CROSS CONNECTOR BRIDGE\TRANSPORTATION\CADD\8516 WAX\SHEETSPLAN\090201-XS.DWG
LAYOUT NAME - 090202-xs

PLOT DATE : 11/1/2017 9:44 AM PLOT BY : MICHAEL GASPER PLOT NAME : PLOT SCALE : 1 IN:10 FT HORZ. / 1 IN:10 FT VERT.

WISDOT/CADDS SHEET 49

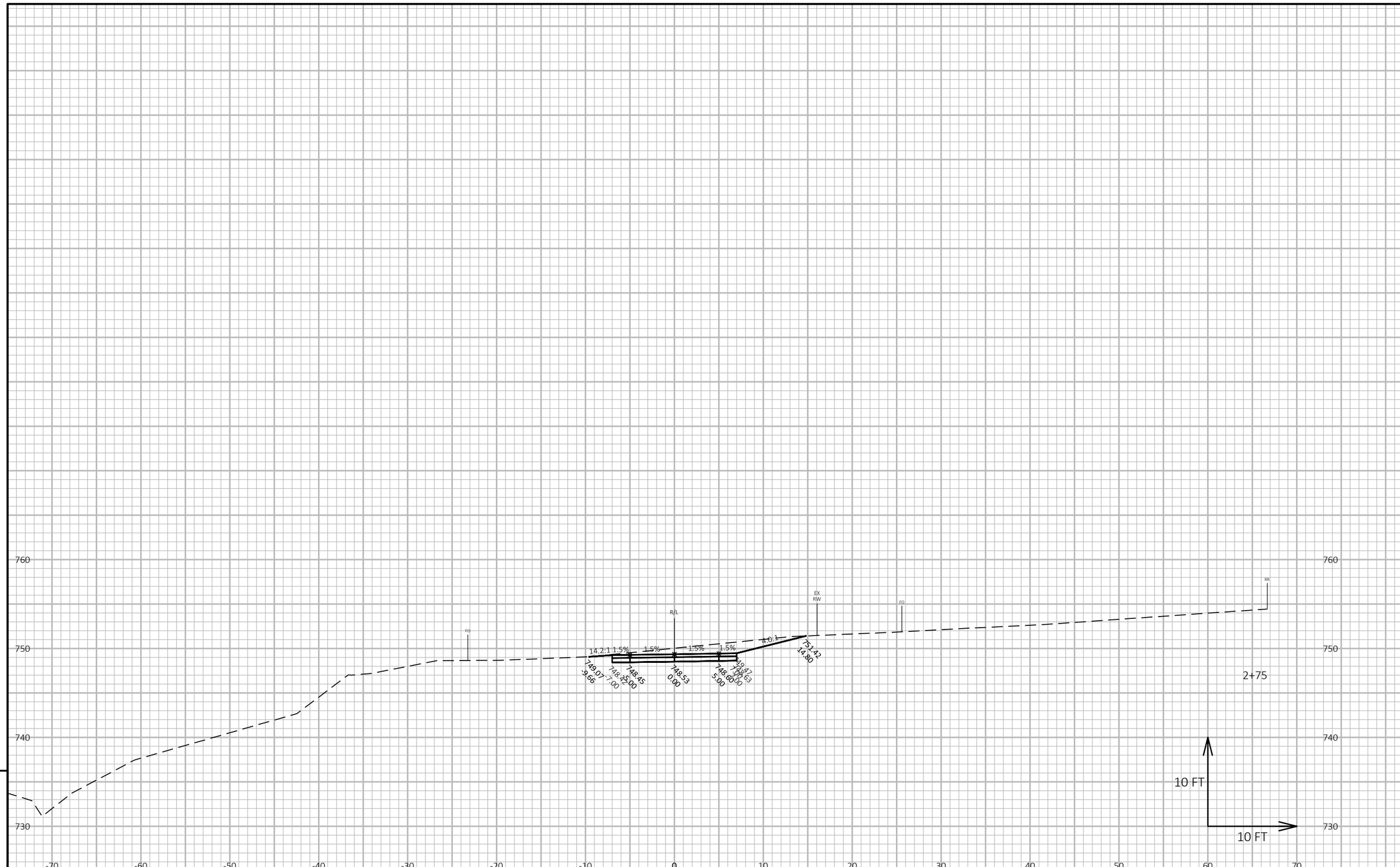

PROJECT NO: 1693-32-74	HWY: NON-HWY	COUNTY: MILWAUKEE COUNTY	CROSS SECTIONS: 090	SHEET 132	E

FILE NAME : P:\8516 WEST ALLIS CROSS CONNECTOR BRIDGE\TRANSPORTATION\CADD\8516 WAX\SHEETSPLAN\090201-XS.DWG
LAYOUT NAME - 090203-xs
PLOT DATE : 11/1/2017 9:44 AM
PLOT BY : MICHAEL GASPER
PLOT NAME :
PLOT SCALE : 1 IN:10 FT HORZ. / 1 IN:10 FT VERT.
WISDOT/CADDS SHEET 49

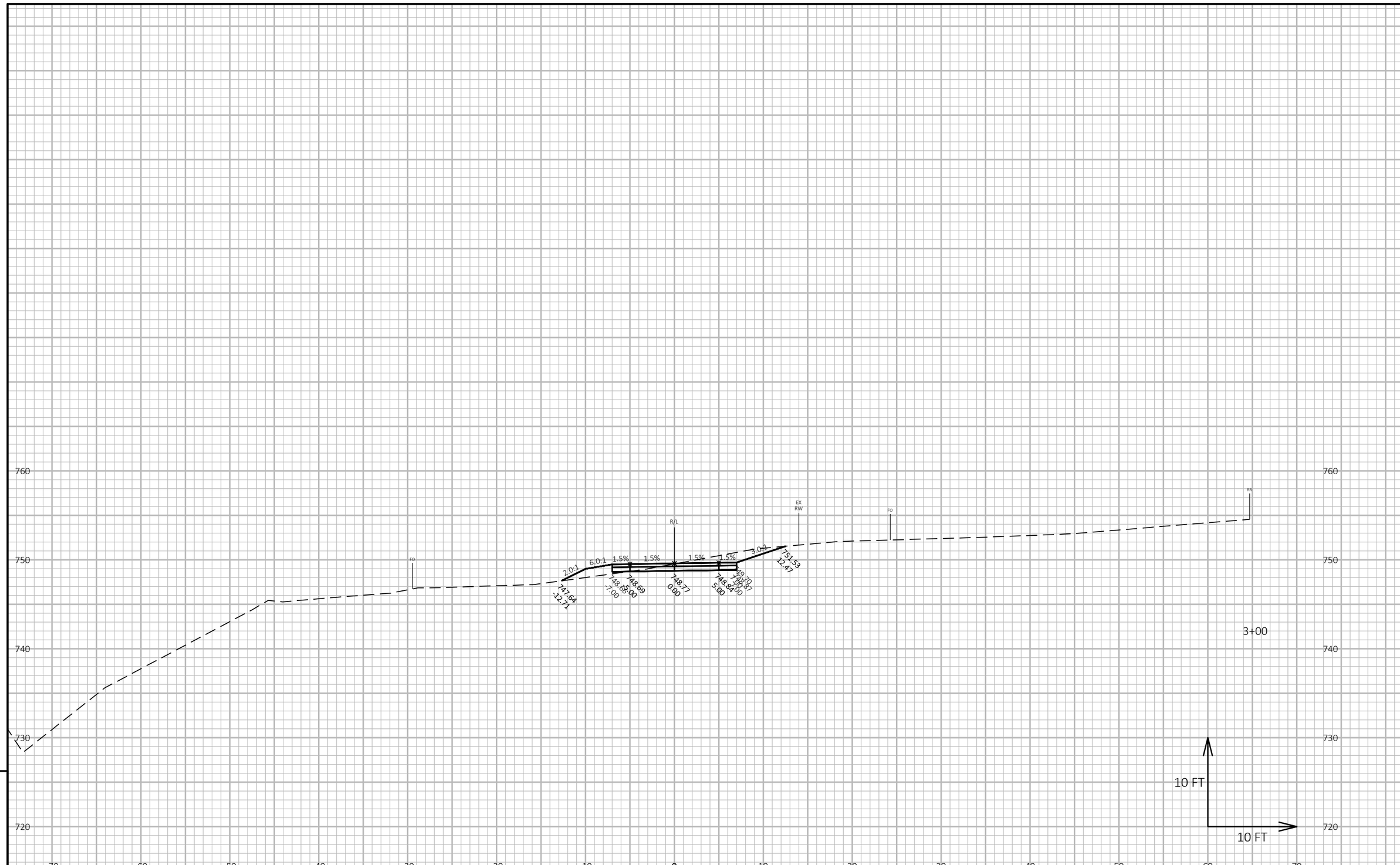

PROJECT NO: 1693-32-74	HWY: NON-HWY	COUNTY: MILWAUKEE COUNTY	CROSS SECTIONS: 090	SHEET 133	E

FILE NAME : P:\8516 WEST ALLIS CROSS CONNECTOR BRIDGE\TRANSPORTATION\CADD\8516 WAX\SHEETSPLAN\090201-XS.DWG
LAYOUT NAME - 090204-xs
PLOT DATE : 11/1/2017 9:44 AM
PLOT BY : MICHAEL GASPER
PLOT NAME :
PLOT SCALE : 1 IN:10 FT HORZ. / 1 IN:10 FT VERT.

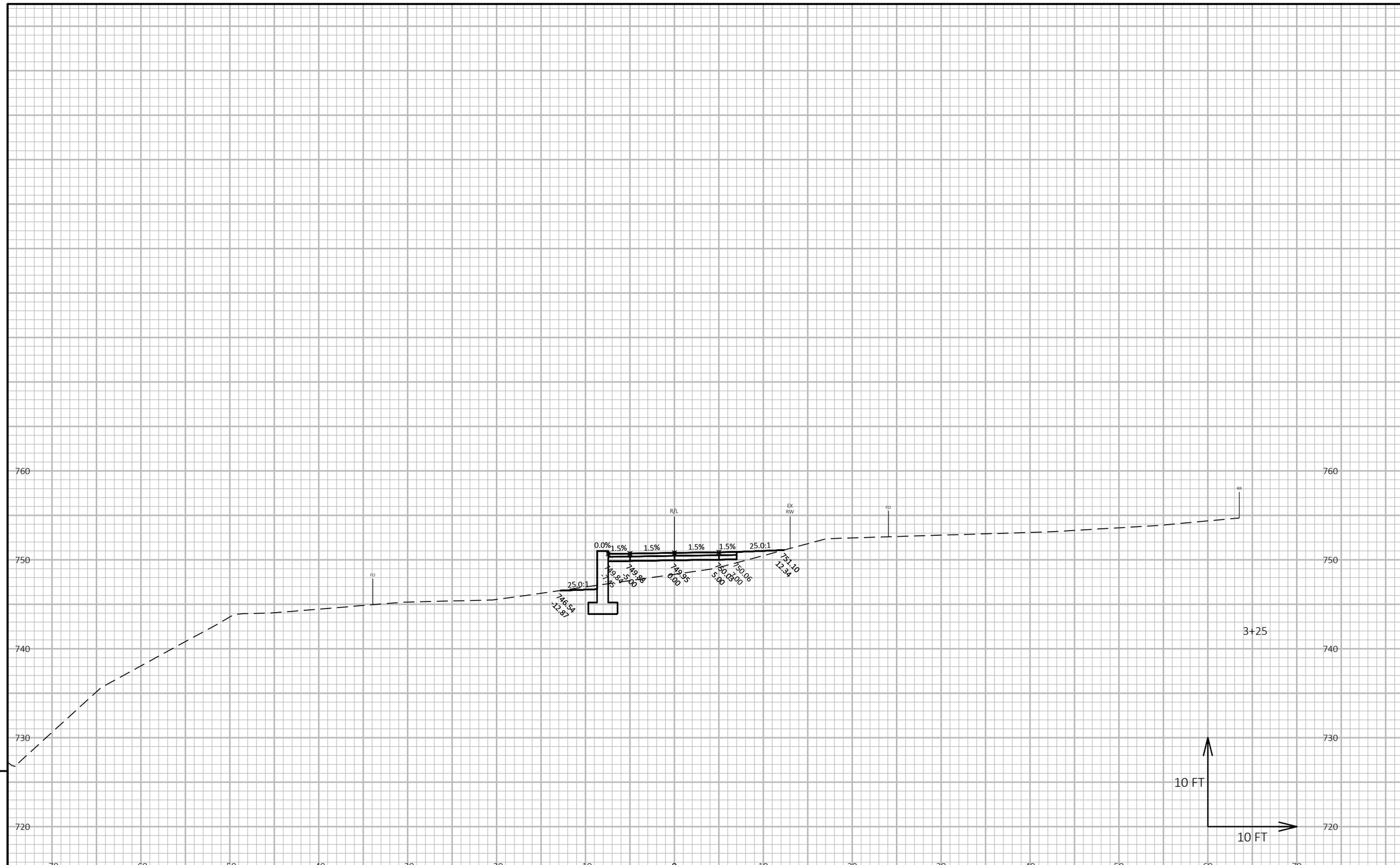

9

9

PROJECT NO: 1693-32-74	HWY: NON-HWY	COUNTY: MILWAUKEE COUNTY	CROSS SECTIONS: 090	SHEET 134	E

FILE NAME : P:\8516 WEST ALLIS CROSS CONNECTOR BRIDGE\TRANSPORTATION\CADD\8516 WAX\SHEETSPLAN\090201-XS.DWG
LAYOUT NAME - 090205-xs
PLOT DATE : 11/1/2017 9:44 AM
PLOT BY : MICHAEL GASPER
PLOT NAME :
PLOT SCALE : 1 IN:10 FT HORZ. / 1 IN:10 FT VERT.

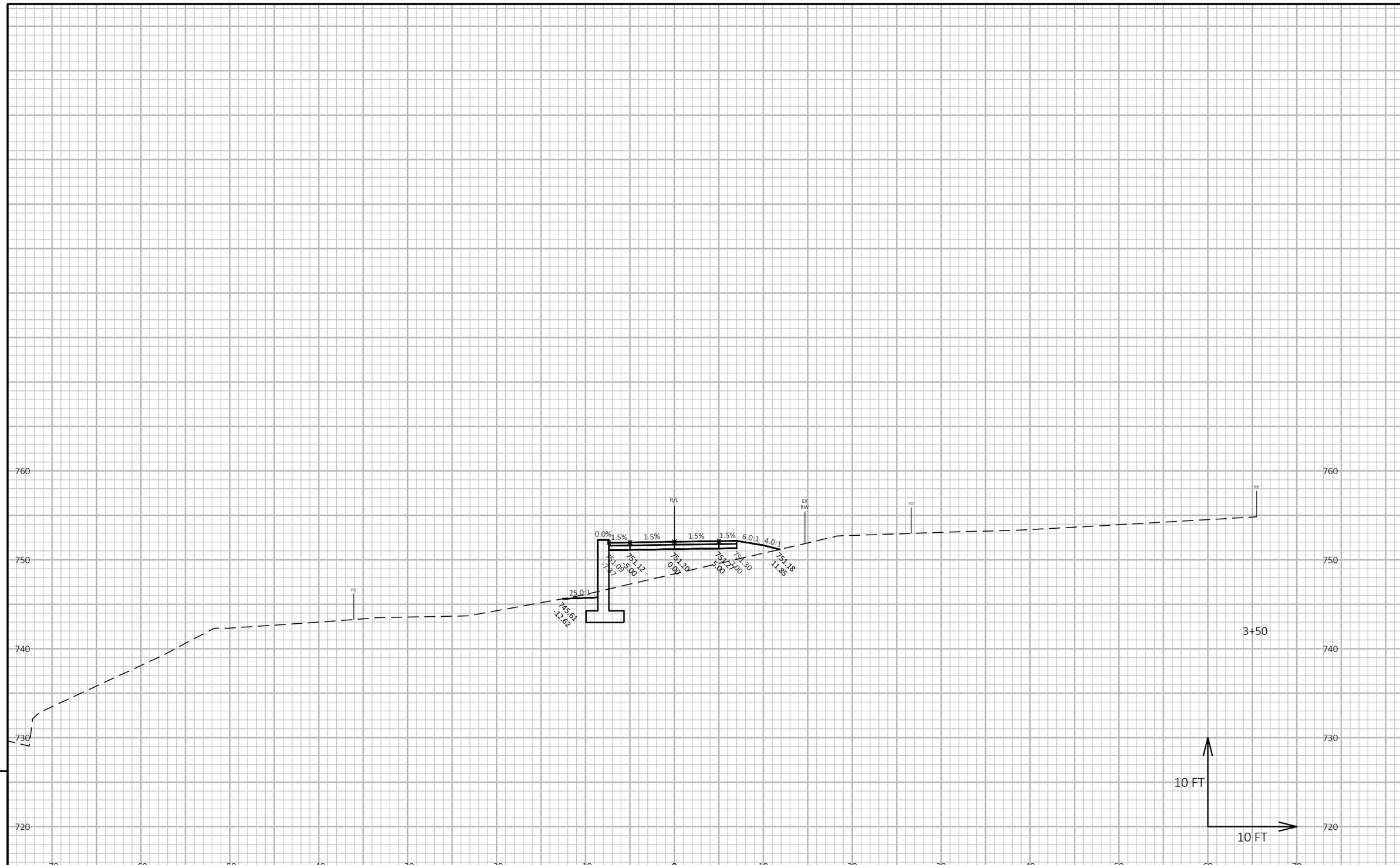

PROJECT NO: 1693-32-74	HWY: NON-HWY	COUNTY: MILWAUKEE COUNTY	CROSS SECTIONS: 090	SHEET 135	E

FILE NAME : P:\8516 WEST ALLIS CROSS CONNECTOR BRIDGE\TRANSPORTATION\CADD\8516 WAX\SHEETSPLAN\090201-XS.DWG
LAYOUT NAME - 090206-xs
PLOT DATE : 11/1/2017 9:45 AM PLOT BY : MICHAEL GASPER PLOT NAME : PLOT SCALE : 1 IN:10 FT HORZ. / 1 IN:10 FT VERT.

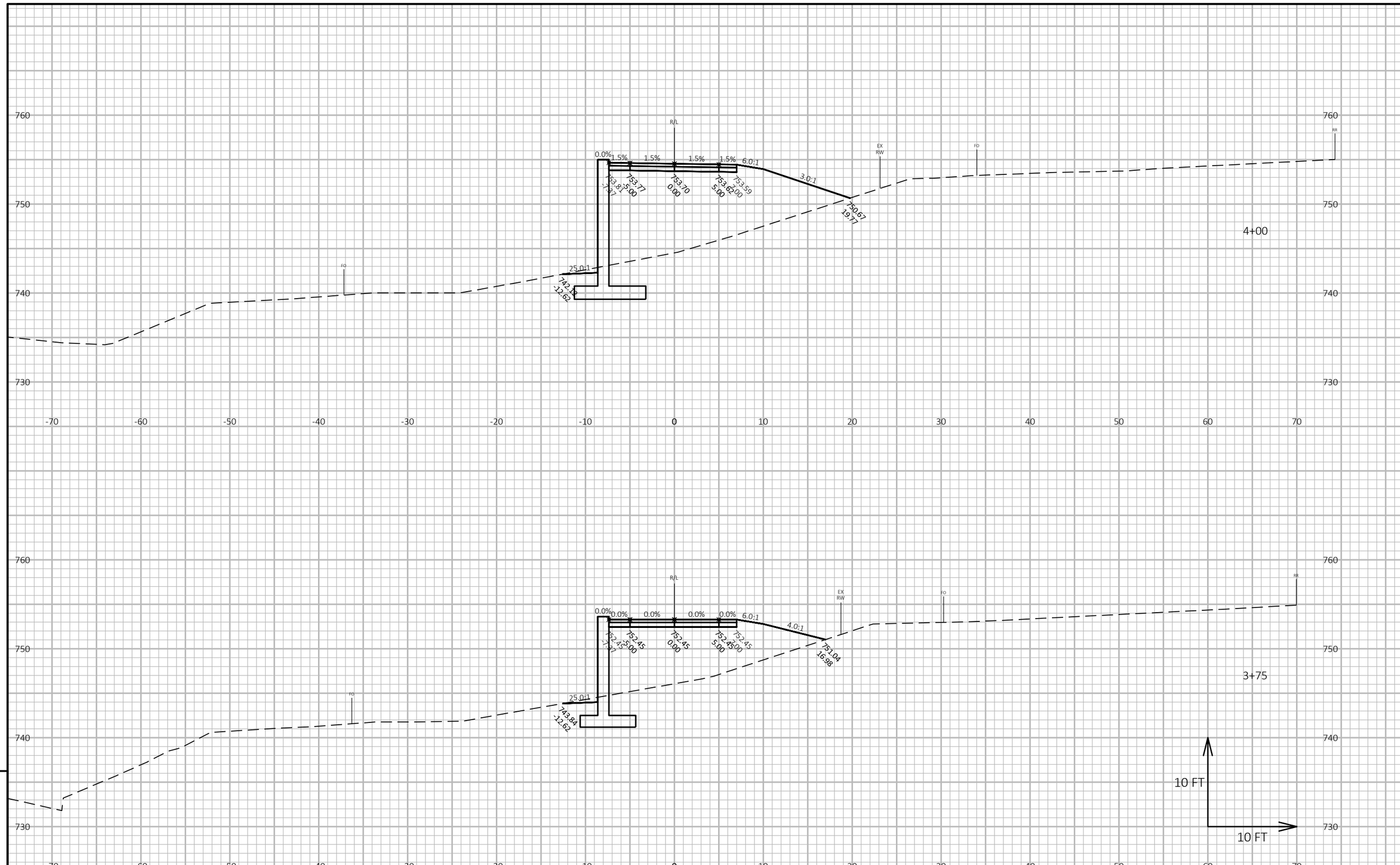

9

9

PROJECT NO: 1693-32-74	HWY: NON-HWY	COUNTY: MILWAUKEE COUNTY	CROSS SECTIONS: 090	SHEET 136	E

FILE NAME : P:\8516 WEST ALLIS CROSS CONNECTOR BRIDGE\TRANSPORTATION\CADD\8516 WAX\SHEETSPLAN\090201-XS.DWG
LAYOUT NAME - 090207-xs
PLOT DATE : 11/1/2017 9:45 AM
PLOT BY : MICHAEL GASPER
PLOT NAME :
PLOT SCALE : 1 IN:10 FT HORZ. / 1 IN:10 FT VERT.
WISDOT/CADDS SHEET 49

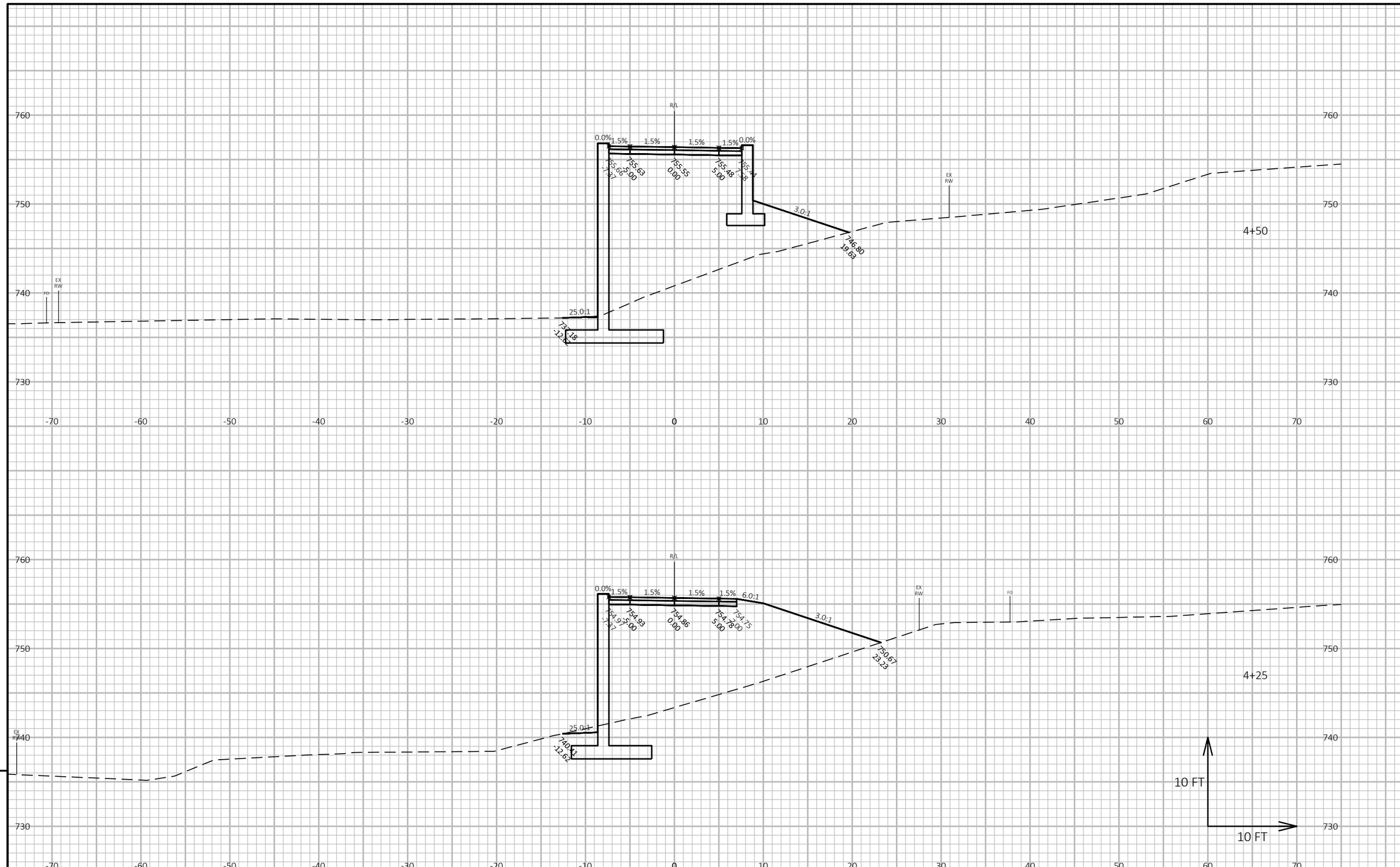

PROJECT NO: 1693-32-74	HWY: NON-HWY	COUNTY: MILWAUKEE COUNTY	CROSS SECTIONS: 090	SHEET 137	E

FILE NAME : P:\8516 WEST ALLIS CROSS CONNECTOR BRIDGE\TRANSPORTATION\CADD\8516 WAX\SHEETSPLAN\090201-XS.DWG
LAYOUT NAME - 090208-xs
PLOT DATE : 11/1/2017 9:45 AM
PLOT BY : MICHAEL GASPER
PLOT NAME :
PLOT SCALE : 1 IN:10 FT HORZ. / 1 IN:10 FT VERT.

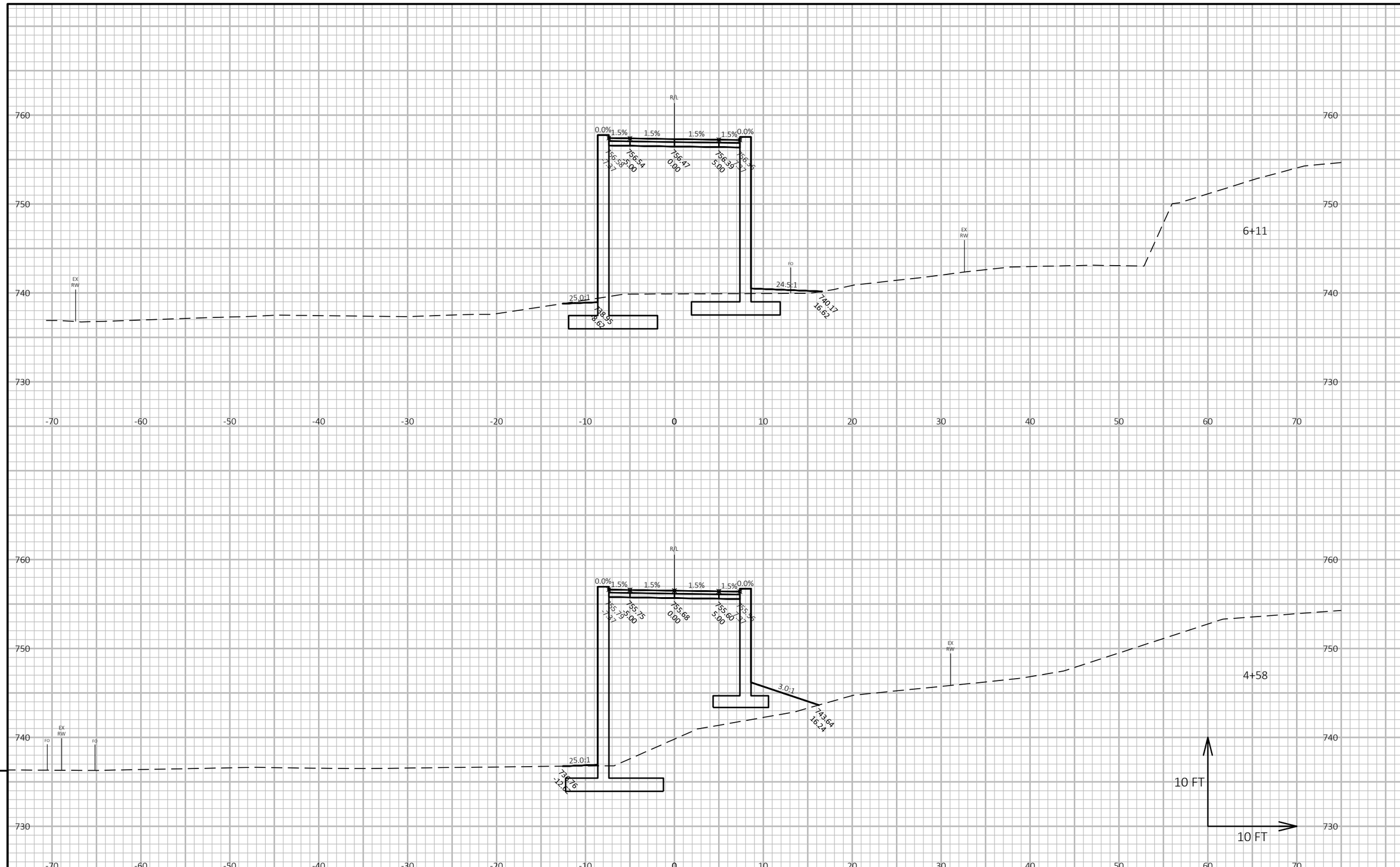

PROJECT NO: 1693-32-74	HWY: NON-HWY	COUNTY: MILWAUKEE COUNTY	CROSS SECTIONS: 090	SHEET 138	E

FILE NAME : P:\8516 WEST ALLIS CROSS CONNECTOR BRIDGE\TRANSPORTATION\CADD\8516 WAX\SHEETSPLAN\090201-XS.DWG
LAYOUT NAME - 090209-xs
PLOT DATE : 11/1/2017 9:45 AM
PLOT BY : MICHAEL GASPER
PLOT NAME :
PLOT SCALE : 1 IN:10 FT HORZ. / 1 IN:10 FT VERT.

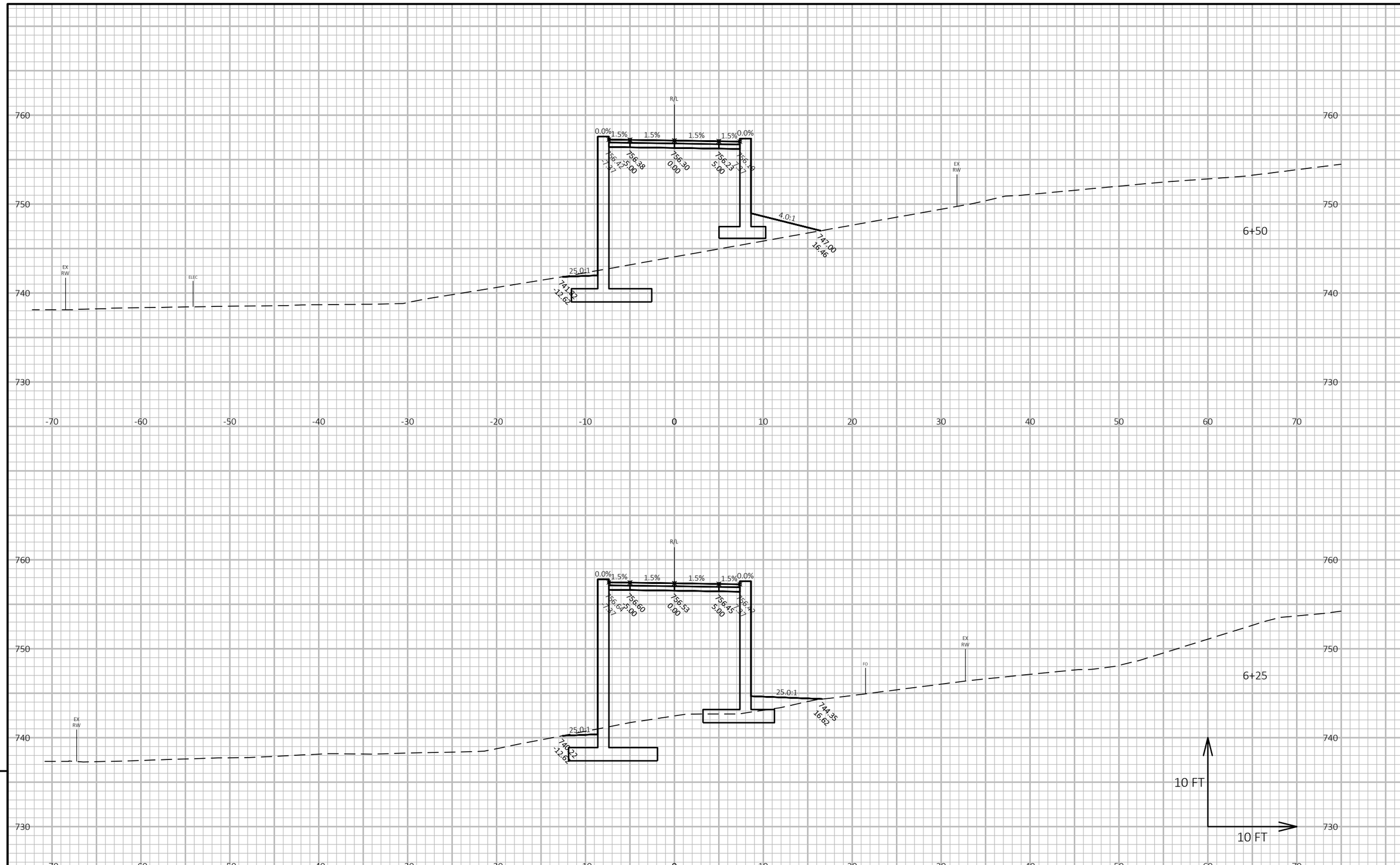

PROJECT NO: 1693-32-74	HWY: NON-HWY	COUNTY: MILWAUKEE COUNTY	CROSS SECTIONS: 090	SHEET 139	E

FILE NAME : P:\8516 WEST ALLIS CROSS CONNECTOR BRIDGE\TRANSPORTATION\CADD\8516 WAX\SHEETSPLAN\090201-XS.DWG
LAYOUT NAME - 090210-xs
PLOT DATE : 11/1/2017 9:45 AM
PLOT BY : MICHAEL GASPER
PLOT NAME :
PLOT SCALE : 1 IN:10 FT HORZ. / 1 IN:10 FT VERT.
WISDOT/CADDS SHEET 49

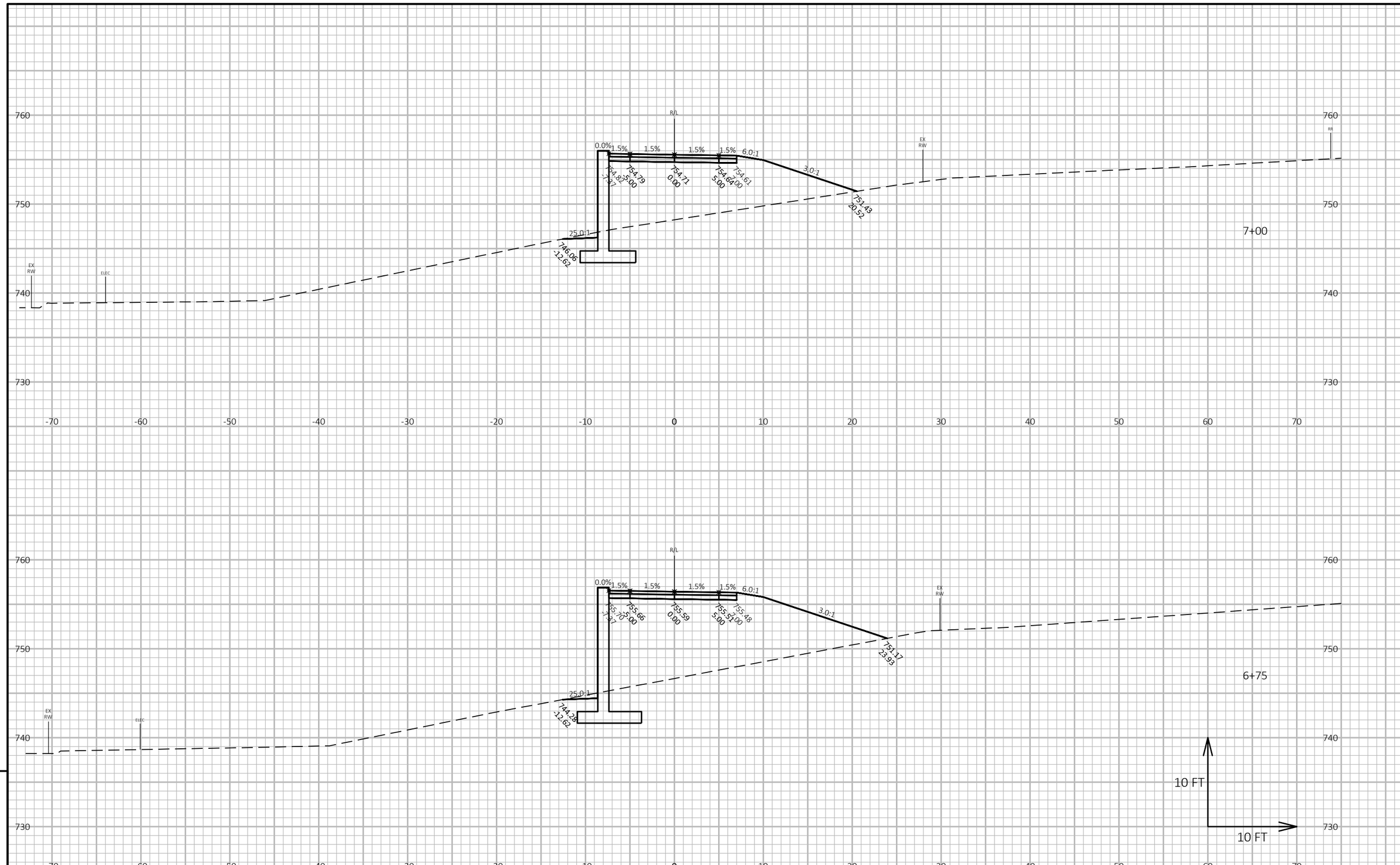

9

9

PROJECT NO: 1693-32-74	HWY: NON-HWY	COUNTY: MILWAUKEE COUNTY	CROSS SECTIONS: 090	SHEET 140	E

FILE NAME : P:\8516 WEST ALLIS CROSS CONNECTOR BRIDGE\TRANSPORTATION\CADD\8516 WAX\SHEETSPLAN\090201-XS.DWG
LAYOUT NAME - 090211-xs
PLOT DATE : 11/1/2017 9:45 AM
PLOT BY : MICHAEL GASPER
PLOT NAME :
PLOT SCALE : 1 IN:10 FT HORZ. / 1 IN:10 FT VERT.

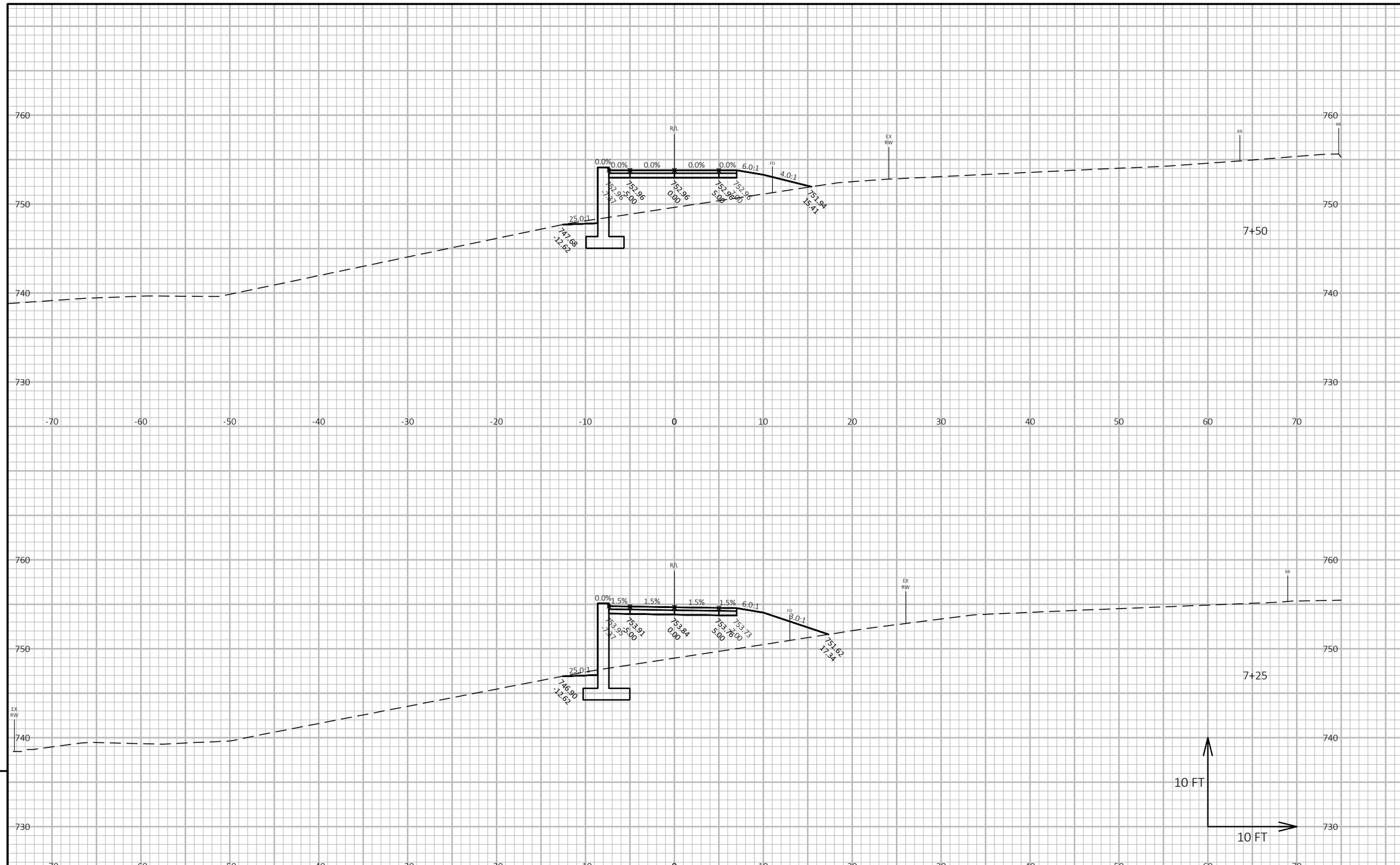

9

9

PROJECT NO: 1693-32-74	HWY: NON-HWY	COUNTY: MILWAUKEE COUNTY	CROSS SECTIONS: 090	SHEET 141	E

FILE NAME : P:\8516 WEST ALLIS CROSS CONNECTOR BRIDGE\TRANSPORTATION\CADD\8516 WAX\SHEETSPLAN\090201-XS.DWG
LAYOUT NAME - 090212-xs
PLOT DATE : 11/1/2017 9:45 AM
PLOT BY : MICHAEL GASPER
PLOT NAME :
PLOT SCALE : 1 IN:10 FT HORZ. / 1 IN:10 FT VERT.
WISDOT/CADDS SHEET 49

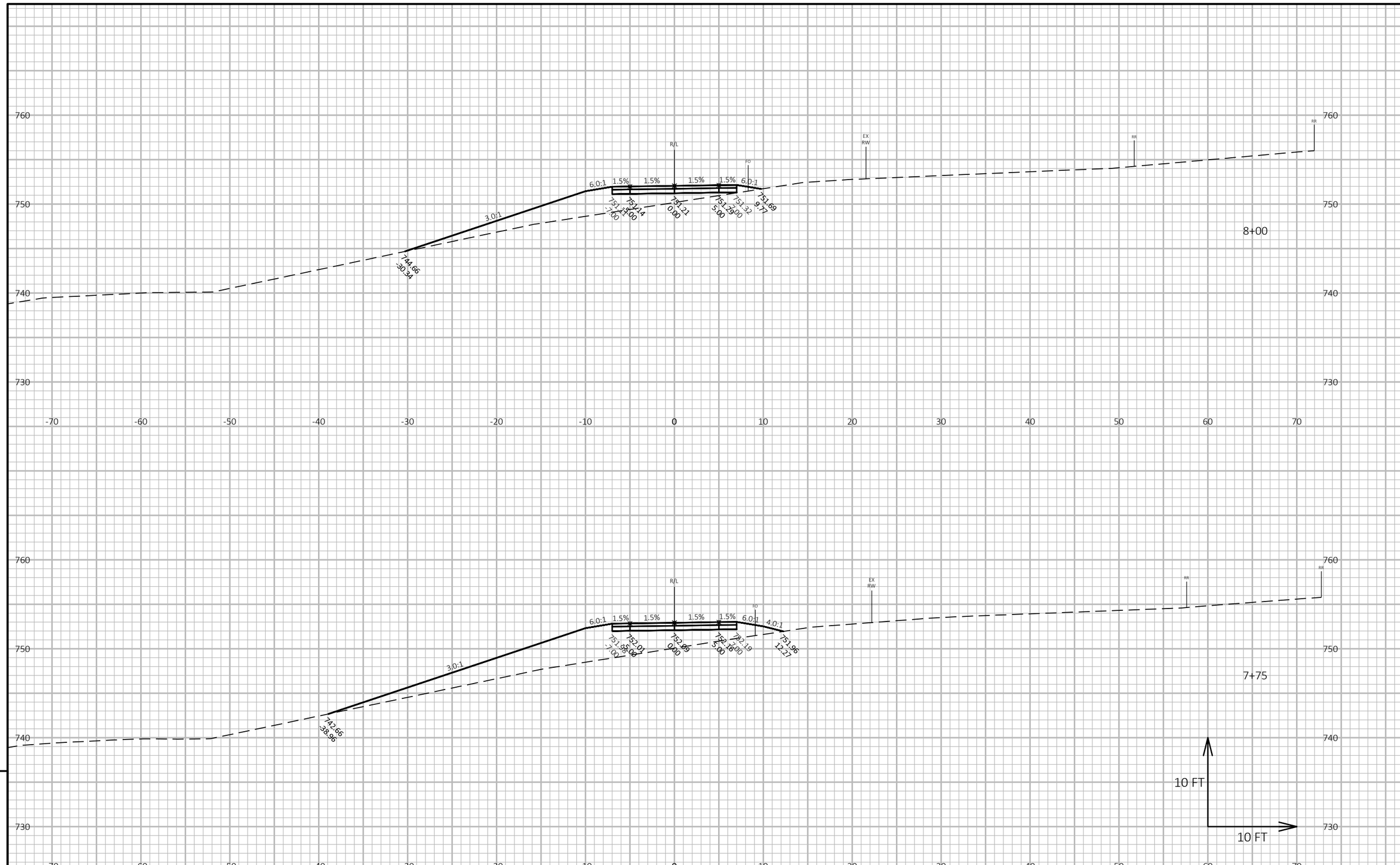

PROJECT NO: 1693-32-74	HWY: NON-HWY	COUNTY: MILWAUKEE COUNTY	CROSS SECTIONS: 090	SHEET 142	E

FILE NAME : P:\8516 WEST ALLIS CROSS CONNECTOR BRIDGE\TRANSPORTATION\CADD\8516 WAX\SHEETSPLAN\090201-XS.DWG
LAYOUT NAME - 090213-xs
PLOT DATE : 11/1/2017 9:45 AM PLOT BY : MICHAEL GASPER PLOT NAME : PLOT SCALE : 1 IN:10 FT HORZ. / 1 IN:10 FT VERT.

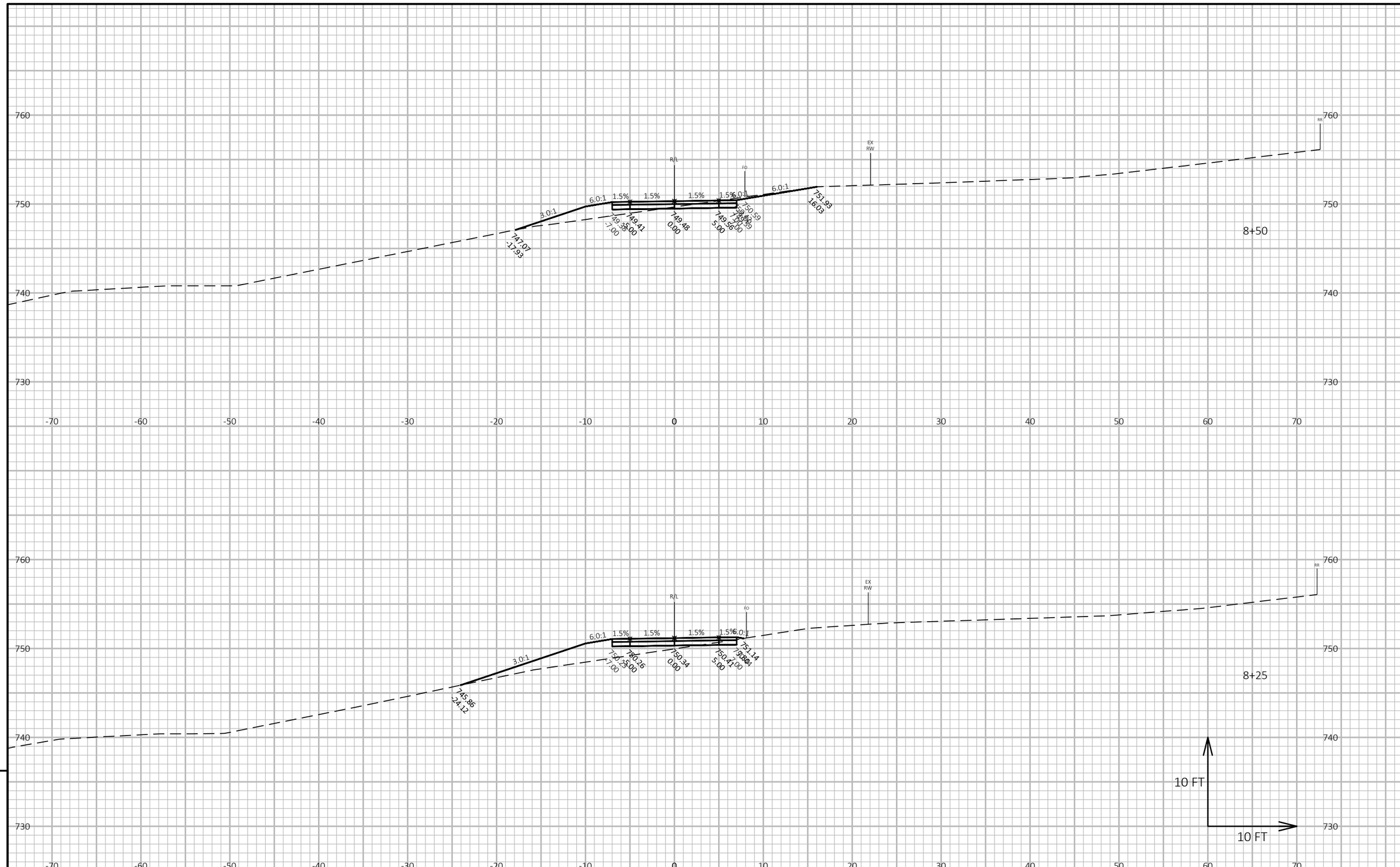

9

9

PROJECT NO: 1693-32-74	HWY: NON-HWY	COUNTY: MILWAUKEE COUNTY	CROSS SECTIONS: 090	SHEET 143	E

FILE NAME : P:\8516 WEST ALLIS CROSS CONNECTOR BRIDGE\TRANSPORTATION\CADD\8516 WAX\SHEETSPLAN\090201-XS.DWG
LAYOUT NAME - 090214-xs
PLOT DATE : 11/1/2017 9:45 AM PLOT BY : MICHAEL GASPER PLOT NAME : PLOT SCALE : 1 IN:10 FT HORZ. / 1 IN:10 FT VERT.

WISDOT/CADDS SHEET 49

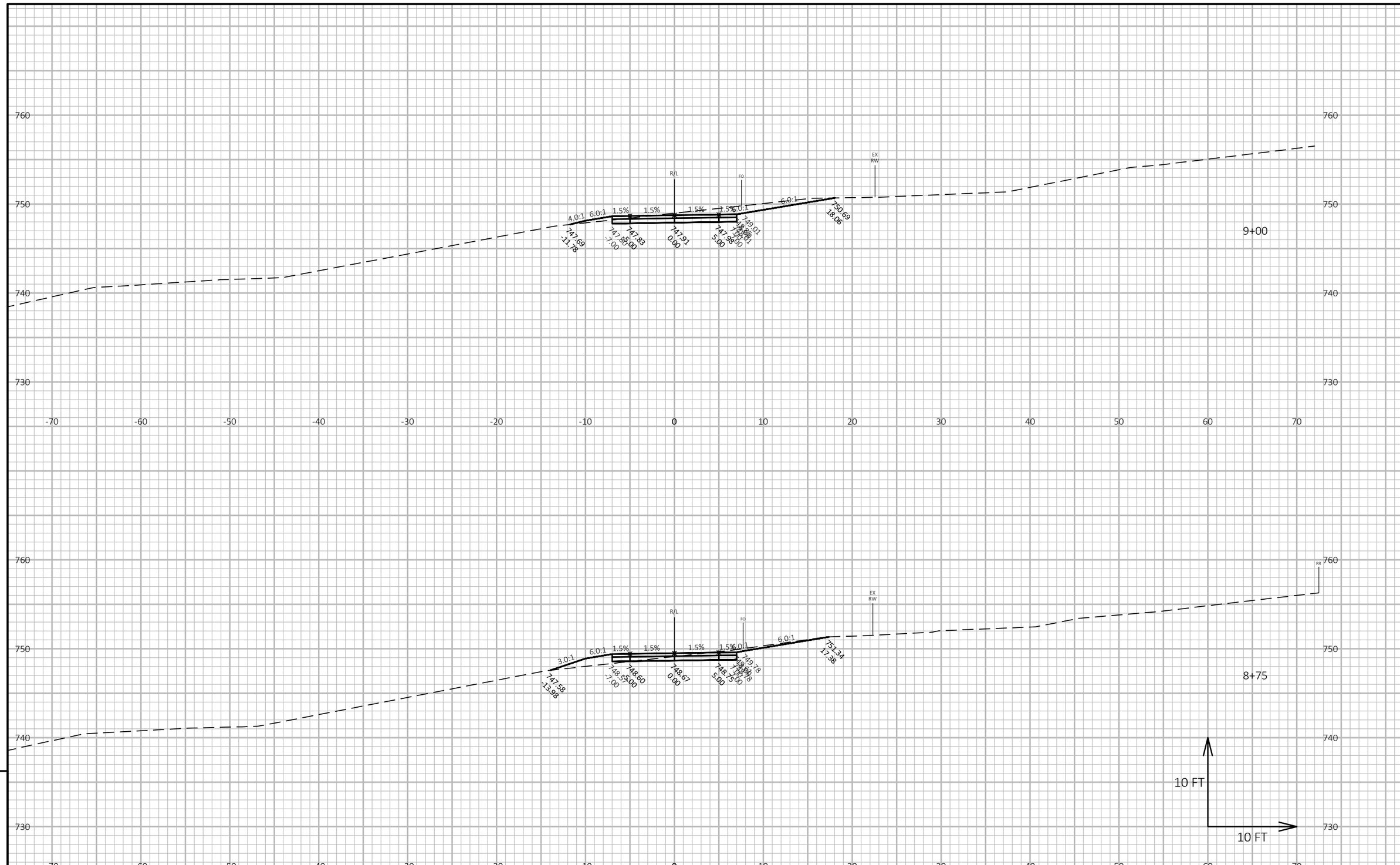

9

9

PROJECT NO: 1693-32-74	HWY: NON-HWY	COUNTY: MILWAUKEE COUNTY	CROSS SECTIONS: 090	SHEET 144	E

FILE NAME : P:\8516 WEST ALLIS CROSS CONNECTOR BRIDGE\TRANSPORTATION\CADD\8516 WAX\SHEETSPLAN\090201-XS.DWG
LAYOUT NAME - 090215-xs
PLOT DATE : 11/1/2017 9:45 AM
PLOT BY : MICHAEL GASPER
PLOT NAME :
PLOT SCALE : 1 IN:10 FT HORZ. / 1 IN:10 FT VERT.

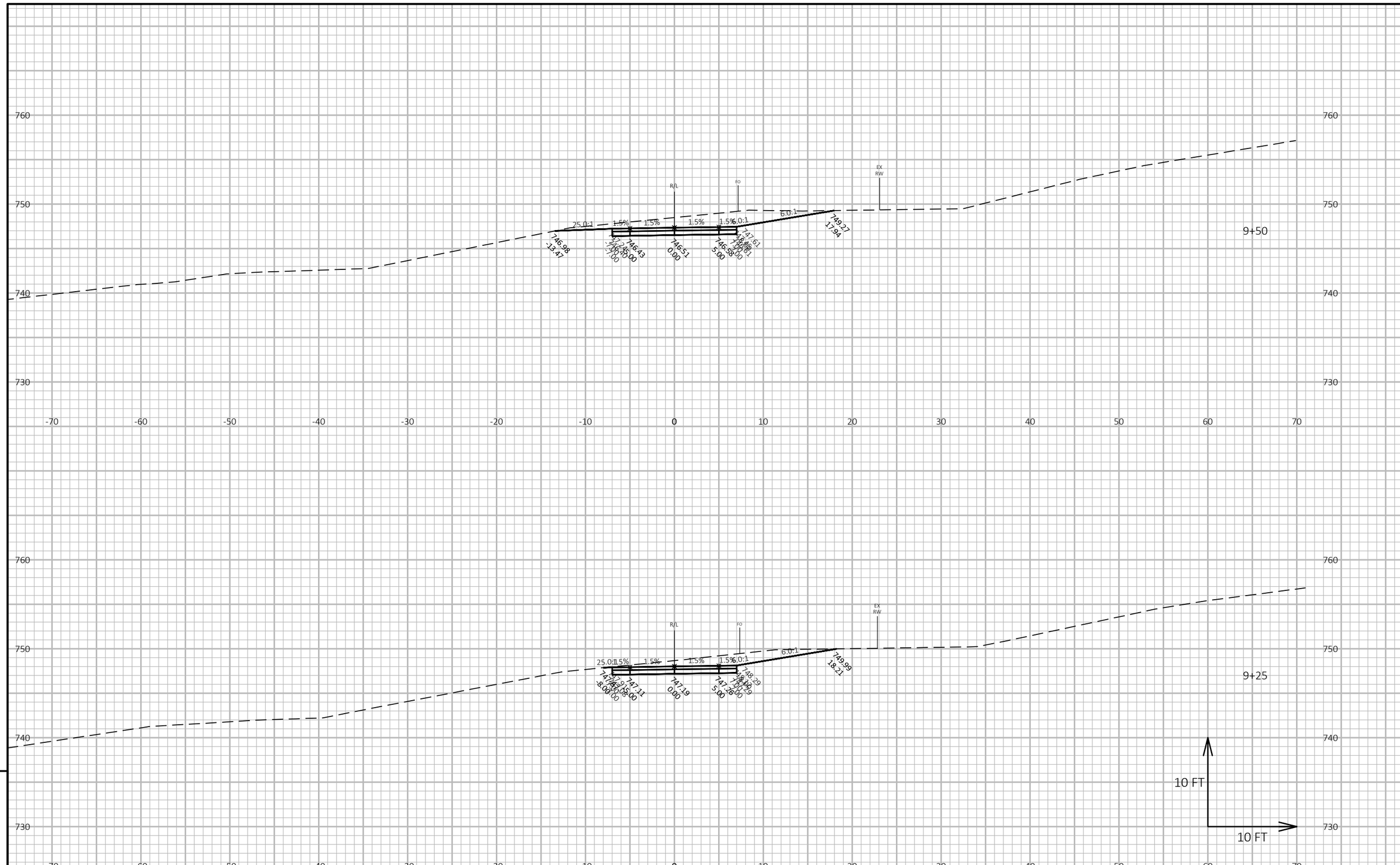

9

9

PROJECT NO: 1693-32-74	HWY: NON-HWY	COUNTY: MILWAUKEE COUNTY	CROSS SECTIONS: 090	SHEET 145	E

FILE NAME : P:\8516 WEST ALLIS CROSS CONNECTOR BRIDGE\TRANSPORTATION\CADD\8516 WAX\SHEETSPLAN\090201-XS.DWG
LAYOUT NAME - 090216-xs
PLOT DATE : 11/1/2017 9:45 AM
PLOT BY : MICHAEL GASPER
PLOT NAME :
PLOT SCALE : 1 IN:10 FT HORZ. / 1 IN:10 FT VERT.
WISDOT/CADDS SHEET 49

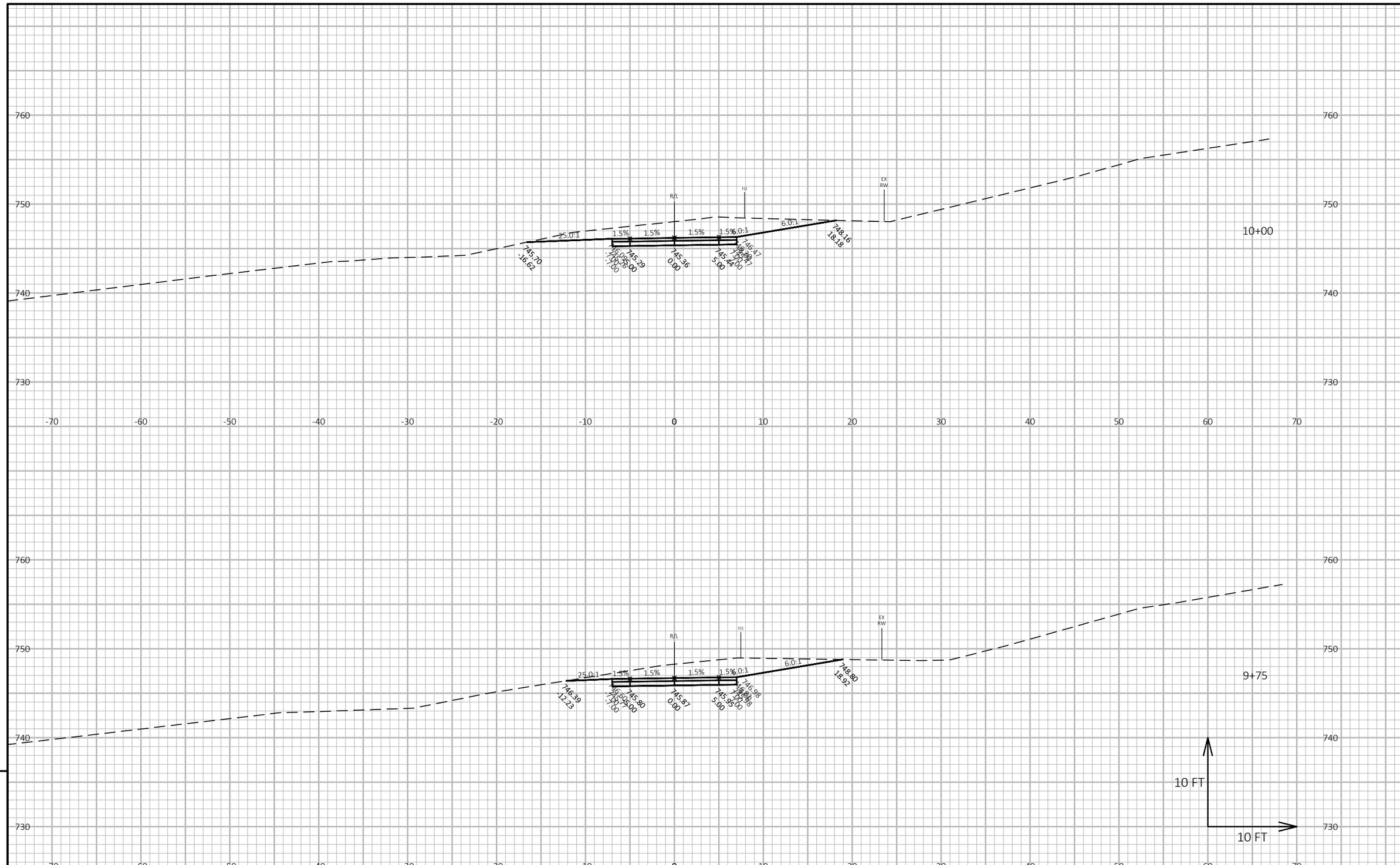

PROJECT NO: 1693-32-74	HWY: NON-HWY	COUNTY: MILWAUKEE COUNTY	CROSS SECTIONS: 090	SHEET 146	E

FILE NAME : P:\8516 WEST ALLIS CROSS CONNECTOR BRIDGE\TRANSPORTATION\CADD\8516 WAX\SHEETSPLAN\090201-XS.DWG
LAYOUT NAME - 090217-xs
PLOT DATE : 11/1/2017 9:45 AM
PLOT BY : MICHAEL GASPER
PLOT NAME :
PLOT SCALE : 1 IN:10 FT HORZ. / 1 IN:10 FT VERT.
WISDOT/CADDS SHEET 49

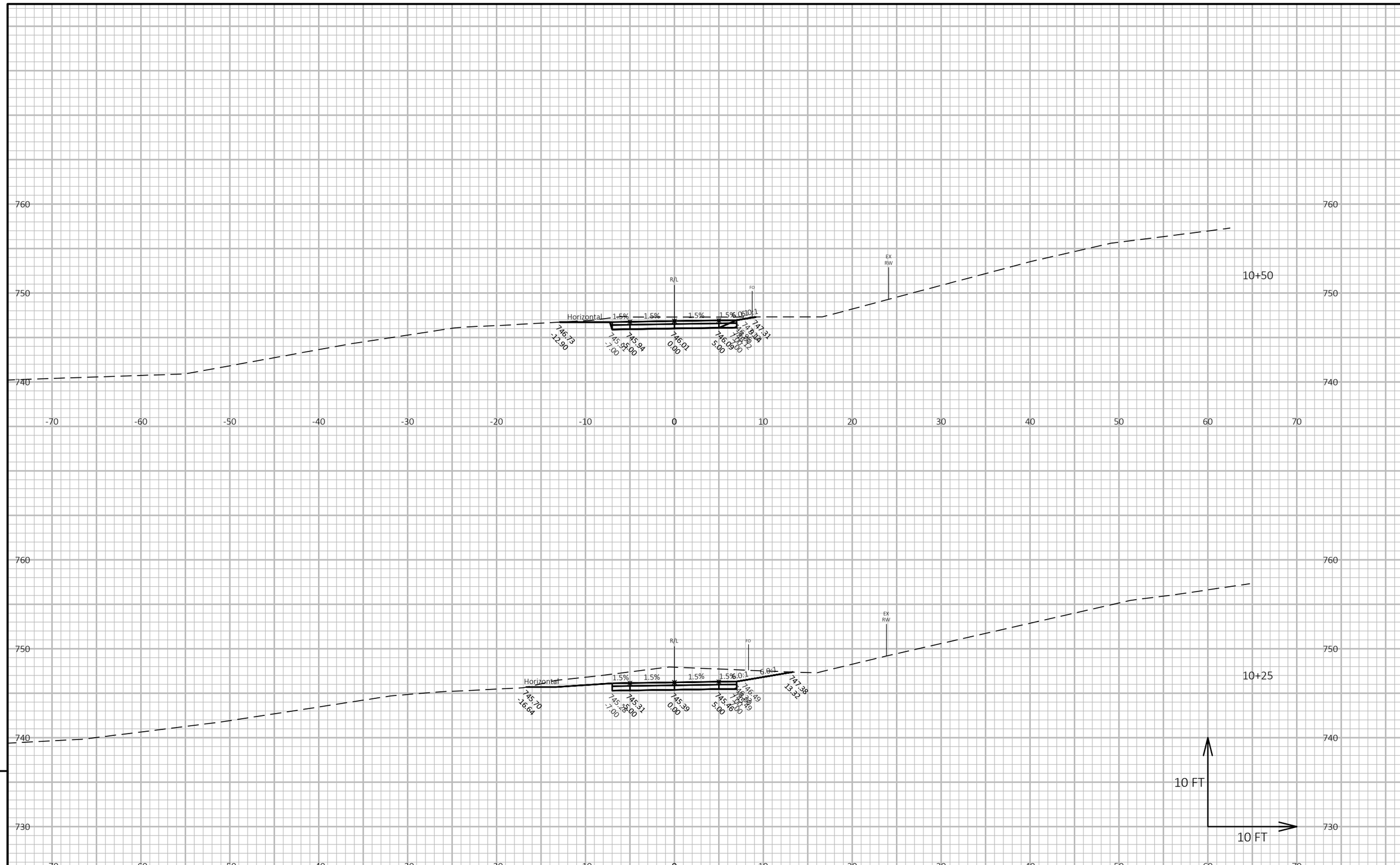

9

9

PROJECT NO: 1693-32-74	HWY: NON-HWY	COUNTY: MILWAUKEE COUNTY	CROSS SECTIONS: 090	SHEET 147	E

FILE NAME : P:\8516 WEST ALLIS CROSS CONNECTOR BRIDGE\TRANSPORTATION\CADD\8516 WAX\SHEETSPLAN\090201-XS.DWG
LAYOUT NAME - 090218-xs
PLOT DATE : 11/1/2017 9:46 AM
PLOT BY : MICHAEL GASPER
PLOT NAME :
PLOT SCALE : 1 IN:10 FT HORZ. / 1 IN:10 FT VERT.

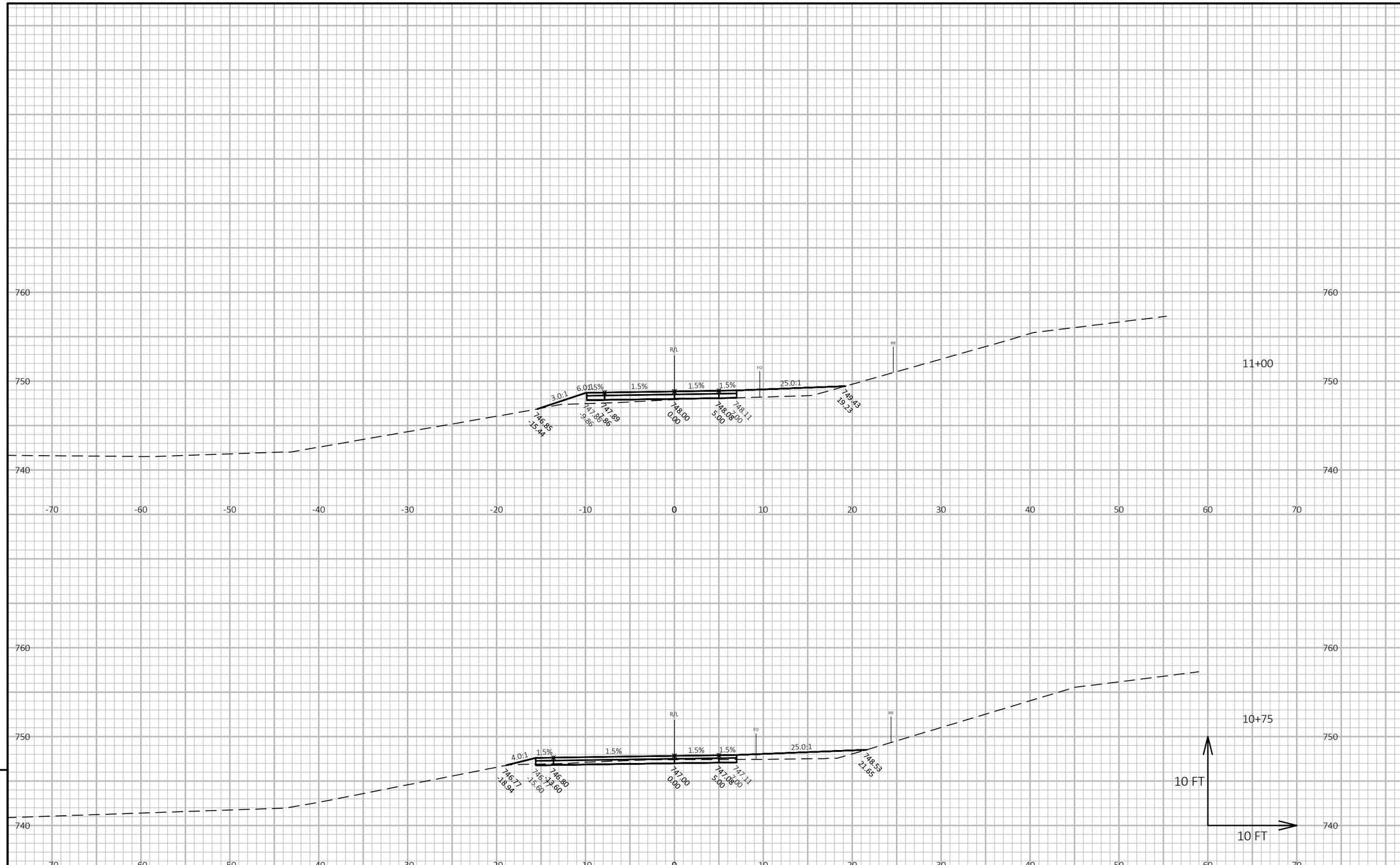

9

9

PROJECT NO: 1693-32-74	HWY: NON-HWY	COUNTY: MILWAUKEE COUNTY	CROSS SECTIONS: 090	SHEET 148	E

FILE NAME : P:\8516 WEST ALLIS CROSS CONNECTOR BRIDGE\TRANSPORTATION\CADD\8516 WAX\SHEETSPLAN\090201-XS.DWG
LAYOUT NAME - 090219-xs

PLOT DATE : 11/1/2017 9:46 AM PLOT BY : MICHAEL GASPER PLOT NAME : PLOT SCALE : 1 IN:10 FT HORZ. / 1 IN:10 FT VERT.

WISDOT/CADDS SHEET 49

END PROJECT
STA. 11+29.02

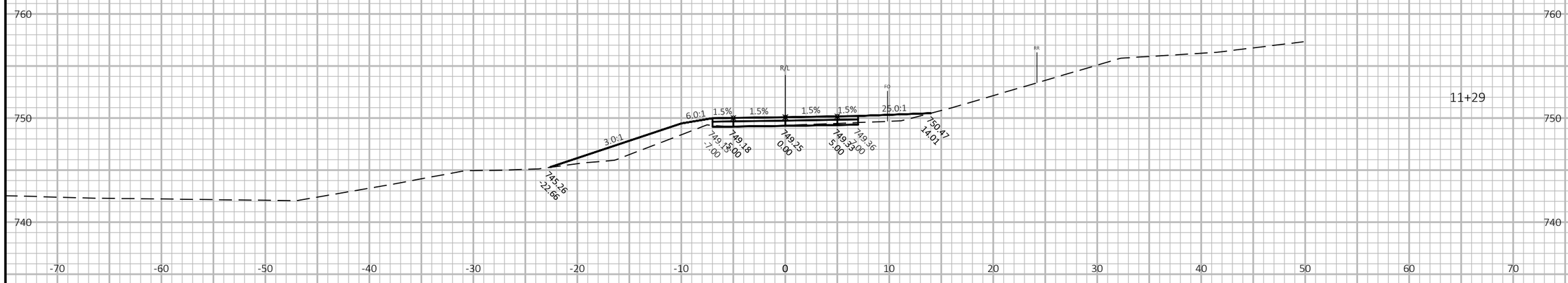

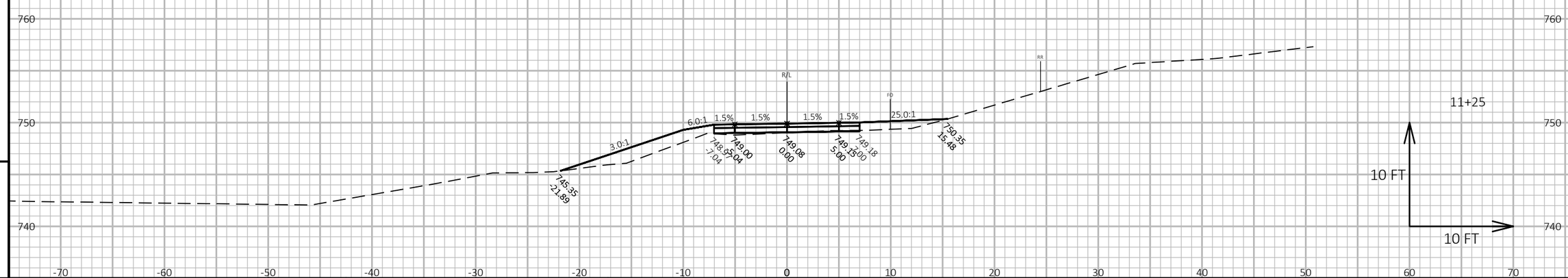

9

9

PROJECT NO: 1693-32-74	HWY: NON-HWY	COUNTY: MILWAUKEE COUNTY	CROSS SECTIONS: 090	SHEET 149	E

FILE NAME : P:\8516 WEST ALLIS CROSS CONNECTOR BRIDGE\TRANSPORTATION\CADD\8516 WAX\SHEETSPLAN\090201-XS.DWG
LAYOUT NAME - 090220-xs
PLOT DATE : 11/1/2017 9:46 AM
PLOT BY : MICHAEL GASPER
PLOT NAME :
PLOT SCALE : 1 IN:10 FT HORZ. / 1 IN:10 FT VERT.

Wisconsin Department of Transportation

Dedicated people creating transportation solutions through innovation and exceptional service.

http://www.dot.wisconsin.gov