MAD

PROJECT ID: 3300-01-73

WITH: 3300-01-74

COUNTY: JEFFERSON

MARCH 2018

ORDER OF SHEETS

TOTAL SHEETS = 450

STATE PROJECT	FEDERAL PROJECT	
	PROJECT	CONTRACT
3300-01-73	WISC 2018137	1
3300-01-74	—	—

STATE OF WISCONSIN
DEPARTMENT OF TRANSPORTATION

PLAN OF PROPOSED IMPROVEMENT

C LAKE MILLS, MAIN STREET

TOPEL STREET TO MADISON STREET

STH 89

JEFFERSON COUNTY

ROADWAY

STATE PROJECT NUMBER
3300-01-73

SANITARY SEWER & WATER MAIN

STATE PROJECT NUMBER
3300-01-74

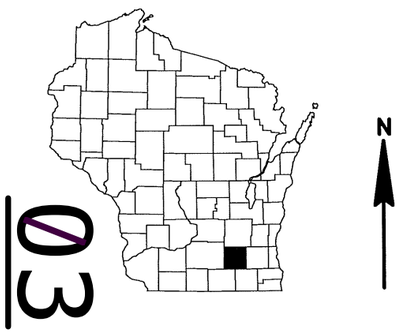

N

DESIGN DESIGNATION 3300-01-03

A.A.D.T.	2018	=	8500
A.A.D.T.	2038	=	9300
D.H.V.		=	4.9%
D.D.		=	59/41
T.		=	5.7%
DESIGN SPEED		=	30 M.P.H.
ESALS		=	1,900,000

CONVENTIONAL SYMBOLS

PLAN

CORPORATE LIMITS

PROPERTY LINE

LOT LINE

LIMITED HIGHWAY EASEMENT

EXISTING RIGHT OF WAY

PROPOSED OR NEW R/W LINE

SLOPE INTERCEPT

REFERENCE LINE (300'EB')

EXISTING CULVERT

PROPOSED CULVERT (Box or Pipe)

COMBUSTIBLE FLUIDS (CAUTION)

MARSH AREA

WOODED OR SHRUB AREA

PROFILE

GRADE LINE

ORIGINAL GROUND

MARSH OR ROCK PROFILE (To be noted as such) (ROCK)

SPECIAL DITCH (LABEL)

GRADE ELEVATION (95.36)

CULVERT (Profile View)

UTILITIES

ELECTRIC — E —

OVERHEAD UTILITY — OH —

FIBER OPTIC — FO —

GAS — G —

SANITARY SEWER — SAN —

STORM SEWER — SS —

TELEPHONE — T —

WATER — W —

UTILITY PEDESTAL

POWER POLE

TELEPHONE POLE

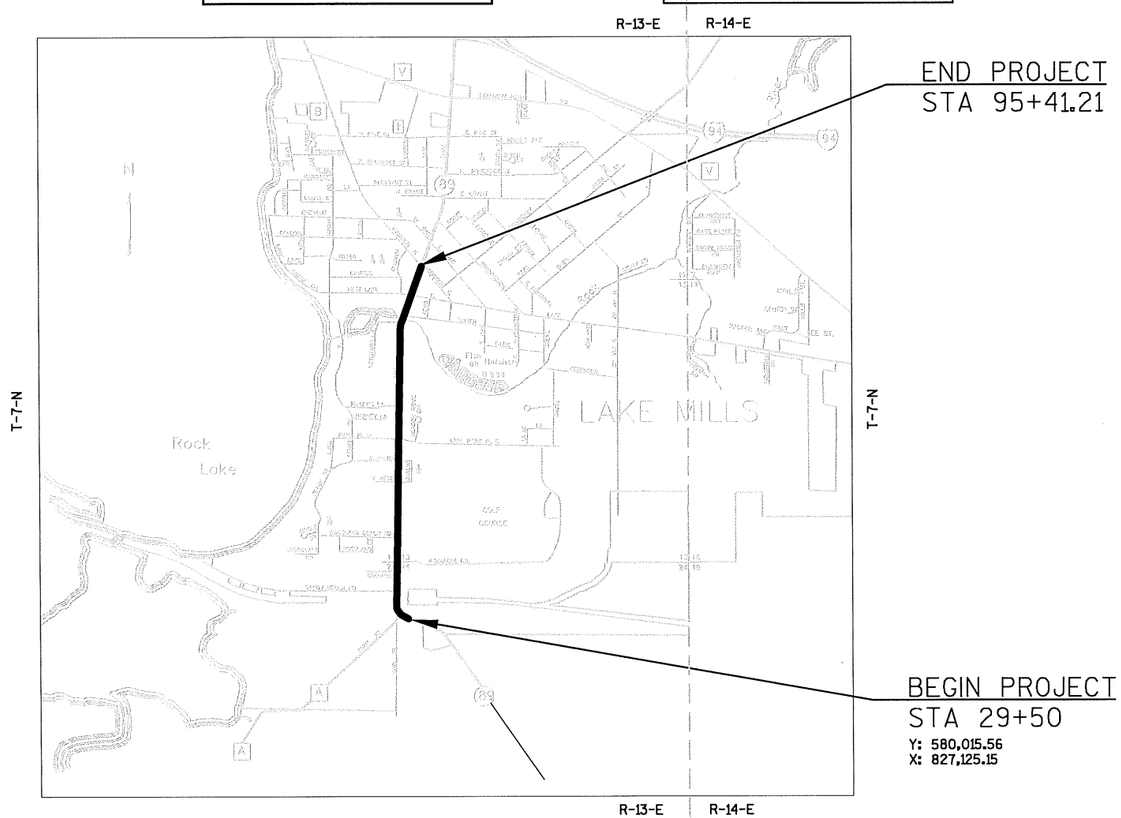

LAYOUT

SCALE 0 — 0.5 MILES

TOTAL NET LENGTH OF CENTERLINE = 1.248 MI.

HORIZONTAL POSITIONS SHOWN ON THIS PLAN ARE WISCONSIN COUNTY COORDINATES, JEFFERSON COUNTY, NAD83 (2007), IN U.S. SURVEY FEET. VALUES ARE GRID COORDINATES, GRID BEARINGS, AND GRID DISTANCES. GRID DISTANCES MAY BE USED AS GROUND DISTANCES.

ELEVATIONS SHOWN ON THIS PLAN ARE REFERENCED TO THE NATIONAL GEODETIC VERTICAL DATUM OF NAVD 88 (2007).

STATE OF WISCONSIN
DEPARTMENT OF TRANSPORTATION

PREPARED BY

Surveyor	R.A. SMITH NATIONAL
Designer	JEREMY WHITE
Project Manager	BRANDAN HAGER
Regional Examiner	
Regional Supervisor	JIM OETTINGER

APPROVED FOR THE DEPARTMENT

DATE: 11-1-17 (Signature)

E

2

GENERAL NOTES

NO TREES OR SHRUBS THAT ARE NOT MARKED ON THE PLAN TO BE REMOVED SHALL BE REMOVED WITHOUT THE APPROVAL OF THE ENGINEER IN THE FIELD.

THE LOCATIONS OF EXISTING AND PROPOSED UTILITY INSTALLATIONS AS SHOWN ON THE PLANS ARE APPROXIMATE. THERE MAY BE OTHER UTILITY INSTALLATIONS WITHIN THE PROJECT AREA THAT ARE NOT SHOWN. CONTRACTOR SHALL COORDINATE HIS CONSTRUCTION ACTIVITIES WITH A CALL TO DIGGERS HOTLINE AND/OR A DIRECT CALL TO THE UTILITIES THAT HAVE FACILITIES IN THE AREA. NOT ALL UTILITIES ARE MEMBERS OF DIGGERS HOTLINE.

ASPHALTIC SURFACE AND WEIGHT CALCULATIONS ARE BASED ON 112 LB/SY/IN.

PLACE THE 3.5" AND 5" ASPHALTIC SURFACE IN TWO LAYERS.

APPLY TACK COAT BETWEEN LAYERS OF ASPHALTIC SURFACE. THE APPLICATION RATE IS 0.05 GALLONS PER SQUARE YARD OR AS DIRECTED BY THE ENGINEER.

THE CONTRACTOR'S PAVING OPERATIONS SHALL BE CONSISTENT WITH THE PLAN TYPICAL SECTIONS AND CONSTRUCTED TO PREVENT ASPHALTIC SURFACE LONGITUDINAL JOINTS FROM BEING LOCATED WITHIN A DRIVING, TURNING, BIKE OR PARKING LANE.

ASPHALT PAVING LIMITS AT INTERSECTIONS ARE TO BE DETERMINED IN THE FIELD BY THE ENGINEER AND SHALL HAVE BUTT JOINTS.

SAWCUTS, AS SHOWN ON THE PLANS, ARE SUGGESTED LOCATIONS AND MAY BE ADJUSTED AT THE DISCRETION OF THE ENGINEER TO BETTER SUIT FIELD CONDITIONS.

EXACT SIGN LOCATIONS SHOWN ON THE PLANS ARE APPROXIMATE AND THE LOCATIONS OF SIGNS ARE TO BE DETERMINED BY THE ENGINEER.

THE EROSION CONTROL DEVICES AS SHOWN ON THE EROSION CONTROL SHEETS ARE AT SUGGESTED LOCATIONS. EXACT LOCATIONS WILL BE DETERMINED BY THE ENGINEER. EROSION CONTROL DEVICES SHALL BE PLACED IN SEQUENCE WITH CONSTRUCTION OPERATIONS OR AS DETERMINED BY THE ENGINEER.

INLETS SHALL BE COVERED AS NECESSARY TO PREVENT CONSTRUCTION MATERIAL FROM FALLING INTO THE INLETS.

ALL OPENINGS OF HOLES BELOW SUBGRADE RESULTING FROM REMOVALS OR ABANDONMENTS SHALL BE BACKFILLED WITH GRANULAR MATERIAL AND COMPACTED. GRANULAR MATERIAL IS INCIDENTAL TO THE REMOVAL ITEM.

ALL PROPERTY LINES IN PLANS ARE APPROXIMATE.

THE LOCATION OF STOP LINES SHALL BE DETERMINED IN THE FIELD BY THE ENGINEER.

CURB AND GUTTER PLAN GRADES ARE AT THE FLANGE LINE UNLESS OTHERWISE NOTED.

RADIUS DIMENSIONS FOR THE CURB AND GUTTER ARE TO THE FLANGE OF THE CURB.

UTILITY LINES IN CROSS SECTIONS ARE FOR HORIZONTAL REFERENCE ONLY.

RIGHT OF WAY LINES SHOWN IN THE CROSS SECTIONS ARE APPROXIMATE.

DISTURBED AREAS WITHIN THE RIGHT-OF-WAY SHALL BE FERTILIZED, SEEDED AND MULCHED.

CONSTRUCT INSIDE EDGE OF SIDEWALK 1/2 INCH HIGHER THAN TOP OF CURB WHEN THEY ARE ADJACENT TO EACH OTHER.

SIDEWALK REPLACEMENT SHOULD BE TO THE NEAREST JOINT.

IF REMOVING CONCRETE STEPS IS NECESSARY AND APPROVED BY THE ENGINEER, IT WILL BE PAID FOR AS REMOVING CONCRETE SIDEWALK. NEW STEPS OR NEW DROPS BETWEEN ENTRANCES AND SIDEWALK SHALL NOT BE ADDED AT ANY LOCATION WITHIN THE PROJECT UNLESS APPROVED BY THE ENGINEER.

CONTRACTOR SHALL MAINTAIN ACCESS TO ALL DRIVEWAYS AT ALL TIMES EXCEPT WHEN PAVING OR INSTALLING UTILITIES REQUIRE THE DRIVEWAY TO BE CLOSED. ACCESS TO DRIVEWAY SHALL BE RE-ESTABLISHED IMMEDIATELY AFTER PAVEMENT OR UTILITIES ARE INSTALLED.

UTILITIES AND OTHER CONTACTS

2

CHARTER COMMUNICATIONS (COMMUNICATION)
FIELD CONTACT: RON FRASE
N3760 CTH DJ
JUNEAU, WI 53039
(920) 349-3202 x103; MOBILE (608)438-9648
ron.frase@charter.com

BRANDON STORM
2701 DANIELS ST.
MADISON, WI 53718
(608) 274-3822; MOBILE (608) 444-9493

FRONTIER COMMUNICATIONS OF WI LLC (COMMUNICATION)
FIELD CONTACT: ED STIEBER
100 COMMUNICATIONS DR
SUN PRAIRIE, WI 53590
(608)-837-1410; MOBILE (262) 325-7048
Edward.o.stieber@ftr.com

RUSS RYAN
107 PLEASANT VIEW DR.
PLYMOUTH, WI 53703
(920) 893-7212; MOBILE (920) 737-9662

LAKE MILLS LIGHT AND WATER DEPT (ELECTRICITY)
FIELD CONTACT: CHRIS EVERSON or AL MILBRATH
155 S. INDUSTRIAL DRIVE
LAKE MILLS, WI 53551
(920) 648-4026

LAKE MILLS LIGHT AND WATER DEPT (WATER)
PAUL HERMANSON
155 S. INDUSTRIAL DRIVE
LAKE MILLS, WI 53551
(920) 648-4026 MOBILE (920) 723-4684
phermanson@ci.lake-mills.wi.us

LAKE MILLS WASTEWATER UTILITY (SANITARY)
PAUL HERMANSON
155 S. INDUSTRIAL DRIVE
LAKE MILLS, WI 53551
(920) 648-4026; MOBILE (920) 723-4684
phermanson@ci.lake-mills.wi.us

CITY OF LAKE MILLS (COMMUNICATION)
PAUL HERMANSON
155 S. INDUSTRIAL DRIVE
LAKE MILLS, WI 53551
(920) 648-4026 MOBILE (920) 723-4684
phermanson@ci.lake-mills.wi.us

SPRINT COMMUNICATIONS (COMMUNICATION)
FIELD CONTACT: KENNETH M. NINE
110 N. MAIN ST.
CULVER, IN 46511
(574) 842-8830;MOBILE (574) 904-6336
Kennethnine@att.net

JAMES BURTON
1901 N. ROSELLE RD.
SUITE 500
SCHAUMBURG, IL 60195
(800) 788-0751; MOBILE (708) 955-6659

WE ENERGIES (GAS/PETROLEUM)
FIELD CONTACT: JACOB SCHOENUNG
500 S 116th ST.
WEST ALLIS, WI 53024
(414) 262-6705; MOBILE (414) 416-3365
jacob.schoenung@we-energies.com

DAN SANDE
333 W. EVERETT ST.
A299
MILWAUKEE, WI 53203
(414) 221-4578; MOBILE (414) 550-4993

DIGGERS HOTLINE
Dial 811 or (800)242-8511
www.DiggersHotline.com

WI DNR LIASON
LAURA BUB
3911 FISH HATCHERY ROAD
FITCHBURG, WI 53711-5397
(608) 275-3485
Laura.bub@wisconsin.gov

DESIGN PROJECT MANAGER (WISDOT)
BRANDAN HAGER
2101 WRIGHT ST.
MADISON, WI 53704
(608) 245-2625
Brandan.Hager@dot.wi.gov

DESIGN PROJECT LEADER (WISDOT)
JEREMY WHITE
2101 WRIGHT ST.
MADISON, WI 53704
(608) 246-7545
Jeremy.White@dot.wi.gov

2

STANDARD ABBREVIATIONS

AGG.	AGGREGATE	FERT.	FERTILIZER	P.L.E.	PERMANENT LIMITED EASEMENT
AH	AHEAD	F/L, F.L.	FLOW LINE	R	RADIUS OR RANGE
AE, AEW	APRON ENDWALL	CWT.	HUNDRED WEIGHT	R/L	REFERENCE LINE
ASPH.	ASPHALTIC	INL	INLET	R.C.C.P.	REINFORCED CONCRETE CULVERT PIPE
A.D.T.	AVERAGE DAILY TRAFFIC	INTER.	INTERSECTION	RT	RIGHT
BK.	BACK	JT.	JOINT	REQ'D	REQUIRED
BEG.	BEGIN	LT	LEFT	R/W	RIGHT OF WAY
B.M.	BENCH MARK	L.	LENGTH OF CURVE	RD.	ROAD
C/L	CENTER LINE	L.F.	LINEAR FOOT(FEET)	SHLD.	SHOULDER(S)
C.M.C.P.	CORRUGATED METAL CULVERT PIPE	LS	LUMP SUM	S	SOUTH
C.M.P.	CORRUGATED METAL PIPE			S.F.	SQUARE FOOT (FEET)
CTH	COUNTY TRUNK HIGHWAY	MAX.	MAXIMUM	SDD	STANDARD DETAIL DRAWING(S)
CR.	CREEK	MGAL	1000 GALLONS	STH	STATE TRUNK HIGHWAY
C.A.B.C.	CRUSHED AGGREGATE BASE COURSE	MIN.	MINIMUM	STA.	STATION
C.Y.	CUBIC YARD	N.C.	NORMAL CROWN OR NO CHANGE	S.E.	SUPERELEVATION
C.P.	CULVERT PIPE	N	NORTH	T	TANGENT
C. & G.	CURB AND GUTTER	NO.	NUMBER	TEL.	TELEPHONE
D	DEGREE OF CURVE, CENTRAL ANGLE OR DELTA	PAV'T	PAVEMENT	TEMP.	TEMPORARY
D.H.V.	DESIGN HOUR VOLUME	P.C.	POINT OF CURVATURE	T.L.E.	TEMPORARY LIMITED EASEMENT
DIA.	DIAMETER	P.I.	POINT OF INTERSECTION	TER.	TERRACE
DISCH.	DISCHARGE	P.T.	POINT OF TANGENCY	T.O.C.	TOP OF CURB
EA	EACH	V.P.C.	VERTICAL POINT OF CURVATURE	T.	(TRUCKS) PERCENT OF
E	EAST	V.P.I.	VERTICAL POINT OF INTERSECTION	TYP.	TYPICAL
ELEC.	ELECTRIC(AL), ELEC. CABLE	V.P.T.	VERTICAL POINT OF TANGENCY	UNCL.	UNCLASSIFIED
EL., ELEV.	ELEVATION	PCC	PORTLAND CEMENT CONCRETE	U.G.	UNDERGROUND (CABLE)
EXC.	EXCAVATION	P.E.	PRIVATE ENTRANCE	V.C.	VERTICAL CURVE
F.F.	FACE TO FACE	P.L.	PROPERTY LINE	W	WEST

SECTION 2 ORDER OF SHEETS

2

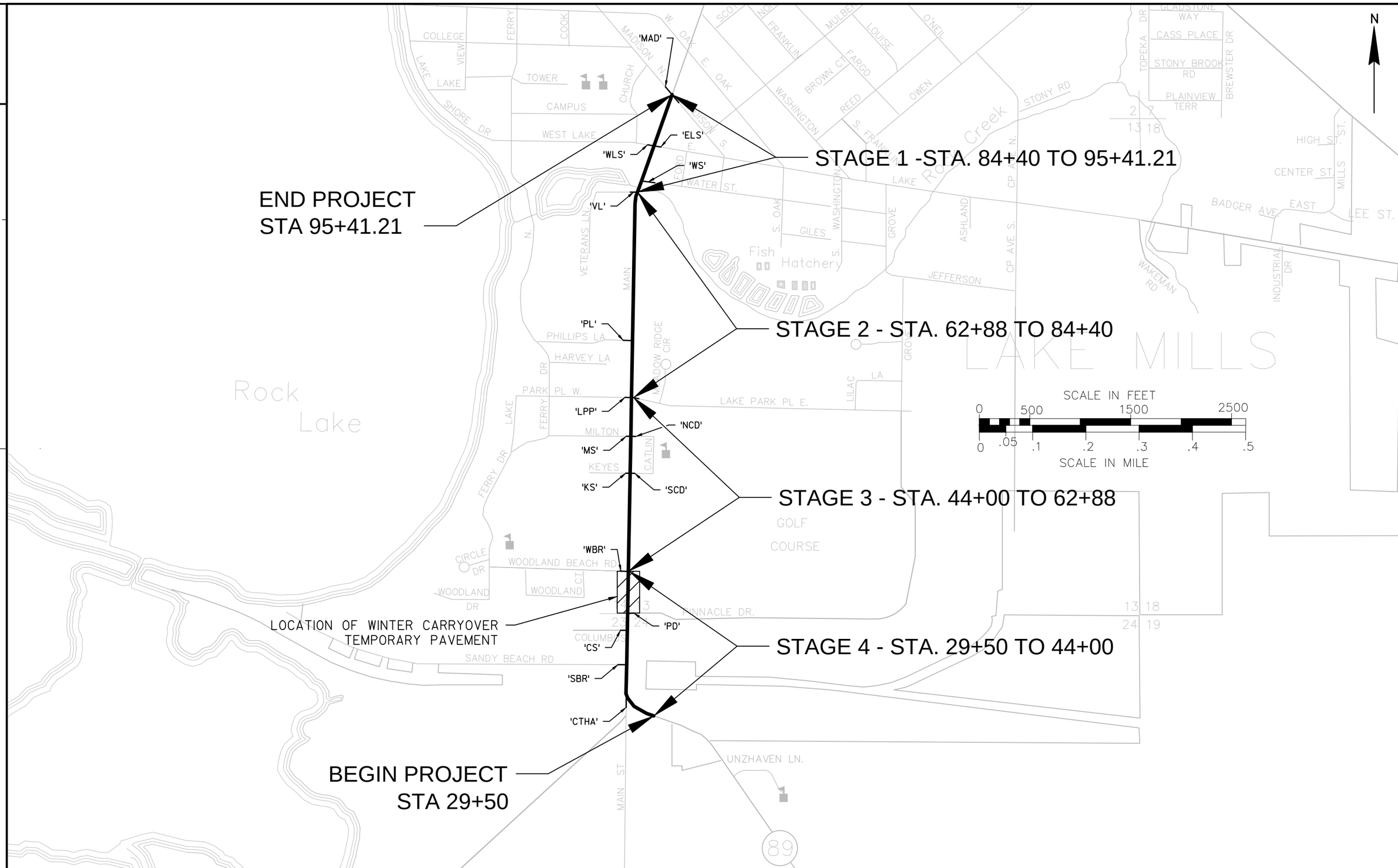

PROJECT NO:3300-01-73	HWY:STH 89	COUNTY:JEFFERSON	PROJECT OVERVIEW	SHEET 4	E

FILE NAME : N:\PDS\C3D\33000103\SHEETSPLAN\020201-PROJECT OVERVIEW\020201-PO.DWG
LAYOUT NAME - 020201-PO
PLOT DATE : 10/11/2017 1:27 PM PLOT BY : WHITE, JEREMY J PLOT NAME : PLOT SCALE : 1 IN:200 FT

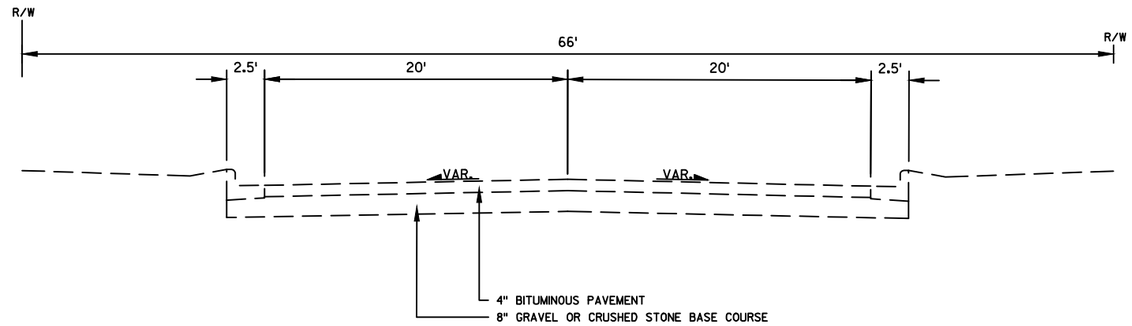

EXISTING TYPICAL SECTION

BEG. OF PROJECT TO TRAIL CROSSING
STA 29+50 TO STA 33+47
STH 89

CTH A/TOPEL ST.
STA 8+25-CTHA to STA 9+83-CTHA

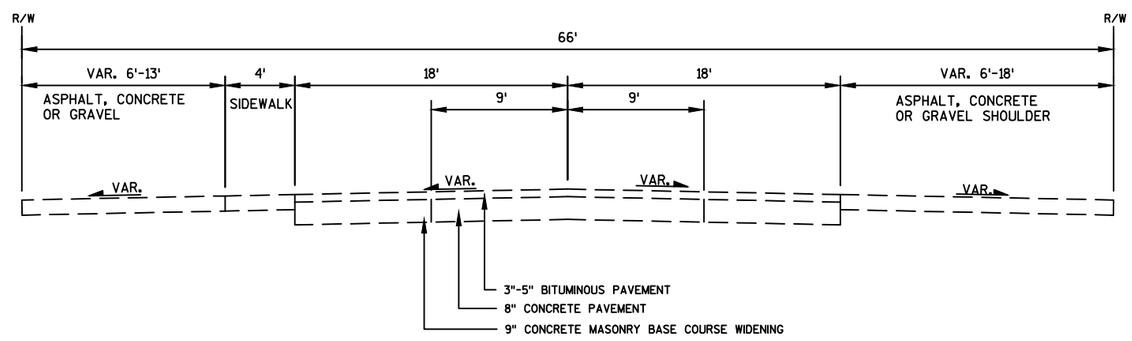

EXISTING TYPICAL SECTION

TRAIL CROSSING TO COLUMBUS STREET
STA 33+47 TO STA 38+37
STH 89

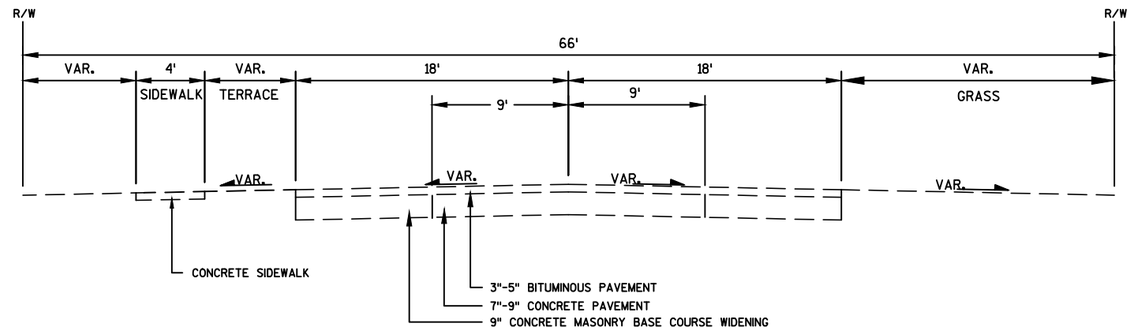

EXISTING TYPICAL SECTION

COLUMBUS STREET TO LAKE MILLS GOLF CLUB
STA 38+37 TO STA 51+20
STH 89

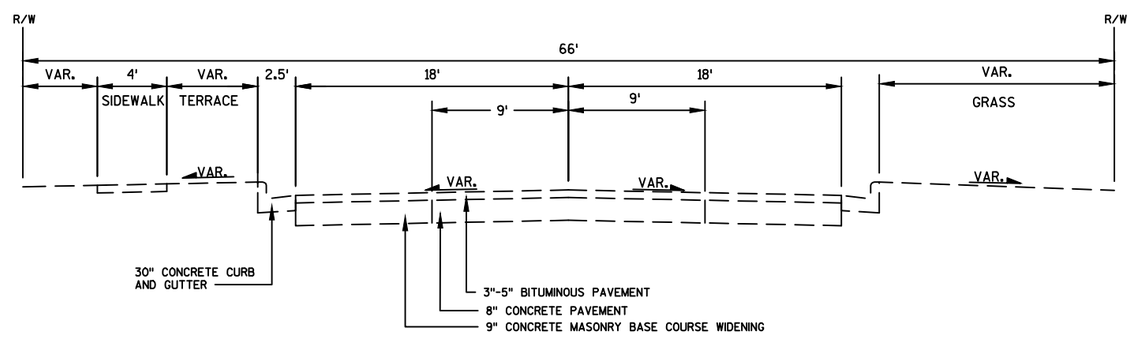

EXISTING TYPICAL SECTION

LAKE MILLS GOLF CLUB TO CATLIN DRIVE/KEYES STREET
STA 51+20 TO STA 55+17
STH 89

PROJECT NO:3300-01-73	HWY:STH 89	COUNTY:JEFFERSON	EXISTING TYPICAL SECTIONS	SHEET 6	E

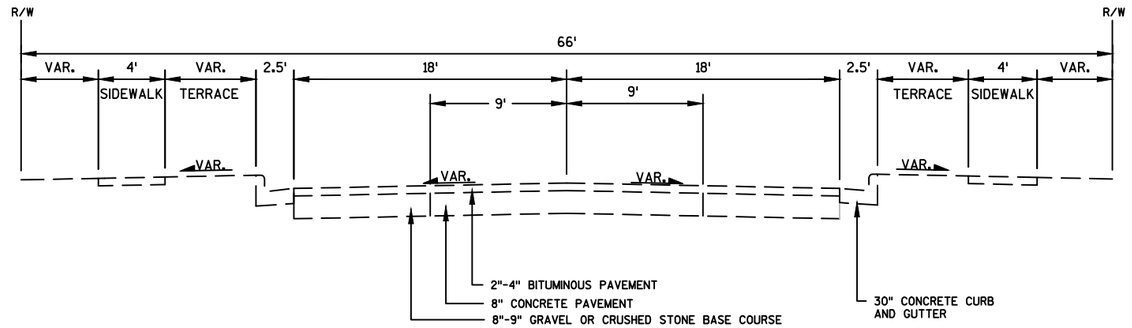

EXISTING TYPICAL SECTION

CATLIN DRIVE/KEYES STREET TO E. LAKE PARK PLACE
STA 55+17 TO STA 63+08
STH 89

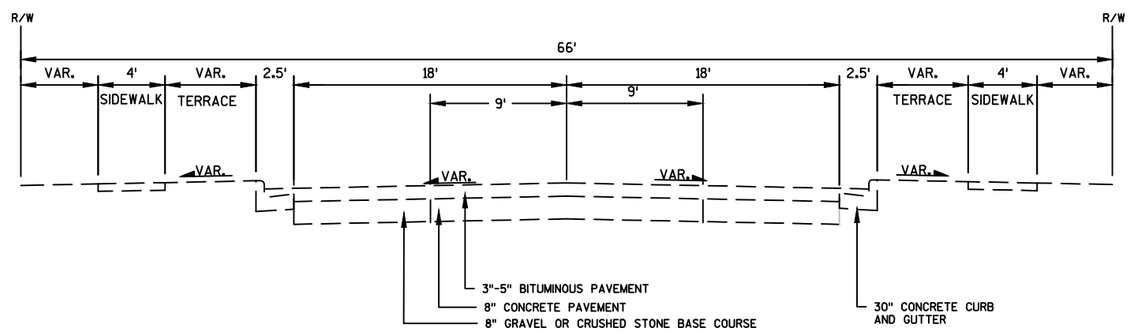

EXISTING TYPICAL SECTION

E. LAKE PARK PL. TO 354' NORTH OF E. LAKE PARK PLACE
STA 63+08 TO STA 66+41
STH 89

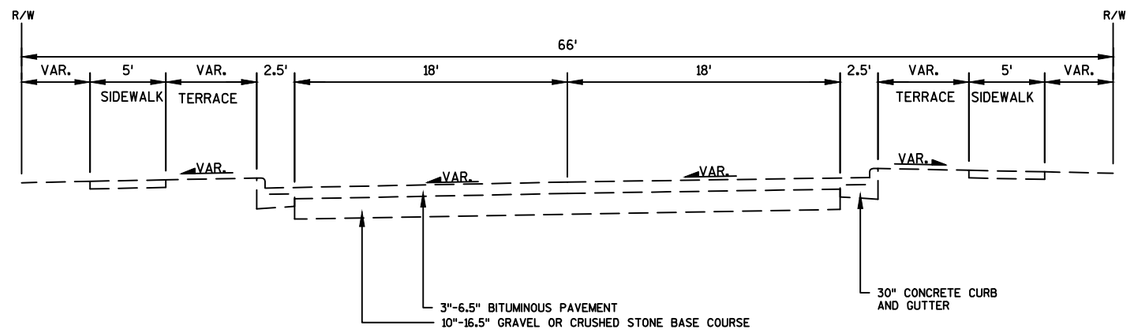

EXISTING TYPICAL SECTION

354' NORTH OF E. LAKE PARK PLACE TO WATER STREET
STA 66+41 TO STA 86+09
STH 89

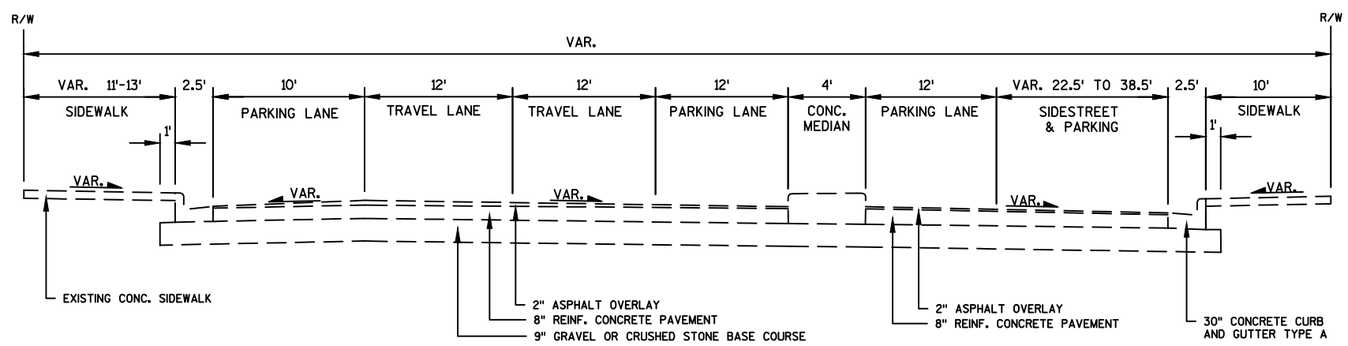

EXISTING TYPICAL SECTION

WATER STREET TO LAKE STREET
STA 86+09 TO STA 90+00
STH 89

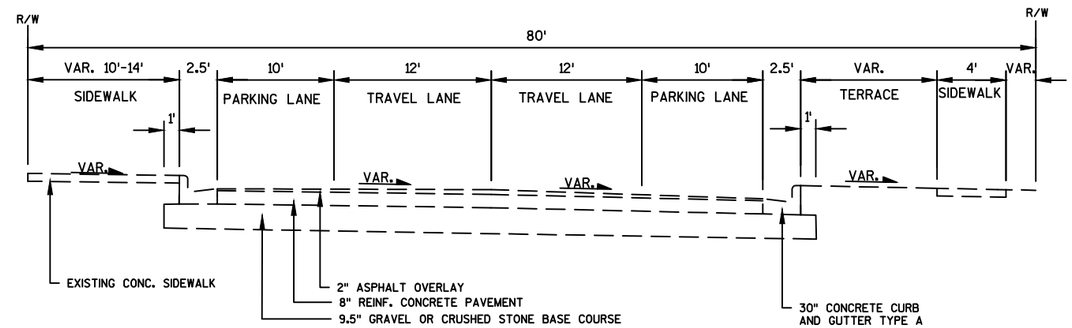

EXISTING TYPICAL SECTION

LAKE STREET TO MADISON STREET
STA 90+00 TO STA 95+41.21
STH 89

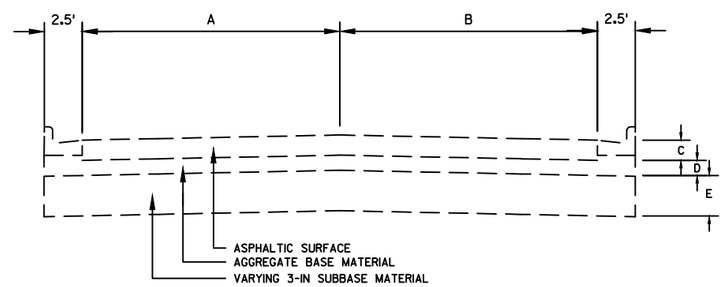

EXISTING TYPICAL SECTION

VARIOUS SIDE STREETS

	LANE WIDTH A (FT)	LANE WIDTH B (FT)	PAVEMENT THICKNESS C (IN)	BASE THICKNESS D (IN)	SUBBASE THICKNESS E (IN)	PAVEMENT TYPE	STA	TO	STA
CTH A	20'	20'	4	8	0	ASPHALT	8+25.0-CTH A	-	9+19.5-CTH A
SANDY BEACH ROAD	9.5	10.5	3.5	3	9	ASPHALT	8+80.0-SBR	-	9+59.8-SBR
CATLIN DRIVE, SOUTH	18'	19	3.5	3	9	ASPHALT	10+50.6-SCD	-	10+92.3-SCD
CATLIN DRIVE, NORTH	18'	19'	3.5	3	9	ASPHALT	10+49.6-NCD	-	10+91.2-NCD
WATER STREET	16.5'	16.5'	3.5	3	9	ASPHALT	10+46.3-WS	-	11+19.3-WS

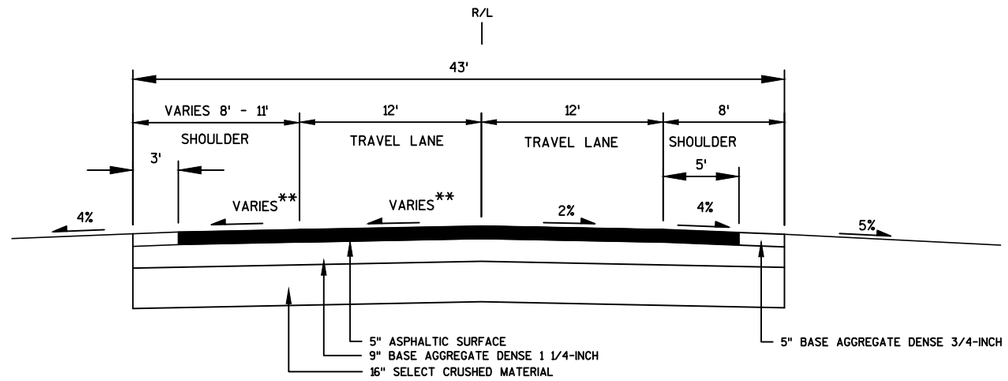

PROPOSED TYPICAL SECTION

SOUTH PROJECT TERMINI
STA 29+50 TO STA 30+00
STH 89

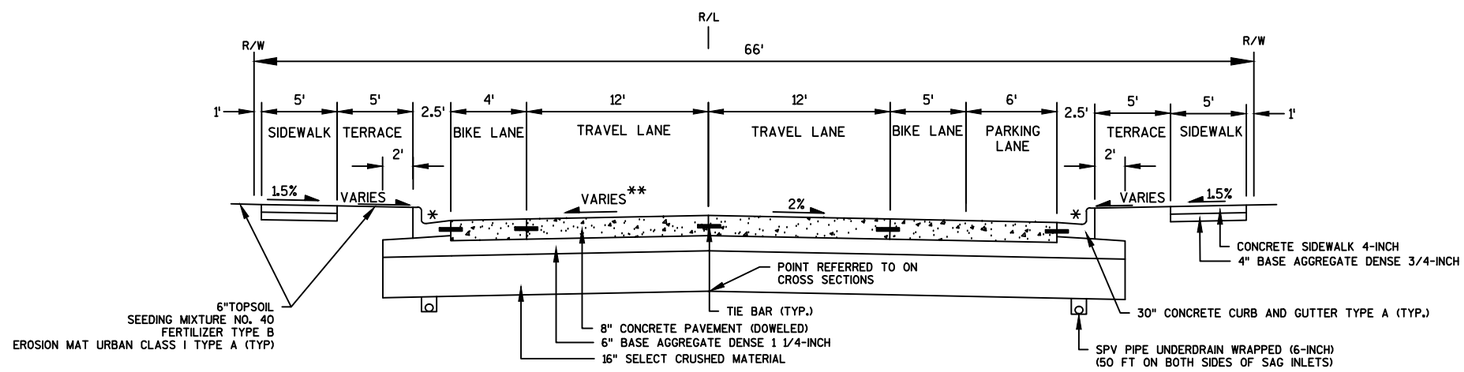

PROPOSED TYPICAL SECTION

TOPEL STREET TO WATER STREET
STA 30+00 TO STA 86+58
STH 89

SPV PIPE UNDERDRAIN WRAPPED
(6-INCH) BLOWUP

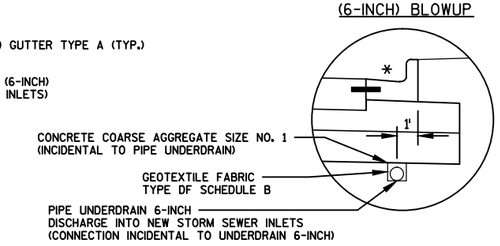

GEOTEXTILE FABRIC
OVERLAP DETAIL

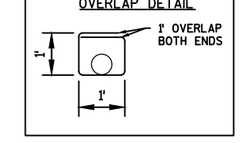

*GUTTER SLOPES ARE TO BE 6.25% UNLESS OTHERWISE NOTED IN THE CURB RAMP DETAIL SHEETS

**CROSS SLOPES VARY DUE TO CURVE SUPERELEVATION. REFER TO CROSS SECTIONS AND ALIGNMENT DIAGRAM SHEETS.

PROJECT NO:3300-01-73	HWY:STH 89	COUNTY:JEFFERSON	PROPOSED TYPICAL SECTIONS	SHEET 10	E

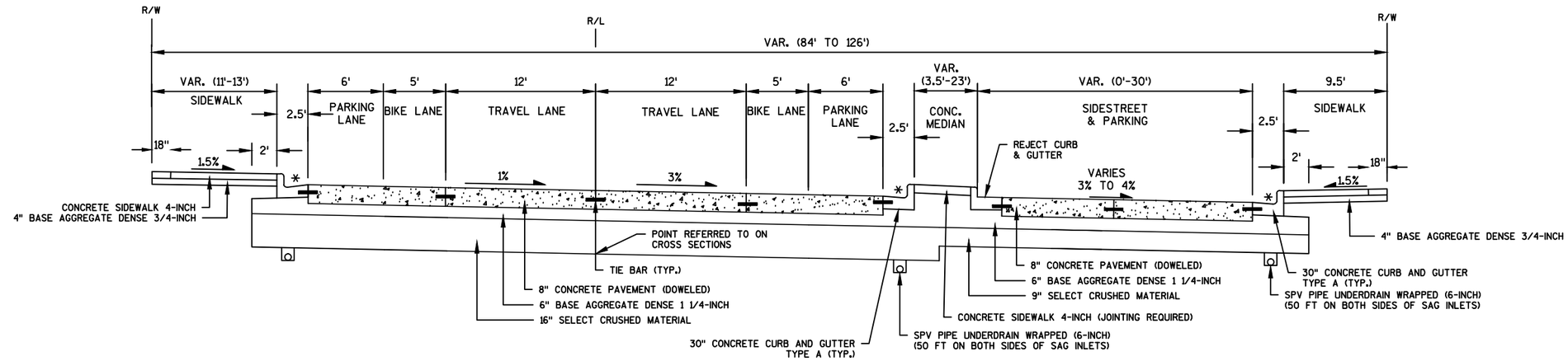

PROPOSED TYPICAL SECTION

WATER STREET TO LAKE STREET
STA. 86+58 TO STA. 89+70
STH 89

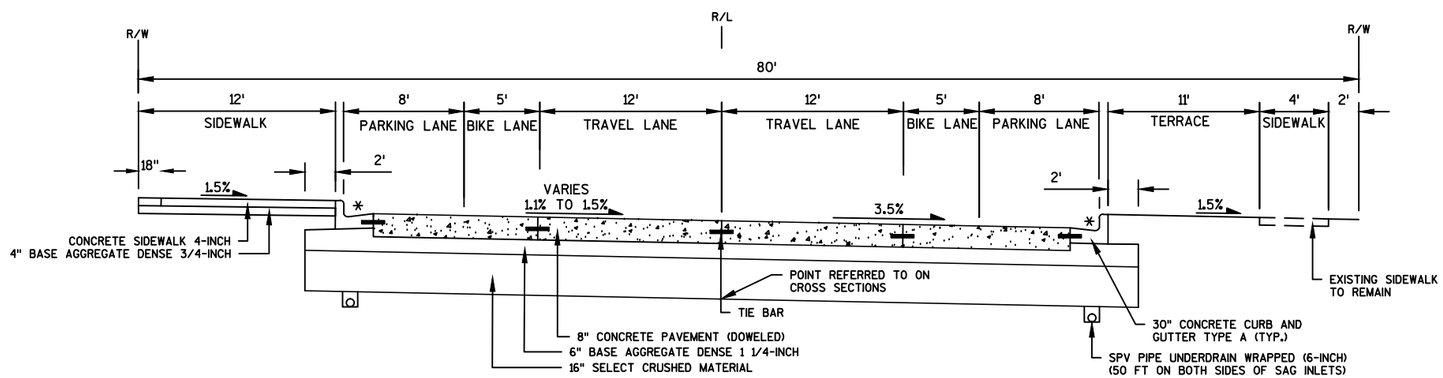

PROPOSED TYPICAL SECTION

LAKE STREET TO MADISON STREET
STA. 89+70 TO STA. 95+41.21
STH 89

*GUTTER SLOPES ARE TO BE 6.25% UNLESS OTHERWISE NOTED IN THE CURB RAMP DETAIL SHEETS

SPV PIPE UNDERDRAIN WRAPPED (6-INCH) BLOWUP

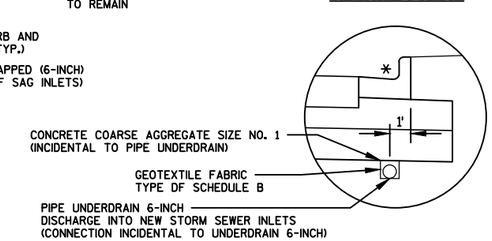

GEOTEXTILE FABRIC OVERLAP DETAIL

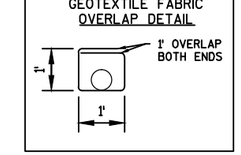

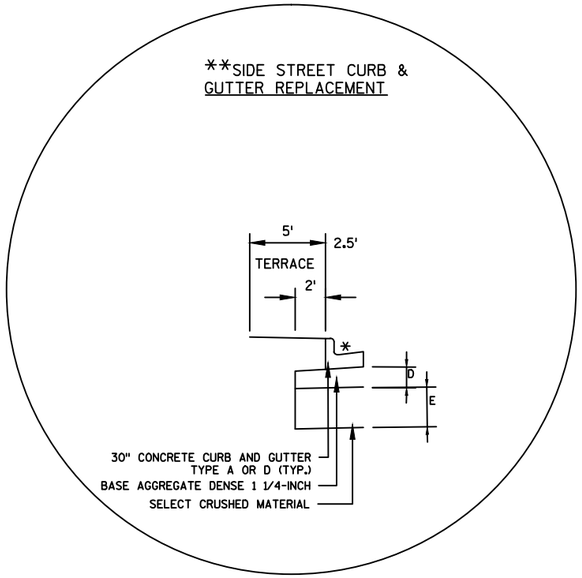

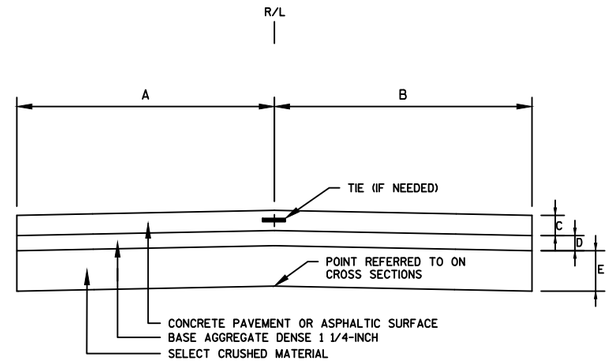

PROPOSED TYPICAL SECTION

VARIOUS SIDE STREETS

*GUTTER SLOPES ARE TO BE 6.25% UNLESS OTHERWISE NOTED IN THE CURB RAMP DETAIL SHEETS

	LANE WIDTH A (FT)	LANE WIDTH B (FT)	PAVEMENT THICKNESS C (IN)	BASE THICKNESS D (IN)	SUBBASE THICKNESS E (IN)	PAVEMENT TYPE	STA	TO	STA
CTH A*	17' - 20'	17' - 20'	5	9	16	ASPHALTIC SURFACE	8+25.0-CTH A	-	9+19.5-CTH A
SANDY BEACH ROAD*	10' - 12'	10' - 19'	3.5	3	9	ASPHALTIC SURFACE	8+80.0-SBR	-	9+59.8-SBR
COLUMBUS STREET	11'	11'	3.5	3	9	ASPHALTIC SURFACE	9+52.5-CS	-	9+66.0-CS
PINNACLE DRIVE*	17'	17'	3	8	-	ASPHALTIC SURFACE	10+52.9-PD	-	10+67.9-PD
WOODLAND BEACH ROAD*	16'	16'	2.5	8	-	ASPHALTIC SURFACE	9+31.0-WBR	-	9+61.0-WBR
KEYES STREET*	13'	13'	3.5	3	9	ASPHALTIC SURFACE	9+51.8-KS	-	9+66.8-KS
CATLIN DRIVE, SOUTH*	12' - 18'	12' - 18.5'	3.5	3	9	ASPHALTIC SURFACE	10+50.6-SCD	-	10+92.3-SCD
MILTON STREET*	13.5'	13.5'	3.5	3	9	ASPHALTIC SURFACE	9+36.6-MS	-	9+66.6-MS
CATLIN DRIVE, NORTH*	12' - 18'	12' - 18'	3.5	3	9	ASPHALTIC SURFACE	10+49.6-NCD	-	10+91.2-NCD
WEST LAKE PARK PLACE*	13.5'	13.5'	3.5	3	9	ASPHALTIC SURFACE	9+46.7-LPP	-	9+61.7-LPP
EAST LAKE PARK PLACE*	17'	17'	3.5	3	9	ASPHALTIC SURFACE	10+39.9-LPP	-	10+54.9-LPP
PHILLIPS LANE*	14'	14'	3.5	3	9	ASPHALTIC SURFACE	9+51.3-PL	-	9+66.3-PL
VETERANS LANE*	17'	17'	3	6	9	ASPHALTIC SURFACE	9+35.6-VL	-	9+50.5-VL
WATER STREET*	16.5'	16.5'	8	6	9	CONCRETE PAVEMENT DOWELED AND TIED	10+46.3-WS	-	11+04.3-WS
WATER STREET*	16.5'	16.5'	3.5	3	9	ASPHALTIC SURFACE	11+04.3-WS	-	11+19.3-WS
WEST LAKE STREET*	19.5'	19.5'	5	9	16	ASPHALTIC SURFACE	9+32.6-WLS	-	9+47.6-WLS
EAST LAKE STREET*	22'	28'	5	9	16	ASPHALTIC SURFACE	10+72.3-ELS	-	10+87.3-ELS

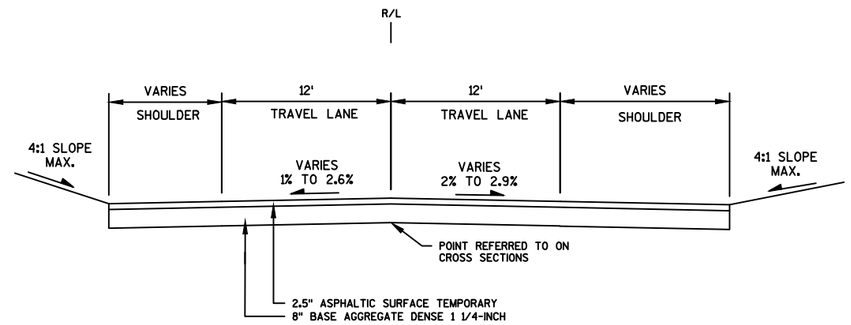

PROPOSED TYPICAL SECTION

WINTER CARRYOVER LANES
STA 40+40-WNTR TO STA 44+00-WNTR

PROJECT NO:3300-01-73	HWY:STH 89	COUNTY:JEFFERSON	PROPOSED TYPICAL SECTIONS	SHEET 13	E

FILE NAME : N:\PDS\C3D\33000103\SHEETSPLAN\020301-TYPICAL SECTIONS\020301-TS.DWG
TYPICAL SECTIONS - PROP TYP 4
PLOT DATE : 10/13/2017 11:24 AM PLOT BY : WHITE, JEREMY J PLOT NAME : PLOT SCALE : 0.093090

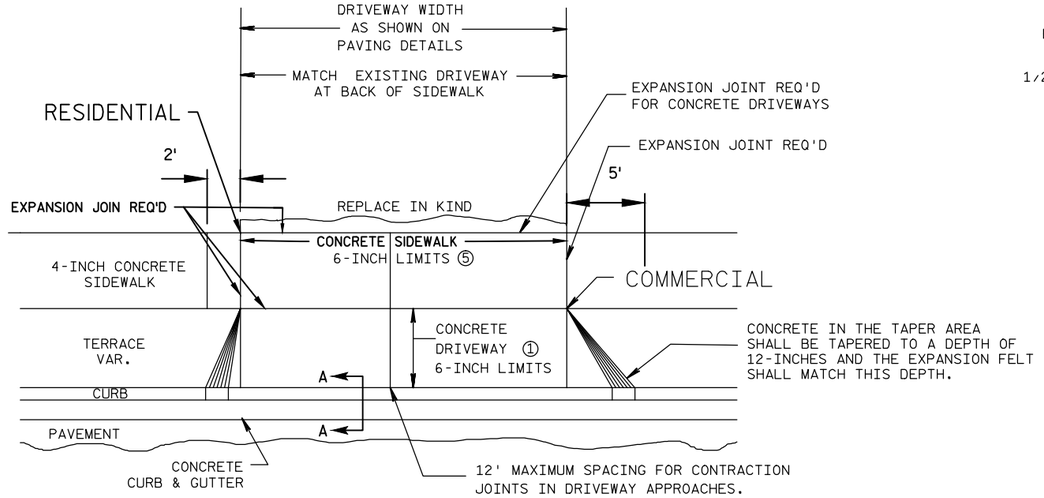

DRIVEWAY PLAN VIEW

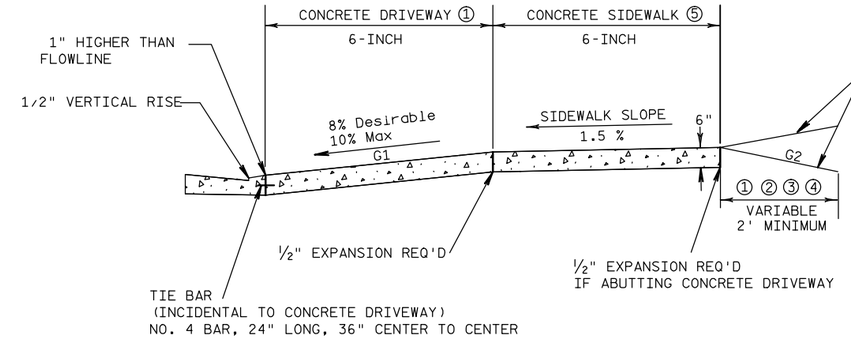

TYPICAL DRIVEWAY SECTION

DRIVEWAY SLOPE
7% DESIRABLE MAX, 10% MAX

① — CONCRETE DRIVEWAY
CONCRETE DRIVEWAY 6-INCH
6" BASE AGGREGATE DENSE 1 1/4-INCH

② — ASPHALT SURFACE COMMERCIAL
4" ASPHALTIC SURFACE DRIVEWAYS
6" BASE AGGREGATE DENSE 1 1/4-INCH

③ — ASPHALT SURFACE RESIDENTIAL
3" ASPHALTIC SURFACE DRIVEWAYS
6" BASE AGGREGATE DENSE 1 1/4-INCH

④ — BASE AGGREGATE DENSE 1 1/4-INCH
6" BASE AGGREGATE DENSE 1 1/4-INCH

⑤ — CONCRETE SIDEWALK 6-INCH

NOTE: ALGEBRAIC DIFFERENCE BETWEEN TANGENT GRADES G1 & G2 TO NOT EXCEED 15%

DEPRESS SIDEWALK PROFILE IF DRIVEWAY APRON EXCEEDS MAX SLOPE

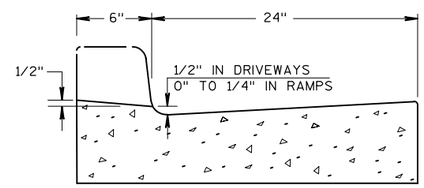

DRIVEWAY SECTION WISDOT TYPE A
CONCRETE CURB & GUTTER
SECTION A-A

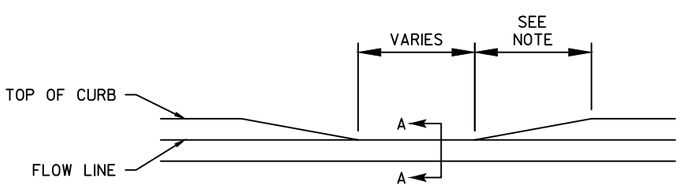

TYPICAL CURB CUT DETAIL

NOTE:
12" TO 18" TAPER FOR STANDARD DRIVEWAY APPROACH
18" TO 24" TAPER FOR STANDARD RAMP

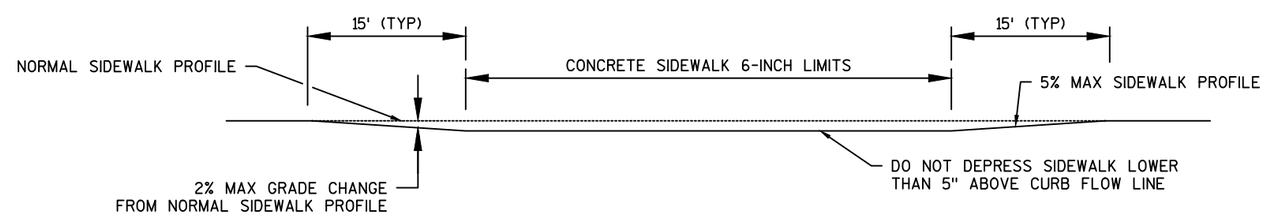

DEPRESSED SIDEWALK PROFILE DETAIL

2

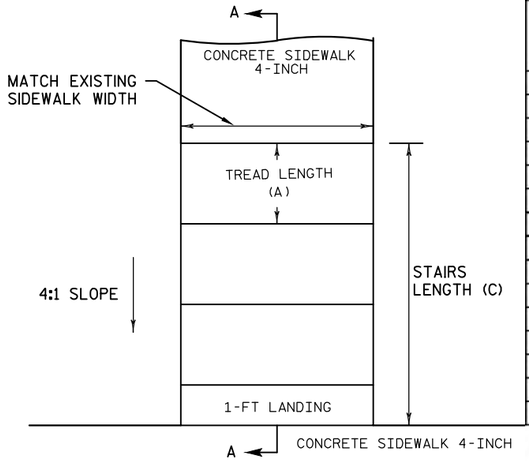

STA	LOCATION	TREAD LENGTH (A) INCH	*RISER HEIGHT (B) INCH	NUMBER OF RISERS	LENGTH OF STAIRS (C) FT
54+25	RT	12	6	2	3
59+62	LT	12	4.5	3	4
65+55	LT	12	6	2	3
72+37	LT	12	6	2	3
74+65	RT	12	6	2	3
75+07	LT	12	6	2	3
75+75	LT	12	6	1	2
77+00	RT	12	5	2	3
78+00	RT	12	4.25	2	3
78+70	RT	12	4	2	3
79+48	RT	12	5	2	3
80+26	RT	12	4	2	3
80+45	LT	12	4	2	3
80+85	RT	12	7	2	3
81+50	RT	12	4	2	3

* IF FIELD ADJUSTMENTS ARE NEEDED FOR RISER HEIGHT, RISERS MUST BE BETWEEN 4 AND 7 INCHES.

CONCRETE STEPS DETAIL

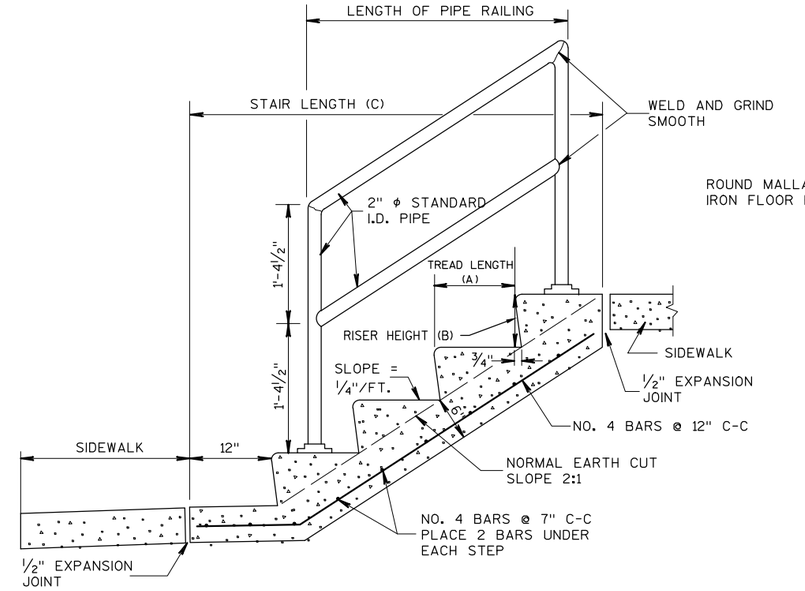

SECTION A-A

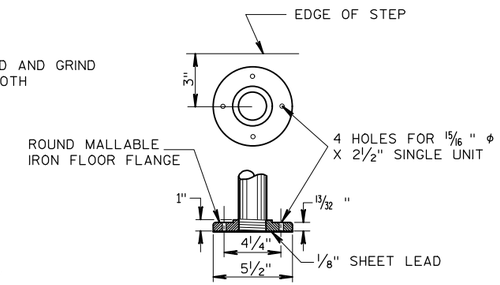

FLANGE DETAIL

NOTE:

STEEL REINFORCEMENT AND PIPE RAILING NOT REQUIRED ON STEPS WITH 2 RISERS OR LESS.

RAILING TO BE PLACED ON LEFT ASCENDING SIDE OF STEPS ONLY.

2

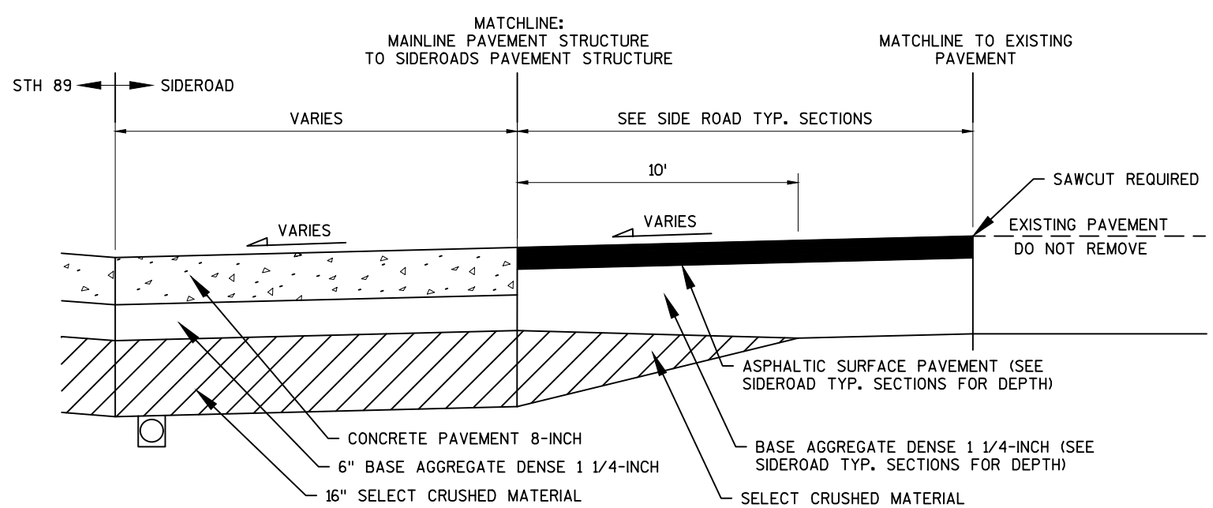

SUBGRADE TRANSITION BETWEEN MAINLINE CONCRETE PAVEMENT STRUCTURE AND SIDEROAD PAVEMENT STRUCTURE

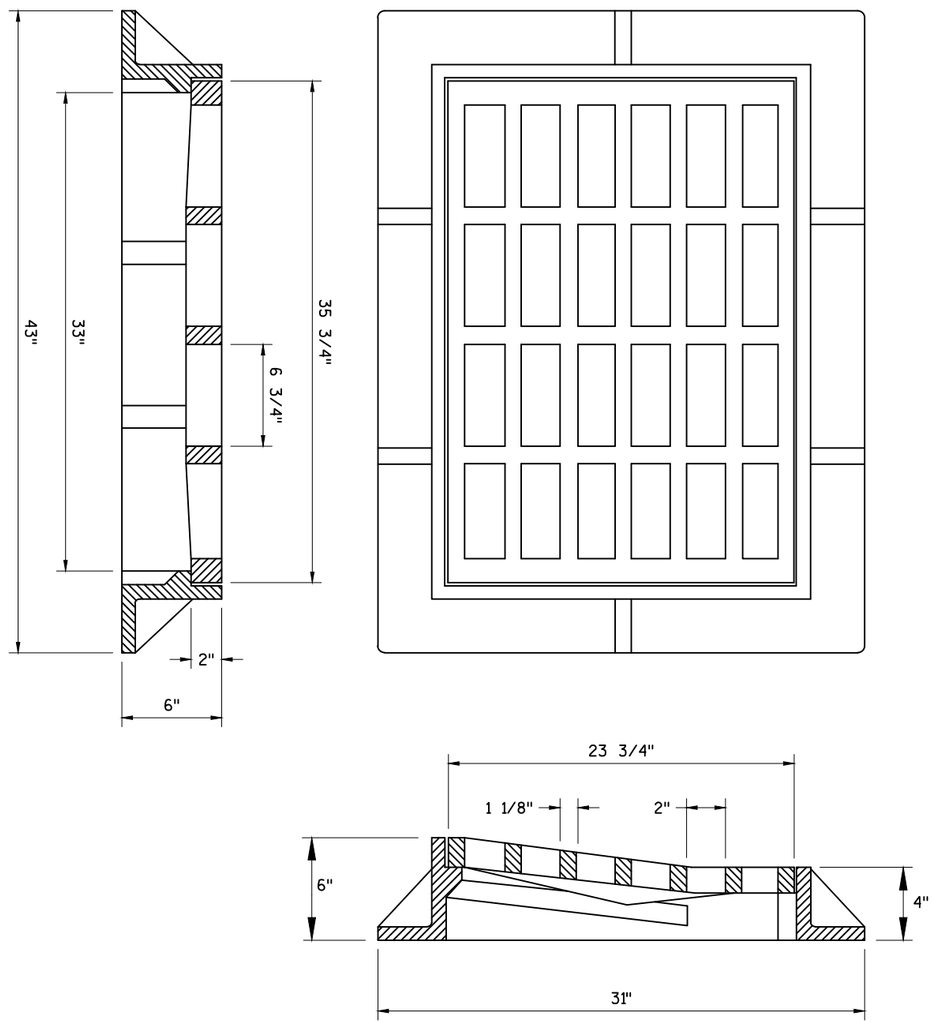

INLET COVER TYPE 3290A

SEE WINTER CARRYOVER PLAN & PROFILE FOR LOCATIONS

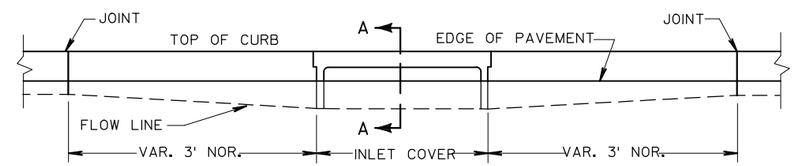

ELEVATION

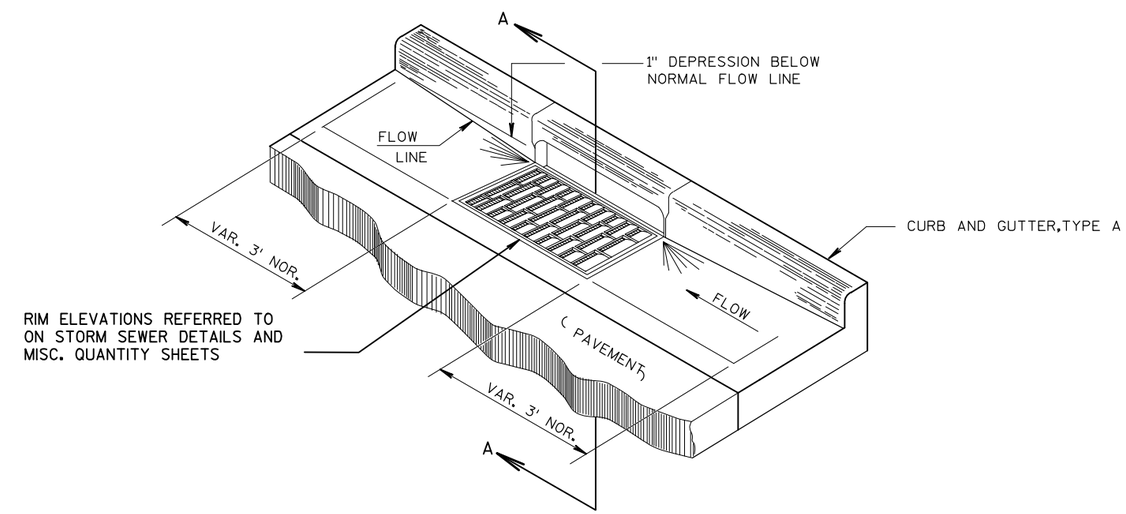

CONCRETE CURB & GUTTER 30-INCH TYPE A
AT INLET LOCATIONS DETAIL

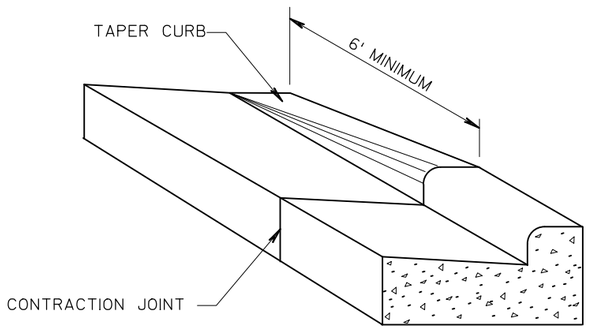

DETAIL OF CURB & GUTTER TERMINI

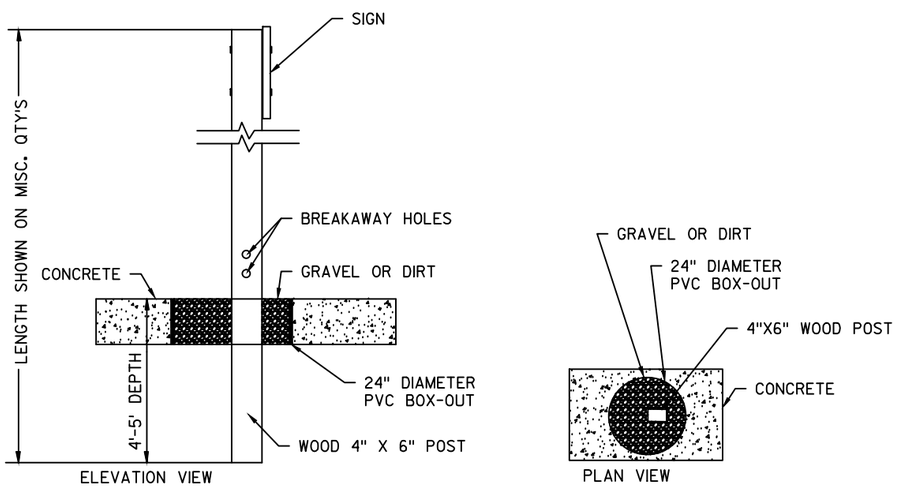

DETAIL OF WOOD 4" X 6" SIGN POST IN BOX-OUT

NOTES: 1. ALL MATERIAL TO BE APPROVED BY ENGINEER PRIOR TO INSTALLATION.
2. 24 INCH X 24 INCH SQUARE BOX-OUTS MAY BE USED.

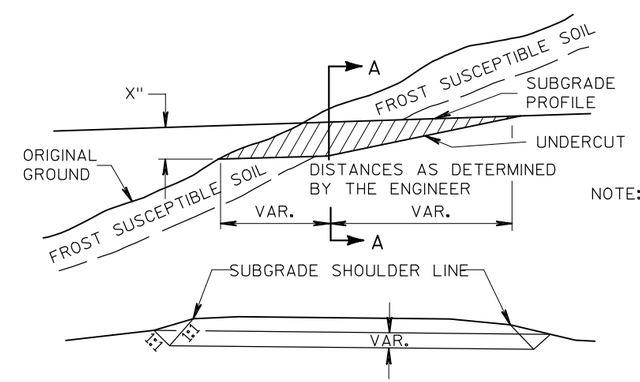

SECTION A-A

CROSS SECTION SHOWING UNDERCUT

DETAIL FOR EXCAVATION BELOW

SUBGRADE AT CUTS

NOTE: EXACT LOCATIONS AND EXTENT OF E.B.S. SECTIONS SHALL BE DETERMINED BY THE ENGINEER IN THE FIELD.

E.B.S. AREA TO BE BACKFILLED WITH MATERIAL ACCEPTABLE TO THE ENGINEER

BACKFILL MUST BE HOMOGENEOUS WITH ADJOINING FILL MATERIAL.

THE FILL SECTION WITHIN 100' OF THE MOUTH OF THE CUT MUST BE KEPT 2' BELOW SUBGRADE UNTIL E.B.S. IS COMPLETED.

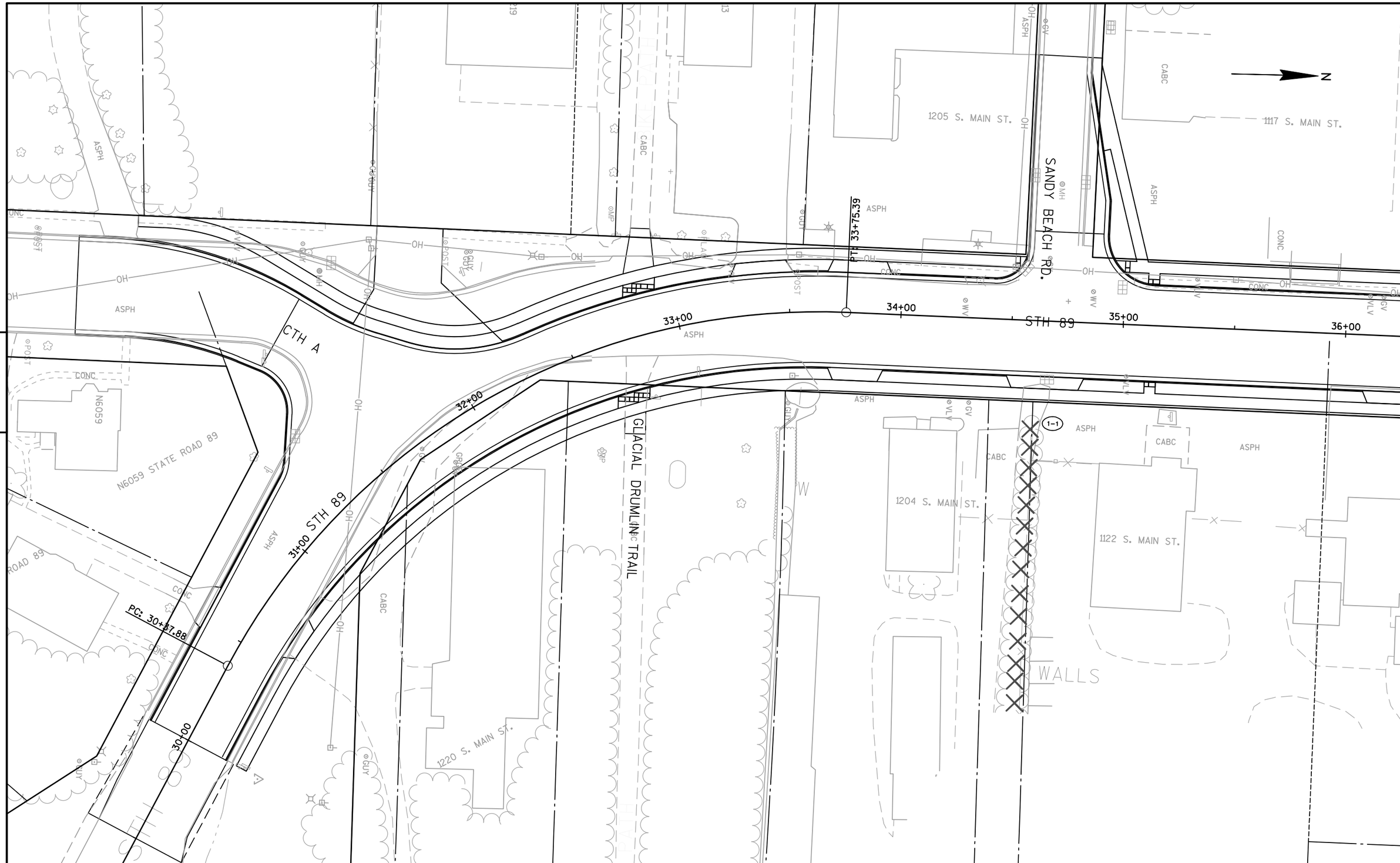

PROJECT NO:3300-01-73	HWY:STH 89	COUNTY:JEFFERSON	TREE REMOVAL	SHEET 18	E

FILE NAME : N:\PDS\C3D\33000103\SHEETSPLAN\021201-PLAN DETAILS\021201-PD-TREES.DWG
LAYOUT NAME - SHEET - (1)
PLOT DATE : 10/23/2017 5:35 PM PLOT BY : WHITE, JEREMY J PLOT NAME : PLOT SCALE : 1 IN:40 FT

WISDOT/CADDS SHEET 44

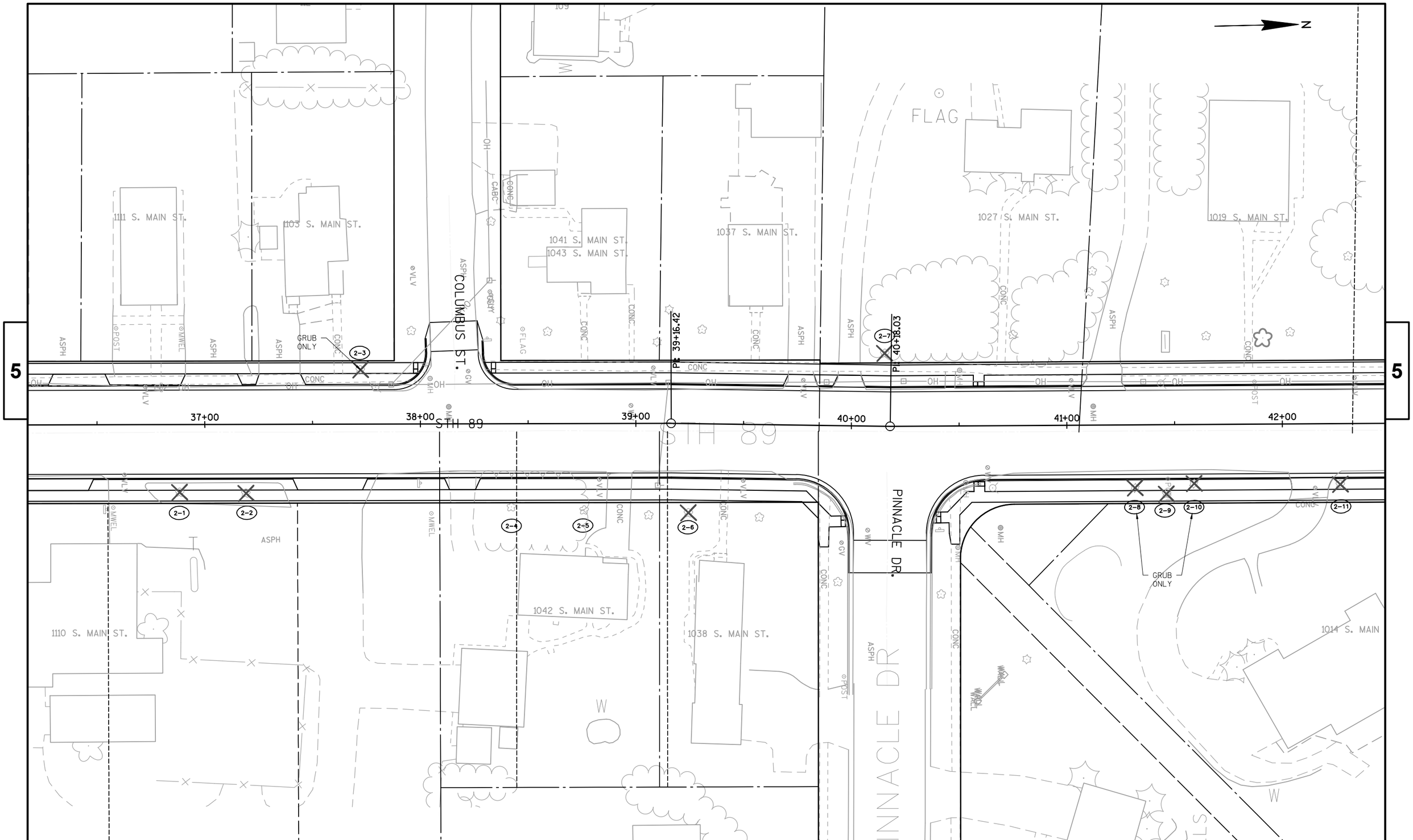

PROJECT NO:3300-01-73	HWY:STH 89	COUNTY:JEFFERSON	TREE REMOVAL	SHEET 19	E

FILE NAME : N:\PDS\C3D\33000103\SHEETSPLAN\021201-PLAN DETAILS\021201-PD-TREES.DWG
LAYOUT NAME - SHEET - (2)
PLOT DATE : 10/23/2017 5:36 PM PLOT BY : WHITE, JEREMY J PLOT NAME : PLOT SCALE : 1 IN:40 FT

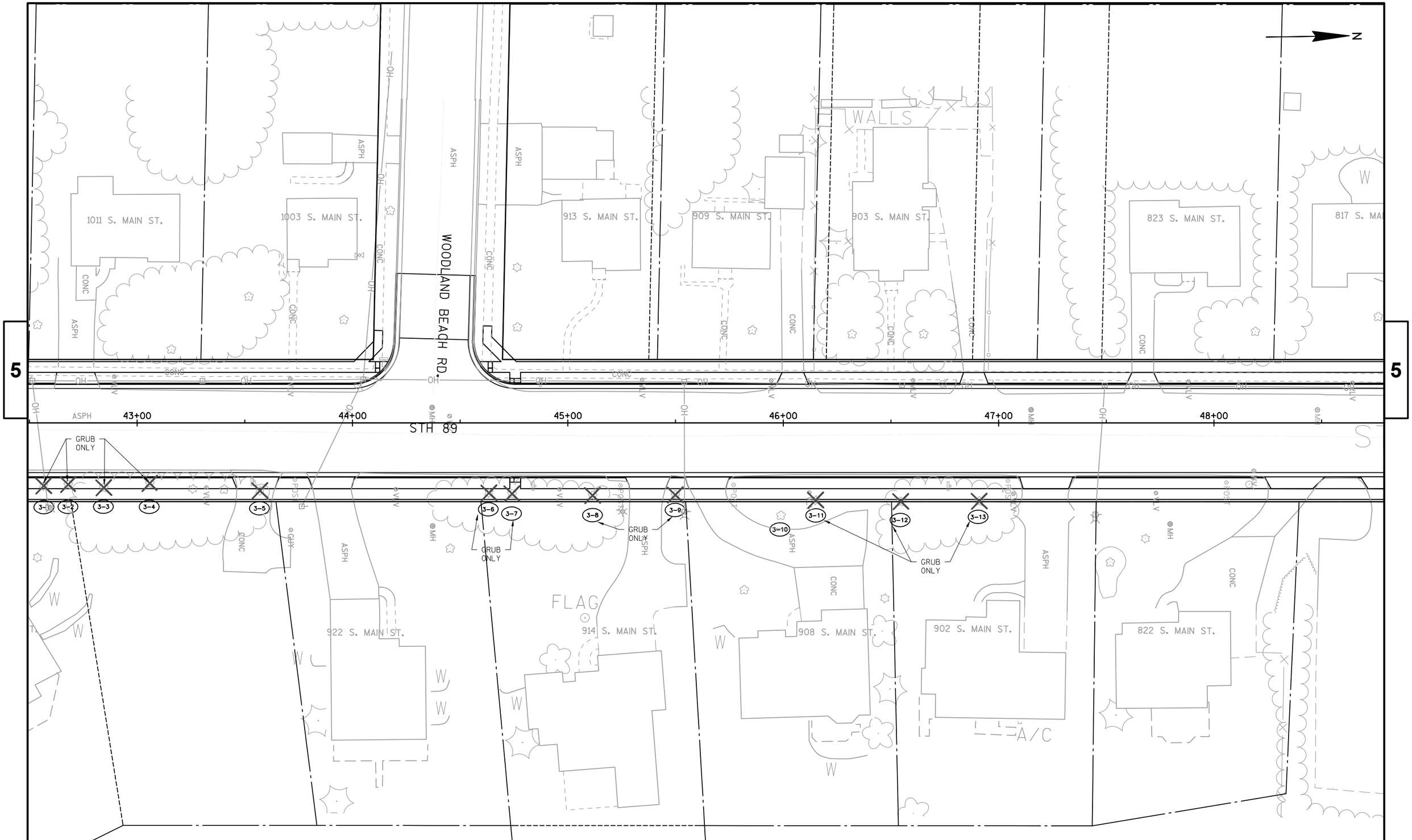

PROJECT NO:3300-01-73	HWY:STH 89	COUNTY:JEFFERSON	TREE REMOVAL	SHEET 20	E

FILE NAME : N:\PDS\C3D\33000103\SHEETSPLAN\021201-PLAN DETAILS\021201-PD-TREES.DWG
LAYOUT NAME - SHEET - (3)
PLOT DATE : 10/23/2017 5:36 PM PLOT BY : WHITE, JEREMY J PLOT NAME : PLOT SCALE : 1 IN:40 FT

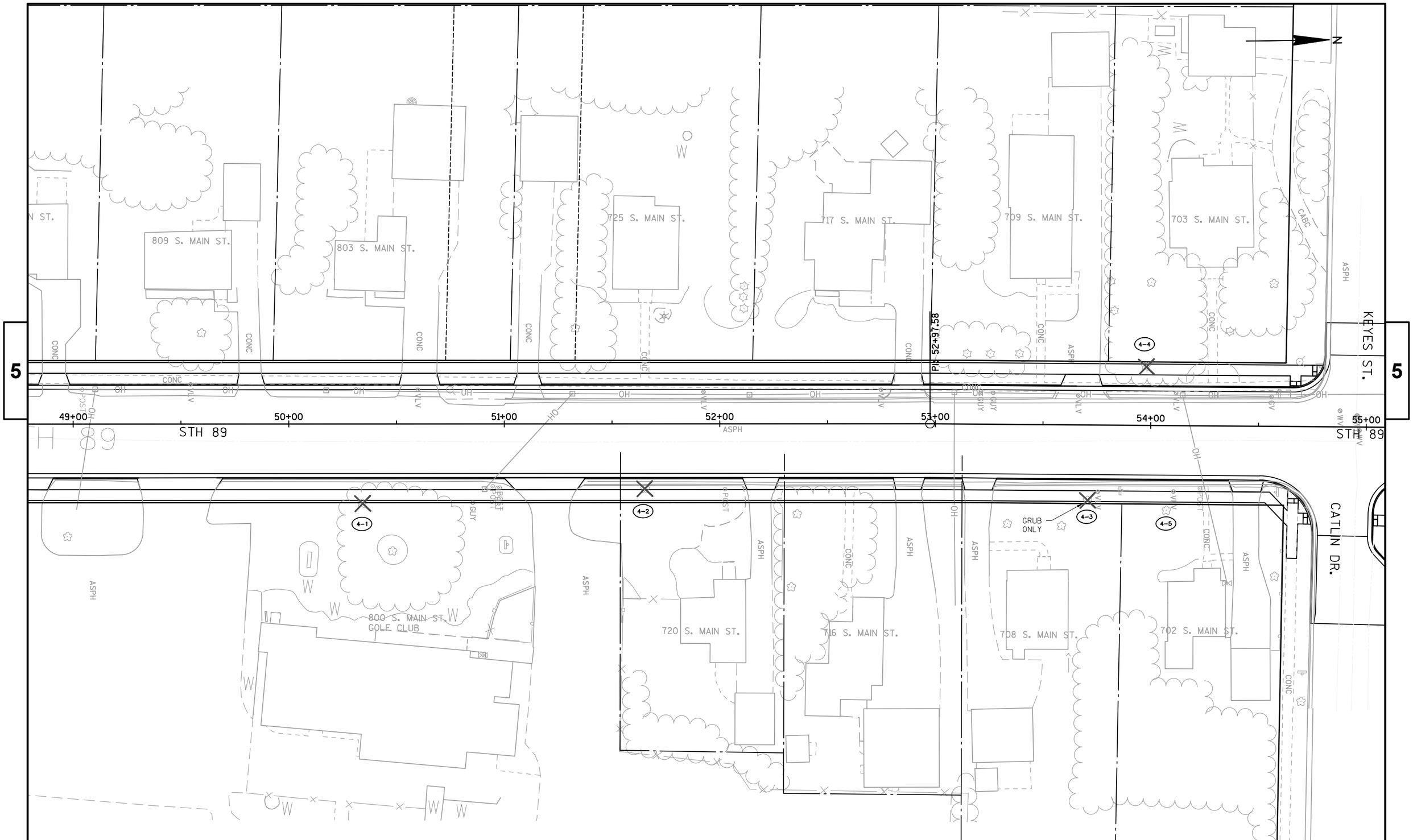

PROJECT NO:3300-01-73	HWY:STH 89	COUNTY:JEFFERSON	TREE REMOVAL	SHEET 21	E

FILE NAME : N:\PDS\C3D\33000103\SHEETSPLAN\021201-PLAN DETAILS\021201-PD-TREES.DWG
LAYOUT NAME - SHEET - (4)
PLOT DATE : 10/23/2017 5:36 PM PLOT BY : WHITE, JEREMY J PLOT NAME : PLOT SCALE : 1 IN:40 FT

WISDOT/CADDS SHEET 44

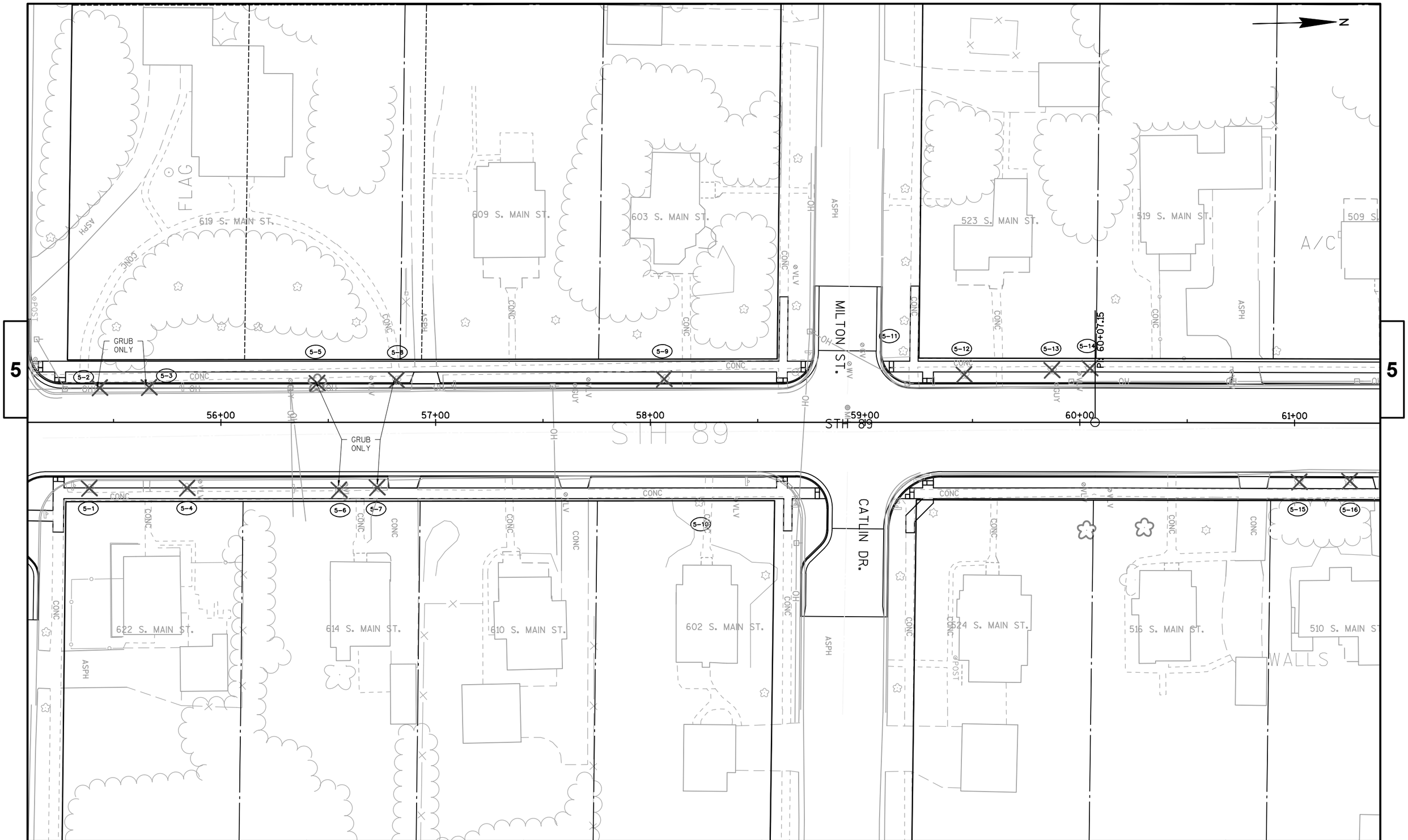

PROJECT NO:3300-01-73	HWY:STH 89	COUNTY:JEFFERSON	TREE REMOVAL	SHEET 22	E

FILE NAME : N:\PDS\C3D\33000103\SHEETSPLAN\021201-PLAN DETAILS\021201-PD-TREES.DWG
LAYOUT NAME - SHEET - (5)
PLOT DATE : 10/23/2017 5:36 PM PLOT BY : WHITE, JEREMY J PLOT NAME : PLOT SCALE : 1 IN:40 FT

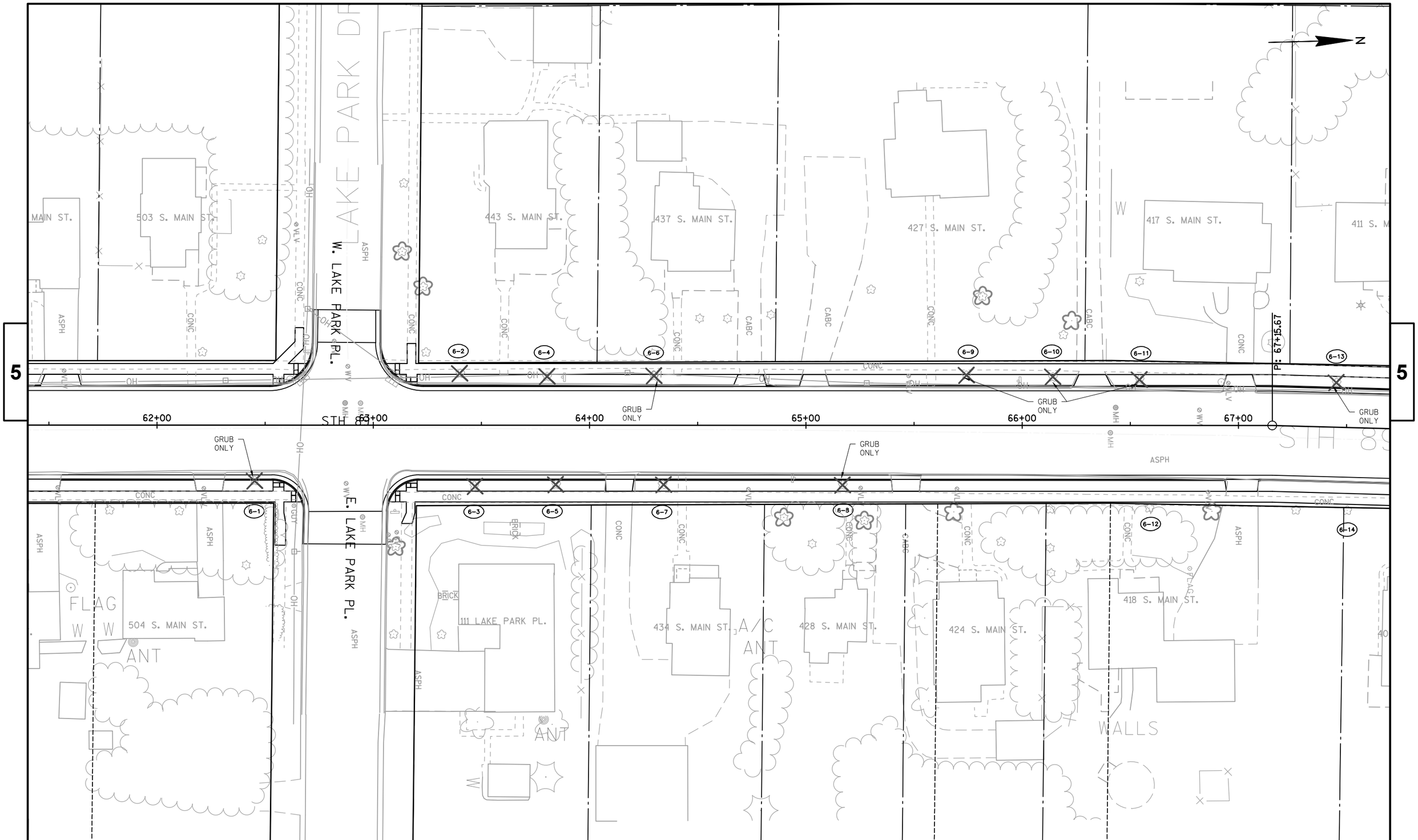

PROJECT NO:3300-01-73	HWY:STH 89	COUNTY:JEFFERSON	TREE REMOVAL	SHEET 23	E

FILE NAME : N:\PDS\C3D\33000103\SHEETSPLAN\021201-PLAN DETAILS\021201-PD-TREES.DWG
LAYOUT NAME - SHEET - (6)
PLOT DATE : 10/23/2017 5:36 PM PLOT BY : WHITE, JEREMY J PLOT NAME : PLOT SCALE : 1 IN:40 FT

WISDOT/CADDS SHEET 44

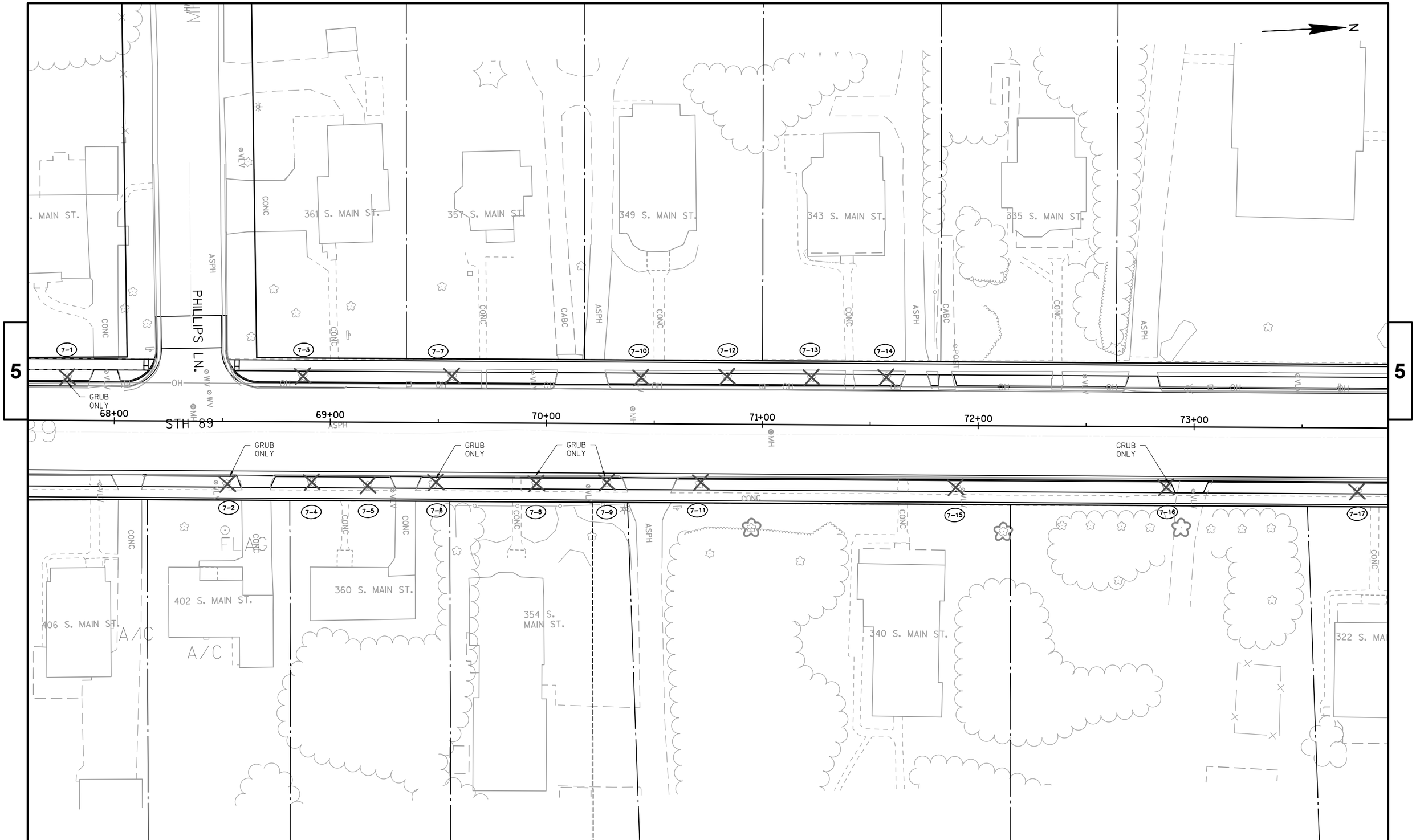

PROJECT NO:3300-01-73	HWY:STH 89	COUNTY:JEFFERSON	TREE REMOVAL	SHEET 24	E

FILE NAME : N:\PDS\C3D\33000103\SHEETSPLAN\021201-PLAN DETAILS\021201-PD-TREES.DWG
LAYOUT NAME - SHEET - (7)
PLOT DATE : 10/23/2017 5:37 PM PLOT BY : WHITE, JEREMY J PLOT NAME : PLOT SCALE : 1 IN:40 FT

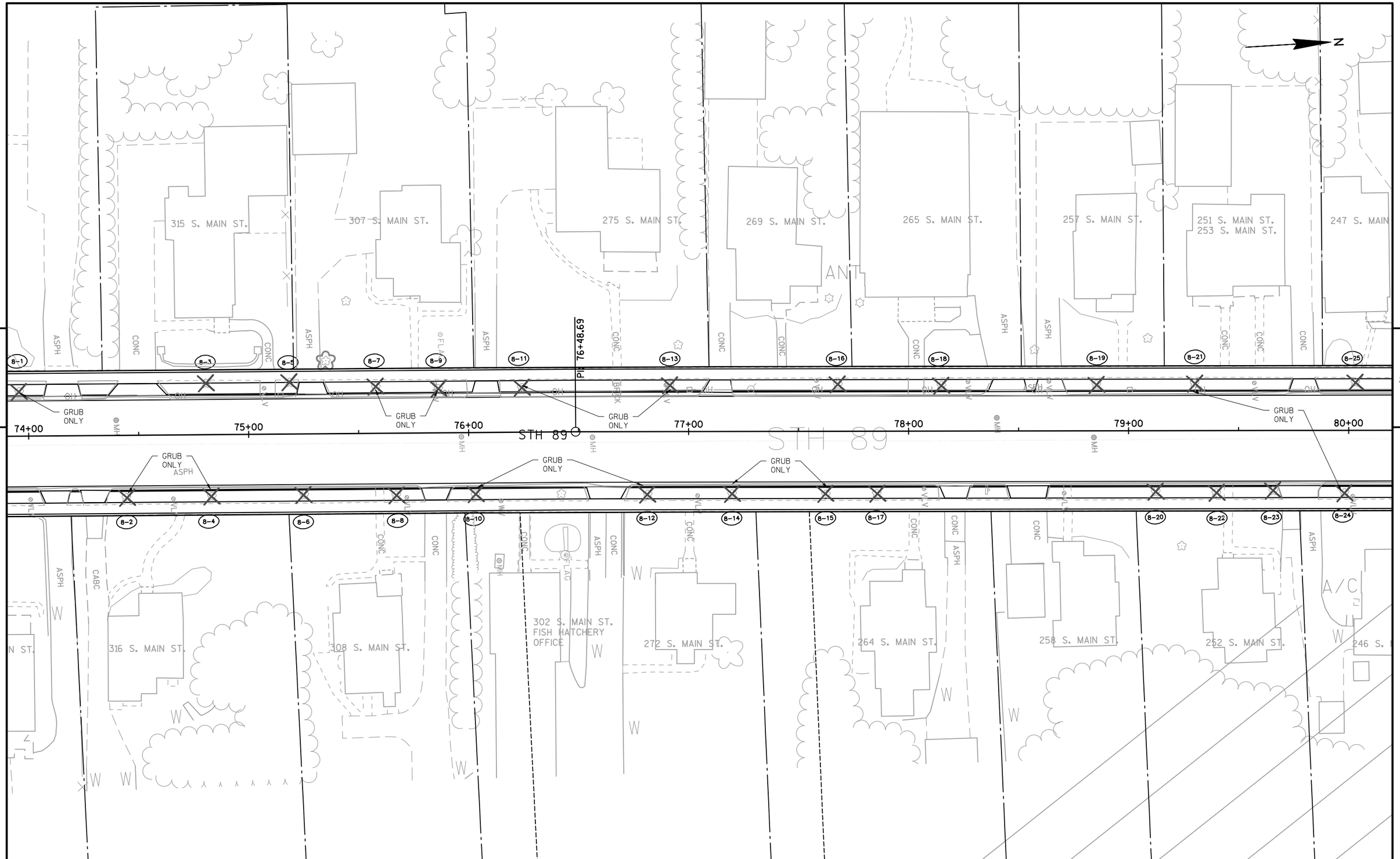

PROJECT NO:3300-01-73	HWY:STH 89	COUNTY:JEFFERSON	TREE REMOVAL	SHEET 25	E

FILE NAME : N:\PDS\C3D\33000103\SHEETSPLAN\021201-PLAN DETAILS\021201-PD-TREES.DWG
LAYOUT NAME - SHEET - (8)
PLOT DATE : 10/23/2017 5:37 PM PLOT BY : WHITE, JEREMY J PLOT NAME : PLOT SCALE : 1 IN:40 FT

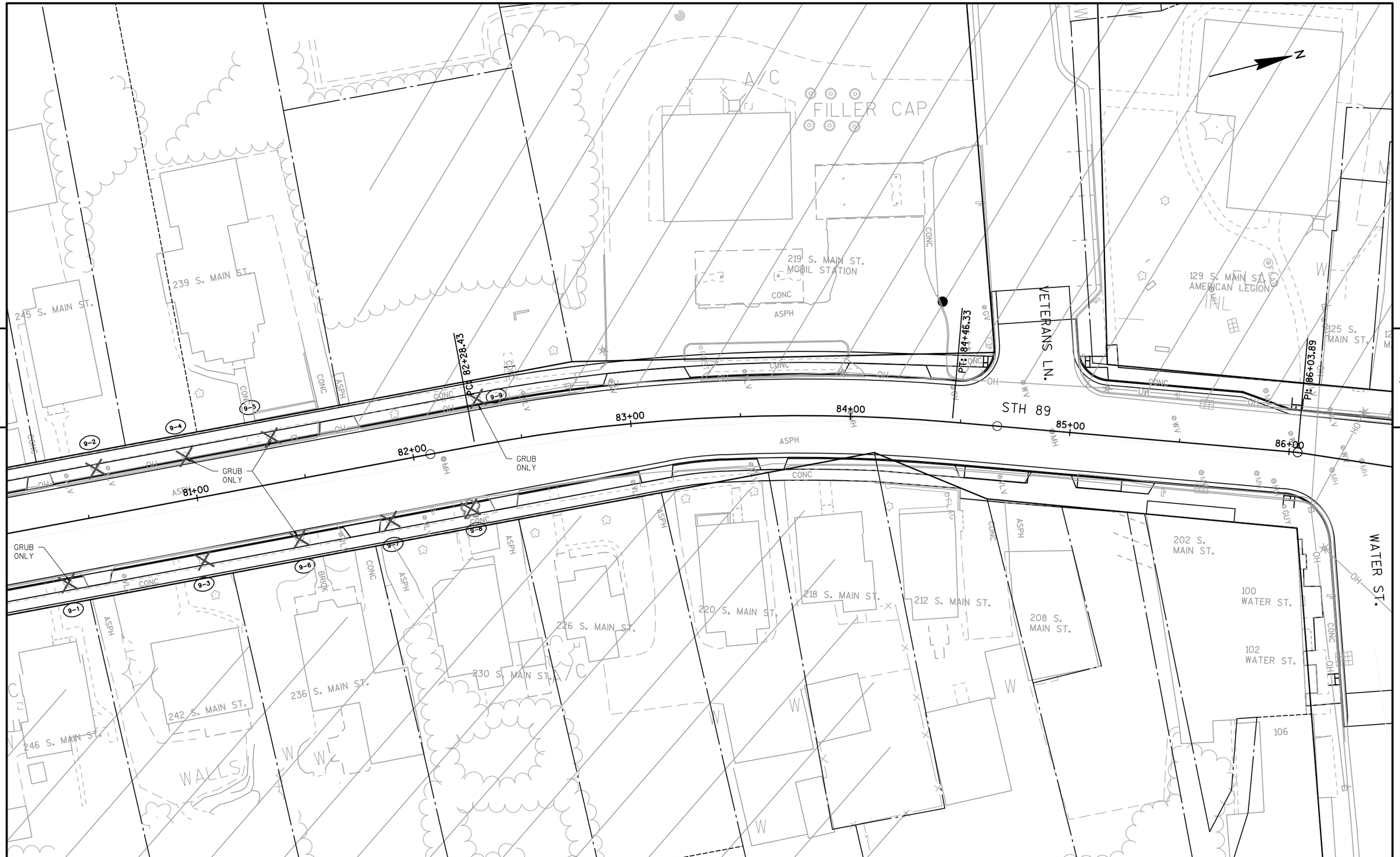

PROJECT NO:3300-01-73	HWY:STH 89	COUNTY:JEFFERSON	TREE REMOVAL	SHEET 26	E

FILE NAME : N:\PDS\C3D\33000103\SHEETSPLAN\021201-PLAN DETAILS\021201-PD-TREES.DWG
LAYOUT NAME - SHEET - (9)
PLOT DATE : 10/23/2017 5:37 PM PLOT BY : WHITE, JEREMY J PLOT NAME : PLOT SCALE : 1 IN:40 FT

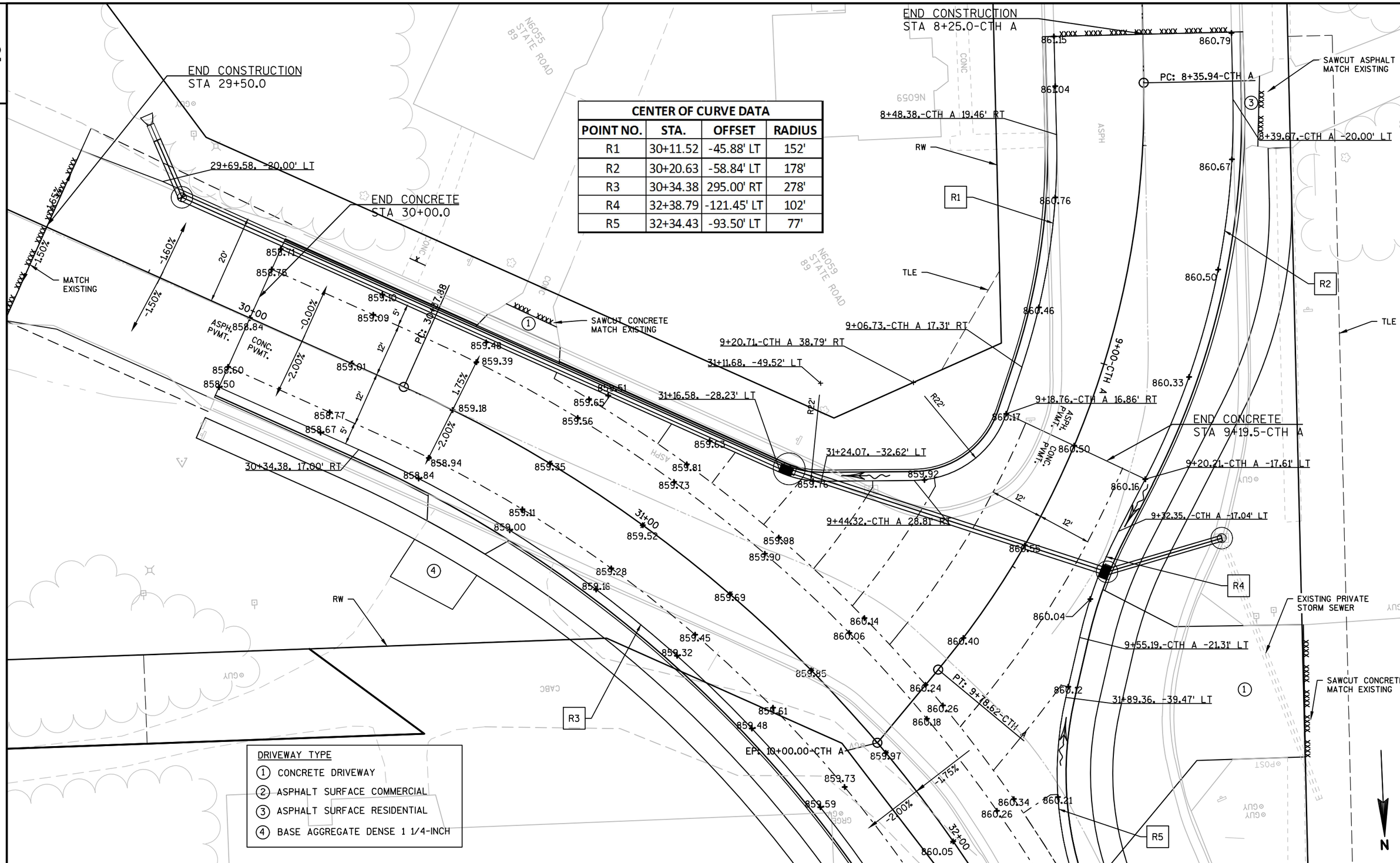

CENTER OF CURVE DATA

POINT NO.	STA.	OFFSET	RADIUS
R1	30+11.52	-45.88' LT	152'
R2	30+20.63	-58.84' LT	178'
R3	30+34.38	295.00' RT	278'
R4	32+38.79	-121.45' LT	102'
R5	32+34.43	-93.50' LT	77'

PROJECT NO:3300-01-73	HWY:STH 89	COUNTY:JEFFERSON	PAVING & INTERSECTION DETAILS	SHEET 27	E

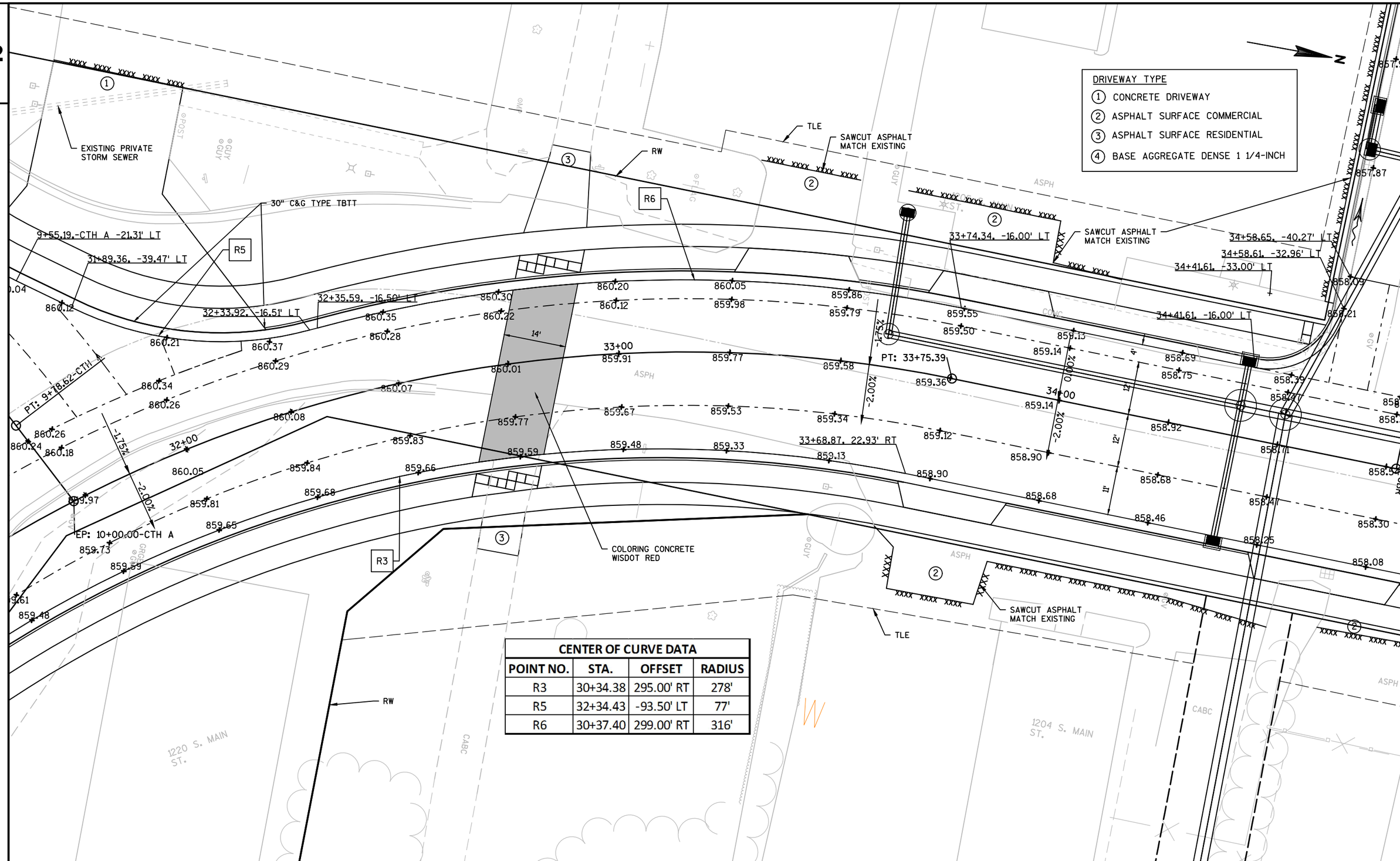

CENTER OF CURVE DATA			
POINT NO.	STA.	OFFSET	RADIUS
R3	30+34.38	295.00' RT	278'
R5	32+34.43	-93.50' LT	77'
R6	30+37.40	299.00' RT	316'

PROJECT NO:3300-01-73	HWY:STH 89	COUNTY:JEFFERSON	PAVING & INTERSECTION DETAILS	SHEET 28	E

FILE NAME : N:\PDS\C3D\33000103\SHEETSPLAN\021101-INTERSECTION DETAILS\021101-ID.DWG
LAYOUT NAME - INT - (2)
PLOT DATE : 1/16/2018 2:30 PM PLOT BY : LEX, BRANDON WILLIAMPLOT NAME : PLOT SCALE : 1 IN:20 FT

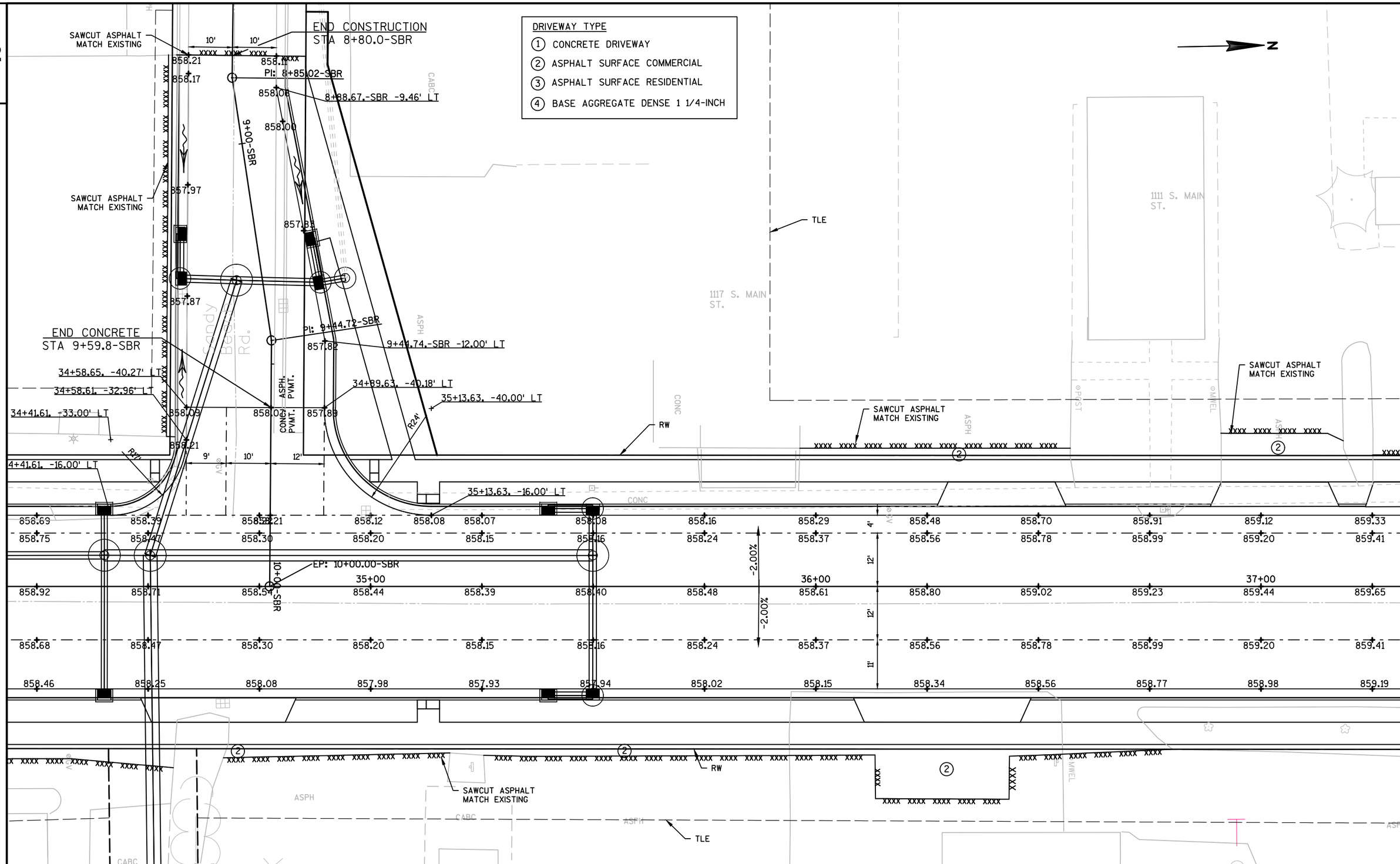

PROJECT NO:3300-01-73	HWY:STH 89	COUNTY:JEFFERSON	PAVING & INTERSECTION DETAILS	SHEET 29	E

FILE NAME : N:\PDS\C3D\33000103\SHEETSPLAN\021101-INTERSECTION DETAILS\021101-ID.DWG
LAYOUT NAME - INT - (3)
PLOT DATE : 1/16/2018 2:31 PM PLOT BY : LEX, BRANDON WILLIAMPLOT NAME : PLOT SCALE : 1 IN:20 FT

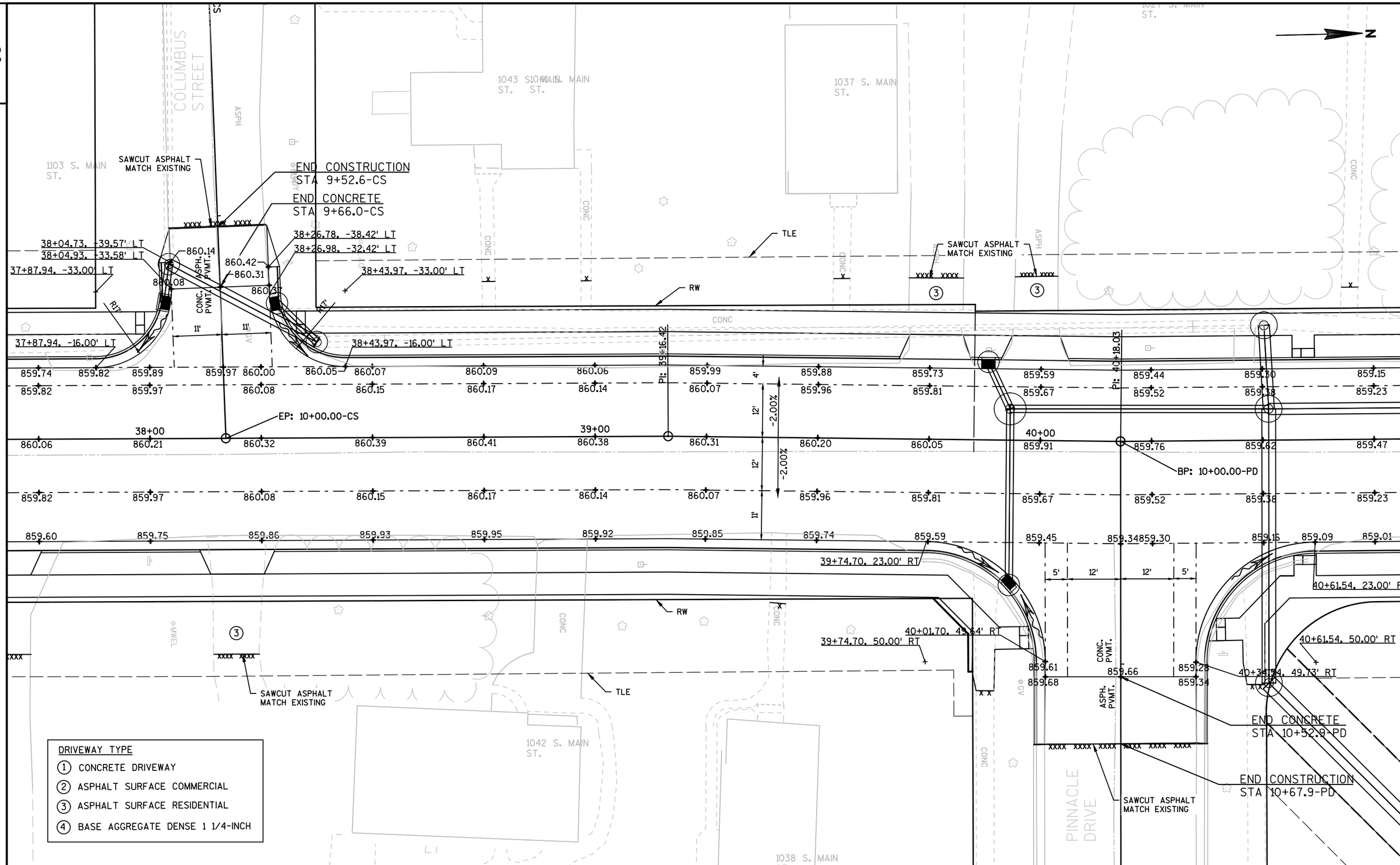

PROJECT NO:3300-01-73	HWY:STH 89	COUNTY:JEFFERSON	PAVING & INTERSECTION DETAILS	SHEET 30	E

FILE NAME : N:\PDS\C3D\33000103\SHEETSPLAN\021101-INTERSECTION DETAILS\021101-ID.DWG
LAYOUT NAME - INT - (4)
PLOT DATE : 1/16/2018 2:31 PM PLOT BY : LEX, BRANDON WILLIAMPLOT NAME : PLOT SCALE : 1 IN:20 FT

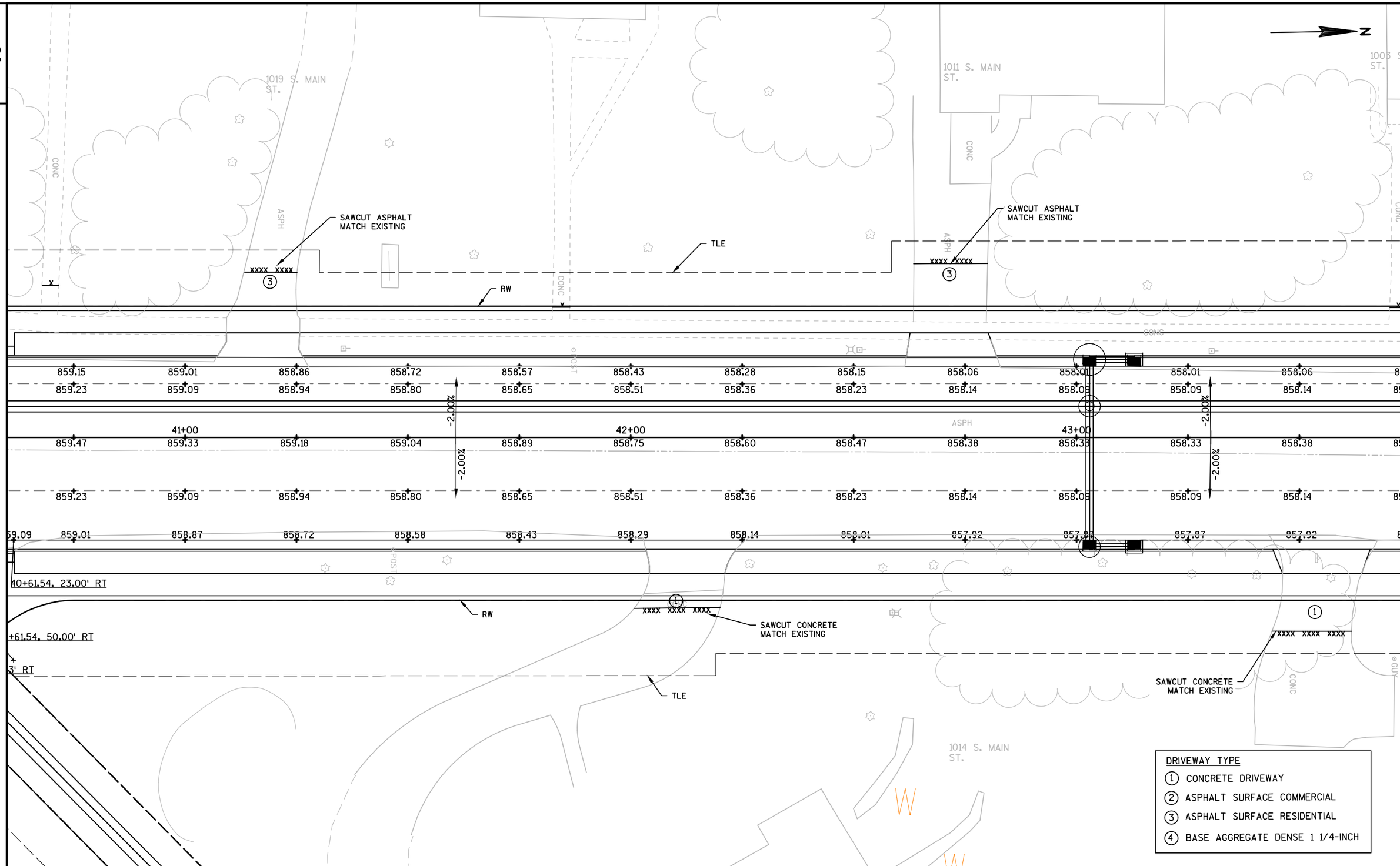

PROJECT NO:3300-01-73	HWY:STH 89	COUNTY:JEFFERSON	PAVING & INTERSECTION DETAILS	SHEET 31	E

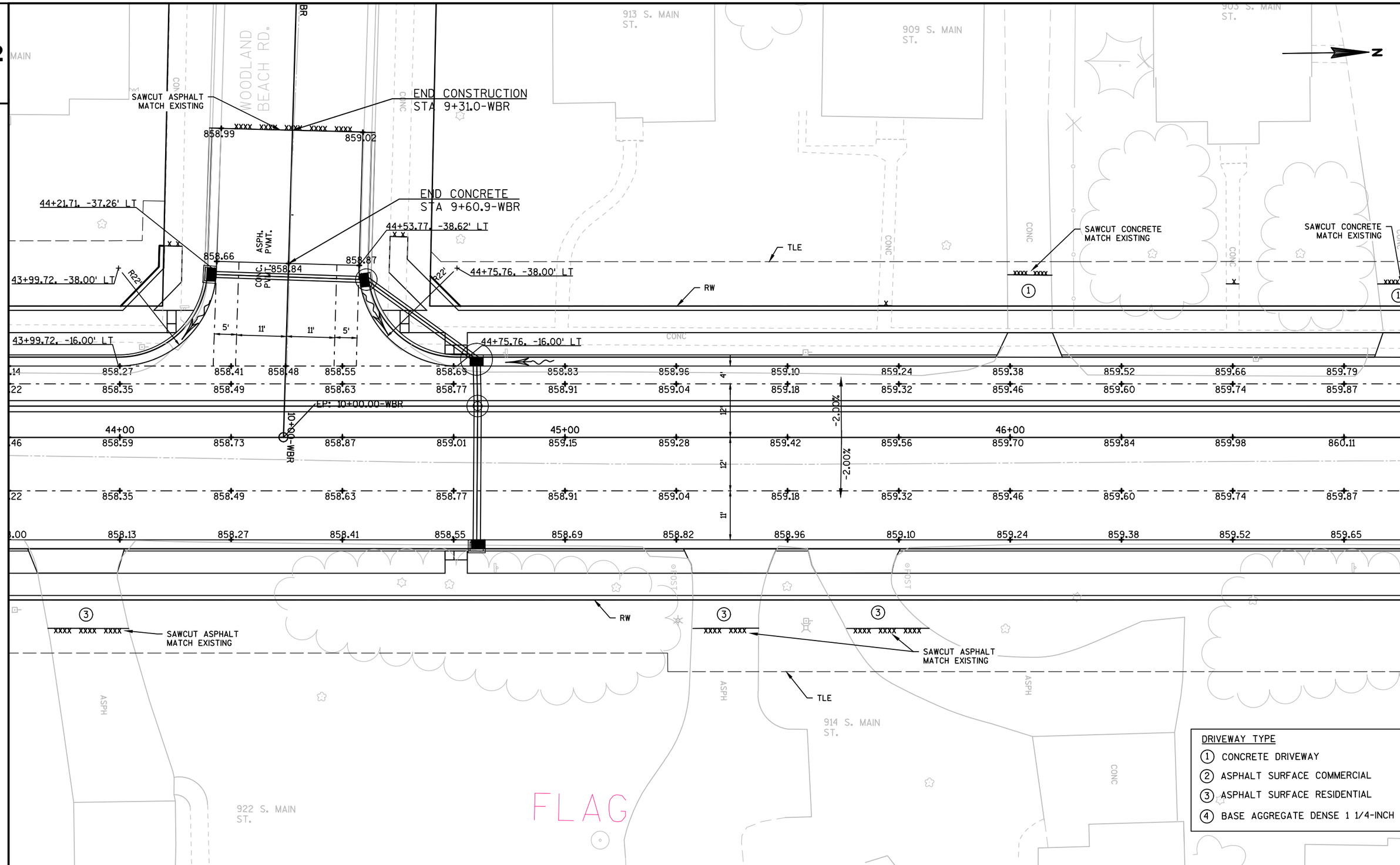

PROJECT NO:3300-01-73	HWY:STH 89	COUNTY:JEFFERSON	PAVING & INTERSECTION DETAILS	SHEET 32	E

FILE NAME : N:\PDS\C3D\33000103\SHEETSPLAN\021101-INTERSECTION DETAILS\021101-ID.DWG
LAYOUT NAME - INT - (6)
PLOT DATE : 1/16/2018 2:31 PM PLOT BY : LEX, BRANDON WILLIAMPLOT NAME : PLOT SCALE : 1 IN:20 FT

WISDOT/CADDS SHEET 42

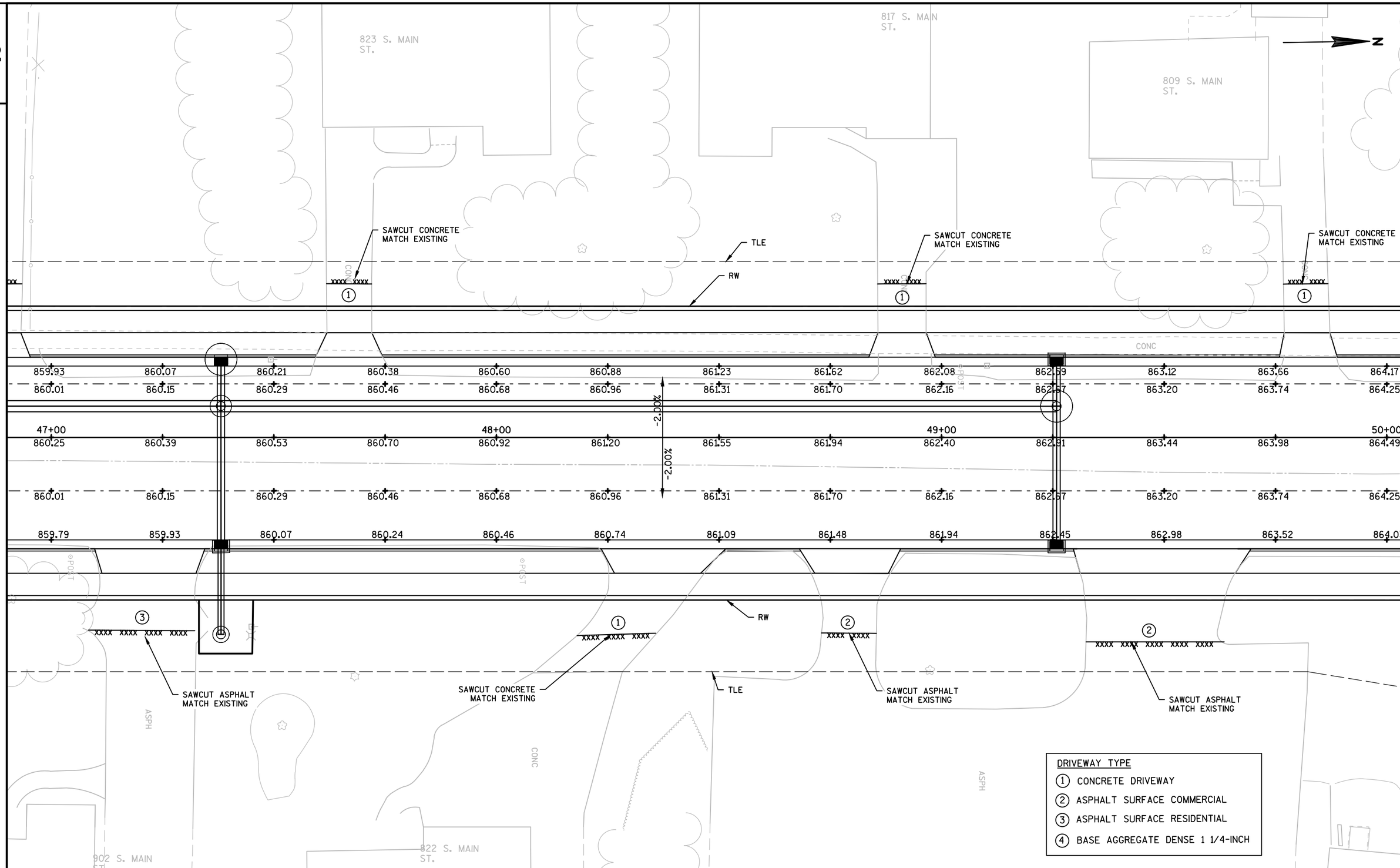

PROJECT NO:3300-01-73	HWY:STH 89	COUNTY:JEFFERSON	PAVING & INTERSECTION DETAILS	SHEET 33	E

FILE NAME : N:\PDS\C3D\33000103\SHEETSPLAN\021101-INTERSECTION DETAILS\021101-ID.DWG
LAYOUT NAME - INT - (7)
PLOT DATE : 1/16/2018 2:31 PM PLOT BY : LEX, BRANDON WILLIAMPLOT NAME : PLOT SCALE : 1 IN:20 FT

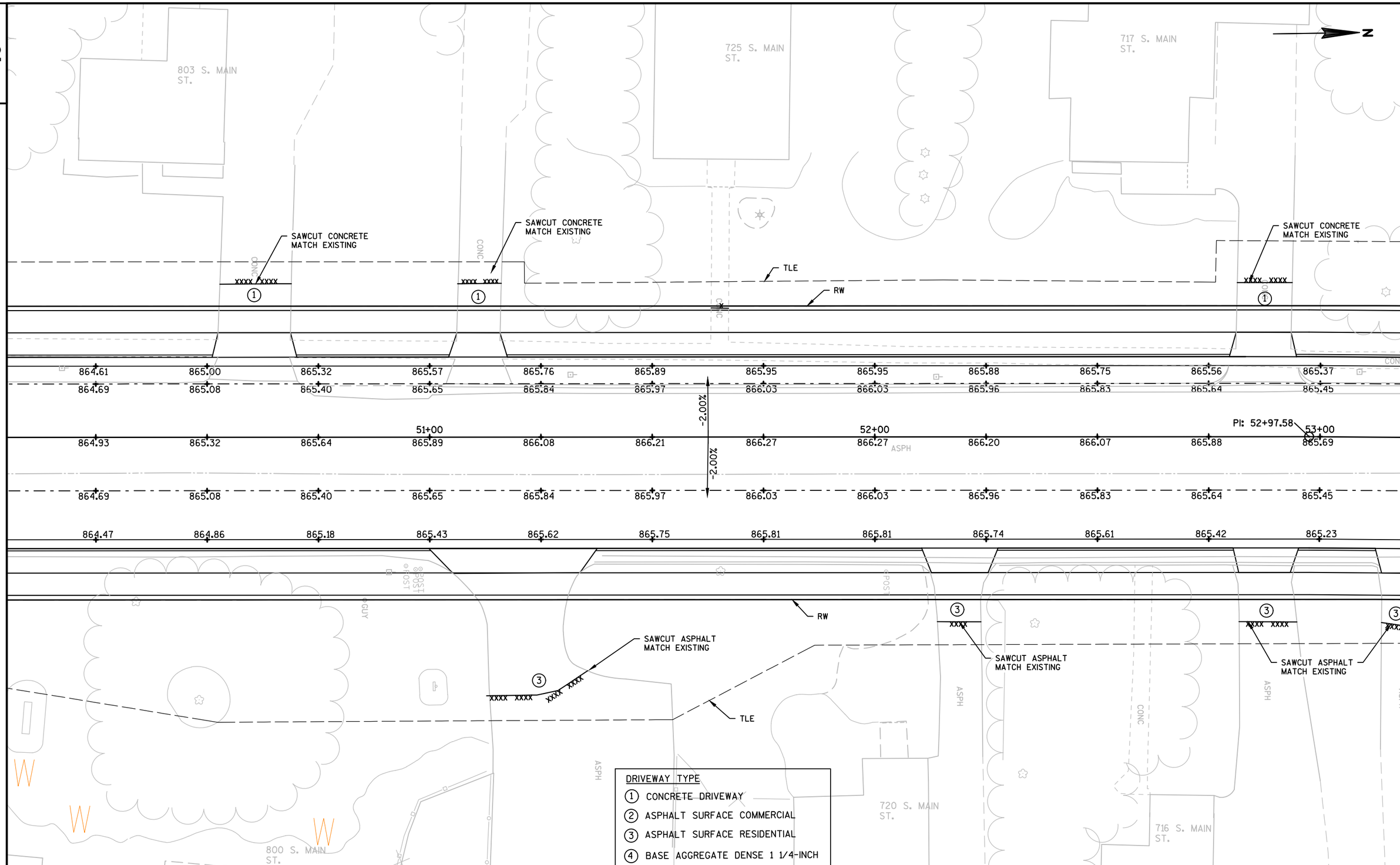

PROJECT NO:3300-01-73	HWY:STH 89	COUNTY:JEFFERSON	PAVING & INTERSECTION DETAILS	SHEET 34	E

FILE NAME : N:\PDS\C3D\33000103\SHEETSPLAN\021101-INTERSECTION DETAILS\021101-ID.DWG
LAYOUT NAME - INT - (8)
PLOT DATE : 1/16/2018 2:31 PM PLOT BY : LEX, BRANDON WILLIAMPLOT NAME : PLOT SCALE : 1 IN:20 FT

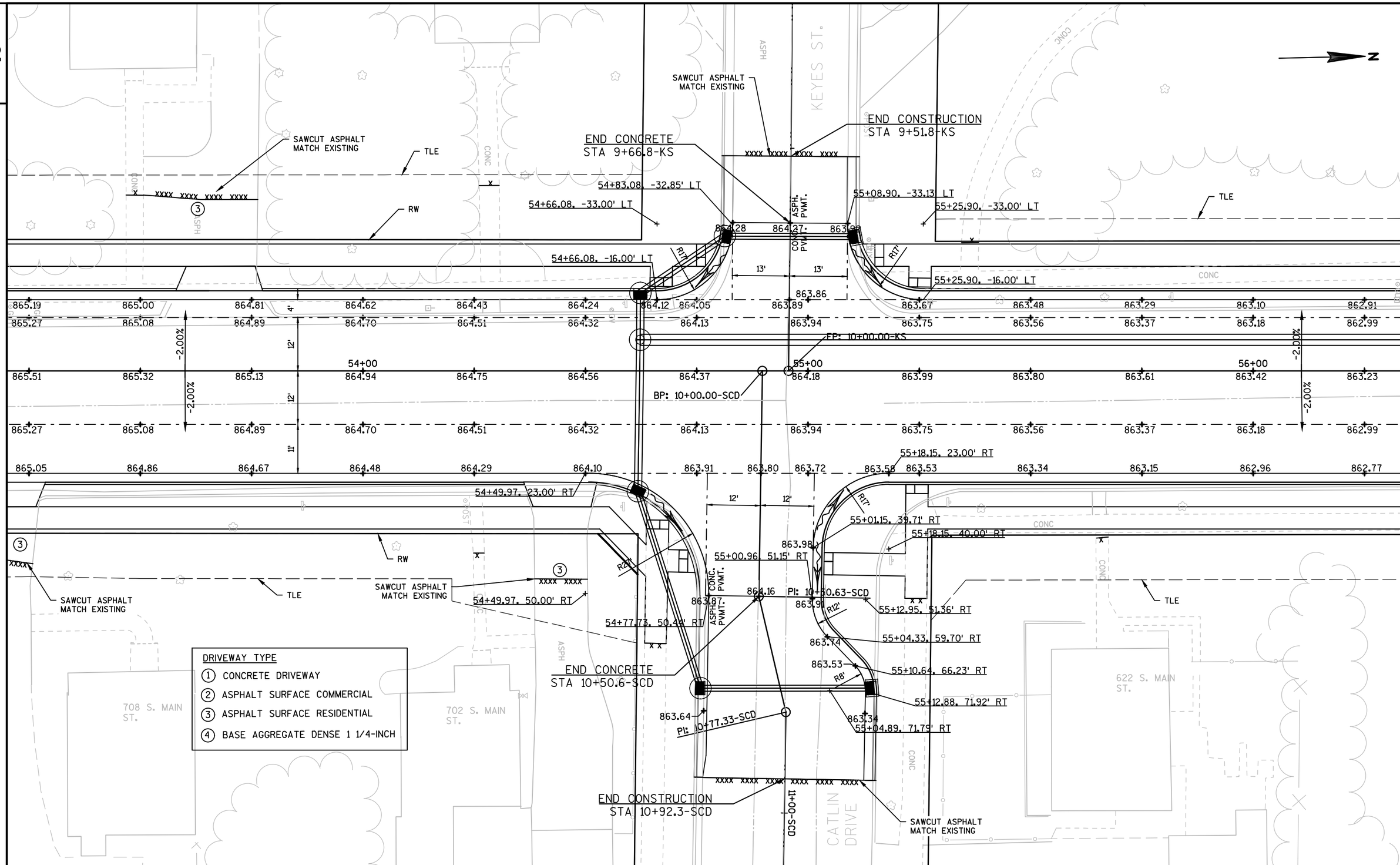

PROJECT NO:3300-01-73	HWY:STH 89	COUNTY:JEFFERSON	PAVING & INTERSECTION DETAILS	SHEET 35	E

FILE NAME : N:\PDS\C3D\33000103\SHEETSPLAN\021101-INTERSECTION DETAILS\021101-ID.DWG
LAYOUT NAME - INT - (9)
PLOT DATE : 1/16/2018 2:32 PM PLOT BY : LEX, BRANDON WILLIAMPLOT NAME : PLOT SCALE : 1 IN:20 FT
WISDOT/CADDS SHEET 42

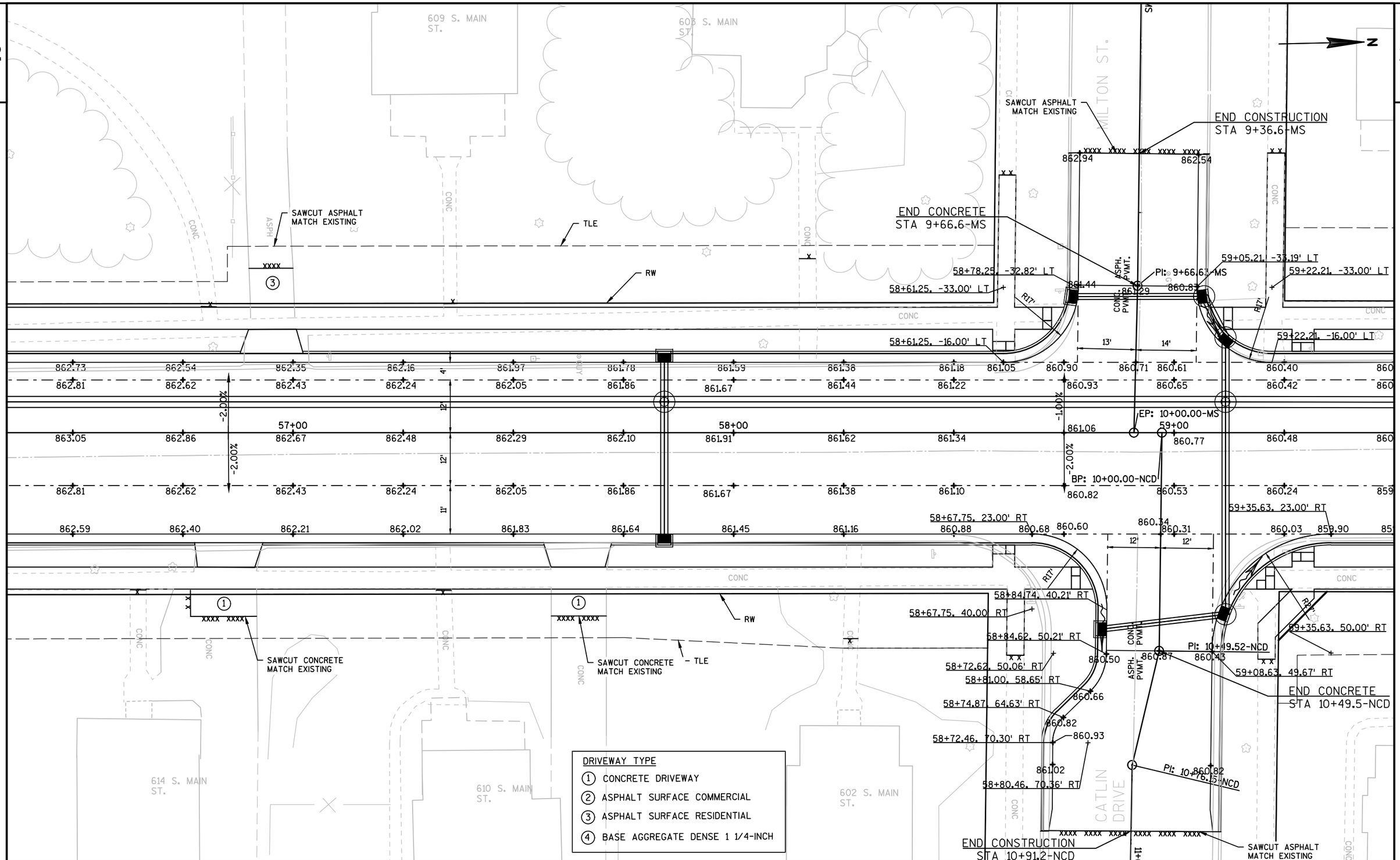

PROJECT NO:3300-01-73	HWY:STH 89	COUNTY:JEFFERSON	PAVING & INTERSECTION DETAILS	SHEET 36	E

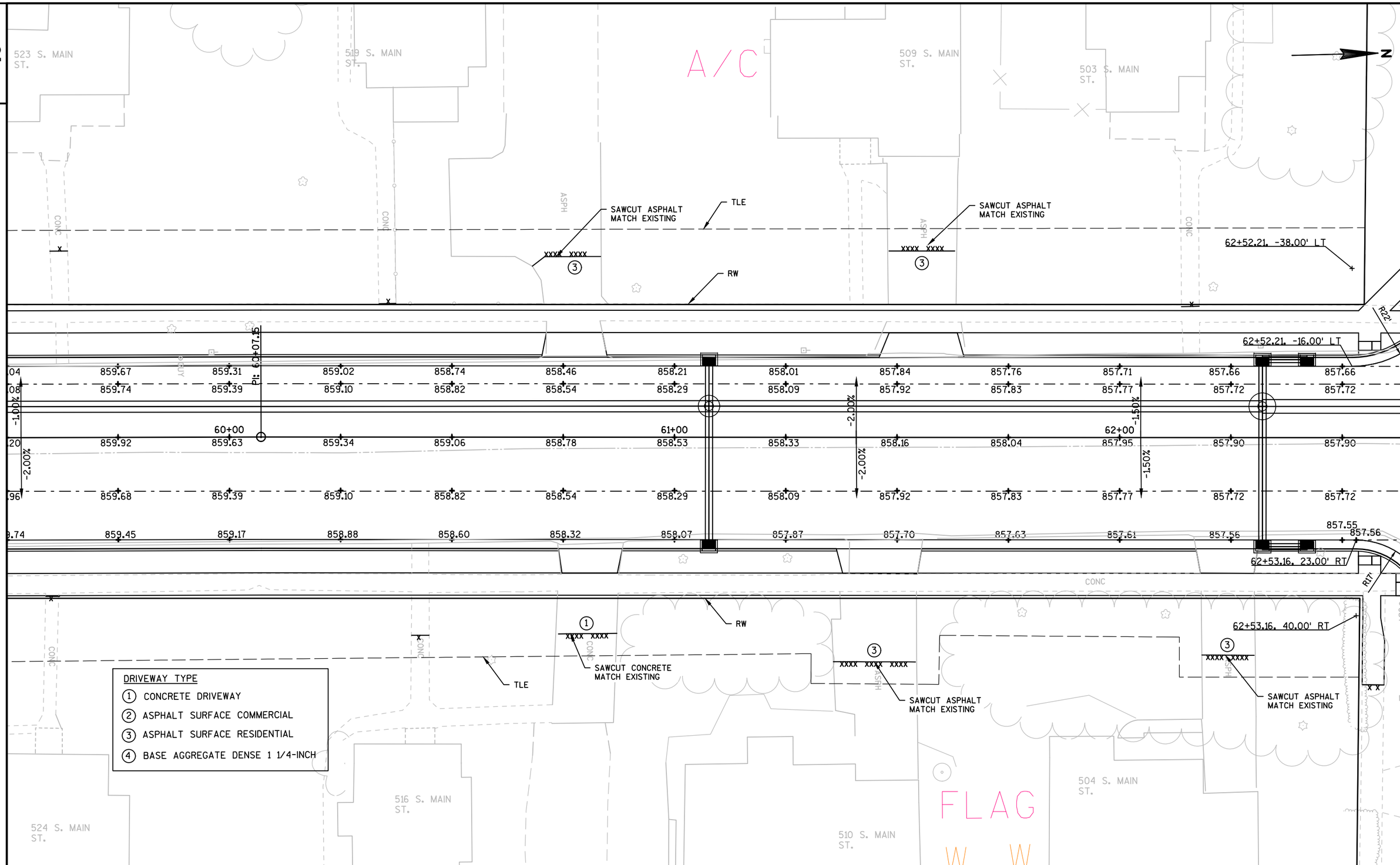

PROJECT NO:3300-01-73	HWY:STH 89	COUNTY:JEFFERSON	PAVING & INTERSECTION DETAILS	SHEET 37	E

FILE NAME : N:\PDS\C3D\33000103\SHEETSPLAN\021101-INTERSECTION DETAILS\021101-ID.DWG
LAYOUT NAME - INT - (11)
PLOT DATE : 1/16/2018 2:32 PM PLOT BY : LEX, BRANDON WILLIAMPLOT NAME : PLOT SCALE : 1 IN:20 FT

WISDOT/CADDS SHEET 42

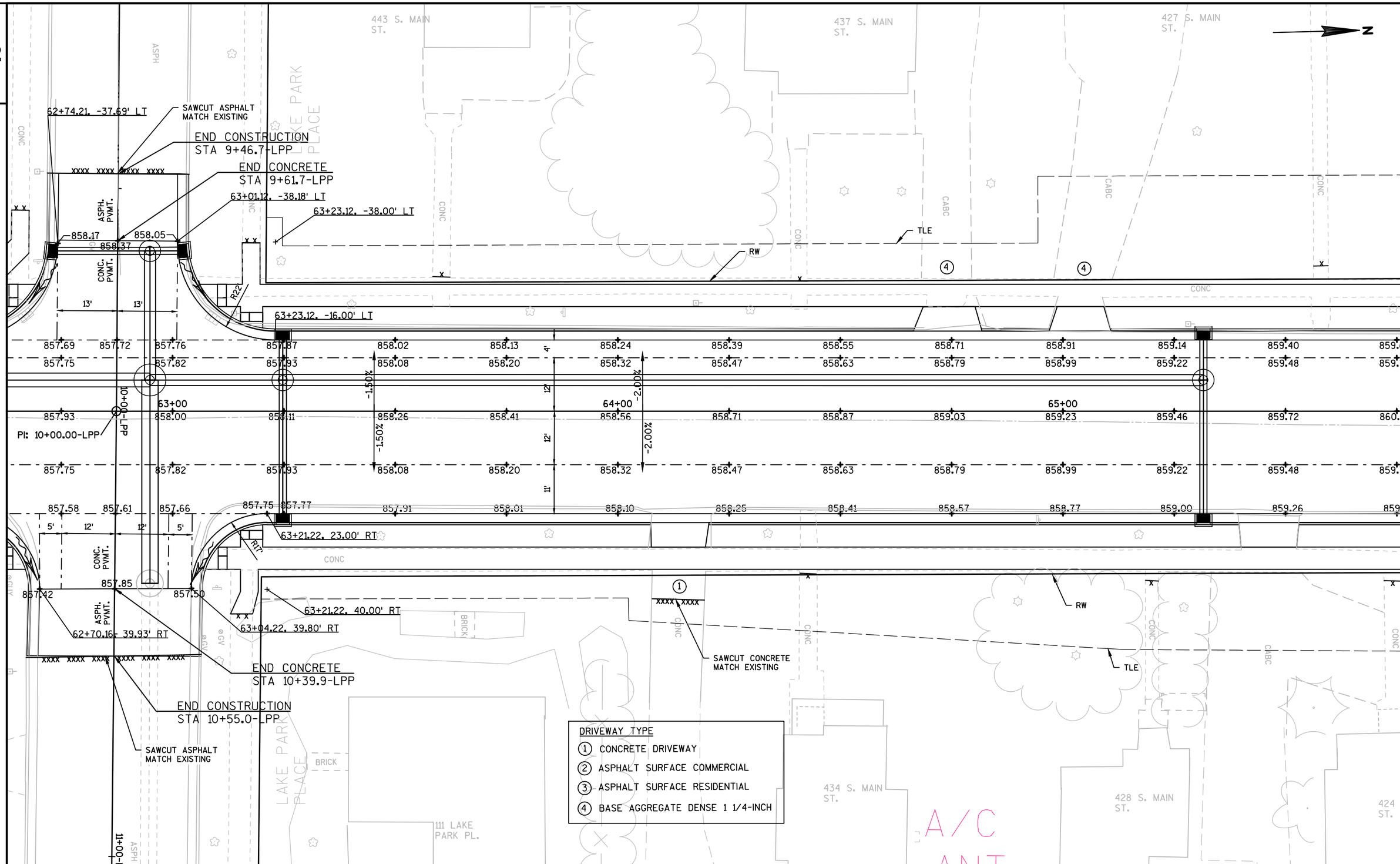

PROJECT NO:3300-01-73	HWY:STH 89	COUNTY:JEFFERSON	PAVING & INTERSECTION DETAILS	SHEET 38	E

FILE NAME : N:\PDS\C3D\33000103\SHEETSPLAN\021101-INTERSECTION DETAILS\021101-ID.DWG
LAYOUT NAME - INT - (12)
PLOT DATE : 1/16/2018 2:32 PM
PLOT BY : LEX, BRANDON WILLIAMPLOT NAME :
PLOT SCALE : 1 IN:20 FT

WISDOT/CADDS SHEET 42

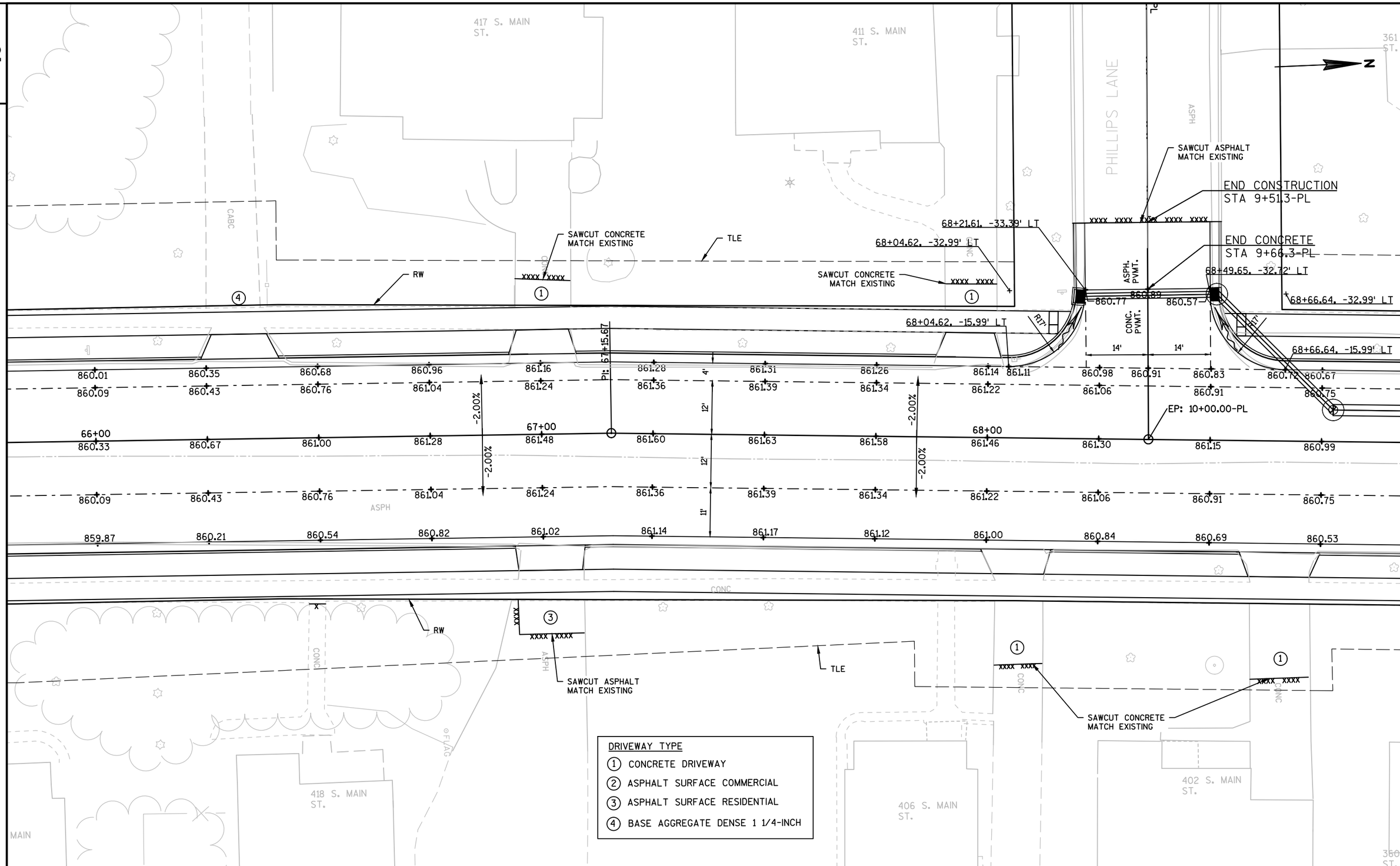

PROJECT NO:3300-01-73	HWY:STH 89	COUNTY:JEFFERSON	PAVING & INTERSECTION DETAILS	SHEET 39	E

FILE NAME : N:\PDS\C3D\33000103\SHEETSPLAN\021101-INTERSECTION DETAILS\021101-ID.DWG
LAYOUT NAME - INT - (13)
PLOT DATE : 1/16/2018 2:32 PM PLOT BY : LEX, BRANDON WILLIAMPLOT NAME : PLOT SCALE : 1 IN:20 FT

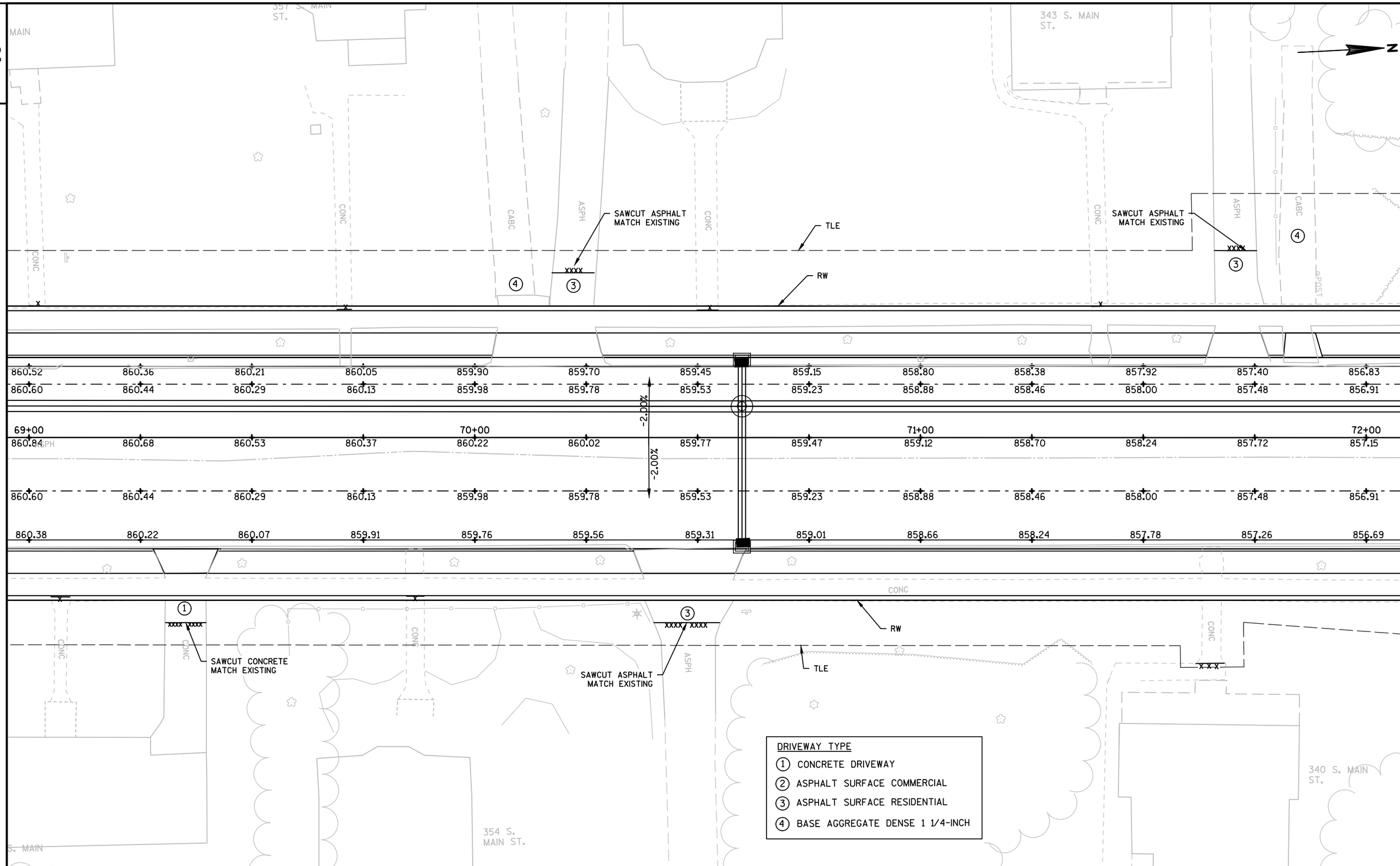

PROJECT NO:3300-01-73	HWY:STH 89	COUNTY:JEFFERSON	PAVING & INTERSECTION DETAILS	SHEET 40	E

FILE NAME : N:\PDS\C3D\33000103\SHEETSPLAN\021101-INTERSECTION DETAILS\021101-ID.DWG
LAYOUT NAME - INT - (14)
PLOT DATE : 1/16/2018 2:32 PM PLOT BY : LEX, BRANDON WILLIAMPLOT NAME : PLOT SCALE : 1 IN:20 FT

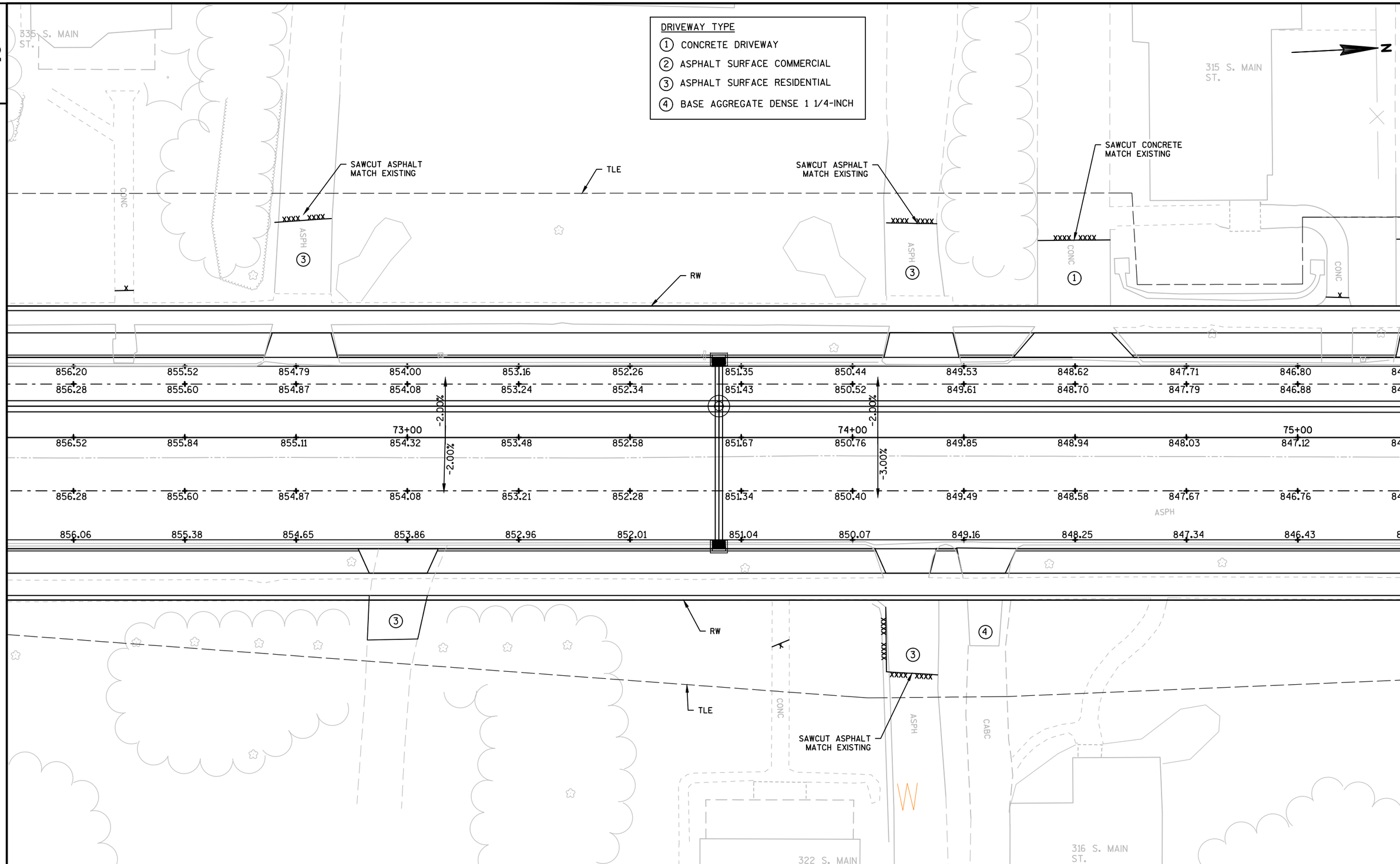

PROJECT NO:3300-01-73	HWY:STH 89	COUNTY:JEFFERSON	PAVING & INTERSECTION DETAILS	SHEET 41	E

FILE NAME : N:\PDS\C3D\33000103\SHEETSPLAN\021101-INTERSECTION DETAILS\021101-ID.DWG
LAYOUT NAME - INT - (15)
PLOT DATE : 1/16/2018 2:33 PM PLOT BY : LEX, BRANDON WILLIAMPLOT NAME : PLOT SCALE : 1 IN:20 FT

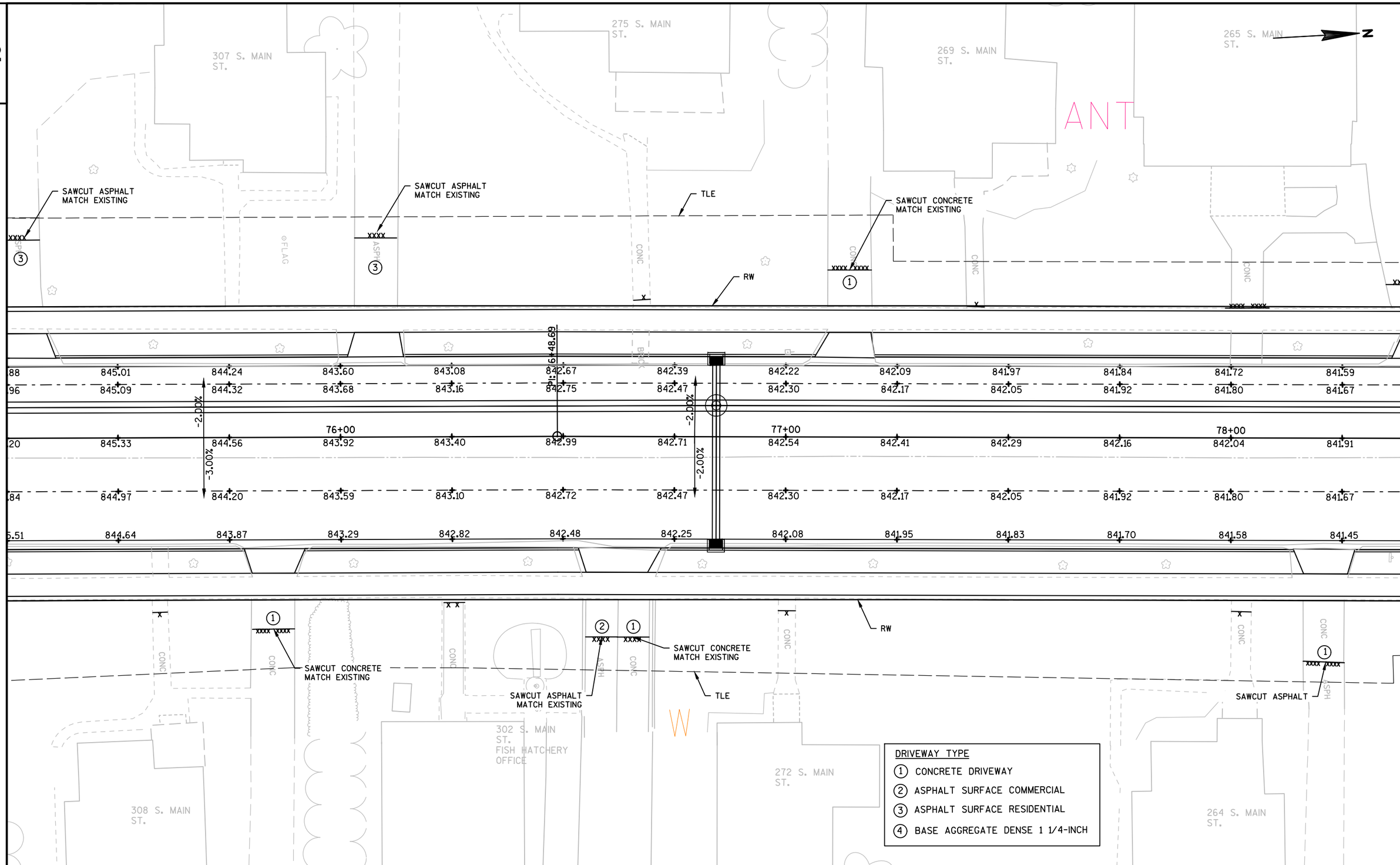

PROJECT NO:3300-01-73	HWY:STH 89	COUNTY:JEFFERSON	PAVING & INTERSECTION DETAILS	SHEET 42	E

FILE NAME : N:\PDS\C3D\33000103\SHEETSPLAN\021101-INTERSECTION DETAILS\021101-ID.DWG
LAYOUT NAME - INT - (16)
PLOT DATE : 1/16/2018 2:33 PM PLOT BY : LEX, BRANDON WILLIAMPLOT NAME : PLOT SCALE : 1 IN:20 FT

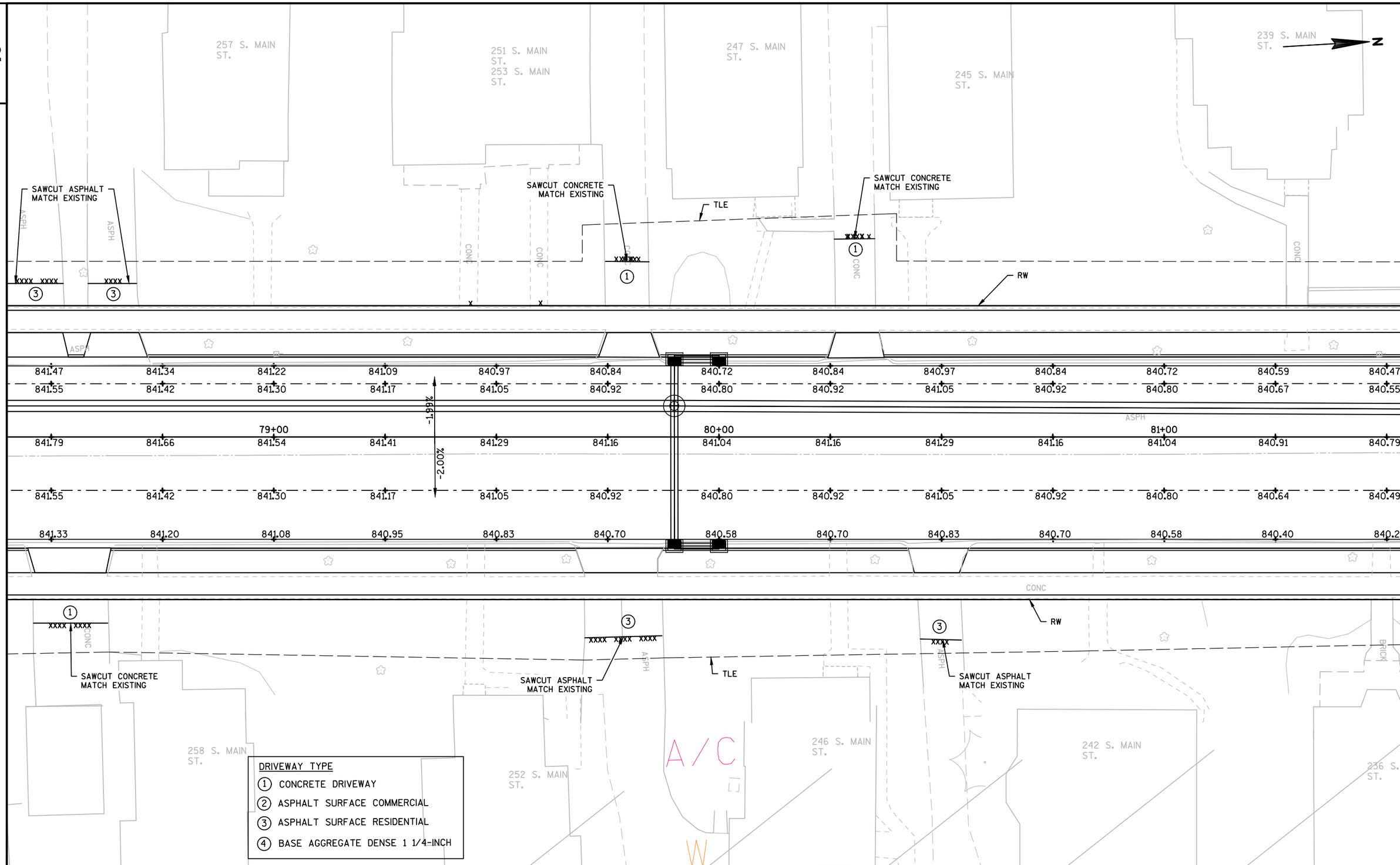

PROJECT NO:3300-01-73	HWY:STH 89	COUNTY:JEFFERSON	PAVING & INTERSECTION DETAILS	SHEET 43	E

FILE NAME : N:\PDS\C3D\33000103\SHEETSPLAN\021101-INTERSECTION DETAILS\021101-ID.DWG
LAYOUT NAME - INT - (17)
PLOT DATE : 1/16/2018 2:33 PM PLOT BY : LEX, BRANDON WILLIAMPLOT NAME : PLOT SCALE : 1 IN:20 FT

2

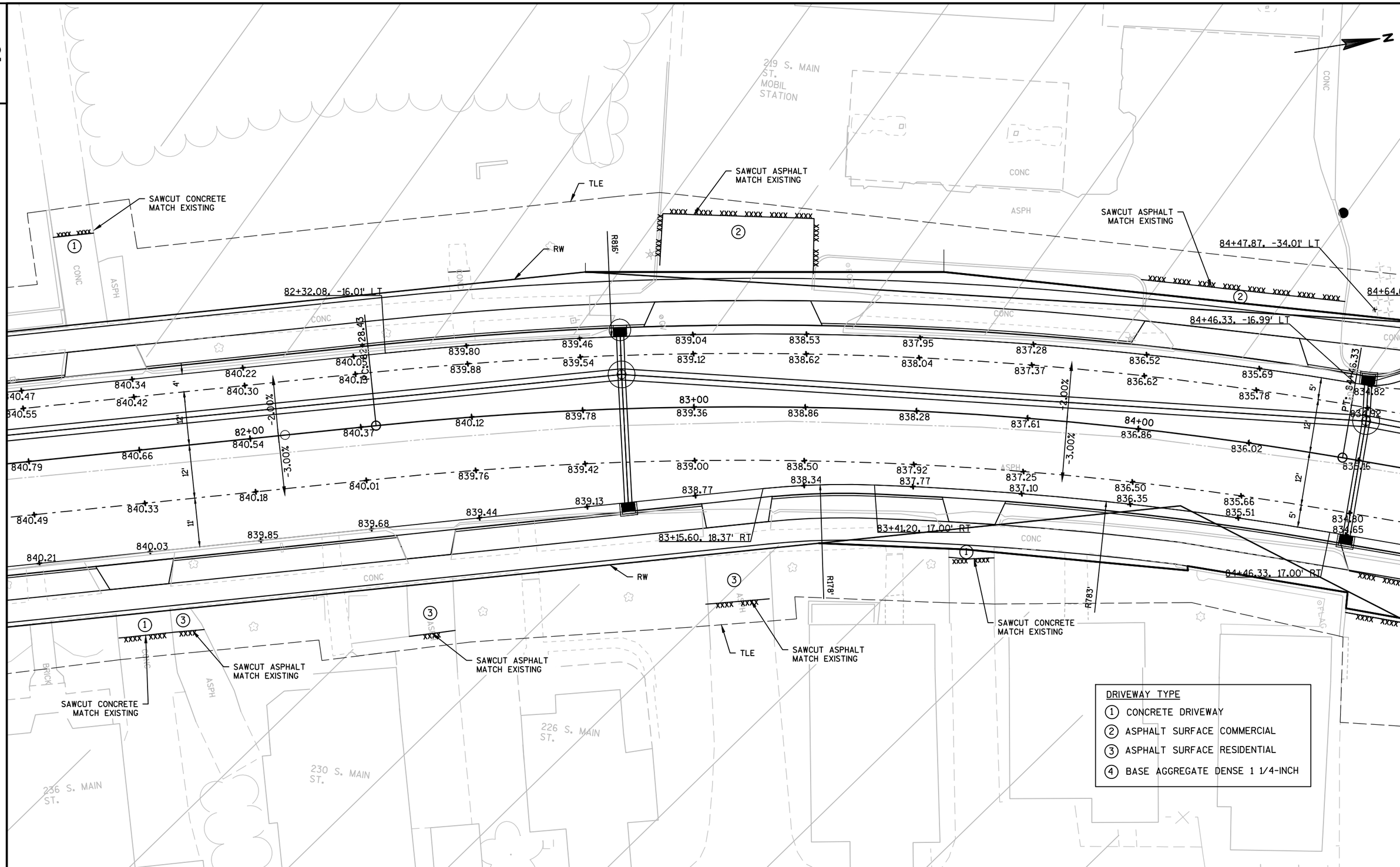

2

PROJECT NO:3300-01-73	HWY:STH 89	COUNTY:JEFFERSON	PAVING & INTERSECTION DETAILS	SHEET 44	E

FILE NAME : N:\PDS\C3D\33000103\SHEETSPLAN\021101-INTERSECTION DETAILS\021101-ID.DWG
LAYOUT NAME - INT - (18)
PLOT DATE : 1/16/2018 2:33 PM PLOT BY : LEX, BRANDON WILLIAMPLOT NAME : PLOT SCALE : 1 IN:20 FT

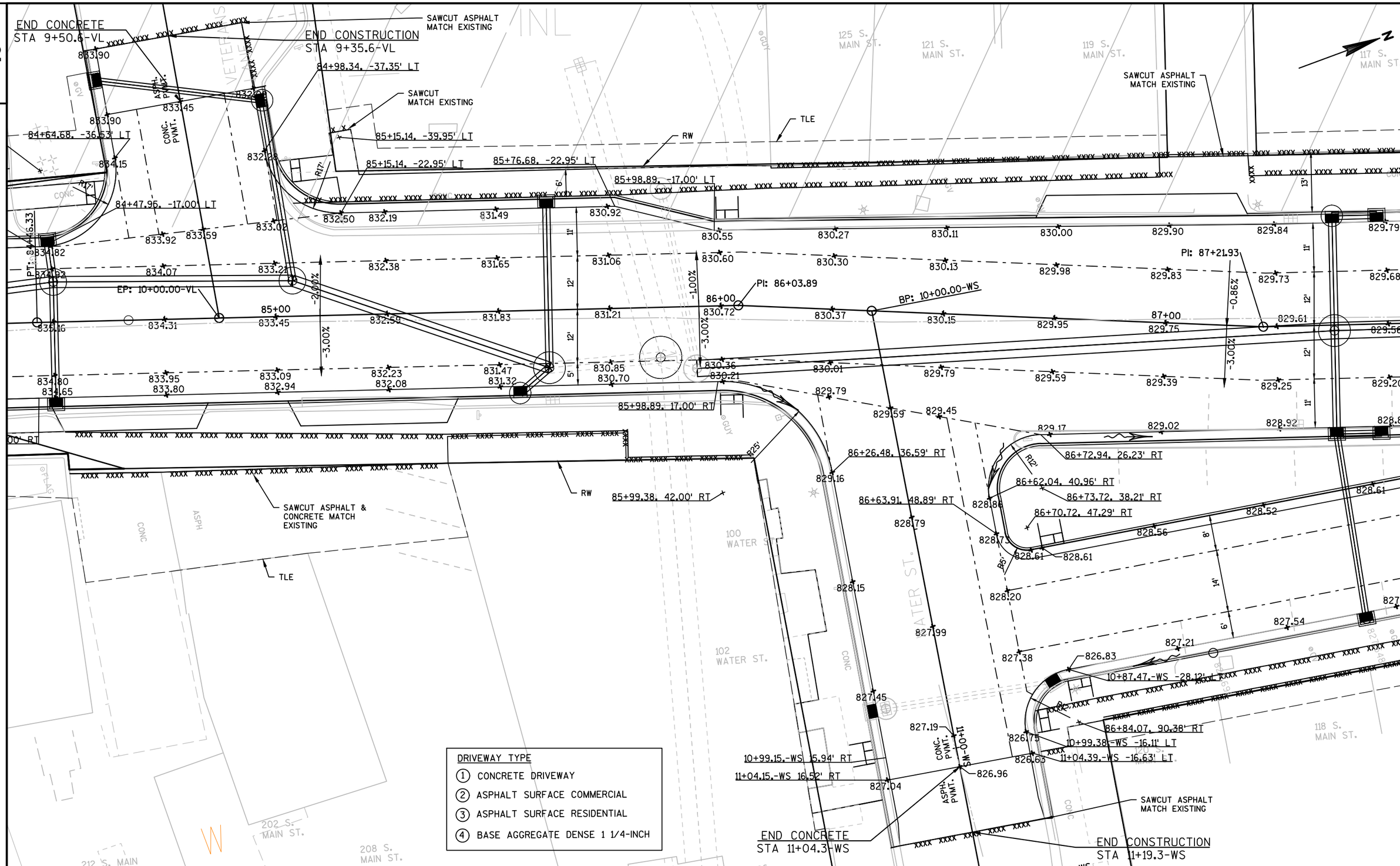

PROJECT NO:3300-01-73	HWY:STH 89	COUNTY:JEFFERSON	PAVING & INTERSECTION DETAILS	SHEET 45	E

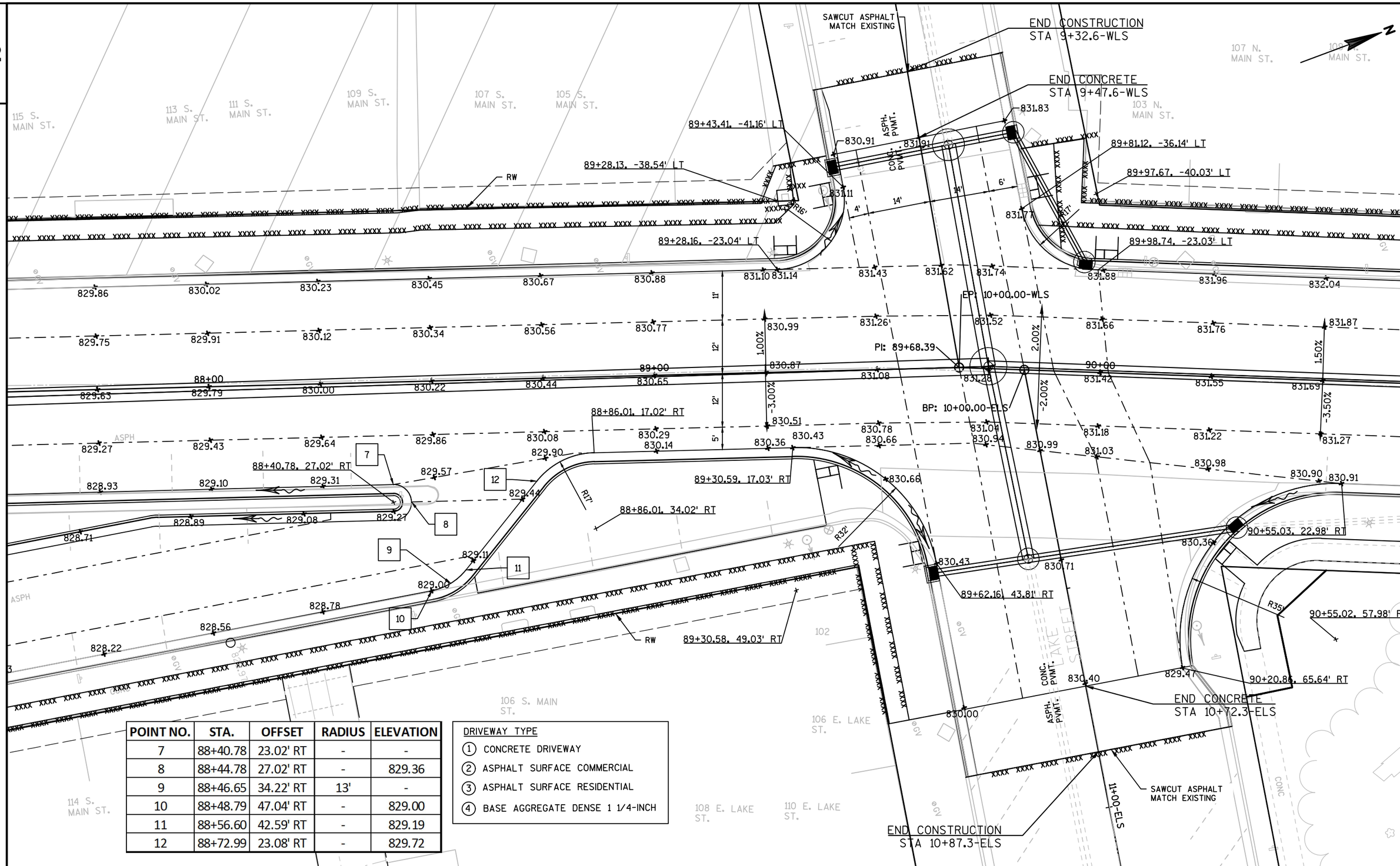

POINT NO.	STA.	OFFSET	RADIUS	ELEVATION
7	88+40.78	23.02' RT	-	-
8	88+44.78	27.02' RT	-	829.36
9	88+46.65	34.22' RT	13'	-
10	88+48.79	47.04' RT	-	829.00
11	88+56.60	42.59' RT	-	829.19
12	88+72.99	23.08' RT	-	829.72

DRIVEWAY TYPE

1. CONCRETE DRIVEWAY
2. ASPHALT SURFACE COMMERCIAL
3. ASPHALT SURFACE RESIDENTIAL
4. BASE AGGREGATE DENSE 1 1/4-INCH

PROJECT NO:3300-01-73	HWY:STH 89	COUNTY:JEFFERSON	PAVING & INTERSECTION DETAILS	SHEET 46	E

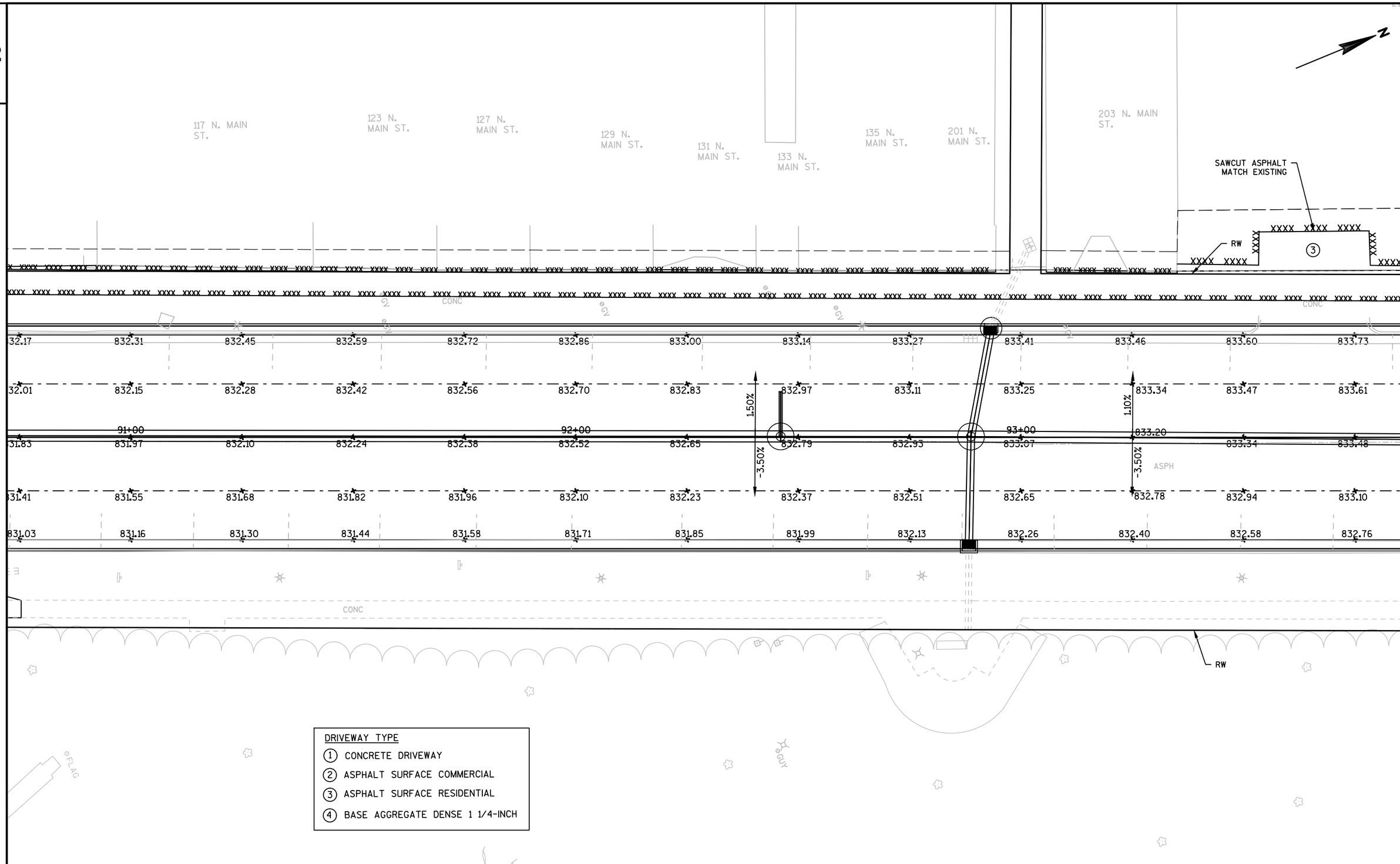

DRIVEWAY TYPE

1. CONCRETE DRIVEWAY
2. ASPHALT SURFACE COMMERCIAL
3. ASPHALT SURFACE RESIDENTIAL
4. BASE AGGREGATE DENSE 1 1/4-INCH

PROJECT NO:3300-01-73	HWY:STH 89	COUNTY:JEFFERSON	PAVING & INTERSECTION DETAILS	SHEET 47	E

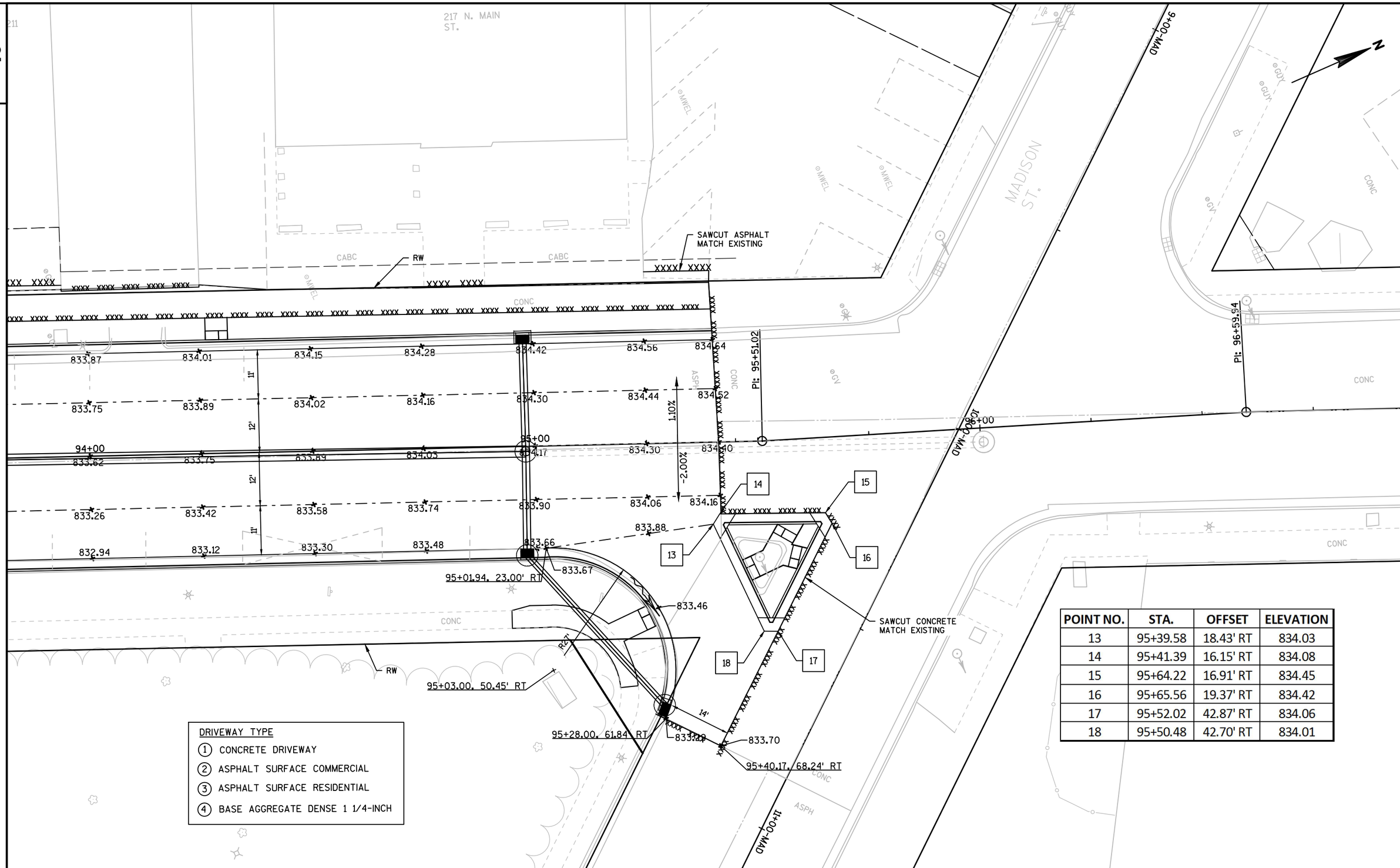

DRIVEWAY TYPE

1. CONCRETE DRIVEWAY
2. ASPHALT SURFACE COMMERCIAL
3. ASPHALT SURFACE RESIDENTIAL
4. BASE AGGREGATE DENSE 1 1/4-INCH

POINT NO.	STA.	OFFSET	ELEVATION
13	95+39.58	18.43' RT	834.03
14	95+41.39	16.15' RT	834.08
15	95+64.22	16.91' RT	834.45
16	95+65.56	19.37' RT	834.42
17	95+52.02	42.87' RT	834.06
18	95+50.48	42.70' RT	834.01

PROJECT NO:3300-01-73	HWY:STH 89	COUNTY:JEFFERSON	PAVING & INTERSECTION DETAILS	SHEET 48	E

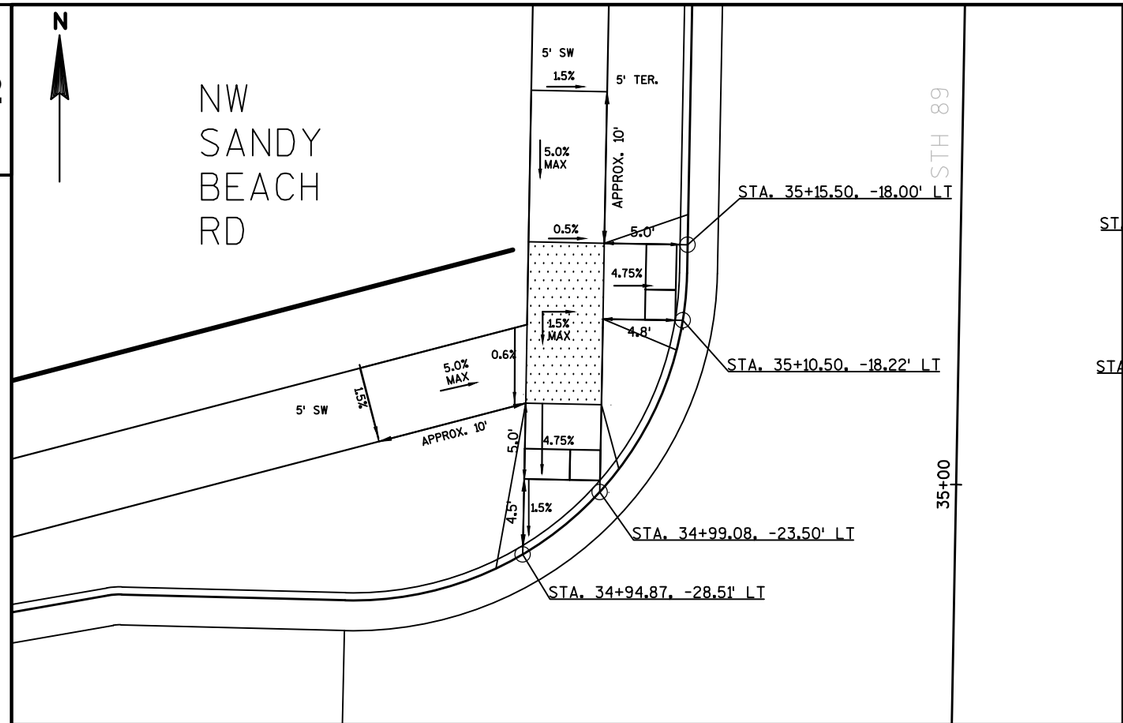

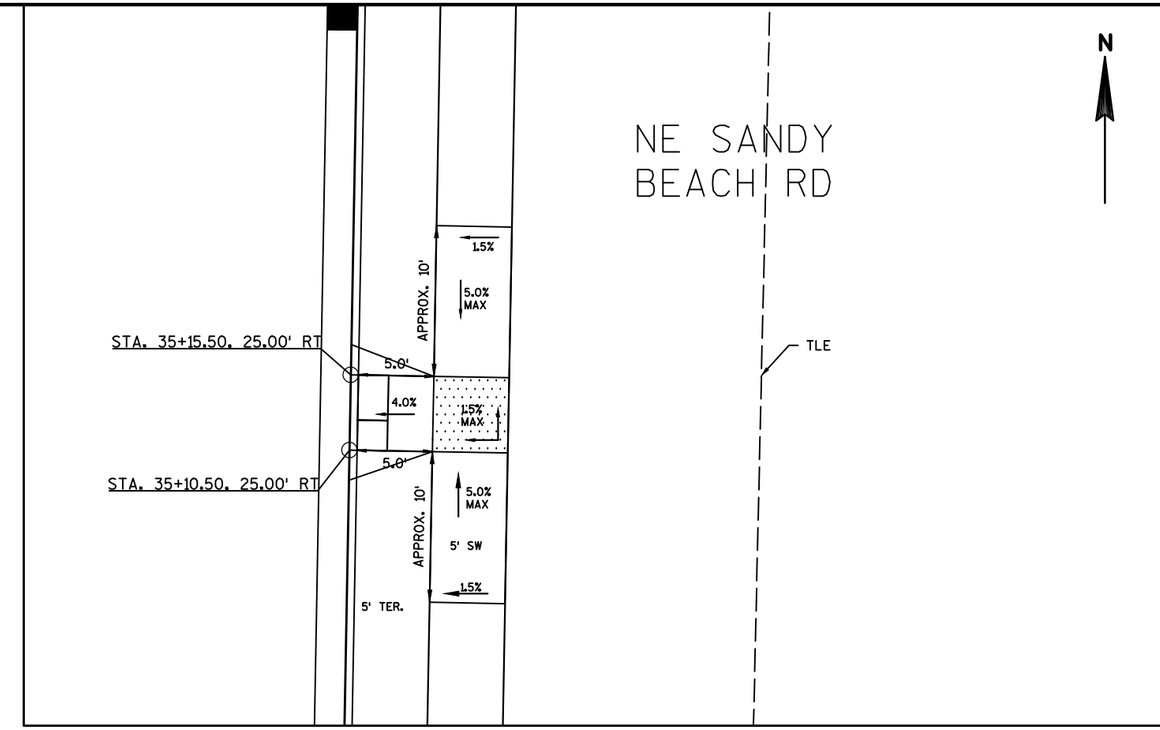

ALL TERRACES ARE GRASS
UNLESS OTHERWISE NOTED
IN PLANS

INLET (2 X 3)

LEVEL LANDING AREA
(<1.5% ANY DIRECTION)

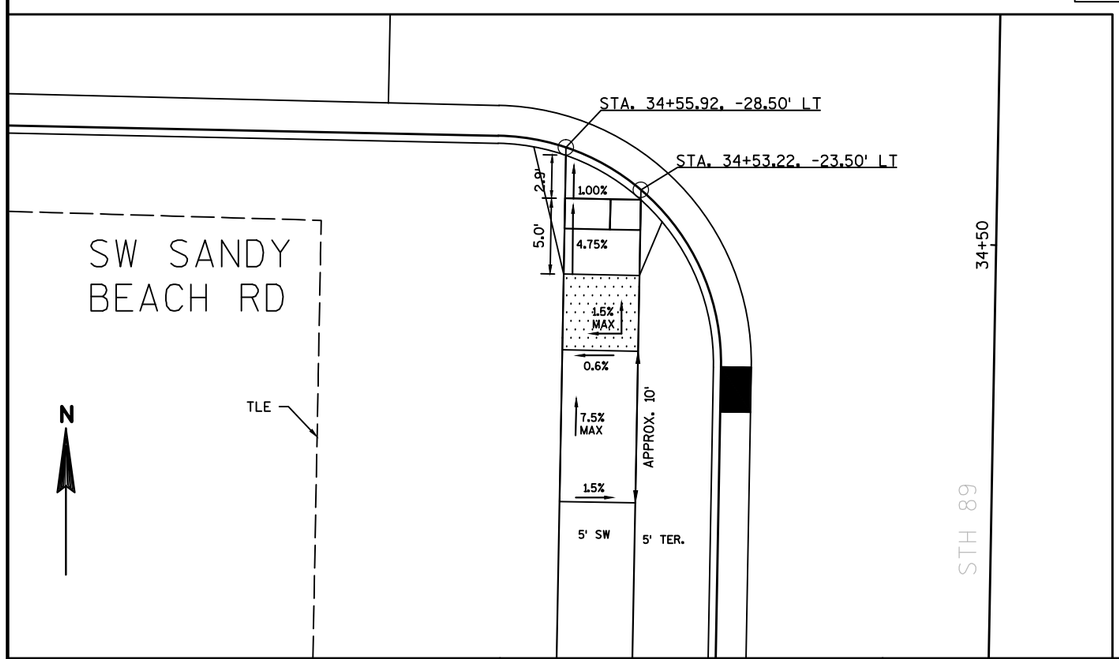

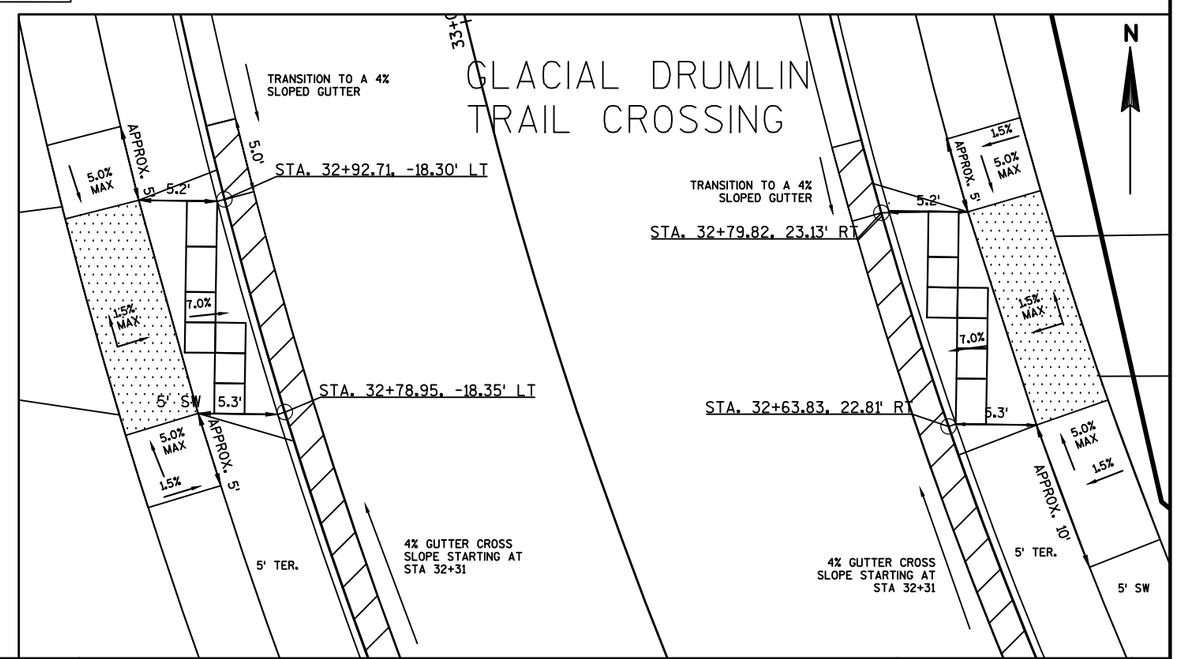

PROJECT NO:3300-01-73	HWY:STH 89	COUNTY:JEFFERSON	CURB RAMP DETAILS	SHEET 49	E

2

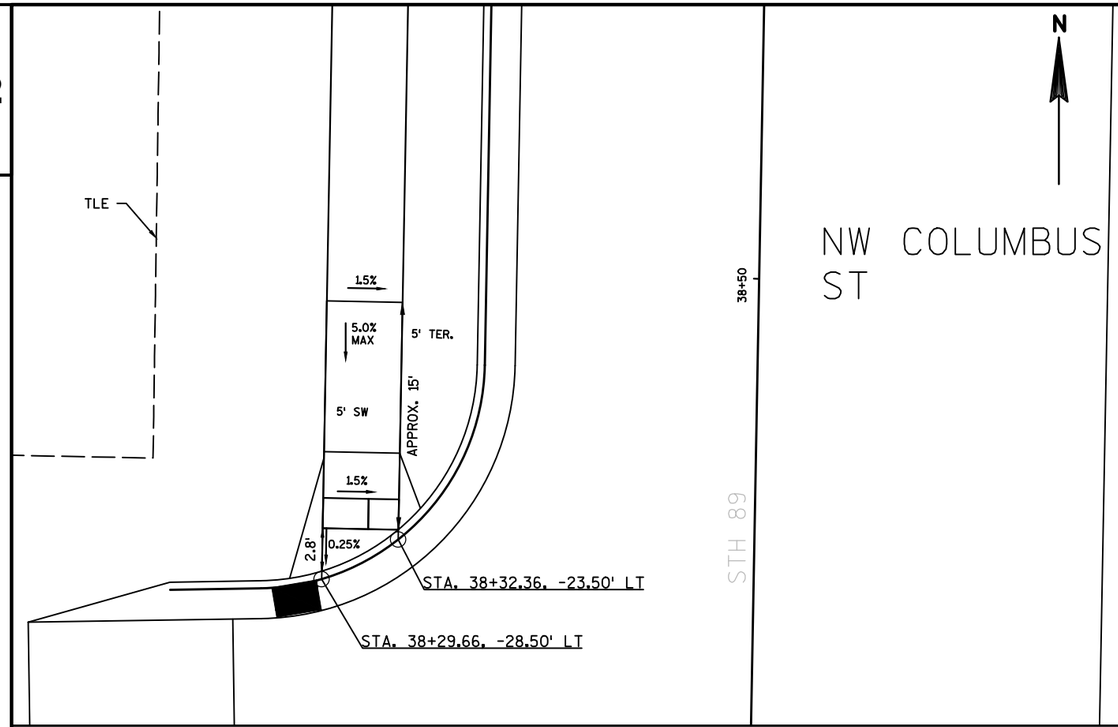

INLET (2 X 3)

LEVEL LANDING AREA (<1.5% ANY DIRECTION)

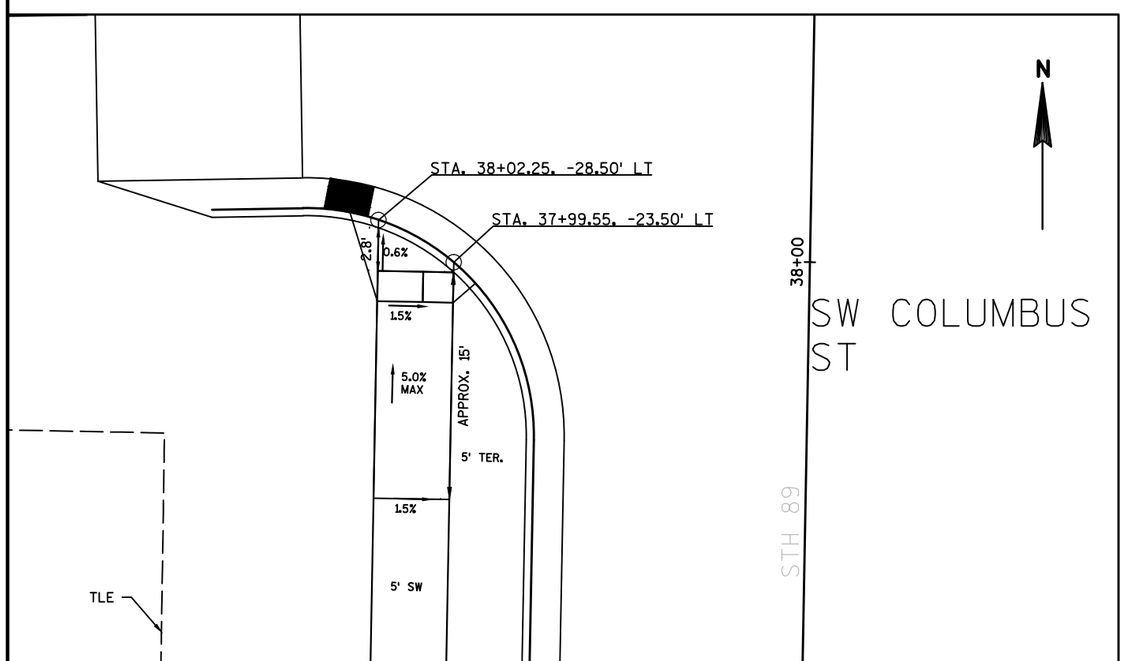

2

PROJECT NO:3300-01-73	HWY:STH 89	COUNTY:JEFFERSON	CURB RAMP DETAILS	SHEET 50	E

2

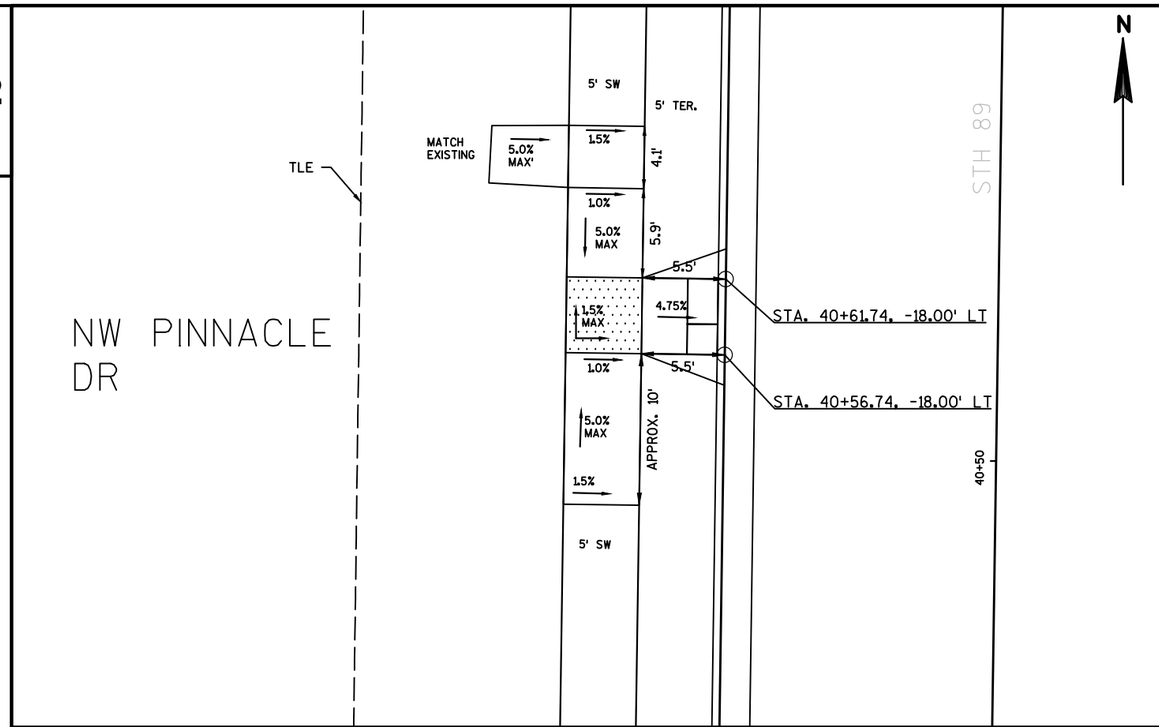

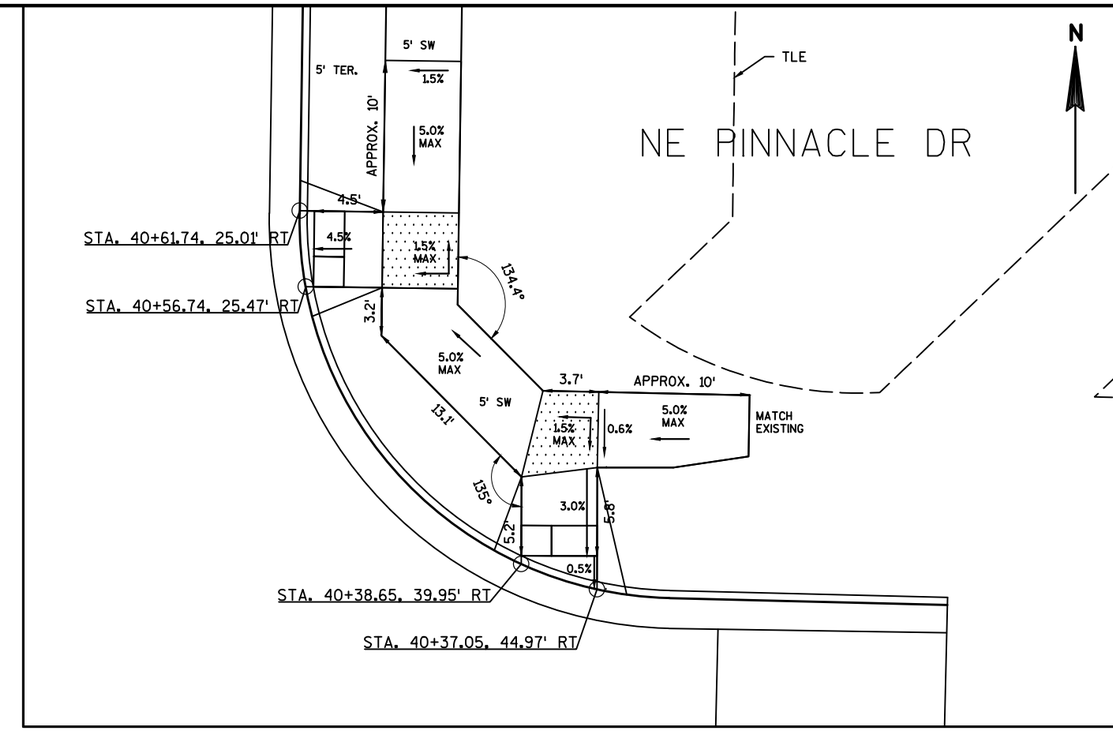

2

INLET (2 X 3)

LEVEL LANDING AREA (<1.5% ANY DIRECTION)

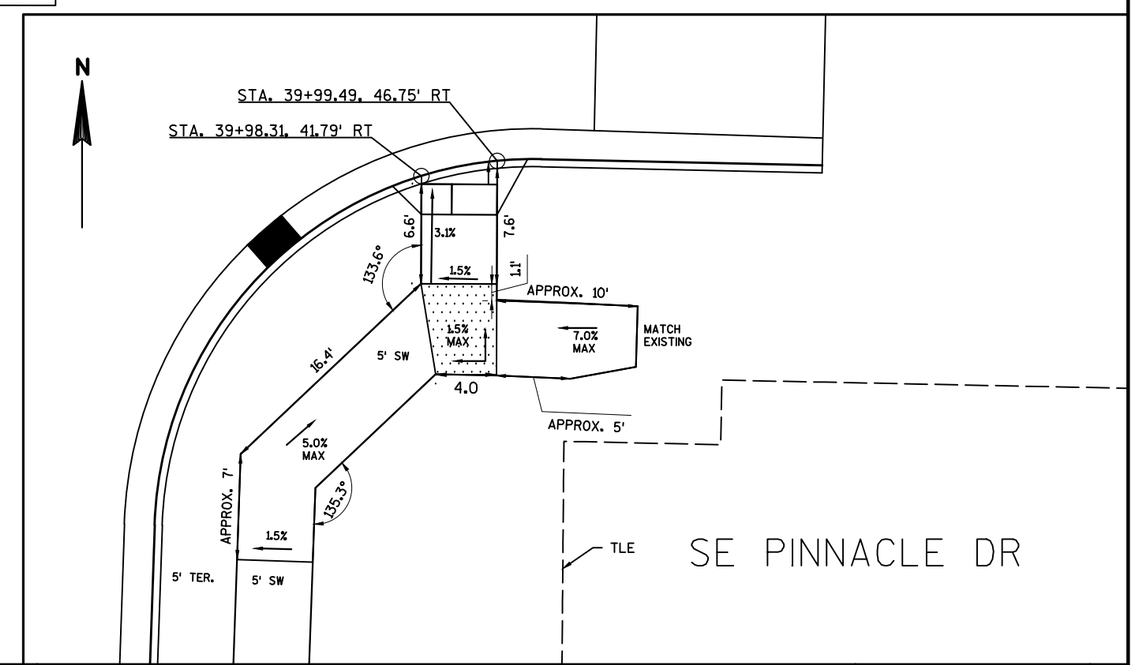

PROJECT NO:3300-01-73	HWY:STH 89	COUNTY:JEFFERSON	CURB RAMP DETAILS	SHEET 51	E

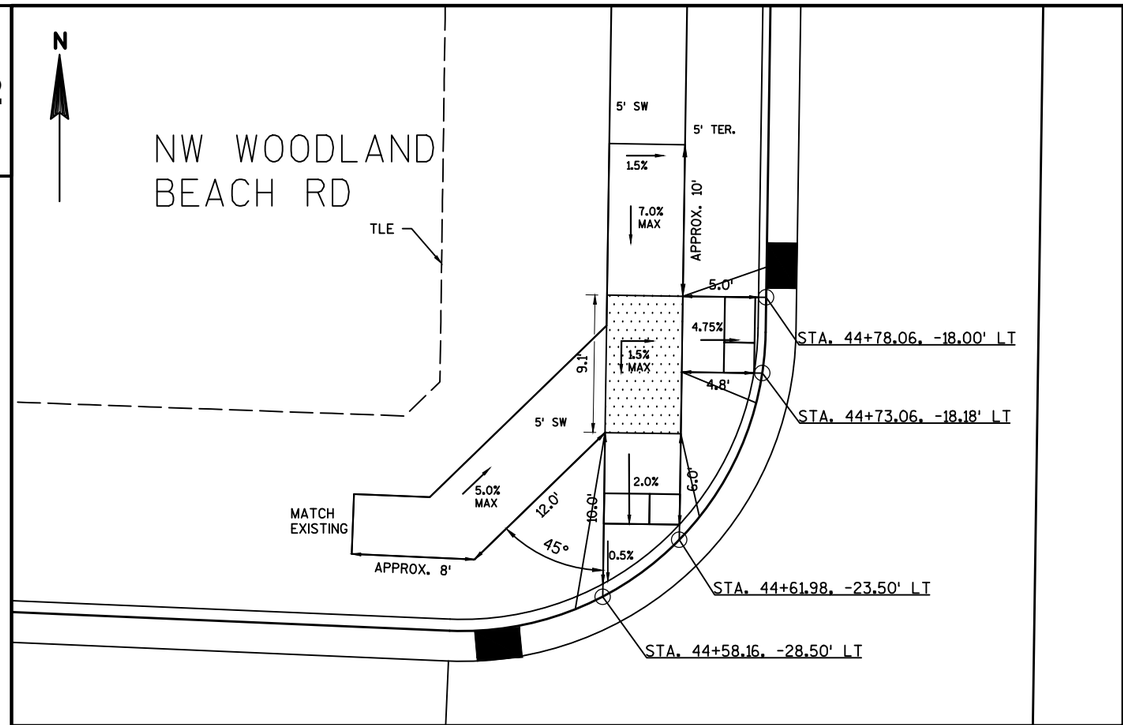

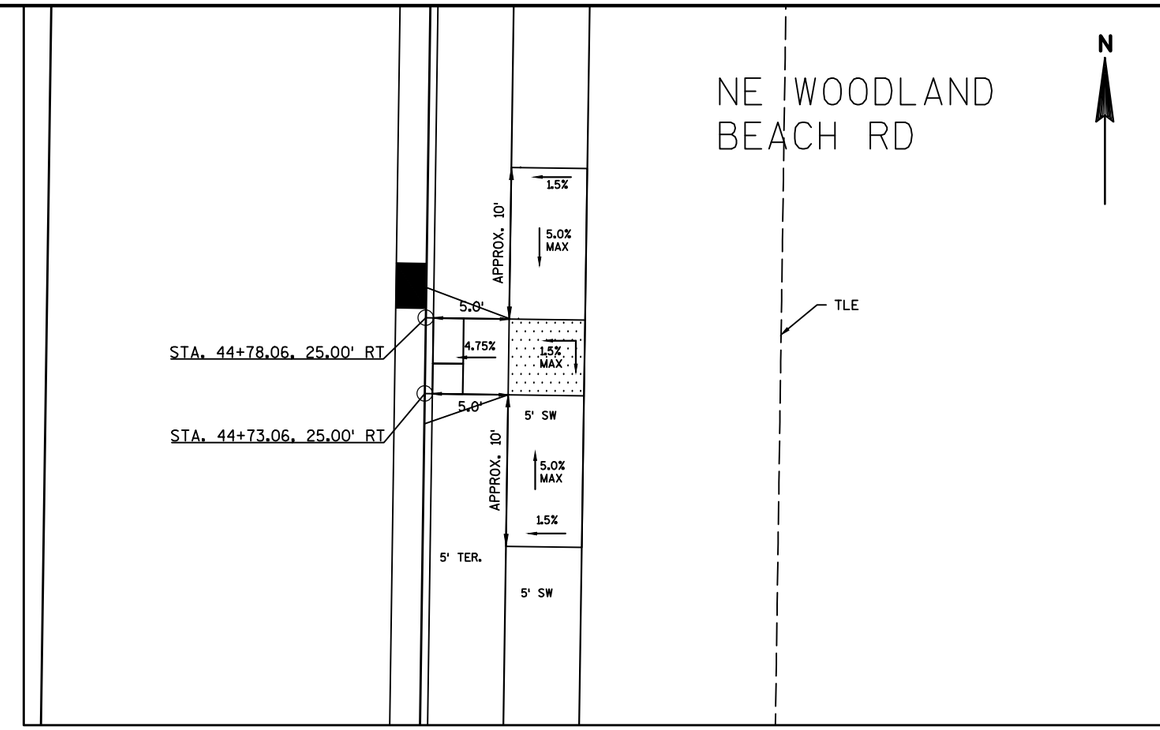

INLET (2 X 3)

LEVEL LANDING AREA
(<1.5% ANY DIRECTION)

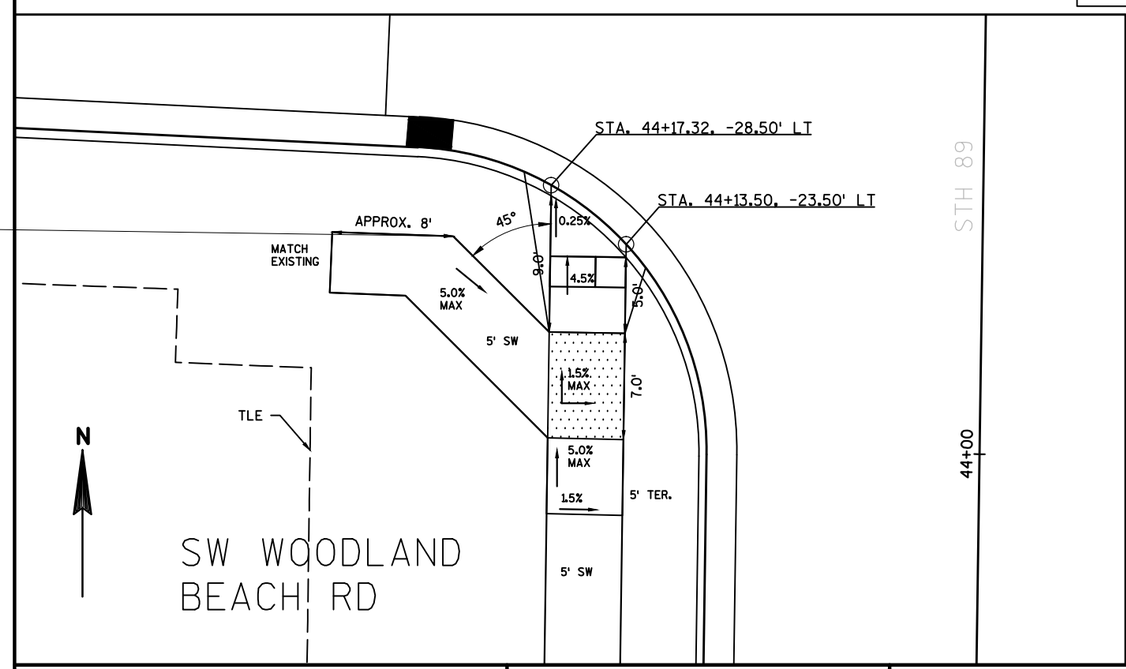

PROJECT NO:3300-01-73	HWY:STH 89	COUNTY:JEFFERSON	CURB RAMP DETAILS	SHEET 52	E

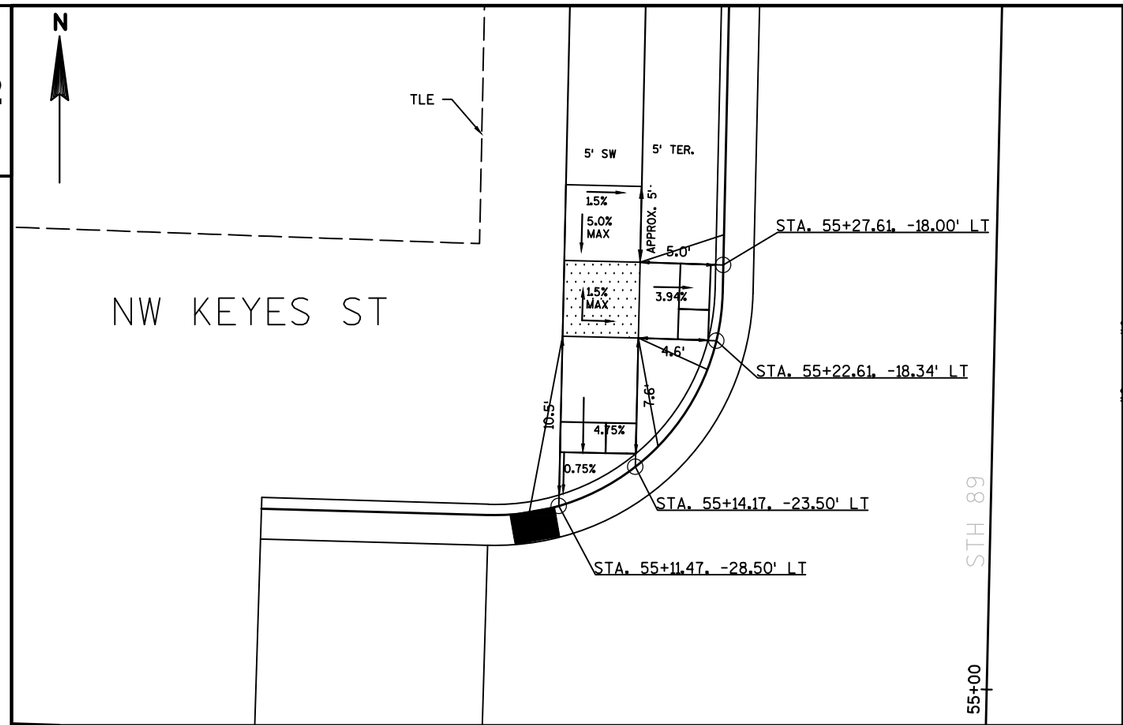

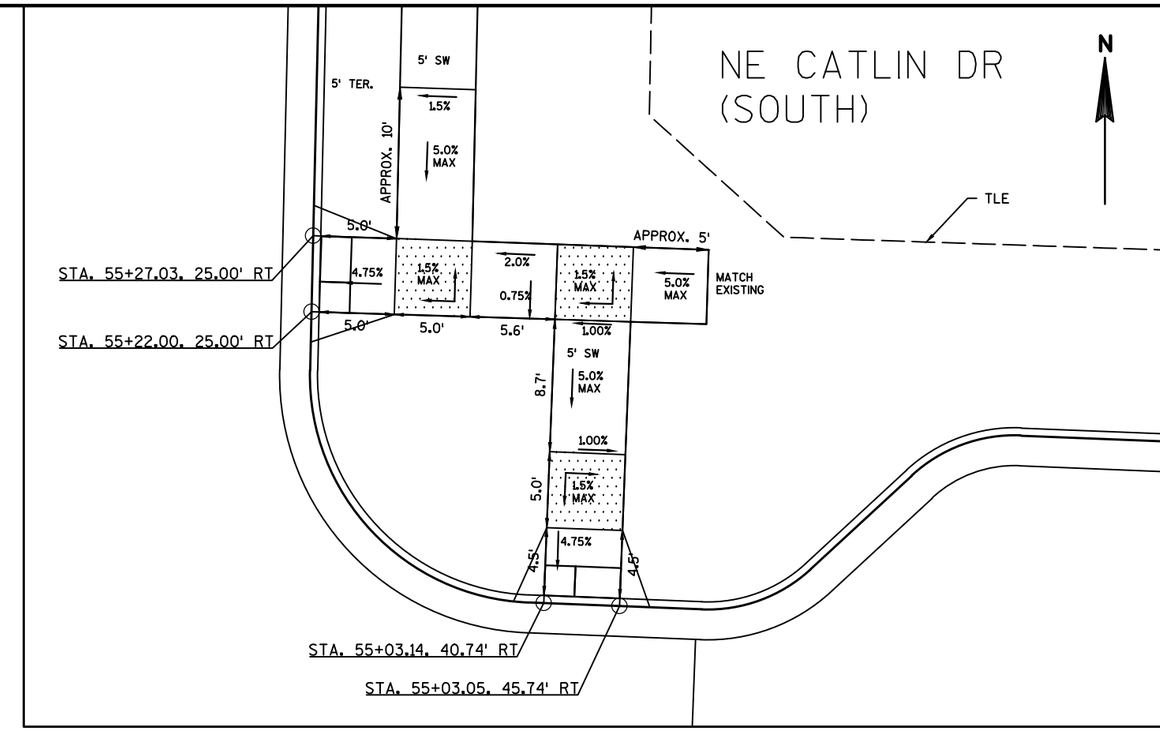

INLET (2 X 3)

LEVEL LANDING AREA (<1.5% ANY DIRECTION)

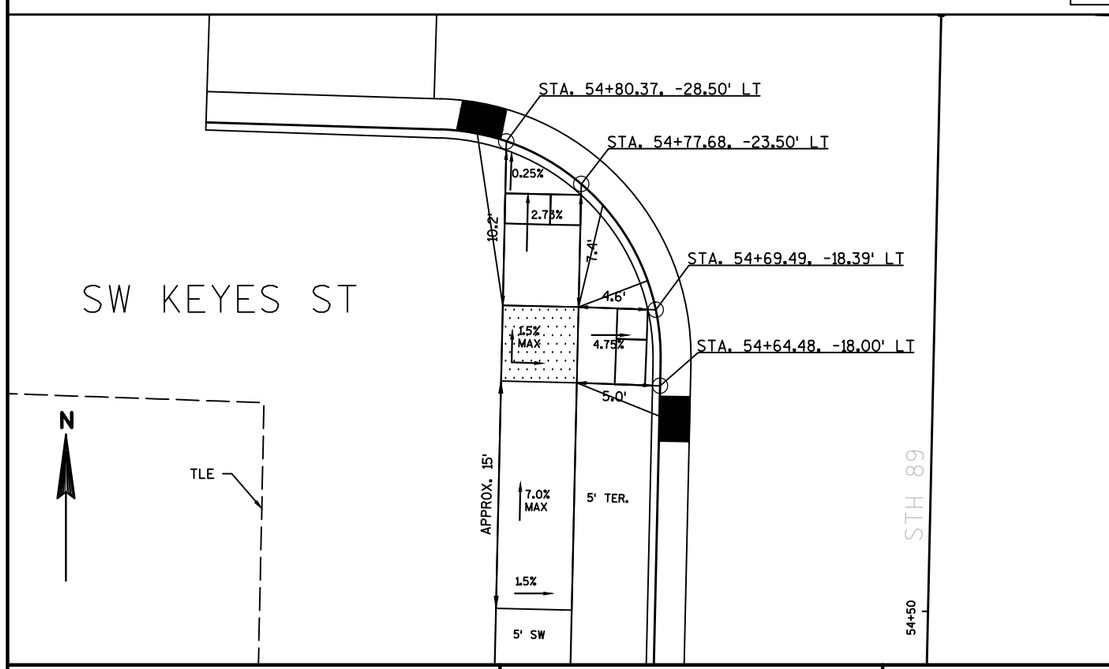

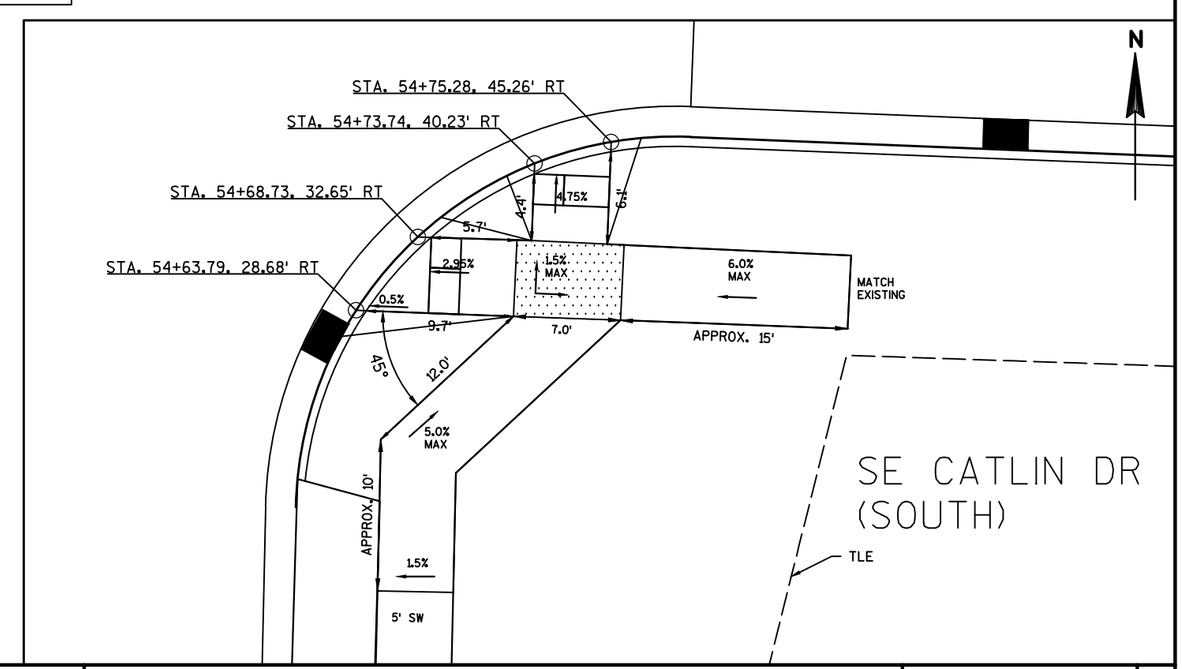

PROJECT NO:3300-01-73	HWY:STH 89	COUNTY:JEFFERSON	CURB RAMP DETAILS	SHEET 53	E

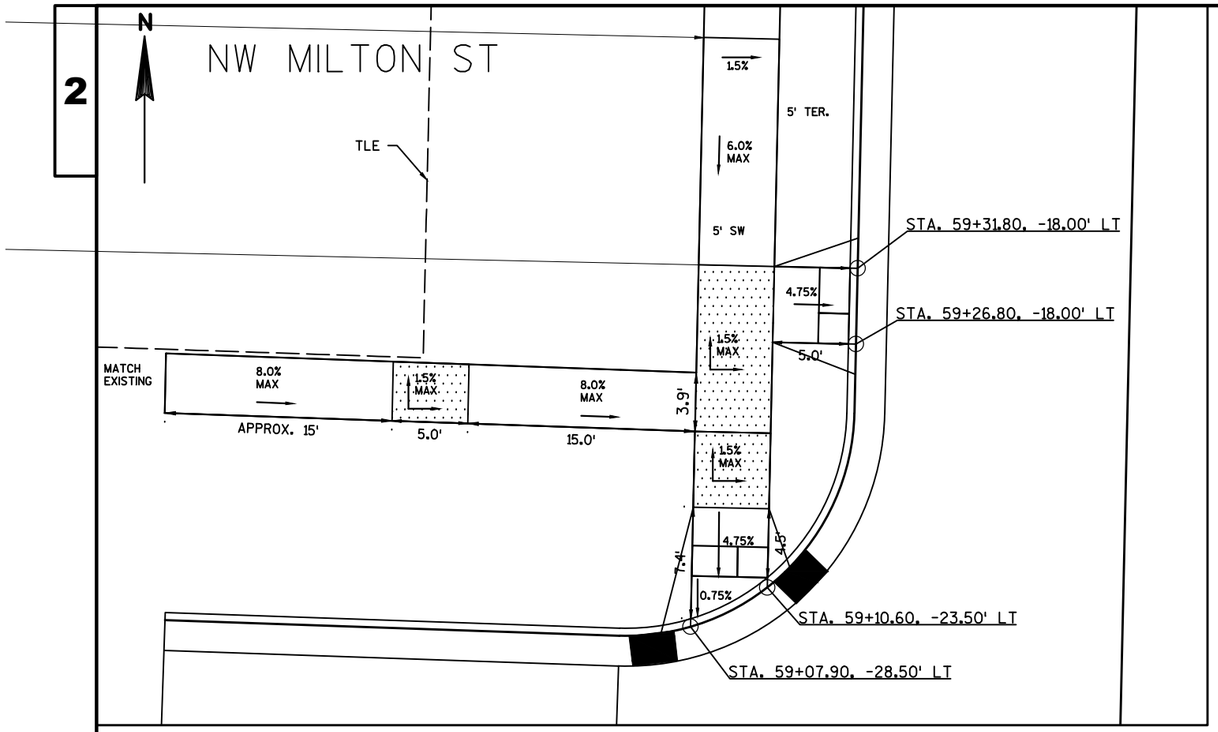

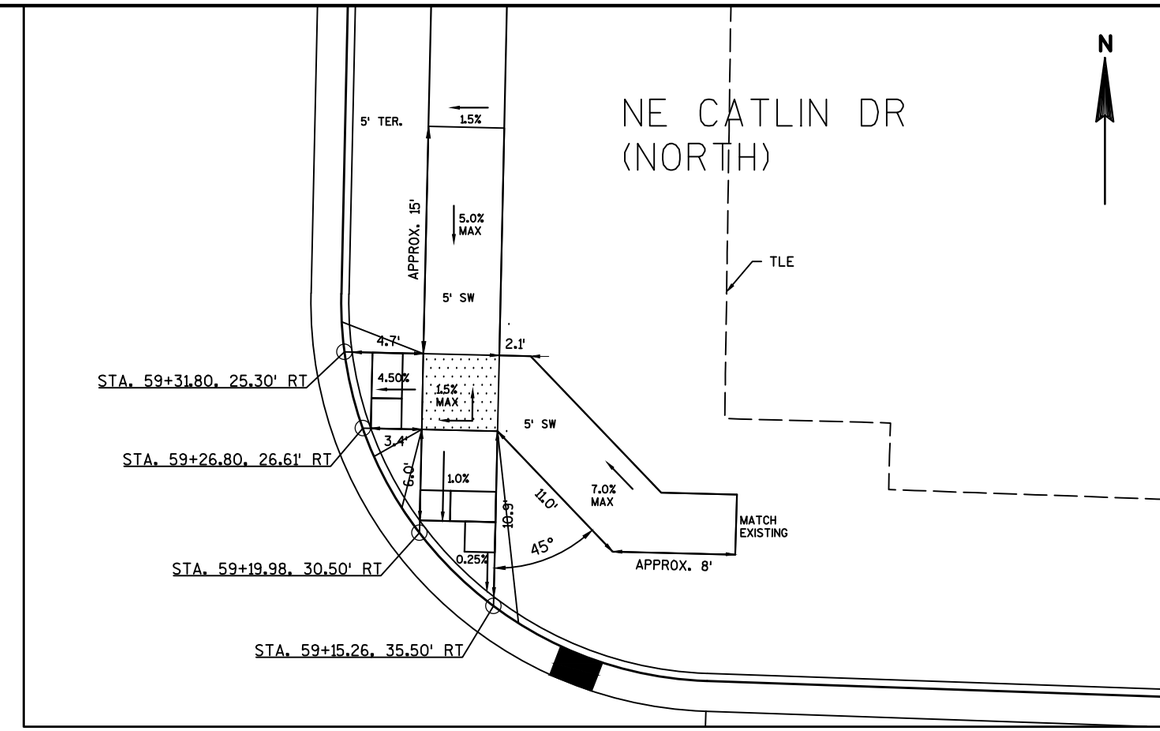

INLET (2 X 3)

LEVEL LANDING AREA (<1.5% ANY DIRECTION)

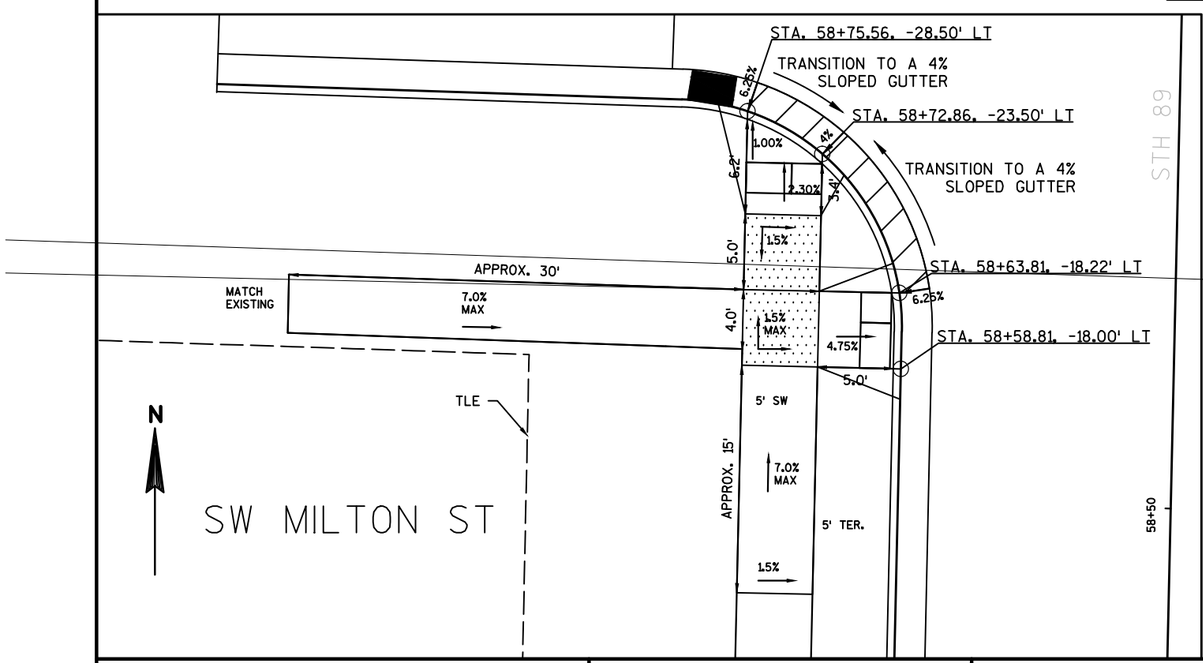

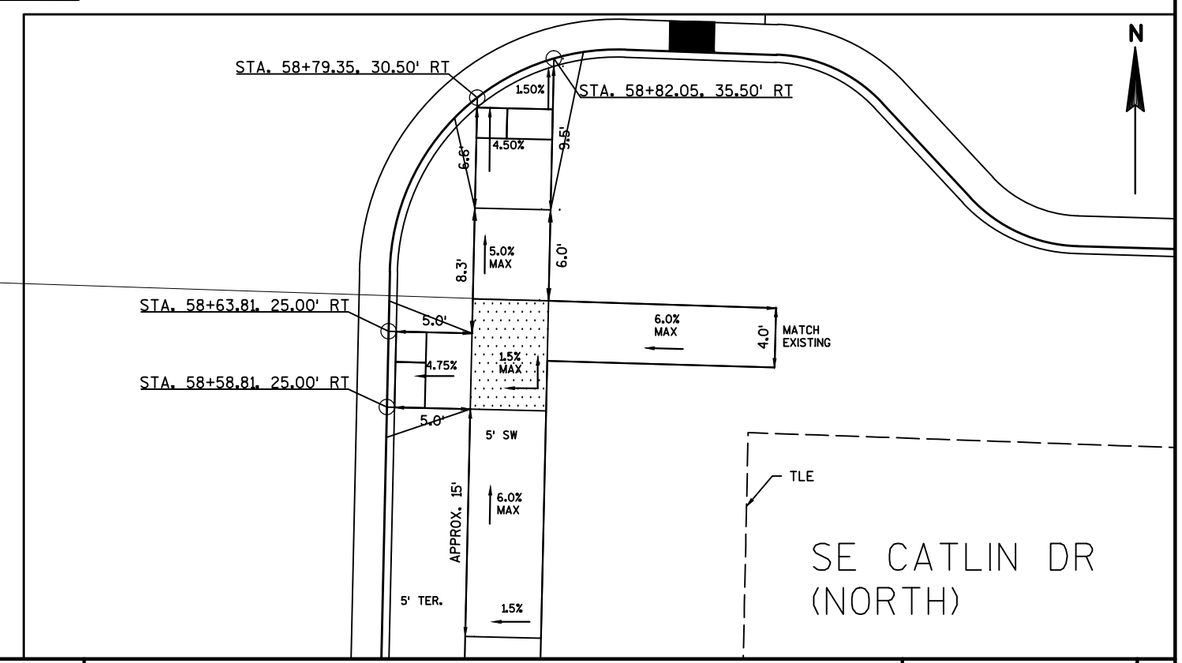

PROJECT NO:3300-01-73	HWY:STH 89	COUNTY:JEFFERSON	CURB RAMP DETAILS	SHEET 54	E

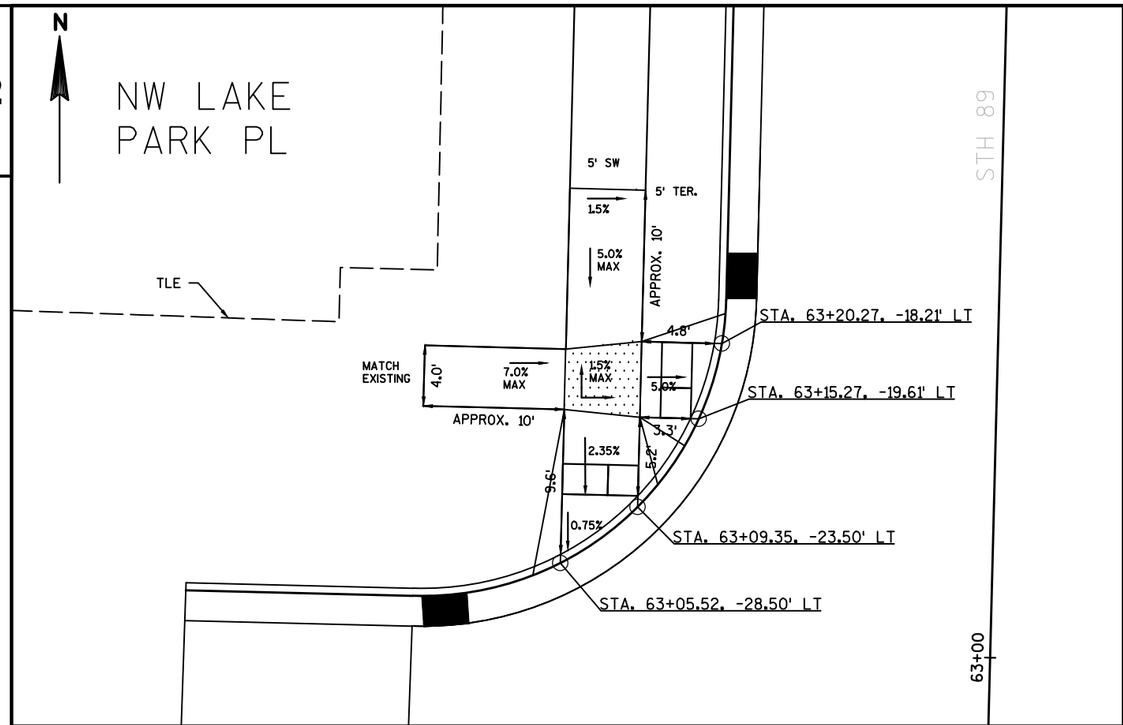

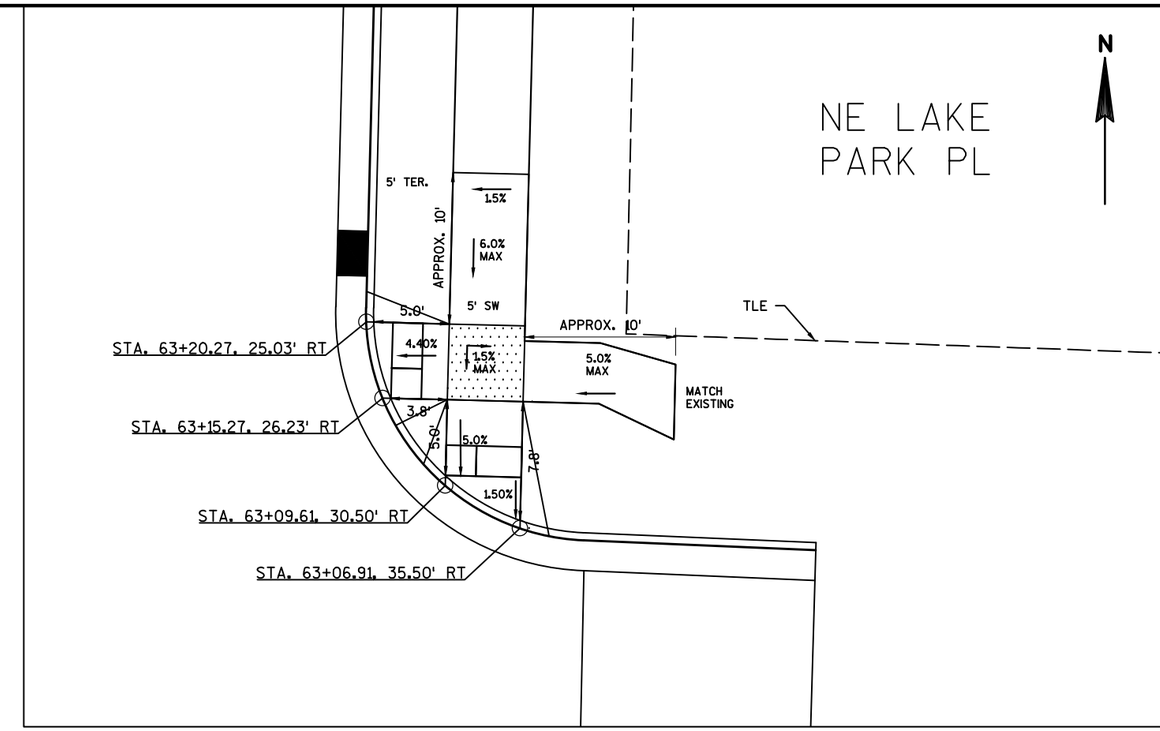

INLET (2 X 3)

LEVEL LANDING AREA (<1.5% ANY DIRECTION)

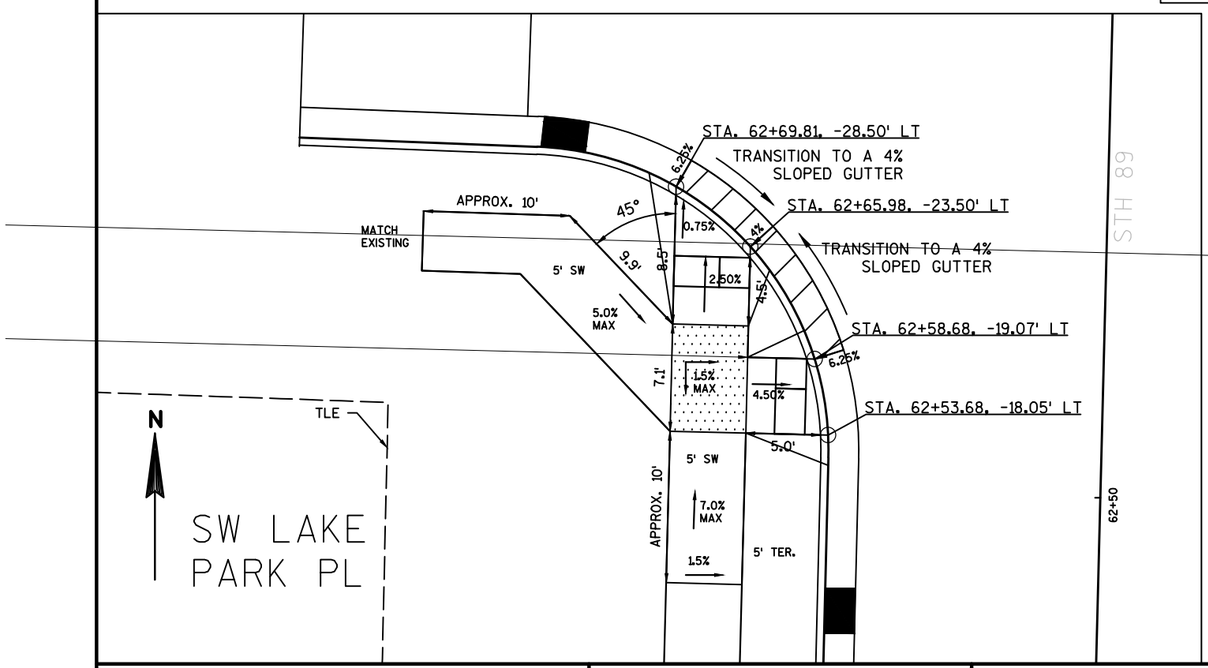

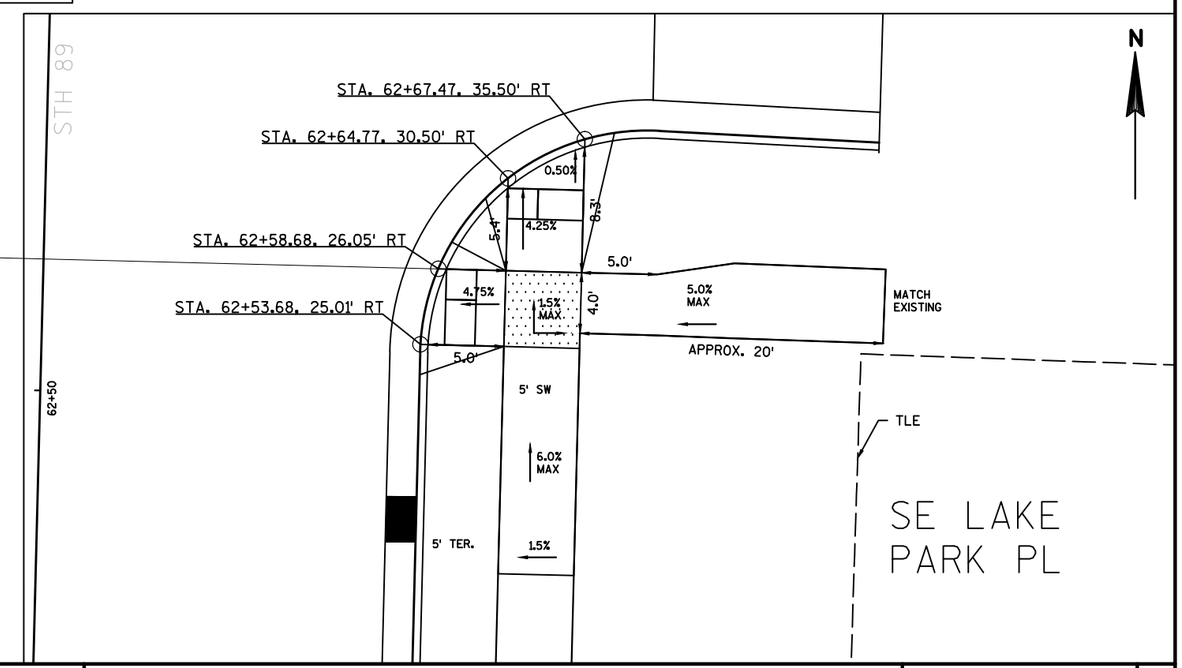

PROJECT NO:3300-01-73	HWY:STH 89	COUNTY:JEFFERSON	CURB RAMP DETAILS	SHEET 55	E

2

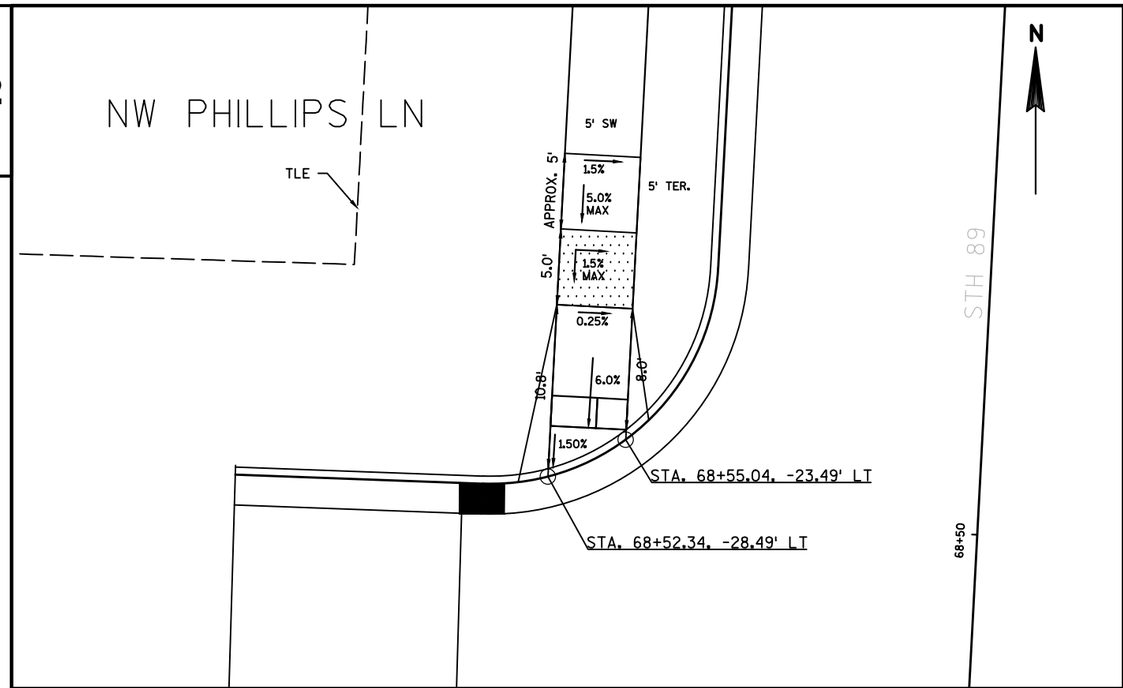

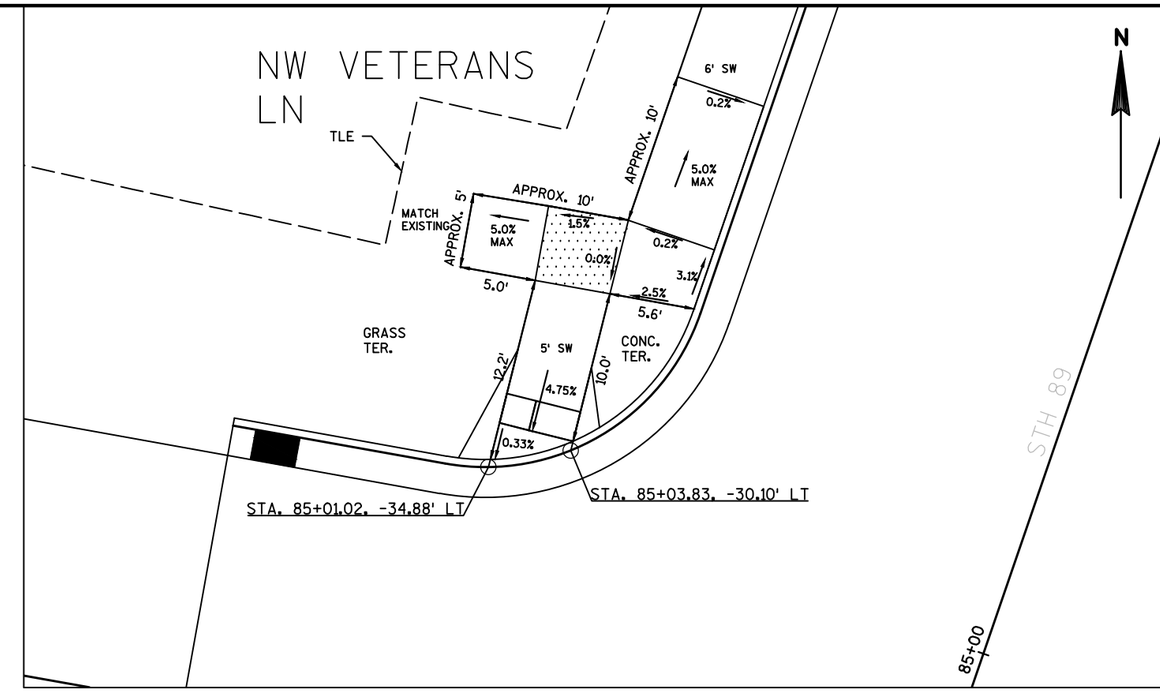

2

INLET (2 X 3)

LEVEL LANDING AREA (<1.5% ANY DIRECTION)

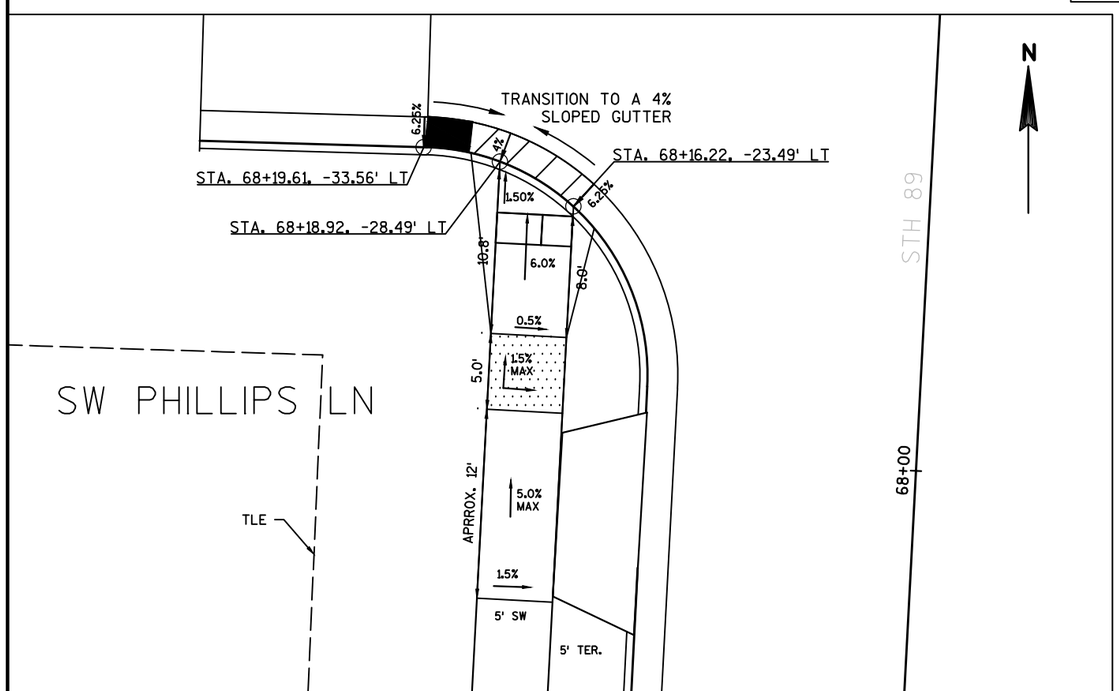

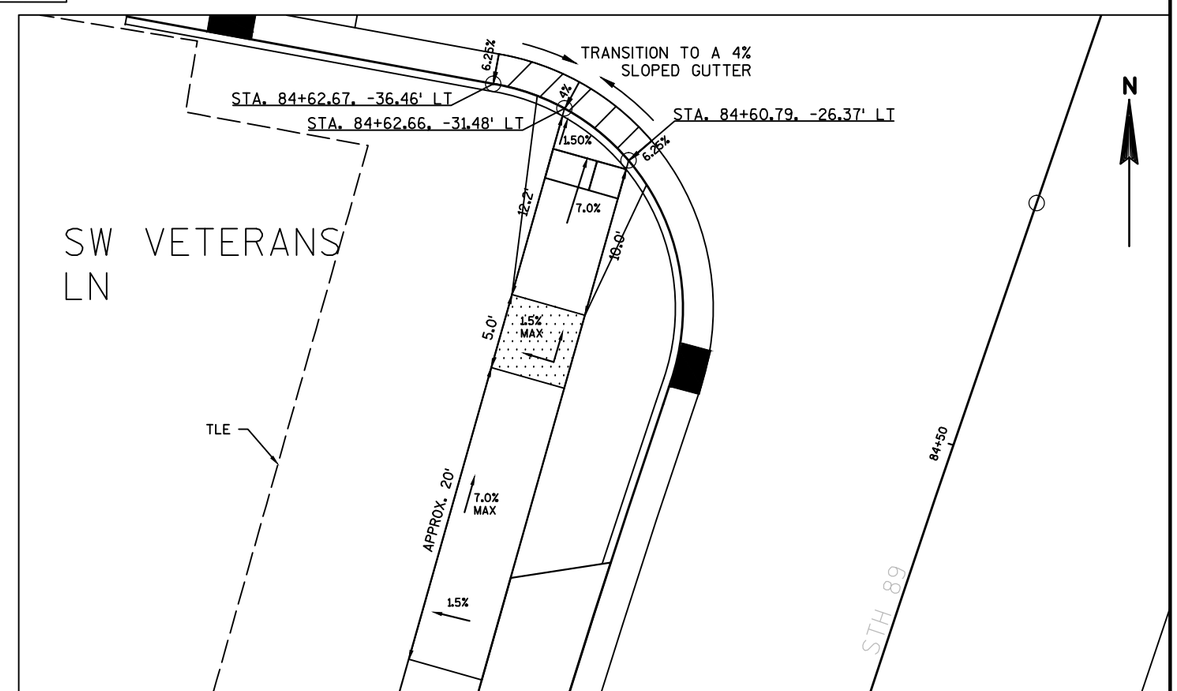

PROJECT NO:3300-01-73	HWY:STH 89	COUNTY:JEFFERSON	CURB RAMP DETAILS	SHEET 56	E

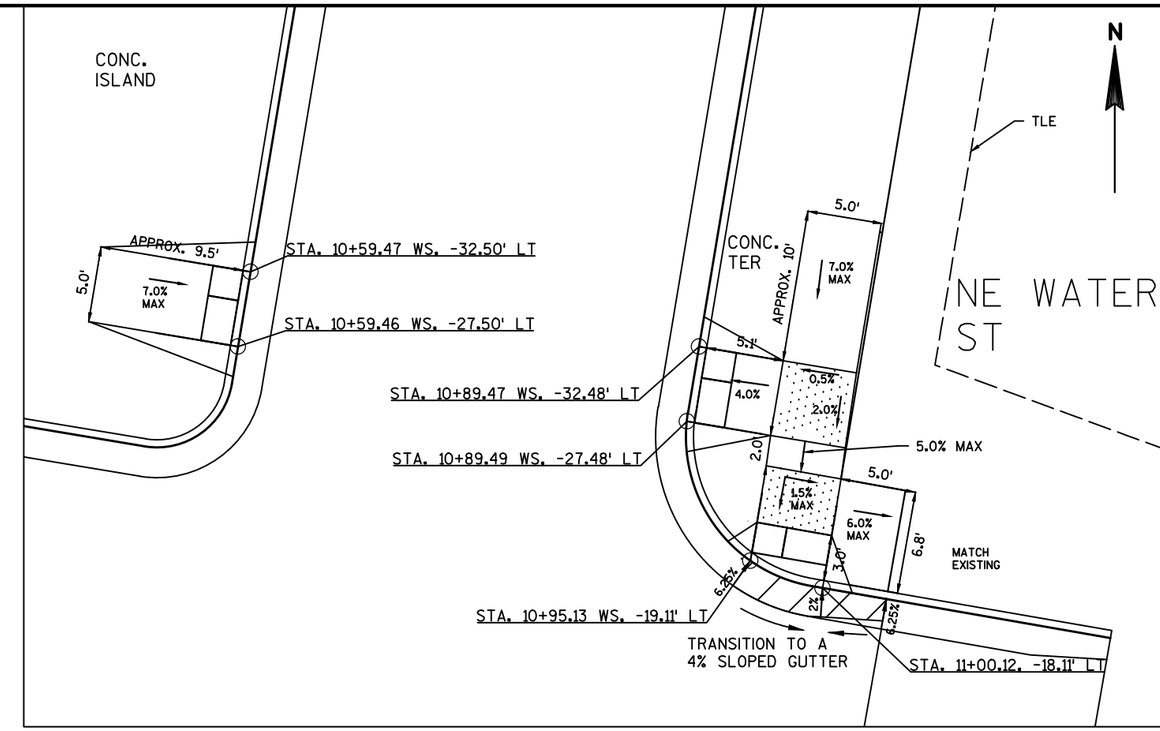

2

INLET (2 X 3)

LEVEL LANDING AREA
(<1.5% ANY DIRECTION)

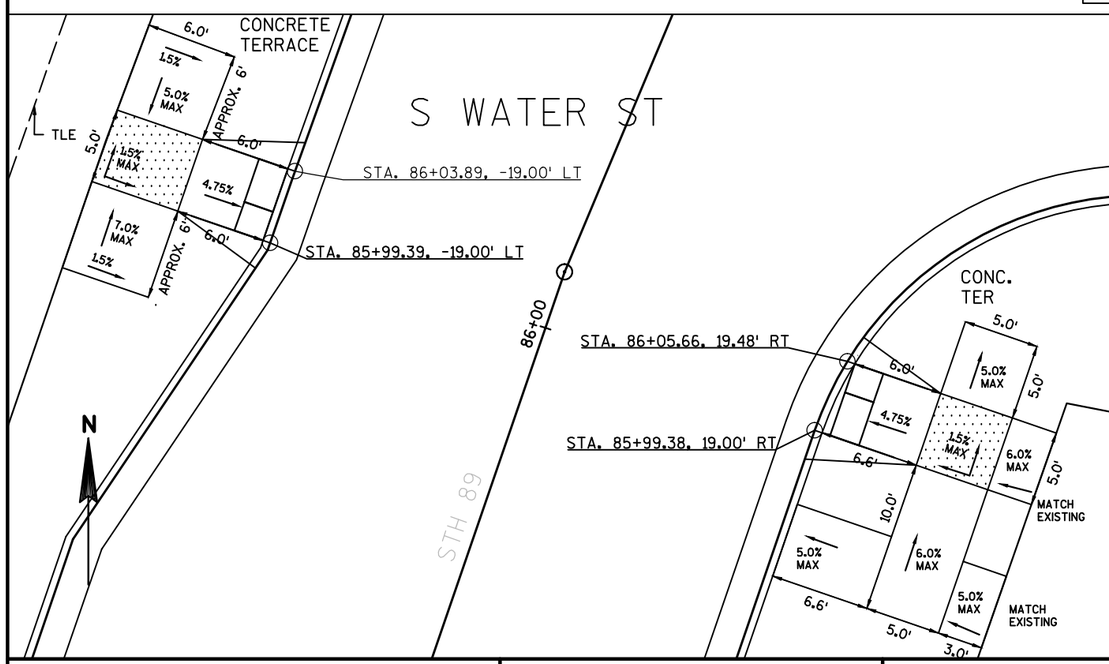

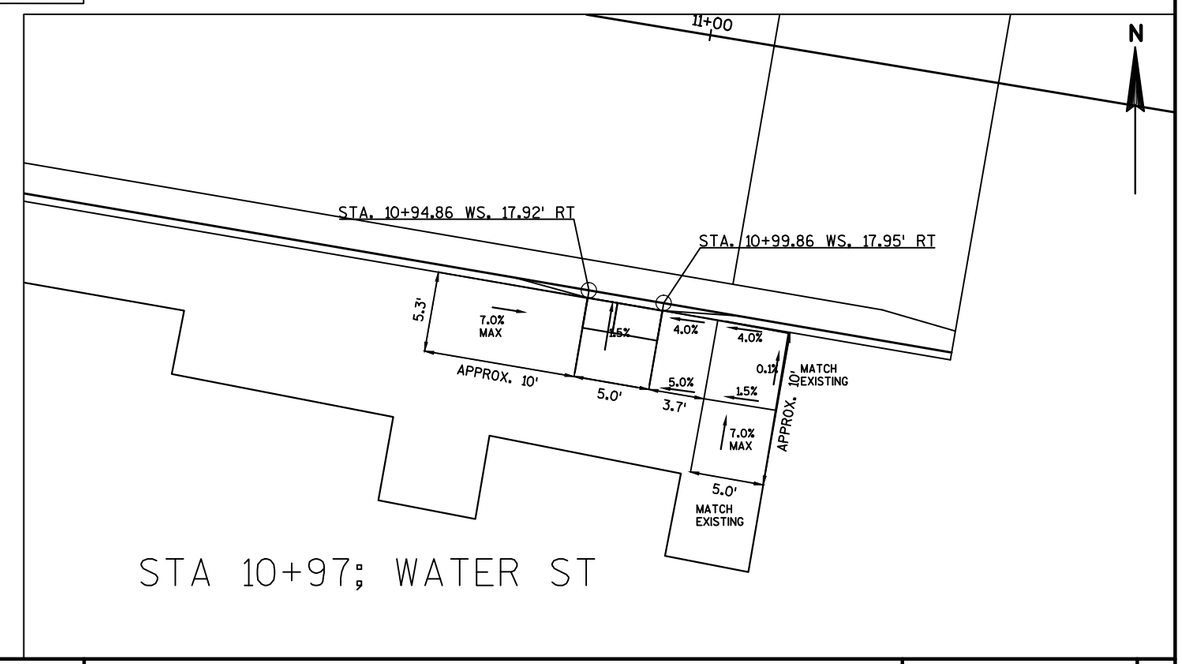

PROJECT NO:3300-01-73	HWY:STH 89	COUNTY:JEFFERSON	CURB RAMP DETAILS	SHEET 57	E

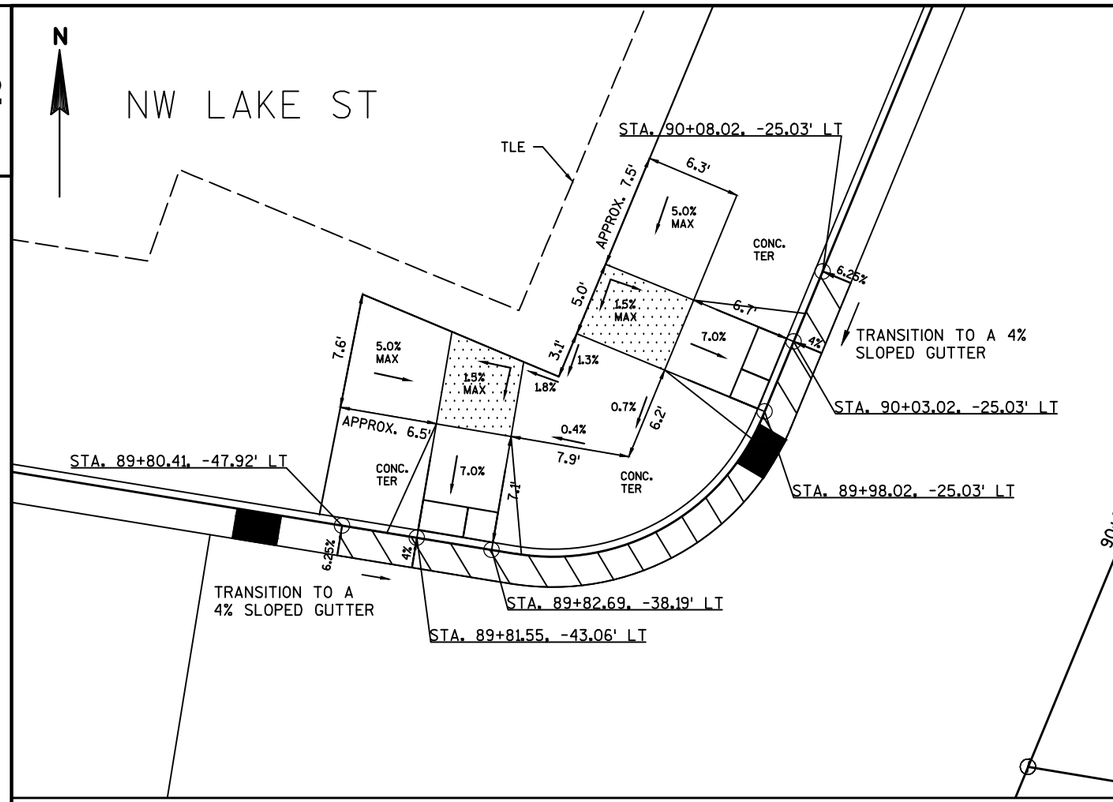

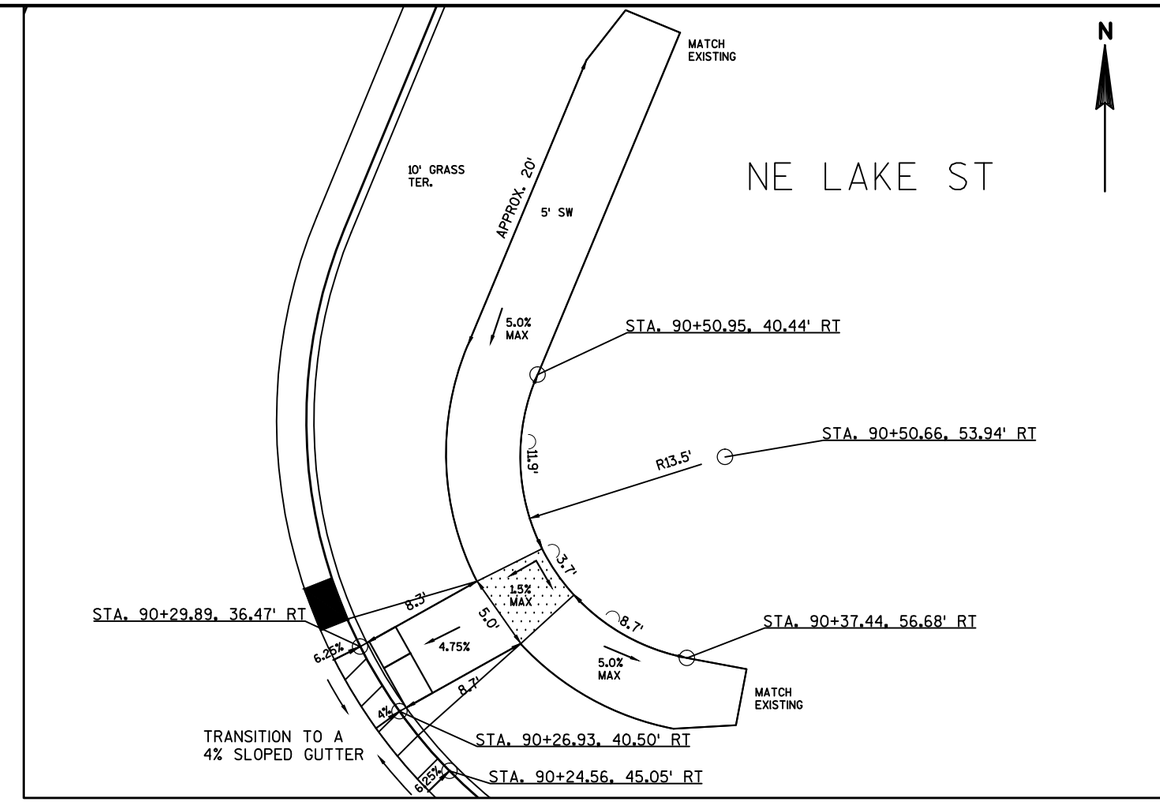

INLET (2 X 3)

LEVEL LANDING AREA (<1.5% ANY DIRECTION)

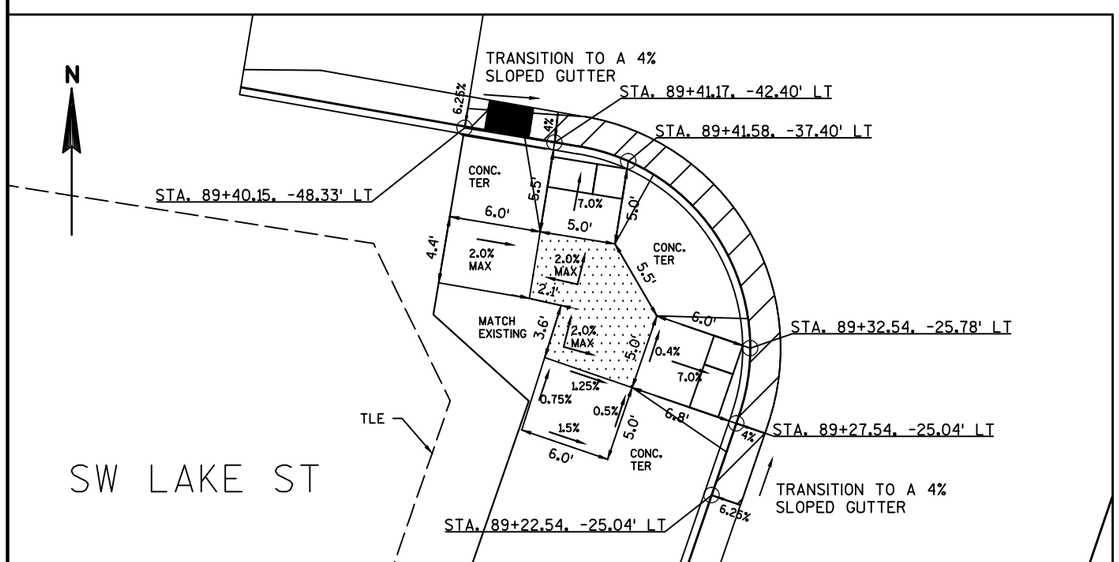

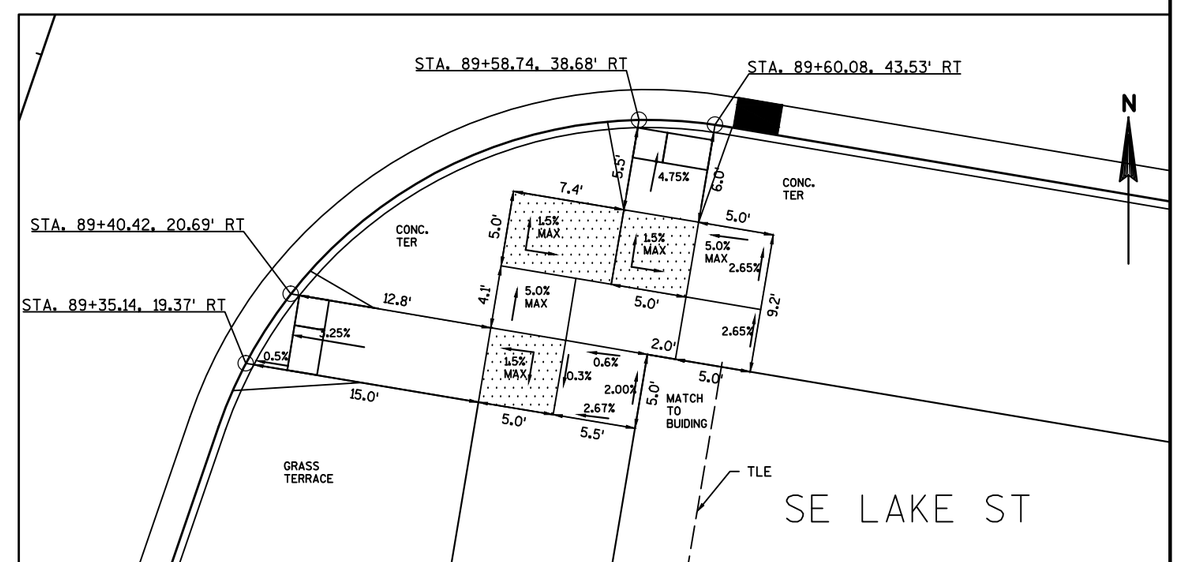

PROJECT NO:3300-01-73	HWY:STH 89	COUNTY:JEFFERSON	CURB RAMP DETAILS	SHEET 58	E

2

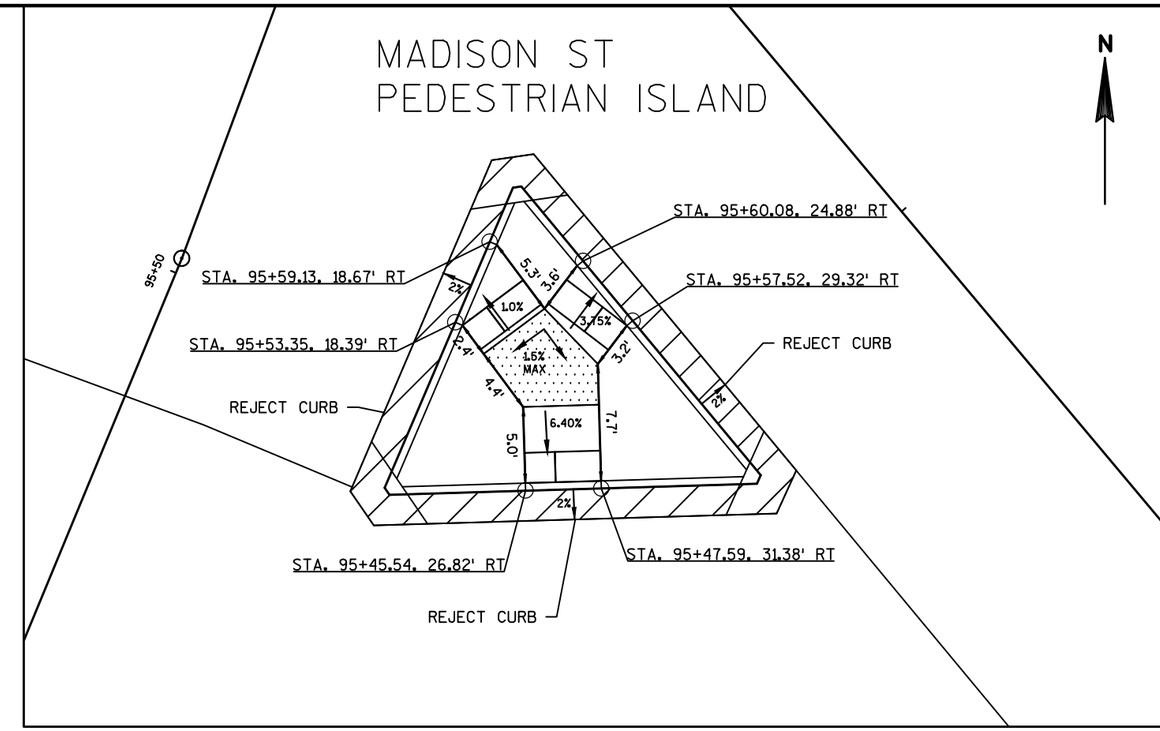

2

INLET (2 X 3)

LEVEL LANDING AREA (<1.5% ANY DIRECTION)

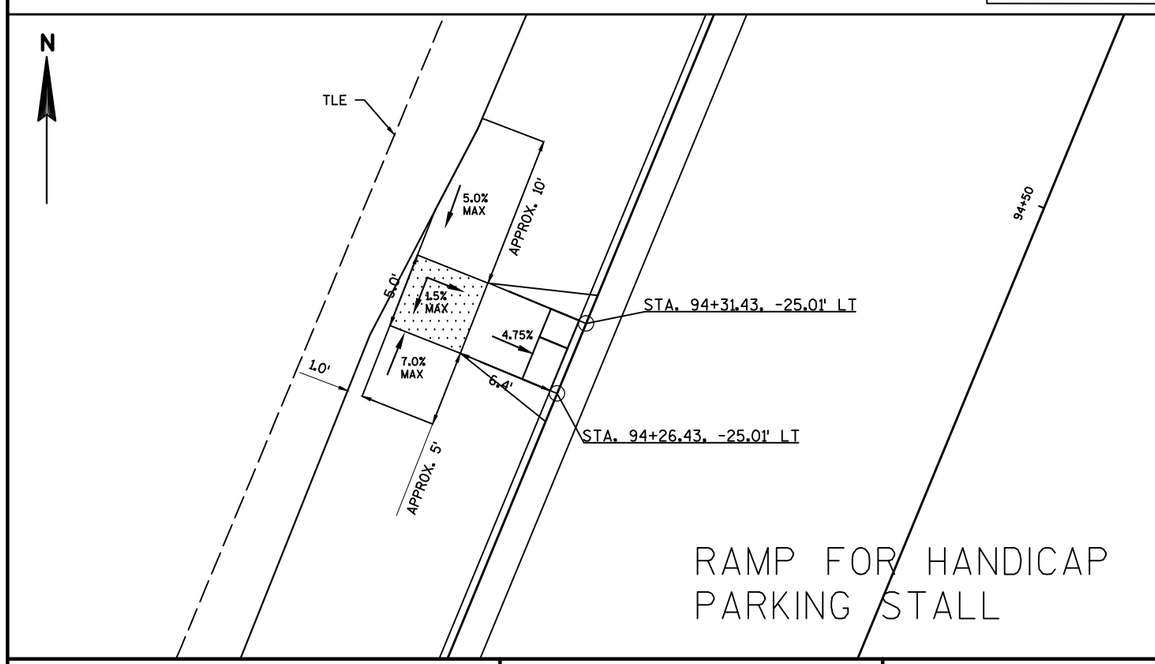

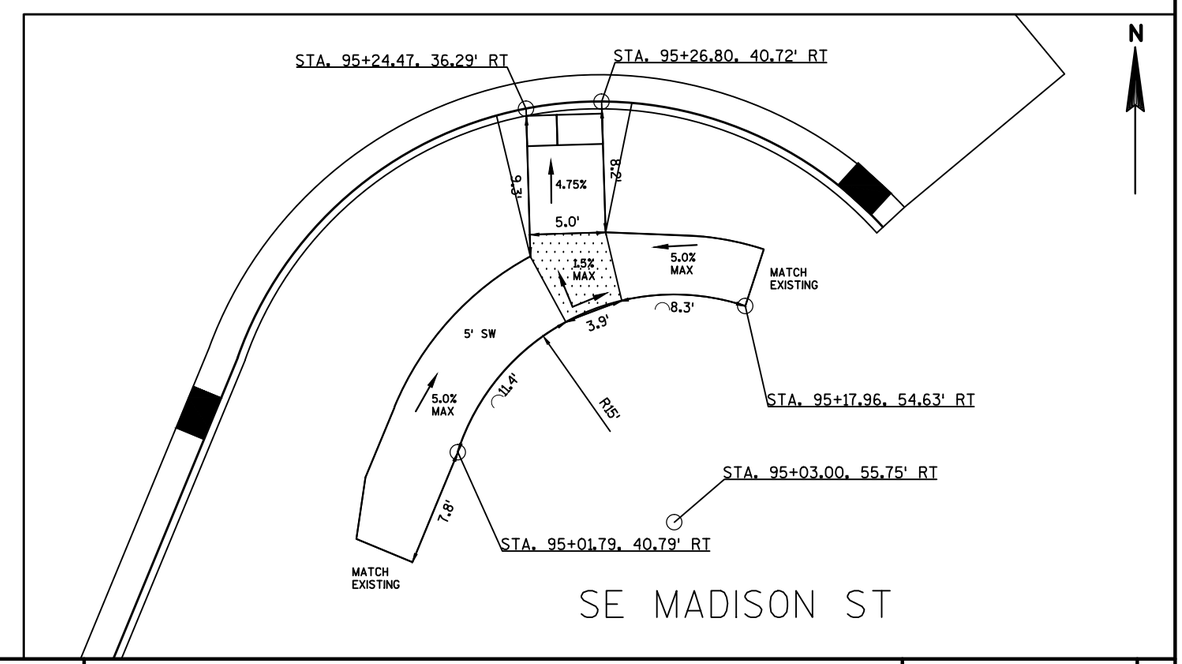

PROJECT NO:3300-01-73	HWY:STH 89	COUNTY:JEFFERSON	CURB RAMP DETAILS	SHEET 59	E

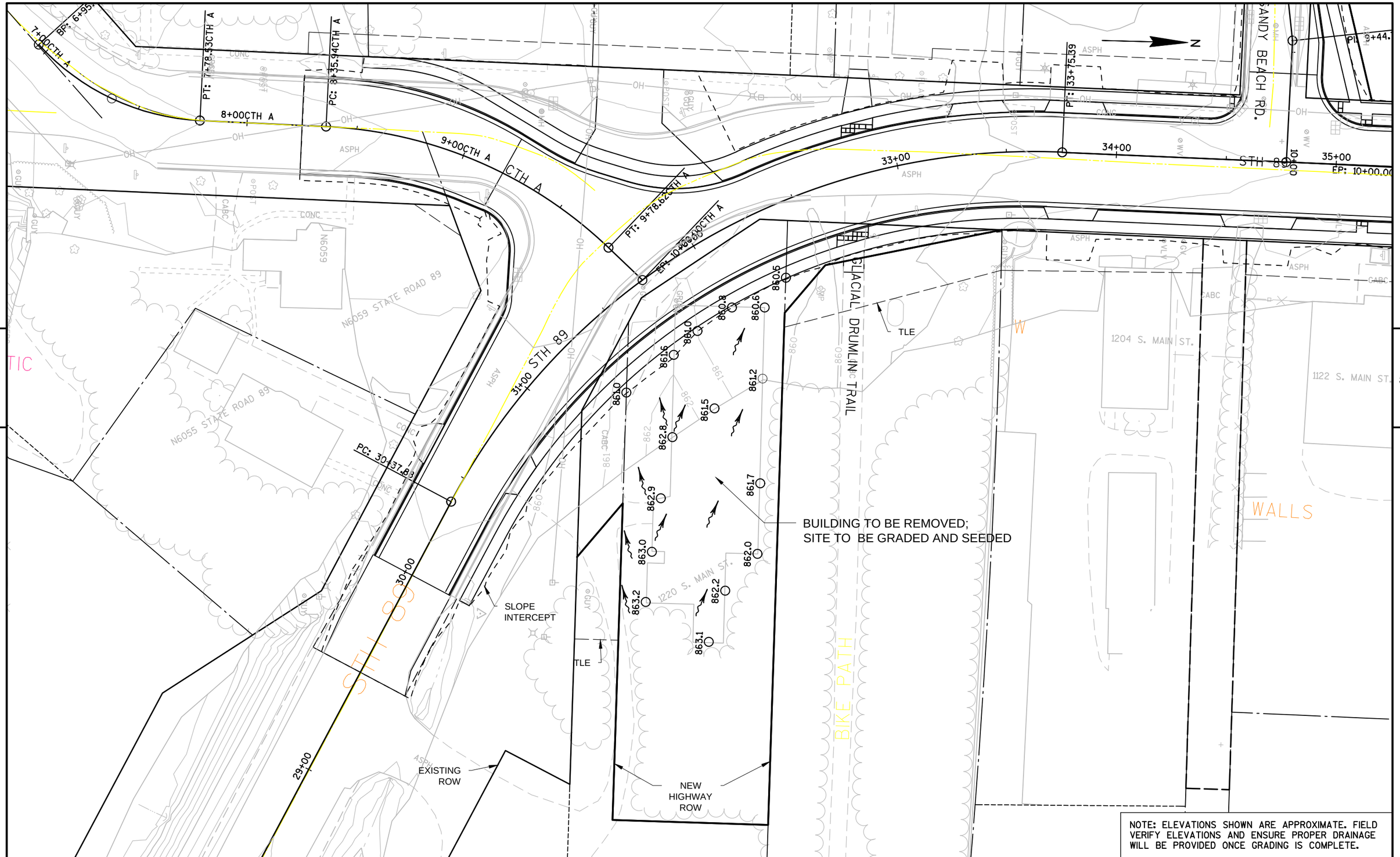

NOTE: ELEVATIONS SHOWN ARE APPROXIMATE. FIELD VERIFY ELEVATIONS AND ENSURE PROPER DRAINAGE WILL BE PROVIDED ONCE GRADING IS COMPLETE.

PROJECT NO:3300-01-73	HWY:STH 89	COUNTY:JEFFERSON	BUILDING SITE GRADING	SHEET 60	E

FILE NAME : N:\PDS\C3D\33000103\SHEETSPLAN\021201-PLAN DETAILS\021201-PD-SITE GRADING PLAN.DWG
LAYOUT NAME - SHEET - (1)
PLOT DATE : 10/24/2017 6:56 PM PLOT BY : WHITE, JEREMY J PLOT NAME : PLOT SCALE : 1 IN:40 FT

WISDOT/CADDS SHEET 44

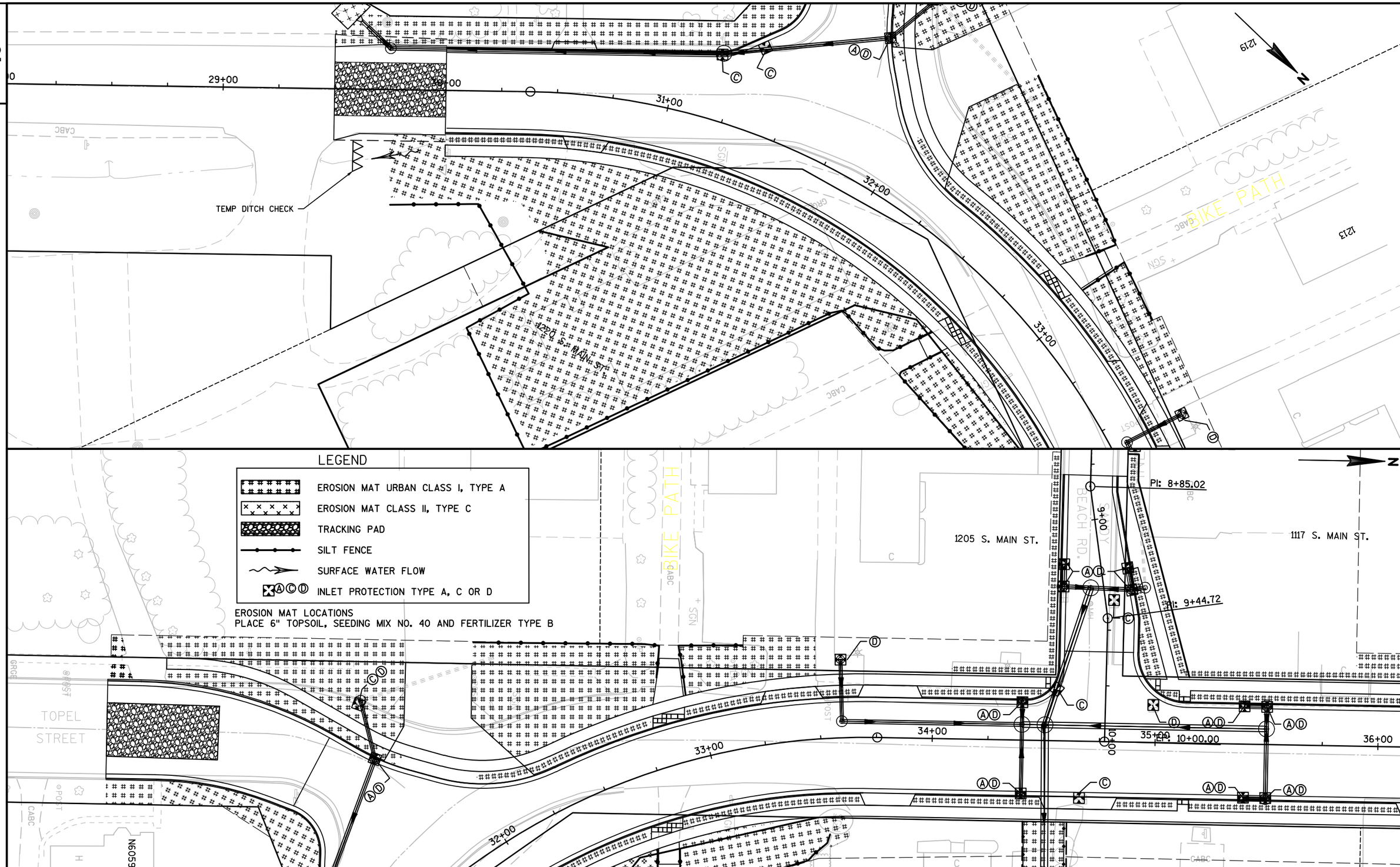

PROJECT NO:3300-01-73	HWY:STH 89	COUNTY:JEFFERSON	EROSION CONTROL	SHEET 61	E

FILE NAME : N:\PDS\C3D\33000103\SHEETSPLAN\022001-EROSION CONTROL\022001-EC.DWG
LAYOUT NAME - 022001-EC (1)
PLOT DATE : 1/17/2018 3:53 PM PLOT BY : WHITE, JEREMY J PLOT NAME : PLOT SCALE : 1 IN:40 FT

WISDOT/CADDS SHEET 44

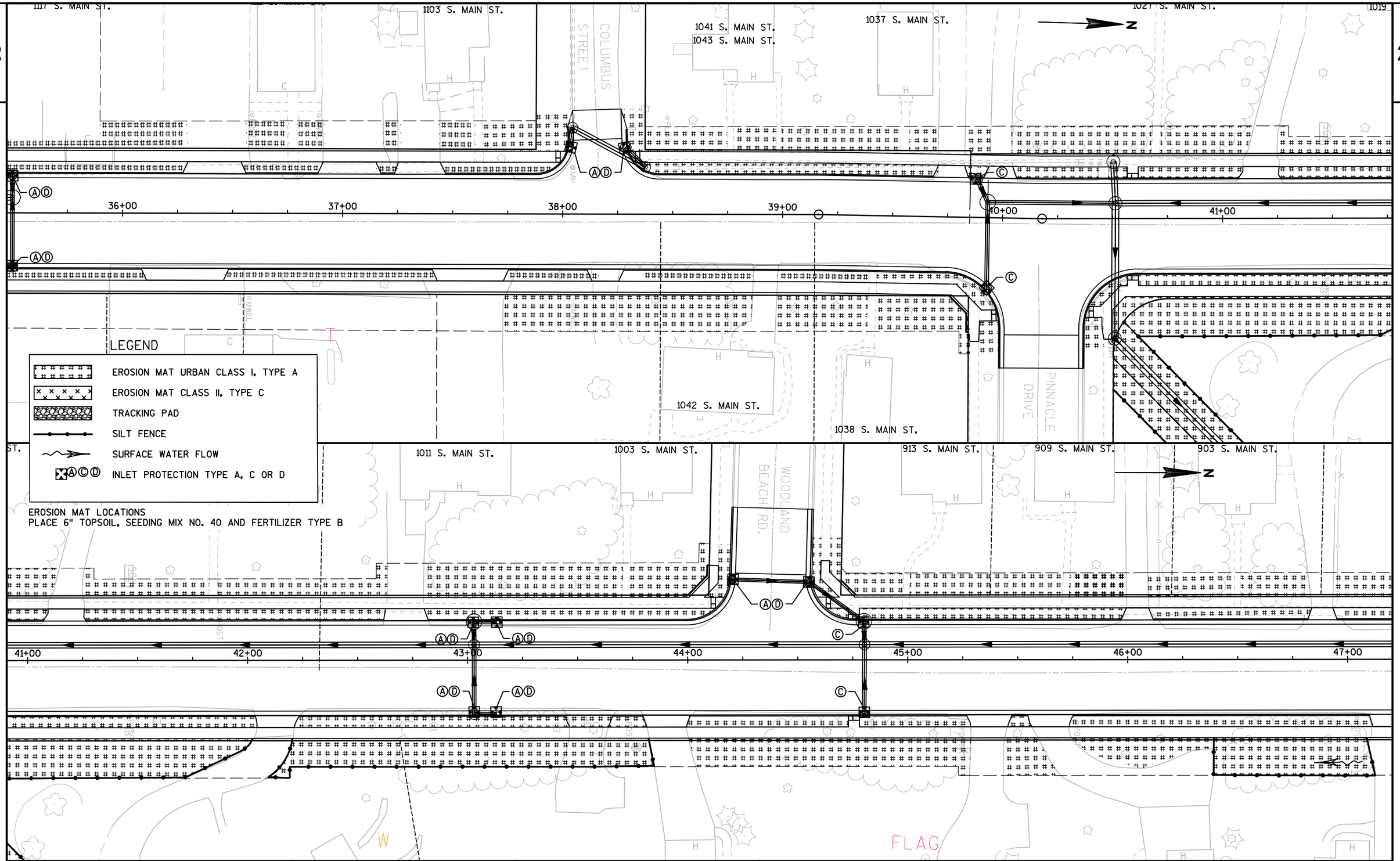

PROJECT NO:3300-01-73	HWY:STH 89	COUNTY:JEFFERSON	EROSION CONTROL	SHEET 62	E

FILE NAME : N:\PDS\C3D\33000103\SHEETSPLAN\022001-EROSION CONTROL\022001-EC.DWG
LAYOUT NAME - 022001-EC (2)
PLOT DATE : 1/16/2018 2:51 PM PLOT BY : LEX, BRANDON WILLIAMPLOT NAME : PLOT SCALE : 1 IN:40 FT

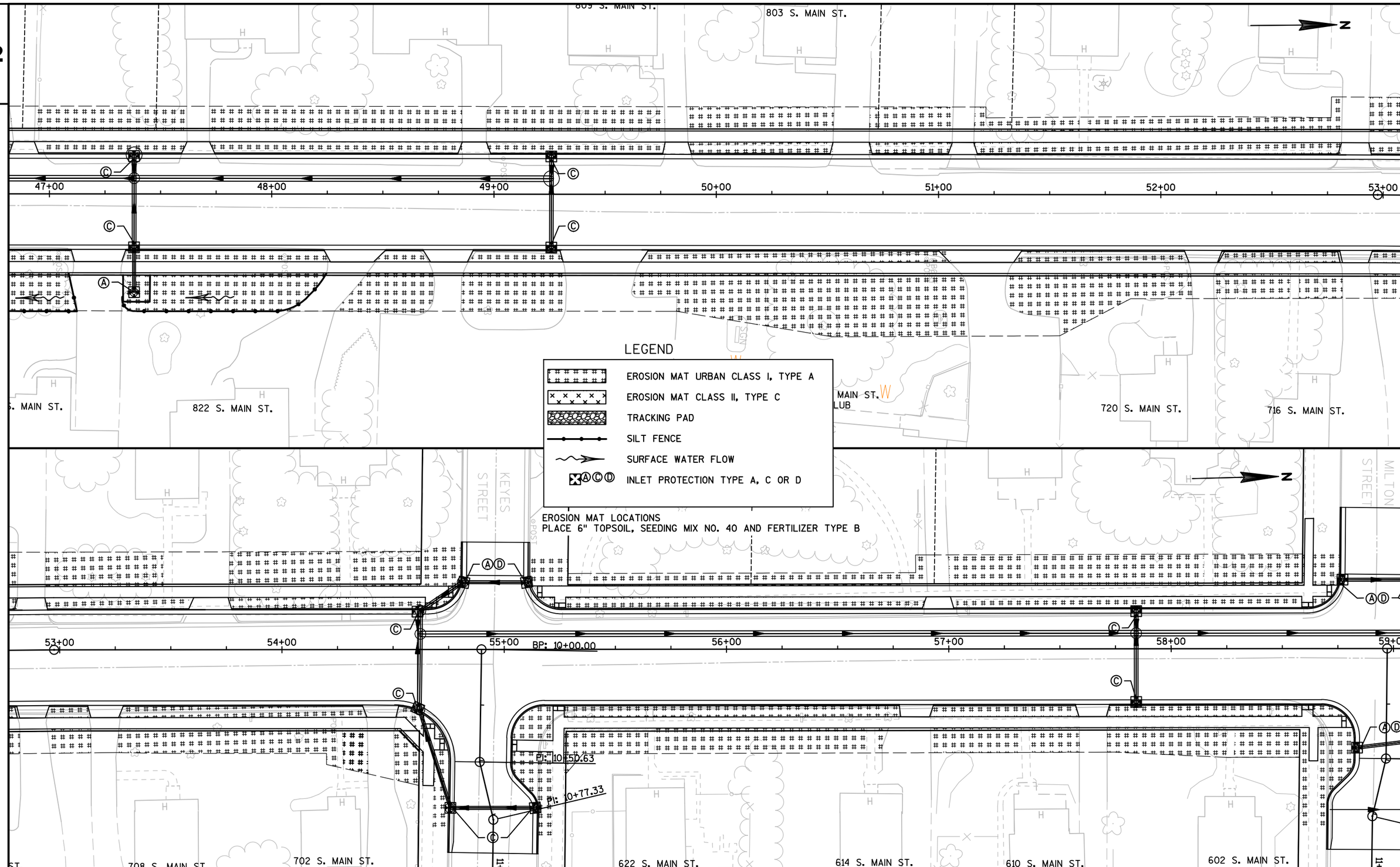

PROJECT NO:3300-01-73	HWY:STH 89	COUNTY:JEFFERSON	EROSION CONTROL	SHEET 63	E

FILE NAME : N:\PDS\C3D\33000103\SHEETSPLAN\022001-EROSION CONTROL\022001-EC.DWG
LAYOUT NAME - 022001-EC (3)
PLOT DATE : 1/16/2018 2:51 PM PLOT BY : LEX, BRANDON WILLIAMPLOT NAME : PLOT SCALE : 1 IN:40 FT

2

MILTON STREET

A/C

59+00 BP: 10+00.00 60+00 61+00 62+00 63+00 64+00

10+99.92

PI: 10+76.15

11+00

524

510 S. MAIN ST.

FLAG

504 S. MAIN S.

WALLS

ANT

LAKE PARK PLACE

111 LAKE PARK PL.

434 S. MAIN ST.

437 S. MAIN ST.

PHILLIPS LANE

361 S. MAIN ST.

357 S. MAIN ST.

64+00 65+00 66+00 67+00 68+00 69+00 70+00

418 S. MAIN ST.

402 S. MAIN ST.

360 S. MAIN ST.

354 S.

434 S. MAIN ST.

428 S. MAIN ST.

424 S. MAIN ST.

406 S. MAIN ST.

LEGEND

- EROSION MAT URBAN CLASS I, TYPE A
- EROSION MAT CLASS II, TYPE C
- TRACKING PAD
- SILT FENCE
- SURFACE WATER FLOW
- ⒶⒸⒹ INLET PROTECTION TYPE A, C OR D

EROSION MAT LOCATIONS
PLACE 6" TOPSOIL, SEEDING MIX NO. 40 AND FERTILIZER TYPE B

PROJECT NO:3300-01-73	HWY:STH 89	COUNTY:JEFFERSON	EROSION CONTROL	SHEET 64	E

FILE NAME : N:\PDS\C3D\33000103\SHEETSPLAN\022001-EROSION CONTROL\022001-EC.DWG
LAYOUT NAME - 022001-EC (4)
PLOT DATE : 1/16/2018 2:51 PM PLOT BY : LEX, BRANDON WILLIAMPLOT NAME : PLOT SCALE : 1 IN:40 FT

WISDOT/CADDS SHEET 44

2

ST.
349 S. MAIN ST.
343 S. MAIN ST.
335 S. MAIN ST.
315 S. MAIN ST.
307 S. MAIN ST.

70+00 71+00 72+00 73+00 74+00 75+00 76+00

LEGEND

- EROSION MAT URBAN CLASS I, TYPE A
- EROSION MAT CLASS II, TYPE C
- TRACKING PAD
- SILT FENCE
- SURFACE WATER FLOW
- INLET PROTECTION TYPE A, C OR D

354 S. MAIN ST.
253 S. MAIN ST.
322 S. MAIN ST.
316 S. MAIN ST.
308 S. MAIN ST.

EROSION MAT LOCATIONS
PLACE 6" TOPSOIL, SEEDING MIX NO. 40 AND FERTILIZER TYPE B

ENVIRONMENTALLY SENSITIVE AREA

76+00 77+00 78+00 79+00 80+00 81+00 82+00

ENVIRONMENTALLY SENSITIVE AREA

302 S. MAIN ST.
FISH HATCHERY
OFFICE
272 S. MAIN ST.
264 S. MAIN ST.
258 S. MAIN ST.
252 S. MAIN ST.
246 S. MAIN ST.
242 S. MAIN ST.
236 S. MAIN ST.

2

PROJECT NO:3300-01-73	HWY:STH 89	COUNTY:JEFFERSON	EROSION CONTROL	SHEET 65	E

FILE NAME : N:\PDS\C3D\33000103\SHEETSPLAN\022001-EROSION CONTROL\022001-EC.DWG
LAYOUT NAME - 022001-EC (5)
PLOT DATE : 1/16/2018 2:52 PM PLOT BY : LEX, BRANDON WILLIAMPLOT NAME : PLOT SCALE : 1 IN:40 FT

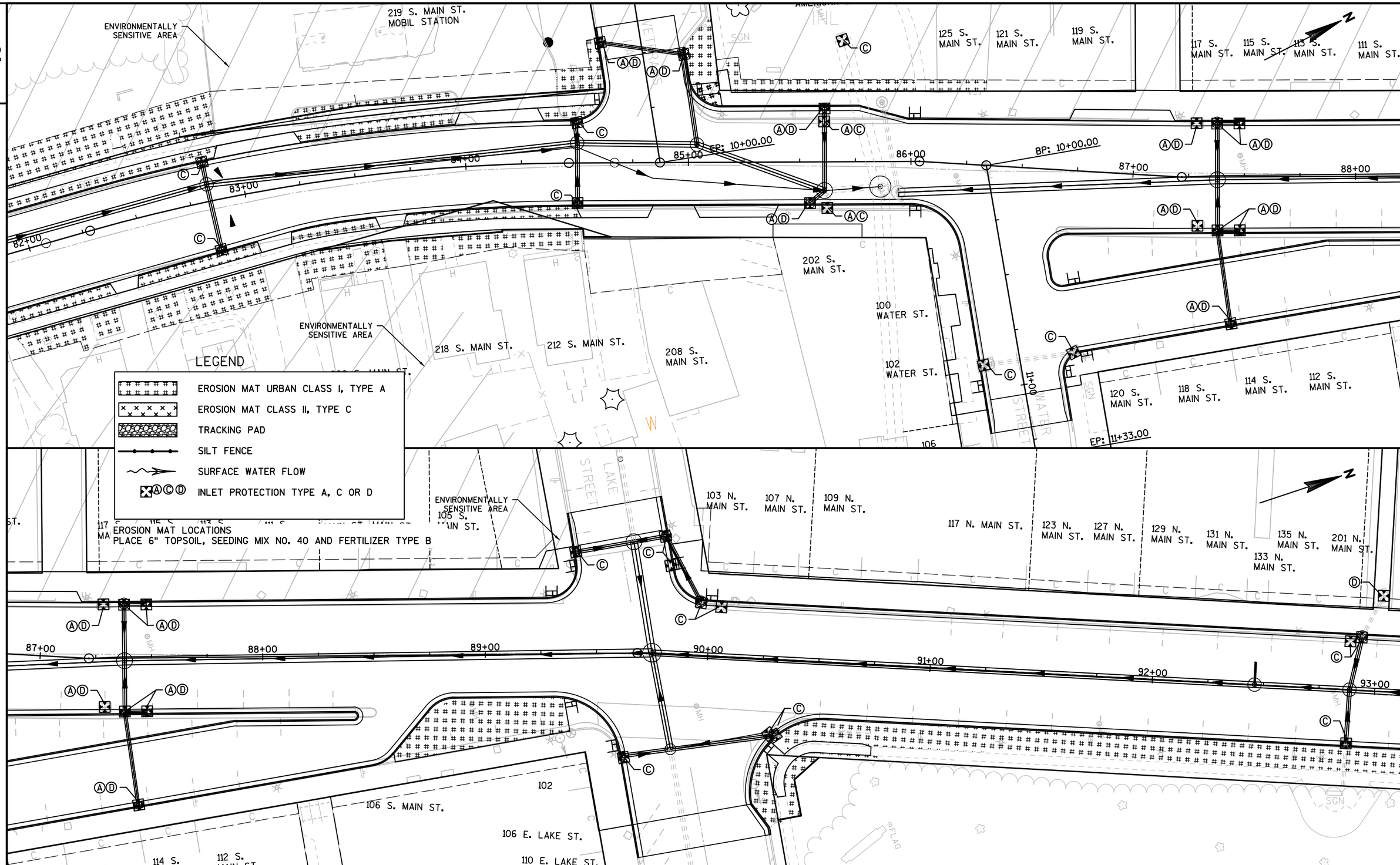

PROJECT NO:3300-01-73	HWY:STH 89	COUNTY:JEFFERSON	EROSION CONTROL	SHEET 66	E

FILE NAME : N:\PDS\C3D\33000103\SHEETSPLAN\022001-EROSION CONTROL\022001-EC.DWG
LAYOUT NAME - 022001-EC (6)
PLOT DATE : 1/16/2018 2:52 PM PLOT BY : LEX, BRANDON WILLIAMPLOT NAME : PLOT SCALE : 1 IN:40 FT

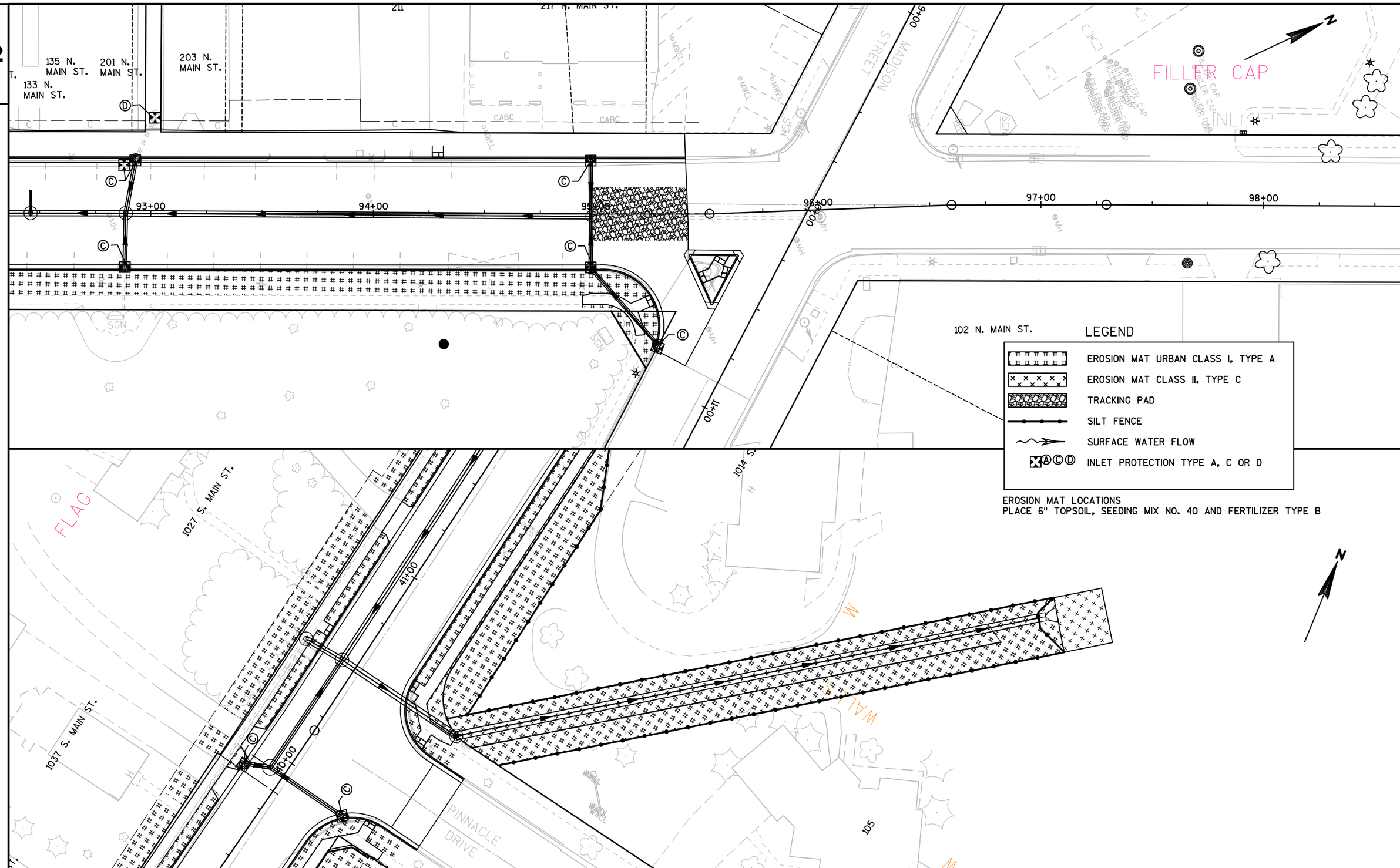

PROJECT NO:3300-01-73	HWY:STH 89	COUNTY:JEFFERSON	EROSION CONTROL	SHEET 67	E

FILE NAME : N:\PDS\C3D\33000103\SHEETSPLAN\022001-EROSION CONTROL\022001-EC.DWG
LAYOUT NAME - 022001-EC (7)
PLOT DATE : 1/16/2018 2:52 PM PLOT BY : LEX, BRANDON WILLIAMPLOT NAME : PLOT SCALE : 1 IN:40 FT

WISDOT/CADDS SHEET 44

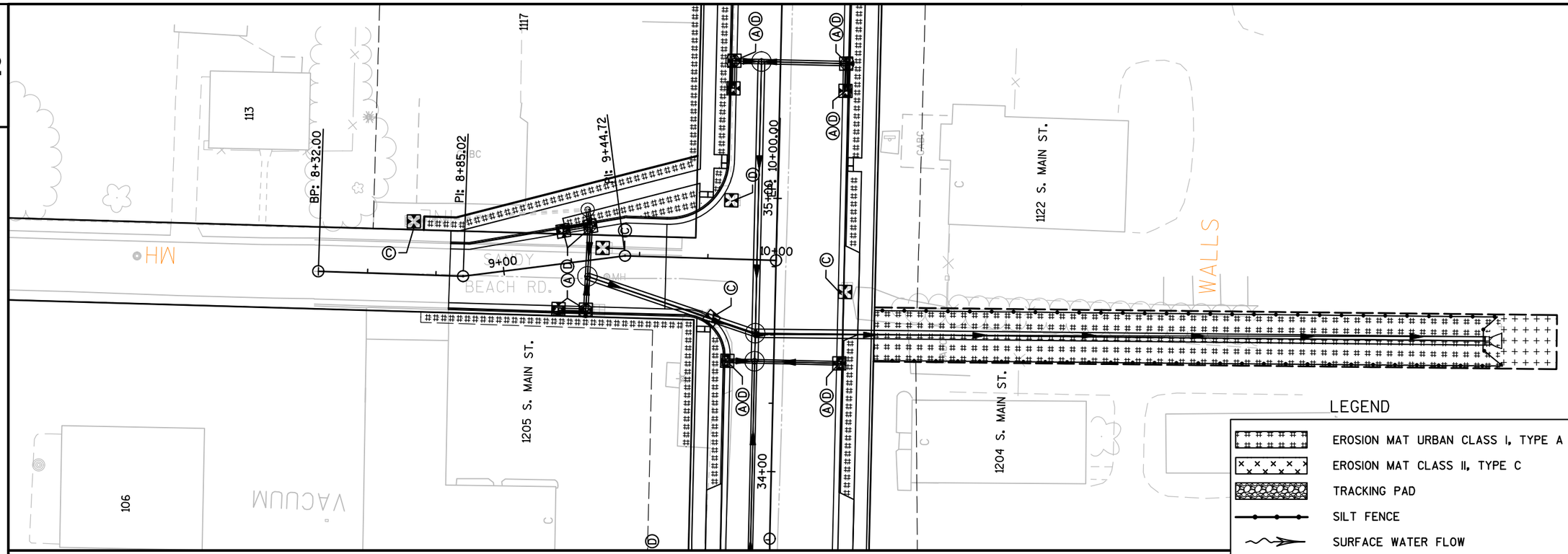

LEGEND

- EROSION MAT URBAN CLASS I, TYPE A
- EROSION MAT CLASS II, TYPE C
- TRACKING PAD
- SILT FENCE
- SURFACE WATER FLOW
- Ⓐ Ⓒ Ⓓ INLET PROTECTION TYPE A, C OR D

EROSION MAT LOCATIONS
PLACE 6" TOPSOIL, SEEDING MIX NO. 40 AND FERTILIZER TYPE B

PROJECT NO:3300-01-73	HWY:STH 89	COUNTY:JEFFERSON	EROSION CONTROL	SHEET 68	E

2

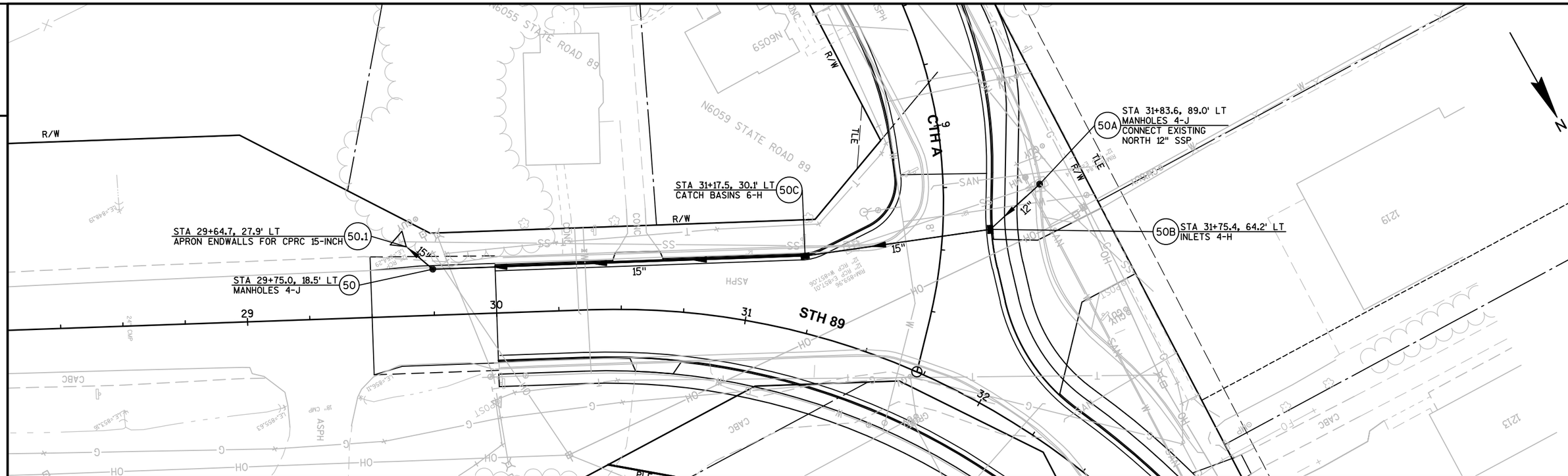

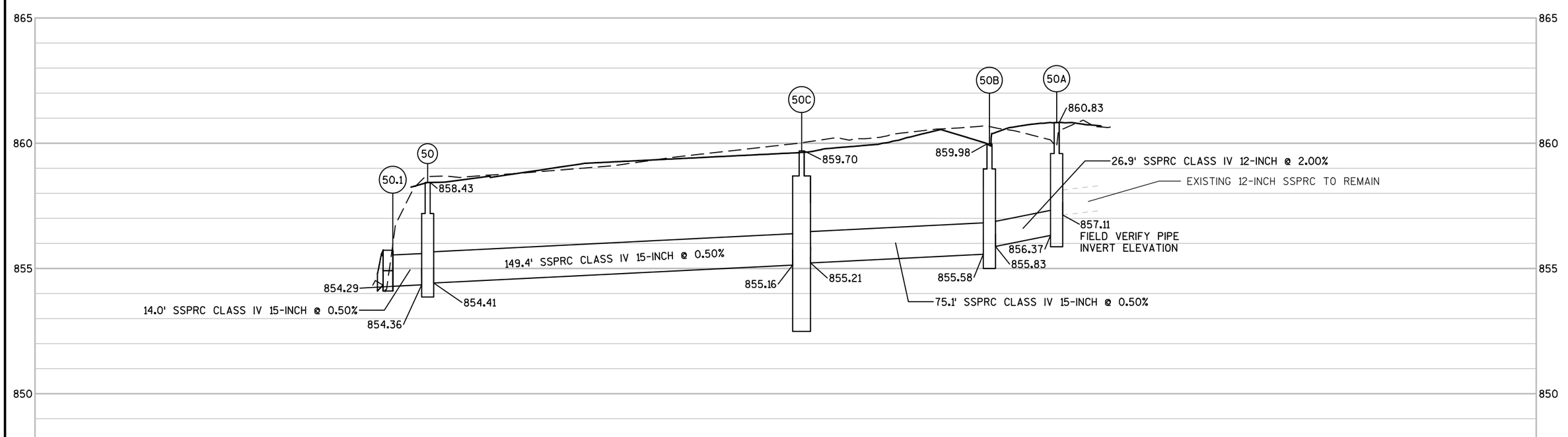

PROJECT NO:3300-01-73	HWY:STH 89	COUNTY:JEFFERSON	STORM SEWER	SHEET 69	E

FILE NAME : T:\1142720.02\CADD\CIVIL3D\33000103\SHEETSPLAN\022501-STORM SEWER\022501-SS.DWG
LAYOUT NAME - 022501
PLOT DATE : 10/31/2017 10:40 AM PLOT BY : BLACKWOOD, JIM PLOT NAME : PLOT SCALE : 1 IN:40 FT

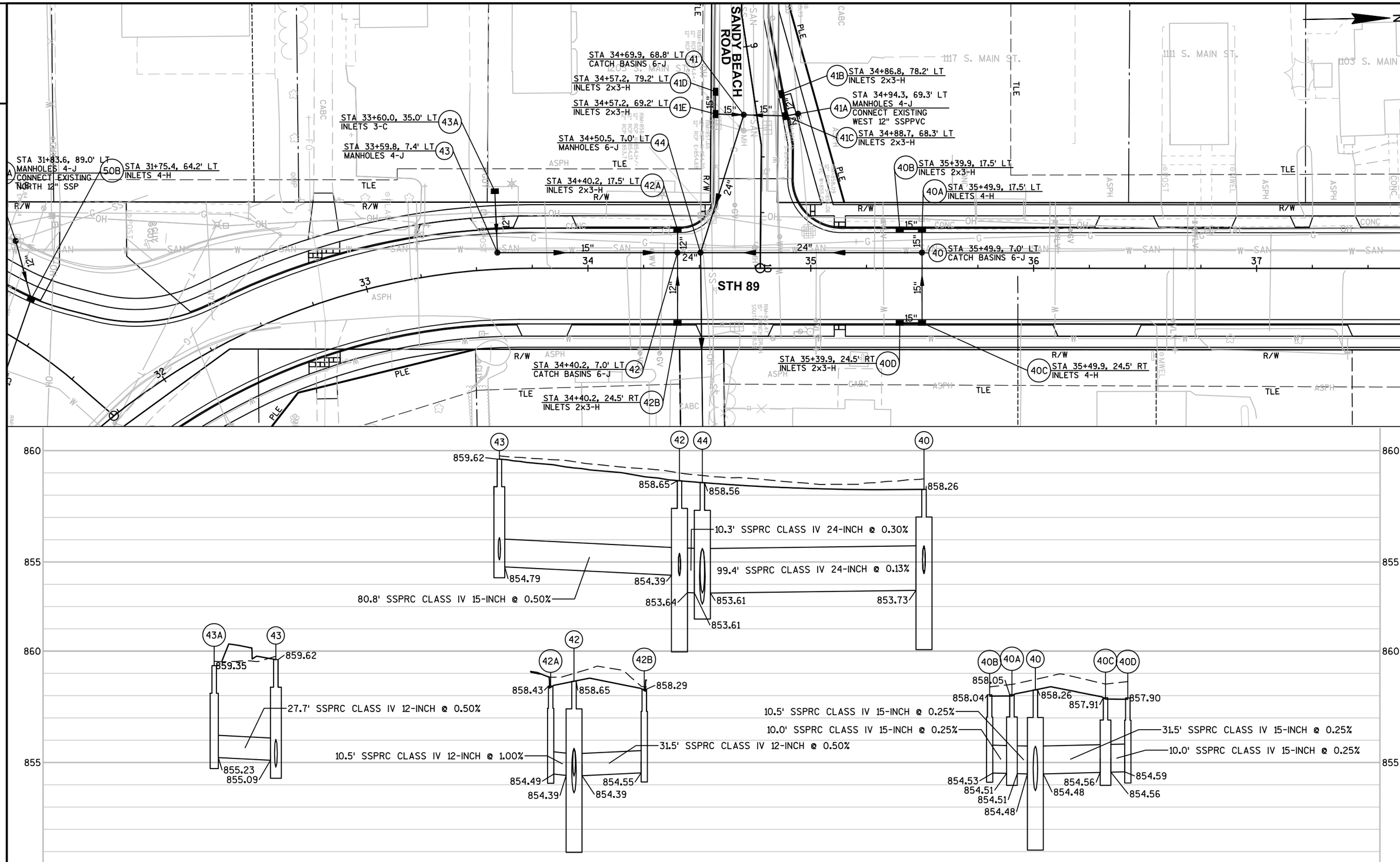

PROJECT NO:3300-01-73	HWY:STH 89	COUNTY:JEFFERSON	STORM SEWER	SHEET 70	E

2

STA 34+94.3, 69.3' LT
MANHOLES 4-J
CONNECT EXISTING
WEST 12" SSPPVC (41A)

STA 34+88.7, 68.3' LT
INLETS 2x3-H (41C)

STA 34+86.8, 78.2' LT
INLETS 2x3-H (41B)

EX41

SANDY BEACH ROAD

STA 34+69.9, 68.8' LT
CATCH BASINS 6-J (41)

STA 34+57.2, 79.2' LT
INLETS 2x3-H (41D)

STA 34+57.2, 69.2' LT
INLETS 2x3-H (41E)

STA 34+50.5, 7.0' LT
MANHOLES 6-J (44)

STA 34+40.2, 17.5' LT
INLETS 2x3-H (42A)

STA 34+40.2, 7.0' LT
CATCH BASINS 6-J (42)

STA 34+40.2, 24.5' RT
INLETS 2x3-H (42B)

STA 34+53.7, 260.0' RT
APRON ENDWALLS FOR CPRC 30-INCH (45)

STH 89

1122 S. MAIN ST.

1204 S. MAIN ST.

VACUUM

N

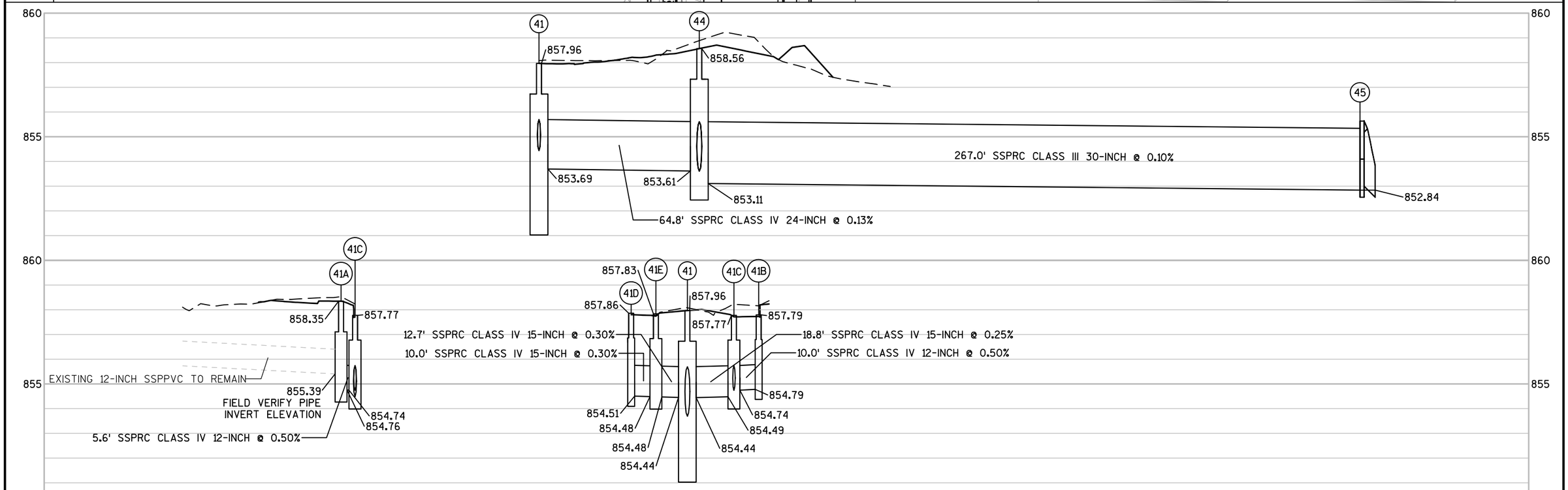

PROJECT NO:3300-01-73	HWY:STH 89	COUNTY:JEFFERSON	STORM SEWER	SHEET 71	E

FILE NAME : T:\1142720.02\CADD\CIVIL3D\33000103\SHEETSPLAN\022501-STORM SEWER\022501-SS.DWG
LAYOUT NAME - 022503
PLOT DATE : 10/31/2017 10:41 AM PLOT BY : BLACKWOOD, JIM PLOT NAME : PLOT SCALE : 1 IN:40 FT

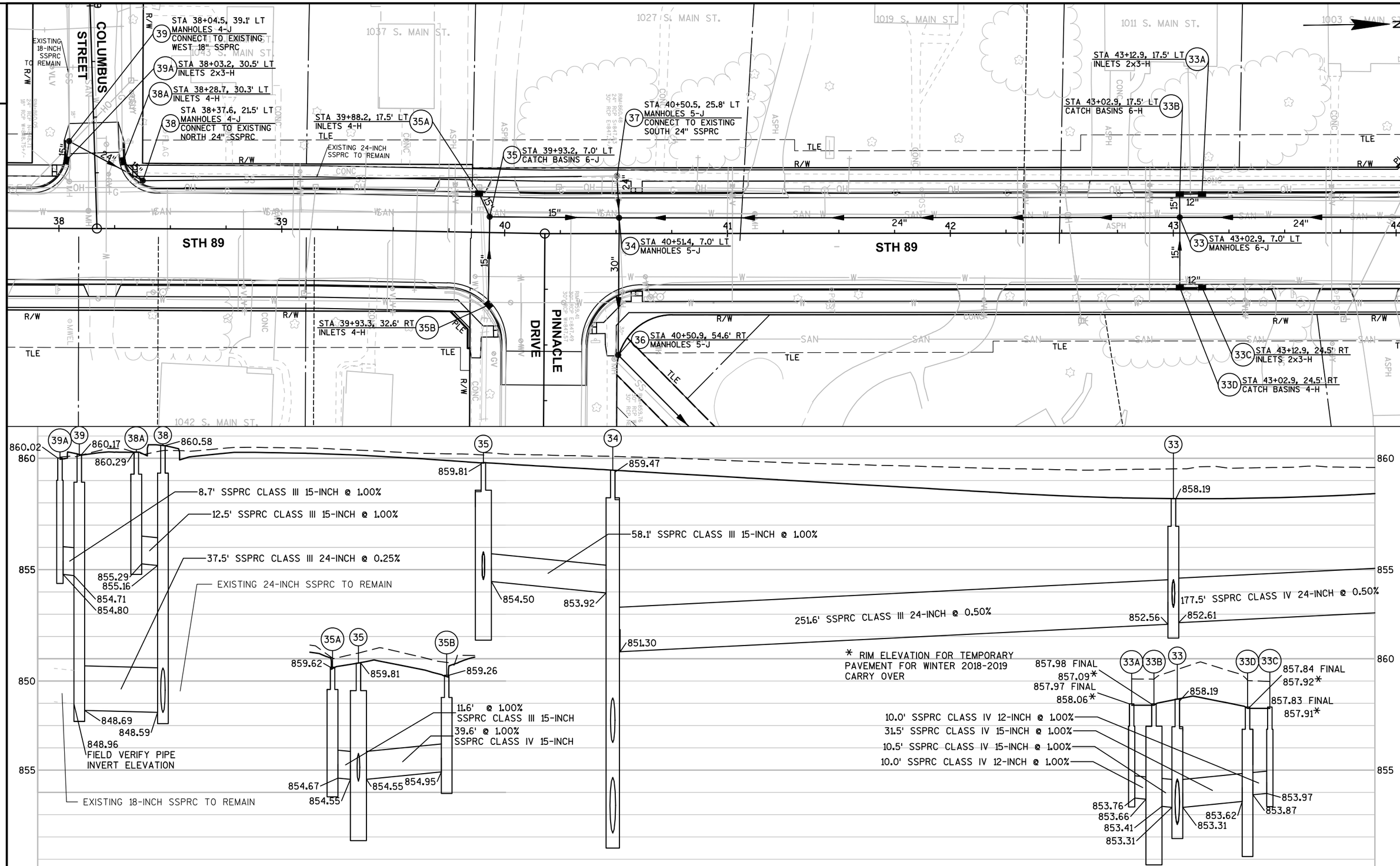

PROJECT NO:3300-01-73	HWY:STH 89	COUNTY:JEFFERSON	STORM SEWER	SHEET 72	E

FILE NAME : T:\1142720.02\CADD\CIVIL3D\33000103\SHEETSPLAN\022501-STORM SEWER\022501-SS.DWG
LAYOUT NAME - 022504
PLOT DATE : 10/31/2017 10:41 AM PLOT BY : BLACKWOOD, JIM PLOT NAME : PLOT SCALE : 1 IN:40 FT

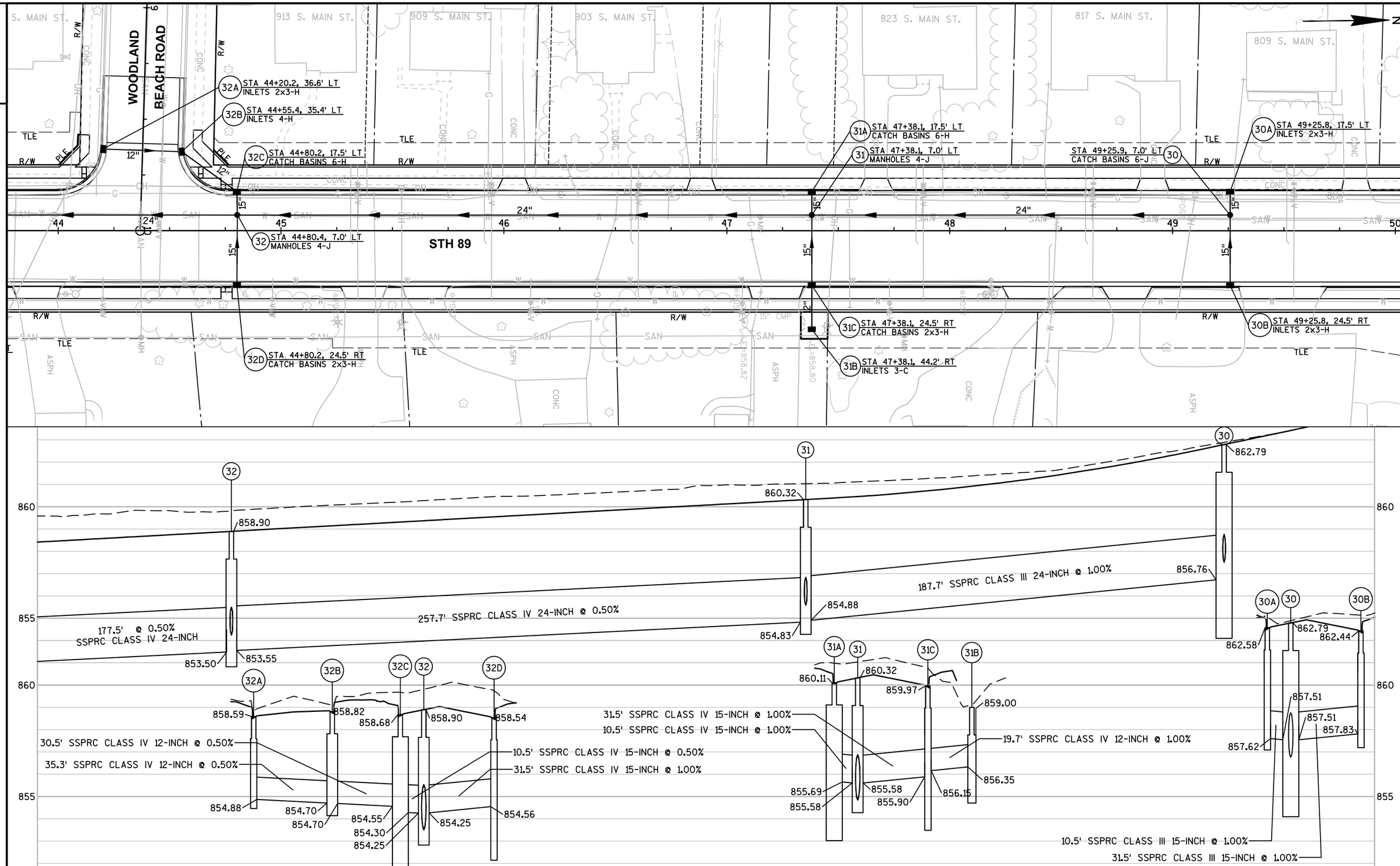

PROJECT NO:3300-01-73	HWY:STH 89	COUNTY:JEFFERSON	STORM SEWER	SHEET 73	E

FILE NAME : T:\1142720.02\CADD\CIVIL3D\33000103\SHEETSPLAN\022501-STORM SEWER\022501-SS.DWG
LAYOUT NAME - 022505
PLOT DATE : 10/31/2017 10:41 AM PLOT BY : BLACKWOOD, JIM PLOT NAME : PLOT SCALE : 1 IN:40 FT

2

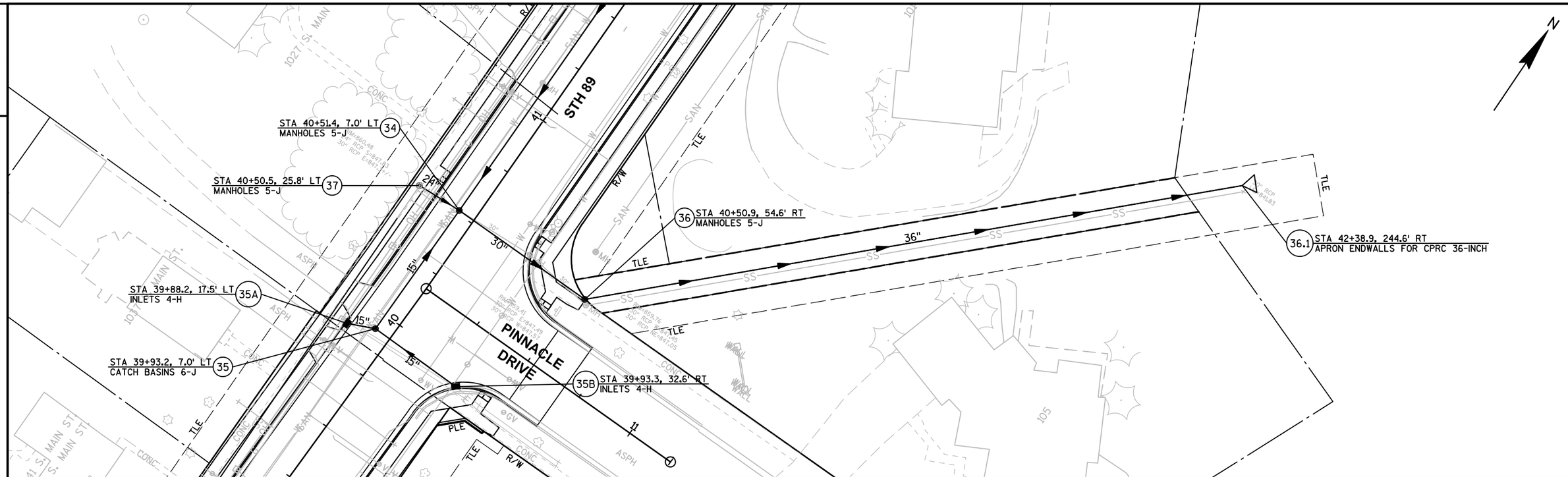

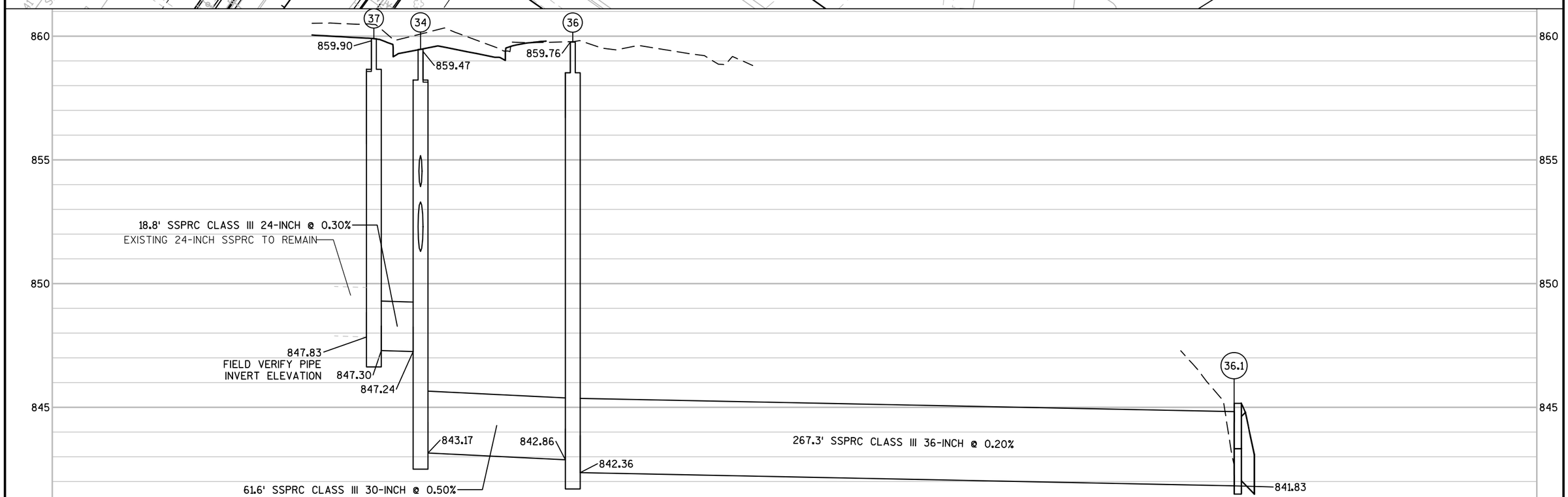

PROJECT NO:3300-01-73	HWY:STH 89	COUNTY:JEFFERSON	STORM SEWER	SHEET 74	E

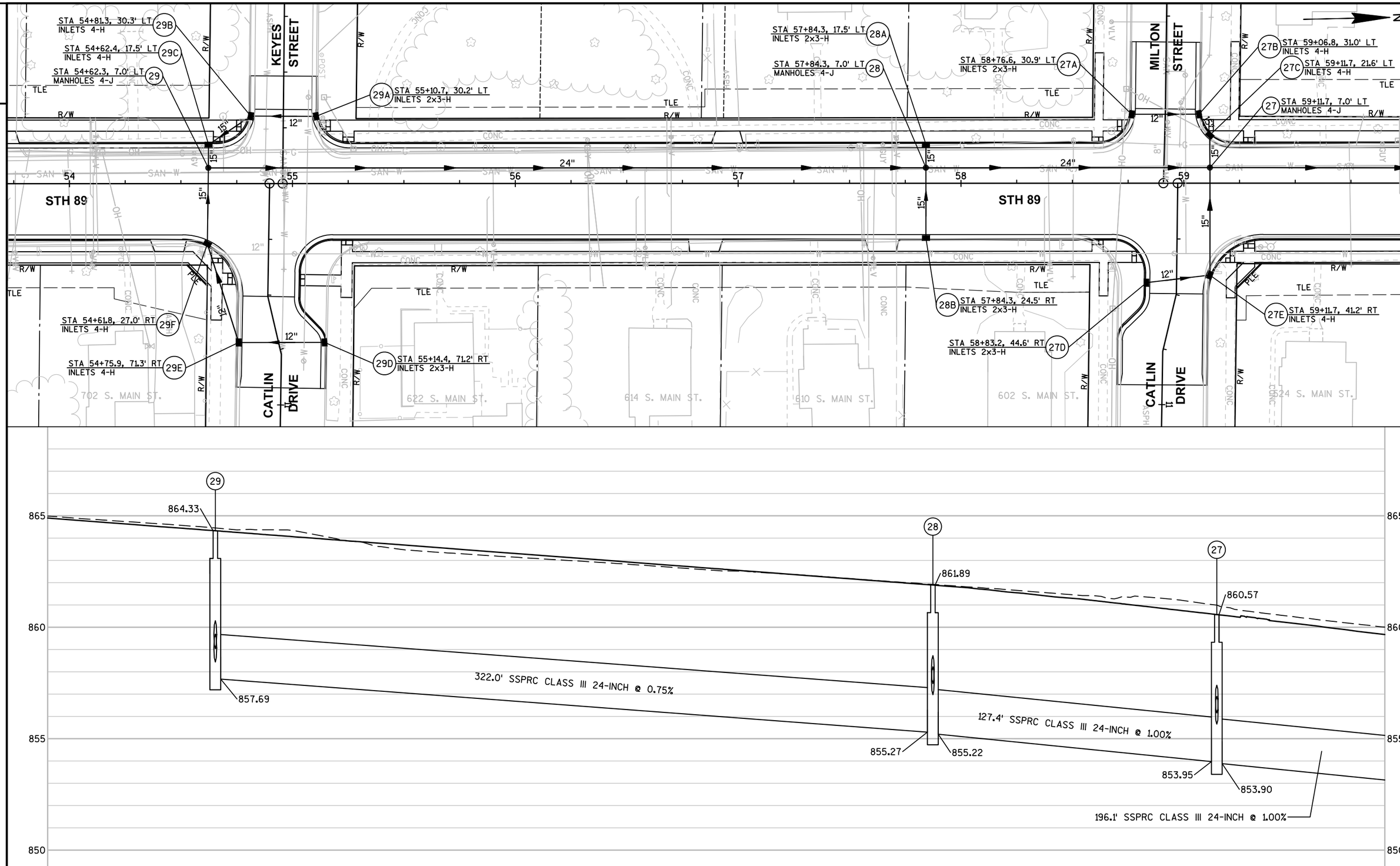

PROJECT NO:3300-01-73	HWY:STH 89	COUNTY:JEFFERSON	STORM SEWER	SHEET 75	E

FILE NAME : T:\1142720.02\CADD\CIVIL3D\33000103\SHEETSPLAN\022501-STORM SEWER\022501-SS.DWG
LAYOUT NAME - 022507
PLOT DATE : 10/31/2017 10:42 AM PLOT BY : BLACKWOOD, JIM PLOT NAME : PLOT SCALE : 1 IN:40 FT

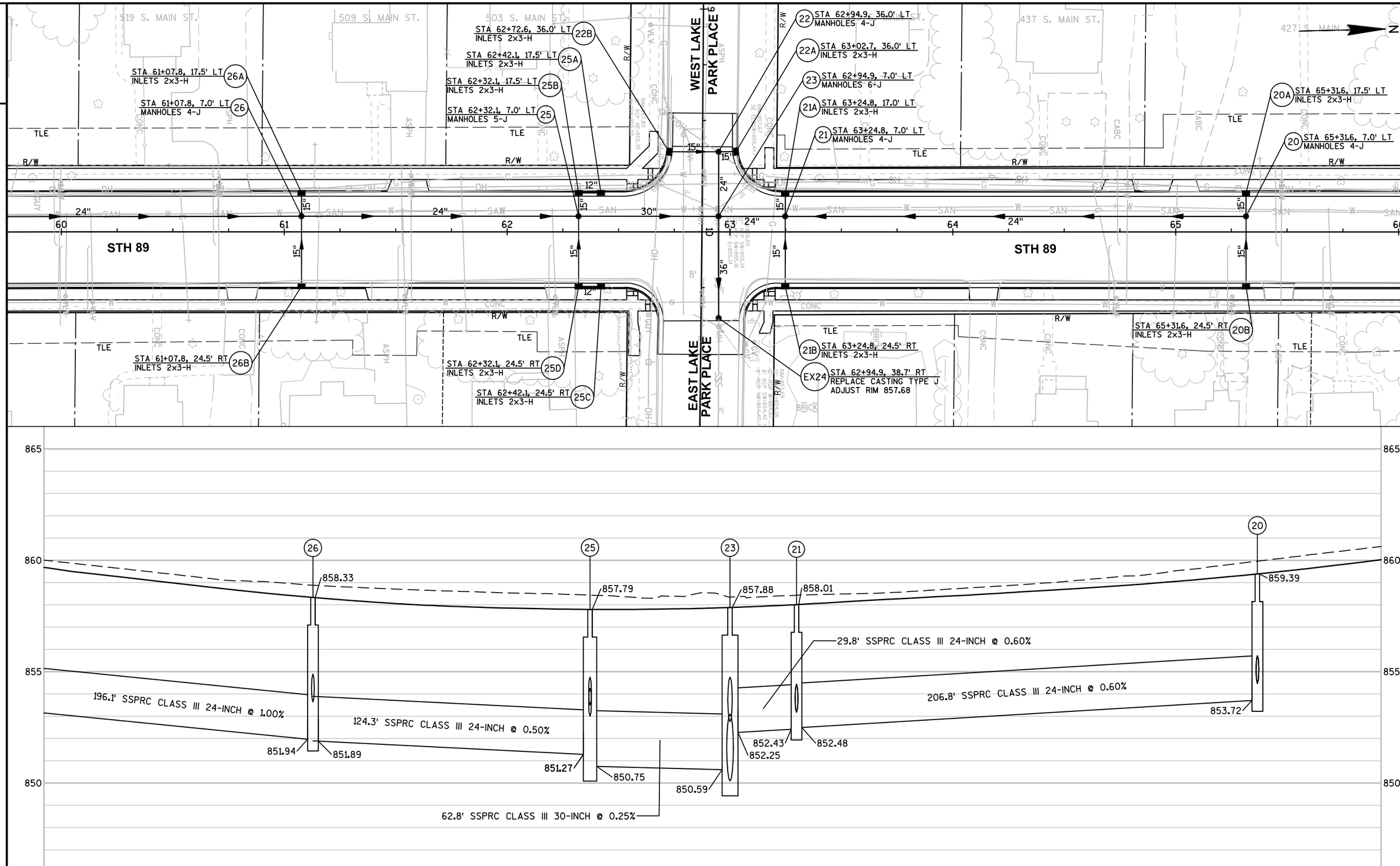

PROJECT NO:3300-01-73	HWY:STH 89	COUNTY:JEFFERSON	STORM SEWER	SHEET 76	E

FILE NAME : T:\1142720.02\CADD\CIVIL3D\33000103\SHEETSPLAN\022501-STORM SEWER\022501-SS.DWG
LAYOUT NAME - 022508
PLOT DATE : 10/31/2017 10:42 AM PLOT BY : BLACKWOOD, JIM PLOT NAME : PLOT SCALE : 1 IN:40 FT

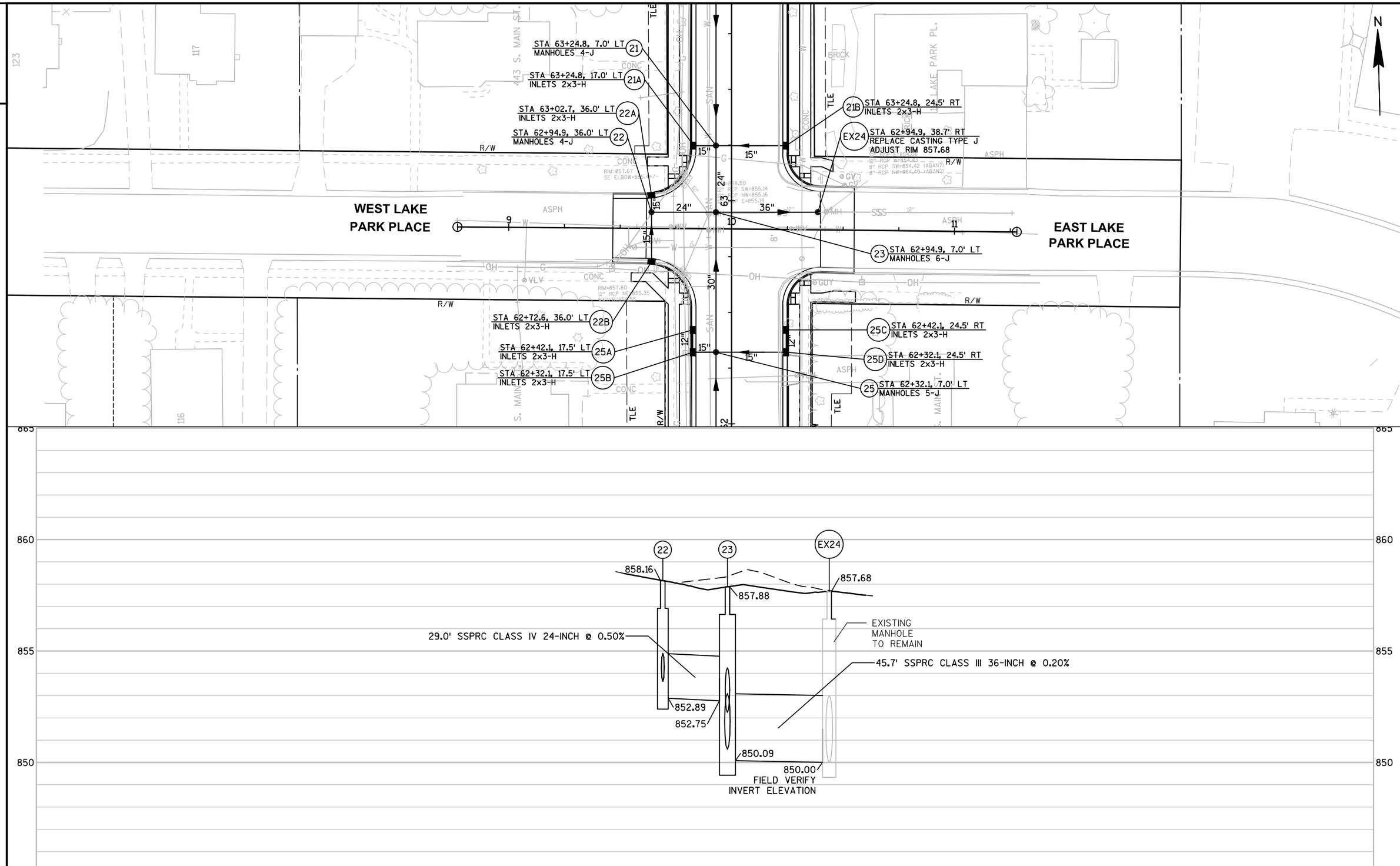

PROJECT NO:3300-01-73	HWY:STH 89	COUNTY:JEFFERSON	STORM SEWER	SHEET 77	E

2

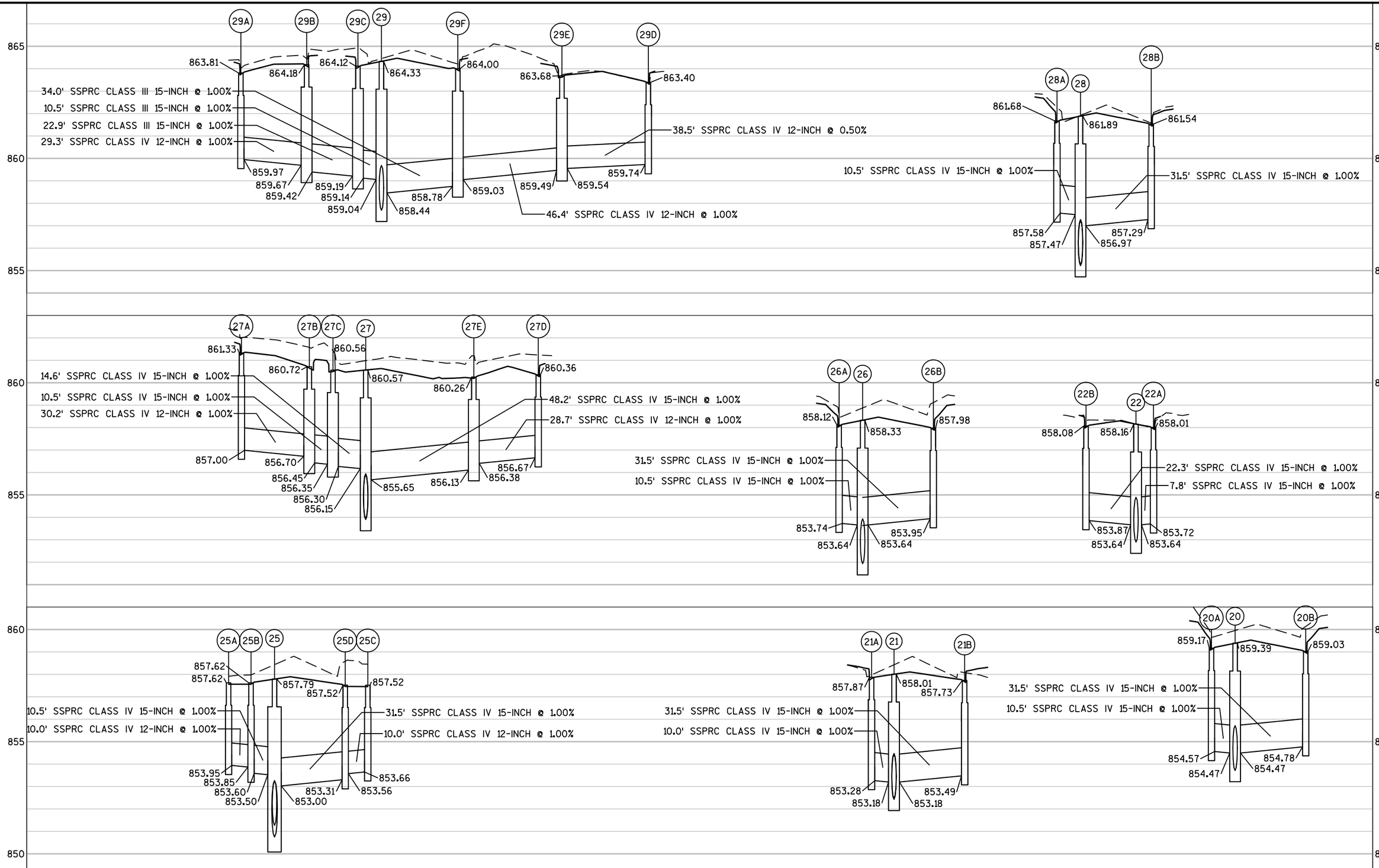

2

PROJECT NO:3300-01-73	HWY:STH 89	COUNTY:JEFFERSON	STORM SEWER	SHEET 78	E

FILE NAME : T:\1142720.02\CADD\CIVIL3D\33000103\SHEETSPLAN\022501-STORM SEWER\022501-SS.DWG
LAYOUT NAME - 022510
PLOT DATE : 10/31/2017 10:42 AM PLOT BY : BLACKWOOD, JIM PLOT NAME : PLOT SCALE : 1 IN:40 FT

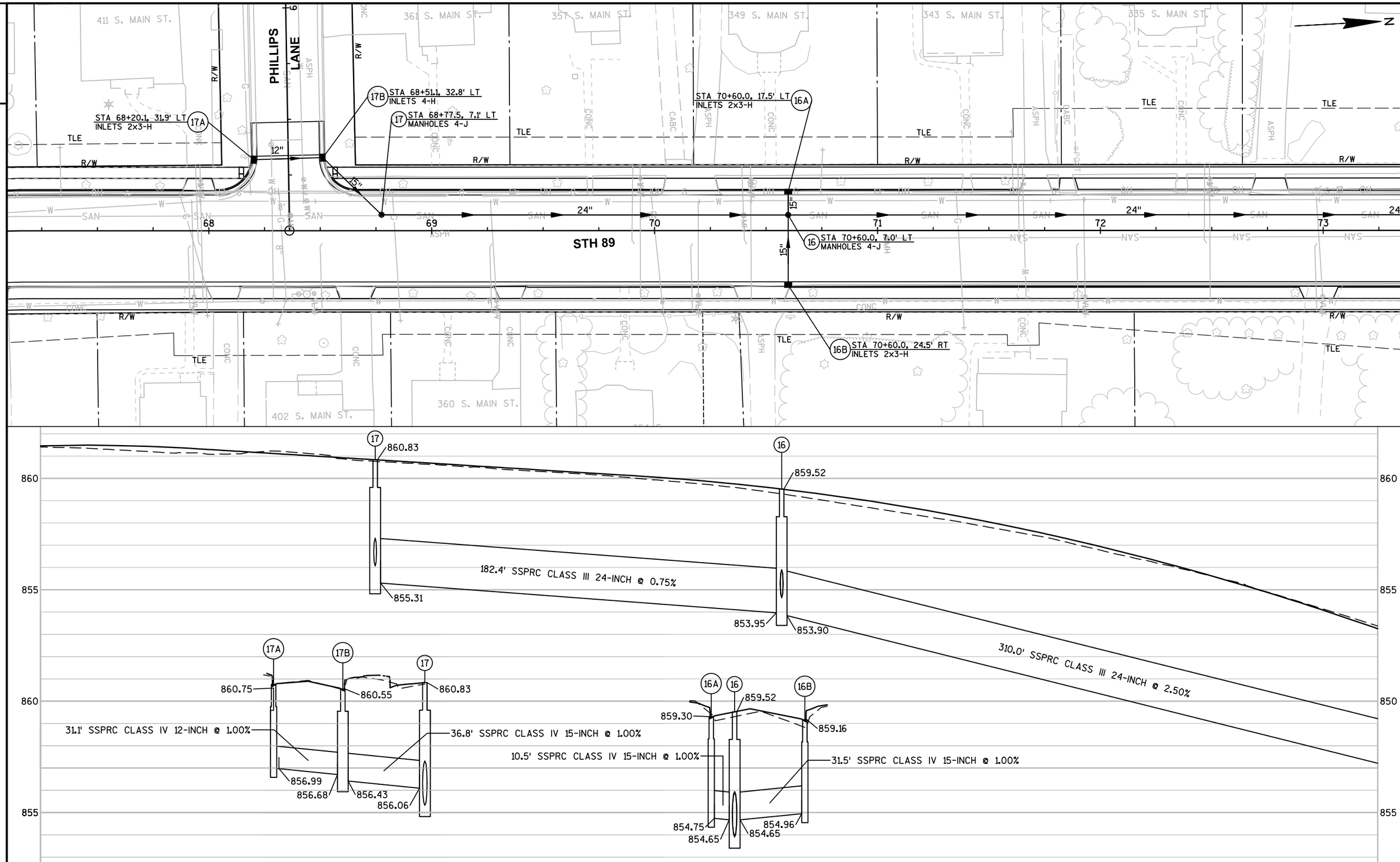

PROJECT NO:3300-01-73	HWY:STH 89	COUNTY:JEFFERSON	STORM SEWER	SHEET 79	E

FILE NAME : T:\1142720.02\CADD\CIVIL3D\33000103\SHEETSPLAN\022501-STORM SEWER\022501-SS.DWG
LAYOUT NAME - 022511
PLOT DATE : 10/31/2017 10:42 AM PLOT BY : BLACKWOOD, JIM PLOT NAME : PLOT SCALE : 1 IN:40 FT

2

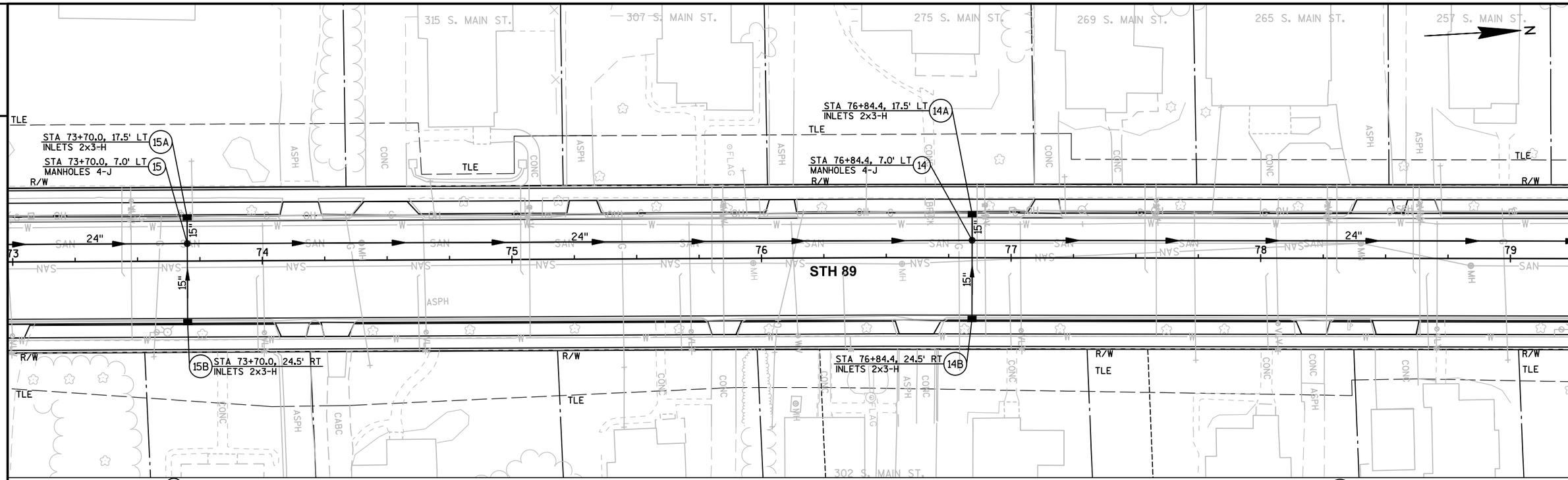

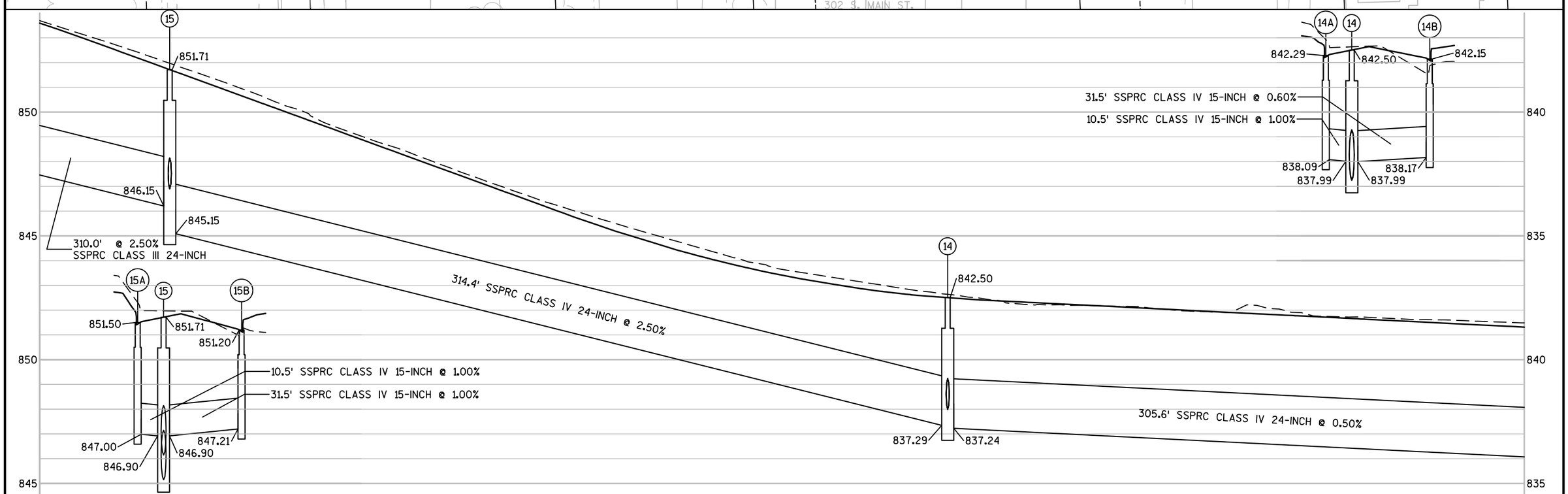

PROJECT NO:3300-01-73	HWY:STH 89	COUNTY:JEFFERSON	STORM SEWER	SHEET 80	E

2

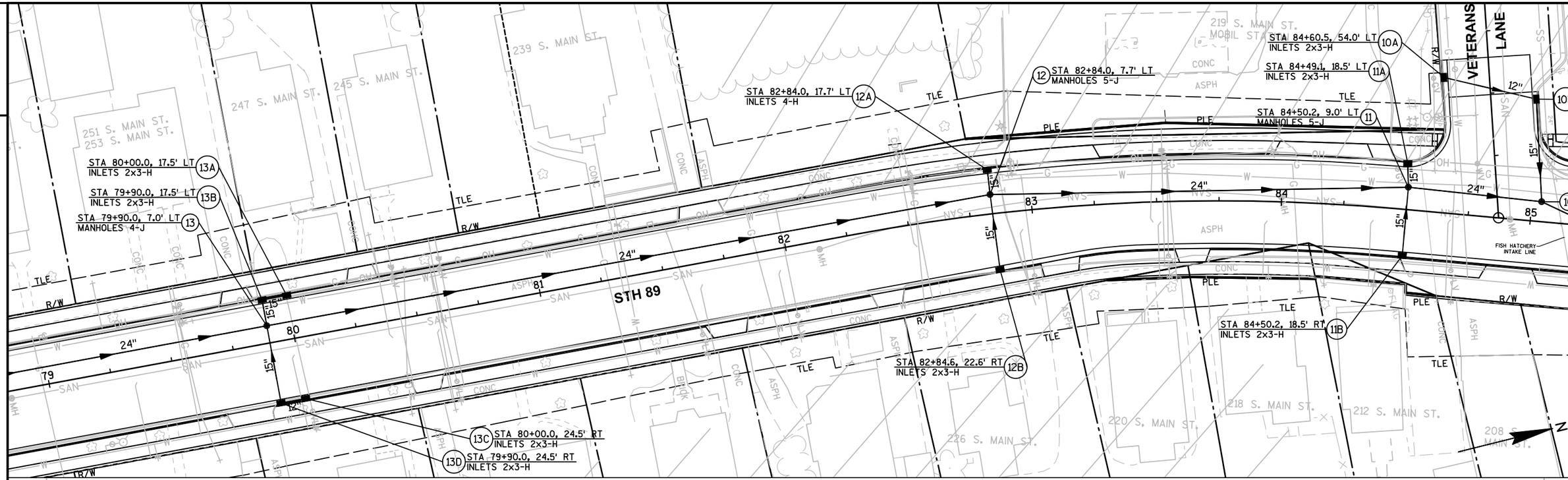

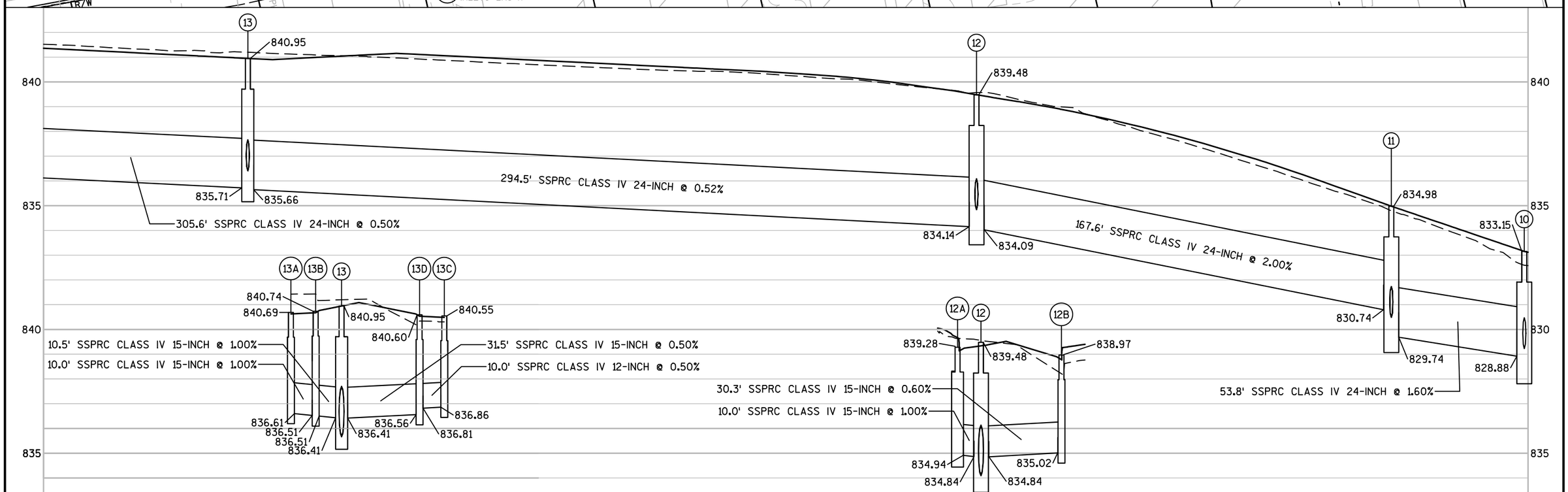

PROJECT NO:3300-01-73	HWY:STH 89	COUNTY:JEFFERSON	STORM SEWER	SHEET 81	E

FILE NAME : \\RASMITH.COM\BROOKFIELD\TRANSPORTATION\1142720.02\CADD\CIVIL3D\33000103\SHEETSPLAN\022501-STORM SEWER\022501-SS.DWG PLOT DATE : 12/28/2017 10:55 AM PLOT BY : WHITEFOOT, DANIEL PLOT NAME : PLOT SCALE : 1 IN:40 FT
LAYOUT NAME - 022513

WISDOT/CADDS SHEET 41

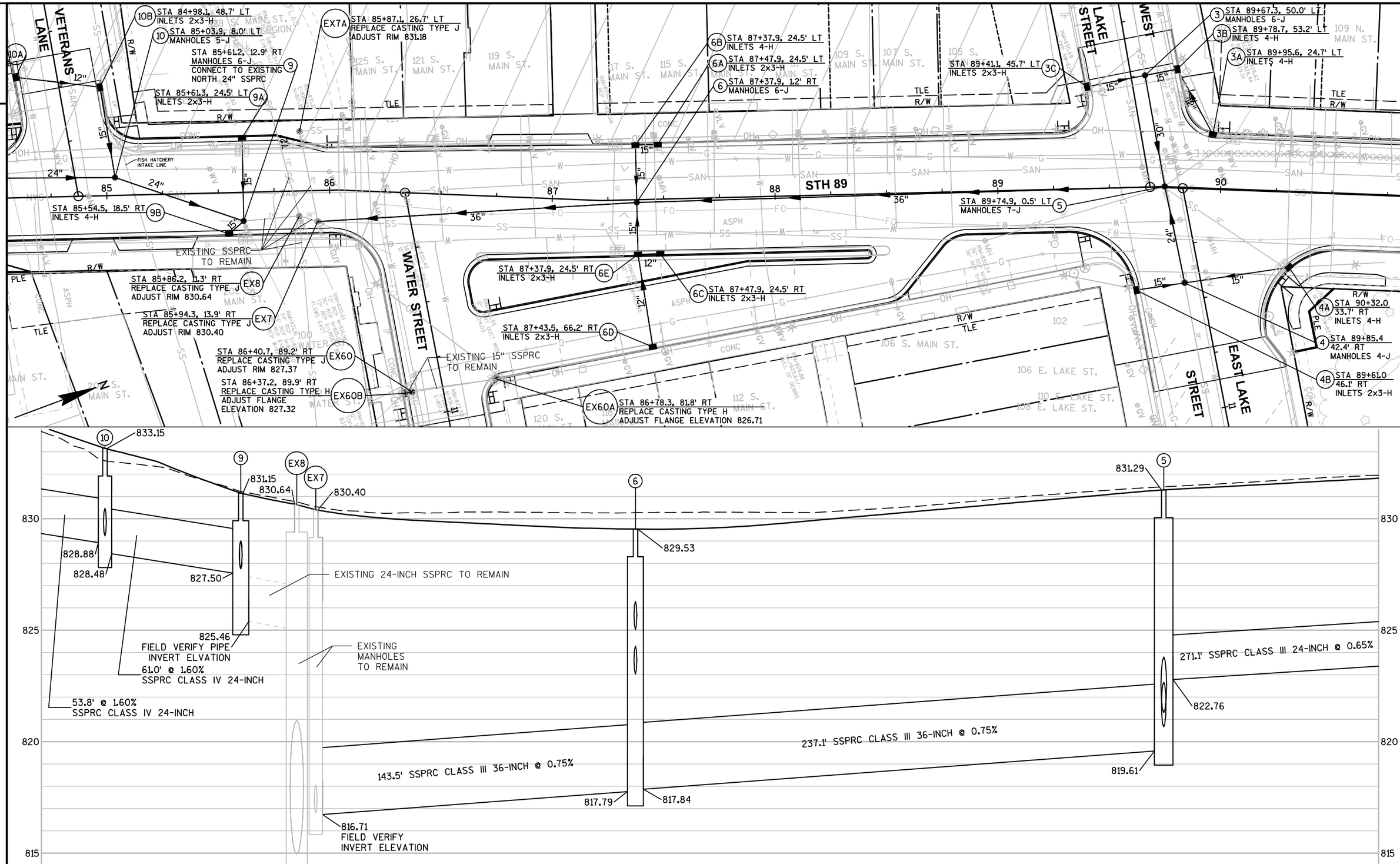

PROJECT NO:3300-01-73	HWY:STH 89	COUNTY:JEFFERSON	STORM SEWER	SHEET 82	E

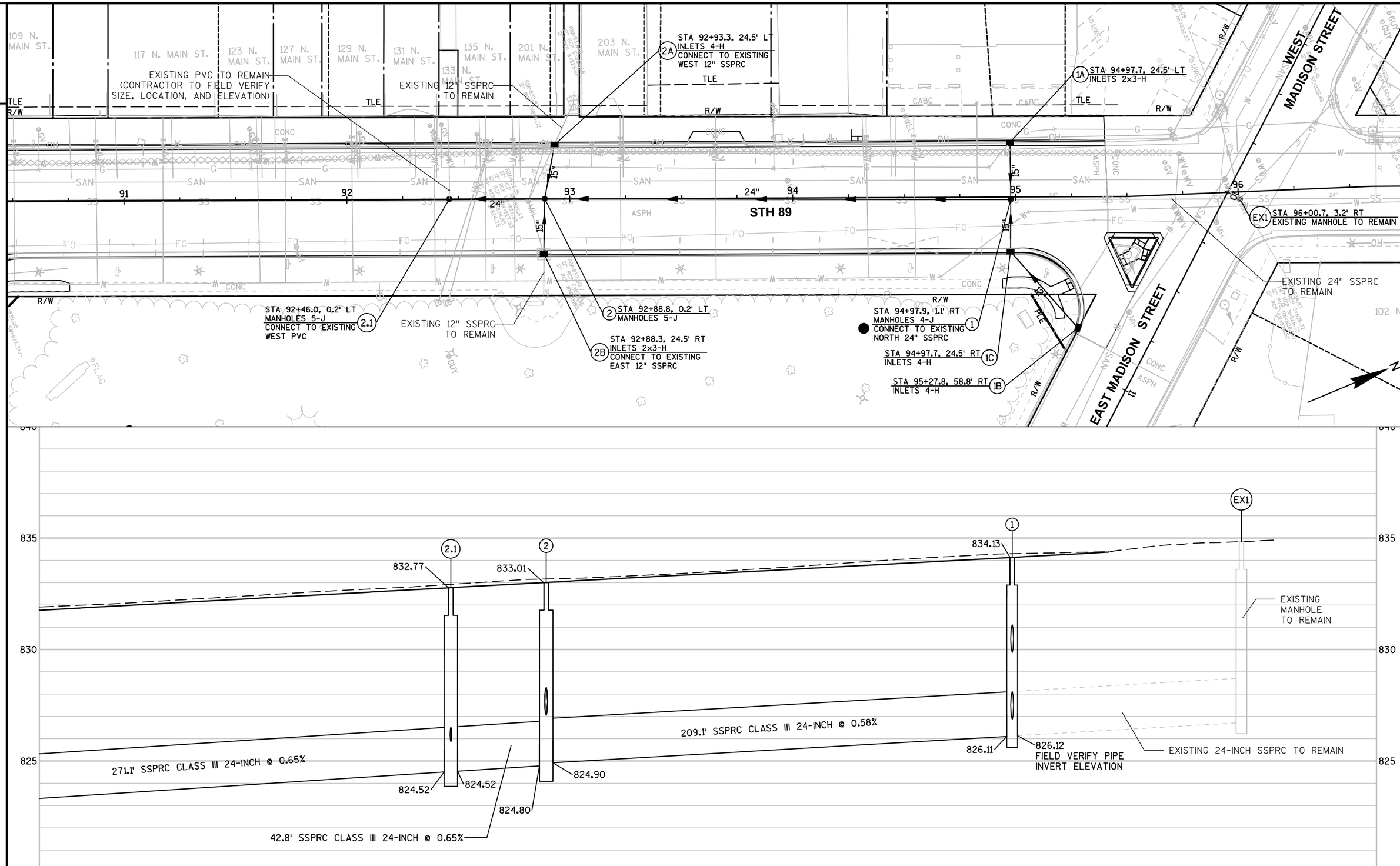

PROJECT NO:3300-01-73	HWY:STH 89	COUNTY:JEFFERSON	STORM SEWER	SHEET 83	E

FILE NAME : \\RASMITH.COM\BROOKFIELD\TRANSPORTATION\1142720.02\CADD\CIVIL3D\33000103\SHEETSPLAN\022501-STORM SEWER\022501-SS.DWG PLOT DATE : 12/28/2017 10:56 AM PLOT BY : WHITEFOOT, DANIEL PLOT NAME : PLOT SCALE : 1 IN:40 FT
LAYOUT NAME - 022515

2

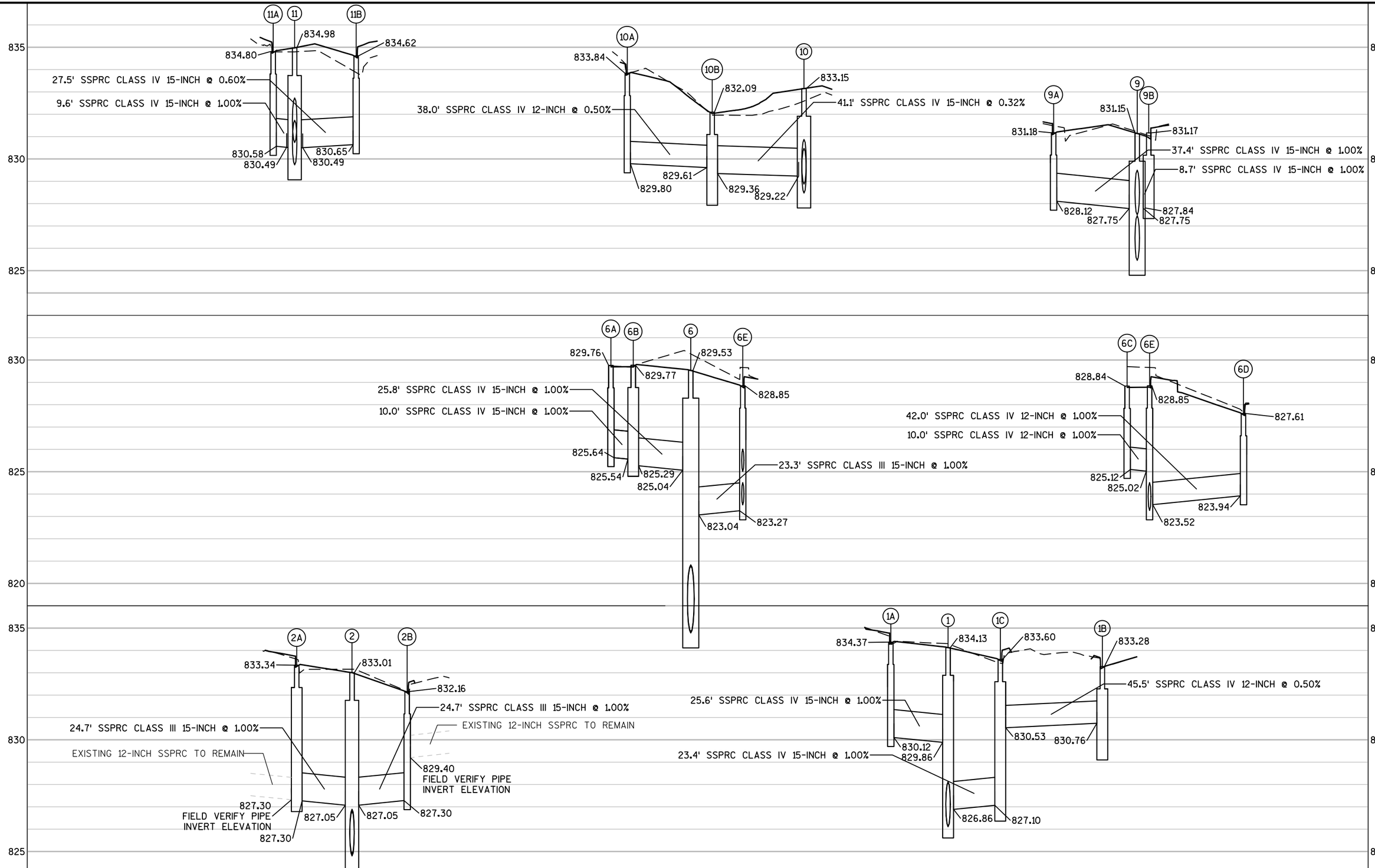

PROJECT NO:3300-01-73	HWY:STH 89	COUNTY:JEFFERSON	STORM SEWER	SHEET 84	E

FILE NAME : \\RASMITH.COM\BROOKFIELD\TRANSPORTATION\1142720.02\CADD\CIVIL3D\33000103\SHEETSPLAN\022501-STORM SEWER\022501-SS.DWG PLOT DATE : 12/28/2017 10:56 AM PLOT BY : WHITEFOOT, DANIEL PLOT NAME : PLOT SCALE : **********
LAYOUT NAME - 022516

WISDOT/CADDS SHEET 41

2

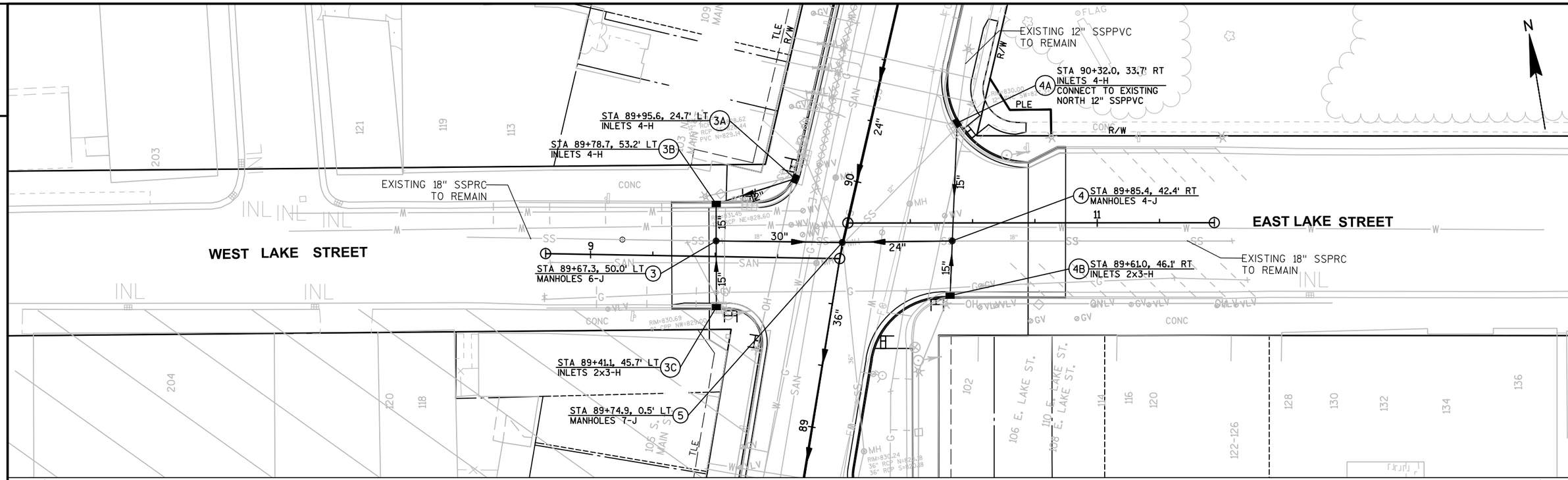

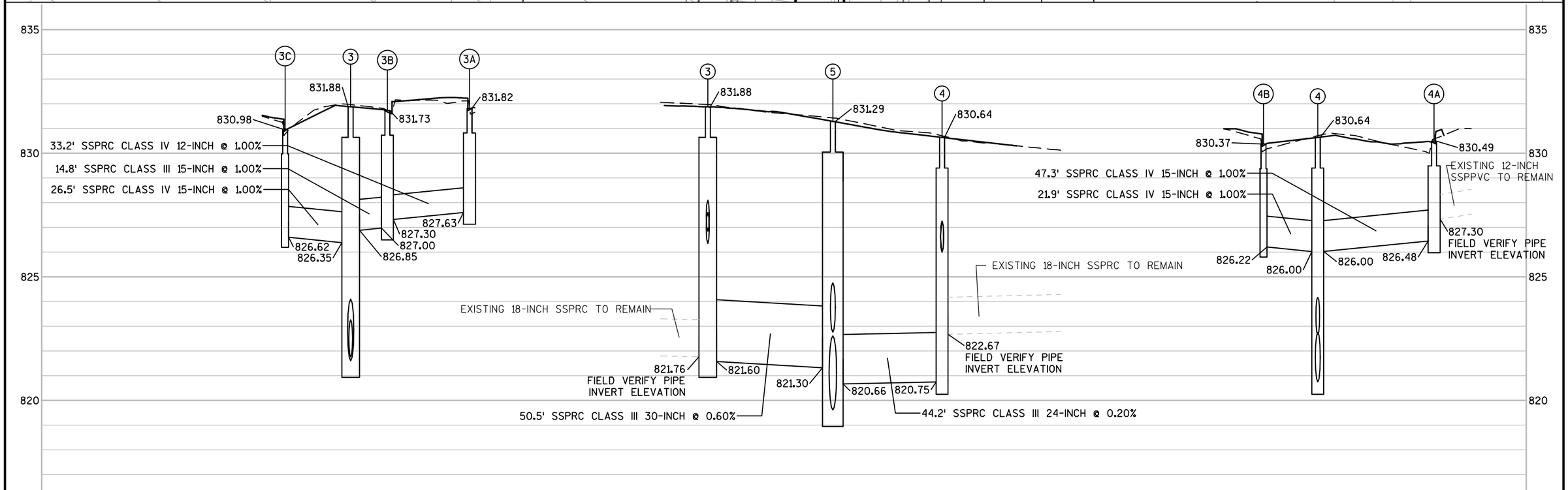

PROJECT NO:3300-01-73	HWY:STH 89	COUNTY:JEFFERSON	STORM SEWER	SHEET 85	E

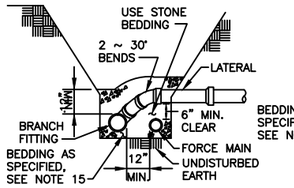

TRENCH DETAIL – FORCE MAIN AND GRAVITY SEWER AT THE SAME ELEVATION

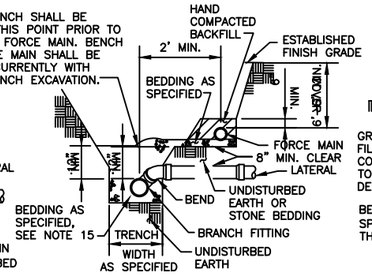

TRENCH DETAIL – FORCE MAIN ON BENCH

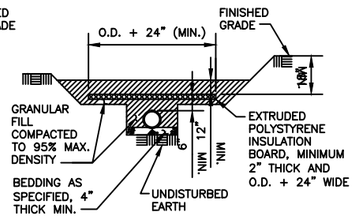

SEWER INSULATION DETAIL

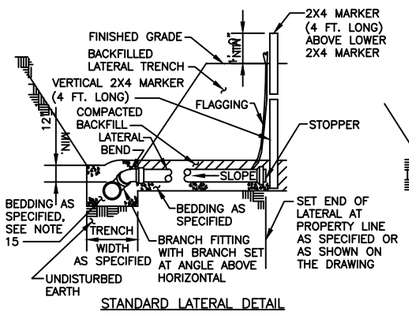

STANDARD LATERAL DETAIL

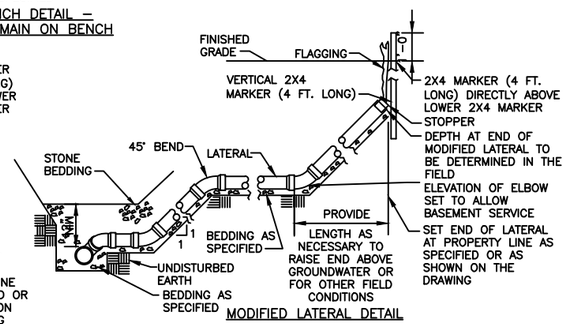

MODIFIED LATERAL DETAIL

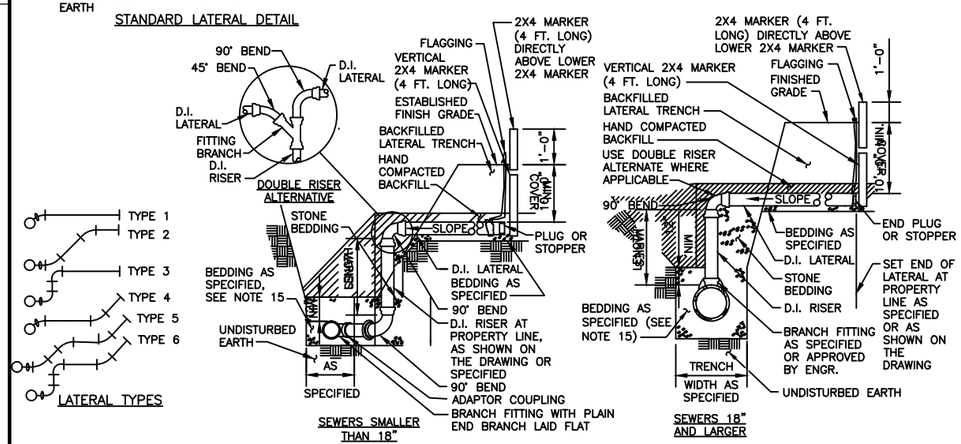

STANDARD RISER DETAILS

1. ALL WORK SHALL BE DONE IN ACCORDANCE WITH THE REQUIREMENTS OF REGULATORY BODIES OF THE STATE AND APPLICABLE MUNICIPAL ORDINANCES.

2. DETAILS RELATIVE TO ITEMS SHOWN ON THIS DRAWING SHALL CONFORM TO THE PERTINENT REQUIREMENTS OF THE SPECIFICATIONS AND THE APPLICABLE SPECIAL PROVISIONS.

3. VARIATIONS IN DIMENSIONS AND DESIGN MAY BE PERMISSABLE, PROVIDING EQUIVALENT CAPACITY AND STRENGTH ARE ATTAINED.

4. ALL NEW CONSTRUCTION SHALL BE PLACED ON UNDISTURBED EARTH OR STONE BEDDING.

5. BEDDING CLASSES "B" AND "C" SHALL MEET OR EXCEED ASTM C12 REQUIREMENTS.

6. ALL LATERALS SHALL BE LAID AT A STANDARD SLOPE OF 1/4–INCH PER FOOT UNLESS OTHERWISE NOTED ON THE DRAWINGS, OR SPECIFIED. IN NO CASE SHALL LATERAL SLOPE BE LESS THAN 1/8–INCH PER FOOT. MAXIMUM LATERAL SLOPE SHALL BE 1 TO 1.

7. END PLUGS OR STOPPERS FOR THE ENDS OF LATERALS AND BRANCH FITTINGS SHALL BE PROVIDED.

8. 2x4'S SHALL BE PLACED AT ALL LATERALS ENDS SO THAT ONE PROTRUDES 12 INCHES ABOVE FINISHED GRADE AND ONE IS LOCATED IN THE GROUND AT THE END OF THE LATERAL. 2x4'S SHALL BE PAINTED FLOURESCENT ORANGE. 2x4'S SHALL EACH BE AT LEAST 4 FT. LONG.

9. BAR STEEL REINFORCEMENT SHALL BE IMBEDDED 1 1/2–INCH CLEAR MINIMUM.

10. THE TOP OF ANY MANHOLE STRUCTURE SHALL BE LEFT SUFFICIENTLY LOW TO PERMIT PROPER ADJUSTMENT OF COVER TO GRADE.

11. INSTALL DOUBLE RISERS WHERE SHOWN ON THE DRAWINGS OR SPECIFIED.

12. STANDARD LATERALS AND MODIFIED LATERALS SHALL BE CONSTRUCTED OF MATERIAL AS SPECIFIED.

13. RISERS AND LATERALS FROM RISERS SHALL BE CONSTRUCTED OF DUCTILE IRON. FITTINGS FOR RISERS AND LATERALS FROM RISERS SHALL BE GRAY IRON OR DUCTILE IRON.

14. FLAGGING SHALL BE 4–INCH WIDE STANDARD ORANGE VINYL TAPE. TIE FLAGGING AROUND END OF ALL LATERALS AND EXTEND UNBROKEN TO FINISHED GRADE DIRECTLY ABOVE ENDS OF LATERALS.

15. STONE BEDDING SHALL BE USED AROUND AND TO ONE FT. ABOVE TOP OF ALL SEWER MAINS AT LATERAL CONNECTIONS. PROVIDE BEDDING AS SPECIFIED ELSEWHERE.

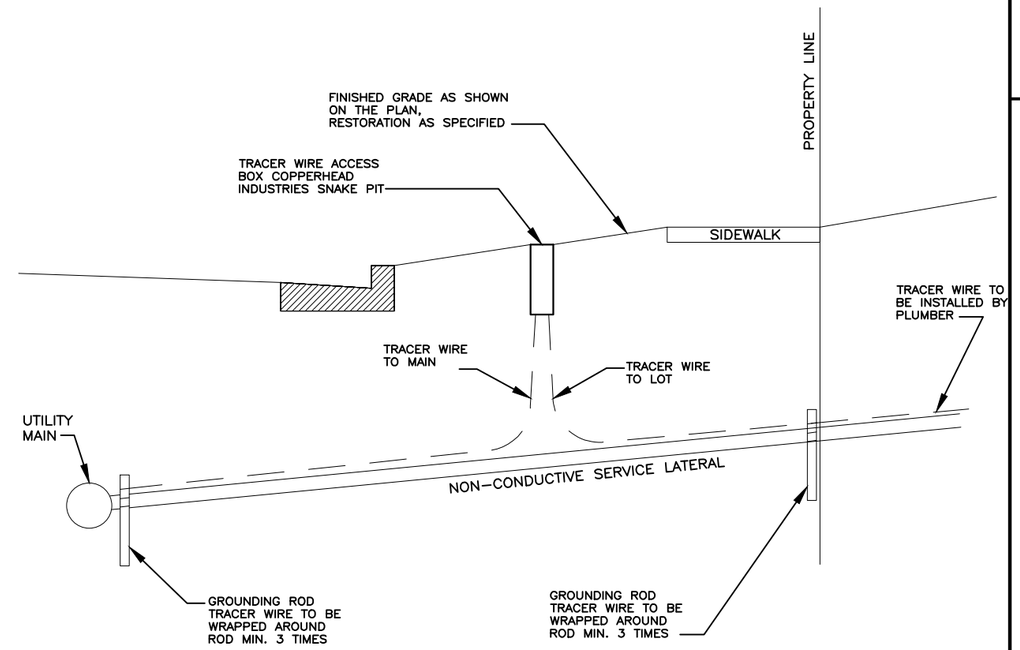

NOTES:
1. TRACER WIRE ACCESS BOX TO INSTALLED IN THE TERRACE. EXACT LOCTATION TO BE DETERMINED IN THE FIELD BY OWNER.

2. TRACER WIRE ACCESS BOX COVER TO BE PERMANENTLY ENGRAVED WITH "SEWER" BY THE MANUFACTURER.

3. MINIMUM 18–IN OF WIRE TO BE COILED WITHIN THE ACCESS BOX.

4. GROUNDING ROD TO BE A 2–FT LONG, 5/8–IN DIAMETER STEEL GROUNDING ROD.

5. TRACER WIRE TO BE 10 GAUGE SOLID WIRE

TRACER WIRE INSTALLATION

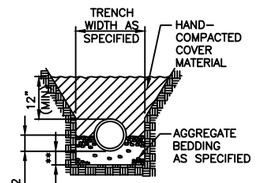

CLASS "B" BEDDING DETAIL

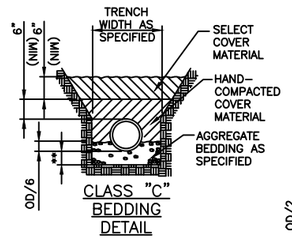

CLASS "C" BEDDING DETAIL

** OUTSIDE DIAMETER/4, 4" MINIMUM.

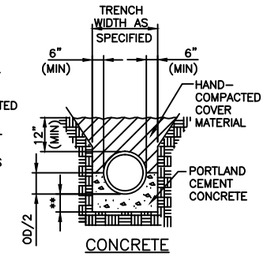

CONCRETE CRADLE DETAIL

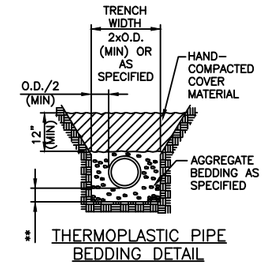

THERMOPLASTIC PIPE BEDDING DETAIL

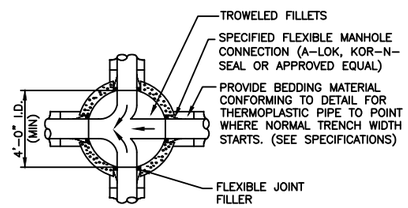

JUNCTION MANHOLE

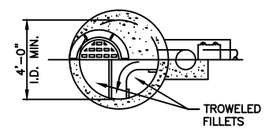

HALF SECTION C-C

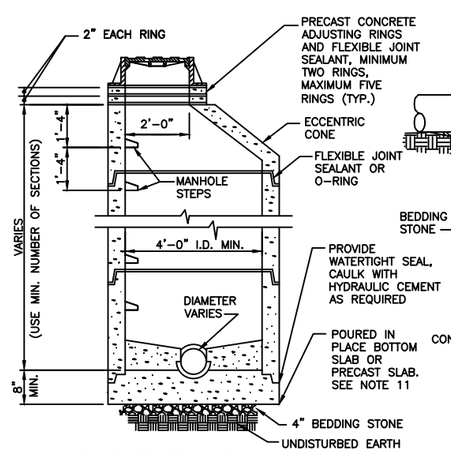

STANDARD PRECAST MANHOLE

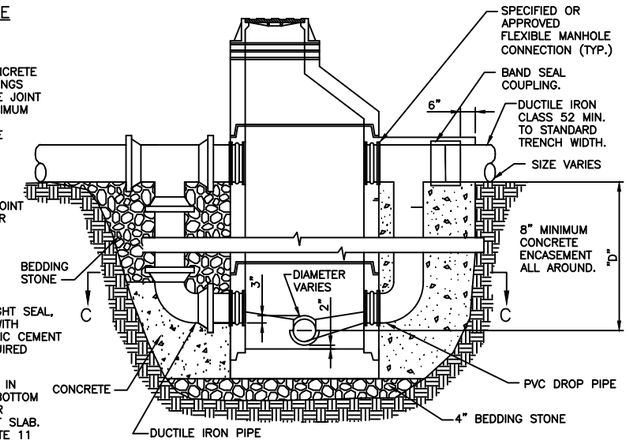

DROP TYPE ENTRANCE OPTIONS TO STANDARD MANHOLE

DROP TYPE ENTRANCE TO BE USED WHEREVER DIMENSION "D" EXCEEDS 2'-0".

SANITARY SEWER MANHOLE

NOTES:

1. DETAILS RELATIVE TO ITEMS SHOWN ON THIS DRAWING SHALL CONFORM TO THE PERTINENT REQUIREMENTS OF THE SPECIFICATIONS AND THE APPLICABLE SPECIAL PROVISIONS.

2. VARIATIONS IN DIMENSIONS AND DESIGN MAY BE PERMISSIBLE, PROVIDING EQUIVALENT CAPACITY AND STRENGTH ARE ATTAINED.

3. ALL CONCRETE FILLETS SHALL BE HAND TROWELED WITH A 1/4"/FT. SLOPE.

4. INSIDE DIMENSIONS FOR MANHOLES: USE MINIMUM 4' DIAMETER FOR SEWER LESS THAN 18" IN DIAMETER; USE MINIMUM 5' DIAMETER FOR SEWER 18" THRU 24" IN DIAMETER; USE MINIMUM 6' DIAMETER OR MINIMUM 6' SQUARE FOR SEWER OVER 24" IN DIAMETER.

5. BEDDING CLASSES "B" AND "C" SHALL MEET OR EXCEED ASTM C12 REQUIREMENTS.

6. DROP TYPE ENTRANCE TO STANDARD MANHOLE WILL BE PAID FOR SEPARATELY IF SO LISTED IN THE BID.

7. SEE DRAWINGS FOR DROP TYPE ENTRANCES FOR SANITARY SEWERS LARGER THAN 15".

8. ALL WORK SHALL BE DONE IN ACCORDANCE WITH THE REQUIREMENTS OF REGULATORY BODIES OF THE STATE AND APPLICABLE MUNICIPAL ORDINANCES.

9. ALL NEW CONSTRUCTION SHALL BE PLACED ON UNDISTURBED EARTH OR STONE BEDDING.

10. FLAT SLAB TOPS SHALL BE DESIGNED FOR H-20 TRUCK LOADING AND SHALL MEET REQUIREMENTS OF ASTM C-478.

11. BASE SLABS SHALL BE REINFORCED AS FOLLOWS: REINFORCING SHALL BE PLACED IN EACH DIRECTION AT 2" CLEAR FROM TOP SURFACE OF SLAB, REINFORCING SHALL BE GRADE 60. USE OF CAST-IN-PLACE SLAB SHALL NOT RELIEVE CONTRACTOR OF REQUIREMENTS TO PROVIDE WATERTIGHT JOINTS.

INSIDE DIA.	DEPTH	REINF.
4'	≤ 30'	#3@8"
5'	≤ 20'	#3@8"
5'	20'-30'	#4@10"
6'	≤ 20'	#4@10"
6'	20'-25'	#4@8"
6'	25'-30'	#4@6"

12. FLAT SLABS SHALL BE PROVIDED IN SHALLOW DEPTH SITUATIONS IN LIEU OF ECCENTRIC CONES.

2

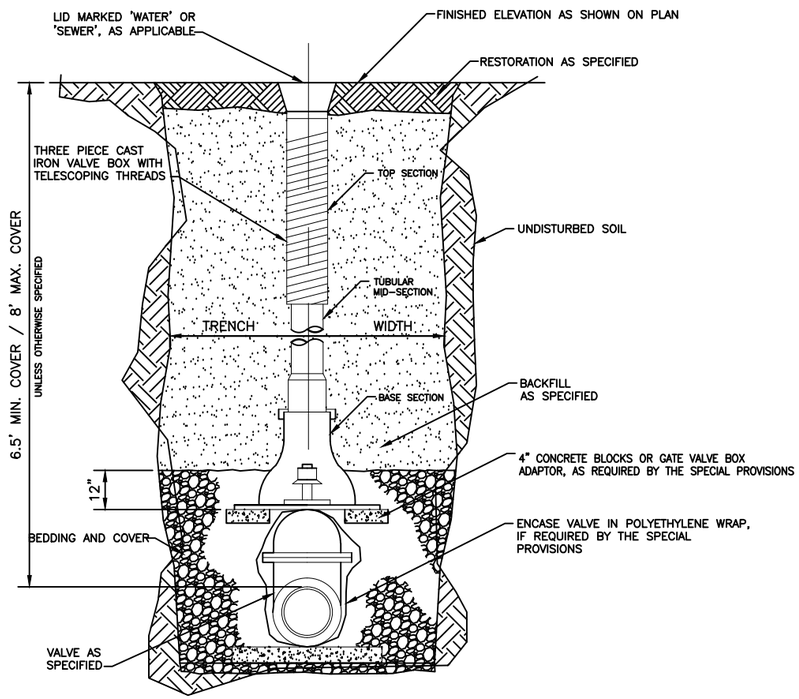

WATER MAIN GATE VALVE AND VALVE BOX

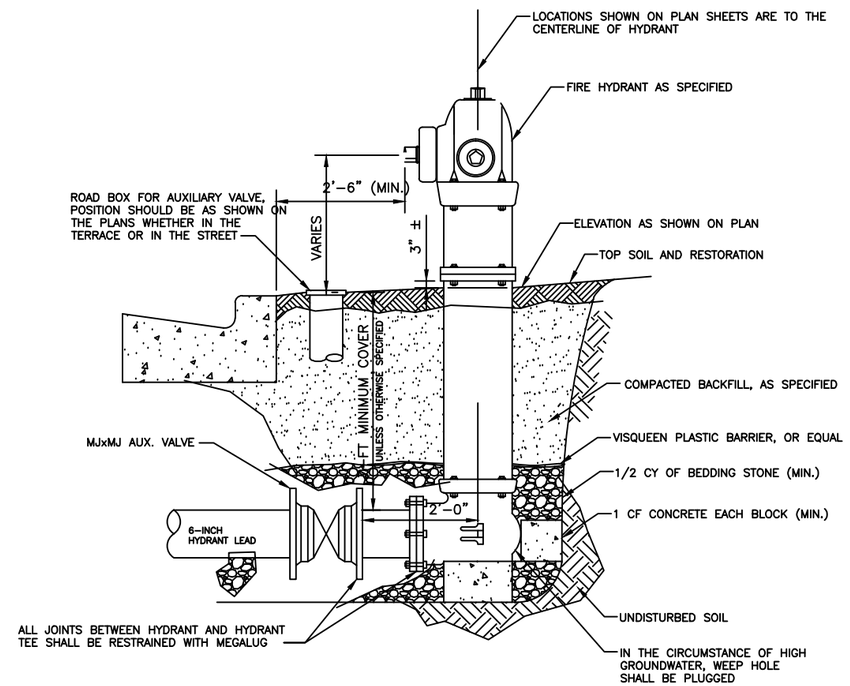

FIRE HYDRANT WITH AUXILIARY VALAVE AND LEAD

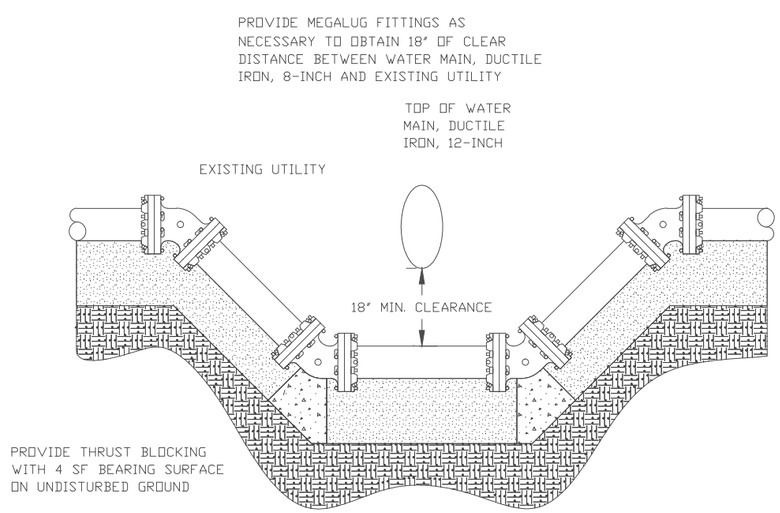

WATER MAIN, DUCTILE IRON, 12-INCH OFFSET DETAIL

NO SCALE

PROJECT NO: 3300-01-73	HWY: STH 89	COUNTY: JEFFERSON	WATER MAIN DETAILS	SHEET 88	E

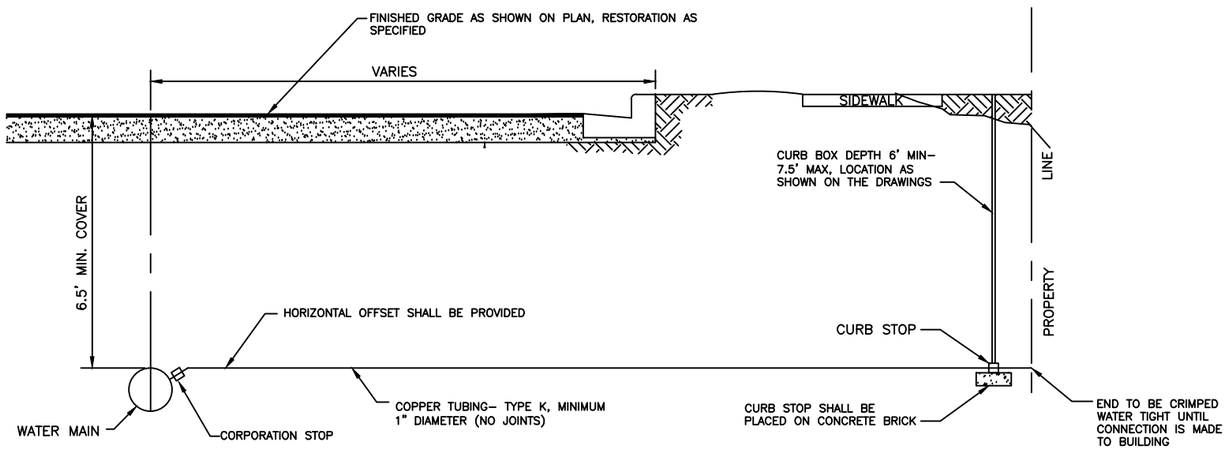

SECTION VIEW

NOTES

1. ALL FITTINGS SHALL BE FLARED OR COMPRESSION JOINT TYPE, AND CONFORM TO AWWA REQUIREMENTS

2. CORPORATION STOP TO BE TAPPED INTO DUCTILE IRON WATER MAIN, UNLESS OTHERWISE SPECIFIED, AND ATTACHED TO PVC WATER MAIN WITH A SADDLE

3. ALL TAPS TO BE MADE UNDER PRESSURE WHEN APPLICABLE.

4. NO TAPS TO BE CLOSER THAN 18" APART ALONG MAIN

5. ALL COPPER TUBE BENDS TO BE SMOOTH RADIUS, 10" MIN

6. WATER SERVICE LATERAL TO BE TESTED ALONG WITH WATER MAIN, UNLESS IT IS AN EXISTING SERVICE BEING RECONNECTED

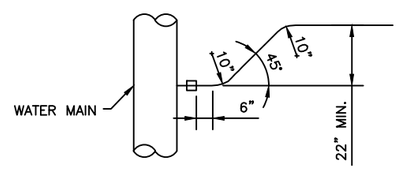

HORIZONTAL OFFSET
PLAN VIEW

WATER SERVICE, COPPER

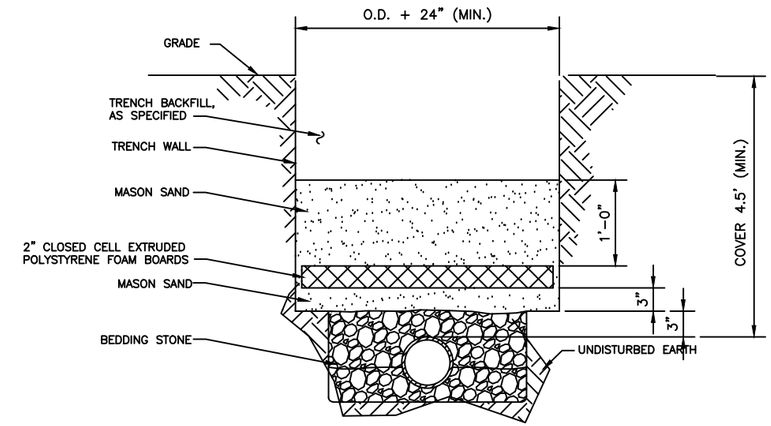

FULL WIDTH INSULATION

NOTES:

1. INSULATION REQUIRED ON ALL PIPES HAVING LESS THAN 6–FT OF COVER, AND NO PIPES SHALL BE INSTALLED WITH LESS THAN 5–FT OF COVER

2. INSULATION REQUIRED ON ALL WATER MAIN PIPES WITHIN 3 FT OF STORM SEWER

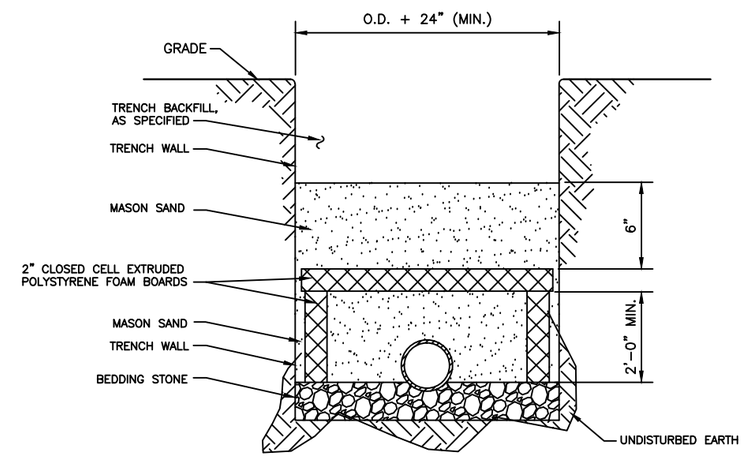

INVERTED U INSULATION

2

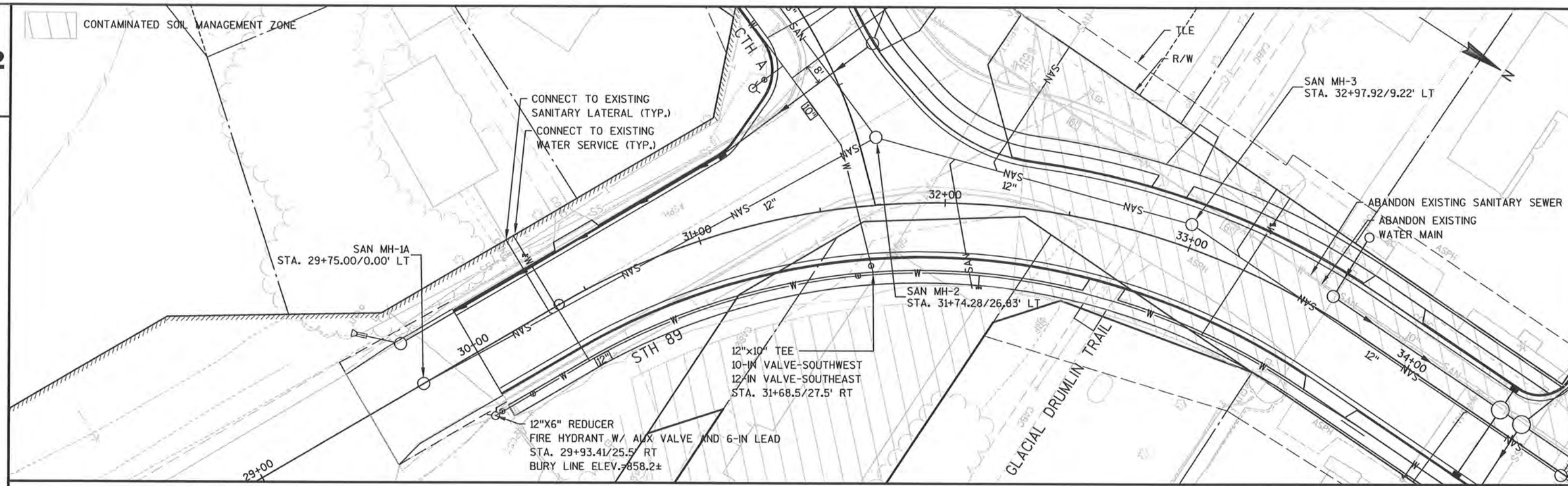

2

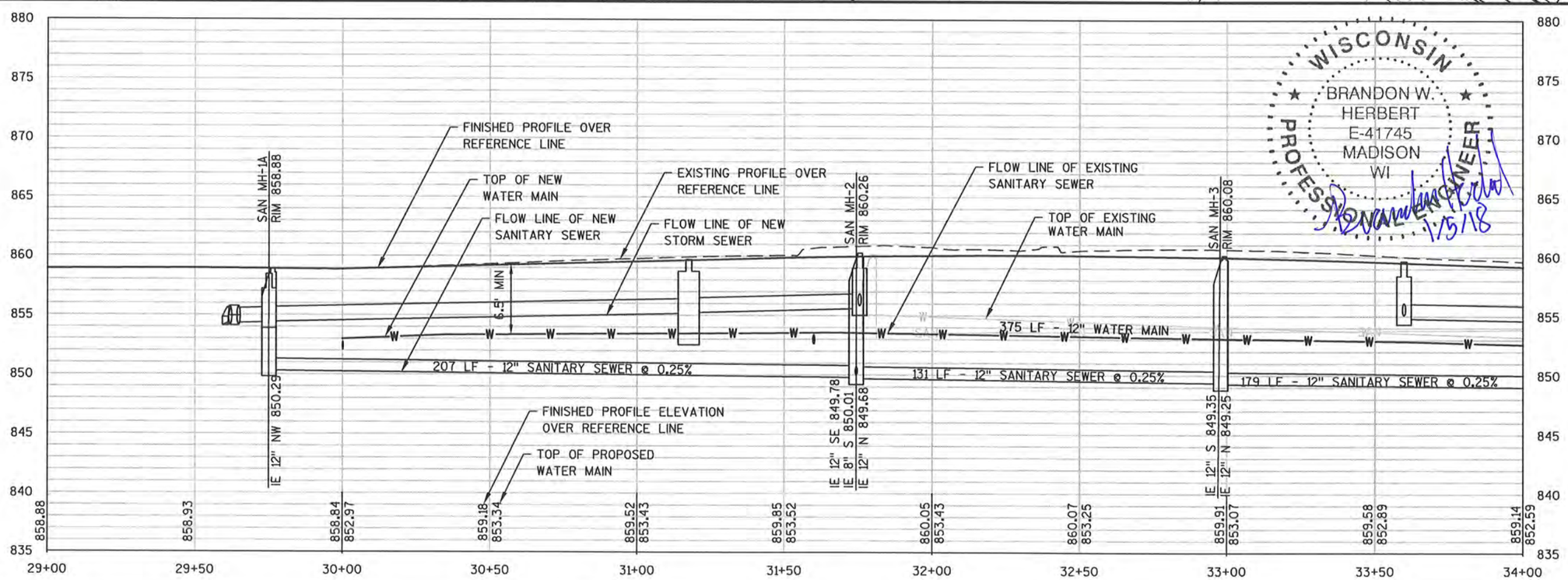

WISCONSIN
BRANDON W. HERBERT
E-41745
MADISON
WI
PROFESSIONAL ENGINEER
1/5/18

PROJECT NO: 3300-01-74	HWY: STH 89	COUNTY: JEFFERSON	WATER AND SANITARY SEWER	SHEET 90	E

FILE NAME : S:\MAD\1000--1099\1060\037\ACAD\CIVIL3D\33000103\SHEETSPLAN\023001-UTILITY PLAN\023001-PP.DWG
LAYOUT NAME - 023001-PP - PP - (1)
PLOT DATE : 1/5/2018 3:13 PM PLOT BY : POLYDORIS, DIANE PLOT NAME : PLOT SCALE : 1:40_XREF

WISDOT/CADDS SHEET 41

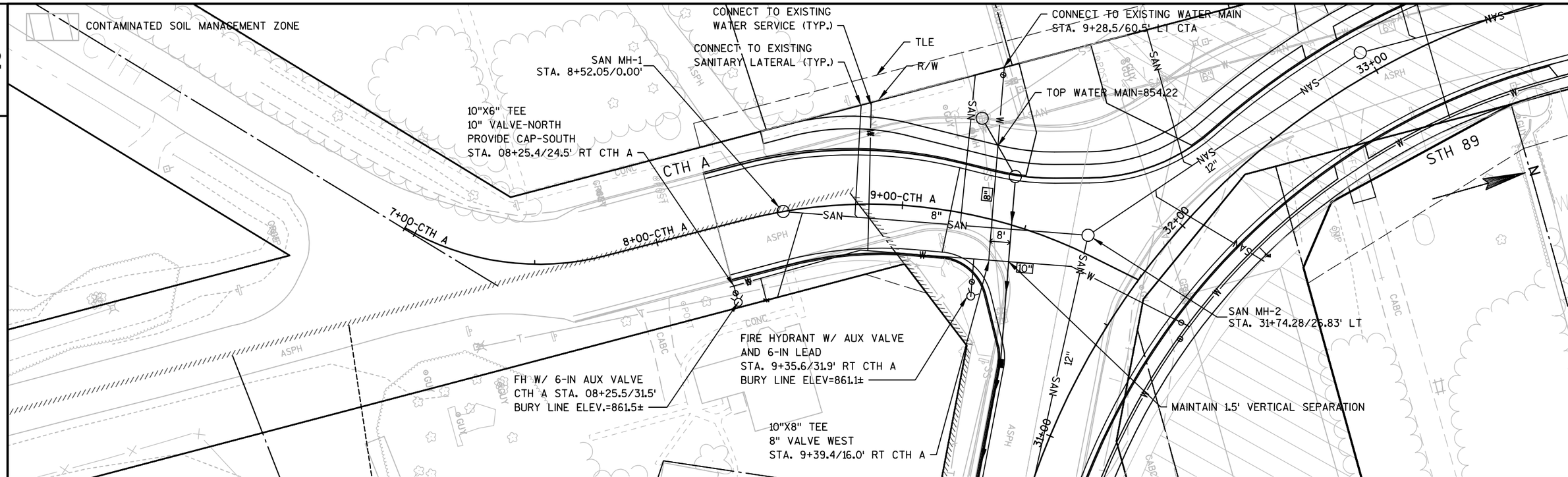

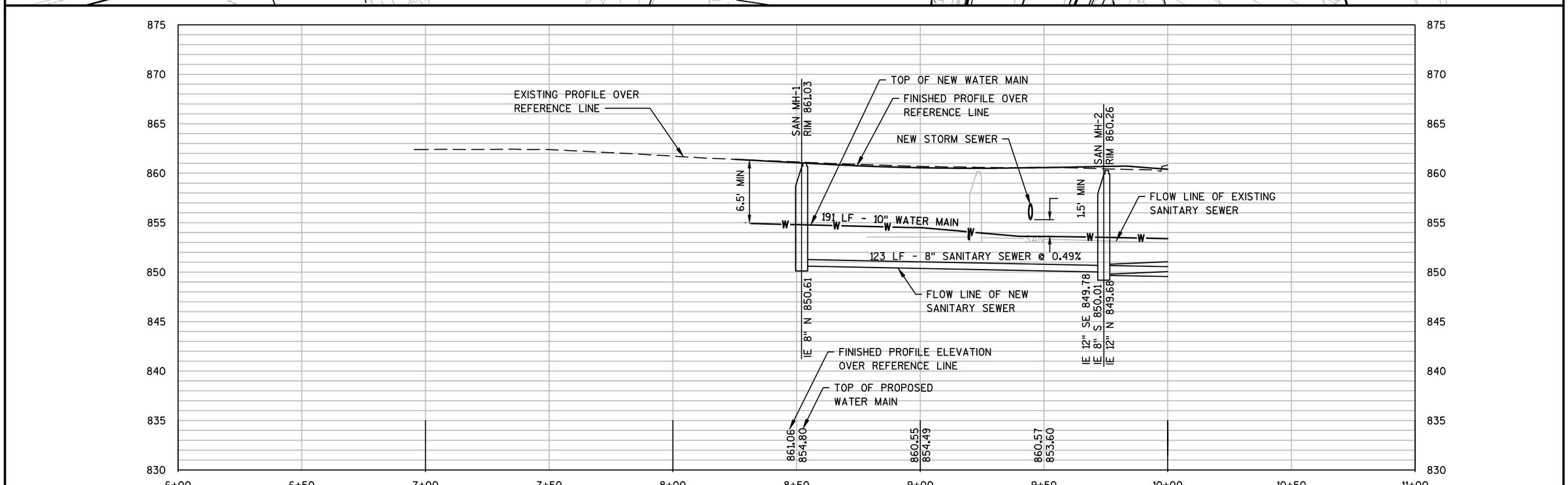

PROJECT NO:3300-01-74	HWY:STH 89	COUNTY:JEFFERSON	WATER AND SANITARY SEWER	SHEET 91	E

FILE NAME : S:\MAD\1000--1099\1060\037\ACAD\CIVIL3D\33000103\SHEETSPLAN\023001-UTILITY PLAN\023001-PP.DWG
LAYOUT NAME - 023001-PP - PP - (2)
PLOT DATE : 1/5/2018 3:13 PM PLOT BY : POLYDORIS, DIANE PLOT NAME : PLOT SCALE : 1 IN:40 FT

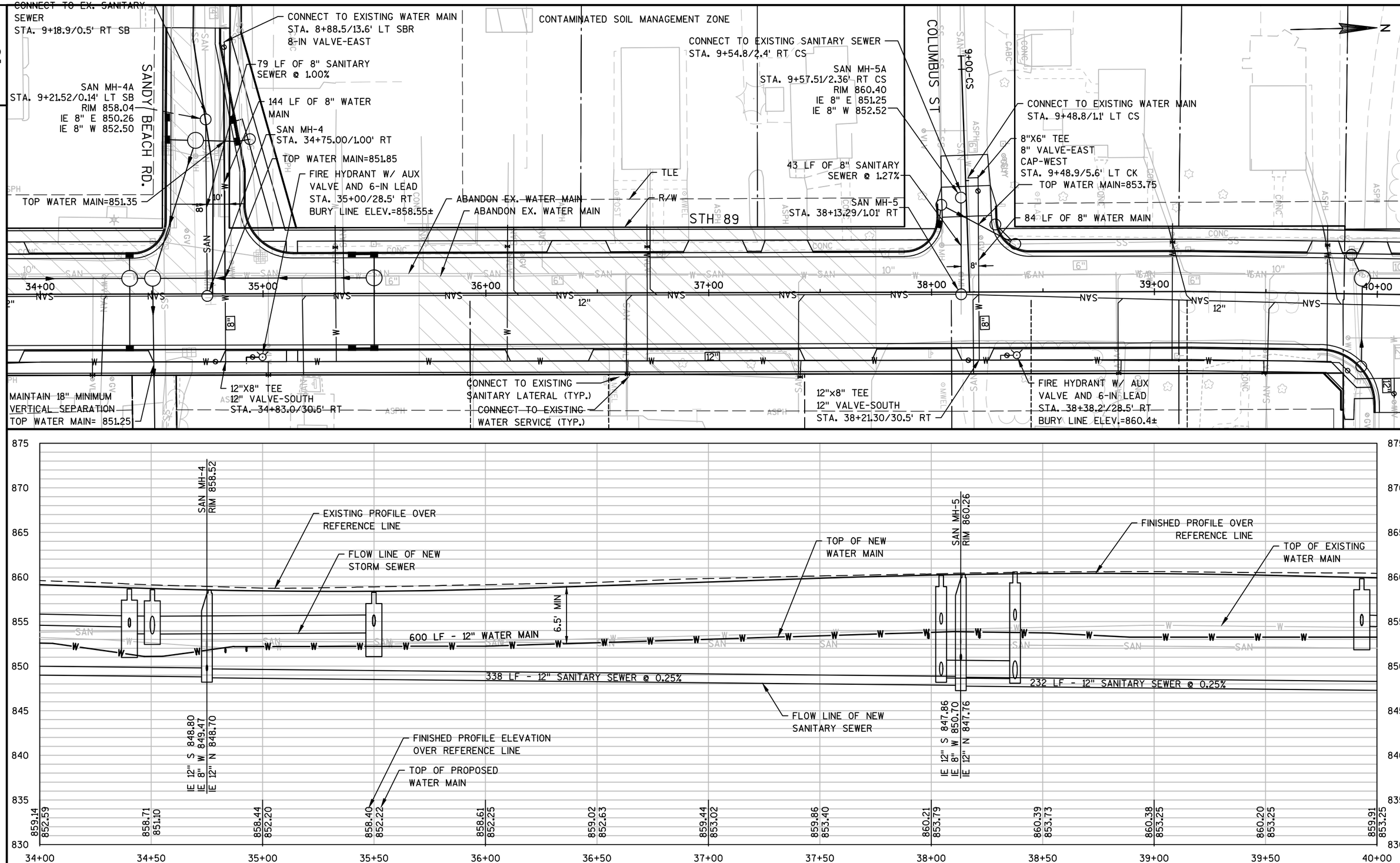

PROJECT NO: 3300-01-74	HWY: STH 89	COUNTY: JEFFERSON	WATER AND SANITARY SEWER	SHEET 92	E

FILE NAME : S:\MAD\1000--1099\1060\037\ACAD\CIVIL3D\33000103\SHEETSPLAN\023001-UTILITY PLAN\023001-PP.DWG
LAYOUT NAME - 023001-PP - PP - (3)
PLOT DATE : 1/5/2018 3:14 PM PLOT BY : POLYDORIS, DIANE PLOT NAME : PLOT SCALE : 1:40_XREF

2

12"X12" TEE
12" VALVE-EAST
12" VALVE-SOUTH
ABANDON EXISTING WATER MAIN-WEST
STA. 40+08.1/31.2' RT

40 LF OF 8" WATER MAIN
TEMPORARY FOR WINTER CARRYOVER
ABANDON AFTER WINTER CARRYOVER

CONNECT TO EXISTING WATER MAIN
FOR WINTER CARRYOVER. ABANDON
WATER MAIN NORTH.

SAN MH-T
STA. 40+43.22/9.07' LT
RIM 859.47
IE 10" E 850.89
IE 10" S 851.89
REMOVE AFTER WINTER CARRYOVER

15 LF OF 10" SANITARY SEWER @ 8.66% FOR
WINTER CARRYOVER

SAN MH-6
STA. 40+45.00/5.98' RT
RIM 859.53
IE 12" N 847.08
IE 12" S 847.18
IE 10" W 849.58

ABANDON EX. SANITARY SEWER
ABANDON EX. WATER MAIN

CONNECT TO EXISTING
SANITARY LATERAL (TYP.)

10"X6" TEE
10" VALVE-EAST
CAP-WEST
STA. 9+36.00/8.40' RT WBR

TOP WATER MAIN=852.20

99 LF OF 10" WATER MAIN

WOODLAND BEACH RD.

CONNECT TO EXISTING WATER MAIN
STA. 9+36.2/8.9' LT WBR

SAN MH-7A
STA. 9+45.99/0.36' LT
RIM 859.09
IE 8" E 849.25
IE 8" W 851.25
CONNECT TO EXSITING SANITARY SEWER

60 LF OF 8" SANITARY
SEWER @ 0.45%

MAINTAIN MINIMUM 1.5' VERTICAL SEPARATION
TOP OF WATER MAIN=851.5'

SAN MH-7
STA. 44+37.00/6.00' RT

N

40+00 41+00 42+00 43+00 44+00 45+00 46+00

8.5'
8"

STH 89

TLE
R/W

ABANDON EX. WATER MAIN

FIRE HYDRANT W/ AUX
VALVE AND 6-IN LEAD
STA. 40+69.8/27.0' RT
BURY LINE ELEV.=859.3±

12"X8" TEE
STA. 40+29.5/31.0' RT
12" VALVE-NORTH
TEMP. 12" CAP SOUTH OF VALVE DURING WINTER CARRYOVER
8" CAP-WEST AFTER WINTER CARRYOVER

9 LF OF 12"
WATER MAIN

CONNECT TO EXISTING WATER MAIN
STA. 10+46.4/10.4' RT PD

PINNACLE DR.

12"X10" TEE
12" VALVE-NORTH
STA. 44+28.6/30.5' RT

CONNECT TO EXISTING
WATER SERVICE (TYP.)

FIRE HYDRANT W/ AUX
VALVE AND 6-IN LEAD
STA. 44+59.5/28.5' RT
BURY LINE ELEV.=859.0±

40 LF OF 8" SANITARY
SEWER @ 0.40%

CONNECT TO EXISTING SANITARY SEWER

2

875 870 865 860 855 850 845 840 835 830

SAN MH-6
RIM 859.53

SAN MH-7
RIM 858.68

EXISTING PROFILE OVER
REFERENCE LINE

FINISHED PROFILE OVER
REFERENCE LINE

TOP OF NEW WATER MAIN

FLOW LINE OF NEW
SANITARY SEWER

TOP OF EXISTING WATER MAIN

FLOW LINE OF EXISTING
SANITARY SEWER

FLOW LINE OF NEW
STORM SEWER

6.5' MIN

600 LF - 12" WATER MAIN

392 LF - 12" SANITARY SEWER @ 0.25%

313 LF - 12" SANITARY SEWER @ 0.25%

IE 12" S 847.18
IE 10" W 849.58
IE 12" N 847.08

IE 12" S 846.10
IE 8" W 848.98 (DROP)
IE 8" E 851.48 (DROP)
IE 12" N 846.00

FINISHED PROFILE ELEVATION
OVER REFERENCE LINE

TOP OF PROPOSED
WATER MAIN

859.91 853.25 | 859.62 851.96 | 859.33 851.93 | 859.04 851.89 | 858.75 851.86 | 858.47 851.82 | 858.33 851.79 | 858.38 851.74 | 858.59 851.68 | 858.87 851.08 | 859.15 852.30 | 859.42 852.69 | 859.70 853.07

40+00 40+50 41+00 41+50 42+00 42+50 43+00 43+50 44+00 44+50 45+00 45+50 46+00

PROJECT NO: 3300-01-74	HWY: STH 89	COUNTY: JEFFERSON	WATER AND SANITARY SEWER	SHEET 93	E

FILE NAME : S:\MAD\1000--1099\1060\037\ACAD\CIVIL3D\33000103\SHEETSPLAN\023001-UTILITY PLAN\023001-PP.DWG
LAYOUT NAME - 023001-PP - PP - (4)
PLOT DATE : 1/5/2018 3:14 PM PLOT BY : POLYDORIS, DIANE PLOT NAME : PLOT SCALE : 1:40_XREF

WISDOT/CADDS SHEET 41

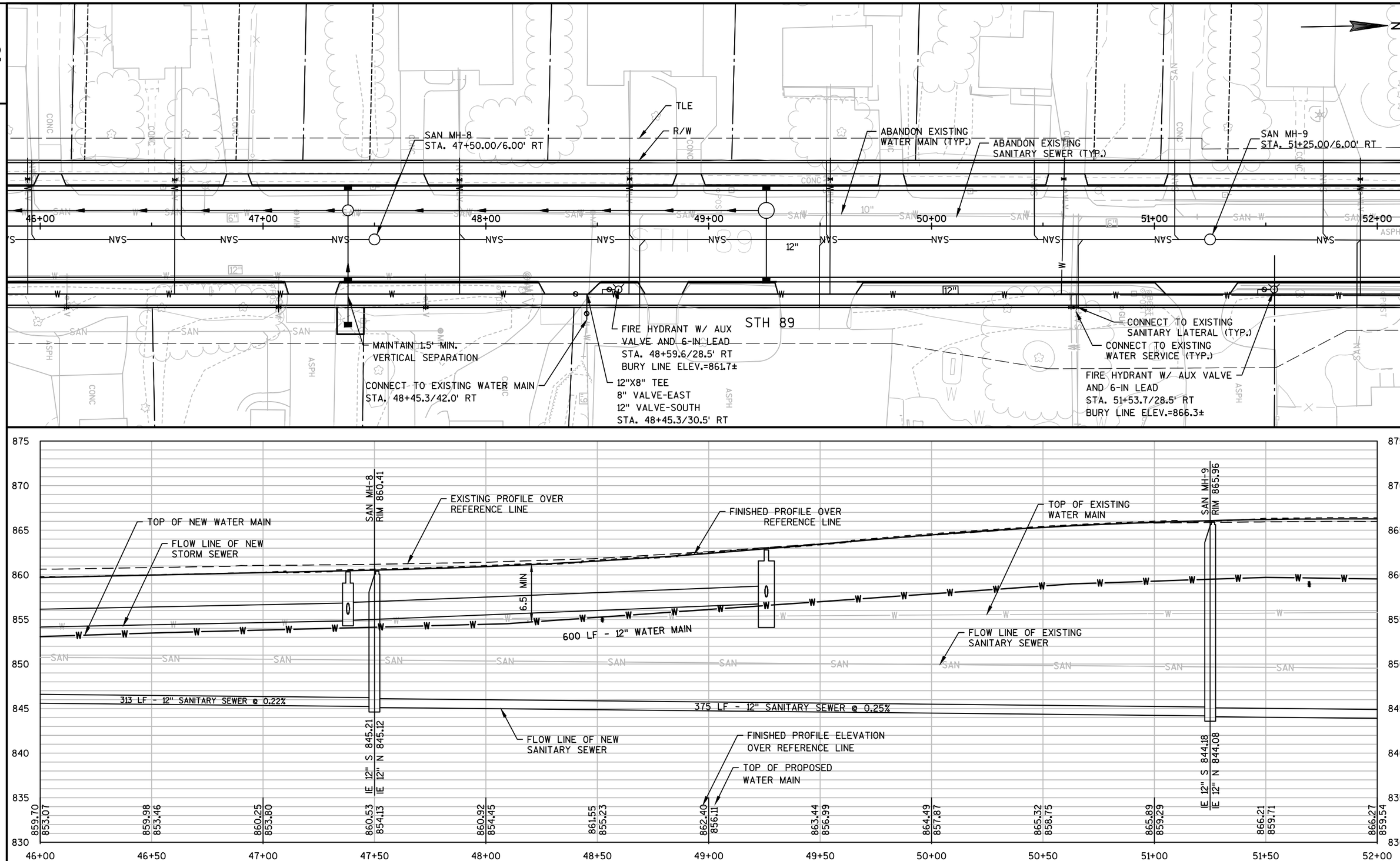

PROJECT NO: 3300-01-74	HWY: STH 89	COUNTY: JEFFERSON	WATER AND SANITARY SEWER	SHEET 94	E

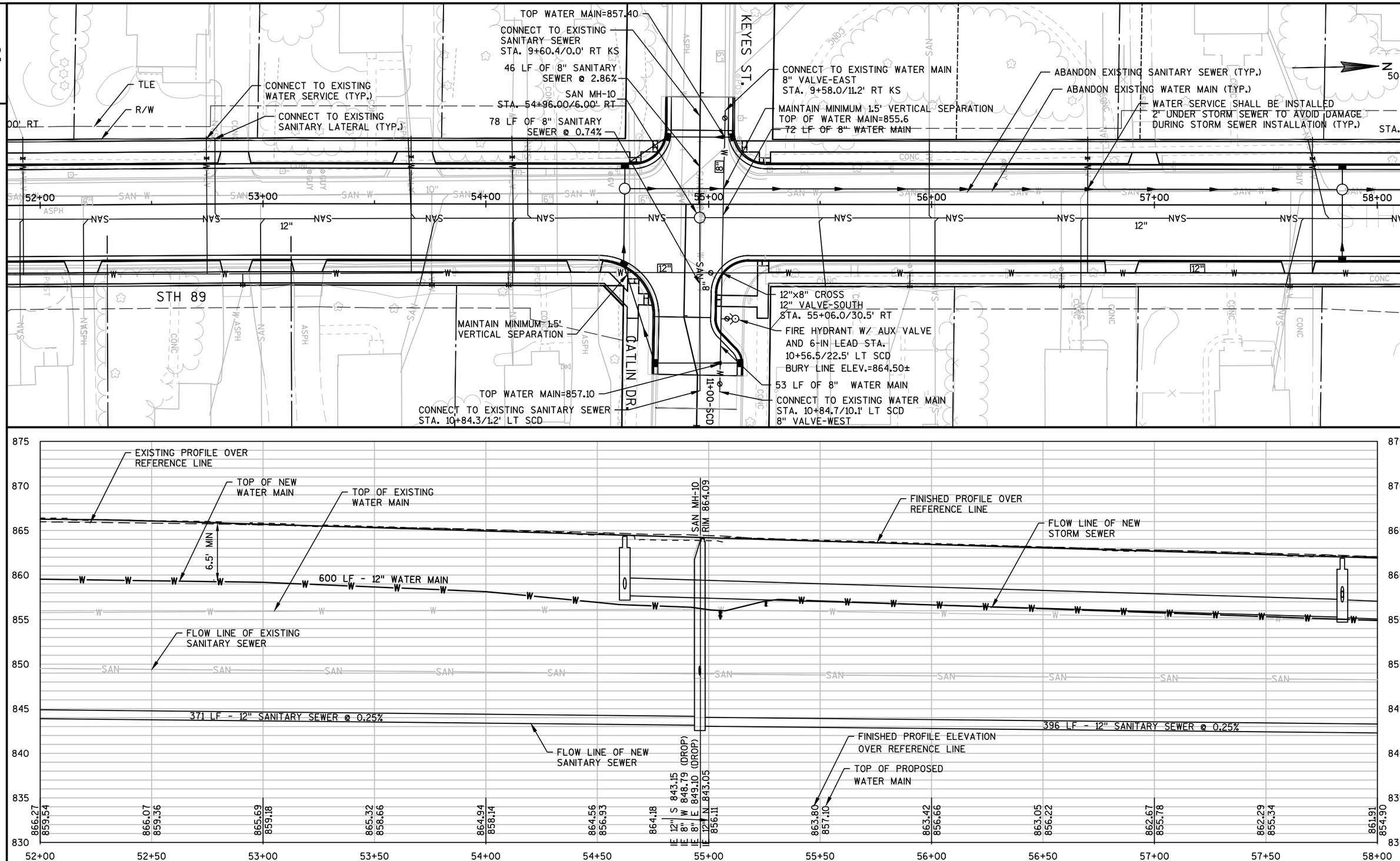

PROJECT NO: 3300-01-74	HWY: STH 89	COUNTY: JEFFERSON	WATER AND SANITARY SEWER	SHEET 95	E

FILE NAME : S:\MAD\1000--1099\1060\037\ACAD\CIVIL3D\33000103\SHEETSPLAN\023001-UTILITY PLAN\023001-PP.DWG
LAYOUT NAME - 023001-PP - PP - (6)
PLOT DATE : 1/5/2018 3:15 PM PLOT BY : POLYDORIS, DIANE PLOT NAME : PLOT SCALE : 1:40_XREF

WISDOT/CADDS SHEET 41

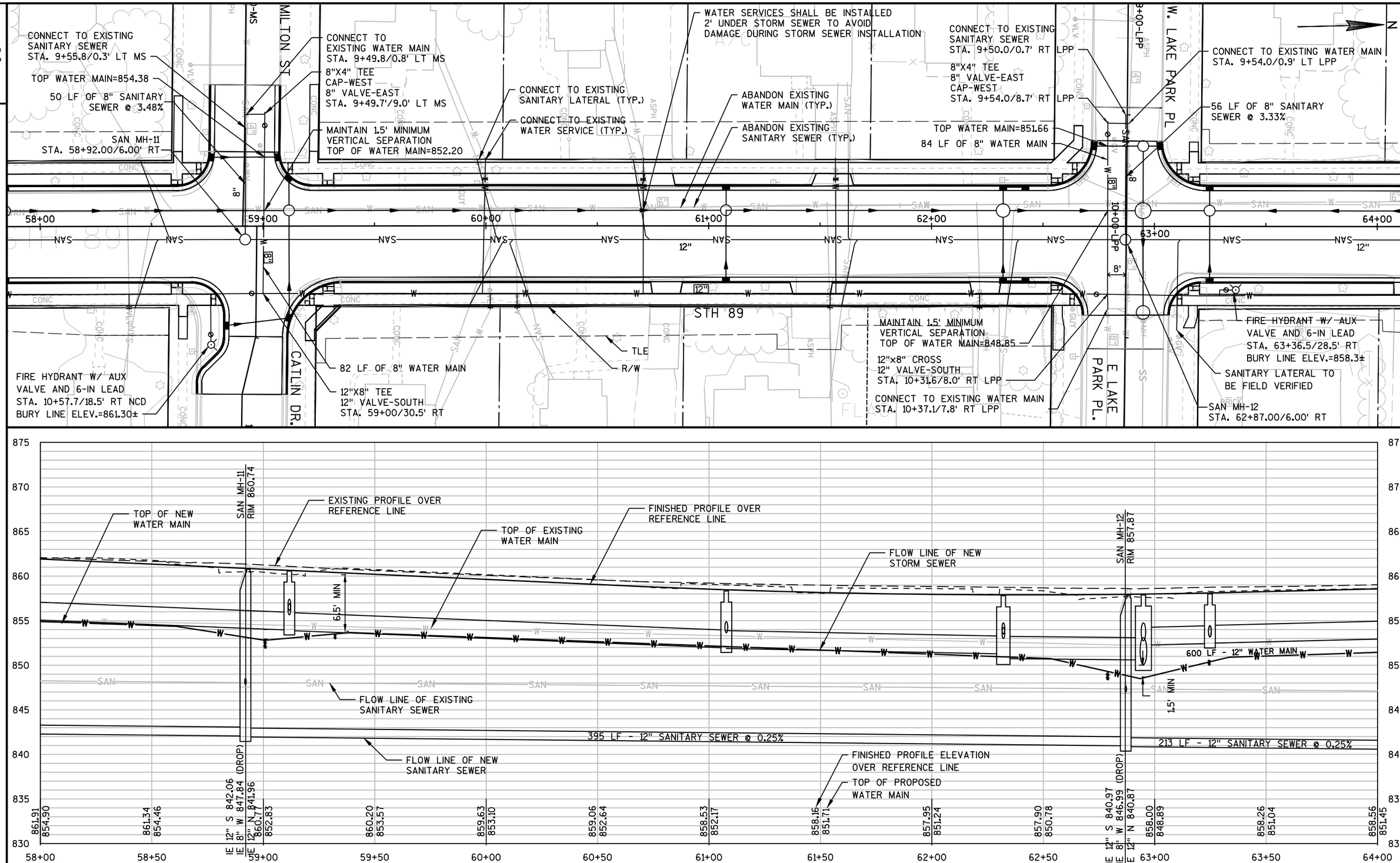

PROJECT NO: 3300-01-74	HWY: STH 89	COUNTY: JEFFERSON	WATER AND SANITARY SEWER	SHEET 96	E

FILE NAME : S:\MAD\1000--1099\1060\037\ACAD\CIVIL3D\33000103\SHEETSPLAN\023001-UTILITY PLAN\023001-PP.DWG
LAYOUT NAME - 023001-PP - PP - (7)
PLOT DATE : 1/5/2018 3:15 PM PLOT BY : POLYDORIS, DIANE PLOT NAME : PLOT SCALE : 1:40_XREF

WISDOT/CADDS SHEET 41

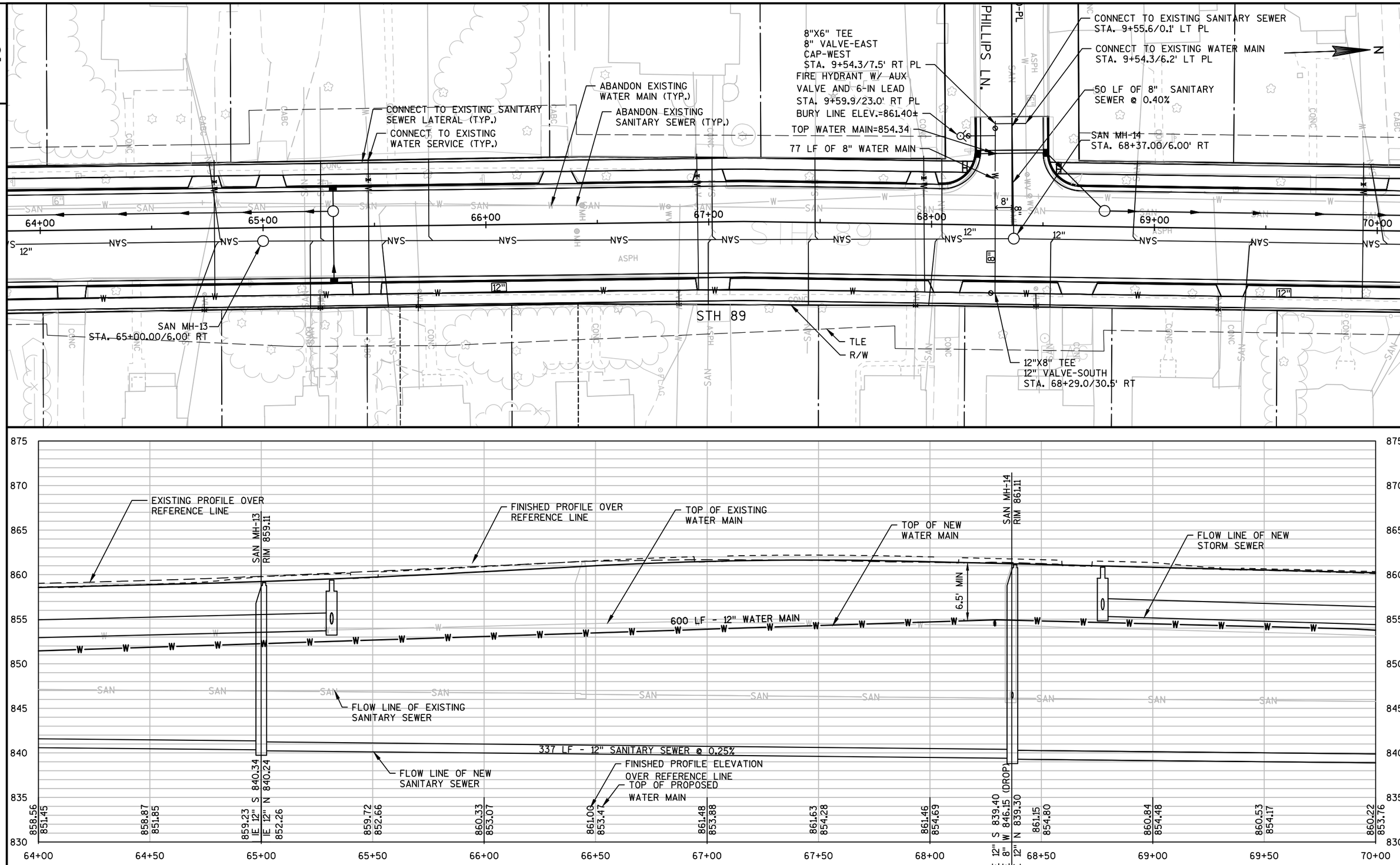

PROJECT NO: 3300-01-74	HWY: STH 89	COUNTY: JEFFERSON	WATER AND SANITARY SEWER	SHEET 97	E

FILE NAME : S:\MAD\1000--1099\1060\037\ACAD\CIVIL3D\33000103\SHEETSPLAN\023001-UTILITY PLAN\023001-PP.DWG
LAYOUT NAME - 023001-PP - PP - (8)
PLOT DATE : 1/5/2018 3:16 PM PLOT BY : POLYDORIS, DIANE PLOT NAME : PLOT SCALE : 1:40_XREF

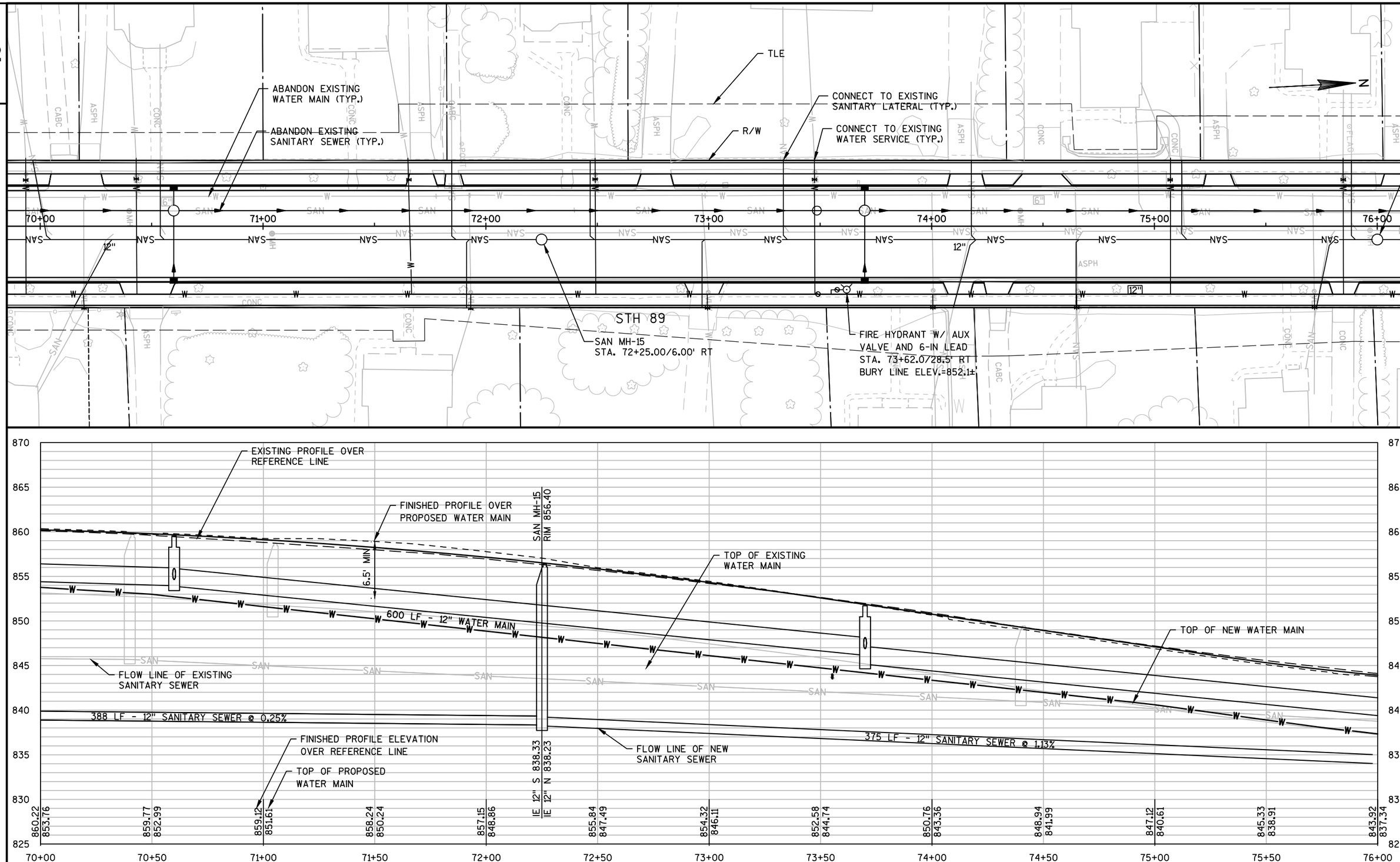

PROJECT NO: 3300-01-74	HWY:	COUNTY:	WATER AND SANITARY SEWER	SHEET 98	E

FILE NAME : S:\MAD\1000--1099\1060\037\ACAD\CIVIL3D\33000103\SHEETSPLAN\023001-UTILITY PLAN\023001-PP.DWG
LAYOUT NAME - 023001-PP - PP - (9)
PLOT DATE : 1/5/2018 3:16 PM PLOT BY : POLYDORIS, DIANE PLOT NAME :

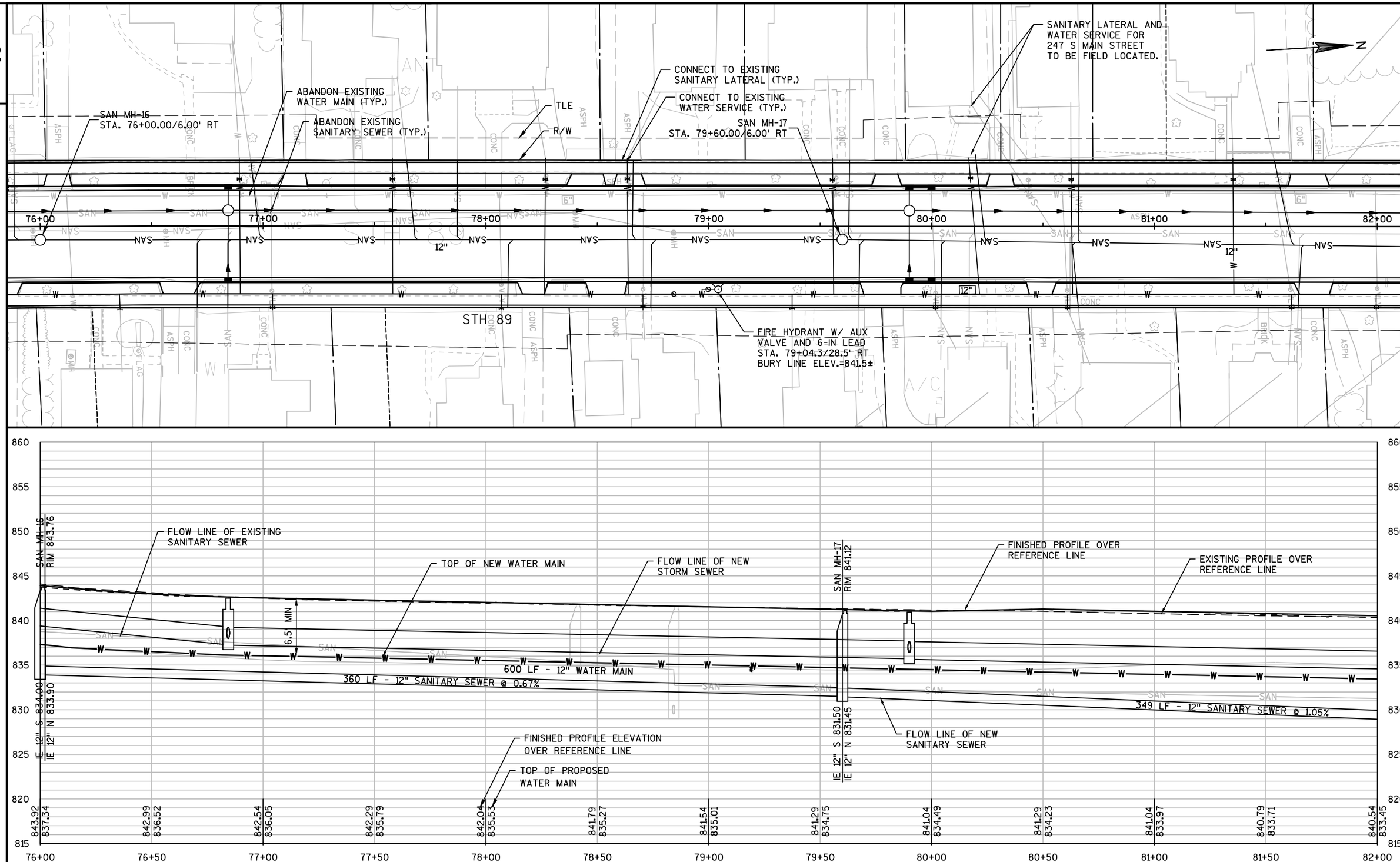

PROJECT NO: 3300-01-74	HWY: STH 89	COUNTY: JEFFERSON	WATER AND SANITARY SEWER	SHEET 99	E

FILE NAME : S:\MAD\1000--1099\1060\037\ACAD\CIVIL3D\33000103\SHEETSPLAN\023001-UTILITY PLAN\023001-PP.DWG
LAYOUT NAME - 023001-PP - PP - (10)
PLOT DATE : 1/5/2018 3:16 PM PLOT BY : POLYDORIS, DIANE PLOT NAME : PLOT SCALE : 1:40_XREF

2

CONTAMINATED SOIL MANAGEMENT ZONE

CONTAMINATED GROUNDWATER MANAGEMENT ZONE

CONNECT TO EXISTING SANITARY LATERAL (TYP.)

CONNECT TO EXISTING WATER SERVICE (TYP.)

SAN MH-18
STA. 83+10.00/6.00' RT

CONNECT TO EXISTING WATER MAIN
9+36.5/6.0' RT VL

8"X6" TEE
8" VALVE-EAST
CAP-WEST
STA. 9+36.4/13.7' RT VL
TOP WATER MAIN=828.11

CONNECT TO EXISTING SANITARY SEWER

FIRE HYDRANT W/ AUX VALVE
AND 6-IN LEAD
STA. 9+60.0/25.0' LT VL
BURY LINE ELEV.=832.5±

EXISTING 24" PVC

ABANDON EXISTING SANITARY SEWER (TYP.)

ABANDON EXISTING WATER MAIN (TYP.)

SAN MH-21
STA. 86+77.83/4.64' LT

FIRE HYDRANT W/ AUX
VALVE AND 6-IN LEAD
STA. 87+00/36.0' RT
BURY LINE ELEV.=829.0±

VETERANS LN.

STH 89

82+00 83+00 84+00 85+00 86+00 87+00 88+00

MAINTAIN 1.5'
MINIMUM SEPARATION
TOP OF WATER MAIN=827.67

MAINTAIN 1.5'
MINIMUM SEPARATION
TOP OF WATER MAIN=824.80

86 LF OF 8" WATER MAIN

12"X8" TEE
12" VALVE-SOUTH
STA. 84+77.0/25.0' RT

60 LF OF 8" SANITARY
SEWER @ 0.26%

TLE

R/W

MAINTAIN 1.5' MINIMUM
VERTICAL SEPARATION

12"X8" TEE
12" VALVE-SOUTH
STA. 86+48.3/21.3' RT

SAN MH-19
STA. 84+91.98/0.18' RT

WATER ST.

CONNECT TO EXISTING
SANITARY MANHOLE
I.E. 819.64

SAN MH-20
STA. 86+33.42/0.00' RT

MAINTAIN 1.5'
VERTICAL SEPARATION
TOP WATER MAIN=821.49

108 LF OF 15" SANITARY
SEWER @ 1.76%

84 LF OF 8" WATER MAIN

CONNECT TO EXISTING WATER MAIN
STA. 11+08.3/8.6' LT WS
TOP OF MAIN=820.9±

N

2

850 845 840 835 830 825 820 815 810 805

TOP OF NEW WATER MAIN

FLOW LINE OF EXISTING
SANITARY SEWER

FLOW LINE OF NEW
SANITARY SEWER

FINISHED PROFILE OVER
REFERENCE LINE

SAN MH-18
RIM 838.99

SAN MH-19
RIM 833.72

SAN MH-20
RIM 830.28

SAN MH-21
RIM 829.93

TOP OF EXISTING
WATER MAIN

EXISTING PROFILE OVER
REFERENCE LINE

FLOW LINE OF NEW
STORM SEWER

6.5' MIN

593 LF - 12" WATER MAIN

181 LF - 12" SANITARY SEWER @ 0.92%

141 LF - 12" SANITARY SEWER @ 2.97%

EXISTING 24" PVC

1.5' MIN

IE 12" S 827.77
IE 12" N 827.72

IE 12" S 826.05
IE 8" W 826.40
IE 12" N 826.00

IE 12" S 821.80
IE 15" E 821.55

IE 8" N 821.70

FINISHED PROFILE ELEVATION
OVER REFERENCE LINE

TOP OF PROPOSED
WATER MAIN

840.54 833.45 | 840.12 833.19 | 839.36 832.84 | 838.28 831.83 | 836.86 830.42 | 835.16 828.75 | 833.45 825.87 | 831.83 824.75 | 830.72 823.13 | 830.15 823.15 | 829.75 823.10 | 829.56 822.98 | 829.79 823.37

82+00 82+50 83+00 83+50 84+00 84+50 85+00 85+50 86+00 86+50 87+00 87+50 88+00

PROJECT NO:3300-01-73	HWY:STH 89	COUNTY:JEFFERSON	WATER AND SANITARY SEWER	SHEET 100	E

FILE NAME : S:\MAD\1000--1099\1060\037\ACAD\CIVIL3D\33000103\SHEETSPLAN\023001-UTILITY PLAN\023001-PP.DWG
LAYOUT NAME - 023001-PP - PP - (11)
PLOT DATE : 1/5/2018 3:17 PM PLOT BY : POLYDORIS, DIANE PLOT NAME : PLOT SCALE : 1:40_XREF

2

CONTAMINATED SOIL MANAGEMENT ZONE

CONTAMINATED GROUNDWATER MANAGEMENT ZONE

10"X10" TEE
10"X6" REDUCER WEST

10"X10" TEE
10" VALVE-EAST
CAP-WEST
STA. 9+42.4/10.6' RT WLS

CONNECT TO EXISTING SANITARY LATERAL (TYP.)

ABANDON EXISTING SANITARY SEWER

CONNECT TO EXISTING SANITARY SEWER
ADJUST EXISTING MANHOLE CASTING

W. LAKE ST.

CONNECT TO EXISTING WATER MAIN
STA. 9+36.5/12.0' LT WLS

CONNECT TO EXISTING WATER MAIN
STA. 9+36.5/18.0' LT WLS

CUT AND PLUG EXISTING WATER MAIN ABANDON-EAST

ABANDON EXISTING FIRE HYDRANT

6" SANITARY LATERAL CONNECT AT 22.5 DEGREE BEND

REMOVE EXISTING WATER MAIN

CONNECT TO EXISTING WATER SERVICE (TYP.)

6" SANITARY LATERAL CONNECT AT 22.5 DEGREE BEND

PROVIDE 6-IN VALVE

SANITARY LATERAL CONNECT AT 22.5 DEGREE BEND

REMOVE EXISTING WATER MAIN (TYP.)

6" SANITARY LATERAL CONNECT AT 22.5 DEGREE BEND

TLE

R/W

4" SANITARY LATERAL CONNECT AT 22.5 DEGREE BEND

6" SANITARY LATERAL CONNECT AT 22.5 DEGREE BEND

PROVIDE 6-IN VALVE

ADJUST EXISTING MANHOLE CASTING

4" SANITARY LATERAL CONNECT AT 22.5 DEGREE BEND

STH 89

88+00 89+00 90+00 91+00 92+00 93+00 94+

FIRE HYDRANT W/ AUX VALVE AND 6-IN LEAD
STA. 89+15.0/24.5' RT
BURY LINE ELEV.=830.75±

12"X10" TEE
STA. 89+61.0/15.6' RT

CONNECT TO EXISTING 10" WATER MAIN W/ 10"X12" TEE
12" VALVE-SOUTH
CAP-WEST
ABANDON-WEST
STA. 89+84.8/14.0' RT

ABANDON EXISTING FIRE HYDRANT

ADJUST EXISTING WATER VALVES (TYP.)

E. LAKE ST.

6" SANITARY LATERAL CONNECT AT 22.5 DEGREE BEND

ADJUST EXISTING MANHOLE CASTING PLUG OPENING SOUTH

PROVIDE WATER MAIN OFFSET TO PROVIDE 1.5' MINIMUM SEPARATION UNDER STORM SEWER
TOP WATER MAIN=824.58

PROVIDE CUT-IN 10"X6" TEE

SANITARY LATERAL CONNECT AT 22.5 DEGREE BEND

4" SANITARY LATERAL CONNECT AT 45 DEGREE BEND

4" SANITARY LATERAL CONNECT AT 22.5 DEGREE BEND

SANITARY LATERAL CONNECT AT 22.5 DEGREE BEND

6" SANITARY LATERAL CONNECT AT 22.5 DEGREE BEND

4" SANITARY LATERAL CONNECT AT 22.5 DEGREE BEND

PROVIDE CUT-IN 10"X6" TEE

4" SANITARY LATERAL CONNECT AT 22.5 DEGREE BEND

2

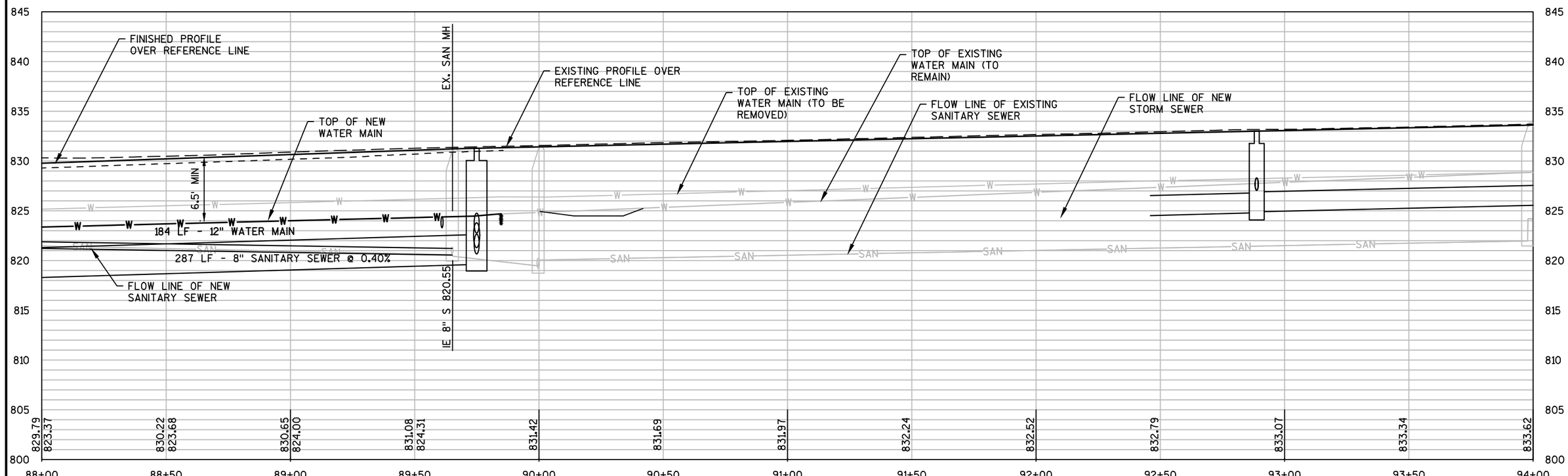

PROJECT NO: 3300-01-74	HWY: STH 89	COUNTY: JEFFERSON	WATER AND SANITARY SEWER	SHEET 101	E

2

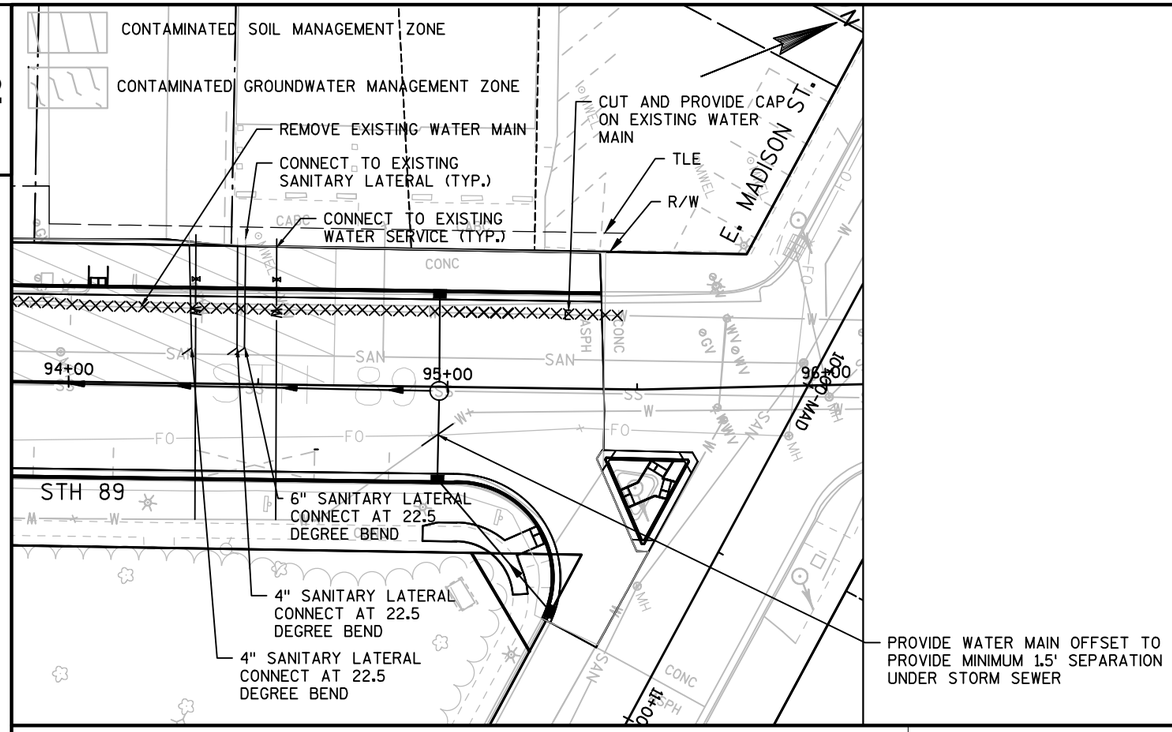

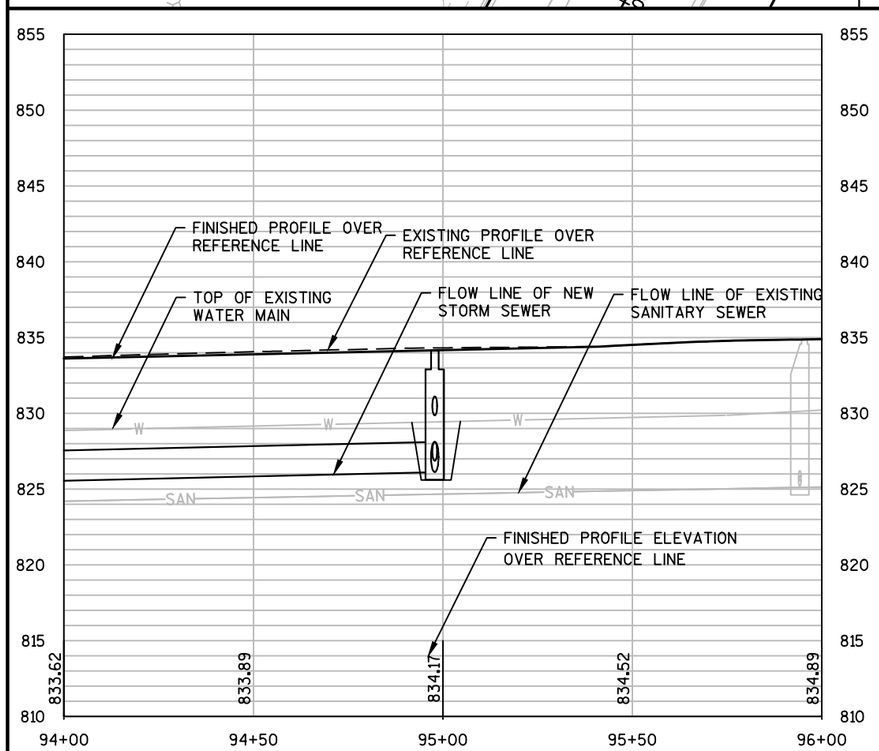

2

PROJECT NO: 3300-01-74	HWY: STH 89	COUNTY: JEFFERSON	WATER AND SANITARY SEWER	SHEET 102	E

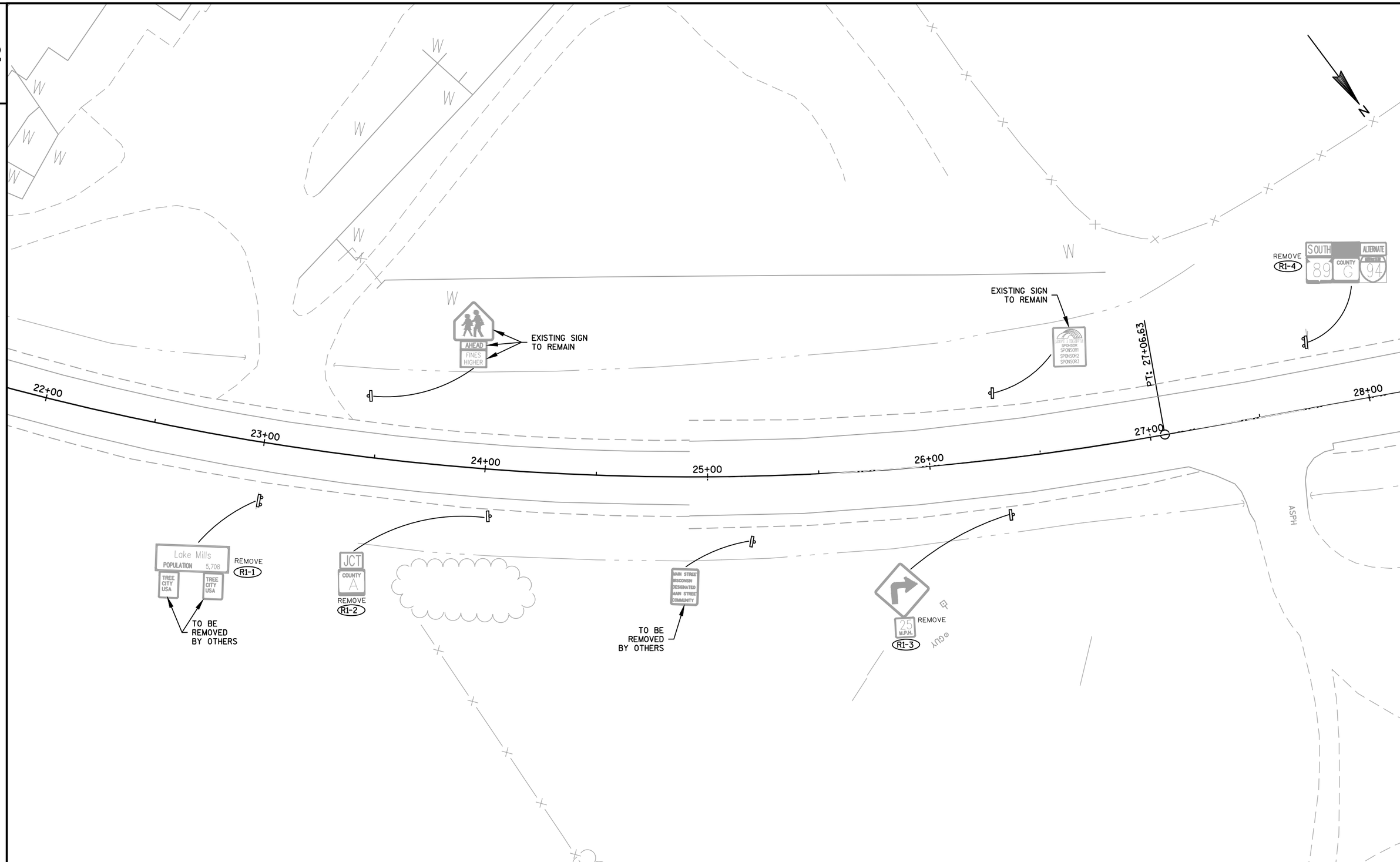

PROJECT NO:3300-01-73	HWY:STH 89	COUNTY:JEFFERSON	EXISTING SIGNING - REMOVALS	SHEET 103	E

FILE NAME : N:\PDS\C3D\33000103\SHEETSPLAN\023202-EXISTING SIGNING\023202-ES.DWG
LAYOUT NAME - ES- (1)
PLOT DATE : 10/26/2017 9:15 AM PLOT BY : WHITE, JEREMY J PLOT NAME : PLOT SCALE : 1 IN:40 FT

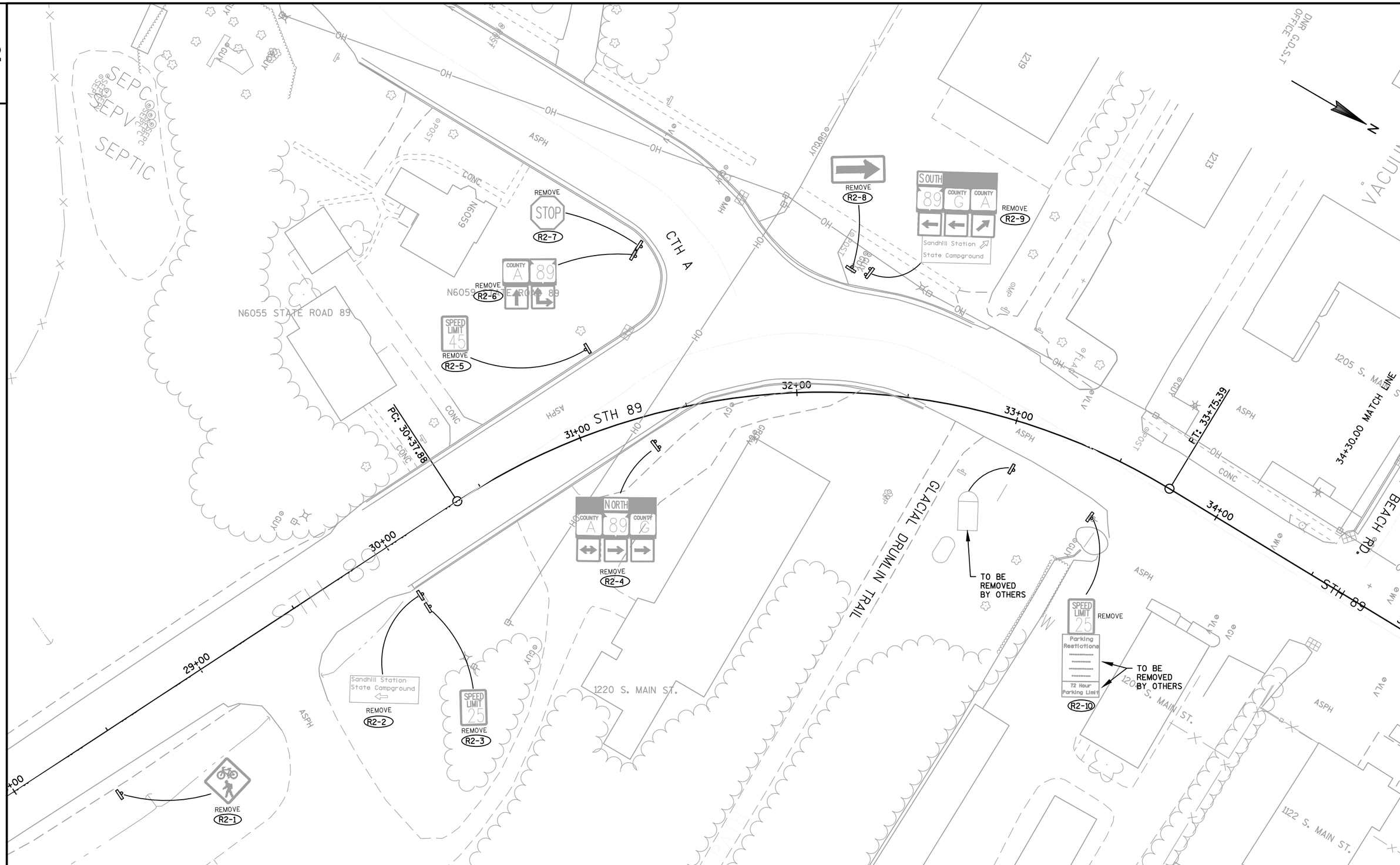

PROJECT NO:3300-01-73	HWY:STH 89	COUNTY:JEFFERSON	EXISTING SIGNING - REMOVALS	SHEET 104	E

FILE NAME : N:\PDS\C3D\33000103\SHEETSPLAN\023202-EXISTING SIGNING\023202-ES.DWG
LAYOUT NAME - ES-(2)
PLOT DATE : 10/26/2017 9:15 AM PLOT BY : WHITE, JEREMY J PLOT NAME : PLOT SCALE : 1 IN:40 FT

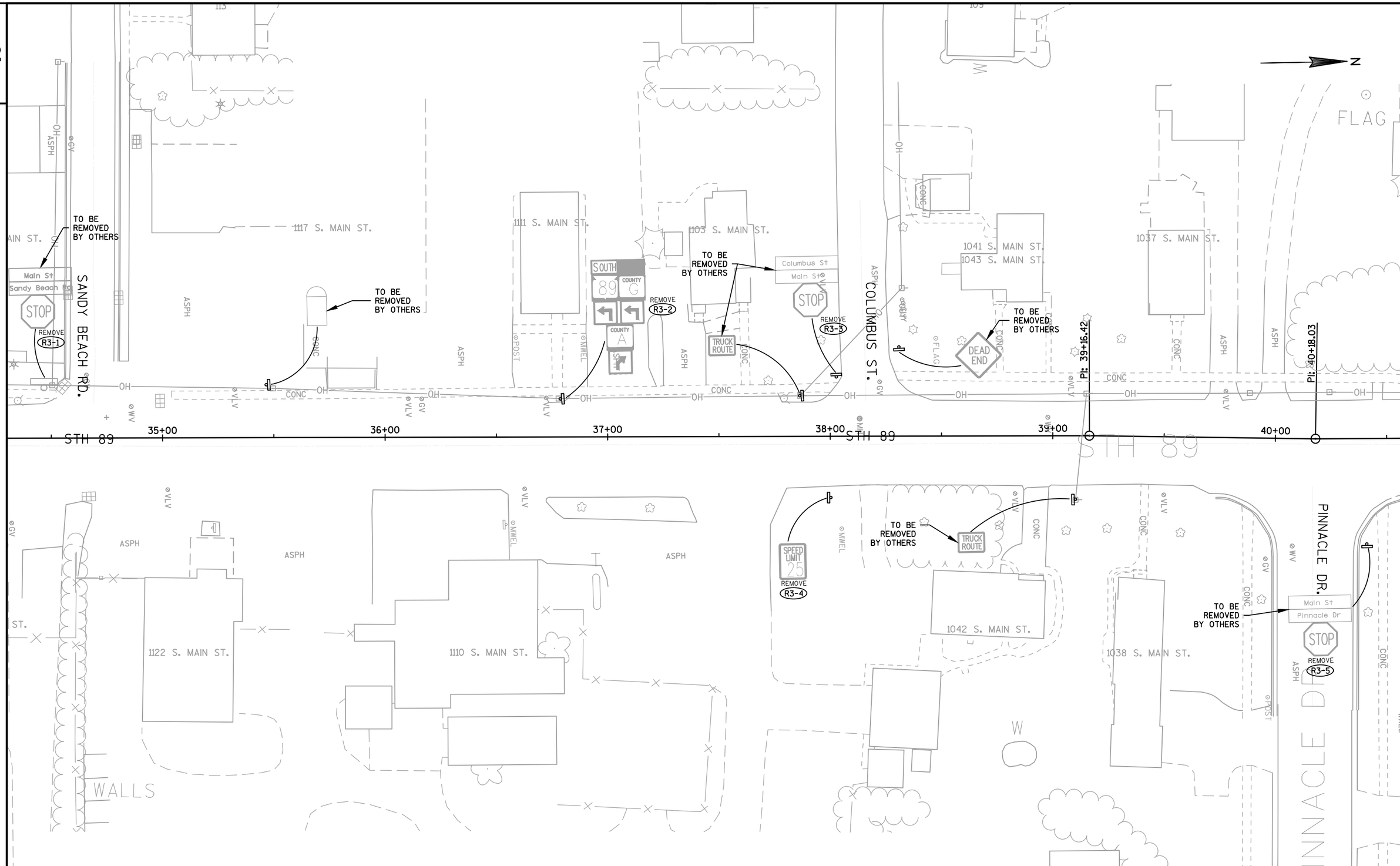

PROJECT NO:3300-01-73	HWY:STH 89	COUNTY:JEFFERSON	EXISTING SIGNING - REMOVALS	SHEET 105	E

FILE NAME : N:\PDS\C3D\33000103\SHEETSPLAN\023202-EXISTING SIGNING\023202-ES.DWG
LAYOUT NAME - ES-(3)
PLOT DATE : 10/26/2017 9:16 AM PLOT BY : WHITE, JEREMY J PLOT NAME : PLOT SCALE : 1 IN:40 FT

WISDOT/CADDS SHEET 42

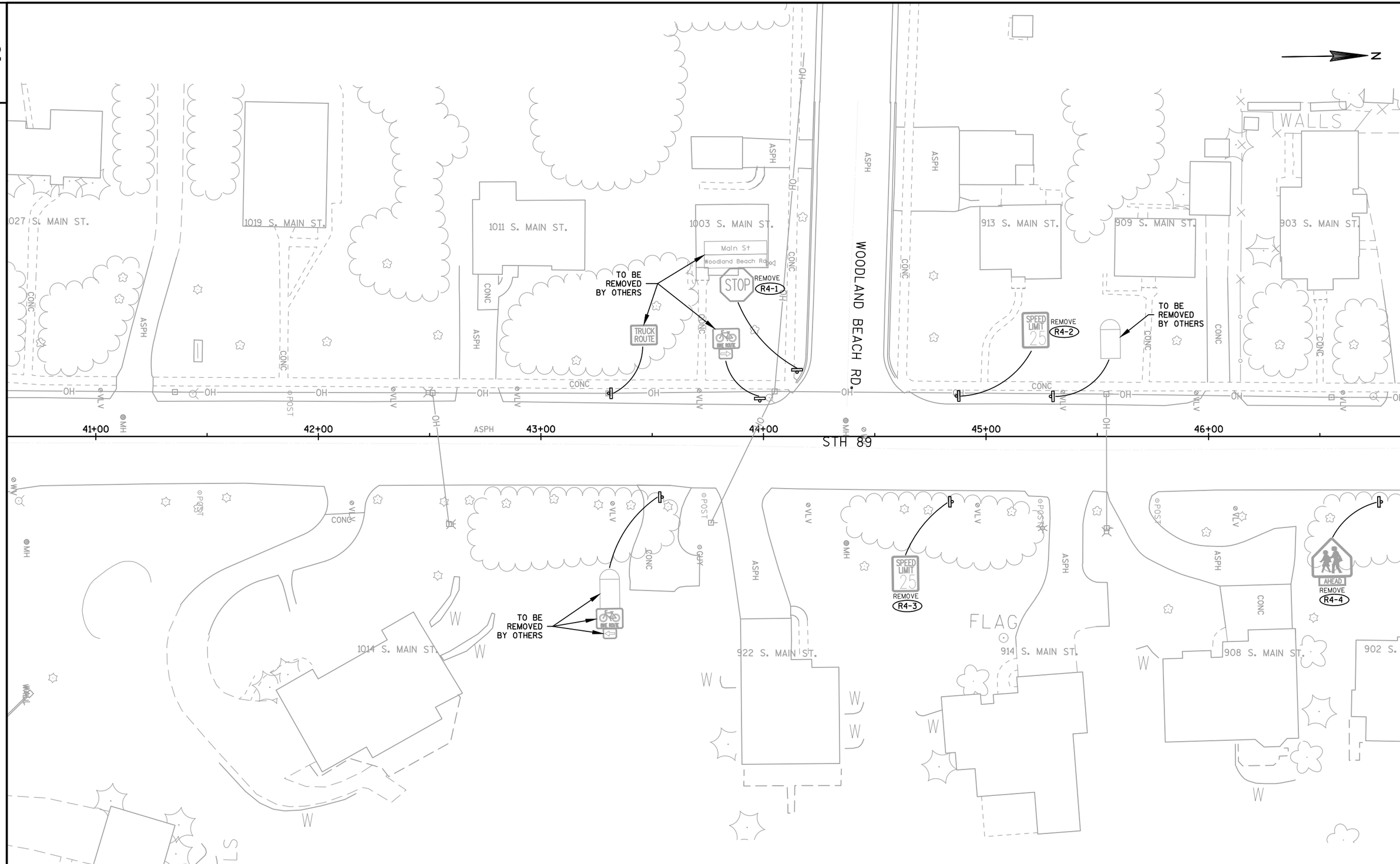

PROJECT NO:3300-01-73	HWY:STH 89	COUNTY:JEFFERSON	EXISTING SIGNING - REMOVALS	SHEET 106	E

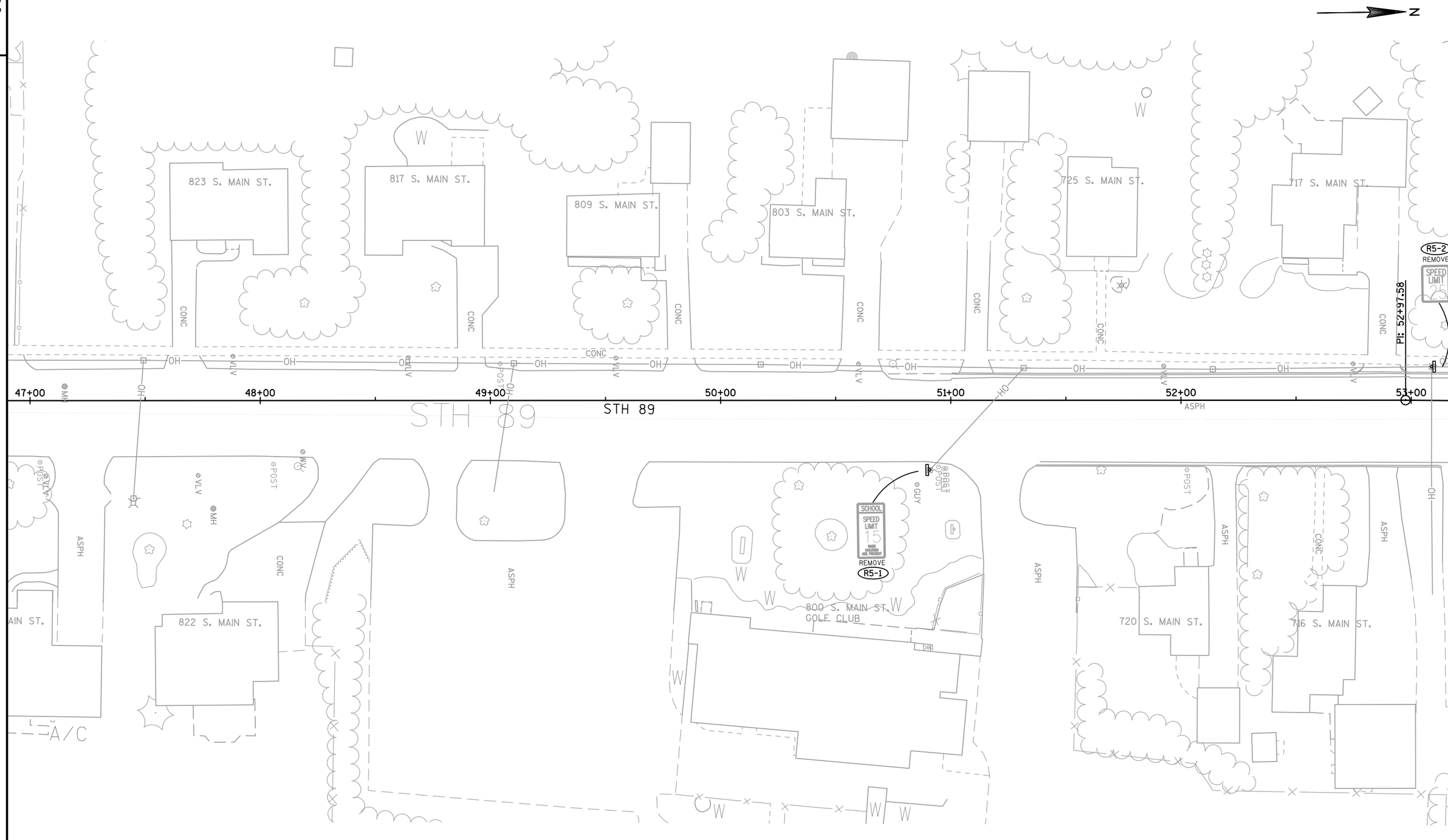

PROJECT NO:3300-01-73	HWY:STH 89	COUNTY:JEFFERSON	EXISTING SIGNING - REMOVALS	SHEET 107	E

FILE NAME : N:\PDS\C3D\33000103\SHEETSPLAN\023202-EXISTING SIGNING\023202-ES.DWG
LAYOUT NAME - ES- (5)
PLOT DATE : 10/26/2017 9:16 AM PLOT BY : WHITE, JEREMY J PLOT NAME : PLOT SCALE : 1 IN:40 FT

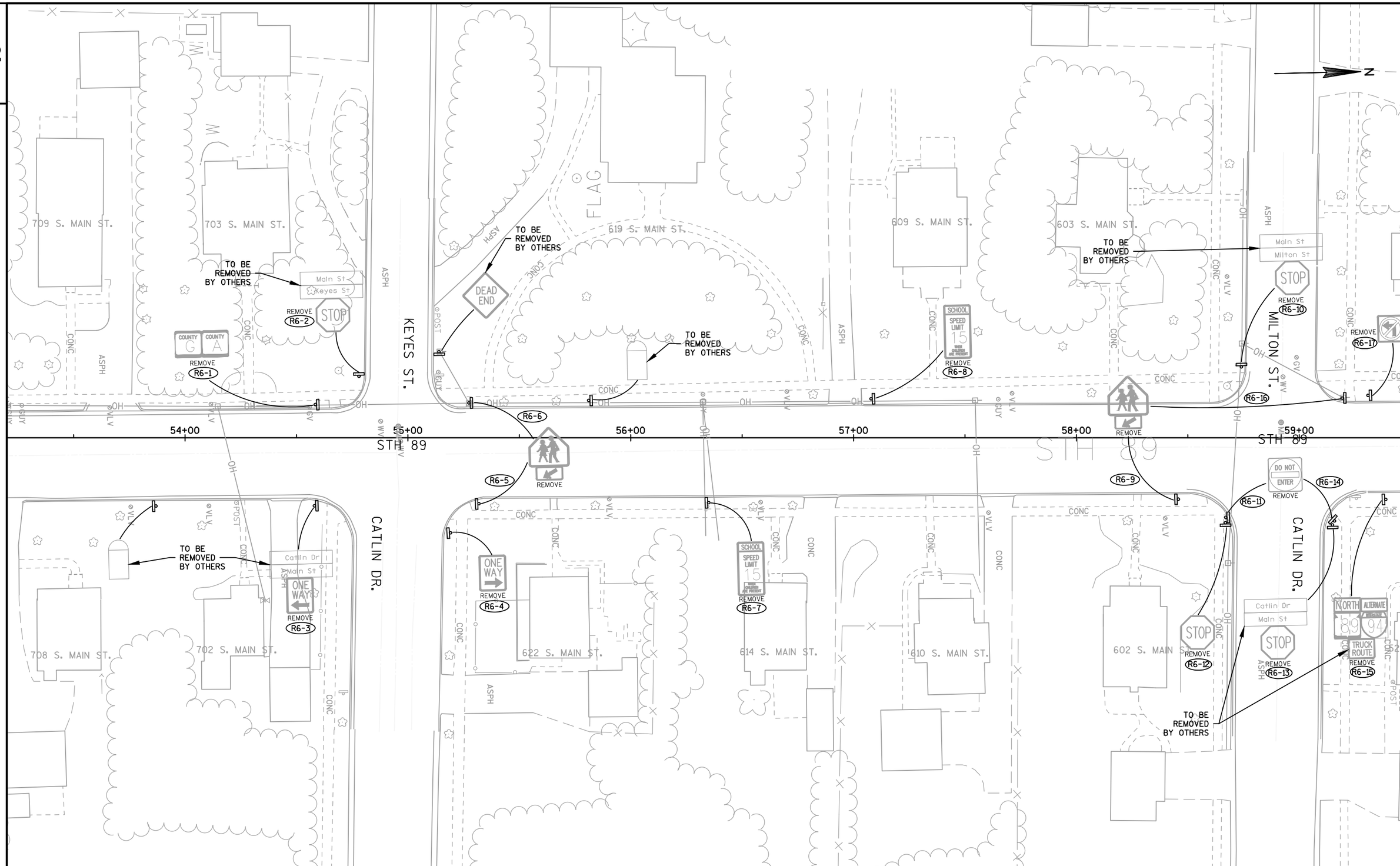

PROJECT NO:3300-01-73	HWY:STH 89	COUNTY:JEFFERSON	EXISTING SIGNING - REMOVALS	SHEET 108	E

2

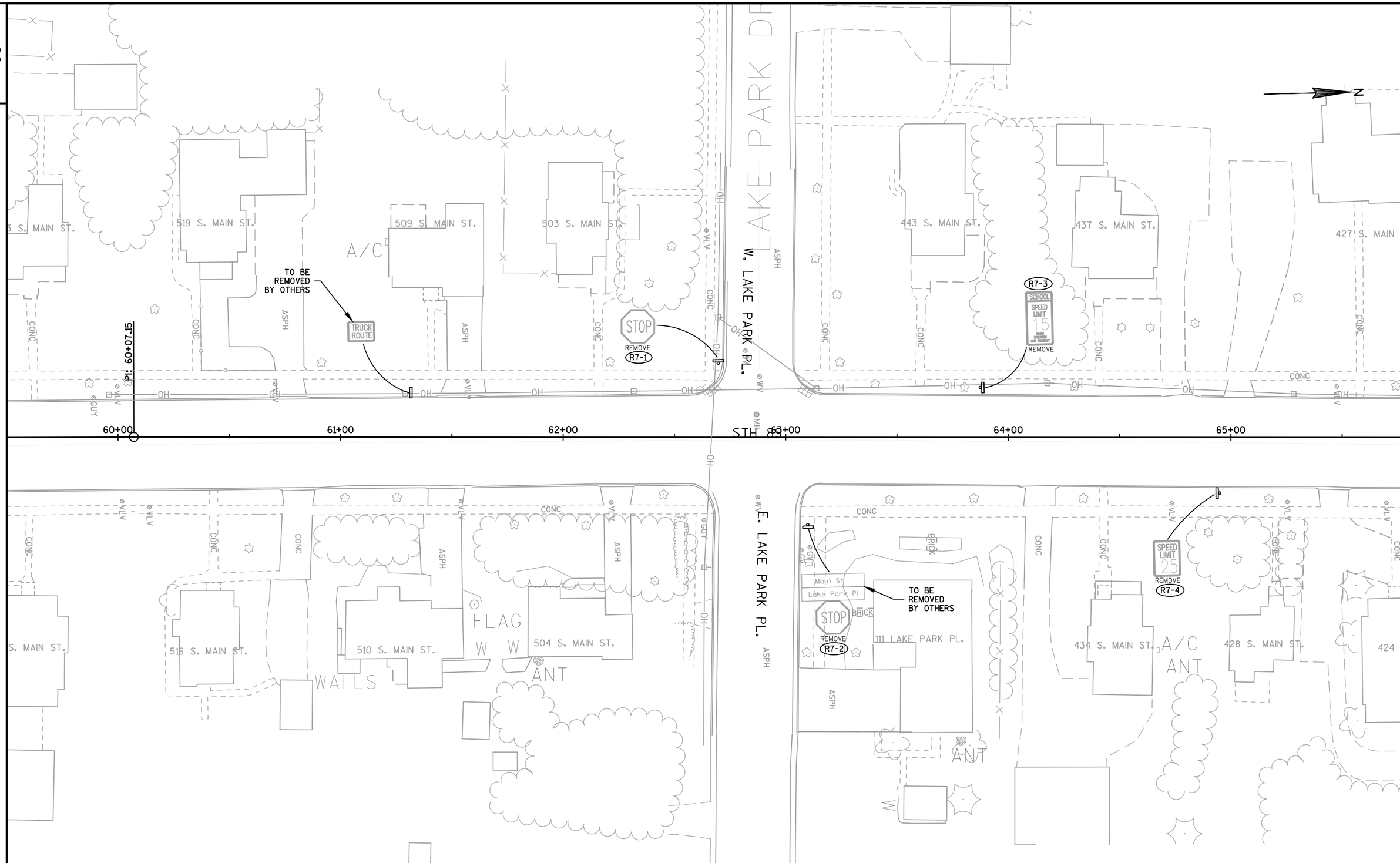

2

PROJECT NO:3300-01-73	HWY:STH 89	COUNTY:JEFFERSON	EXISTING SIGNING - REMOVALS	SHEET 109	E

FILE NAME : N:\PDS\C3D\33000103\SHEETSPLAN\023202-EXISTING SIGNING\023202-ES.DWG
LAYOUT NAME - ES- (7)
PLOT DATE : 10/26/2017 9:16 AM PLOT BY : WHITE, JEREMY J PLOT NAME : PLOT SCALE : 1 IN:40 FT

WISDOT/CADDS SHEET 42

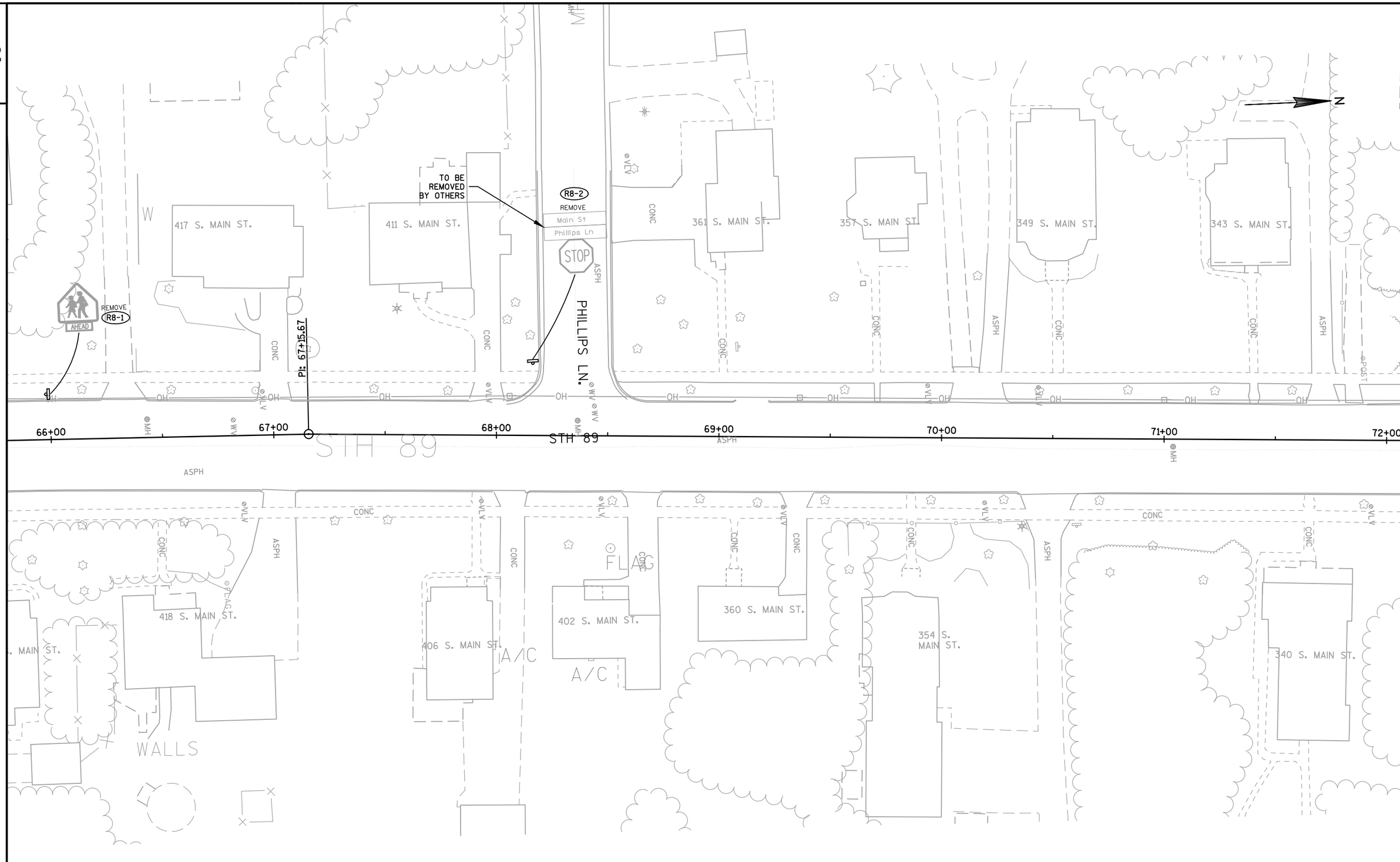

PROJECT NO:3300-01-73	HWY:STH 89	COUNTY:JEFFERSON	EXISTING SIGNING - REMOVALS	SHEET 110	E

FILE NAME : N:\PDS\C3D\33000103\SHEETSPLAN\023202-EXISTING SIGNING\023202-ES.DWG
LAYOUT NAME - ES- (8)
PLOT DATE : 10/26/2017 9:16 AM PLOT BY : WHITE, JEREMY J PLOT NAME : PLOT SCALE : 1 IN:40 FT

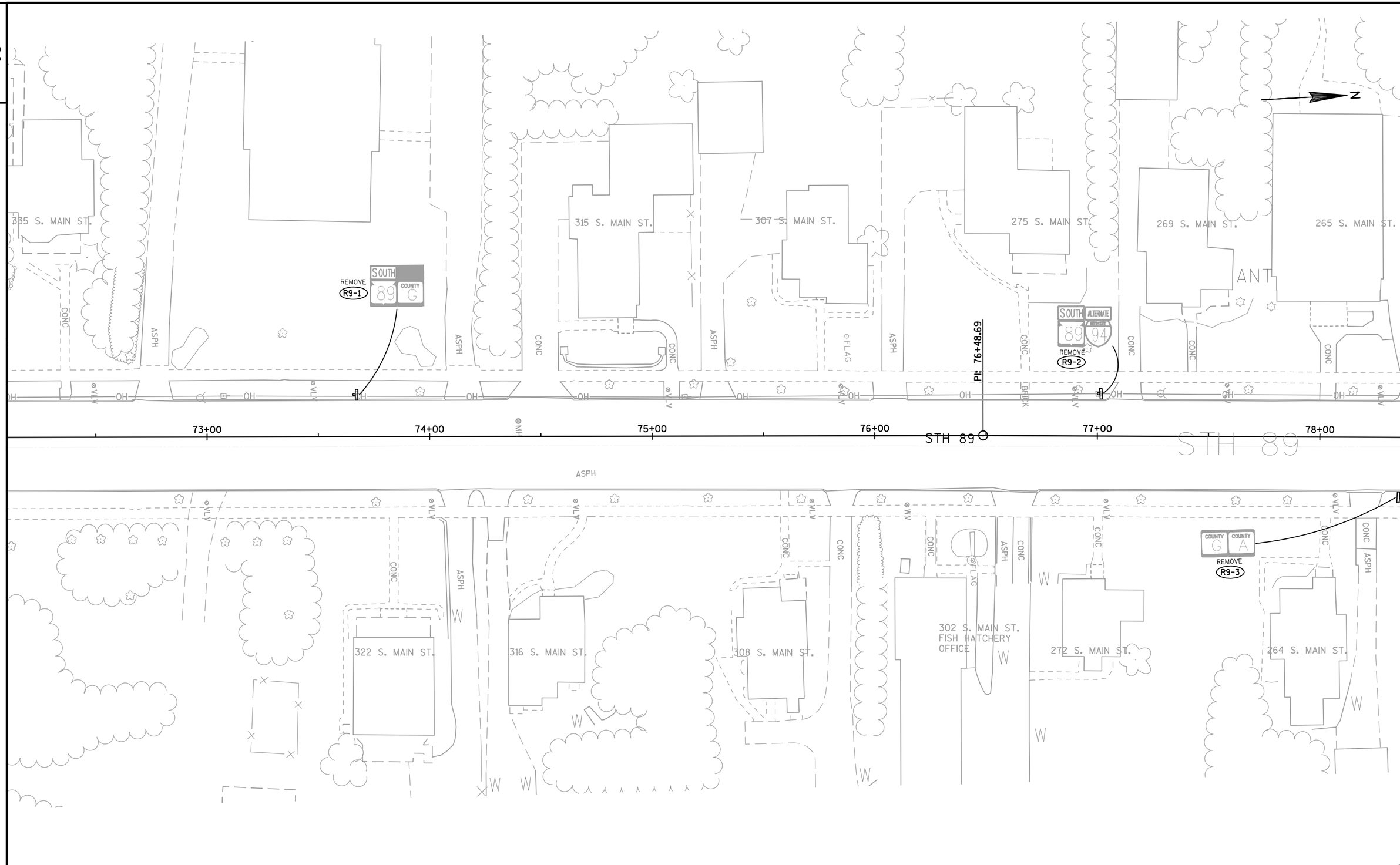

PROJECT NO:3300-01-73	HWY:STH 89	COUNTY:JEFFERSON	EXISTING SIGNING - REMOVALS	SHEET 111	E

FILE NAME : N:\PDS\C3D\33000103\SHEETSPLAN\023202-EXISTING SIGNING\023202-ES.DWG
LAYOUT NAME - ES- (9)
PLOT DATE : 10/26/2017 9:16 AM PLOT BY : WHITE, JEREMY J PLOT NAME : PLOT SCALE : 1 IN:40 FT

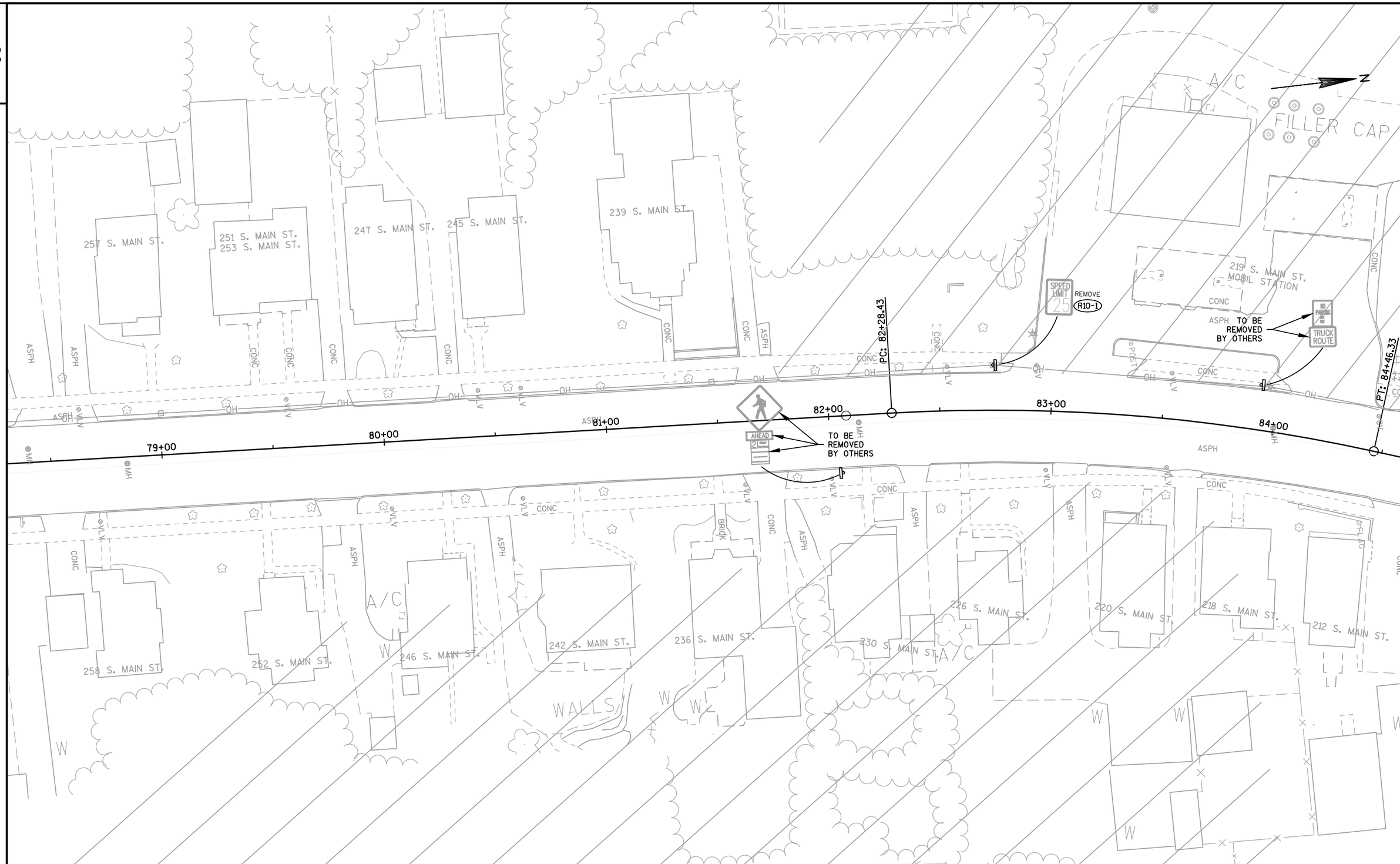

PROJECT NO:3300-01-73	HWY:STH 89	COUNTY:JEFFERSON	EXISTING SIGNING - REMOVALS	SHEET 112	E

FILE NAME : N:\PDS\C3D\33000103\SHEETSPLAN\023202-EXISTING SIGNING\023202-ES.DWG
LAYOUT NAME - ES- (10)
PLOT DATE : 10/26/2017 9:16 AM PLOT BY : WHITE, JEREMY J PLOT NAME : PLOT SCALE : 1 IN:40 FT

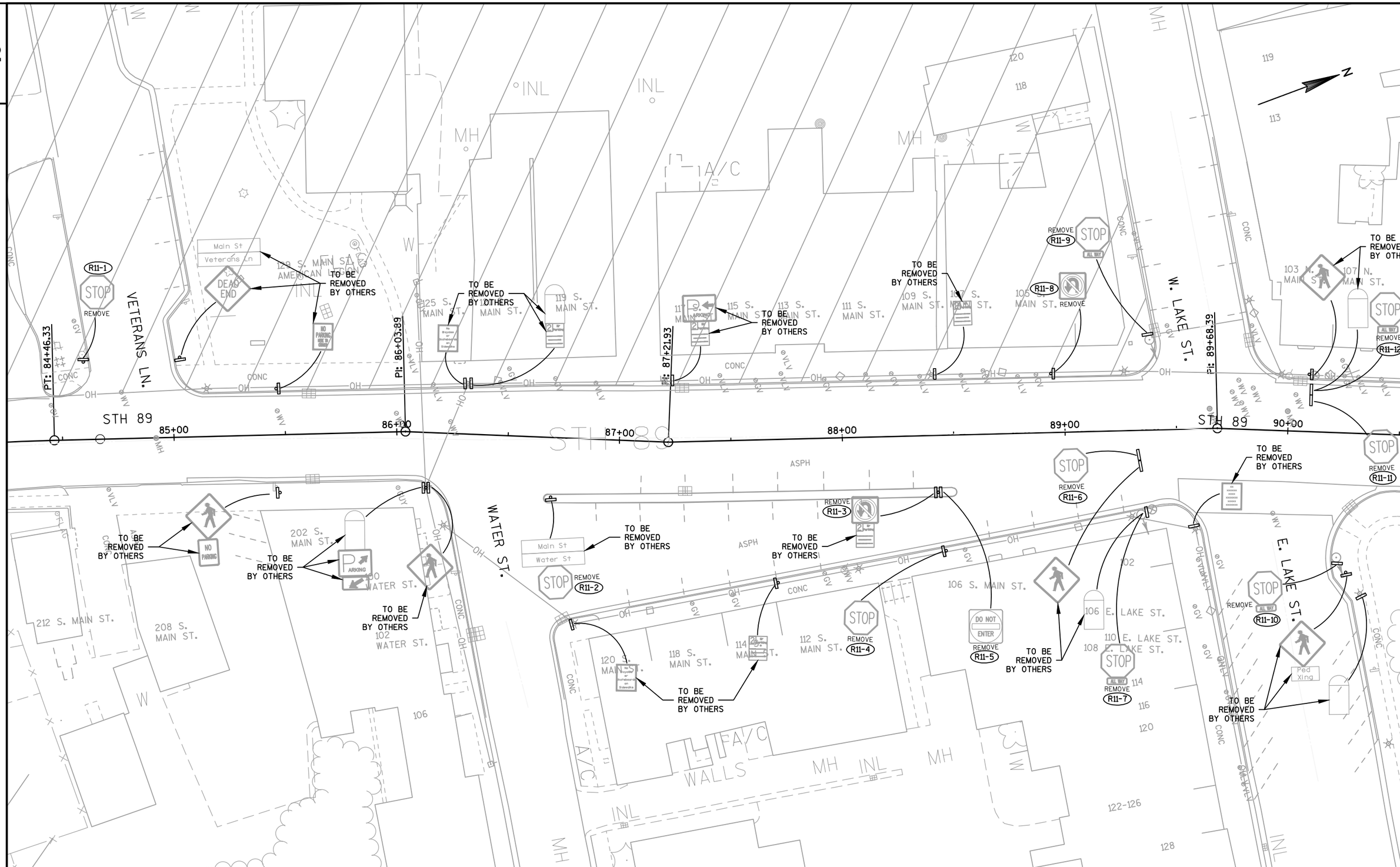

PROJECT NO:3300-01-73	HWY:STH 89	COUNTY:JEFFERSON	EXISTING SIGNING - REMOVALS	SHEET 113	E

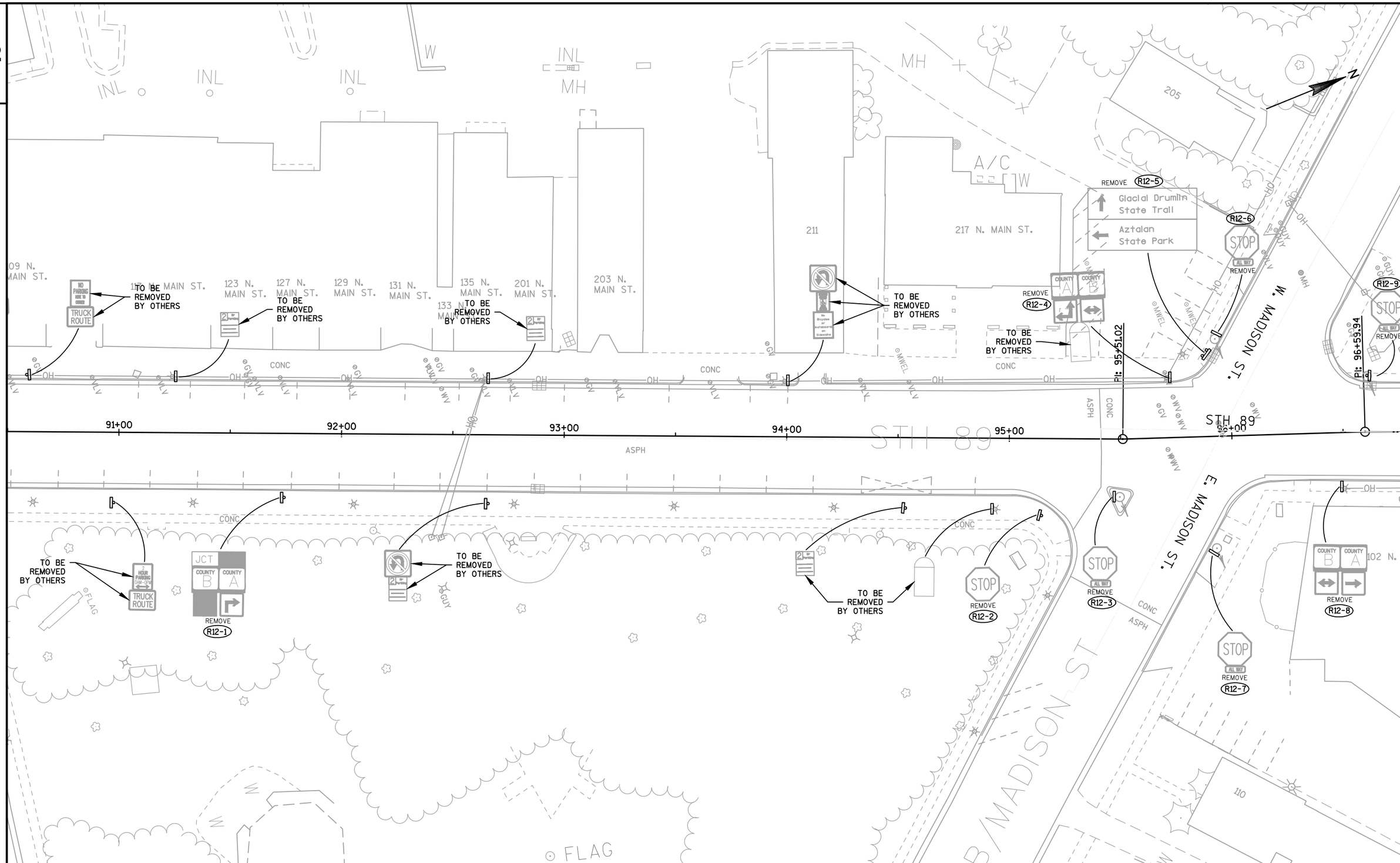

PROJECT NO:3300-01-73	HWY:STH 89	COUNTY:JEFFERSON	EXISTING SIGNING - REMOVALS	SHEET 114	E

FILE NAME : N:\PDS\C3D\33000103\SHEETSPLAN\023202-EXISTING SIGNING\023202-ES.DWG
LAYOUT NAME - ES- (12)
PLOT DATE : 10/26/2017 9:17 AM PLOT BY : WHITE, JEREMY J PLOT NAME : PLOT SCALE : 1 IN:40 FT

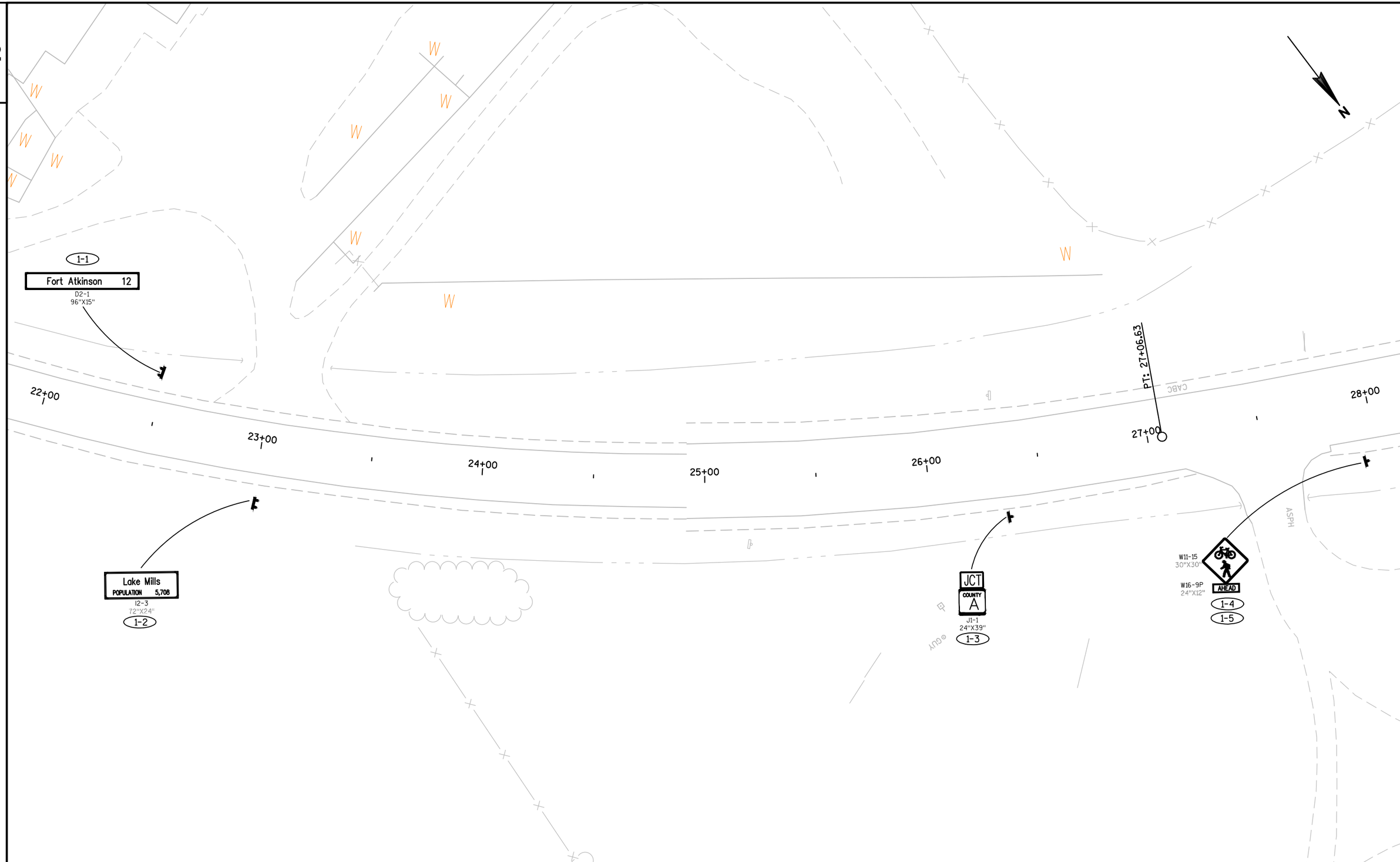

PROJECT NO:3300-01-73	HWY:STH 89	COUNTY:JEFFERSON	PERMANENT SIGNING & PAVEMENT MARKING	SHEET 115	E

FILE NAME : N:\PDS\C3D\33000103\SHEETSPLAN\023201-PERMANENT SIGNING & MARKING\023201-PS.DWG
LAYOUT NAME - PS - (1)
PLOT DATE : 10/27/2017 6:48 PM PLOT BY : WHITE, JEREMY J PLOT NAME : PLOT SCALE : 1 IN:40 FT

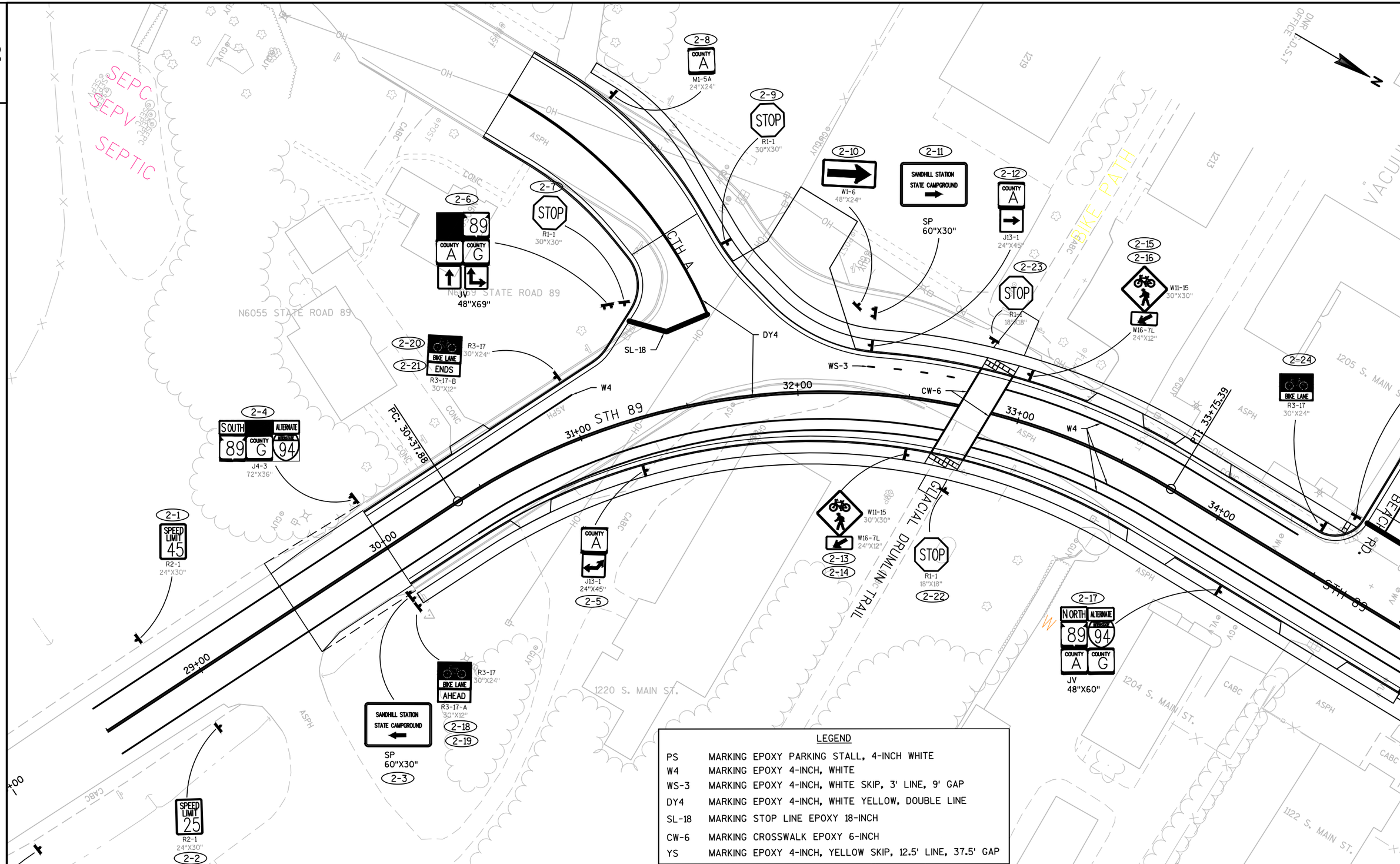

PROJECT NO:3300-01-73	HWY:STH 89	COUNTY:JEFFERSON	PERMANENT SIGNING & PAVEMENT MARKING	SHEET 116	E

FILE NAME : N:\PDS\C3D\33000103\SHEETSPLAN\023201-PERMANENT SIGNING & MARKING\023201-PS.DWG
LAYOUT NAME - PS - (2)
PLOT DATE : 10/27/2017 6:48 PM PLOT BY : WHITE, JEREMY J PLOT NAME : PLOT SCALE : 1 IN:40 FT

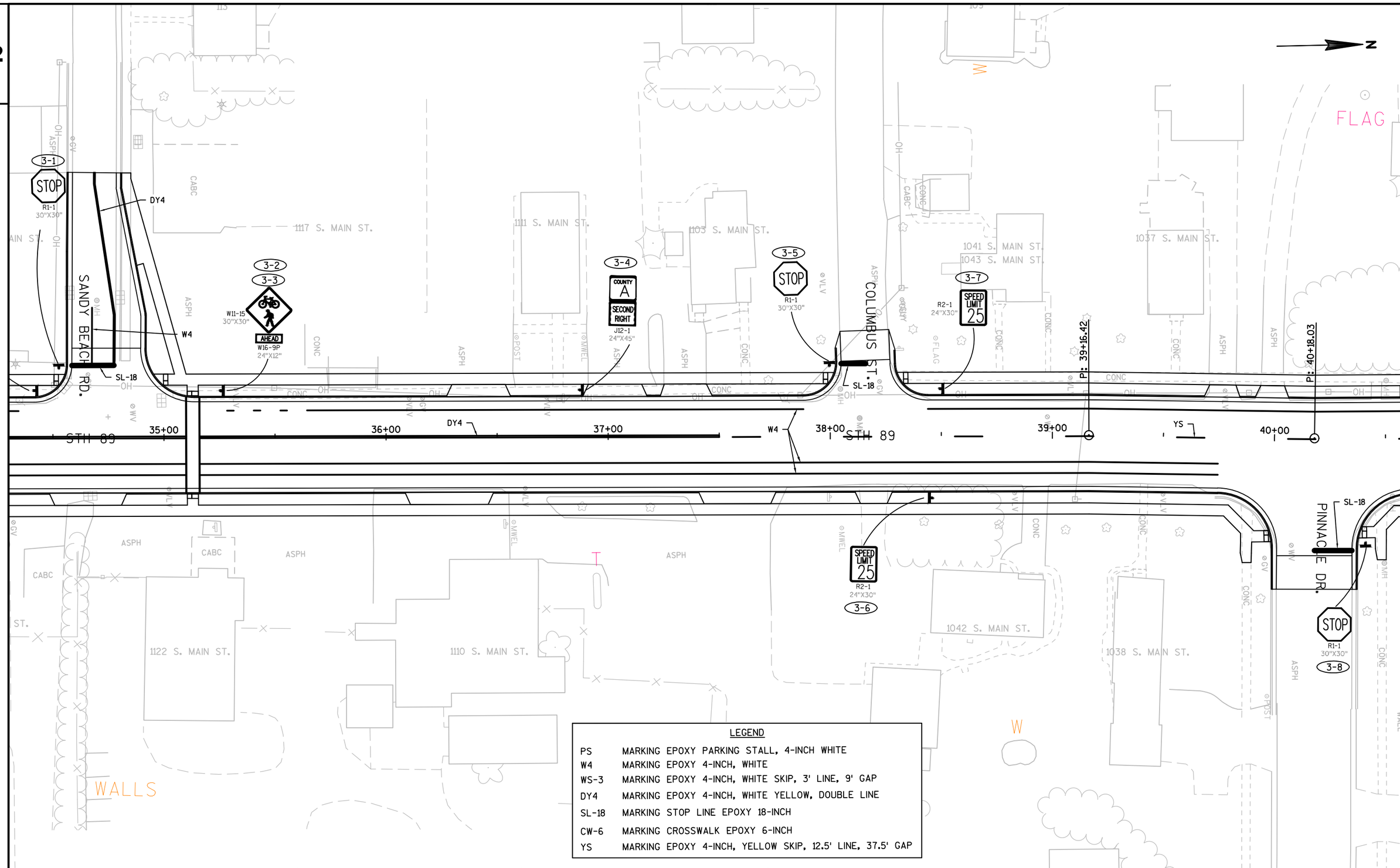

LEGEND

PS	MARKING EPOXY PARKING STALL, 4-INCH WHITE
W4	MARKING EPOXY 4-INCH, WHITE
WS-3	MARKING EPOXY 4-INCH, WHITE SKIP, 3' LINE, 9' GAP
DY4	MARKING EPOXY 4-INCH, WHITE YELLOW, DOUBLE LINE
SL-18	MARKING STOP LINE EPOXY 18-INCH
CW-6	MARKING CROSSWALK EPOXY 6-INCH
YS	MARKING EPOXY 4-INCH, YELLOW SKIP, 12.5' LINE, 37.5' GAP

PROJECT NO:3300-01-73	HWY:STH 89	COUNTY:JEFFERSON	PERMANENT SIGNING & PAVEMENT MARKING	SHEET 117	E

FILE NAME : N:\PDS\C3D\33000103\SHEETSPLAN\023201-PERMANENT SIGNING & MARKING\023201-PS.DWG
LAYOUT NAME - PS - (3)
PLOT DATE : 10/27/2017 6:48 PM PLOT BY : WHITE, JEREMY J PLOT NAME : PLOT SCALE : 1 IN:40 FT

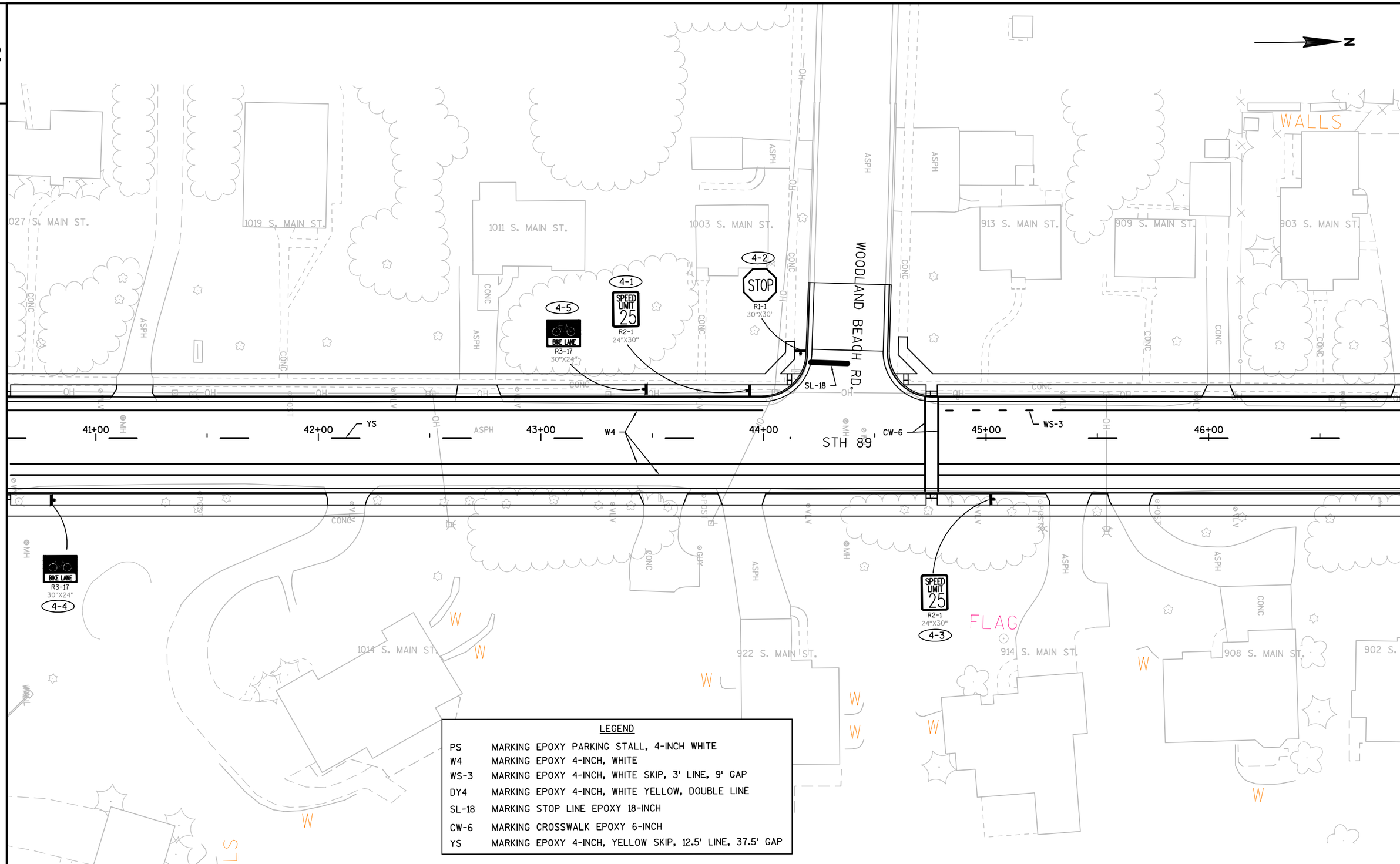

LEGEND

PS	MARKING EPOXY PARKING STALL, 4-INCH WHITE
W4	MARKING EPOXY 4-INCH, WHITE
WS-3	MARKING EPOXY 4-INCH, WHITE SKIP, 3' LINE, 9' GAP
DY4	MARKING EPOXY 4-INCH, WHITE YELLOW, DOUBLE LINE
SL-18	MARKING STOP LINE EPOXY 18-INCH
CW-6	MARKING CROSSWALK EPOXY 6-INCH
YS	MARKING EPOXY 4-INCH, YELLOW SKIP, 12.5' LINE, 37.5' GAP

PROJECT NO:3300-01-73	HWY:STH 89	COUNTY:JEFFERSON	PERMANENT SIGNING & PAVEMENT MARKING	SHEET 118	E

FILE NAME : N:\PDS\C3D\33000103\SHEETSPLAN\023201-PERMANENT SIGNING & MARKING\023201-PS.DWG
LAYOUT NAME - PS - (4)
PLOT DATE : 10/27/2017 6:48 PM PLOT BY : WHITE, JEREMY J PLOT NAME : PLOT SCALE : 1 IN:40 FT

WISDOT/CADDS SHEET 42

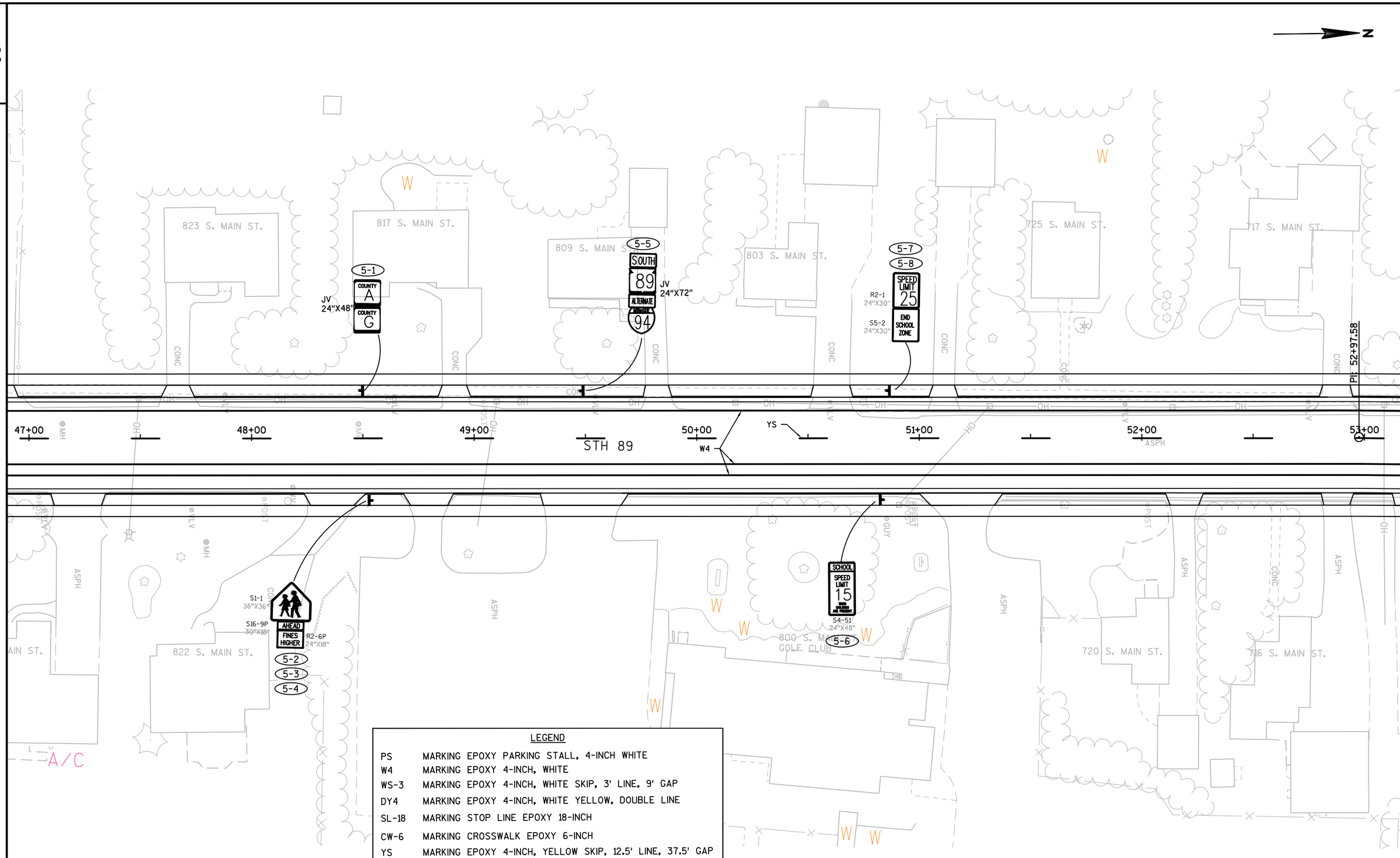

LEGEND

PS	MARKING EPOXY PARKING STALL, 4-INCH WHITE
W4	MARKING EPOXY 4-INCH, WHITE
WS-3	MARKING EPOXY 4-INCH, WHITE SKIP, 3' LINE, 9' GAP
DY4	MARKING EPOXY 4-INCH, WHITE YELLOW, DOUBLE LINE
SL-18	MARKING STOP LINE EPOXY 18-INCH
CW-6	MARKING CROSSWALK EPOXY 6-INCH
YS	MARKING EPOXY 4-INCH, YELLOW SKIP, 12.5' LINE, 37.5' GAP

PROJECT NO:3300-01-73	HWY:STH 89	COUNTY:JEFFERSON	PERMANENT SIGNING & PAVEMENT MARKING	SHEET 119	E

FILE NAME : N:\PDS\C3D\33000103\SHEETSPLAN\023201-PERMANENT SIGNING & MARKING\023201-PS.DWG
LAYOUT NAME - PS - (5)
PLOT DATE : 10/27/2017 6:49 PM PLOT BY : WHITE, JEREMY J PLOT NAME : PLOT SCALE : 1 IN:40 FT

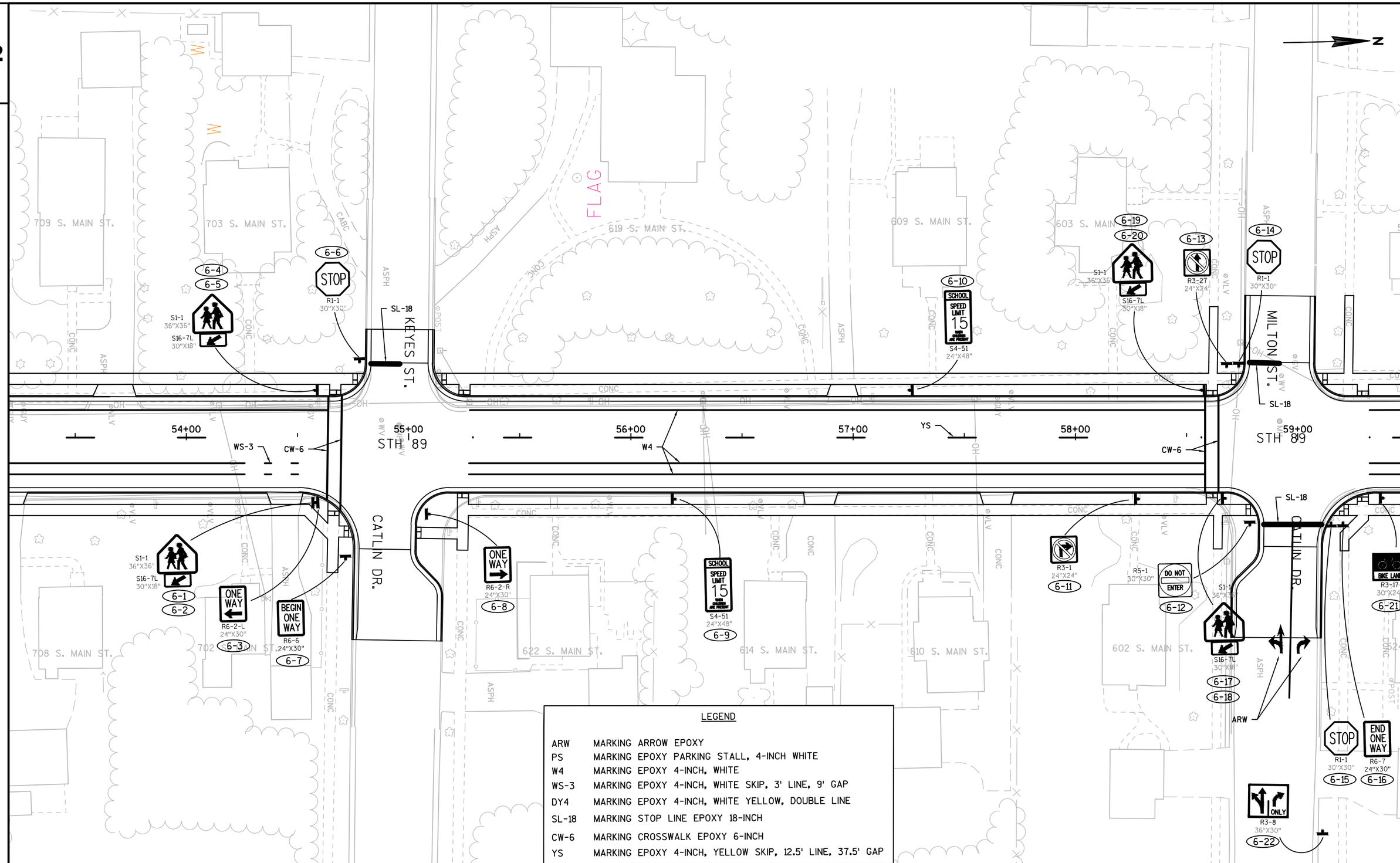

LEGEND

ARW	MARKING ARROW EPOXY
PS	MARKING EPOXY PARKING STALL, 4-INCH WHITE
W4	MARKING EPOXY 4-INCH, WHITE
WS-3	MARKING EPOXY 4-INCH, WHITE SKIP, 3' LINE, 9' GAP
DY4	MARKING EPOXY 4-INCH, WHITE YELLOW, DOUBLE LINE
SL-18	MARKING STOP LINE EPOXY 18-INCH
CW-6	MARKING CROSSWALK EPOXY 6-INCH
YS	MARKING EPOXY 4-INCH, YELLOW SKIP, 12.5' LINE, 37.5' GAP

PROJECT NO:3300-01-73	HWY:STH 89	COUNTY:JEFFERSON	PERMANENT SIGNING & PAVEMENT MARKING	SHEET 120	E

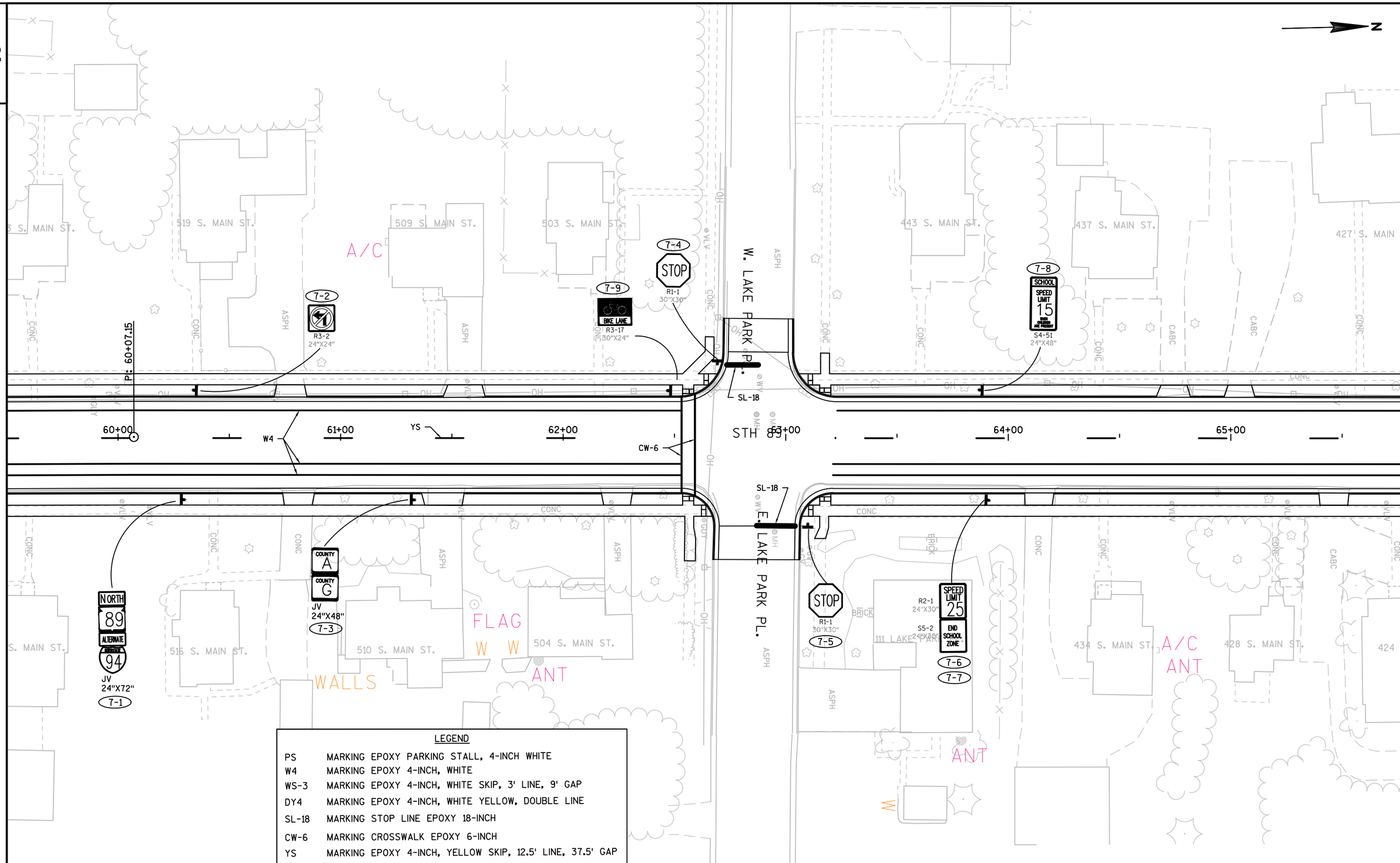

LEGEND

PS	MARKING EPOXY PARKING STALL, 4-INCH WHITE
W4	MARKING EPOXY 4-INCH, WHITE
WS-3	MARKING EPOXY 4-INCH, WHITE SKIP, 3' LINE, 9' GAP
DY4	MARKING EPOXY 4-INCH, WHITE YELLOW, DOUBLE LINE
SL-18	MARKING STOP LINE EPOXY 18-INCH
CW-6	MARKING CROSSWALK EPOXY 6-INCH
YS	MARKING EPOXY 4-INCH, YELLOW SKIP, 12.5' LINE, 37.5' GAP

PROJECT NO:3300-01-73	HWY:STH 89	COUNTY:JEFFERSON	PERMANENT SIGNING & PAVEMENT MARKING	SHEET 121	E

FILE NAME : N:\PDS\C3D\33000103\SHEETSPLAN\023201-PERMANENT SIGNING & MARKING\023201-PS.DWG
LAYOUT NAME - PS - (7)
PLOT DATE : 10/27/2017 6:49 PM PLOT BY : WHITE, JEREMY J PLOT NAME : PLOT SCALE : 1 IN:40 FT

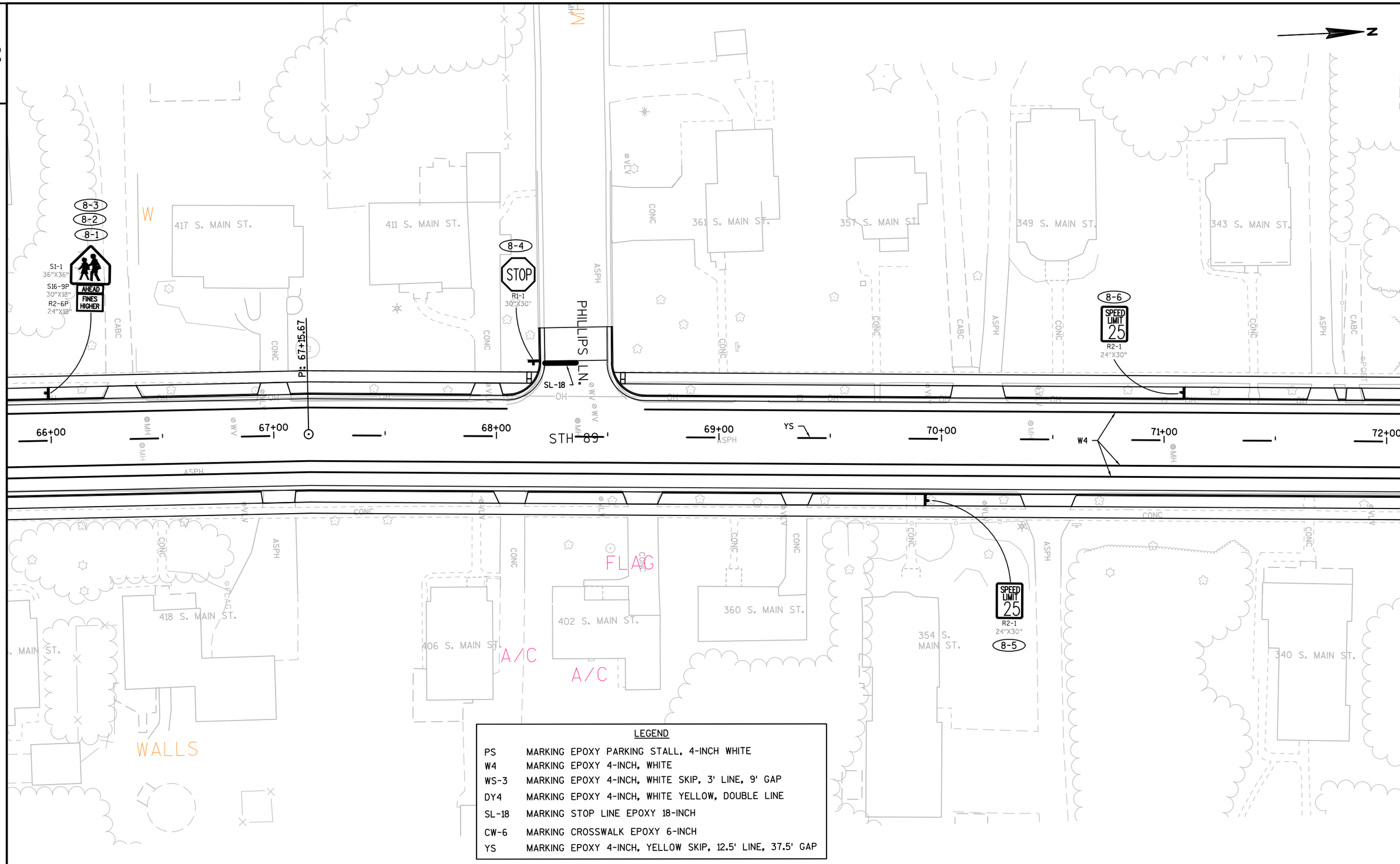

LEGEND

PS	MARKING EPOXY PARKING STALL, 4-INCH WHITE
W4	MARKING EPOXY 4-INCH, WHITE
WS-3	MARKING EPOXY 4-INCH, WHITE SKIP, 3' LINE, 9' GAP
DY4	MARKING EPOXY 4-INCH, WHITE YELLOW, DOUBLE LINE
SL-18	MARKING STOP LINE EPOXY 18-INCH
CW-6	MARKING CROSSWALK EPOXY 6-INCH
YS	MARKING EPOXY 4-INCH, YELLOW SKIP, 12.5' LINE, 37.5' GAP

PROJECT NO:3300-01-73	HWY:STH 89	COUNTY:JEFFERSON	PERMANENT SIGNING & PAVEMENT MARKING	SHEET 122	E

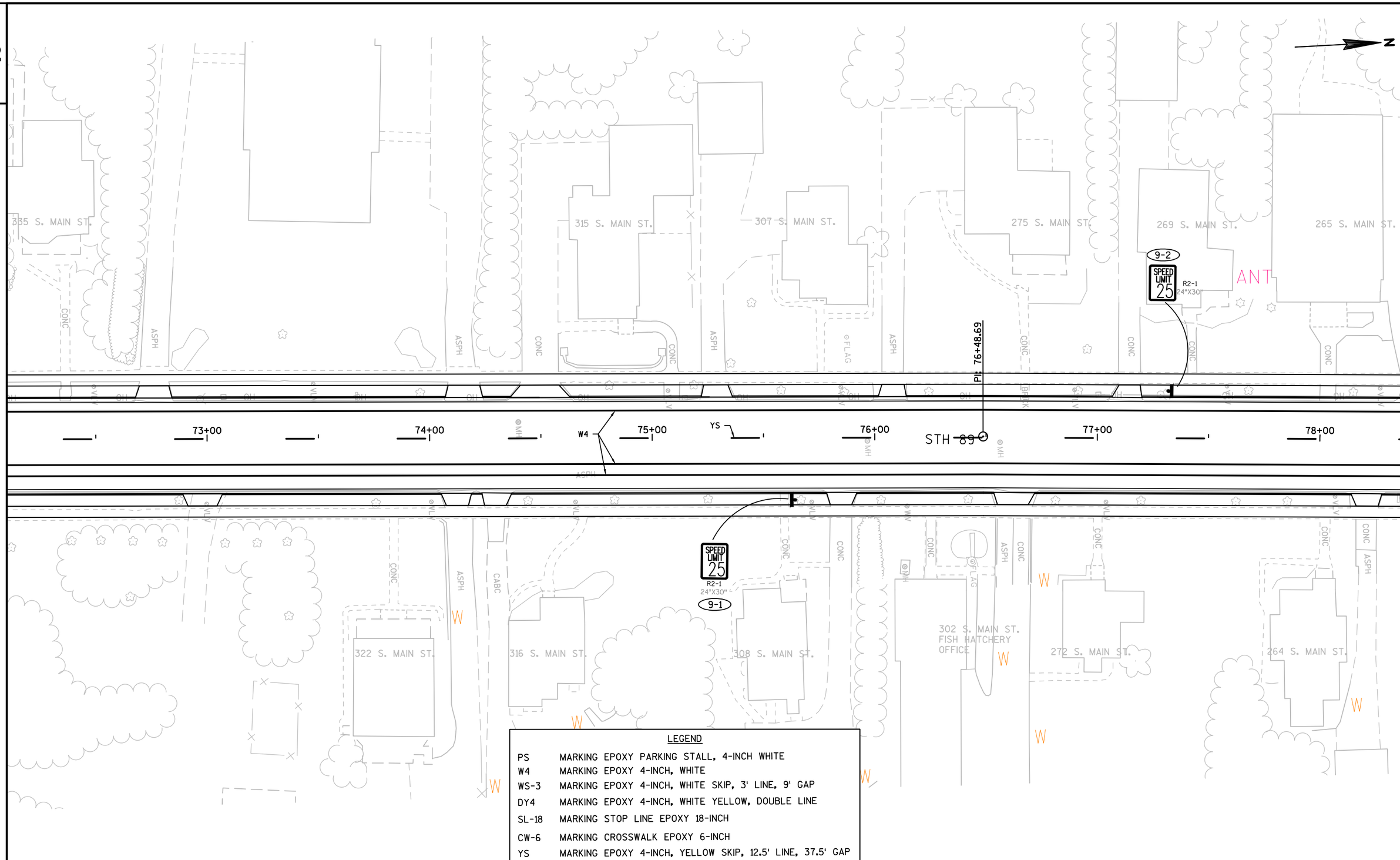

LEGEND

PS	MARKING EPOXY PARKING STALL, 4-INCH WHITE
W4	MARKING EPOXY 4-INCH, WHITE
WS-3	MARKING EPOXY 4-INCH, WHITE SKIP, 3' LINE, 9' GAP
DY4	MARKING EPOXY 4-INCH, WHITE YELLOW, DOUBLE LINE
SL-18	MARKING STOP LINE EPOXY 18-INCH
CW-6	MARKING CROSSWALK EPOXY 6-INCH
YS	MARKING EPOXY 4-INCH, YELLOW SKIP, 12.5' LINE, 37.5' GAP

PROJECT NO:3300-01-73	HWY:STH 89	COUNTY:JEFFERSON	PERMANENT SIGNING & PAVEMENT MARKING	SHEET 123	E

FILE NAME : N:\PDS\C3D\33000103\SHEETSPLAN\023201-PERMANENT SIGNING & MARKING\023201-PS.DWG
LAYOUT NAME - PS - (9)
PLOT DATE : 10/27/2017 6:49 PM PLOT BY : WHITE, JEREMY J PLOT NAME : PLOT SCALE : 1 IN:40 FT

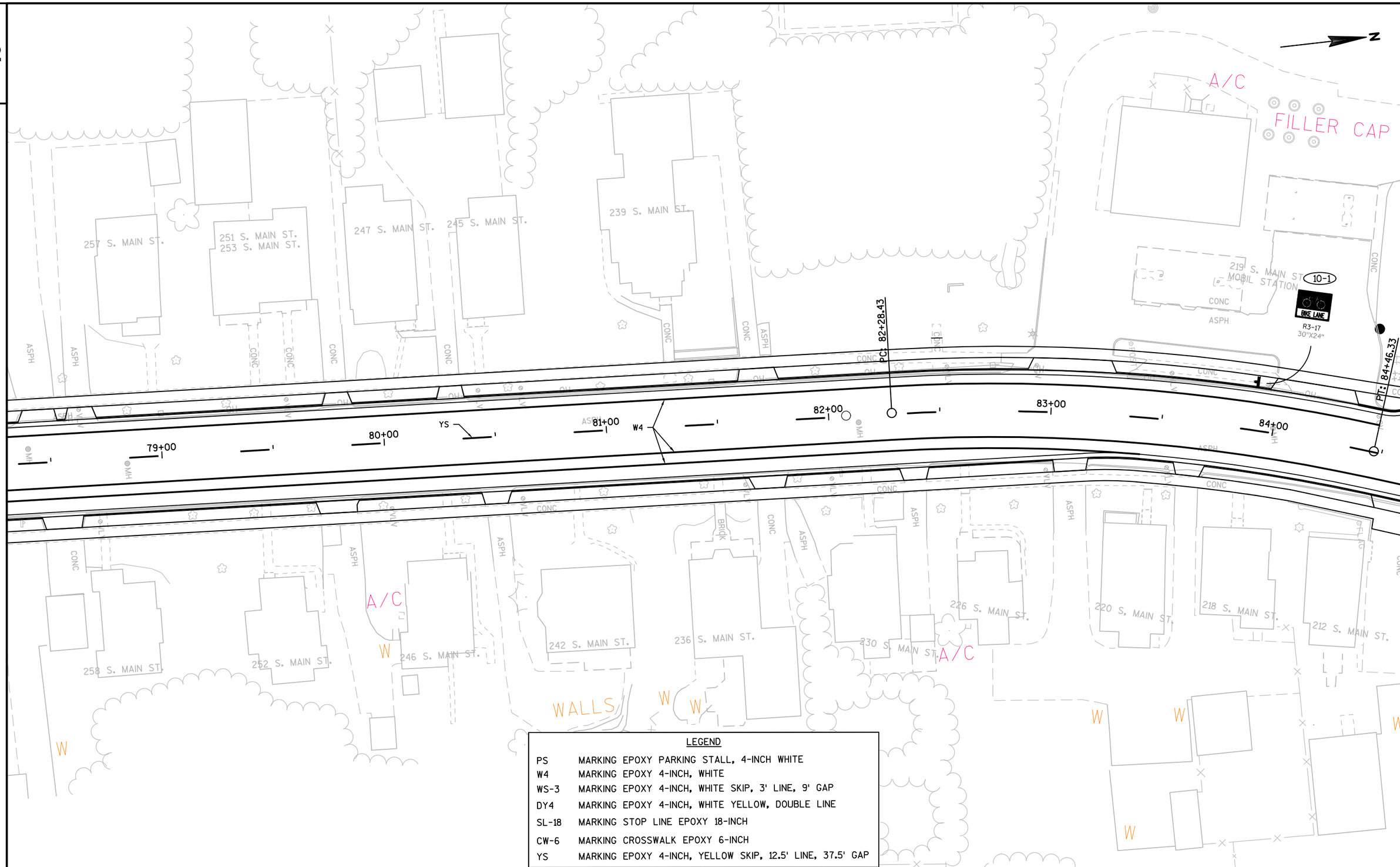

LEGEND

PS	MARKING EPOXY PARKING STALL, 4-INCH WHITE
W4	MARKING EPOXY 4-INCH, WHITE
WS-3	MARKING EPOXY 4-INCH, WHITE SKIP, 3' LINE, 9' GAP
DY4	MARKING EPOXY 4-INCH, WHITE YELLOW, DOUBLE LINE
SL-18	MARKING STOP LINE EPOXY 18-INCH
CW-6	MARKING CROSSWALK EPOXY 6-INCH
YS	MARKING EPOXY 4-INCH, YELLOW SKIP, 12.5' LINE, 37.5' GAP

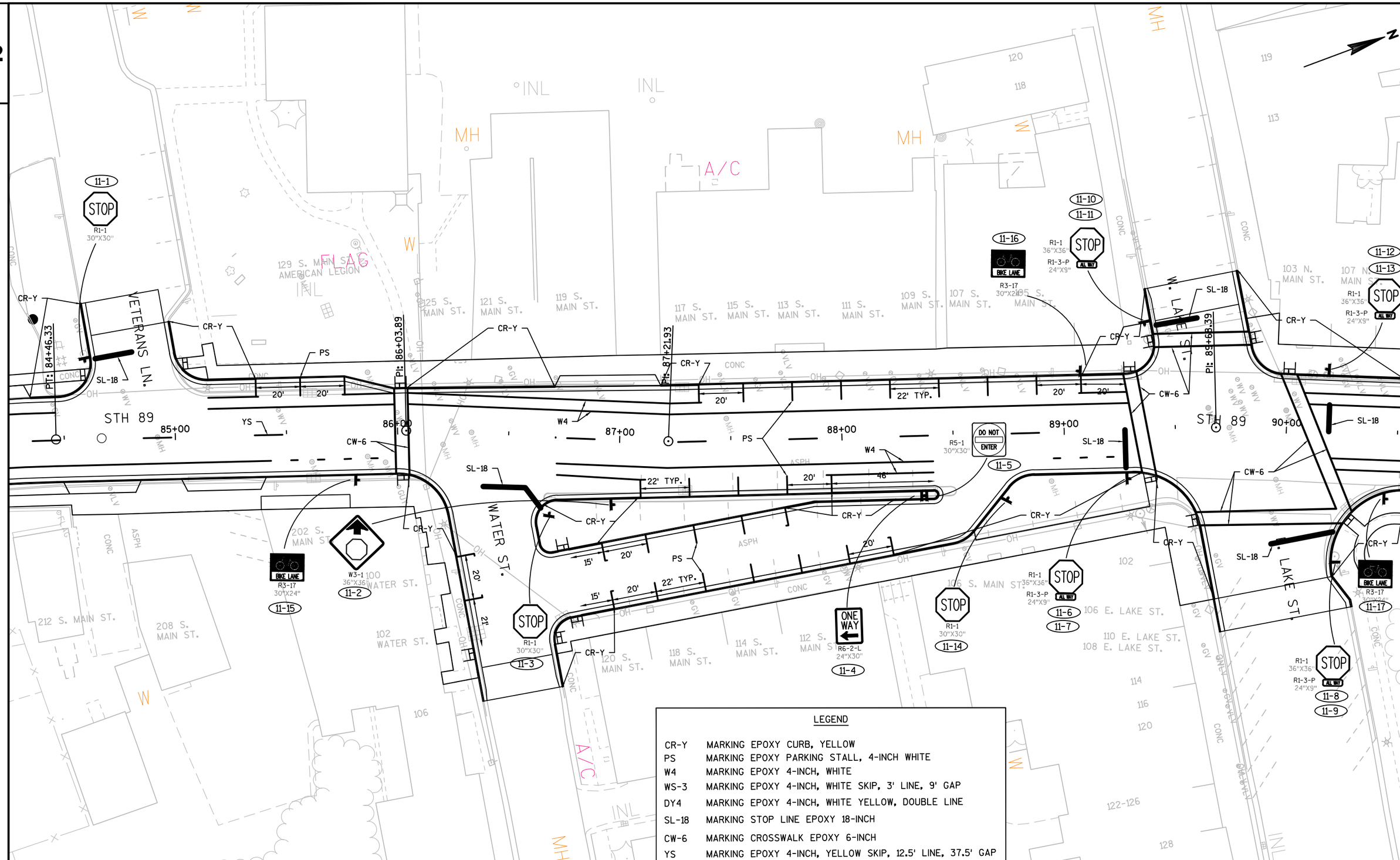

LEGEND

CR-Y	MARKING EPOXY CURB, YELLOW
PS	MARKING EPOXY PARKING STALL, 4-INCH WHITE
W4	MARKING EPOXY 4-INCH, WHITE
WS-3	MARKING EPOXY 4-INCH, WHITE SKIP, 3' LINE, 9' GAP
DY4	MARKING EPOXY 4-INCH, WHITE YELLOW, DOUBLE LINE
SL-18	MARKING STOP LINE EPOXY 18-INCH
CW-6	MARKING CROSSWALK EPOXY 6-INCH
YS	MARKING EPOXY 4-INCH, YELLOW SKIP, 12.5' LINE, 37.5' GAP

PROJECT NO:3300-01-73	HWY:STH 89	COUNTY:JEFFERSON	PERMANENT SIGNING & PAVEMENT MARKING	SHEET 125	E

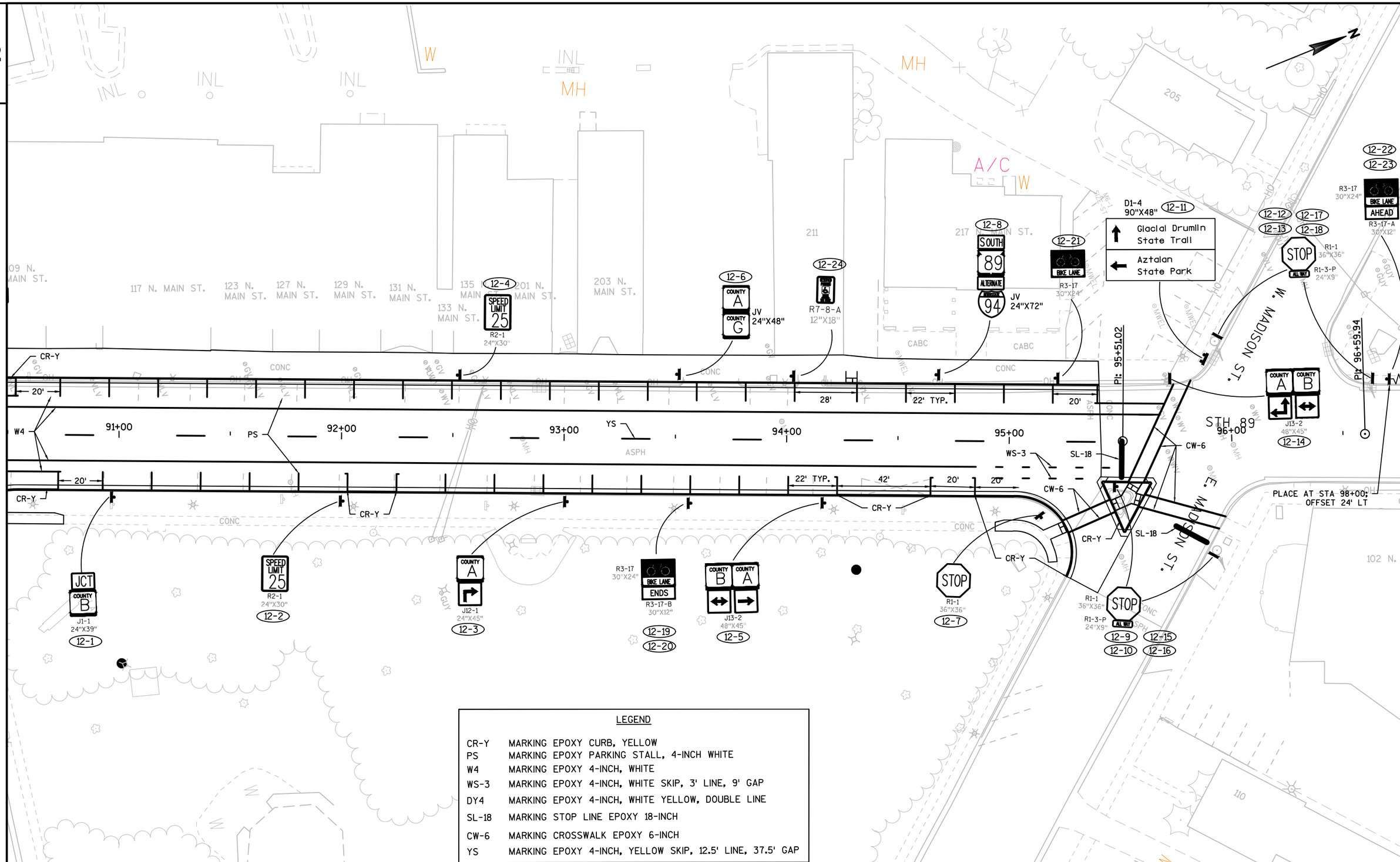

LEGEND

CR-Y	MARKING EPOXY CURB, YELLOW
PS	MARKING EPOXY PARKING STALL, 4-INCH WHITE
W4	MARKING EPOXY 4-INCH, WHITE
WS-3	MARKING EPOXY 4-INCH, WHITE SKIP, 3' LINE, 9' GAP
DY4	MARKING EPOXY 4-INCH, WHITE YELLOW, DOUBLE LINE
SL-18	MARKING STOP LINE EPOXY 18-INCH
CW-6	MARKING CROSSWALK EPOXY 6-INCH
YS	MARKING EPOXY 4-INCH, YELLOW SKIP, 12.5' LINE, 37.5' GAP

PROJECT NO:3300-01-73	HWY:STH 89	COUNTY:JEFFERSON	PERMANENT SIGNING & PAVEMENT MARKING	SHEET 126	E

LIGHTING PLANS PREPARED BY:

DATE SIGNATURE

LEGEND:

- T1 — SINGLE ARM LIGHTING UNIT – TYPE 1 (DECORATIVE LIGHT POLE)
- T2 — ARMLESS LIGHTING UNIT – TYPE 2 (DECORATIVE LIGHT POLE)
- LIGHTING CONDUIT (2" SCHEDULE 40 PVC UNLESS NOTED)
- CONCRETE CONTROL CABINET BASE/ELECTRICAL SERVICE
- PULL BOX (24"x42" STEEL)
- POLE MOUNTED RECTANGULAR RAPID FLASHING BEACON W/ SIGN
- PB — PUSH BUTTON
- SF1 — STOP SIGN WITH FLASHER

LIGHTING UNIT LEGEND

STA 82+52.4, 28.5'RT
LED–8–5S–T1–B–(SL118)

- STATION (LOCATION)
- POLE NUMBER
- CIRCUIT NUMBER
- POLE TYPE
- BASE TYPE
- MAST ARM LENGTH IN FEET
- LUMINAIRE TYPE

CONDUIT/CONDUCTOR LEGEND

CB100	1	2"
A 3 #2	1	#2

- SERVICE CABINET
- NO. OF CONDUITS
- CONDUIT SIZE
- SIZE (AWG) OF EQUIPMENT GROUNDING CONDUCTOR
- QTY. OF EQUIPMENT GROUNDING CONDUCTOR
- SIZE (AWG) OF UNGROUNDED & NEUTRAL CONDUCTORS
- QTY. OF UNGROUNDED AND NEUTRAL CONDUCTORS
- CIRCUIT

ABBREVIATIONS:

PWO = PULL WIRE ONLY

NOTES:

1) WISCONSIN DOT ELECTRICAL UNIT SHALL APPROVE THE FINAL LOCATION FOR ALL CONCRETE BASES AND PULLBOXES IN THE FIELD PRIOR TO INSTALLATION. CONTACT THEM 3 DAYS IN ADVANCE.
2) PITCH ALL CONDUIT TOWARD PULLBOXES. A 2" DRAIN DUCT TO DITCH OR STORM SEWER REQUIRED FOR ALL PULLBOXES IN LOW POINTS. REFER TO THE MISCELLANEOUS QUANTITIES FOR LOCATIONS OF DRAIN DUCT.
3) THE LOCATION OF EXISTING AND PROPOSED UTILITIES AS SHOWN ON THE PLANS ARE APPROXIMATE. IN ADDITION, THERE MAY BE OTHER UTILITIES WITHIN THE PROJECT AREA WHICH ARE NOT SHOWN. THE CONTRACTOR SHALL VERIFY THE LOCATIONS OF ALL UTILITIES PRIOR TO CONSTRUCTION.
4) ALL POLES SHALL BE PLACED A MINIMUM OF 2–3 FEET FROM THE BACK OF CURB.
5) CABINET BASES AND THE PULLBOXES AND CONDUIT WITHIN THE AREA OF CABINET BASES SHALL BE INSTALLED PER FIELD CONDITIONS (WITH ENGINEER APPROVAL). VERIFY THE LOCATION OF ALL ELECTRICAL FACILITIES WITH THE ENGINEER PRIOR TO INSTALLING.
6) ALL STREET LIGHT CIRCUITS TO BE 120/240 SINGLE PHASE. STREET LIGHTS TO OPERATE AT 120 VOLTS, ALTERNATING PHASE CONDUCTORS FROM POLE TO POLE. CONTRACTOR TO BALANCE ELECTRICAL LOADS ON EACH FEEDER.
7) NO SPLICES ALLOWED IN PULLBOXES UNLESS NOTED OTHERWISE.
8) CONDUIT MUST BE PLACED PRIOR TO CURB AND GUTTER AND SIDEWALK CONSTRUCTION.
9) FLASHER ASSEMBLIES TO OPERATE AT 120VOLTS.
10) FOR LAKE MILLS LIGHT AND WATER ASSISTANCE CONTACT MR. CHRIS EVENSON, LEAD FOREMAN, AT 920–648–4026.

Sheet 1 of 17

HIGHWAY LIGHTING
STH 89 (N/S MAIN ST.)
CITY OF LAKE MILLS
JEFFERSON COUNTY

DESIGN: FORSTER ELECTRICAL ENGINEERING

DATE: 2017–10–10 REV: 2

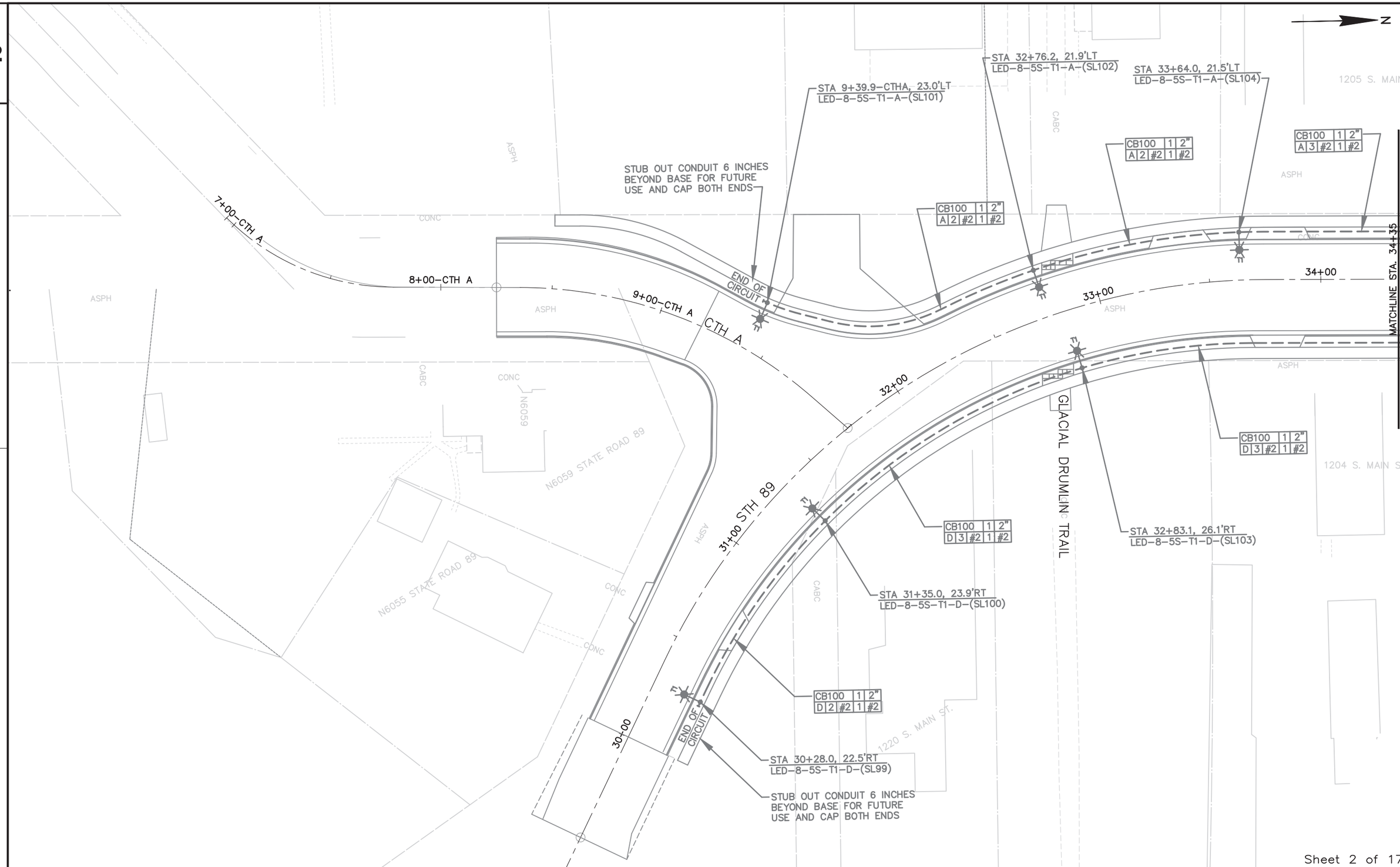

Sheet 2 of 17

PROJECT NO:3300-01-73	HWY: STH 89	COUNTY: JEFFERSON	LIGHTING PLAN – LAYOUTS	SHEET 128 E

FILE NAME : D:\ABAUTZ CURRENT WORK\L3 LAKE MILLS PROJECTS\L3-15D LAKE MILLS LIGHTING\L3-15D-WDOT-3300-01-73-E01.DWG
LAYOUT NAME – SHEET (E01)
PLOT DATE : 10/10/2017 9:56 AM PLOT BY : FORSTER ENGINEERING PLOT NAME : PLOT SCALE : 1" = 40'

WISDOT/CADDS SHEET 44

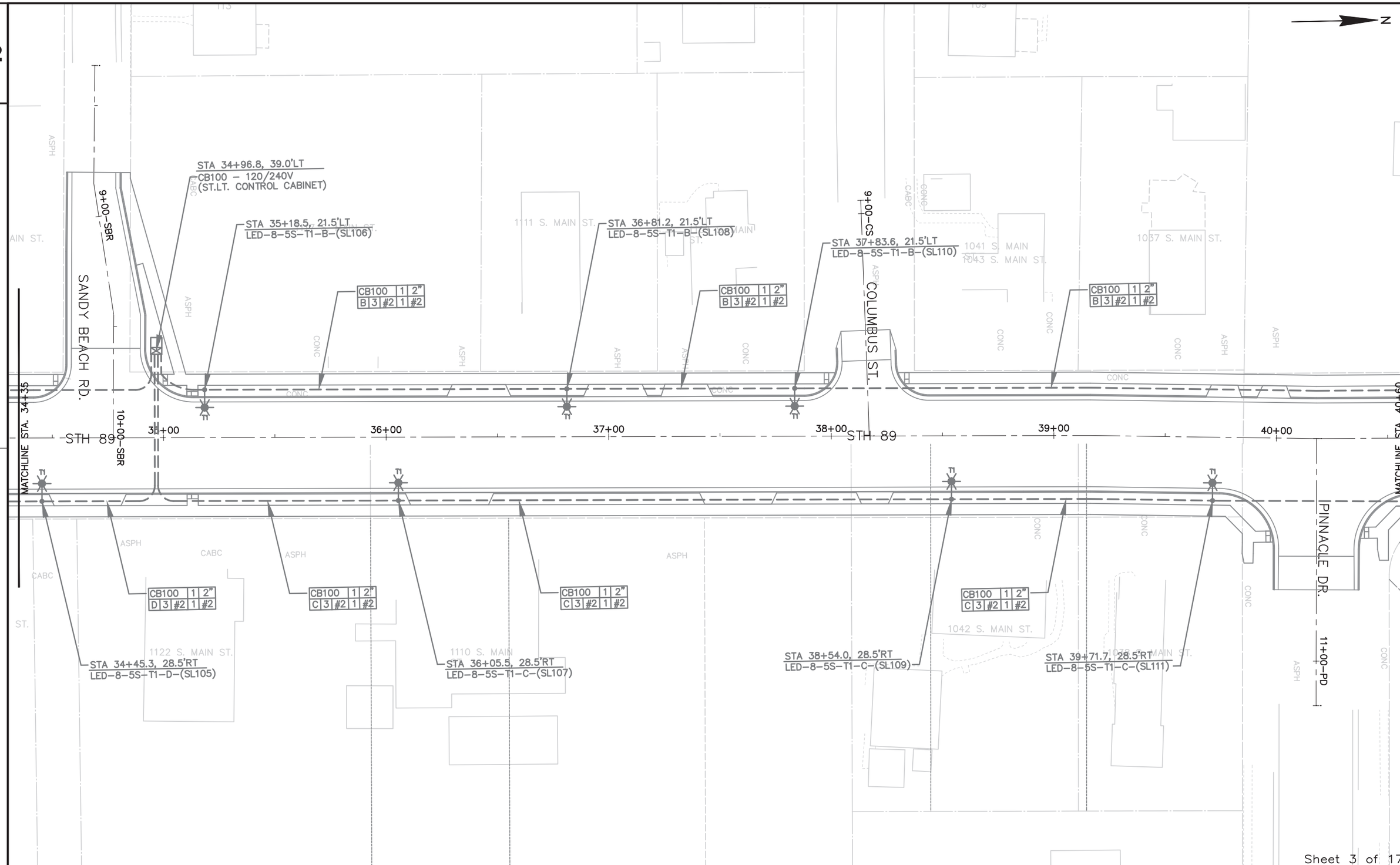

Sheet 3 of 17

PROJECT NO:3300-01-73	HWY: STH 89	COUNTY: JEFFERSON	LIGHTING PLAN – LAYOUTS	SHEET 129 E

FILE NAME : D:\ABAUTZ CURRENT WORK\L3 LAKE MILLS PROJECTS\L3-15D LAKE MILLS LIGHTING\L3-15D-WDOT-3300-01-73-E01.DWG PLOT DATE : 10/10/2017 9:56 AM PLOT BY : FORSTER ENGINEERING PLOT NAME : PLOT SCALE : 1" = 40'
LAYOUT NAME – SHEET (E02)

WISDOT/CADDS SHEET 44

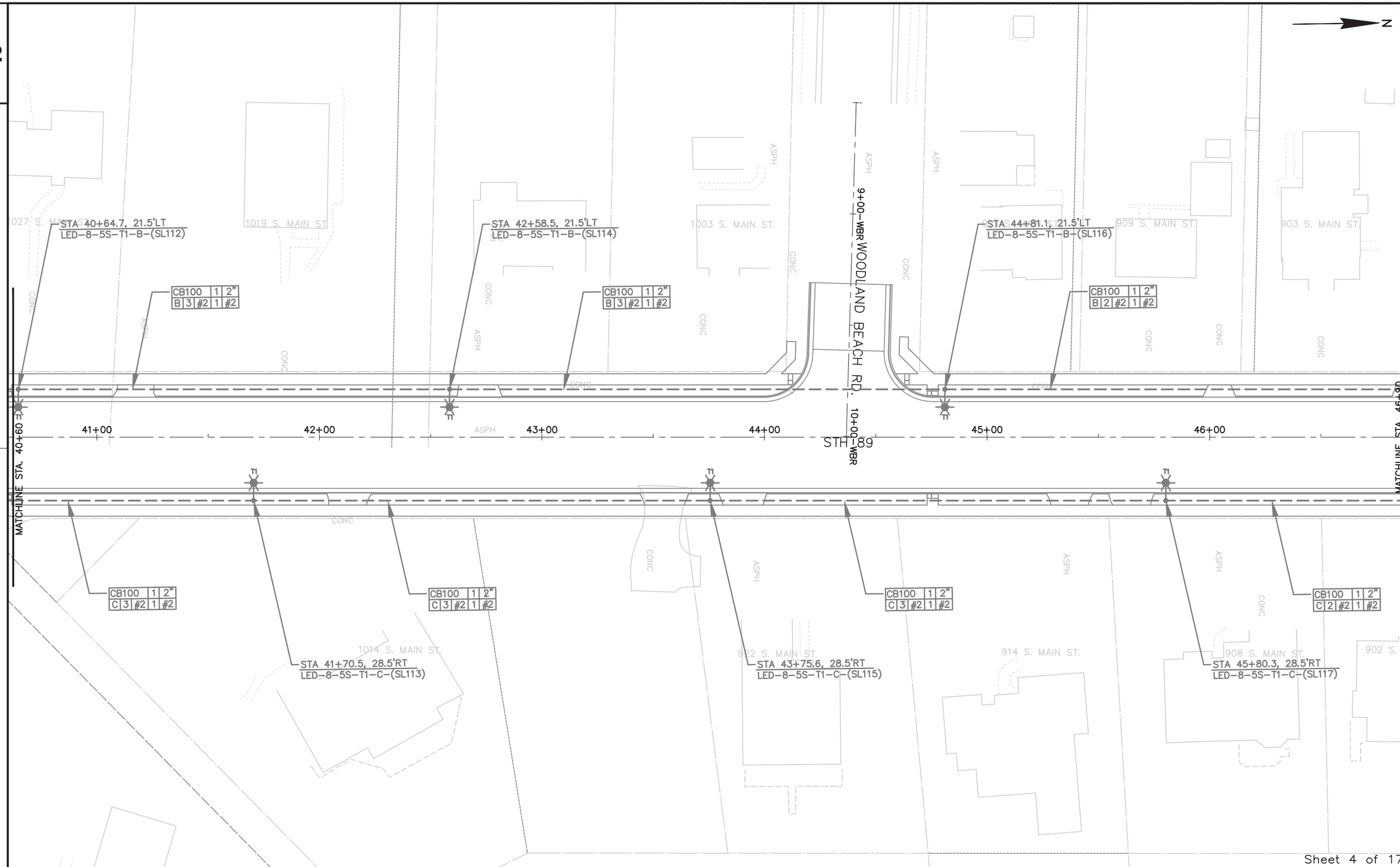

Sheet 4 of 17

PROJECT NO:3300-01-73	HWY: STH 89	COUNTY: JEFFERSON	LIGHTING PLAN – LAYOUTS	SHEET 130 E

FILE NAME : D:\ABAUTZ CURRENT WORK\L3 LAKE MILLS PROJECTS\L3-15D LAKE MILLS LIGHTING\L3-15D-WDOT-3300-01-73-E01.DWG
LAYOUT NAME – SHEET (E03)
PLOT DATE : 10/10/2017 9:56 AM PLOT BY : FORSTER ENGINEERING PLOT NAME : PLOT SCALE : 1" = 40'

WISDOT/CADDS SHEET 44

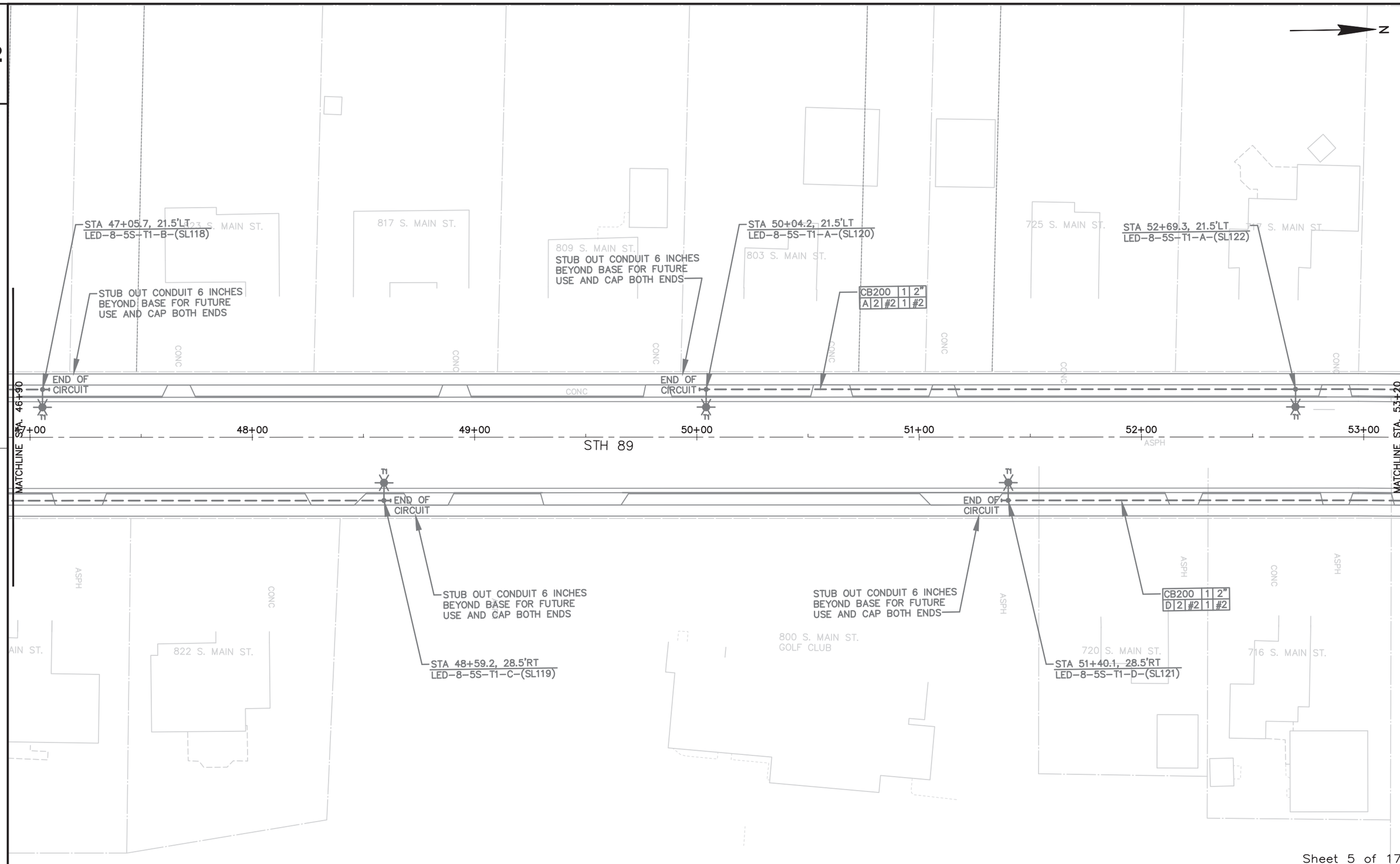

Sheet 5 of 17

PROJECT NO:3300-01-73	HWY: STH 89	COUNTY: JEFFERSON	LIGHTING PLAN – LAYOUTS	SHEET 131 E

FILE NAME : D:\ABAUTZ CURRENT WORK\L3 LAKE MILLS PROJECTS\L3-15D LAKE MILLS LIGHTING\L3-15D-WDOT-3300-01-73-E01.DWG PLOT DATE : 10/10/2017 9:56 AM PLOT BY : FORSTER ENGINEERING PLOT NAME : PLOT SCALE : 1" = 40'
LAYOUT NAME – SHEET (E04)

WISDOT/CADDS SHEET 44

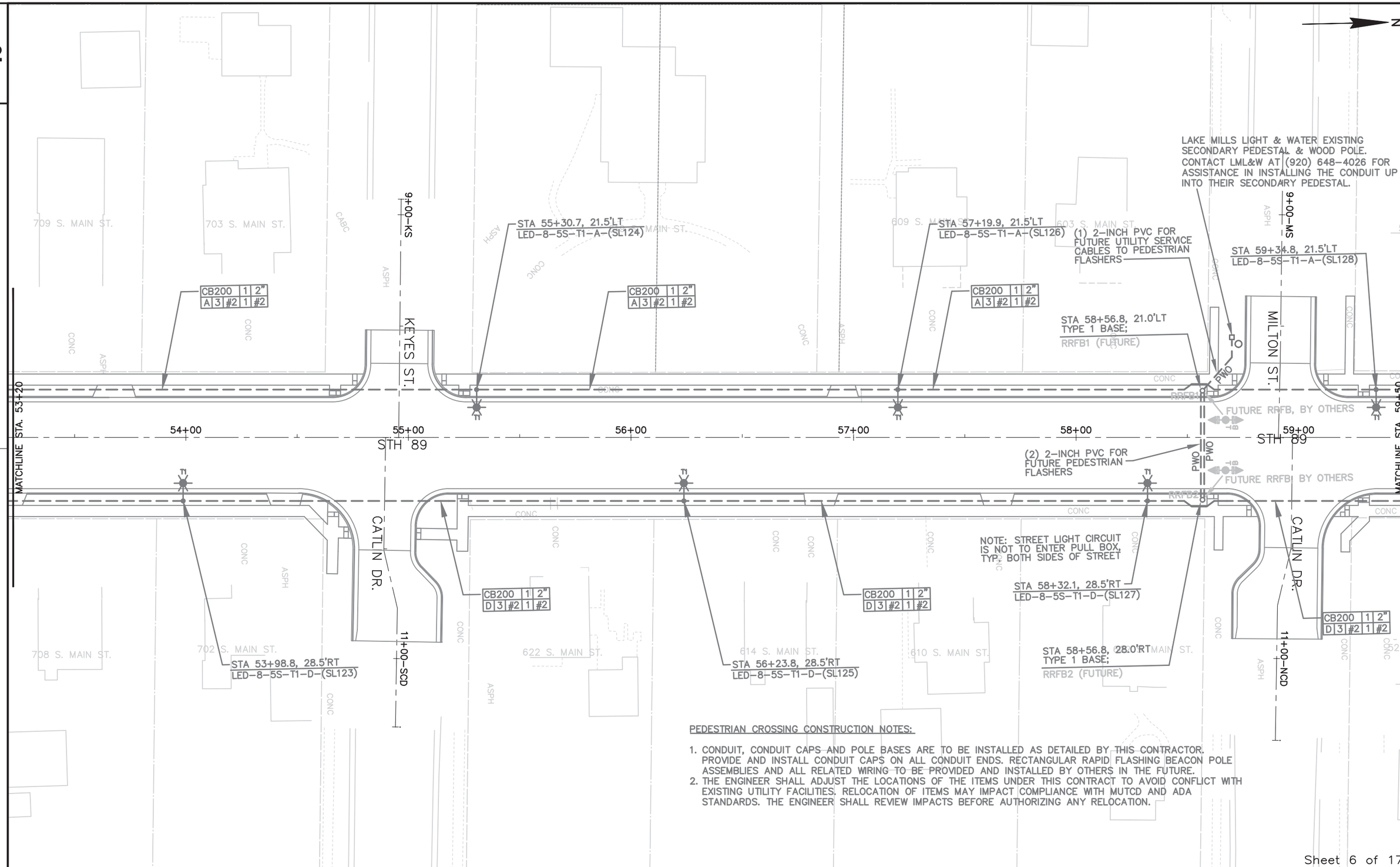

PEDESTRIAN CROSSING CONSTRUCTION NOTES:

1. CONDUIT, CONDUIT CAPS AND POLE BASES ARE TO BE INSTALLED AS DETAILED BY THIS CONTRACTOR. PROVIDE AND INSTALL CONDUIT CAPS ON ALL CONDUIT ENDS. RECTANGULAR RAPID FLASHING BEACON POLE ASSEMBLIES AND ALL RELATED WIRING TO BE PROVIDED AND INSTALLED BY OTHERS IN THE FUTURE.
2. THE ENGINEER SHALL ADJUST THE LOCATIONS OF THE ITEMS UNDER THIS CONTRACT TO AVOID CONFLICT WITH EXISTING UTILITY FACILITIES. RELOCATION OF ITEMS MAY IMPACT COMPLIANCE WITH MUTCD AND ADA STANDARDS. THE ENGINEER SHALL REVIEW IMPACTS BEFORE AUTHORIZING ANY RELOCATION.

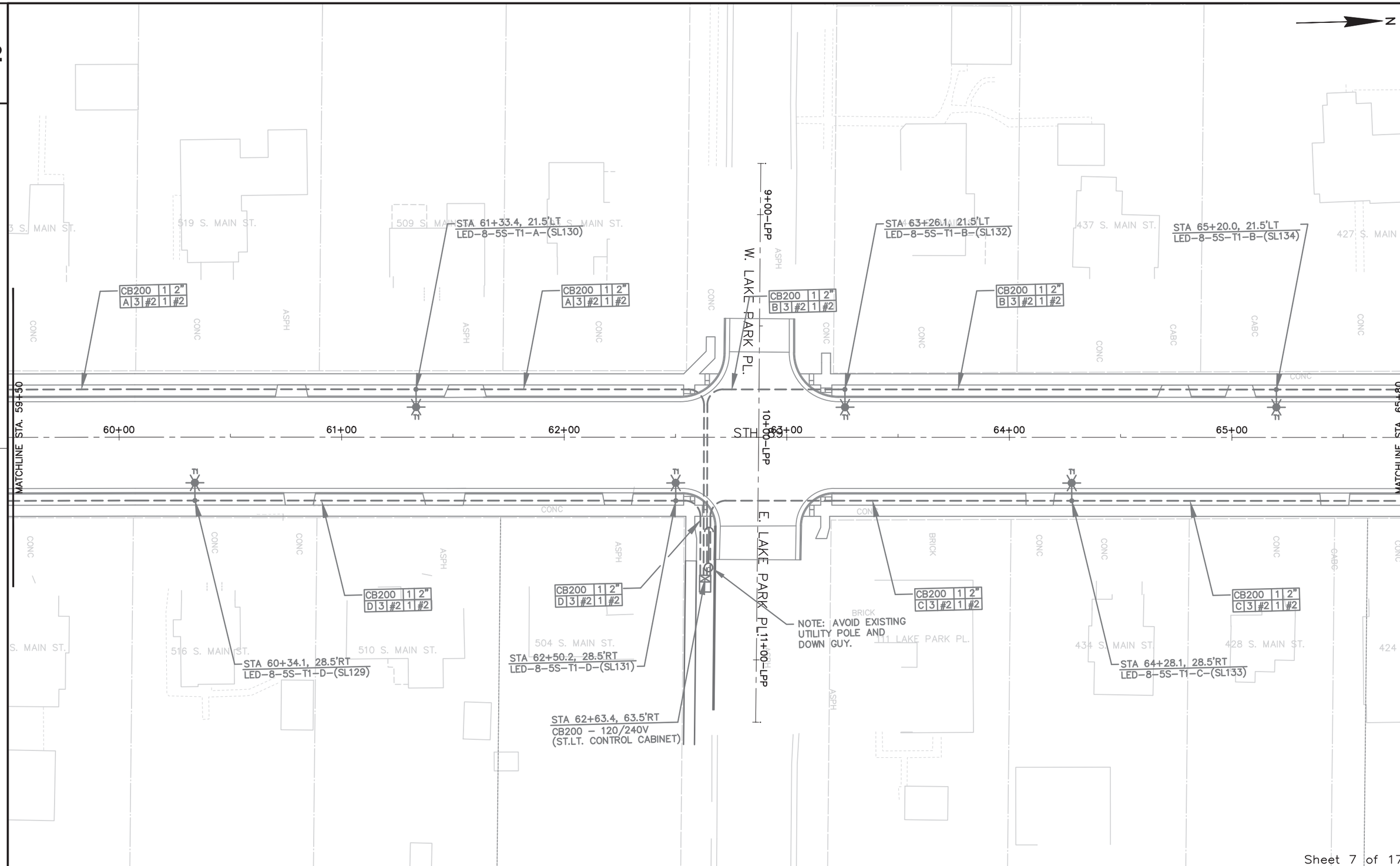

Sheet 7 of 17

PROJECT NO:3300-01-73	HWY: STH 89	COUNTY: JEFFERSON	LIGHTING PLAN - LAYOUTS	SHEET 133 E

FILE NAME : D:\ABAUTZ CURRENT WORK\L3 LAKE MILLS PROJECTS\L3-15D LAKE MILLS LIGHTING\L3-15D-WDOT-3300-01-73-E01.DWG PLOT DATE : 10/10/2017 9:56 AM PLOT BY : FORSTER ENGINEERING PLOT NAME : PLOT SCALE : 1" = 40'
LAYOUT NAME - SHEET (E06)

WISDOT/CADDS SHEET 44

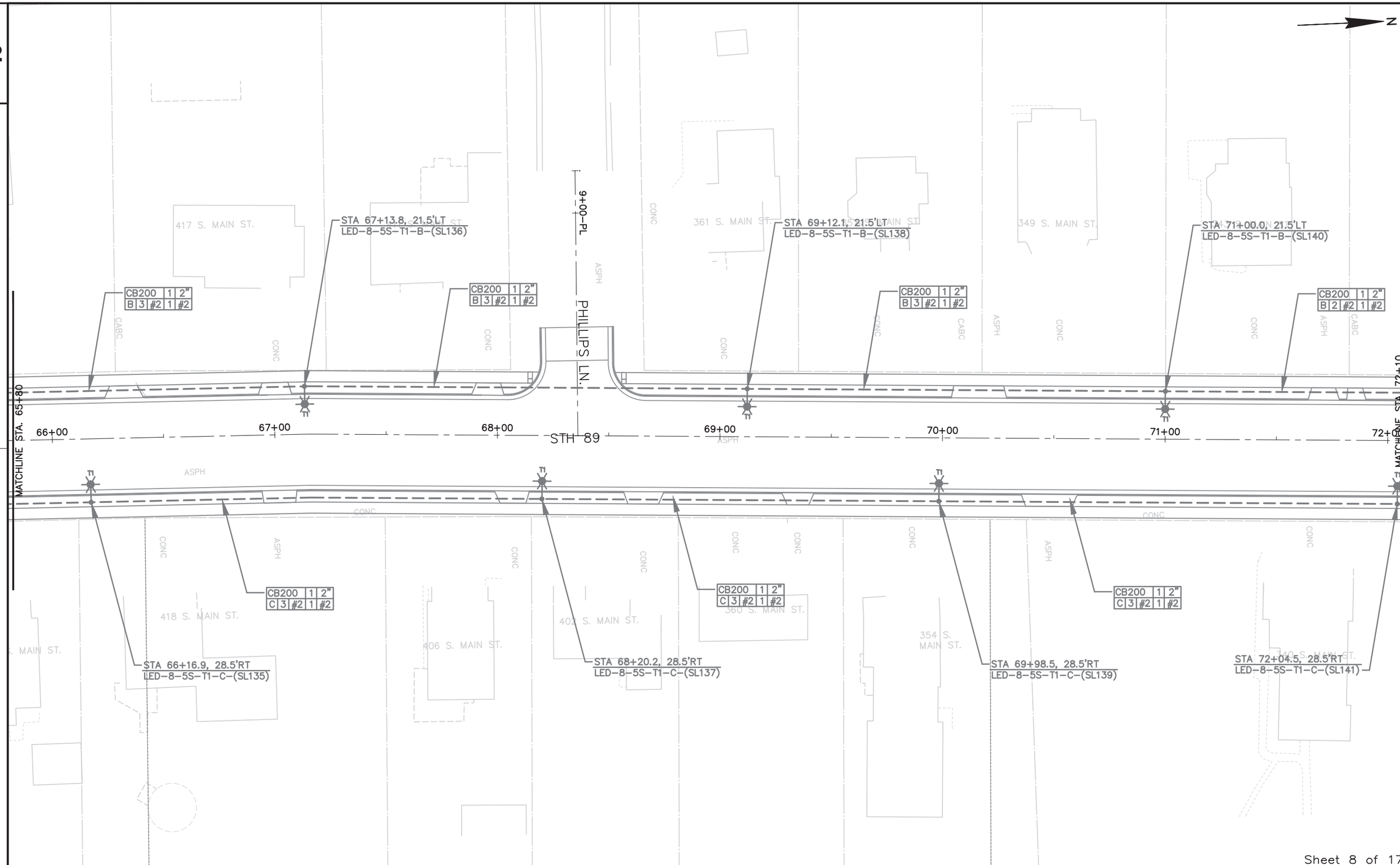

Sheet 8 of 17

PROJECT NO:3300-01-73	HWY: STH 89	COUNTY: JEFFERSON	LIGHTING PLAN – LAYOUTS	SHEET 134 E

FILE NAME : D:\ABAUTZ CURRENT WORK\L3 LAKE MILLS PROJECTS\L3-15D LAKE MILLS LIGHTING\L3-15D-WDOT-3300-01-73-E01.DWG
LAYOUT NAME – SHEET (E07)
PLOT DATE : 10/10/2017 9:56 AM PLOT BY : FORSTER ENGINEERING PLOT NAME : PLOT SCALE : 1" = 40'

WISDOT/CADDS SHEET 44

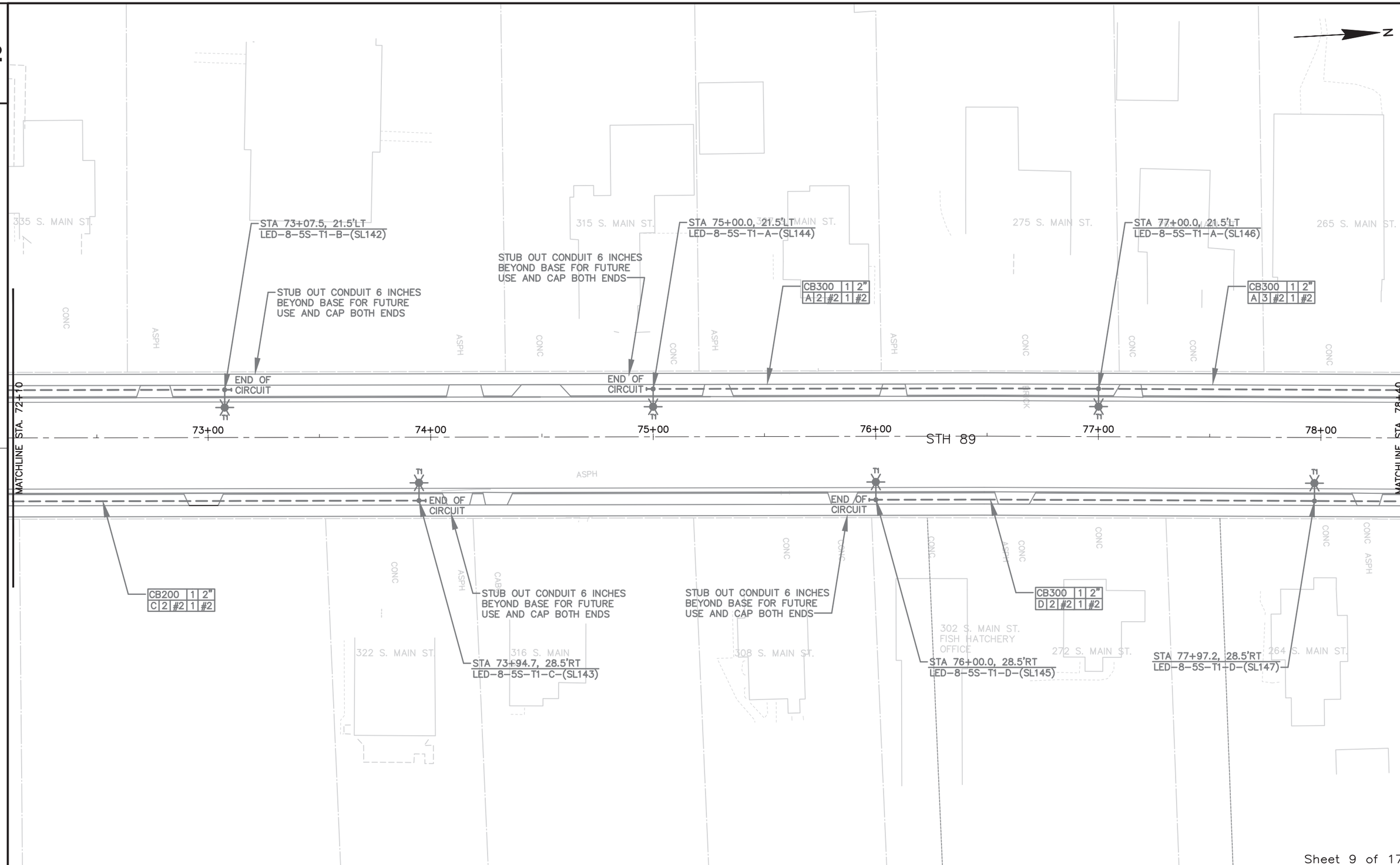

Sheet 9 of 17

PROJECT NO:3300-01-73	HWY:STH 89	COUNTY:JEFFERSON	LIGHTING PLAN – LAYOUTS	SHEET 135 E

FILE NAME : D:\ABAUTZ CURRENT WORK\L3 LAKE MILLS PROJECTS\L3-15D LAKE MILLS LIGHTING\L3-15D-WDOT-3300-01-73-E01.DWG
LAYOUT NAME – SHEET (E08)
PLOT DATE : 10/10/2017 9:56 AM PLOT BY : FORSTER ENGINEERING PLOT NAME : PLOT SCALE : 1" = 40'

WISDOT/CADDS SHEET 44

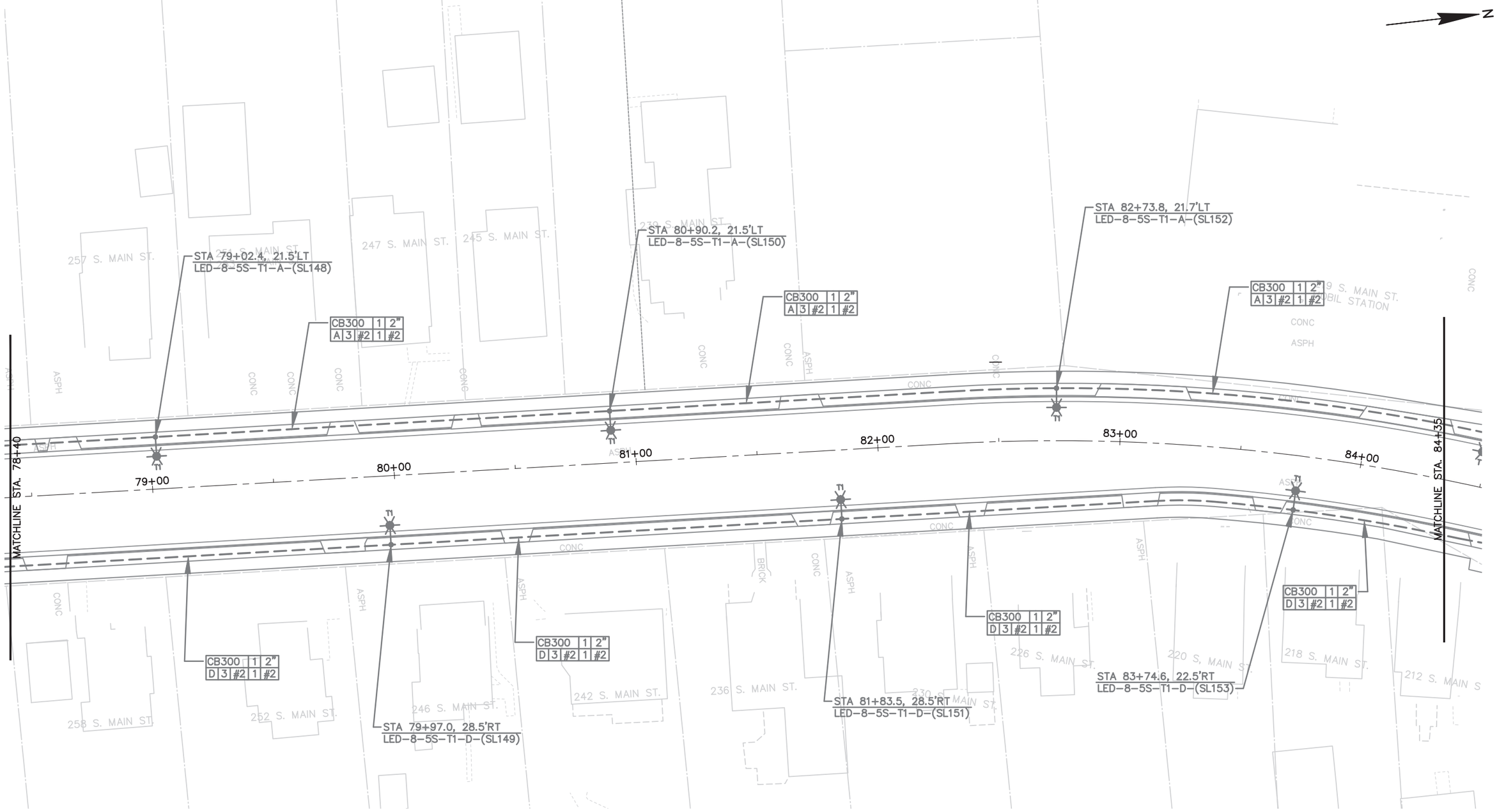

Sheet 10 of 17

PROJECT NO:3300-01-73	HWY: STH 89	COUNTY: JEFFERSON	LIGHTING PLAN – LAYOUTS	SHEET 136 E

FILE NAME : D:\ABAUTZ CURRENT WORK\L3 LAKE MILLS PROJECTS\L3-15D LAKE MILLS LIGHTING\L3-15D-WDOT-3300-01-73-E01.DWG
LAYOUT NAME – SHEET (E09)
PLOT DATE : 10/10/2017 9:56 AM PLOT BY : FORSTER ENGINEERING PLOT NAME : PLOT SCALE : 1" = 40'

WISDOT/CADDS SHEET 44

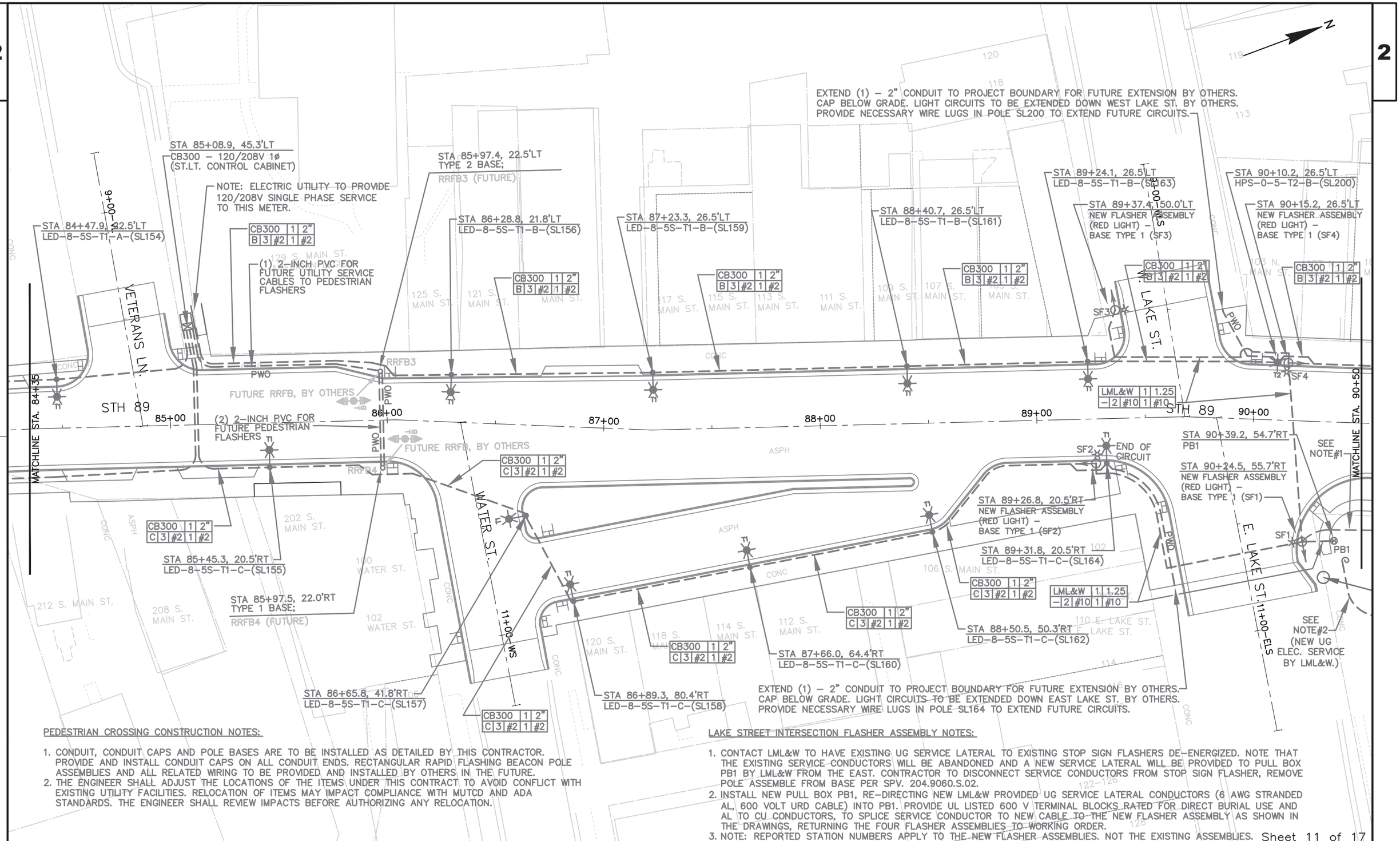

PEDESTRIAN CROSSING CONSTRUCTION NOTES:

1. CONDUIT, CONDUIT CAPS AND POLE BASES ARE TO BE INSTALLED AS DETAILED BY THIS CONTRACTOR. PROVIDE AND INSTALL CONDUIT CAPS ON ALL CONDUIT ENDS. RECTANGULAR RAPID FLASHING BEACON POLE ASSEMBLIES AND ALL RELATED WIRING TO BE PROVIDED AND INSTALLED BY OTHERS IN THE FUTURE.
2. THE ENGINEER SHALL ADJUST THE LOCATIONS OF THE ITEMS UNDER THIS CONTRACT TO AVOID CONFLICT WITH EXISTING UTILITY FACILITIES. RELOCATION OF ITEMS MAY IMPACT COMPLIANCE WITH MUTCD AND ADA STANDARDS. THE ENGINEER SHALL REVIEW IMPACTS BEFORE AUTHORIZING ANY RELOCATION.

LAKE STREET INTERSECTION FLASHER ASSEMBLY NOTES:

1. CONTACT LML&W TO HAVE EXISTING UG SERVICE LATERAL TO EXISTING STOP SIGN FLASHERS DE–ENERGIZED. NOTE THAT THE EXISTING SERVICE CONDUCTORS WILL BE ABANDONED AND A NEW SERVICE LATERAL WILL BE PROVIDED TO PULL BOX PB1 BY LML&W FROM THE EAST. CONTRACTOR TO DISCONNECT SERVICE CONDUCTORS FROM STOP SIGN FLASHER, REMOVE POLE ASSEMBLE FROM BASE PER SPV. 204.9060.S.02.
2. INSTALL NEW PULL BOX PB1, RE–DIRECTING NEW LML&W PROVIDED UG SERVICE LATERAL CONDUCTORS (6 AWG STRANDED AL, 600 VOLT URD CABLE) INTO PB1. PROVIDE UL LISTED 600 V TERMINAL BLOCKS RATED FOR DIRECT BURIAL USE AND AL TO CU CONDUCTORS, TO SPLICE SERVICE CONDUCTOR TO NEW CABLE TO THE NEW FLASHER ASSEMBLY AS SHOWN IN THE DRAWINGS, RETURNING THE FOUR FLASHER ASSEMBLIES TO WORKING ORDER.
3. NOTE: REPORTED STATION NUMBERS APPLY TO THE NEW FLASHER ASSEMBLIES. NOT THE EXISTING ASSEMBLIES.

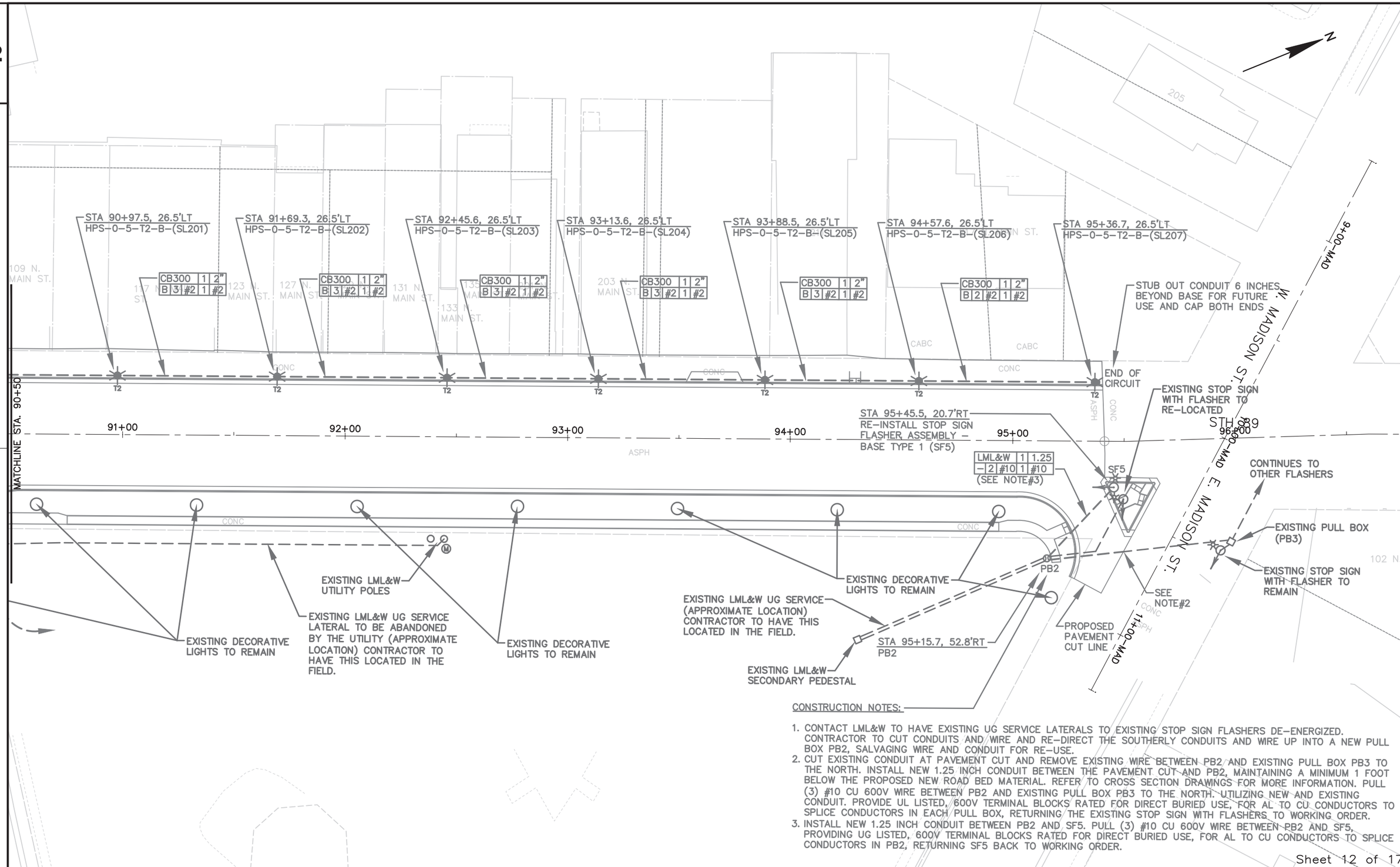

CONSTRUCTION NOTES:

1. CONTACT LML&W TO HAVE EXISTING UG SERVICE LATERALS TO EXISTING STOP SIGN FLASHERS DE-ENERGIZED. CONTRACTOR TO CUT CONDUITS AND WIRE AND RE-DIRECT THE SOUTHERLY CONDUITS AND WIRE UP INTO A NEW PULL BOX PB2, SALVAGING WIRE AND CONDUIT FOR RE-USE.
2. CUT EXISTING CONDUIT AT PAVEMENT CUT AND REMOVE EXISTING WIRE BETWEEN PB2 AND EXISTING PULL BOX PB3 TO THE NORTH. INSTALL NEW 1.25 INCH CONDUIT BETWEEN THE PAVEMENT CUT AND PB2, MAINTAINING A MINIMUM 1 FOOT BELOW THE PROPOSED NEW ROAD BED MATERIAL. REFER TO CROSS SECTION DRAWINGS FOR MORE INFORMATION. PULL (3) #10 CU 600V WIRE BETWEEN PB2 AND EXISTING PULL BOX PB3 TO THE NORTH. UTILIZING NEW AND EXISTING CONDUIT. PROVIDE UL LISTED, 600V TERMINAL BLOCKS RATED FOR DIRECT BURIED USE, FOR AL TO CU CONDUCTORS TO SPLICE CONDUCTORS IN EACH PULL BOX, RETURNING THE EXISTING STOP SIGN WITH FLASHERS TO WORKING ORDER.
3. INSTALL NEW 1.25 INCH CONDUIT BETWEEN PB2 AND SF5. PULL (3) #10 CU 600V WIRE BETWEEN PB2 AND SF5, PROVIDING UG LISTED, 600V TERMINAL BLOCKS RATED FOR DIRECT BURIED USE, FOR AL TO CU CONDUCTORS TO SPLICE CONDUCTORS IN PB2, RETURNING SF5 BACK TO WORKING ORDER.

Sheet 12 of 17

PROJECT NO:3300-01-73	HWY: STH 89	COUNTY: JEFFERSON	LIGHTING PLAN - LAYOUTS	SHEET 138 E

FILE NAME : D:\ABAUTZ CURRENT WORK\L3 LAKE MILLS PROJECTS\L3-15D LAKE MILLS LIGHTING\L3-15D-WDOT-3300-01-73-E01.DWG PLOT DATE : 10/10/2017 9:56 AM PLOT BY : FORSTER ENGINEERING PLOT NAME : PLOT SCALE : 1" = 40'
LAYOUT NAME - SHEET (E11)

WISDOT/CADDS SHEET 44

2

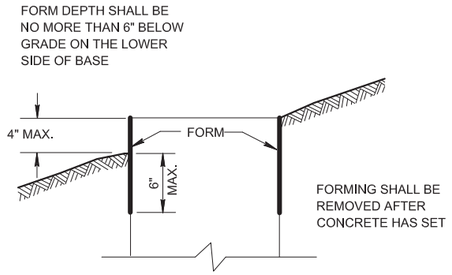

FORMING DETAIL

QUANTITY REQUIREMENTS	CONCRETE BASE TYPE
	SPECIAL TYPE 5
APPROX. CUBIC YARDS OF CONCRETE	0.58
LBS. OF HOOP BAR STEEL	18
LBS. OF VERTICAL BAR STEEL	18

GENERAL NOTES

DETAILS OF CONSTRUCTION, MATERIALS AND WORKMANSHIP NOT SHOWN ON THIS DRAWING SHALL CONFORM TO THE PERTINENT REQUIREMENTS OF THE CONTRACT.

BASES SHALL BE EXCAVATED BY USE OF A CIRCULAR AUGER.

TOP SURFACES OF CONCRETE BASES SHALL BE TROWEL FINISHED SMOOTH AND LEVEL.

CONDUIT SIZES AND LOCATIONS SHALL BE AS SHOWN ON THE PLANS.

THE FINAL OR TERMINATING CONCRETE BASE IN A CONDUIT RUN SHALL HAVE A 6" EXIT STUB INSTALLED FOR FUTURE CABLING USE. THE EXIT STUB SHALL BE SIZED AS USED THROUGHOUT THE CONDUIT RUN AS SHOWN AT THE ENTRANCE OF THE BASE.

MINIMUM BENDING RADIUS OF CONDUIT IS EQUAL TO 6 X THE DIAMETER.

CONDUIT HEIGHT ABOVE CONCRETE BASES SHALL BE 1 INCH. ALL METALLIC CONDUIT ENDS SHALL BE REAMED AND THREADED.

ALL CONDUIT ENDS AT THE TOP OF CONCRETE BASES SHALL BE CAPPED IF METALLIC OR PLUGGED IF NONMETALLIC IMMEDIATELY AFTER PLACEMENT AND BEFORE CONCRETE IS POURED. CONDUITS IN WHICH WIRE OR CABLE IS NOT INSTALLED SHALL REMAIN CAPPED OR PLUGGED.

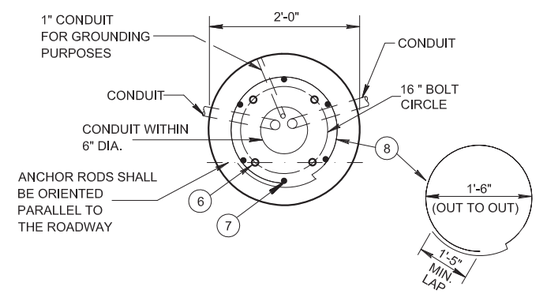

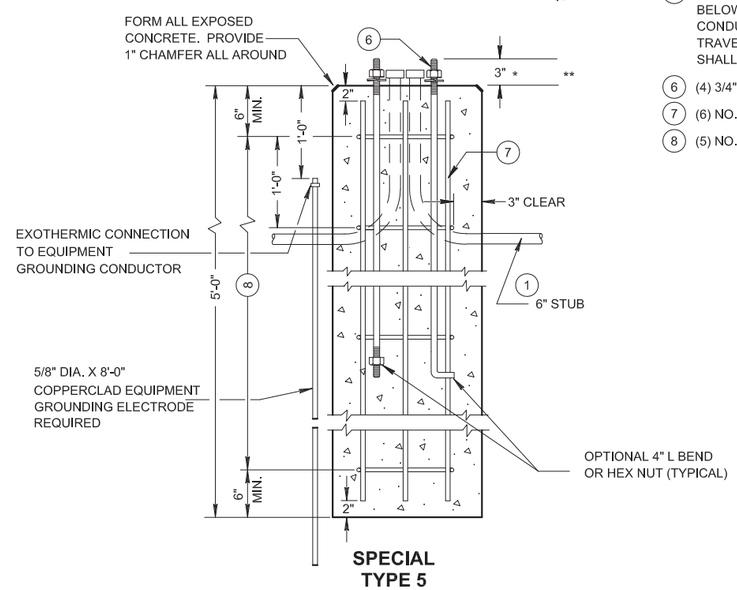

SPECIAL TYPE 5

CONCRETE BASE

GENERAL NOTES (CONTINUED)

BELL ENDS SHALL BE INSTALLED ON ALL PVC CONDUIT EXPOSED AT THE TOP OF CONCRETE BASES BEFORE INSTALLATION OF CABLE OR WIRE.

ENDS OF CONDUIT INSTALLED BELOW GRADE FOR FUTURE USE SHALL BE CAPPED IF METALLIC OR PLUGGED IF NONMETALLIC.

WHEN REQUIRED TO CONNECT NONMETALLIC CONDUIT TO METALLIC CONDUIT, ONLY ADAPTER FITTINGS, U.L. LISTED FOR ELECTRICAL USE, SHALL BE USED.

IF A BASE REQUIRES A DEEP FORM BECAUSE OF LOOSE DIRT OR FILL, THE FORM SHALL BE REMOVED BEFORE BACKFILLING AROUND THE BASE. BACKFILL SHALL BE TAMPED TIGHT AGAINST THE BARE CONCRETE BASE IN LAYERS OF 1 FOOT OR LESS.

A NO. 4 AWG, STRANDED COPPER EQUIPMENT GROUNDING CONDUCTOR SHALL BE EXOTHERMICALLY WELDED TO THE EQUIPMENT GROUNDING ELECTRODE (GROUND ROD).

THE EQUIPMENT GROUNDING CONDUCTOR SHALL BE FURNISHED AND INSTALLED TO ENTER THE BASE THROUGH A 1 INCH CONDUIT INSTALLED FOR GROUNDING PURPOSES, LEAVING A 4 FOOT COIL OF WIRE ABOVE THE CONCRETE BASE. THE EQUIPMENT GROUNDING CONDUCTOR SHALL BE NEATLY COILED AND THE COILS TIED TOGETHER.

ANCHOR RODS SHALL BE THREADED 12" IN LENGTH ON EACH END OF THE ROD, ANCHOR RODS SHALL BE MANUFACTURED IN ACCORDANCE WITH SECTION 654.2.1 OF THE STANDARD SPECIFICATIONS.

WASHERS AND LOCK WASHERS ARE REQUIRED ON ALL ANCHOR RODS.

WHEN ANCHOR RODS USING THE ALTERNATE "L" BEND ARE FURNISHED, THE 4" "L" BEND SHALL BE IN ADDITION TO THE SPECIFIED ANCHOR ROD BAR LENGTH. THE "L" BEND END SHALL NOT BE THREADED.

ANCHOR RODS SHALL BE INSTALLED WITH MISALIGNMENTS OF LESS THAN 1:40 FROM VERTICAL.

WELDING OF THE ANCHOR RODS TO THE CAGE IS UNACCEPTABLE. TIE WIRES SHALL BE USED.

BAR STEEL REINFORCEMENT SHALL BE COATED WITH POWDERED EPOXY RESIN IN ACCORDANCE WITH SECTION 505 OF THE STANDARD SPECIFICATIONS (LATEST EDITION).

(1) THE MINIMUM DEPTH OF CONDUIT EXITING THE CONCRETE BASE AND INSTALLED BELOW THE TRAVELED WAY SHALL BE 24 INCHES. THE MINIMUM DEPTH OF CONDUIT EXITING THE CONCRETE BASE THAT IS NOT INSTALLED BELOW THE TRAVELED WAY SHALL BE 18 INCHES. THE MAXIMUM DEPTH OF ALL CONDUIT SHALL BE 36 INCHES EXCEPT WITH WRITTEN APPROVAL BY THE ENGINEER.

(6) (4) 3/4" DIA. X 18" ANCHOR RODS.

(7) (6) NO.4 X 4'-8" BAR STEEL REINFORCEMENT.

(8) (5) NO. 4 X 5'-1" BAR STEEL REINFORCEMENT @ 1'-0" C-C.

2

* ANY ANCHOR ROD PROJECTION SHORTER THAN 2-3/4" OR LONGER THAN 3-1/4" SHALL REQUIRE THE BASE TO BE REMOVED AND REPLACED AT THE CONTRACTORS EXPENSE.

** FOR NONBREAKAWAY INSTALLATIONS, 4 -1/2" \ ANCHOR ROD PROJECTION WITH THE USE OF LEVELING NUTS. RODENT SCREEN REQUIRED.

Sheet 13 of 17

SPECIAL CONCRETE BASE TYPE 5

DESIGN: FORSTER ELECTRICAL ENGINEERING

DATE: 2017–10–10 REV: 1

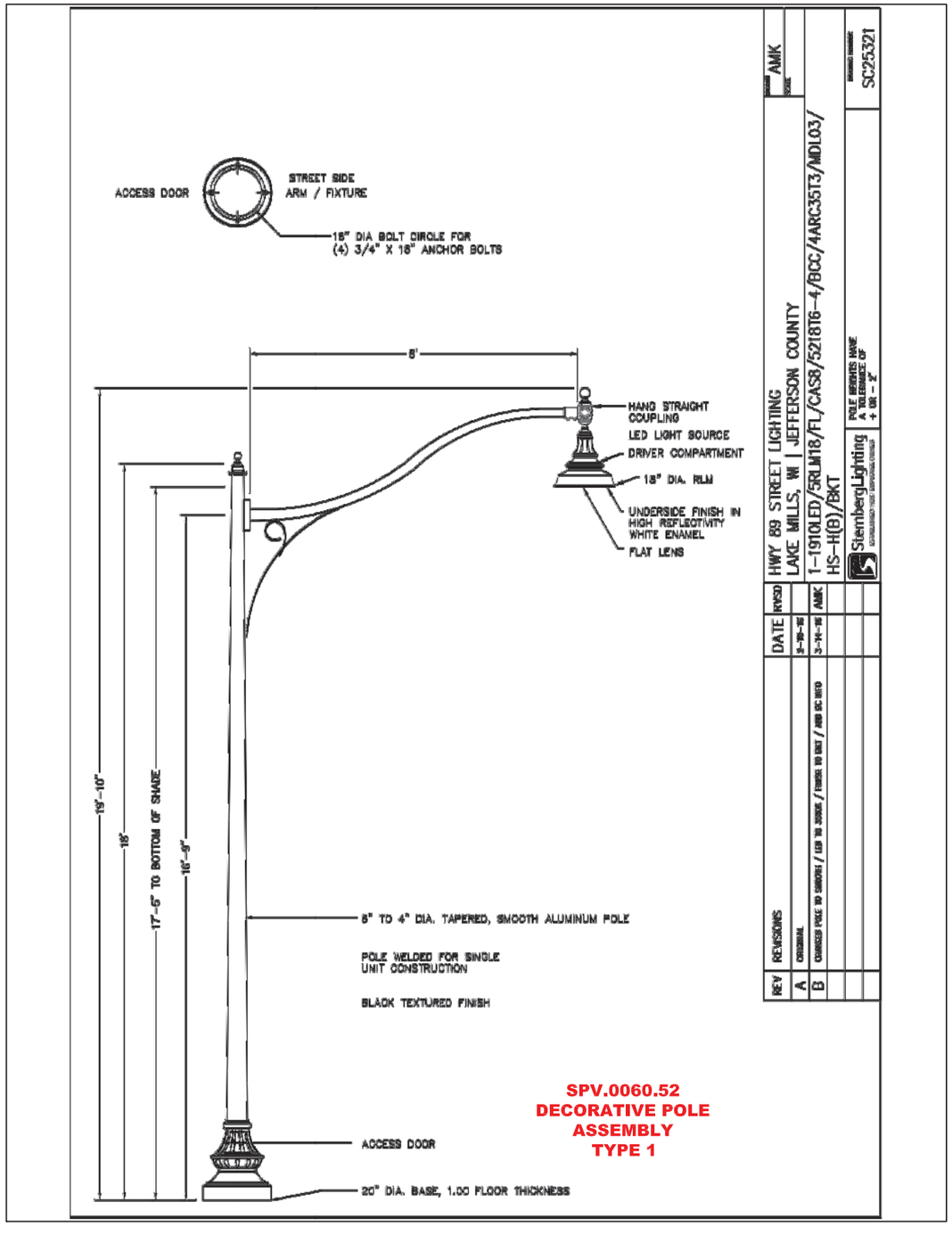

SPV.0060.52
DECORATIVE POLE
ASSEMBLY
TYPE 1

REV	REVISIONS	DATE	KVSD
A	ORIGINAL	2-26-16	AMK
B	CORRECT POLE TO SHROUD / LED TO 3000K / FINISH TO GRAY / ADD DC INFO	3-24-16	AMK

HWY 89 STREET LIGHTING
LAKE MILLS, WI | JEFFERSON COUNTY
1-191OLED/5RLM18/FL/CASB/5218T6-4/BCC/4ARC3573/MDL03/HS-H(B)/BKT

AMK

SC253321

POLE MOUNTS HAVE A TOLERANCE OF + OR - 2°

StembergLighting

REV.	ALTERATION	DATE	BY

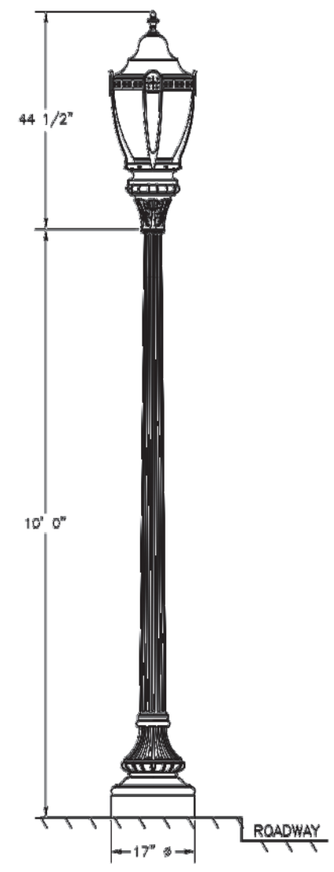

LUMINAIRE SPECIFICATIONS

CATALOG NO.:	K124-IAR-III-150(MOG) -HPS-120(MT)-K13-WRS-HSS
QUANTITY:	
GLOBE MAT'L:	INTERNAL ACRYLIC RIPPLED
IES CLASSIFIC.:	TYPE III
WATTAGE:	150W
LIGHT SOURCE:	HIGH PRESSURE SODIUM
LINE VOLTAGE:	120V (MULTI-TAP)
POLE ADAPTOR:	K13
PAINT:	TEXTURED FOREST GREEN
OPTIONS:	#2 FINIAL & WESTINGHOUSE RING & STRUTS (PAINT: GOLD) HOUSE SIDE SHIELD

ANSI S55 LAMP BY OTHERS

POLE SPECIFICATIONS

CATALOG NO.:	KM10FC-10
QUANTITY:	
MATERIAL:	1-PC. TAPERED CAST ALUMINUM
PAINT:	TEXTURED FOREST GREEN
TOP SIZE:	3 3/4"
OVERALL HGT.	10' 0"
APPROX. WGT.:	115 lbs.
ANCHOR BOLTS:	(4) 3/4" x 27"L
BOLT CIRCLE:	12" ø

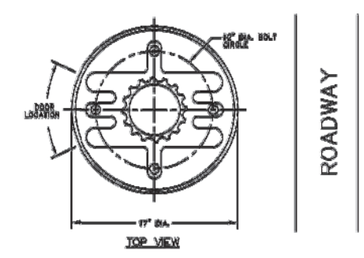

CUSTOMER APPROVAL & DATE:

SPV.0060.53
DECORATIVE POLE
ASSEMBLY
TYPE 2

CUSTOMER ORDER No:	---
KMFG. ORDER No:	---
KING U.S. ORDER No:	---

Notes:
Although rare, oscillating loads severe enough to cause damage can occasionally occur in structures of all types. Because they are influenced by many factors not provided to StressCrete, these loads are unpredictable. The users maintenance program should include observation for excessive vibration & examination for any structural damage. The StressCrete warranty specifically excludes fatigue failure or similar phenomena resulting from induced vibration, oscillation or resonance associated with the eccentric rotation of attached equipment.

King Luminaire • StressCrete • Est. 1953
STRESSCRETE GROUP

Manufacturing Locations:
Burlington, Ontario 1-800-268-7809
Northport, Alabama 1-800-435-6563
Atchison, Kansas 1-800-637-1024
Jefferson, Ohio 1-800-268-7809

PROJECT/CUSTOMER:				
LAKE MILLS				
DRAWN BY: SHAUN C	AT: SC3	CHECKED BY:	DATE: 2-26-16	REVISION:
DRAWING TYPE: CONCEPT DRAWING			DRAWING NUMBER: LAKE MILLS-1	

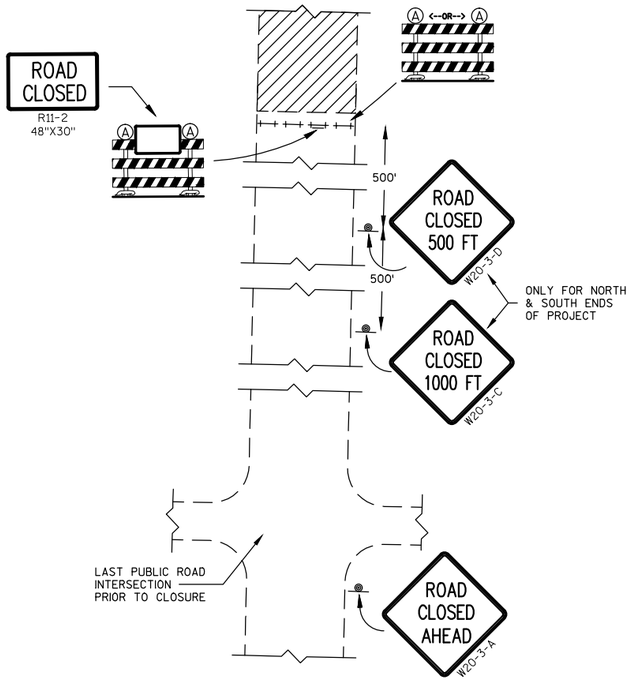

DETAIL A
MAINLINE CLOSURES

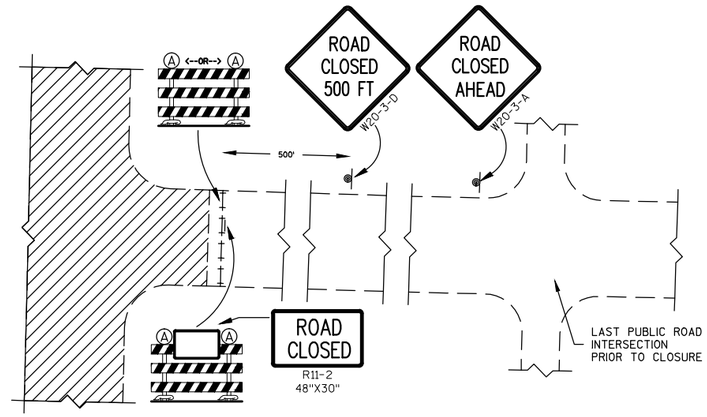

DETAIL B
NO ACCESS TO PROJECT FROM SIDE STREETS

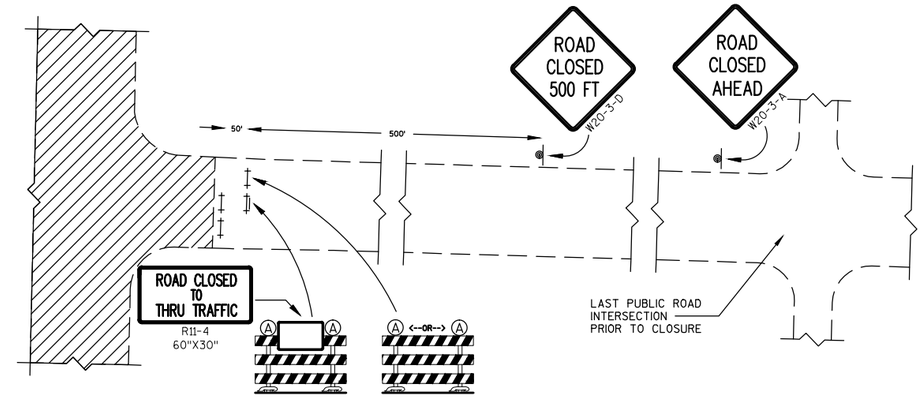

DETAIL C
RESIDENT ACCESS TO PROJECT

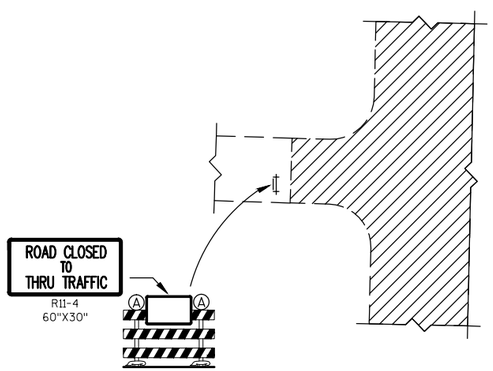

DETAIL D
DEAD END SIDE STREETS

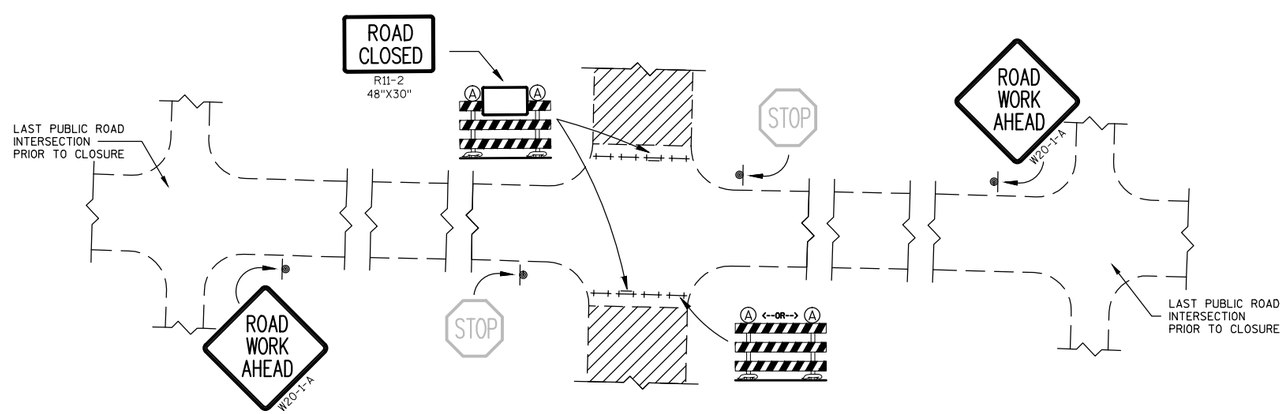

DETAIL E
PUBLIC CROSS-TRAFFIC MAINTAINED, NO ACCESS TO PROJECT

*REFER TO TRAFFIC CONTROL SHEETS FOR LOCATIONS OF EACH DETAIL

LEGEND

- (A) - TYPE A WARNING LIGHT (FLASHING)
- TYPE III BARRICADE
- TYPE III BARRICADE WITH ATTACHED SIGN
- POST MOUNTED WARNING SIGN
- WORK ZONE

PROJECT NO:3300-01-73	HWY:STH 89	COUNTY:JEFFERSON	TRAFFIC CONTROL DETAILS	SHEET 141	E

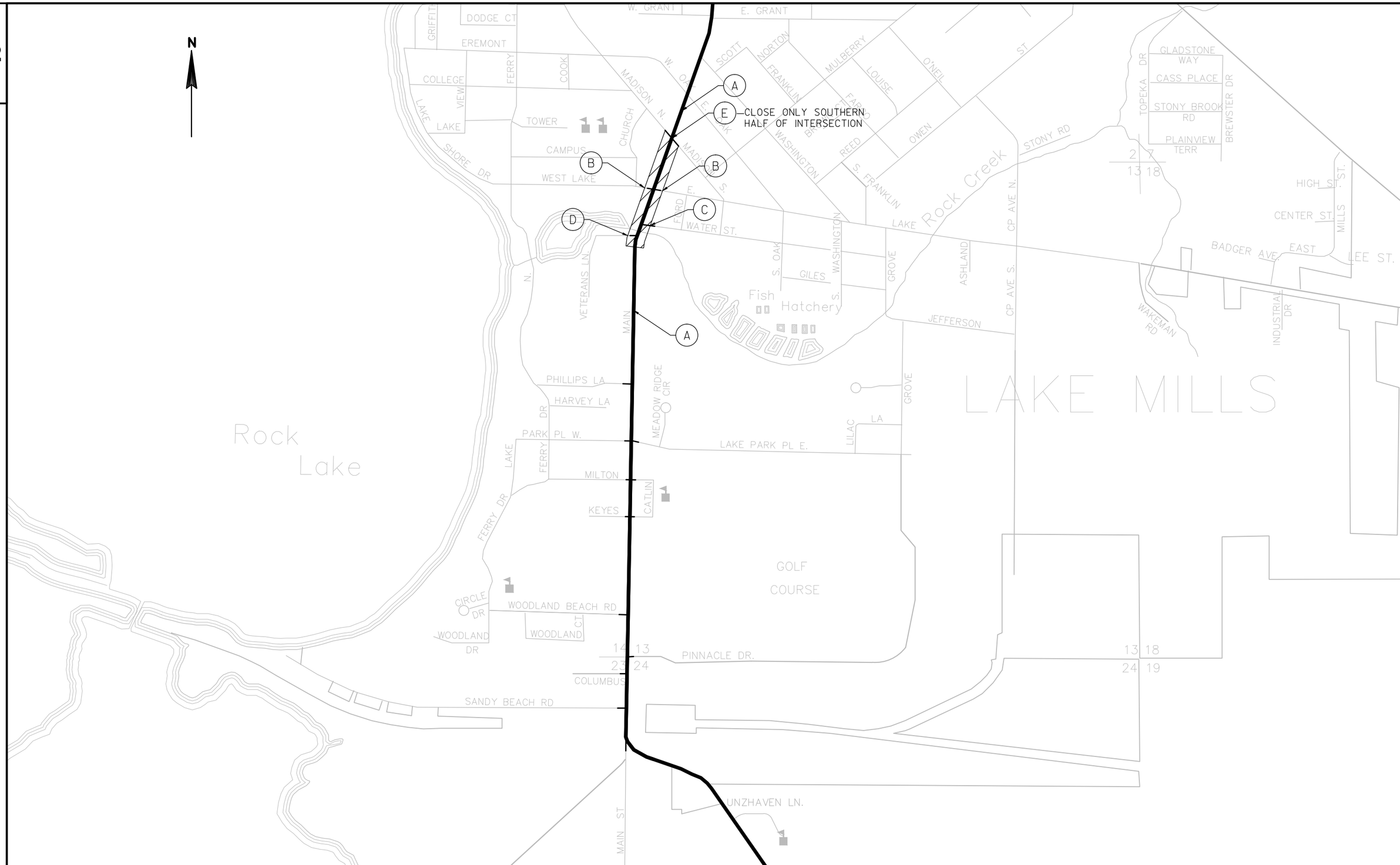

PROJECT NO:3300-01-73	HWY:STH 89	COUNTY:JEFFERSON	TRAFFIC CONTROL STAGE 1	SHEET 142	E

FILE NAME : N:\PDS\C3D\33000103\SHEETSPLAN\025001-TRAFFIC CONTROL\025001_TC.DWG PLOT DATE : 10/26/2017 6:18 PM PLOT BY : WHITE, JEREMY J PLOT NAME : PLOT SCALE : 1 IN:200 FT

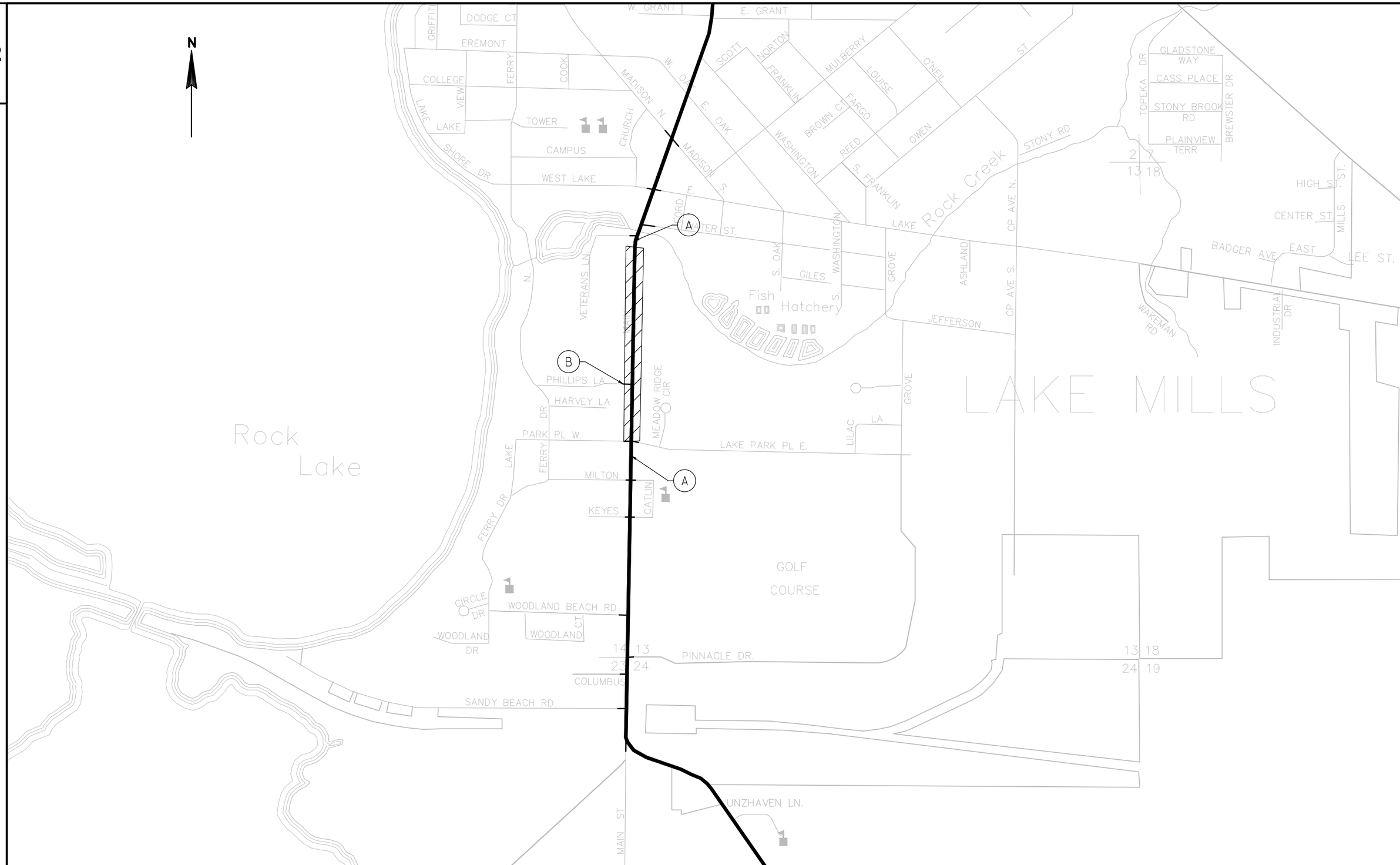

PROJECT NO:3300-01-73	HWY:STH 89	COUNTY:JEFFERSON	TRAFFIC CONTROL STAGE 2	SHEET 143	E

FILE NAME : N:\PDS\C3D\33000103\SHEETSPLAN\025001-TRAFFIC CONTROL\025001_TC.DWG PLOT DATE : 10/26/2017 6:18 PM PLOT BY : WHITE, JEREMY J PLOT NAME : PLOT SCALE : 1 IN:200 FT

WISDOT/CADDS SHEET 42

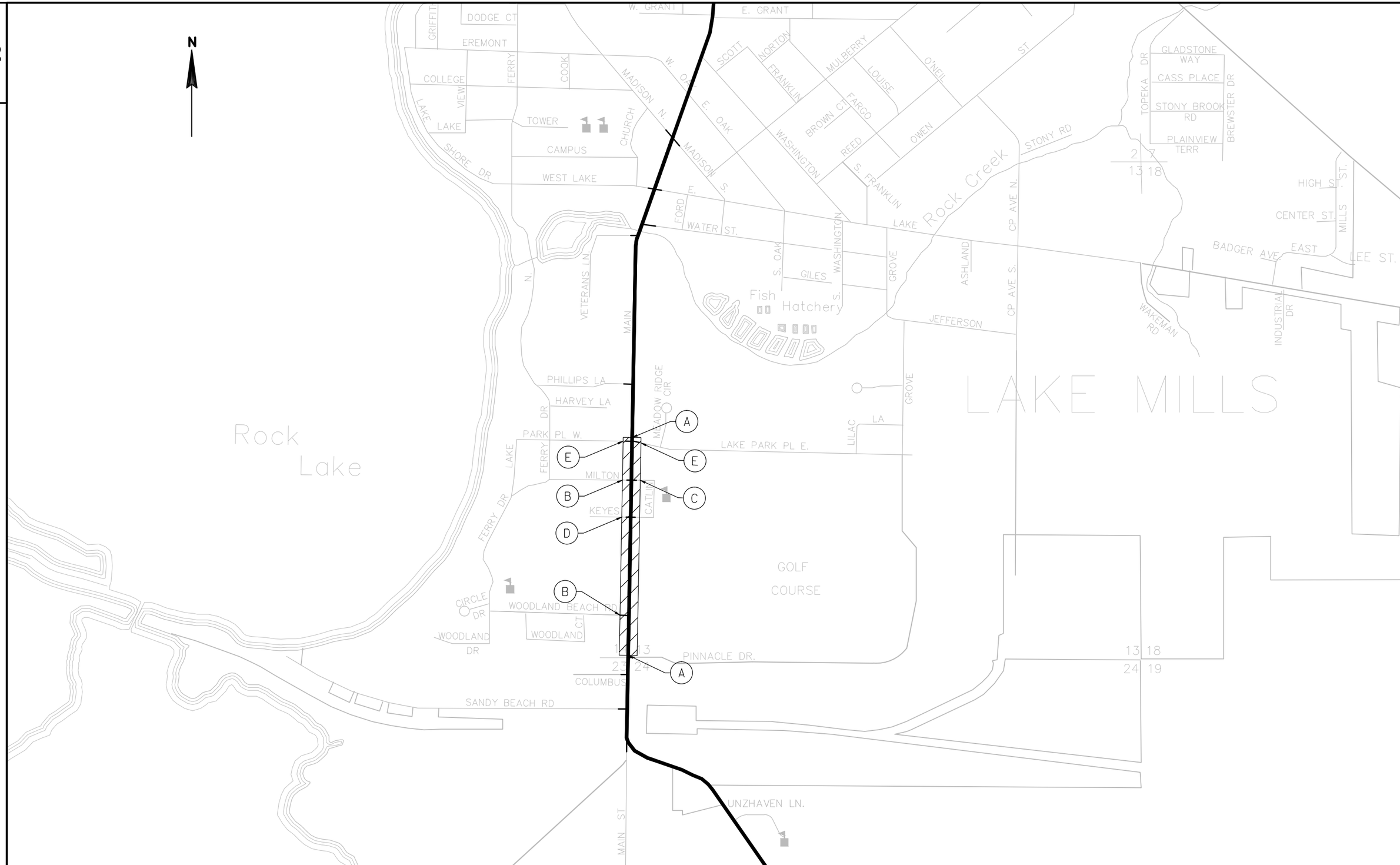

PROJECT NO:3300-01-73	HWY:STH 89	COUNTY:JEFFERSON	TRAFFIC CONTROL STAGE 3	SHEET 144	E

FILE NAME : N:\PDS\C3D\33000103\SHEETSPLAN\025001-TRAFFIC CONTROL\025001_TC.DWG PLOT DATE : 10/26/2017 6:18 PM PLOT BY : WHITE, JEREMY J PLOT NAME : PLOT SCALE : 1 IN:200 FT

WISDOT/CADDS SHEET 42

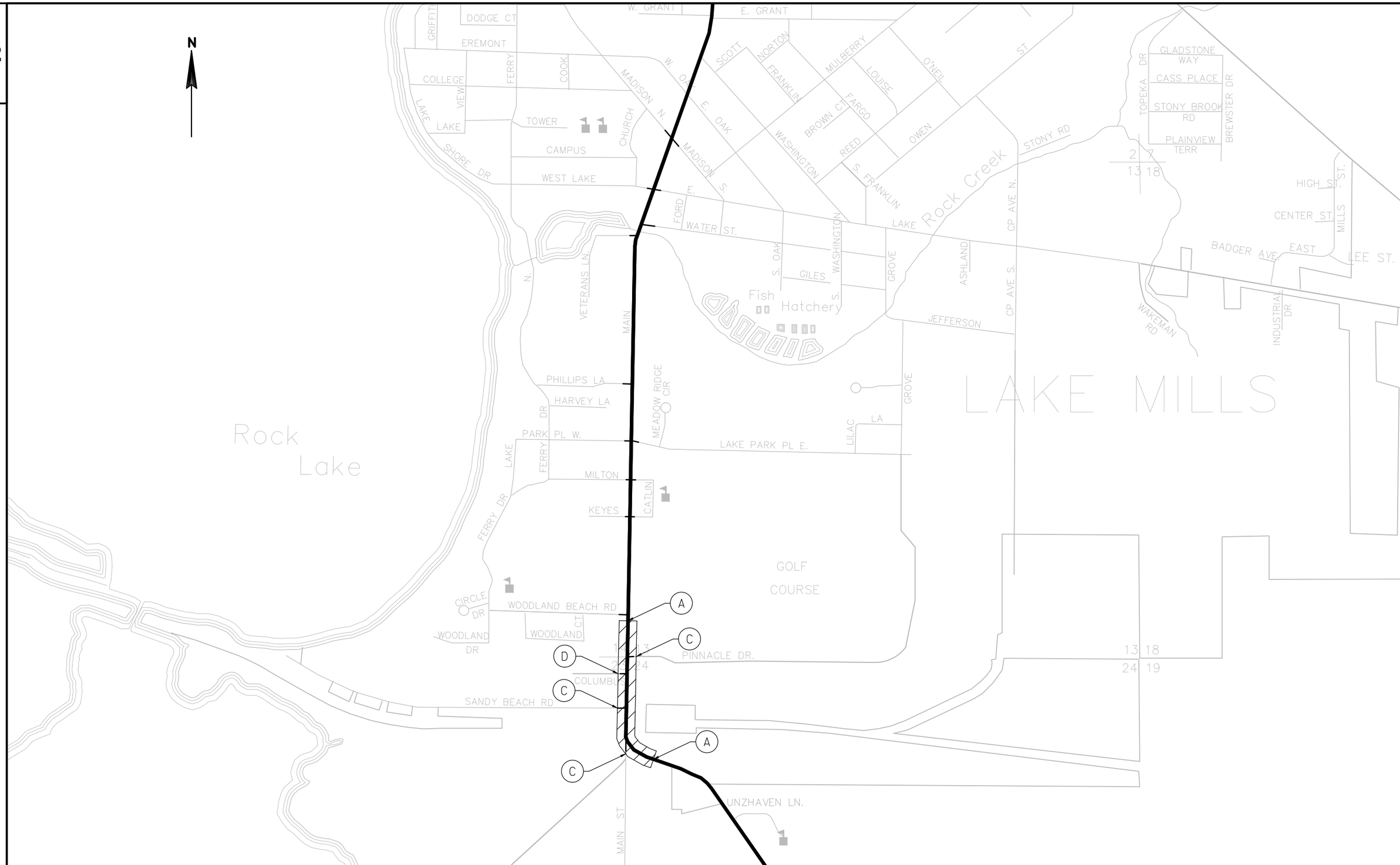

PROJECT NO:3300-01-73	HWY:STH 89	COUNTY:JEFFERSON	TRAFFIC CONTROL STAGE 4	SHEET 145	E

FILE NAME : N:\PDS\C3D\33000103\SHEETSPLAN\025001-TRAFFIC CONTROL\025001_TC.DWG PLOT DATE : 10/26/2017 6:18 PM PLOT BY : WHITE, JEREMY J PLOT NAME : PLOT SCALE : 1 IN:200 FT

WISDOT/CADDS SHEET 42

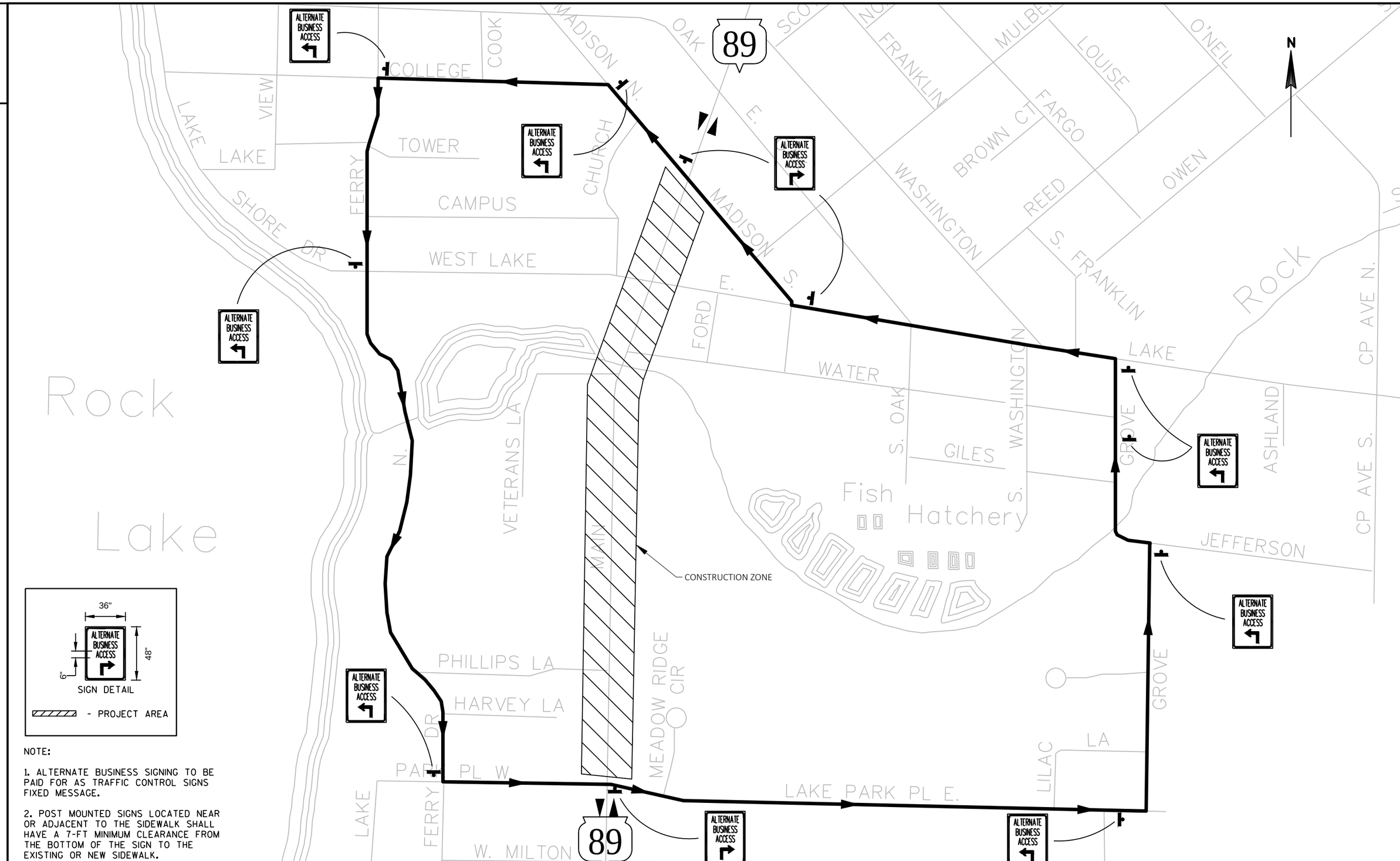

NOTE:

1. ALTERNATE BUSINESS SIGNING TO BE PAID FOR AS TRAFFIC CONTROL SIGNS FIXED MESSAGE.

2. POST MOUNTED SIGNS LOCATED NEAR OR ADJACENT TO THE SIDEWALK SHALL HAVE A 7-FT MINIMUM CLEARANCE FROM THE BOTTOM OF THE SIGN TO THE EXISTING OR NEW SIDEWALK.

PROJECT NO: 3300-01-73	HWY: STH 89	COUNTY: JEFFERSON	ALTERNATE BUSINESS ACCESS SIGNING PLAN - STAGES 1 & 2	SHEET 146	E

FILE NAME : N:\PDS\C3D\33000103\SHEETSPLAN\025001-TRAFFIC CONTROL\025002_TC.DWG
LAYOUT NAME - Stage 1&2
PLOT DATE : 10/26/2017 6:27 PM PLOT BY : WHITE, JEREMY J PLOT NAME : PLOT SCALE : 1 IN:100 FT

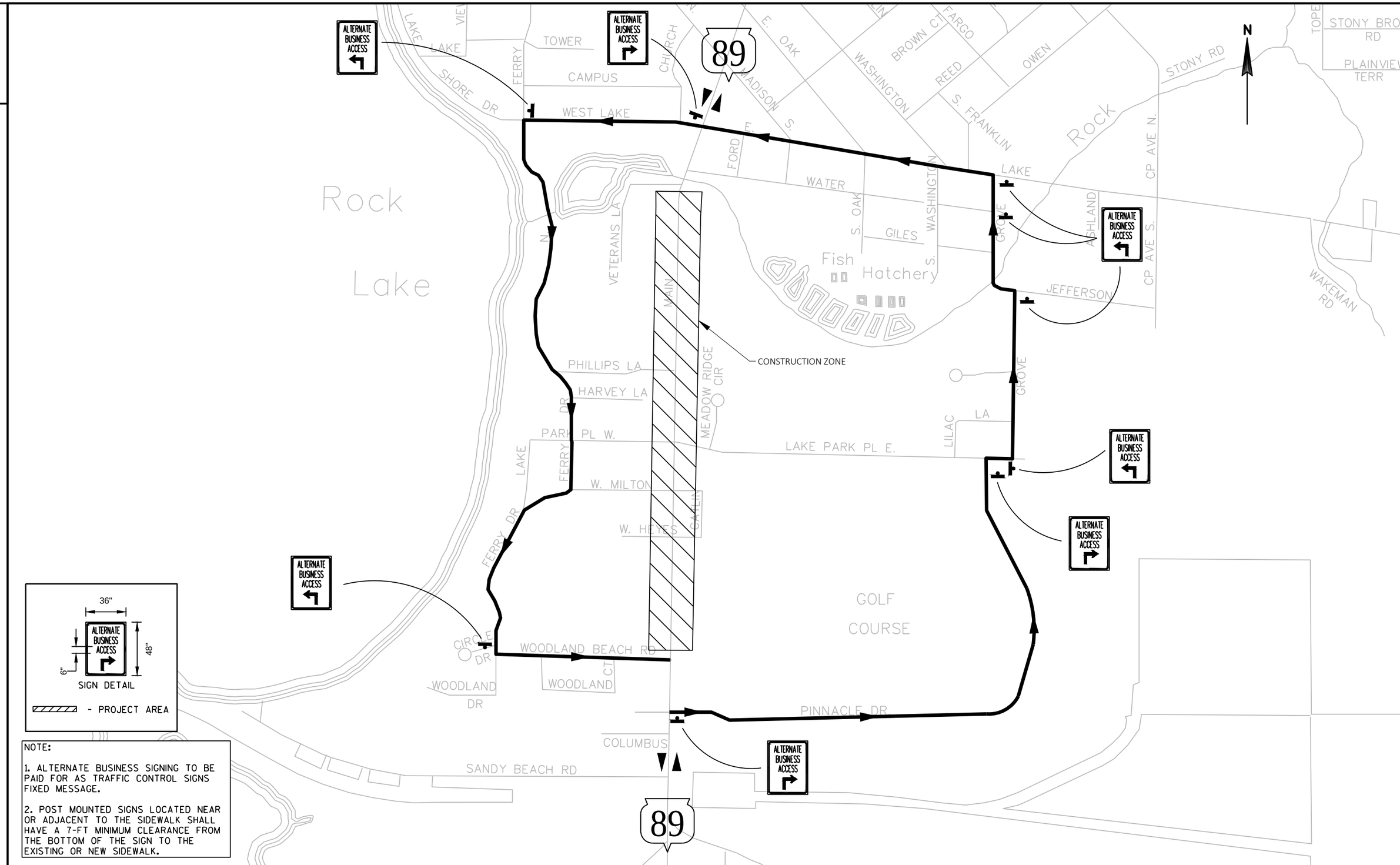

NOTE:

1. ALTERNATE BUSINESS SIGNING TO BE PAID FOR AS TRAFFIC CONTROL SIGNS FIXED MESSAGE.

2. POST MOUNTED SIGNS LOCATED NEAR OR ADJACENT TO THE SIDEWALK SHALL HAVE A 7-FT MINIMUM CLEARANCE FROM THE BOTTOM OF THE SIGN TO THE EXISTING OR NEW SIDEWALK.

PROJECT NO: 3300-01-73	HWY: STH 89	COUNTY: JEFFERSON	ALTERNATE BUSINESS ACCESS SIGNING PLAN - STAGES 2 & 3	PLOT SCALE : Custom	SHEET 147	E

FILE NAME : N:\PDS\C3D\33000103\SHEETSPLAN\025001-TRAFFIC CONTROL\025002_TC.DWG
LAYOUT NAME - Stage 2&3
PLOT DATE : 10/26/2017 6:28 PM
PLOT BY : WHITE, JEREMY J
PLOT NAME :

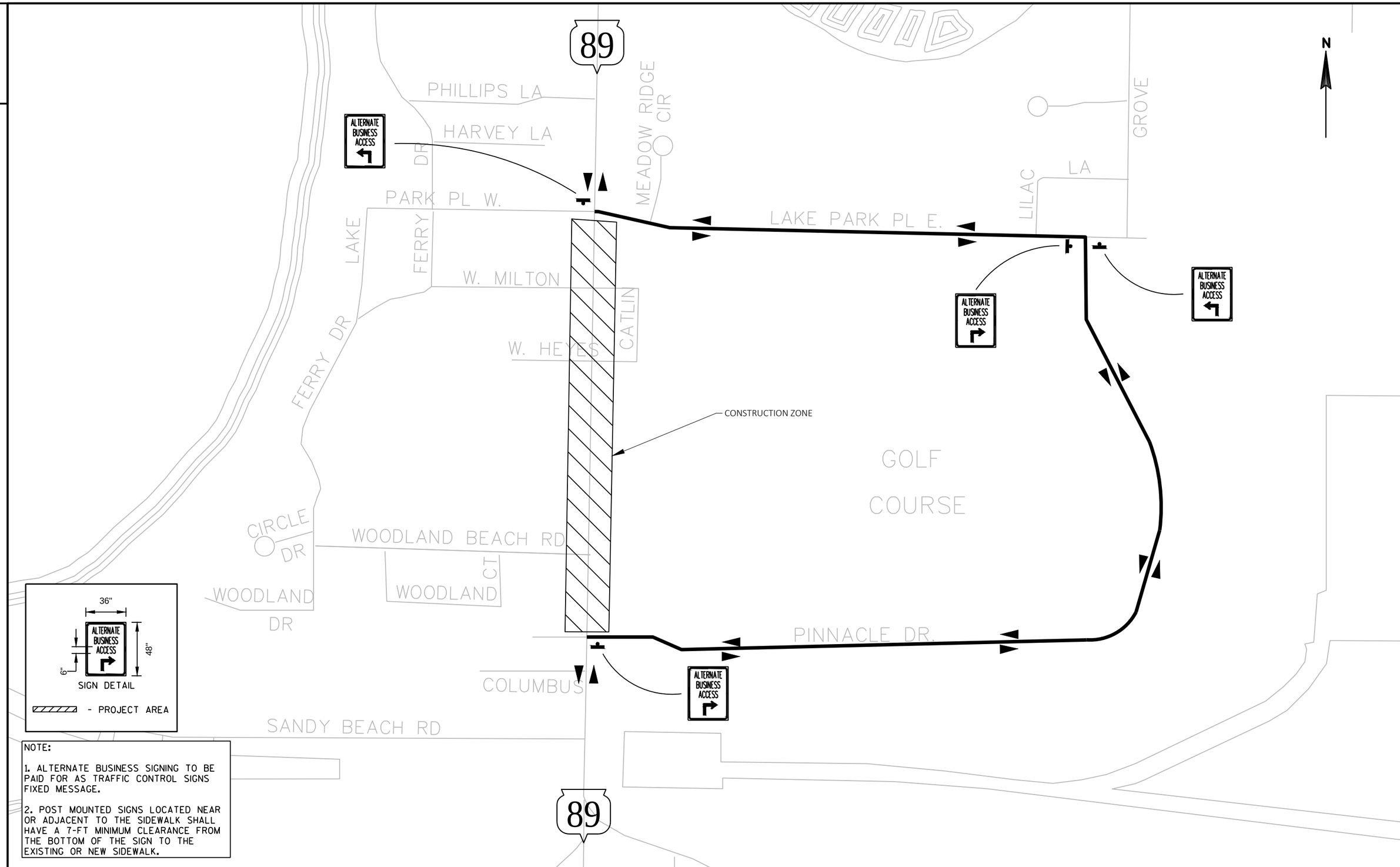

NOTE:

1. ALTERNATE BUSINESS SIGNING TO BE PAID FOR AS TRAFFIC CONTROL SIGNS FIXED MESSAGE.

2. POST MOUNTED SIGNS LOCATED NEAR OR ADJACENT TO THE SIDEWALK SHALL HAVE A 7-FT MINIMUM CLEARANCE FROM THE BOTTOM OF THE SIGN TO THE EXISTING OR NEW SIDEWALK.

PROJECT NO: 3300-01-73	HWY: STH 89	COUNTY: JEFFERSON	ALTERNATE BUSINESS ACCESS SIGNING PLAN - STAGES 3 & 4	PLOT SCALE : Custom	SHEET 148	E

FILE NAME : N:\PDS\C3D\33000103\SHEETSPLAN\025001-TRAFFIC CONTROL\025002_TC.DWG
LAYOUT NAME - Stage 3&4
PLOT DATE : 10/26/2017 6:28 PM
PLOT BY : WHITE, JEREMY J
PLOT NAME :

2

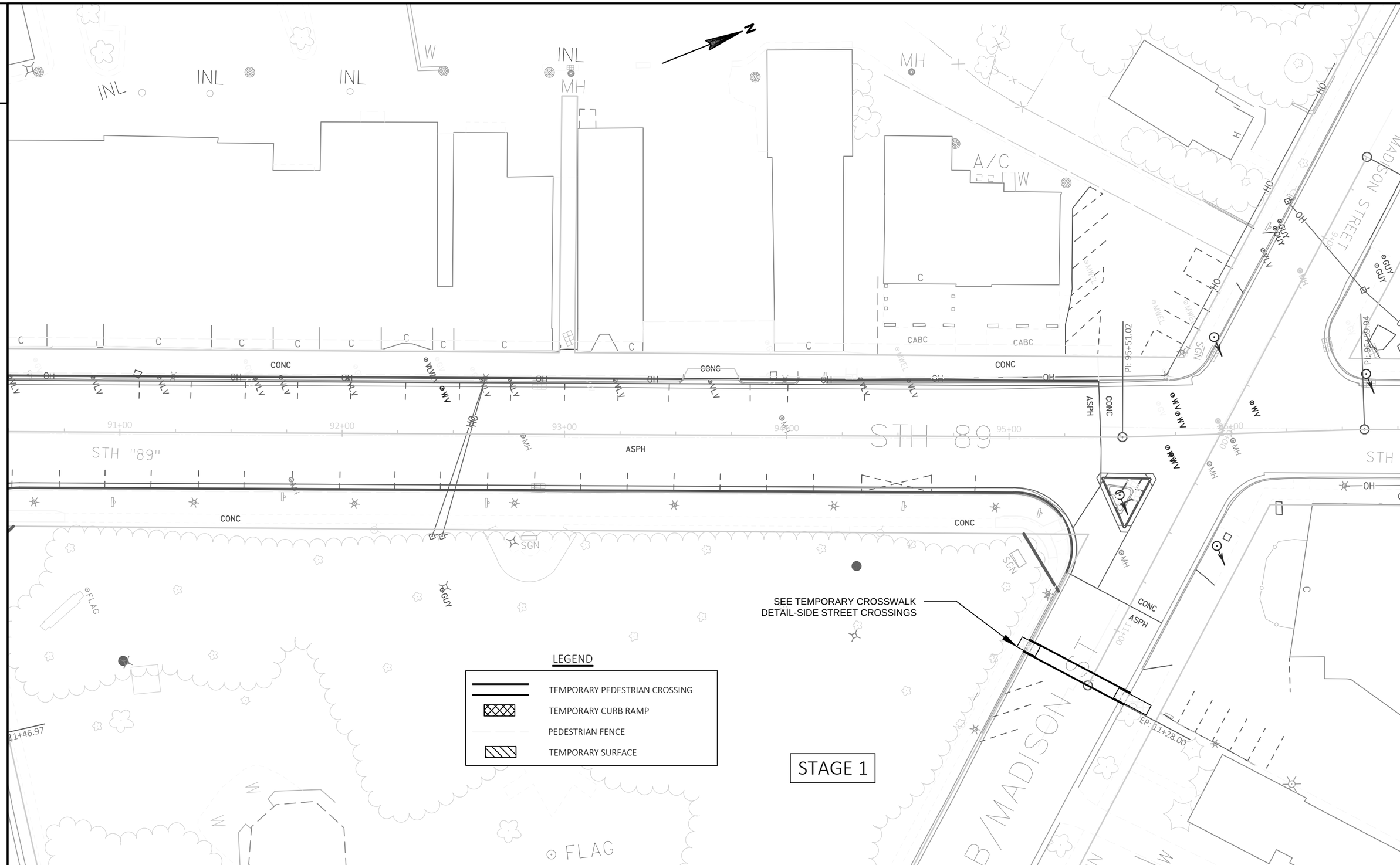

2

PROJECT NO: 3300-01-73	HWY: STH 89	COUNTY: JEFFERSON	TEMPORARY PEDESTRIAN ACCESS - STAGE 1	SHEET 149	E

FILE NAME : N:\PDS\C3D\33000103\SHEETSPLAN\025001-TRAFFIC CONTROL\025003_TC.DWG
LAYOUT NAME - TEMP PED 1
PLOT DATE : 10/26/2017 7:15 PM PLOT BY : WHITE, JEREMY J PLOT NAME : PLOT SCALE : 1 IN:40 FT

2

SEE TEMPORARY CROSSWALK DETAIL-SIDE STREET CROSSINGS

SEE TEMPORARY CROSSWALK DETAIL-SIDE STREET CROSSINGS

SEE TEMPORARY CROSSWALK DETAIL-SIDE STREET CROSSINGS

SEE TEMPORARY CROSSWALK DETAIL-SIDE STREET CROSSINGS

BP: 8+72.00

BP: 8+82.00

BP: 10+00.00

EP: 10+00.00

EP: 11+33.00

PI: 84+16.33

PI: 86+03.89

PI: 87+21.93

PI: 89+68.39

STH "89"

STH 89

W LAKE STREET

E LAKE STREET

WATER STREET

VETERANS AVENUE

STAGE 1

LEGEND

- TEMPORARY PEDESTRIAN CROSSING
- TEMPORARY CURB RAMP
- PEDESTRIAN FENCE
- TEMPORARY SURFACE

PROJECT NO: 3300-01-73	HWY: STH 89	COUNTY: JEFFERSON	TEMPORARY PEDESTRIAN ACCESS - STAGE 1	SHEET 150	E

FILE NAME : N:\PDS\C3D\33000103\SHEETSPLAN\025001-TRAFFIC CONTROL\025003_TC.DWG
LAYOUT NAME - TEMP PED 2

PLOT DATE : 10/26/2017 7:15 PM PLOT BY : WHITE, JEREMY J PLOT NAME : PLOT SCALE : 1 IN:40 FT

WISDOT/CADDS SHEET 42

2

SEE TEMPORARY CROSSWALK
DETAIL-SIDE STREET CROSSINGS

PI: 67+15.67

STH 89

STH "89"

STAGE 2

LEGEND

- TEMPORARY PEDESTRIAN CROSSING
- TEMPORARY CURB RAMP
- PEDESTRIAN FENCE
- TEMPORARY SURFACE

PI: 60+07.15

PI: 10+00.00

SEE TEMPORARY CROSSWALK
DETAIL-SIDE STREET CROSSINGS

STAGE 3

2

PROJECT NO: 3300-01-73	HWY: STH 89	COUNTY: JEFFERSON	PEDESTRIAN ACCESS - STAGES 2 & 3	SHEET 151	E

FILE NAME : N:\PDS\C3D\33000103\SHEETSPLAN\025001-TRAFFIC CONTROL\025003_TC.DWG
LAYOUT NAME - TEMP PED 3
PLOT DATE : 10/26/2017 7:16 PM PLOT BY : WHITE, JEREMY J PLOT NAME : PLOT SCALE : 1 IN:40 FT

WISDOT/CADDS SHEET 44

2

SEE TEMPORARY CROSSWALK DETAIL-SIDE STREET CROSSINGS

SEE TEMPORARY CROSSWALK DETAIL-SIDE STREET CROSSINGS

STAGE 3

LEGEND

- TEMPORARY PEDESTRIAN CROSSING
- TEMPORARY CURB RAMP
- PEDESTRIAN FENCE
- TEMPORARY SURFACE

SEE TEMPORARY CROSSWALK DETAIL-SIDE STREET CROSSINGS

STAGE 3

2

PROJECT NO: 3300-01-73	HWY: STH 89	COUNTY: JEFFERSON	PEDESTRIAN ACCESS - STAGE 3	SHEET 152	E

FILE NAME : N:\PDS\C3D\33000103\SHEETSPLAN\025001-TRAFFIC CONTROL\025003_TC.DWG
LAYOUT NAME - TEMP PED 4
PLOT DATE : 10/26/2017 7:16 PM PLOT BY : WHITE, JEREMY J PLOT NAME : PLOT SCALE : 1 IN:40 FT

2

SEE TRAFFIC CONTROL - SANDY BEACH ROAD TEMPORARY BYPASS

SEE TEMPORARY CROSSWALK DETAIL-SIDE STREET CROSSINGS

SEE TEMPORARY CROSSWALK DETAIL-SIDE STREET CROSSINGS

SEE TEMPORARY CROSSWALK DETAIL-SIDE STREET CROSSINGS

BP: 8+32.00
PI: 8+85.02
BP: 9+44.72
BP: 8+94.00
PI: 39+16.42
PI: 40+18.03
EP: 10+00.00
EP: 10+00.00
BP: 10+00.00
EP: 11+20.00

SANDY BEACH ROAD
COLUMBUS STREET
STH "89"
STH 89
FLAG
PINNACLE DRIVE
WALLS
A/C

LEGEND

- TEMPORARY PEDESTRIAN CROSSING
- TEMPORARY CURB RAMP
- PEDESTRIAN FENCE
- TEMPORARY SURFACE

STAGE 4

PROJECT NO: 3300-01-73	HWY: STH 89	COUNTY: JEFFERSON	PEDESTRIAN ACCESS - STAGE 4	SHEET 153	E

FILE NAME : N:\PDS\C3D\33000103\SHEETSPLAN\025001-TRAFFIC CONTROL\025003_TC.DWG
LAYOUT NAME - TEMP PED 5
PLOT DATE : 10/26/2017 7:16 PM PLOT BY : WHITE, JEREMY J PLOT NAME : PLOT SCALE : 1 IN:40 FT

WISDOT/CADDS SHEET 44

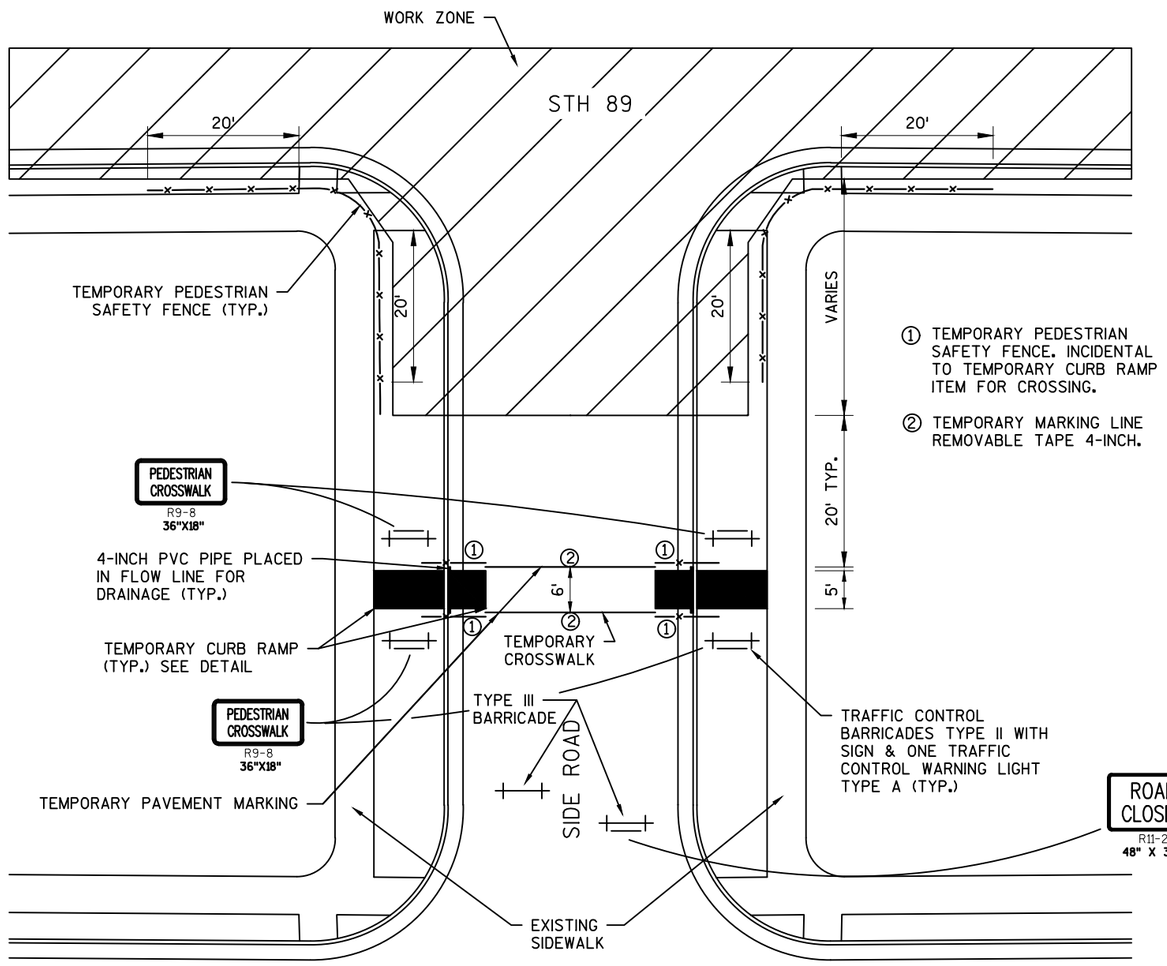

USE ACROSS ALL SIDE STREETS CLOSED TO THROUGH TRAFFIC ACROSS STH 89.

TEMPORARY CROSSWALK DETAIL – SIDE STREET CROSSINGS
(REQUIRED AT ALL CLOSED SIDE STREETS)

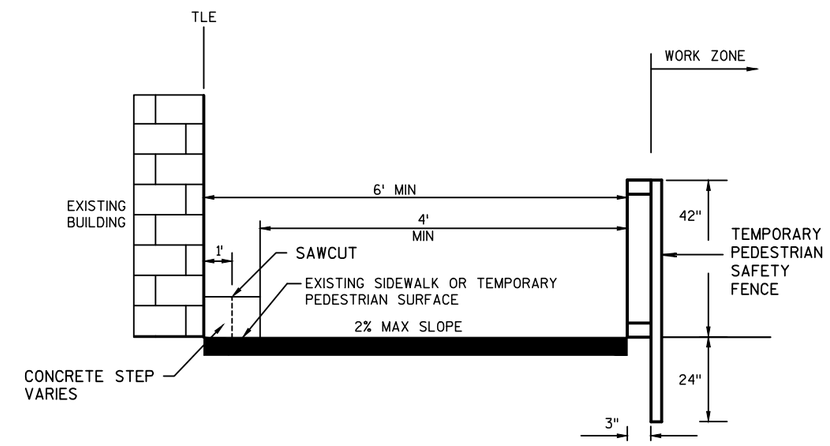

TEMPORARY PEDESTRIAN ACCESS AT BUILDING FACE

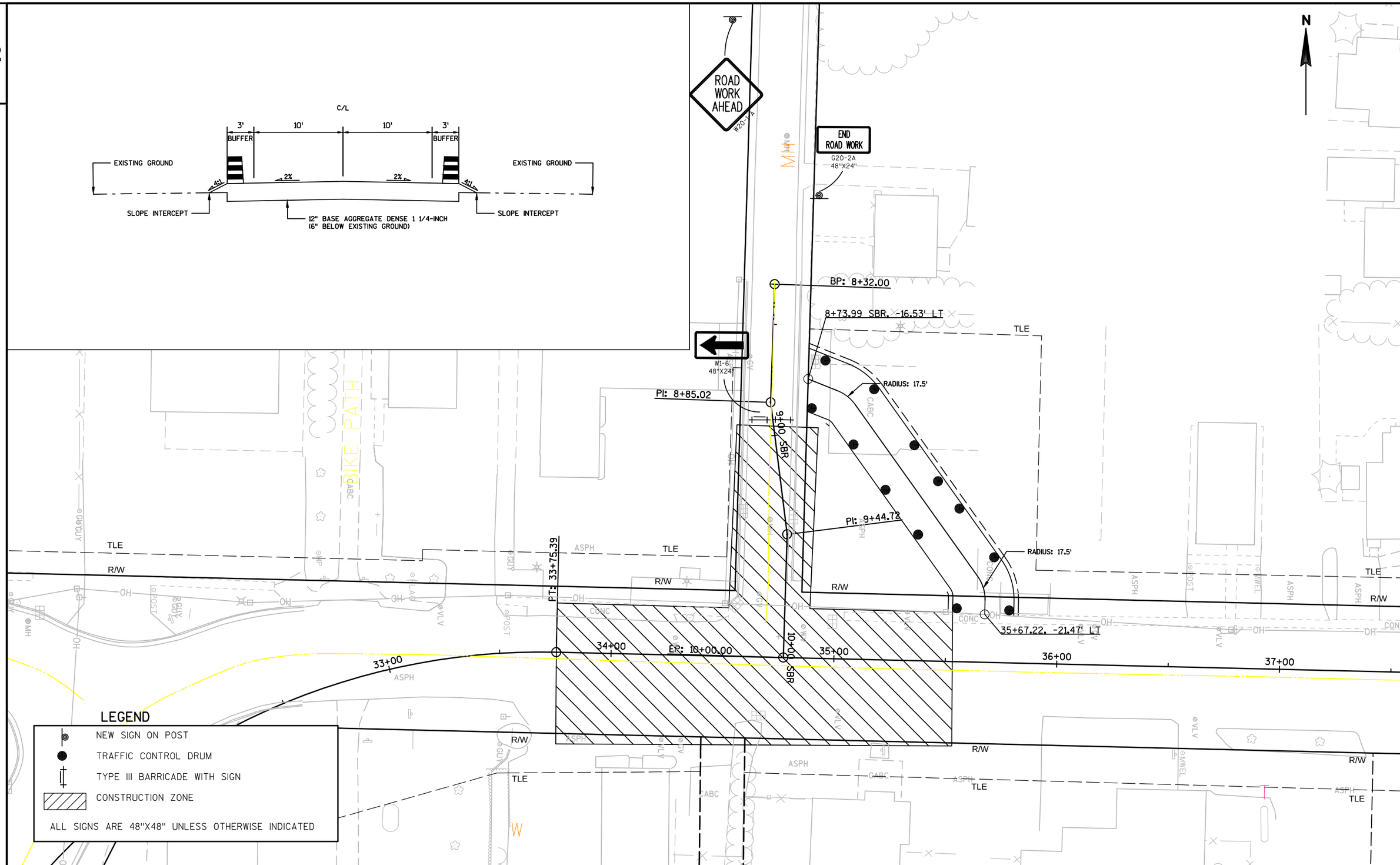

PROJECT NO:3300-01-73	HWY:STH 89	COUNTY:JEFFERSON	TRAFFIC CONTROL - SANDY BEACH TEMPORARY BYPASS	SHEET 155	E

FILE NAME : N:\PDS\C3D\33000103\SHEETSPLAN\026001-CONSTRUCTION STAGING\SBR-TEMP BYPASS.DWG
LAYOUT NAME - SHEET - (4)
PLOT DATE : 10/26/2017 7:43 PM PLOT BY : WHITE, JEREMY J PLOT NAME : PLOT SCALE : 1 IN:40 FT

WISDOT/CADDS SHEET 42

2

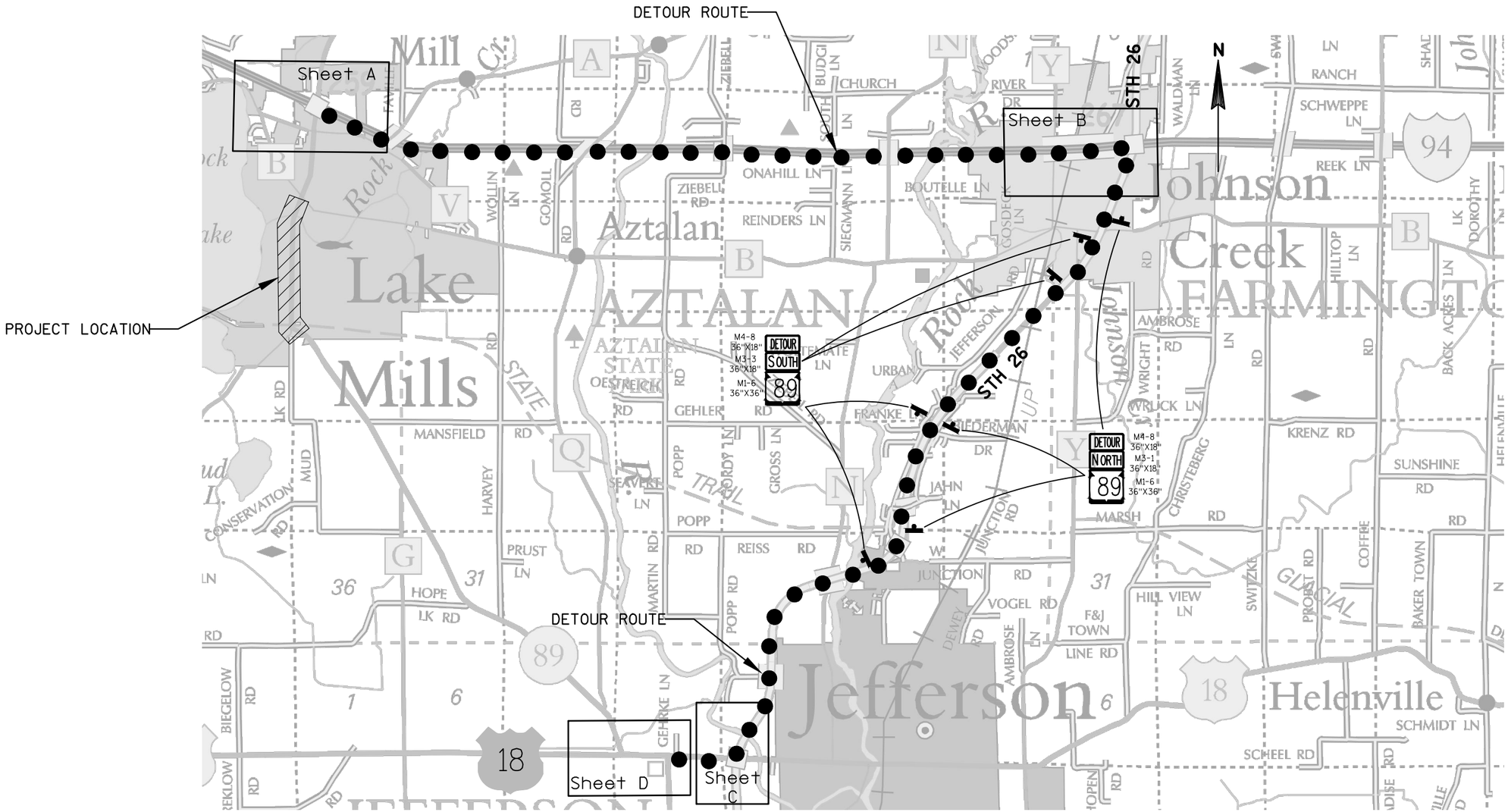

PROJECT NO:3300-01-73	HWY:STH 89	COUNTY:JEFFERSON	DETOUR ROUTE	SHEET 156	E

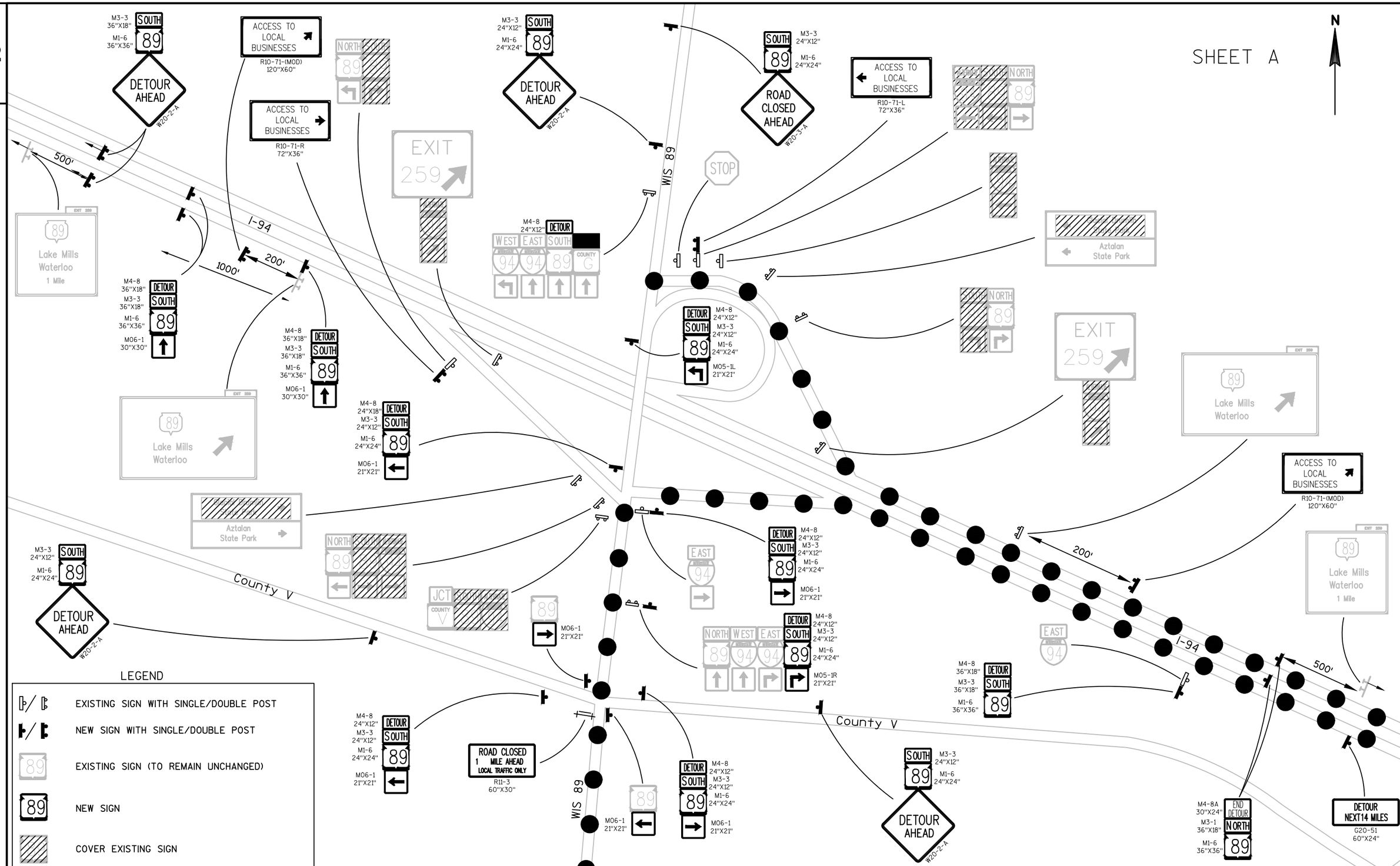

PROJECT NO:3300-01-73	HWY:STH 89	COUNTY:JEFFERSON	DETOUR ROUTE	SHEET 157	E

FILE NAME : N:\PDS\C3D\33000103\SHEETSPLAN\027001-DETOURS\027100_DT.DWG
LAYOUT NAME - 027100_DT - IH94-STH 89
PLOT DATE : 12/5/2017 3:28 PM PLOT BY : WHITE, JEREMY J PLOT NAME : PLOT SCALE : 1 IN:200 FT

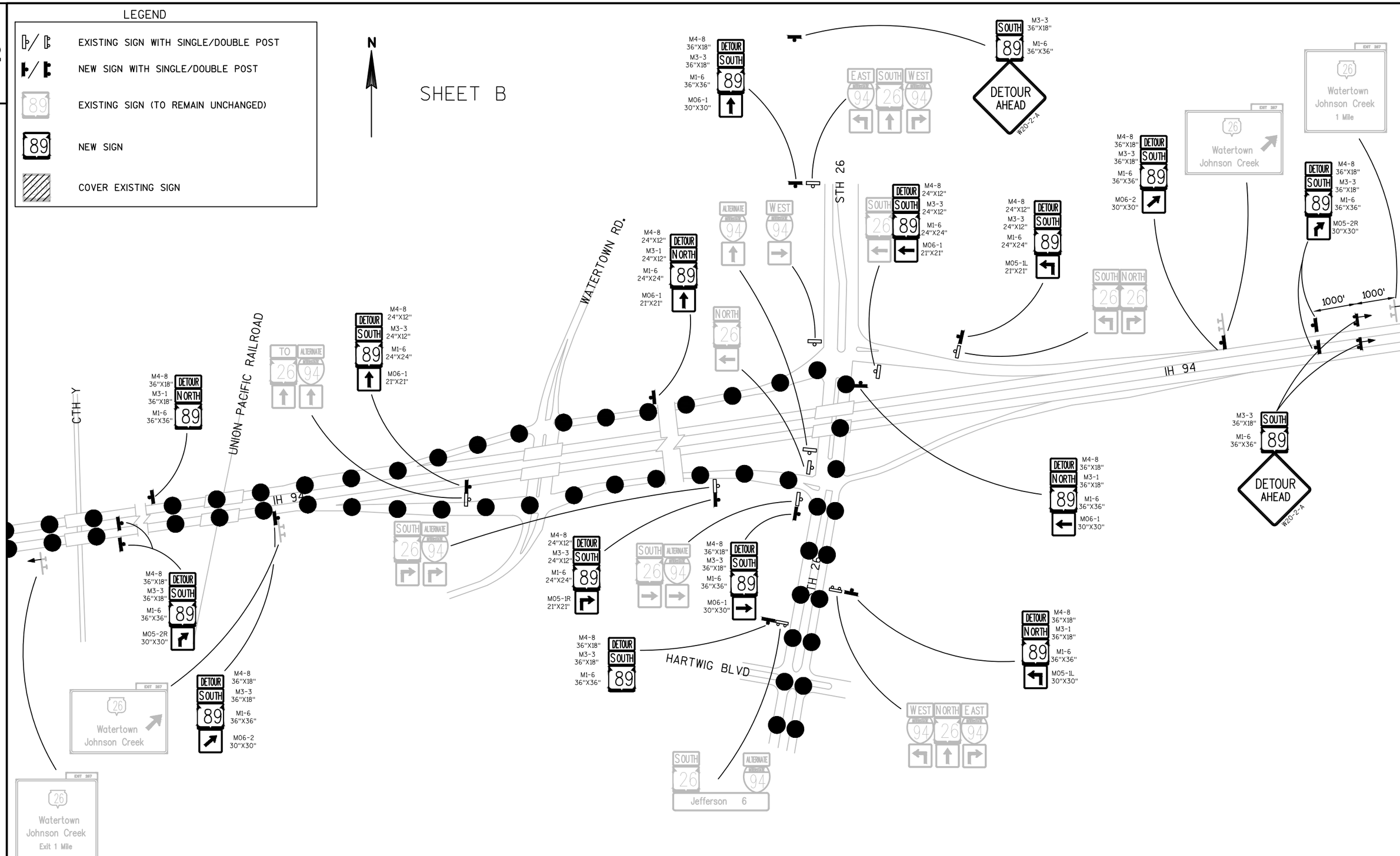

PROJECT NO:3300-01-73	HWY:STH 89	COUNTY:JEFFERSON	DETOUR ROUTE	SHEET 158	E

FILE NAME : N:\PDS\C3D\33000103\SHEETSPLAN\027001-DETOURS\027100_DT.DWG
LAYOUT NAME - 027100_DT - IH94-STH26
PLOT DATE : 12/5/2017 3:28 PM PLOT BY : WHITE, JEREMY J PLOT NAME : PLOT SCALE : 1 IN:200 FT

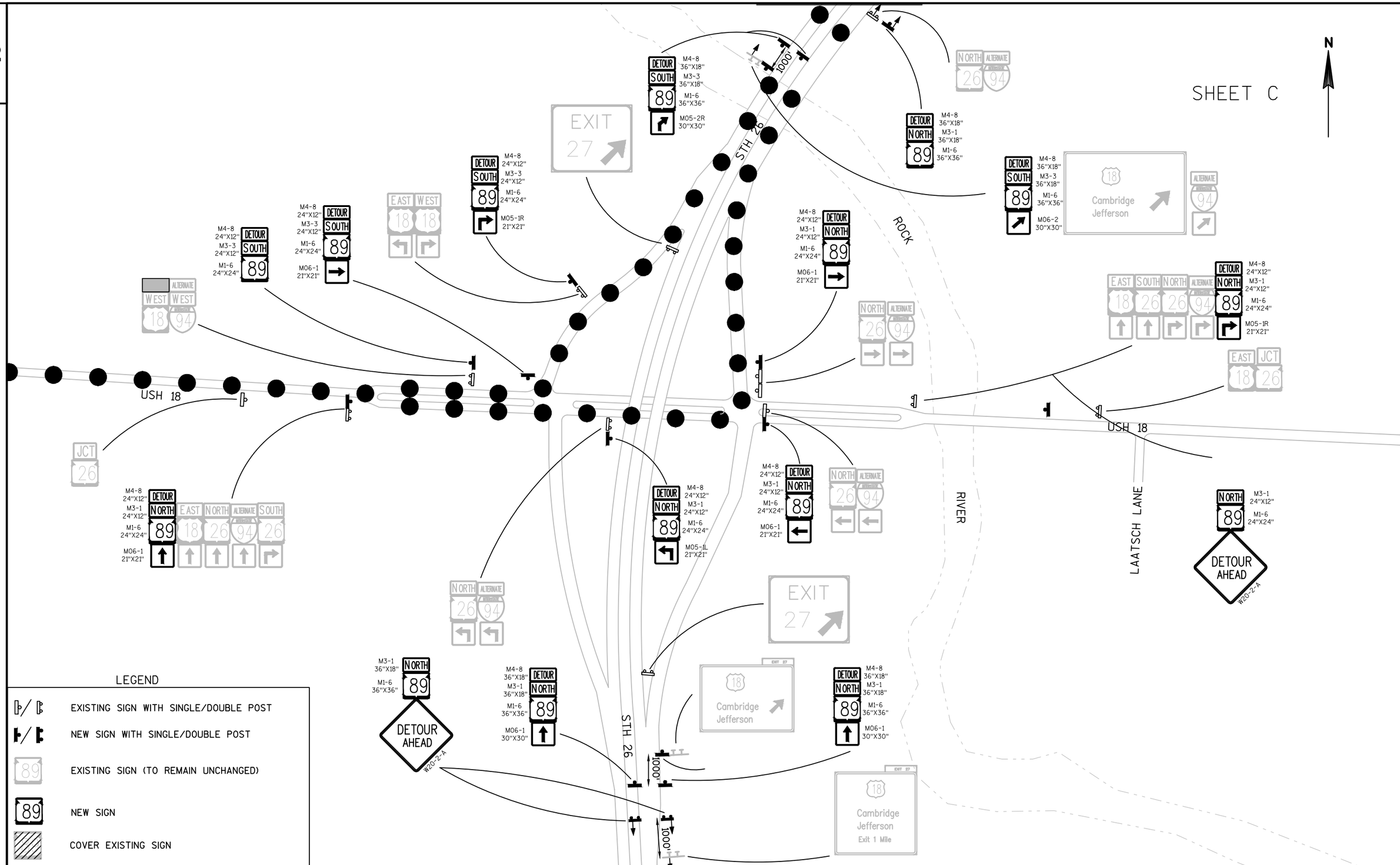

PROJECT NO:3300-01-73	HWY:STH 89	COUNTY:JEFFERSON	DETOUR ROUTE	SHEET 159	E

FILE NAME : N:\PDS\C3D\33000103\SHEETSPLAN\027001-DETOURS\027100_DT.DWG
LAYOUT NAME - 027100_DT - USH18-STH26
PLOT DATE : 12/5/2017 3:28 PM PLOT BY : WHITE, JEREMY J PLOT NAME : PLOT SCALE : 1 IN:200 FT

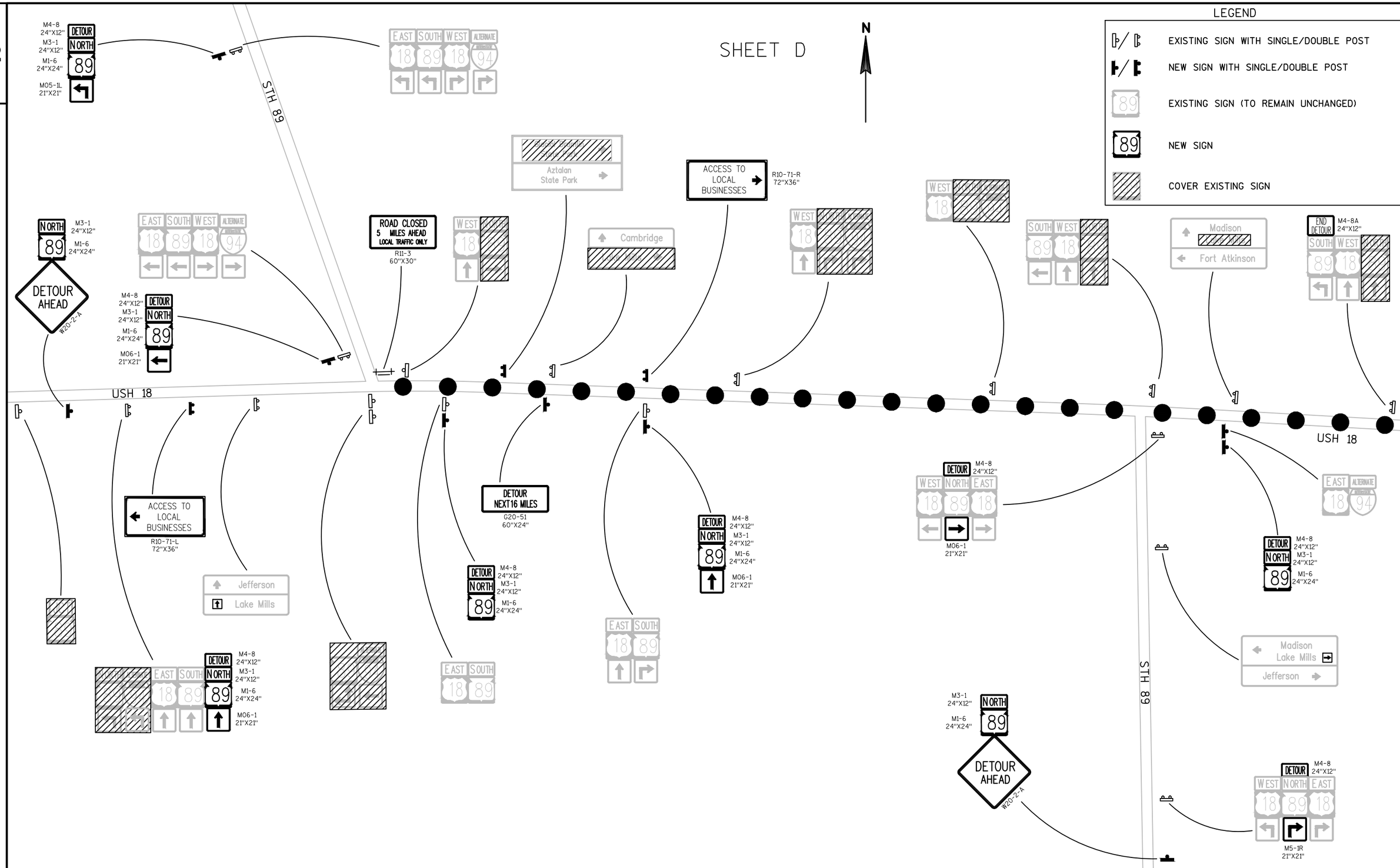

PROJECT NO:3300-01-73	HWY:STH 89	COUNTY:JEFFERSON	DETOUR ROUTE	SHEET 160	E

FILE NAME : N:\PDS\C3D\33000103\SHEETSPLAN\027001-DETOURS\027100_DT.DWG
LAYOUT NAME - 027100_DT - STH89-USH18
PLOT DATE : 12/5/2017 3:28 PM PLOT BY : WHITE, JEREMY J PLOT NAME : PLOT SCALE : 1 IN:200 FT

PI STA = 7+39.25-CTHA
Y = 579892.626
X = 826875.184
DELTA = 44°54'58"
D = 54°03'09"
T = 43.82'
L = 83.10'
R = 106.00'
PC STA = 6+95.43-CTHA
Y = 579862.330
X = 826843.529
PT STA = 7+78.53-CTHA
Y = 579936.429
X = 826876.209
BK = N46°15'27.2"E
AH = N01°20'28.7"E

PI STA = 9+10.47-CTHA
Y = 580068.333
X = 826879.298
DELTA = 40°52'34"
D = 28°38'52"
T = 74.53'
L = 142.68'
R = 200.00'
PC STA = 8+35.94-CTHA
Y = 579993.823
X = 826877.553
PT STA = 9+78.62-CTHA
Y = 580123.530
X = 826929.378
BK = N01°20'28.7"E
AH = N42°13'02.2"E

EP=10+00.00-CTHA
Y=580139.36
X=826943.74

BP=8+32.00-SBR
Y=580425.82
X=826715.31

PI=8+85.02-SBR
Y=580424.26
X=826768.30

PI=9+44.72-SBR
Y=580432.00
X=826827.50

EP=10+00.00-SBR
Y=580430.58
X=826882.76

BP=8+94.00-CS
Y=580768.62
X=826783.00

EP=10+00.00-CS
Y=580770.26
X=826888.98

PI=39+16.42
Y=580869.59
X=826890.81

PI=40+18.03
Y=580971.15
X=826894.32

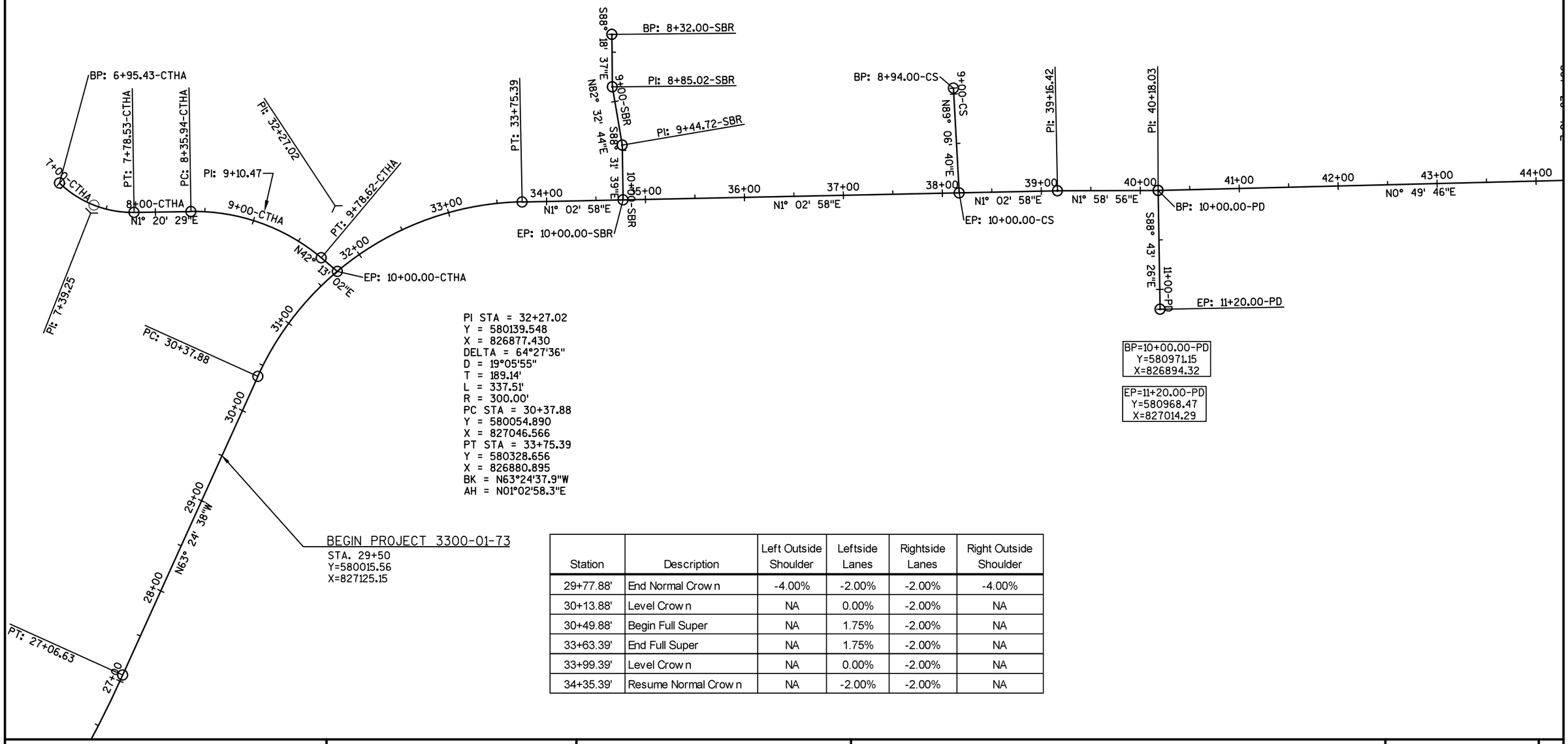

PI STA = 32+27.02
Y = 580139.548
X = 826877.430
DELTA = 64°27'36"
D = 19°05'55"
T = 189.14'
L = 337.51'
R = 300.00'
PC STA = 30+37.88
Y = 580054.890
X = 827046.566
PT STA = 33+75.39
Y = 580328.656
X = 826880.895
BK = N63°24'37.9"W
AH = N01°02'58.3"E

BP=10+00.00-PD
Y=580971.15
X=826894.32

EP=11+20.00-PD
Y=580968.47
X=827014.29

Station	Description	Left Outside Shoulder	Leftside Lanes	Rightside Lanes	Right Outside Shoulder
29+77.88'	End Normal Crown	-4.00%	-2.00%	-2.00%	-4.00%
30+13.88'	Level Crown	NA	0.00%	-2.00%	NA
30+49.88'	Begin Full Super	NA	1.75%	-2.00%	NA
33+63.39'	End Full Super	NA	1.75%	-2.00%	NA
33+99.39'	Level Crown	NA	0.00%	-2.00%	NA
34+35.39'	Resume Normal Crown	NA	-2.00%	-2.00%	NA

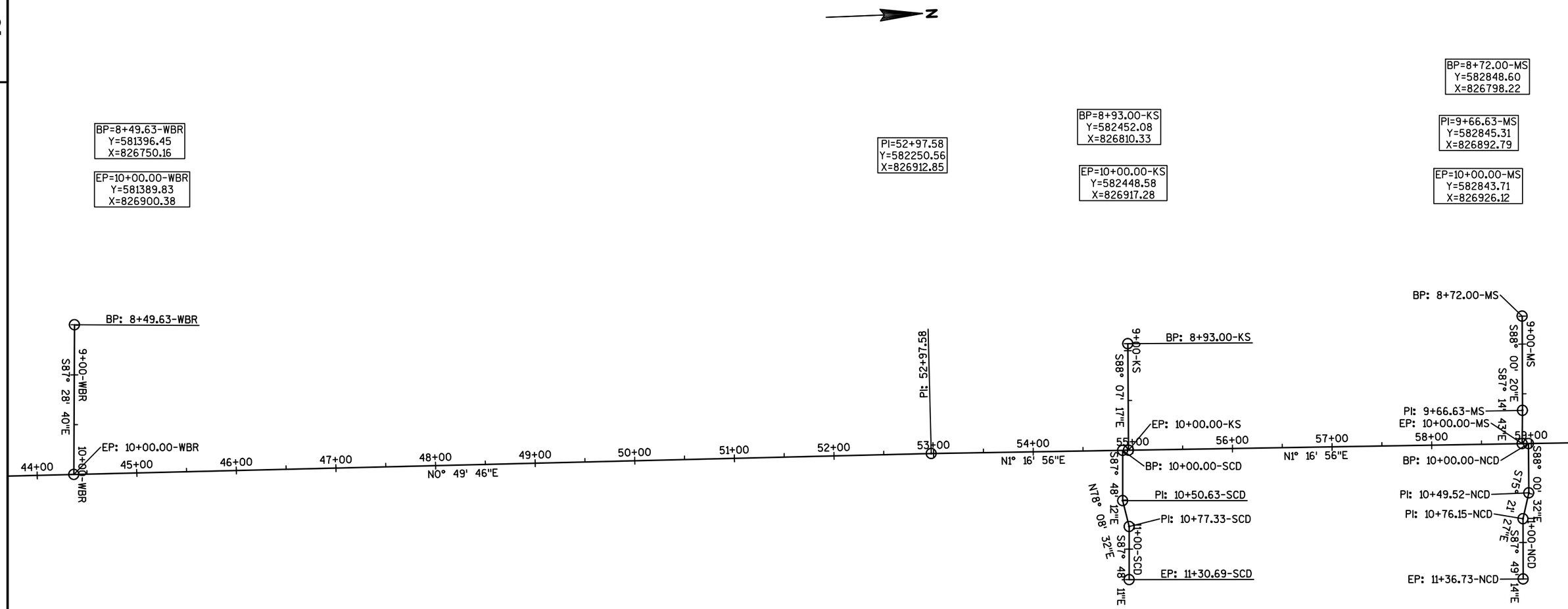
N
BP=8+49.63-WBR
Y=581396.45
X=826750.16
EP=10+00.00-WBR
Y=581389.83
X=826900.38
PI=52+97.58
Y=582250.56
X=826912.85
BP=8+93.00-KS
Y=582452.08
X=826810.33
EP=10+00.00-KS
Y=582448.58
X=826917.28
BP=8+72.00-MS
Y=582848.60
X=826798.22
PI=9+66.63-MS
Y=582845.31
X=826892.79
EP=10+00.00-MS
Y=582843.71
X=826926.12
BP: 8+49.63-WBR
9+00-WBR
S87° 28' 40"E
EP: 10+00.00-WBR
10+00-WBR
44+00
45+00
46+00
47+00
48+00
49+00
50+00
51+00
52+00
53+00
54+00
55+00
56+00
57+00
58+00
59+00
N0° 49' 46"E
PI: 52+97.58
N1° 16' 56"E
9+00-KS
S88° 07' 17"E
BP: 8+93.00-KS
EP: 10+00.00-KS
BP: 10+00.00-SCD
N1° 16' 56"E
PI: 10+50.63-SCD
N78° 08' 32"E
PI: 10+77.33-SCD
10+00-SCD
S87° 48' 11"E
EP: 11+30.69-SCD
BP: 8+72.00-MS
9+00-MS
S88° 00' 20"E
S87° 14' 43"E
PI: 9+66.63-MS
EP: 10+00.00-MS
BP: 10+00.00-NCD
S88° 00' 32"E
S75° 21' 27"E
PI: 10+49.52-NCD
PI: 10+76.15-NCD
10+00-NCD
S87° 49' 14"E
EP: 11+36.73-NCD
BP=10+00.00-SCD
Y=582442.70
X=826917.15
PI=10+50.63-SCD
Y=582440.76
X=826967.74
PI=10+77.33-SCD
Y=582446.25
X=826993.87
EP=11+30.69-SCD
Y=582444.20
X=827047.19
BP=10+00.00-NCD
Y=582850.07
X=826926.26
PI=10+49.52-NCD
Y=582848.35
X=826975.76
PI=10+76.15-NCD
Y=582841.62
X=827001.52
EP=11+36.73-NCD
Y=582839.32
X=827062.06

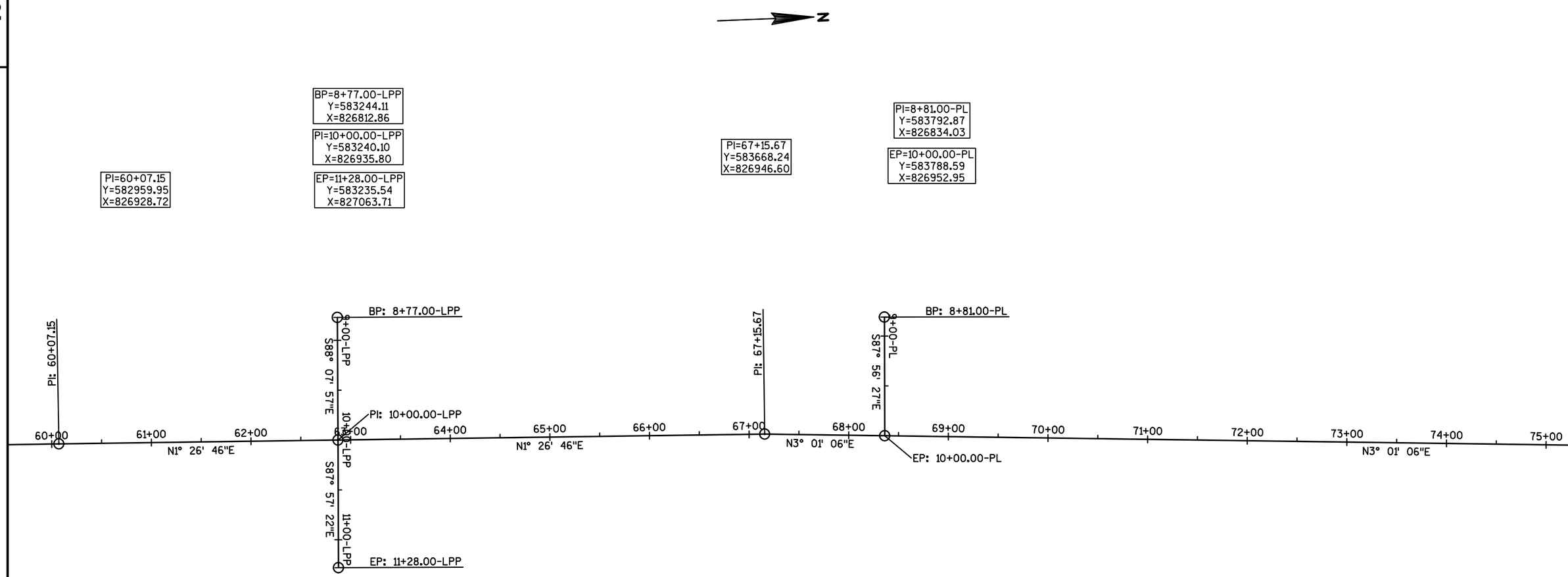

2

PROJECT NO:3300-01-73	HWY:STH 89	COUNTY:JEFFERSON	ALIGNMENT DETAIL	SHEET 163	E

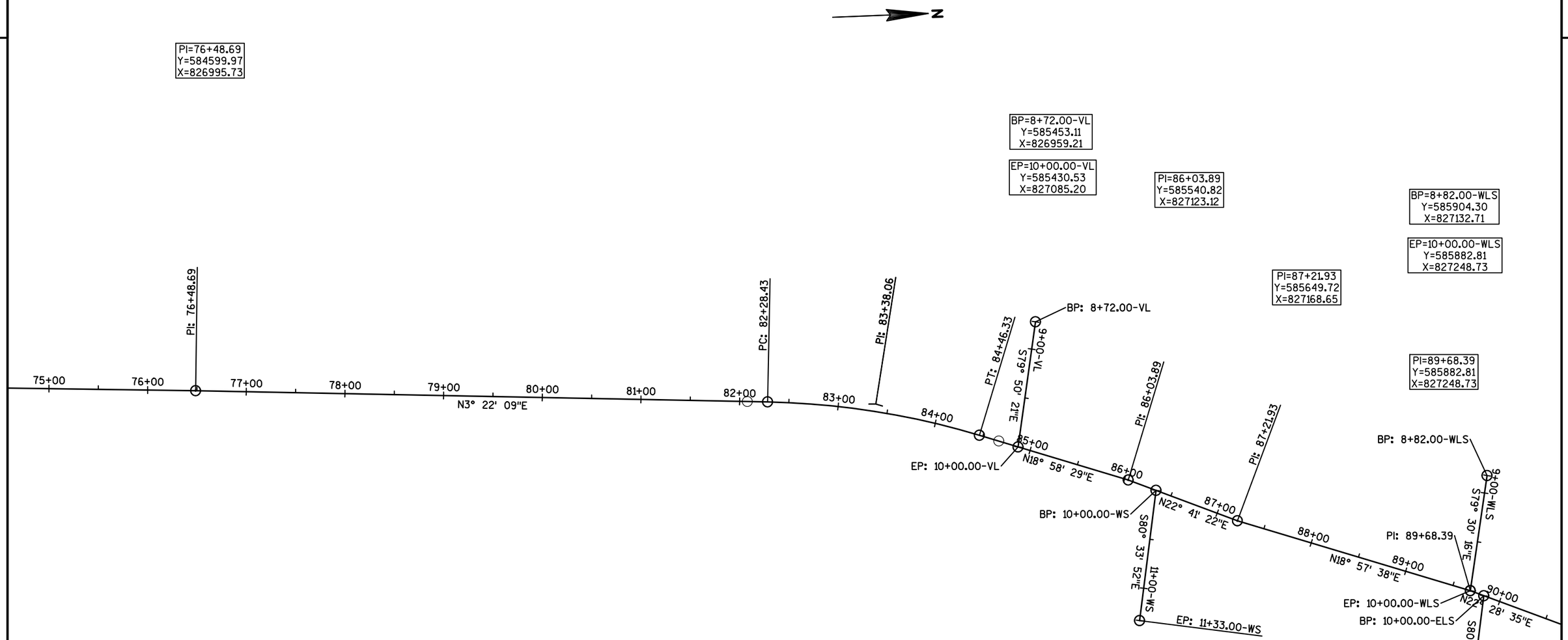

PI STA = 83+38.06
Y = 585288.150
X = 827036.246
DELTA = 15°36'21"
D = 7°09'43"
T = 109.63'
L = 217.90'
R = 800.00'
PC STA = 82+28.43
Y = 585178.712
X = 827029.803
PT STA = 84+46.33
Y = 585391.821
X = 827071.891
BK = N03°22'08.7"E
AH = N18°58'29.5"E

PROJECT NO:3300-01-73	HWY:STH 89	COUNTY:JEFFERSON	ALIGNMENT DETAIL	SHEET 164	E

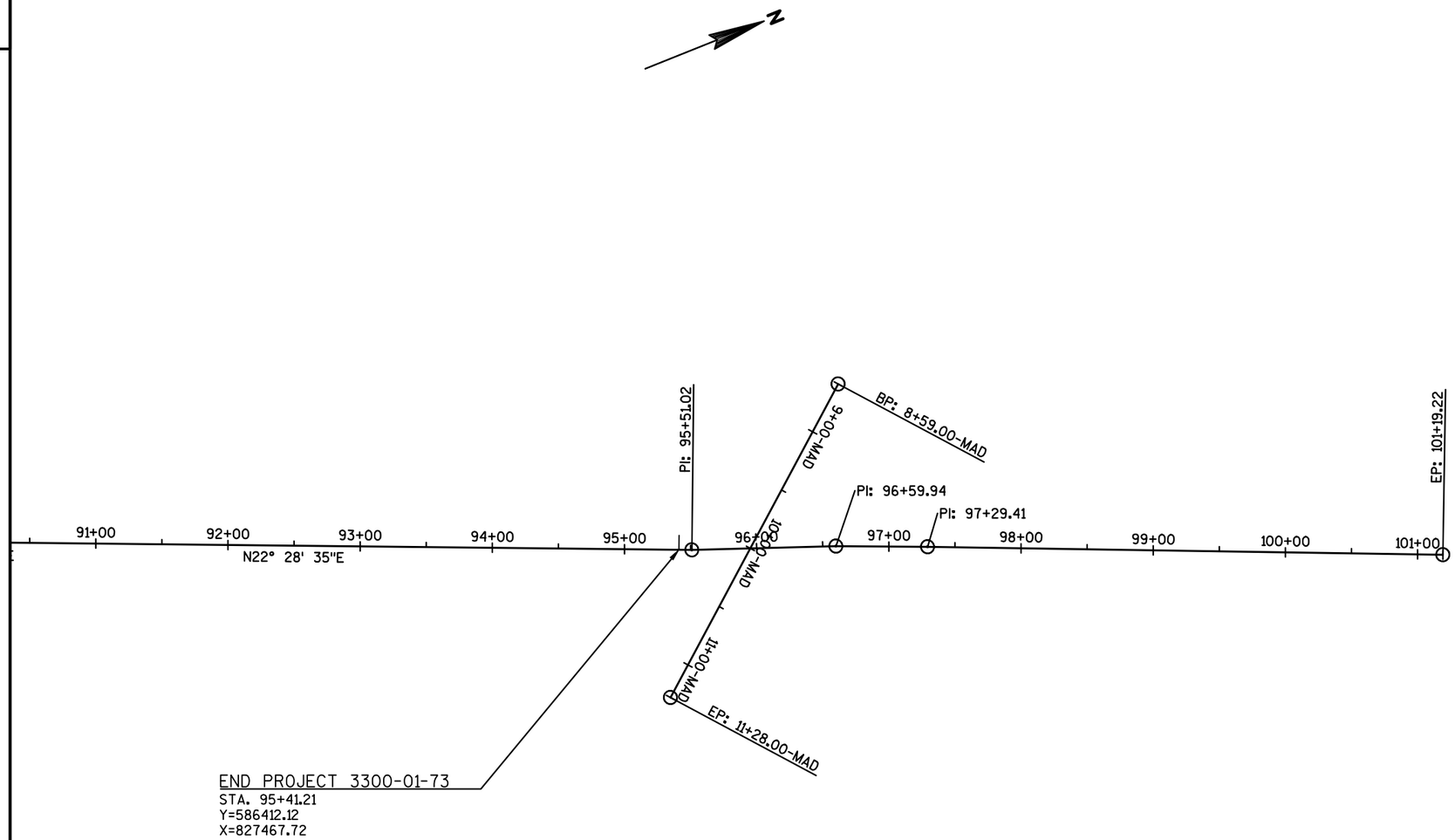

PROJECT NO:3300-01-73	HWY:STH 89	COUNTY:JEFFERSON	ALIGNMENT DETAIL	SHEET 165	E

FILE NAME : N:\PDS\C3D\33000103\SHEETSPLAN\027201-ALIGNMENT DIAGRAM\027201-AD.DWG
LAYOUT NAME - ****
PLOT DATE : 7/27/2017 4:39 PM PLOT BY : WHITE, JEREMY J PLOT NAME : PLOT SCALE : 1 IN:100 FT

Estimate Of Quantities

Line	Item	Item Description	Unit	Total	3300-01-73 Qty	3300-01-74 Qty
0002	201.0110	Clearing	SY	280.000	280.000	
0004	201.0120	Clearing	ID	1,397.000	1,397.000	
0006	201.0210	Grubbing	SY	280.000	280.000	
0008	201.0220	Grubbing	ID	2,481.000	2,481.000	
0010	204.0100	Removing Pavement	SY	14,340.000	14,340.000	
0012	204.0150	Removing Curb & Gutter	LF	8,254.000	8,254.000	
0014	204.0155	Removing Concrete Sidewalk	SY	6,245.000	6,245.000	
0016	204.0195	Removing Concrete Bases	EACH	15.000	15.000	
0018	204.0210	Removing Manholes	EACH	10.000	10.000	
0020	204.0220	Removing Inlets	EACH	19.000	19.000	
0022	204.0235	Removing Buildings (parcel) 01. Parcel #2	LS	1.000	1.000	
0024	204.0240	Site Clearance (parcel) 01. Parcel #2	LS	1.000	1.000	
0026	204.0245	Removing Storm Sewer (size) 01. 8-Inch To 20-Inch	LF	1,272.000	1,272.000	
0028	204.0245	Removing Storm Sewer (size) 02. 21-Inch To 36-Inch	LF	1,053.000	1,053.000	
0030	204.9060.S	Removing (item description) 01. Street Light Assembly	EACH	15.000	15.000	
0032	204.9060.S	Removing (item description) 02. Stop Sign Flasher Assembly	EACH	4.000	4.000	
0034	204.9090.S	Removing (item description) 01. Existing Concrete Steps	LF	37.000	37.000	
0036	205.0100	Excavation Common	CY	41,322.000	41,322.000	
0038	213.0100	Finishing Roadway (project) 01. 3300-01-73	EACH	1.000	1.000	
0040	305.0110	Base Aggregate Dense 3/4-Inch	TON	1,949.000	1,949.000	
0042	305.0120	Base Aggregate Dense 1 1/4-Inch	TON	15,423.000	15,423.000	
0044	312.0110	Select Crushed Material	TON	28,985.000	28,985.000	
0046	405.0100	Coloring Concrete WisDOT Red	CY	14.000	14.000	
0048	415.0080	Concrete Pavement 8-Inch	SY	32,211.000	32,211.000	
0050	415.0210	Concrete Pavement Gaps	EACH	10.000	10.000	
0052	415.1080	Concrete Pavement HES 8-Inch	SY	73.000	73.000	
0054	415.5110.S	Concrete Pavement Joint Layout	LS	1.000	1.000	
0056	416.0160	Concrete Driveway 6-Inch	SY	2,133.000	2,133.000	
0058	416.0180	Concrete Driveway 8-Inch	SY	230.000	230.000	
0060	416.0610	Drilled Tie Bars	EACH	31.000	31.000	
0062	416.0620	Drilled Dowel Bars	EACH	40.000	40.000	
0064	440.4410	Incentive IRI Ride	DOL	4,992.000	4,992.000	
0066	455.0605	Tack Coat	GAL	82.700	82.700	
0068	465.0105	Asphaltic Surface	TON	421.000	421.000	
0070	465.0120	Asphaltic Surface Driveways and Field Entrances	TON	212.000	212.000	
0072	465.0125	Asphaltic Surface Temporary	TON	233.000	233.000	
0074	522.1015	Apron Endwalls for Culvert Pipe Reinforced Concrete 15-Inch	EACH	1.000	1.000	

Line	Item	Item Description	Unit	Total	3300-01-73 Qty	3300-01-74 Qty
0076	522.1030	Apron Endwalls for Culvert Pipe Reinforced Concrete 30-Inch	EACH	1.000	1.000	
0078	522.1036	Apron Endwalls for Culvert Pipe Reinforced Concrete 36-Inch	EACH	1.000	1.000	
0080	601.0409	Concrete Curb & Gutter 30-Inch Type A	LF	13,587.000	13,587.000	
0082	601.0411	Concrete Curb & Gutter 30-Inch Type D	LF	1,016.000	1,016.000	
0084	601.0586	Concrete Curb & Gutter 4-Inch Sloped 30-Inch Type TBTT	LF	30.000	30.000	
0086	602.0405	Concrete Sidewalk 4-Inch	SF	67,993.000	67,993.000	
0088	602.0415	Concrete Sidewalk 6-Inch	SF	122.000	122.000	
0090	602.0505	Curb Ramp Detectable Warning Field Yellow	SF	668.000	668.000	
0092	602.1500	Concrete Steps	SF	177.000	177.000	
0094	608.0315	Storm Sewer Pipe Reinforced Concrete Class III 15-Inch	LF	311.000	311.000	
0096	608.0324	Storm Sewer Pipe Reinforced Concrete Class III 24-Inch	LF	2,562.000	2,562.000	
0098	608.0330	Storm Sewer Pipe Reinforced Concrete Class III 30-Inch	LF	442.000	442.000	
0100	608.0336	Storm Sewer Pipe Reinforced Concrete Class III 36-Inch	LF	693.000	693.000	
0102	608.0412	Storm Sewer Pipe Reinforced Concrete Class IV 12-Inch	LF	589.000	589.000	
0104	608.0415	Storm Sewer Pipe Reinforced Concrete Class IV 15-Inch	LF	1,470.000	1,470.000	
0106	608.0424	Storm Sewer Pipe Reinforced Concrete Class IV 24-Inch	LF	1,835.000	1,835.000	
0108	611.0530	Manhole Covers Type J	EACH	48.000	48.000	
0110	611.0612	Inlet Covers Type C	EACH	2.000	2.000	
0112	611.0624	Inlet Covers Type H	EACH	90.000	90.000	
0114	611.1004	Catch Basins 4-FT Diameter	EACH	1.000	1.000	
0116	611.1006	Catch Basins 6-FT Diameter	EACH	9.000	9.000	
0118	611.1230	Catch Basins 2x3-FT	EACH	2.000	2.000	
0120	611.2004	Manholes 4-FT Diameter	EACH	22.000	22.000	
0122	611.2005	Manholes 5-FT Diameter	EACH	9.000	9.000	
0124	611.2006	Manholes 6-FT Diameter	EACH	6.000	6.000	
0126	611.2007	Manholes 7-FT Diameter	EACH	1.000	1.000	
0128	611.3003	Inlets 3-FT Diameter	EACH	2.000	2.000	
0130	611.3004	Inlets 4-FT Diameter	EACH	24.000	24.000	
0132	611.3230	Inlets 2x3-FT	EACH	57.000	57.000	
0134	611.8105	Adjusting Catch Basin Covers	EACH	2.000	2.000	
0136	611.8115	Adjusting Inlet Covers	EACH	2.000	2.000	
0138	611.8120.S	Cover Plates Temporary	EACH	10.000	10.000	

Line	Item	Item Description	Unit	Total	3300-01-73 Qty	3300-01-74 Qty
0140	618.0100	Maintenance And Repair of Haul Roads (project) 01. 3300-01-73	EACH	1.000	1.000	
0142	619.1000	Mobilization	EACH	1.000	0.559	0.441
0144	624.0100	Water	MGAL	210.000	210.000	
0146	625.0100	Topsoil	SY	12,343.000	12,343.000	
0148	625.0500	Salvaged Topsoil	SY	470.000	470.000	
0150	628.1504	Silt Fence	LF	1,890.000	1,890.000	
0152	628.1520	Silt Fence Maintenance	LF	1,890.000	1,890.000	
0154	628.1905	Mobilizations Erosion Control	EACH	10.000	10.000	
0156	628.1910	Mobilizations Emergency Erosion Control	EACH	8.000	8.000	
0158	628.2006	Erosion Mat Urban Class I Type A	SY	21,858.000	21,858.000	
0160	628.2027	Erosion Mat Class II Type C	SY	125.000	125.000	
0162	628.7005	Inlet Protection Type A	EACH	45.000	45.000	
0164	628.7015	Inlet Protection Type C	EACH	56.000	56.000	
0166	628.7020	Inlet Protection Type D	EACH	48.000	48.000	
0168	628.7560	Tracking Pads	EACH	3.000	3.000	
0170	629.0210	Fertilizer Type B	CWT	7.790	7.790	
0172	630.0140	Seeding Mixture No. 40	LB	222.200	222.200	
0174	630.0200	Seeding Temporary	LB	28.800	28.800	
0176	634.0614	Posts Wood 4x6-Inch X 14-FT	EACH	3.000	3.000	
0178	634.0616	Posts Wood 4x6-Inch X 16-FT	EACH	20.000	20.000	
0180	634.0618	Posts Wood 4x6-Inch X 18-FT	EACH	13.000	13.000	
0182	634.0810	Posts Tubular Steel 2x2-Inch X 10-FT	EACH	2.000	2.000	
0184	634.0811	Posts Tubular Steel 2x2-Inch X 11-FT	EACH	49.000	49.000	
0186	634.0812	Posts Tubular Steel 2x2-Inch X 12-FT	EACH	5.000	5.000	
0188	634.0814	Posts Tubular Steel 2x2-Inch X 14-FT	EACH	8.000	8.000	
0190	637.2210	Signs Type II Reflective H	SF	656.560	656.560	
0192	637.2230	Signs Type II Reflective F	SF	147.000	147.000	
0194	638.2602	Removing Signs Type II	EACH	73.000	73.000	
0196	638.3000	Removing Small Sign Supports	EACH	67.000	67.000	
0198	638.4000	Moving Small Sign Supports	EACH	8.000	8.000	
0200	642.5401	Field Office Type D	EACH	1.000	1.000	
0202	643.0300	Traffic Control Drums	DAY	360.000	360.000	
0204	643.0420	Traffic Control Barricades Type III	DAY	7,045.000	7,045.000	
0206	643.0705	Traffic Control Warning Lights Type A	DAY	8,382.000	8,382.000	
0208	643.0900	Traffic Control Signs	DAY	64,262.000	64,262.000	
0210	643.0920	Traffic Control Covering Signs Type II	EACH	42.000	42.000	
0212	643.1000	Traffic Control Signs Fixed Message	SF	476.000	476.000	
0214	643.1050	Traffic Control Signs PCMS	DAY	52.000	52.000	
0216	643.5000	Traffic Control	EACH	1.000	1.000	

Line	Item	Item Description	Unit	Total	3300-01-73 Qty	3300-01-74 Qty
0218	644.1410.S	Temporary Pedestrian Surface Asphalt	SF	3,458.000	3,458.000	
0220	644.1616.S	Temporary Pedestrian Safety Fence	LF	3,567.000	3,567.000	
0222	646.1020	Marking Line Epoxy 4-Inch	LF	20,229.000	20,229.000	
0224	646.5020	Marking Arrow Epoxy	EACH	2.000	2.000	
0226	646.6120	Marking Stop Line Epoxy 18-Inch	LF	342.000	342.000	
0228	646.7420	Marking Crosswalk Epoxy Transverse Line 6-Inch	LF	1,265.000	1,265.000	
0230	646.8120	Marking Curb Epoxy	LF	1,133.000	1,133.000	
0232	646.8320	Marking Parking Stall Epoxy	LF	444.000	444.000	
0234	649.0150	Temporary Marking Line Removable Tape 4-Inch	LF	960.000	960.000	
0236	650.4000	Construction Staking Storm Sewer	EACH	146.000	146.000	
0238	650.4500	Construction Staking Subgrade	LF	8,043.000	8,043.000	
0240	650.5000	Construction Staking Base	LF	518.000	518.000	
0242	650.5500	Construction Staking Curb Gutter and Curb & Gutter	LF	1,016.000	1,016.000	
0244	650.7000	Construction Staking Concrete Pavement	LF	7,526.000	7,526.000	
0246	650.8500	Construction Staking Electrical Installations (project) 01. 3300-01-73	LS	1.000	1.000	
0248	650.9000	Construction Staking Curb Ramps	EACH	62.000	62.000	
0250	650.9910	Construction Staking Supplemental Control (project) 01. 3300-01-73	LS	1.000	1.000	
0252	650.9920	Construction Staking Slope Stakes	LF	8,043.000	8,043.000	
0254	652.0215	Conduit Rigid Nonmetallic Schedule 40 1 1/4-Inch	LF	465.000	465.000	
0256	652.0225	Conduit Rigid Nonmetallic Schedule 40 2-Inch	LF	12,302.000	12,302.000	
0258	653.0140	Pull Boxes Steel 24x42-Inch	EACH	2.000	2.000	
0260	654.0101	Concrete Bases Type 1	EACH	8.000	8.000	
0262	654.0102	Concrete Bases Type 2	EACH	1.000	1.000	
0264	654.0105	Concrete Bases Type 5	EACH	8.000	8.000	
0266	654.0230	Concrete Control Cabinet Bases Type L30	EACH	3.000	3.000	
0268	655.0610	Electrical Wire Lighting 12 AWG	LF	6,234.000	6,234.000	
0270	655.0615	Electrical Wire Lighting 10 AWG	LF	1,749.000	1,749.000	
0272	655.0635	Electrical Wire Lighting 2 AWG	LF	47,810.000	47,810.000	
0274	656.0400	Electrical Service Main Lugs Only Meter Pedestal (location) 01. STA 34+96.8, 39.0' LT	LS	1.000	1.000	
0276	656.0400	Electrical Service Main Lugs Only Meter Pedestal (location) 02. STA 62+63.4, 63.5' RT	LS	1.000	1.000	
0278	656.0400	Electrical Service Main Lugs Only Meter Pedestal (location) 03. STA 85+08.9, 45.3' LT	LS	1.000	1.000	
0280	657.0100	Pedestal Bases	EACH	4.000	4.000	
0282	657.0415	Traffic Signal Standards Aluminum 11-FT	EACH	4.000	4.000	
0284	658.0170	Traffic Signal Face 1S 8-Inch	EACH	4.000	4.000	
0286	659.2130	Lighting Control Cabinets 120/240 30-Inch	EACH	3.000	3.000	
0288	690.0150	Sawing Asphalt	LF	2,103.000	2,103.000	

Line	Item	Item Description	Unit	Total	3300-01-73 Qty	3300-01-74 Qty
0290	690.0250	Sawing Concrete	LF	3,378.000	3,378.000	
0292	715.0415	Incentive Strength Concrete Pavement	DOL	8,494.000	8,494.000	
0294	999.1000.S	Seismograph	LS	1.000	1.000	
0296	999.1500.S	Crack and Damage Survey	LS	1.000	1.000	
0298	ASP.1T0A	On-the-Job Training Apprentice at $5.00/HR	HRS	2,200.000	2,200.000	
0300	ASP.1T0G	On-the-Job Training Graduate at $5.00/HR	HRS	1,550.000	1,550.000	
0302	SPV.0035	Special 26. Granular Backfill, Sanitary Sewer	CY	3,572.000		3,572.000
0304	SPV.0035	Special 27. Granular Backfill, Water Main	CY	3,595.000		3,595.000
0306	SPV.0045	Special 01. Temporary Curb Ramp	DAY	3,964.000	3,964.000	
0308	SPV.0045	Special 02. Temporary Crosswalk	DAY	2,018.000	2,018.000	
0310	SPV.0060	Special 01. Remove, Salvage, And Reinstall Stop Sign Flasher Assembly	EACH	1.000	1.000	
0312	SPV.0060	Special 02. Landmark Reference Monuments Special	EACH	2.000	2.000	
0314	SPV.0060	Special 03. Research And Locate Existing Land Parcel Monuments	EACH	64.000	64.000	
0316	SPV.0060	Special 04. Verify And Replace Existing Land Parcel Monuments	EACH	64.000	64.000	
0318	SPV.0060	Special 05. Inlet Cover Type 3290A	EACH	4.000	4.000	
0320	SPV.0060	Special 06. Connect Storm Sewer To Existing Manhole	EACH	6.000	6.000	
0322	SPV.0060	Special 07. Connect Storm Sewer Manhole To Existing Storm Sewer Pipe	EACH	10.000	10.000	
0324	SPV.0060	Special 26. Connect to Existing Water Main	EACH	19.000		19.000
0326	SPV.0060	Special 27. Connect to Existing Water Service	EACH	142.000		142.000
0328	SPV.0060	Special 28. Water Service Corporation, Curb Stop and Box, 1-Inch	EACH	135.000		135.000
0330	SPV.0060	Special 29. Water Service Corporation, Curb Stop, and Box, 2-Inch	EACH	7.000		7.000
0332	SPV.0060	Special 30. Fire Hydrant with Auxilary Valve and 6-Inch Lead	EACH	18.000		18.000
0334	SPV.0060	Special 31. Water Main Gate Valve and Valve Box, 6-Inch	EACH	2.000		2.000
0336	SPV.0060	Special 32. Water Main Gate Valve and Valve Box, 8-Inch	EACH	10.000		10.000
0338	SPV.0060	Special 33. Water Main Gate Valve and Valve Box, 10-Inch	EACH	4.000		4.000
0340	SPV.0060	Special 34. Water Main Gate Valve and Valve Box, 12-Inch	EACH	18.000		18.000
0342	SPV.0060	Special 35. Adjust Existing Valve Box	EACH	6.000		6.000
0344	SPV.0060	Special 36. Water Main Offset	EACH	5.000		5.000
0346	SPV.0060	Special 37. Utility Line Opening (ULO)	EACH	12.000		12.000
0348	SPV.0060	Special 38. Betonite Clay Dams	EACH	4.000		4.000
0350	SPV.0060	Special 39. Flourocarbon Water Main Gaskets	EACH	15.000		15.000

Line	Item	Item Description	Unit	Total	3300-01-73 Qty	3300-01-74 Qty
0352	SPV.0060	Special 40. Nitrile Water Main Gaskets	EACH	20.000		20.000
0354	SPV.0060	Special 41. Connect to Existing Sanitary Sewer Main or Manhole	EACH	13.000		13.000
0356	SPV.0060	Special 42. Connect to Existing Sanitary Sewer Lateral	EACH	151.000		151.000
0358	SPV.0060	Special 43. Sanitary Sewer Manhole (4-Foot Diameter)	EACH	26.000		26.000
0360	SPV.0060	Special 44. Construct Outside Drop	EACH	7.000		7.000
0362	SPV.0060	Special 51. Special Concrete Base-Type 5	EACH	66.000	66.000	
0364	SPV.0060	Special 52. Decorative Pole Assembly-Type 1	EACH	66.000	66.000	
0366	SPV.0060	Special 53. Decorative Pole Assembly-Type 2	EACH	8.000	8.000	
0368	SPV.0090	Special 01. Pipe Underdrain Wrapped 6-Inch And Aggregate	LF	7,612.000	7,612.000	
0370	SPV.0090	Special 02. Stair Hand Railing	LF	3.000	3.000	
0372	SPV.0090	Special 03. Concrete Curb And Gutter 30-Inch Type A Special	LF	273.000	273.000	
0374	SPV.0090	Special 26. Water Service Copper, 1-Inch	LF	5,153.000		5,153.000
0376	SPV.0090	Special 27. Water Service Copper, 2-Inch	LF	200.000		200.000
0378	SPV.0090	Special 28. Water Main, Ductile Iron (DI), 6-Inch	LF	204.000		204.000
0380	SPV.0090	Special 29. Water Main, Ductile Iron (DI), 8-Inch	LF	841.000		841.000
0382	SPV.0090	Special 30. Water Main, Ductile Iron (DI), 10-Inch	LF	387.000		387.000
0384	SPV.0090	Special 31. Water Main, Ductile Iron (DI), 12-Inch	LF	5,961.000		5,961.000
0386	SPV.0090	Special 32. Sanitary Lateral, 4-Inch	LF	5,095.000		5,095.000
0388	SPV.0090	Special 33. Sanitary Lateral, 6-Inch	LF	200.000		200.000
0390	SPV.0090	Special 34. Sanitary Sewer, Polyvinyl Chloride (PVC), SDR 35, 8-Inch	LF	1,222.000		1,222.000
0392	SPV.0090	Special 35. Sanitary Sewer, Polyvinyl Chloride (PVC), SDR 35, 10-Inch	LF	15.000		15.000
0394	SPV.0090	Special 36. Sanitary Sewer, Polyvinyl Chloride (PVC), SDR 35, 12-Inch	LF	4,409.000		4,409.000
0396	SPV.0090	Special 37. Sanitary Sewer, Polyvinyl Chloride (PVC), SDR 26, 12-Inch	LF	1,389.000		1,389.000
0398	SPV.0090	Special 38. Sanitary Sewer, Polyvinyl Chloride (PVC), SDR 35, 15-Inch	LF	108.000		108.000
0400	SPV.0090	Special 39. Water Main Insulation	LF	100.000		100.000
0402	SPV.0105	Special 26. Temporary Water Main and Service Connections	LS	1.000		1.000
0404	SPV.0105	Special 27. Remove Existing Water Main	LS	1.000		1.000
0406	SPV.0105	Special 28. Abandon Existing Water Main	LS	1.000		1.000
0408	SPV.0105	Special 29. Abandon Existing Sanitary Sewer	LS	1.000		1.000
0410	SPV.0195	Special 01. Excavation, Hauling, and Disposal of Contaminated Soil	TON	3,591.000	1,623.000	1,968.000

3

Division	From/To Station	Location	205.0100 Common Excavation (1) Cut (2)	EBS Excavation (3)	Salvaged/Unusable Pavement Material (4)	Available Material (5)	Reduced EBS in Fill (9) Factor 0.80	Expanded EBS Backfill (11) Factor 1.30	Unexpanded Fill	Expanded Fill (13) Factor 1.25	Mass Ordinate +/- (14)	Waste	Comment:
Stage 1													
	84+40 - 95+41.2	STH 89	6,032	0	0	6,032	0	0	239	298	5,734	5,734	
	10+19.2 ELS - 10+72.3	E LAKE ST	232	0	0	232	0	0	0	0	232	232	
	9+32.8 WLS - 9+75 WLS	W LAKE ST	176	0	0	176	0	0	0	0	176	176	
	9+35.6 VL - 9+75 VL	VETERANS LN	95	0	0	95	0	0	0	0	95	95	
	10+22.4 WS - 11+15 WS	WATER ST	272	0	0	272	0	0	0	0	272	272	
		DOWNTOWN PARKING ANNEX	532	0	0	532	0	0	0	0	532	532	
	EBS	UNDISTRIBUTED	0	176	0	0							
Stage 1 Subtotal			7,339	176	0	7,339	0	0	239	299	7,041	7,041	
Stage 2													
	62+88 - 84+40	STH 89	10,879	0	0	10,879	0	0	471	0	10,879	10,879	
	9+46.7 LPP - 10+50 LPP	LAKE PARK PL	77	0	0	77	0	0	0	0	77	77	
	9+51.4 PL - 9+80 PL	PHILLIPS LN	53	0	0	53	0	0	0	0	53	53	
	EBS	UNDISTRIBUTED	0	176	0	0							
Stage 2 Subtotal			11,009	176	0	11,009	0	0	471	0	11,009	11,009	
Stage 3													
	44+00 - 62+88	STH 89	11,082	0	0	11,082	0	0	458	0	11,082	11,082	
	9+51.8 KS - 9+80 KS	KEYES ST	60	0	0	60	0	0	0	0	60	60	
	9+46.7 LPP - 10+50 LPP	LAKE PARK PL	77	0	0	77	0	0	0	0	77	77	
	9+36.6 MS - 9+80 MS	MILTON ST	104	0	0	104	0	0	0	0	104	104	
	10+23.2 NCD - 10+90 NCD	N CATLIN DR	161	0	0	161	0	0	0	0	161	161	
	10+23.3 SCD - 10+90 SCD	S CATLIN DR	122	0	0	122	0	0	0	0	122	122	
	9+31 WBR - 9+80 WBR	WOODLAND BEACH RD	104	0	0	104	0	0	0	0	104	104	
	EBS	UNDISTRIBUTED	0	176	0	0							
Stage 3 Subtotal			11,710	176	0	11,710	0	0	458	0	11,710	11,710	
Stage 4													
	29+50 - 44+00	STH 89	8,717	0	0	8,717	0	0	447	0	8,717	8,717	
	9+55 CS - 9+80 CS	COLUMBUS ST	47	0	0	47	0	0	0	0	47	47	
	8+25 A - 9+80 A	CTH A	779	0	0	779	0	0	0	0	779	779	
	10+24 PD - 10+65 PD	PINNACLE DR	109	0	0	109	0	0	0	0	109	109	
	8+80 SBR - 9+80 SBR	SANDY BEACH RD	229	0	0	229	0	0	0	0	229	229	
	8+32 SBR - 10+00 SBR	SANDY BEACH RD BYPASS	212	0	0	212	0	0	0	0	212	212	
	40+40 WNTR - 44+00 WNTR	WINTER CARRYOVER	467	0	0	467	0	0	0	0	467	467	
	EBS	UNDISTRIBUTED	0	176	0	0							
Stage 4 Subtotal			10,560	176	0	10,560	0	0	447	0	10,560	10,560	
Grand Total			40,618	704	0	40,618	0	0	1,615	299	40,320	40,320	
Total Common Exc			41,322										

Notes:

(1) Common Excavation is the sum of the Cut and EBS Excavation columns. Item number 205.0100

(2) Salvaged/Unsuable Pavement Material is included in Cut.

(3) EBS Excavation to be backfilled with Select Borrow material. Note: this is designers choice, can be backfilled with Borrow, or Cut as well.

(4) Salvaged/Unusable Pavement Material

(5) Available Material = Cut - Salvaged/Unusuable Pavement Material

(6) Marsh Excavation - to be backfilled with Select Borrow Material. Note: this is designers choice, can be backfilled with Borrow, or Cut as well. Item number 205.0500

(7) Rock Excavation item number 205.0200

(8) Reduced Marsh in Fill - Excavated Marsh material is usuable in Fills outside the 1:1 slope. Marsh in Fill Reduction factor = 0.6

(9) Reduced EBS in Fill - Excavated EBS material is usuable in Fills outside the 1:1 slope. EBS in Fill Reduction factor = 0.8

10) Expanded Marsh Backfill - This is to be filled with Select Borrow material. Marsh Backfill Factor = 1.5. Item number 208.1100

(11) Expanded EBS Backfill - This is to be filled with Select Borrow material. EBS Backfill Factor = 1.3. Item number 208.1100

(12) Expanded Rock Factor = 1.1

(13) Expanded Fill Factor = 1.25

Depending on selections:

Expanded Fill = (Unexpanded Fill - Rock* Rock Factor - Reduced Marsh - Reduced EBS) * Fill Factor

Or Expanded Fill = (Unexpanded Fill - Rock * Rock Factor - Reduced EBS) * Fill Factor

Or Expanded Fill = (Unexpanded Fill - Rock * Rock Factor - Reduced Marsh) * Fill Factor

Or Expanded Fill = (Unexpanded Fill - Rock * Rock Factor) * Fill Factor

(14) The Mass Ordinate + or - Qty calculated for the Division. Plus quantity indicates an excess of material within the Division. Minus indicates a shortage of material within the Division.

3

CLEARING & GRUBBING

CATEGORY	STATION	OFFSET	LOCATION	201.0110 CLEARING SY	201.0120 CLEARING ID	201.0210 GRUBBING SY	201.0220 GRUBBING ID
STAGE 2							
0010	82+33	21' LT	STH 89	-	-	-	16
0010	82+21	28' RT	STH 89	-	24	-	24
0010	81+55	27' RT	STH 89	-	24	-	24
0010	81+42	27' RT	STH 89	-	-	-	12
0010	81+38	21' LT	STH 89	-	-	-	23
0010	80+98	19' LT	STH 89	-	-	-	26
0010	80+97	28' RT	STH 89	-	13	-	13
0010	80+57	22' LT	STH 89	-	12	-	12
0010	80+35	27' RT	STH 89	-	-	-	18
0010	80+03	22' LT	STH 89	-	15	-	15
0010	79+98	28' RT	STH 89	-	-	-	20
0010	79+66	27' RT	STH 89	-	21	-	21
0010	79+40	28' RT	STH 89	-	22	-	22
0010	79+30	21' LT	STH 89	-	-	-	56
0010	79+12	28' RT	STH 89	-	21	-	21
0010	78+85	21' LT	STH 89	-	27	-	27
0010	78+15	21' LT	STH 89	-	28	-	28
0010	77+86	28' RT	STH 89	-	23	-	23
0010	77+68	21' LT	STH 89	-	29	-	29
0010	77+62	28' RT	STH 89	-	-	-	22
0010	77+20	28' RT	STH 89	-	-	-	23
0010	76+91	21' LT	STH 89	-	-	-	22
0010	76+81	28' RT	STH 89	-	-	-	28
0010	76+24	20' LT	STH 89	-	-	-	28
0010	76+02	28' RT	STH 89	-	-	-	13
0010	75+86	20' LT	STH 89	-	-	-	15
0010	75+67	28' RT	STH 89	-	26	-	26
0010	75+58	21' RT	STH 89	-	-	-	16
0010	75+25	28' RT	STH 89	-	24	-	24
0010	75+19	23' LT	STH 89	-	26	-	26
0010	74+83	28' RT	STH 89	-	-	-	18
0010	74+81	23' LT	STH 89	-	25	-	25
0010	74+44	28' RT	STH 89	-	-	-	20
0010	73+96	20' LT	STH 89	-	-	-	16
0010	73+76	29' RT	STH 89	-	27	-	27
0010	72+87	28' RT	STH 89	-	-	-	35
0010	71+90	29' RT	STH 89	-	23	-	23
0010	71+57	22' LT	STH 89	-	23	-	23
0010	71+23	22' LT	STH 89	-	25	-	25
0010	70+84	22' LT	STH 89	-	14	-	14
0010	70+71	28' RT	STH 89	-	31	-	31
0010	70+44	21' LT	STH 89	-	16	-	16
0010	70+28	27' RT	STH 89	-	-	-	16
0010	69+96	28' RT	STH 89	-	-	-	14
0010	69+56	21' LT	STH 89	-	17	-	17
0010	69+48	28' RT	STH 89	-	-	-	26
0010	69+17	29' RT	STH 89	-	19	-	19
0010	68+92	28' RT	STH 89	-	22	-	22
			SUBTOTAL 0010	0	577	0	1060

CLEARING & GRUBBING

CATEGORY	STATION	OFFSET	LOCATION	201.0110 CLEARING SY	201.0120 CLEARING ID	201.0210 GRUBBING SY	201.0220 GRUBBING ID	REMARKS
STAGE 2								
0010	68+87	21' LT	STH 89	-	24	-	24	
0010	68+52	29' RT	STH 89	-	-	-	15	
0010	67+78	20' LT	STH 89	-	-	-	22	
0010	67+52	38' RT	STH 89	-	28	-	28	POSSIBLE REMOVAL
0010	67+45	21' LT	STH 89	-	-	-	26	
0010	66+59	38' RT	STH 89	-	34	-	34	POSSIBLE REMOVAL
0010	66+54	21' LT	STH 89	-	-	-	22	
0010	66+14	23' LT	STH 89	-	-	-	11	
0010	65+74	23' LT	STH 89	-	-	-	14	
0010	65+17	27' RT	STH 89	-	-	-	17	
0010	64+34	27' RT	STH 89	-	22	-	22	
0010	64+30	23' LT	STH 89	-	-	-	20	
0010	63+85	27' RT	STH 89	-	26	-	26	
0010	63+80	23' LT	STH 89	-	16	-	16	
0010	63+47	28' RT	STH 89	-	26	-	26	
0010	63+40	24' LT	STH 89	-	24	-	24	
STAGE 3								
0010	62+45	26' RT	STH 89	-	-	-	23	
0010	61+26	27' RT	STH 89	-	39	-	39	
0010	61+02	27' RT	STH 89	-	33	-	33	
0010	60+05	25' LT	STH 89	-	25	-	25	
0010	59+87	24' LT	STH 89	-	26	-	26	
0010	59+46	22' LT	STH 89	-	20	-	20	
0010	59+18	33' LT	STH 89	-	-	-	24	POSSIBLE REMOVAL
0010	58+23	37' RT	STH 89	-	31	-	31	POSSIBLE REMOVAL
0010	58+07	20' LT	STH 89	-	30	-	30	
0010	56+82	20' LT	STH 89	-	-	-	9	
0010	56+73	30' RT	STH 89	-	-	-	28	
0010	56+55	31' RT	STH 89	-	-	-	24	
0010	55+45	18' LT	STH 89	-	-	-	3	
0010	55+84	30' RT	STH 89	-	25	-	25	
0010	55+67	16' LT	STH 89	-	-	-	8	
0010	55+44	16' LT	STH 89	-	-	-	28	
0010	55+39	31' RT	STH 89	-	26	-	26	
0010	54+08	39' RT	STH 89	-	27	-	27	POSSIBLE REMOVAL
0010	53+98	27' LT	STH 89	-	30	-	30	
0010	53+71	35' RT	STH 89	-	-	-	13	
0010	51+65	30' RT	STH 89	-	22	-	22	
0010	50+34	37' RT	STH 89	-	18	-	18	
0010	46+91	36' RT	STH 89	-	-	-	21	
0010	46+55	36' RT	STH 89	-	-	-	26	
0010	46+15	36' RT	STH 89	-	-	-	16	
0010	45+99	43' RT	STH 89	-	16	-	16	
0010	45+50	33' RT	STH 89	-	-	-	19	
0010	45+12	34' RT	STH 89	-	-	-	25	
0010	44+74	33' RT	STH 89	-	-	-	25	
0010	44+63	33' RT	STH 89	-	-	-	7	
			SUBTOTAL 0010	0	568	0	1014	

3

3

CLEARING & GRUBBING CONT.

CATEGORY	STATION	OFFSET	LOCATION	201.0110 CLEARING SY	201.0120 CLEARING ID	201.0210 GRUBBING SY	201.0220 GRUBBING ID	REMARKS
STAGE 4								
0010	43+57	31' RT	STH 89	-	22	-	22	
0010	43+06	28' RT	STH 89	-	-	-	25	
0010	42+85	30' RT	STH 89	-	-	-	24	
0010	42+68	29' RT	STH 89	-	-	-	19	
0010	42+57	29' RT	STH 89	-	-	-	11	
0010	42+27	28' RT	STH 89	-	23	-	23	
0010	41+59	27' RT	STH 89	-	-	-	20	
0010	41+46	32' RT	STH 89	-	26	-	26	
0010	41+32	29' LT	STH 89	-	-	-	27	
0010	40+15	34' LT	STH 89	-	51	-	51	
0010	39+25	41' RT	STH 89	-	22	-	22	
0010	38+76	40' RT	STH 89	-	46	-	46	POSSIBLE REMOVAL
0010	38+42	39' RT	STH 89	-	46	-	46	POSSIBLE REMOVAL
0010	37+72	25' LT	STH 89	-	-	-	29	
0010	37+19	32' RT	STH 89	-	9	-	9	
0010	36+88	32' RT	STH 89	-	7	-	7	
0010	34+50	RT	STH 89	280	-	280	-	DENSE VEGETATION
			SUBTOTAL 0010	280	252	280	407	
			TOTAL 0010	280	1,397	280	2,481	

REMOVING STORM SEWER ITEMS

CATEGORY	STATION	Offset	TO	STATION	Offset	DIAMETER (INCH)	204.0245.01 REMOVING STORM SEWER (01. 8-INCH TO 20-INCH) LF	204.0245.02 REMOVING STORM SEWER (01. 21-INCH TO 36-INCH) LF
STAGE 1								
0010	92+81	1' RT	-	92+93	25' LT	12	28	-
0010	92+81	1' RT	-	92+89	25' RT	12	25	-
0010	92+81	1' RT	-	92+87	23' LT	12	25	-
0010	89+74	0'	-	90+05	23' LT	12	38	-
0010	89+83	38' LT	-	90+05	23' LT	12	27	-
0010	89+67	50' LT	-	89+74	0'	18	51	-
0010	89+41	44' LT	-	89+60	62' LT	8	29	-
0010	89+74	0'	-	90+30	34' RT	12	65	-
0010	89+74	0'	-	89+80	43' RT	18	44	-
0010	89+74	0'	-	94+98	1' RT	24	-	524
0010	88+94	22' RT	-	89+74	0' LT	36		84
0010	87+23	13' RT	-	87+28	21' RT	12	10	-
0010	87+27	13' RT	-	87+28	25' LT	15	38	-
0010	85+86	14' RT	-	88+94	22' RT	36		300
0010	85+61	13' RT	-	85+61	21' RT	15	8	-
0010	85+61	19' LT	-	85+61	13' RT	15	32	-
STAGE 2								
0010	62+94	10' LT	-	62+94	43' RT	12	53	-
0010	62+94	10' LT	-	63+09	21' LT	12	19	-
STAGE 3								
0010	62+66	22' LT	-	62+94	10' LT	12	30	-
STAGE 4								
0010	40+49	56' RT	-	42+37	246' RT	30	-	30
0010	40+49	56' RT	-	40+53	26' RT	30	-	30
0010	40+50	26' LT	-	40+53	26' RT	30	-	52
0010	38+04	21' LT	-	38+35	21' LT	24	-	33
0010	38+04	22' LT	-	38+04	40' LT	18	18	-
0010	34+94	69' LT	-	34+98	17' LT	12	53	-
0010	34+55	23' LT	-	34+98	17' LT	12	44	-
0010	34+69	62' LT	-	34+79	64' LT	12	11	-
0010	34+69	62' LT	-	34+69	69' LT	12	7	-
0010	34+55	65' LT	-	34+69	62' LT	12	14	-
0010	34+55	26' RT	-	34+66	26' RT	15	11	-
0010	34+55	23' LT	-	34+55	266' RT	12	289	-
0010	34+55	23' LT	-	34+56	65' LT	12	42	-
0010	31+33	38' LT	-	31+83	90' LT	12	80	-
0010	29+62	30' LT	-	31+33	38' LT	12	181	-
						TOTAL 0010	1,272	1,053

3

3

REMOVING PAVEMENT

CATEGORY	STATION	TO	STATION	LOCATION	204.0100 REMOVING PAVEMENT SY	REMARKS
STAGE 1						
0010	89+76	-	95+41	STH 89	2,390	LAKE ST TO MADISON ST
0010	86+34	-	89+76	STH 89	2,535	WATER ST TO LAKE ST
0010	84+40	-	86+34	STH 89	29	VETERANS LN TO WATER ST
STAGE 2						
0010	68+37	-	84+40	STH 89	454	PHILLIPS LN TO VETERANS LN
0010	62+88	-	68+37	STH 89	806	LAKE PARK PL TO PHILLIPS LN
STAGE 3						
0010	58+91	-	62+88	STH 89	848	MILTON ST TO LAKE PARK PL
0010	54+95	-	58+91	STH 89	834	KEYES ST TO MILTON ST
0010	51+20		54+95	STH 89	792	LM GOLF CLUB TO KEYES ST
0010	44+00	-	51+20	STH 89	1,535	WOODLAND BEACH RD TO LM GOLF CLUB
STAGE 4						
0010	40+40	-	44+00	STH 89	765	PINNACLE DR TO WOODLAND BEACH RD
0010	38+17	-	40+40	STH 89	462	COLUMBUS ST TO PINNACLE DR
0010	34+77	-	38+17	STH 89	807	SANDY BEACH RD TO COLUMBUS ST
0010	31+72	-	34+77	STH 89	367	CTH A TO SANDY BEACH RD
				TOTAL 0010	12,624	
STAGE 1						
0030	90+00	-	95+41	STH 89	548	LAKE ST TO MADISON ST (PARKING STALLS)
0030	86+09	-	90+00	STH 89	1,168	WATER ST TO LAKE ST (PARKING STALLS)
				TOTAL 0030	1,716	
				TOTAL	14,340	

REMOVING CURB & GUTTER

CATEGORY	STATION	TO	STATION	LOCATION	204.0150 REMOVING CURB & GUTTER LF
STAGE 1					
0010	8440	-	86+09	STH 89	309
0010	9+35 'VL'	-	9+68 'VL'	VETERANS LN	50
STAGE 2					
0010	68+20	-	84+68	STH 89	3201
0010	63+04	-	68+20	STH 89	1085
STAGE 3					
0010	59+11	-	62+70	STH 89	771
0010	55+12	-	58+76	STH 89	763
0010	51+00	-	54+80	STH 89	748
0010	10+44 'NCD'	-	10+91 'NCD'	N. CATLIN DR	61
0010	9+50 'MS'	-	9+72 'MS'	MILTON ST	67
0010	10+43 'SCD'	-	10+90 'SCD'	S. CATLIN DR	58
0010	9+66 'KS'	-	9+52 'KS'	KEYES ST	15
0010	9+46 'WBR'	-	9+76 'WBR'	WOODLAND BEACH RD	94
STAGE 4					
0010	30+00	-	32+59	STH 89	568
0010	10+25 'PD'	-	10+68 'PD'	PINNACLE DR	80
0010	8+80 'SBR'	-	9+73 'SBR'	SANDY BEACH RD	177
0010	8+24 'A'	-	9+14 'A'	CTH A	207
				TOTAL 0010	8254

3

3

REMOVING CONCRETE SIDEWALK

CATEGORY	STATION	TO	STATION	LOCATION	204.0155 REMOVING CONCRETE SIDEWALK SY
STAGE 1					
0010	94+90	-	95+25	STH 89 - RT	19
0010	90+19	-	90+75	STH 89 - RT	32
0010	89+90	-	95+41	STH 89 - LT	830
0010	86+54	-	89+50	STH 89 - RT	388
0010	85+05	-	89+50	STH 89 - LT	630
0010	84+50	-	86+03	STH 89 - RT	181
0010	84+44	-	84+65	STH 89 - LT	12
0010	10+19 'WS'	-	11+09 'WS'	WATER ST - LT	96
STAGE 2					
0010	83+35	-	84+05	STH 89 - LT	32
0010	68+54	-	82+78	STH 89 - LT	815
0010	63+06	-	84+50	STH 89 - RT	1,192
0010	63+04	-	68+19	STH 89 - LT	262
STAGE 3					
0010	59+12	-	62+66	STH 89 - RT	180
0010	59+07	-	62+71	STH 89 - LT	176
0010	55+19	-	58+68	STH 89 - RT	177
0010	55+13	-	58+76	STH 89 - LT	177
0010	54+25	-	54+25	STH 89 - RT	3
0010	52+60	-	52+60	STH 89 - RT	4
0010	44+59	-	54+80	STH 89 - LT	473
0010	10+28 'SCD'	-	10+52 'SCD'	S. CATLIN DR - RT	18
STAGE 4					
0010	39+43	-	39+43	STH 89 - RT	6
0010	38+31	-	44+17	STH 89 - LT	266
0010	35+04	-	38+05	STH 89 - LT	135
0010	33+45	-	34+53	STH 89 - LT	44
0010	31+50	-	32+50	STH 89 - LT	35
0010	10+29 'PD'	-	10+53 'PD'	PINNACLE DR - LT	12
0010	10+29 'PD'	-	10+53 'PD'	PINNACLE DR - RT	12
0010	8+79 'SBR'	-	9+65 'SBR'	SANDY BEACH RD - LT	38
0010	8+50 'A'	-	9+39 'A'	CTH A - LT	35
				TOTAL 0010	6,245

REMOVING CONCRETE BASES

CATEGORY	STATION	OFFSET	204.0195 REMOVING CONCRETE BASES EACH
STAGE 1			
0010	95+71	27' LT	1
0010	93+99	25' LT	1
0010	92+64	25' LT	1
0010	91+24	25' LT	1
0010	89+96	25' LT	1
0010	89+57	45' RT	1
0010	89+29	39' LT	1
0010	89+27	27' LT	1
0010	88+41	27' LT	1
0010	88+06	59' RT	1
0010	87+20	27' LT	1
0010	86+83	83' RT	1
0010	86+31	23' LT	1
0010	86+22	41' RT	1
0010	85+15	22' LT	1
		TOTAL 0010	15

REMOVING INLETS

CATEGORY	STATION	OFFSET	204.0220 REMOVING INLETS EACH
STAGE 1			
0010	92+89	23' LT	1
0010	92+88	24' RT	1
0010	90+30	34' RT	1
0010	90+05	23' LT	1
0010	89+80	39' LT	1
0010	89+41	44' LT	1
0010	87+29	22.5' RT	1
0010	87+29	25' LT	1
0010	85+61	18' LT	1
0010	85+61	20' RT	1
STAGE 2			
0010	63+09	22' LT	1
0010	62+66	22' LT	1
STAGE 4			
0010	34+98	16.5' LT	1
0010	34+80	63' LT	1
0010	34+66	26' RT	1
0010	34+55	65' LT	1
0010	34+55	23' LT	1
0010	31+33	38' LT	1
0010	31+84	90' LT	1
		TOTAL 0010	19

REMOVING MANHOLES

CATEGORY	STATION	OFFSET	204.0210 REMOVING MANHOLES EACH
STAGE 1			
0010	92+81	0.7' RT	1
0010	89+74	0.1' LT	1
0010	88+94	22' RT	1
0010	85+61	13' RT	1
STAGE 2			
0010	62+94	10' LT	1
STAGE 4			
0010	40+53	26' RT	1
0010	40+50	26' LT	1
0010	40+49	56' RT	1
0010	38+04	21' LT	1
0010	34+69	62' LT	1
		TOTAL 0010	10

3

3

REMOVING STREET LIGHT ASSEMBLY

CATEGORY	STATION	OFFSET	204.9060.S.01 (01. STREET LIGHT ASSEMBLY) EACH
STAGE 1			
0010	95+71	27' LT	1
0010	93+99	25' LT	1
0010	92+64	25' LT	1
0010	91+24	25' LT	1
0010	89+96	25' LT	1
0010	89+57	45' RT	1
0010	89+27	27' LT	1
0010	89+30	39' RT	1
0010	88+41	27' LT	1
0010	88+06	59' RT	1
0010	87+20	27' LT	1
0010	86+83	83' RT	1
0010	86+31	23' LT	1
0010	86+23	41' RT	1
0010	85+15	22' LT	1
		TOTAL 0010	15

REMOVING EXISTING CONCRETE STEPS

CATEGORY	STATION	OFFSET	204.9090.S.01 (01. EXISTING CONCRETE STEPS) LF
STAGE 2			
0010	83+47	31' RT	5
0010	82+61	37' RT	5
0010	82+49	25' LT	8
0010	81+30	21' LT	3
0010	73+84	37' RT	5
0010	72+37	31' LT	1
0010	72+37	22' LT	3
0010	71+65	28' RT	3
0010	67+91	27' RT	1
0010	65+68	21' LT	3
		TOTAL 0010	37

BASE AGGREGATE ITEMS

CATEGORY	STATION	TO	STATION	LOCATION	* 305.0110 BASE AGGREGATE DENSE 3/4-INCH TON	* 305.0120 BASE AGGREGATE DENSE 1 1/4-INCH TON	* 312.0110 SELECT CRUSHED MATERIAL TON	REMARKS
STAGE 1								
0010	89+68	-	95+41	STH 89	191	1109	2588	LAKE ST TO N. PROJECT LIMITS
0010	86+34	-	89+68	STH 89	256	477	1112	WATER ST TO LAKE ST
0010	84+52	-	86+34	STH 89	68	299	699	VETERANS LN TO WATER ST
0010	10+72 'ELS'	-	10+87 'ELS'	E. LAKE ST	-	57	29	
0010	9+39 'WLS'	-	9+54 'WLS'	W. LAKE ST	-	42	21	
0010	11+04 'WS'	-	11+19 'WS'	WATER ST	26	12	10	
0010	9+35 'VL'	-	9+51 'VL'	VETERANS LN	-	24	10	
0010	84+40	-	95+41	STH 89 - LT/RT	-	57	-	DRIVEWAYS
STAGE 2								
0010	68+37	-	84+87	STH 89	419	2610	6090	PHILLIPS LN TO VETERANS LN
0010	62+87	-	68+37	STH 89	137	901	2102	LAKE PARK PL TO PHILLIPS LN
0010	9+51 'PL'	-	9+66 'PL'	PHILLIPS LN	-	10	9	
0010	10+40 'LPP'	-	10+55 'LPP'	E. LAKE PARK PL	-	6	5	
0010	9+46 'LPP'	-	9+61 'LPP'	W. LAKE PARK PL	-	5	4	
0010	62+88	-	84+40	STH 89 - LT/RT	-	601	-	DRIVEWAYS
STAGE 3								
0010	58+91	-	62+87	STH 89	104	700	1632	MILTON ST TO LAKE PARK PL
0010	54+95	-	58+91	STH 89	105	677	1580	KEYES ST TO MILTON ST
0010	44+36	-	54+95	STH 89	278	1717	4007	WOODLAND BEACH RD TO KEYES ST
0010	10+40 'LPP'	-	10+55 'LPP'	E. LAKE PARK PL	-	6	5	
0010	9+46 'LPP'	-	9+61 'LPP'	W. LAKE PARK PL	-	5	4	
0010	10+49 'NCD'	-	10+75 'NCD'	N. CATLIN DR	-	32	28	
0010	9+52 'MS'	-	9+66 'MS'	MILTON ST	-	19	17	
0010	10+51 'SCD'	-	10+75 'SCD'	S. CATLIN DR	-	32	27	
0010	9+52 'KS'	-	9+66 'KS'	KEYES ST	-	9	8	
0010	9+45 'WBR'	-	9+60 'WBR'	WOODLAND BEACH RD	-	61	-	
0010	44+00	-	62+88	STH 89 - LT/RT	-	233	-	DRIVEWAYS
STAGE 4								
0010	40+18	-	44+36	STH 89	104	706	1647	PINNACLE DR TO WOODLAND BEACH RD.
0010	38+17	-	40+18	STH 89	50	360	839	COLUMBUS ST TO PINNACLE DR
0010	34+77	-	38+17	STH 89	85	563	699	SANDY BEACH RD TO COLUMBUS ST
0010	30+00	-	34+77	STH 89	91	957	2233	BEGIN CONCRETE TO SANDY BEACH RD
0010	29+50	-	30+00	STH 89	-	127	65	
0010	40+40		44+00	STH 89	-	711	-	WINTER CARRYOVER
0010	10+52 'PD'	-	10+68 'PD'	PINNACLE DR	-	33	-	
0010	9+54 'CS'	-	9+66 'CS'	COLUMBUS ST	-	7	6	
0010	8+30 'SBR'	-	9+71 'SBR'	SANDY BEACH RD	14	-	-	
0010	8+30 'SBR'	-	9+71 'SBR'	SANDY BEACH RD	-	282	-	TEMPORARY ACCESS
0010	8+25 'A'	-	9+20 'A'	CTH A	21	250	127	
0010	29+50	-	44+00	STH 89 - LT/RT	-	231	-	DRIVEWAYS
				TOTAL 0010	1,949	13,928	25,603	

*ADDITIONAL QUANTITIES SHOWN ELSEWHERE

3

BASE AGGREGATE ITEMS

CATEGORY	STATION	TO	STATION	LOCATION	* 305.0110 BASE AGGREGATE DENSE 3/4-INCH TON	* 305.0120 BASE AGGREGATE DENSE 1 1/4-INCH TON	* 312.0110 SELECT CRUSHED MATERIAL TON	REMARKS
STAGE 1								
0030	89+68	-	95+41	STH 89 - RT	-	82	192	ON-STREET PARKING
0030	89+68	-	95+41	STH 89 - LT	-	88	205	ON-STREET PARKING
0030	86+34	-	89+68	STH 89 - RT	-	249	582	ADJACENT PARKING AREA
0030	86+34	-	89+68	STH 89 - RT	-	19	45	ON-STREET PARKING
0030	86+34	-	89+68	STH 89 - LT	-	38	89	ON-STREET PARKING
0030	84+87	-	86+34	STH 89 - LT	-	9	21	ON-STREET PARKING
STAGE 2								
0030	68+37	-	84+87	STH 89 - RT	-	309	721	ON-STREET PARKING
0030	62+87	-	68+37	STH 89 - RT	-	110	257	ON-STREET PARKING
STAGE 3								
0030	58+91	-	62+87	STH 89 - RT	-	63	146	ON-STREET PARKING
0030	54+95	-	58+91	STH 89 - RT	-	65	151	ON-STREET PARKING
0030	44+36	-	54+95	STH 89 - RT	-	214	499	ON-STREET PARKING
STAGE 4								
0030	40+18	-	44+36	STH 89 - RT	-	79	184	ON-STREET PARKING
0030	38+17	-	40+18	STH 89 - RT	-	30	40	ON-STREET PARKING
0030	34+77	-	38+17	STH 89 - RT	-	66	153	ON-STREET PARKING
0030	33+75	-	34+77	STH 89 - RT	-	23	53	ON-STREET PARKING
0030	8+80 'SBR'	-	9+59 'SBR'	SANDY BEACH RD	-	51	44	
				TOTAL 0030	0	1,495	3,382	
				TOTAL	1,949	15,423	28,985	

* ADDITIONAL QUANTITIES SHOWN ELSEWHERE

WATER

CATEGORY	STATION	TO	STATION	LOCATION	624.0100 WATER MGAL
0010	29+50	-	95+41.21	PROJECT	210
				TOTAL 0010	210

3

CONCRETE PAVEMENT

CATEGORY	STATION	TO	STATION	LOCATION	405.0100 COLORING CONCRETE WISDOT RED CY	415.0080 CONCRETE PAVEMENT 8-INCH SY	415.0210 CONCRETE PAVEMENT GAPS EACH	415.1080 CONCRETE PAVEMENT HES 8-INCH SY	416.0610 DRILLED TIE BARS EACH	416.0620 DRILLED DOWEL BARS EACH	650.7000 CONSTRUCTION STAKING CONCRETE PAVEMENT LF	REMARKS
STAGE 1												
0010	89+68	-	95+41	STH 89	-	2,710	-	-	22	40	698	LAKE ST TO END CONCRETE
0010	86+34	-	89+68	STH 89	-	1,841	1	-	9	-	618	WATER ST TO LAKE ST
0010	84+87	-	86+34	STH 89	-	736	1	-	-	-	197	VETERANS LN TO WATER ST
0010	84+40	-	84+87	STH 89	-	246	-	-	-	-	47	S. END OF STAGE 1 TO VETERANS LN
STAGE 2												
0010	68+37	-	84+40	STH 89	-	6,216	1	-	-	-	1,637	PHILLIPS LN TO S. END OF STAGE 1
0010	62+88	-	68+37	STH 89	-	2,166	1	-	-	-	628	LAKE PARK PL TO PHILLIPS LN
STAGE 3												
0010	58+91	-	62+88	STH 89	-	1,717	1	-	-	-	480	MILTON ST TO LAKE PARK PL
0010	54+95	-	58+91	STH 89	-	1,632	1	-	-	-	480	KEYES ST TO MILTON ST
0010	44+36	-	54+95	STH 89	-	4,105	1	-	-	-	1,098	WOODLAND BEACH RD TO KEYES ST
0010	44+00	-	44+36	STH 89	-	188	-	-	-	-	36	S. END OF STAGE 3 TO WOODLAND BEACH RD
STAGE 4												
0010	40+18	-	44+00	STH 89	-	1,705	1	-	-	-	435	PINNACLE DR TO WOODLAND BEACH RD.
0010	38+17	-	40+18	STH 89	-	881	1	-	-	-	235	COLUMBUS ST TO S. END OF STAGE 3
0010	34+77	-	38+17	STH 89	-	1,351	-	-	-	-	380	SANDY BEACH RD TO COLUMBUS ST
0010	30+00	-	34+77	STH 89	14	1,931	1	-	-	-	477	BEGIN CONCRETE TO SANDY BEACH RD
0010	9+20 'A'	-	9+83 'A'	CTH A	-	449	-	-	-	-	80	
0010				UNDISTRIBUTED	-	-	-	73	-	-	-	
				TOTAL 0010	14	27,874	10	73	31	40	7,526	
STAGE 1												
0030	89+68	-	95+41	STH 89 - RT	-	247	-	-	-	-	-	ON-STREET PARKING
0030	89+68	-	95+41	STH 89 - LT	-	264	-	-	-	-	-	ON-STREET PARKING
0030	86+34	-	89+68	STH 89 - RT	-	748	-	-	-	-	-	ADJACENT PARKING AREA
0030	86+34	-	89+68	STH 89 - RT	-	58	-	-	-	-	-	ON-STREET PARKING
0030	86+34	-	89+68	STH 89 - LT	-	115	-	-	-	-	-	ON-STREET PARKING
0030	84+40	-	86+34	STH 89 - LT	-	27	-	-	-	-	-	ON-STREET PARKING
STAGE 2												
0030	68+37	-	84+40	STH 89 - RT	-	927	-	-	-	-	-	ON-STREET PARKING
0030	62+88	-	68+37	STH 89 - RT	-	331	-	-	-	-	-	ON-STREET PARKING
0030	58+91	-	62+88	STH 89 - RT	-	188	-	-	-	-	-	ON-STREET PARKING
STAGE 3												
0030	54+95	-	58+91	STH 89 - RT	-	195	-	-	-	-	-	ON-STREET PARKING
0030	44+36	-	54+95	STH 89 - RT	-	642	-	-	-	-	-	ON-STREET PARKING
STAGE 4												
0030	40+18	-	44+36	STH 89 - RT	-	237	-	-	-	-	-	ON-STREET PARKING
0030	38+17	-	40+18	STH 89 - RT	-	92	-	-	-	-	-	ON-STREET PARKING
0030	34+77	-	38+17	STH 89 - RT	-	198	-	-	-	-	-	ON-STREET PARKING
0030	33+75	-	34+77	STH 89 - RT	-	68	-	-	-	-	-	ON-STREET PARKING
				TOTAL 0030	0	4,337	0	0	0	0	0	
				TOTAL	14	32,211	10	73	31	40	7,526	

3

DRIVEWAYS

CATEGORY	STATION	LOCATION	416.0160 CONCRETE DRIVEWAY 6-INCH SY	416.0180 CONCRETE DRIVEWAY 8-INCH SY	465.0120 ASPHALTIC SURFACE DRIVEWAYS AND FIELD ENTRANCES TON	REMARKS
STAGE 1						
0010	85+24	STH 89 - RT	56	-	11	208 S. MAIN ST
0010	84+68	STH 89 - RT	89	-	10	208 S. MAIN ST
STAGE 2						
0010	84+20	STH 89 - LT	43	-	-	219 S. MAIN ST
0010	83+64	STH 89 - RT	16	-	-	218 S. MAIN ST
0010	83+10	STH 89 - RT	17	-	3	220 S. MAIN ST
0010	83+08	STH 89 - LT	42	-	12	219 S. MAIN ST
0010	82+38	STH 89 - RT	13	-	2	230 S. MAIN ST
0010	81+72	STH 89 - RT	25	-	-	236 S. MAIN ST
0010	81+69	STH 89 - LT	39	-	-	239 S. MAIN ST
0010	80+49	STH 89 - RT	13	-	2	242 S. MAIN ST
0010	80+31	STH 89 - LT	28	-	-	247 & 245 S. MAIN ST
0010	79+80	STH 89 - LT	13	-	-	251 & 253 S. MAIN ST
0010	79+78	STH 89 - RT	21	-	3	252 & 246 S. MAIN ST
0010	78+64	STH 89 - LT	14	-	1	257 S. MAIN ST
0010	78+54	STH 89 - RT	31	-	-	258 S. MAIN ST
0010	78+45	STH 89 - LT	18	-	2	265 S. MAIN ST
0010	78+21	STH 89 - RT	27	-	-	264 S. MAIN ST
0010	77+14	STH 89 - LT	22	-	-	269 S. MAIN ST
0010	76+63	STH 89 - RT	21	-	1	302 & 272 S. MAIN ST
0010	76+08	STH 89 - LT	12	-	3	275 S. MAIN ST
0010	75+85	STH 89 - RT	20	-	-	308 S. MAIN ST
0010	75+29	STH 89 - LT	14	-	3	307 S. MAIN ST
0010	74+50	STH 89 - LT	52	-	-	315 S. MAIN ST
0010	74+30	STH 89 - RT	12	-	-	316 S. MAIN ST
0010	74+15	STH 89 - LT	17	-	4	321 S. MAIN ST
0010	74+12	STH 89 - RT	13	-	4	322 S. MAIN ST
0010	73+00	STH 89 - RT	17	-	2	330 S. MAIN ST
0010	72+76	STH 89 - LT	16	-	5	321 S. MAIN ST
0010	71+85	STH 89 - LT	8	-	-	335 S. MAIN ST
0010	71+71	STH 89 - LT	13	-	2	343 S. MAIN ST
0010	70+47	STH 89 - RT	26	-	2	340 & 354 S. MAIN ST
0010	70+16	STH 89 - LT	27	-	2	357 & 349 S. MAIN ST
0010	69+35	STH 89 - RT	19	-	-	360 S. MAIN ST
0010	68+66	STH 89 - RT	44	-	-	402 S. MAIN ST
0010	68+07	STH 89 - RT	33	-	-	406 S. MAIN ST
0010	67+96	STH 89 - LT	21	-	-	411 S. MAIN ST
0010	67+02	STH 89 - RT	17	-	3	418 S. MAIN ST
0010	67+00	STH 89 - LT	23	-	-	417 S. MAIN ST
0010	66+32	STH 89 - LT	16	-	-	417 S. MAIN ST
0010	65+46	STH 89 - RT	15	-	-	424 S. MAIN ST
0010	65+04	STH 89 - LT	14	-	-	427 S. MAIN ST
0010	64+74	STH 89 - LT	14	-	-	437 S. MAIN ST
0010	64+14	STH 89 - RT	23	-	-	434 S. MAIN ST
STAGE 3						
0010	62+24	STH 89 - RT	15	-	3	504 S. MAIN ST
0010	61+56	STH 89 - LT	19	-	4	509 S. MAIN ST
		SUBTOTAL 0010	1068	0	84	

DRIVEWAYS

CATEGORY	STATION	LOCATION	416.0160 CONCRETE DRIVEWAY 6-INCH SY	416.0180 CONCRETE DRIVEWAY 8-INCH SY	465.0120 ASPHALTIC SURFACE DRIVEWAYS AND FIELD ENTRANCES TON	REMARKS
STAGE 3						
0010	61+47	STH 89 - RT	20	-	5	510 S. MAIN ST
0010	60+81	STH 89 - RT	28	-	-	516 S. MAIN ST
0010	60+77	STH 89 - LT	15	-	3	519 S. MAIN ST
0010	57+65	STH 89 - RT	24	-	-	610 S. MAIN ST
0010	56+95	STH 89 - LT	13	-	2	609 S. MAIN ST
0010	56+85	STH 89 - RT	27	-	-	614 S. MAIN ST
0010	54+45	STH 89 - RT	16	-	3	702 S. MAIN ST
0010	53+63	STH 89 - LT	19	-	5	709 S. MAIN ST
0010	53+20	STH 89 - RT	16	-	2	708 S. MAIN ST
0010	52+88	STH 89 - RT	15	-	1	716 S. MAIN ST
0010	52+87	STH 89 - LT	23	-	-	717 S. MAIN ST
0010	52+19	STH 89 - RT	16	-	1	720 S. MAIN ST
0010	51+20	STH 89 - RT	34	-	8	800 S. MAIN ST
0010	51+11	STH 89 - LT	19	-	-	725 S. MAIN ST
0010	50+61	STH 89 - LT	30	-	-	803 S. MAIN ST
0010	49+82	STH 89 - LT	19	-	-	809 S. MAIN ST
0010	49+49	STH 89 - RT	41	-	8	800 S. MAIN ST
0010	48+91	STH 89 - LT	21	-	-	817 S. MAIN ST
0010	48+78	STH 89 - RT	20	-	3	800 S. MAIN ST
0010	48+36	STH 89 - RT	25	-	3	822 S. MAIN ST
0010	47+67	STH 89 - LT	20	-	-	823 S. MAIN ST
0010	47+21	STH 89 - RT	26	-	3	902 S. MAIN ST
0010	46+89	STH 89 - LT	12	-	1	903 S. MAIN ST
0010	46+05	STH 89 - LT	13	-	1	909 S. MAIN ST
0010	45+65	STH 89 - RT	20	-	2	908 S. MAIN ST
0010	45+37	STH 89 - RT	20	-	2	914 S. MAIN ST
STAGE 4						
0010	43+91	STH 89 - RT	22	-	2	922 S. MAIN ST
0010	42+71	STH 89 - LT	20	-	3	1011 S. MAIN ST
0010	42+14	STH 89 - RT	44	-	-	1014 S. MAIN ST
0010	41+17	STH 89 - LT	20	-	2	1019 S. MAIN ST
0010	39+99	STH 89 - LT	14	-	2	1027 S. MAIN ST
0010	39+76	STH 89 - LT	15	-	2	1037 S. MAIN ST
0010	38+24	STH 89 - RT	15	-	-	1042 S. MAIN ST
0010	37+58	STH 89 - RT	37	-	10	1042 & 1110 S. MAIN ST
0010	37+35	STH 89 - LT	24	-	0	1103 S. MAIN ST
0010	37+05	STH 89 - LT	30	-	4	1111 S. MAIN ST
0010	36+42	STH 89 - LT	30	-	6	1117 S. MAIN ST
0010	36+28	STH 89 - RT	90	-	-	1110 S. MAIN ST
0010	34+66	STH 89 - RT	36	-	18	1122 S. MAIN ST
0010	33+81	STH 89 - LT	30	-	8	1205 S. MAIN ST
0010	33+80	STH 89 - RT	25	-	11	1204 S. MAIN ST
0010	33+39	STH 89 - LT	28	-	7	1213 S. MAIN ST
0010	30+65	STH 89 - RT	19	-	-	1220 S. MAIN ST
0010	30+56	STH 89 - LT	14	-	-	N6055 STH 89
0010	9+65 'A'	CTH A - LT	-	230	-	1219 S. MAIN ST
		SUBTOTAL 0010	1065	230	128	
		TOTAL 0010	2,133	230	212	

3

3

ASPHALTIC SURFACE

CATEGORY	STATION	TO	STATION	LOCATION	455.0605 TACK COAT GAL	465.0105 ASPHALTIC SURFACE TON	465.0125 ASPHALTIC SURFACE TEMPORARY TON
STAGE 1							
0010	10+72 'ELS'	-	10+87 'ELS'	E. LAKE ST	4.4	25	-
0010	9+39 'WLS'	-	9+54 'WLS'	W. LAKE ST	3.3	18	-
0010	11+04 'WS'	-	11+19 'WS'	WATER ST	2.8	11	-
0010	9+35 'VL'	-	9+51 'VL'	VETERANS LN	-	9	-
STAGE 2							
0010	9+51 'PL'	-	9+66 'PL'	PHILLIPS LN	2.3	9	-
0010	10+40 'LPP'	-	10+55 'LPP'	E. LAKE PARK PL	1.4	6	-
0010	9+46 'LPP'	-	9+61 'LPP'	W. LAKE PARK PL	1.2	4	-
STAGE 3							
0010	10+40 'LPP'	-	10+55 'LPP'	E. LAKE PARK PL	1.4	6	-
0010	9+46 'LPP'	-	9+61 'LPP'	W. LAKE PARK PL	1.2	4	-
0010	10+49 'NCD'	-	10+75 'NCD'	CATLIN DR N	7.5	29	-
0010	9+52 'MS'	-	9+66 'MS'	MILTON ST	4.5	18	-
0010	10+51 'SCD'	-	10+75 'SCD'	CATLIN DR S	7.3	29	-
0010	9+52 'KS'	-	9+66 'KS'	KEYES ST	2.1	8	-
0010	9+45 'WBR'	-	9+60 'WBR'	WOODLAND BEACH RD	-	15	-
STAGE 4 WC							
0010	40+40	-	44+00	STH 89	-	-	233
STAGE 4							
0010	29+50	-	30+00	STH 89	10.2	57	-
0010	10+52 'PD'	-	10+68 'PD'	PINNACLE DR	-	10	-
0010	9+54 'CS'	-	9+66 'CS'	COLUMBUS ST	1.7	6	-
0010	8+25 'A'	-	9+20 'A'	CTH A	20.0	112	-
				TOTAL 0010	71.3	376	233
0030	8+80 'SBR'	-	9+59 'SBR'	SANDY BEACH RD	11.4	45	-
				TOTAL 0030	11.4	45	0
				TOTAL	82.7	421	233

CURB RAMPS

CATEGORY	STATION	TO	STATION	LOCATION	602.0505 CURB RAMP DETECTABLE WARNING FIELD YELLOW SF	650.9000 CONSTRUCTION STAKING CURB RAMPS EACH	REMARKS
STAGE 1							
0010	95+25	-	95+65	STH 89 - RT	40	4	MADISON ST
0010	94+25	-	94+30	STH 89 - LT	10	1	HANDICAP PARKING SPACE
0010	89+25	-	90+05	STH 89 - LT	40	4	W. L AKE ST
0010	89+35	-	90+30	STH 89 - RT	30	3	E. LAKE ST
0010	86+00	-	86+05	STH 89	20	2	WATER ST
0010	84+60	-	85+05	STH 89 - LT	20	2	VETERANS LN
0010	10+55 'WS'	-	11+00 'WS'	WATER ST	40	4	WATER ST
STAGE 2							
0010	68+15	-	68+55	STH 89 - LT	20	2	PHILLIPS LN
0010	62+55	-	63+20	STH 89 - LT	20	2	W. LAKE PARK PL
0010	62+55	-	63+20	STH 89 - RT	20	2	E. LAKE PARK PL
STAGE 3							
0010	62+55	-	63+20	STH 89 - LT	20	2	W. LAKE PARK PL
0010	62+55	-	63+20	STH 89 - RT	20	2	E. LAKE PARK PL
0010	58+60	-	59+30	STH 89 - LT	40	4	MILTON ST
0010	58+60	-	59+30	STH 89 - RT	44	4	N. CATLIN DR
0010	54+65	-	55+25	STH 89 - LT	40	4	KEYES ST
0010	54+65	-	55+25	STH 89 - RT	40	4	S. CATLIN DR
0010	44+10	-	44+75	STH 89 - LT	40	4	WOODLAND BEACH RD
STAGE 4							
0010	39+95	-	40+60	STH 89	40	4	PINNACLE DR
0010	38+00	-	38+35	STH 89 - LT	20	2	COLUMBUS ST
0010	34+50	-	35+15	STH 89	40	4	SANDY BEACH RD
0010	32+70	-	32+85	STH 89	64	2	GLACIER DRUMLIN BIKE TRAIL
				TOTAL 0010	668	62	

3

3

CURB & GUTTER ITEMS

CATEGORY	STATION	TO	STATION	LOCATION	601.0409 CONCRETE CURB & GUTTER 30-INCH TYPE A LF	601.0411 CONCRETE CURB & GUTTER 30-INCH TYPE D LF	601.0586 CONCRETE CURB & GUTTER 4-INCH SLOPED 30-INCH TYPE TBTT LF	650.5500 CONSTRUCTION STAKING CURB GUTTER AND CURB & GUTTER LF	SPV.0090.03 CONCRETE CURB & GUTTER 30-INCH TYPE A SPECIAL LF	REMARKS
STAGE 1										
0010	95+41	-	95+65	STH 89 - RT	73	-	-	-	-	MADISON ST. PEDESTRIAN REFUGE ISLAND
0010	89+83	-	95+41	STH 89 - RT	559	17	-	17	10	E. LAKE ST TO MADISON ST
0010	86+34	-	89+83	STH 89 - RT	365	30	-	30	-	WATER ST TO E. LAKE ST
0010	84+40	-	86+34	STH 89 - RT	262	16	-	16	9	STAGE 1 S. LIMITS TO WATER ST
0010	89+68	-	95+41	STH 89 - LT	583	15	-	15	42	W. LAKE ST TO MADISON ST
0010	84+87	-	89+68	STH 89 - LT	481	15	-	15	37	VETERANS LN TO W. LAKE ST
0010	84+40	-	84+87	STH 89 - LT	44	16	-	16	11	STAGE 1 S. LIMITS TO VETERANS LN
STAGE 2										
0010	62+87	-	84+40	STH 89 - RT	2,136	15	-	15	-	LAKE PARK PL TO STAGE 1 S. LIMITS
0010	68+37	-	84+40	STH 89 - LT	1,604	15	-	15	-	PHILLIPS LN TO STAGE 1 S. LIMITS
0010	62+87	-	68+37	STH 89 - LT	538	30	-	30	11	LAKE PARK PL TO PHILLIPS LN
STAGE 3										
0010	58+97	-	62+87	STH 89 - RT	380	57	-	57	-	N. CATLIN DR TO LAKE PARK PL
0010	54+90	-	58+97	STH 89 - RT	418	91	-	91	-	S. CATLIN DR TO N. CATLIN DR
0010	44+00	-	54+90	STH 89 - RT	1,091	41	-	41	-	STAGE 3 S. LIMITS TO S. CATLIN DR
0010	58+91	-	62+87	STH 89 - LT	386	45	-	45	15	MILTON ST TO LAKE PARK PL
0010	54+95	-	58+91	STH 89 - LT	384	46	-	46	17	KEYES ST TO MILTON ST
0010	44+37	-	54+95	STH 89 - LT	1,047	45	-	45	-	WOODLAND BEACH RD TO KEYES ST
0010	44+00	-	44+37	STH 89 - LT	33	30	-	30	-	STAGE 3 S. LIMITS TO WOODLAND BEACH RD
STAGE 4										
0010	40+18	-	44+00	STH 89 - RT	381	15	-	15	-	PINNACLE DR TO WOODLAND BEACH RD
0010	30+00	-	40+18	STH 89 - RT	993	15	-	15	51	STAGE 4 S. LIMITS TO PINNACLE DR
0010	38+17	-	44+00	STH 89 - LT	581	5	-	5	-	COLUMBUS ST TO WOODLAND BEACH RD
0010	34+77	-	38+17	STH 89 - LT	334	22	-	22	-	SANDY BEACH RD TO COLUMBUS ST
0010	31+72	-	34+77	STH 89 - LT	353	185	30	185	70	CTH A TO SANDY BEACH RD
0010	30+00	-	31+72	STH 89 - LT	178	120	-	120	-	STAGE 4 S. LIMITS TO CTH A
				TOTAL 0010	13,204	886	30	886	273	
STAGE 1										
0030	86+62	-	88+43	STH 89 - RT	383	-	-	-	-	MEDIAN PARKING ISLAND
STAGE 4										
0030	8+80 'SBR'	-	9+45 'SBR'	SANDY BEACH RD - RT	-	65	-	65	-	
0030	8+80 'SBR'	-	9+45 'SBR'	SANDY BEACH RD - LT	-	65	-	65	-	
				TOTAL 0030	383	130	0	130	0	
				TOTAL	13,587	1,016	30	1,016	273	

3

CONCRETE SIDEWALK

CATEGORY	STATION	TO	STATION	LOCATION	602.0405 CONCRETE SIDEWALK 4-INCH SF	602.0415 CONCRETE SIDEWALK 6-INCH SF	REMARKS
STAGE 1							
0010	95+41	-	95+65	STH 89 - RT	225	-	PEDESTRIAN REFUGE ISLAND
0010	94+93	-	95+22	STH 89 - RT	206	-	SW CORNER OF MADISON ST
0010	89+68	-	95+41	STH 89 - LT	6,864	-	LAKE ST TO END CONCRETE
0010	90+17	-	90+73	STH 89 - RT	314	-	NE CORNER OF LAKE ST
0010	86+55	-	88+40	STH 89 - RT	2,002	-	MEDIAN ISLAND
0010	86+34	-	89+68	STH 89 - LT	4,108	-	WATER ST TO LAKE ST
0010	86+34	-	89+68	STH 89 - RT	3,763	-	WATER ST TO LAKE ST
0010	84+87	-	86+34	STH 89 - LT	1,068	-	VETERANS LN TO WATER ST
0010	84+52	-	86+34	STH 89 - RT	1,239	-	VETERANS LN TO WATER ST
0010	10+18 'WS'	-	11+09 'WS'	WATER ST - RT	999	-	WATER ST
STAGE 2							
0010	68+37	-	84+87	STH 89 - LT	6,885	-	PHILLIPS LN TO VETERANS LN
0010	68+37	-	84+52	STH 89 - RT	6,795	-	PHILLIPS LN TO VETERANS LN
0010	62+87	-	68+37	STH 89 - LT	2,313	-	LAKE PARK PL TO PHILLIPS LN
0010	62+87	-	68+37	STH 89 - RT	2,450	-	LAKE PARK PL TO PHILLIPS LN
STAGE 3							
0010	58+91	-	62+87	STH 89 - LT	1,928	-	MILTON ST TO LAKE PARK PL
0010	58+91	-	62+87	STH 89 - RT	1,756	-	MILTON ST TO LAKE PARK PL
0010	54+95	-	58+91	STH 89 - LT	1,912	-	KEYES ST TO MILTON ST
0010	54+95	-	58+91	STH 89 - RT	1,943	-	KEYES ST TO MILTON ST
0010	44+36	-	54+95	STH 89 - LT	4,711	-	WOODLAND BEACH RD TO KEYES ST
0010	44+01	-	54+95	STH 89 - RT	4,548	-	WOODLAND BEACH RD TO KEYES ST
STAGE 4							
0010	40+18	-	44+36	STH 89 - LT	1,929	-	PINNACLE DR TO WOODLAND BEACH RD.
0010	40+18	-	44+01	STH 89 - RT	1,734	-	PINNACLE DR TO WOODLAND BEACH RD.
0010	38+17	-	40+18	STH 89 - LT	823	-	COLUMBUS ST TO PINNACLE DR
0010	38+17	-	40+18	STH 89 - RT	914	-	COLUMBUS ST TO PINNACLE DR
0010	34+77	-	38+17	STH 89 - LT	1,202	-	SANDY BEACH RD TO COLUMBUS ST
0010	34+77	-	38+17	STH 89 - RT	1,404	-	SANDY BEACH RD TO COLUMBUS ST
0010	30+00	-	34+77	STH 89 - LT	1,043	-	BEGIN PROJECT TO SANDY BEACH RD
0010	30+00	-	34+77	STH 89 - RT	1,896	-	BEGIN PROJECT TO SANDY BEACH RD
0010	8+30 'SBR'	-	9+71 'SBR'	SANDY BEACH RD - LT	519	-	SANDY BEACH RD
0010	32+87			STH 89 - LT	-	72	GLACIER DRUMLIN BIKE TRAIL
0010	32+71			STH 89 - RT	-	50	GLACIER DRUMLIN BIKE TRAIL
0010	9+20 'A'	-	9+83 'A'	CTH A - LT	500	-	CTH A
				TOTAL 0010	67,993	122	

CONCRETE STEPS

CATEGORY	STATION	OFFSET	602.1500 CONCRETE STEPS SF	REMARKS
STAGE 2				
0010	81+50	35' RT	15	236 S. MAIN ST
0010	80+85	28' LT	12	242 S. MAIN ST
0010	80+45	30' LT	12	245 S. MAIN ST
0010	80+26	30' LT	12	246 S. MAIN ST
0010	79+48	35' RT	11	252 S. MAIN ST
0010	78+70	28' LT	11	258 S. MAIN ST
0010	78+00	28' LT	14	264 S. MAIN ST
0010	77+00	35' RT	11	272 S. MAIN ST
0010	75+75	35' RT	6	307 S. MAIN ST
0010	75+07	35' RT	14	315 S. MAIN ST
0010	74+65	35' RT	12	316 S. MAIN ST
0010	72+37	35' RT	13	335 S. MAIN ST
0010	65+55	28' LT	10	427 S. MAIN ST
STAGE 3				
0010	59+62	35' RT	15	523 S. MAIN ST
0010	54+25	35' RT	9	702 S. MAIN ST
		TOTAL 0010	177	

STORM SEWER STRUCTURES

STRUCTURE NUMBER	STATION	OFFSET		TOP STRUCTURE ELEV	RIM OR FLANGE ELEV	BOTTOM STRUCTURE ELEV	STR DEPTH FEET	611.1004 CATCH BASIN 4-FT DIA. EACH	611.1006 CATCH BASIN 6-FT DIA. EACH	611.1230 CATCH BASIN 2x3-FT EACH	611.2004 MANHOLE 4-FT DIA. EACH	611.2005 MANHOLE 5-FT DIA. EACH	611.2006 MANHOLE 6-FT DIA. EACH	611.2007 MANHOLE 7-FT DIA. EACH	611.3003 INLET 3-FT DIA. EACH	611.3004 INLET 4-FT DIA. EACH	611.3230 INLET 2x3-FT EACH	611.0530 MANHOLE COVERS TYPE J EACH	611.0612 INLET COVERS TYPE C EACH	611.0624 INLET COVERS TYPE H EACH	611.8105 ADJUSTING CATCH BASIN COVERS EACH	611.8115 ADJUSTING INLET COVERS EACH	SPV.0060.07 CONNECT STORM SEWER STRUCTURE TO EXISTING STORM SEWER PIPE EACH	STAGE	COMMENTS
1	94+97.9	1.1	RT	833.05	834.13	825.86	7.2				1							1					1	1	
1A	94+97.7	24.5	LT	833.54	834.37	829.93	3.6										1			1				1	
1B	95+27.8	58.8	RT	832.45	833.28	830.59	1.9									1				1				1	
1C	94+97.7	24.5	RT	832.77	833.60	826.91	5.9									1				1				1	
2	92+88.8	0.2	LT	831.92	833.01	824.55	7.4					1						1						1	
2A	92+93.3	24.5	LT	832.51	833.34	827.11	5.4									1				1			1	1	
2B	92+88.3	24.5	RT	831.33	832.16	827.11	4.2										1			1			1	1	
2.1	92+46.0	0.2	LT	831.69	832.77	824.27	7.4					1						1					1	1	
3	89+67.3	50.0	LT	830.80	831.88	821.31	9.5						1					1						1	
3A	89+95.6	24.7	LT	830.99	831.82	827.47	3.5									1				1				1	
3B	89+78.7	53.2	LT	830.90	831.73	826.81	4.1									1				1				1	
3C	89+41.1	45.7	LT	830.14	830.98	826.43	3.7										1			1				1	
4	89+85.4	42.4	RT	829.56	830.64	820.50	9.1				1							1						1	
4A	90+32.0	33.7	RT	829.65	830.49	826.29	3.4									1				1			1	1	
4B	89+61.0	46.1	RT	829.54	830.37	826.03	3.5										1			1				1	
5	89+74.9	0.5	LT	830.21	831.29	819.28	10.9							1				1						1	
6	87+37.9	1.2	RT	828.45	829.53	817.46	11.0						1					1						1	
6A	87+47.9	24.5	LT	828.92	829.76	825.48	3.4										1			1				1	
6B	87+37.9	24.5	LT	828.93	829.77	825.10	3.8									1				1				1	
6C	87+47.9	24.5	RT	828.00	828.84	824.95	3.1										1			1				1	
6D	87+43.5	66.2	RT	826.77	827.61	823.77	3.0										1			1				1	
6E	87+37.9	24.5	RT	828.01	828.85	823.08	4.9										1			1				1	
EX7	85+94.3	13.9	RT		830.40													1						1	
EX7A	85+87.2	26.7	LT		831.18													1						1	
EX8	85+86.2	11.3	RT		830.64													1						1	
9	85+61.2	12.9	RT	830.06	831.15	825.21	4.9						1					1						1	
9A	85+61.3	24.5	LT	830.35	831.18	827.93	2.4										1			1				1	
9B	85+54.5	18.5	RT	830.33	831.17	827.65	2.7									1				1				1	
10	85+03.9	8.0	LT	832.07	833.15	828.23	3.8					1						1						1	
10A	84+60.5	54.0	LT	833.01	833.84	829.63	3.4										1			1				1	
10B	84+98.1	48.7	LT	831.26	832.09	829.17	2.1										1			1				1	
11	84+50.2	9.0	LT	833.90	834.98	829.49	4.4					1						1						1	
11A	84+49.1	18.5	LT	833.97	834.80	830.39	3.6										1			1				1	
11B	84+50.2	18.5	RT	833.78	834.62	830.46	3.3										1			1				1	
12	82+84.0	7.7	LT	838.40	839.48	833.84	4.6					1						1						2	
12A	82+84.0	17.7	LT	838.45	839.28	834.75	3.7									1				1				2	
12B	82+84.6	22.6	RT	838.14	838.97	834.83	3.3										1			1				2	
13	79+90.0	7.0	LT	839.87	840.95	835.41	4.5				1							1						2	
13A	80+00.0	17.5	LT	839.85	840.69	836.42	3.4										1			1				2	
13B	79+90.0	17.5	LT	839.90	840.74	836.32	3.6										1			1				2	
13C	80+00.0	24.5	RT	839.71	840.55	836.70	3.0										1			1				2	
13D	79+90.0	24.5	RT	839.76	840.60	836.37	3.4										1			1				2	
14	76+84.4	7.0	LT	841.42	842.50	836.98	4.4				1							1						2	
14A	76+84.4	17.5	LT	841.45	842.29	837.90	3.6										1			1				2	
14B	76+84.4	24.5	RT	841.31	842.15	837.98	3.3										1			1				2	
15	73+70.0	7.0	LT	850.63	851.71	844.90	5.7				1							1						2	
15A	73+70.0	17.5	LT	850.67	851.50	846.81	3.9										1			1				2	
15B	73+70.0	24.5	RT	850.36	851.20	847.02	3.3										1			1				2	
16	70+60.0	7.0	LT	858.43	859.52	853.65	4.8				1							1						2	
16A	70+60.0	17.5	LT	858.47	859.30	854.56	3.9										1			1				2	
16B	70+60.0	24.5	RT	858.33	859.16	854.77	3.6										1			1				2	
17	68+77.5	7.1	LT	859.75	860.83	855.06	4.7				1							1						2	
17A	68+20.1	31.9	LT	859.92	860.75	856.83	3.1										1			1				2	
17B	68+51.1	32.8	LT	859.71	860.55	856.24	3.5									1				1				2	
20	65+31.6	7.0	LT	858.30	859.39	853.47	4.8				1							1						2	
20A	65+31.6	17.5	LT	858.34	859.17	854.38	4.0										1			1				2	
20B	65+31.6	24.5	RT	858.20	859.03	854.59	3.6										1			1				2	
21	63+24.8	7.0	LT	856.92	858.01	852.18	4.7				1							1						2	
21A	63+24.8	17.0	LT	857.04	857.87	853.09	3.9										1			1				2	
21B	63+24.8	24.5	RT	856.90	857.73	853.30	3.6										1			1				2	
22	62+94.9	36.0	LT	857.07	858.16	852.64	4.4				1							1						3	
SUBTOTAL								**0**	**0**	**0**	**10**	**5**	**3**	**1**	**0**	**10**	**29**	**22**	**0**	**39**	**0**	**0**	**5**		

ALL ITEMS CATEGORY 0010 UNLESS NOTED

STORM SEWER STRUCTURES (CONTINUED)

STRUCTURE NUMBER	STATION	OFFSET		TOP STRUCTURE ELEV	RIM OR FLANGE ELEV	BOTTOM STRUCTURE ELEV	STR DEPTH FEET	611.1004 CATCH BASIN 4-FT DIA. EACH	611.1006 CATCH BASIN 6-FT DIA. EACH	611.1230 CATCH BASIN 2x3-FT EACH	611.2004 MANHOLE 4-FT DIA. EACH	611.2005 MANHOLE 5-FT DIA. EACH	611.2006 MANHOLE 6-FT DIA. EACH	611.2007 MANHOLE 7-FT DIA. EACH	611.3003 INLET 3-FT DIA. EACH	611.3004 INLET 4-FT DIA. EACH	611.3230 INLET 2x3-FT EACH	611.0530 MANHOLE COVERS TYPE J EACH	611.0612 INLET COVERS TYPE C EACH	611.0624 INLET COVERS TYPE H EACH	611.8105 ADJUSTING CATCH BASIN COVERS EACH	611.8115 ADJUSTING INLET COVERS EACH	SPV.0060.07 CONNECT STORM SEWER STRUCTURE TO EXISTING STORM SEWER PIPE EACH	STAGE	COMMENTS
22A	63+02.7	36.0	LT	857.17	858.01	853.53	3.6										1			1				3	
22B	62+72.6	36.0	LT	857.24	858.08	853.68	3.6										1			1				3	
23	62+94.9	7.0	LT	856.79	857.88	849.76	7.0						1					1						2	
EX24	62+94.9	38.7	RT		857.68													1						2	
25	62+32.1	7.0	LT	856.71	857.79	850.46	6.3					1						1						3	
25A	62+42.1	17.5	LT	856.79	857.62	853.79	3.0										1			1				3	
25B	62+32.1	17.5	LT	856.79	857.62	853.41	3.4										1			1				3	
25C	62+42.1	24.5	RT	856.68	857.52	853.50	3.2										1			1				3	
25D	62+32.1	24.5	RT	856.69	857.52	853.12	3.6										1			1				3	
26	61+07.8	7.0	LT	857.25	858.33	851.64	5.6				1							1						3	
26A	61+07.8	17.5	LT	857.28	858.12	853.55	3.7										1			1				3	
26B	61+07.8	24.5	RT	857.14	857.98	853.76	3.4										1			1				3	
27	59+11.7	7.0	LT	859.48	860.57	853.65	5.8				1							1						3	
27A	58+76.6	30.9	LT	860.49	861.33	856.84	3.7										1			1				3	
27B	59+06.8	31.0	LT	859.88	860.72	856.26	3.6									1				1				3	
27C	59+11.7	21.6	LT	859.73	860.56	856.11	3.6									1				1				3	
27D	58+83.2	44.6	RT	859.53	860.36	856.50	3.0										1			1				3	
27E	59+11.7	41.2	RT	859.42	860.26	855.94	3.5									1				1				3	
28	57+84.3	7.0	LT	860.81	861.89	854.97	5.8				1							1						3	
28A	57+84.3	17.5	LT	860.84	861.68	857.39	3.5										1			1				3	
28B	57+84.3	24.5	RT	860.70	861.54	857.10	3.6										1			1				3	
29	54+62.3	7.0	LT	863.24	864.33	857.44	5.8				1							1						3	
29A	55+10.7	30.2	LT	862.98	863.81	859.80	3.2										1			1				3	
29B	54+81.3	30.3	LT	863.35	864.18	859.23	4.1									1				1				3	
29C	54+62.4	17.5	LT	863.28	864.12	858.95	4.3									1				1				3	
29D	55+14.4	71.2	RT	862.56	863.40	859.57	3.0										1			1				3	
29E	54+75.9	71.3	RT	862.85	863.68	859.33	3.5									1				1				3	
29F	54+61.8	27.0	RT	863.17	864.00	858.59	4.6									1				1				3	
30	49+25.9	7.0	LT	861.71	862.79	854.51	7.2		1									1						3	SEE NOTE 1
30A	49+25.8	17.5	LT	861.74	862.58	857.43	4.3										1			1				3	
30B	49+25.8	24.5	RT	861.60	862.44	857.64	4.0										1			1				3	
31	47+38.1	7.0	LT	859.24	860.32	854.58	4.7				1							1						3	
31A	47+38.1	17.5	LT	859.28	860.11	853.50	5.8		1											1				3	SEE NOTE 1
31B	47+38.1	44.2	RT	857.92	859.00	856.18	1.7								1				1					3	
31C	47+38.1	24.5	RT	859.14	859.97	853.71	5.4			1										1				3	
32	44+80.4	7.0	LT	857.81	858.90	853.25	4.6				1							1						3	
32A	44+20.2	36.6	LT	857.76	858.59	854.71	3.0										1			1				3	
32B	44+55.4	35.4	LT	857.98	858.82	854.54	3.4									1				1				3	
32C	44+80.2	17.5	LT	857.85	858.68	852.11	5.7		1											1				3	SEE NOTE 1
32D	44+80.2	24.5	RT	857.71	858.54	852.37	5.3			1										1				3	
33	43+02.9	7.0	LT	857.11	858.19	852.31	4.8						1					1						4 (2018)	
33A	43+12.9	17.5	LT	857.14	857.97	853.60	3.5										1			1		1		4 (2018)	SEE NOTE 2
33B	43+02.9	17.5	LT	857.14	857.98	851.22	5.9		1											1	1			4 (2018)	SEE NOTES 1 & 2
33C	43+12.9	24.5	RT	857.00	857.83	853.81	3.2										1			1		1		4 (2018)	SEE NOTE 2
33D	43+02.9	24.5	RT	857.00	857.84	851.43	5.6	1												1	1			4 (2018)	SEE NOTES 1 & 2
34	40+51.4	7.0	LT	858.39	859.47	842.88	15.5					1						1						4 (2018)	
35	39+93.2	7.0	LT	858.72	859.81	852.31	6.4		1									1						4 (2018)	SEE NOTE 1
35A	39+88.2	17.5	LT	858.79	859.62	854.48	4.3									1				1			1	4 (2018)	
35B	39+93.3	32.6	RT	858.43	859.26	854.76	3.7									1				1				4 (2018)	
36	40+50.9	54.6	RT	858.68	859.76	842.03	16.6					1						1						4 (2018)	
36.1	42+38.9	244.6	RT																					4 (2018)	
37	40+50.5	25.8	LT	858.82	859.90	847.05	11.8					1						1						4 (2018)	
38	38+37.6	21.5	LT	859.49	860.58	848.34	11.2				1							1					1	4 (2019)	
38A	38+28.7	30.3	LT	859.45	860.29	855.10	4.4									1				1				4 (2019)	
39	38+04.5	39.1	LT	859.08	860.17	848.44	10.6				1							1					1	4 (2019)	
39A	38+03.2	30.5	LT	859.18	860.02	854.61	4.6										1			1				4 (2019)	
40	35+49.9	7.0	LT	857.18	858.26	851.48	5.7		1									1						4 (2019)	SEE NOTE 1
40A	35+49.9	17.5	LT	857.22	858.05	854.32	2.9									1				1				4 (2019)	
40B	35+39.9	17.5	LT	857.21	858.04	854.34	2.9										1			1				4 (2019)	
40C	35+49.9	24.5	RT	857.08	857.91	854.37	2.7									1				1				4 (2019)	
SUBTOTAL								**1**	**6**	**2**	**8**	**4**	**2**	**0**	**1**	**13**	**21**	**18**	**1**	**40**	**2**	**2**	**3**		

ALL ITEMS CATEGORY 0010 UNLESS NOTED

STORM SEWER STRUCTURES (CONTINUED)

STRUCTURE NUMBER	STATION	OFFSET		TOP STRUCTURE ELEV	RIM OR FLANGE ELEV	BOTTOM STRUCTURE ELEV	STR DEPTH FEET	611.1004 CATCH BASIN 4-FT DIA. EACH	611.1006 CATCH BASIN 6-FT DIA. EACH	611.1230 CATCH BASIN 2x3-FT EACH	611.2004 MANHOLE 4-FT DIA. EACH	611.2005 MANHOLE 5-FT DIA. EACH	611.2006 MANHOLE 6-FT DIA. EACH	611.2007 MANHOLE 7-FT DIA. EACH	611.3003 INLET 3-FT DIA. EACH	611.3004 INLET 4-FT DIA. EACH	611.3230 INLET 2x3-FT EACH	611.0530 MANHOLE COVERS TYPE J EACH	611.0612 INLET COVERS TYPE C EACH	611.0624 INLET COVERS TYPE H EACH	611.8105 ADJUSTING CATCH BASIN COVERS EACH	611.8115 ADJUSTING INLET COVERS EACH	SPV.0060.07 CONNECT STORM SEWER STRUCTURE TO EXISTING STORM SEWER PIPE EACH	STAGE	COMMENTS
40D	35+39.9	24.5	RT	857.07	857.90	854.40	2.7										1			1				4 (2019)	
41	34+69.9	68.8	LT	856.88	857.96	851.44	5.4		1									1						4 (2019)	SEE NOTE 1
41A	34+94.3	69.3	LT	857.26	858.35	854.60	2.7				1							1					1	4 (2019)	
41B	34+86.9	78.2	LT	856.96	857.79	854.62	2.3										1			1				4 (2019)	
41C	34+88.7	68.3	LT	856.94	857.77	854.30	2.6										1			1				4 (2019)	
41D	34+57.2	79.2	LT	857.02	857.86	854.32	2.7										1			1				4 (2019)	
41E	34+57.2	69.2	LT	857.00	857.83	854.29	2.7										1			1				4 (2019)	
42	34+40.2	7.0	LT	857.56	858.65	851.39	6.2		1									1						4 (2019)	SEE NOTE 1
42A	34+40.2	17.5	LT	857.60	858.43	854.30	3.3										1			1				4 (2019)	
42B	34+40.2	24.5	RT	857.46	858.29	854.36	3.1										1			1				4 (2019)	
43	33+59.8	7.4	LT	858.54	859.62	854.60	3.9				1							1						4 (2019)	
43A	33+60.0	35.0	LT	858.26	859.35	855.07	3.2								1				1					4 (2019)	
44	34+50.5	7.0	LT	857.48	858.56	852.82	4.7						1					1						4 (2019)	
45	34+53.7	260.0	RT																					4 (2019)	
50	29+75.0	18.5	LT	857.35	858.43	854.17	3.2				1							1						4 (2019)	
50A	31+83.6	89.0	LT	859.75	860.83	856.20	3.5				1							1					1	4 (2019)	
50B	31+75.4	64.2	LT	859.14	859.98	855.39	3.8									1				1				4 (2019)	
50C	31+17.5	30.1	LT	858.86	859.70	852.97	5.9		1											1				4 (2019)	SEE NOTE 1
50.1	29+64.7	27.9	LT																					4 (2019)	
EX60	86+40.7	89.2	RT		827.37													1						1	
EX60A	86+78.3	81.8	RT		826.71															1				1	
EX60B	86+37.2	89.9	RT		827.32															1				1	
SUBTOTAL								**0**	**3**	**0**	**4**	**0**	**1**	**0**	**1**	**1**	**7**	**8**	**1**	**11**	**0**	**0**	**2**		
TOTAL								**1**	**9**	**2**	**22**	**9**	**6**	**1**	**2**	**24**	**57**	**48**	**2**	**90**	**2**	**2**	**10**		

GENERAL NOTES

-RIM ELEVATIONS ARE GIVEN AT THE FLANGE LINE OF THE CASTING FOR INLET GRATES OR THE CENTER OF THE STRUCTURE FOR MANHOLES AND FIELD INLETS.

-STATIONS AND OFFSETS ARE TO THE CENTER OF STRUCTURES OR TO THE END OF PIPE WHERE THERE IS AN ENDWALL.

-STR DEPTH = RIM ELEV - INV -PIPE THICKNESS - CASTING HEIGHT - ADJUSTMENT

CASTING HEIGHT = 9" FOR TYPE J AND TYPE C COVERS AND 6" FOR TYPE H COVERS

ADJUSTMENT = 4" TYPICAL

NOTE 1: STRUCTURE UP-SIZED AND 2 FOOT SUMP ADDED FOR WATER QUALITY TSS REMOVAL.

NOTE 2: RIM ELEVATIONS FOR TEMPORARY PAVEMENT FOR WINTER 2018-2019 CARRY OVER: 33A = 858.06, 33B = 858.09, 33C = 857.91, 33D = 857.92

ALL ITEMS CATEGORY 0010 UNLESS NOTED

STORM SEWER PIPES

FROM STR	TO STR	INLET ELEV	DISCH ELEV	SLOPE (FT/FT)	STAGE	608.0315 CLASS III 15" (LF)	608.0324 CLASS III 24" (LF)	608.0330 CLASS III 30" (LF)	608.0330 CLASS III 36" (LF)	608.0412 CLASS IV 12" (LF)	608.0415 CLASS IV 15" (LF)	608.0424 CLASS IV 24" (LF)	SPV.0060.06 CONNECT NEW STORM SEWER PIPE TO EXISTING STORM SEWER STRUCTURE EACH	522.1015 AEW FOR CULVERT PIPE REIN. CONC. 15" EACH	522.1030 AEW FOR CULVERT PIPE REIN. CONC. 30" EACH	522.1036 AEW FOR CULVERT PIPE REIN. CONC. 36" EACH
1	2	826.11	824.90	0.0058	1		209.1									
1A	1	830.12	829.86	0.0100	1						25.6					
1B	1C	830.76	830.53	0.0050	1					45.5						
1C	1	827.10	826.86	0.0100	1	23.4										
2	2.1	824.80	824.52	0.0065	1		42.8									
2A	2	827.30	827.05	0.0100	1	24.7										
2B	2	827.30	827.05	0.0100	1	24.7										
2.1	5	824.52	822.76	0.0065	1		271.1									
3	5	821.60	821.30	0.0060	1			50.5								
3A	3B	827.63	827.30	0.0100	1					33.2						
3B	3	827.00	826.85	0.0100	1	14.8										
3C	3	826.62	826.35	0.0100	1						26.5					
4	5	820.75	820.66	0.0020	1		44.2									
4A	4	826.48	826.00	0.0100	1						47.3					
4B	4	826.22	826.00	0.0100	1						21.9					
5	6	819.61	817.84	0.0075	1				237.1							
6	EX7	817.79	816.71	0.0075	1				143.5				1			
6A	6B	825.64	825.54	0.0100	1					10.0						
6B	6	825.29	825.04	0.0100	1						25.8					
6C	6E	825.12	825.02	0.0100	1					10.0						
6D	6E	823.94	823.52	0.0100	1					42.0						
6E	6	823.27	823.04	0.0100	1	23.3										
EX7					1											
EX7A					1											
EX8					1											
9		825.46			1											
9A	9	828.12	827.75	0.0100	1						37.4		1			
9B	9	827.84	827.75	0.0100	1						8.7		1			
10	9	828.48	827.50	0.0160	1							61.0	1			
10A	10B	829.80	829.61	0.0050	1					38.0						
10B	10	829.36	829.23	0.0032	1						41.1					
11	10	829.74	828.88	0.0160	1							53.8				
11A	11	830.58	830.49	0.0100	1						9.6					
11B	11	830.65	830.49	0.0060	1						27.5					
12	11	834.09	830.74	0.0200	2							167.6				
12A	12	834.94	834.84	0.0100	2						10.0					
12B	12	835.02	834.84	0.0060	2						30.3					
13	12	835.66	834.14	0.0052	2							294.5				
13A	13B	836.61	836.51	0.0100	2						10.0					
13B	13	836.51	836.41	0.0100	2						10.5					
13C	13D	836.86	836.81	0.0050	2					10.0						
13D	13	836.56	836.41	0.0050	2						31.5					
14	13	837.23	835.71	0.0050	2							305.6				
14A	14	838.09	837.98	0.0100	2						10.5					
14B	14	838.17	837.98	0.0060	2						31.5					
15	14	845.15	837.28	0.0250	2							314.4				
15A	15	847.00	846.90	0.0100	2						10.5					
15B	15	847.21	846.90	0.0100	2						31.5					
16	15	853.90	846.15	0.0250	2		310.0									
16A	16	854.75	854.65	0.0100	2						10.5					
16B	16	854.96	854.65	0.0100	2						31.5					
17	16	855.31	853.95	0.0075	2		182.4									
17A	17B	856.99	856.68	0.0100	2					31.1						
17B	17	856.43	856.06	0.0100	2						36.8					
20	21	853.72	852.48	0.0060	2		206.8									
20A	20	854.57	854.47	0.0100	2						10.5					
20B	20	854.78	854.47	0.0100	2						31.5					
21	23	852.43	852.25	0.0060	2		29.8									
21A	21	853.28	853.18	0.0100	2						10.0					
21B	21	853.49	853.18	0.0100	2						31.5					
22	23	852.89	852.75	0.0050	3							29.0				
SUBTOTAL						**110.9**	**1296.2**	**50.5**	**380.5**	**219.8**	**610.1**	**1225.8**	**4**	**0**	**0**	**0**

ALL ITEMS CATEGORY 0010 UNLESS NOTED

STORM SEWER PIPES (CONTINUED)

FROM STR	TO STR	INLET ELEV	DISCH ELEV	SLOPE (FT/FT)	STAGE	608.0315 CLASS III 15" (LF)	608.0324 CLASS III 24" (LF)	608.0330 CLASS III 30" (LF)	608.0330 CLASS III 36" (LF)	608.0412 CLASS IV 12" (LF)	608.0415 CLASS IV 15" (LF)	608.0424 CLASS IV 24" (LF)	SPV.0060.06 CONNECT NEW STORM SEWER PIPE TO EXISTING STORM SEWER STRUCTURE EACH	522.1015 AEW FOR CULVERT PIPE REIN. CONC. 15" EACH	522.1030 AEW FOR CULVERT PIPE REIN. CONC. 30" EACH	522.1036 AEW FOR CULVERT PIPE REIN. CONC. 36" EACH
22A	22	853.72	853.64	0.0100	3						7.8					
22B	22	853.87	853.64	0.0100	3						22.3					
23	24	850.09	850.00	0.0020	2				45.7				1			
EX24					2											
25	23	850.75	850.59	0.0025	3			62.8								
25A	25B	853.95	853.85	0.0100	3					10.0						
25B	25	853.60	853.50	0.0100	3						10.5					
25C	25D	853.66	853.56	0.0100	3					10.0						
25D	25	853.31	853.00	0.0100	3						31.5					
26	25	851.89	851.27	0.0050	3		124.3									
26A	26	853.74	853.64	0.0100	3						10.5					
26B	26	853.95	853.64	0.0100	3						31.5					
27	26	853.90	851.94	0.0100	3		196.1									
27A	27B	857.00	856.70	0.0100	3					30.2						
27B	27C	856.45	856.35	0.0100	3						10.5					
27C	27	856.30	856.15	0.0100	3						14.6					
27D	27E	856.67	856.38	0.0100	3					28.7						
27E	27	856.13	855.65	0.0100	3						48.2					
28	27	855.22	853.95	0.0100	3		127.4									
28A	28	857.58	857.47	0.0100	3						10.5					
28B	28	857.29	856.97	0.0100	3						31.5					
29	28	857.69	855.27	0.0075	3		322.0									
29A	29B	859.97	859.67	0.0100	3					29.3						
29B	29C	859.42	859.19	0.0100	3	22.9										
29C	29	859.14	859.04	0.0100	3	10.5										
29D	29E	859.74	859.54	0.0050	3					38.5						
29E	29F	859.49	859.03	0.0100	3					46.4						
29F	29	858.78	858.44	0.0100	3	34.0										
30	31	856.76	854.88	0.0100	3		187.7									
30A	30	857.62	857.51	0.0100	3	10.5										
30B	30	857.83	857.51	0.0100	3	31.5										
31	32	854.83	853.55	0.0050	3							257.7				
31A	31	855.69	855.58	0.0100	3						10.5					
31B	31C	856.35	856.15	0.0100	3					19.7						
31C	31	855.90	855.58	0.0100	3						31.5					
32	33	853.50	852.61	0.0050	3							177.5				
32A	32B	854.88	854.70	0.0050	3					35.3						
32B	32C	854.70	854.55	0.0050	3					30.5						
32C	32	854.30	854.25	0.0050	3						10.5					
32D	32	854.56	854.25	0.0100	3						31.5					
33	34	852.56	851.30	0.0050	4 (2018)		251.6									
33A	33B	853.76	853.66	0.0100	4(2018)					10.0						
33B	33	853.41	853.31	0.0100	4(2018)						10.5					
33C	33D	853.97	853.87	0.0100	4(2018)					10.0						
33D	33	853.62	853.31	0.0100	4(2018)						31.5					
34	36	843.17	842.86	0.0050	4 (2018)			61.6								
35	34	854.50	853.92	0.0100	4(2018)	58.1										
35A	35	854.67	854.55	0.0100	4(2018)	11.6										
35B	35	854.95	854.55	0.0100	4(2018)						39.6					
36	36.1	842.36	841.83	0.0020	4(2018)				267.3							1
36.1					4 (2018)											
37	34	847.30	847.24	0.0030	4(2018)		18.8						1			
38		848.59			4(2019)											
38A	38	855.29	855.16	0.0100	4(2019)	12.5										
39	38	848.69	848.59	0.0025	4(2019)		37.5									
39A	39	854.80	854.71	0.0100	4(2019)	8.7										
40	44	853.73	853.61	0.0013	4(2019)							99.4				
40A	40	854.51	854.48	0.0025	4(2019)						10.5					
40B	40A	854.53	854.51	0.0025	4(2019)						10.0					
40C	40	854.56	854.48	0.0025	4(2019)						31.5					
SUBTOTAL						**200.3**	**1265.4**	**124.4**	**313.0**	**298.7**	**447.1**	**534.6**	**2**	**0**	**0**	**1**

ALL ITEMS CATEGORY 0010 UNLESS NOTED

STORM SEWER PIPES (CONTINUED)

FROM STR	TO STR	INLET ELEV	DISCH ELEV	SLOPE (FT/FT)	STAGE	608.0315 CLASS III 15" (LF)	608.0324 CLASS III 24" (LF)	608.0330 CLASS III 30" (LF)	608.0336 CLASS III 36" (LF)	608.0412 CLASS IV 12" (LF)	608.0415 CLASS IV 15" (LF)	608.0424 CLASS IV 24" (LF)	SPV.0060.06 CONNECT NEW STORM SEWER PIPE TO EXISTING STORM SEWER STRUCTURE EACH	522.1015 AEW FOR CULVERT PIPE REIN. CONC. 15" EACH	522.1030 AEW FOR CULVERT PIPE REIN. CONC. 30" EACH	522.1036 AEW FOR CULVERT PIPE REIN. CONC. 36" EACH
40D	40C	854.59	854.56	0.0025	4(2019)						10.0					
41	44	853.69	853.61	0.0013	4(2019)							64.8				
41A	41C	854.76	854.74	0.0050	4(2019)					5.6						
41B	41C	854.79	854.74	0.0050	4(2019)					10.0						
41C	41	854.49	854.44	0.0025	4(2019)						18.8					
41D	41E	854.51	854.48	0.0030	4(2019)						10.0					
41E	41	854.48	854.44	0.0030	4(2019)						12.7					
42	44	853.64	853.61	0.0030	4(2019)							10.3				
42A	42B	854.49	854.39	0.0100	4(2019)						10.5					
42B	42	854.55	854.39	0.0050	4(2019)						31.5					
43	42	854.79	854.39	0.0050	4(2019)						80.8					
43A	43	855.23	855.09	0.0050	4(2019)					27.7						
44	45	853.11	852.84	0.0010	4(2019)			267.0								
45					4(2019)										1	
50	50.1	854.36	854.29	0.0050	4(2019)						14.0					
50A	50B	856.37	855.83	0.0200	4(2019)					26.9						
50B	50C	855.58	855.21	0.0050	4(2019)						75.1					
50C	50	855.16	854.41	0.0050	4(2019)						149.4					
50.1					4(2019)									1		
EX60					1											
EX60A					1											
EX60B					1											
SUBTOTAL						**0.0**	**0.0**	**267.0**	**0.0**	**70.2**	**412.9**	**75.1**	**0**	**1**	**1**	**0**
TOTAL						**311**	**2562**	**442**	**693**	**589**	**1470**	**1835**	**6**	**1**	**1**	**1**

GENERAL NOTES

1. STATIONS AND OFFSETS ARE TO THE CENTER OF STRUCTURES OR TO THE END OF PIPE WHERE THERE IS AN ENDWALL.
2. PIPE LENGTHS ARE MEASURED TO THE CENTER OF STRUCTURES.
3. JOINT TIES FOR CONCRETE PIPE SHALL BE PROVIDED AT ALL REINFORCED CONCRETE APRON ENDWALL LOCATIONS. APRON ENDWALLS SHALL BE TIED FOR THE LAST THREE JOINTS AT PIPE ENDS. THE COST OF THESE TIES SHALL BE INCLUDED IN THE CONTRACT UNIT PRICE FOR THE REINFORCED CONCRETE STORM SEWER PIPE.

ALL ITEMS CATEGORY 0010 UNLESS NOTED

3

RESTORATION ITEMS

CATEGORY	STATION	TO	STATION	LOCATION	625.0100 TOPSOIL SY	625.0500 SALVAGED TOPSOIL SY	628.2006 EROSION MAT URBAN CLASS I TYPE A SY	628.2027 EROSION MAT CLASS II TYPE C SY	629.0210 FERTILIZER TYPE B CWT	630.0140 SEEDING MIXTURE NO. 40 LB	630.0200 SEEDING TEMPORARY LB	REMARKS
STAGE 1												
0010	89+83	-	95+41	STH 89 - RT	-	-	691	-	-	-	-	E. LAKE ST TO MADISON ST
0010	86+34	-	89+83	STH 89 - RT	-	-	160	-	-	-	-	WATER ST TO E. LAKE ST
0010	84+87	-	89+68	STH 89 - LT	-	-	97	-	-	-	-	VETERANS LN TO W. LAKE ST
0010	84+40	-	86+34	STH 89 - RT	22	-	20	-	0.01	0.4	-	S. STAGE 1 LIMITS TO WATER ST
0010	84+40	-	84+87	STH 89 - LT	22	-	45	-	0.01	0.4	-	S. STAGE 1 LIMITS TO VETERANS LN
STAGE 2												
0010	62+88	-	84+40	STH 89 - RT	2,410	-	3,824	-	1.52	43.4	-	E. LAKE PARK PL TO N. STAGE 2 LIMITS
0010	68+37	-	84+40	STH 89 - LT	1,795	-	3,066	-	1.13	32.3	-	PHILLIPS LN TO N. STAGE 2 LIMITS
0010	62+88	-	68+37	STH 89 - LT	615	-	944	-	0.39	11.1	-	W. LAKE PARK PL TO PHILLIPS LN
STAGE 3												
0010	58+97	-	62+88	STH 89 - RT	438	-	651	-	0.28	7.9	-	N. CATLIN DR TO E. LAKE PARK PL
0010	58+91	-	62+88	STH 89 - LT	445	-	813	-	0.28	8.0	-	MILTON ST TO W. LAKE PARK PL
0010	54+90	-	58+97	STH 89 - RT	456	-	687	-	0.29	8.2	-	S. CATLIN DR TO N. CATLIN DR
0010	54+95	-	58+91	STH 89 - LT	444	-	605	-	0.28	8.0	-	KEYES ST TO MILTON ST
0010	44+36	-	54+95	STH 89 - LT	1,186	-	1,601	-	0.75	21.3	-	WOODLAND BEACH RD TO KEYES ST
0010	44+00	-	54+90	STH 89 - RT	1,221	-	2,049	-	0.77	22.0	-	S. STAGE 3 LIMITS TO S. CATLIN DR
0010	44+00	-	44+36	STH 89 - LT	40	-	48	-	0.03	0.7	-	S. STAGE 3 LIMITS TO WOODLAND BEACH RD
STAGE 4												
0010	40+18	-	44+00	STH 89 - RT	428	-	1,432	61	0.27	7.7	-	PINNACLE DR TO N. STAGE 4 LIMITS
0010	38+17	-	44+00	STH 89 - LT	653	-	968	-	0.41	11.8	-	COLUMBUS ST TO N. STAGE 4 LIMITS
0010	29+50	-	40+18	STH 89 - RT	1,196	-	2,298	49	0.75	21.5	-	S. STAGE 4 LIMITS TO PINNACLE DR
0010	34+77	-	38+17	STH 89 - LT	381	-	450	-	0.24	6.9	-	SANDY BEACH RD TO COLUMBUS ST
0010	31+72	-	34+77	STH 89 - LT	342	-	1,014	-	0.22	6.1	-	CTH A TO SANDY BEACH RD
0010	29+50	-	31+72	STH 89 - LT	249	-	395	15	0.16	4.5	-	S. STAGE 4 LIMITS TO CTH A
0010	8+32 'SBR'	-	10+00 'SBR'	SANDY BEACH RD	-	470	-	-	-	-	28.8	SANDY BEACH RD TEMPORARY ACCESS
				TOTAL 0010	12,343	470	21,858	125	7.79	222.2	28.8	

EROSION CONTROL ITEMS

CATEGORY	STATION	TO	STATION	LOCATION	628.1504 SILT FENCE LF	628.1520 SILT FENCE MAINTENANCE LF	628.7560 TRACKING PADS EACH	REMARKS
0010	84+40	-	95+41	STH 89	-	-	1	STAGE 1
0010	62+88	-	84+40	STH 89	492	492	-	STAGE 2
0010	44+00	-	62+88	STH 89	211	211	-	STAGE 3
0010	29+50	-	44+00	STH 89	1,187	1,187	1	STAGE 4
0010	8+25 A	-	8+75 A	CTH A	-	-	1	STAGE 4
				TOTAL 0010	1,890	1,890	3	

MOBILIZATION EROSION CONTROL

CATEGORY	STATION	TO	STATION	LOCATION	628.1905 MOBILIZATIONS EROSION CONTROL EACH	628.1910 MOBILIZATIONS EMERGENCY EROSION CONTROL EACH
0010	29+50	-	95+41	PROJECT	10	8
				TOTAL 0010	10	8

3

3

INLET PROTECTION ITEMS

CATEGORY	STATION	LOCATION	628.7005 INLET PROTECTION TYPE A EACH	628.7015 INLET PROTECTION TYPE C EACH	628.7020 INLET PROTECTION TYPE D EACH
STAGE 1					
0010	94+97	STH 89 - RT	-	1	-
0010	94+97	STH 89 - LT	-	1	-
0010	93+01	STH 89 - LT	-	-	1
0010	92+92	STH 89 - LT	-	1	-
0010	92+88	STH 89 - RT	-	1	-
0010	92+88	STH 89 - LT	-	1	-
0010	90+34	STH 89 - RT	-	1	-
0010	90+29	STH 89 - RT	-	1	-
0010	90+04	STH 89 - LT	-	1	-
0010	89+95	STH 89 - LT	-	1	-
0010	89+81	STH 89 - LT	-	1	-
0010	89+78	STH 89 - LT	-	1	-
0010	89+62	STH 89 - RT	-	1	-
0010	89+41	STH 89 - LT	-	1	-
0010	87+47	STH 89 - RT	1	-	1
0010	87+47	STH 89 - LT	1	-	1
0010	87+44	STH 89 - RT	1	-	1
0010	87+37	STH 89 - RT	1	-	1
0010	87+37	STH 89 - LT	1	-	1
0010	87+28	STH 89 - RT	1	-	1
0010	87+28	STH 89 - LT	1	-	1
0010	85+70	STH 89 - LT	-	1	-
0010	85+62	STH 89 - RT	-	-	1
0010	85+61	STH 89 - RT	2	1	1
0010	85+61	STH 89 - LT	2	1	-
0010	85+60	STH 89 - LT	-	-	-
0010	84+50	STH 89 - RT	-	1	-
0010	84+50	STH 89 - LT	-	1	-
0010	10+85 'MAD'	MADISON ST - RT	-	1	-
0010	10+88 'WS'	WATER ST - RT	-	1	-
0010	10+88 'WS'	WATER ST - LT	-	1	-
0010	9+42 'VL'	VETERANS LN - RT	1	-	1
0010	9+54 'VL'	VETERANS LN - LT	1	-	1
STAGE 2					
0010	82+91	STH 89 - RT	-	-	-
0010	82+84	STH 89 - LT	-	1	-
0010	80+00	STH 89 - RT	1	-	1
0010	80+00	STH 89 - LT	1	-	1
		SUBTOTAL 0010	15	22	14

INLET PROTECTION ITEMS

CATEGORY	STATION	LOCATION	628.7005 INLET PROTECTION TYPE A EACH	628.7015 INLET PROTECTION TYPE C EACH	628.7020 INLET PROTECTION TYPE D EACH
STAGE 2					
0010	79+89	STH 89 - RT	1	-	1
0010	79+89	STH 89 - LT	1	-	1
0010	76+84	STH 89 - RT	1	-	1
0010	76+84	STH 89 - LT	1	-	1
0010	73+70	STH 89 - RT	-	1	-
0010	73+70	STH 89 - LT	-	1	-
0010	70+60	STH 89 - RT	-	1	-
0010	70+60	STH 89 - LT	-	1	-
0010	68+50	STH 89 - LT	-	1	-
0010	68+20	STH 89 - LT	-	1	-
0010	65+31	STH 89 - RT	-	1	-
0010	65+31	STH 89 - LT	-	1	-
0010	63+24	STH 89 - RT	1	-	1
0010	63+24	STH 89 - LT	1	-	1
0010	63+09	STH 89 - LT	1	-	1
0010	63+02	STH 89 - LT	-	1	-
STAGE 3					
0010	62+72	STH 89 - LT	-	1	-
0010	62+67	STH 89 - LT	1	-	1
0010	62+42	STH 89 - RT	1	-	1
0010	62+42	STH 89 - LT	1	-	1
0010	62+31	STH 89 - RT	1	-	1
0010	62+31	STH 89 - LT	1	-	1
0010	61+07	STH 89 - RT	-	1	-
0010	61+06	STH 89 - LT	-	1	-
0010	59+11	STH 89 - LT	-	-	1
0010	59+06	STH 89 - LT	-	-	1
0010	58+76	STH 89 - LT	1	-	-
0010	57+84	STH 89 - RT	-	1	-
0010	57+84	STH 89 - LT	-	1	-
0010	55+10	STH 89 - LT	-	-	1
0010	54+81	STH 89 - LT	1	-	-
0010	54+61	STH 89 - RT	-	1	-
0010	54+61	STH 89 - LT	-	1	-
0010	49+25	STH 89 - RT	-	1	-
0010	49+25	STH 89 - LT	-	1	-
0010	47+38	STH 89 - RT	1	1	-
0010	47+38	STH 89 - LT	-	1	-
		SUBTOTAL 0010	15	20	15

INLET PROTECTION ITEMS

CATEGORY	STATION	LOCATION	628.7005 INLET PROTECTION TYPE A EACH	628.7015 INLET PROTECTION TYPE C EACH	628.7020 INLET PROTECTION TYPE D EACH
STAGE 3					
0010	44+80	STH 89 - RT	-	1	-
0010	44+80	STH 89 - LT	-	1	-
0010	44+54	STH 89 - LT	-	-	1
0010	44+20	STH 89 - LT	-	1	-
0010	10+44 'NCD'	N. CATLIN DR - RT	1	-	-
0010	10+69 'NCD'	N. CATLIN DR - LT	-	-	1
0010	10+67 'SCD'	S. CATLIN DR - RT	-	1	-
0010	10+76 'SCD'	S. CATLIN DR - LT	-	1	-
STAGE 4					
0010	43+13	STH 89 - LT	1	-	1
0010	43+13	STH 89 - RT	1	-	1
0010	43+03	STH 89 - LT	1	-	1
0010	43+03	STH 89 - RT	1	-	1
0010	39+93	STH 89 - RT	-	1	-
0010	39+88	STH 89 - LT	-	1	-
0010	38+28	STH 89 - LT	-	-	1
0010	38+03	STH 89 - LT	1	-	-
0010	35+50	STH 89 - LT	1	-	1
0010	35+50	STH 89 - RT	1	-	1
0010	35+40	STH 89 - LT	1	-	1
0010	35+40	STH 89 - RT	1	-	1
0010	34+98	STH 89 - LT	-	-	1
0010	34+66	STH 89 - RT	-	1	-
0010	34+55	STH 89 - LT	-	1	-
0010	34+40	STH 89 - LT	1	-	1
0010	34+40	STH 89 - RT	1	-	1
0010	33+60	STH 89 - LT	-	-	1
0010	31+82	STH 89 - LT	-	1	1
0010	31+78	STH 89 - LT	1	-	1
0010	31+32	STH 89 - LT	-	1	-
0010	31+17	STH 89 - LT	-	1	-
0010	8+66 'SBR'	SANDY BEACH RD - LT	-	1	-
0010	9+23 'SBR'	SANDY BEACH RD - LT	-	-	1
0010	9+33 'SBR'	SANDY BEACH RD - LT	-	-	1
0010	9+37 'SBR'	SANDY BEACH RD - LT	-	1	-
0010	9+18 'SBR'	SANDY BEACH RD - RT	1	-	-
0010	9+27 'SBR'	SANDY BEACH RD - RT	1	-	-
		SUBTOTAL 0010	15	14	19
		TOTAL 0010	45	56	48

3

3

PERMANENT SIGNING

CATEGORY	SIGN NO.	SIGN CODE	SIGN SIZE W X H	MESSAGE	634.0614 POSTS WOOD 4X6-INCH X 14-FT EACH	634.0616 POSTS WOOD 4X6-INCH X 16-FT EACH	634.0618 POSTS WOOD 4X6-INCH X 18-FT EACH	634.0810 POSTS TUBULAR STEEL 2X2-INCH X 10-FT EACH	634.0811 POSTS TUBULAR STEEL 2X2-INCH X 11-FT EACH	634.0812 POSTS TUBULAR STEEL 2X2-INCH X 12-FT EACH	634.0814 POSTS TUBULAR STEEL 2X2-INCH X 14-FT EACH	637.2210 SIGNS TYPE II REFLECTIVE H SF	637.2230 SIGNS TYPE II REFLECTIVE F SF	REMARKS
0010	1-1	D2-1	96 X 15	FORT ATKINSON 12	-	2	-	-	-	-	-	10	-	-
0010	1-2	I2-3	72 X 24	LAKE MILLS, POPULATION 5708	-	-	2	-	-	-	-	12	-	-
0010	1-3	J1-1	24 X 39	JCT, COUNTY A	-	1	-	-	-	-	-	6.5	-	-
0010	1-4	W11-15	30 X 30	"BIKE AND PEDESTRIAN" SYMBOLS	-	-	1	-	-	-	-	-	6.25	-
0010	1-5	W16-9P	24 X 12	AHEAD	-	-	-	-	-	-	-	-	2	ON SAME POST AS 1-4
0010	2-1	R2-1	24 X 30	SPEED LIMIT 45	-	1	-	-	-	-	-	5	-	-
0010	2-2	R2-1	24 X 30	SPEED LIMIT 25	-	1	-	-	-	-	-	5	-	-
0010	2-3	SP	60 X 30	SANDHILL STATION STATE CAMPGROUND, "LEFT ARROW" SYMBOL	-	2	-	-	-	-	-	12.5	-	-
0010	2-4	J4-3	72 X 36	SOUTH 89, COUNTY G, ALTERNATE 94	-	2	-	-	-	-	-	18	-	-
0010	2-5	J13-1	24 X 45	COUNTY A, "LEFT AND TILT RIGHT ARROW" SYMBOL	-	-	-	-	-	-	1	7.5	-	-
0010	2-6	JV	48 X 69	COUNTY A, "UP ARROW" SYMBOL, 89, COUNTY G, "AHEAD AND RIGHT ARROW" SYMBOL	-	-	2	-	-	-	-	23	-	-
0010	2-7	R1-1	30 X 30	STOP	-	-	-	-	1	-	-	5.18	-	-
0010	2-8	M1-5A	24 X 24	COUNTY A	-	-	-	-	1	-	-	4	-	-
0010	2-9	R1-1	30 X 30	STOP	-	-	-	-	1	-	-	5.18	-	-
0010	2-10	W1-6	48 X 24	"LARGE RIGHT ARROW" SYMBOL	1	-	-	-	-	-	-	-	8	-
0010	2-11	SP	60 X 30	SANDHILL STATION STATE CAMPGROUND, "RIGHT ARROW" SYMBOL	2	-	-	-	-	-	-	12.5	-	-
0010	2-12	J13-1	24 X 45	COUNTY A, "RIGHT ARROW" SYMBOL	-	-	-	-	-	1	-	7.5	-	-
0010	2-13	W11-15	30 X 30	"BIKE AND PEDESTRIAN" SYMBOLS	-	1	-	-	-	-	-	-	6.25	-
0010	2-14	W16-7L	24 X 12	"TILT DOWN LEFT ARROW" SYMBOL	-	-	-	-	-	-	-	-	2	ON SAME POST AS 2-13
0010	2-15	W11-15	30 X 30	"BIKE AND PEDESTRIAN" SYMBOLS	-	1	-	-	-	-	-	-	6.25	-
0010	2-16	W16-7L	24 X 12	"TILT DOWN LEFT ARROW" SYMBOL	-	-	-	-	-	-	-	-	2	ON SAME POST AS 2-15
0010	2-17	JV	48 X 60	NORTH 89, COUNTY A; ALTERNATE 94, COUNTY G	-	-	1	-	-	-	-	20	-	-
0010	2-18	R3-17	30 X 24	"BIKE LANE"	-	-	-	-	1	-	-	5	-	-
0010	2-19	R3-17-A	30 X 12	"AHEAD"	-	-	-	-	-	-	-	2.5	-	ON SAME POST AS 2-18
0010	2-20	R3-17	30 X 24	"BIKE LANE"	-	-	-	-	1	-	-	5	-	-
0010	2-21	R3-17-B	30 X 12	"ENDS"	-	-	-	-	-	-	-	2.5	-	ON SAME POST AS 2-20
0010	2-22	R1-1	18 X 18	STOP	-	-	-	1	-	-	-	1.86	-	-
0010	2-23	R1-1	18 X 18	STOP	-	-	-	1	-	-	-	1.86	-	-
0010	2-24	R3-17	30 X 24	BIKE LANE	-	-	-	-	1	-	-	5	-	-
0010	3-1	R1-1	30 X 30	STOP	-	-	-	-	1	-	-	5.18	-	-
0010	3-2	W11-15	30 X 30	"BIKE AND PEDESTRIAN" SYMBOLS	-	1	-	-	-	-	-	-	6.25	-
0010	3-3	W16-9P	24 X 12	AHEAD	-	-	-	-	-	-	-	-	2	ON SAME POST AS 3-2
0010	3-4	J12-1	24 X 45	COUNTY A, SECOND RIGHT	-	-	-	-	-	1	-	7.5	-	-
0010	3-5	R1-1	30 X 30	STOP	-	-	-	-	1	-	-	5.18	-	-
0010	3-6	R2-1	24 X 30	SPEED LIMIT 25	-	-	-	-	1	-	-	5	-	-
0010	3-7	R2-1	24 X 30	SPEED LIMIT 25	-	-	-	-	1	-	-	5	-	-
0010	3-8	R1-1	30 X 30	STOP	-	-	-	-	1	-	-	5.18	-	-
0010	4-1	R2-1	24 X 30	SPEED LIMIT 25	-	-	-	-	1	-	-	5	-	-
0010	4-2	R1-1	30 X 30	STOP	-	-	-	-	1	-	-	5.18	-	-
0010	4-3	R2-1	24 X 30	SPEED LIMIT 25	-	-	-	-	1	-	-	5	-	-
0010	4-4	R3-17	30 X 24	BIKE LANE	-	-	-	-	1	-	-	5	-	-
0010	4-5	R3-17	30 X 24	BIKE LANE	-	-	-	-	1	-	-	5	-	-
0010	5-1	JV	24 X 48	COUNTY A, COUNTY G	-	-	-	-	-	-	1	8	-	-
0010	5-2	S1-1	36 X 36	SCHOOL ADVANCE	-	-	1	-	-	-	-	-	6.75	-
0010	5-3	S16-9P	30 X 18	AHEAD	-	-	-	-	-	-	-	-	3.75	ON SAME POST AS 5-2
0010	5-4	R2-6P	24 X 18	FINES HIGHER	-	-	-	-	-	-	-	3	-	ON SAME POST AS 5-2
0010	5-5	JV	24 X 72	ALTERNATE 94, SOUTH 89	-	-	1	-	-	-	-	12	-	-
0010	5-6	S4-51	24 X 48	SCHOOL, SPEED LIMIT 15 WHEN CHILDREN ARE PRESENT	-	-	-	-	-	-	1	8	-	-
				SUBTOTAL 0010	3	12	8	2	16	2	3	266.80	51.50	

3

PERMANENT SIGNING CONT.

CATEGORY	SIGN NO.	SIGN CODE	SIGN SIZE W X H	MESSAGE	634.0614 POSTS WOOD 4X6-INCH X 14-FT EACH	634.0616 POSTS WOOD 4X6-INCH X 16-FT EACH	634.0618 POSTS WOOD 4X6-INCH X 18-FT EACH	634.0810 POSTS TUBULAR STEEL 2X2-INCH X 10-FT EACH	634.0811 POSTS TUBULAR STEEL 2X2-INCH X 11-FT EACH	634.0812 POSTS TUBULAR STEEL 2X2-INCH X 12-FT EACH	634.0814 POSTS TUBULAR STEEL 2X2-INCH X 14-FT EACH	637.2210 SIGNS TYPE II REFLECTIVE H SF	637.2230 SIGNS TYPE II REFLECTIVE F SF	REMARKS
0010	5-7	R2-1	24 X 30	SPEED LIMIT 25	-	-	1	-	-	-	-	5	-	-
0010	5-8	S5-2	24 X 30	END SCHOOL ZONE	-	-	-	-	-	-	-	-	5	ON SAME POST AS 5-7
0010	6-1	S1-1	36 X 36	SCHOOL ADVANCE	-	1	-	-	-	-	-	-	6.75	-
0010	6-2	S16-7L	30 X 18	"TILT DOWN LEFT ARROW" SYMBOL	-	-	-	-	-	-	-	-	3.75	ON SAME POST AS 6-1
0010	6-3	R6-2-L	24 X 30	ONE WAY, "LEFT ARROW" SYMBOL	-	-	-	-	-	-	-	5	-	ON SAME POST AS 6-1, OPPOSITE SIDE
0010	6-4	S1-1	36 X 36	"SCHOOL ADVANCE" SYMBOL	-	1	-	-	-	-	-	-	6.75	-
0010	6-5	S16-7L	30 X 18	"TILT DOWN LEFT ARROW" SYMBOL	-	-	-	-	-	-	-	-	3.75	ON SAME POST AS 6-4
0010	6-6	R1-1	30 X 30	STOP	-	-	-	-	1	-	-	5.18	-	-
0010	6-7	R6-6	24 X 30	BEGIN ONE WAY	-	-	-	-	1	-	-	5	-	-
0010	6-8	R6-2-R	24 X 30	ONE WAY, "RIGHT ARROW" SYMBOL	-	-	-	-	1	-	-	5	-	-
0010	6-9	S4-51	24 X 48	SCHOOL, SPEED LIMIT 15 WHEN CHILDREN ARE PRESENT	-	-	-	-	-	-	1	-	8	-
0010	61-0	S4-51	24 X 48	SCHOOL, SPEED LIMIT 15 WHEN CHILDREN ARE PRESENT	-	-	-	-	-	-	1	-	8	-
0010	61-1	R3-1	24 X 24	"NO RIGHT TURN" SYMBOL	-	-	-	-	1	-	-	4	-	-
0010	61-2	R5-1	30 X 30	DO NOT ENTER	-	-	-	-	1	-	-	6.25	-	-
0010	6-13	R3-27	24 X 24	"NO AHEAD MOVEMENT" SYMBOL	-	-	-	-	1	-	-	4	-	-
0010	6-14	R1-1	30 X 30	STOP	-	-	-	-	1	-	-	5.18	-	-
0010	6-15	R1-1	30 X 30	STOP	-	-	-	-	1	-	-	5.18	-	-
0010	6-16	R6-7	24 X 30	END ONE WAY	-	-	-	-	1	-	-	5	-	-
0010	6-17	S1-1	36 X 36	"SCHOOL ADVANCE" SYMBOL	-	1	-	-	-	-	-	-	6.75	-
0010	6-18	S16-7L	30 X 18	"TILT DOWN LEFT ARROW" SYMBOL	-	-	-	-	-	-	-	-	3.75	ON SAME POST AS 6-17
0010	6-19	S1-1	36 X 36	"SCHOOL ADVANCE" SYMBOL	-	1	-	-	-	-	-	-	6.75	-
0010	6-20	S16-7L	30 X 18	"TILT DOWN LEFT ARROW" SYMBOL	-	-	-	-	-	-	-	-	3.75	ON SAME POST AS 6-19
0010	6-21	R3-17	30 X 24	BIKE LANE	-	-	-	-	1	-	-	5	-	-
0010	6-22	R3-8	30 X 36	LANE CONTROL	-	-	-	-	-	1	-	7.5	-	-
0010	7-1	JV	24 X 72	ALTERNATE 94, NORTH 89	-	-	1	-	-	-	-	12	-	-
0010	7-2	R3-2	24 X 24	"NO LEFT TURN" SYMBOL	-	-	-	-	1	-	-	4	-	-
0010	7-3	JV	24 X 48	COUNTY A, COUNTY G	-	-	-	-	-	-	1	8	-	-
0010	7-4	R1-1	30 X 30	STOP	-	-	-	-	1	-	-	5.18	-	-
0010	7-5	R1-1	30 X 30	STOP	-	-	-	-	1	-	-	5.18	-	-
0010	7-6	R2-1	24 X 30	SPEED LIMIT 25	-	-	1	-	-	-	-	5	-	-
0010	7-7	S5-2	24 X 30	END SCHOOL ZONE	-	-	-	-	-	-	-	-	5	ON SAME POST AS 7-6
0010	7-8	S4-51	24 X 48	SCHOOL, SPEED LIMIT 15 WHEN CHILDREN ARE PRESENT	-	-	-	-	-	-	1	-	8	-
0010	7-9	R3-17	30 X 24	BIKE LANE	-	-	-	-	1	-	-	5	-	-
0010	8-1	S1-1	36 X 36	"SCHOOL ADVANCE" SYMBOL	-	-	1	-	-	-	-	-	6.75	-
0010	8-2	S16-9P	30 X 18	AHEAD	-	-	-	-	-	-	-	-	3.75	ON SAME POST AS 8-1
0010	8-3	R2-6P	24 X 18	FINES HIGHER	-	-	-	-	-	-	-	3	-	ON SAME POST AS 8-1
0010	8-4	R1-1	30 X 30	STOP	-	-	-	-	1	-	-	5.18	-	-
0010	8-5	R2-1	24 X 30	SPEED LIMIT 25	-	-	-	-	1	-	-	5	-	-
0010	8-6	R2-1	24 X 30	SPEED LIMIT 25	-	-	-	-	1	-	-	5	-	-
0010	9-1	R2-1	24 X 30	SPEED LIMIT 25	-	-	-	-	1	-	-	5	-	-
0010	9-2	R2-1	24 X 30	SPEED LIMIT 25	-	-	-	-	1	-	-	5	-	-
0010	10-1	R3-17	30 X 24	BIKE LANE	-	-	-	-	1	-	-	5	-	-
0010	11-1	R1-1	30 X 30	STOP	-	-	-	-	1	-	-	5.18	-	-
0010	11-2	W3-1	36 X 36	"STOP SIGN AHEAD" SYMBOL	-	1	-	-	-	-	-	-	9	-
0010	11-3	R1-1	30 X 30	STOP	-	-	-	-	1	-	-	5.18	-	-
0010	11-4	R6-2-L	24 X 30	ONE WAY, "LEFT ARROW" SYMBOL	-	-	-	-	1	-	-	5	-	-
0010	11-5	R5-1	30 X 30	DO NOT ENTER	-	-	-	-	-	-	-	6.25	-	ON SAME POST AS 11-4, OPPOSITE SIDE
0010	11-6	R1-1	36 X 36	STOP	-	-	-	-	-	-	-	7.46	-	ON FLASHING BEACON
				SUBTOTAL 0010	0	5	4	0	23	1	4	173.90	95.50	

3

PERMANENT SIGNING CONT.

CATEGORY	SIGN NO.	SIGN CODE	SIGN SIZE W X H	MESSAGE	634.0614 POSTS WOOD 4X6-INCH X 14-FT EACH	634.0616 POSTS WOOD 4X6-INCH X 16-FT EACH	634.0618 POSTS WOOD 4X6-INCH X 18-FT EACH	634.0810 POSTS TUBULAR STEEL 2X2-INCH X 10-FT EACH	634.0811 POSTS TUBULAR STEEL 2X2-INCH X 11-FT EACH	634.0812 POSTS TUBULAR STEEL 2X2-INCH X 12-FT EACH	634.0814 POSTS TUBULAR STEEL 2X2-INCH X 14-FT EACH	637.2210 SIGNS TYPE II REFLECTIVE H SF	637.2230 SIGNS TYPE II REFLECTIVE F SF	REMARKS
0010	11-7	R1-3-P	24 X 9	ALL WAY	-	-	-	-	-	-	-	1.5	-	ON SAME FLASHING BEACON AS 11-6
0010	11-8	R1-1	36 X 36	STOP	-	-	-	-	-	-	-	7.46	-	ON FLASHING BEACON
0010	11-9	R1-3-P	24 X 9	ALL WAY	-	-	-	-	-	-	-	1.5	-	ON SAME FLASHING BEACON AS 11-8
0010	11-10	R1-1	36 X 36	STOP	-	-	-	-	-	-	-	7.46	-	ON FLASHING BEACON
0010	11-11	R1-3-P	24 X 9	ALL WAY	-	-	-	-	-	-	-	1.5	-	ON SAME FLASHING BEACON AS 11-10
0010	11-12	R1-1	36 X 36	STOP	-	-	-	-	-	-	-	7.46	-	ON FLASHING BEACON
0010	11-13	R1-3-P	24 X 9	ALL WAY	-	-	-	-	-	-	-	1.5	-	ON SAME FLASHING BEACON AS 11-12
0010	11-14	R1-1	30 X 30	STOP	-	-	-	-	1	-	-	5.18	-	-
0010	11-15	R3-17	30 X 24	BIKE LANE	-	-	-	-	1	-	-	5	-	-
0010	11-16	R3-17	30 X 24	BIKE LANE	-	-	-	-	1	-	-	5	-	-
0010	11-17	R3-17	30 X 24	BIKE LANE	-	-	-	-	1	-	-	5	-	-
0010	12-1	J1-1	24 X 39	JCT, COUNTY B	-	-	-	-	-	1	-	6.5	-	-
0010	12-2	R2-1	24 X 30	SPEED LIMIT 25	-	-	-	-	1	-	-	5	-	-
0010	12-3	J12-1	24 X 45	COUNTY A, "RIGHT ARROW" SYMBOL	-	-	-	-	-	1	-	7.5	-	-
0010	12-4	R2-1	24 X 30	SPEED LIMIT 25	-	-	-	-	1	-	-	5	-	-
0010	12-5	J13-2	48 X 45	COUNTY B, "DOUBLE ARROW" SYMBOL, COUNTY A, "RIGHT ARROW" SYMBOL	-	1	-	-	-	-	-	15	-	-
0010	12-6	JV	24 X 48	COUNTY A, COUNTY G	-	-	-	-	-	-	1	8	-	-
0010	12-7	R1-1	36 X 36	STOP	-	-	-	-	1	-	-	7.46	-	-
0010	12-8	JV	24 X 72	ALTERNATE 94, SOUTH 89	-	-	1	-	-	-	-	12	-	-
0010	12-9	R1-1	36 X 36	STOP	-	-	-	-	-	-	-	7.46	-	ON FLASHING BEACON
0010	12-10	R1-3-P	24 X 9	ALL WAY	-	-	-	-	-	-	-	1.5	-	ON SAME FLASHING BEACON AS 12-9
0010	12-11	D1-4	90 X 48	"UP ARROW" SYMBOL, GLACIAL DRUMLIN STATE TRAIL, "LEFT ARROW" SYMBOL, AZTALAN STATE PARK	-	2	-	-	-	-	-	30	-	-
0010	12-12	R1-1	36 X 36	STOP	-	-	-	-	-	-	-	7.46	-	ON FLASHING BEACON
0010	12-13	R1-3-P	24 X 9	ALL WAY	-	-	-	-	-	-	-	1.5	-	ON SAME FLASHING BEACON AS 12-12
0010	12-14	J13-2	48 X 45	COUNTY A, "AHEAD AND LEFT ARROW" SYMBOL, COUNTY B, "DOUBLE ARROW" SYMBOL	-	-	-	-	-	-	-	15	-	ON FLASHING BEACON
0010	12-15	R1-1	36 X 36	STOP	-	-	-	-	-	-	-	7.46	-	ON FLASHING BEACON
0010	12-16	R1-3-P	24 X 9	ALL WAY	-	-	-	-	-	-	-	1.5	-	ON SAME FLASHING BEACON AS 12-15
0010	12-17	R1-1	36 X 36	STOP	-	-	-	-	-	-	-	7.46	-	ON FLASHING BEACON
0010	12-18	R1-3-P	24 X 9	ALL WAY	-	-	-	-	-	-	-	1.5	-	ON SAME FLASHING BEACON AS 12-17
0010	12-19	R3-17	30 X 24	BIKE LANE	-	-	-	-	1	-	-	5	-	-
0010	12-20	R3-17-B	30 X 12	"ENDS"	-	-	-	-	-	-	-	2.5	-	ON SAME POST AS 12-19
0010	12-21	R3-17	30 X 24	BIKE LANE	-	-	-	-	1	-	-	5	-	-
0010	12-22	R3-17	30 X 24	BIKE LANE	-	-	-	-	1	-	-	5	-	-
0010	12-23	R3-17-A	30 X 12	"AHEAD"	-	-	-	-	-	-	-	2.5	-	-
				SUBTOTAL 0010	0	3	1	0	10	2	1	215.86	0.00	
				TOTAL 0010	3	20	13	2	49	5	8	656.56	147.00	

3

3

SIGN REMOVALS

CATEGORY	SIGN NO.	STATION	LOCATION	SIGN MESSAGE	638.2602 REMOVING SIGNS TYPE II EACH	638.3000 REMOVING SMALL SIGN SUPPORTS EACH	REMARKS
0010	1-01	23+03	STH 89 - RT	LAKE MILLS POPULATION 5708	1	2	-
0010	1-02	24+04	STH 89 - RT	JCT, COUNTY A	1	1	-
0010	1-03	26+35	STH 89 - RT	"ROAD TURNS RIGHT" SYMBOL, 25 M.P.H.	1	1	-
0010	1-04	27+75	STH 89 - LT	SOUTH, 89, COUNTY G, ALTERNATE, 94	1	2	-
0010	2-01	28+40	STH 89 - RT	"BIKE AND PEDESTRIAN" SYMBOLS	1	1	-
0010	2-02	30+02	STH 89 - RT	SANDHILL STATION STATE CAMPGROUND, "LEFT ARROW" SYMBOL	1	1	-
0010	2-03	30+02	STH 89 - RT	SPEED LIMIT 25	1	1	-
0010	2-04	31+32	STH 89 - RT	COUNTY A, "DOUBLE ARROW" SYMBOL, NORTH, 89, "RIGHT ARROW" SYMBOL, COUNTY G, "RIGHT ARROW" SYMBOL	1	2	-
0010	2-05	31+15	STH 89 - LT	SPEED LIMIT 45	1	1	-
0010	2-06	9+21 'CTHA'	CTH A - RT	COUNTY A, "UP ARROW" SYMBOL, 89, "AHEAD AND RIGHT ARROW" SYMBOL	1	1	-
0010	2-07	9+18 'CTHA'	CTH A - RT	STOP	1	1	-
0010	2-08	32+23	STH 89 - LT	"LARGE RIGHT ARROW" SYMBOL	1	1	-
0010	2-09	32+28	STH 89 - LT	SOUTH, 89, "LEFT ARROW" SYMBOL, COUNTY G, "LEFT ARROW" SYMBOL, COUNTY A, "TILT RIGHT ARROW" SYMBOL, SANDHILL STATION STATE CAMPGROUND "TILT RIGHT ARROW" SYMBOL	1	2	-
0010	2-10	33+50	STH 89 - RT	SPEED LIMIT 25, PARKING RESTRICTIONS, 72 HOUR PARKING LIMIT	1	1	-
0010	3-01	9+71 'SBR'	SANDY BEACH RD - RT	STOP	1	1	-
0010	3-02	36+79	STH 89 - LT	SOUTH, 89, "RIGHT TURN ARROW" SYMBOL, COUNTY G, "RIGHT TURN ARROW" SYMBOL, COUNTY A, "ADVANCE RIGHT TURN ARROW" SYMBOL	1	1	-
0010	3-03	9+73 'CS'	COLUMBUS ST - RT	STOP	1	1	-
0010	3-04	38+00	STH 89 - RT	SPEED LIMIT 25	1	1	-
0010	3-05	10+47 'PD'	PINNACLE DR - LT	STOP	1	1	-
0010	4-01	9+72 'WBR'	WOODLAND BEACH RD - RT	STOP	1	1	-
0010	4-02	44+85	STH 89 - RT	SPEED LIMIT 25	1	1	-
0010	4-03	44+87	STH 89 - LT	SPEED LIMIT 25	1	1	-
0010	4-04	46+78	STH 89 - RT	SCHOOL ADVANCE, AHEAD	1	1	-
0010	5-01	50+91	STH 89 - RT	SCHOOL, SPEED LIMIT 15 WHEN CHILDREN ARE PRESENT	1	1	-
0010	5-02	53+09	STH 89 - LT	SPEED LIMIT 25	1	1	-
0010	6-01	54+58	STH 89 - LT	COUNTY G, COUNTY A	1	1	-
0010	6-02	9+73 'KS'	KEYES ST - RT	STOP	1	1	-
0010	6-03	54+58	STH 89 - RT	ONE WAY "LEFT ARROW" SYMBOL	1	1	-
0010	6-04	55+19	STH 89 - RT	ONE WAY RIGHT ARROW" SYMBOL	1	1	-
0010	6-05	55+32	STH 89 - RT	SCHOOL ADVANCE, "TILT DOWN LEFT ARROW" SYMBOL	1	1	-
0010	6-06	55+27	STH 89 - LT	SCHOOL ADVANCE, "TILT DOWN LEFT ARROW" SYMBOL	1	1	-
0010	6-07	56+35	STH 89 - RT	SCHOOL, SPEED LIMIT 15 WHEN CHILDREN ARE PRESENT	1	1	-
0010	6-08	57+08	STH 89 - LT	SCHOOL, SPEED LIMIT 15 WHEN CHILDREN ARE PRESENT	1	1	-
0010	6-09	58+46	STH 89 - RT	SCHOOL ADVANCE, "TILT DOWN LEFT ARROW" SYMBOL	1	1	-
0010	6-10	9+69 'MS'	MILTON ST - RT	STOP	1	1	-
0010	6-11	58+67	STH 89 - RT	DO NOT ENTER	1	1	-
0010	6-12	10+38 'NCD'	N. CATLIN DR - RT	STOP	1	1	-
0010	6-13	10+39 'NCD'	N. CATLIN DR - LT	STOP	1	1	-
0010	6-14	59+16	STH 89 - RT	DO NOT ENTER	1	1	-
0010	6-15	59+39	STH 89 - RT	NORTH, 89, ALTERNATE, 94	1	1	-
0010	6-16	59+19	STH 89 - LT	SCHOOL ADVANCE, "TILT DOWN LEFT ARROW" SYMBOL	1	1	-
0010	6-17	59+31	STH 89 - LT	"NO LEFT TURN" SYMBOL	1	1	-
0010	7-01	9+67 'LPP'	W. LAKE PARK PL - RT	STOP	1	1	-
0010	7-02	10+39 'LPP'	E. LAKE PARK PL - LT	STOP	1	1	-
0010	7-03	63+87	STH 89 - LT	SCHOOL, SPEED LIMIT 15 WHEN CHILDREN ARE PRESENT	1	1	-
0010	7-04	64+95	STH 89 - RT	SPEED LIMIT 25	1	1	-
0010	8-01	65+98	STH 89 - LT	SCHOOL ADVANCE, AHEAD	1	1	-
0010	8-02	9+67 'PL'	PHILLIPS LN - RT	STOP	1	1	-
0010	9-01	73+66	STH 89 - LT	SOUTH, 89, COUNTY G	1	1	-
0010	9-02	77+00	STH 89 - LT	SOUTH, 89, ALTERNATE, 94	1	1	-
0010	9-03	78+36	STH 89 - RT	COUNTY G, COUNTY A	1	1	-
0010	10-01	82+74	STH 89 - LT	SPEED LIMIT 25	1	1	-
0010	11-01	9+62 'VL'	VETERANS LN - RT	STOP	1	1	-
0010	11-02	10+34 'WS'	WATER ST - LT	STOP	1	1	-
0010	11-03	88+42	STH 89 - RT	"NO U-TURNS" SYMBOL	1	1	-
0010	11-04	88+45	STH 89 - RT	STOP	1	1	-
0010	11-05	88+42	STH 89 - RT	DO NOT ENTER	1	-	ON SAME SUPPORT AS 11-03
0010	11-06	89+33	STH 89 - RT	STOP	1	-	ON OVERHEAD SUPPORT ARM
0010	11-07	89+36	STH 89 - RT	STOP, ALL WAY	1	-	ON LIGHT POLE
0010	11-08	88+94	STH 89 - LT	"NO U-TURNS" SYMBOL	1	1	-
0010	11-09	9+53 'ELS'	W. LAKE ST - RT	STOP, ALL WAY	1	-	ON LIGHT POLE
0010	11-10	10+66 'WLS'	E. LAKE ST - LT	STOP, ALL WAY	1	-	ON LIGHT POLE
0010	11-11	90+10	STH 89 - LT	STOP	1	-	ON OVERHEAD SUPPORT ARM
0010	11-12	90+10	STH 89 - LT	STOP, ALL WAY	1	-	ON LIGHT POLE
0010	12-01	91+74	STH 89 - RT	JCT, COUNTY B, COUNTY A, "RIGHT TURN ARROW" SYMBOL	1	1	-
0010	12-02	95+15	STH 89 - RT	STOP	1	1	-
0010	12-03	95+47	STH 89 - RT	STOP, ALL WAY	1	-	ON LIGHT POLE
0010	12-04	95+73	STH 89 - LT	COUNTY A, "AHEAD AND LEFT ARROW" SYMBOL, COUNTY B, "DOUBLE ARROW" SYMBOL	1	-	ON LIGHT POLE
0010	12-05	95+88	STH 89 - LT	"UP ARROW" SYMBOL, GLACIAL DRUMLIN STATE TRAIL, "LEFT ARROW" SYMBOL, AZTALAN STATE PARK	1	2	-
0010	12-06	9+60 'MAD'	W. MADISON ST - RT	STOP, ALL WAY	1	-	ON LIGHT POLE
0010	12-07	10+48 'MAD'	E. MADISON ST - LT	STOP, ALL WAY	1	-	ON LIGHT POLE
0010	12-08	96+49	STH 89 - RT	COUNTY B, "DOUBLE ARROW" SYMBOL, COUNTY A, "RIGHT ARROW" SYMBOL	1	-	ON LIGHT POLE
0010	12-09	96+61	STH 89 - LT	STOP, ALL WAY	1	1	-
				TOTAL:	73	66	

3

3

TRAFFIC CONTROL

CATEGORY	LOCATION	DAYS	643.0300 TRAFFIC CONTROL DRUMS EACH	643.0300 TRAFFIC CONTROL DRUMS DAY	* 643.0420 TRAFFIC CONTROL BARRICADES TYPE III EACH	643.0420 TRAFFIC CONTROL BARRICADES TYPE III DAY	643.0705 TRAFFIC CONTROL WARNING LIGHTS TYPE A EACH	643.0705 TRAFFIC CONTROL WARNING LIGHTS TYPE A DAY	* 643.0900 TRAFFIC CONTROL SIGNS EACH	643.0900 TRAFFIC CONTROL SIGNS DAY
STAGE 1										
0010	STH 89	31	-	-	4	124	5	155	5	155
0010	STH 89	76	-	-	-	-	-	-	5	380
0010	MADISON ST	76	-	-	4	304	5	380	2	152
0010	W. LAKE ST	76	-	-	4	304	5	380	3	228
0010	E. LAKE ST	76	-	-	4	304	5	380	3	228
0010	WATER ST	76	-	-	4	304	5	380	3	228
0010	VETERANS LN	76	-	-	1	76	2	152	1	76
STAGE 2										
0010	STH 89	46	-	-	4	184	5	230	5	230
0010	STH 89	32	-	-	4	128	5	160	5	160
0010	PHILLIPS LN	91	-	-	4	364	5	455	3	273
STAGE 3										
0010	STH 89	42	-	-	4	168	5	210	5	210
0010	STH 89	62	-	-	4	248	5	310	5	310
0010	LAKE PARK PL	101	-	-	8	808	10	1010	4	404
0010	N. CATLIN DR	101	-	-	4	404	5	505	2	202
0010	MILTON ST	101	-	-	4	404	5	505	3	303
0010	KEYES ST	101	-	-	1	101	2	202	1	101
0010	WOODLAND BEACH RD	101	-	-	4	404	5	505	3	303
STAGE 4 WC										
0010	STH 89	39	-	-	4	156	5	195	5	195
STAGE 4										
0010	STH 89	84	-	-	8	672	10	840	10	840
0010	PINNACLE DR	84	-	-	4	336	5	420	3	252
0010	COLUMBUS ST	84	-	-	1	84	2	168	1	84
0010	SANDY BEACH RD	84	-	-	4	336	5	420	2	168
0010	SANDY BEACH RD	30	12	360	-	-	-	-	-	-
0010	CTH A	84	-	-	4	336	5	420	3	252
	TOTAL 0010			360		6,549		8,382		5,734

*ADDITIONAL QUANTITIES SHOWN ELSEWHERE

PEDESTRIAN ACCESS ITEMS

CATEGORY	LOCATION	DAYS	644.1410.S TEMPORARY PEDESTRIAN SURFACE ASPHALT SF	644.1616.S TEMPORARY PEDESTRIAN SAFETY FENCE LF	649.0150 TEMPORARY MARKING LINE REMOVABLE TAPE 4-INCH LF	SPV.0045.01 TEMPORARY CURB RAMP EACH	SPV.0045.01 TEMPORARY CURB RAMP DAY	SPV.0045.02 TEMPORARY CROSSWALK EACH	SPV.0045.02 TEMPORARY CROSSWALK DAY
STAGE 1									
0010	STH 89	72	-	1,894	120	6	432	3	216
0010	MADISON ST	72	-	-	80	2	144	1	72
0010	E. LAKE ST	72	-	85	40	2	144	1	72
0010	W. LAKE ST	72	-	77	40	2	144	1	72
0010	WATER ST	72	-	110	40	2	144	1	72
0010	VETERANS LN	72	-	59	40	1	72	1	72
STAGE 2									
0010	PHILLIPS LN	88	439	129	40	2	176	1	88
STAGE 3									
0010	STH 89	103	-	-	120	6	618	3	309
0010	LAKE PARK PL	103	-	241	80	4	412	2	206
0010	MILTON ST	103	-	130	40	2	206	1	103
0010	N. CATLIN DR	103	-	191	40	2	206	1	103
0010	KEYES ST	103	299	148	40	2	206	1	103
0010	S. CATLIN DR	103	232	193	40	2	206	1	103
0010	WOODLAND BEACH RD	103	-	130	40	2	206	1	103
STAGE 4									
0010	STH 89	81	1,091	-	40	2	162	1	81
0010	PINNACLE DR	81	67	83	40	2	162	1	81
0010	COLUMBUS ST	81	365	97	40	2	162	1	81
0010	SANDY BEACH RD	81	965	-	40	2	162	1	81
	TOTAL 0010		3,458	3,567	960		3,964		2,018

TRAFFIC CONTROL SIGNS PCMS

CATEGORY	LOCATION	DAYS	643.1050 TRAFFIC CONTROL SIGNS PCMS EACH	643.1050 TRAFFIC CONTROL SIGNS PCMS DAY	REMARKS
0010	STH 89	10	2	20	BEFORE PROJECT BEGINS IN 2018
0010	LAKE PARK PL	3	2	6	BEFORE STAGE 2 BEGINS
0010	LAKE PARK PL	3	2	6	BEFORE STAGE 3 BEGINS
0010	STH 89	10	2	20	BEFORE PROJECT BEGINS IN 2019
	TOTAL 0010			52	

3

3

ALTERNATE BUSINESS ACCESS SIGNS ITEMS

CATEGORY	STAGES	638.4000 MOVING SMALL SIGN SUPPORTS EACH	* 643.1000 TRAFFIC CONTROL SIGNS FIXED MESSAGE EACH	SF	REMARKS
0030	1 & 2	-	8	96	ALT BUS ACCESS, LT TURN ARROW
0030	1 & 2	-	3	36	ALT BUS ACCESS, RT TURN ARROW
0030	2 &3	2	-	-	ALT BUS ACCESS, LT TURN ARROW
0030	2 &3	3	-	-	ALT BUS ACCESS, RT TURN ARROW
0030	3 &4	2	-	-	ALT BUS ACCESS, LT TURN ARROW
0030	3 &4	1	-	-	ALT BUS ACCESS, RT TURN ARROW
	TOTAL 0030	8		132	

TRAFFIC CONTROL ITEMS - DETOUR

LOCATION	DAYS	* 643.0420 TRAFFIC CONTROL BARRICADES TYPE III EACH	DAYS	* 643.0900 TRAFFIC CONTROL SIGNS EACH	DAYS	* 643.1000 TRAFFIC CONTROL SIGNS FIXED MESSAGE EACH	SF	643.0920 TRAFFIC CONTROL COVERING SIGNS TYPE II EACH
CATEGORY CODE 0010								
2018								
OVERVIEW	164	-	-	21	3,444	-	-	-
SHEET A	164	1	164	58	9,512	4	136	10
SHEET B	164	-	-	64	10,496	-	-	-
SHEET C	164	-	-	56	9,184	-	-	-
SHEET D	164	1	164	37	6,068	2	36	11
2019								
OVERVIEW	84	-	-	21	1,764	-	-	-
SHEET A	84	1	84	58	4,872	4	136	10
SHEET B	84	-	-	64	5,376	-	-	-
SHEET C	84	-	-	56	4,704	-	-	-
SHEET D	84	1	84	37	3,108	2	36	11
TOTAL 0010			496		58,528		344	42

*ADDITIONAL QUANTITIES SHOWN ELSEWHERE

-QUANTITY FOR COVERING SIGNS TYPE II IS BASED ON 1 COVER CYCLE PER CALANDER YEAR AS LISTED IN THE TABLE

PAVEMENT MARKING ITEMS

CATEGORY	STATION	TO	STATION	LOCATION	646.1020 MARKING LINE EPOXY 4-INCH WHITE LF	YELLOW LF	646.5020 MARKING ARROW EPOXY EACH	646.6120 MARKING STOP LINE EPOXY 18-INCH LF	646.7420 MARKING CROSSWALK EPOXY TRANSVERSE LINE 6-INCH LF	646.8120 MARKING CURB EPOXY LF	646.8320 MARKING PARKING STALL EPOXY LF
STAGE 1											
0010	84+40	-	96+00	STH 89	12319	239	-	17	445	-	-
0010	9+55 'MAD'	-	10+55 'MAD'	MADISON ST	-	-	-	36	74	-	-
0010	10+25 'ELS'	-	10+55 'ELS'	E. LAKE ST	-	-	-	27	127	-	-
0010	9+50 'WLS'	-	9+75 'WLS'	W. LAKE ST	-	-	-	20	87	-	-
0010	10+25 'WS'	-	10+50 'WS'	WATER ST	-	-	-	30	-	-	-
0010	9+60 'VL'	-	9+65 'VL'	VETERANS LN	-	-	-	17	-	-	-
STAGE 2											
0010	62+88	-	84+40	STH 89	2065	525	-	-	-	-	-
0010	9+65 'PL'	-	9+70 'PL'	PHILLIPS LN	-	-	-	15	-	-	-
STAGE 3											
0010	44+00	-	62+88	STH 89	1676	418	-	-	359	-	-
0010	9+65 'LPP'	-	10+40 'LPP'	LAKE PARK PL	-	-	-	32	-	-	-
0010	9+65 'MS'	-	9+70 'MS'	MILTON ST	-	-	-	14	-	-	-
0010	10+35 'NCD'	-	11+20 'NCD'	N. CATLIN DR	-	-	2	26	-	-	-
0010	9+65 'KS'	-	9+70 'KS'	KEYES ST	-	-	-	14	-	-	-
0010	9+65 'WBR'	-	9+70 'WBR'	WOODLAND BEACH RD	-	-	-	17	-	-	-
STAGE 4											
0010	29+50	-	44+00	STH 89	1065	1922	-	-	173	-	-
0010	10+50 'PD'	-	10+55 'PD'	PINNACLE DR	-	-	-	16	-	-	-
0010	9+65 'CS'	-	9+70 'CS'	COLUMBUS ST	-	-	-	12	-	-	-
0010	9+40 'SBR'	-	9+70 'SBR'	SANDY BEACH RD	-	-	-	20	-	-	-
0010	9+40 'A'	-	9+45 'A'	CTH A	-	-	-	29	-	-	-
				TOTAL 0010	17,125	3,104	2	342	1,265	0	0
STAGE 1											
0030	85+00	-	96+00	STH 89	-	-	-	-	-	433	354
0030	86+75	-	88+25	PARKING ANNEX	-	-	-	-	-	378	76
0030	10+50 'WS'	-	10+75 'WS'	WATER ST	-	-	-	-	-	46	14
0030	9+30 'VL'	-	9+90 'VL'	VETERANS LN	-	-	-	-	-	109	-
0030	9+30 'WLS'	-	9+80 'WLS'	W. LAKE ST.	-	-	-	-	-	83	-
0030	10+19 'ELS'	-	10+74 'ELS'	E. LAKE ST.	-	-	-	-	-	84	-
				TOTAL 0030	0	0	0	0	0	1,133	444
				TOTAL	17125	3104	2	342	1265	1133	444

3

3

SAWCUTS

CATEGORY	STATION	TO	STATION	LOCATION	690.0150 SAWING ASPHALT LF	690.0250 SAWING CONCRETE LF
STAGE 1						
0010	84+40	-	95+41	STH 89	64	2,583
0010	10+00 'MAD'	-	11+00 'MAD'	MADISON ST	-	72
0010	10+00 'ELS'	-	10+87 'ELS'	E. LAKE ST	56	5
0010	9+32 'WLS'	-	10+00 'WLS'	W. LAKE ST	39	4
0010	10+00 'WS'	-	11+19 'WS'	WATER ST	33	16
0010	9+35 'VL'	-	10+00 'VL'	VETERANS LN	48	5
STAGE 2						
0010	62+88	-	84+40	STH 89	328	297
0010	9+51 'PL'	-	10+00 'PL'	PHILLIPS LN	29	5
0010	10+00 'ELPP'	-	10+55 'ELPP'	E. LAKE PARK PL	17	3
0010	9+47 'WLPP'	-	10+00 'WLPP'	W. LAKE PARK PL	14	2
STAGE 3						
0010	44+00	-	62+88	STH 89	266	261
0010	10+00 'ELPP'	-	10+55 'ELPP'	E. LAKE PARK PL	17	2
0010	9+47 'WLPP'	-	10+00 'WLPP'	W. LAKE PARK PL	14	2
0010	9+36 'MS'	-	10+00 'MS'	MILTON ST	31	3
0010	10+00 'NCD'	-	10+91 'NCD'	N. CATLIN DR	37	4
0010	9+51 'KS'	-	10+00 'KS'	KEYES ST	26	5
0010	10+00 'SCD'	-	10+92 'SCD'	S. CATLIN DR	38	4
0010	9+31 'WBR'	-	10+00 'WBR'	WOODLAND BEACH RD	32	5
STAGE 4						
0010	29+50	-	44+00	STH 89	794	81
0010	10+00 'PD'	-	10+68 'PD'	PINNACLE DR	34	5
0010	9+52 'CS'	-	10+00 'CS'	COLUMBUS ST	22	-
0010	8+80 'SBR'	-	10+00 'SBR'	SANDY BEACH RD	108	9
0010	8+25 'CTH A'	-	10+00 'CTH A'	CTH A	56	5
				TOTAL 0010	2,103	3,378

CONSTRUCTION STAKING

CATEGORY	STATION	TO	STATION	LOCATION	650.4000 CONSTRUCTION STAKING STORM SEWER EACH	650.4500 CONSTRUCTION STAKING SUBGRADE LF	* 650.5000 CONSTRUCTION STAKING BASE LF	650.9920 CONSTRUCTION STAKING SLOPE STAKES LF
STAGE 1								
0010	84+40	-	95+41	STH 89	23	1,101	50	1,101
0010	10+00	-	11+00	MADISON ST	1	-	-	-
0010	10+00	-	10+87	E. LAKE ST	3	87	15	87
0010	9+32	-	10+00	W. LAKE ST	3	68	15	68
0010	10+00	-	11+19	WATER ST	3	119	15	119
0010	86+50	-	88+75	PARKING ANNEX	1	180	-	180
0010	9+35	-	10+00	VETERANS LN	2	65	15	65
STAGE 2								
0010	62+88	-	84+40	STH 89	26	2,152	-	2,152
0010	9+51	-	10+00	PHILLIPS LN	2	49	15	49
0010	10+00	-	10+55	E. LAKE PARK PL	1	55	15	55
0010	9+47	-	10+00	W. LAKE PARK PL	2	53	15	53
STAGE 3								
0010	44+00	-	62+88	STH 89	29	1,888	-	1,888
0010	9+47	-	10+00	W. LAKE PARK PL	1	-	-	-
0010	9+36	-	10+00	MILTON ST	2	64	30	64
0010	10+00	-	10+91	N. CATLIN DR	2	91	42	91
0010	9+51	-	10+00	KEYES ST	2	49	15	49
0010	10+00	-	10+92	S. CATLIN DR	2	92	42	92
0010	9+31	-	10+00	WOODLAND BEACH RD	2	69	30	69
STAGE 4								
0010	29+50	-	44+00	STH 89	26	1,450	-	1,450
0010	10+00	-	10+68	PINNACLE DR	2	68	15	68
0010	9+52	-	10+00	COLUMBUS ST	3	48	14	48
0010	8+80	-	10+00	SANDY BEACH RD	6	120	80	120
0010	8+25	-	10+00	CTH A	2	175	95	175
				TOTAL 0010	146	8,043	518	8,043

* THE DEPARTMENT WILL NOT MEASURE STAKING FOR BASE UNDERLYING CONCRETE PAVEMENT

3

LANDMARK REFERENCE MONUMENTS SPECIAL

CATEGORY	STATION	OFFSET	SPV.0060.02 LANDMARK REFERENCE MONUMENTS SPECIAL EACH	REMARKS
0010	39+85.4	2.7' RT	1	
0010	66+40.6	15.1' RT	1	
		TOTAL 0010	2	

3

EXISTING LAND PARCEL MONUMENTS ITEMS

CATEGORY	STATION *	OFFSET *	LOCATION	SPV.0060.03 RESEARCH AND LOCATE EXISTING LAND PARCEL MONUMENTS EACH **	SPV.0060.04 VERIFTY AND REPLACE EXISTING LAND PARCEL MONUMENTS EACH **
STAGE 1					
0010	88+21	38.5'	STH 89 - LT	1	1
0010	87+71	38.5'	STH 89 - LT	1	1
0010	86+32	33.5'	STH 89 - LT	1	1
0010	84+49	35.5'	STH 89 - LT	1	1
			SUBTOTAL 0010	4	4
STAGE 2					
0010	83+56	30.5'	STH 89 - RT	1	1
0010	82+42	36.5'	STH 89 - RT	1	1
0010	81+71	29.5'	STH 89 - LT	1	1
0010	80+72	29.5'	STH 89 - LT	1	1
0010	80+44	36.5'	STH 89 - RT	1	1
0010	77+72	29.5'	STH 89 - LT	1	1
0010	77+07	29.5'	STH 89 - LT	1	1
0010	76+03	29.5'	STH 89 - LT	1	1
0010	75+21	29.5'	STH 89 - LT	1	1
0010	75+18	36.5'	STH 89 - RT	1	1
0010	74+33	29.5'	STH 89 - LT	1	1
0010	74+19	36.5'	STH 89 - RT	1	1
0010	73+53	36.5'	STH 89 - RT	1	1
0010	72+64	42.0'	STH 89 - LT	1	1
0010	72+15	36.5'	STH 89 - RT	1	1
0010	71+83	29.5'	STH 89 - LT	1	1
0010	70+60	36.5'	STH 89 - RT	1	1
0010	69+56	36.5'	STH 89 - RT	1	1
0010	69+35	29.5'	STH 89 - LT	1	1
0010	68+82	36.5'	STH 89 - RT	1	1
0010	68+66	29.5'	STH 89 - LT	1	1
0010	68+15	36.5'	STH 89 - RT	1	1
0010	67+59	37.0'	STH 89 - RT	1	1
0010	67+23	28.5'	STH 89 - LT	1	1
0010	65+46	36.5'	STH 89 - RT	1	1
0010	64+86	29.5'	STH 89 - LT	1	1
0010	64+81	36.5'	STH 89 - RT	1	1
0010	64+01	37.0'	STH 89 - RT	1	1
			SUBTOTAL 0010	28	28

*ALL STATIONS AND OFFSETS ARE APPROXIMATE
**ADDITIONAL QUANTITIES SHOWN ELSEWHERE

EXISTING LAND PARCEL MONUMENTS ITEMS

CATEGORY	STATION *	OFFSET *	LOCATION	SPV.0060.03 RESEARCH AND LOCATE EXISTING LAND PARCEL MONUMENTS EACH **	SPV.0060.04 VERIFTY AND REPLACE EXISTING LAND PARCEL MONUMENTS EACH **
STAGE 3					
0010	61+71	36.0'	STH 89 - RT	1	1
0010	58+59	29.5'	STH 89 - LT	1	1
0010	58+58	36.5'	STH 89 - RT	1	1
0010	57+76	29.5'	STH 89 - LT	1	1
0010	56+93	36.5'	STH 89 - RT	1	1
0010	53+87	36.5'	STH 89 - RT	1	1
0010	53+80	29.5'	STH 89 - LT	1	1
0010	52+98	29.5'	STH 89 - LT	1	1
0010	50+73	23.5'	STH 89 - LT	1	1
0010	49+10	26.5'	STH 89 - LT	1	1
0010	48+40	36.5'	STH 89 - RT	1	1
0010	48+28	29.5'	STH 89 - LT	1	1
0010	47+45	36.5'	STH 89 - RT	1	1
0010	47+18	29.5'	STH 89 - LT	1	1
0010	46+88	29.5'	STH 89 - LT	1	1
0010	46+50	36.5'	STH 89 - RT	1	1
0010	46+14	29.5'	STH 89 - LT	1	1
0010	45+42	29.5'	STH 89 - LT	1	1
			SUBTOTAL	18	18
STAGE 4					
0010	44+60	36.5'	STH 89 - RT	1	1
0010	43+30	29.5'	STH 89 - LT	1	1
0010	42+33	29.5'	STH 89 - LT	1	1
0010	41+19	36.5'	STH 89 - RT	1	1
0010	41+08	29.5'	STH 89 - LT	1	1
0010	40+82	74.0'	STH 89 - RT	1	1
0010	39+85	29.5'	STH 89 - LT	1	1
0010	39+11	36.5'	STH 89 - RT	1	1
0010	39+11	29.5'	STH 89 - LT	1	1
0010	38+09	36.5'	STH 89 - RT	1	1
0010	37+22	29.5'	STH 89 - LT	1	1
0010	33+57	29.5'	STH 89 - LT	1	1
0010	32+83	46.0'	STH 89 - LT	1	1
0010	32+02	93.5'	STH 89 - LT	1	1
			SUBTOTAL 0010	14	14
			TOTAL 0010	64	64

*ALL STATIONS AND OFFSETS ARE APPROXIMATE
**ADDITIONAL QUANTITIES SHOWN ELSEWHERE

3

3

EXCAVATION, HAULING, AND DISPOSAL OF CONTAMINATED SOIL

SPV.0195.01

CATEGORY	STATION	TO	STATION	LOCATION	EXCAVATION, HAULING, AND DISPOSAL OF CONTAMINATED SOIL TON
STAGE 1					
0010	84+50	-	85+75	STH 89	76
STAGE 4					
0010	35+70	-	37+75	STH 89	646
0010	33+60	-	34+70	STH 89	394
0010	32+30	-	33+60	STH 89	507
				TOTAL 0010	1,623

SPECIAL (05. INLET COVER TYPE 3290A)

CATEGORY	STATION	OFFSET	LOCATION	SPV.0060.05 INLET COVER 3290 A EACH	REMARKS
0010	43+12.9	17.5'	LT	1	STORM SEWER STRUCTURE 33A
0010	43+02.9	17.5'	LT	1	STORM SEWER STRUCTURE 33B
0010	43+12.9	24.5'	RT	1	STORM SEWER STRUCTURE 33C
0010	43+02.9	24.5'	RT	1	STORM SEWER STRUCTURE 33D
			TOTAL 0010	4	

PIPE UNDERDRAIN ITEM

CATEGORY	STATION	TO	STATION	LOCATION	SPV.0090.01 PIPE UNDERDRAIN WRAPPED 6-INCH AND AGGREGATE LF
STAGE 1					
0010	89+75	-	95+40	STH 89 - RT	371
0010	89+75	-	95+40	STH 89 - LT	439
0010	84+90	-	89+75	STH 89 - RT	490
0010	84+90	-	89+75	STH 89 - LT	314
STAGE 2					
0010	68+35	-	84+90	STH 89 - RT	785
0010	68+35	-	84+90	STH 89 - LT	786
0010	62+97	-	68+35	STH 89 - RT	156
0010	62+97	-	68+35	STH 89 - LT	182
STAGE 3					
0010	58+92	-	62+97	STH 89 - RT	125
0010	58+92	-	62+97	STH 89 - LT	124
0010	54+95	-	58+92	STH 89 - RT	258
0010	54+95	-	58+92	STH 89 - LT	259
0010	44+36	-	54+95	STH 89 - RT	498
0010	44+36	-	54+95	STH 89 - LT	498
STAGE 4					
0010	40+19	-	44+36	STH 89 - RT	402
0010	40+19	-	44+36	STH 89 - LT	367
0010	38+18	-	40+19	STH 89 - RT	91
0010	38+18	-	40+19	STH 89 - LT	62
0010	34+77	-	38+18	STH 89 - RT	325
0010	34+77	-	38+18	STH 89 - LT	365
0010	30+00	-	34+77	STH 89 - RT	323
0010	30+00	-	34+77	STH 89 - LT	392
				TOTAL 0010	7,612

STAIR HAND RAILING ITEM

CATEGORY	STATION	OFFSET	LOCATION	SPV.0090.02 STAIR HAND RAILING LF	REMARKS
STAGE 3					
0010	59+62	28'	STH 89 - LT	3	523 S. MAIN ST
			TOTAL 0010	3	

3

3

LIGHTING BASES, POLES, ARMS, FIXTURES AND WIRE

State Project No. 3300-01-73

LIGHT NUMBER	STATION	OFFSET	R/L	SPV.0060.51 SPECIAL CONCRETE BASE - TYPE 5 EACH	SPV.0060.52 DECORATIVE POLE ASSEMBLY TYPE 1 EACH	654.0105 CONCRETE BASES TYPE 5 EACH	SPV.0060.53 DECORATIVE POLE ASSEMBLY TYPE 2 EACH	655.0610 ELECTRICAL WIRE LIGHTING 12 AWG LF
ALL ITEMS ARE CATEGORY 0020								
SL 99	30+28.0	22.5'	RT	1	1	--	--	87
SL 100	31+35.0	23.9'	RT	1	1	--	--	87
SL 101	9+39.9-CTHA	23.0'	LT	1	1	--	--	87
SL 102	32+76.2	21.9'	LT	1	1	--	--	87
SL 103	32+83.1	26.7'	RT	1	1	--	--	87
SL 104	33+64.0	21.5'	LT	1	1	--	--	87
SL 105	34+45.3	28.5'	RT	1	1	--	--	87
SL 106	35+18.5	21.5'	LT	1	1	--	--	87
SL 107	36+05.5	28.5'	RT	1	1	--	--	87
SL 108	36+81.2	21.5'	LT	1	1	--	--	87
SL 109	38+54.0	28.5'	RT	1	1	--	--	87
SL 110	37+83.6	21.5'	LT	1	1	--	--	87
SL 111	39+71.7	28.5'	RT	1	1	--	--	87
SL 112	40+64.7	21.5'	LT	1	1	--	--	87
SL 113	41+70.5	28.5'	RT	1	1	--	--	87
SL 114	42+58.5	21.5'	LT	1	1	--	--	87
SL 115	43+75.6	28.5'	RT	1	1	--	--	87
SL 116	44+81.1	21.5'	LT	1	1	--	--	87
SL 117	45+80.3	28.5'	RT	1	1	--	--	87
SL 118	47+05.7	21.5'	LT	1	1	--	--	87
SL 119	48+59.2	28.5'	RT	1	1	--	--	87
SL 120	50+04.2	21.5'	LT	1	1	--	--	87
SL 121	51+40.1	28.5'	RT	1	1	--	--	87
SL 122	52+69.3	21.5'	LT	1	1	--	--	87
SL 123	53+98.8	28.5'	RT	1	1	--	--	87
SL 124	55+30.7	21.5'	LT	1	1	--	--	87
SL 125	56+23.8	28.5'	RT	1	1	--	--	87
SL 126	57+19.9	21.5'	LT	1	1	--	--	87
SL 127	58+32.1	28.5'	RT	1	1	--	--	87
SL 128	59+34.8	21.5'	LT	1	1	--	--	87
SL 129	60+34.1	28.5'	RT	1	1	--	--	87
SL 130	61+33.4	21.5'	LT	1	1	--	--	87
SL 131	62+50.2	28.5'	RT	1	1	--	--	87
SL 132	63+26.1	21.5'	LT	1	1	--	--	87
SL 133	64+28.1	28.5'	RT	1	1	--	--	87
SL 134	65+20.0	21.5'	LT	1	1	--	--	87
SL 135	66+16.9	28.5'	RT	1	1	--	--	87
SL 136	67+13.8	21.5'	LT	1	1	--	--	87
SL 137	68+20.2	28.5'	RT	1	1	--	--	87
SL 138	69+12.1	21.5'	LT	1	1	--	--	87
SL 139	69+98.5	28.5'	RT	1	1	--	--	87
SL 140	71+00.0	21.5'	LT	1	1	--	--	87
SL 141	72+04.5	28.5'	RT	1	1	--	--	87
SL 142	73+07.5	21.5'	LT	1	1	--	--	87
SL 143	73+94.7	28.5'	RT	1	1	--	--	87
SL 144	75+00.0	21.5'	LT	1	1	--	--	87
SL 145	76+00.0	28.5'	RT	1	1	--	--	87
SL 146	77+00.0	21.5'	LT	1	1	--	--	87
SL 147	77+97.2	28.5'	RT	1	1	--	--	87
SL 148	79+02.4	21.5'	LT	1	1	--	--	87
SL 149	79+97.0	28.5'	RT	1	1	--	--	87
SL 150	80+90.2	21.5'	LT	1	1	--	--	87
SL 151	81+83.5	28.5'	RT	1	1	--	--	87
SL 152	82+73.8	21.7'	LT	1	1	--	--	87
SL 153	83+74.6	22.5'	RT	1	1	--	--	87
SL 154	84+47.9	22.5'	LT	1	1	--	--	87
SL 155	85+45.3	20.5'	RT	1	1	--	--	87
SL 156	86+28.8	21.8'	LT	1	1	--	--	87
SL 157	86+65.8	41.8'	RT	1	1	--	--	87
SL 158	86+89.3	80.4'	RT	1	1	--	--	87
SL 159	87+23.3	26.5'	LT	1	1	--	--	87
SL 160	87+66.0	64.4'	RT	1	1	--	--	87
SL 161	88+40.7	26.5'	LT	1	1	--	--	87
SL 162	88+50.5	50.3'	RT	1	1	--	--	87
SL 163	89+24.1	26.5'	LT	1	1	--	--	87
SL 164	89+31.8	20.5'	RT	1	1	--	--	87
SL 200	90+10.2	26.5'	LT	--	--	1	1	39
SL 201	90+97.5	26.5'	LT	--	--	1	1	39
SL 202	91+69.3	26.5'	LT	--	--	1	1	39
SL 203	92+45.6	26.5'	LT	--	--	1	1	39
SL 204	93+13.6	26.5'	LT	--	--	1	1	39
SL 205	93+88.5	26.5'	LT	--	--	1	1	39
SL 206	94+57.6	26.5'	LT	--	--	1	1	39
SL 207	95+36.7	26.5'	LT	--	--	1	1	39
	TOTALS			**66**	**66**	**8**	**8**	**6054**

* ADDITIONAL QUANTITIES LISTED ELSEWHERE

3

Sheet 15 of 17

HIGHWAY LIGHTING
STH 89 (N/S MAIN ST.)
CITY OF LAKE MILLS
JEFFERSON COUNTY

DESIGN: FORSTER ELECTRICAL ENGINEERING

DATE: 2017-10-10 REV: 1

State Project No. 3300-01-73

LIGHTING CONDUIT AND WIRE

FROM	-	TO	652.0225 * CONDUIT RIGID NONMETALLIC SCH. 40 2-INCH LF	655.0635 * ELECTRICAL WIRE LIGHTING 2 AWG LF	REMARKS
ALL ITEMS ARE CATEGORY 0020					
SL 101	-	SL 102	126	399	
SL 102	-	SL 104	94	404	
SL 104	-	CB 100	147	616	
SL 99	-	SL 100	99	424	
SL 100	-	SL 103	136	572	
CB 103	-	SL 105	154	660	
CB 105	-	CB 100	115	504	
CB 100	-	SL 106	31	152	
SL 106	-	SL 108	163	680	
SL 108	-	SL 110	102	436	
SL 110	-	SL 112	281	1136	
SL 112	-	SL 114	194	820	
SL 114	-	SL 116	223	920	
SL 116	-	SL 118	225	696	
CB 100	-	SL 107	175	728	
SL 107	-	SL 109	246	1012	
SL 109	-	SL 111	117	496	
SL 111	-	SL 113	199	824	
SL 113	-	SL 115	205	848	
SL 115	-	SL 117	205	848	
SL 117	-	SL 119	279	858	
SL 120	-	SL 122	265	816	
SL 122	-	SL 124	262	1076	
SL 124	-	SL 126	189	784	
SL 126	-	SL 128	215	888	Refer to separate material list for RRFB conduit/pull box system also in this vacinity.
SL 128	-	SL 130	199	824	
SL 130	-	CB 200	212	876	
SL 121	-	SL 123	259	798	
SL 123	-	SL 125	225	928	
SL 125	-	SL 127	208	860	
SL 127	-	SL 129	202	836	Refer to separate material list for RRFB conduit/pull box system also in this vacinity.
SL 129	-	SL 131	216	908	
SL 131	-	CB 200	44	220	
CB 200	-	SL 132	144	620	
SL 132	-	SL 134	194	804	
SL 134	-	SL 136	194	804	
SL 136	-	SL 138	199	824	
SL 138	-	SL 140	188	780	
SL 140	-	SL 142	208	645	
CB 200	-	SL 133	196	828	
SL 133	-	SL 135	189	784	
SL 135	-	SL 137	203	840	
SL 137	-	SL 139	178	740	
SL 139	-	SL 141	206	852	
SL 141	-	SL 143	190	591	
SL 144	-	SL 146	200	621	
SL 146	-	SL 148	202	836	
SL 148	-	SL 150	188	780	
SL 150	-	SL 152	185	768	
SL 152	-	SL 154	179	744	
SL 154	-	CB 300	78	356	
SL 145	-	SL 147	197	816	
SL 147	-	SL 149	199	824	
SL 149	-	SL 151	187	776	
SL 151	-	SL 153	173	720	
SL 153	-	CB 300	211	888	
SUB-TOTALS			**10300**	**41088**	

* ADDITIONAL QUANTITIES LISTED ELSEWHERE

3

State Project No. 3300-01-73

LIGHTING CONDUIT AND WIRE

FROM	-	TO	652.0225 * CONDUIT RIGID NONMETALLIC SCH. 40 2-INCH LF	655.0635 * ELECTRICAL WIRE LIGHTING 2 AWG LF	REMARKS
ALL ITEMS ARE CATEGORY 0020					
CB 300	-	SL 156	135	584	Refer to separate material list for RRFB conduit/pull box system also in this vacinity.
SL 156	-	SL 159	93	400	
SL 159	-	SL 161	117	496	
SL 161	-	SL 163	83	360	
SL 163	-	SL 200	88	380	
SL 200	-	SL 201	87	376	
SL 201	-	SL 202	72	316	
SL 202	-	SL 203	76	332	
SL 203	-	SL 204	68	300	
SL 204	-	SL 205	75	328	
SL 205	-	SL 206	69	304	
SL 206	-	SL 207	79	258	
SL 200	-	Proj. Boundary	41	0	Cap conduit below grade. To be extended down W. Lake St. by other.
CB 300	-	SL 155	96	428	
SL 155	-	SL 157	123	520	Refer to separate material list for RRFB conduit/pull box system also in this vacinity.
SL 157	-	SL 158	45	208	
SL 158	-	SL 160	83	360	
SL 160	-	SL 162	86	372	
SL 162	-	SL 164	93	400	
SL 164	-	Proj. Boundary	69	0	Cap conduit below grade. To be extended down E. Lake St. by other.
SUB-TOTALS			**1678**	**6722**	

* ADDITIONAL QUANTITIES LISTED ELSEWHERE

3

State Project No. 3300-01-73

LIGHTING CONTROL

CABINET NUMBER	STATION	OFFSET	R/L	654.0230 CONCRETE CONTROL CABINET BASES TYPE L30 EACH	659.2130 LIGHTING CONTROL CABINET 120/240 30-inch EACH	656.0400.01 ELECTRICAL SERVICE MAIN LUGS ONLY METER PEDESTAL LS	656.0400.02 ELECTRICAL SERVICE MAIN LUGS ONLY METER PEDESTAL LS	656.0400.03 ELECTRICAL SERVICE MAIN LUGS ONLY METER PEDESTAL LS	REMARKS
ALL ITEMS ARE CATEGORY 0020									
CB 100	34+96.8	39.0'	LT	1	1	1			Service voltage to be 120/240V single phase
CB 200	62+63.4	63.5'	RT	1	1		1		Service voltage to be 120/240V single phase
CB 300	85+08.9	45.3'	LT	1	1			1	Service voltage to be 120/208V single phase. Provide 5th meter Jaw at 9 o'clock position. Snap on Jaw is not acceptable. Include IP-20 breaker space in panelboard for future RRFB lights.
TOTALS				**3**	**3**	**1**	**1**	**1**	

Sheet 16 of 17

HIGHWAY LIGHTING
STH 89 (N/S MAIN ST.)
CITY OF LAKE MILLS
JEFFERSON COUNTY

DESIGN: FORSTER ELECTRICAL ENGINEERING

DATE: 2018-01-12 REV: 2

LIGHTING CONDUIT AND WIRE

State Project No. 3300-01-73

FROM	-	TO	652.0225 * CONDUIT RIGID NONMETALLIC SCH. 40 2 INCH LF	652.0215 CONDUIT RIGID NONMETALLIC SCH. 40 1 1/4-Inch LF	655.0615 ELECTRICAL WIRE LIGHTING 10 AWG LF	REMARKS
ALL ITEMS ARE CATEGORY 0030						
Milton Street and Main (future RRFB)						
Utility Pedestal	-	RRFB 1	32			Contact Utility for assistance in installing conduit up into their pedestal. (920)-648-4026)
RRFB 1		RRFB 2	100			2 conduits in run
Water Street and Main (future RRFB)						
CB300	-	RRFB 3	100			
RRFB 3	-	RRFB 4	92			2 conduits in run
Lake Street and Main (Standard Flasher Assembly)						
PB 1		SF 1		15	78	Contact Utility for assistance in installing service conductors into PB1. (920)-648-4026). Contractor to provide UL listed 600 V terminal blocks rated for direct burial use and Al to Cu conductors, to splice service conductor to new cable.
SF 1	-	SF 2		130	423	
SF 1	-	SF 4		85	288	
SF 4		SF 3		105	348	
Madison Street and Main (Standard Flasher Assembly)						
PB 2		PB 3		85	444	Contact Utility to de-energize service conductors near PB2. (920)-648-4026). Contractor to provide UL listed 600 V terminal blocks rated for direct burial use and Al to Cu conductors for all necessary cable splicing. Refer to plan drawing for more detail.
PB 2	-	SF 5		45	168	Contractor to provide UL listed 600 V terminal blocks rated for direct burial use and Al to Cu conductors for all necessary cable splicing. Refer to plan drawing for more detail.
SUB-TOTALS			**324**	**465**	**1749**	

* ADDITIONAL QUANTITIES LISTED ELSEWHERE

BASES, POLES AND ARMS

State Project No. 3300-01-73

POLE NUMBER		STATION	OFFSET	LOCATION	654.0101 CONCRETE BASES TYPE 1 EACH	654.0102 CONCRETE BASES TYPE 2 EACH	204.9060.S.02 REMOVING STOP SIGN FLASHER ASSEMBLY EACH	SPV.0060.01 REMOVE, SALVAGE, AND REINSTALL STOP SIGN FLASHER ASSEMBLY EACH	657.0100 PEDESTAL BASES TYPE 1 EACH	657.0415 TRAFFIC SIGNAL STANDARDS ALUMINUM 11-FT EACH	658.0170 TRAFFIC SIGNAL FACE 1S 8-INCH EACH	655.0610 ELECTRICAL WIRE LIGHTING 12 AWG LF	REMARKS
ALL ITEMS ARE CATEGORY 0030													
RRFB	1	58+56.8	21'	LT	1	--	--	--	--	--	--	--	Concrete base by Contractor. Future RRFB pole assembly and wiring by others.
RRFB	2	58+56.8	28'	RT	1	--	--	--	--	--	--	--	Concrete base by Contractor. Future RRFB pole assembly and wiring by others.
RRFB	3	85+97.4	22.5'	LT	--	1	--	--	--	--	--	--	Concrete base by Contractor. Future RRFB pole assembly and wiring by others.
RRFB	4	85+97.5	22'	RT	1	--	--	--	--	--	--	--	Concrete base by Contractor. Future RRFB pole assembly and wiring by others.
SF	1	90+24.5	55.7'	RT	1	--	1	--	1	1	1	45	Note: The reported station applies to the new assembly, not the existing assembly. Provide and install new Standard Flasher pole assembly, with pedestal base, 11 foot tall pole, and single 8 inch diameter red LED signal light. Light to be mounted at top of pole using single slipfitter offset-serated mounting assembly, omitting pole cap (refer to SDD 9-E-7-5 for more information). All flash electronics, mounting hardware and cable terminations required to complete the installation are considered incidental to the bid items.
SF	2	89+26.8	20.5'	RT	1	--	1	--	1	1	1	45	Note: The reported station applies to the new assembly, not the existing assembly. Provide and install new Standard Flasher pole assembly, with pedestal base, 11 foot tall pole, and single 8 inch diameter red LED signal light. Light to be mounted at top of pole using single slipfitter offset-serated mounting assembly, omitting pole cap (refer to SDD 9-E-7-5 for more information). All flash electronics, mounting hardware and cable terminations required to complete the installation are considered incidental to the bid items.
SF	3	89+37.4	50.0'	LT	1	--	1	--	1	1	1	45	Note: The reported station applies to the new assembly, not the existing assembly. Provide and install new Standard Flasher pole assembly, with pedestal base, 11 foot tall pole, and single 8 inch diameter red LED signal light. Light to be mounted at top of pole using single slipfitter offset-serated mounting assembly, omitting pole cap (refer to SDD 9-E-7-5 for more information). All flash electronics, mounting hardware and cable terminations required to complete the installation are considered incidental to the bid items.
SF	4	90+15.2	26.5'	LT	1	--	1	--	1	1	1	45	Note: The reported station applies to the new assembly, not the existing assembly. Provide and install new Standard Flasher pole assembly, with pedestal base, 11 foot tall pole, and single 8 inch diameter red LED signal light. Light to be mounted at top of pole using single slipfitter offset-serated mounting assembly, omitting pole cap (refer to SDD 9-E-7-5 for more information). All flash electronics, mounting hardware and cable terminations required to complete the installation are considered incidental to the bid items.
SF	5	95+45.5	20.7'	RT	1	--	--	1	--	--	--	--	Note: The reported station applies to the new assembly, not the existing assembly. Contractor to Remove existing Standard Flasher pole assembly and store for reinstallation. Re-install Stop Sign pole assembly on new concrete base. Reuse existing internal wiring and flash electronics.
				TOTALS	8	1	4	1	4	4	4	**180**	

State Project No. 3300-01-73

PULL BOXES

PULL BOX NUMBER	STATION	OFFSET	R/L	653.0140 PULL BOXES STEEL 24x42-Inch EACH
ALL ITEMS ARE CATEGORY 0030				
PB 1	90+39.2	54.7'	RT	1
PB 2	95+15.7	52.8'	RT	1
PB 3	(Existing Pull Box)			
	SHEET TOTALS			2

Sheet 17 of 17

HIGHWAY LIGHTING
STH 89 (N/S MAIN ST.)
CITY OF LAKE MILLS
JEFFERSON COUNTY

DESIGN: FORSTER ELECTRICAL ENGINEERING

DATE: 2017–10–10 REV: 1

3

WATER MAIN, DUCTILE IRON (DI)

CATEGORY	START ALIGNMENT	START STATION	START OFFSET	END ALIGNMENT	END STATION	END OFFSET	SPV.0090.28 6-INCH LF	SPV.0090.29 8-INCH LF	SPV.0090.30 10-INCH LF	SPV.0090.31 12-INCH LF	SPV.0035.27 GRANULAR BACKFILL,WATER MAIN CY
0010	89 PROP	30+00.00	25.5' RT	89 PROP	89+84.8	14.0' RT	---	---	---	5,952	---
	89 PROP	48+45.30	30.5' RT	89 PROP	48+45.30	42.0' RT	---	12	---	---	---
	89 PROP	91+17.40	37.0'RT	89 PROP	91+17.40	40.0'LT	77	---	---	---	---
	89 PROP	93.23.00	37.0'RT	89 PROP	93.23.00	40.0'LT	77	---	---	---	---
	SBR	8+88.50	13.6' LT	89 PROP	34+83.0	31.5' RT	---	144	---	---	---
	CS	9+48.90	5.6' LT	89 PROP	38+21.3	31.5' RT	---	83	---	---	---
	CTH A	8+25.40	24.5' RT	89 PROP	31+68.5	27.5' RT	---	---	191	---	---
	CTH A	9+28.50	60.5' LT	CTH A	9+39.4	16.0' RT	---	78	---	---	---
	PD	10+37.50	10.4' RT	PD	10+46.4	10.4' RT	---	---	---	9	---
	WBR	9+36.00	8.4' RT	89 PROP	44+28.60	31.5' RT	---	---	96	---	---
	KS	9+58.00	11.2' LT	SCD	10+73.70	11.3' LT	---	113	---	---	---
	MS	9+49.70	9.0' LT	89 PROP	59+00	31.5' RT	---	83	---	---	---
	LPP	9+54.00	8.7' RT	LPP	10+37.1	7.8' RT	---	84	---	---	---
	PL	9+59.00	7.5' RT	89 PROP	68+29.0	31.5' RT	---	72	---	---	---
	VL	9+36.40	13.7' RT	89 PROP	84+77.0	25.75' RT	---	88	---	---	---
	WS	11+08.30	8.6' RT	89 PROP	86+48.3	21.3' RT	---	84	---	---	---
	WLS	9+42.00	18.0' LT	89 PROP	89+61.00	15.6' RT	---	---	100	---	---
	UNDISTRIBUTED						50	---	---	---	3,595
						TOTALS	204	841	387	5,961	3,595

ADJUST EXISTING VALVE BOX

CATEGORY	ALI	STATION	OFFSET	SPV.0060.35 EA
0010	89 PROP	62+79.10	40.0' RT	1
	UNDISTRIBUTED			5
			TOTALS	6

WATER MAIN OFFSET

CATEGORY	ALI	STATION	SPV.0060.36 EA
0010	89 PROP	95+00.00	1
	UNDISTRIBUTED		4
		TOTALS	5

FIRE HYDRANT WITH AUXILIARY VALVE AND 6-INCH LEAD

CATEGORY	ALI	STATION	OFFSET	SPV.0060.30 EA
0010	89 PROP	29+93.41	25.5' RT	1
	89 PROP	35+00.00	28.5' RT	1
	89 PROP	38+38.20	28.5' RT	1
	89 PROP	40+69.80	28.5' RT	1
	89 PROP	44+59.50	28.5' RT	1
	89 PROP	48+59.60	28.5' RT	1
	89 PROP	51+53.70	28.5' RT	1
	89 PROP	63+36.50	28.5' RT	1
	89 PROP	73+62.00	28.5' RT	1
	89 PROP	79+04.30	28.5' RT	1
	89 PROP	87+00.00	36.0' RT	1
	89 PROP	89+15.00	24.5' RT	1
	CTH A	8+25.50	31.5' RT	1
	CTH A	9+35.60	31.9' RT	1
	SCD	10+56.50	22.5' LT	1
	NCD	10+57.70	18.5' RT	1
	PL	9+59.90	23.0' RT	1
	VL	9+60.00	25.0' LT	1
			TOTALS	18

CONNECT TO EXISTING WATER MAIN

CATEGORY	ALI	STATION	OFFSET	SPV.0060.26 EA
0010	SBR	8+88.50	13.6' LT	1
	CS	9+48.80	1.1' LT	1
	CTH A	9+28.50	60.5' LT	1
	PD	10+46.40	10.4' RT	1
	WBR	9+36.20	8.9' LT	1
	KS	9+58.00	11.2' LT	1
	SCD	10+84.70	11.4' LT	1
	MS	9+49.80	0.8' LT	1
	LPP	9+54.00	0.9' LT	1
	LPP	10+37.10	7.8' RT	1
	PL	9+54.30	6.2' LT	1
	VL	9+36.50	6.0' RT	1
	WS	11+08.30	8.6' LT	1
	WLS	9+36.50	12.0' LT	1
	WLS	9+36.50	18.0' LT	1
	89 PROP	48+45.30	42.0' RT	1
	89 PROP	89+84.80	14.0' RT	1
	89 PROP	91+17.40	37.0' RT	1
	89 PROP	93+23.00	37.0' RT	1
			TOTALS	19

WATER MAIN GAVE VALVE AND VALVE BOX

CATEGORY	ALI	STATION	OFFSET	SPV.0060.31 6-INCH EA	SPV.0060.32 8-INCH EA	SPV.0060.33 10-INCH EA	SPV.0060.34 12-INCH EA
0010	89 PROP	30+10.80	25.5' RT	---	---	---	1
	89 PROP	31+62.00	27.3' RT	---	---	---	1
	89 PROP	31+68.15	24.0' RT	---	---	1	---
	89 PROP	34+78.60	30.5' RT	---	---	---	1
	89 PROP	38+16.50	30.5' RT	---	---	---	1
	89 PROP	39+87.20	34.5' RT	---	---	---	1
	89 PROP	40+08.20	44.6' RT	---	---	---	1
	89 PROP	40+48.50	31.5' RT	---	---	---	1
	89 PROP	44+40.50	30.5' RT	---	---	---	1
	89 PROP	48+40.27	30.5' RT	---	---	---	1
	89 PROP	48+45.25	39.3' RT	---	1	---	---
	89 PROP	55+01.00	30.5' RT	---	---	---	1
	89 PROP	58+94.90	30.2' RT	---	---	---	1
	89 PROP	62+74.00	30.5' RT	---	---	---	1
	89 PROP	68+27.00	30.5' RT	---	---	---	1
	89 PROP	73+49.20	30.5' RT	---	---	---	1
	89 PROP	78+84.35	30.5' RT	---	---	---	1
	89 PROP	84+43.20	25.0' RT	---	---	---	1
	89 PROP	86+28.50	23.3' RT	---	---	---	1
	89 PROP	89+82.50	14.25' RT	---	---	---	1
	89 PROP	91+17.40	27.0' LT	1	---	---	---
	89 PROP	93+23.00	27.0' LT	1	---	---	---
	CTH A	8+31.60	24.5' RT	---	---	1	---
	CTH A	9+28.80	57.4' LT	---	1	---	---
	SANDY BEACH RD	8+90.75	13.2' LT	---	1	---	---
	COLUMBUS ST	9+54.84	5.4' LT	---	1	---	---
	WOODLAND BEACH RD	9+39.40	8.3' RT	---	---	1	---
	KEYES ST	9+61.20	11.2' LT	---	1	---	---
	S CATLIN DR	10+81.10	10.1' LT	---	1	---	---
	MILTON ST	9+54.75	9.0' LT	---	1	---	---
	LAKE PARK PL	9+58.80	8.7' RT	---	1	---	---
	PHILLIPS LN	9+56.45	7.5' RT	---	1	---	---
	VETERANS LN	9+39.50	13.6' RT	---	1	---	---
	W LAKE ST	9+45.35	10.6' RT	---	---	1	---
			TOTALS	2	10	4	18

EXCAVATION, HAULING AND DISPOSAL OF CONTAMINATED SOIL

CATEGORY	STATION	TO	STATION	LOCATION	SPV.0195.01 TON	COMMENTS
0010	32+30.00	-	33+60.00	LT TO RT LIMITS	88	SITE 7
	35+70.00	-	37+75.00	LT TO RT LIMITS	269	SITE 11
	84+50.00	-	85+75.00	CL TO RT LIMITS	138	SITE 17
	86+80.00	-	87+25.00	CL TO LT LIMITS	33	SITE 25
	93+65.00	-	94+70.00	CL TO LT LIMITS	54	SITE 38
			UNDISTRIBUTED		50	---
			SUBTOTALS (0010)		633	

CATEGORY	STATION	TO	STATION	LOCATION	SPV.0195.01 TON	COMMENTS
0020	32+30.00	-	33+60.00	LT TO RT LIMITS	227	SITE 7
	33+60.00	-	34+70.00	CL TO LT LIMITS	159	SITE 9
	35+70.00	-	37+75.00	LT TO RT LIMITS	623	SITE 11
	84+50.00	-	85+75.00	CL TO RT LIMITS	160	SITE 17
	86+80.00	-	87+25.00	CL TO LT LIMITS	116	SITE 25
			UNDISTRIBUTED		50	---
			SUBTOTALS (0020)		1,335	
				TOTALS	1,968	

3

3

WATER SERVICES SUMMARY

CATEGORY	ALIGNMENT	STATION	OFFSET TO MAIN CONNECTION	SPV.0090.26 WATER SERVICE COPPER, 1-INCH LF	SPV.0090.27 WATER SERVICE COPPER, 2-INCH LF	SPV.0060.28 WATER SERVICE CORPORATION, CURB STOP, AND BOX, 1-INCH EA	SPV.0060.29 WATER SERVICE CORPORATION, CURB STOP, AND BOX, 2-INCH EA	SPV.0060.27 CONNECT TO EXISTING WATER SERVICE EA
0010	CTH A	08+36.65	24.40	10		1	---	1
	CTH A	08+86.00	18.60	59	---	1	---	1
	89 PROP	30+37.00	25.50	59	---	1	---	1
	89 PROP	32+15.60	28.00	6	---	1	---	1
	89 PROP	33+18.30	33.40	65	---	1	---	1
	89 PROP	34+23.40	30.50	7	---	1	---	1
	89 PROP	35+02.30	30.50	7	---	1	---	1
	89 PROP	35+32.85	30.50	61	---	1	---	1
	89 PROP	36+09.50	30.50	61	---	1	---	1
	89 PROP	36+63.70	30.50	7	---	1	---	1
	89 PROP	36+72.40	30.50	61	---	1	---	1
	89 PROP	37+41.30	30.50	7	---	1	---	1
	89 PROP	38+85.00	30.50	7	---	1	---	1
	89 PROP	39+07.80	31.00	61	---	1	---	1
	89 PROP	39+49.50	30.50	7	---	1	---	1
	89 PROP	39+78.00	30.50	62	---	1	---	1
	89 PROP	41+02.00	31.20	61	---	1	---	1
	89 PROP	42+15.00	30.50	7	---	1	---	1
	89 PROP	42+33.60	30.50	61	---	1	---	1
	89 PROP	42+90.00	30.50	61	---	1	---	1
	89 PROP	43+32.50	30.50	7	---	1	---	1
	89 PROP	43+71.00	30.50	61	---	1	---	1
	89 PROP	44+20.00	30.50	7	---	1	---	1
	89 PROP	44+96.00	30.50	7	---	1	---	1
	89 PROP	45+34.50	30.50	61	---	1	---	1
	89 PROP	45+94.50	30.50	61	---	1	---	1
	89 PROP	46+11.90	30.50	7	---	1	---	1
	89 PROP	46+60.30	30.50	61	---	1	---	1
	89 PROP	47+07.00	30.50	7	---	1	---	1
	89 PROP	47+73.00	30.50	7	---	1	---	1
	89 PROP	47+88.20	30.50	61	---	1	---	1
	89 PROP	48+64.20	30.50	61	---	1	---	1
	89 PROP	49+54.50	30.50	61	---	1	---	1
	89 PROP	50+58.20	30.50	61	---	1	---	1
	89 PROP	50+62.50	30.50	7	---	1	---	1
	89 PROP	50+64.90	30.50	7	---	1	---	1
	89 PROP	51+92.40	31.20	62	---	1	---	1
	89 PROP	52+74.80	31.30	62	---	1	---	1
	89 PROP	52+90.70	31.50	6	---	1	---	1
	89 PROP	53+66.50	31.00	62	---	1	---	1
	89 PROP	53+75.90	31.00	7	---	1	---	1
	89 PROP	54+10.00	30.50	7	---	1	---	1
	89 PROP	54+13.00	30.50	62	---	1	---	1
	89 PROP	55+90.30	30.50	8	---	1	---	1
	89 PROP	56+58.40	30.50	7	---	1	---	1
			SUBTOTALS	1,561	---	45	---	45

CONT. ON RIGHT

WATER SERVICES SUMMARY (CONT.)

CATEGORY	ALIGNMENT	STATION	OFFSET TO MAIN CONNECTION	SPV.0090.26 WATER SERVICE COPPER, 1-INCH LF	SPV.0090.27 WATER SERVICE COPPER, 2-INCH LF	SPV.0060.28 WATER SERVICE CORPORATION, CURB STOP, AND BOX, 1-INCH EA	SPV.0060.29 WATER SERVICE CORPORATION, CURB STOP, AND BOX, 2-INCH EA	SPV.0060.27 CONNECT TO EXISTING WATER SERVICE EA
0010 (CONT)	89 PROP	56+70.00	30.50	61	---	1	---	1
	89 PROP	57+60.90	30.50	7	---	1	---	1
	89 PROP	57+70.90	30.50	61	---	1	---	1
	89 PROP	58+40.00	30.50	7	---	1	---	1
	89 PROP	59+98.50	30.50	61	---	1	---	1
	89 PROP	60+02.00	30.50	7	---	1	---	1
	89 PROP	60+14.00	30.50	7	---	1	---	1
	89 PROP	60+70.53	30.50	62	---	1	---	1
	89 PROP	61+54.50	30.50	6	---	1	---	1
	89 PROP	61+57.00	30.50	61	---	1	---	1
	89 PROP	62+21.50	30.50	7	---	1	---	1
	89 PROP	64.73.50	30.50	6	---	1	---	1
	89 PROP	64+78.00	30.50	62	---	1	---	1
	89 PROP	65+25.20	30.50	6	---	1	---	1
	89 PROP	65+47.50	30.50	63	---	1	---	1
	89 PROP	65+69.00	30.50	6	---	1	---	1
	89 PROP	66+86.20	30.50	6	---	1	---	1
	89 PROP	66+95.00	30.50	62	---	1	---	1
	89 PROP	67+93.50	30.50	7	---	1	---	1
	89 PROP	67+97.40	30.50	62	---	1	---	1
	89 PROP	68+47.50	30.50	7	---	1	---	1
	89 PROP	69+29.20	30.50	7	---	1	---	1
	89 PROP	69+93.50	30.50	61	---	1	---	1
	89 PROP	70+19.50	30.50	7	---	1	---	1
	89 PROP	70+43.50	30.50	61	---	1	---	1
	89 PROP	71+67.00	30.50	61	---	1	---	1
	89 PROP	71+93.30	30.50	7	---	1	---	1
	89 PROP	72+49.50	30.50	62	---	1	---	1
	89 PROP	73+00.00	30.50	7	---	1	---	1
	89 PROP	73+47.50	30.50	61	---	1	---	1
	89 PROP	74+00.00	30.50	7	---	1	---	1
	89 PROP	74+65.20	30.50	7	---	1	---	1
	89 PROP	75+07.00	30.50	61	---	1	---	1
	89 PROP	75+71.90	30.50	7	---	1	---	1
	89 PROP	75+84.70	30.50	61	---	1	---	1
	89 PROP	76+35.40	30.50	61	---	1	---	1
	89 PROP	76+89.50	30.50	61	---	1	---	1
	89 PROP	77+04.00	30.50	7	---	1	---	1
	89 PROP	77+58.00	30.50	61	---	1	---	1
	89 PROP	78+07.00	30.50	7	---	1	---	1
	89 PROP	78+26.70	30.50	61	---	1	---	1
	89 PROP	78+63.50	30.50	61	---	1	---	1
	89 PROP	78+70.50	30.50	7	---	1	---	1
	89 PROP	79+37.00	30.50	7	---	1	---	1
	89 PROP	79+56.00	30.50	61	---	1	---	1
			SUBTOTALS	1,503	---	45	---	45

CONT. ON NEXT SHEET

3

3

WATER SERVICES SUMMARY (CONT.)

CATEGORY	ALIGNMENT	STATION	OFFSET TO MAIN CONNECTION	SPV.0090.26 WATER SERVICE COPPER, 1-INCH LF	SPV.0090.27 WATER SERVICE COPPER, 2-INCH LF	SPV.0060.28 WATER SERVICE CORPORATION, CURB STOP, AND BOX, 1-INCH EA	SPV.0060.29 WATER SERVICE CORPORATION, CURB STOP, AND BOX, 2-INCH EA	SPV.0060.27 CONNECT TO EXISTING WATER SERVICE EA
0010 (CONT)	89 PROP	80+01.80	30.50	7	---	1	---	1
	89 PROP	80+21.55	30.50	61	---	1	---	1
	89 PROP	80+61.00	30.50	7	---	1	---	1
	89 PROP	80+63.20	30.50	61	---	1	---	1
	89 PROP	81+35.50	30.50	61	---	1	---	1
	89 PROP	81+61.60	30.50	7	---	1	---	1
	89 PROP	82+00.00	30.50	7	---	1	---	1
	89 PROP	82+55.00	30.00	61	---	1	---	1
	89 PROP	83+00.00	27.50	8	---	1	---	1
	89 PROP	83+52.40	24.50	54	---	1	---	1
	89 PROP	83+54.50	24.50	7	---	1	---	1
	89 PROP	83+95.40	24.50	7	---	1	---	1
	89 PROP	84+39.80	25.00	9	---	1	---	1
	89 PROP	84+71.10	25.00	11	---	1	---	1
	89 PROP	85+79.50	25.50	9	---	1	---	1
	89 PROP	86+08.60	25.00	58	---	1	---	1
	89 PROP	86+20.40	24.00	60	---	1	---	1
	89 PROP	86+52.00	20.90	60	---	1	---	1
	89 PROP	86+93.30	18.00	56	---	1	---	1
	89 PROP	87+46.50	16.00	55	---	1	---	1
	89 PROP	87+72.25	16.00	55	---	1	---	1
	89 PROP	88+11.30	16.00	55	---	1	---	1
	89 PROP	88+36.00	16.00	55	---	1	---	1
	89 PROP	88+54.00	16.00	55	---	1	---	1
	89 PROP	88+79.30	15.50	55	---	1	---	1
	89 PROP	90+31.00	37.00	75	---	1	---	1
	89 PROP	90+41.30	37.00	75	---	1	---	1
	89 PROP	90+50.80	37.00	75	---	1	---	1
	89 PROP	90+88.00	37.00	74	---	1	---	1
	89 PROP	91+61.00	36.80	74	---	1	---	1
	89 PROP	91+72.40	36.70	74	---	1	---	1
	89 PROP	92+02.40	36.50	74	---	1	---	1
	89 PROP	92+39.40	36.70	74	---	1	---	1
	89 PROP	92+62.40	36.50	73	---	1	---	1
	89 PROP	92+75.30	36.50	73	---	1	---	1
	89 PROP	93+65.50	36.50	74	---	1	---	1
	89 PROP	94+33.80	35.90	72	---	1	---	1
	89 PROP	94+55.20	35.70	72	---	1	---	1
	WS	11+02.55	-8.60	41	---	1	---	1
	WLS	9+57.32	10.40	48	---	1	---	1
	UNDISTRIBUTED			100	200	5	7	12
			SUBTOTALS	2,089	200	45	7	52
			TOTALS	5,153	200	135	7	142

WATER MAIN INSULATION

CATEGORY	ALIGNMENT	LOCATION	SPV.0090.39 LF*
0010	89 PROP	85+00 - 86+00	16
	UNDISTRIBUTED		84
		TOTALS	100

* ACTUAL QUANTITY AND LOCATION TO BE FIELD DETERMINED BY ENGINEER

WATER MAIN GASKETS

CATEGORY	LOCATION	SPV.0060.39 FLUOROCARBON EA	SPV.0060.40 NITRILE EA
0010	UNDISTRIBUTED	15	20

BENTONITE CLAY DAMS

CATEGORY	LOCATION	SPV.0060.38 EA
0010	UNDISTRIBUTED	4

UTILITY LINE OPENING (ULO)

CATEGORY	LOCATION	SPV.0060.37 EA
0010	UNDISTRIBUTED	8
0020	UNDISTRIBUTED	4
	TOTALS	12

3

SANITARY SEWER MANHOLE, (4-FOOT DIAMETER)

CATEGORY	STRUCTURE NUMBER	REFERENCE ALIGNMENT	STATION	LOCATION (OFFSET)	FINAL TOP OF CASTING	IE	DEPTH	SPV.0060.43 SANITARY SEWER MANHOLE, (4-FOOT DIAMETER) EA	SPV.0060.44 CONSTRUCT OUTSIDE DROP EA
0020	1	CTH A	8+52.05	0.00	861.03	850.61	10.4	1	---
	2	89 PROP	31+74.28	-26.83	860.26	849.68	10.6	1	---
	3	89 PROP	32+97.92	-9.22	860.08	849.25	10.8	1	---
	4	89 PROP	34+75.00	1.00	858.52	848.70	9.8	1	---
	5	89 PROP	38+13.29	1.01	860.26	847.76	12.5	1	---
	6	89 PROP	40+45.00	5.98	859.53	847.08	12.4	1	---
	7	89 PROP	44+37.00	6.00	858.68	846.00	12.7	1	2
	8	89 PROP	47+50.00	6.00	860.41	845.12	15.3	1	---
	9	89 PROP	51+25.00	6.00	865.96	844.08	21.9	1	---
	10	89 PROP	54+96.00	6.00	864.09	843.05	21.0	1	2
	11	89 PROP	58+92.00	6.00	860.74	841.96	18.8	1	1
	12	89 PROP	62+87.00	6.00	857.87	840.87	17.0	1	1
	13	89 PROP	65+00.00	6.00	859.11	840.24	18.9	1	---
	14	89 PROP	68+37.00	6.00	861.11	839.30	21.8	1	1
	15	89 PROP	72+25.00	6.00	856.40	838.23	18.2	1	---
	16	89 PROP	76+00.00	6.00	843.76	833.90	9.9	1	---
	17	89 PROP	79+60.00	6.00	841.12	831.45	9.7	1	---
	18	89 PROP	83+10.00	6.00	838.99	827.72	11.3	1	---
	19	89 PROP	84+91.98	0.18	833.72	826.00	7.7	1	---
	20	89 PROP	86+33.42	0.00	830.28	821.55	8.7	1	---
	21	89 PROP	86+77.83	-4.64	829.93	821.70	8.2	1	---
	1A	89 PROP	29+75.00	0.00	858.88	850.29	8.6	1	---
	4A	SBR	9+21.52	-0.14	858.04	850.26	7.8	1	---
	5A	CS	9+57.51	2.36	860.40	851.25	9.1	1	---
	7A	WBR	9+45.99	-0.36	859.09	849.25	9.8	1	---
	T	89 PROP	40+43.22	-9.07	859.48	850.89	8.6	1	---
							TOTALS	26	7

3

SANITARY LATERALS

CATEGORY	REFERENCE ALIGNMENT	STATION	OFFSET TO MAIN CONNECTION	SPV.0090.32 SANITARY LATERAL, 4-INCH LF	SPV.0090.33 SANITARY LATERAL, 6-INCH LF	SPV.0060.42 CONNECT TO EXISTING SANITARY SEWER LATERAL EACH
0020	CTH A	8+59.94	1.83	35	---	1
	CTH A	8+81.85	5.23	46	---	1
	CTH A	9+25.63	4.87	61	---	1
	89 PROP	30+34.12	1.82	36	---	1
	89 PROP	32+03.46	-17.50	30	---	1
	89 PROP	32+19.72	-13.80	59	---	1
	89 PROP	33+19.36	-4.15	31	---	1
	89 PROP	34+29.72	1.01	36	---	1
	89 PROP	35+19.24	1.00	36	---	1
	89 PROP	35+38.04	1.00	31	---	1
	89 PROP	36+14.81	1.01	31	---	1
	89 PROP	36+65.55	1.01	37	---	1
	89 PROP	36+76.51	1.01	41	---	1
	89 PROP	37+43.02	1.01	43	---	1
	89 PROP	38+21.04	1.23	41	---	1
	89 PROP	38+85.78	3.05	35	---	1
	89 PROP	39+16.71	3.92	35	---	1
	89 PROP	39+54.03	4.36	33	---	1
	89 PROP	39+83.79	4.71	36	---	1
	89 PROP	41+06.54	5.99	36	---	1
	89 PROP	42+41.00	5.99	38	---	1
	89 PROP	42+91.05	5.99	36	---	1
	89 PROP	43+74.69	6.00	36	---	1
	89 PROP	45+38.98	6.00	43	---	1
	89 PROP	45+97.65	6.00	36	---	1
	89 PROP	46+65.08	6.00	36	---	1
	89 PROP	47+90.56	6.00	36	---	1
	89 PROP	48+66.27	6.00	36	---	1
	89 PROP	48+71.62	6.00	31	---	1
	89 PROP	49+52.24	6.00	31	---	1
	89 PROP	49+54.39	6.00	36	---	1
	89 PROP	50+47.71	6.00	36	---	1
	89 PROP	50+67.87	6.00	31	---	1
	89 PROP	51+10.92	6.00	36	---	1
	89 PROP	51+78.09	6.22	37	---	1
	89 PROP	51+92.46	6.29	31	---	1
	89 PROP	52+21.53	6.41	31	---	1
	89 PROP	52+80.03	6.66	37	---	1
	89 PROP	53+00.77	6.72	31	---	1
	89 PROP	53+68.20	6.47	37	---	1
	89 PROP	53+78.58	6.43	32	---	1
	89 PROP	54+13.84	6.30	31	---	1
	89 PROP	54+20.42	6.28	37	---	1
	89 PROP	55+51.19	6.00	32	---	1
	89 PROP	56+00.00	6.00	36	---	1
	89 PROP	56+03.06	6.00	31	---	1
	89 PROP	56+68.03	6.00	31	---	1
	89 PROP	57+66.83	6.00	32	---	1
	89 PROP	57+78.37	6.00	37	---	1
	89 PROP	58+53.11	6.00	32	---	1
			SUBTOTALS	1,801	---	50

CONT. ON RIGHT

SANITARY LATERALS (CONT.)

CATEGORY	REFERENCE ALIGNMENT	STATION	OFFSET TO MAIN CONNECTION	SPV.0090.32 SANITARY LATERAL, 4-INCH LF	SPV.0090.33 SANITARY LATERAL, 6-INCH LF	SPV.0060.42 CONNECT TO EXISTING SANITARY SEWER LATERAL EACH
0020	89 PROP	58+59.13	6.00	39	---	1
(CONT.)	89 PROP	60+05.86	6.23	38	---	1
	89 PROP	60+08.67	6.23	34	---	1
	89 PROP	60+12.18	6.23	32	---	1
	89 PROP	60+73.42	6.18	37	---	1
	89 PROP	61+63.42	6.10	36	---	1
	89 PROP	61+66.70	6.10	31	---	1
	89 PROP	62+39.14	6.04	31	---	1
	89 PROP	63+11.54	6.04	41	---	1
	89 PROP	64+80.07	6.00	33	---	1
	89 PROP	64+81.65	6.00	36	---	1
	89 PROP	65+22.41	6.22	31	---	1
	89 PROP	65+27.54	6.27	36	---	1
	89 PROP	65+55.13	6.55	31	---	1
	89 PROP	65+76.04	6.75	37	---	1
	89 PROP	67+00.85	7.98	30	---	1
	89 PROP	67+03.16	8.01	38	---	1
	89 PROP	67+45.62	7.61	30	---	1
	89 PROP	67+49.11	7.54	37	---	1
	89 PROP	68+02.66	6.60	31	---	1
	89 PROP	68+05.56	6.55	36	---	1
	89 PROP	68+54.66	6.00	31	---	1
	89 PROP	68+91.98	6.00	36	---	1
	89 PROP	69+44.25	6.00	31	---	1
	89 PROP	70+04.75	6.00	37	---	1
	89 PROP	70+32.23	6.00	35	---	1
	89 PROP	70+55.63	6.00	36	---	1
	89 PROP	71+86.61	6.00	36	---	1
	89 PROP	71+92.56	6.00	31	---	1
	89 PROP	72+48.75	6.00	36	---	1
	89 PROP	72+98.27	6.00	31	---	1
	89 PROP	73+35.29	6.00	36	---	1
	89 PROP	74+19.55	6.00	36	---	1
	89 PROP	74+20.00	6.00	33	---	1
	89 PROP	74+66.09	6.00	31	---	1
	89 PROP	75+14.52	6.00	36	---	1
	89 PROP	75+81.14	6.00	32	---	1
	89 PROP	75+90.15	6.00	36	---	1
	89 PROP	76+71.72	6.24	31	---	1
	89 PROP	76+85.40	6.23	31	---	1
	89 PROP	77+00.58	6.22	37	---	1
	89 PROP	77+69.42	6.16	36	---	1
	89 PROP	77+88.67	6.14	36	---	1
	89 PROP	78+12.07	6.12	31	---	1
	89 PROP	78+67.14	6.08	36	---	1
	89 PROP	78+76.26	6.08	31	---	1
	89 PROP	79+64.16	6.05	36	---	1
	89 PROP	79+69.65	6.12	31	---	1
	89 PROP	80+05.90	6.54	31	---	1
	89 PROP	80+25.23	6.77	39	---	1
			SUBTOTALS	1,710	---	50

CONT. ON RIGHT

SANITARY LATERALS (CONT.)

CATEGORY	REFERENCE ALIGNMENT	STATION	OFFSET TO MAIN CONNECTION	SPV.0090.32 SANITARY LATERAL, 4-INCH LF	SPV.0090.33 SANITARY LATERAL, 6-INCH LF	SPV.0060.42 CONNECT TO EXISTING SANITARY SEWER LATERAL EACH
0020	89 PROP	80+64.29	7.23	30	---	1
(CONT.)	89 PROP	80+66.80	7.26	37	---	1
	89 PROP	81+62.71	8.39	39	---	1
	89 PROP	81+66.72	8.44	28	---	1
	89 PROP	82+40.74	9.22	28	---	1
	89 PROP	82+62.85	8.84	40	---	1
	89 PROP	83+04.08	6.51	30	---	1
	89 PROP	83+58.06	8.13	19	---	1
	89 PROP	83+60.44	8.16	35	---	1
	89 PROP	83+65.28	8.20	18	---	1
	89 PROP	84+23.73	6.40	14	---	1
	89 PROP	84+73.96	1.91	32	---	1
	89 PROP	86+04.20	1.54	34	---	1
	89 PROP	86+14.08	1.02	34	---	1
	89 PROP	86+82.75	-4.99	32	---	1
	89 PROP	86+99.91	-6.19	31	---	1
	89 PROP	87+35.09	-7.78	31	---	1
	89 PROP	87+63.73	-7.92	31	---	1
	89 PROP	87+76.98	-7.99	31	---	1
	89 PROP	87+78.92	-8.00	31	---	1
	89 PROP	87+88.58	-8.05	31	---	1
	89 PROP	88+12.91	-8.17	31	---	1
	89 PROP	88+14.57	-8.17	31	---	1
	89 PROP	88+15.90	-8.18	31	---	1
	89 PROP	88+38.55	-8.29	31	---	1
	89 PROP	88+60.91	-8.40	30	---	1
	89 PROP	88+65.38	-8.43	30	---	1
	89 PROP	88+81.49	-8.51	30	---	1
	89 PROP	90+21.66	-8.76	31	---	1
	89 PROP	90+44.83	-8.71	29	---	1
	89 PROP	90+73.83	-8.63	30	---	1
	89 PROP	90+94.60	-8.58	30	---	1
	89 PROP	91+19.62	-8.52	30	---	1
	89 PROP	91+45.68	-8.46	30	---	1
	89 PROP	91+59.71	-8.42	30	---	1
	89 PROP	91+65.57	-8.29	30	---	1
	89 PROP	92+02.81	-8.32	30	---	1
	89 PROP	92+28.72	-8.25	30	---	1
	89 PROP	92+37.86	-8.23	30	---	1
	89 PROP	92+43.66	-8.21	30	---	1
	89 PROP	92+57.68	-8.18	30	---	1
	89 PROP	92+75.57	-8.15	30	---	1
	89 PROP	93+21.59	-8.02	30	---	1
	89 PROP	94+29.86	-7.59	30	---	1
	89 PROP	94+41.90	-7.75	30	---	1
	89 PROP	94+43.85	-7.75	30	---	1
	UNDISTRIBUTED			200	200	5
			SUBTOTALS	1,585	200	51
			TOTALS	5,095	200	151

3

3

SANITARY SEWER PIPES

CATEGORY	LOCATION (DOWNSTREAM)	LOCATION (UPSTREAM)	IE (DOWNSTREAM)	IE (UPSTREAM)	SLOPE (%)	SPV.0090.34 SANITARY SEWER, POLYVINYL CHLORIDE (PVC), SDR 35, 8-INCH LF	SPV.0090.35 SANITARY SEWER, POLYVINYL CHLORIDE (PVC), SDR 35, 10-INCH LF	SPV.0090.36 SANITARY SEWER, POLYVINYL CHLORIDE (PVC), SDR 35, 12-INCH LF	SPV.0090.38 SANITARY SEWER, POLYVINYL CHLORIDE (PVC), SDR 35, 15-INCH LF	SPV.0090.37 SANITARY SEWER, POLYVINYL CHLORIDE (PVC), SDR 26, 12-INCH LF	SPV.0035.26 GRANULAR BACKFILL, SANITARY SEWER LF	SPV.0060.41 CONNECT TO EXISTING SANITARY SEWER MAIN OR MANHOLE EA
0020	2	1	850.01	850.61	0.49%	123	---	---	---	---	62	---
	3	2	849.35	849.68	0.25%	---	---	131	---	---	66	---
	4	3	848.80	849.25	0.25%	---	---	179	---	---	90	---
	5	4	847.86	848.70	0.25%	---	---	338	---	---	169	---
	6	5	847.18	847.76	0.25%	---	---	232	---	---	116	---
	7	6	846.10	847.08	0.25%	---	---	392	---	---	196	---
	8	7	845.21	846.00	0.25%	---	---	313	---	---	157	---
	9	8	844.18	845.12	0.25%	---	---	375	---	---	188	---
	10	9	843.15	844.08	0.25%	---	---	371	---	---	186	---
	11	10	842.06	843.05	0.25%	---	---	396	---	---	198	---
	12	11	840.97	841.96	0.25%	---	---	395	---	---	198	---
	13	12	840.34	840.87	0.25%	---	---	213	---	---	107	---
	14	13	839.40	840.24	0.25%	---	---	337	---	---	169	---
	15	14	838.33	839.30	0.25%	---	---	---	---	388	194	---
	16	15	834.00	838.23	1.13%	---	---	---	---	375	188	---
	17	16	831.50	833.90	0.67%	---	---	---	---	360	180	---
	18	17	827.77	831.45	1.05%	---	---	349	---	---	175	---
	19	18	826.05	827.72	0.92%	---	---	181	---	---	91	---
	20	19	821.80	826.00	2.97%	---	---	---	---	141	71	---
	EX MH SAN-1	20	819.64	821.55	1.77%	---	---	---	108	---	54	1
	EX MH SAN-6941	21	820.55	821.70	0.40%	287	---	---	---	---	144	1
	12	CONNECT TO EXISTING	846.99	848.86	3.33%	56	---	---	---	---	28	1
	10	CONNECT TO EXISTING	848.79	850.11	2.86%	46	---	---	---	---	23	1
	10	CONNECT TO EXISTING	849.10	849.68	0.74%	78	---	---	---	---	39	1
	11	CONNECT TO EXISTING	847.84	849.58	3.48%	50	---	---	---	---	25	1
	14	CONNECT TO EXISTING	846.15	846.35	0.40%	50	---	---	---	---	25	1
	19	CONNECT TO EXISTING	826.40	826.56	0.26%	60	---	---	---	---	30	1
	2	1A	849.78	850.29	0.25%	---	---	207	---	---	104	---
	4	4A	849.47	850.26	1.00%	79	---	---	---	---	40	1
	5	5A	850.70	851.25	1.27%	43	---	---	---	---	22	1
	7	7A	848.98	849.25	0.45%	60	---	---	---	---	30	1
	7	CONNECT TO EXISTING	851.48	851.64	0.40%	40	---	---	---	---	20	1
	6	T	849.58	850.89	8.66%	---	15	---	---	---	8	1
					TOTALS	1,222	15	4,409	108	1,389	3,572	13

3

STATE OF WISCONSIN
DEPARTMENT OF TRANSPORTATION
TRANSPORTATION PROJECT PLAT TITLE SHEET
3300-01-20
CITY OF LAKE MILLS, MAIN ST.
TOPEL STREET TO MADISON STREET
STH 89
JEFFERSON COUNTY

CONVENTIONAL SYMBOLS

SECTION LINE
QUARTER LINE
SIXTEENTH LINE
NEW REFERENCE LINE
NEW R/W LINE
EXISTING R/W LINE
PROPERTY LINE
LOT, TIE & OTHER MINOR LINES
CORPORATE LIMITS
UNDERGROUND FACILITY (COMMUNICATIONS, ELECTRIC, ETC)
FEE ACQUISITION AREA (HATCHING VARIES BY OWNER)
TEMPORARY LIMITED EASEMENT AREA
EASEMENT AREA (HIGHWAY, PERMANENT LIMITED, OR RESTRICTED DEVELOPMENT)
TRANSMISSION STRUCTURES
BUILDING
NATIONAL GEODETIC SURVEY MONUMENT
SIXTEENTH CORNER MONUMENT

SECTION CORNER
NOTATION FOR COMBUSTABLE FLUIDS
NOTATION FOR HIGH VOLTAGE TRANSMISSION LINES
BRIDGE

R/W MONUMENT (TO BE SET)
NON-MONUMENTED R/W POINT
FOUND CHISELED X
FOUND IRON PIN
VALVE (GAS, WATER, ETC.)
SIGN
OFF-PREMISE SIGN

	COMPENSABLE	NON-COMPENSABLE
ELECTRIC POLE		
TELEPHONE POLE		
PEDESTAL (LABEL TYPE) (TV, TEL, ELEC, ETC.)		

ACCESS CONTROLLED BY ACQUISITION
NO ACCESS (BY STATUTORY AUTHORITY)
ACCESS RESTRICTED (BY PREVIOUS PROJECT OR CONTROL)

PARCEL NUMBER 25
UTILITY NUMBER 40

CONVENTIONAL ABBREVIATIONS

ACCESS RIGHTS	AR	POINT OF COMPOUND CURVE	PCC
ACRES	AC	POINT OF INTERSECTION	PI
AHEAD	AH	PROPERTY LINE	P.L.
ALUMINUM	ALUM	RAILROAD SPIKE	RRSPK
AND OTHERS	ET AL	RECORDED AS	(100')
BACK	BK	REFERENCE LINE	R/L
BLOCK	BLK	REMAINING	REM
CENTERLINE	C/L	RIGHT	RT
CERTIFIED SURVEY MAP	CSM	RIGHT OF WAY	R/W
CONCRETE	CONC	SECTION	SEC
COUNTY	CO	SEPTIC VENT	SEPV
COUNTY TRUNK HIGHWAY	CTH	SQUARE FEET	SF
DISTANCE	DIST	STATE TRUNK HIGHWAY	STH
CORNER	COR	STATION	STA
DOCUMENT NUMBER	DOC	SUBDIVISION	SUBD
EASEMENT	EASE	TANGENT	TAN
EXISTING	EX	TELEPHONE PEDESTAL	TP
GAS VALVE	GV	TEMPORARY LIMITED EASEMENT	TLE
GOVERNMENT LOT	GL		
GRID NORTH	GN	TRANSPORTATION PROJECT PLAT	TPP
HIGHWAY EASEMENT	HE		
IDENTIFICATION	ID	UNITED STATES HIGHWAY	USH
LAND CONTRACT	LC	VOLUME	V
LEFT	LT		
MONUMENT	MON		
NATIONAL GEODETIC SURVEY	NGS		
NUMBER	NO		
OUTLOT	OL		
PAGE	P		
PARKER KALON NAIL	PK		
POINT OF TANGENCY	PT		
PERMANENT LIMITED EASEMENT	PLE		
POINT OF BEGINNING	POB		
POINT OF CURVATURE	PC		

CURVE DATA

LONG CHORD	LC
LONG CHORD BEARING	LCB
RADIUS	R
DEGREE OF CURVE	D
CENTRAL ANGLE OR DELTA	Δ
LENGTH OF CURVE	L
TANGENT	T
DIRECTION AHEAD	DA
DIRECTION BACK	DB

CONVENTIONAL UTILITY SYMBOLS

WATER —W—
GAS —G—
TELEPHONE —T—
OVERHEAD TRANSMISSION LINES —OH—
ELECTRIC —E—
CABLE TELEVISION —TV—
FIBER OPTIC —FO—
SANITARY SEWER —SAN—
STORM SEWER —SS—

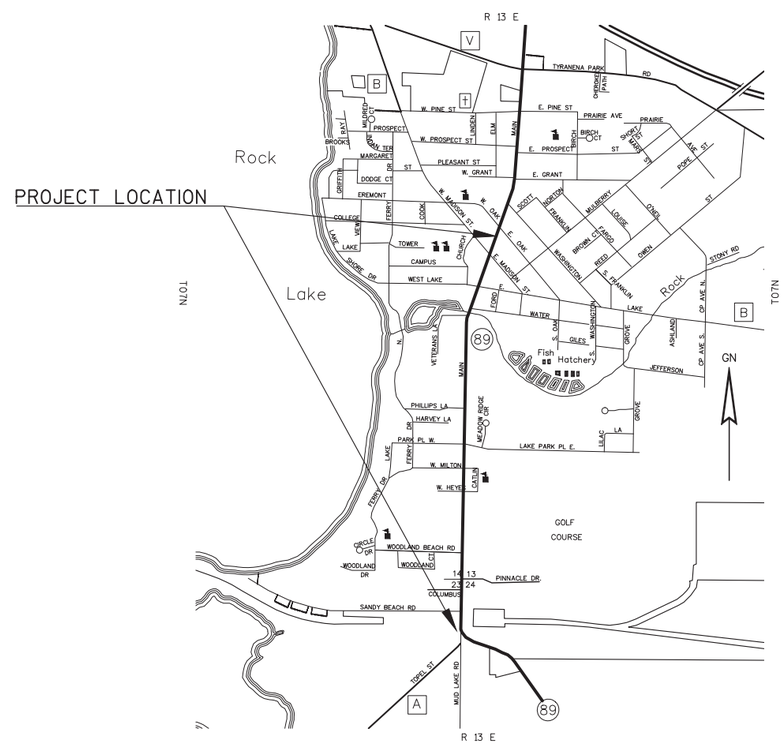

THE NOTES,CONVENTIONAL SIGNS, AND ABBREVIATIONS ARE ASSOCIATED WITH EACH TRANSPORTATION PROJECT PLAT FOR PROJECT 3300-01-20.

NOTES:

POSITIONS SHOWN ON THIS PLAT ARE WISCONSIN COORDINATE REFERENCE SYSTEM COORDINATES (WISCRS), JEFFERSON COUNTY, NAD83(2011), IN US SURVEY FEET. VALUES SHOWN ARE GRID COORDINATES, GRID BEARINGS, AND GRID DISTANCES. GRID DISTANCES MAY BE USED AS GROUND DISTANCES.

RIGHT-OF-WAY MONUMENTS ARE TYPE 2 MONUMENTS (TYPICALLY 3/4" X 24" REBAR) AND WILL BE PLACED PRIOR TO THE COMPLETION OF THE PROJECT.

ALL RIGHT-OF-WAY LINES DEPICTED IN THE NON-ACQUISITION AREAS ARE INTENDED TO RE-ESTABLISH EXISTING RIGHT-OF-WAY LINES AS DETERMINED FROM PREVIOUS PROJECTS, OTHER RECORDED DOCUMENTS, OR FROM CENTERLINE OF EXISTING PAVEMENTS.

RIGHT-OF-WAY BOUNDARIES ARE DEFINED WITH COURSES OF THE PERIMETER OF THE HIGHWAY LANDS REFERENCED TO THE U.S. PUBLIC LAND SURVEY SYSTEM OR OTHER "SURVEYS" OF PUBLIC RECORD.

DIMENSIONING FOR THE NEW RIGHT-OF-WAY IS MEASURED ALONG AND PERPENDICULAR TO THE NEW REFERENCE LINES.

A TEMPORARY LIMITED EASEMENT (TLE) IS A RIGHT FOR CONSTRUCTION PURPOSES, AS DEFINED HEREIN, INCLUDING THE RIGHT TO OPERATE NECESSARY EQUIPMENT THEREON, THE RIGHT OF INGRESS AND EGRESS, AS LONG AS REQUIRED FOR SUCH PUBLIC PURPOSE, INCLUDING THE RIGHT TO PRESERVE, PROTECT, REMOVE, OR PLANT THEREON ANY VEGETATION THAT THE HIGHWAY AUTHORITIES MAY DEEM DESIRABLE. ALL (TLEs) ON THIS PLAT EXPIRE AT THE COMPLETION OF THE CONSTRUCTION PROJECT FOR WHICH THIS INSTRUMENT IS GIVEN.

A PERMANENT LIMITED EASEMENT (PLE) IS A RIGHT FOR CONSTRUCTION AND MAINTENANCE PURPOSES, AS DEFINED HEREIN, INCLUDING THE RIGHT TO OPERATE NECESSARY EQUIPMENT THEREON AND THE RIGHT OF INGRESS AND EGRESS, AS LONG AS REQUIRED FOR SUCH PUBLIC PURPOSE, INCLUDING THE RIGHT TO PRESERVE, PROTECT, REMOVE, OR PLANT THEREON ANY VEGETATION THAT THE HIGHWAY AUTHORITIES MAY DEEM DESIRABLE, BUT WITHOUT PREJUDICE TO THE OWNER'S RIGHTS TO MAKE OR CONSTRUCT IMPROVEMENTS ON SAID LANDS OR TO FLATTEN THE SLOPES, PROVIDING SAID ACTIVITIES WILL NOT IMPAIR OR OTHERWISE ADVERSELY AFFECT THE HIGHWAY FACILITIES.

AN EASEMENT FOR HIGHWAY PURPOSES (HE), AS LONG AS SO USED, INCLUDING THE RIGHT TO PRESERVE, PROTECT, REMOVE, OR PLANT THEREON ANY VEGETATION THAT THE HIGHWAY AUTHORITIES MAY DEEM DESIRABLE.

PROPERTY LINES SHOWN ON THIS PLAT ARE DRAWN FROM DATA DERIVED FROM MAPS AND DOCUMENTS OF PUBLIC RECORD AND/OR EXISTING OCCUPATIONAL LINES. THIS PLAT MAY NOT BE A TRUE REPRESENTATION OF EXISTING PROPERTY LINES, EXCLUDING RIGHT-OF-WAY, AND SHOULD NOT BE USED AS A SUBSTITUTE FOR AN ACCURATE FIELD SURVEY.

FOR THE LATEST ACCESS/DRIVEWAY INFORMATION, CONTACT THE PLANNING UNIT OF THE CITY OF LAKE MILLS.

PARCEL IDENTIFICATION NUMBERS MAY NOT POINT TO ALL AREAS OF ACQUISITION, AS NOTED ON THE SCHEDULE OF LANDS & INTERESTS REQUIRED.

EXISTING ACCESS CONTROL ALONG STH 89 HAS BEEN ESTABLISHED FROM THE RIDGE, PINECREST AND FIRST ADDITION TO PHILLIPS WOODS.

EXISTING HIGHWAY RIGHT-OF-WAY SHOWN HEREIN IS BASED ON THE FOLLOWING POINTS OF REFERENCE:

EXISTING HIGHWAY RIGHT OF WAY FOR STH 89 ESTABLISHED FROM PREVIOUS PROJECTS AND SURVEYS: T0443(5), 3300-02-21, PHILLIPS THIRD ADDITION TO LAKE PARK PLACE, PINECREST SUBDIVISION, PHILLIP'S FIRST ADDITION TO LAKE PARK PLACE, LAKE PARK PLACE, PHILLIP'S SECOND ADDITION TO LAKE PARK PLACE, ORIGINAL PLAT OF LAKE MILLS, FIRST ADDITION TO PHILLIPS WOODS, W.H. RAYNOR'S ADDITION, CSM 3414, CSM 1285, CSM 1286, CSM 1478, CSM 5420, CSM 1631, CSM 2377, CSM 5151 AND PLATS OF SURVEYS S16-101, 246M074, 246M121, S10-176, S19-089, S28-112, S26-024, 246M093, S08-074, S04-146, S14-064, S22-181, 246M012, S22-181, 246M027, S11-038, S10-057, US FISH HATCHERY SURVEY, DOCUMENT NUMBER 1289963, DOCUMENT NUMBER 1292474, VOLUME 1272 PAGE 240 DOCUMENT NUMBER 1071071, VOLUME 854 PAGE 937 DOCUMENT NUMBER 911522.
EXISTING HIGHWAY RIGHT OF WAY FOR MUD LAKE RD. ESTABLISHED FROM PREVIOUS SURVEYS: CSM 1285, CSM 2541, PLAT OF SURVEY S31-212
EXISTING HIGHWAY RIGHT OF WAY FOR SANDY BEACH RD. ESTABLISHED FROM PREVIOUS SURVEYS: PLAT OF SURVEY S04-152 AND PROPERTY IRONS FROM REUBEN F. SCHULZ SURVEY APRIL 11, 1985 REFERENCED IN DOCUMENT NUMBER 1296945
EXISTING HIGHWAY RIGHT OF WAY FOR COLUMBUS ST. ESTABLISHED FROM PREVIOUS SURVEY: PLAT OF SURVEY S28-111
EXISTING HIGHWAY RIGHT OF WAY FOR PINNACLE DR. ESTABLISHED FROM PREVIOUS SURVEYS: THE RIDGE SUBDIVISION
EXISTING HIGHWAY RIGHT OF WAY FOR WOODLAND BEACH RD. ESTABLISHED FROM PREVIOUS SURVEYS: PHILLIPS THIRD ADDITION TO LAKE PARK PLACE
EXISTING HIGHWAY RIGHT OF WAY FOR KEYES ST. ESTABLISHED FROM PREVIOUS SURVEY: PHILLIP'S FIRST ADDITION TO LAKE PARK PLACE
EXISTING HIGHWAY RIGHT OF WAY FOR CATLIN DR. ESTABLISHED FROM PREVIOUS SURVEY: PHILLIP'S SECOND ADDITION TO LAKE PARK PLACE
EXISTING HIGHWAY RIGHT OF WAY FOR MILTON ST. ESTABLISHED FROM PREVIOUS SURVEYS: PHILLIP'S FIRST ADDITION TO LAKE PARK PLACE AND LAKE PARK PLACE
EXISTING HIGHWAY RIGHT OF WAY FOR LAKE PARK PL. ESTABLISHED FROM PREVIOUS SURVEYS: LAKE PARK PLACE AND PHILLIP'S SECOND ADDITION TO LAKE PARK PLACE
EXISTING HIGHWAY RIGHT OF WAY FOR PHILLIPS LANE ESTABLISHED FROM PREVIOUS SURVEY: FIRST ADDITION TO PHILLIPS WOODS
EXISTING HIGHWAY RIGHT OF WAY FOR VETERANS LANE ESTABLISHED FROM PREVIOUS SURVEYS: WILLOW ROAD R/W DEDICATION PER CITY OF LAKE MILLS RESOLUTION OF MARCH 15, 1960, CSM4716, PLAT OF SURVEYS S04-102, S03-115, DOCUMENT NUMBER 1289963
EXISTING HIGHWAY RIGHT OF WAY FOR WATER ST. ESTABLISHED FROM PREVIOUS SURVEYS: ORIGINAL PLAT OF LAKE MILLS, CSM 1631, CSM 1587, CSM 3689, CSM 2896, PLATS OF SURVEYS 246M012, S04-133, 246M134
EXISTING HIGHWAY RIGHT OF WAY FOR LAKE ST. ESTABLISHED FROM PREVIOUS SURVEYS: ORIGINAL PLAT OF LAKE MILLS, PLATS OF SURVEYS 246M012, S04-133, 246M134
EXISTING HIGHWAY RIGHT OF WAY FOR MADISON ST. ESTABLISHED FROM PREVIOUS SURVEYS: ORIGINAL PLAT OF LAKE MILLS, CSM 3643, PLATS OF SURVEYS S11-038, S10-057

RESERVED FOR REGISTER OF DEEDS
PROJECT NUMBER 3300-01-20- 4.03
SHEET 2 OF 2
AMENDMENT NO:

FOR ADDITIONAL INFORMATION REFER TO THE TITLE SHEET, RECORDED IN THE OFFICE OF REGISTER OF DEEDS, IN JEFFERSON COUNTY AS SHEET 2 OF 2 OF DOCUMENT #1374770 AND FILED IN T3 PAGE 71.

SEE SHEET 2 OF 2 FOR DETAILS

1378644
MAP#:
VOLUME: 4 PAGE: 2
Office of Register of Deeds Jefferson County, \
RECEIVED FOR RECORD
01/31/2017 10:50:45 AM
Stacl M. Hoffman
Total Pages 2
REC FEE 25.00
THIS IS A COPY, ORIGINAL DOCUMENT IS FILED AT THE COUNTY REGISTER OF DEEDS

RESERVED FOR REGISTER OF DEEDS
PROJECT NUMBER 3300-01-20 - 4.01
SHEET 1 OF 2
AMENDMENT NO: 1

210

3300-01-20 4.01A1

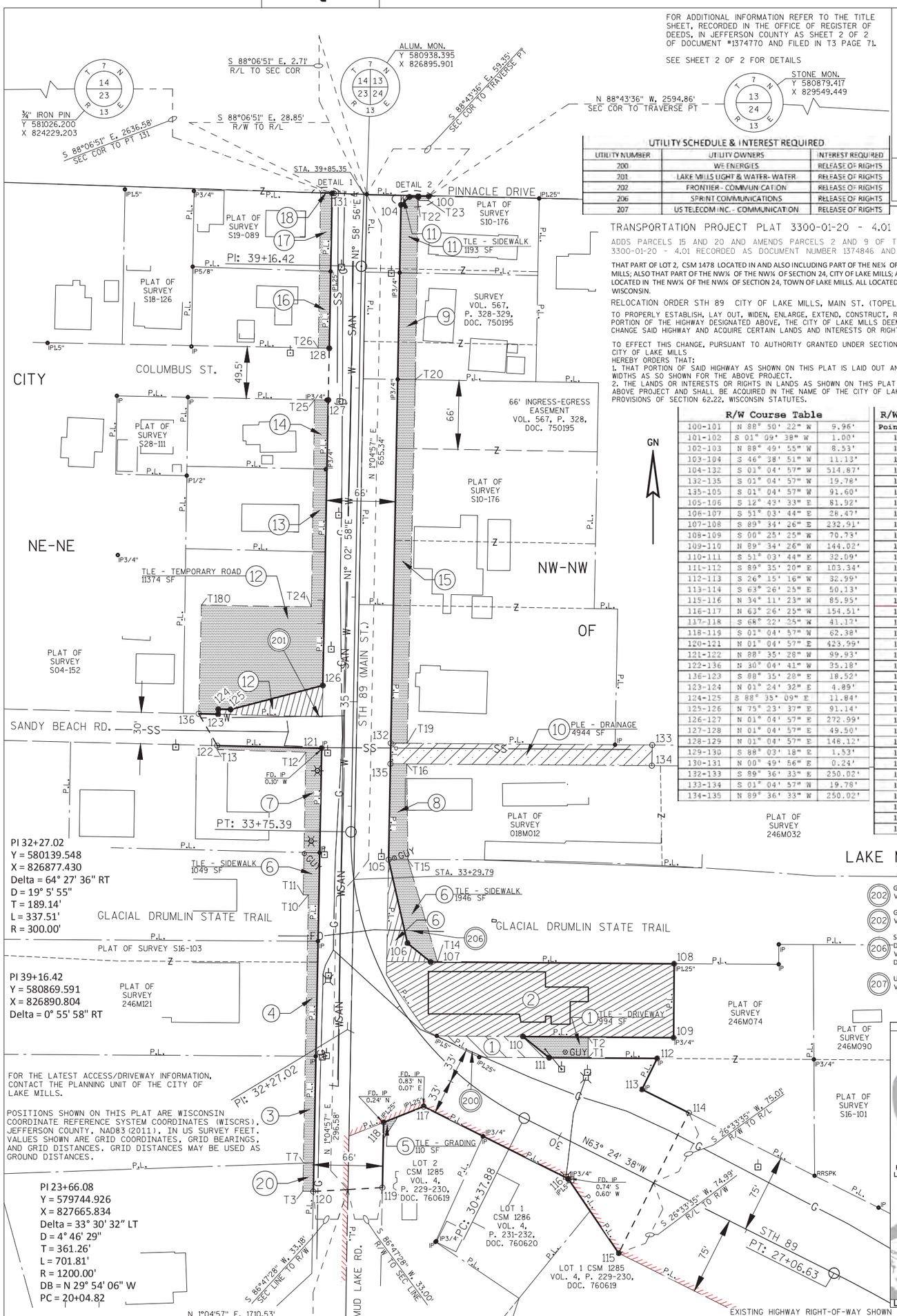

UTILITY SCHEDULE & INTEREST REQUIRED

UTILITY NUMBER	UTILITY OWNERS	INTEREST REQUIRED
200	WE ENERGIES	RELEASE OF RIGHTS
201	LAKE MILLS LIGHT & WATER- WATER	RELEASE OF RIGHTS
202	FRONTIER - COMMUNICATION	RELEASE OF RIGHTS
206	SPRINT COMMUNICATIONS	RELEASE OF RIGHTS
207	US TELECOM INC. - COMMUNICATION	RELEASE OF RIGHTS

TRANSPORTATION PROJECT PLAT 3300-01-20 - 4.01 AMENDMENT 1

ADDS PARCELS 15 AND 20 AND AMENDS PARCELS 2 AND 9 OF TRANSPORTATION PROJECT PLAT 3300-01-20 - 4.01 RECORDED AS DOCUMENT NUMBER 1374846 AND FILED IN VOLUME T3, PAGE 72.

THAT PART OF LOT 2, CSM 1478 LOCATED IN AND ALSO INCLUDING PART OF THE NE¼ OF THE NE¼ OF SECTION 23, CITY OF LAKE MILLS; ALSO THAT PART OF THE NW¼ OF THE NW¼ OF SECTION 24, CITY OF LAKE MILLS; ALSO THAT PART OF LOT 2, CSM 1285 LOCATED IN THE NW¼ OF THE NW¼ OF SECTION 24, TOWN OF LAKE MILLS. ALL LOCATED IN T 7 N, R 13 E, JEFFERSON COUNTY, WISCONSIN.

RELOCATION ORDER STH 89 CITY OF LAKE MILLS, MAIN ST. (TOPEL ST. TO MADISON ST.)

TO PROPERLY ESTABLISH, LAY OUT, WIDEN, ENLARGE, EXTEND, CONSTRUCT, RECONSTRUCT, IMPROVE, OR MAINTAIN A PORTION OF THE HIGHWAY DESIGNATED ABOVE, THE CITY OF LAKE MILLS DEEMS IT NECESSARY TO RELOCATE OR CHANGE SAID HIGHWAY AND ACQUIRE CERTAIN LANDS AND INTERESTS OR RIGHTS IN LANDS FOR THE ABOVE PROJECT.

TO EFFECT THIS CHANGE, PURSUANT TO AUTHORITY GRANTED UNDER SECTION 62.22, WISCONSIN STATUTES, THE CITY OF LAKE MILLS
HEREBY ORDERS THAT:
1. THAT PORTION OF SAID HIGHWAY AS SHOWN ON THIS PLAT IS LAID OUT AND ESTABLISHED TO THE LINES AND WIDTHS AS SO SHOWN FOR THE ABOVE PROJECT.
2. THE LANDS OR INTERESTS OR RIGHTS IN LANDS AS SHOWN ON THIS PLAT ARE REQUIRED BY THE CITY FOR THE ABOVE PROJECT AND SHALL BE ACQUIRED IN THE NAME OF THE CITY OF LAKE MILLS, PURSUANT TO THE PROVISIONS OF SECTION 62.22, WISCONSIN STATUTES.

R/W Course Table

100-101	N 88° 50' 22" W	9.96'
101-102	S 01° 09' 38" W	1.00'
102-103	N 88° 49' 55" W	8.53'
103-104	S 46° 38' 51" W	11.13'
104-132	S 01° 04' 57" W	514.87'
132-135	S 01° 04' 57" W	19.78'
135-105	S 01° 04' 57" W	91.60'
105-106	S 12° 43' 33" E	81.92'
106-107	S 51° 03' 44" E	28.47'
107-108	S 89° 34' 26" E	232.91'
108-109	S 00° 25' 25" W	70.73'
109-110	N 89° 34' 26" W	144.02'
110-111	S 51° 03' 44" E	32.09'
111-112	S 89° 35' 20" E	103.34'
112-113	S 26° 15' 16" W	32.99'
113-114	S 63° 26' 25" E	50.13'
115-116	N 34° 11' 23" W	85.95'
116-117	N 63° 26' 25" W	154.51'
117-118	S 68° 22' 25" W	41.17'
118-119	S 01° 04' 57" W	62.38'
120-121	N 01° 04' 57" E	423.99'
121-122	N 88° 35' 28" W	99.93'
122-136	N 30° 04' 41" W	35.18'
136-123	S 88° 35' 28" E	18.52'
123-124	N 01° 24' 32" E	4.89'
124-125	S 88° 35' 09" E	11.84'
125-126	N 75° 23' 37" E	91.14'
126-127	N 01° 04' 57" E	272.99'
127-128	N 01° 04' 57" E	49.50'
128-129	N 01° 04' 57" E	148.12'
129-130	S 88° 03' 18" E	1.53'
130-131	N 00° 49' 56" E	0.24'
132-133	S 89° 36' 33" E	250.02'
133-134	S 01° 04' 57" W	19.78'
134-135	N 89° 36' 33" W	250.02'

R/W Station & Offset Table

Point No.	Station	Offset
100	39+85.55	62.07'
101	39+85.41	52.10'
102	39+84.41	52.12'
103	39+84.29	43.59'
104	39+76.37	35.77'
105	33+46.05	35.11'
106	32+53.08	34.09'
107	32+23.49	46.56'
108	29+75.82	196.23'
109	29+44.63	132.75'
110	30+84.33	66.45'
111	30+43.77	62.33'
112	29+49.81	107.97'
113	29+49.61	74.98'
114	28+99.49	75.01'
115	28+99.41	74.99'
116	29+74.42	33.03'
117	31+17.93	45.33'
118	31+32.23	82.62'
119	31+02.30	129.99'
120	31+33.25	176.90'
121	34+54.91	29.56'
122	34+55.54	129.49'
123	34+85.54	129.16'
124	34+90.42	129.13'
125	34+90.35	117.29'
126	35+14.94	29.52'
127	37+87.93	29.37'
128	38+37.43	29.34'
129	39+85.06	30.38'
130	39+85.06	28.84'
131	39+85.30	28.85'
132	34+60.91	36.44'
133	34+63.78	286.45'
134	34+44.00	286.44'
135	34+41.13	36.43'
136	34+85.65	147.67'

(202) GENERAL TELEPHONE COMPANY
VOL 369, P 416, DOC 555826 - PARCEL 2

(202) GTE NORTH INCORPORATED
VOL 910, P 936 & 937, DOC 937607 - PARCEL 3

(206) SPRINT COMMUNICATIONS COMPANY
DOC 1332462 - PARCELS 1 & 3
VOL 709, P 559-564, DOC 836574 - PARCELS 4 & 6
DOC 1325614 - PARCELS 7 & 8

(207) US TELECOM INC
VOL 658, P 850-852, DOC 806285 - PARCELS 4 & 6

EXISTING HIGHWAY RIGHT-OF-WAY SHOWN HEREIN IS BASED ON THE FOLLOWING POINTS OF REFERENCE:

EXISTING HIGHWAY RIGHT-OF-WAY FOR STH 89 ESTABLISHED FROM PREVIOUS PROJECTS AND SURVEYS: T0443(5), CSM 3414, CSM 1285, CSM 1286, CSM 1478 AND PLATS OF SURVEYS S16-101, 246M074, 246M121, S10-176, S19-089.

EXISTING HIGHWAY RIGHT-OF-WAY FOR MUD LAKE RD. ESTABLISHED FROM PREVIOUS SURVEYS: CSM 1285, CSM 2541, PLAT OF SURVEY S31-212.

EXISTING HIGHWAY RIGHT-OF-WAY FOR SANDY BEACH RD. ESTABLISHED FROM PREVIOUS SURVEYS: PLAT OF SURVEY S04-152 AND FOUND PROPERTY IRONS FROM REUBEN F. SCHULZ SURVEY APRIL 11, 1985 REFERENCED IN DOCUMENT NUMBER 1296945.

EXISTING HIGHWAY RIGHT-OF-WAY FOR COLUMBUS ST. ESTABLISHED FROM PREVIOUS SURVEY: PLAT OF SURVEY S28-111.

FOUND IRON PINS ARE 1", UNLESS OTHERWISE NOTED.

SCHEDULE OF LANDS & INTERESTS REQUIRED

OWNERS NAMES ARE SHOWN FOR REFERENCE PURPOSES ONLY, AND ARE SUBJECT TO CHANGE PRIOR TO TRANSFER OF LAND INTERESTS TO THE CITY.

PARCEL NUMBER	OWNER(S)	INTEREST REQUIRED	R/W ACRES OR S.F. REQUIRED NEW	EXISTING	TOTAL	TLE ACRES OR S.F.	PLE ACRES OR S.F.
1	VP PROPERTIES V LLC	FEE & TLE	1493		1493	994	
2	TOPEL REVOCABLE TRUST	FEE	18240		18240		
3	TOPELS LAKESIDE PARK, INC	TLE				1021	
4	LAKE MILLS FEED & GRAIN INC	TLE				1069	
5	MARILYN M TRIELOFF	TLE				110	
6	WISCONSIN DEPARTMENT OF NATURAL RESOURCES	FEE & TLE	1326		1326	2995	
7	K TOPEL ENTERPRISES LLC	TLE				1844	
8	DONALD & SHERRY JAEGER	TLE				1554	
9	DELORES J TOPEL	FEE & TLE		3358	3358	1695	
10	UNKNOWN OWNER	PLE					4944
11	CONNIE ZASTROW	FEE & TLE	47	2425	2472	1193	
12	CITY OF LAKE MILLS	FEE & TLE	1590		1590	11374	
13	TOWN OF LAKE MILLS	TLE				1004	
14	JUSTIN TOMCZAK	TLE				851	
15	TOPEL REVOCABLE TRUST	FEE & TLE		7109	7109	5836	
16	DONALD G WOLFGRAM	TLE				779	
17	PAUL P STRUPP	TLE				813	
18	JORDAN O SAPP	TLE				3	
20	TOPEL REVOCABLE TRUST	TLE				272	

ALL AREAS SHOWN IN SQUARE FEET UNLESS OTHERWISE NOTED.
* PURPOSE FOR TLES IS TO REMOVE & REPLACE SIDE WALK, UNLESS NOTED. BUILDINGS WILL NOT BE AFFECTED BY TLES.

TLE Station & Offset Table

Point No.	Station	Offset
T1	30+09.11	78.82'
T2	30+18.00	96.70'
T3	31+37.73	183.86'
T7	31+50.15	164.74'
T10	33+22.07	45.08'
T11	33+22.83	50.00'
T12	34+50.77	44.56'
T13	34+51.72	129.51'
T14	32+19.72	52.31'
T15	33+44.40	53.47'
T16	34+41.31	52.00'
T19	34+61.08	52.00'
T20	38+08.93	53.49'
T22	39+81.16	51.79'
T23	39+81.29	62.12'
T24	35+89.69	41.82'
T25	37+87.95	42.37'
T26	38+37.44	39.77'
T27	39+85.28	41.44'
T180	35+89.79	147.02'

STATE OF WISCONSIN DEPARTMENT OF TRANSPORTATION

I, KEIF S. CALLAWAY PROFESSIONAL LAND SURVEYOR, HEREBY CERTIFY THAT IN FULL COMPLIANCE WITH THE PROVISIONS OF SECTION 84.095 OF THE WISCONSIN STATUTES AND UNDER THE DIRECTION OF THE CITY OF LAKE MILLS, I HAVE MAPPED THIS TRANSPORTATION PROJECT PLAT AND THAT SUCH PLAT CORRECTLY REPRESENTS ALL EXTERIOR BOUNDARIES OF THE SURVEYED LAND.

WISCONSIN Keif S. Callaway S-2607 Sun Prairie, WI LAND SURVEYOR

SIGNATURE: _____ DATE: 1/23/17
PRINT NAME: KEIF S. CALLAWAY
REGISTRATION NUMBER: S-2607

THIS PLAT AND RELOCATION ORDER ARE APPROVED FOR THE CITY OF LAKE MILLS

SIGNATURE: _____ DATE: 1/24/17
PRINT NAME: STEVE WILKE

PLOT DATE : 1/31/2017 1:01 PM
PLOT BY : CLARK, CLYDE J
PLOT NAME : ==========
PLOT SCALE : ==========
PLOT DATE :
FILE NAME : N:\PDS\RW-PLAT\3300\03\040401_A1.DWG
APPRAISAL PLAT DATE : JAN. 23, 2017

TRANSPORTATION PROJECT PLAT NO: 3300-01-20- 4.01 AMENDMENT 1

RELOCATION ORDER STH 89 CITY OF LAKE MILLS, MAIN ST. (TOPEL ST. TO MADISON ST.)

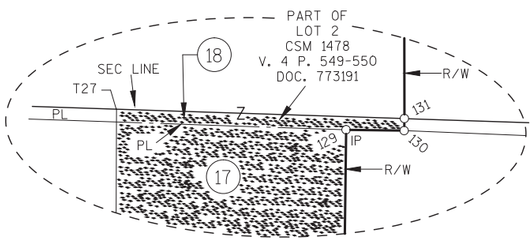

DETAIL 1
(NOT TO SCALE)

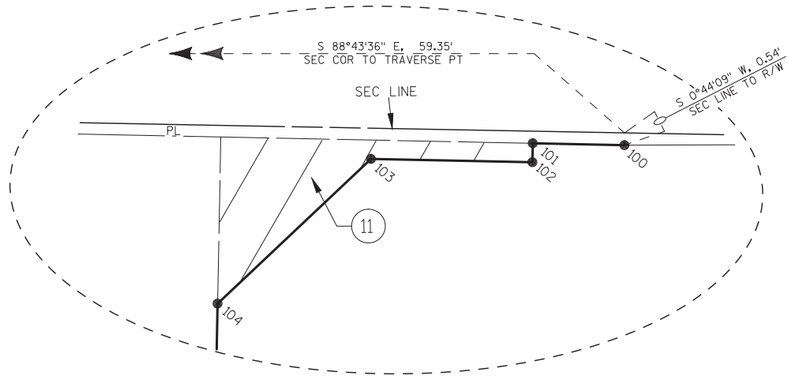

DETAIL 2
(NOT TO SCALE)

TPP NUMBER 3300-01-20 - 4.01
AMENDMENT 1
SHEET 2 OF 2

1374847
MAP#:
VOLUME: T3 PAGE: 73
Office of Register of Deeds Jefferson County,
RECEIVED FOR RECORD
10/26/2016 2:42:58 PM
Staci M. Hoffman
Total Pages 1
REC FEE 25.00
THIS IS A COPY. ORIGINAL DOCUMENT IS FILED AT THE COUNTY REGISTER OF DEEDS

212

RESERVED FOR REGISTER OF DEEDS
PROJECT NUMBER 3300-01-20- 4.02
SHEET 1 OF 2
AMENDMENT NO:---

TRANSPORTATION PROJECT PLAT NO: 3300-01-20- 4.02

THAT PART OF LOTS 1 & 2, CSM 1478; LOTS 1 & 2, BLOCK 11, LOTS 1, 2, 11 & 12, BLOCK 12, LOTS 1, 12 & 13, BLOCK 13 AND LOTS 1 & 2, BLOCK 14 OF PHILLIPS THIRD ADDITION TO LAKE PARK PLACE; LOT 2, BLOCK 10, PHILLIPS FIRST ADDITION TO LAKE PARK PLACE; ALSO THAT PART OF VACATED PICKET STREET AND VACATED ATWOOD STREET, ALL LOCATED IN AND ALSO INCLUDING PART OF THE SE¼ OF THE SE¼ OF SECTION 14; ALSO THAT PART OF LOT 96 OF THE RIDGE, LOTS 1 - 7 OF PINECREST, LOT 15 OF PHILLIP'S SECOND ADDITION TO LAKE PARK PLACE, THE REPLAT OF OUTLOT 8, WHITE PINES ADDITION TO THE RIDGE, ALL LOCATED IN AND ALSO INCLUDING PART OF THE SW¼ OF THE SW¼ OF SECTION 13, ALL IN T 7 N, R 13 E, CITY OF LAKE MILLS, JEFFERSON COUNTY, WISCONSIN.

RELOCATION ORDER STH 89 CITY OF LAKE MILLS, MAIN ST. (TOPEL ST. TO MADISON ST.)

TO PROPERLY ESTABLISH, LAY OUT, WIDEN, ENLARGE, EXTEND, CONSTRUCT, RECONSTRUCT, IMPROVE, OR MAINTAIN A PORTION OF THE HIGHWAY DESIGNATED ABOVE, THE CITY OF LAKE MILLS DEEMS IT NECESSARY TO RELOCATE OR CHANGE SAID HIGHWAY AND ACQUIRE CERTAIN LANDS AND INTERESTS OR RIGHTS IN LANDS FOR THE ABOVE PROJECT.
TO EFFECT THIS CHANGE, PURSUANT TO AUTHORITY GRANTED UNDER SECTION 62.22, WISCONSIN STATUTES, THE CITY OF LAKE MILLS
HEREBY ORDERS THAT:
1. THAT PORTION OF SAID HIGHWAY AS SHOWN ON THIS PLAT IS LAID OUT AND ESTABLISHED TO THE LINES AND WIDTHS AS SO SHOWN FOR THE ABOVE PROJECT.
2. THE LANDS OR INTERESTS OR RIGHTS IN LANDS AS SHOWN ON THIS PLAT ARE REQUIRED BY THE CITY FOR THE ABOVE PROJECT AND SHALL BE ACQUIRED IN THE NAME OF THE CITY OF LAKE MILLS, PURSUANT TO THE PROVISIONS OF SECTION 62.22, WISCONSIN STATUTES.

SCHEDULE OF LANDS & INTERESTS REQUIRED

OWNERS NAMES ARE SHOWN FOR REFERENCE PURPOSES ONLY, AND ARE SUBJECT TO CHANGE PRIOR TO TRANSFER OF LAND INTERESTS TO THE CITY.

PARCEL NUMBER	OWNER(S)	INTEREST REQUIRED	R/W ACRES OR S.F. REQUIRED NEW	EXISTING	TOTAL	TLE ACRES OR S.F.
18	JORDAN O SAPP	TLE				1534
19	STEVEN R & TERESA M NELSON	TLE				1189
21	JENELLE M THURNBAUER	TLE				1110
22	RYAN WILSON	FEE & TLE	51		51	1166
23	OPA & GIGI REVOCABLE TRUST	TLE				3260
24	ROGER L & SUSAN A BUCHHOLTZ	TLE				3585
26	MICHAEL P & DAWN M GANZOW	TLE				1133
27	NICOLE K & JOHN D GULD	TLE				1266
28	JAMES D & ELIZABETH A OERTEL	TLE				1532
29	DONALD A & SARAH MARTIN	FEE & TLE	145		145	1380
31	DALE D & THERESA L WRASSE	TLE				1511
32	LAKE MILLS GOLF LLC	TLE				6592
33	MARC NELSON	TLE				1054
34	FRIEDRICH CJ & LAURA B HAHN JOINT IRREVOCABLE TRUST	TLE				825
36	JOHN A & KATHRYN E WITTWER	TLE				4
37	RICHARD R & BONNIE L PORUBSKY	FEE & TLE	23		23	697
38	JAMES W & KERRY L LATSCH	TLE				723
39	PEGGY A MCGRATH	TLE				1040
41	SHELLI M EGGERT	TLE				1100
42	N CHARLES EGGERT & LAUREN M SCHRADER	TLE				826
43	WAYNE D & JEANETTE E HILLS	TLE				825
44	HERBERT G DIETER JR.	TLE				1098
46	JOHN P & BONNIE J GRAF	TLE				699
47	KAREN J HAMMER	TLE				652
48	JOSHUA J. BUBLITZ	TLE				231
	ALL AREAS SHOWN IN SQUARE FEET UNLESS OTHERWISE NOTED.					
	* PURPOSE FOR TLES IS TO REMOVE & REPLACE SIDE WALK, UNLESS NOTED. BUILDINGS WILL NOT BE AFFECTED BY TLES.					

EXISTING HIGHWAY RIGHT-OF-WAY SHOWN HEREIN IS BASED ON THE FOLLOWING POINTS OF REFERENCE:

EXISTING HIGHWAY RIGHT-OF-WAY FOR STH 89 ESTABLISHED FROM PREVIOUS SURVEYS: PHILLIP'S THIRD ADDITION TO LAKE PARK PLACE, PINECREST SUBDIVISION, PHILLIP'S FIRST ADDITION TO LAKE PARK PLACE, CSM 1478, PLATS OF SURVEYS S28-112, S26-024 AND S19-089.

EXISTING HIGHWAY RIGHT-OF-WAY FOR PINNACLE DRIVE ESTABLISHED FROM PREVIOUS SURVEY: THE RIDGE SUBDIVISION.

EXISTING HIGHWAY RIGHT-OF-WAY FOR WOODLAND BEACH ROAD ESTABLISHED FROM PREVIOUS SURVEY: PHILLIPS THIRD ADDITION TO LAKE PARK PLACE.

FOUND IRON PINS ARE 1", UNLESS OTHERWISE NOTED.

EXISTING ACCESS CONTROL ALONG STH 89 HAS BEEN ESTABLISHED FROM THE RIDGE AND PINECREST SUBDIVISIONS.

SEE SHEET 2 OF 2 FOR STATION/OFFSET TABLES, R/W COURSE TABLE AND DETAILS.

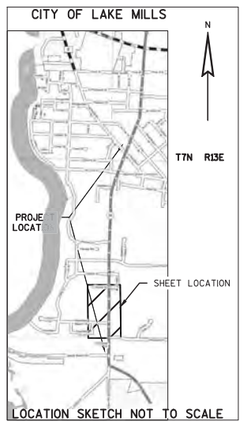

UTILITY SCHEDULE & INTEREST REQUIRED

UTILITY NUMBER	UTILITY OWNERS	INTEREST REQUIRED
202	FRONTIER COMMUNICATION	RELEASE OF RIGHTS
203	LAKE MILLS LIGHT & WATER ELECTRIC	RELEASE OF RIGHTS
208	LAKE MILLS LIGHT & WATER SANITARY SEWER	RELEASE OF RIGHTS

15' DRAINAGE EASEMENT
VOL 11, P 17, DOC 924932 OF PLATS

25' DEDICATED UTILITY EASEMENT
VOL 10 OF PLATS, P 73, DOC 880300

PUBLIC STORM WATER DETENTION EASEMENT
VOL 11, P 17, DOC 924932 OF PLATS

213-214
L=39.09'
LC=35.23'
LCB= S 43°53'42" E
R=25.00'

FOR ADDITIONAL INFORMATION REFER TO THE TITLE SHEET, RECORDED IN THE OFFICE OF REGISTER OF DEEDS, IN JEFFERSON COUNTY AS SHEET 2 OF 2 OF DOCUMENT #1374770 AND FILED IN T3 PAGE 71.

POSITIONS SHOWN ON THIS PLAT ARE WISCONSIN COORDINATE REFERENCE SYSTEM COORDINATES (WISCRS), JEFFERSON COUNTY, NAD83 (2011), IN US SURVEY FEET. VALUES SHOWN ARE GRID COORDINATES, GRID BEARINGS, AND GRID DISTANCES. GRID DISTANCES MAY BE USED AS GROUND DISTANCES.

FOR THE LATEST ACCESS/DRIVEWAY INFORMATION, CONTACT THE PLANNING UNIT OF THE CITY OF LAKE MILLS.

SCALE, FEET
0 50 100

STATE OF WISCONSIN DEPARTMENT OF TRANSPORTATION

I, KEIF S. CALLAWAY, PROFESSIONAL LAND SURVEYOR, HEREBY CERTIFY THAT IN FULL COMPLIANCE WITH THE PROVISIONS OF SECTION 84.095 OF THE WISCONSIN STATUTES AND UNDER THE DIRECTION OF THE CITY OF LAKE MILLS, I HAVE MAPPED THIS TRANSPORTATION PROJECT PLAT AND THAT SUCH PLAT CORRECTLY REPRESENTS ALL EXTERIOR BOUNDARIES OF THE SURVEYED LAND.

WISCONSIN Keif S. Callaway S-2607 Sun Prairie, WI LAND SURVEYOR

SIGNATURE: DATE: 10/25/16
PRINT NAME: KEIF S. CALLAWAY
REGISTRATION NUMBER: S-2607

THIS PLAT AND RELOCATION ORDER ARE APPROVED FOR THE CITY OF LAKE MILLS

SIGNATURE: DATE: 10/25/16
PRINT NAME: STEVE WILKE

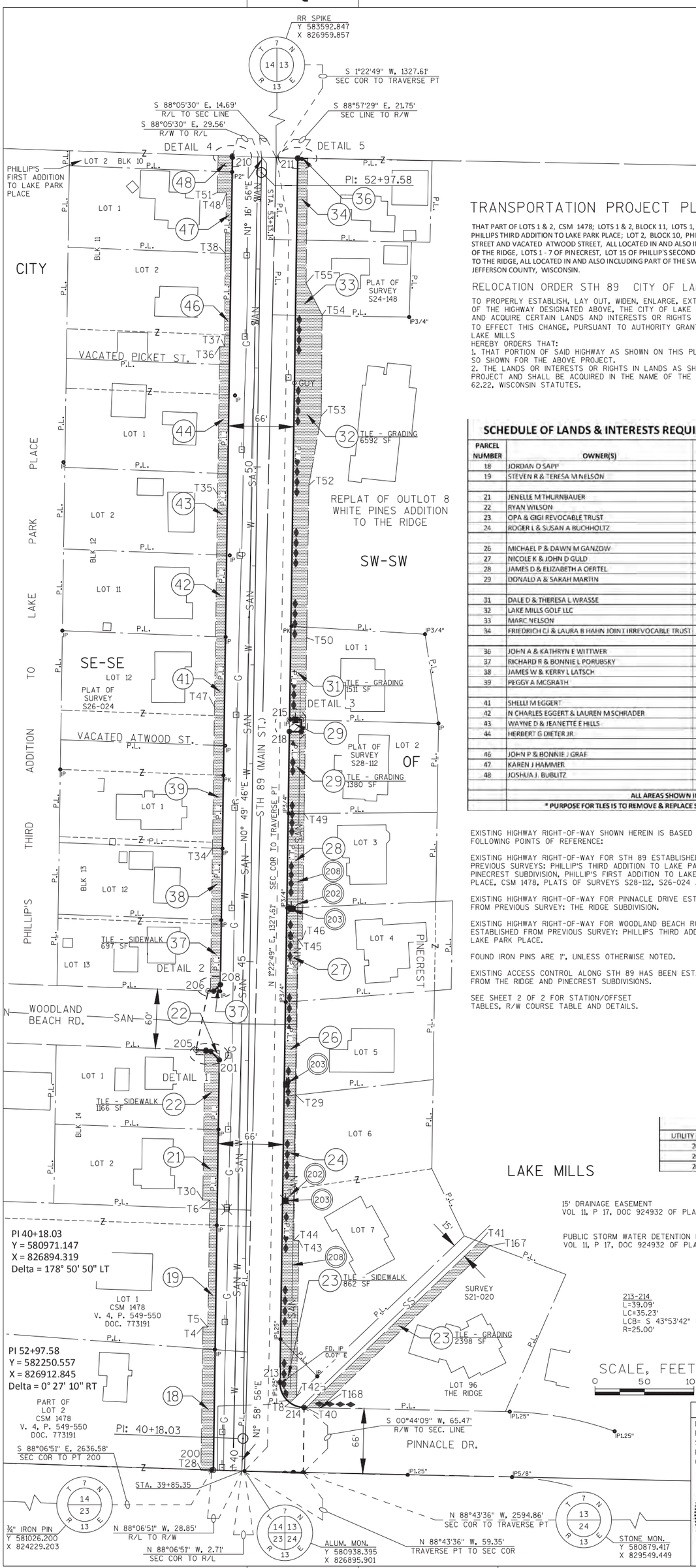

PLOT NAME : PLOT SCALE : ========== PLOT BY : CLARK, CLYDE J PLOT DATE : 10/27/2016 11:07 AM PLOT DATE :

FILE NAME : N:\PDS\RW-PLAT\3300\103\040402.DWG
APPRAISAL PLAT DATE : OCT. 25, 2016

3300-01-20 4.02

TRANSPORTATION PROJECT PLAT NO: 3300-01-20- 4.02

RELOCATION ORDER STH 89 CITY OF LAKE MILLS, MAIN ST. (TOPEL ST. TO MADISON ST.)

GN

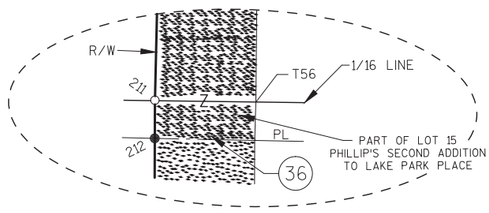

DETAIL 5
(NOT TO SCALE)

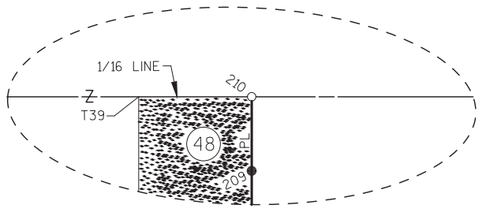

DETAIL 4
(NOT TO SCALE)

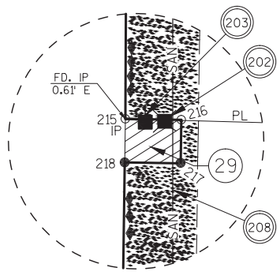

DETAIL 3
(NOT TO SCALE)

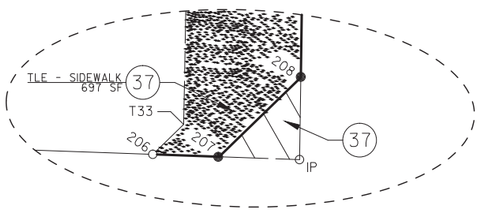

DETAIL 2
(NOT TO SCALE)

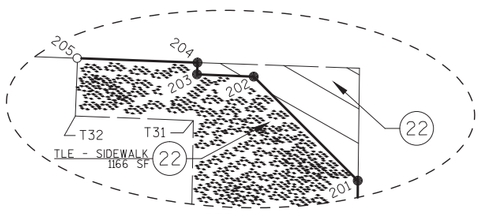

DETAIL 1
(NOT TO SCALE)

TLE Station & Offset Table

Point No.	Station	Offset
T4	41+30.18	42.07'
T5	41+30.15	37.10'
T6	42+58.46	37.10'
T8	40+55.04	46.87'
T28	39+85.28	41.44'
T29	43+65.94	48.45'
T30	42+58.53	44.10'
T31	44+05.06	40.17'
T32	44+05.29	53.14'
T33	44+72.19	39.45'
T34	46+14.17	39.47'
T35	49+71.83	39.45'
T36	51+21.28	39.41'
T37	51+21.31	34.59'
T38	52+15.40	35.28'
T39	53+13.62	43.97'
T40	40+50.30	63.44'
T41	42+20.30	236.29'
T42	40+61.62	53.56'
T43	42+19.10	53.44'
T44	42+19.10	48.45'
T45	45+23.08	48.45'
T46	45+23.11	52.61'
T47	47+56.89	39.48'
T48	52+76.56	34.75'
T49	46+50.61	52.61'
T50	48+28.30	52.62'
T51	52+76.76	44.11'
T52	49+82.24	52.63'
T53	50+52.38	64.05'
T54	51+54.58	63.51'
T55	51+86.47	46.79'
T56	53+13.11	46.34'
T167	42+16.53	246.72'
T168	40+50.22	77.62'

R/W Course Table

200-201	N 00° 49' 56" E	414.33'
201-202	N 45° 00' 00" W	12.29'
202-203	N 87° 43' 10" W	4.75'
203-204	N 02° 02' 26" E	1.00'
204-205	N 87° 57' 34" W	10.02'
205-206	N 11° 31' 44" E	60.83'
206-207	S 87° 57' 34" E	5.54'
207-208	N 45° 50' 38" E	9.51'
208-209	N 00° 49' 56" E	836.18'
209-210	N 01° 19' 42" E	1.01'
211-212	S 01° 19' 42" W	0.39'
212-215	S 00° 49' 56" W	567.05'
215-216	S 88° 27' 38" E	12.00'
216-217	S 00° 49' 56" W	12.00'
217-218	N 89° 10' 04" W	12.00'
218-213	S 00° 49' 56" W	657.85'
213-214	SEE CURVE NOTE	

R/W Station & Offset Table

Point No.	Station	Offset
200	39+85.30	28.85'
201	44+00.22	29.48'
202	44+08.79	38.30'
203	44+08.91	43.04'
204	44+09.91	43.02'
205	44+10.12	53.03'
206	44+69.90	41.74'
207	44+69.78	36.20'
208	44+76.50	29.48'
209	53+12.45	29.56'
210	53+13.46	29.56'
211	53+13.07	36.44'
212	53+12.68	36.44'
213	40+75.34	36.50'
214	40+50.31	61.29'
215	47+45.34	36.54'
216	47+45.19	48.54'
217	47+33.19	48.54'
218	47+33.19	36.54'

TPP NUMBER 3300-01-20 - 4.02
SHEET 2 OF 2

1374770
MAP#:
VOLUME: T3 PAGE: 71
Office of Register of Deeds Jefferson County, WI
RECEIVED FOR RECORD
10/25/2016 8:03:35 AM
Staci M. Hoffman
Total Pages 1
REC FEE 25.00
THIS IS A COPY. ORIGINAL DOCUMENT IS FILED AT THE COUNTY REGISTER OF DEEDS
214

RESERVED FOR REGISTER OF DEEDS
PROJECT NUMBER 3300-01-20 - 4.03
SHEET 1 OF 2
AMENDMENT NO:___

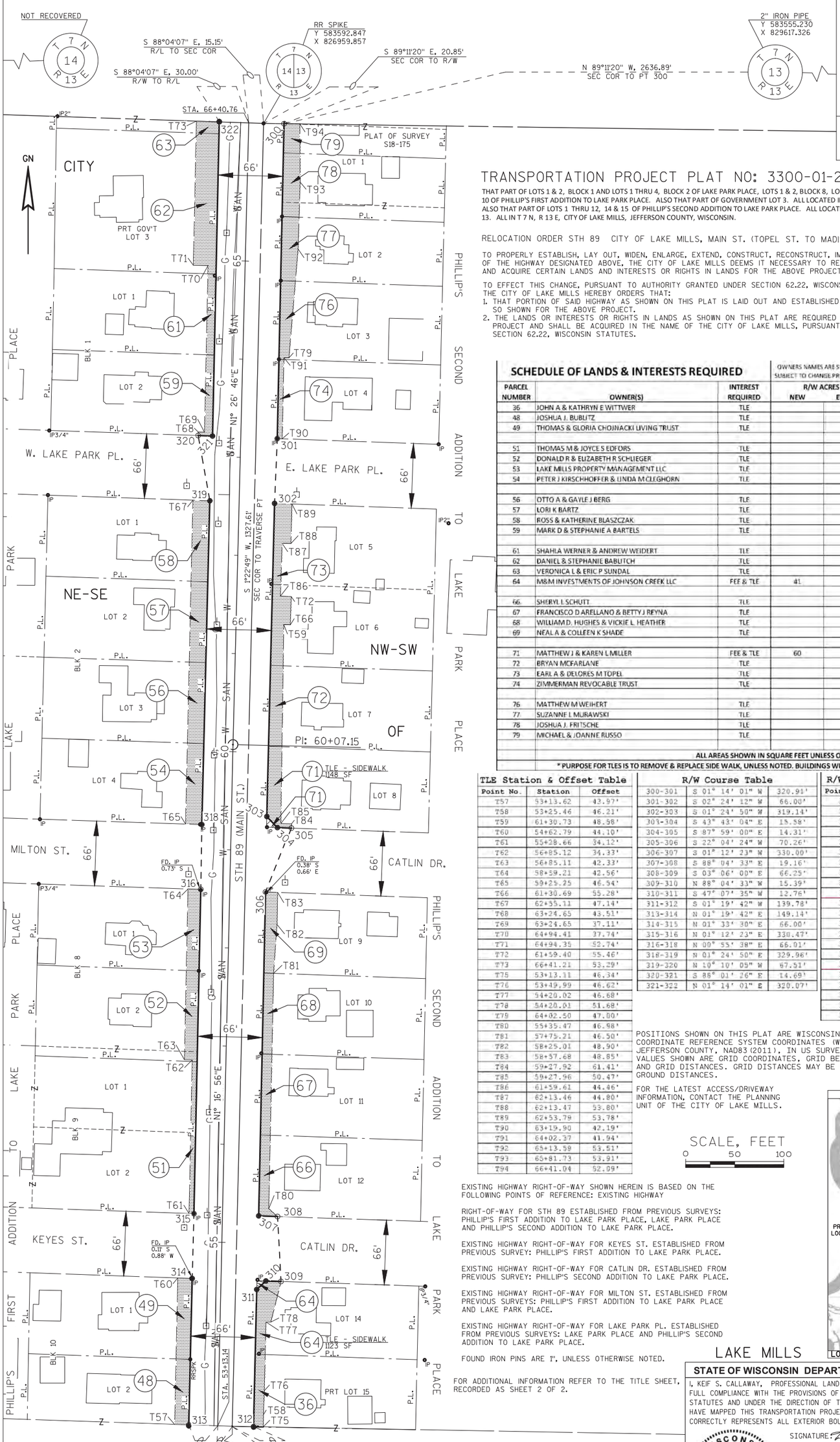

TRANSPORTATION PROJECT PLAT NO: 3300-01-20- 4.03

THAT PART OF LOTS 1 & 2, BLOCK 1 AND LOTS 1 THRU 4, BLOCK 2 OF LAKE PARK PLACE, LOTS 1 & 2, BLOCK 8, LOTS 1 & 2, BLOCK 9 AND LOTS 1 & 2, BLOCK 10 OF PHILLIP'S FIRST ADDITION TO LAKE PARK PLACE. ALSO THAT PART OF GOVERNMENT LOT 3. ALL LOCATED IN THE NE¼ OF THE SE¼ OF SECTION 14. ALSO THAT PART OF LOTS 1 THRU 12, 14 & 15 OF PHILLIP'S SECOND ADDITION TO LAKE PARK PLACE. ALL LOCATED IN THE NW¼ OF THE SW¼ OF SECTION 13. ALL IN T 7 N, R 13 E, CITY OF LAKE MILLS, JEFFERSON COUNTY, WISCONSIN.

RELOCATION ORDER STH 89 CITY OF LAKE MILLS, MAIN ST. (TOPEL ST. TO MADISON ST.)

TO PROPERLY ESTABLISH, LAY OUT, WIDEN, ENLARGE, EXTEND, CONSTRUCT, RECONSTRUCT, IMPROVE, OR MAINTAIN A PORTION OF THE HIGHWAY DESIGNATED ABOVE, THE CITY OF LAKE MILLS DEEMS IT NECESSARY TO RELOCATE OR CHANGE SAID HIGHWAY AND ACQUIRE CERTAIN LANDS AND INTERESTS OR RIGHTS IN LANDS FOR THE ABOVE PROJECT.

TO EFFECT THIS CHANGE, PURSUANT TO AUTHORITY GRANTED UNDER SECTION 62.22, WISCONSIN STATUTES, THE CITY OF LAKE MILLS HEREBY ORDERS THAT:

1. THAT PORTION OF SAID HIGHWAY AS SHOWN ON THIS PLAT IS LAID OUT AND ESTABLISHED TO THE LINES AND WIDTHS AS SO SHOWN FOR THE ABOVE PROJECT.
2. THE LANDS OR INTERESTS OR RIGHTS IN LANDS AS SHOWN ON THIS PLAT ARE REQUIRED BY THE CITY FOR THE ABOVE PROJECT AND SHALL BE ACQUIRED IN THE NAME OF THE CITY OF LAKE MILLS, PURSUANT TO THE PROVISIONS OF SECTION 62.22, WISCONSIN STATUTES.

SCHEDULE OF LANDS & INTERESTS REQUIRED

OWNERS NAMES ARE SHOWN FOR REFERENCE PURPOSES ONLY, AND ARE SUBJECT TO CHANGE PRIOR TO TRANSFER OF LAND INTERESTS TO THE CITY.

PARCEL NUMBER	OWNER(S)	INTEREST REQUIRED	R/W ACRES OR S.F. REQUIRED NEW	EXISTING	TOTAL	TLE ACRES OR S.F.
36	JOHN A & KATHRYN E WITTWER	TLE				740
48	JOSHUA J. BUBLITZ	TLE				965
49	THOMAS & GLORIA CHOJNACKI LIVING TRUST	TLE				1204
51	THOMAS M & JOYCE S EDFORS	TLE				774
52	DONALD R & ELIZABETH R SCHLIEGER	TLE				1189
53	LAKE MILLS PROPERTY MANAGEMENT LLC	TLE				1081
54	PETER J KIRSCHHOFFER & LINDA M CLEGHORN	TLE				1374
56	OTTO A & GAYLE J BERG	TLE				1387
57	LORI K BARTZ	TLE				1401
58	ROSS & KATHERINE BLASZCZAK	TLE				1414
59	MARK D & STEPHANIE A BARTELS	TLE				706
61	SHAHLA WERNER & ANDREW WEIDERT	TLE				683
62	DANIEL & STEPHANIE BABLITCH	TLE				3207
63	VERONICA L & ERIC P SUNDAL	TLE				279
64	M&M INVESTMENTS OF JOHNSON CREEK LLC	FEE & TLE	41		41	1123
66	SHERYL L SCHUTT	TLE				867
67	FRANCISCO D ARELLANO & BETTY J REYNA	TLE				827
68	WILLIAM D. HUGHES & VICKIE L. HEATHER	TLE				823
69	NEAL A & COLLEEN K SHADE	TLE				962
71	MATTHEW J & KAREN L MILLER	FEE & TLE	60		60	1148
72	BRYAN MCFARLANE	TLE				1093
73	EARL A & DELORES M TOPEL	TLE				2255
74	ZIMMERMAN REVOCABLE TRUST	TLE				406
76	MATTHEW M WEIHERT	TLE				992
77	SUZANNE L MURAWSKI	TLE				1084
78	JOSHUA J. FRITSCHE	TLE				1131
79	MICHAEL & JOANNE RUSSO	TLE				494

ALL AREAS SHOWN IN SQUARE FEET UNLESS OTHERWISE NOTED.

* PURPOSE FOR TLES IS TO REMOVE & REPLACE SIDE WALK, UNLESS NOTED. BUILDINGS WILL NOT BE AFFECTED BY TLES.

TLE Station & Offset Table

Point No.	Station	Offset
T57	53+13.62	42.97'
T58	53+25.46	46.21'
T59	61+30.73	48.58'
T60	54+62.79	44.10'
T61	55+28.66	34.12'
T62	56+85.12	34.33'
T63	56+85.11	42.33'
T64	58+59.21	42.56'
T65	59+25.25	46.54'
T66	61+30.69	55.28'
T67	62+55.11	47.14'
T68	63+24.65	43.51'
T69	63+24.65	37.11'
T70	64+94.41	37.74'
T71	64+94.35	52.74'
T72	61+59.40	55.46'
T73	66+41.21	53.29'
T75	53+13.11	46.34'
T76	53+49.99	46.62'
T77	54+20.02	46.68'
T78	54+20.01	51.68'
T79	64+02.50	47.00'
T80	55+35.47	46.98'
T81	57+75.21	46.50'
T82	58+25.01	48.90'
T83	58+57.68	48.85'
T84	59+27.92	61.41'
T85	59+27.96	50.47'
T86	61+59.61	44.46'
T87	62+13.46	44.80'
T88	62+13.47	53.80'
T89	62+53.79	53.78'
T90	63+19.90	42.19'
T91	64+02.37	41.94'
T92	65+13.59	53.51'
T93	65+81.73	53.91'
T94	66+41.04	52.09'

R/W Course Table

300-301	S 01° 14' 01" W	320.91'
301-302	S 02° 24' 12" W	66.00'
302-303	S 01° 24' 50" W	319.14'
303-304	S 43° 43' 04" E	15.58'
304-305	S 87° 59' 00" E	14.31'
305-306	S 22° 04' 24" W	70.26'
306-307	S 01° 12' 23" W	330.00'
307-308	S 88° 04' 33" E	19.16'
308-309	S 03° 06' 00" E	66.25'
309-310	N 88° 04' 33" W	15.39'
310-311	S 47° 07' 35" W	12.76'
311-312	S 01° 19' 42" W	139.78'
313-314	N 01° 19' 42" E	149.14'
314-315	N 01° 33' 30" E	66.00'
315-316	N 01° 12' 23" E	330.47'
316-318	N 00° 55' 38" E	66.01'
318-319	N 01° 24' 50" E	329.96'
319-320	N 10° 10' 05" W	67.51'
320-321	S 88° 01' 26" E	14.69'
321-322	N 01° 14' 01" E	320.07'

R/W Station & Offset Table

Point No.	Station	Offset
300	66+40.86	36.00'
301	63+19.95	37.19'
302	62+53.96	36.09'
303	59+34.72	36.06'
304	59+23.71	47.07'
305	59+23.52	61.39'
306	58+57.84	36.45'
307	55+27.84	36.88'
308	55+27.62	56.04'
309	54+61.56	61.10'
310	54+61.73	45.71'
311	54+52.85	36.56'
312	53+13.07	36.44'
313	53+13.46	29.56'
314	54+62.60	29.44'
315	55+28.60	29.12'
316	58+59.07	29.55'
318	59+25.08	29.96'
319	62+54.95	29.91'
320	63+21.08	43.51'
321	63+20.94	28.82'
322	66+41.01	30.00'

POSITIONS SHOWN ON THIS PLAT ARE WISCONSIN COORDINATE REFERENCE SYSTEM COORDINATES (WISCRS), JEFFERSON COUNTY, NAD83 (2011), IN US SURVEY FEET. VALUES SHOWN ARE GRID COORDINATES, GRID BEARINGS, AND GRID DISTANCES. GRID DISTANCES MAY BE USED AS GROUND DISTANCES.

FOR THE LATEST ACCESS/DRIVEWAY INFORMATION, CONTACT THE PLANNING UNIT OF THE CITY OF LAKE MILLS.

SCALE, FEET
0 50 100

EXISTING HIGHWAY RIGHT-OF-WAY SHOWN HEREIN IS BASED ON THE FOLLOWING POINTS OF REFERENCE: EXISTING HIGHWAY

RIGHT-OF-WAY FOR STH 89 ESTABLISHED FROM PREVIOUS SURVEYS: PHILLIP'S FIRST ADDITION TO LAKE PARK PLACE, LAKE PARK PLACE AND PHILLIP'S SECOND ADDITION TO LAKE PARK PLACE.

EXISTING HIGHWAY RIGHT-OF-WAY FOR KEYES ST. ESTABLISHED FROM PREVIOUS SURVEY: PHILLIP'S FIRST ADDITION TO LAKE PARK PLACE.

EXISTING HIGHWAY RIGHT-OF-WAY FOR CATLIN DR. ESTABLISHED FROM PREVIOUS SURVEY: PHILLIP'S SECOND ADDITION TO LAKE PARK PLACE.

EXISTING HIGHWAY RIGHT-OF-WAY FOR MILTON ST. ESTABLISHED FROM PREVIOUS SURVEYS: PHILLIP'S FIRST ADDITION TO LAKE PARK PLACE AND LAKE PARK PLACE.

EXISTING HIGHWAY RIGHT-OF-WAY FOR LAKE PARK PL. ESTABLISHED FROM PREVIOUS SURVEYS: LAKE PARK PLACE AND PHILLIP'S SECOND ADDITION TO LAKE PARK PLACE.

FOUND IRON PINS ARE 1", UNLESS OTHERWISE NOTED.

FOR ADDITIONAL INFORMATION REFER TO THE TITLE SHEET, RECORDED AS SHEET 2 OF 2.

PI 60+07.15
Y = 582959.948
X = 826928.723
Delta = 0° 09' 50" RT

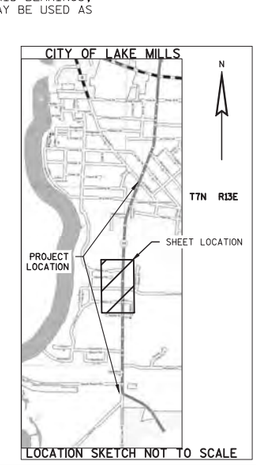

LAKE MILLS

STATE OF WISCONSIN DEPARTMENT OF TRANSPORTATION

I, KEIF S. CALLAWAY, PROFESSIONAL LAND SURVEYOR, HEREBY CERTIFY THAT IN FULL COMPLIANCE WITH THE PROVISIONS OF SECTION 84.095 OF THE WISCONSIN STATUTES AND UNDER THE DIRECTION OF THE CITY OF LAKE MILLS, I HAVE MAPPED THIS TRANSPORTATION PROJECT PLAT AND THAT SUCH PLAT CORRECTLY REPRESENTS ALL EXTERIOR BOUNDARIES OF THE SURVEYED LAND.

WISCONSIN Keif S. Callaway S-2607 Sun Prairie, WI LAND SURVEYOR

SIGNATURE: _____ DATE: 10/20/16
PRINT NAME: KEIF S. CALLAWAY
REGISTRATION NUMBER: S-2607

THIS PLAT AND RELOCATION ORDER ARE APPROVED FOR THE CITY OF LAKE MILLS

SIGNATURE: _____ DATE: 10/20/16
PRINT NAME: STEVE WILKE

3300-01-20 4.03
PLOT NAME : PLOT SCALE : ==========
PLOT BY : CLARK, CLYDE J
PLOT DATE : 10/25/2016 2:39 PM
PLOT DATE :
FILE NAME : N:\PDS\RW-PLAT\3300\03\040403.DWG
APPRAISAL PLAT DATE : OCT. 20, 2016

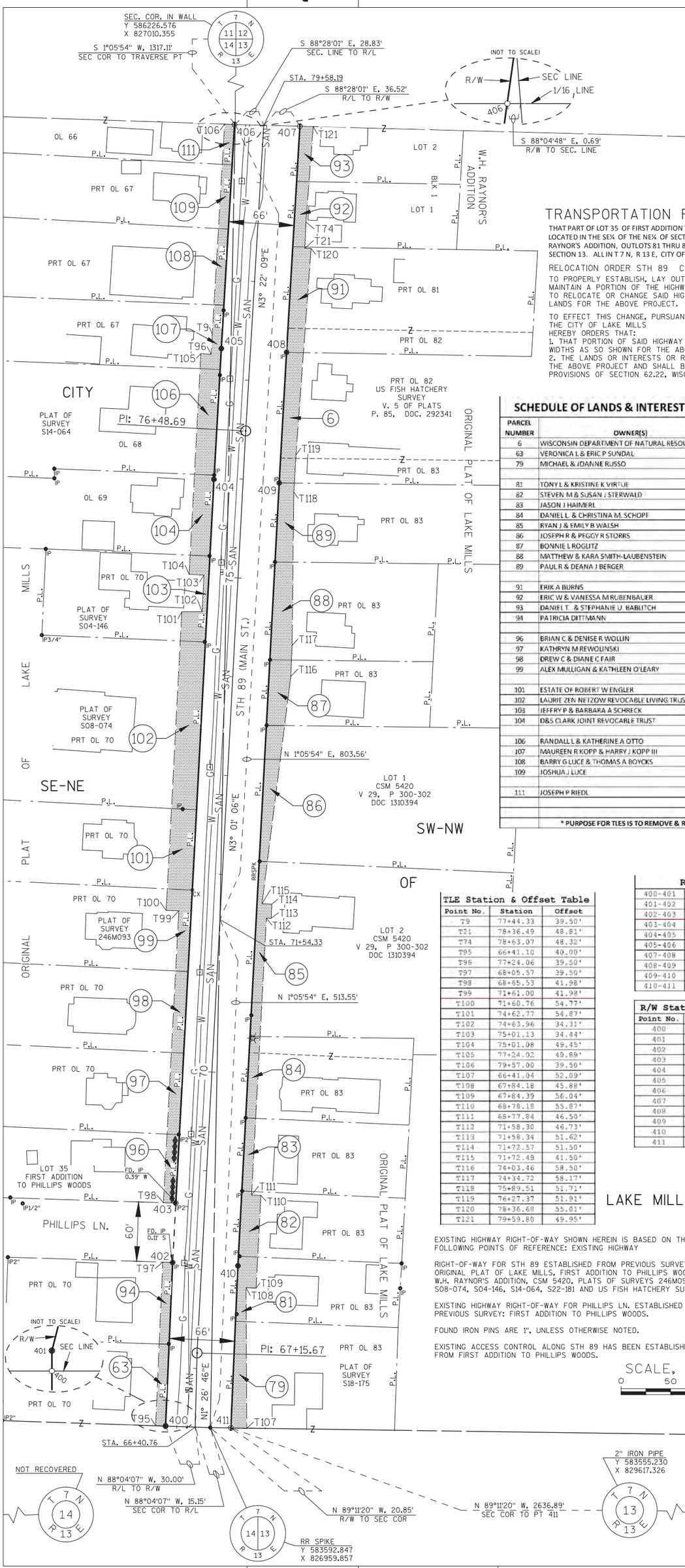

1374848
MAP#:
VOLUME: T3 PAGE: 74
Office of Register of Deeds Jefferson County, WI
RECEIVED FOR RECORD
10/26/2016 2:42:59 PM
Staci M. Hoffman
Total Pages 1
REC FEE 25.00
THIS IS A COPY, ORIGINAL DOCUMENT IS FILED AT THE COUNTY REGISTER OF DEEDS

RESERVED FOR REGISTER OF DEEDS
PROJECT NUMBER 3300-01-20 - 4.04
AMENDMENT NO:___

TRANSPORTATION PROJECT PLAT NO: 3300-01-20- 4.04

THAT PART OF LOT 35 OF FIRST ADDITION TO PHILLIPS WOODS, OUTLOTS 66 THRU 70 OF THE ORIGINAL PLAT OF LAKE MILLS. ALL LOCATED IN THE SE¼ OF THE NE¼ OF SECTION 14. ALSO THAT PART OF LOTS 1 & 2 CSM 5420, LOTS 1 & 2, BLOCK 1 OF W.H. RAYNOR'S ADDITION, OUTLOTS 81 THRU 83 OF THE ORIGINAL PLAT OF LAKE MILLS. ALL LOCATED IN THE SW¼ OF THE NW¼ OF SECTION 13. ALL IN T 7 N, R 13 E, CITY OF LAKE MILLS, JEFFERSON COUNTY, WISCONSIN.

RELOCATION ORDER STH 89 CITY OF LAKE MILLS, MAIN ST. (TOPEL ST. TO MADISON ST.)

TO PROPERLY ESTABLISH, LAY OUT, WIDEN, ENLARGE, EXTEND, CONSTRUCT, RECONSTRUCT, IMPROVE, OR MAINTAIN A PORTION OF THE HIGHWAY DESIGNATED ABOVE, THE CITY OF LAKE MILLS DEEMS IT NECESSARY TO RELOCATE OR CHANGE SAID HIGHWAY AND ACQUIRE CERTAIN LANDS AND INTERESTS OR RIGHTS IN LANDS FOR THE ABOVE PROJECT.

TO EFFECT THIS CHANGE, PURSUANT TO AUTHORITY GRANTED UNDER SECTION 62.22, WISCONSIN STATUTES, THE CITY OF LAKE MILLS
HEREBY ORDERS THAT:
1. THAT PORTION OF SAID HIGHWAY AS SHOWN ON THIS PLAT IS LAID OUT AND ESTABLISHED TO THE LINES AND WIDTHS AS SO SHOWN FOR THE ABOVE PROJECT.
2. THE LANDS OR INTERESTS OR RIGHTS IN LANDS AS SHOWN ON THIS PLAT ARE REQUIRED BY THE CITY FOR THE ABOVE PROJECT AND SHALL BE ACQUIRED IN THE NAME OF THE CITY OF LAKE MILLS, PURSUANT TO THE PROVISIONS OF SECTION 62.22, WISCONSIN STATUTES.

SCHEDULE OF LANDS & INTERESTS REQUIRED

OWNERS NAMES ARE SHOWN FOR REFERENCE PURPOSES ONLY, AND ARE SUBJECT TO CHANGE PRIOR TO TRANSFER OF LAND INTERESTS TO THE CITY.

PARCEL NUMBER	OWNER(S)	INTEREST REQUIRED	R/W ACRES OR S.F. REQUIRED NEW	EXISTING	TOTAL	TLE ACRES OR S.F.
6	WISCONSIN DEPARTMENT OF NATURAL RESOURCES	TLE				2110
63	VERONICA L & ERIC P SUNDAL	TLE				828
79	MICHAEL & JOANNE RUSSO	TLE				1451
81	TONY L & KRISTINE K VIRTUE	TLE				950
82	STEVEN M & SUSAN J STERWALD	TLE				1248
83	JASON J HAIMERL	TLE				743
84	DANIEL L. & CHRISTINA M. SCHOPF	TLE				832
85	RYAN J & EMILY B WALSH	TLE				1719
86	JOSEPH R & PEGGY R STORRS	TLE				1822
87	BONNIE L ROGLITZ	TLE				1365
88	MATTHEW & KARA SMITH-LAUBENSTEIN	TLE				2000
89	PAUL R & DEANA J BERGER	TLE				1322
91	ERIK A BURNS	TLE				1890
92	ERIC W & VANESSA M RUBENBAUER	TLE				800
93	DANIEL T. & STEPHANIE U. BABLITCH	TLE				726
94	PATRICIA DITTMANN	TLE				828
96	BRIAN C & DENISE R WOLLIN	TLE				866
97	KATHRYN M REWOLINSKI	TLE				1029
98	DREW C & DIANE C FAIR	TLE				1029
99	ALEX MULLIGAN & KATHLEEN O'LEARY	TLE				1306
101	ESTATE OF ROBERT W ENGLER	TLE				2056
102	LAURIE ZEN NETZOW REVOCABLE LIVING TRUST	TLE				4300
103	JEFFRY P & BARBARA A SCHRECK	TLE				1329
104	D&S CLARK JOINT REVOCABLE TRUST	TLE				1632
106	RANDALL L & KATHERINE A OTTO	TLE				2154
107	MAUREEN R KOPP & HARRY J KOPP III	TLE				806
108	BARRY G LUCE & THOMAS A BOYCKS	TLE				771
109	JOSHUA J LUCE	TLE				650
111	JOSEPH P RIEDL	TLE				409
	ALL AREAS SHOWN IN SQUARE FEET UNLESS OTHERWISE NOTED.					
	* PURPOSE FOR TLES IS TO REMOVE & REPLACE SIDE WALK, UNLESS NOTED. BUILDINGS WILL NOT BE AFFECTED BY TLES.					

TLE Station & Offset Table

Point No.	Station	Offset
T9	77+44.33	39.50'
T21	78+36.49	48.81'
T74	78+63.07	48.32'
T95	66+41.10	40.00'
T96	77+24.06	39.50'
T97	68+05.57	39.50'
T98	68+65.53	41.98'
T99	71+61.00	41.98'
T100	71+60.76	54.77'
T101	74+62.77	54.87'
T102	74+63.96	34.31'
T103	75+01.13	34.44'
T104	75+01.08	49.45'
T105	77+24.02	49.89'
T106	79+57.00	39.50'
T107	66+41.04	52.09'
T108	67+84.18	45.88'
T109	67+84.39	56.04'
T110	68+78.18	55.87'
T111	68+77.84	46.50'
T112	71+58.30	46.73'
T113	71+58.34	51.62'
T114	71+72.57	51.50'
T115	71+72.49	41.50'
T116	74+03.46	58.50'
T117	74+34.72	58.17'
T118	75+89.51	51.71'
T119	76+27.37	51.91'
T120	78+36.68	55.01'
T121	79+59.80	49.95'

R/W Course Table

400-401	N 03° 14' 01" E	0.32'
401-402	N 02° 28' 51" E	165.25'
402-403	N 03° 01' 14" E	60.01'
403-404	N 03° 01' 06" E	732.39'
404-405	N 03° 14' 06" E	132.43'
405-406	N 03° 22' 09" E	226.82'
407-408	S 03° 22' 09" W	228.86'
408-409	S 03° 14' 06" W	132.23'
409-410	S 03° 01' 06" W	792.22'
410-411	S 02° 28' 51" W	163.97'

R/W Station & Offset Table

Point No.	Station	Offset
400	66+41.01	30.00'
401	66+41.33	30.00'
402	68+05.78	29.50'
403	68+65.79	29.50'
404	75+98.18	29.50'
405	77+30.43	29.50'
406	79+57.25	29.50'
407	79+59.36	36.50'
408	77+30.51	36.50'
409	75+98.05	36.50'
410	68+05.84	36.50'
411	66+40.86	36.00'

PI 67+15.67
Y = 583668.241
X = 826946.603
Delta = 1° 34' 20" RT

PI 76+48.69
Y = 584599.970
X = 826995.733
Delta = 0° 21' 30" RT

EXISTING HIGHWAY RIGHT-OF-WAY SHOWN HEREIN IS BASED ON THE FOLLOWING POINTS OF REFERENCE: EXISTING HIGHWAY

RIGHT-OF-WAY FOR STH 89 ESTABLISHED FROM PREVIOUS SURVEYS: ORIGINAL PLAT OF LAKE MILLS, FIRST ADDITION TO PHILLIPS WOODS, W.H. RAYNOR'S ADDITION, CSM 5420, PLATS OF SURVEYS 246M093, S08-074, S04-146, S14-064, S22-181 AND US FISH HATCHERY SURVEY.

EXISTING HIGHWAY RIGHT-OF-WAY FOR PHILLIPS LN. ESTABLISHED FROM PREVIOUS SURVEY: FIRST ADDITION TO PHILLIPS WOODS.

FOUND IRON PINS ARE 1", UNLESS OTHERWISE NOTED.

EXISTING ACCESS CONTROL ALONG STH 89 HAS BEEN ESTABLISHED FROM FIRST ADDITION TO PHILLIPS WOODS.

SCALE, FEET
0 50 100

VERIZON NORTH INC.
DOC 1195104 - PARCEL 89

GENERAL TELEPHONE COMPANY
VOL 25, P 246 - PARCEL 102

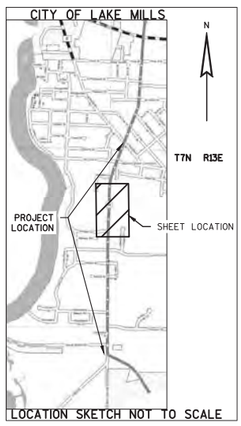

LOCATION SKETCH NOT TO SCALE

FOR ADDITIONAL INFORMATION REFER TO THE TITLE SHEET, RECORDED IN THE OFFICE OF REGISTER OF DEEDS, IN JEFFERSON COUNTY AS SHEET 2 OF 2 OF DOCUMENT #1374770 AND FILED IN T3 PAGE 71.

POSITIONS SHOWN ON THIS PLAT ARE WISCONSIN COORDINATE REFERENCE SYSTEM COORDINATES (WISCRS), JEFFERSON COUNTY, NAD83 (2011), IN US SURVEY FEET. VALUES SHOWN ARE GRID COORDINATES, GRID BEARINGS, AND GRID DISTANCES. GRID DISTANCES MAY BE USED AS GROUND DISTANCES.

FOR THE LATEST ACCESS/DRIVEWAY INFORMATION, CONTACT THE PLANNING UNIT OF THE CITY OF LAKE MILLS.

STATE OF WISCONSIN DEPARTMENT OF TRANSPORTATION

I, KEIF S. CALLAWAY, PROFESSIONAL LAND SURVEYOR, HEREBY CERTIFY THAT IN FULL COMPLIANCE WITH THE PROVISIONS OF SECTION 84.095 OF THE WISCONSIN STATUTES AND UNDER THE DIRECTION OF THE CITY OF LAKE MILLS, I HAVE MAPPED THIS TRANSPORTATION PROJECT PLAT AND THAT SUCH PLAT CORRECTLY REPRESENTS ALL EXTERIOR BOUNDARIES OF THE SURVEYED LAND.

WISCONSIN Keif S. Callaway S-2607 Sun Prairie, WI LAND SURVEYOR

SIGNATURE: _____ DATE: 10/25/16
PRINT NAME: KEIF S. CALLAWAY
REGISTRATION NUMBER: S-2607

THIS PLAT AND RELOCATION ORDER ARE APPROVED FOR THE CITY OF LAKE MILLS

SIGNATURE: _____ DATE: 10/25/16
PRINT NAME: STEVE WILKE

3300-01-20 4.04

PLOT DATE : 10/27/2016 11:29 AM PLOT BY : CLARK, CLYDE J PLOT NAME : PLOT SCALE : ==========

PLOT DATE :

FILE NAME : N:\PDS\RW-PLAT\3300\03\040404.DWG
APPRAISAL PLAT DATE : OCT. 25, 2016

FOR ADDITIONAL INFORMATION REFER TO THE TITLE SHEET, RECORDED IN THE OFFICE OF REGISTER OF DEEDS, IN JEFFERSON COUNTY AS SHEET 2 OF 2 OF DOCUMENT #1374770 AND FILED IN T3 PAGE 71.

SEC. COR. IN WALL
Y 586226.576
X 827010.355

S 87°44'58" E, 335.62'
SEC COR TO PT 533

ALUM MON.
Y 586121.568
X 829682.380

N 87°44'58" W, 2253.13'
SEC COR TO PT 500

S 87°44'58" E, 53.18' R/W TO R/L

S 87°44'58" E, 46.15' R/L TO R/W

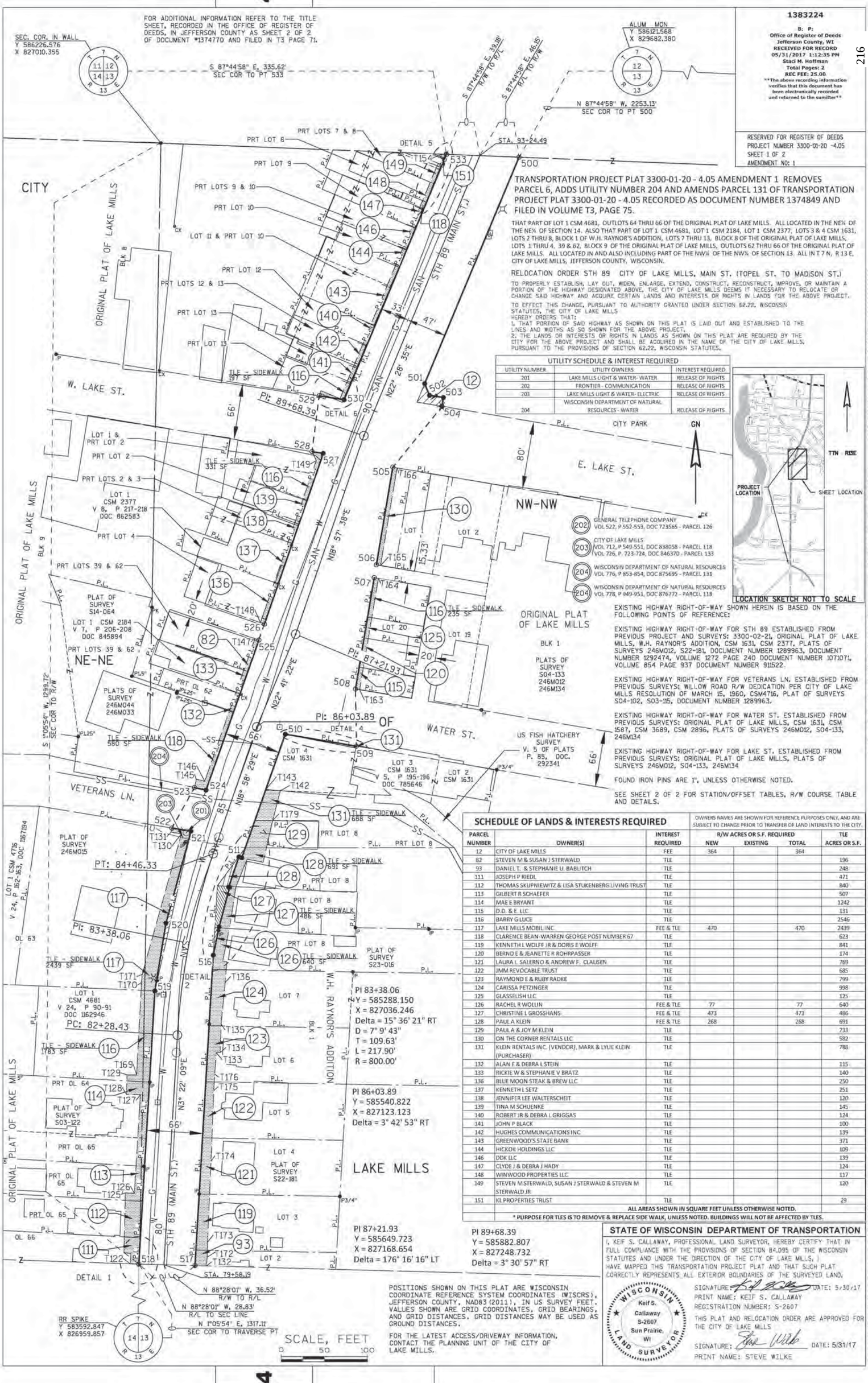

1383224

B: P:
Office of Register of Deeds
Jefferson County, WI
RECEIVED FOR RECORD
05/31/2017 1:12:35 PM
Staci M. Hoffman
Total Pages: 2
REC FEE: 25.00
The above recording information verifies that this document has been electronically recorded and returned to the sumitter

216

RESERVED FOR REGISTER OF DEEDS
PROJECT NUMBER 3300-01-20 -4.05
SHEET 1 OF 2
AMENDMENT NO: 1

3300-01-20 4.05A1

TRANSPORTATION PROJECT PLAT 3300-01-20 - 4.05 AMENDMENT 1 REMOVES PARCEL 6, ADDS UTILITY NUMBER 204 AND AMENDS PARCEL 131 OF TRANSPORTATION PROJECT PLAT 3300-01-20 - 4.05 RECORDED AS DOCUMENT NUMBER 1374849 AND FILED IN VOLUME T3, PAGE 75.

THAT PART OF LOT 1 CSM 4681, OUTLOTS 64 THRU 66 OF THE ORIGINAL PLAT OF LAKE MILLS. ALL LOCATED IN THE NE¼ OF THE NE¼ OF SECTION 14. ALSO THAT PART OF LOT 1 CSM 4681, LOT 1 CSM 2184, LOT 1 CSM 2377, LOTS 3 & 4 CSM 1631, LOTS 2 THRU 8, BLOCK 1 OF W.H. RAYNOR'S ADDITION, LOTS 7 THRU 13, BLOCK 8 OF THE ORIGINAL PLAT OF LAKE MILLS, LOTS 1 THRU 4, 39 & 62, BLOCK 9 OF THE ORIGINAL PLAT OF LAKE MILLS, OUTLOTS 62 THRU 66 OF THE ORIGINAL PLAT OF LAKE MILLS. ALL LOCATED IN AND ALSO INCLUDING PART OF THE NW¼ OF THE NW¼ OF SECTION 13. ALL IN T 7 N, R 13 E, CITY OF LAKE MILLS, JEFFERSON COUNTY, WISCONSIN.

RELOCATION ORDER STH 89 CITY OF LAKE MILLS, MAIN ST. (TOPEL ST. TO MADISON ST.)

TO PROPERLY ESTABLISH, LAY OUT, WIDEN, ENLARGE, EXTEND, CONSTRUCT, RECONSTRUCT, IMPROVE, OR MAINTAIN A PORTION OF THE HIGHWAY DESIGNATED ABOVE, THE CITY OF LAKE MILLS DEEMS IT NECESSARY TO RELOCATE OR CHANGE SAID HIGHWAY AND ACQUIRE CERTAIN LANDS AND INTERESTS OR RIGHTS IN LANDS FOR THE ABOVE PROJECT.

TO EFFECT THIS CHANGE, PURSUANT TO AUTHORITY GRANTED UNDER SECTION 62.22, WISCONSIN STATUTES, THE CITY OF LAKE MILLS
HEREBY ORDERS THAT:
1. THAT PORTION OF SAID HIGHWAY AS SHOWN ON THIS PLAT IS LAID OUT AND ESTABLISHED TO THE LINES AND WIDTHS AS SO SHOWN FOR THE ABOVE PROJECT.
2. THE LANDS OR INTERESTS OR RIGHTS IN LANDS AS SHOWN ON THIS PLAT ARE REQUIRED BY THE CITY FOR THE ABOVE PROJECT AND SHALL BE ACQUIRED IN THE NAME OF THE CITY OF LAKE MILLS, PURSUANT TO THE PROVISIONS OF SECTION 62.22, WISCONSIN STATUTES.

UTILITY SCHEDULE & INTEREST REQUIRED

UTILITY NUMBER	UTILITY OWNERS	INTEREST REQUIRED
201	LAKE MILLS LIGHT & WATER- WATER	RELEASE OF RIGHTS
202	FRONTIER - COMMUNICATION	RELEASE OF RIGHTS
203	LAKE MILLS LIGHT & WATER- ELECTRIC	RELEASE OF RIGHTS
204	WISCONSIN DEPARTMENT OF NATURAL RESOURCES - WATER	RELEASE OF RIGHTS

202 GENERAL TELEPHONE COMPANY
VOL 522, P 552-553, DOC 723565 - PARCEL 126

203 CITY OF LAKE MILLS
VOL 712, P 549-551, DOC 838058 - PARCEL 118
VOL 726, P. 723-724, DOC 846370 - PARCEL 133

204 WISCONSIN DEPARTMENT OF NATURAL RESOURCES
VOL 776, P 853-854, DOC 875695 - PARCEL 131

204 WISCONSIN DEPARTMENT OF NATURAL RESOURCES
VOL 778, P 949-951, DOC 876772 - PARCEL 118

T7N R13E
PROJECT LOCATION
SHEET LOCATION
LOCATION SKETCH NOT TO SCALE

EXISTING HIGHWAY RIGHT-OF-WAY SHOWN HEREIN IS BASED ON THE FOLLOWING POINTS OF REFERENCE:

EXISTING HIGHWAY RIGHT-OF-WAY FOR STH 89 ESTABLISHED FROM PREVIOUS PROJECT AND SURVEYS: 3300-02-21, ORIGINAL PLAT OF LAKE MILLS, W.H. RAYNOR'S ADDITION, CSM 1631, CSM 2377, PLATS OF SURVEYS 246M012, S22-181, DOCUMENT NUMBER 1289963, DOCUMENT NUMBER 1292474, VOLUME 1272 PAGE 240 DOCUMENT NUMBER 1071071, VOLUME 854 PAGE 937 DOCUMENT NUMBER 911522.

EXISTING HIGHWAY RIGHT-OF-WAY FOR VETERANS LN. ESTABLISHED FROM PREVIOUS SURVEYS: WILLOW ROAD R/W DEDICATION PER CITY OF LAKE MILLS RESOLUTION OF MARCH 15, 1960, CSM4716, PLAT OF SURVEYS S04-102, S03-115, DOCUMENT NUMBER 1289963.

EXISTING HIGHWAY RIGHT-OF-WAY FOR WATER ST. ESTABLISHED FROM PREVIOUS SURVEYS: ORIGINAL PLAT OF LAKE MILLS, CSM 1631, CSM 1587, CSM 3689, CSM 2896, PLATS OF SURVEYS 246M012, S04-133, 246M134

EXISTING HIGHWAY RIGHT-OF-WAY FOR LAKE ST. ESTABLISHED FROM PREVIOUS SURVEYS: ORIGINAL PLAT OF LAKE MILLS, PLATS OF SURVEYS 246M012, S04-133, 246M134

FOUND IRON PINS ARE 1", UNLESS OTHERWISE NOTED.

SEE SHEET 2 OF 2 FOR STATION/OFFSET TABLES, R/W COURSE TABLE AND DETAILS.

SCHEDULE OF LANDS & INTERESTS REQUIRED

OWNERS NAMES ARE SHOWN FOR REFERENCE PURPOSES ONLY, AND ARE SUBJECT TO CHANGE PRIOR TO TRANSFER OF LAND INTERESTS TO THE CITY.

PARCEL NUMBER	OWNER(S)	INTEREST REQUIRED	R/W ACRES OR S.F. REQUIRED NEW	EXISTING	TOTAL	TLE ACRES OR S.F.
12	CITY OF LAKE MILLS	FEE	364		364	
82	STEVEN M & SUSAN J STERWALD	TLE				196
93	DANIEL T. & STEPHANIE U. BABLITCH	TLE				248
111	JOSEPH P RIEDL	TLE				471
112	THOMAS SKUPNIEWITZ & LISA STUKENBERG LIVING TRUST	TLE				840
113	GILBERT R SCHAEFER	TLE				507
114	MAE E BRYANT	TLE				1242
115	D.D. & E. LLC	TLE				131
116	BARRY G LUCE	TLE				2546
117	LAKE MILLS MOBIL INC	FEE & TLE	470		470	2439
118	CLARENCE BEAN-WARREN GEORGE POST NUMBER 67	TLE				623
119	KENNETH L WOLFF JR & DORIS E WOLFF	TLE				841
120	BERND E & JEANETTE R ROHRPASSER	TLE				174
121	LAURA L SALERNO & ANDREW F. CLAUSEN	TLE				769
122	JMM REVOCABLE TRUST	TLE				685
123	RAYMOND E & RUBY RADKE	TLE				799
124	CARISSA PETZINGER	TLE				998
125	GLASSELISH LLC	TLE				125
126	RACHEL R WOLLIN	FEE & TLE	77		77	640
127	CHRISTINE L GROSSHANS	FEE & TLE	473		473	486
128	PAUL A KLEIN	FEE & TLE	268		268	691
129	PAUL A & JOY M KLEIN	TLE				733
130	ON THE CORNER RENTALS LLC	TLE				582
131	KLEIN RENTALS INC. (VENDOR), MARK & LYLIE KLEIN (PURCHASER)	TLE				788
132	ALAN E & DEBRA L STEIN	TLE				115
133	RICKIE W & STEPHANIE V BRATZ	TLE				140
136	BLUE MOON STEAK & BREW LLC	TLE				250
137	KENNETH L SETZ	TLE				251
138	JENNIFER LEE WALTERSCHEIT	TLE				120
139	TINA M SCHUENKE	TLE				145
140	ROBERT JR & DEBRA L GRIGGAS	TLE				124
141	JOHN P BLACK	TLE				100
142	HUGHES COMMUNICATIONS INC	TLE				139
143	GREENWOOD'S STATE BANK	TLE				371
144	HICKOK HOLDINGS LLC	TLE				109
146	DDK LLC	TLE				139
147	CLYDE J & DEBRA J HADY	TLE				124
148	WINWOOD PROPERTIES LLC	TLE				117
149	STEVEN M STERWALD, SUSAN J STERWALD & STEVEN M STERWALD JR	TLE				120
151	KL PROPERTIES TRUST	TLE				29
	ALL AREAS SHOWN IN SQUARE FEET UNLESS OTHERWISE NOTED.					

* PURPOSE FOR TLES IS TO REMOVE & REPLACE SIDE WALK, UNLESS NOTED. BUILDINGS WILL NOT BE AFFECTED BY TLES.

PI 83+38.06
Y = 585288.150
X = 827036.246
Delta = 15° 36' 21" RT
D = 7° 9' 43"
T = 109.63'
L = 217.90'
R = 800.00'

PI 86+03.89
Y = 585540.822
X = 827123.123
Delta = 3° 42' 53" RT

PI 87+21.93
Y = 585649.723
X = 827168.654
Delta = 176° 16' 16" LT

PI 89+68.39
Y = 585882.807
X = 827248.732
Delta = 3° 30' 57" RT

RR SPIKE
Y 583592.847
X 826959.857

N 88°28'01" W, 36.52'
R/W TO R/L

N 88°28'01" W, 28.83'
R/L TO SEC LINE

N 1°05'54" E, 1317.11'
SEC COR TO TRAVERSE PT

POSITIONS SHOWN ON THIS PLAT ARE WISCONSIN COORDINATE REFERENCE SYSTEM COORDINATES (WISCRS), JEFFERSON COUNTY, NAD83 (2011), IN US SURVEY FEET. VALUES SHOWN ARE GRID COORDINATES, GRID BEARINGS, AND GRID DISTANCES. GRID DISTANCES MAY BE USED AS GROUND DISTANCES.

FOR THE LATEST ACCESS/DRIVEWAY INFORMATION, CONTACT THE PLANNING UNIT OF THE CITY OF LAKE MILLS.

STATE OF WISCONSIN DEPARTMENT OF TRANSPORTATION

I, KEIF S. CALLAWAY, PROFESSIONAL LAND SURVEYOR, HEREBY CERTIFY THAT IN FULL COMPLIANCE WITH THE PROVISIONS OF SECTION 84.095 OF THE WISCONSIN STATUTES AND UNDER THE DIRECTION OF THE CITY OF LAKE MILLS, I HAVE MAPPED THIS TRANSPORTATION PROJECT PLAT AND THAT SUCH PLAT CORRECTLY REPRESENTS ALL EXTERIOR BOUNDARIES OF THE SURVEYED LAND.

WISCONSIN Keif S. Callaway S-2607 Sun Prairie, WI LAND SURVEYOR

SIGNATURE: DATE: 5/30/17
PRINT NAME: KEIF S. CALLAWAY
REGISTRATION NUMBER: S-2607

THIS PLAT AND RELOCATION ORDER ARE APPROVED FOR THE CITY OF LAKE MILLS

SIGNATURE: DATE: 5/31/17
PRINT NAME: STEVE WILKE

FILE NAME : N:\PDS\RW-PLAT\33000103\040405A1.DWG
APPRAISAL PLAT DATE : MAY 30, 2017
PLOT DATE : 5/30/2017 12:32 PM
PLOT BY : CLARK, CLYDE J
PLOT SCALE : **********
PLOT NAME :

TRANSPORTATION PROJECT PLAT NO: 3300-01-20- 4.05 AMENDMENT 1

RELOCATION ORDER STH 89 CITY OF LAKE MILLS, MAIN ST. (TOPEL ST. TO MADISON ST.)

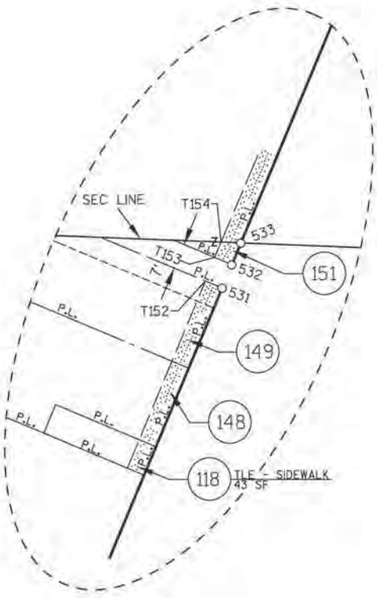

DETAIL 5
(NOT TO SCALE)

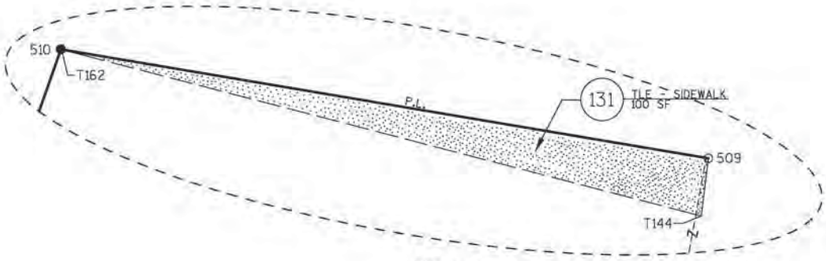

DETAIL 4
(NOT TO SCALE)

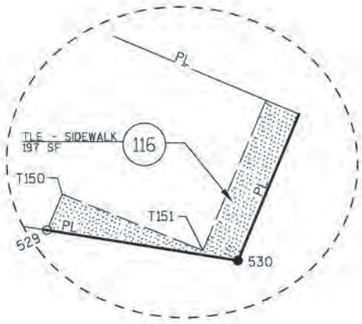

DETAIL 6
(NOT TO SCALE)

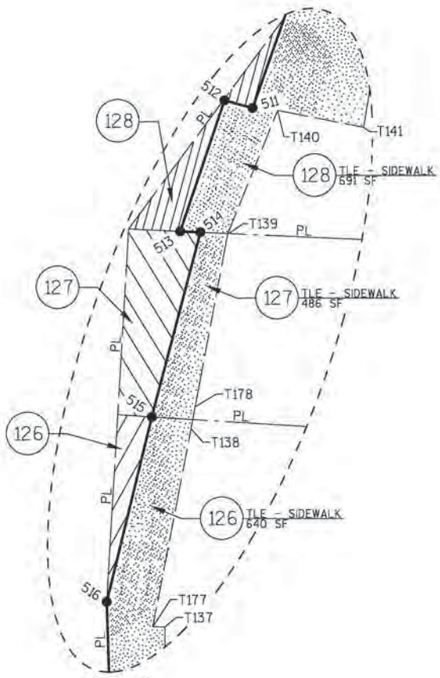

DETAIL 2
(NOT TO SCALE)

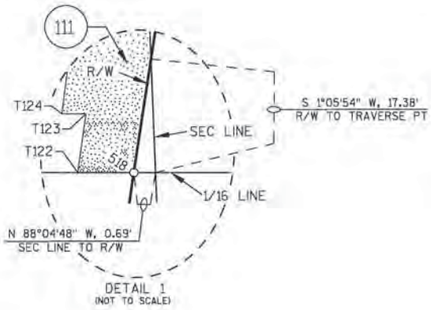

DETAIL 1
(NOT TO SCALE)

GN

R/W Course Table		
500-501	S 22° 37' 16" W	288.18'
501-502	S 22° 22' 44" E	14.90'
502-503	S 81° 13' 51" E	16.48'
503-504	S 08° 46' 09" W	10.52'
504-505	S 38° 58' 15" W	91.84'
505-506	S 09° 33' 07" W	116.30'
506-507	S 09° 33' 07" W	15.33'
507-508	S 09° 33' 07" W	132.70'
508-509	S 00° 58' 39" E	67.13'
509-510	N 80° 26' 30" W	84.70'
510-511	S 19° 24' 02" W	153.84'
511-512	N 74° 57' 51" W	3.58'
512-513	S 18° 38' 46" W	37.50'
513-514	S 87° 10' 49" E	1.07'
514-515	S 18° 44' 53" W	48.23'
515-516	S 11° 39' 36" W	33.91'
516-517	S 03° 22' 09" W	365.29'
518-519	N 03° 22' 09" E	321.51'
519-520	N 09° 15' 58" E	80.53'
520-521	N 15° 15' 13" E	112.00'
521-522	N 80° 35' 43" W	22.85'
522-523	N 29° 16' 40" E	54.55'
523-524	S 77° 32' 11" E	13.85'
524-525	N 19° 24' 02" E	186.86'
525-526	N 19° 08' 42" E	20.00'
526-527	N 19° 00' 08" E	211.96'
527-528	N 80° 59' 37" W	13.37'
528-529	N 07° 17' 22" E	66.03'
529-530	S 80° 59' 37" E	29.72'
530-531	N 22° 37' 16" E	298.90'
531-532	N 22° 37' 16" E	7.00'
532-533	N 22° 37' 16" E	6.50'

R/W Station & Offset Table		
Point No.	Station	Offset
500	93+40.44	83.31'
501	90+52.27	42.58'
502	90+41.71	53.09'
503	90+45.61	89.10'
504	90+35.39	71.59'
505	89+44.59	44.14'
506	88+29.88	63.15'
507	88+14.73	65.66'
508	86+89.57	89.65'
509	86+28.09	116.58'
510	86+08.85	34.11'
511	84+52.79	38.21'
512	84+52.54	29.64'
513	84+13.85	29.22'
514	84+14.12	30.26'
515	83+63.98	30.37'
516	83+28.73	30.46'
517	79+59.36	36.50'
518	79+57.25	29.50'
519	82+76.91	31.03'
520	83+54.48	31.52'
521	84+62.79	33.31'
522	84+58.99	55.84'
523	85+12.66	46.09'
524	85+14.23	32.33'
525	86+98.88	37.17'
526	87+18.84	38.41'
527	89+33.30	38.38'
528	89+30.99	51.55'
529	89+91.62	66.48'
530	89+98.55	37.55'
531	92+97.44	36.60'
532	93+04.44	36.78'
533	93+10.94	36.77'

TLE Station & Offset Table		
Point No.	Station	Offset
T122	79+57.00	39.50'
T123	79+69.29	39.50'
T124	79+69.30	47.66'
T125	80+39.91	50.23'
T126	80+39.91	39.55'
T127	81+55.99	39.38'
T128	81+55.38	55.96'
T129	81+78.47	56.34'
T130	84+56.13	42.95'
T131	84+54.30	55.05'
T132	79+59.80	49.95'
T133	82+10.71	46.58'
T134	82+10.92	51.23'
T135	82+45.62	50.35'
T136	82+97.70	49.47'
T137	83+23.80	47.56'
T138	83+59.82	42.62'
T139	84+37.02	37.28'
T140	84+53.21	39.65'
T141	84+55.83	58.68'
T142	85+41.94	50.49'
T143	85+37.84	33.85'
T144	86+25.90	117.12'
T145	85+22.58	47.22'
T146	85+23.73	37.26'
T147	86+98.55	42.16'
T148	87+18.51	43.40'
T149	89+22.82	43.38'
T150	89+97.99	66.81'
T151	89+97.98	42.56'
T152	92+97.47	41.80'
T153	93+04.47	41.86'
T154	93+09.04	41.92'
T162	86+08.73	34.12'
T163	86+90.71	94.52'
T164	88+15.54	70.59'
T165	88+30.67	68.09'
T166	89+45.40	49.07'
T169	81+79.14	45.11'
T170	82+84.52	47.75'
T171	82+93.32	48.37'
T172	79+70.00	50.12'
T173	79+87.63	49.62'
T174	80+83.20	48.07'
T175	81+65.82	46.39'
T176	81+85.28	46.47'
T177	83+23.31	42.58'
T178	83+70.60	42.18'
T179	85+05.86	53.30'

TPP NUMBER 3300-01-20 - 4.05 -
AMENDMENT 1
SHEET 2 OF 2

TRANSPORTATION PROJECT PLAT NO: 3300-01-20- 4.06

THAT PART OF LOTS 4 THRU 8 OF BLOCK 8 OF THE ORIGINAL PLAT OF LAKE MILLS LOCATED IN AND ALSO INCLUDING PART OF THE SW¼ OF THE SW¼ OF SECTION 12, T 7 N, R 13 E, CITY OF LAKE MILLS, JEFFERSON COUNTY, WISCONSIN.

RELOCATION ORDER STH 89 CITY OF LAKE MILLS, MAIN ST. (TOPEL ST. TO MADISON ST.)

TO PROPERLY ESTABLISH, LAY OUT, WIDEN, ENLARGE, EXTEND, CONSTRUCT, RECONSTRUCT, IMPROVE, OR MAINTAIN A PORTION OF THE HIGHWAY DESIGNATED ABOVE, THE CITY OF LAKE MILLS DEEMS IT NECESSARY TO RELOCATE OR CHANGE SAID HIGHWAY AND ACQUIRE CERTAIN LANDS AND INTERESTS OR RIGHTS IN LANDS FOR THE ABOVE PROJECT.

TO EFFECT THIS CHANGE, PURSUANT TO AUTHORITY GRANTED UNDER SECTION 62.22, WISCONSIN STATUTES, THE CITY OF LAKE MILLS HEREBY ORDERS THAT:

1. THAT PORTION OF SAID HIGHWAY AS SHOWN ON THIS PLAT IS LAID OUT AND ESTABLISHED TO THE LINES AND WIDTHS AS SO SHOWN FOR THE ABOVE PROJECT.
2. THE LANDS OR INTERESTS OR RIGHTS IN LANDS AS SHOWN ON THIS PLAT ARE REQUIRED BY THE CITY FOR THE ABOVE PROJECT AND SHALL BE ACQUIRED IN THE NAME OF THE CITY OF LAKE MILLS, PURSUANT TO THE PROVISIONS OF SECTION 62.22, WISCONSIN STATUTES.

1374850
MAP#:
VOLUME: T3 PAGE: 76
Office of Register of Deeds Jefferson County, WI
RECEIVED FOR RECORD
10/26/2016 2:43:01 PM
Staci M. Hoffman
Total Pages 1
REC FEE 25.00
THIS IS A COPY. ORIGINAL DOCUMENT IS FILED AT THE COUNTY REGISTER OF DEEDS

RESERVED FOR REGISTER OF DEEDS
PROJECT NUMBER 3300-01-20 - 4.06
AMENDMENT NO:___

SCHEDULE OF LANDS & INTERESTS REQUIRED

OWNERS NAMES ARE SHOWN FOR REFERENCE PURPOSES ONLY, AND ARE SUBJECT TO CHANGE PRIOR TO TRANSFER OF LAND INTERESTS TO THE CITY.

PARCEL NUMBER	OWNER(S)	INTEREST REQUIRED	R/W ACRES OR S.F. REQUIRED NEW	EXISTING	TOTAL	TLE ACRES OR S.F.
12	CITY OF LAKE MILLS	FEE	375		375	
116	BARRY G LUCE	TLE				297
151	KL PROPERTIES TRUST	TLE				936
152	BURKARD LEWIS PROPERTIES LLC	TLE				518
	ALL AREAS SHOWN IN SQUARE FEET UNLESS OTHERWISE NOTED.					
	* PURPOSE FOR TLES IS TO REMOVE & REPLACE SIDE WALK, UNLESS NOTED. BUILDINGS WILL NOT BE AFFECTED BY TLES.					

TLE Station & Offset Table

Point No.	Station	Offset
T155	93+09.04	41.92'
T156	93+35.07	41.71'
T157	93+35.17	50.95'
T158	93+94.17	51.56'
T159	93+94.27	41.56'
T160	95+46.03	41.17'
T161	95+46.01	36.17'

R/W Station & Offset Table

Point No.	Station	Offset
600	93+10.94	36.77'
601	95+79.80	35.05'
602	95+22.57	69.52'
603	95+06.87	43.73'
604	93+40.44	43.31'

R/W Course Table

600-601	N 22° 37' 16" E	267.54'
602-603	S 81° 08' 07" W	30.19'
603-604	S 22° 37' 16" W	166.42'

GN

SCALE, FEET
0 50 100

EXISTING HIGHWAY RIGHT-OF-WAY SHOWN HEREIN IS BASED ON THE FOLLOWING POINTS OF REFERENCE:

EXISTING HIGHWAY RIGHT-OF-WAY FOR STH 89 ESTABLISHED FROM PREVIOUS PROJECTS AND SURVEYS: 3300-02-21, ORIGINAL PLAT OF LAKE MILLS, CSM 5151, PLATS OF SURVEYS 246M027, S11-038, S10-057

EXISTING HIGHWAY RIGHT-OF-WAY FOR MADISON ST. ESTABLISHED FROM PREVIOUS SURVEYS: ORIGINAL PLAT OF LAKE MILLS, CSM 3643, PLATS OF SURVEYS S11-038, S10-057

FOUND IRON PINS ARE 1", UNLESS OTHERWISE NOTED.

FOR ADDITIONAL INFORMATION REFER TO THE TITLE SHEET, RECORDED IN THE OFFICE OF REGISTER OF DEEDS, IN JEFFERSON COUNTY AS SHEET 2 OF 2 OF DOCUMENT #1374770 AND FILED IN T3 PAGE 71.

POSITIONS SHOWN ON THIS PLAT ARE WISCONSIN COORDINATE REFERENCE SYSTEM COORDINATES (WISCRS), JEFFERSON COUNTY, NAD83 (2011), IN US SURVEY FEET. VALUES SHOWN ARE GRID COORDINATES, GRID BEARINGS, AND GRID DISTANCES. GRID DISTANCES MAY BE USED AS GROUND DISTANCE.

FOR THE LATEST ACCESS/DRIVEWAY INFORMATION, CONTACT THE PLANNING UNIT OF THE CITY OF LAKE MILLS.

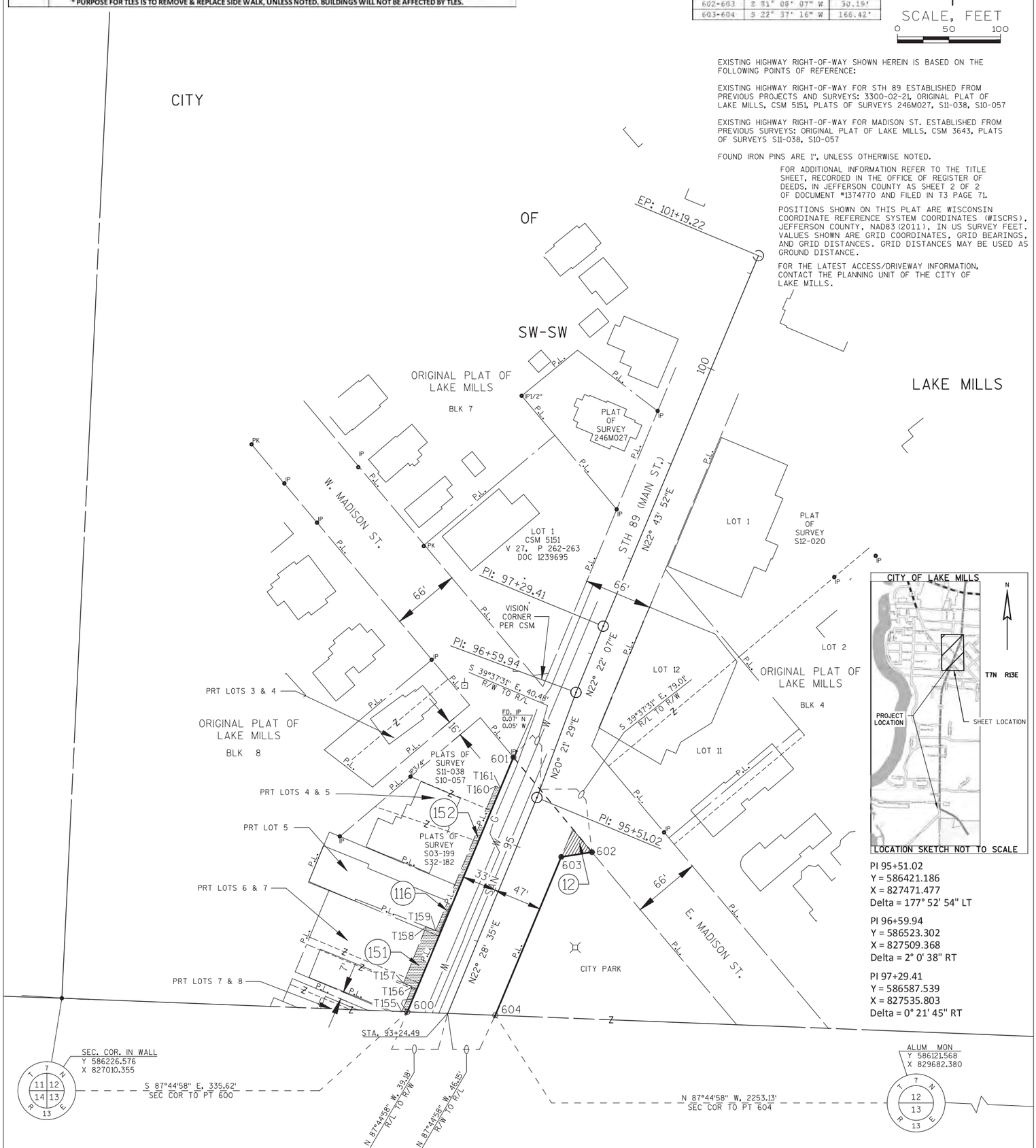

PI 95+51.02
Y = 586421.186
X = 827471.477
Delta = 177° 52' 54" LT

PI 96+59.94
Y = 586523.302
X = 827509.368
Delta = 2° 0' 38" RT

PI 97+29.41
Y = 586587.539
X = 827535.803
Delta = 0° 21' 45" RT

STATE OF WISCONSIN DEPARTMENT OF TRANSPORTATION

I, KEIF S. CALLAWAY, PROFESSIONAL LAND SURVEYOR, HEREBY CERTIFY THAT IN FULL COMPLIANCE WITH THE PROVISIONS OF SECTION 84.095 OF THE WISCONSIN STATUTES AND UNDER THE DIRECTION OF THE CITY OF LAKE MILLS, I HAVE MAPPED THIS TRANSPORTATION PROJECT PLAT AND THAT SUCH PLAT CORRECTLY REPRESENTS ALL EXTERIOR BOUNDARIES OF THE SURVEYED LAND.

WISCONSIN Keif S. Callaway S-2607 Sun Prairie, WI LAND SURVEYOR

SIGNATURE: _____ DATE: 10/25/16
PRINT NAME: KEIF S. CALLAWAY
REGISTRATION NUMBER: S-2607

THIS PLAT AND RELOCATION ORDER ARE APPROVED FOR THE CITY OF LAKE MILLS

SIGNATURE: _____ DATE: 10/25/16
PRINT NAME: STEVE WILKE

3300-01-20 4.06
PLOT NAME : PLOT SCALE : ==========
PLOT BY : CLARK, CLYDE J
PLOT DATE : 10/27/2016 12:46 PM
PLOT DATE :
FILE NAME : N:\PDS\RW-PLAT\3300\03\040406.DWG
APPRAISAL PLAT DATE : OCT. 25, 2016

DATE: OCT. 25, 2016

REVISION DATE

TRANSPORTATION PROJECT PLAT NO: 3300-01-20 - 4.07

RELOCATION ORDER STH 89 CITY OF LAKE MILLS, MAIN ST. (TOPEL ST. TO MADISON ST.

POSITIONS SHOWN ON THIS PLAT ARE WISCONSIN COORDINATE REFERENCE SYSTEM COORDINATES (WISCRS), JEFFERSON COUNTY, NAD83(2011), IN US SURVEY FEET. VALUES SHOWN ARE GRID COORDINATES, GRID BEARINGS, AND GRID DISTANCES. GRID DISTANCES MAY BE USED AS GROUND DISTANCES.

R/W MONUMENT POINT NUMBER AND COORDINATE TABLE

R/W MONUMENT POINT NUMBER AND COORDINATE TABLE

POINT	Y	X
100	580,936.541	826,955.226
101	580,936.742	826,945.264
102	580,935.743	826,945.244
103	580,935.916	826,936.720
104	580,928.274	826,928.626
105	580,302.132	826,916.795
106	580,222.219	826,934.842
107	580,204.325	826,956.989
108	580,202.592	827,189.891
109	580,131.859	827,189.368
110	580,132.930	827,045.350
111	580,112.760	827,070.314
112	580,112.018	827,173.649
113	580,082.432	827,159.056
114	580,060.018	827,203.894
115	579,925.848	827,136.825
116	579,996.948	827,088.524
117	580,066.033	826,950.321
118	580,050.859	826,912.048
119	579,988.491	826,910.870
120	579,984.787	826,844.788
121	580,408.704	826,852.797
122	580,411.161	826,752.896
123	580,441.148	826,753.777
124	580,446.033	826,752.897
125	580,445.741	826,765.732
126	580,468.726	826,853.931
127	580,741.665	826,859.088
128	580,791.156	826,860.023
129	580,939.245	826,862.821
130	580,939.193	826,864.354
131	580,939.434	826,864.357
132	580,413.488	826,918.899
133	580,411.783	827,168.912
134	580,392.010	827,168.538
135	580,393.715	826,918.526
136	580,441.603	826,735.265

R/W MONUMENT POINT NUMBER AND COORDINATE TABLE

POINT	Y	X
200	580,939.434	826,864.357
201	581,353.724	826,870.375
202	581,362.416	826,861.683
203	581,362.604	826,856.941
204	581,363.604	826,856.977
205	581,363.961	826,846.967
206	581,423.565	826,859.125
207	581,423.368	826,864.664
208	581,429.990	826,871.483
209	582,266.085	826,883.629
210	582,267.095	826,883.652
211	582,265.225	826,949.627
212	582,264.840	826,949.618
213	581,027.922	826,931.649
214	581,002.537	826,956.074
215	581,697.850	826,941.381
216	581,697.527	826,953.378
217	581,685.528	826,953.204
218	581,685.703	826,941.205

R/W MONUMENT POINT NUMBER AND COORDINATE TABLE

POINT	Y	X
300	583,592.552	826,980.703
301	583,271.717	826,973.794
302	583,205.774	826,971.026
303	582,886.734	826,963.152
304	582,875.474	826,973.919
305	582,874.970	826,988.224
306	582,809.859	826,961.820
307	582,479.932	826,954.872
308	582,479.289	826,974.018
309	582,413.132	826,977.601
310	582,413.648	826,962.217
311	582,404.968	826,952.867
312	582,265.225	826,949.627
313	582,267.095	826,883.652
314	582,416.192	826,887.109
315	582,482.170	826,888.904
316	582,812.567	826,895.862
318	582,878.568	826,896.931
319	583,208.426	826,905.072
320	583,274.876	826,893.154
321	583,274.369	826,907.836

R/W MONUMENT POINT NUMBER AND COORDINATE TABLE

POINT	Y	X
400	583,594.369	826,914.727
401	583,594.691	826,914.734
402	583,759.782	826,921.886
403	583,819.712	826,925.049
404	584,551.084	826,963.614
405	584,683.303	826,971.088
406	584,909.734	826,984.417
407	584,907.963	827,050.427
408	584,679.501	827,036.978
409	584,547.484	827,029.516
410	583,756.365	826,987.800
411	583,592.552	826,980.703

R/W MONUMENT POINT NUMBER AND COORDINATE TABLE

POINT	Y	X
500	586,210.045	827,430.990
501	585,944.038	827,320.147
502	585,930.265	827,325.818
503	585,927.752	827,342.106
504	585,917.356	827,340.503
505	585,845.956	827,282.744
506	585,731.268	827,263.445
507	585,716.151	827,260.901
508	585,585.291	827,238.881
509	585,518.168	827,240.026
510	585,532.233	827,156.502
511	585,387.127	827,105.401
512	585,388.056	827,101.942
513	585,352.529	827,089.954
514	585,352.476	827,091.026
515	585,305.836	827,078.748
516	585,272.623	827,071.895
517	584,907.963	827,050.427
518	584,909.734	826,984.417
519	585,230.684	827,003.311
520	585,310.160	827,016.278
521	585,418.211	827,045.744
522	585,421.946	827,023.196
523	585,469.529	827,049.874
524	585,466.541	827,063.395
525	585,642.793	827,125.465
526	585,661.687	827,132.024
527	585,862.096	827,201.039
528	585,864.190	827,187.832
529	585,929.687	827,196.210
530	585,925.033	827,225.560
531	586,200.937	827,340.527
532	586,207.399	827,343.219

R/W MONUMENT POINT NUMBER AND COORDINATE TABLE

POINT	Y	X
600	586,213.396	827,345.718
601	586,460.357	827,448.625
602	586,368.318	827,524.834
603	586,363.665	827,495.002
604	586,210.045	827,430.990

4

4

FILE NAME : N:\PDS\RW-PLAT\33000103\040407.DWG

PLOT BY : CLARK, CLYDE J

3300-01-20 - 4.07

BENCHMARK/CONTROL POINT						
NO.	STATION	DESCRIPTION	OFFSET	ELEV.	NORTHING	EASTING
CP 16	31+22.65	1" CAPPED IRON PIPE	69.86 LT	861.02	580051.76	826929.71
CP 9	33+54.80	1" CAPPED IRON PIPE	58.21 LT	859.86	580305.21	826823.17

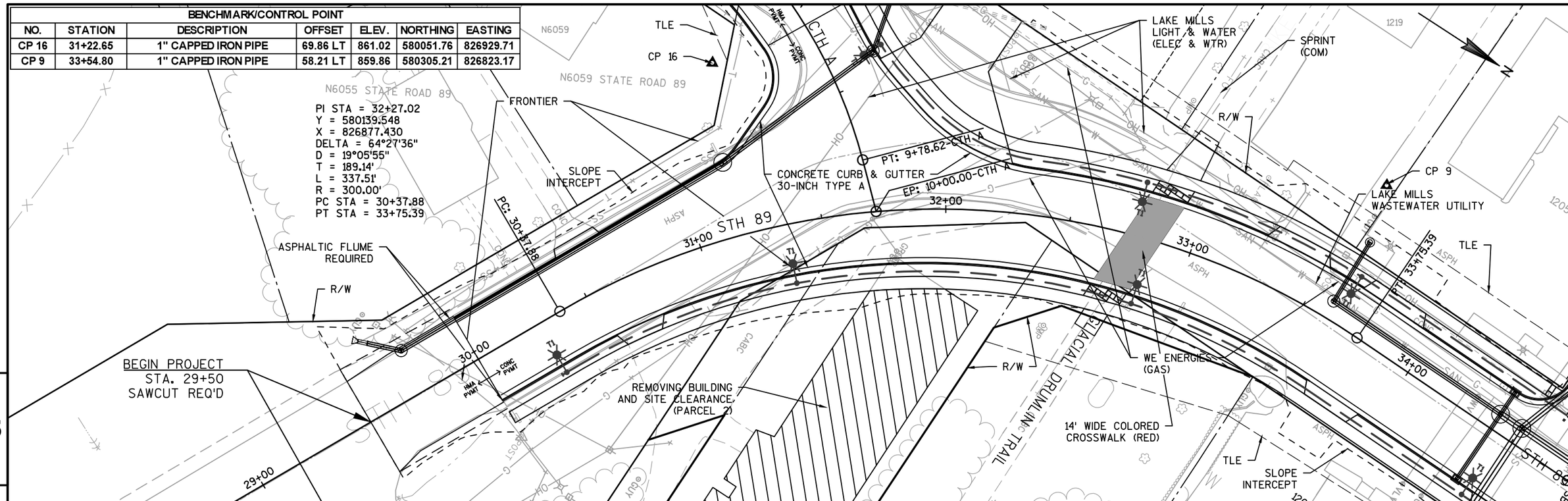

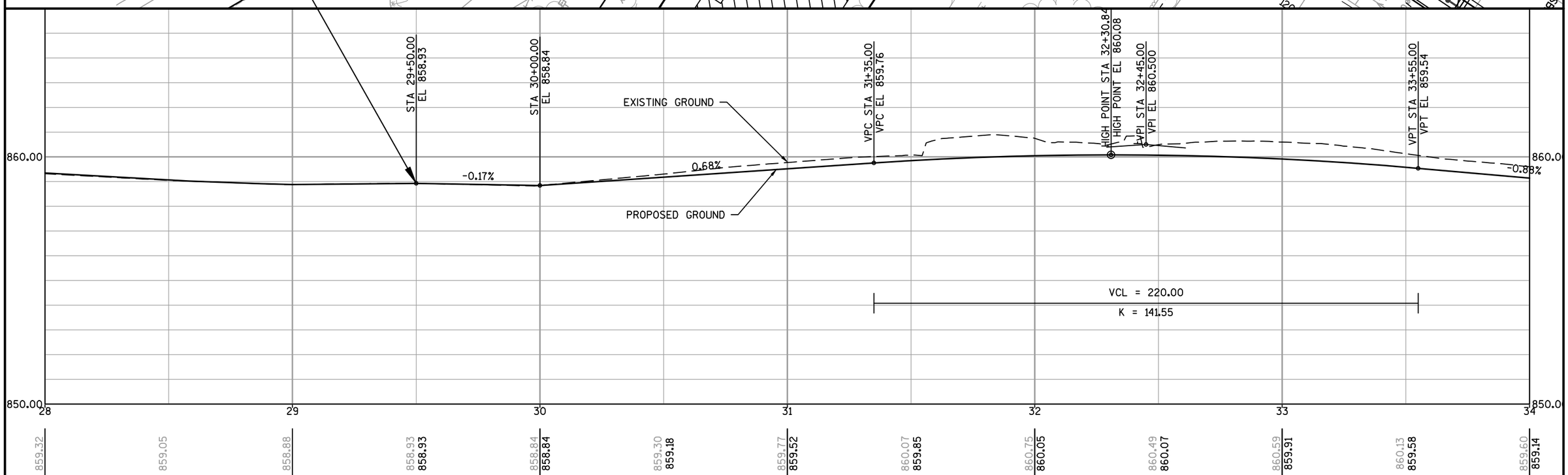

PROJECT NO: 3300-01-73	HWY: STH 89	COUNTY: JEFFERSON	PLAN AND PROFILE: MAINLINE	SHEET 220	E

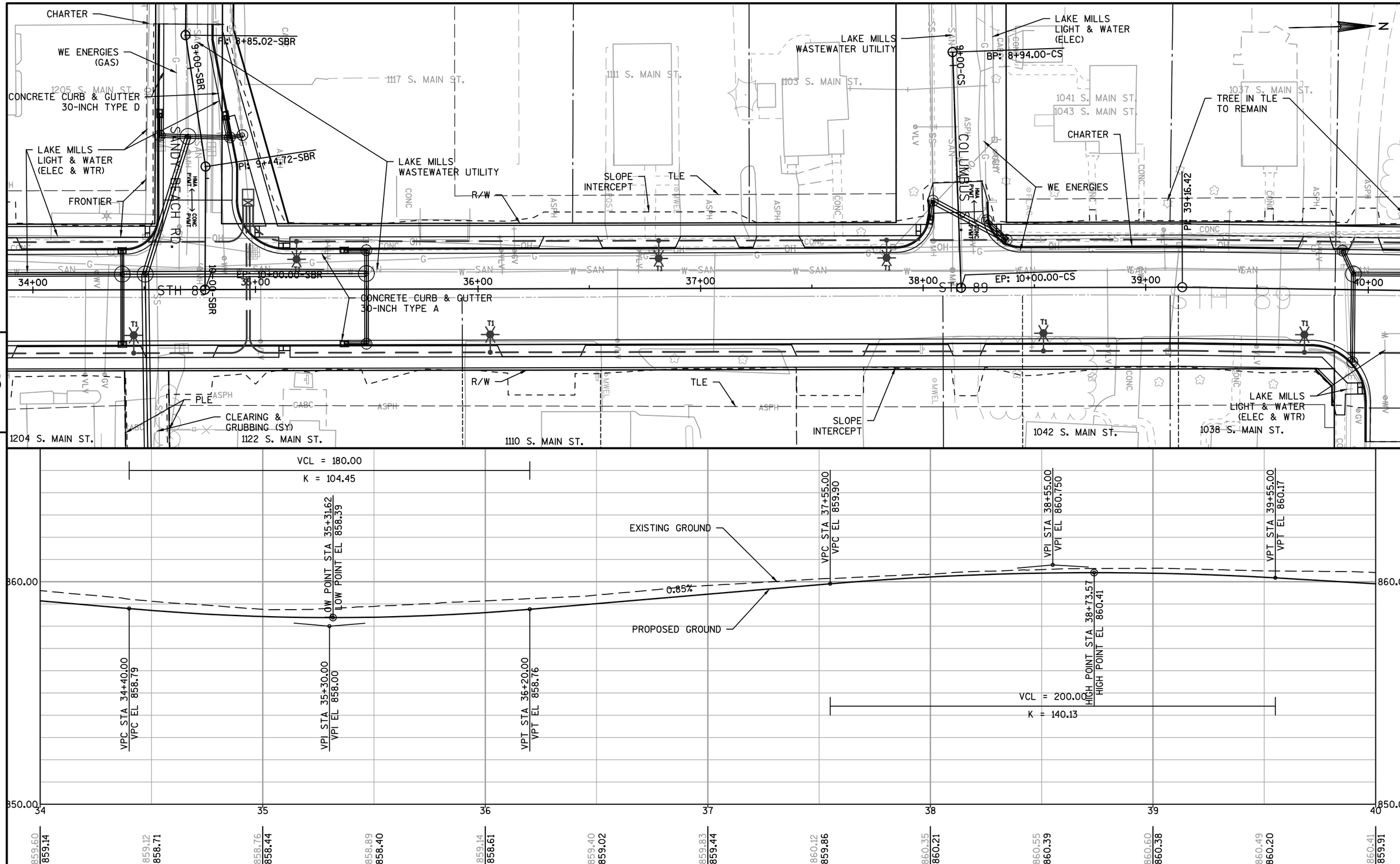

PROJECT NO: 3300-01-73	HWY: STH 89	COUNTY: JEFFERSON	PLAN AND PROFILE: MAINLINE	SHEET 221	E

FILE NAME : N:\PDS\C3D\33000103\SHEETSPLAN\050101-PLAN & PROFILE\050101-PP.DWG
LAYOUT NAME - PP - (2)
PLOT DATE : 1/16/2018 3:06 PM
PLOT BY : LEX, BRANDON WILLIAMPLOT NAME :
PLOT SCALE : 1:40_XREF

BENCHMARK/CONTROL POINT						
NO.	STATION	DESCRIPTION	OFFSET	ELEV.	NORTHING	EASTING
CP 8	40+89.17	1" CAPPED IRON PIPE	58.14 RT	859.86	581041.32	826953.45
CP 7	44+68.88	1" CAPPED IRON PIPE	212.10 LT	859.05	581425.00	826688.76
CP 14	44+72.62	8' SPIKE NW OF INTERSECTION	31.94 LT	859.79	581426.04	826869.11

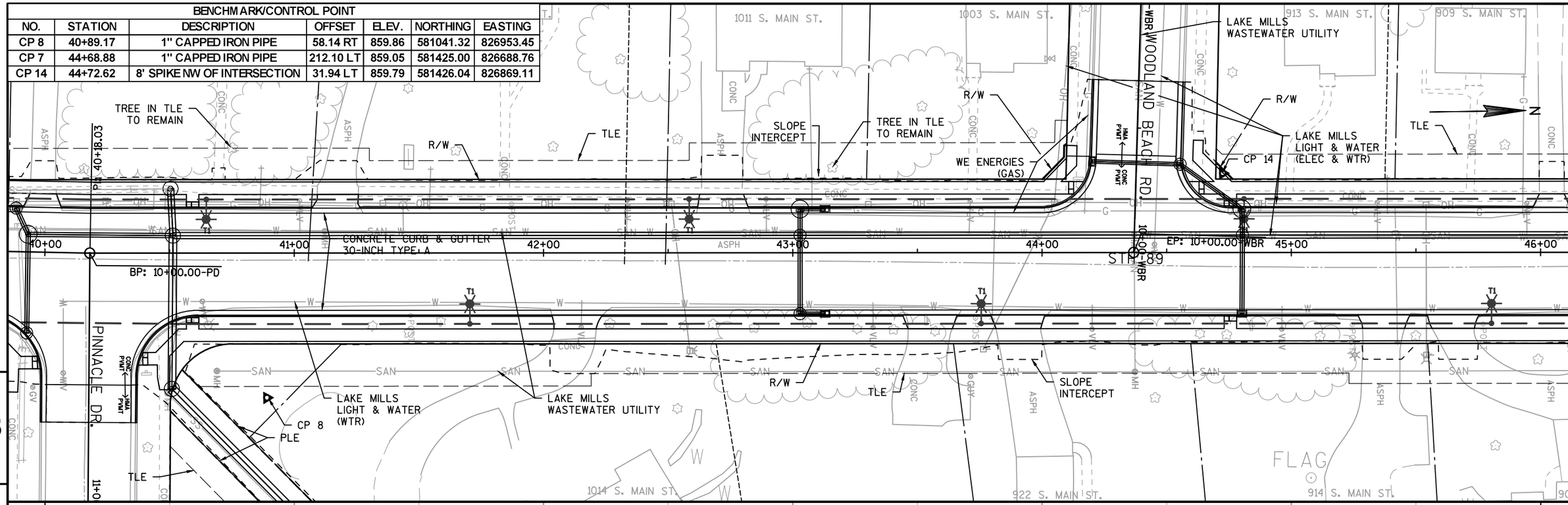

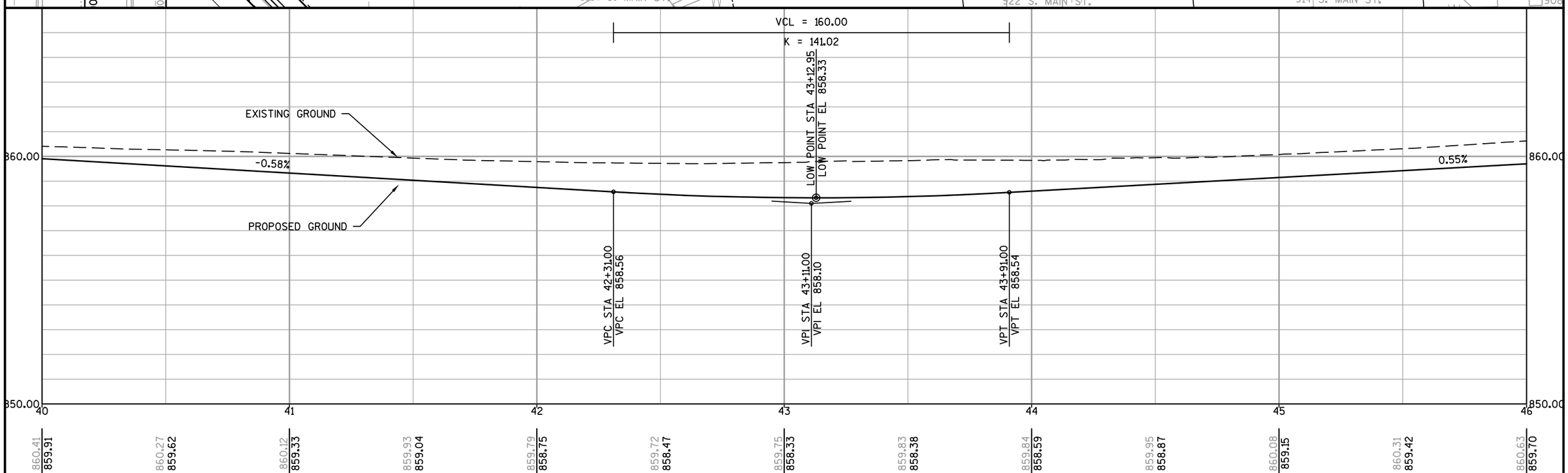

PROJECT NO: 3300-01-73	HWY: STH 89	COUNTY: JEFFERSON	PLAN AND PROFILE: MAINLINE	SHEET 222	E

FILE NAME : N:\PDS\C3D\33000103\SHEETSPLAN\050101-PLAN & PROFILE\050101-PP.DWG
LAYOUT NAME - PP - (3)
PLOT DATE : 1/16/2018 3:06 PM PLOT BY : LEX, BRANDON WILLIAMPLOT NAME : PLOT SCALE : 1:40_XREF

WISDOT/CADDS SHEET 44

BENCHMARK/CONTROL POINT						
NO.	STATION	DESCRIPTION	OFFSET	ELEV.	NORTHING	EASTING
CP 15	49+95.80	1" CAPPED IRON PIPE	55.33 RT	867.86	581947.99	826963.76

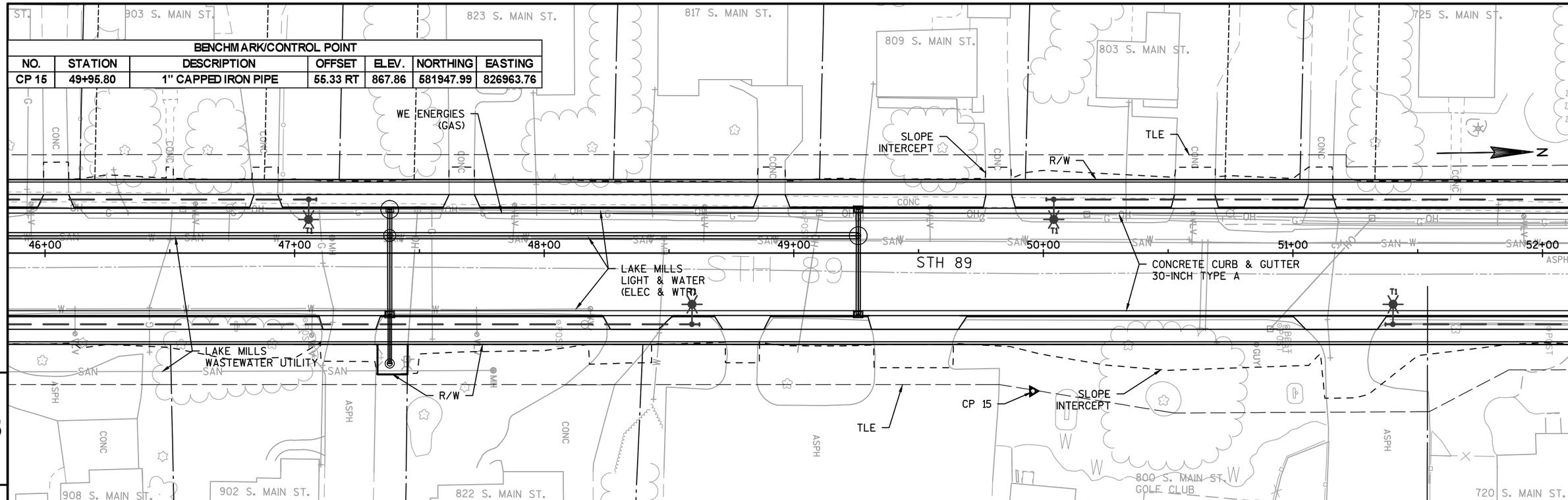

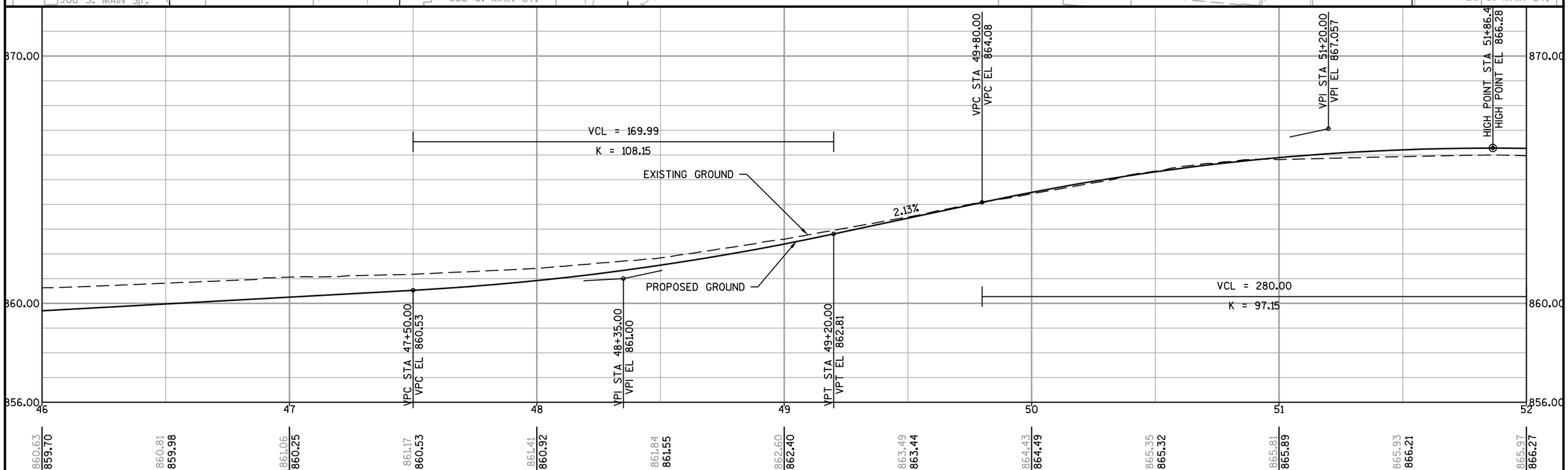

PROJECT NO: 3300-01-73	HWY: STH 89	COUNTY: JEFFERSON	PLAN AND PROFILE: MAINLINE	SHEET 223	E

FILE NAME : N:\PDS\C3D\33000103\SHEETSPLAN\050101-PLAN & PROFILE\050101-PP.DWG
LAYOUT NAME - PP - (4)
PLOT DATE : 1/16/2018 3:07 PM PLOT BY : LEX, BRANDON WILLIAMPLOT NAME : PLOT SCALE : 1:40_XREF

BENCHMARK/CONTROL POINT						
NO.	STATION	DESCRIPTION	OFFSET	ELEV.	NORTHING	EASTING
CP 17	56+68.38	1" CAPPED IRON PIPE	31.98 LT	863.04	582621.93	826889.30

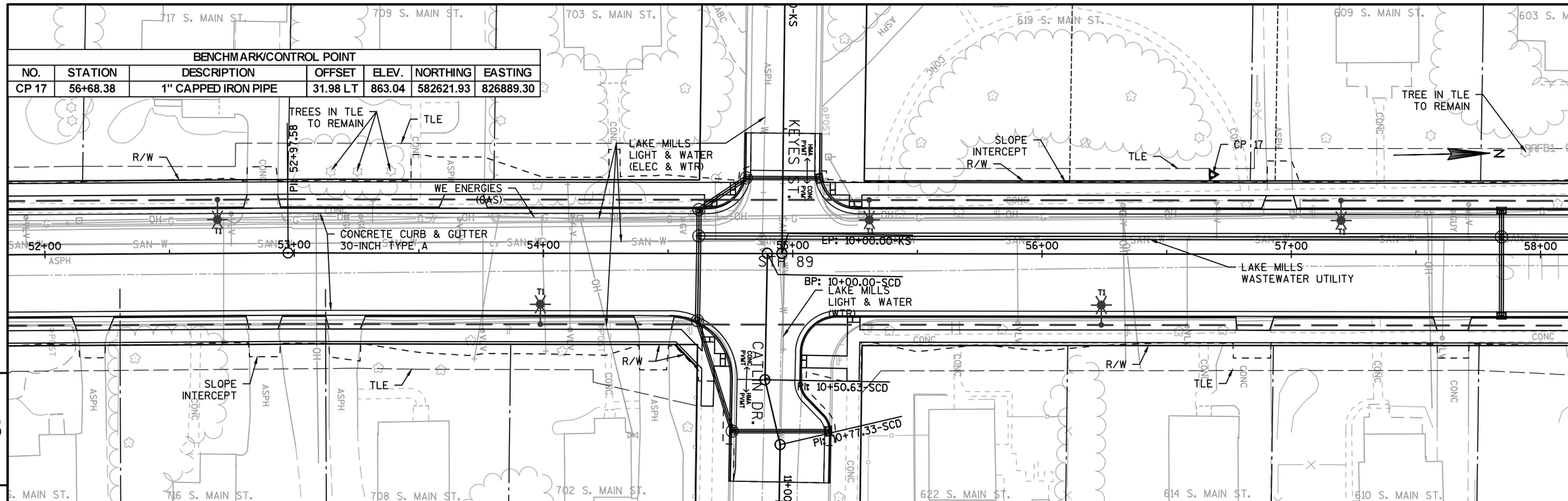

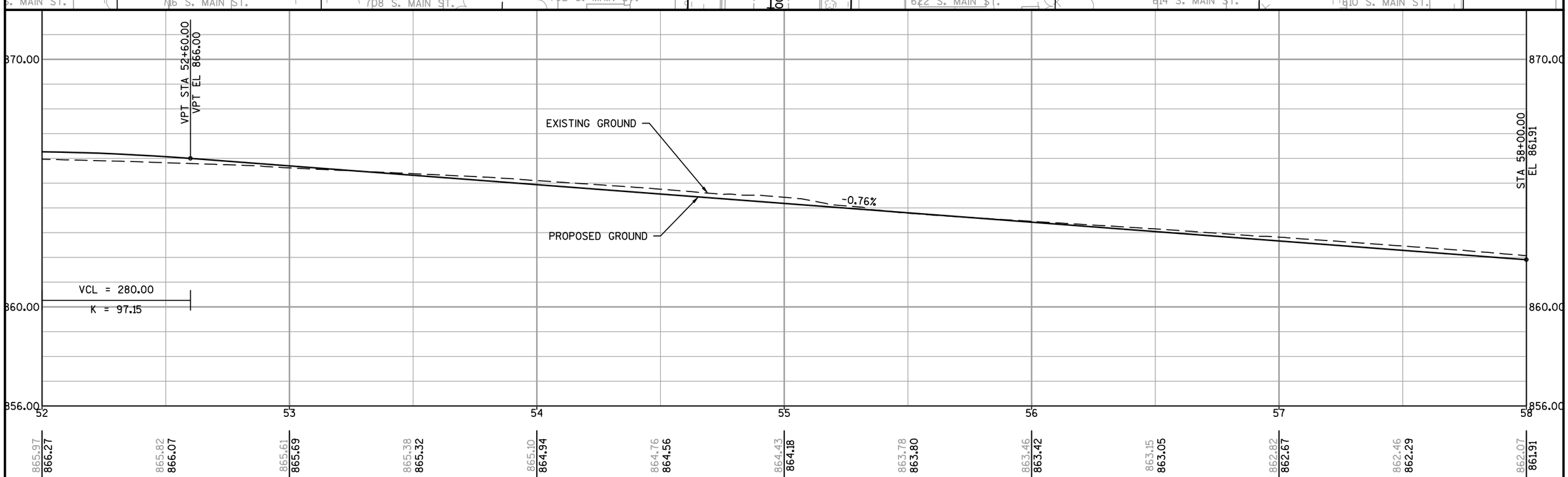

PROJECT NO: 3300-01-73	HWY: STH 89	COUNTY: JEFFERSON	PLAN AND PROFILE: MAINLINE	SHEET 224	E

FILE NAME : N:\PDS\C3D\33000103\SHEETSPLAN\050101-PLAN & PROFILE\050101-PP.DWG
LAYOUT NAME - PP - (5)
PLOT DATE : 1/16/2018 3:07 PM
PLOT BY : LEX, BRANDON WILLIAMPLOT NAME :
PLOT SCALE : 1:40_XREF

BENCHMARK/CONTROL POINT						
NO.	STATION	DESCRIPTION	OFFSET	ELEV.	NORTHING	EASTING
BM 603	58+30.15	NE CORNER OF 1ST STAIR ON N. SIDE OF HOUSE; #603 S. MAIN ST.	104.92 LT	864.58	582785.34	826819.88
CP 5	61+98.22	1" CAPPED IRON PIPE	342.70 RT	852.03	583142.31	827276.16
CP-13	63+24.14	8''' SPIKE NW OF INTERSECTION	42.86 LT	858.75	583277.88	826893.91

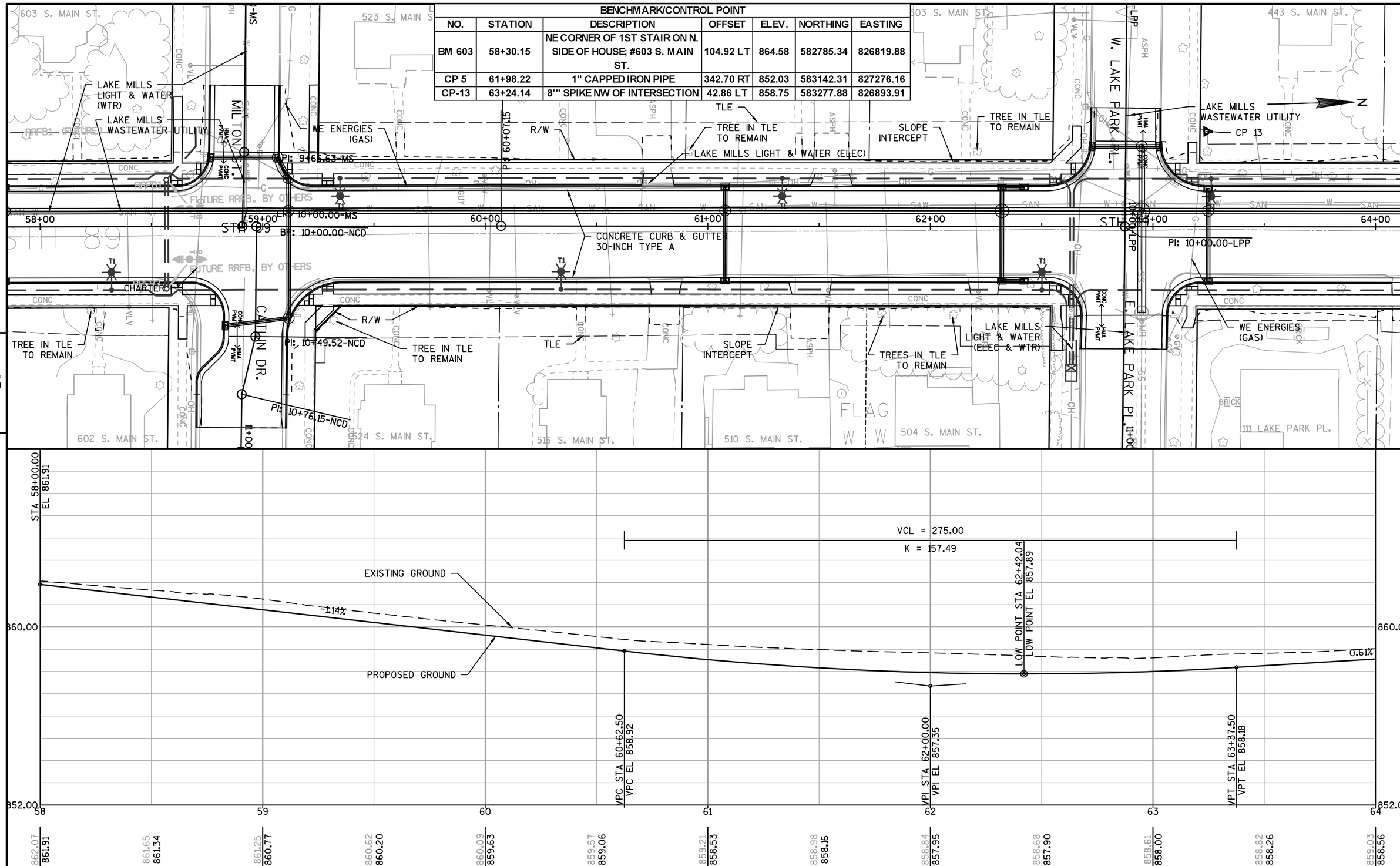

PROJECT NO: 3300-01-73	HWY: STH 89	COUNTY: JEFFERSON	PLAN AND PROFILE: MAINLINE	SHEET 225	E

FILE NAME : N:\PDS\C3D\33000103\SHEETSPLAN\050101-PLAN & PROFILE\050101-PP.DWG
LAYOUT NAME - PP - (6)
PLOT DATE : 1/16/2018 3:07 PM PLOT BY : LEX, BRANDON WILLIAMPLOT NAME : PLOT SCALE : 1:40_XREF

BENCHMARK/CONTROL POINT						
NO.	STATION	DESCRIPTION	OFFSET	ELEV.	NORTHING	EASTING
BM 411	67+54.20	TOP OF LIGHT POLE BASE; #411 S. MAIN ST.	56.41 LT	862.59	583709.70	826892.3

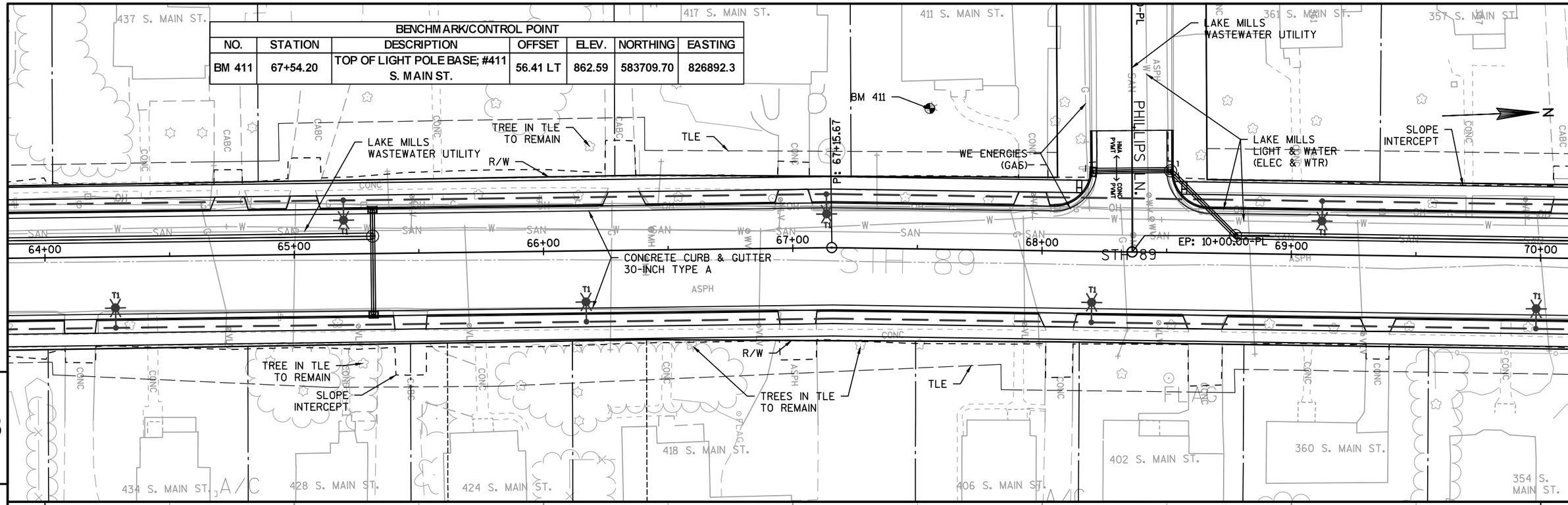

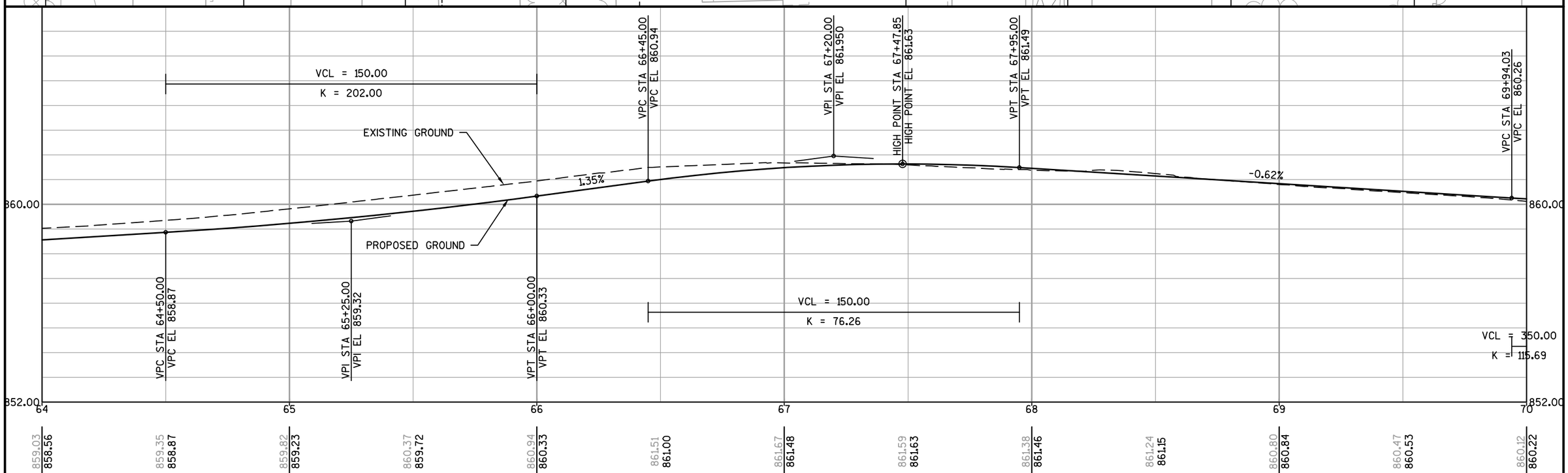

PROJECT NO: 3300-01-73	HWY: STH 89	COUNTY: JEFFERSON	PLAN AND PROFILE: MAINLINE	SHEET 226	E

BENCHMARK/CONTROL POINT						
NO.	STATION	DESCRIPTION	OFFSET	ELEV.	NORTHING	EASTING
CP 12	71+15.98	8" SPIKE IN YARD	39.97 RT	859.40	584065.95	827007.67

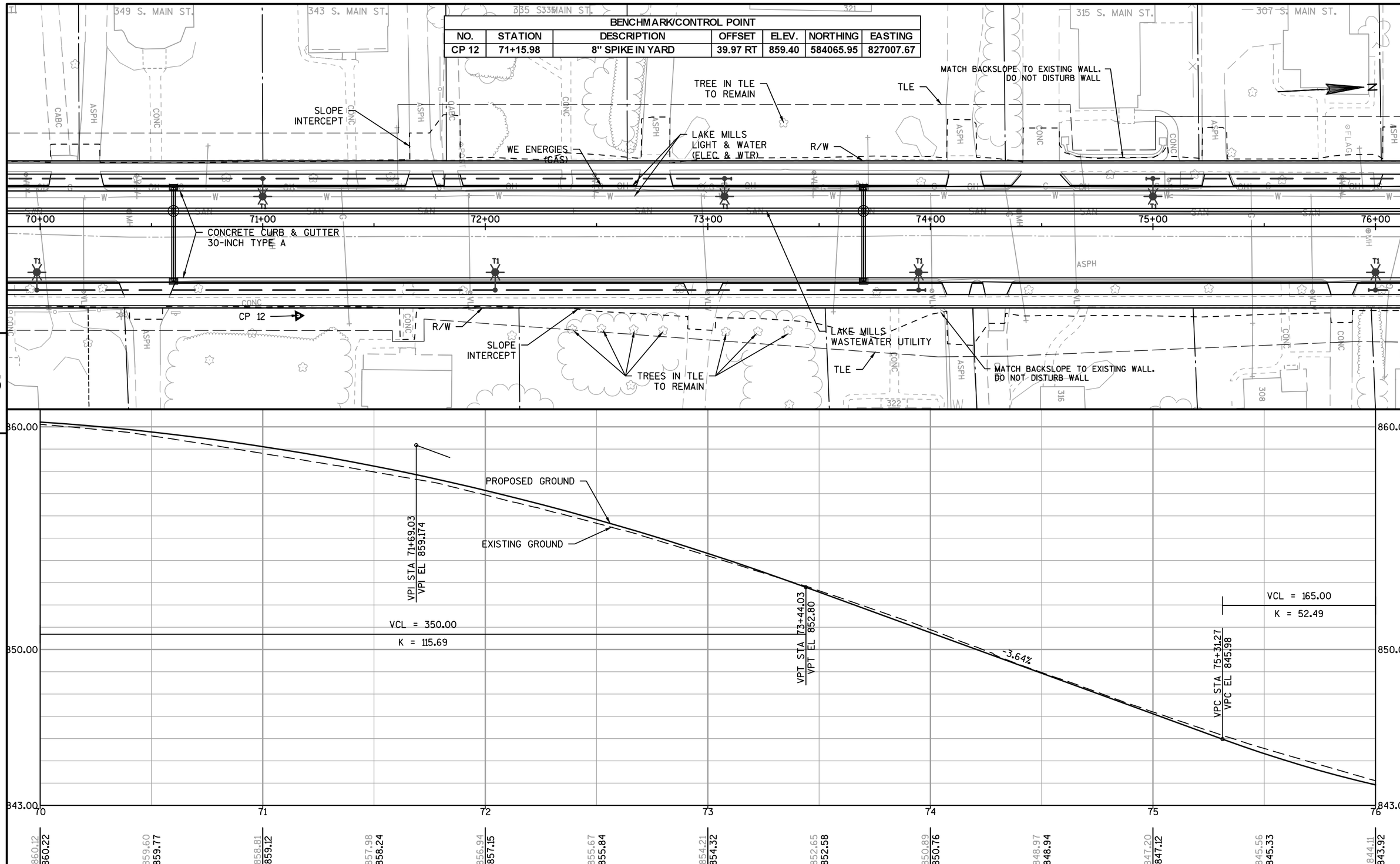

PROJECT NO: 3300-01-73	HWY: STH 89	COUNTY: JEFFERSON	PLAN AND PROFILE: MAINLINE	SHEET 227	E

BENCHMARK/CONTROL POINT						
NO.	STATION	DESCRIPTION	OFFSET	ELEV.	NORTHING	EASTING
BM 302	76+42.96	CHISELED BOX; SW CORNER OF HATCHERY SIGN	43.85 RT	844.34	584591.94	827039.23

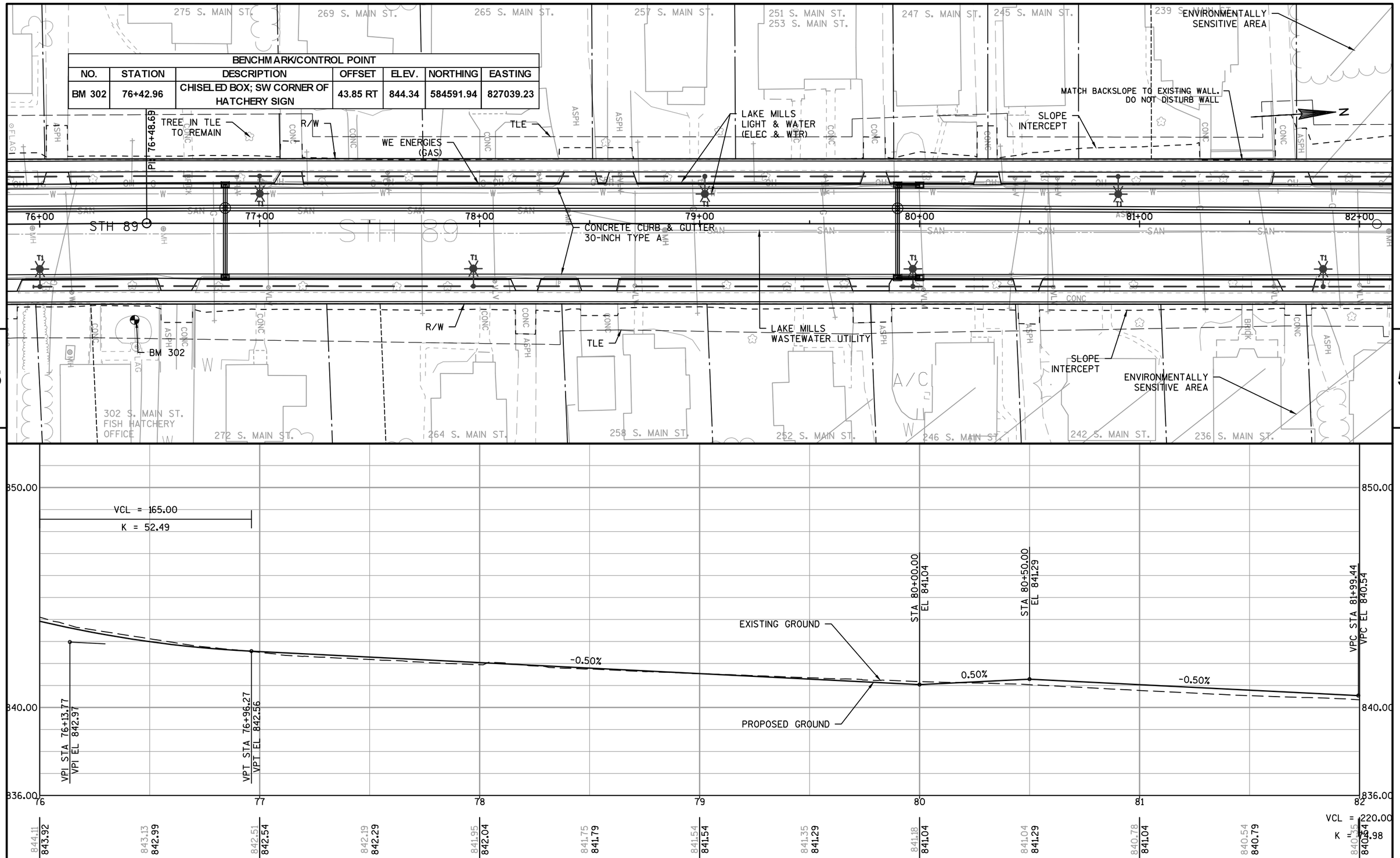

PROJECT NO: 3300-01-73	HWY: STH 89	COUNTY: JEFFERSON	PLAN AND PROFILE: MAINLINE	SHEET 228	E

FILE NAME : N:\PDS\C3D\33000103\SHEETSPLAN\050101-PLAN & PROFILE\050101-PP.DWG
LAYOUT NAME - PP - (9)
PLOT DATE : 1/16/2018 3:08 PM PLOT BY : LEX, BRANDON WILLIAMPLOT NAME : PLOT SCALE : 1:40_XREF

WISDOT/CADDS SHEET 44

BENCHMARK/CONTROL POINT						
NO.	STATION	DESCRIPTION	OFFSET	ELEV.	NORTHING	EASTING
CP 10	83+64.61	MAG NAIL IN PARKING LOT	35.32 LT	838.48	585321.38	827014.82
CP 3	84+27.86	1" CAPPED IRON PIPE	251.72 LT	834.58	585450.66	826826.20

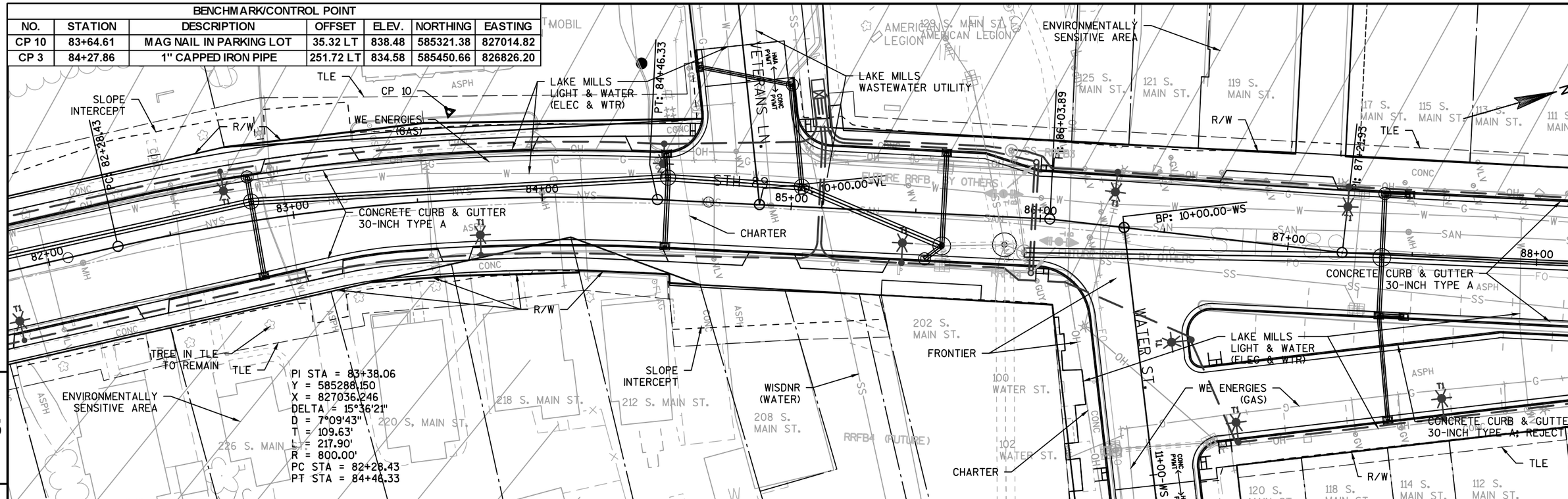

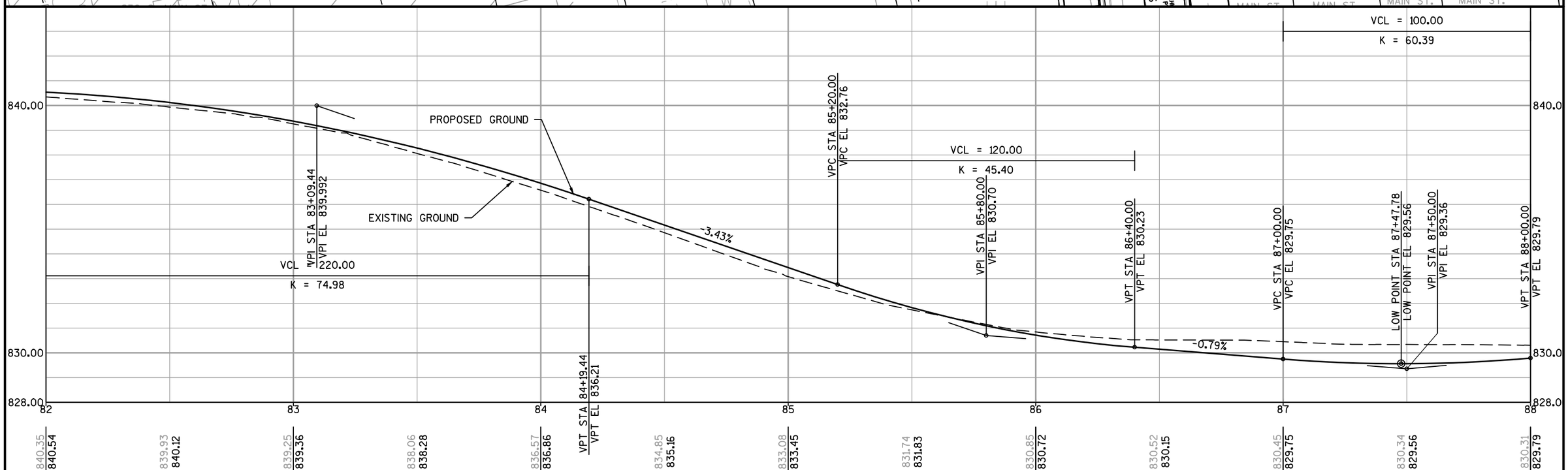

PROJECT NO: 3300-01-73	HWY: STH 89	COUNTY: JEFFERSON	PLAN AND PROFILE: MAINLINE	SHEET 229	E

FILE NAME : N:\PDS\C3D\33000103\SHEETSPLAN\050101-PLAN & PROFILE\050101-PP.DWG
LAYOUT NAME - PP - (10)
PLOT DATE : 1/16/2018 3:08 PM PLOT BY : LEX, BRANDON WILLIAMPLOT NAME : PLOT SCALE : 1:40_XREF

BENCHMARK/CONTROL POINT						
NO.	STATION	DESCRIPTION	OFFSET	ELEV.	NORTHING	EASTING
CP 11	90+51.68	1" CAPPED IRON PIPE	51.34 RT	830.86	585940.16	827327.96

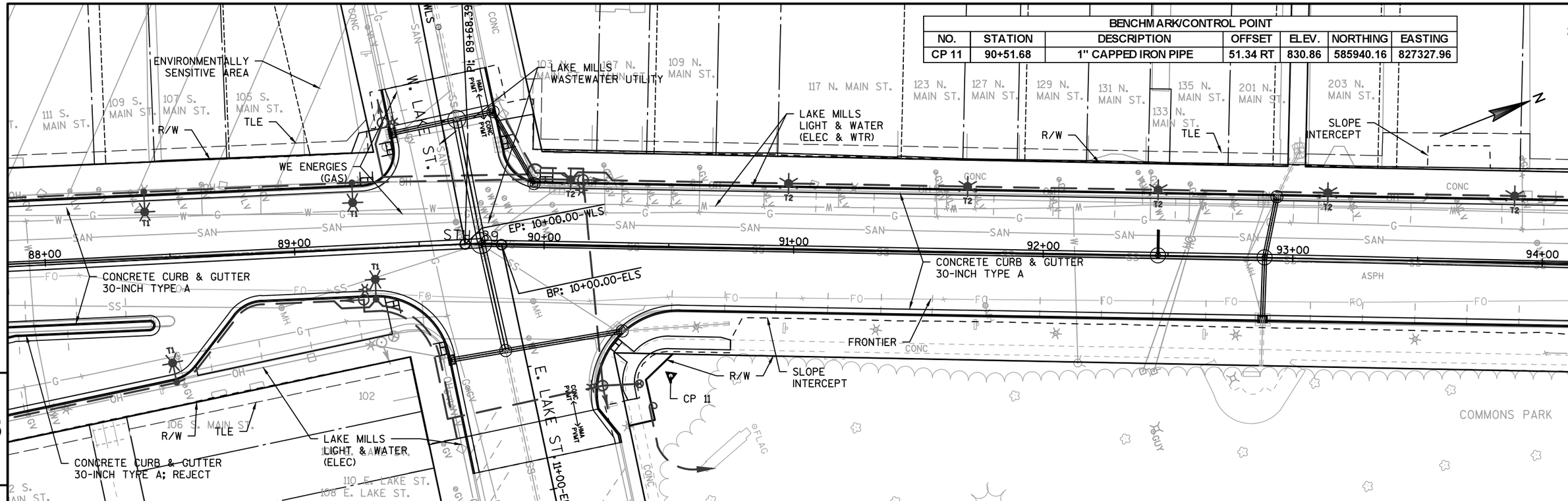

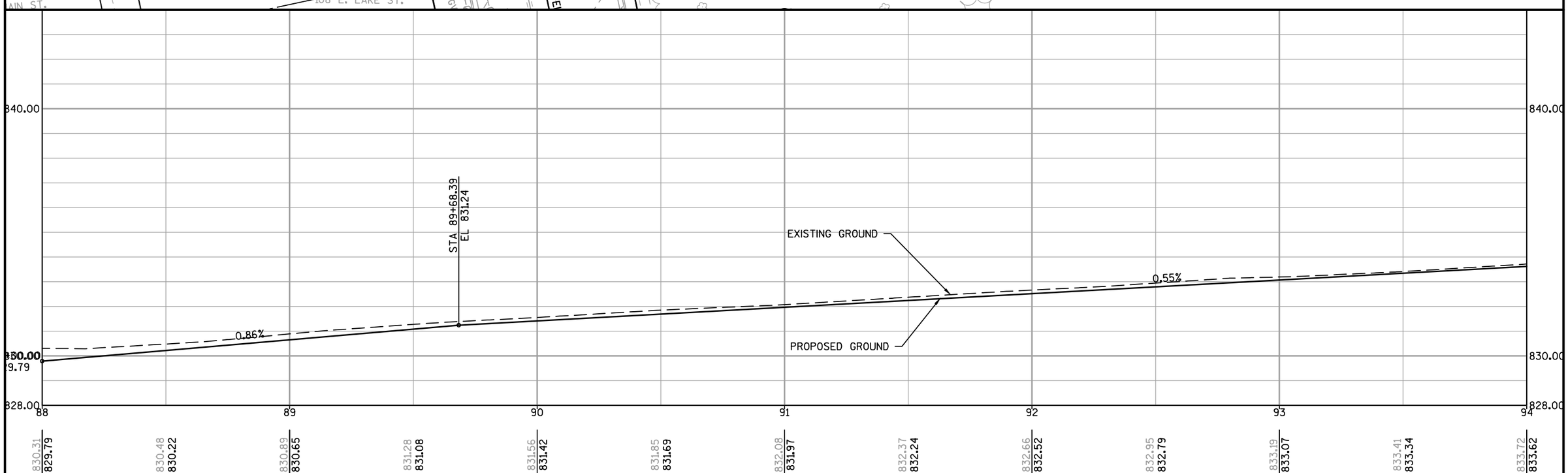

PROJECT NO: 3300-01-73	HWY: STH 89	COUNTY: JEFFERSON	PLAN AND PROFILE: MAINLINE	SHEET 230	E

FILE NAME : N:\PDS\C3D\33000103\SHEETSPLAN\050101-PLAN & PROFILE\050101-PP.DWG
LAYOUT NAME - PP - (11)
PLOT DATE : 1/16/2018 3:09 PM PLOT BY : LEX, BRANDON WILLIAMPLOT NAME : PLOT SCALE : 1:40_XREF

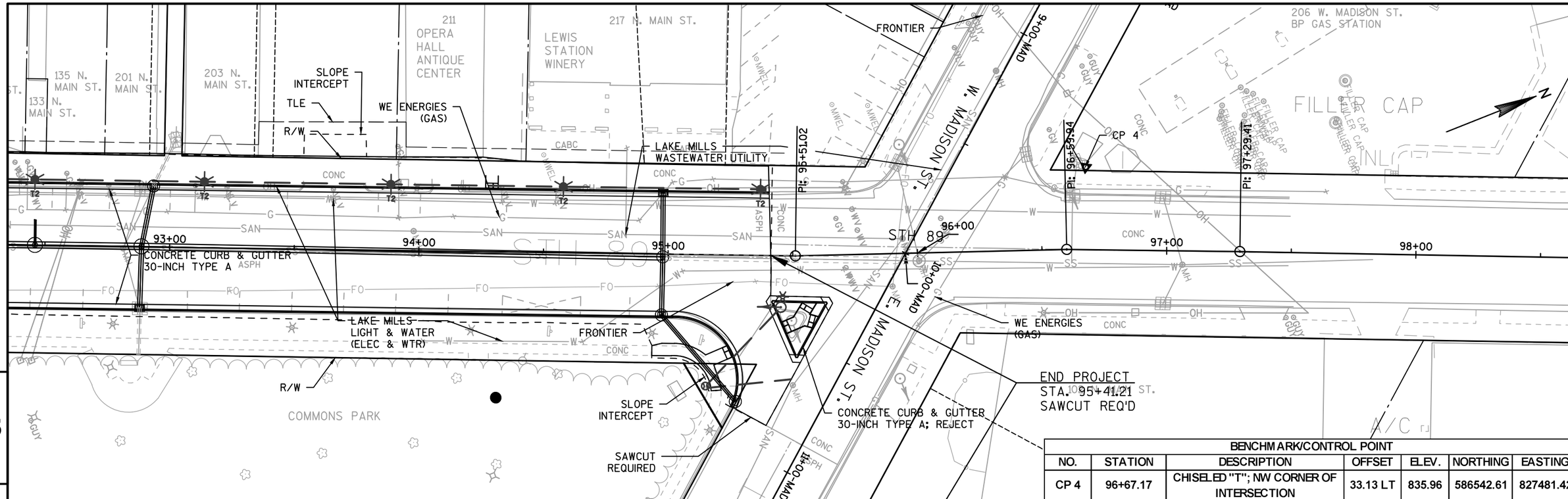

BENCHMARK/CONTROL POINT						
NO.	STATION	DESCRIPTION	OFFSET	ELEV.	NORTHING	EASTING
CP 4	96+67.17	CHISELED "T"; NW CORNER OF INTERSECTION	33.13 LT	835.96	586542.61	827481.42

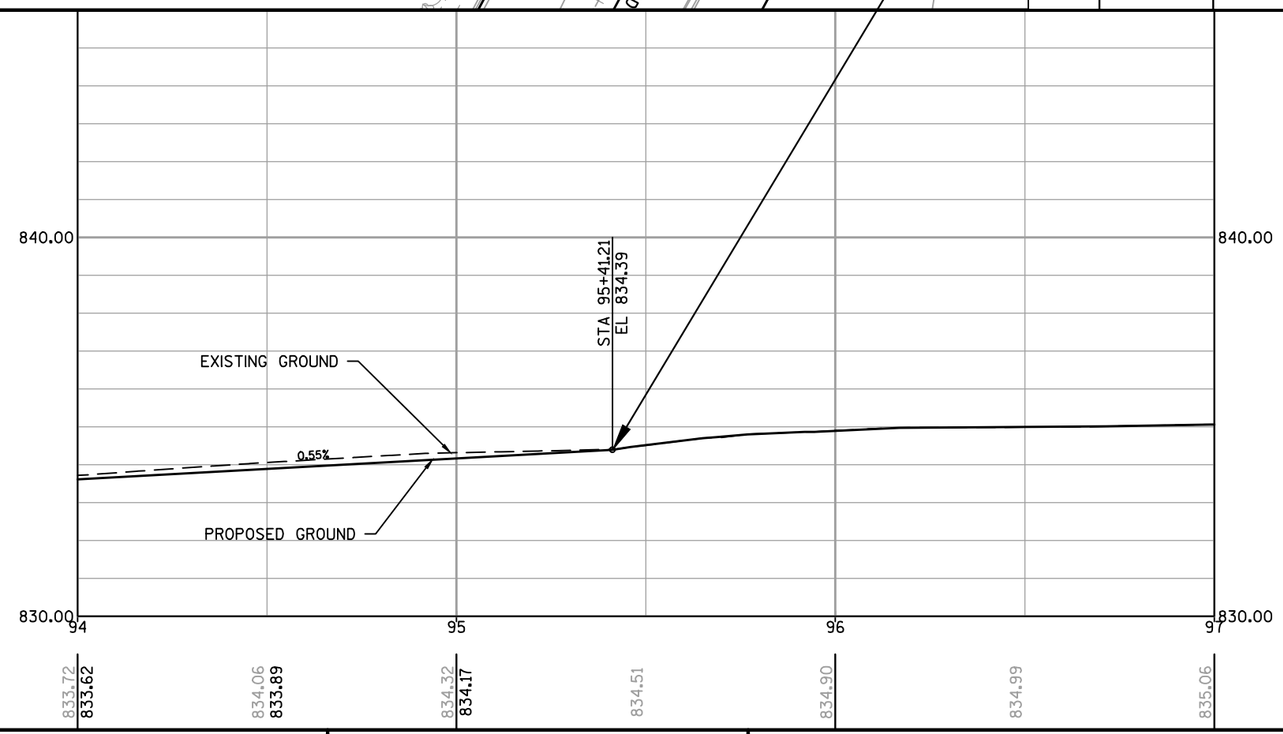

PROJECT NO:3300-01-73	HWY:STH 89	COUNTY:JEFFERSON	PLAN AND PROFILE: MAINLINE	SHEET 231	E

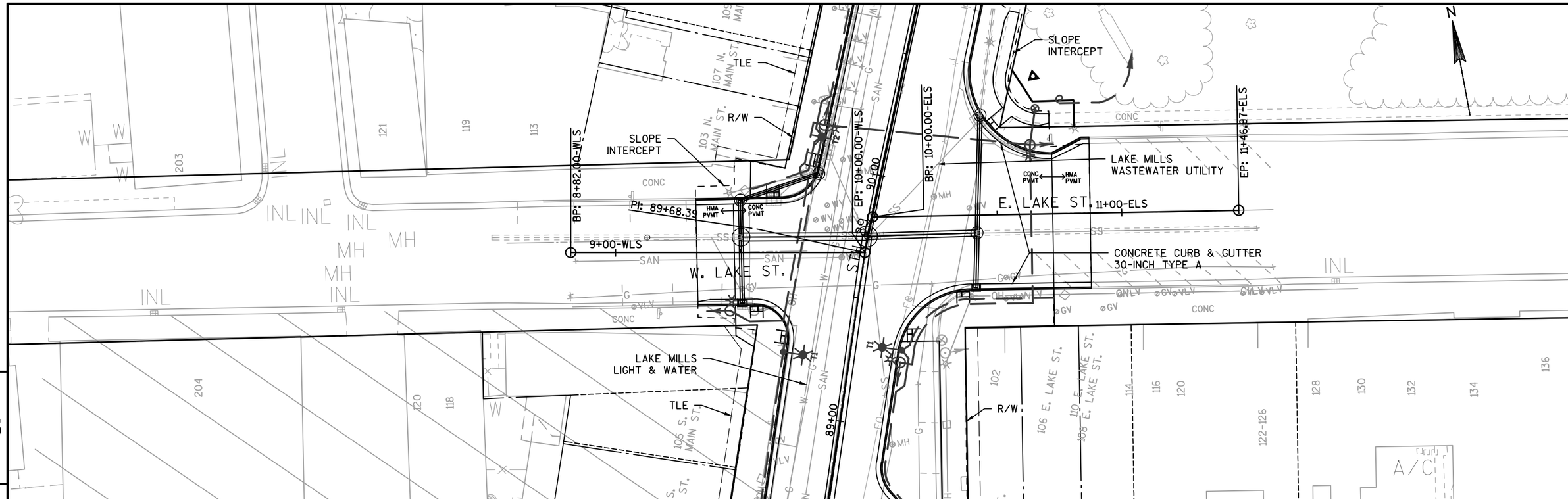

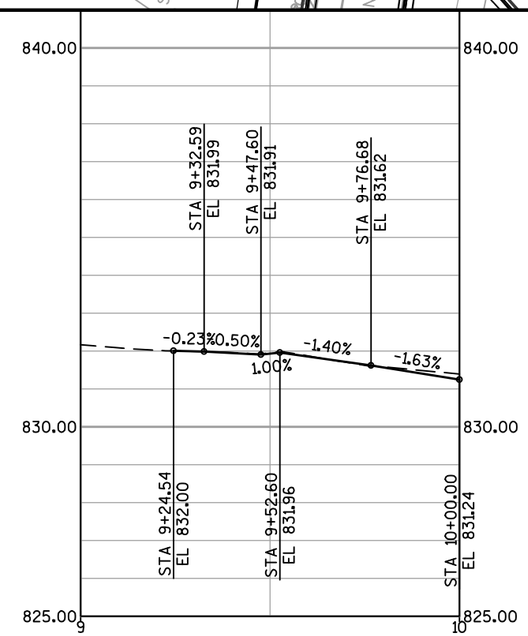

PROJECT NO:3300-01-73	HWY:STH 89	COUNTY:JEFFERSON	PLAN AND PROFILE: WEST LAKE STREET	SHEET 232	E

FILE NAME : N:\PDS\C3D\33000103\SHEETSPLAN\050101-PLAN & PROFILE\050101-PP.DWG
LAYOUT NAME - WLS
PLOT DATE : 1/16/2018 3:09 PM PLOT BY : LEX, BRANDON WILLIAMPLOT NAME : PLOT SCALE : 1 IN:40 FT

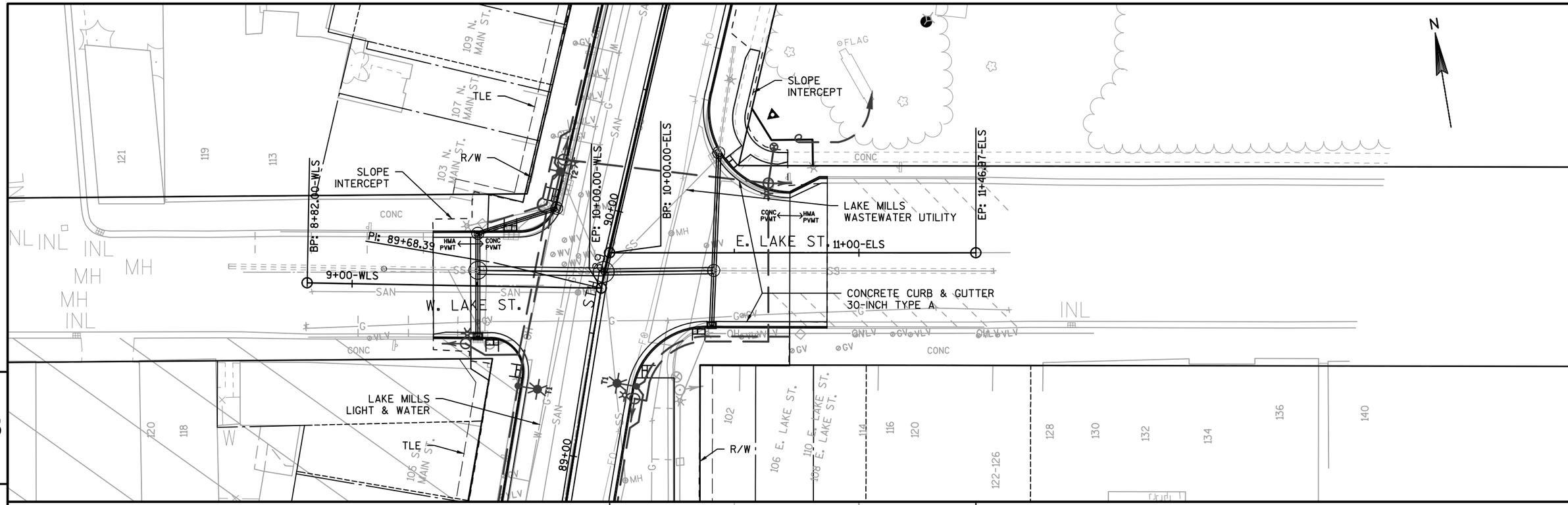

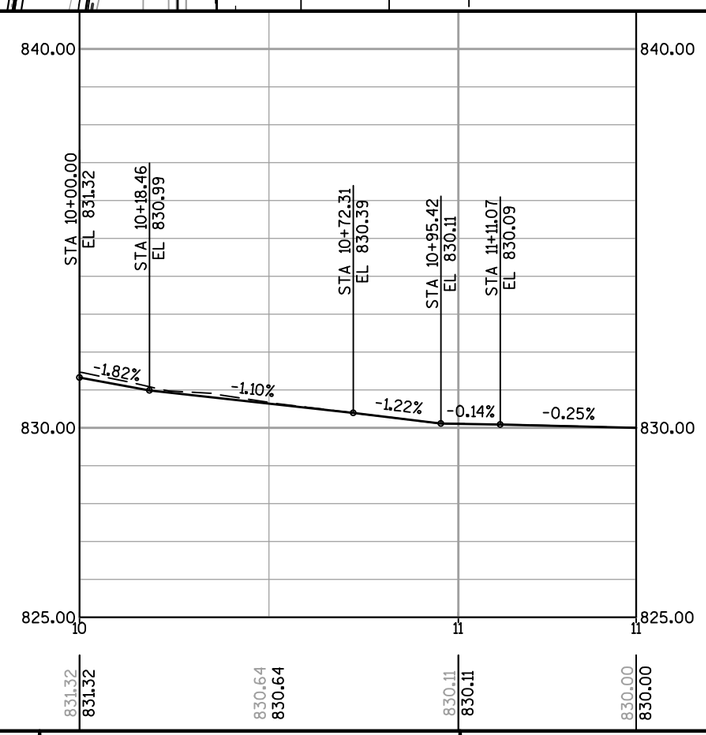

PROJECT NO: 3300-01-73	HWY: STH 89	COUNTY: JEFFERSON	PLAN AND PROFILE: EAST LAKE STREET	SHEET 233	E

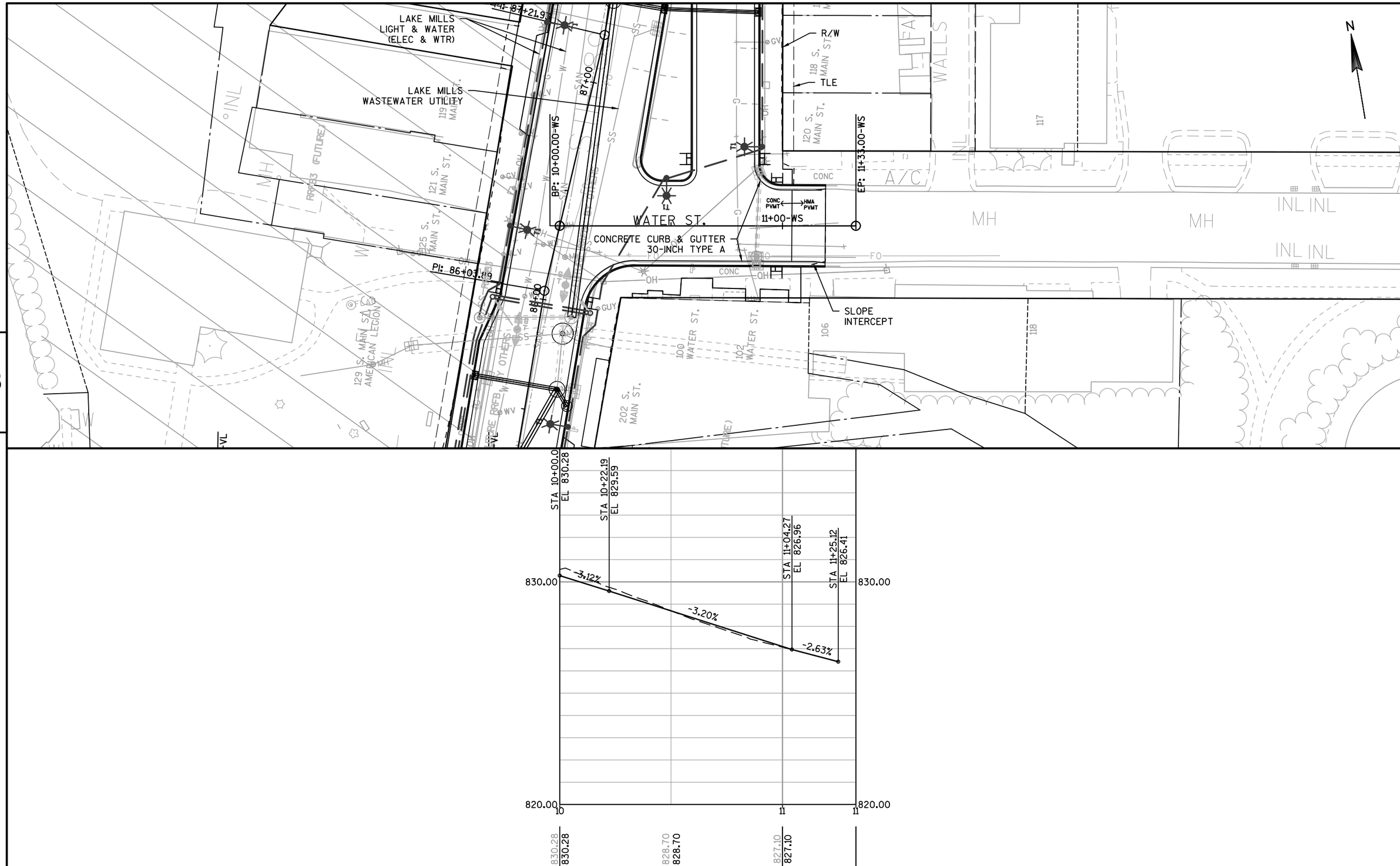

PROJECT NO: 3300-01-73	HWY: STH 89	COUNTY: JEFFERSON	PLAN AND PROFILE: WATER STREET	SHEET 234	E

FILE NAME : N:\PDS\C3D\33000103\SHEETSPLAN\050101-PLAN & PROFILE\050101-PP.DWG
LAYOUT NAME - WS
PLOT DATE : 1/16/2018 3:10 PM PLOT BY : LEX, BRANDON WILLIAMPLOT NAME : PLOT SCALE : 1 IN:40 FT

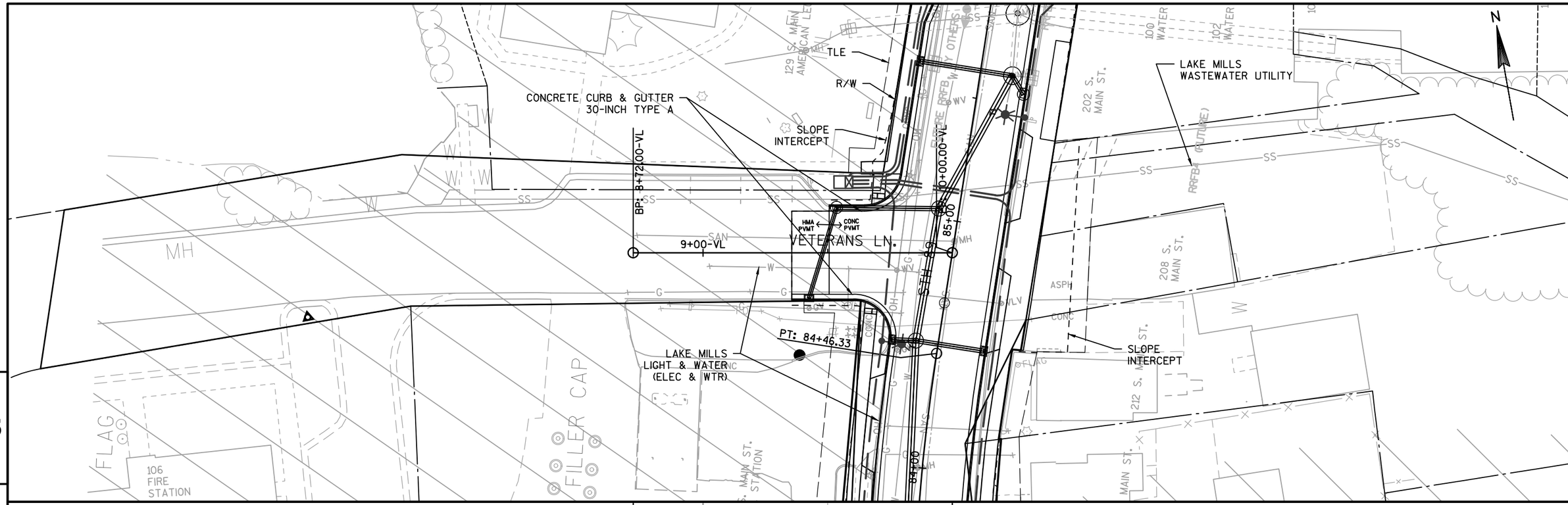

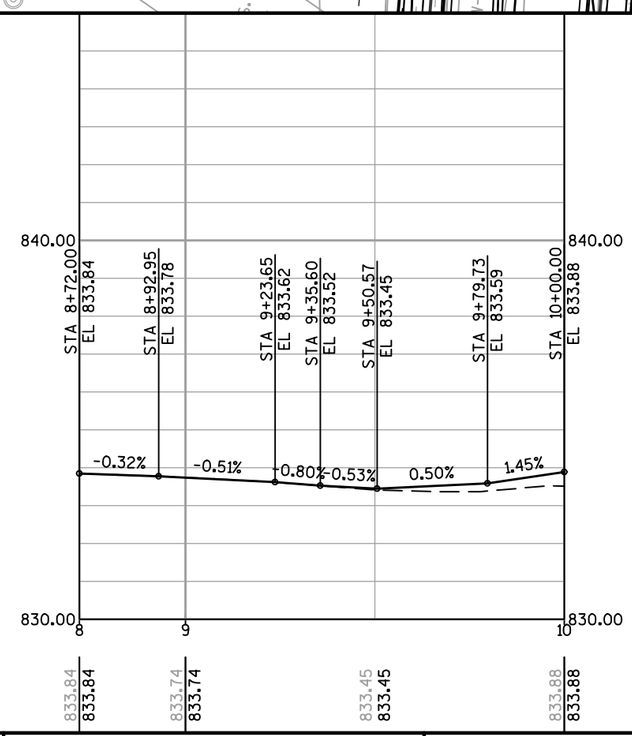

PROJECT NO: 3300-01-73	HWY: STH 89	COUNTY: JEFFERSON	PLAN AND PROFILE: VETERANS LANE	SHEET 235	E

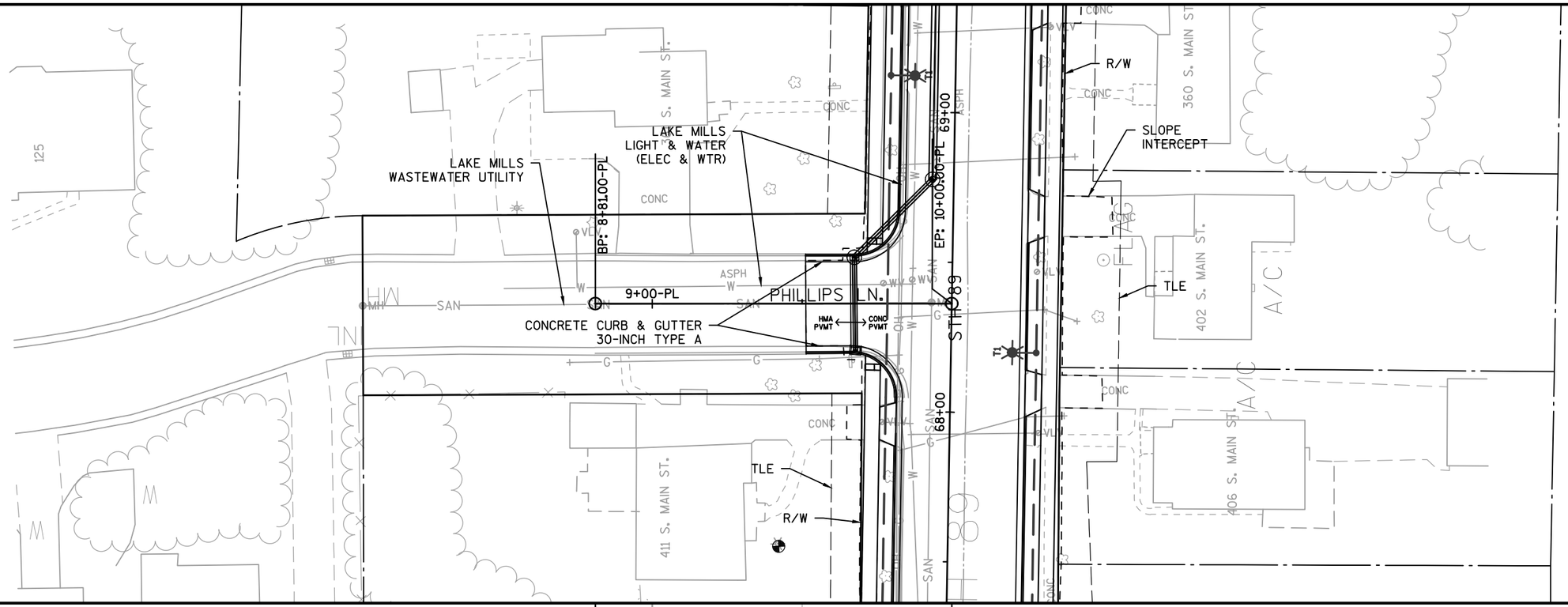

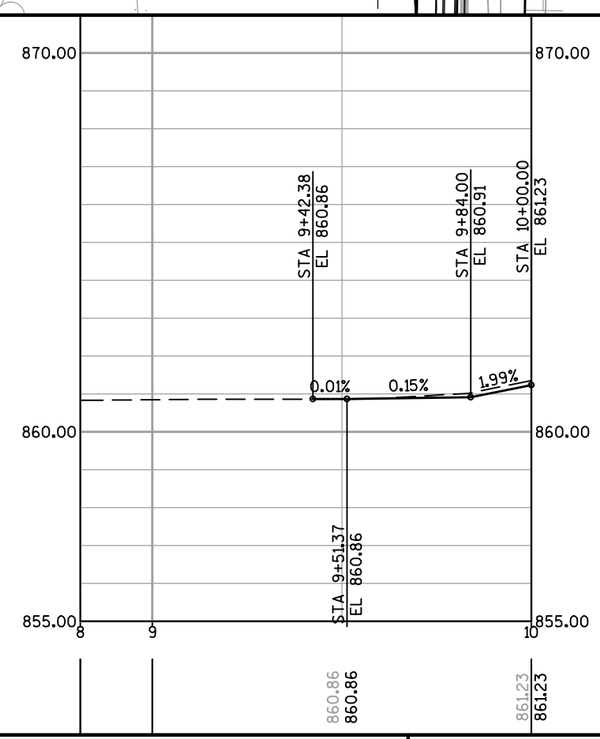

PROJECT NO: 3300-01-73	HWY: STH 89	COUNTY: JEFFERSON	PLAN AND PROFILE: PHILLIPS LANE	SHEET 236	E

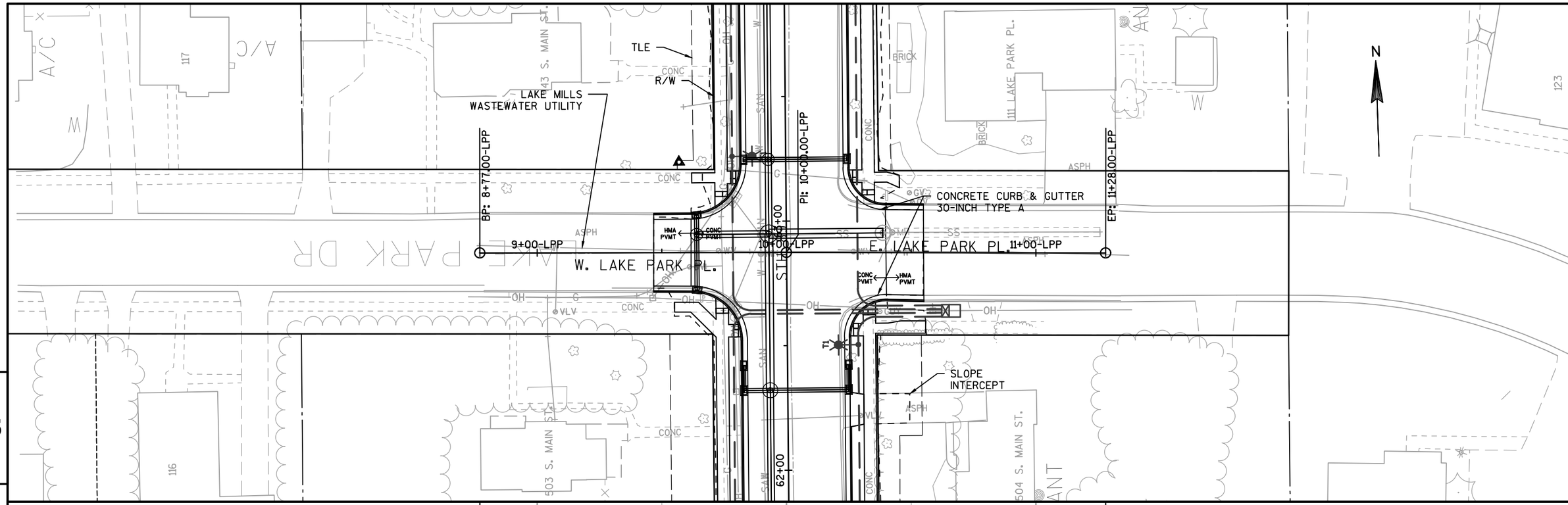

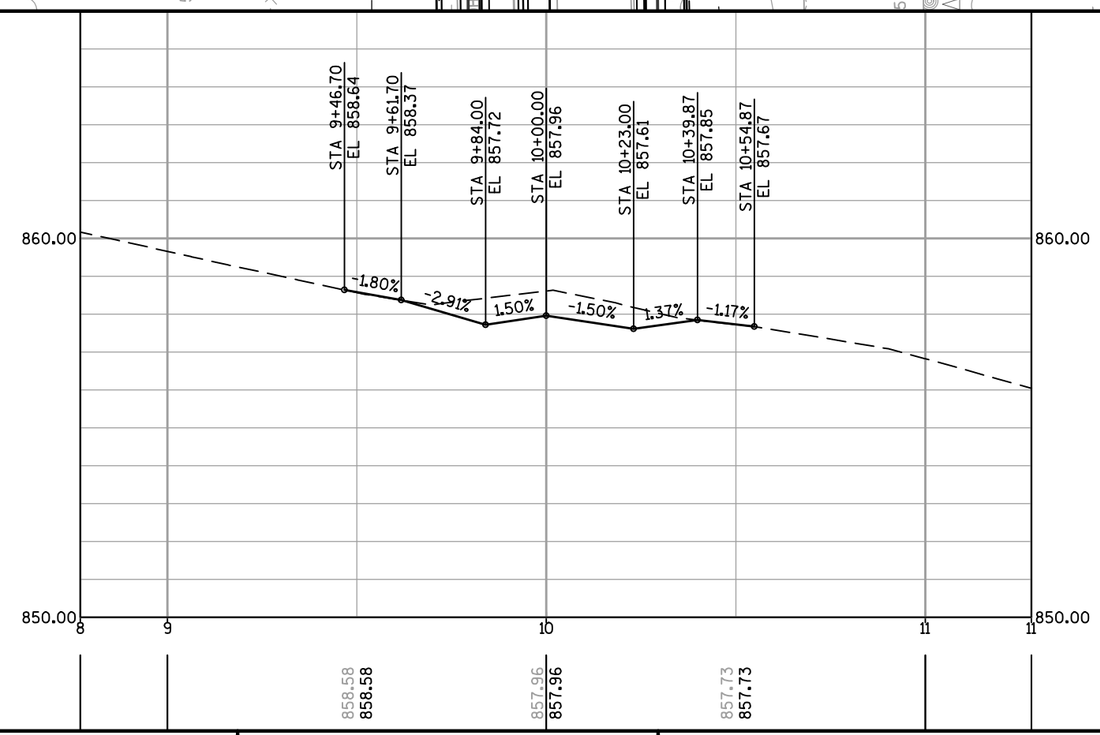

PROJECT NO: 3300-01-73	HWY: STH 89	COUNTY: JEFFERSON	PLAN AND PROFILE: LAKE PARK PLACE	SHEET 237	E

FILE NAME : N:\PDS\C3D\33000103\SHEETSPLAN\050101-PLAN & PROFILE\050101-PP.DWG
LAYOUT NAME - LPP
PLOT DATE : 1/16/2018 3:11 PM PLOT BY : LEX, BRANDON WILLIAMPLOT NAME : PLOT SCALE : 1 IN:40 FT

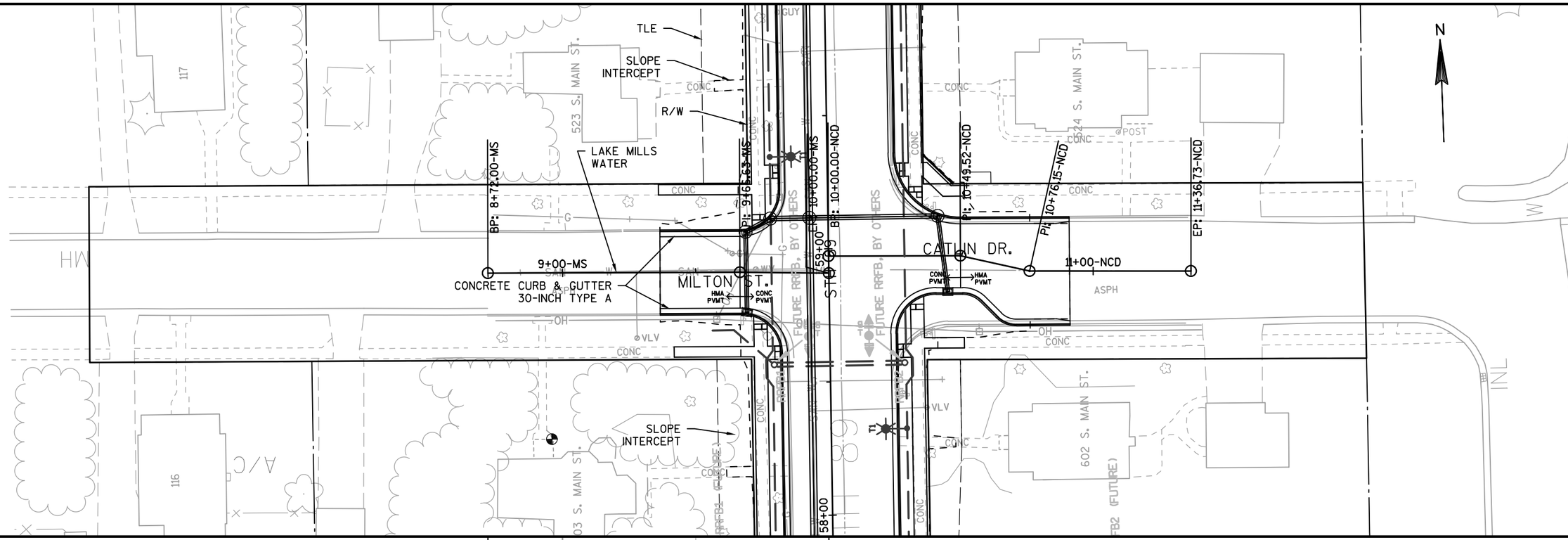

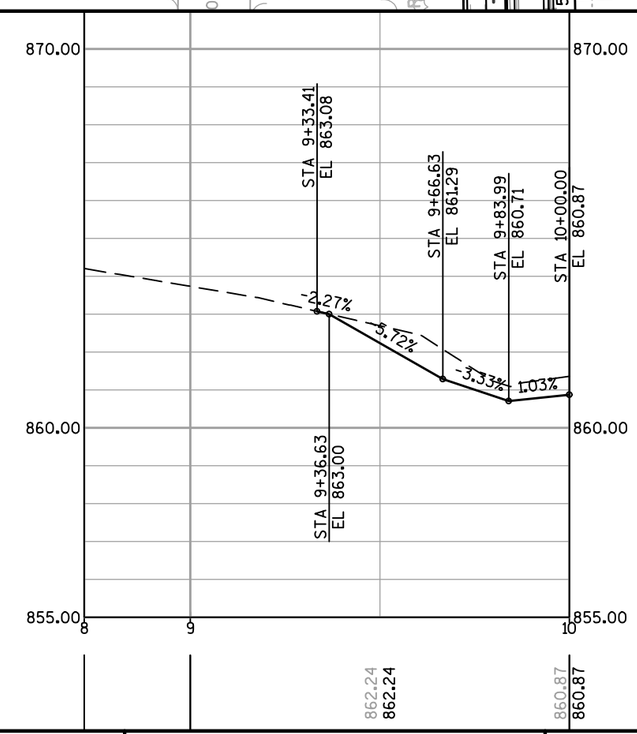

PROJECT NO:3300-01-73	HWY:STH 89	COUNTY:JEFFERSON	PLAN AND PROFILE: MILTON STREET	SHEET 238	E

FILE NAME : N:\PDS\C3D\33000103\SHEETSPLAN\050101-PLAN & PROFILE\050101-PP.DWG
LAYOUT NAME - MS
PLOT DATE : 1/16/2018 3:11 PM PLOT BY : LEX, BRANDON WILLIAMPLOT NAME : PLOT SCALE : 1 IN:40 FT

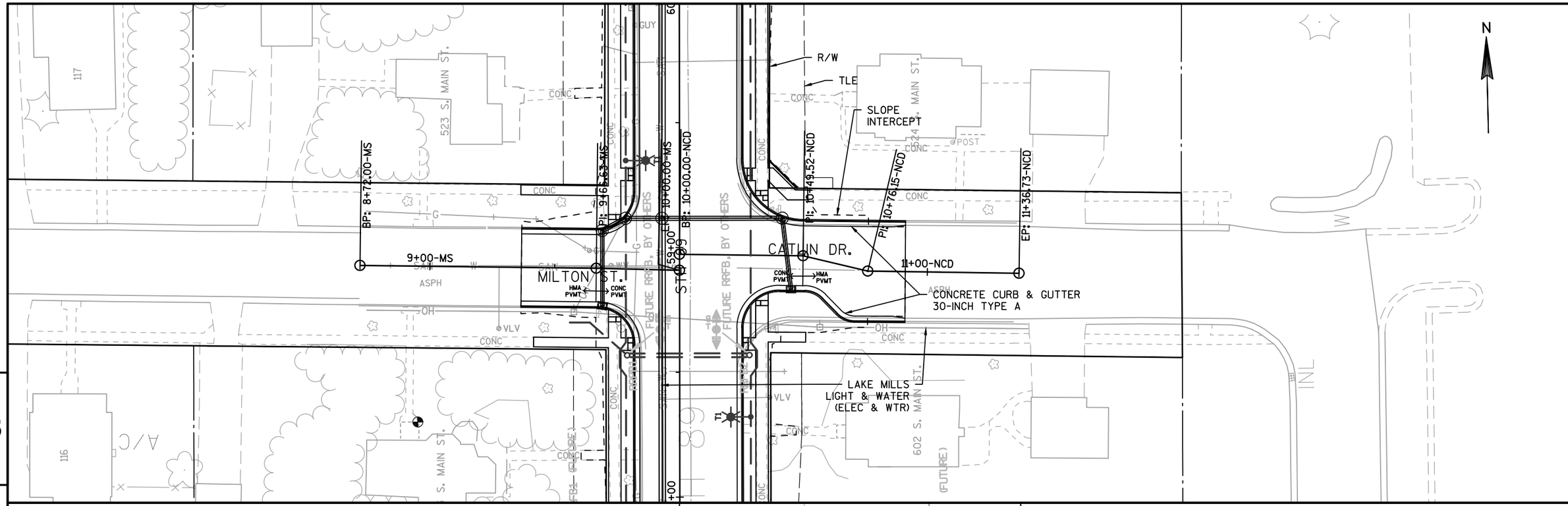

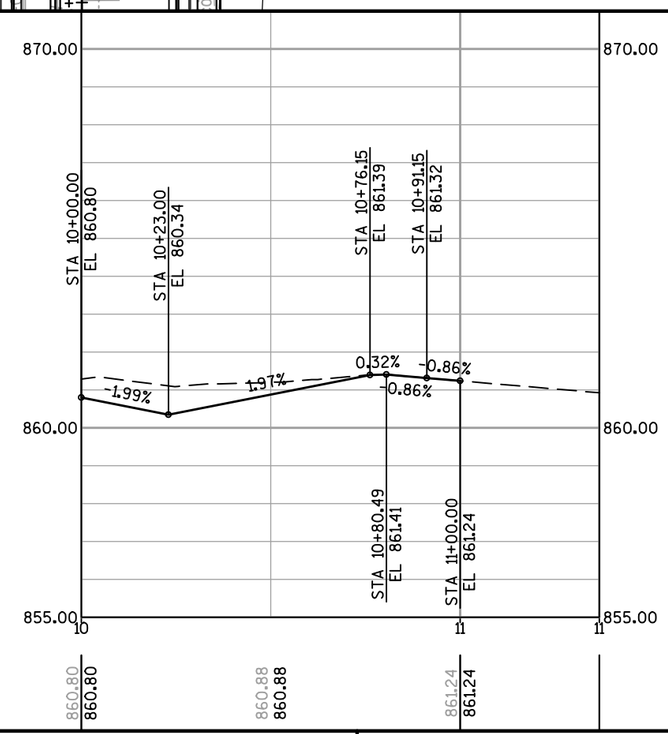

PROJECT NO: 3300-01-73	HWY: STH 89	COUNTY: JEFFERSON	PLAN AND PROFILE: NORTH CATLIN DRIVE	SHEET 239	E

FILE NAME : N:\PDS\C3D\33000103\SHEETSPLAN\050101-PLAN & PROFILE\050101-PP.DWG
LAYOUT NAME - NCD
PLOT DATE : 1/16/2018 3:11 PM PLOT BY : LEX, BRANDON WILLIAMPLOT NAME : PLOT SCALE : 1 IN:40 FT

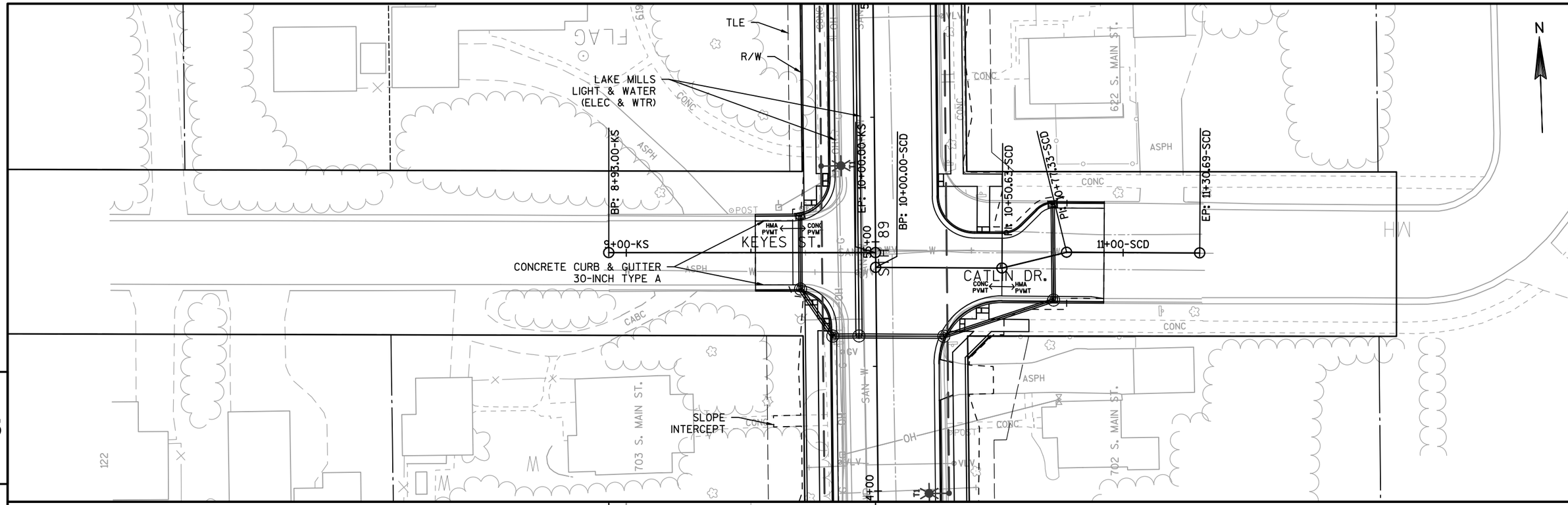

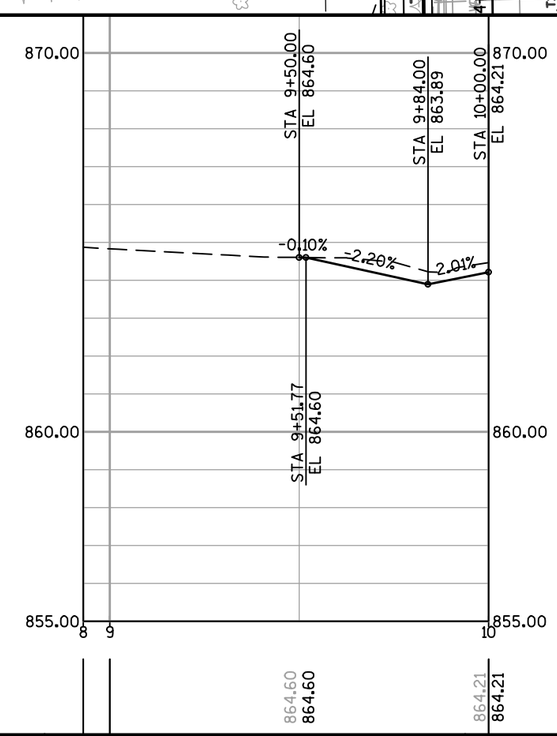

PROJECT NO: 3300-01-73	HWY: STH 89	COUNTY: JEFFERSON	PLAN AND PROFILE: KEYES STREET	SHEET 240	E

FILE NAME : N:\PDS\C3D\33000103\SHEETSPLAN\050101-PLAN & PROFILE\050101-PP.DWG
LAYOUT NAME - KS
PLOT DATE : 1/16/2018 3:12 PM PLOT BY : LEX, BRANDON WILLIAMPLOT NAME : PLOT SCALE : 1 IN:40 FT

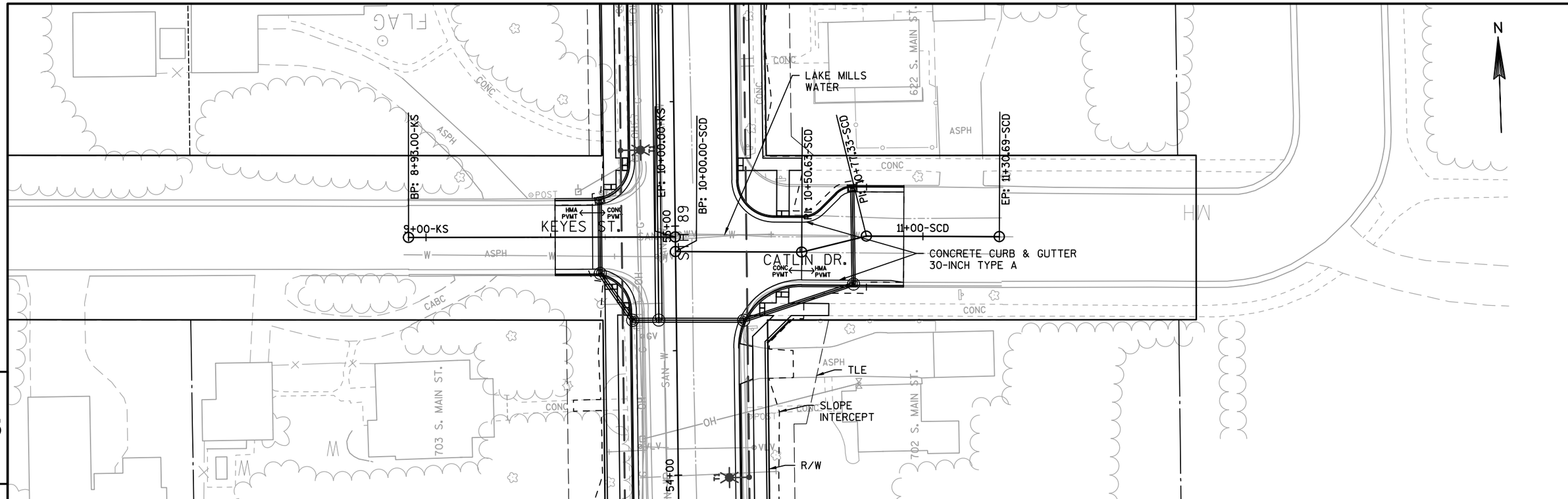

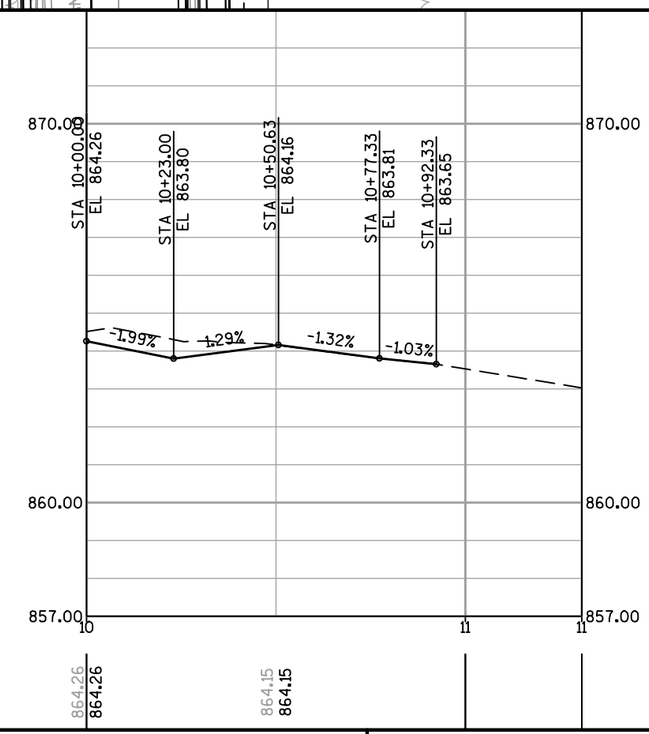

PROJECT NO: 3300-01-73	HWY: STH 89	COUNTY: JEFFERSON	PLAN AND PROFILE: SOUTH CATLIN DRIVE	SHEET 241	E

FILE NAME : N:\PDS\C3D\33000103\SHEETSPLAN\050101-PLAN & PROFILE\050101-PP.DWG
LAYOUT NAME - SCD
PLOT DATE : 1/16/2018 3:12 PM PLOT BY : LEX, BRANDON WILLIAMPLOT NAME : PLOT SCALE : 1 IN:40 FT

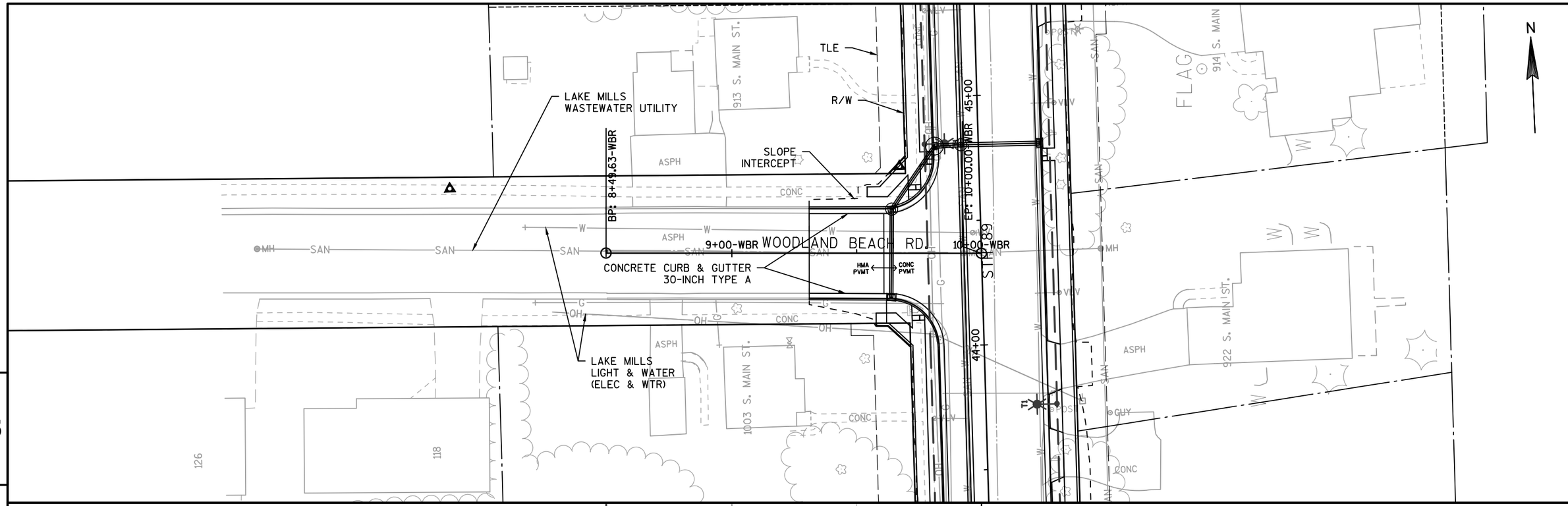

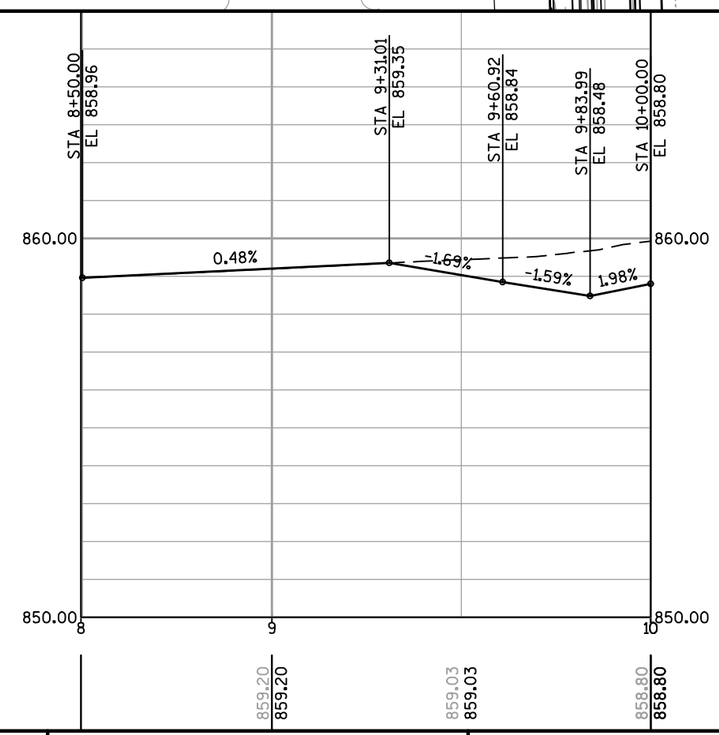

PROJECT NO:3300-01-73	HWY:STH 89	COUNTY:JEFFERSON	PLAN AND PROFILE: WOODLAND BEACH ROAD	SHEET 242	E

FILE NAME : N:\PDS\C3D\33000103\SHEETSPLAN\050101-PLAN & PROFILE\050101-PP.DWG
LAYOUT NAME - WBR
PLOT DATE : 1/16/2018 3:12 PM PLOT BY : LEX, BRANDON WILLIAMPLOT NAME : PLOT SCALE : 1 IN:40 FT

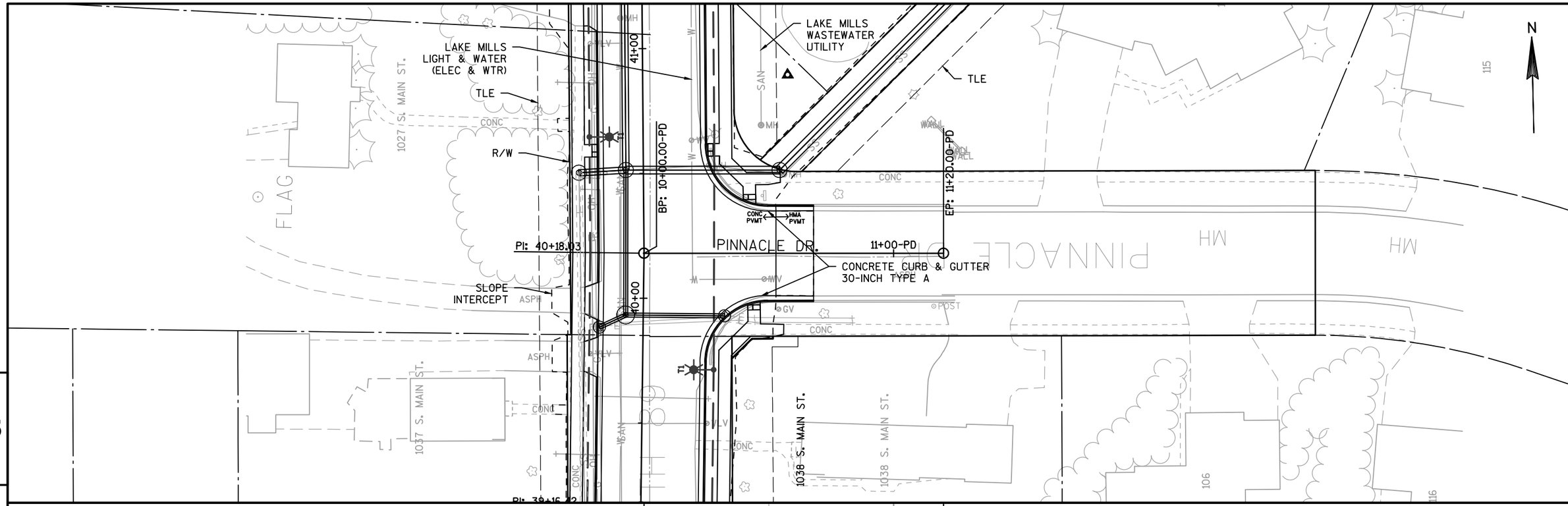

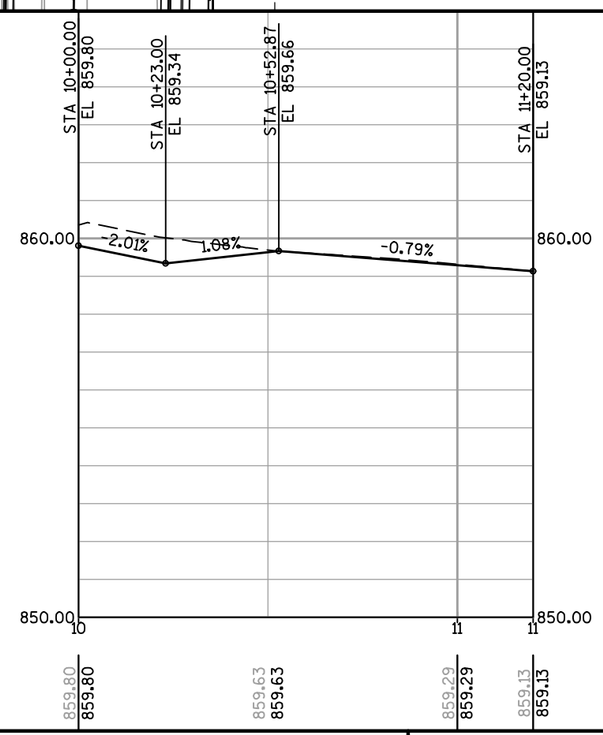

PROJECT NO: 3300-01-73	HWY: STH 89	COUNTY: JEFFERSON	PLAN AND PROFILE: PINNACLE DRIVE	SHEET 243	E

FILE NAME : N:\PDS\C3D\33000103\SHEETSPLAN\050101-PLAN & PROFILE\050101-PP.DWG
LAYOUT NAME - PD
PLOT DATE : 1/16/2018 3:12 PM PLOT BY : LEX, BRANDON WILLIAMPLOT NAME : PLOT SCALE : 1 IN:40 FT

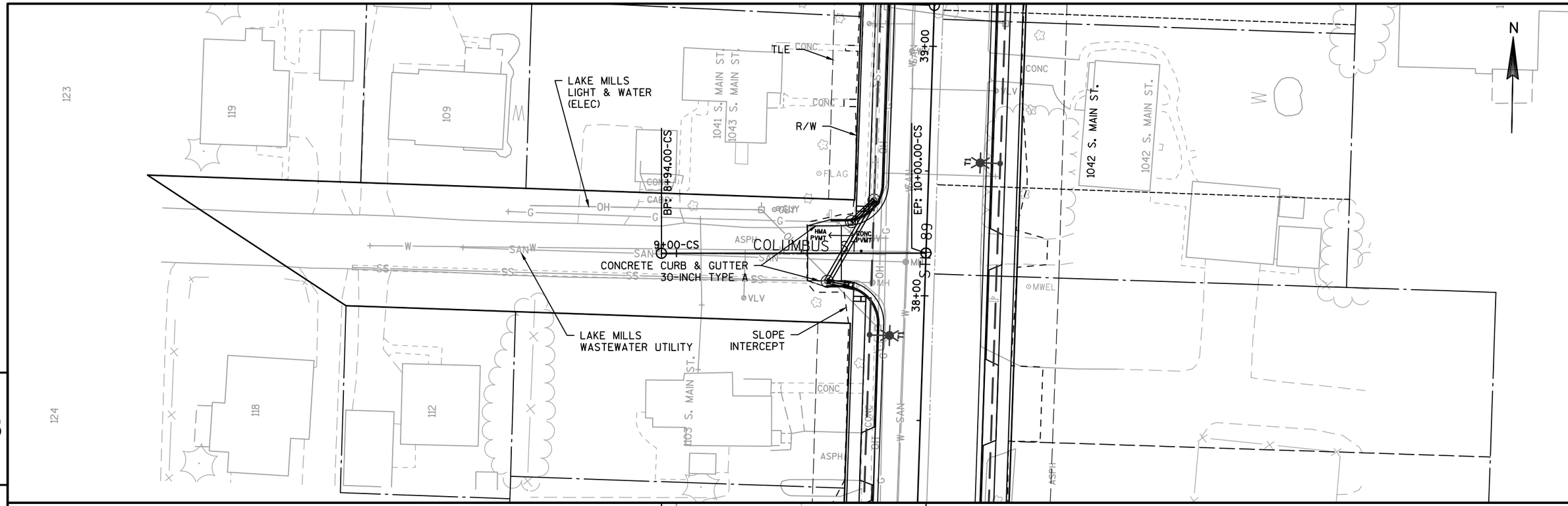

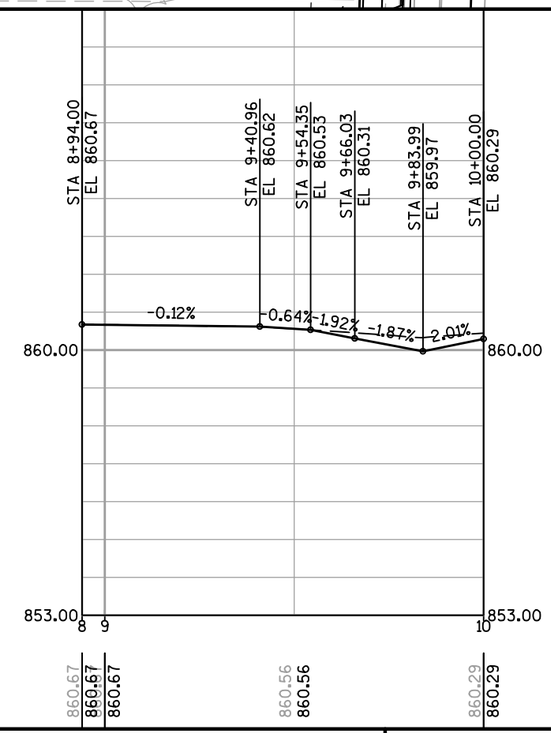

PROJECT NO: 3300-01-73	HWY: STH 89	COUNTY: JEFFERSON	PLAN AND PROFILE: COLUMBUS STREET	SHEET 244	E

FILE NAME : N:\PDS\C3D\33000103\SHEETSPLAN\050101-PLAN & PROFILE\050101-PP.DWG
LAYOUT NAME - CS
PLOT DATE : 1/16/2018 3:13 PM PLOT BY : LEX, BRANDON WILLIAMPLOT NAME : PLOT SCALE : 1 IN:40 FT

BENCHMARK/CONTROL POINT						
NO.	STATION	DESCRIPTION	OFFSET	ELEV.	NORTHING	EASTING
BM 1205	34+53.99	SPIKE IN POWER POLE	168.18 LT	860.05	580410.32	826714.19

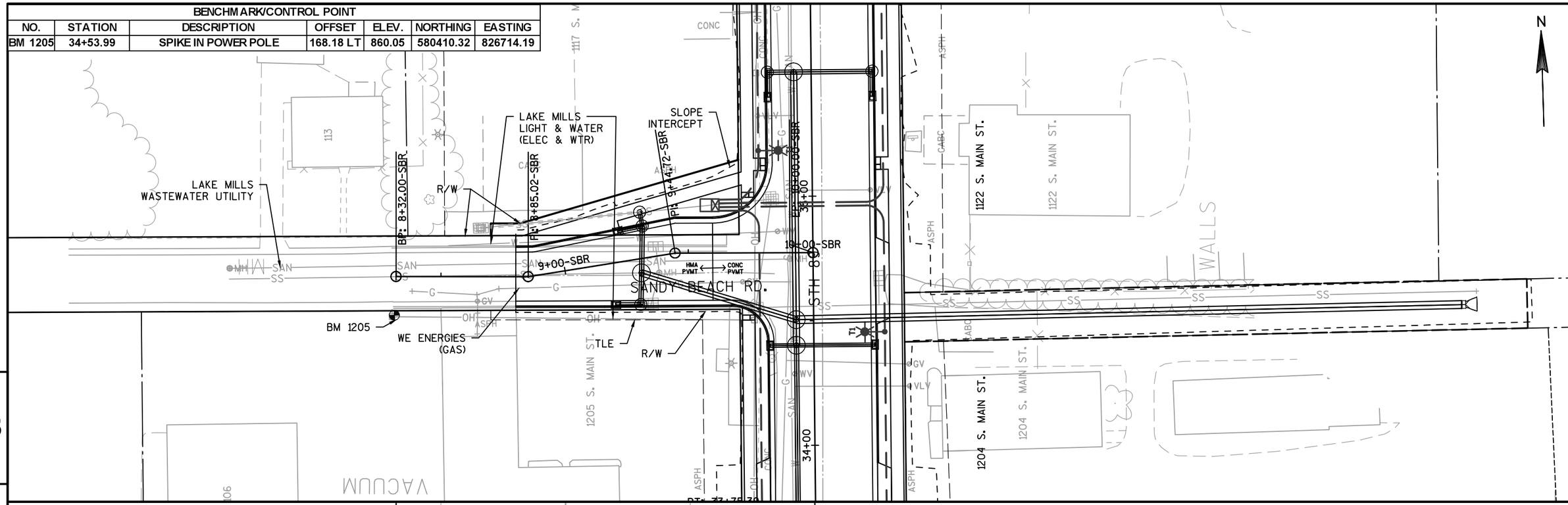

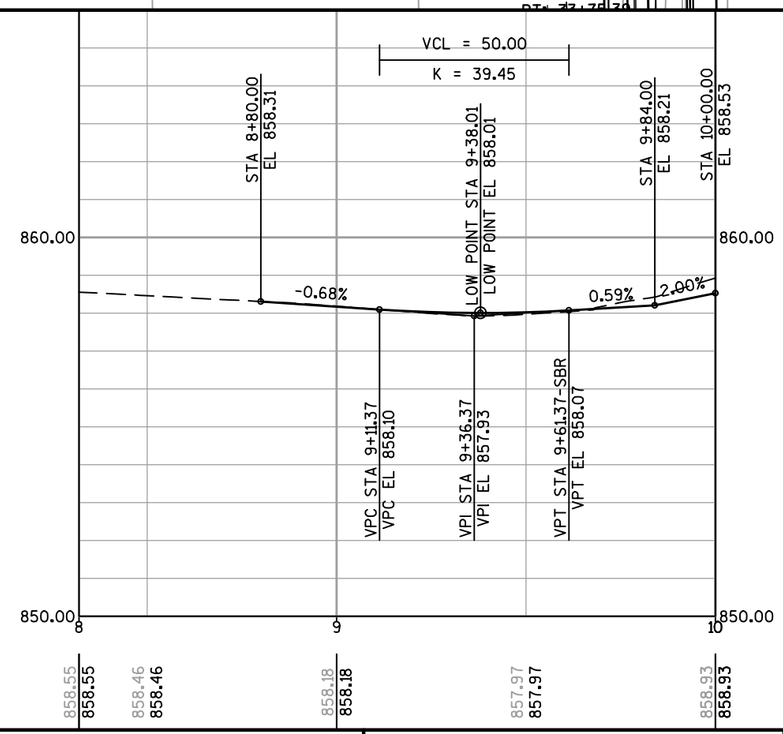

PROJECT NO:3300-01-73	HWY:STH 89	COUNTY:JEFFERSON	PLAN AND PROFILE: SANDY BEACH ROAD	SHEET 245	E

BENCHMARK/CONTROL POINT						
NO.	STATION	DESCRIPTION	OFFSET	ELEV.	NORTHING	EASTING
CP 16	31+22.65	1" CAPPED IRON CAP	69.86 LT	861.02	580051.76	826929.71

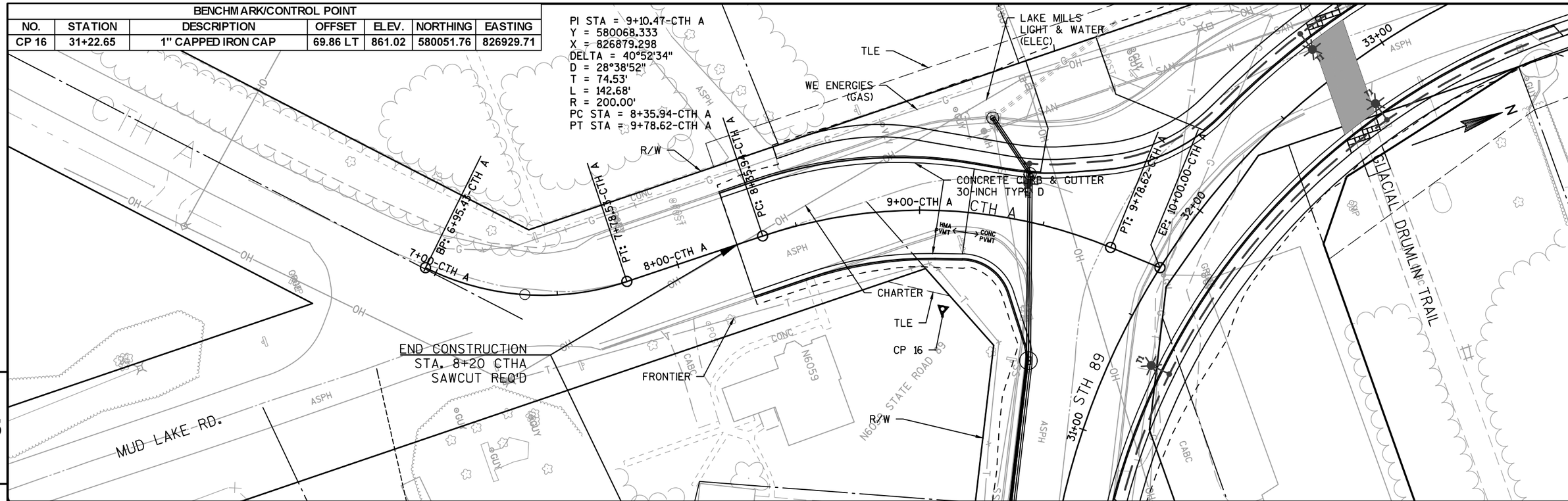

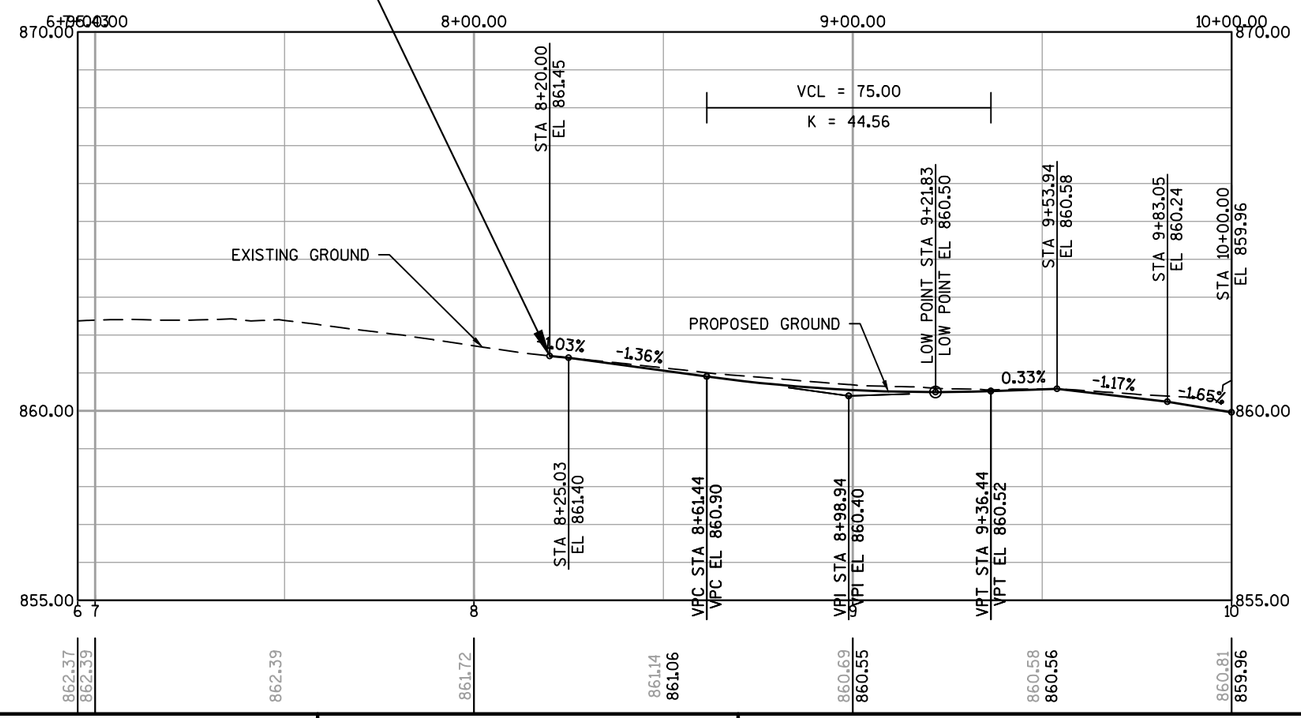

PROJECT NO:3300-01-73	HWY:STH 89	COUNTY:JEFFERSON	PLAN AND PROFILE: CTH A	SHEET 246	E

FILE NAME : N:\PDS\C3D\33000103\SHEETSPLAN\050101-PLAN & PROFILE\050101-PP.DWG
LAYOUT NAME - PP - (13)
PLOT DATE : 1/16/2018 3:13 PM PLOT BY : LEX, BRANDON WILLIAMPLOT NAME : PLOT SCALE : 1 IN:40 FT

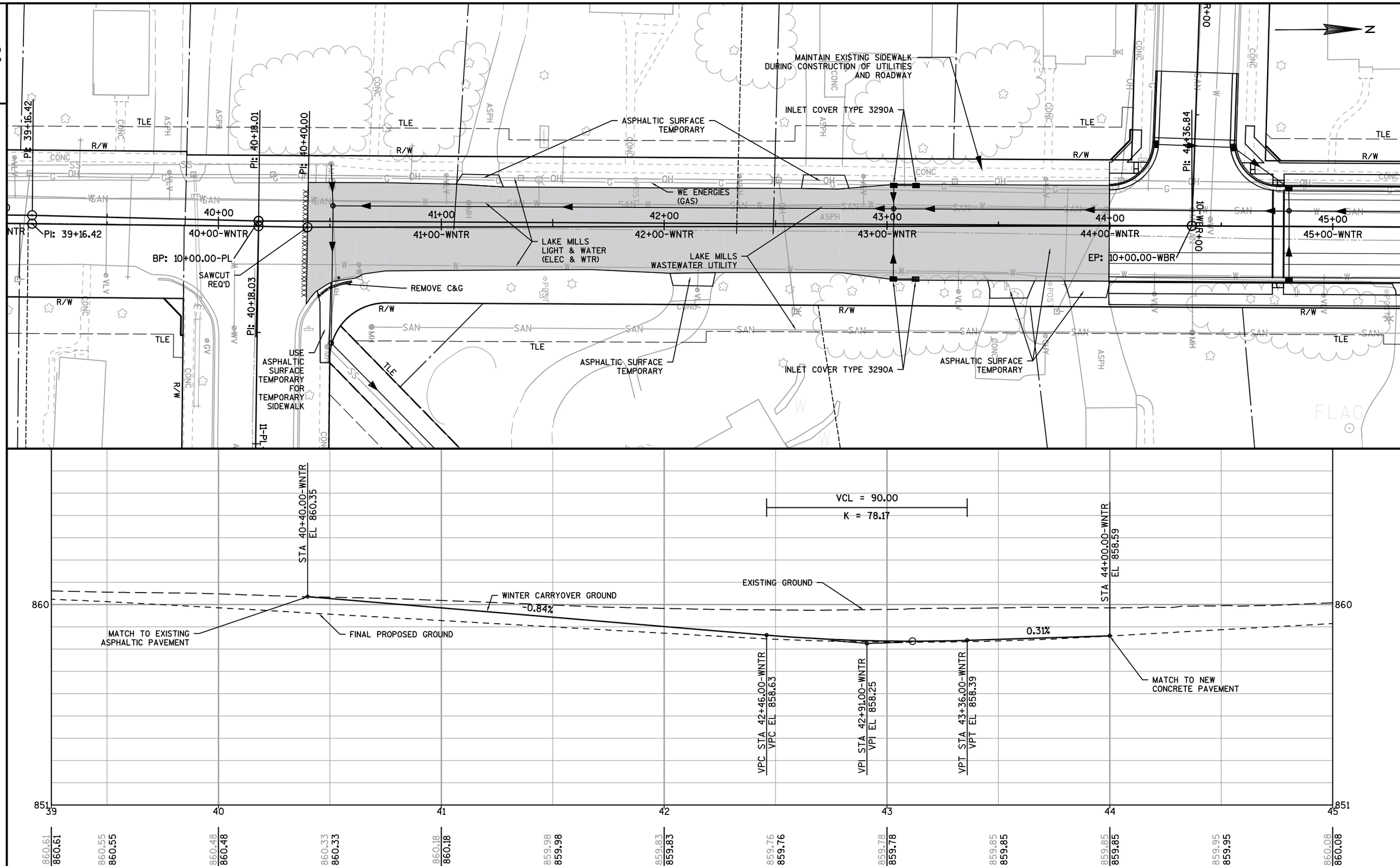

PROJECT NO: 3300-01-73	HWY: STH 89	COUNTY: JEFFERSON	PLAN AND PROFILE: WINTER CARRYOVER LANES	SHEET 247	E

FILE NAME : N:\PDS\C3D\33000103\SHEETSPLAN\050101-PLAN & PROFILE\050103-PP-WINTER CARRYOVER.DWG
LAYOUT NAME - WINTER CARRYOVER LANES
PLOT DATE : 1/16/2018 3:14 PM PLOT BY : LEX, BRANDON WILLIAMPLOT NAME : PLOT SCALE : 1 IN:40 FT

Standard Detail Drawing List

08A05-19A	INLET COVERS TYPE A, H, A-S, H-S & Z
08A05-19B	INLET COVERS TYPE B, B-A, C, MS, MS-A, & WM
08A05-19D	INLET COVER TYPE BW, MANHOLE COVERS, TYPE K, J, J-S, L & M
08A08-02	CATCH BASINS 3-FT, 4-FT, 5-FT AND 6-FT DIAMETER
08A09-02	CATCH BASINS 2X3-FT AND 2.5X3-FT
08B09-02	MANHOLES 3-FT, 4-FT, 5-FT, 6-FT, 7-FT AND 8-FT DIAMETER
08C06-02	INLETS 3-FT AND 4-FT DIAMETER
08C07-02	INLETS 2X2-FT, 2X2.5-FT, 2X3-FT AND 2.5X3-FT
08D01-19	CONCRETE CURB, CONCRETE CURB AND GUTTER AND TIES
08D01-20A	CONCRETE CURB & GUTTER
08D01-20B	CONCRETE CURB, TIES AND CURB AND GUTTER APPLICATIONS
08D05-19A	CURB RAMPS TYPES 1 AND 1-A
08D05-19B	CURB RAMPS TYPES 2 AND 3
08D05-19C	CURB RAMPS TYPES 4A AND 4A1
08D05-19D	CURB RAMPS TYPE 4B AND 4B1
08D05-19E	CURB RAMPS TYPES 5, 6, 7A, 7B & 8
08D05-19G	CURB RAMPS RECTANGULAR AND RADIAL DETECTABLE WARNING PLATES
08D18-01	DRIVEWAY AND SIDEWALK RAMPS TYPES X & Y
08D19-01	DRIVEWAY AND SIDEWALK RAMPS TYPE Z
08E08-03	TYPICAL INSTALLATIONS OF EROSION BALES / TEMPORARY DITCH CHECKS
08E09-06	SILT FENCE
08E10-02	INLET PROTECTION TYPE A, B, C AND D
08E14-01	TRACKING PAD
08F01-11	APRON ENDWALLS FOR CULVERT PIPE
09B02-10	CONDUIT
09B04-11	PULL BOX
09C02-07	CONCRETE BASES, TYPES 1, 2, 5, & 6
09C03-04	TRANSFORMER/PEDESTAL BASES
09C14-02	CONCRETE CONTROL CABINET BASE, TYPE L
09D01-05	CABINET SERVICE INSTALLATION (METER BREAKER PEDESTAL)
09D04-02	LIGHTING CONTROL CABINET 120/240 VOLT
09E03-05	NON-FREEWAY LIGHTING UNIT POLE WIRING
09E07-05	TRAFFIC SIGNAL STANDARD PEDESTRIAN AND FLASHER TYPICAL MOUNTING DETAILS
13C01-18	CONCRETE PAVEMENT LONGITUDINAL JOINTS AND TIES
13C13-08	URBAN DOWELED CONCRETE PAVEMENT
13C18-05A	CONCRETE PAVEMENT JOINTING
13C18-05B	CONCRETE PAVEMENT STEEL REINFORCEMENT
13C18-05C	CONCRETE PAVEMENT JOINT TYPES
13C18-05D	CONCRETE PAVEMENT JOINTING AT UTILITY FIXTURES
15C02-06A	BARRICADES AND SIGNS FOR MAINLINE CLOSURES
15C02-06B	BARRICADES AND SIGNS FOR MAINLINE CLOSURES
15C02-06C	DETOUR SIGNING FOR MAINLINE CLOSURES
15C03-03	BARRICADES AND SIGNS FOR SIDEROAD CLOSURES
15C07-14C	PAVEMENT MARKING ARROWS
15C08-18A	LONGITUDINAL MARKING (MAINLINE)
15C33-02	STOP LINE AND CROSSWALK PAVEMENT MARKING
15D30-03B	TRAFFIC CONTROL, TEMPORARY ADA COMPLIANT PEDESTRIAN ACCOMMODATION
15D30-03C	TRAFFIC CONTROL, PEDESTRIAN ACCOMMODATION
15D38-02A	TEMPORARY TRAFFIC CONTROL SIGN MOUNTING
15D38-02B	ATTACHMENT OF SIGNS TO POSTS
16A01-06	LANDMARK REFERENCE MONUMENTS AND COVERS

6

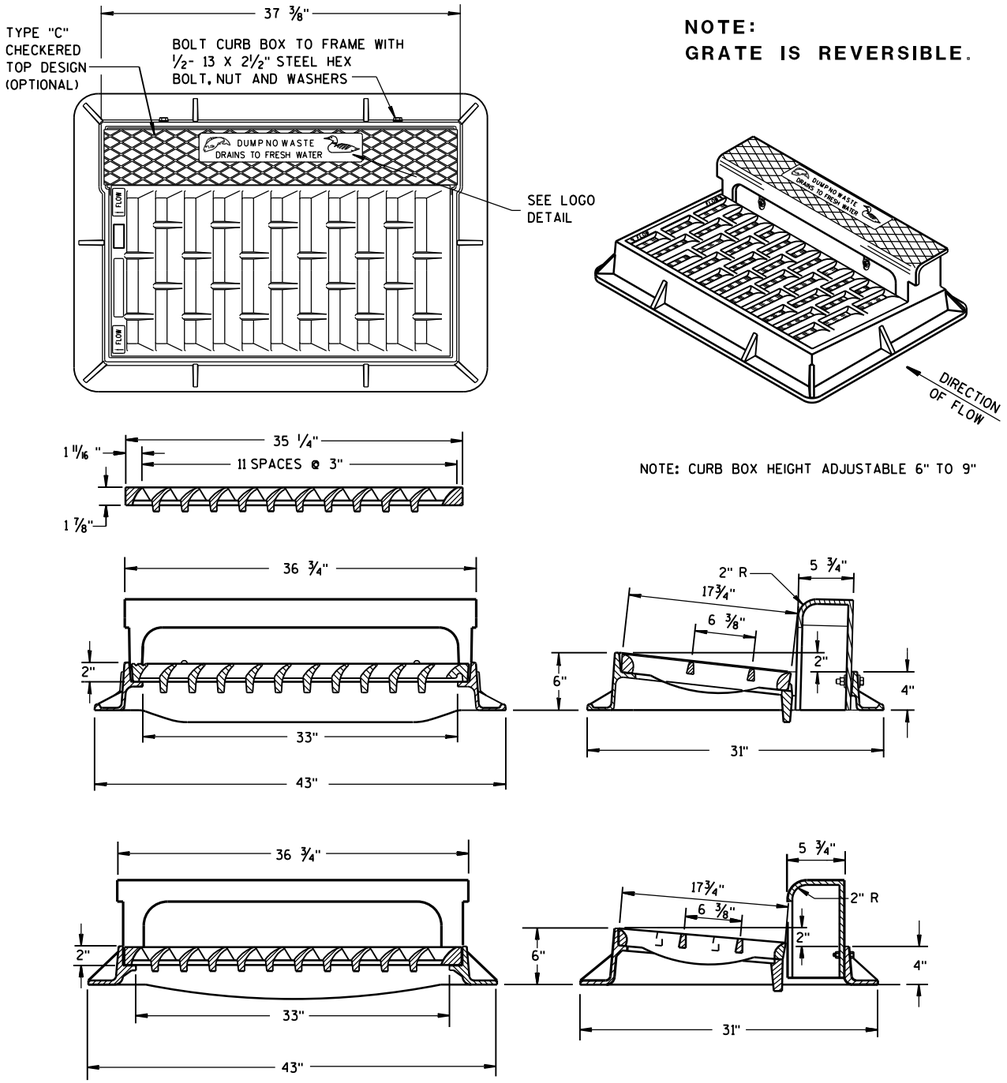

NOTE:
GRATE IS REVERSIBLE.

NOTE: CURB BOX HEIGHT ADJUSTABLE 6" TO 9"

TYPE "H"

NOTE: EITHER CASTING IS ACCEPTABLE

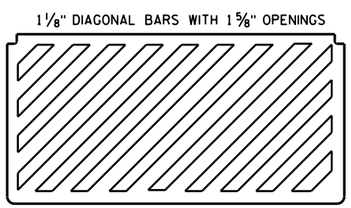

SPECIAL GRATE FOR TYPE "H" COVER

(MEASURES 35 1/4" X 17 3/4" X 2")

(NOTED AS TYPE H-S ON DRAINAGE TABLE)

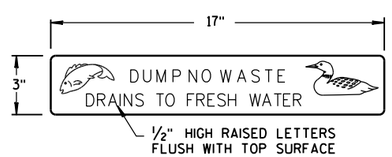

LOGO DETAIL

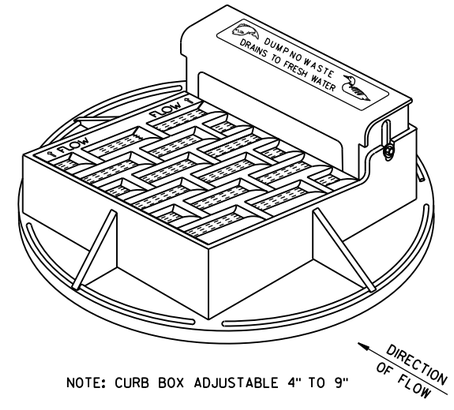

NOTE: CURB BOX ADJUSTABLE 4" TO 9"

NOTE:
GRATE IS REVERSIBLE.

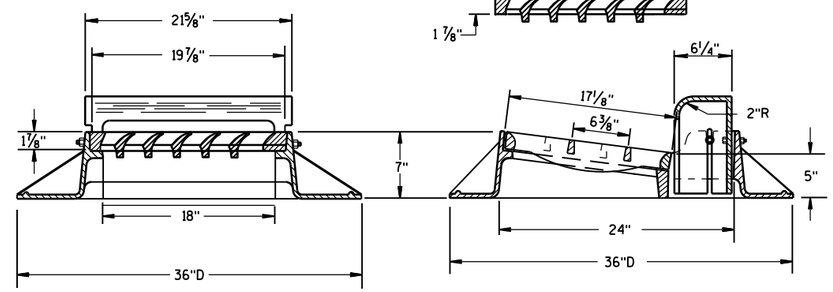

TYPE "A"

GENERAL NOTES

DETAILS OF CONSTRUCTION, MATERIALS AND WORKMANSHIP NOT SHOWN ON THIS DRAWING SHALL CONFORM TO THE PERTINENT REQUIREMENTS OF THE STANDARD SPECIFICATIONS AND THE APPLICABLE SPECIAL PROVISIONS.

DETAIL DRAWINGS FOR PROPOSED ALTERNATE DESIGNS FOR CATCH BASIN, MANHOLE AND INLET COVERS SHALL BE SUBMITTED TO THE ENGINEER FOR APPROVAL PROVIDING THAT SUCH ALTERNATE DESIGNS MAKE PROVISION FOR EQUIVALENT CAPACITY AND STRENGTH.

ROUND FRAMES AND COVERS SHALL HAVE CONTINUOUSLY MACHINED BEARING SURFACES TO PREVENT ROCKING AND RATTLING.

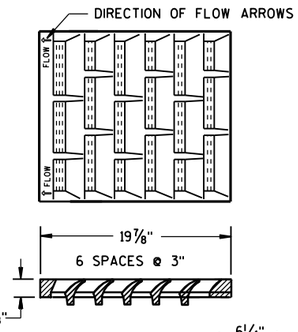

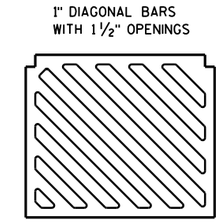

SPECIAL GRATE FOR TYPE "A" COVER

(MEASURES 19 3/4" X 17" X 1 7/8")

(NOTED AS TYPE A-S ON DRAINAGE TABLE)

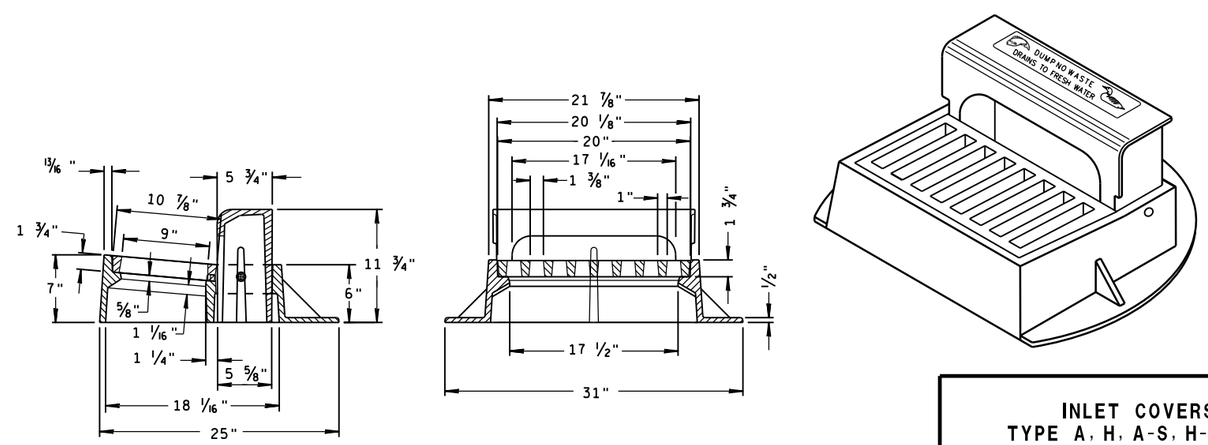

TYPE "Z"

INLET COVERS
TYPE A, H, A-S, H-S & Z

STATE OF WISCONSIN
DEPARTMENT OF TRANSPORTATION

APPROVED
11-27-13 /S/ Jerry H. Zogg
DATE ROADWAY STANDARDS DEVELOPMENT ENGINEER
FHWA

6

S.D.D. 8 A 5-19a

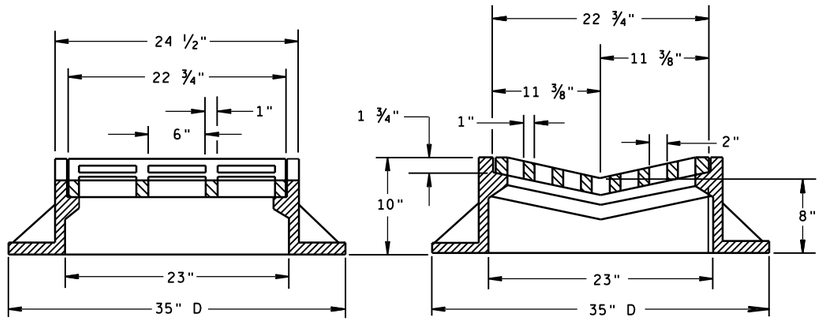

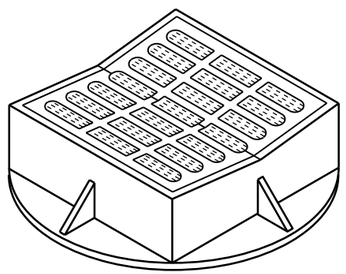

TYPE "B"

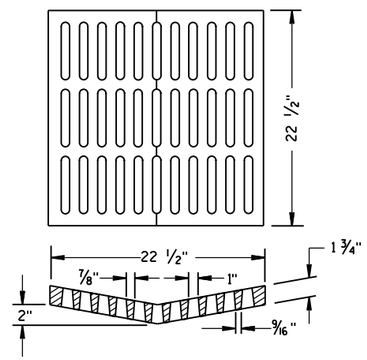

ALTERNATIVE GRATE FOR TYPE "B" COVER

USE WHERE PEDESTRIAN OR BICYCLE TRAFFIC IS POSSIBLE.

NOTED AS TYPE B-A ON THE DRAINAGE TABLE

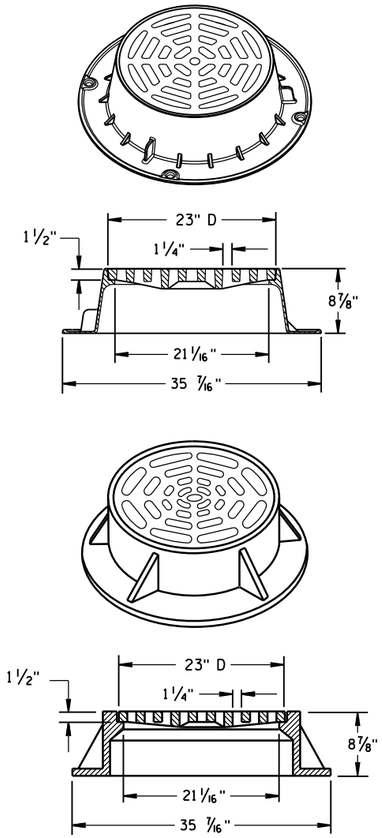

TYPE "C"

NOTE: EITHER CASTING IS ACCEPTABLE

GENERAL NOTES

DETAILS OF CONSTRUCTION, MATERIALS AND WORKMANSHIP NOT SHOWN ON THIS DRAWING SHALL CONFORM TO THE PERTINENT REQUIREMENTS OF THE STANDARD SPECIFICATIONS AND THE APPLICABLE SPECIAL PROVISIONS.

DETAIL DRAWINGS FOR PROPOSED ALTERNATE DESIGNS FOR CATCH BASIN, MANHOLE AND INLET COVERS SHALL BE SUBMITTED TO THE ENGINEER FOR APPROVAL PROVIDING THAT SUCH ALTERNATE DESIGNS MAKE PROVISION FOR EQUIVALENT CAPACITY AND STRENGTH.

ROUND FRAMES AND COVERS SHALL HAVE CONTINUOUSLY MACHINED BEARING SURFACES TO PREVENT ROCKING AND RATTLING.

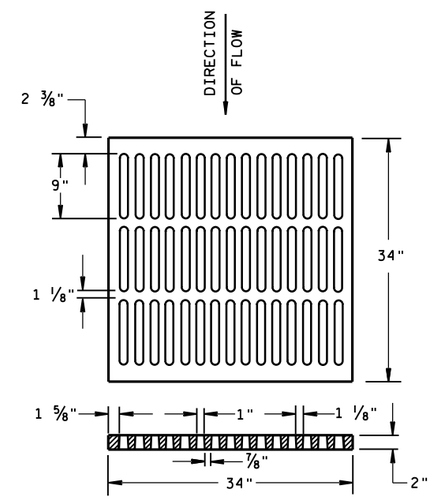

ALTERNATIVE TYPE "MS"

USE WHERE PEDESTRIAN OR BICYCLE TRAFFIC IS PERMITTED

NOTED AS TYPE MS-A ON THE DRAINAGE TABLE

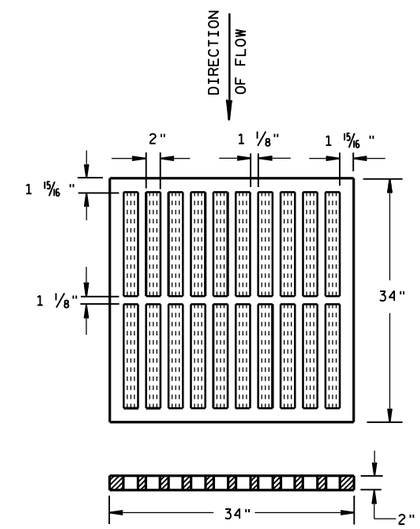

TYPE "MS"

USE ON FREEWAYS AND EXPRESSWAYS

NOTED AS TYPE MS ON DRAINAGE TABLE

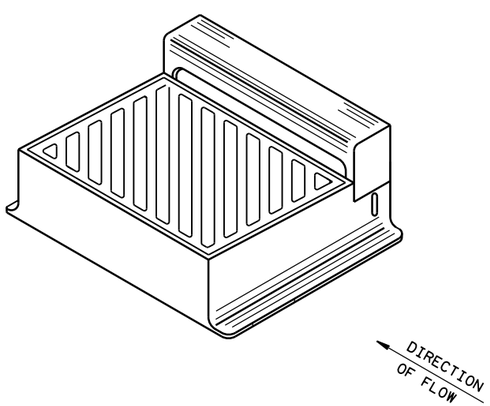

DIAGONAL SLOTS, SHALL BE ORIENTED TO THE DIRECTION OF FLOW AS ILLUSTRATED. GRATES ARE MANUFACTURED TO BE REVERSIBLE.

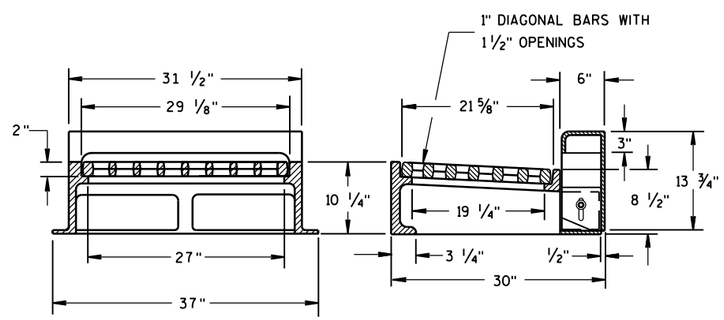

NOTE: CURB BOX HEIGHT ADJUSTABLE 6" TO 9"

TYPE "WM"

6

6

S.D.D. 8 A 5-19b

S.D.D. 8 A 5-19b

INLET COVERS
TYPE B, B-A, C, MS, MS-A, & WM

STATE OF WISCONSIN
DEPARTMENT OF TRANSPORTATION

APPROVED

11/27/2013 — DATE

/S/ Jerry H. Zogg — ROADWAY STANDARDS DEVELOPMENT ENGINEER

FHWA

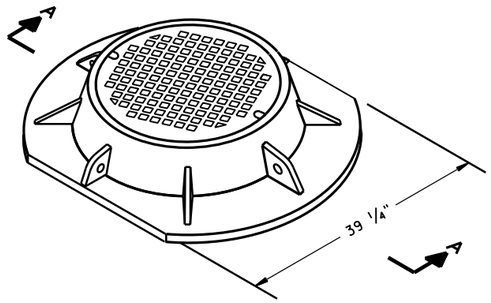

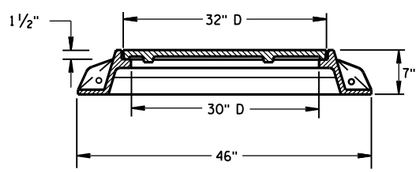

SECTION A-A
TYPE "K"

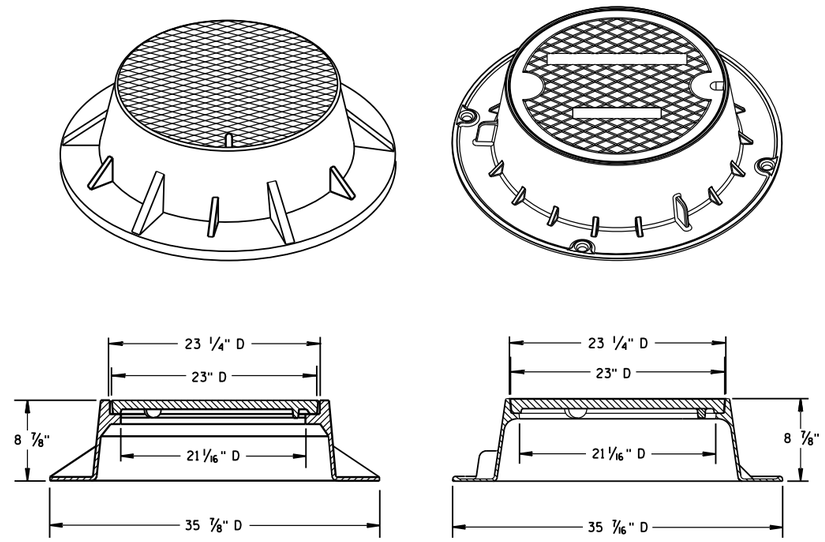

TYPE "J"
NOTE: EITHER CASTING IS ACCEPTABLE

GENERAL NOTES

DETAILS OF CONSTRUCTION, MATERIALS AND WORKMANSHIP NOT SHOWN ON THIS DRAWING SHALL CONFORM TO THE PERTINENT REQUIREMENTS OF THE STANDARD SPECIFICATIONS AND THE APPLICABLE SPECIAL PROVISIONS.

DETAIL DRAWINGS FOR PROPOSED ALTERNATE DESIGNS FOR MANHOLE COVERS SHALL BE SUBMITTED TO THE ENGINEER FOR APPROVAL PROVIDING THAT SUCH ALTERNATE DESIGNS MAKE PROVISION FOR EQUIVALENT CAPACITY AND STRENGTH.

ROUND FRAMES AND COVERS SHALL HAVE CONTINUOUSLY MACHINED BEARING SURFACES TO PREVENT ROCKING AND RATTLING.

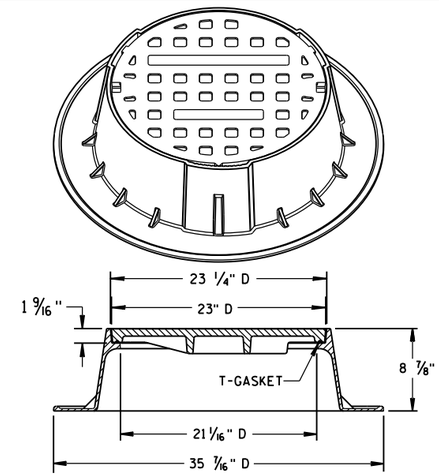

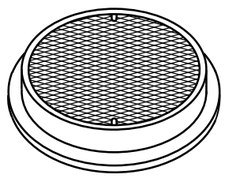

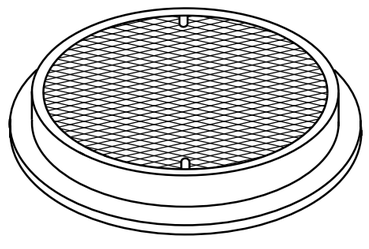

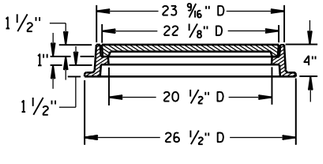

TYPE "L"

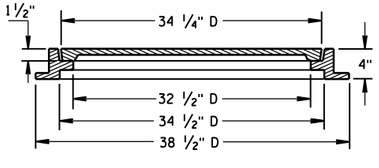

TYPE "M"

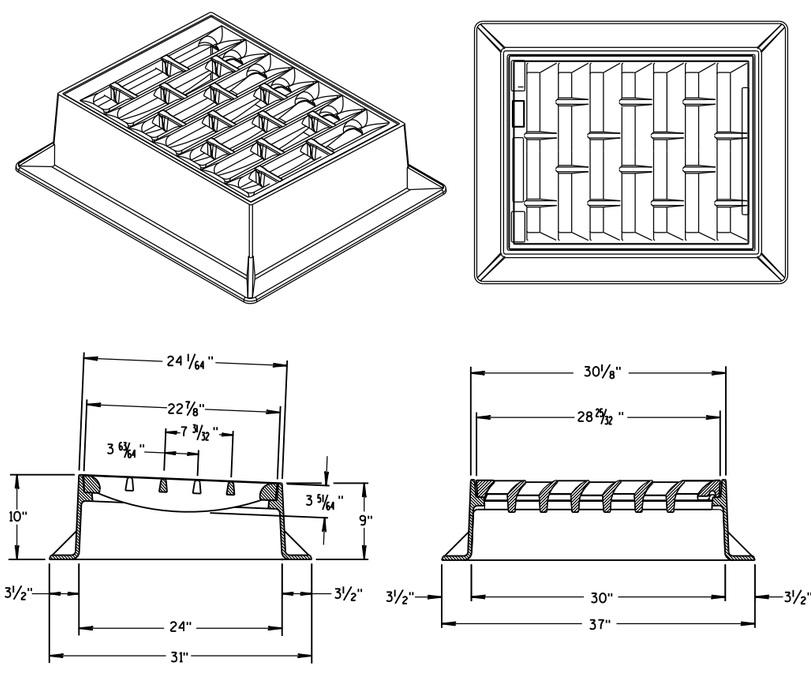

INLET COVER TYPE "BW"

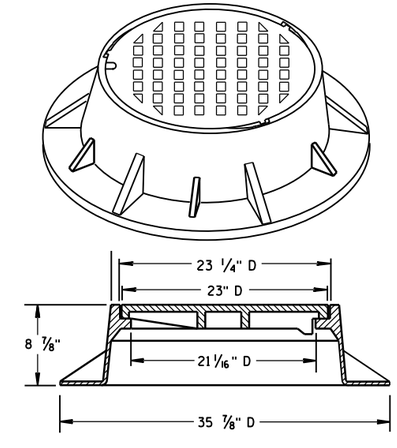

TYPE "J" SPECIAL
TYPE "B" NON-ROCKING SELF-SEAL LID
(NOTED AS TYPE J-S ON THE DRAINAGE TABLE)
NOTE: EITHER CASTING IS ACCEPTABLE

INLET COVER TYPE BW
MANHOLE COVERS, TYPE K, J, J-S, L & M

STATE OF WISCONSIN
DEPARTMENT OF TRANSPORTATION

APPROVED
11/27/2013 — DATE
/S/ Jerry H. Zogg — ROADWAY STANDARDS DEVELOPMENT ENGINEER
FHWA

6
S.D.D. 8 A 5-19d

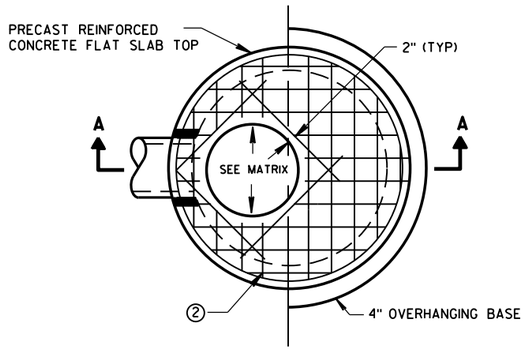

PLAN VIEW CIRCULAR OPENING

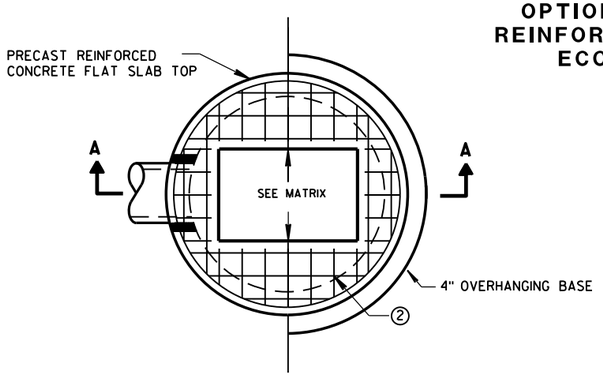

PLAN VIEW RECTANGULAR OPENING

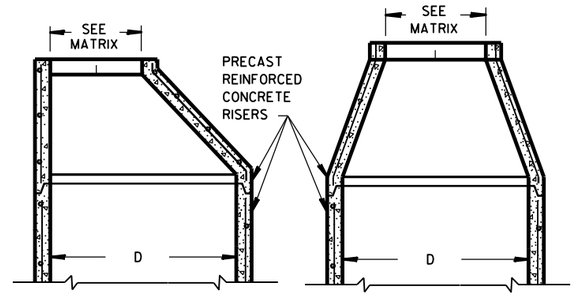

OPTIONAL PRECAST REINFORCED CONCRETE ECCENTRIC TOP

OPTIONAL PRECAST REINFORCED CONCRETE CONCENTRIC TOP

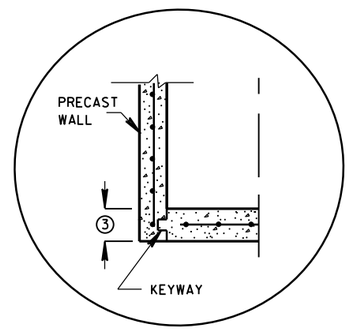

PRECAST REINFORCED CONCRETE WITH INTEGRAL BASE OPTION

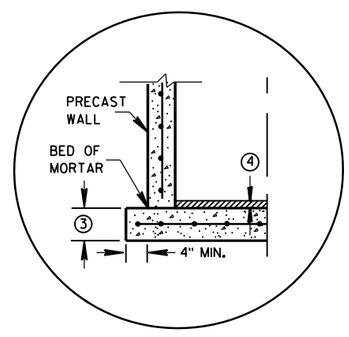

SEPARATE PRECAST REINFORCED CONCRETE BASE OPTION

DETAIL "A"

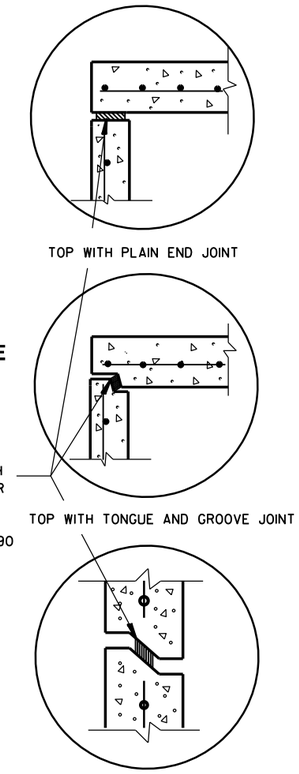

DETAIL "B"

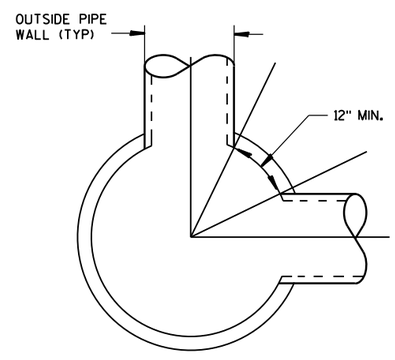

DETAIL "C"

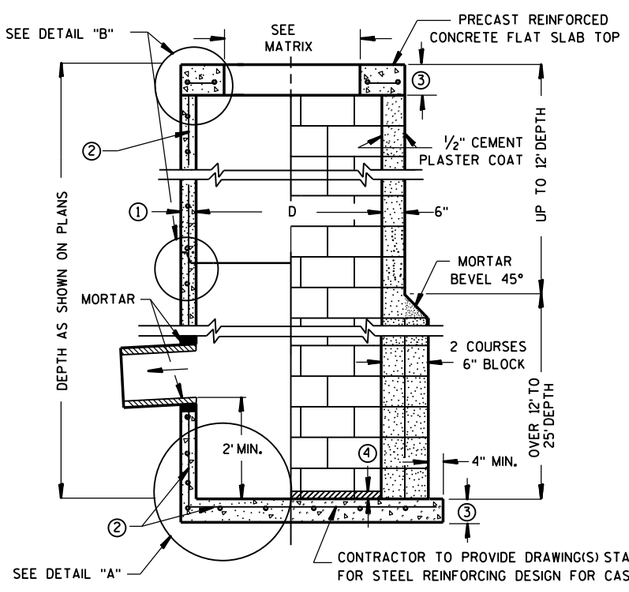

CONTRACTOR TO PROVIDE DRAWING(S) STAMPED BY A PROFESSIONAL ENGINEER FOR STEEL REINFORCING DESIGN FOR CAST-IN-PLACE STRUCTURES

SECTION A-A

PRECAST REINFORCED CONCRETE WITH MONOLITHIC BASE

CONCRETE BLOCK WITH CAST-IN-PLACE OR PRECAST REINFORCED CONCRETE BASE ②

GENERAL NOTES

DETAILS OF CONSTRUCTION, MATERIALS AND WORKMANSHIP NOT SHOWN ON THIS DRAWING SHALL CONFORM TO THE PERTINENT REQUIREMENTS OF THE STANDARD SPECIFICATIONS AND THE APPLICABLE SPECIAL PROVISIONS.

UNLESS OTHERWISE AUTHORIZED IN WRITING BY THE ENGINEER, THE CONTRACTOR SHALL NOT ORDER AND DELIVER PRECAST CATCH BASIN UNITS REQUIRED FOR THE PROJECT UNTIL A LIST OF SIZES IS FURNISHED BY THE ENGINEER.

DETAILED DRAWINGS FOR PROPOSED ALTERNATE DESIGNS FOR UNDERGROUND DRAINAGE STRUCTURES SHALL BE SUBMITTED TO THE ENGINEER FOR APPROVAL PROVIDING THAT SUCH ALTERNATE DESIGNS MAKE PROVISION FOR EQUIVALENT CAPACITY AND STRENGTH.

ALL DRAINAGE STRUCTURES ARE DESIGNATED ON THE PLANS AS "MANHOLES 3X3-L", "CATCH BASINS 4-B", "INLETS 2X3-H", ETC. THE FIRST NUMBERS DESIGNATE THE SIZE OF THE STRUCTURE, AND THE FOLLOWING LETTER DESIGNATES THE TYPE OF COVER TO BE USED TO COMPRISE THE COMPLETE UNIT.

BASES SHALL BE PLACED ON A BED OF MATERIAL AT LEAST 6 INCHES IN DEPTH, WHICH MEETS THE REQUIREMENTS OF FOUNDATION BACKFILL. THIS BEDDING SHALL BE COMPACTED AND PROVIDE UNIFORM SUPPORT FOR THE ENTIRE AREA OF THE BASE.

PRECAST REINFORCED CONCRETE CONE TOPS (ECCENTRIC OR CONCENTRIC) OR PRECAST REINFORCED CONCRETE FLAT SLAB TOPS MAY BE USED ON CONCRETE BLOCK STRUCTURES.

ECCENTRIC CONE TOPS MAY BE USED ON ALL STRUCTURES, AND CONCENTRIC CONE TOPS SHALL BE USED ONLY ON STRUCTURES 5 FEET OR LESS IN DEPTH, UNLESS OTHERWISE DIRECTED BY THE ENGINEER.

STEPS MEETING AASHTO M199 AND THE FOLLOWING REQUIREMENTS SHALL BE INSTALLED IN ALL STRUCTURES OVER 5 FEET IN DEPTH: 16 INCH C-C MAXIMUM SPACING; PROJECT A MINIMUM CLEAR DISTANCE OF 4 INCHES FROM THE WALL AT THE POINT OF EMBEDMENT; MINIMUM LENGTH OF 10 INCHES; MINIMUM WALL EMBEDMENT OF 3 INCHES. FERROUS METAL STEPS NOT PAINTED OR TREATED TO RESIST CORROSION SHALL HAVE A MINIMUM CROSS SECTIONAL DIMENSION OF 1 INCH.

STEPS OF APPROVED POLYPROPYLENE PLASTIC COATED REINFORCEMENT BAR ARE ACCEPTABLE. REINFORCING BAR MUST BE A MINIMUM OF ½ INCH AND MEET THE REQUIREMENTS OF ASTM A615.

CERTIFICATION SHALL BE PROVIDED THAT INSTALLED STEPS WHEN TESTED IN ACCORDANCE WITH SECTION 10 OF AASHTO T280 CAN WITHSTAND A VERTICAL LOAD OF 800 LBS. AND A HORIZONTAL LOAD OF 400 LBS.

ALL BAR STEEL REINFORCEMENT SHALL BE EMBEDDED 2 INCHES CLEAR UNLESS OTHERWISE SHOWN OR NOTED.

ALL PRECAST INLET UNITS SHALL CONFORM TO THE PERTINENT REQUIREMENTS OF AASHTO DESIGNATION M199.

PRECAST REINFORCED RISERS SHALL HAVE A TONGUE AND GROOVE JOINT WITH TONGUE UP OR DOWN.

CONCRETE BLOCK WILL NOT BE PERMITED FOR STRUCTURES GREATER THAN 4 FEET IN DIAMETER.

4" OVERHANGING BASES ARE REQUIRED FOR ALL CONCRETE BLOCK INSTALLATIONS. 4" OVERHANG IS REQUIRED WHEN SEPARATE PRECAST BASE IS PROVIDED. OVERHANG IS NOT REQUIRED ON PRECAST STRUCTURES WITH AN INTEGRAL OR MONOLITHIC BASE.

FOR ADDITIONAL CONFIGURATIONS, MAINTAIN A MINIMUM OF 12 INCHES AS MEASURED FROM THE INSIDE OF THE STRUCTURE WALL BETWEEN THE OUTSIDE PIPE WALLS OF ADJACENT PIPES. SEE DETAIL "C".

① MINIMUM WALL THICKNESS SHALL BE 4 INCHES FOR 3-FT, 5 INCHES FOR 4-FT, 6 INCHES FOR 5-FT AND 7 INCHES FOR 6-FT DIAMETER PRECAST CATCH BASINS.

② FOR PRECAST CATCH BASINS PROVIDE REINFORCING STEEL IN ACCORDANCE TO AASHTO M199.

③ PRECAST FLAT SLAB TOPS AND BASES WITH A DIAMETER OF 48" AND LESS SHALL HAVE A MINIMUM THICKNESS OF 6". PRECAST FLAT SLAB TOPS AND BASES WITH A DIAMETER LARGER THAN 48" SHALL HAVE A MINIMUM THICKNESS OF 8".

④ 1" CONCRETE KEY POURED AFTER INSTALLATION. 2' SUMP MEASURED FROM TOP OF KEY.

CATCH BASIN COVER OPENING MATRIX

CATCH BASIN SIZE	INLET COVER TYPE	ALL A'S	ALL B'S	BW	C	F	ALL H'S	S	T	V	WM	Z
	OPENING SIZE (FT)											
3-FT	2X2	X	X					X		X		
	2 DIA.				X							X
4-FT-6-FT	2X2	X	X					X		X		
	2X2.5			X				X	X	X	X	
	2 DIA.				X							X
	2X3						X					
	2.5X3					X						

PIPE MATRIX

CATCH BASIN SIZE	MAXIMUM INSIDE PIPE DIAMETER FOR TWO PIPES	
	180° SEPARATION (IN)	90° SEPARATION (IN)
3-FT	15	12
4-FT	24	18
5-FT	36	24
6-FT	42	30

CATCH BASINS 3-FT, 4-FT, 5-FT AND 6-FT DIAMETER

CATCH BASINS 3-FT, 4-FT, 5-FT AND 6-FT DIAMETER

STATE OF WISCONSIN
DEPARTMENT OF TRANSPORTATION

APPROVED
Sept., 2016 — DATE
/S/ Rodney Taylor — ROADWAY STANDARDS UNIT SUPERVISOR
FHWA

6

S.D.D. 8 A 8-2

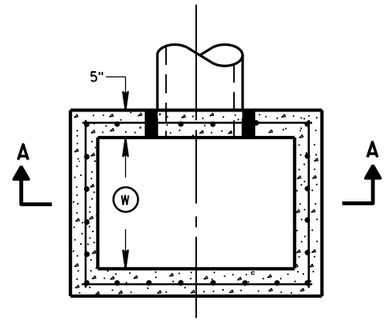

PLAN VIEW

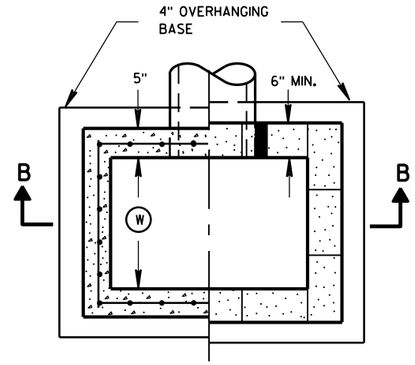

PLAN VIEW

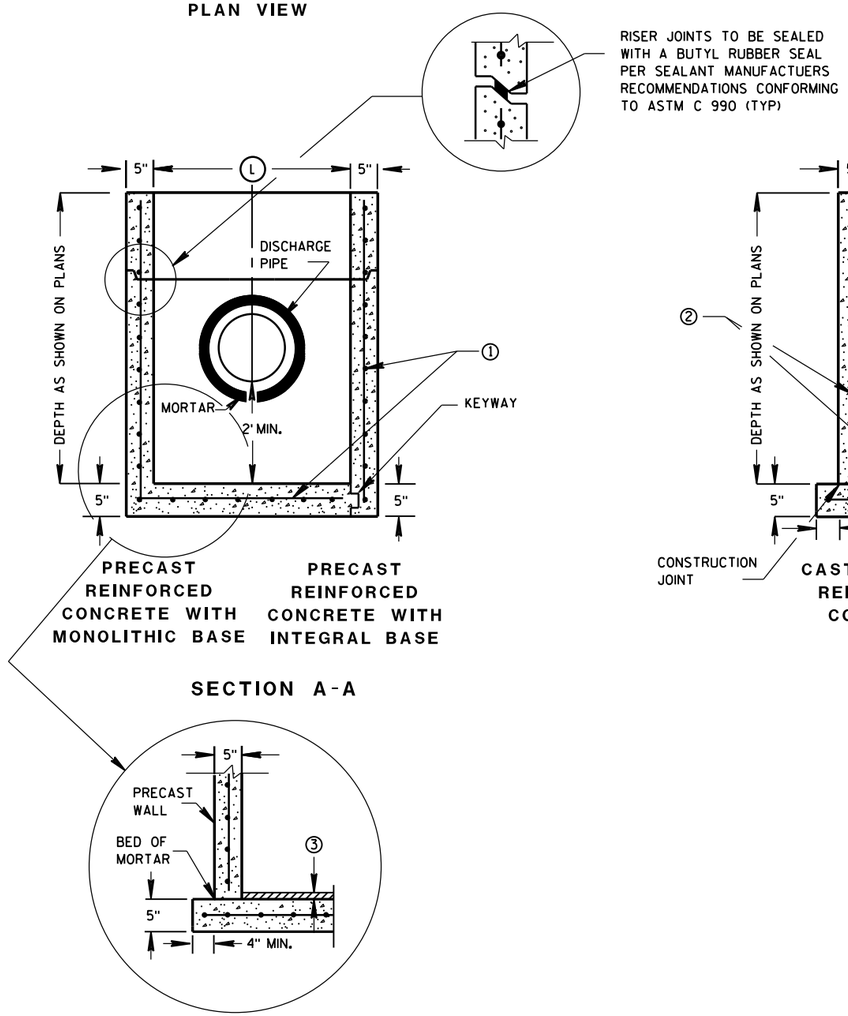

SECTION A-A

SEPARATE PRECAST REINFORCED CONCRETE BASE OPTION

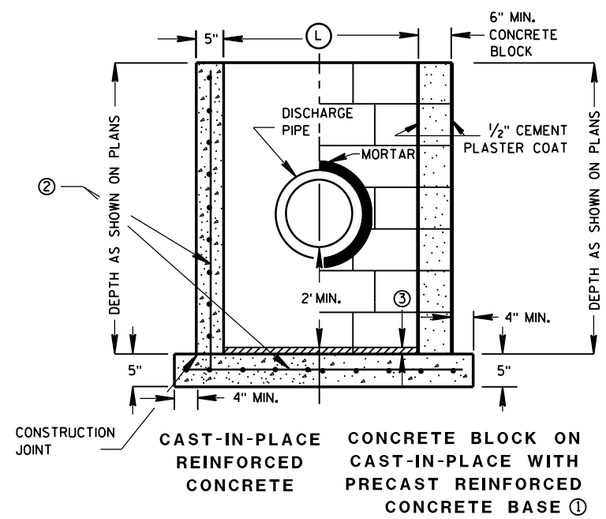

SECTION B-B

GENERAL NOTES

DETAILS OF CONSTRUCTION, MATERIALS AND WORKMANSHIP NOT SHOWN ON THIS DRAWING SHALL CONFORM TO THE PERTINENT REQUIREMENTS OF THE STANDARD SPECIFICATIONS AND THE APPLICABLE SPECIAL PROVISIONS.

UNLESS OTHERWISE AUTHORIZED IN WRITING BY THE ENGINEER, THE CONTRACTOR SHALL NOT ORDER AND DELIVER PRECAST CATCH BASIN UNITS REQUIRED FOR THE PROJECT UNTIL A LIST OF SIZES IS FURNISHED BY THE ENGINEER.

DETAILED DRAWINGS FOR PROPOSED ALTERNATE DESIGNS FOR UNDERGROUND DRAINAGE STRUCTURES SHALL BE SUBMITTED TO THE ENGINEER FOR APPROVAL PROVIDING THAT SUCH ALTERNATE DESIGNS MAKE PROVISION FOR EQUIVALENT CAPACITY AND STRENGTH.

ALL PRECAST CATCH BASIN UNITS SHALL CONFORM TO THE PERTINENT REQUIREMENTS OF ASTM C 913.

ALL DRAINAGE STRUCTURES ARE DESIGNATED ON THE PLANS AS "MANHOLES 3X3-L", "CATCH BASINS 4-B", "INLETS 2X3-H", ETC. THE FIRST NUMBERS DESIGNATES THE SIZE OF THE STRUCTURE, AND THE FOLLOWING LETTER DESIGNATES THE TYPE OF COVER TO BE USED TO COMPRISE THE COMPLETE UNIT.

BASES SHALL BE PLACED ON A BED OF MATERIAL AT LEAST 6 INCHES IN DEPTH, WHICH MEETS THE REQUIREMENTS OF FOUNDATION BACKFILL. THIS BEDDING SHALL BE COMPACTED AND PROVIDE UNIFORM SUPPORT FOR THE ENTIRE AREA OF THE BASE.

ALL BAR STEEL REINFORCEMENT SHALL BE EMBEDDED 2 INCHES CLEAR UNLESS OTHERWISE SHOWN OR NOTED.

PRECAST REINFORCED RISERS SHALL HAVE A TONGUE AND GROOVE JOINT WITH TONGUE UP OR DOWN.

4" OVERHANGING BASES ARE REQUIRED FOR CAST-IN-PLACE REINFORCED CONCRETE AND CONCRETE BLOCK INSTALLATIONS.
4" OVERHANG IS REQUIRED WHEN SEPARATE PRECAST BASE IS PROVIDED.
OVERHANG IS NOT REQUIRED ON PRECAST STRUCTURES WITH AN INTEGRAL OR MONOLITHIC BASE.

MAXIMUM INSIDE PIPE DIAMETER DETERMINED BY 3" CLEARANCE ON EACH SIDE OF THE OUTSIDE WALL OF THE PIPE. SEE DETAIL "A". ASSUMES PIPE ENTERS PERPENDICULAR TO THE STRUCTURE.

① FOR PRECAST CATCH BASINS PROVIDE REINFORCING STEEL IN ACCORDANCE TO ASTM C 913.

② CONTRACTOR TO PROVIDE DRAWING(S) STAMPED BY A PROFESSIONAL ENGINEER FOR STEEL REINFORCING DESIGN FOR CAST-IN-PLACE STRUCTURES.

③ 1" CONCRETE KEY POURED AFTER INSTALLATION. 2' SUMP MEASURED FROM TOP OF KEY.

CATCH BASIN COVER MATRIX

CATCH BASIN SIZE		INLET COVER TYPE	F	ALL H'S
	WIDTH Ⓦ (FT)	LENGTH Ⓛ (FT)		
2X3-FT	2	3		X
2.5X3-FT	2.5	3	X	

PIPE MATRIX

CATCH BASIN SIZE	MAXIMUM INSIDE PIPE DIAMETER FOR TWO PIPES	
	WIDTH (IN)	LENGTH (IN)
2X3-FT	12	24
2.5X3-FT	18	24

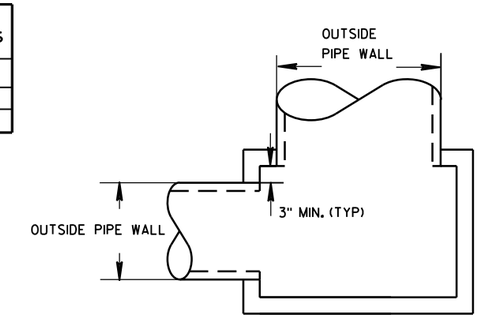

DETAIL "A"

CATCH BASINS 2X3-FT AND 2.5X3-FT

CATCH BASINS 2X3-FT AND 2.5X3-FT

STATE OF WISCONSIN
DEPARTMENT OF TRANSPORTATION

APPROVED
Sept., 2016 — DATE
/S/ Rodney Taylor — ROADWAY STANDARDS UNIT SUPERVISOR
FHWA

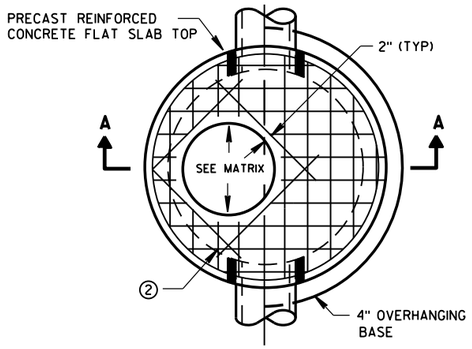

PLAN VIEW CIRCULAR OPENING

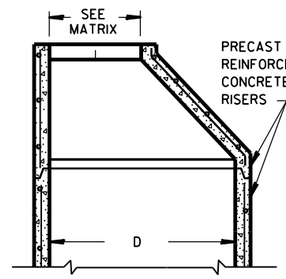

OPTIONAL PRECAST REINFORCED CONCRETE ECCENTRIC TOP

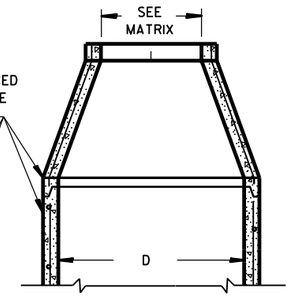

OPTIONAL PRECAST REINFORCED CONCRETE CONCENTRIC TOP

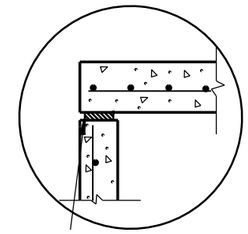

TOP WITH PLAIN END JOINT

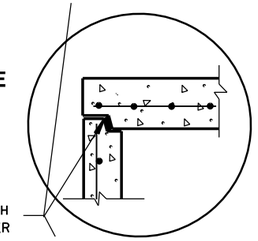

JOINTS TO BE SEALED WITH A BUTYL RUBBER SEAL PER SEALANT MANUFACTURERS RECOMMENDATIONS CONFORMING TO ASTM C990 (TYP)

TOP WITH TONGUE AND GROOVE JOINT

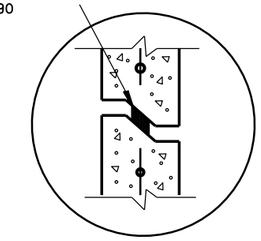

RISER WITH TONGUE AND GROOVE JOINT

DETAIL "B"

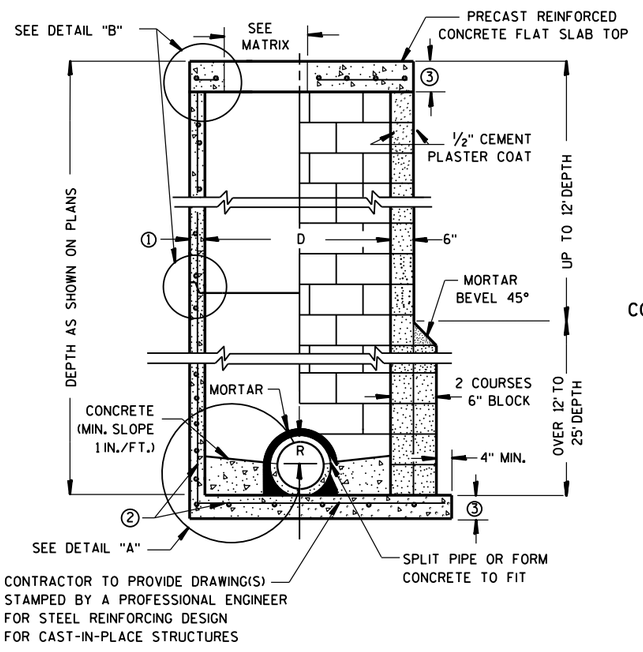

PRECAST REINFORCED CONCRETE WITH MONOLITHIC BASE

CONCRETE BLOCK WITH CAST-IN-PLACE OR PRECAST REINFORCED CONCRETE BASE ②

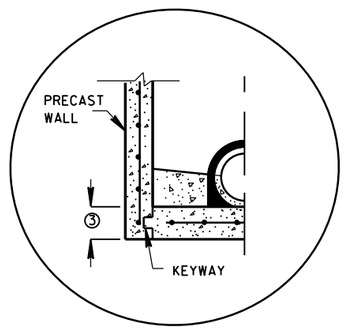

PRECAST REINFORCED CONCRETE WITH INTEGRAL BASE OPTION

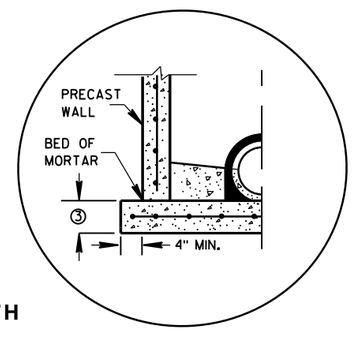

SEPARATE PRECAST REINFORCED CONCRETE BASE OPTION

DETAIL "A"

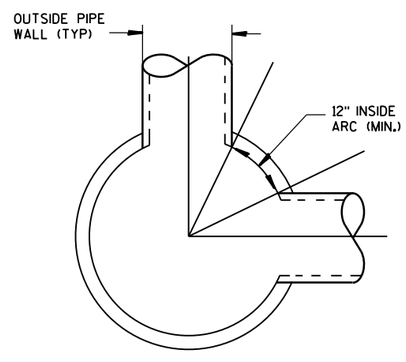

DETAIL "C"

GENERAL NOTES

DETAILS OF CONSTRUCTION, MATERIALS AND WORKMANSHIP NOT SHOWN ON THIS DRAWING SHALL CONFORM TO THE PERTINENT REQUIREMENTS OF THE STANDARD SPECIFICATIONS AND THE APPLICABLE SPECIAL PROVISIONS.

UNLESS OTHERWISE AUTHORIZED IN WRITING BY THE ENGINEER, THE CONTRACTOR SHALL NOT ORDER AND DELIVER PRECAST MANHOLE UNITS REQUIRED FOR THE PROJECT UNTIL A LIST OF SIZES IS FURNISHED BY THE ENGINEER.

DETAILED DRAWINGS FOR PROPOSED ALTERNATE DESIGNS FOR UNDERGROUND DRAINAGE STRUCTURES SHALL BE SUBMITTED TO THE ENGINEER FOR APPROVAL PROVIDING THAT SUCH ALTERNATE DESIGNS MAKE PROVISION FOR EQUIVALENT CAPACITY AND STRENGTH.

ALL DRAINAGE STRUCTURES ARE DESIGNATED ON THE PLANS AS "MANHOLES 3X3-L", "CATCH BASINS 4-B", "INLETS 2X3-H", ETC. THE FIRST NUMBERS DESIGNATE THE SIZE OF THE STRUCTURE, AND THE FOLLOWING LETTER DESIGNATES THE TYPE OF COVER TO BE USED TO COMPRISE THE COMPLETE UNIT.

BASES SHALL BE PLACED ON A BED OF MATERIAL AT LEAST 6 INCHES IN DEPTH, WHICH MEETS THE REQUIREMENTS OF FOUNDATION BACKFILL. THIS BEDDING SHALL BE COMPACTED AND PROVIDE UNIFORM SUPPORT FOR THE ENTIRE AREA OF THE BASE.

PRECAST REINFORCED CONE TOPS (ECCENTRIC OR CONCENTRIC) OR PRECAST REINFORCED FLAT SLAB TOPS MAY BE USED ON CONCRETE BLOCK STRUCTURES.

ECCENTRIC CONE TOPS MAY BE USED ON ALL STRUCTURES, AND CONCENTRIC CONE TOPS SHALL BE USED ONLY ON STRUCTURES 5 FEET OR LESS IN DEPTH, UNLESS OTHERWISE DIRECTED BY THE ENGINEER.

STEPS MEETING AASHTO M199 AND THE FOLLOWING REQUIREMENTS SHALL BE INSTALLED IN ALL STRUCTURES OVER 5 FEET IN DEPTH: 16 INCH C-C MAXIMUM SPACING; PROJECT A MINIMUM CLEAR DISTANCE OF 4 INCHES FROM THE WALL AT THE POINT OF EMBEDMENT; MINIMUM LENGTH OF 10 INCHES; MINIMUM WALL EMBEDMENT OF 3 INCHES. FERROUS METAL STEPS NOT PAINTED OR TREATED TO RESIST CORROSION SHALL HAVE A MINIMUM CROSS SECTIONAL DIMENSION OF 1 INCH.

STEPS OF APPROVED POLYPROPYLENE PLASTIC COATED REINFORCEMENT BAR ARE ACCEPTABLE. REINFORCING BAR MUST BE A MINIMUM OF ½" AND MEET THE REQUIREMENTS OF ASTM A615.

CERTIFICATION SHALL BE PROVIDED THAT INSTALLED STEPS WHEN TESTED IN ACCORDANCE WITH SECTION 10 OF AASHTO T280 CAN WITHSTAND A VERTICAL LOAD OF 800 LBS. AND A HORIZONTAL LOAD OF 400 LBS.

ALL BAR STEEL REINFORCEMENT SHALL BE EMBEDDED 2 INCHES CLEAR UNLESS OTHERWISE SHOWN OR NOTED.

CONCRETE BLOCK WILL NOT BE PERMITED FOR STRUCTURES GREATER THAN 4 FEET IN DIAMETER.

PRECAST REINFORCED RISERS SHALL HAVE A TONGUE AND GROOVE JOINT WITH TONGUE UP OR DOWN.

ALL PRECAST MANHOLE UNITS SHALL CONFORM TO THE PERTINENT REQUIREMENTS OF AASHTO DESIGNATION M 199.

4" OVERHANGING BASES ARE REQUIRED FOR ALL CONCRETE BLOCK INSTALLATIONS. 4" OVERHANG IS REQUIRED WHEN SEPARATE PRECAST BASE IS PROVIDED. OVERHANG IS NOT REQUIRED ON PRECAST STRUCTURES WITH AN INTEGRAL OR MONOLITHIC BASE.

FOR ADDITIONAL CONFIGURATIONS, MAINTAIN A MINIMUM OF 12 INCHES AS MEASURED FROM THE INSIDE OF THE STRUCTURE WALL BETWEEN THE OUTSIDE PIPE WALLS OF ADJACENT PIPES. SEE DETAIL "C".

① MINIMUM WALL THICKNESS SHALL BE 4 INCHES FOR 3-FT, 5 INCHES FOR 4-FT, 6 INCHES FOR 5-FT, 7 INCHES FOR 6-FT, 8 INCHES FOR 7-FT AND 9 INCHES FOR 8-FT DIAMETER PRECAST MANHOLES.

② FOR PRECAST MANHOLES PROVIDE REINFORCING STEEL IN ACCORDANCE TO AASHTO M199.

③ PRECAST FLAT SLAB TOPS AND BASES WITH A DIAMETER OF 48" AND LESS SHALL HAVE A MINIMUM THICKNESS OF 6". PRECAST FLAT SLAB TOPS AND BASES WITH A DIAMETER LARGER THAN 48" SHALL HAVE A MINIMUM THICKNESS OF 8".

MANHOLE COVER OPENING MATRIX

MANHOLE COVER TYPE	C	ALL J'S	K	L	M
OPENING SIZE (FT)					
2 DIA.	X	X		X	
3 DIA.			X		X

PIPE MATRIX

MANHOLE SIZE	MAXIMUM INSIDE PIPE DIAMETER FOR TWO PIPES	
	180° SEPARATION (IN)	90° SEPARATION (IN)
3-FT	15	12
4-FT	24	18
5-FT	36	24
6-FT	42	36
7-FT	48	36
8-FT	60	42

MANHOLES 3-FT, 4-FT, 5-FT, 6-FT, 7-FT AND 8-FT DIAMETER

STATE OF WISCONSIN
DEPARTMENT OF TRANSPORTATION

APPROVED
Sept., 2016 — DATE
/S/ Rodney Taylor — ROADWAY STANDARDS DEVELOPMENT UNIT SUPERV
FHWA

6

S.D.D. 8 B 9-2

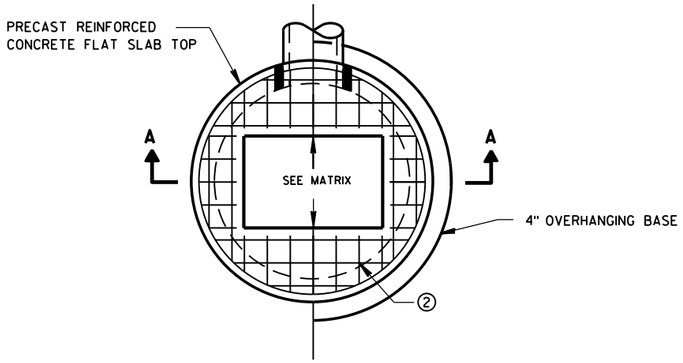

PLAN VIEW RECTANGULAR OPENING

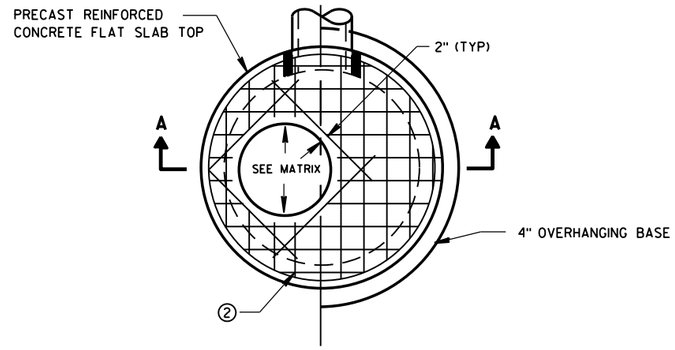

PLAN VIEW CIRCULAR OPENING

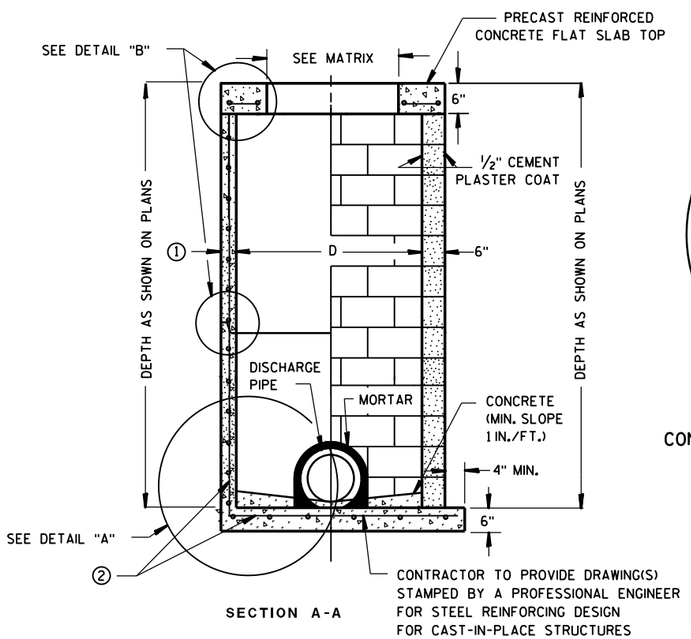

SECTION A-A

PRECAST REINFORCED CONCRETE WITH MONOLITHIC BASE

CONCRETE BLOCK WITH CAST-IN-PLACE OR PRECAST REINFORCED CONCRETE BASE ②

CIRCULAR INLETS W/ FLAT TOP

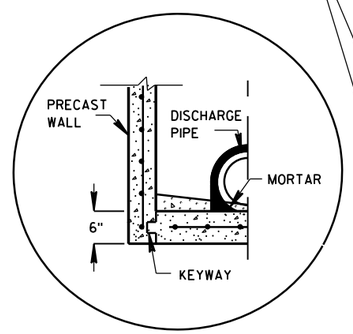

PRECAST REINFORCED CONCRETE WITH INTEGRAL BASE OPTION

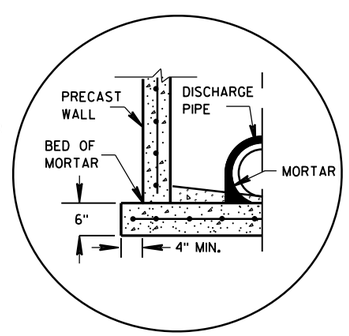

SEPARATE PRECAST REINFORCED CONCRETE BASE OPTION

DETAIL "A"

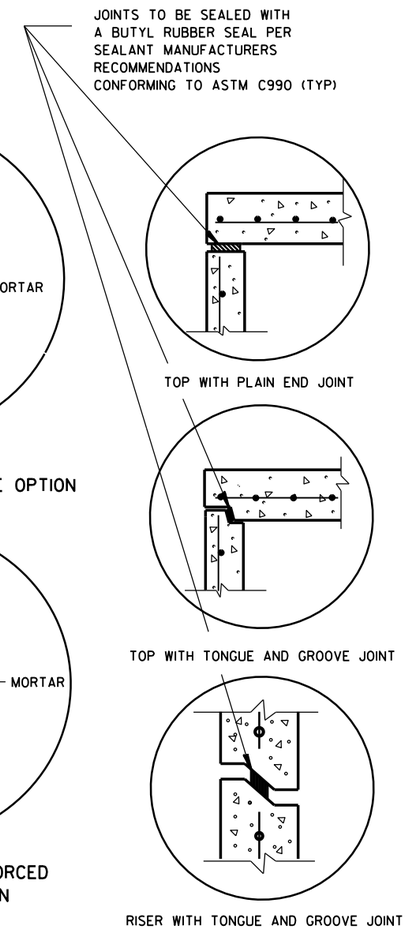

DETAIL "B"

GENERAL NOTES

DETAILS OF CONSTRUCTION, MATERIALS AND WORKMANSHIP NOT SHOWN ON THIS DRAWING SHALL CONFORM TO THE PERTINENT REQUIREMENTS OF THE STANDARD SPECIFICATIONS AND THE APPLICABLE SPECIAL PROVISIONS.

UNLESS OTHERWISE AUTHORIZED IN WRITING BY THE ENGINEER, THE CONTRACTOR SHALL NOT ORDER AND DELIVER PRECAST INLET UNITS REQUIRED FOR THE PROJECT UNTIL A LIST OF SIZES IS FURNISHED BY THE ENGINEER.

DETAILED DRAWINGS FOR PROPOSED ALTERNATE DESIGNS FOR UNDERGROUND DRAINAGE STRUCTURES SHALL BE SUBMITTED TO THE ENGINEER FOR APPROVAL PROVIDING THAT SUCH ALTERNATE DESIGNS MAKE PROVISION FOR EQUIVALENT CAPACITY AND STRENGTH.

ALL DRAINAGE STRUCTURES ARE DESIGNATED ON THE PLANS AS "MANHOLES 3X3-L", "CATCH BASINS 4-B", "INLETS 2X3-H", ETC. THE FIRST NUMBERS DESIGNATE THE SIZE OF THE STRUCTURE, AND THE FOLLOWING LETTER DESIGNATES THE TYPE OF COVER TO BE USED TO COMPRISE THE COMPLETE UNIT.

BASES SHALL BE PLACED ON A BED OF MATERIAL AT LEAST 6 INCHES IN DEPTH, WHICH MEETS THE REQUIREMENTS OF FOUNDATION BACKFILL. THIS BEDDING SHALL BE COMPACTED AND PROVIDE UNIFORM SUPPORT FOR THE ENTIRE AREA OF THE BASE.

ALL BAR STEEL REINFORCEMENT SHALL BE EMBEDDED 2 INCHES CLEAR UNLESS OTHERWISE SHOWN OR NOTED.

ALL PRECAST INLET UNITS SHALL CONFORM TO THE PERTINENT REQUIREMENTS OF AASHTO DESIGNATION M199.

PRECAST REINFORCED RISERS SHALL HAVE A TONGUE AND GROOVE JOINT WITH TONGUE UP OR DOWN.

4" OVERHANGING BASES ARE REQUIRED FOR ALL CONCRETE BLOCK INSTALLATIONS. 4" OVERHANG IS REQUIRED WHEN SEPARATE PRECAST BASE IS PROVIDED. OVERHANG IS NOT REQUIRED ON PRECAST STRUCTURES WITH AN INTEGRAL OR MONOLITHIC BASE.

FOR ADDITIONAL CONFIGURATIONS, MAINTAIN A MINIMUM OF 12 INCHES AS MEASURED FROM THE INSIDE OF THE STRUCTURE WALL BETWEEN THE OUTSIDE PIPE WALLS OF ADJACENT PIPES. SEE DETAIL "C".

① MINIMUM WALL THICKNESS SHALL BE 4-IN FOR 3-FT DIAMETER AND 5-IN FOR 4-FT DIAMETER PRECAST INLETS.

② FOR PRECAST CATCH BASINS PROVIDE REINFORCING STEEL IN ACCORDANCE TO AASHTO M199.

INLET COVER OPENING MATRIX

	INLET COVER TYPE	ALL A'S	ALL B'S	BW	C	F	ALL H'S	S	T	V	WM	Z
INLET SIZE	OPENING SIZE (FT)											
3-FT	2 DIA.				X							X
	2X2	X	X					X		X		
4-FT	2 DIA.				X							X
	2X2	X	X					X		X		
	2X2.5			X				X	X	X	X	
	2X3						X					
	2.5X3					X						

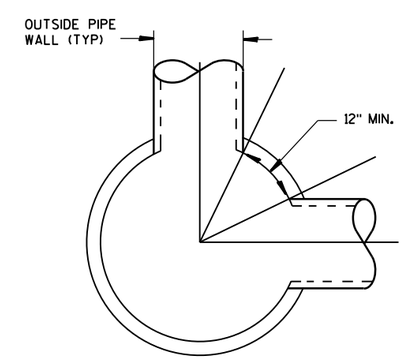

DETAIL "C"

PIPE MATRIX

INLET SIZE	MAXIMUM INSIDE PIPE DIAMETER FOR TWO PIPES	
	180° SEPARATION (IN)	90° SEPARATION (IN)
3-FT	15	12
4-FT	24	18

INLETS 3-FT AND 4-FT DIAMETER

INLETS 3-FT
AND 4-FT DIAMETER

STATE OF WISCONSIN
DEPARTMENT OF TRANSPORTATION

APPROVED
Sept., 2016 — /S/ Rodney Taylor
DATE — ROADWAY STANDARDS DEVELOPMENT UNIT SUPERVISOR
FHWA

6

S.D.D. 8 C 6-2

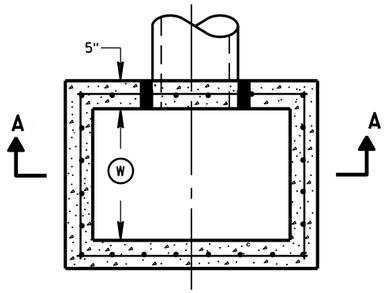

PLAN VIEW

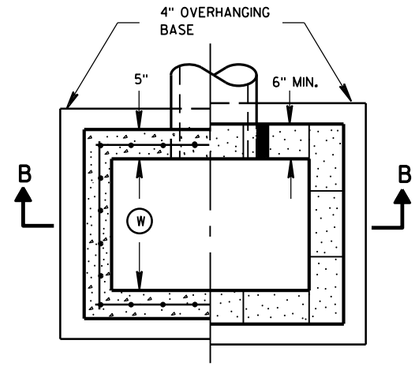

PLAN VIEW

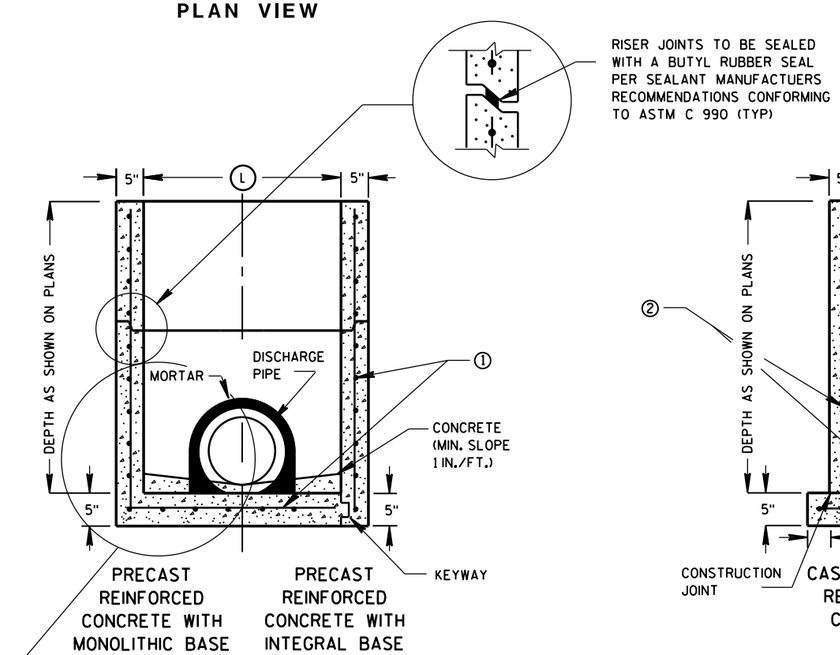

SECTION A-A

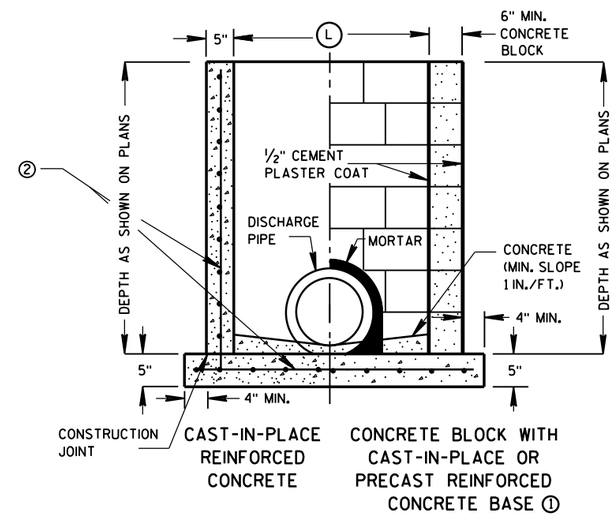

SECTION B-B

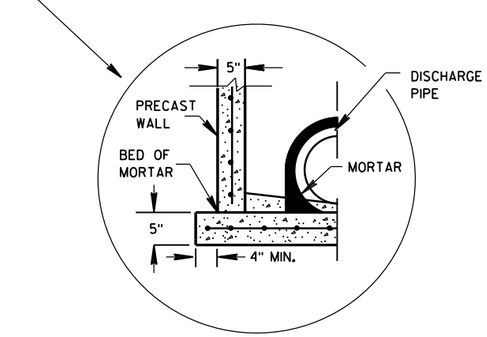

SEPARATE PRECAST REINFORCED CONCRETE BASE OPTION

GENERAL NOTES

DETAILS OF CONSTRUCTION, MATERIALS AND WORKMANSHIP NOT SHOWN ON THIS DRAWING SHALL CONFORM TO THE PERTINENT REQUIREMENTS OF THE STANDARD SPECIFICATIONS AND THE APPLICABLE SPECIAL PROVISIONS.

UNLESS OTHERWISE AUTHORIZED IN WRITING BY THE ENGINEER, THE CONTRACTOR SHALL NOT ORDER AND DELIVER PRECAST INLET UNITS REQUIRED FOR THE PROJECT UNTIL A LIST OF SIZES IS FURNISHED BY THE ENGINEER.

DETAILED DRAWINGS FOR PROPOSED ALTERNATE DESIGNS FOR UNDERGROUND DRAINAGE STRUCTURES SHALL BE SUBMITTED TO THE ENGINEER FOR APPROVAL PROVIDING THAT SUCH ALTERNATE DESIGNS MAKE PROVISION FOR EQUIVALENT CAPACITY AND STRENGTH.

ALL PRECAST INLET UNITS SHALL CONFORM TO THE PERTINENT REQUIREMENTS OF ASTM C 913.

ALL DRAINAGE STRUCTURES ARE DESIGNATED ON THE PLANS AS "MANHOLES 3X3-L", "CATCH BASINS 4-B", "INLETS 2X3-H", ETC. THE FIRST NUMBERS DESIGNATES THE SIZE OF THE STRUCTURE, AND THE FOLLOWING LETTER DESIGNATES THE TYPE OF COVER TO BE USED TO COMPRISE THE COMPLETE UNIT.

BASES SHALL BE PLACED ON A BED OF MATERIAL AT LEAST 6 INCHES IN DEPTH, WHICH MEETS THE REQUIREMENTS OF FOUNDATION BACKFILL. THIS BEDDING SHALL BE COMPACTED AND PROVIDE UNIFORM SUPPORT FOR THE ENTIRE AREA OF THE BASE.

ALL BAR STEEL REINFORCEMENT SHALL BE EMBEDDED 2 INCHES CLEAR UNLESS OTHERWISE SHOWN OR NOTED.

PRECAST REINFORCED RISERS SHALL HAVE A TONGUE AND GROOVE JOINT WITH TONGUE UP OR DOWN.

4" OVERHANGING BASES ARE REQUIRED FOR CAST-IN-PLACE REINFORCED CONCRETE AND CONCRETE BLOCK INSTALLATIONS.
4" OVERHANG IS REQUIRED WHEN SEPARATE PRECAST BASE IS PROVIDED.
OVERHANG IS NOT REQUIRED ON PRECAST STRUCTURES WITH AN INTEGRAL OR MONOLITHIC BASE.

MAXIMUM INSIDE PIPE DIAMETER DETERMINED BY 3 INCH CLEARANCE ON EACH SIDE OF THE OUTSIDE WALL OF THE PIPE. SEE DETAIL "A". ASSUMES PIPE ENTERS PERPENDICULAR TO THE STRUCTURE.

① FOR PRECAST INLETS PROVIDE REINFORCING STEEL IN ACCORDANCE TO ASTM C 913.

② CONTRACTOR TO PROVIDE DRAWING(S) STAMPED BY A PROFESSIONAL ENGINEER FOR STEEL REINFORCING DESIGN FOR CAST-IN-PLACE STRUCTURES.

INLET COVER MATRIX

INLET SIZE		INLET COVER TYPE	ALL A'S	ALL B'S	BW	F	ALL H'S	S	T	V	WM
	WIDTH Ⓦ (FT)	LENGTH Ⓛ (FT)									
2X2-FT	2	2	X	X				X		X	
2X2.5-FT	2	2.5			X			X	X	X	X
2X3-FT	2	3					X				
2.5X3-FT	2.5	3				X					

PIPE MATRIX

INLET SIZE	MAXIMUM INSIDE PIPE DIAMETER	
	WIDTH (IN)	LENGTH (IN)
2X2-FT	12	12
2X2.5-FT	12	18
2X3-FT	12	24
2.5X3-FT	18	24

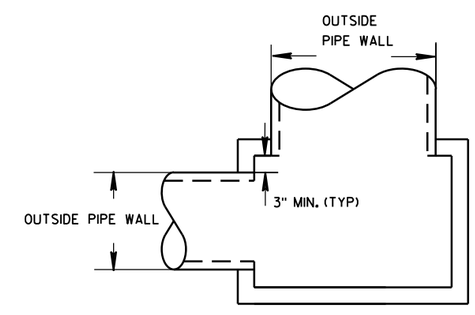

DETAIL "A"

INLETS 2X2-FT, 2X2.5-FT, 2X3-FT AND 2.5X3-FT

INLETS 2X2-FT, 2X2.5-FT, 2X3-FT AND 2.5X3-FT

STATE OF WISCONSIN
DEPARTMENT OF TRANSPORTATION

APPROVED
Sept., 2016 — DATE
/S/ Rodney Taylor
ROADWAY STANDARDS D IT
UNIT SUPERVIS
FHWA

6

S.D.D. 8 C 7-2

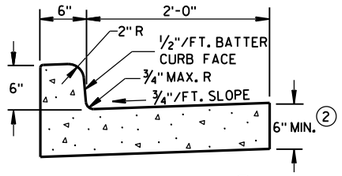

TYPES A & D ①

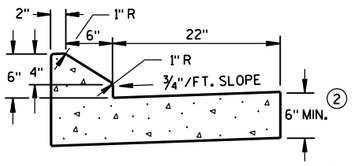

6" SLOPED CURB TYPES G & J ①

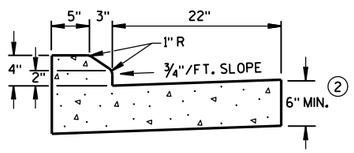

4" SLOPED CURB TYPES G & J ①

CONCRETE CURB & GUTTER 30"

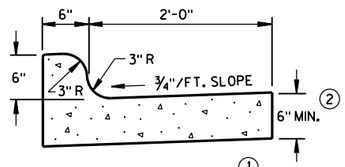

TYPES K & L ①

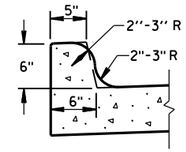

OPTIONAL CURB SHAPE
FOR TYPES K & L ①

CONCRETE CURB & GUTTER 30"

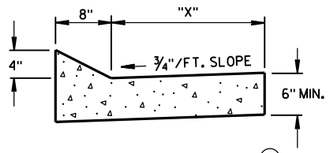

TYPES TBT & TBTT ①

CONCRETE CURB & GUTTER

TBT & TBTT	"X"
30"	22"
36"	28"

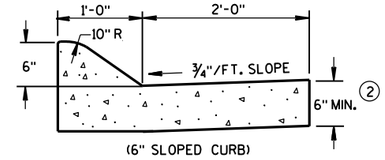

(6" SLOPED CURB)

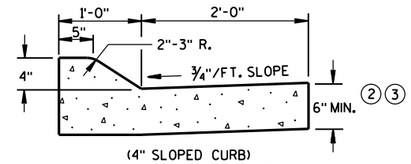

(4" SLOPED CURB)

TYPES A & D ①

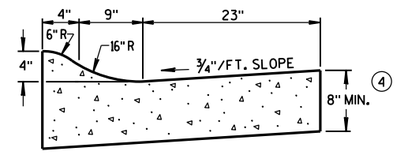

4" SLOPED CURB TYPES R & T ①⑤

CONCRETE CURB & GUTTER 36"

GENERAL NOTES

DETAILS OF CONSTRUCTION, MATERIALS AND WORKMANSHIP NOT SHOWN ON THIS DRAWING SHALL CONFORM TO THE PERTINENT REQUIREMENTS OF THE CONTRACT.

PAVEMENT TIES AND TIE BARS SHALL BE EPOXY COATED IN CONFORMANCE WITH SUBSECTION 505.2.6.2 OF THE STANDARD SPECIFICATIONS.

INTEGRAL CURB & GUTTER SHALL CONFORM TO THE DETAILS SHOWN FOR CONCRETE CURB & GUTTER INCLUDING THE TRANSVERSE GUTTER SLOPE. A LONGITUDINAL CONSTRUCTION JOINT IS NOT REQUIRED WITH INTEGRAL CURB AND GUTTER.

WHERE THE TRANSVERSE JOINTS IN THE PAVEMENT ARE REQUIRED TO BE SEALED, THE JOINTS IN THE INTEGRAL CURB AND GUTTER SHALL BE SEALED TO THE FACE OF CURB WITH THE SAME TYPE OF SEALANT. THE COST OF FURNISHING AND INSTALLING THIS SEALANT SHALL BE INCIDENTAL TO THE ITEM CONCRETE CURB AND GUTTER.

UNLESS OTHERWISE SHOWN ON THE TYPICAL CROSS SECTIONS, THE BASE AGGREGATE AND COMMON EXCAVATION LIMITS ARE 2'-0" BEHIND THE BACK OF CURBS.

① TIE BARS ARE REQUIRED FOR CURB AND GUTTER TYPES A, G, K, R AND TBTT.

② THE BOTTOM OF CURB AND GUTTER MAY BE CONSTRUCTED EITHER LEVEL OR PARALLEL TO THE SLOPE OF THE SUBGRADE OR BASE AGGREGATE PROVIDED A 6" MINIMUM GUTTER THICKNESS IS MAINTAINED.

③ USE 8" MINIMUM GUTTER THICKNESS WHEN USED WITH AN ADJACENT CONCRETE TRUCK APRON PLACED BEHIND BACK OF CURB.

④ THE BOTTOM OF CURB AND GUTTER MAY BE CONSTRUCTED EITHER LEVEL OR PARALLEL TO THE SLOPE OF THE SUBGRADE OR BASE AGGREGATE PROVIDED A 8" MINIMUM GUTTER THICKNESS IS MAINTAINED.

⑤ THE FACE OF CURB IS 6" FROM THE BACK OF CURB.

⑥ WHEN REVERSE SLOPE GUTTER IS REQUIRED, THE LOCATION(S) WILL BE SHOWN ELSEWHERE IN THE PLAN.

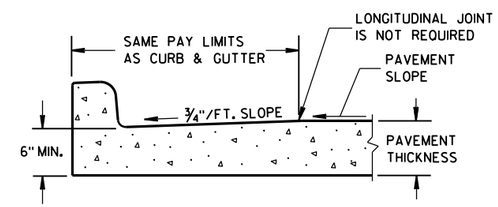

PARTIAL SECTION OF PAVEMENT
WITH INTEGRAL CURB & GUTTER

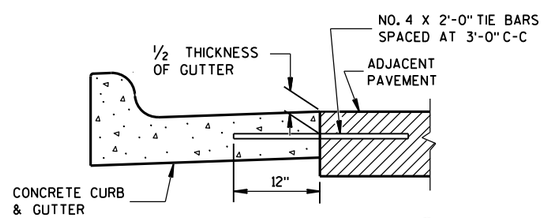

TYPICAL TIE BAR LOCATION ①

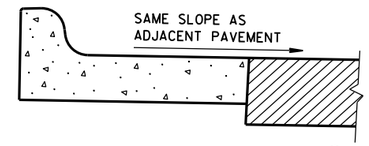

REVERSE SLOPE GUTTER ⑥
(TYPICAL FOR ALL CURB & GUTTER TYPES)

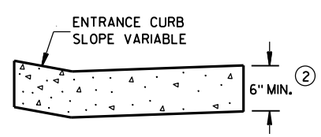

DRIVEWAY ENTRANCE CURB
(WHEN DIRECTED BY THE ENGINEER)

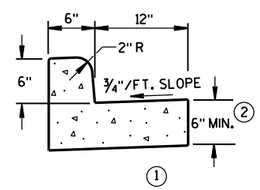

① TYPES A & D

CONCRETE CURB & GUTTER 18"

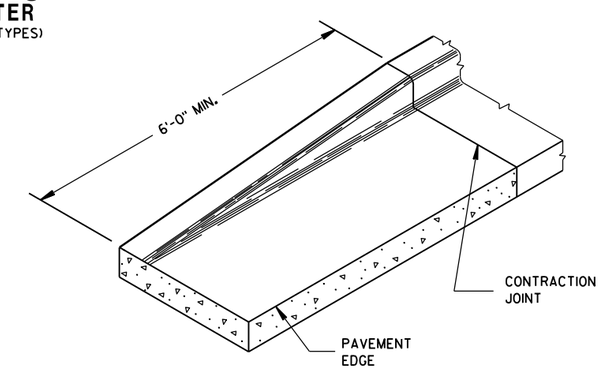

END SECTION CURB & GUTTER

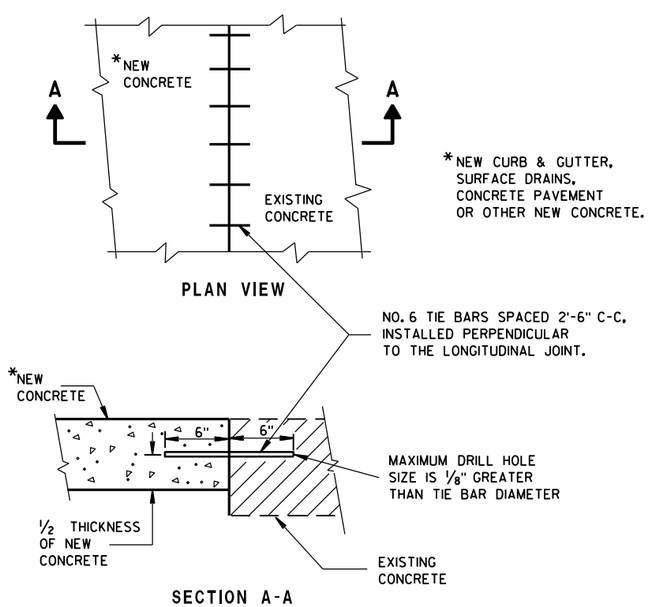

PLAN VIEW

SECTION A-A

TIE BARS DRILLED
INTO EXISTING PAVEMENT

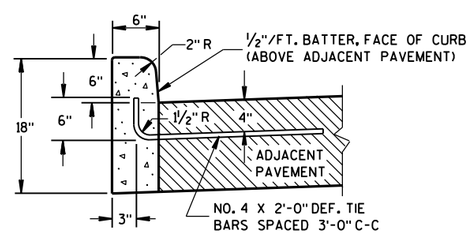

① TYPES A & D

CONCRETE CURB

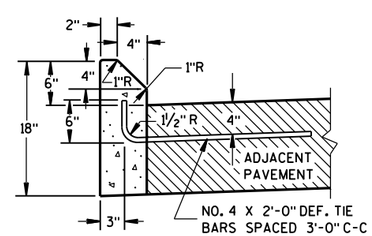

① TYPES G & J

CONCRETE CURB, CONCRETE CURB & GUTTER AND TIES

STATE OF WISCONSIN
DEPARTMENT OF TRANSPORTATION

APPROVED
June, 2016 — DATE
/S/ Jerry H. Zogg — ROADWAY STANDARDS DEVELOPMENT ENGINEER
FHWA

6

S.D.D. 8 D 1-19

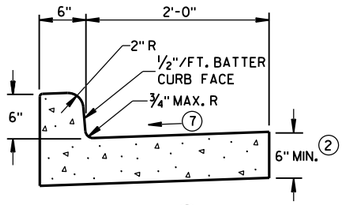

TYPES A[1] & D

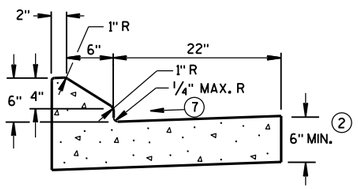

6" SLOPED CURB TYPES G[1] & J

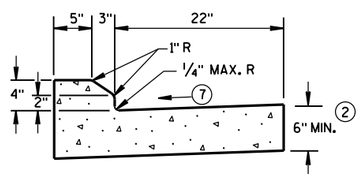

4" SLOPED CURB TYPES G[1] & J

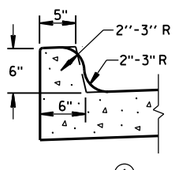

TYPES K[1] & L
(OPTIONAL CURB SHAPE)

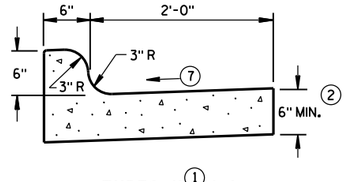

TYPES K[1] & L

CONCRETE CURB & GUTTER 30"

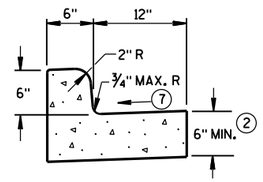

TYPES A[1] & D

CONCRETE CURB & GUTTER 18"

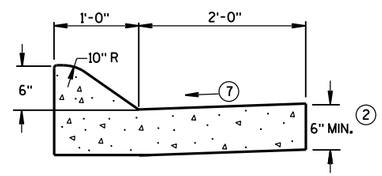

6" SLOPED CURB TYPES A[1] & D

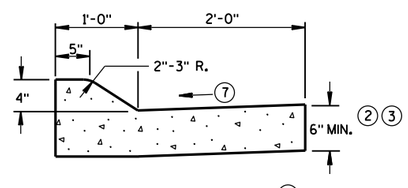

4" SLOPED CURB TYPES A[1] & D

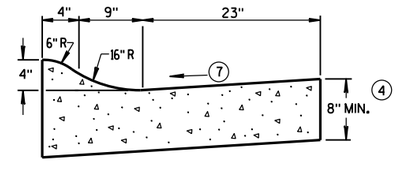

4" SLOPED CURB TYPES R[1] & T[5]

CONCRETE CURB & GUTTER 36"

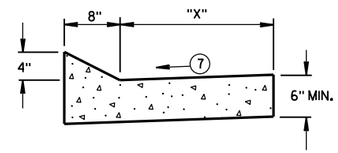

TYPES TBT & TBTT[1]

CONCRETE CURB & GUTTER

TBT & TBTT	"X"
30"	22"
36"	28"

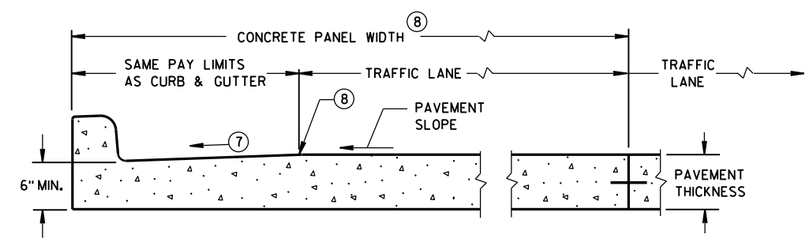

PARTIAL SECTION OF PAVEMENT*
WITH INTEGRAL CURB & GUTTER

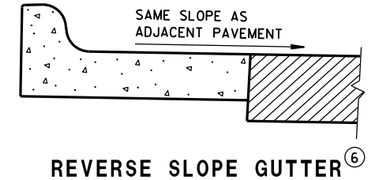

REVERSE SLOPE GUTTER[6]
(TYPICAL FOR ALL CURB & GUTTER TYPES)

GENERAL NOTES

DETAILS OF CONSTRUCTION, MATERIALS AND WORKMANSHIP NOT SHOWN ON THIS DRAWING SHALL CONFORM TO THE PERTINENT REQUIREMENTS OF THE CONTRACT.

PAVEMENT TIES AND TIE BARS SHALL BE EPOXY COATED IN CONFORMANCE WITH SUBSECTION 505.2.6.2 OF THE STANDARD SPECIFICATIONS.

INTEGRAL CURB & GUTTER SHALL CONFORM TO THE DETAILS SHOWN FOR CONCRETE CURB & GUTTER INCLUDING THE TRANSVERSE GUTTER SLOPE.

WHERE THE TRANSVERSE JOINTS IN THE PAVEMENT ARE REQUIRED TO BE SEALED, THE JOINTS IN THE INTEGRAL CURB AND GUTTER SHALL BE SEALED TO THE FACE OF CURB WITH THE SAME TYPE OF SEALANT. THE COST OF FURNISHING AND INSTALLING THIS SEALANT SHALL BE INCIDENTAL TO THE ITEM CONCRETE CURB AND GUTTER.

UNLESS OTHERWISE SHOWN ON THE TYPICAL CROSS SECTIONS, THE BASE AGGREGATE AND COMMON EXCAVATION LIMITS ARE 2'-0" BEHIND THE BACK OF CURBS.

1. TIE BARS ARE REQUIRED FOR CURB AND GUTTER TYPES A, G, K, R AND TBTT.
2. THE BOTTOM OF CURB AND GUTTER MAY BE CONSTRUCTED EITHER LEVEL OR PARALLEL TO THE SLOPE OF THE SUBGRADE OR BASE AGGREGATE PROVIDED A 6" MINIMUM GUTTER THICKNESS IS MAINTAINED.
3. USE 8" MINIMUM GUTTER THICKNESS WHEN USED WITH AN ADJACENT CONCRETE TRUCK APRON PLACED BEHIND BACK OF CURB.
4. THE BOTTOM OF CURB AND GUTTER MAY BE CONSTRUCTED EITHER LEVEL OR PARALLEL TO THE SLOPE OF THE SUBGRADE OR BASE AGGREGATE PROVIDED A 8" MINIMUM GUTTER THICKNESS IS MAINTAINED.
5. THE FACE OF CURB IS 6" FROM THE BACK OF CURB.
6. WHEN REVERSE SLOPE GUTTER IS REQUIRED, THE LOCATION(S) WILL BE SHOWN ELSEWHERE IN THE PLAN.
7. USE 4% GUTTER CROSS SLOPE UNLESS OTHERWISE NOTED IN THE PLANS.
8. INCLUDE LONGITUDINAL JOINT AND TIE BARS ALONG LANE EDGE WHEN CONCRETE PANEL WIDTH EXCEEDS THE MAXIMUM WIDTH PER TABLE BELOW. LONGITUDINAL JOINT(S) ARE NOT ALLOWED WITHIN TRAFFIC LANES AND BIKE LANES. LONGITUDINAL JOINT MAY BE SAWED.

PAVEMENT THICKNESS AND MAXIMUM CONCRETE PANEL WIDTH TABLE

PAVEMENT THICKNESS	MAXIMUM PANEL WIDTH
LESS THAN 10"	12'
10" & ABOVE	15'

* BIKE LANE IS NOT SHOWN.

CONCRETE CURB & GUTTER

STATE OF WISCONSIN
DEPARTMENT OF TRANSPORTATION

GENERAL NOTES

DETAILS OF CONSTRUCTION, MATERIALS AND WORKMANSHIP NOT SHOWN ON THIS DRAWING SHALL CONFORM TO THE PERTINENT REQUIREMENTS OF THE CONTRACT.

PAVEMENT TIES AND TIE BARS SHALL BE EPOXY COATED IN CONFORMANCE WITH SUBSECTION 505.2.6.2 OF THE STANDARD SPECIFICATIONS.

UNLESS OTHERWISE SHOWN ON THE TYPICAL CROSS SECTIONS, THE BASE AGGREGATE AND COMMON EXCAVATION LIMITS ARE 2'-0" BEHIND THE BACK OF CURBS.

(1) TIE BARS ARE REQUIRED FOR CURB AND GUTTER TYPES A, G, K, R AND TBTT.

(2) THE BOTTOM OF CURB AND GUTTER MAY BE CONSTRUCTED EITHER LEVEL OR PARALLEL TO THE SLOPE OF THE SUBGRADE OR BASE AGGREGATE PROVIDED A 6" MINIMUM GUTTER THICKNESS IS MAINTAINED.

(9) REFER TO SDD 8D18 AND SDD 8D19 FOR ADDITIONAL DRIVEWAY ENTRANCE CURB DETAILS.

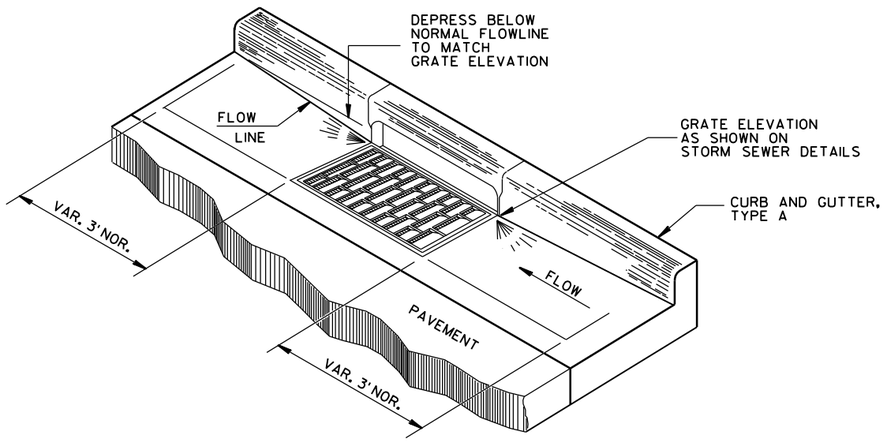

DETAIL OF CURB AND GUTTER AT INLETS

(TYPE H INLET COVER SHOWN)

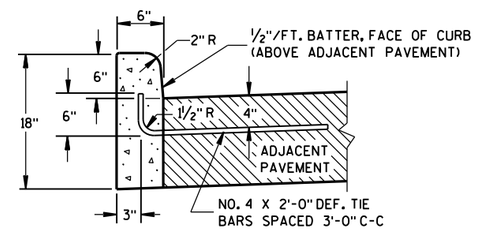

TYPES A(1) & D

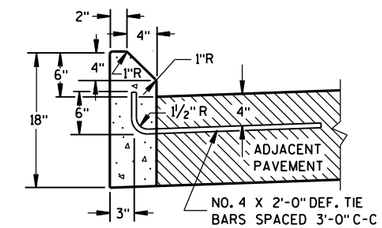

TYPES G(1) & J

CONCRETE CURB

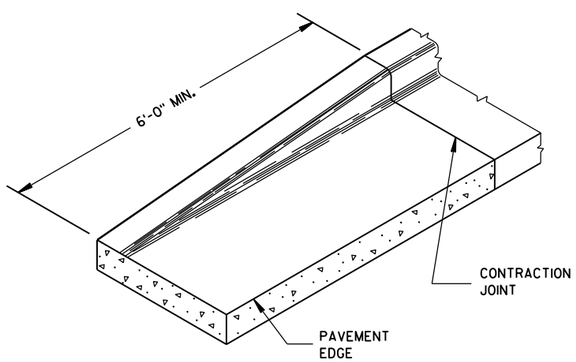

END SECTION CURB & GUTTER

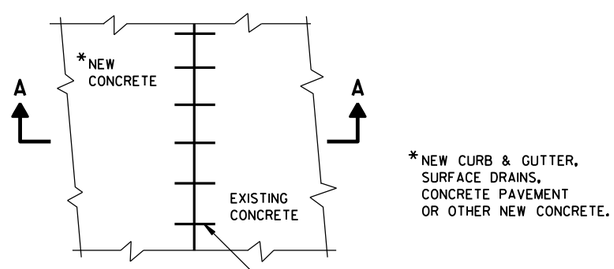

PLAN VIEW

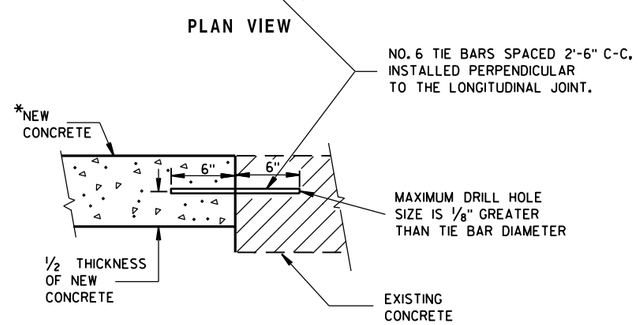

SECTION A-A

TIE BARS DRILLED INTO EXISTING PAVEMENT

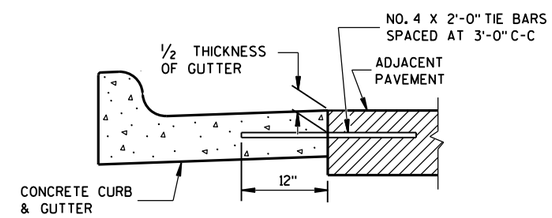

TYPICAL TIE BAR LOCATION (1)

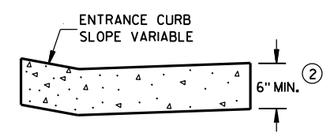

DRIVEWAY ENTRANCE CURB (9)

(WHEN DIRECTED BY THE ENGINEER)

CONCRETE CURB, TIES AND CURB AND GUTTER APPLICATIONS

STATE OF WISCONSIN
DEPARTMENT OF TRANSPORTATION

APPROVED
June, 2017 — DATE
/S/ Rodney Taylor — ROADWAY STANDARDS UNIT SUPERVISOR
ENT
FHWA

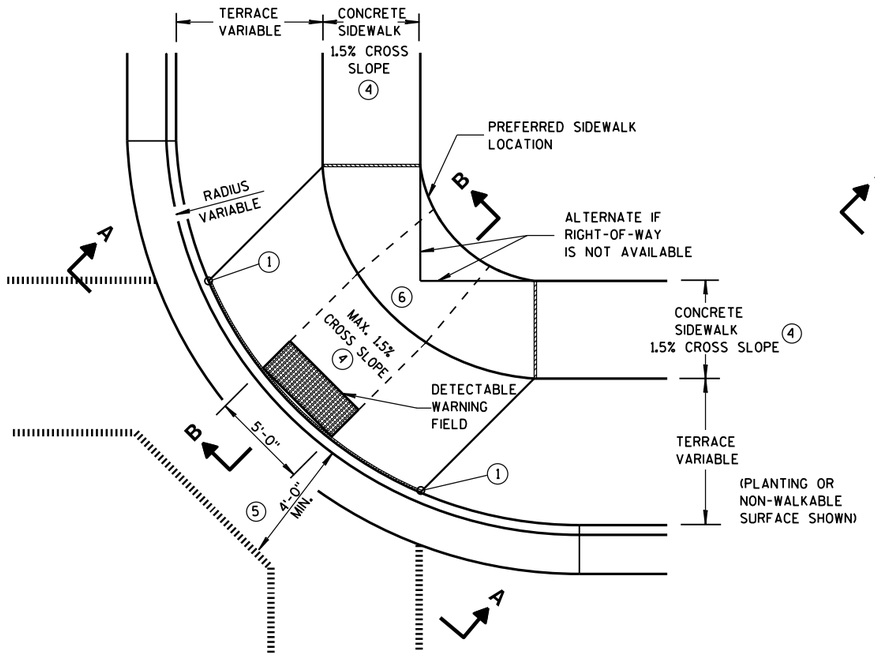

PLAN VIEW

TYPE 1 RAMP

(CENTER OF CORNER RADIUS)

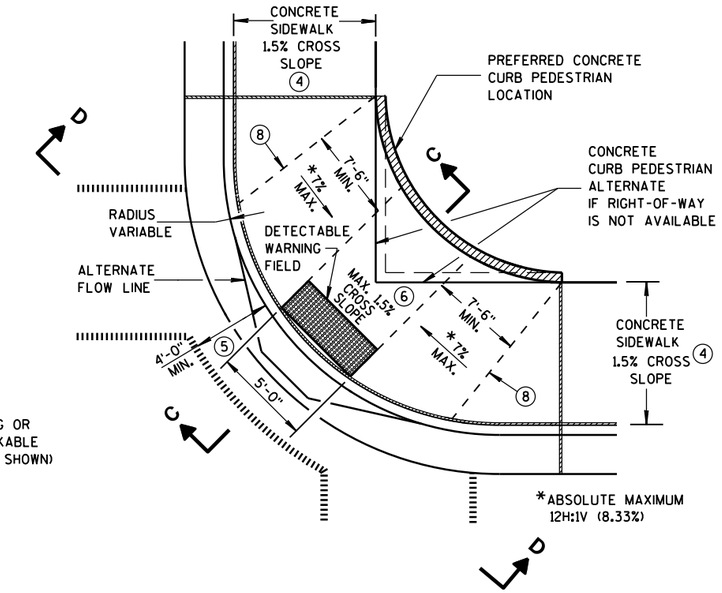

PLAN VIEW

TYPE 1-A RAMP

(NO TERRACE)

GENERAL NOTES

AVOID PLACING DRAINAGE STRUCTURES, JUNCTION BOXES OR OTHER OBSTRUCTIONS IN FRONT OF RAMP ACCESS AREAS.

DETAILS OF CONSTRUCTION, MATERIALS AND WORKMANSHIP NOT SHOWN ON THIS DRAWING SHALL CONFORM TO THE PERTINENT REQUIREMENTS OF THE STANDARD SPECIFICATIONS AND THE APPLICABLE SPECIAL PROVISIONS.

WHEN NECESSARY, THE SIDEWALK ELEVATION MAY BE LOWERED TO MEET THE HIGH POINT ON THE RAMP.

TYPE 1 RAMPS SHALL HAVE A NORMAL SIDEWALK APRON AND CURB ON BOTH SIDES OF RAMP.

DETECTABLE WARNING FIELD SHALL BE MEASURED AND PAID BY THE SQUARE FOOT AS "CURB RAMP DETECTABLE WARNING FIELD". THE CONCRETE PEDESTRIAN CURB, IF NEEDED, SHALL BE MEASURED AND PAID BY THE LINEAL FOOT AS "CONCRETE CURB PEDESTRIAN". CONCRETE SIDEWALK IN THE CURB RAMP AREA SHALL BE MEASURED AND PAID BY THE SQUARE FOOT AS CONCRETE SIDEWALK, INCLUDING THE AREA UNDER THE DETECTABLE WARNING FIELD.

SELECT CURB RAMP DETECTABLE WARNING FIELD MATERIALS AND DEVICES FROM THE DEPARTMENT'S APPROVED MATERIALS LIST. THE COLOR OF THE DETECTABLE WARNING FIELD IS SPECIFIED ELSEWHERE AND IS INCIDENTAL TO THE BID ITEM OF "CURB RAMP DETECTABLE WARNING FIELD".

DETECTABLE WARNING FIELDS THAT ARE INSTALLED AS A GROUP OR SIDE BY SIDE, SHALL BE FROM THE SAME MANUFACTURER.

SURFACE TEXTURE OF THE RAMP SHALL BE OBTAINED BY COARSE BROOMING TRANSVERSE TO THE SLOPE OF THE RAMP.

1. THIS POINT IS AN EXTENSION OF OUTSIDE EDGE OF APPROACHING SIDEWALK WHERE IT MEETS THE BACK OF CONCRETE CURB. POINT LOCATION MAY BE ADJUSTED TO ALIGN WITH BEGINNING OF FULL-HEIGHT CURB IF THIS DISTANCE IS SHORT.
2. GRADE CHANGE BETWEEN GUTTER FLAG SLOPE AND THE CURB RAMP SLOPE SHALL NOT EXCEED 11%. MAXIMUM GUTTER FLAG SLOPE IS 4%. PROVIDE LONGITUDINAL DRAINAGE AROUND CURB AND AWAY FROM CURB RAMP. NO VERTICAL LIPS OR DISCONTINUITIES GREATER THAN 1/4-INCH ARE ALLOWED. SLOPE OF CURB HEAD OPENING SHALL MATCH THE RAMP SLOPE, MINIMALLY 1.5% AND NOT TO EXCEED 7%. WHEN ADJACENT TO 1.5% LANDING, CONSTRUCT CURB HEAD OPENING AT 1.5% IN THE DIRECTION OF PEDESTRIAN TRAVEL.
3. ABSOLUTE MAXIMUM 12H:1V (8.33%) CURB RAMP SLOPE IS ALLOWABLE WITH FLATTENED GUTTER FLAG SLOPE AND NOT TO EXCEED 11% GRADE CHANGE.
4. ±0.5% CONSTRUCTION TOLERANCE IN SIDEWALK CROSS SLOPE. THE SIDEWALK CROSS SLOPE SHALL NOT EXCEED 2% WITHOUT PRIOR APPROVAL FROM THE ENGINEER.
5. PROVIDE A LEVEL LANDING IN THE STREET AND GUTTER AREA. (2% MAXIMUM SLOPE IN ANY DIRECTION). WHEN THE GUTTER SLOPE EXCEEDS 2%, CONSTRUCT THE LEVEL LANDING IN THE STREET AREA.
6. PROVIDE A LEVEL LANDING (MAXIMUM 2% SLOPE) IN ANY DIRECTION OF PEDESTRIAN TRAVEL. STANDARD LANDING SIZE IS 5 FEET X 5 FEET.
8. **PROVIDE GRADE BREAK PERPENDICULAR TO DIRECTION OF WHEELCHAIR TRAVEL.**

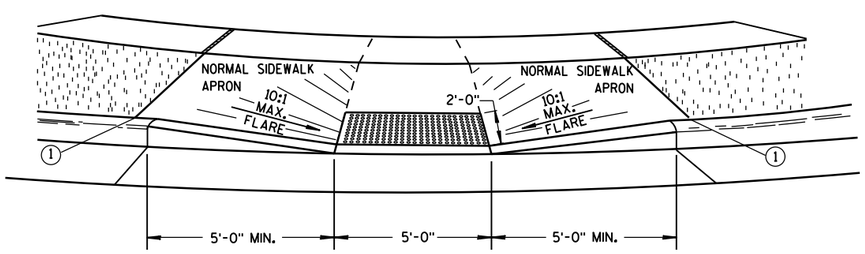

VIEW A-A

** WIDTH SHOWN ELSEWHERE IN THE PLANS

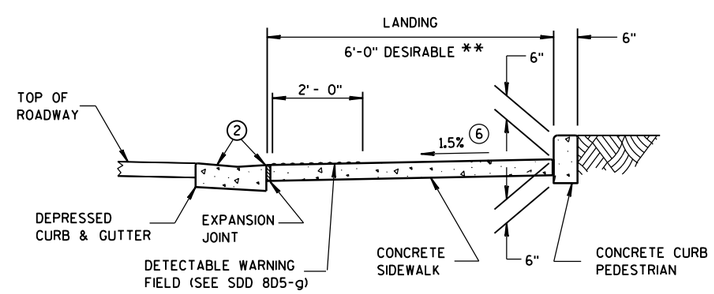

SECTION C-C

LEGEND

- ½" EXPANSION JOINT-SIDEWALK
- CONTRACTION JOINT FIELD LOCATED
- PAVEMENT MARKING CROSSWALK (WHITE)
- ALTERNATIVE LAYOUT

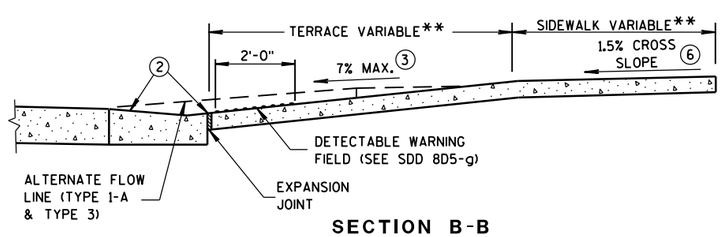

SECTION B-B

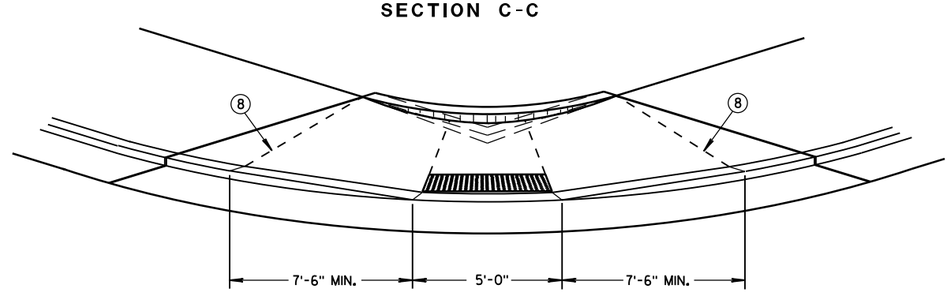

VIEW D-D

CURB RAMPS
TYPES 1 AND 1-A

STATE OF WISCONSIN
DEPARTMENT OF TRANSPORTATION

6

6

S.D.D. 8 D 5-19a

S.D.D. 8 D 5-19a

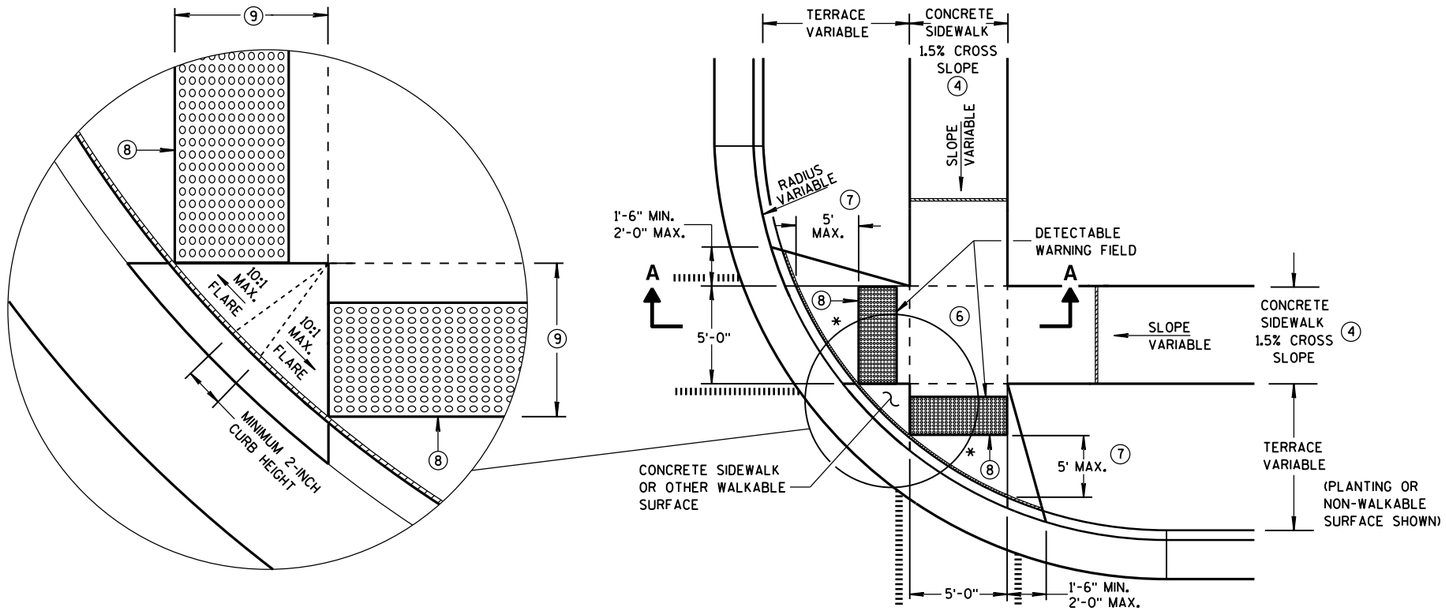

PLAN VIEW
TYPE 2 RAMP
(ON LINE WITH SIDEWALK)

GENERAL NOTES

AVOID PLACING DRAINAGE STRUCTURES, JUNCTION BOXES OR OTHER OBSTRUCTIONS IN FRONT OF RAMP ACCESS AREAS.

DETECTABLE WARNING FIELDS THAT ARE INSTALLED AS A GROUP OR SIDE BY SIDE, SHALL BE FROM THE SAME MANUFACTURER.

(2) GRADE CHANGE BETWEEN GUTTER FLAG SLOPE AND THE CURB RAMP SLOPE SHALL NOT EXCEED 11%. MAXIMUM GUTTER FLAG SLOPE IS 4%. PROVIDE LONGITUDINAL DRAINAGE AROUND CURB AND AWAY FROM CURB RAMP. NO VERTICAL LIPS OR DISCONTINUITIES GREATER THAN 1/4-INCH ARE ALLOWED. SLOPE OF CURB HEAD OPENING SHALL MATCH THE RAMP SLOPE, MINIMALLY 1.5% AND NOT TO EXCEED 7%. WHEN ADJACENT TO 1.5% LANDING, CONSTRUCT CURB HEAD OPENING AT 1.5% IN THE DIRECTION OF PEDESTRIAN TRAVEL.

(3) ABSOLUTE MAXIMUM 12H:1V (8.33%) CURB RAMP SLOPE IS ALLOWABLE WITH FLATTENED GUTTER FLAG SLOPE AND NOT TO EXCEED 11% GRADE CHANGE.

(4) ±0.5% CONSTRUCTION TOLERANCE IN SIDEWALK CROSS SLOPE. THE SIDEWALK CROSS SLOPE SHALL NOT EXCEED 2% WITHOUT PRIOR APPROVAL FROM THE ENGINEER.

(6) PROVIDE A LEVEL LANDING (MAXIMUM 2% SLOPE) IN ANY DIRECTION OF PEDESTRIAN TRAVEL. STANDARD LANDING SIZE IS 5 FEET X 5 FEET.

(7) WHEN THIS GRADE BREAK DISTANCE EXCEEDS 5 FEET, USE RADIAL DETECTABLE WARNING FIELD PER SDD 8D5-f.

(8) PROVIDE GRADE BREAK PERPENDICULAR TO DIRECTION OF WHEELCHAIR TRAVEL.

(9) WHEN THIS DISTANCE IS LESS THAN 6'-0", IT MAY BE DIFFICULT TO ACHIEVE A 7% SLOPE OR FLATTER ALONG THE RAMP. REDUCE CURB HEIGHT IN TRIANGLE AREA TO ACHIEVE 7% SLOPE OR FLATTER ON RAMP. CONSTRUCT 2-INCH MINIMUM CURB HEIGHT BETWEEN 10:1 FLARES.

LEGEND

- 1/2" EXPANSION JOINT-SIDEWALK
- CONTRACTION JOINT FIELD LOCATED
- PAVEMENT MARKING CROSSWALK (WHITE)
- ALTERNATIVE LAYOUT

* MAXIMUM 2.0% SLOPE IN ALL DIRECTIONS IN FRONT OF GRADE BREAK

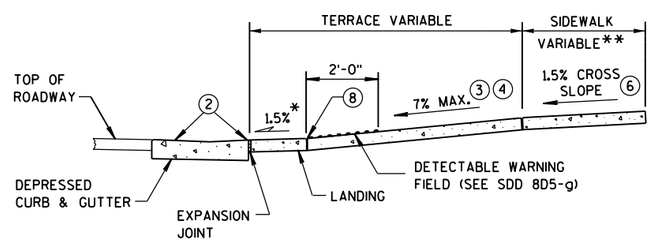

SECTION A-A

** WIDTH SHOWN ELSEWHERE IN THE PLANS

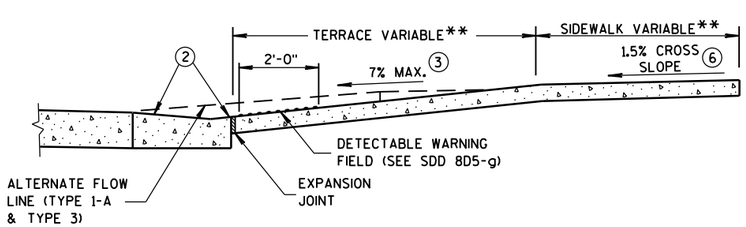

SECTION B-B

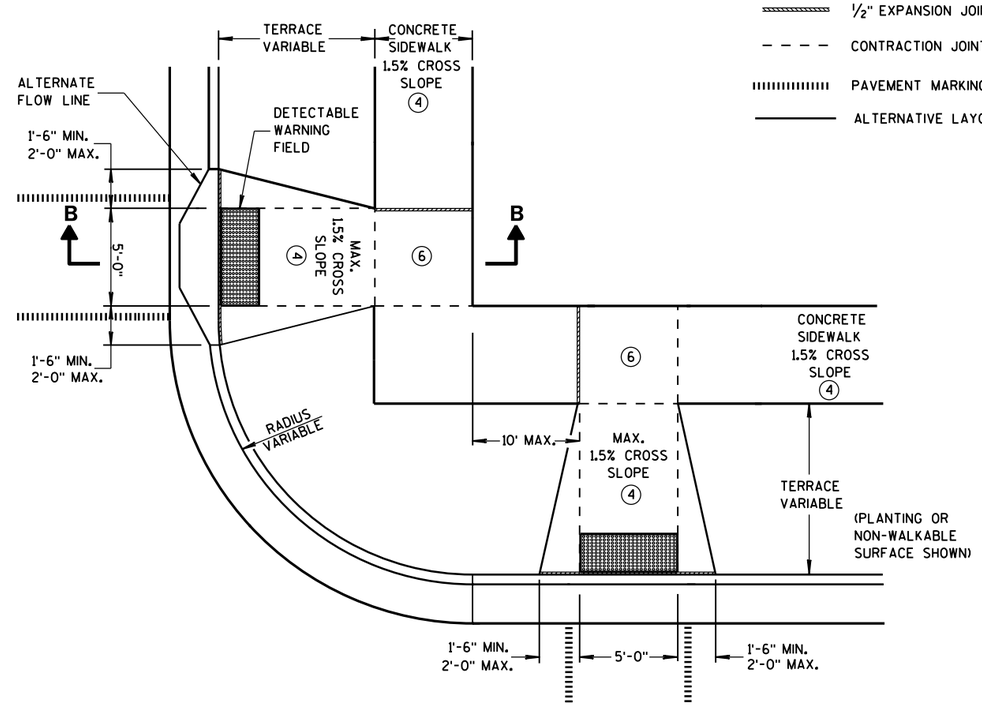

PLAN VIEW
TYPE 3 RAMP
(OUTSIDE OF CROSSWALK AREA)

CURB RAMPS TYPES 2 AND 3

STATE OF WISCONSIN
DEPARTMENT OF TRANSPO

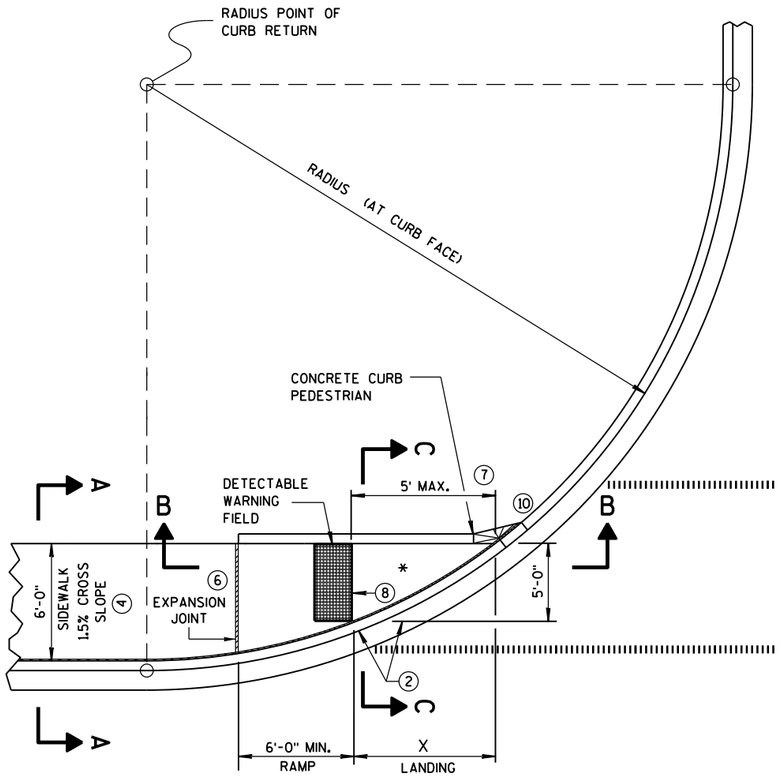

CURB RAMP TYPE 4A
PLAN VIEW

RADIUS (AT CURB FACE)	X
10 FEET	4'-7"
15 FEET	6'-5½"

INTERMEDIATE RADII CAN BE INTERPOLATED

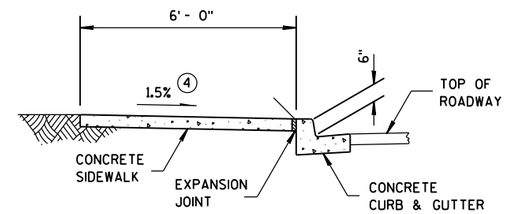

SECTION A-A FOR TYPE 4A

GENERAL NOTES

AVOID PLACING DRAINAGE STRUCTURES, JUNCTION BOXES OR OTHER OBSTRUCTIONS IN FRONT OF RAMP ACCESS AREAS.

DETECTABLE WARNING FIELDS THAT ARE INSTALLED AS A GROUP OR SIDE BY SIDE, SHALL BE FROM THE SAME MANUFACTURER.

(2) GRADE CHANGE BETWEEN GUTTER FLAG SLOPE AND THE CURB RAMP SLOPE SHALL NOT EXCEED 11%. MAXIMUM GUTTER FLAG SLOPE IS 4%. PROVIDE LONGITUDINAL DRAINAGE AROUND CURB AND AWAY FROM CURB RAMP. NO VERTICAL LIPS OR DISCONTINUITIES GREATER THAN ¼-INCH ARE ALLOWED. SLOPE OF CURB HEAD OPENING SHALL MATCH THE RAMP SLOPE, MINIMALLY 1.5% AND NOT TO EXCEED 7%. WHEN ADJACENT TO 1.5% LANDING, CONSTRUCT CURB HEAD OPENING AT 1.5% IN THE DIRECTION OF PEDESTRIAN TRAVEL.

(3) ABSOLUTE MAXIMUM 12H:1V (8.33%) CURB RAMP SLOPE IS ALLOWABLE WITH FLATTENED GUTTER FLAG SLOPE AND NOT TO EXCEED 11% GRADE CHANGE.

(4) ±0.5% CONSTRUCTION TOLERANCE IN SIDEWALK CROSS SLOPE. THE SIDEWALK CROSS SLOPE SHALL NOT EXCEED 2% WITHOUT PRIOR APPROVAL FROM THE ENGINEER.

(6) PROVIDE A LEVEL LANDING (MAXIMUM 2% SLOPE) IN ANY DIRECTION OF PEDESTRIAN TRAVEL. STANDARD LANDING SIZE IS 5 FEET X 5 FEET.

(7) WHEN THIS GRADE BREAK DISTANCE EXCEEDS 5 FEET, USE RADIAL DETECTABLE WARNING FIELD PER SDD 8D5-f.

(8) PROVIDE GRADE BREAK PERPENDICULAR TO DIRECTION OF WHEELCHAIR TRAVEL.

(10) INSTALL TRANSITION NOSE. (INCIDENTAL TO OTHER PAY ITEMS). DO NOT MARK TRANSITION NOSE.

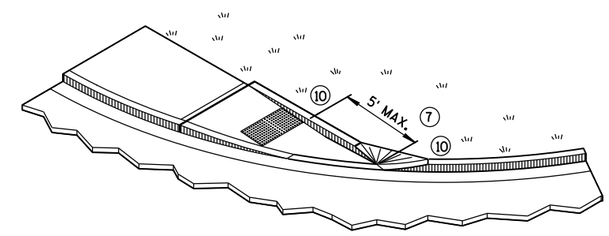

ISOMETRIC VIEW FOR TYPE 4A

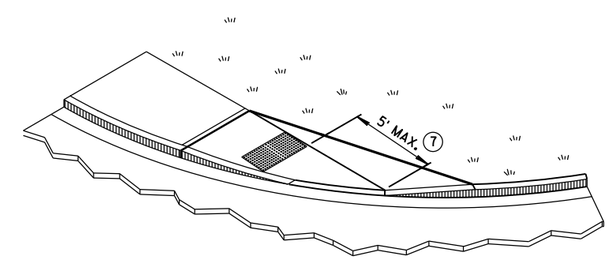

ISOMETRIC VIEW FOR TYPE 4A1

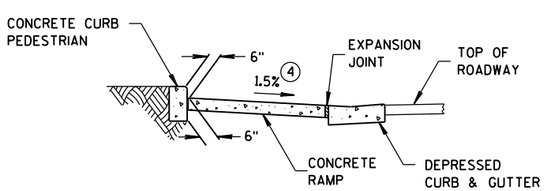

SECTION C-C FOR TYPE 4A

* MAXIMUM 2.0% SLOPE IN ALL DIRECTIONS IN FRONT OF GRADE BREAK

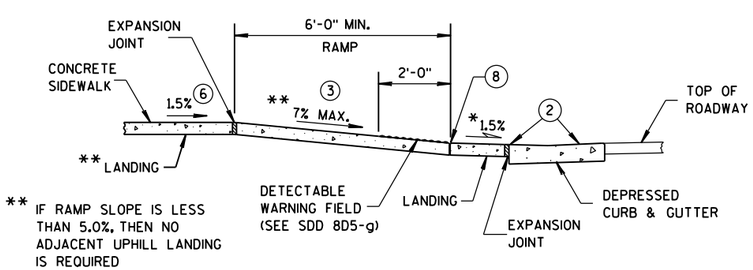

SECTION B-B FOR TYPE 4A

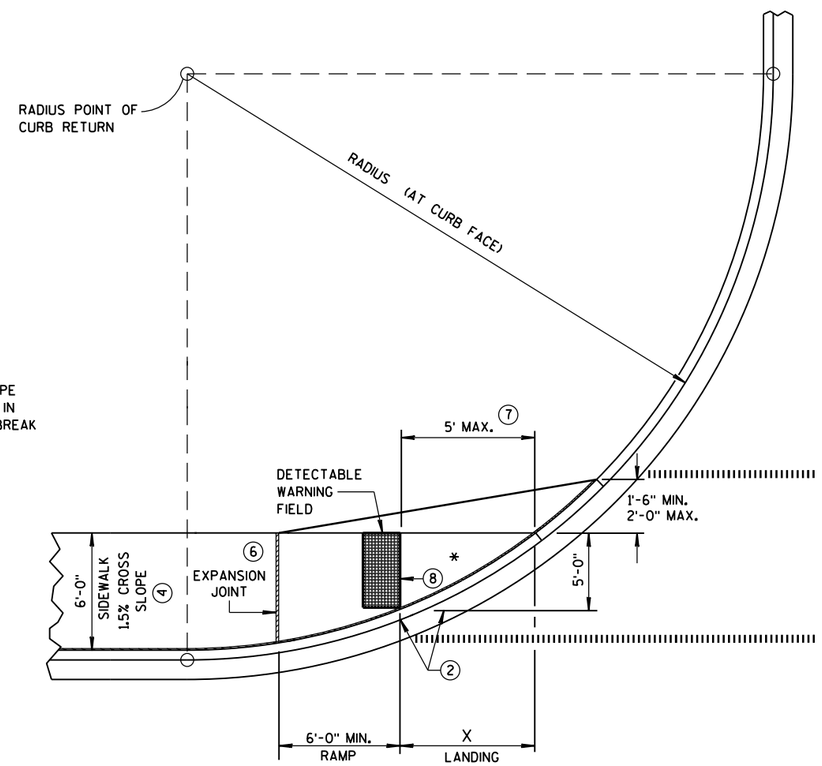

CURB RAMP TYPE 4A1
PLAN VIEW

LEGEND

- ½" EXPANSION JOINT-SIDEWALK
- CONTRACTION JOINT FIELD LOCATED
- PAVEMENT MARKING CROSSWALK (WHITE)

CURB RAMPS
TYPES 4A AND 4A1

STATE OF WISCONSIN
DEPARTMENT OF TRANSPO

6

S.D.D. 8 D 5-19c

RADIUS (AT CURB FACE)	W = 3' - 0"		W = 4' - 0"		W = 5' - 0"		W = 6' - 0"		W = 7' - 0"		W = 8' - 0"		W = 9' - 0"		W = 10' - 0"	
	X	Y	X	Y	X	Y	X	Y	X	Y	X	Y	X	Y	X	Y
10 FEET	2'-10¼"	0'-5"	2'-1"	1'-4½"	1'-5"	2'-1"	0'-10"	2'-7½"	0'-3¼"	3'-0¼"						
15 FEET	4'-6¾"	2'-1¾"	3'-9"	3'-5¼"	3'-1¼"	4'-6"	2'-6¾"	5'-4½"	2'-1"	6'-1"	1'-8"	6'-8½"	1'-3¼"	7'-2½"	0'-10¾"	7'-7¼"
20 FEET	5'-9¾"	3'-6½"	4'-11½"	5'-1¾"	4'-3¼"	6'-5½"	3'-8¾"	7'-7"	3'-3"	8'-6½"	2'-10"	9'-4½"	2'-5½"	10'-1¼"	2'-1¼"	10'-9"
30 FEET			6'-9¼"	7'-11¼"	6'-0¼"	9'-8"	5'-5"	11'-1¾"	4'-10¾"	12'-5¾"	4'-5½"	13'-7¾"	4'-0¾"	14'-8½"	3'-8½"	15'-8¼"
40 FEET									6'-1¾"	15'-8½"	5'-8"	17'-2"	5'-3"	18'-5¾"	4'-10¾"	19'-8¼"
50 FEET															5'-10¼"	23'-2"

INTERMEDIATE RADII CAN BE INTERPOLATED
DIMENSION "Y" IS CALCULATED BASED ON 6'-0" RAMP LENGTH
DIMENSION "X" IS CALCULATED BASED ON 5'-0" SIDEWALK WIDTH

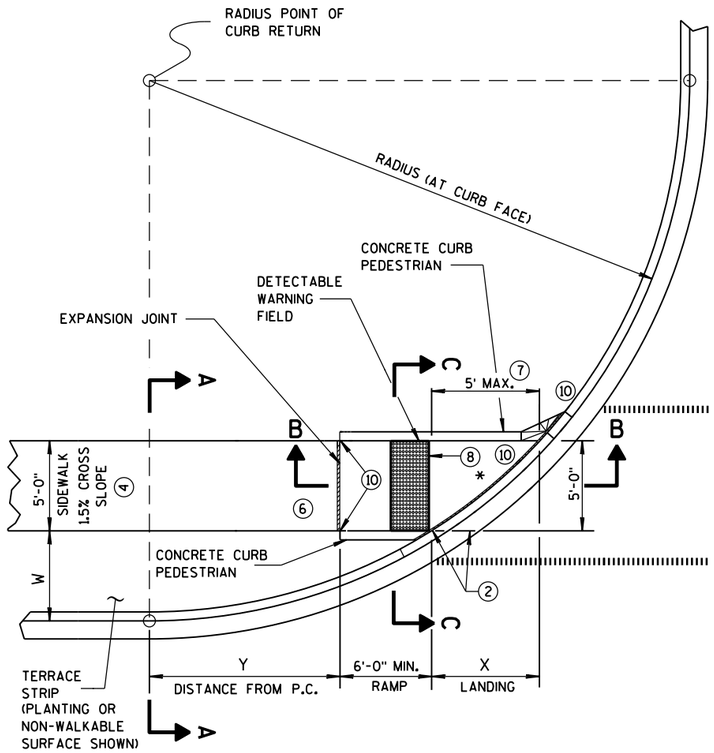

CURB RAMP TYPE 4B
PLAN VIEW

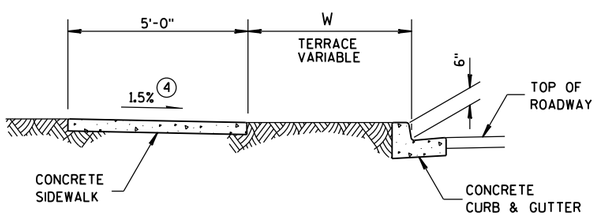

SECTION A-A FOR TYPE 4B

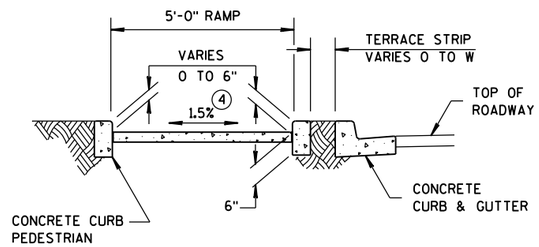

SECTION C-C FOR TYPE 4B

* MAXIMUM 2.0% SLOPE IN ALL DIRECTIONS IN FRONT OF GRADE BREAK

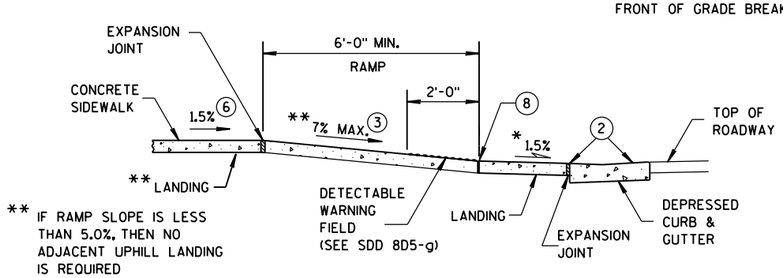

** IF RAMP SLOPE IS LESS THAN 5.0%, THEN NO ADJACENT UPHILL LANDING IS REQUIRED

SECTION B-B FOR TYPE 4B

GENERAL NOTES

AVOID PLACING DRAINAGE STRUCTURES, JUNCTION BOXES OR OTHER OBSTRUCTIONS IN FRONT OF RAMP ACCESS AREAS.

DETECTABLE WARNING FIELDS THAT ARE INSTALLED AS A GROUP OR SIDE BY SIDE, SHALL BE FROM THE SAME MANUFACTURER.

(2) GRADE CHANGE BETWEEN GUTTER FLAG SLOPE AND THE CURB RAMP SLOPE SHALL NOT EXCEED 11%. MAXIMUM GUTTER FLAG SLOPE IS 4%. PROVIDE LONGITUDINAL DRAINAGE AROUND CURB AND AWAY FROM CURB RAMP. NO VERTICAL LIPS OR DISCONTINUITIES GREATER THAN ¼-INCH ARE ALLOWED. SLOPE OF CURB HEAD OPENING SHALL MATCH THE RAMP SLOPE, MINIMALLY 1.5% AND NOT TO EXCEED 7%. WHEN ADJACENT TO 1.5% LANDING, CONSTRUCT CURB HEAD OPENING AT 1.5% IN THE DIRECTION OF PEDESTRIAN TRAVEL.

(3) ABSOLUTE MAXIMUM 12H:1V (8.33%) CURB RAMP SLOPE IS ALLOWABLE WITH FLATTENED GUTTER FLAG SLOPE AND NOT TO EXCEED 11% GRADE CHANGE.

(4) ±0.5% CONSTRUCTION TOLERANCE IN SIDEWALK CROSS SLOPE. THE SIDEWALK CROSS SLOPE SHALL NOT EXCEED 2% WITHOUT PRIOR APPROVAL FROM THE ENGINEER.

(6) PROVIDE A LEVEL LANDING (MAXIMUM 2% SLOPE) IN ANY DIRECTION OF PEDESTRIAN TRAVEL. STANDARD LANDING SIZE IS 5 FEET X 5 FEET.

(7) WHEN THIS GRADE BREAK DISTANCE EXCEEDS 5 FEET, USE RADIAL DETECTABLE WARNING FIELD PER SDD 8D5-f.

(8) PROVIDE GRADE BREAK PERPENDICULAR TO DIRECTION OF WHEELCHAIR TRAVEL.

(10) INSTALL TRANSITION NOSE. (INCIDENTAL TO OTHER PAY ITEMS). DO NOT MARK TRANSITION NOSE.

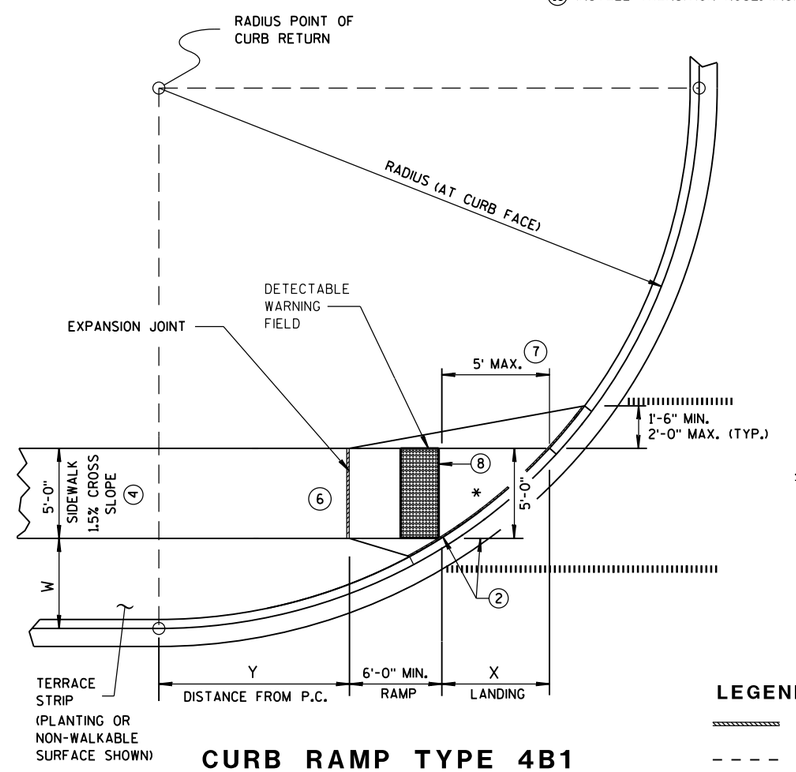

CURB RAMP TYPE 4B1
PLAN VIEW

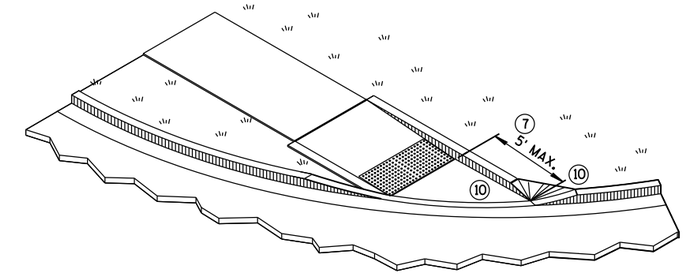

ISOMETRIC VIEW FOR TYPE 4B

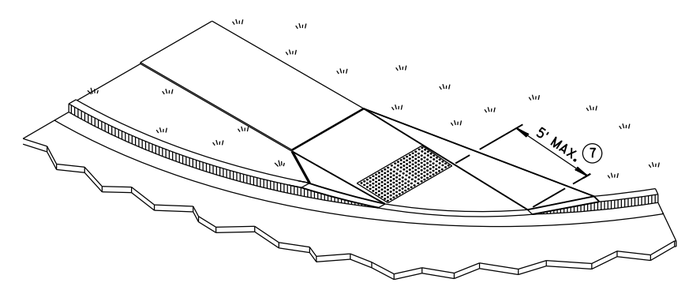

ISOMETRIC VIEW FOR TYPE 4B1

LEGEND

- ½" EXPANSION JOINT-SIDEWALK
- CONTRACTION JOINT FIELD LOCATED
- PAVEMENT MARKING CROSSWALK (WHITE)

CURB RAMPS
TYPE 4B AND 4B1

STATE OF WISCONSIN
DEPARTMENT OF TRANSPO

6

S.D.D. 8 D 5-19d

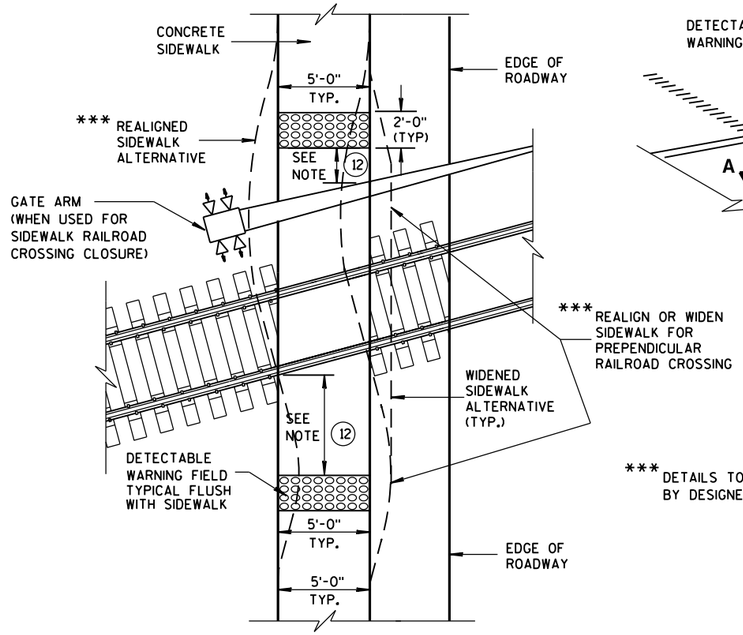

TYPE 8
DETECTABLE WARNINGS AT RAILROAD CROSSING

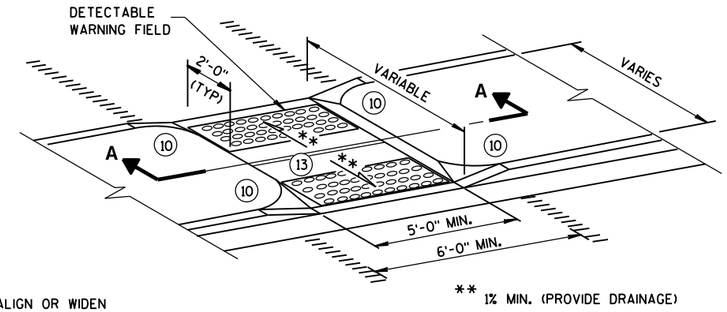

*** DETAILS TO BE DETERMINED BY DESIGNER

MEDIAN ISLAND NON-ELEVATED PEDESTRIAN CROSSING
TYPE 5

GENERAL NOTES

AVOID PLACING DRAINAGE STRUCTURES, JUNCTION BOXES OR OTHER OBSTRUCTIONS IN FRONT OF RAMP ACCESS AREAS.

SIDEWALK CROSS SLOPE SHALL NOT EXCEED 2%.

DETECTABLE WARNING FIELDS THAT ARE INSTALLED AS A GROUP OR SIDE BY SIDE, SHALL BE FROM THE SAME MANUFACTURER.

(2) GRADE CHANGE BETWEEN GUTTER FLAG SLOPE AND THE CURB RAMP SLOPE SHALL NOT EXCEED 11%. MAXIMUM GUTTER FLAG SLOPE IS 4%. PROVIDE LONGITUDINAL DRAINAGE AROUND CURB AND AWAY FROM CURB RAMP. NO VERTICAL LIPS OR DISCONTINUITIES GREATER THAN 1/4-INCH ARE ALLOWED. SLOPE OF CURB HEAD OPENING SHALL MATCH THE RAMP SLOPE, MINIMALLY 1.5% AND NOT TO EXCEED 7%. WHEN ADJACENT TO 1.5% LANDING, CONSTRUCT CURB HEAD OPENING AT 1.5% IN THE DIRECTION OF PEDESTRIAN TRAVEL.

(3) ABSOLUTE MAXIMUM 12H:1V (8.33%) CURB RAMP SLOPE IS ALLOWABLE WITH FLATTENED GUTTER FLAG SLOPE AND NOT TO EXCEED 11% GRADE CHANGE.

(4) ±0.5% CONSTRUCTION TOLERANCE IN SIDEWALK CROSS SLOPE. THE SIDEWALK CROSS SLOPE SHALL NOT EXCEED 2% WITHOUT PRIOR APPROVAL FROM THE ENGINEER.

(6) PROVIDE A LEVEL LANDING (MAXIMUM 2% SLOPE) IN ANY DIRECTION OF PEDESTRIAN TRAVEL. STANDARD LANDING SIZE IS 5 FEET X 5 FEET.

(10) INSTALL TRANSITION NOSE. (INCIDENTAL TO OTHER PAY ITEMS). DO NOT MARK TRANSITION NOSE.

(11) SLOPE SIDEWALK TOWARD LANDING AS SHOWN WHERE THERE IS NO TERRACE OR WHERE THE TERRACE WIDTH IS LESS THAN 6 FEET WIDE.

(12) THE EDGE OF THE DETECTABLE WARNING FIELD NEAREST TO A RAILROAD CROSSING SHALL BE 1.5 FEET ± 0.1' FROM THE FACE OF THE GATE ARM IF THE GATE ARM EXTENDS ACROSS THE SIDEWALK. WHERE THERE IS NO PEDESTRIAN GATE, THE EDGE OF THE DETECTABLE WARNING FIELD NEAREST TO THE RAILROAD CROSSING SHALL BE 15 FEET FROM THE NEAREST RAIL.

(13) DO NOT INSTALL DETECTABLE WARNING FIELDS AT THE EDGES OF STREET-LEVEL PEDESTRIAN REFUGE ISLANDS IF A MINIMUM 2-FOOT CONCRETE SURFACE WITHOUT DETECTABLE WARNINGS (MEASURED IN THE DIRECTION OF PEDESTRIAN TRAVEL) CANNOT BE ACHIEVED.

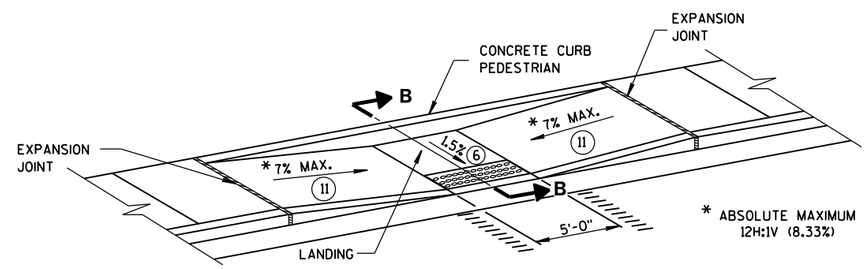

MID-BLOCK CROSSING
TYPE 7A

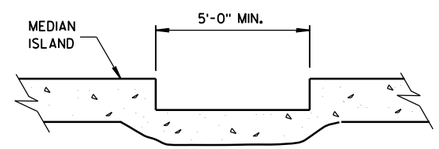

SECTION A-A

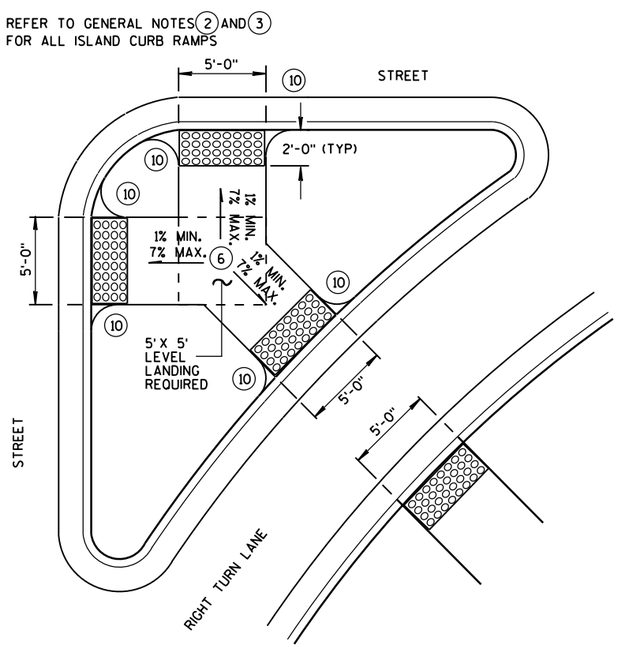

TYPE 6
DETECTABLE WARNING AT ISLANDS

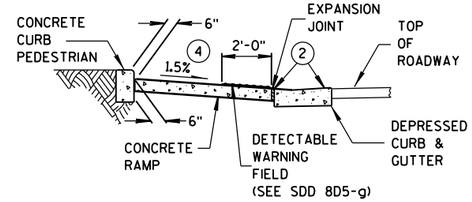

SECTION B-B

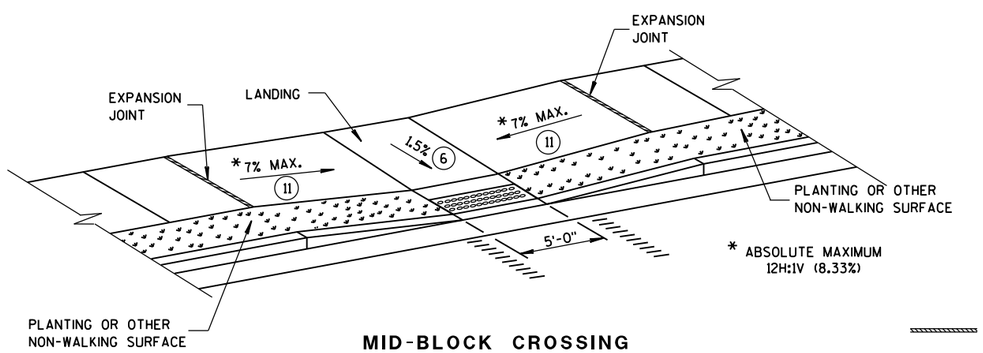

MID-BLOCK CROSSING
TYPE 7B

NOTE: THESE PARALLEL AND PARALLEL/PERPENDICULAR CURB RAMPS MAY BE USED AT INTERSECTIONS AND MID BLOCK LOCATIONS.

LEGEND

- ½" EXPANSION JOINT-SIDEWALK
- CONTRACTION JOINT FIELD LOCATED
- PAVEMENT MARKING CROSSWALK (WHITE)

CURB RAMPS
TYPES 5, 6, 7A, 7B & 8

STATE OF WISCONSIN
DEPARTMENT OF TRANSPOR

6

S.D.D. 8 D 5-19e

	MIN.	MAX.
A	1.6"	2.4"
B	0.65"	1.5"
C	*	*
D	0.9"	1.4"

* THE C DIMENSION IS 50% TO 65% OF THE D DIMENSION.

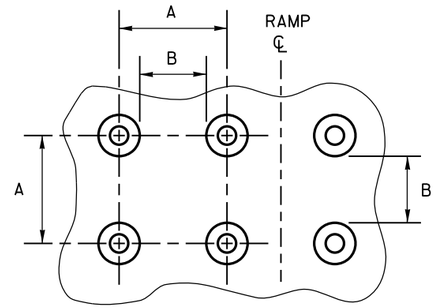

PLAN VIEW

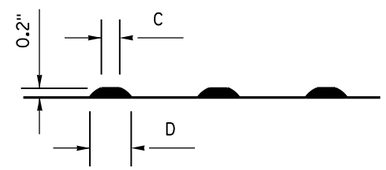

ELEVATION VIEW

TRUNCATED DOMES

DETECTABLE WARNING PATTERN DETAIL

GENERAL NOTES

DETECTABLE WARNING FIELDS THAT ARE INSTALLED AS A GROUP OR SIDE BY SIDE, SHALL BE FROM THE SAME MANUFACTURER.

PLACE ALL DETECTABLE WARNING FIELD SYSTEMS IN ACCORDANCE TO THE MANUFACTURER'S RECOMMENDATION.

FIELD CUTS AT INTERMEDIATE JOINTS WITHIN THE RADIAL DETECTABLE WARNING FIELD ARE PROHIBITED.

DETERMINE FINAL RADIAL WARNING FIELD CONFIGURATION AND ITS INDIVIDUAL PLATE LOCATIONS. PERFORM PRE-LAYOUT PRIOR TO PLACEMENT IN PLASTIC CONCRETE. FOLLOW MANUFACTURER'S PRODUCT LIST AND INSTALLATION RECOMMENDATIONS.

FOR RADIAL DETECTABLE WARNING FIELD APPLICATIONS WHERE STANDARD RADIAL PLATES ARE NOT AVAILABLE AT AN INTERSECTION CURB RADIUS, A COMBINATION OF SQUARE OR RECTANGULAR PLATES AND RADIAL PLATES MAY BE USED TO FORM RADIAL CONFIGURATION. RADIAL WEDGES IN COMBINATION WITH SQUARE PANELS ARE ALSO ACCEPTABLE. FOLLOW MANUFACTURER'S RECOMMENDATIONS.

REFER TO CONTRACT AND STANDARD SPECIFICATIONS FOR FIELD CUTTING REQUIREMENTS.

DO NOT EMBED IN CONCRETE ANY FIELD-CUT PLATES WITH CUT EDGES SHORTER THAN 6 INCHES. CONSULT WITH MANUFACTURER FOR RE-DRILLING AND ANCHORING REQUIREMENTS OF FIELD-CUT PLATES.

(15) FIELD SAW CUTS ALONG RADIAL DETECTABLE WARNING PLATES WILL BE NECESSARY TO MATCH EACH CURB RAMP EDGE. AVOID CUTTING THROUGH DOMES WHENEVER POSSIBLE. MAKE FIELD CUTS TRUE TO LINE AND WITHIN 1/8" DEVIATION. SMOOTH EDGES OF FIELD CUT PLATES.

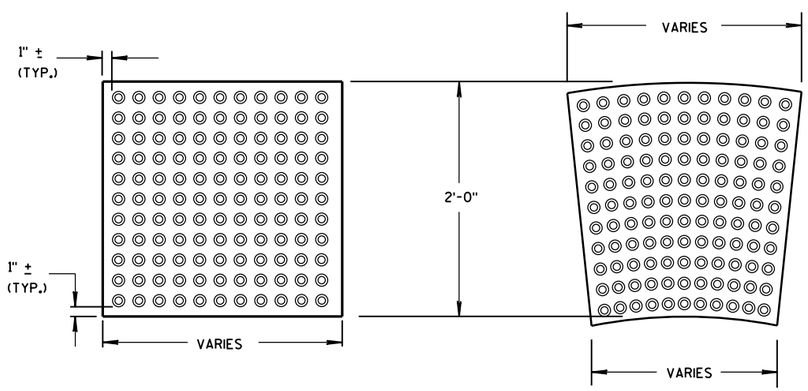

RECTANGULAR PLATES

RADIAL PLATES

DETECTABLE WARNING FIELDS (TYPICAL)

PLAN VIEW

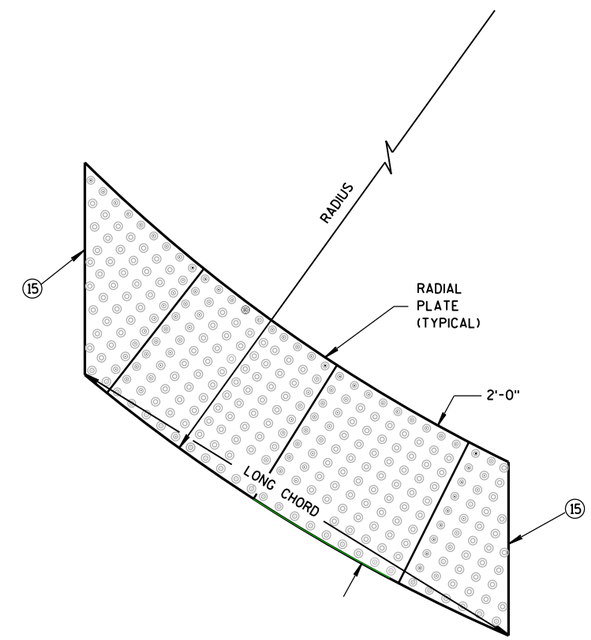

RADIAL DETECTABLE WARNING FIELD ATTRIBUTES

CURB RAMPS
RECTANGULAR AND RADIAL
DETECTABLE WARNING PLATES

STATE OF WISCONSIN
DEPARTMENT OF TRANSPORTATION

APPROVED
June, 2017 — DATE
/S/ Rodney Taylor — ROADWAY STANDARDS UNIT SUPERV
ENT
FHWA

6

S.D.D. 8 D 5-19g

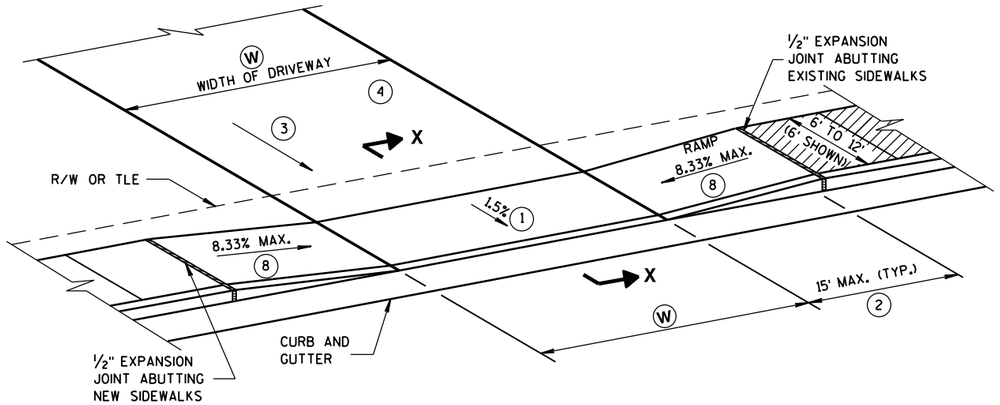

TYPE X

SIDEWALK ABUTS CURB & GUTTER
TERRACE VARIES 0 TO 3 FEET

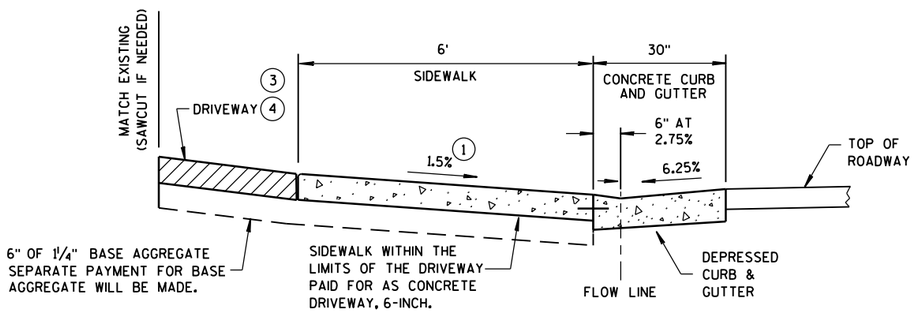

SECTION X-X

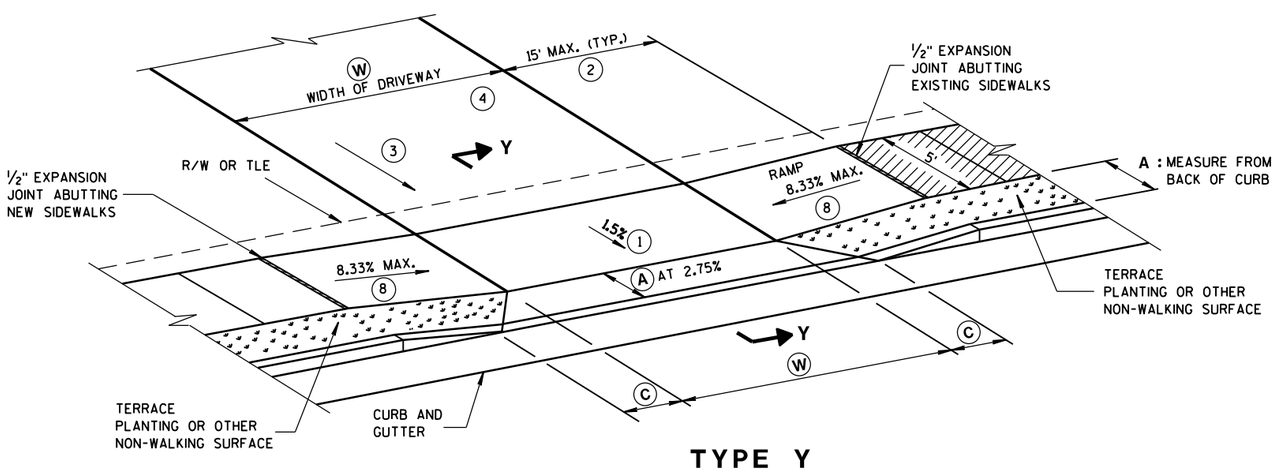

TYPE Y

SIDEWALK WITH NARROWER TERRACE
TERRACE VARIES 4 TO 6 FEET

W: 12' MIN. - 24' MAX. RESIDENTIAL AND NON-COMMERCIAL (PE & FE)
16' MIN. - 35' MAX. COMMERCIAL (CE)

GENERAL NOTES

1. CONSTRUCTION TOLERANCE OF 0.5% ± FOR SIDEWALK CROSS SLOPE. THE SIDEWALK CROSS SLOPE SHALL NOT EXCEED 2%.
2. THE SIDEWALK RAMP MAXIMUM RUNNING SLOPE SHALL NOT REQUIRE THE RAMP LENGTH TO EXCEED 15 FEET TO AVOID CHASING THE SLOPE INDEFINITELY WHEN CONNECTING TO STEEP GRADES. WHEN APPLYING THE 15 FOOT MAXIMUM LENGTH, THE RUNNING SLOPE OF THE SIDEWALK SHALL BE AS FLAT AS FEASIBLE AND NOT EXCEED THE LONGITUDINAL GRADE OF THE ROADWAY.
3. DRIVEWAY SLOPES: DESIRABLE MAXIMUM
   - 10.5% UP AWAY FROM SIDEWALK (SAG)
   - 8.5% DOWN AWAY FROM SIDEWALK (CREST)
   - ABSOLUTE MAXIMUM 15% FOR BOTH CREST AND SAG
4. DRIVEWAY TYPES
   - 6-INCH CONCRETE DRIVEWAY PAVEMENT OVER 6-INCH BASE AGGREGATE
   - 2-INCH TO 3-INCH ASPHALTIC SURFACE OVER 6-INCH BASE AGGREGATE
   - 6-INCH BASE AGGREGATE (MAY BE INCREASED FOR CLAY SUBGRADES)
5. PROVIDE CONSTRUCTION JOINTS ALONG THE CENTER OF THE CONCRETE FOR DRIVEWAYS UNDER 20 FEET IN WIDTH AND AT THE THIRD POINTS OVER 20 FEET IN WIDTH.
6. W IS SHOWN ON PLAN AND PROFILE SHEETS.
7. OFFSETS, ELEVATIONS, AND PERCENT GRADE ARE SHOWN ON THE CROSS SECTIONS.
8. SLOPE SIDEWALK RAMP TOWARD APRON AS SHOWN WHERE THERE IS NO TERRACE OR WHERE THE TERRACE WIDTH IS LESS THAN 6 FEET WIDE.

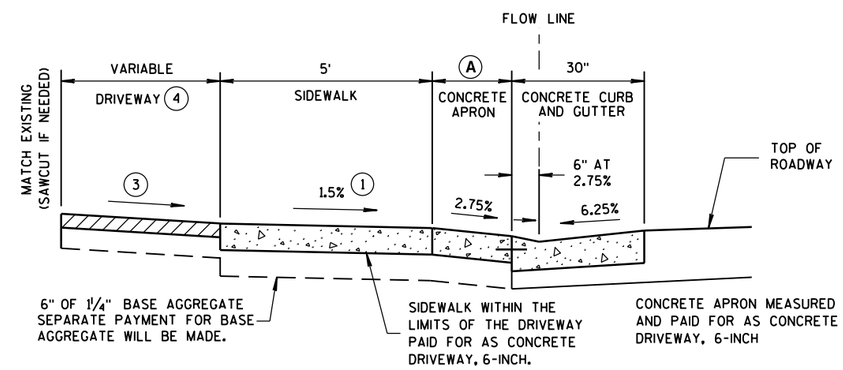

NOTE: SIDEWALK MAY BE DEPRESSED IN DRIVEWAY AREAS

SECTION Y-Y

DRIVEWAY DETAIL
WITH CONCRETE CURB & GUTTER

(URBAN AND SUBURBAN)

TABLE Y

A FEET	C FEET
3.5'	2.0'
4.5'	3.0'
5.5'	3.5'

NOT TO SCALE

DRIVEWAY AND SIDEWALK RAMPS
TYPES X & Y

STATE OF WISCONSIN
DEPARTMENT OF TRANSPORTATION

APPROVED
December, 2016 /S/ Rodney Taylor
DATE ROADWAY STANDARDS UNIT SUPERV ENT
FHWA

6

S.D.D. 8 D 18-1

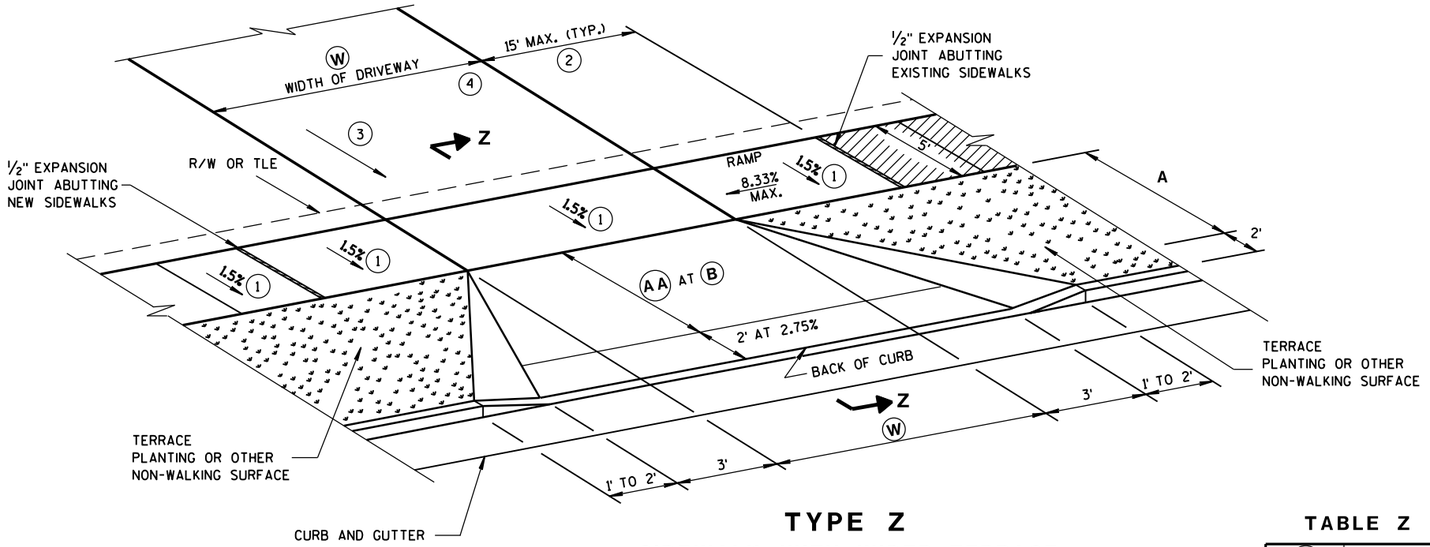

TYPE Z

SIDEWALK WITH WIDER TERRACE

TERRACE VARIES 7 TO 12 FEET

TABLE Z

AA FEET	B %
4.5'	11.5%
5.5'	9-11.5%
6.5'	8-11.5%
7.5'	7-11.5%
8.5'	6-11.5%
9.5'	5-11.5%

GENERAL NOTES

1. CONSTRUCTION TOLERANCE OF 0.5% ± FOR SIDEWALK CROSS SLOPE. THE SIDEWALK CROSS SLOPE SHALL NOT EXCEED 2%.
2. THE SIDEWALK RAMP MAXIMUM RUNNING SLOPE SHALL NOT REQUIRE THE RAMP LENGTH TO EXCEED 15 FEET TO AVOID CHASING THE SLOPE INDEFINITELY WHEN CONNECTING TO STEEP GRADES. WHEN APPLYING THE 15 FOOT MAXIMUM LENGTH, THE RUNNING SLOPE OF THE SIDEWALK SHALL BE AS FLAT AS FEASIBLE AND NOT EXCEED THE LONGITUDINAL GRADE OF THE ROADWAY.
3. DRIVEWAY SLOPES: DESIRABLE MAXIMUM
   - 10.5% UP AWAY FROM SIDEWALK (SAG)
   - 8.5% DOWN AWAY FROM SIDEWALK (CREST)
   - ABSOLUTE MAXIMUM 15% FOR BOTH CREST AND SAG
4. DRIVEWAY TYPES
   - 6-INCH CONCRETE DRIVEWAY PAVEMENT OVER 6-INCH BASE AGGREGATE
   - 2-INCH TO 3-INCH ASPHALTIC SURFACE OVER 6-INCH BASE AGGREGATE
   - 6-INCH BASE AGGREGATE (MAY BE INCREASED FOR CLAY SUBGRADES)
5. PROVIDE CONSTRUCTION JOINTS ALONG THE CENTER OF THE CONCRETE FOR DRIVEWAYS UNDER 20 FEET IN WIDTH AND AT THE THIRD POINTS OVER 20 FEET IN WIDTH.
6. W IS SHOWN ON PLAN AND PROFILE SHEETS.
7. OFFSETS, ELEVATIONS, AND PERCENT GRADE ARE SHOWN ON THE CROSS SECTIONS.

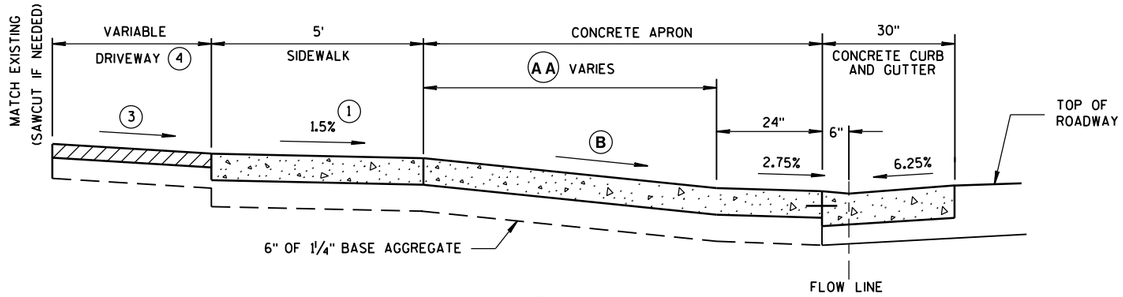

PROVIDE AA AND B AS SHOWN ON CROSS SECTIONS.

NOTE: SIDEWALK MAY BE DEPRESSED IN DRIVEWAY AREAS FOR **B** VALUES NOT SHOWN IN TABLE Z.

SIDEWALK WITHIN THE LIMITS OF THE DRIVEWAY PAID FOR AS CONCRETE DRIVEWAY, 6-INCH.

SEPARATE PAYMENT FOR BASE AGGREGATE WILL BE MADE.

CONCRETE APRON MEASURED AND PAID FOR AS CONCRETE DRIVEWAY, 6-INCH

SECTION Z-Z

DRIVEWAY DETAIL WITH CONCRETE CURB & GUTTER

(URBAN AND SUBURBAN)

W: 12' MIN. - 24' MAX. RESIDENTIAL AND NON-COMMERCIAL (PE & FE)
16' MIN. - 35' MAX. COMMERCIAL (CE)

NOT TO SCALE

DRIVEWAY AND SIDEWALK RAMPS TYPE Z

STATE OF WISCONSIN
DEPARTMENT OF TRANSPORTATION

APPROVED
December, 2016 /S/ Rodney Taylor
DATE ROADWAY STANDARDS UNIT SUPERV ENT
FHWA

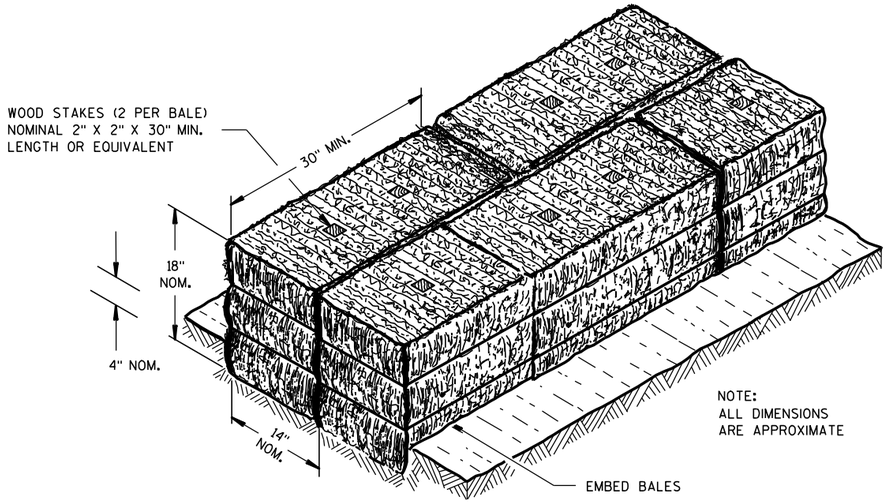

SECTION A-A

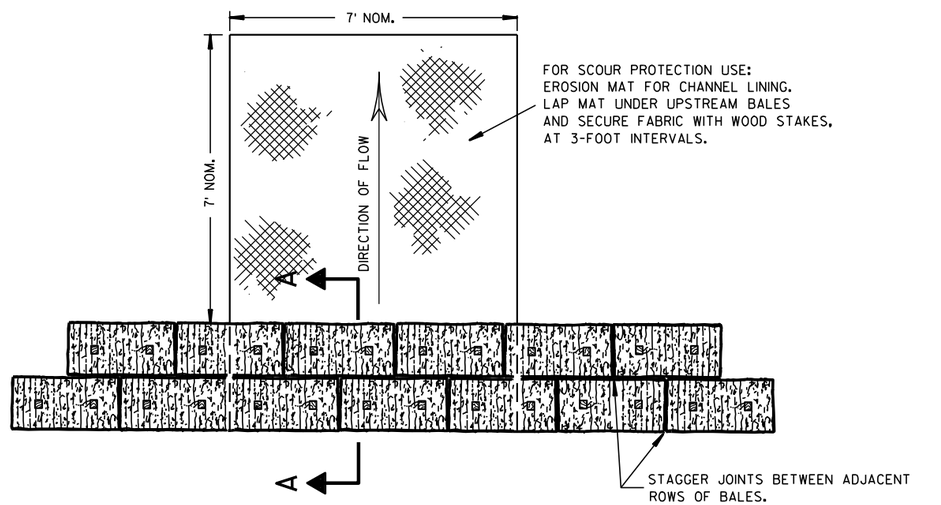

PLAN VIEW

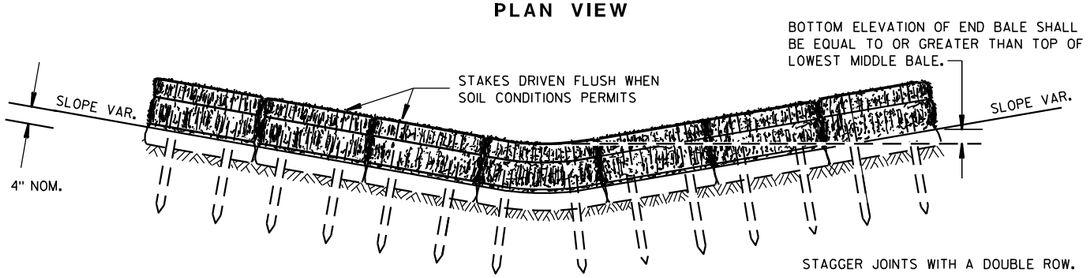

FRONT ELEVATION

TEMPORARY DITCH CHECK USING EROSION BALES ①

GENERAL NOTES

DETAILS OF CONSTRUCTION, MATERIALS AND WORKMANSHIP NOT SHOWN ON THIS DRAWING SHALL CONFORM TO THE PERTINENT REQUIREMENTS OF THE STANDARD SPECIFICATIONS AND THE APPLICABLE SPECIAL PROVISIONS.

① TEMPORARY DITCH CHECKS EITHER EROSION BALES OR MANUFACTURED SHALL BE PAID FOR UNDER THE BID ITEM OF TEMPORARY DITCH CHECK. THE DEPARTMENT WILL NOT PAY FOR TEMPORARY DITCH CHECKS CONSTRUCTED OF A SINGLE ROW OF EROSION BALES.

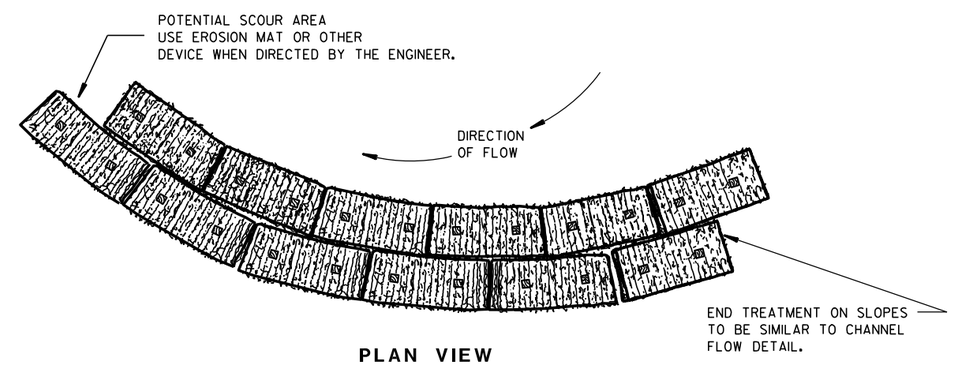

PLAN VIEW

WHEN ALTERING THE DIRECTION OF FLOW

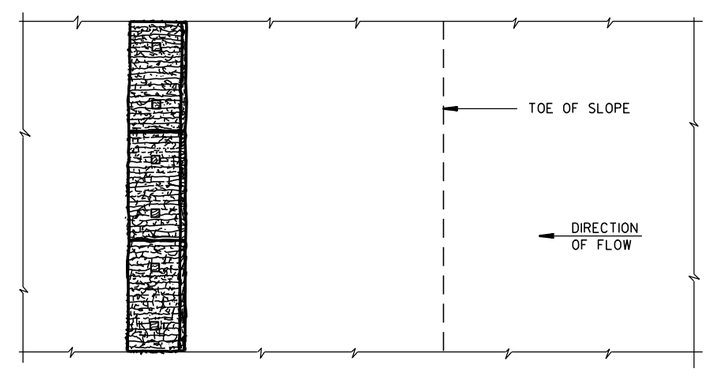

PLAN VIEW

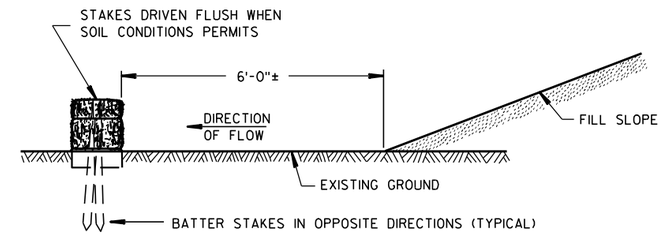

FRONT ELEVATION

WHEN EXISTING GROUND SLOPES AWAY FROM FILL SLOPE

EROSION BALES FOR SHEET FLOW

TYPICAL INSTALLATIONS OF EROSION BALES / TEMPORARY DITCH CHECKS

STATE OF WISCONSIN
DEPARTMENT OF TRANSPORTATION

APPROVED
6/04/02 — DATE
/S/ Beth Cann — CHIEF ROADWAY DEVELOPMENT ENGINEER
FHWA

6
S.D.D. 8 E 8-3

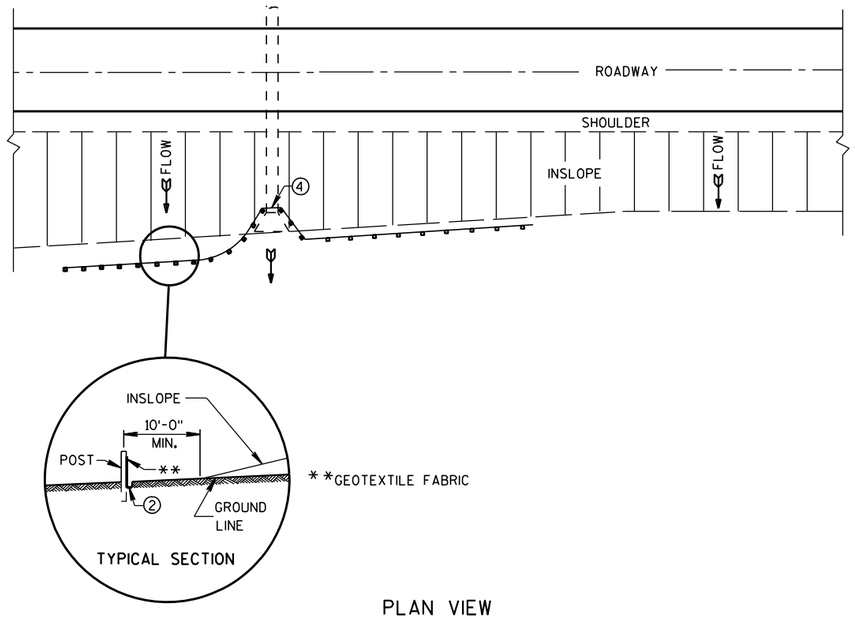

PLAN VIEW

TYPICAL APPLICATION OF SILT FENCE

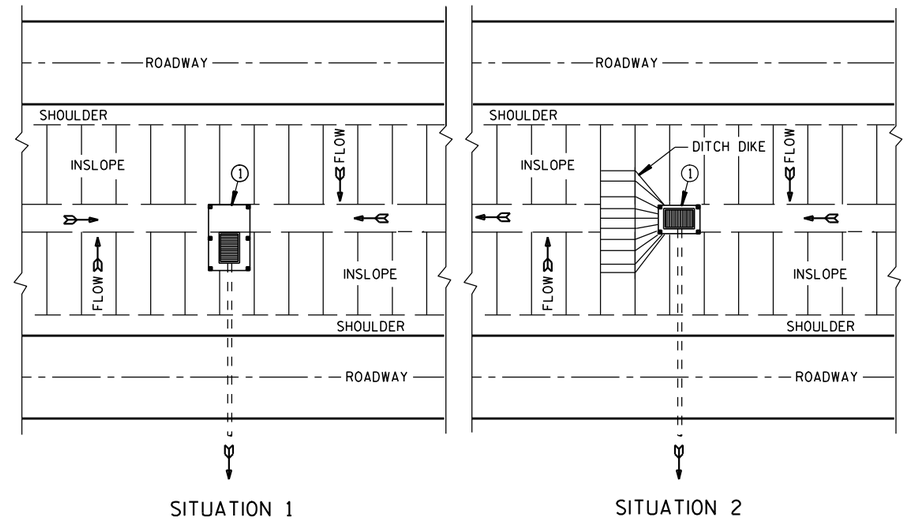

PLAN VIEW

SILT FENCE AT MEDIAN SURFACE DRAINS

GENERAL NOTES

DETAILS OF CONSTRUCTION NOT SHOWN ON THIS DRAWING SHALL CONFORM TO THE PERTINENT REQUIREMENTS OF THE STANDARD SPECIFICATIONS AND APPLICABLE SPECIAL PROVISIONS.

① HORIZONTAL BRACE REQUIRED WITH 2" X 4" WOODEN FRAME OR EQUIVALENT AT TOP OF POSTS.

② FOR MANUAL INSTALLATIONS THE TRENCH SHALL BE A MINIMUM OF 4" WIDE & 6" DEEP TO BURY AND ANCHOR THE GEOTEXTILE FABRIC. FOLD MATERIAL TO FIT TRENCH AND BACKFILL & COMPACT TRENCH WITH EXCAVATED SOIL.

③ WOOD POSTS SHALL BE A MINIMUM SIZE OF 1⅛" X 1⅛" OF OAK OR HICKORY.

④ SILT FENCE TO EXTEND ACROSS THE TOP OF THE PIPE.

⑤ CONSTRUCT SILT FENCE FROM A CONTINUOUS ROLL IF POSSIBLE BY CUTTING LENGTHS TO AVOID JOINTS. IF A JOINT IS NECESSARY USE ONE OF THE FOLLOWING TWO METHODS; A) OVERLAP THE END POSTS AND TWIST, OR ROTATE, AT LEAST 180 DEGREES. B) HOOK THE END OF EACH SILT FENCE LENGTH.

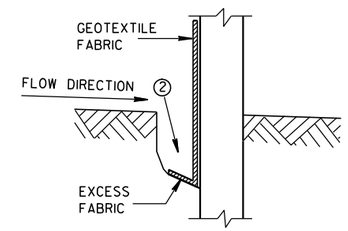

TRENCH DETAIL

NOTE: ADDITIONAL POST DEPTH OR TIE BACKS MAY BE REQUIRED IN UNSTABLE SOILS

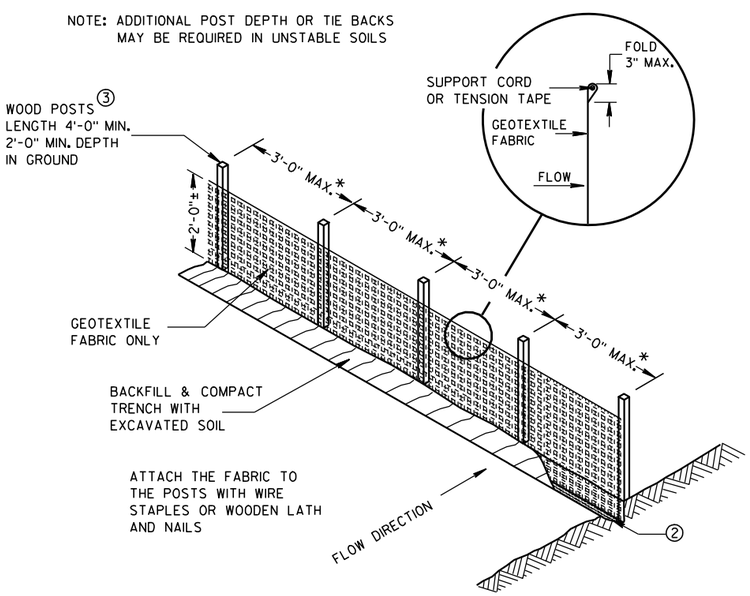

*NOTE: 8'-0" POST SPACING ALLOWED IF A WOVEN GEOTEXTILE FABRIC IS USED.

SILT FENCE

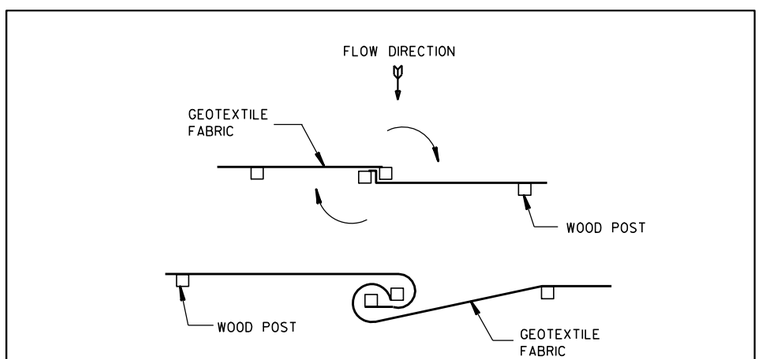

TWIST METHOD

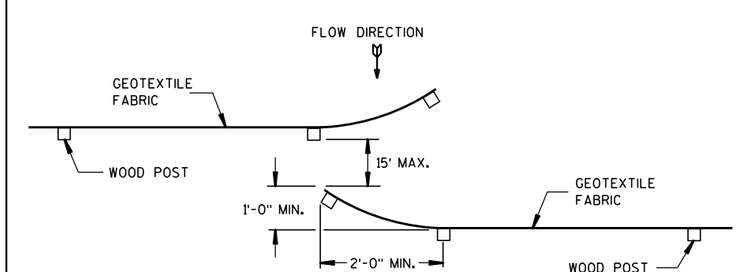

HOOK METHOD

JOINING TWO LENGTHS OF SILT FENCE ⑤

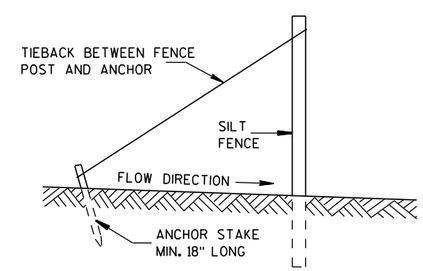

SILT FENCE TIE BACK

(WHEN REQUIRED BY THE ENGINEER)

SILT FENCE
STATE OF WISCONSIN DEPARTMENT OF TRANSPORTATION
APPROVED 4-29-05 DATE — /S/ Beth Cann-- CHIEF ROADWAY DEVELOP ENGINEER FHWA

6

6

S.D.D. 8 E 9-6

S.D.D. 8 E 9-6

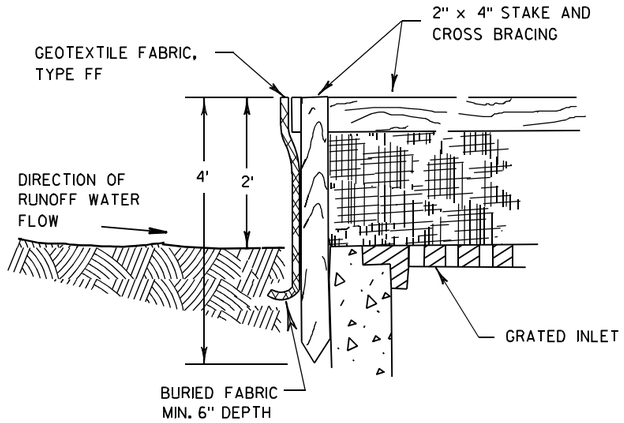

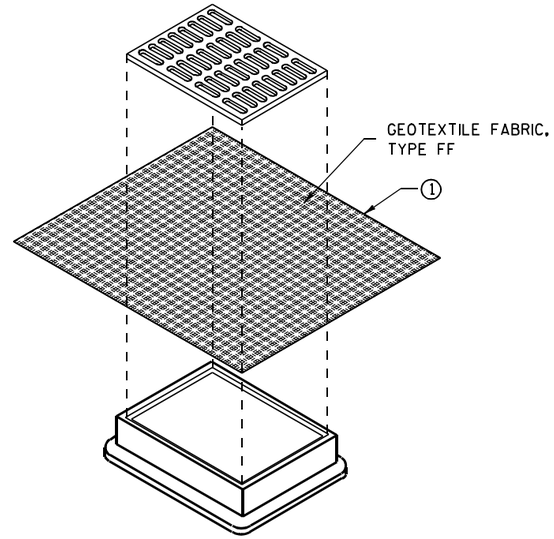

INLET PROTECTION, TYPE B
(WITHOUT CURB BOX)

(CAN BE INSTALLED IN ANY INLET WITHOUT A CURB BOX)

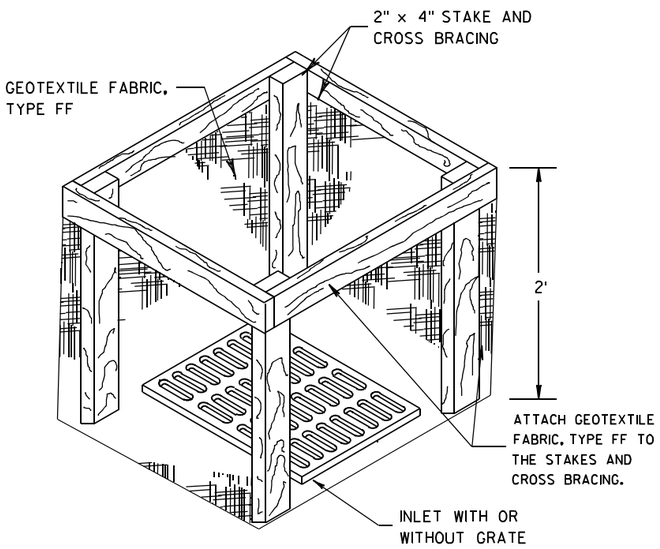

INLET PROTECTION, TYPE A

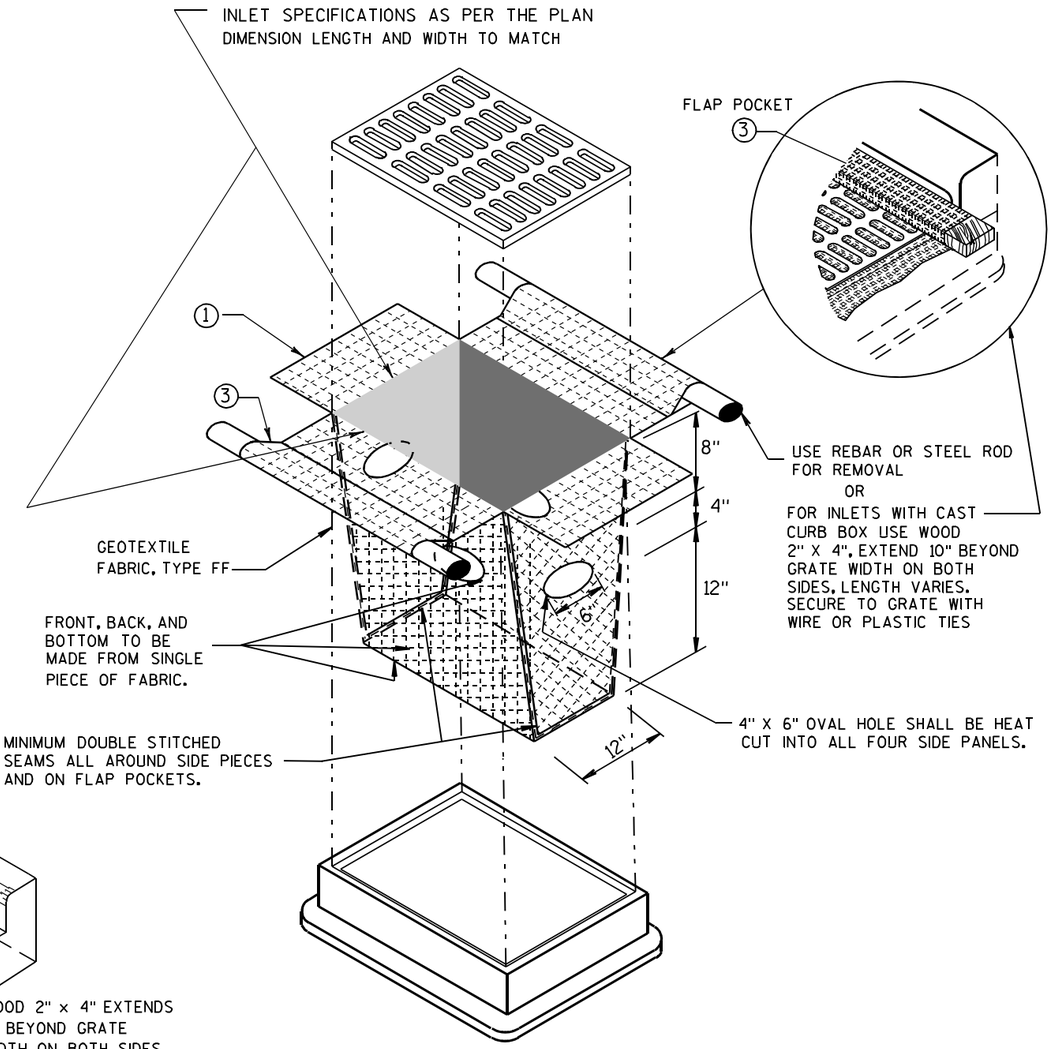

INLET PROTECTION, TYPE D

(CAN BE INSTALLED IN ANY INLET TYPE WITH
OR WITHOUT A CURB BOX AS PER NOTE ②)

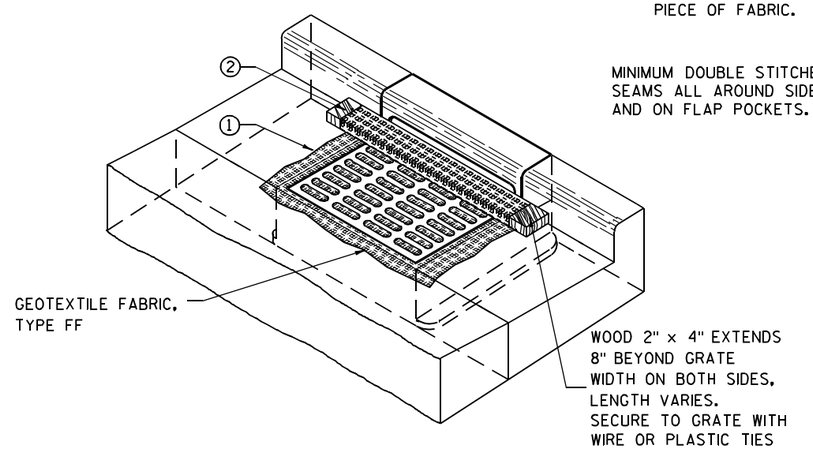

INLET PROTECTION, TYPE C (WITH CURB BOX)

GENERAL NOTES

INLET PROTECTION DEVICES SHALL BE MAINTAINED OR REPLACED AT THE DIRECTION OF THE ENGINEER.

MANUFACTURED ALTERNATIVES APPROVED AND LISTED ON THE DEPARTMENT'S EROSION CONTROL PRODUCT ACCEPTABILITY LIST MAY BE SUBSTITUTED.

WHEN REMOVING OR MAINTAINING INLET PROTECTION, CARE SHALL BE TAKEN SO THAT THE SEDIMENT TRAPPED ON THE GEOTEXTILE FABRIC DOES NOT FALL INTO THE INLET. ANY MATERIAL FALLING INTO THE INLET SHALL BE REMOVED IMMEDIATELY.

① FINISHED SIZE, INCLUDING FLAP POCKETS WHERE REQUIRED, SHALL EXTEND A MINIMUM OF 10" AROUND THE PERIMETER TO FACILITATE MAINTENANCE OR REMOVAL.

② FOR INLET PROTECTION, TYPE C (WITH CURB BOX), AN ADDITIONAL 18" OF FABRIC IS WRAPPED AROUND THE WOOD AND SECURED WITH STAPLES. THE WOOD SHALL NOT BLOCK THE ENTIRE HEIGHT OF THE CURB BOX OPENING.

③ FLAP POCKETS SHALL BE LARGE ENOUGH TO ACCEPT WOOD 2X4.

INSTALLATION NOTES

TYPE B & C

TRIM EXCESS FABRIC IN THE FLOW LINE TO WITHIN 3" OF THE GRATE.

THE CONTRACTOR SHALL DEMONSTRATE A METHOD OF MAINTENANCE, USING A SEWN FLAP, HAND HOLDS OR OTHER METHOD TO PREVENT ACCUMULATED SEDIMENT FROM ENTERING THE INLET.

TYPE D

DO NOT INSTALL INLET PROTECTION TYPE D IN INLETS SHALLOWER THAN 30", MEASURED FROM THE BOTTOM OF THE INLET TO THE TOP OF THE GRATE.

TRIM EXCESS FABRIC IN THE FLOW LINE TO WITHIN 3" OF THE GRATE.

THE INSTALLED BAG SHALL HAVE A MINIMUM SIDE CLEARANCE, BETWEEN THE INLET WALLS AND THE BAG, MEASURED AT THE BOTTOM OF THE OVERFLOW HOLES, OF 3". WHERE NECESSARY THE CONTRACTOR SHALL CINCH THE BAG, USING PLASTIC ZIP TIES, TO ACHIEVE THE 3" CLEARANCE. THE TIES SHALL BE PLACED AT A MAXIMUM OF 4" FROM THE BOTTOM OF THE BAG.

INLET PROTECTION
TYPE A, B, C, AND D

STATE OF WISCONSIN
DEPARTMENT OF TRANSPORTATION

APPROVED
10/16/02 — DATE
/S/ Beth Cannon — CHIEF ROADWAY DEVELOPMENT ENGINEER
FHWA

6

S.D.D. 8 E 10-2

GENERAL NOTES

DETAILS OF CONSTRUCTION, MATERIALS AND WORKMANSHIP NOT SHOWN ON THIS DRAWING SHALL CONFORM TO THE PERTINENT REQUIREMENTS OF THE STANDARD SPECIFICATIONS AND THE APPLICABLE SPECIAL PROVISIONS.

TRACKING PAD SHALL BE INSPECTED DAILY. DEFICIENT AREAS SHALL BE REPAIRED OR REPLACED IMMEDIATELY.

TRACKING PAD TO BE REMOVED AFTER CONSTRUCTION IS COMPLETED.

TRACKING PAD SHALL BE THE FULL WIDTH OF THE EGRESS POINT.

SURFACE WATER MUST BE PREVENTED FROM PASSING THROUGH THE TRACKING PAD. FLOWS SHALL BE DIVERTED AWAY, AROUND OR CONVEYED UNDER THE TRACKING PAD.

CULVERT PIPE OR OTHER BMP USED TO DIVERT WATER AWAY, AROUND OR UNDER THE TRACKING PAD SHALL BE DESIGNED TO CONVEY THE 2 YEAR - 24 HOUR EVENT.

THE COST OF ADDITIONAL BMP TO DIVERT WATER ARE INCIDENTAL TO THE TRACKING PAD BID ITEM.

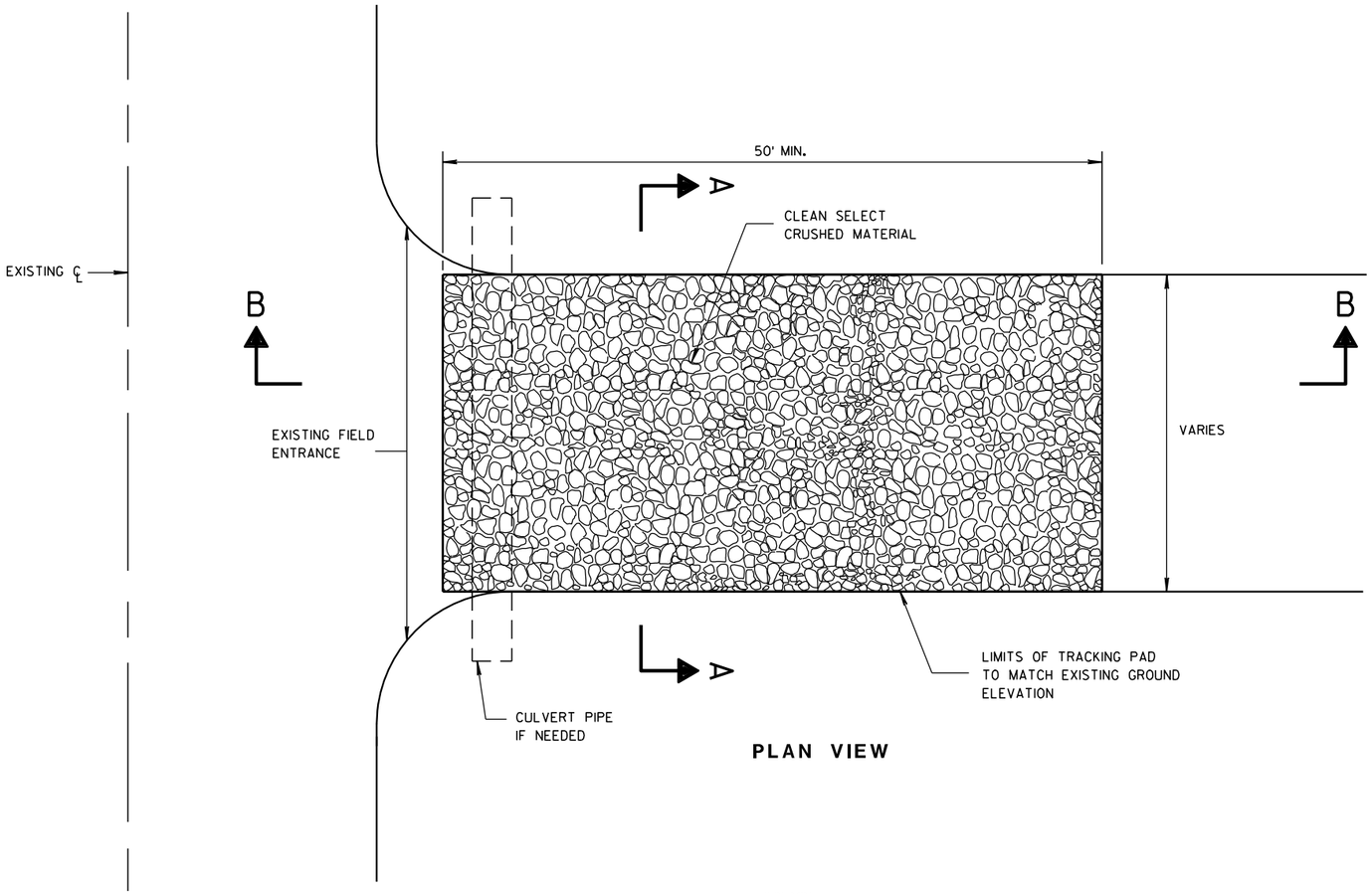

PLAN VIEW

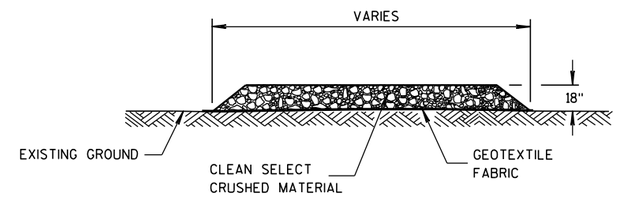

SECTION A-A

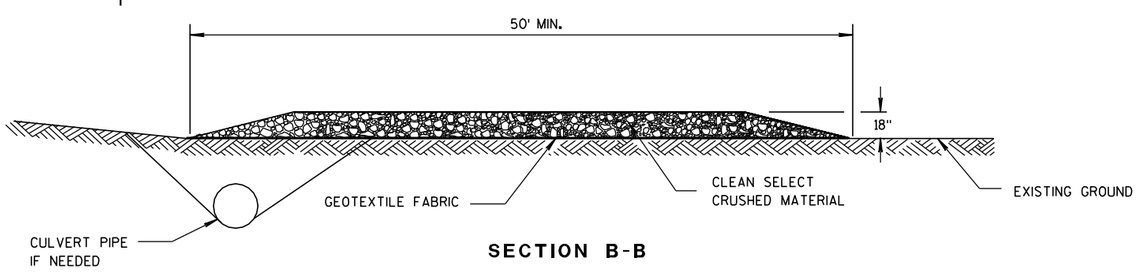

SECTION B-B

TRACKING PAD

6

6

S.D.D. 8 E 14-1

S.D.D. 8 E 14-1

TRACKING PAD

STATE OF WISCONSIN
DEPARTMENT OF TRANSPORTATION

APPROVED

3/24/2011	/S/ Jerry H. Zona	
DATE	ROADWAY STANDARDS ENGINEER	ENT

FHWA

METAL APRON ENDWALLS

PIPE DIA. (IN.)	MIN. THICK. (Inches) STEEL	MIN. THICK. (Inches) ALUM.	DIMENSIONS (Inches) A (±1")	B (MAX.)	H (±1")	L (±1 1/2")	L1 ①	L2 ①	W (±2")	APPROX. SLOPE	BODY
12	.064	.060	6	6	6	21	12	17 1/2	24	2 1/2 to 1	1 Pc.
15	.064	.060	7	8	6	26	14	21 3/4	30	2 1/2 to 1	1 Pc.
18	.064	.060	8	10	6	31	15	28 1/4	36	2 1/2 to 1	1 Pc.
21	.064	.060	9	12	6	36	18	29 5/8	42	2 1/2 to 1	1 Pc.
24	.064	.075	10	13	6	41	18	37 1/4	48	2 1/2 to 1	1 Pc.
30	.079	.075	12	16	8	51	18	52 1/4	60	2 1/2 to 1	1 Pc.
36	.079	.105	14	19	9	60	24	59 3/4	72	2 1/2 to 1	2 Pc.
42	.109	.105	16	22	11	69	24	75 5/8	84	2 1/2 to 1	2 Pc.
48	.109	.105	18	27	12	78	24	81	90	2 1/4 to 1	3 Pc.
54	.109	.105	18	30	12	84	30	85 1/2	102	2 1/4 to 1	3 Pc.
60	.109×	.105×	18	33	12	87	—	—	114	2 to 1	3 Pc.
66	.109×	.105×	18	36	12	87	—	—	120	2 to 1	3 Pc.
72	.109×	.105×	18	39	12	87	—	—	126	2 to 1	3 Pc.
78	.109×	.105×	18	42	12	87	—	—	132	1 1/2 to 1	3 Pc.
84	.109×	.105×	18	45	12	87	—	—	138	1 1/2 to 1	3 Pc.
90	.109×	.105×	18	37	12	87	—	—	144	1 1/2 to 1	3 Pc.
96	.109×	.105×	18	35	12	87	—	—	150	1 1/2 to 1	3 Pc.

× EXCEPT CENTER PANEL
SEE GENERAL NOTES

REINFORCED CONCRETE APRON ENDWALLS

PIPE DIA. (IN.)	DIMENSIONS (Inches) T	A	B	C	D	E	G	APPROX. SLOPE
12	2	4	24	48 7/8	72 7/8	24	2	3 to 1
15	2 1/4	6	27	46	73	30	2 1/4	3 to 1
18	2 1/2	9	27	46	73	36	2 1/2	3 to 1
21	2 3/4	9	36	37 1/2	73 1/2	42	2 3/4	3 to 1
24	3	9 1/2	43 1/2	30	73 1/2	48	3	3 to 1
27	3 1/4	10 1/2	49 1/2	24	73 1/2	54	3 1/4	3 to 1
30	3 1/2	12	54	19 3/4	73 1/2	60	3 1/2	3 to 1
36	4	15	63	34 3/4	97 3/4	72	4	3 to 1
42	4 1/2	21	63	35	98	78	4 1/2	3 to 1
48	5	24	72	26	98	84	5	3 to 1
54	5 1/2	27	65	*33 1/4-**35	*98 1/4-**100	90	5 1/2	2 2/5 to 1
60	6	*30-**35	60	39	99	96	5	2 to 1
66	6 1/2	*24-**30	*72-**78	*21-**27	99	102	5 1/2	2 to 1
72	7	*24-**36	78	21	99	108	6	2 to 1
78	7 1/2	*24-**36	78	21	99	114	6 1/2	2 to 1
84	8	36	90 1/2	21	111 1/2	120	6 1/2	1 1/2 to 1
90	8 1/2	41	87 1/2	24	111 1/2	132	6 1/2	1 1/2 to 1

*MINIMUM
**MAXIMUM

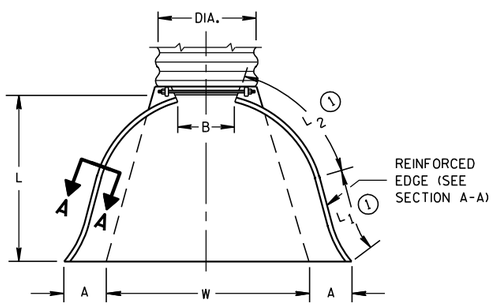

PLAN VIEW

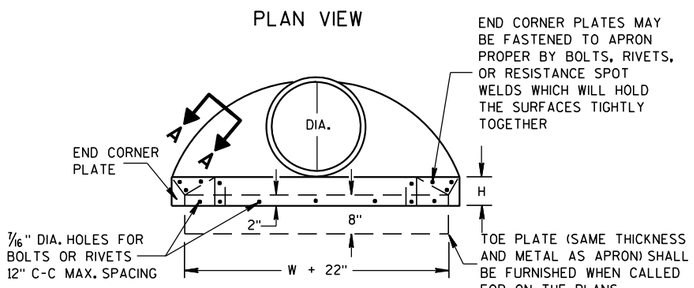

END VIEW

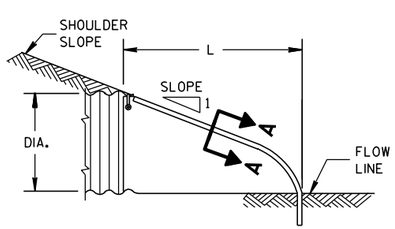

SIDE ELEVATION

METAL ENDWALLS

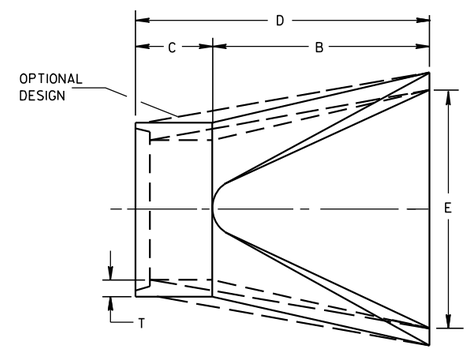

PLAN

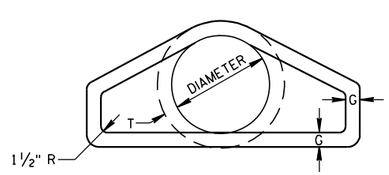

END VIEW

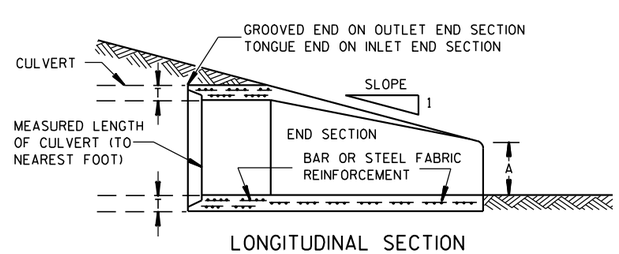

LONGITUDINAL SECTION

CONCRETE ENDWALLS

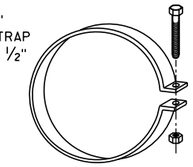

ALTERNATE FOR TYPE 1 CONNECTION

END SECTION CONNECTOR STRAP

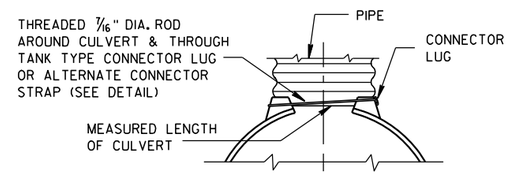

TYPE 1
FOR 12" THRU 24" CORR. PIPE

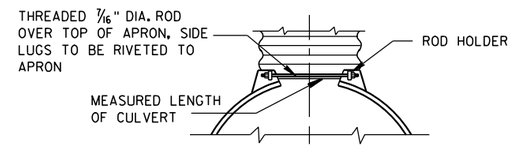

TYPE 2
FOR 30" THRU 96" CORR. PIPE

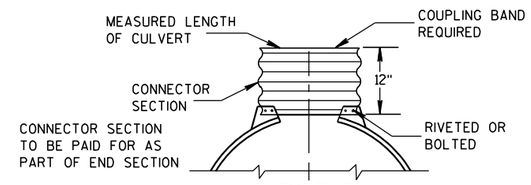

TYPE 3
FOR 42" THRU 96" CORR. PIPE

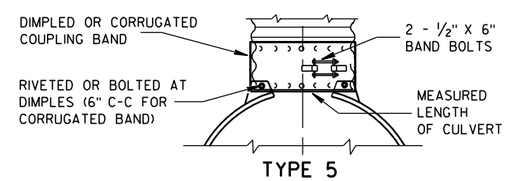

TYPE 5
ALTERNATE FOR:
ALL SIZES CORRUGATED CIRCULAR PIPE

NOTE: DIMPLED BAND FITS OVER OUTSIDE OF ENDWALL, AND CORRUGATED BAND FITS INSIDE ENDWALL. DIMPLED BAND MAY BE USED WITH HELICALLY CORRUGATED PIPE.

FOR CIRCUMFERENTIALLY CORRUGATED PIPE USE ENDWALL CONNECTION DETAILS 1, 2, 3 OR 5 AS APPLICABLE.

FOR HELICALLY CORRUGATED PIPE USE ENDWALL CONNECTION DETAILS 1, 2 OR 5.

FOR HELICALLY CORRUGATED PIPES WITH TWO CIRCUMFERENTIAL CORRUGATIONS AT EACH END USE ENDWALL CONNECTION DETAILS 1, 2 OR 3.

CONNECTION DETAILS

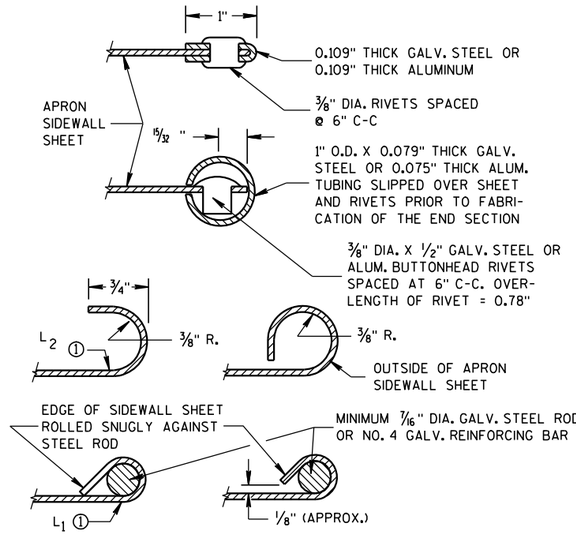

SECTION A-A

GENERAL NOTES

DETAILS OF CONSTRUCTION, MATERIALS AND WORKMANSHIP NOT SHOWN ON THIS DRAWING SHALL CONFORM TO THE PERTINENT REQUIREMENTS OF THE STANDARD SPECIFICATIONS AND THE APPLICABLE SPECIAL PROVISIONS.

CONCRETE CULVERT ENDWALLS MAY NOT BE USED WITH GALVANIZED STEEL OR ALUMINUM CULVERT PIPE OR VISE VERSA. GALVANIZED STEEL OR ALUMINUM ENDWALLS SHALL NORMALLY BE INSTALLED ON CULVERT PIPE OF THE SAME METAL.

ALL THREE PIECE STEEL APRON ENDWALLS FOR 60" DIAMETER PIPE AND LARGER SHALL HAVE 0.109" SIDES AND 0.138" CENTER PANELS. ALL THREE PIECE ALUMINUM APRON ENDWALLS FOR 60" DIAMETER PIPE AND LARGER SHALL HAVE 0.105" SIDES AND 0.134" CENTER PANELS. THE WIDTH OF CENTER PANELS SHALL BE GREATER THAN 20 PERCENT OF THE PIPE PERIMETER.

LAP SEAMS SHALL BE TIGHTLY JOINED BY GALVANIZED RIVETS OR BOLTS FOR STEEL UNITS AND ALUMINUM RIVETS AND BOLTS FOR ALUMINUM UNITS. FOR THE 60" THROUGH 96" DIAMETER APRON ENDWALL SIZES, THE REINFORCED EDGES AND CENTER PANEL SEAMS SHALL BE FURTHER REINFORCED WITH GALVANIZED STEEL OR ALUMINUM STIFFENER ANGLES. THE ANGLES SHALL BE ATTACHED BY GALVANIZED NUTS AND BOLTS FOR STEEL UNITS AND ALUMINUM NUTS AND BOLTS FOR ALUMINUM UNITS.

WHERE TWO OR MORE PIPES WITH APRON ENDWALLS ARE LAID ADJACENT TO EACH OTHER, THEY SHALL BE SEPARATED BY A DISTANCE SUFFICIENT TO PROVIDE A MINIMUM CLEARANCE OF 6 INCHES BETWEEN APRON ENDWALLS.

① FOR PIPE SIZES UP TO 60" DIAMETER, A 180° ROLLED EDGE MAY BE USED INSTEAD OF STEEL ROD REINFORCEMENT. SEE SECTION A-A.

APRON ENDWALLS FOR CULVERT PIPE

STATE OF WISCONSIN
DEPARTMENT OF TRANSPORTATION

APPROVED
11/30/94 — DATE
/S/ Rory L. Rhinesmith — CHIEF ROADWAY DEVELOPMENT ENGINEER
FHWA

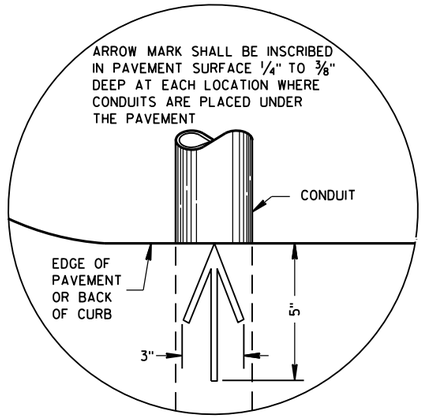

PLAN VIEW

ARROW MARK

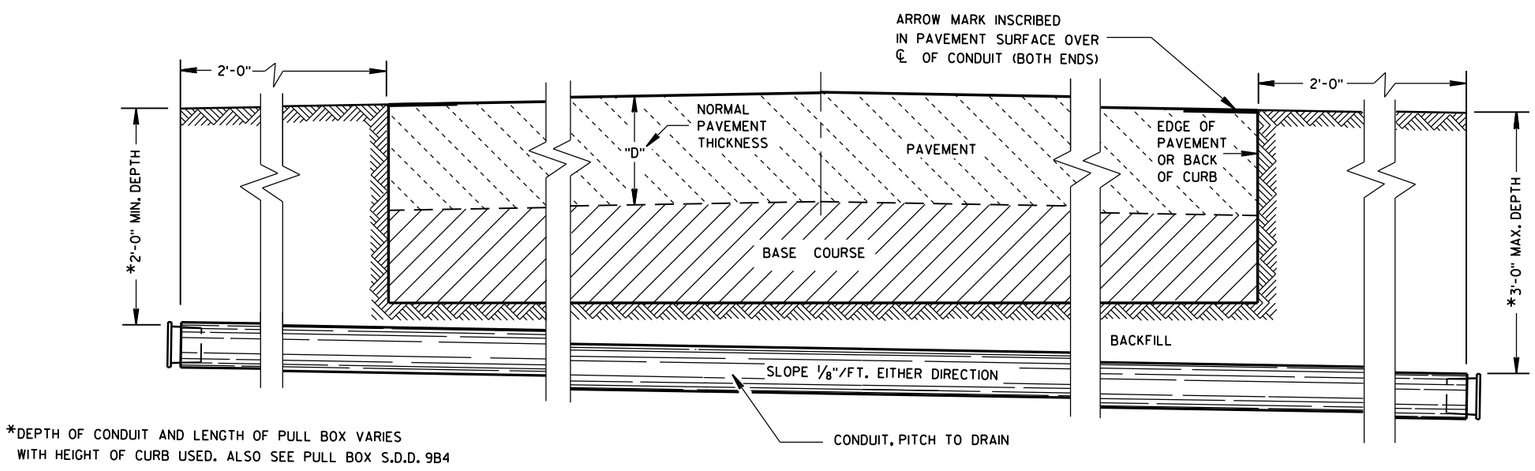

*DEPTH OF CONDUIT AND LENGTH OF PULL BOX VARIES WITH HEIGHT OF CURB USED. ALSO SEE PULL BOX S.D.D. 9B4

SIDE ELEVATION

DETAIL FOR CONDUIT UNDER PAVED HIGHWAYS

GENERAL NOTES

DETAILS OF CONSTRUCTION, MATERIALS AND WORKMANSHIP NOT SHOWN ON THIS DRAWING SHALL CONFORM TO THE PERTINENT REQUIREMENTS OF THE CONTRACT.

METALLIC (STANDARD SPECIFICATION 652.2.2) OR NONMETALLIC (STANDARD SPECIFICATION 652.2.3) CONDUIT SHALL BE FURNISHED AND PLACED AS SHOWN.

DEPTH OF CONDUIT INSTALLED BELOW THE TRAVELED WAY SHALL BE 24 INCHES MINIMUM AND 36 INCHES MAXIMUM.

DEPTH OF CONDUIT INSTALLED THAT IS NOT BELOW THE TRAVELED WAY SHALL BE 18 INCHES MINIMUM AND 36 INCHES MAXIMUM.

ANY EXCEPTION TO THE MAXIMUM DEPTH SHALL BE ONLY WITH THE WRITTEN APPROVAL OF THE ENGINEER.

THE TRENCH SHALL NOT BE BACKFILLED PRIOR TO INSPECTION OF THE CONDUIT.

ALL METALLIC CONDUIT RACEWAY ENDS SHALL BE REAMED AND THREADED.

ALL METALLIC CONDUIT IN WHICH WIRE OR CABLE IS TO BE INSTALLED SHALL BE BUSHED WITH APPROVED THREADED BUSHINGS BEFORE INSTALLATION OF THE WIRE OR CABLE.

ALL METALLIC CONDUITS IN WHICH WIRE OR CABLE IS NOT TO BE INSTALLED SHALL BE CAPPED WITH THREADED PROTECTIVE CAPS, AS APPROVED BY THE ENGINEER.

ALL NONMETALLIC CONDUIT SHALL BE CAPPED OR PLUGGED IMMEDIATELY AFTER INSTALLATION AND SHALL REMAIN CAPPED OR PLUGGED UNTIL WIRE/CABLES ARE INSTALLED.

NONMETALLIC CONDUITS IN WHICH WIRE OR CABLE IS NOT BEING INSTALLED SHALL REMAIN CAPPED OR PLUGGED.

BENDING OF PVC ELECTRICAL CONDUIT SHALL BE ACCOMPLISHED BY USING A BLANKET OR EMERSION TYPE TANK DESIGNED FOR THE PURPOSE OF BENDING PVC ELECTRICAL CONDUIT.

ALL CUT ENDS SHALL BE TRIMMED INSIDE AND OUTSIDE TO REMOVE ALL ROUGH EDGES ON NONMETALLIC CONDUIT. (SEE NEC 347.5)

WHEN REQUIRED TO CONNECT NONMETALLIC CONDUIT TO METALLIC CONDUIT, ONLY U.L. LISTED ADAPTER FITTINGS SHALL BE USED.

PRIOR TO CONDUIT ACCEPTANCE, CONDUIT CAPS OR PLUGS SHALL BE REMOVED, AND THE CAPS, PLUGS AND CONDUIT ENDS SHALL BE THOROUGHLY CLEANED AND THEN THE CAPS OR PLUGS REINSTALLED TO ENSURE THAT THE CAPS OR PLUGS CAN BE EASILY REMOVED IN THE FUTURE.

ALL CONDUIT BEING FURNISHED AND INSTALLED SHALL HAVE THE U.L. LABEL FIRMLY ATTACHED.

CONDUIT RUNS SHALL BE THE SAME SIZE OF CONDUIT FROM ONE END TO THE OTHER (FROM PULL BOX TO PULL BOX-OR-JUNCTION BOX TO JUNCTION BOX-OR-BASE TO BASE, ETC.).

TRACER WIRE SHALL BE INSTALLED AS STATED IN THE STANDARD SPECIFICATION, ITEM 652.3.1.1.

ALL CONDUIT RUNS SHALL BE STRAIGHT (WITHOUT BENDS) FROM PULL BOX TO PULL BOX, PULL BOX TO BASE AND BASE TO BASE AS SHOWN ON THE PLANS.

CONDUIT

STATE OF WISCONSIN
DEPARTMENT OF TRANSPORTATION

APPROVED
March, 2017 — /S/ Ahmet Demirbilek
DATE — STATE ELECTRICAL
FHWA

TABLE OF NOMINAL DIMENSIONS AND WEIGHTS

DIMENSION IN INCHES		CORRUGATED STEEL PIPE								
PIPE DIAMETER (INSIDE)	A	12	12	12	18	18	18	24	24	24
PIPE LENGTH **	B	24	30	36	24	30	36	36	42	48
WALL THICKNESS	C	0.064	0.064	0.064	0.064	0.064	0.064	0.064	0.064	0.064
COVER	D	10 1/4	10 1/4	10 1/4	16 1/4	16 1/4	16 1/4	22 1/4	22 1/4	22 1/4
FRAME	E	14 1/2	14 1/2	14 1/2	20 1/2	20 1/2	20 1/2	26 1/2	26 1/2	26 1/2
FRAME	F	8 1/2	8 1/2	8 1/2	14 1/2	14 1/2	14 1/2	20 1/2	20 1/2	20 1/2
FRAME	G	11 1/2	11 1/2	11 1/2	17 1/2	17 1/2	17 1/2	23 1/2	23 1/2	23 1/2
WEIGHT IN POUNDS *										
FRAME AND COVER		60	60	60	110	110	110	155	155	155

* THE ACTUAL WEIGHT OF THE MANHOLE FRAME AND COVER MAY VARY WITHIN 5 PERCENT PLUS OR MINUS OF THE WEIGHTS SHOWN.

** NORMALLY USED LENGTHS. THE PROJECT ENGINEER SHALL DETERMINE IF PIPE LENGTHS, OTHER THAN THOSE SPECIFIED, SHALL BE USED, TO A MAXIMUM OF 48" (CONTINUOUS LENGTH, NON-SPLICED). THE ADDITIONAL LENGTH SHALL BE INCIDENTAL TO THE PULL BOX BID PRICE.

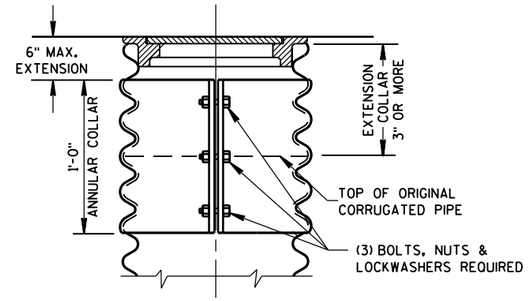

CORRUGATED PIPE EXTENDER

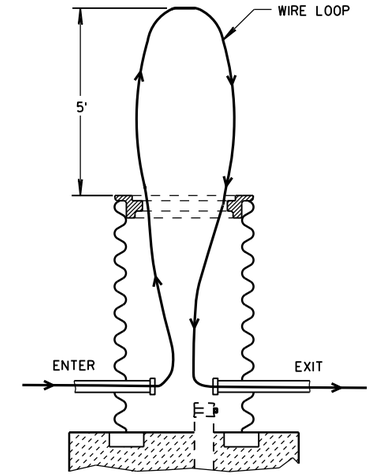

MEASUREMENT DETAIL FOR WIRE/CABLE IN THE PULL BOX

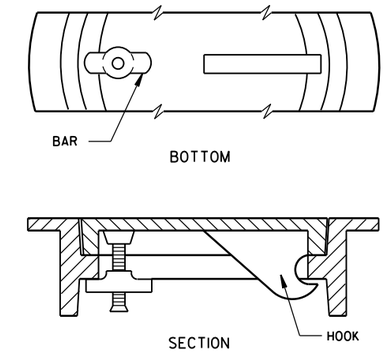

ALTERNATE COVER (LOCKING)

TIGHTENING BAR TYPE

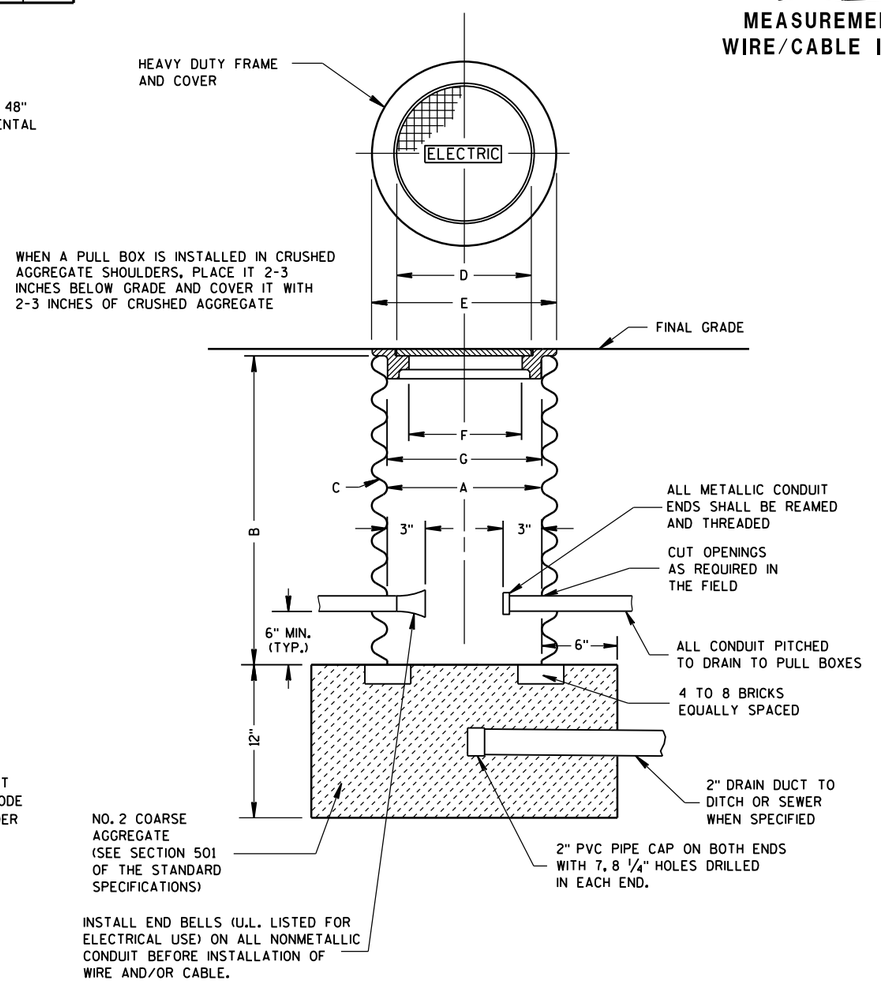

PULL BOX

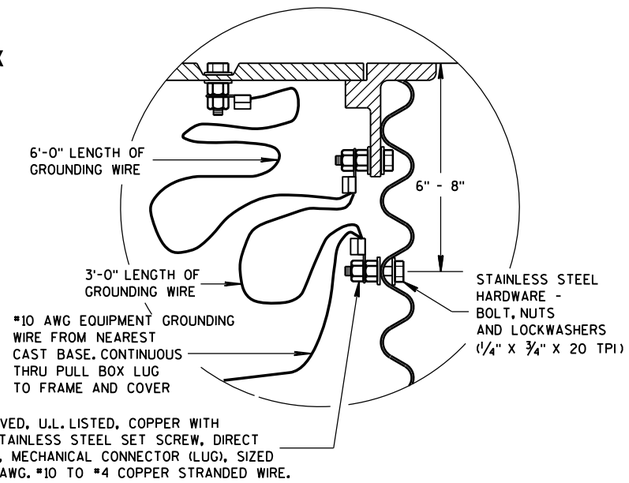

EQUIPMENT GROUNDING LUG AND LOCATION IN STEEL PULL BOXES

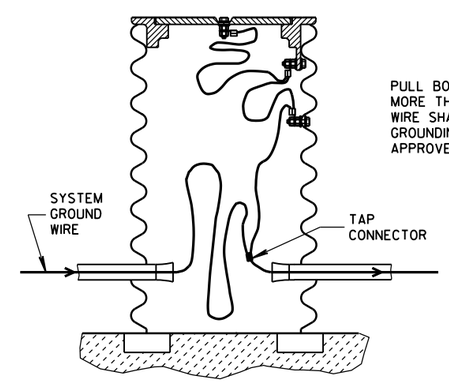

EQUIPMENT GROUNDING LUG AND LOCATION IN STEEL PULL BOXES

GENERAL NOTES

DETAILS OF CONSTRUCTION, MATERIALS AND WORKMANSHIP NOT SHOWN ON THIS DRAWING SHALL CONFORM TO THE PERTINENT REQUIREMENTS OF THE CONTRACT.

ALL FRAMES AND COVERS SHALL BE HEAVY DUTY TYPE, SUITABLE FOR VEHICULAR TRAFFIC LOADS.

PULL BOXES LOCATED IN THE ROADWAYS SHALL HAVE LOCKING COVERS.

ENTRANCE HOLES INTO PULL BOXES SHALL BE CUT WITH A CIRCULAR HOLE SAW OR HYDRAULIC CONDUIT PUNCH. HOLE SIZE SHALL BE THE OUTSIDE DIAMETER OF THE CONDUIT THAT IS TO FIT IN THE OPENING PLUS NO MORE THAN 1/4".

THE CONTRACTOR SHALL NOT INSTALL WIRE IN ANY PULL BOX UNTIL ITS INSTALLATION HAS BEEN INSPECTED AND ACCEPTED BY THE ENGINEER.

GROUNDING LUGS (MECHANICAL CONNECTORS) SHALL BE U.L. LISTED AND APPROVED FOR USE WITH COPPER WIRE.

ALL METALLIC CONDUIT IN WHICH WIRE AND/OR CABLE IS TO BE INSTALLED, SHALL BE BUSHED BEFORE INSTALLATION OF THE WIRE AND/OR CABLE.

WHEN PULL BOXES ARE INSTALLED FOR FUTURE USE, DO NOT INSTALL THE EQUIPMENT GROUNDING LUG. THE EQUIPMENT GROUNDING LUG, THE EQUIPMENT GROUNDING ELECTRODE AND THE EQUIPMENT GROUNDING CONDUCTOR SHALL BE REQUIRED AND INSTALLED UNDER A FUTURE WIRING CONTRACT.

PULL BOX

STATE OF WISCONSIN
DEPARTMENT OF TRANSPORTATION

APPROVED
Sept. 2014 — DATE
/S/ Ahmet Demirbilek — STATE ELECTRICAL
FHWA

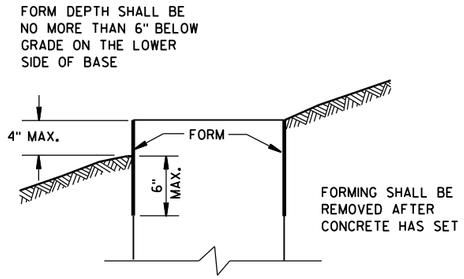

FORMING DETAIL

QUANTITY REQUIREMENTS	CONCRETE BASE TYPE		
	1	2	5 & 6
APPROX. CUBIC YARDS OF CONCRETE	0.40	0.57	0.40
LBS. OF HOOP BAR STEEL	NONE	23	16
LBS. OF VERTICAL BAR STEEL	NONE	60	18

GENERAL NOTES

DETAILS OF CONSTRUCTION, MATERIALS AND WORKMANSHIP NOT SHOWN ON THIS DRAWING SHALL CONFORM TO THE PERTINENT REQUIREMENTS OF THE CONTRACT.

BASES SHALL BE EXCAVATED BY USE OF A CIRCULAR AUGER.

TOP SURFACES OF CONCRETE BASES SHALL BE TROWEL FINISHED SMOOTH AND LEVEL.

CONDUIT SIZES AND LOCATIONS SHALL BE AS SHOWN ON THE PLANS.

THE FINAL OR TERMINATING CONCRETE BASE IN A CONDUIT RUN SHALL HAVE A 6" EXIT STUB INSTALLED FOR FUTURE CABLING USE. THE EXIT STUB SHALL BE SIZED AS USED THROUGHOUT THE CONDUIT RUN AS SHOWN AT THE ENTRANCE OF THE BASE.

MINIMUM BENDING RADIUS OF CONDUIT IS EQUAL TO 6 X THE DIAMETER.

CONDUIT HEIGHT ABOVE CONCRETE BASES SHALL BE 1 INCH. ALL METALLIC CONDUIT ENDS SHALL BE REAMED AND THREADED.

ALL CONDUIT ENDS AT THE TOP OF CONCRETE BASES SHALL BE CAPPED IF METALLIC OR PLUGGED IF NONMETALLIC IMMEDIATELY AFTER PLACEMENT AND BEFORE CONCRETE IS POURED. CONDUITS IN WHICH WIRE OR CABLE IS NOT INSTALLED SHALL REMAIN CAPPED OR PLUGGED.

GENERAL NOTES (CONTINUED)

BELL ENDS SHALL BE INSTALLED ON ALL PVC CONDUIT EXPOSED AT THE TOP OF CONCRETE BASES BEFORE INSTALLATION OF CABLE OR WIRE.

ENDS OF CONDUIT INSTALLED BELOW GRADE FOR FUTURE USE SHALL BE CAPPED IF METALLIC OR PLUGGED IF NONMETALLIC.

WHEN REQUIRED TO CONNECT NONMETALLIC CONDUIT TO METALLIC CONDUIT, ONLY ADAPTER FITTINGS, U.L. LISTED FOR ELECTRICAL USE, SHALL BE USED.

IF A BASE REQUIRES A DEEP FORM BECAUSE OF LOOSE DIRT OR FILL, THE FORM SHALL BE REMOVED BEFORE BACKFILLING AROUND THE BASE. BACKFILL SHALL BE TAMPED TIGHT AGAINST THE BARE CONCRETE BASE IN LAYERS OF 1 FOOT OR LESS.

A NO. 4 AWG, STRANDED COPPER EQUIPMENT GROUNDING CONDUCTOR SHALL BE EXOTHERMICALLY WELDED TO THE EQUIPMENT GROUNDING ELECTRODE (GROUND ROD) FOR TYPE 1, TYPE 2, TYPE 5, AND TYPE 6 BASES.

THE EQUIPMENT GROUNDING CONDUCTOR SHALL BE FURNISHED AND INSTALLED TO ENTER THE BASE OF THE TYPE 2 AND TYPE 5 BASES THROUGH A 1 INCH CONDUIT INSTALLED FOR GROUNDING PURPOSES, LEAVING A 4 FOOT COIL OF WIRE ABOVE THE CONCRETE BASE. THE EQUIPMENT GROUNDING CONDUCTOR SHALL BE NEATLY COILED AND THE COILS TIED TOGETHER.

ANCHOR RODS SHALL BE THREADED 12" IN LENGTH ON EACH END OF THE ROD. ANCHOR RODS SHALL BE MANUFACTURED IN ACCORDANCE WITH SECTION 654.2.1 OF THE STANDARD SPECIFICATIONS.

WASHERS AND LOCK WASHERS ARE REQUIRED ON ALL ANCHOR RODS.

WHEN ANCHOR RODS USING THE ALTERNATE "L" BEND ARE FURNISHED, THE 4" "L" BEND SHALL BE IN ADDITION TO THE SPECIFIED ANCHOR ROD BAR LENGTH. THE "L" BEND END SHALL NOT BE THREADED.

ANCHOR RODS SHALL BE INSTALLED WITH MISALIGNMENTS OF LESS THAN 1:40 FROM VERTICAL.

WELDING OF THE ANCHOR RODS TO THE CAGE IS UNACCEPTABLE. TIE WIRES SHALL BE USED.

BAR STEEL REINFORCEMENT SHALL BE COATED WITH POWDERED EPOXY RESIN IN ACCORDANCE WITH SECTION 505 OF THE STANDARD SPECIFICATIONS (LATEST EDITION).

(1) THE MINIMUM DEPTH OF CONDUIT EXITING THE CONCRETE BASE AND INSTALLED BELOW THE TRAVELED WAY SHALL BE 24 INCHES. THE MINIMUM DEPTH OF CONDUIT EXITING THE CONCRETE BASE THAT IS NOT INSTALLED BELOW THE TRAVELED WAY SHALL BE 18 INCHES. THE MAXIMUM DEPTH OF ALL CONDUIT SHALL BE 36 INCHES EXCEPT WITH WRITTEN APPROVAL BY THE ENGINEER.

(2) (4) 1" DIA. X 3'-6" ANCHOR RODS.

(3) (4) 1" DIA. X 5'-0" ANCHOR RODS.

(4) (6) NO. 6 X 6'-8" BAR STEEL REINFORCEMENT.

(5) (7) NO. 4 X 5'-1" BAR STEEL REINFORCEMENT @ 1'-0" C-C.

(6) (4) 1" DIA. X 3'-6" ANCHOR RODS.

(7) (6) NO.4 X 4'-8" BAR STEEL REINFORCEMENT.

(8) (5) NO. 4 X 5'-1" BAR STEEL REINFORCEMENT @ 1'-0" C-C.

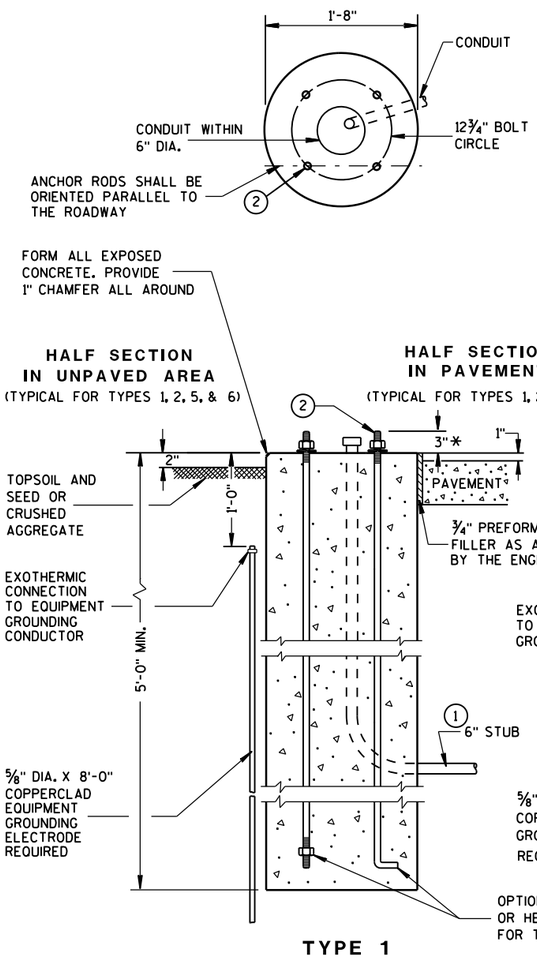

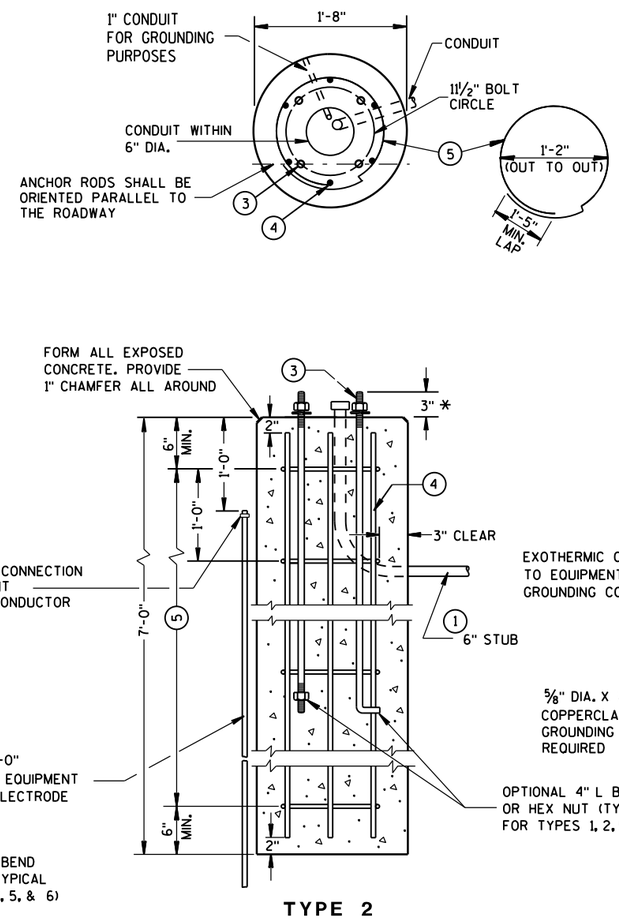

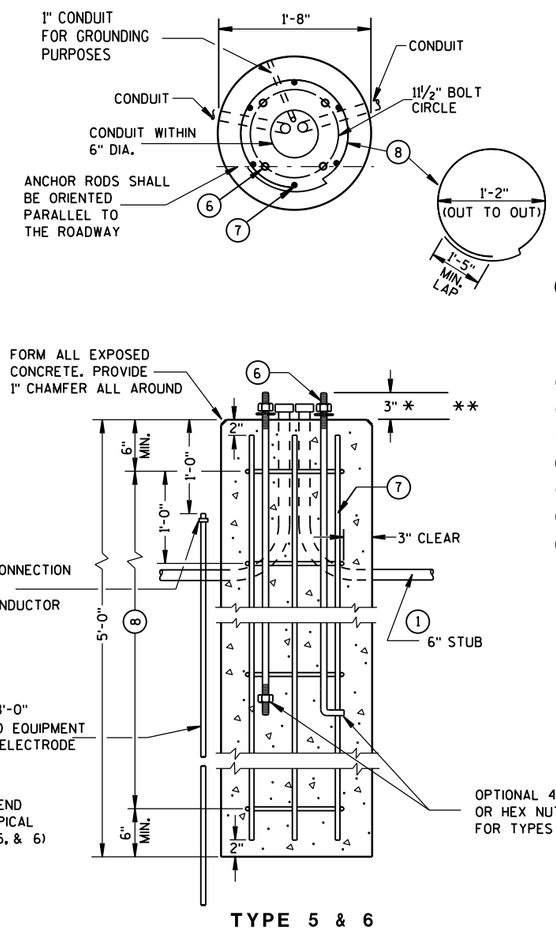

CONCRETE BASES

* ANY ANCHOR ROD PROJECTION SHORTER THAN 2¾" OR LONGER THAN 3¼" SHALL REQUIRE THE BASE TO BE REMOVED AND REPLACED AT THE CONTRACTORS EXPENSE.

** FOR NONBREAKAWAY INSTALLATIONS, 4½" ± ANCHOR ROD PROJECTION WITH THE USE OF LEVELING NUTS. RODENT SCREEN REQUIRED.

CONCRETE BASES, TYPES 1, 2, 5, & 6

STATE OF WISCONSIN
DEPARTMENT OF TRANSPORTATION

APPROVED
Sept. 2014 — DATE
/S/ Ahmet Demirbilek — STATE ELECTRICAL 275
FHWA

6

S.D.D. 9 C 2-7

GENERAL NOTES

DETAILS OF CONSTRUCTION, MATERIALS AND WORKMANSHIP NOT SHOWN ON THIS DRAWING SHALL CONFORM TO THE PERTINENT REQUIREMENTS OF THE CONTRACT.

FOUR (4) BOLTS SHALL BE FURNISHED WITH EACH TRANSFORMER BASE. BOLTS SHALL BE 1" DIAMETER, 4" IN LENGTH, WITH WASHERS, LOCK WASHERS AND NUTS. BOLTS, NUTS AND WASHERS SHALL BE MANUFACTURED IN ACCORDANCE WITH SECTION 641.2.2 OF THE STANDARD SPECIFICATIONS.

LEVELING SHIMS, IF NEEDED, SHALL BE DESIGNED FOR THE PURPOSE AND USED UNDER CAST BASES WHEN PLUMBING POLES OR STANDARDS DURING INSTALLATION. THE USE OF WASHERS IN LIEU OF PROPER LEVELING SHIMS IS NOT ACCEPTABLE.

SHIM LENGTH SHALL BE LONG ENOUGH TO COMPLETELY COVER THE AREA UNDER THE LENGTH AND WIDTH OF THE BASE MOUNTING FLANGE.

DOUBLE NUTTING IS NOT ACCEPTABLE FOR LEVELING OR MOUNTING PURPOSES.

A NEMA APPROVED, U.L. LISTED, COPPER WITH BRASS OR STAINLESS STEEL SET SCREW, DIRECT BURY RATED, MECHANICAL CONNECTOR (LUG), SIZED TO ACCEPT AWG. #10 TO #4 COPPER STRANDED WIRE SHALL BE FURNISHED AND INSTALLED IN THE PEDESTAL AND TRANSFORMER BASES.

THE MECHANICAL CONNECTOR SHALL BE INSTALLED USING A 1/4" - 20 (TPI) STAINLESS STEEL HEX HEAD BOLT OF SUFFICIENT LENGTH TO FIRMLY ATTACH THE LUG TO THE BASE.

SHOULD THE MANNER OF ATTACHMENT OF THE LUG REQUIRE WASHERS, HEX NUTS, LOCK WASHER - THEY SHALL BE STAINLESS STEEL AS IS THE BOLT. THE MANNER OF ATTACHMENT SHALL NOT BLOCK ACCESSIBILITY TO WIRE PLACEMENT IN THE CONNECTOR.

PEDESTAL BASE COLLAR THREADING SHALL BE TAPERED AND IN ACCORDANCE WITH NATIONAL PIPE THREADING DIMENSIONS.

BASE COLLAR THREADING SHALL EXTEND INTO THE BASE COLLAR WITH SUFFICIENT DEPTH TO ACCEPT THE INSTALLATION OF TRAFFIC SIGNAL STANDARDS TO A DEPTH OF 1 1/2", THEN TIGHTENING TO A POINT OF BEING IMMOVABLE.

THE ACCESS DOOR SHALL BE OF THE SAME MATERIAL AS THE BASE.

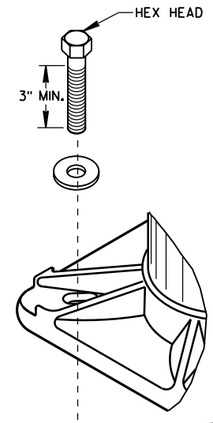

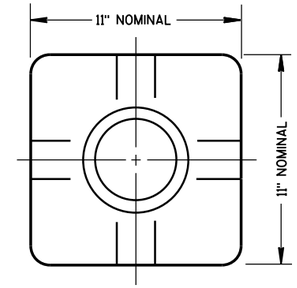

TOP VIEW
(PEDESTAL BASE)

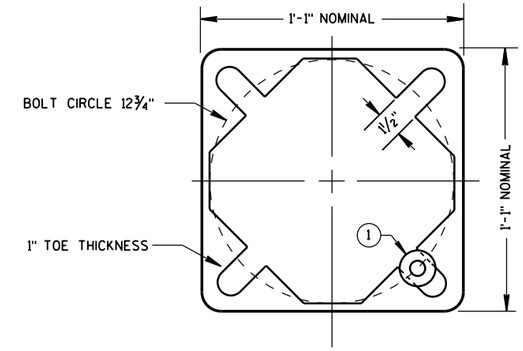

BOTTOM VIEW
(PEDESTAL BASE)

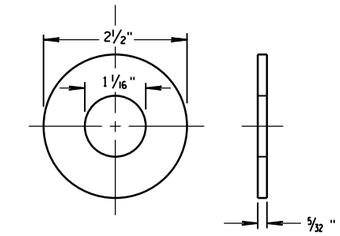

ZINC COATED STEEL WASHER
TO BE PROVIDED BY THE CONTRACTOR

PEDESTAL BASE WASHER (1)

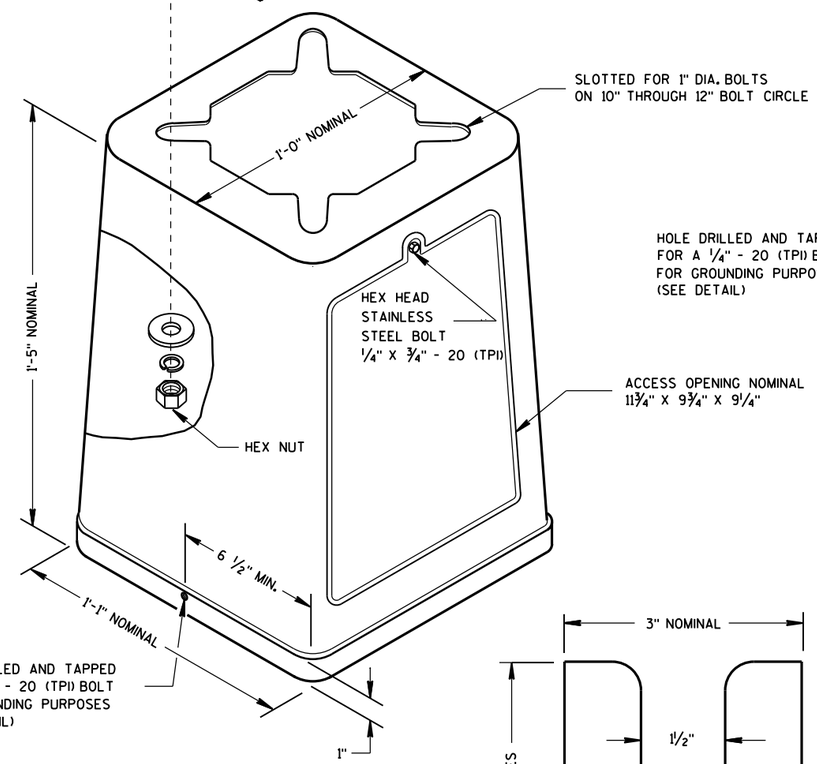

ISOMETRIC VIEW

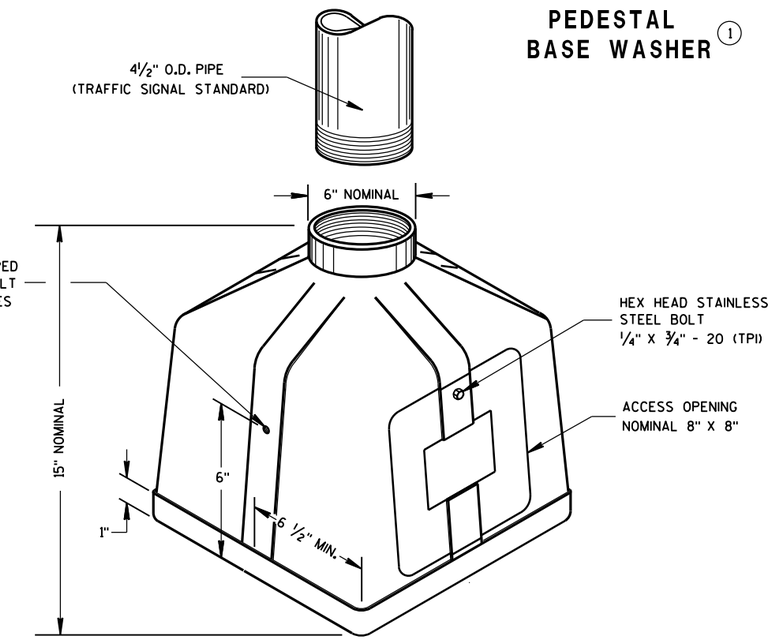

ISOMETRIC VIEW
PEDESTAL BASE

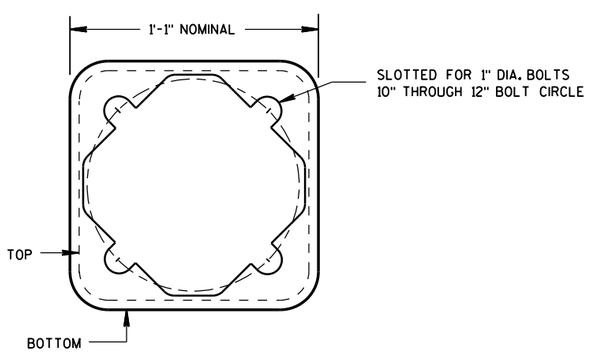

BOTTOM VIEW
(TRANSFORMER BASE)

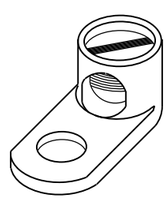

TYPICAL MECHANICAL CONNECTOR LUG

TO BE FURNISHED WITH EACH BASE

TRANSFORMER BASE

INTENDED FOR USE WITH TYPE 2, 3, 4, 5 & 6 POLES

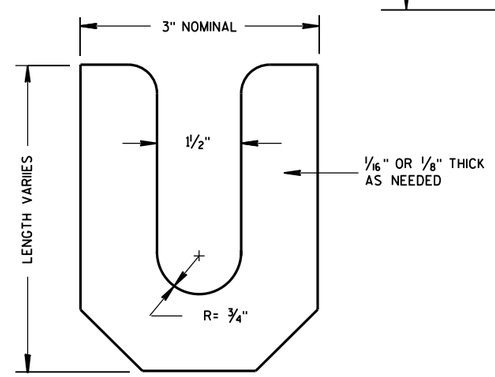

LEVELING SHIM

TRANSFORMER/PEDESTAL BASES	
STATE OF WISCONSIN DEPARTMENT OF TRANSPORTATION	
APPROVED Sept. 2014 DATE FHWA	/S/ Ahmet Demirbilek STATE ELECTRICAL

6

6

S.D.D. 9 C 3-4

S.D.D. 9 C 3-4

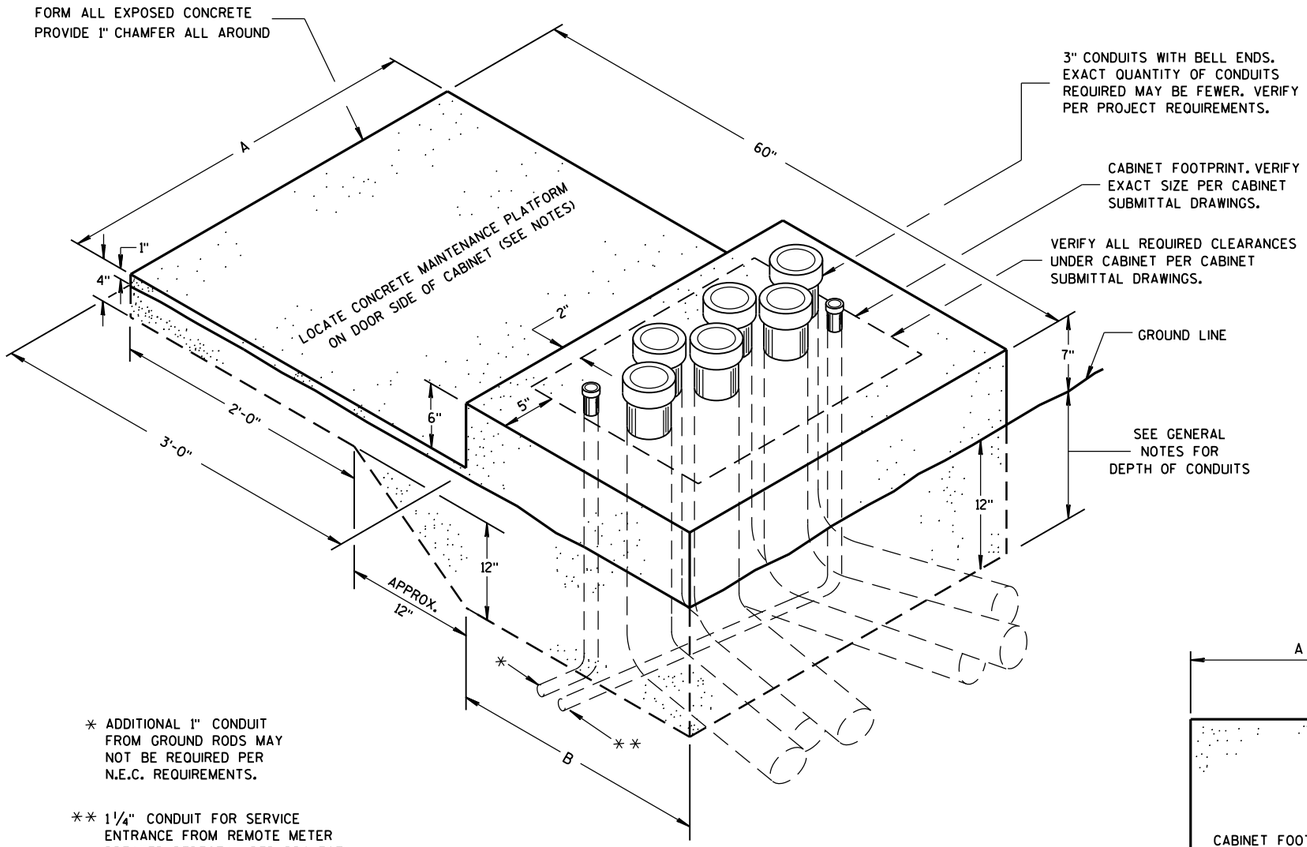

* ADDITIONAL 1" CONDUIT FROM GROUND RODS MAY NOT BE REQUIRED PER N.E.C. REQUIREMENTS.

** 1¼" CONDUIT FOR SERVICE ENTRANCE FROM REMOTE METER BREAKER PEDESTAL PER PROJECT REQUIREMENTS. VERIFY LOCATION OF CONDUIT DEPENDENT UPON LOCATION OF INCOMING FEEDER AND FOR EASE OF CONNECTION TO LOAD CENTER.

ISOMETRIC VIEW

CONCRETE CONTROL CABINET BASE, TYPE L

(C.Y. CONCRETE = APPROX. 0.4)

CONCRETE BASE TYPE	CABINET WIDTH	DIMENSIONS		MAXIMUM 3" CONDUITS
		A	B	
L24	24"	34"	24"	4
L30	30"	40"	24"	6

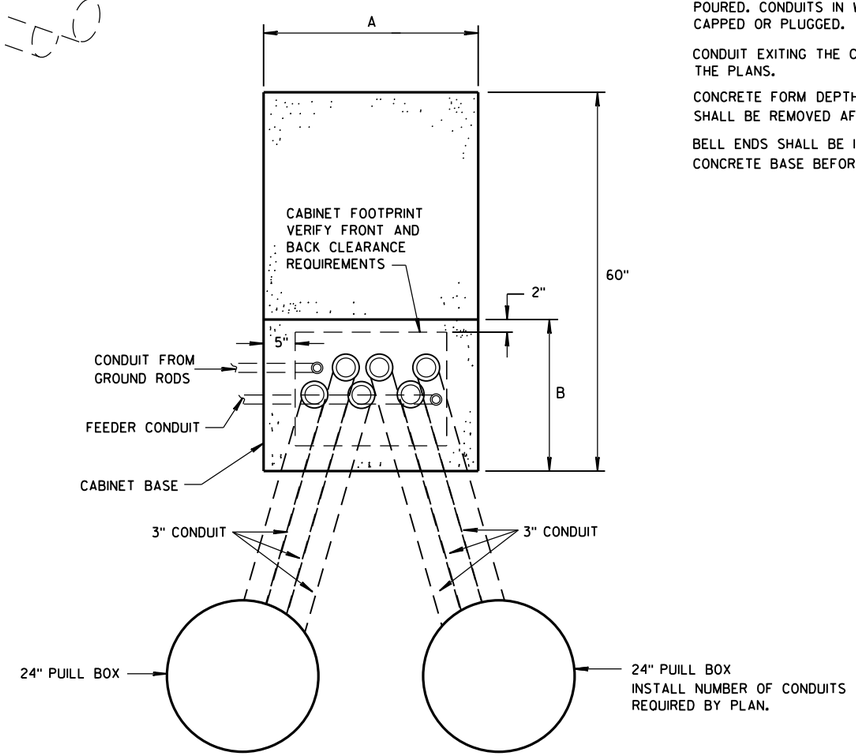

PLAN VIEW

CONCRETE CONTROL CABINET BASE, TYPE L

GENERAL NOTES

DETAILS OF CONSTRUCTION, MATERIALS AND WORKMANSHIP NOT SHOWN ON THIS DRAWING SHALL CONFORM TO THE PERTINENT REQUIREMENTS OF THE CONTRACT.

INSTALL FOUR STAINLESS STEEL APPROVED CONCRETE MASONRY ANCHORS TO ANCHOR THE CABINET BASES. THE ANCHORS SHALL BE LOCATED AS DIRECTED BY THE ENGINEER TO PROPERLY ANCHOR THE CONTROL CABINET TO THE BASE.

WHEN REQUIRED TO CONNECT NONMETALLIC CONDUIT TO METALLIC CONDUIT, ONLY ADAPTER FITTINGS, U.L. LISTED FOR ELECTRICAL USE, SHALL BE USED.

CONDUIT HEIGHT ABOVE THE CONCRETE BASE SHALL BE 1 INCH.

DEPTH OF CONDUIT INSTALLED BELOW THE TRAVELED WAY SHALL BE 24 INCHES MINIMUM AND 36 INCHES MAXIMUM.

DEPTH OF CONDUIT INSTALLED THAT IS NOT BELOW THE TRAVELED WAY SHALL BE 18 INCHES MINIMUM AND 36 INCHES MAXIMUM.

ANY EXCEPTION TO THE MAXIMUM DEPTH SHALL BE ONLY WITH THE WRITTEN APPROVAL OF THE ENGINEER.

CONTROL CABINET BASE TOP SURFACE SHALL BE TROWEL FINISHED SMOOTH AND LEVEL.

MAINTENANCE PLATFORM SHALL BE FLOAT OR BROOM FINISHED AND BE LEVEL.

MAINTENANCE PLATFORMS ARE NOT REQUIRED WHEN THE SURROUNDING AREA IS PAVED.

MINIMUM BENDING RADIUS OF CONDUIT = 6 X THE DIAMETER.

ALL METALLIC CONDUIT ENDS SHALL BE REAMED AND THREADED.

CAP ALL BELOW GRADE METALLIC CONDUIT ENDS IN WHICH WIRE OR CABLE IS NOT BEING INSTALLED.

PLUG ALL BELOW GRADE NONMETALLIC CONDUIT ENDS IN WHICH WIRE OR CABLE IS NOT BEING INSTALLED.

ALL CONDUIT ENDS AT THE TOP OF CONCRETE BASES SHALL BE CAPPED IF METALLIC OR PLUGGED IF NONMETALLIC IMMEDIATELY AFTER PLACEMENT AND BEFORE CONCRETE IS POURED. CONDUITS IN WHICH WIRE OR CABLE IS NOT BEING INSTALLED SHALL REMAIN CAPPED OR PLUGGED.

CONDUIT EXITING THE CONCRETE BASE SHALL TERMINATE IN PULL BOXES AS SHOWN ON THE PLANS.

CONCRETE FORM DEPTH BELOW FINISHED GRADE SHALL BE 6" MAXIMUM. CONCRETE FORMS SHALL BE REMOVED AFTER CONCRETE HAS SET.

BELL ENDS SHALL BE INSTALLED ON ALL PVC CONDUIT EXPOSED AT THE TOP OF THE CONCRETE BASE BEFORE INSTALLATION OF CABLE OR WIRE.

6

6

CONCRETE CONTROL
CABINET BASE, TYPE L

STATE OF WISCONSIN
DEPARTMENT OF TRANSPORTATION

APPROVED
Nov. 2014 — DATE
/S/ Thomas Gonring — STATE LIGHTING ENGINE — WYS
FHWA

S.D.D. 9 C 14-2

S.D.D. 9 C 14-2

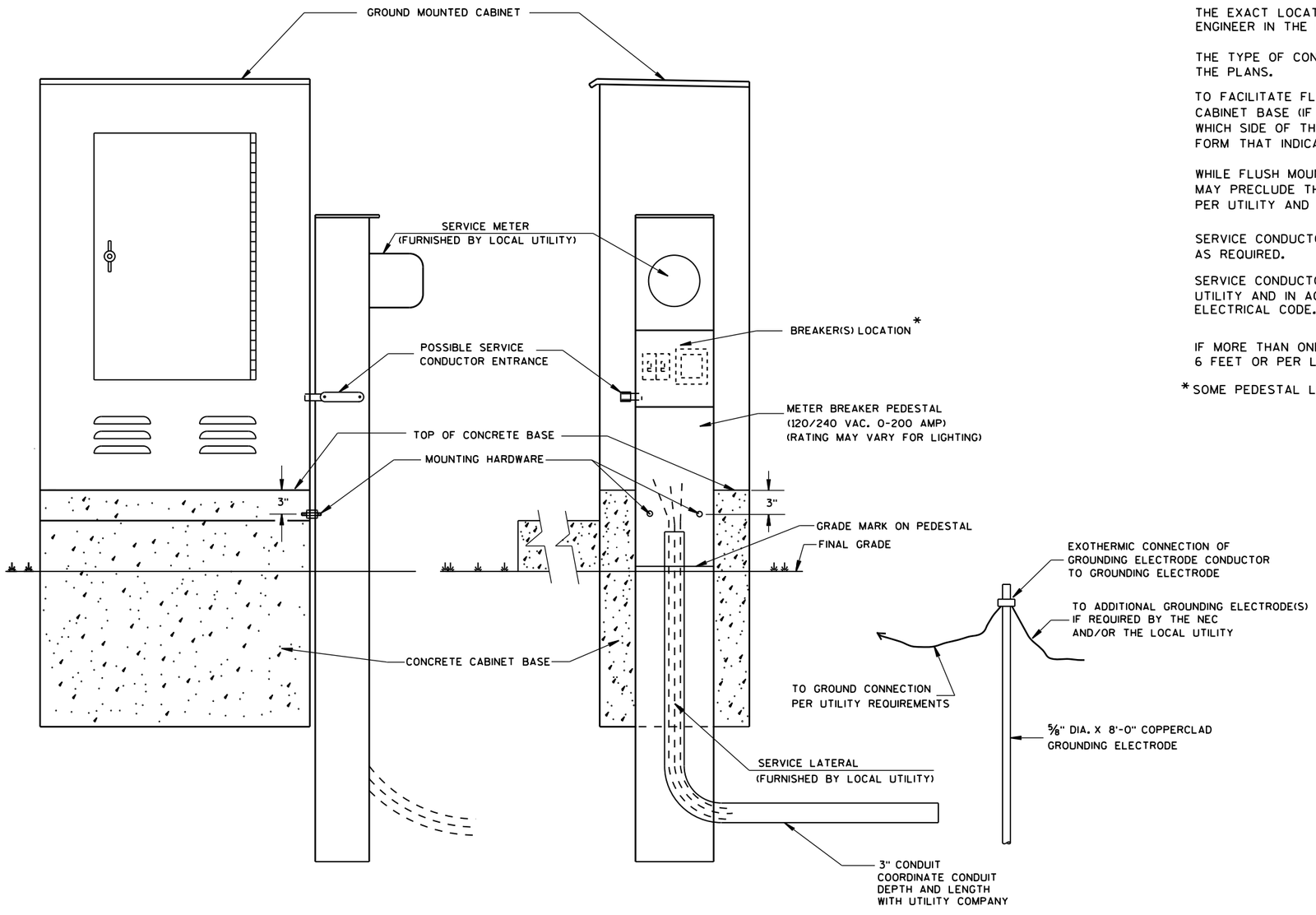

TYPICAL CABINET SERVICE INSTALLATION

GENERAL NOTES

DETAILS OF CONSTRUCTION, MATERIALS AND WORKMANSHIP NOT SHOWN ON THIS DRAWING SHALL CONFORM TO THE PERTINENT REQUIREMENTS OF THE CONTRACT.

THE EXACT LOCATION OF THE METER BREAKER PEDESTAL SHALL BE DETERMINED BY THE ENGINEER IN THE FIELD.

THE TYPE OF CONCRETE CABINET BASE TO BE INSTALLED SHALL BE AS CALLED FOR IN THE PLANS.

TO FACILITATE FLUSH MOUNTING OF THE METER BREAKER PEDESTAL AGAINST THE SIDE OF THE CABINET BASE (IF FLUSH MOUNTING POSSIBLE. CONFER WITH THE LOCAL UTILITY TO DETERMINE WHICH SIDE OF THE CONCRETE BASE THE ELECTRICAL SERVICE LATERAL WILL APPROACH. THEN FORM THAT INDICATED SIDE FOR FULL SIDE DEPTH.

WHILE FLUSH MOUNTING IS THE MOST DESIRABLE MOUNTING CONFIGURATION UTILITY REQUIREMENTS MAY PRECLUDE THIS OPTION. CONTRACTOR MUST PROVIDE UTILITY APPROVED PEDESTAL AND INSTALL PER UTILITY AND MANUFACTURERS REQUIREMENTS.

SERVICE CONDUCTOR ENTRANCES SHALL BE RIGID METALLIC CONDUIT, NIPPLES AND/OR CONDULETS AS REQUIRED.

SERVICE CONDUCTOR ENTRANCES SHALL BE SIZED AND LOCATED AS REQUIRED BY THE LOCAL UTILITY AND IN ACCORDANCE WITH APPROPRIATE ARTICLES OF THE LATEST ACCEPTED NATIONAL ELECTRICAL CODE.

IF MORE THAN ONE GROUNDING ELECTRODE IS REQUIRED, THE DISTANCE APART SHALL BE 6 FEET OR PER LOCAL UTILITY REGULATIONS.

*SOME PEDESTAL LIGHTING PLANS SHOW MAIN LUGS ONLY.

6

6

CABINET SERVICE INSTALLATION
(METER BREAKER PEDESTAL)

STATE OF WISCONSIN
DEPARTMENT OF TRANSPORTATION

APPROVED
Sept. 2014 — /S/ Ahmet Demirbilek
DATE — STATE ELECTRICAL
FHWA

S.D.D. 9 D 1-5

GENERAL NOTES

DETAILS OF CONSTRUCTION, MATERIALS AND WORKMANSHIP NOT SHOWN ON THIS DRAWING SHALL CONFORM TO THE PERTINENT REQUIREMENTS OF THE STANDARD SPECIFICATIONS AND APPLICABLE SPECIAL PROVISIONS.

ALL INTERNAL ELECTRICAL COMPONENTS WILL BE PRE-WIRED BY THE CABINET FABRICATOR.

ALL CONDUIT ENTRIES SHALL BE SEALED WITH AN APPROPRIATE DUCT SEALING COMPOUND.

ORIENT PHOTOCELL AWAY FROM AMBIENT LIGHT SOURCES AND ONCOMING TRAFFIC HEADLIGHTS.

THE CONTRACTOR SHALL TOUCH UP ANY DAMAGE TO THE ANODIZED FINISH CAUSED BY THE INSTALLATION PROCESS. COLOR MATCH PAINT SHALL BE USED.

A COMPLETE LIGHTING OR ELECTRICAL PLAN SHALL BE SECURELY PLACED IN THE DOCUMENT HOLDER ATTACHED TO THE DOOR.

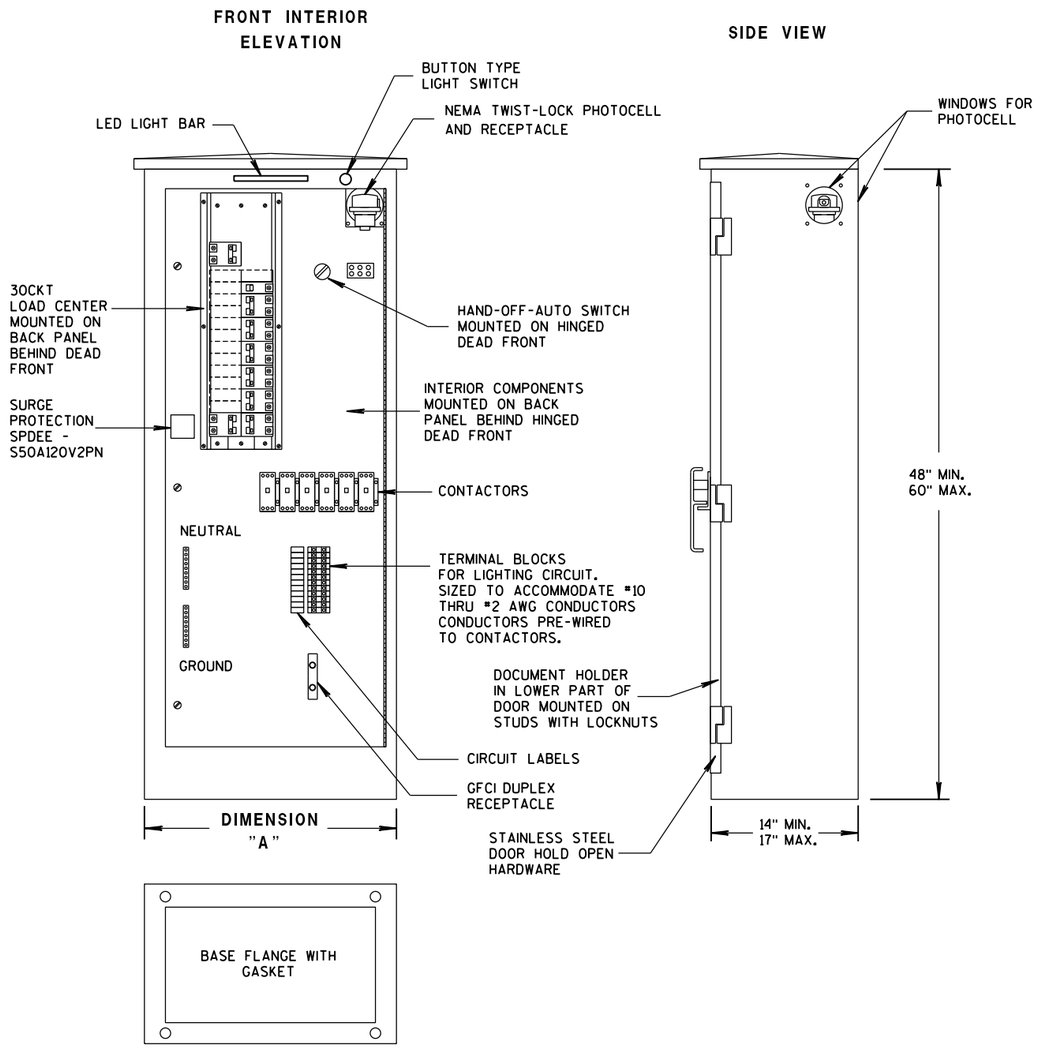

TABLE OF DIMENSIONS (INCHES)

CONCRETE BASE TYPE	CABINET WIDTH	DIMENSION "A"
L24	24"	24"
L30	30"	30"

LIGHTING CONTROL CABINET

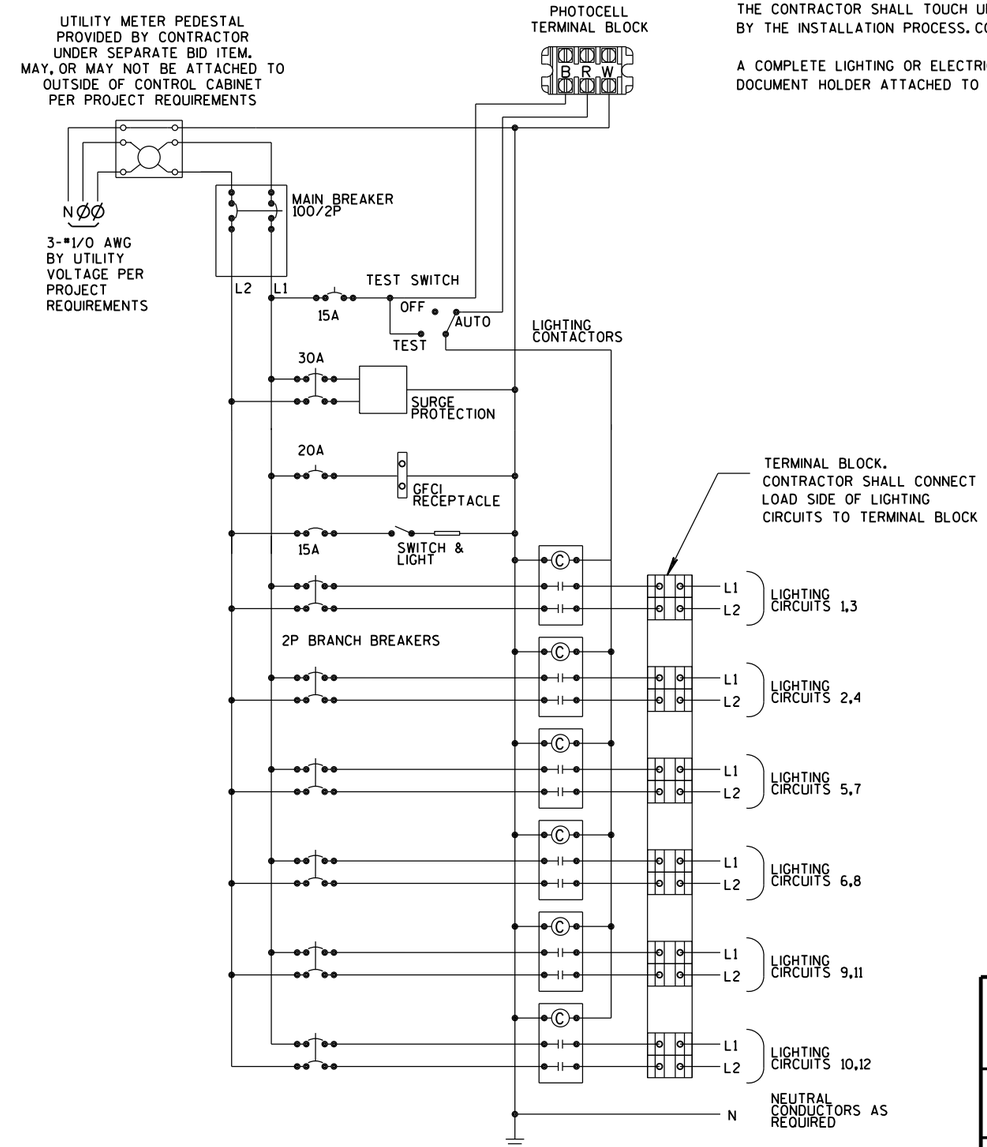

CONTROL CABINET SCHEMATIC

LIGHTING CONTROL CABINET
120/240 VOLT

STATE OF WISCONSIN
DEPARTMENT OF TRANSPORTATION

APPROVED
Sept. 2014 — DATE
/S/ Thomas Gonring — STATE LIGHTING ENGINEER
FHWA

6

S.D.D. 9 D 4-2

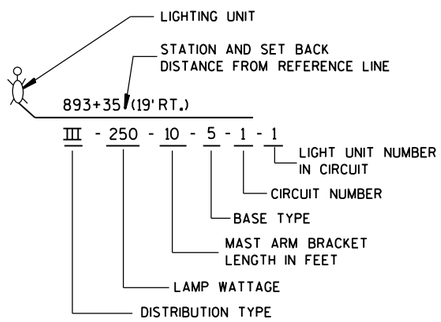

LIGHTING UNIT CODE
(TYPICAL)

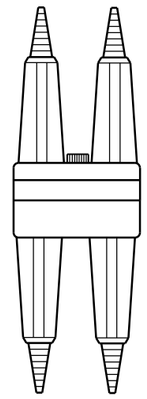

DETAIL "A"
BREAKAWY DOUBLE POLE WITH WATERPROOF INSULATING BOOT

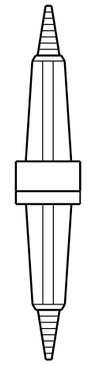

DETAIL "B"
BREAKAWY SINGLE POLE WITH WATERPROOF INSULATING BOOT

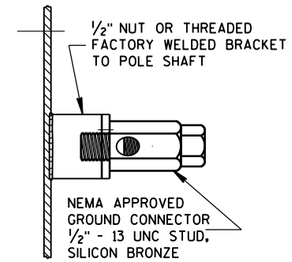

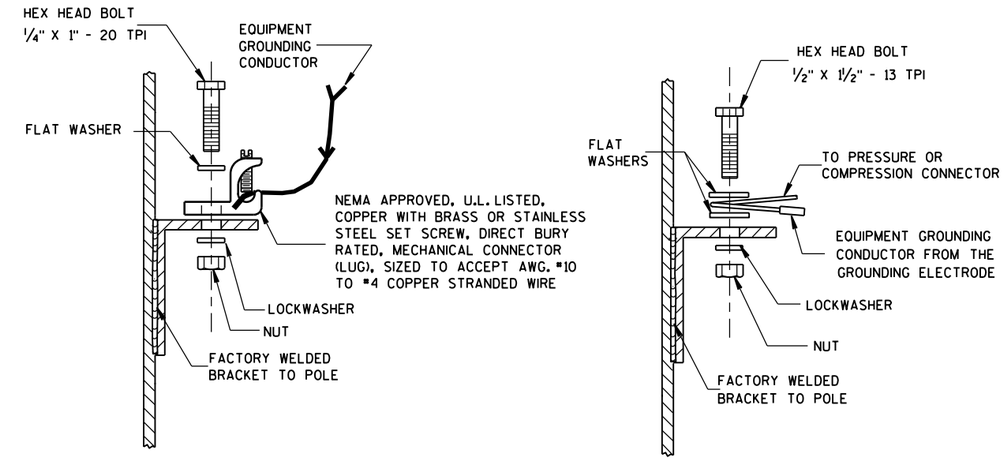

TYPICAL GROUNDING CONNECTIONS
NUT, BOLT, WASHERS AND LOCKWASHERS SHALL BE STAINLESS STEEL

GENERAL NOTES
DETAILS OF CONSTRUCTION, MATERIALS AND WORKMANSHIP NOT SHOWN ON THIS DRAWING SHALL CONFORM TO THE PERTINENT REQUIREMENTS OF THE CONTRACT.

THE EQUIPMENT GROUNDING CONNECTOR SHALL BE TAPED WITH 3 WRAPS (MINIMUM) OF APPROVED RUBBER TAPE AND THEN 3 WRAPS (MINIMUM) OF APPROVED VINYL TAPE TO COVER SHARP WIRE ENDS AFTER THE CONNECTION IS COMPLETED.

WHEN TRANSFORMER BASES ARE USED, ALL WIRING CONNECTIONS SHALL OCCUR WITHIN THE TRANSFORMER BASES.

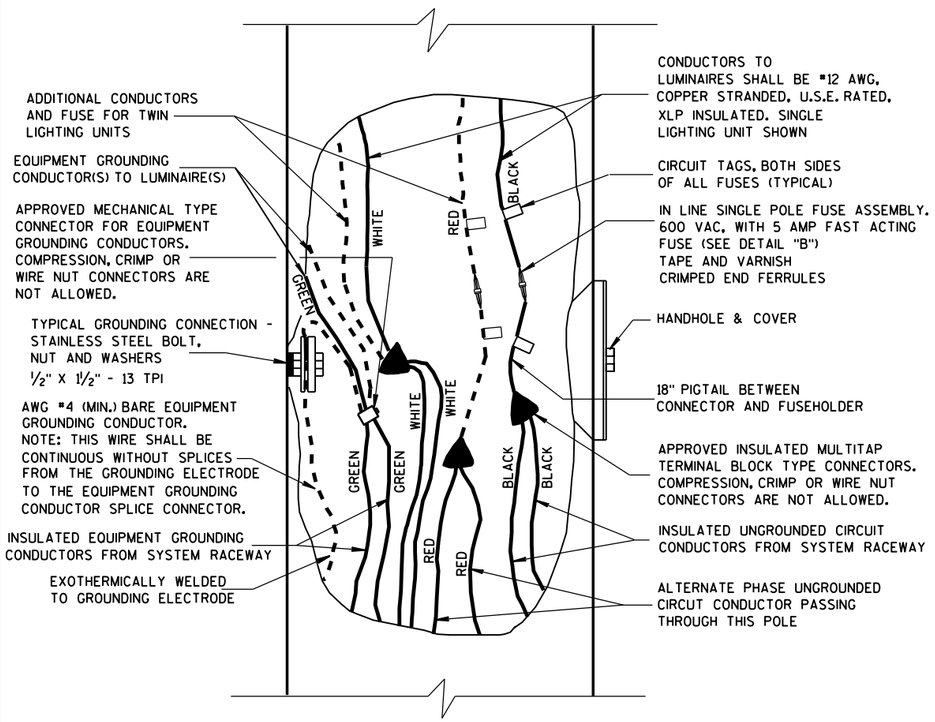

3 WIRE - 120, 240 OR 480 VAC (UNGROUNDED CONDUCTOR) WITH GROUNDED CONDUCTOR AND WITH EQUIPMENT GROUNDING CONDUCTOR

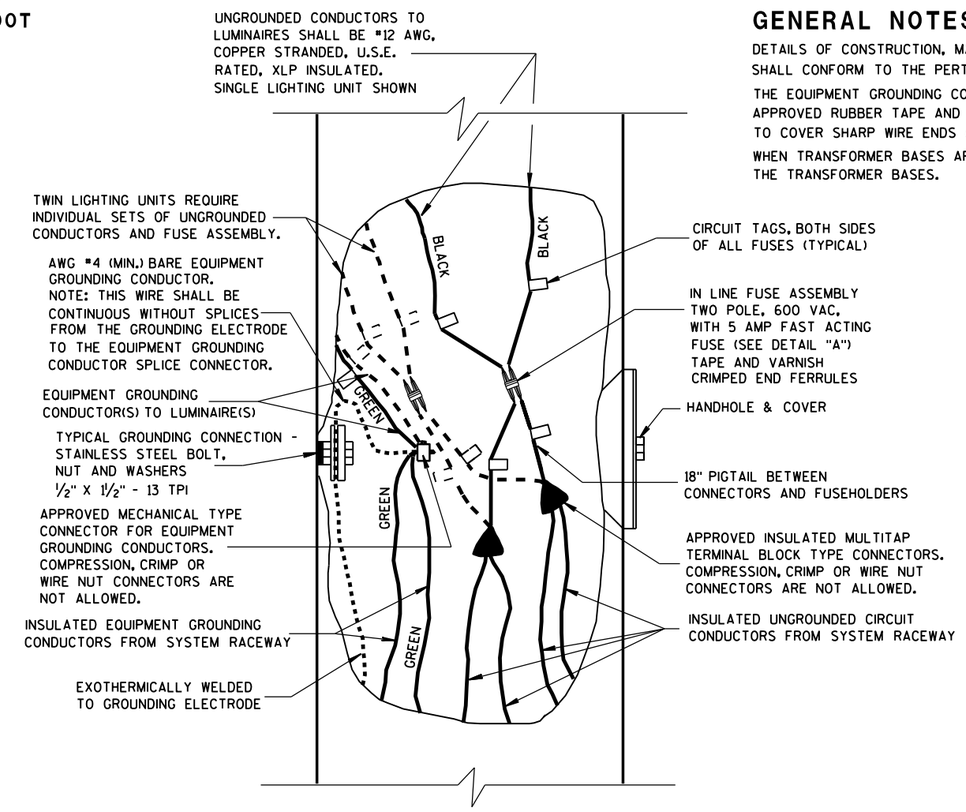

2 WIRE - 240 OR 480 VAC (UNGROUNDED CONDUCTORS) WITH EQUIPMENT GROUNDING CONDUCTOR

NON-FREEWAY LIGHTING UNIT POLE WIRING	
STATE OF WISCONSIN DEPARTMENT OF TRANSPORTATION	
APPROVED Sept. 2014 DATE	/S/ Ahmet Demirbilek STATE ELECTRICAL
FHWA	

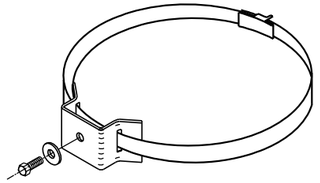

TYPICAL SIGN MOUNTING BAND

(TOP AND BOTTOM OF SIGN)

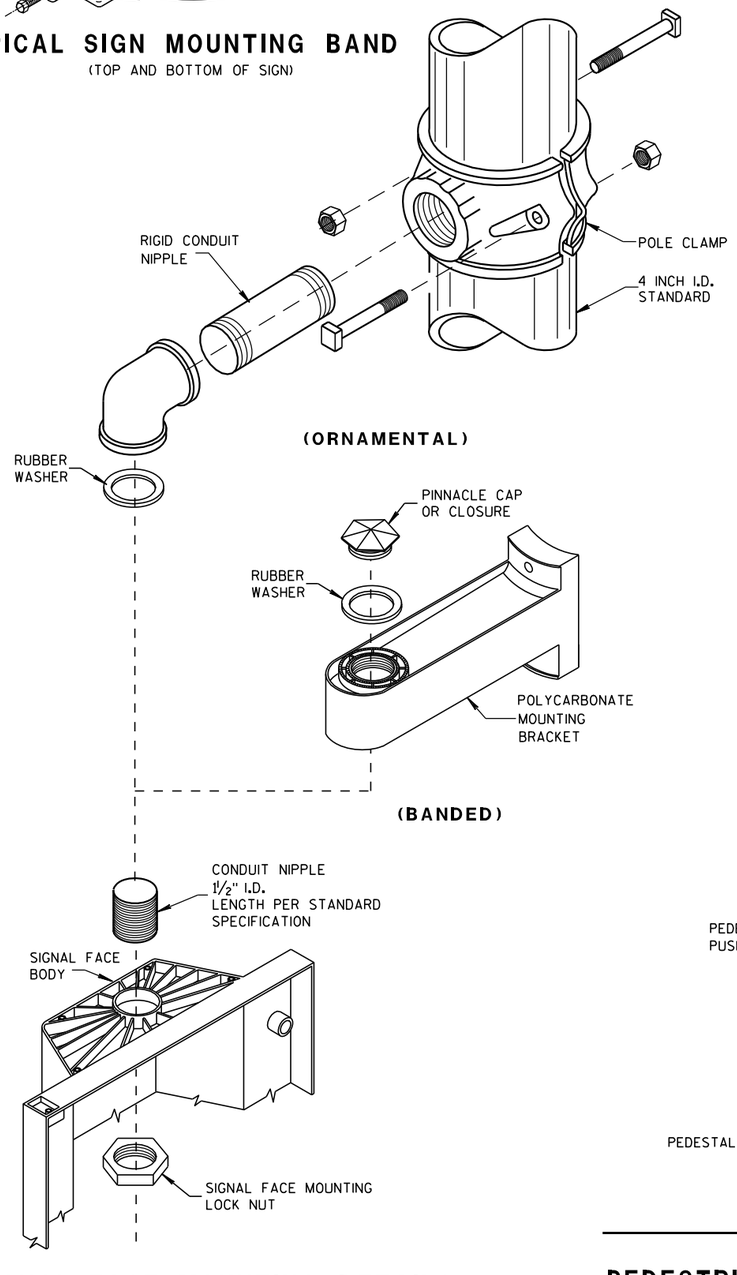

SIGNAL FACE MOUNTING DETAILS

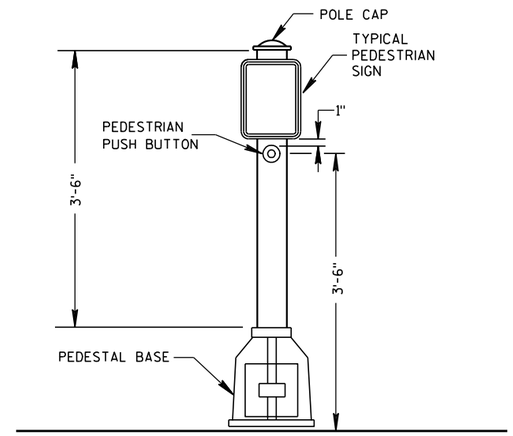

PEDESTRIAN PUSH BUTTON TYPICAL MOUNTING

GENERAL NOTES

DETAILS OF CONSTRUCTION, MATERIALS AND WORKMANSHIP NOT SHOWN ON THIS DRAWING SHALL CONFORM TO THE PERTINENT REQUIREMENTS OF THE CONTRACT.

SEE THE SIGNAL PLAN FOR REQUIRED SIGNAL FACE SIZES.

LOCATIONS SHALL BE AS SHOWN ON THE PLANS.

ALL PEDESTAL BASES SHALL BE MOUNTED ON CONCRETE BASE - TYPE 1.

FOR APPROVED MOUNTING HARDWARE, SEE THE CONTRACT SPECIFICATIONS.

POLYCARBONATE SIGNAL FACE MOUNTING BRACKETS SHALL BE USED UNLESS ORNAMENTAL POLE CLAMPS ARE SPECIFIED.

LENGTH OF TRAFFIC STANDARDS SHALL BE AS SHOWN ON THE PLANS.

MOUNTINGS AND BRACKETS SHALL BE AS SHOWN ON THE PLANS OR DESCRIBED IN THE SPECIAL PROVISIONS (BY THE DISTRICT TRAFFIC ENGINEER).

PEDESTRIAN SIGNS SHALL BE AS DESIGNATED IN THE PLANS.

FURNISH AND INSTALL VENTILATED, CAST, METALLIC (ALUMINUM ALLOY) CAPS. FASTEN CAPS WITH ONE (1) ¼" X ¾" - 20 TPI STAINLESS STEEL, HEX HEAD BOLT.

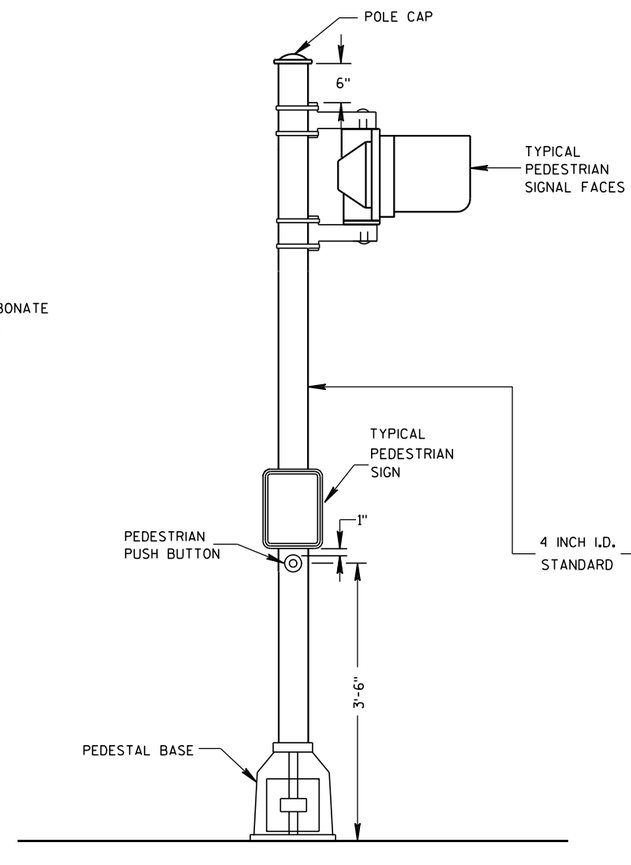

PEDESTRIAN FACE STANDARD-10 FT.

(WALK-DON'T WALK)

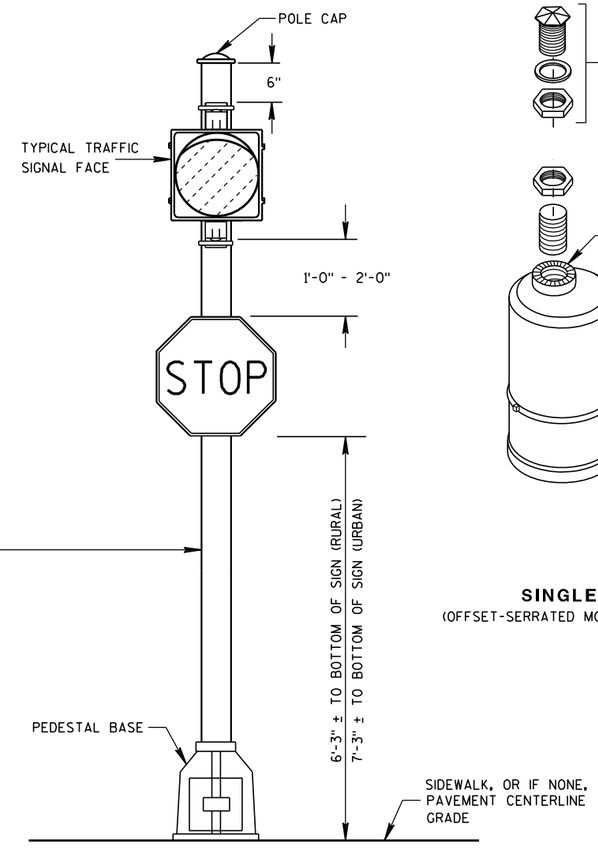

STANDARD FLASHER.

10 FOOT, 13 FOOT OR 15 FOOT AS REQUIRED

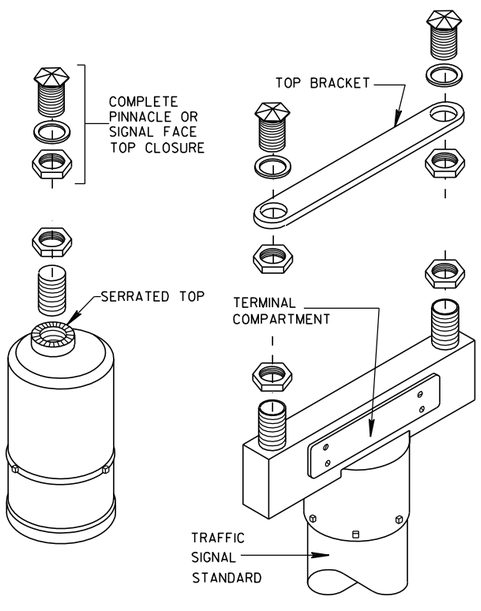

SINGLE
(OFFSET-SERRATED MOUNTING)

DOUBLE
(SERRATED MOUNTING)

SLIPFITTERS

TRAFFIC SIGNAL STANDARD PEDESTRIAN AND FLASHER TYPICAL MOUNTING DETAILS

STATE OF WISCONSIN
DEPARTMENT OF TRANSPORTATION

APPROVED

5/11/10 — DATE
/S/ John Corbin — STATE ELECTRICAL ENGI
HWYS
FHWA

281

6

6

S.D.D. 9 E 7-5

S.D.D. 9 E 7-5

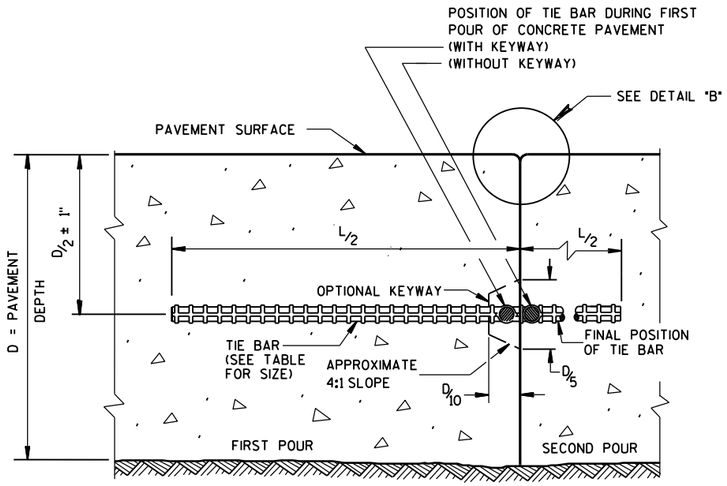

CONSTRUCTION JOINT

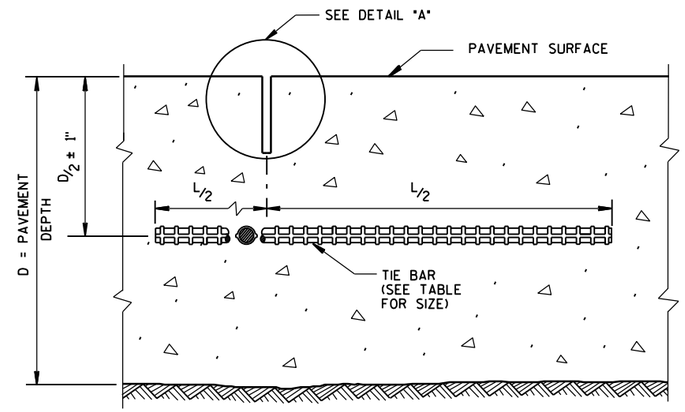

SAWED JOINT

GENERAL NOTES

DO NOT SEAL OR FILL LONGITUDINAL JOINTS.

CREATE A LONGITUDINAL JOINT FOR PAVEMENT WIDTHS GREATER THAN 15 FEET.

CORRELATE LONGITUDINAL JOINTS WITH LANE LINES WHEN POSSIBLE.

(1) ANCHOR TIE BARS INTO DRILLED HOLES WITH AN EPOXY.

(2) PAVEMENT THAT WAS IN PLACE PRIOR TO THE CONTRACT.

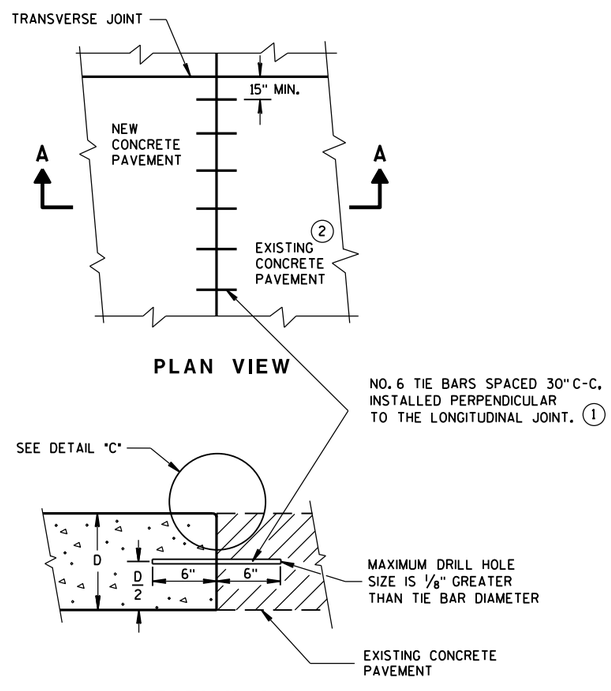

PLAN VIEW

SECTION A-A
LONGITUDINAL CONSTRUCTION JOINT TIE BARS ANCHORED INTO EXISTING PAVEMENT

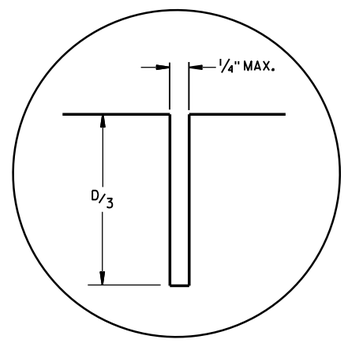

DETAIL "A"

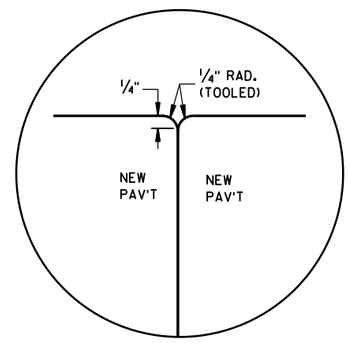

DETAIL "B"

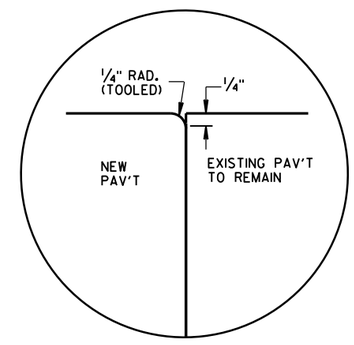

DETAIL "C"

TIE BAR TABLE

PAVEMENT DEPTH (D)	TIE BAR SIZE	TIE BAR LENGTH (L)	MAX. TIE BAR SPACING
< 10 1/2"	NO. 4	30"	36"
≥ 10 1/2"	NO. 5	36"	36"
	NO. 4 *	30"	24" **

* SUBSTITUTE BENT BARS AT LONGITUDINAL JOINTS WHEN EQUIPMENT LIMITATIONS DURING CONSTRUCTION WARRANT (e.g. AUXILIARY LANES OR TURN LANES)

** CONFORM TO 15" MINUMUM SPACING FROM TRANSVERSE JOINTS; SPACING BETWEEN TIE BARS WILL BE 30" AT TRANSVERSE JOINTS.

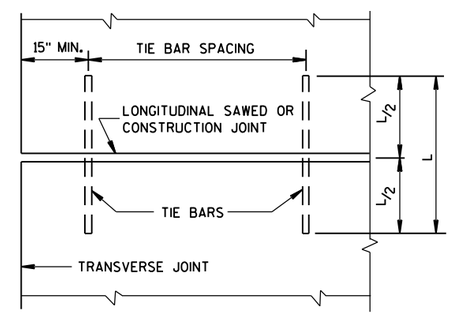

PLAN VIEW
SHOWING LOCATION OF TIE BARS

CONCRETE PAVEMENT
LONGITUDINAL JOINTS AND TIES

STATE OF WISCONSIN
DEPARTMENT OF TRANSPORTATION

APPROVED
June, 2015 — DATE
/S/ Peter Kemp, P.E. — PAVEMENT SUPER
FHWA

6

S.D.D. 13 C 1-18

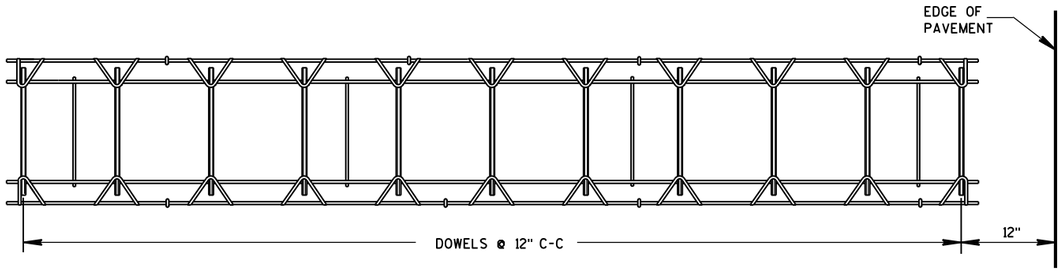

PLAN VIEW

SIDE VIEW

CONTRACTION JOINT DOWEL ASSEMBLY ①

PAVEMENT DEPTH, DOWEL BAR SIZE AND JOINT SPACING TABLE

PAVEMENT DEPTH (D)	DOWEL BAR DIAMETER	CONTRACTION JOINT SPACING
5 ½", 6", 6 ½"	NONE	12'
7", 7 ½"	1"	14'
8", 8 ½"	1 ¼"	15'
9", 9 ½"	1 ¼"	15'
10" & ABOVE	1 ½"	15'

GENERAL NOTES

CONTRACTION JOINTS

CONSTRUCT TRANSVERSE CONTRACTION JOINTS NORMAL TO THE CENTERLINE. SHOW THE LOCATION OF CONTRACTION JOINTS THROUGH INTERSECTIONS ON THE PLANS OR AS DIRECTED BY THE ENGINEER.

DO NOT SEAL OR FILL CONTRACTION JOINTS.

INSTALL DOWEL BARS PARALLEL TO THE PAVEMENT CENTERLINE AND PAVEMENT SURFACE.

FOR PAVEMENT SLABS OF VARYING WIDTHS, LOCATE THE OUTER MOST DOWEL BAR SO THAT THE CENTER OF THE BAR IS A MINIMUM OF 6 INCHES AND A MAXIMUM OF 18 INCHES FROM THE LONGITUDINAL JOINT AND THE FREE EDGE OF PAVEMENT.

CONSTRUCTION JOINTS

LOCATE CONSTRUCTION JOINTS A MINIMUM OF 6 FEET FROM THE NEAREST CONTRACTION JOINT AND ALIGN PARALLEL TO CONTRACTION JOINTS.

① OBTAIN THE ENGINEER'S APPROVAL FOR THE USE OF ALTERNATIVE DESIGNS OF THE DOWEL ASSEMBLY. USE MECHANICAL DOWEL BAR INSERTERS OR DOWEL ASSEMBLIES WHEN CONSTRUCTING CONTRACTION JOINTS.

② SECURE BASKETS WITH ANCHORS TO HOLD DOWEL BARS IN THE CORRECT POSITION AND ALIGNMENT. TYPE, LOCATION, NUMBER AND LENGTH OF ANCHORS ARE DEPENDENT UPON FIELD CONDITIONS.

③ FORM OR SAW CONSTRUCTION JOINTS. PROVIDE A ¼-INCH RADIUS AT FORMED JOINTS.

④ PROVIDE A SMOOTH VERTICAL FACE FOR THE ENTIRE DEPTH OF THE PAVEMENT WHEN FORMING CONSTRUCTION JOINTS.

⑤ INSTALL DOWEL BARS AT CONSTRUCTION JOINTS BY FORMING OR DRILLING. INSTALL FORMED DOWEL BARS 12 INCHES C-C AND 12 INCHES FROM PAVEMENT EDGE. REMOVE EXCESS CONCRETE FROM THE FREE END OF THE DOWEL BAR IF DOWEL BARS ARE FORMED THROUGH A HEADER BOARD. INSTALL DRILLED DOWEL BARS ACCORDING TO *DRILLED DOWEL BAR CONSTRUCTION JOINT* DETAIL.

⑥ APPLY A THIN UNIFORM COATING OF SURFACE TREATMENT TO THE FREE END OF DOWEL BARS TO PREVENT BONDING.

⑦ ANCHOR DOWEL BARS INTO DRILLED HOLES WITH AN EPOXY. MAXIMUM DRILLED HOLE SIZE IS ⅛-INCH GREATER THAN DOWEL BAR DIAMETER, 9 INCHES IN LENGTH.

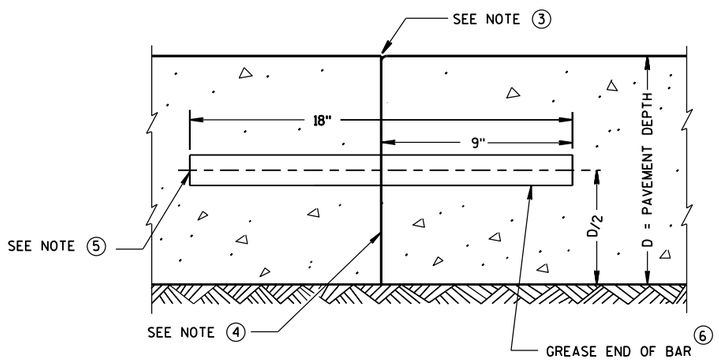

TRANSVERSE CONSTRUCTION JOINT

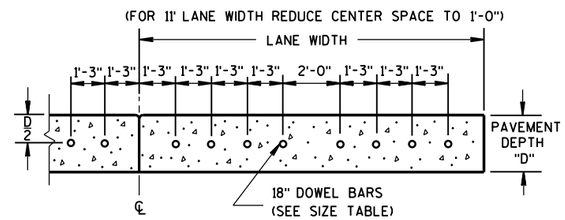

DRILLED DOWEL BAR CONSTRUCTION JOINT ⑦

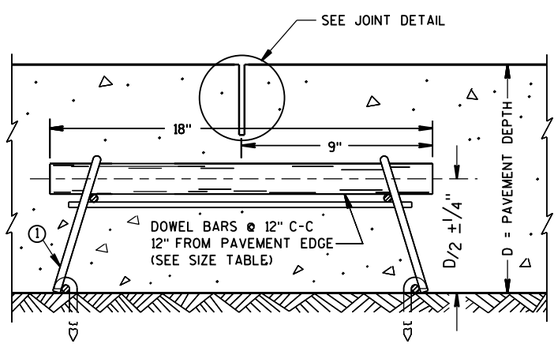

DOWELED CONTRACTION JOINT

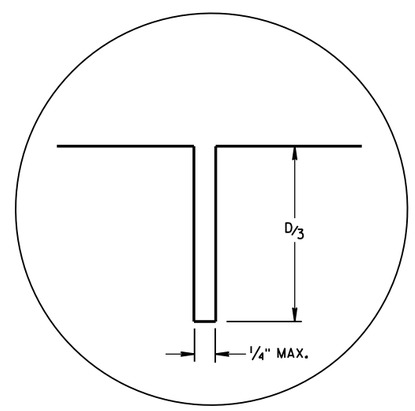

JOINT DETAIL

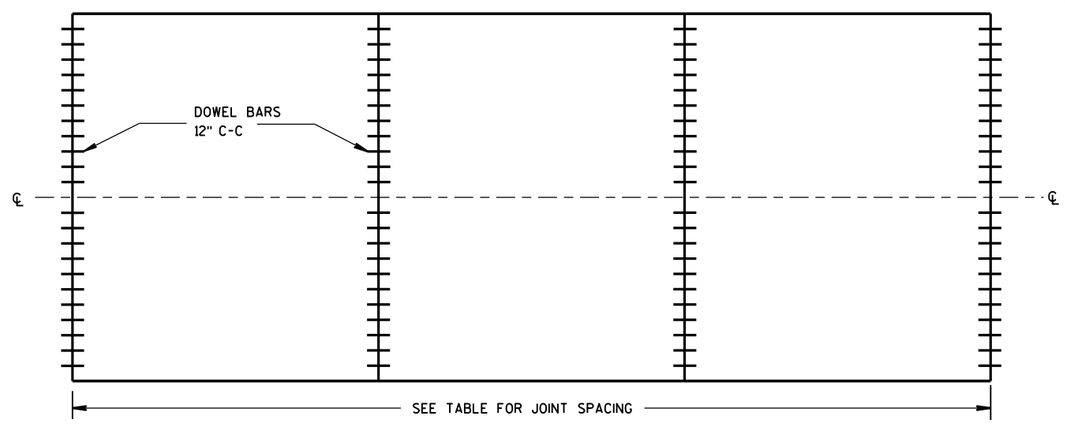

CONTRACTION JOINT LOCATIONS

URBAN DOWELED CONCRETE PAVEMENT

STATE OF WISCONSIN
DEPARTMENT OF TRANSPORTATION

APPROVED

5/3/2013 — DATE

/S/ Deb Bischoff — PAVEMENT POLICY & DE ... NEER

FHWA

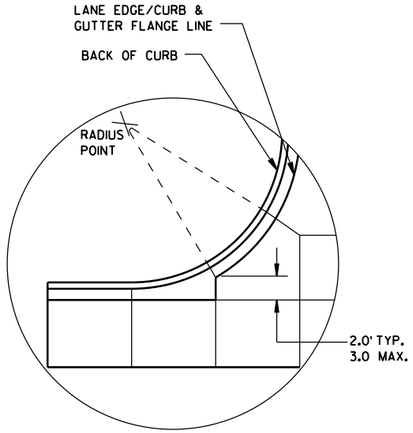

DETAIL "A"

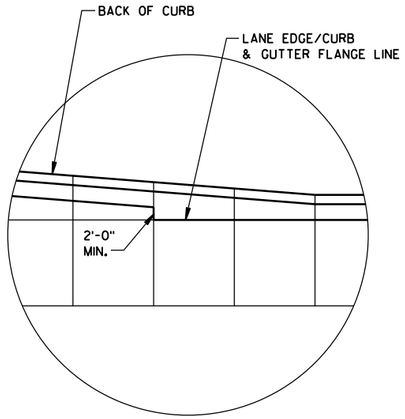

DETAIL "B"

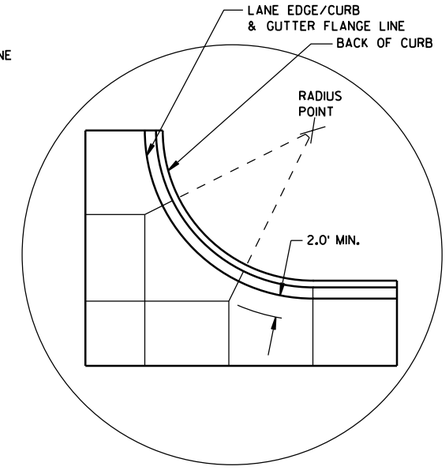

DETAIL "C"

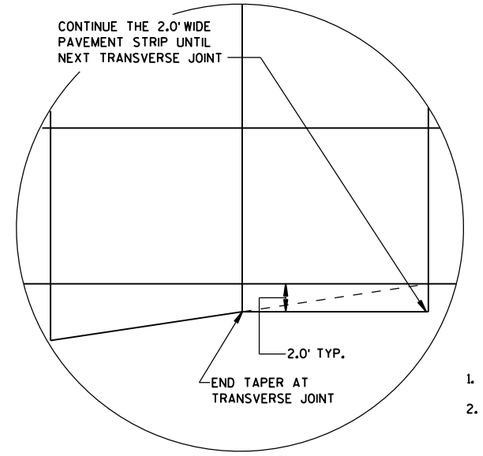

DETAIL "D"

GENERAL NOTES

THE PRIMARY ROADWAY CONTROLS THE TRANSVERSE JOINT PATTERN.

ALIGN NEW JOINTS WITH EXISTING JOINTS OR CRACKS.

CONSTRUCT TRANSVERSE JOINTS PERPENDICULAR TO THE ROADWAY.

ADJUST TRANSVERSE JOINTS TO ALIGN WITH UTILITY FIXTURES (E.G. MANHOLES AND INLETS) IN THE PAVEMENT STRUCTURE WHEN POSSIBLE. WATER VALVES DO NOT REQUIRE JOINT ADJUSTMENT.

AVOID SLABS LESS THAN 2 FEET WIDE OR GREATER THAN 15 FEET WIDE.

SEE TABLE FOR TRANSVERSE JOINT SPACING. JOINT SPACING SPECIFIED IS MAXIMUM AND ACTUAL SPACING CAN BE ADJUSTED TO ACCOMMODATE INTERSECTIONS.

AVOID ANGLES LESS THAN 60° BY DOGLEGGING JOINTS THROUGH CURVE RADIUS POINTS. USE 90° ANGLES WHEN POSSIBLE.

CORRELATE LONGITUDINAL JOINTS WITH LANE LINES WHEN POSSIBLE.

1. PROVIDE TRANSVERSE JOINTS AT ALL PAVEMENT WIDTH CHANGES.
2. CONSTRUCT DOWELED EXPANSION JOINT ON THE SIDE ROAD OF AN INTERSECTION IF THE SIDE ROAD IS CONCRETE PAVEMENT AND GREATER THAN 300 FEET IN LENGTH. ALIGN EXPANSION JOINT WITH EDGE OF RADIUS.
3. THE ENGINEER MAY APPROVE SLIGHT VARIATIONS FROM THESE JOINTING DETAILS.

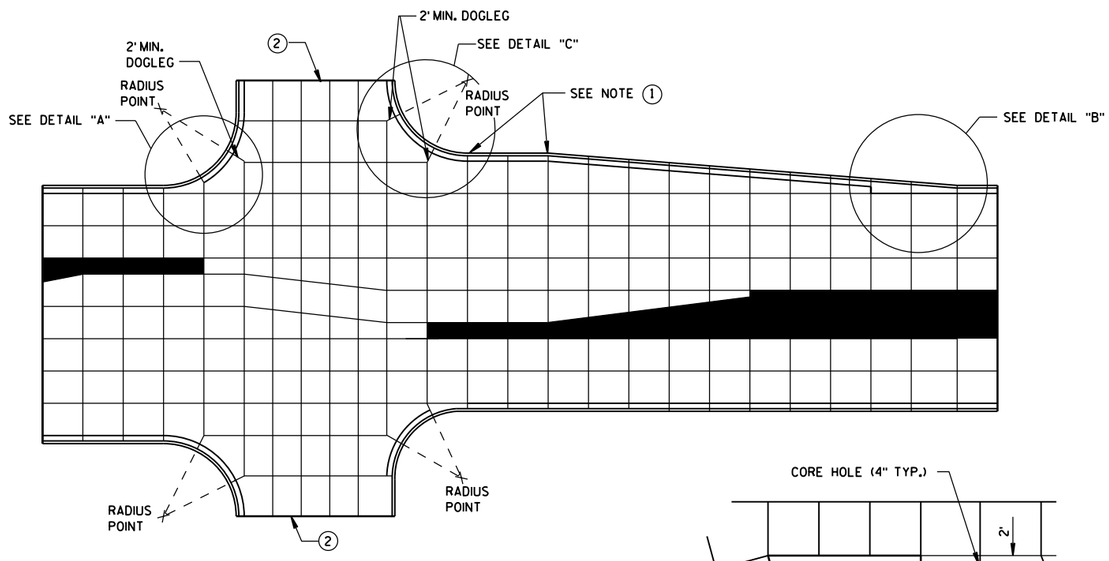

STANDARD INTERSECTION

PAVEMENT DEPTH AND JOINT SPACING TABLE

PAVEMENT DEPTH (D)	CONTRACTION JOINT SPACING
6", 6½"	12'
7", 7½"	14'
8" & ABOVE	15'

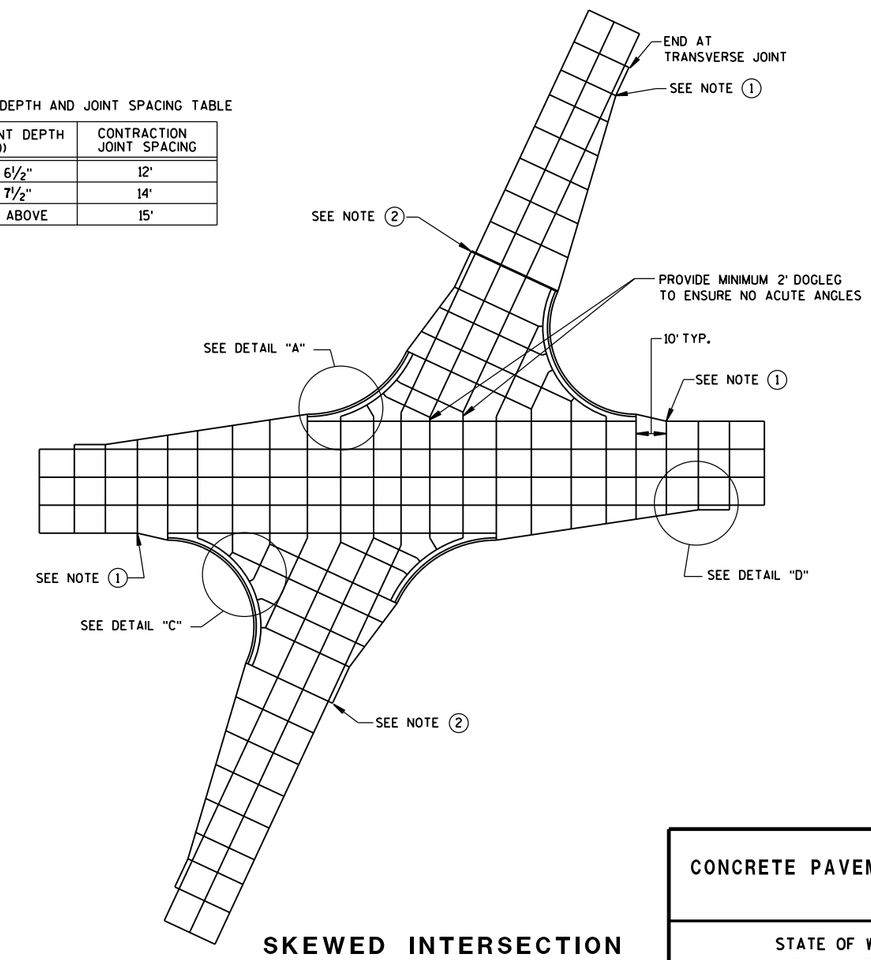

SKEWED INTERSECTION

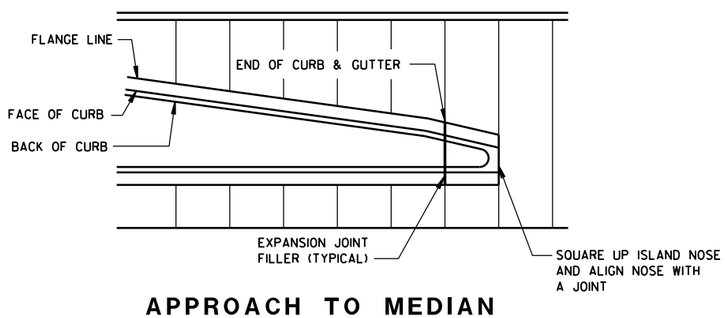

APPROACH TO MEDIAN

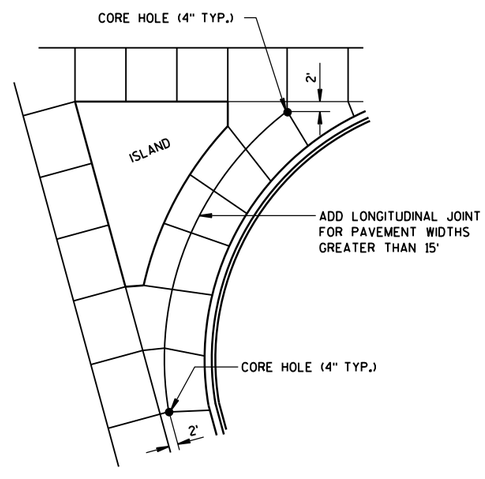

LARGE RIGHT TURN

CONCRETE PAVEMENT JOINTING

STATE OF WISCONSIN
DEPARTMENT OF TRANSPORTATION

6

S.D.D. 13 C 18-5a

LEGEND

POTENTIAL DOWELED EXPANSION JOINT

DOWELED JOINT

TIED JOINT

GENERAL NOTES

USE AN EXPANSION JOINT FILLER MEETING THE REQUIREMENTS OF STANDARD SPECIFICATION 415.

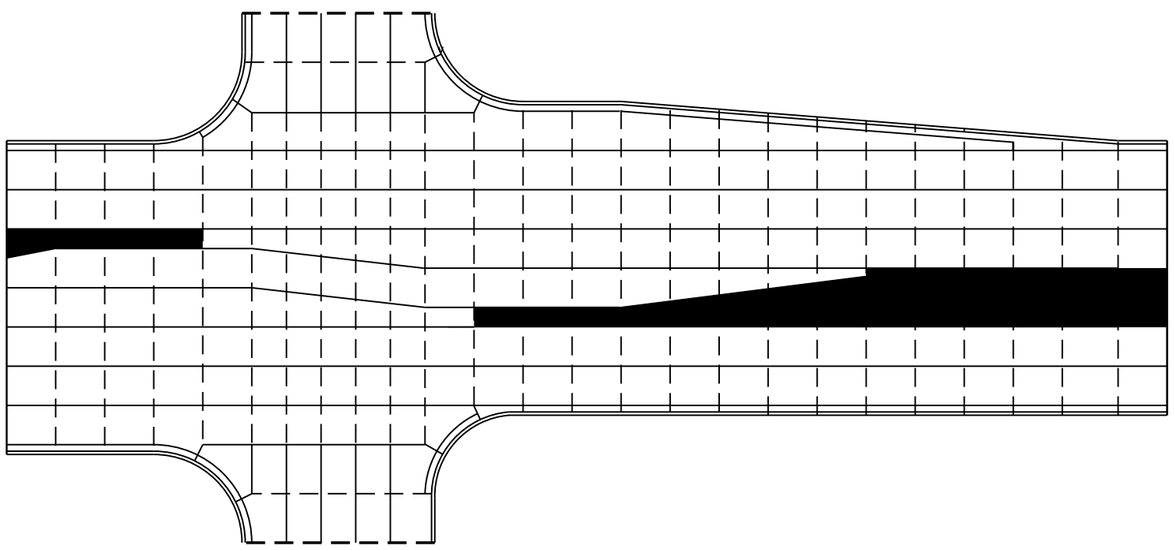

STANDARD INTERSECTION

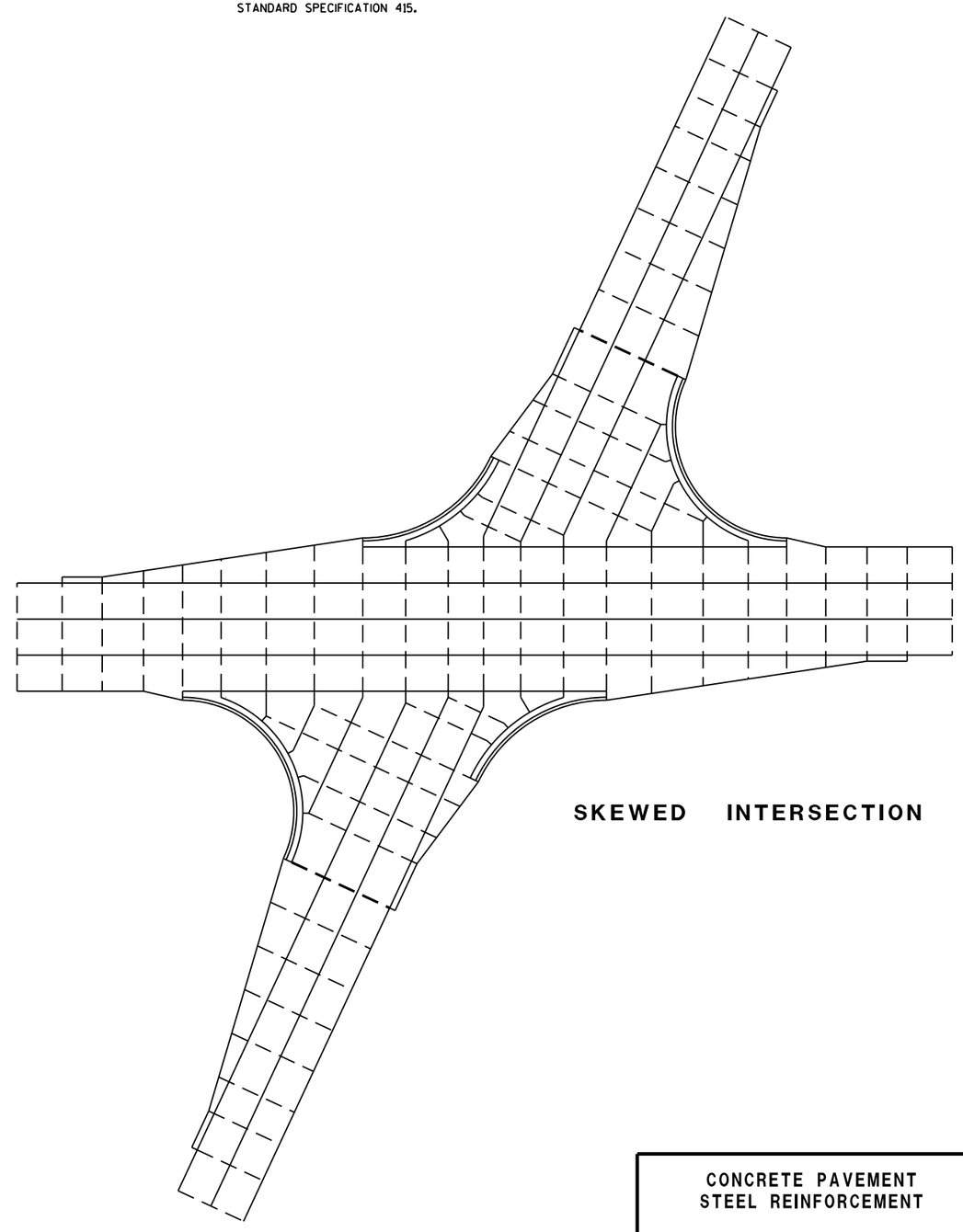

SKEWED INTERSECTION

CONCRETE PAVEMENT
STEEL REINFORCEMENT

STATE OF WISCONSIN
DEPARTMENT OF TRANSPORTATION

6

S.D.D. 13 C 18-5b

6

S.D.D. 13 C 18-5b

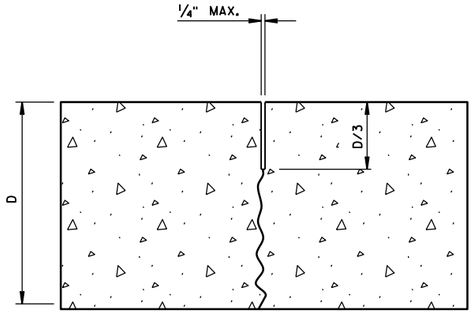

UNDOWELED-TRANSVERSE

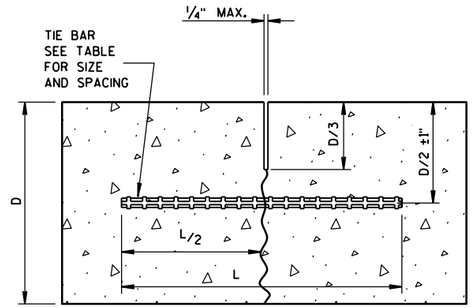

TIED LONGITUDINAL

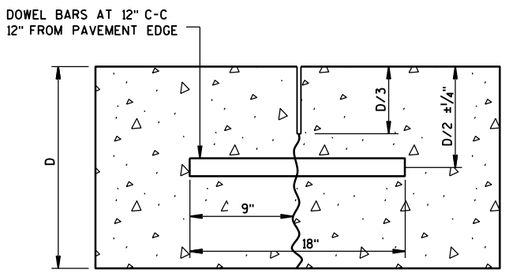

DOWELED-TRANSVERSE

CONTRACTION JOINTS

SEE NOTE (2)

TIE BAR TABLE

PAVEMENT DEPTH (D)	TIE BAR SIZE	TIE BAR LENGTH (L)	MAX. TIE BAR SPACING
< 10 1/2"	NO. 4	30"	36"
≥ 10 1/2"	NO. 5	36"	36"
	NO. 4*	30"	24"**

* SUBSTITUTE BENT BARS AT LONGITUDINAL JOINTS WHEN EQUIPMENT LIMITATIONS DURING CONSTRUCTION WARRANT (e.g. AUXILIARY LANES OR TURN LANES)

** CONFORM TO 15" MINUMUM SPACING FROM TRANSVERSE JOINTS; SPACING BETWEEN TIE BARS WILL BE 30" AT TRANSVERSE JOINTS.

GENERAL NOTES

1. USE DOWELED EXPANSION JOINTS ON SIDE ROADS AT INTERSECTIONS (TO ISOLATE THE SIDE ROAD FROM THE THROUGH STREET) IF THE SIDE ROAD IS CONCRETE PAVEMENT AND GREATER THAN 300 FEET IN LENGTH.
2. SPACE CONTRACTION JOINTS IN ACCORDANCE WITH 13C4, 13C11 OR 13C13.
3. LOCATE CONSTRUCTION JOINTS A MINIMUM OF 6 FEET FROM THE NEAREST CONTRACTION JOINT AND ALIGN PARALLEL TO CONTRACTION JOINTS.
4. CONSTRUCTION JOINTS CAN BE FORMED OR SAWED.
5. IF JOINT IS FORMED, PROVIDE A 1/4-INCH RADIUS.
6. ANCHOR TIE BARS INTO DRILLED HOLES WITH AN EPOXY.

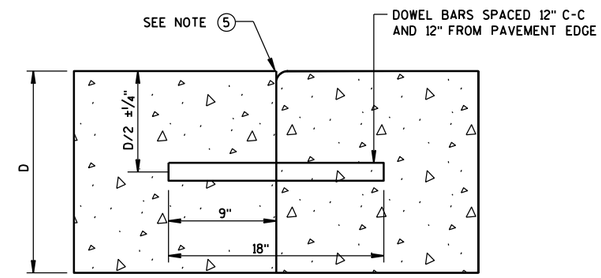

DOWELED TRANSVERSE (3)

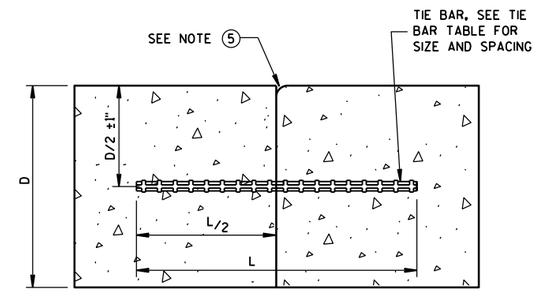

TIED LONGITUDINAL

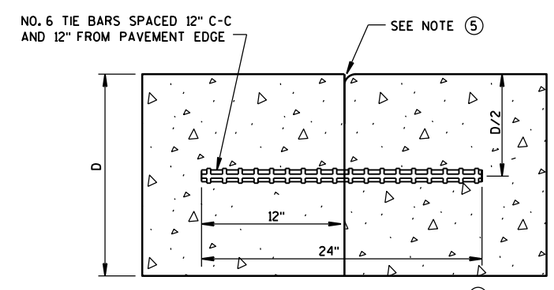

TIED TRANSVERSE (3)

(FOR USE ON NON-DOWELED PAVEMENTS ONLY)

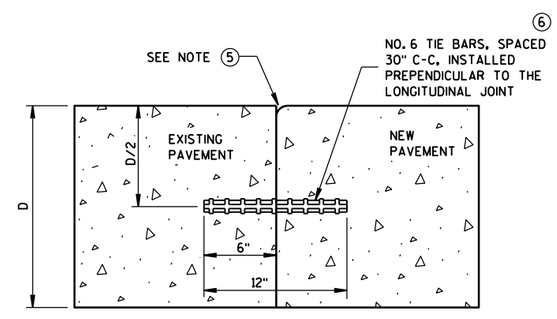

TIED LONGITUDINAL TO EXISTING

CONSTRUCTION JOINTS

SEE NOTE (4)

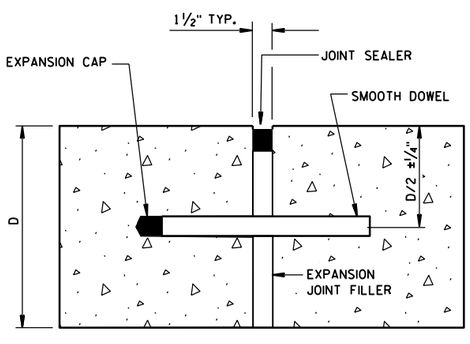

DOWELED-TRANSVERSE

SEE NOTE (1)

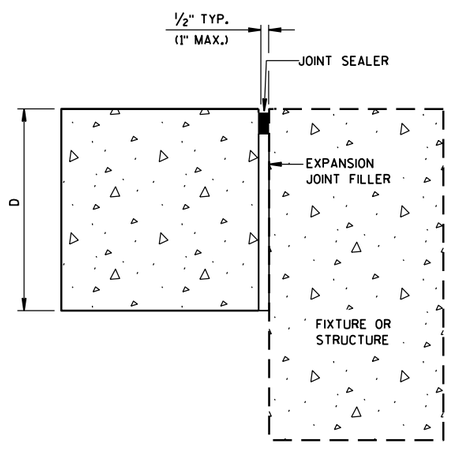

UNTIED-LONGITUDINAL

EXPANSION JOINTS

CONCRETE PAVEMENT
JOINT TYPES

STATE OF WISCONSIN
DEPARTMENT OF TRANSPOR

6

S.D.D. 13 C 18-5c

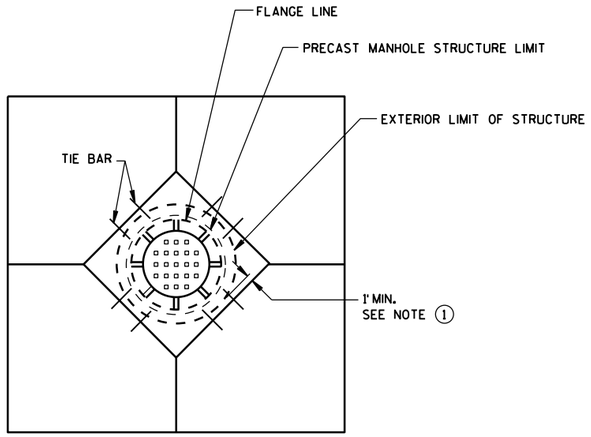

DIAGONAL MANHOLE BOXOUT FOR CONSTRUCTION JOINTS

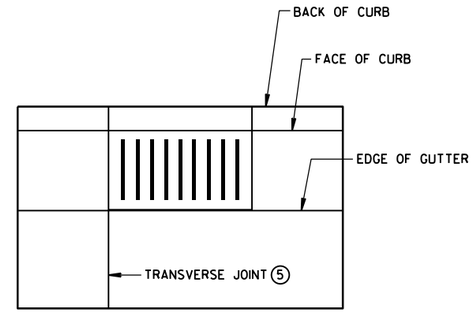

INLET WITH TRANSVERSE JOINT

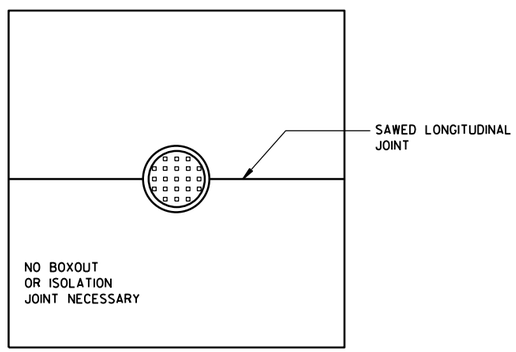

MANHOLE WITH LONGITUDINAL JOINT

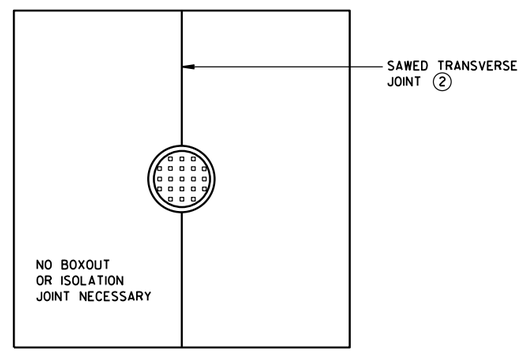

MANHOLE WITH TRANSVERSE JOINT

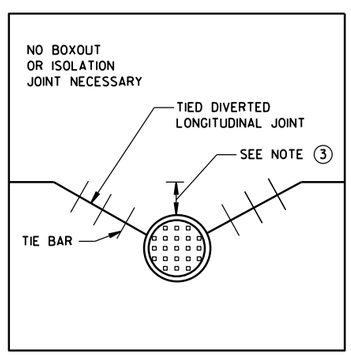

MANHOLE WITH DIVERTED LONGITUDINAL CONTRACTION JOINT

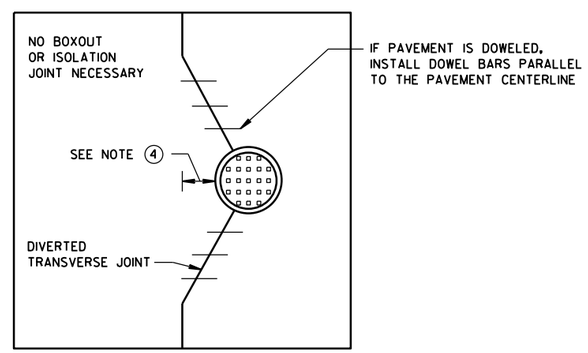

MANHOLE WITH DIVERTED TRANSVERSE CONTRACTION JOINT

GENERAL NOTES

1. USE BOXOUTS WHEN UTILITY STRUCTURE IS IN THE PATH OF CONSTRUCTION JOINTS. PROVIDE A 1-FOOT MINIMUM CLEARANCE BETWEEN THE EXTERIOR LIMIT OF THE STRUCTURE TO THE DIAMOND BOXOUT.
2. ADJUST TRANSVERSE JOINT TO INTERSECT MANHOLE IF POSSIBLE.
3. IF DISTANCE BETWEEN THE LONGITUDINAL JOINT AND THE EDGE OF MANHOLE IS 2 FEET OR LESS, DIVERT THE LONGITUDIAL JOINT AT A 2:1 TAPER RATE TO THE CENTER OF THE MANHOLE. IF THE DISTANCE IS GREATER THAN 2 FEET, DO NOT DIVERT THE JOINT AND SAW AS NORMAL. PLACE REBAR REINFORCEMENT AROUND THE MANHOLE.
4. IF DISTANCE FROM THE EDGE OF THE MANHOLE TO THE NEAREST TRANSVERSE JOINT IS 4 FEET OR LESS, REDIRECT JOINT TO INTERSECT THE CENTER OF THE MANHOLE. IF DISTANCE IS GREATER THAN 4 FEET, DO NOT DIVERT THE JOINT AND SAW AS NORMAL. PLACE REBAR REINFORCEMENT AROUND THE MANHOLE.
5. ALIGN TRANSVERSE JOINT WITH ONE EDGE OF INLET WHEN PRACTICAL.

CONCRETE PAVEMENT
JOINTING AT UTILITY FIXTURES

STATE OF WISCONSIN
DEPARTMENT OF TRANSPORTATION

APPROVED
December, 2016 /S/ Peter Kemp, P.E.
DATE PAVEMENT SUPEF
FHWA

6

S.D.D. 13 C 18-5d

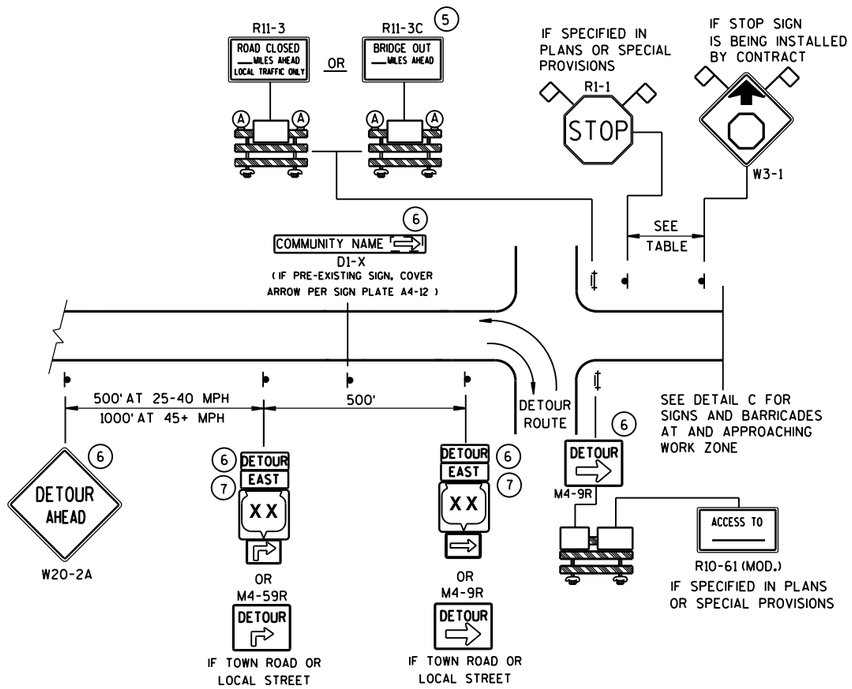

DETAIL A

MAINLINE CLOSURE WITH POSTED DETOUR

WORK ZONE GREATER THAN ½ MILE FROM DETOUR ROUTE (1000 FEET IF URBAN)

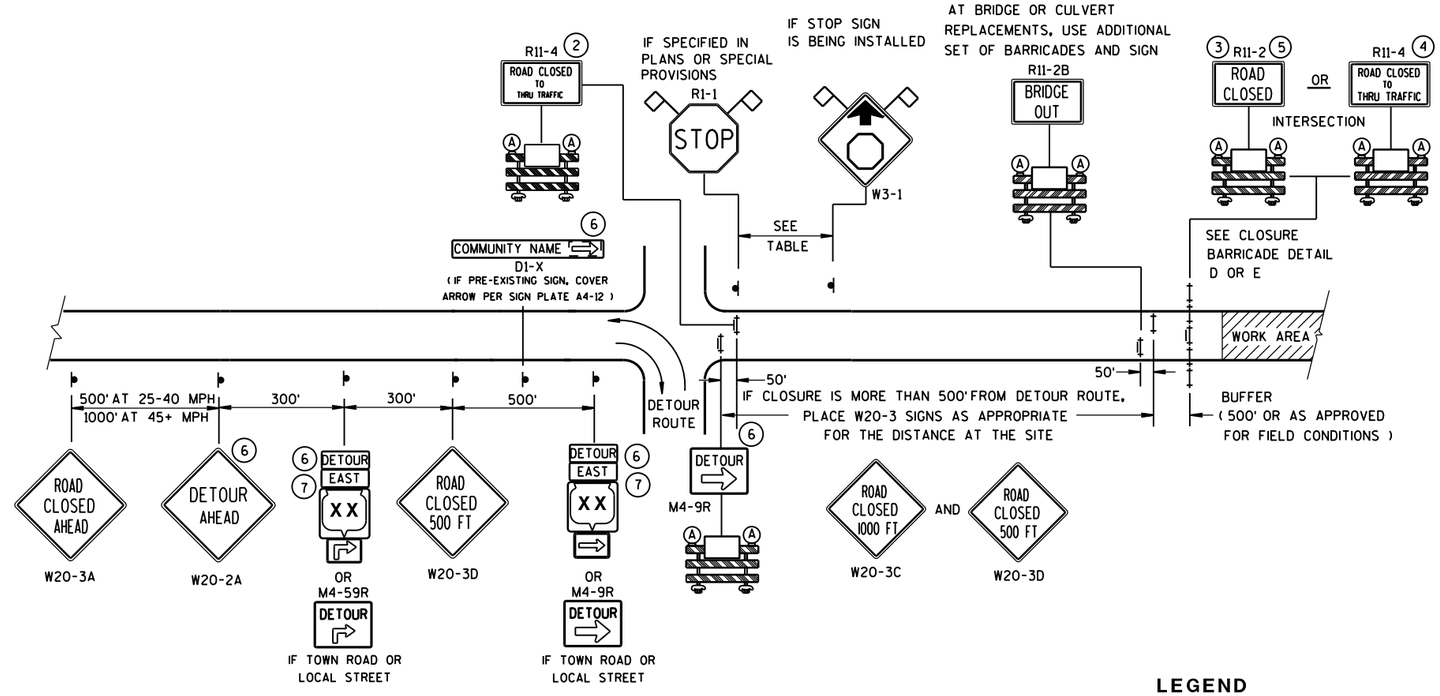

DETAIL B

MAINLINE CLOSURE WITH POSTED DETOUR

WORK ZONE LESS THAN ½ MILE FROM DETOUR ROUTE (1000 FEET IF URBAN)

LEGEND

- SIGN ON PERMANENT SUPPORT
- TYPE III BARRICADE
- TYPE III BARRICADE WITH ATTACHED SIGN
- (A) TYPE "A" WARNING LIGHT (FLASHING)
- WORK AREA
- DETOUR / EAST — M4-8 / M3-X
- XX — M1-4; XX COUNTY XX — M1-5A; XX — M1-6
- M05-1 OR M06-1
- FLAGS, 16" X 16" MIN., (ORANGE)

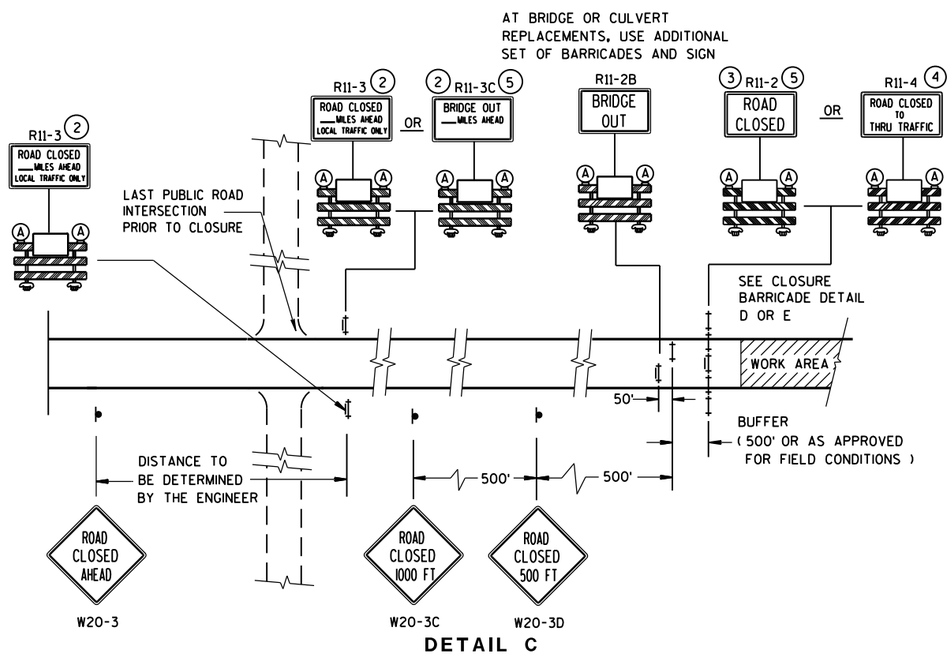

DETAIL C

MAINLINE CLOSURE, NO POSTED DETOUR

SPEED LIMIT (MPH)	"STOP AHEAD" ADVANCE WARNING DISTANCE (FT)
25	200
30	200
35	350
40	350
45	500
50	550
55	750

SEE SDD 15C2-SHEET "**b**" FOR GENERAL NOTES AND FOOTNOTES (1) THROUGH (7)

BARRICADES AND SIGNS FOR MAINLINE CLOSURES

STATE OF WISCONSIN
DEPARTMENT OF TRANSPORTATION

Sept. 2015 — DATE
/S/ Peter Amakobe Atepe — STATEWIDE WORK ZONE TRAFFIC SAFETY ENGINEER
FHWA

6

6

S.D.D. 15 C 2-6a

S.D.D. 15 C 2-6a

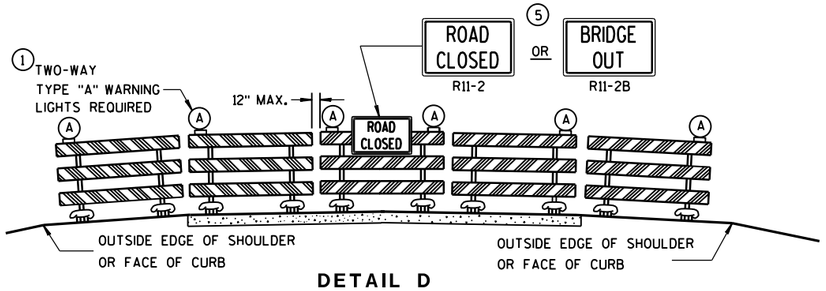

DETAIL D

ROAD CLOSURE BARRICADE DETAIL

APPROACH VIEW

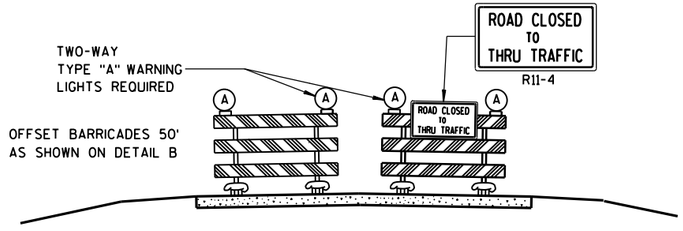

DETAIL E

LANE CLOSURE BARRICADE DETAIL

APPROACH VIEW

SEE SDD 15C2-SHEET "**a**" FOR LEGEND

GENERAL NOTES

THE EXACT NUMBER, LOCATION, AND SPACING OF ALL SIGNS AND BARRICADES SHALL BE ADJUSTED TO FIT FIELD CONDITIONS AS APPROVED BY THE ENGINEER.

ANY SIGNS TEMPORARY OR EXISTING, WHICH CONFLICT WITH TRAFFIC CONTROL "IN USE" SHALL BE REMOVED OR COVERED AS NEEDED AND AS APPROVED BY THE ENGINEER.

THE SPACING BETWEEN TRAFFIC CONTROL SIGNS SHOULD BE ADJUSTED TO NOT CONFLICT WITH AND SHOULD PROVIDE A DESIRABLE MINIMUM OF 200 FEET CLEARANCE TO EXISTING SIGNS THAT WILL REMAIN IN PLACE.

BARRICADES THAT MUST BE MOVED FOR A WORK OPERATION SHALL BE IMMEDIATELY RE-ESTABLISHED UPON COMPLETION OF THE OPERATION OR, FOR CONTINUING OPERATIONS, AT THE END OF EACH WORKING DAY.

SIGNS THAT WILL BE IN PLACE LESS THAN 7 CONTINUOUS DAYS AND NIGHTS MAY BE MOUNTED ON PORTABLE SUPPORTS.

ALL TYPE III BARRICADES SHALL HAVE RAILS REFLECTORIZED ON BOTH FACES. STRIPES SHALL BE PROPERLY SLOPED DOWN TOWARD THE TRAFFIC SIDE OR AS SHOWN IN THE ROAD CLOSURE BARRICADE DETAIL D FOR FULL ROAD CLOSURES.

TYPE "A" LOW-INTENSITY FLASHING WARNING LIGHTS SHALL BE VISIBLE ON BOTH SIDES OF THE BARRICADE.

THE R11-2, R11-3, M4-9, R11-4 AND R10-61 SIGNS PLACED ON BARRICADES SHALL COVER NO MORE THAN THE TOP RAIL. THE SIGNS SHALL NOT COVER ANY PORTION OF THE MIDDLE OR BOTTOM RAILS.

"WO AND "MO" SIGNS ARE THE SAME AS "W" AND "M" SIGNS EXCEPT THE BACKGROUND IS ORANGE.

ALL SIGNS SHALL BE 48" X 48" UNLESS OTHERWISE NOTED BELOW:

R11-2 SHALL BE 48" X 30".
R11-3, R11-4 AND R10-61 SHALL BE 60" X 30".
M4-9 SHALL BE 30" X 24".
M3-X SHALL BE 24" X 12". (36" X 18" IF NEEDED TO MATCH EXISTING SIGNS.)
M4-8 SHALL BE 24" X 12". (30" X 15" IF NEEDED TO MATCH EXISTING SIGNS.)
M1-4, M1-5A, AND M1-6 SHALL BE 24" X 24". (36" X 36" IF NEEDED TO MATCH EXISTING SIGNS.)
M05-1 AND M06-1 SHALL BE 21" X 21". (30" X 30" IF NEEDED TO MATCH EXISTING SIGNS.)
D1-X SHALL BE AS SHOWN ON SPECIFIC PROJECT SIGNING DETAIL SHEETS.
R1-1 SHALL BE 36" X 36".

1. TWO WARNING LIGHTS SHALL BE PROVIDED ON THE CENTER BARRICADE AND A MINIMUM OF ONE WARNING LIGHT SHALL BE PROVIDED ON EACH OF THE OTHER BARRICADES WITHIN THE ROADWAY LIMITS. SPACING OF THE WARNING LIGHTS SHALL BE UNIFORM TO THE EDGE OF ROADWAY AS SHOWN (APPROX. 8-FOOT LIGHT SPACING).
2. THESE SIGNS AND BARRICADES ARE NOT REQUIRED IF ROAD CLOSURE BEGINS AT INTERSECTION.
3. FOR ROAD CLOSURE WITHOUT LOCAL ACCESS TO PROJECT, SEE ROAD CLOSURE BARRICADE DETAIL D.
4. FOR ROAD CLOSURE WITH LOCAL ACCESS TO PROJECT, SEE LANE CLOSURE BARRICADE DETAIL E.
5. FOR BRIDGE OR CULVERT REPLACEMENTS, SUBSTITUTE "BRIDGE OUT" INSTEAD OF "ROAD CLOSED" ON R11-2 AND R11-3 SIGNS.
6. INSTALL DETOUR AND COMMUNITY GUIDE SIGNS AND ARROWS ONLY IF SPECIFIED IN THE CONTRACT. IF THERE ARE EXISTING ROUTE MARKER ASSEMBLIES THAT WILL REMAIN IN PLACE, ADJUST THE LOCATION OF THE DETOUR ROUTE SIGNS TO CORRESPOND WITH THE EXISTING ASSEMBLIES. MODIFY EXISTING SIGNS WHERE POSSIBLE. SEE SPECIFIC PROJECT DETOUR SIGNING DETAIL SHEETS. IF DETOUR SIGNS ARE BEING INSTALLED BY OTHERS, PLACE THE CONTRACTED TRAFFIC CONTROL SIGNS TO ALLOW FOR PLACEMENT OF ALL WARNING, DETOUR AND GUIDE SIGNS AS SHOWN.
7. "EAST" CARDINAL DIRECTION MARKERS AND RIGHT TURN ARROWS ARE SHOWN. USE OTHER CARDINAL DIRECTIONS AND ARROWS AS APPROPRIATE.

BARRICADES AND SIGNS FOR MAINLINE CLOSURES

STATE OF WISCONSIN
DEPARTMENT OF TRANSPORTATION

Sept. 2015 — DATE
/S/ Peter Amakobe Atepe — STATEWIDE WORK ZONE TRAFFIC SAFETY ENGINEER
FHWA

6

S.D.D. 15 C 2-6b

THIS DRAWING PROVIDES GENERAL GUIDANCE ON TYPICAL DETOUR SIGN LAYOUT AND SPACING. SEE PROJECT DETOUR SIGNING SHEETS FOR SPECIFIC DETAILS FOR EACH PROJECT.

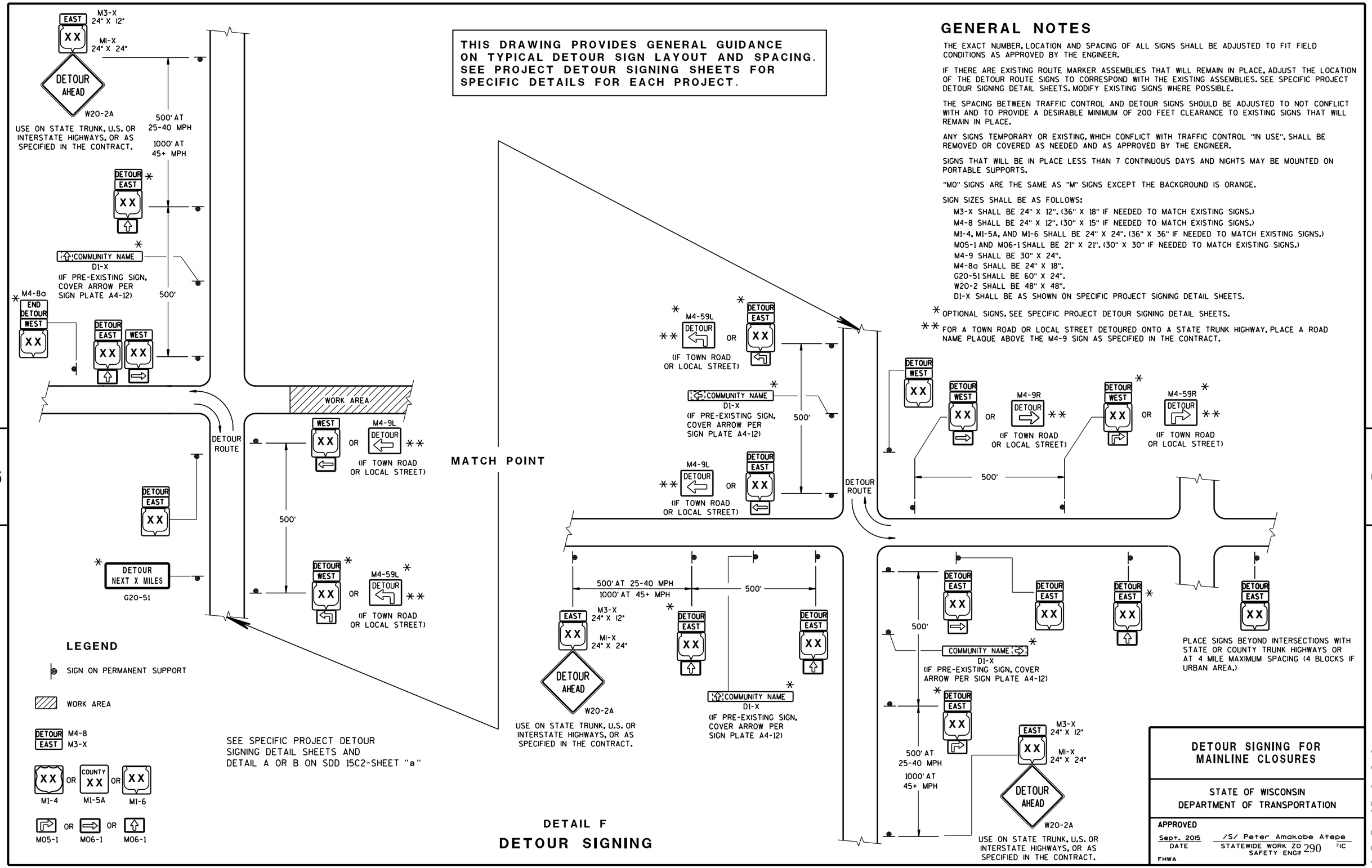

DETAIL F

DETOUR SIGNING

GENERAL NOTES

THE EXACT NUMBER, LOCATION AND SPACING OF ALL SIGNS SHALL BE ADJUSTED TO FIT FIELD CONDITIONS AS APPROVED BY THE ENGINEER.

IF THERE ARE EXISTING ROUTE MARKER ASSEMBLIES THAT WILL REMAIN IN PLACE, ADJUST THE LOCATION OF THE DETOUR ROUTE SIGNS TO CORRESPOND WITH THE EXISTING ASSEMBLIES. SEE SPECIFIC PROJECT DETOUR SIGNING DETAIL SHEETS. MODIFY EXISTING SIGNS WHERE POSSIBLE.

THE SPACING BETWEEN TRAFFIC CONTROL AND DETOUR SIGNS SHOULD BE ADJUSTED TO NOT CONFLICT WITH AND TO PROVIDE A DESIRABLE MINIMUM OF 200 FEET CLEARANCE TO EXISTING SIGNS THAT WILL REMAIN IN PLACE.

ANY SIGNS TEMPORARY OR EXISTING, WHICH CONFLICT WITH TRAFFIC CONTROL "IN USE", SHALL BE REMOVED OR COVERED AS NEEDED AND AS APPROVED BY THE ENGINEER.

SIGNS THAT WILL BE IN PLACE LESS THAN 7 CONTINUOUS DAYS AND NIGHTS MAY BE MOUNTED ON PORTABLE SUPPORTS.

"MO" SIGNS ARE THE SAME AS "M" SIGNS EXCEPT THE BACKGROUND IS ORANGE.

SIGN SIZES SHALL BE AS FOLLOWS:

- M3-X SHALL BE 24" X 12". (36" X 18" IF NEEDED TO MATCH EXISTING SIGNS.)
- M4-8 SHALL BE 24" X 12". (30" X 15" IF NEEDED TO MATCH EXISTING SIGNS.)
- M1-4, M1-5A, AND M1-6 SHALL BE 24" X 24". (36" X 36" IF NEEDED TO MATCH EXISTING SIGNS.)
- M05-1 AND M06-1 SHALL BE 21" X 21". (30" X 30" IF NEEDED TO MATCH EXISTING SIGNS.)
- M4-9 SHALL BE 30" X 24".
- M4-8a SHALL BE 24" X 18".
- G20-51 SHALL BE 60" X 24".
- W20-2 SHALL BE 48" X 48".
- D1-X SHALL BE AS SHOWN ON SPECIFIC PROJECT SIGNING DETAIL SHEETS.

* OPTIONAL SIGNS. SEE SPECIFIC PROJECT DETOUR SIGNING DETAIL SHEETS.

** FOR A TOWN ROAD OR LOCAL STREET DETOURED ONTO A STATE TRUNK HIGHWAY, PLACE A ROAD NAME PLAQUE ABOVE THE M4-9 SIGN AS SPECIFIED IN THE CONTRACT.

DETOUR SIGNING FOR MAINLINE CLOSURES
STATE OF WISCONSIN DEPARTMENT OF TRANSPORTATION
APPROVED Sept. 2015 — DATE /S/ Peter Amakobe Atepe — STATEWIDE WORK ZONE TRAFFIC SAFETY ENGINEER FHWA

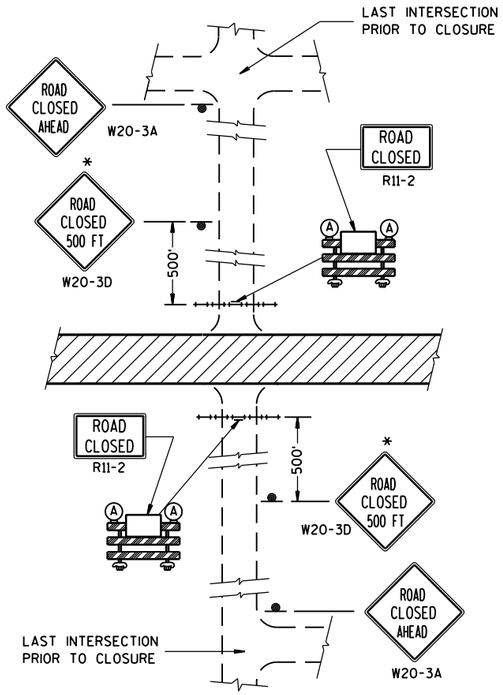

DETAIL 1

(NO ACCESS TO PROJECT)

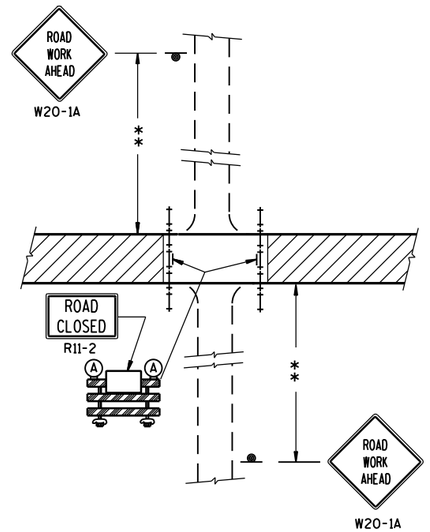

DETAIL 2

(PUBLIC CROSS-TRAFFIC MAINTAINED.
NO ACCESS TO PROJECT).

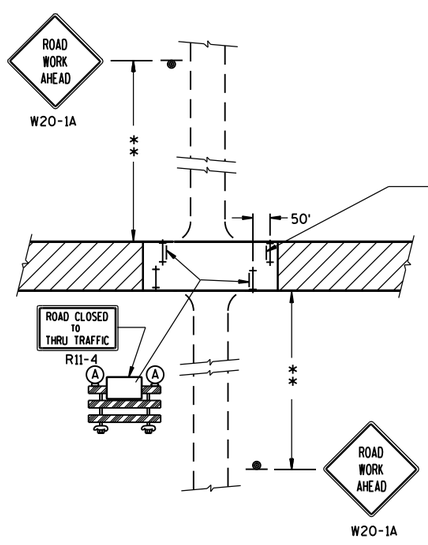

DETAIL 3

(PUBLIC CROSS-TRAFFIC MAINTAINED. CONTRACTOR,
LOCAL BUSINESS AND RESIDENT ACCESS).

FOR BRIDGE OR CULVERT
REPLACEMENT, USE ADDITIONAL
SIGN ON BARRICADE

BRIDGE OUT
XX MILES AHEAD
R11-3C

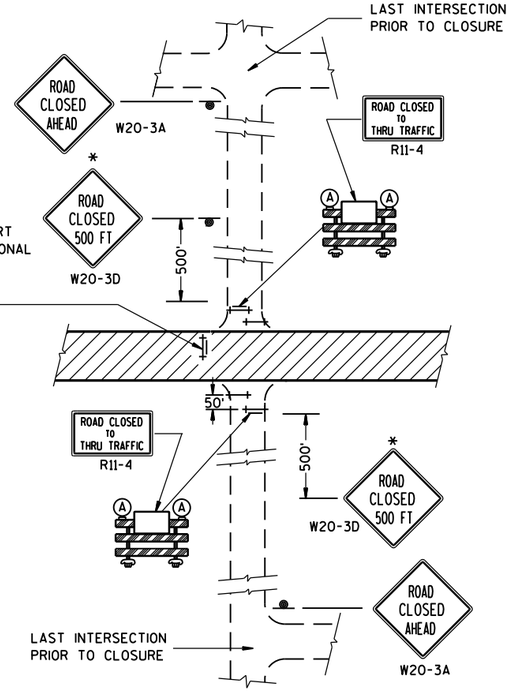

DETAIL 4

(CONTRACTOR, LOCAL BUSINESS AND
RESIDENT ACCESS TO PROJECT)

GENERAL NOTES

THE EXACT NUMBER, LOCATION, AND SPACING OF ALL SIGNS AND BARRICADES SHALL BE ADJUSTED TO FIT FIELD CONDITIONS AS APPROVED BY THE ENGINEER.

ANY SIGNS TEMPORARY OR EXISTING, WHICH CONFLICT WITH TRAFFIC CONTROL "IN USE" SHALL BE REMOVED OR COVERED AS NEEDED AND AS APPROVED BY THE ENGINEER.

THE SPACING BETWEEN TRAFFIC CONTROL SIGNS SHOULD BE ADJUSTED TO NOT CONFLICT WITH AND SHOULD PROVIDE A DESIRABLE MINIMUM OF 200 FEET CLEARANCE TO EXISTING SIGNS THAT WILL REMAIN IN PLACE.

IF A "STOP" SIGN MUST BE REMOVED FOR A WORK OPERATION, A TEMPORARY "STOP" SIGN SHALL BE PLACED PRIOR TO THE SIGN REMOVAL, OR A FLAGGER SHALL BE PROVIDED UNTIL THE SIGN IS RE-ESTABLISHED.

BARRICADES THAT MUST BE MOVED FOR A WORK OPERATION SHALL BE IMMEDIATELY RE-ESTABLISHED UPON COMPLETION OF THE OPERATION OR, FOR CONTINUING OPERATIONS, AT THE END OF EACH WORKING DAY.

SIGNS THAT WILL BE IN PLACE LESS THAN 7 CONTINUOUS DAYS AND NIGHTS MAY BE MOUNTED ON PORTABLE SUPPORTS.

ALL TYPE III BARRICADES SHALL HAVE RAILS REFLECTORIZED ON BOTH FACES. STRIPES SHALL BE PROPERLY SLOPED DOWN TOWARD THE TRAFFIC SIDE OR AS SHOWN IN THE ROAD CLOSURE BARRICADE DETAIL D FOR FULL ROAD CLOSURES.

TYPE "A" LOW-INTENSITY FLASHING WARNING LIGHTS SHALL BE VISIBLE ON BOTH SIDES OF THE BARRICADE.

THE R11-2, R11-3 AND R11-4 SIGNS PLACED ON BARRICADES SHALL COVER NO MORE THAN THE TOP RAIL. THE SIGNS SHALL NOT COVER ANY PORTION OF THE MIDDLE OR BOTTOM RAILS.

ALL SIGNS SHALL BE 48" X 48" UNLESS OTHERWISE NOTED BELOW:
R11-2 SHALL BE 48" X 30".
R11-4 AND R11-3 SHALL BE 60" X 30".

*OMIT THE "ROAD CLOSED 500 FT." SIGN IF THE LAST INTERSECTION IS 500 FT. OR LESS FROM THE WORK ZONE.

**500' MAX. OR AT LAST INTERSECTION WHICHEVER IS CLOSER.

LEGEND

- SIGN ON PERMANENT SUPPORT
- TYPE III BARRICADE
- TYPE III BARRICADE WITH ATTACHED SIGN
- (A) TYPE "A" WARNING LIGHT (FLASHING)
- WORK AREA

BARRICADES AND SIGNS FOR SIDEROAD CLOSURES

STATE OF WISCONSIN
DEPARTMENT OF TRANSPORTATION

APPROVED
Sept. 2015 — DATE
/S/ Peter Amakobe Atepe — STATEWIDE WORK ZONE TRAFFIC SAFETY ENGINEER
FHWA

6

S.D.D. 15 C 3-3

GENERAL NOTES

DETAILS OF INSTALLATION, MATERIALS AND WORKMANSHIP NOT SHOWN ON THIS DRAWING SHALL CONFORM TO THE PERTINENT REQUIREMENTS OF THE STANDARD SPECIFICATIONS AND APPLICABLE SPECIAL PROVISIONS.

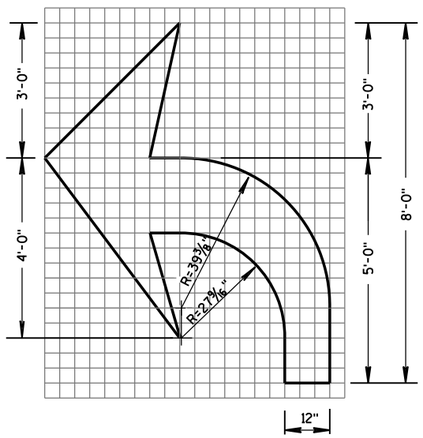

TYPE 2

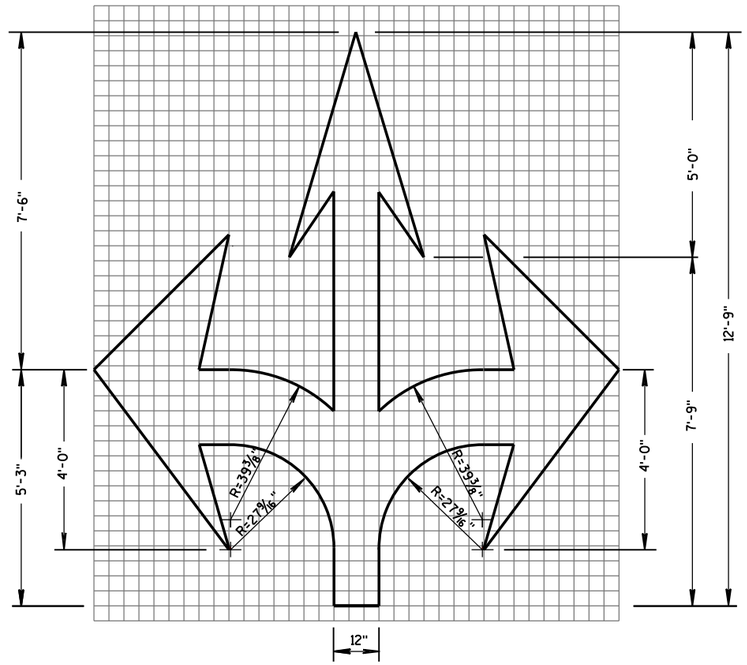

TYPE 6

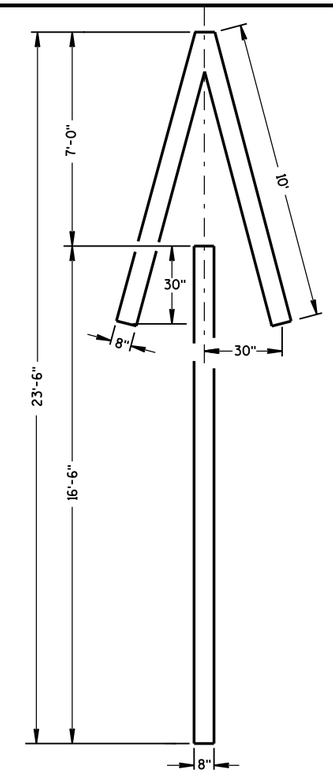

TYPE 4

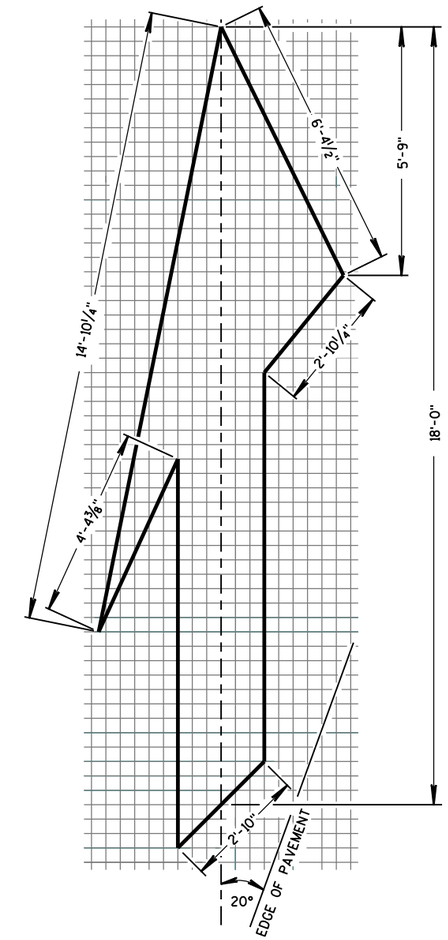

TYPE 5 LANE DROP ARROW

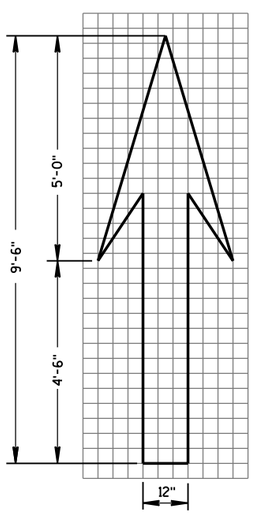

TYPE 1

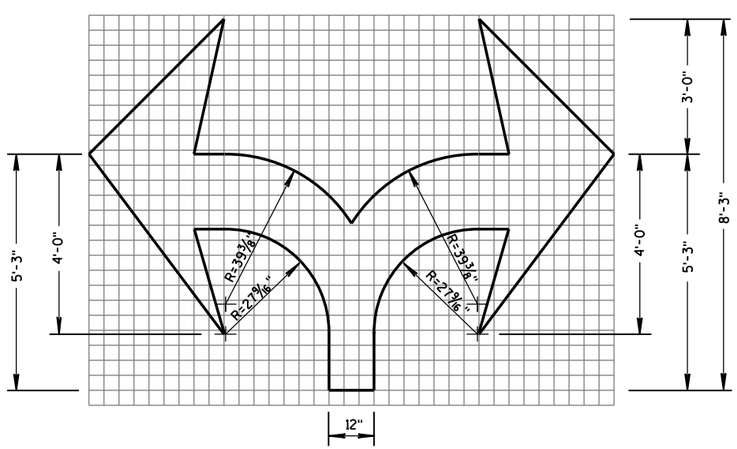

TYPE 7

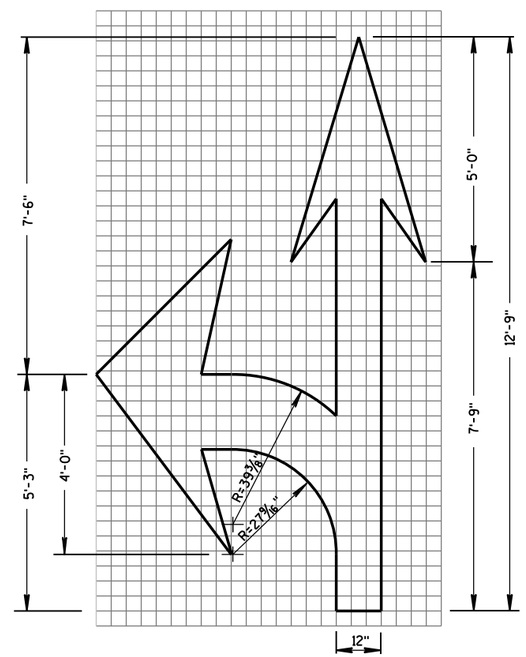

TYPE 3

PAVEMENT MARKING ARROWS

STATE OF WISCONSIN
DEPARTMENT OF TRANSPORTATION

APPROVED
June 2017 — DATE
/S/ Matthew R. Rauch
STATE SIGNING AND MAR[illegible]NEER
FHWA

6

S.D.D. 15 C 7-14c

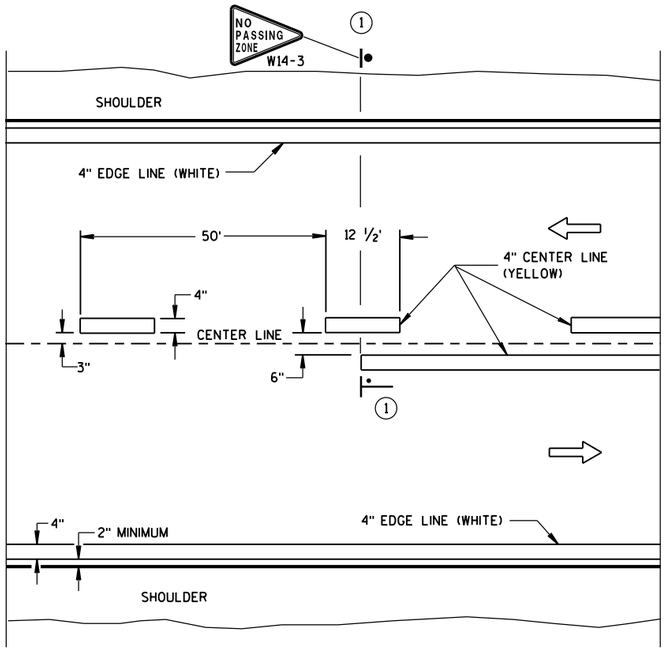

TWO WAY TRAFFIC

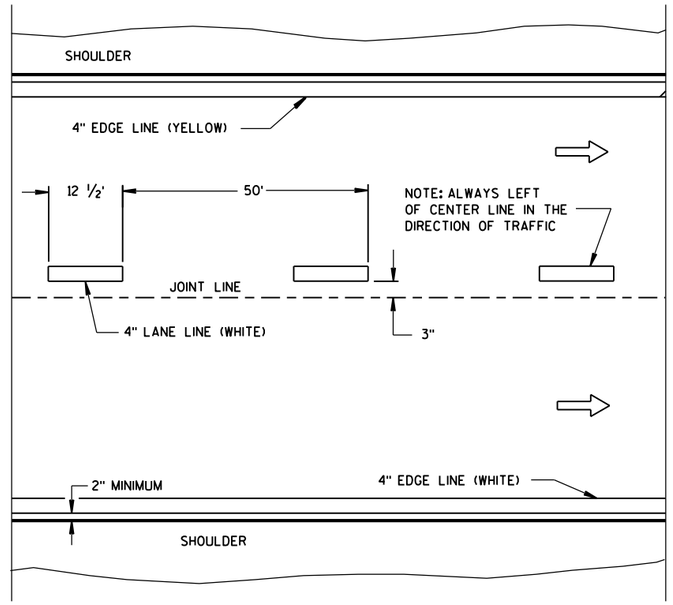

ONE WAY TRAFFIC

PERMANENT PAVEMENT MARKING

GENERAL NOTES

DETAILS OF CONSTRUCTION NOT SHOWN ON THIS DRAWING SHALL CONFORM TO STANDARD SPECIFICATIONS AND SPECIAL PROVISIONS.

(1) LOCATE THE NO PASSING ZONE W14-3 SIGN WITHIN 50 FEET OF THE "T" MARKING.

NOTE

ARROW SYMBOL (⇨) SHOWS DIRECTION OF TRAVEL

LEGEND

"T" MARKING

POST MOUNTED SIGN

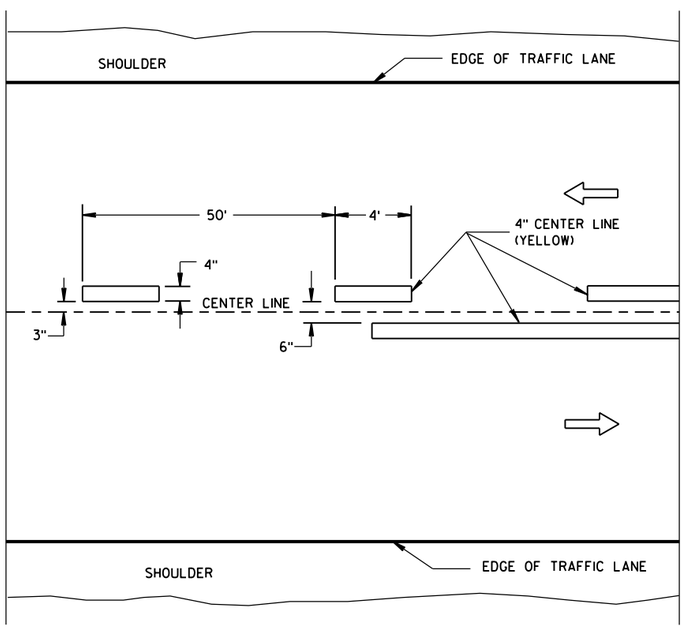

TWO WAY TRAFFIC

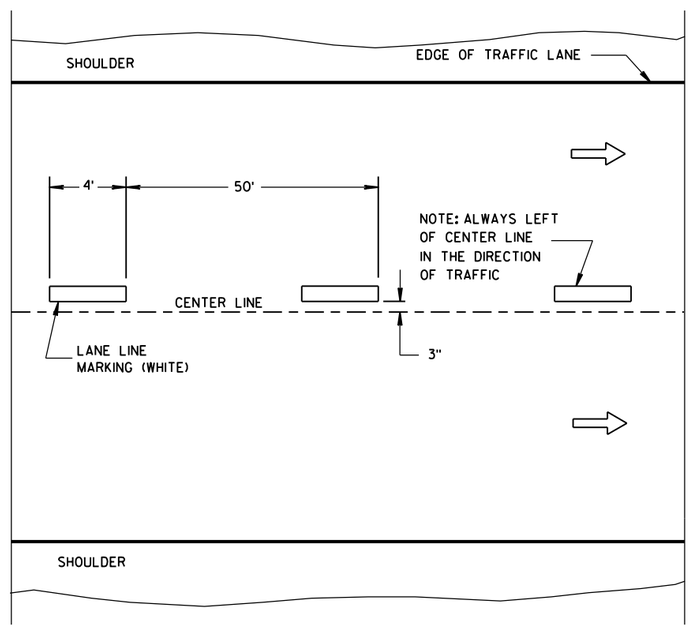

ONE WAY TRAFFIC

TEMPORARY PAVEMENT MARKING

6

6

S.D.D. 15 C 8-18a

S.D.D. 15 C 8-18a

LONGITUDINAL MARKING (MAINLINE)

STATE OF WISCONSIN
DEPARTMENT OF TRANSPORTATION

APPROVED
June 2017 /S/ Matthew R. Rauch
DATE STATE SIGNING AND MAR ENGINEER
FHWA

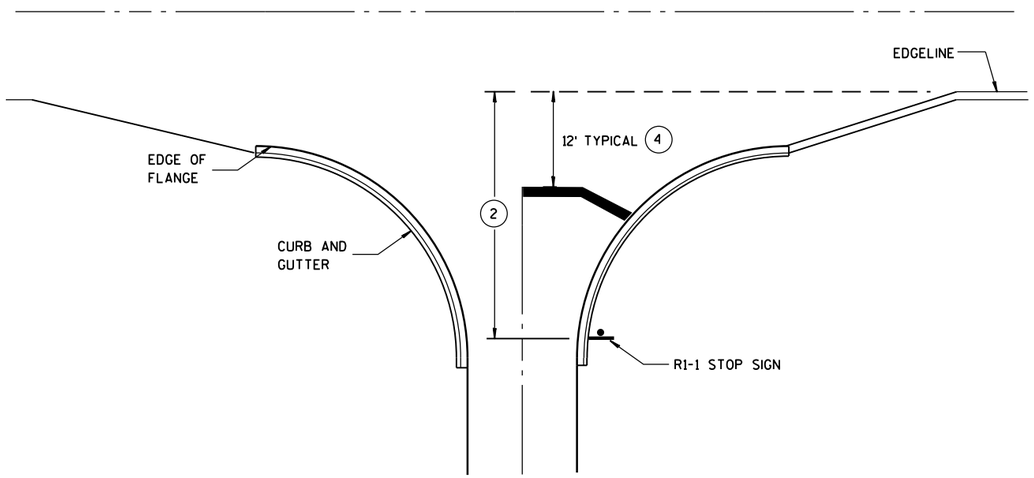

TYPICAL STOP LINE PAVEMENT MARKING WITH CURB AND GUTTER

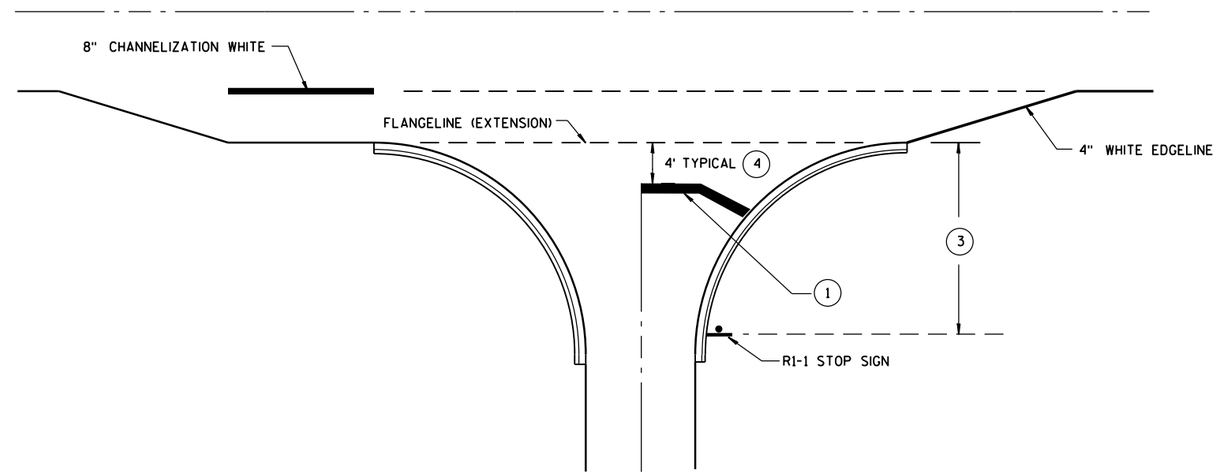

TYPICAL STOP LINE PAVEMENT MARKING FOR SIDEROADS WITH RIGHT TURN LANE

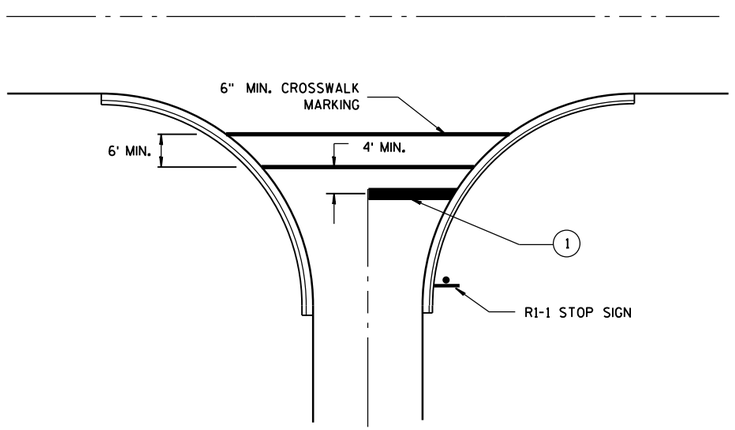

TYPICAL STOP LINE PAVEMENT MARKING FOR SIDEROADS WITH CROSSWALK MARKING

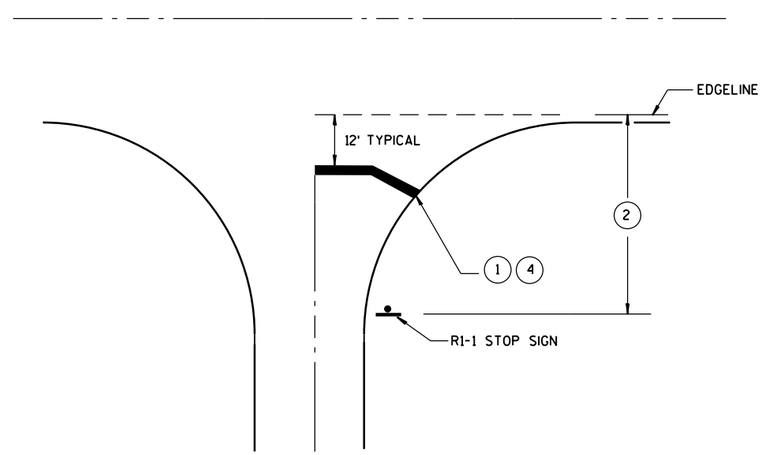

TYPICAL STOP LINE PAVEMENT MARKING WITHOUT CURB AND GUTTER

GENERAL NOTES

1. 18-INCH STOP LINES MAY BE DELETED OR ADDED BY THE PROJECT ENGINEER BASED ON VISIBILITY AND SIGHT LINES.
2. IF STOP SIGN IS LESS THAN OR EQUAL TO 40 FEET FROM THE EDGELINE THAN NO STOP LINE IS REQUIRED.
3. IF STOP SIGN IS LESS THAN OR EQUAL TO 30 FEET FROM THE FLANGELINE EXTENSION THAN NO STOP LINE IS REQUIRED.
4. MOVE CLOSER TO EDGE OF TRAVEL LANE AS NEEDED FOR VISIBILITY AND SIGHT LINES. (NO CLOSER THAN 4 FEET).

STOP LINE AND CROSSWALK PAVEMENT MARKING

STATE OF WISCONSIN
DEPARTMENT OF TRANSPORTATION

APPROVED
4-18-2016 — DATE
/S/ Matthew R. Rauch — STATE SIGNING AND MAR NEER
FHWA

6

S.D.D. 15 C 33-2

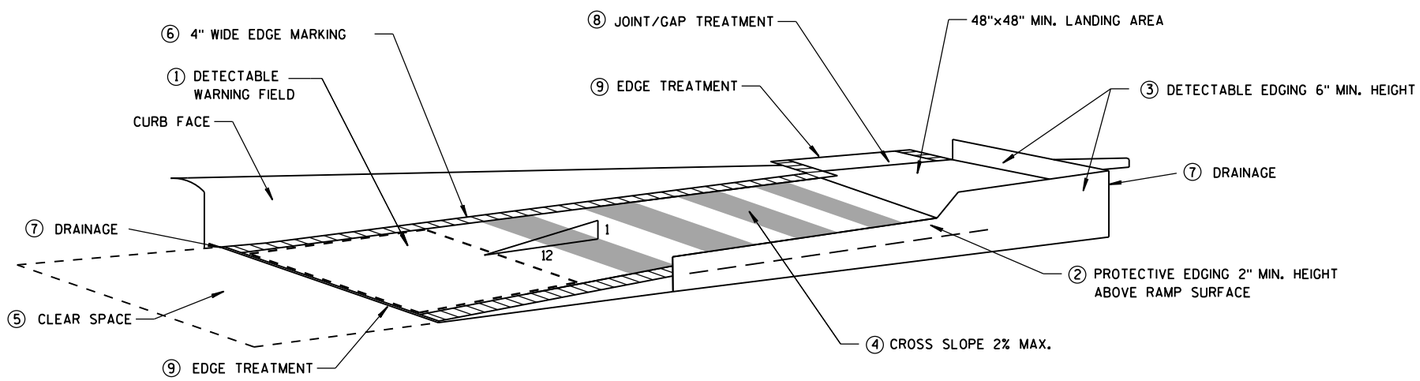

TEMPORARY CURB RAMP PARALLEL TO CURB

GENERAL NOTES

NOTIFY THE BUS COMPANY 7 DAYS IN ADVANCE OF THE BUS STOP RELOCATION.

ALTERNATE SIDEWALK WORK BETWEEN LEFT AND RIGHT SIDE OF ROADWAY TO MAINTAIN PEDESTRIAN ACCESS.

① CURB RAMPS SHALL BE 48" MIN. WIDTH WITH A FIRM, STABLE AND SLIP RESISTANT SURFACE. INSTALL CONTRASTING DETECTABLE WARNING FIELD AT PEDESTRIAN STREET CROSSINGS. REFER TO SDD 8D5 SHEET "E".

② PROTECTIVE EDGING WITH A 2" MIN. HEIGHT SHALL BE INSTALLED WHEN A CURB RAMP OR LANDING PLATFORM HAS A VERTICAL DROP OF 6" OR GREATER OR HAS A SIDE APRON SLOPE STEEPER THAN 1:3 (33%). PROTECTIVE EDGING SHOULD BE CONSIDERED WHEN CURB RAMPS OR LANDING PLATFORMS HAVE A VERTICAL DROP OF 3" OR MORE.

③ DETECTABLE EDGING WITH 6" MIN. HEIGHT AND CONTRASTING COLOR SHALL BE INSTALLED ON ALL CURB RAMP LANDINGS WHERE THE WALKWAY CHANGES DIRECTION (TURNS).

④ CURB RAMPS AND LANDINGS SHALL HAVE A 1:50 (2%) MAX. CROSS-SLOPE.

⑤ CLEAR SPACE OF 48"X48" MIN. SHALL BE PROVIDED ABOVE AND BELOW THE CURB RAMP.

⑥ THE CURB RAMP WALKWAY EDGE SHALL BE MARKED WITH A YELLOW COLOR, 4" WIDE MARKING, UNLESS A CONTRASTING DETECTABLE WARNING FIELD IS PROVIDED.

⑦ DO NOT RESTRICT WATER FLOW IN THE GUTTER SYSTEM.

⑧ LATERAL JOINTS OR GAPS BETWEEN SURFACES SHALL BE LESS THAN 1/2" WIDTH.

⑨ CHANGES BETWEEN SURFACE HEIGHTS SHALL NOT EXCEED 1/2". LATERAL EDGES SHALL BE VERTICAL UP TO 1/4" HIGH, AND BEVELED AT 1:2 BETWEEN 1/4" AND 1/2".

⑩ 5' WIDE MIN. WITH PEDSETRIAN SAFETY FENCE, 10' WIDE MIN. WITHOUT PEDESTRIAN SAFETY FENCE.

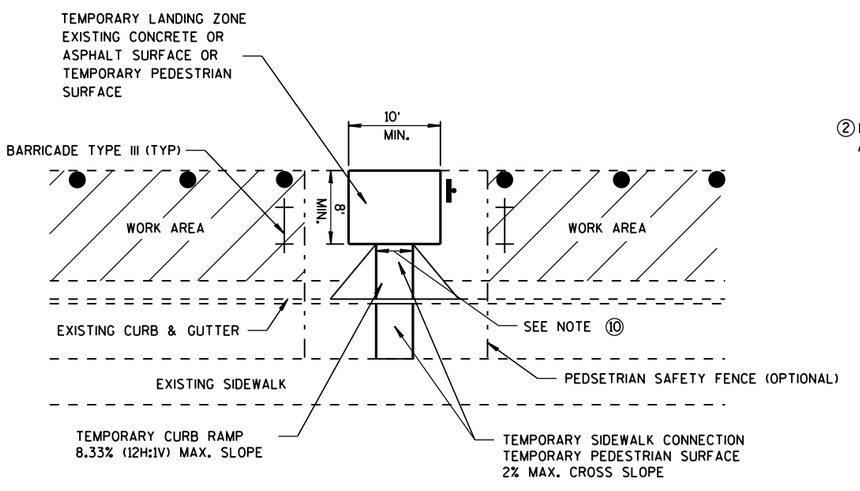

TEMPORARY BUS STOP PAD

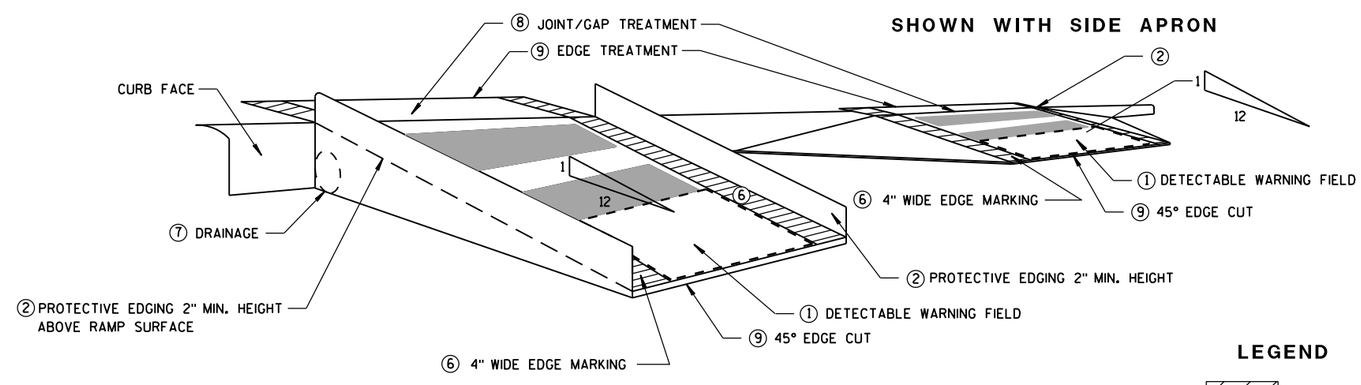

TEMPORARY CURB RAMP PERPENDICULAR TO CURB

LEGEND

- WORK AREA
- TYPE III BARRICADE
- TRAFFIC CONTOL DRUM

TRAFFIC CONTROL, TEMPORARY ADA COMPLIANT PEDESTRIAN ACCOMMODATION

STATE OF WISCONSIN
DEPARTMENT OF TRANSPORTATION

APPROVED
June 2016 — DATE
/S/ Peter Amakobe Atepe — STATEWIDE WORK ZONE TRAFFIC SAFETY ENGINEER
FHWA

6

S.D.D. 15 D 30-3b

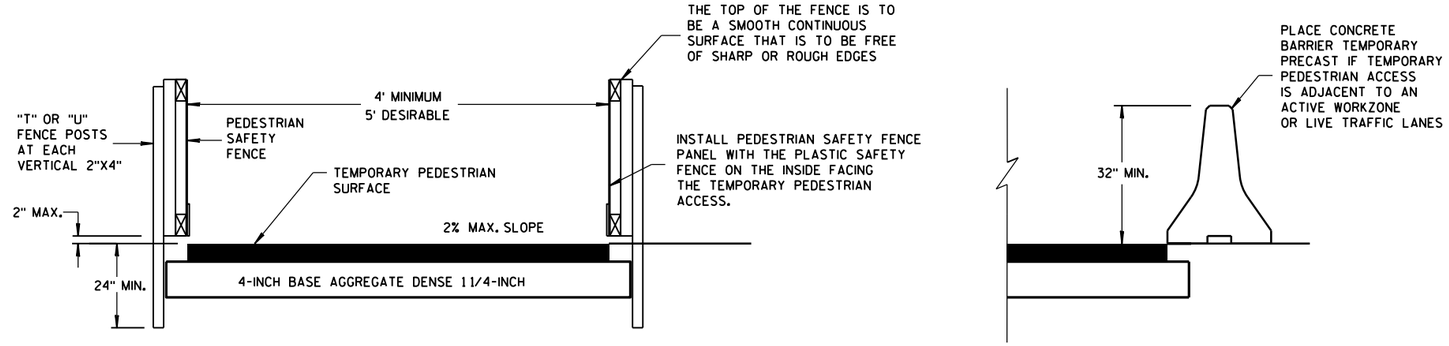

TEMPORARY PEDESTRIAN ACCESS

GENERAL NOTES

1. INTERCHANGEABLE WITH THE PEDESTRIAN SAFETY FENCE.

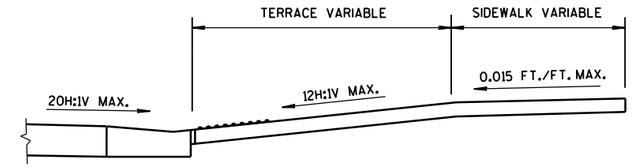

SECTION A-A

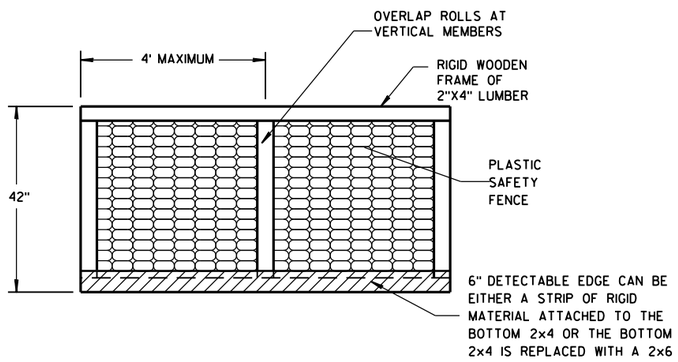

PEDESTRIAN SAFETY FENCE

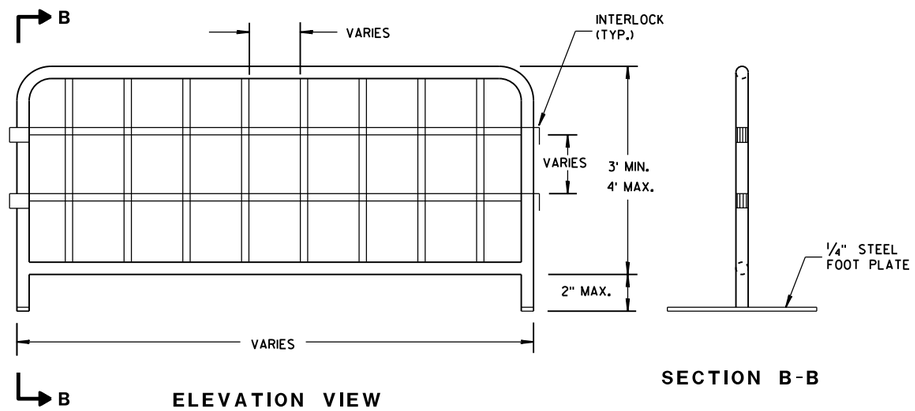

ELEVATION VIEW

SECTION B-B

TEMPORARY PEDESTRIAN STEEL BARRICADE (1)

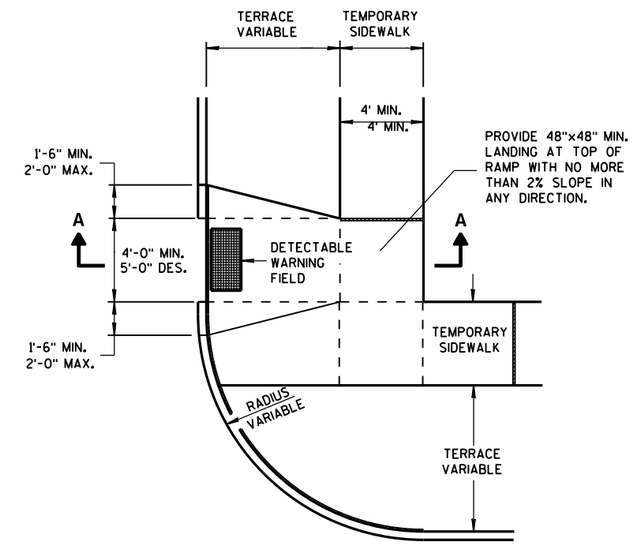

PLAN VIEW

TEMPORARY TYPE 3 RAMP

(OUTSIDE OF CROSSWALK AREA)

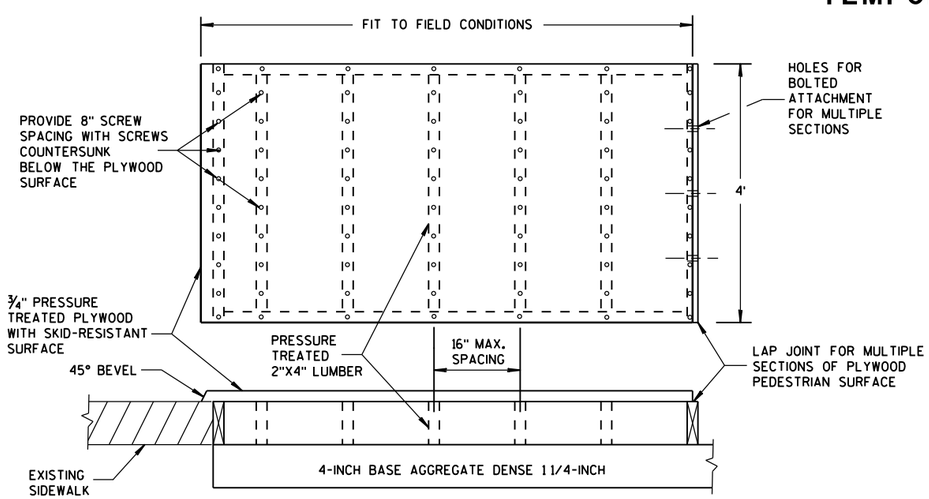

TEMPORARY PEDESTRIAN SURFACE PLYWOOD

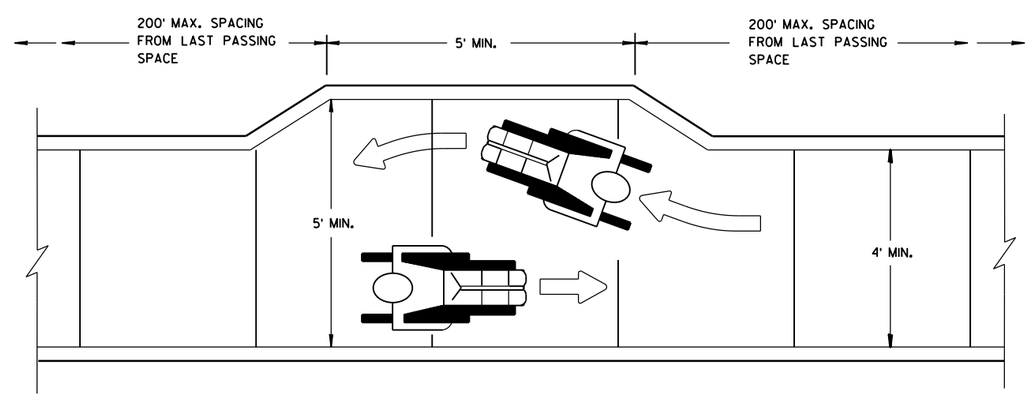

NARROW SIDEWALK PASSING DETAIL

TRAFFIC CONTROL, PEDESTRIAN ACCOMMODATION

STATE OF WISCONSIN
DEPARTMENT OF TRANSPORTATION

APPROVED
June 2016 — DATE
/S/ Peter Amakobe Atepe
STATEWIDE WORK ZONE TRAFFIC SAFETY ENGINEER
FHWA

6

6

S.D.D. 15 D 30-3c

S.D.D. 15 D 30-3c

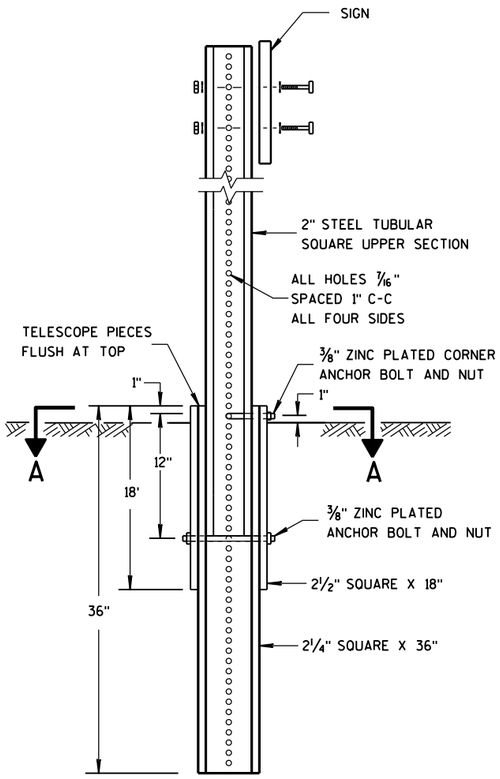

DETAIL OF TUBULAR STEEL SIGN POST

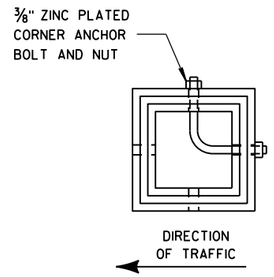

SECTION A-A

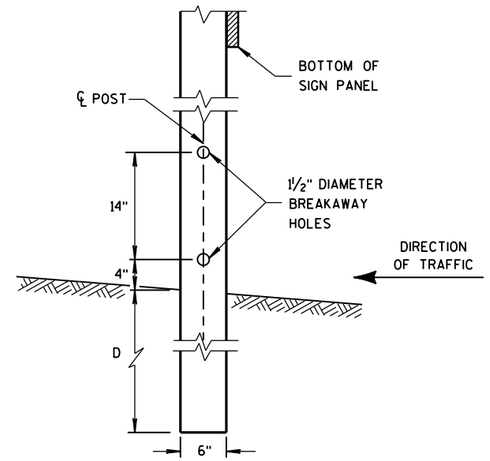

4"x6" WOOD POST MODIFICATION

GENERAL NOTES

1. 6 FEET FROM THE EDGE OF PAVEMENT (EDGE LINE LOCATION) UNLESS OTHERWISE DIRECTED BY THE PROJECT ENGINEER. LATERAL OFFSET SHOULD BE ADJUSTED TO AVOID THE DITCH FLOWLINE.
2. THE EXISTENCE OF CURB AND GUTTER DOES NOT IN ITSELF MANDATE THE VERTICAL CLEARANCE ILLUSTRATED. THAT HEIGHT IS TYPICALLY MEASURED WHERE THERE IS SIDEWALK ADJACENT TO THE ROADWAY OR PARKING IS PERMITTED. IN THE ABSENCE OF SIDEWALK, VERTICAL CLEARANCE IS MEASURED FROM THE TOP OF THE CURB. IF NO SIDEWALK AND NO PARKING, VERTICAL CLEARANCE MAY BE REDUCED TO 5 FOOT MINIMUM. OFFSET OF SIGNS IS MEASURED FROM THE CURB FLOWLINE.
3. FOR SIGNS REQUIRING 4 POSTS, SPACE INTERMEDIATE POSTS EVENLY.

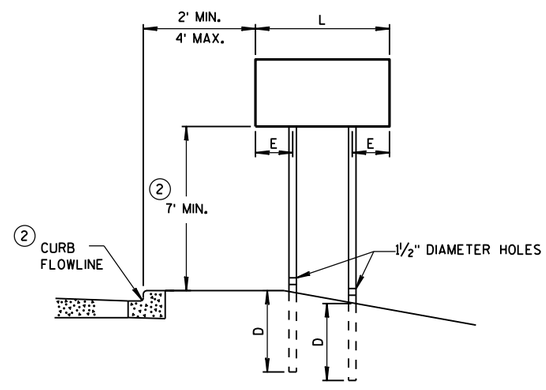

URBAN AREA

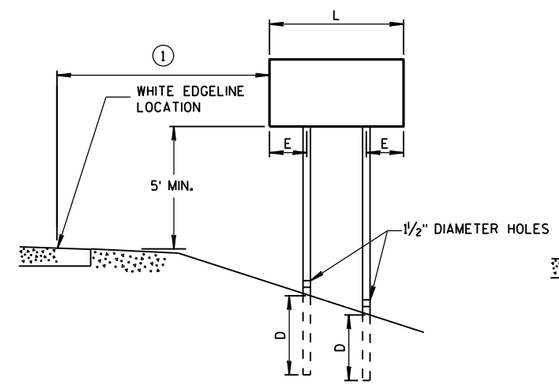

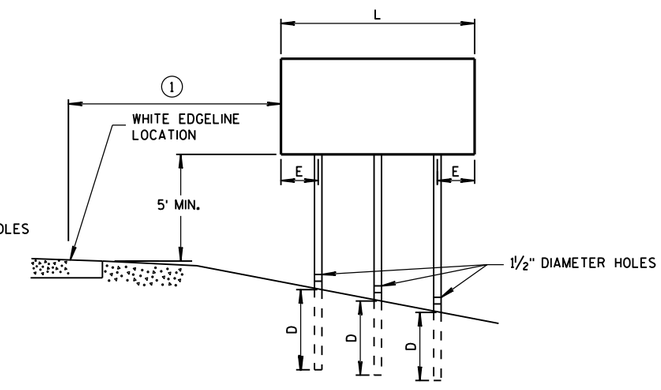

RURAL AREA

POST MOUNTING DETAIL FOR TEMPORARY TRAFFIC CONTROL FIXED MESSAGE SIGNS

TUBULAR STEEL POSTS

AREA OF SIGN INSTALLATION (SQ. FT.)	NUMBER OF REQUIRED TUBULAR STEEL POSTS
9 OR LESS	1
GREATER THAN 9 LESS THAN OR EQUAL TO 18	2
GREATER THAN 18 LESS THAN OR EQUAL TO 27	3

SIGNS WIDER THAN 3 FEET OR LARGER THAN 9 SQ. FT. SHALL BE MOUNTED ON MULTIPLE POSTS (SEE ABOVE TABLE).

SIGNS LARGER THAN 27 SQ. FT. SHALL NOT BE MOUNTED ON TUBULAR STEEL POSTS.

WOOD POST EMBEDMENT DEPTH

AREA OF SIGN INSTALLATION (SQ. FT.)	D (MIN)
20 OR LESS	4'
GREATER THAN 20	5'

4" X 6" WOOD POST

POST SPACING REQUIREMENTS		NUMBER OF WOOD POSTS REQUIRED
L	E	
48" OR LESS AND LESS THAN 20 SQ. FT.	-	1
LESS THAN 60"	12"	2
60" TO 120"	L/5	2
GREATER THAN 120" LESS THAN 168"	12"	3
168" AND GREATER	12"	4

SEE NOTE 3

TEMPORARY TRAFFIC CONTROL SIGN MOUNTING

STATE OF WISCONSIN
DEPARTMENT OF TRANSPO

6

S.D.D. 15 D 38-2a

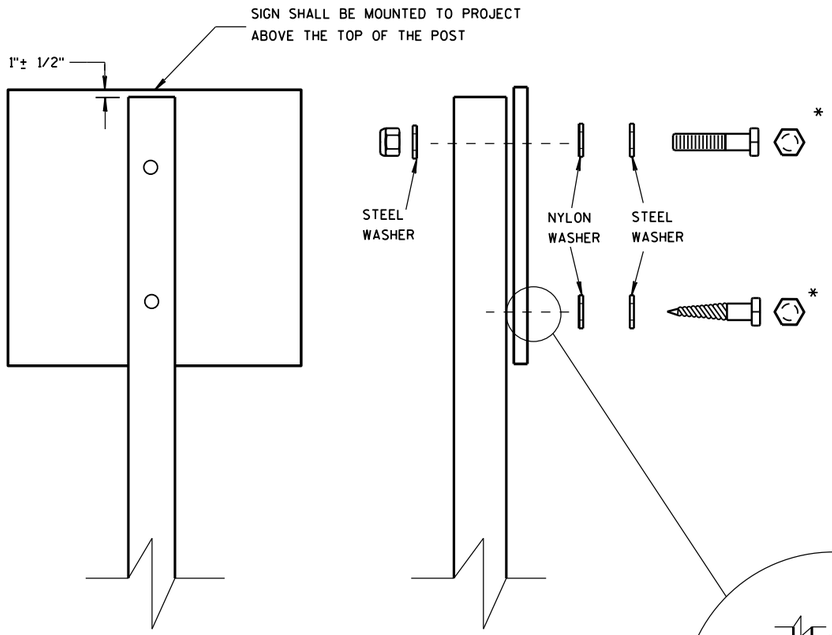

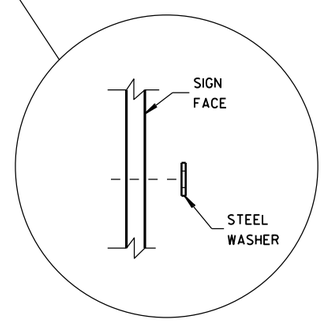

WASHER PLACEMENT WHEN SIGN HAS OTHER THAN TYPE H OR TYPE F FACE

NUTS, BOLTS AND LAGS USED FOR MOUNTING SIGNS SHALL HAVE HEXAGONAL HEADS AND SHALL BE EITHER:

A. HOT DIP GALVANIZED IN ACCORDANCE WITH ASTM DESIGNATION: A 153, CLASS D, OR SC 3

B. ELECTRO-GALVANIZED IN ACCORDANCE WITH ASTM DESIGNATION: B 633, TYPE III, SC 3

THREADS ON BOLTS AND NUTS SHALL BE MANUFACTURED WITH SUFFICIENT ALLOWANCE FOR THE CADMIUM PLATE OR GALVANIZED COATING TO PERMIT THE NUTS TO RUN FREELY ON THE BOLTS.

WOOD POSTS (4" x 4" or 4" x 6")

LAG SCREWS - 3/8" X 3"

MACHINE BOLTS - 5/16" X 6-1/2" OR 7" LENGTH W/ NUTS

SQUARE STEEL POSTS (2" x 2")

MACHINE BOLTS - 3/8" X 3-1/4" LENGTH W/ NUTS

RIVETS - 9/32" (6605-9-6) BULB-TITE, TRI-FOLD, ALUMINUM BODY/MANDREL O.D. FLANGE .720-.765 INCH, GRIP RANGE .042-.375 INCH

WASHERS (ALL POSTS) -

1-1/4" O.D. X 3/8" I.D. X 1/16" STEEL

1-1/4" O.D. X 3/8" I.D. X .080 NYLON FOR ALL TYPE H SIGNS

* TWO DIFFERENT FASTENING SYSTEMS ARE SHOWN FOR ILLUSTRATION PURPOSES. ON ANY INDIVIDUAL SIGN, EITHER ONE OR THE OTHER SYSTEM SHALL BE USED. ACTUAL NUMBER OF FASTENERS PER SIGN VARIES WITH THE SIGN AREA. FOR A SINGLE POST INSTALLATION, ALL SIGNS GREATER THAN 9 SQ. FT. REQUIRE THE USE OF 3 FASTENERS.

6

6

S.D.D. 15 D 38-2b

S.D.D. 15 D 38-2b

ATTACHMENT OF SIGNS TO POSTS

STATE OF WISCONSIN
DEPARTMENT OF TRANSPORTATION

APPROVED

June 2017 — /S/ Andrew Heldtke

DATE — WORK ZONE ENG

FHWA

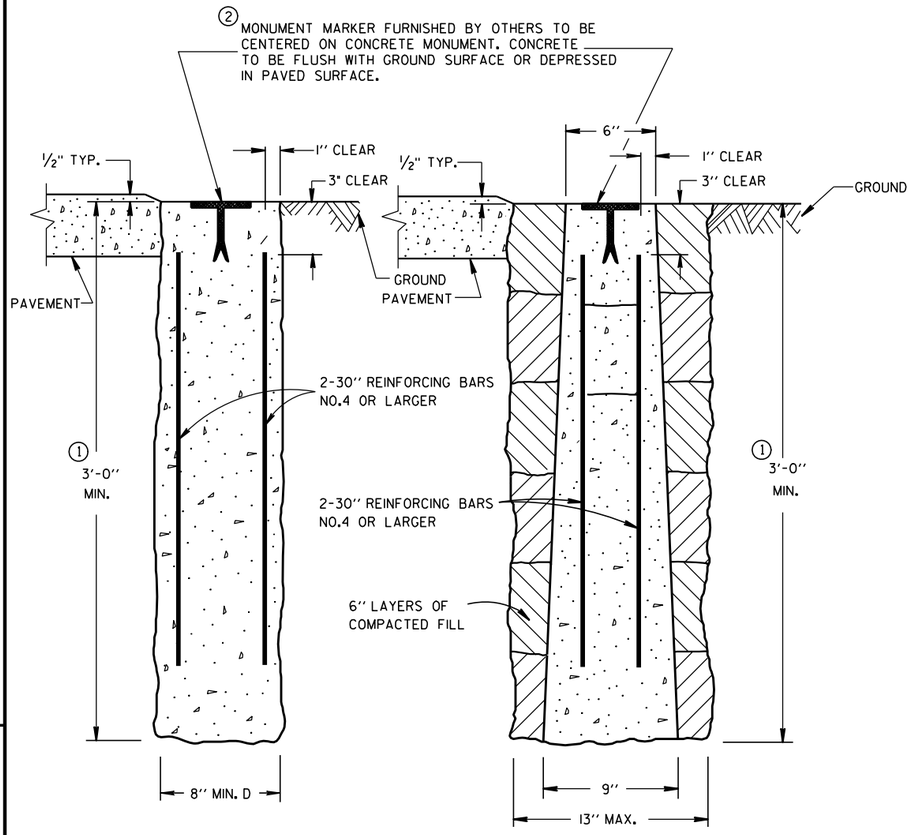

CAST-IN-PLACE PRECAST

CONCRETE MONUMENTS

TYPE A

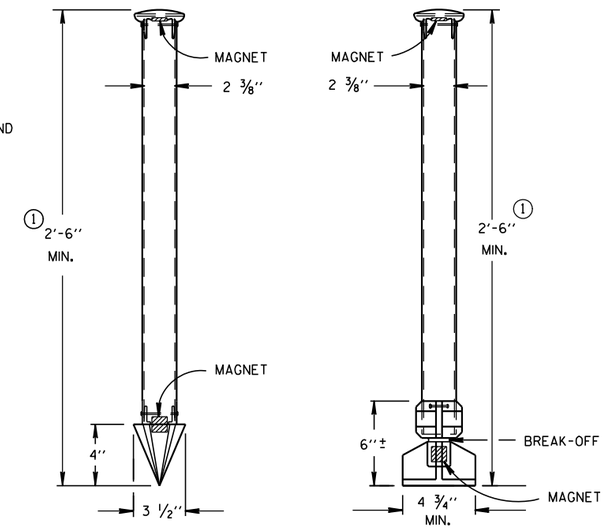

TYPE C TYPE D

DRIVE-IN MONUMENT BREAK-OFF MONUMENT

ALUMINUM MONUMENTS

(INCLUDES MARKER)

GENERAL NOTES

DETAILS OF CONSTRUCTION, MATERIALS AND WORKMANSHIP NOT SHOWN ON THIS DRAWING SHALL CONFORM TO THE PERTINENT REQUIREMENTS OF THE STANDARD SPECIFICATIONS AND THE APPLICABLE SPECIAL PROVISIONS.

DETAILED DRAWINGS OF PROPOSED ALTERNATE DESIGNS FOR METAL MONUMENTS OR MONUMENT COVERS SHALL BE SUBMITTED TO THE ENGINEER FOR APPROVAL.

INSTALLED METAL MONUMENTS MUST BE EASILY DETECTED WITH A DIP NEEDLE. INSERT PERMANENT MAGNETS SHALL BE ATTACHED NEAR THE TOP AND BOTTOM OF THOSE MONUMENTS CONSTRUCTED OF A METAL ALLOY WHICH IS NOT ATTRACTIVE TO A DIP NEEDLE.

THE CAST IRON MONUMENT COVER SHALL BE A "NON-ROCKING" TYPE. ADJUSTMENT OF THE COVER TO GRADE MAY BE ACCOMPLISHED BY THE USE OF MORTAR AND BRICK, OR BY EITHER PRECAST OR CAST-IN-PLACE REINFORCED CONCRETE GRADE RINGS.

MONUMENTS SHALL BE LOCATED AND PLACED AT THE DIRECTION OF THE ENGINEER.

ALUMINUM MONUMENTS AND MONUMENT COVERS SHALL BE MADE FROM AN ALUMINUM AND MAGNESIUM ALLOY AS DETERMINED BY THE MANUFACTURER.

THE MONUMENT COVERS DETAILED ON THIS DRAWING ARE NOT EQUAL ALTERNATES. MONUMENT COVERS SHALL BE CAST IRON UNLESS ALUMINUM IS SPECIFIED ELSEWHERE IN THE CONTRACT.

MONUMENT SHALL BE CAST-IN-PLACE CONCRETE UNLESS PRECAST CONCRETE OR ALUMINUM MONUMENTS ARE SPECIFIED IN THE CONTRACT OR PERMITTED BY THE ENGINEER.

① MINIMUM LENGTH SHALL BE 4'-0" FOR MONUMENTS INSTALLED IN PAVED AREAS.

② AN OFFICIAL COUNTY MONUMENT MARKER SUPPLIED BY A COUNTY MAY BE REQUIRED FOR SOME SECTION CORNERS AND WITNESS MONUMENTS INSTEAD OF THIS WIS DOT MARKER.

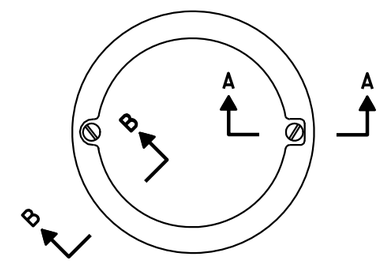

TOP VIEW

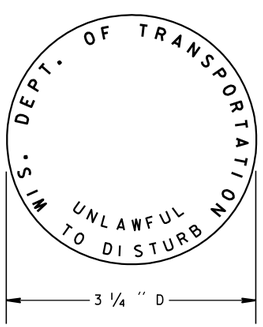

② WIS DOT MONUMENT MARKER LOGO

FOR TYPES "A", "C" & "D"

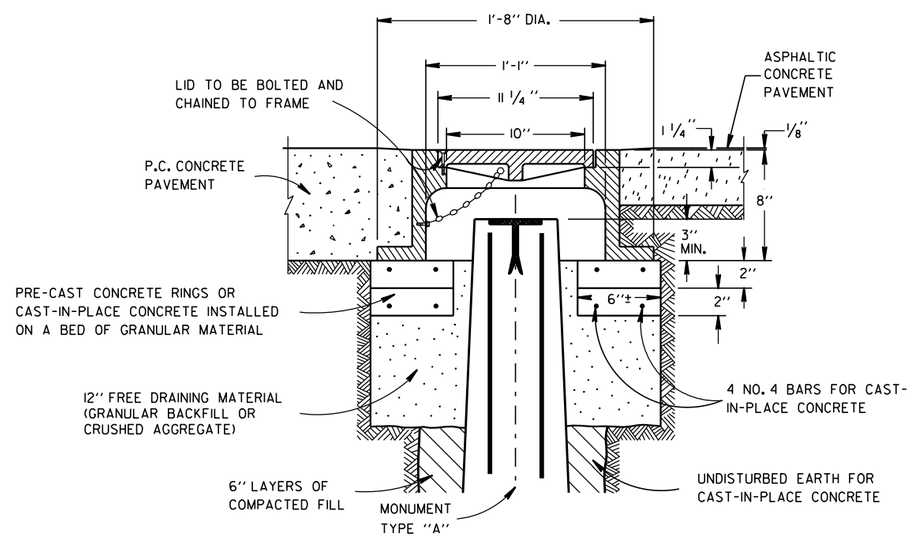

CAST IRON MONUMENT COVER

(APPROXIMATE WEIGHT - 95 LBS.)

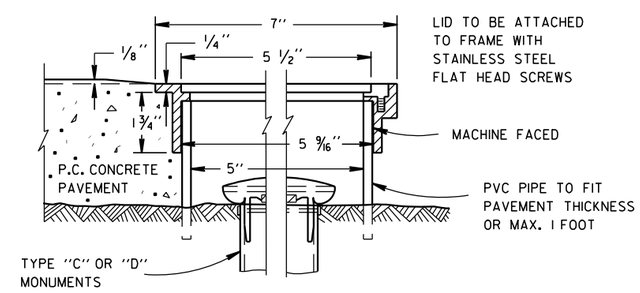

SECTION B-B SECTION A-A

ALUMINUM MONUMENT COVER

(APPROXIMATE WEIGHT 2 LBS)

(FOR CONCRETE PAVEMENT ONLY)

LANDMARK REFERENCE MOUNMENTS AND COVERS

STATE OF WISCONSIN
DEPARTMENT OF TRANSPORTATION

APPROVED

9/22/1999 /S/ Rory L. Rhinesmith

DATE CHIEF ROADWAY DEVELOPMENT ENGINEER

FHWA

NOTES

1. All Signs Type II - Type H Reflective
2. Color:
   Background - Green except as noted
   Message - White
3. Message Series - E except as noted

D2-1; 2.250" Radius, 0.750" Border

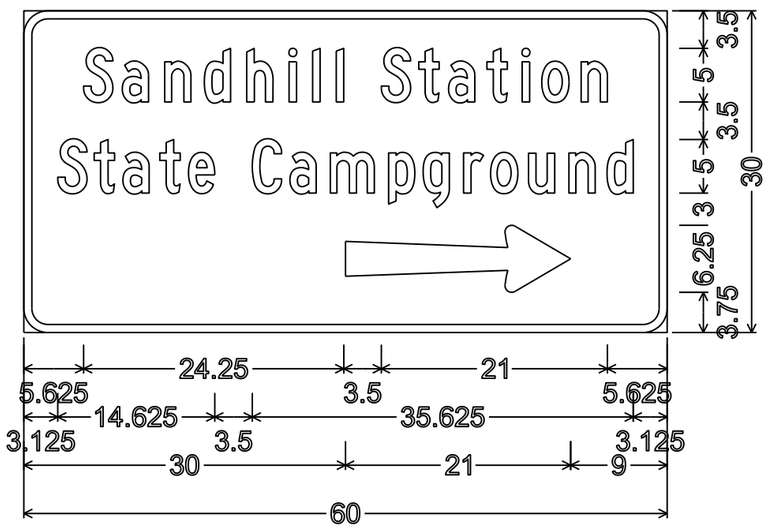

D7-68R;
2.250" Radius, 0.750" Border, White on Brown;
"Sandhill" C; "Station" C; "State" C; "Campground" C

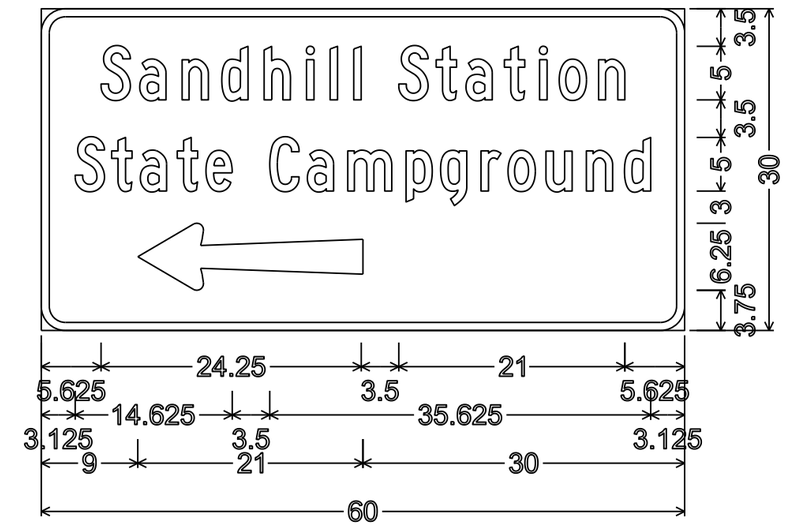

D7-68L;
2.250" Radius, 0.750" Border, White on Brown;
"Sandhill" C; "Station" C; "State" C; "Campground" C

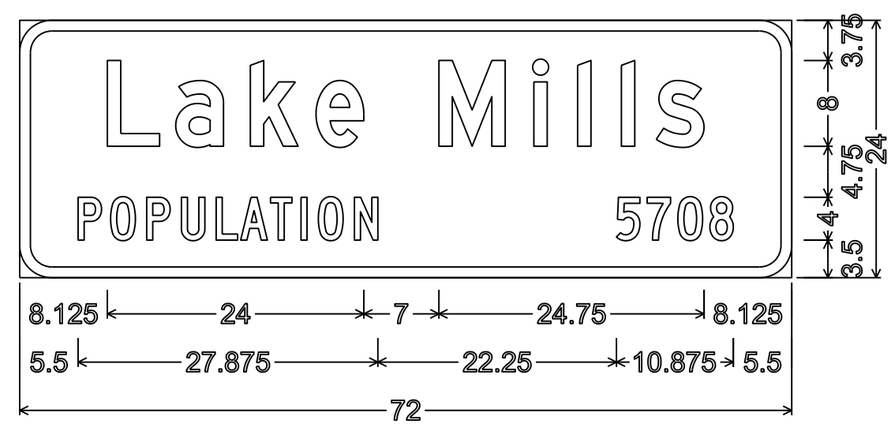

I2-3; 3.000" Radius, 1.000" Border,
"Lake" D; "Mills" D; "POPULATION" C; "5708" C

7

7

PROJECT NO: 3300-01-73	HWY: STH 89	COUNTY: JEFFERSON	PERMANENT SIGNING	SHEET NO: 300	E

NOTES

1. All Signs Type II - Type H Reflective
2. Color:
   Background - Brown
   Message - White
3. Message Series - C

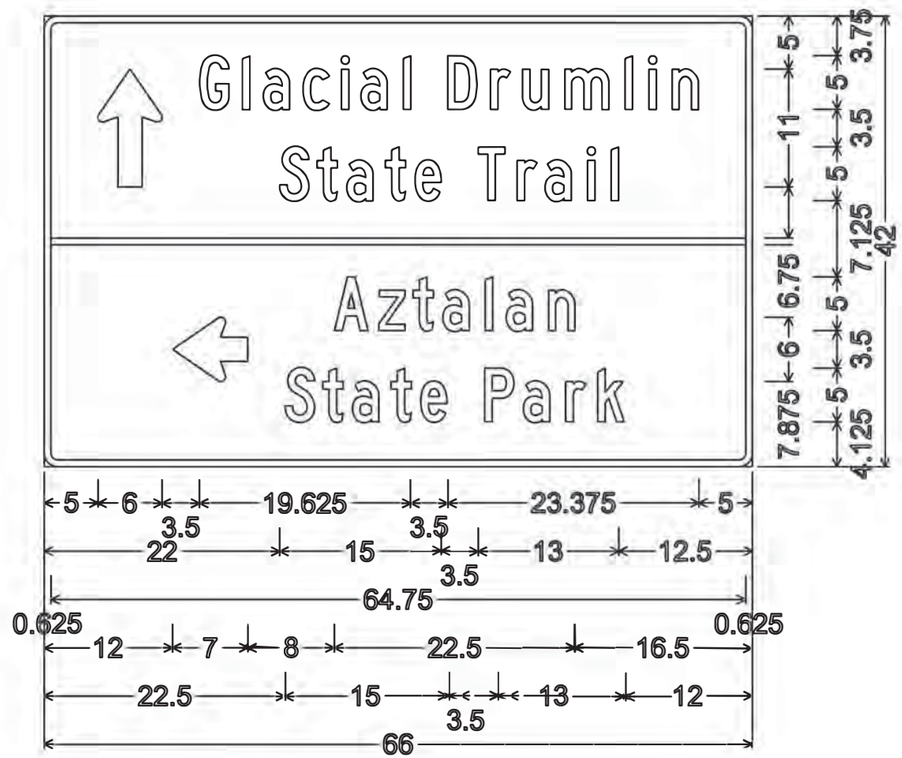

D1-4; 1.250" Radius, 0.625" Border, White on Brown;
"Glacial Drumlin" C; "State Trail" C; "Aztalan" C; "State" C; "Park" C

TYPICAL ASSEMBLIES

J1-1

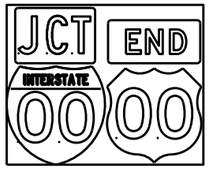

J1-2

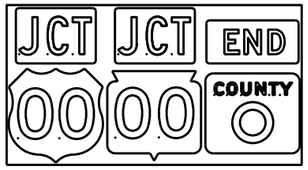

J1-3

J2-1

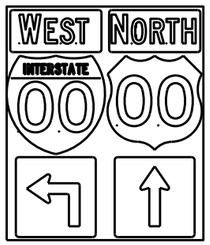

J2-2

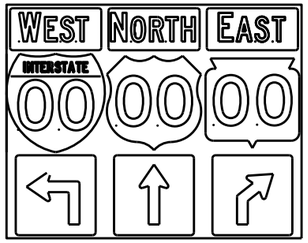

J2-3

JV

(Typical Vertical J-Assembly
See Note 10 and 11)

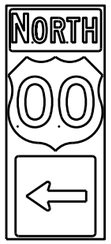

J3-1

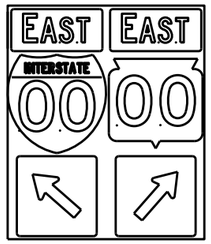

J3-2

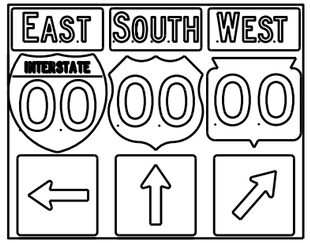

J3-3

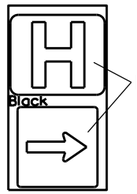

Blue Background

JH-1

J4-1

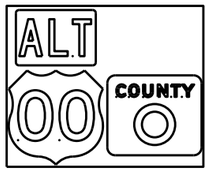

J4-2

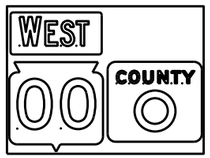

J4-2

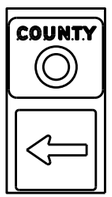

J13-1

J12-1

J32-1

J33-1

J23-1

J22-1

blue background
with interstate

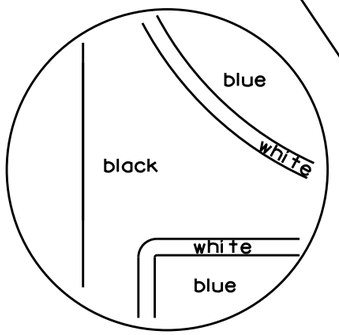

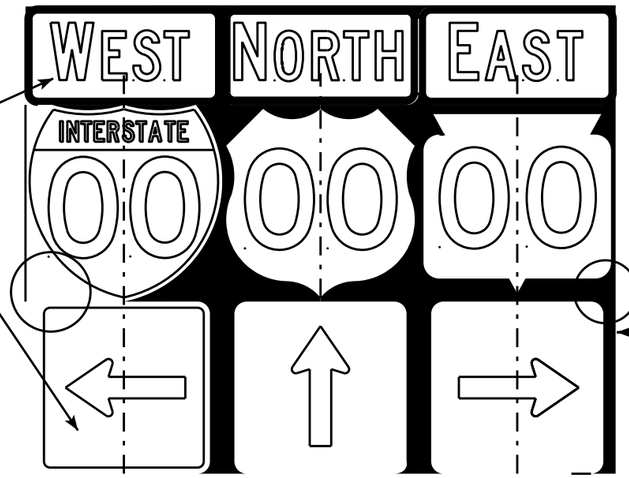

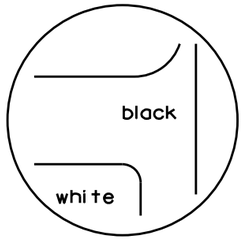

[black background]

NOTES

1. Signs are Type II - Type H Reflective - reference WIS DOT Standard Specification for HIGHWAY and STRUCTURE CONSTRUCTION latest edition.
2. Color:
   Background - Black Non-reflective
   Message - see Note 5
3. Message Series - See Note 5
4. Corners shall be square or rounded if base material is plywood. If base material is metal the corners shall be rounded.
5. The colors and message spacing on each marker shall be according to the applicable route marker panel specifications.
6. Certain marker heads require the component pieces to be the same color. As an example, all the components used with an M1-1 Interstate marker shall be blue.
7. Single panel j-assemblies shall only be used with route marker shields that are same size. If the route marker shields are different size use multiple piece component.
8. Route assemblies that have 24 inch route shields and have dimensions greater than 48 inches (both vertical and horizontal) shall have one horizontal splice between the arrows and route shields. Vertical splices shall not be used on route assemblies with a horizontal dimension of 144 inches or less. The contractor shall not use more than one vertical joint per sign and the joint shall be between route shields.
9. Route assemblies that have 36 inch shields and have dimensions greater than 48 inchs (both vertical and horizontal) shall have two horizontal splices. One horizontal splice shall be between the cardinal direction and route shields and the other horizontal splice shall be between the arrows and route shields. Vertical splices shall not be used on route assemblies with a horizontal dimension of 144 or less. The contractor shall not use more than one vertical joint per sign and the joint shall be between route shields.
10. All Vertical J Assemblies are given a Sign Code of JV
11. For JV Assemblies that have a mixture of Interstate and non Interstate shields, arrows and cardinals shall be white on blue.

ROUTE MARKERS & COMPONENTS
IN TYPICAL ASSEMBLIES

WISCONSIN DEPT OF TRANSPORTATION

APPROVED Matthew R Rauch
for State Traffic Engineer

DATE 2/06/14 PLATE A2-1S.8

PROJECT NO: | SHEET NO: E

URBAN AREA

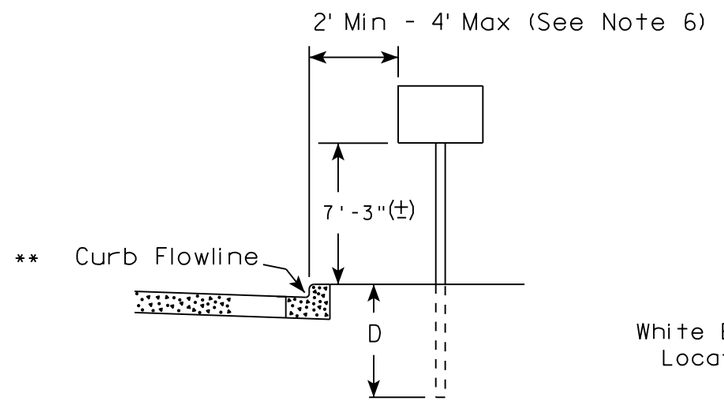

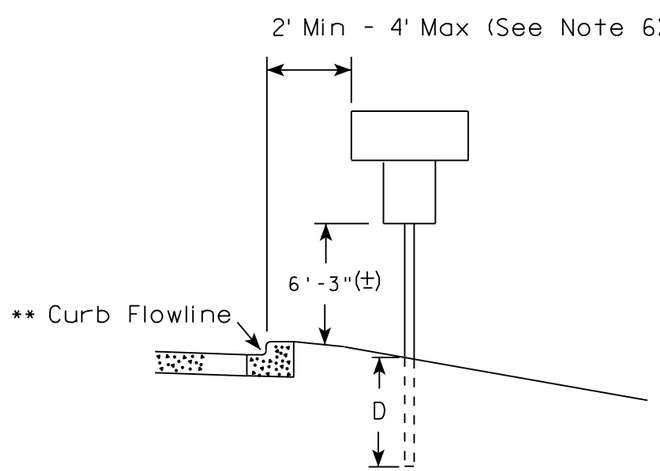

RURAL AREA (See Note 2)

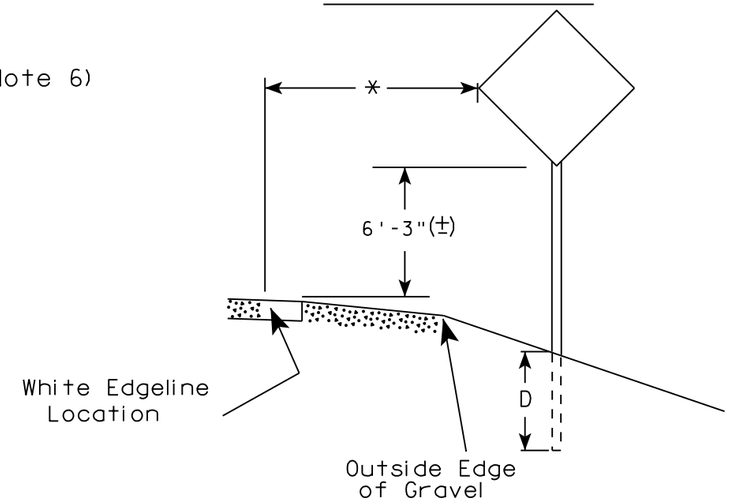

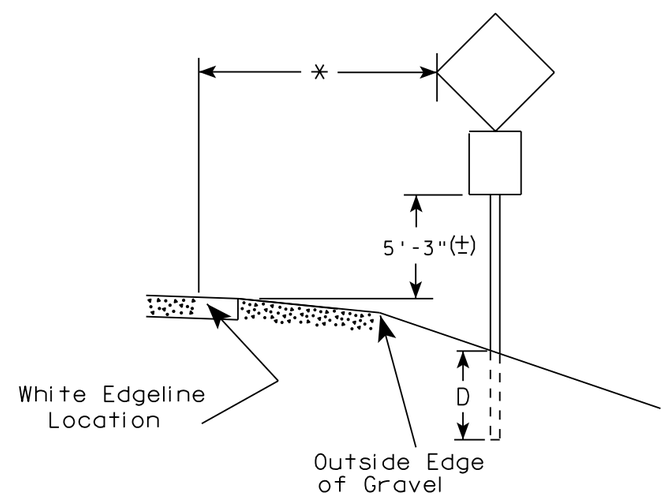

** The existence of curb and gutter does not in itself mandate the vertical clearance illustrated. That height is typically measured where there is sidewalk adjacent to the roadway or parking is permitted. In the absence of sidewalk vertical clearance is measured from the top of the curb. Offset of signs is measured from the flow line.

* 6 feet from edge of a paved shoulder or 12 feet from the edge of pavement (edge line location) or 2 feet from outside edge of gravel, whichever is greater unless directed by project engineer.

GENERAL NOTES

1. Signs wider than 4 feet or 20 sq.ft or larger, shall be mounted on multiple posts. Refer to plate A4-4.
2. If signs are mounted on barrier wall, see A4-10 sign plate.
3. For expressways and freeways, mounting height is 7'- 3" (±) or 6'-3" (±) depending upon existence of a sub-sign.
4. J-Assemblies are considered to be one sign for mounting height.
5. Minimum mounting height for signs mounted on traffic signal poles is 5'- 3" (±).
6. Offset distance shall be consistent with existing signs or consistent throughout length of project.
7. The (±) tolerance for mounting height is 3 inches.
8. Folding signs shall be mounted at a height of 5'-3" (±) or as directd by the Engineer.
9. The Double Arrow sign (W12-1) shall be mounted at a height of 2'-3" (±). The Chevron sign (W1-8), Roundabout Chevron panel (R6-4B), Enhanced Reference Markers, Clearance Markers (W5-52), Mile Markers (D10 series), In Road Object Markers (W5-54) & End of Road Markers (W5-56) shall be mounted at a height of 4'-3" (±).

POST EMBEDMENT DEPTH

Area of Sign Installation (Sq. Ft.)	D (Min)
20 or Less	4'
Greater than 20	5'

TYPICAL INSTALLATION OF PERMANENT TYPE II SIGNS ON SINGLE POSTS

WISCONSIN DEPT OF TRANSPORTATION

APPROVED Matthew R Rauch for State Traffic Engineer

DATE 8/21/17 PLATE NO. A4-3.21

7

7

PROJECT NO:	HWY:	COUNTY:		SHEET NO: 303	E

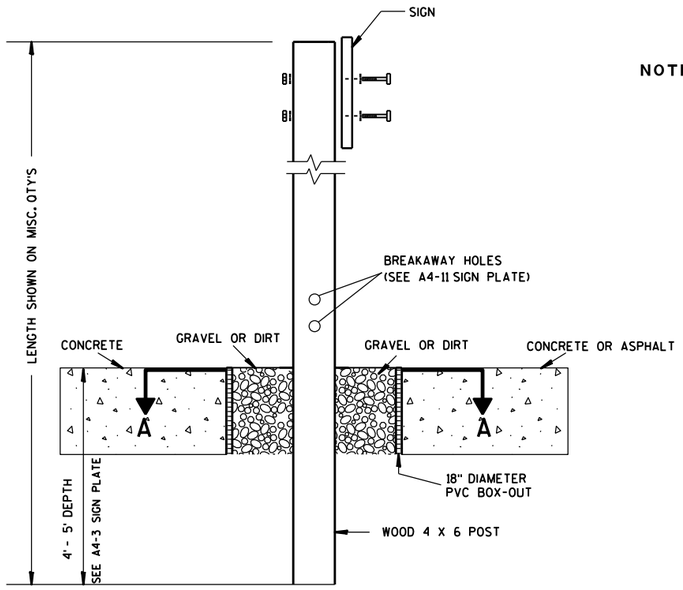

ELEVATION VIEW

DETAIL OF WOOD 4 X 6 SIGN POST IN BOX-OUT

NOTES:
1. ALL MATERIAL TO BE APPROVED BY ENGINEER PRIOR TO INSTALLATION
2. SEE SIGN PLATE A4-8 FOR SIGN HARDWARE REQUIREMENTS
3. 18 INCH X 18 INCH SQUARE BOX-OUTS MAY BE USED FOR INSTALLATIONS IN EXISTING CONCRETE OR ASPHALT LOCATIONS.

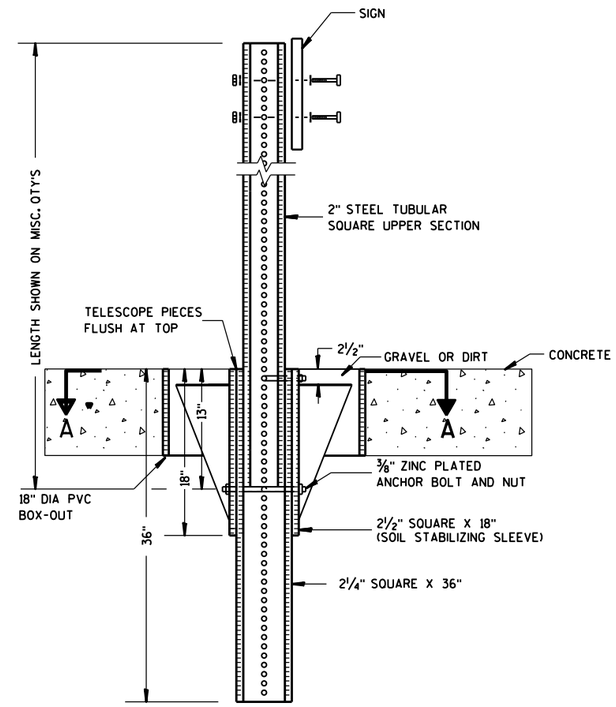

ELEVATION VIEW

DETAIL OF STEEL 2 X 2 SIGN POST IN BOX-OUT

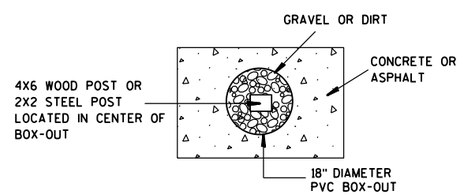

PLAN VIEW

FOR NEW CONCRETE/ASPHALT INSTALLATIONS

SIGN POST
BOX-OUTS
A4-3B

WISCONSIN DEPT OF TRANSPORTATION

APPROVED Matthew R Rauch
for State Traffic Engineer

DATE 1/27/14 PLATE NO. A4-3B.1

PROJECT NO:	HWY:	COUNTY:		SHEET NO:	E

URBAN AREA

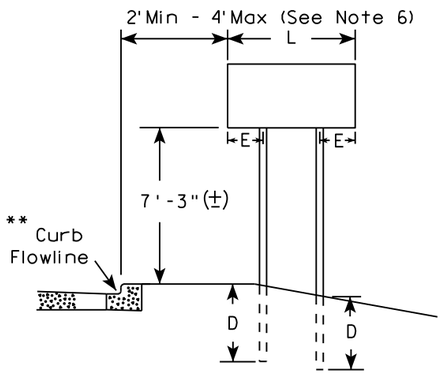

RURAL AREA (See Note 3)

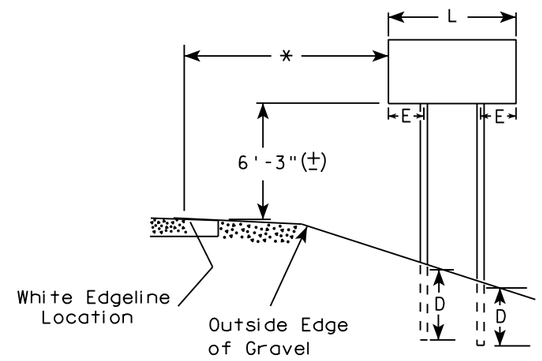

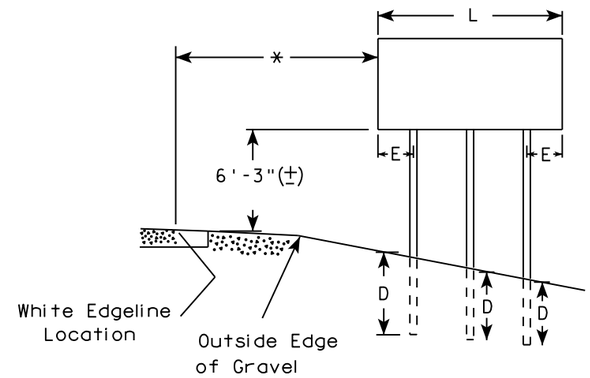

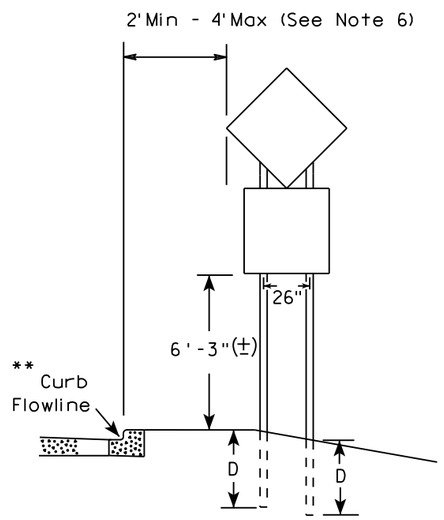

48" DIAMOND WARNING SIGN

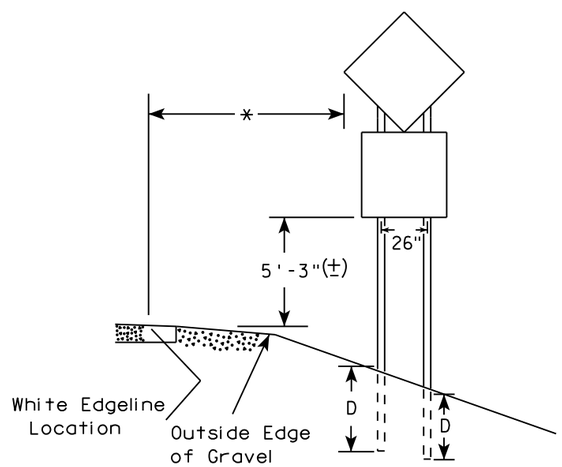

48" DIAMOND WARNING SIGN

GENERAL NOTES

1. For 3 or 4 post installations, individual post spacing shall be greater than 3'-6".
2. See tables below for required number of posts.
3. For expressways and freeways, mounting height is 7'-3" (±) or 6'-3" (±) depending upon existence of sub-sign.
4. The (±) tolerance for mounting height is 3 inches.
5. J-Assemblies are considered to be one sign for mounting height.
6. Offset distance shall be consistent with existing signs or consistent throughout length of project.
7. Folding signs shall be mounted at a height of 5'-3" (±) or as directed by the engineer.
8. The Double Arrow sign (W12-1) shall be mounted at a height of 2'-3" (±). The Chevron sign (W1-8), Roundabout Chevron panel (R6-4B), Clearance Markers (W5-52), Mile Markers (D10 series), In Road Object Markers (W5-54) & End of Road Markers (W5-56) shall be mounted at a height of 4"-3" (±).

* 6 feet from edge of a paved shoulder or 12 feet from the edge of pavement (edge line location) or 2 feet from outside edge of gravel, whichever is greater unless directed by project engineer.

** The existence of curb and gutter does not in itself mandate the vertical clearance illustrated. That height is typically measured where there is sidewalk adjacent to the roadway or parking is permitted. In the absence of sidewalk vertical clearance is measured from the top of the curb. Offset of signs is measured from the flow line.

*** See A4-3 sign plate for signs 4' or less in width and less than 20 S.F. in area.

SIGN SHAPE OTHER THAN DIAMOND (TWO POSTS REQUIRED)	
L	E
*** Greater than 48" Less than 60"	12"
60" to 108"	L/5

SIGN SHAPE OTHER THAN DIAMOND (THREE POSTS REQUIRED)	
L	E
Greater than 108" to 144"	12"

POST EMBEDMENT DEPTH

Area of Sign Installation (Sq. Ft.)	D (Min)
20 or Less	4'
Greater than 20	5'

TYPICAL INSTALLATION OF TYPE II SIGNS ON MULTIPLE POSTS

WISCONSIN DEPT OF TRANSPORTATION

APPROVED Matthew R Rauch
For State Traffic Engineer

DATE 8/21/17 PLATE NO. A4-4.15

7

7

PROJECT NO:	HWY:	COUNTY:		SHEET NO: 305	E

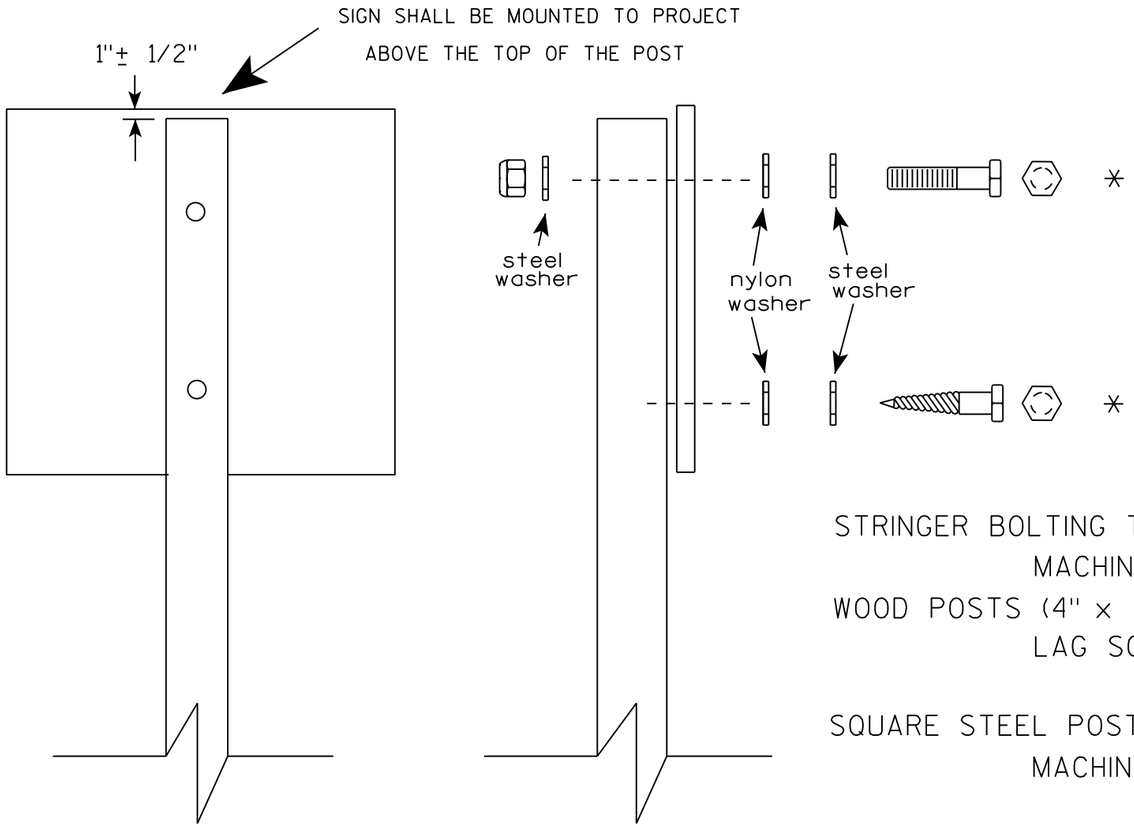

Nuts, bolts and lags used for mounting signs shall have hexagonal heads and shall be either :

a. Hot dip galvanized in accordance with ASTM Designation: A 153, Class D, or SC 3

b. Electro-galvanized in accordance with ASTM Designation : B 633, TYPE III, SC 3.

Threads on bolts and nuts shall be manufactured with sufficient allowance for the cadmium plate or galvanized coating to permit the nuts to run freely on the bolts.

STRINGER BOLTING TO ALUMINUM SIGNS (SEE SIGN PLATE A4-18)

MACHINE BOLTS - 5/16" X 1-3/4" Length w/ lock nuts

WOOD POSTS (4" x 4" or 4" x 6")

LAG SCREWS - 3/8" X 3" (NO STRINGERS ON BACK OF SIGN)

3/8" X 4" (STRINGERS ON BACK OF SIGN)

SQUARE STEEL POSTS (2" x 2")

MACHINE BOLTS - 3/8" X 3-1/4" Length w/ nuts (NO STRINGER ON BACK OF SIGN)

3/8" X 5" Length w/ nuts (STRINGERS ON BACK OF SIGN)

RIVETS - 9/32 " (6605-9-6) BULB-TITE, TRI-FOLD, ALUMINUM BODY/MANDREL

O.D. FLANGE .720-.765 INCH, GRIP RANGE .042-.375 INCH

WASHERS (ALL POSTS) -

1-1/4" O.D. X 3/8" I.D. X 1/16" STEEL

1-1/4" O.D. X 3/8" I.D. X .080 NYLON

* Two different fastening systems are shown for illustration purposes. On any individual sign, either one or the other system shall be used. Actual number of fasteners per sign varies with the sign area, but normally there are two. For a single post installation, all signs greater than 9 sq. ft. require the use of 3 fasteners.

ATTACHMENT OF SIGNS TO POSTS

WISCONSIN DEPT OF TRANSPORTATION

APPROVED Matthew R Rauch
for State Traffic Engineer

DATE 8/11/16 PLATE NO. A4-8.8

PROJECT NO: SHEET NO: E

TELESCOPIC TUBING ANCHORS
TWO PIECE SYSTEM

2 1/4 " SQUARE
12 GAUGE
PERFORATED
GALVANIZED FINISH

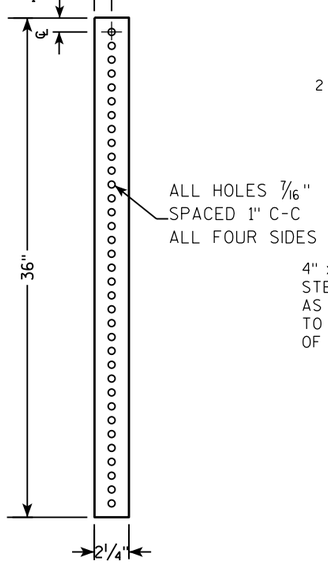

2 1/2 " SQUARE
12 GAUGE
OMNI-DIRECTIONAL
PERFORATED
SOIL STABILIZING SLEEVE
GALVANIZED FINISH

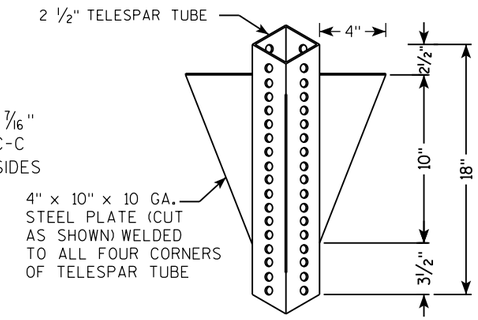

DETAIL OF TUBULAR STEEL SIGN POST
(IN POURED CONCRETE OR ASPHALT)

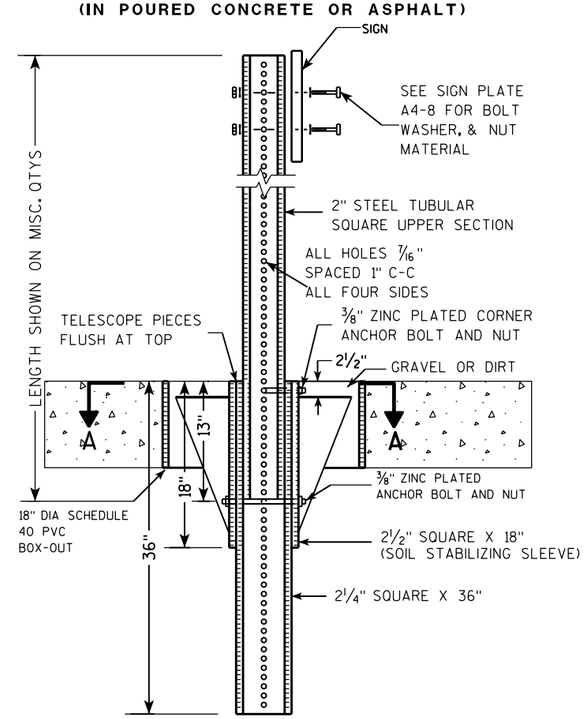

DETAIL OF TUBULAR STEEL SIGN POST
(IN LOCATIONS OTHER THAN POURED CONCRETE OR ASPHALT)

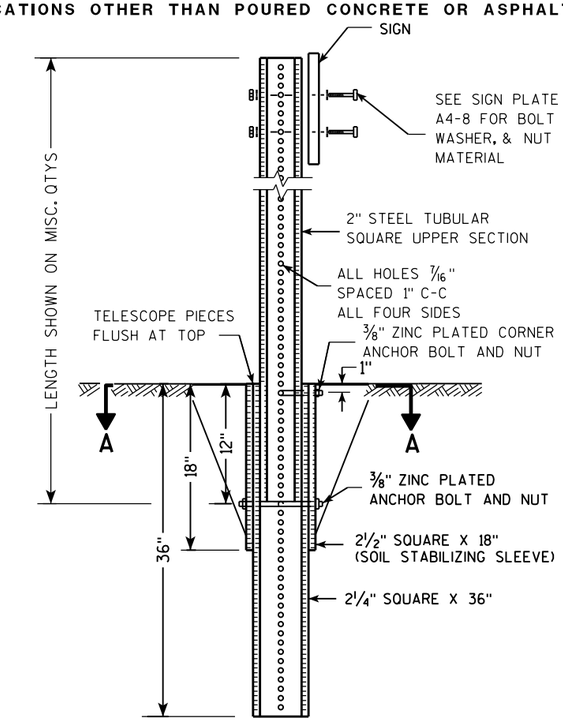

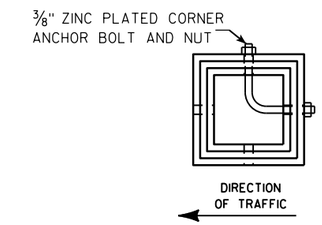

SECTION A-A

Area of Sign Installation (Sq. Ft.)	Number of Required Posts
9 or less	1
Greater than 9 less than or equal to 18	2
Greater than 18 less than or equal to 27	3

Signs wider than 3 feet or larger than 9 sq. ft shall be mounted on multiple posts (see above table).

TUBULAR STEEL
SIGN POST
A4-9

WISCONSIN DEPT OF TRANSPORTATION

APPROVED Matthew R Rauch
for State Traffic Engineer

DATE 2/05/15 PLATE A4-9.9

7 7

PROJECT NO:	HWY:	COUNTY:		SHEET NO:	E

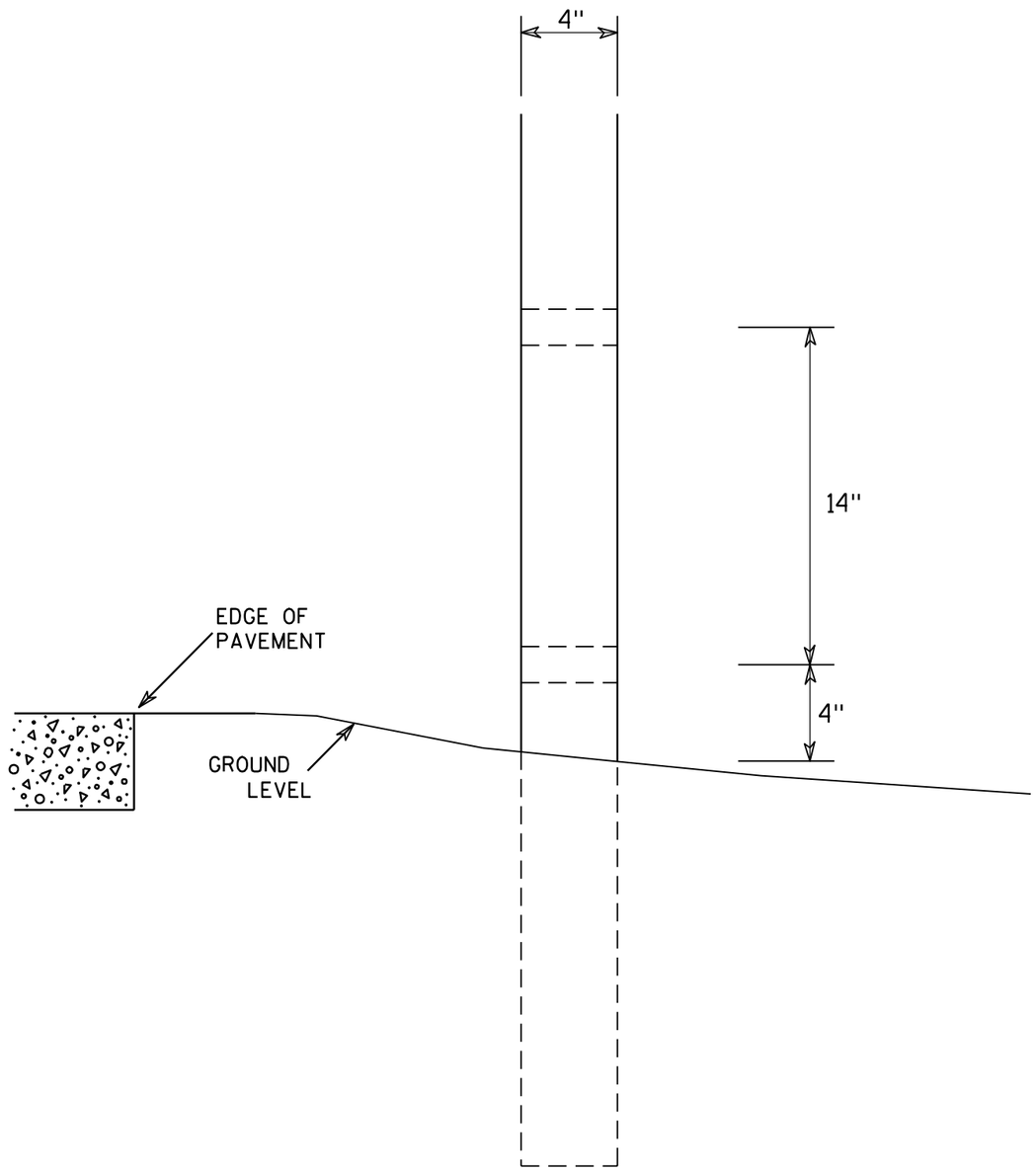

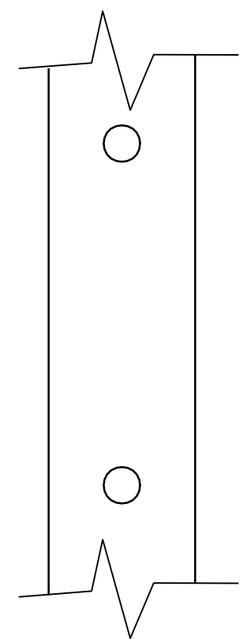

SIDE VIEW

GENERAL NOTES

1. All 4 x 6 Wood Posts shall be modified by having two 1½" diameter holes drilled perpendicular to the roadway centerline.

4 X 6 WOOD POST MODIFICATIONS

WISCONSIN DEPT OF TRANSPORTATION

APPROVED Chester J Spang for State Traffic Engineer

DATE 3/27/97 PLATE NO. A4-11.2

PROJECT NO:	HWY:	COUNTY:		SHEET NO: 308	E

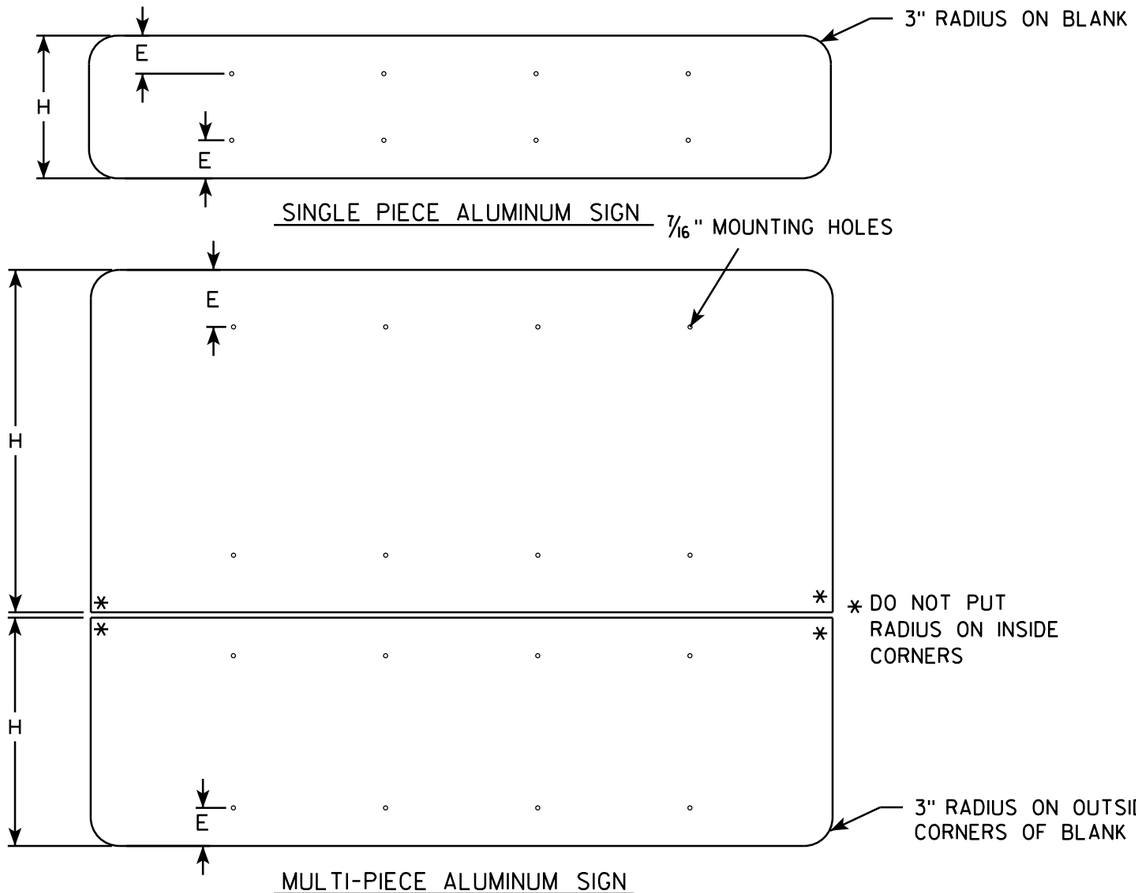

GENERAL NOTES

- ALL SIGNS OVER 60" IN WIDTH SHALL HAVE A 3" RADIUS ON THE OUTSIDE CORNERS OF THE ALUMINUM BLANK.
- MOUNTING HOLES SHALL BE 7/16" DIAMETER.
- SEE CHART FOR HOLE SPACING REQUIREMENTS
- FOR SIGN PANELS WITH DIMENSION (H) 36" AND OVER, DIMENSION E SHALL BE 6"
- FOR SIGN PANELS WITH DIMENSION (H) UNDER 36", DIMENSION E SHALL BE 4"
- SIGN STRINGER MATERIAL SHALL CONSIST OF STEEL CHANNEL POST SECTIONS, WEIGHING 1.12 LBS/FT IN ACCORDANCE WITH SECTION 633.2.1 OF THE STANDARD SPECIFICATIONS FOR HIGHWAY AND STRUCTURE CONSTRUCTION.
- SEE SIGN PLATE A4-8 FOR SIGN STRINGER BOLTING REQUIREMENTS.

SIGN WIDTH	STRINGER WIDTH	POSTS	HOLE SPACING	MOUNTING HOLES						
78"	72"	2	16"	15"	31"	47"	63"			
84"	72"	2	17"	16 1/2"	33 1/2"	50 1/2"	67 1/2"			
90"	72"	2	18"	18"	36"	54"	72"			
96"	90"	2	19"	19 1/2"	38 1/2"	57 1/2"	76 1/2"			
102"	90"	2	20"	21"	41"	61"	81"			
108"	90"	2	21"	22 1/2"	43 1/2"	64 1/2"	85 1/2"			
114"	108"	3	15"	12"	27"	42"	57"	72"	87"	102"
120"	108"	3	16"	12"	28"	44"	60"	76"	92"	108"
126"	108"	3	17"	12"	29"	46"	63"	80"	97"	114"
132"	126"	3	18"	12"	30"	48"	66"	84"	102"	120"
138"	126"	3	19"	12"	31"	50"	69"	88"	107"	126"
144"	126"	3	20"	12"	32"	52"	72"	92"	112"	132"

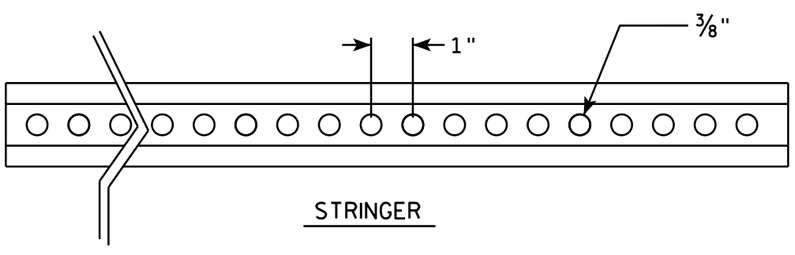

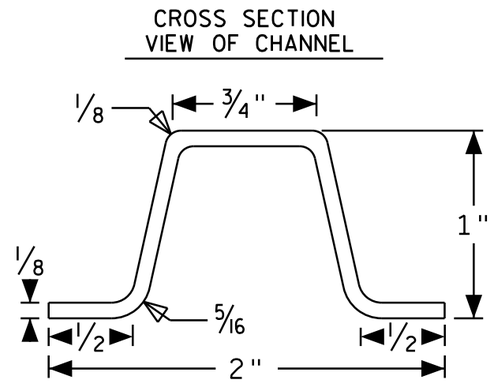

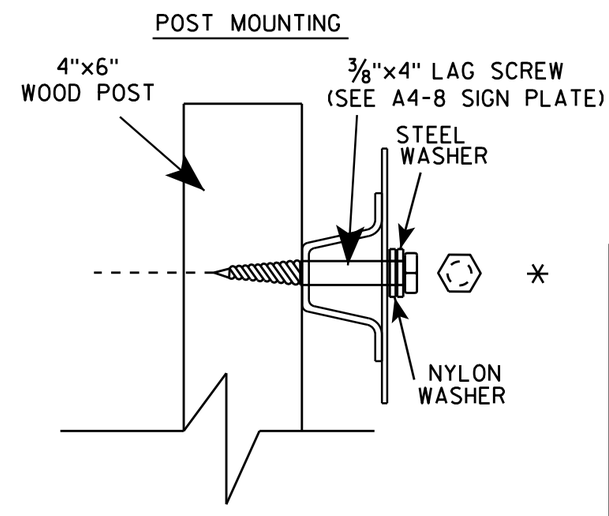

SIGN STRINGER MOUNTING REQUIREMENTS

WISCONSIN DEPT OF TRANSPORTATION

APPROVED Matthew R Rauch
for State Traffic Engineer

DATE 4/26/16 PLATE NO A4-18.1

PROJECT NO:	HWY:	COUNTY:		SHEET NO:	E

BANDING

SINGLE SIGN

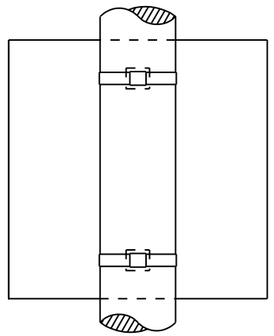

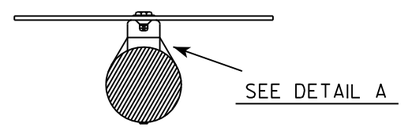

"J" ASSEMBLY

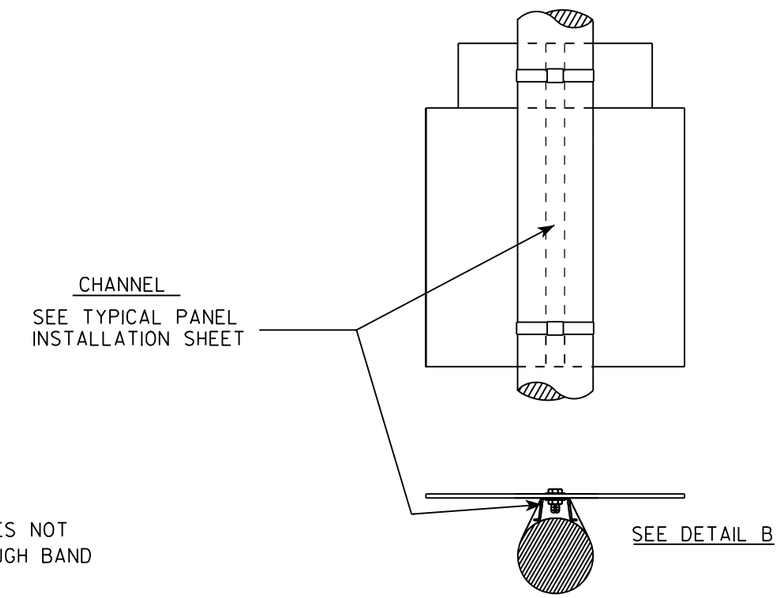

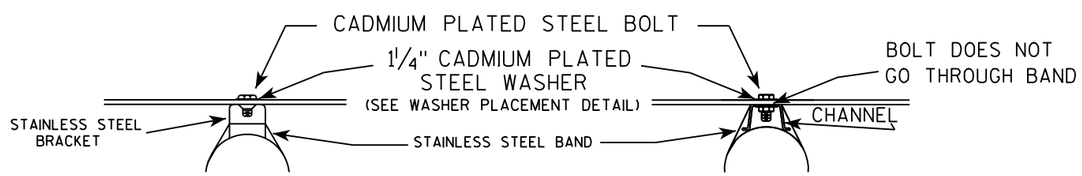

WASHER PLACEMENT

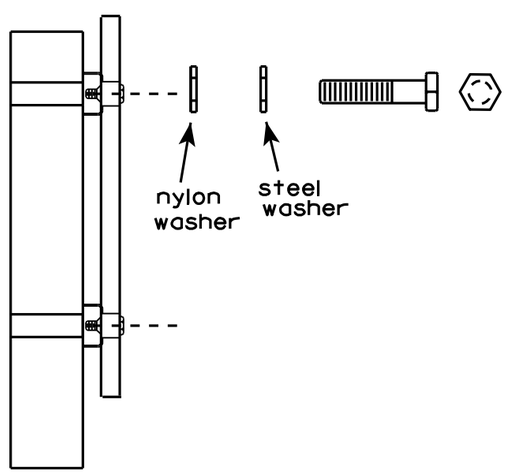

WASHERS (ALL POSTS) -

1-1/4" O.D. X 3/8" I.D. X 1/16" STEEL

1-1/4" O.D. X 3/8" I.D. X .080 NYLON

FOR ALL TYPE H SIGNS

GENERAL NOTES

1. Any sign over 3 feet in width shall use the V-Block banding method. See A5-10 standard plate.
2. Signs 3 feet or greater in height shall have three bracket bands installed. Signs less than 3 feet in height shall have two bracket bands installed.
3. Banding and assembly bracket shall be stainless steel. All bands shall be ¾" in width and 0.025" thickness.

STANDARD SIGN

SIGN BANDING DETAILS

WISCONSIN DEPT OF TRANSPORTATION

APPROVED Matthew R Rauch for State Traffic Engineer

DATE 8/16/13 PLATE NO. A5-9.3

PROJECT NO:	HWY:	COUNTY:		SHEET NO: 310	E

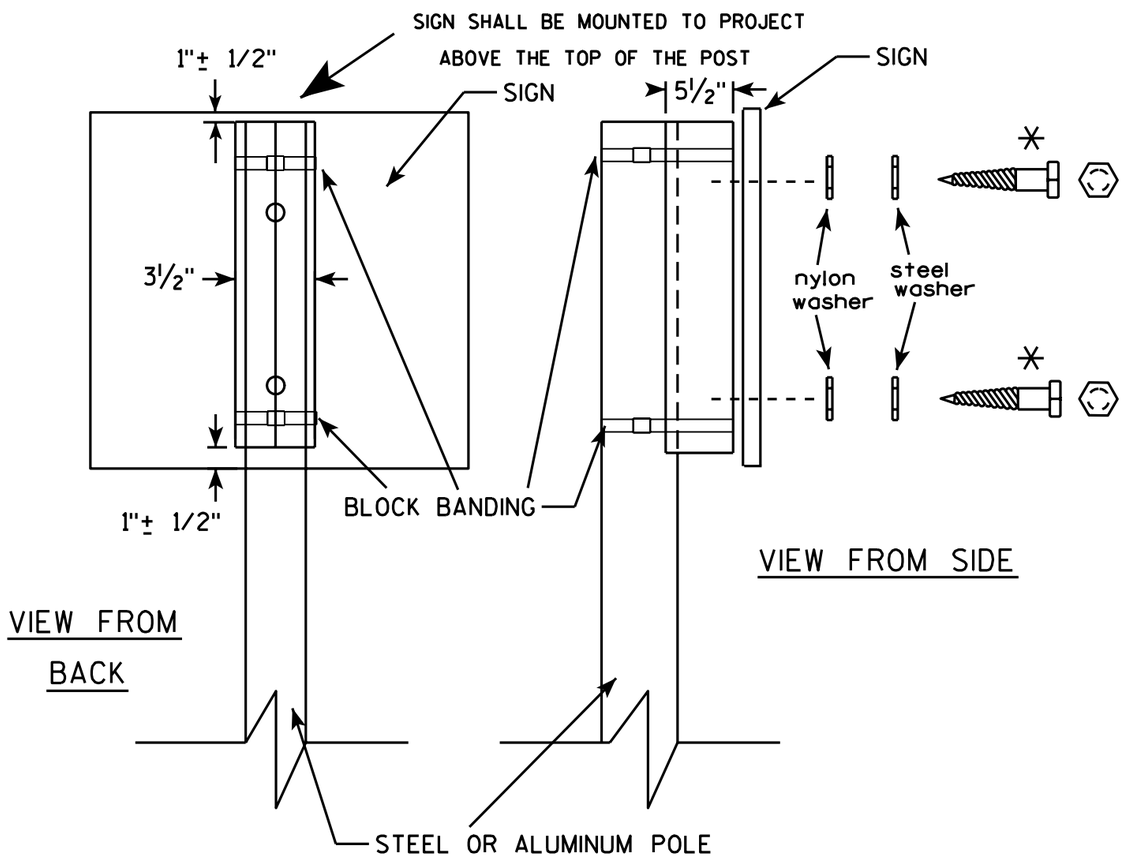

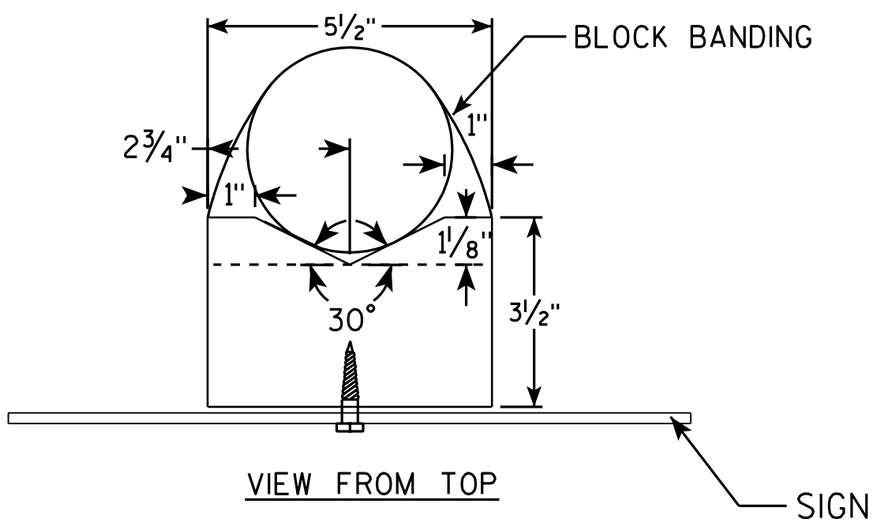

GENERAL NOTES

1. WOOD 4"X6" POST MATERIAL SHALL CONFORM TO 507.2.2 OF THE WisDOT STANDARD SPECIFICATIONS
2. BLOCK BANDING AND CLIPS SHALL BE STAINLESS STEEL, ¾" WIDTH AND 0.025" THICKNESS
3. SIGNS 3' OR GREATER IN HEIGHT SHALL UTILIZE 3 BLOCK BANDS. SIGNS UNDER 3' IN HEIGHT SHALL UTILIZE 2 BLOCK BANDS
4. ACTUAL NUMBER OF FASTENERS PER SIGN VARIES WITH THE SIGN AREA, BUT NORNALLY THERE ARE TWO. FOR SIGNS GREATER THAN 9 S.F. 3 FASTENERS SHALL BE USED.
5. ALL SIGN MOUNTING BOLTS AND WASHERS SHALL BE EITHER:
   a. Hot dip or mechanically galvanized in accordance with ASTM Designation: A 153, Class D, or
   b. Cadmium plated in accordance with ASTM Designation : B 766 TYPE 3, Class 12, or
   c. Electro-galvanized in accordance with ASTM Designation : B 633, TYPE III, SC 3.
6. ALL BOLTS SHALL HAVE HEXAGONAL HEADS.
7. STEEL WASHERS SHALL BE 1¼" O.D. X ⅜" I.D. X 1/16"
8. NYLON WASHERS SHALL BE 1¼" O.D. X ⅜" I.D. X .080 FOR TYPE H OR TYPE F FACE SIGN

✳ LAG BOLTS SHALL BE ⅜" X 2½"

BLOCK BANDING DETAIL
(V-BLOCK OPTION)

WISCONSIN DEPT OF TRANSPORTATION

APPROVED Matthew R Rauch
for State Traffic Engineer

DATE 7/12/07 PLATE NO. A5-10.1

PROJECT NO:				SHEET NO: 311	E

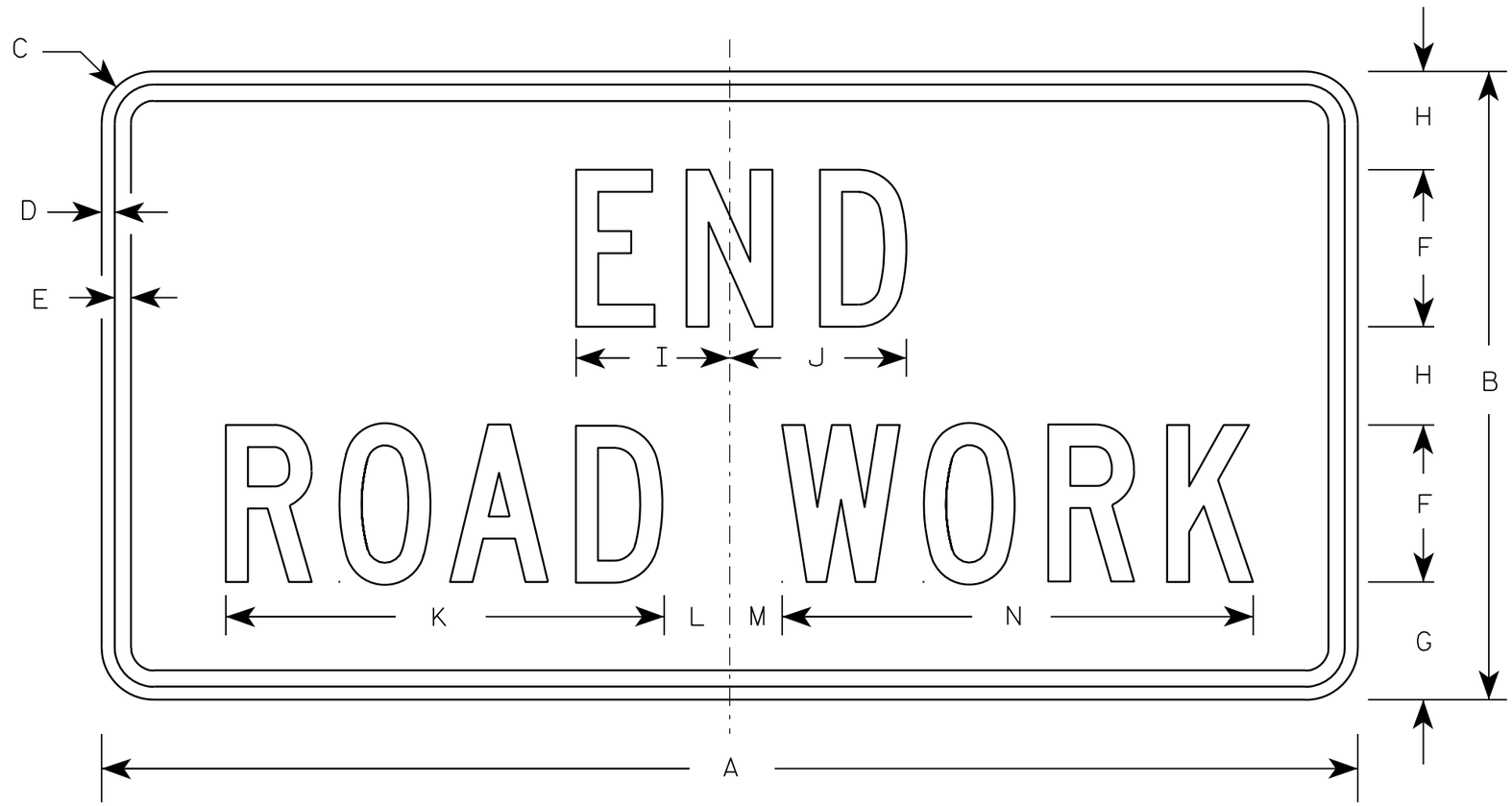

G20-2A

NOTES

1. Sign is Type II - Type F Reflective - reference WIS DOT Standard Specification for HIGHWAY and STRUCTURE CONSTRUCTION latest edition.
2. Color:
   Background - Orange
   Message - Black
3. Message Series - C
4. Corners may be square or rounded when base material is plywood but borders shall be rounded as shown. When base material is metal, the corners and borders shall be rounded.

Metric equivalent for this sign is:

SIZE	
1	900 mm X 450 mm
2	1200 mm X 600 mm
3	1200 mm X 600 mm
4	1200 mm X 600 mm
5	1200 mm X 600 mm

SIZE	A	B	C	D	E	F	G	H	I	J	K	L	M	N	O	P	Q	R	S	T	U	V	W	X	Y	Z	Area sq. ft.	Area m2
1	36	18	1 1/8	3/8	1/2	4	3 3/4	2 1/2	4 1/8	4 1/8	11 1/8	2	1	12 1/8													4.5	0.41
2	48	24	1 1/2	1/2	5/8	6	4 1/2	3 3/4	5 7/8	6 3/4	16 3/4	2 1/2	1 3/4	18 1/2													8.0	0.72
3	48	24	1 1/2	1/2	5/8	6	4 1/2	3 3/4	5 7/8	6 3/4	16 3/4	2 1/2	1 3/4	18 1/2													8.0	0.72
4	48	24	1 1/2	1/2	5/8	6	4 1/2	3 3/4	5 7/8	6 3/4	16 3/4	2 1/2	1 3/4	18 1/2													8.0	0.72
5	48	24	1 1/2	1/2	5/8	6	4 1/2	3 3/4	5 7/8	6 3/4	16 3/4	2 1/2	1 3/4	18 1/2													8.0	0.72

STANDARD SIGN

G20-2A

WISCONSIN DEPT OF TRANSPORTATION

APPROVED Matthew R Rauch
for State Traffic Engineer

DATE 9/30/09 PLATE NO. G20-2A.8

PROJECT NO:	HWY:	COUNTY:		SHEET NO: 312	E

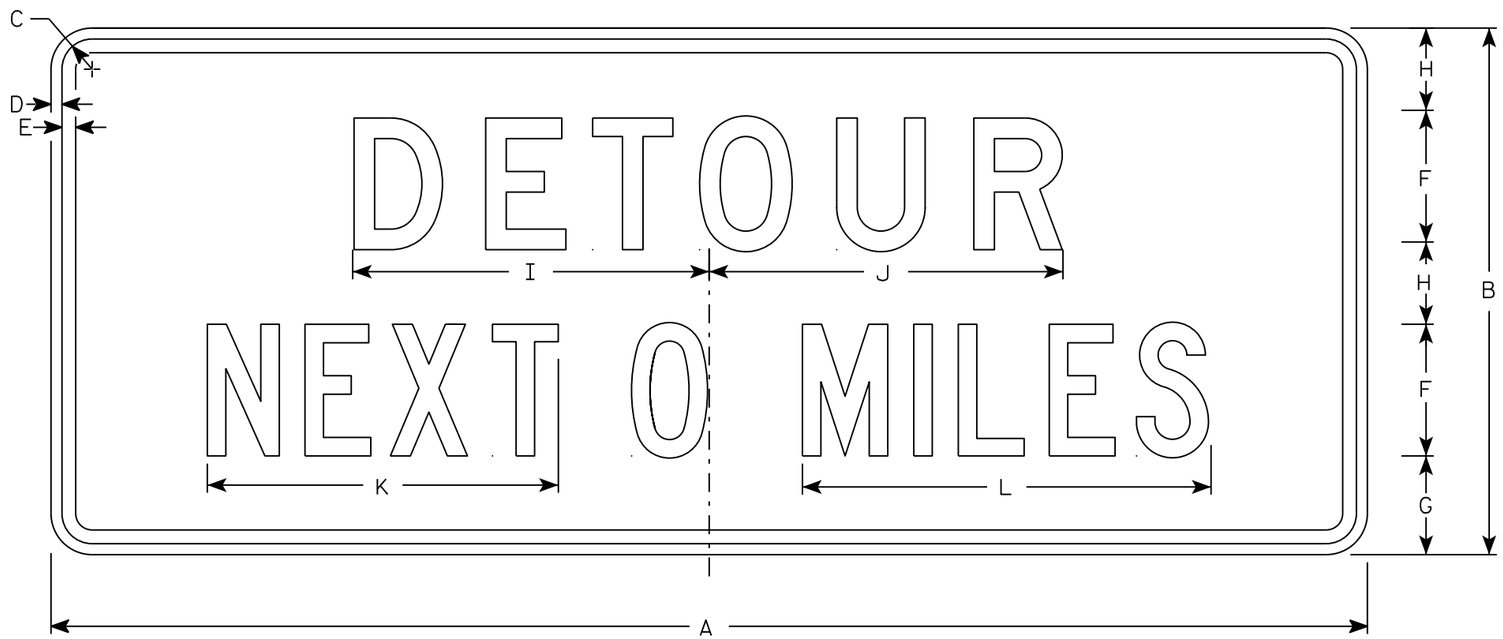

G20-51

NOTES

1. Sign is Type II - Type F Reflective
2. Color:
   Background - Orange
   Message - Black
3. Message Series - Line 1 is D and Line 2 is C
4. Corners may be square or rounded when base material is plywood but borders shall be rounded as shown. When base material is metal, the corners and borders shall be rounded.
5. Round distance to nearest whole Mile and substitute appropriate numerals and optically adjust spacing to achieve proper balance

SIZE	A	B	C	D	E	F	G	H	I	J	K	L	M	N	O	P	Q	R	S	T	U	V	W	X	Y	Z	Area sq. ft.
1																											
2	60	24	1 3/8	1/2	5/8	6	4 1/2	3 3/4	16 1/4	16 1/8	16	18 5/8															10
3																											
4	60	24	1 3/8	1/2	5/8	6	4 1/2	3 3/4	16 1/4	16 1/8	16	18 5/8															10
5																											

STANDARD SIGN
G20-51

WISCONSIN DEPT OF TRANSPORTATION

APPROVED Matthew R Rauch
for State Traffic Engineer

DATE 3/14/17 PLATE NO. G20-51.2

PROJECT NO:	HWY:	COUNTY:		SHEET NO: 313	E

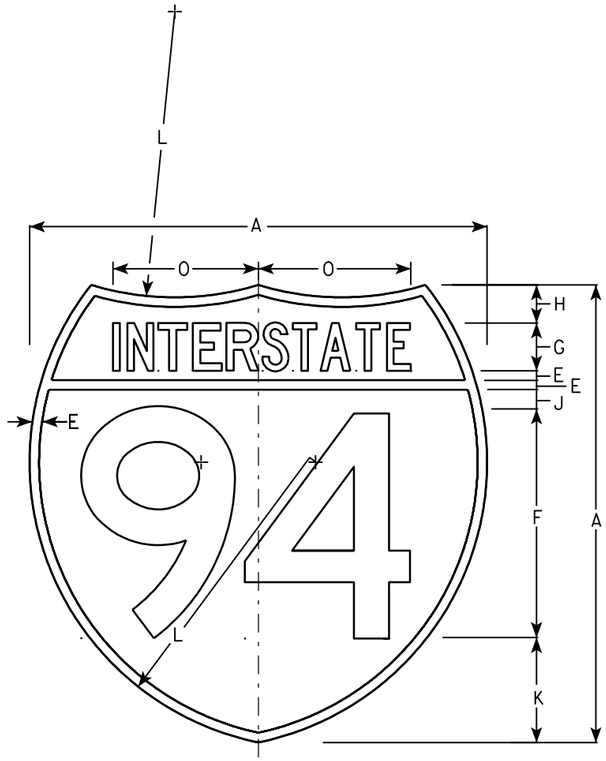

M1-1

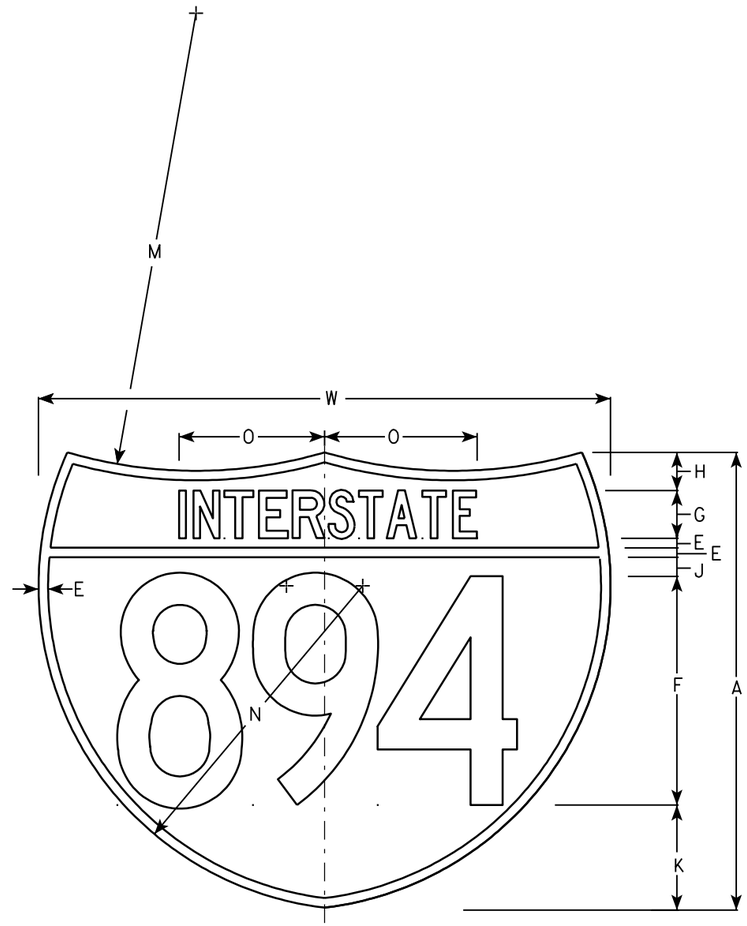

M1-1A

NOTES

1. Sign is Type II - See Note 6 - reference WIS DOT Standard Specification for HIGHWAY and STRUCTURE CONSTRUCTION latest edition.
2. Color:
   Background - Top Red - Bottom Blue (See Note 6)
   Message - White - See Note 6
3. Message Series - See note 5
4. Substitute appropriate numerals & ajust spacing as per plate A10-1.
5. M1-1 - Numerals - D
   Interstate - C
   M1-1A - All copy - C
6. Permanent Signs
   Message - Type H Reflective
   Detour or other temporary signs
   Background - Reflective
   Message - Reflective

Metric equivalent for these signs are:

SIZE	M1-1	SIZE	M1-1A
1			
2	600 mm X 600 mm	2	600 mm X 750 mm
3	900 mm X 900 mm	3	900 mm X 1125 mm
4	900 mm X 900 mm	4	900 mm X 1125 mm
5	900 mm X 900 mm	5	900 mm X 1125 mm

SIZE	A	B	C	D	E	F	G	H	I	J	K	L	M	N	O	P	Q	R	S	T	U	V	W	X	Y	M1-1 Area sq. ft.	M1-1A Area sq. ft.	M1-1 Area m2	M1-1A Area m2
1																													
2	24				1/2	12	2 1/2	2		1	5 1/2	15	24	17	7 7/8								30			3.13	3.91	.36	.46
3	36				3/4	18	3 3/4	3		1 1/2	8 1/4	22 1/2	36	25 1/2	11 3/4								45			7.03	8.79	.81	1.05
4	36				3/4	18	3 3/4	3		1 1/2	8 1/4	22 1/2	36	25 1/2	11 3/4								45			7.03	8.79	.81	1.05
5	36				3/4	18	3 3/4	3		1 1/2	8 1/4	22 1/2	36	25 1/2	11 3/4								45			7.03	8.79	.81	1.05

INTERSTATE ROUTE MARKER
M1-1 FOR ASSEMBLIES

WISCONSIN DEPT OF TRANSPORTATION

APPROVED Matthew R Rauch
for State Traffic Engineer

DATE 08/23/05 PLATE NO. M1-1.8

PROJECT NO:	HWY:	COUNTY:		SHEET NO: 314	E

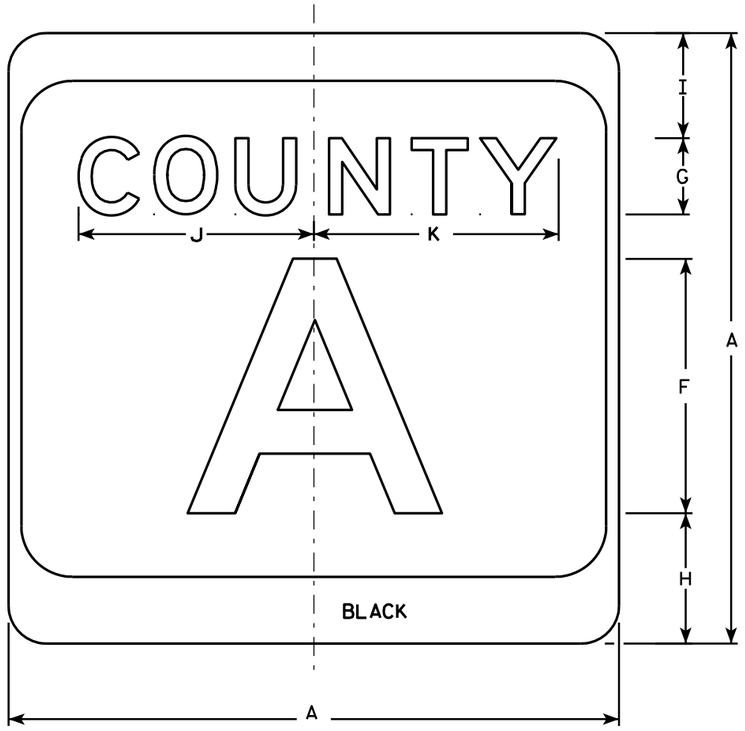

M1-5A

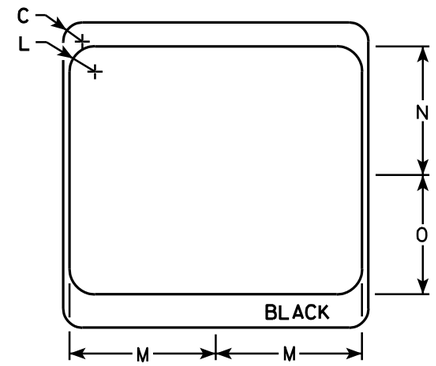

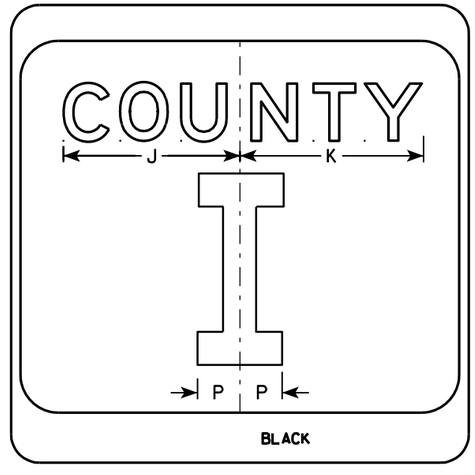

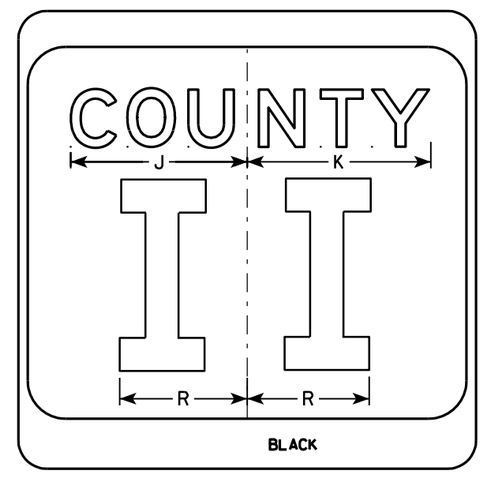

NOTES

1. Sign is Type II - see Note 7 - reference WIS DOT Standard Specification for HIGHWAY and STRUCTURE CONSTRUCTION latest edition.
2. Color:
   Background - White & Black - See Note 7
   Message - Black
3. Message Series - see Note 5
4. Corners may be square or rounded when base material is plywood but borders shall be rounded as shown. When base material is metal, the corners and borders shall be rounded.
5. Message Series E for 1 letter.
   Message Series D for 2 letters unless message is too big then Series C.
   Message Series C for 3 letters unless message is too big then Series B.
6. Substitute appropriate letters & optically center to achieve proper balance.
7. Permanent Signs
   Background - Type H Reflective
   Detour or temporary Signs
   Background - Reflective

SIZE	A	B	C	D	E	F	G	H	I	J	K	L	M	N	O	P	Q	R	S	T	U	V	W	X	Y	Z	Area sq. ft.
1																											
2	24		1 1/2			10	3	5 1/8	4 1/8	9 1/4	9 5/8	2	11 1/2	10 1/8	9 3/8	2 1/4		6 5/8									4.0
3	36		2 1/4			16	4	7 5/8	5 5/8	12 1/4	12 7/8	3	17 1/8	15 1/4	14	3 3/8		10									9.0
4	36		2 1/4			16	4	7 5/8	5 5/8	12 1/4	12 7/8	3	17 1/8	15 1/4	14	3 3/8		10									9.0
5	36		2 1/4			16	4	7 5/8	5 5/8	12 1/4	12 7/8	3	17 1/8	15 1/4	14	3 3/8		10									9.0

CTH MARKER
M1-5A FOR ASSEMBLIES

WISCONSIN DEPT OF TRANSPORTATION

APPROVED Matthew R Rauch
for State Traffic Engineer

DATE 9/27/11 PLATE NO. M1-5A.8

PROJECT NO: | HWY: | COUNTY: | SHEET NO: 315 | E

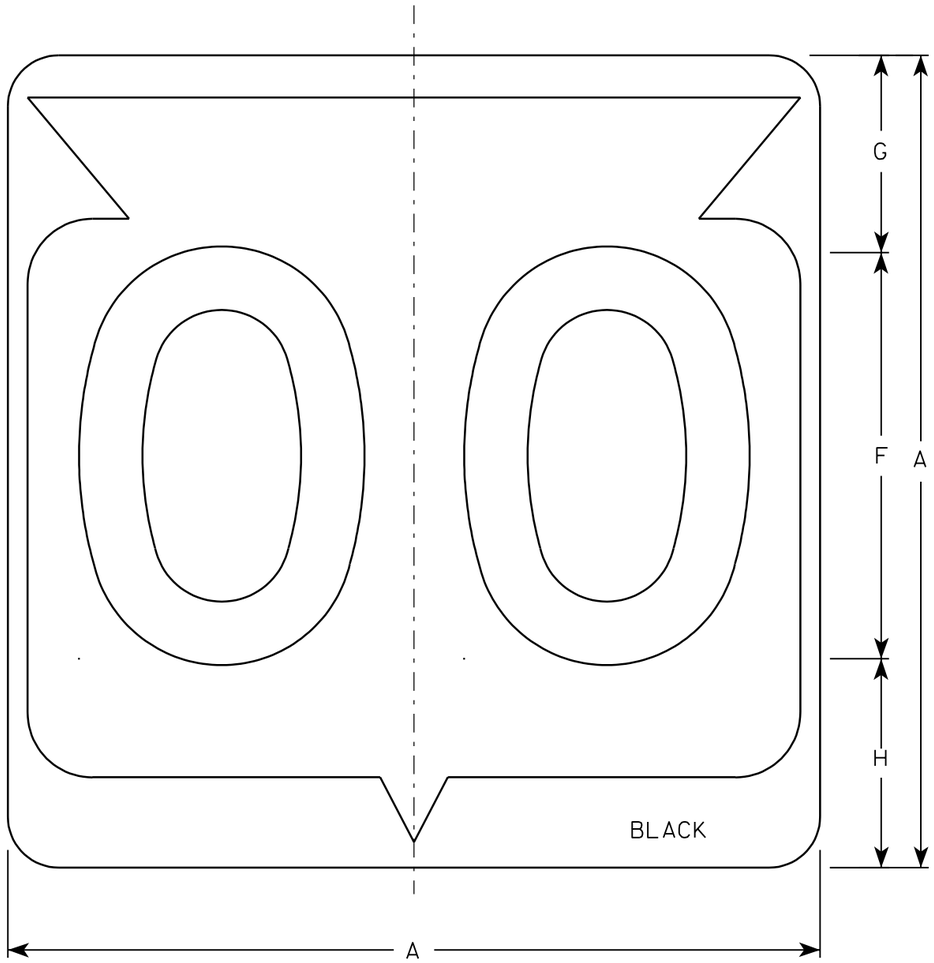

M1-6

NOTES

1. Sign is Type II - See Note 6 - reference WIS DOT Standard Specification for HIGHWAY and STRUCTURE CONSTRUCTION latest edition.
2. Color:
   Background - White & Black - See Note 6
   Message - Black
3. Message Series - See note 5
4. Corners may be square or rounded when base material is plywood but borders shall be rounded as shown. When base material is metal, the corners and borders shall be rounded.
5. Substitute appropriate Series numerals and adjust spacing as per plate A10-1.
6. Permanent Signs
   Background - Type H Reflective
   Detour or temporary Signs
   Background - Reflective

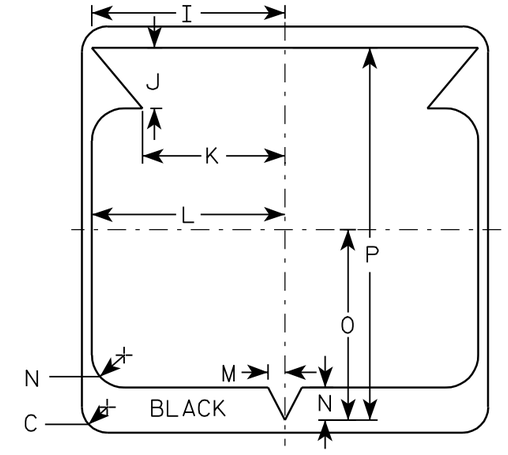

Metric equivalent for this sign is:

SIZE	
1	
2	600 mm X 600 mm
3	900 mm X 900 mm
4	900 mm X 900 mm
5	900 mm X 900 mm

SIZE	A	B	C	D	E	F	G	H	I	J	K	L	M	N	O	P	Q	R	S	T	U	V	W	X	Y	Z	Area sq. ft.	Area m2
1																												
2	24		1 1/2			12	5 1/2	6 1/2	10 1/4	2 1/2	8 7/8	11 1/2	1	1 7/8	11 1/4	21 7/8											4.0	.36
3	36		2 1/4			18	8 3/4	9 1/4	15 3/8	5 3/8	12 5/8	17 1/8	1 1/2	2 7/8	16 7/8	33											9.0	.81
4	36		2 1/4			18	8 3/4	9 1/4	15 3/8	5 3/8	12 5/8	17 1/8	1 1/2	2 7/8	16 7/8	33											9.0	.81
5	36		2 1/4			18	8 3/4	9 1/4	15 3/8	5 3/8	12 5/8	17 1/8	1 1/2	2 7/8	16 7/8	33											9.0	.81

STATE ROUTE MARKER
M1-6 FOR ASSEMBLIES

WISCONSIN DEPT OF TRANSPORTATION

APPROVED Chester J Spang
for State Traffic Engineer

DATE 3/20/02 PLATE NO. M1-6.9

PROJECT NO: | HWY: | COUNTY: | SHEET NO: 316 | E

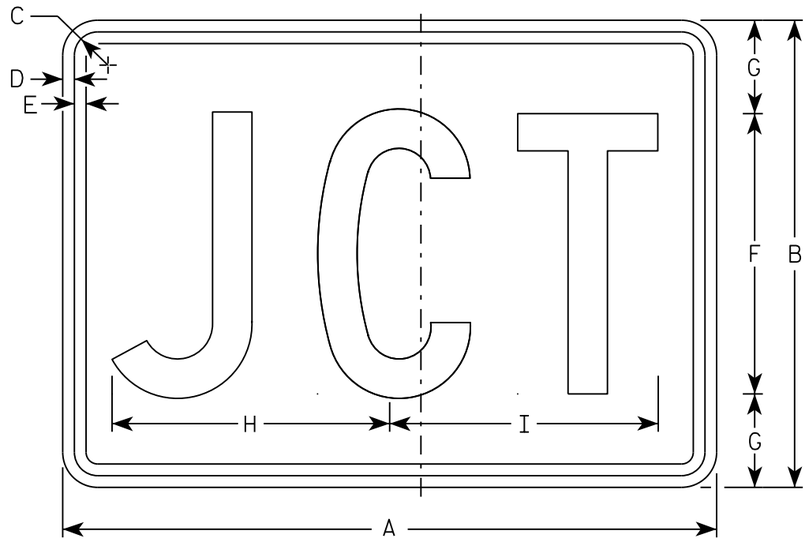

M2-1
MM2-1
MP2-1

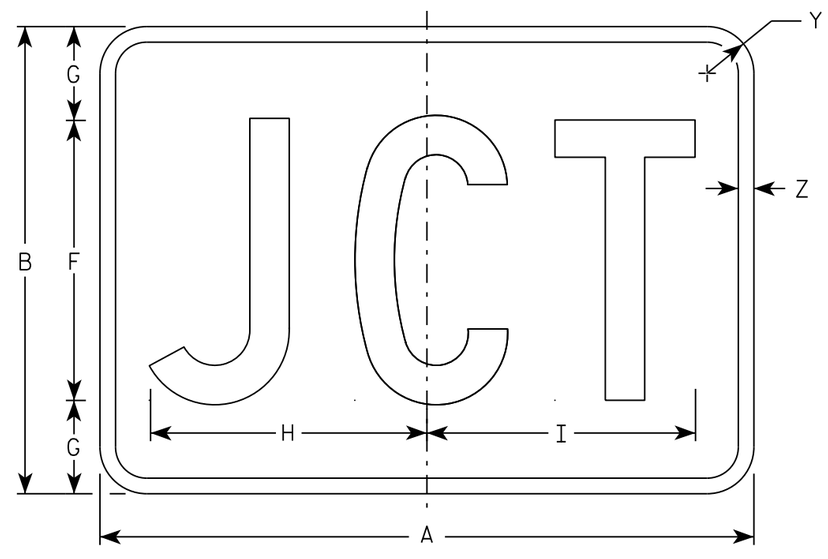

MB2-1
MK2-1
MN2-1
MR2-1

NOTES

1. Sign is Type II - Type H
2. Color:
   Background - See note 5
   Message - See note 5
3. Message Series - C
4. Corners may be square or rounded when base material is plywood but borders shall be rounded as shown. When base material is metal, the corners and borders shall be rounded.
5. M2-1 Background - White
   Message - Black
   MB2-1 Background - Blue
   Message - White
   MK2-1 Background - Green
   Message - White
   MM2-1 Background - White
   Message - Green
   MN2-1 Background - Brown
   Message - White
   MP2-1 Background - White
   Message - Blue
   MR2-1 Background - Brown
   Message - Yellow

SIZE	A	B	C	D	E	F	G	H	I	J	K	L	M	N	O	P	Q	R	S	T	U	V	W	X	Y	Z	Area sq. ft.
1																											
2	21	15	1 1/8	3/8	3/8	9	3	8 7/8	8 5/8																1 1/2	1/2	2.20
3	30	21	1 1/8	3/8	3/8	13	4	12 7/8	12 3/8																1 1/2	1/2	4.40
4	30	21	1 1/8	3/8	3/8	13	4	12 7/8	12 3/8																1 1/2	1/2	4.40
5	30	21	1 1/8	3/8	3/8	13	4	12 7/8	12 3/8																1 1/2	1/2	4.40

STANDARD SIGN
M2-1

WISCONSIN DEPT OF TRANSPORTATION

APPROVED Matthew R Rauch
for State Traffic Engineer

DATE 10/15/15 PLATE 317 2-1.12

PROJECT NO: | HWY: | COUNTY: | SHEET NO: | E

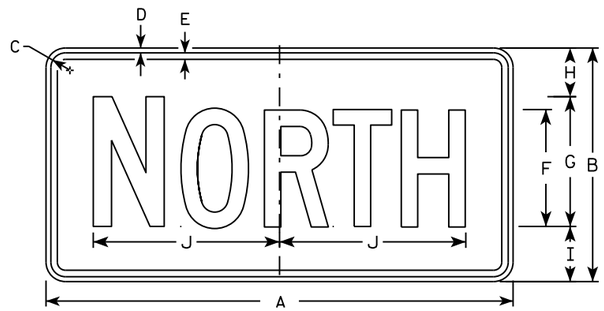

M3-1
MM3-1
MP3-1

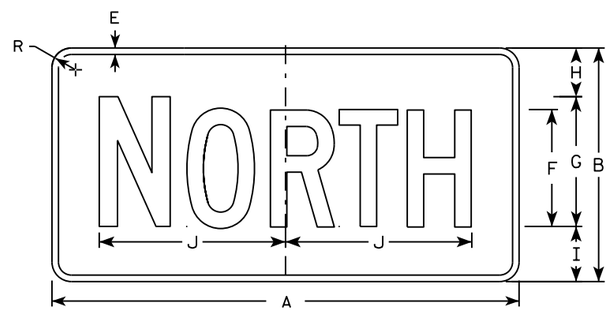

MB3-1
MK3-1
MN3-1

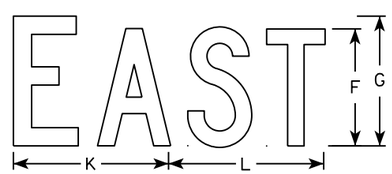

M3-2
MM3-2
MP3-2

MB3-2
MK3-2
MN3-2

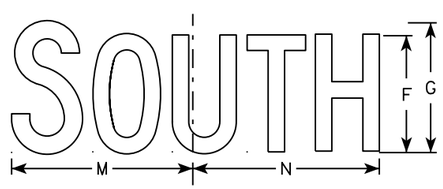

M3-3
MM3-3
MP3-3

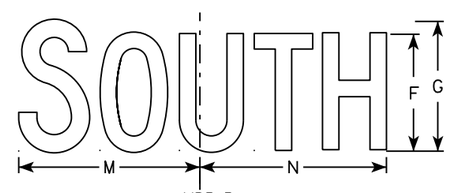

MB3-3
MK3-3
MN3-3

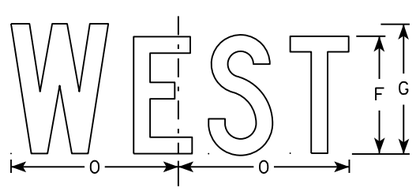

M3-4
MM3-4
MP3-4

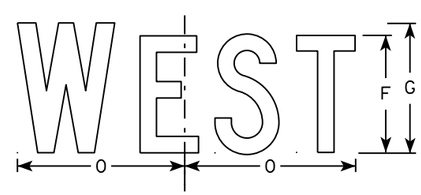

MB3-4
MK3-4
MN3-4

NOTES

1. All Signs Type II - Type H
2. Color:
   Background - See note 5
   Message - See note 5
3. Message Series - C
4. Corners may be square or rounded when base material is plywood but borders shall be rounded as shown. When base material is metal, the corners and borders shall be rounded.
5. M3-1 thru M3-4 Background - White
   Message - Black
   MB3-1 thru MB3-4 Background - Blue
   Message - White
   MK3-1 thru MK3-4 Background - Green
   Message - White
   MM3-1 thru MM3-4 Background - White
   Message - Green
   MN3-1 thru MN3-4 Background - Brown
   Message - White
   MP3-1 thru MP3-4 Background - White
   Message - Blue
6. Note the first letter of each direction is larger than the remainder of the message.

SIZE	A	B	C	D	E	F	G	H	I	J	K	L	M	N	O	P	Q	R	S	T	U	V	W	X	Y	Z	Area sq. ft.
1																											
2	24	12	1 1/8	3/8	3/8	6	7	2 1/4	2 3/4	10 1/4	7 7/8	8 3/8	10 1/4	9 3/4	8 3/4			1 1/2									2.00
3	36	18	1 1/8	3/8	1/2	9	10	3 3/4	4 1/4	14 3/8	12	12 1/8	14	14 1/8	13			1 1/2									4.5
4	36	18	1 1/8	3/8	1/2	9	10	3 3/4	4 1/4	14 3/8	12	12 1/8	14	14 1/8	13			1 1/2									4.5
5	36	18	1 1/8	3/8	1/2	9	10	3 3/4	4 1/4	14 3/8	12	12 1/8	14	14 1/8	13			1 1/2									4.5

STANDARD SIGNS
M3-1 thur M3-4
SERIES

WISCONSIN DEPT OF TRANSPORTATION

APPROVED Matthew R Rauch
for State Traffic Engineer

DATE 10/15/15 PLATE NO M3-1.14

PROJECT NO: | HWY: | COUNTY: | SHEET NO: | E

M4 - 1
M04 - 1

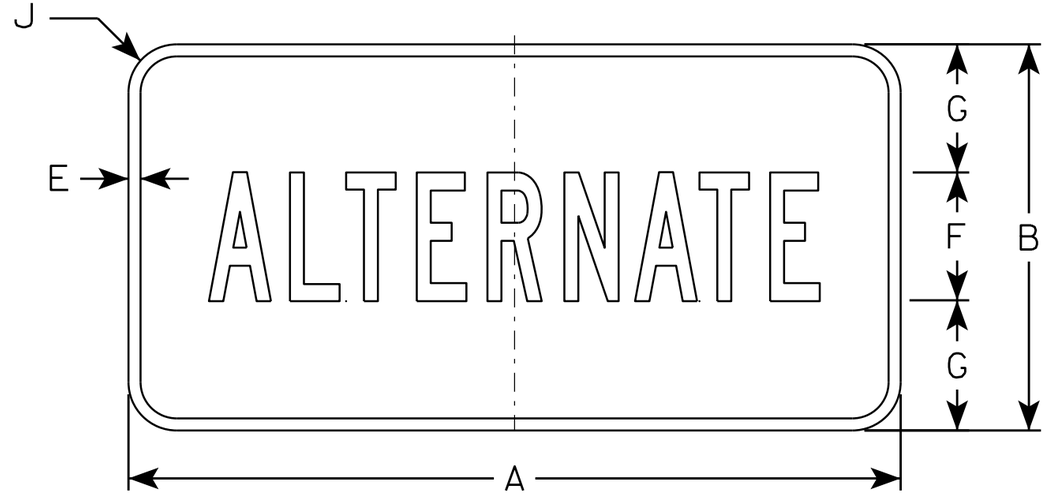

MB4 - 1

NOTES

1. Sign is Type II - Type H except as Shown
2. Color:
   Background - See Note 5
   Message - See note 5
3. Message Series - B
4. Corners may be square or rounded when base material is plywood but borders shall be rounded as shown. When base material is metal, the corners and borders shall be rounded.
5. M4-1 Background - White
   Message - Black

   MB4-1 Background - Blue
   Message - White

   M04-1 Background - Orange - Type F
   Message - Black

SIZE	A	B	C	D	E	F	G	H	I	J	K	L	M	N	O	P	Q	R	S	T	U	V	W	X	Y	Z	Area sq. ft.
1																											
2	24	12	1 1/8	3/8	3/8	4	4	9 3/4	9 1/2	1 1/2																	2.00
3	36	18	1 1/8	3/8	1/2	7	5 1/2	16 3/8	16 1/2	1 1/2																	4.5
4	36	18	1 1/8	3/8	1/2	7	5 1/2	16 3/8	16 1/2	1 1/2																	4.5
5	36	18	1 1/8	3/8	1/2	7	5 1/2	16 3/8	16 1/2	1 1/2																	4.5

STANDARD SIGN
M4 - 1

WISCONSIN DEPT OF TRANSPORTATION

APPROVED Matthew R Rauch
for State Traffic Engineer

DATE 6/30/14 PLATE '14-1.8

PROJECT NO: | HWY: | COUNTY: | SHEET NO: | E

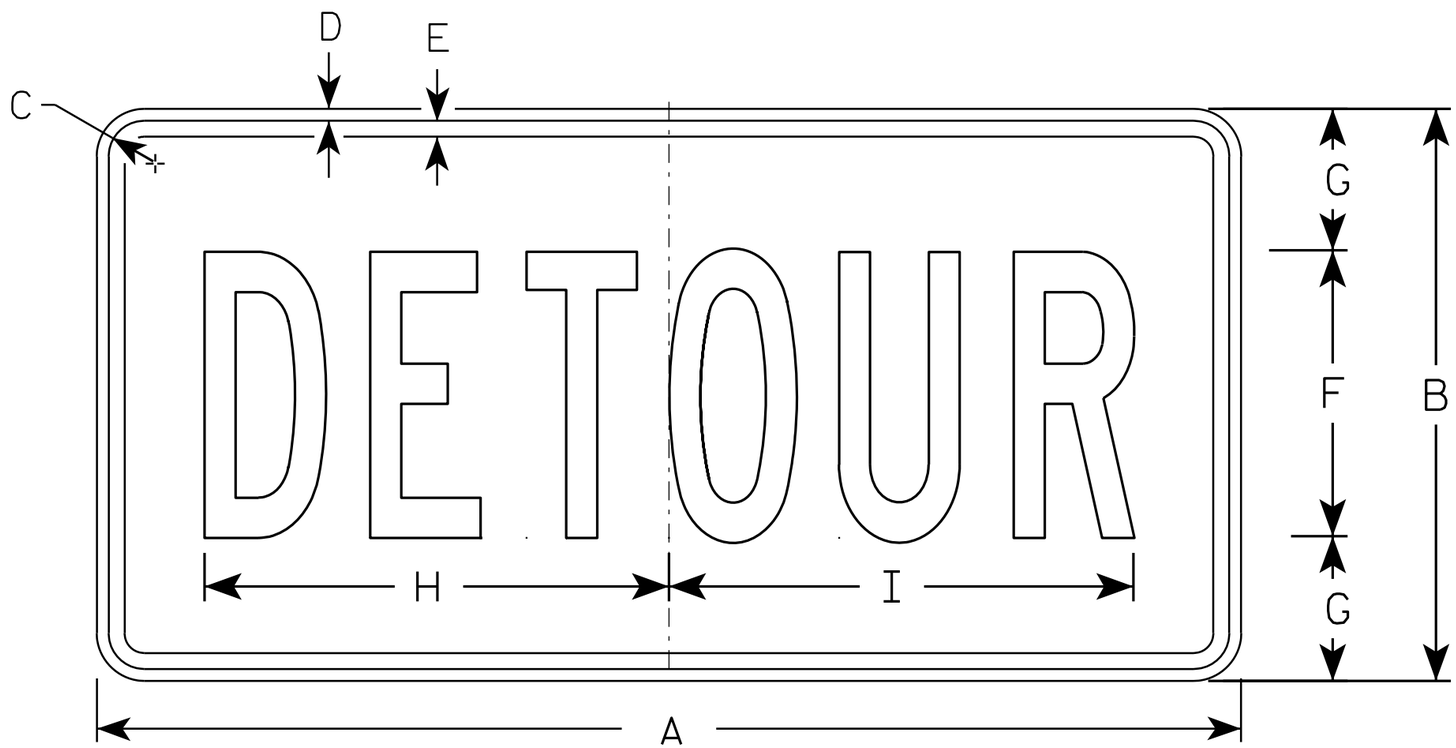

M4-8

NOTES

1. Sign is Type II - Type F Reflective - reference WIS DOT Standard Specification for HIGHWAY and STRUCTURE CONSTRUCTION latest edition.
2. Color:
   Background - Orange
   Message - Black
3. Message Series - B
4. Corners may be square or rounded when base material is plywood but borders shall be rounded as shown. When base material is metal, the corners and borders shall be rounded.

SIZE	A	B	C	D	E	F	G	H	I	J	K	L	M	N	O	P	Q	R	S	T	U	V	W	X	Y	Z	Area sq. ft.
1																											
2	24	12	1 1/8	3/8	3/8	6	3	10	10 1/4																		2.0
3	36	18	1 1/8	3/8	1/2	9	4 1/2	14 5/8	14 1/2																		4.5
4																											
5																											

STANDARD SIGN
M4-8

WISCONSIN DEPT OF TRANSPORTATION

APPROVED Matthew R Rauch
for State Traffic Engineer

DATE 11/10/10 PLATE NO. M4-8.2

PROJECT NO: | HWY: | COUNTY: | SHEET NO: 320 | E

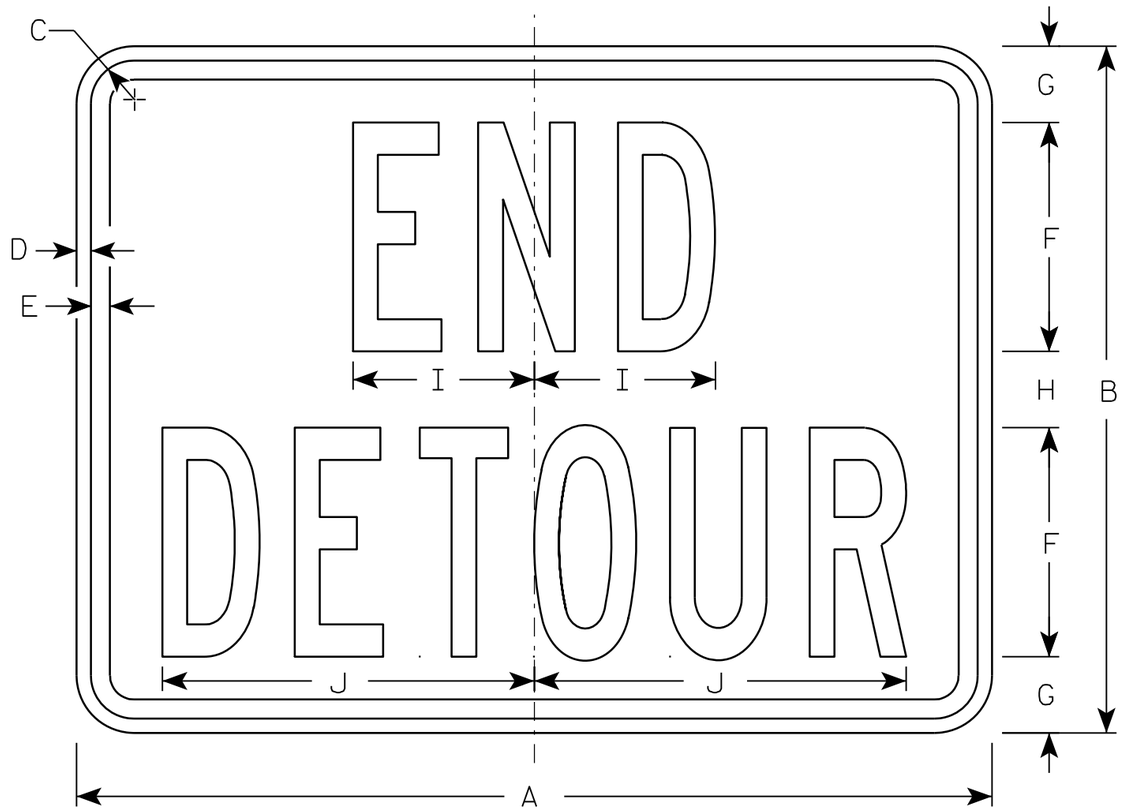

M4-8A

NOTES

1. Sign is Type II - Type F Reflective - reference WIS DOT Standard Specification for HIGHWAY and STRUCTURE CONSTRUCTION latest edition.
2. Color:
   Background - Orange
   Message - Black
3. Message Series - B
4. Corners may be square or rounded when base material is plywood but borders shall be rounded as shown. When base material is metal, the corners and borders shall be rounded.

SIZE	A	B	C	D	E	F	G	H	I	J	K	L	M	N	O	P	Q	R	S	T	U	V	W	X	Y	Z	Area sq. ft.
1																											
2	24	18	1 1/8	3/8	1/2	6	2	2	4 3/4	9 3/4																	3.0
3	30	24	1 1/8	3/8	1/2	8	2 1/2	3	6 3/4	13																	5.0
4																											
5																											

STANDARD SIGN
M4-8A

WISCONSIN DEPT OF TRANSPORTATION

APPROVED Matthew R Rauch
for State Traffic Engineer

DATE 3/9/11 PLATE NO. M4-8A.2

PROJECT NO: | HWY: | COUNTY: | SHEET NO: 321 | E

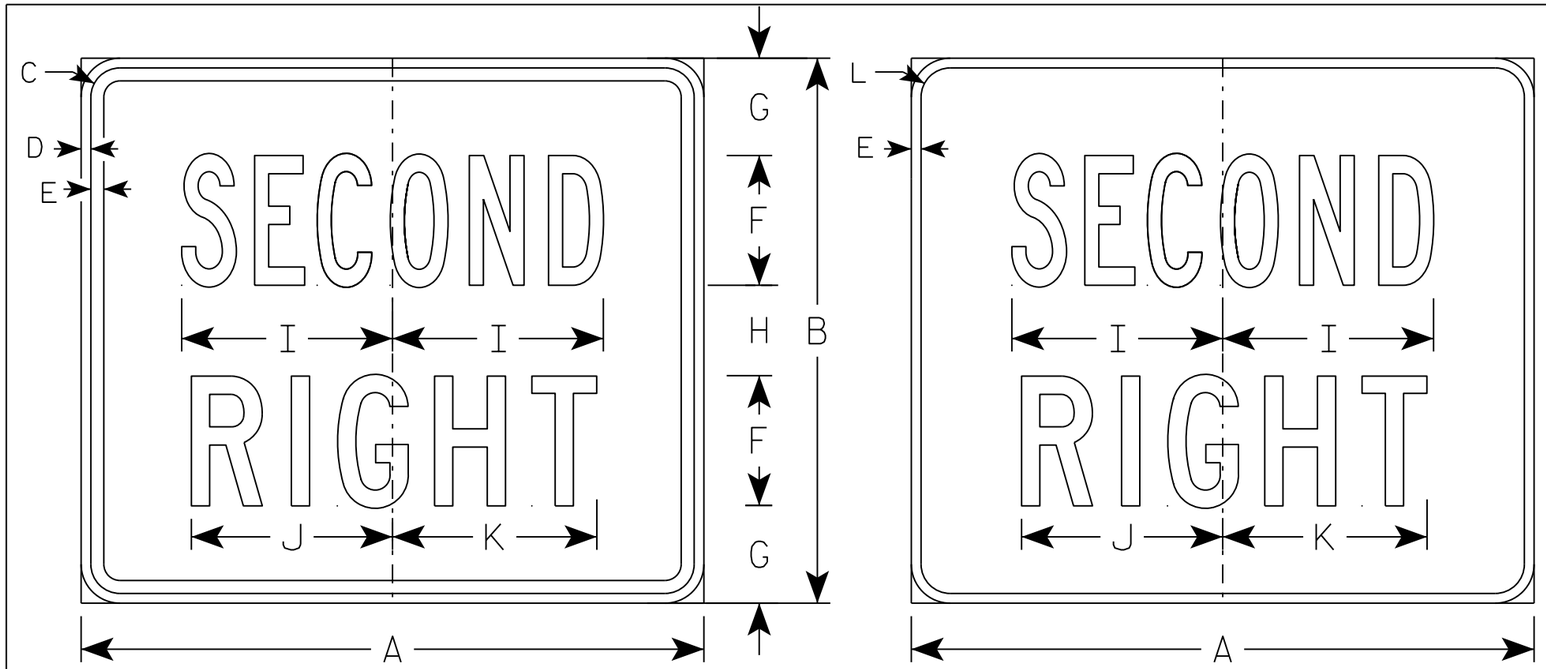

M4-22R
MM4-22R
M04-22R
MP4-22R

MB4-22R
MK4-22R
MN4-22R
MR4-22R

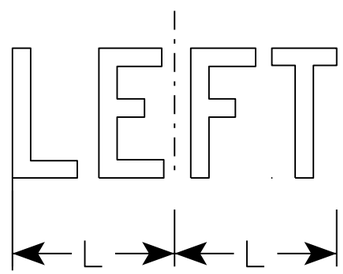

M4-22L
MB4-22L
MK4-22L
MM4-22L
MN4-22L
M04-22L
MP4-22L
MR4-22L

NOTES

1. Sign is Type II - Type H except as Shown
2. Color:
   Background - See note 5
   Message - See note 5
3. Message Series - C
4. Corners may be square or rounded when base material is plywood but borders shall be rounded as shown. When base material is metal, the corners and borders shall be rounded.
5. M4-22 Background - White
   Message - Black
   MB4-22 Background - Blue
   Message - White
   MK4-22 Background - Green
   Message - White
   MM4-22 Background - White
   Message - Green
   MN4-22 Background - Brown
   Message - White
   M04-22 Background - Orange - Type F Reflective
   Message - Black
   MP4-22 Background - White
   Message - Blue
   MR4-22 Background - Brown
   Message - Yellow

SIZE	A	B	C	D	E	F	G	H	I	J	K	L	M	N	O	P	Q	R	S	T	U	V	W	X	Y	Z	Area sq. ft.
1																											
2	24	21	1 1/8	3/8	1/2	5	3 3/4	3 1/2	8 1/8	7 3/4	7 7/8	1 1/2															3.5
3	36	30	1 5/8	5/8	3/4	8	4 3/4	4 1/2	13 1/8	12 5/8	12 1/2	1 7/8															7.5
4																											
5																											

STANDARD SIGN
M4-22

WISCONSIN DEPT OF TRANSPORTATION

APPROVED Matthew R Rauch
For State Traffic Engineer

DATE 10/15/15 PLATE NO. M4-22.4

PROJECT NO: | HWY: | COUNTY: | SHEET NO: | E

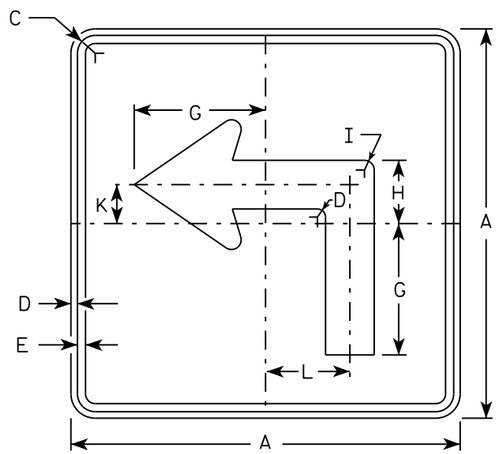

M5-1L
MM5-1L
MO5-1L
MP5-1L

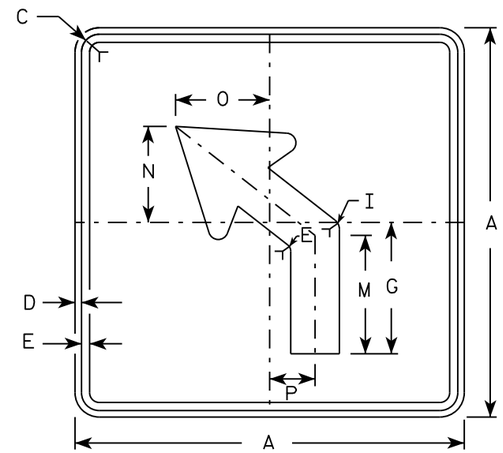

M5-2L
MM5-2L
MO5-2L
MP5-2L

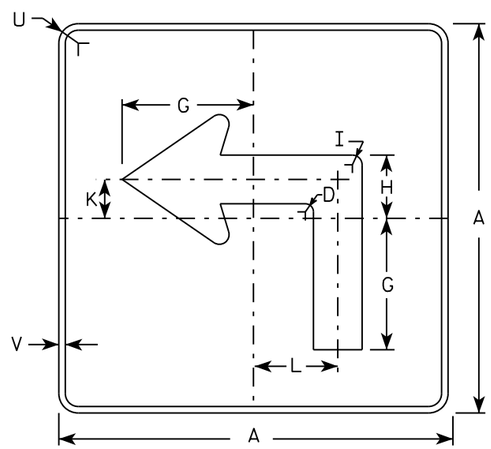

MB5-1L
MK5-1L
MN5-1L
MR5-1L

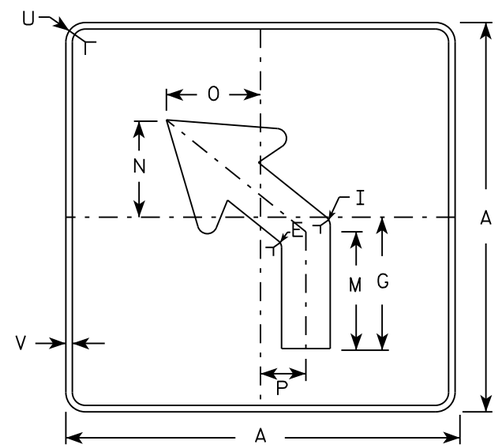

MB5-2L
MK5-2L
MN5-2L
MR5-2L

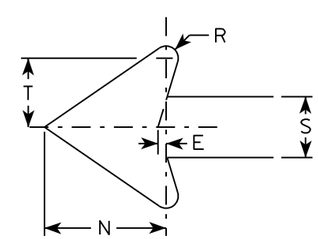

NOTES

1. Signs are Type II - Type H reflective except as shown
2. Color:
   Background - See note 4
   Message - See note 4
3. Corners may be square or rounded when base material is plywood but borders shall be rounded as shown. When base material is metal, the corners and borders shall be rounded.
4. M5-1 and M5-2 Background - White
   Message - Black
   MB5-1 and MB5-2 Background - Blue
   Message - White
   MK5-1 and MK5-2 Background - Green
   Message - White
   MM5-1 and MM5-2 Background - White
   Message - Green
   MN5-1 and MN5-2 Background - Brown
   Message - White
   MO5-1 and MO5-2 Background - Orange - Type F Reflective
   Message - Black
   MP5-1 and MP5-2 Background - White - Type H Reflective
   Message - Blue
   MR5-1 and MR5-2 Background - Brown
   Message - Yellow
5. M5-1R same as M5-1L except arrow points right.
6. M5-2R same as M5-2L except arrow tilts right.

SIZE	A	B	C	D	E	F	G	H	I	J	K	L	M	N	O	P	Q	R	S	T	U	V	W	X	Y	Z	Area sq. ft.
1																											
2	21		1 1/8	3/8	3/8		7	3 3/8	5/8		2 1/8	4 1/2	6 3/8	5 1/4	5	2 1/2		1/2	2 5/8	3	1 1/2	1/2					3.06
3	30		1 3/8	1/2	5/8		10 1/8	4 7/8	7/8		3	6 1/2	9 1/8	7 1/2	7 1/4	3 1/2		3/4	3 3/4	4 1/4	1 7/8	1/2					6.25
4	30		1 3/8	1/2	5/8		10 1/8	4 7/8	7/8		3	6 1/2	9 1/8	7 1/2	7 1/4	3 1/2		3/4	3 3/4	4 1/4	1 7/8	1/2					6.25
5	30		1 3/8	1/2	5/8		10 1/8	4 7/8	7/8		3	6 1/2	9 1/8	7 1/2	7 1/4	3 1/2		3/4	3 3/4	4 1/4	1 7/8	1/2					6.25

STANDARD SIGN
M5-1 & M5-2

WISCONSIN DEPT OF TRANSPORTATION

APPROVED Matthew R Rauch
for State Traffic Engineer

DATE 10/15/15 PLATE NO. M5-1.13

PROJECT NO:	HWY:	COUNTY:		SHEET NO:	E

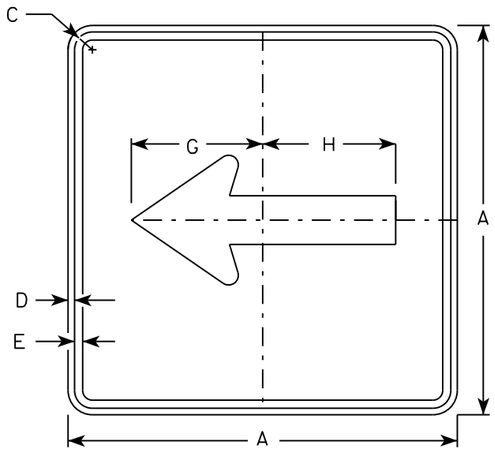

M6-1
MM6-1
MO6-1
MP6-1

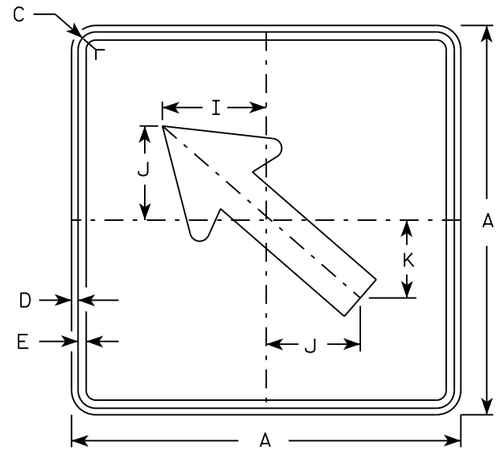

M6-2
MM6-2
MO6-2
MP6-2

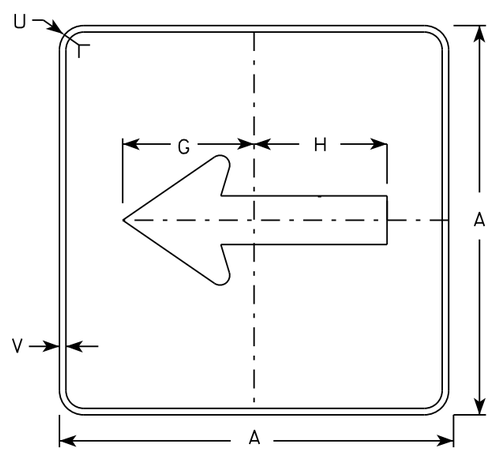

MB6-1
MK6-1
MN6-1
MR6-1

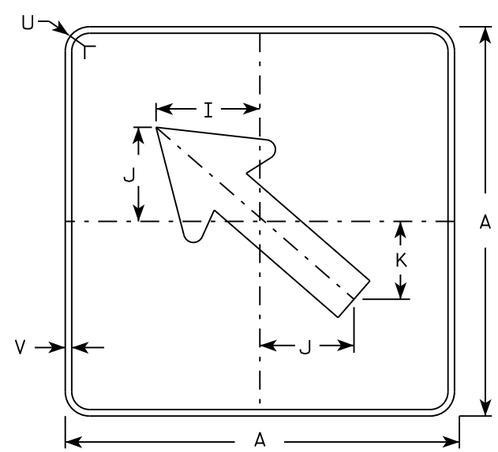

MB6-2
MK6-2
MN6-2
MR6-2

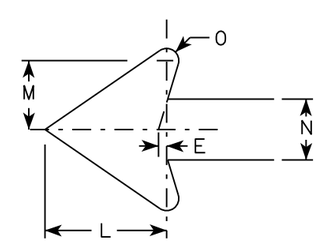

NOTES

1. Signs are Type II - Type H except as Shown
2. Color:
   Background - See note 4
   Message - See note 4
3. Corners may be square or rounded when base material is plywood but borders shall be rounded as shown. When base material is metal, the corners and borders shall be rounded.
4. M6-1 and M6-2 Background - White
   Message - Black
   MB6-1 and MB6-2 Background - Blue
   Message - White
   MK6-1 and MK6-2 Background - Green
   Message - White
   MM6-1 and MM6-2 Background - White
   Message - Green
   MN6-1 and MN6-2 Background - Brown
   Message - White
   MO6-1 and MO6-2 Background - Orange - Type F Reflective
   Message - Black
   MP6-1 and MP6-2 Background - White
   Message - Blue
   MR6-1 and MR6-2 Background - Brown
   Message - Yellow

SIZE	A	B	C	D	E	F	G	H	I	J	K	L	M	N	O	P	Q	R	S	T	U	V	W	X	Y	Z	Area sq. ft.
1																											
2	21		1 1/8	3/8	3/8		7 1/2	7 1/8	5 5/8	5	4 1/4	5 1/4	3	2 5/8	1/2						1 1/2	1/2					3.06
3	30		1 3/8	1/2	5/8		10 3/4	10 1/4	8	7 1/4	6	7 1/2	4 1/4	3 3/4	3/4						1 7/8	1/2					6.25
4	30		1 3/8	1/2	5/8		10 3/4	10 1/4	8	7 1/4	6	7 1/2	4 1/4	3 3/4	3/4						1 7/8	1/2					6.25
5	30		1 3/8	1/2	5/8		10 3/4	10 1/4	8	7 1/4	6	7 1/2	4 1/4	3 3/4	3/4						1 7/8	1/2					6.25

STANDARD SIGN
M6-1 & M6-2
SERIES

WISCONSIN DEPT OF TRANSPORTATION

APPROVED Matthew R Rauch
for State Traffic Engineer

DATE 10/15/15 PLATE 324 M6-1.15

PROJECT NO: | HWY: | COUNTY: | SHEET NO: | E

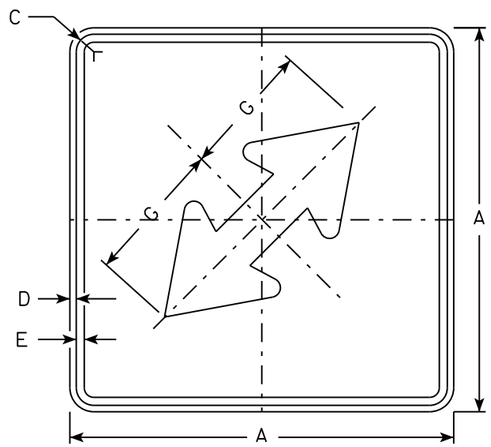

M6-5
MM6-5
MO6-5
MP6-5

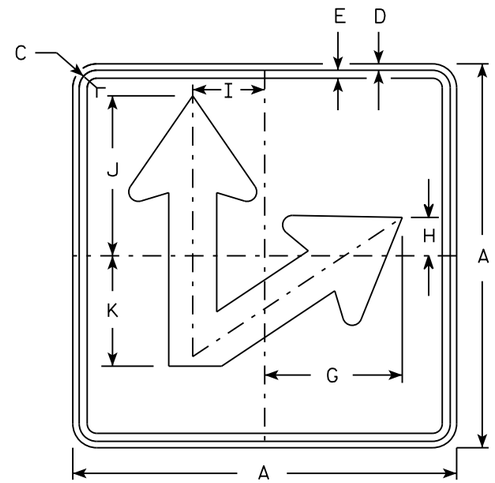

M6-7R
MM6-7R
MO6-7R
MP6-7R

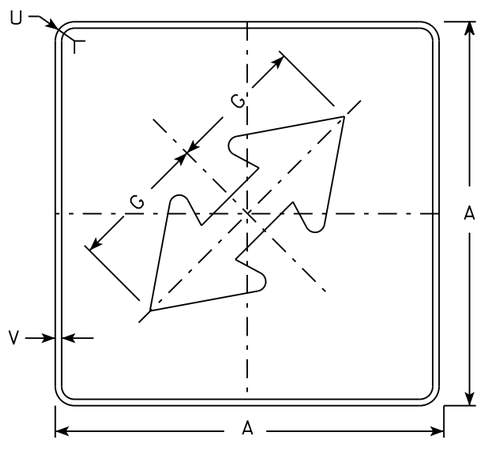

MB6-5
MK6-5
MN6-5
MR6-5

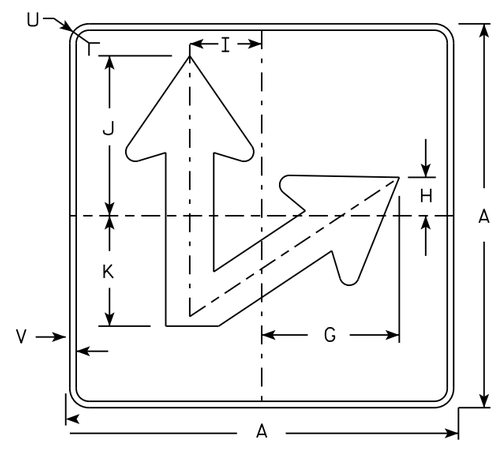

MB6-7R
MK6-7R
MN6-7R
MR6-7R

NOTES

1. Sign is Type II - Type H except as Shown
2. Color:

M6-5 and M6-7	Background	White
	Message	Black
MB6-5 and MB6-7	Background	Blue
	Message	White
MK6-5 and MK6-7	Background	Green
	Message	White
MM6-5 and MM6-7	Background	White
	Message	Green
MN6-5 and MN6-7	Background	Brown
	Message	White
MO6-5 and MO6-7	Background	Orange - Type F Reflective
	Message	Black
MP6-5 and MP6-7	Background	White
	Message	Blue
MR6-5 and MR6-7	Background	Brown
	Message	Yellow

3. M6-7L same as M6-7R except arrow points ahead and left.

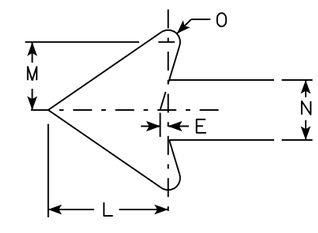

SIZE	A	B	C	D	E	F	G	H	I	J	K	L	M	N	O	P	Q	R	S	T	U	V	W	X	Y	Z	Area sq. ft.
1																											
2	21		1 1/8	3/8	3/8		7 1/2	2 1/8	4 1/4	8 3/4	6	5 1/4	3	2 5/8	1/2						1 1/2	1/2					3.06
3	30		1 3/8	1/2	5/8		10 3/4	3	6 3/4	12 1/2	8 5/8	7 1/2	4 1/4	3 3/4	3/4						1 7/8	1/2					6.25
4	30		1 3/8	1/2	5/8		10 3/4	3	6 3/4	12 1/2	8 5/8	7 1/2	4 1/4	3 3/4	3/4						1 7/8	1/2					6.25
5	30		1 3/8	1/2	5/8		10 3/4	3	6 3/4	12 1/2	8 5/8	7 1/2	4 1/4	3 3/4	3/4						1 7/8	1/2					6.25

STANDARD SIGN
M6-5 & M6-7
SERIES

WISCONSIN DEPT OF TRANSPORTATION

APPROVED Matthew R Rauch for State Traffic Engineer

DATE 3/21/17 PLATE NO. M6-7.10

PROJECT NO: | HWY: | COUNTY: | SHEET NO: 325 | E

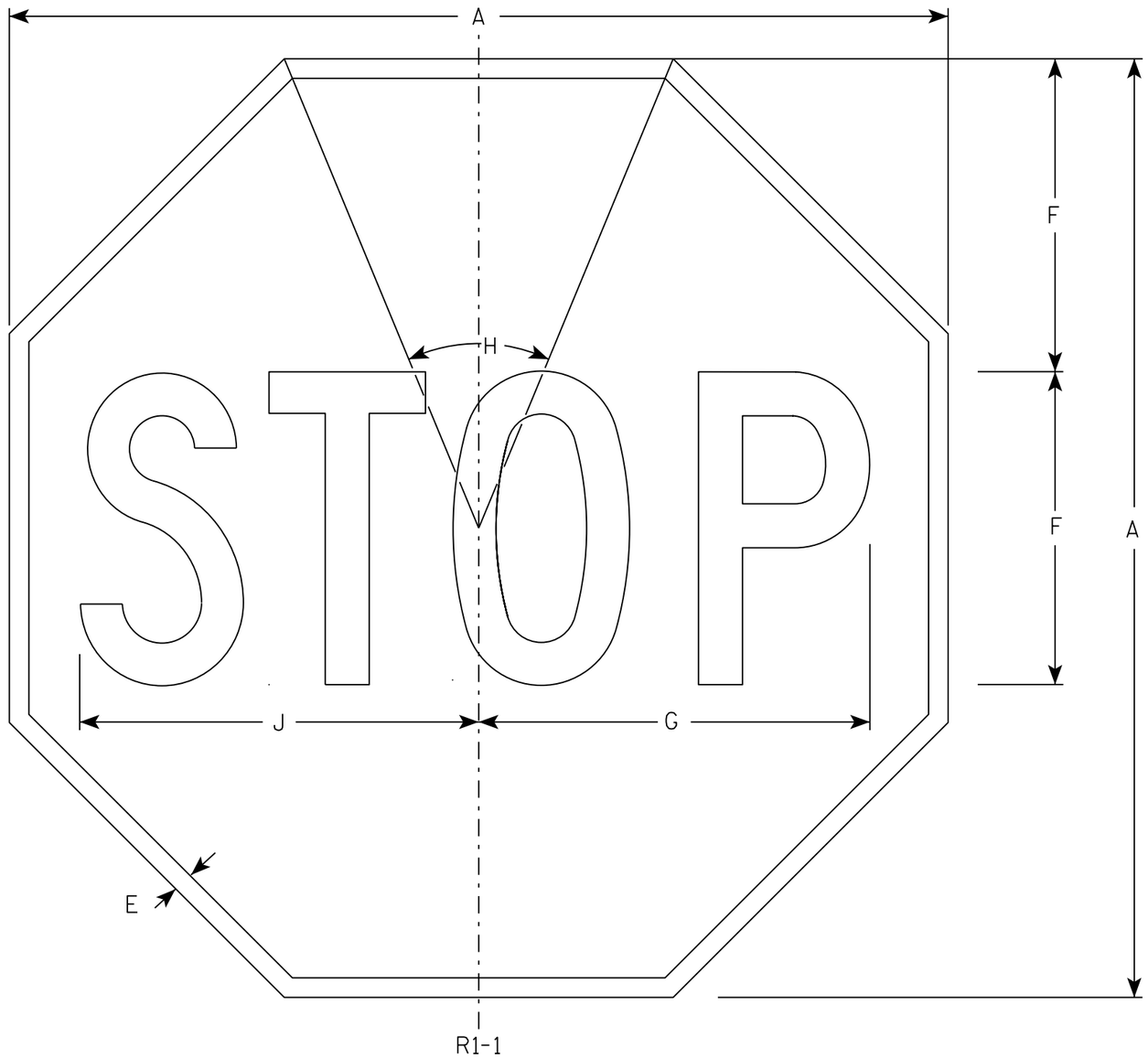

NOTES

1. Sign is Type II - Type H Reflective - reference WIS DOT Standard Specification for HIGHWAY and STRUCTURE CONSTRUCTION latest edition.
2. Color:
   Background - Red
   Message - White
3. Message Series - C

SIZE	A	B	C	D	E	F	G	H	I	J	K	L	M	N	O	P	Q	R	S	T	U	V	W	X	Y	Z	Area sq. ft.
1	30				5/8	10	12 1/2	45°		12 3/4																	5.18
2S	30				5/8	10	12 1/2	45°		12 3/4																	5.18
2M	36				3/4	12	15	45°		15 3/8																	7.46
3	36				3/4	12	15	45°		15 3/8																	7.46
4	48				1	16	20	45°		20 1/2																	13.25
5	48				1	16	20	45°		20 1/2																	13.25
6	18				3/8	6	7 3/4	45°		7 3/4																	1.86
7	12				1/4	4	5	45°		5 1/8																	0.78

STANDARD SIGN
R1-1

WISCONSIN DEPT OF TRANSPORTATION

APPROVED Matthew R Rauch
for State Traffic Engineer

DATE 11/12/15 PLATE NO. R1-1.13

PROJECT NO: | HWY: | COUNTY: | SHEET NO: 326 | E

NOTES

1. Sign is Type II - Type H Reflective
2. Color:
   Background - Red
   Message - White
3. Message Series - C
4. For 30"x30" R1-1 use 18"x6" R1-3P sign
   For 36"x36" R1-1 use 24"x9" R1-3P sign
   For 48"x48" R1-1 use 30"x12" R1-3P sign

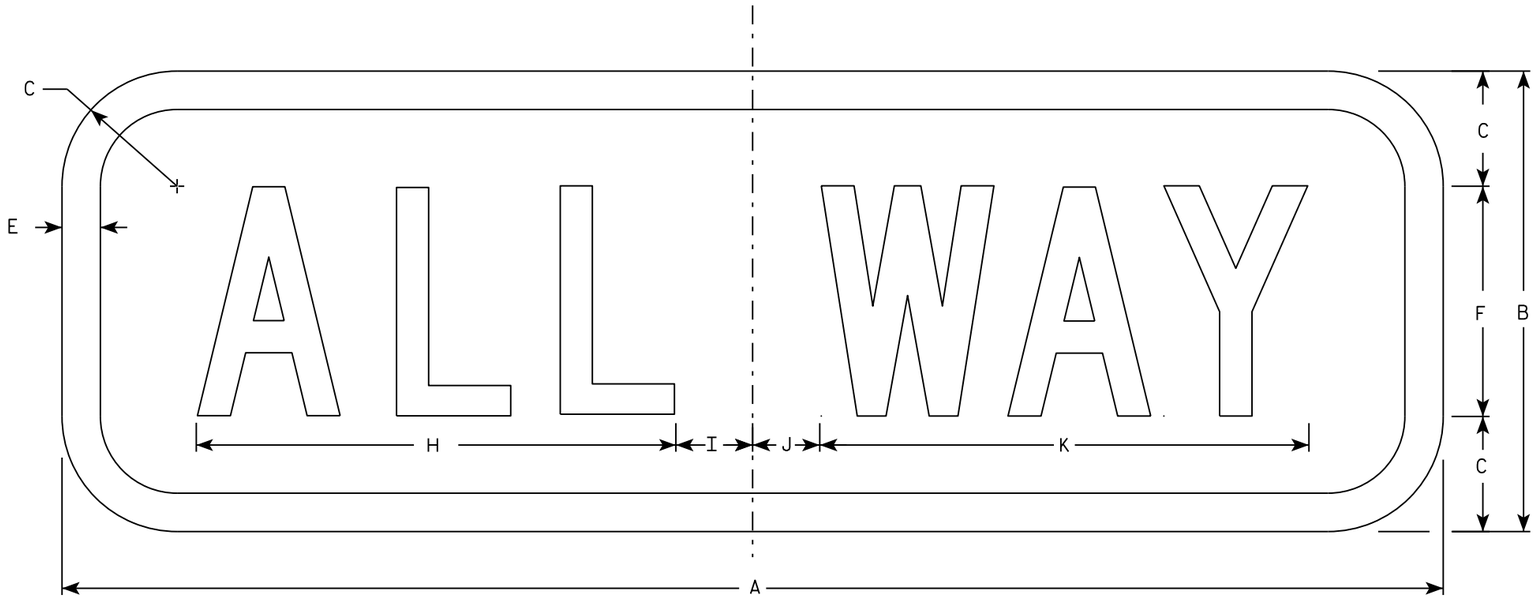

R1-3P

SIZE	A	B	C	D	E	F	G	H	I	J	K	L	M	N	O	P	Q	R	S	T	U	V	W	X	Y	Z	Area sq. ft.
1	18	6	1 1/2		1/2	3		6 1/4	1 1/4	7/8	6 3/8																0.75
2S	18	6	1 1/2		1/2	3		6 1/4	1 1/4	7/8	6 3/8																1.5
2M	24	9	1 1/2		1/2	5		9 1/4	1 1/4	3/4	9 3/4																1.5
3	24	9	1 1/2		1/2	5		9 1/4	1 1/4	3/4	9 3/4																1.5
4	30	12	2 1/4		5/8	6		11	2 1/4	1 1/2	11 3/4																2.5
5	30	12	2 1/4		5/8	6		11	2 1/4	1 1/2	11 3/4																2.5

STANDARD SIGN

R1-3P

WISCONSIN DEPT OF TRANSPORTATION

APPROVED Matthew R Rauch
for State Traffic Engineer

DATE 11/29/16 PLATE NO. R1-3P.3

PROJECT NO: | HWY: | COUNTY: | SHEET NO: 327 | E

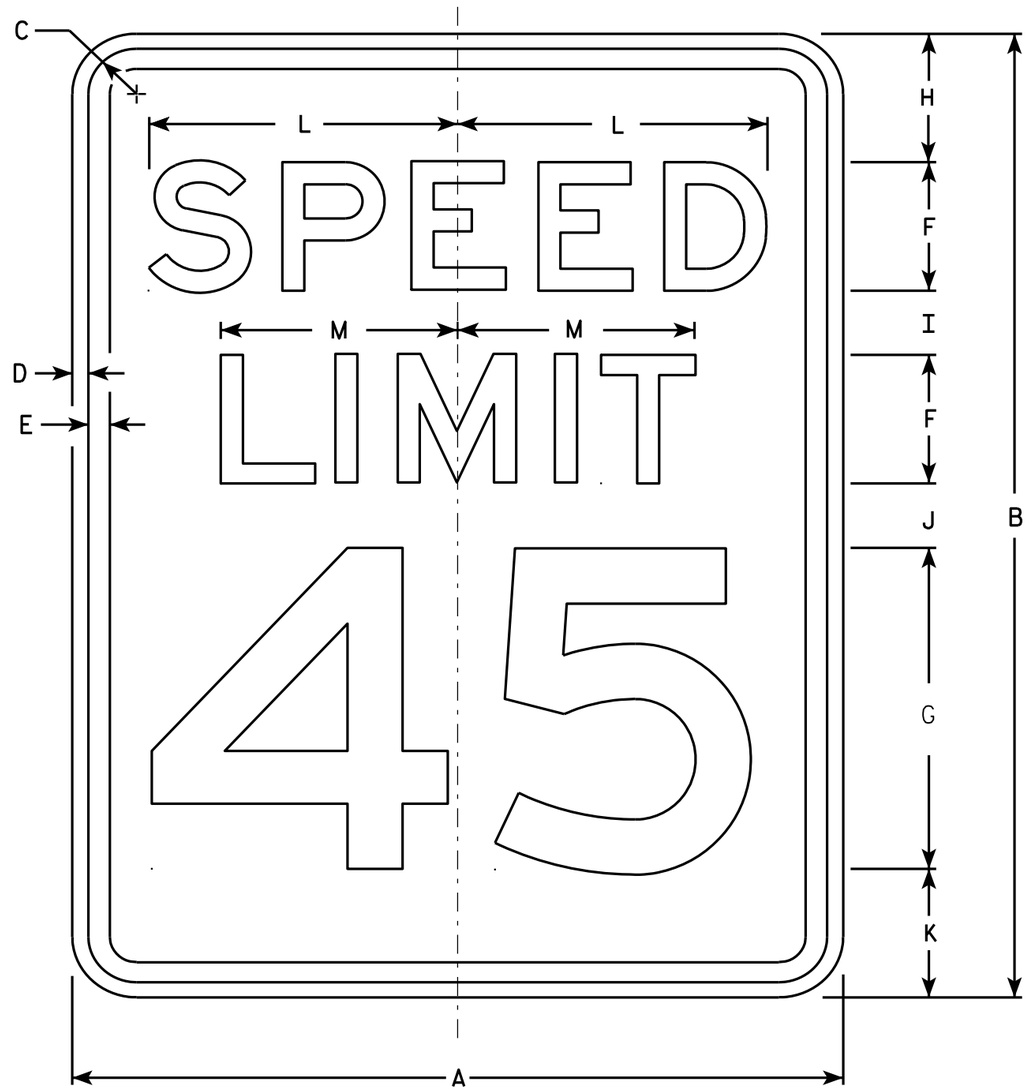

R2-1

NOTES

1. Sign is Type II - Type H Reflective - reference WIS DOT Standard Specification for HIGHWAY and STRUCTURE CONSTRUCTION latest edition.
2. Color:
   Background - White
   Message - Black
3. Message Series - E
4. Corners may be square or rounded when base material is plywood but borders shall be rounded as shown. When base material is metal, the corners and borders shall be rounded.
5. Substitute appropriate numerals and optically adjust spacing to achieve proper balance.

SIZE	A	B	C	D	E	F	G	H	I	J	K	L	M	N	O	P	Q	R	S	T	U	V	W	X	Y	Z	Area sq. ft.
1	18	24	1 1/8	3/8	1/2	3	8	3	2	2	3	7 1/4	5 1/2														3.0
2S	24	30	1 1/8	3/8	1/2	4	10	3	2 1/4	3 3/8	3 3/8	9 5/8	7 3/8														5.0
2M	30	36	1 3/8	1/2	5/8	5	12	5	2 1/2	2 1/2	4	12	9 1/4														7.5
3	36	48	1 3/8	1/2	5/8	6	14	6	5	5	6	14 3/8	11														12.0
4	36	48	1 3/8	1/2	5/8	6	14	6	5	5	6	14 3/8	11														12.0
5	48	60	2 1/4	3/4	1	8	20	6	4 1/2	6 3/4	6 3/4	19 1/4	14 5/8														20.0

STANDARD SIGN
R2-1

WISCONSIN DEPT OF TRANSPORTATION

APPROVED Matthew R Rauch
for State Traffic Engineer

DATE 5/26/10 PLATE NO. R2-1.13

PROJECT NO: | HWY: | COUNTY: | SHEET NO: 328 | E

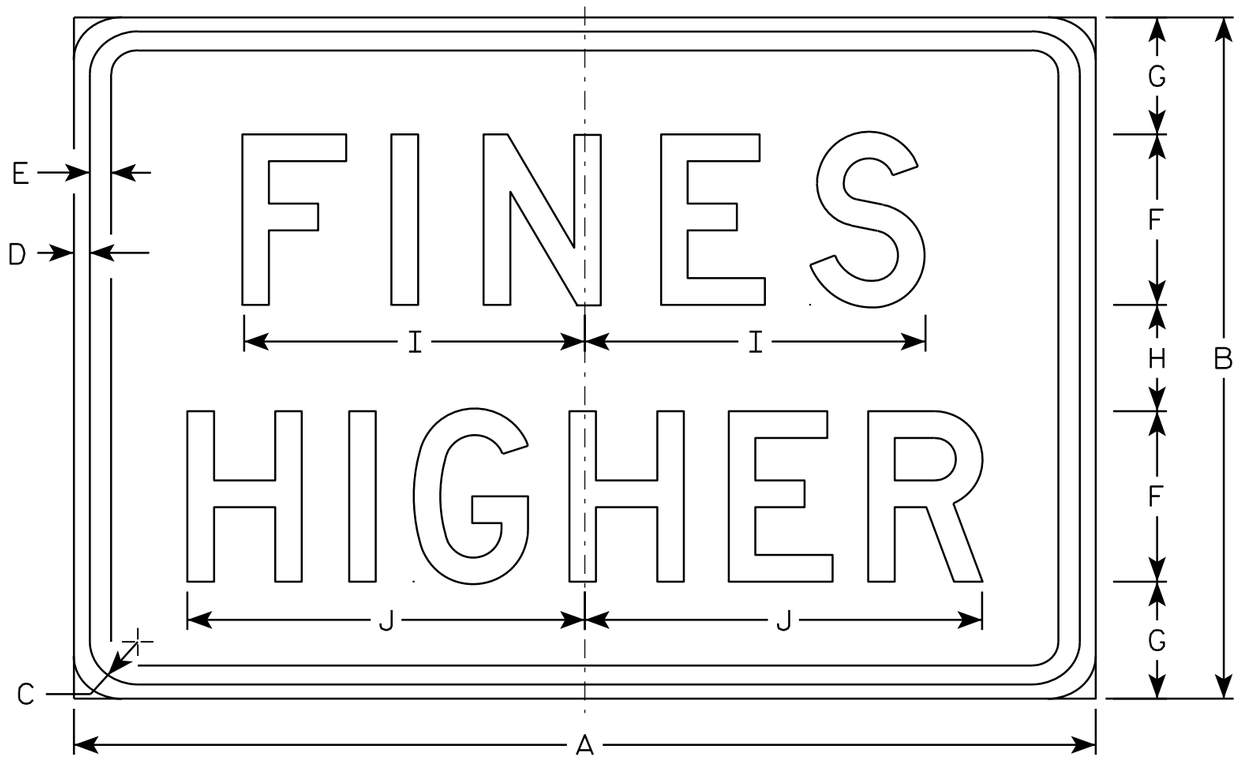

R2-6P

NOTES

1. Sign is Type II - Type H Reflective - reference WIS DOT Standard Specification for HIGHWAY and STRUCTURE CONSTRUCTION latest edition.
2. Color:
   Background - White
   Message - Black
3. Message Series - D
4. Corners may be square or rounded when base material is plywood but borders shall be rounded as shown. When base material is metal, the corners and borders shall be rounded.

SIZE	A	B	C	D	E	F	G	H	I	J	K	L	M	N	O	P	Q	R	S	T	U	V	W	X	Y	Z	Area sq. ft.
1																											
2S	24	18	1 1/8	3/8	3/8	4	3 1/2	3	7 5/8	9 1/4																	3.0
2M	24	18	1 1/8	3/8	3/8	4	3 1/2	3	7 5/8	9 1/4																	3.0
3	36	24	1 1/8	3/8	1/2	6	4 1/8	3 3/4	12	14																	6.0
4	36	24	1 1/8	3/8	1/2	6	4 1/8	3 3/4	12	14																	6.0
5	48	36	1 3/8	1/2	5/8	8	7	6	15 1/8	19																	12.0

STANDARD SIGN
R2-6P

WISCONSIN DEPT OF TRANSPORTATION

APPROVED Matthew R Rauch
for State Traffic Engineer

DATE 12/20/10 PLATE NO. R2-6P.2

PROJECT NO: | HWY: | COUNTY: | SHEET NO: 329 | E

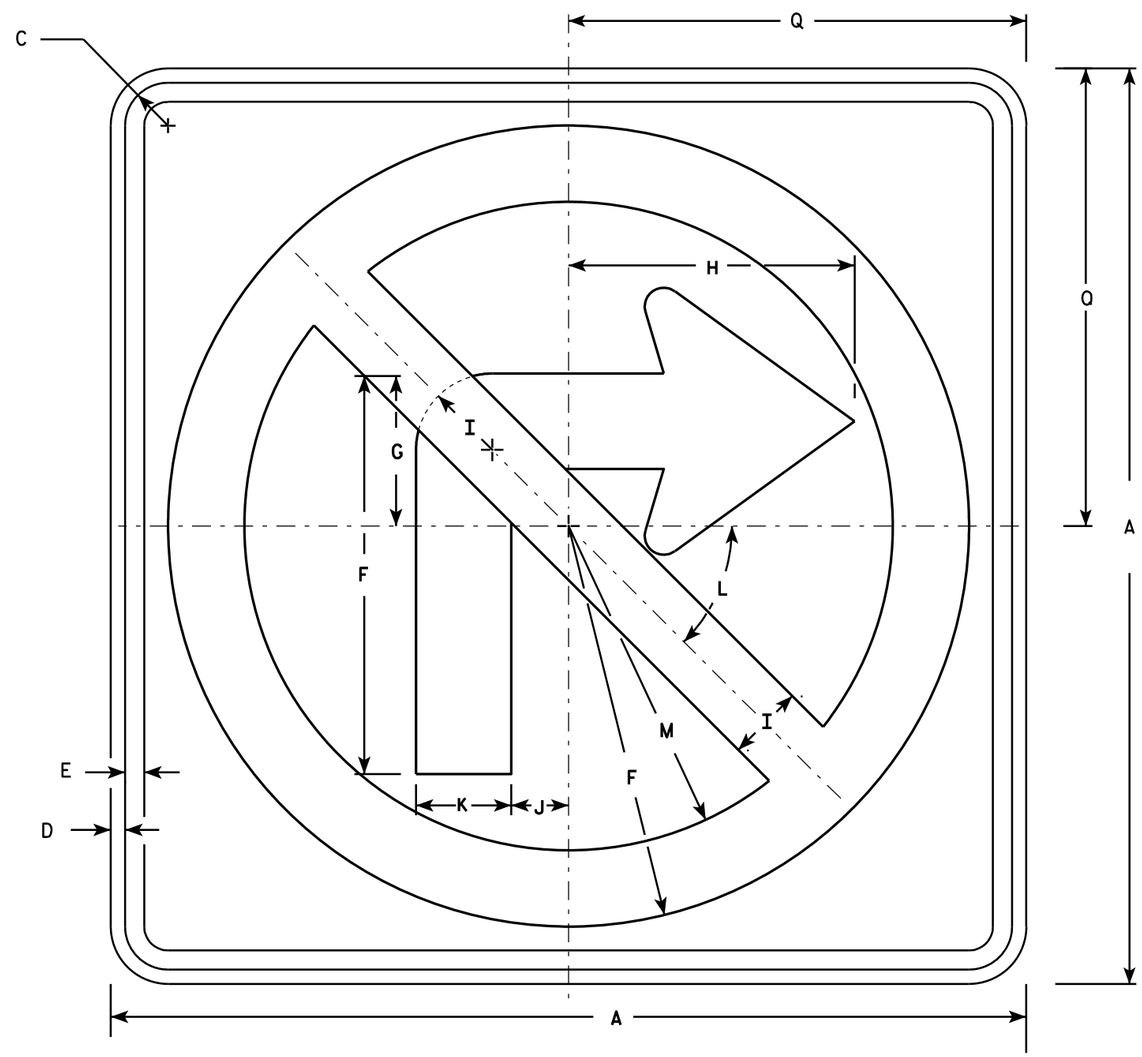

R3-1

NOTES

1. Sign is Type II - Type H Reflective - reference WIS DOT Standard Specification for HIGHWAY and STRUCTURE CONSTRUCTION latest edition.
2. Color:
   Background - White
   Message - See note 4
3. Corners may be square or rounded when base material is plywood but borders shall be rounded as shown. When base material is metal, the corners and borders shall be rounded.
4. Border & Arrow are non reflective black, the circle with diagonal bar is reflective red.

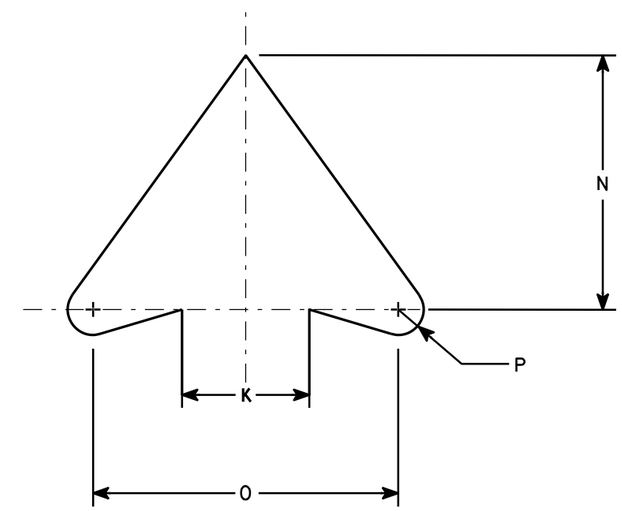

ARROW DETAIL

SIZE	A	B	C	D	E	F	G	H	I	J	K	L	M	N	O	P	Q	R	S	T	U	V	W	X	Y	Z	Area sq. ft.
1	24		1 1/8	3/8	1/2	10 1/2	4	7 1/2	2	1 1/2	2 1/2	45	8 1/2	5	6	1/2	12										4.0
2S	24		1 1/8	3/8	1/2	10 1/2	4	7 1/2	2	1 1/2	2 1/2	45°	8 1/2	5	6	1/2	12										4.0
2M	36		1 5/8	5/8	3/4	15 3/4	6	11 1/4	3	2 1/4	3 3/4	45	12 3/4	7 1/2	9	3/4	18										9.0
3	36		1 5/8	5/8	3/4	15 3/4	6	11 1/4	3	2 1/4	3 3/4	45	12 3/4	7 1/2	9	3/4	18										9.0
4	36		1 5/8	5/8	3/4	15 3/4	6	11 1/4	3	2 1/4	3 3/4	45°	12 3/4	7 1/2	9	3/4	18										9.0
5	48		2 1/4	3/4	1	21	8	15	4	3	5	45°	17	10	12	1	24										16.0

STANDARD SIGN
R3-1

WISCONSIN DEPT OF TRANSPORTATION

APPROVED Matthew R Rauch
for State Traffic Engineer

DATE 12/08/10 PLATE NO. R3-1.5

PROJECT NO:	HWY:	COUNTY:		SHEET NO: 330	E

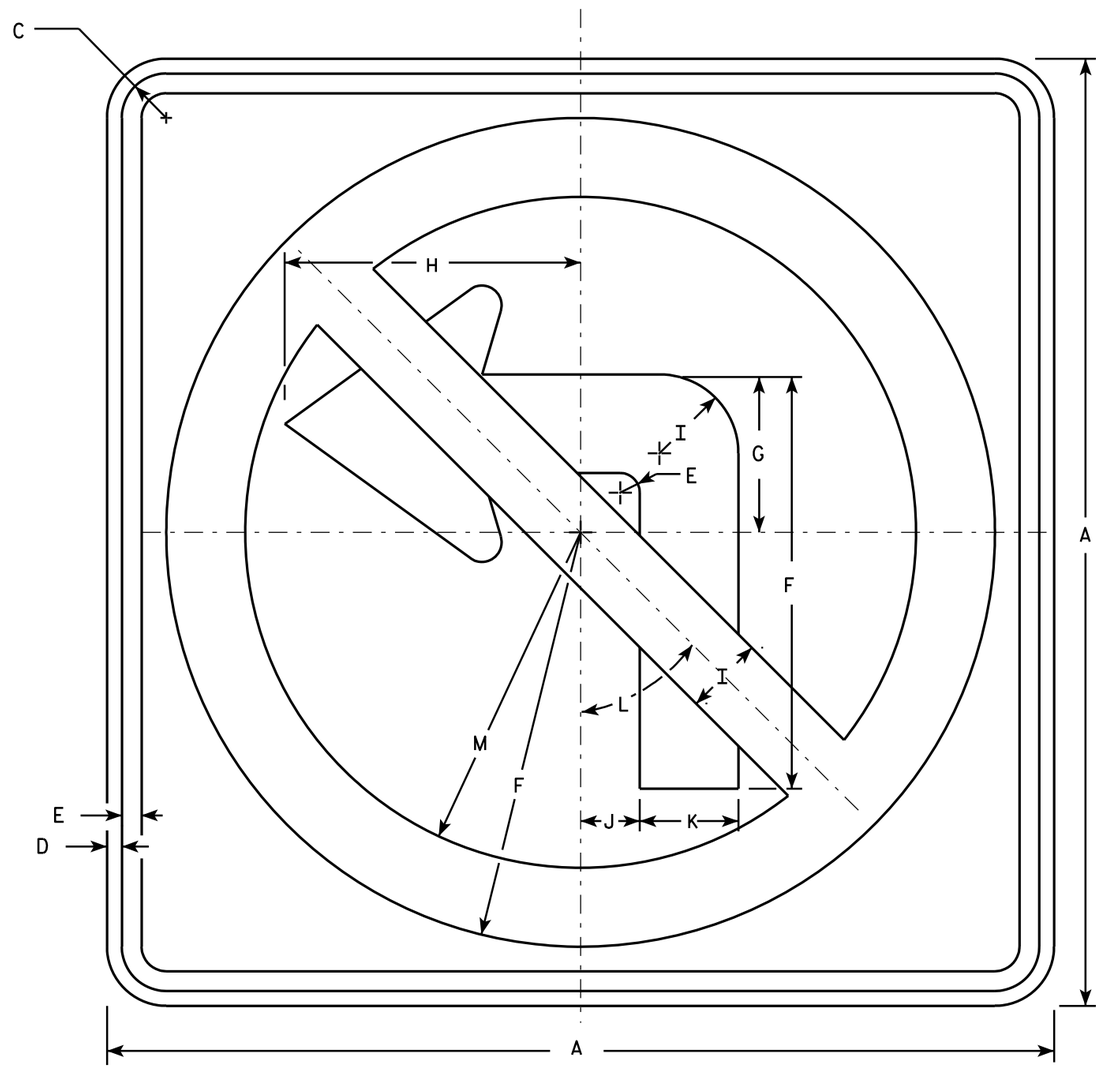

R3-2

NOTES

1. Sign is Type II - Type H Reflective - reference WIS DOT Standard Specification for HIGHWAY and STRUCTURE CONSTRUCTION latest edition.
2. Color:
   Background - White
   Message - See note 4
3. Corners may be square or rounded when base material is plywood but borders shall be rounded as shown. When base material is metal, the corners and borders shall be rounded.
4. Border & Arrow are non reflective black, the circle with diagonal bar is reflective red.

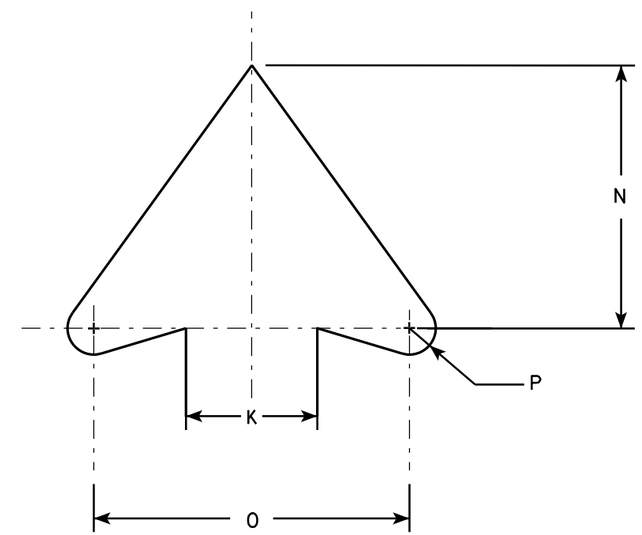

ARROW DETAIL

SIZE	A	B	C	D	E	F	G	H	I	J	K	L	M	N	O	P	Q	R	S	T	U	V	W	X	Y	Z	Area sq. ft.
1	24		1 1/8	3/8	1/2	10 1/2	4	7 1/2	2	1 1/2	2 1/2	45°	8 1/2	5	6	1/2											4.0
2S	24		1 1/8	3/8	1/2	10 1/2	4	7 1/2	2	1 1/2	2 1/2	45°	8 1/2	5	6	1/2											4.0
2M	36		1 5/8	5/8	3/4	15 3/4	6	11 1/4	3	2 1/4	3 3/4	45°	12 3/4	7 1/2	9	3/4											9.0
3	36		1 5/8	5/8	3/4	15 3/4	6	11 1/4	3	2 1/4	3 3/4	45°	12 3/4	7 1/2	9	3/4											9.0
4	36		1 5/8	5/8	3/4	15 3/4	6	11 1/4	3	2 1/4	3 3/4	45°	12 3/4	7 1/2	9	3/4											9.0
5	48		2 1/4	3/4	1	21	8	15	4	3	5	45°	17	10	12	1											16.0

STANDARD SIGN
R3-2

WISCONSIN DEPT OF TRANSPORTATION

APPROVED Matthew R Rauch
for State Traffic Engineer

DATE 12/08/10 PLATE NO. R3-2.10

PROJECT NO:	HWY:	COUNTY:		SHEET NO: 331	E

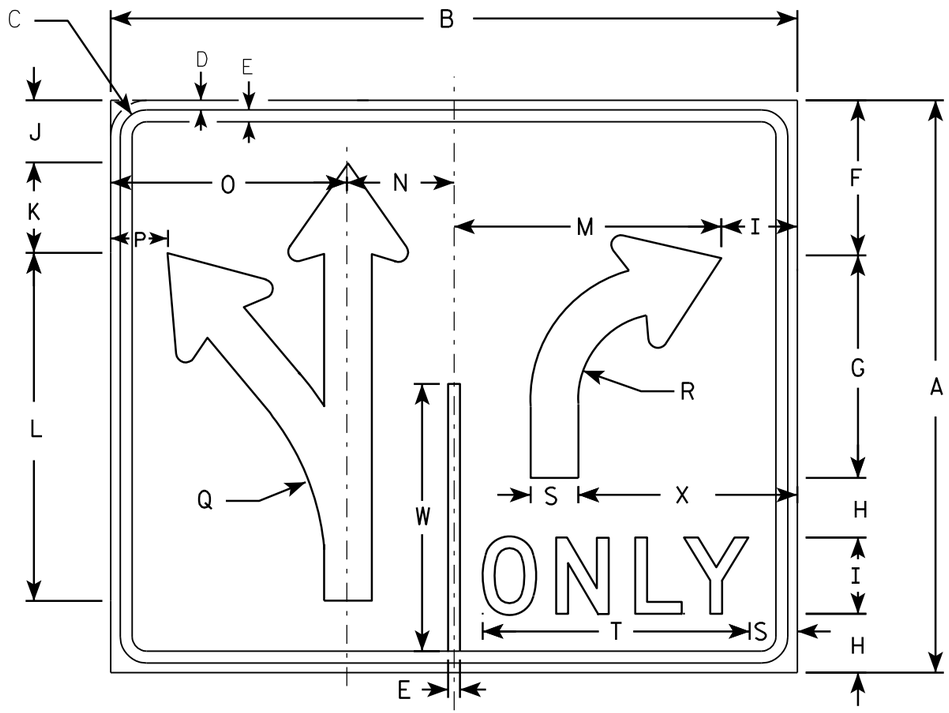

R3-8

NOTES

1. Sign is Type II - Type H Reflective - reference WIS DOT Standard Specification for HIGHWAY and STRUCTURE CONSTRUCTION latest edition.
2. Color:
   Background - WHITE
   Message - BLACK
3. Message Series - D
4. Corners may be square or rounded when base material is plywood but borders shall be rounded as shown. When base material is metal, the corners and borders shall be rounded.

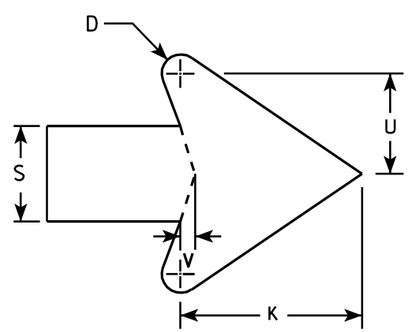

ARROW DETAIL

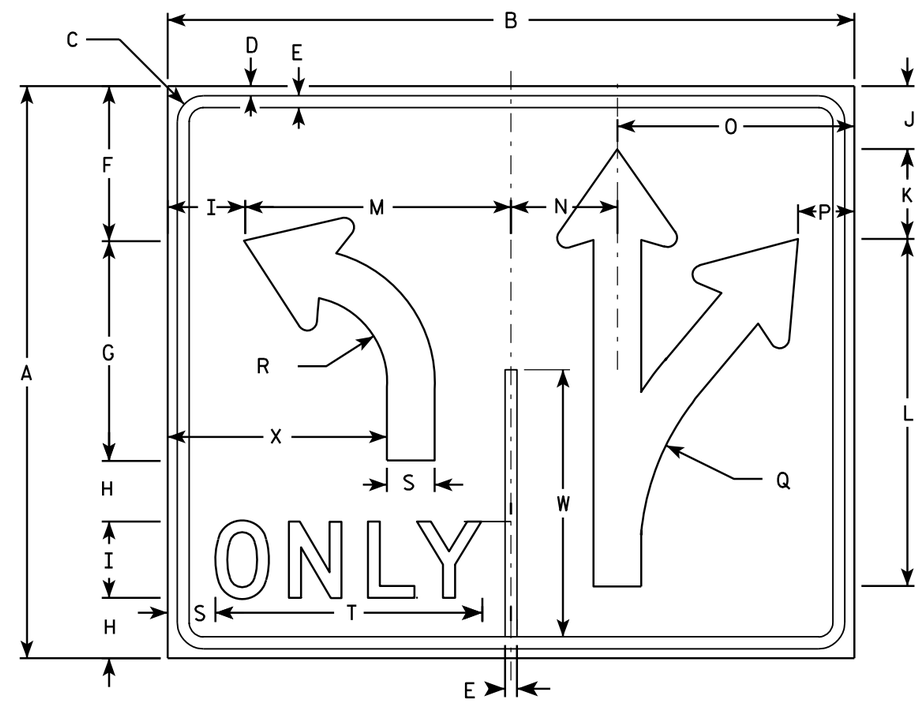

R3-8A

SIZE	A	B	C	D	E	F	G	H	I	J	K	L	M	N	O	P	Q	R	S	T	U	V	W	X	Y	Z	Area sq. ft.
1																											
2S	30	36	1 3/8	1/2	5/8	8 1/8	11 5/8	3 1/8	4	3 1/4	4 3/4	18 1/4	14	5 5/8	12 3/8	3	13 1/4	4 1/2	2 1/2	14	2 5/8	3/8	14	11 1/2			7.5
2M	30	36	1 3/8	1/2	5/8	8 1/8	11 5/8	3 1/8	4	3 1/4	4 3/4	18 1/4	14	5 5/8	12 3/8	3	13 1/4	4 1/2	2 1/2	14	2 5/8	3/8	14	11 1/2			7.5
3																											
4	48	54	2 1/4	3/4	1	13 1/4	18 1/2	5 1/8	6	5 1/4	7 1/8	29 1/8	21	8 3/8	18 5/8	4 3/8	21 7/8	7 1/4	3 3/4	20 5/8	4	5/8	22 3/8	17 1/4			18.0
5	48	54	2 1/4	3/4	1	13 1/4	18 1/2	5 1/8	6	5 1/4	7 1/8	29 1/8	21	8 3/8	18 5/8	4 3/8	21 7/8	7 1/4	3 3/4	20 5/8	4	5/8	22 3/8	17 1/4			18.0

STANDARD SIGN
R3-8 & R3-8A

WISCONSIN DEPT OF TRANSPORTATION

APPROVED Matthew R Rauch
for State Traffic Engineer

DATE 3/18/2011 PLATE NO. R3-8.5

PROJECT NO: | HWY: | COUNTY: | SHEET NO: 332 | E

R3-17

NOTES

1. Sign is Type II - Type H Reflective - reference WIS DOT Standard Specification for HIGHWAY and STRUCTURE CONSTRUCTION latest edition.
2. Color:
   Background - AS SHOWN
   Message - BLACK
3. Message Series - C or as noted on the Signs.
4. Corners may be square or rounded when base material is plywood but borders shall be rounded as shown. When base material is metal, the corners and borders shall be rounded.

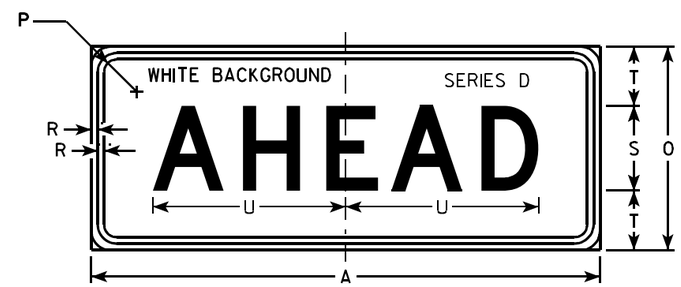

R3-17ap

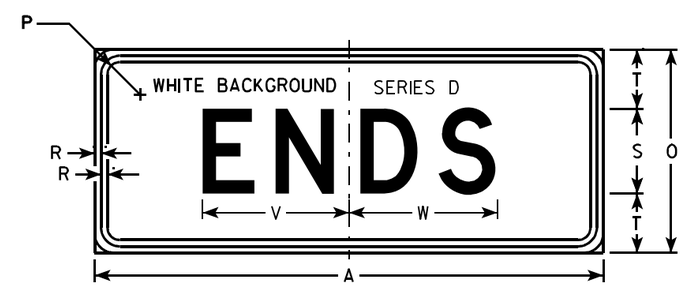

R3-17bp

SIZE	A	B	C	D	E	F	G	H	I	J	K	L	M	N	O	P	Q	R	S	T	U	V	W	X	Y	Z	R3-17 Area sq. ft.	R3-17ap Area sq. ft.	R3-17bp Area sq. ft.
1																													
2S	30	24	1 1/8	3/8	1/2	2	4	4 1/8	7 7/8	6 3/8	9 1/2	2 5/8	7/8	13	12	1 1/8	3 3/8	3/8	5	3 1/2	11 3/8	8 5/8	8 3/4	2 3/8	15 5/8	8	5.0	2.5	2.5
2M	30	24	1 1/8	3/8	1/2	2	4	4 1/8	7 7/8	6 3/8	9 1/2	2 5/8	7/8	13	12	1 1/8	3 3/8	3/8	5	3 1/2	11 3/8	8 5/8	8 3/4	2 3/8	15 5/8	8	5.0	2.5	2.5
3																													
4																													
5																													

STANDARD SIGN
R3-17 & R3-17a&bp

WISCONSIN DEPT OF TRANSPORTATION

APPROVED Matthew R Rauch
for State Traffic Engineer

DATE 4/12/2011 PLATE NO. R3-17.2

PROJECT NO:

SHEET NO: 333 E

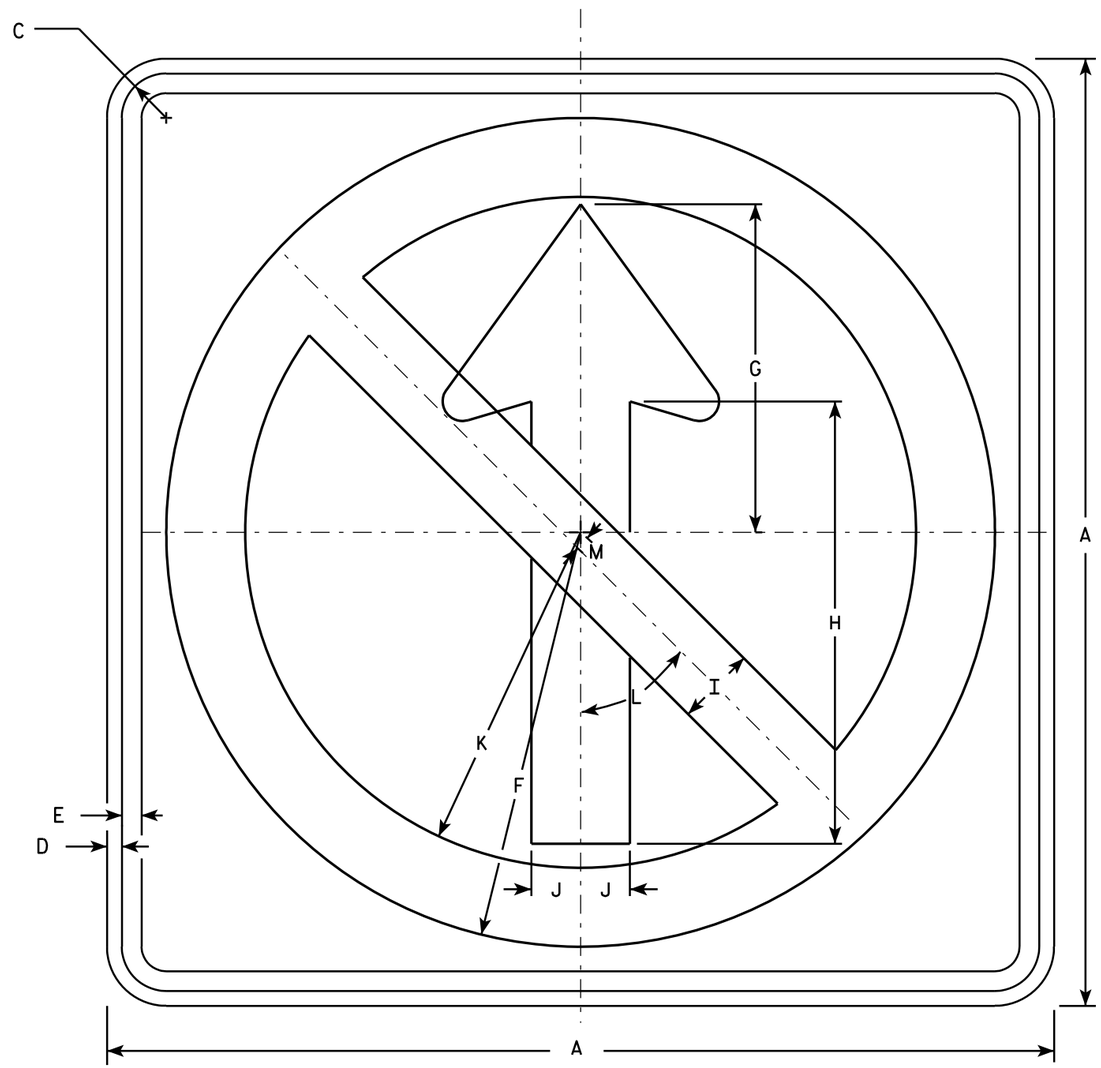

R3-27

NOTES

1. Sign is Type II - Type H Reflective - reference WIS DOT Standard Specification for HIGHWAY and STRUCTURE CONSTRUCTION latest edition.
2. Color:
   Background - White
   Message - See note 4
3. Corners may be square or rounded when base material is plywood but borders shall be rounded as shown. When base material is metal, the corners and borders shall be rounded.
4. Border & Arrow are non reflective black, the circle with diagonal bar is reflective red.

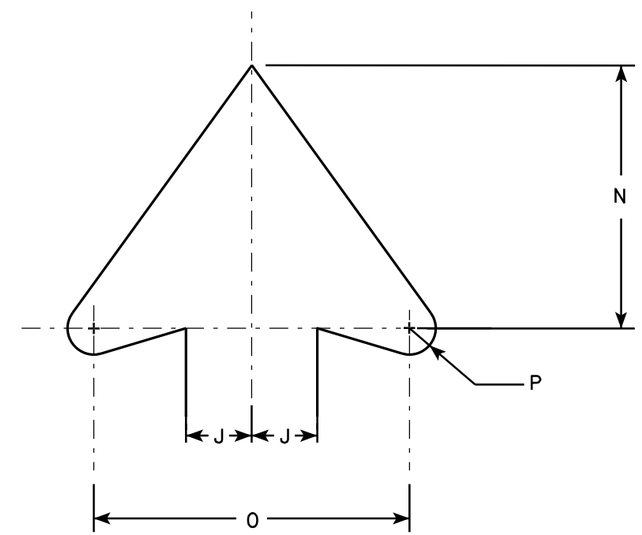

ARROW DETAIL

SIZE	A	B	C	D	E	F	G	H	I	J	K	L	M	N	O	P	Q	R	S	T	U	V	W	X	Y	Z	Area sq. ft.
1																											
2S	24		1 1/8	3/8	1/2	10 1/2	8 3/8	11 1/4	2	1 1/4	8 1/2	45°	3/8	5	6	1/2											4.0
2M	36		1 5/8	5/8	3/4	15 3/4	12 1/2	16 3/4	3	1 7/8	12 3/4	45°	1/2	7 1/2	9	3/4											9.0
3	36		1 5/8	5/8	3/4	15 3/4	12 1/2	16 3/4	3	1 7/8	12 3/4	45°	1/2	7 1/2	9	3/4											9.0
4	48		2 1/4	3/4	1	21	16 5/8	22 3/8	4	2 1/2	17	45°	3/4	10	12	1											16.0
5																											

STANDARD SIGN
R3-27

WISCONSIN DEPT OF TRANSPORTATION

APPROVED Matthew R Rauch
for State Traffic Engineer

DATE 10/07/10 PLATE NO. R3-27.1

PROJECT NO: | HWY: | COUNTY: | SHEET NO: 334 | E

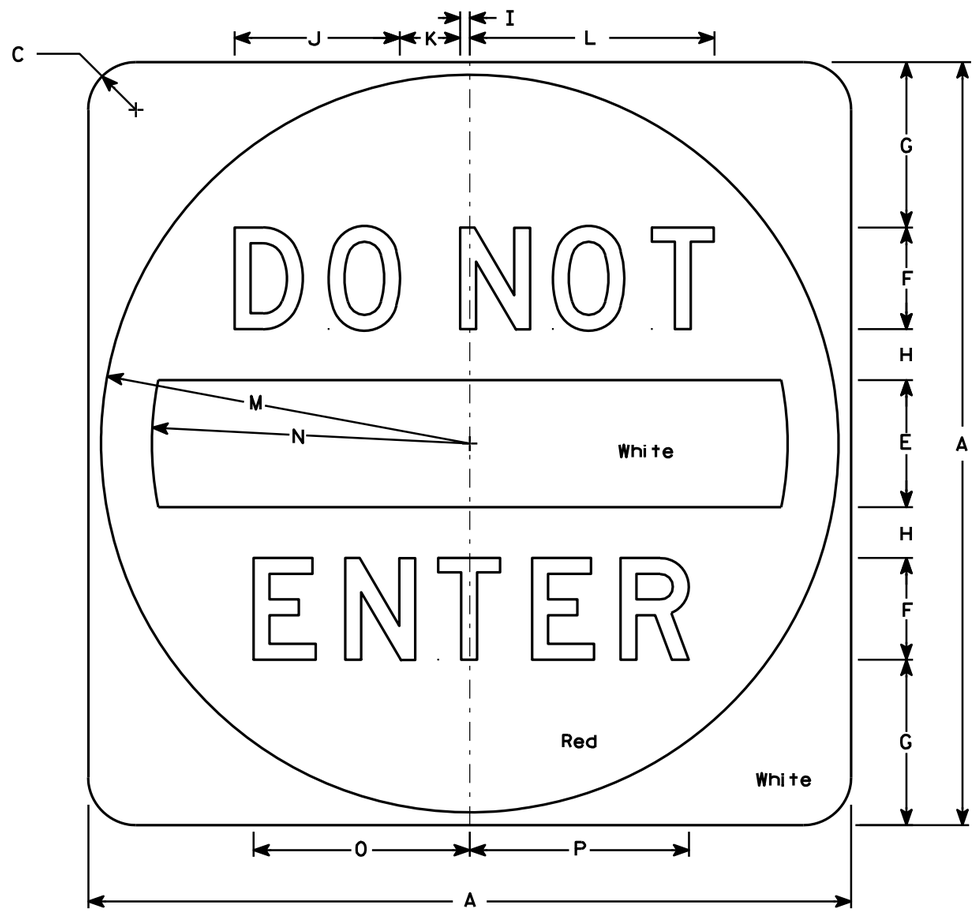

R5-1

NOTES

1. Sign is Type II - Type H Reflective - reference WIS DOT Standard Specification for HIGHWAY and STRUCTURE CONSTRUCTION latest edition.
2. Color:
   Background - See detail
   Message - White - Type H Reflective
3. Message Series - D
4. Corners may be square or rounded when base material is plywood but when base material is metal, the cornors shall be rounded.

SIZE	A	B	C	D	E	F	G	H	I	J	K	L	M	N	O	P	Q	R	S	T	U	V	W	X	Y	Z	Area sq. ft.
1																											
2S	30		1 7/8		5	4	6 1/2	2	3/8	6 1/2	2 3/8	9 5/8	14 1/2	12 1/2	8 1/2	8 5/8											6.26
2M	36		2 1/4		6	5	7 1/2	2 1/2	1/2	8 1/8	3	12 1/8	17 1/2	15	10 5/8	10 3/4											9.0
3	36		2 1/4		6	5	7 1/2	2 1/2	1/2	8 1/8	3	12 1/8	17 1/2	15	10 5/8	10 3/4											9.0
4	36		2 1/4		6	5	7 1/2	2 1/2	1/2	8 1/8	3	12 1/8	17 1/2	15	10 5/8	10 3/4											9.0
5	48		3		8	6	11	3	5/8	9 3/4	3 5/8	14 1/2	23 1/2	20	12 3/4	12 7/8											16.0

STANDARD SIGN
R5-1

WISCONSIN DEPT OF TRANSPORTATION

APPROVED Matthew R Rauch
for State Traffic Engineer

DATE 12/17/10 PLATE NO. R5-1.15

PROJECT NO: | HWY: | COUNTY: | SHEET NO: 335 | E

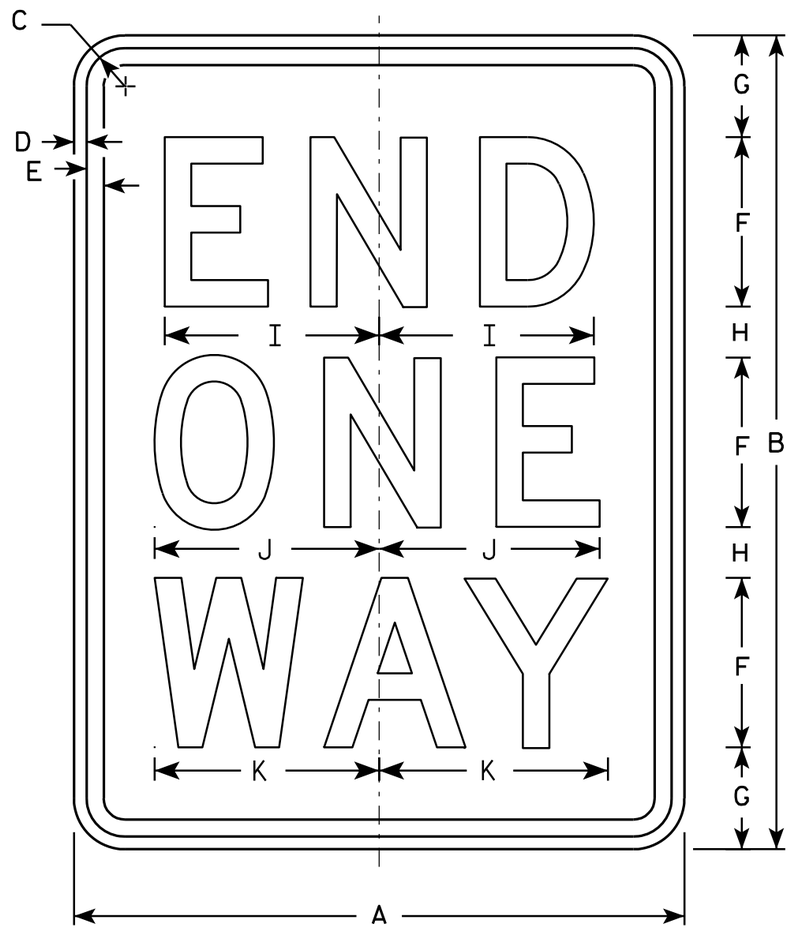

R6 - 7

NOTES

1. Sign is Type II - Type H Reflective - reference WIS DOT Standard Specification for HIGHWAY and STRUCTURE CONSTRUCTION latest edition.
2. Color:
   Background - White
   Message - Black
3. Message Series - D
4. Corners may be square or rounded when base material is plywood but borders shall be rounded as shown. When base material is metal, the corners and borders shall be rounded.

SIZE	A	B	C	D	E	F	G	H	I	J	K	L	M	N	O	P	Q	R	S	T	U	V	W	X	Y	Z
1																										
2S	24	30	1 1/8	3/8	1/2	6	3 1/2	2 1/2	8	8 1/8	8 1/2															
2M	30	36	1 3/8	1/2	5/8	8	3 1/4	2 3/4	10 1/8	10 1/2	11 1/2															
3	36	48	1 3/8	1/2	5/8	10	5 1/4	3 1/4	12 5/8	12 3/4	13 3/8															
4	36	48	1 3/8	1/2	5/8	10	5 1/4	3 1/4	12 5/8	12 3/4	13 3/8															
5																										

STANDARD SIGN
R6 - 7

WISCONSIN DEPT OF TRANSPORTATION

APPROVED Matthew R Rauch
for State Traffic Engineer

DATE 11/2/10 PLATE NO. R6-7.1

PROJECT NO: | HWY: | COUNTY: | SHEET NO: 336 | E

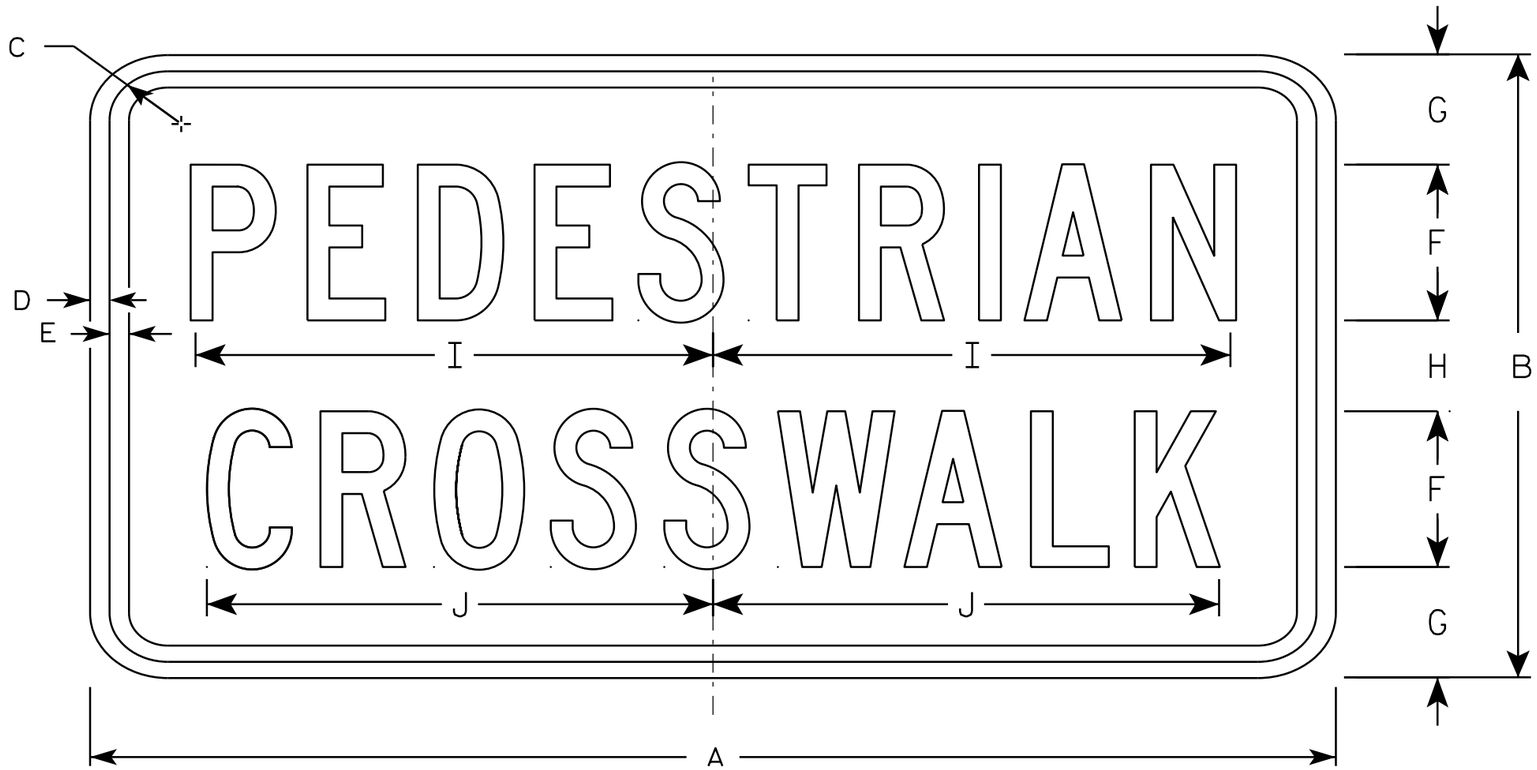

R9-8

NOTES

1. Sign is Type II - Type H Reflective - reference WIS DOT Standard Specification for HIGHWAY and STRUCTURE CONSTRUCTION latest edition.
2. Color:
   Background - White
   Message - Black
3. Message Series - C
4. Corners may be square or rounded when base material is plywood but borders shall be rounded as shown. When base material is metal, the corners and borders shall be rounded.

SIZE	A	B	C	D	E	F	G	H	I	J	K	L	M	N	O	P	Q	R	S	T	U	V	W	X	Y	Z	Area sq. ft.
1																											
2S	24	12	1 3/4	1/2	1/2	3	2 1/8	1 3/4	10	9 3/4																	2.0
2M	24	12	1 3/4	1/2	1/2	3	2 1/8	1 3/4	10	9 3/4																	2.0
3	30	18	1 3/4	1/2	1/2	4	3 1/2	3	13	13																	3.75
4																											
5																											

STANDARD SIGN
R9-8

WISCONSIN DEPT OF TRANSPORTATION

APPROVED Matthew R Rauch
for State Traffic Engineer

DATE 3/17/16 PLATE R9-8.1

PROJECT NO: | HWY: | COUNTY: | SHEET NO: | E

R10-71

R10-71L

NOTES

1. Sign is Type II - Type H Reflective - reference WIS DOT Standard Specification for HIGHWAY and STRUCTURE CONSTRUCTION latest edition.
2. Color:
   Background - White
   Message - Black
3. Message Series - D
4. Corners may be square or rounded when base material is plywood but borders shall be rounded as shown. When base material is metal, the corners and borders shall be rounded.

R10-71R

SIZE	A	B	C	D	E	F	G	H	I	J	K	L	M	N	O	P	Q	R	S	T	U	V	W	X	Y	Z	R10-71L&R Area sq. ft.	R10-71 Area sq. ft.
1																												
2S	72	36	2 1/4	3/4	1	18	5	4	6	20 5/8	11 3/4	9 1/8	8 1/2	12 7/8	9 7/8	16 1/8	23 7/8	30	5 5/8	26 3/4	66	23 5/8	8 3/4	13	26 7/8	27	18.0	16.5
2M	72	36	2 1/4	3/4	1	18	5	4	6	20 5/8	11 3/4	9 1/8	8 1/2	12 7/8	9 7/8	16 1/8	23 7/8	30	5 5/8	26 3/4	66	23 5/8	8 3/4	13	26 7/8	27	18.0	16.5
3																												
4																												
5																												

STANDARD SIGN
R10-71

WISCONSIN DEPT OF TRANSPORTATION

APPROVED Matthew R Rauch
for State Traffic Engineer

DATE 4/4/11 PLATE NO. R10-71.3

PROJECT NO:

SHEET NO: 338 E

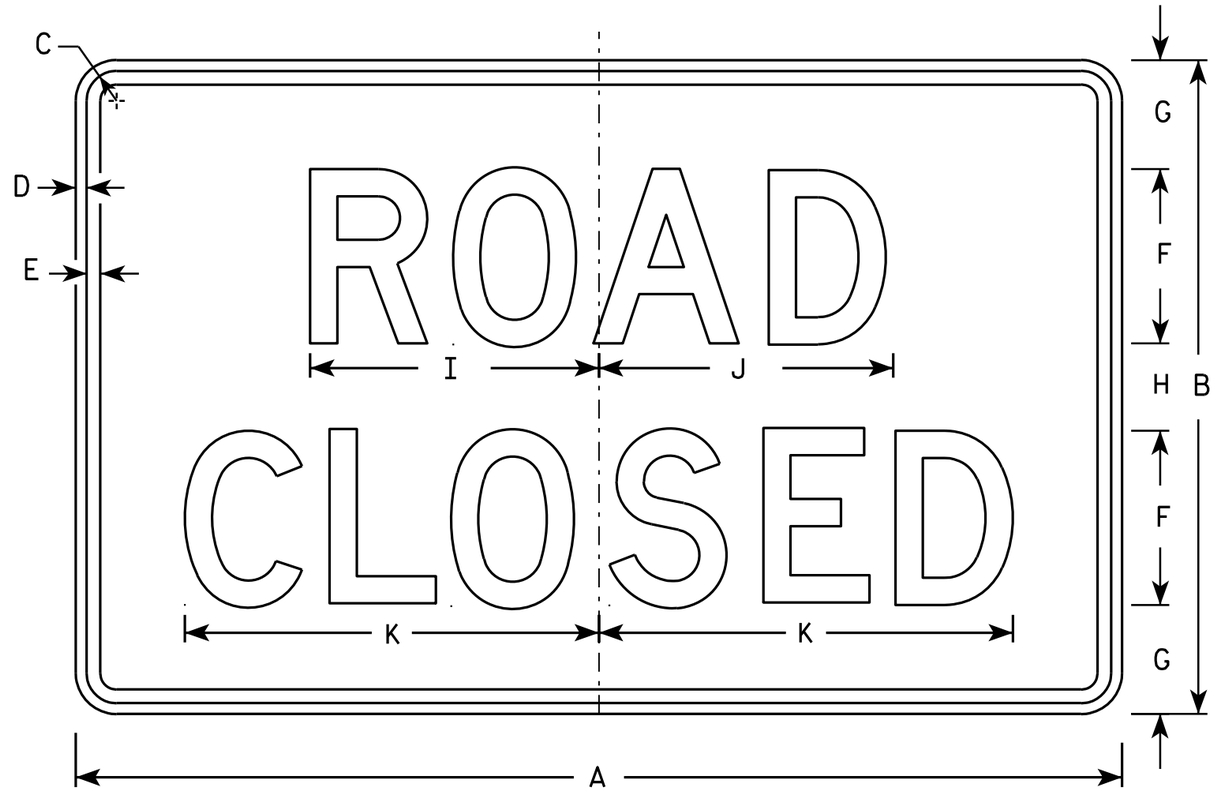

R11-2

NOTES

1. Sign is Type II - Type H Reflective - reference WIS DOT Standard Specification for HIGHWAY and STRUCTURE CONSTRUCTION latest edition.
2. Color:
   Background - White
   Message - Black
3. Message Series - D
4. Corners may be square or rounded when base material is plywood but borders shall be rounded as shown. When base material is metal, the corners and borders shall be rounded.
5. Modify the message as required.

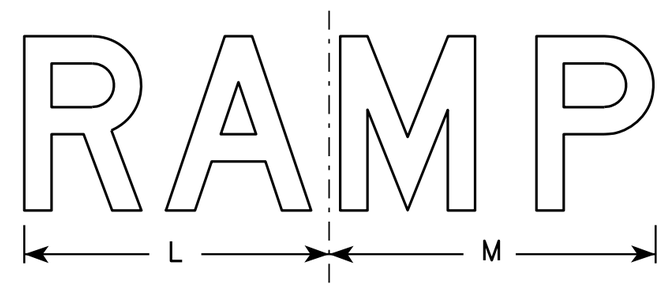

R11-2R

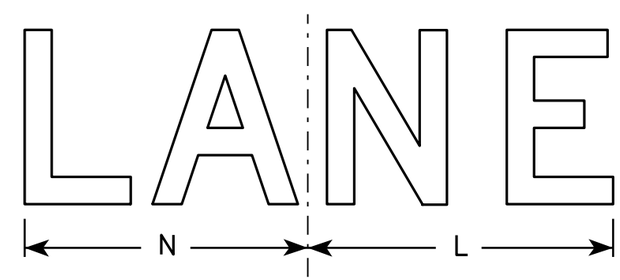

R11-2L

SIZE	A	B	C	D	E	F	G	H	I	J	K	L	M	N	O	P	Q	R	S	T	U	V	W	X	Y	Z	Area sq. ft.
1																											
2S	48	30	1 3/8	1/2	5/8	8	5	4	13 1/4	13 1/2	19	14	15	13													10.0
2M	48	30	1 3/8	1/2	5/8	8	5	4	13 1/4	13 1/2	19	14	15	13													10.0
3	48	30	1 3/8	1/2	5/8	8	5	4	13 1/4	13 1/2	19	14	15	13													10.0
4	48	30	1 3/8	1/2	5/8	8	5	4	13 1/4	13 1/2	19	14	15	13													10.0
5	48	30	1 3/8	1/2	5/8	8	5	4	13 1/4	13 1/2	19	14	15	13													10.0

STANDARD SIGN
R11-2

WISCONSIN DEPT OF TRANSPORTATION

APPROVED Matthew R Rauch
for State Traffic Engineer

DATE 4/1/11 PLATE NO. R11-2.10

PROJECT NO:	HWY:	COUNTY:		SHEET NO: 339	E

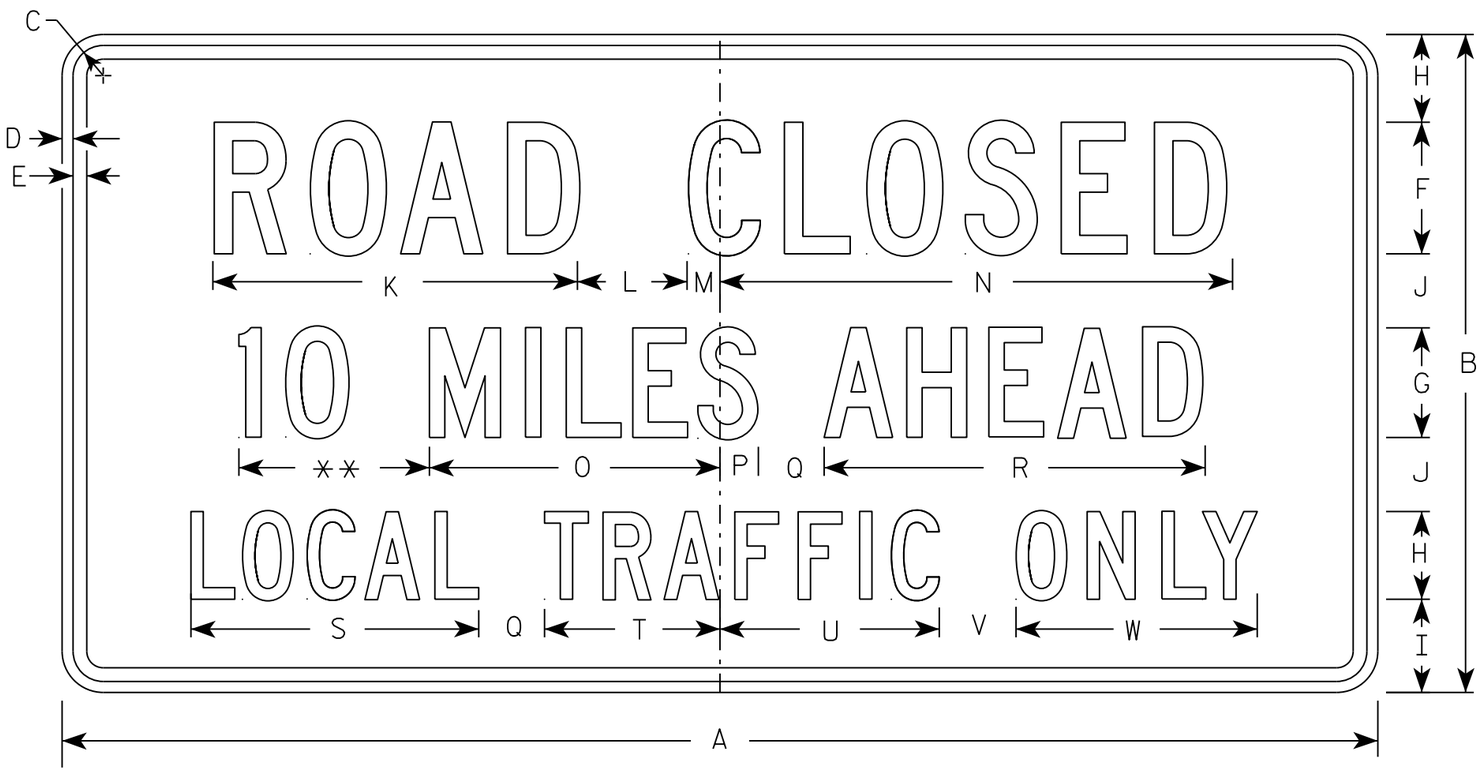

R11-3

** See Note 5

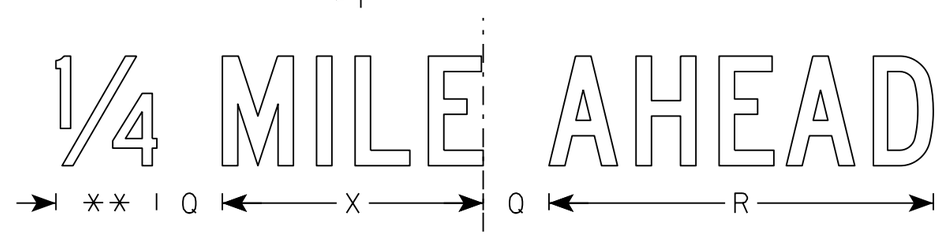

NOTES

1. Sign is Type II - Type H Reflective
2. Color:
   Background - White
   Message - Black
3. Message Series - C
4. Corners may be square or rounded when base material is plywood but borders shall be rounded as shown. When base material is metal, the corners and borders shall be rounded.
5. Substitute appropriate numerals to nearest quarter mile and optically adjust spacing to achieve proper balance.

SIZE	A	B	C	D	E	F	G	H	I	J	K	L	M	N	O	P	Q	R	S	T	U	V	W	X	Y	Z	Area sq. ft.
1	36	18	1 3/8	1/2	5/8	4	3	2 1/2	2	2	11 1/8	3	1 1/8	15 1/4	8	1 1/2	2	10 3/4	8 3/8	4 3/4	6 1/2	2	6 3/4	7 1/8			4.5
2S	60	30	1 3/8	1/2	5/8	6	5	4	4 1/4	3 3/8	16 5/8	5	1 1/2	23	13 1/4	1 3/4	3	17 3/8	13 1/8	8	10	3 1/2	11	11 7/8			12.5
2M	60	30	1 3/8	1/2	5/8	6	5	4	4 1/4	3 3/8	16 5/8	5	1 1/2	23	13 1/4	1 3/4	3	17 3/8	13 1/8	8	10	3 1/2	11	11 7/8			12.5
3																											
4																											
5																											

STANDARD SIGN
R11-3

WISCONSIN DEPT OF TRANSPORTATION

APPROVED Matthew R Rauch
for State Traffic Engineer

DATE 3/15/17 PLATE NO. R11-3.8

PROJECT NO: | HWY: | COUNTY: | SHEET NO: 340 | E

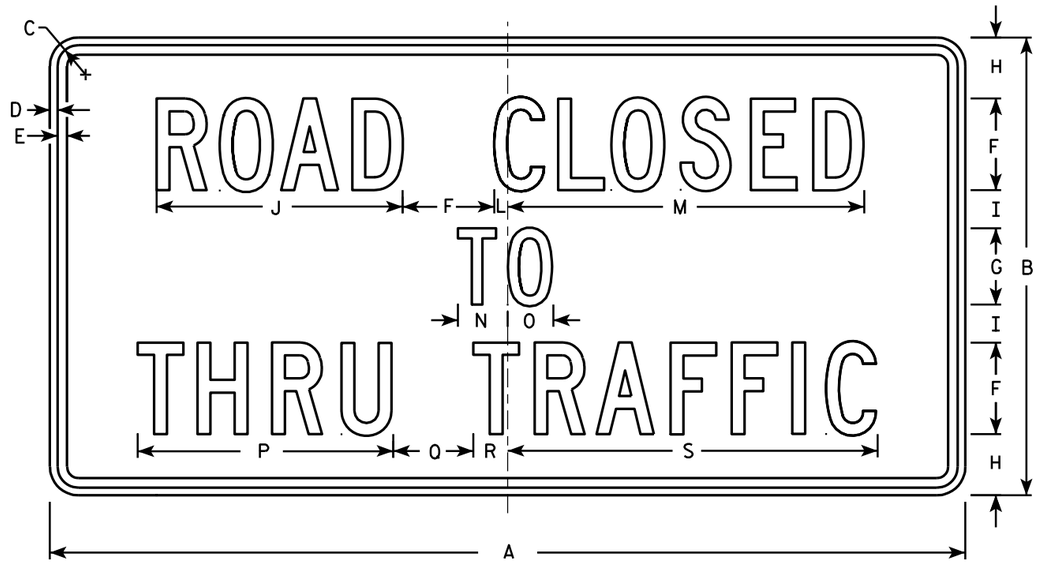

R11-4

NOTES

1. Sign is Type II - Type H Reflective - reference WIS DOT Standard Specification for HIGHWAY and STRUCTURE CONSTRUCTION latest edition.
2. Color:
   Background - White
   Message - Black
3. Message Series - C
4. Corners may be square or rounded when base material is plywood but borders shall be rounded as shown. When base material is metal, the corners and borders shall be rounded.

SIZE	A	B	C	D	E	F	G	H	I	J	K	L	M	N	O	P	Q	R	S	T	U	V	W	X	Y	Z	Area sq. ft.
1																											
2S	60	30	1 3/8	1/2	5/8	6	5	4	2 1/2	16 1/8		7/8	23 3/8	3 1/4	3	16 3/4	5 1/4	2 1/4	24 1/4								12.5
2M	60	30	1 3/8	1/2	5/8	6	5	4	2 1/2	16 1/8		7/8	23 3/8	3 1/4	3	16 3/4	5 1/4	2 1/4	24 1/4								12.5
3																											
4																											
5																											

STANDARD SIGN
R11 - 4

WISCONSIN DEPT OF TRANSPORTATION

APPROVED Matthew R Rauch for State Traffic Engineer

DATE 4/1/11 PLATE NO. R11-4.3

PROJECT NO: | HWY: | COUNTY: | SHEET NO: 341 | E

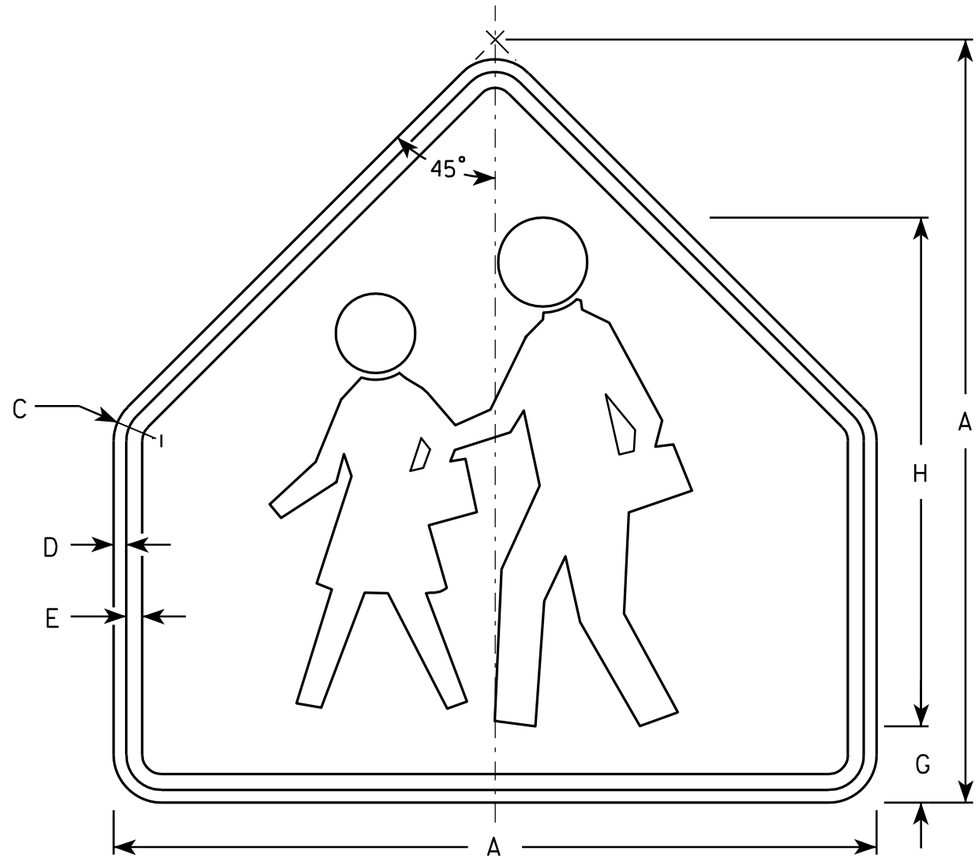

S1-1

NOTES

1. Sign is Type II - Type F Reflective - reference WIS DOT Standard Specification for HIGHWAY and STRUCTURE CONSTRUCTION latest edition.
2. Color:
   Background - Yellow-Green
   Message - Black
3. Corners may be square or rounded when base material is plywood but borders shall be rounded as shown. When base material is metal, the corners and borders shall be rounded.

SIZE	A	B	C	D	E	F	G	H	I	J	K	L	M	N	O	P	Q	R	S	T	U	V	W	X	Y	Z	Area sq. ft.
1	30		1 3/8	1/2	5/8		3	20																			4.69
2	36		1 5/8	5/8	3/4		3 1/2	24																			6.75
3	36		1 5/8	5/8	3/4		3 1/2	24																			6.75
4	48		2 1/4	3/4	1		4 3/4	32																			12
5																											

STANDARD SIGN
S1-1

WISCONSIN DEPT OF TRANSPORTATION

APPROVED Matthew R Rauch
for State Traffic Engineer
DATE 6/30/05 PLATE NO. S1-1.8

PROJECT NO: | HWY: | COUNTY: | SHEET NO: 342 | E

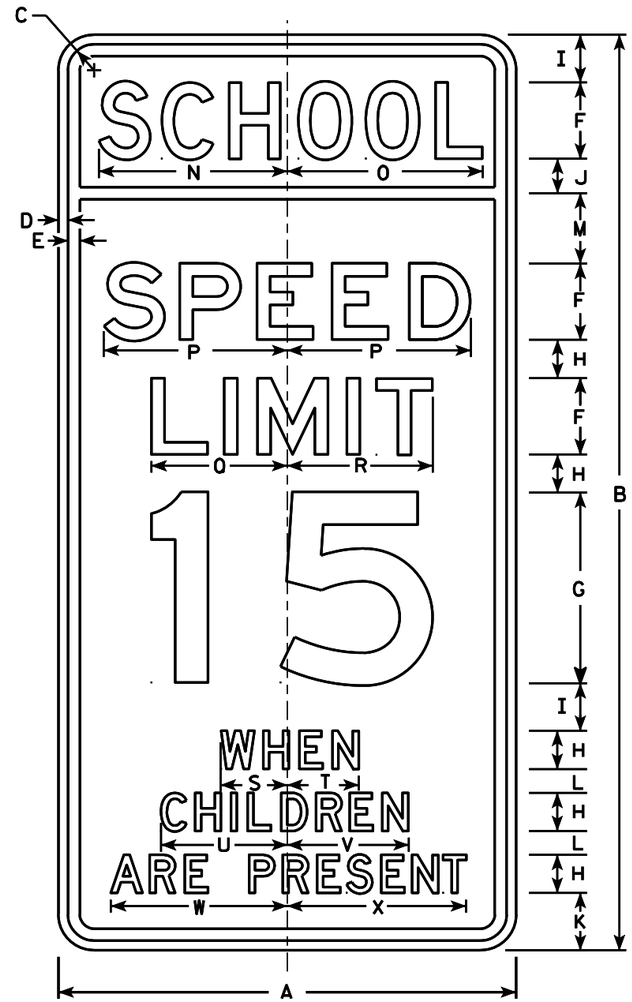

S4-51

NOTES

1. Sign is Type II - reference WIS DOT Standard Specification for HIGHWAY and STRUCTURE CONSTRUCTION latest edition. (See note 5).
2. Color:
   Background - See note 5
   Message - Black
3. Message Series - See note 6
4. Corners may be square or rounded when base material is plywood but borders shall be rounded as shown. When base material is metal, the corners and borders shall be rounded.
5. Top panel (SCHOOL) background - Yellow Green -Type F Reflective. Lower panel background - White -Type H Reflective.
6. From top to bottom:
   Lines 1, 5, 6 & 7 are series D
   Lines 2, 3 & 4 are series E
7. Line 4 substitute appropriate numerals and adjust spacing to achieve proper balance.

Metric equivalent for this sign is:

SIZE	
1	
2	600 mm X 1200 mm
3	900 mm X 1800 mm
4	
5	

SIZE	A	B	C	D	E	F	G	H	I	J	K	L	M	N	O	P	Q	R	S	T	U	V	W	X	Y	Z	Area sq. ft.	Area m2
1																												
2	24	48	1 3/8	1/2	5/8	4	10	2	2 1/2	1 3/4	3	1 1/4	3 3/4	9 7/8	10 1/4	9 5/8	7 1/8	7 5/8	3 1/2	3 3/8	6 5/8	6 3/8	9 1/4	9 3/8			8.00	0.72
3	36	72	2 1/4	3/4	1	6	15	3	3 3/4	2 3/4	4 1/2	1 7/8	5 1/2	15	15 1/4	14 1/2	11 1/4	11 1/2	5 1/2	5 3/4	10	9 3/4	14	14 1/8			18.00	1.62
4																												
5																												

STANDARD SIGN
S4-51

WISCONSIN DEPT OF TRANSPORTATION

APPROVED Matthew R Rauch
for State Traffic Engineer

DATE 4/26/10 PLATE NO. S4-51.9

PROJECT NO:	HWY:	COUNTY:		SHEET NO: 343	E

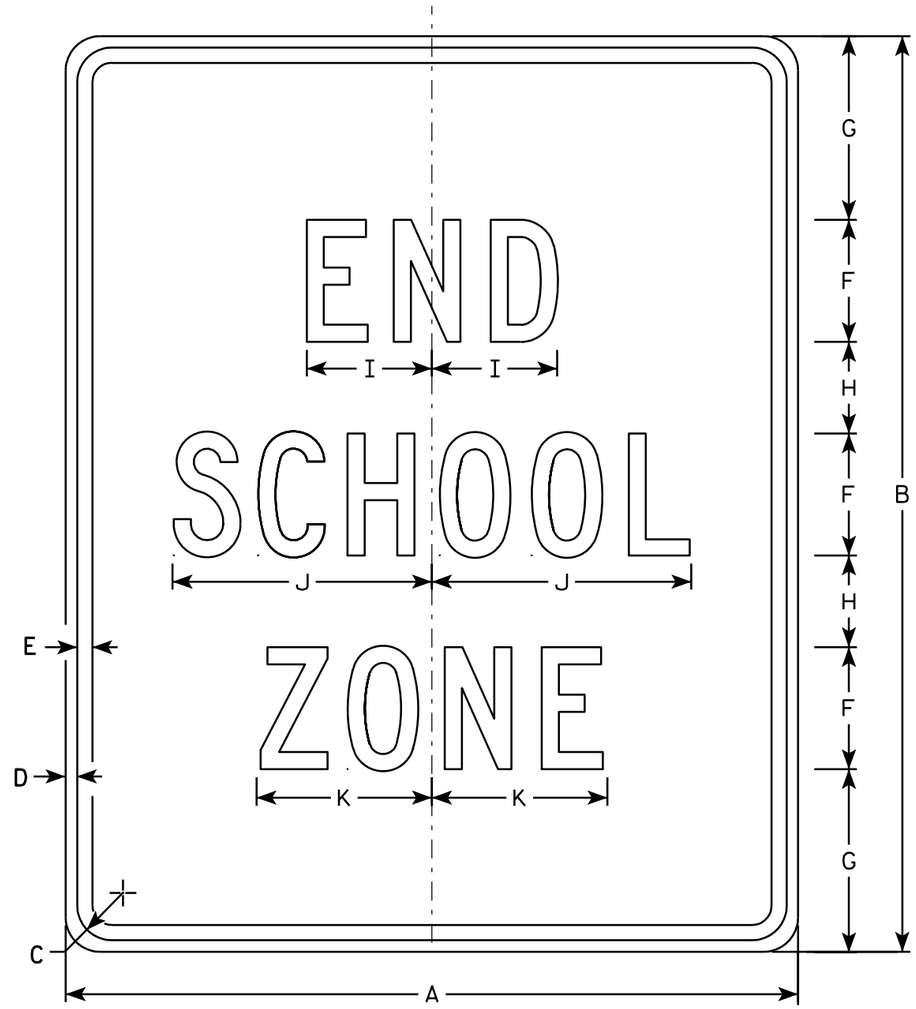

S5-2

NOTES

1. Sign is Type II - Type H Reflective - reference WIS DOT Standard Specification for HIGHWAY and STRUCTURE CONSTRUCTION latest edition.
2. Color:
   Background - White
   Message - Black
3. Message Series - C
4. Corners may be square or rounded when base material is plywood but borders shall be rounded as shown. When base material is metal, the corners and borders shall be rounded.

SIZE	A	B	C	D	E	F	G	H	I	J	K	L	M	N	O	P	Q	R	S	T	U	V	W	X	Y	Z	Area sq. ft.
1																											
2	24	30	1 1/8	3/8	1/2	4	6	3	4 1/8	8 1/2	5 3/4																5.0
3	36	42	1 5/8	5/8	3/4	6	7	5	6 1/8	12 5/8	8 5/8																10.5
4																											
5																											

STANDARD SIGN
S5-2

WISCONSIN DEPT OF TRANSPORTATION

APPROVED Matthew R Rauch
for State Traffic Engineer

DATE 3/8/11 PLATE NO. S5-2.2

PROJECT NO: | HWY: | COUNTY: | SHEET NO: 344 | E

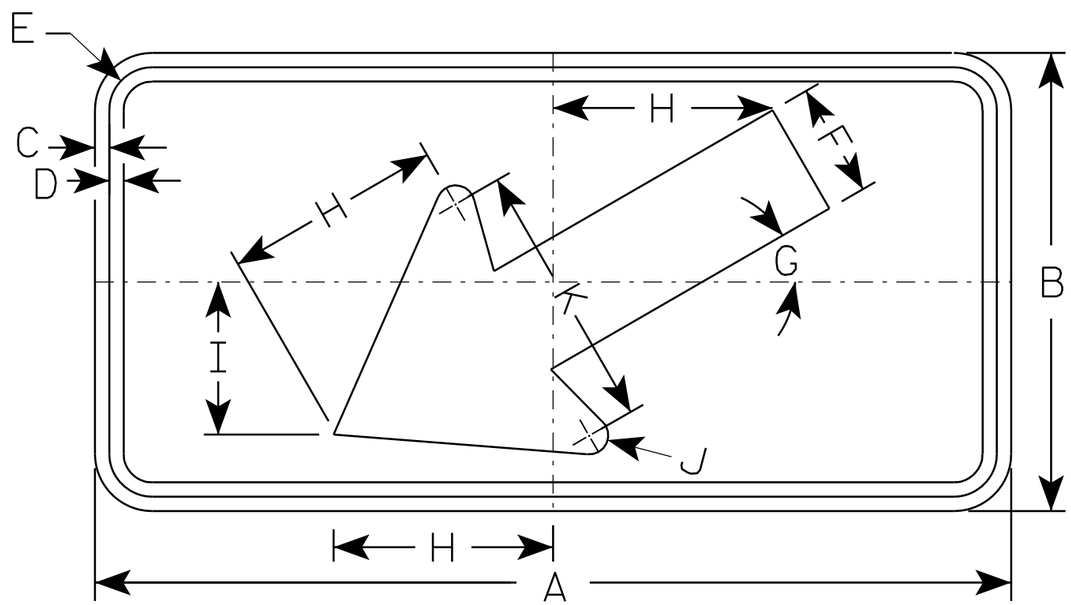

S16-7L

NOTES

1. Sign is Type II - Type F Reflective - reference WIS DOT Standard Specification for HIGHWAY and STRUCTURE CONSTRUCTION latest edition.
2. Color:
   Background - Yellow-Green
   Message - Black
3. Corners may be square or rounded when base material is plywood but borders shall be rounded as shown. When base material is metal, the corners and borders shall be rounded.
4. S16-7R are the same as S16-7L except the arrow is reversed along the vertical centerline.

SIZE	A	B	C	D	E	F	G	H	I	J	K	L	M	N	O	P	Q	R	S	T	U	V	W	X	Y	Z	Area sq. ft.
1	24	12	3/8	3/8	1 1/8	3	30°	5 3/4	4	1/2	7																2.0
2S	30	18	3/8	1/2	1 1/8	4 1/2	30°	8 1/2	6	5/8	10 1/4																3.75
2M	30	18	3/8	1/2	1 1/8	4 1/2	30°	8 1/2	6	5/8	10 1/4																3.75
3	30	18	3/8	1/2	1 1/8	4 1/2	30°	8 1/2	6	5/8	10 1/4																3.75
4	48	24	1/2	5/8	1 3/8	6	30°	11 1/2	8	1	14																8.0
5																											

STANDARD SIGN
S16-7

WISCONSIN DEPT OF TRANSPORTATION

APPROVED Matthew R Rauch
for State Traffic Engineer

DATE 7/22/13 PLATE NO. S16-7.1

PROJECT NO: | HWY: | COUNTY: | SHEET NO: 345 | E

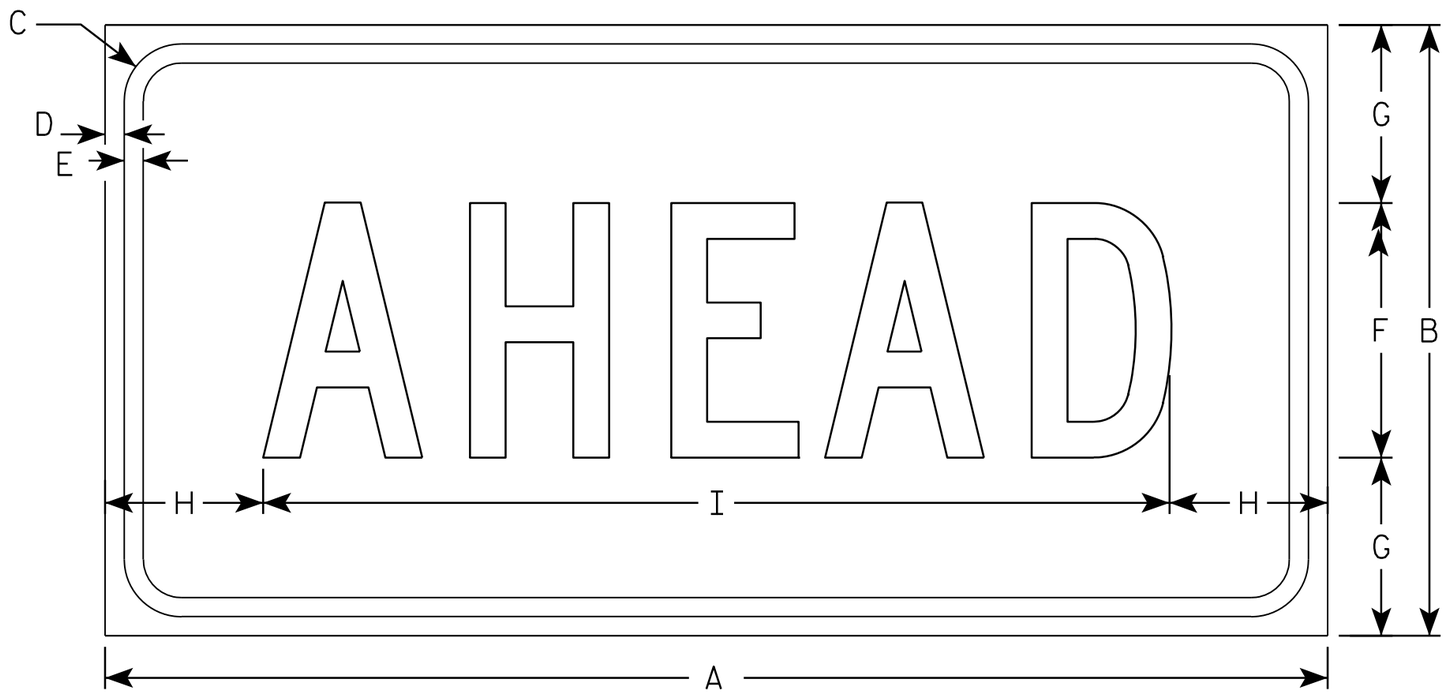

S16-9P

NOTES

1. Sign is Type II - Type F Reflective - reference WIS DOT Standard Specification for HIGHWAY and STRUCTURE CONSTRUCTION latest edition.
2. Color:
   Background - Yellow-Green
   Message - Black
3. Message Series - C
4. Corners may be square or rounded when base material is plywood but borders shall be rounded as shown. When base material is metal, the corners and borders shall be rounded.

SIZE	A	B	C	D	E	F	G	H	I	J	K	L	M	N	O	P	Q	R	S	T	U	V	W	X	Y	Z	Area sq. ft.
1	24	12	1 1/8	3/8	3/8	5	3 1/2	3 1/8	17 3/4																		2.0
2S	30	18	1 1/8	3/8	1/2	7	5 1/2	2 3/4	24 1/2																		3.75
2M	30	18	1 1/8	3/8	1/2	7	5 1/2	2 3/4	24 1/2																		3.75
3	30	18	1 1/8	3/8	1/2	7	3 1/2	2 3/4	24 1/2																		3.75
4	48	24	1 3/8	1/2	5/8	10	7	6 1/8	35 3/4																		8.0
5																											

STANDARD SIGN
S16-9P

WISCONSIN DEPT OF TRANSPORTATION

APPROVED Matthew R Rauch
for State Traffic Engineer

DATE 7/22/13 PLATE NO. S16-9P.1

PROJECT NO: | HWY: | COUNTY: | SHEET NO: 346 | E

NOTES

1. Sign is Type II - Type F Reflective - reference WIS DOT Standard Specification for HIGHWAY and STRUCTURE CONSTRUCTION latest edition.
2. Color:
   Background - Yellow
   Message - Black
3. Corners may be square or rounded when base material is plywood but borders shall be rounded as shown. When base material is metal, the corners and borders shall be rounded.

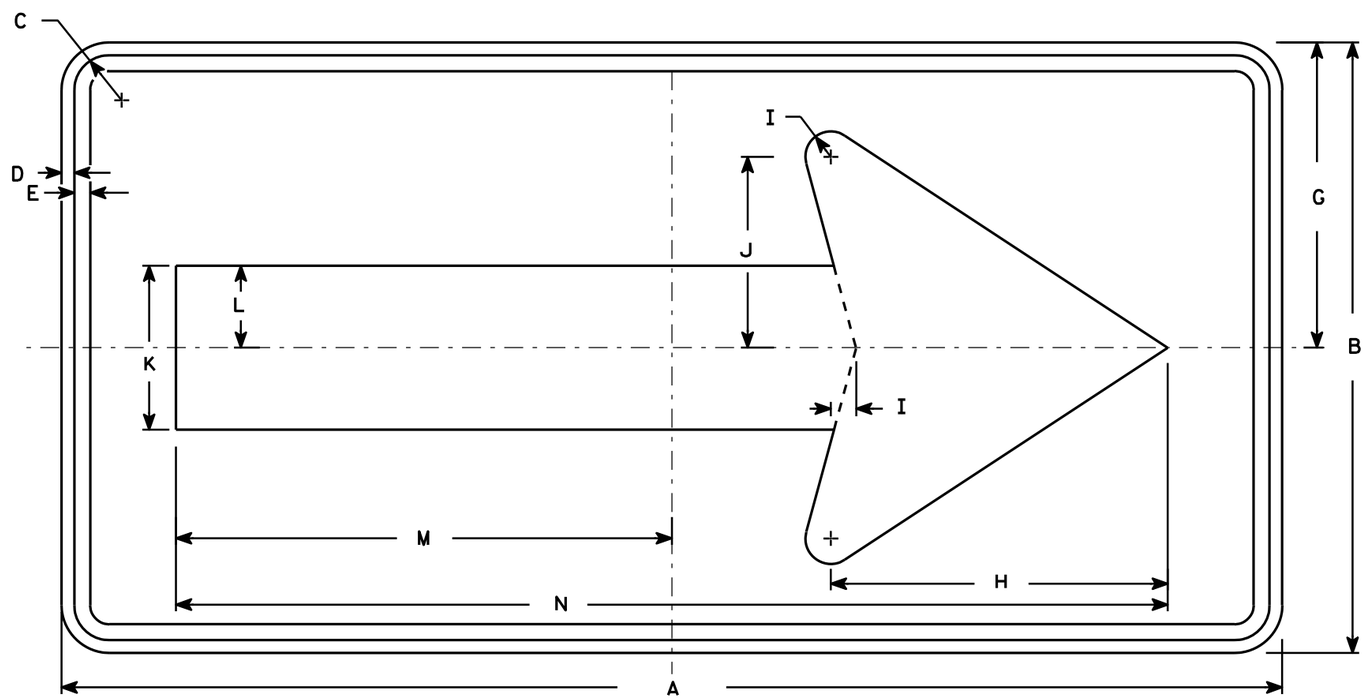

W1-6

SIZE	A	B	C	D	E	F	G	H	I	J	K	L	M	N	O	P	Q	R	S	T	U	V	W	X	Y	Z	Area sq. ft.
1	36	18	1 1/8	3/8	3/8		9	10	3/4	5 5/8	4 3/4	2 3/8	14 5/8	29 1/4													4.5
2S	48	24	1 3/8	1/2	5/8		12	13 1/4	1	7 1/2	6 1/2	3 1/4	19 1/2	39													8.0
2M	48	24	1 3/8	1/2	5/8		12	13 1/4	1	7 1/2	6 1/2	3 1/4	19 1/2	39													8.0
3	60	30	1 3/8	1/2	5/8		15	16 1/4	1 1/4	9 1/4	8	4	24 3/8	48 3/4													12.5
4	60	30	1 3/8	1/2	5/8		15	16 1/4	1 1/4	9 1/4	8	4	24 3/8	48 3/4													12.5
5	96	48	2 1/4	3/4	1		24	26 1/2	2	15	13	6 1/2	39	78													32.0

STANDARD SIGN
W1-6

WISCONSIN DEPT OF TRANSPORTATION

APPROVED Matthew R Rauch
for State Traffic Engineer

DATE 6/7/10 PLATE NO. W1-6.8

PROJECT NO:	HWY:	COUNTY:		SHEET NO: 347	E

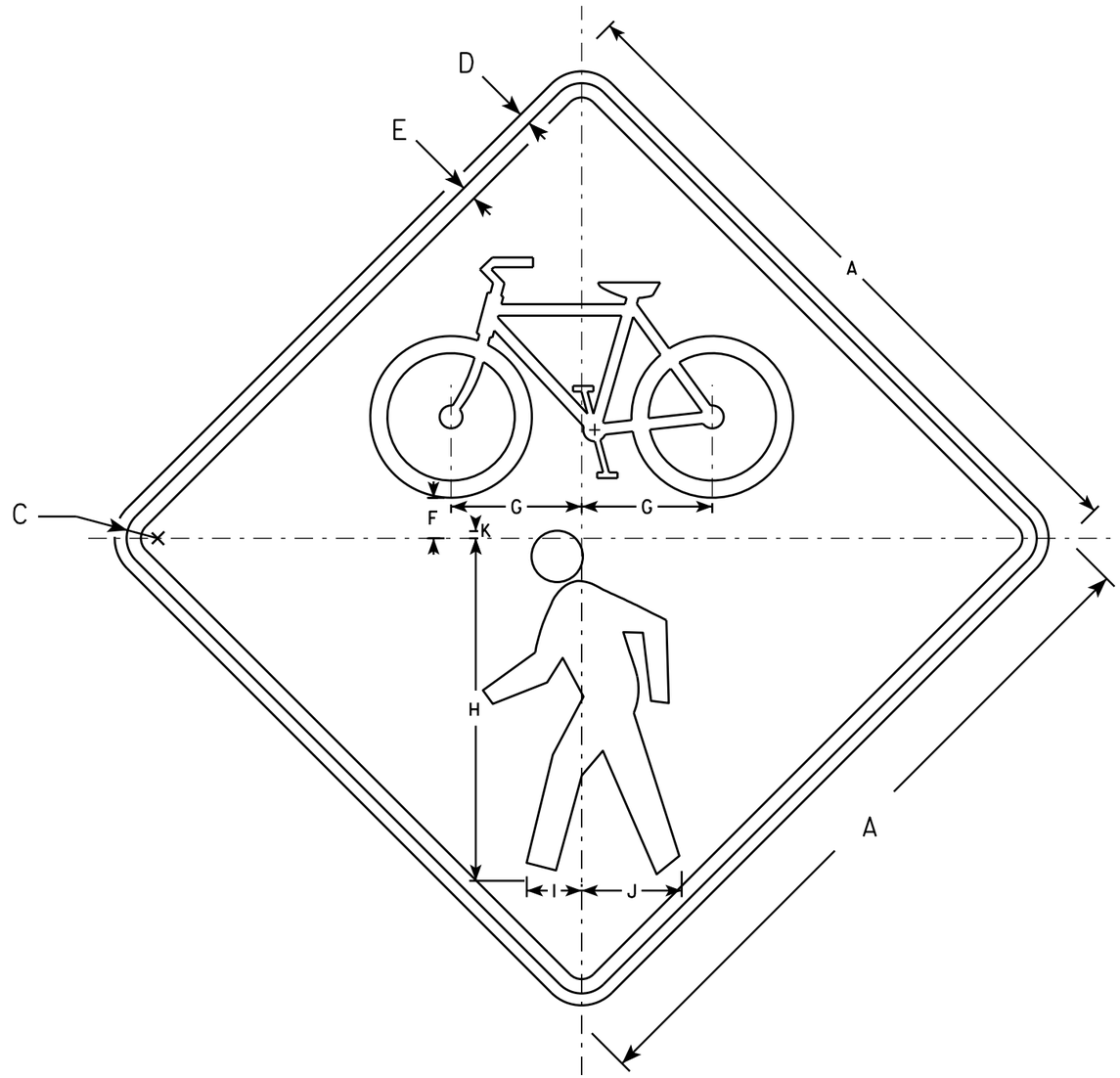

W11-15

NOTES

1. Sign is Type II - Type F Reflective
2. Color:
   Background - Yellow
   Message - Black
3. Corners may be square or rounded when base material is plywood but borders shall be rounded as shown. When base material is metal, the corners and borders shall be rounded.

SIZE	A	B	C	D	E	F	G	H	I	J	K	L	M	N	O	P	Q	R	S	T	U	V	W	X	Y	Z	Area sq. ft.
1	24		1 1/8	3/8	1/2	1 3/8	4 5/8	12	1 7/8	3 1/2	1/4																4.0
2S	30		1 3/8	1/2	5/8	1 3/4	5 3/4	15	2 3/8	4 3/8	3/8																6.25
2M	36		1 5/8	5/8	3/4	2 1/8	6 7/8	18	2 7/8	5 1/4	3/8																9.0
3	36		1 5/8	5/8	3/4	2 1/8	6 7/8	18	2 7/8	5 1/4	3/8																16.0
4	48		2 1/4	3/4	1	2 7/8	9 1/8	24	3 7/8	7	1/2																16.0
5																											

STANDARD SIGN
W11-15

WISCONSIN DEPT OF TRANSPORTATION

APPROVED Matthew R Rauch for State Traffic Engineer

DATE 2/13/14 PLATE NO W11-15.4

PROJECT NO:	HWY:	COUNTY:		SHEET NO:	E

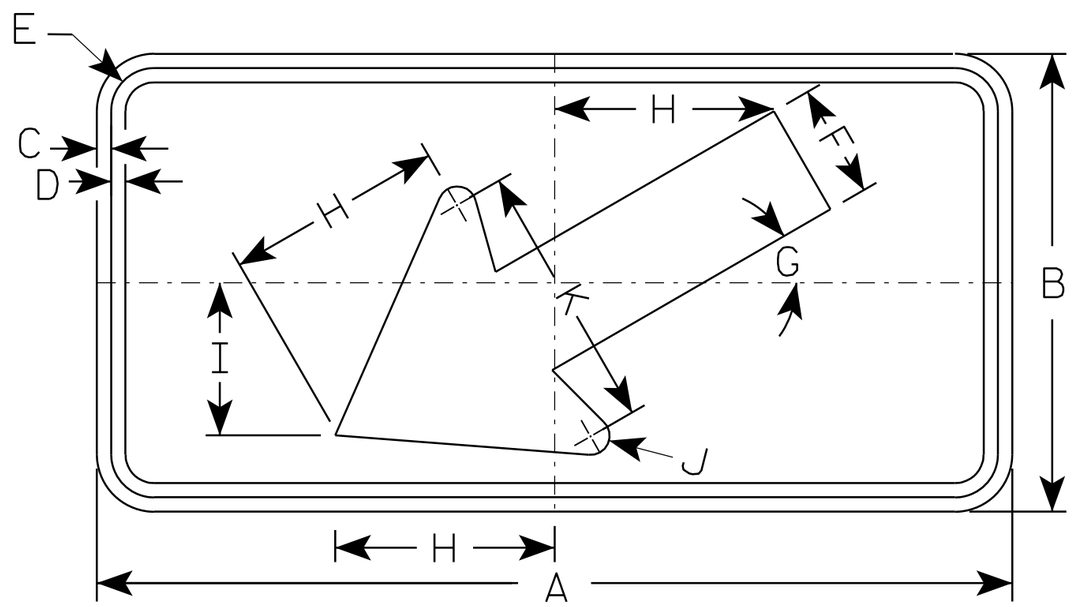

W16-7L

NOTES

1. Sign is Type II - Type F Reflective - reference WIS DOT Standard Specification for HIGHWAY and STRUCTURE CONSTRUCTION latest edition.
2. Color:
   Background - Yellow
   Message - Black
3. Corners may be square or rounded when base material is plywood but borders shall be rounded as shown. When base material is metal, the corners and borders shall be rounded.
4. W16-7R is the same as W16-L except the arrow is reversed along the vertical centerline.

SIZE	A	B	C	D	E	F	G	H	I	J	K	L	M	N	O	P	Q	R	S	T	U	V	W	X	Y	Z	Area sq. ft.
1																											
2S	24	12	3/8	3/8	1 1/8	3	30°	5 3/4	4	1/2	7																2.0
2M	30	18	3/8	1/2	1 1/8	4 1/2	30°	8 1/2	6	5/8	10 1/4																3.75
3	30	18	3/8	1/2	1 1/8	4 1/2	30°	8 1/2	6	5/8	10 1/4																3.75
4																											8
5																											8

STANDARD SIGN
W16-7

WISCONSIN DEPT OF TRANSPORTATION

APPROVED Matthew R Rauch
for State Traffic Engineer

DATE 11/02/10 PLATE NO. W16-7.5

PROJECT NO: | HWY: | COUNTY: | SHEET NO: 349 | E

NOTES

1. Sign is Type II - Type F Reflective - reference WIS DOT Standard Specification for HIGHWAY and STRUCTURE CONSTRUCTION latest edition.
2. Color:
   Background - Yellow
   Message - Black
3. Message Series - C
4. Corners may be square or rounded when base material is plywood but borders shall be rounded as shown. When base material is metal, the corners and borders shall be rounded.

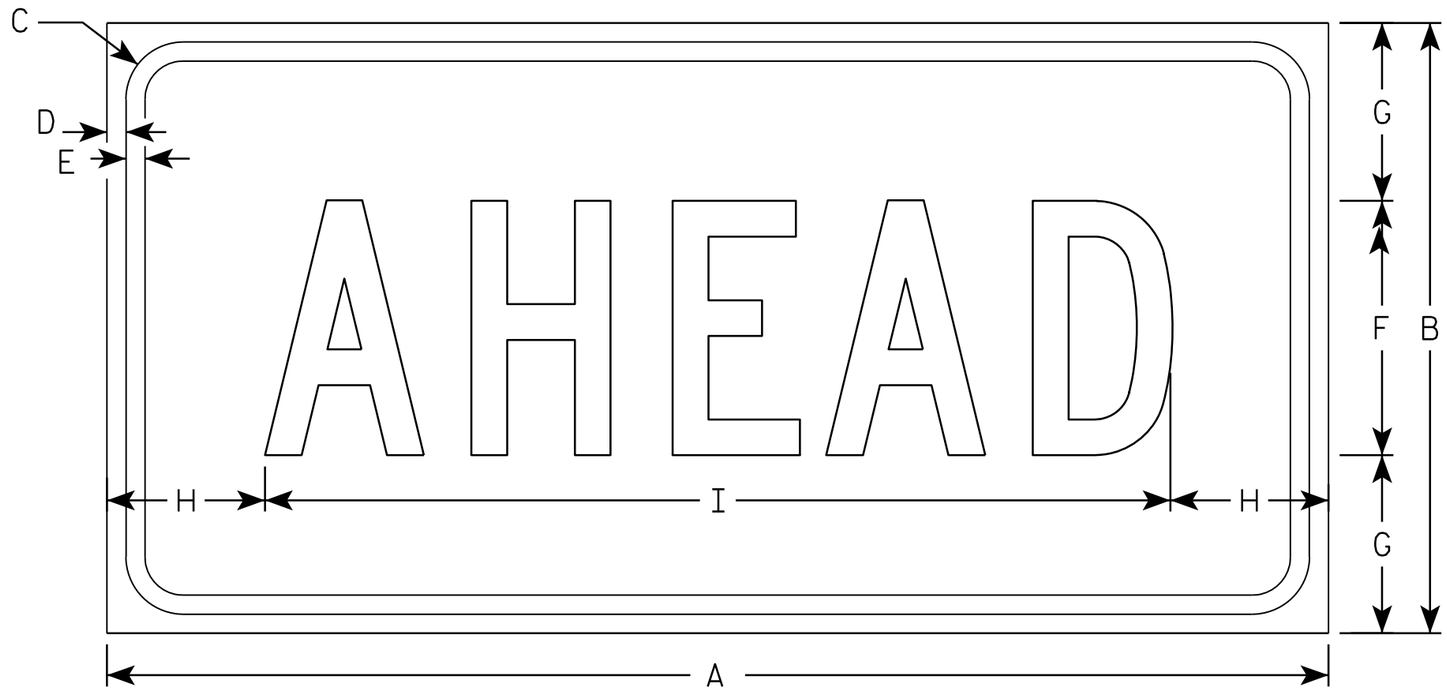

W16-9P

SIZE	A	B	C	D	E	F	G	H	I	J	K	L	M	N	O	P	Q	R	S	T	U	V	W	X	Y	Z	Area sq. ft.
1																											
2S	24	12	1 1/8	3/8	3/8	5	3 1/2	3 1/8	17 3/4																		2.0
2M	30	18	1 1/8	3/8	1/2	7	5 1/2	2 3/4	24 1/2																		3.75
3	30	18	1 1/8	3/8	1/2	7	3 1/2	2 3/4	24 1/2																		3.75
4	48	24	1 3/8	1/2	5/8	10	7	6 1/8	35 3/4																		8.0
5																											

STANDARD SIGN
W16-9P

WISCONSIN DEPT OF TRANSPORTATION

APPROVED Matthew R Rauch
for State Traffic Engineer

DATE 12/28/10 PLATE NO. W16-9P.6

PROJECT NO: | HWY: | COUNTY: | SHEET NO: 350 | E

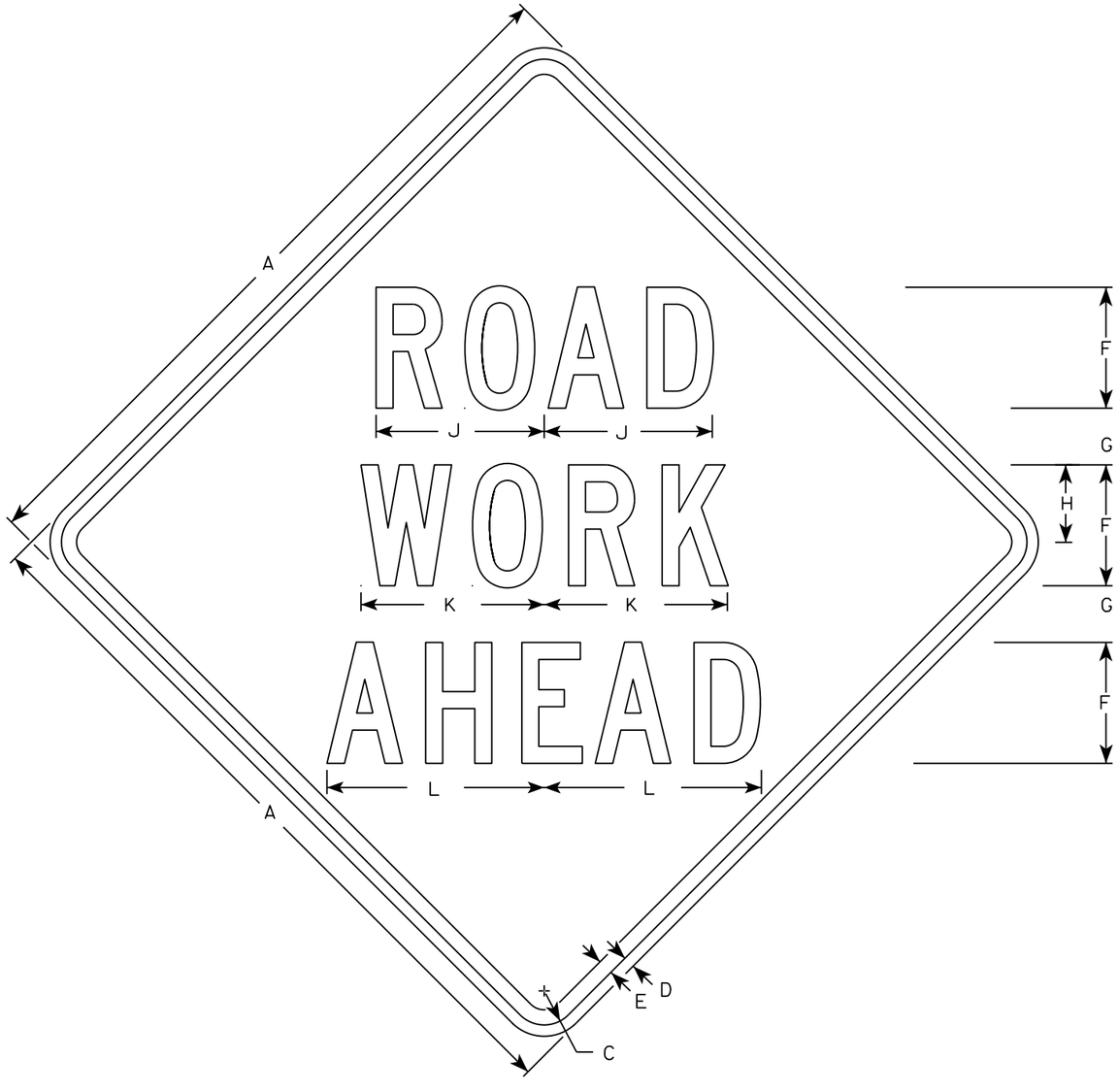

W20-1A

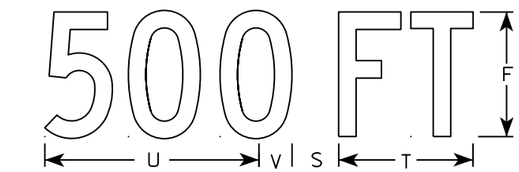

W20-1D

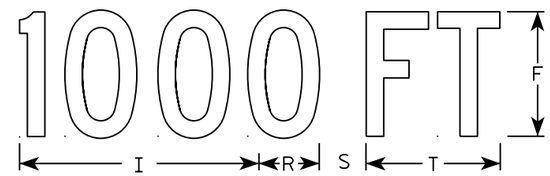

W20-1C

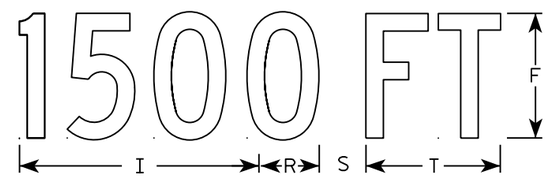

W20-1B

W20-1G

W20-1F

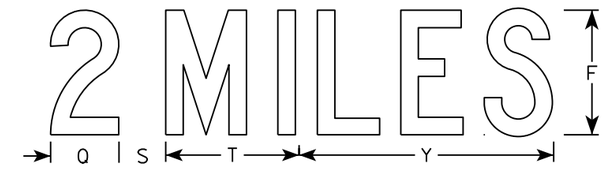

W20-1E

NOTES

1. Sign is Type II - Type F Reflective
2. Color:
   Background - Orange
   Message - Black
3. Message Series - C
4. Corners may be square or rounded when base material is plywood but borders shall be rounded as shown. When base material is metal, the corners and borders shall be rounded.

SIZE	A	B	C	D	E	F	G	H	I	J	K	L	M	N	O	P	Q	R	S	T	U	V	W	X	Y	Z	Area sq. ft.
1	36		1 3/8	1/2	5/8	5	2 5/8	3 1/4	10 1/8	7	7 5/8	8 7/8	1 1/8	4 1/2	3 1/2	9		2 1/2	2 1/4	5 5/8	9	1 3/8	8	1 3/4	10 3/4	6	9.0
2S	48		2 1/4	3/4	1	8	3 3/4	5 1/8	15 3/8	11 1/8	12 1/8	14 3/8	1 5/8	6 7/8	5 3/8	13 7/8	4 3/8	3 7/8	3	8 5/8	13 3/4	2 1/8	11 7/8	2 3/4	16 3/8	9	16.0
2M	48		2 1/4	3/4	1	8	3 3/4	5 1/8	15 3/8	11 1/8	12 1/8	14 3/8	1 5/8	6 7/8	5 3/8	13 7/8	4 3/8	3 7/8	3	8 5/8	13 3/4	2 1/8	11 7/8	2 3/4	16 3/8	9	16.0
3	48		2 1/4	3/4	1	8	3 3/4	5 1/8	15 3/8	11 1/8	12 1/8	14 3/8	1 5/8	6 7/8	5 3/8	13 7/8	4 3/8	3 7/8	3	8 5/8	13 3/4	2 1/8	11 7/8	2 3/4	16 3/8	9	16.0
4	48		2 1/4	3/4	1	8	3 3/4	5 1/8	15 3/8	11 1/8	12 1/8	14 3/8	1 5/8	6 7/8	5 3/8	13 7/8	4 3/8	3 7/8	3	8 5/8	13 3/4	2 1/8	11 7/8	2 3/4	16 3/8	9	16.0
5	48		2 1/4	3/4	1	8	3 3/4	5 1/8	15 3/8	11 1/8	12 1/8	14 3/8	1 5/8	6 7/8	5 3/8	13 7/8	4 3/8	3 7/8	3	8 5/8	13 3/4	2 1/8	11 7/8	2 3/4	16 3/8	9	16.0

STANDARD SIGN
W20-1A, B, C, D, F & G

WISCONSIN DEPT OF TRANSPORTATION

APPROVED Matthew R Rauch
for State Traffic Engineer

DATE 5/07/15 PLATE NO. W20-1.10

PROJECT NO:

SHEET NO: E

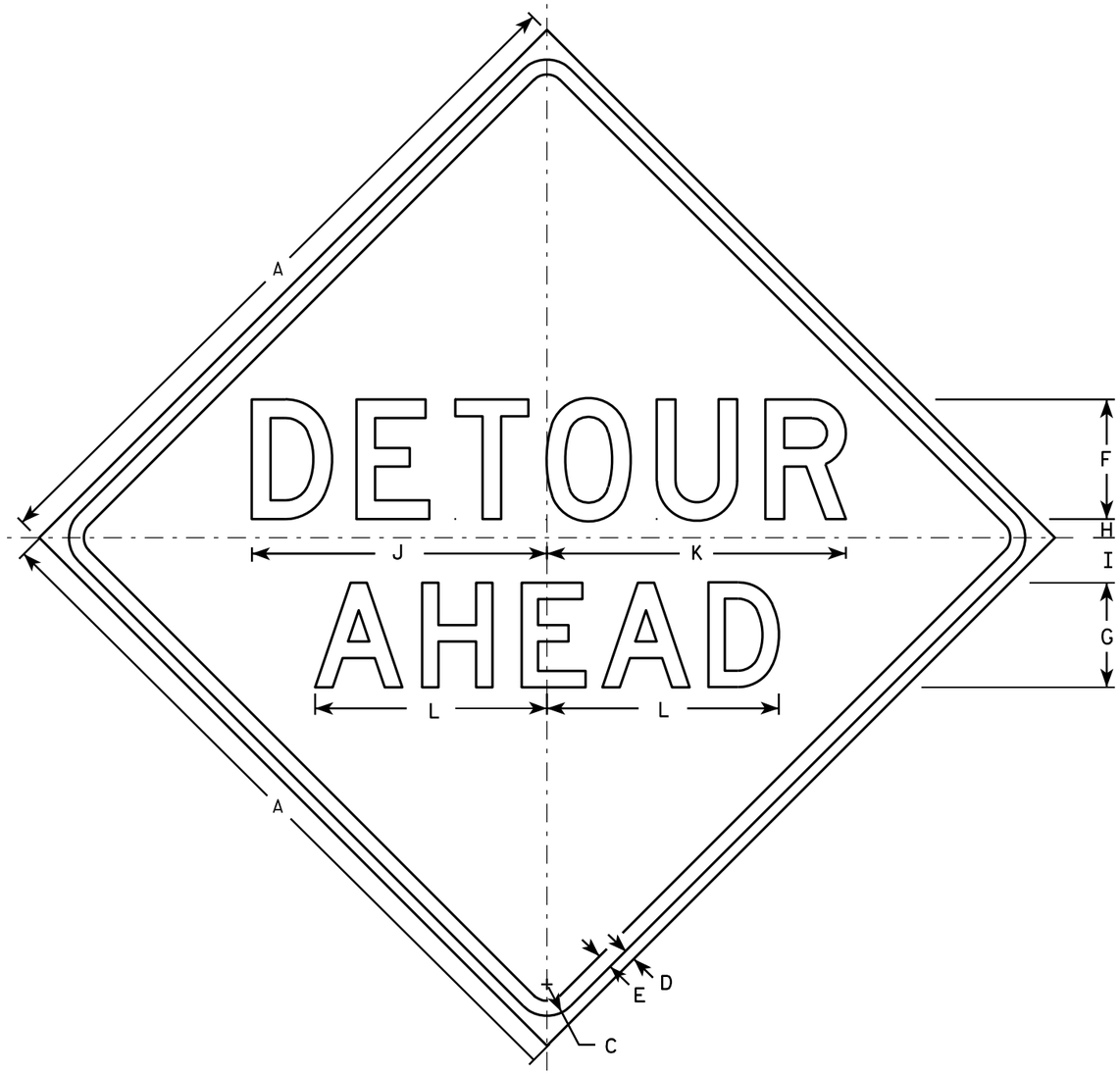

W20-2A

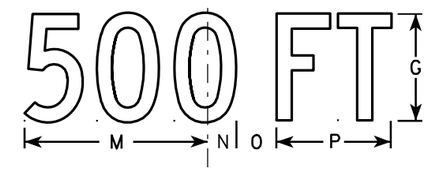

W20-2D

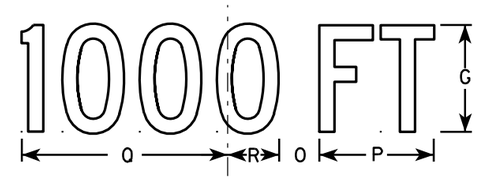

W20-2C

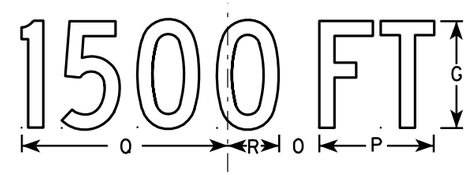

W20-2B

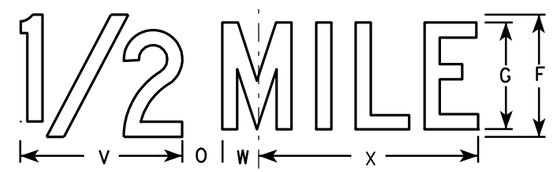

W20-2G

W20-2F

NOTES

1. Sign is Type II - Type F Reflective - reference WIS DOT Standard Specification for HIGHWAY and STRUCTURE CONSTRUCTION latest edition.
2. Color:
   Background - Orange
   Message - Black
3. Message Series - See note 5
4. Corners may be square or rounded when base material is plywood but borders shall be rounded as shown. When base material is metal, the corners and borders shall be rounded.
5. Line 1 is Series D.
   Line 2 is Series D for AHEAD and Series C for all other distances.

SIZE	A	B	C	D	E	F	G	H	I	J	K	L	M	N	O	P	Q	R	S	T	U	V	W	X	Y	Z	Area sq. ft.
1	36		1 5/8	5/8	3/4	6	5	1	2 1/4	14 3/4	15	11 5/8	9	1 3/8	1 7/8	5 5/8	10 1/8	2 1/2	1 1/8	4 1/2	3 1/2	8	1 3/4	10 3/4			9.0
2S	48		2 1/4	3/4	1	8	7	1 1/4	3	19 3/4	20	15 1/2	12	1 7/8	2 5/8	7 1/2	13 1/2	3 3/8	1 1/2	6	4 5/8	10 5/8	2 3/8	14 3/8			16.0
2M	48		2 1/4	3/4	1	8	7	1 1/4	3	19 3/4	20	15 1/2	12	1 7/8	2 5/8	7 1/2	13 1/2	3 3/8	1 1/2	6	4 5/8	10 5/8	2 3/8	14 3/8			16.0
3	48		2 1/4	3/4	1	8	7	1 1/4	3	19 3/4	20	15 1/2	12	1 7/8	2 5/8	7 1/2	13 1/2	3 3/8	1 1/2	6	4 5/8	10 5/8	2 3/8	14 3/8			16.0
4	48		2 1/4	3/4	1	8	7	1 1/4	3	19 3/4	20	15 1/2	12	1 7/8	2 5/8	7 1/2	13 1/2	3 3/8	1 1/2	6	4 5/8	10 5/8	2 3/8	14 3/8			16.0
5	48		2 1/4	3/4	1	8	7	1 1/4	3	19 3/4	20	15 1/2	12	1 7/8	2 5/8	7 1/2	13 1/2	3 3/8	1 1/2	6	4 5/8	10 5/8	2 3/8	14 3/8			16.0

STANDARD SIGN
W20-2A,B,C,D,F & G

WISCONSIN DEPT OF TRANSPORTATION

APPROVED Matthew R Rauch
for State Traffic Engineer
DATE 3/18/11 PLATE NO. W20-2.6

PROJECT NO:	HWY:	COUNTY:		SHEET NO: 352	E

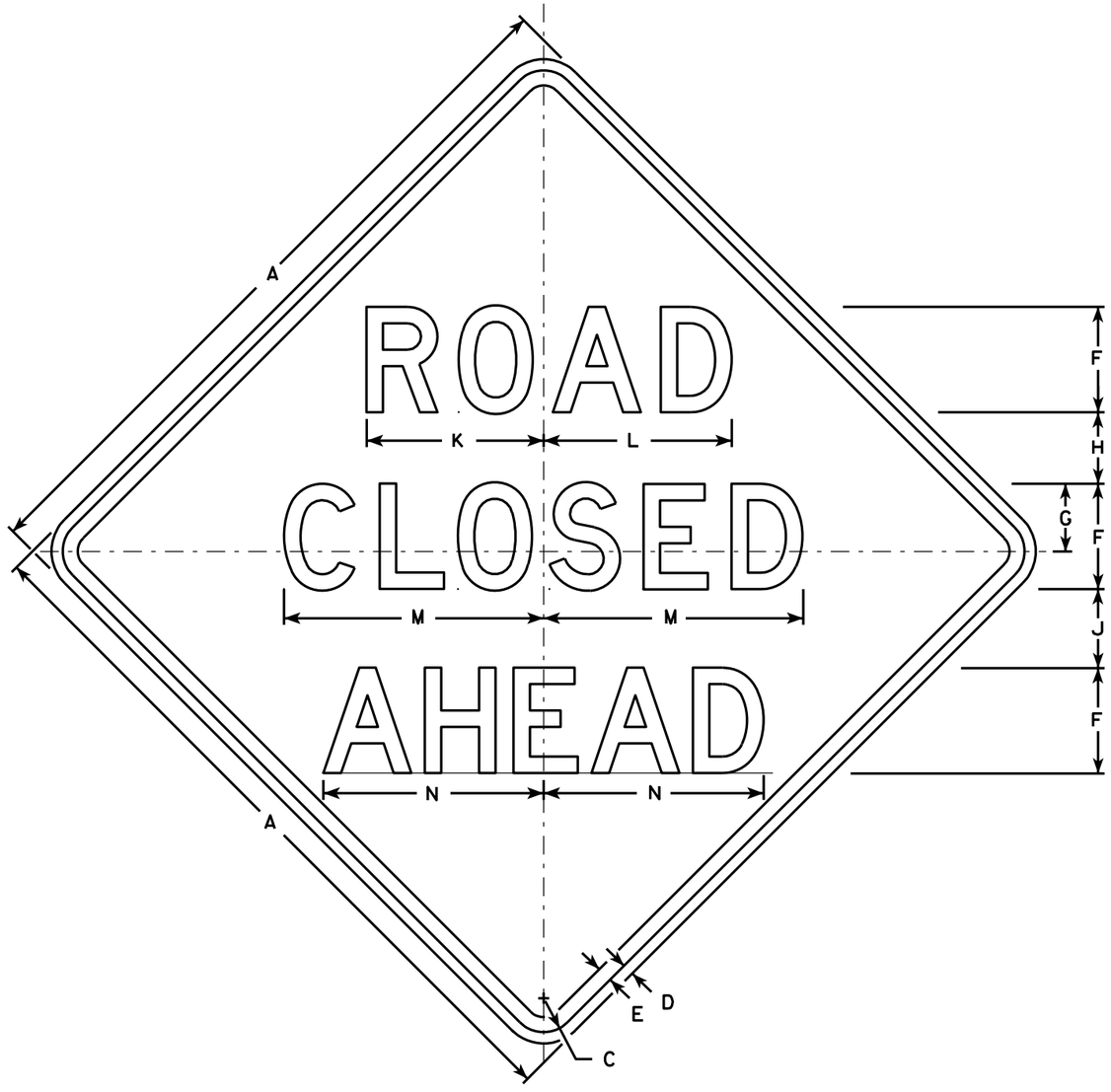

W20-3A

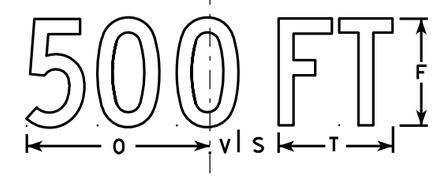

W20-3D

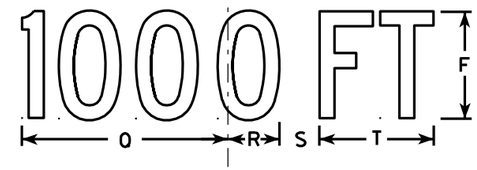

W20-3C

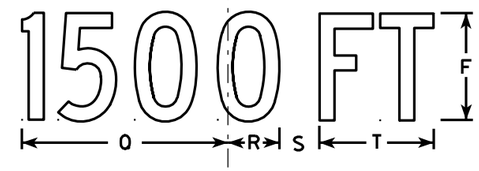

W20-3B

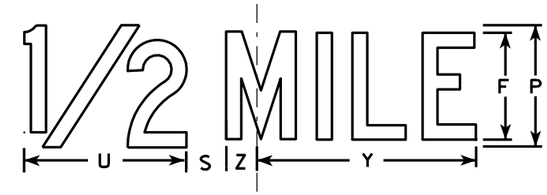

W20-3G

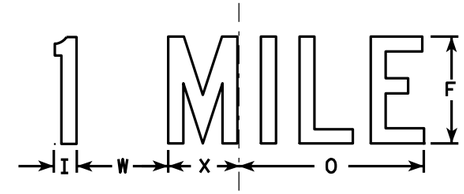

W20-3F

NOTES

1. Sign is Type II - Type F Reflective - reference WIS DOT Standard Specification for HIGHWAY and STRUCTURE CONSTRUCTION latest edition.
2. Color:
   Background - Orange
   Message - Black
3. Message Series - see note 5
4. Corners may be square or rounded when base material is plywood but borders shall be rounded as shown. When base material is metal, the corners and borders shall be rounded.
5. Lines 1 and 2 are Series D.
   Line 3 is Series D for AHEAD and Series C for all other distances.

SIZE	A	B	C	D	E	F	G	H	I	J	K	L	M	N	O	P	Q	R	S	T	U	V	W	X	Y	Z	Area sq. ft.
1	36		1 5/8	5/8	3/4	5	3 3/8	3 1/2	1 1/8	4	8 3/8	8 7/8	12 1/2	11	9	6	10 1/8	2 1/2	1 7/8	5 5/8	8	1 3/8	4 1/2	3 1/2	10 3/4	1 3/4	9.0
2S	48		2 1/4	3/4	1	7	4 1/2	4 3/4	1 1/2	5 1/4	11 3/4	12 1/2	17 1/4	14 5/8	12	8	13 1/2	3 3/8	2 5/8	7 1/2	10 5/8	1 7/8	6	4 5/8	14 3/8	2 3/8	16.0
2M	48		2 1/4	3/4	1	7	4 1/2	4 3/4	1 1/2	5 1/4	11 3/4	12 1/2	17 1/4	14 5/8	12	8	13 1/2	3 3/8	2 5/8	7 1/2	10 5/8	1 7/8	6	4 5/8	14 3/8	2 3/8	16.0
3	48		2 1/4	3/4	1	7	4 1/2	4 3/4	1 1/2	5 1/4	11 3/4	12 1/2	17 1/4	14 5/8	12	8	13 1/2	3 3/8	2 5/8	7 1/2	10 5/8	1 7/8	6	4 5/8	14 3/8	2 3/8	16.0
4	48		2 1/4	3/4	1	7	4 1/2	4 3/4	1 1/2	5 1/4	11 3/4	12 1/2	17 1/4	14 5/8	12	8	13 1/2	3 3/8	2 5/8	7 1/2	10 5/8	1 7/8	6	4 5/8	14 3/8	2 3/8	16.0
5	48		2 1/4	3/4	1	7	4 1/2	4 3/4	1 1/2	5 1/4	11 3/4	12 1/2	17 1/4	14 5/8	12	8	13 1/2	3 3/8	2 5/8	7 1/2	10 5/8	1 7/8	6	4 5/8	14 3/8	2 3/8	16.0

STANDARD SIGN
W20-3A, B, C, D, F & G

WISCONSIN DEPT OF TRANSPORTATION

APPROVED Matthew R Rauch
for State Traffic Engineer
DATE 3/18/11 PLATE NO. W20-3.7

PROJECT NO: | HWY: | COUNTY: | SHEET NO: 353 | E

NOTES

1. Sign is Type II - Type F Reflective - reference WIS DOT Standard Specification for HIGHWAY and STRUCTURE CONSTRUCTION latest edition.
2. Color:
   Background - Orange
   Message - Black
3. Corners may be square or rounded when base material is plywood but borders shall be rounded as shown. When base material is metal, the corners and borders shall be rounded.

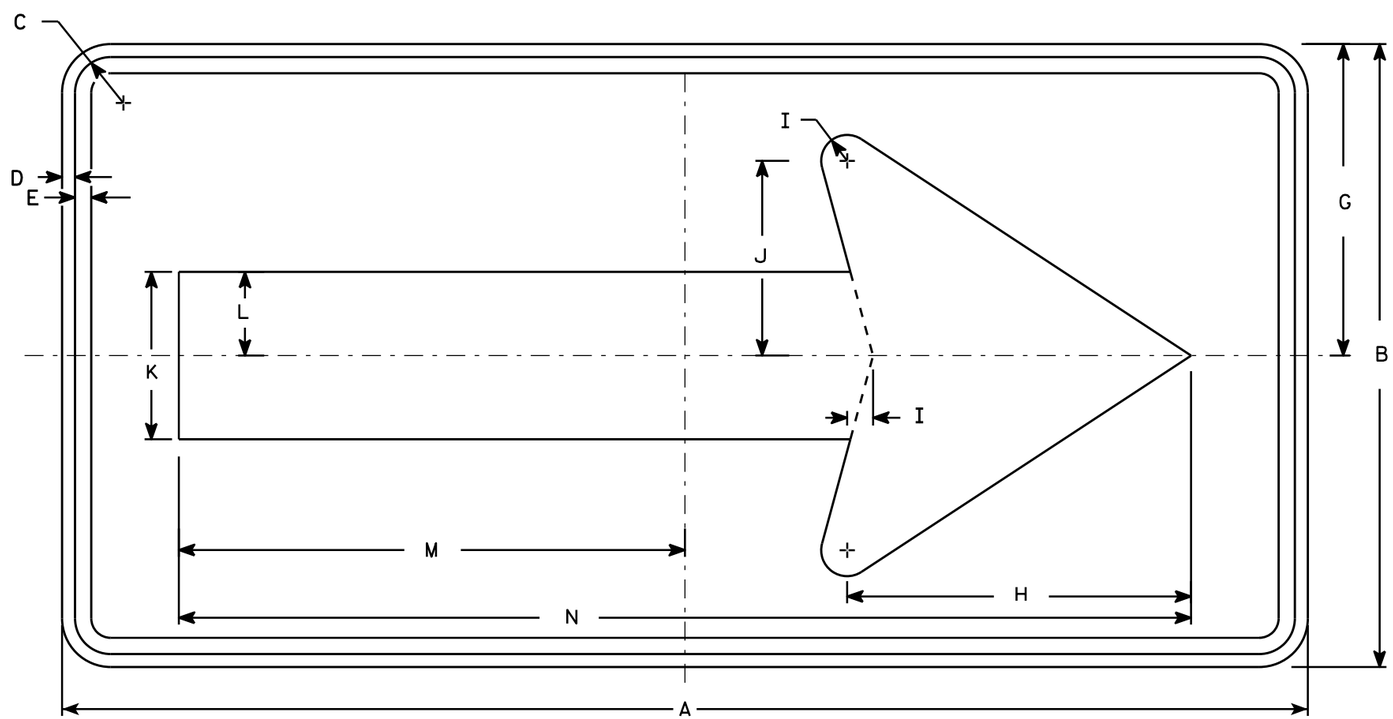

W01-6

SIZE	A	B	C	D	E	F	G	H	I	J	K	L	M	N	O	P	Q	R	S	T	U	V	W	X	Y	Z	Area sq. ft.
1																											
2S	48	24	1 3/8	1/2	5/8		12	13 1/4	1	7 1/2	6 1/2	3 1/4	19 1/2	39													8.0
2M	48	24	1 3/8	1/2	5/8		12	13 1/4	1	7 1/2	6 1/2	3 1/4	19 1/2	39													8.0
3	60	30	1 3/8	1/2	5/8		15	16 1/4	1 1/4	9 1/4	8	4	24 3/8	48 3/4													12.5
4	60	30	1 3/8	1/2	5/8		15	16 1/4	1 1/4	9 1/4	8	4	24 3/8	48 3/4													12.5
5	60	30	1 3/8	1/2	5/8		15	16 1/4	1 1/4	9 1/4	8	4	24 3/8	48 3/4													12.5

STANDARD SIGN

W01-6

WISCONSIN DEPT OF TRANSPORTATION

APPROVED Matthew R Rauch
for State Traffic Engineer

DATE 11/18/13 PLATE NO. W01-6.1

PROJECT NO: | HWY: | COUNTY: | SHEET NO: | E

STH 89

STATION	Distance	AREA (SF) Cut	AREA (SF) Salvaged/Unusable Pavement Material	AREA (SF) Fill	AREA (SF) EBS	Incremental Vol (CY) (Unadjusted) Cut Note 1	Incremental Vol (CY) (Unadjusted) Salvaged/Unusable Pavement Material Note 2	Incremental Vol (CY) (Unadjusted) Fill Note 3	Incremental Vol (CY) (Unadjusted) EBS	Cumulative Vol (CY) Cut 1.00 Note 1	Cumulative Vol (CY) Expanded Fill 1.25	Cumulative Vol (CY) Expanded EBS Backfill 1.30 Note 5	Cumulative Vol (CY) Reduced EBS in Fill 0.80 Note 7	Cumulative Vol (CY) Mass Ordinate Note 8
29+50	0.00	90.49	0.00	0.00	0.00	0	0	0	0	0	0	0	0	0
29+75	25.00	97.63	0.00	0.18	0.00	87	0	0	0	87	0	0	0	87
30+00	25.00	109.26	0.00	2.86	0.00	96	0	1	0	183	2	0	0	181
30+25	25.00	111.70	0.00	0.96	0.00	102	0	2	0	285	4	0	0	281
30+50	25.00	115.63	0.00	1.61	0.00	105	0	1	0	390	6	0	0	385
30+75	25.00	129.01	0.00	0.52	0.00	113	0	1	0	504	7	0	0	497
31+00	25.00	149.82	0.00	0.27	0.00	129	0	0	0	633	7	0	0	626
31+05	5.00	154.77	0.00	0.25	0.00	28	0	0	0	661	7	0	0	654
31+10	5.00	160.49	0.00	0.32	0.00	29	0	0	0	690	7	0	0	683
31+15	5.00	167.23	0.00	0.25	0.00	30	0	0	0	720	7	0	0	713
31+20	5.00	177.17	0.00	0.00	0.00	32	0	0	0	752	7	0	0	745
31+25	5.00	195.36	0.00	0.00	0.00	34	0	0	0	787	7	0	0	779
31+30	5.00	205.62	0.00	0.00	0.00	37	0	0	0	824	7	0	0	817
31+35	5.00	194.73	0.00	0.00	0.00	37	0	0	0	861	7	0	0	854
31+40	5.00	187.53	0.00	0.00	0.00	35	0	0	0	896	7	0	0	889
31+45	5.00	181.38	0.00	0.00	0.00	34	0	0	0	931	7	0	0	923
31+50	5.00	175.92	0.00	0.00	0.00	33	0	0	0	964	7	0	0	956
31+55	5.00	170.15	0.00	0.00	0.00	32	0	0	0	996	7	0	0	988
31+60	5.00	163.31	0.00	0.00	0.00	31	0	0	0	1,027	7	0	0	1,019
31+65	5.00	154.61	0.00	0.00	0.00	29	0	0	0	1,056	7	0	0	1,049
31+70	5.00	148.46	0.00	0.00	0.00	28	0	0	0	1,084	7	0	0	1,077
31+75	5.00	158.99	0.00	0.00	0.00	28	0	0	0	1,113	7	0	0	1,105
31+80	5.00	170.38	0.00	0.00	0.00	30	0	0	0	1,143	7	0	0	1,136
31+85	5.00	182.94	0.00	0.02	0.00	33	0	0	0	1,176	7	0	0	1,168
31+90	5.00	196.51	0.00	0.01	0.00	35	0	0	0	1,211	7	0	0	1,203
31+95	5.00	208.25	0.00	0.00	0.00	37	0	0	0	1,248	7	0	0	1,241
32+00	5.00	203.54	0.00	0.00	0.00	38	0	0	0	1,287	7	0	0	1,279
32+05	5.00	191.58	0.00	0.22	0.00	37	0	0	0	1,323	8	0	0	1,316
32+10	5.00	177.65	0.00	2.05	0.00	34	0	0	0	1,357	8	0	0	1,350
32+15	5.00	170.41	0.00	5.40	0.00	32	0	1	0	1,390	9	0	0	1,381
32+20	5.00	165.72	0.00	8.22	0.00	31	0	1	0	1,421	10	0	0	1,410
32+25	5.00	154.38	0.00	7.89	0.00	30	0	1	0	1,450	12	0	0	1,438
32+30	5.00	147.48	0.00	8.18	0.00	28	0	1	0	1,478	14	0	0	1,464
32+31.71	1.71	147.24	0.00	7.22	0.00	9	0	0	0	1,488	15	0	0	1,473
32+50	18.29	143.73	0.00	0.82	0.00	99	0	3	0	1,586	18	0	0	1,568
32+75	25.00	156.23	0.00	0.27	0.00	139	0	1	0	1,725	19	0	0	1,706
33+00	25.00	157.86	0.00	0.31	0.00	145	0	0	0	1,870	19	0	0	1,852
33+25	25.00	153.11	0.00	0.71	0.00	144	0	0	0	2,014	20	0	0	1,995
33+50	25.00	137.02	0.00	3.45	0.00	134	0	2	0	2,149	22	0	0	2,127
33+69.2	19.20	134.79	0.00	3.45	0.00	97	0	2	0	2,245	25	0	0	2,220
33+75	5.80	158.74	0.00	0.00	0.00	32	0	0	0	2,277	25	0	0	2,251
33+92.76	17.76	138.67	0.00	3.76	0.00	98	0	1	0	2,375	27	0	0	2,348
34+00	7.24	140.51	0.00	3.12	0.00	37	0	1	0	2,412	28	0	0	2,384
34+25	25.00	145.73	0.00	2.01	0.00	133	0	2	0	2,545	31	0	0	2,514
34+38.3	13.30	144.36	0.00	2.40	0.00	71	0	1	0	2,616	32	0	0	2,584
34+40	1.70	143.66	0.00	2.60	0.00	9	0	0	0	2,625	33	0	0	2,592
34+45	5.00	141.75	0.00	3.66	0.00	26	0	1	0	2,652	33	0	0	2,618
34+50	5.00	147.06	0.00	5.47	0.00	27	0	1	0	2,678	34	0	0	2,644
34+55	5.00	157.35	0.00	0.00	0.00	28	0	1	0	2,707	35	0	0	2,671
34+60	5.00	158.65	0.00	0.00	0.00	29	0	0	0	2,736	35	0	0	2,701
34+65	5.00	152.22	0.00	0.00	0.00	29	0	0	0	2,765	35	0	0	2,729
34+70	5.00	142.24	0.00	0.00	0.00	27	0	0	0	2,792	35	0	0	2,757
34+75	5.00	134.87	0.00	0.00	0.00	26	0	0	0	2,817	35	0	0	2,782
34+80	5.00	134.50	0.00	0.00	0.00	25	0	0	0	2,842	35	0	0	2,807
34+85	5.00	137.52	0.00	4.38	0.00	25	0	0	0	2,868	36	0	0	2,832
34+90	5.00	145.96	0.00	3.19	0.00	26	0	1	0	2,894	36	0	0	2,857
34+95	5.00	155.59	0.00	2.25	0.00	28	0	1	0	2,922	37	0	0	2,885
35+00	5.00	150.40	0.00	3.21	0.00	28	0	1	0	2,950	38	0	0	2,912
35+05	5.00	141.53	0.00	2.52	0.00	27	0	1	0	2,977	38	0	0	2,939

STH 89

STATION	Distance	AREA (SF) Cut	Salvaged/Unusable Pavement Material	Fill	EBS	Incremental Vol (CY) (Unadjusted) Cut	Salvaged/Unusable Pavement Material	Fill	EBS	Cumulative Vol (CY) Cut 1.00	Expanded Fill 1.25	Expanded EBS Backfill 1.30	Reduced EBS in Fill 0.80	Mass Ordinate
						Note 1	Note 2	Note 3		Note 1		Note 5	Note 7	Note 8
35+10	5.00	139.13	0.00	2.26	0.00	26	0	0	0	3,003	39	0	0	2,964
35+15	5.00	140.85	0.00	2.75	0.00	26	0	0	0	3,029	40	0	0	2,990
35+16.42	1.42	141.23	0.00	2.61	0.00	7	0	0	0	3,036	40	0	0	2,997
35+25	8.58	144.86	0.00	1.73	0.00	45	0	1	0	3,082	41	0	0	3,041
35+50	25.00	152.79	0.00	0.95	0.00	138	0	1	0	3,220	42	0	0	3,178
35+75	25.00	160.46	0.00	0.37	0.00	145	0	1	0	3,365	43	0	0	3,322
36+00	25.00	163.45	0.00	0.00	0.00	150	0	0	0	3,515	43	0	0	3,472
36+12.76	12.76	168.53	0.00	0.00	0.00	78	0	0	0	3,593	43	0	0	3,550
36+25	12.24	190.48	0.00	0.00	0.00	81	0	0	0	3,675	43	0	0	3,631
36+29.7	4.70	197.99	0.00	0.00	0.00	34	0	0	0	3,708	43	0	0	3,665
36+45.93	16.23	179.47	0.00	0.00	0.00	113	0	0	0	3,822	43	0	0	3,779
36+50	4.07	178.82	0.00	0.00	0.00	27	0	0	0	3,849	43	0	0	3,806
36+53.71	3.71	166.25	0.00	0.00	0.00	24	0	0	0	3,873	43	0	0	3,829
36+75	21.29	163.68	0.00	0.00	0.00	130	0	0	0	4,003	43	0	0	3,960
36+91.1	16.10	168.08	0.00	0.00	0.00	99	0	0	0	4,101	43	0	0	4,058
37+00	8.90	173.26	0.00	0.00	0.00	56	0	0	0	4,158	43	0	0	4,115
37+25	25.00	154.83	0.00	0.00	0.00	152	0	0	0	4,310	43	0	0	4,267
37+43.1	18.10	158.13	0.00	0.17	0.00	105	0	0	0	4,415	43	0	0	4,371
37+50	6.90	166.57	0.00	0.15	0.00	41	0	0	0	4,456	43	0	0	4,413
37+70.85	20.85	163.73	0.00	0.30	0.00	128	0	0	0	4,584	43	0	0	4,540
37+75	4.15	142.72	0.00	0.40	0.00	24	0	0	0	4,607	43	0	0	4,564
37+80	5.00	141.05	0.00	0.76	0.00	26	0	0	0	4,633	44	0	0	4,590
37+85	5.00	139.27	0.00	1.21	0.00	26	0	0	0	4,659	44	0	0	4,616
37+90	5.00	137.10	0.00	1.42	0.00	26	0	0	0	4,685	44	0	0	4,641
37+95	5.00	140.19	0.00	3.43	0.00	26	0	0	0	4,711	45	0	0	4,666
38+00	5.00	148.68	0.00	0.46	0.00	27	0	0	0	4,737	45	0	0	4,692
38+05	5.00	141.23	0.00	0.57	0.00	27	0	0	0	4,764	45	0	0	4,719
38+10	5.00	133.49	0.00	0.68	0.00	25	0	0	0	4,790	45	0	0	4,744
38+15	5.00	124.90	0.00	0.78	0.00	24	0	0	0	4,814	46	0	0	4,768
38+20	5.00	148.42	0.00	0.00	0.00	25	0	0	0	4,839	46	0	0	4,793
38+25	5.00	160.48	0.00	0.00	0.00	29	0	0	0	4,867	46	0	0	4,822
38+30	5.00	153.08	0.00	0.20	0.00	29	0	0	0	4,897	46	0	0	4,851
38+35	5.00	148.68	0.00	1.68	0.00	28	0	0	0	4,924	46	0	0	4,879
38+40	5.00	144.61	0.00	0.39	0.00	27	0	0	0	4,952	46	0	0	4,905
38+45	5.00	146.95	0.00	0.20	0.00	27	0	0	0	4,979	46	0	0	4,932
38+50	5.00	147.51	0.00	0.10	0.00	27	0	0	0	5,006	46	0	0	4,960
38+55	5.00	147.78	0.00	0.00	0.00	27	0	0	0	5,033	46	0	0	4,987
38+58.3	3.30	148.56	0.00	0.00	0.00	18	0	0	0	5,051	46	0	0	5,005
38+75	16.70	148.96	0.00	0.00	0.00	92	0	0	0	5,143	46	0	0	5,097
39+00	25.00	149.67	0.00	0.00	0.00	138	0	0	0	5,282	46	0	0	5,235
39+25	25.00	150.99	0.00	0.00	0.00	139	0	0	0	5,421	46	0	0	5,375
39+50	25.00	157.53	0.00	0.00	0.00	143	0	0	0	5,564	46	0	0	5,517
39+56.51	6.51	159.68	0.00	0.00	0.00	38	0	0	0	5,602	46	0	0	5,556
39+60	3.49	159.87	0.00	0.00	0.00	21	0	0	0	5,623	46	0	0	5,576
39+65	5.00	159.59	0.00	0.00	0.00	30	0	0	0	5,652	46	0	0	5,606
39+70	5.00	162.94	0.00	0.00	0.00	30	0	0	0	5,682	46	0	0	5,636
39+75	5.00	175.31	0.00	0.00	0.00	31	0	0	0	5,713	46	0	0	5,667
39+80	5.00	175.76	0.00	0.00	0.00	33	0	0	0	5,746	46	0	0	5,699
39+85	5.00	165.90	0.00	0.00	0.00	32	0	0	0	5,777	46	0	0	5,731
39+90	5.00	177.02	0.00	0.19	0.00	32	0	0	0	5,809	46	0	0	5,763
39+95	5.00	213.59	0.00	0.00	0.00	36	0	0	0	5,845	46	0	0	5,799
40+00	5.00	210.01	0.00	0.00	0.00	39	0	0	0	5,885	46	0	0	5,838
40+05	5.00	181.74	0.00	0.00	0.00	36	0	0	0	5,921	46	0	0	5,874
40+10	5.00	169.70	0.00	0.00	0.00	33	0	0	0	5,953	46	0	0	5,907
40+15	5.00	156.99	0.00	0.00	0.00	30	0	0	0	5,984	46	0	0	5,937
40+20	5.00	154.82	0.00	0.00	0.00	29	0	0	0	6,012	46	0	0	5,966
40+25	5.00	169.79	0.00	0.00	0.00	30	0	0	0	6,043	46	0	0	5,996
40+30	5.00	183.46	0.00	0.00	0.00	33	0	0	0	6,075	46	0	0	6,029
40+35	5.00	195.22	0.00	0.00	0.00	35	0	0	0	6,110	46	0	0	6,064

STH 89

STATION	Distance	AREA (SF) Cut	Salvaged/Unusable Pavement Material	Fill	EBS	Incremental Vol (CY) (Unadjusted) Cut	Salvaged/Unusable Pavement Material	Fill	EBS	Cumulative Vol (CY) Cut 1.00	Expanded Fill 1.25	Expanded EBS Backfill 1.30	Reduced EBS in Fill 0.80	Mass Ordinate
						Note 1	Note 2	Note 3		Note 1		Note 5	Note 7	Note 8
40+40	5.00	206.73	0.00	0.00	0.00	37	0	0	0	6,148	46	0	0	6,101
40+45	5.00	188.58	0.00	0.17	0.00	37	0	0	0	6,184	46	0	0	6,138
40+50	5.00	176.70	0.00	0.15	0.00	34	0	0	0	6,218	46	0	0	6,172
40+55	5.00	171.16	0.00	0.01	0.00	32	0	0	0	6,250	46	0	0	6,204
40+60	5.00	171.35	0.00	0.00	0.00	32	0	0	0	6,282	46	0	0	6,235
40+65	5.00	172.43	0.00	0.00	0.00	32	0	0	0	6,314	46	0	0	6,267
40+70	5.00	170.80	0.00	0.00	0.00	32	0	0	0	6,345	46	0	0	6,299
40+75	5.00	169.50	0.00	0.03	0.00	32	0	0	0	6,377	46	0	0	6,331
40+80	5.00	170.97	0.00	0.03	0.00	32	0	0	0	6,409	46	0	0	6,362
40+83.27	3.27	171.98	0.00	0.04	0.00	21	0	0	0	6,429	46	0	0	6,383
41+00	16.73	176.73	0.00	0.00	0.00	108	0	0	0	6,537	46	0	0	6,491
41+25	25.00	191.14	0.00	0.01	0.00	170	0	0	0	6,708	46	0	0	6,661
41+50	25.00	186.11	0.00	0.00	0.00	175	0	0	0	6,882	46	0	0	6,836
41+75	25.00	190.80	0.00	0.00	0.00	174	0	0	0	7,057	46	0	0	7,010
42+00	25.00	195.28	0.00	0.00	0.00	179	0	0	0	7,236	46	0	0	7,189
42+25	25.00	201.13	0.00	0.09	0.00	184	0	0	0	7,419	46	0	0	7,373
42+50	25.00	202.36	0.00	0.86	0.00	187	0	0	0	7,606	47	0	0	7,559
42+62.65	12.65	205.07	0.00	1.21	0.00	95	0	0	0	7,701	48	0	0	7,654
42+75	12.35	222.02	0.00	2.09	0.00	98	0	1	0	7,799	49	0	0	7,750
42+80.19	5.19	205.46	0.00	2.54	0.00	41	0	0	0	7,840	49	0	0	7,791
43+00	19.81	199.58	0.00	7.53	0.00	149	0	4	0	7,989	54	0	0	7,935
43+25	25.00	199.42	0.00	4.89	0.00	185	0	6	0	8,173	61	0	0	8,112
43+50	25.00	197.05	0.00	3.53	0.00	184	0	4	0	8,357	66	0	0	8,291
43+75	25.00	195.37	0.00	0.72	0.00	182	0	2	0	8,539	68	0	0	8,470
43+75.21	0.21	195.36	0.00	0.70	0.00	2	0	0	0	8,540	68	0	0	8,472
43+80	4.79	194.82	0.00	0.34	0.00	35	0	0	0	8,575	68	0	0	8,506
43+85	5.00	206.20	0.00	0.00	0.00	37	0	0	0	8,612	68	0	0	8,543
43+90	5.00	203.90	0.00	0.00	0.00	38	0	0	0	8,650	68	0	0	8,581
43+95	5.00	199.43	0.00	0.08	0.00	37	0	0	0	8,687	68	0	0	8,619
44+00	5.00	187.19	0.00	0.58	0.00	36	0	0	0	8,723	69	0	0	8,654
44+05	5.00	191.08	0.00	0.54	0.00	35	0	0	0	8,758	69	0	0	8,689
44+10	5.00	199.05	0.00	0.00	0.00	36	0	0	0	8,794	69	0	0	8,725
44+15	5.00	212.89	0.00	0.00	0.00	38	0	0	0	8,832	69	0	0	8,764
44+20	5.00	217.30	0.00	0.00	0.00	40	0	0	0	8,872	69	0	0	8,803
44+25	5.00	205.81	0.00	0.00	0.00	39	0	0	0	8,911	69	0	0	8,843
44+30	5.00	192.54	0.00	0.00	0.00	37	0	0	0	8,948	69	0	0	8,879
44+35	5.00	177.54	0.00	0.00	0.00	34	0	0	0	8,982	69	0	0	8,914
44+40	5.00	178.76	0.00	0.00	0.00	33	0	0	0	9,015	69	0	0	8,947
44+45	5.00	193.73	0.00	0.00	0.00	34	0	0	0	9,050	69	0	0	8,981
44+50	5.00	205.26	0.00	0.00	0.00	37	0	0	0	9,087	69	0	0	9,018
44+55	5.00	213.16	0.00	0.04	0.00	39	0	0	0	9,126	69	0	0	9,057
44+60	5.00	209.93	0.00	0.09	0.00	39	0	0	0	9,165	69	0	0	9,096
44+65	5.00	191.33	0.00	0.04	0.00	37	0	0	0	9,202	69	0	0	9,133
44+70	5.00	183.36	0.00	0.03	0.00	35	0	0	0	9,237	69	0	0	9,168
44+75	5.00	180.89	0.00	0.02	0.00	34	0	0	0	9,270	69	0	0	9,202
44+80	5.00	181.92	0.00	0.02	0.00	34	0	0	0	9,304	69	0	0	9,235
44+85	5.00	182.47	0.00	0.02	0.00	34	0	0	0	9,338	69	0	0	9,269
44+90	5.00	182.45	0.00	0.01	0.00	34	0	0	0	9,371	69	0	0	9,303
44+95	5.00	182.56	0.00	0.00	0.00	34	0	0	0	9,405	69	0	0	9,336
45+00	5.00	182.51	0.00	0.00	0.00	34	0	0	0	9,439	69	0	0	9,370
45+02.62	2.62	182.38	0.00	0.00	0.00	18	0	0	0	9,457	69	0	0	9,388
45+25	22.38	181.15	0.00	0.00	0.00	151	0	0	0	9,607	69	0	0	9,539
45+28.57	3.57	188.12	0.00	0.00	0.00	24	0	0	0	9,632	69	0	0	9,563
45+45.4	16.83	189.80	0.00	0.00	0.00	118	0	0	0	9,750	69	0	0	9,681
45+50	4.60	179.09	0.00	0.16	0.00	31	0	0	0	9,781	69	0	0	9,712
45+56.44	6.44	180.78	0.00	0.03	0.00	43	0	0	0	9,824	69	0	0	9,755
45+75	18.56	178.51	0.00	0.06	0.00	123	0	0	0	9,947	69	0	0	9,879
46+00	25.00	196.24	0.00	0.14	0.00	173	0	0	0	10,121	69	0	0	10,052
46+09.52	9.52	181.09	0.00	0.00	0.00	67	0	0	0	10,187	69	0	0	10,118

STH 89

STATION	Distance	AREA (SF) Cut	Salvaged/Unusable Pavement Material	Fill	EBS	Incremental Vol (CY) (Unadjusted) Cut	Salvaged/Unusable Pavement Material	Fill	EBS	Cumulative Vol (CY) Cut	Expanded Fill	Expanded EBS Backfill	Reduced EBS in Fill	Mass Ordinate
										1.00	1.25	1.30	0.80	
						Note 1	Note 2	Note 3		Note 1		Note 5	Note 7	Note 8
46+25	15.48	177.45	0.00	0.07	0.00	103	0	0	0	10,290	69	0	0	10,221
46+50	25.00	173.68	0.00	0.18	0.00	163	0	0	0	10,453	69	0	0	10,384
46+75	25.00	169.12	0.00	5.60	0.00	159	0	3	0	10,612	73	0	0	10,539
46+83.78	8.78	179.35	0.00	5.85	0.00	57	0	2	0	10,668	75	0	0	10,593
46+93.2	9.42	180.37	0.00	5.94	0.00	63	0	2	0	10,731	77	0	0	10,654
47+00	6.80	168.04	0.00	5.42	0.00	44	0	1	0	10,775	79	0	0	10,696
47+10.67	10.67	184.08	0.00	0.00	0.00	70	0	1	0	10,844	81	0	0	10,764
47+25	14.33	184.67	0.00	0.00	0.00	98	0	0	0	10,942	81	0	0	10,862
47+32.26	7.26	176.87	0.00	0.00	0.00	49	0	0	0	10,991	81	0	0	10,910
47+50	17.74	162.14	0.00	4.52	0.00	111	0	1	0	11,102	82	0	0	11,020
47+61.95	11.95	171.65	0.00	4.00	0.00	74	0	2	0	11,176	85	0	0	11,091
47+75	13.05	160.72	0.00	3.47	0.00	80	0	2	0	11,256	87	0	0	11,169
48+00	25.00	157.06	0.00	2.77	0.00	147	0	3	0	11,404	91	0	0	11,313
48+25	25.00	172.93	0.00	0.00	0.00	153	0	1	0	11,556	92	0	0	11,464
48+43.09	18.09	156.14	0.00	0.00	0.00	110	0	0	0	11,667	92	0	0	11,574
48+50	6.91	154.51	0.00	0.00	0.00	40	0	0	0	11,706	92	0	0	11,614
48+75	25.00	165.24	0.00	0.00	0.00	148	0	0	0	11,854	92	0	0	11,762
48+85.72	10.72	176.02	0.00	0.00	0.00	68	0	0	0	11,922	92	0	0	11,830
49+00	14.28	148.06	0.00	0.10	0.00	86	0	0	0	12,008	92	0	0	11,916
49+25	25.00	145.98	0.00	0.38	0.00	136	0	0	0	12,144	93	0	0	12,051
49+32.24	7.24	156.09	0.00	0.61	0.00	41	0	0	0	12,184	93	0	0	12,092
49+50	17.76	160.68	0.00	0.80	0.00	104	0	0	0	12,289	93	0	0	12,195
49+64.01	14.01	139.45	0.00	0.71	0.00	78	0	0	0	12,366	94	0	0	12,273
49+75	10.99	138.46	0.00	0.70	0.00	57	0	0	0	12,423	94	0	0	12,329
49+87.25	12.25	137.47	0.00	0.80	0.00	63	0	0	0	12,486	95	0	0	12,391
50+00	12.75	136.70	0.00	2.55	0.00	65	0	1	0	12,550	96	0	0	12,455
50+25	25.00	137.12	0.00	1.55	0.00	127	0	2	0	12,677	98	0	0	12,579
50+50	25.00	147.32	0.00	0.76	0.00	132	0	1	0	12,809	99	0	0	12,710
50+68.75	18.75	155.41	0.00	0.00	0.00	105	0	0	0	12,914	100	0	0	12,814
50+75	6.25	148.62	0.00	1.22	0.00	35	0	0	0	12,949	100	0	0	12,849
51+00	25.00	149.26	0.00	0.92	0.00	138	0	1	0	13,087	101	0	0	12,986
51+06.14	6.14	155.10	0.00	0.00	0.00	35	0	0	0	13,122	101	0	0	13,020
51+12.93	6.79	168.78	0.00	0.00	0.00	41	0	0	0	13,162	101	0	0	13,061
51+15.81	2.88	173.12	0.00	0.00	0.00	18	0	0	0	13,181	101	0	0	13,079
51+25	9.19	168.81	0.00	0.50	0.00	58	0	0	0	13,239	101	0	0	13,138
51+50	25.00	139.61	0.00	0.35	0.00	143	0	0	0	13,382	102	0	0	13,280
51+75	25.00	133.29	0.00	0.55	0.00	126	0	0	0	13,508	102	0	0	13,406
52+00	25.00	126.82	0.00	1.01	0.00	120	0	1	0	13,628	103	0	0	13,525
52+12.71	12.71	125.99	0.00	1.94	0.00	60	0	1	0	13,688	104	0	0	13,584
52+25	12.29	127.66	0.00	1.68	0.00	58	0	1	0	13,746	105	0	0	13,640
52+50	25.00	131.72	0.00	0.99	0.00	120	0	1	0	13,866	107	0	0	13,759
52+75	25.00	136.09	0.00	0.69	0.00	124	0	1	0	13,990	108	0	0	13,882
52+81.56	6.56	145.21	0.00	0.01	0.00	34	0	0	0	14,024	108	0	0	13,916
52+94.23	12.67	132.46	0.00	1.15	0.00	65	0	0	0	14,089	108	0	0	13,981
53+00	5.77	134.93	0.00	0.76	0.00	29	0	0	0	14,118	108	0	0	14,009
53+14.14	14.14	142.75	0.00	0.00	0.00	73	0	0	0	14,190	109	0	0	14,082
53+25	10.86	152.55	0.00	0.01	0.00	59	0	0	0	14,250	109	0	0	14,141
53+50	25.00	149.23	0.00	0.10	0.00	140	0	0	0	14,389	109	0	0	14,281
53+75	25.00	174.33	0.00	0.07	0.00	150	0	0	0	14,539	109	0	0	14,430
54+00	25.00	155.24	0.00	0.02	0.00	153	0	0	0	14,692	109	0	0	14,583
54+25	25.00	155.40	0.00	0.00	0.00	144	0	0	0	14,836	109	0	0	14,727
54+38.4	13.40	153.12	0.00	0.00	0.00	77	0	0	0	14,912	109	0	0	14,803
54+43.8	5.40	168.58	0.00	0.00	0.00	32	0	0	0	14,944	109	0	0	14,835
54+45	1.20	171.02	0.00	0.00	0.00	8	0	0	0	14,952	109	0	0	14,843
54+50	5.00	171.40	0.00	0.00	0.00	32	0	0	0	14,984	109	0	0	14,875
54+55	5.00	138.86	0.00	0.00	0.00	29	0	0	0	15,012	109	0	0	14,903
54+60	5.00	143.43	0.00	0.00	0.00	26	0	0	0	15,038	109	0	0	14,930
54+65	5.00	151.72	0.00	0.00	0.00	27	0	0	0	15,066	109	0	0	14,957
54+70	5.00	170.80	0.00	0.00	0.00	30	0	0	0	15,096	109	0	0	14,987

STH 89

STATION	Distance	AREA (SF) Cut	AREA (SF) Salvaged/Unusable Pavement Material	AREA (SF) Fill	AREA (SF) EBS	Incremental Vol (CY) (Unadjusted) Cut Note 1	Incremental Vol (CY) (Unadjusted) Salvaged/Unusable Pavement Material Note 2	Incremental Vol (CY) (Unadjusted) Fill Note 3	Incremental Vol (CY) (Unadjusted) EBS	Cumulative Vol (CY) Cut 1.00 Note 1	Cumulative Vol (CY) Expanded Fill 1.25	Cumulative Vol (CY) Expanded EBS Backfill 1.30 Note 5	Cumulative Vol (CY) Reduced EBS in Fill 0.80 Note 7	Cumulative Vol (CY) Mass Ordinate Note 8
54+75	5.00	205.95	0.00	0.00	0.00	35	0	0	0	15,130	109	0	0	15,022
54+80	5.00	190.98	0.00	0.00	0.00	37	0	0	0	15,167	109	0	0	15,058
54+85	5.00	155.98	0.00	0.00	0.00	32	0	0	0	15,199	109	0	0	15,091
54+90	5.00	126.39	0.00	0.00	0.00	26	0	0	0	15,225	109	0	0	15,117
54+95	5.00	135.98	0.00	0.00	0.00	24	0	0	0	15,250	109	0	0	15,141
55+00	5.00	162.17	0.00	0.00	0.00	28	0	0	0	15,277	109	0	0	15,169
55+05	5.00	190.05	0.00	0.00	0.00	33	0	0	0	15,310	109	0	0	15,201
55+10	5.00	164.16	0.00	0.00	0.00	33	0	0	0	15,343	109	0	0	15,234
55+15	5.00	153.27	0.00	0.00	0.00	29	0	0	0	15,372	109	0	0	15,263
55+20	5.00	136.68	0.00	0.00	0.00	27	0	0	0	15,399	109	0	0	15,290
55+25	5.00	125.31	0.00	0.00	0.00	24	0	0	0	15,423	109	0	0	15,315
55+30	5.00	137.22	0.00	0.46	0.00	24	0	0	0	15,448	109	0	0	15,339
55+35	5.00	135.61	0.00	0.24	0.00	25	0	0	0	15,473	109	0	0	15,364
55+40	5.00	136.10	0.00	0.13	0.00	25	0	0	0	15,498	109	0	0	15,389
55+45	5.00	135.56	0.00	0.10	0.00	25	0	0	0	15,523	109	0	0	15,414
55+49.76	4.76	134.41	0.00	0.09	0.00	24	0	0	0	15,547	109	0	0	15,438
55+50	0.24	134.38	0.00	0.09	0.00	1	0	0	0	15,548	109	0	0	15,439
55+75	25.00	132.77	0.00	0.29	0.00	124	0	0	0	15,672	109	0	0	15,563
56+00	25.00	132.78	0.00	0.48	0.00	123	0	0	0	15,795	110	0	0	15,685
56+25	25.00	132.72	0.00	0.59	0.00	123	0	0	0	15,918	110	0	0	15,807
56+50	25.00	133.51	0.00	0.26	0.00	123	0	0	0	16,041	111	0	0	15,930
56+75	25.00	135.90	0.00	0.00	0.00	125	0	0	0	16,166	111	0	0	16,055
56+91.7	16.70	155.75	0.00	0.00	0.00	90	0	0	0	16,256	111	0	0	16,145
57+00	8.30	153.79	0.00	0.00	0.00	48	0	0	0	16,303	111	0	0	16,193
57+25	25.00	141.12	0.00	0.00	0.00	137	0	0	0	16,440	111	0	0	16,329
57+50	25.00	140.38	0.00	0.00	0.00	130	0	0	0	16,570	111	0	0	16,459
57+58.59	8.59	144.99	0.00	0.00	0.00	45	0	0	0	16,616	111	0	0	16,505
57+71.13	12.54	148.81	0.00	0.00	0.00	68	0	0	0	16,684	111	0	0	16,573
57+75	3.87	139.98	0.00	0.00	0.00	21	0	0	0	16,705	111	0	0	16,594
58+00	25.00	142.25	0.00	0.00	0.00	131	0	0	0	16,835	111	0	0	16,724
58+25	25.00	146.33	0.00	0.00	0.00	134	0	0	0	16,969	111	0	0	16,858
58+36.03	11.03	148.27	0.00	0.01	0.00	60	0	0	0	17,029	111	0	0	16,918
58+40	3.97	149.20	0.00	0.00	0.00	22	0	0	0	17,051	111	0	0	16,940
58+45	5.00	150.00	0.00	0.00	0.00	28	0	0	0	17,079	111	0	0	16,968
58+50	5.00	150.73	0.00	0.00	0.00	28	0	0	0	17,106	111	0	0	16,996
58+55	5.00	152.69	0.00	0.00	0.00	28	0	0	0	17,135	111	0	0	17,024
58+60	5.00	158.81	0.00	0.00	0.00	29	0	0	0	17,163	111	0	0	17,052
58+65	5.00	143.20	0.00	0.00	0.00	28	0	0	0	17,191	111	0	0	17,080
58+70	5.00	155.95	0.00	0.00	0.00	28	0	0	0	17,219	111	0	0	17,108
58+75	5.00	194.46	0.00	0.00	0.00	32	0	0	0	17,252	111	0	0	17,141
58+80	5.00	203.20	0.00	0.00	0.00	37	0	0	0	17,288	111	0	0	17,177
58+85	5.00	186.58	0.00	0.00	0.00	36	0	0	0	17,324	111	0	0	17,213
58+90	5.00	151.58	0.00	0.00	0.00	31	0	0	0	17,356	111	0	0	17,245
58+95	5.00	138.24	0.00	0.00	0.00	27	0	0	0	17,383	111	0	0	17,272
59+00	5.00	151.83	0.00	0.00	0.00	27	0	0	0	17,409	111	0	0	17,298
59+05	5.00	177.93	0.00	0.00	0.00	31	0	0	0	17,440	111	0	0	17,329
59+10	5.00	197.33	0.00	0.00	0.00	35	0	0	0	17,475	111	0	0	17,364
59+15	5.00	181.36	0.00	0.00	0.00	35	0	0	0	17,510	111	0	0	17,399
59+20	5.00	168.76	0.00	0.00	0.00	32	0	0	0	17,542	111	0	0	17,431
59+25	5.00	154.37	0.00	0.00	0.00	30	0	0	0	17,572	111	0	0	17,461
59+30	5.00	147.35	0.00	0.00	0.00	28	0	0	0	17,600	111	0	0	17,489
59+35	5.00	143.36	0.00	0.00	0.00	27	0	0	0	17,627	111	0	0	17,516
59+40	5.00	157.43	0.00	0.00	0.00	28	0	0	0	17,655	111	0	0	17,544
59+45	5.00	157.23	0.00	0.00	0.00	29	0	0	0	17,684	111	0	0	17,573
59+47.52	2.52	156.94	0.00	0.00	0.00	15	0	0	0	17,699	111	0	0	17,588
59+50	2.48	156.69	0.00	0.00	0.00	14	0	0	0	17,713	111	0	0	17,602
59+75	25.00	154.98	0.00	0.00	0.00	144	0	0	0	17,857	111	0	0	17,746
60+00	25.00	158.71	0.00	0.00	0.00	145	0	0	0	18,003	111	0	0	17,892
60+25	25.00	156.92	0.00	0.02	0.00	146	0	0	0	18,149	111	0	0	18,038

STH 89

STATION	Distance	AREA (SF) Cut	Salvaged/Unusable Pavement Material	Fill	EBS	Incremental Vol (CY) (Unadjusted) Cut Note 1	Salvaged/Unusable Pavement Material Note 2	Fill Note 3	EBS	Cumulative Vol (CY) Cut 1.00 Note 1	Expanded Fill 1.25	Expanded EBS Backfill 1.30 Note 5	Reduced EBS in Fill 0.80 Note 7	Mass Ordinate Note 8
60+50	25.00	157.41	0.00	0.00	0.00	146	0	0	0	18,294	111	0	0	18,183
60+75	25.00	194.12	0.00	0.00	0.00	163	0	0	0	18,457	111	0	0	18,346
60+83.78	8.78	181.49	0.00	0.00	0.00	61	0	0	0	18,518	111	0	0	18,407
61+00	16.22	164.76	0.00	0.00	0.00	104	0	0	0	18,622	111	0	0	18,511
61+25	25.00	166.67	0.00	0.00	0.00	153	0	0	0	18,775	111	0	0	18,664
61+37.17	12.17	169.00	0.00	0.00	0.00	76	0	0	0	18,851	111	0	0	18,740
61+47.33	10.16	193.48	0.00	0.04	0.00	68	0	0	0	18,919	111	0	0	18,808
61+50	2.67	209.57	0.00	0.00	0.00	20	0	0	0	18,939	111	0	0	18,828
61+54.39	4.39	194.82	0.00	0.00	0.00	33	0	0	0	18,972	111	0	0	18,861
61+63.4	9.01	166.54	0.00	0.00	0.00	60	0	0	0	19,032	111	0	0	18,921
61+75	11.60	166.48	0.00	0.00	0.00	72	0	0	0	19,104	111	0	0	18,993
62+00	25.00	164.19	0.00	0.00	0.00	153	0	0	0	19,257	111	0	0	19,146
62+18.34	18.34	165.22	0.00	0.00	0.00	112	0	0	0	19,369	111	0	0	19,258
62+25	6.66	187.09	0.00	0.00	0.00	43	0	0	0	19,412	111	0	0	19,301
62+30.32	5.32	169.97	0.00	0.00	0.00	35	0	0	0	19,448	111	0	0	19,337
62+40.2	9.88	161.42	0.00	0.00	0.00	61	0	0	0	19,508	111	0	0	19,397
62+45	4.80	160.68	0.00	0.00	0.00	29	0	0	0	19,537	111	0	0	19,426
62+50	5.00	160.86	0.00	0.00	0.00	30	0	0	0	19,567	111	0	0	19,456
62+55	5.00	148.46	0.00	0.00	0.00	29	0	0	0	19,595	111	0	0	19,484
62+60	5.00	156.92	0.00	0.00	0.00	28	0	0	0	19,623	111	0	0	19,513
62+65	5.00	179.14	0.00	0.00	0.00	31	0	0	0	19,655	111	0	0	19,544
62+70	5.00	183.53	0.00	0.00	0.00	34	0	0	0	19,688	111	0	0	19,577
62+75	5.00	167.35	0.00	0.00	0.00	32	0	0	0	19,721	111	0	0	19,610
62+80	5.00	151.73	0.00	0.00	0.00	30	0	0	0	19,750	111	0	0	19,639
62+85	5.00	133.33	0.00	0.00	0.00	26	0	0	0	19,777	111	0	0	19,666
62+90	5.00	134.01	0.00	0.00	0.00	25	0	0	0	19,801	111	0	0	19,690
62+95	5.00	150.75	0.00	0.00	0.00	26	0	0	0	19,828	111	0	0	19,717
63+00	5.00	164.51	0.00	0.00	0.00	29	0	0	0	19,857	111	0	0	19,746
63+05	5.00	176.94	0.00	0.00	0.00	32	0	0	0	19,889	111	0	0	19,778
63+10	5.00	169.66	0.00	0.00	0.00	32	0	0	0	19,921	111	0	0	19,810
63+15	5.00	147.82	0.00	0.00	0.00	29	0	0	0	19,950	111	0	0	19,839
63+20	5.00	138.70	0.00	0.00	0.00	27	0	0	0	19,977	111	0	0	19,866
63+25	5.00	142.49	0.00	1.26	0.00	26	0	0	0	20,003	111	0	0	19,891
63+30	5.00	142.59	0.00	1.01	0.00	26	0	0	0	20,029	111	0	0	19,918
63+32.56	2.56	142.54	0.00	0.89	0.00	14	0	0	0	20,043	111	0	0	19,931
63+50	17.44	142.50	0.00	0.60	0.00	92	0	0	0	20,135	112	0	0	20,022
63+75	25.00	142.59	0.00	0.36	0.00	132	0	0	0	20,267	113	0	0	20,154
64+00	25.00	142.22	0.00	0.95	0.00	132	0	1	0	20,398	113	0	0	20,285
64+07.74	7.74	148.47	0.00	0.49	0.00	42	0	0	0	20,440	114	0	0	20,326
64+19.75	12.01	152.09	0.00	0.11	0.00	67	0	0	0	20,507	114	0	0	20,393
64+25	5.25	146.72	0.00	0.10	0.00	29	0	0	0	20,536	114	0	0	20,422
64+50	25.00	149.74	0.00	0.04	0.00	137	0	0	0	20,673	114	0	0	20,559
64+68.2	18.20	155.23	0.00	0.00	0.00	103	0	0	0	20,776	114	0	0	20,662
64+75	6.80	164.53	0.00	0.00	0.00	40	0	0	0	20,816	114	0	0	20,702
64+80.28	5.28	155.69	0.00	0.73	0.00	31	0	0	0	20,848	114	0	0	20,734
65+00	19.72	181.27	0.00	0.00	0.00	123	0	0	0	20,971	114	0	0	20,856
65+11.07	11.07	171.07	0.00	0.00	0.00	72	0	0	0	21,043	114	0	0	20,928
65+25	13.93	168.96	0.00	0.00	0.00	88	0	0	0	21,131	114	0	0	21,016
65+40.09	15.09	179.10	0.00	0.00	0.00	97	0	0	0	21,228	114	0	0	21,113
65+50	9.91	189.76	0.00	0.00	0.00	68	0	0	0	21,296	114	0	0	21,181
65+52.62	2.62	173.46	0.00	0.00	0.00	18	0	0	0	21,313	114	0	0	21,199
65+75	22.38	178.97	0.00	0.00	0.00	146	0	0	0	21,459	114	0	0	21,345
66+00	25.00	176.46	0.00	0.00	0.00	165	0	0	0	21,624	114	0	0	21,509
66+25	25.00	166.39	0.00	0.00	0.00	159	0	0	0	21,782	114	0	0	21,668
66+37.32	12.32	173.47	0.00	0.00	0.00	78	0	0	0	21,860	114	0	0	21,746
66+50	12.68	161.29	0.00	0.00	0.00	79	0	0	0	21,939	114	0	0	21,824
66+75	25.00	153.07	0.00	0.00	0.00	146	0	0	0	22,084	114	0	0	21,970
66+94.36	19.36	160.53	0.00	0.11	0.00	112	0	0	0	22,197	114	0	0	22,082
67+00	5.64	181.27	0.00	0.00	0.00	36	0	0	0	22,232	114	0	0	22,118

STH 89

STATION	Distance	AREA (SF) Cut	Salvaged/Unusable Pavement Material	Fill	EBS	Incremental Vol (CY) (Unadjusted) Cut	Salvaged/Unusable Pavement Material	Fill	EBS	Cumulative Vol (CY) Cut	Expanded Fill	Expanded EBS Backfill	Reduced EBS in Fill	Mass Ordinate
										1.00	1.25	1.30	0.80	
						Note 1	Note 2	Note 3		Note 1		Note 5	Note 7	Note 8
67+08.77	8.77	160.32	0.00	0.00	0.00	55	0	0	0	22,288	114	0	0	22,173
67+25	16.23	142.30	0.00	0.32	0.00	91	0	0	0	22,379	115	0	0	22,264
67+50	25.00	139.46	0.00	0.40	0.00	130	0	0	0	22,509	115	0	0	22,394
67+75	25.00	134.75	0.00	0.66	0.00	127	0	0	0	22,636	116	0	0	22,521
67+80.08	5.08	135.01	0.00	0.55	0.00	25	0	0	0	22,662	116	0	0	22,546
67+85	4.92	134.67	0.00	0.89	0.00	25	0	0	0	22,686	116	0	0	22,570
67+90	5.00	133.24	0.00	1.03	0.00	25	0	0	0	22,711	116	0	0	22,595
67+95	5.00	143.68	0.00	0.00	0.00	26	0	0	0	22,737	116	0	0	22,620
68+00	5.00	143.39	0.00	0.00	0.00	27	0	0	0	22,763	116	0	0	22,647
68+05	5.00	154.34	0.00	0.00	0.00	28	0	0	0	22,791	116	0	0	22,674
68+10	5.00	157.69	0.00	0.00	0.00	29	0	0	0	22,820	116	0	0	22,703
68+15	5.00	149.79	0.00	0.00	0.00	28	0	0	0	22,848	116	0	0	22,732
68+20	5.00	150.97	0.00	0.00	0.00	28	0	0	0	22,876	116	0	0	22,760
68+25	5.00	144.26	0.00	0.00	0.00	27	0	0	0	22,903	116	0	0	22,787
68+30	5.00	137.04	0.00	0.00	0.00	26	0	0	0	22,929	116	0	0	22,813
68+35	5.00	128.52	0.00	0.00	0.00	25	0	0	0	22,954	116	0	0	22,838
68+40	5.00	135.22	0.00	0.00	0.00	24	0	0	0	22,978	116	0	0	22,862
68+45	5.00	144.95	0.00	0.00	0.00	26	0	0	0	23,004	116	0	0	22,888
68+50	5.00	155.30	0.00	0.00	0.00	28	0	0	0	23,032	116	0	0	22,916
68+55	5.00	158.13	0.00	0.00	0.00	29	0	0	0	23,061	116	0	0	22,945
68+60	5.00	158.28	0.00	0.00	0.00	29	0	0	0	23,090	116	0	0	22,974
68+65	5.00	165.37	0.00	0.00	0.00	30	0	0	0	23,120	116	0	0	23,004
68+70	5.00	155.89	0.00	0.90	0.00	30	0	0	0	23,150	116	0	0	23,034
68+75	5.00	133.80	0.00	0.79	0.00	27	0	0	0	23,177	117	0	0	23,060
68+80	5.00	133.56	0.00	0.69	0.00	25	0	0	0	23,202	117	0	0	23,085
68+83.81	3.81	133.13	0.00	0.61	0.00	19	0	0	0	23,220	117	0	0	23,104
69+00	16.19	130.79	0.00	0.62	0.00	79	0	0	0	23,300	117	0	0	23,182
69+25	25.00	130.82	0.00	0.23	0.00	121	0	0	0	23,421	118	0	0	23,303
69+30.56	5.56	132.82	0.00	0.20	0.00	27	0	0	0	23,448	118	0	0	23,330
69+39.73	9.17	133.54	0.00	0.03	0.00	45	0	0	0	23,493	118	0	0	23,375
69+50	10.27	130.36	0.00	0.28	0.00	50	0	0	0	23,543	118	0	0	23,425
69+75	25.00	128.71	0.00	0.42	0.00	120	0	0	0	23,663	118	0	0	23,545
70+00	25.00	125.96	0.00	0.47	0.00	118	0	0	0	23,781	119	0	0	23,662
70+04.92	4.92	135.01	0.00	0.55	0.00	24	0	0	0	23,805	119	0	0	23,686
70+25	20.08	136.24	0.00	0.87	0.00	101	0	1	0	23,906	120	0	0	23,786
70+40.02	15.02	120.86	0.00	1.64	0.00	71	0	1	0	23,977	121	0	0	23,857
70+50	9.98	130.16	0.00	0.14	0.00	46	0	0	0	24,024	121	0	0	23,903
70+55.46	5.46	119.08	0.00	1.23	0.00	25	0	0	0	24,049	121	0	0	23,928
70+75	19.54	120.40	0.00	0.16	0.00	87	0	1	0	24,135	122	0	0	24,014
71+00	25.00	119.49	0.00	0.31	0.00	111	0	0	0	24,247	122	0	0	24,125
71+25	25.00	119.88	0.00	0.61	0.00	111	0	0	0	24,357	123	0	0	24,235
71+50	25.00	125.63	0.00	0.24	0.00	114	0	0	0	24,471	123	0	0	24,348
71+66.25	16.25	139.83	0.00	0.10	0.00	80	0	0	0	24,551	123	0	0	24,428
71+75	8.75	148.85	0.00	0.00	0.00	47	0	0	0	24,598	123	0	0	24,475
71+88.74	13.74	127.02	0.00	0.20	0.00	70	0	0	0	24,668	123	0	0	24,545
72+00	11.26	125.65	0.00	0.61	0.00	53	0	0	0	24,721	123	0	0	24,597
72+25	25.00	122.26	0.00	1.57	0.00	115	0	1	0	24,835	125	0	0	24,711
72+50	25.00	126.57	0.00	1.55	0.00	115	0	1	0	24,951	127	0	0	24,824
72+69.85	19.85	124.35	0.00	2.51	0.00	92	0	1	0	25,043	128	0	0	24,914
72+75	5.15	160.01	0.00	2.73	0.00	27	0	0	0	25,070	129	0	0	24,941
72+82.9	7.90	168.31	0.00	2.00	0.00	48	0	1	0	25,118	130	0	0	24,988
73+00	17.10	125.13	0.00	3.90	0.00	93	0	2	0	25,211	132	0	0	25,079
73+25	25.00	129.76	0.00	4.36	0.00	118	0	4	0	25,329	137	0	0	25,192
73+50	25.00	134.89	0.00	4.50	0.00	123	0	4	0	25,451	142	0	0	25,309
73+75	25.00	139.82	0.00	6.27	0.00	127	0	5	0	25,579	148	0	0	25,430
74+00	25.00	139.27	0.00	2.83	0.00	129	0	4	0	25,708	154	0	0	25,554
74+07.47	7.47	148.26	0.00	0.17	0.00	40	0	0	0	25,748	154	0	0	25,593
74+20.63	13.16	145.37	0.00	1.99	0.00	72	0	1	0	25,819	155	0	0	25,664
74+25	4.37	135.76	0.00	1.92	0.00	23	0	0	0	25,842	155	0	0	25,687

STH 89

STATION	Distance	AREA (SF) Cut	Salvaged/Unusable Pavement Material	Fill	EBS	Incremental Vol (CY) (Unadjusted) Cut	Salvaged/Unusable Pavement Material	Fill	EBS	Cumulative Vol (CY) Cut 1.00	Expanded Fill 1.25	Expanded EBS Backfill 1.30	Reduced EBS in Fill 0.80	Mass Ordinate
						Note 1	Note 2	Note 3		Note 1		Note 5	Note 7	Note 8
74+33.66	8.66	132.51	0.00	0.04	0.00	43	0	0	0	25,885	156	0	0	25,729
74+40.97	7.31	126.94	0.00	3.26	0.00	35	0	0	0	25,920	156	0	0	25,764
74+50	9.03	159.48	0.00	4.50	0.00	48	0	1	0	25,968	158	0	0	25,810
74+57.96	7.96	146.80	0.00	5.56	0.00	45	0	1	0	26,013	160	0	0	25,853
74+75	17.04	133.68	0.00	5.84	0.00	89	0	4	0	26,102	164	0	0	25,937
75+00	25.00	134.38	0.00	5.25	0.00	124	0	5	0	26,226	171	0	0	26,055
75+25	25.00	153.59	0.00	4.12	0.00	133	0	4	0	26,359	176	0	0	26,183
75+33.23	8.23	143.32	0.00	4.65	0.00	45	0	1	0	26,404	178	0	0	26,227
75+50	16.77	137.17	0.00	2.91	0.00	87	0	2	0	26,491	181	0	0	26,311
75+75	25.00	139.09	0.00	2.52	0.00	128	0	3	0	26,619	184	0	0	26,436
75+79.88	4.88	140.61	0.00	0.28	0.00	25	0	0	0	26,644	184	0	0	26,460
75+89.58	9.70	143.84	0.00	0.00	0.00	51	0	0	0	26,696	184	0	0	26,512
76+00	10.42	139.16	0.00	1.57	0.00	55	0	0	0	26,750	184	0	0	26,566
76+12.87	12.87	147.26	0.00	1.38	0.00	68	0	1	0	26,818	185	0	0	26,633
76+25	12.13	138.87	0.00	1.38	0.00	64	0	1	0	26,883	186	0	0	26,697
76+50	25.00	135.53	0.00	2.01	0.00	127	0	2	0	27,010	188	0	0	26,822
76+55.19	5.19	133.86	0.00	1.48	0.00	26	0	0	0	27,036	188	0	0	26,847
76+69.48	14.29	136.50	0.00	0.00	0.00	72	0	0	0	27,107	189	0	0	26,918
76+75	5.52	131.57	0.00	2.62	0.00	27	0	0	0	27,135	189	0	0	26,945
77+00	25.00	123.91	0.00	2.98	0.00	118	0	3	0	27,253	193	0	0	27,060
77+09.37	9.37	122.69	0.00	3.43	0.00	43	0	1	0	27,296	194	0	0	27,102
77+19.33	9.96	124.37	0.00	3.30	0.00	46	0	1	0	27,341	196	0	0	27,146
77+25	5.67	118.75	0.00	2.36	0.00	26	0	1	0	27,367	196	0	0	27,171
77+50	25.00	118.01	0.00	3.21	0.00	110	0	3	0	27,476	199	0	0	27,277
77+75	25.00	117.74	0.00	2.92	0.00	109	0	3	0	27,586	203	0	0	27,383
78+00	25.00	118.71	0.00	3.33	0.00	109	0	3	0	27,695	207	0	0	27,488
78+16.3	16.30	122.20	0.00	2.44	0.00	73	0	2	0	27,768	209	0	0	27,559
78+25	8.70	130.76	0.00	0.00	0.00	41	0	0	0	27,808	209	0	0	27,599
78+36.18	11.18	124.68	0.00	3.17	0.00	53	0	1	0	27,861	210	0	0	27,651
78+45.93	9.75	134.53	0.00	0.23	0.00	47	0	1	0	27,908	211	0	0	27,697
78+50	4.07	139.14	0.00	0.00	0.00	21	0	0	0	27,929	211	0	0	27,718
78+62.78	12.78	134.43	0.00	0.70	0.00	65	0	0	0	27,994	211	0	0	27,782
78+69.72	6.94	123.38	0.00	4.29	0.00	33	0	1	0	28,027	212	0	0	27,815
78+75	5.28	120.96	0.00	3.42	0.00	24	0	1	0	28,051	213	0	0	27,838
79+00	25.00	125.09	0.00	2.29	0.00	114	0	3	0	28,164	216	0	0	27,948
79+25	25.00	126.77	0.00	2.17	0.00	117	0	2	0	28,281	219	0	0	28,062
79+50	25.00	126.37	0.00	2.12	0.00	117	0	2	0	28,398	221	0	0	28,177
79+75	25.00	148.79	0.00	0.00	0.00	127	0	1	0	28,526	222	0	0	28,303
79+87.26	12.26	133.59	0.00	0.00	0.00	64	0	0	0	28,590	222	0	0	28,367
80+00	12.74	135.92	0.00	2.05	0.00	64	0	0	0	28,653	223	0	0	28,430
80+25	25.00	120.15	0.00	3.18	0.00	119	0	2	0	28,772	226	0	0	28,546
80+35.94	10.94	115.18	0.00	3.28	0.00	48	0	1	0	28,820	228	0	0	28,592
80+50	14.06	121.71	0.00	0.00	0.00	62	0	1	0	28,881	229	0	0	28,652
80+75	25.00	114.60	0.00	4.24	0.00	109	0	2	0	28,991	231	0	0	28,759
81+00	25.00	117.05	0.00	4.13	0.00	107	0	4	0	29,098	236	0	0	28,862
81+25	25.00	120.97	0.00	2.96	0.00	110	0	3	0	29,208	240	0	0	28,968
81+50	25.00	116.99	0.00	4.13	0.00	110	0	3	0	29,318	244	0	0	29,074
81+61.68	11.68	123.92	0.00	3.46	0.00	52	0	2	0	29,370	246	0	0	29,124
81+75	13.32	138.29	0.00	0.16	0.00	65	0	1	0	29,435	247	0	0	29,188
82+00	25.00	129.55	0.00	2.75	0.00	124	0	1	0	29,559	249	0	0	29,310
82+25	25.00	137.22	0.00	2.36	0.00	124	0	2	0	29,683	252	0	0	29,430
82+31.68	6.68	145.39	0.00	0.00	0.00	35	0	0	0	29,717	252	0	0	29,465
82+42.66	10.98	147.13	0.00	0.03	0.00	59	0	0	0	29,777	252	0	0	29,524
82+50	7.34	145.88	0.00	1.98	0.00	40	0	0	0	29,817	253	0	0	29,564
82+75	25.00	144.88	0.00	2.48	0.00	135	0	2	0	29,951	255	0	0	29,696
82+91.76	16.76	115.77	0.00	3.51	0.00	81	0	2	0	30,032	258	0	0	29,775
83+00	8.24	128.39	0.00	3.60	0.00	37	0	1	0	30,070	259	0	0	29,810
83+02.1	2.10	128.18	0.00	1.19	0.00	10	0	0	0	30,080	259	0	0	29,820
83+17.21	15.11	132.33	0.00	0.00	0.00	73	0	0	0	30,152	260	0	0	29,893

9

9

STH 89

STATION	Distance	AREA (SF) Cut	Salvaged/Unusable Pavement Material	Fill	EBS	Incremental Vol (CY) (Unadjusted) Cut	Salvaged/Unusable Pavement Material	Fill	EBS	Cumulative Vol (CY) Cut	Expanded Fill	Expanded EBS Backfill	Reduced EBS in Fill	Mass Ordinate
										1.00	1.25	1.30	0.80	
						Note 1	Note 2	Note 3		Note 1		Note 5	Note 7	Note 8
83+25	7.79	125.19	0.00	5.08	0.00	37	0	1	0	30,190	261	0	0	29,929
83+50	25.00	102.48	0.00	5.66	0.00	105	0	5	0	30,295	267	0	0	30,028
83+75	25.00	100.65	0.00	3.26	0.00	94	0	4	0	30,389	272	0	0	30,117
84+00	25.00	97.18	0.00	3.39	0.00	92	0	3	0	30,481	276	0	0	30,205
84+25	25.00	96.52	0.00	3.52	0.00	90	0	3	0	30,570	280	0	0	30,290
84+34.61	9.61	97.22	0.00	3.52	0.00	34	0	1	0	30,605	281	0	0	30,323
84+35	0.39	97.23	0.00	3.50	0.00	1	0	0	0	30,606	281	0	0	30,325
84+40	5.00	97.17	0.00	3.43	0.00	18	0	1	0	30,624	282	0	0	30,342
84+45	5.00	96.84	0.00	3.04	0.00	18	0	1	0	30,642	283	0	0	30,359
84+50	5.00	94.21	0.00	2.97	0.00	18	0	1	0	30,660	284	0	0	30,376
84+55	5.00	118.44	0.00	0.00	0.00	20	0	0	0	30,680	284	0	0	30,395
84+60	5.00	151.52	0.00	0.00	0.00	25	0	0	0	30,705	284	0	0	30,420
84+65	5.00	149.56	0.00	0.00	0.00	28	0	0	0	30,732	284	0	0	30,448
84+70	5.00	138.58	0.00	0.00	0.00	27	0	0	0	30,759	284	0	0	30,475
84+75	5.00	122.45	0.00	0.00	0.00	24	0	0	0	30,783	284	0	0	30,499
84+80	5.00	107.72	0.00	1.02	0.00	21	0	0	0	30,805	284	0	0	30,520
84+85	5.00	101.82	0.00	0.60	0.00	19	0	0	0	30,824	284	0	0	30,540
84+90	5.00	115.78	0.00	0.56	0.00	20	0	0	0	30,844	285	0	0	30,560
84+95	5.00	131.16	0.00	0.52	0.00	23	0	0	0	30,867	285	0	0	30,582
85+00	5.00	142.69	0.00	0.48	0.00	25	0	0	0	30,892	285	0	0	30,608
85+05	5.00	120.80	0.00	0.71	0.00	24	0	0	0	30,917	285	0	0	30,632
85+10	5.00	115.50	0.00	0.63	0.00	22	0	0	0	30,939	285	0	0	30,654
85+15	5.00	115.46	0.00	0.87	0.00	21	0	0	0	30,960	285	0	0	30,675
85+20	5.00	119.42	0.00	0.50	0.00	22	0	0	0	30,982	285	0	0	30,696
85+25	5.00	121.25	0.00	0.13	0.00	22	0	0	0	31,004	285	0	0	30,719
85+25.17	0.17	121.29	0.00	0.13	0.00	1	0	0	0	31,005	285	0	0	30,719
85+30	4.83	117.67	0.00	0.05	0.00	21	0	0	0	31,026	285	0	0	30,741
85+35	5.00	120.49	0.00	0.01	0.00	22	0	0	0	31,048	285	0	0	30,763
85+40	5.00	123.53	0.00	0.00	0.00	23	0	0	0	31,071	285	0	0	30,785
85+45	5.00	126.16	0.00	0.00	0.00	23	0	0	0	31,094	285	0	0	30,808
85+50	5.00	128.57	0.00	0.00	0.00	24	0	0	0	31,118	285	0	0	30,832
85+55	5.00	129.93	0.00	0.00	0.00	24	0	0	0	31,141	285	0	0	30,856
85+60	5.00	131.24	0.00	0.00	0.00	24	0	0	0	31,166	285	0	0	30,880
85+65	5.00	132.27	0.00	0.00	0.00	24	0	0	0	31,190	285	0	0	30,905
85+70	5.00	133.72	0.00	0.00	0.00	25	0	0	0	31,215	285	0	0	30,929
85+75	5.00	134.61	0.00	0.00	0.00	25	0	0	0	31,240	285	0	0	30,954
85+80	5.00	132.78	0.00	0.00	0.00	25	0	0	0	31,264	285	0	0	30,979
85+85	5.00	129.02	0.00	0.01	0.00	24	0	0	0	31,289	285	0	0	31,003
85+90	5.00	125.73	0.00	0.03	0.00	24	0	0	0	31,312	286	0	0	31,027
85+95	5.00	122.05	0.00	0.22	0.00	23	0	0	0	31,335	286	0	0	31,050
86+00	5.00	119.03	0.00	0.72	0.00	22	0	0	0	31,357	286	0	0	31,072
86+05	5.00	120.33	0.00	0.52	0.00	22	0	0	0	31,380	286	0	0	31,094
86+10	5.00	128.69	0.00	0.19	0.00	23	0	0	0	31,403	286	0	0	31,117
86+15	5.00	138.94	0.00	0.07	0.00	25	0	0	0	31,427	286	0	0	31,141
86+20	5.00	149.39	0.00	0.04	0.00	27	0	0	0	31,454	286	0	0	31,168
86+25	5.00	142.52	0.00	0.02	0.00	27	0	0	0	31,481	286	0	0	31,195
86+30	5.00	138.29	0.00	0.00	0.00	26	0	0	0	31,507	286	0	0	31,221
86+35	5.00	132.51	0.00	0.00	0.00	25	0	0	0	31,532	286	0	0	31,246
86+40	5.00	129.72	0.00	0.01	0.00	24	0	0	0	31,556	286	0	0	31,271
86+45	5.00	138.05	0.00	0.02	0.00	25	0	0	0	31,581	286	0	0	31,295
86+50	5.00	147.10	0.00	0.01	0.00	26	0	0	0	31,608	286	0	0	31,322
86+55	5.00	156.24	0.00	0.01	0.00	28	0	0	0	31,636	286	0	0	31,350
86+60	5.00	165.56	0.00	0.01	0.00	30	0	0	0	31,666	286	0	0	31,380
86+65	5.00	175.62	0.00	0.02	0.00	32	0	0	0	31,697	286	0	0	31,411
86+70	5.00	169.71	0.00	0.70	0.00	32	0	0	0	31,729	286	0	0	31,443
86+75	5.00	171.95	0.00	0.08	0.00	32	0	0	0	31,761	286	0	0	31,475
86+75.61	0.61	172.51	0.00	0.07	0.00	4	0	0	0	31,765	286	0	0	31,478
87+00	24.39	178.16	0.00	0.00	0.00	158	0	0	0	31,923	286	0	0	31,637
87+25	25.00	168.80	0.00	0.00	0.00	161	0	0	0	32,084	286	0	0	31,797

STH 89

STATION	Distance	AREA (SF) Cut	AREA (SF) Salvaged/Unusable Pavement Material	AREA (SF) Fill	AREA (SF) EBS	Incremental Vol (CY) (Unadjusted) Cut Note 1	Incremental Vol (CY) (Unadjusted) Salvaged/Unusable Pavement Material Note 2	Incremental Vol (CY) (Unadjusted) Fill Note 3	Incremental Vol (CY) (Unadjusted) EBS	Cumulative Vol (CY) Cut 1.00 Note 1	Cumulative Vol (CY) Expanded Fill 1.25	Cumulative Vol (CY) Expanded EBS Backfill 1.30 Note 5	Cumulative Vol (CY) Reduced EBS in Fill 0.80 Note 7	Cumulative Vol (CY) Mass Ordinate Note 8
87+50	25.00	176.47	0.00	0.00	0.00	160	0	0	0	32,243	286	0	0	31,957
87+75	25.00	176.89	0.00	0.00	0.00	164	0	0	0	32,407	286	0	0	32,121
88+00	25.00	168.98	0.00	0.00	0.00	160	0	0	0	32,567	286	0	0	32,281
88+25	25.00	160.24	0.00	0.01	0.00	152	0	0	0	32,720	286	0	0	32,433
88+43.75	18.75	149.82	0.00	0.04	0.00	108	0	0	0	32,827	286	0	0	32,541
88+45	1.25	152.54	0.00	0.04	0.00	7	0	0	0	32,834	286	0	0	32,548
88+50	5.00	164.19	0.00	0.00	0.00	29	0	0	0	32,864	286	0	0	32,577
88+55	5.00	169.61	0.00	0.01	0.00	31	0	0	0	32,895	286	0	0	32,608
88+60	5.00	179.09	0.00	0.00	0.00	32	0	0	0	32,927	286	0	0	32,641
88+65	5.00	172.57	0.00	0.00	0.00	33	0	0	0	32,959	286	0	0	32,673
88+70	5.00	159.52	0.00	0.00	0.00	31	0	0	0	32,990	286	0	0	32,704
88+75	5.00	144.19	0.00	0.00	0.00	28	0	0	0	33,018	286	0	0	32,732
88+80	5.00	134.42	0.00	0.05	0.00	26	0	0	0	33,044	286	0	0	32,758
88+85	5.00	130.06	0.00	0.04	0.00	24	0	0	0	33,069	286	0	0	32,782
88+90	5.00	133.59	0.00	0.00	0.00	24	0	0	0	33,093	286	0	0	32,807
88+95	5.00	133.75	0.00	0.00	0.00	25	0	0	0	33,118	286	0	0	32,831
89+00	5.00	133.85	0.00	0.00	0.00	25	0	0	0	33,142	286	0	0	32,856
89+05	5.00	134.05	0.00	0.05	0.00	25	0	0	0	33,167	286	0	0	32,881
89+10	5.00	134.16	0.00	0.06	0.00	25	0	0	0	33,192	286	0	0	32,906
89+15	5.00	134.26	0.00	0.08	0.00	25	0	0	0	33,217	286	0	0	32,931
89+20	5.00	133.91	0.00	0.11	0.00	25	0	0	0	33,242	286	0	0	32,956
89+25	5.00	134.05	0.00	0.12	0.00	25	0	0	0	33,267	286	0	0	32,980
89+30	5.00	134.20	0.00	0.53	0.00	25	0	0	0	33,291	286	0	0	33,005
89+35	5.00	139.23	0.00	7.08	0.00	25	0	1	0	33,317	287	0	0	33,030
89+40	5.00	147.23	0.00	5.31	0.00	27	0	1	0	33,343	289	0	0	33,055
89+45	5.00	148.41	0.00	2.44	0.00	27	0	1	0	33,371	290	0	0	33,081
89+50	5.00	158.26	0.00	0.92	0.00	28	0	0	0	33,399	290	0	0	33,109
89+55	5.00	168.70	0.00	0.01	0.00	30	0	0	0	33,429	290	0	0	33,139
89+60	5.00	172.34	0.00	0.00	0.00	32	0	0	0	33,461	290	0	0	33,171
89+65	5.00	156.94	0.00	0.00	0.00	30	0	0	0	33,491	290	0	0	33,201
89+70	5.00	161.74	0.00	0.00	0.00	30	0	0	0	33,521	290	0	0	33,231
89+75	5.00	158.08	0.00	0.00	0.00	30	0	0	0	33,551	290	0	0	33,260
89+80	5.00	153.96	0.00	0.00	0.00	29	0	0	0	33,579	290	0	0	33,289
89+85	5.00	151.59	0.00	0.00	0.00	28	0	0	0	33,608	290	0	0	33,318
89+90	5.00	134.14	0.00	0.00	0.00	26	0	0	0	33,634	290	0	0	33,344
89+95	5.00	134.70	0.00	0.09	0.00	25	0	0	0	33,659	290	0	0	33,369
90+00	5.00	142.09	0.00	0.01	0.00	26	0	0	0	33,685	290	0	0	33,395
90+05	5.00	150.83	0.00	0.00	0.00	27	0	0	0	33,712	290	0	0	33,422
90+10	5.00	158.64	0.00	0.00	0.00	29	0	0	0	33,740	290	0	0	33,450
90+15	5.00	166.59	0.00	0.00	0.00	30	0	0	0	33,771	290	0	0	33,480
90+20	5.00	172.46	0.00	0.00	0.00	31	0	0	0	33,802	290	0	0	33,512
90+25	5.00	177.71	0.00	0.00	0.00	32	0	0	0	33,834	290	0	0	33,544
90+30	5.00	0.00	0.00	0.65	0.00	16	0	0	0	33,851	290	0	0	33,561
90+35	5.00	169.41	0.00	0.10	0.00	16	0	0	0	33,867	290	0	0	33,576
90+40	5.00	161.71	0.00	0.00	0.00	31	0	0	0	33,897	290	0	0	33,607
90+45	5.00	156.03	0.00	0.00	0.00	29	0	0	0	33,927	290	0	0	33,636
90+50	5.00	152.57	0.00	0.00	0.00	29	0	0	0	33,955	290	0	0	33,665
90+55	5.00	150.76	0.00	0.00	0.00	28	0	0	0	33,983	290	0	0	33,693
90+60	5.00	150.24	0.00	0.00	0.00	28	0	0	0	34,011	290	0	0	33,721
90+61.21	1.21	150.14	0.00	0.00	0.00	7	0	0	0	34,018	290	0	0	33,728
90+75	13.79	148.77	0.00	0.02	0.00	76	0	0	0	34,094	290	0	0	33,804
91+00	25.00	147.04	0.00	0.04	0.00	137	0	0	0	34,231	290	0	0	33,941
91+25	25.00	148.99	0.00	0.00	0.00	137	0	0	0	34,368	290	0	0	34,078
91+50	25.00	149.52	0.00	0.00	0.00	138	0	0	0	34,506	290	0	0	34,216
91+75	25.00	150.92	0.00	0.00	0.00	139	0	0	0	34,645	290	0	0	34,355
92+00	25.00	149.53	0.00	0.00	0.00	139	0	0	0	34,785	290	0	0	34,494
92+25	25.00	147.69	0.00	0.01	0.00	138	0	0	0	34,922	290	0	0	34,632
92+50	25.00	147.49	0.00	0.01	0.00	137	0	0	0	35,059	290	0	0	34,768
92+75	25.00	147.35	0.00	0.02	0.00	136	0	0	0	35,195	290	0	0	34,905

STH 89

STATION	Distance	AREA (SF) Cut	AREA (SF) Salvaged/Unusable Pavement Material	AREA (SF) Fill	AREA (SF) EBS	Incremental Vol (CY) (Unadjusted) Cut Note 1	Incremental Vol (CY) (Unadjusted) Salvaged/Unusable Pavement Material Note 2	Incremental Vol (CY) (Unadjusted) Fill Note 3	Incremental Vol (CY) (Unadjusted) EBS	Cumulative Vol (CY) Cut 1.00 Note 1	Cumulative Vol (CY) Expanded Fill 1.25	Cumulative Vol (CY) Expanded EBS Backfill 1.30 Note 5	Cumulative Vol (CY) Reduced EBS in Fill 0.80 Note 7	Cumulative Vol (CY) Mass Ordinate Note 8
93+00	25.00	145.06	0.00	0.03	0.00	135	0	0	0	35,331	290	0	0	35,040
93+25	25.00	145.87	0.00	0.05	0.00	135	0	0	0	35,465	290	0	0	35,175
93+50	25.00	144.58	0.00	0.05	0.00	134	0	0	0	35,600	291	0	0	35,309
93+75	25.00	153.54	0.00	0.08	0.00	138	0	0	0	35,738	291	0	0	35,447
94+00	25.00	146.34	0.00	0.03	0.00	139	0	0	0	35,877	291	0	0	35,586
94+25	25.00	147.64	0.00	0.12	0.00	136	0	0	0	36,013	291	0	0	35,722
94+50	25.00	147.41	0.00	0.05	0.00	137	0	0	0	36,149	291	0	0	35,859
94+75	25.00	146.72	0.00	0.08	0.00	136	0	0	0	36,286	291	0	0	35,995
95+00	25.00	145.42	0.00	0.08	0.00	135	0	0	0	36,421	291	0	0	36,130
95+03.08	3.08	145.24	0.00	0.07	0.00	17	0	0	0	36,437	291	0	0	36,146
95+05	1.92	145.18	0.00	0.06	0.00	10	0	0	0	36,448	291	0	0	36,157
95+10	5.00	147.48	0.00	0.03	0.00	27	0	0	0	36,475	291	0	0	36,184
95+15	5.00	152.66	0.00	0.03	0.00	28	0	0	0	36,503	291	0	0	36,212
95+20	5.00	162.52	0.00	0.06	0.00	29	0	0	0	36,532	291	0	0	36,241
95+25	5.00	154.04	0.00	0.00	0.00	29	0	0	0	36,561	291	0	0	36,270
95+30	5.00	144.31	0.00	0.00	0.00	28	0	0	0	36,589	291	0	0	36,298
95+35	5.00	134.36	0.00	0.00	0.00	26	0	0	0	36,615	291	0	0	36,323
95+40	5.00	120.35	0.00	0.00	0.00	24	0	0	0	36,638	291	0	0	36,347

Temp Lane Winter Carryover

STATION	Distance	AREA (SF) Cut	Salvaged/Unusable Pavement Material	Fill	EBS	Incremental Vol (CY) (Unadjusted) Cut	Salvaged/Unusable Pavement Material	Fill	EBS	Cumulative Vol (CY) Cut	Expanded Fill	Expanded EBS Backfill	Reduced EBS in Fill	Mass Ordinate
										1.00	1.25	1.30	0.80	
						Note 1	Note 2	Note 3		Note 1		Note 5	Note 7	Note 8
40+40	0.00	39.31	0.00	0.00	0.00	0	0	0	0	0	0	0	0	0
40+50	10.00	38.40	0.00	0.14	0.00	14	0	0	0	14	0	0	0	14
40+75	25.00	39.66	0.00	0.00	0.00	36	0	0	0	51	0	0	0	50
41+00	25.00	42.27	0.00	0.00	0.00	38	0	0	0	88	0	0	0	88
41+25	25.00	46.51	0.00	0.00	0.00	41	0	0	0	130	0	0	0	129
41+50	25.00	50.70	0.00	0.00	0.00	45	0	0	0	175	0	0	0	174
41+75	25.00	56.12	0.00	0.00	0.00	49	0	0	0	224	0	0	0	224
42+00	25.00	63.42	0.00	0.00	0.00	55	0	0	0	279	0	0	0	279
42+25	25.00	69.63	0.00	0.00	0.00	62	0	0	0	341	0	0	0	341
42+50	25.00	78.82	0.00	0.00	0.00	69	0	0	0	410	0	0	0	410
42+75	25.00	86.40	0.00	0.00	0.00	76	0	0	0	486	0	0	0	486
43+00	25.00	96.71	0.00	0.00	0.00	85	0	0	0	571	0	0	0	571
43+25	25.00	101.23	0.00	0.00	0.00	92	0	0	0	663	0	0	0	662
43+50	25.00	98.94	0.00	0.00	0.00	93	0	0	0	755	0	0	0	755
43+75	25.00	99.46	0.00	0.00	0.00	92	0	0	0	847	0	0	0	847
44+00	25.00	96.01	0.00	0.00	0.00	90	0	0	0	938	0	0	0	937

Notes:		
1 - Cut	Cut includes Salvaged/Unusable Pavement material	
2 - Salvaged/Unusable Pavement Material	This does not show up in cross sections	
3 - Fill	Does not include Unusable Pavement Exc volume	
4 - Expanded Marsh Backfill	Will be backfilled with Granular Backfill (or Cut, or Borrow)	Note 4 - Select one based on input dialog selection
5 - Expanded EBS	Will be backfilled with Granular Backfill (or Cut, or Borrow)	Note 5 - Select one based on input dialog selection
6 - Reduced Marsh in Fill	Reduced Marsh Excavation that can be used in Fill	Note 6 - If excavated Marsh can be used in Fill
7 - Reduced EBS in Fill	Reduced EBS Excavation that can be used in Fill	Note 7 - If excavated EBS can be used in Fill
8 - Mass Ordinate	If Marsh or EBS to be backfilled with Cut or Borrow: [(Cut + Marsh Exc + EBS) - ((Fill - Reduced Marsh in Fill) - (Reduced EBS in Fill) - Expanded Rock) * Fill Factor)]	Note 8 - Select one based on mass haul input dialog selection. EBS and Marsh Exc used outside 1:1 in fill slopes
8 - Mass Ordinate	If Marsh and EBS to be backfilled with Granular: [(Cut + EBS + Marsh Exc) - ((Fill - (Reduced Marsh in Fill) - (Reduced EBS in Fill) - (Expanded Rock)) * Fill Factor))]	EBS and Marsh Exc used outside 1:1 in fill slopes
8 - Mass Ordinate	If Marsh and EBS to be backfilled with Granular: [(Cut) - ((Fill - Expanded Rock) * Fill Factor))]	Marsh and EBS are not usable outside the 1:1 slopes
8 - Mass Ordinate	If Marsh and EBS to be backfilled with Cut or Borrow: [(Cut) - ((Fill - Expanded Rock) * Fill Factor))]	Marsh and EBS are not usable outside the 1:1 slopes

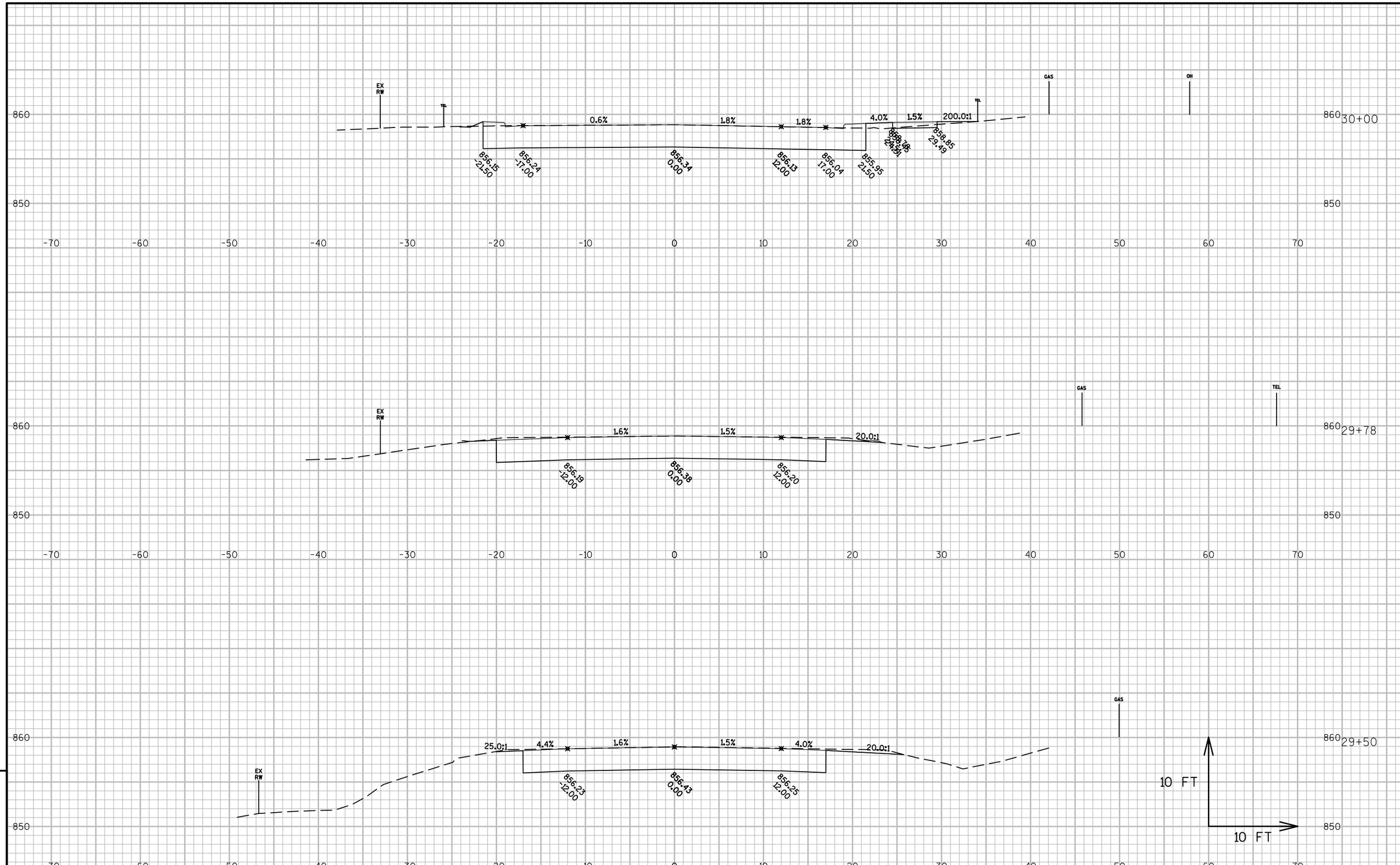

PROJECT NO:3300-01-73	HWY:STH 89	COUNTY:JEFFERSON	CROSS SECTIONS:STH 89 MAINLINE	SHEET 367	E

FILE NAME : N:\PDS\C3D\33000103\SHEETSPLAN\090201-CROSS SECTIONS\090201-XS.DWG
LAYOUT NAME - XS-(1)
PLOT DATE : 12/12/2017 3:05 PM PLOT BY : WHITE, JEREMY J PLOT NAME : PLOT SCALE : 1 IN:10 FT

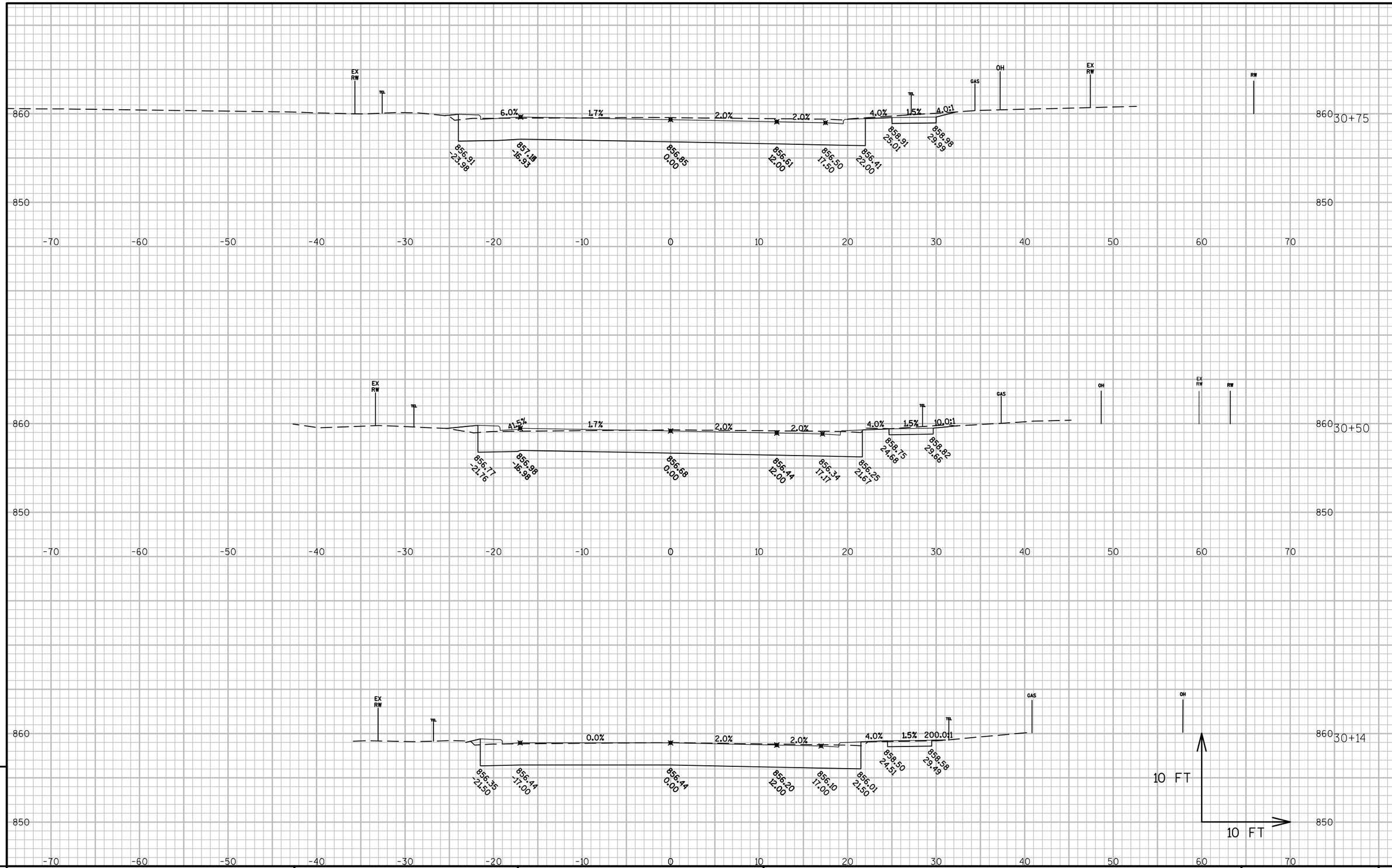

9

9

PROJECT NO:3300-01-73	HWY:STH 89	COUNTY:JEFFERSON	CROSS SECTIONS:STH 89 MAINLINE	SHEET 368	E

FILE NAME : N:\PDS\C3D\33000103\SHEETSPLAN\090201-CROSS SECTIONS\090201-XS.DWG
LAYOUT NAME - XS-(2)
PLOT DATE : 12/12/2017 3:06 PM PLOT BY : WHITE, JEREMY J PLOT NAME : PLOT SCALE : 1 IN:10 FT

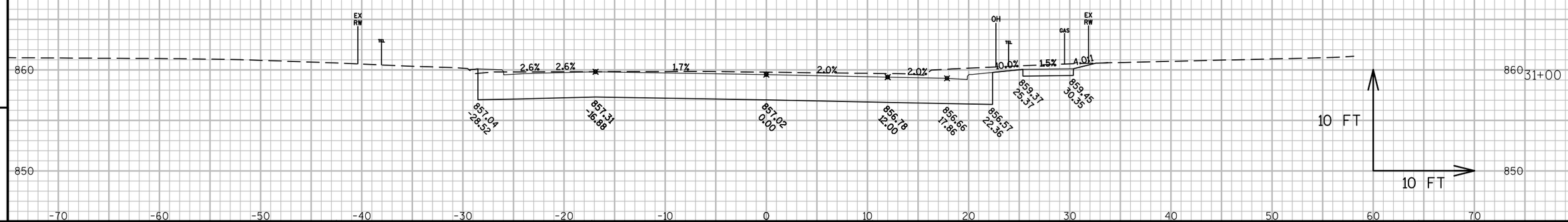

9

9

PROJECT NO:3300-01-73	HWY:STH 89	COUNTY:JEFFERSON	CROSS SECTIONS:STH 89 MAINLINE	SHEET 369	E

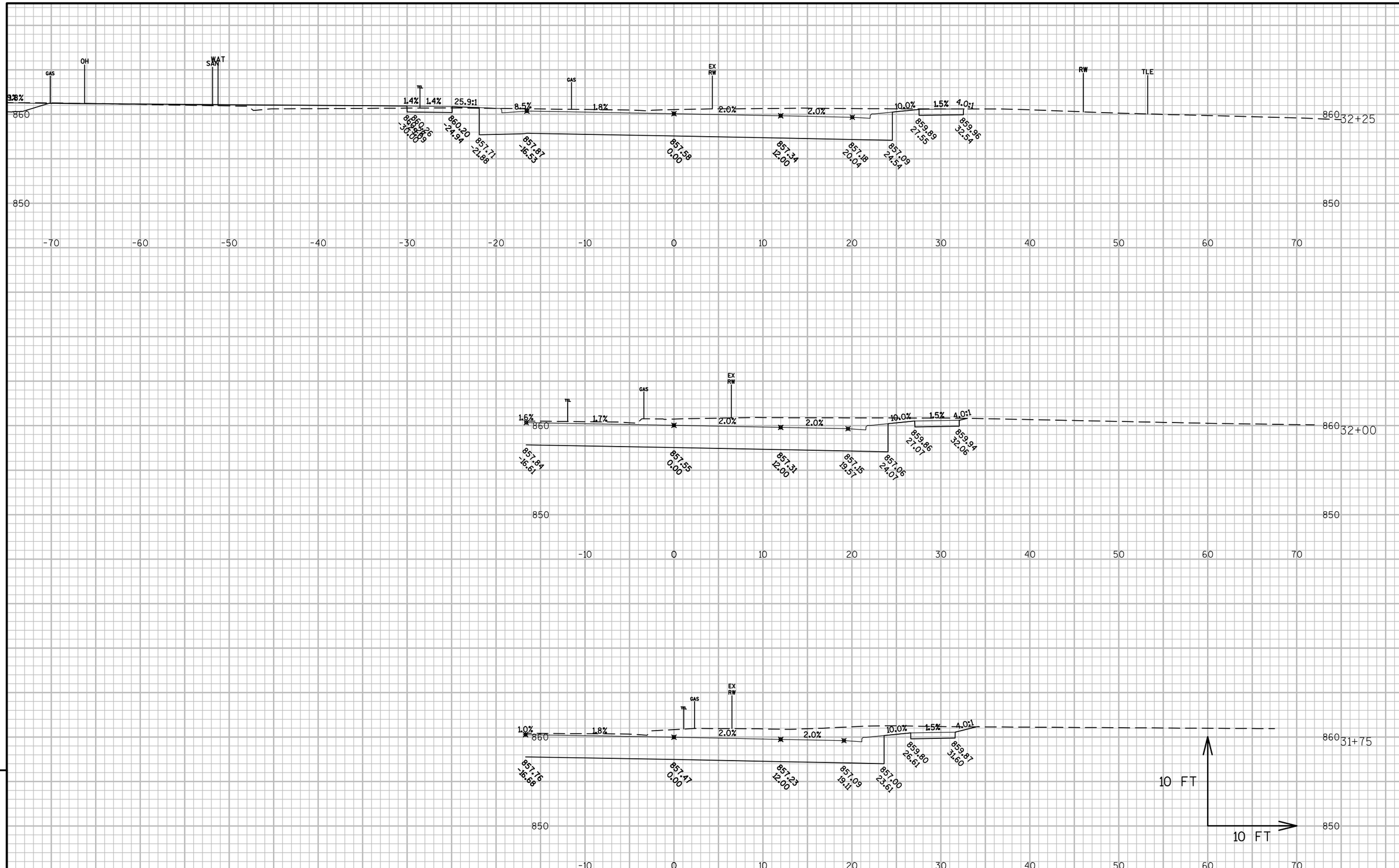

9

9

PROJECT NO:3300-01-73	HWY:STH 89	COUNTY:JEFFERSON	CROSS SECTIONS:STH 89 MAINLINE	SHEET 370	E

FILE NAME : N:\PDS\C3D\33000103\SHEETSPLAN\090201-CROSS SECTIONS\090201-XS.DWG
LAYOUT NAME - XS-(4)
PLOT DATE : 12/12/2017 3:06 PM PLOT BY : WHITE, JEREMY J PLOT NAME : PLOT SCALE : 1 IN:10 FT

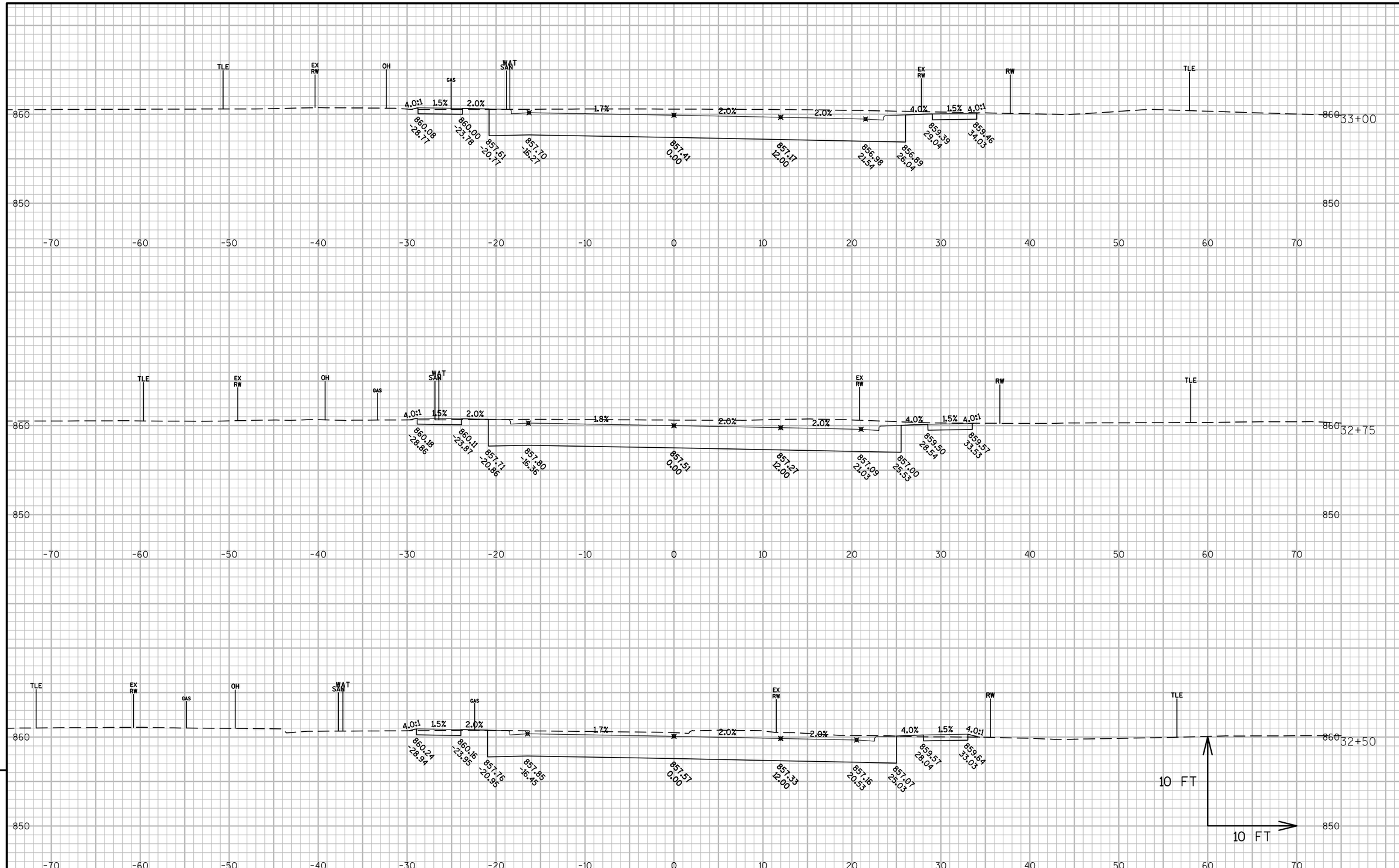

9

9

PROJECT NO:3300-01-73	HWY:STH 89	COUNTY:JEFFERSON	CROSS SECTIONS:STH 89 MAINLINE	SHEET 371	E

FILE NAME : N:\PDS\C3D\33000103\SHEETSPLAN\090201-CROSS SECTIONS\090201-XS.DWG
LAYOUT NAME - XS-(5)
PLOT DATE : 12/12/2017 3:06 PM PLOT BY : WHITE, JEREMY J PLOT NAME : PLOT SCALE : 1 IN:10 FT

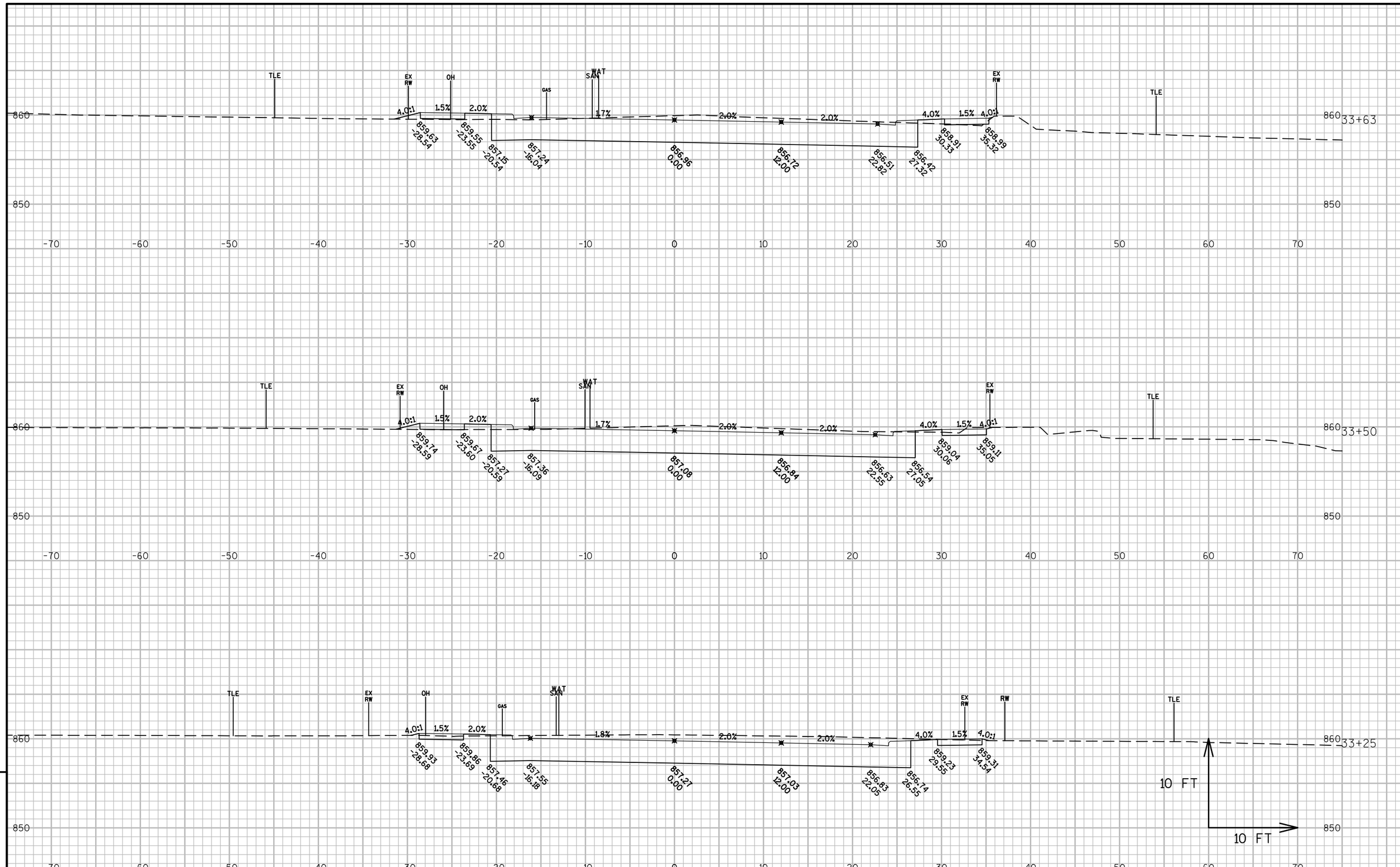

PROJECT NO:3300-01-73	HWY:STH 89	COUNTY:JEFFERSON	CROSS SECTIONS:STH 89 MAINLINE	SHEET 372	E

FILE NAME : N:\PDS\C3D\33000103\SHEETSPLAN\090201-CROSS SECTIONS\090201-XS.DWG
LAYOUT NAME - XS-(6)
PLOT DATE : 12/12/2017 3:07 PM PLOT BY : WHITE, JEREMY J PLOT NAME : PLOT SCALE : 1 IN:10 FT

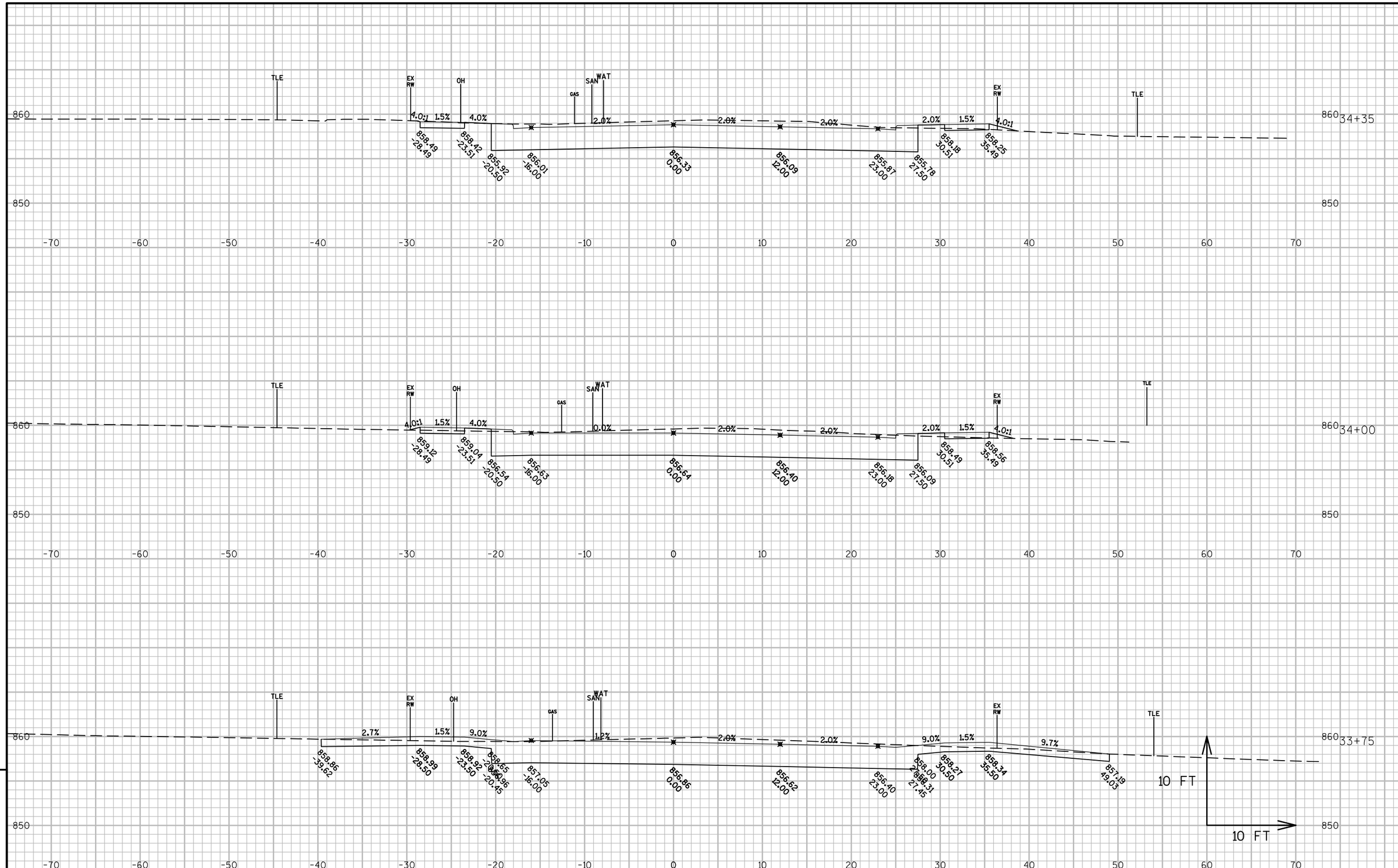

9

9

PROJECT NO:3300-01-73	HWY:STH 89	COUNTY:JEFFERSON	CROSS SECTIONS:STH 89 MAINLINE	SHEET 373	E

FILE NAME : N:\PDS\C3D\33000103\SHEETSPLAN\090201-CROSS SECTIONS\090201-XS.DWG
LAYOUT NAME - XS-(7)

PLOT DATE : 12/12/2017 3:07 PM PLOT BY : WHITE, JEREMY J PLOT NAME : PLOT SCALE : 1 IN:10 FT

WISDOT/CADDS SHEET 49

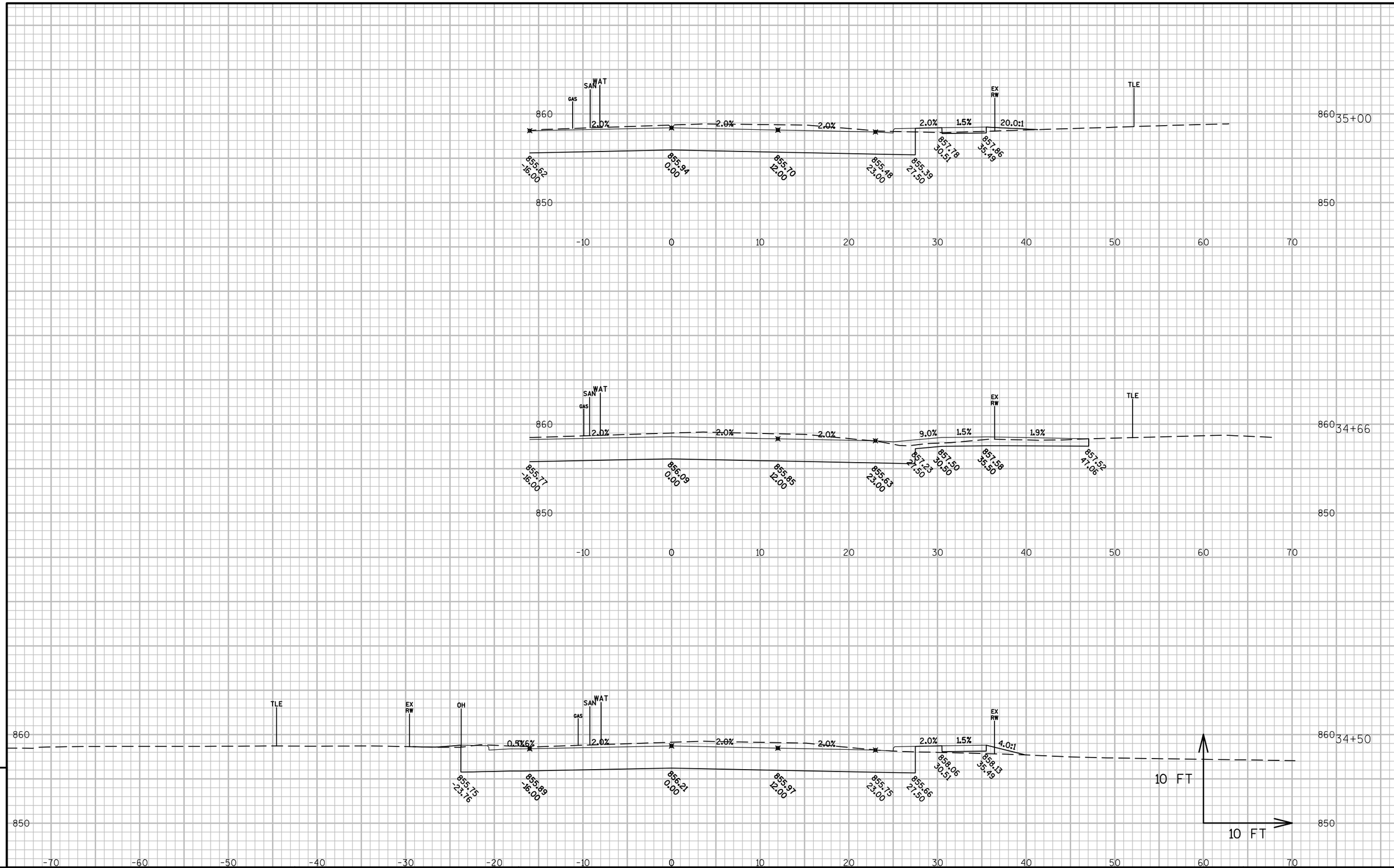

9

9

PROJECT NO:3300-01-73	HWY:STH 89	COUNTY:JEFFERSON	CROSS SECTIONS:STH 89 MAINLINE	SHEET 374	E

FILE NAME : N:\PDS\C3D\33000103\SHEETSPLAN\090201-CROSS SECTIONS\090201-XS.DWG
LAYOUT NAME - XS-(8)

PLOT DATE : 12/12/2017 3:07 PM PLOT BY : WHITE, JEREMY J PLOT NAME : PLOT SCALE : 1 IN:10 FT

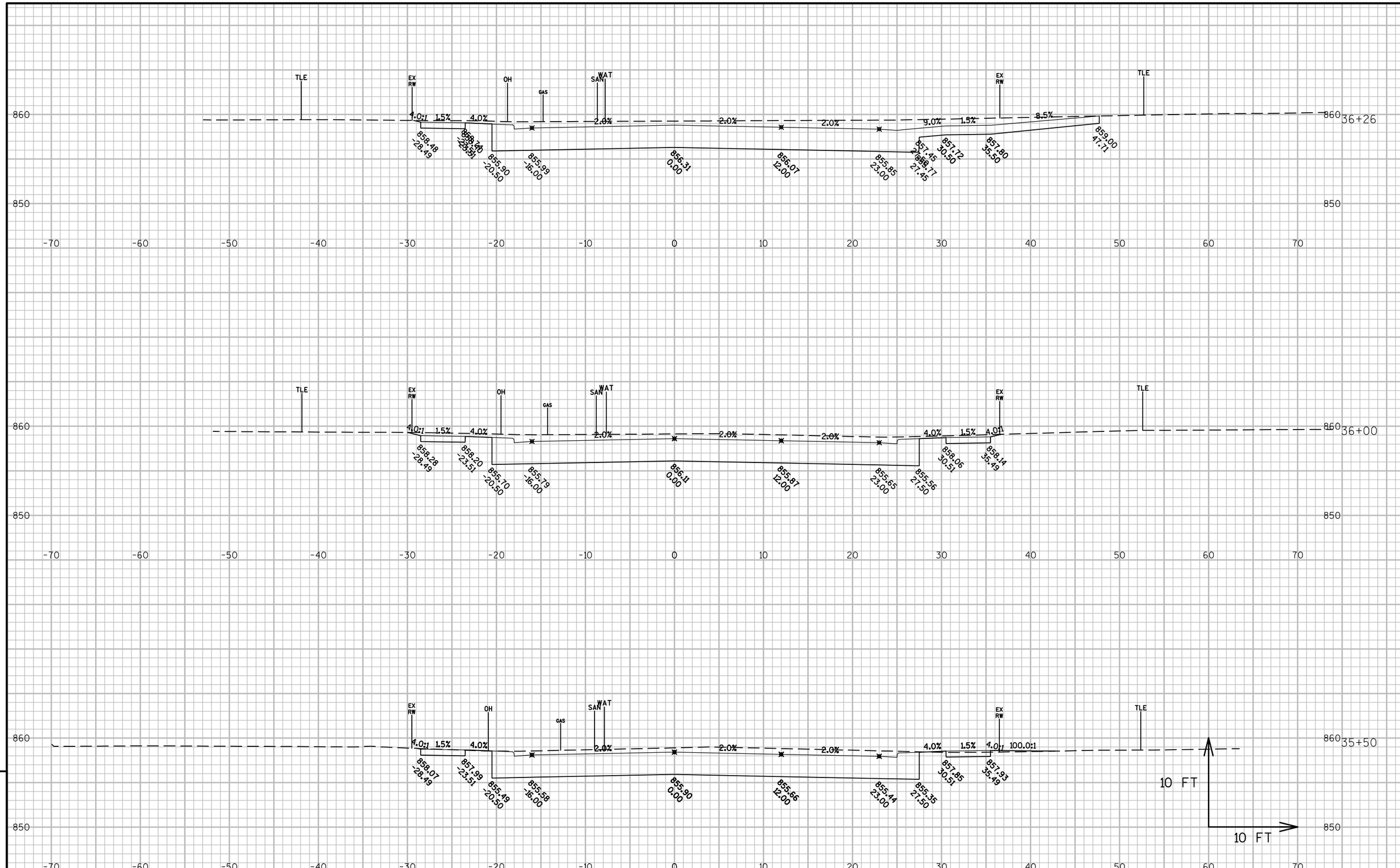

9

9

PROJECT NO:3300-01-73	HWY:STH 89	COUNTY:JEFFERSON	CROSS SECTIONS:STH 89 MAINLINE	SHEET 375	E

FILE NAME : N:\PDS\C3D\33000103\SHEETSPLAN\090201-CROSS SECTIONS\090201-XS.DWG
LAYOUT NAME - XS-(9)
PLOT DATE : 12/12/2017 3:08 PM PLOT BY : WHITE, JEREMY J PLOT NAME : PLOT SCALE : 1 IN:10 FT

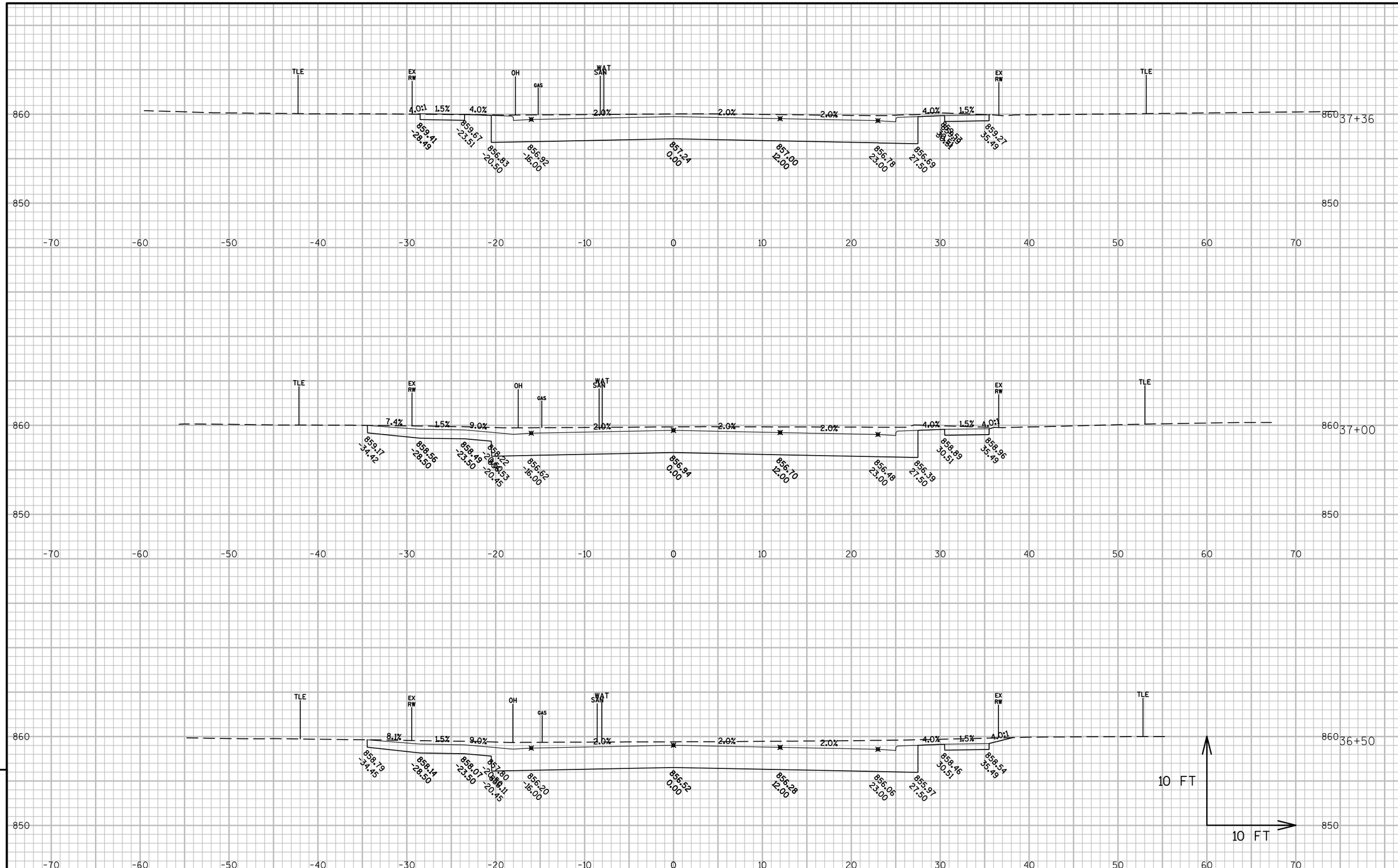

9

9

PROJECT NO:3300-01-73	HWY:STH 89	COUNTY:JEFFERSON	CROSS SECTIONS:STH 89 MAINLINE	SHEET 376	E

FILE NAME : N:\PDS\C3D\33000103\SHEETSPLAN\090201-CROSS SECTIONS\090201-XS.DWG
LAYOUT NAME - XS-(10)
PLOT DATE : 12/12/2017 3:08 PM PLOT BY : WHITE, JEREMY J PLOT NAME : PLOT SCALE : 1 IN:10 FT

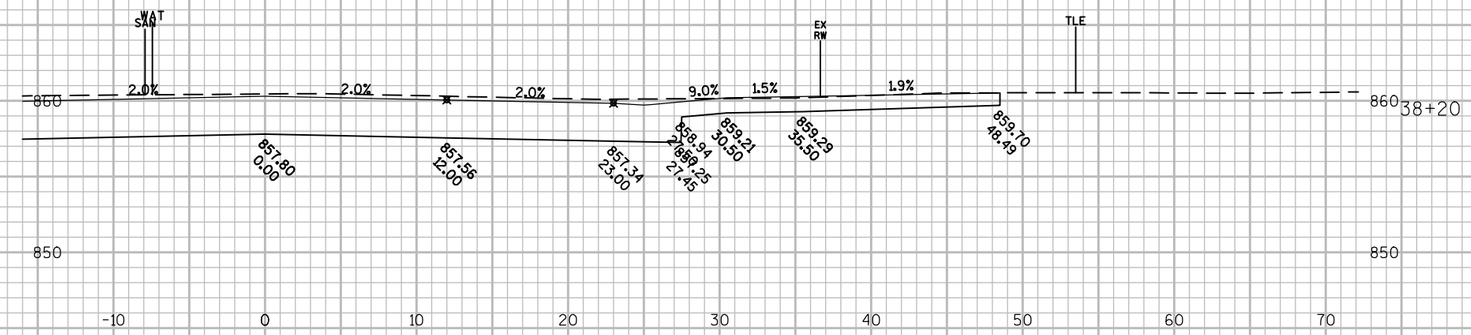

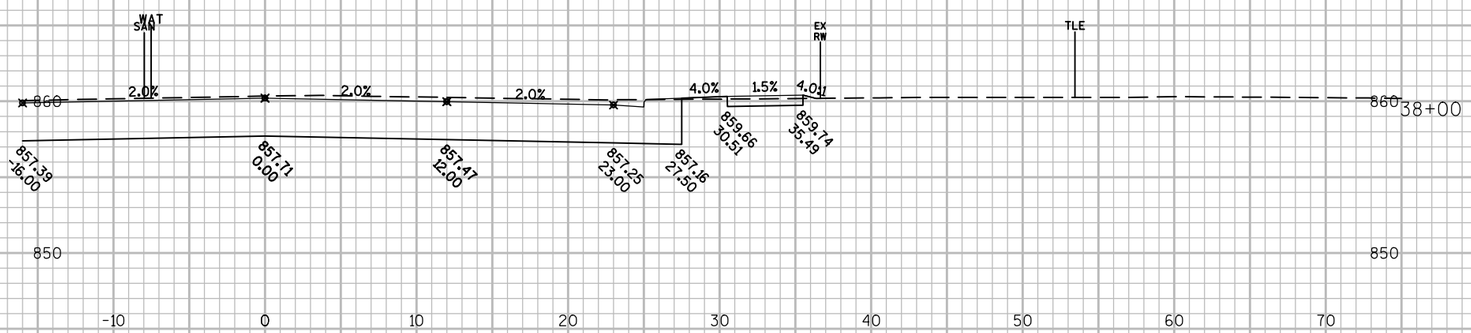

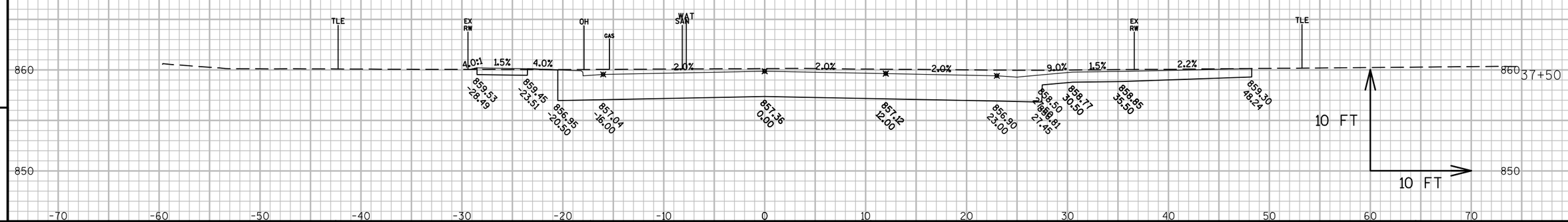

9

9

PROJECT NO:3300-01-73	HWY:STH 89	COUNTY:JEFFERSON	CROSS SECTIONS:STH 89 MAINLINE	SHEET 377	E

FILE NAME : N:\PDS\C3D\33000103\SHEETSPLAN\090201-CROSS SECTIONS\090201-XS.DWG
LAYOUT NAME - XS-(11)
PLOT DATE : 12/12/2017 3:08 PM PLOT BY : WHITE, JEREMY J PLOT NAME : PLOT SCALE : 1 IN:10 FT

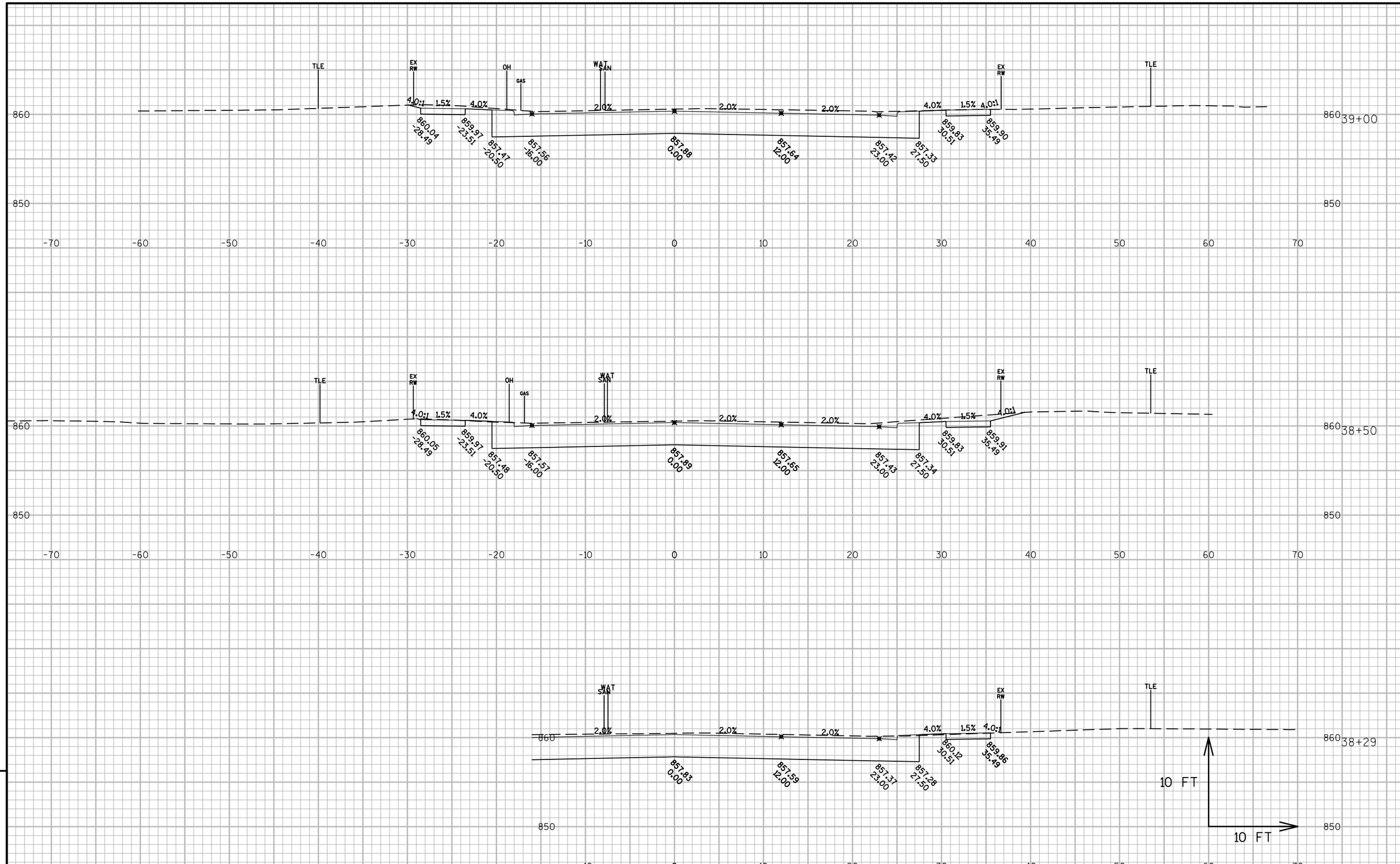

PROJECT NO:3300-01-73	HWY:STH 89	COUNTY:JEFFERSON	CROSS SECTIONS:STH 89 MAINLINE	SHEET 378	E

FILE NAME : N:\PDS\C3D\33000103\SHEETSPLAN\090201-CROSS SECTIONS\090201-XS.DWG
LAYOUT NAME - XS-(12)
PLOT DATE : 12/12/2017 3:09 PM PLOT BY : WHITE, JEREMY J PLOT NAME : PLOT SCALE : 1 IN:10 FT

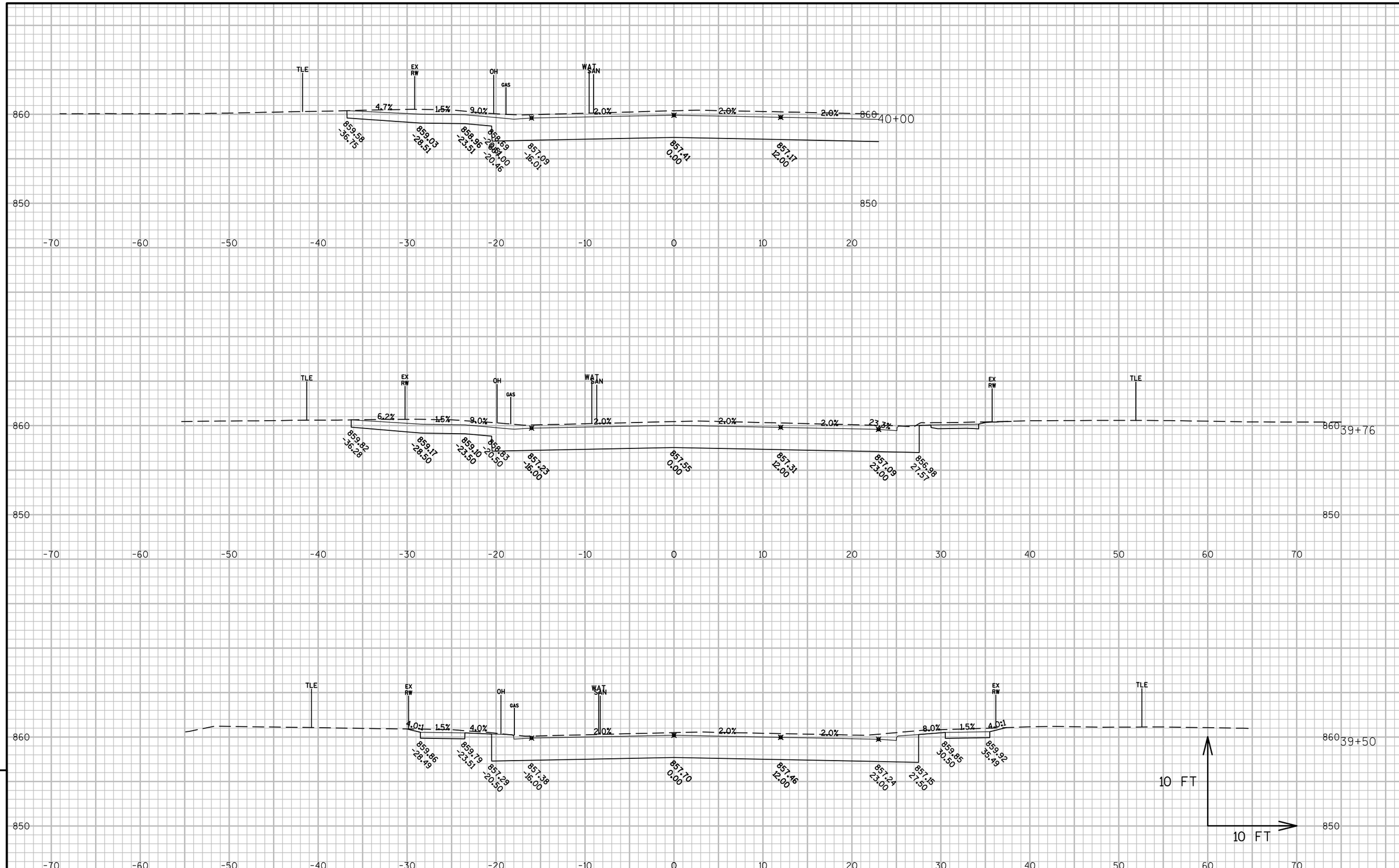

9

9

PROJECT NO:3300-01-73	HWY:STH 89	COUNTY:JEFFERSON	CROSS SECTIONS:STH 89 MAINLINE	SHEET 379	E

FILE NAME : N:\PDS\C3D\33000103\SHEETSPLAN\090201-CROSS SECTIONS\090201-XS.DWG
LAYOUT NAME - XS-(13)
PLOT DATE : 12/12/2017 3:09 PM PLOT BY : WHITE, JEREMY J PLOT NAME : PLOT SCALE : 1 IN:10 FT

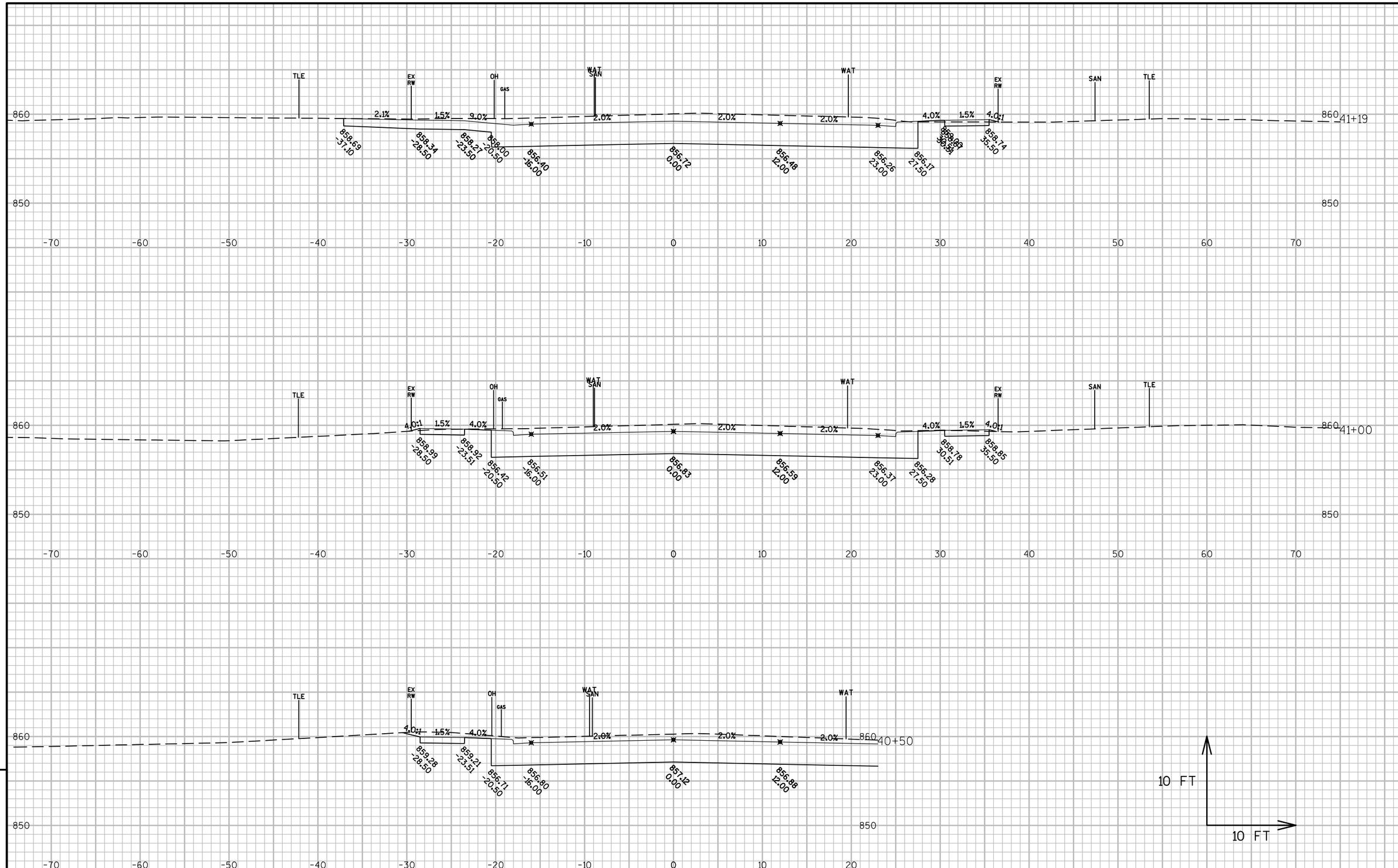

9

9

PROJECT NO:3300-01-73	HWY:STH 89	COUNTY:JEFFERSON	CROSS SECTIONS:STH 89 MAINLINE	SHEET 380	E

FILE NAME : N:\PDS\C3D\33000103\SHEETSPLAN\090201-CROSS SECTIONS\090201-XS.DWG
LAYOUT NAME - XS-(14)
PLOT DATE : 12/12/2017 3:09 PM PLOT BY : WHITE, JEREMY J PLOT NAME : PLOT SCALE : 1 IN:10 FT

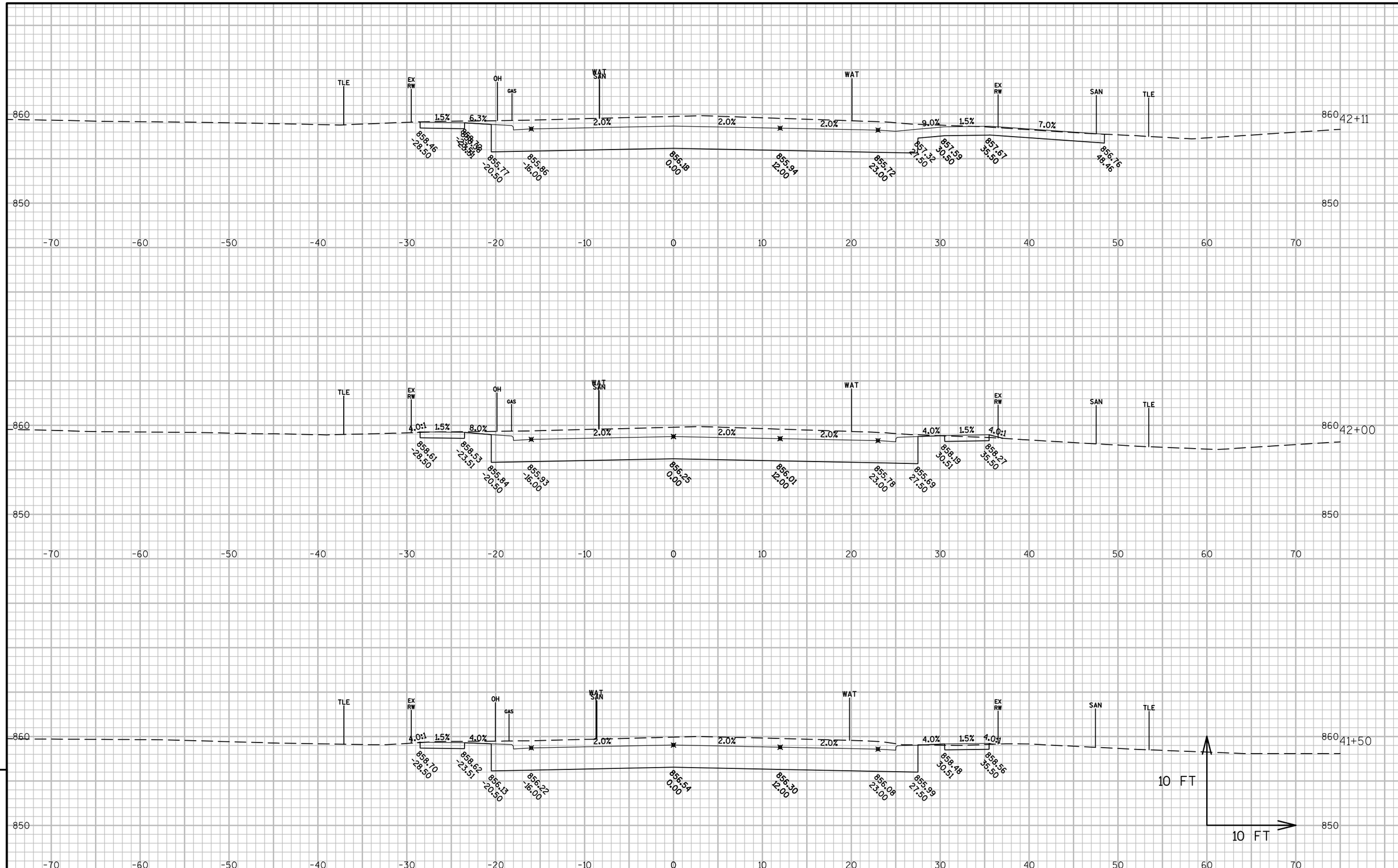

9

9

PROJECT NO:3300-01-73	HWY:STH 89	COUNTY:JEFFERSON	CROSS SECTIONS:STH 89 MAINLINE	SHEET 381	E

FILE NAME : N:\PDS\C3D\33000103\SHEETSPLAN\090201-CROSS SECTIONS\090201-XS.DWG
LAYOUT NAME - XS-(15)
PLOT DATE : 12/12/2017 3:09 PM PLOT BY : WHITE, JEREMY J PLOT NAME : PLOT SCALE : 1 IN:10 FT

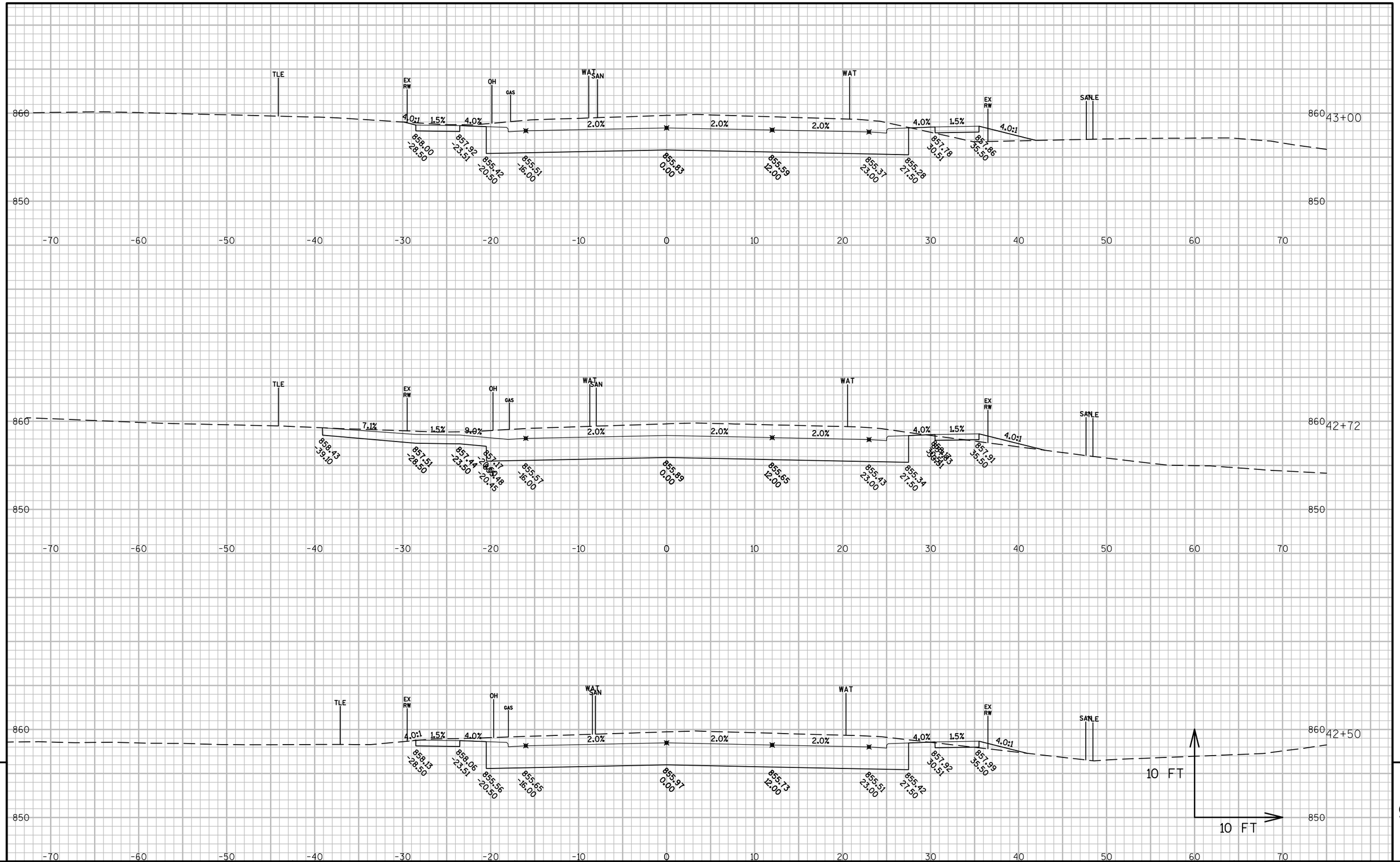

9

9

PROJECT NO:3300-01-73	HWY:STH 89	COUNTY:JEFFERSON	CROSS SECTIONS:STH 89 MAINLINE	SHEET 382	E

FILE NAME : N:\PDS\C3D\33000103\SHEETSPLAN\090201-CROSS SECTIONS\090201-XS.DWG
LAYOUT NAME - XS-(16)
PLOT DATE : 12/12/2017 3:10 PM PLOT BY : WHITE, JEREMY J PLOT NAME : PLOT SCALE : 1 IN:10 FT

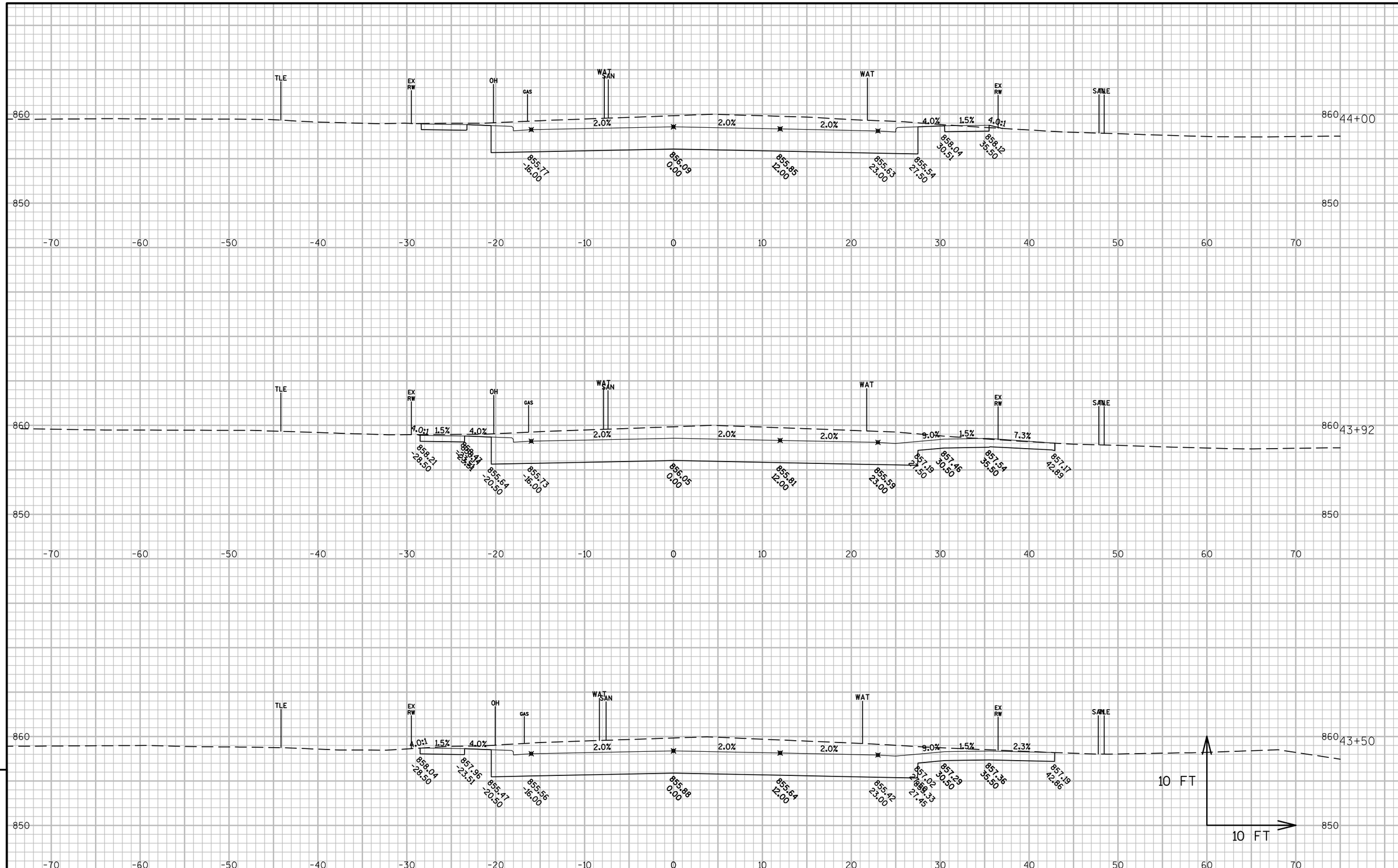

9

9

PROJECT NO:3300-01-73	HWY:STH 89	COUNTY:JEFFERSON	CROSS SECTIONS:STH 89 MAINLINE	SHEET 383	E

FILE NAME : N:\PDS\C3D\33000103\SHEETSPLAN\090201-CROSS SECTIONS\090201-XS.DWG
LAYOUT NAME - XS-(17)
PLOT DATE : 12/12/2017 3:10 PM PLOT BY : WHITE, JEREMY J PLOT NAME : PLOT SCALE : 1 IN:10 FT

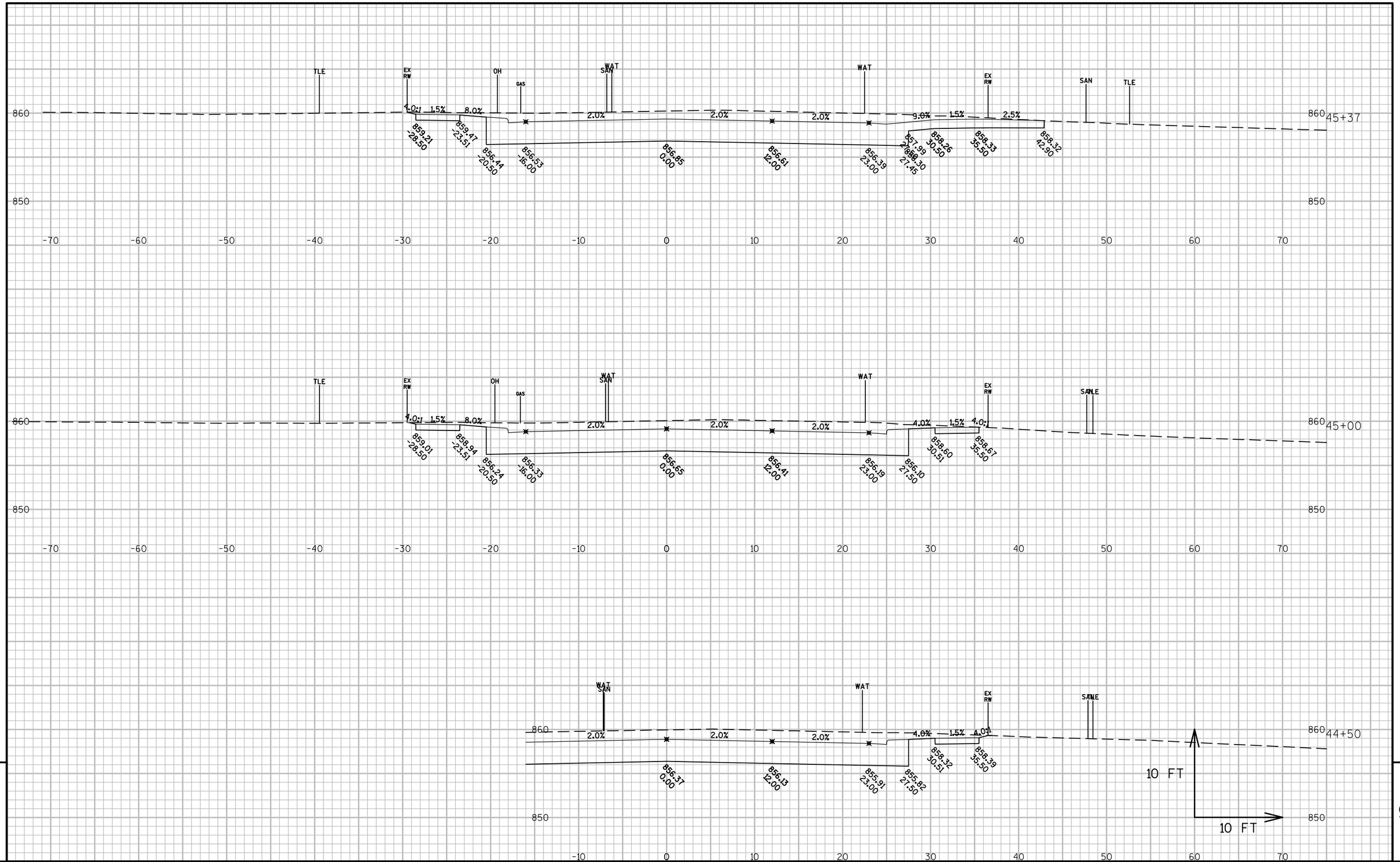

9

9

PROJECT NO:3300-01-73	HWY:STH 89	COUNTY:JEFFERSON	CROSS SECTIONS:STH 89 MAINLINE	SHEET 384	E

FILE NAME : N:\PDS\C3D\33000103\SHEETSPLAN\090201-CROSS SECTIONS\090201-XS.DWG
LAYOUT NAME - XS-(18)

PLOT DATE : 12/12/2017 3:10 PM PLOT BY : WHITE, JEREMY J PLOT NAME : PLOT SCALE : 1 IN:10 FT

WISDOT/CADDS SHEET 49

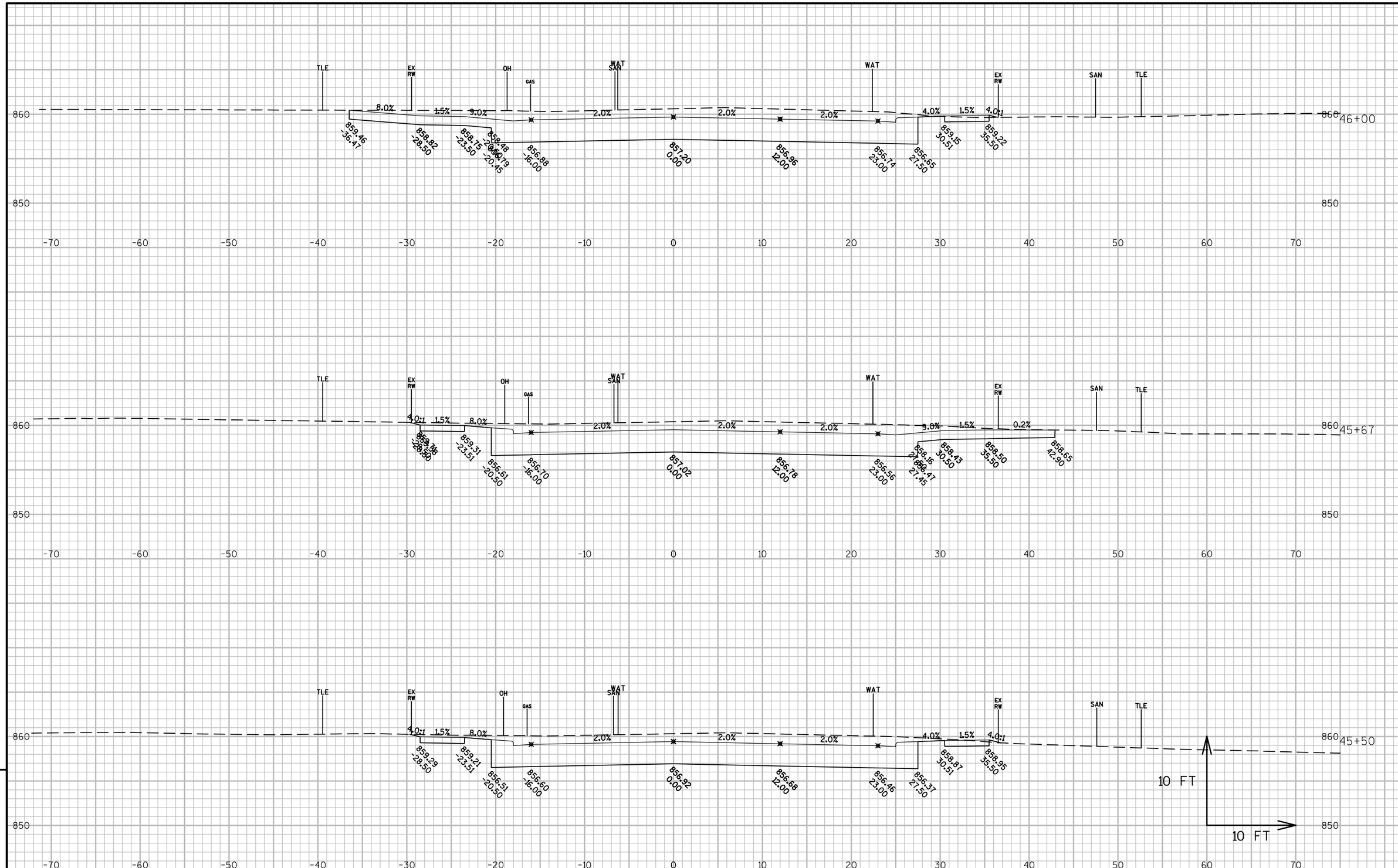

9

9

PROJECT NO:3300-01-73	HWY:STH 89	COUNTY:JEFFERSON	CROSS SECTIONS:STH 89 MAINLINE	SHEET 385	E

FILE NAME : N:\PDS\C3D\33000103\SHEETSPLAN\090201-CROSS SECTIONS\090201-XS.DWG
LAYOUT NAME - XS-(19)
PLOT DATE : 12/12/2017 3:11 PM PLOT BY : WHITE, JEREMY J PLOT NAME : PLOT SCALE : 1 IN:10 FT

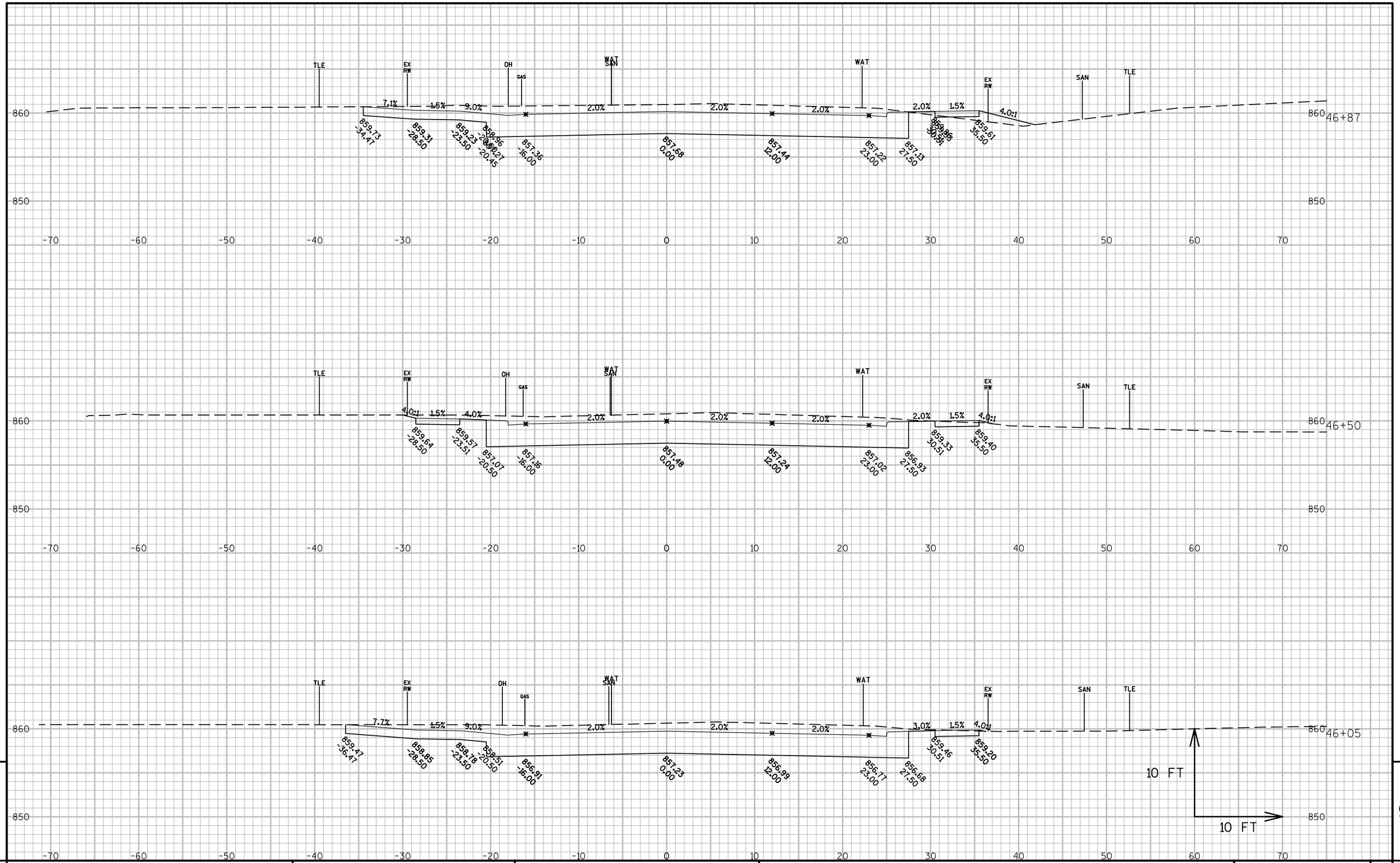

9

9

PROJECT NO:3300-01-73	HWY:STH 89	COUNTY:JEFFERSON	CROSS SECTIONS:STH 89 MAINLINE	SHEET 386	E

FILE NAME : N:\PDS\C3D\33000103\SHEETSPLAN\090201-CROSS SECTIONS\090201-XS.DWG
LAYOUT NAME - XS-(20)
PLOT DATE : 12/12/2017 3:11 PM PLOT BY : WHITE, JEREMY J PLOT NAME : PLOT SCALE : 1 IN:10 FT

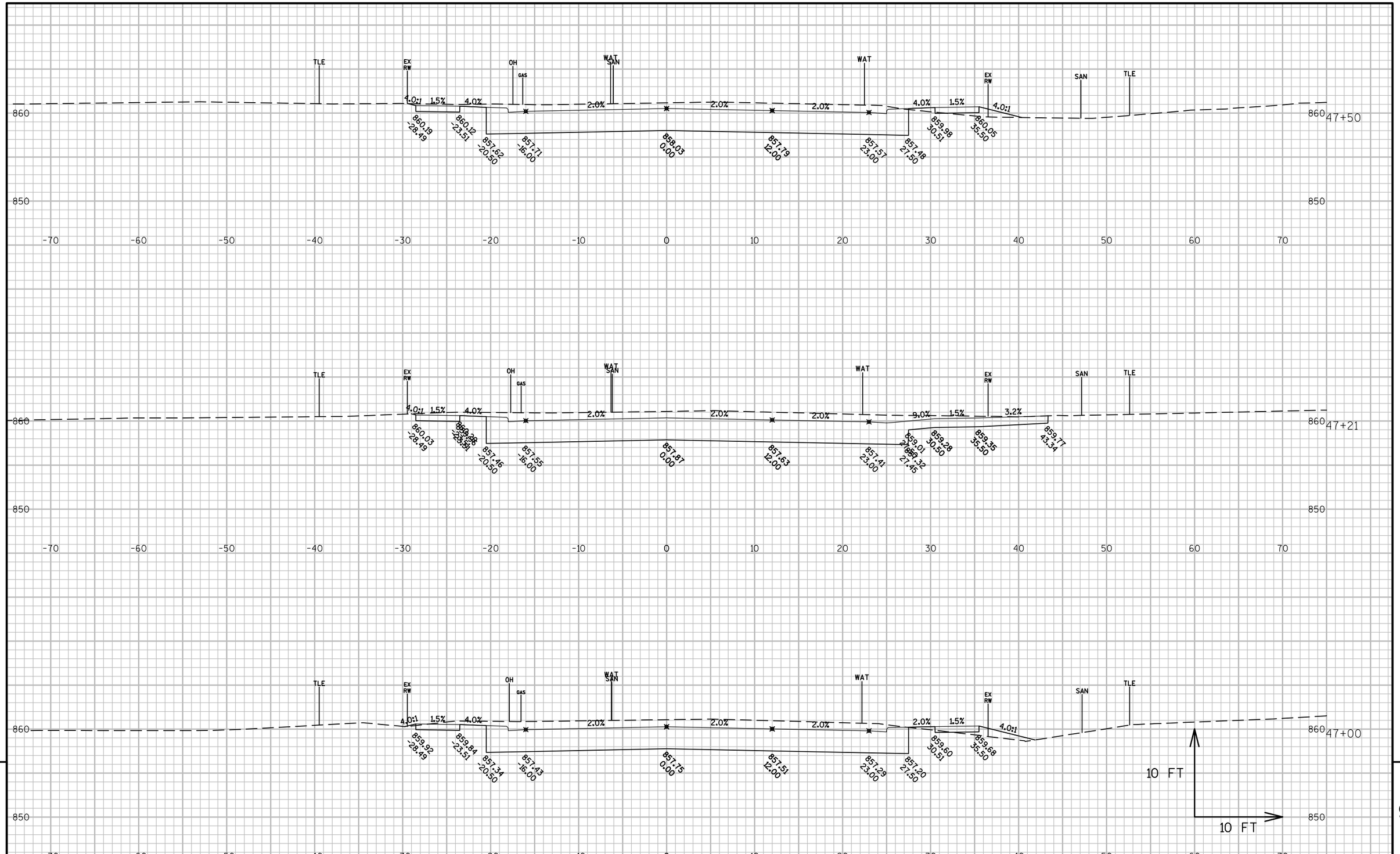

9

9

PROJECT NO:3300-01-73	HWY:STH 89	COUNTY:JEFFERSON	CROSS SECTIONS:STH 89 MAINLINE	SHEET 387	E

FILE NAME : N:\PDS\C3D\33000103\SHEETSPLAN\090201-CROSS SECTIONS\090201-XS.DWG
LAYOUT NAME - XS-(21)
PLOT DATE : 12/12/2017 3:11 PM PLOT BY : WHITE, JEREMY J PLOT NAME : PLOT SCALE : 1 IN:10 FT

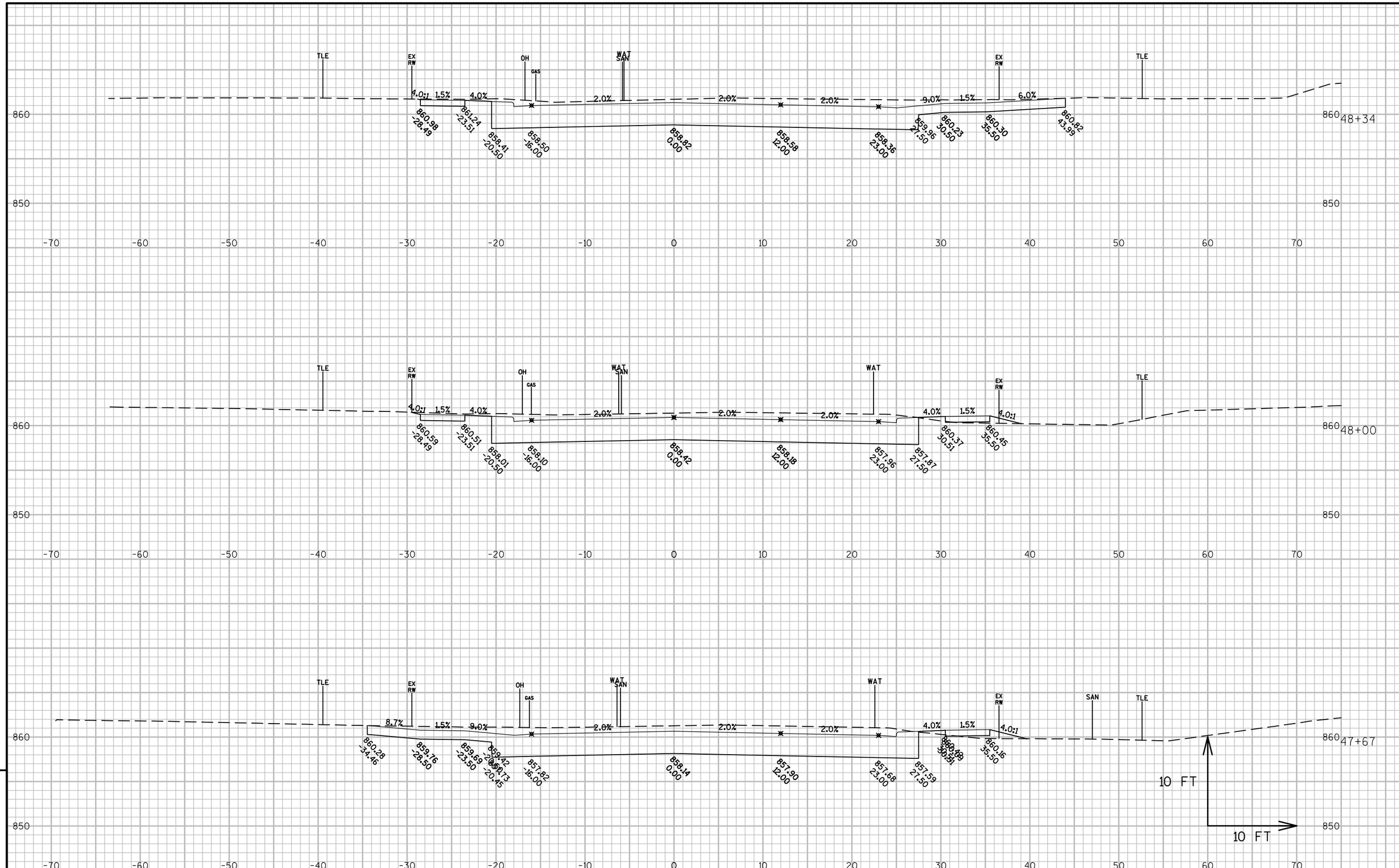

PROJECT NO:3300-01-73	HWY:STH 89	COUNTY:JEFFERSON	CROSS SECTIONS:STH 89 MAINLINE	SHEET 388	E

FILE NAME : N:\PDS\C3D\33000103\SHEETSPLAN\090201-CROSS SECTIONS\090201-XS.DWG
LAYOUT NAME - XS-(22)
PLOT DATE : 12/12/2017 3:11 PM PLOT BY : WHITE, JEREMY J PLOT NAME : PLOT SCALE : 1 IN:10 FT

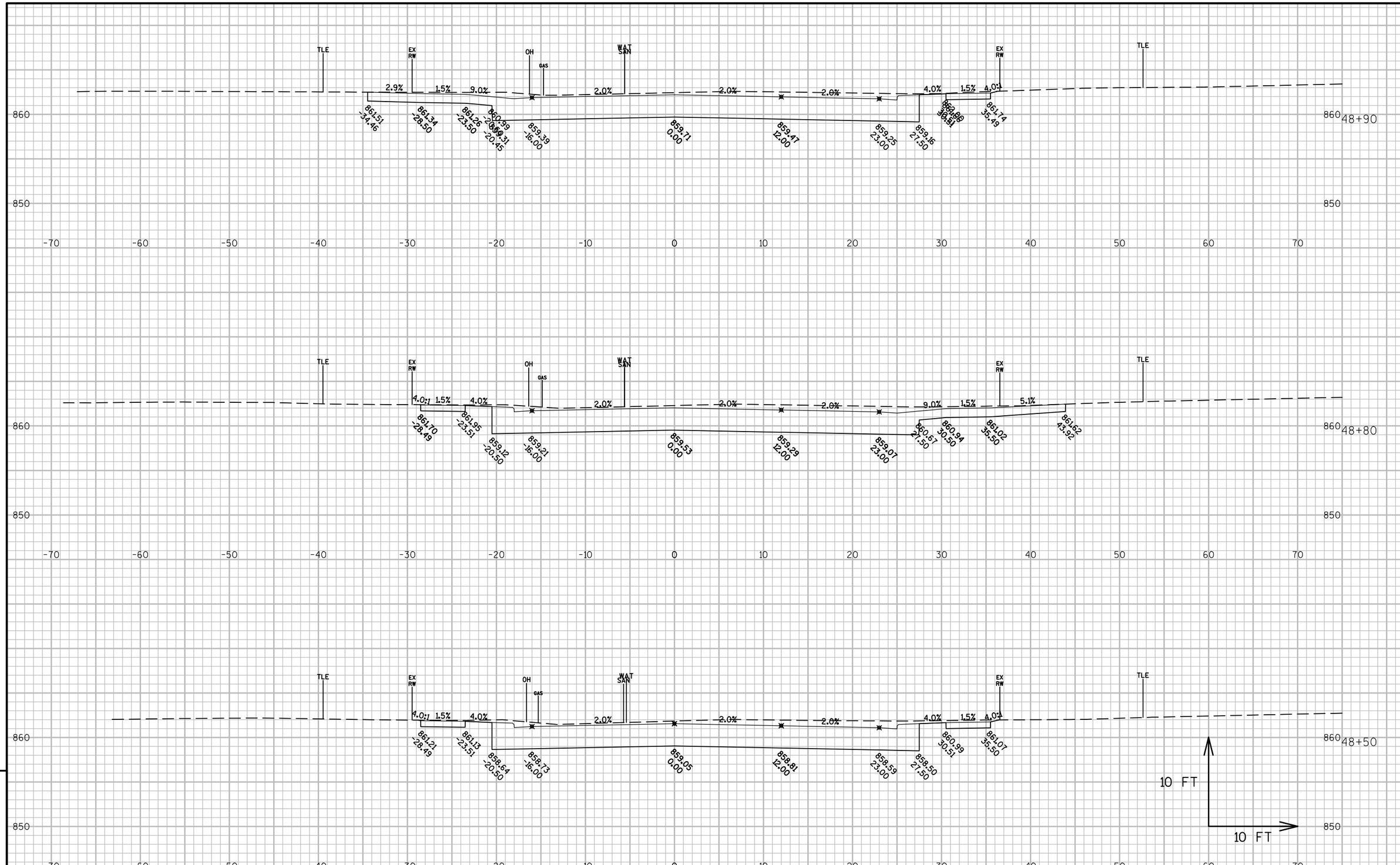

9

9

PROJECT NO:3300-01-73	HWY:STH 89	COUNTY:JEFFERSON	CROSS SECTIONS:STH 89 MAINLINE	SHEET 389	E

FILE NAME : N:\PDS\C3D\33000103\SHEETSPLAN\090201-CROSS SECTIONS\090201-XS.DWG
LAYOUT NAME - XS-(23)
PLOT DATE : 12/12/2017 3:12 PM PLOT BY : WHITE, JEREMY J PLOT NAME : PLOT SCALE : 1 IN:10 FT

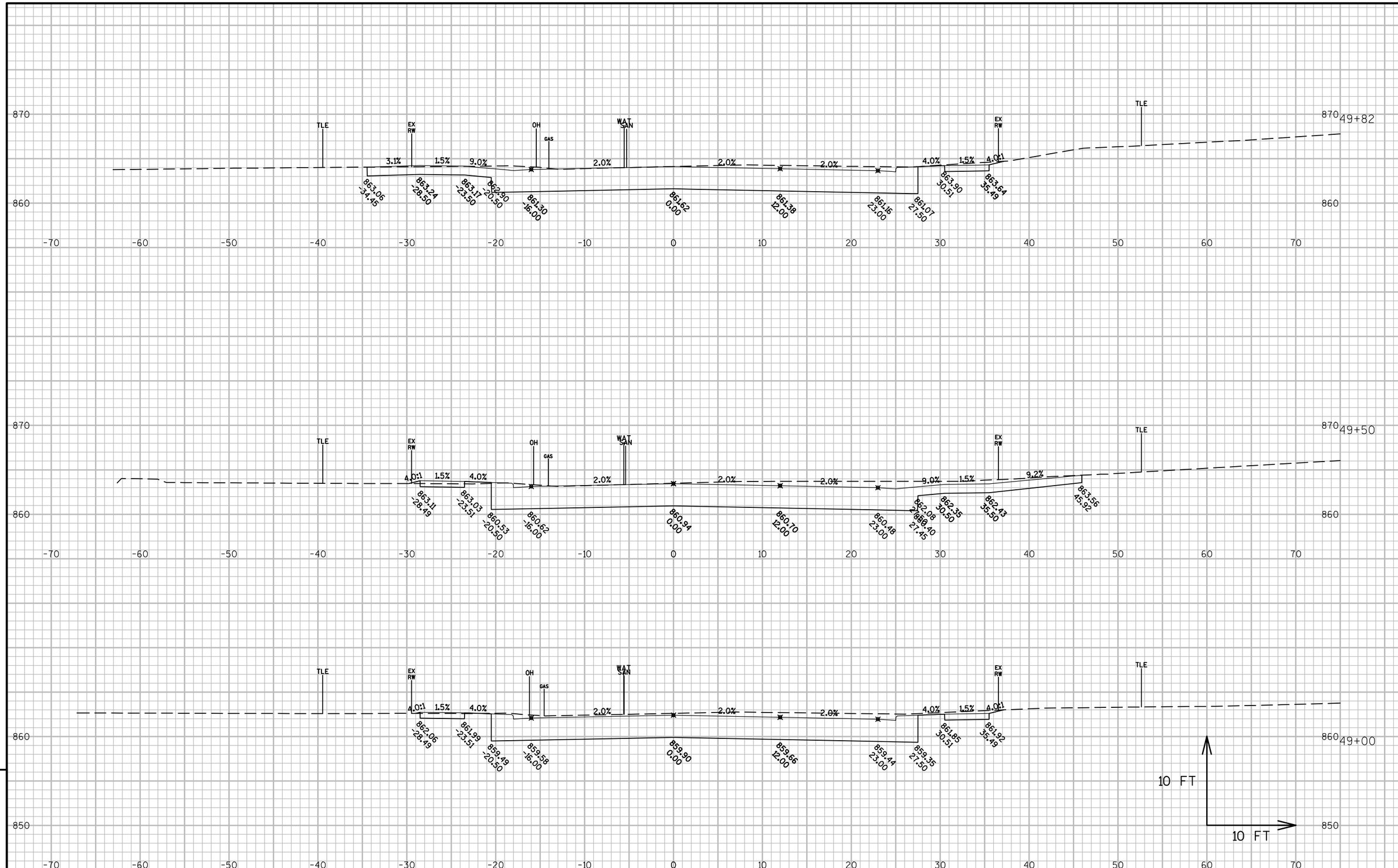

9

9

PROJECT NO:3300-01-73	HWY:STH 89	COUNTY:JEFFERSON	CROSS SECTIONS:STH 89 MAINLINE	SHEET 390	E

FILE NAME : N:\PDS\C3D\33000103\SHEETSPLAN\090201-CROSS SECTIONS\090201-XS.DWG
LAYOUT NAME - XS-(24)
PLOT DATE : 12/12/2017 3:12 PM PLOT BY : WHITE, JEREMY J PLOT NAME : PLOT SCALE : 1 IN:10 FT

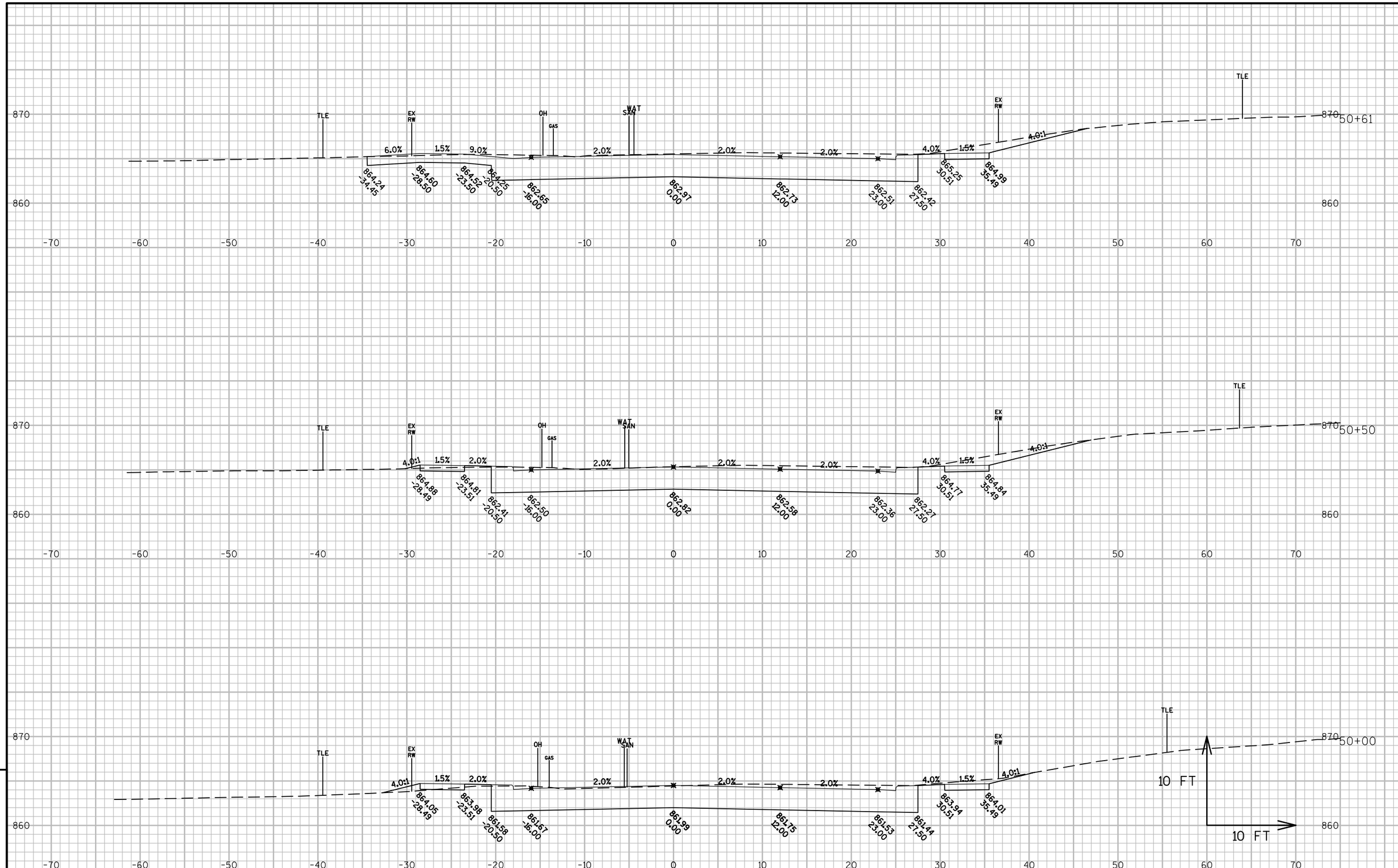

9

9

PROJECT NO:3300-01-73	HWY:STH 89	COUNTY:JEFFERSON	CROSS SECTIONS:STH 89 MAINLINE	SHEET 391	E

FILE NAME : N:\PDS\C3D\33000103\SHEETSPLAN\090201-CROSS SECTIONS\090201-XS.DWG
LAYOUT NAME - XS-(25)
PLOT DATE : 12/12/2017 3:12 PM PLOT BY : WHITE, JEREMY J PLOT NAME : PLOT SCALE : 1 IN:10 FT

WISDOT/CADDS SHEET 49

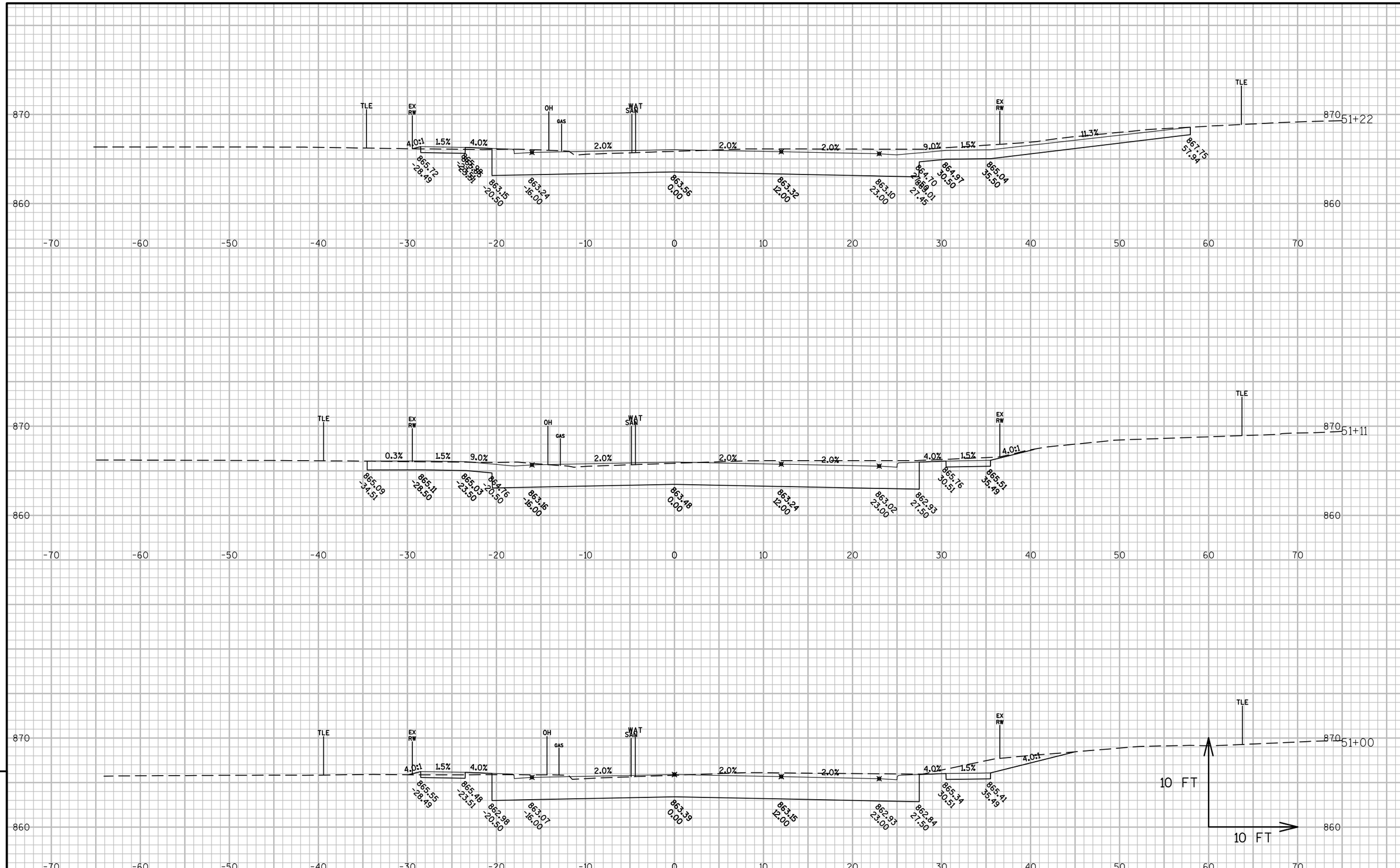

9

9

PROJECT NO:3300-01-73	HWY:STH 89	COUNTY:JEFFERSON	CROSS SECTIONS:STH 89 MAINLINE	SHEET 392	E

FILE NAME : N:\PDS\C3D\33000103\SHEETSPLAN\090201-CROSS SECTIONS\090201-XS.DWG
LAYOUT NAME - XS-(26)
PLOT DATE : 12/12/2017 3:13 PM PLOT BY : WHITE, JEREMY J PLOT NAME : PLOT SCALE : 1 IN:10 FT

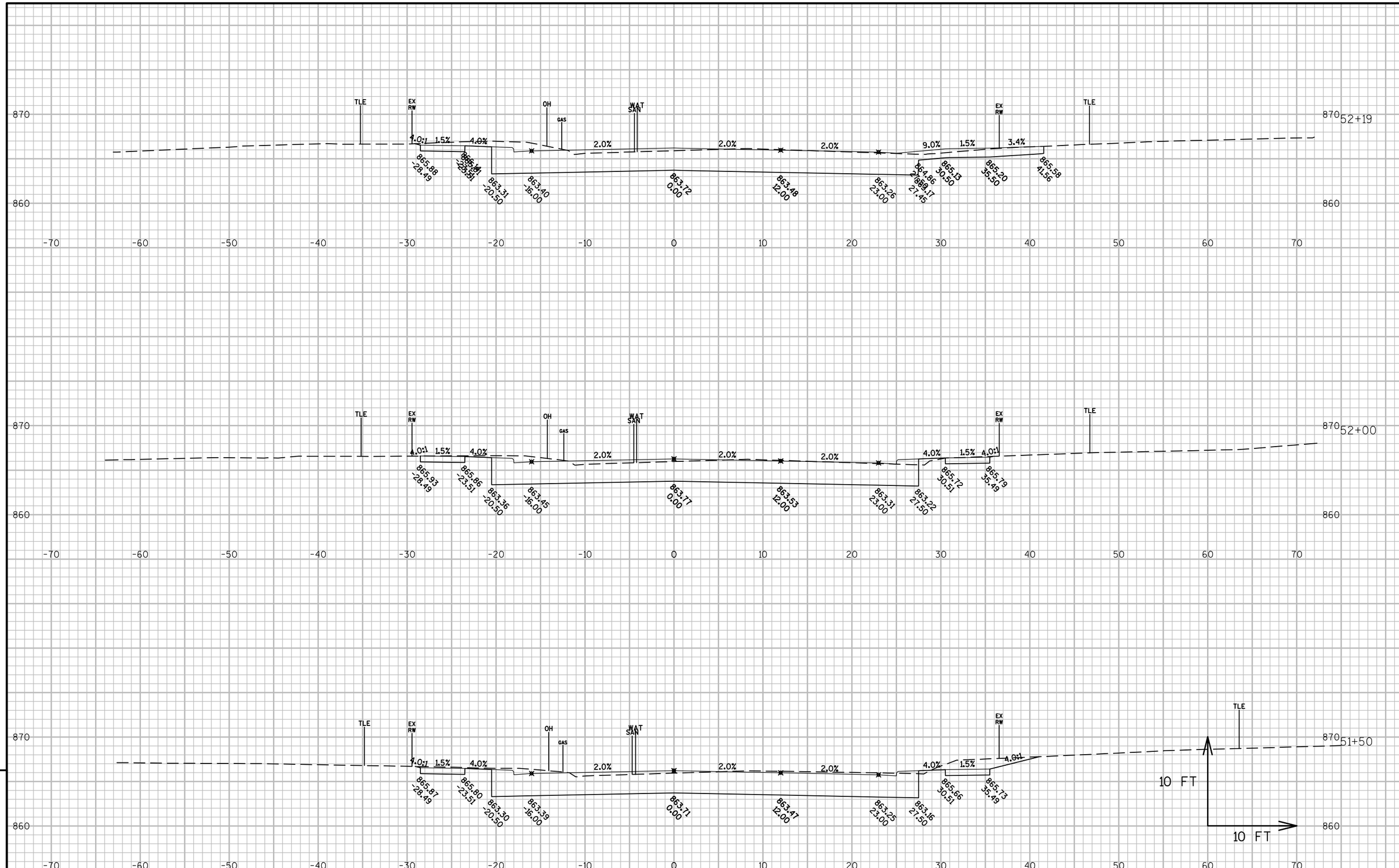

9

9

PROJECT NO:3300-01-73	HWY:STH 89	COUNTY:JEFFERSON	CROSS SECTIONS:STH 89 MAINLINE	SHEET 393	E

FILE NAME : N:\PDS\C3D\33000103\SHEETSPLAN\090201-CROSS SECTIONS\090201-XS.DWG
LAYOUT NAME - XS-(27)

PLOT DATE : 12/12/2017 3:13 PM PLOT BY : WHITE, JEREMY J PLOT NAME : PLOT SCALE : 1 IN:10 FT

WISDOT/CADDS SHEET 49

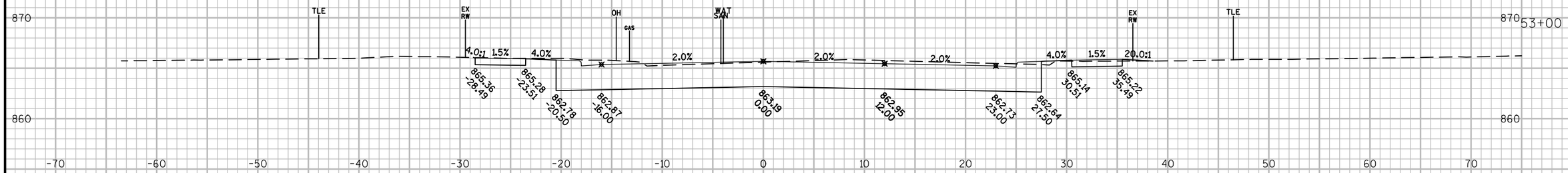

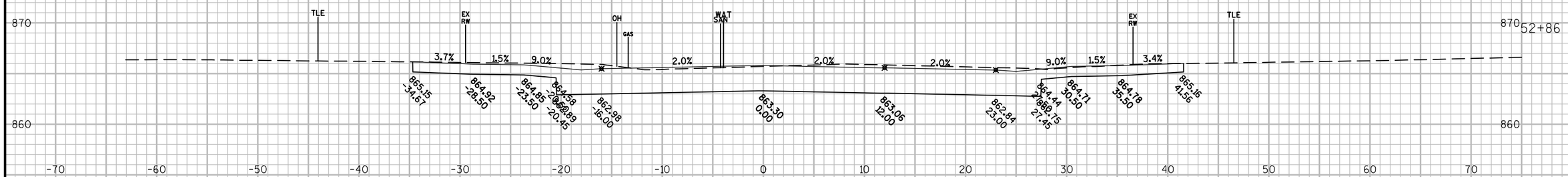

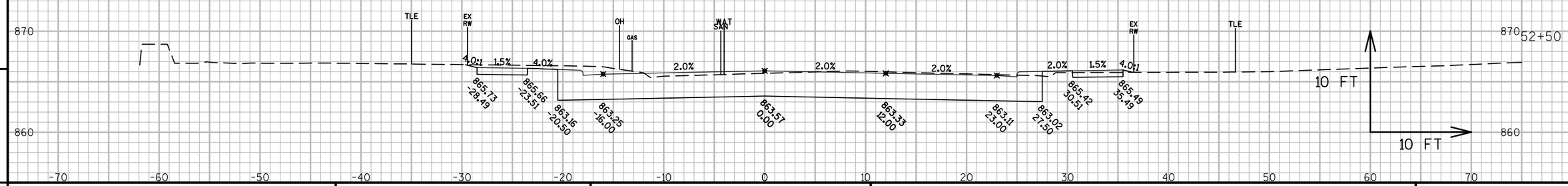

9

9

PROJECT NO:3300-01-73	HWY:STH 89	COUNTY:JEFFERSON	CROSS SECTIONS:STH 89 MAINLINE	SHEET 394	E

FILE NAME : N:\PDS\C3D\33000103\SHEETSPLAN\090201-CROSS SECTIONS\090201-XS.DWG
LAYOUT NAME - XS-(28)
PLOT DATE : 12/12/2017 3:13 PM PLOT BY : WHITE, JEREMY J PLOT NAME : PLOT SCALE : 1 IN:10 FT

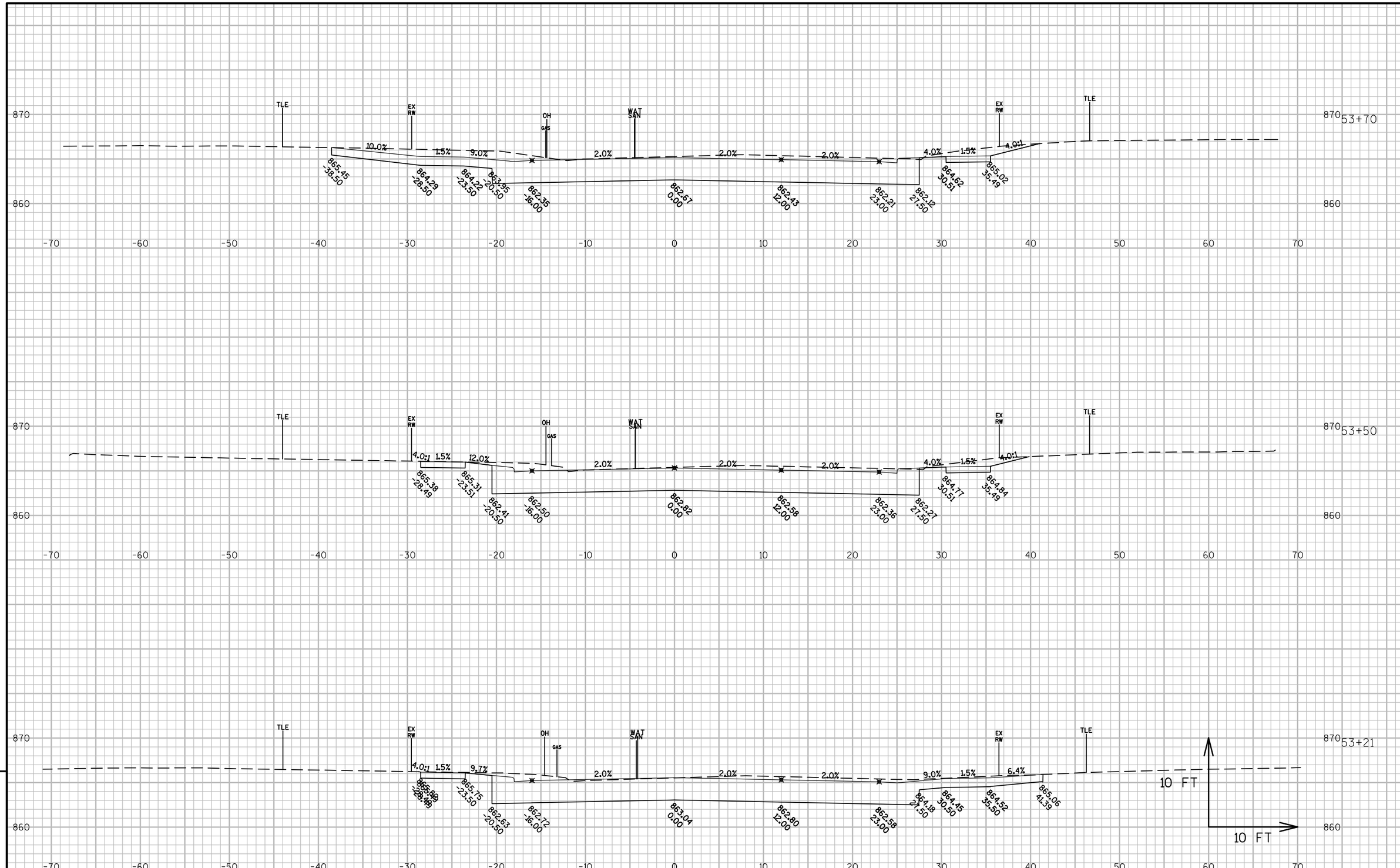

9

9

PROJECT NO:3300-01-73	HWY:STH 89	COUNTY:JEFFERSON	CROSS SECTIONS:STH 89 MAINLINE	SHEET 395	E

FILE NAME : N:\PDS\C3D\33000103\SHEETSPLAN\090201-CROSS SECTIONS\090201-XS.DWG
LAYOUT NAME - XS-(29)

PLOT DATE : 12/12/2017 3:14 PM PLOT BY : WHITE, JEREMY J PLOT NAME : PLOT SCALE : 1 IN:10 FT

WISDOT/CADDS SHEET 49

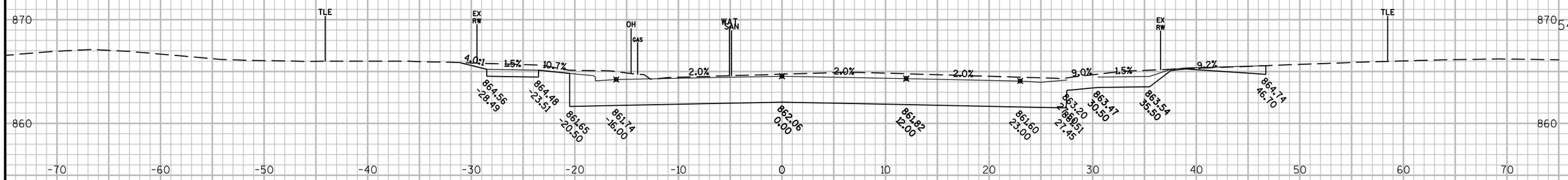

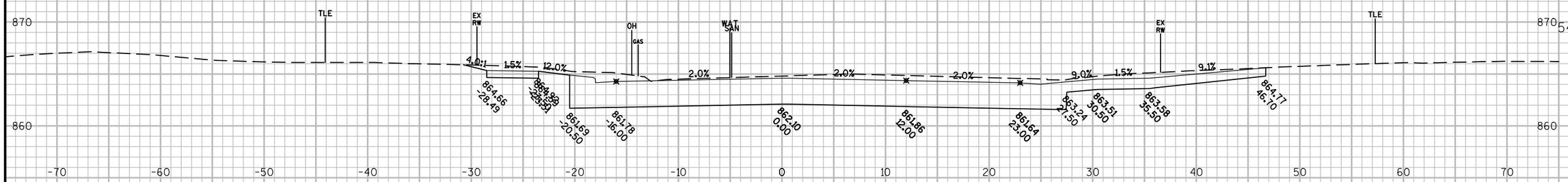

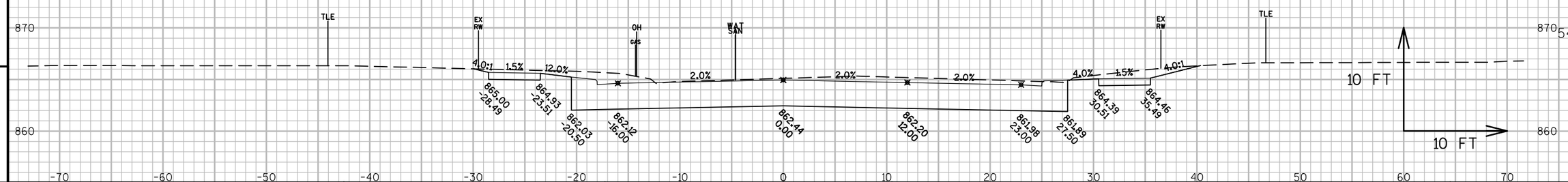

9

9

PROJECT NO:3300-01-73	HWY:STH 89	COUNTY:JEFFERSON	CROSS SECTIONS:STH 89 MAINLINE	SHEET 396	E

FILE NAME : N:\PDS\C3D\33000103\SHEETSPLAN\090201-CROSS SECTIONS\090201-XS.DWG
LAYOUT NAME - XS-(30)
PLOT DATE : 12/12/2017 3:14 PM PLOT BY : WHITE, JEREMY J PLOT NAME : PLOT SCALE : 1 IN:10 FT

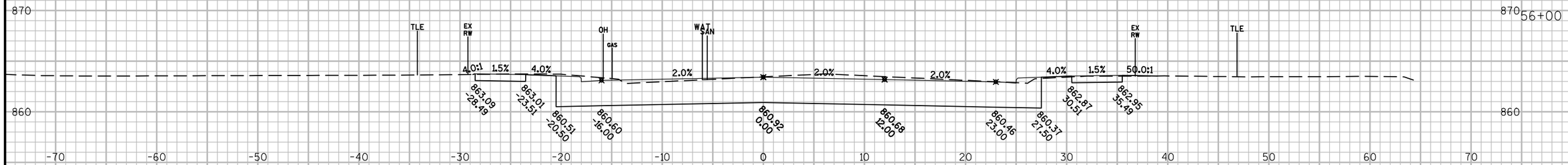

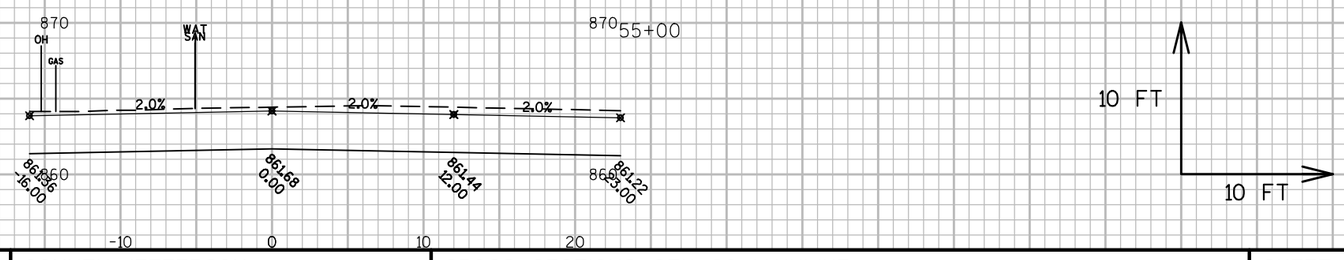

9

9

PROJECT NO:3300-01-73	HWY:STH 89	COUNTY:JEFFERSON	CROSS SECTIONS:STH 89 MAINLINE	SHEET 397	E

FILE NAME : N:\PDS\C3D\33000103\SHEETSPLAN\090201-CROSS SECTIONS\090201-XS.DWG
LAYOUT NAME - XS-(31)
PLOT DATE : 12/12/2017 3:14 PM PLOT BY : WHITE, JEREMY J PLOT NAME : PLOT SCALE : 1 IN:10 FT

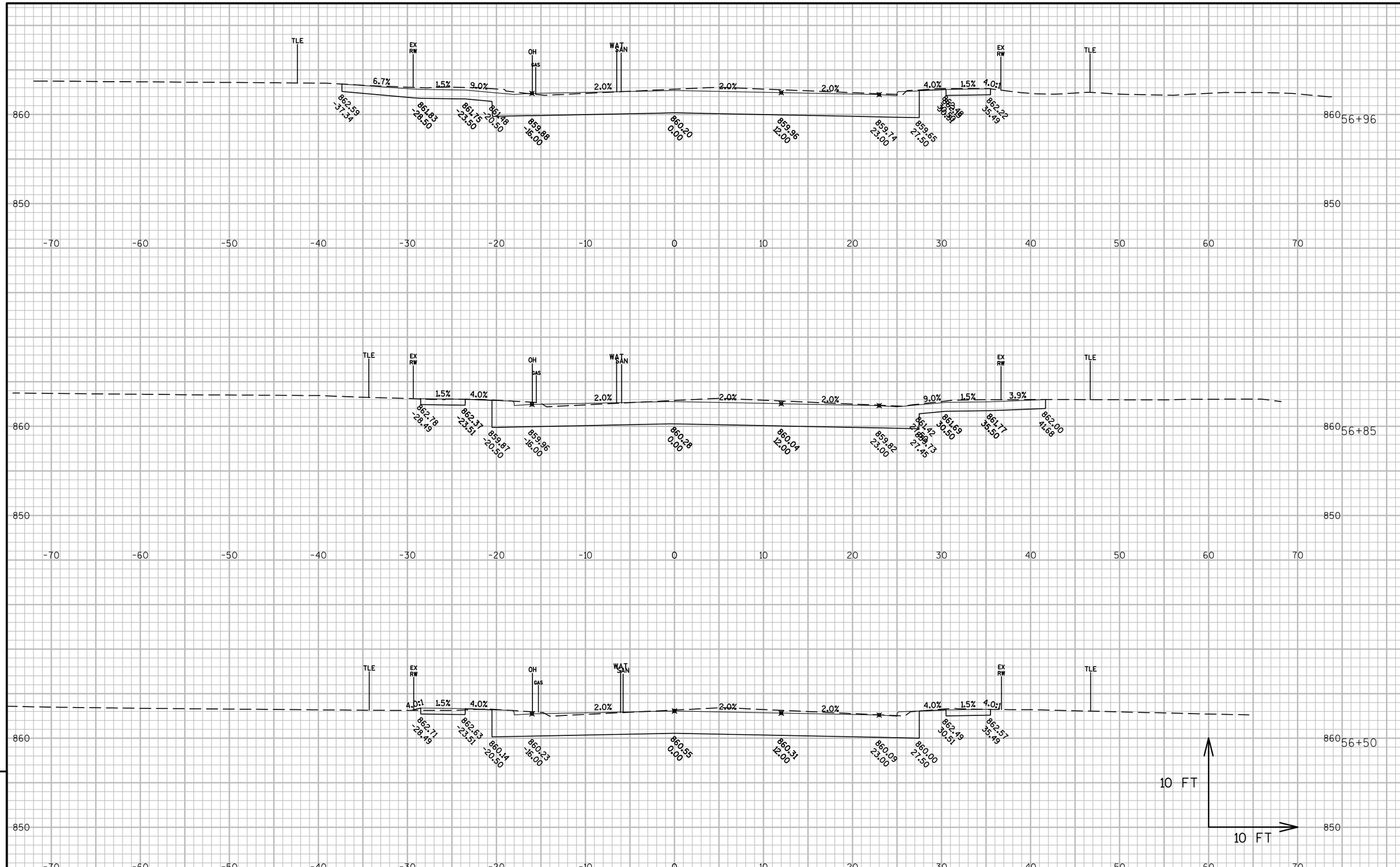

PROJECT NO:3300-01-73	HWY:STH 89	COUNTY:JEFFERSON	CROSS SECTIONS:STH 89 MAINLINE	SHEET 398	E

FILE NAME : N:\PDS\C3D\33000103\SHEETSPLAN\090201-CROSS SECTIONS\090201-XS.DWG
LAYOUT NAME - XS-(32)
PLOT DATE : 12/12/2017 3:14 PM PLOT BY : WHITE, JEREMY J PLOT NAME : PLOT SCALE : 1 IN:10 FT

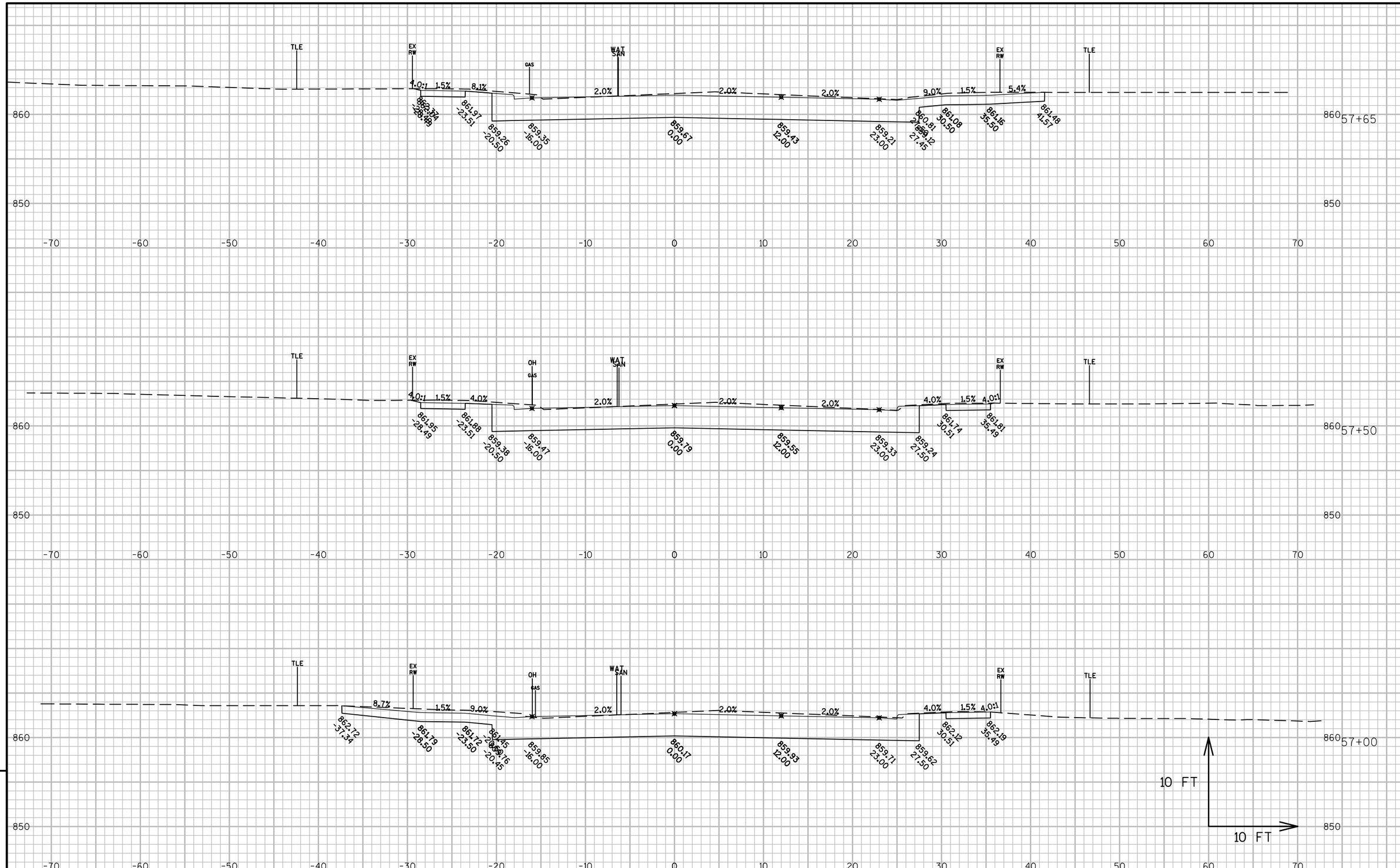

9

9

PROJECT NO:3300-01-73	HWY:STH 89	COUNTY:JEFFERSON	CROSS SECTIONS:STH 89 MAINLINE	SHEET 399	E

FILE NAME : N:\PDS\C3D\33000103\SHEETSPLAN\090201-CROSS SECTIONS\090201-XS.DWG
LAYOUT NAME - XS-(33)
PLOT DATE : 12/12/2017 3:15 PM PLOT BY : WHITE, JEREMY J PLOT NAME : PLOT SCALE : 1 IN:10 FT

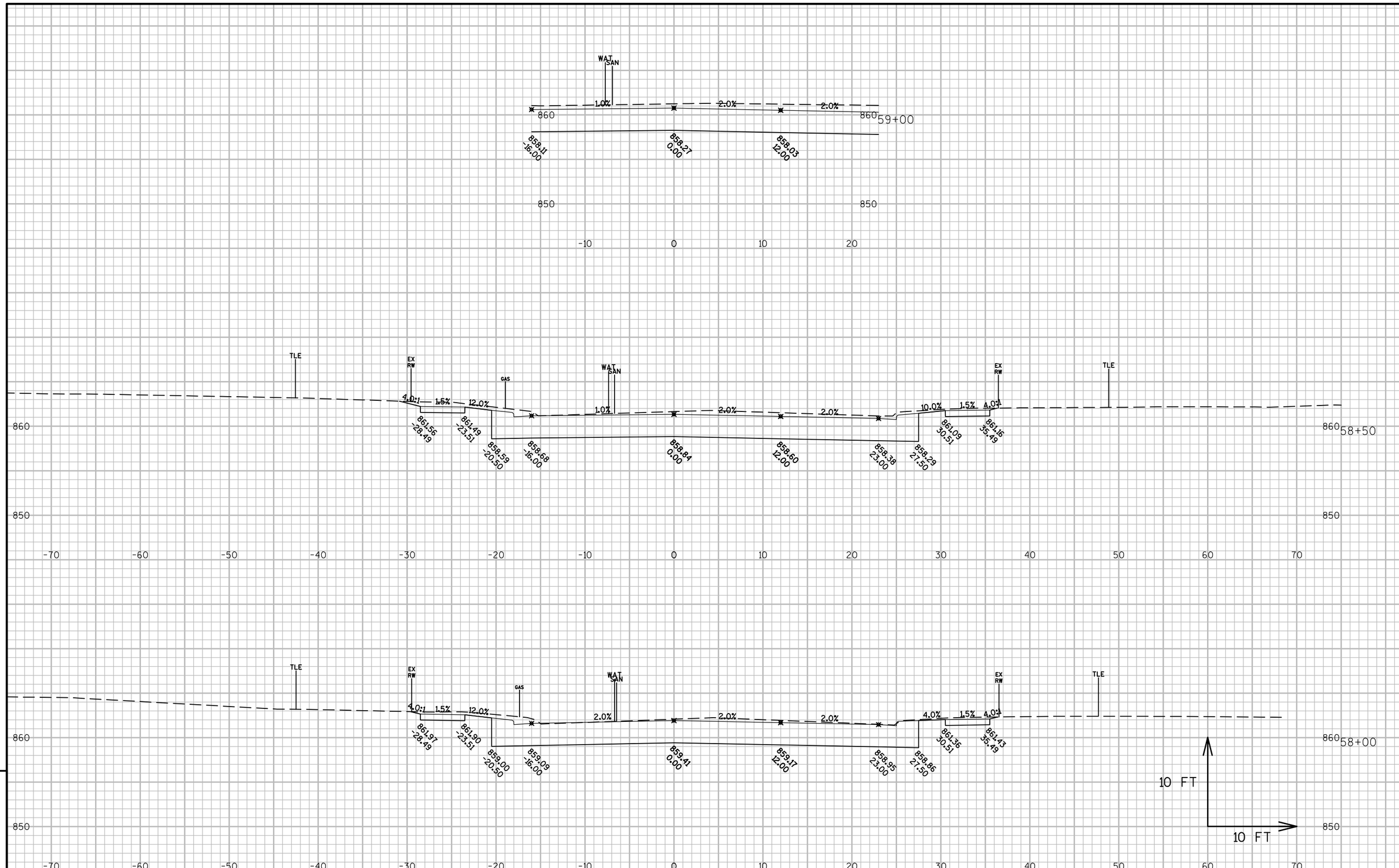

9

9

PROJECT NO:3300-01-73	HWY:STH 89	COUNTY:JEFFERSON	CROSS SECTIONS:STH 89 MAINLINE	SHEET 400	E

FILE NAME : N:\PDS\C3D\33000103\SHEETSPLAN\090201-CROSS SECTIONS\090201-XS.DWG
LAYOUT NAME - XS-(34)
PLOT DATE : 12/12/2017 3:15 PM PLOT BY : WHITE, JEREMY J PLOT NAME : PLOT SCALE : 1 IN:10 FT

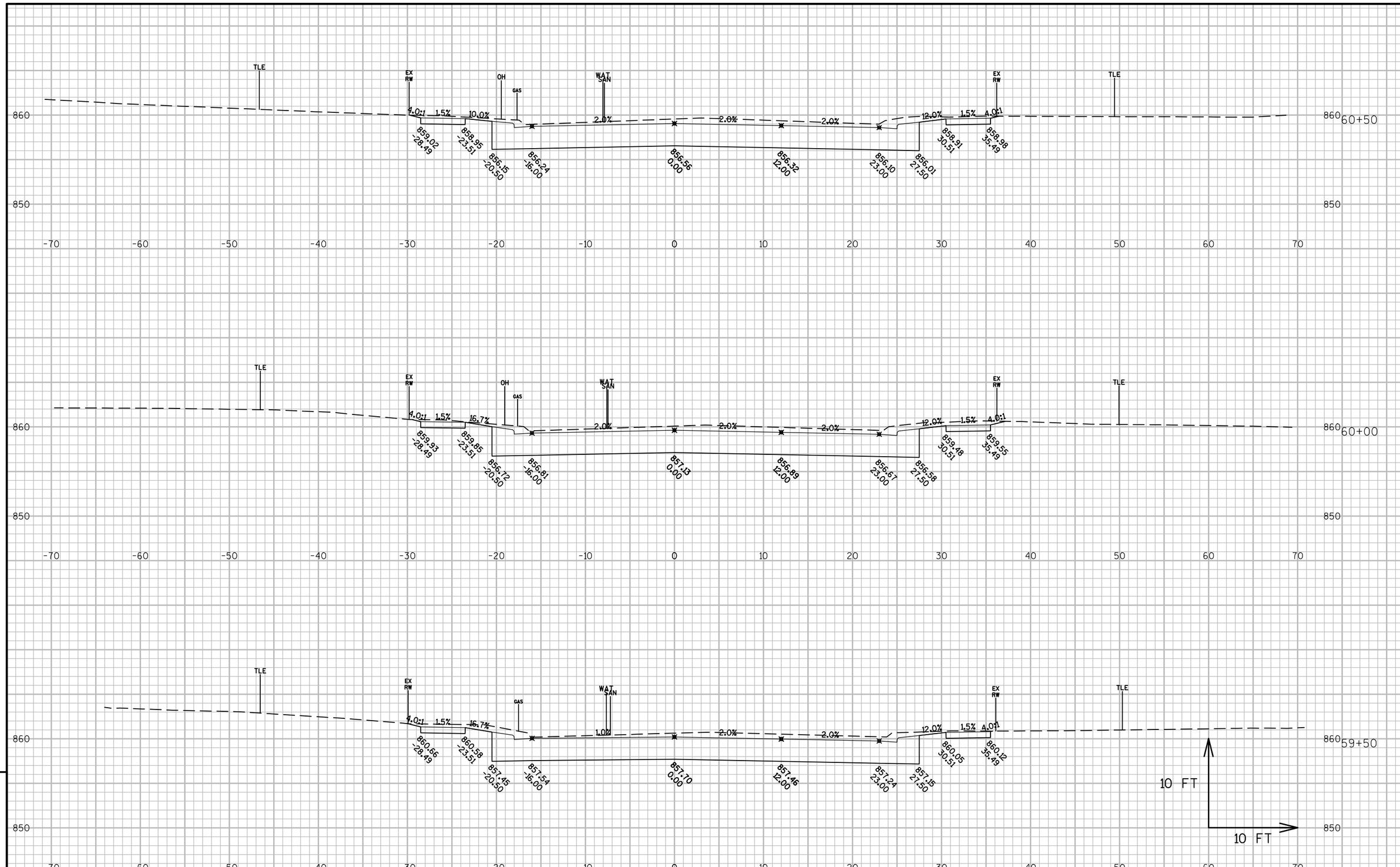

9

9

PROJECT NO:3300-01-73	HWY:STH 89	COUNTY:JEFFERSON	CROSS SECTIONS:STH 89 MAINLINE	SHEET 401	E

FILE NAME : N:\PDS\C3D\33000103\SHEETSPLAN\090201-CROSS SECTIONS\090201-XS.DWG
LAYOUT NAME - XS-(35)

PLOT DATE : 12/12/2017 3:15 PM PLOT BY : WHITE, JEREMY J PLOT NAME : PLOT SCALE : 1 IN:10 FT

WISDOT/CADDS SHEET 49

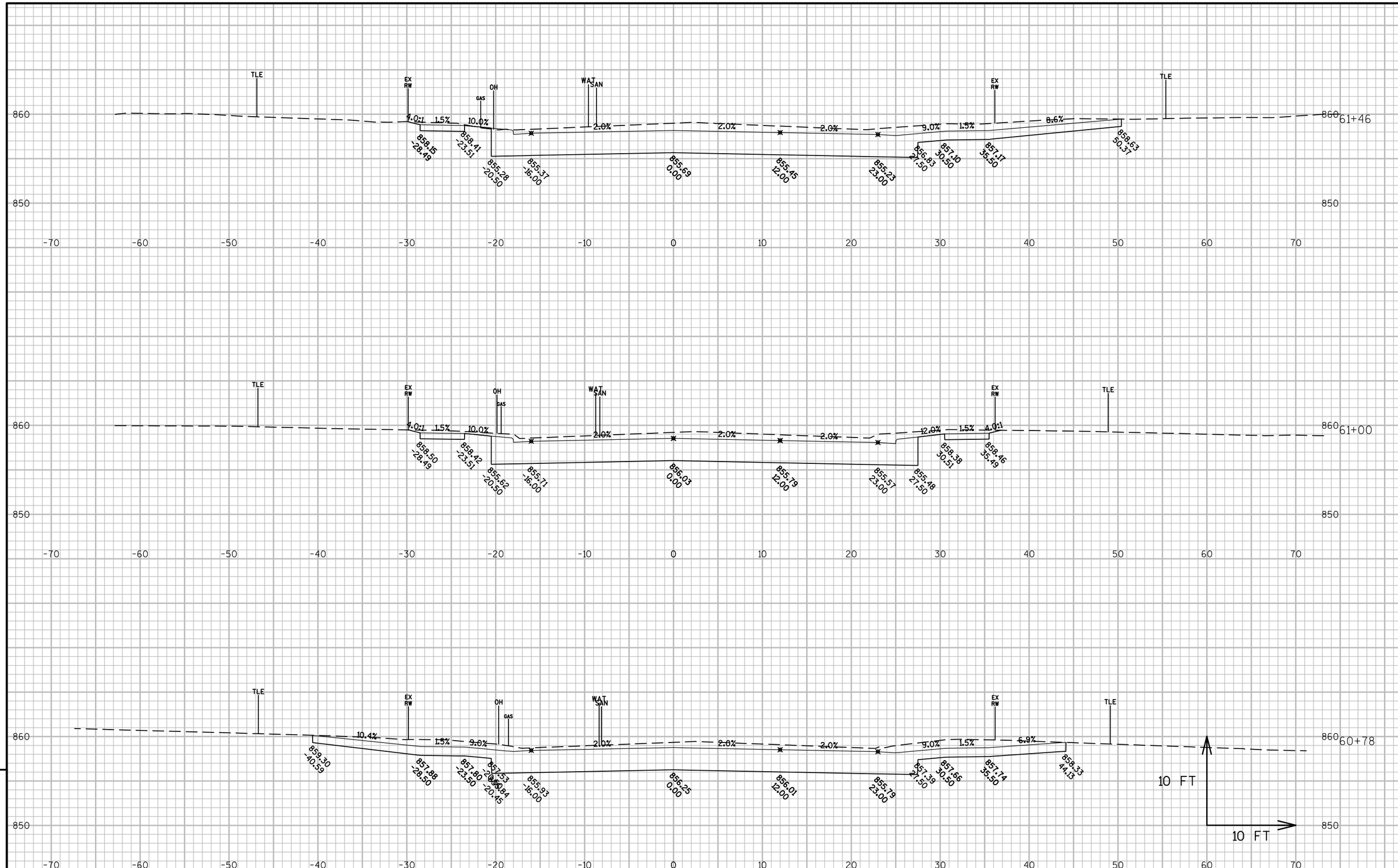

9

9

PROJECT NO:3300-01-73	HWY:STH 89	COUNTY:JEFFERSON	CROSS SECTIONS:STH 89 MAINLINE	SHEET 402	E

FILE NAME : N:\PDS\C3D\33000103\SHEETSPLAN\090201-CROSS SECTIONS\090201-XS.DWG
LAYOUT NAME - XS-(36)
PLOT DATE : 12/12/2017 3:16 PM PLOT BY : WHITE, JEREMY J PLOT NAME : PLOT SCALE : 1 IN:10 FT

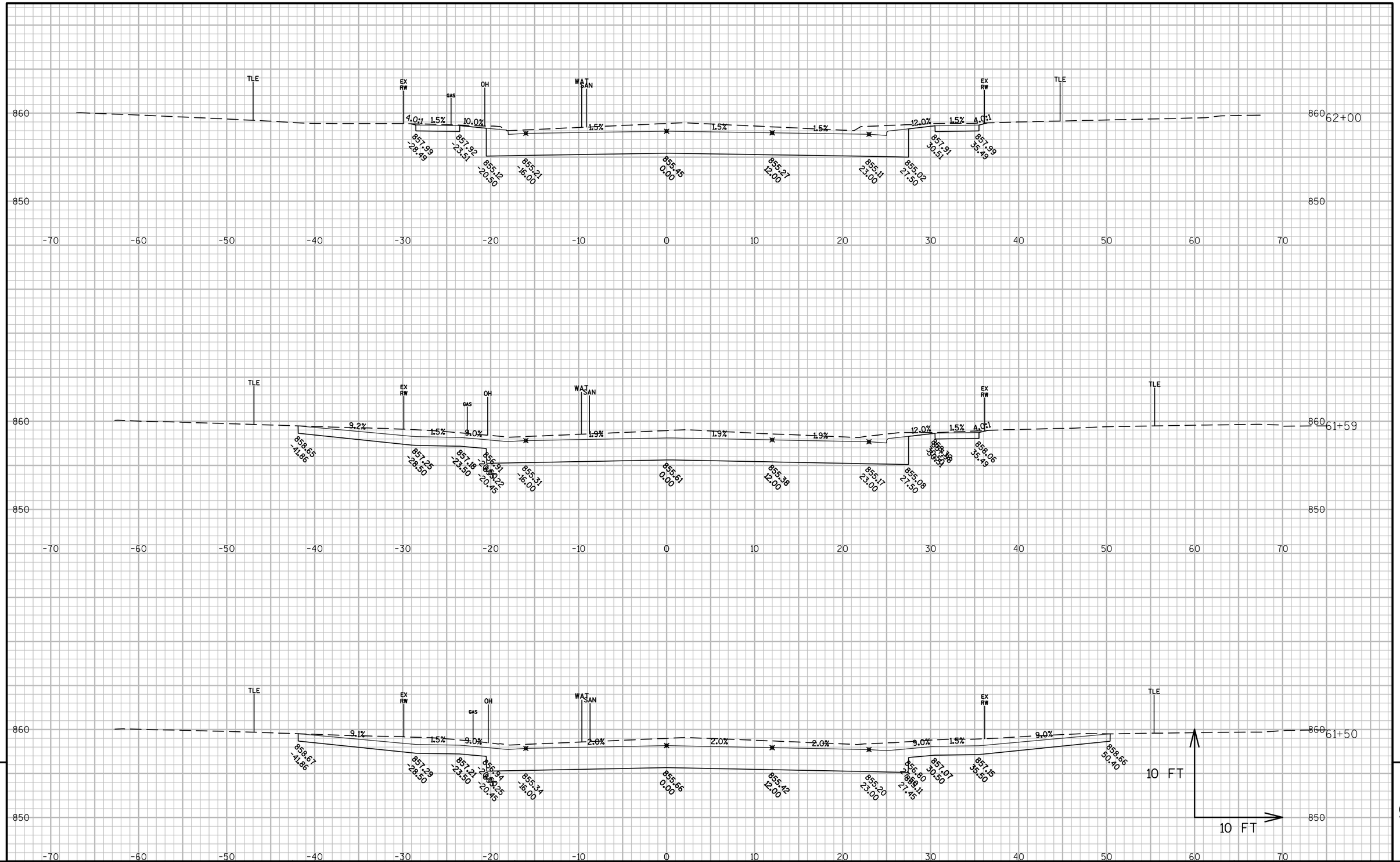

9

9

PROJECT NO:3300-01-73	HWY:STH 89	COUNTY:JEFFERSON	CROSS SECTIONS:STH 89 MAINLINE	SHEET 403	E

FILE NAME : N:\PDS\C3D\33000103\SHEETSPLAN\090201-CROSS SECTIONS\090201-XS.DWG
LAYOUT NAME - XS-(37)

PLOT DATE : 12/12/2017 3:16 PM PLOT BY : WHITE, JEREMY J PLOT NAME : PLOT SCALE : 1 IN:10 FT

WISDOT/CADDS SHEET 49

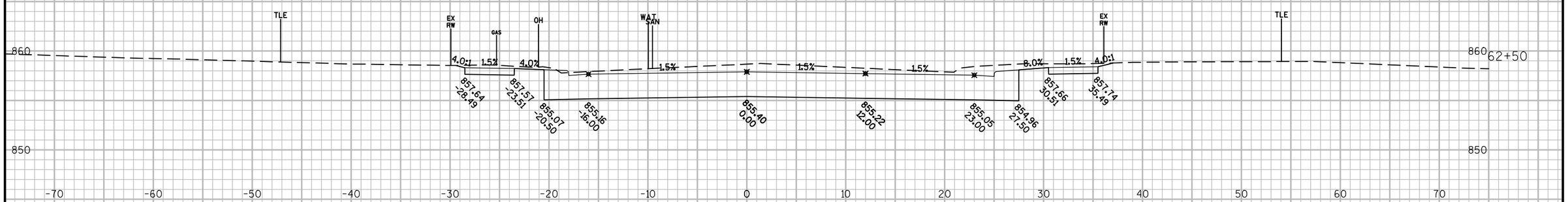

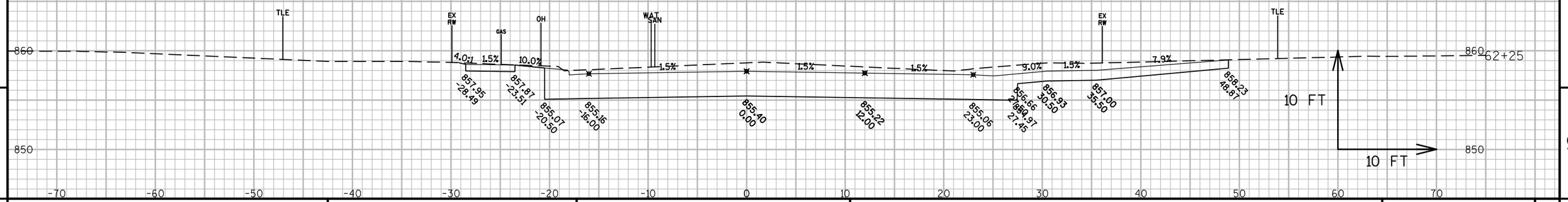

9

9

PROJECT NO:3300-01-73	HWY:STH 89	COUNTY:JEFFERSON	CROSS SECTIONS:STH 89 MAINLINE	SHEET 404	E

FILE NAME : N:\PDS\C3D\33000103\SHEETSPLAN\090201-CROSS SECTIONS\090201-XS.DWG
LAYOUT NAME - XS-(38)

PLOT DATE : 12/12/2017 3:16 PM PLOT BY : WHITE, JEREMY J PLOT NAME : PLOT SCALE : 1 IN:10 FT

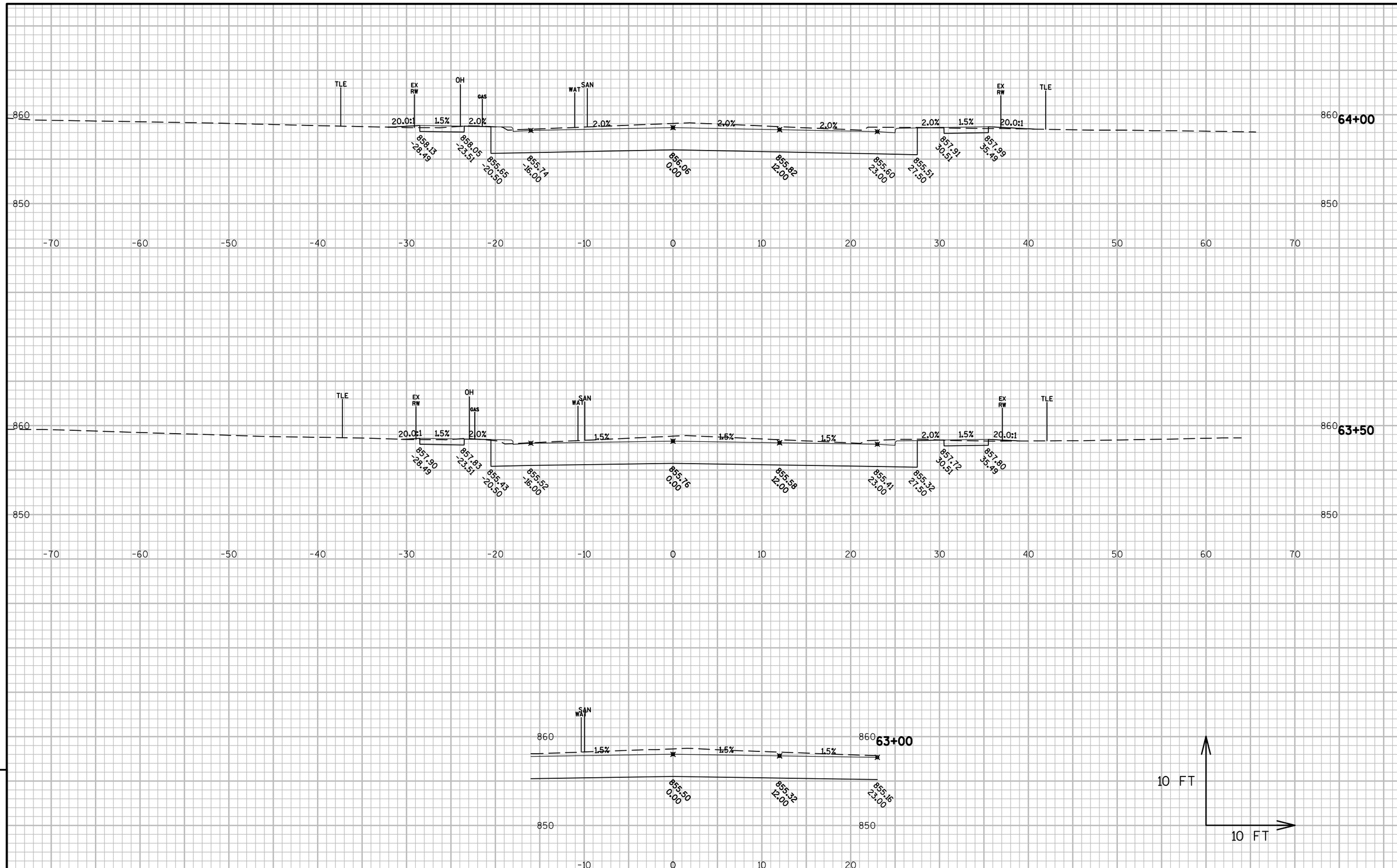

9

9

PROJECT NO:3300-01-73	HWY:STH 89	COUNTY:JEFFERSON	CROSS SECTIONS:STH 89 MAINLINE	SHEET 405	E

FILE NAME : N:\PDS\C3D\33000103\SHEETSPLAN\090201-CROSS SECTIONS\090202-XS.DWG
LAYOUT NAME - XS - (1)
PLOT DATE : 12/12/2017 2:36 PM PLOT BY : WHITE, JEREMY J PLOT NAME : PLOT SCALE : 1 IN:10 FT

WISDOT/CADDS SHEET 49

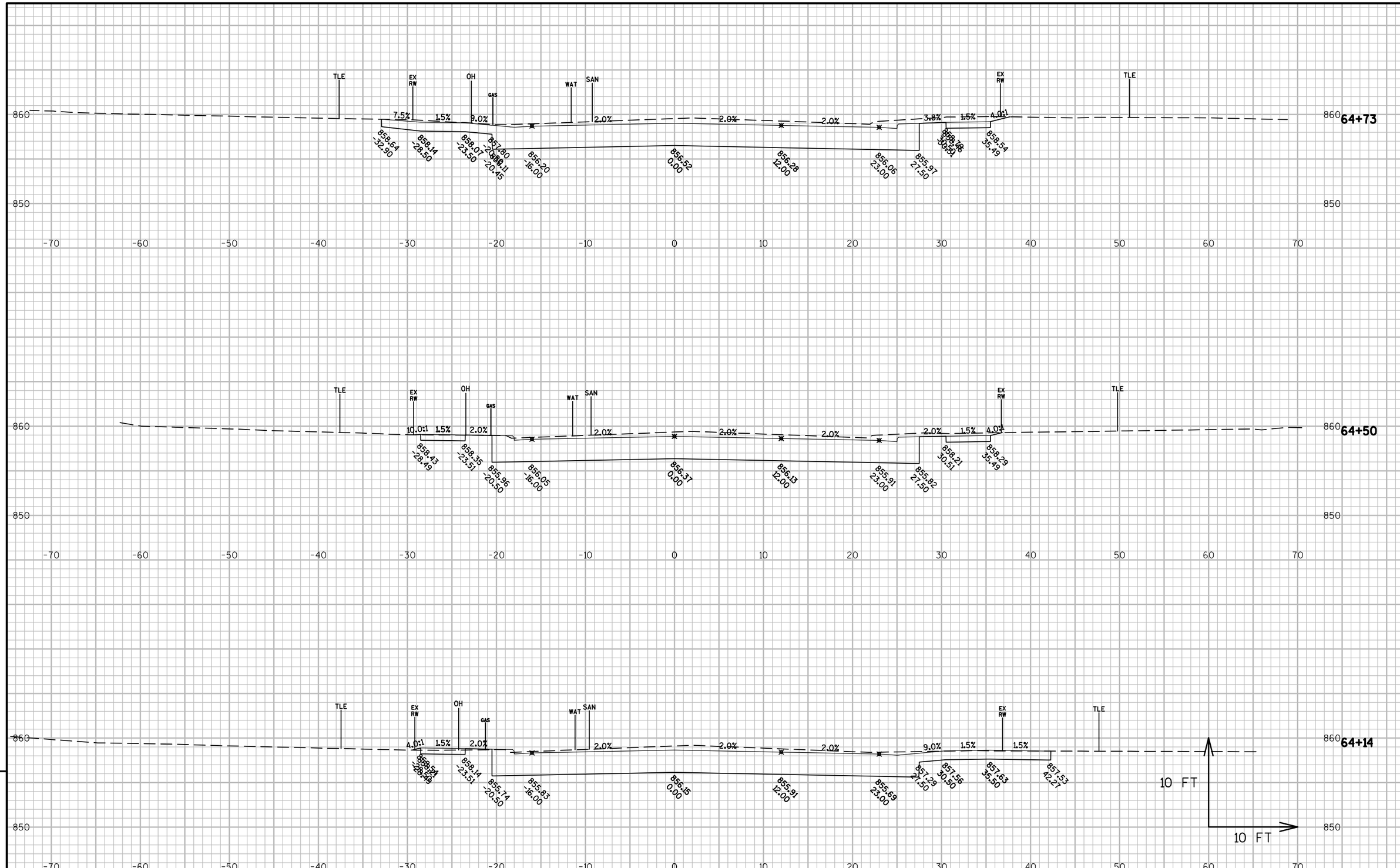

9

9

PROJECT NO:3300-01-73	HWY:STH 89	COUNTY:JEFFERSON	CROSS SECTIONS:STH 89 MAINLINE	SHEET 406	E

FILE NAME : N:\PDS\C3D\33000103\SHEETSPLAN\090201-CROSS SECTIONS\090202-XS.DWG
LAYOUT NAME - XS - (2)
PLOT DATE : 12/12/2017 2:37 PM PLOT BY : WHITE, JEREMY J PLOT NAME : PLOT SCALE : 1 IN:10 FT

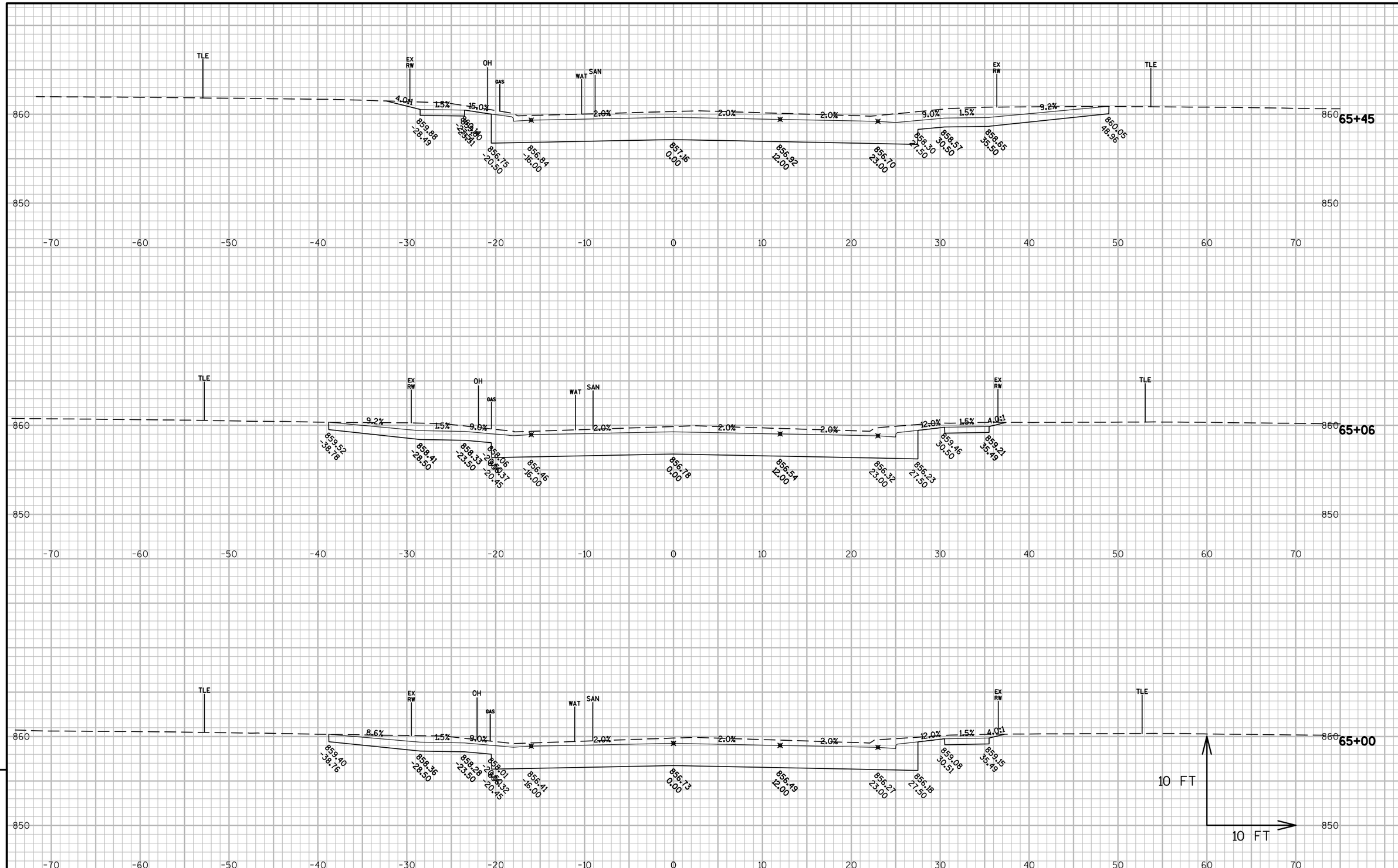

9

9

PROJECT NO:3300-01-73	HWY:STH 89	COUNTY:JEFFERSON	CROSS SECTIONS:STH 89 MAINLINE	SHEET 407	E

FILE NAME : N:\PDS\C3D\33000103\SHEETSPLAN\090201-CROSS SECTIONS\090202-XS.DWG
LAYOUT NAME - XS - (3)
PLOT DATE : 12/12/2017 2:37 PM PLOT BY : WHITE, JEREMY J PLOT NAME : PLOT SCALE : 1 IN:10 FT

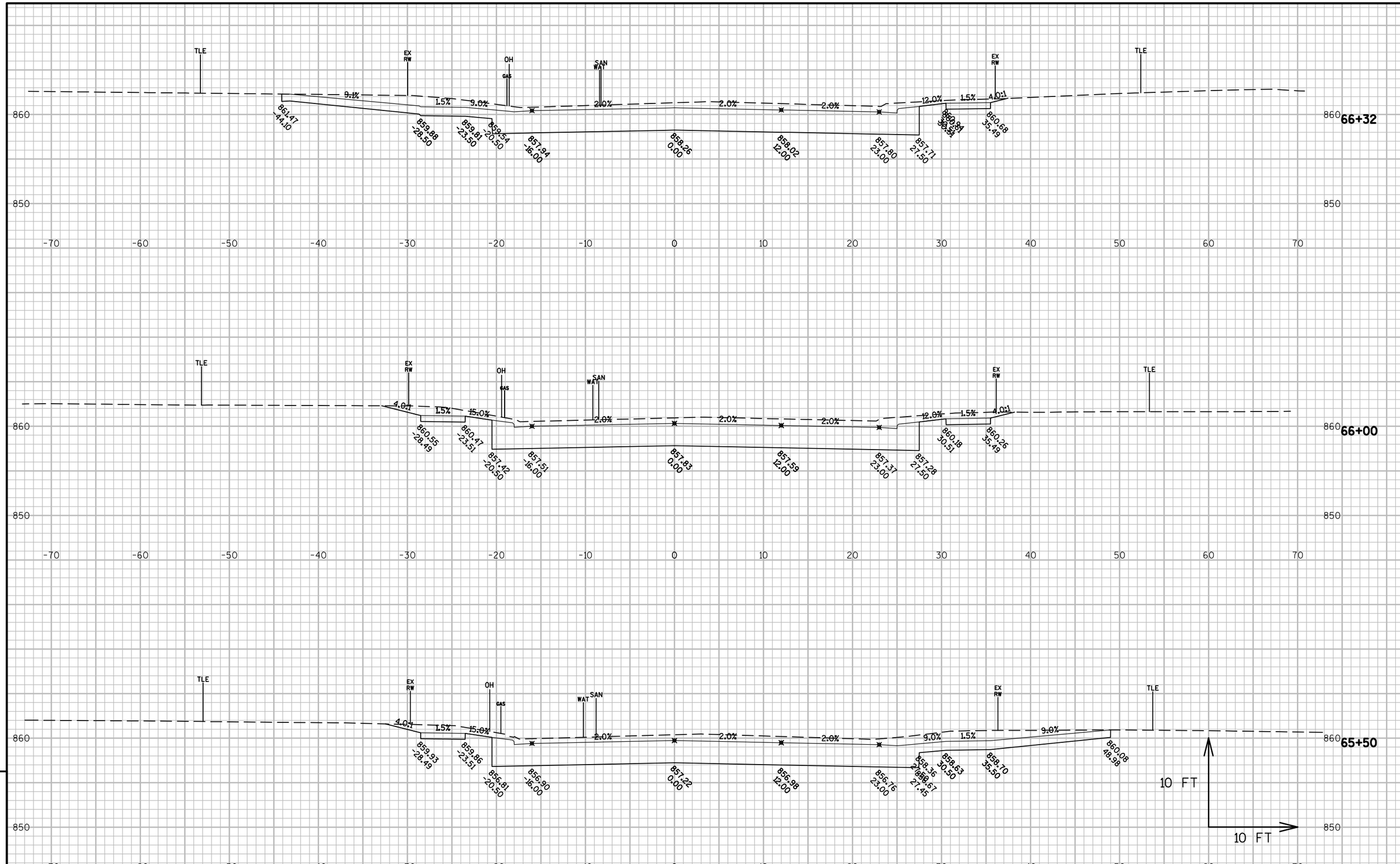

9

9

PROJECT NO: 3300-01-73	HWY: STH 89	COUNTY: JEFFERSON	CROSS SECTIONS: STH 89 MAINLINE	SHEET 408	E

FILE NAME : N:\PDS\C3D\33000103\SHEETSPLAN\090201-CROSS SECTIONS\090202-XS.DWG
LAYOUT NAME - XS - (4)
PLOT DATE : 12/12/2017 2:37 PM PLOT BY : WHITE, JEREMY J PLOT NAME : PLOT SCALE : 1 IN:10 FT

WISDOT/CADDS SHEET 49

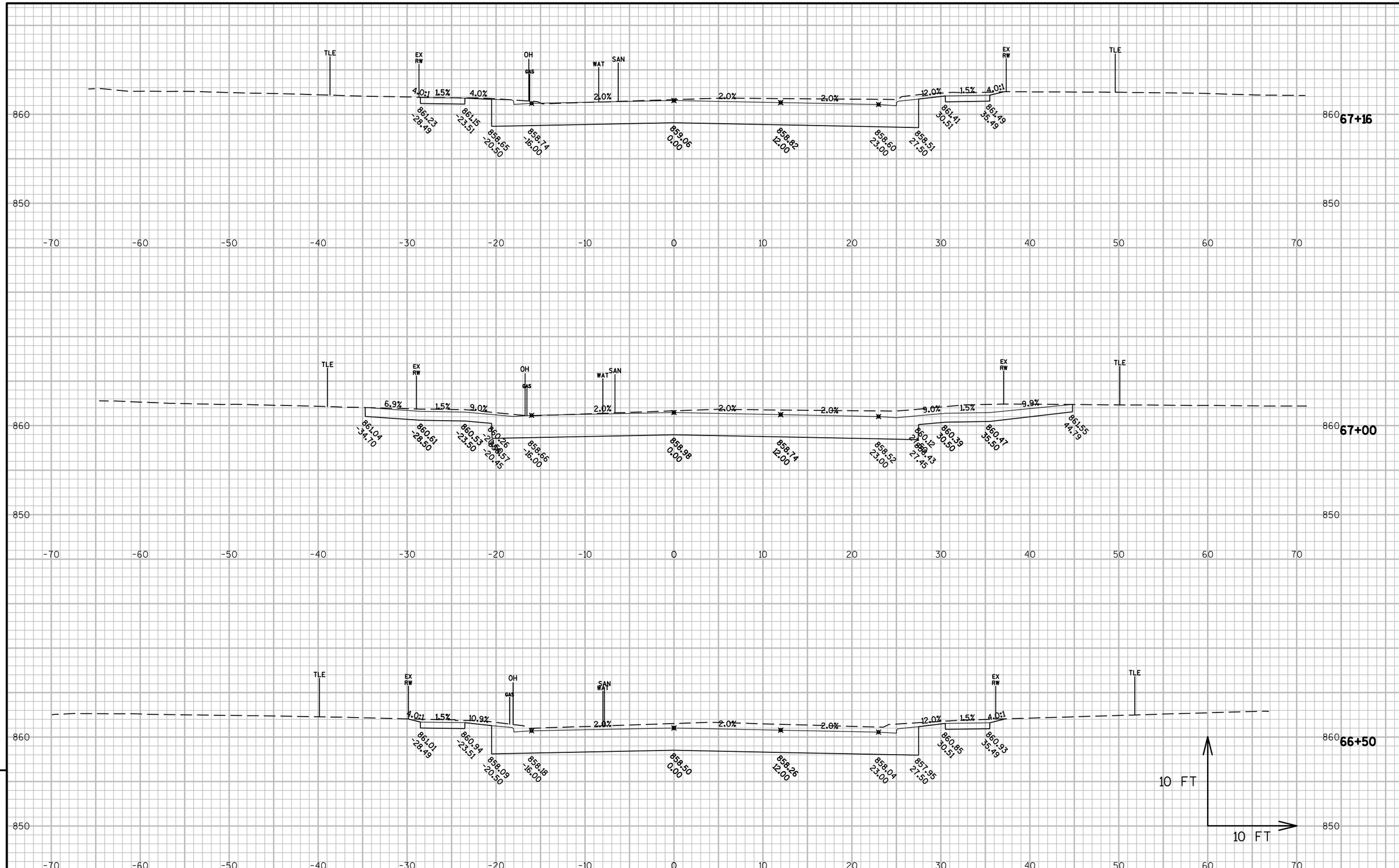

9

9

PROJECT NO:3300-01-73	HWY:STH 89	COUNTY:JEFFERSON	CROSS SECTIONS:STH 89 MAINLINE	SHEET 409	E

FILE NAME : N:\PDS\C3D\33000103\SHEETSPLAN\090201-CROSS SECTIONS\090202-XS.DWG
LAYOUT NAME - XS - (5)
PLOT DATE : 12/12/2017 2:38 PM PLOT BY : WHITE, JEREMY J PLOT NAME : PLOT SCALE : 1 IN:10 FT

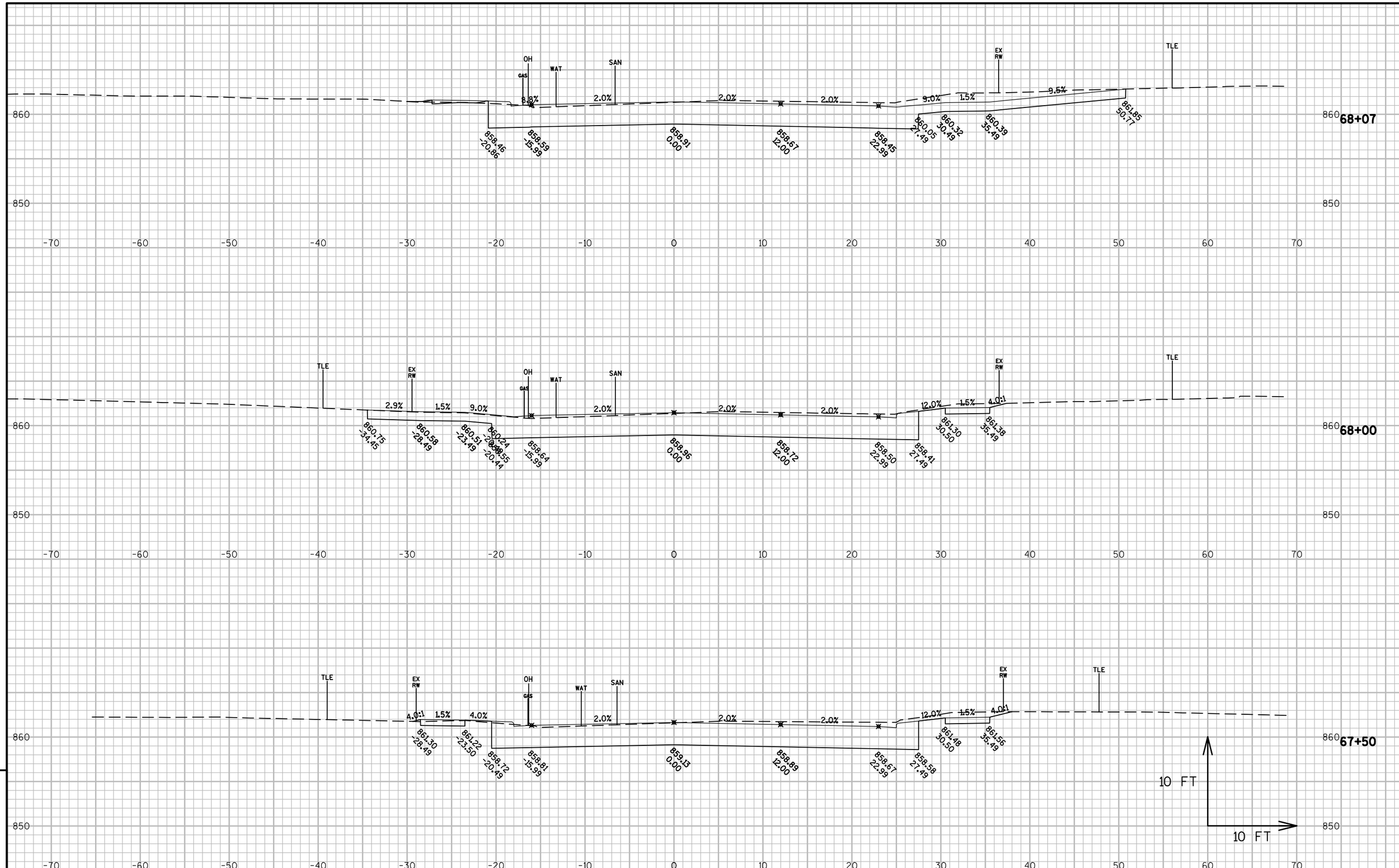

9

9

PROJECT NO:3300-01-73	HWY:STH 89	COUNTY:JEFFERSON	CROSS SECTIONS:STH 89 MAINLINE	SHEET 410	E

FILE NAME : N:\PDS\C3D\33000103\SHEETSPLAN\090201-CROSS SECTIONS\090202-XS.DWG
LAYOUT NAME - XS - (6)
PLOT DATE : 12/12/2017 2:38 PM PLOT BY : WHITE, JEREMY J PLOT NAME : PLOT SCALE : 1 IN:10 FT

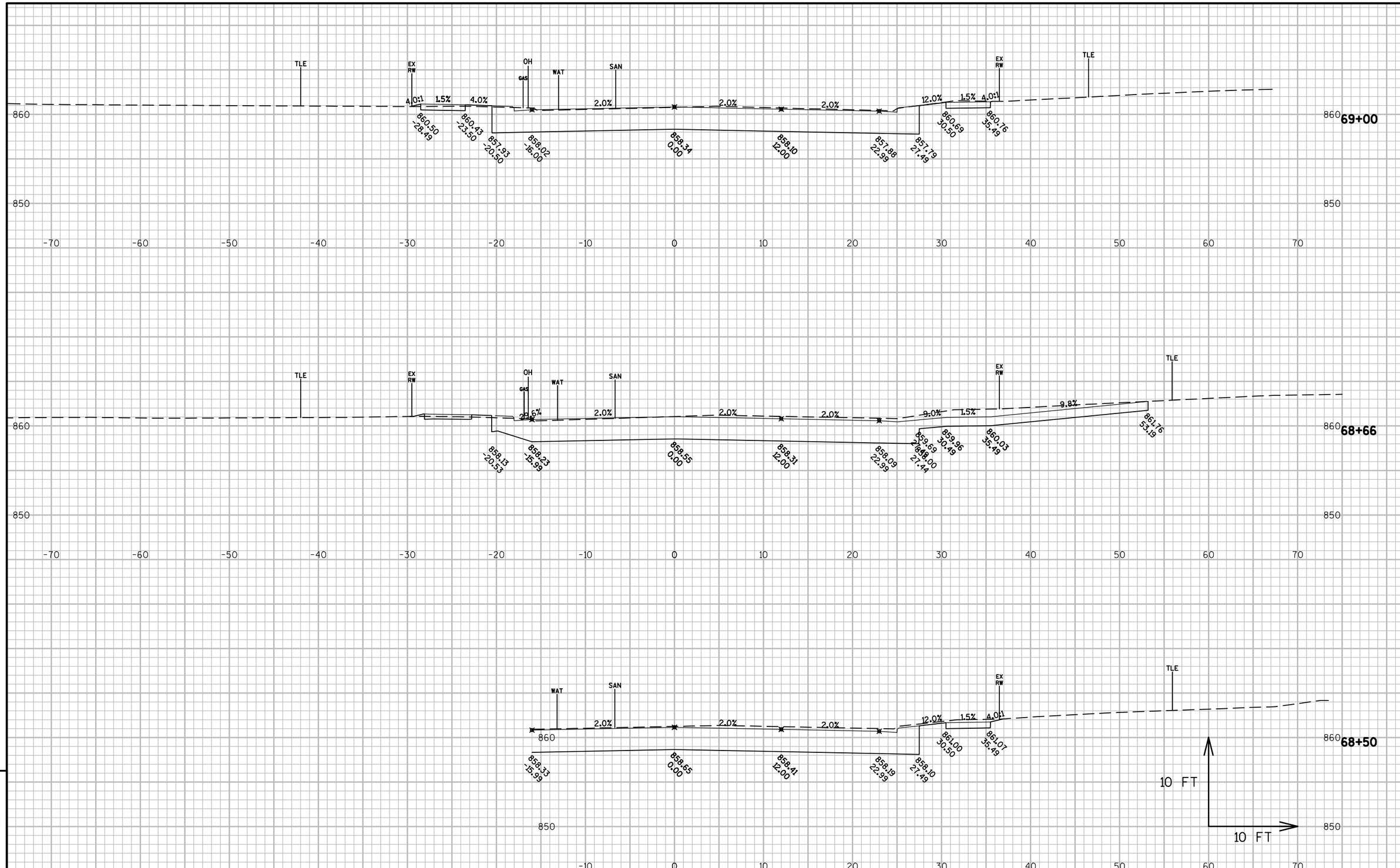

9

9

PROJECT NO:3300-01-73	HWY:STH 89	COUNTY:JEFFERSON	CROSS SECTIONS:STH 89 MAINLINE	SHEET 411	E

FILE NAME : N:\PDS\C3D\33000103\SHEETSPLAN\090201-CROSS SECTIONS\090202-XS.DWG
LAYOUT NAME - XS - (7)
PLOT DATE : 12/12/2017 2:38 PM PLOT BY : WHITE, JEREMY J PLOT NAME : PLOT SCALE : 1 IN:10 FT

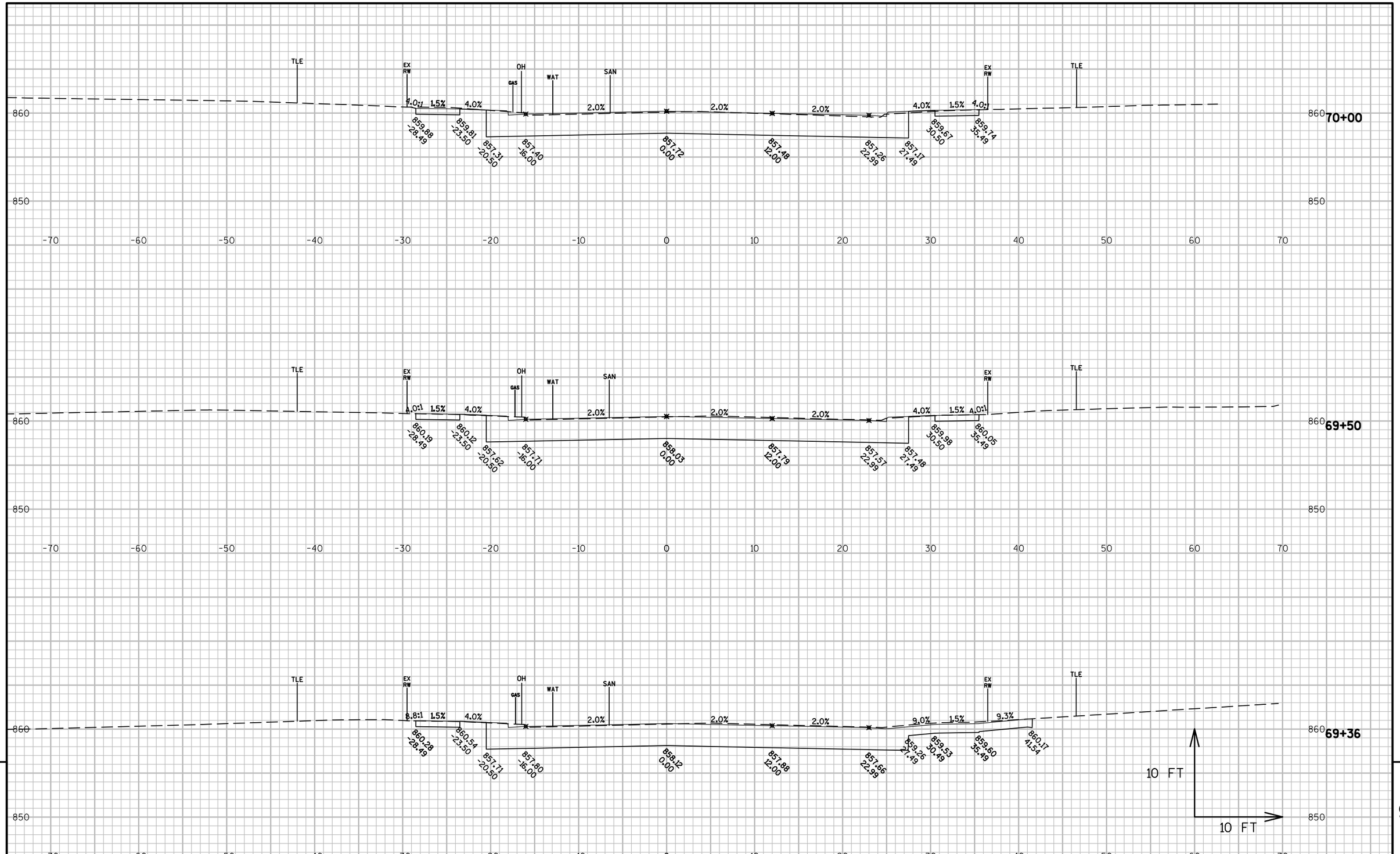

9

9

PROJECT NO:3300-01-73	HWY:STH 89	COUNTY:JEFFERSON	CROSS SECTIONS:STH 89 MAINLINE	SHEET 412	E

FILE NAME : N:\PDS\C3D\33000103\SHEETSPLAN\090201-CROSS SECTIONS\090202-XS.DWG
LAYOUT NAME - XS - (8)
PLOT DATE : 12/12/2017 2:39 PM PLOT BY : WHITE, JEREMY J PLOT NAME : PLOT SCALE : 1 IN:10 FT

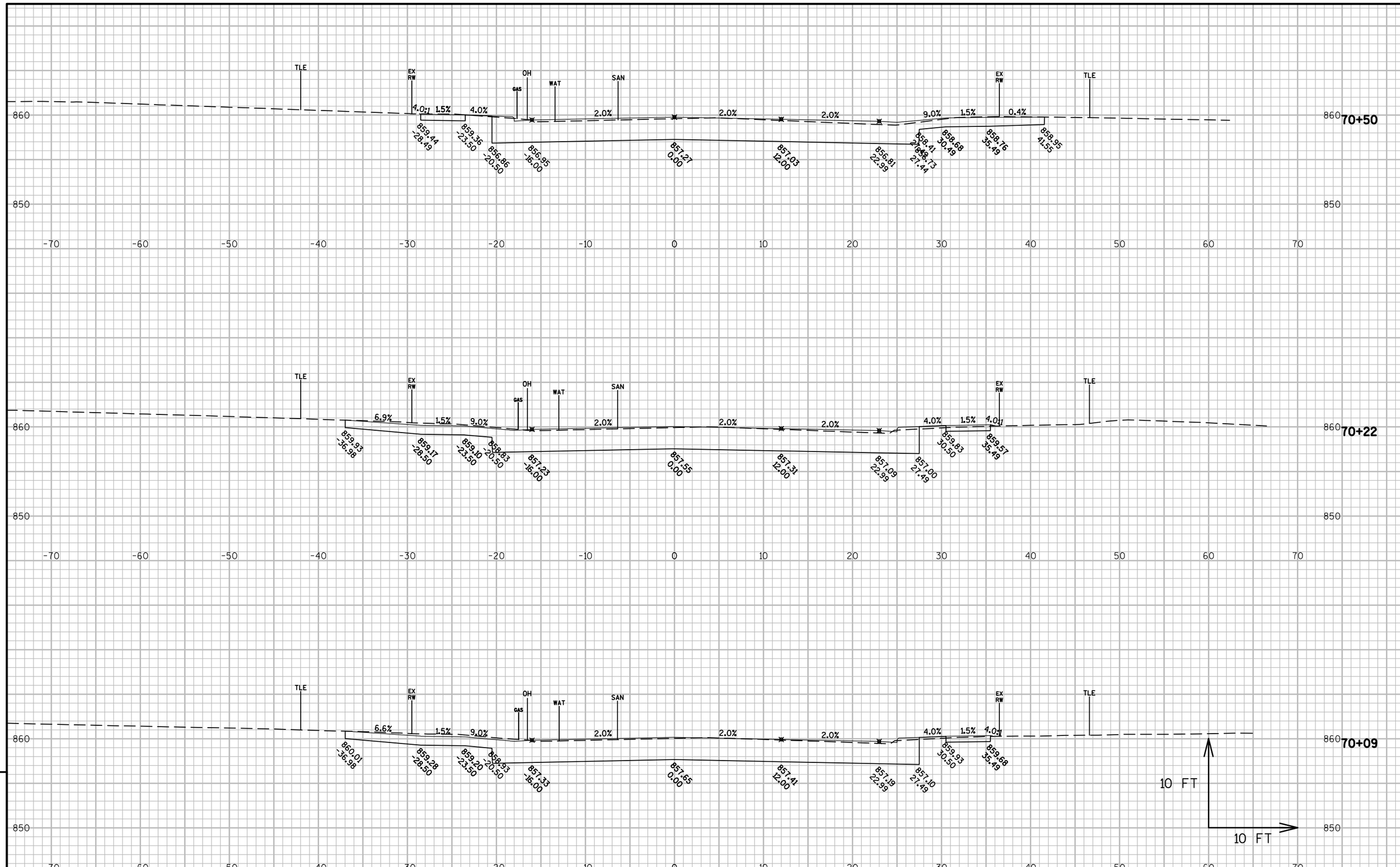

9

9

PROJECT NO:3300-01-73	HWY:STH 89	COUNTY:JEFFERSON	CROSS SECTIONS:STH 89 MAINLINE	SHEET 413	E

FILE NAME : N:\PDS\C3D\33000103\SHEETSPLAN\090201-CROSS SECTIONS\090202-XS.DWG
LAYOUT NAME - XS - (9)

PLOT DATE : 12/12/2017 2:39 PM PLOT BY : WHITE, JEREMY J PLOT NAME : PLOT SCALE : 1 IN:10 FT

WISDOT/CADDS SHEET 49

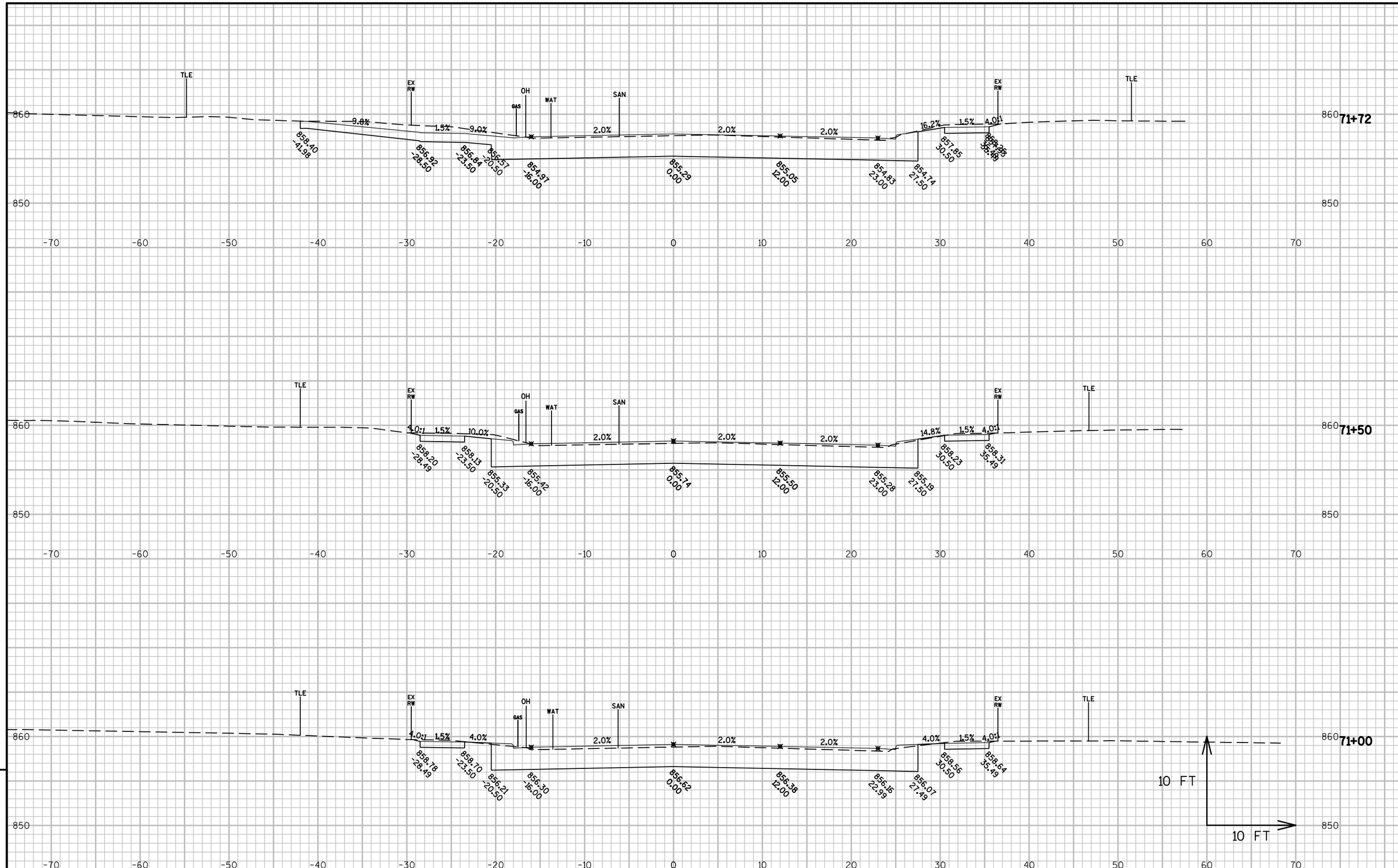

9

9

PROJECT NO:3300-01-73	HWY:STH 89	COUNTY:JEFFERSON	CROSS SECTIONS:STH 89 MAINLINE	SHEET 414	E

FILE NAME : N:\PDS\C3D\33000103\SHEETSPLAN\090201-CROSS SECTIONS\090202-XS.DWG
LAYOUT NAME - XS - (10)
PLOT DATE : 12/12/2017 2:39 PM PLOT BY : WHITE, JEREMY J PLOT NAME : PLOT SCALE : 1 IN:10 FT

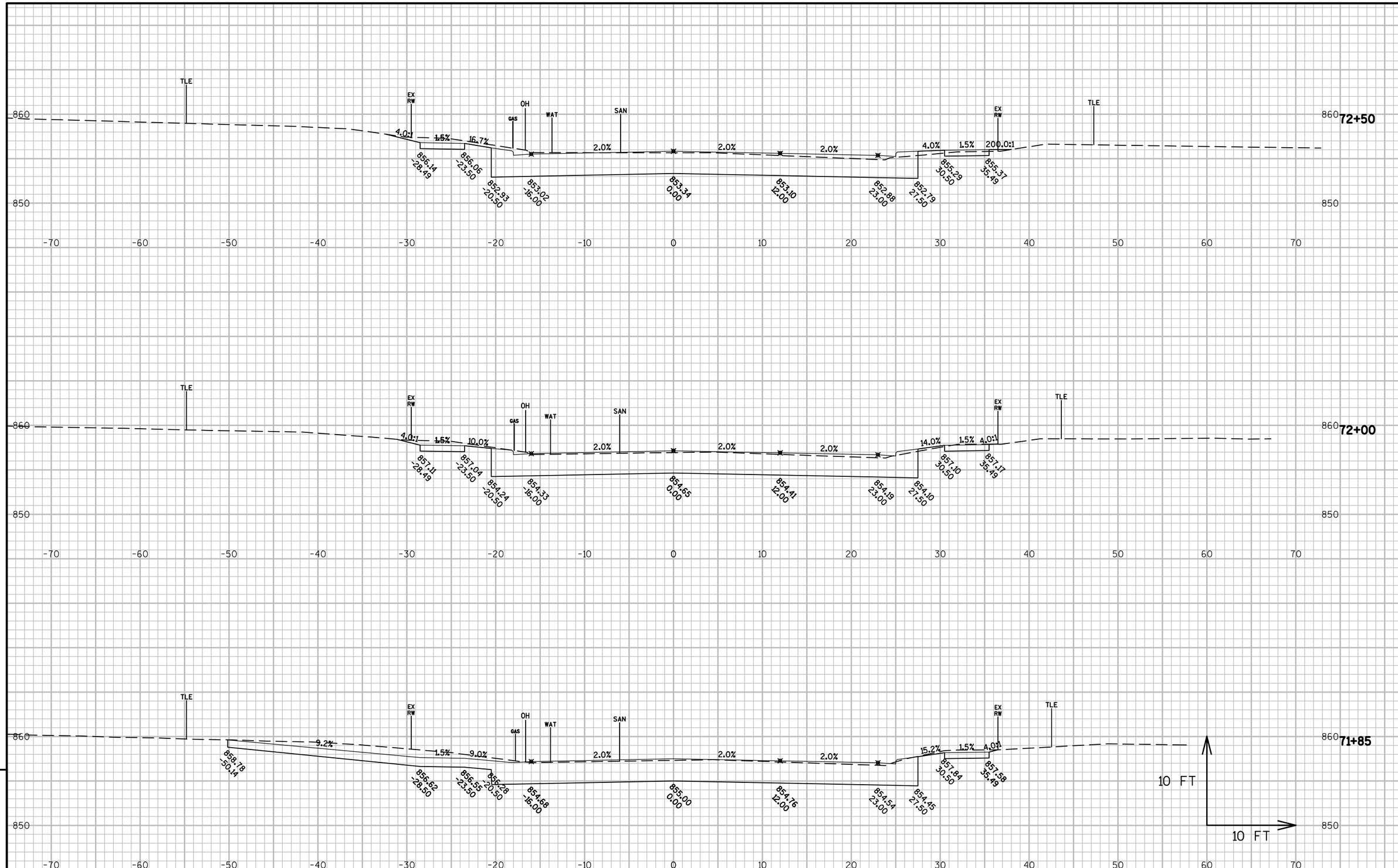

9

9

PROJECT NO:3300-01-73	HWY:STH 89	COUNTY:JEFFERSON	CROSS SECTIONS:STH 89 MAINLINE	SHEET 415	E

FILE NAME : N:\PDS\C3D\33000103\SHEETSPLAN\090201-CROSS SECTIONS\090202-XS.DWG
LAYOUT NAME - XS - (11)
PLOT DATE : 12/12/2017 2:40 PM PLOT BY : WHITE, JEREMY J PLOT NAME : PLOT SCALE : 1 IN:10 FT

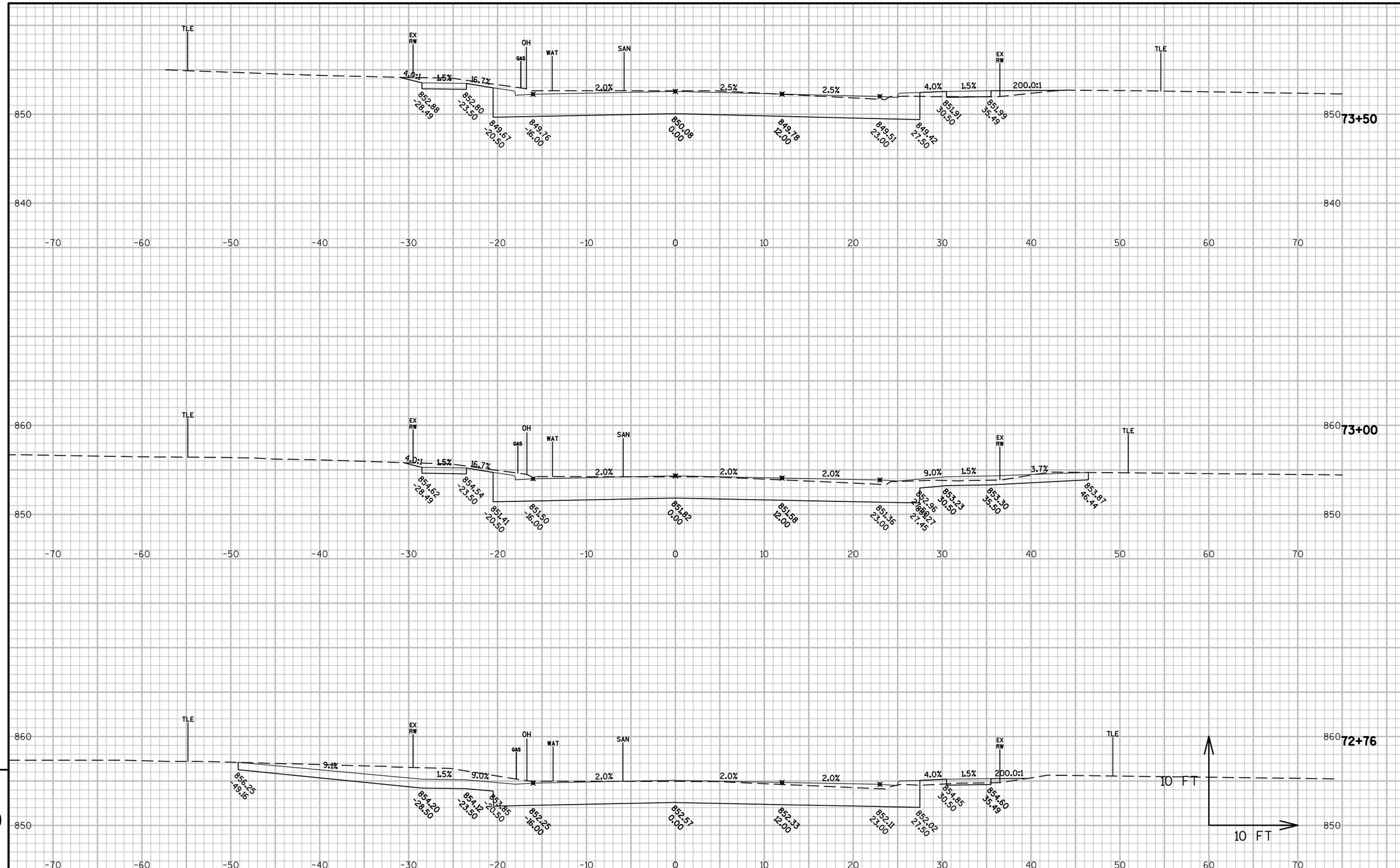

PROJECT NO:3300-01-73	HWY:STH 89	COUNTY:JEFFERSON	CROSS SECTIONS:STH 89 MAINLINE	SHEET 416	E

FILE NAME : N:\PDS\C3D\33000103\SHEETSPLAN\090201-CROSS SECTIONS\090202-XS.DWG
LAYOUT NAME - XS - (12)
PLOT DATE : 12/12/2017 2:40 PM PLOT BY : WHITE, JEREMY J PLOT NAME : PLOT SCALE : 1 IN:10 FT

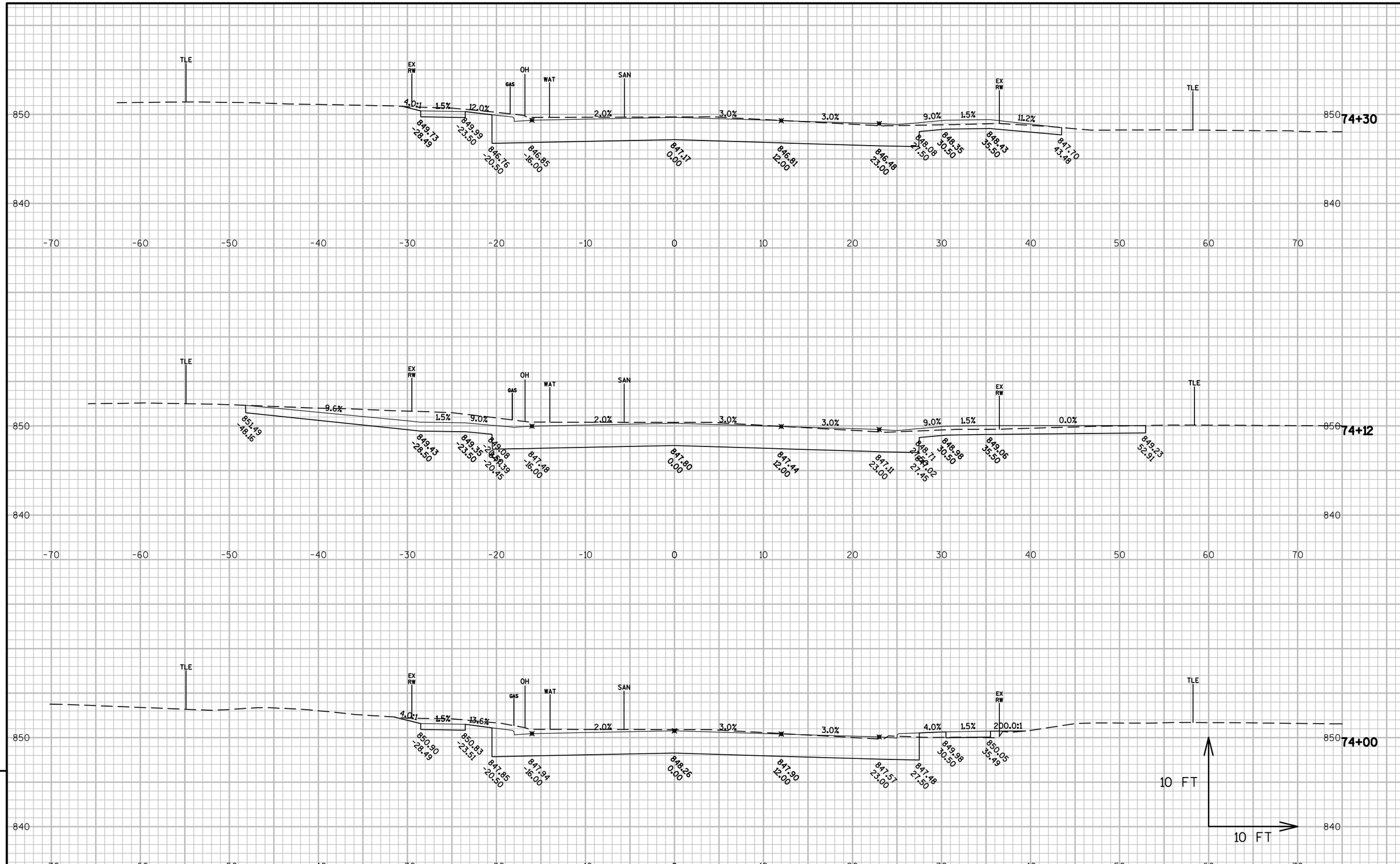

9

9

PROJECT NO:3300-01-73	HWY:STH 89	COUNTY:JEFFERSON	CROSS SECTIONS:STH 89 MAINLINE	SHEET 417	E

FILE NAME : N:\PDS\C3D\33000103\SHEETSPLAN\090201-CROSS SECTIONS\090202-XS.DWG
LAYOUT NAME - XS - (13)
PLOT DATE : 12/12/2017 2:40 PM PLOT BY : WHITE, JEREMY J PLOT NAME : PLOT SCALE : 1 IN:10 FT

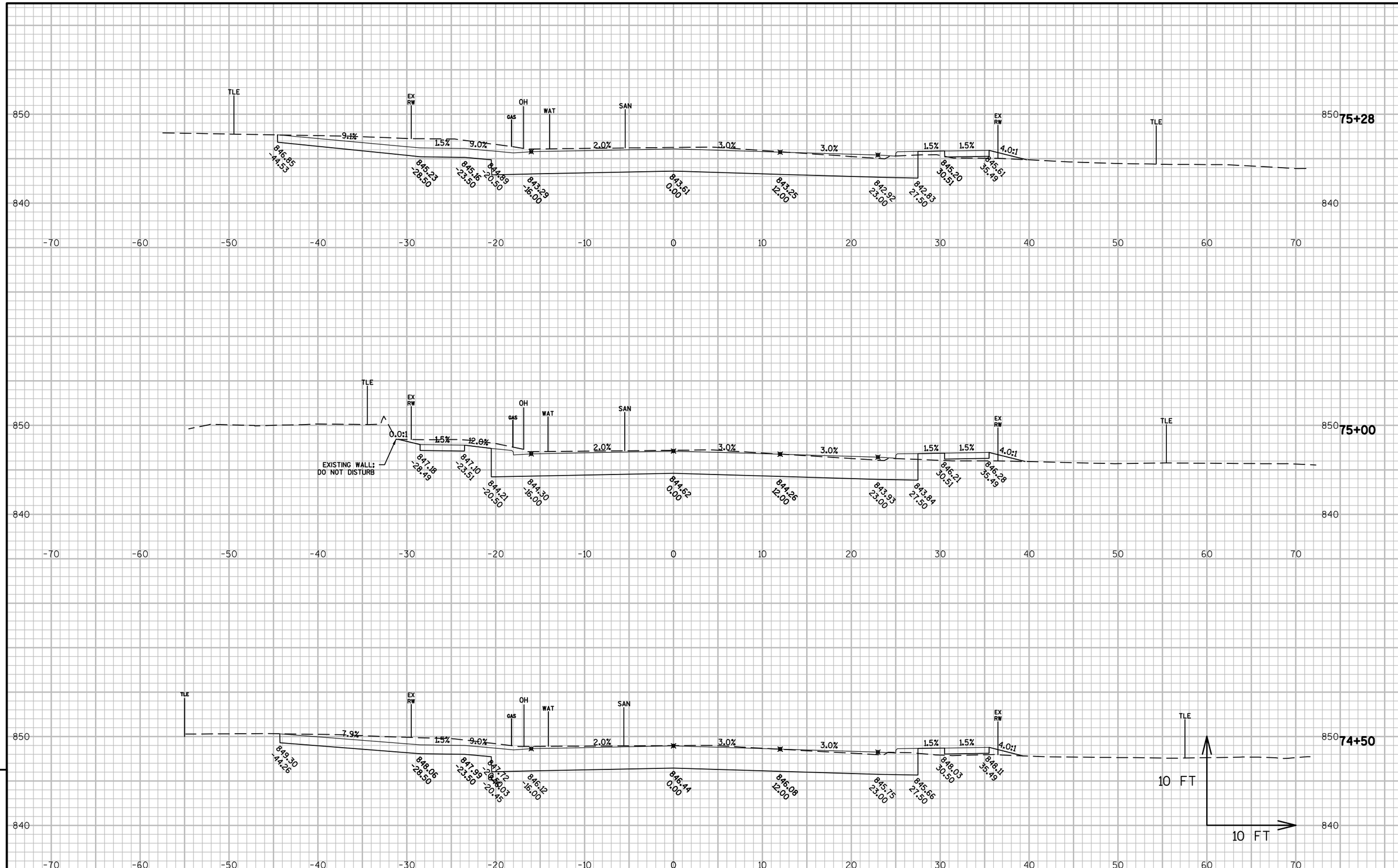

9

9

PROJECT NO:3300-01-73	HWY:STH 89	COUNTY:JEFFERSON	CROSS SECTIONS:STH 89 MAINLINE	SHEET 418	E

FILE NAME : N:\PDS\C3D\33000103\SHEETSPLAN\090201-CROSS SECTIONS\090202-XS.DWG
LAYOUT NAME - XS - (14)
PLOT DATE : 12/12/2017 2:41 PM PLOT BY : WHITE, JEREMY J PLOT NAME : PLOT SCALE : 1 IN:10 FT

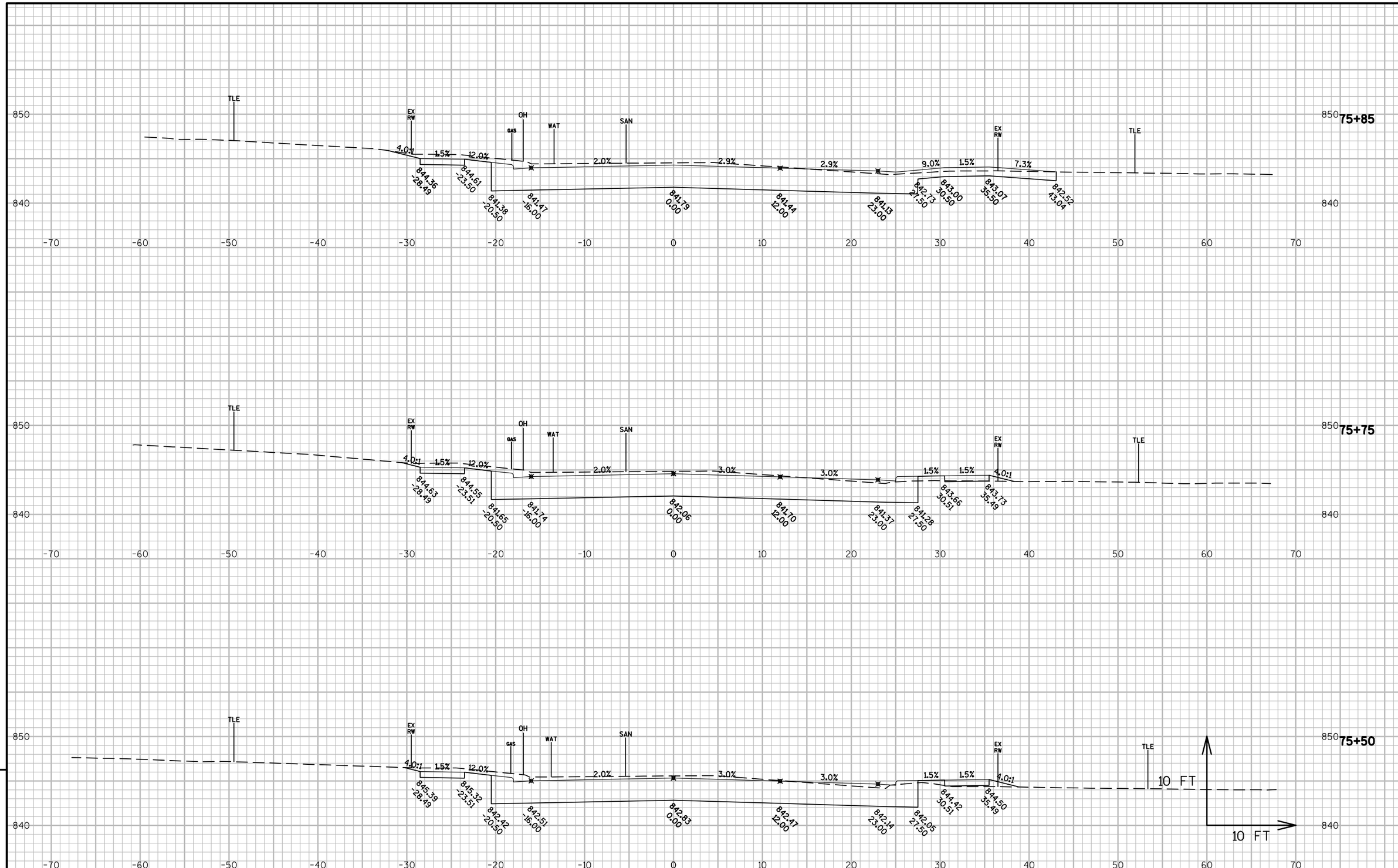

9

9

PROJECT NO:3300-01-73	HWY:STH 89	COUNTY:JEFFERSON	CROSS SECTIONS:STH 89 MAINLINE	SHEET 419	E

FILE NAME : N:\PDS\C3D\33000103\SHEETSPLAN\090201-CROSS SECTIONS\090202-XS.DWG
LAYOUT NAME - XS - (15)
PLOT DATE : 12/12/2017 2:41 PM PLOT BY : WHITE, JEREMY J PLOT NAME : PLOT SCALE : 1 IN:10 FT

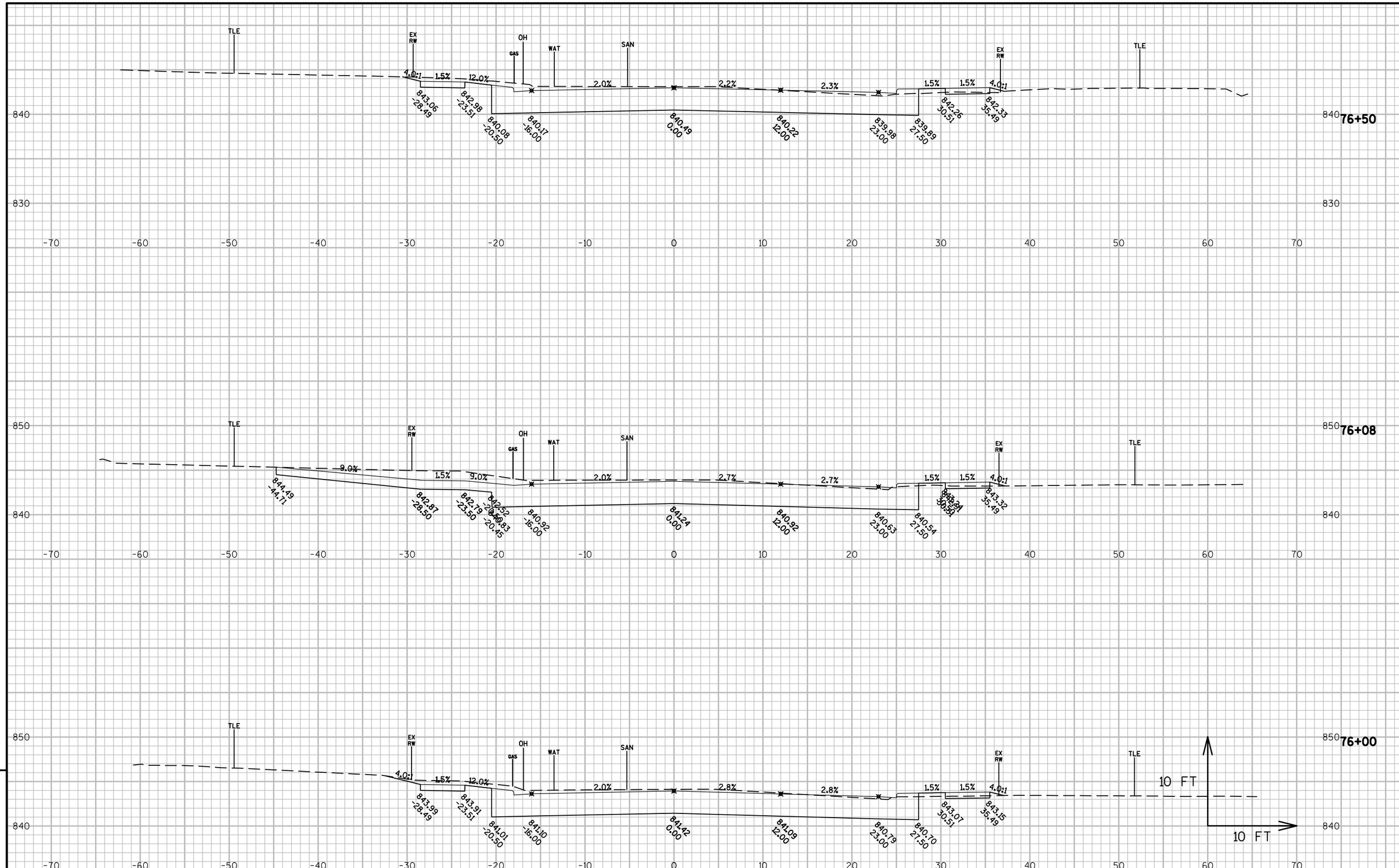

9

9

PROJECT NO:3300-01-73	HWY:STH 89	COUNTY:JEFFERSON	CROSS SECTIONS:STH 89 MAINLINE	SHEET 420	E

FILE NAME : N:\PDS\C3D\33000103\SHEETSPLAN\090201-CROSS SECTIONS\090202-XS.DWG
LAYOUT NAME - XS - (16)
PLOT DATE : 12/12/2017 2:41 PM PLOT BY : WHITE, JEREMY J PLOT NAME : PLOT SCALE : 1 IN:10 FT

WISDOT/CADDS SHEET 49

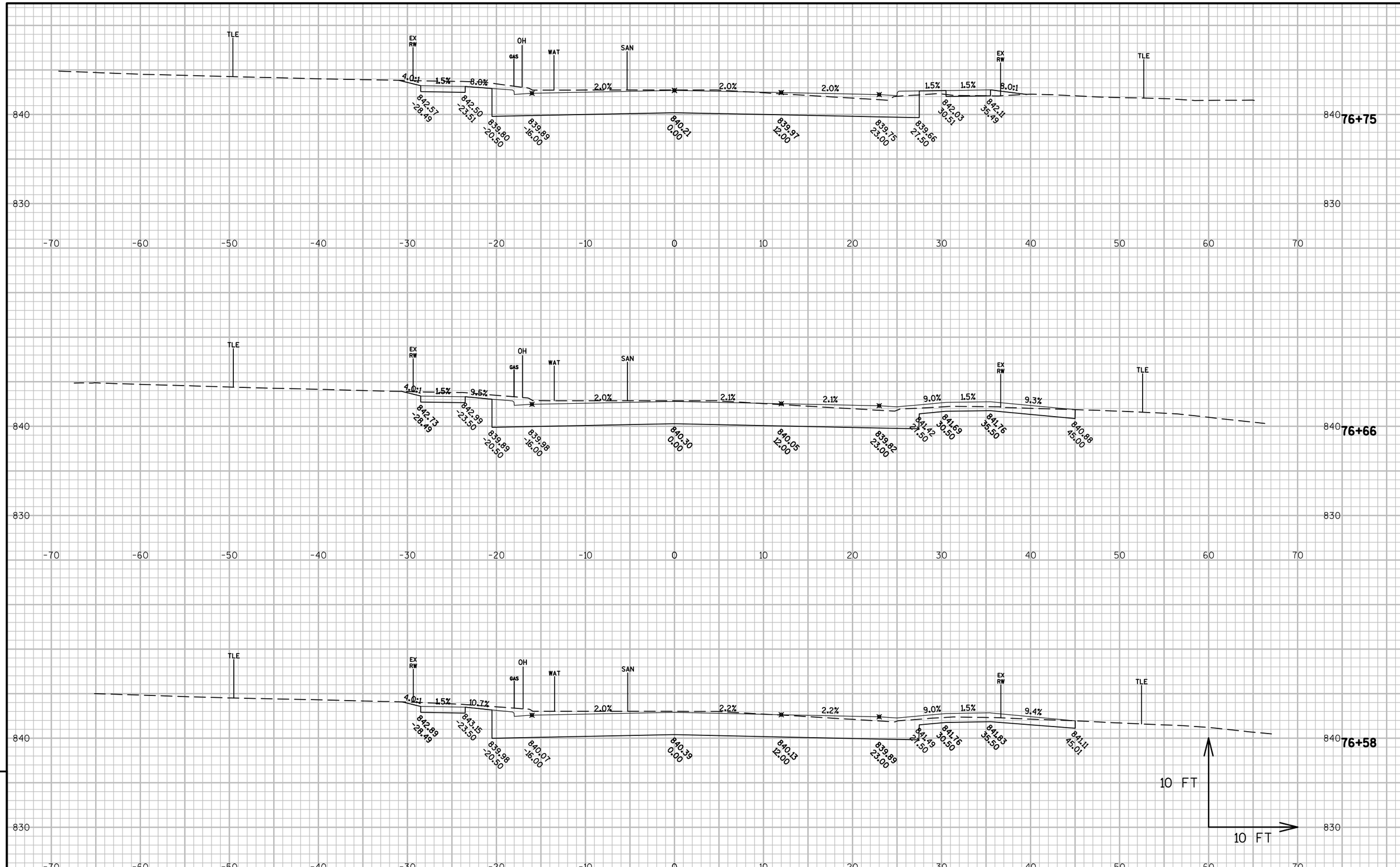

9

9

PROJECT NO:3300-01-73	HWY:STH 89	COUNTY:JEFFERSON	CROSS SECTIONS:STH 89 MAINLINE	SHEET 421	E

FILE NAME : N:\PDS\C3D\33000103\SHEETSPLAN\090201-CROSS SECTIONS\090202-XS.DWG
LAYOUT NAME - XS - (17)
PLOT DATE : 12/12/2017 2:42 PM PLOT BY : WHITE, JEREMY J PLOT NAME : PLOT SCALE : 1 IN:10 FT

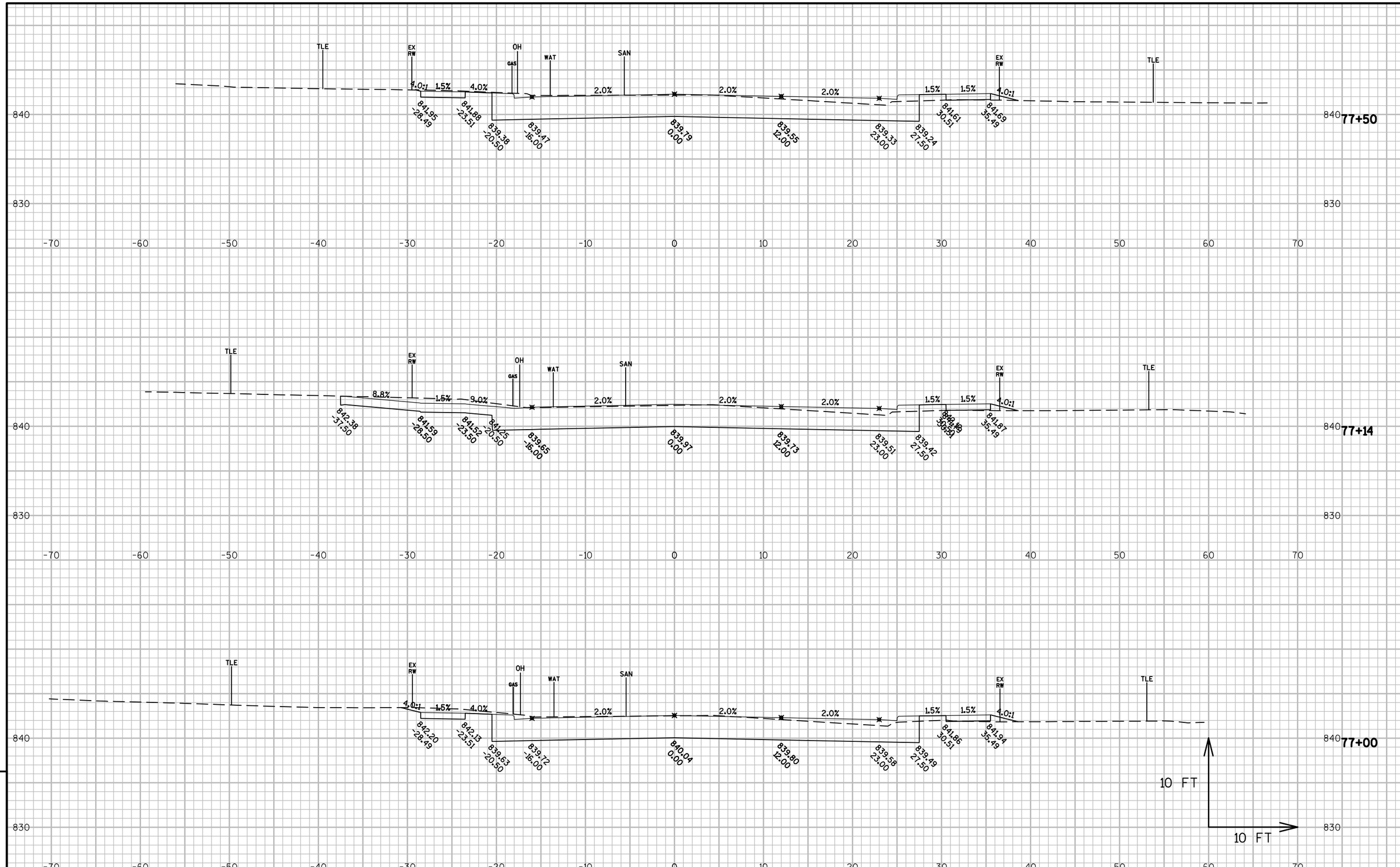

9

PROJECT NO:3300-01-73	HWY:STH 89	COUNTY:JEFFERSON	CROSS SECTIONS:STH 89 MAINLINE	SHEET 422	E

FILE NAME : N:\PDS\C3D\33000103\SHEETSPLAN\090201-CROSS SECTIONS\090202-XS.DWG
LAYOUT NAME - XS - (18)
PLOT DATE : 12/12/2017 2:42 PM PLOT BY : WHITE, JEREMY J PLOT NAME : PLOT SCALE : 1 IN:10 FT

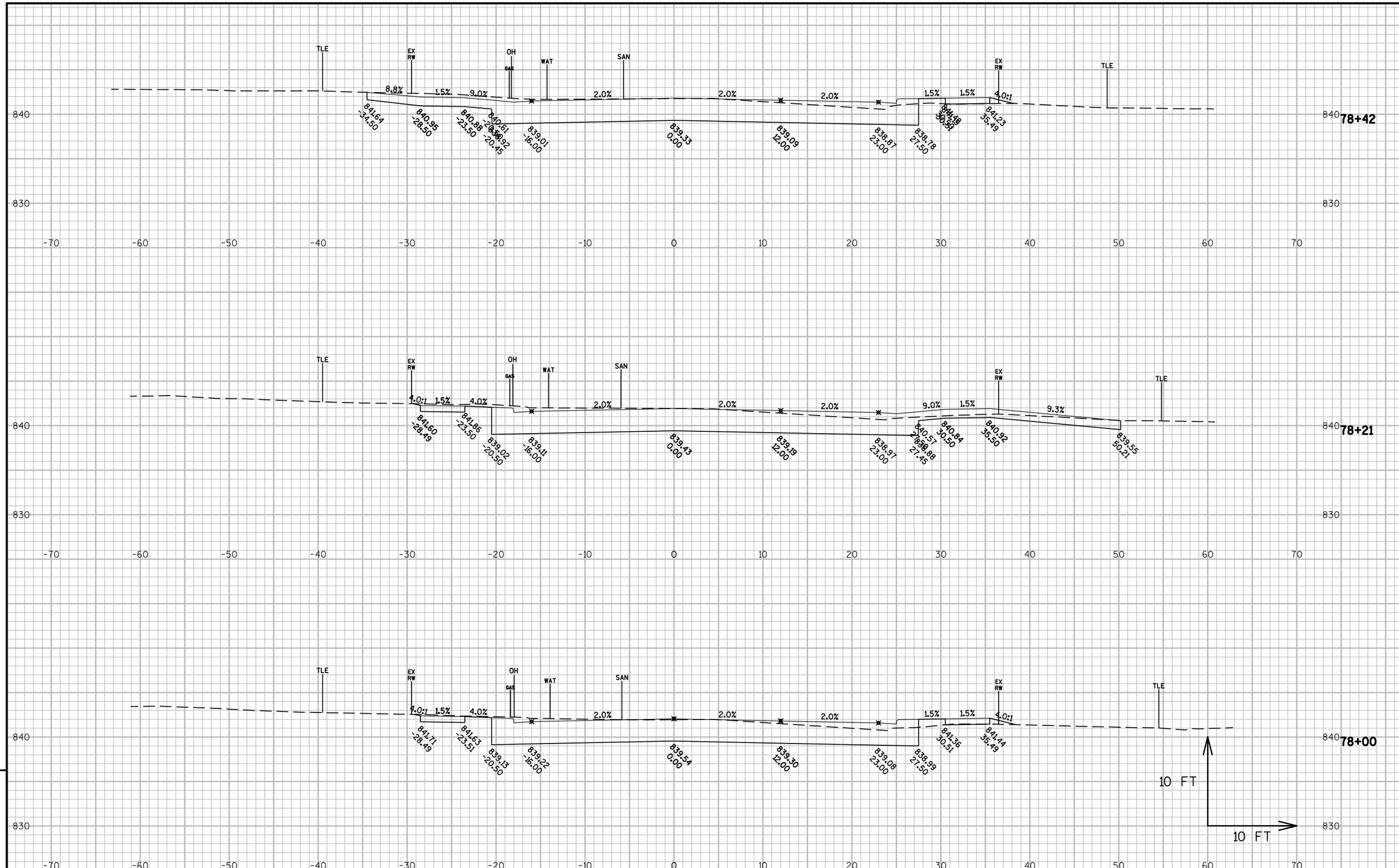

9

9

PROJECT NO:3300-01-73	HWY:STH 89	COUNTY:JEFFERSON	CROSS SECTIONS:STH 89 MAINLINE	SHEET 423	E

FILE NAME : N:\PDS\C3D\33000103\SHEETSPLAN\090201-CROSS SECTIONS\090202-XS.DWG
LAYOUT NAME - XS - (19)
PLOT DATE : 12/12/2017 2:42 PM PLOT BY : WHITE, JEREMY J PLOT NAME : PLOT SCALE : 1 IN:10 FT

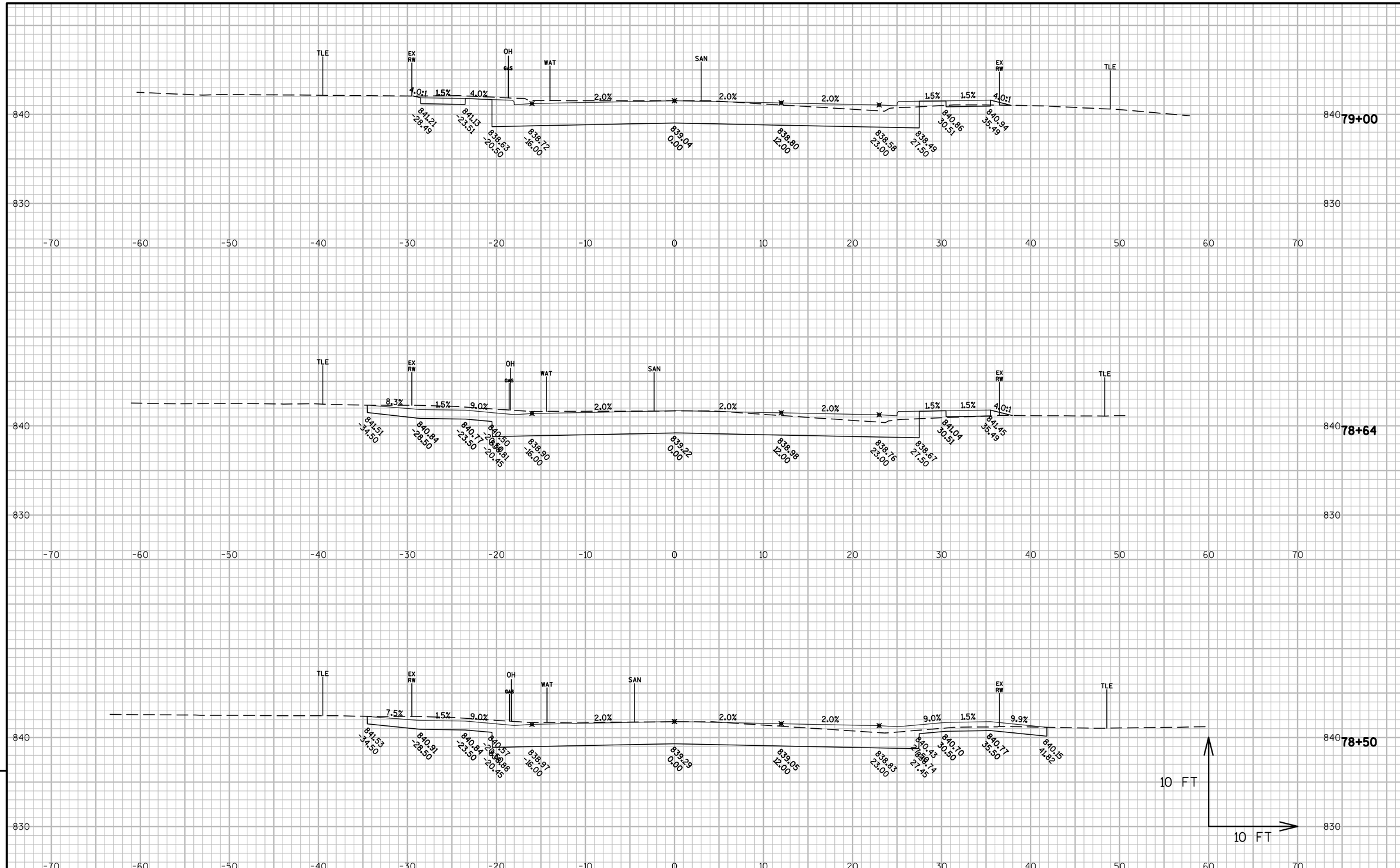

9

9

PROJECT NO:3300-01-73	HWY:STH 89	COUNTY:JEFFERSON	CROSS SECTIONS:STH 89 MAINLINE	SHEET 424	E

FILE NAME : N:\PDS\C3D\33000103\SHEETSPLAN\090201-CROSS SECTIONS\090202-XS.DWG
LAYOUT NAME - XS - (20)

PLOT DATE : 12/12/2017 2:42 PM PLOT BY : WHITE, JEREMY J PLOT NAME : PLOT SCALE : 1 IN:10 FT

WISDOT/CADDS SHEET 49

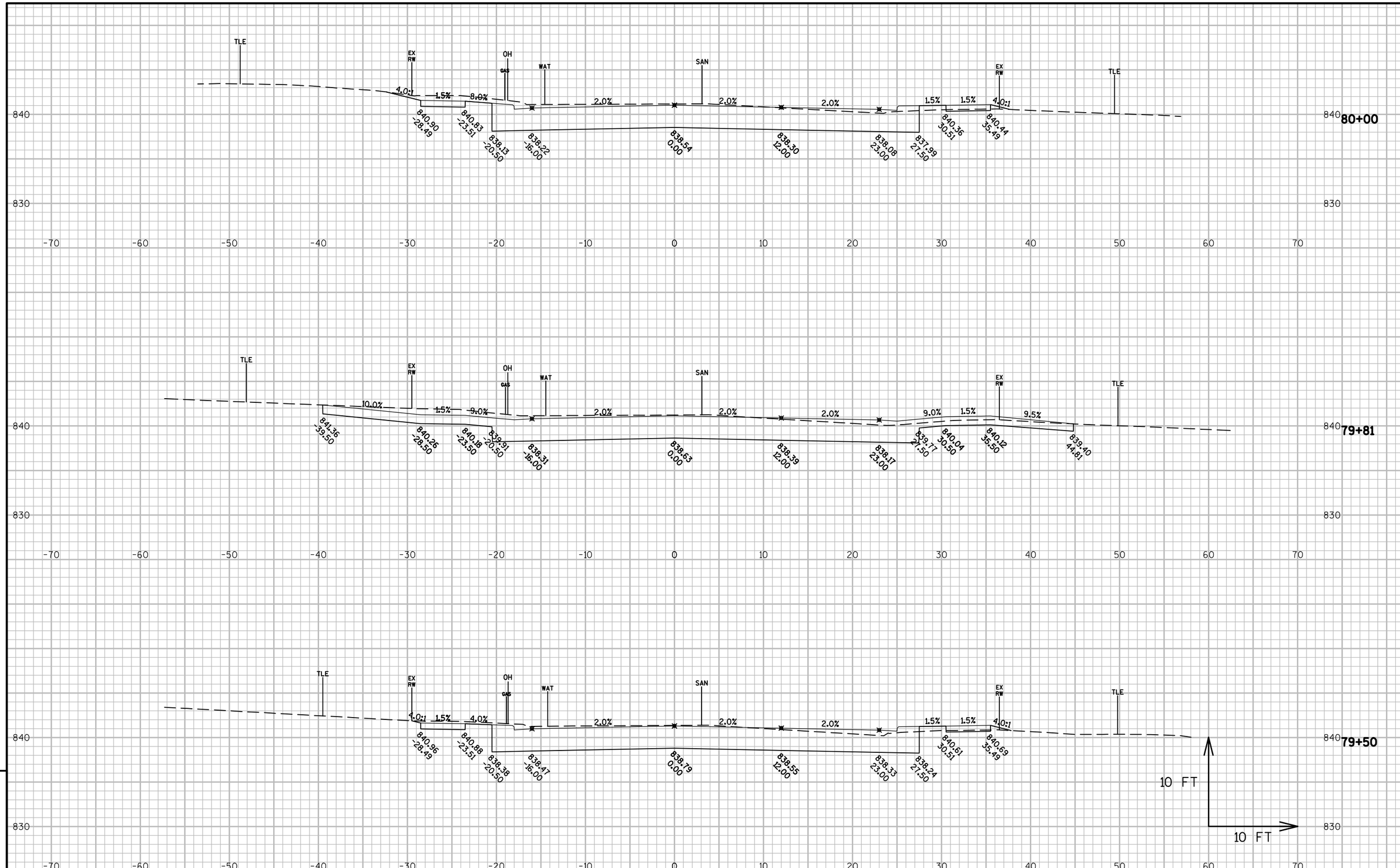

9

9

PROJECT NO:3300-01-73	HWY:STH 89	COUNTY:JEFFERSON	CROSS SECTIONS:STH 89 MAINLINE	SHEET 425	E

FILE NAME : N:\PDS\C3D\33000103\SHEETSPLAN\090201-CROSS SECTIONS\090202-XS.DWG
LAYOUT NAME - XS - (21)
PLOT DATE : 12/12/2017 2:43 PM PLOT BY : WHITE, JEREMY J PLOT NAME : PLOT SCALE : 1 IN:10 FT

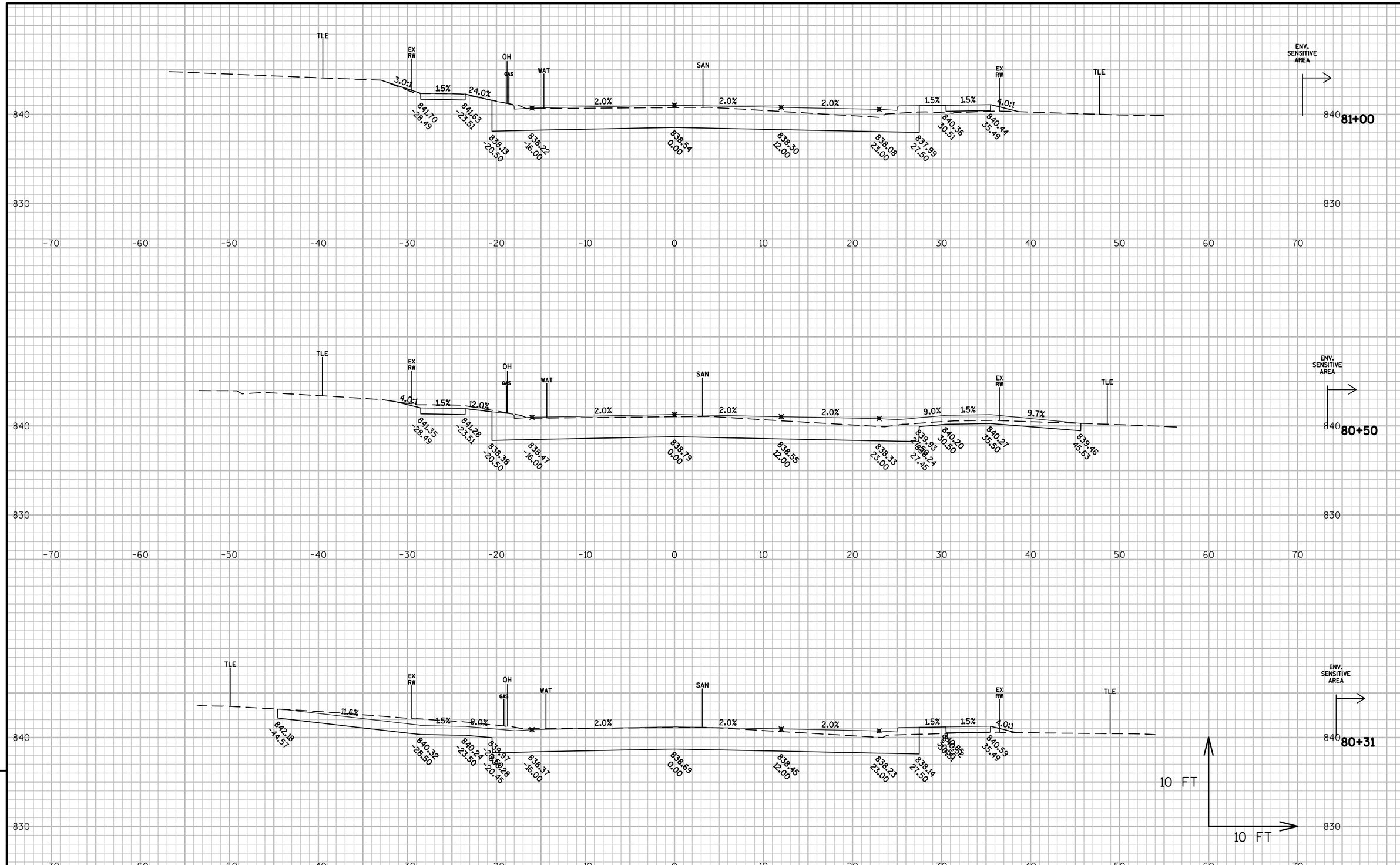

PROJECT NO:3300-01-73	HWY:STH 89	COUNTY:JEFFERSON	CROSS SECTIONS:STH 89 MAINLINE	SHEET 426	E

FILE NAME : N:\PDS\C3D\33000103\SHEETSPLAN\090201-CROSS SECTIONS\090202-XS.DWG
LAYOUT NAME - XS - (22)
PLOT DATE : 12/12/2017 2:43 PM PLOT BY : WHITE, JEREMY J PLOT NAME : PLOT SCALE : 1 IN:10 FT

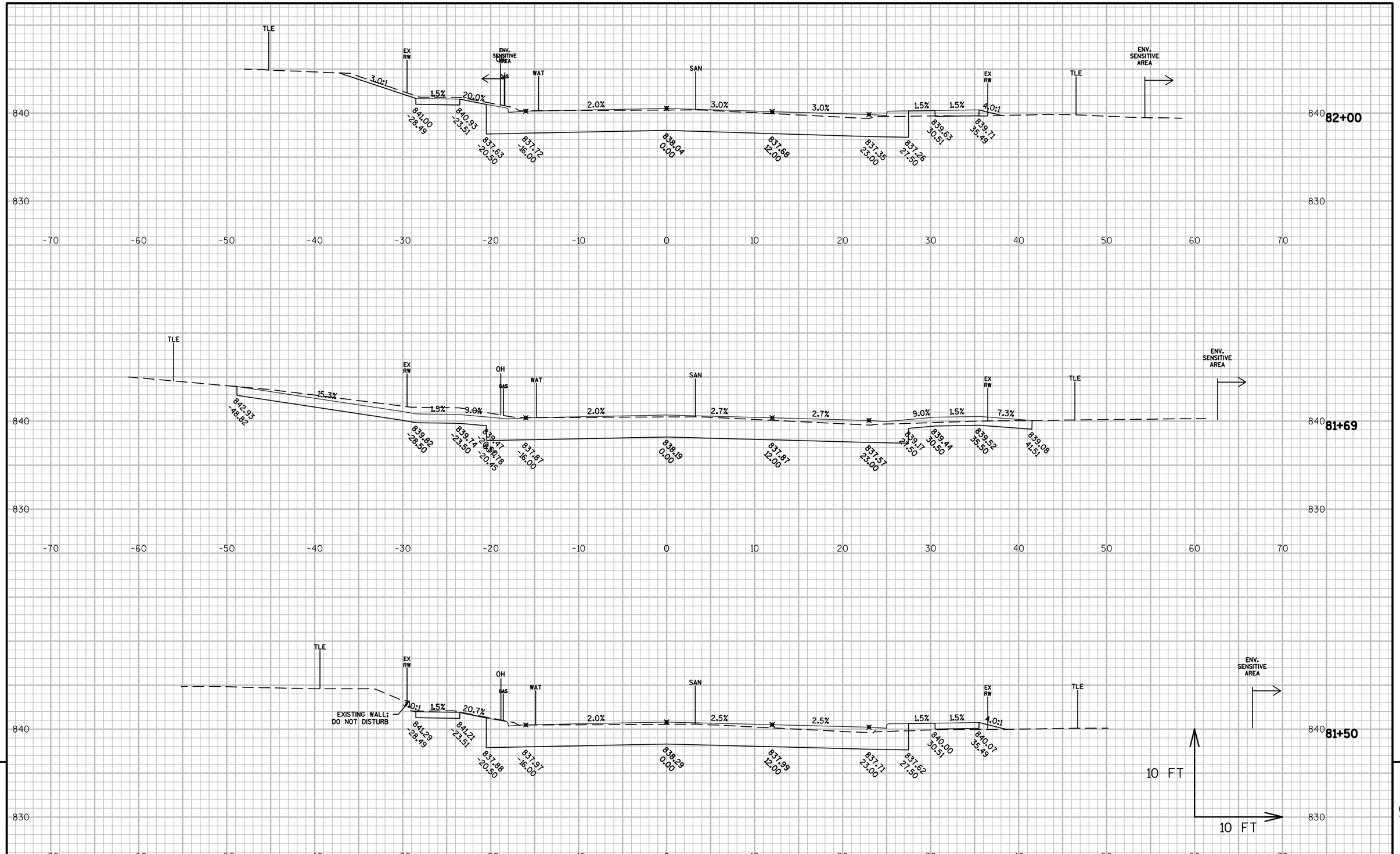

PROJECT NO:3300-01-73	HWY:STH 89	COUNTY:JEFFERSON	CROSS SECTIONS:STH 89 MAINLINE	SHEET 427	E

FILE NAME : N:\PDS\C3D\33000103\SHEETSPLAN\090201-CROSS SECTIONS\090202-XS.DWG
LAYOUT NAME - XS - (23)
PLOT DATE : 12/12/2017 2:44 PM PLOT BY : WHITE, JEREMY J PLOT NAME : PLOT SCALE : 1 IN:10 FT

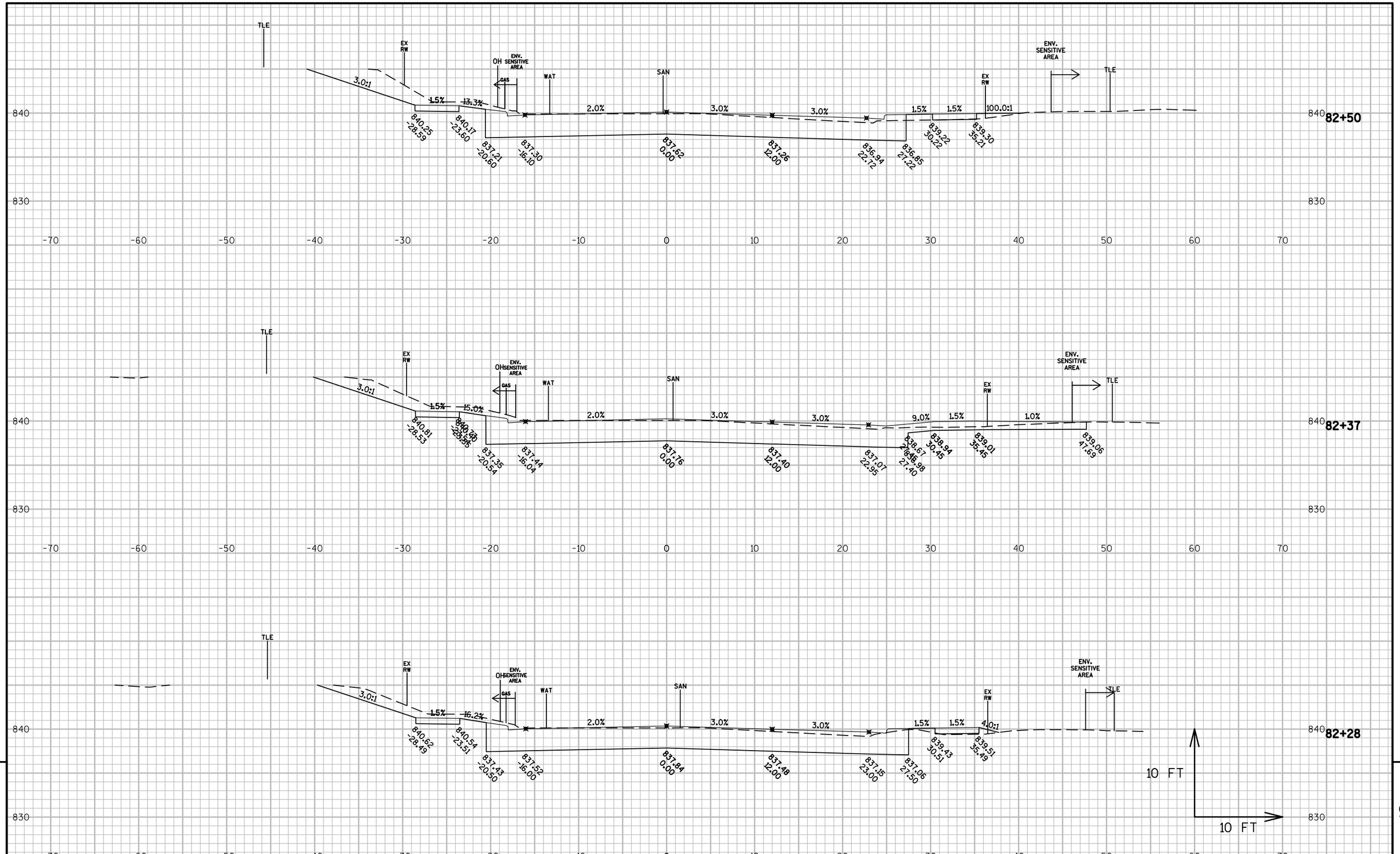

9

9

PROJECT NO:3300-01-73	HWY:STH 89	COUNTY:JEFFERSON	CROSS SECTIONS:STH 89 MAINLINE	SHEET 428	E

FILE NAME : N:\PDS\C3D\33000103\SHEETSPLAN\090201-CROSS SECTIONS\090202-XS.DWG
LAYOUT NAME - XS - (24)
PLOT DATE : 12/12/2017 2:44 PM PLOT BY : WHITE, JEREMY J PLOT NAME : PLOT SCALE : 1 IN:10 FT

WISDOT/CADDS SHEET 49

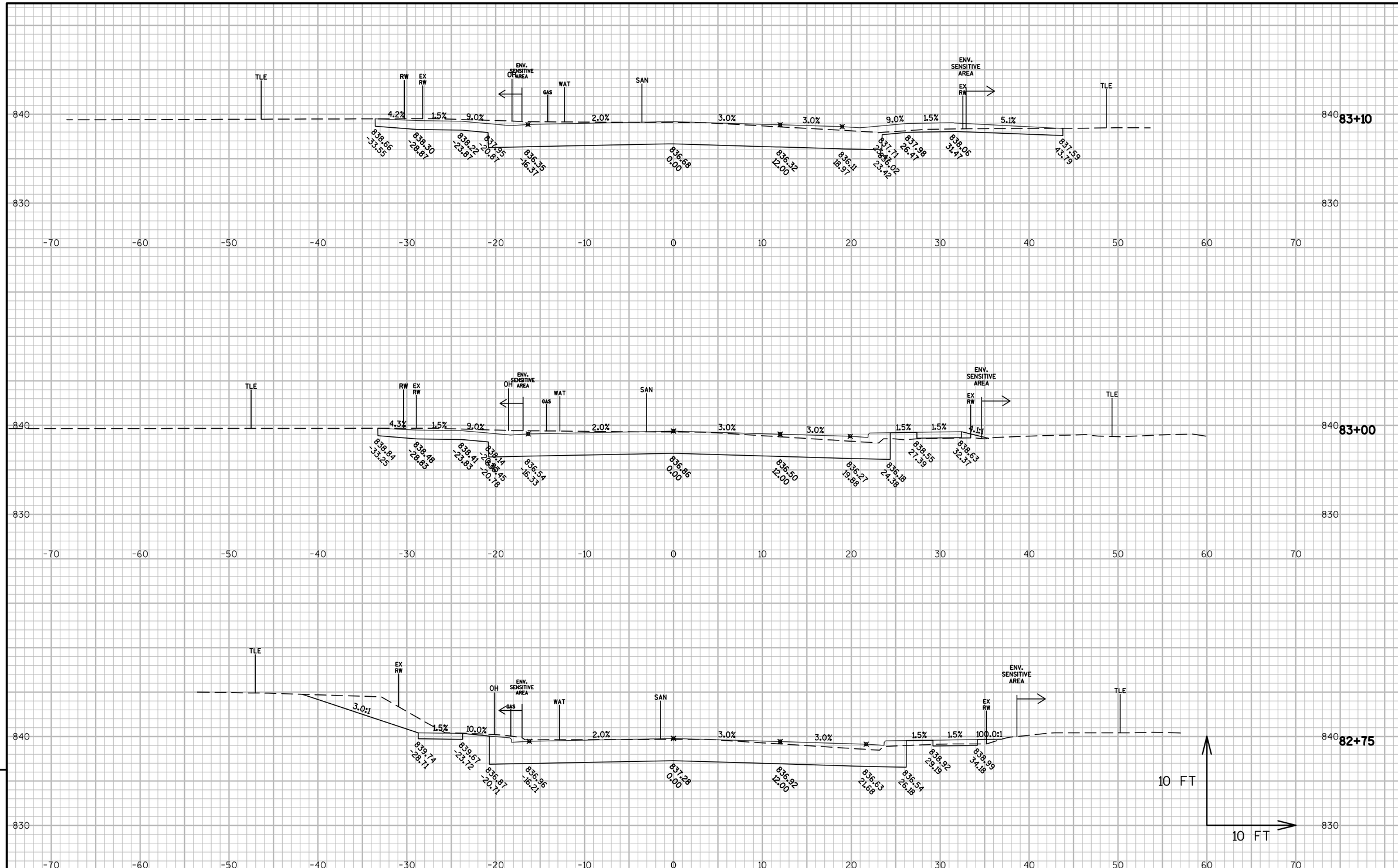

9

9

PROJECT NO:3300-01-73	HWY:STH 89	COUNTY:JEFFERSON	CROSS SECTIONS:STH 89 MAINLINE	SHEET 429	E

FILE NAME : N:\PDS\C3D\33000103\SHEETSPLAN\090201-CROSS SECTIONS\090202-XS.DWG
LAYOUT NAME - XS - (25)
PLOT DATE : 12/12/2017 2:44 PM PLOT BY : WHITE, JEREMY J PLOT NAME : PLOT SCALE : 1 IN:10 FT

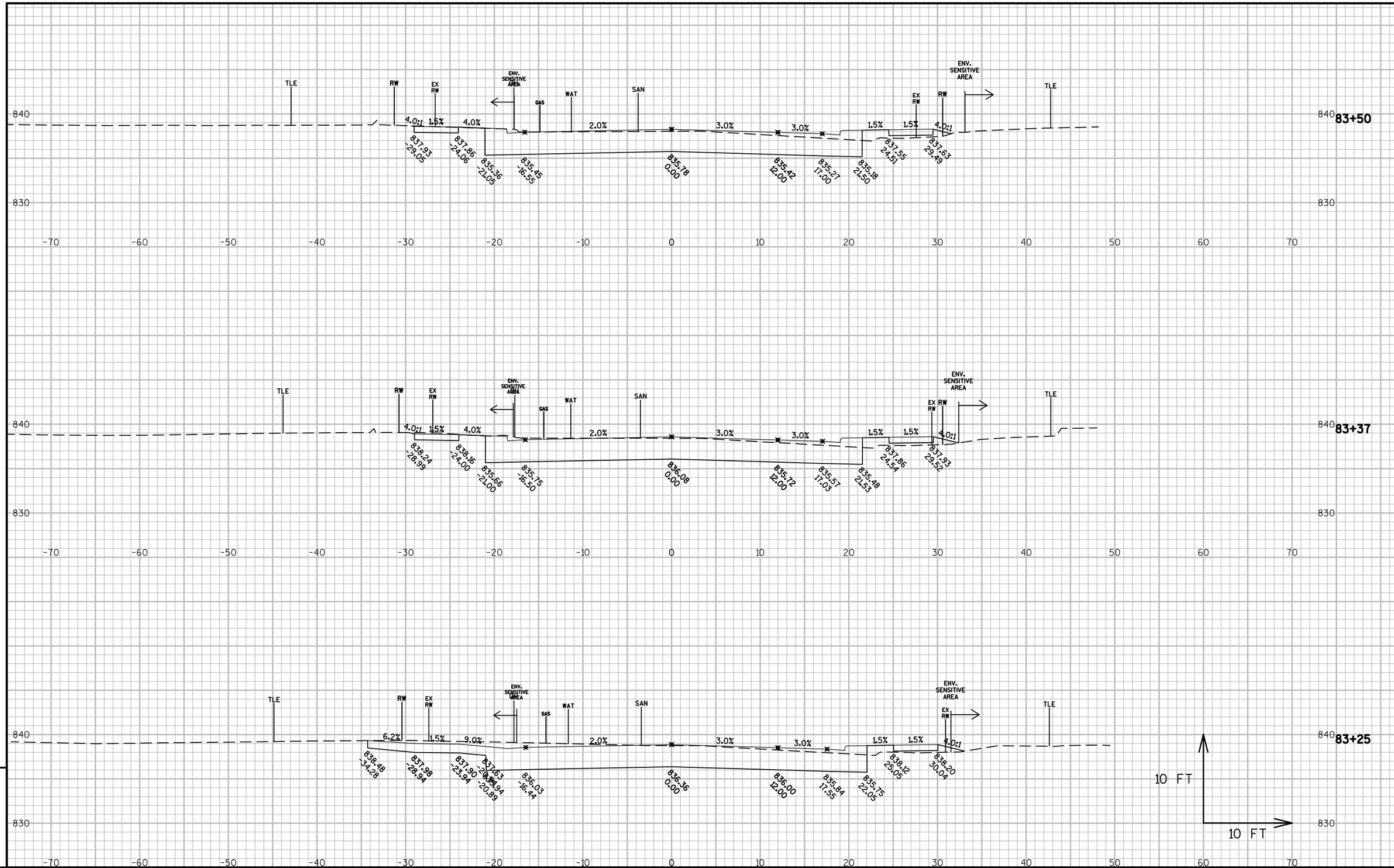

9

9

PROJECT NO:3300-01-73	HWY:STH 89	COUNTY:JEFFERSON	CROSS SECTIONS:STH 89 MAINLINE	SHEET 430	E

FILE NAME : N:\PDS\C3D\33000103\SHEETSPLAN\090201-CROSS SECTIONS\090202-XS.DWG
LAYOUT NAME - XS - (26)
PLOT DATE : 12/12/2017 2:45 PM PLOT BY : WHITE, JEREMY J PLOT NAME : PLOT SCALE : 1 IN:10 FT

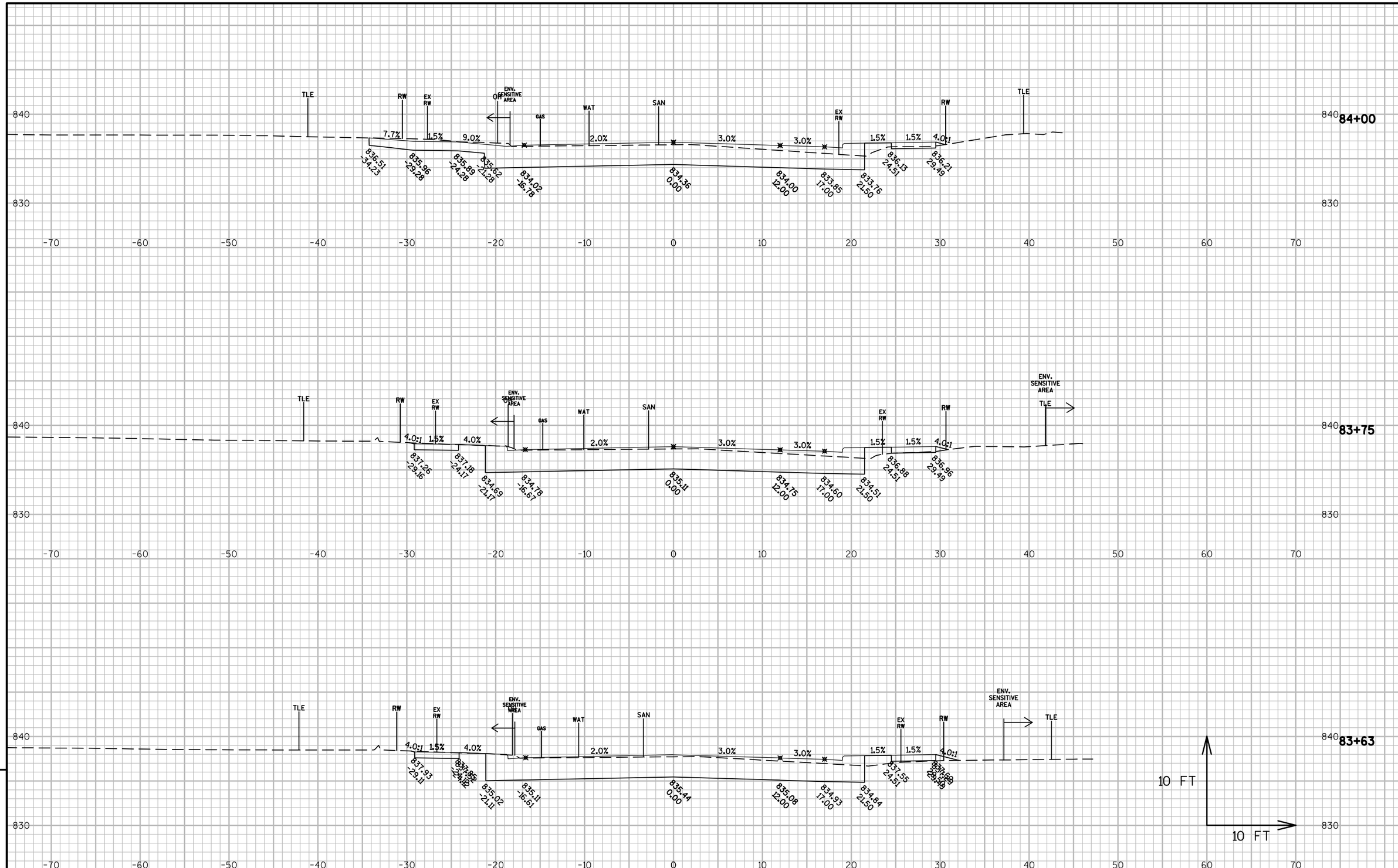

9

9

PROJECT NO:3300-01-73	HWY:STH 89	COUNTY:JEFFERSON	CROSS SECTIONS:STH 89 MAINLINE	SHEET 431	E

FILE NAME : N:\PDS\C3D\33000103\SHEETSPLAN\090201-CROSS SECTIONS\090202-XS.DWG
LAYOUT NAME - XS - (27)
PLOT DATE : 12/12/2017 2:45 PM PLOT BY : WHITE, JEREMY J PLOT NAME : PLOT SCALE : 1 IN:10 FT

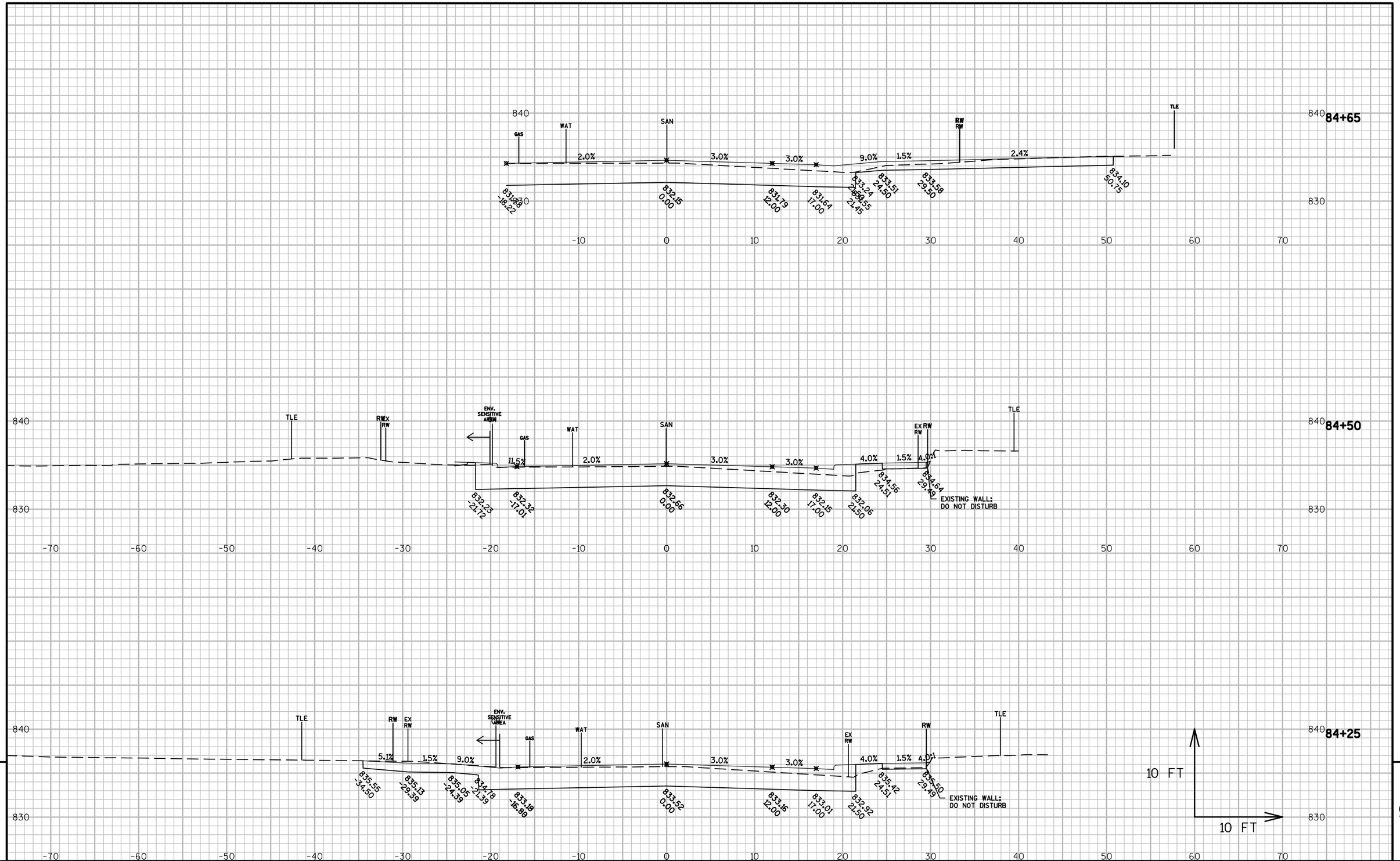

9

9

PROJECT NO:3300-01-73	HWY:STH 89	COUNTY:JEFFERSON	CROSS SECTIONS:STH 89 MAINLINE	SHEET 432	E

FILE NAME : N:\PDS\C3D\33000103\SHEETSPLAN\090201-CROSS SECTIONS\090202-XS.DWG
LAYOUT NAME - XS - (28)
PLOT DATE : 12/12/2017 2:45 PM PLOT BY : WHITE, JEREMY J PLOT NAME : PLOT SCALE : 1 IN:10 FT

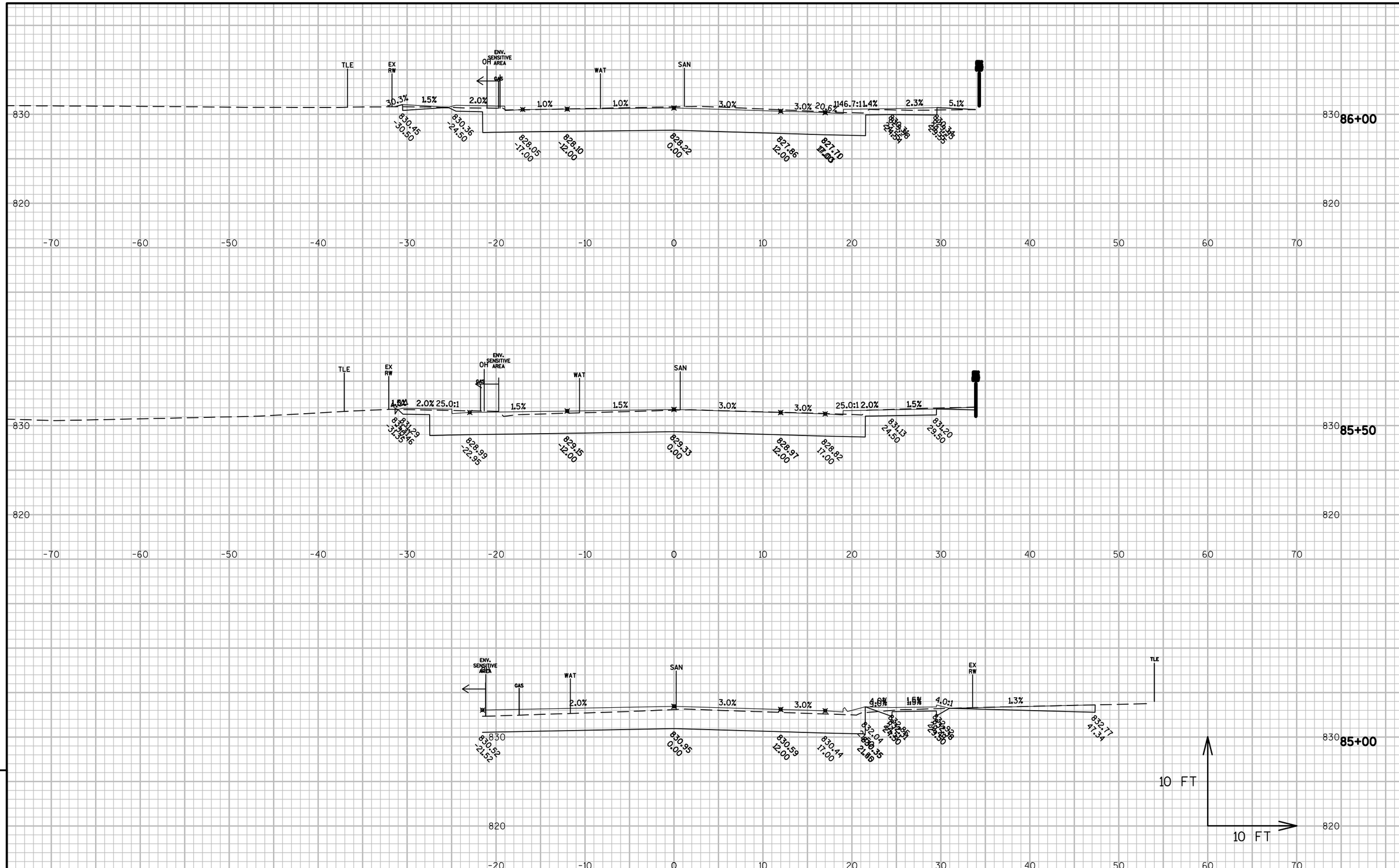

9

9

PROJECT NO:3300-01-73	HWY:STH 89	COUNTY:JEFFERSON	CROSS SECTIONS:STH 89 MAINLINE	SHEET 433	E

FILE NAME : N:\PDS\C3D\33000103\SHEETSPLAN\090201-CROSS SECTIONS\090202-XS.DWG
LAYOUT NAME - XS - (29)
PLOT DATE : 12/12/2017 2:46 PM PLOT BY : WHITE, JEREMY J PLOT NAME : PLOT SCALE : 1 IN:10 FT

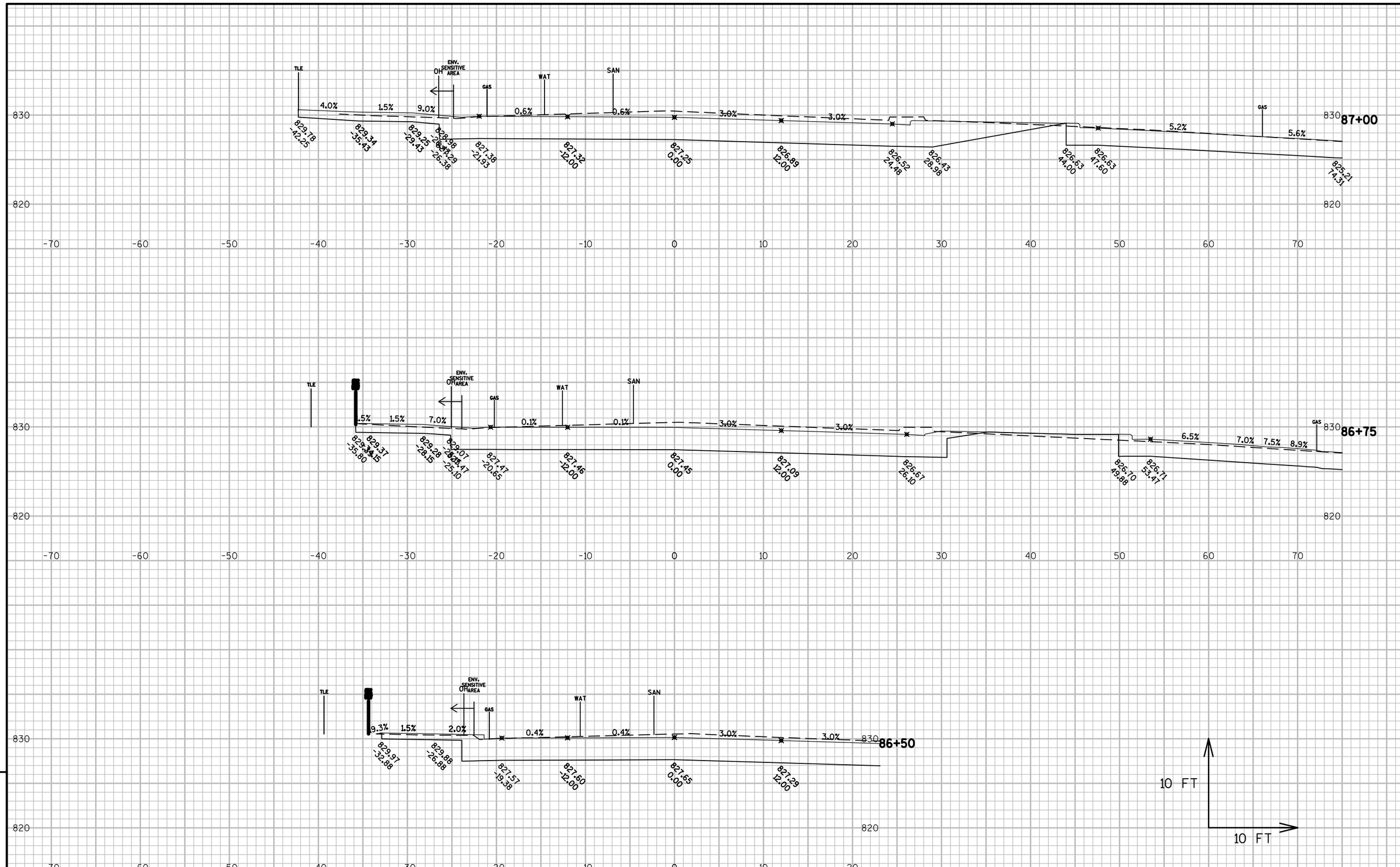

9

9

PROJECT NO:3300-01-73	HWY:STH 89	COUNTY:JEFFERSON	CROSS SECTIONS:STH 89 MAINLINE	SHEET 434	E

FILE NAME : N:\PDS\C3D\33000103\SHEETSPLAN\090201-CROSS SECTIONS\090202-XS.DWG
LAYOUT NAME - XS - (30)
PLOT DATE : 12/12/2017 2:46 PM PLOT BY : WHITE, JEREMY J PLOT NAME : PLOT SCALE : 1 IN:10 FT

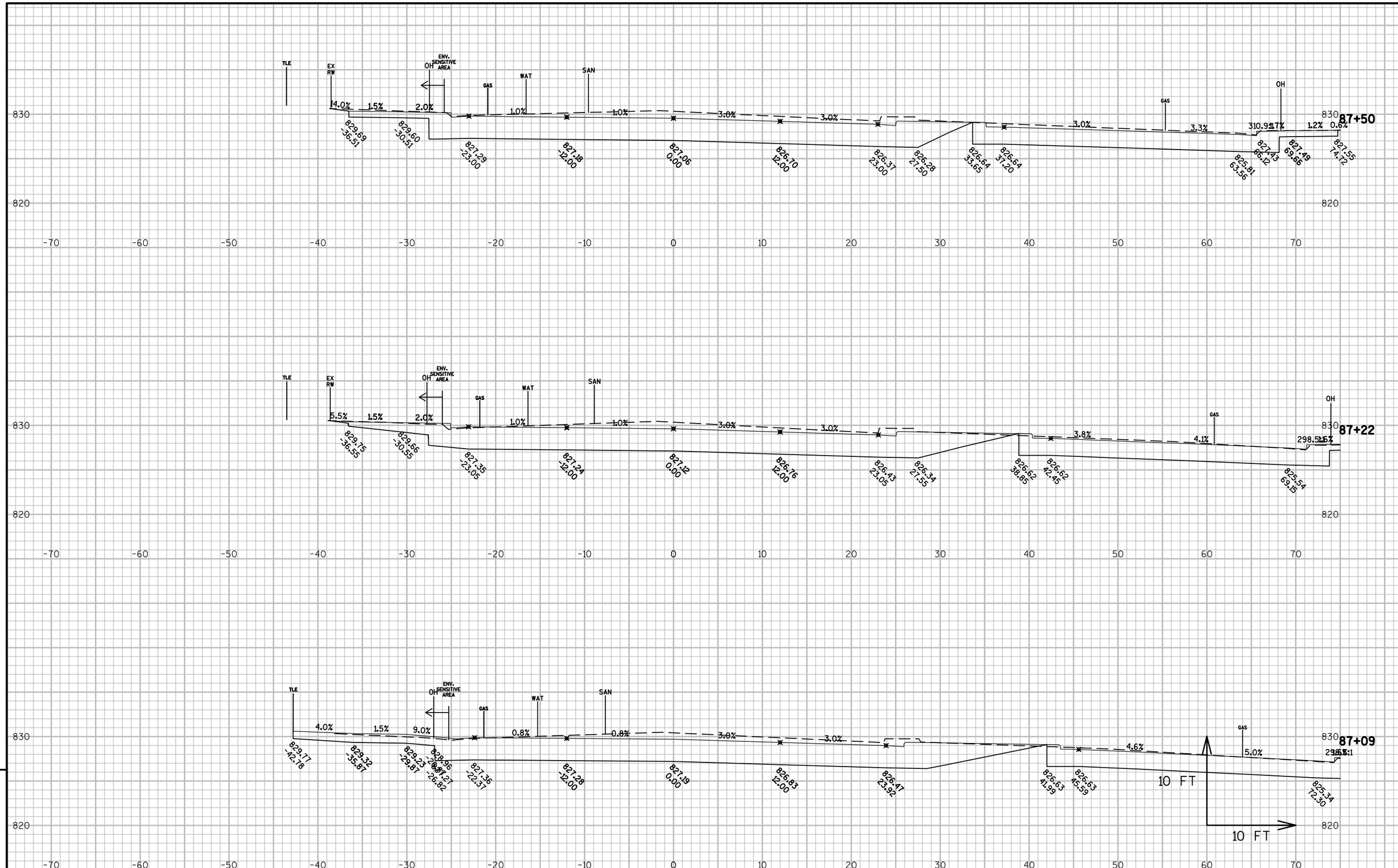

9

9

PROJECT NO:3300-01-73	HWY:STH 89	COUNTY:JEFFERSON	CROSS SECTIONS:STH 89 MAINLINE	SHEET 435	E

FILE NAME : N:\PDS\C3D\33000103\SHEETSPLAN\090201-CROSS SECTIONS\090202-XS.DWG
LAYOUT NAME - XS - (31)
PLOT DATE : 12/12/2017 2:46 PM PLOT BY : WHITE, JEREMY J PLOT NAME : PLOT SCALE : 1 IN:10 FT

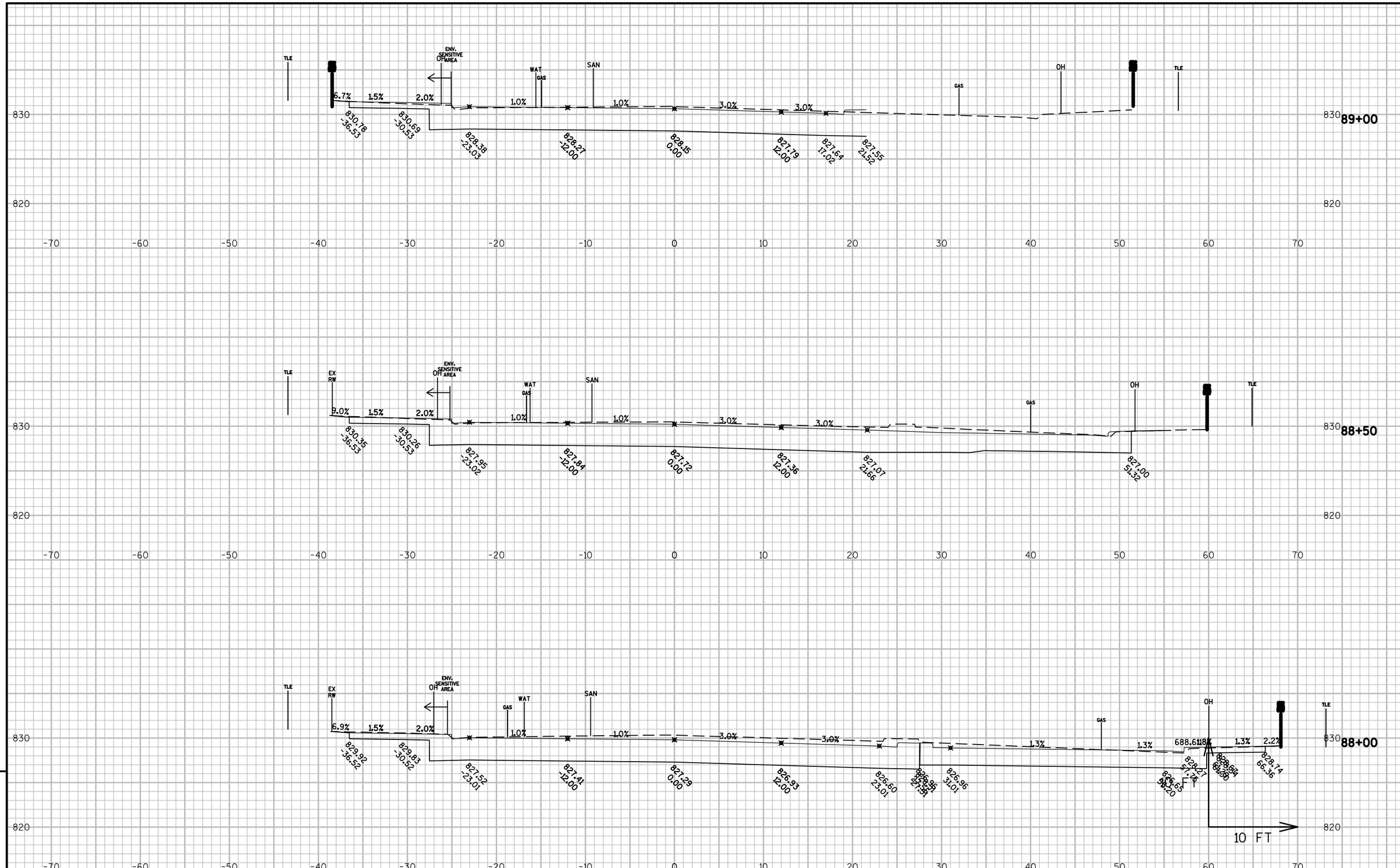

9

9

PROJECT NO:3300-01-73	HWY:STH 89	COUNTY:JEFFERSON	CROSS SECTIONS:STH 89 MAINLINE	SHEET 436	E

FILE NAME : N:\PDS\C3D\33000103\SHEETSPLAN\090201-CROSS SECTIONS\090202-XS.DWG
LAYOUT NAME - XS - (32)
PLOT DATE : 12/12/2017 2:47 PM PLOT BY : WHITE, JEREMY J PLOT NAME : PLOT SCALE : 1 IN:10 FT

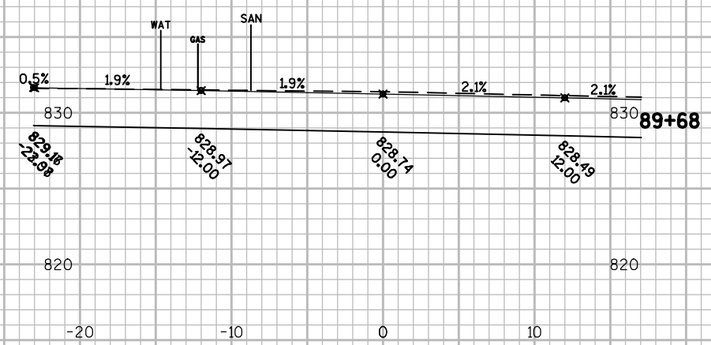

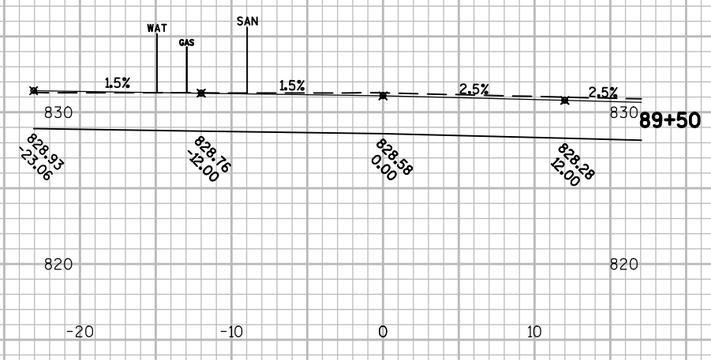

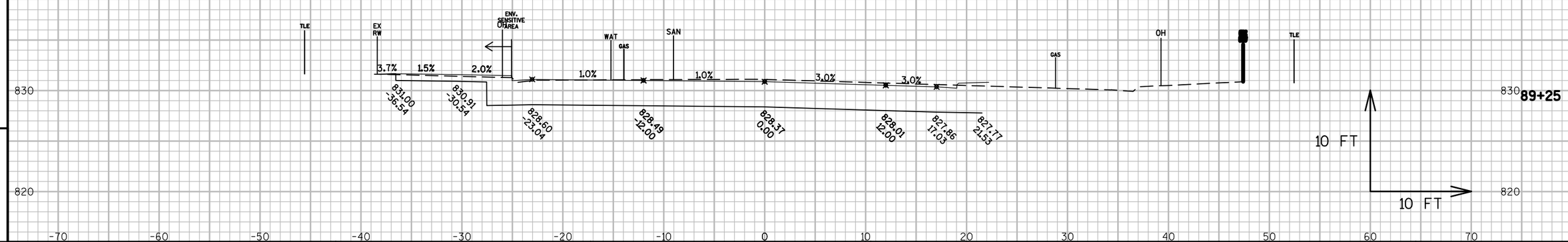

9

9

PROJECT NO:3300-01-73	HWY:STH 89	COUNTY:JEFFERSON	CROSS SECTIONS:STH 89 MAINLINE	SHEET 437	E

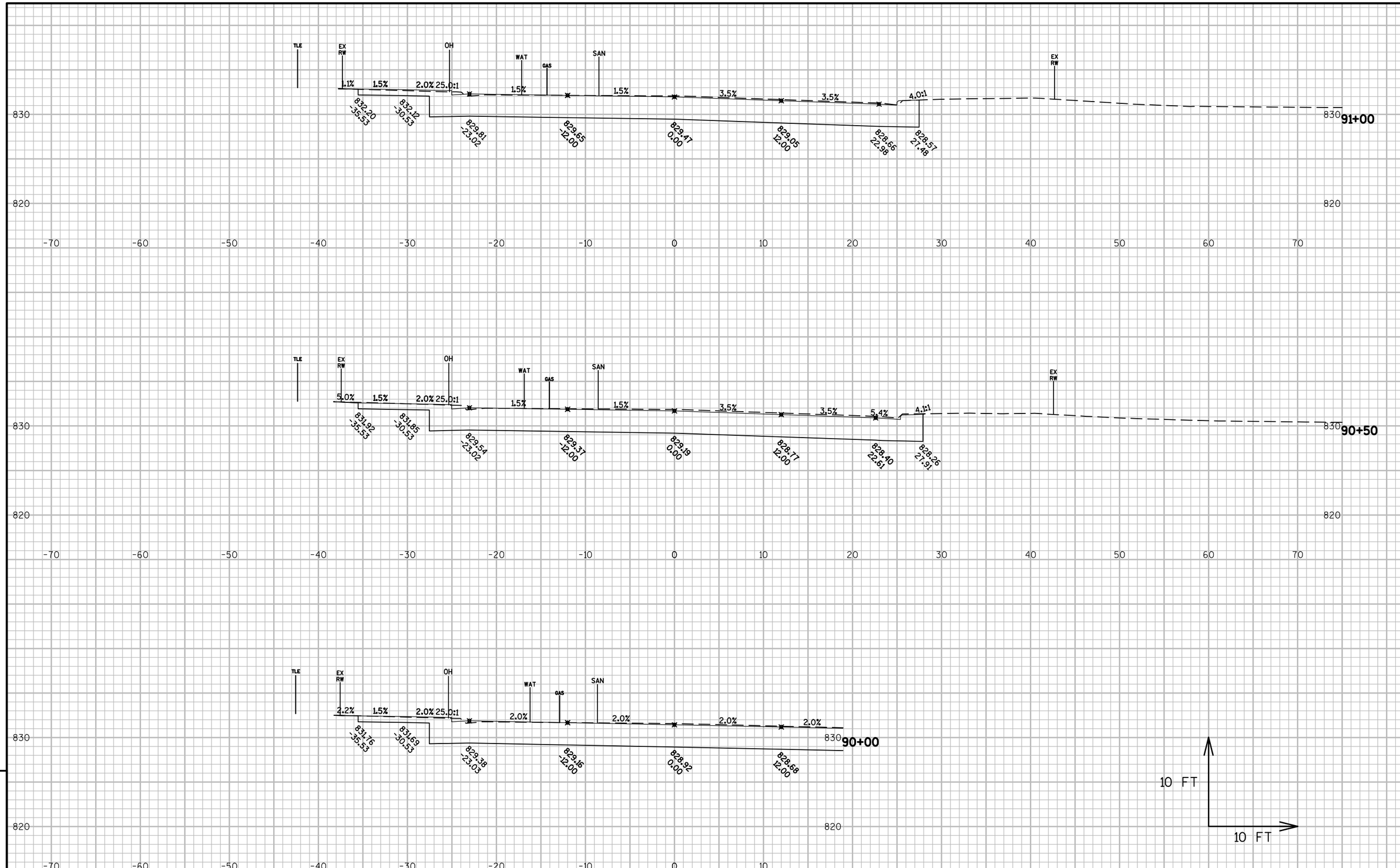

9

9

PROJECT NO:3300-01-73	HWY:STH 89	COUNTY:JEFFERSON	CROSS SECTIONS:STH 89 MAINLINE	SHEET 438	E

FILE NAME : N:\PDS\C3D\33000103\SHEETSPLAN\090201-CROSS SECTIONS\090202-XS.DWG
LAYOUT NAME - XS - (34)
PLOT DATE : 12/12/2017 2:47 PM PLOT BY : WHITE, JEREMY J PLOT NAME : PLOT SCALE : 1 IN:10 FT

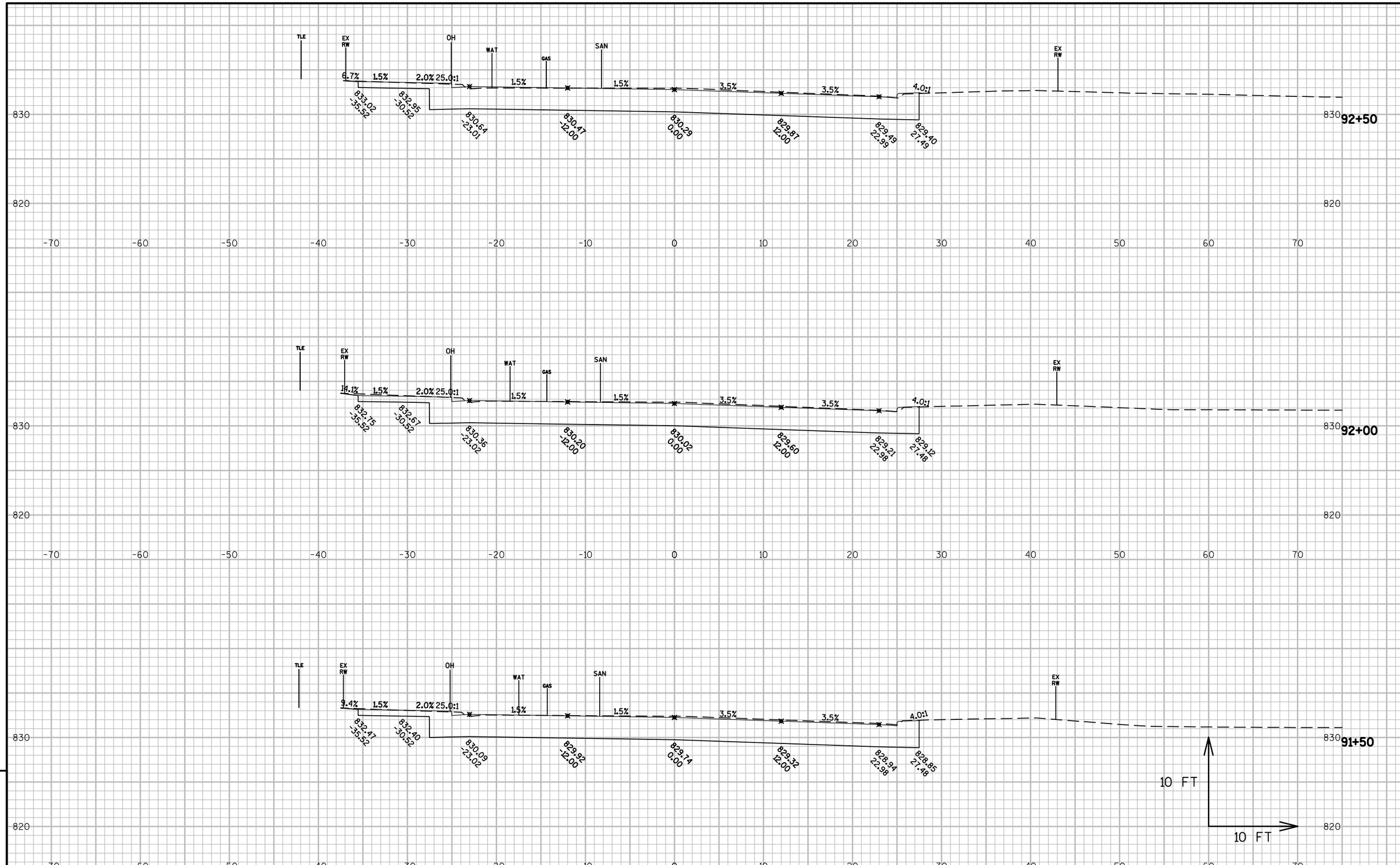

PROJECT NO:3300-01-73	HWY:STH 89	COUNTY:JEFFERSON	CROSS SECTIONS:STH 89 MAINLINE	SHEET 439	E

FILE NAME : N:\PDS\C3D\33000103\SHEETSPLAN\090201-CROSS SECTIONS\090202-XS.DWG
LAYOUT NAME - XS - (35)
PLOT DATE : 12/12/2017 2:47 PM PLOT BY : WHITE, JEREMY J PLOT NAME : PLOT SCALE : 1 IN:10 FT

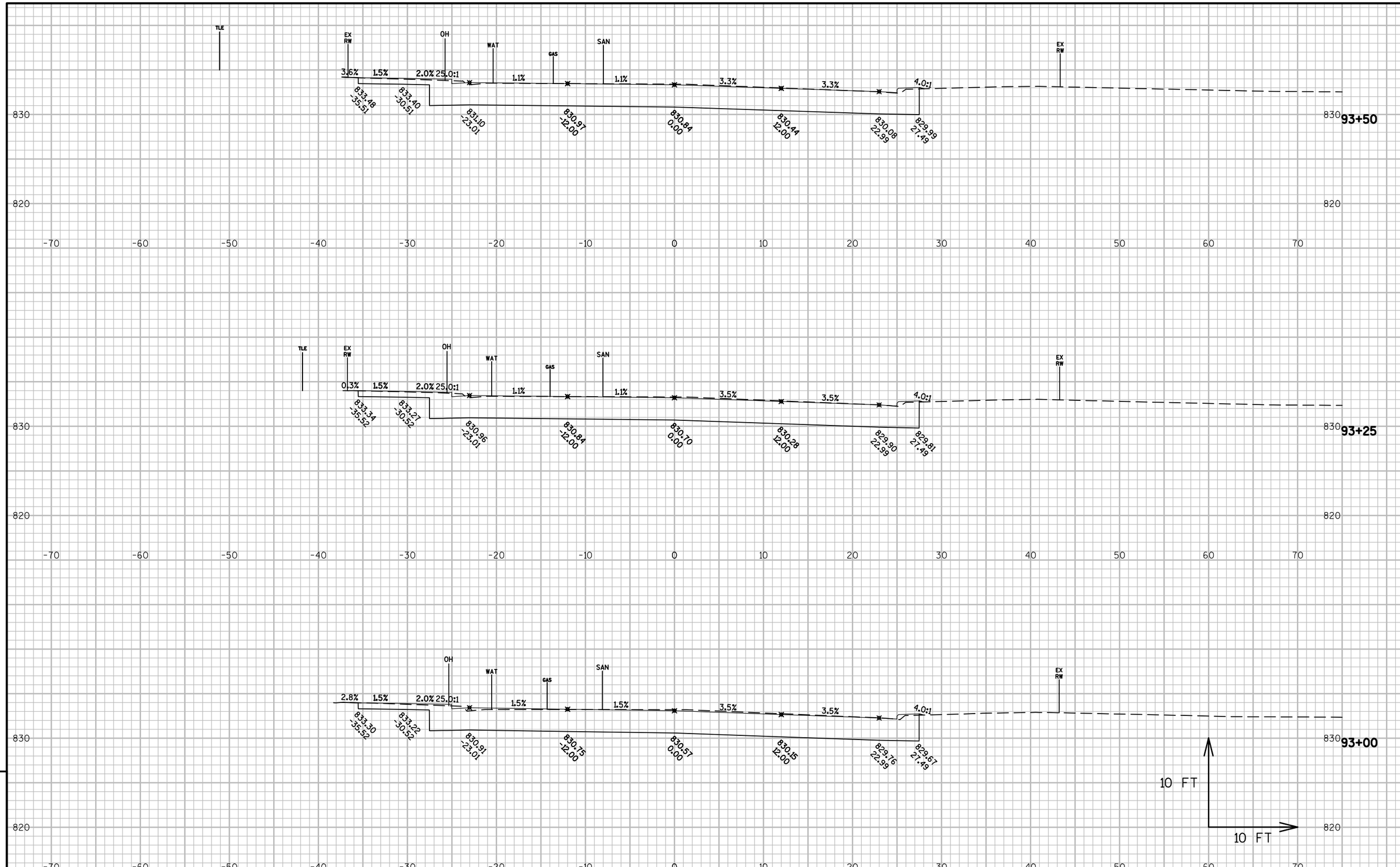

9

9

PROJECT NO:3300-01-73	HWY:STH 89	COUNTY:JEFFERSON	CROSS SECTIONS:STH 89 MAINLINE	SHEET 440	E

FILE NAME : N:\PDS\C3D\33000103\SHEETSPLAN\090201-CROSS SECTIONS\090202-XS.DWG
LAYOUT NAME - XS - (36)
PLOT DATE : 12/12/2017 2:48 PM PLOT BY : WHITE, JEREMY J PLOT NAME : PLOT SCALE : 1 IN:10 FT

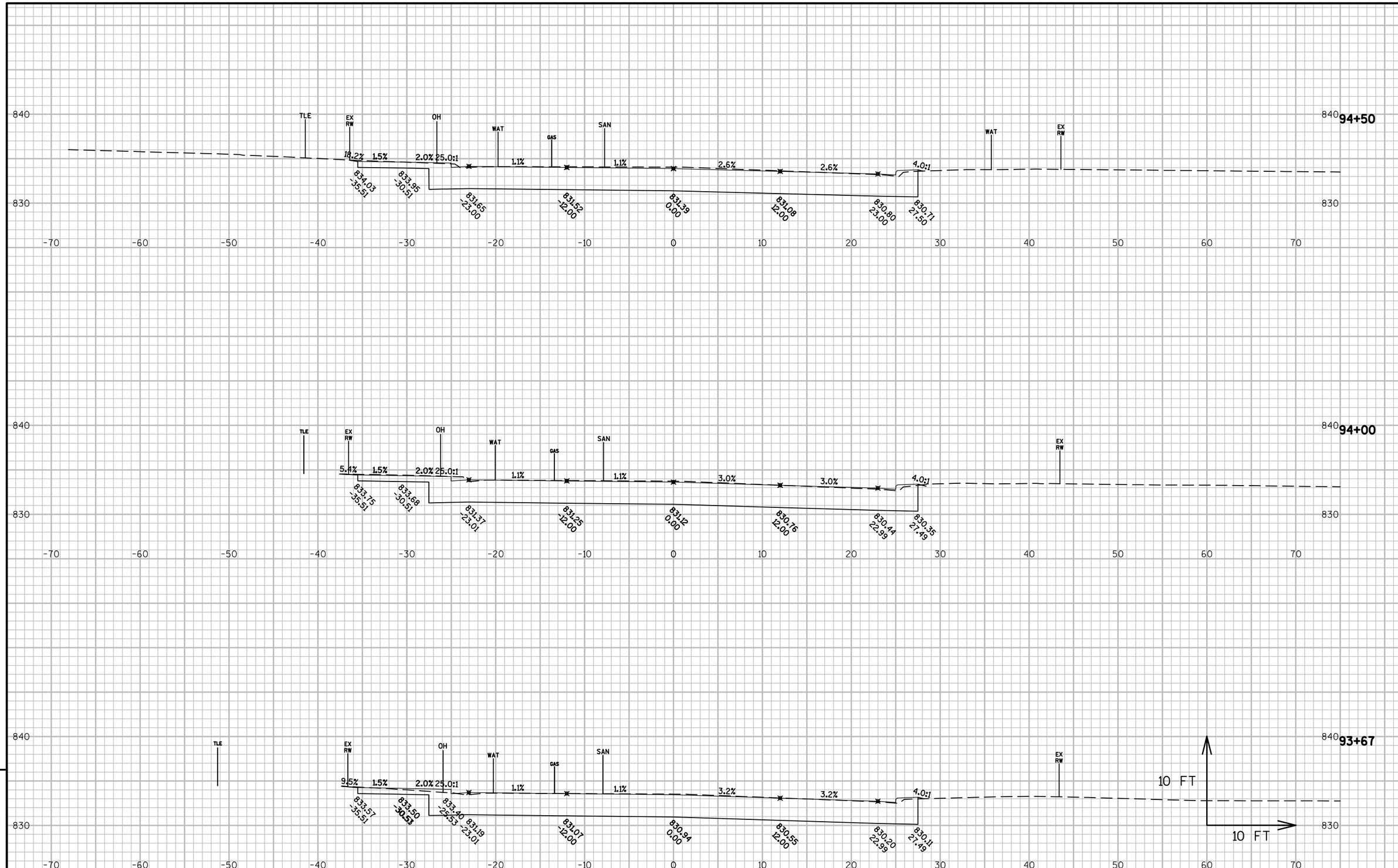

9

9

PROJECT NO:3300-01-73	HWY:STH 89	COUNTY:JEFFERSON	CROSS SECTIONS:STH 89 MAINLINE	SHEET 441	E

FILE NAME : N:\PDS\C3D\33000103\SHEETSPLAN\090201-CROSS SECTIONS\090202-XS.DWG
LAYOUT NAME - XS - (37)
PLOT DATE : 12/12/2017 2:48 PM PLOT BY : WHITE, JEREMY J PLOT NAME : PLOT SCALE : 1 IN:10 FT

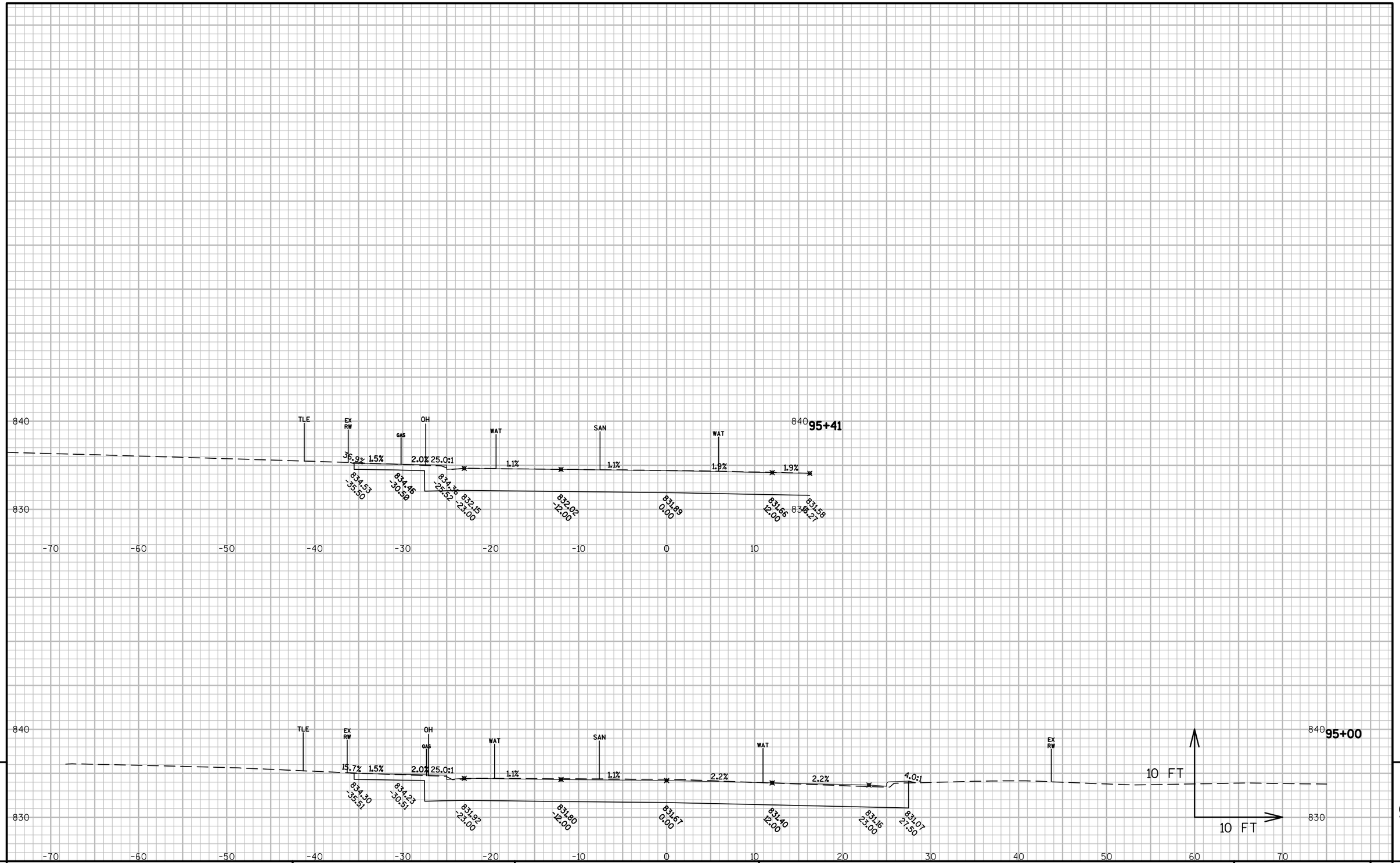

9

9

PROJECT NO:3300-01-73	HWY:STH 89	COUNTY:JEFFERSON	CROSS SECTIONS:STH 89 MAINLINE	SHEET 442	E

FILE NAME : N:\PDS\C3D\33000103\SHEETSPLAN\090201-CROSS SECTIONS\090202-XS.DWG
LAYOUT NAME - XS - (38)
PLOT DATE : 12/12/2017 2:48 PM PLOT BY : WHITE, JEREMY J PLOT NAME : PLOT SCALE : 1 IN:10 FT

WISDOT/CADDS SHEET 49

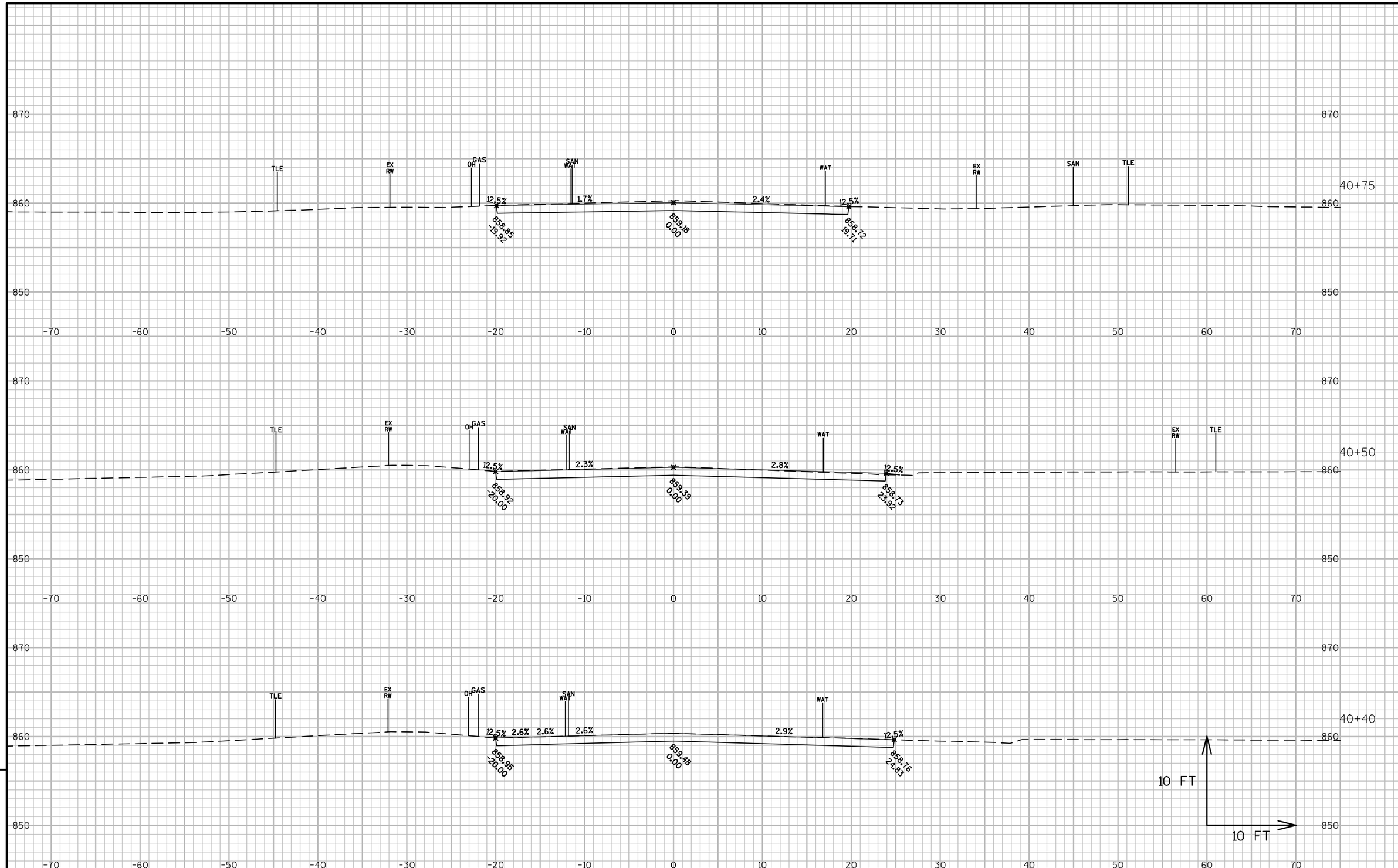

9

9

PROJECT NO:3300-01-73	HWY:STH 89	COUNTY:JEFFERSON	CROSS SECTIONS: TEMP LANE WINTER CARRYOVER	SHEET 443	E

FILE NAME : N:\PDS\C3D\33000103\SHEETSPLAN\090201-CROSS SECTIONS\090204-XS-WINTER CARRYOVER.DWG
LAYOUT NAME - WC - (1)

PLOT DATE : 7/28/2017 1:33 PM PLOT BY : WHITE, JEREMY J PLOT NAME : PLOT SCALE : 1 IN:10 FT

WISDOT/CADDS SHEET 49

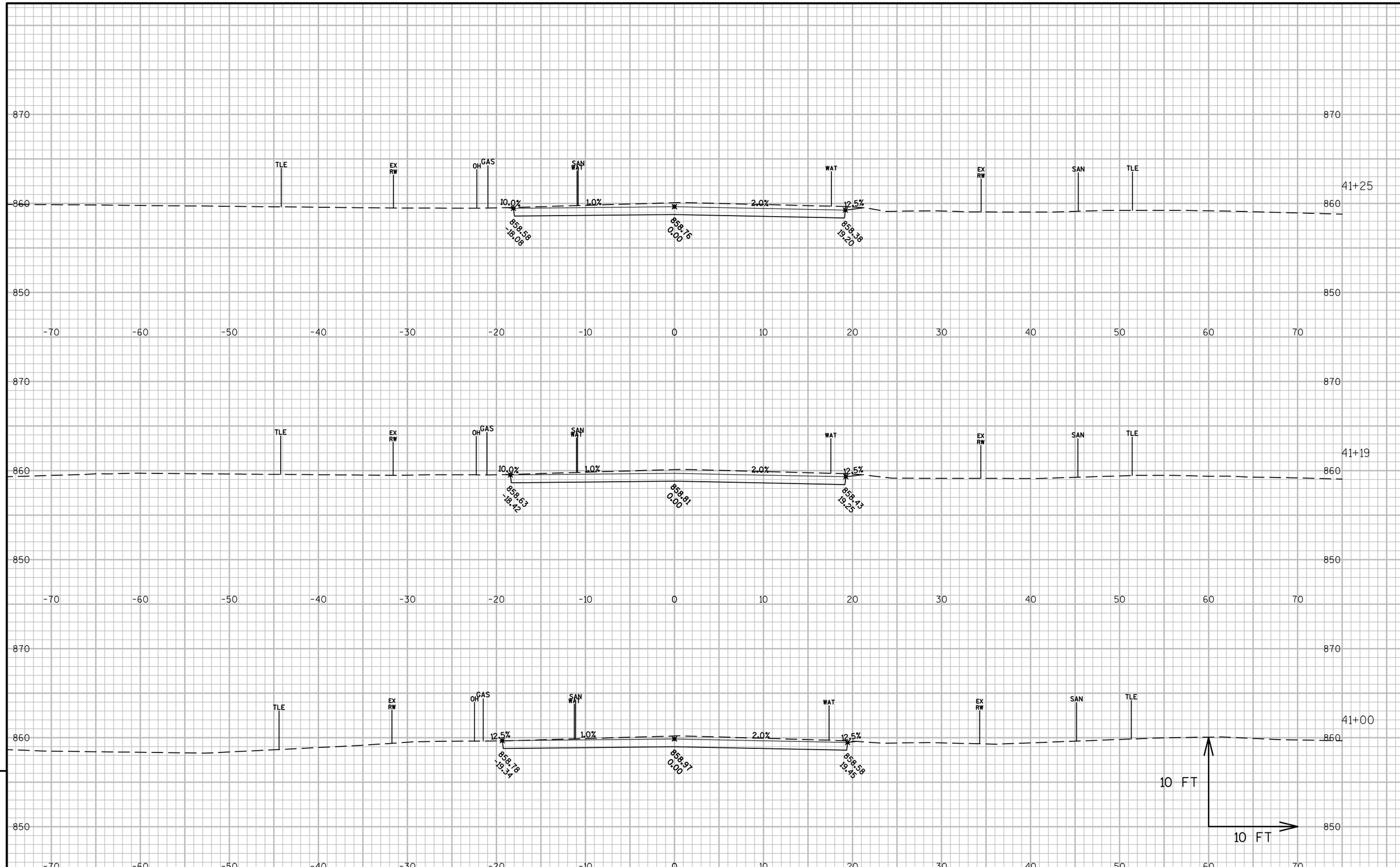

9

9

PROJECT NO:3300-01-73	HWY:STH 89	COUNTY:JEFFERSON	CROSS SECTIONS: TEMP LANE WINTER CARRYOVER	SHEET 444	E

FILE NAME : N:\PDS\C3D\33000103\SHEETSPLAN\090201-CROSS SECTIONS\090204-XS-WINTER CARRYOVER.DWG
LAYOUT NAME - WC - (2)
PLOT DATE : 7/28/2017 1:33 PM PLOT BY : WHITE, JEREMY J PLOT NAME : PLOT SCALE : 1 IN:10 FT

WISDOT/CADDS SHEET 49

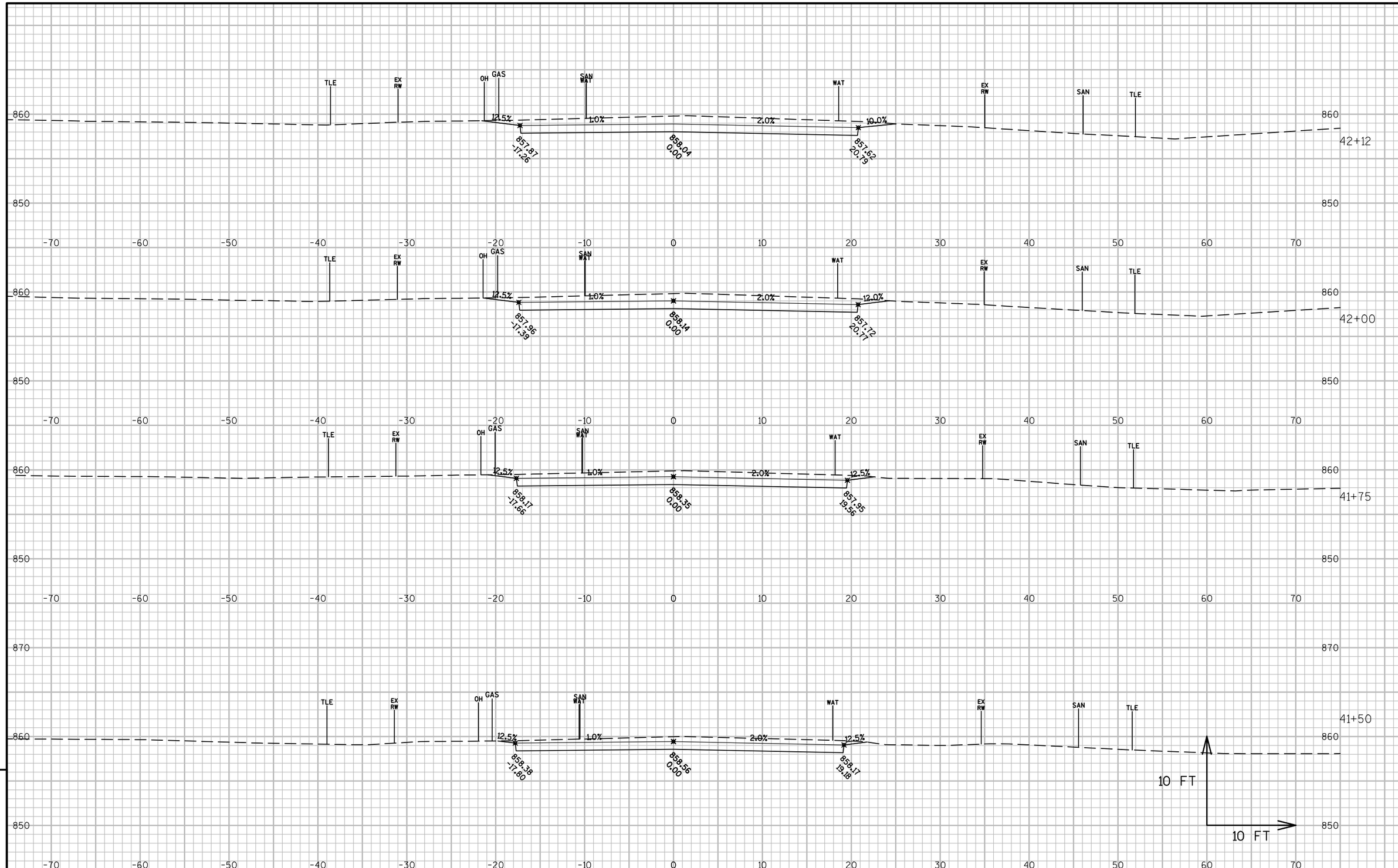

PROJECT NO:3300-01-73	HWY:STH 89	COUNTY:JEFFERSON	CROSS SECTIONS: TEMP LANE WINTER CARRYOVER	SHEET 445	E

FILE NAME : N:\PDS\C3D\33000103\SHEETSPLAN\090201-CROSS SECTIONS\090204-XS-WINTER CARRYOVER.DWG
LAYOUT NAME - WC - (3)
PLOT DATE : 7/28/2017 1:33 PM PLOT BY : WHITE, JEREMY J PLOT NAME : PLOT SCALE : 1 IN:10 FT

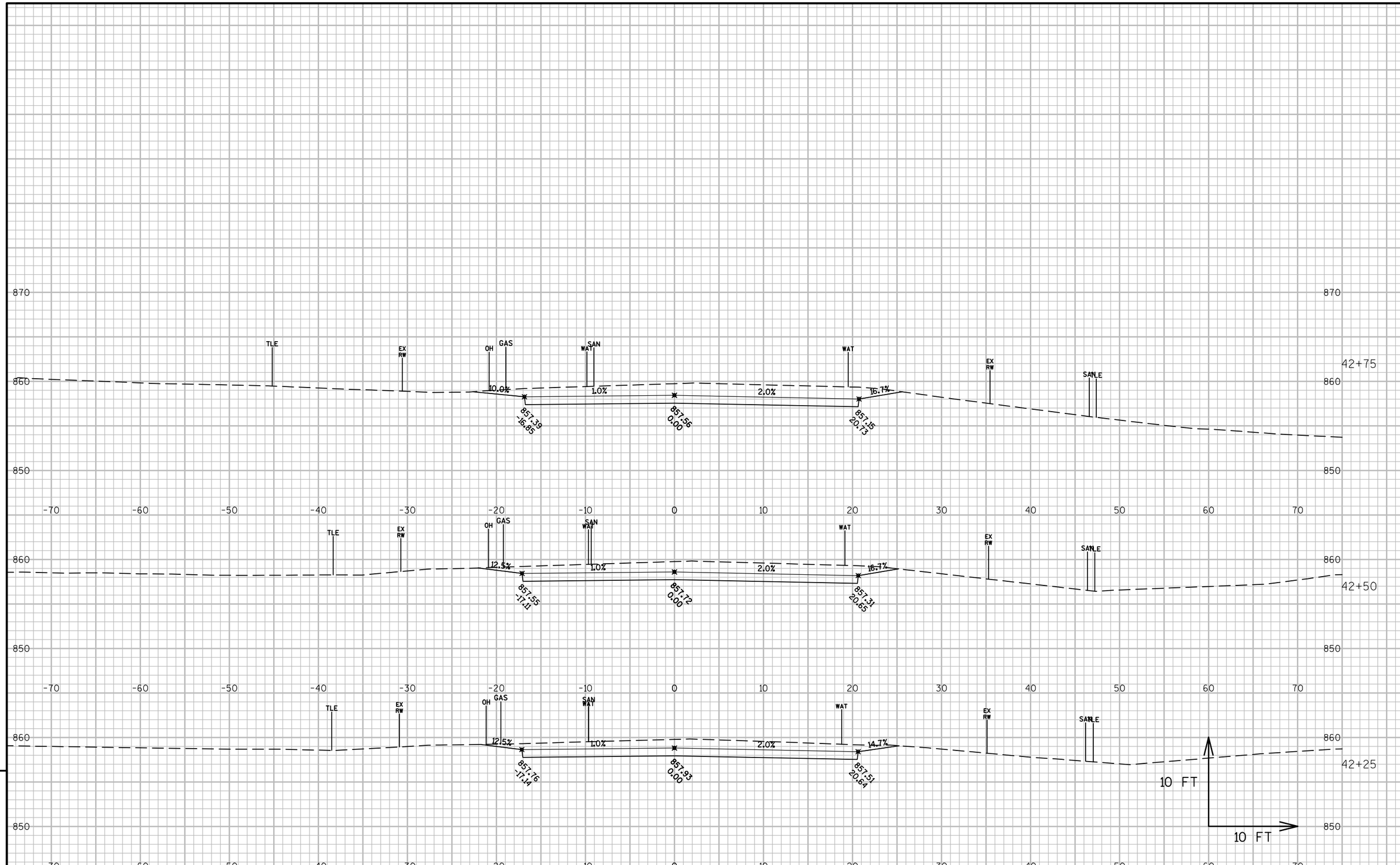

PROJECT NO:3300-01-73	HWY:STH 89	COUNTY:JEFFERSON	CROSS SECTIONS: TEMP LANE WINTER CARRYOVER	SHEET 446	E

FILE NAME : N:\PDS\C3D\33000103\SHEETSPLAN\090201-CROSS SECTIONS\090204-XS-WINTER CARRYOVER.DWG
LAYOUT NAME - WC - (4)
PLOT DATE : 7/28/2017 1:34 PM PLOT BY : WHITE, JEREMY J PLOT NAME : PLOT SCALE : 1 IN:10 FT

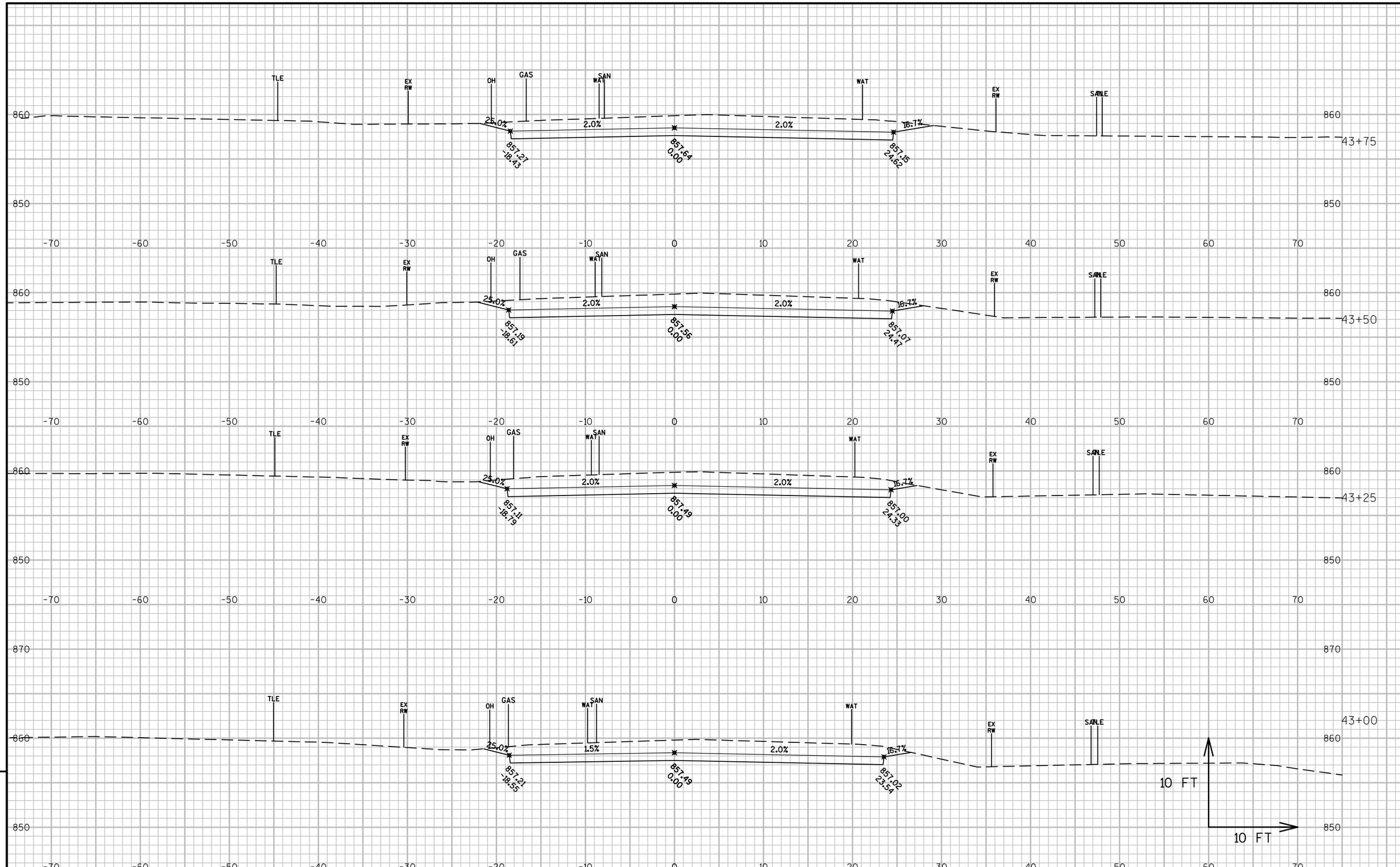

PROJECT NO:3300-01-73	HWY:STH 89	COUNTY:JEFFERSON	CROSS SECTIONS: TEMP LANE WINTER CARRYOVER	SHEET 447	E

FILE NAME : N:\PDS\C3D\33000103\SHEETSPLAN\090201-CROSS SECTIONS\090204-XS-WINTER CARRYOVER.DWG
LAYOUT NAME - WC - (5)
PLOT DATE : 7/28/2017 1:34 PM PLOT BY : WHITE, JEREMY J PLOT NAME : PLOT SCALE : 1 IN:10 FT

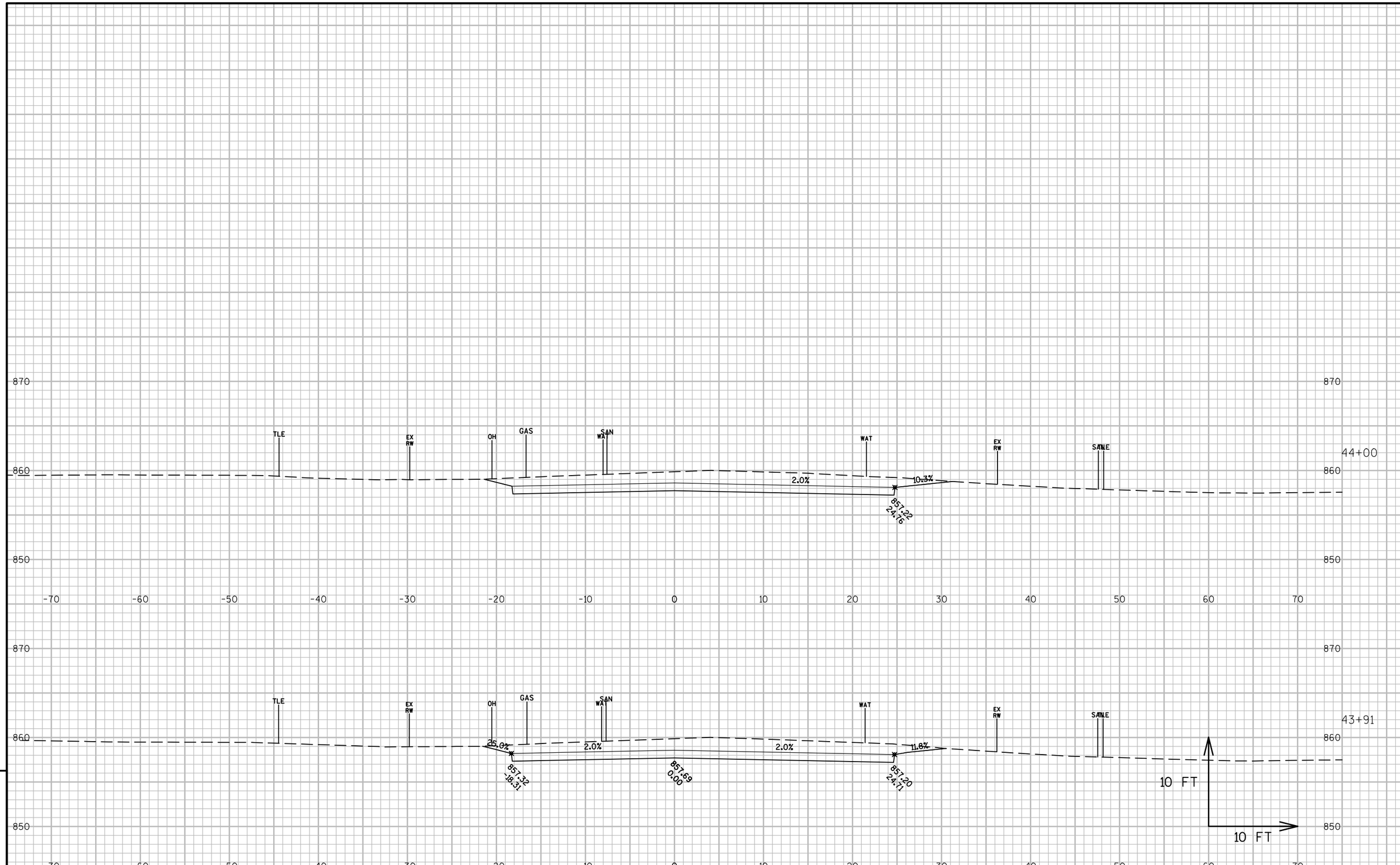

PROJECT NO:3300-01-73	HWY:STH 89	COUNTY:JEFFERSON	CROSS SECTIONS: TEMP LANE WINTER CARRYOVER	SHEET 448	E

FILE NAME : N:\PDS\C3D\33000103\SHEETSPLAN\090201-CROSS SECTIONS\090204-XS-WINTER CARRYOVER.DWG
LAYOUT NAME - WC - (6)
PLOT DATE : 7/28/2017 1:34 PM PLOT BY : WHITE, JEREMY J PLOT NAME : PLOT SCALE : 1 IN:10 FT

Notes

Wisconsin Department of Transportation

Dedicated people creating transportation solutions through innovation and exceptional service.

http://www.dot.wisconsin.gov