GRE

PROJECT ID: 9021-06-71

COUNTY: OCONTO

JANUARY 2018

ORDER OF SHEETS

Section No.	1	Title
Section No.	2	Typical Sections and Details (includes Erosion Control)
Section No.	3	Estimate of Quantities
Section No.	3	Miscellaneous Quantities
~~Section No.~~	~~4~~	~~Right of Way Plat~~
Section No.	5	Plan and Profile
Section No.	6	Standard Detail Drawings
Section No.	7	Sign Plates
Section No.	8	Structure Plans
Section No.	9	Computer Earthwork Data
Section No.	9	Cross Sections

TOTAL SHEETS = 48

STATE OF WISCONSIN
DEPARTMENT OF TRANSPORTATION

PLAN OF PROPOSED IMPROVEMENT

T LENA, SUNSHINE RD

KELLY BROOK BRIDGE & APPROACHES

LOC STR

OCONTO COUNTY

STATE PROJECT	FEDERAL PROJECT	
	PROJECT	CONTRACT
9021-06-71	WISC 2018049	1

STATE PROJECT NUMBER
9021-06-71

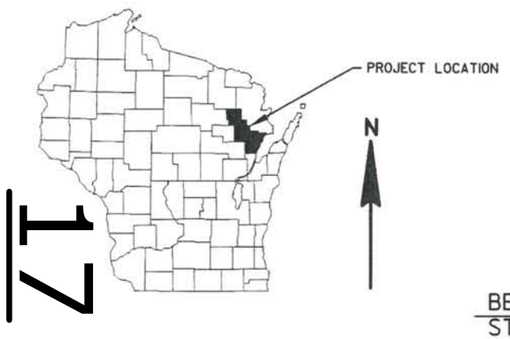

DESIGN DESIGNATION

A.A.D.T.	2018	=	160
A.A.D.T.	2038	=	195
D.H.V.		=	52
D.D.		=	60/40
T.		=	5.7%
DESIGN SPEED		=	35 MPH
ESALS		=	15,000

BEGIN PROJECT 9021-06-71
STA 8+50.00
Y = 204816.348
X = 553714.963

STRUCTURE B-42-133

END PROJECT 9021-06-71
STA 12+00.00

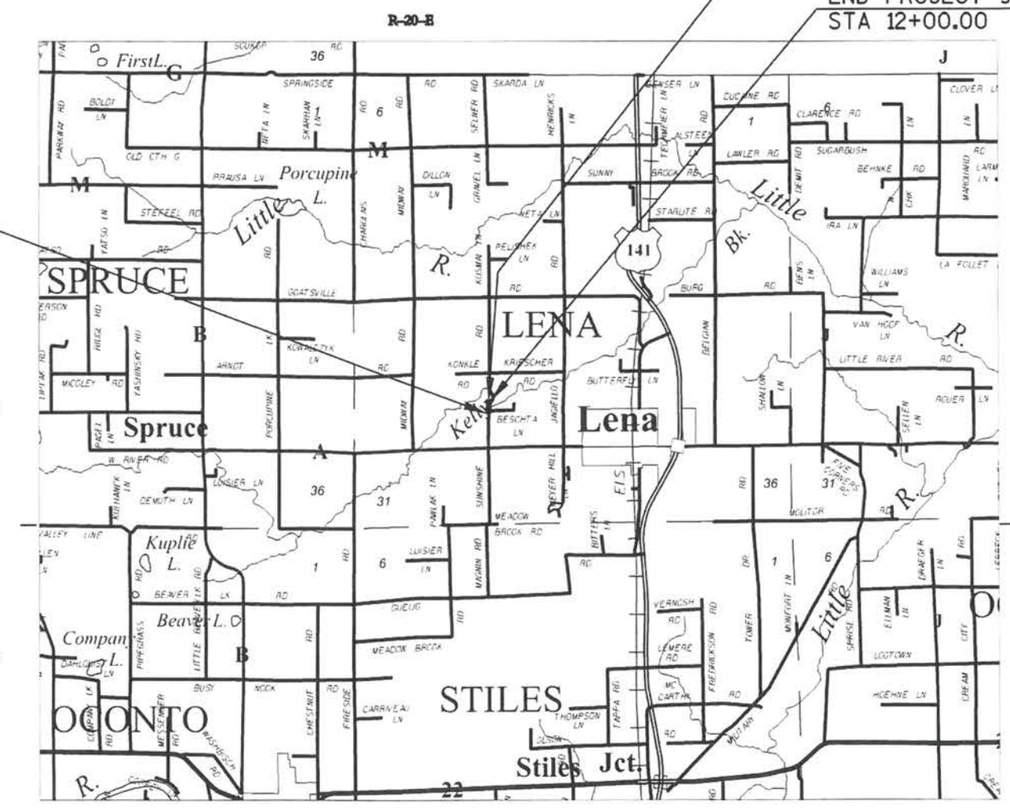

LAYOUT
SCALE 0 — 2 MI

TOTAL NET LENGTH OF CENTERLINE = 0.066 MILES

HORIZONTAL POSITIONS SHOWN ON THIS PLAN ARE WISCONSIN COUNTY COORDINATES, OCONTO COUNTY, NAD83 (2011), IN U.S. SURVEY FEET. VALUES ARE GRID COORDINATES, GRID BEARINGS, AND GRID DISTANCES. GRID DISTANCES MAY BE USED AS GROUND DISTANCES.

CONVENTIONAL SYMBOLS

PLAN
- CORPORATE LIMITS
- PROPERTY LINE
- LOT LINE
- LIMITED HIGHWAY EASEMENT
- EXISTING RIGHT OF WAY
- PROPOSED OR NEW R/W LINE
- SLOPE INTERCEPT
- REFERENCE LINE
- EXISTING CULVERT
- PROPOSED CULVERT (Box or Pipe)
- COMBUSTIBLE FLUIDS (CAUTION)
- WETLAND AREA
- WOODED OR SHRUB AREA

PROFILE
- GRADE LINE
- ORIGINAL GROUND
- MARSH OR ROCK PROFILE (To be noted as such) (ROCK)
- SPECIAL DITCH (LABEL)
- GRADE ELEVATION (95.36)
- CULVERT (Profile View)

UTILITIES
- ELECTRIC — E —
- FIBER OPTIC — FO —
- GAS — G —
- SANITARY SEWER — SAN —
- STORM SEWER — SS —
- TELEPHONE — T —
- WATER — W —
- UTILITY PEDESTAL
- POWER POLE
- TELEPHONE POLE

ACCEPTED FOR OCONTO COUNTY
DATE 7/24/17 Patrick J. Scanlan (Signature)

ORIGINAL PLANS PREPARED BY
OMNI ASSOCIATES

WISCONSIN PROFESSIONAL ENGINEER
KRISTOFER R. OLSON
E-35236
APPLETON, WI
7/21/17

STATE OF WISCONSIN
DEPARTMENT OF TRANSPORTATION

PREPARED BY
Surveyor: OMNNI ASSOCIATES
Designer: OMNNI ASSOCIATES
Management Consultant: JT ENGINEERING

APPROVED FOR THE DEPARTMENT
DATE: 7/25/17
Management Consultant Signature

E

GENERAL NOTES

THE LOCATIONS OF EXISTING AND PROPOSED UTILITY FACILITIES AS SHOWN ON THE PLANS ARE APPROXIMATE. THERE MAY BE OTHER UTILITY FACILITIES WITHIN THE PROJECT AREA THAT ARE NOT SHOWN.

FILL AS SHOWN ON THE PLANS PERTAINS TO EMBANKMENTS CONSTRUCTED FROM COMMON EXCAVATION. THE ALLOWANCE USED FOR EXPANDING THE FILLS TO COMPUTE THE VOLUME OF MATERIAL REQUIRED IS 25 PERCENT. ALL FILL VOLUMES SHOWN ARE THE ACTUAL VOLUMES.

ASPHALTIC SURFACE 4" DEPTH TO BE CONSTRUCTED AS FOLLOWS:
- 1 3/4" UPPER LAYER (12.5 mm NOMINAL SIZE AGGREGATE)
- 2 1/4" LOWER LAYER (19 mm NOMINAL SIZE AGGREGATE)

NO TREES OR SHRUBS ARE TO BE REMOVED WITHOUT THE APPROVAL OF THE ENGINEER.

ALL DISTURBED AREAS, NOT OTHERWISE SURFACED ARE TO BE TOPSOILED, FERTILIZED, TEMPORARY SEEDED, SEEDED AND MULCHED.

SEED MIXTURE NO. 30 SHALL BE USED ON ALL DISTURBED AREAS, EXCEPT WETLANDS SHALL BE SEEDED WITH MIXTURE NO. 60.

FERTILIZER SHALL NOT BE USED WITHIN 10 FEET OF NAVIGABLE WATERWAYS AND WETLANDS.

WETLAND AREAS ARE SHOWN ON THE PLANS. CONTRACTOR SHALL LIMIT CONSTRUCTION ACTIVITIES TO WORK WITHIN THE SLOPE INTERCEPTS IN THE WETLAND AREAS.

THE EXACT LOCATIONS OF ALL EROSION CONTROL ITEMS SHALL BE DETERMINED BY THE ENGINEER IN THE FIELD.

DISTANCES SHOWN ON THIS PLAN ARE GROUND DISTANCES.

PLAN ELEVATIONS = USGS DATUM, NAVD 88 (2012A)

THE WISCONSIN DEPARTMENT OF TRANSPORTATION WILL FURNISH THE CONTRACTOR A MONUMENT WHICH SHALL BE SET IN THE STRUCTURE AS DESIGNATED BY THE ENGINEER.

EROSION CONTROL NOTES

RUNOFF COEFFICIENTS FOR THIS PROJECT: EXISTING PAVEMENT 0.95, EXISTING SLOPES 0.30, NEW PAVEMENT 0.95, NEW SLOPES 0.30.

TOTAL PROJECT AREA = 0.59 ACRES
TOTAL AREA EXPECTED TO BE DISTURBED BY CONSTRUCTION ACTIVITIES = 0.40 ACRES

CONTACTS

ELECTRIC	OCONTO ELECTRIC COOPERATIVE PO BOX 168 OCONTO FALLS, WI 54154 ATTN: JACK PARDY TELEPHONE: 920-846-2816 EMAIL: jpardy@ocontoelectric.com
TELEPHONE	CENTURY LINK ATTN: PETER JOHNSON 2425 MARY STREET MARINETTE, WI 54143 TELEPHONE: 920-735-0059 EMAIL: peter.s.johnson@centurylink.com
DNR LIAISON	JIM DOPERALSKI DEPARTMENT OF NATURAL RESOURCES NORTH EAST REGION HEADQUARTERS 2984 SHAWANO AVENUE GREEN BAY, WI 54313 TELEPHONE: 920-662-5119 EMAIL: james.doperalski@wisconsin.gov

DIGGERS HOTLINE
Dial 811 or (800)242-8511
www.DiggersHotline.com

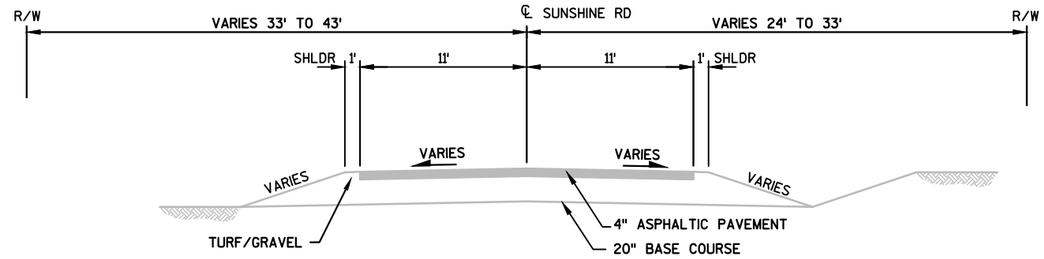

TYPICAL EXISTING SECTION - SUNSHINE RD

STA 8+50.00 TO STA 12+00.00

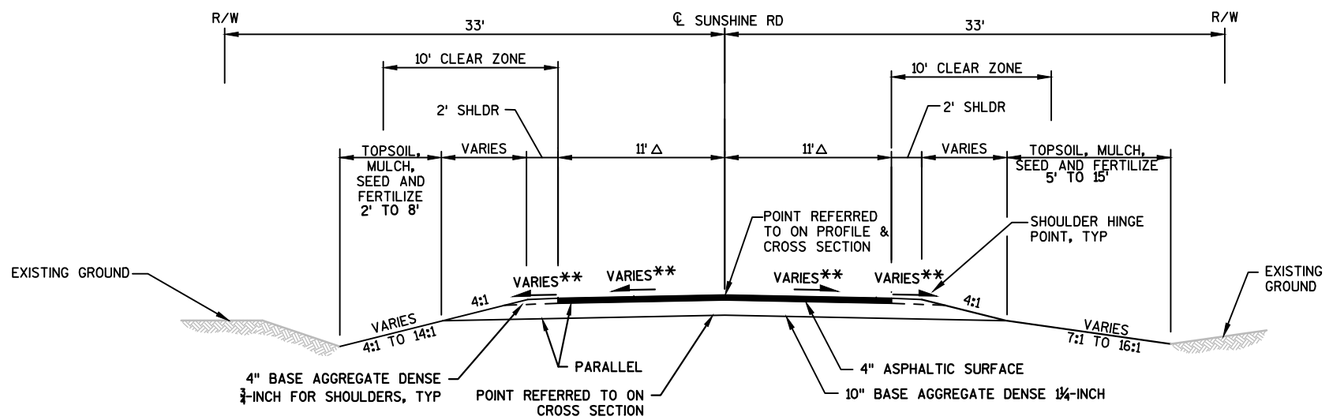

** SUPERELEVATION TRANSITION	
STATION TO STATION	TRANSITIONS
8+50 TO 8+85	EXISTING TO NORMAL CROWN
8+85 TO 9+63	NORMAL CROWN TO REVERSE CROWN
9+63 TO 9+74	REVERSE CROWN TO SUPERELEVATION 2.6%
9+74 TO 10+27	SUPERELEVATION 2.6% (INCLUDES BRIDGE)
10+27 TO 10+52	2.6% TO FULL SUPERELEVATION 3.9%
10+52 TO 11+50	FULL SUPERELEVATION 3.9%
11+50 TO 12+00	FULL SE 3.9% TO EXISTING CROSS-SLOPES

△ 11' LANE WIDENS TO 11' LANE PLUS 4' PAVED SHOULDER AT THE STRUCTURE

TYPICAL FINISHED SECTION - SUNSHINE RD

STA 8+50 TO STA 9+74

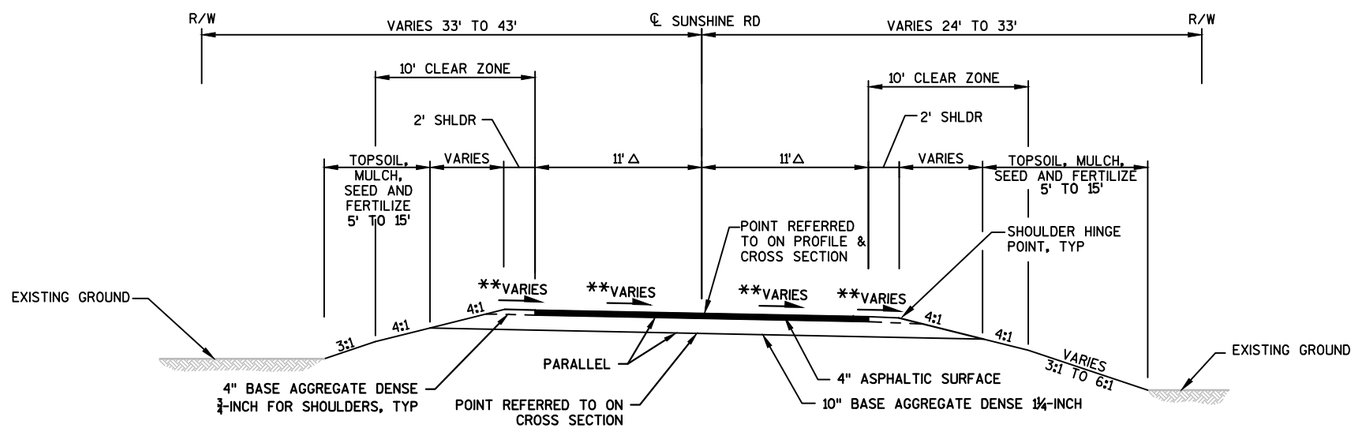

TYPICAL FINISHED SECTION - SUNSHINE RD

STA 10+37 TO STA 12+00

PROJECT NO:9021-06-71	HWY:SUNSHINE RD	COUNTY:OCONTO	PLAN: TYPICAL SECTIONS	SHEET 3	E

2

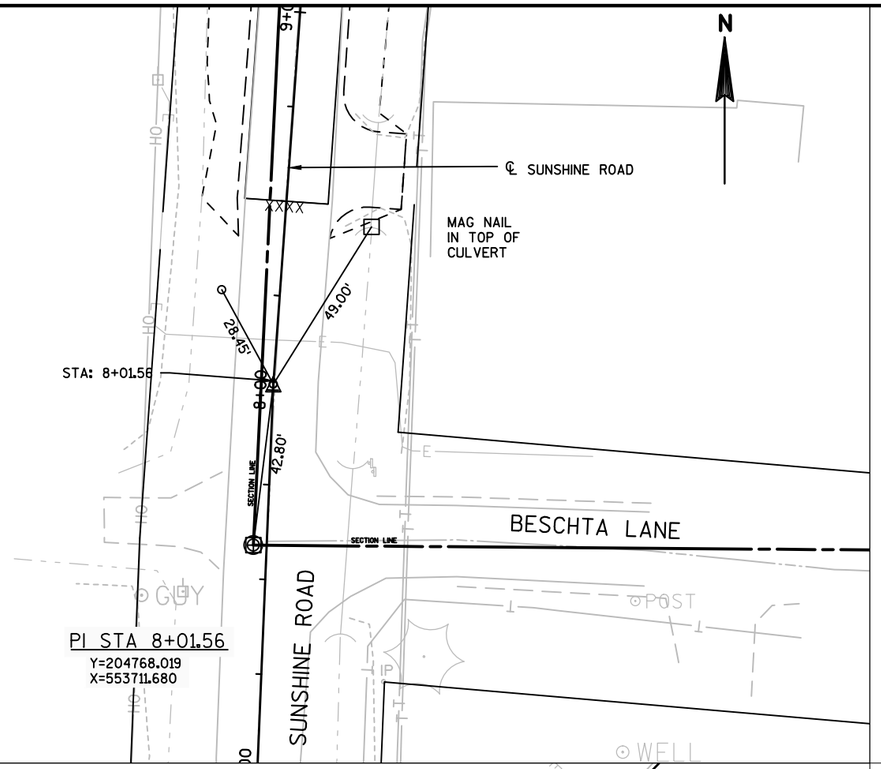

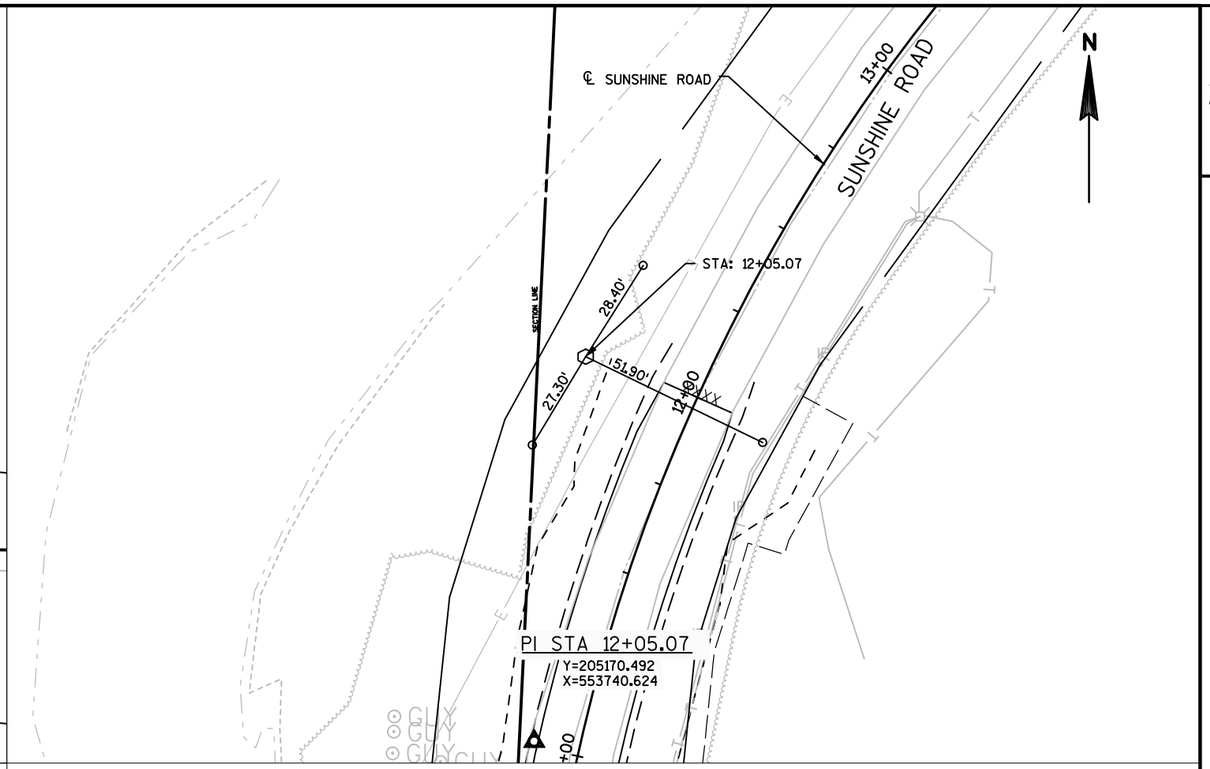

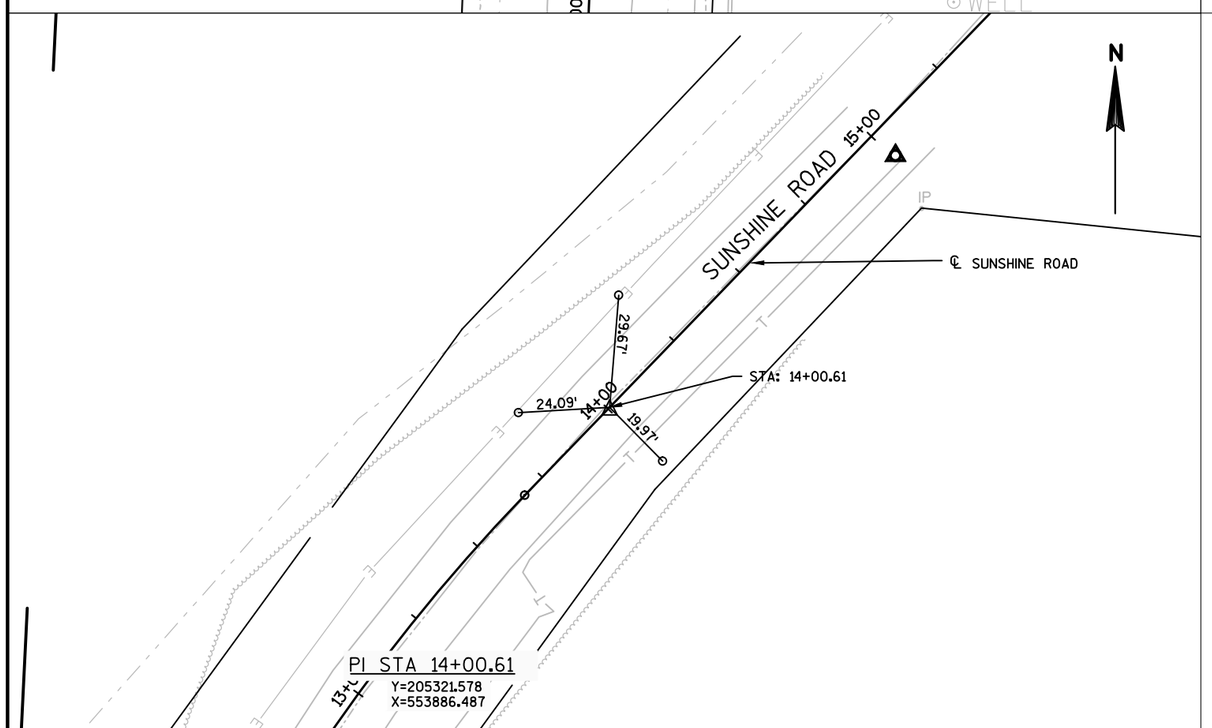

LEGEND

- MAG SPIKE
- IRON PIPE
- 3/4-INCH REBAR
- CHISELED X
- CENTER NOT WATER SERVICE VALVE

2

PROJECT NO:9021-06-71	HWY:SUNSHINE ROAD	COUNTY:OCONTO	ALIGNMENT TIES	SHEET 4	E

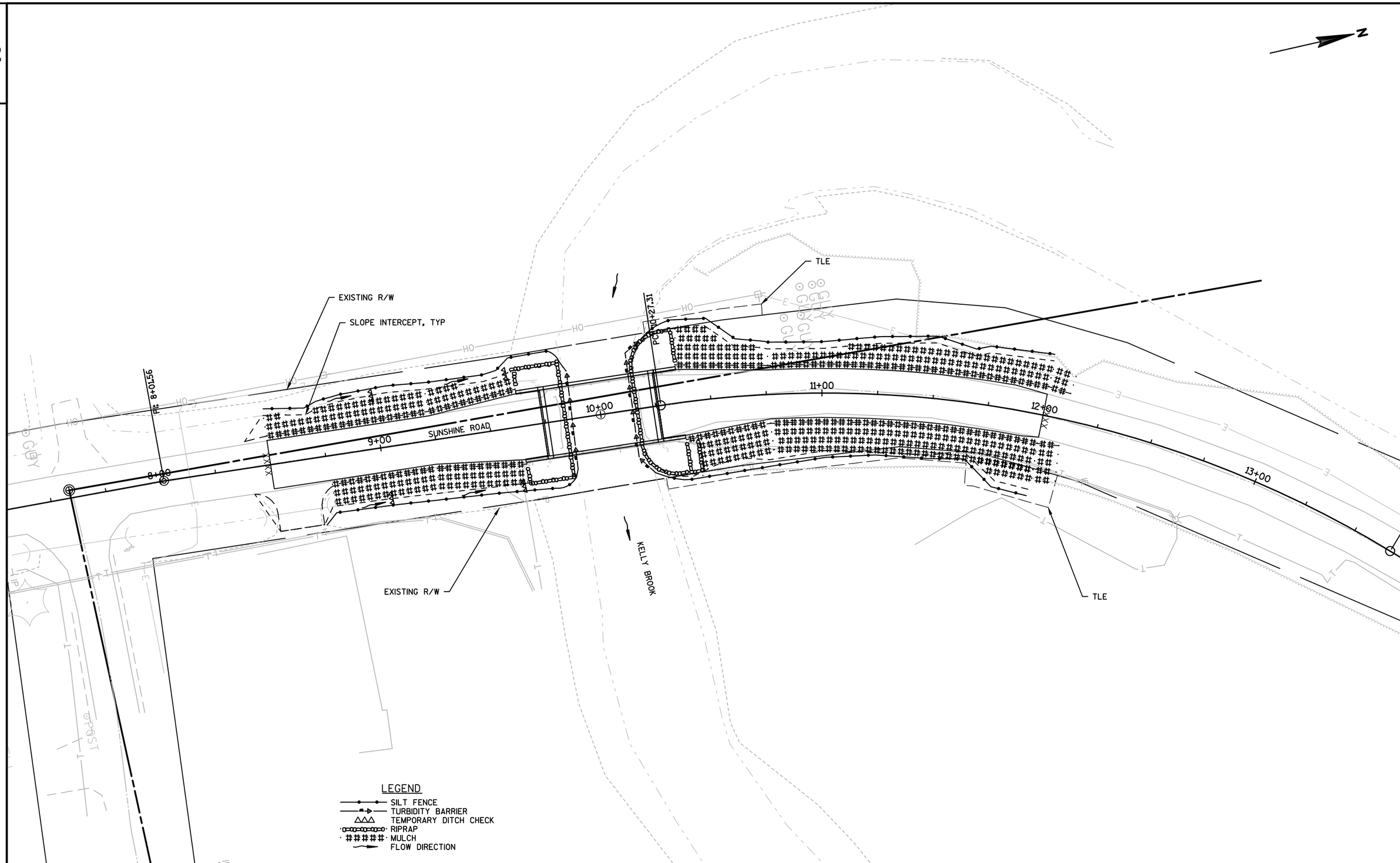

PROJECT NO:9021-06-71	HWY:SUNSHINE ROAD	COUNTY:OCONTO	EROSION CONTROL	SHEET 5	E

FILE NAME : F:\TR\JOBS\E2192A15\CIVIL 3D 2014\SHEETSPLAN\90210671-022001-EC.DWG
LAYOUT NAME - 90210671-022001-EC
PLOT DATE : 7/12/2017 7:50 AM PLOT BY : MATT TOMSOVIC PLOT NAME : PLOT SCALE : 1 IN:40 FT

Estimate Of Quantities

9021-06-71

Line	Item	Item Description	Unit	Total	Qty
0002	201.0205	Grubbing	STA	1.000	1.000
0004	203.0600.S	Removing Old Structure Over Waterway With Minimal Debris (station) 01. 10+00	LS	1.000	1.000
0006	204.0165	Removing Guardrail	LF	110.000	110.000
0008	205.0100	Excavation Common **P**	CY	350.000	350.000
0010	206.1000	Excavation for Structures Bridges (structure) 01. B-42-133	LS	1.000	1.000
0012	210.1500	Backfill Structure Type A	TON	290.000	290.000
0014	213.0100	Finishing Roadway (project) 01. 9021-06-71	EACH	1.000	1.000
0016	305.0110	Base Aggregate Dense 3/4-Inch	TON	60.000	60.000
0018	305.0120	Base Aggregate Dense 1 1/4-Inch	TON	690.000	690.000
0020	455.0605	Tack Coat	GAL	60.000	60.000
0022	465.0105	Asphaltic Surface	TON	190.000	190.000
0024	502.0100	Concrete Masonry Bridges	CY	212.000	212.000
0026	502.3200	Protective Surface Treatment	SY	241.000	241.000
0028	505.0400	Bar Steel Reinforcement HS Structures	LB	4,140.000	4,140.000
0030	505.0600	Bar Steel Reinforcement HS Coated Structures	LB	28,170.000	28,170.000
0032	513.4061	Railing Tubular Type M (structure) 01. B-42-133	LF	150.000	150.000
0034	516.0500	Rubberized Membrane Waterproofing	SY	18.000	18.000
0036	550.1100	Piling Steel HP 10-Inch X 42 Lb	LF	300.000	300.000
0038	606.0200	Riprap Medium	CY	3.000	3.000
0040	606.0300	Riprap Heavy	CY	135.000	135.000
0042	612.0406	Pipe Underdrain Wrapped 6-Inch	LF	136.000	136.000
0044	619.1000	Mobilization	EACH	1.000	1.000
0046	624.0100	Water	MGAL	4.600	4.600
0048	625.0100	Topsoil	SY	1,340.000	1,340.000
0050	627.0200	Mulching	SY	1,340.000	1,340.000
0052	628.1504	Silt Fence	LF	810.000	810.000
0054	628.1520	Silt Fence Maintenance	LF	810.000	810.000
0056	628.1905	Mobilizations Erosion Control	EACH	4.000	4.000
0058	628.1910	Mobilizations Emergency Erosion Control	EACH	2.000	2.000
0060	628.6005	Turbidity Barriers	SY	160.000	160.000
0062	628.7504	Temporary Ditch Checks	LF	160.000	160.000
0064	628.7570	Rock Bags	EACH	30.000	30.000
0066	629.0210	Fertilizer Type B	CWT	0.800	0.800
0068	630.0130	Seeding Mixture No. 30	LB	23.000	23.000
0070	630.0160	Seeding Mixture No. 60	LB	10.000	10.000
0072	630.0200	Seeding Temporary	LB	19.000	19.000
0074	634.0614	Posts Wood 4x6-Inch X 14-FT	EACH	4.000	4.000
0076	637.2230	Signs Type II Reflective F	SF	12.000	12.000

9021-06-71

Line	Item	Item Description	Unit	Total	Qty
0078	638.2602	Removing Signs Type II	EACH	4.000	4.000
0080	638.3000	Removing Small Sign Supports	EACH	4.000	4.000
0082	642.5001	Field Office Type B	EACH	1.000	1.000
0084	643.0420	Traffic Control Barricades Type III	DAY	1,200.000	1,200.000
0086	643.0705	Traffic Control Warning Lights Type A	DAY	1,920.000	1,920.000
0088	643.0900	Traffic Control Signs	DAY	840.000	840.000
0090	643.5000	Traffic Control	EACH	1.000	1.000
0092	645.0111	Geotextile Type DF Schedule A	SY	84.000	84.000
0094	645.0120	Geotextile Type HR	SY	200.000	200.000
0096	646.1005	Marking Line Paint 4-Inch	LF	1,400.000	1,400.000
0098	650.4500	Construction Staking Subgrade	LF	298.000	298.000
0100	650.5000	Construction Staking Base	LF	298.000	298.000
0102	650.6500	Construction Staking Structure Layout (structure) 01. B-42-133	LS	1.000	1.000
0104	650.9910	Construction Staking Supplemental Control (project) 01. 9021-06-71	LS	1.000	1.000
0106	650.9920	Construction Staking Slope Stakes	LF	298.000	298.000
0108	690.0150	Sawing Asphalt	LF	44.000	44.000
0110	715.0502	Incentive Strength Concrete Structures	DOL	1,272.000	1,272.000
0112	ASP.1T0A	On-the-Job Training Apprentice at $5.00/HR	HRS	150.000	150.000
0114	ASP.1T0G	On-the-Job Training Graduate at $5.00/HR	HRS	300.000	300.000
0116	SPV.0060	Special 01. Locate and Replace Existing Land Parcel Monuments	EACH	3.000	3.000

3

EARTHWORK

Division	From/To Station	Location	205.0100 Common Excavation	Unexpanded Fill	Expanded Fill Factor 1.25	Mass Ordinate +/- (14)	Waste
SOUTH OF BRIDGE	8+25/9+73.75	SUNSHINE RD	163	8	10	152	152
NORTH OF BRIDGE	10+26.25/12+25	SUNSHINE RD	185	28	35	149	149
Rounded Total			350	35	45	305	305

14) The Mass Ordinate + or - Qty calculated for the Division. Plus quantity indicates an excess of material within the Division. Minus indicates a shortage of material within the Division.

ALL ITEMS ARE CATEGORY 0010 UNLESS OTHERWISE NOTED

3

CLEARING & GRUBBING

STATION	LOCATION	201.0205 GRUBBING STATION
11+00/12+00 RT	SUNSHINE	1
	TOTALS	**1**

REMOVING GUARDRAIL

STATION	TO	STATION	DIR	LOCATION	204.0165 REMOVING GUARDRAIL LF
9+57	-	10+57	LT	SUNSHINE	55
9+57	-	10+57	RT	SUNSHINE	55
TOTALS					**110**

BASE AGGREGATE DENSE AND WATER

STATION TO STATION	LOCATION	305.0110 BASE AGGREGATE DENSE 3/4-INCH TON	305.0120 BASE AGGREGATE DENSE 1 1/4-INCH TON	624.0100 WATER MGAL
8+25 - STRUCTURE	SUNSHINE	20	290	1.9
STRUCTURE - 12+00	SUNSHINE	25	400	2.6
DWY	SUNSHINE	15	---	0.1
TOTALS		**60**	**690**	**4.6**

3

LANDSCAPING

STATION	TO	STATION	DIR	LOCATION	625.0100 TOPSOIL SY	627.0200 MULCHING SY	630.0130 SEEDING NO 30 LB	630.0160 SEEDING NO 60 LB	630.0200 SEEDING TEMPORARY LB	629.0210 FERTILIZER TYPE B CWT
8+40	-	9+65	LT	SUNSHINE	190	190	3	---	3	0.1
8+40	-	9+65	RT	SUNSHINE	220	220	4	---	3	0.1
10+35	-	12+10	LT	SUNSHINE	310	310	5	---	4	0.2
10+35	-	12+10	RT	SUNSHINE	350	350	6	---	5	0.2
UNDISTRIBUTED				SUNSHINE	270	270	5	10	4	0.2
				TOTALS	**1,340**	**1,340**	**23**	**10**	**19**	**0.8**

ASPHALTIC ITEMS

STATION TO STATION	LOCATION	455.0605 TACK COAT GAL	465.0105 ASPHALTIC SURFACE TON
8+50 - STRUCTURE	SUNSHINE	35	110
STRUCTURE - 12+00	SUNSHINE	25	80
	TOTALS	**60**	**190**

TURBIDITY BARRIER

STATION	LOCATION	628.6005 TURBIDITY BARRIER SY
9+85	SUNSHINE ROAD	80
10+10	SUNSHINE ROAD	80
	TOTAL	**160**

EROSION CONTROL ITEMS

STATION	TO	STATION	DIR	LOCATION	628.1504 SILT FENCE LF	628.1520 SILT FENCE MAINTENANCE LF	628.1905 MOBILIZATIONS EROSION CONTROL EACH	628.1910 MOBILIZATIONS EMERGENCY EROSION CONTROL EACH	628.7504 TEMPORARY DITCH CHECKS LF	628.7570 ROCK BAGS EACH
8+40	-	9+65	LT	SUNSHINE	140	140	---	---	32	---
8+40	-	9+65	RT	SUNSHINE	120	120	---	---	32	---
10+35	-	12+10	LT	SUNSHINE	210	210	---	---	32	---
10+35	-	12+10	RT	SUNSHINE	180	180	---	---	32	---
UNDISTRIBUTED				SUNSHINE	160	160	4	2	32	30
				TOTALS	**810**	**810**	**4**	**2**	**160**	**30**

ALL ITEMS ARE CATEGORY 0010 UNLESS OTHERWISE NOTED

3

SIGNS REFLECTIVE TYPE II & POSTS WOOD

STATION	DIR	LOCATION	CODE	SIGN SIZE HORIZ X VERT IN X IN	634.0614 POSTS WOOD 4X6-INCH X 14-FT EACH	637.2230 SIGNS TYPE II RELFECTIVE F SF
9+62	LT	SUNSHINE	W5-52L	12 X 36	1	3
9+62	RT	SUNSHINE	W5-52R	12 X 36	1	3
10+38	LT	SUNSHINE	W5-52R	12 X 36	1	3
10+38	RT	SUNSHINE	W5-52L	12 X 36	1	3
				TOTALS	**4**	**12**

REMOVING SIGNS TYPE II AND REMOVING SMALL SIGN SUPPORTS

STATION	DIR	LOCATION	DESCRIPTION	638.2602 REMOVING SIGNS TYPE II EACH	638.3000 REMOVING SMALL SIGN SUPPORTS EACH
9+65	LT	SUNSHINE	OBJECT MARKER	1	1
9+65	RT	SUNSHINE	OBJECT MARKER	1	1
10+34	LT	SUNSHINE	OBJECT MARKER	1	1
10+34	RT	SUNSHINE	OBJECT MARKER	1	1
			TOTALS	**4**	**4**

TRAFFIC CONTROL ROAD CLOSURE

LOCATION	APROX. SERVICE PERIOD	643.0420 TRAFFIC CONTROL BARRICADES TYPE III EACH		643.0705 TRAFFIC CONTROL WARNING LIGHTS TYPE A EACH		643.0900 TRAFFIC CONTROL SIGNS EACH	
		NO.	DAYS	NO.	DAYS	NO.	DAYS
NORTH OF PROJECT	60	10	600	16	960	7	420
SOUTH OF PROJECT	60	10	600	16	960	7	420
			1,200		**1,920**		**840**

MARKING LINE PAINT

STATION	LOCATION	646.1005 4-INCH DOUBLE YELLOW LF	646.1005 4-INCH WHITE LF
8+50 - 12+00	SUNSHINE	700	700
	TOTAL	**1,400**	

SAWING ASPHALT

STATION	LOCATION	690.0150 SAWING ASPHALT LF
8+50	SUNSHINE	22
12+00	SUNSHINE	22
	TOTAL	**44**

CONSTRUCTION STAKING

STATION	TO	STATION	LOCATION	650.4500 CONSTRUCTION STAKING SUBGRADE LF	650.5000 CONSTRUCTION STAKING BASE LF	CATEGORY 0020 650.6500 CONSTRUCTION STAKING STRUCTURE LAYOUT B-42-133 LS	650.9910 CONSTRUCTION STAKING SUPPLEMENTAL CONTROL 9021-06-71 LS	650.9920 CONSTRUCTION STAKING SLOPE STAKES LF
8+50	-	9+74	SUNSHINE	124	124	---	---	124
10+26	-	12+00	SUNSHINE	174	174	---	---	174
PROJECT				---	---	1	---	---
TOTALS				**298**	**298**	**1**	**1**	**298**

LOCATE AND REPLACE EXISTING LAND MONUMENTS

STATION	DIR	LOCATION	DESCRIPTION	SPV.0060.01 LOCATE AND REPLACE EXISTING LAND PARCEL MONUMENTS EACH
10+62	RT	SUNSHINE	IRON PIN	1
11+37	RT	SUNSHINE	IRON PIN	1
11+74	RT	SUNSHINE	IRON PIN	1
			TOTALS	**3**

ALL ITEMS ARE CATEGORY 0010 UNLESS OTHERWISE NOTED

BENCH MARKS			
NO.	STATION	DESCRIPTION	ELEV.
BM2	8+79, 36'LT	60D NAIL IN PP*B-157 SOUTH	717.25
		OF BRIDGE WEST R/W	
BM3	7+08, 96'RT	WELL CAP HOUSE *7894	721.30

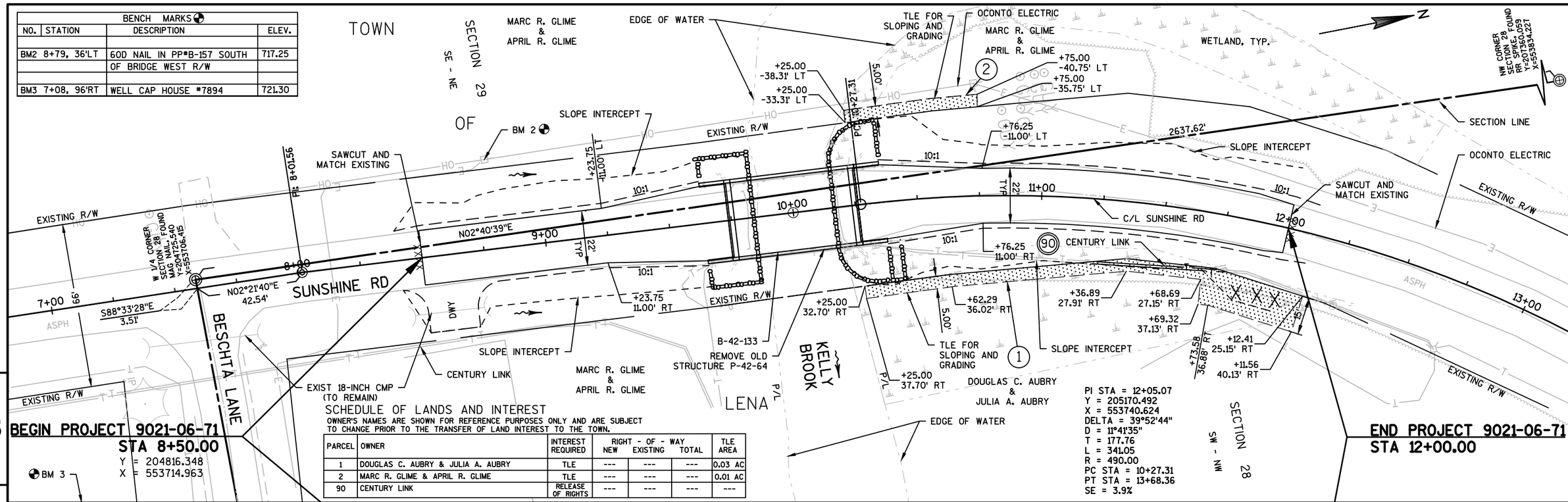

SCHEDULE OF LANDS AND INTEREST

OWNER'S NAMES ARE SHOWN FOR REFERENCE PURPOSES ONLY AND ARE SUBJECT TO CHANGE PRIOR TO THE TRANSFER OF LAND INTEREST TO THE TOWN.

PARCEL	OWNER	INTEREST REQUIRED	RIGHT - OF - WAY NEW	EXISTING	TOTAL	TLE AREA
1	DOUGLAS C. AUBRY & JULIA A. AUBRY	TLE	---	---	---	0.03 AC
2	MARC R. GLIME & APRIL R. GLIME	TLE	---	---	---	0.01 AC
90	CENTURY LINK	RELEASE OF RIGHTS	---	---	---	---

PROJECT NO: 9021-06-71	HWY: SUNSHINE RD	COUNTY: OCONTO	PLAN AND PROFILE: SUNSHINE RD	SHEET 11	E

FILE NAME : F:\TR\JOBS\E2192A15\CIVIL 3D 2014\SHEETSPLAN\90210671-050101-PP.DWG
LAYOUT NAME - 90210671-050101-PP
PLOT DATE : 7/12/2017 7:53 AM PLOT BY : MATT TOMSOVIC PLOT NAME : PLOT SCALE : **********

Standard Detail Drawing List

08E08-03	TYPICAL INSTALLATIONS OF EROSION BALES / TEMPORARY DITCH CHECKS
08E09-06	SILT FENCE
08E11-02	TURBIDITY BARRIER
12A03-10	NAME PLATE (STRUCTURES)
15C02-06A	BARRICADES AND SIGNS FOR MAINLINE CLOSURES
15C02-06B	BARRICADES AND SIGNS FOR MAINLINE CLOSURES
15C06-08	SIGNING & MARKING FOR TWO LANE BRIDGES
15C08-17A	LONGITUDINAL MARKING (MAINLINE)

6

6

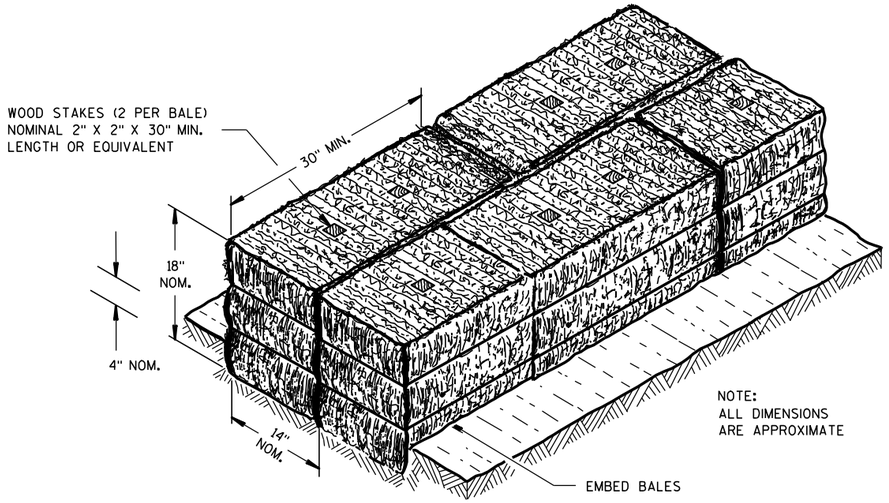

SECTION A-A

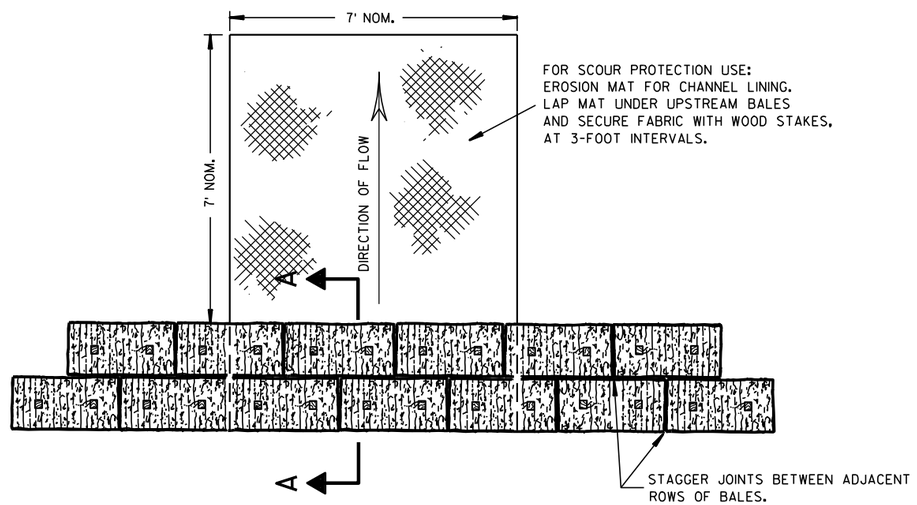

PLAN VIEW

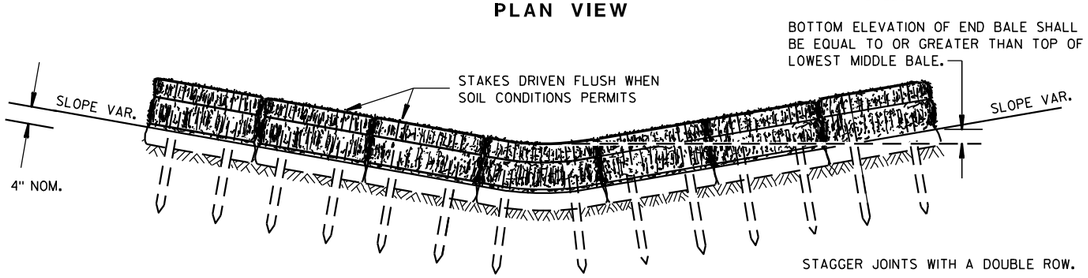

FRONT ELEVATION

TEMPORARY DITCH CHECK USING EROSION BALES ①

GENERAL NOTES

DETAILS OF CONSTRUCTION, MATERIALS AND WORKMANSHIP NOT SHOWN ON THIS DRAWING SHALL CONFORM TO THE PERTINENT REQUIREMENTS OF THE STANDARD SPECIFICATIONS AND THE APPLICABLE SPECIAL PROVISIONS.

① TEMPORARY DITCH CHECKS EITHER EROSION BALES OR MANUFACTURED SHALL BE PAID FOR UNDER THE BID ITEM OF TEMPORARY DITCH CHECK. THE DEPARTMENT WILL NOT PAY FOR TEMPORARY DITCH CHECKS CONSTRUCTED OF A SINGLE ROW OF EROSION BALES.

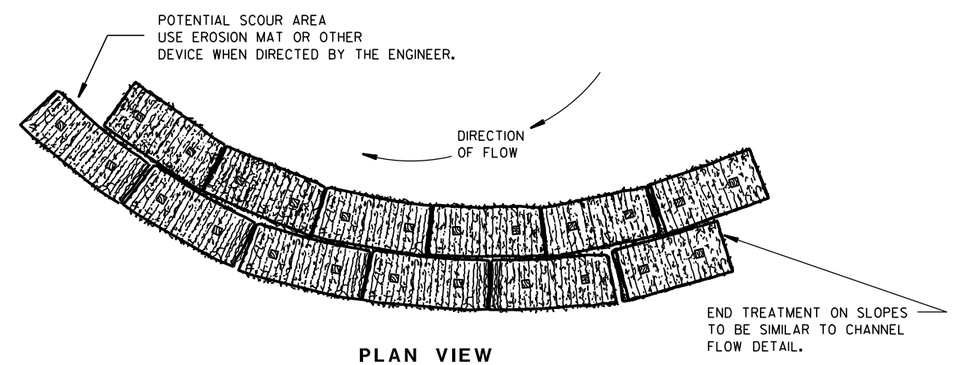

PLAN VIEW

WHEN ALTERING THE DIRECTION OF FLOW

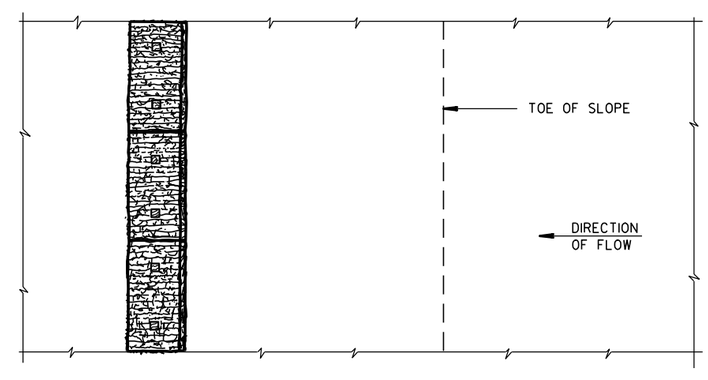

PLAN VIEW

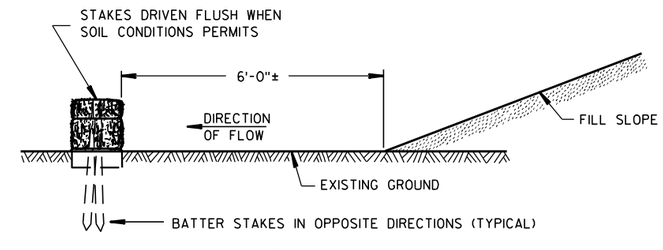

FRONT ELEVATION

WHEN EXISTING GROUND SLOPES AWAY FROM FILL SLOPE

EROSION BALES FOR SHEET FLOW

TYPICAL INSTALLATIONS OF EROSION BALES / TEMPORARY DITCH CHECKS

STATE OF WISCONSIN
DEPARTMENT OF TRANSPORTATION

APPROVED

6/04/02 — DATE

/S/ Beth Cann — CHIEF ROADWAY DEVELOPMENT ENGINEER

FHWA

6

6

S.D.D. 8 E 8-3

S.D.D. 8 E 8-3

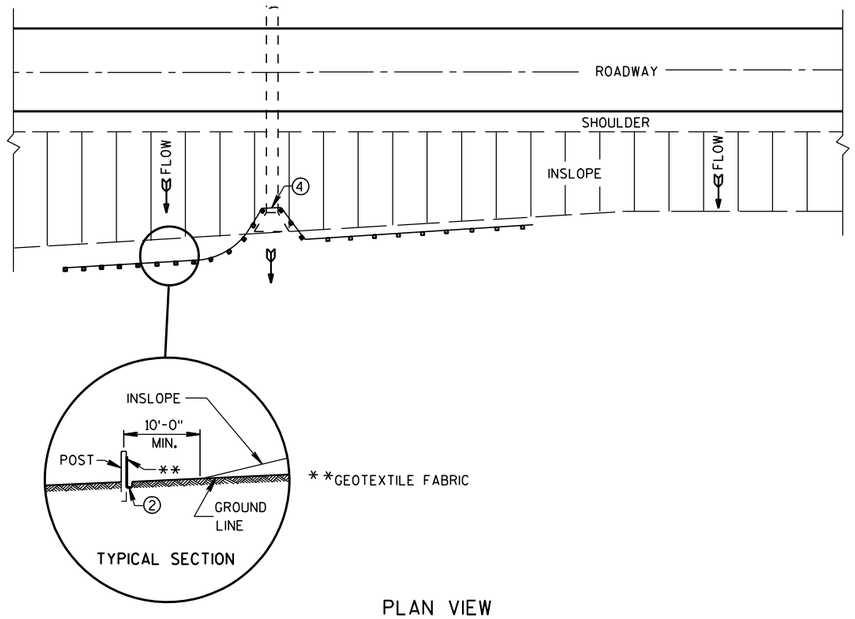

PLAN VIEW

TYPICAL APPLICATION OF SILT FENCE

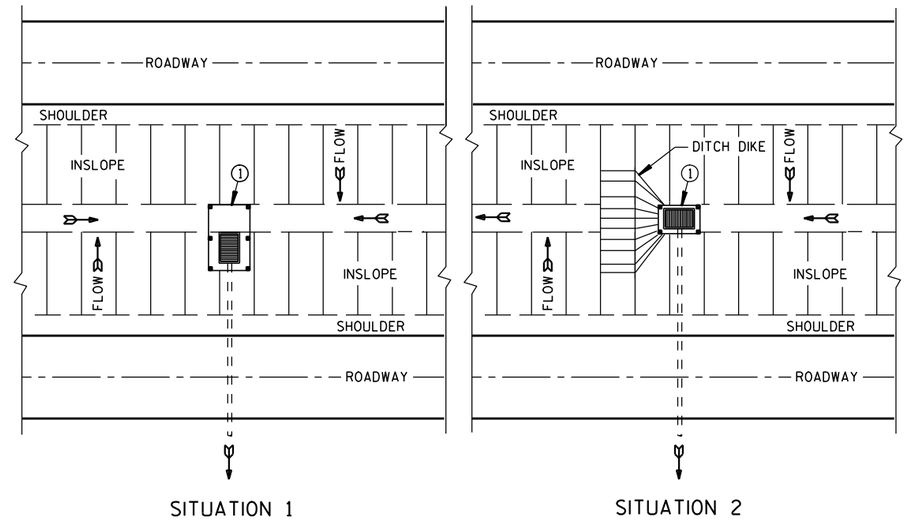

PLAN VIEW

SILT FENCE AT MEDIAN SURFACE DRAINS

GENERAL NOTES

DETAILS OF CONSTRUCTION NOT SHOWN ON THIS DRAWING SHALL CONFORM TO THE PERTINENT REQUIREMENTS OF THE STANDARD SPECIFICATIONS AND APPLICABLE SPECIAL PROVISIONS.

① HORIZONTAL BRACE REQUIRED WITH 2" X 4" WOODEN FRAME OR EQUIVALENT AT TOP OF POSTS.

② FOR MANUAL INSTALLATIONS THE TRENCH SHALL BE A MINIMUM OF 4" WIDE & 6" DEEP TO BURY AND ANCHOR THE GEOTEXTILE FABRIC. FOLD MATERIAL TO FIT TRENCH AND BACKFILL & COMPACT TRENCH WITH EXCAVATED SOIL.

③ WOOD POSTS SHALL BE A MINIMUM SIZE OF 1⅛" X 1⅛" OF OAK OR HICKORY.

④ SILT FENCE TO EXTEND ACROSS THE TOP OF THE PIPE.

⑤ CONSTRUCT SILT FENCE FROM A CONTINUOUS ROLL IF POSSIBLE BY CUTTING LENGTHS TO AVOID JOINTS. IF A JOINT IS NECESSARY USE ONE OF THE FOLLOWING TWO METHODS; A) OVERLAP THE END POSTS AND TWIST, OR ROTATE, AT LEAST 180 DEGREES. B) HOOK THE END OF EACH SILT FENCE LENGTH.

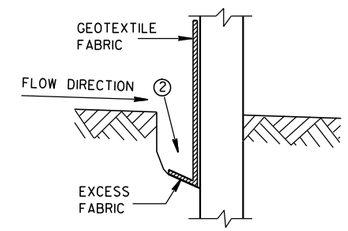

TRENCH DETAIL

NOTE: ADDITIONAL POST DEPTH OR TIE BACKS MAY BE REQUIRED IN UNSTABLE SOILS

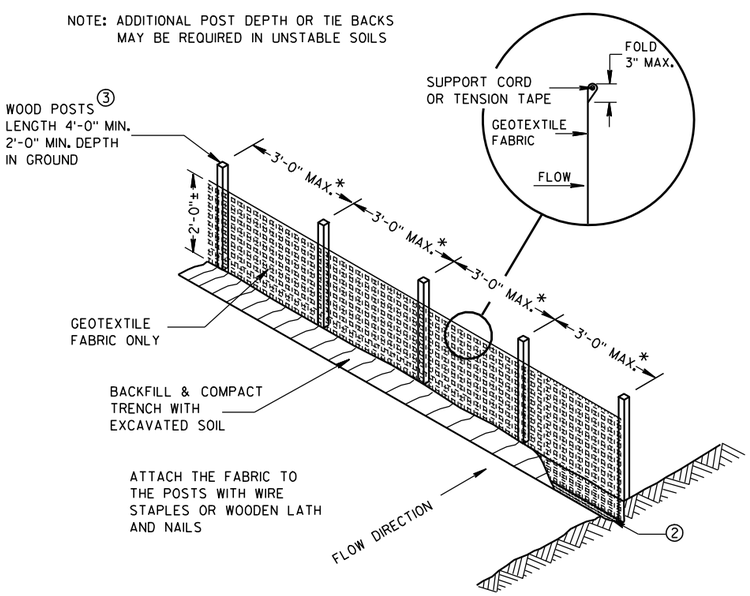

*NOTE: 8'-0" POST SPACING ALLOWED IF A WOVEN GEOTEXTILE FABRIC IS USED.

SILT FENCE

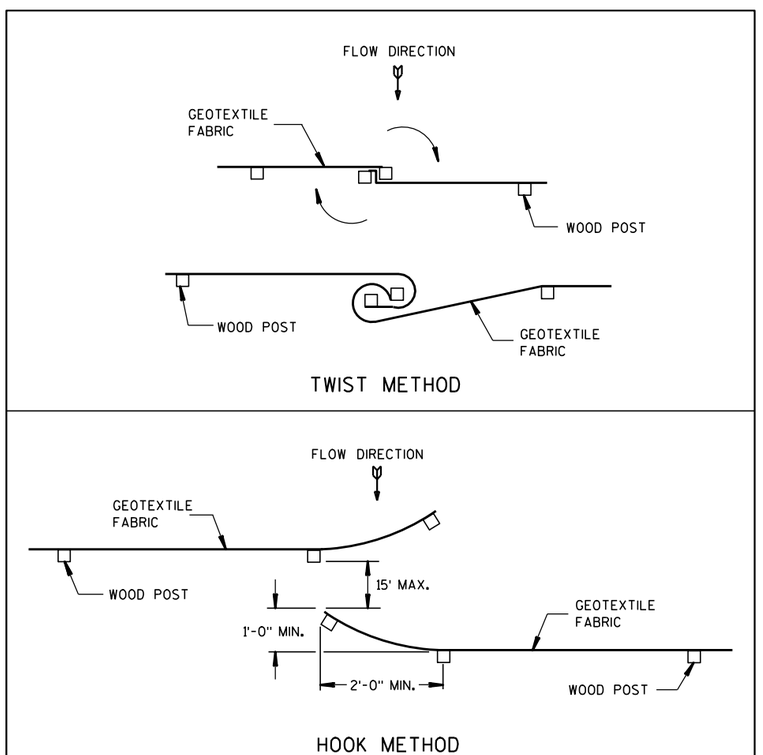

JOINING TWO LENGTHS OF SILT FENCE ⑤

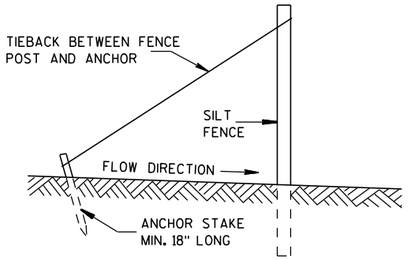

SILT FENCE TIE BACK

(WHEN REQUIRED BY THE ENGINEER)

SILT FENCE	
STATE OF WISCONSIN DEPARTMENT OF TRANSPORTATION	
APPROVED 4-29-05 DATE	/S/ Beth Cann-- CHIEF ROADWAY DEVELOP ENGINEER
FHWA	

6

6

S.D.D. 8 E 9-6

S.D.D. 8 E 9-6

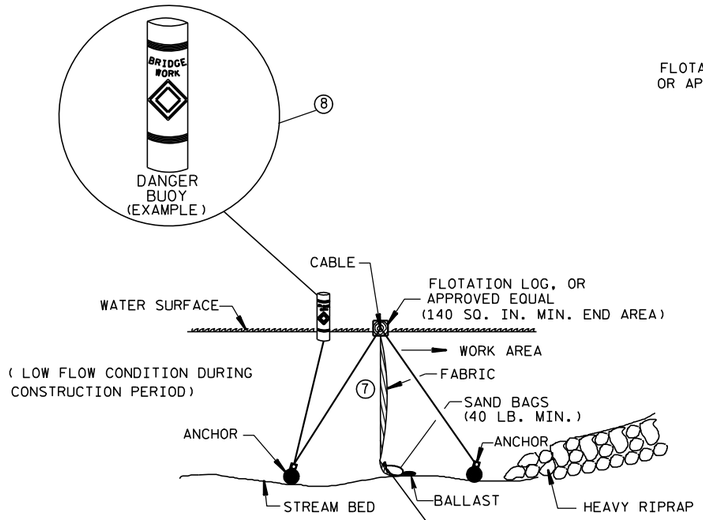

SECTION B-B

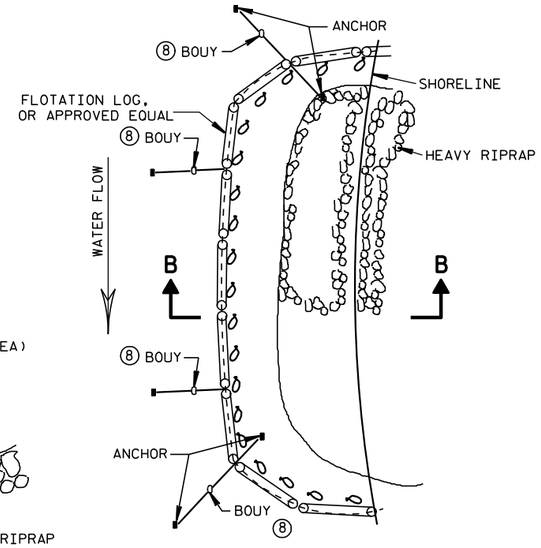

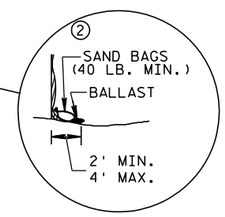

TURBIDITY BARRIER FLOAT ALTERNATIVE
CAUTION - SEE NOTE 6

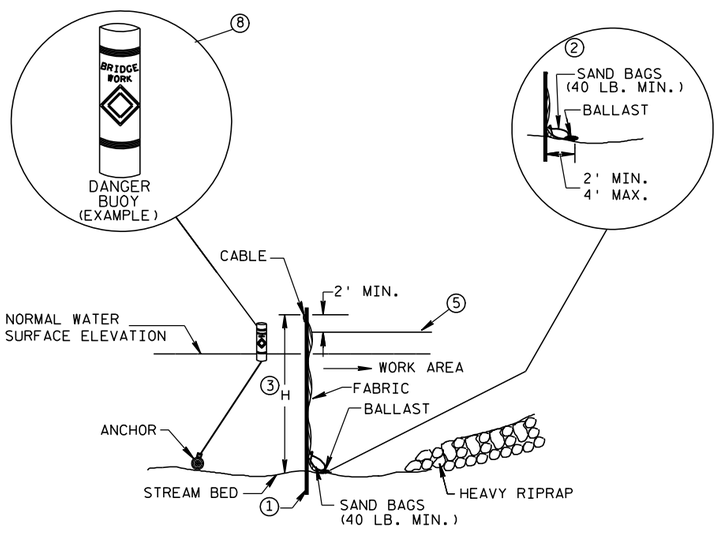

SECTION A-A

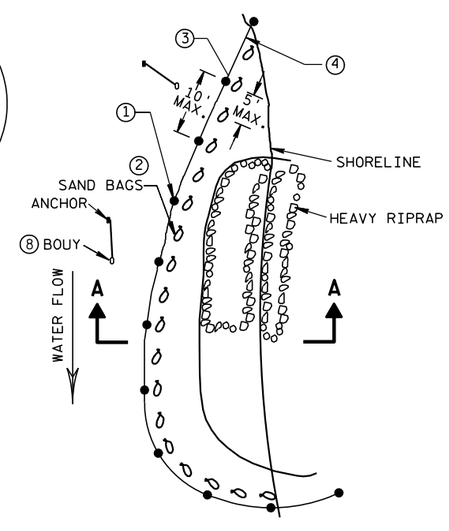

PLAN VIEW

TURBIDITY BARRIER STANDARD POST INSTALLATION

TURBIDITY BARRIER PLACEMENT DETAILS

GENERAL NOTES

DETAILS OF CONSTRUCTION, MATERIALS AND WORKMANSHIP NOT SHOWN ON THIS DRAWING SHALL CONFORM TO THE PERTINENT REQUIREMENTS OF THE STANDARD SPECIFICATIONS AND THE APPLICABLE SPECIAL PROVISIONS.

TURBIDITY BARRIER MAY BE REMOVED AT THE ENGINEERS DISCRETION, WHEN PERMANENT EROSION CONTROL MEASURES HAVE BEEN ESTABLISHED.

① DRIVEN STEEL POSTS, PIPES, OR CHANNELS. LENGTH SHALL BE SUFFICIENT TO SECURELY SUPPORT BARRIER AT HIGH WATER ELEVATIONS.

② SANDBAGS TO BE USED AS ADDITIONAL BALLAST WHEN ORDERED BY THE ENGINEER TO MEET ADVERSE FIELD CONDITIONS. SPACE AS APPROPRIATE FOR SITE CONDITIONS.

③ WHEN BARRIER HEIGHT, H, EXCEEDS 8 FT., POST SPACING MAY NEED TO BE DECREASED.

④ IN WATERWAYS SUBJECT TO FLUCTUATING WATER ELEVATIONS, PROVISIONS SHOULD BE MADE TO ALLOW THE WATER TO EQUALIZE ON EACH SIDE OF THE BARRIER. THIS MAY BE ACCOMPLISHED BY LEAVING A PORTION OF THE BARRIER OPEN ON THE UPSTREAM END.

⑤ ESTIMATED HIGH WATER ELEVATION DURING CONSTRUCTION PERIOD. MIMIMUM BARRIER HEIGHT SHALL BE 2'GREATER THAN EITHER THE Q2 ELEVATION OR THE ESTIMATED HIGH WATER ELEVATION DURING CONSTRUCTION, WICHEVER IS GREATER.

⑥ FLOAT ALTERNATIVE WILL ONLY BE ALLOWED WITH WRITTEN APPROVAL OF THE ENGINEER, AND IS MEANT FOR LOCATIONS WHERE BED ROCK PREVENTS THE INSTALLATION OF POSTS.

⑦ ALLOW SUFFICIENT SLACK VERTICALLY AND HORIZONTALLY SO THAT SEDIMENT BUILD UP WILL NOT SEPARATE OR LOWER THE TURBIDITY BARRIER.

⑧ USE AS DIRECTED BY COAST GUARD OR DNR PERMIT WHEN WORKING IN NAVIGABLE WATERWAYS.

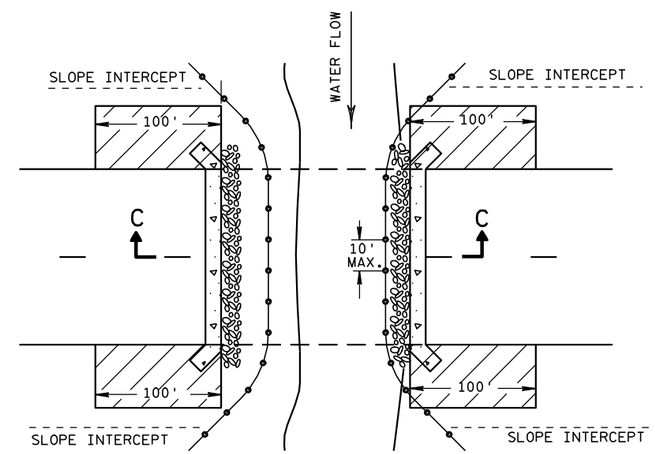

PLAN VIEW

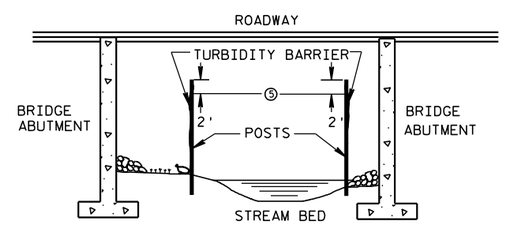

SECTION C-C

TURBIDITY BARRIER DETAIL SHOWING TYPICAL PLACEMENT AT STRUCTURES

TURBIDITY BARRIER	
STATE OF WISCONSIN DEPARTMENT OF TRANSPORTATION	
APPROVED	
6/04/02 DATE	/S/ Beth Cann CHIEF ROADWAY DEVELOPMENT ENGINEER
FHWA	

6

S.D.D. 8 E 11-2

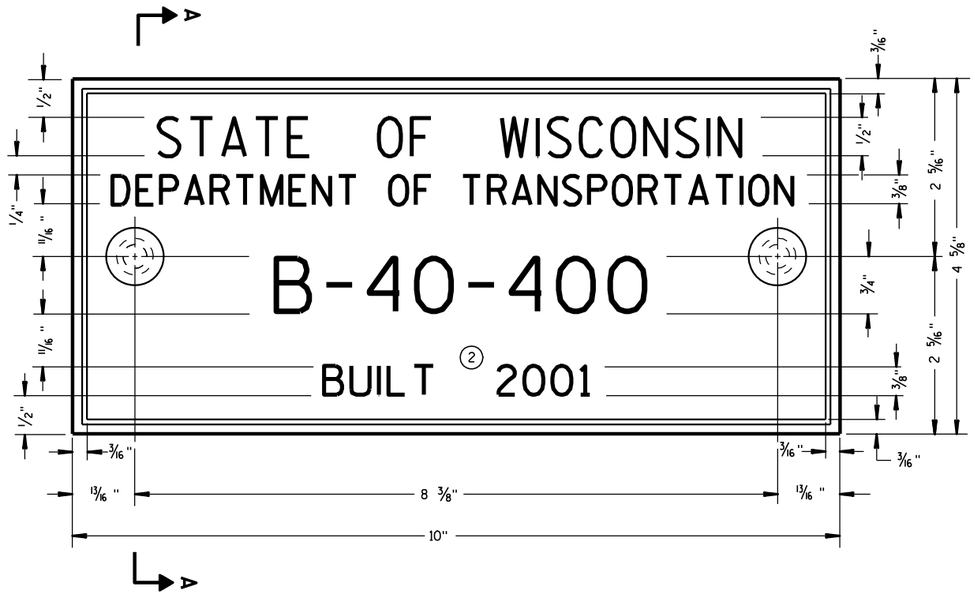

TYPICAL NAME PLATE

(BRIDGES, CULVERTS, AND RETAINING WALLS)

GENERAL NOTES

NAME PLATES TO BE INSTALLED ON BRIDGES, CULVERTS, AND RETAINING WALLS SHALL CONFORM TO THE REQUIREMENTS OF SECTION 502.3.11 OF THE STANDARD SPECIFICATIONS.

THE BRIDGE NUMBER AND YEAR BUILT SHOWN ON THIS DRAWING ARE EXAMPLES ONLY. SEE CONSTRUCTION PLANS FOR INDIVIDUAL NUMBERING AND YEAR BUILT.

① EPOXY RESIN SHALL BE FROM AN APPROVED MANUFACTURER AND USED IN ACCORDANCE WITH MANUFACTURER'S RECOMMENDATIONS.

② REHABILITATION OF AN EXISTING STRUCTURE SHOULD USE THE DATE OF ORIGINAL STRUCTURE CONSTRUCTION.

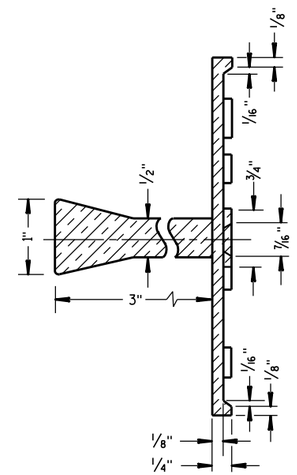

SECTION A-A

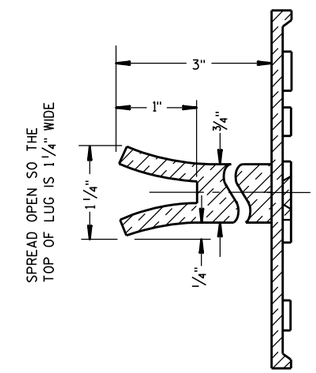

ALTERNATE LUG

6

FOR MULTI-UNIT STRUCTURES
LINE 3 ABOVE SHALL READ

B = BRIDGE
C = CULVERT
R = RETAINING WALL

COUNTY NO.

BRIDGE NO.

UNIT NO. FOR MULTIPLE
UNIT BRIDGE

B-40-400-1A

NUMBERING DESIGNATION
MULTI-UNIT STRUCTURES

① ADHERE ANCHOR LUG TO
PRECAST RETAINING WALL
WITH EPOXY RESIN.

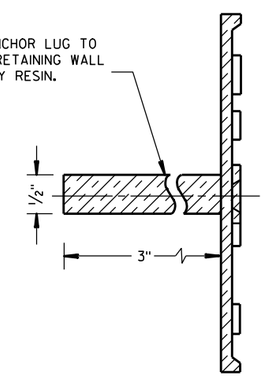

ALTERNATE LUG

(FOR ATTACHMENT TO PRECAST STRUCTURES)

NAME PLATE (STRUCTURES)		
STATE OF WISCONSIN DEPARTMENT OF TRANSPORTATION		
APPROVED		
3/26/10 DATE	/S/ Scot Beck-- CHIEF STRUCTURAL DEVELOP	ENGINEER
FHWA		

S.D.D. 12 A 3-10

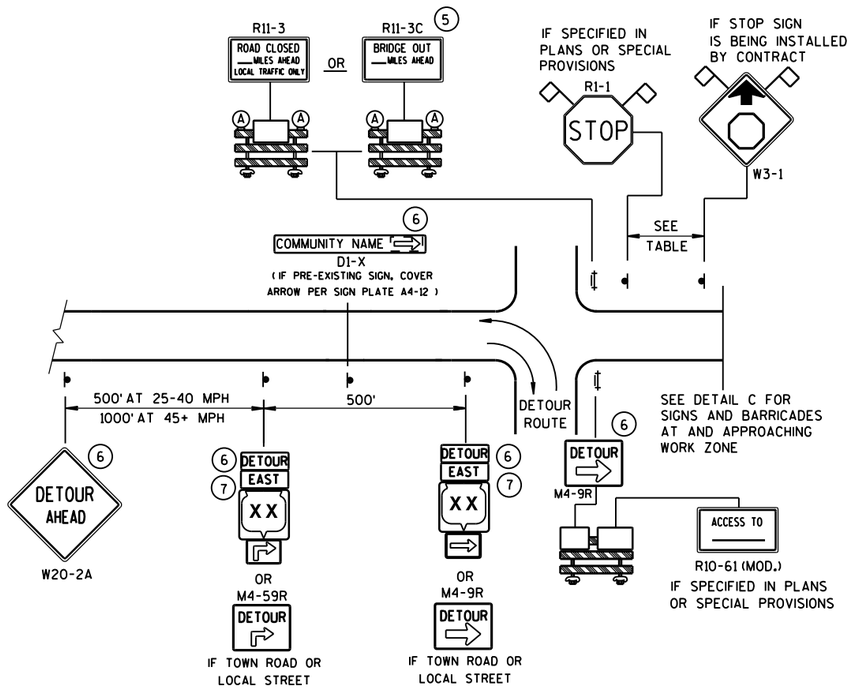

DETAIL A

MAINLINE CLOSURE WITH POSTED DETOUR

WORK ZONE GREATER THAN ½ MILE FROM DETOUR ROUTE (1000 FEET IF URBAN)

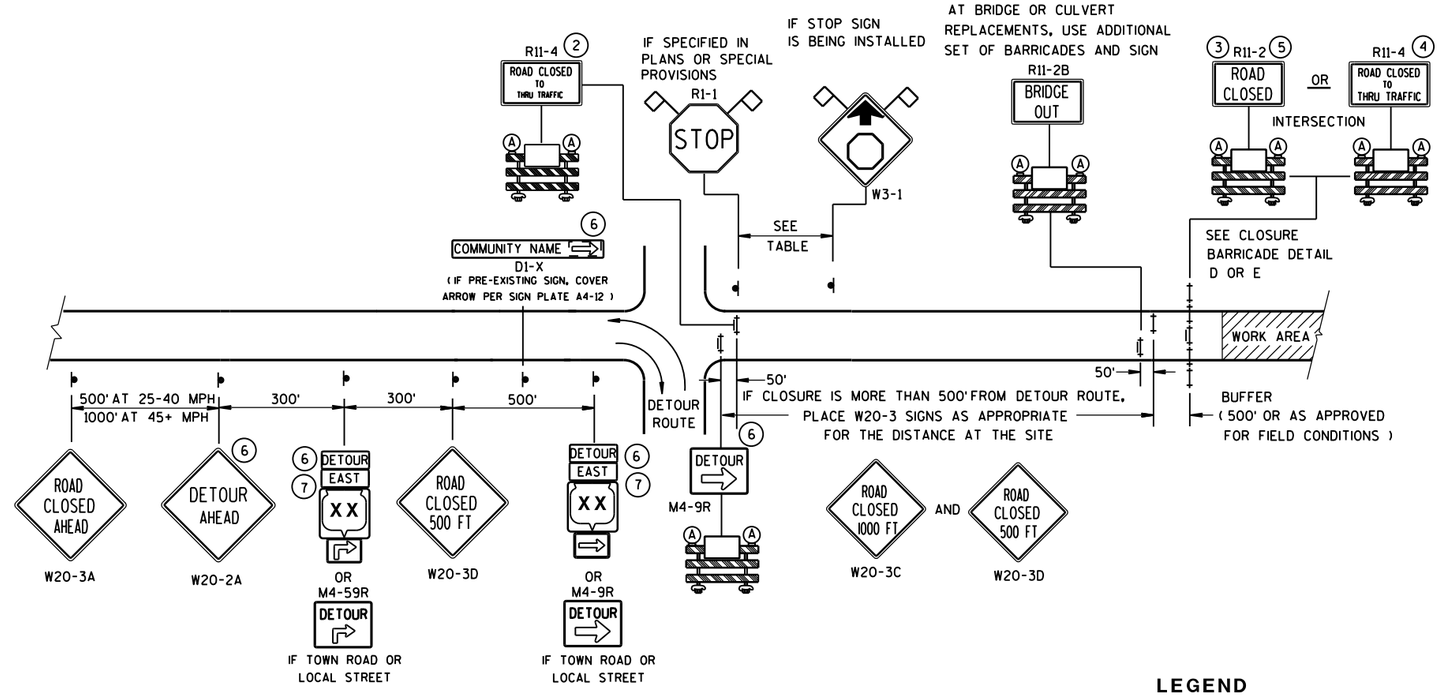

DETAIL B

MAINLINE CLOSURE WITH POSTED DETOUR

WORK ZONE LESS THAN ½ MILE FROM DETOUR ROUTE (1000 FEET IF URBAN)

LEGEND

- SIGN ON PERMANENT SUPPORT
- TYPE III BARRICADE
- TYPE III BARRICADE WITH ATTACHED SIGN
- (A) TYPE "A" WARNING LIGHT (FLASHING)
- WORK AREA
- DETOUR / EAST — M4-8 / M3-X
- XX — M1-4; COUNTY XX — M1-5A; XX — M1-6
- M05-1 OR M06-1
- FLAGS, 16" X 16" MIN., (ORANGE)

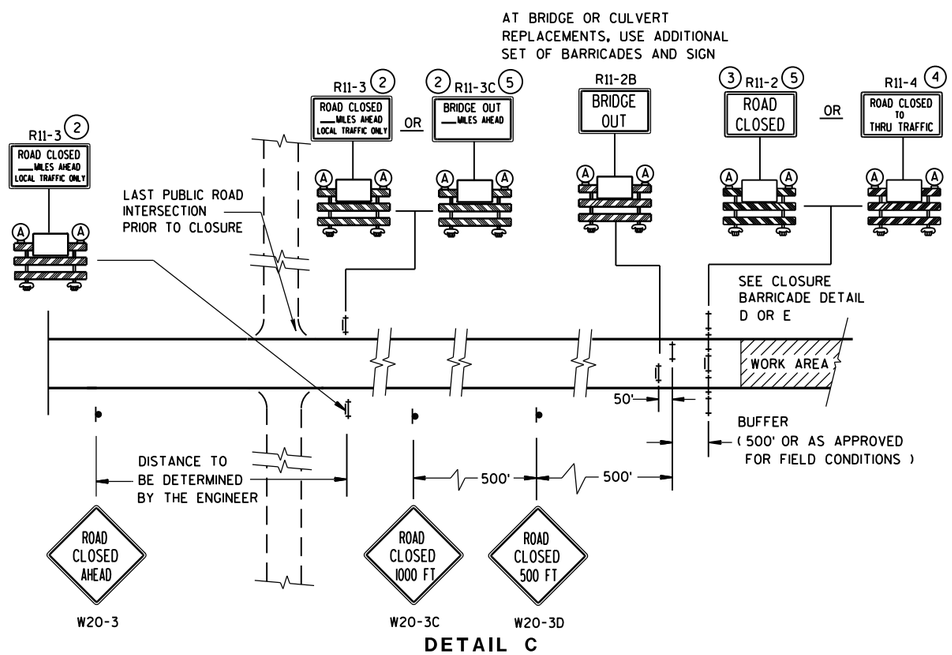

DETAIL C

MAINLINE CLOSURE, NO POSTED DETOUR

SPEED LIMIT (MPH)	"STOP AHEAD" ADVANCE WARNING DISTANCE (FT)
25	200
30	200
35	350
40	350
45	500
50	550
55	750

SEE SDD 15C2-SHEET "**b**" FOR GENERAL NOTES AND FOOTNOTES (1) THROUGH (7)

BARRICADES AND SIGNS FOR MAINLINE CLOSURES

STATE OF WISCONSIN
DEPARTMENT OF TRANSPORTATION

Sept. 2015 — DATE
/S/ Peter Amakobe Atepe — STATEWIDE WORK ZONE TRAFFIC SAFETY ENGINEER
FHWA

6

6

S.D.D. 15 C 2-6a

S.D.D. 15 C 2-6a

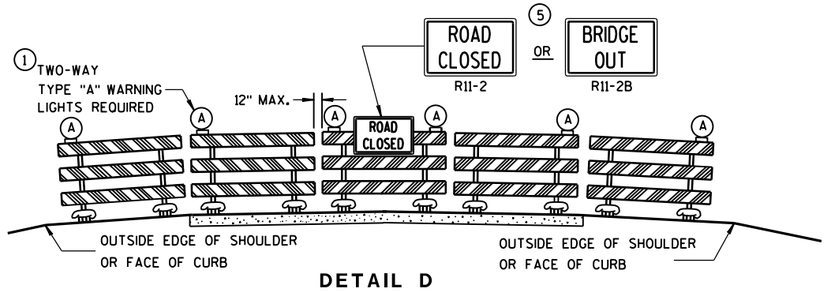

DETAIL D

ROAD CLOSURE BARRICADE DETAIL

APPROACH VIEW

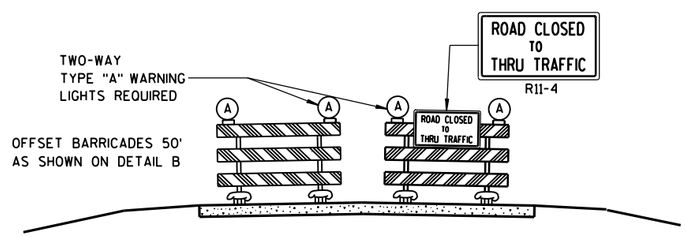

DETAIL E

LANE CLOSURE BARRICADE DETAIL

APPROACH VIEW

SEE SDD 15C2-SHEET "**a**" FOR LEGEND

GENERAL NOTES

THE EXACT NUMBER, LOCATION, AND SPACING OF ALL SIGNS AND BARRICADES SHALL BE ADJUSTED TO FIT FIELD CONDITIONS AS APPROVED BY THE ENGINEER.

ANY SIGNS TEMPORARY OR EXISTING, WHICH CONFLICT WITH TRAFFIC CONTROL "IN USE" SHALL BE REMOVED OR COVERED AS NEEDED AND AS APPROVED BY THE ENGINEER.

THE SPACING BETWEEN TRAFFIC CONTROL SIGNS SHOULD BE ADJUSTED TO NOT CONFLICT WITH AND SHOULD PROVIDE A DESIRABLE MINIMUM OF 200 FEET CLEARANCE TO EXISTING SIGNS THAT WILL REMAIN IN PLACE.

BARRICADES THAT MUST BE MOVED FOR A WORK OPERATION SHALL BE IMMEDIATELY RE-ESTABLISHED UPON COMPLETION OF THE OPERATION OR, FOR CONTINUING OPERATIONS, AT THE END OF EACH WORKING DAY.

SIGNS THAT WILL BE IN PLACE LESS THAN 7 CONTINUOUS DAYS AND NIGHTS MAY BE MOUNTED ON PORTABLE SUPPORTS.

ALL TYPE III BARRICADES SHALL HAVE RAILS REFLECTORIZED ON BOTH FACES. STRIPES SHALL BE PROPERLY SLOPED DOWN TOWARD THE TRAFFIC SIDE OR AS SHOWN IN THE ROAD CLOSURE BARRICADE DETAIL D FOR FULL ROAD CLOSURES.

TYPE "A" LOW-INTENSITY FLASHING WARNING LIGHTS SHALL BE VISIBLE ON BOTH SIDES OF THE BARRICADE.

THE R11-2, R11-3, M4-9, R11-4 AND R10-61 SIGNS PLACED ON BARRICADES SHALL COVER NO MORE THAN THE TOP RAIL. THE SIGNS SHALL NOT COVER ANY PORTION OF THE MIDDLE OR BOTTOM RAILS.

"WO AND "MO" SIGNS ARE THE SAME AS "W" AND "M" SIGNS EXCEPT THE BACKGROUND IS ORANGE.

ALL SIGNS SHALL BE 48" X 48" UNLESS OTHERWISE NOTED BELOW:

R11-2 SHALL BE 48" X 30".
R11-3, R11-4 AND R10-61 SHALL BE 60" X 30".
M4-9 SHALL BE 30" X 24".
M3-X SHALL BE 24" X 12". (36" X 18" IF NEEDED TO MATCH EXISTING SIGNS.)
M4-8 SHALL BE 24" X 12". (30" X 15" IF NEEDED TO MATCH EXISTING SIGNS.)
M1-4, M1-5A, AND M1-6 SHALL BE 24" X 24". (36" X 36" IF NEEDED TO MATCH EXISTING SIGNS.)
M05-1 AND M06-1 SHALL BE 21" X 21". (30" X 30" IF NEEDED TO MATCH EXISTING SIGNS.)
D1-X SHALL BE AS SHOWN ON SPECIFIC PROJECT SIGNING DETAIL SHEETS.
R1-1 SHALL BE 36" X 36".

1. TWO WARNING LIGHTS SHALL BE PROVIDED ON THE CENTER BARRICADE AND A MINIMUM OF ONE WARNING LIGHT SHALL BE PROVIDED ON EACH OF THE OTHER BARRICADES WITHIN THE ROADWAY LIMITS. SPACING OF THE WARNING LIGHTS SHALL BE UNIFORM TO THE EDGE OF ROADWAY AS SHOWN (APPROX. 8-FOOT LIGHT SPACING).
2. THESE SIGNS AND BARRICADES ARE NOT REQUIRED IF ROAD CLOSURE BEGINS AT INTERSECTION.
3. FOR ROAD CLOSURE WITHOUT LOCAL ACCESS TO PROJECT, SEE ROAD CLOSURE BARRICADE DETAIL D.
4. FOR ROAD CLOSURE WITH LOCAL ACCESS TO PROJECT, SEE LANE CLOSURE BARRICADE DETAIL E.
5. FOR BRIDGE OR CULVERT REPLACEMENTS, SUBSTITUTE "BRIDGE OUT" INSTEAD OF "ROAD CLOSED" ON R11-2 AND R11-3 SIGNS.
6. INSTALL DETOUR AND COMMUNITY GUIDE SIGNS AND ARROWS ONLY IF SPECIFIED IN THE CONTRACT. IF THERE ARE EXISTING ROUTE MARKER ASSEMBLIES THAT WILL REMAIN IN PLACE, ADJUST THE LOCATION OF THE DETOUR ROUTE SIGNS TO CORRESPOND WITH THE EXISTING ASSEMBLIES. MODIFY EXISTING SIGNS WHERE POSSIBLE. SEE SPECIFIC PROJECT DETOUR SIGNING DETAIL SHEETS. IF DETOUR SIGNS ARE BEING INSTALLED BY OTHERS, PLACE THE CONTRACTED TRAFFIC CONTROL SIGNS TO ALLOW FOR PLACEMENT OF ALL WARNING, DETOUR AND GUIDE SIGNS AS SHOWN.
7. "EAST" CARDINAL DIRECTION MARKERS AND RIGHT TURN ARROWS ARE SHOWN. USE OTHER CARDINAL DIRECTIONS AND ARROWS AS APPROPRIATE.

BARRICADES AND SIGNS FOR MAINLINE CLOSURES

STATE OF WISCONSIN
DEPARTMENT OF TRANSPORTATION

Sept. 2015 — DATE
/S/ Peter Amakobe Atepe — STATEWIDE WORK ZONE TRAFFIC SAFETY ENGINEER
FHWA

6

S.D.D. 15 C 2-6b

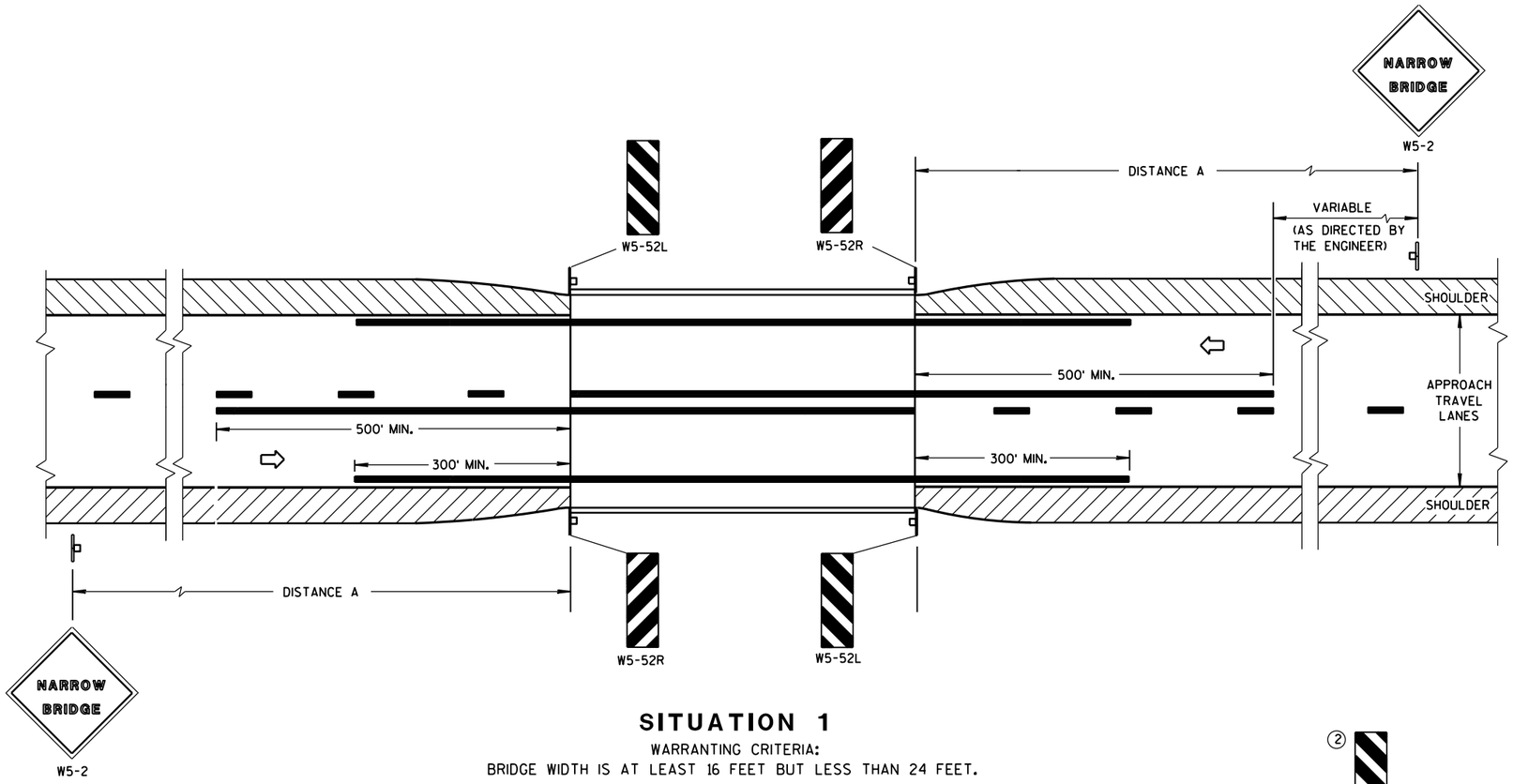

SITUATION 1

WARRANTING CRITERIA:
BRIDGE WIDTH IS AT LEAST 16 FEET BUT LESS THAN 24 FEET.

GENERAL NOTES

DETAILS OF TRAFFIC CONTROL DEVICES AND INSTALLATION NOT SHOWN ON THIS DRAWING SHALL CONFORM TO THE PERTINENT REQUIREMENTS OF THE STANDARD SPECIFICATIONS, THE SPECIAL PROVISIONS, AND THE MANUAL ON UNIFORM TRAFFIC CONTROL DEVICES.

1. LOCATE W5-52 SIGN POST(S) BEHIND GUARDRAIL WHEN PRESENT.
2. OMIT ON ONE-WAY TRAVELLED WAYS.
3. EDGE OF W5-52 SIGN SHALL BE PLACED IN LINE WITH FACE OF CURB OR PARAPET.

DISTANCE TABLE

POSTED OR 85th PERCENTILE SPEED	DISTANCE "A"
25	150'
30	200'
35	250'
40	300'
45	400'
50	550'
55	750'

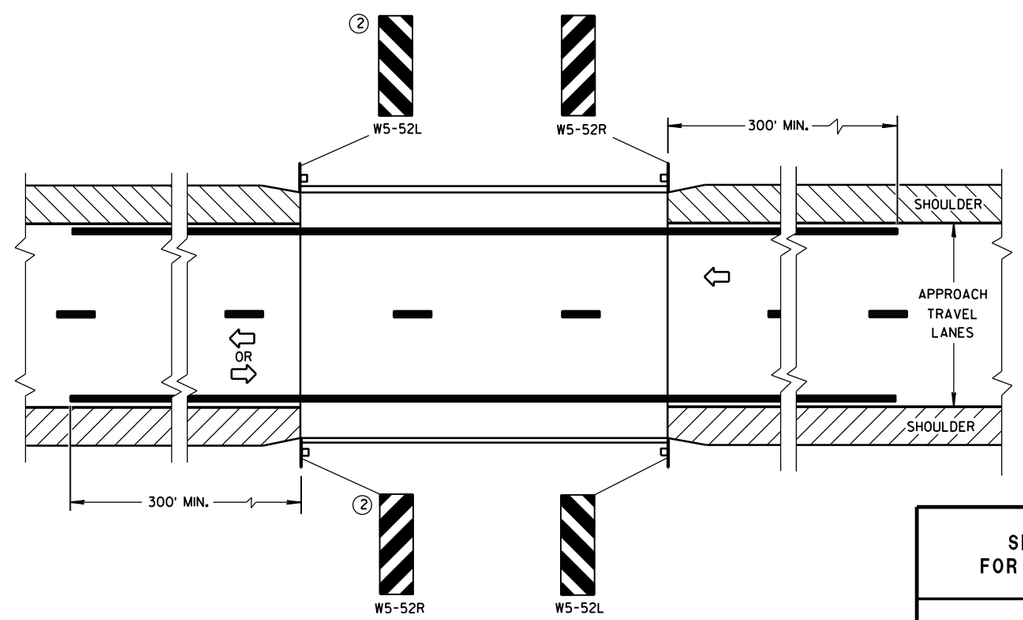

SITUATION 2

WARRANTING CRITERIA:

1. BRIDGE WIDTH IS AT LEAST 24 FEET AND
2. BRIDGE SHOULDER WIDTH IS LESS THAN 6 FEET.

SIGNING & MARKING FOR TWO LANE BRIDGES

STATE OF WISCONSIN
DEPARTMENT OF TRANSPORTATION

APPROVED
4-18-16 /S/ Matthew R. Rauch
DATE STATE SIGNING AND MAR ...NEER
FHWA

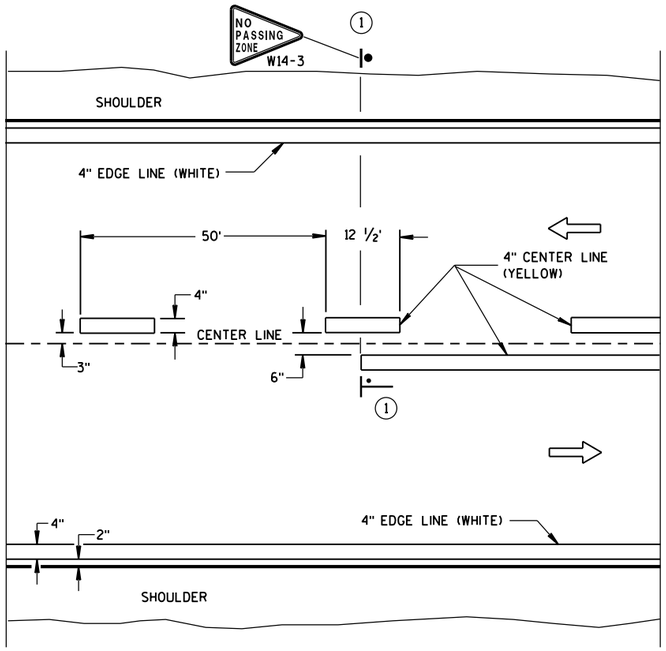

TWO WAY TRAFFIC

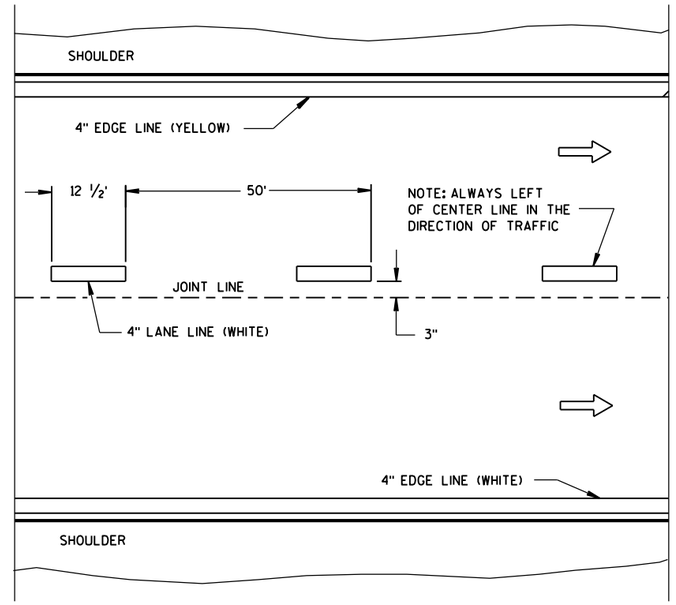

ONE WAY TRAFFIC

PERMANENT PAVEMENT MARKING

GENERAL NOTES

DETAILS OF CONSTRUCTION NOT SHOWN ON THIS DRAWING SHALL CONFORM TO STANDARD SPECIFICATIONS AND SPECIAL PROVISIONS.

(1) NO PASSING ZONE W14-3 SIGN SHALL BE LOCATED WITHIN 50 FEET OF THE "T" MARKING.

NOTE

ARROW SYMBOL (⇨) SHOWS DIRECTION OF TRAVEL

LEGEND

"T" MARKING

POST MOUNTED SIGN

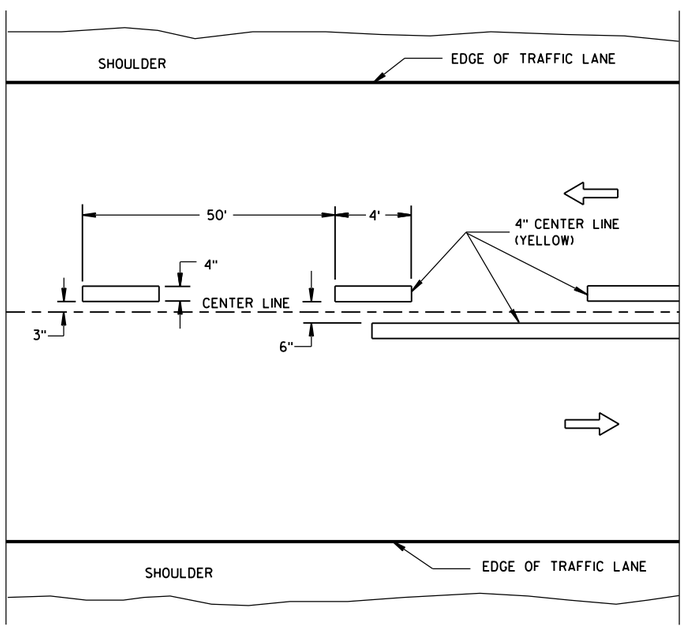

TWO WAY TRAFFIC

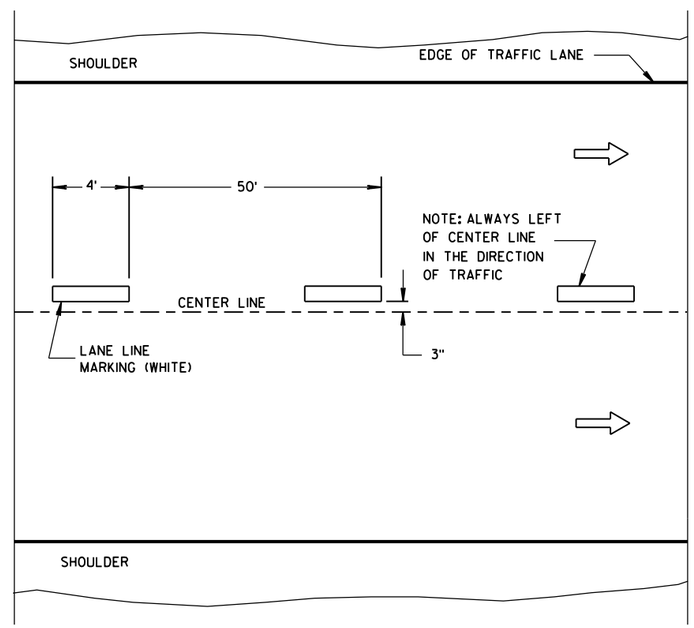

ONE WAY TRAFFIC

TEMPORARY PAVEMENT MARKING

6

6

S.D.D. 15 C 8-17a

S.D.D. 15 C 8-17a

LONGITUDINAL MARKING (MAINLINE)

STATE OF WISCONSIN
DEPARTMENT OF TRANSPORTATION

APPROVED

Sept., 2016	/S/ Matthew R. Rauch	
DATE	STATE SIGNING AND MAR	INEER

FHWA

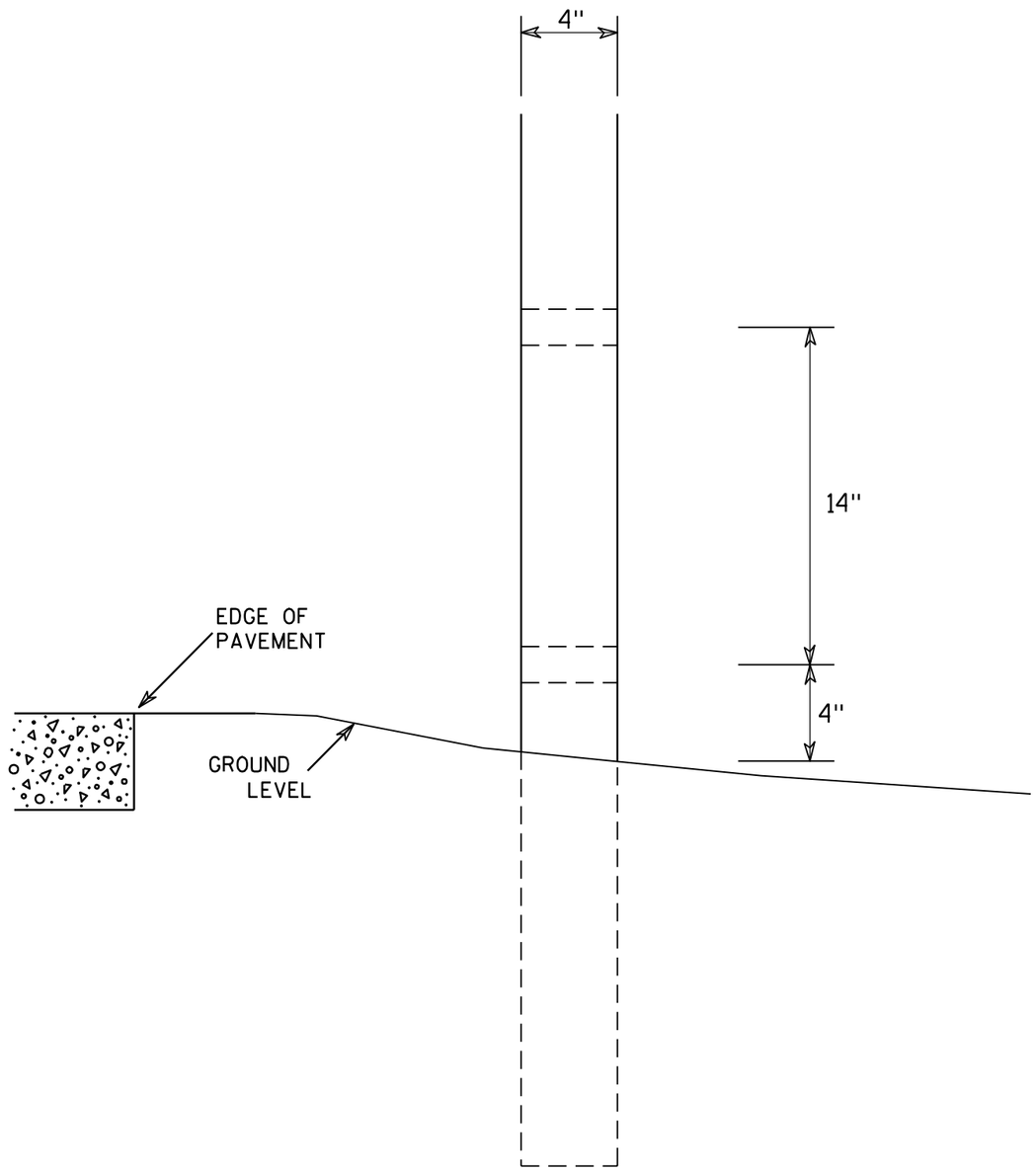

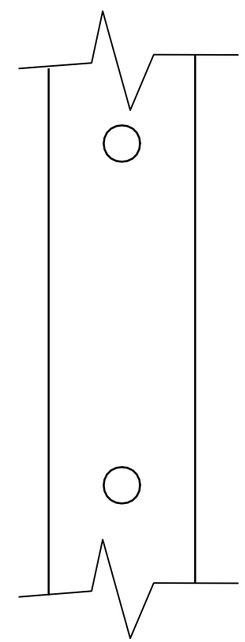

SIDE VIEW

GENERAL NOTES

1. All 4 x 6 Wood Posts shall be modified by having two 1½" diameter holes drilled perpendicular to the roadway centerline.

4 X 6 WOOD POST MODIFICATIONS

WISCONSIN DEPT OF TRANSPORTATION

APPROVED Chester J Spang for State Traffic Engineer

DATE 3/27/97 PLATE NO. A4-11.2

PROJECT NO:	HWY:	COUNTY:		SHEET NO: 21	E

URBAN AREA

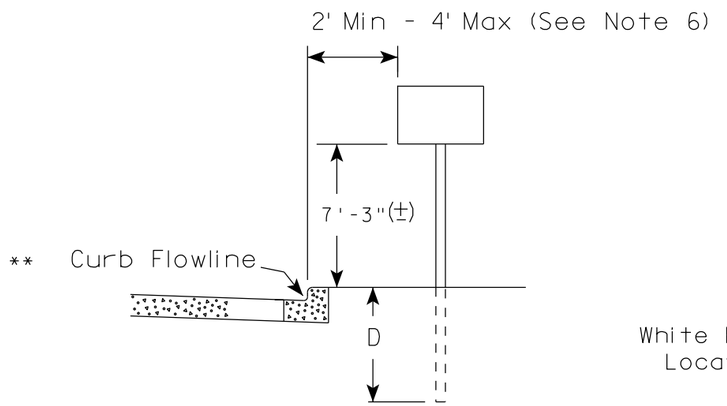

RURAL AREA (See Note 2)

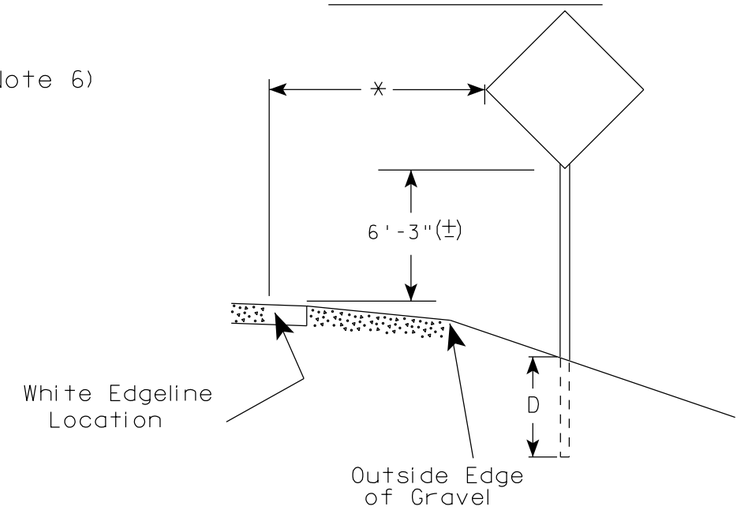

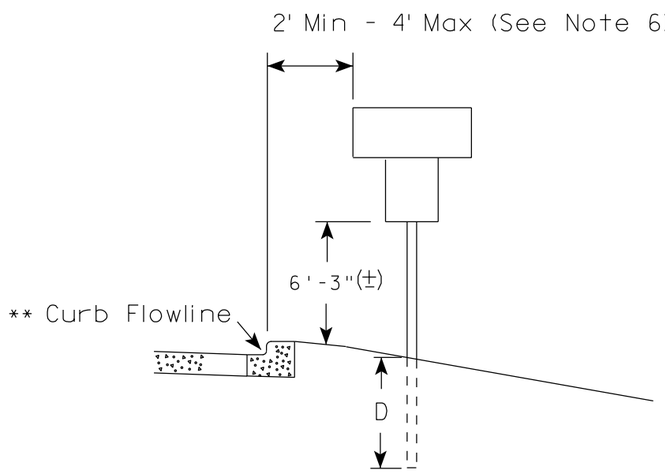

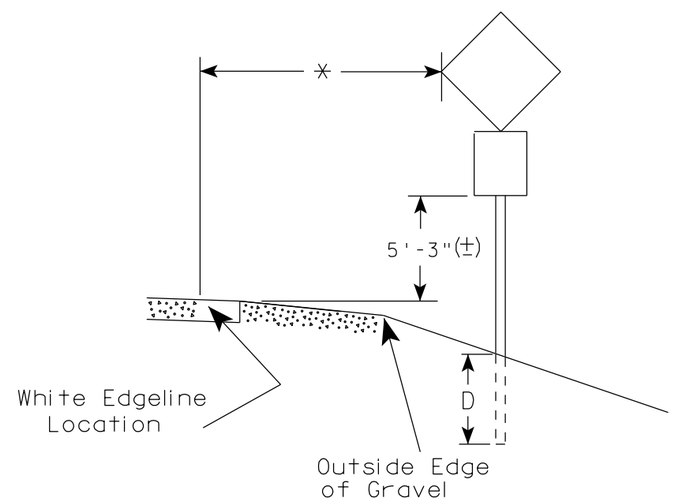

** The existence of curb and gutter does not in itself mandate the vertical clearance illustrated. That height is typically measured where there is sidewalk adjacent to the roadway or parking is permitted. In the absence of sidewalk vertical clearance is measured from the top of the curb. Offset of signs is measured from the flow line.

* 6 feet from edge of a paved shoulder or 12 feet from the edge of pavement (edge line location) or 2 feet from outside edge of gravel, whichever is greater unless directed by project engineer.

GENERAL NOTES

1. Signs wider than 4 feet or 20 sq.ft or larger, shall be mounted on multiple posts. Refer to plate A4-4.
2. If signs are mounted on barrier wall, see A4-10 sign plate.
3. For expressways and freeways, mounting height is 7'- 3" (±) or 6'-3" (±) depending upon existence of a sub-sign.
4. Minimum mounting height for J assemblies (A2-1S) is 7'-3" (±) or 6'-3" (±) per urban or rural detail respectively.
5. Minimum mounting height for signs mounted on traffic signal poles is 5'- 3" (±).
6. Offset distance shall be consistent with existing signs or consistent throughout length of project.
7. The (±) tolerance for mounting height is 3 inches.
8. Folding signs shall be mounted at a height of 5'-3" (±) or as directd by the Engineer.
9. The Double Arrow sign (W12-1) shall be mounted at a height of 2'-3" (±). The Chevron sign (W1-8), Roundabout Chevron panel (R6-4B), Enhanced Reference Markers, Clearance Markers (W5-52), Mile Markers (D10 series), In Road Object Markers (W5-54) & End of Road Markers (W5-56) shall be mounted at a height of 4'-3" (±).

POST EMBEDMENT DEPTH

Area of Sign Installation (Sq. Ft.)	D (Min)
20 or Less	4'
Greater than 20	5'

TYPICAL INSTALLATION OF PERMANENT TYPE II SIGNS ON SINGLE POSTS

WISCONSIN DEPT OF TRANSPORTATION

APPROVED Matthew R Rauch for State Traffic Engineer

DATE 7/23/15 PLATE NO. A4-3.20

PROJECT NO:	HWY:	COUNTY:		SHEET NO:	E

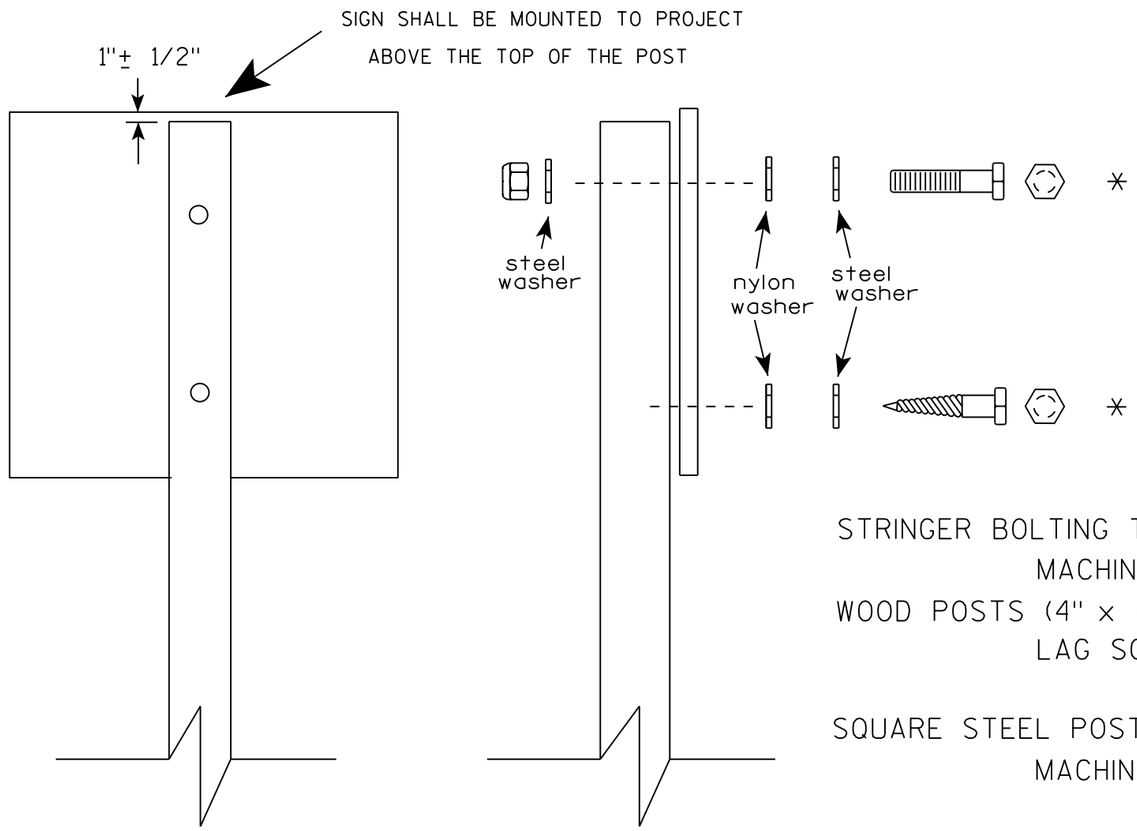

Nuts, bolts and lags used for mounting signs shall have hexagonal heads and shall be either :

a. Hot dip galvanized in accordance with ASTM Designation: A 153, Class D, or SC 3

b. Electro-galvanized in accordance with ASTM Designation : B 633, TYPE III, SC 3.

Threads on bolts and nuts shall be manufactured with sufficient allowance for the cadmium plate or galvanized coating to permit the nuts to run freely on the bolts.

STRINGER BOLTING TO ALUMINUM SIGNS (SEE SIGN PLATE A4-18)

MACHINE BOLTS - 5/16" X 1-3/4" Length w/ lock nuts

WOOD POSTS (4" x 4" or 4" x 6")

LAG SCREWS - 3/8" X 3" (NO STRINGERS ON BACK OF SIGN)

3/8" X 4" (STRINGERS ON BACK OF SIGN)

SQUARE STEEL POSTS (2" x 2")

MACHINE BOLTS - 3/8" X 3-1/4" Length w/ nuts (NO STRINGER ON BACK OF SIGN)

3/8" X 5" Length w/ nuts (STRINGERS ON BACK OF SIGN)

RIVETS - 9/32 " (6605-9-6) BULB-TITE, TRI-FOLD, ALUMINUM BODY/MANDREL

O.D. FLANGE .720-.765 INCH, GRIP RANGE .042-.375 INCH

WASHERS (ALL POSTS) -

1-1/4" O.D. X 3/8" I.D. X 1/16" STEEL

1-1/4" O.D. X 3/8" I.D. X .080 NYLON

* Two different fastening systems are shown for illustration purposes. On any individual sign, either one or the other system shall be used. Actual number of fasteners per sign varies with the sign area, but normally there are two. For a single post installation, all signs greater than 9 sq. ft. require the use of 3 fasteners.

ATTACHMENT OF SIGNS TO POSTS

WISCONSIN DEPT OF TRANSPORTATION

APPROVED Matthew R Rauch
for State Traffic Engineer

DATE 8/11/16 PLATE NO. A4-8.8

PROJECT NO:

SHEET NO: E

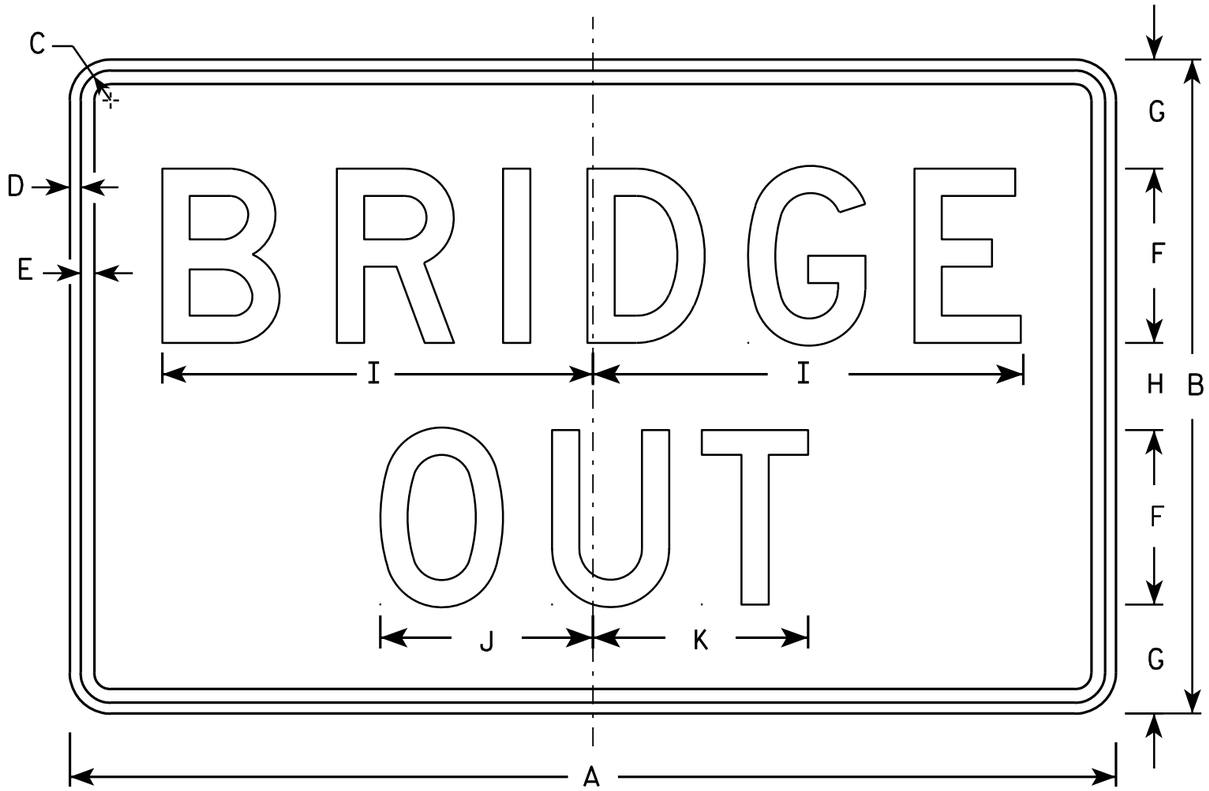

R11-2B

NOTES

1. Sign is Type II - Type H Reflective - reference WIS DOT Standard Specification for HIGHWAY and STRUCTURE CONSTRUCTION latest edition.
2. Color:
   Background - White
   Message - Black
3. Message Series - D
4. Corners may be square or rounded when base material is plywood but borders shall be rounded as shown. When base material is metal, the corners and borders shall be rounded.

SIZE	A	B	C	D	E	F	G	H	I	J	K	L	M	N	O	P	Q	R	S	T	U	V	W	X	Y	Z	Area sq. ft.
1																											
2S	48	30	1 3/8	1/2	5/8	8	5	4	19 3/4	9 3/4	9 7/8																10.0
2M	48	30	1 3/8	1/2	5/8	8	5	4	19 3/4	9 3/4	9 7/8																10.0
3	48	30	1 3/8	1/2	5/8	8	5	4	19 3/4	9 3/4	9 7/8																10.0
4	48	30	1 3/8	1/2	5/8	8	5	4	19 3/4	9 3/4	9 7/8																10.0
5	48	30	1 3/8	1/2	5/8	8	5	4	19 3/4	9 3/4	9 7/8																10.0

STANDARD SIGN
R11-2B

WISCONSIN DEPT OF TRANSPORTATION

APPROVED Matthew R Rauch
For State Traffic Engineer
DATE 4/1/11 PLATE NO. R11-2B.2

PROJECT NO:

SHEET NO: 24 E

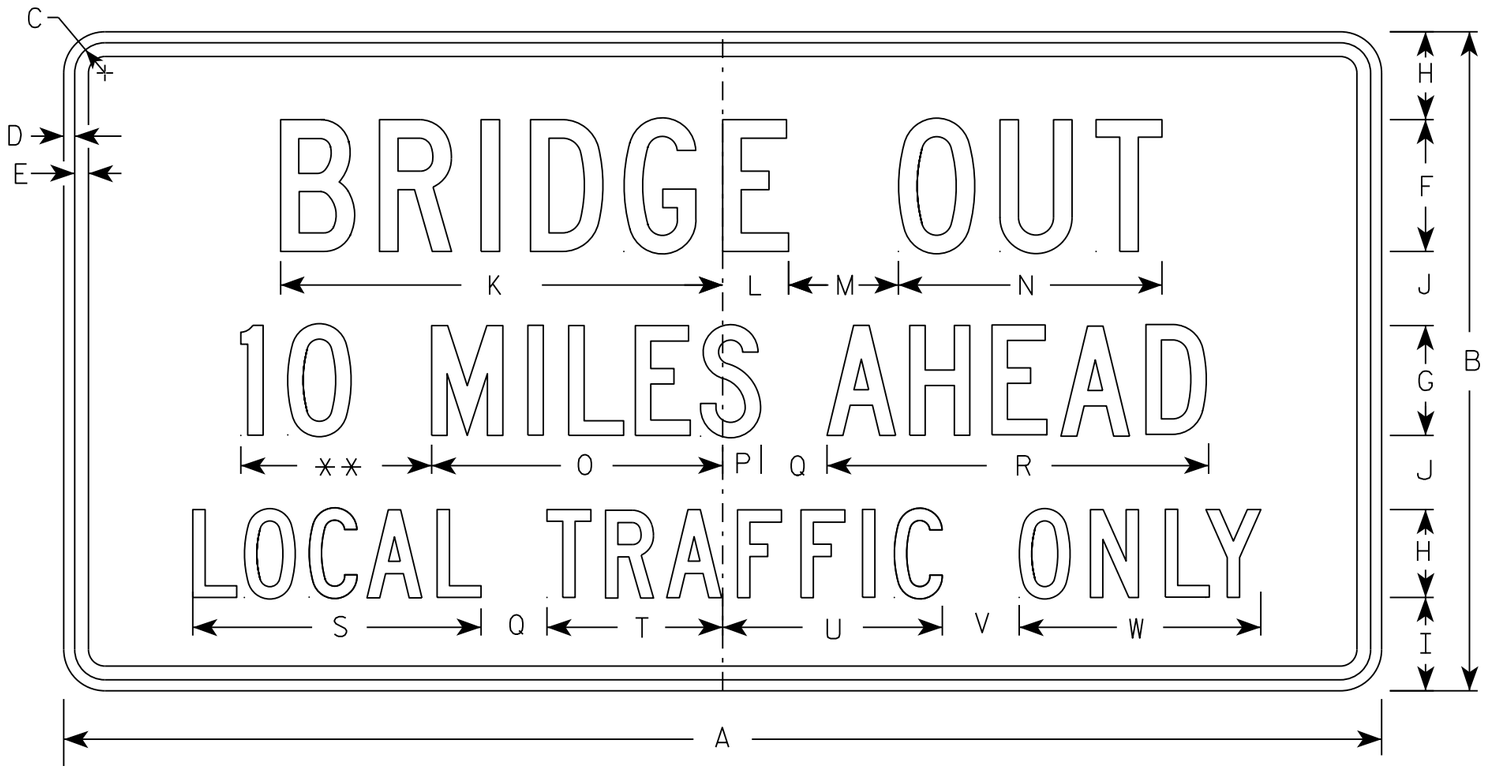

R11-3B

** See Note 5

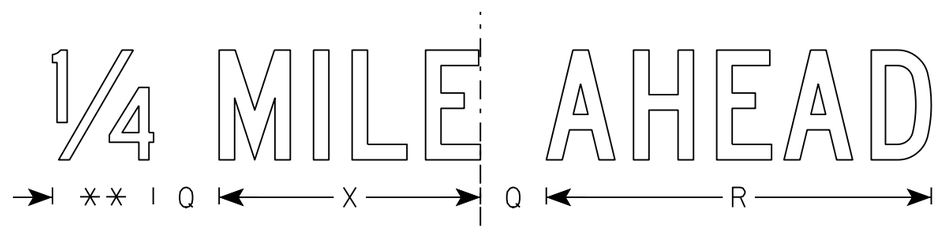

NOTES

1. Sign is Type II - Type H Reflective
2. Color:
   Background - White
   Message - Black
3. Message Series - C
4. Corners may be square or rounded when base material is plywood but borders shall be rounded as shown. When base material is metal, the corners and borders shall be rounded.
5. Substitute appropriate numerals to nearest quarter mile and optically adjust spacing to achieve proper balance.

SIZE	A	B	C	D	E	F	G	H	I	J	K	L	M	N	O	P	Q	R	S	T	U	V	W	X	Y	Z	Area sq. ft.
1	36	18	1 3/8	1/2	5/8	4	3	2 1/2	2	2	13 1/4	2 1/4	3	8	8	1 1/2	2	10 3/4	8 3/8	4 3/4	6 1/2	2	6 3/4	7 1/8			4.5
2S	60	30	1 3/8	1/2	5/8	6	5	4	4 1/4	3 3/8	20 1/8	3	5	12	13 1/4	1 3/4	3	17 3/8	13 1/8	8	10	3 1/2	11	11 7/8			12.5
2M	60	30	1 3/8	1/2	5/8	6	5	4	4 1/4	3 3/8	20 1/8	3	5	12	13 1/4	1 3/4	3	17 3/8	13 1/8	8	10	3 1/2	11	11 7/8			12.5
3																											
4																											
5																											

STANDARD SIGN
R11-3B

WISCONSIN DEPT OF TRANSPORTATION

APPROVED Matthew R Rauch
for State Traffic Engineer

DATE 3/21/17 PLATE NO. R11-3B.3

PROJECT NO: | HWY: | COUNTY: | SHEET NO: 25 | E

NOTES

1. Sign is Type II - Type H Reflective
2. Color:
   Background - White
   Message - Black
3. Message Series - C
4. Corners may be square or rounded when base material is plywood but borders shall be rounded as shown. When base material is metal, the corners and borders shall be rounded.
5. Substitute appropriate numerals to nearest quarter mile and optically adjust spacing to achieve proper balance.

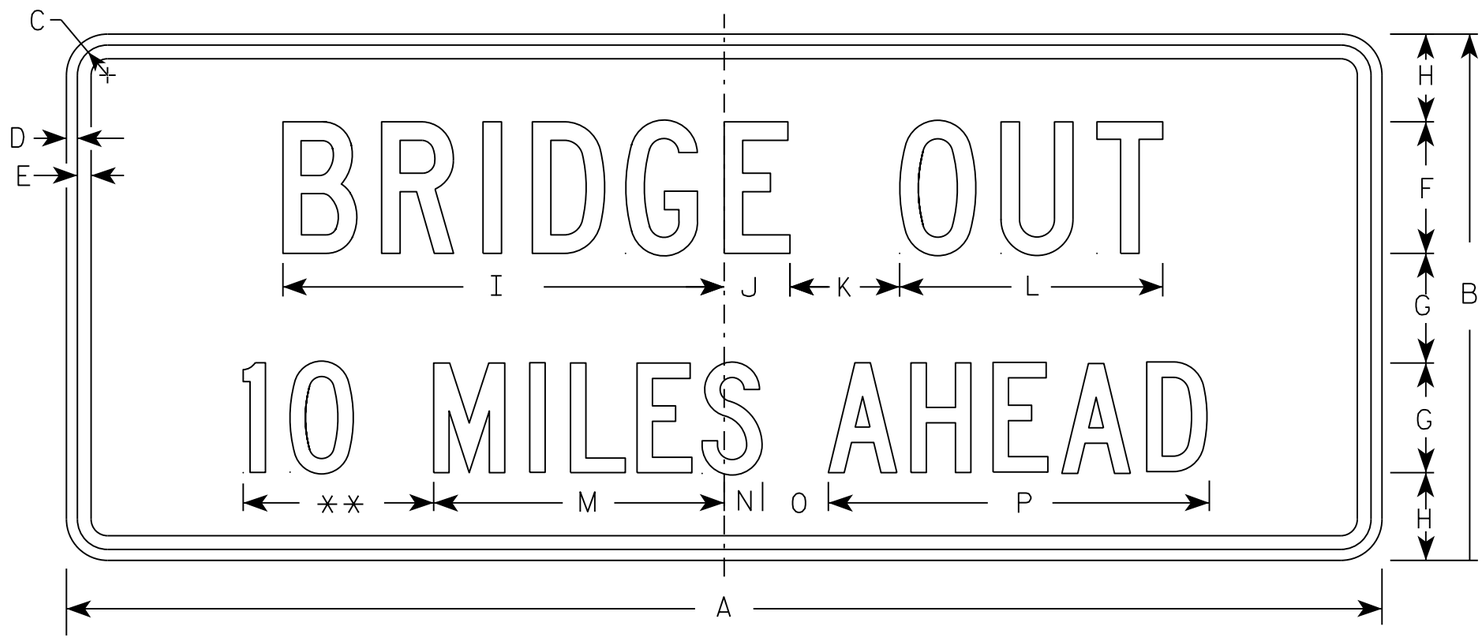

R11-3C

** See Note 5

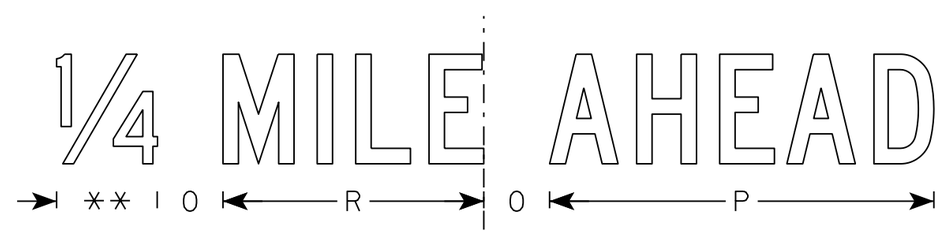

SIZE	A	B	C	D	E	F	G	H	I	J	K	L	M	N	O	P	Q	R	S	T	U	V	W	X	Y	Z	Area sq. ft.
1	36	15	1 3/8	1/2	5/8	4	3	2 1/2	13 1/4	2 1/4	3	8	8	1 1/2	2	10 3/4		7 1/8									3.75
2S	60	24	1 3/8	1/2	5/8	6	5	4	20 1/8	3	5	12	13 1/4	1 3/4	3	17 3/8		11 7/8									10.0
2M	60	24	1 3/8	1/2	5/8	6	5	4	20 1/8	3	5	12	13 1/4	1 3/4	3	17 3/8		11 7/8									10.0
3																											
4																											
5																											

STANDARD SIGN
R11-3C

WISCONSIN DEPT OF TRANSPORTATION

APPROVED Matthew R Rauch
for State Traffic Engineer

DATE 7/28/16 PLATE NO. R11-3C.3

PROJECT NO:

SHEET NO: 26 E

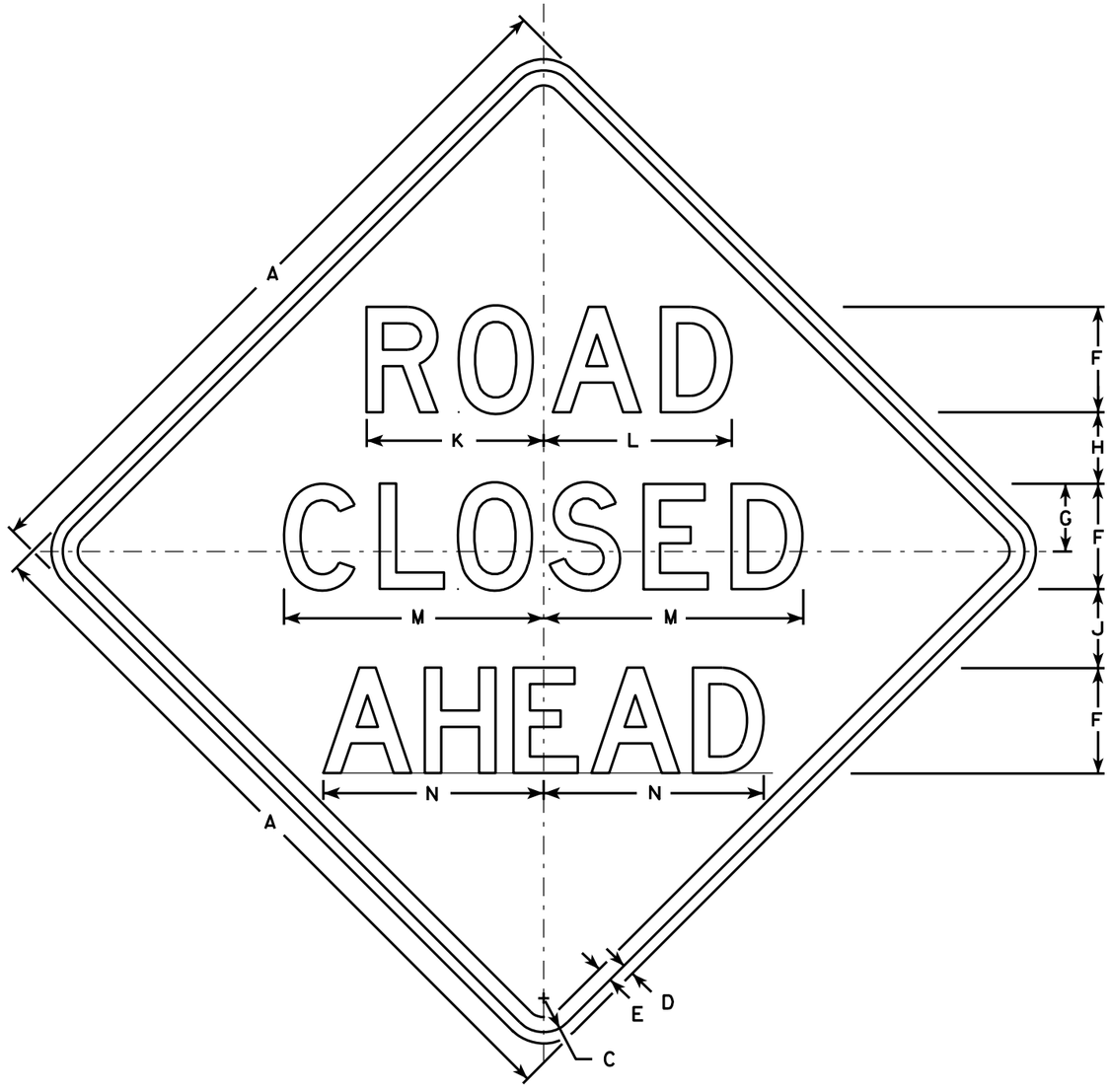

W20-3A

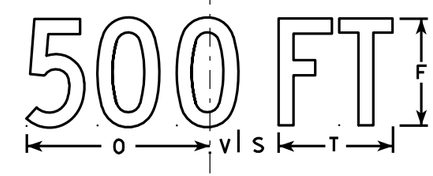

W20-3D

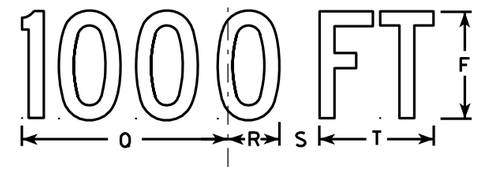

W20-3C

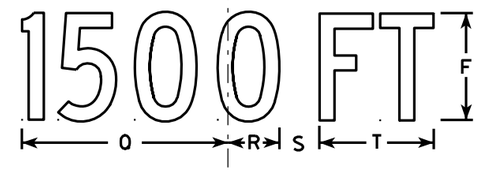

W20-3B

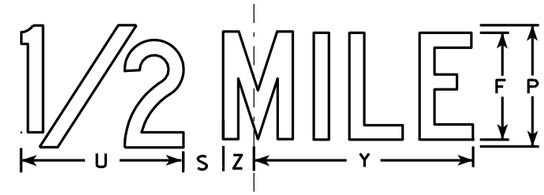

W20-3G

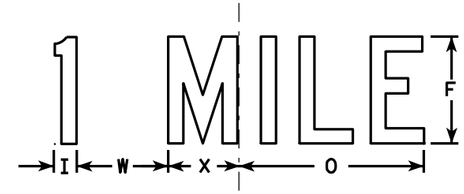

W20-3F

NOTES

1. Sign is Type II - Type F Reflective - reference WIS DOT Standard Specification for HIGHWAY and STRUCTURE CONSTRUCTION latest edition.
2. Color:
   Background - Orange
   Message - Black
3. Message Series - see note 5
4. Corners may be square or rounded when base material is plywood but borders shall be rounded as shown. When base material is metal, the corners and borders shall be rounded.
5. Lines 1 and 2 are Series D.
   Line 3 is Series D for AHEAD and Series C for all other distances.

SIZE	A	B	C	D	E	F	G	H	I	J	K	L	M	N	O	P	Q	R	S	T	U	V	W	X	Y	Z	Area sq. ft.
1	36		1 5/8	5/8	3/4	5	3 3/8	3 1/2	1 1/8	4	8 3/8	8 7/8	12 1/2	11	9	6	10 1/8	2 1/2	1 7/8	5 5/8	8	1 3/8	4 1/2	3 1/2	10 3/4	1 3/4	9.0
2S	48		2 1/4	3/4	1	7	4 1/2	4 3/4	1 1/2	5 1/4	11 3/4	12 1/2	17 1/4	14 5/8	12	8	13 1/2	3 3/8	2 5/8	7 1/2	10 5/8	1 7/8	6	4 5/8	14 3/8	2 3/8	16.0
2M	48		2 1/4	3/4	1	7	4 1/2	4 3/4	1 1/2	5 1/4	11 3/4	12 1/2	17 1/4	14 5/8	12	8	13 1/2	3 3/8	2 5/8	7 1/2	10 5/8	1 7/8	6	4 5/8	14 3/8	2 3/8	16.0
3	48		2 1/4	3/4	1	7	4 1/2	4 3/4	1 1/2	5 1/4	11 3/4	12 1/2	17 1/4	14 5/8	12	8	13 1/2	3 3/8	2 5/8	7 1/2	10 5/8	1 7/8	6	4 5/8	14 3/8	2 3/8	16.0
4	48		2 1/4	3/4	1	7	4 1/2	4 3/4	1 1/2	5 1/4	11 3/4	12 1/2	17 1/4	14 5/8	12	8	13 1/2	3 3/8	2 5/8	7 1/2	10 5/8	1 7/8	6	4 5/8	14 3/8	2 3/8	16.0
5	48		2 1/4	3/4	1	7	4 1/2	4 3/4	1 1/2	5 1/4	11 3/4	12 1/2	17 1/4	14 5/8	12	8	13 1/2	3 3/8	2 5/8	7 1/2	10 5/8	1 7/8	6	4 5/8	14 3/8	2 3/8	16.0

STANDARD SIGN
W20-3A, B, C, D, F & G

WISCONSIN DEPT OF TRANSPORTATION

APPROVED Matthew R Rauch
for State Traffic Engineer
DATE 3/18/11 PLATE NO. W20-3.7

7

7

PROJECT NO: | HWY: | COUNTY: | SHEET NO: 27 | E

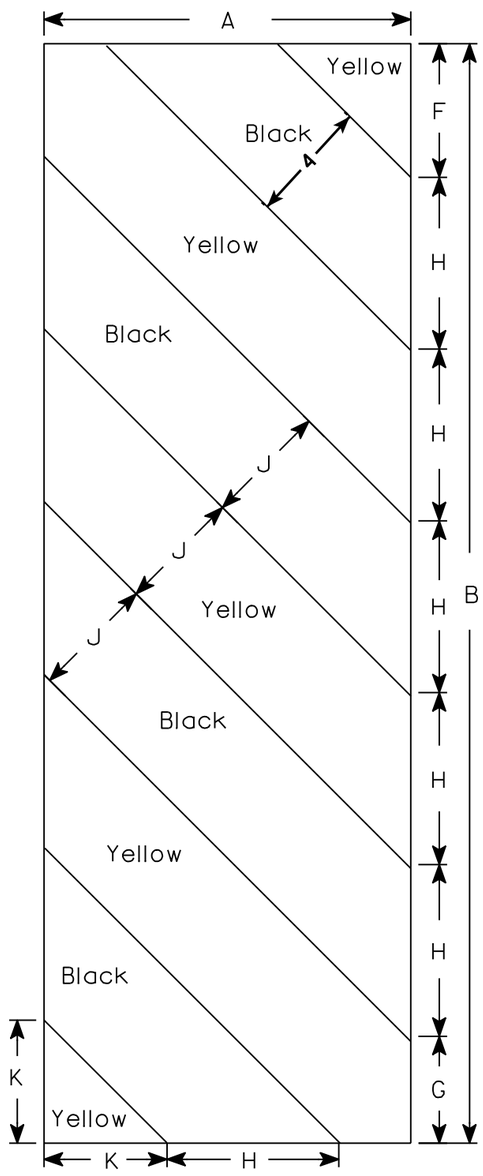

W5-52L

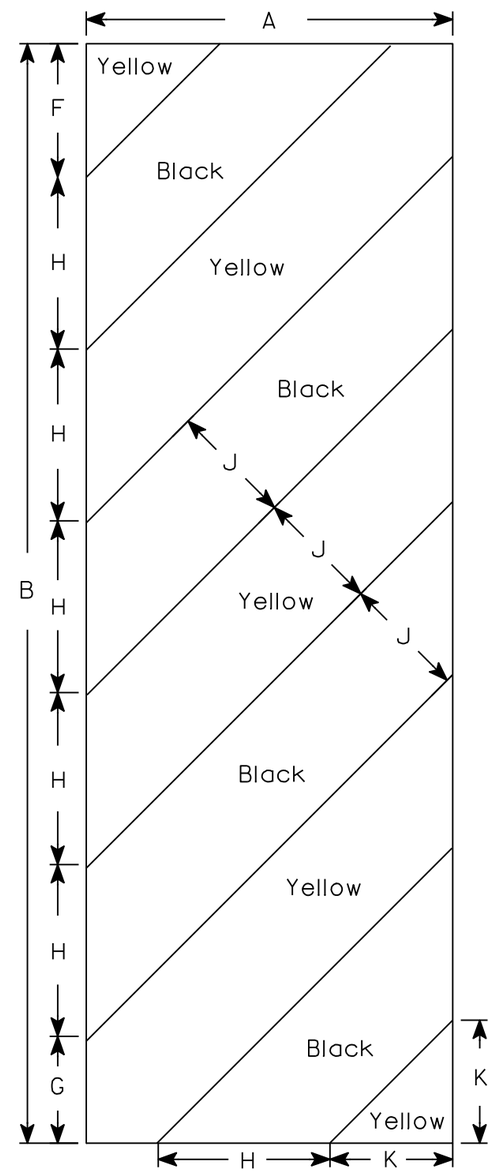

W5-52R

NOTES

1. Sign is Type II - Type F Reflective - reference WIS DOT Standard Specification for HIGHWAY and STRUCTURE CONSTRUCTION latest edition.
2. Color:
   Background - Yellow
   Message - Black
3. Corners may be square or rounded when base material is plywood but borders shall be rounded as shown. When base material is metal, the corners and borders shall be rounded.
4. Alternate colors of stripes as shown.

SIZE	A	B	C	D	E	F	G	H	I	J	K	L	M	N	O	P	Q	R	S	T	U	V	W	X	Y	Z	Area sq. ft.
1																											
2S	12	36				4 3/8	3 1/2	5 5/8	45°	4	4																3.0
2M	12	36				4 3/8	3 1/2	5 5/8	45°	4	4																3.0
3	18	54				6	5 1/2	8 1/2	45°	6	6 9/16																6.75
4																											
5																											

STANDARD SIGN
W5-52L & W5-52R

WISCONSIN DEPT OF TRANSPORTATION

APPROVED Matthew R Rauch
for State Traffic Engineer

DATE 5/29/12 PLATE NO. W5-52.9

PROJECT NO: | HWY: | COUNTY: | SHEET NO: 28 | E

STATE PROJECT NUMBER
9021-06-71

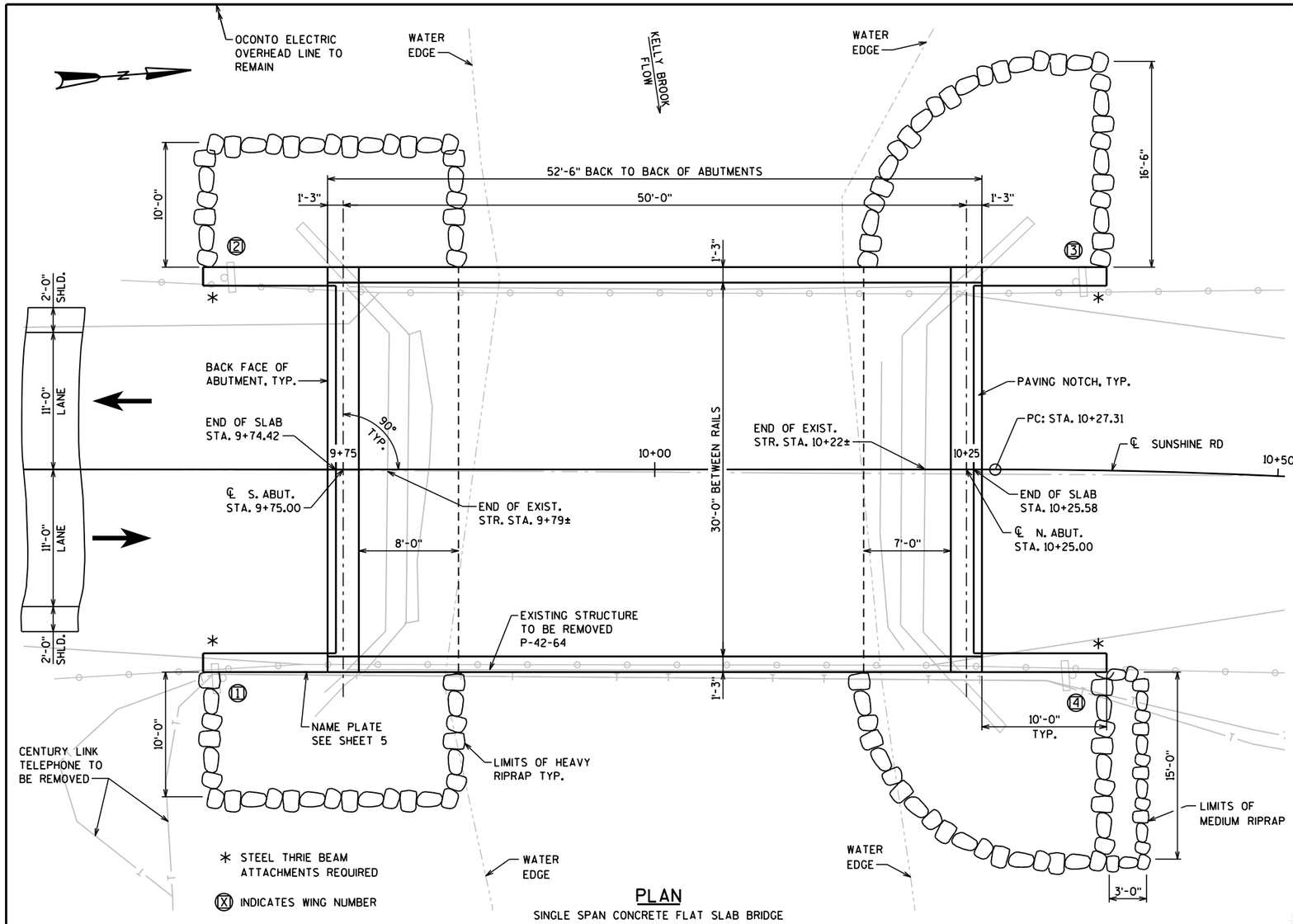

PLAN

SINGLE SPAN CONCRETE FLAT SLAB BRIDGE

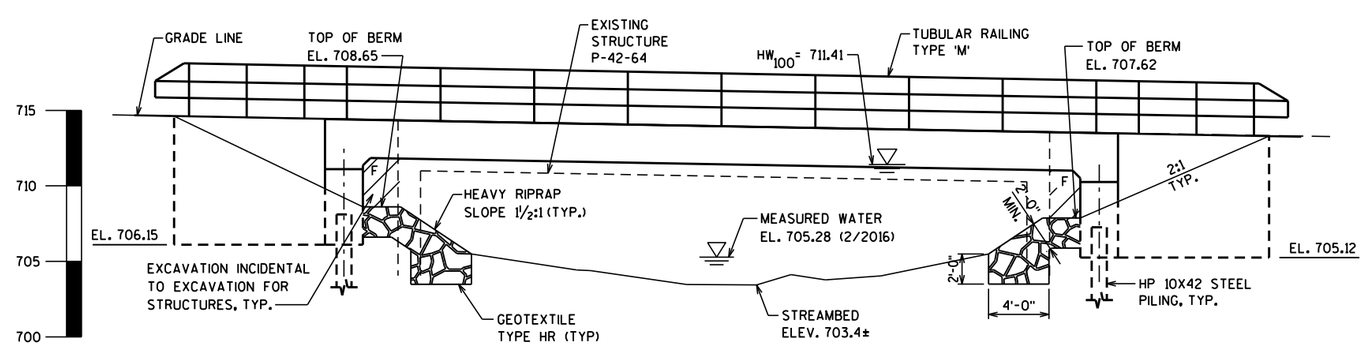

ELEVATION

LIST OF DRAWINGS

1. GENERAL PLAN
2. CROSS SECTION & QUANTITIES
3. SUBSURFACE EXPLORATION
4. SOUTH ABUTMENT
5. SOUTH ABUTMENT DETAILS
6. NORTH ABUTMENT
7. NORTH ABUTMENT DETAILS
8. SUPERSTRUCTURE
9. SUPERSTRUCTURE DETAILS
10. TUBULAR STEEL RAILING TYPE 'M'

TRAFFIC DATA

ADT = 160 (2018)
195 (2038)
RDS = 35 M.P.H.

DESIGN DATA

STRUCTURE IS DESIGNED FOR FUTURE WEARING SURFACE OF 20#/SQ. FT.

LIVE LOAD:

DESIGN LOADING — HL-93
INVENTORY RATING FACTOR — RF = 1.16
OPERATING RATING FACTOR — RF = 1.51
WISCONSIN STANDARD PERMIT VEHICLE (Wis-SPV) — 250 KIPS

MATERIAL PROPERTIES:

CONCRETE MASONRY
SUPERSTRUCTURE — f'c = 4,000 PSI
ALL OTHER — f'c = 3,500 PSI
HIGH STRENGTH BAR STEEL REINFORCEMENT, GRADE 60 — fy = 60,000 PSI

HYDRAULIC DATA

100 YEAR FREQUENCY

Q_{100} — 1900 C.F.S.
VELOCITY — 7.53 F.P.S.
HIGH WATER — EL. 711.41 (100 YEAR)
WATERWAY AREA — 252 S.F.
DRAINAGE AREA — 74 SQ. MILES
OVERTOPPING FREQUENCY = N/A
SCOUR CRITICAL CODE = 8

2 YEAR FREQUENCY

Q_2 — 566 C.F.S.
VELOCITY — 4.21 F.P.S.
HIGH WATER — EL. 708.22 (2 YEAR)

FOUNDATION DATA

ABUTMENTS TO BE SUPPORTED ON HP 10 X 42 STEEL PILING DRIVEN TO A REQUIRED DRIVING RESISTANCE OF 180 TONS ** PER PILE. ESTIMATED LENGTH = 30' AT EACH ABUTMENT.

** THE FACTORED AXIAL RESISTANCE OF PILES IN COMPRESSION USED FOR DESIGN IS THE REQUIRED DRIVING RESISTANCE MULTIPLIED BY A RESISTANCE FACTOR OF 0.5 USING MODIFIED GATES TO DETERMINE DRIVEN PILE CAPACITY.

WISCONSIN KRISTOFER R. OLSON E-35236 APPLETON, WI PROFESSIONAL ENGINEER

7/7/2017

CONSULTANT CONTACT

KRISTOFER OLSON
OMNNI ASSOCIATES, INC.
(920) 735-6900

BRIDGE OFFICE CONTACT

WILLIAM DREHER
(608) 266-8489

NO.	DATE	REVISION	BY

ORIGINAL PLANS PREPARED BY OMNNI ASSOCIATES

STATE OF WISCONSIN DEPARTMENT OF TRANSPORTATION

ACCEPTED William C. Dreher SDR 08/28/17
CHIEF STRUCTURES DESIGN ENGINEER — DATE

STRUCTURE B-42-133

SUNSHINE ROAD OVER KELLY BROOK

COUNTY	OCONTO	TOWN	LENA
DESIGN SPEC.	AASHTO LRFD BRIDGE DESIGN SPECIFICATIONS	LOAD	HL-93
DESIGNED BY BRE	DESIGN CK'D. KRO	DRAWN BY BRE	PLANS CK'D. KRO

GENERAL PLAN

SHEET 1 OF 10

8

8

STATE PROJECT NUMBER
9021-06-71

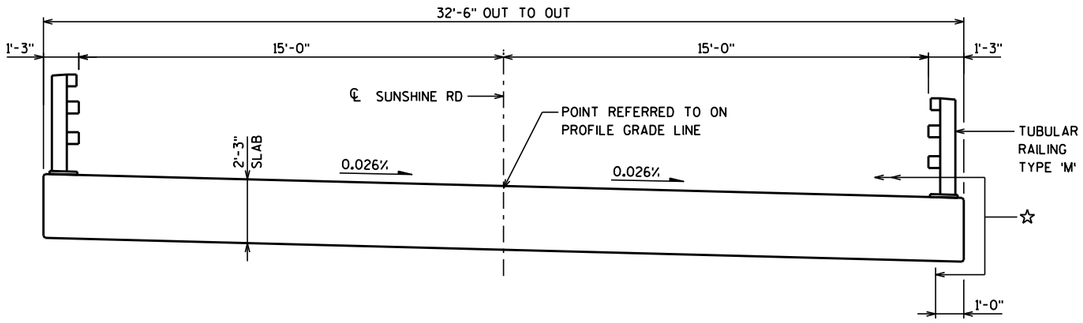

CROSS SECT. THRU RDWY.

LOOKING UPSTATION

GENERAL NOTES

DRAWINGS SHALL NOT BE SCALED.

BAR STEEL REINFORCEMENT SHALL BE EMBEDDED 2" CLEAR UNLESS OTHERWISE SHOWN OR NOTED.

THE FIRST OR FIRST TWO DIGITS OF THE BAR MARK SIGNIFIES THE BAR SIZE.

SLAB FALSEWORK SHALL BE SUPPORTED ON PILES OR SUBSTRUCTURE, UNLESS ALTERNATE METHOD IS APPROVED BY THE ENGINEER.

AT THE BACKFACE OF ABUTMENTS, ALL EXCAVATED VOLUME NOT OCCUPIED BY THE NEW STRUCTURE SHALL BE BACKFILLED WITH STRUCTURE BACKFILL TYPE A.

THE EXISTING GROUND LINE SHALL BE USED AS THE UPPER LIMITS OF EXCAVATION.

THE SLOPE OF THE FILL IN FRONT OF THE ABUTMENTS SHALL BE COVERED WITH HEAVY RIPRAP AND GEOTEXTILE TYPE 'HR' TO THE EXTENT SHOWN ON THE GENERAL PLAN SHEET AND IN THE ABUTMENT DETAILS.

THIS BRIDGE WILL REPLACE THE EXISTING CAST-IN-PLACE CONCRETE GIRDER BRIDGE SUPPORTED ON FULL RETAINING CONCRETE ABUTMENTS. THE STRUCTURE WAS BUILT IN 1919.

☆ PROTECTIVE SURFACE TREATMENT SHALL BE APPLIED TO THE ENTIRE TOP, SIDES, AND EXTERIOR 1'-0" OF THE UNDERSIDE OF THE DECK, TOP AND EXTERIOR EXPOSED FACE OF WINGS, AND THE END 1'-0" OF THE FRONT FACE OF ABUTMENT.

AT ABUTMENTS CONCRETE POURED UNDER WATER WILL BE ALLOWED AND SHALL BE DONE IN ACCORDANCE WITH SECTION 502.3.5.3 OF THE STANDARD SPECIFICATIONS.

BENCH MARKS (NAVD 88)

NO.	STATION	DESCRIPTION	ELEV.
BM 2	8+79, 36' LT.	60D NAIL IN PP# B-157	717.25
BM 3	7+08, 96' RT.	WELL CAP NORTH OF HOUSE #7894, SHOT "S" IN WORD LUISIER	721.30

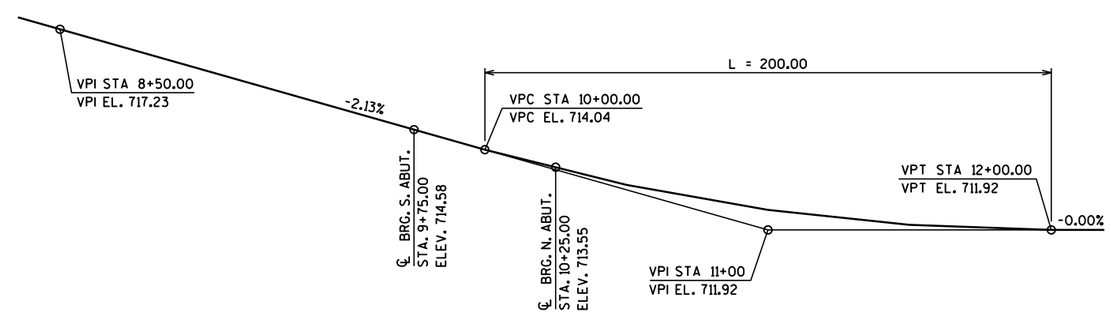

PROFILE GRADE LINE

TOTAL ESTIMATED QUANTITIES

ITEM NO.	BID ITEMS	UNIT	SUPER.	SOUTH ABUT.	NORTH ABUT.	TOTALS
203.0600.S	REMOVING OLD STRUCTURE OVER WATERWAY WITH MINIMAL DEBRIS STA 10+00	LS	1	-----	-----	1
206.1000	EXCAVATION FOR STRUCTURES BRIDGES B-42-133	LS	1	-----	-----	1
210.1500	BACKFILL STRUCTURE TYPE A	TON	-----	150	140	290
502.0100	CONCRETE MASONRY BRIDGES	CY	146	33	33	212
502.3200	PROTECTIVE SURFACE TREATMENT	SY	241	-----	-----	241
505.0400	BAR STEEL REINFORCEMENT HS STRUCTURES	LB	-----	2,070	2,070	4,140
505.0600	BAR STEEL REINFORCEMENT HS COATED STRUCTURES	LB	25,210	1,490	1,470	28,170
513.4061	RAILING TUBULAR TYPE M B-42-133	LF	150	-----	-----	150
516.0500	RUBBERIZED MEMBRANE WATERPROOFING	SY	-----	9	9	18
550.1100	PILING STEEL HP 10-INCH X 42 LB	LF	-----	150	150	300
606.0200	RIPRAP MEDIUM	CY	-----	-----	3	3
606.0300	RIPRAP HEAVY	CY	-----	60	75	135
612.0406	PIPE UNDERDRAIN WRAPPED 6-INCH	LF	-----	68	68	136
645.0111	GEOTEXTILE TYPE DF SCHEDULE A	SY	-----	42	42	84
645.0120	GEOTEXTILE TYPE HR	SY	-----	90	110	200
	NON-BID ITEMS					
	FILLER	SIZE				1/2"&3/4"

8

8

NO.	DATE	REVISION	BY

STATE OF WISCONSIN
DEPARTMENT OF TRANSPORTATION

STRUCTURE B-42-133

DRAWN BY BRE | PLANS CK'D. KRO

CROSS SECTION & QUANTITIES

SHEET 2 OF 10

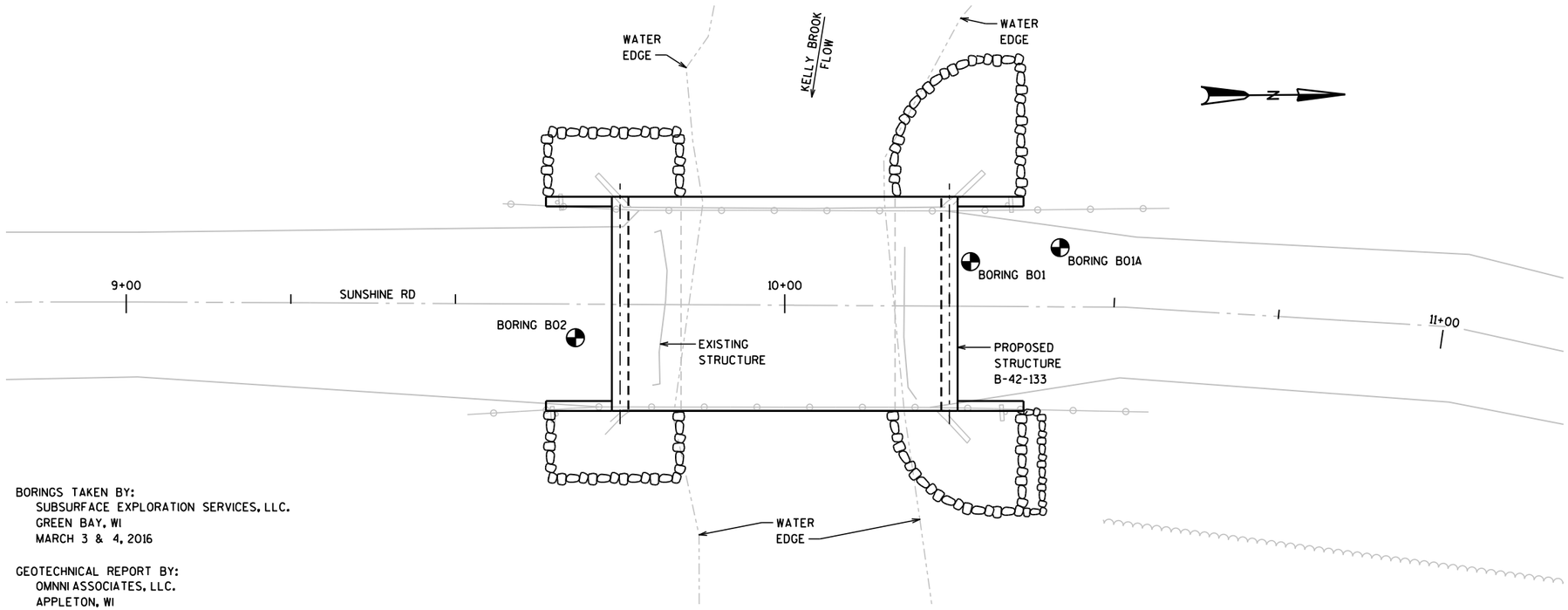

BORINGS TAKEN BY:
SUBSURFACE EXPLORATION SERVICES, LLC.
GREEN BAY, WI
MARCH 3 & 4, 2016

GEOTECHNICAL REPORT BY:
OMNNI ASSOCIATES, LLC.
APPLETON, WI
MAY, 2016

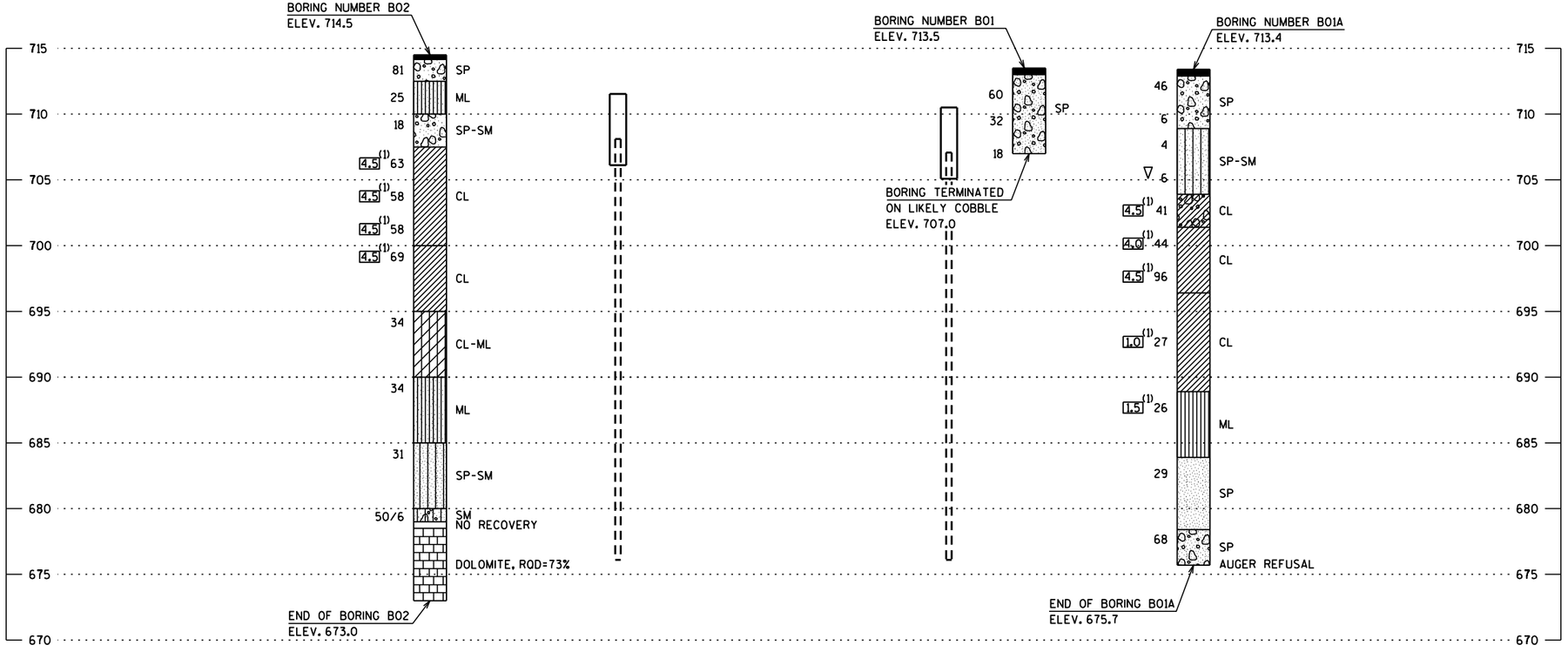

STATE PROJECT NUMBER

9021-06-71

MATERIAL SYMBOLS

ASPHALT	TOPSOIL	PEAT
CONCRETE	FILL	GRAVEL
SAND	CLAY	SILT
BOULDERS OR COBBLES	LIMESTONE	BEDROCK (UNKNOWN)
SHALE	SANDSTONE	IGNEOUS/ META

LEGEND OF BORING

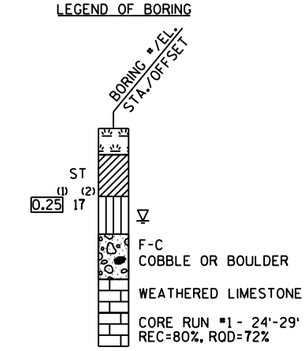

(1) UNCONFINED STRENGTH, AS DETERMINED BY A POCKET PENETROMETER (TSF)

(2) UNLESS OTHERWISE, SPECIFIED THE SPT 'N' VALUE IS BASED ON AASHTO T-206, STANDARD PENETRATION TEST. THE SPT 'N' VALUE PRESENTED HAS NOT BEEN CORRECTED FOR OVERBURDEN PRESSURE OR HAMMER EFFICIENCY.

GROUND WATER ELEVATION

- AT TIME OF DRILLING
- END OF DRILLING
- AFTER DRILLING

ABBREVIATIONS

F-FINE M-MEDIUM C-COARSE ST-SHELBY TUBE

SUBSURFACE EXPLORATION FOR FOUNDATION DESIGN AND BIDDERS INFORMATION

BORINGS WERE COMPLETED AT POINTS APPROXIMATELY AS INDICATED ON THIS DRAWING TO OBTAIN INFORMATION CONCERNING THE CHARACTER OF SUBSURFACE MATERIALS FOUND AT THE SITE. BECAUSE THE INVESTIGATED DEPTHS ARE LIMITED AND THE AREA OF THE BORINGS IS VERY SMALL IN RELATION TO THE ENTIRE SITE, THE WISCONSIN DEPARTMENT OF TRANSPORTATION DOES NOT WARRANT SIMILAR SUBSURFACE CONDITIONS BELOW, BETWEEN, OR BEYOND THESE BORINGS. VARIATIONS IN SOIL CONDITIONS SHOULD BE EXPECTED AND FLUCTUATIONS IN GROUNDWATER LEVELS MAY OCCUR.

NO.	DATE	REVISION	BY

STATE OF WISCONSIN
DEPARTMENT OF TRANSPORTATION
STRUCTURES DESIGN SECTION

STRUCTURE B-42-133

DRAWN BY BRE PLANS CK'D. KRO

SUBSURFACE EXPLORATION

SHEET 3 OF 10

8

8

STATE PROJECT NUMBER
9021-06-71

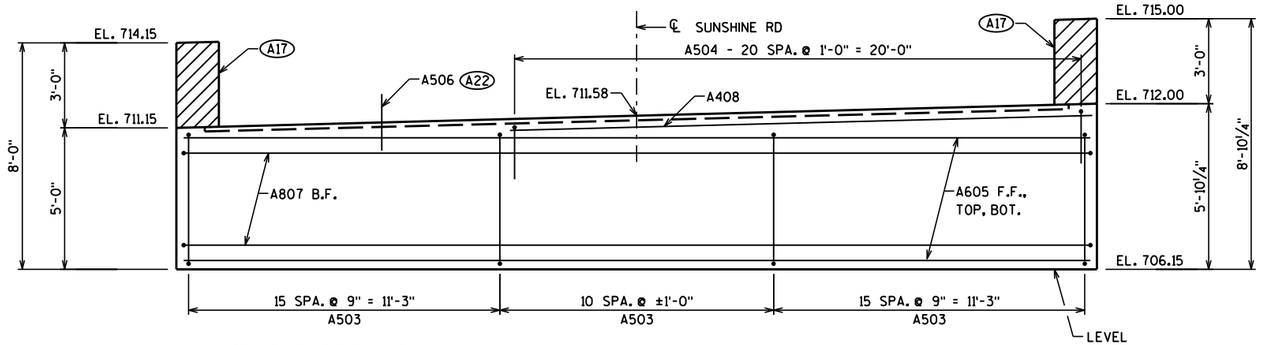

NOTE: SPACE A503 BARS TO MISS PILING

ELEVATION

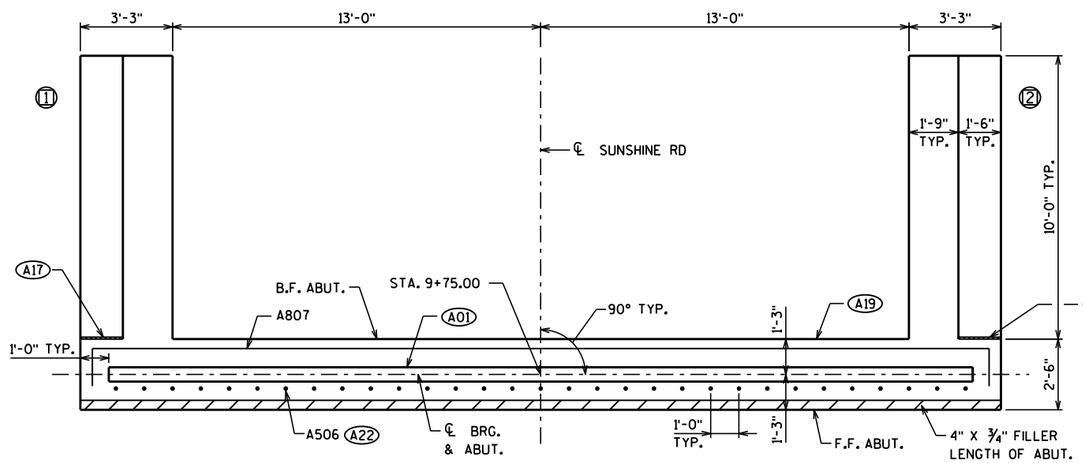

PLAN

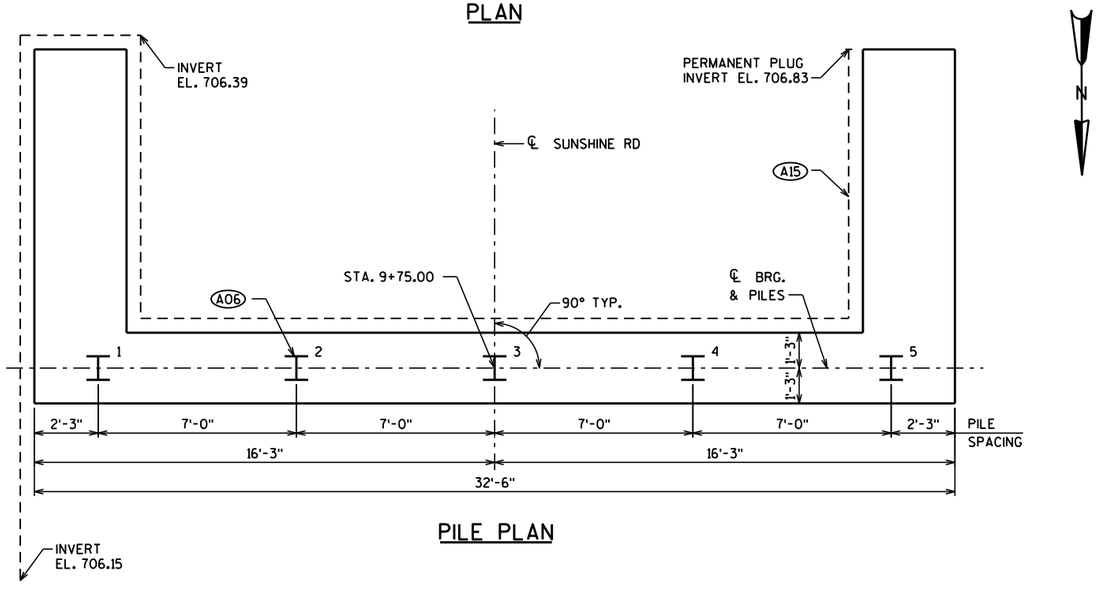

PILE PLAN

LEGEND

A01 KEYED CONST. JOINT FORMED BY BEVELED 2" x 6".

A06 SOUTH ABUTMENT TO BE SUPPORTED ON HP 10 X 42 STEEL PILING, ESTIMATED 30'-0" LONG WITH A REQUIRED DRIVING RESISTANCE OF 180 TONS PER PILE.

A15 PIPE UNDERDRAIN WRAPPED 6-INCH. SLOPE 0.5% MIN. TO SUITABLE DRAINAGE. ATTACH RODENT SHIELD AT ENDS OF PIPE UNDERDRAIN. SEE SHEET 5 FOR DETAILS.

A17 ½" FILLER (INCLUDED IN WING LENGTH): SEAL ALL EXPOSED HORIZONTAL AND VERTICAL SURFACES OF ½" FILLER WITH NON-STAINING GRAY NON-BITUMINOUS JOINT SEALER. (1" DEEP AND HOLD ⅛" BELOW SURFACE OF CONCRETE.) EXTEND SEALER 3" BELOW GUTTER LINE AT INSIDE FACE.

A19 18" RUBBERIZED MEMBRANE WATERPROOFING. SEAL ALL HORIZONTAL AND VERTICAL JOINTS ON BACKFACE.

A22 A506 BARS AT 1'-0". THESE BARS MAY BE PLACED AFTER CONCRETE IS POURED BUT BEFORE INITIAL SET HAS TAKEN PLACE.

SEE SHEET 5 FOR BILL OF BARS, BAR BENDING DIAGRAMS, AND PILE SPLICE DETAILS.

X INDICATES WING NUMBER.

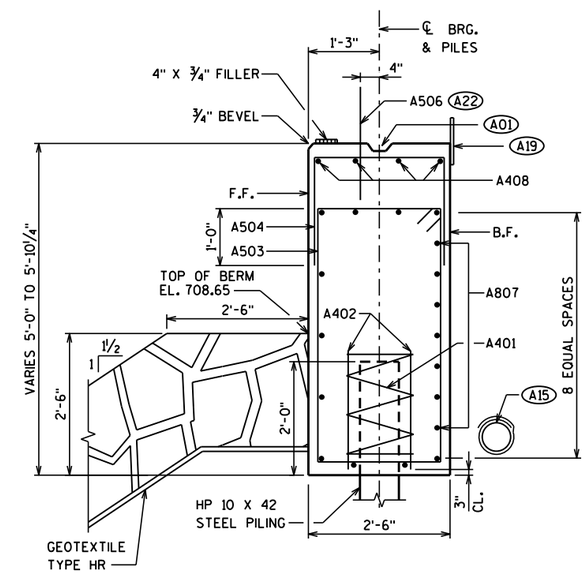

SECTION THRU BODY

HORIZ. BARS NOT OTHERWISE IDENTIFIED ARE A605 BARS

NO.	DATE	REVISION	BY

STATE OF WISCONSIN
DEPARTMENT OF TRANSPORTATION

STRUCTURE B-42-133

DRAWN BY MRW | PLANS CK'D. BRE

SOUTH ABUTMENT

SHEET 4 OF 10

STATE PROJECT NUMBER
9021-06-71

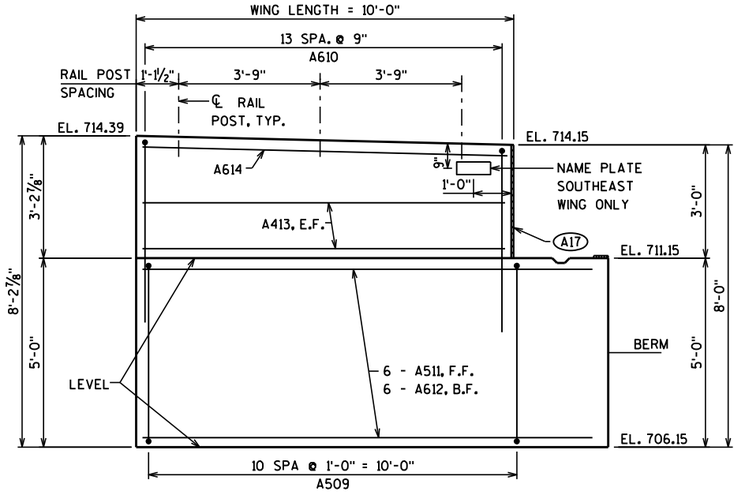

WING 1 ELEVATION

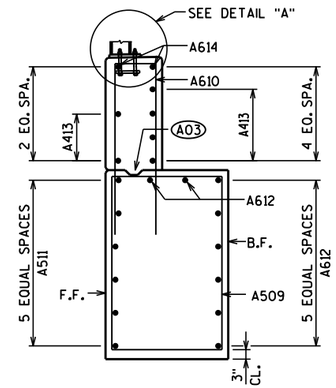

WING 1 SECTION

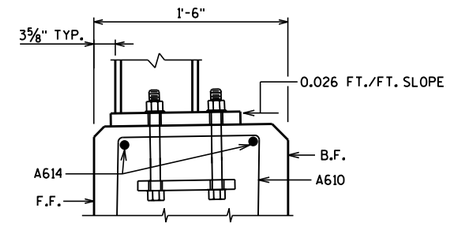

DETAIL "A"

BILL OF BARS

BAR MARK	COAT	NO. REQ'D.	LENGTH	BENT	LOCATION
A401		5	28'-0"	X	BODY - ONE PER PILE
A402		10	2'-3"		BODY - TWO PER PILE
A503		41	14'-2"	X	BODY - STIRRUPS
A504		21	5'-9"	X	BODY - VERTICAL, TOP
A605		11	32'-2"		BODY - HORIZONTAL
A506	X	31	2'-0"		BODY - VERTICAL, DOWEL
A807		7	34'-5"	X	BODY - HORIZONTAL B.F.
A408		4	20'-0"		BODY - HORIZONTAL, TOP
A509	X	11	15'-8"	X	WINGS - STIRRUPS, WALL 1
A610	X	28	11'-0"	X	WINGS - VERTICAL
A511	X	13	12'-2"		WINGS - HORIZONTAL, F.F.
A612	X	16	11'-11"		WINGS - HORIZONTAL, B.F. & TOP
A413	X	12	9'-7"		WINGS - HORIZONTAL
A614	X	4	9'-7"		WINGS - HORIZONTAL-TOP
A515	X	11	17'-4"	X	WINGS - STIRRUPS, WALL 2

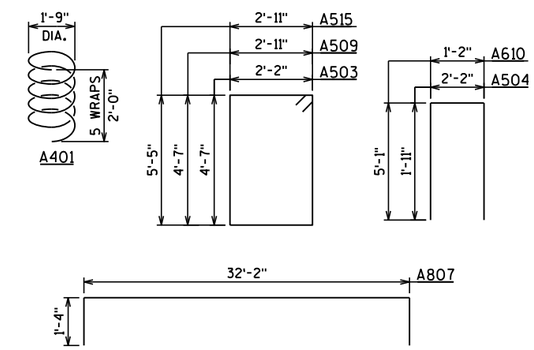

BAR BENDING DIAGRAMS

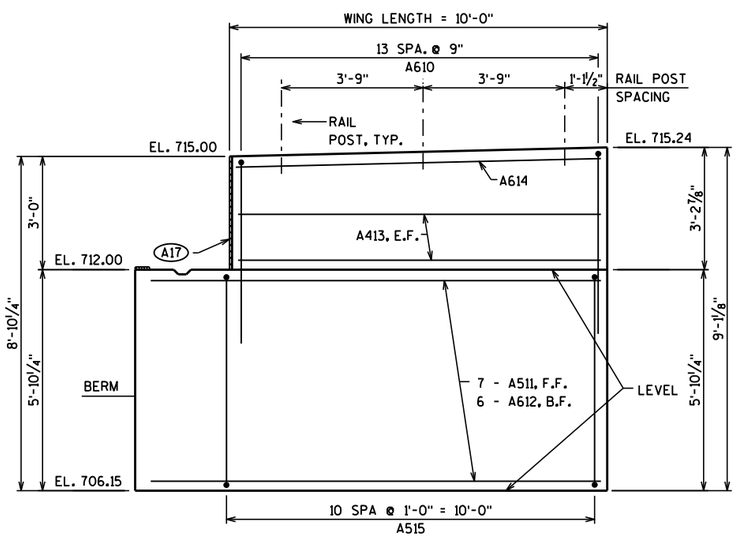

WING 2 ELEVATION

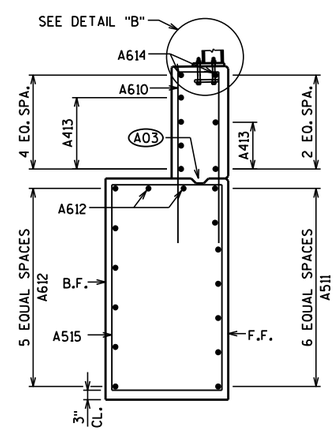

WING 2 SECTION

DETAIL "B"

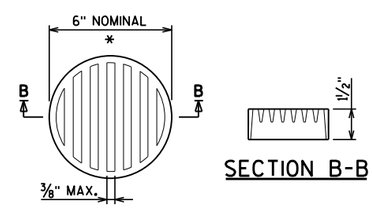

SECTION B-B

RODENT SCREEN DETAIL

* DIMENSIONS ARE APPROXIMATE. THE GRATE IS SIZED TO FIT INTO A PIPE COUPLING. ORIENT SO SLOTS ARE VERTICAL.

THE RODENT SCREEN, PIPE COUPLING AND SCREWS SHALL BE CONSIDERED INCIDENTAL TO THE BID ITEM "PIPE UNDERDRAIN WRAPPED 6-INCH".

THE RODENT SCREEN SHALL BE A PVC GRATE SIMILAR TO THIS DETAIL. THE GRATE IS COMMERCIALLY AVAILABLE AS A FLOOR STRAINER. A PIPE COUPLING IS REQUIRED FOR THE ATTACHMENT OF THIS SCREEN TO THE EXPOSED END OF THE PIPE UNDERDRAIN. THE SCREEN SHALL BE FASTENED TO THE PIPE COUPLING WITH TWO OR MORE NO. 10 X 1-INCH SHEET METAL SCREWS.

LEGEND

(A03) OPTIONAL CONST. JOINT: KEYWAY FORMED BY BEVELED 2" X 6". (18" R.M.W. @ B.F. & ¾" "V" GROOVE @ F.F. IF JOINT IS USED.)

(A17) ½" FILLER (INCLUDED IN WING LENGTH): SEAL ALL EXPOSED HORIZ. & VERT. SURFACES OF ½" FILLER WITH NON-STAINING GRAY NON-BITUMINOUS JOINT SEALER. (1" DEEP AND HOLD ⅛" BELOW SURFACE OF CONCRETE). EXTEND SEALER 3" BELOW GUTTER LINE AT INSIDE FACE.

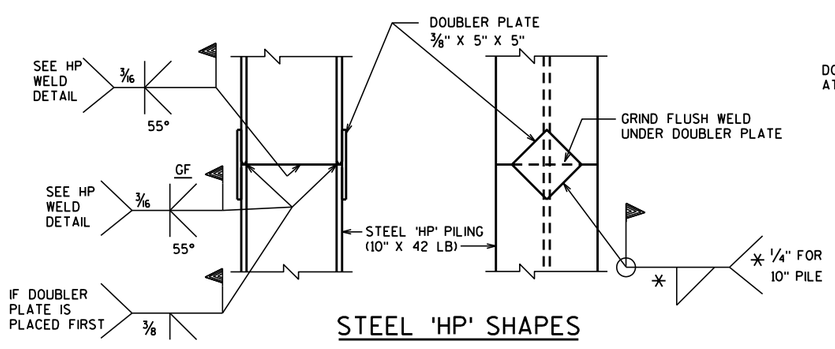

STEEL 'HP' SHAPES

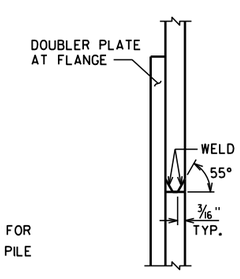

HP WELD DETAIL

FLANGE SHOWN, WEB SIMILAR

NO.	DATE	REVISION	BY

STATE OF WISCONSIN
DEPARTMENT OF TRANSPORTATION

STRUCTURE B-42-133

DRAWN BY MRW | PLANS CK'D. BRE

SOUTH ABUTMENT DETAILS

SHEET 5 OF 10

33

8

8

STATE PROJECT NUMBER
9021-06-71

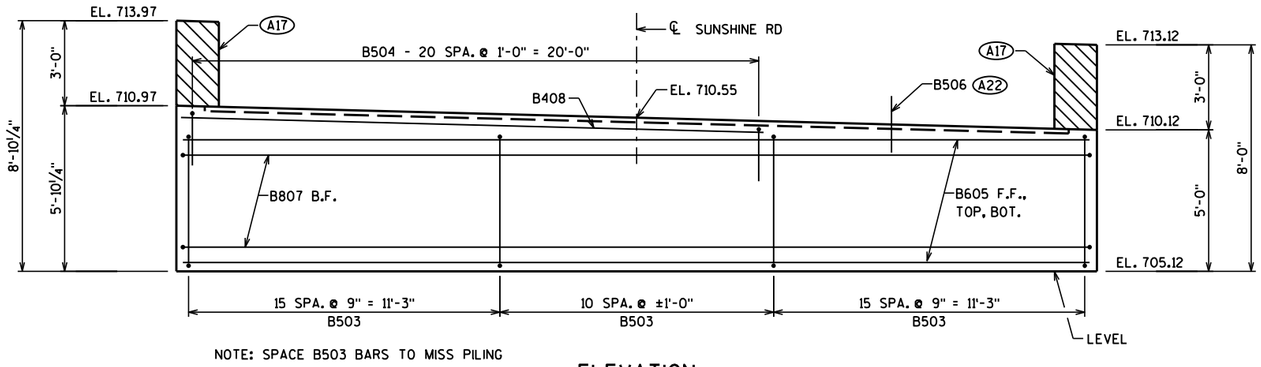

NOTE: SPACE B503 BARS TO MISS PILING

ELEVATION

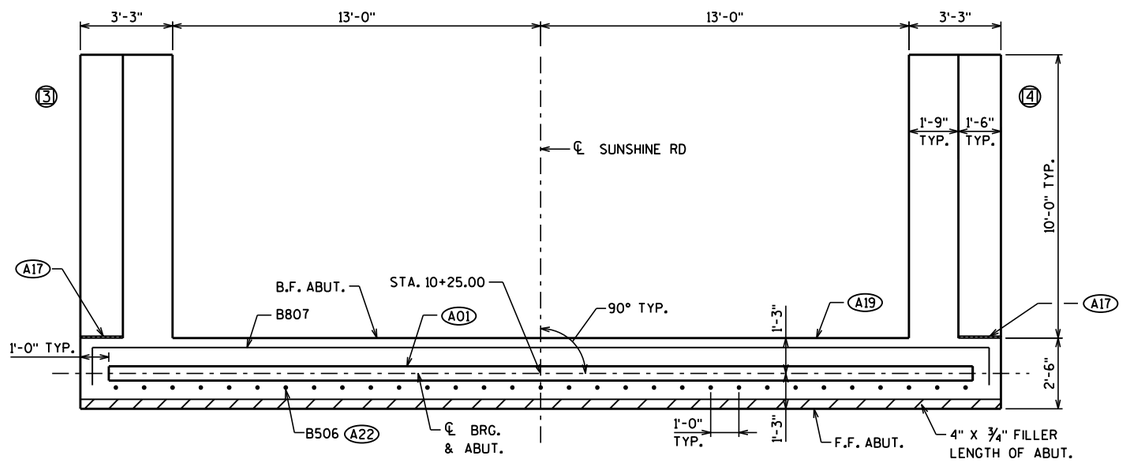

PLAN

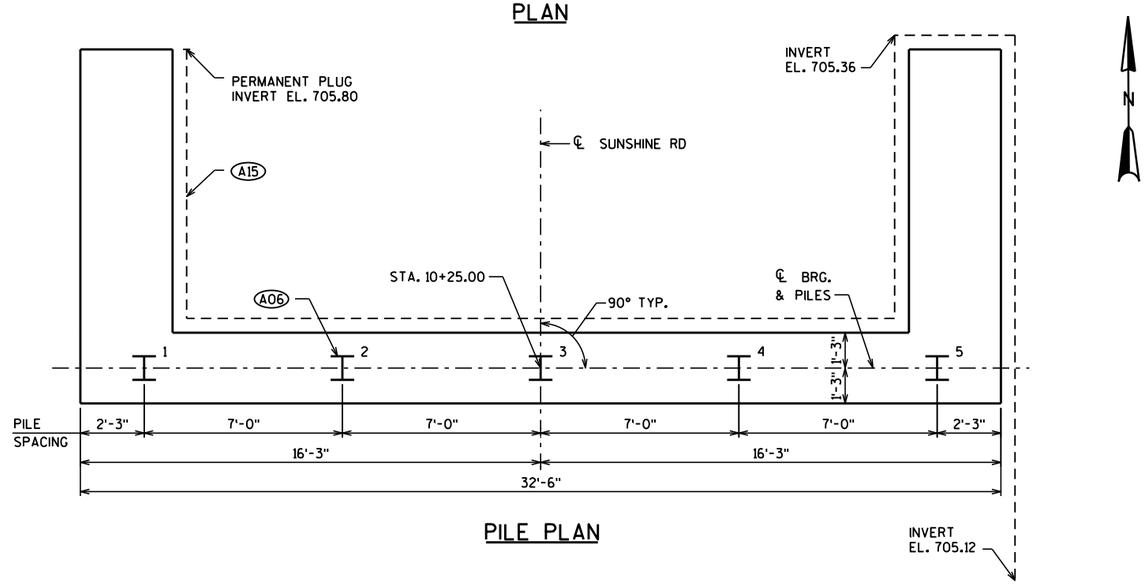

PILE PLAN

LEGEND

A01 KEYED CONST. JOINT FORMED BY BEVELED 2" x 6".

A06 NORTH ABUTMENT TO BE SUPPORTED ON HP 10 X 42 STEEL PILING, ESTIMATED 30'-0" LONG WITH A REQUIRED DRIVING RESISTANCE OF 180 TONS PER PILE.

A15 PIPE UNDERDRAIN WRAPPED 6-INCH. SLOPE 0.5% MIN. TO SUITABLE DRAINAGE. ATTACH RODENT SHIELD AT ENDS OF PIPE UNDERDRAIN. SEE SHEET 5 FOR DETAILS.

A17 ½" FILLER (INCLUDED IN WING LENGTH): SEAL ALL EXPOSED HORIZONTAL AND VERTICAL SURFACES OF ½" FILLER WITH NON-STAINING GRAY NON-BITUMINOUS JOINT SEALER. (1" DEEP AND HOLD ⅛" BELOW SURFACE OF CONCRETE.) EXTEND SEALER 3" BELOW GUTTER LINE AT INSIDE FACE.

A19 18" RUBBERIZED MEMBRANE WATERPROOFING. SEAL ALL HORIZONTAL AND VERTICAL JOINTS ON BACKFACE.

A22 B506 BARS AT 1'-0". THESE BARS MAY BE PLACED AFTER CONCRETE IS POURED BUT BEFORE INITIAL SET HAS TAKEN PLACE.

SEE SHEET 7 FOR BILL OF BARS AND BAR BENDING DIAGRAMS.

SEE SHEET 5 FOR PILE SPLICE DETAILS.

X INDICATES WING NUMBER.

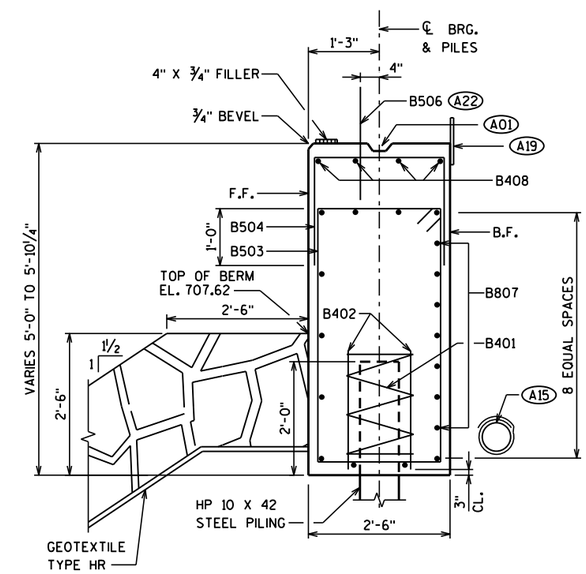

SECTION THRU BODY

HORIZ. BARS NOT OTHERWISE IDENTIFIED ARE B605 BARS

NO.	DATE	REVISION	BY

STATE OF WISCONSIN
DEPARTMENT OF TRANSPORTATION

STRUCTURE B-42-133

DRAWN BY MRW | PLANS CK'D. BRE

NORTH ABUTMENT

SHEET 6 OF 10

STATE PROJECT NUMBER
9021-06-71

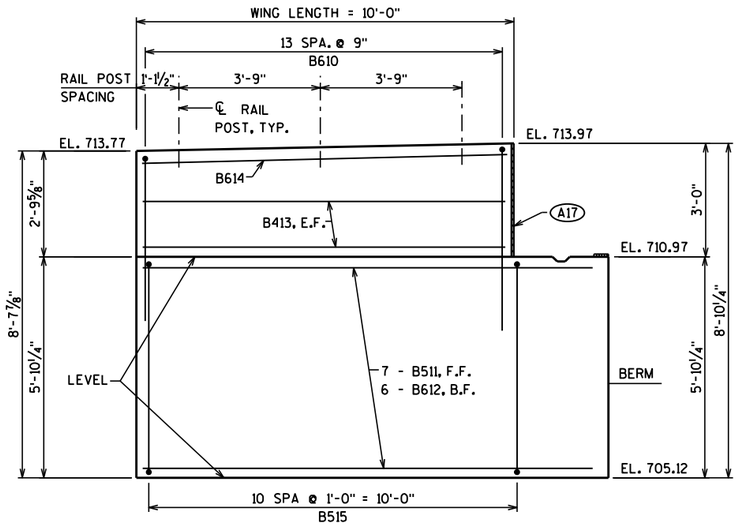

WING 3 ELEVATION

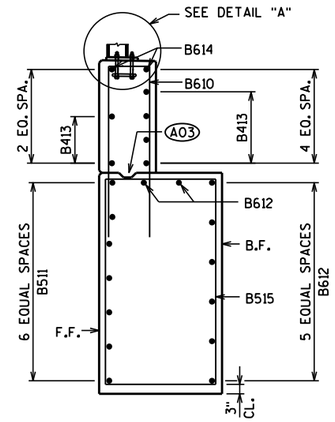

WING 3 SECTION

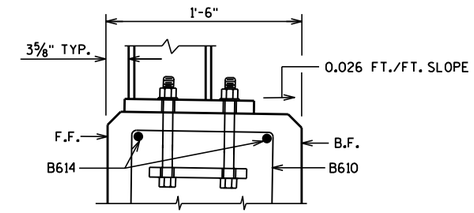

DETAIL "A"

BILL OF BARS

BAR MARK	COAT	NO. REQ'D.	LENGTH	BENT	LOCATION
B401		5	28'-0"	X	BODY - ONE PER PILE
B402		10	2'-3"		BODY - TWO PER PILE
B503		41	14'-2"	X	BODY - STIRRUPS
B504		21	5'-9"	X	BODY - VERTICAL, TOP
B605		11	32'-2"		BODY - HORIZONTAL
B506	X	31	2'-0"		BODY - VERTICAL, DOWEL
B807		7	34'-5"	X	BODY - HORIZONTAL B.F.
B408		4	20'-0"		BODY - HORIZONTAL, TOP
B509	X	11	15'-8"	X	WINGS - STIRRUPS, WALL 4
B610	X	28	10'-6"	X	WINGS - VERTICAL
B511	X	13	12'-2"		WINGS - HORIZONTAL, F.F.
B612	X	16	11'-11"		WINGS - HORIZONTAL, B.F. & TOP
B413	X	12	9'-7"		WINGS - HORIZONTAL
B614	X	4	9'-7"		WINGS - HORIZONTAL-TOP
B515	X	11	17'-4"	X	WINGS - STIRRUPS, WALL 3

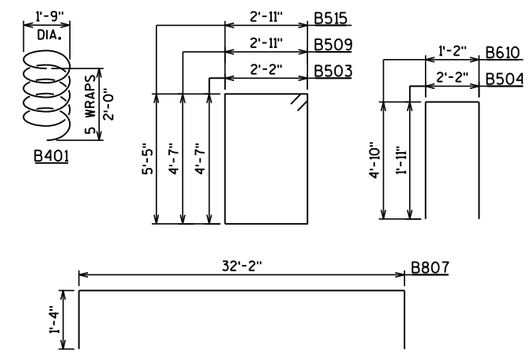

BAR BENDING DIAGRAMS

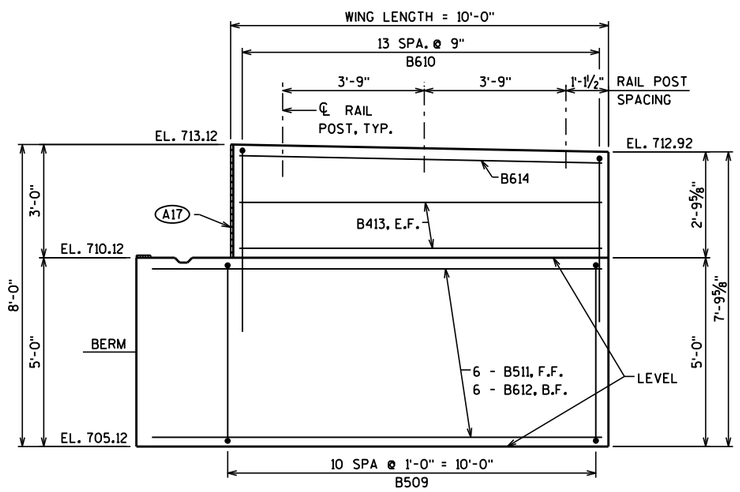

WING 4 ELEVATION

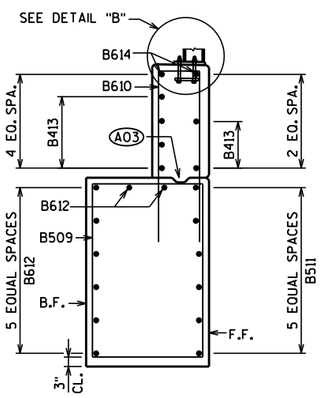

WING 4 SECTION

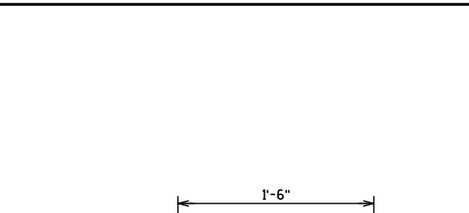

DETAIL "B"

LEGEND

(A03) OPTIONAL CONST. JOINT: KEYWAY FORMED BY BEVELED 2" X 6". (18" R.M.W. @ B.F. & ¾" "V" GROOVE @ F.F. IF JOINT IS USED.)

(A15) PIPE UNDERDRAIN WRAPPED 6-INCH. SLOPE 0.5% MIN. TO SUITABLE DRAINAGE. ATTACH RODENT SHIELD AT ENDS OF PIPE UNDERDRAIN.

(A17) ½" FILLER (INCLUDED IN WING LENGTH): SEAL ALL EXPOSED HORIZ. & VERT. SURFACES OF ½" FILLER WITH NON-STAINING GRAY NON-BITUMINOUS JOINT SEALER. (1" DEEP AND HOLD ⅛" BELOW SURFACE OF CONCRETE). EXTEND SEALER 3" BELOW GUTTER LINE AT INSIDE FACE.

◭ BACKFILL PAY LIMITS. BACKFILL BEYOND BACKFILL PAY LIMITS SHALL BE INCIDENTAL TO EXCAVATION FOR STRUCTURES. LIMITS OF EXCAVATION SHALL BE DETERMINED BY THE CONTRACTOR.

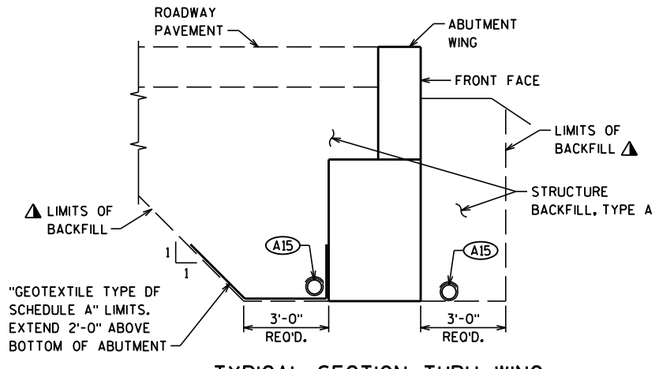

TYPICAL SECTION THRU WING

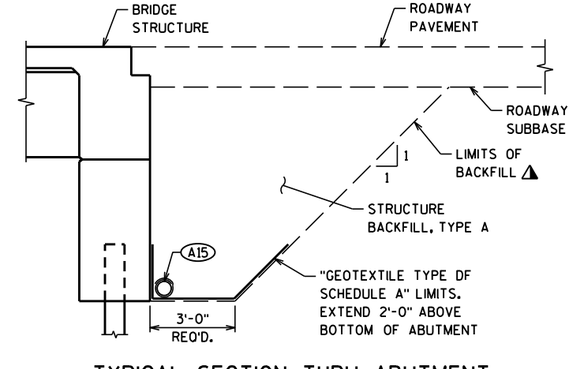

TYPICAL SECTION THRU ABUTMENT

NO.	DATE	REVISION	BY

STATE OF WISCONSIN
DEPARTMENT OF TRANSPORTATION

STRUCTURE B-42-133

DRAWN BY MRW | PLANS CK'D. BRE

NORTH ABUTMENT DETAILS

SHEET 7 OF 10

35

8

8

STATE PROJECT NUMBER
9021-06-71

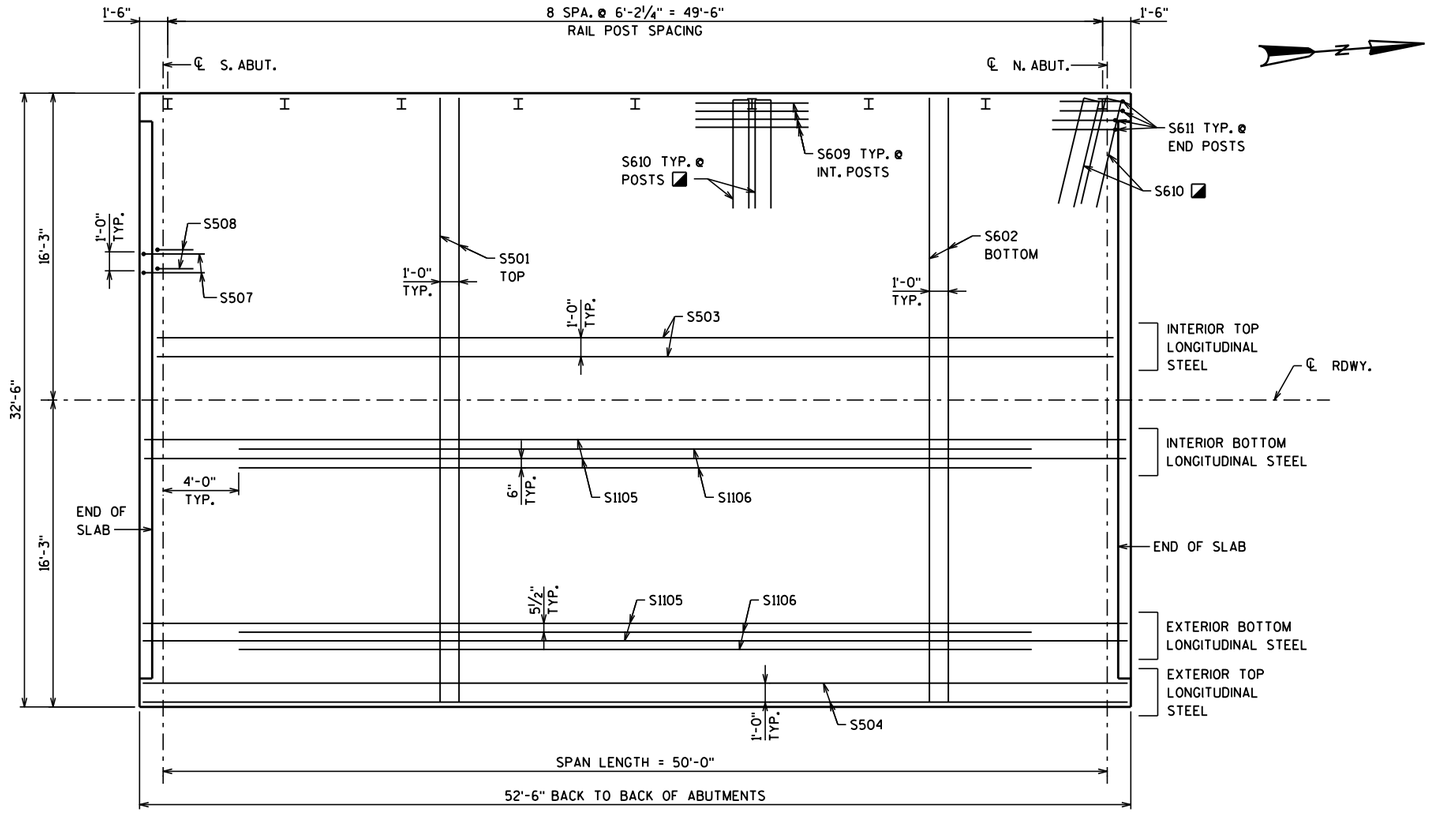

PLAN

NOTES

TOP TRANSVERSE BARS IN SLAB SHALL BE SUPPORTED BY INDIVIDUAL BAR CHAIRS AT APPROXIMATELY 3'-0" CENTERS EACH WAY. BOTTOM LONGITUDINAL BARS SHALL BE SUPPORTED BY CONTINUOUS BAR CHARIS AT APPROXIMATELY 4'-0" CENTERS.

TRANSVERSE BARS SHALL BE PLACED PARALLEL TO THE ℄ OF SUBSTRUCTURE UNITS.

ALL SLAB THICKNESS DIMENSIONS ARE MINIMUM. ANY TOLERANCES NECESSARY TO CORRECT CONSTRUCTION DISCREPANCIES ARE TO BE PLUS (+).

⊗ ¾" V-GROOVE. EXTEND V-GROOVE TO 6" FROM FRONT FACE OF ABUTMENT DIAPHRAGM.

(A19) 18" RUBBERIZED MEMBRANE WATERPROOFING. SEAL ALL HORIZONTAL AND VERTICAL JOINTS ON BACKFACE.

◪ PLACE BELOW AND TIE TO TOP MAT OF STEEL.

PRIOR TO RELEASING SLAB FALSEWORK, TAKE TOP OF SLAB ELEVATIONS AT THE ℄ OF ABUTMENTS, AND AT 5/10 POINTS TO VERIFY CAMBER. TAKE ELEVATIONS ALONG GUTTER LINES AND CROWN OR ℄.

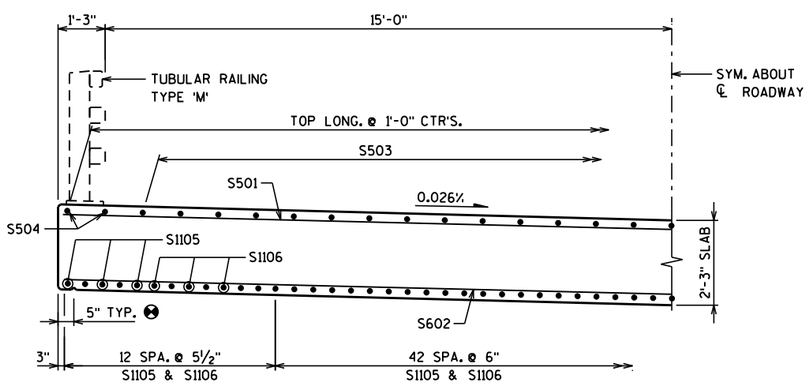

CROSS SECTION THRU ROADWAY

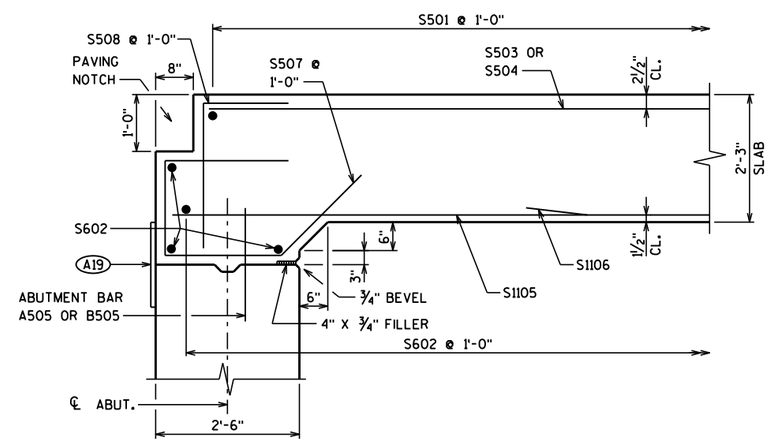

LONG. SECTION THRU RDWY.

NO.	DATE	REVISION	BY

STATE OF WISCONSIN
DEPARTMENT OF TRANSPORTATION

STRUCTURE B-42-133

DRAWN BY BRE | PLANS CK'D. KRO

SUPERSTRUCTURE

SHEET 8 OF 10

8

8

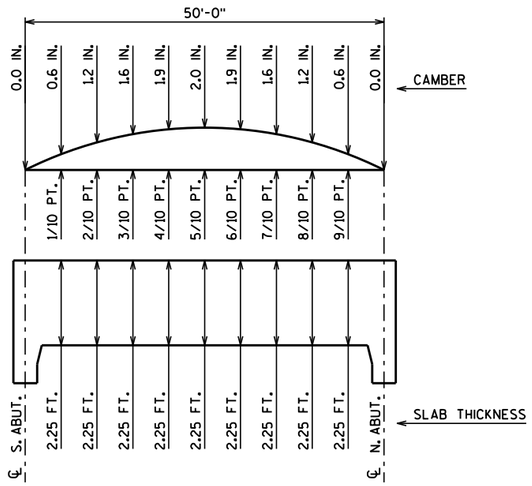

CAMBER DIAGRAM

CAMBER IS BASED ON 3 TIMES DEAD LOAD DEFLECTIONS. CAMBER SPANS AS SHOWN TO PROVIDE FOR DEADLOAD DEFLECTION AND FUTURE CREEP. CAMBER DOES NOT INCLUDE ALLOWANCE FOR FORM SETTLEMENT.

BILL OF BARS

BAR MARK	COAT	NO. REQ'D.	LENGTH	BENT	LOCATION
S501	X	52	32'-2"		TRANSVERSE TOP
S602	X	59	32'-2"		TRANSVERSE BOTTOM
S503	X	29	50'-10"		LONGITUDINAL TOP
S504	X	4	52'-2"		LONGITUDINAL TOP OUTSIDE
S1105	X	34	52'-2"		LONGITUDINAL BOTTOM
S1106	X	33	42'-0"		LONGITUDINAL BOTTOM
S507	X	66	7'-8"	X	END OF SLAB
S508	X	66	3'-11"	X	END OF SLAB
S609	X	56	6'-0"		AT RAIL POSTS
S610	X	36	12'-0"	X	AT RAIL POSTS
S611	X	16	4'-11"	X	AT END RAIL POSTS

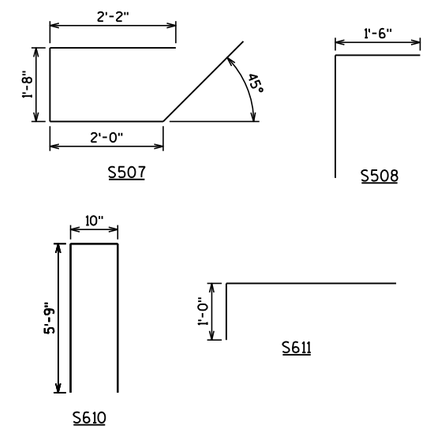

BAR BEND DIAGRAMS

TOP OF DECK ELEVATIONS

LOCATION	S.ABUT.	1/10	2/10	3/10	4/10	5/10	6/10	7/10	8/10	9/10	N.ABUT.
W. EDGE	715.00	714.90	714.79	714.68	714.58	714.47	714.37	714.27	714.17	714.07	713.97
C/L	714.58	714.47	714.36	714.26	714.15	714.05	713.94	713.84	713.74	713.64	713.55
E. EDGE	714.15	714.04	713.94	713.83	713.72	713.62	713.51	713.41	713.31	713.21	713.12

8

NO.	DATE	REVISION	BY

STATE OF WISCONSIN
DEPARTMENT OF TRANSPORTATION

STRUCTURE B-42-133

DRAWN BY BRE | PLANS CK'D. KRO

SUPERSTRUCTURE DETAILS

SHEET 9 OF 10

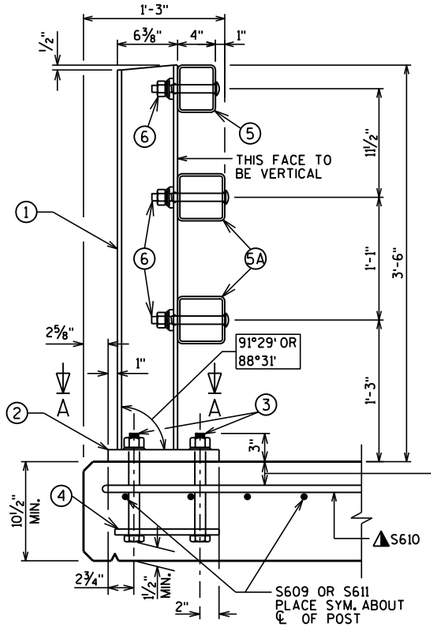

SECTION THRU RAILING ON DECK

2 1/2" FOR SLABS ON GIRDERS; FOR OTHER STRUCTURES, PLACE BELOW TOP MAT SLAB REINFORCEMENT.

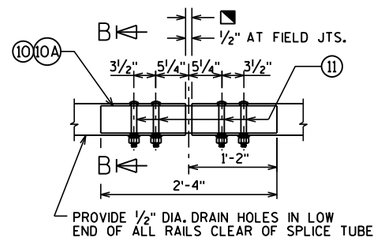

FIELD ERECTION JOINT DETAIL

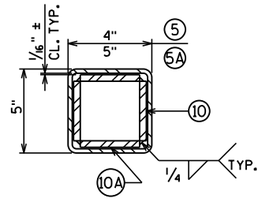

SECTION B-B

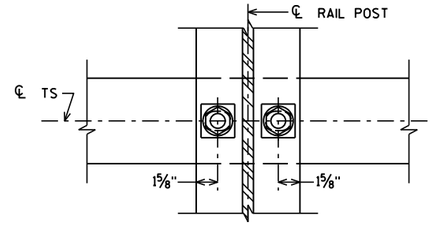

SECTION THRU POST WEB

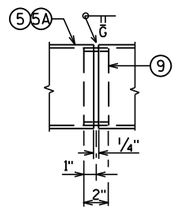

SHOP RAIL SPLICE DETAIL

LOCATION MUST BE SHOWN ON SHOP DRAWINGS

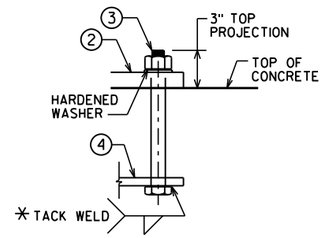

ANCHOR BOLTS

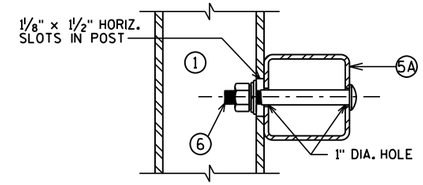

SECTION THRU RAIL

NOTE: CONNECTIONS AT LOWER RAILS SHOWN. CONNECTIONS AT TOP RAIL SIMILAR.

TYPICAL RAIL TO POST CONNECTIONS

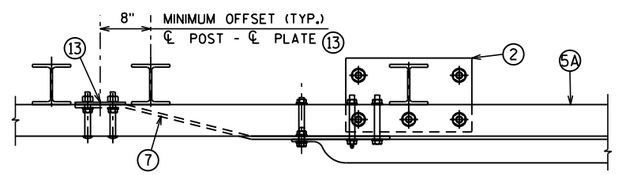

TOP VIEW AT END POST

THRIE BEAM RAIL ATTACHMENT

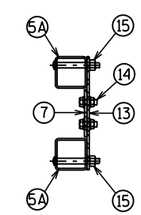

SECTION C-C

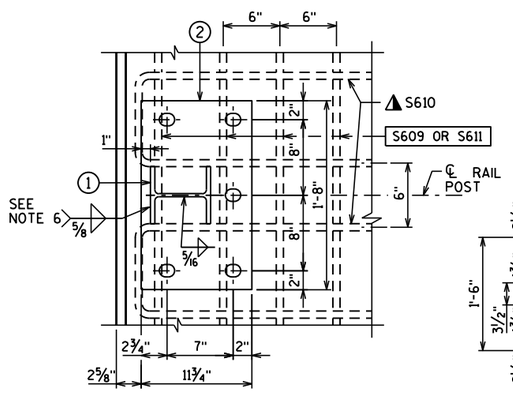

SECTION A-A

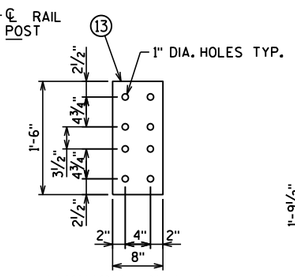

ANCHOR PLATE

AT BEAM GUARD ATTACHMENT

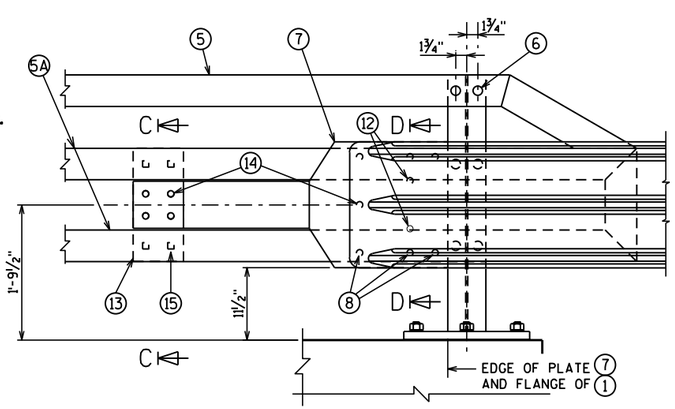

DETAIL AT END POST

THRIE BEAM RAIL ATTACHMENT

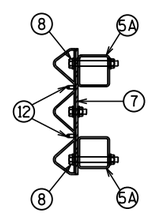

SECTION D-D

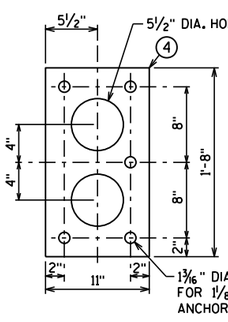

ANCHOR PLATE

AT RAIL TO DECK CONNECTION

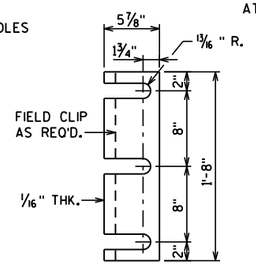

POST SHIM DETAIL

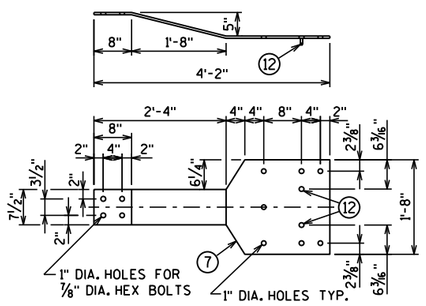

BACK-UP PLATE DETAIL

AT BEAM GUARD ATTACHMENT

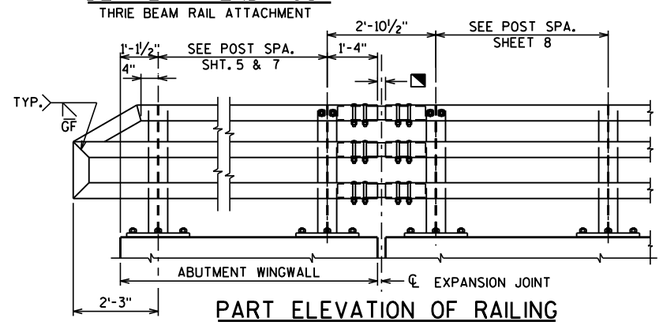

PART ELEVATION OF RAILING

LEGEND

1. W6 x 25 WITH 1 1/8" X 1 1/2" HORIZ. SLOTS ON EACH SIDE OF POST FOR BOLT NO. 6. CUT BOTTOM OF POST TO MATCH CROSS SLOPE OF ROADWAY. PLACE POST VERTICAL. PLACE POSTS NORMAL TO GRADE LINE.
2. PLATE 1 1/4" x 11 3/4" x 1'-8" WITH 15/16" X 1 5/8" SLOTTED HOLES FOR ANCHOR BOLTS NO. 3. WELD TO NO. 1 AS SHOWN. SLOTS PARALLEL TO SHORT SIDE OF PLATE.
3. ASTM A449 - 1 1/8" DIA. ANCHOR BOLTS WITH NUT AND HARDENED WASHER (ALL GALVANIZED). 5 REQ'D. PER POST. THREAD 3" AND PLACE NORMAL TO PLATE NO. 2. CHAMFER TOP OF BOLTS BEFORE THREADING. USE 1'-9" LONG IN ABUTMENT WINGS. AT POSTS ON CONCRETE SLAB SUPERSTRUCTURES WHERE THE SLAB THICKNESS IS > 16" USE 1'-3" LONG. USE 10 3/4" LONG AT ALL OTHER LOCATIONS. (AN EQUIVALENT THREADED ROD WITH NUTS AND HARDENED WASHERS MAY BE SUBSTITUTED FOR ANCHOR BOLTS IN WINGS IF REQ'D. FOR CONSTRUCTIBILITY.)
4. 5/8" x 11" x 1'-8" ANCHOR PLATE (GALVANIZED) WITH 13/16" DIA. HOLES FOR ANCHOR BOLTS NO. 3
5. TS 5 x 4 x 0.25 STRUCTURAL TUBING. ATTACH TO NO. 1 WITH NO. 6.
5A. TS 5 x 5 x 0.25 STRUCTURAL TUBING. ATTACH TO NO. 1 WITH NO. 6.
6. 7/8" DIA. A325 SLOTTED ROUND HEAD BOLT WITH NUT. 3/16" X 1 5/8" X 1 5/8" WASHER, AND LOCK WASHER (2 REQ'D. AT EACH RAIL TO POST LOCATION.)
7. 1/2" THK. BACK-UP PLATE WITH 2 - 7/8" X 1 1/2" THREADED SHOP WELDED STUDS (NO. 12). BOLT TO RAIL AS SHOWN IN DETAIL. REQUIRED AT THRIE BEAM GUARD RAIL ATTACHMENTS ONLY. PLACE SYMMETRICALLY ABOUT TUBES NO. 5A.
8. 1" DIA. HOLES IN PLATE NO. 7 & TUBES NO. 5A FOR 7/8" DIA. A325 BOLTS WITH HEX NUTS AND WASHERS. 6 HOLES IN TUBES AND PLATE NO. 7.
9. SPLICE SLEEVE FABRICATED FROM 1/4" PLATE. PROVIDE "SLIDING FIT".
10. 3/8" X 3 5/8" X 2'-4" PLATE. 2 PER RAIL. USED IN NO. 5 & 5A.

10A. 3/8" X 2 5/8" X 2'-4" PLATE USED IN NO. 5. 3/8" X 3 5/8" X 2'-4" PLATE USED IN NO. 5A. 2 PER RAIL.

11. 7/8" DIA. A325 ROUND HEAD BOLT WITH NUT, WASHER, AND LOCK WASHER. USE 15/16" X 1 1/4" LONGIT. SLOTTED HOLES AT FIELD JOINTS AND 15/16" X 2 1/4" MIN. LONGIT. SLOTTED HOLES AT EXP. JOINTS IN PLATE NO. 10A.
12. 7/8" DIA. X 1 1/2" LONG THREADED SHOP WELDED STUDS (2 REQ'D).
13. 3/8" X 8" X 1'-6" PLATE. BOLT TO RAIL AS SHOWN IN DETAIL. REQ'D. AT THRIE BEAM GUARD RAIL ATTACHMENTS ONLY. PLACE SYM. ABOUT TUBES NO. 5A.
14. 7/8" DIA. X 2" LONG A325 HEX BOLT WITH NUT AND WASHER (5 REQ'D.).
15. 1" DIA. HOLES IN TUBES NO. 5A FOR 7/8" DIA. A325 ROUND HEAD BOLT WITH NUT, WASHER AND LOCK WASHER (4 REQ'D.). 4 HOLES IN TUBES.

GENERAL NOTES

1. BID ITEM SHALL BE "RAILING TUBULAR TYPE M B-42-133" WHICH INCLUDES ALL ITEMS SHOWN.
2. RAIL POST AND BASE PLATES SHALL CONFORM TO THE REQUIREMENTS OF ASTM A709 GRADE 50. HOLLOW RAILING STRUCTURAL TUBING SHALL CONFORM TO THE REQUIREMENTS OF ASTM A500 GRADE B OR C WITH A CERTIFIED FY = 50 KSI. ANCHOR PLATES, AND SPLICE TUBE PLATES SHALL CONFORM TO THE REQUIREMENTS OF ASTM A709 GRADE 36.
3. THE NUT SECURING THE POST BASE PLATE TO THE CONCRETE SHALL BE TIGHTENED TO A SNUG FIT AND GIVEN AN ADDITIONAL 1/8 TURN.
4. RAILS SHALL BE CONTINUOUS OVER A MINIMUM OF THREE (3) POSTS WITHOUT SPLICES WHERE POSSIBLE. RAILS SHALL BE SPLICED IN A PANEL OVER EXPANSION JOINTS.
5. ENDS OF TUBE SECTIONS SHALL BE SAWED. GRIND SMOOTH EXPOSED EDGES. ALL CUT ENDS SHALL BE TRUE AND SMOOTH.
6. WELD IS THE SAME ON BOTH FLANGES. FLANGE WELD DOES NOT REQUIRE MAGNETIC PARTICLE TESTING.
7. FILL BOLT SLOT OPENINGS IN POST SHIMS AND PLATE NO. 2 AND CAULK AROUND PERIMETER OF PLATE NO. 2 WITH NON-STAINING GRAY NON-BITUMINOUS JOINT SEALER. STEEL POST SHIMS MAY BE USED UNDER POSTS WHERE REQ'D. FOR ALIGNMENT.
8. POST BASE PLATES SHALL BE FLAT WITH ALL SURFACES SMOOTH AND FREE FROM WARP AND ALL EDGES SMOOTH, STRAIGHT AND VERTICAL. ALL PLATE CUTS SHALL BE MACHINE OR MACHINE FLAME CUT.
9. ALL MATERIAL SHALL BE GALVANIZED AFTER FABRICATION. PRIOR TO GALVANIZING, ALL STEEL RAILING POSTS & STEEL TUBING SHALL BE GIVEN A NO. 6 BLAST CLEANING BY SSPC SPECIFICATIONS.
10. THIS RAILING MEETS NCHRP REPORT 350 EVALUATION CRITERIA FOR TEST LEVEL 4 (TL-4).

▲ TIE TO TOP MAT OF STEEL.

* FOR ANCHOR BOLTS IN WINGS, TACK WELD MAY BE USED IN FIELD AFTER ANCHOR PLATE IS IN POSITION IF REQ'D. FOR CONSTRUCTIBILITY.

◥ RDWY. OPENING OR 2 1/2" MIN. FOR STRIP SEAL EXP. JOINT & 1/2" OPENING FOR A1 ABUTMENT.

NO.	DATE	REVISION	BY

STATE OF WISCONSIN
DEPARTMENT OF TRANSPORTATION

STRUCTURE B-42-133

DRAWN BY BRE | PLANS CK'D. KRO

TUBULAR STEEL RAILING TYPE 'M'

SHEET 10 OF 10

EARTHWORK

STATION	AREA (SF)		Incremental Vol (CY) (Unadjusted)		Cumulative Vol (CY)		Mass Ordinate
	Cut	Fill	Cut	Fill	Cut 1.00	Expanded Fill 1.25	
08+25	0.00	0.00	0	0	0	0	0
08+50	39.05	2.11	18	1	18	1	17
08+75	40.57	0.00	37	1	55	2	52
09+00	39.67	0.00	37	0	92	2	90
09+06.14	37.94	0.00	9	0	101	2	98
09+23.75	32.26	0.00	23	0	124	2	121
09+25	31.83	0.00	1	0	125	2	123
09+50	24.49	2.26	26	1	151	4	148
09+57.64	21.53	10.76	7	2	158	6	152
09+63.75	20.28	19.88	5	3	163	10	152
09+73.75	19.51	1.61	0	0	163	10	152
STRUCTURE							
10+26.25	29.55	0.05	0	0	163	10	152
10+27.31	29.45	0.03	1	0	164	10	153
10+36.54	28.89	44.99	10	8	174	20	154
10+50	30.59	10.20	15	14	189	37	151
10+61.64	32.28	2.59	14	3	202	41	161
10+75	31.43	0.79	16	1	218	42	176
10+76.25	31.23	0.67	1	0	219	42	178
11+00	21.32	0.44	23	0	242	42	200
11+25	21.75	1.34	20	1	262	43	219
11+50	19.05	1.55	19	1	281	45	236
11+66.66	28.46	0.00	15	0	296	46	250
11+75	34.92	0.03	10	0	306	46	260
11+83.33	41.96	0.00	12	0	318	46	272
12+00	53.89	0.00	30	0	347	46	301

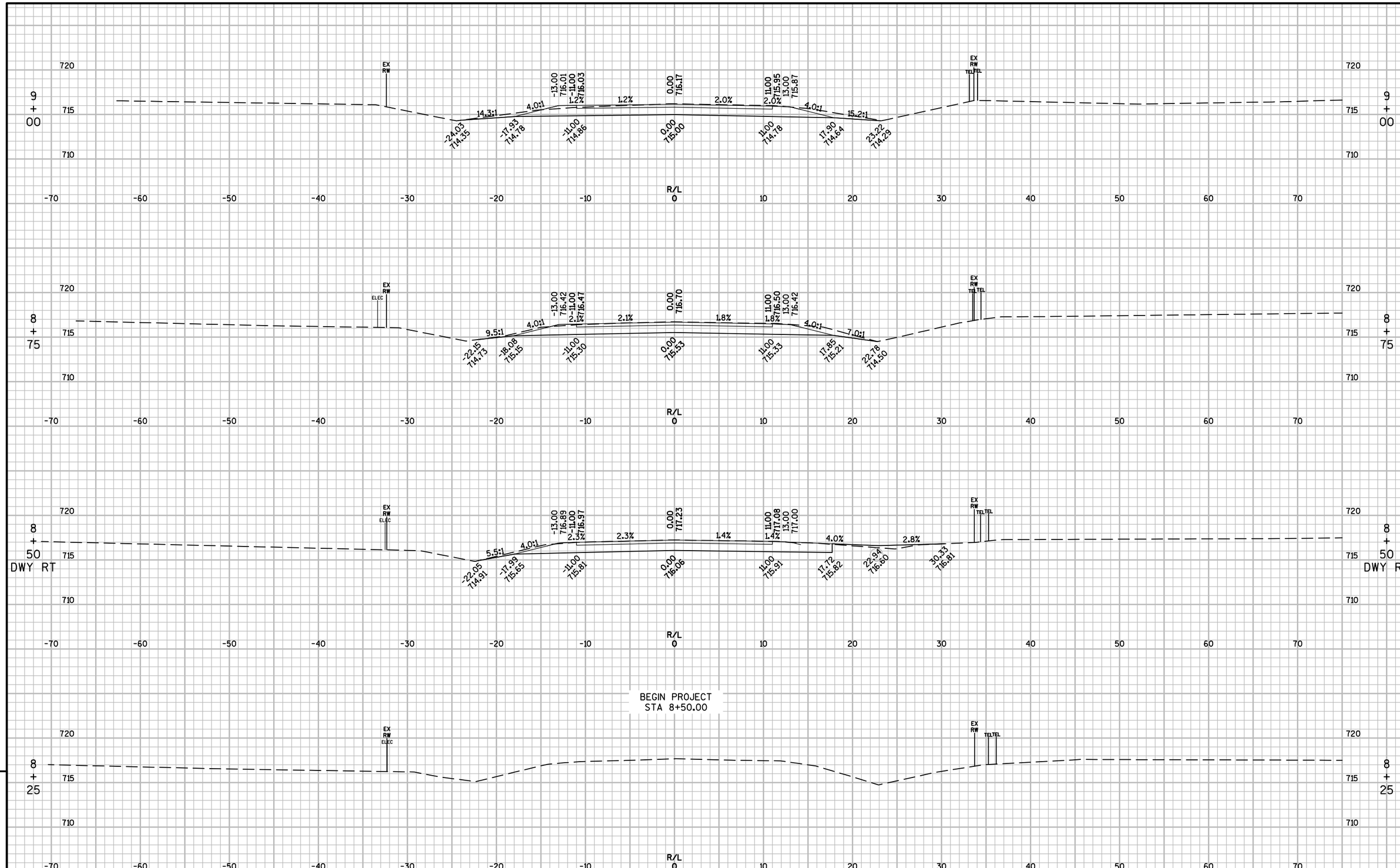

9

9

PROJECT NO: 9021-06-71	HWY: SUNSHINE RD	COUNTY: OCONTO	CROSS SECTIONS: SUNSHINE RD	SHEET 40	E

FILE NAME : F:\TR\JOBS\E2192A15\CIVIL 3D 2014\SHEETSPLAN\90210671-090201-XS.DWG
LAYOUT NAME - 90210671-090201-XS

PLOT DATE : 7/12/2017 7:48 AM PLOT BY : MATT TOMSOVIC PLOT NAME : PLOT SCALE : 1 IN:10 FT

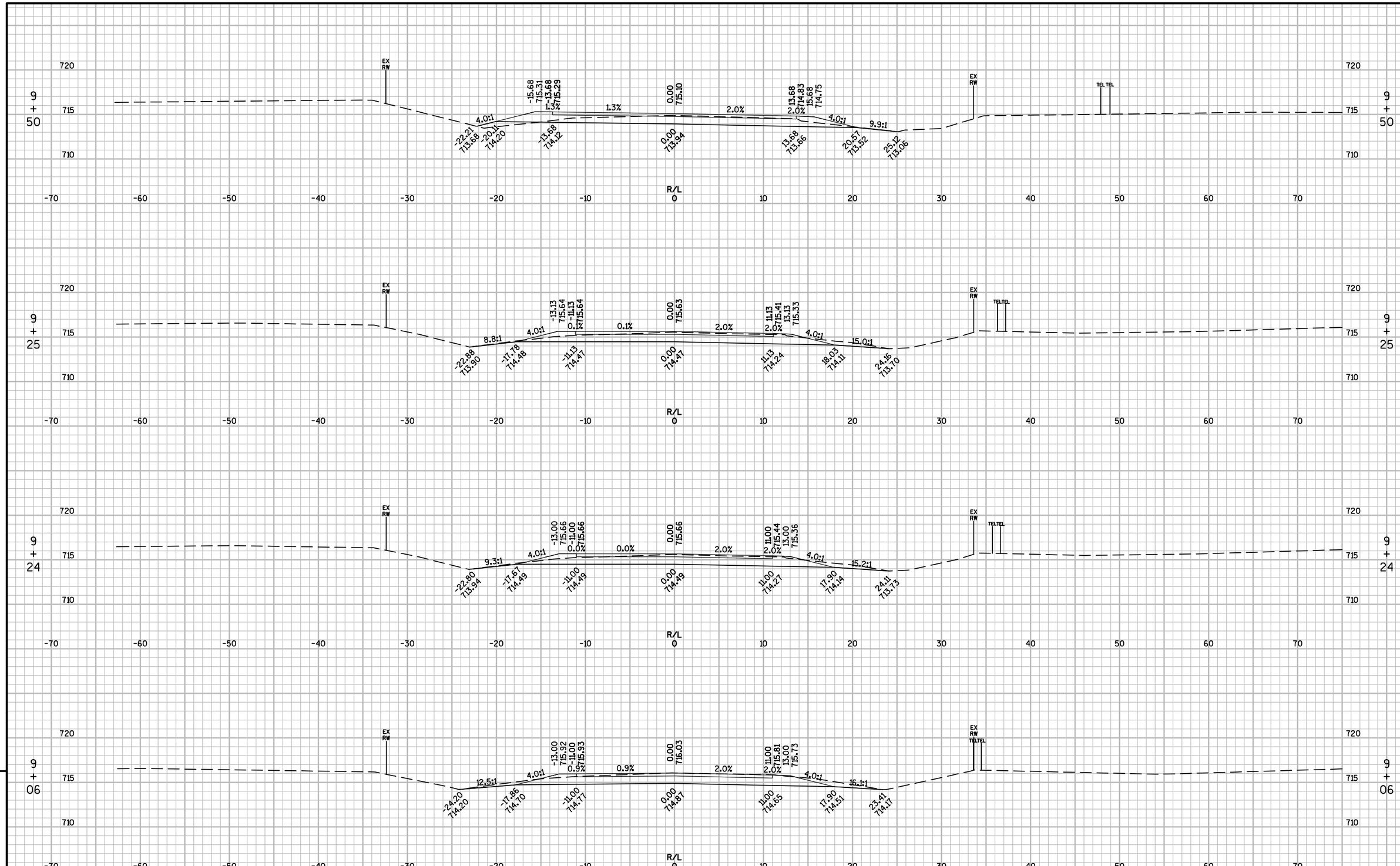

9 | 9

PROJECT NO: 9021-06-71	HWY: SUNSHINE RD	COUNTY: OCONTO	CROSS SECTIONS: SUNSHINE RD	SHEET 41	E

FILE NAME : F:\TR\JOBS\E2192A15\CIVIL 3D 2014\SHEETSPLAN\90210671-090201-XS.DWG
LAYOUT NAME - 90210671-090202-XS
PLOT DATE : 7/12/2017 7:48 AM PLOT BY : MATT TOMSOVIC PLOT NAME : PLOT SCALE : 1 IN:10 FT

STRUCTURE B-42-133
STA 9+74.42 TO 10+25.58

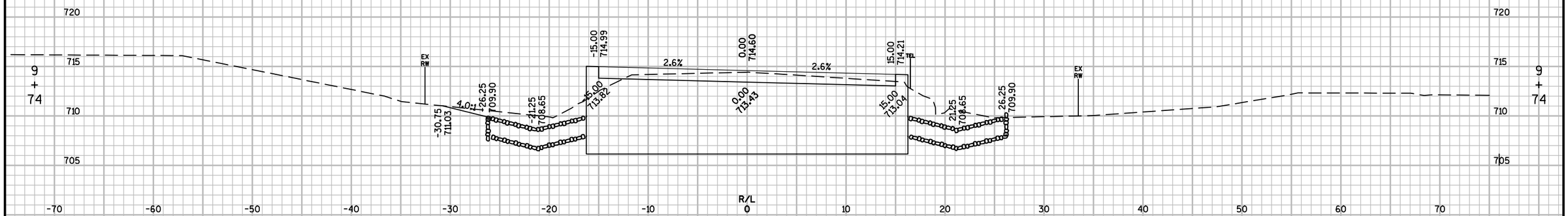

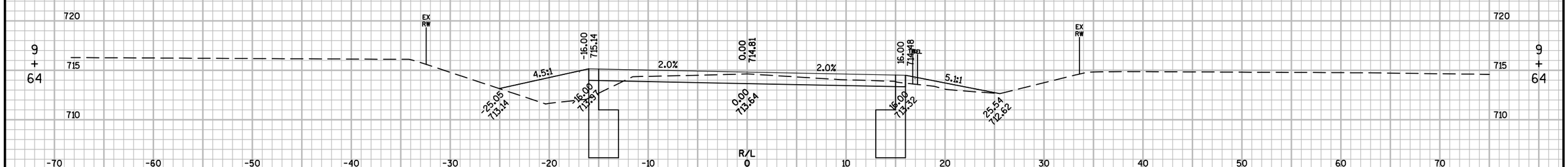

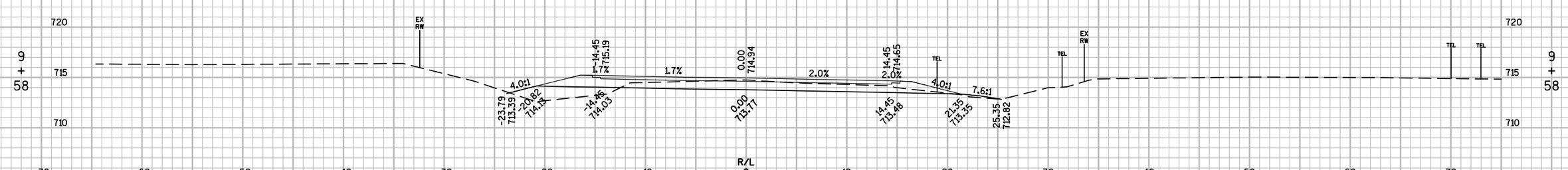

9 9

PROJECT NO: 9021-06-71	HWY: SUNSHINE RD	COUNTY: OCONTO	CROSS SECTIONS: SUNSHINE RD	SHEET 42	E

FILE NAME : F:\TR\JOBS\E2192A15\CIVIL 3D 2014\SHEETSPLAN\90210671-090201-XS.DWG
LAYOUT NAME - 90210671-090203-XS
PLOT DATE : 7/12/2017 7:48 AM PLOT BY : MATT TOMSOVIC PLOT NAME : PLOT SCALE : 1 IN:10 FT

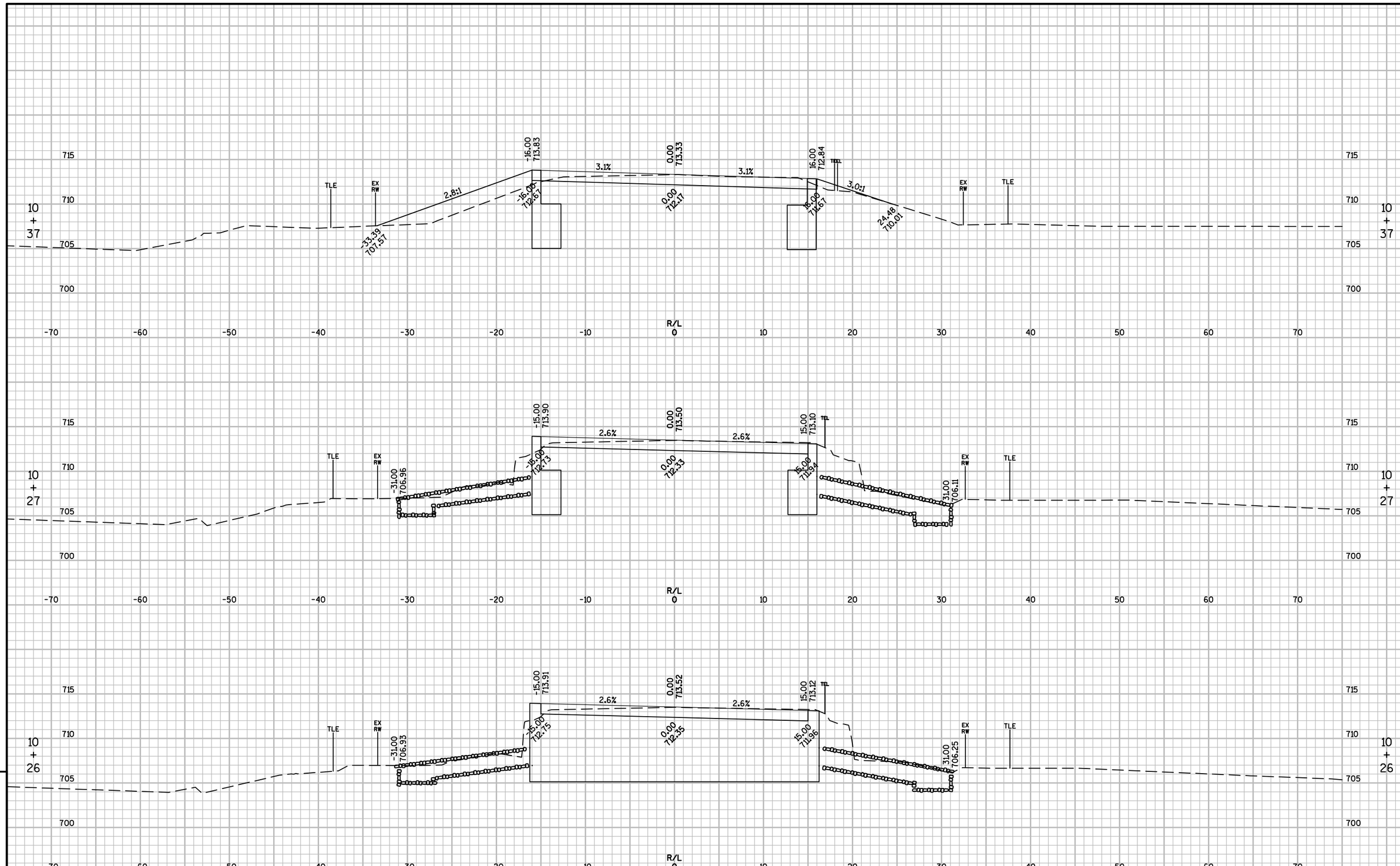

9

PROJECT NO: 9021-06-71	HWY: SUNSHINE RD	COUNTY: OCONTO	CROSS SECTIONS: SUNSHINE RD	SHEET 43	E

FILE NAME : F:\TR\JOBS\E2192A15\CIVIL 3D 2014\SHEETSPLAN\90210671-090201-XS.DWG
LAYOUT NAME - 90210671-090204-XS

PLOT DATE : 7/12/2017 7:48 AM PLOT BY : MATT TOMSOVIC PLOT NAME : PLOT SCALE : 1 IN:10 FT

WISDOT/CADDS SHEET 49

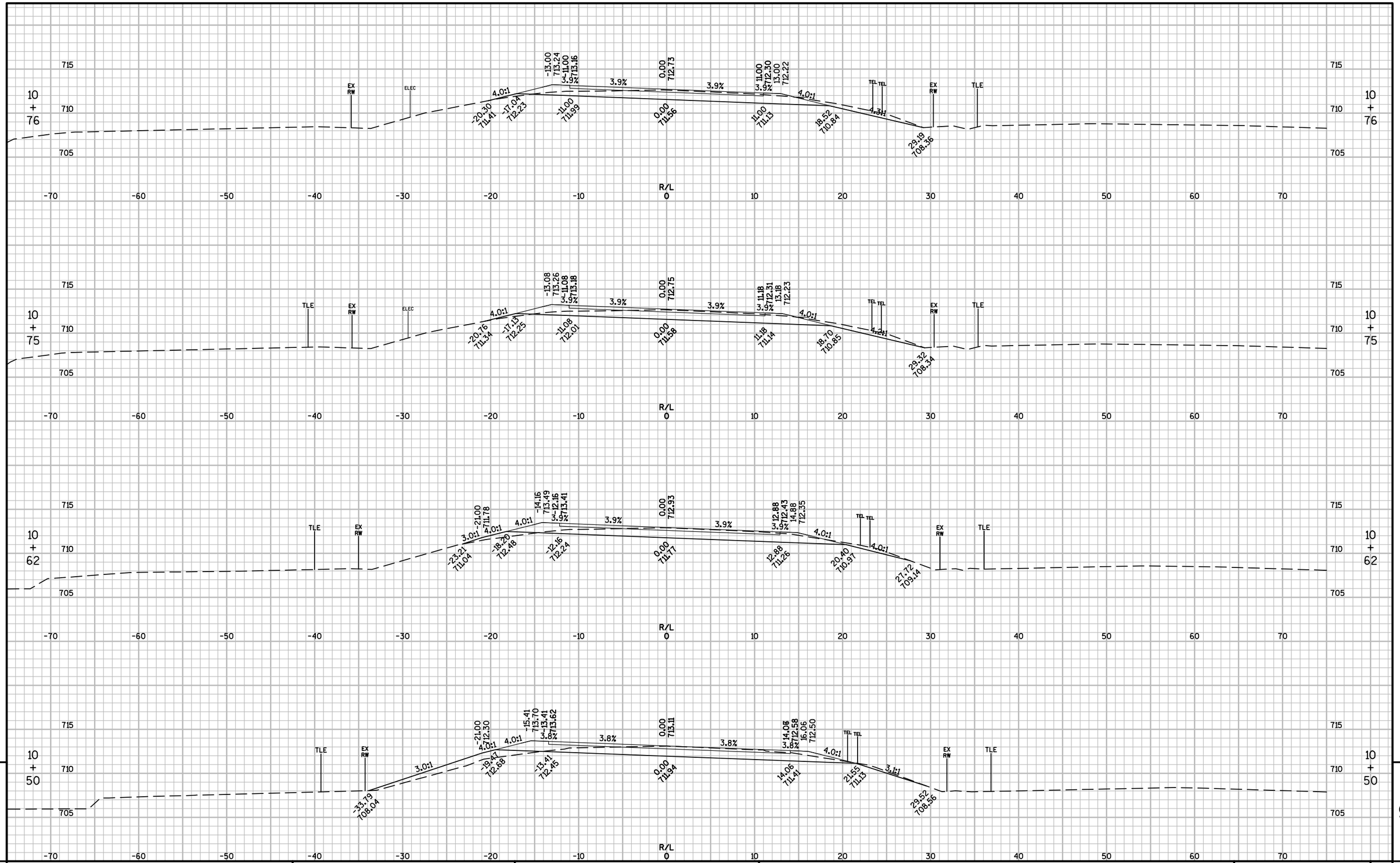

9

9

PROJECT NO: 9021-06-71	HWY: SUNSHINE RD	COUNTY: OCONTO	CROSS SECTIONS: SUNSHINE RD	SHEET 44	E

FILE NAME : F:\TR\JOBS\E2192A15\CIVIL 3D 2014\SHEETSPLAN\90210671-090201-XS.DWG
LAYOUT NAME - 90210671-090205-XS

PLOT DATE : 7/12/2017 7:48 AM PLOT BY : MATT TOMSOVIC PLOT NAME : PLOT SCALE : 1 IN:10 FT

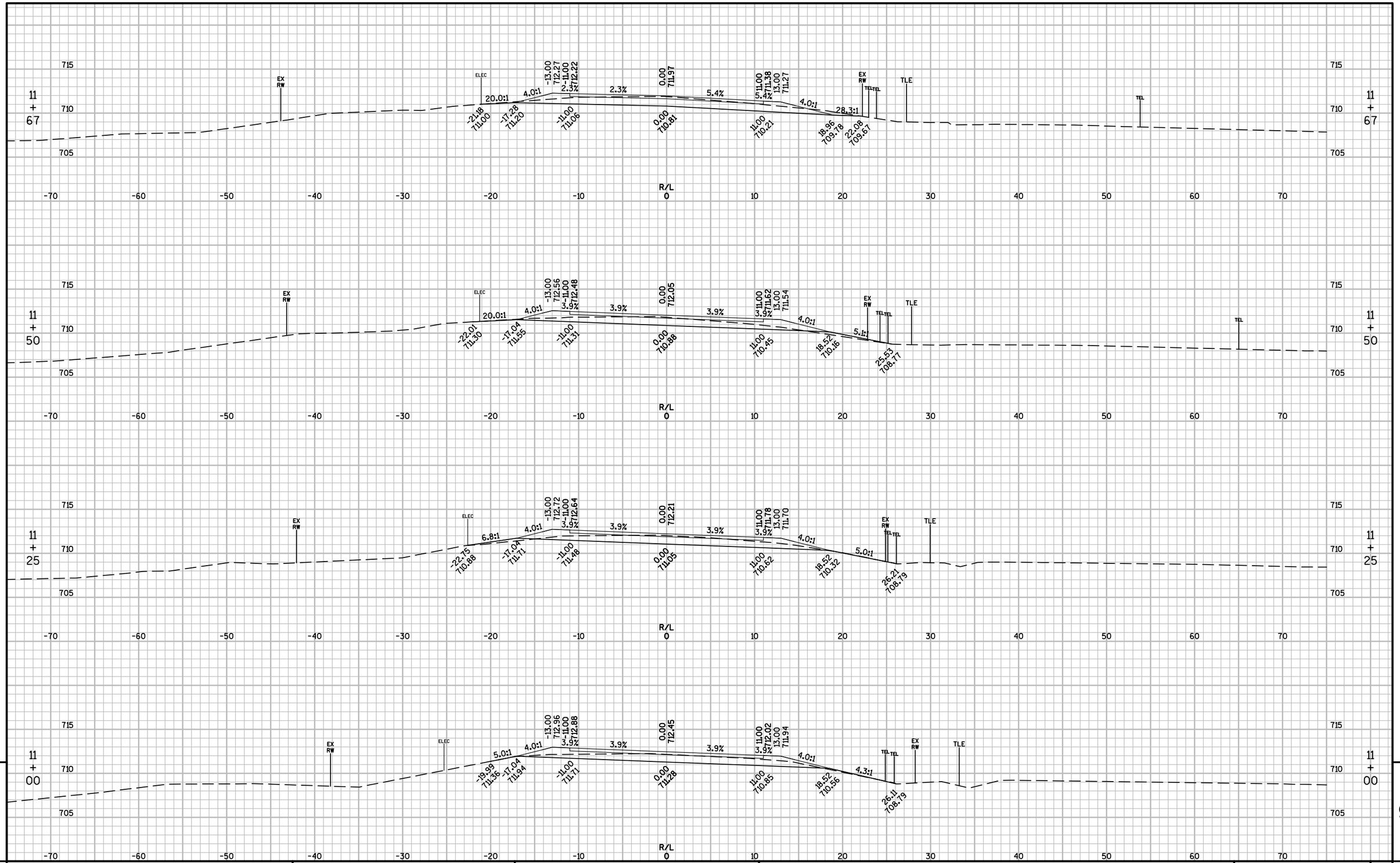

9

9

PROJECT NO: 9021-06-71	HWY: SUNSHINE RD	COUNTY: OCONTO	CROSS SECTIONS: SUNSHINE RD	SHEET 45	E

FILE NAME : F:\TR\JOBS\E2192A15\CIVIL 3D 2014\SHEETSPLAN\90210671-090201-XS.DWG
LAYOUT NAME - 90210671-090206-XS

PLOT DATE : 7/12/2017 7:48 AM PLOT BY : MATT TOMSOVIC PLOT NAME : PLOT SCALE : 1 IN:10 FT

WISDOT/CADDS SHEET 49

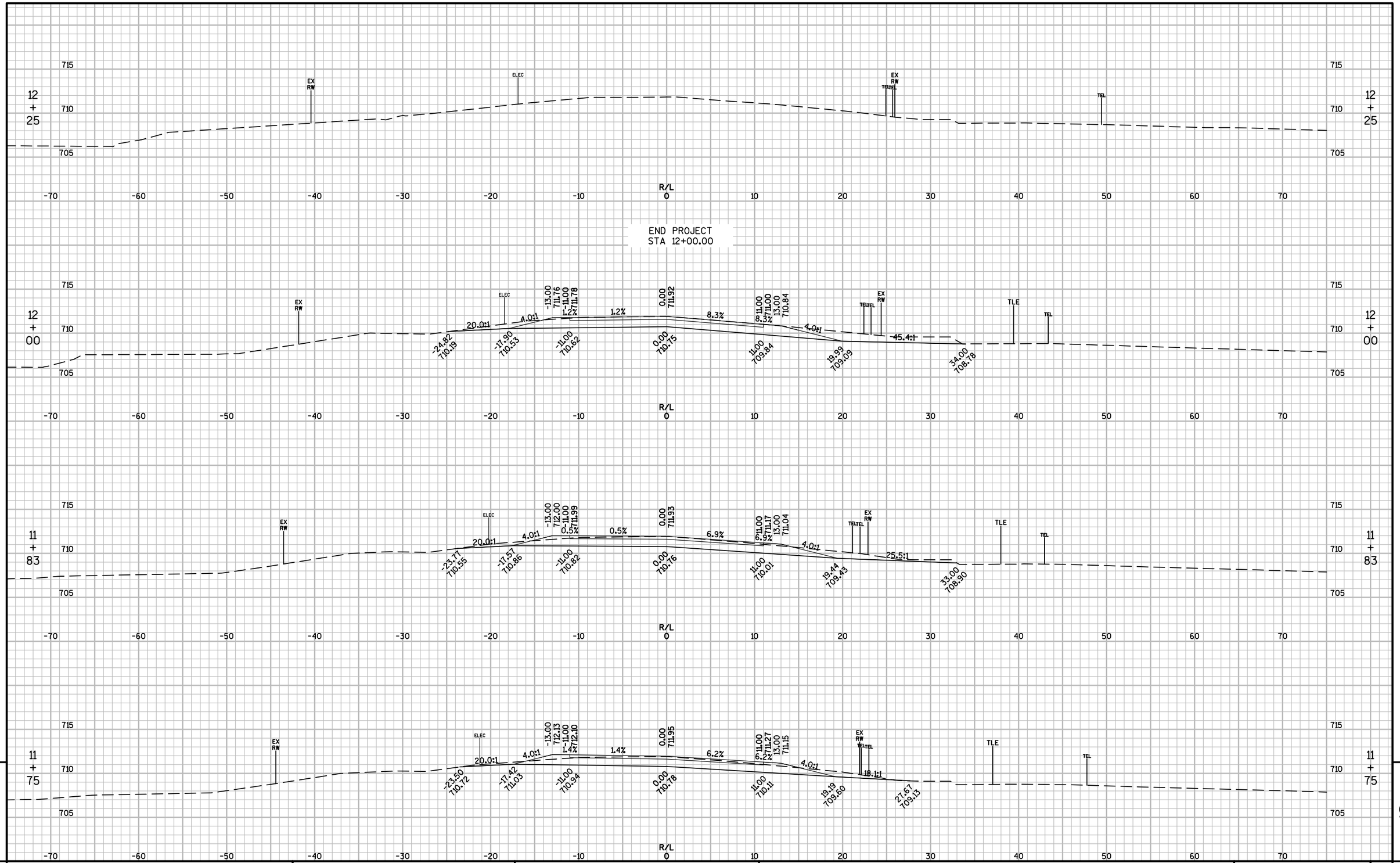

PROJECT NO: 9021-06-71	HWY: SUNSHINE RD	COUNTY: OCONTO	CROSS SECTIONS: SUNSHINE RD	SHEET 46	E

FILE NAME : F:\TR\JOBS\E2192A15\CIVIL 3D 2014\SHEETSPLAN\90210671-090201-XS.DWG
LAYOUT NAME - 90210671-090207-XS

PLOT DATE : 7/12/2017 7:48 AM PLOT BY : MATT TOMSOVIC PLOT NAME : PLOT SCALE : 1 IN:10 FT

Notes

Wisconsin Department of Transportation

Dedicated people creating transportation solutions through innovation and exceptional service.

http://www.dot.wisconsin.gov