NEL

DECEMBER 2017

PROJECT ID: 4997-00-64

WITH: NA

COUNTY: DOOR

ORDER OF SHEETS

Section No. 1	Title
Section No. 2	Typical Sections and Details (Includes Erosion Control)
Section No. 3	Estimate of Quantities
Section No. 3	Miscellaneous Quantities
Section No. 4	Right of Way Plat
Section No. 5	Plan and Profile
Section No. 6	Standard Detail Drawings
Section No. 7	Sign Plates
~~Section No. 8~~	~~Structure Plans~~
Section No. 9	Computer Earthwork Data
Section No. 9	Cross Sections

TOTAL SHEETS = 234

N

11

DESIGN DESIGNATION

A.A.D.T.	(2017)	= 2900
A.A.D.T.	(2037)	= 3700
D.H.V.		= 495
D.D.		= 59/41
T.		= 5.1%
DESIGN SPEED		= 30 MPH
ESALS		= 380,000

CONVENTIONAL SYMBOLS

PLAN

- CORPORATE LIMITS
- PROPERTY LINE
- LOT LINE
- LIMITED HIGHWAY EASEMENT
- EXISTING RIGHT OF WAY
- PROPOSED OR NEW R/W LINE
- SLOPE INTERCEPT
- REFERENCE LINE
- EXISTING CULVERT
- PROPOSED CULVERT (Box or Pipe)
- COMBUSTIBLE FLUIDS (CAUTION)
- MARSH AREA
- WOODED OR SHRUB AREA

PROFILE

- GRADE LINE
- ORIGINAL GROUND
- MARSH OR ROCK PROFILE (To be noted as such) (ROCK)
- SPECIAL DITCH (LABEL)
- GRADE ELEVATION (955.36)
- CULVERT (Profile View)

UTILITIES

- ELECTRIC (E)
- FIBER OPTIC (FO)
- GAS (G)
- SANITARY SEWER (SAN)
- STORM SEWER (SS)
- TELEPHONE (T)
- WATER (W)
- UTILITY PEDESTAL
- POWER POLE
- TELEPHONE POLE

STATE OF WISCONSIN
DEPARTMENT OF TRANSPORTATION

PLAN OF PROPOSED IMPROVEMENT

C STURGEON BAY, CTH C

STH 42/57 - WEST ELM ST

CTH C

DOOR COUNTY

STATE PROJECT NUMBER
4997-00-64

STATE PROJECT	FEDERAL PROJECT	
	PROJECT	CONTRACT
PROJECT ID	WISC 2018016	1
4997-00-64		

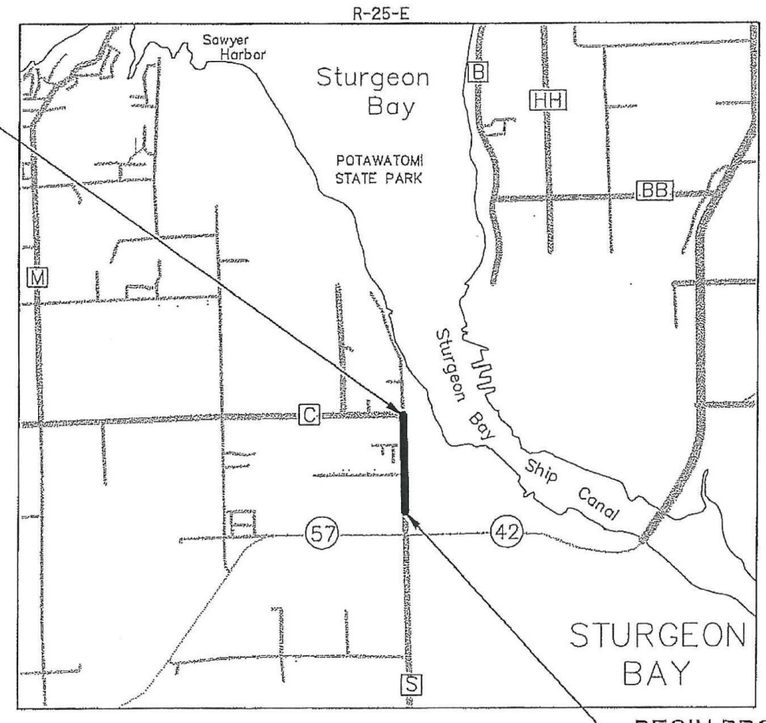

END PROJECT
STA. 62+77.12

BEGIN PROJECT
STA. 11+53.45
Y= 153,547.76
X= 488,518.92

LAYOUT
SCALE 0 1/2 MILE

TOTAL NET LENGTH OF CENTERLINE = 0.970 MILES

HORIZONTAL POSITIONS SHOWN ON THIS PLAN ARE WISCONSIN COUNTY COORDINATES, DOOR COUNTY, NAD83 (2011), IN U.S. SURVEY FEET, VALUES ARE GRID COORDINATES, GRID BEARINGS, AND GRID DISTANCES. GRID DISTANCES MAY BE USED AS GROUND DISTANCES.

ACCEPTED FOR
COUNTY of DOOR
7/24/17 (Date)
(Signature & Title of Official)

ORIGINAL PLANS PREPARED BY
DONOHUE

WISCONSIN
TIMOTHY J. MOYER
E-39623
SHEBOYGAN, WI
PROFESSIONAL ENGINEER

7/20/2017 (Date)
(Signature)

STATE OF WISCONSIN
DEPARTMENT OF TRANSPORTATION

PREPARED BY

Surveyor	BAUDHUIN INCORPORATED
Designer	DONOHUE & ASSOCIATES, INC
Management Consultant	SHORT ELLIOTT HENDRICKSON (LPMC)

APPROVED FOR THE DEPARTMENT
DATE: 7/24/17
Management Consultant Signature

E

UTILITY CONTACTS

MR. TODD HURST
AT&T, COMMUNICATIONS
1601 N BALLARD RD
APPLETON, WI
TH1914@ATT.COM
PHONE 920-202-0652

MR. JASON BIERI
CITY OF STURGEON BAY
ELECTRIC SUPERVISOR
230 VINE STREET
PO BOX 27
STURGEON BAY, WI 54235
JBIERI@WPPIENERGY.ORG
PHONE: 920-746-2820

MR. NICK FRASE
COMMUNICATIONS
CHARTER COMMUNICATIONS
3315 LINCOLN AVENUE
TWO RIVERS, WI 54241
NICK.FRASE@CHARTER.COM
PHONE: 920-793-2216 EXT 30

MR. DENNIS LAFAVE
COMMUNICATIONS
NET-LEC (MI-TECH SERVICES INC.)
1700 INDUSTRIAL DR.
GREEN BAY, WI 54302
DLAFAVE@MI-TECH.US
PHONE: 920-619-9774

MR. CLIFF WHITE
STURGEON BAY UTILITIES
SANITARY AND WATER
230 EAST VINE STREET
STURGEON BAY, WI 54235-0057
CWHITE@WPPIENERGY.ORG

MR. CHAD SHEFCHIK
CITY OF STURGEON BAY
SANITARY AND WATER
CITY HALL
420 MICHIGAN STREET
STURGEON BAY, WI 54235
CSHEFCHIK@STURGEONBAYWI.ORG
PHONE: 920-746-2913

MS. CHRISTOPHER STREBEL
GAS
WISCONSIN PUBLIC SERVICE
2850 S. ASHLAND AVENUE
PO BOX 19001
GREEN BAY, WI 54307-9001
CJSTREBEL@WISCONSINPUBLICSERVICE.COM
PHONE: 920-617-5127 (O) 920-660-2021 (C)

MR. TONY MARCINIAK
ATC - ELECTRIC
PO BOX 47
WAUKESHA, WI 53187-0047
TMARCINIAK@ATCLLC.COM
PHON: 262-506-6814

CONVENTIONAL SYMBOLS AND ABBREVIATIONS

STATE, COUNTY, or TOWN LINE	
SECTION LINE	
QUARTER LINE	
SIXTEENTH LINE	
PROPOSED REFERENCE LINE	
PROPOSED R/W LINE	
EXISTING H.E. LINE	
PROPERTY LINE	
EASEMENT LINE	
CORPORATE LIMITS	
EXISTING CENTERLINE	
LOT & TIE LINES	
UTILITIES (TELEPHONE,GAS,ELECTRIC,CABLE TV,FIBER OPTIC)	FO (TYPE)
NO ACCESS (BY PREVIOUS ACQUISITION/CONTROL)	
NO ACCESS (BY ACQUISITION)	
NO ACCESS (BY STATUTORY AUTHORITY)	
FEE (HATCH VARIES)	
TEMPORARY LIMITED EASEMENT	
PERMANENT LIMITED EASEMENT	
PARCEL NUMBER	102
UTILITY PARCEL NUMBER	92
SIGN NUMBER (OFF PREMISE)	21-1
BUILDING	
FOUND IRON PIPE/PIN	I.P. ("I" UNLESS NOTED)
R/W MONUMENT	(SET)
R/W STANDARD	(SET)
SIGN	SIGN
SECTION CORNER SYMBOL	

ACCESS POINT/ DRIVEWAY CONNECTION	AP
ACCESS RIGHTS	AR
ACRES	AC.
AND OTHERS	ET.AL.
CENTERLINE	C/L
CERTIFIED SURVEY MAP	CSM
DOCUMENT	DOC.
HIGHWAY EASEMENT	H.E.
LAND CONTRACT	LC
MONUMENT	MON.
PAGE	P.
PERMANENT LIMITED EASEMENT	PLE
PROPERTY LINE	PL
RECORDED AS	(100')
REFERENCE LINE	R/L
REMAINING	REM.
RIGHT-OF-WAY	R/W
SECTION	SEC.
SQUARE FEET	SQ.FT.
STATION	STA.
TEMPORARY LIMITED EASEMENT	TLE
VOLUME	V.

CURVE DATA

LONG CHORD	LCH
LONG CHORD BEARING	LCB
RADIUS	R
DEGREE OF CURVE	D
CENTRAL ANGLE OR DELTA	DELTA
LENGTH OF CURVE	L
TANGENT	TAN

	NON COMPENSABLE	COMPENSABLE
POWER POLE		
TELEPHONE POLE		
TELEPHONE PEDESTAL		
SAWCUT LOCATION		XXXX XXXX

GENERAL NOTES:

UTILITY
THE LOCATIONS OF EXISTING AND PROPOSED UTILITY INSTALLATIONS AS SHOWN ON THE PLANS ARE APPROXIMATE. THERE MAY BE OTHER UTILITY INSTALLATIONS WITHIN THE PROJECT AREA THAT ARE NOT SHOWN.

NO TREES OR SHRUBS ARE TO BE REMOVED WITHOUT APPROVAL OF THE ENGINEER, UNLESS DESIGNATED ON THE PLANS.

SILT FENCE TO BE PLACED AS SHOWN ON THE PLAN OR AS DIRECTED BY THE ENGINEER.

EROSION CONTROL IS SHOWN ON THE EROSION CONTROL SHEETS AND IN THE SUMMARY OF MISCELLANEOUS QUANTITIES.

THE CONTROL SURVEY CONDUCTED FOR THIS PROJECT MET THIRD ORDER CONTROL SURVEY SPECIFICATIONS.

ALL DISTANCES ARE GROUND DISTANCES. TIES ARE HORIZONTAL UNLESS SHOWN OTHERWISE.

ALL CURB AND GUTTER RADII SHOWN ON THE PLANS ARE MEASURED TO THE FACE OF CURB UNLESS OTHERWISE NOTED.

THE EXACT LOCATION AND WIDTHS OF PRIVATE OR COMMERCIAL DRIVEWAYS ARE TO BE DETERMINED BY THE ENGINEER IN THE FIELD.

CONTRACTOR TO VERIFY ELEVATION OF EXISTING CONNECTING STORM SEWERS PRIOR TO INSTALLING OR CONNECTING NEW STRUCTURES.

ALL DISTURBED AREAS BETWEEN THE EXISTING/PROPOSED SIDEWALKS AND BACK OF PROPOSED CURB AND GUTTER SHALL BE RESTORED WITH TOPSOIL, SEED, FERTILIZER AND URBAN EMAT TYPE 1 CLASS A. ALL OTHER DISTURBED AREAS WITHIN THE RIGHT OF WAY ARE TO BE RESTORED WITH TOPSOIL, SEED, FERTILIZER AND MULCH AS DIRECT BY THE ENGINEER. ANY OTHER DISTURBED AREAS ARE TO BE SEEDED, FERTILIZED AND MULCHED AT THE CONTRACTORS EXPENSE.

EXCAVATION BELOW SUBGRADE (EBS) LOCATIONS ARE NOT SHOWN ON THE CROSS SECTIONS. IF REQUIRED, EBS WILL BE PAID FOR AS COMMON EXCAVATION. EXACT LOCATIONS OF EBS WILL BE DETERMINED BY THE ENGINEER IN THE FIELD.

BASED UPON SOIL BORINGS AND ROCK PROBES, STORM SEWER ROCK EXCAVATION IS NOT ANTICIPATED ON THE PROJECT. THERE ARE LOCATIONS WHERE THE ROCK SURFACE APPROACHES THE STORM SEWER ELEVATIONS. AN UNDISTRIBUTED QUANTITY OF STORM SEWER ROCK EXCAVATION HAS BEEN INCLUDED IN THE PLANS TO ESTABLISH A UNIT PRICE SHOULD ROCK BE ENCOUNTERED.

BASED UPON SOIL BORINGS AND ROCK PROBES, ROCK EXCAVATION IS NOT ANTICIPATED ON THE PROJECT. THERE IS THE POTENTIAL TO ENCOUNTER ROCK EXCAVATION AT THE MAPLE STREET RELOCATION. AN UNDISTRIBUTED QUANTITY OF ROCK EXCAVATION HAS BEEN INCLUDED IN THE PLANS TO ESTABLISH A UNIT PRICE SHOULD ROCK BE ENCOUNTERED.

GENERAL NOTES CONTINUED:

CROSS DRAIN PIPE ELEVATIONS, LENGTHS AND LOCATIONS AS SHOWN ON THE PLANS MAY BE ADJUSTED TO FIT EXISTING FIELD CONDITIONS AS DIRECTED BY THE ENGINEER IN THE FIELD.

PROVIDE INFORMATION TO THE ENGINEER THAT THE FINAL ELEVATIONS OF STORM SEWER PIPE OUTFALLS AND INLETS MATCH EXISTING CONDITIONS AT LEAST 14 DAYS BEFORE ORDERING INLETS, CATCH BASINS, MANHOLES, ENDWALLS AND STORM SEWER PIPE. SEE STANDARD SPECIFICATION SECTION 650.

ALL MANHOLE AND INLET OFFSETS ARE GIVEN TO THE CENTER OF THE STRUCTURE UNLESS OTHERWISE NOTED IN THE MISCELLANEOUS QUANTITIES.

STATIONING, DISTANCES, AND OFFSETS FOR SIGNS SHOWN ON THE PLANS ARE APPROXIMATE. LOCATIONS MAY BE ADJUSTED TO FIT FIELD CONDITIONS AS DIRECTED BY THE ENGINEER.

ALL HOLES OR OPENINGS BELOW SUBGRADE RESULTING FROM ABANDONMENT ORE REMOVAL OF EXISTING STRUCTURES SHALL BE FILLED WITH BACKFILL GRANULAR. BACKFILL GRANULAR MATERIAL IS INCIDENTAL TO THE REMOVAL ITEM.

TOPSOIL, SEED, FERTILIZER, EMAT AND MULCH SHALL BE PLACED WITHIN 14 WORKING DAYS AFTER GRADING WORK IS COMPLETED. IF FINAL EROSION CONTROL ITEMS ARE NOT PLACED WITHIN 14 DAYS, SALVAGED TOPSOIL AND TEMPORARY SEEDING ARE REQUIRED AT THE CONTRACTOR'S EXPENSE.

DNR CONTACT

MATT SCHAEVE
DNR SERVICE CENTER
2984 SHAWANO AVENUE
GREEN BAY, WI 54313
(920) 662-5472
MATTHEW.SCHAEVE@WISCONSIN.GOV

DIGGERS HOTLINE
Dial 811 or (800)242-8511
www.DiggersHotline.com

PROJECT NO: 4997-00-64	HWY: CTH C	COUNTY: DOOR	GENERAL NOTES	SHEET 2	E

2

N

STH 42/57

SPRUCE ST

OAK ST

MAPLE ST

JUNIPER ST

BARRICK RD

HICKORY ST

ELM ST

CTH C

STA. 21+□2.5□ CTH C □
STA. 102+21.□0 SPRUCE ST

STA. 21+□1.□1 CTH C □
STA. 102+21.□0 SPRUCE ST

STA. □5+22.12 CTH C □
STA. 202+7□.5□ OAK ST

STA. 45+94.90 CTH C □
STA. 400+00.00 □UNIPER ST

STA. 40+04.41 CTH C □
STA. □14+5□.9□ MAPLE ST

STA. □5+4□.12 CTH C □
STA. 202+7□.5□ OAK ST

STA. 49+□□.95 CTH C □
STA. 502+□0.□□ BARRICK RD

STA. 54+□7.□7 CTH C □
STA. □00+00.00 HICKORY ST

STA. □2+92.7□ CTH C □
STA. 702+2□.0□ ELM ST □WEST□
STA. 702+2□.0□ ELM ST □EAST□

HICKORY STREET
STORM SEWER REPLACEMENT
□ROM CTH C TO THE BAY

STA. 11+5□.45 - STA. 29+50
MILL AND OVERLAY

STA. 14+50 - STA. 29+50
NEW SIDEWALK ON
BOTH SIDES O□ CTH C

STA. 29+50 - STA. □2+77.12
COMPLETE RECONSTRUCTION

PROJECT NO: 4997-00-64	HWY: CTH C	COUNTY: DOOR	PROJECT OVERVIEW	SHEET 3	E

2

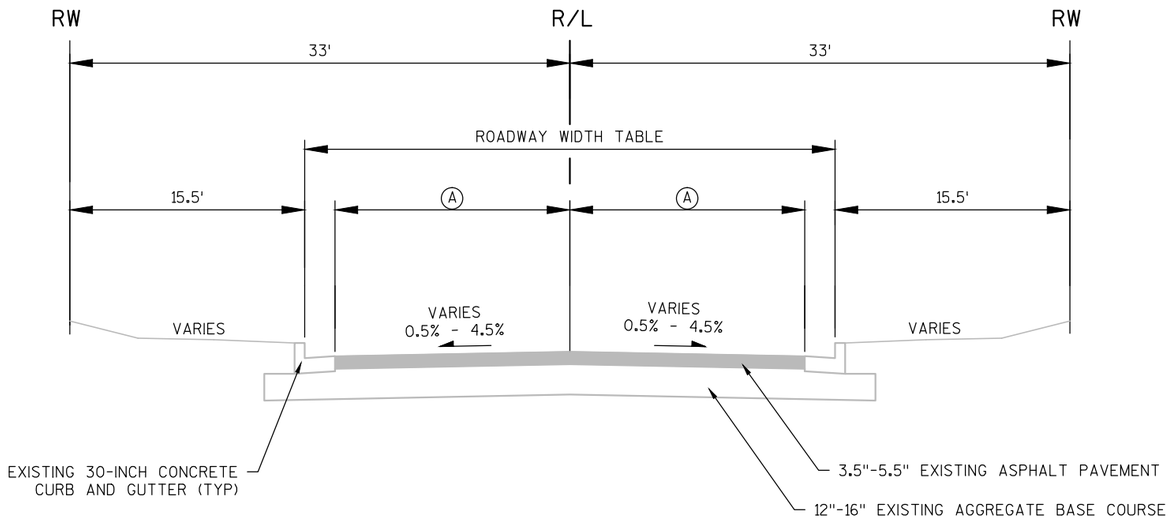

EXISTING TYPICAL SECTION CTH C

STA. 11+40.11 TO STA. 29+50.21

ROADWAY WIDTH TABLE			
STA.	STA.	ROADWAY WIDTH	Ⓐ
11+40.11	13+26	47'	21.5'
13+26	14+93	VARIES	VARIES
14+93	17+88	35'	15.5'
17+88	19+10	VARIES	VARIES
19+10	24+06	47'	21.5'
24+06	25+50	VARIES	VARIES
25+50	29+50	35'	15.5'
36+83	39+75	39'	17.5'
61+20	62+77.12	39'	17.5'

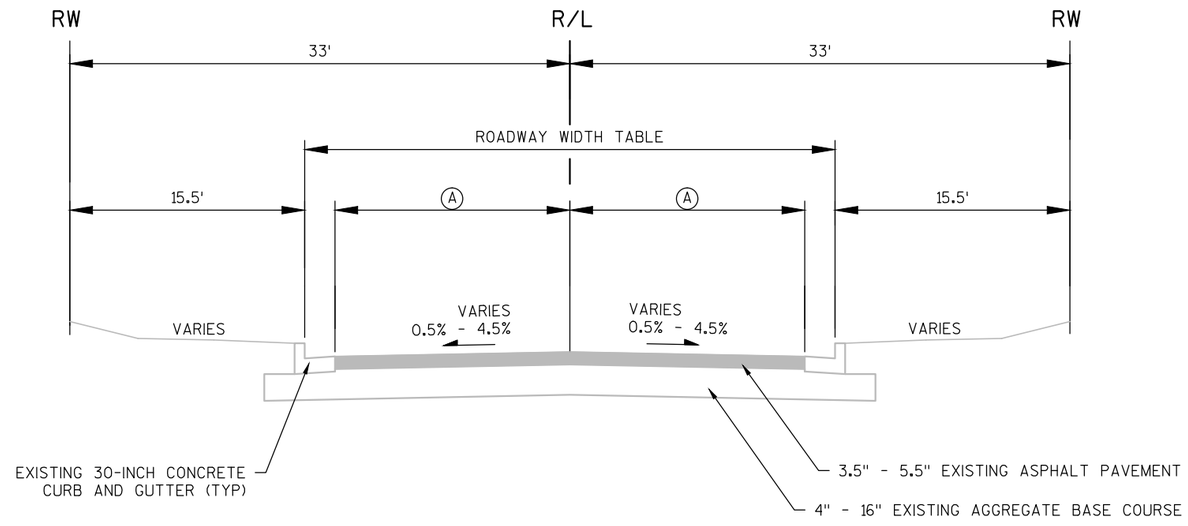

EXISTING TYPICAL SECTION CTH C

STA. 36+83 TO STA. 39+75
STA. 61+20 TO STA. 62+77.12

2

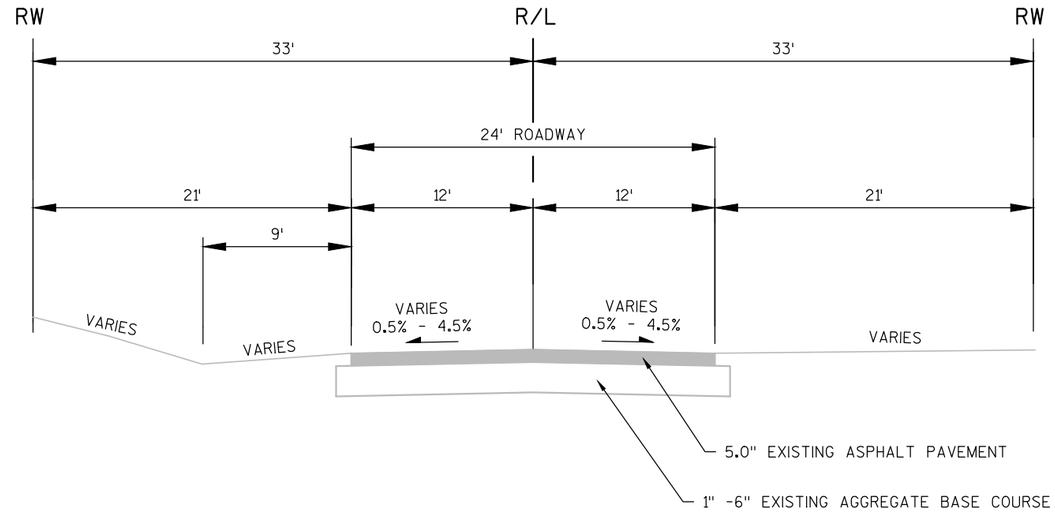

EXISTING TYPICAL SECTION CTH C

STA 29+50 TO STA 36+83

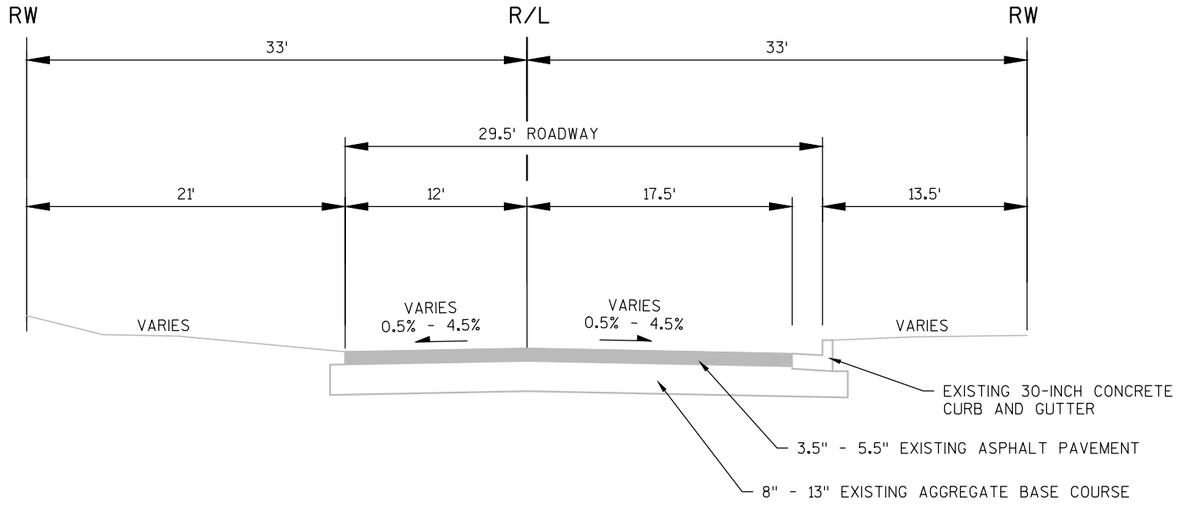

EXISTING TYPICAL SECTION CTH C

STA. 39+75 TO STA. 61+20

PROJECT NO: 4997-00-64	HWY: CTH C	COUNTY: DOOR	PLAN: TYPICAL SECTIONS	SHEET 5	E

2

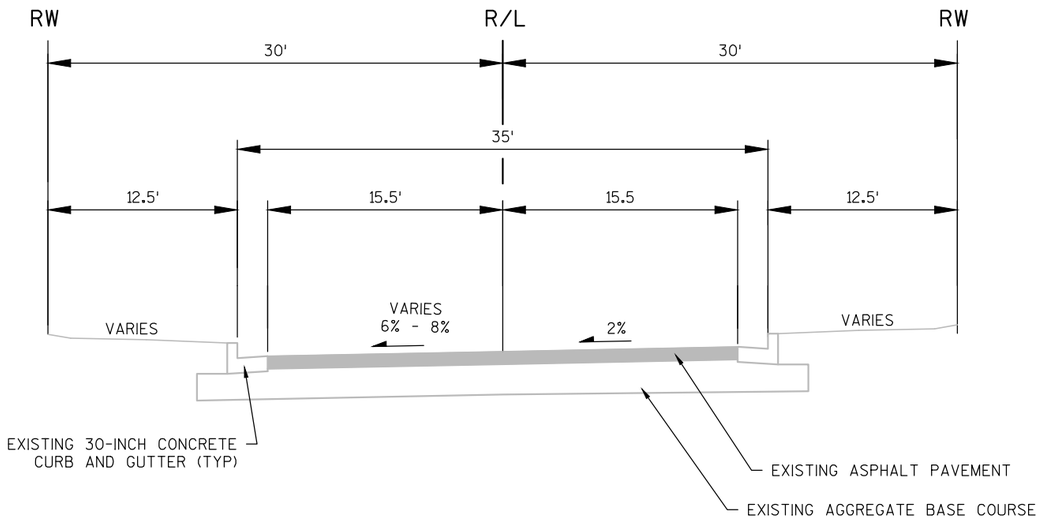

EXISTING TYPICAL SECTION MAPLE ST

STA. 310+23.79 TO STA. 314+58.98

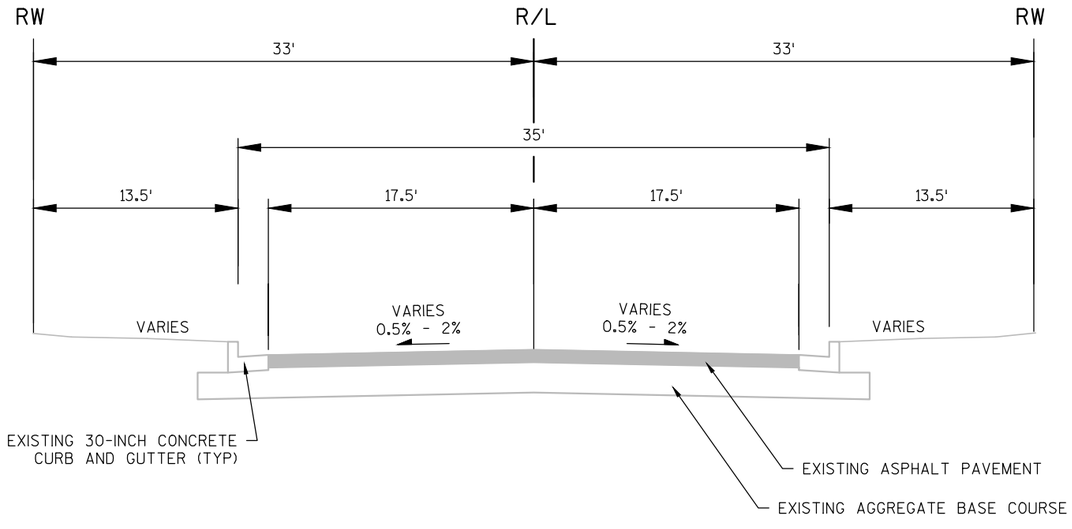

EXISTING TYPICAL SECTION MAPLE ST

STA. 314+58.98 TO STA. 317+88.69

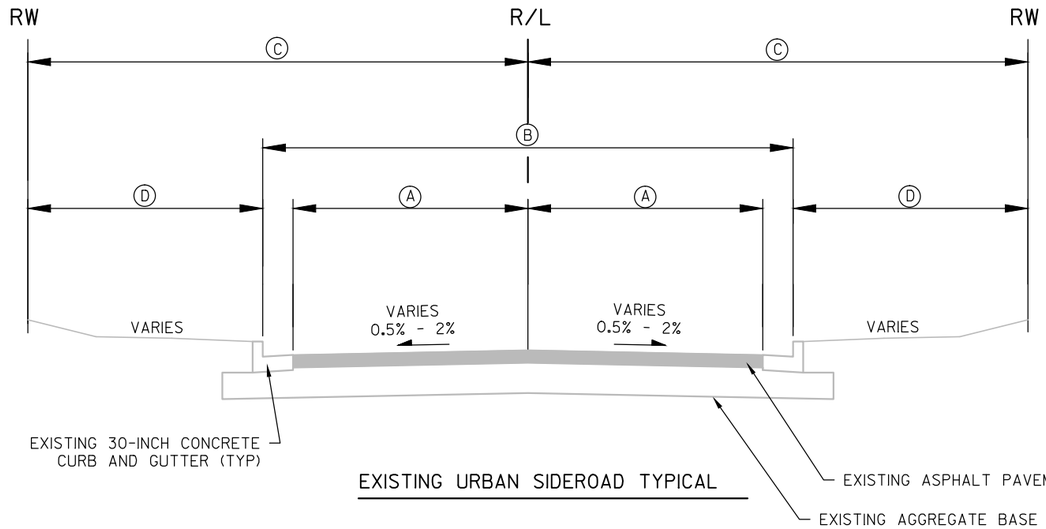

EXISTING URBAN SIDEROAD TYPICAL

URBAN ROADWAY WIDTH TABLE				
ROADWAY	A	B	C	D
SPRUCE ST. (EAST)	15.5'	35'	30'	12.5'
OAK ST. (EAST)	15.5'	35'	33'	15.5'
UNIPER ST.	15.5'	29.5	VARIES	12.5'
HICKORY ST.	15.5'	35'	30'	12.5'

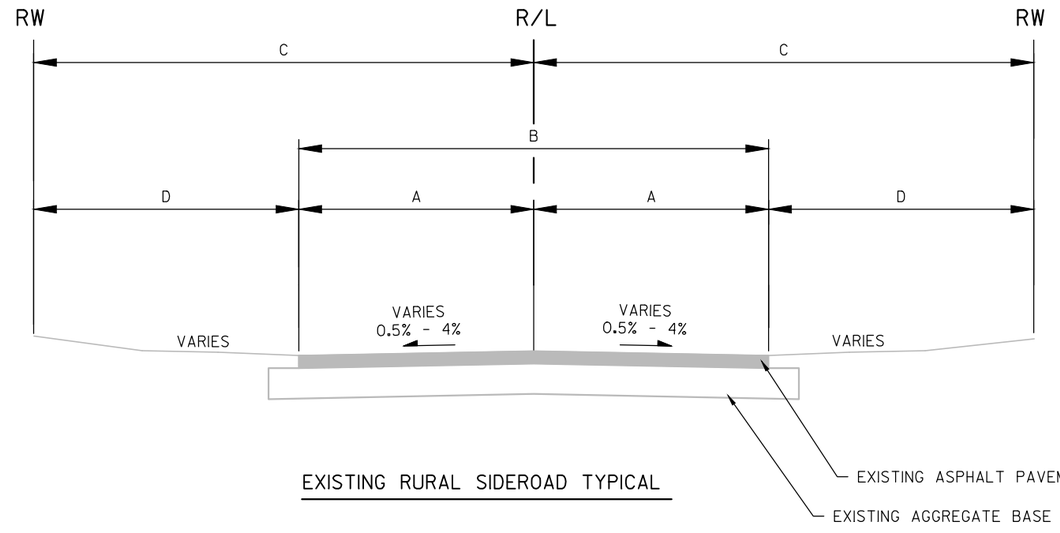

EXISTING RURAL SIDEROAD TYPICAL

RURAL ROADWAY WIDTH TABLE				
ROADWAY	A	B	C	D
OAK ST. (WEST)	10'	20'	29'-37'	19'-27'
BARRICK ST.	8'-13'	21'	16'-22'	3'-14'

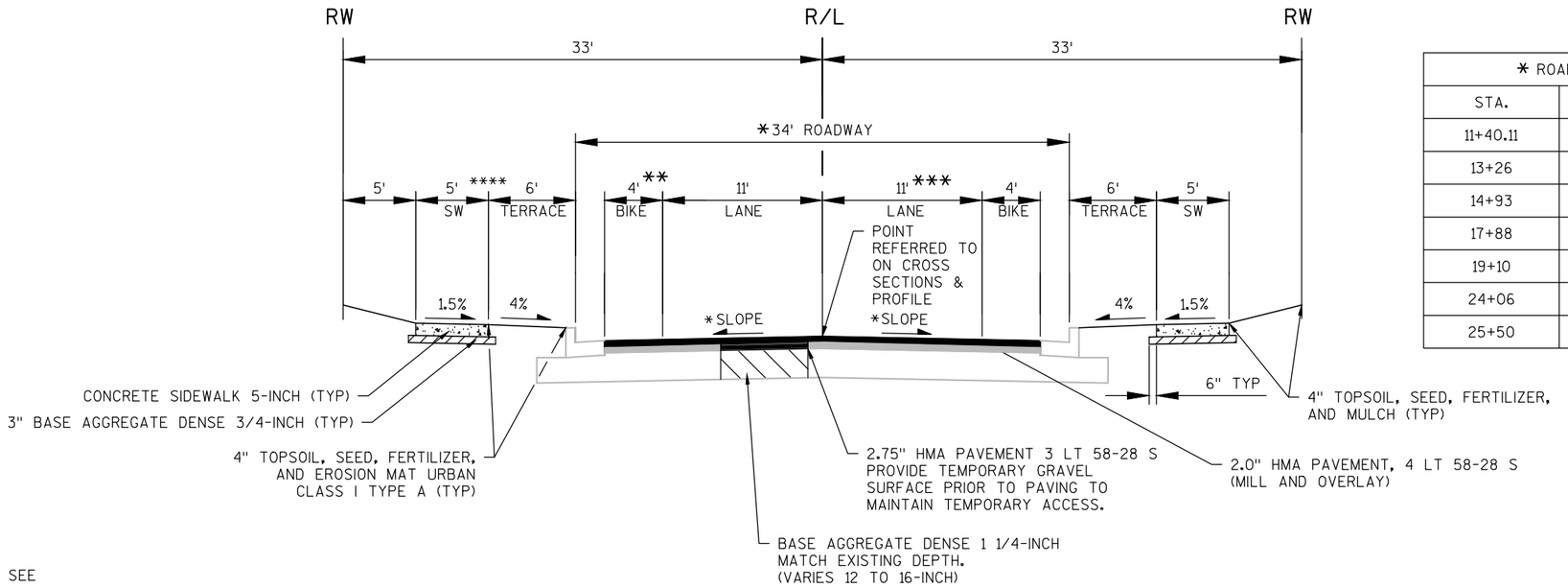

* ROADWAY WIDTH TABLE		
STA.	STA.	ROADWAY WIDTH
11+40.11	13+26	46'
13+26	14+93	VARIES
14+93	17+88	34'
17+88	19+10	VARIES
19+10	24+06	46'
24+06	25+50	VARIES
25+50	29+50.21	34'

* SLOPE VARIES 2% - 4%. SEE CROSS SECTIONS

** VARIES 4' - 15' AT RIGHT TURN LANE. SEE PAVING DETAILS.

*** VARIES 11' - 22' AT LEFT TURN LANE. SEE PAVING DETAILS.

**** 6' SIDEWALK AT BACK OF CURB WITH NO TERRACE FROM STA 14+85 TO STA 16+31, LT

PROPOSED TYPICAL SECTION CTH C

STA 11+40.11 TO STA 29+50.21

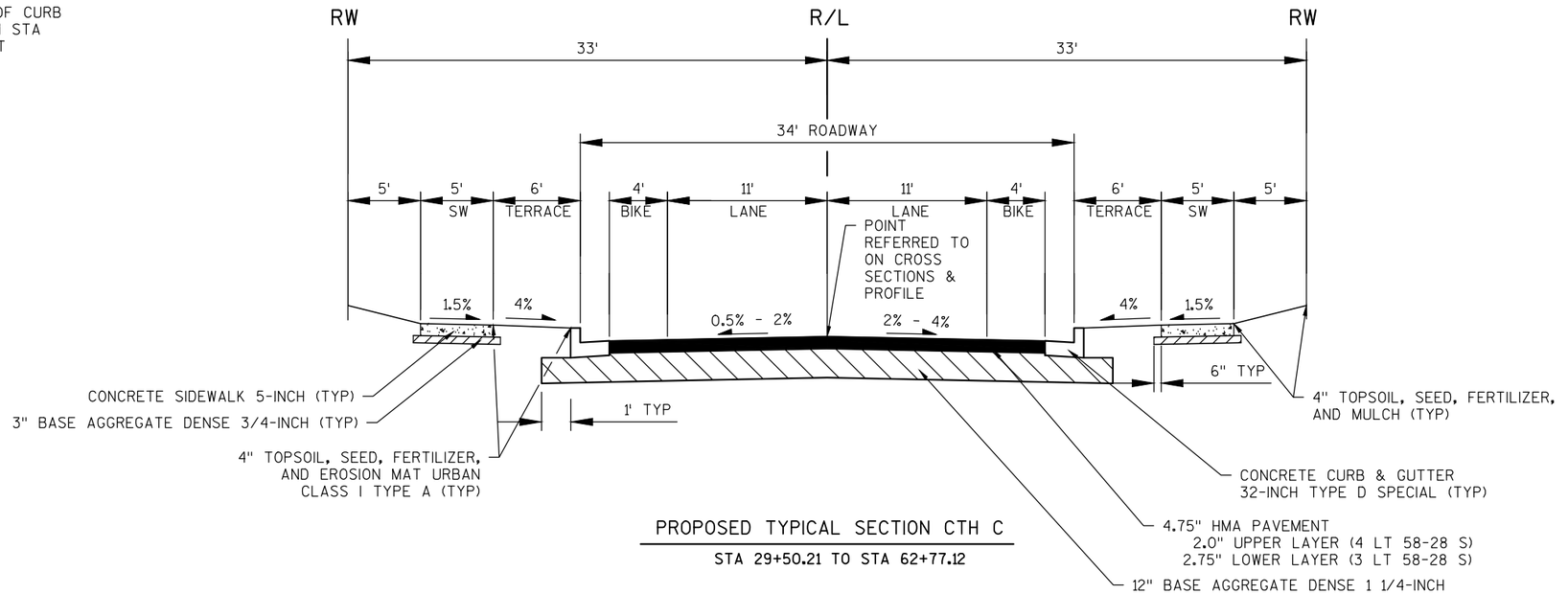

PROPOSED TYPICAL SECTION CTH C

STA 29+50.21 TO STA 62+77.12

PROJECT NO: 4997-00-64	HWY: CTH C	COUNTY: DOOR	PLAN: TYPICAL SECTIONS	SHEET 8	E

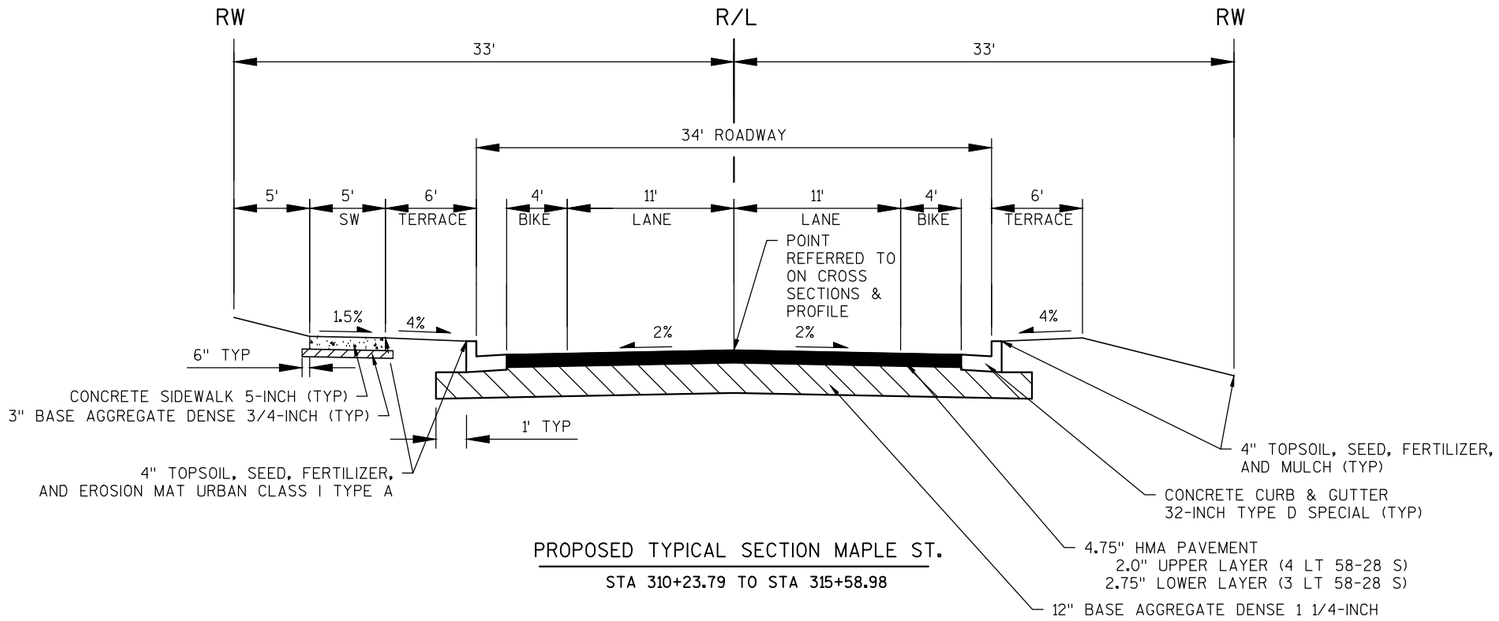

PROPOSED TYPICAL SECTION MAPLE ST.

STA 310+23.79 TO STA 315+58.98

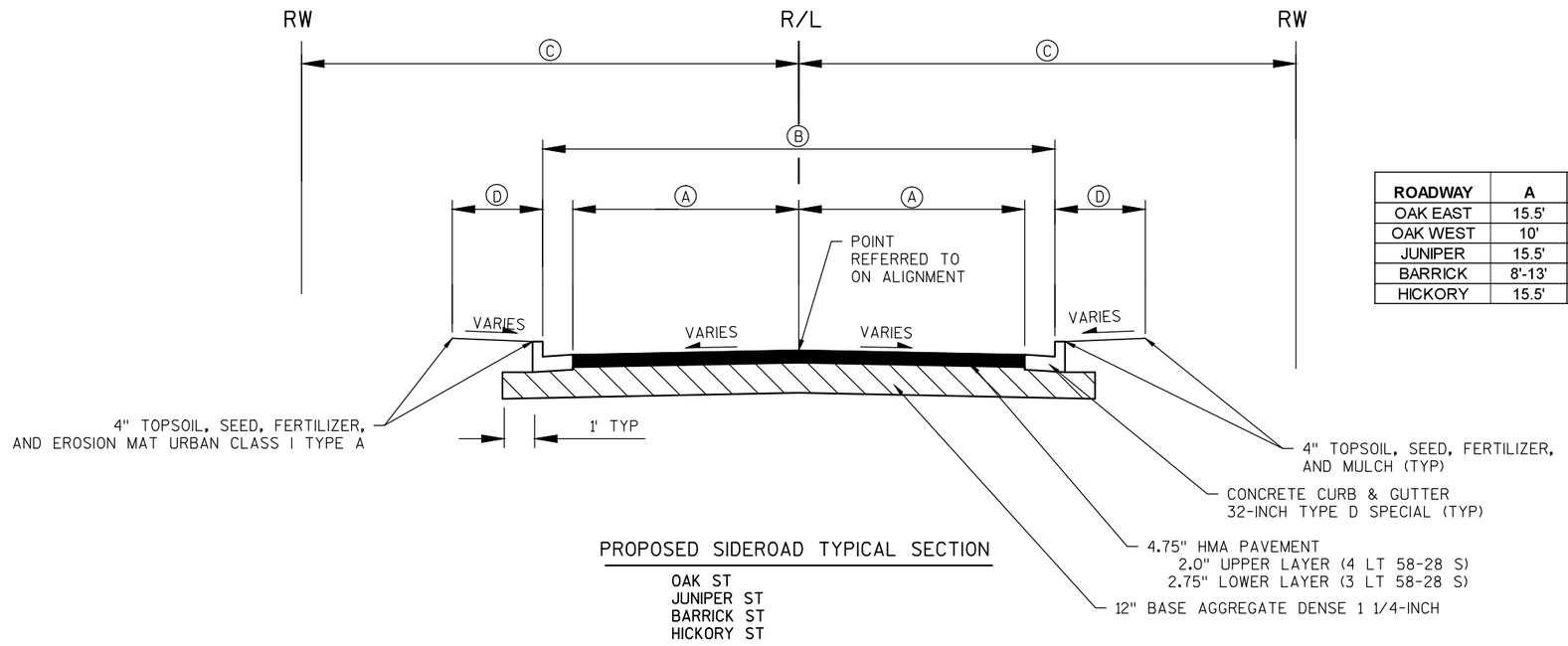

PROPOSED SIDEROAD TYPICAL SECTION

OAK ST
JUNIPER ST
BARRICK ST
HICKORY ST

ROADWAY	A	B	C	D
OAK EAST	15.5'	35'	33'	VARIES - SEE CROSS SECTIONS
OAK WEST	10'	20'	29'-37'	VARIES - SEE CROSS SECTIONS
JUNIPER	15.5'	29.5'	VARIES	VARIES - SEE CROSS SECTIONS
BARRICK	8'-13'	21'	16'-22'	VARIES - SEE CROSS SECTIONS
HICKORY	15.5'	35'	30'	VARIES - SEE CROSS SECTIONS

2

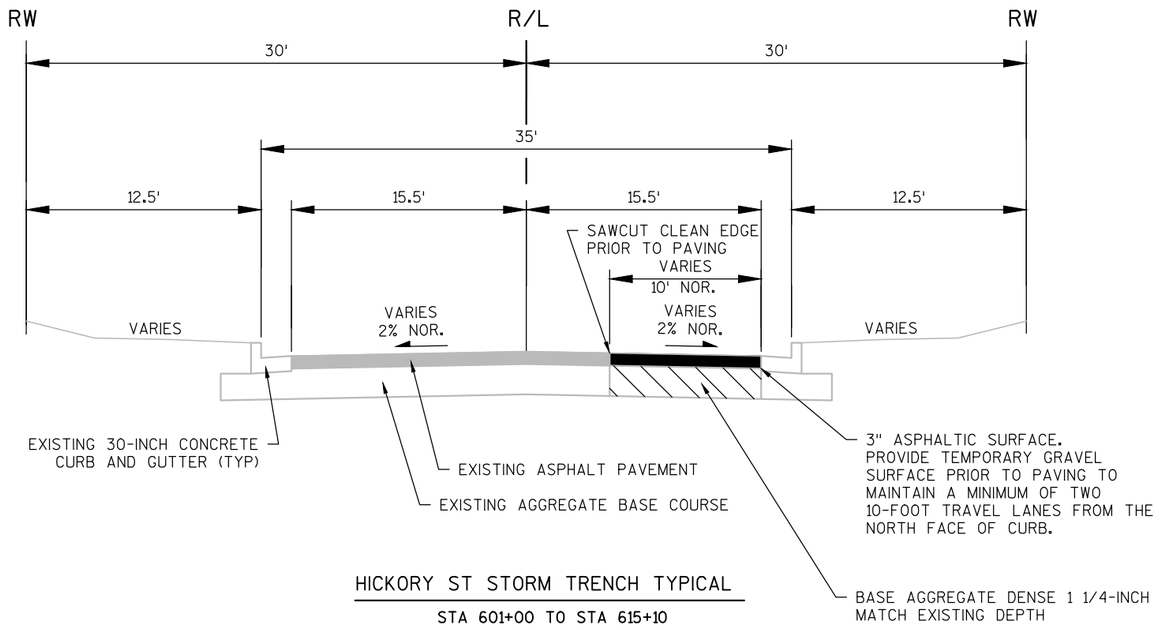

HICKORY ST STORM TRENCH TYPICAL

STA 601+00 TO STA 615+10

PROJECT NO: 4997-00-64	HWY: CTH C	COUNTY: DOOR	PLAN: TYPICAL SECTIONS	SHEET 10	E

FILE NAME : L:\PROJECTS\12642\DWG\4997-00-63\SHEETSOTHER\020301_TS.DWG
LAYOUT NAME - 020301_TS - 020307_TS 1 IN 10 FT
PLOT DATE : 7/25/2017 1:58 PM PLOT BY : MOYER, TIM PLOT NAME : PLOT SCALE : 1 IN:10 FT
WISDOT/CADDS SHEET 42

DRIVEWAY ENTRANCE DETAIL WITH SIDEWALK, CURB & GUTTER

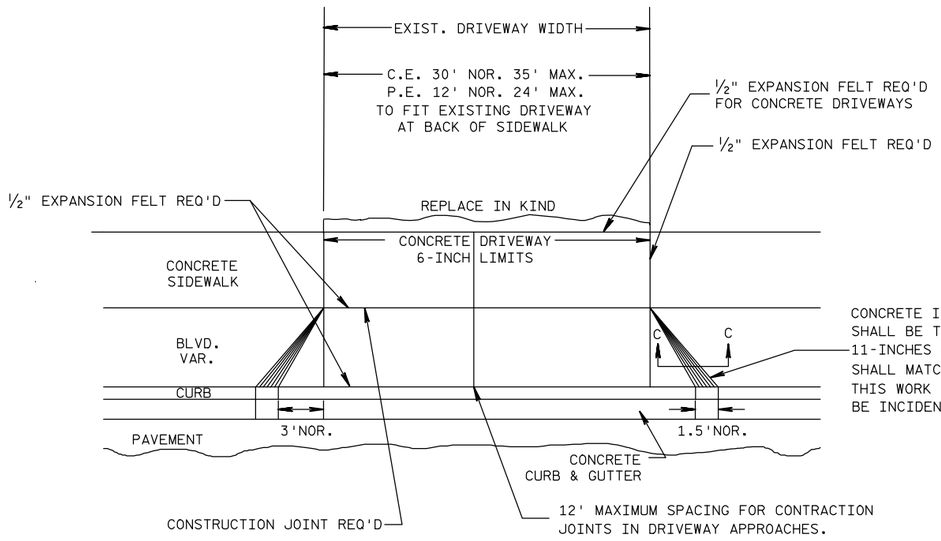

PLAN VIEW

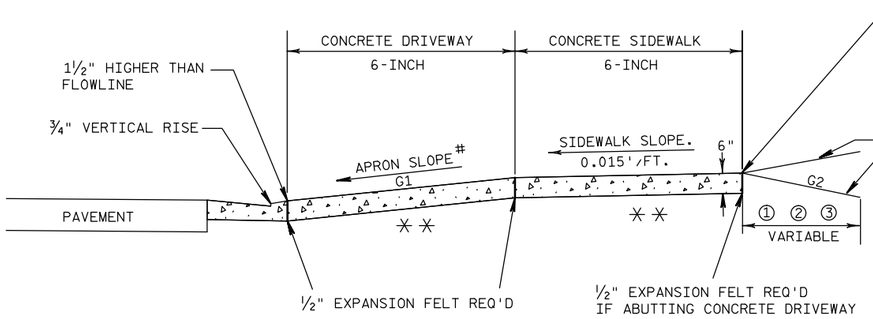

TYPICAL SIDEWALK SECTION

①—6" CONCRETE DRIVEWAY OR
H.E.S. CONCRETE DRIVEWAY

②— 6" BASE AGG. DENSE 1 1/4-INCH

③— 4" BASE AGG. DENSE 1 1/4-INCH
BASE WITH 2" ASPHALTIC SURFACE

✳✳ = 6" BASE AGG. DENSE 1 1/4-INCH
REQ'D UNDER CONCRETE DRWY

\#

TERRACE WIDTH	APRON SLOPE (G1)		
	MIN %	DESIRABLE %	MAX %
3 FT	7.0	8.5	9.0
4 FT	5.0	7.0	9.0
5 FT	4.0	7.0	9.0
6 FT	4.0	7.0	9.0
7 FT	3.5	7.0	9.0
8 FT	3.0	7.0	9.0

NOTE: ALGEBRAIC DIFFERENCE BETWEEN TANGENT
GRADES G1 & G2 TO NOT EXCEED 15%

DEPRESS SIDEWALK PROFILE IF DRIVEWAY
APRON EXCEEDS MAX SLOPE

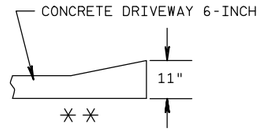

SECTION C-C

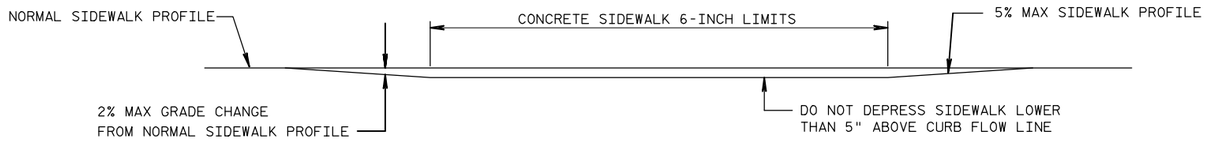

DEPRESSED SIDEWALK PROFILE DETAIL

PROJECT NO: 4997-00-64	HWY: CTH C	COUNTY: DOOR	PLAN: CONSTRUCTION DETAILS	SHEET 11	E

2

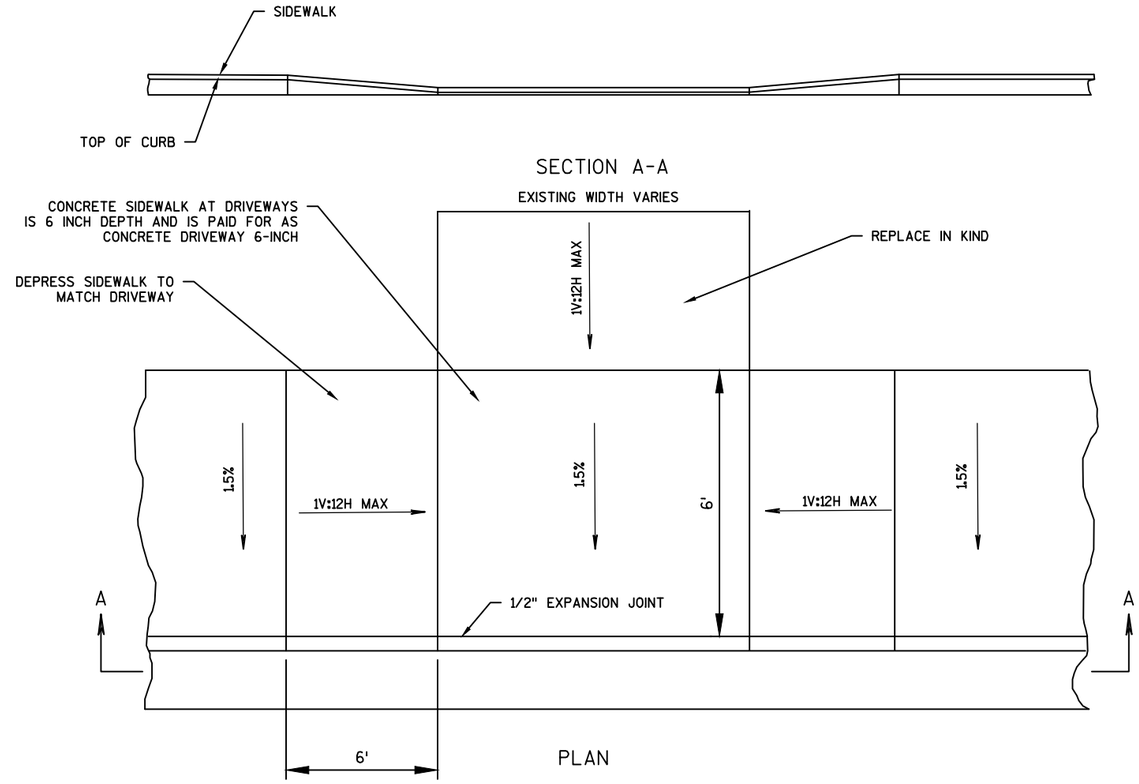

SECTION A-A

PLAN

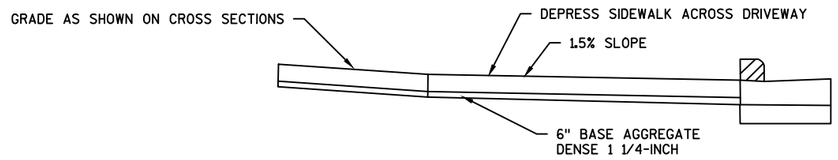

PROFILE

URBAN DRIVEWAY DETAIL

FOR USE IN AREAS WHERE SIDEWALK IS ADJACENT TO BACK OF CURB

PROJECT NO: 4997-00-64	HWY: CTH C	COUNTY: DOOR	PLAN: CONSTRUCTION DETAILS	SHEET 12	E

FILE NAME : L:\PROJECTS\12642\DWG\4997-00-63\SHEETSOTHER\021001_CD.DWG
LAYOUT NAME - 021001_CD - 021002_CD
PLOT DATE : 7/25/2017 1:43 PM PLOT BY : MOYER, TIM PLOT NAME : PLOT SCALE : 1 IN:10 FT
WISDOT/CADDS SHEET 42

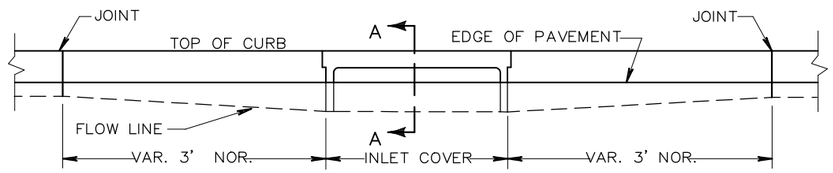

ELEVATION

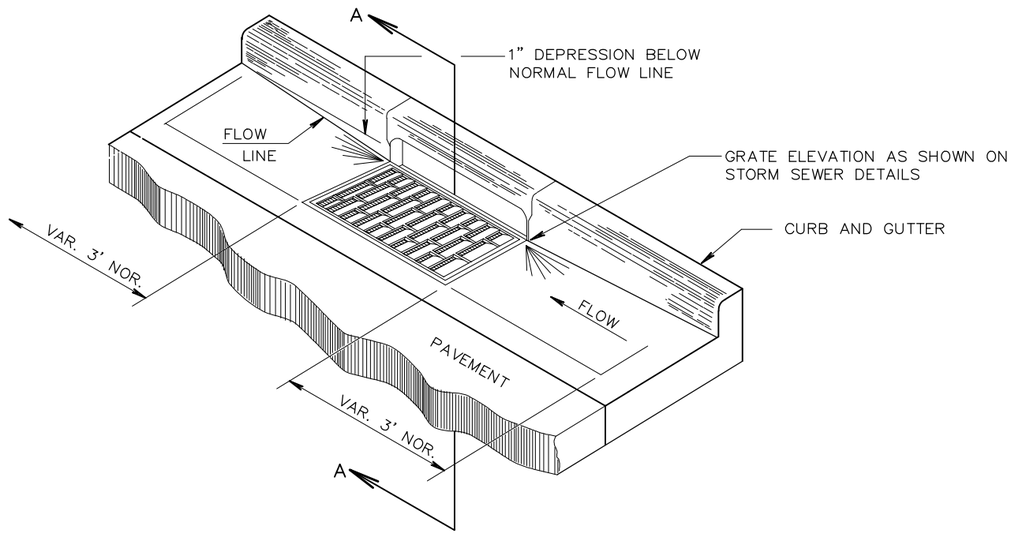

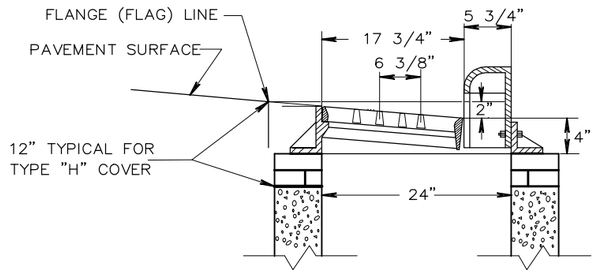

SECTION A–A

DETAIL OF CURB AND GUTTER AT INLETS

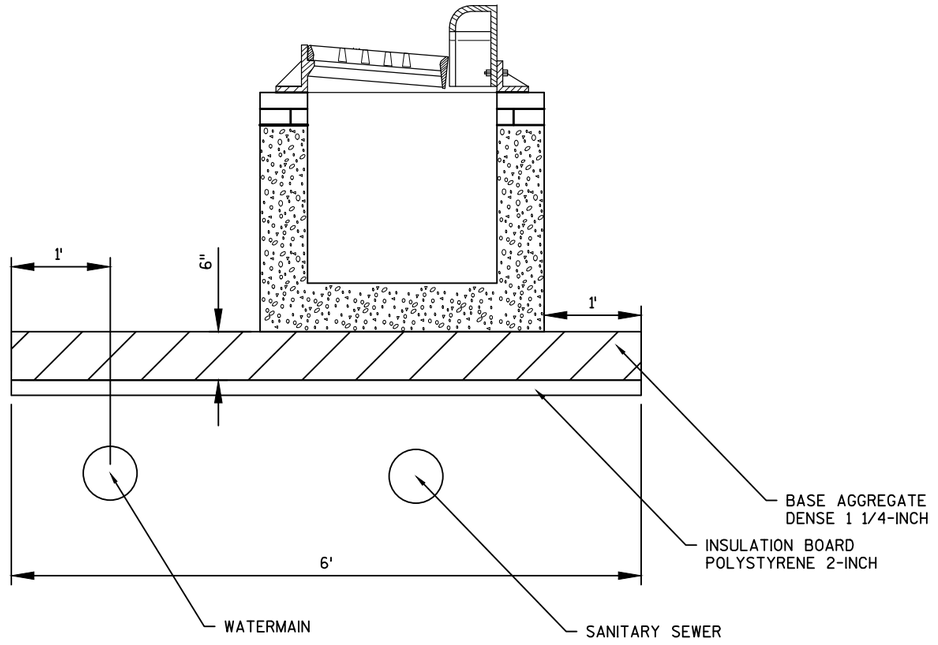

INSULATION BOARD POLYSTYRENE 2-INCH

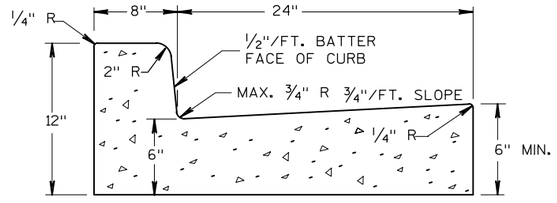

CONCRETE CURB AND GUTTER, 32-INCH, TYPE D SPECIAL

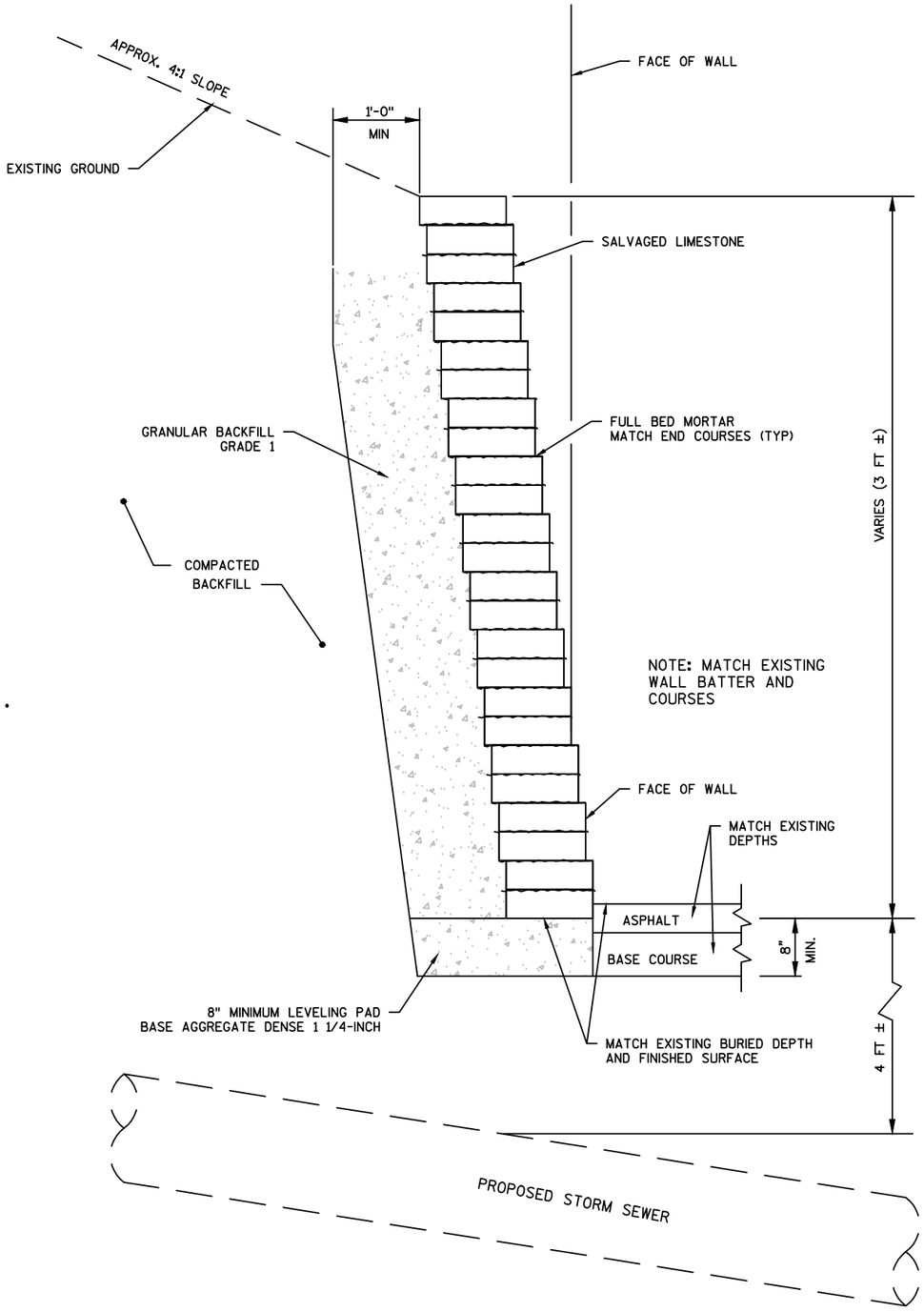

REMOVING AND REPLACING RETAINING WALL

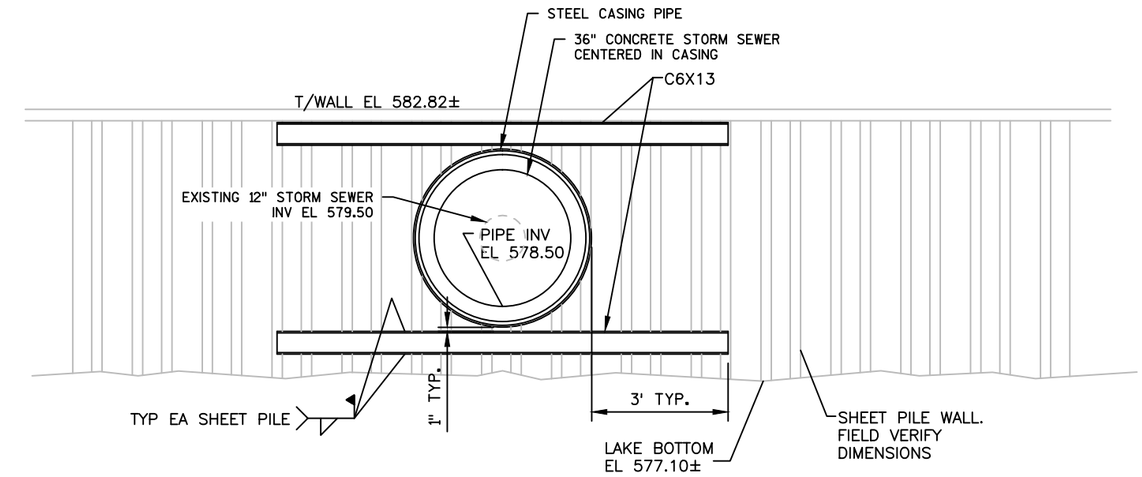

ELEVATION

FROM LANDSIDE OF WALL

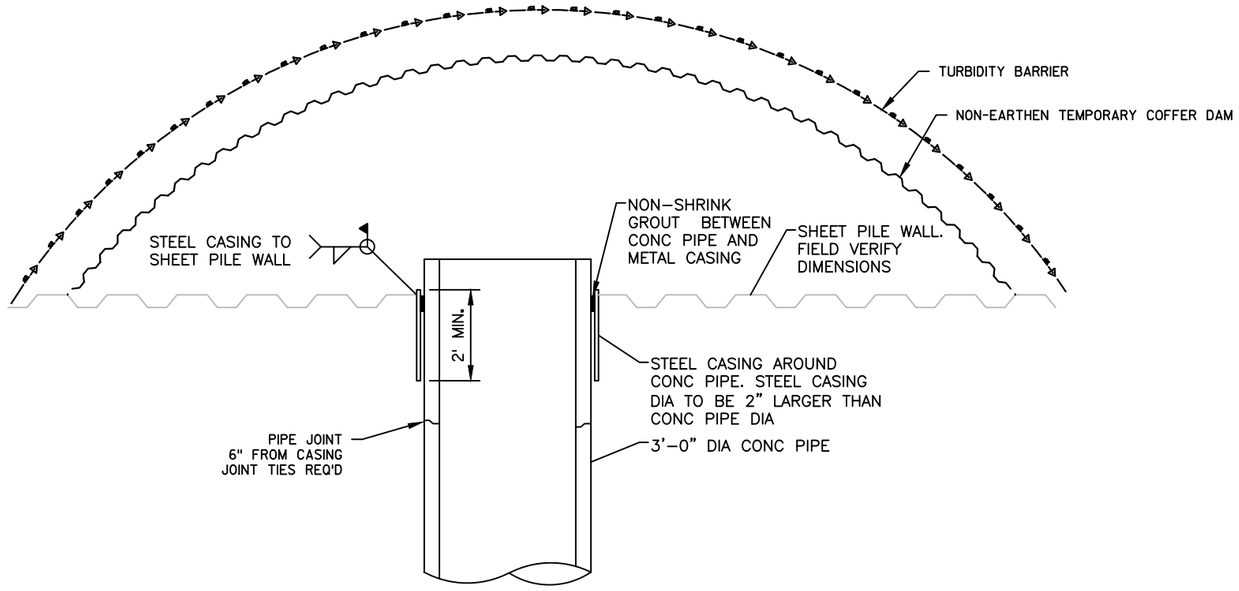

PLAN

STORM SEWER OUTFALL DETAIL

2

N

PRIVATE RD.

FLOWLINE ELEVATION
693.68

17+07.54, -28.00' L

BOW ELEVATION
693.78

16+97.41, -28.00' L
694.20

16+90.01, -28.00' L
694.09

16+85.01, -28.00' L
694.02

5'

7.0%

1.75%

4.0%

2

8.3%

4.0%

16+85.01, -23.00' L
693.95

FLOWLINE ELEVATION
693.51

CTH C

FLOWLINE ELEVATION
694.25

17+38.83, -28.00' L

BOW ELEVATION
694.34

17+49.09, -28.00' L
694.76

17+54.09, -28.00' L
695.11

2

4.0%

1.5%

7.0%

5.8%

5'

17+54.09, -23.00' L
695.04

17+49.09, -23.00' L
694.69

17+43.09, -22.99' L

FLOWLINE ELEVATION
693.66

17+03.41, -23.00' L

16+97.41, -23.00' L
694.13

FLOWLINE ELEVATION
694.35

CTH C

17+00

18+00

2

4.0%

16+90.01, 23.00' R
693.92

16+85.01, 23.00' R
693.85

8.3%

3.8%

6.2%

16+80.01, 28.00' R
694.11

16+85.01, 28.00' R
693.92

16+95.01, 28.00' R
694.30

16+90.01, 28.00' R
693.99

X CURB RAMP TYPE

CURB RAMP DETECTABLE WARNING FIELD

PROJECT NO:4997-00-64	HWY:CTH C	COUNTY:DOOR	CURB RAMP DETAILS	SHEET	E

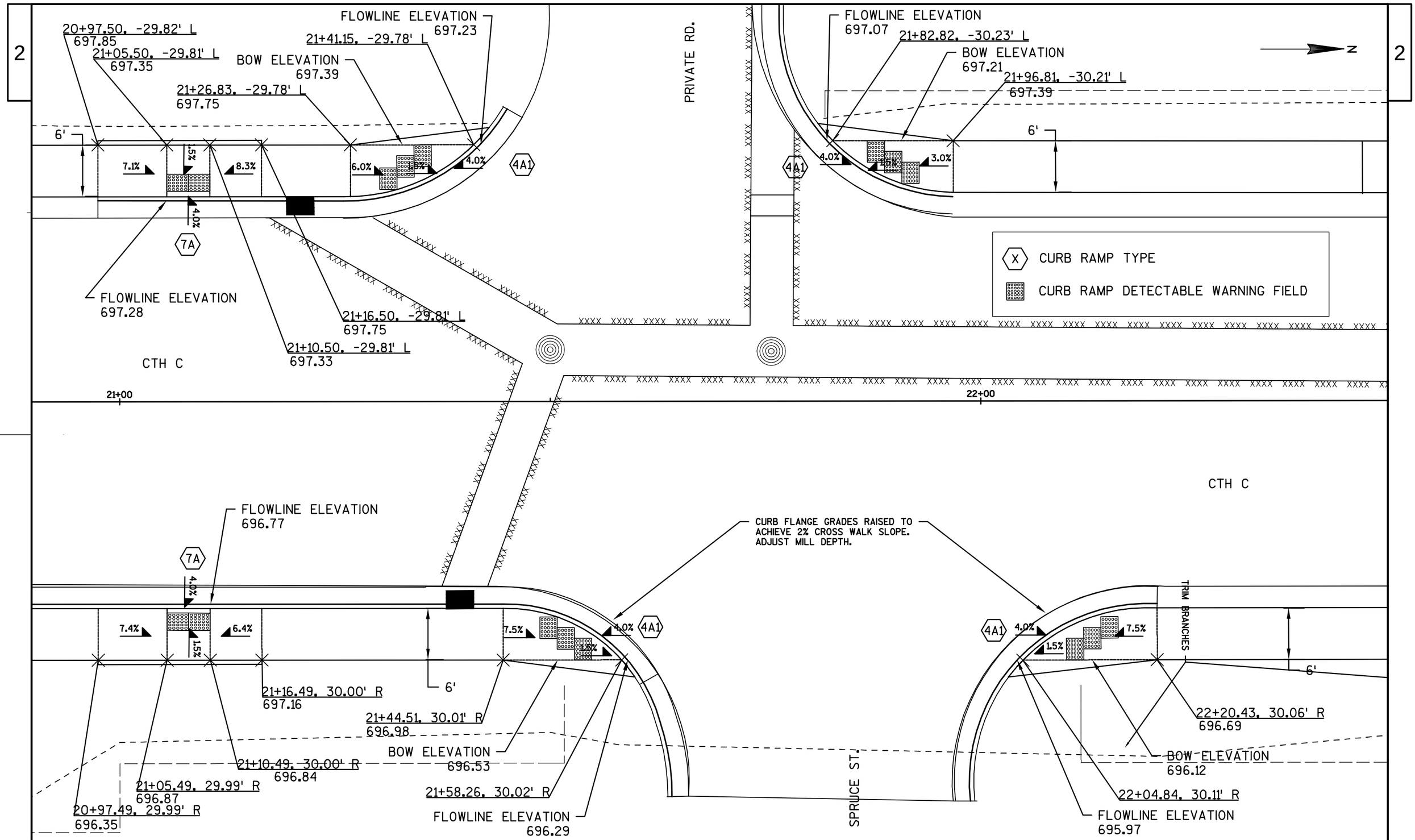

PROJECT NO:4997-00-64	HWY:CTH C	COUNTY:DOOR	CURB RAMP DETAILS	SHEET	E

FILE NAME : L:\PROJECTS\12642\DWG\4997-00-63\SHEETSPLAN\021208_PD.DWG
LAYOUT NAME - 021208_PD - 021202_PD
PLOT DATE : 7/11/2017 11:03 AM PLOT BY : MOYER, TIM PLOT NAME : PLOT SCALE : 1 IN:10 FT
WISDOT/CADDS SHEET 42

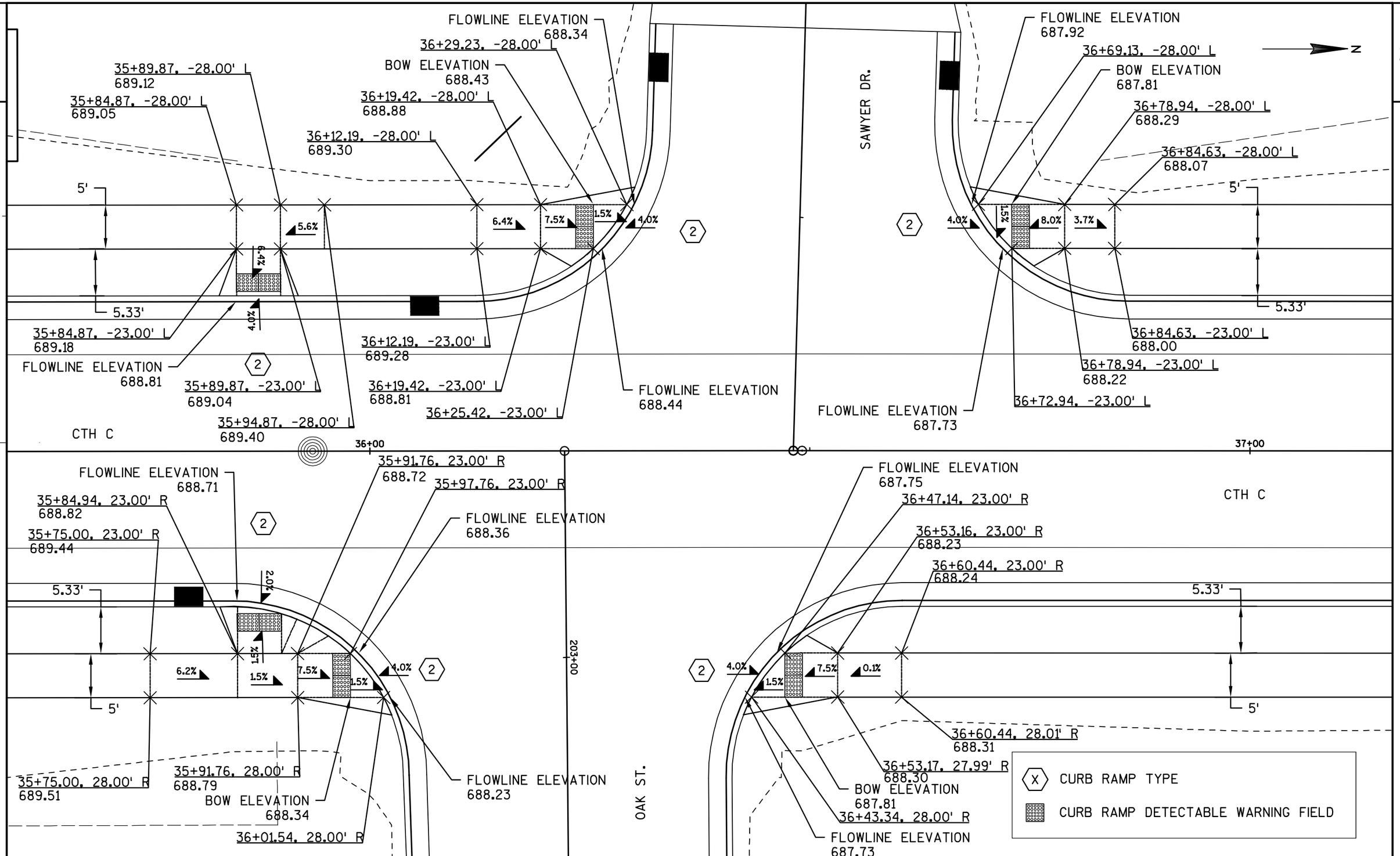

PROJECT NO:4997-00-64	HWY:CTH C	COUNTY:DOOR	CURB RAMP DETAILS	SHEET	E

FILE NAME : L:\PROJECTS\12642\DWG\4997-00-63\SHEETSPLAN\021208_PD.DWG
LAYOUT NAME - 021208_PD - 021203_PD
PLOT DATE : 7/11/2017 11:03 AM PLOT BY : MOYER, TIM PLOT NAME : PLOT SCALE : 1 IN:10 FT
WISDOT/CADDS SHEET 42

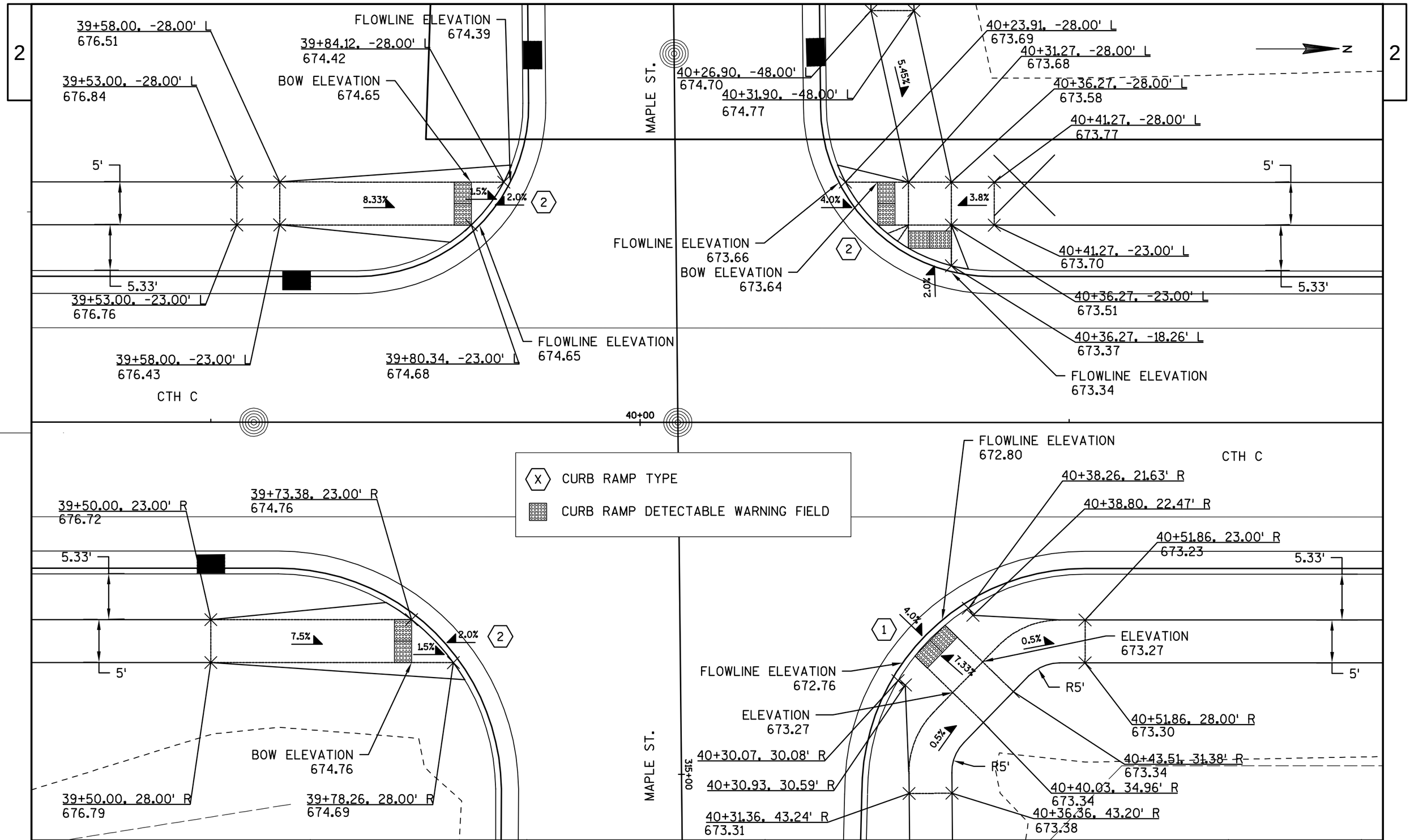

PROJECT NO:4997-00-64	HWY:CTH C	COUNTY:DOOR	CURB RAMP DETAILS	SHEET	E

FILE NAME : L:\PROJECTS\12642\DWG\4997-00-63\SHEETSPLAN\021208_PD.DWG
LAYOUT NAME - 021208_PD - 021204_PD
PLOT DATE : 7/11/2017 11:03 AM PLOT BY : MOYER, TIM PLOT NAME : PLOT SCALE : 1 IN:10 FT
WISDOT/CADDS SHEET 42

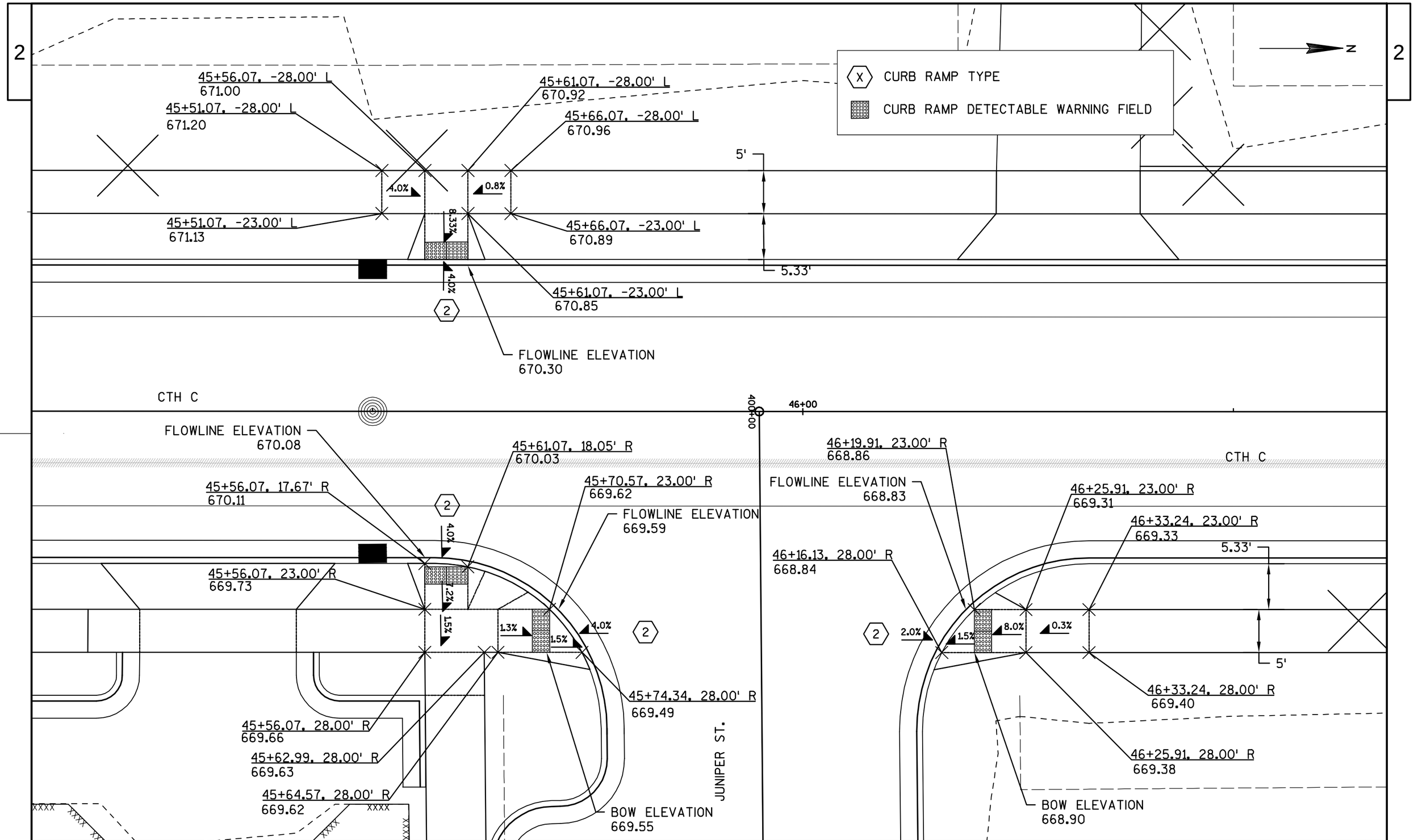

PROJECT NO:4997-00-64	HWY: CTH C	COUNTY: DOOR	CURB RAMP DETAILS	SHEET	E

FILE NAME : L:\PROJECTS\12642\DWG\4997-00-63\SHEETSPLAN\021208_PD.DWG
LAYOUT NAME - 021208_PD - 021205_PD

PLOT DATE : 7/11/2017 11:04 AM PLOT BY : MOYER, TIM PLOT NAME : PLOT SCALE : 1 IN:10 FT

WISDOT/CADDS SHEET 42

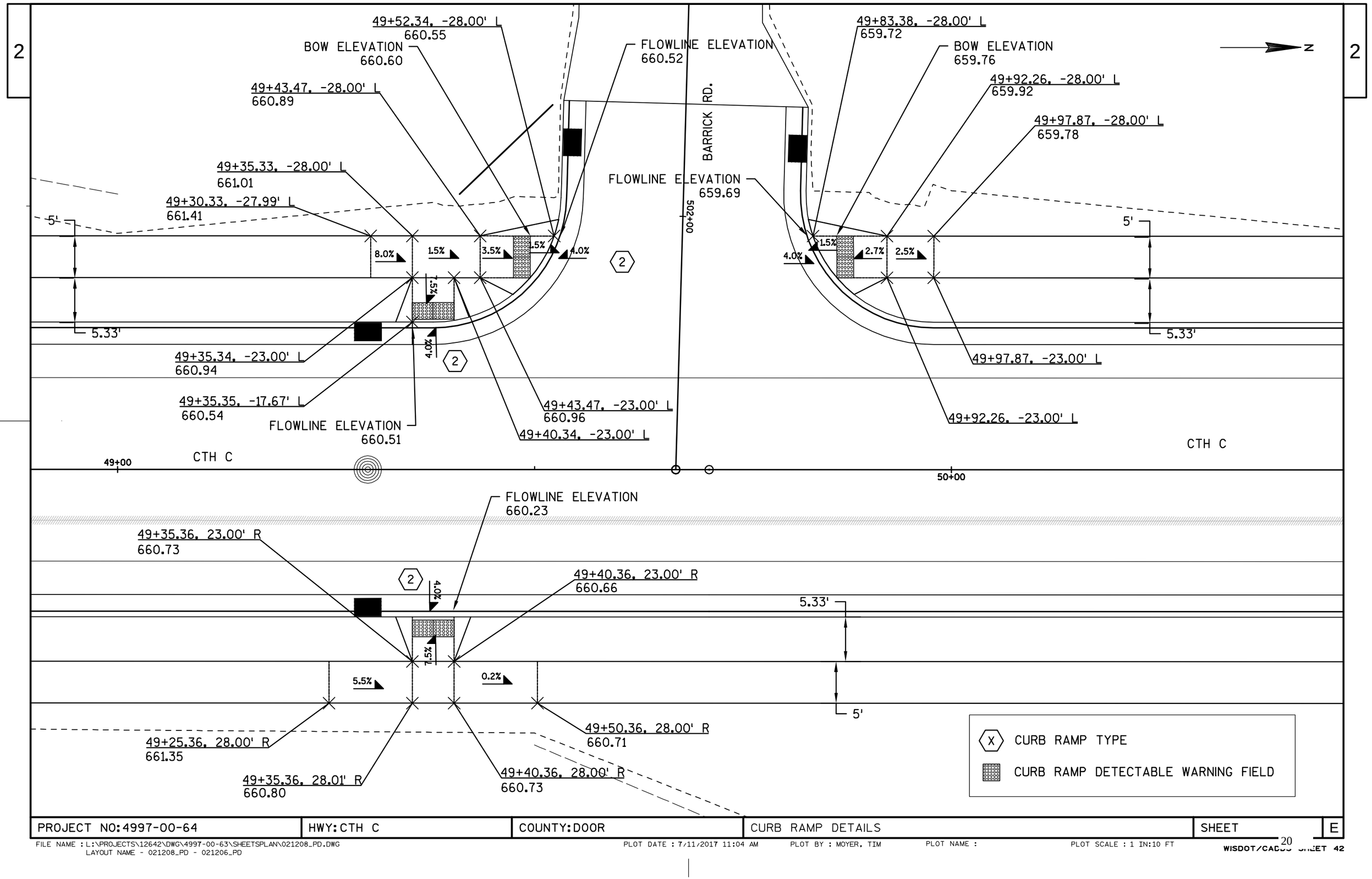

PROJECT NO:4997-00-64	HWY:CTH C	COUNTY:DOOR	CURB RAMP DETAILS	SHEET	E

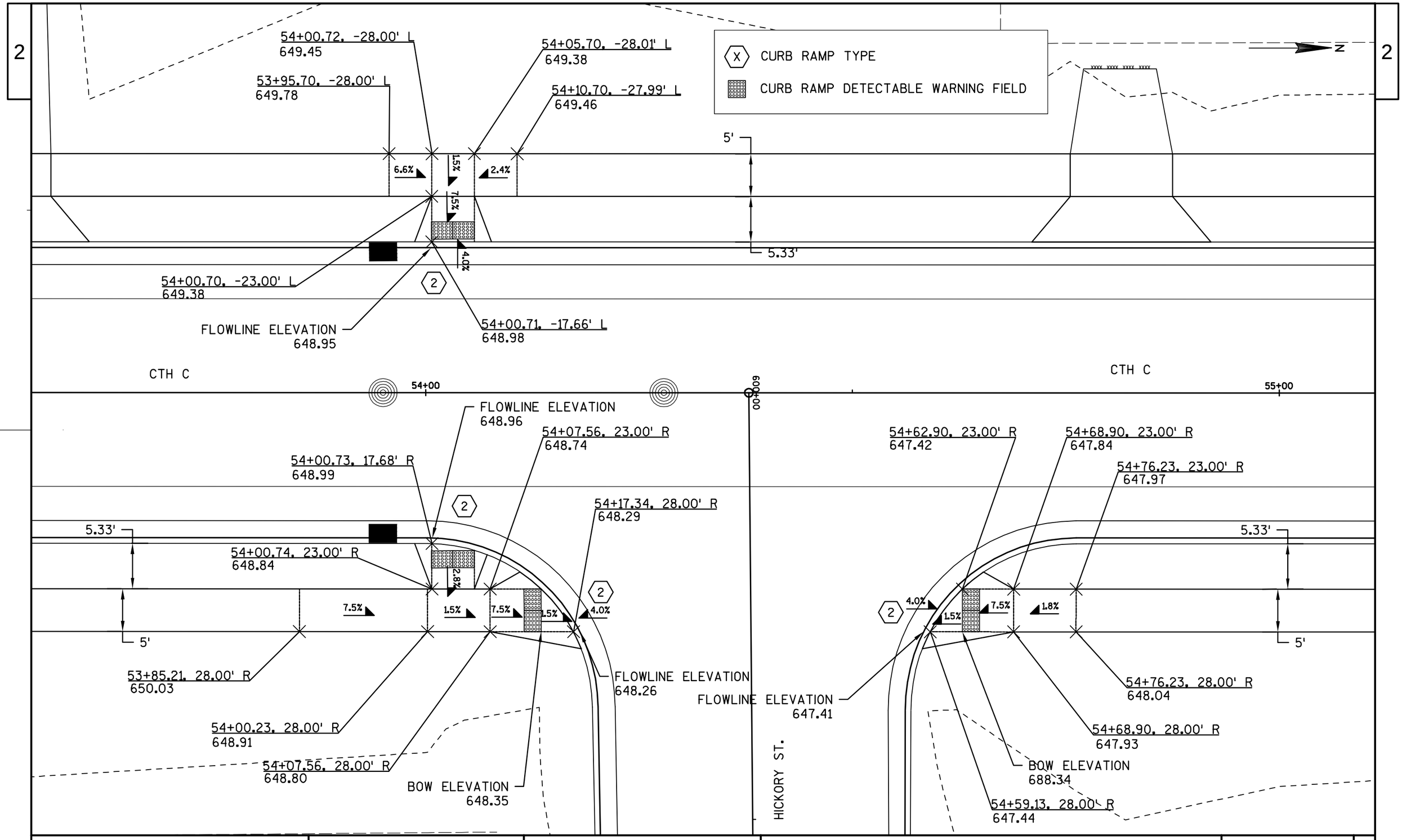

PROJECT NO:4997-00-64	HWY: CTH C	COUNTY: DOOR	CURB RAMP DETAILS	SHEET	E

2

2

N

BOW ELEVATION
632.64

62+38.90, -28.00' L
633.05

62+52.80, -28.00' L
632.50

FLOWLINE ELEVATION
632.47

7.5%

1.5%

4.0%

2

X CURB RAMP TYPE

CURB RAMP DETECTABLE WARNING FIELD

62+38.90, -23.00' L
632.98

62+44.90, -23.00' L
632.57

CTH C

62+00

63+00

62+70.75, 23.00' R
630.57

62+44.75, 23.00' R
632.50

62+64.75, 23.00' R
630.88

8.1%

8.3%

1.5%

4.0%

2

FLOWLINE ELEVATION
630.38

62+44.75, 28.00' R
632.57

62+73.62, 28.00' R
630.41

ELM ST.

62+64.75, 28.00' R
630.95

BOW ELEVATION
630.45

PROJECT NO:4997-00-64	HWY:CTH C	COUNTY:DOOR	CURB RAMP DETAILS	SHEET	E

FILE NAME : L:\PROJECTS\12642\DWG\4997-00-63\SHEETSPLAN\021208_PD.DWG
LAYOUT NAME - 021208_PD - 021208_PD

PLOT DATE : 7/11/2017 11:04 AM PLOT BY : MOYER, TIM PLOT NAME : PLOT SCALE : 1 IN:10 FT

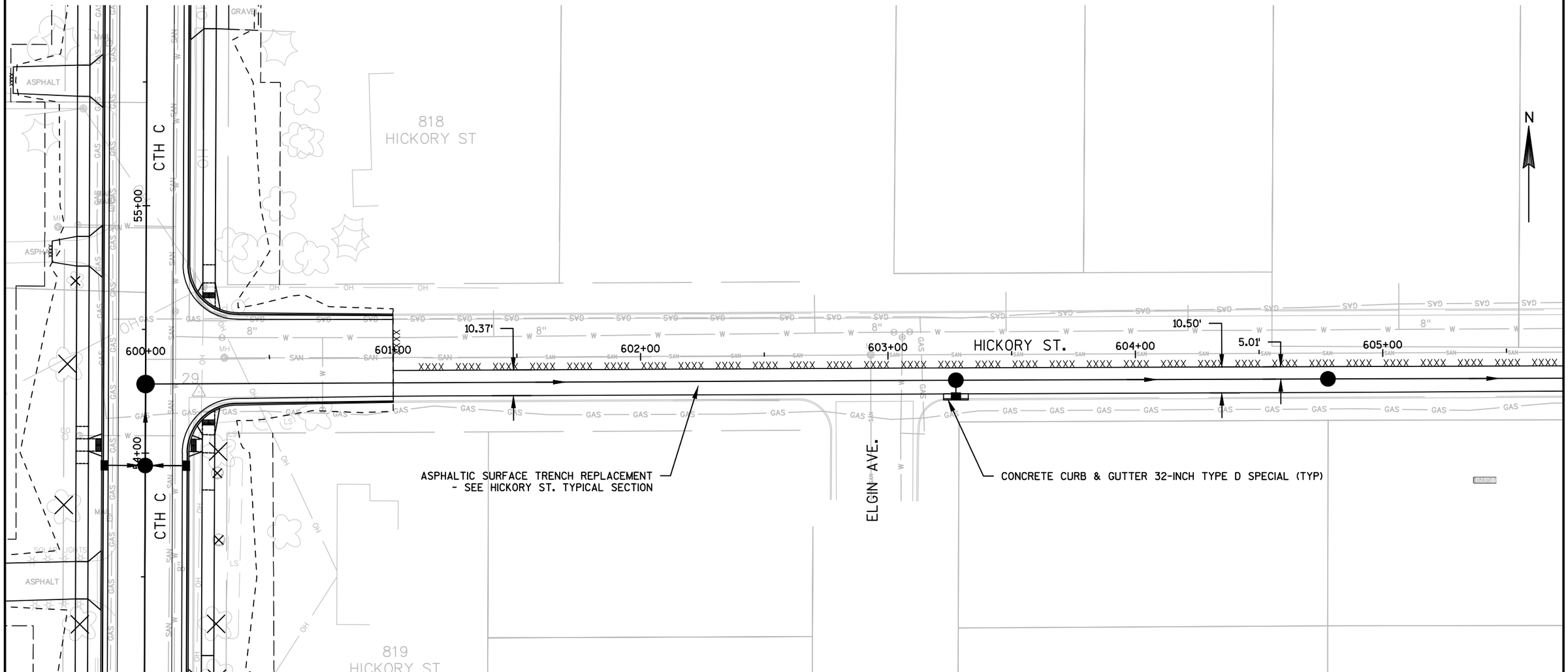

PROJECT NO: 4997-00-64	HWY: CTH C	COUNTY: DOOR	PLAN DETAIL - HICKORY ST.	SHEET 23	E

FILE NAME : L:\PROJECTS\12642\DWG\4997-00-63\SHEETSPLAN\021209_PD.DWG
LAYOUT NAME - 021209_PD - 021209_PD

PLOT DATE : 7/11/2017 11:16 AM PLOT BY : MOYER, TIM PLOT NAME : ----------PLOT SCALE : 1" = 40'_XREF

WISDOT/CADDS SHEET 41

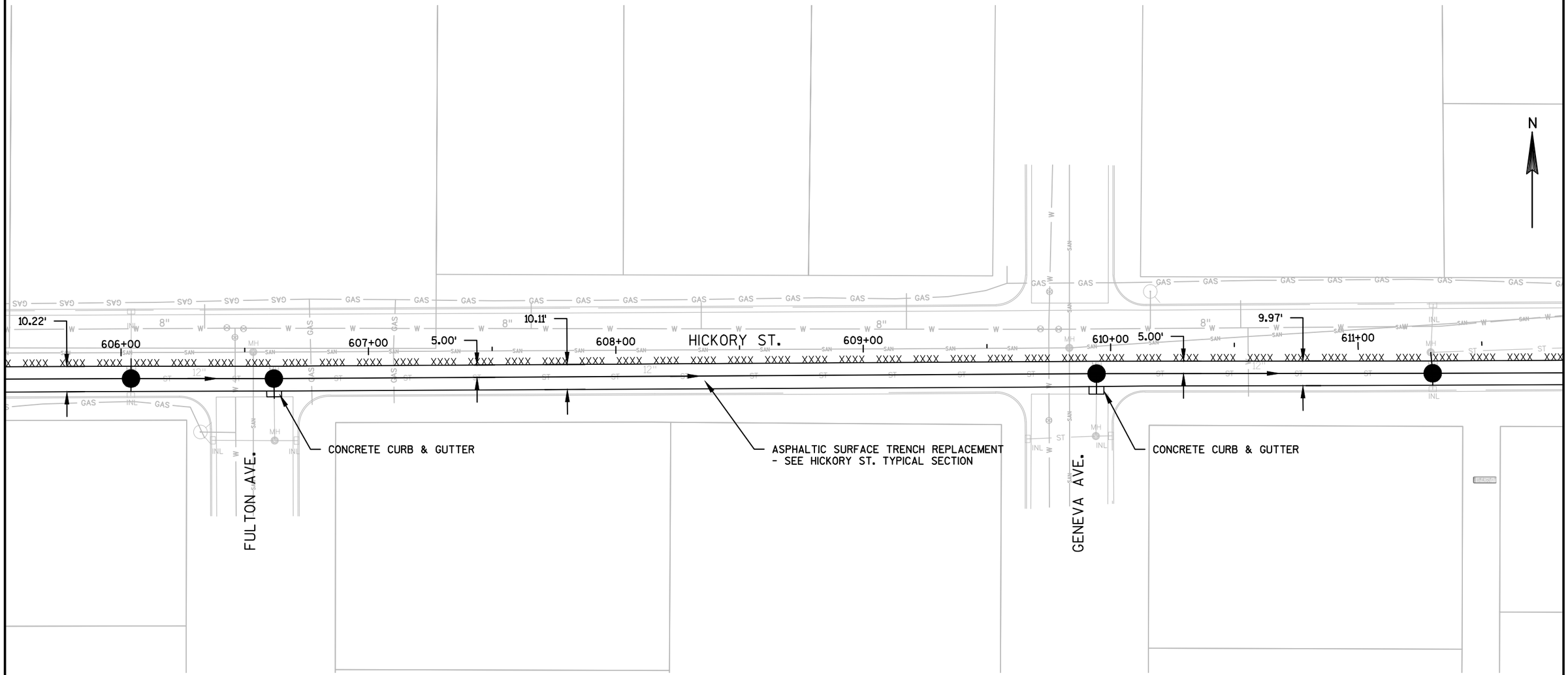

PROJECT NO: 4997-00-64	HWY: CTH C	COUNTY: DOOR	PLAN DETAIL - HICKORY ST.	SHEET 24	E

FILE NAME : L:\PROJECTS\12642\DWG\4997-00-63\SHEETSPLAN\021209_PD.DWG
LAYOUT NAME - 021209_PD - 021210_PD

PLOT DATE : 7/11/2017 11:16 AM PLOT BY : MOYER, TIM PLOT NAME : _____ PLOT SCALE : 1" = 40'_XREF

WISDOT/CADDS SHEET 41

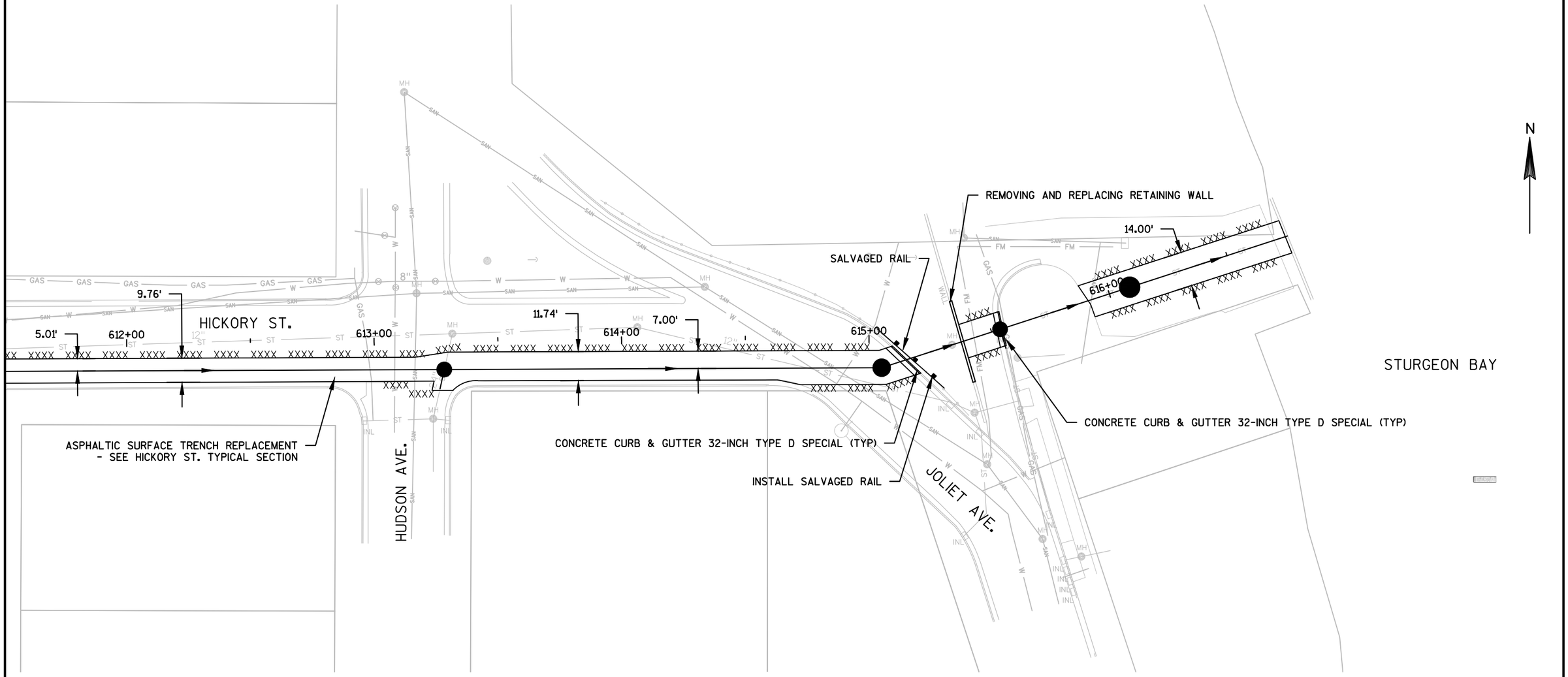

PROJECT NO: 4997-00-64	HWY: CTH C	COUNTY: DOOR	PLAN DETAIL - HICKORY ST.	SHEET	E

FILE NAME : L:\PROJECTS\12642\DWG\4997-00-63\SHEETSPLAN\021209_PD.DWG
LAYOUT NAME - 021209_PD - 021211_PD

PLOT DATE : 7/11/2017 11:16 AM PLOT BY : MOYER, TIM PLOT NAME : ---------- PLOT SCALE : 1" = 40'_XREF

WISDOT/CADDS SHEET 41

2

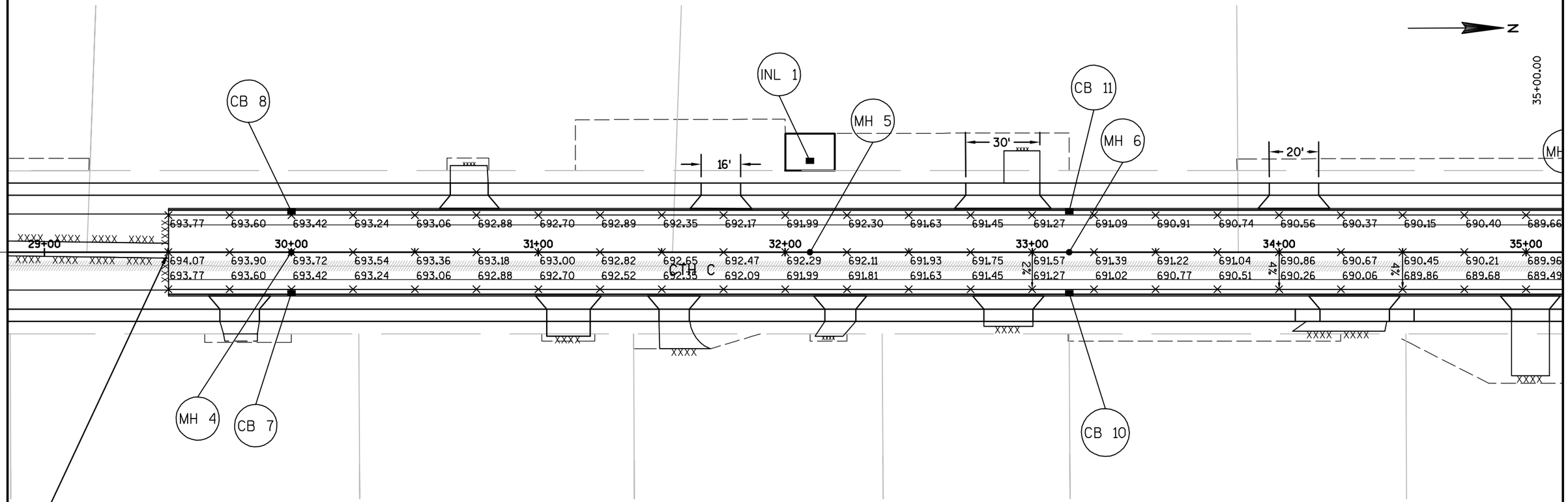

NOTE:

SEE PLAN SHEETS FOR LAYOUT DETAILS/NOTES FOR MILL AND OVERLAY FROM STA. 11+40 TO STA. 29+50.

GENERAL NOTES:

1. SEE STORM SEWER PLAN FOR MANHOLE AND INLET RIM ELEVATIONS.
2. ALL RADII MEASURED TO FACE OF CURB.
3. ALL ELEVATIONS GIVEN AT THE LANE LINE AND FLANGE LINE.
4. ALL PAVEMENT GRADES ARE SHOWN AT 25' INTERVALS AND AT MIDPOINTS UNLESS NOTED OTHERWISE.

PROJECT NO: 4997-00-64	HWY: CTH C	COUNTY: DOOR	PAVING GRADES	SHEET	E

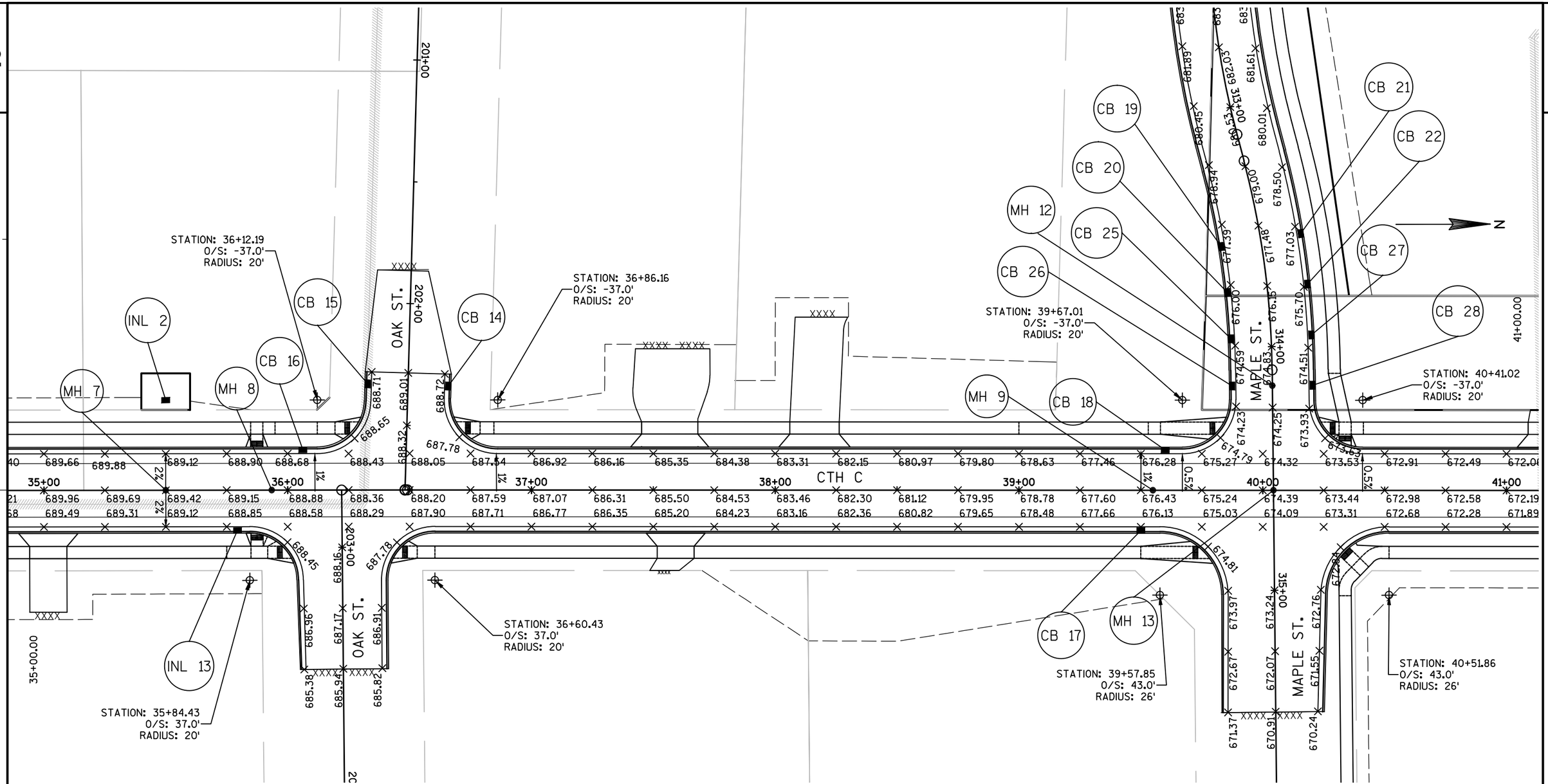

NOTE:

SEE STORM SEWER PLAN FOR
MANHOLE AND INLET RIM ELEVATIONS

PROJECT NO: 4997-00-64	HWY: CTH C	COUNTY: DOOR	PAVING GRADES	SHEET 27	E

2

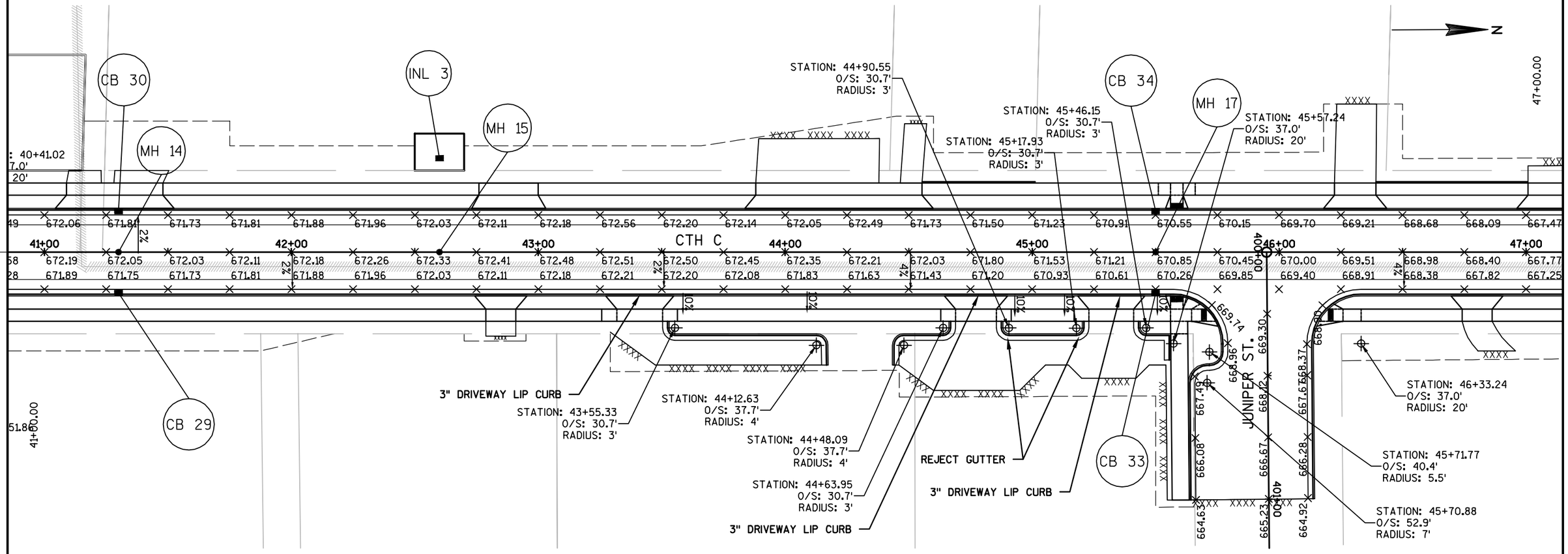

NOTE:

SEE STORM SEWER PLAN FOR
MANHOLE AND INLET RIM ELEVATIONS

PROJECT NO:4997-00-64	HWY:CTH C	COUNTY:DOOR	PAVING GRADES	SHEET	E

FILE NAME : L:\PROJECTS\12642\DWG\4997-00-63\SHEETSPLAN\021301_PG.DWG
LAYOUT NAME - 021301_PG - 021303_PG

PLOT DATE : 7/11/2017 11:27 AM PLOT BY : MOYER, TIM PLOT NAME : PLOT SCALE : 1" = 40'_XREF

WISDOT/CADDS SHEET 42

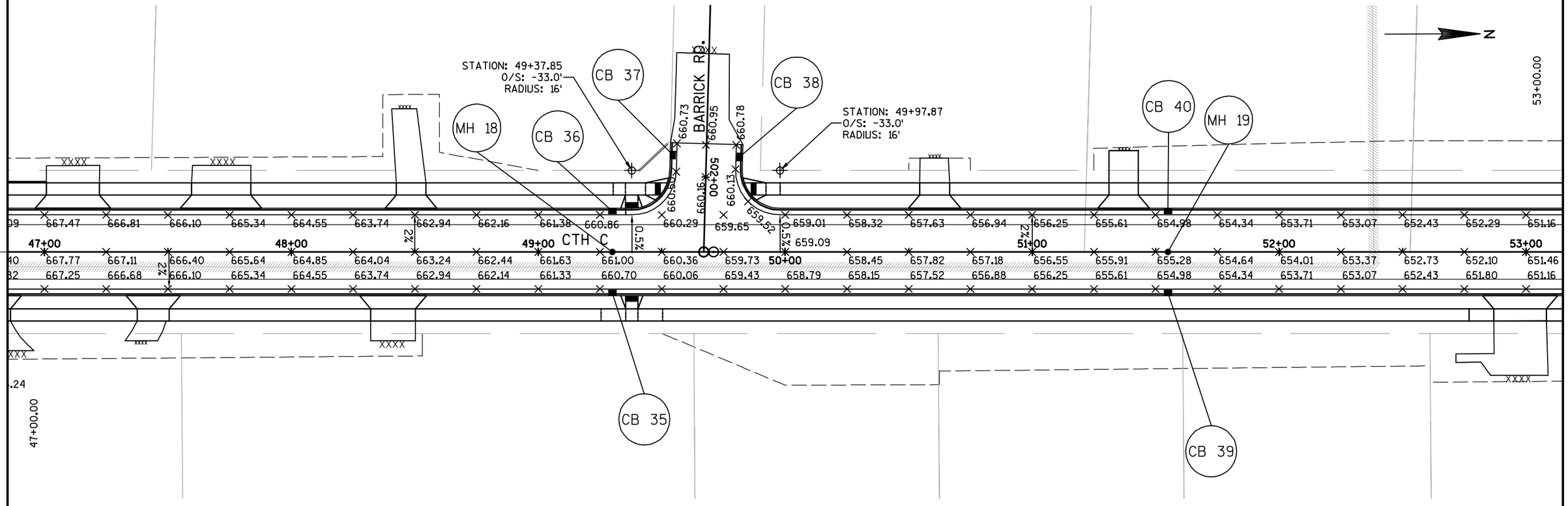

NOTE:

SEE STORM SEWER PLAN FOR
MANHOLE AND INLET RIM ELEVATIONS

PROJECT NO: 4997-00-64	HWY: CTH C	COUNTY: DOOR	PAVING GRADES	SHEET	E

FILE NAME : L:\PROJECTS\12642\DWG\4997-00-63\SHEETSPLAN\021301_PG.DWG
LAYOUT NAME - 021301_PG - 021304_PG

PLOT DATE : 7/11/2017 11:27 AM PLOT BY : MOYER, TIM PLOT NAME : PLOT SCALE : 1" = 40'_XREF

WISDOT/CADDS SHEET 42

2

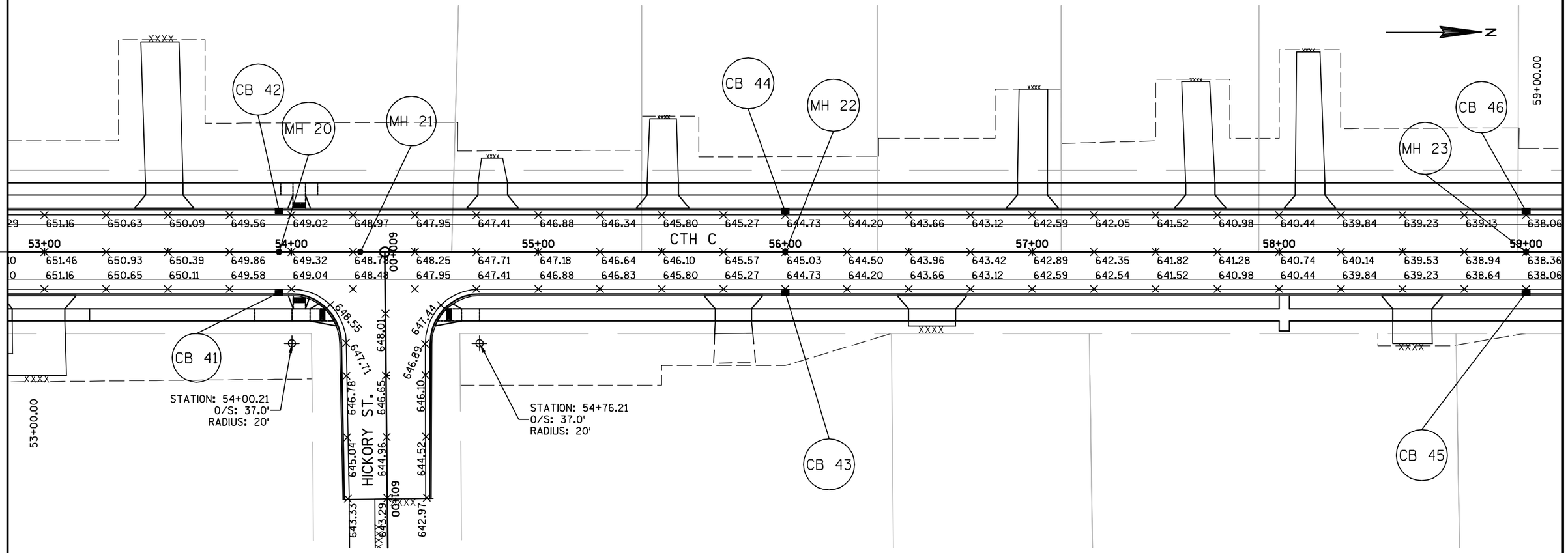

NOTE:

SEE STORM SEWER PLAN FOR
MANHOLE AND INLET RIM ELEVATIONS

PROJECT NO: 4997-00-64	HWY: CTH C	COUNTY: DOOR	PAVING GRADES	SHEET	E

2

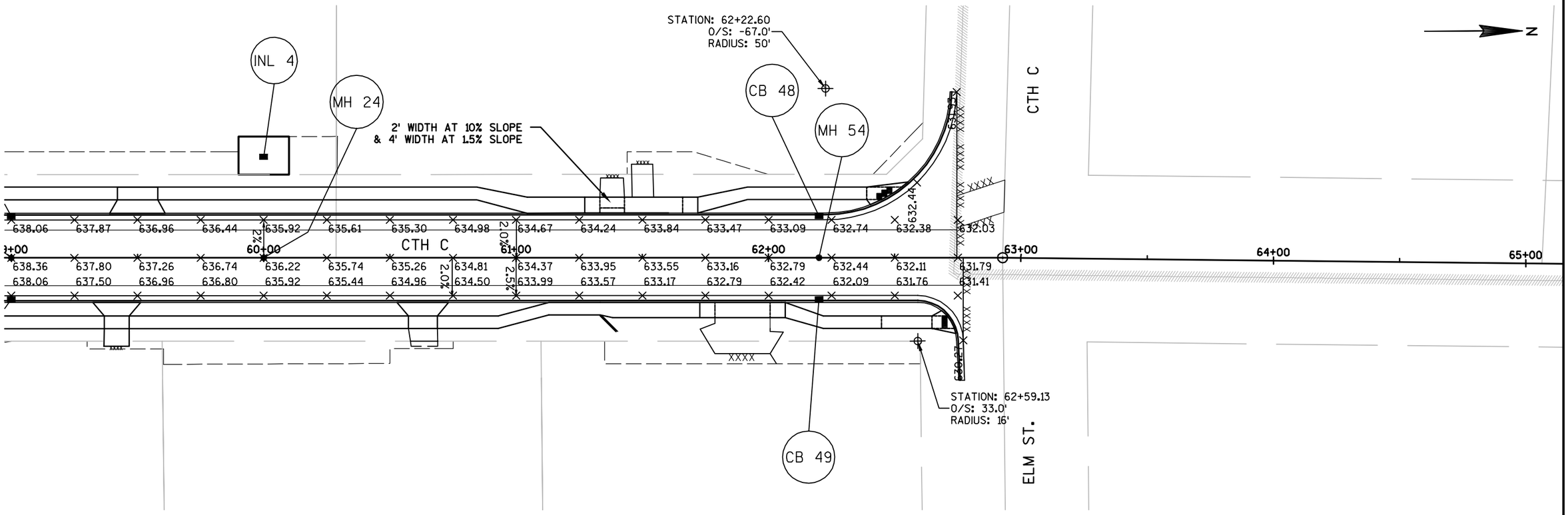

NOTE:

SEE STORM SEWER PLAN FOR
MANHOLE AND INLET RIM ELEVATIONS

PROJECT NO:4997-00-64	HWY:CTH C	COUNTY:DOOR	PAVING GRADES	SHEET	E

2

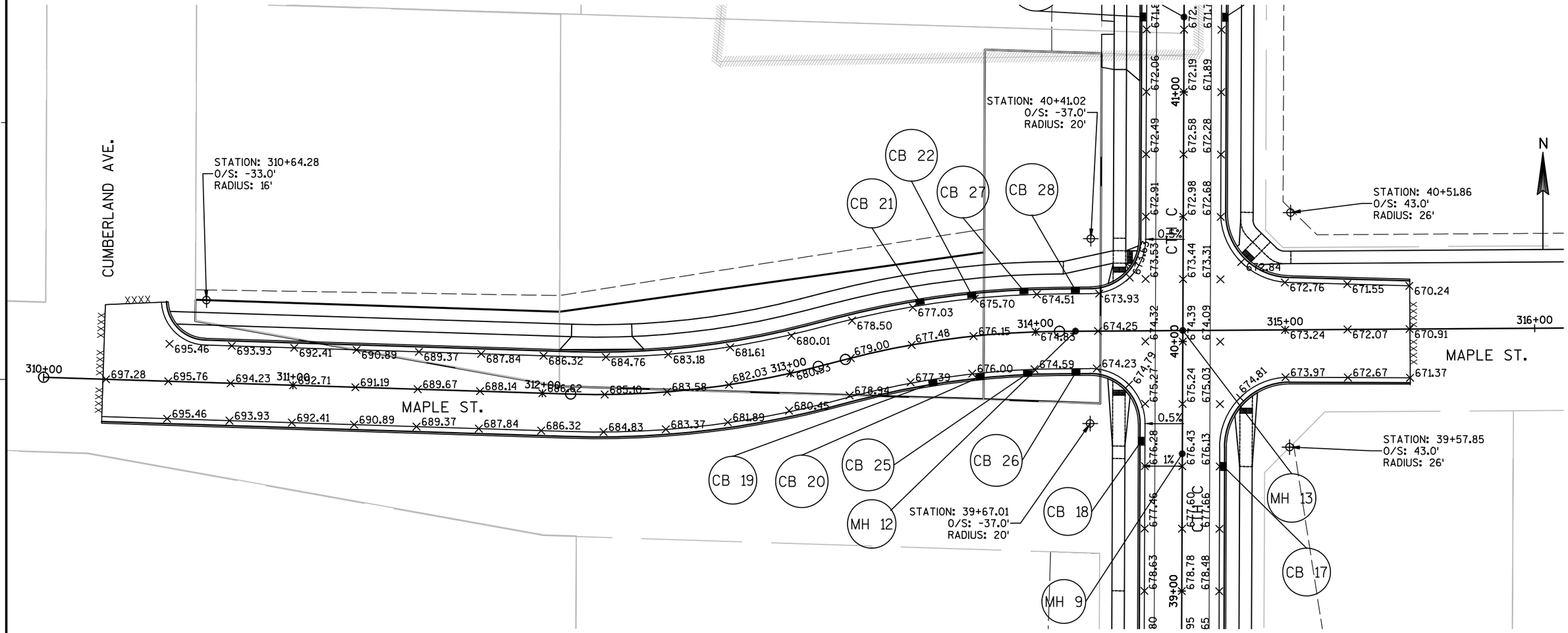

NOTE:

SEE STORM SEWER PLAN FOR
MANHOLE AND INLET RIM ELEVATIONS

PROJECT NO: 4997-00-64	HWY: CTH C	COUNTY: DOOR	PAVING GRADES	SHEET 32	E

2

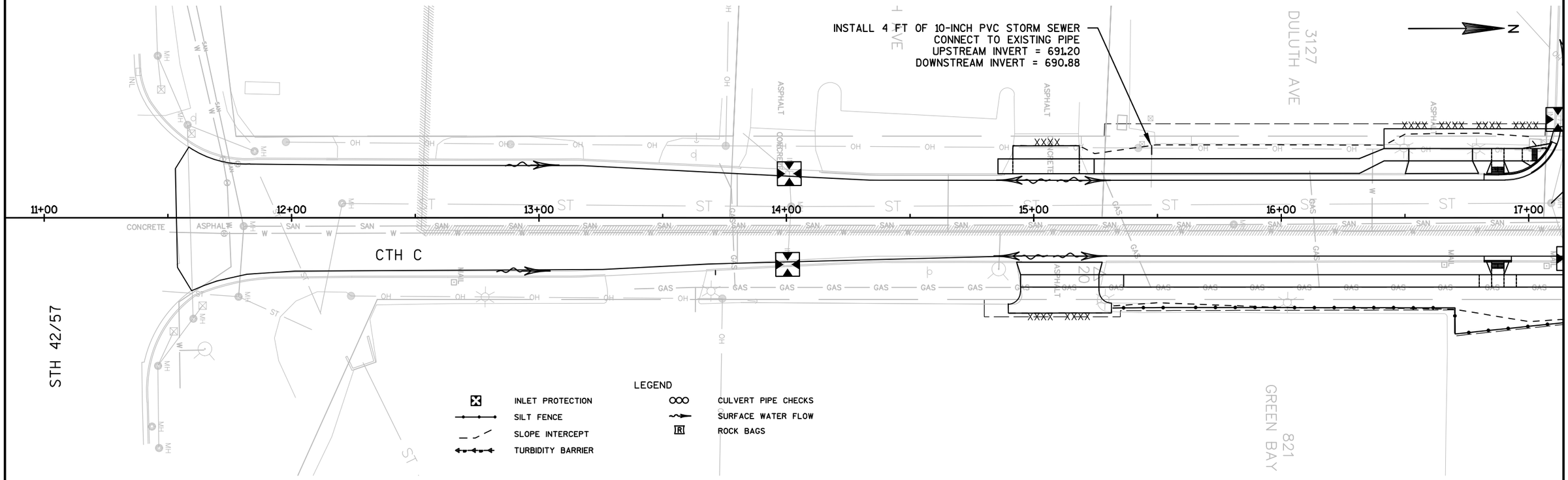

LEGEND

- INLET PROTECTION
- SILT FENCE
- SLOPE INTERCEPT
- TURBIDITY BARRIER
- CULVERT PIPE CHECKS
- SURFACE WATER FLOW
- ROCK BAGS

NOTES:

- INLET PROTECTION TYPE B IS REQUIRED AT ALL EXISTING INLETS WITHOUT A CURB BOX. INLET PROTECTION TYPE C IS REQUIRED AT ALL EXISTING INLETS WITH A CURB BOX. INLET PROTECTION TYPE A IS REQUIRED AT ALL NEW INLETS PRIOR TO INSTALLING CASTING. AFTER INSTALLING CASTING, INLET PROTECTION TYPE B IS REQUIRED AT ALL INLETS WITHOUT A CURB BOX. AFTER INSTALLING CASTING, INLET PROTECTION TYPE C REQUIRED AT ALL NEW INLETS WITH A CURB BOX.
- SEE TYPICAL SECTIONS FOR E-MAT AND MULCH LOCATIONS.
- ALL CONCRETE PIPE SHALL BE CLASS III UNLESS NOTED OTHERWISE.
- IF EXISTING WATER SERVICE LATERAL CONFLICTS WITH STORM SEWER, RELOCATE AND REPLACE WATER SERVICE FROM MAIN TO CURBSTOP. NOTIFY STURGEON BAY UTILITIES (SBU) WHEN CONFLICT IS FOUND AND DO NOT BEGIN RELOCATION AND REPLACEMENT UNTIL AUTHORIZATION FROM SBU. LOCATIONS FOR REPLACEMENT AND RELOCATION ARE NOTED IN THE MISC. QUANTITIES.

CONNECT NEW 12" STORM SEWER TO EXISTING MANHOLE
MODIFY MANHOLE OPENING AS NECESSARY TO ACCOMMODATE PIPE
FIELD VERIFY ELEVATION PRIOR TO STARTING WORK

CB 55 STA 17+36, 31.5' L
CATCH BASINS 2x3-H

MH 56 STA 21+21, 22.7' L
CATCH BASINS 4-H
INLET PROTECTION REQUIRED

MH 55 STA 21+76, 47.7' L
CATCH BASINS 4-H
INLET PROTECTION REQUIRED

MH 36 STA 21+76, 5.8' L
MANHOLES 5-J

MH 1 STA 21+50, 6.0' L
MANHOLES 5-J

CB 2 STA 21+40, 23.0' R
INLETS 2x3-H
INLET PROTECTION REQUIRED

CTH C

SPRUCE DR.

17+00 18+00 19+00 20+00 21+00 22+00 23+00

P1 P2 P3 P4 P5

N

NOTES:

- INLET PROTECTION TYPE B IS REQUIRED AT ALL EXISTING INLETS WITHOUT A CURB BOX. INLET PROTECTION TYPE C IS REQUIRED AT ALL EXISTING INLETS WITH A CURB BOX. INLET PROTECTION TYPE A IS REQUIRED AT ALL NEW INLETS PRIOR TO INSTALLING CASTING. AFTER INSTALLING CASTING, INLET PROTECTION TYPE B IS REQUIRED AT ALL INLETS WITHOUT A CURB BOX. AFTER INSTALLING CASTING, INLET PROTECTION TYPE C REQUIRED AT ALL NEW INLETS WITH A CURB BOX.
- SEE TYPICAL SECTIONS FOR E-MAT AND MULCH LOCATIONS.
- ALL CONCRETE PIPE SHALL BE CLASS III UNLESS NOTED OTHERWISE.
- IF EXISTING WATER SERVICE LATERAL CONFLICTS WITH STORM SEWER, RELOCATE AND REPLACE WATER SERVICE FROM MAIN TO CURBSTOP. NOTIFY STURGEON BAY UTILITIES (SBU) WHEN CONFLICT IS FOUND AND DO NOT BEGIN RELOCATION AND REPLACEMENT UNTIL AUTHORIZATION FROM SBU. LOCATIONS FOR REPLACEMENT AND RELOCATION ARE NOTED IN THE MISC. QUANTITIES.

LEGEND

- INLET PROTECTION
- SILT FENCE
- SLOPE INTERCEPT
- TURBIDITY BARRIER
- CULVERT PIPE CHECKS
- SURFACE WATER FLOW
- [R] ROCK BAGS

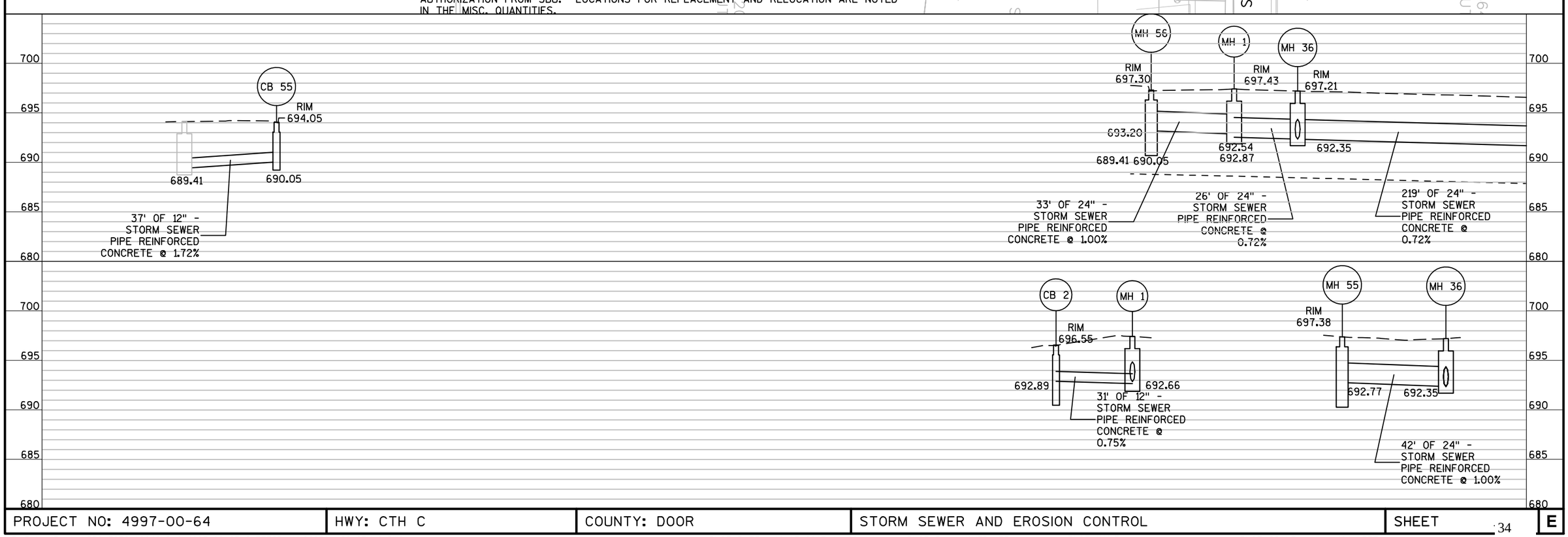

PROJECT NO: 4997-00-64	HWY: CTH C	COUNTY: DOOR	STORM SEWER AND EROSION CONTROL	SHEET 34	E

FILE NAME : L:\PROJECTS\12642\DWG\4997-00-63\SHEETSPLAN\022501_SS_CTH C.DWG
LAYOUT NAME - 022501_SS_CTH C - 022501_SS
PLOT DATE : 10/13/2017 11:20 AM PLOT BY : MOYER, TIM PLOT NAME : ---------- PLOT SCALE : 1" = 40'_XREF
WISDOT/CADDS SHEET 41

2

CB 50 STA 23+93, 22.8' L
CATCH BASINS 2x3-H
INLET PROTECTION
REQUIRED

CB 3 STA 24+00, 22.8' L
CATCH BASINS 2x3-H
INLET PROTECTION
REQUIRED

STA 26+92, 16.9' L
CATCH BASINS 2x3-H
INLET PROTECTION
REQUIRED
CB 51

CB 6 STA 27+00, 16.9' L
CATCH BASINS 2x3-H
INLET PROTECTION
REQUIRED

P3 P8 P5 P6 P12 P11 P13 P7 P10

23+00 24+00 25+00 26+00 27+00 28+00 29+00

MH 2 STA 23+95, 4.0' L
MANHOLES 4-J

MH 3 STA 27+00, 4.0' L
MANHOLES 4-J

CTH C

CB 4 STA 23+95, 22.9' R
CATCH BASINS 2x3-H
INLET PROTECTION
REQUIRED

CB 5 STA 27+00, 16.8' R
CATCH BASINS 2x3-H
INLET PROTECTION
REQUIRED

S. DULUTH 346

NOTES:

- INLET PROTECTION TYPE B IS REQUIRED AT ALL EXISTING INLETS WITHOUT A CURB BOX. INLET PROTECTION TYPE C IS REQUIRED AT ALL EXISTING INLETS WITH A CURB BOX. INLET PROTECTION TYPE A IS REQUIRED AT ALL NEW INLETS PRIOR TO INSTALLING CASTING. AFTER INSTALLING CASTING, INLET PROTECTION TYPE B IS REQUIRED AT ALL INLETS WITHOUT A CURB BOX. AFTER INSTALLING CASTING, INLET PROTECTION TYPE C REQUIRED AT ALL NEW INLETS WITH A CURB BOX.
- SEE TYPICAL SECTIONS FOR E-MAT AND MULCH LOCATIONS.
- ALL CONCRETE PIPE SHALL BE CLASS III UNLESS NOTED OTHERWISE.
- IF EXISTING WATER SERVICE LATERAL CONFLICTS WITH STORM SEWER, RELOCATE AND REPLACE WATER SERVICE FROM MAIN TO CURBSTOP. NOTIFY STURGEON BAY UTILITIES (SBU) WHEN CONFLICT IS FOUND AND DO NOT BEGIN RELOCATION AND REPLACEMENT UNTIL AUTHORIZATION FROM SBU. LOCATIONS FOR REPLACEMENT AND RELOCATION ARE NOTED IN THE MISC. QUANTITIES.

LEGEND

- INLET PROTECTION
- SILT FENCE
- SLOPE INTERCEPT
- TURBIDITY BARRIER
- CULVERT PIPE CHECKS
- SURFACE WATER FLOW
- ROCK BAGS

700 695 690 685 680

MH 2
RIM 695.72
690.77
690.77
305' OF 24" - STORM SEWER PIPE REINFORCED CONCRETE @ 0.35%
EX-8" - SAN
219' OF 24" - STORM SEWER PIPE REINFORCED CONCRETE @ 0.72%

MH 3
RIM 694.60
689.69
689.69
300' OF 24" - STORM SEWER PIPE REINFORCED CONCRETE @ 0.32%
EX 8" - SAN

CB 4
RIM 695.27
691.27
691.00
691.04
27' OF 12" - STORM SEWER PIPE REINFORCED CONCRETE @ 1.00%

MH 2
RIM 695.43

CB 3
691.23
691.48
19' OF 15" - STORM SEWER PIPE REINFORCED CONCRETE @ 1.00%

CB 50
RIM 695.55
691.55
7' OF 12" - STORM SEWER PIPE @ 1.00%

CB 5
RIM 694.38
690.38
690.17
689.87
21' OF 12" - STORM SEWER PIPE REINFORCED CONCRETE @ 1.00%

MH 3
RIM 694.39
690.00
690.24
13' OF 15" - STORM SEWER PIPE REINFORCED CONCRETE @ 1.00%

CB 6
RIM 694.32
690.32
8' OF 12" - STORM SEWER PIPE @ 1.00%

PROJECT NO: 4997-00-64	HWY: CTH C	COUNTY: DOOR	STORM SEWER AND EROSION CONTROL	SHEET 35	E

FILE NAME : L:\PROJECTS\12642\DWG\4997-00-63\SHEETSPLAN\022501_SS_CTH C.DWG
LAYOUT NAME - 022501_SS_CTH C - 022502_SS
PLOT DATE : 10/13/2017 11:21 AM PLOT BY : MOYER, TIM PLOT NAME : _____ PLOT SCALE : 1" = 40'_XREF
WISDOT/CADDS SHEET 41

2

LEGEND

- INLET PROTECTION
- SILT FENCE
- SLOPE INTERCEPT
- TURBIDITY BARRIER
- CULVERT PIPE CHECKS
- SURFACE WATER FLOW
- ROCK BAGS

N

CB 8 STA 30+00, 16.5' L
CATCH BASINS 2x3-H
INLET PROTECTION REQUIRED

INL 1 STA 32+10, 37.0' L
INLETS MEDIAN 2G-MS
INLET PROTECTION REQUIRED

CB 11 STA 33+15, 16.5' L
CATCH BASINS 2x3-H
INLET PROTECTION REQUIRED

P13 P14 P15 P16 P17 P18 P19 P20 P21

29+00 30+00 31+00 32+00 33+00 34+00 35+00

MH 4 STA 30+00, 0.0'
MANHOLES 4-J

MH 5 STA 32+10, 0.0'
MANHOLES 4-J

MH 6 STA 33+15, 0.0'
MANHOLES 5-J

CTH C

CB 7 STA 30+00, 16.5' R
CATCH BASINS 2x3-H
INLET PROTECTION REQUIRED

CB 10 STA 33+15, 16.5' R
CATCH BASINS 2x3-H
INLET PROTECTION REQUIRED

NOTES:

- INLET PROTECTION TYPE B IS REQUIRED AT ALL EXISTING INLETS WITHOUT A CURB BOX. INLET PROTECTION TYPE C IS REQUIRED AT ALL EXISTING INLETS WITH A CURB BOX. INLET PROTECTION TYPE A IS REQUIRED AT ALL NEW INLETS PRIOR TO INSTALLING CASTING. AFTER INSTALLING CASTING, INLET PROTECTION TYPE B IS REQUIRED AT ALL INLETS WITHOUT A CURB BOX. AFTER INSTALLING CASTING, INLET PROTECTION TYPE C REQUIRED AT ALL NEW INLETS WITH A CURB BOX.
- SEE TYPICAL SECTIONS FOR E-MAT AND MULCH LOCATIONS.
- ALL CONCRETE PIPE SHALL BE CLASS III UNLESS NOTED OTHERWISE.
- IF EXISTING WATER SERVICE LATERAL CONFLICTS WITH STORM SEWER, RELOCATE AND REPLACE WATER SERVICE FROM MAIN TO CURBSTOP. NOTIFY STURGEON BAY UTILITIES (SBU) WHEN CONFLICT IS FOUND AND DO NOT BEGIN RELOCATION AND REPLACEMENT UNTIL AUTHORIZATION FROM SBU. LOCATIONS FOR REPLACEMENT AND RELOCATION ARE NOTED IN THE MISC. QUANTITIES.

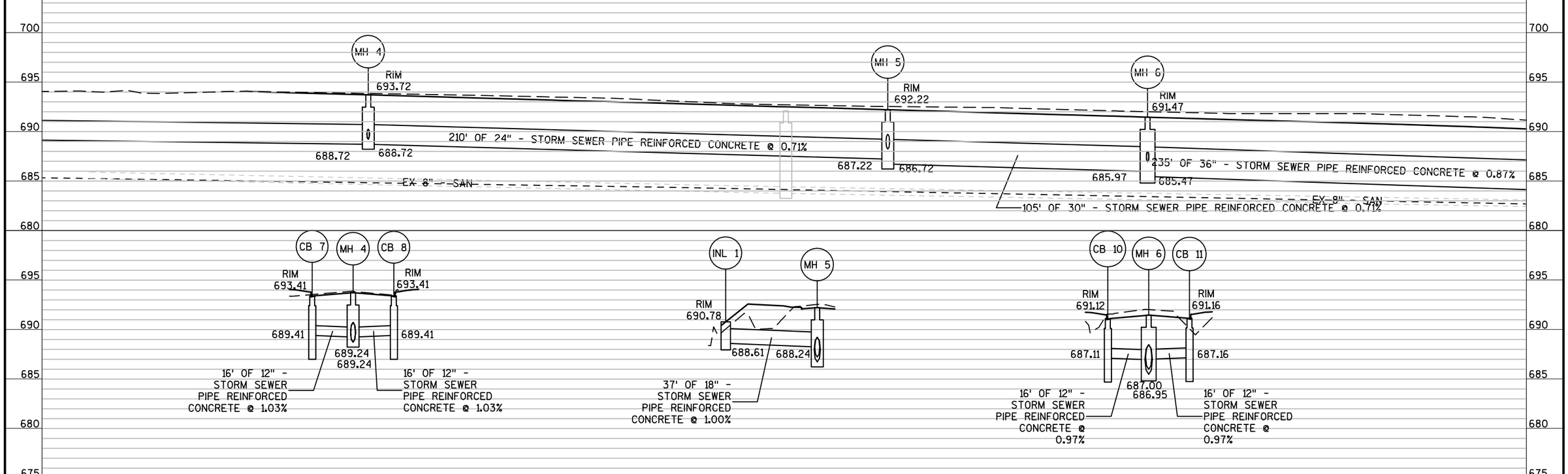

PROJECT NO: 4997-00-64	HWY: CTH C	COUNTY: DOOR	STORM SEWER AND EROSION CONTROL	SHEET 36	E

FILE NAME : L:\PROJECTS\12642\DWG\4997-00-63\SHEETSPLAN\022501_SS_CTH C.DWG
LAYOUT NAME - 022501_SS_CTH C - 022503_SS
PLOT DATE : 10/13/2017 11:21 AM PLOT BY : MOYER, TIM PLOT NAME : _____ PLOT SCALE : 1" = 40'_XREF
WISDOT/CADDS SHEET 41

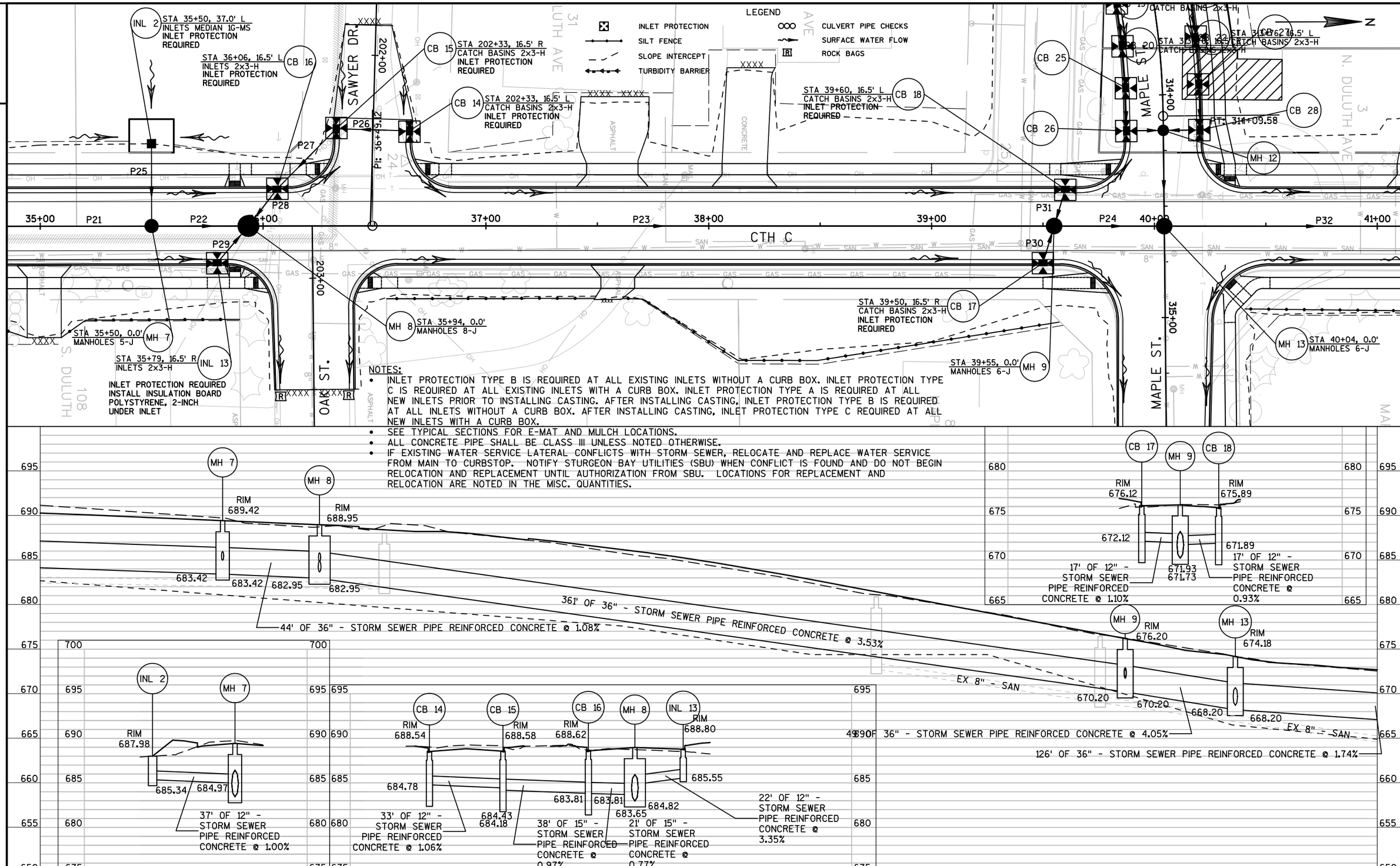

NOTES:

- INLET PROTECTION TYPE B IS REQUIRED AT ALL EXISTING INLETS WITHOUT A CURB BOX. INLET PROTECTION TYPE C IS REQUIRED AT ALL EXISTING INLETS WITH A CURB BOX. INLET PROTECTION TYPE A IS REQUIRED AT ALL NEW INLETS PRIOR TO INSTALLING CASTING. AFTER INSTALLING CASTING, INLET PROTECTION TYPE B IS REQUIRED AT ALL INLETS WITHOUT A CURB BOX. AFTER INSTALLING CASTING, INLET PROTECTION TYPE C REQUIRED AT ALL NEW INLETS WITH A CURB BOX.
- SEE TYPICAL SECTIONS FOR E-MAT AND MULCH LOCATIONS.
- ALL CONCRETE PIPE SHALL BE CLASS III UNLESS NOTED OTHERWISE.
- IF EXISTING WATER SERVICE LATERAL CONFLICTS WITH STORM SEWER, RELOCATE AND REPLACE WATER SERVICE FROM MAIN TO CURBSTOP. NOTIFY STURGEON BAY UTILITIES (SBU) WHEN CONFLICT IS FOUND AND DO NOT BEGIN RELOCATION AND REPLACEMENT UNTIL AUTHORIZATION FROM SBU. LOCATIONS FOR REPLACEMENT AND RELOCATION ARE NOTED IN THE MISC. QUANTITIES.

PROJECT NO: 4997-00-64	HWY: CTH C	COUNTY: DOOR	STORM SEWER AND EROSION CONTROL	SHEET 37	E

NOTES:

- INLET PROTECTION TYPE B IS REQUIRED AT ALL EXISTING INLETS WITHOUT A CURB BOX. INLET PROTECTION TYPE C IS REQUIRED AT ALL EXISTING INLETS WITH A CURB BOX. INLET PROTECTION TYPE A IS REQUIRED AT ALL NEW INLETS PRIOR TO INSTALLING CASTING. AFTER INSTALLING CASTING, INLET PROTECTION TYPE B IS REQUIRED AT ALL INLETS WITHOUT A CURB BOX. AFTER INSTALLING CASTING, INLET PROTECTION TYPE C REQUIRED AT ALL NEW INLETS WITH A CURB BOX.
- SEE TYPICAL SECTIONS FOR E-MAT AND MULCH LOCATIONS.
- ALL CONCRETE PIPE SHALL BE CLASS III UNLESS NOTED OTHERWISE.
- IF EXISTING WATER SERVICE LATERAL CONFLICTS WITH STORM SEWER, RELOCATE AND REPLACE WATER SERVICE FROM MAIN TO CURBSTOP. NOTIFY STURGEON BAY UTILITIES (SBU) WHEN CONFLICT IS FOUND AND DO NOT BEGIN RELOCATION AND REPLACEMENT UNTIL AUTHORIZATION FROM SBU. LOCATIONS FOR REPLACEMENT AND RELOCATION ARE NOTED IN THE MISC. QUANTITIES.

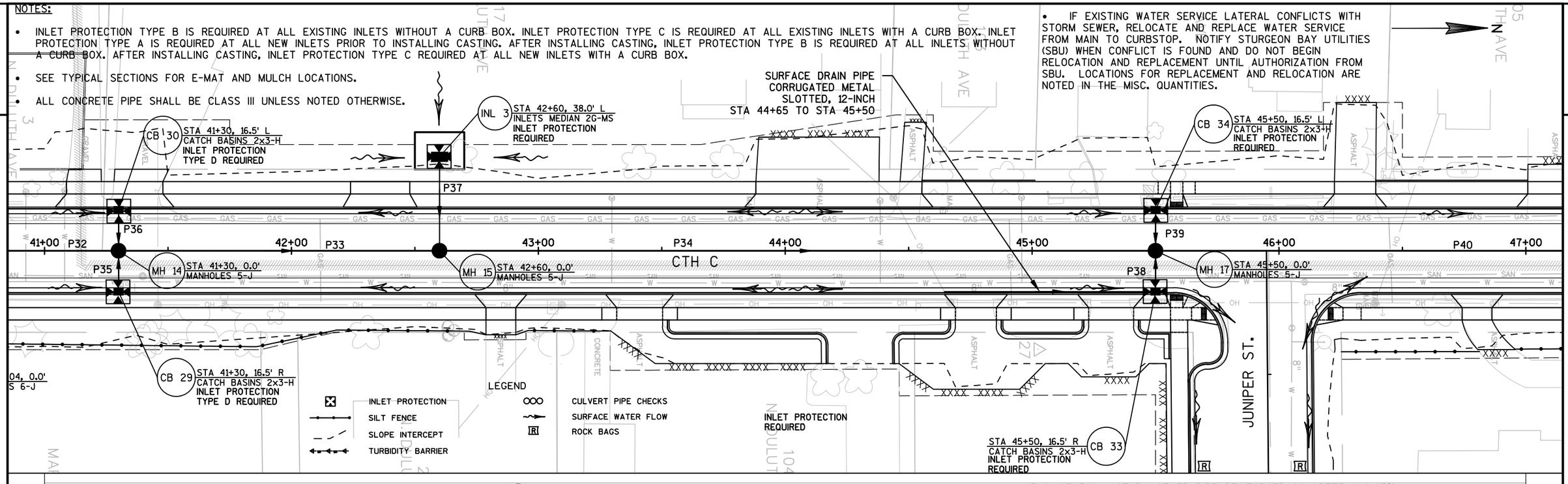

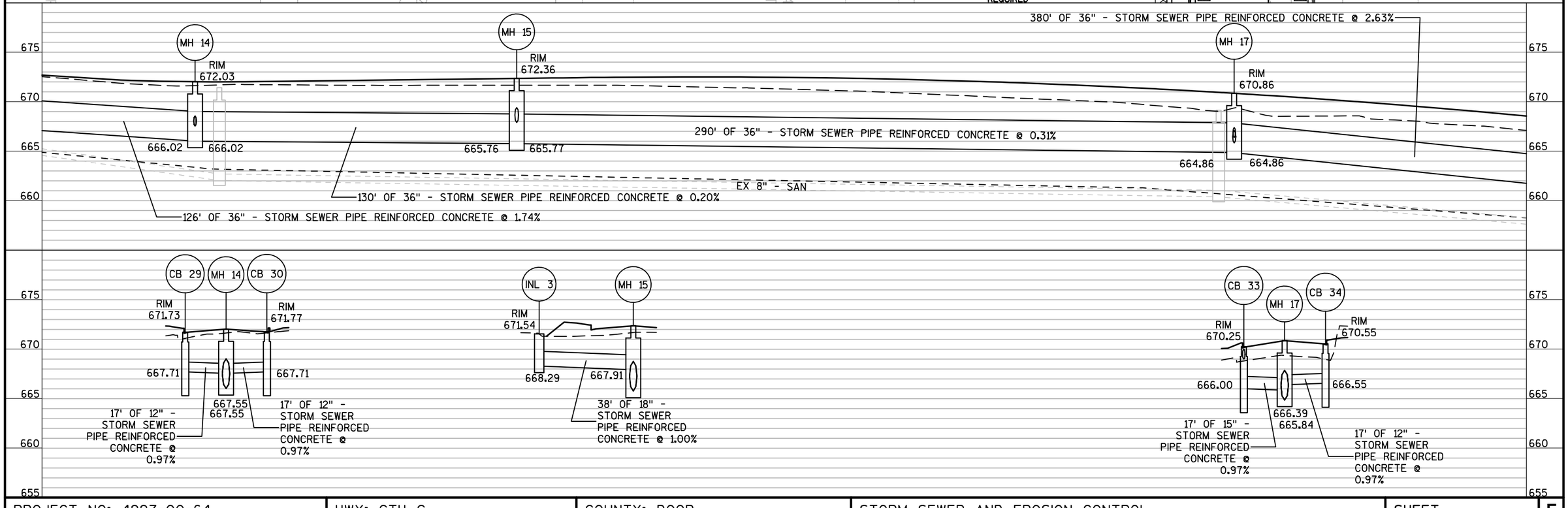

PROJECT NO: 4997-00-64	HWY: CTH C	COUNTY: DOOR	STORM SEWER AND EROSION CONTROL	SHEET 38	E

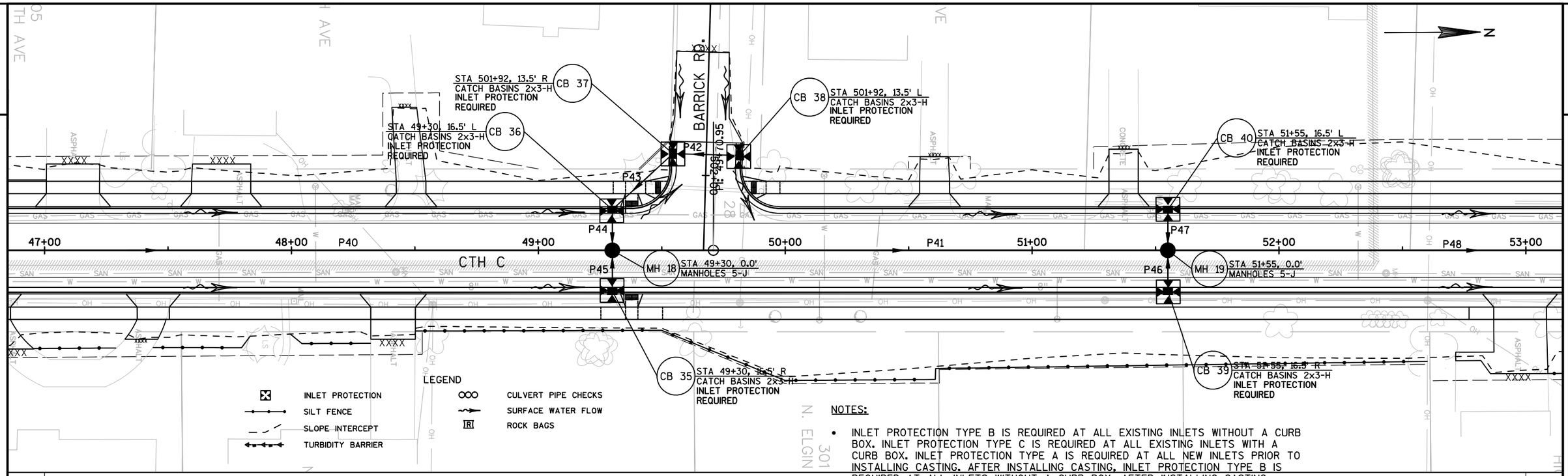

NOTES:

- INLET PROTECTION TYPE B IS REQUIRED AT ALL EXISTING INLETS WITHOUT A CURB BOX. INLET PROTECTION TYPE C IS REQUIRED AT ALL EXISTING INLETS WITH A CURB BOX. INLET PROTECTION TYPE A IS REQUIRED AT ALL NEW INLETS PRIOR TO INSTALLING CASTING. AFTER INSTALLING CASTING, INLET PROTECTION TYPE B IS REQUIRED AT ALL INLETS WITHOUT A CURB BOX. AFTER INSTALLING CASTING, INLET PROTECTION TYPE C REQUIRED AT ALL NEW INLETS WITH A CURB BOX.
- SEE TYPICAL SECTIONS FOR E-MAT AND MULCH LOCATIONS.
- ALL CONCRETE PIPE SHALL BE CLASS III UNLESS NOTED OTHERWISE.
- IF EXISTING WATER SERVICE LATERAL CONFLICTS WITH STORM SEWER, RELOCATE AND REPLACE WATER SERVICE FROM MAIN TO CURBSTOP. NOTIFY STURGEON BAY UTILITIES (SBU) WHEN CONFLICT IS FOUND AND DO NOT BEGIN RELOCATION AND REPLACEMENT UNTIL AUTHORIZATION FROM SBU. LOCATIONS FOR REPLACEMENT AND RELOCATION ARE NOTED IN THE MISC. QUANTITIES.

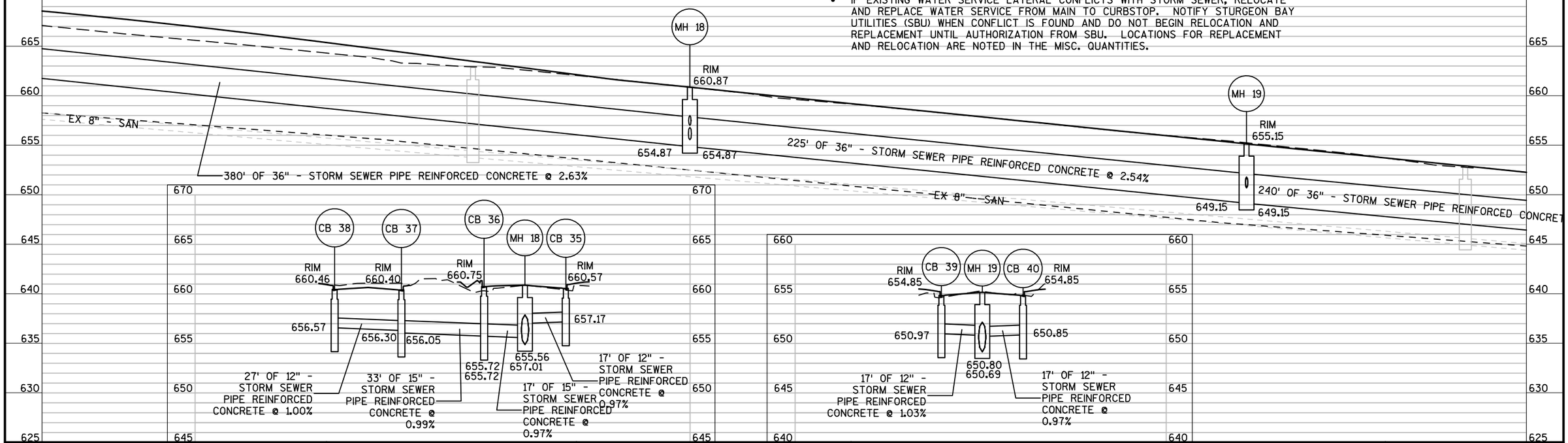

PROJECT NO: 4997-00-64	HWY: CTH C	COUNTY: DOOR	STORM SEWER AND EROSION CONTROL	SHEET 39	E

FILE NAME : L:\PROJECTS\12642\DWG\4997-00-63\SHEETSPLAN\022501_SS_CTH C.DWG
LAYOUT NAME - 022501_SS_CTH C - 022506_SS
PLOT DATE : 10/13/2017 11:22 AM PLOT BY : MOYER, TIM PLOT NAME : _____ PLOT SCALE : 1" = 40'_XREF
WISDOT/CADDS SHEET 41

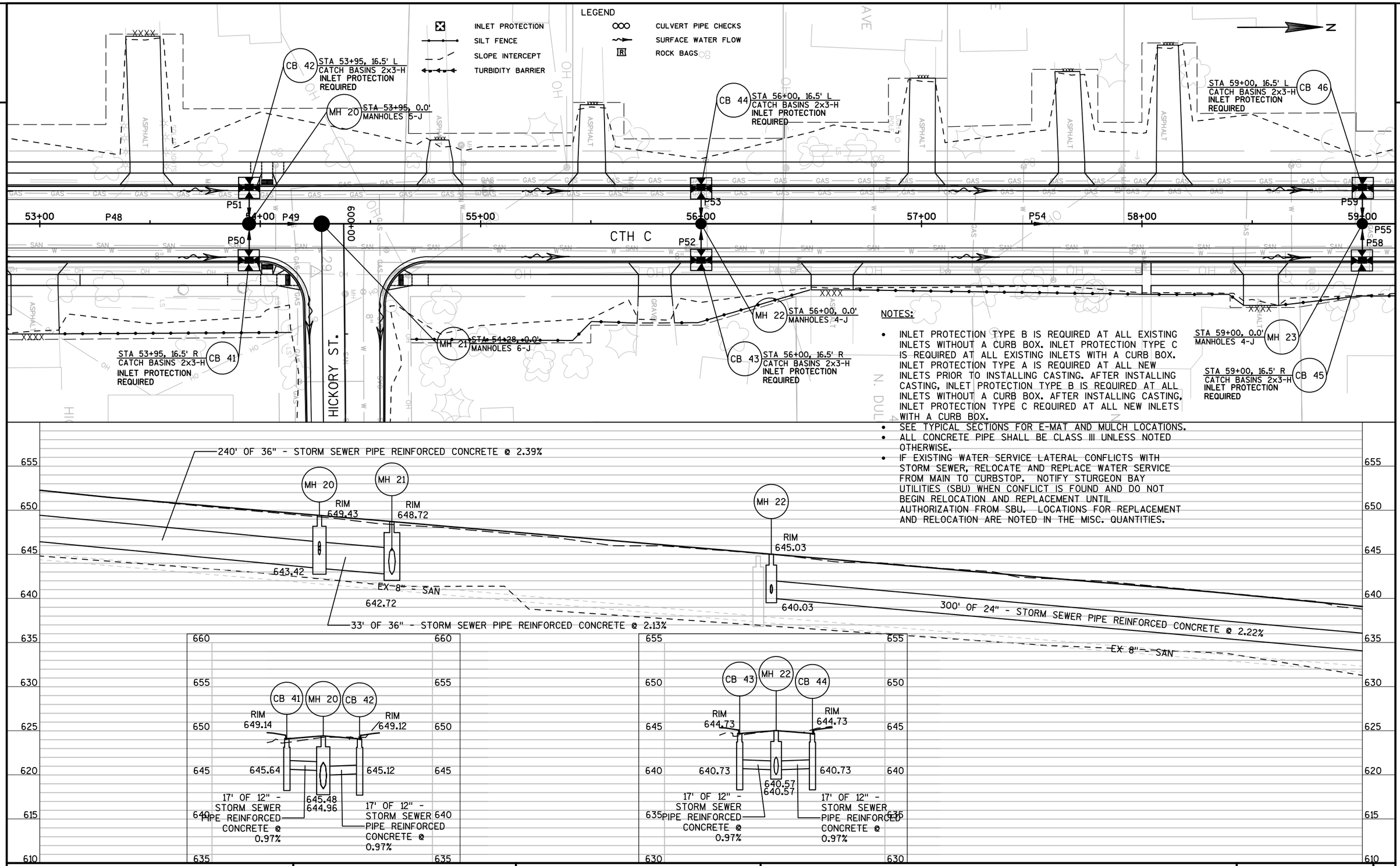

NOTES:

- INLET PROTECTION TYPE B IS REQUIRED AT ALL EXISTING INLETS WITHOUT A CURB BOX. INLET PROTECTION TYPE C IS REQUIRED AT ALL EXISTING INLETS WITH A CURB BOX. INLET PROTECTION TYPE A IS REQUIRED AT ALL NEW INLETS PRIOR TO INSTALLING CASTING. AFTER INSTALLING CASTING, INLET PROTECTION TYPE B IS REQUIRED AT ALL INLETS WITHOUT A CURB BOX. AFTER INSTALLING CASTING, INLET PROTECTION TYPE C REQUIRED AT ALL NEW INLETS WITH A CURB BOX.
- SEE TYPICAL SECTIONS FOR E-MAT AND MULCH LOCATIONS.
- ALL CONCRETE PIPE SHALL BE CLASS III UNLESS NOTED OTHERWISE.
- IF EXISTING WATER SERVICE LATERAL CONFLICTS WITH STORM SEWER, RELOCATE AND REPLACE WATER SERVICE FROM MAIN TO CURBSTOP. NOTIFY STURGEON BAY UTILITIES (SBU) WHEN CONFLICT IS FOUND AND DO NOT BEGIN RELOCATION AND REPLACEMENT UNTIL AUTHORIZATION FROM SBU. LOCATIONS FOR REPLACEMENT AND RELOCATION ARE NOTED IN THE MISC. QUANTITIES.

PROJECT NO: 4997-00-64	HWY: CTH C	COUNTY: DOOR	STORM SEWER AND EROSION CONTROL	SHEET 40	E

CONNECT NEW 24" STORM SEWER TO EXISTING MANHOLE
MODIFY MANHOLE OPENING AS NECESSARY TO ACCOMMODATE PIPE
FIELD VERIFY ELEVATION PRIOR TO STARTING WORK

ABANDON STORM SEWER (18")
REMOVING INLETS

CB 46 — STA 59+00, 16.5' L — CATCH BASINS 2x3-H — INLET PROTECTION REQUIRED

INL 4 — STA 60+00, 40.0' L — INLETS MEDIAN 2G-MS — INLET PROTECTION REQUIRED

STA 62+20, 16.5' L — CATCH BASINS 2x3-H — INLET PROTECTION REQUIRED — CB 48

MH 23 — STA 59+00, 0.0' — MANHOLES 4-J

ABANDON STORM SEWER (15")

P59 P60 P55 P56 P57 P62 P58 P61

59+00 60+00 61+00 62+00 63+00 64+00 65+00

CTH C

CB 45 — STA 59+00, 16.5' R — CATCH BASINS 2x3-H — INLET PROTECTION REQUIRED

MH 24 — STA 60+00, 0.0' — MANHOLES 4-J

STA 62+20, 0.0' — MANHOLES 4-J — MH 54

STA 62+20, 16.5' R — CATCH BASINS 2x3-H — INLET PROTECTION REQUIRED — CB 49

00+80.62+92.78

703+00

ELM ST.

N. DULUTH

518

525

S 1ST ST

HUDSON

NOTES:

- INLET PROTECTION TYPE B IS REQUIRED AT ALL EXISTING INLETS WITHOUT A CURB BOX. INLET PROTECTION TYPE C IS REQUIRED AT ALL EXISTING INLETS WITH A CURB BOX. INLET PROTECTION TYPE A IS REQUIRED AT ALL NEW INLETS PRIOR TO INSTALLING CASTING. AFTER INSTALLING CASTING, INLET PROTECTION TYPE B IS REQUIRED AT ALL INLETS WITHOUT A CURB BOX. AFTER INSTALLING CASTING, INLET PROTECTION TYPE C REQUIRED AT ALL NEW INLETS WITH A CURB BOX.
- SEE TYPICAL SECTIONS FOR E-MAT AND MULCH LOCATIONS.
- ALL CONCRETE PIPE SHALL BE CLASS III UNLESS NOTED OTHERWISE.
- IF EXISTING WATER SERVICE LATERAL CONFLICTS WITH STORM SEWER, RELOCATE AND REPLACE WATER SERVICE FROM MAIN TO CURBSTOP. NOTIFY STURGEON BAY UTILITIES (SBU) WHEN CONFLICT IS FOUND AND DO NOT BEGIN RELOCATION AND REPLACEMENT UNTIL AUTHORIZATION FROM SBU. LOCATIONS FOR REPLACEMENT AND RELOCATION ARE NOTED IN THE MISC. QUANTITIES.

LEGEND

- INLET PROTECTION
- SILT FENCE
- SLOPE INTERCEPT
- TURBIDITY BARRIER
- CULVERT PIPE CHECKS
- SURFACE WATER FLOW
- ROCK BAGS

100' OF 24" - STORM SEWER PIPE REINFORCED CONCRETE @ 2.14%

MH 23 — RIM 638.36 — 633.36 — 633.36

MH 24 — RIM 636.22 — 631.22 — 631.22

220' OF 24" - STORM SEWER PIPE REINFORCED CONCRETE CLASS IV @ 1.35%

MH 54 — RIM 632.51 — 628.26 — 628.26

CONNECT NEW 24" STORM SEWER TO EXISTING MANHOLE
MODIFY MANHOLE OPENING AS NECESSARY TO ACCOMMODATE PIPE
FIELD VERIFY ELEVATION PRIOR TO STARTING WORK

627.91

EX 8" SAN

76' OF 24" - STORM SEWER PIPE REINFORCED CONCRETE CLASS IV@ 0.46%

CB 45 — RIM 638.06 — 634.06 — 633.90 633.90

17' OF 12" - STORM SEWER PIPE REINFORCED CONCRETE @ 0.97%

MH 23 — CB 46 — RIM 638.06 — 634.06

17' OF 12" - STORM SEWER PIPE REINFORCED CONCRETE @ 0.97%

INL 4 — RIM 634.19 — 632.17

MH 24 — 631.77

40' OF 18" - STORM SEWER PIPE REINFORCED CONCRETE @ 1.00%

CB 49 — RIM 632.13 — 628.72

MH 54 — 628.52 628.56

CB 48 — RIM 632.59 — 628.69

17' OF 12" - STORM SEWER PIPE REINFORCED CONCRETE @ 1.00%

17' OF 12" - STORM SEWER PIPE REINFORCED CONCRETE @ 1.00%

PROJECT NO: 4997-00-64	HWY: CTH C	COUNTY: DOOR	STORM SEWER AND EROSION CONTROL	SHEET 41	E

LEGEND

- INLET PROTECTION
- SILT FENCE
- SLOPE INTERCEPT
- TURBIDITY BARRIER
- CULVERT PIPE CHECKS
- SURFACE WATER FLOW
- ROCK BAGS

NOTES:

- INLET PROTECTION TYPE B IS REQUIRED AT ALL EXISTING INLETS WITHOUT A CURB BOX. INLET PROTECTION TYPE C IS REQUIRED AT ALL EXISTING INLETS WITH A CURB BOX. INLET PROTECTION TYPE A IS REQUIRED AT ALL NEW INLETS PRIOR TO INSTALLING CASTING. AFTER INSTALLING CASTING, INLET PROTECTION TYPE B IS REQUIRED AT ALL INLETS WITHOUT A CURB BOX. AFTER INSTALLING CASTING, INLET PROTECTION TYPE C REQUIRED AT ALL NEW INLETS WITH A CURB BOX.
- SEE TYPICAL SECTIONS FOR E-MAT AND MULCH LOCATIONS.
- ALL CONCRETE PIPE SHALL BE CLASS III UNLESS NOTED OTHERWISE.
- IF EXISTING WATER SERVICE LATERAL CONFLICTS WITH STORM SEWER, RELOCATE AND REPLACE WATER SERVICE FROM MAIN TO CURBSTOP. NOTIFY STURGEON BAY UTILITIES (SBU) WHEN CONFLICT IS FOUND AND DO NOT BEGIN RELOCATION AND REPLACEMENT UNTIL AUTHORIZATION FROM SBU. LOCATIONS FOR REPLACEMENT AND RELOCATION ARE NOTED IN THE MISC. QUANTITIES.

818 HICKORY ST

CTH C

55+00

MH 21

600+00

601+00

602+00

603+00

604+00

605+00

HICKORY ST.

10.37'

10.50'

5.01'

CB 42

CB 41

MH 20

ELGIN AVE.

MH 27 STA 603+27, 10.1' R
MANHOLES 5-J

CB 53 STA 603+27, 16.6' R
INLETS 2x3-H
INLET PROTECTION REQUIRED

MH 35 STA 604+78, 10.4' R
MANHOLES 5-J

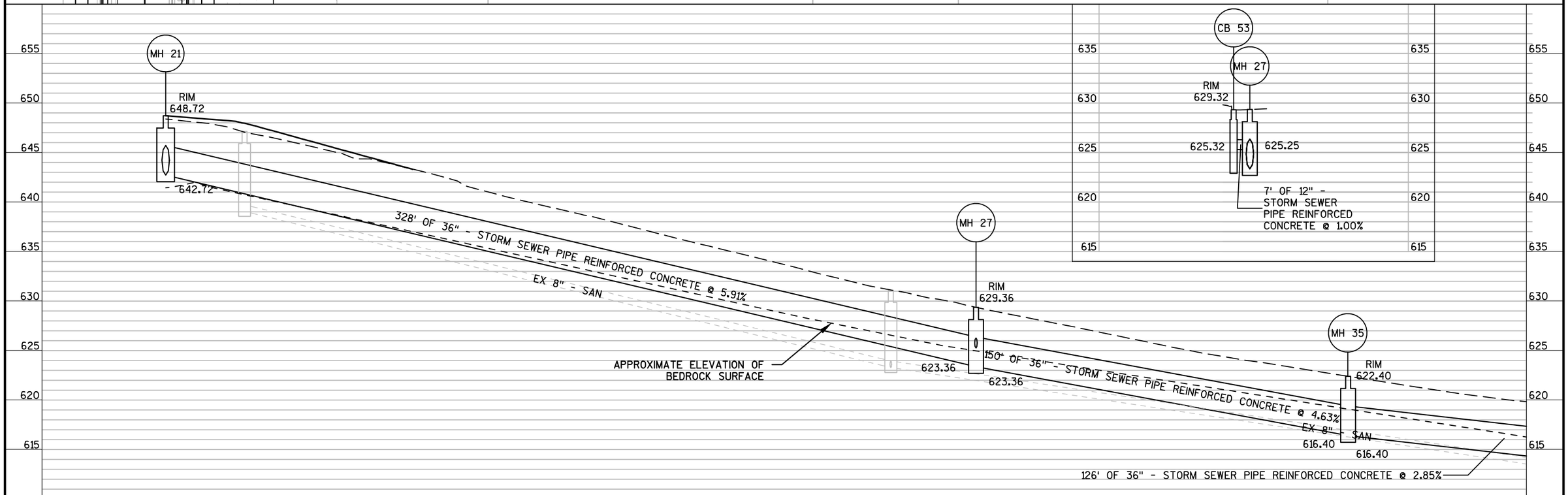

PROJECT NO: 4997-00-64	HWY: CTH C	COUNTY: DOOR	STORM SEWER AND EROSION CONTROL HICKORY ST.	SHEET 42	E

NOTES:

- INLET PROTECTION TYPE B IS REQUIRED AT ALL EXISTING INLETS WITHOUT A CURB BOX. INLET PROTECTION TYPE C IS REQUIRED AT ALL EXISTING INLETS WITH A CURB BOX. INLET PROTECTION TYPE A IS REQUIRED AT ALL NEW INLETS PRIOR TO INSTALLING CASTING. AFTER INSTALLING CASTING, INLET PROTECTION TYPE B IS REQUIRED AT ALL INLETS WITHOUT A CURB BOX. AFTER INSTALLING CASTING, INLET PROTECTION TYPE C REQUIRED AT ALL NEW INLETS WITH A CURB BOX.
- SEE TYPICAL SECTIONS FOR E-MAT AND MULCH LOCATIONS.
- ALL CONCRETE PIPE SHALL BE CLASS III UNLESS NOTED OTHERWISE.
- IF EXISTING WATER SERVICE LATERAL CONFLICTS WITH STORM SEWER, RELOCATE AND REPLACE WATER SERVICE FROM MAIN TO CURBSTOP. NOTIFY STURGEON BAY UTILITIES (SBU) WHEN CONFLICT IS FOUND AND DO NOT BEGIN RELOCATION AND REPLACEMENT UNTIL AUTHORIZATION FROM SBU. LOCATIONS FOR REPLACEMENT AND RELOCATION ARE NOTED IN THE MISC. QUANTITIES.

N

MH 28 STA 606+04, 10.6' R
MANHOLES 6-J

REMOVE EXISTING STORM SEWER (12")

REMOVING MANHOLE

REMOVE EXISTING STORM SEWER (12")

MH 29 STA 606+62, 10.9' R
MANHOLES 6-J

FULTON AVE.

HICKORY ST.

REMOVE EXISTING STORM SEWER (12")

REMOVING MANHOLE

MH 30 STA 609+94, 10.6' R
MANHOLES 6-J

GENEVA AVE.

STA 611+30, 11.2' R
MANHOLES 6-J MH 31

REMOVING MANHOLE

606+00 607+00 608+00 609+00 610+00 611+00

10.22' 5.00' 10.11' 5.00' 9.97'

LEGEND

- INLET PROTECTION
- SILT FENCE
- SLOPE INTERCEPT
- TURBIDITY BARRIER
- CULVERT PIPE CHECKS
- SURFACE WATER FLOW
- ROCK BAGS

MH 28
RIM 618.81
612.81
612.31
126' OF 36" - STORM SEWER PIPE REINFORCED CONCRETE @ 2.85%

MH 29
RIM 618.29
611.79
611.79
EX 12" - STORM
58' OF 42" - STORM SEWER PIPE REINFORCED CONCRETE @ 0.90%

APPROXIMATE ELEVATION OF BEDROCK SURFACE

MH 30
RIM 617.41
610.91
610.91
EX 12" - STORM
EX 8" - SAN
333' OF 42" - STORM SEWER PIPE REINFORCED CONCRETE @ 0.26%

MH 31
RIM 616.74
610.24
610.24
EX 12" STORM
136' OF 42" - STORM SEWER PIPE REINFORCED CONCRETE @ 0.49%

MH 28
614.46
614.28
614.55
614.46
5' OF 12" - STORM SEWER PIPE REINFORCED CONCRETE @ 3.48%
8' OF 12" - STORM SEWER PIPE REINFORCED CONCRETE @ 1.08%

MH 29
613.84
613.56
8' OF 12" - STORM SEWER PIPE REINFORCED CONCRETE @ 3.47%

MH 30
612.75
612.37
8' OF 12" - STORM SEWER PIPE REINFORCED CONCRETE @ 4.71%

MH 31
613.16
612.69
612.37
612.27
5' OF 12" - STORM SEWER PIPE REINFORCED CONCRETE @ 9.77%
9' OF 12" - STORM SEWER PIPE REINFORCED CONCRETE @ 1.12%

625 620 615 610 605 600

PROJECT NO: 4997-00-64	HWY: CTH C	COUNTY: DOOR	STORM SEWER AND EROSION CONTROL HICKORY ST.	SHEET 43	E

FILE NAME : L:\PROJECTS\12642\DWG\4997-00-63\SHEETSPLAN\022501_SS_HICKORY ST.DWG
LAYOUT NAME - 022501_SS_HICKORY ST - 022502_SS
PLOT DATE : 10/13/2017 11:42 AM PLOT BY : MOYER, TIM PLOT NAME : ---------- PLOT SCALE : 1" = 40'_XREF
WISDOT/CADDS SHEET 41

NOTES:

- INLET PROTECTION TYPE B IS REQUIRED AT ALL EXISTING INLETS WITHOUT A CURB BOX. INLET PROTECTION TYPE C IS REQUIRED AT ALL EXISTING INLETS WITH A CURB BOX. INLET PROTECTION TYPE A IS REQUIRED AT ALL NEW INLETS PRIOR TO INSTALLING CASTING. AFTER INSTALLING CASTING, INLET PROTECTION TYPE B IS REQUIRED AT ALL INLETS WITHOUT A CURB BOX. AFTER INSTALLING CASTING, INLET PROTECTION TYPE C REQUIRED AT ALL NEW INLETS WITH A CURB BOX.
- SEE TYPICAL SECTIONS FOR E-MAT AND MULCH LOCATIONS.
- ALL CONCRETE PIPE SHALL BE CLASS III UNLESS NOTED OTHERWISE.
- IF EXISTING WATER SERVICE LATERAL CONFLICTS WITH STORM SEWER, RELOCATE AND REPLACE WATER SERVICE FROM MAIN TO CURBSTOP. NOTIFY STURGEON BAY UTILITIES (SBU) WHEN CONFLICT IS FOUND AND DO NOT BEGIN RELOCATION AND REPLACEMENT UNTIL AUTHORIZATION FROM SBU. LOCATIONS FOR REPLACEMENT AND RELOCATION ARE NOTED IN THE MISC. QUANTITIES.

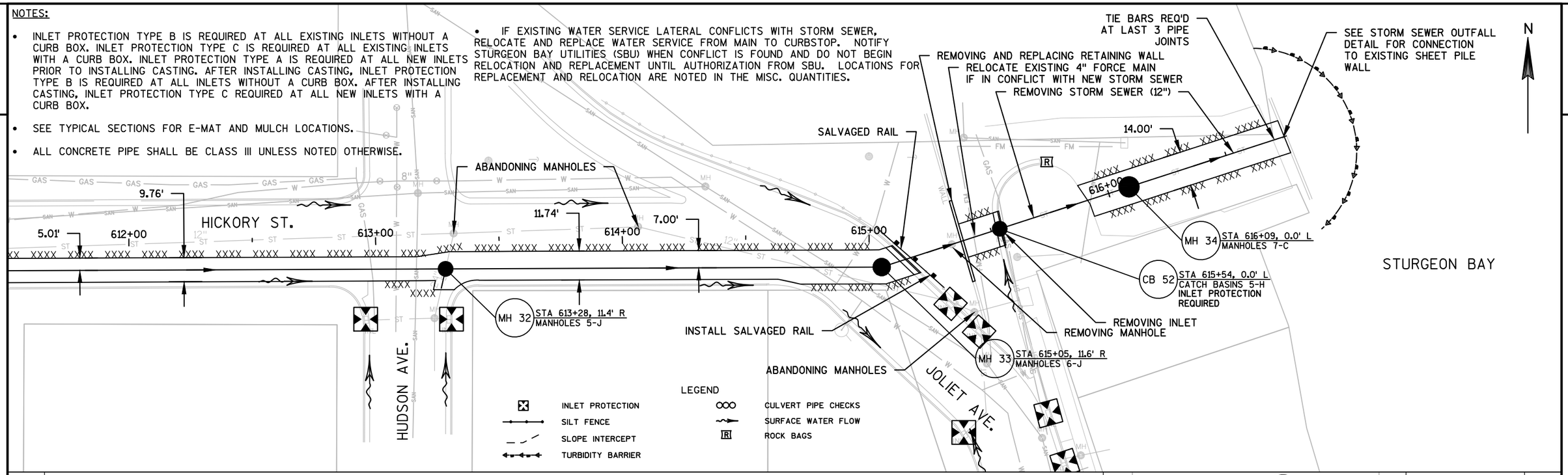

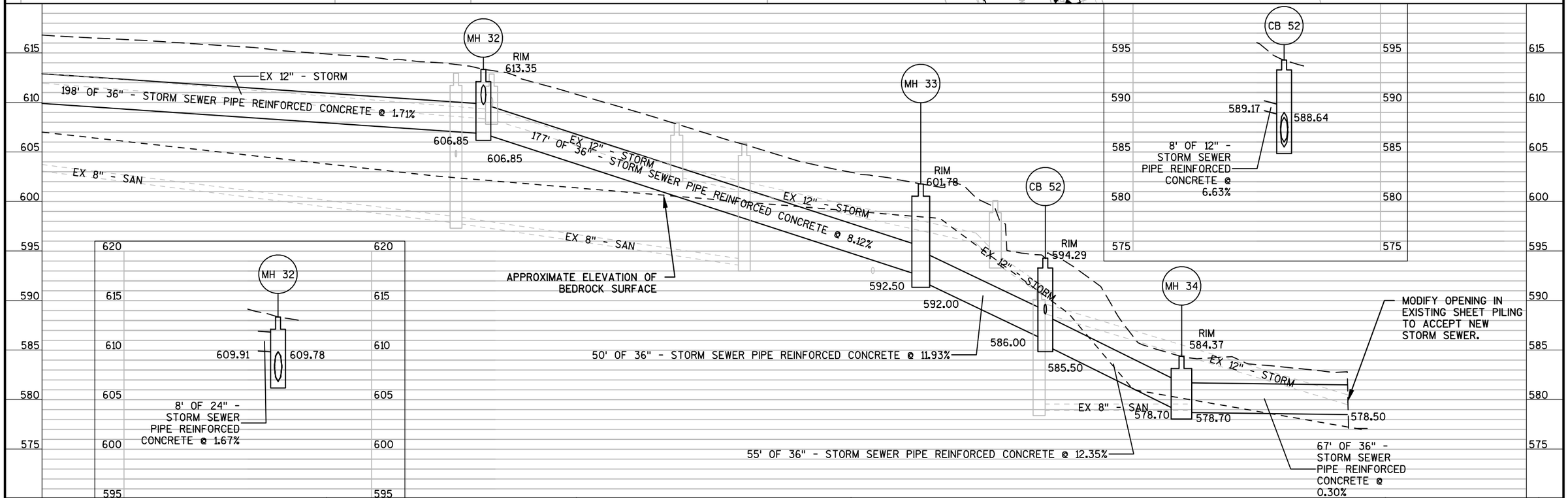

PROJECT NO: 4997-00-64	HWY: CTH C	COUNTY: DOOR	STORM SEWER AND EROSION CONTROL HICKORY ST.	SHEET 44	E

FILE NAME : L:\PROJECTS\12642\DWG\4997-00-63\SHEETSPLAN\022501_SS_HICKORY ST.DWG
LAYOUT NAME - 022501_SS_HICKORY ST - 022503_SS
PLOT DATE : 10/13/2017 11:42 AM PLOT BY : MOYER, TIM PLOT NAME : ---------- PLOT SCALE : 1" = 40'_XREF
WISDOT/CADDS SHEET 41

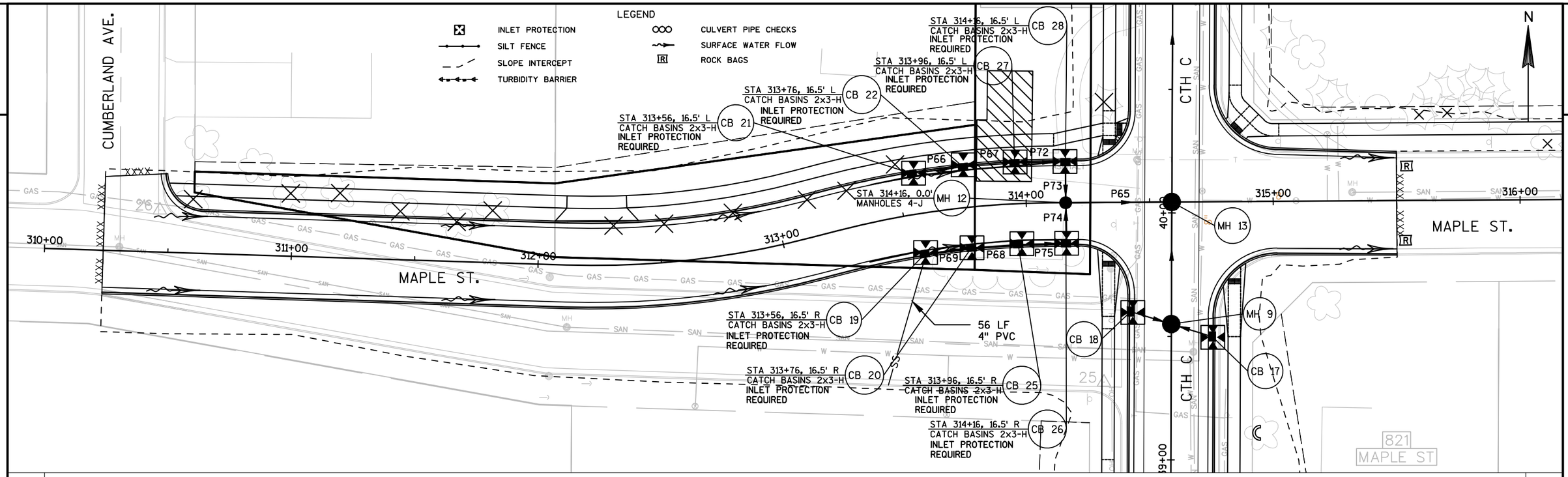

NOTES:

- INLET PROTECTION TYPE B IS REQUIRED AT ALL EXISTING INLETS WITHOUT A CURB BOX. INLET PROTECTION TYPE C IS REQUIRED AT ALL EXISTING INLETS WITH A CURB BOX. INLET PROTECTION TYPE A IS REQUIRED AT ALL NEW INLETS PRIOR TO INSTALLING CASTING. AFTER INSTALLING CASTING, INLET PROTECTION TYPE B IS REQUIRED AT ALL INLETS WITHOUT A CURB BOX. AFTER INSTALLING CASTING, INLET PROTECTION TYPE C REQUIRED AT ALL NEW INLETS WITH A CURB BOX.
- SEE TYPICAL SECTIONS FOR E-MAT AND MULCH LOCATIONS.
- ALL CONCRETE PIPE SHALL BE CLASS III UNLESS NOTED OTHERWISE.
- IF EXISTING WATER SERVICE LATERAL CONFLICTS WITH STORM SEWER, RELOCATE AND REPLACE WATER SERVICE FROM MAIN TO CURBSTOP. NOTIFY STURGEON BAY UTILITIES (SBU) WHEN CONFLICT IS FOUND AND DO NOT BEGIN RELOCATION AND REPLACEMENT UNTIL AUTHORIZATION FROM SBU. LOCATIONS FOR REPLACEMENT AND RELOCATION ARE NOTED IN THE MISC. QUANTITIES.

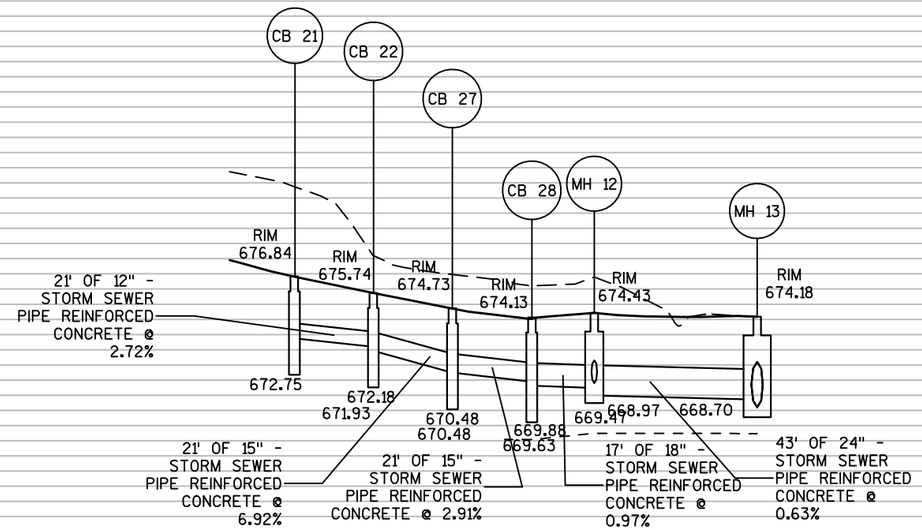

PROJECT NO: 4997-00-64	HWY: CTH C	COUNTY: DOOR	STORM SEWER AND EROSION CONTROL MAPLE ST.	SHEET 45	E

FILE NAME : L:\PROJECTS\12642\DWG\4997-00-63\SHEETSPLAN\022501_SS_MAPLE ST.DWG
LAYOUT NAME - 022501_SS_MAPLE ST - 022501_SS
PLOT DATE : 10/13/2017 11:49 AM PLOT BY : MOYER, TIM PLOT NAME : _____ PLOT SCALE : 1" = 40'_XREF
WISDOT/CADDS SHEET 41

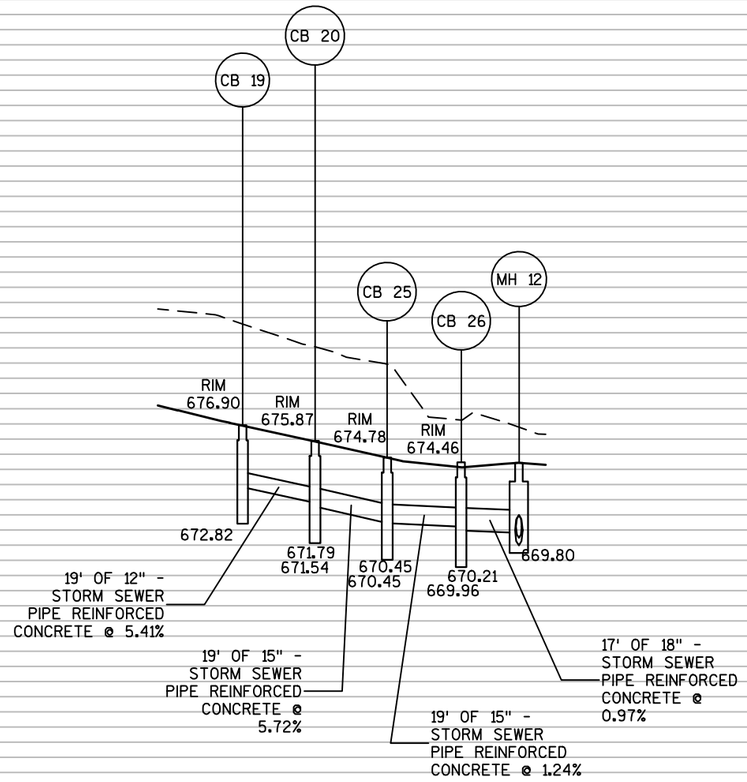

725 720 715 710 705 700 695 690 685 680 675 670 665 660 655 650 645 640 635 630

PROJECT NO: 4997-00-64	HWY: CTH C	COUNTY: DOOR	STORM SEWER AND EROSION CONTROL MAPLE ST.	SHEET 46	E

2

N

EXISTING SIGN
TO REMAIN

EXISTING SIGN
TO REMAIN

PAVEMENT MARKING
WORDS EPOXY

C
18-INCH

C
12-INCH

STOP 5
R1-1
30"X30"

STOP 4
REMOVE

BIKE LANE 3
R7-9A
18"X24"

XXXX XXXX XXXX XXXX

XXXX

11+00

12+00

13+00

14+00

15+00

16+00

17+00

STH 42/57

CTH C

MARKING DIAGONAL
EPOXY 12-INCH YELLOW (TYP)

MARKING SYMBOL EPOXY
BIKE LANE (TYP)

MARKING ARROW
EPOXY TYPE 2 (TYP)

MARKING SYMBOL EPOXY
BIKE SHARED LANE

COUNTY C
M1-5A
24"X24"

SPEED LIMIT 25
NO ENGINE BRAKING EXCEPT IN EMERGENCY
NEIGHBORHOOD WATCH COMMUNITY

EXISTING SIGN
TO REMAIN

BIKE LANE 2
R7-9A
18"X24"

MARKING ARROW EPOXY
BIKE LANE (TYP)

PAVEMENT MARKING LEGEND

- (A) MARKING LINE EPOXY 4-INCH (DOUBLE YELLOW CENTERLINE)
- (B) MARKING LINE EPOXY 4-INCH (WHITE)
- (C) MARKING STOP LINE EPOXY (SIZE)
- (D) MARKING CROSSWALK EPOXY TRANSVERSE LINE 6-INCH
- (E) MARKING LINE EPOXY 8-INCH (WHITE)

SIGNING LEGEND

- EXISTING SIGN MOUNTED ON POST(S)
- PROPOSED SIGN MOUNTED ON POST(S)
- (XX) DENOTES SIGN NUMBER
- STOP R1-1 30"X30" — PROPOSED SIGN
- STOP REMOVE — EXISTING SIGN TO BE REMOVED
- STOP — EXISTING SIGN TO REMAIN

PROJECT NO: 4997-00-64	HWY: CTH C	COUNTY: DOOR	PERMANENT SIGNING AND PAVEMENT MARKING	SHEET 47	E

FILE NAME : L:\PROJECTS\12642\DWG\4997-00-63\SHEETSPLAN\024501_PM.DWG
LAYOUT NAME - 024501_PM - 024501_PM

PLOT DATE : 10/13/2017 12:01 PM PLOT BY : MOYER, TIM PLOT NAME : PLOT SCALE : 1" = 40'_XREF

2

2

SIGNING LEGEND

EXISTING SIGN MOUNTED ON POST(S)

PROPOSED SIGN MOUNTED ON POST(S)

XX DENOTES SIGN NUMBER

PROPOSED SIGN

STOP
R1-1
30"X30"

EXISTING SIGN TO BE REMOVED

STOP
REMOVE

EXISTING SIGN TO REMAIN

STOP

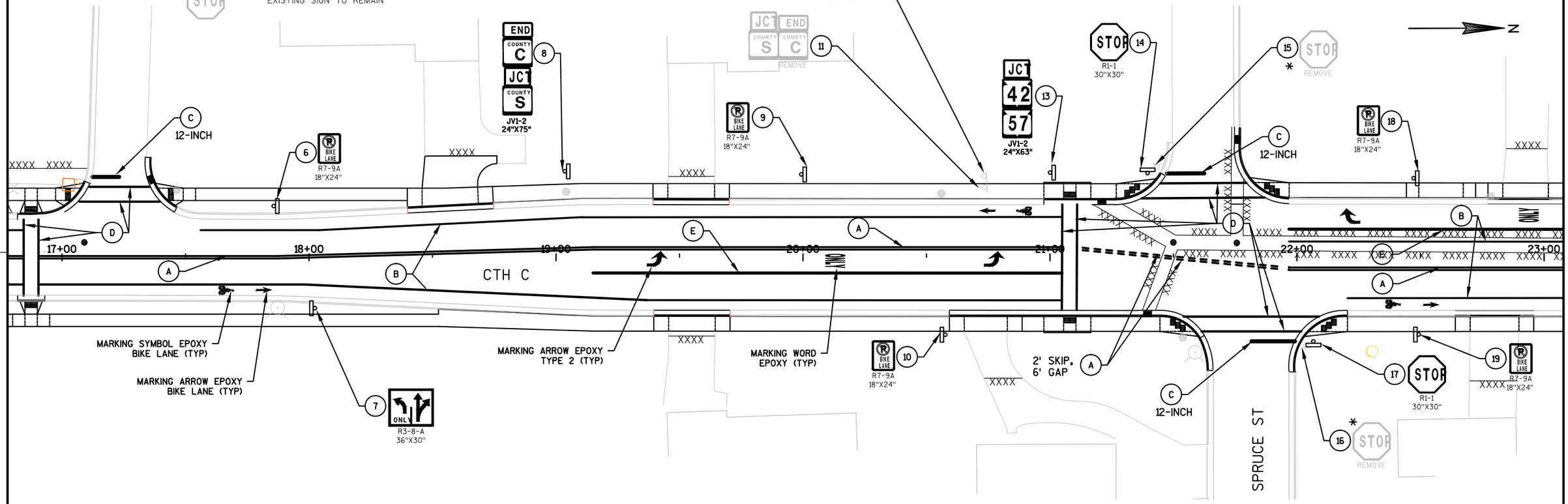

* = STREET NAME SIGNS REMOVED
BY OTHERS PRIOR TO CONSTRUCTION.

PAVEMENT MARKING LEGEND

- (A) MARKING LINE EPOXY 4-INCH (DOUBLE YELLOW CENTERLINE)
- (B) MARKING LINE EPOXY 4-INCH (WHITE)
- (C) MARKING STOP LINE EPOXY (SIZE)
- (D) MARKING CROSSWALK EPOXY TRANSVERSE LINE 6-INCH
- (E) MARKING LINE EPOXY 8-INCH (WHITE)

PROJECT NO: 4997-00-64	HWY: CTH C	COUNTY: DOOR	PERMANENT SIGNING AND PAVEMENT MARKING	SHEET 48	E

2

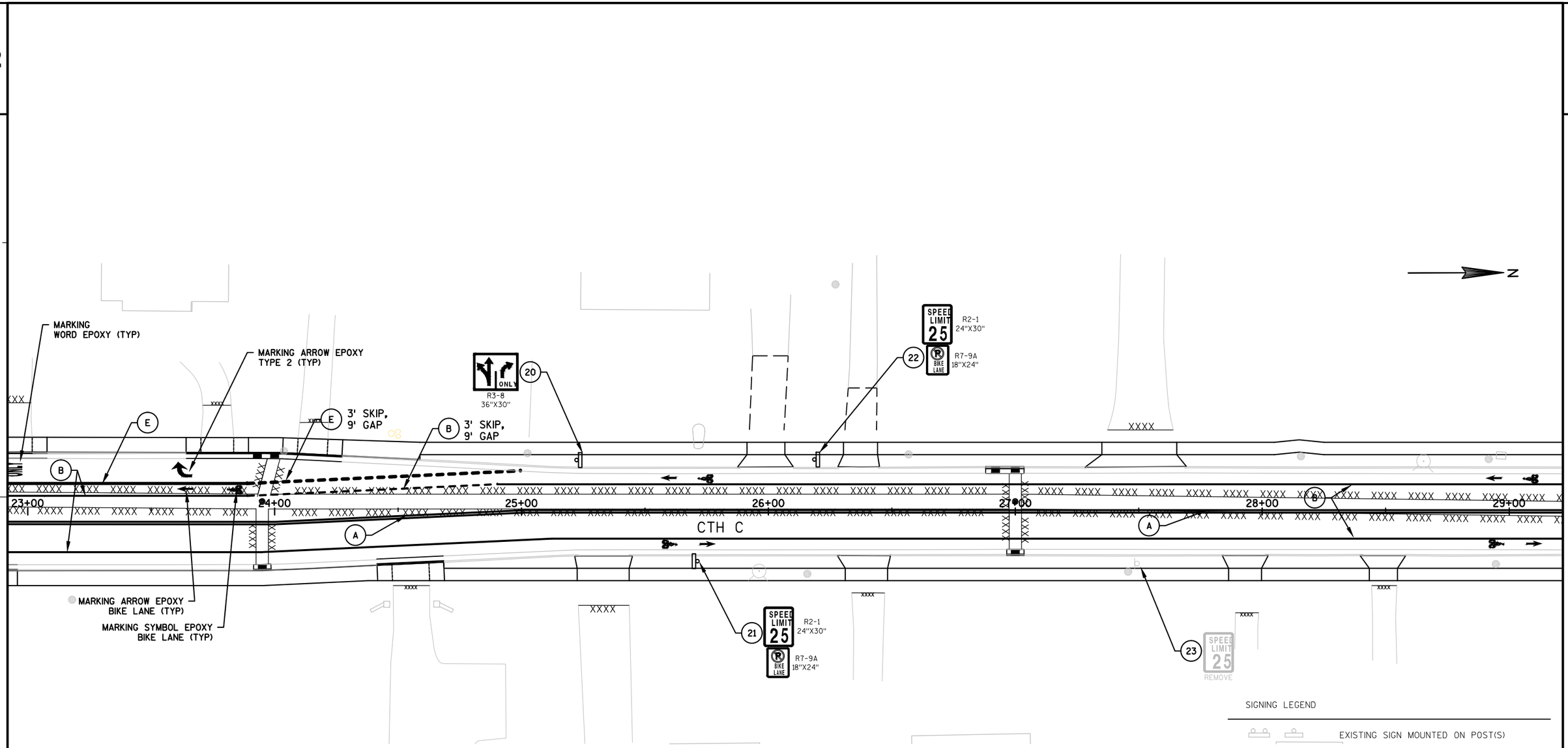

PAVEMENT MARKING LEGEND

- (A) MARKING LINE EPOXY 4-INCH (DOUBLE YELLOW CENTERLINE)
- (B) MARKING LINE EPOXY 4-INCH (WHITE)
- (C) MARKING STOP LINE EPOXY (SIZE)
- (D) MARKING CROSSWALK EPOXY TRANSVERSE LINE 6-INCH
- (E) MARKING LINE EPOXY 8-INCH (WHITE)

SIGNING LEGEND

- EXISTING SIGN MOUNTED ON POST(S)
- PROPOSED SIGN MOUNTED ON POST(S)
- (XX) DENOTES SIGN NUMBER
- STOP R1-1 30"X30" — PROPOSED SIGN
- STOP REMOVE — EXISTING SIGN TO BE REMOVED
- STOP — EXISTING SIGN TO REMAIN

PROJECT NO: 4997-00-64	HWY: CTH C	COUNTY: DOOR	PERMANENT SIGNING AND PAVEMENT MARKING	SHEET 49	E

FILE NAME : L:\PROJECTS\12642\DWG\4997-00-63\SHEETSPLAN\024501_PM.DWG
LAYOUT NAME - 024501_PM - 024503_PM
PLOT DATE : 10/13/2017 12:05 PM PLOT BY : MOYER, TIM PLOT NAME : PLOT SCALE : 1" = 40'_XREF
WISDOT/CADDS SHEET 42

2

2

N

35+00.00

24 BIKE LANE R7-9A 18"X24"

26 REMOVE

29+00 30+00 31+00 32+00 33+00 34+00 35+00

A B

CTH C

XXXX XXXX XXXX XXXX

XXXX XXXX XXXX XXXX

XXXX XXXX XXXX XXXX

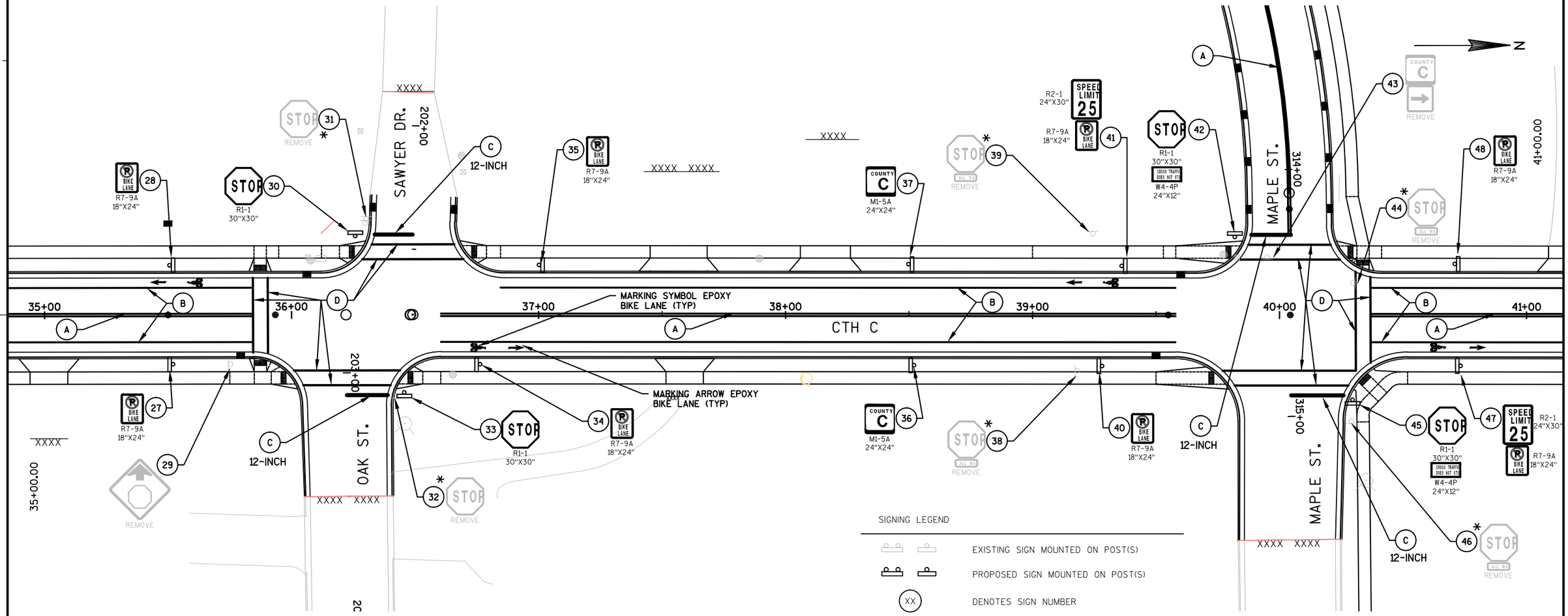

PAVEMENT MARKING LEGEND

- (A) MARKING LINE EPOXY 4-INCH (DOUBLE YELLOW CENTERLINE)
- (B) MARKING LINE EPOXY 4-INCH (WHITE)
- (C) MARKING STOP LINE EPOXY (SIZE)
- (D) MARKING CROSSWALK EPOXY TRANSVERSE LINE 6-INCH
- (E) MARKING LINE EPOXY 8-INCH (WHITE)

* = STREET NAME SIGNS REMOVED BY OTHERS PRIOR TO CONSTRUCTION.

SIGNING LEGEND

- EXISTING SIGN MOUNTED ON POST(S)
- PROPOSED SIGN MOUNTED ON POST(S)
- (XX) DENOTES SIGN NUMBER
- PROPOSED SIGN
- EXISTING SIGN TO BE REMOVED
- EXISTING SIGN TO REMAIN

PROJECT NO: 4997-00-64	HWY: CTH C	COUNTY: DOOR	PERMANENT SIGNING AND PAVEMENT MARKING	SHEET 51	E

FILE NAME : L:\PROJECTS\12642\DWG\4997-00-63\SHEETSPLAN\024501_PM.DWG
LAYOUT NAME - 024501_PM - 024505_PM
PLOT DATE : 10/13/2017 12:07 PM PLOT BY : MOYER, TIM PLOT NAME : PLOT SCALE : 1" = 40'_XREF
WISDOT/CADDS SHEET 42

2

SIGNING LEGEND

	EXISTING SIGN MOUNTED ON POST(S)
	PROPOSED SIGN MOUNTED ON POST(S)
XX	DENOTES SIGN NUMBER
STOP R1-1 30"X30"	PROPOSED SIGN
STOP REMOVE	EXISTING SIGN TO BE REMOVED
STOP	EXISTING SIGN TO REMAIN

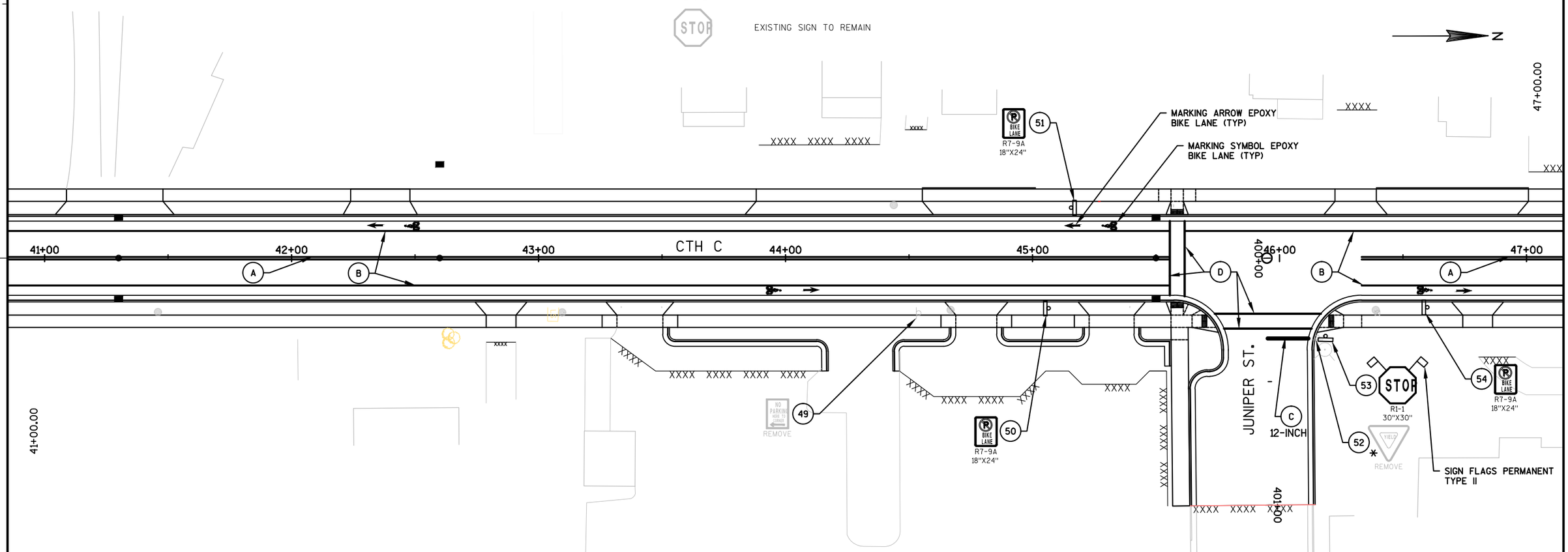

PAVEMENT MARKING LEGEND

- (A) MARKING LINE EPOXY 4-INCH (DOUBLE YELLOW CENTERLINE)
- (B) MARKING LINE EPOXY 4-INCH (WHITE)
- (C) MARKING STOP LINE EPOXY (SIZE)
- (D) MARKING CROSSWALK EPOXY TRANSVERSE LINE 6-INCH
- (E) MARKING LINE EPOXY 8-INCH (WHITE)

* = STREET NAME SIGNS REMOVED BY OTHERS PRIOR TO CONSTRUCTION.

PROJECT NO:4997-00-64	HWY:CTH C	COUNTY:DOOR	PERMANENT SIGNING AND PAVEMENT MARKING	SHEET 52	E

2

N

53+00.00

BARRICK RD.

XXXX

STREET NAME SIGN
REMOVED BY OTHERS
PRIOR TO CONSTRUCTION

C
12-INCH

55
SPEED LIMIT 25
REMOVE

R2-1
24"X30"
XXXX
R7-9A
18"X24"
57
SPEED LIMIT 25
BIKE LANE

59
STOP
REMOVE

58
STOP
R1-1
30"X30"

502+00

47+00
48+00
49+00 CTH C
50+00
51+00
52+00
53+00

B
A
D
A
B

XXXX
XXXX
XXXX
XXXX
XXXX

47+00.00

56
SCHOOL
SPEED LIMIT 15
WHEN CHILDREN ARE PRESENT
REMOVE

60
SPEED LIMIT 25
R2-1
24"X30"
R7-9A
18"X24"
BIKE LANE

MARKING ARROW EPOXY
BIKE LANE (TYP)

MARKING SYMBOL EPOXY
BIKE LANE (TYP)

PAVEMENT MARKING LEGEND

- (A) MARKING LINE EPOXY 4-INCH (DOUBLE YELLOW CENTERLINE)
- (B) MARKING LINE EPOXY 4-INCH (WHITE)
- (C) MARKING STOP LINE EPOXY (SIZE)
- (D) MARKING CROSSWALK EPOXY TRANSVERSE LINE 6-INCH
- (E) MARKING LINE EPOXY 8-INCH (WHITE)

SIGNING LEGEND

- EXISTING SIGN MOUNTED ON POST(S)
- PROPOSED SIGN MOUNTED ON POST(S)
- XX — DENOTES SIGN NUMBER
- STOP R1-1 30"X30" — PROPOSED SIGN
- STOP REMOVE — EXISTING SIGN TO BE REMOVED
- STOP — EXISTING SIGN TO REMAIN

PROJECT NO: 4997-00-64	HWY: CTH C	COUNTY: DOOR	PERMANENT SIGNING AND PAVEMENT MARKING	SHEET 53	E

2

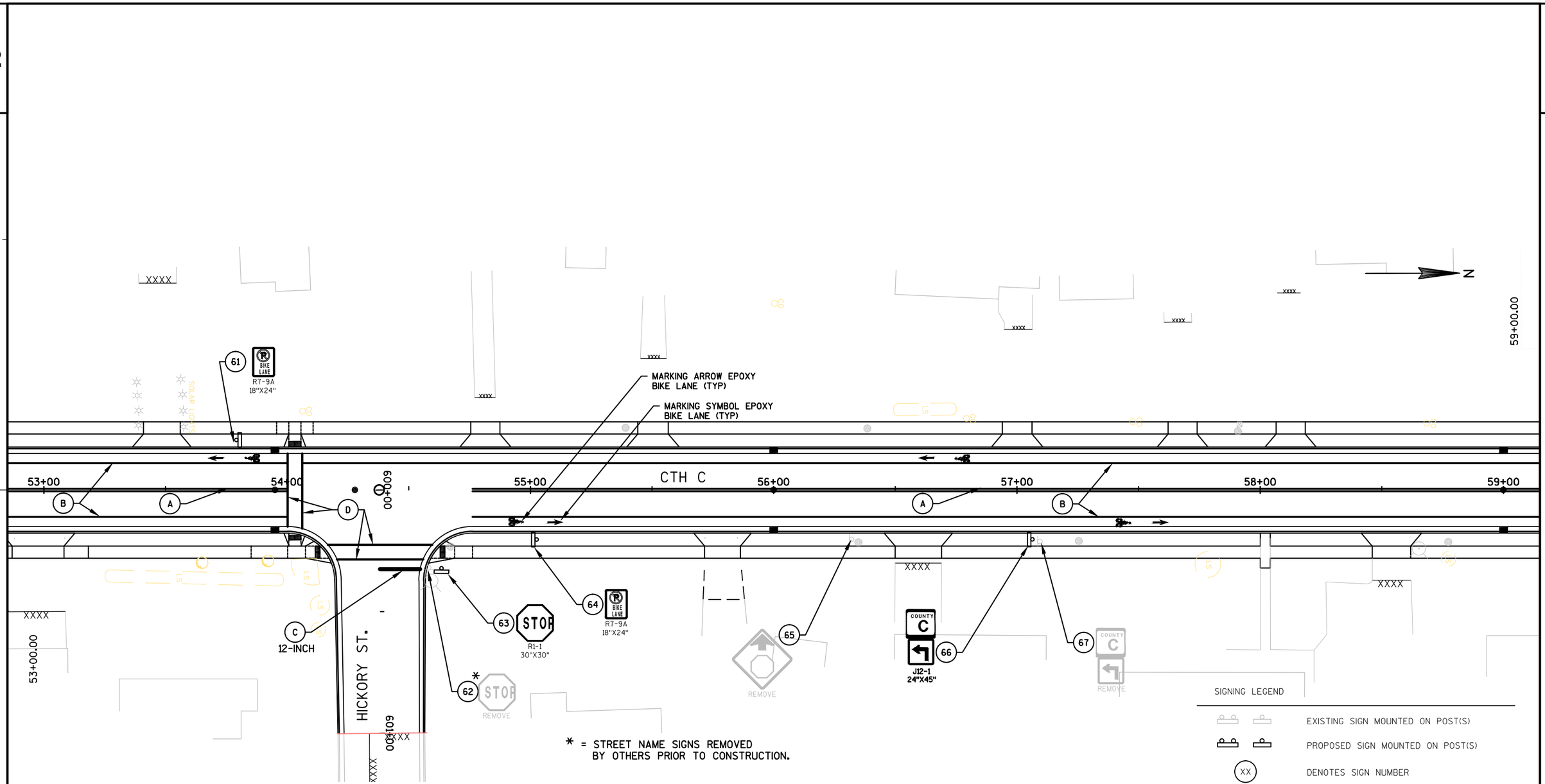

PAVEMENT MARKING LEGEND

- (A) MARKING LINE EPOXY 4-INCH (DOUBLE YELLOW CENTERLINE)
- (B) MARKING LINE EPOXY 4-INCH (WHITE)
- (C) MARKING STOP LINE EPOXY (SIZE)
- (D) MARKING CROSSWALK EPOXY TRANSVERSE LINE 6-INCH
- (E) MARKING LINE EPOXY 8-INCH (WHITE)

SIGNING LEGEND

- EXISTING SIGN MOUNTED ON POST(S)
- PROPOSED SIGN MOUNTED ON POST(S)
- (XX) DENOTES SIGN NUMBER
- STOP R1-1 30"X30" — PROPOSED SIGN
- STOP REMOVE — EXISTING SIGN TO BE REMOVED
- STOP — EXISTING SIGN TO REMAIN

PROJECT NO: 4997-00-64	HWY: CTH C	COUNTY: DOOR	PERMANENT SIGNING AND PAVEMENT MARKING	SHEET 54	E

FILE NAME : L:\PROJECTS\12642\DWG\4997-00-63\SHEETSPLAN\024501_PM.DWG
LAYOUT NAME - 024501_PM - 024508_PM
PLOT DATE : 10/13/2017 12:11 PM PLOT BY : MOYER, TIM PLOT NAME : PLOT SCALE : 1" = 40'_XREF
WISDOT/CADDS SHEET 42

2

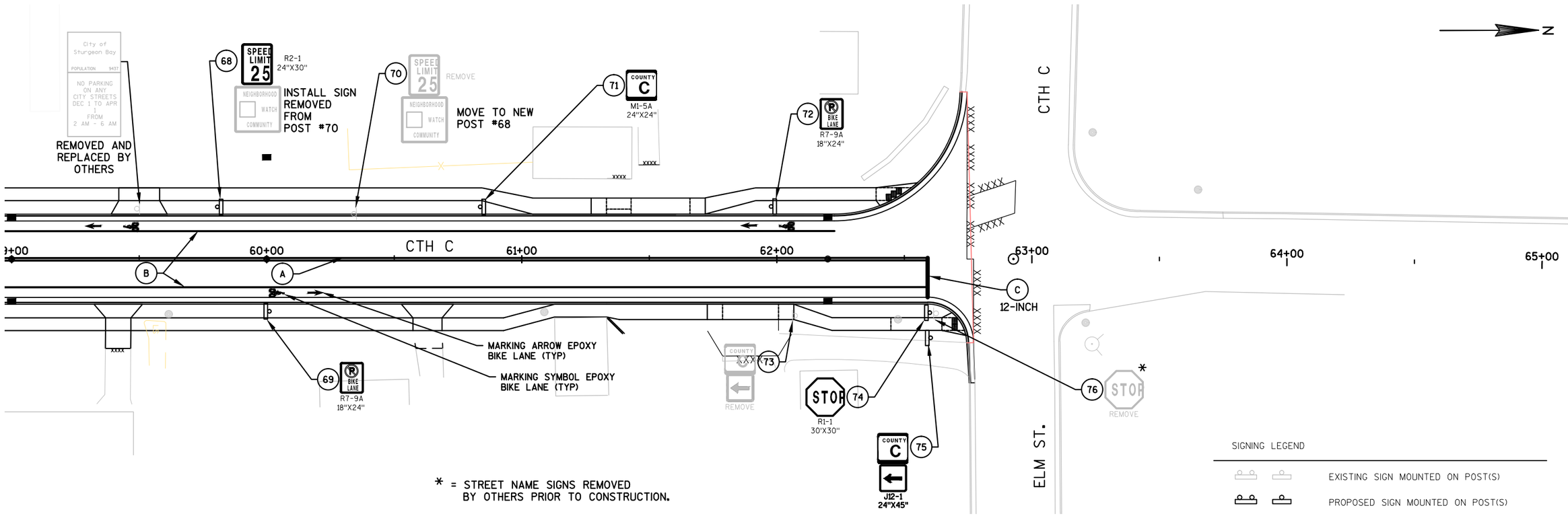

* = STREET NAME SIGNS REMOVED BY OTHERS PRIOR TO CONSTRUCTION.

SIGNING LEGEND

	EXISTING SIGN MOUNTED ON POST(S)
	PROPOSED SIGN MOUNTED ON POST(S)
XX	DENOTES SIGN NUMBER
STOP R1-1 30"X30"	PROPOSED SIGN
STOP REMOVE	EXISTING SIGN TO BE REMOVED
STOP	EXISTING SIGN TO REMAIN

PAVEMENT MARKING LEGEND

- (A) MARKING LINE EPOXY 4-INCH (DOUBLE YELLOW CENTERLINE)
- (B) MARKING LINE EPOXY 4-INCH (WHITE)
- (C) MARKING STOP LINE EPOXY (SIZE)
- (D) MARKING CROSSWALK EPOXY TRANSVERSE LINE 6-INCH
- (E) MARKING LINE EPOXY 8-INCH (WHITE)

PROJECT NO: 4997-00-64	HWY: CTH C	COUNTY: DOOR	PERMANENT SIGING AND PAVEMENT MARKING	SHEET 55	E

FILE NAME : L:\PROJECTS\12642\DWG\4997-00-63\SHEETSPLAN\024501_PM.DWG
LAYOUT NAME - 024501_PM - 024509_PM
PLOT DATE : 10/13/2017 12:12 PM PLOT BY : MOYER, TIM PLOT NAME : PLOT SCALE : 1" = 40'_XREF
WISDOT/CADDS SHEET 42

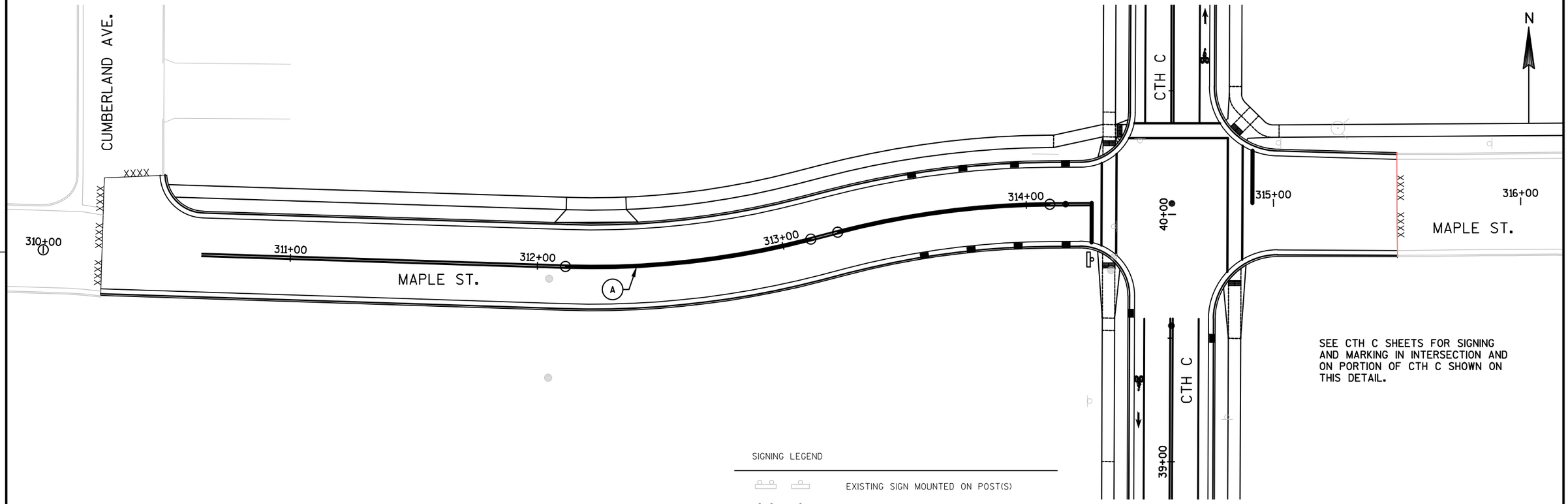

SEE CTH C SHEETS FOR SIGNING AND MARKING IN INTERSECTION AND ON PORTION OF CTH C SHOWN ON THIS DETAIL.

SIGNING LEGEND

	EXISTING SIGN MOUNTED ON POST(S)
	PROPOSED SIGN MOUNTED ON POST(S)
XX	DENOTES SIGN NUMBER
STOP R1-1 30"X30"	PROPOSED SIGN
STOP REMOVE	EXISTING SIGN TO BE REMOVED
STOP	EXISTING SIGN TO REMAIN

PAVEMENT MARKING LEGEND

- (A) MARKING LINE EPOXY 4-INCH (DOUBLE YELLOW CENTERLINE)
- (B) MARKING LINE EPOXY 4-INCH (WHITE)
- (C) MARKING STOP LINE EPOXY (SIZE)
- (D) MARKING CROSSWALK EPOXY TRANSVERSE LINE 6-INCH
- (E) MARKING LINE EPOXY 8-INCH (WHITE)

PROJECT NO:4997-00-64	HWY:CTH C	COUNTY:DOOR	PERMANENT SIGNING AND PAVEMENT MARKING	SHEET 56	E

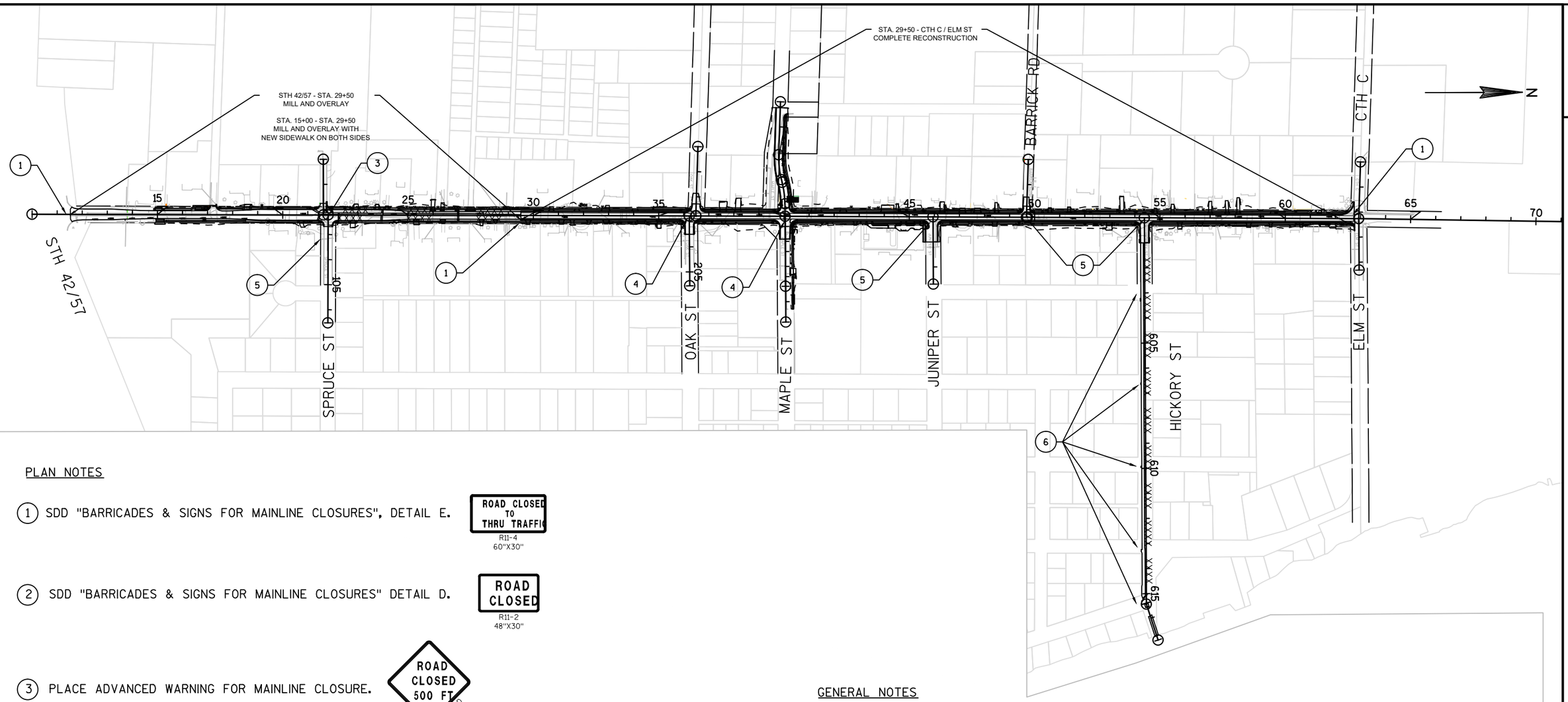

PLAN NOTES

(1) SDD "BARRICADES & SIGNS FOR MAINLINE CLOSURES", DETAIL E.

ROAD CLOSED TO THRU TRAFFIC
R11-4
60"X30"

(2) SDD "BARRICADES & SIGNS FOR MAINLINE CLOSURES" DETAIL D.

ROAD CLOSED
R11-2
48"X30"

(3) PLACE ADVANCED WARNING FOR MAINLINE CLOSURE.

ROAD CLOSED 500 FT
W20-3-D

(4) SDD "BARRICADES & SIGNS FOR SIDEROAD CLOSURES" DETAIL 1 OR DETAIL 3. EITHER OAK ST OR MAPLE ST SHALL REMAIN OPEN THROUGH THE WORK ZONE AT ALL TIMES.

(5) SDD "BARRICADES & SIGNS FOR SIDEROAD CLOSURES" DETAIL 4

(6) SDD "BARRICADES & SIGNS FOR SIDEROAD CLOSURES" DETAIL 1 OR DETAIL 3. USE DETAIL 1 DURING WORK WITHIN THE INTERSECTIONS AND DETAIL 3 DURING MID BLOCK WORK. NO TWO ADJACENT INTERSECTIONS MAY BE CLOSED AT THE SAME TIME.

GENERAL NOTES

1 ADVANCE WARNING SIGNS ARE NOT SHOWN AND SHALL CONFORM TO SDD "BARRICADES AND SIGNS FOR MAINLINE CLOSURES" DETAIL C, OR SDD "BARRICADES AND SIGNS FOR SIDEROAD CLOSURES" DETAIL 3 OR 4.

2 ALL SIGNS SHALL BE 48"X48" UNLESS OTHERWISE NOTED.

3 THE EXACT NUMBER, LOCATION, AND SPACING OF ALL SIGNS AND DEVICES SHALL BE ADJUSTED TO FIT FIELD CONDITIONS OR AS DETERMINED BY THE ENGINEER.

4 "WO" SIGNS ARE THE SAME AS "W" SIGNS EXCEPT THE BACKGROUND IS ORANGE.

5 TRAFFIC CONTROL SIGNS SHALL BE REMOVED WHEN NOT APPLICABLE OR AS DIRECTED BY THE ENGINEER.

6. CHANGE "ROAD CLOSED TO THRU TRAFFIC" TO "ROAD CLOSED" DURING PAVING OPERATIONS.

2

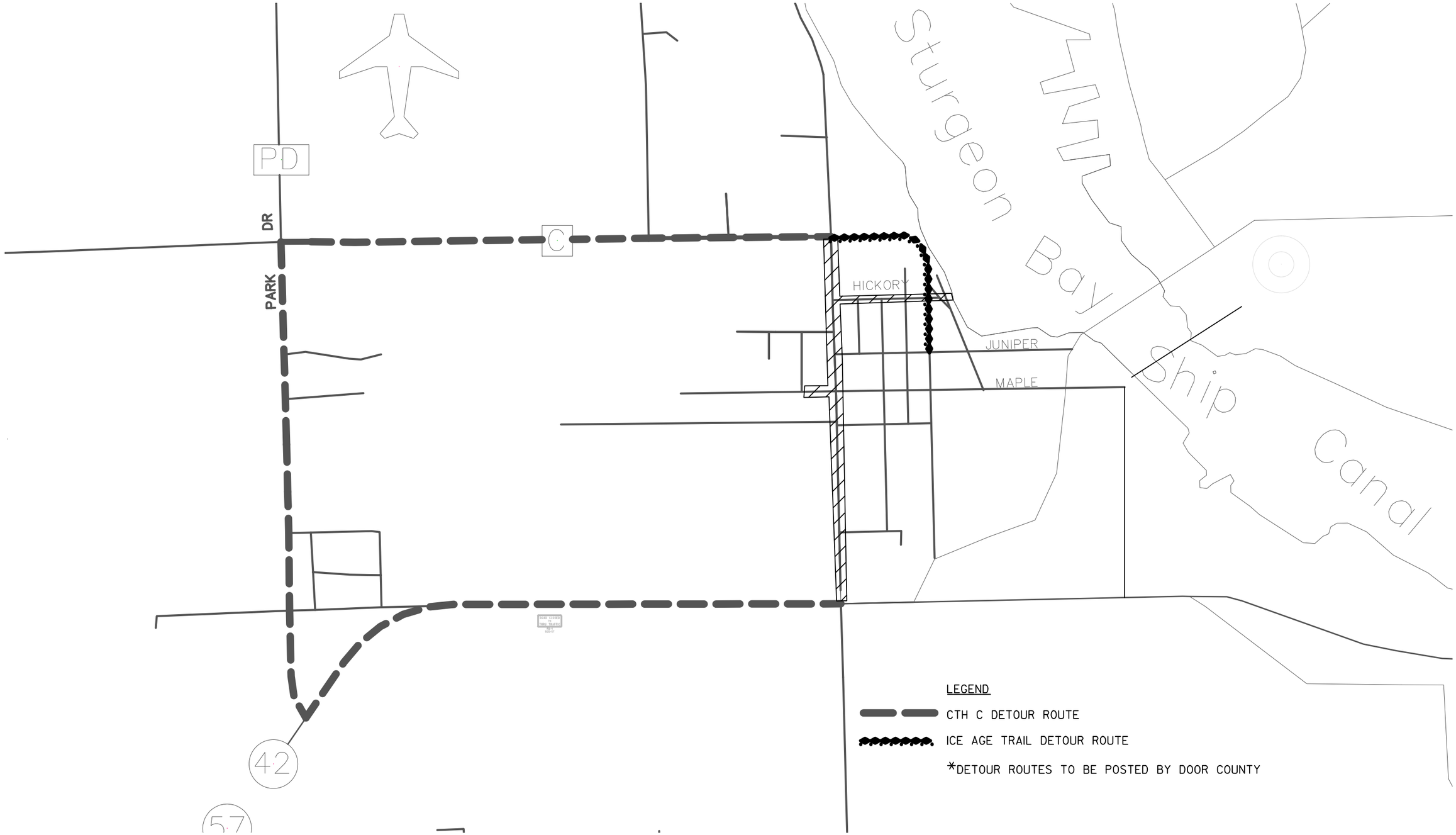

PROJECT NO: 4997-00-64	HWY: CTH C	COUNTY: DOOR	DETOUR	SHEET 58	E

Spruce St

NUMBER	LENGTH	LINE/CHORD DIRECTION	STATION START	STATION END	NORTHING START	EASTING START
L1	430.402	S89° 49' 11.76"E	102+21.80	106+52.20	154575.92	488521.53

Auto Way

NUMBER	LENGTH	LINE/CHORD DIRECTION	STATION START	STATION END	NORTHING START	EASTING START
L2	221.804	N89° 58' 37.90"E	100+00.00	102+21.80	154556.78	488299.68

Oak St East

NUMBER	LENGTH	LINE/CHORD DIRECTION	STATION START	STATION END	NORTHING START	EASTING START
L3	279.148	N89° 39' 10.05"E	202+76.53	205+55.68	156016.42	488525.18

CTH C

NUMBER	LENGTH	LINE/CHORD DIRECTION	STATION START	STATION END	NORTHING START	EASTING START
L11	2649.116	N00° 08' 42.81"E	10+00.00	36+49.12	153394.31	488518.53

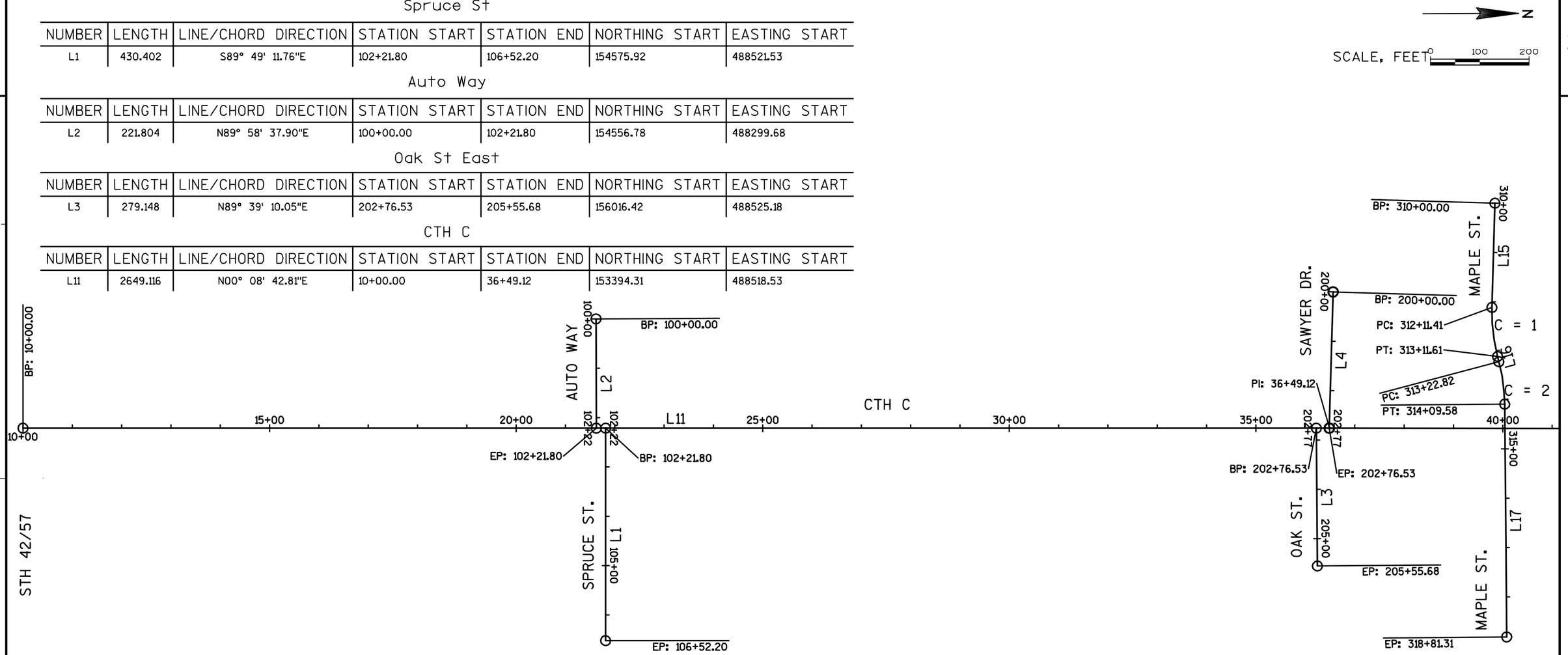

Oak St West

NUMBER	LENGTH	LINE/CHORD DIRECTION	STATION START	STATION END	NORTHING START	EASTING START
L4	276.533	S88° 10' 22.77"E	200+00.00	202+76.53	156051.24	488248.85

Maple St Proposed

NUMBER	LENGTH	LINE/CHORD DIRECTION	STATION START	STATION END	NORTHING START	EASTING START	PI STATION	PI NORTHING	PI EASTING	RADIUS	DELTA	T
L15	211.415	S88° 10' 20.74"E	310+00.00	312+11.41	156379.97	488070.08						
C = 1	100.197	N83° 37' 34.90"E					312+61.86	156371.62	488331.80	350.00	016°24'	50.44
L16	11.205	N75° 25' 30.53"E	313+11.61	313+22.82	156384.31	488380.62						
C = 2	86.762	N82° 31' 36.10"E					313+66.42	156398.10	488433.67	350.00	014°12'	43.60
L17	471.730	N89° 37' 41.67"E	314+09.58	318+81.31	156398.39	488477.27						

PROJECT NO: 4997-00-64	HWY: CTH C	COUNTY: DOOR	ALIGNMENT DIAGRAM	SHEET	E

FILE NAME : L:\PROJECTS\12642\DWG\4997-00-63\SHEETSPLAN\027201_AD.DWG
LAYOUT NAME - 027201_AD - 027201_AD
PLOT DATE : 7/11/2017 1:02 PM PLOT BY : MOYER, TIM PLOT NAME : PLOT SCALE : 1 IN:200 FT

WISDOT/CADDS SHEET 42

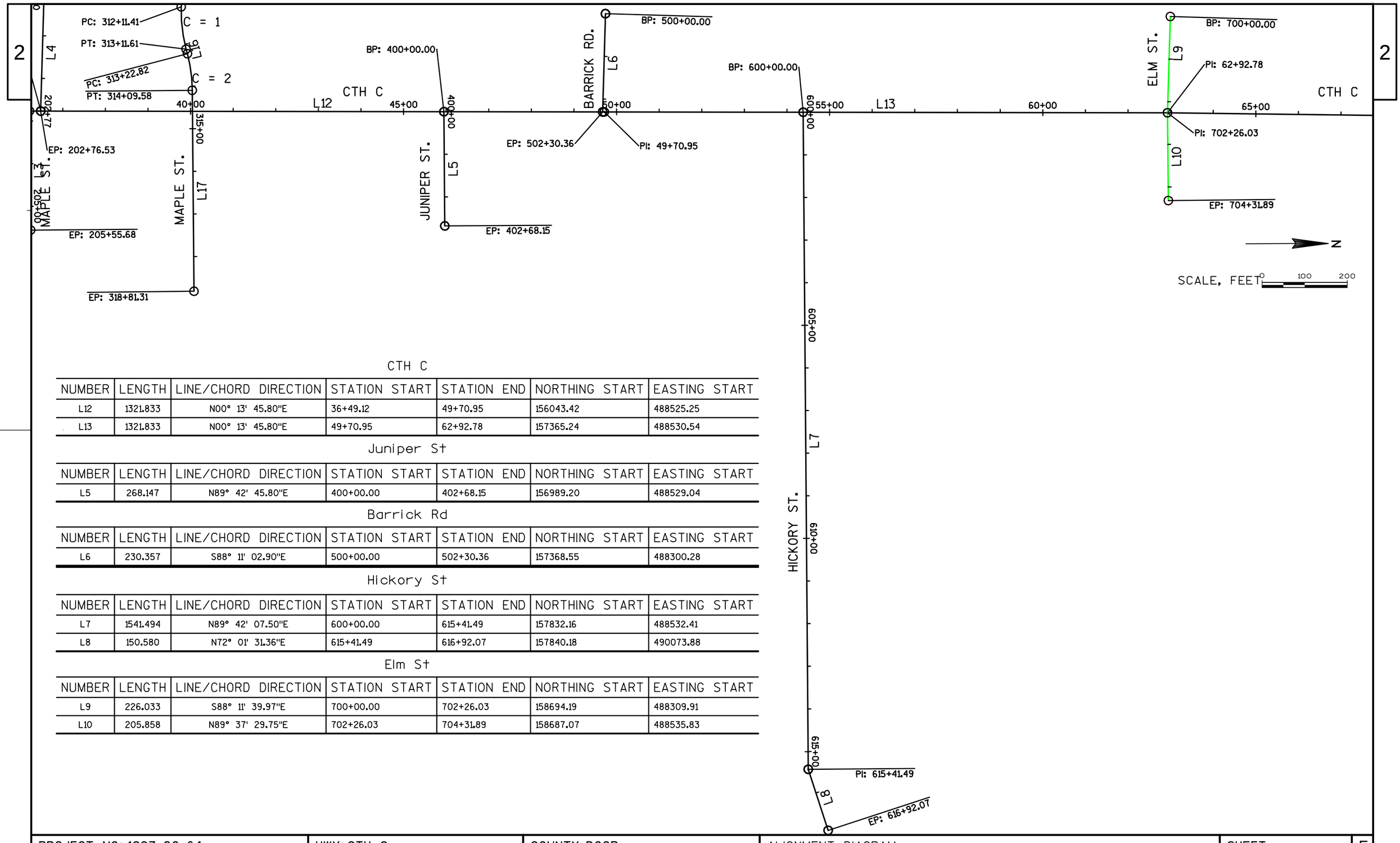

CTH C

NUMBER	LENGTH	LINE/CHORD DIRECTION	STATION START	STATION END	NORTHING START	EASTING START
L12	1321.833	N00° 13' 45.80"E	36+49.12	49+70.95	156043.42	488525.25
L13	1321.833	N00° 13' 45.80"E	49+70.95	62+92.78	157365.24	488530.54

Juniper St

NUMBER	LENGTH	LINE/CHORD DIRECTION	STATION START	STATION END	NORTHING START	EASTING START
L5	268.147	N89° 42' 45.80"E	400+00.00	402+68.15	156989.20	488529.04

Barrick Rd

NUMBER	LENGTH	LINE/CHORD DIRECTION	STATION START	STATION END	NORTHING START	EASTING START
L6	230.357	S88° 11' 02.90"E	500+00.00	502+30.36	157368.55	488300.28

Hickory St

NUMBER	LENGTH	LINE/CHORD DIRECTION	STATION START	STATION END	NORTHING START	EASTING START
L7	1541.494	N89° 42' 07.50"E	600+00.00	615+41.49	157832.16	488532.41
L8	150.580	N72° 01' 31.36"E	615+41.49	616+92.07	157840.18	490073.88

Elm St

NUMBER	LENGTH	LINE/CHORD DIRECTION	STATION START	STATION END	NORTHING START	EASTING START
L9	226.033	S88° 11' 39.97"E	700+00.00	702+26.03	158694.19	488309.91
L10	205.858	N89° 37' 29.75"E	702+26.03	704+31.89	158687.07	488535.83

PROJECT NO:4997-00-64	HWY:CTH C	COUNTY:DOOR	ALIGNMENT DIAGRAM	SHEET	E

4997-00-64

Line	Item	Item Description	Unit	Total	Qty
0002	201.0105	Clearing	STA	47.000	47.000
0004	201.0205	Grubbing	STA	47.000	47.000
0006	203.0100	Removing Small Pipe Culverts	EACH	8.000	8.000
0008	204.0120	Removing Asphaltic Surface Milling	SY	20,940.000	20,940.000
0010	204.0150	Removing Curb & Gutter	LF	4,977.000	4,977.000
0012	204.0155	Removing Concrete Sidewalk	SY	48.000	48.000
0014	204.0210	Removing Manholes	EACH	5.000	5.000
0016	204.0220	Removing Inlets	EACH	1.000	1.000
0018	204.0245	Removing Storm Sewer (size) 01. 12-inch	LF	678.000	678.000
0020	204.0250	Abandoning Manholes	EACH	2.000	2.000
0022	205.0100	Excavation Common	CY	13,478.000	13,478.000
0024	211.0100	Prepare Foundation for Asphaltic Paving (project) 01. 4997-00-64	LS	1.000	1.000
0026	213.0100	Finishing Roadway (project) 01. 4997-00-64	EACH	1.000	1.000
0028	305.0110	Base Aggregate Dense 3/4-Inch	TON	1,892.000	1,892.000
0030	305.0120	Base Aggregate Dense 1 1/4-Inch	TON	14,300.000	14,300.000
0032	416.0160	Concrete Driveway 6-Inch	SY	811.000	811.000
0034	440.4410	Incentive IRI Ride	DOL	3,881.820	3,881.820
0036	455.0605	Tack Coat	GAL	1,664.000	1,664.000
0038	460.2000	Incentive Density HMA Pavement	DOL	3,000.000	3,000.000
0040	460.4110.S	Reheating HMA Pavement Longitudinal Joints	LF	9,530.000	9,530.000
0042	460.5223	HMA Pavement 3 LT 58-28 S	TON	2,260.000	2,260.000
0044	460.5224	HMA Pavement 4 LT 58-28 S	TON	2,416.000	2,416.000
0046	465.0105	Asphaltic Surface	TON	348.000	348.000
0048	465.0120	Asphaltic Surface Driveways and Field Entrances	TON	312.000	312.000
0050	520.8000	Concrete Collars for Pipe	EACH	5.000	5.000
0052	521.2005.S	Surface Drain Pipe Corrugated Metal Slotted (inch) 01. 12-Inch	LF	85.000	85.000
0054	601.0600	Concrete Curb Pedestrian	LF	10.000	10.000
0056	602.0410	Concrete Sidewalk 5-Inch	SF	55,365.000	55,365.000
0058	602.0515	Curb Ramp Detectable Warning Field Natural Patina	SF	275.000	275.000
0060	608.0005	Storm Sewer Rock Excavation	CY	585.000	585.000
0062	608.0312	Storm Sewer Pipe Reinforced Concrete Class III 12-Inch	LF	684.000	684.000
0064	608.0315	Storm Sewer Pipe Reinforced Concrete Class III 15-Inch	LF	238.000	238.000
0066	608.0318	Storm Sewer Pipe Reinforced Concrete Class III 18-Inch	LF	149.000	149.000
0068	608.0324	Storm Sewer Pipe Reinforced Concrete Class III 24-Inch	LF	1,586.000	1,586.000
0070	608.0330	Storm Sewer Pipe Reinforced Concrete Class III 30-	LF	105.000	105.000

4997-00-64

Line	Item	Item Description	Unit	Total	Qty
		Inch			
0072	608.0336	Storm Sewer Pipe Reinforced Concrete Class III 36-Inch	LF	3,264.000	3,264.000
0074	608.0342	Storm Sewer Pipe Reinforced Concrete Class III 42-Inch	LF	527.000	527.000
0076	608.0424	Storm Sewer Pipe Reinforced Concrete Class IV 24-Inch	LF	296.000	296.000
0078	611.0530	Manhole Covers Type J	EACH	30.000	30.000
0080	611.0612	Inlet Covers Type C	EACH	1.000	1.000
0082	611.0624	Inlet Covers Type H	EACH	48.000	48.000
0084	611.0642	Inlet Covers Type MS	EACH	4.000	4.000
0086	611.1230	Catch Basins 2x3-FT	EACH	43.000	43.000
0088	611.2004	Manholes 4-FT Diameter	EACH	11.000	11.000
0090	611.2005	Manholes 5-FT Diameter	EACH	14.000	14.000
0092	611.2006	Manholes 6-FT Diameter	EACH	7.000	7.000
0094	611.2007	Manholes 7-FT Diameter	EACH	1.000	1.000
0096	611.2008	Manholes 8-FT Diameter	EACH	1.000	1.000
0098	611.3230	Inlets 2x3-FT	EACH	6.000	6.000
0100	611.3901	Inlets Median 1 Grate	EACH	1.000	1.000
0102	611.3902	Inlets Median 2 Grate	EACH	3.000	3.000
0104	612.0902.S	Insulation Board Polystyrene (inch) 01. 2-Inch	SY	2.000	2.000
0106	618.0100	Maintenance And Repair of Haul Roads (project) 01. 4997-00-64	EACH	1.000	1.000
0108	619.1000	Mobilization	EACH	1.000	1.000
0110	623.0200	Dust Control Surface Treatment	SY	4,500.000	4,500.000
0112	624.0100	Water	MGAL	40.000	40.000
0114	625.0100	Topsoil	SY	11,500.000	11,500.000
0116	627.0200	Mulching	SY	7,200.000	7,200.000
0118	628.1504	Silt Fence	LF	4,000.000	4,000.000
0120	628.1520	Silt Fence Maintenance	LF	4,000.000	4,000.000
0122	628.1905	Mobilizations Erosion Control	EACH	4.000	4.000
0124	628.1910	Mobilizations Emergency Erosion Control	EACH	4.000	4.000
0126	628.2006	Erosion Mat Urban Class I Type A	SY	4,300.000	4,300.000
0128	628.6005	Turbidity Barriers	SY	50.000	50.000
0130	628.7005	Inlet Protection Type A	EACH	60.000	60.000
0132	628.7010	Inlet Protection Type B	EACH	5.000	5.000
0134	628.7015	Inlet Protection Type C	EACH	64.000	64.000
0136	628.7020	Inlet Protection Type D	EACH	2.000	2.000
0138	628.7555	Culvert Pipe Checks	EACH	20.000	20.000
0140	628.7570	Rock Bags	EACH	50.000	50.000
0142	629.0210	Fertilizer Type B	CWT	8.000	8.000

4997-00-64

Line	Item	Item Description	Unit	Total	Qty
0144	630.0140	Seeding Mixture No. 40	LB	220.000	220.000
0146	634.0614	Posts Wood 4x6-Inch X 14-FT	EACH	40.000	40.000
0148	634.0616	Posts Wood 4x6-Inch X 16-FT	EACH	9.000	9.000
0150	634.0620	Posts Wood 4x6-Inch X 20-FT	EACH	1.000	1.000
0152	637.0620	Sign Flags Permanent Type II	EACH	2.000	2.000
0154	637.2210	Signs Type II Reflective H	SF	244.980	244.980
0156	637.2230	Signs Type II Reflective F	SF	4.000	4.000
0158	638.2602	Removing Signs Type II	EACH	40.000	40.000
0160	638.3000	Removing Small Sign Supports	EACH	26.000	26.000
0162	642.5201	Field Office Type C	EACH	1.000	1.000
0164	643.0300	Traffic Control Drums	DAY	9,150.000	9,150.000
0166	643.0420	Traffic Control Barricades Type III	DAY	10,050.000	10,050.000
0168	643.0705	Traffic Control Warning Lights Type A	DAY	20,050.000	20,050.000
0170	643.0715	Traffic Control Warning Lights Type C	DAY	3,700.000	3,700.000
0172	643.0900	Traffic Control Signs	DAY	9,700.000	9,700.000
0174	643.5000	Traffic Control	EACH	1.000	1.000
0176	646.1020	Marking Line Epoxy 4-Inch	LF	19,274.000	19,274.000
0178	646.3020	Marking Line Epoxy 8-Inch	LF	510.000	510.000
0180	646.5020	Marking Arrow Epoxy	EACH	36.000	36.000
0182	646.5120	Marking Word Epoxy	EACH	3.000	3.000
0184	646.5220	Marking Symbol Epoxy	EACH	31.000	31.000
0186	646.6020	Marking Stop Line Epoxy 12-Inch	LF	159.000	159.000
0188	646.6120	Marking Stop Line Epoxy 18-Inch	LF	57.000	57.000
0190	646.7120	Marking Diagonal Epoxy 12-Inch	LF	30.000	30.000
0192	646.7405	Marking Crosswalk Paint Transverse Line 6-Inch	LF	1,239.000	1,239.000
0194	650.4000	Construction Staking Storm Sewer	EACH	87.000	87.000
0196	650.4500	Construction Staking Subgrade	LF	3,852.000	3,852.000
0198	650.5500	Construction Staking Curb Gutter and Curb & Gutter	LF	8,628.000	8,628.000
0200	650.8000	Construction Staking Resurfacing Reference	LF	1,810.000	1,810.000
0202	650.9910	Construction Staking Supplemental Control (project) 01. 4997-00-64	LS	1.000	1.000
0204	650.9920	Construction Staking Slope Stakes	LF	5,302.000	5,302.000
0206	690.0150	Sawing Asphalt	LF	6,815.000	6,815.000
0208	690.0250	Sawing Concrete	LF	227.000	227.000
0210	ASP.1T0A	On-the-Job Training Apprentice at $5.00/HR	HRS	2,000.000	2,000.000
0212	ASP.1T0G	On-the-Job Training Graduate at $5.00/HR	HRS	1,320.000	1,320.000
0214	SPV.0035	Special 01. Abandon Storm Sewer	CY	26.000	26.000
0216	SPV.0060	Special 01. Reconstructing Sanitary Manholes	EACH	2.000	2.000
0218	SPV.0060	Special 02. Adjusting Curb Stop Risers	EACH	62.000	62.000
0220	SPV.0060	Special 03. Adjusting Valve Boxes	EACH	55.000	55.000

4997-00-64

Line	Item	Item Description	Unit	Total	Qty
0222	SPV.0060	Special 04. Adjusting Sanitary Manholes	EACH	12.000	12.000
0224	SPV.0060	Special 05. Curb Stops	EACH	10.000	10.000
0226	SPV.0090	Special 01. Concrete Curb & Gutter 32-Inch Type D Special	LF	8,628.000	8,628.000
0228	SPV.0090	Special 02. Storm Sewer Pipe PVC 4-Inch	LF	56.000	56.000
0230	SPV.0090	Special 03. Water Service 1-Inch	LF	914.000	914.000
0232	SPV.0090	Special 04. Sanitary Lateral 6-Inch	LF	1,027.000	1,027.000
0234	SPV.0090	Special 05. Storm Sewer Pipe PVC 10-Inch	LF	4.000	4.000
0236	SPV.0105	Special 01. Removing and Replacing Retaining Wall	LS	1.000	1.000
0238	SPV.0105	Special 02. Removing and Reinstalling Guardrail	LS	1.000	1.000
0240	SPV.0105	Special 03. Storm Sewer Outfall	LS	1.000	1.000

3

CLEARING AND GRUBBING ITEMS

STA	DESCRIPTION	ITEM NO. 201.0105 CLEARING STA	ITEM NO. 201.0205 GRUBBING STA
19+00	CTH C	1	1
24+00	CTH C	1	1
25+00	CTH C	1	1
26+00	CTH C	1	1
27+00	CTH C	1	1
28+00	CTH C	1	1
29+00	CTH C	1	1
31+00	CTH C	1	1
32+00	CTH C	1	1
33+00	CTH C	1	1
34+00	CTH C	1	1
35+00	CTH C	1	1
36+00	CTH C	1	1
37+00	CTH C	1	1
38+00	CTH C	1	1
40+00	CTH C	1	1
41+00	CTH C	1	1
42+00	CTH C	1	1
43+00	CTH C	1	1
44+00	CTH C	1	1
45+00	CTH C	1	1
46+00	CTH C	1	1
47+00	CTH C	1	1
48+00	CTH C	1	1
49+00	CTH C	1	1
50+00	CTH C	1	1
51+00	CTH C	1	1
52+00	CTH C	1	1
53+00	CTH C	1	1
54+00	CTH C	1	1
55+00	CTH C	1	1
56+00	CTH C	1	1
57+00	CTH C	1	1
59+00	CTH C	1	1
60+00	CTH C	1	1
61+00	CTH C	1	1
62+00	CTH C	1	1
310+00	CTH C	1	1
311+00	CTH C	1	1
312+00	CTH C	1	1
313+00	CTH C	1	1
314+00	CTH C	1	1
315+00	CTH C	1	1
11+00	CTH C	1	1
316+00	CTH C	1	1
12+00	CTH C	1	1
317+00	CTH C	1	1
PROJECT 4997-00-64 SUBTOTAL		47	47
	TOTAL	47	47

REMOVING SMALL PIPE CULVERTS

STA	LOCATION	DESCRIPTION	ITEM NO. 203.0100 REMOVING SMALL PIPE CULVERTS EACH
30+75	LT	18" CMP	1
31+75	LT	18" CMP	1
33+00	LT	18" CMP	1
33+50	LT & RT	24" CMP	1
50+50	LT	18" CMP	1
51+50	LT	18" CMP	1
53+00	LT	18" CMP	1
53+50	LT	18" CMP	1
PROJECT 4997-00-64 SUBTOTAL			8
		TOTAL	8

REMOVING PAVEMENT ITEMS

STA	STA	DESCRIPTION	ITEM NO. 204.0120 REMOVING ASPHALTIC SURFACE MILLING SY	AVERAGE DEPTH
11+53	29+50	CTH C	7690	4"
29+50	62+77	CTH C	10500	4"
600+00	624+50	HICKORY	2750	4"
PROJECT 4997-00-64 SUBTOTAL			20940	
		TOTAL	20940	

* MILLINGS TO BE HAULED BY DOOR COUNTY AND TO BECOME DOOR COUNTY PROPERTY.

REMOVING CURB & GUTTER ITEMS

STA	STA	DESCRIPTION	ITEM NO. 204.0150 REMOVING CURB & GUTTER LF
11+40	29+50	CTH C	475
29+50	62+77	CTH C	3605
310+24	315+59	MAPLE ST	845
601+00	616+92	HICKORY ST	52
PROJECT 4997-00-64 SUBTOTAL			4977
		TOTAL	4977

REMOVING SIDEWALK ITEMS

STA	STA	DESCRIPTION	ITEM NO. 204.0155 REMOVING CONCRETE SIDEWALK SY
400+40	401+00	JUNIPER ST	48
PROJECT 4997-00-64 SUBTOTAL			48
		TOTAL	48

REMOVING MANHOLES AND INLETS

STA	DESCRIPTION	ITEM NO. 204.0210 REMOVING MANHOLES EACH	ITEM NO. 204.0220 REMOVING INLETS EACH
606+04	HICKORY ST	1	--
606+62	HICKORY ST	1	--
609+94	HICKORY ST	1	--
611+30	HICKORY ST	1	--
615+35	HICKORY ST	1	--
615+54	HICKORY ST	--	1
PROJECT 4997-00-64 SUBTOTAL		5	1
	TOTAL	5	1

REMOVING STORM SEWER

STA	STA	DESCRIPTION	ITEM NO. 204.0245 REMOVING STORM SEWER SIZE (12-INCH) LF
606+00	611+33	HICKORY ST	535
615+35	616+78	HICKORY ST	143
PROJECT 4997-00-64 SUBTOTAL			678
		TOTAL	678

ABANDONING MANHOLES

STA	DESCRIPTION	ITEM NO. 204.0250 ABANDONING MANHOLES EACH
613+30, LT	HICKORY ST	1
614+08, LT	HICKORY ST	1
PROJECT 4997-00-64 SUBTOTAL		2
	TOTAL	2

ALL ITEMS ON THIS PAGE ARE CATEGORY CODE 0010 UNLESS OTHERWISE NOTED.

EARTHWORK SUMMARY TABLE

Division	From/To Station	Location	Common Excavation (1) (#205.0100) Cut (2)	Common Excavation (1) (#205.0100) EBS Excavation (3)	Salvaged /Unusable Pavement Material (4)	Available Material (5)	Unexpanded Fill	Expanded Fill (6) Factor 1.25	Mass Ordinate +/- (7)	Waste	Comment:
1	14+50 - 29+50	CTH C Resurface	658	0	0	658	226	283	376	376	
2	29+50 - 62+77.12	CTH C Reconstruct	7838	0	0	7838	2196	2745	5093	5093	
3	15+61 - 18+23	Maple	4982	0	0	4982	66	83	4900	4900	
Grand Total			13478	0	0	13478	2488	3110	10368	10369	
			Total Common Exc	13478							

1) Common Excavation is the sum of the Cut and EBS Excavation columns. Item number 205.0100
2) Salvaged/Unsuable Pavement Material is included in Cut in reconstruction area.
3) EBS Excavation to be backfilled with Select Borrow material. Note: this is designers choice, can be backfilled with Borrow, or Cut as well.
4) Salvaged/Unusable Pavement Material
5) Available Material = Cut - Salvaged/Unusuable Pavement Material
6) Expanded Fill. Factor = 1.25
Depending on selections:

Expanded Fill = (Unexpanded Fill - Rock* Rock Factor - Reduced Marsh - Reduced EBS) * Fill Factor

Or Expanded Fill = (Unexpanded Fill - Rock* Rock Factor - Reduced EBS) * Fill Factor
Or Expanded Fill = (Unexpanded Fill - Rock* Rock Factor - Reduced Marsh) * Fill Factor
Or Expanded Fill = (Unexpanded Fill - Rock* Rock Factor) * Fill Factor

7) The Mass Ordinate + or - Qty calculated for the Division. Plus quantity indicates an excess of material within the Division. Minus indicates a shortage of material within the Division.

BASE ITEMS

STA	STA	DESCRIPTION	ITEM NO. 305.0110 BASE AGGREGATE DENSE 3/4 INCH DRIVEWAY (CONCRETE) TON	DRIVEWAY (BEHIND ASPHALT) TON	DRIVEWAY (ASPHALTIC SURFACE) TON	SIDEWALK TON
11+40	62+77	CTH C	170	39	397	1285
PROJECT 4997-00-64 SUBTOTAL			170	39	397	1285
		TOTAL		1892		

BASE ITEMS

STA	STA	DESCRIPTION	ITEM NO. 305.0120 BASE AGGREGATE DENSE 1-1/4 INCH TON
29+50	62+77	CTH C	12335
21+50	29+50	CTH C	375
601+00	616+75	HICKORY ST	1206
		TEMPORARY ACCESS	384
PROJECT 4997-00-64 SUBTOTAL			14300
		TOTAL	14300

DRIVEWAY ITEMS

STA	STA	DESCRIPTION	ITEM NO. 416.0160 CONCRETE DRIVEWAY 6-INCH SY
11+40	29+50	CTH C	170
29+50	62+77	CTH C	641
PROJECT 4997-00-64 SUBTOTAL			811
		TOTAL	811

PAVEMENT ITEMS

STA	STA	DESCRIPTION	ITEM NO. 211.0100 PREPARE FOUNDATION FOR ASPHALTIC PAVING ID 4997-00-64 LS	ITEM NO. 455.0605 TACK COAT GAL	ITEM NO. 460.4110.S REHEATING HMA PAVEMENT LONGITUDINAL JOINTS	ITEM NO. 460.5223 HMA PAVEMENT 3 LT 58-28 S TON	ITEM NO. 460.5224 HMA PAVEMENT 4 LT 58-28 S TON	ITEM NO. 465.0105 ASPHALTIC SURFACE TON
11+40	29+50	CTH C	--	530	1810	84	833	--
29+50	62+77	CTH C	--	879	6650	1900	1382	--
310+24	315+59	MAPLE ST	--	128	1070	276	201	--
601+00	616+92	HICKORY ST	--	127	0	--	--	348
		PROJECT	1	--	0	--	--	--
PROJECT 4997-00-64 SUBTOTAL			1	1664	9530	2260	2416	348
		TOTAL		1664	9530	2260	2416	348

PAVEMENT ITEMS

STA	STA	DESCRIPTION	ITEM NO. 465.0120 ASPHALTIC SURFACE DRIVEWAYS AND FIELD ENTRANCES TON
11+40	29+50	CTH C	56
29+50	62+77	CTH C	256
PROJECT 4997-00-64 SUBTOTAL			312
		TOTAL	312

ALL ITEMS ON THIS PAGE ARE CATEGORY CODE 0010 UNLESS OTHERWISE NOTED.

3

SIDEWALK ITEMS

STA	STA	DESCRIPTION	ITEM NO. 602.0410 CONCRETE SIDEWALK 5-INCH SF
11+40	62+77	CTH C	55365
PROJECT 4997-00-64 SUBTOTAL			**55365**
		TOTAL	**55365**

CURB RAMP ITEMS

STA	STA	DESCRIPTION	2.5 X 2 EACH	2.5 X 2 SF	ITEM NO. 602.0515 CURB RAMP DETECTABLE WARNING FIELD NATURAL PATINA SF
11+40	62+77	CTH C	55	275	275
PROJECT 4997-00-64 SUBTOTAL					**275**
		TOTAL			**275**

CURB ITEMS

STA	STA	DESCRIPTION	ITEM NO. 601.0600 CONCRETE CURB PEDESTRIAN LF
61+33	61+40	CTH C	10
PROJECT 4997-00-64 SUBTOTAL			**10**
		TOTAL	**10**

3

TRAFFIC CONTROL ITEMS

LOCATION	DAYS IN SERVICE	ITEM NO. 643.5000 TRAFFIC CONTROL NO.	ITEM NO. 643.0300 TRAFFIC CONTROL DRUMS NO.	DAYS	ITEM NO. 643.0420 TRAFFIC CONTROL BARRICADES TYPE III NO.	DAYS	ITEM NO. 643.0900 TRAFFIC CONTROL SIGNS NO.	DAYS	ITEM NO. 643.0705 TRAFFIC CONTROL WARNING LIGHTS TYPE A NO.	DAYS	ITEM NO. 643.0715 TRAFFIC CONTROL WARNING LIGHTS TYPE C NO.	DAYS
ADVANCED WARNING - MAINLINE	182	---	0	0	18	3,276	7	1,274	36	6,552	0	0
ADVANCED WARNING - SIDEROADS	182	---	0	0	28	5,096	42	7,644	56	10,192	0	0
WORK ZONE	182	---	50	9,100	9	1,638	4	728	18	3,276	20	3,640
UNDISTRIBUTED		1		50		40		54		30		60
PROJECT TOTALS		**1**		**9,150**		**10,050**		**9,700**		**20,050**		**3,700**

PAVEMENT MARKING

LOCATION	646.1020 MARKING LINE EPOXY 4-INCH YELLOW LF	646.1020 MARKING LINE EPOXY 4-INCH WHITE LF	646.3020 MARKING LINE EPOXY 8-INCH LF	646.5020 MARKING ARROW EPOXY TYPE 2 EACH	646.5020 MARKING ARROW EPOXY BIKE LANE EACH	646.5220 MARKING SYMBOL EPOXY BIKE LANE EACH	646.5220 MARKING SYMBOL EPOXY BIKE SHARED LANE EACH	646.5120 MARKING WORD EPOXY (ONLY) EACH	646.6020 MARKING STOP LINE EPOXY 12-INCH LF	646.6120 MARKING STOP LINE EPOXY 18-INCH LF	646.7120 MARKING DIAGONAL EPOXY 12-INCH LF	646.7405 MARKING CROSSWALK EPOXY TRANSVERSE LINE 6-INCH LF
STH 42 - ENTRANCE AT 17+25	1388	723	100	2	3	3	1	1	---	41	30	62
ENTRANCE AT 17+25 - SPRUCE	828	764	190	2	2	2	---	1	---	---	---	86
SPRUCE - OAK	2820	2677	220	2	9	9	---	1	---	---	---	60
OAK TO MAPLE	595	570	---	---	2	2	---	---	---	---	---	---
MAPLE TO JUNIPER	1037	1037	---	---	4	4	---	---	---	---	---	135
JUNIPER TO BARRICK	603	675	---	---	2	2	---	---	---	---	---	60
BARRICK TO HICKORY	805	862	---	---	2	2	---	---	---	---	---	60
HICKORY TO ELM (CTH C WEST)	1600	1566	---	---	6	6	---	---	---	16	---	---
ENTRANCE AT 17+25	---	---	---	---	---	---	---	---	11	---	---	57
SRPUCE	---	---	---	---	---	---	---	---	33	---	---	180
OAK	---	---	---	---	---	---	---	---	32	---	---	153
MAPLE	724	---	---	---	---	---	---	---	37	---	---	174
JUNIPER	---	---	---	---	---	---	---	---	17	---	---	78
BARRICK	---	---	---	---	---	---	---	---	12	---	---	56
HICKORY	---	---	---	---	---	---	---	---	17	---	---	78
Sub-Total	10400	8874		6	30	30	1					
Total	**19274**		**510**	**36**		**31**		**3**	**159**	**57**	**30**	**1239**

ALL ITEMS ON THIS PAGE ARE CATEGORY CODE 0010 UNLESS OTHERWISE NOTED.

3

ERECTION & REMOVAL OF PERMANENT SIGNING, TYPE II

SIGN NO.	LOCATION	SIGN CODE	W X H	637.2210 SIGNS TYPE II REFLECTIVE H S.F.	637.2230 SIGNS TYPE II REFLECTIVE F S.F.	634.0614 POSTS WOOD 4X6-INCH X 14 FT EACH	634.0616 POSTS WOOD 4X6-INCH X 16 FT EACH	634.0620 POSTS WOOD 4X6-INCH X 20 FT EACH	637.0620 SIGN FLAGS PERMANENT TYPE II EACH	638.2602 REMOVING SIGNS TYPE II EACH	638.3000 REMOVING SMALL SIGN SUPPORTS EACH	REMARKS
1	13+15, RT	M1-5A	24" X 24"	4.00	---	1	---	---	---	---	---	
2	15+50, RT	R7-9A	18" X 24"	3.00	---	1	---	---	---	---	---	
3	16+25, LT	R7-9A	18" X 24"	3.00	---	1	---	---	---	---	---	
4	17+05, LT	R1-1		---	---	---	---	---	---	1	1	
5	17+05, LT	R1-1	30" X 30"	5.18	---	1	---	---	---	---	---	
6	17+90, LT	R7-9A	18" X 24"	3.00	---	1	---	---	---	---	---	
7	18+00, RT	R3-8A	36" X 30"	7.50	---	1	---	---	---	---	---	
8	19+00, LT	JV1-2	24" X 75"	12.50	---	---	---	1	---	---	---	
9	20+00, LT	R7-9A	18" X 24"	3.00	---	1	---	---	---	---	---	
10	20+55, RT	R7-9A	18" X 24"	3.00	---	1	---	---	---	---	---	
11	20+70, LT	J1-2		---	---	---	---	---	---	4	1	
12	20+70, LT	J1-2		---	---	---	---	---	---	4	1	
13	21+00, LT	JV1-2	24" X 63"	10.50	---	---	1	---	---	---	---	
14	21+35, LT	R1-1	30" X 30"	5.18	---	1	---	---	---	---	---	
15	21+35, LT	R1-1		---	---	---	---	---	---	1	1	
16	21+05, RT	R1-1		---	---	---	---	---	---	1	1	
17	21+05, RT	R1-1	30" X 30"	5.18	---	1	---	---	---	---	---	
18	22+50, LT	R7-9A	18" X 24"	3.00	---	1	---	---	---	---	---	
19	22+50, RT	R7-9A	18" X 24"	3.00	---	1	---	---	---	---	---	
20	25+25, LT	R3-8	36" X 30"	7.50	---	1	---	---	---	---	---	
21	25+70, RT	R2-1	24" X 30"	5.00	---	---	1	---	---	---	---	
	25+70, RT	R7-9A	18" X 24"	3.00	---	---	---	---	---	---	---	MOUNT UNDER R2-1
22	26+15, LT	R2-1	24" X 30"	5.00	---	---	1	---	---	---	---	
	26+15, LT	R7-9A	18" X 24"	3.00	---	---	---	---	---	---	---	MOUNT UNDER R2-1
23	27+50, RT	R2-1		---	---	---	---	---	---	1	1	
24	33+50, LT	R7-9A	18" X 24"	3.00	---	1	---	---	---	---	---	
25	33+50, RT	R7-9A	18" X 24"	3.00	---	1	---	---	---	---	---	
26	33+55, LT	R5-52R		---	---	---	---	---	---	1	1	
27	35+50, RT	R7-9A	18" X 24"	3.00	---	1	---	---	---	---	---	
28	35+50, LT	R7-9A	18" X 24"	3.00	---	1	---	---	---	---	---	
29	35+75, RT	W3-1		---	---	---	---	---	---	1	1	
30	36+25, LT	R1-1	30" X 30"	5.18	---	1	---	---	---	---	---	
31	36+28, LT	R1-1		---	---	---	---	---	---	1	1	
32	36+40, RT	R1-1		---	---	---	---	---	---	1	1	
33	36+42, RT	R1-1	30" X 30"	5.18	---	1	---	---	---	---	---	
34	36+75, RT	R7-9A	18" X 24"	3.00	---	1	---	---	---	---	---	
35	37+00, LT	R7-9A	18" X 24"	3.00	---	1	---	---	---	---	---	
36	38+50, RT	M1-5A	24" X 24"	4.00	---	1	---	---	---	---	---	
37	38+50, LT	M1-5A	24" X 24"	4.00	---	1	---	---	---	---	---	
38	39+15, RT	R1-1/ R1-3		---	---	---	---	---	---	2	1	
39	39+25, LT	R1-1/ R1-3		---	---	---	---	---	---	2	1	
40	39+30, RT	R7-9A	18" X 24"	3.00	---	1	---	---	---	---	---	
41	39+35, LT	R7-9A	18" X 24"	3.00	---	1	---	---	---	---	---	
PAGE SUBTOTALS				**136.90**	**0.00**	**25**	**3**	**1**	**0**	**20**	**12**	

CONTINUED ON NEXT PAGE

ALL ITEMS ON THIS PAGE ARE CATEGORY CODE 0010 UNLESS OTHERWISE NOTED.

ERECTION & REMOVAL OF PERMANENT SIGNING, TYPE II, CONTINUED FROM PREVIOUS PAGE

SIGN NO.	LOCATION	SIGN CODE	W X H	637.2210 SIGNS TYPE II REFLECTIVE H S.F.	637.2230 SIGNS TYPE II REFLECTIVE F S.F.	634.0614 POSTS WOOD 4X6-INCH X 14 FT EACH	634.0616 POSTS WOOD 4X6-INCH X 16 FT EACH	634.0620 POSTS WOOD 4X6-INCH X 20 FT EACH	637.0620 SIGN FLAGS PERMANENT TYPE II EACH	638.2602 REMOVING SIGNS TYPE II EACH	638.3000 REMOVING SMALL SIGN SUPPORTS EACH	REMARKS
42	39+80, LT	R1-1	30" X 30"	5.18	---	1	---	---	---	---	---	
	39+80, LT	W4-4P	24" X 12"	---	2.00	---	---	---	---	---	---	MOUNT UNDER R1-1
43	39+95, LT	J12-1		---	---	---	---	---	---	2	1	
44	40+30, LT	R1-1/R1-3		---	---	---	---	---	---	2	1	
45	40+30, RT	R1-1	30" X 30"	5.18	---	1	---	---	---	---	---	
	40+30, RT	W4-4P	24" X 12"	---	2.00	---	---	---	---	---	---	MOUNT UNDER R1-1
46	40+30, RT	R1-1/R1-3		---	---	---	---	---	---	2	1	
47	40+70, RT	R2-1	24" X 30"	5.00	---	---	1	---	---	---	---	
	40+70, RT	R7-9A	18" X 24"	3.00	---	---	---	---	---	---	---	MOUNT UNDER R2-1
48	40+70, LT	R2-1	24" X 30"	5.00	---	---	1	---	---	---	---	
	40+70, LT	R7-9A	18" X 24"	3.00	---	---	---	---	---	---	---	MOUNT UNDER R2-1
49	44+50, RT	R7-51L		---	---	---	---	---	---	1	1	
50	45+05, RT	R7-9A	18" X 24"	3.00	---	1	---	---	---	---	---	
51	45+10, LT	R7-9A	18" X 24"	3.00	---	1	---	---	---	---	---	
52	46+12, RT	R1-2		---	---	---	---	---	---	1	1	
53	46+12, RT	R1-1	30" X 30"	5.18	---	1	---	---	2	---	---	
54	47+10, RT	R7-9A	18" X 24"	3.00	---	1	---	---	---	---	---	
55	47+00, LT	R2-1		---	---	---	---	---	---	1	1	
56	48+70, LT	S4-51		---	---	---	---	---	---	1	1	
57	49+15, LT	R2-1	24" X 30"	5.00	---	---	1	---	---	---	---	
	49+15, LT	R7-9A	18" X 24"	3.00	---	---	---	---	---	---	---	MOUNT UNDER R2-1
58	49+50, LT	R1-1	30" X 30"	5.18	---	1	---	---	---	---	---	
59	49+50, LT	R1-1		---	---	---	---	---	---	1	1	
60	50+20, RT	R2-1	24" X 30"	5.00	---	---	1	---	---	---	---	
	50+20, RT	R7-9A	18" X 24"	3.00	---	---	---	---	---	---	---	MOUNT UNDER R2-1
61	53+80, LT	R7-9A	18" X 24"	3.00	---	1	---	---	---	---	---	
62	54+55, RT	R1-1		---	---	---	---	---	---	1	1	
63	54+55, RT	R1-1	30" X 30"	5.18	---	1	---	---	---	---	---	
64	55+00, RT	R7-9A	18" X 24"	3.00	---	1	---	---	---	---	---	
65	56+25, RT	W3-1	-- X --	---	---	---	---	---	---	1	1	
66	57+05, RT	J12-1	24" X 45"	7.50	---	1	---	---	---	---	---	
67	57+05, RT	J12-1		---	---	---	---	---	---	2	1	
68	59+80, LT	R2-1	24" X 30"	5.00	---	---	1	---	---	---	---	
	59+80, LT	D12-50	36" X 36"	---	---	---	---	---	---	---	---	MOUNT SIGN FROM POST 70 UNDER R2-1
69	60+00, RT	R7-9A	18" X 24"	3.00	---	1	---	---	---	---	---	
70	60+35, LT	R2-1/D12-50		---	---	---	---	---	---	2	1	MOUNT SALVAGED SIGN ON POST 68
71	60+85, LT	M1-5A	24" X 24"	4.00	---	1	---	---	---	---	---	
72	62+00, LT	R7-9A	18" X 24"	3.00	---	1	---	---	---	---	---	
73	62+05, RT	J12-1		---	---	---	---	---	---	2	1	
74	62+60, RT	R1-1	30" X 30"	5.18	---	1	---	---	---	---	---	
75	62+60, RT	J12-1	24" X 45"	7.50	---	---	1	---	---	---	---	
76	62+60, RT	R1-1		---	---	---	---	---	---	1	1	
PAGE SUBTOTALS				**108.08**	**4.00**	**15**	**6**	**0**	**2**	**20**	**14**	
PROJECT TOTALS				**244.98**	**4.00**	**40**	**9**	**1**	**2**	**40**	**26**	

ALL ITEMS ON THIS PAGE ARE CATEGORY CODE 0010 UNLESS OTHERWISE NOTED.

STORM SEWER PIPE SUMMARY

PIPE NUMBER	FROM	TO	ITEM NO. 520.8000 CONCRETE COLLARS FOR PIPE EACH	ITEM NO. 608.0005 STORM SEWER ROCK EXCAVATION CY	ITEM NO. 608.0312 CLASS III 12-INCH L.F.	ITEM NO. 608.0315 CLASS III 15-INCH L.F.	ITEM NO. 608.0318 CLASS III 18-INCH L.F.	ITEM NO. 608.0324 CLASS III 24-INCH L.F.	ITEM NO. 608.0330 CLASS III 30-INCH L.F.	ITEM NO. 608.0336 CLASS III 36-INCH L.F.	ITEM NO. 608.0342 CLASS III 42-INCH L.F.	ITEM NO. 608.0424 CLASS IV 24-INCH L.F.	INVERT ELEV	DISCHARGE ELEV	PIPE SLOPE %
					STORM SEWER PIPE REINFORCED CONCRETE										
P0	CB55	EXISTING	--	--	37	--	--	--	--	--	--	--	690.05	689.41	1.72%
P1	MH56	MH1	--	--	--	--	--	33	--	--	--	--	639.20	692.87	1.00%
P2	CB2	MH1	--	--	31	--	--	--	--	--	--	--	692.89	692.66	0.75%
P3	MH55	MH36	--	--	--	--	--	42	--	--	--	--	692.77	692.35	1.00%
P4	MH1	MH36	--	--	--	--	--	26	--	--	--	--	692.54	692.35	0.72%
P5	MH36	MH2	--	--	--	--	--	219	--	--	--	--	692.35	690.77	0.72%
P6	MH2	MH3	--	--	--	--	--	305	--	--	--	--	690.77	689.69	0.35%
P7	CB4	MH2	--	--	27	--	--	--	--	--	--	--	691.27	691.00	1.00%
P8	MH2	CB3	--	--	--	19	--	--	--	--	--	--	691.04	691.23	1.00%
P9	CB3	CB50	--	--	7	--	--	--	--	--	--	--	691.48	691.55	1.00%
P10	CB5	MH3	--	--	21	--	--	--	--	--	--	--	690.38	690.17	1.00%
P11	MH3	CB6	--	--	--	13	--	--	--	--	--	--	689.87	690.00	1.00%
P12	CB6	CB51	--	--	8	--	--	--	--	--	--	--	690.24	690.32	1.00%
P13	MH3	MH4	--	--	--	--	--	300	--	--	--	--	689.69	688.72	0.32%
P14	MH4	MH5	--	--	--	--	--	210	--	--	--	--	688.72	687.22	0.71%
P15	MH5	MH6	--	--	--	--	--	--	105	--	--	--	686.72	685.97	0.71%
P16	CB7	MH4	--	--	16	--	--	--	--	--	--	--	689.41	689.24	1.03%
P17	MH4	CB8	--	--	16	--	--	--	--	--	--	--	689.24	689.41	1.03%
P18	INL1	MH5	--	--	--	--	37	--	--	--	--	--	688.61	688.24	1.00%
P19	CB10	MH6	--	--	16	--	--	--	--	--	--	--	687.11	686.95	0.97%
P20	MH6	CB11	--	--	16	--	--	--	--	--	--	--	687.00	687.16	0.97%
P21	MH6	MH7	--	--	--	--	--	--	--	235	--	--	685.47	683.42	0.87%
P22	MH7	MH8	--	--	--	--	--	--	--	44	--	--	683.42	682.95	1.08%
P23	MH8	MH9	--	32	--	--	--	--	--	361	--	--	682.95	670.20	3.53%
P24	MH9	MH13	--	--	--	--	--	--	--	49	--	--	670.20	668.20	4.05%
P25	INL2	MH7	--	--	37	--	--	--	--	--	--	--	685.34	684.97	1.00%
P26	CB14	CB15	--	--	33	--	--	--	--	--	--	--	684.78	684.43	1.00%
P27	CB15	CB16	--	--	--	38	--	--	--	--	--	--	684.18	683.81	0.99%
P28	CB16	MH8	--	--	--	21	--	--	--	--	--	--	683.81	683.65	0.77%
P29	MH8	CB13	--	--	22	--	--	--	--	--	--	--	684.82	685.55	3.35%
P30	CB17	MH9	--	--	17	--	--	--	--	--	--	--	672.12	671.93	1.10%
P31	MH9	CB18	--	--	17	--	--	--	--	--	--	--	671.73	671.89	0.93%
P32	MH13	MH14	--	--	--	--	--	--	--	126	--	--	668.20	666.02	1.74%
P33	MH14	MH15	--	--	--	--	--	--	--	130	--	--	666.02	665.76	0.20%
P34	MH15	MH17	--	--	--	--	--	--	--	290	--	--	665.77	664.86	0.31%
P35	CB29	MH14	--	--	17	--	--	--	--	--	--	--	667.71	667.55	0.97%
P36	MH14	CB30	--	--	17	--	--	--	--	--	--	--	667.55	667.71	0.97%
P37	INL3	MH15	--	--	--	--	38	--	--	--	--	--	668.29	667.91	1.00%
P38	CB33	MH17	--	--	--	17	--	--	--	--	--	--	666.00	665.84	0.97%
P39	MH17	CB34	--	--	17	--	--	--	--	--	--	--	666.39	666.55	0.97%
P40	MH17	MH18	--	--	--	--	--	--	--	380	--	--	664.86	654.87	2.63%
P41	MH18	MH19	--	--	--	--	--	--	--	225	--	--	654.87	649.15	2.54%
P42	CB38	CB37	--	--	27	--	--	--	--	--	--	--	656.57	656.30	1.00%
P43	CB37	CB36	--	--	--	33	--	--	--	--	--	--	656.05	655.72	0.99%
P44	CB36	MH18	--	--	--	17	--	--	--	--	--	--	655.72	655.56	0.97%
P45	MH18	CB35	--	--	17	--	--	--	--	--	--	--	657.01	657.17	0.97%
P46	CB39	MH19	--	--	17	--	--	--	--	--	--	--	650.97	650.80	1.03%
P47	MH19	CB40	--	--	17	--	--	--	--	--	--	--	650.69	650.85	0.97%
PAGE SUB-TOTALS			0	32	450	158	75	1135	105	1840	0	0			

TABLE CONTINUED ON NEXT PAGE.

ALL ITEMS ON THIS PAGE ARE CATEGORY CODE 0010 UNLESS OTHERWISE NOTED.

STORM SEWER PIPE SUMMARY - CONTINUED FROM PREVIOUS PAGE.

PIPE			ITEM NO. 520.8000 CONCRETE COLLARS FOR PIPE	ITEM NO. 608.0005 STORM SEWER ROCK EXCAVATION	ITEM NO. 608.0312 CLASS III 12-INCH	ITEM NO. 608.0315 CLASS III 15-INCH	ITEM NO. 608.0318 CLASS III 18-INCH	ITEM NO. 608.0324 CLASS III 24-INCH	ITEM NO. 608.0330 CLASS III 30-INCH	ITEM NO. 608.0336 CLASS III 36-INCH	ITEM NO. 608.0342 CLASS III 42-INCH	ITEM NO. 608.0424 CLASS IV 24-INCH	INVERT	DISCHARGE	PIPE SLOPE
					STORM SEWER PIPE REINFORCED CONCRETE										
P48	MH19	MH20	--	--	--	--	--	--	--	240	--	--	649.15	643.42	2.39%
P49	MH20	MH21	--	--	--	--	--	--	--	33	--	--	643.42	642.72	2.13%
P50	CB41	MH20	--	--	17	--	--	--	--	--	--	--	645.64	645.48	0.97%
P51	MH20	CB42	--	--	17	--	--	--	--	--	--	--	644.96	645.12	0.97%
P52	CB43	MH22	--	--	17	--	--	--	--	--	--	--	640.73	640.57	0.97%
P53	MH22	CB44	--	--	17	--	--	--	--	--	--	--	640.57	640.73	0.97%
P54	MH22	MH23	--	--	--	--	--	300	--	--	--	--	640.03	633.36	2.22%
P55	MH23	MH24	--	--	--	--	--	100	--	--	--	--	633.36	631.22	2.14%
P56	MH24	MH54	--	--	--	--	--	--	--	--	--	220	631.22	628.26	1.35%
P57	MH54	EX MH	--	--	--	--	--	--	--	--	--	76	628.26	627.91	0.46%
P58	CB45	MH23	--	--	17	--	--	--	--	--	--	--	634.06	633.90	0.97%
P59	MH23	CB46	--	--	17	--	--	--	--	--	--	--	633.90	634.06	0.97%
P60	INL4	MH24	--	--	--	--	40	--	--	--	--	--	632.17	631.77	1.00%
P61	CB49	MH54	--	--	17	--	--	--	--	--	--	--	628.72	628.56	1.00%
P62	MH54	CB48	--	--	17	--	--	--	--	--	--	--	628.52	628.69	1.00%
P65	MH12	MH13	--	--	--	--	--	43	--	--	--	--	668.97	668.70	63.00%
P66	CB21	CB22	--	--	21	--	--	--	--	--	--	--	672.75	672.18	2.72%
P67	CB22	CB27	--	--	--	21	--	--	--	--	--	--	671.93	670.48	6.92%
P68	CB20	CB25	--	--	--	19	--	--	--	--	--	--	671.54	670.45	5.72%
P69	CB19	CB20	--	--	19	--	--	--	--	--	--	--	672.82	671.74	5.41%
P72	CB27	CB28	--	--	--	21	--	--	--	--	--	--	670.48	669.88	2.91%
P73	CB28	MH12	--	--	--	--	17	--	--	--	--	--	669.63	669.47	0.97%
P74	CB26	MH12	--	--	--	--	17	--	--	--	--	--	669.96	669.80	0.97%
P75	CB25	CB26	--	--	--	19	--	--	--	--	--	--	670.45	670.21	1.24%
P76	MH21	MH27	--	60	--	--	--	--	--	328	--	--	642.72	623.36	5.91%
P77	MH27	MH35	--	74	--	--	--	--	--	150	--	--	623.36	616.40	4.63%
P78	CB53	MH27	--	--	7	--	--	--	--	--	--	--	625.32	625.25	1.00%
P79	MH35	MH28	--	60	--	--	--	--	--	126	--	--	616.40	612.81	2.85%
P80	MH28	MH29	--	16	--	--	--	--	--	--	58	--	612.31	611.79	0.90%
P81	MH29	MH30	--	81	--	--	--	--	--	--	333	--	611.79	610.91	0.26%
P82	MH30	MH31	--	3	--	--	--	--	--	--	136	--	610.91	610.24	0.49%
P83	MH28	INLET	--	--	5	--	--	--	--	--	--	--	614.28	614.46	3.48%
P84	MH28	LATERAL	1	--	8	--	--	--	--	--	--	--	614.46	614.55	1.08%
P85	MH29	LATERAL	1	--	8	--	--	--	--	--	--	--	613.84	613.56	3.47%
P86	MH30	LATERAL	--	--	8	--	--	--	--	--	--	--	612.75	612.37	4.71%
P87	MH31	INLET	--	--	5	--	--	--	--	--	--	--	613.16	612.69	9.77%
P88	MH31	LATERAL	1	--	9	--	--	--	--	--	--	--	612.27	612.37	1.12%
P89	MH31	MH32	--	--	--	--	--	--	--	198	--	--	610.24	606.85	1.71%
P90	MH32	MH33	--	65	--	--	--	--	--	177	--	--	606.85	592.50	8.12%
P91	MH33	CB52	--	59	--	--	--	--	--	50	--	--	592.00	586.00	11.93%
P92	CB52	MH34	--	24	--	--	--	--	--	55	--	--	585.50	578.70	12.35%
P93	MH34	EX SHEET PILE	--	9	--	--	--	--	--	67	--	--	578.70	578.50	0.30%
P94	MH32	LATERAL	1	--	--	--	--	8	--	--	--	--	609.91	609.78	1.67%
P95	CB52	LATERAL	1	--	8	--	--	--	--	--	--	--	589.17	588.64	6.63%
UNDISTRIBUTED			--	102	--	--	--	--	--	--	--	--	--	--	--
PAGE SUB-TOTALS			5	553	234	80	74	451	0	1424	527	296			
TOTALS			**5**	**585**	**684**	**238**	**149**	**1586**	**105**	**3264**	**527**	**296**			

ALL ITEMS ON THIS PAGE ARE CATEGORY CODE 0010 UNLESS OTHERWISE NOTED.

DRAINAGE STRUCTURES

STRUC. NO.	STA.	OFFSET	STRUC. TYPE	ITEM NO. 611.0530 MANHOLE COVERS TYPE J EACH	ITEM NO. 611.0612 INLET COVERS TYPE C EACH	ITEM NO. 611.0624 INLET COVERS TYPE H EACH	ITEM NO. 611.0642 INLET COVERS TYPE MS EACH	ITEM NO. 611.1230 CATCH BASINS 2x3-FT EACH	ITEM NO. 611.2004 MANHOLES 4-FT DIAMETER EACH	ITEM NO. 611.2005 MANHOLES 5-FT DIAMTER EACH	ITEM NO. 611.2006 MANHOLES 6-FT DIAMTER EACH	ITEM NO. 611.2007 MANHOLES 7-FT DIAMETER EACH	ITEM NO. 611.2008 MANHOLES 8-FT DIAMETER EACH	ITEM NO. 611.3230 INLET 2x3-FT EACH	ITEM NO. 611.3901 INLETS MDEIAN 1 GRATE EACH	ITEM NO. 611.3902 INLETS MEDIAN 2 GRATE EACH	RIM OR RIM/FLANGE ELEV.	STRUCTURE INVERT ELEV.	DEPTH
CB55	17+36	31.5' LT	CB	--	--	1	--	1	--	--	--	--	--	--	--	--	694.05	690.05	5.17
MH56	21+21	22.7' LT	MH	--	--	1	--	--	1	--	--	--	--	--	--	--	697.30	693.20	5.27
MH1	21+50	6' LT	MH	1	--	--	--	--	--	1	--	--	--	--	--	--	697.43	692.54	3.82
MH36	21+76	5.8' LT	MH	1	--	--	--	--	--	1	--	--	--	--	--	--	697.21	692.35	3.79
CB2	21+40	23' RT	INLET	--	--	1	--	--	--	--	--	--	--	1	--	--	696.55	692.89	4.83
MH55	21+76	47.7' LT	MH	--	--	1	--	--	1	--	--	--	--	--	--	--	697.38	692.77	5.78
CB4	23+95	22.9' RT	CB	--	--	1	--	1	--	--	--	--	--	--	--	--	695.27	691.27	5.17
MH2	23+95	4' LT	MH	1	--	--	--	--	1	--	--	--	--	--	--	--	695.72	690.77	3.88
CB3	24+00	22.8' LT	CB	--	--	1	--	1	--	--	--	--	--	--	--	--	695.43	691.23	5.37
CB50	23+93	22.8' LT	CB	--	--	1	--	1	--	--	--	--	--	--	--	--	695.55	691.55	5.17
CB5	27+00	16.8' RT	CB	--	--	1	--	1	--	--	--	--	--	--	--	--	694.38	690.38	5.17
MH3	27+00	4' LT	MH	1	--	--	--	--	1	--	--	--	--	--	--	--	694.60	689.69	3.84
CB6	27+00	16.9' LT	CB	--	--	1	--	1	--	--	--	--	--	--	--	--	694.39	690.00	5.56
CB51	26+92	16.9' LT	CB	--	--	1	--	1	--	--	--	--	--	--	--	--	694.32	690.32	5.17
CB7	30+00	16.5' RT	CB	--	--	1	--	1	--	--	--	--	--	--	--	--	693.41	689.41	5.17
MH4	30+00	0'	MH	1	--	--	--	--	1	--	--	--	--	--	--	--	693.72	688.72	3.93
CB8	30+00	16.5' LT	CB	--	--	1	--	1	--	--	--	--	--	--	--	--	693.41	689.41	5.17
MH5	32+10	0'	MH	1	--	--	--	--	1	--	--	--	--	--	--	--	692.22	686.72	4.43
INL1	32+10	37' LT	INLET	--	--	--	1	--	--	--	--	--	--	1	--	1	690.78	688.61	4.17
CB10	33+15	16.5' RT	CB	--	--	1	--	1	--	--	--	--	--	--	--	--	691.12	687.11	5.18
MH6	33+15	0'	MH	1	--	--	--	--	--	1	--	--	--	--	--	--	691.47	685.47	4.93
CB11	33+15	16.5' LT	CB	--	--	1	--	1	--	--	--	--	--	--	--	--	691.16	687.16	5.17
MH7	35+50	0'	MH	1	--	--	--	--	--	1	--	--	--	--	--	--	689.42	683.42	4.93
INL2	35+50	37' LT	INLET	--	--	--	1	--	--	--	--	--	--	1	1	--	687.98	685.34	4.64
INL13	35+79	16.5' RT	INLET	--	--	1	--	--	--	--	--	--	--	1	--	--	688.80	685.55	2.42
CB16	36+06	16.5' LT	CB	--	--	1	--	1	--	--	--	--	--	--	--	--	688.62	683.81	5.98
MH8	35+94	0'	MH	1	--	--	--	--	--	--	--	--	1	--	--	--	688.95	682.95	4.93
CB14	202+33	16.5' LT	CB	--	--	1	--	1	--	--	--	--	--	--	--	--	688.54	684.78	4.93
CB15	202+33	16.5' RT	CB	--	--	1	--	1	--	--	--	--	--	--	--	--	688.58	684.18	5.57
CB17	39+50	16.5' RT	CB	--	--	1	--	1	--	--	--	--	--	--	--	--	676.12	672.12	5.17
CB18	39+60	16.5' LT	CB	--	--	1	--	1	--	--	--	--	--	--	--	--	675.89	671.89	5.17
MH13	40+04	0'	MH	1	--	--	--	--	--	--	1	--	--	--	--	--	674.18	668.20	4.91
CB29	41+30	16.5' RT	CB	--	--	1	--	1	--	--	--	--	--	--	--	--	671.73	667.71	5.19
MH14	41+30	0'	MH	1	--	--	--	--	--	1	--	--	--	--	--	--	672.03	666.02	4.94
CB30	41+30	16.5' LT	CB	--	--	1	--	1	--	--	--	--	--	--	--	--	671.77	667.71	5.23
MH15	42+60	0'	MH	1	--	--	--	--	--	1	--	--	--	--	--	--	672.36	665.76	5.53
INL3	42+60	38' LT	INLET	--	--	--	1	--	--	--	--	--	--	1	--	1	671.54	668.29	5.25
CB33	45+50	16.5' RT	CB	--	--	1	--	1	--	--	--	--	--	--	--	--	670.25	666.00	5.42
MH17	45+50	0'	MH	1	--	--	--	--	--	1	--	--	--	--	--	--	670.86	664.86	4.93
CB34	45+50	16.5' LT	CB	--	--	1	--	1	--	--	--	--	--	--	--	--	670.55	666.55	5.17
CB35	49+30	16.5 ' RT	CB	--	--	1	--	1	--	--	--	--	--	--	--	--	660.57	657.17	4.57
MH18	49+30	0'	MH	1	--	--	--	--	--	1	--	--	--	--	--	--	660.87	654.87	4.93
CB36	49+30	16.5' LT	CB	--	--	1	--	1	--	--	--	--	--	--	--	--	660.75	655.72	6.20
SUB-TOTALS				**14**	**0**	**26**	**3**	**22**	**6**	**8**	**1**	**0**	**1**	**5**	**1**	**2**			

DRAINAGE STRUCTURES - CONTINUED ON NEXT PAGE

DEPTH OF STRUCTURE IS GUTTER FLANGE OR RIM ELEVATION MINUS THE DEPTH OF FRAME AND RINGS MINUS THE FLOWLINE ELEVATION PLUS 2' SUMP. NO SUMP ON MANHOLES.

DEPTH FOR FRAME AND RINGS FOR:
TYPE J = 1.07' (INCLUDES 0.33' FOR ADJUSTING RINGS.)
TYPE H = 0.83' (INCLUDES 0.33' FOR ADJUSTING RINGS.)
TYPE C = 1.07' (INCLUDES 0.33' FOR ADJUSTING RINGS.)
TYPE MS = 0

ALL ITEMS ON THIS PAGE ARE CATEGORY CODE 0010 UNLESS OTHERWISE NOTED.

DRAINAGE STRUCTURES - CONTINUED FROM PREVIOUS PAGE

STRUC. NO.	STA.	OFFSET	STRUC. TYPE	ITEM NO. 611.0530 MANHOLE COVERS TYPE J EACH	ITEM NO. 611.0612 INLET COVERS TYPE C EACH	ITEM NO. 611.0624 INLET COVERS TYPE H EACH	ITEM NO. 611.0642 INLET COVERS TYPE MS EACH	ITEM NO. 611.1230 CATCH BASINS 2x3-FT EACH	ITEM NO. 611.2004 MANHOLES 4-FT DIAMETER EACH	ITEM NO. 611.2005 MANHOLES 5-FT DIAMTER EACH	ITEM NO. 611.2006 MANHOLES 6-FT DIAMTER EACH	ITEM NO. 611.2007 MANHOLES 7-FT DIAMTER EACH	ITEM NO. 611.2008 MANHOLES 8-FT DIAMETER EACH	ITEM NO. 611.3230 INLET 2x3-FT EACH	ITEM NO. 611.3901 INLETS MDEIAN 1 GRATE EACH	ITEM NO. 611.3902 INLETS MEDIAN 2 GRATE EACH	RIM OR RIM/FLANGE ELEV.	STRUCTURE INVERT ELEV.	DEPTH
CB37	501+92	13.5' RT	CB	--	--	1	--	1	--	--	--	--	--	--	--	--	660.40	656.05	5.52
CB38	501+92	13.5' LT	CB	--	--	1	--	1	--	--	--	--	--	--	--	--	660.46	656.57	5.06
CB39	51+55	16.5' RT	CB	--	--	1	--	1	--	--	--	--	--	--	--	--	654.85	650.97	5.05
MH19	51+55	0'	MH	1	--	--	--	--	--	1	--	--	--	--	--	--	655.15	649.15	4.93
CB40	51+55	16.5' LT	CB	--	--	1	--	1	--	--	--	--	--	--	--	--	654.85	650.85	5.17
CB41	53+95	16.5' RT	CB	--	--	1	--	1	--	--	--	--	--	--	--	--	649.14	645.64	4.67
MH20	53+95	0'	MH	1	--	--	--	--	--	1	--	--	--	--	--	--	649.43	643.42	4.94
CB42	53+95	16.5' LT	CB	--	--	1	--	1	--	--	--	--	--	--	--	--	649.12	645.12	5.17
MH21	54+28	0'	MH	1	--	--	--	--	--	--	1	--	--	--	--	--	648.72	642.72	4.93
CB43	56+00	16.5' RT	CB	--	--	1	--	1	--	--	--	--	--	--	--	--	644.73	640.73	5.17
MH22	56+00	0'	MH	1	--	--	--	--	1	--	--	--	--	--	--	--	645.03	640.03	3.93
CB44	56+00	16.5' LT	CB	--	--	1	--	1	--	--	--	--	--	--	--	--	644.73	640.73	5.17
CB45	59+00	16.5' RT	CB	--	--	1	--	1	--	--	--	--	--	--	--	--	638.06	634.06	5.17
MH23	59+00	0'	MH	1	--	--	--	--	1	--	--	--	--	--	--	--	638.36	633.36	3.93
CB46	59+00	16.5' LT	CB	--	--	1	--	1	--	--	--	--	--	--	--	--	638.06	634.06	5.17
MH24	60+00	0'	MH	1	--	--	--	--	1	--	--	--	--	--	--	--	636.22	631.22	3.93
INL4	60+00	40' LT	INLET	--	--	--	1	--	--	--	--	--	--	1	--	1	634.19	632.17	4.02
CB49	62+20	16.5' RT	CB	--	--	1	--	1	--	--	--	--	--	--	--	--	632.23	628.72	4.68
MH54	62+20	0'	MH	1	--	--	--	--	1	--	--	--	--	--	--	--	632.51	628.26	3.18
CB48	62+20	16.5' LT	CB	--	--	1	--	1	--	--	--	--	--	--	--	--	632.59	628.69	5.07
CB19	313+56	16.5' RT	CB	--	--	1	--	1	--	--	--	--	--	--	--	--	676.90	672.82	5.25
CB20	313+76	16.5' RT	CB	--	--	1	--	1	--	--	--	--	--	--	--	--	675.87	671.54	5.50
CB22	313+76	16.5' LT	CB	--	--	1	--	1	--	--	--	--	--	--	--	--	676.27	670.48	6.96
CB21	313+56	16.5' LT	CB	--	--	1	--	1	--	--	--	--	--	--	--	--	676.84	672.75	5.26
CB25	313+96	16.5' RT	CB	--	--	1	--	1	--	--	--	--	--	--	--	--	674.78	670.45	5.50
CB26	314+16	16.5' RT	CB	--	--	1	--	1	--	--	--	--	--	--	--	--	674.46	669.96	5.67
MH12	314+16	0'	MH	1	--	--	--	--	1	--	--	--	--	--	--	--	674.43	668.97	4.39
CB28	314+16	16.5' LT	CB	--	--	1	--	1	--	--	--	--	--	--	--	--	674.13	669.63	5.67
CB27	313+96	16.5' LT	CB	--	--	1	--	1	--	--	--	--	--	--	--	--	674.53	670.53	5.17
CB53	603+27	16.6' RT	CB	--	--	1	--	1	--	--	--	--	--	--	--	--	629.32	625.32	5.17
MH27	603+27	10.1' RT	MH	1	--	--	--	--	--	1	--	--	--	--	--	--	629.36	623.36	4.93
MH35	604+78	10.4' RT	MH	1	--	--	--	--	--	1	--	--	--	--	--	--	622.40	616.40	4.93
MH28	606+04	10.6' RT	MH	1	--	--	--	--	--	--	1	--	--	--	--	--	618.81	612.31	5.43
MH29	606+62	10.9' RT	MH	1	--	--	--	--	--	--	1	--	--	--	--	--	618.29	611.79	5.43
MH30	609+94	10.6' RT	MH	1	--	--	--	--	--	--	1	--	--	--	--	--	617.41	610.91	5.43
MH31	611+30	11.2' RT	MH	1	--	--	--	--	--	--	1	--	--	--	--	--	616.74	610.24	5.43
MH32	613+28	11.4' RT	MH	1	--	--	--	--	--	1	--	--	--	--	--	--	613.35	606.85	5.43
MH33	615+05	11.6' RT	MH	1	--	--	--	--	--	--	1	--	--	--	--	--	601.78	592.00	8.71
CB52	615+54	0'	CB	--	--	1	--	--	--	1	--	--	--	--	--	--	594.29	585.50	9.96
MH34	616+09	0'	MH	--	1	--	--	--	--	--	--	1	--	--	--	--	584.37	578.70	4.60
SUB-TOTALS				**16**	**1**	**22**	**1**	**21**	**5**	**6**	**6**	**1**	**0**	**1**	**0**	**1**			
TOTALS				**30**	**1**	**48**	**4**	**43**	**11**	**14**	**7**	**1**	**1**	**6**	**1**	**3**			

DEPTH OF STRUCTURE IS GUTTER FLANGE OR RIM ELEVATION MINUS THE DEPTH OF FRAME AND RINGS MINUS THE FLOWLINE ELEVATION PLUS 2' SUMP. NO SUMP ON MANHOLES.

DEPTH FOR FRAME AND RINGS FOR:
TYPE J = 1.07' (INCLUDES 0.33' FOR ADJUSTING RINGS.)
TYPE H = 0.83' (INCLUDES 0.33' FOR ADJUSTING RINGS.)
TYPE C = 1.07' (INCLUDES 0.33' FOR ADJUSTING RINGS.)
TYPE MS = 0

ALL ITEMS ON THIS PAGE ARE CATEGORY CODE 0010 UNLESS OTHERWISE NOTED.

EROSION CONTROL AND RESTORATION ITEMS

STA	STA	DESCRIPTION	ITEM NO. 623.0200 DUST CONTROL SURFACE TREATMENT SY	ITEM NO. 624.0100 WATER MGAL	ITEM NO. 625.0100 TOPSOIL SY	ITEM NO. 627.0200 MULCHING SY	ITEM NO. 628.1504 SILT FENCE LF	ITEM NO. 628.1520 SILT FENCE MAINTENANCE LF	ITEM NO. 628.1905 MOBILIZATIONS EROSION CONTROL EACH	ITEM NO. 628.1910 MOBILIZATIONS EMERGENCY EROSION CONTROL EACH	ITEM NO. 628.2006 EROSION MAT URBAN CLASS I TYPE A SY	ITEM NO. 628.6005 TURBIDITY BARRIERS SY	ITEM NO. 628.7005 INLET PROTECTION TYPE A EACH	ITEM NO. 628.7010 INLET PROTECTION TYPE B EACH	ITEM NO. 628.7015 INLET PROTECTION TYPE C EACH	ITEM NO. 628.7020 INLET PROTECTION TYPE D EACH	ITEM NO. 628.7570 ROCK BAGS EACH	ITEM NO. 628.7555 CULVERT PIPE CHECKS EACH	ITEM NO. 629.0210 FERTILIZER TYPE B CWT	ITEM NO. 630.0140 SEEDING MIXTURE N0. 40 LB
11+40	29+50	CTH C	0	0	2360	1535	1232	1232	1	1	825	--	10	---	14	---	---	---	2.0	42
29+50	62+77	CTH C	4100	30	8660	5510	2468	2468	3	3	3150	---	31	4	31	2	---	---	5.5	156
		HICKORY	100	1	20	20	---	---	---	---	---	45	16	---	16	---	---	---	0.1	2
		UNDISTRIBUTED	300	9	460	135	300	300	---	---	325	5	3	1	3	---	50	20	0.4	20
PROJECT 4997-00-64 SUBTOTAL			**4500**	**40**	**11500**	**7200**	**4000**	**4000**	**4**	**4**	**4300**	**50**	**60**	**5**	**64**	**2**	**50**	**20**	**8**	**220**
		TOTAL	**4500**	**40**	**11500**	**7200**	**4000**	**4000**	**4**	**4**	**4300**	**50**	**60**	**5**	**64**	**2**	**50**	**20**	**8**	**220**

ADJUSTING MANHOLE ITEMS

STA	OFFSET	DESCRIPTION	ITEM NO. SPV.0060.01 RECONSTRUCTING MANHOLES EACH	ITEM NO. SPV.0060.04 ADJUSTING MANHOLES EACH	ELEVATION DIFFERENCE
31+69	15' RT	CTH C	---	1	0.02
36+22	15' RT	CTH C	---	1	0.28
38+43	10' RT	CTH C	---	1	0.37
39+44	9' RT	CTH C	---	1	0.14
315+32	3' LT	MAPLE	---	1	0.34
310+30	2' LT	MAPLE	---	1	-0.18
312+12	25' RT	MAPLE	1	---	-2.81
41+40	10' RT	CTH C	---	1	0.39
45+44	10' RT	CTH C	1	---	1.40
48+42	9' RT	CTH C	---	1	0.45
52+43	9' RT	CTH C	---	1	-0.09
54+39	32' RT	CTH C	---	1	0.69
55+94	11' RT	CTH C	---	1	0.13
59+42	10' RT	CTH C	---	1	0.19
PROJECT 4997-00-64 SUBTOTAL			**2**	**12**	
		TOTAL	**2**	**12**	

CURB & GUTTER ITEMS

STA	STA	DESCRIPTION	ITEM NO. SPV.0090.01 CONCRETE CURB & GUTTER 32-INCH TYPE D SPECIAL LF
11+40	29+50	CTH C	475
29+50	62+77	CTH C	7258
310+24	315+59	MAPLE ST	843
601+00	616+92	HICKORY ST	52
PROJECT 4997-00-64 SUBTOTAL			**8628**
		TOTAL	**8628**

SURFACE DRAIN ITEMS

STA	STA	DESCRIPTION	ITEM NO. 521.2005.S SURFACE DRAIN PIPE CORRUGATED METAL SLOTTED, 12-INCH LF
44+65	45+50	CTH C	85
PROJECT 4997-00-64 SUBTOTAL			**85**
		TOTAL	**85**

STORM SEWER ITEMS

CATEGORY CODE 0020

STA	LOCATION	ITEM NO. 612.0902.S INSULATION BOARD POLYSTYRENE, 2-INCH SY
35+79	16.5' RT	2
PROJECT 4997-00-64 SUBTOTAL		**2**
	TOTAL	**2**

STORM SEWER ITEMS

LOCATION	ITEM NO. SPV.0090.02 STORM SEWER PIPE PVC 4-INCH LF	ITEM NO. SPV.0090.05 STORM SEWER PIPE PVC 10-INCH LF
313+20, RT TO CB19	56	---
15+47, LT	---	4
PROJECT 4997-00-64 SUBTOTAL	**56**	**4**
TOTAL	**56**	**4**

ALL ITEMS ON THIS PAGE ARE CATEGORY CODE 0010 UNLESS OTHERWISE NOTED.

WATER AND SANITARY SERVICE ITEMS

CATEGORY CODE 0020

ADDRESS	DESCRIPTION	SPV.0090.03 WATER SERVICE 1-INCH LF	SPV.0090.04 SANITARY LATERAL 6-INCH LF	SPV.0060.02 ADJUSTING CURB STOP RISERS EACH	SPV.0060.05 CURB STOPS EACH
601 S DULUTH AVE	CTH C	---	---	1	---
821 GREEN BAY RD	CTH C	---	---	1	---
3127 S DULUTH AVE	CTH C	---	---	1	---
3137 S DULUTH AVE	CTH C	---	---	1	---
3147 S DULUTH AVE	CTH C	---	---	1	---
420 S DULUTH AVE	CTH C	---	---	1	---
3155 S DULUTH AVE	CTH C	---	---	1	---
821 SPRUCE DR	CTH C	---	---	1	---
3157 S DULUTH AVE	CTH C	---	---	1	---
364 S DULUTH AVE	CTH C	---	---	1	---
357 S DULUTH AVE	CTH C	---	31	1	---
346 S DULUTH AVE	CTH C	---	---	1	---
355 S DULUTH AVE	CTH C	---	36	1	---
3177 S DULUTH AVE	CTH C	---	36	1	---
3179 S DULUTH AVE	CTH C	---	38	1	---
336 S DULUTH AVE	CTH C	---	---	1	---
318 S DULUTH AVE	CTH C	---	---	1	---
304 S DULUTH AVE	CTH C	---	---	1	---
DULUTH AVE STORAGE PARK CONDO	CTH C	---	38	1	---
236 S DULUTH AVE	CTH C	---	---	1	---
221 S DULUTH AVE	CTH C	37	34	1	---
212 S DULUTH AVE	CTH C	---	---	1	---
206 S DULUTH AVE	CTH C	---	---	1	---
136 S DULUTH AVE	CTH C	---	---	1	---
137 S DULUTH AVE	CTH C	37	34	1	---
126 S DULUTH AVE	CTH C	---	---	1	---
108 S DULUTH AVE	CTH C	---	---	1	---
24 S DULUTH AVE	CTH C	---	---	1	---
31 S DULUTH AVE	CTH C	37	34	1	---
19 S DULUTH AVE	CTH C	37	34	1	---
821 MAPLE ST	CTH C	---	---	1	---
808 MAPLE ST	CTH C	---	---	1	---
3 N DULUTH AVE	CTH C	37	34	1	---
11 N DULUTH AVE	CTH C	37	34	1	---
17 N DULUTH AVE	CTH C	37	34	1	---
26 N DULUTH AVE	CTH C	---	---	1	---
104 N DULUTH AVE	CTH C	---	---	1	---
103 N DULUTH AVE	CTH C	37	34	1	---
3301 N DULUTH AVE	CTH C	37	34	1	---
713 JUNIPER W ST	CTH C	---	---	1	---
204 N DULUTH AVE	CTH C	---	---	1	---
3305 N DULUTH AVE	CTH C	37	34	1	---
3315 N DULUTH AVE	CTH C	37	34	1	---
214 N DULUTH AVE	CTH C	---	---	1	---
301 N ELIGIN AVE	CTH C	---	---	1	---
3329 N DULUTH AVE	CTH C	37	34	1	---
317 N DULUTH AVE	CTH C	37	34	1	---
819 HICKORY ST	CTH C	37	34	1	---
337 N DULUTH AVE	CTH C	37	34	1	---
407 N DULUTH AVE	CTH C	37	34	1	---
415 N DULUTH AVE	CTH C	37	34	1	---
423 N DULUTH AVE	CTH C	37	34	1	---
431 N DULUTH AVE	CTH C	37	34	1	---
441 N DULUTH AVE	CTH C	37	34	1	---
551 N DULUTH AVE	CTH C	37	34	1	---
818 HICKORY ST	CTH C	---	---	1	---
426 N DULUTH AVE	CTH C	---	---	1	---
436 N DULUTH AVE	CTH C	---	---	1	---
508 N DULUTH AVE	CTH C	---	---	1	---
518 N DULUTH AVE	CTH C	---	---	1	---
825 ELM ST	CTH C	---	---	1	---
911 ELM ST	CTH C	37	34	1	---
UNDISTRIBUTED	CTH C	100	100	---	10
PROJECT 4997-00-64 SUBTOTAL		**914**	**1027**	**62**	**10**
	TOTAL	**914**	**1027**	**62**	**10**

VALVE BOX ITEMS

CATEGORY CODE 0020

STA	OFFSET	DESCRIPTION	ITEM NO. SPV.0060.03 ADJUSTING VALVE BOXES EACH
11+72	6' RT	CTH C	1
11+72	24' LT	CTH C	1
11+74	14' LT	CTH C	1
11+78	22' LT	CTH C	1
21+55	17' LT	CTH C	1
21+59	20' LT	CTH C	1
21+59	12' LT	CTH C	1
21+62	17' LT	CTH C	1
21+62	6' RT	CTH C	1
25+51	27' LT	CTH C	1
25+99	26' RT	CTH C	1
26+88	28' RT	CTH C	1
28+05	26' RT	CTH C	1
28+88	4' RT	CTH C	1
28+90	24' RT	CTH C	1
28+94	12' RT	CTH C	1
29+00	10' LT	CTH C	1
29+04	6' LT	CTH C	1
29+08	10' LT	CTH C	1
29+28	14' RT	CTH C	1
29+32	15' RT	CTH C	1
30+30	23' LT	CTH C	1
30+99	27' RT	CTH C	1
31+36	16' RT	CTH C	1
32+55	27' RT	CTH C	1
33+42	25' RT	CTH C	1
33+55	23' LT	CTH C	1
36+22	49' RT	CTH C	1
36+46	11' RT	CTH C	1
39+40	8' RT	CTH C	1
40+05	50' RT	CTH C	1
40+08	12' RT	CTH C	1
311+32	4' LT	MAPLE ST	1
40+32	63' RT	CTH C	1
40+92	24' LT	CTH C	1
41+08	24' LT	CTH C	1
46+05	31' RT	CTH C	1
46+10	13' RT	CTH C	1
48+10	26' LT	CTH C	1
50+14	28' RT	CTH C	1
51+10	28' RT	CTH C	1
52+32	26' RT	CTH C	1
54+07	27' LT	CTH C	1
54+47	31' RT	CTH C	1
54+57	12' RT	CTH C	1
54+92	28' LT	CTH C	1
56+78	27' LT	CTH C	1
57+12	22' RT	CTH C	1
57+46	26' LT	CTH C	1
57+60	26' RT	CTH C	1
58+68	26' LT	CTH C	1
59+28	27' RT	CTH C	1
60+13	25' RT	CTH C	1
61+98	24' RT	CTH C	1
62+16	25' LT	CTH C	1
PROJECT 4997-00-64 SUBTOTAL			**55**
		TOTAL	**55**

ALL ITEMS ON THIS PAGE ARE CATEGORY CODE 0010 UNLESS OTHERWISE NOTED.

ABANDON STORM SEWER

STA	-	STA	STREET	DESCRIPTION	ITEM NO. SPV.0035.01 ABANDON STORM SEWER CY
611+29	-	615+50	HICKORY	NEAR CL, 12-INCH	16
61+05		92+92	CTH C	W. FLANGE LINE, 15 AND 18-INCH	10
PROJECT 4997-00-64 SUBTOTAL					**26**
				TOTAL	**26**

CONSTRUCTION STAKING

ROADWAY	DESCRIPTION	ITEM NO. 650.4000 CONSTRUCTION STAKING STORM SEWER EACH	ITEM NO. 650.4500 CONSTRUCTION STAKING SUBGRADE LF	ITEM NO. 650.5500 CONSTRUCTION STAKING CURB GUTTER AND CURB & GUTTER LF	ITEM NO. 650.8000 CONSTRUCTION STAKING REFURFACING REFERENCE LF	ITEM NO. 650.9910 CONSTRUCTION STAKING SUPPLEMENTAL CONTROL LS	ITEM NO. 650.9920 CONSTRUCTION STAKING SLOPE STAKES LF
CTH C	RESURFACE	14	---	475	1810	0.25	1450
CTH C	RECONSTRUCTION	48	3327	7258	---	0.25	3327
MAPLE	RECONSTRUCTION	13	525	843	---	0.25	525
HICKORY	STORM SEWER	12	---	52	---	0.25	---
PROJECT 4997-00-64 SUBTOTAL		**87**	**3852**	**8628**	**1810**	**1**	**5302**
	TOTAL	**87**	**3852**	**8628**	**1810**	**1**	**5302**

SAWCUT ITEMS

STA	-	STA	DESCRIPTION	ITEM NO. 690.0150 SAWING ASPHALT LF	ITEM NO. 690.0250 SAWING CONCRETE LF
15+05	-	15+05	LT, DRIVEWAY	---	27
15+10	-	15+10	RT, DRIVEWAY	46	---
15+38	-	17+10	LT, DRIVEWAY	172	---
16+88	-	16+88	RT, CURB	---	5
17+00	-	17+00	LT, CURB	---	5
17+37	-	17+37	LT, CURB	---	5
18+58	-	18+58	LT, CURB	---	5
18+58	-	18+58	LT, DRIVEWAY	---	33
19+55	-	19+55	LT, DRIVEWAY	19	---
19+55	-	19+55	LT, CURB	---	5
19+55	-	19+55	RT, CURB	---	5
19+55	-	19+55	RT, DRIVEWAY	19	---
20+59	-	21+66	RT, CURB	---	5
20+80	-	20+80	RT, DRIVEWAY	16	---
20+97	-	21+46	LT, CURB	---	5
21+17	-	29+50	TRENCH	1894	---
21+81	-	21+81	LT, CURB	---	5
22+05	-	22+05	RT, CURB	---	5
22+79	-	22+79	RT, CURB	---	5
22+79	-	22+79	RT, DRIVEWAY	19	---
22+92	-	22+92	LT, CURB	---	5
22+92	-	22+92	LT, DRIVEWAY	17	---
23+64	-	24+27	LT, CURB	---	5
23+76	-	23+76	LT, DRIVEWAY	12	---
23+95	-	23+95	RT, CURB	---	5
24+15	-	24+15	LT, DRIVEWAY	12	---
24+55	-	24+55	RT, CURB	---	5
24+55	-	24+55	RT, DRIVEWAY	15	---
25+33	-	25+33	RT, DRIVEWAY	21	---
26+40	-	26+40	RT, DRIVEWAY	14	---
26+96	-	26+96	LT, CURB	---	5
27+00	-	27+00	RT, CURB	---	5
27+50	-	27+50	LT, DRIVEWAY	27	---
27+93	-	27+93	RT, DRIVEWAY	10	---
28+49	-	28+49	RT, DRIVEWAY	10	---
29+50	-	29+50	BEGIN RECONSTRUCT	35	---
30+71	-	30+71	LT, DRIVEWAY	15	---
31+12	-	31+12	RT, DRIVEWAY	---	18
31+55	-	31+55	RT, DRIVEWAY	21	---
32+18	-	32+18	RT, DRIVEWAY	11	---
SUB-TOTALS				**2405**	**163**

CONTINUED TO THE RIGHT

CONTINUED FROM THE LEFT

STA	-	STA	DESCRIPTION	ITEM NO. 690.0150 SAWING ASPHALT LF	ITEM NO. 690.0250 SAWING CONCRETE LF
32+90	-	32+90	RT, DRIVEWAY	---	20
32+95	-	32+95	LT, DRIVEWAY	15	---
34+26	-	34+26	RT, DRIVEWAY	37	---
35+02	-	35+02	RT, DRIVEWAY	15	---
203+50	-	203+50	OAK ST	37	---
201+87	-	201+87	OAK ST	21	---
37+57	-	37+57	LT, DRIVEWAY	31	---
37+59	-	37+59	RT, DRIVEWAY	12	---
38+16	-	38+16	LT, DRIVEWAY	---	22
310+23	-	310+49	MAPLE ST	73	---
315+50	-	315+50	MAPLE ST	42	---
42+85	-	42+85	RT, DRIVEWAY	12	---
43+29	-	44+15	RT, DRIVEWAY	90	---
44+25	-	44+25	LT, DRIVEWAY	58	---
44+46	-	45+57	RT, DRIVEWAY	175	---
401+00	-	401+00	JUNIPER ST	51	---
46+30	-	46+30	LT, DRIVEWAY	16	---
46+88	-	46+88	RT, DRIVEWAY	15	---
47+12	-	47+12	LT, DRIVEWAY	22	---
47+39	-	47+39	RT, DRIVEWAY	13	---
47+81	-	47+81	LT, DRIVEWAY	42	---
48+42	-	48+42	RT, DRIVEWAY	18	---
48+46	-	48+46	LT, DRIVEWAY	10	---
501+50	-	501+50	BARRICK RD	21	---
50+60	-	50+60	LT, DRIVEWAY	11	---
51+37	-	51+37	LT, DRIVEWAY	---	12
52+97	-	52+97	RT, DRIVEWAY	40	---
53+47	-	53+47	LT, DRIVEWAY	16	---
54+81	-	54+81	LT, DRIVEWAY	9	---
55+50	-	55+50	LT, DRIVEWAY	11	---
56+59	-	56+59	RT, DRIVEWAY	19	---
57+00	-	57+00	LT, DRIVEWAY	12	---
57+66	-	57+66	LT, DRIVEWAY	11	---
58+12	-	58+12	LT, DRIVEWAY	10	---
58+55	-	58+55	RT, DRIVEWAY	16	---
59+41	-	59+41	RT, DRIVEWAY	---	10
61+44	-	61+44	LT, DRIVEWAY	17	---
61+90	-	61+90	RT, DRIVEWAY	43	---
62+75	-	62+75	END PROJECT	221	---
601+00	-	601+00	HICKORY ST	36	---
601+00	-	615+20	TRENCH, HICKORY ST	2854	---
615+36	-	615+54	TRENCH, HICKORY ST	61	---
615+89	-	616+75	TRENCH, HICKORY ST	197	---
PROJECT 4997-00-64 SUBTOTAL				**4410**	**64**
			TOTAL	**6815**	**227**

REMOVING AND REPLACING RETAINING WALL

STA	LOCATION	ITEM NO. SPV.0105.01 LS
615+40	OUTFALL TO BAY AT JOLIET AVE	1
PROJECT 4997-00-64 SUBTOTAL		**1**
	TOTAL	**1**

REMOVING AND REINSTALLING GUARDARIL

STA	LOCATION	ITEM NO. SPV.0105.02 LS
615+10	HICKORY ST EAST OF JOLIET AVE	1
PROJECT 4997-00-64 SUBTOTAL		**1**
	TOTAL	**1**

STORM SEWER OUTFALL

STA	LOCATION	ITEM NO. SPV.0105.03 LS
616+75	AT EXISTING SHEET PILE WALL	1
PROJECT 4997-00-64 SUBTOTAL		**1**
	TOTAL	**1**

ALL ITEMS ON THIS PAGE ARE CATEGORY CODE 0010 UNLESS OTHERWISE NOTED.

R/W PROJECT NUMBER 4997-00-64	SHEET NUMBER	TOTAL SHEETS
FEDERAL PROJECT NUMBER	4.1	9

PLAT OF RIGHT-OF-WAY REQUIRED FOR
S.T.H. 42-57 - CTH C
CITY OF STURGEON BAY
DULUTH AVE — DOOR COUNTY

R/W PROJECT NUMBER 4997-00-64

CONVENTIONAL SYMBOLS AND ABBREVIATIONS

SECTION LINE		ACCESS RIGHTS	AR	RECORDED AS	(100')
QUARTER LINE		ACRES	AC.	REEL / IMAGE	R/I
SIXTEENTH LINE		AHEAD	AH	REFERENCE LINE	R/L
EXISTING R/W LINE		ALUMINUM	ALUM	REMAINING	REM.
EASEMENT LINE		AND OTHERS		RESTRICTIVE DEVELOPMENT EASEMENT	RDE
CORPORATE LIMITS		BACK	BK	RIGHT	RT
EXISTING CENTERLINE		BLOCK	BLK	RIGHT OF WAY	R/W
LOT & TIE LINES		CENTERLINE	C/L	SECTION	SEC.
SLOPE INTERCEPT		CERTIFIED SURVEY MAP	CSM	SEPTIC VENT	SEPV
PERMANENT LIMITED EASEMENT		CONCRETE	CONC	SQUARE FEET	SQ. FT.
TEMPORARY LIMITED EASEMENT		COUNTY	CO	STATE TRUNK HIGHWAY	STH
NEW R/W (FEE)		COUNTY TRUNK HIGHWAY	CTH	STATION	STA.
TREE (DECIDUOUS)		DISTANCE	DIST	TELEPHONE PEDESTAL	TP
TREE (EVERGREEN)		DOCUMENT NUMBER	DOC.	TEMPORARY LIMITED EASEMENT	TLE
SANITARY SEWER		EASEMENT	EASE	TRANSPORTATION PROJECT PLAT	TPP
WATER LINE		EXISTING	EX	UNITED STATES HIGHWAY	USH
GAS LINE		GAS VALVE	GV	VOLUME	V.
OVERHEAD WIRE		GRID NORTH	GN		
FOUND IRON PIPE/PIN	(1" UNLESS NOTED)	HIGHWAY EASEMENT	H.E.		
HYDRANT		IDENTIFICATION	ID		
GATE VALVE		LAND CONTRACT	LC		
CURB STOP		LEFT	LT		
MANHOLE		MONUMENT	MON.		
POWER POLE		NATIONAL GEODETIC SURVEY	NGS		
GUY WIRE		NUMBER	NO		
UTILITY VAULT		OUTLOT	OL		
STORM INLET		PAGE	P.		
SIGN		POINT OF TANGENCY	PT		
UTILITY PEDESTAL		PERMANENT LIMITED EASEMENT	PLE		
		POINT OF BEGINNING	POB		
SECTION CORNER SYMBOL	27 / 26 / 34 / 35 / 25	POINT OF CURVATURE	PC		
		POINT OF COMPUND CURVE	PCC		
		POINT OF INTERSECTION	PI		
		PROPERTY LINE	PL		

CITY OF STURGEON BAY
TOWNSHIP 27 NORTH

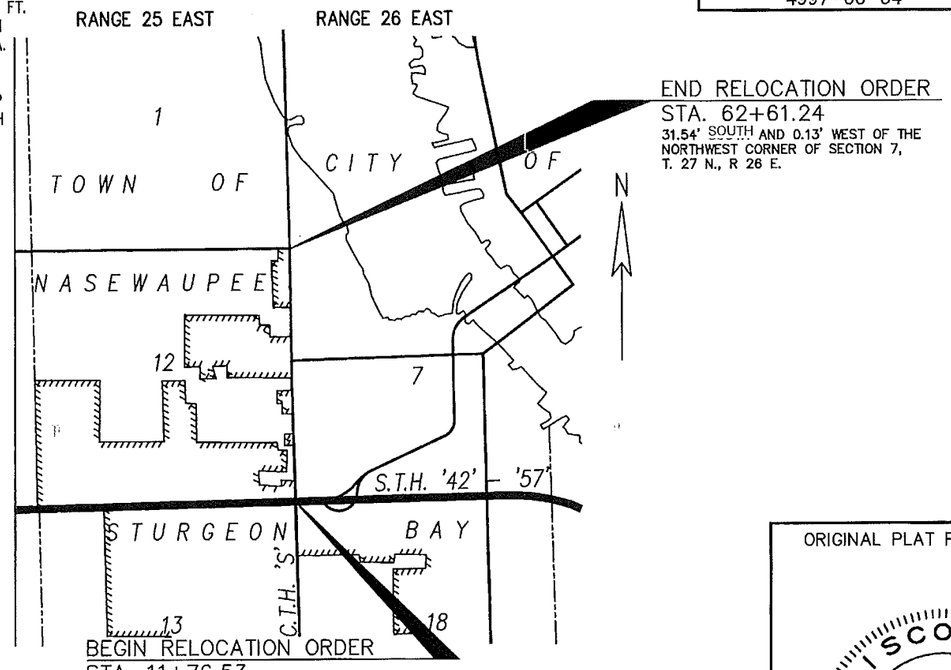

END RELOCATION ORDER
STA. 62+61.24
31.54' SOUTH AND 0.13' WEST OF THE NORTHWEST CORNER OF SECTION 7, T. 27 N., R 26 E.

BEGIN RELOCATION ORDER
STA. 11+76.53
176.61' NORTH AND 0.45' EAST OF THE SOUTHWEST CORNER OF SECTION 7, T. 27 N., R 26 E.

TOTAL NET LENGTH OF CENTERLINE = 0.963 MI.

SCALE
0 1000 2000 3000 4000 5000
FEET

NOTES:

POSITIONS SHOWN ON THIS PLAT ARE WISCONSIN COUNTY COORDINATES, DOOR COUNTY, NAD 83 (1991) IN U.S. SURVEY FEET. VALUES SHOWN ARE GRID COORDINATES, GRID BEARINGS, AND GRID DISTANCES. GRID DISTANCES MAY BE USED AS GROUND DISTANCES.

RIGHT OF WAY MONUMENTS ARE TYPE 2 AND WILL BE PLACED PRIOR TO COMPLETION OF THE PROJECT. RIGHT OF WAY BOUNDARIES ARE DEFINED WITH COURSES OF THE PERIMETER OF THE HIGHWAY LANDS REFERENCED TO THE U.S. PUBLIC LAND SURVEY SYSTEM OR OTHER "SURVEYS OF PUBLIC RECORD".

PROPERTY LINES SHOWN ON THIS PLAT ARE DRAWN FROM DATA DERIVED FROM MAPS AND DOCUMENTS OF PUBLIC RECORD AND/OR EXISTING PROPERTY LINES, EXCLUDING RIGHT OF WAY LINES, AND SHOULD NOT BE USED AS A SUBSTITUTE FOR AN ACCURATE FIELD SURVEY.

PROPERTY OWNERSHIP INFORMATION OBTAINED FROM "OWNERSHIP REPORTS" OBTAINED FROM A LOCAL TITLE COMPANY.

RIGHT OF WAY POINTS SHOWN ON THIS PLAT THAT DO NOT CONTAIN THE "R/W MONUMENT (SET)" SYMBOLS HAVE NOT BEEN SET. THE LOCATION IS INACCESSIBLE AND/OR OBSTRUCTED FOR A MONUMENT TO BE SET.

R/W MONUMENT (SET) IS A 1" x 24" LONG IRON PIPE WITH A WDOT CAP, OR A COUNTERSUNK 3" STEEL SURVEY SPIKE WITH A 1" DIMPLED HEAD.

ORIGINAL PLAT PREPARED BY

WISCONSIN
Michael G. McCarty
S-2298
Sturgeon Bay, WI
LAND SURVEYOR

DATE: 2-16-17

REVISION DATE

DOOR COUNTY

APPROVED FOR DOOR COUNTY
(Signature)
DATE: 2/20/17

E

FILE NAME: Y:\MGM\LDWG\DULUTH AVE 21715\DWG\705-WDOT.DWG — PLOT DATE: 2/16/2017 — PLOT BY: M.G.M.C. — PLOT SCALE: 1:100 — WISDOT/CADDS SHEET 1

SCHEDULE OF LANDS AND INTERSTS REQUIRED

OWNER'S NAMES ARE SHOWN FOR REFERENCE PURPOSE ONLY AND ARE SUBJECT TO CHANGE PRIOR TO THE TRANSFER OF LAND INTERESTS

PARCEL NUMBER	SHEET NUMBER	OWNER(S)	INTEREST REQUIRED	R/W ACRES REQUIRED NEW	EXISTING	TOTAL	T.L.E. ACRES	P.L.E. SQ.FT.
1	4.5	JIM OLSON REAL ESTATE 812 LLC	TLE	------	------	------	0.01	------
2	4.5	DANNY L & CAROL M HANSON	TLE	------	------	------	0.01	------
3	4.5	NEUVILLE FAMILY LIMITED PARTNERSHIP	TLE	------	------	------	0.03	------
5	4.5	JIM OLSON REAL ESTATE 440 LLC	TLE	------	------	------	0.04	------
7	4.5	PAUL A & ROBYN BSCHERER	TLE	------	------	------	0.02	------
8	4.5	MARLA & DAVID L ANTINK	FEE & TLE	0.00	0.13	0.13	0.02	------
12	4.5	WAYNE J & MICHELLE M DENIL	FEE & TLE	0.00	0.01	0.01	0.01	------
13	4.5 & 4.6	JOHN J & JUDITH E ELLENBECKER	FEE & TLE	0.00	0.05	0.05	0.04	------
14	4.6	JEFFREY A & LAURA L HOFFMAN	FEE & TLE	0.00	0.09	0.09	0.02	------
16	4.6	SNUG HARBOR REAL ESTATE HOLDING LLC	FEE & TLE	0.00	0.08	0.08	0.05	------
17	4.6	RONALD L & SUSAN E PASCHKE	FEE & TLE	0.00	0.04	0.04	0.02	------
18	4.6	DULUTH AVENUE STORAGE PARK CONDOMINIUM ASSOC.	FEE & TLE	0.00	0.01	0.01	0.03	------
19	4.6	RONALD E & JACQULYN M WHITE	FEE & TLE	0.00	0.18	0.18	0.02	------
21	4.6	DUANE J & MARY A LARDINOIS	FEE, PLE & TLE	0.00	0.17	0.17	0.06	300
22	4.6 & 4.7	NICHOLAS ORCHARDS CORP	FEE & TLE	0.00	0.10	0.10	0.02	------
23	4.7	NICHOLAS ORCHARDS CORP	FEE, PLE & TLE	0.00	0.10	0.10	0.01	300
24	4.5 & 4.6	ALEXANDRA C BORTLE	TLE	------	------	------	0.04	------
28	4.6	MICHAEL H LU MAYE	TLE	------	------	------	0.01	------
31	4.6	MICHAEL J & LAURA M LEWENS	TLE	------	------	------	0.01	------
32	4.6	CITY OF STURGEON BAY	TLE	------	------	------	0.003	------
33	4.6	JOANNE MAC MILLIN TRUST	TLE	------	------	------	0.001	------
34	4.6	JOHN E & DEBRA L GEITNER	TLE	------	------	------	0.01	------
37	4.6	TIMOTHY L & GRETCHEN A MONTEE	TLE	------	------	------	0.001	------
38	4.6 & 4.7	DANIEL J & ANN L O'HERN	TLE	------	------	------	0.04	------
39	4.7	JYLL M WELDON	TLE	------	------	------	0.02	------
41	4.7	LEE ANN BLIZEL-LUEBECK	TLE	------	------	------	0.07	------
42	4.7	DAVID B & JUDITH A DAHMS	TLE	------	------	------	0.04	------
43	4.7	GORDON L & JUDITH M JESSE	TLE	------	------	------	0.08	------

4

4

REVISION DATE 10/20/17	DATE: 2/16/2017	HWY: S. DULUTH AVE.	STATE R/W PROJECT NUMBER:	PLAT SHEET: 4.2	
		COUNTY: DOOR	CONSTRUCTION PROJECT NUMBER:	PS&E SHEET:	E

FILE NAME: Y:\MGM\LDWG\DULUTH AVE 21715\DWG\705-INDEX.DWG PLOT DATE: 2/16/2017 PLOT BY: M.G.M.C. PLOT SCALE: NOT TO SCALE WISDOT/CADDS SHEET

SCHEDULE OF LANDS AND INTERSTS REQUIRED

OWNER'S NAMES ARE SHOWN FOR REFERENCE PURPOSE ONLY AND ARE SUBJECT TO CHANGE PRIOR TO THE TRANSFER OF LAND INTERESTS

PARCEL NUMBER	SHEET NUMBER	OWNER(S)	INTEREST REQUIRED	R/W ACRES REQUIRED NEW	EXISTING	TOTAL	T.L.E. ACRES	P.L.E. SQ.FT.
46	4.7	GLORIA BELONGIA	FEE & TLE	0.06	0.00	0.06	0.02	------
47	4.7	THOMAS G & JUDITH K LA VINE REVOCABLE LIVING TRUST	FEE & TLE	0.17	0.01	0.18	0.04	------
48	4.7	TODD T LA VINE	FEE & TLE	0.15	0.11	0.26	------	------
49	4.7&4.8	THOMAS G & JUDITH K LA VINE	FEE, PLE & TLE	0.24	0.00	0.24	0.1	300
51	4.8	JOSHUA T OLSON	FEE & TLE	0.00	0.01	0.01	0.02	------
52	4.8	RONALD K & DIANE M JULIAN	FEE & TLE	0.00	0.03	0.03	0.04	------
53	4.8	ROBERT C JORIN & PENNE SUE WILSON	FEE & TLE	0.00	0.08	0.08	0.01	------
54	4.8	BRENDA L NEUMAN	FEE & TLE	0.00	0.04	0.04	0.03	------
56	4.7	KENNETH F & ELISABETH MOORE	FEE & TLE	0.001	0.00	0.001	0.07	------
57	4.7 & 4.8	JAMES D & DENISE L PICKETT	TLE	------	------	------	0.003	------
59	4.8	CORPUS CHRISTI CONGREGATION	TLE	------	------	------	0.14	------
61	4.8	CORNERSTONE OF STURGEON BAY	TLE	------	------	------	0.03	------
62	4.8	ST PETER'S EVANG LUTHERAN. CHURCH	TLE	------	------	------	0.02	------
63	4.8	FRANK BUTH	TLE	------	------	------	0.04	------
64	4.8	JOHN D & DARLENE J THENELL	TLE	------	------	------	0.03	------
66	4.8	JOHN D & DARLENE J THENELL	TLE	------	------	------	0.03	------
67	4.8 & 4.9	DAVID T & BELINDA M RICHARD	TLE	------	------	------	0.07	------
68	4.8	PHILLIP P & JEANNE A PFEIFFER	FEE & TLE	0.00	0.10	0.10	0.01	------
69	4.8	RONALD G & ARLEEN M BRYAN	FEE & TLE	0.00	0.10	0.10	0.03	------
71	4.8 & 4.9	ROBERT HAINES	FEE & TLE	0.00	0.16	0.16	0.11	------
72	4.9	BROCK SOLID ENTERPRISES LLC	FEE & TLE	0.00	0.06	0.06	0.01	------
73	4.9	JOSEPH L & LISA M GIRAUD	FEE & TLE	0.00	0.07	0.07	0.02	------
74	4.9	ANDREA J DITEWIG	FEE & TLE	0.00	0.06	0.06	0.03	------
76	4.9	JEFFERY A VANDERVENTER & TERESA J LOCKHART	FEE & TLE	0.00	0.06	0.06	0.04	------
77	4.9	JEFFERY A VANDERVENTER & TERESA J LOCKHART	FEE & TLE	0.00	0.08	0.08	0.06	------
78	4.9	JOHN & SHELLY DOBSON	FEE, PLE & TLE	0.00	0.10	0.10	0.03	300
79	4.9	POLLY L SCHINK	FEE & TLE	0.00	0.15	0.15	0.01	------
81	4.9	MATTHEW J & KIRSTEN C DIXNER YOUNG	TLE	------	------	------	0.06	------
83	4.9	KEITH M & VICKI L MINTEN	TLE	------	------	------	0.004	------
84	4.9	WALTER J & NANCY L CIESLAK	TLE	------	------	------	0.01	------
86	4.9	ROBERT F PIERRARD	TLE	------	------	------	0.02	------
87	4.9	WAYNE J & MICHELLE M DENIL	TLE	------	------	------	0.03	------

4

4

REVISION DATE	DATE: 2/16/2017		HWY: S. DULUTH AVE.	STATE R/W PROJECT NUMBER: 4997-00-64	PLAT SHEET: 4.3	
			COUNTY: DOOR	CONSTRUCTION PROJECT NUMBER:	PS&E SHEET:	E

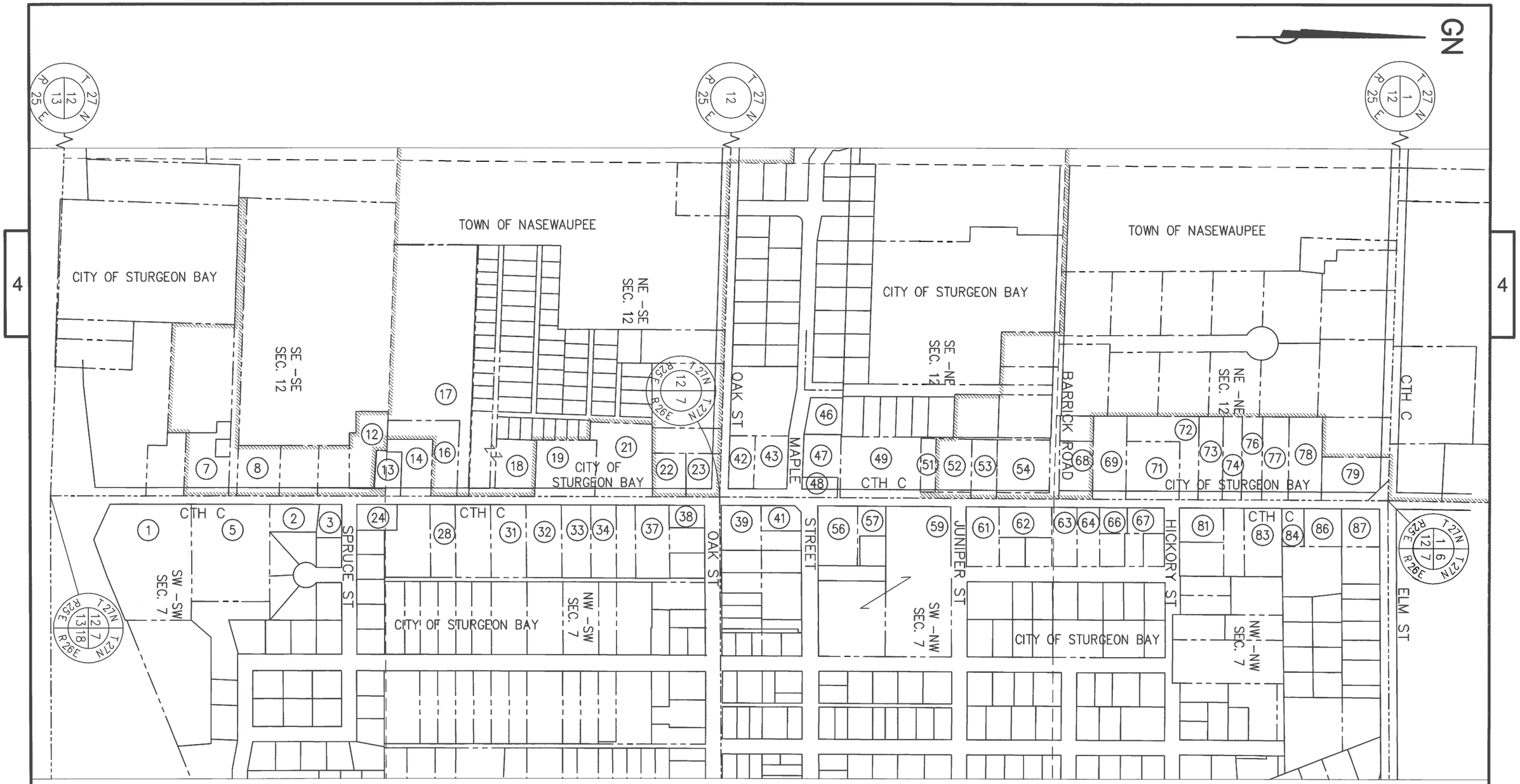

REVISION DATE 10/20/2017	DATE: 2/16/2017	NOT TO SCALE	HWY: N./S. DULUTH AVE.	STATE R/W PROJECT NUMBER: 4997-00-64	PLAT SHEET: 4.4	
			COUNTY: DOOR	CONSTRUCTION PROJECT NUMBER:	PS&E SHEET:	E

FILE NAME: Y:\MGM\LDWG\DULUTH AVE 21715\DWG\705-INDEX.DWG PLOT DATE: 2/16/2017 PLOT BY: M.G.M.C. PLOT SCALE: NOT TO SCALE WISDOT/CADDS SHEET 70

NOTE: EXISTING RIGHT OF WAY OF CTH C ESTABLISHED FROM GOVERNMENT LAND LINES, BOETTCHER PLAT, CSM 533, CSM 812 AND CSM 1702.

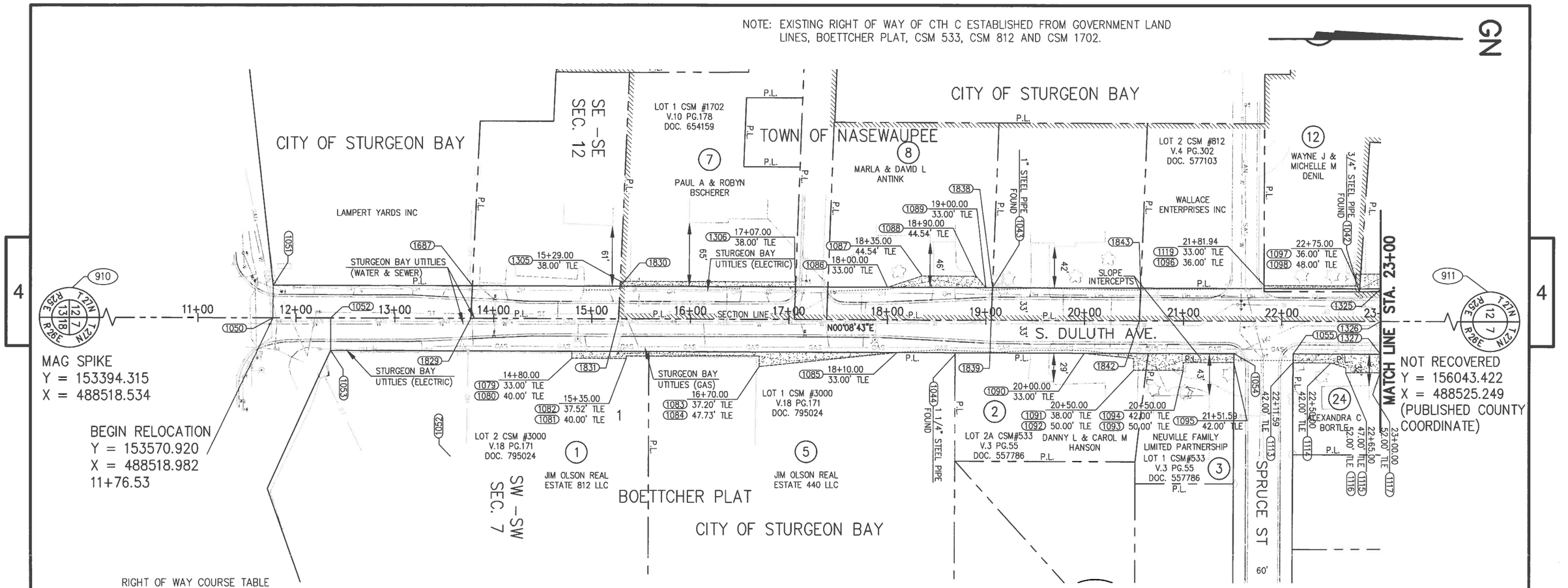

RIGHT OF WAY COURSE TABLE

FROM – TO	BEARING	DISTANCE
1050 – 1051	N89°51'17"W	33.00
1051 – 1687	N00°08'43"E	201.74
1687 – 1830	S87°23'17"E	33.03
1830 – 1831	N00°08'43"E	150.22
1831 – 1830	N87°34'59"W	33.02
1830 – 1838	N00°08'43"E	378.31
1838 – 1839	S87°51'56"E	33.02
1839 – 1842	N00°08'43"E	150.00
1842 – 1843	N87°51'56"W	33.02
1843 – 1325	N00°08'43"E	243.24
1325 – 1326	S89°51'17"E	33.00
1052 – 1053	S89°51'17"E	33.00
1053 – 1054	N00°08'43"E	916.35
1054 – 1055	N00°08'43"E	60.00
1055 – 1327	N00°08'43"E	88.41
1327 – 1326	N89°51'17"W	33.00
910 – 1050	N00°08'43"E	176.61
910 – 1052	N00°08'43"E	235.24
1326 – 911	N00°08'43"E	1349.12
910 – 911	N00°08'43"E	2649.12

FOUND MONUMENTATION TABLE

POINT	Y	X	DESCRIPTION
1042	154672.753	488491.966	3/4" STEEL PIPE FOUND
1043	154301.072	488487.816	1" STEEL PIPE FOUND
1044	154263.051	488555.247	1 1/4" STEEL PIPE FOUND

R/W COORDINATE TABLE

POINT	Y	X
1051	153571.004	488485.982
1053	153629.469	488552.130
1054	154545.820	488554.453
1055	154605.820	488554.605
1325	154694.394	488488.829
1327	154694.227	488554.829
1687	153772.739	488486.493
1829	153771.233	488519.487
1830	153922.848	488486.874
1831	153921.456	488519.869
1838	154301.159	488487.833
1839	154299.930	488520.826
1842	154449.929	488521.210
1843	154451.159	488488.213

R/W STATION & OFFSET TABLE

POINT	STATION	OFFSET
1051	11+76.61	33.00
1053	12+35.24	33.00
1687	13+78.34	33.00
1830	15+28.45	33.00
1838	19+06.76	33.00
1843	20+56.76	33.00
1054	21+51.59	33.00
1055	22+11.59	33.00
1325	23+00.00	33.00
1327	23+00.00	33.00

REVISION DATE	DATE: 2/16/2017	SCALE, FEET 0 50 100	HWY: S. DULUTH AVE.	STATE R/W PROJECT NUMBER: 4997–00–64	PLAT SHEET: 4.5
			COUNTY: DOOR	CONSTRUCTION PROJECT NUMBER:	PS&E SHEET:

FILE NAME: Y:\MGM\LDWG\DULUTH AVE 21715\DWG\21705–RW.DWG PLOT DATE: 2/16/2017 PLOT BY: VB PLOT SCALE: 1:100

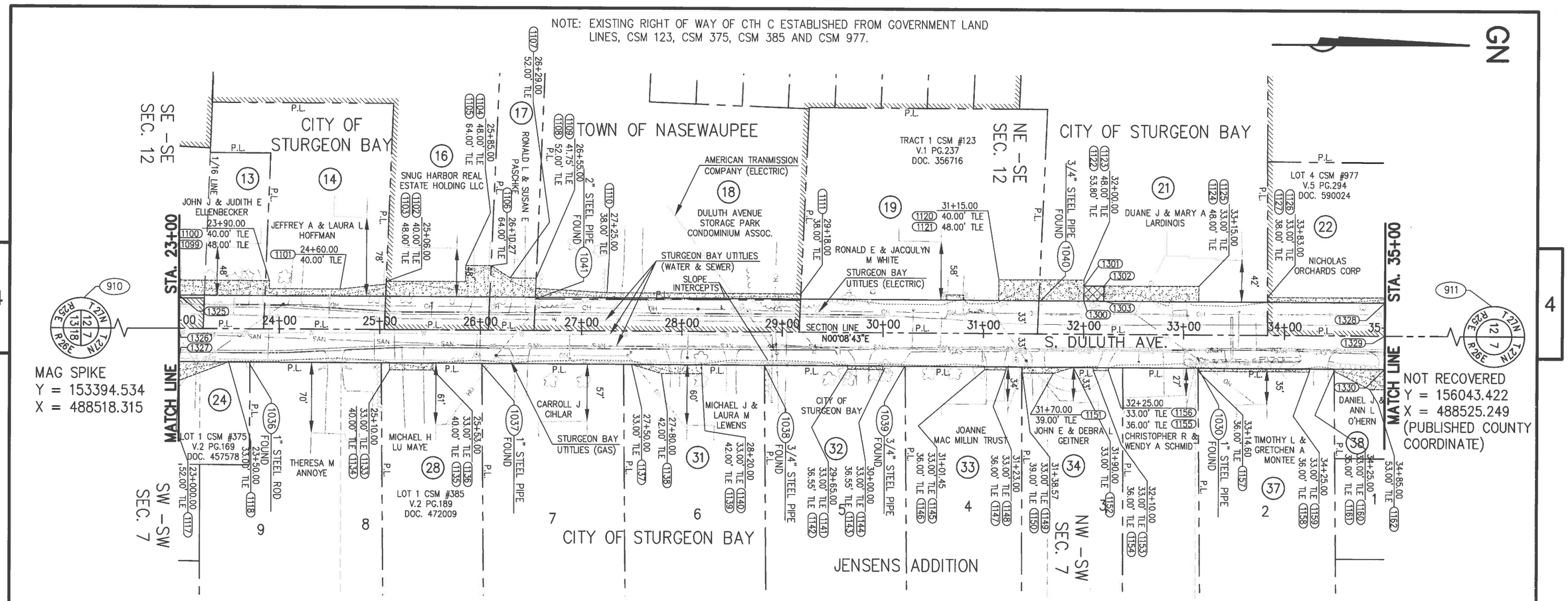

FOUND MONUMENTATION TABLE

POINT	Y	X	DESCRIPTION
1030	155708.774	488557.362	1" STEEL PIPE FOUND
1036	154765.526	488557.731	1" STEEL ROD FOUND
1037	154995.957	488556.897	1" STEEL PIPE FOUND
1038	155276.371	488556.302	3/4" STEEL PIPE FOUND
1039	155416.568	488556.061	3/4" STEEL PIPE FOUND
1040	155549.383	488491.708	3/4" STEEL PIPE FOUND
1041	155048.527	488491.456	2" STEEL PIPE FOUND

PLE COURSE TABLE

FROM – TO	BEARING	DISTANCE
1300 – 1301	N89°51'17"W	15.00
1301 – 1302	N00°08'43"E	20.00
1302 – 1303	S89°51'17"E	15.00
1302 – 1303	S00°08'43"W	20.00
910 – 1326	N00°08'43"E	1300.00
1326 – 1325	N89°51'17"W	33.00
1325 – 1300	N00°08'43"E	900.00

PLE STATION & OFFSET TABLE

POINT	STATION	OFFSET
1300	32+00.00	33.00
1301	32+00.00	48.00
1302	32+20.00	48.00
1303	32+20.00	33.00

RIGHT OF WAY COURSE TABLE

FROM – TO	BEARING	DISTANCE
1326 – 1325	N89°51'17"W	33.00
1325 – 1328	N00°08'43"E	1200.00
1328 – 1329	S89°51'17"E	33.00
1326 – 1327	S89°51'17"E	33.00
1327 – 1330	N00°08'43"E	1200.00
1330 – 1329	N89°51'17"W	33.00
910 – 1326	N00°08'43"E	1300.00
1329 – 911	N00°08'43"E	149.12
910 – 911	N00°08'43"E	2649.12

REVISION DATE	DATE: 2/16/2017	SCALE, FEET 0 50 100	HWY: S. DULUTH AVE.	STATE R/W PROJECT NUMBER: 4997-00-64	PLAT SHEET: 4.6	
			COUNTY: DOOR	CONSTRUCTION PROJECT NUMBER:	PS&E SHEET:	

FILE NAME: Y:\MGM\LDWG\DULUTH AVE 21715\DWG\21705-RW.DWG PLOT DATE: 2/16/2017 PLOT BY: M.G.M.C. PLOT SCALE: 1:100 WISDOT/CADDS SH

FOUND MONUMENTATION TABLE

POINT	Y	X	DESCRIPTION
1017	156049.623	488558.006	1/2" STEEL PIPE FOUND
1018	156207.708	488558.335	1" STEEL PIPE FOUND
1019	156367.070	488736.668	1" STEEL PIPE FOUND
1022	156369.315	488493.678	1/2" STEEL PIPE FOUND
1023	156403.432	488131.325	1" STEEL PIPE FOUND
1024	156317.340	488269.707	1 1/2" STEEL PIPE FOUND
1025	156309.334	488493.487	1" STEEL PIPE FOUND
1026	156177.356	488492.884	1" STEEL PIPE FOUND
1027	156015.892	488353.318	1" STEEL PIPE FOUND
1028	156011.461	488492.168	1" STEEL PIPE FOUND
1029	155910.388	488491.914	1" STEEL PIPE FOUND

RIGHT OF WAY COURSE TABLE – MAPLE ST

FROM – TO	BEARING	DISTANCE
1023 – 1297	N00°13'46"E	7.60
1297 – 1298	S88°07'21"E	145.63
1298 – 1299	N82°03'04"E	171.76
1299 – 1300	N00°14'09"E	81.24
1300 – 1301	S88°11'17"E	46.79
1301 – 1062	S00°14'09"W	140.40
1062 – 1075	N87°57'04"W	216.86
1075 – 1023	N79°45'04"W	147.86

PLE COURSE TABLE

FROM – TO	BEARING	DISTANCE
910 – 1329	N00°08'43"E	2500.00
1329 – 1328	N89°51'17"W	33.00
1328 – 1304	N00°08'43"E	40.00
1304 – 1305	N89°51'17"W	15.00
1305 – 1306	N00°08'43"E	20.00
1306 – 1307	S89°51'17"E	15.00
1307 – 1304	S00°08'43"W	20.00

PLE STATION & OFFSET TABLE

POINT	STATION	OFFSET
1304	35+40.00	33.00
1305	35+40.00	48.00
1306	35+60.00	48.00
1307	35+60.00	33.00

RIGHT OF WAY COURSE TABLE – CTH C & MAPLE STREET

FROM – TO	BEARING	DISTANCE
1063 – 1315	N00°13'46"E	7.00
1315 – 1323	S45°04'16"E	9.85
1323 – 1063	S89°37'42"W	7.00

NOTE: EXISTING RIGHT OF WAY OF CTH C ESTABLISHED FROM GOVERNMENT LAND LINES, BELLEVUE HEIGHTS, CSM 716 AND CSM 977. EXISTING RIGHT OF WAY OF MAPLE ST ESTABLISHED FROM TOWN & COUNTY ESTATES AND CSM 716.

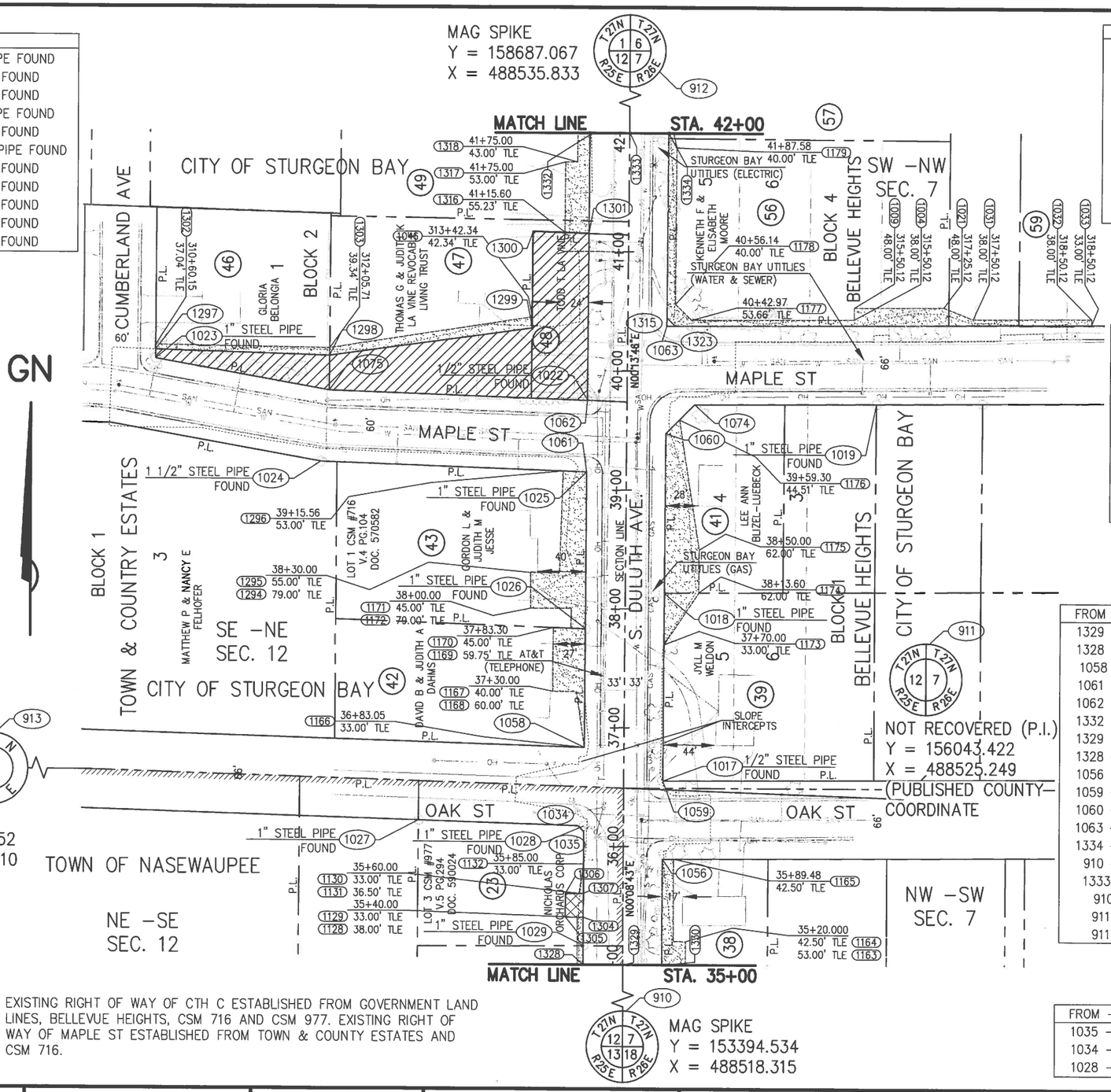

R/W COORDINATE TABLE – CTH C

POINT	Y	X
1328	155894.390	488491.871
1330	155894.223	488557.871
1028	156011.461	488492.168
1056	155983.622	488558.097
1058	156077.487	488492.385
1059	156049.625	488558.274
1060	156341.859	488559.444
1061	156309.340	488493.313
1062	156369.370	488493.554
1063	156431.924	488559.804
1332	156594.434	488494.455
1334	156594.169	488560.454

R/W STATION & OFFSET TABLE – CTH C

POINT	STATION	OFFSET
1328	35+00.00	33.00
1330	35+00.00	33.00
1056	35+89.40	33.00
1028	36+17.07	33.00
1058	36+83.05	33.00
1059	36+55.45	33.00
1060	39+47.69	33.00
1061	39+14.90	33.00
1062	39+74.93	33.00
1063	40+37.75	33.00
1332	42+00.00	33.00
1334	42+00.00	33.00

RIGHT OF WAY COURSE TABLE – CTH C

FROM – TO	BEARING	DISTANCE
1329 – 1328	N89°51'17"W	33.00
1328 – 1028	N00°08'43"E	117.07
1058 – 1061	N00°11'19"E	66.03
1061 – 1062	N00°13'46"E	60.03
1062 – 1332	N00°13'46"E	225.07
1332 – 1333	S89°46'14"E	33.00
1329 – 1330	S89°51'17"E	33.00
1328 – 1028	N00°08'43"E	89.40
1056 – 1059	N00°09'12"E	66.00
1059 – 1060	N00°13'46"E	292.24
1060 – 1063	N00°13'46"E	90.07
1063 – 1334	N00°13'46"E	162.25
1334 – 1333	N89°46'14"W	33.00
910 – 1329	N00°08'43"E	2500.00
1333 – 912	N00°13'46"E	2092.78
910 – 911	N00°08'43"E	2649.12
911 – 912	N00°13'46"E	2643.67
911 – 913	N88°10'22"W	2641.68

RIGHT OF WAY COURSE TABLE – CTH C & OAK STREET

FROM – TO	BEARING	DISTANCE
1035 – 1034	N43°37'19"W	7.23
1034 – 1028	S88°10'22"E	5.00
1028 – 1035	S00°08'43"W	5.07

REVISION DATE	DATE: 2/16/2017	SCALE, FEET 0 50 100	HWY: S. DULUTH AVE.	STATE R/W PROJECT NUMBER: 4997–00–64	PLAT SHEET: 4.7	
			COUNTY: DOOR	CONSTRUCTION PROJECT NUMBER:	PS&E SHEET:	

FILE NAME: Y:\MGM\LDWG\DULUTH AVE 21715\DWG\21705–RW.DWG PLOT DATE: 2/16/2017 PLOT BY: M.G.M.C. PLOT SCALE: 1:100 WISDOT/CADDS SH 83

NOTE: EXISTING RIGHT OF WAY OF CTH C ESTABLISHED FROM GOVERNMENT LAND LINES, BELLEVUE HEIGHTS, WEST HILL PLAT AND CSM 2433.

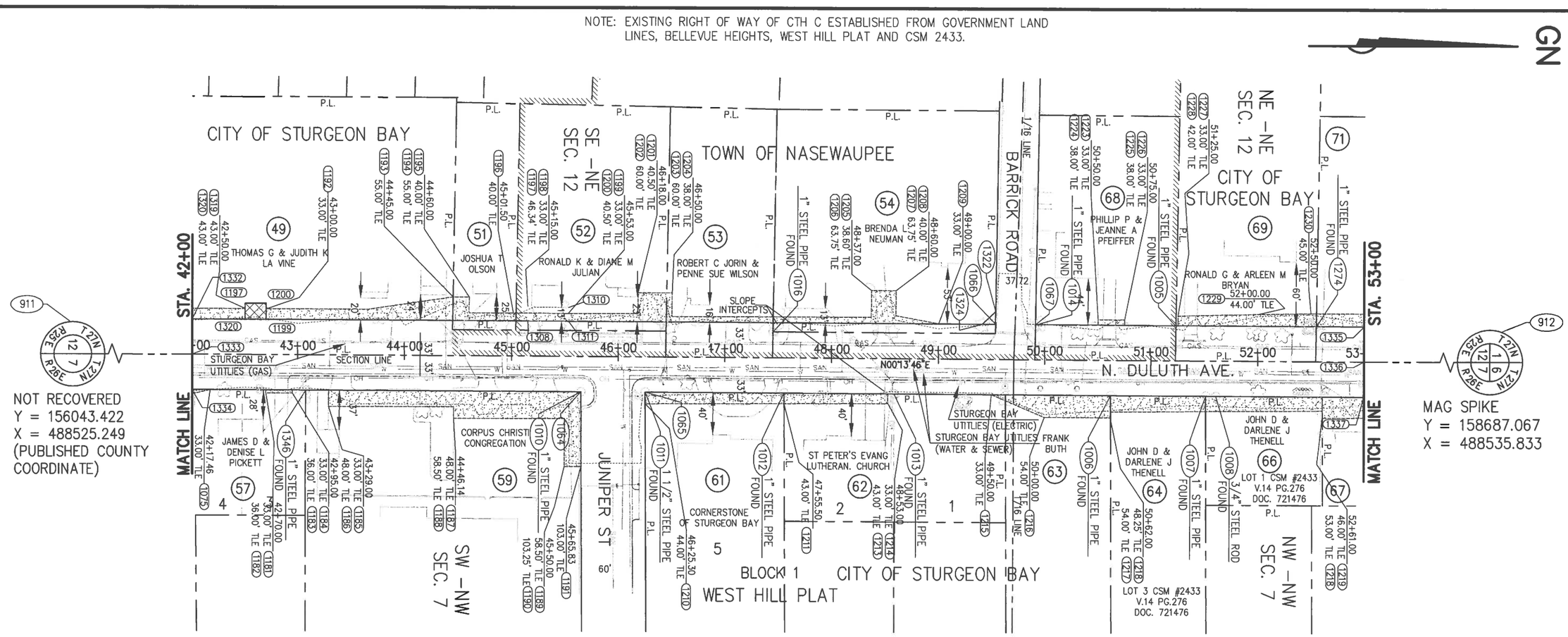

FOUND MONUMENTATION TABLE

POINT	Y	X	DESCRIPTION
1005	157517.209	488498.420	1" STEEL PIPE FOUND
1006	157456.511	488563.533	1" STEEL PIPE FOUND
1007	157545.531	488564.039	1" STEEL PIPE FOUND
1008	157554.895	488564.369	3/4" STEEL ROD FOUND
1010	156959.439	488561.755	1" STEEL PIPE FOUND
1011	157019.369	488562.033	1 1/2" STEEL PIPE FOUND
1012	157149.586	488562.479	3/4" STEEL PIPE FOUND
1013	157252.756	488562.917	1" STEEL PIPE FOUND
1014	157385.556	488497.929	1" STEEL PIPE FOUND
1016	157139.270	488505.356	1" STEEL PIPE FOUND
1274	157649.676	488498.698	1" STEEL PIPE FOUND

R/W COORDINATE TABLE

POINT	Y	X
1064	156959.368	488561.916
1065	157019.370	488562.156
1324	157335.436	488497.421
1066	157347.839	488497.471
1067	157385.560	488497.622
1332	156594.434	488494.455
1334	156594.169	488560.454
1335	157694.425	488498.858
1336	157694.293	488531.858

R/W STATION & OFFSET TABLE

POINT	STATION	OFFSET
1332	42+00.00	33.00
1334	42+00.00	33.00
1064	45+65.20	33.00
1065	46+25.20	33.00
1324	49+41.00	33.00
1066	49+53.41	33.00
1067	49+91.13	33.00
1335	53+00.00	33.00
1337	53+00.00	33.00

RIGHT OF WAY COURSE TABLE CTH C & BARRICK ROAD

FROM – TO	BEARING	DISTANCE
1324–1322	N43°38'25"W	17.37
1322–1066	S89°13'49"E	12.04
1066–1324	S00°13'47"W	12.41

PLE COURSE TABLE

FROM – TO	BEARING	DISTANCE
1320 – 1197	N89°46'14"W	15.00
1197 – 1200	N00°13'46"E	20.00
1200 – 1199	S89°46'14"E	15.00
1199 – 1320	S00°13'46"W	20.00
911 – 1333	N00°13'46"E	550.88
1333 – 1332	N89°46'14"W	33.00
1332 – 1197	N00°13'46"E	50.00

PLE STATION & OFFSET TABLE

POINT	STATION	OFFSET
1320	42+50.00	33.00
1197	42+50.00	48.00
1200	42+70.00	48.00
1199	42+70.00	33.00

RIGHT OF WAY COURSE TABLE CTH C

FROM – TO	BEARING	DISTANCE
1333–1332	N89°46'14"W	33.00
1332–1324	N00°13'46"E	741.00
1324–1067	N00°13'46"E	50.10
1067–1335	N00°13'46"E	308.87
1335–1336	S89°46'14"E	33.00
1333–1334	S89°46'14"E	33.00
1334–1064	N00°13'46"E	365.20
1064–1065	N00°13'46"E	60.00
1065–1337	N00°13'46"E	674.80
1337–1336	N89°46'14"W	33.00
911–1333	N00°13'46"E	550.88
1336–912	N00°13'46"E	992.78
911–912	N00°13'46"E	2643.67

REVISION DATE	DATE: 2/16/2017	SCALE, FEET 0 50 100	HWY: N. DULUTH AVE.	STATE R/W PROJECT NUMBER: 4997-00-64	PLAT SHEET: 4.8	
			COUNTY: DOOR	CONSTRUCTION PROJECT NUMBER:	PS&E SHEET:	

FILE NAME: Y:\MGM\LDWG\DULUTH AVE 21715\DWG\21705-RW.DWG PLOT DATE: 2/16/2017 PLOT BY: M.G.M.C. PLOT SCALE: 1:100 WISDOT/CADDS SH

NOTE: EXISTING RIGHT OF WAY OF CTH C ESTABLISHED FROM GOVERNMENT LAND LINES, WEST HILL PLAT AND OLE GULICKSONS PLAT.

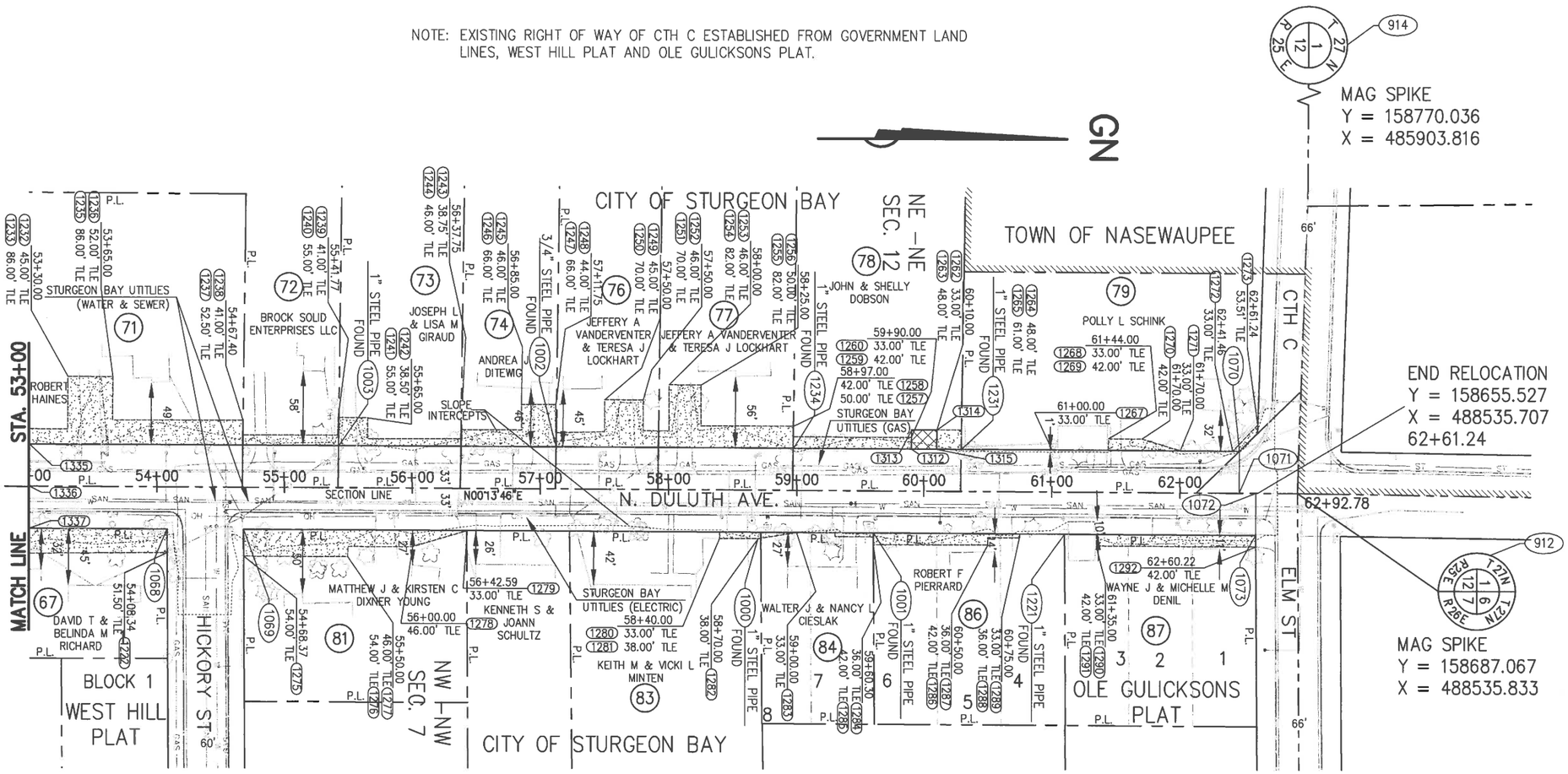

FOUND MONUMENTATION TABLE

POINT	Y	X	DESCRIPTION
1000	158266.311	488567.164	1" STEEL PIPE FOUND
1001	158354.358	488567.561	1" STEEL PIPE FOUND
1002	158106.615	488500.554	3/4" STEEL PIPE FOUND
1003	157936.674	488500.112	1" STEEL PIPE FOUND
1221	158504.256	488568.132	1" STEEL PIPE FOUND
1231	158423.677	488501.801	1" STEEL PIPE FOUND
1234	158291.782	488501.042	1" STEEL PIPE FOUND

R/W COORDINATE TABLE

POINT	Y	X
1335	157694.425	488498.858
1336	157694.293	488531.858
1068	157802.333	488565.291
1069	157862.335	488565.531
1070	158641.120	488502.649
1073	158654.281	488568.702

R/W STATION & OFFSET TABLE

POINT	STATION	OFFSET
1335	53+00.00	33.00
1337	53+00.00	33.00
1068	54+08.17	33.00
1069	54+68.18	33.00
1070	62+46.70	33.00
1073	62+60.13	33.00

RIGHT OF WAY COURSE TABLE

FROM – TO	BEARING	DISTANCE
1336 – 1335	N89°46'14"W	33.00
1335 – 1070	N00°13'46"E	946.70
1070 – 1071	S89°46'14"E	33.00
1336 – 1337	S89°46'14"E	33.00
1337 – 1068	N00°13'46"E	108.47
1068 – 1069	N00°13'46"E	60.00
1069 – 1073	N00°13'46"E	791.95
1073 – 1072	N89°46'14"W	33.00
911 – 1336	N00°13'46"E	1650.80
1071 – 1072	N00°13'46"E	13.43
1072 – 912	N00°13'46"E	32.65
911 – 912	N00°13'46"E	2643.67

PLE COURSE TABLE

FROM – TO	BEARING	DISTANCE
1312 – 1313	N89°46'14"W	15.00
1313 – 1314	N00°13'46"E	20.00
1314 – 1315	S89°46'14"E	15.00
1315 – 1312	S00°13'46"W	20.00
911 – 1336	N00°13'46"E	1650.80
1336 – 1335	N89°46'14"W	33.00
1335 – 1312	N00°13'46"E	690.00

PLE STATION & OFFSET TABLE

POINT	STATION	OFFSET
1312	59+90.00	33.00
1313	59+90.00	48.00
1314	60+10.00	48.00
1315	60+10.00	33.00

REVISION DATE	DATE: 2/16/2017	SCALE, FEET 0 50 100	HWY: N. DULUTH AVE.	STATE R/W PROJECT NUMBER: 4997–00–64	PLAT SHEET: 4.9	
			COUNTY: DOOR	CONSTRUCTION PROJECT NUMBER:	PS&E SHEET:	

FILE NAME: Y:\MGM\LDWG\DULUTH AVE 21715\DWG\21705–RW.DWG PLOT DATE: 2/16/2017 PLOT BY: M.G.M.C. PLOT SCALE: 1:100 WISDOT/CADDS

BP: 10+00.00

10+00 11+00 12+00 13+00 14+00 15+00

CTH C

STH 42/57

BEGIN PROJECT
STA.11+53.45
Y=153,547.76
X=488,518.92

1. ASPHALTIC SURFACE DRIVEWAYS & FIELD ENTRANCES (SEE DETAIL FOR THICKNESS)
2. CONCRETE DRIVEWAY (SEE DETAIL FOR THICKNESS)
3. BASE AGGREGATE DENSE 3/4-INCH

CLEARING AND GRUBBING

BENCH MARKS

NO.	STATION	DESCRIPTION	ELEV.
20	15+26	MAG NAIL DWY 821 GREEN BAY RD.	691.91

R/W
TLE
CONCRETE SIDEWALK 5-INCH
SLOPE INTERCEPT (TYP)
REMOVE TRUNK CLOSEST TO SIDEWALK
18+52.40
23.00'
S. DULUTH AVE
GREEN

15+00 16+00 17+00 18+00 19+00 20+00 21+00

CTH C

PROJECT NO: 4997-00-64	HWY: CTH C	COUNTY: DOOR	PLAN: CTH C	SHEET	E

FILE NAME : L:\PROJECTS\12642\DWG\4997-00-63\SHEETSPLAN\050201_PN.DWG
LAYOUT NAME - 050201_PN - 050201_PN

PLOT DATE : 7/24/2017 3:25 PM PLOT BY : MOYER, TIM PLOT NAME : ---------- PLOT SCALE : **********

WISDOT/CADDS SHEET 44

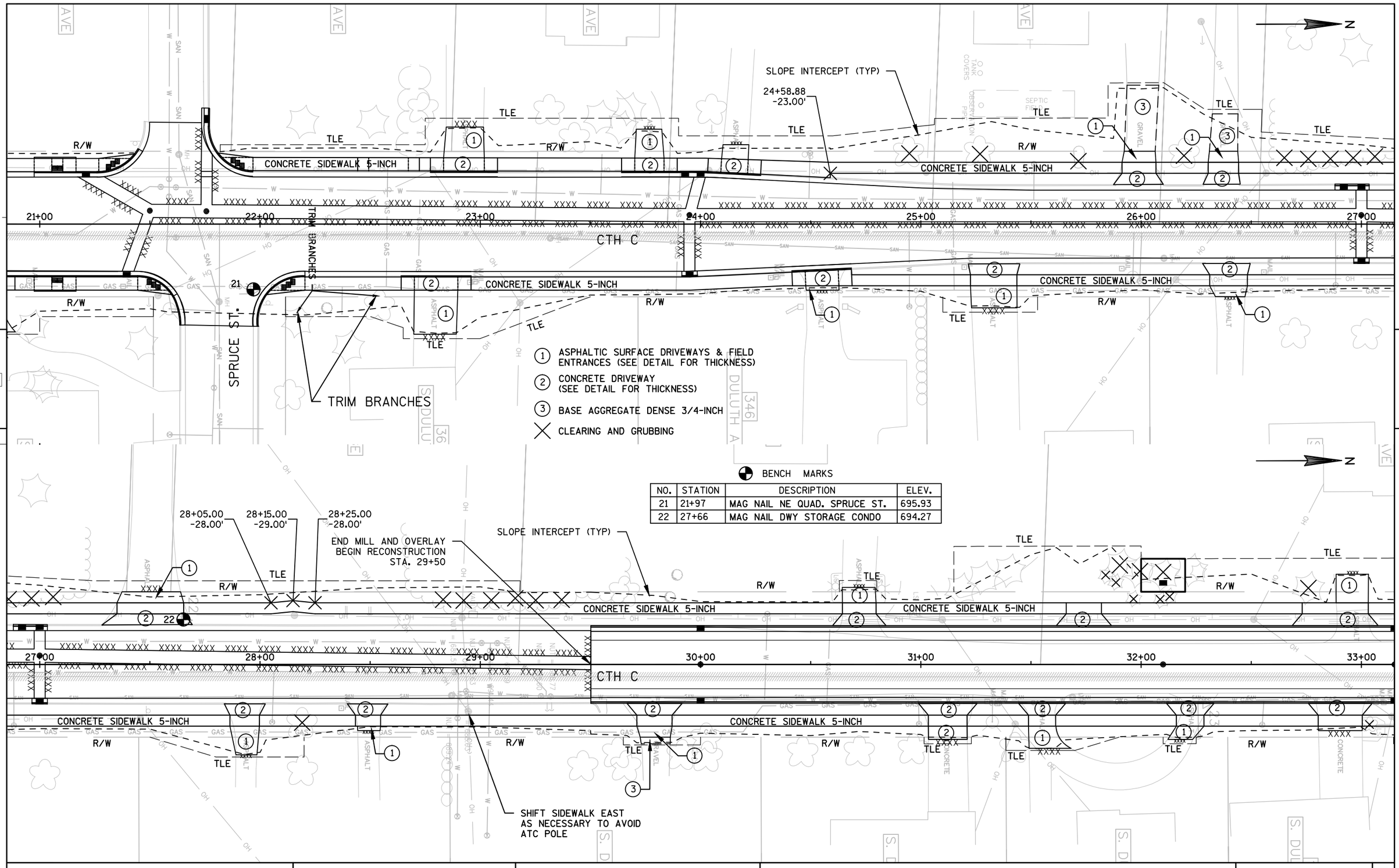

NO.	STATION	DESCRIPTION	ELEV.
21	21+97	MAG NAIL NE QUAD. SPRUCE ST.	695.93
22	27+66	MAG NAIL DWY STORAGE CONDO	694.27

PROJECT NO: 4997-00-64	HWY: CTH C	COUNTY: DOOR	PLAN: CTH C	SHEET 87	E

(1) ASPHALTIC SURFACE DRIVEWAYS & FIELD ENTRANCES (SEE DETAIL FOR THICKNESS)

(2) CONCRETE DRIVEWAY (SEE DETAIL FOR THICKNESS)

(3) BASE AGGREGATE DENSE 3/4-INCH

CLEARING AND GRUBBING

N

SLOPE INTERCEPT (TYP)

REMOVING SMALL PIPE CULVERTS

REMOVING SMALL PIPE CULVERTS

SHIFT SIDEWALK EAST AS NECESSARY TO AVOID ATC POLE

CONCRETE SIDEWALK 5-INCH

CONCRETE SIDEWALK 5-INCH

CONCRETE SIDEWALK 5-INCH

CTH C

N0° 08' 43"E

TLE

PLE

R/W

30'

20'

29+00 30+00 31+00 32+00 33+00 34+00 35+00 35+00.00

END MILL AND OVERLAY
BEGIN RECONSTRUCTION
STA.29+50

BENCH MARKS

NO.	STATION	DESCRIPTION	ELEV.
23	32+29	MAG NAIL @ 206 S. DULUTH DWY	691.97

P.I. 29+50.21
EL 694.07

-0.72%

EXISTING GROUND

FINISHED PROFILE

VPC STA 34+00.00
VPC EL 690.86

VPI STA 34+50.00
VPI EL 690.50

VPT STA 35+00.00
VPT EL 689.96

VCL = 100.00

K = 276.33

FINISHED ELEVATION ON R/L

EXISTING ELEVATION ON R/L

700 690 680 670

694.18 694.09 693.86 693.72 693.63 693.36 693.37 693.00 692.82 692.65 692.57 692.29 692.45 691.93 692.11 691.57 691.82 691.22 691.82 690.86 691.46 690.45 690.61 689.96

29+00 30+00 31+00 32+00 33+00 34+00 35+00

PROJECT NO: 4997-00-64	HWY: CTH C	COUNTY: DOOR	PLAN AND PROFILE: CTH C	SHEET 88	E

FILE NAME : L:\PROJECTS\12642\DWG\4997-00-63\SHEETSPLAN\050101_PP.DWG
LAYOUT NAME - 050101_PP - 050101_PP

PLOT DATE : 7/24/2017 3:03 PM PLOT BY : MOYER, TIM PLOT NAME : _____ PLOT SCALE : 1" = 40'_XREF

WISDOT/CADDS SHEET 40

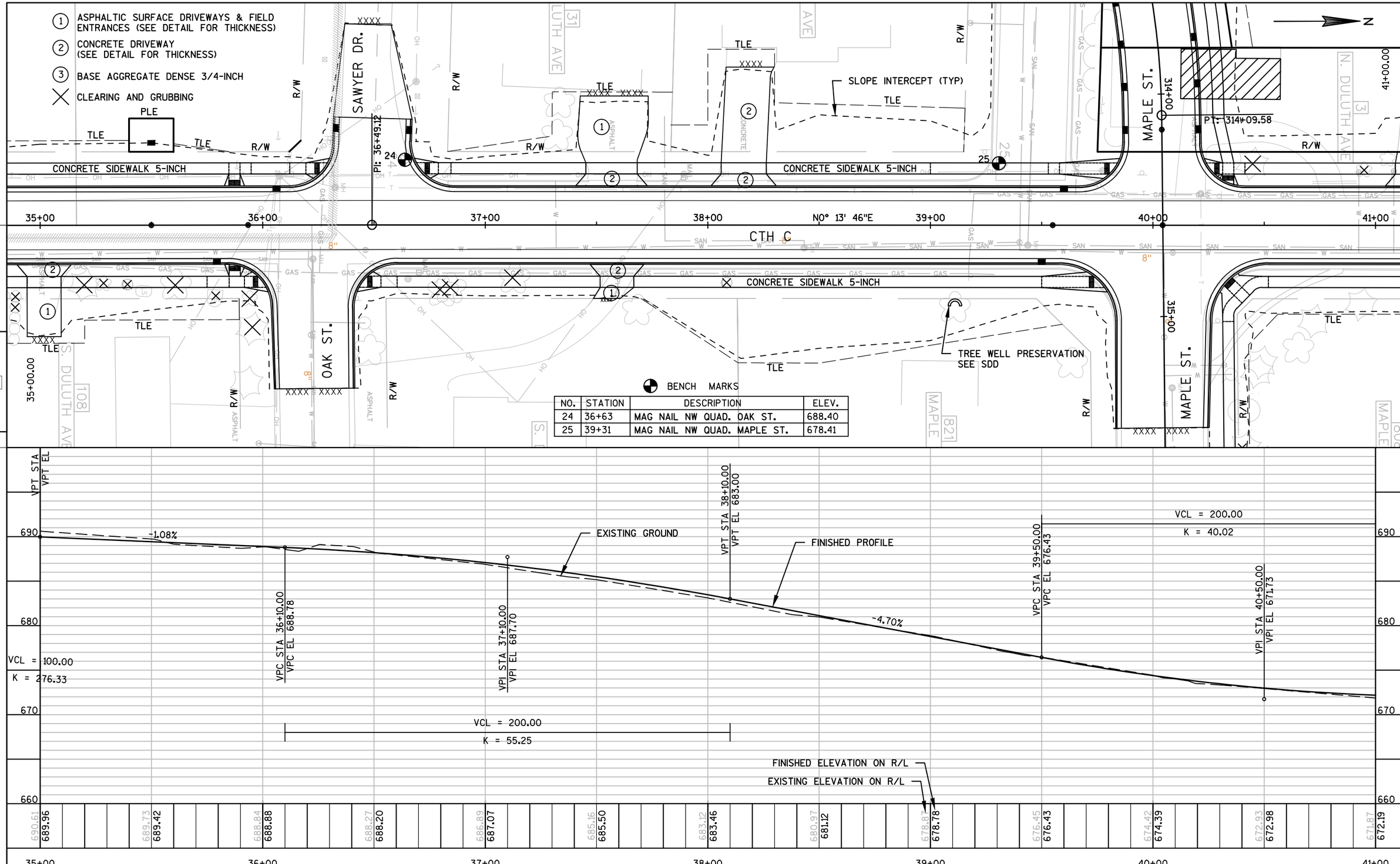

NO.	STATION	DESCRIPTION	ELEV.
24	36+63	MAG NAIL NW QUAD. OAK ST.	688.40
25	39+31	MAG NAIL NW QUAD. MAPLE ST.	678.41

PROJECT NO:4997-00-64	HWY:CTH C	COUNTY:DOOR	PLAN AND PROFILE: CTH C	SHEET 89	E

FILE NAME : L:\PROJECTS\12642\DWG\4997-00-63\SHEETSPLAN\050101_PP.DWG
LAYOUT NAME - 050101_PP - 050102_PP
PLOT DATE : 7/24/2017 3:03 PM PLOT BY : MOYER, TIM PLOT NAME : PLOT SCALE : 1" = 40'_XREF
WISDOT/CADDS SHEET 40

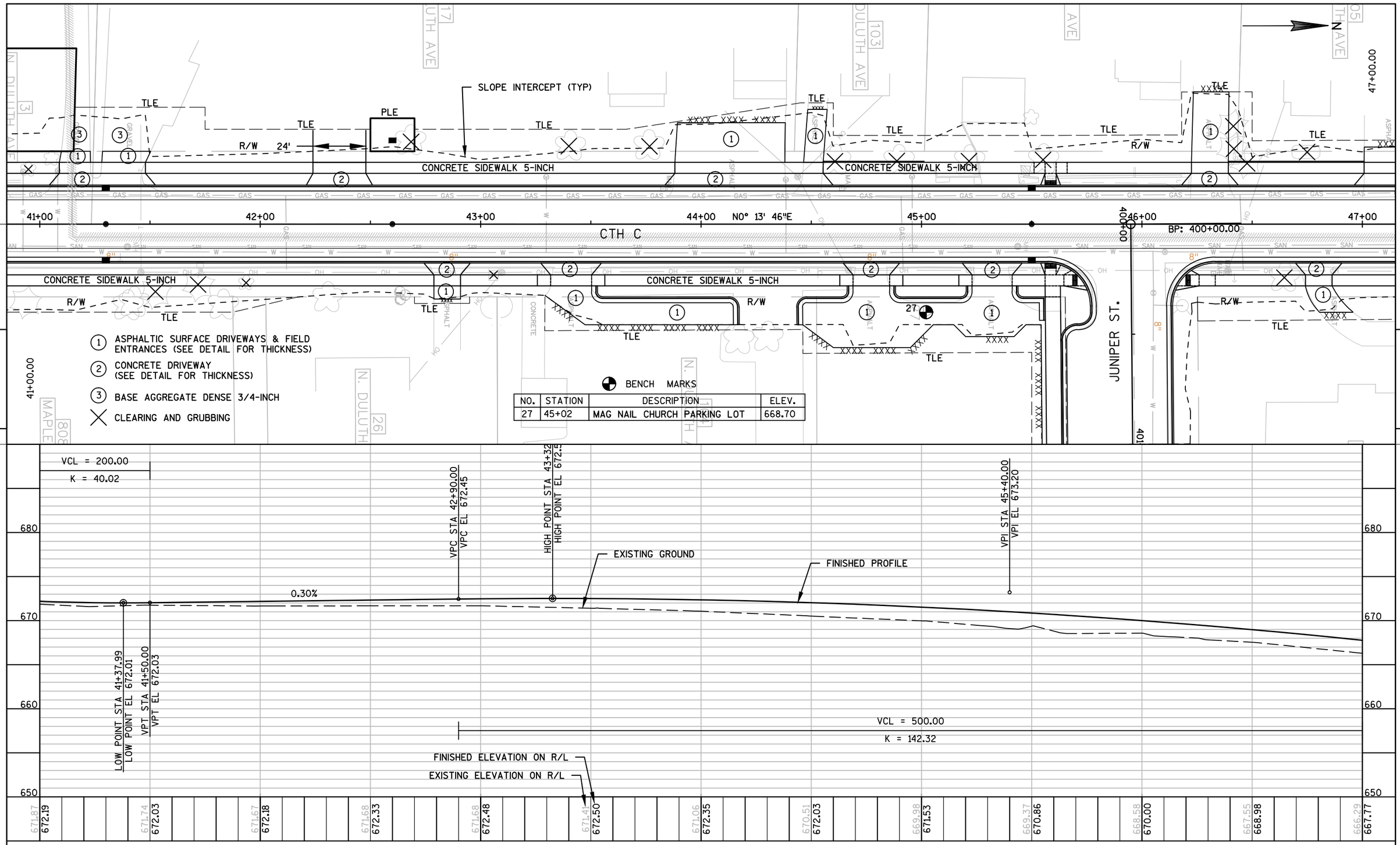

PROJECT NO: 4997-00-64	HWY: CTH C	COUNTY: DOOR	PLAN AND PROFILE: CTH C	SHEET 90 E

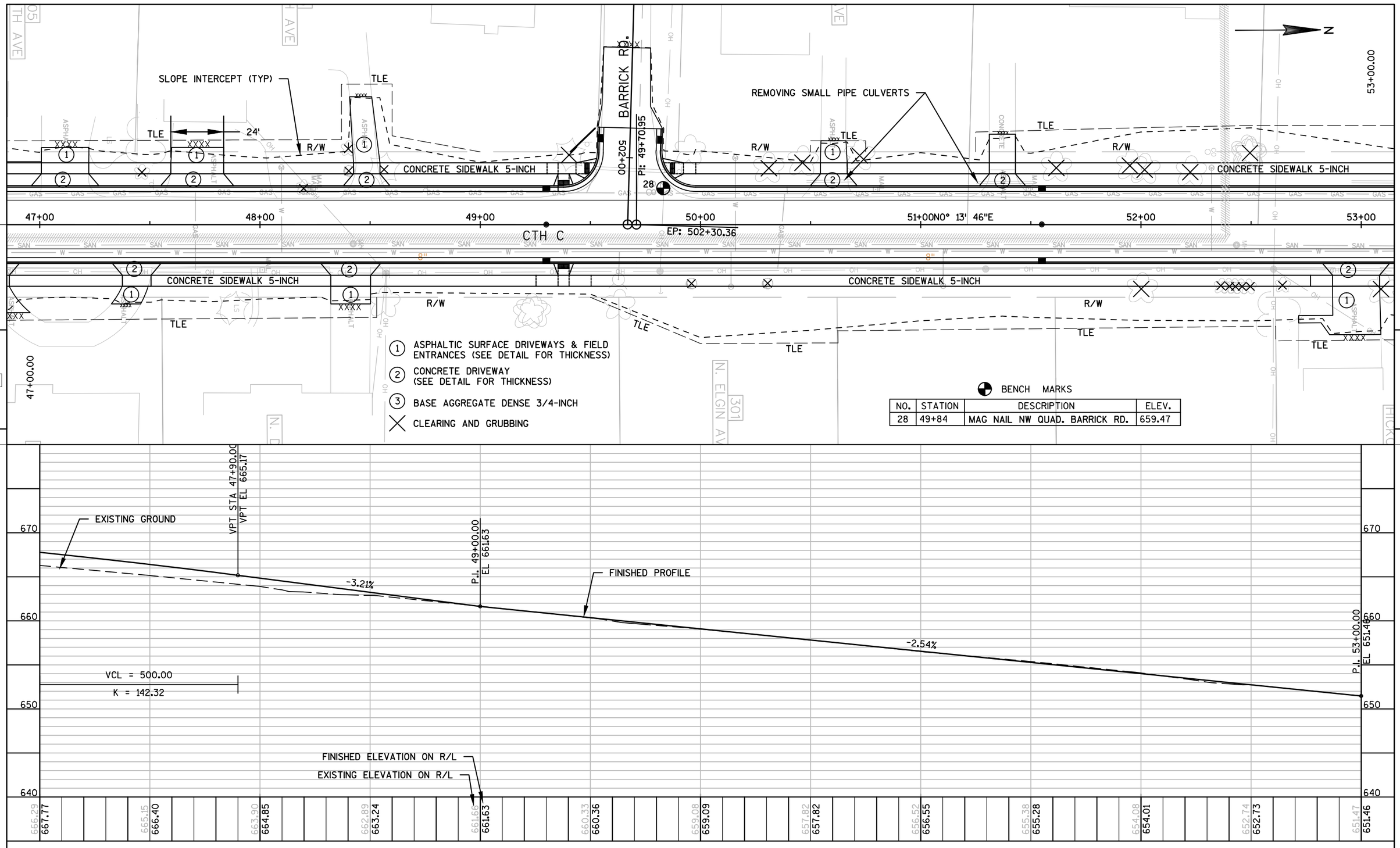

PROJECT NO: 4997-00-64	HWY: CTH C	COUNTY: DOOR	PLAN AND PROFILE: CTH C	SHEET 91 E

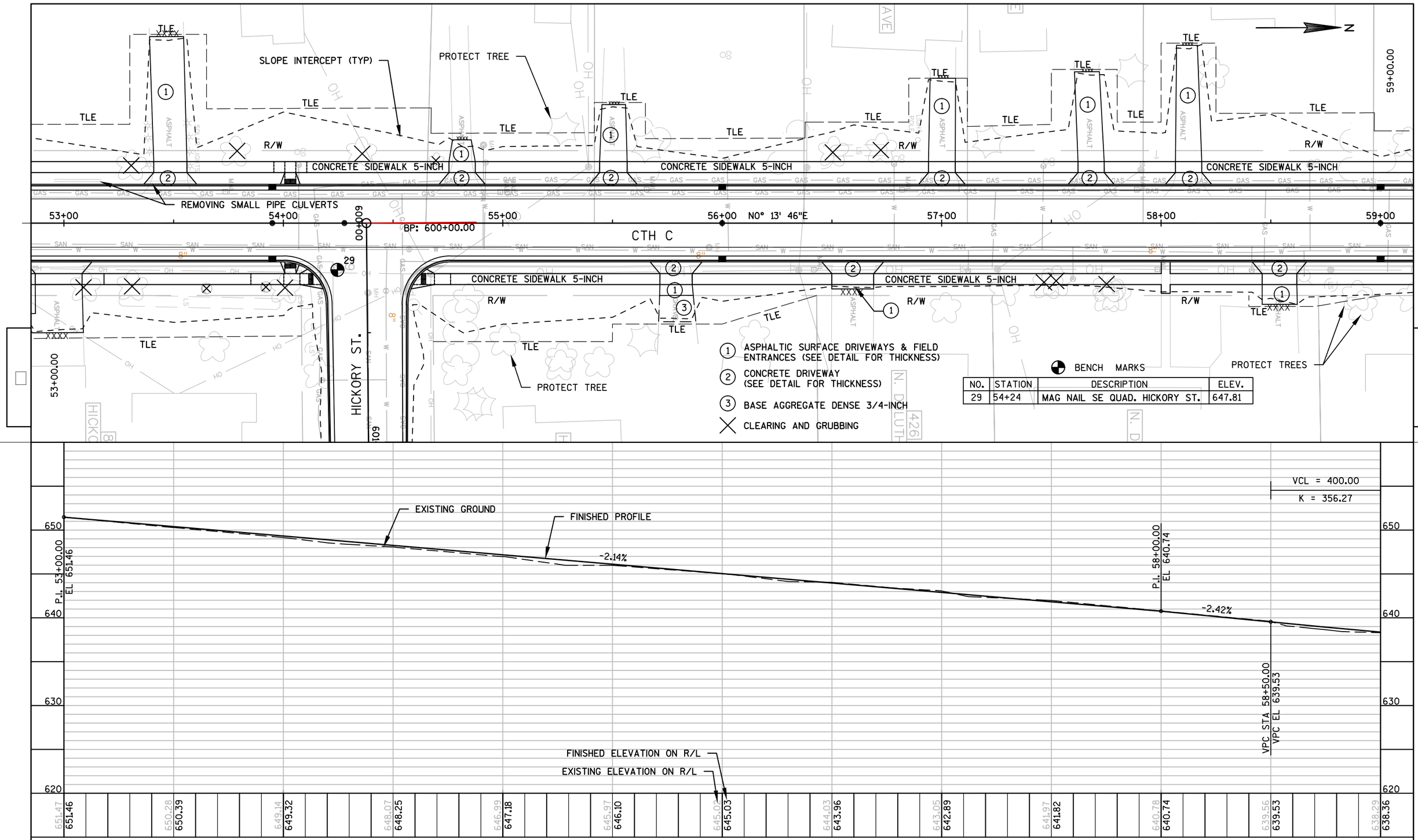

PROJECT NO: 4997-00-64	HWY: CTH C	COUNTY: DOOR	PLAN AND PROFILE: CTH C	SHEET 92 E

FILE NAME : L:\PROJECTS\12642\DWG\4997-00-63\SHEETSPLAN\050101_PP.DWG
LAYOUT NAME - 050101_PP - 050105_PP

PLOT DATE : 7/24/2017 3:05 PM PLOT BY : MOYER, TIM PLOT NAME : _____ PLOT SCALE : 1" = 40'_XREF

WISDOT/CADDS SHEET 40

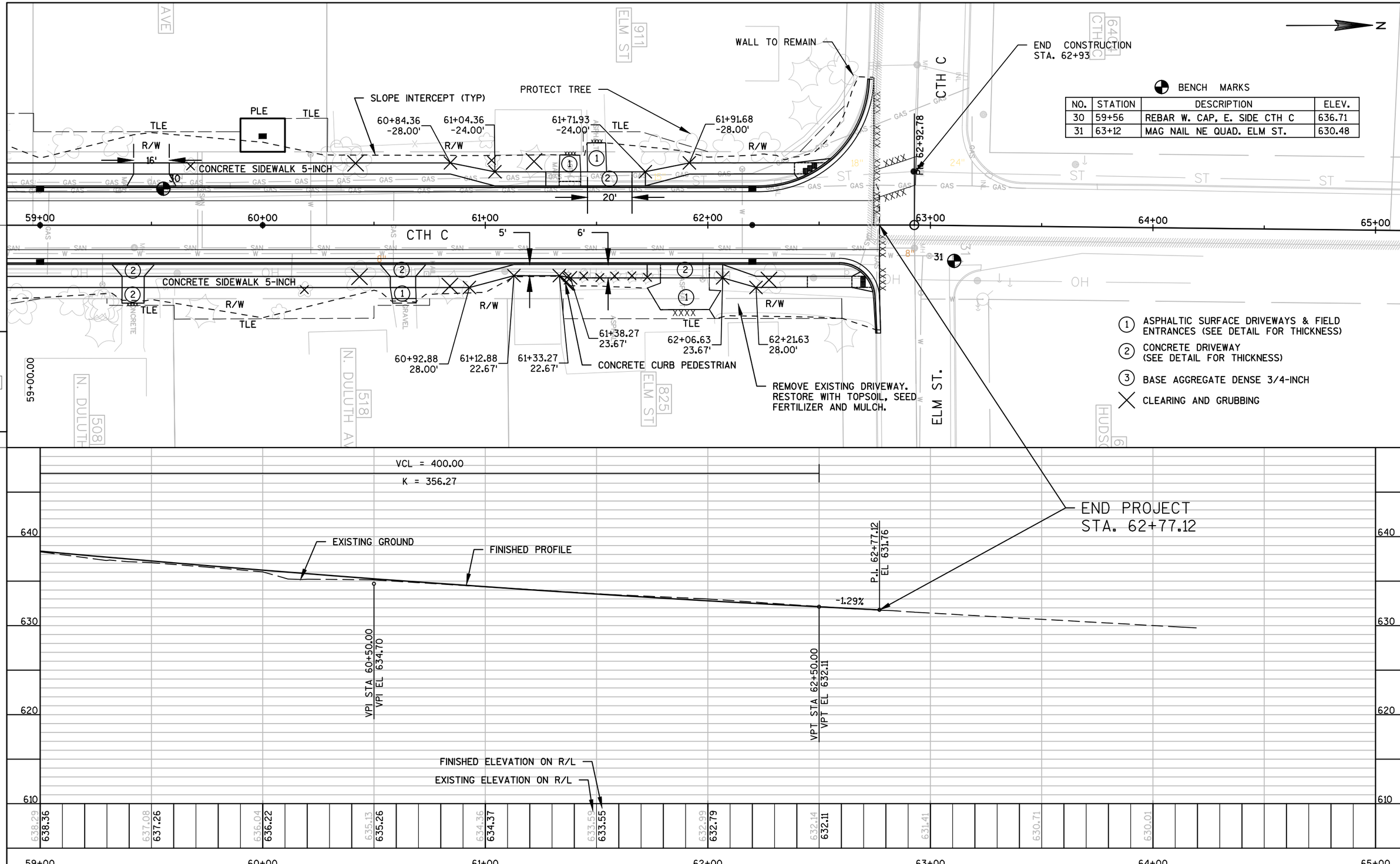

BENCH MARKS

NO.	STATION	DESCRIPTION	ELEV.
30	59+56	REBAR W. CAP, E. SIDE CTH C	636.71
31	63+12	MAG NAIL NE QUAD. ELM ST.	630.48

1. ASPHALTIC SURFACE DRIVEWAYS & FIELD ENTRANCES (SEE DETAIL FOR THICKNESS)
2. CONCRETE DRIVEWAY (SEE DETAIL FOR THICKNESS)
3. BASE AGGREGATE DENSE 3/4-INCH

CLEARING AND GRUBBING

PROJECT NO:4997-00-64	HWY:CTH C	COUNTY:DOOR	PLAN AND PROFILE: CTH C	SHEET 93	E

FILE NAME : L:\PROJECTS\12642\DWG\4997-00-63\SHEETSPLAN\050101_PP.DWG
LAYOUT NAME - 050101_PP - 050106_PP
PLOT DATE : 7/24/2017 3:05 PM PLOT BY : MOYER, TIM PLOT NAME : PLOT SCALE : 1" = 40'_XREF
WISDOT/CADDS SHEET 40

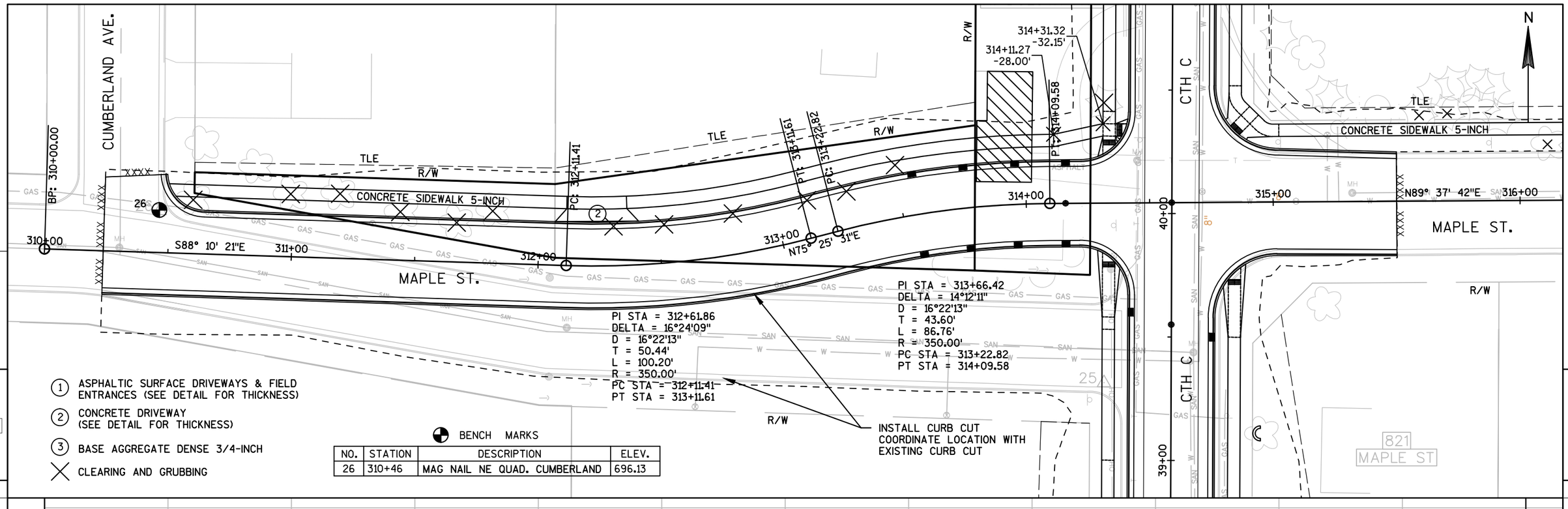

NO.	STATION	DESCRIPTION	ELEV.
26	310+46	MAG NAIL NE QUAD. CUMBERLAND	696.13

PROJECT NO: 4997-00-64	HWY: CTH C	COUNTY: DOOR	PLAN AND PROFILE: MAPLE ST.	SHEET 94	E

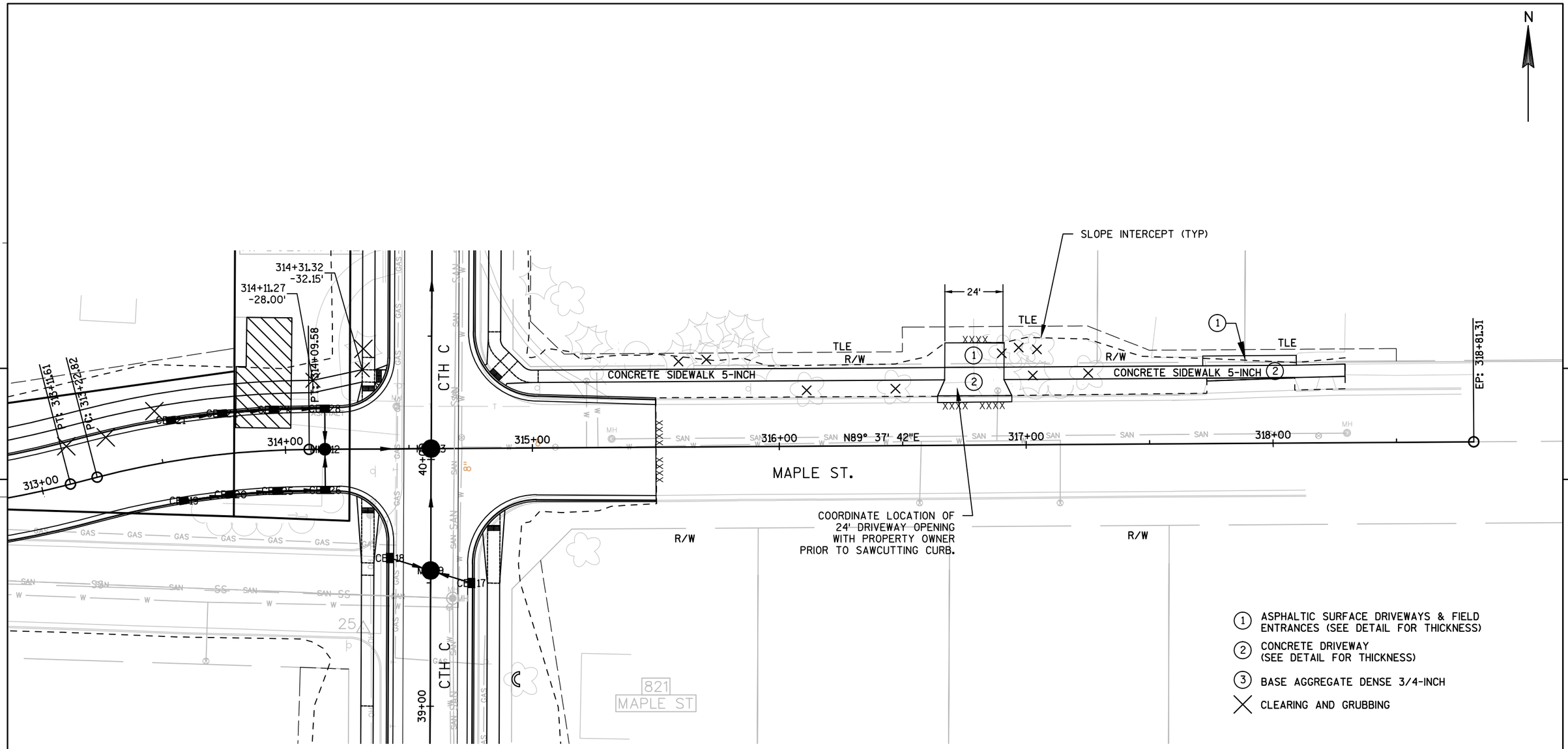

PROJECT NO: 4997-00-64	HWY: CTH C	COUNTY: DOOR	PLAN MAPLE ST.	SHEET 95	E

FILE NAME : L:\PROJECTS\12642\DWG\4997-00-63\SHEETSPLAN\050202_PN.DWG
LAYOUT NAME - 050202_PN - 050203_PN
PLOT DATE : 7/27/2017 3:56 PM PLOT BY : MOYER, TIM PLOT NAME : ---------- PLOT SCALE : 1" = 40'_XREF
WISDOT/CADDS SHEET 44

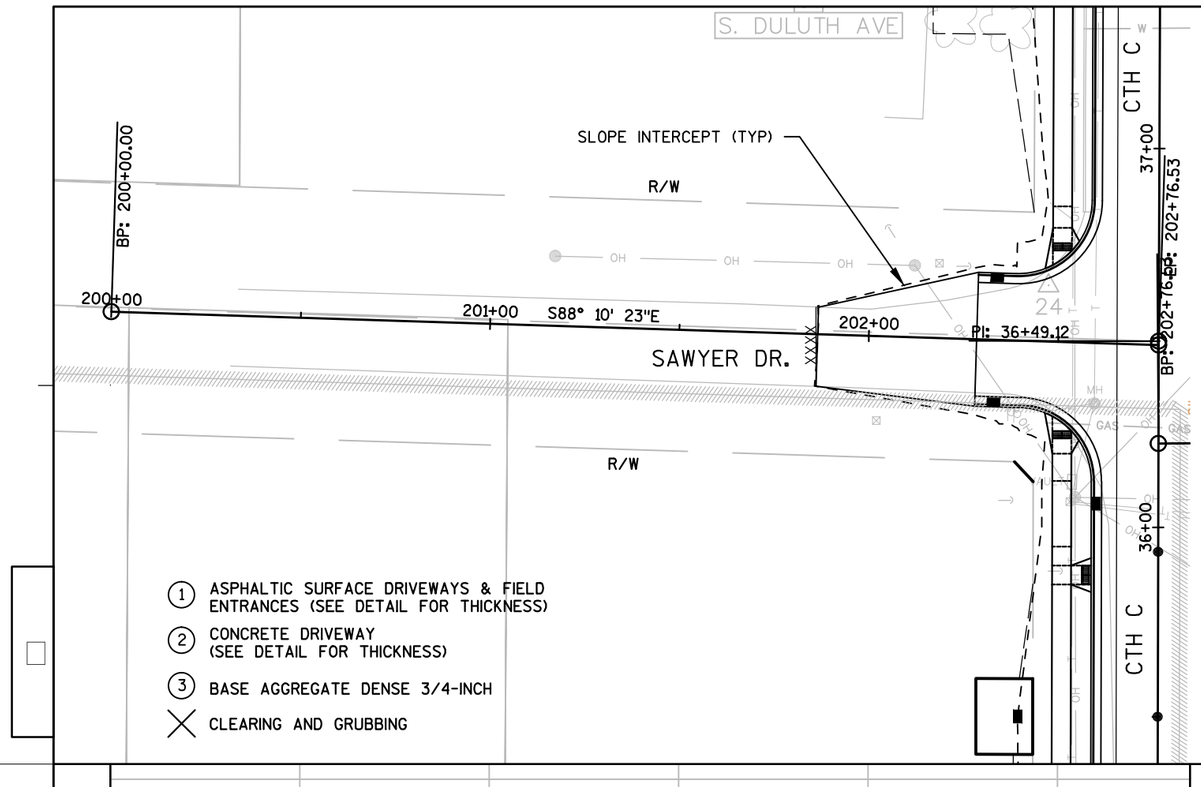

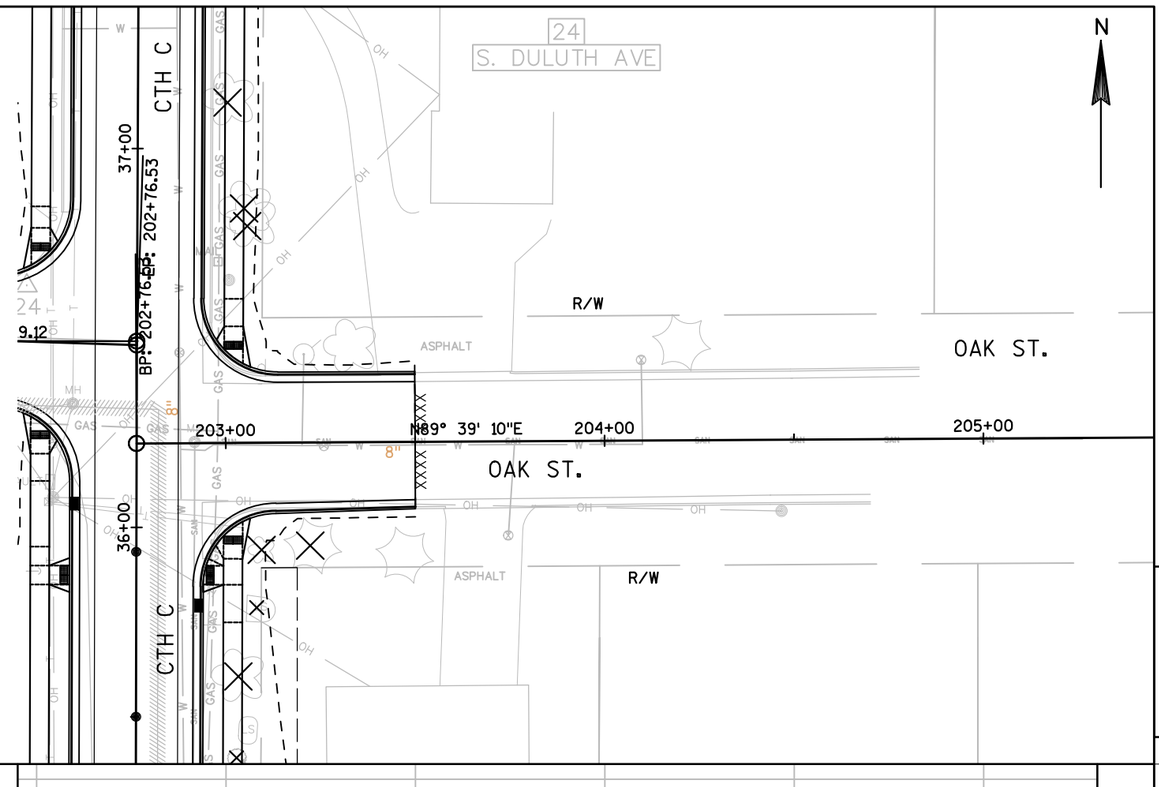

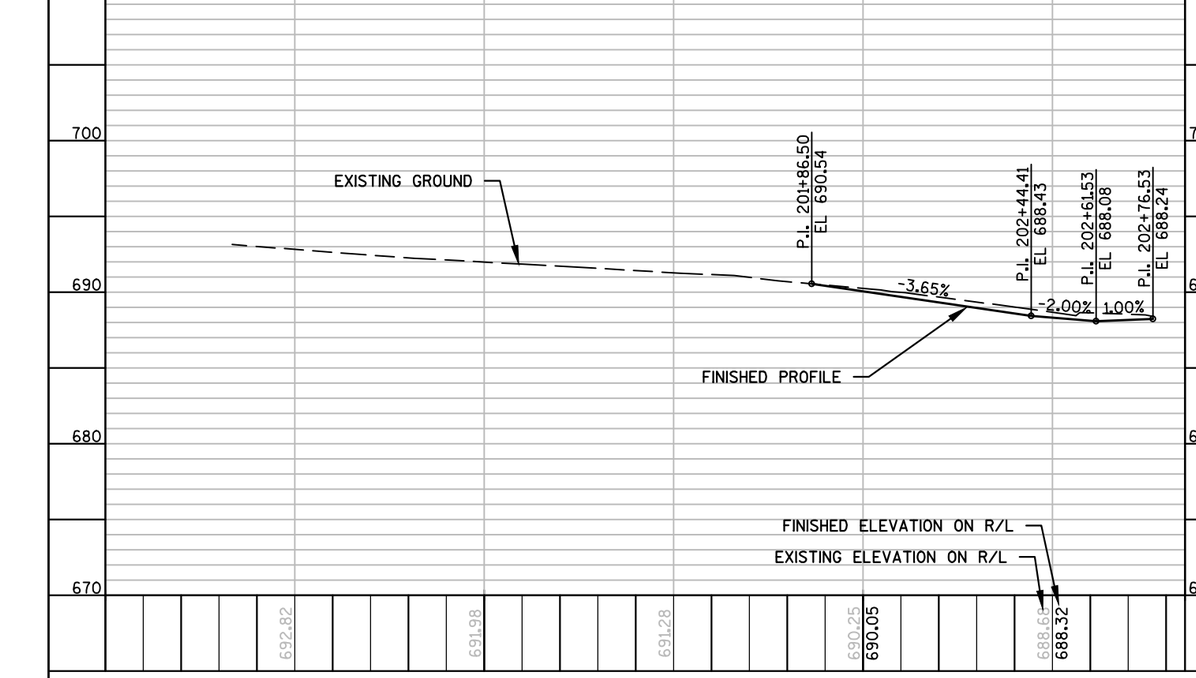

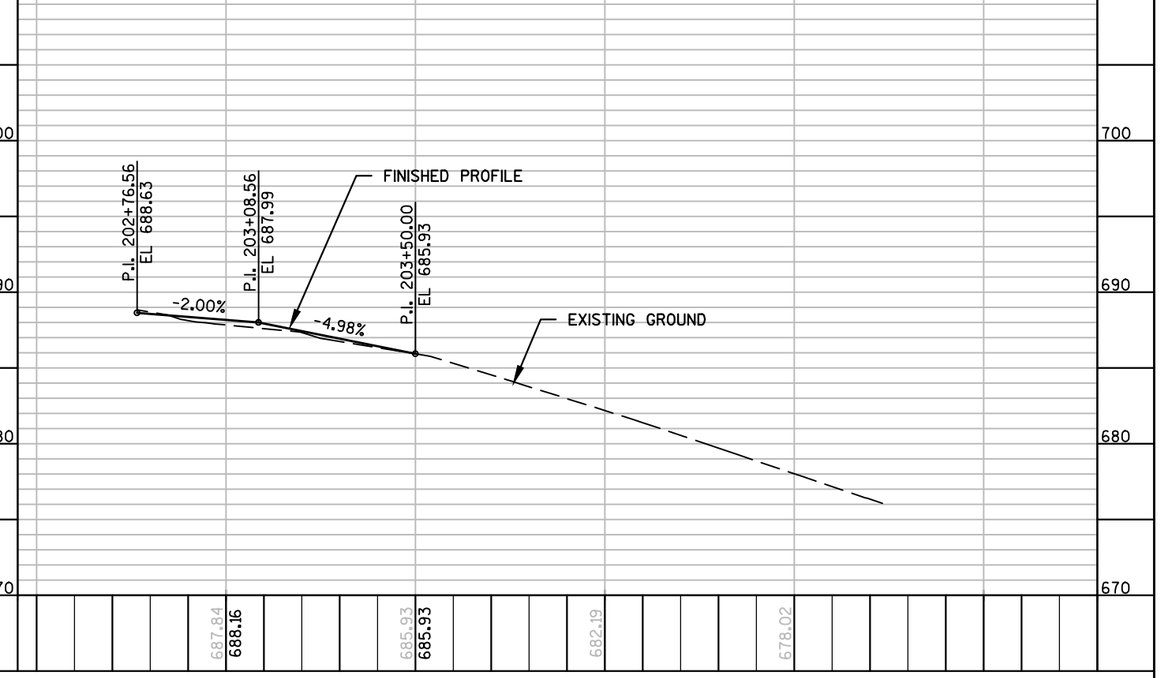

PROJECT NO: 4997-00-64	HWY: CTH C	COUNTY: DOOR	PLAN AND PROFILE: SAWYER DR & OAK ST	SHEET 96 E

FILE NAME : L:\PROJECTS\12642\DWG\4997-00-63\SHEETSPLAN\050103_PP.DWG
LAYOUT NAME - 050103_PP - 050108_PP
PLOT DATE : 7/24/2017 12:54 PM PLOT BY : MOYER, TIM PLOT NAME : _____ PLOT SCALE : 1" = 40'_XREF
WISDOT/CADDS SHEET 40

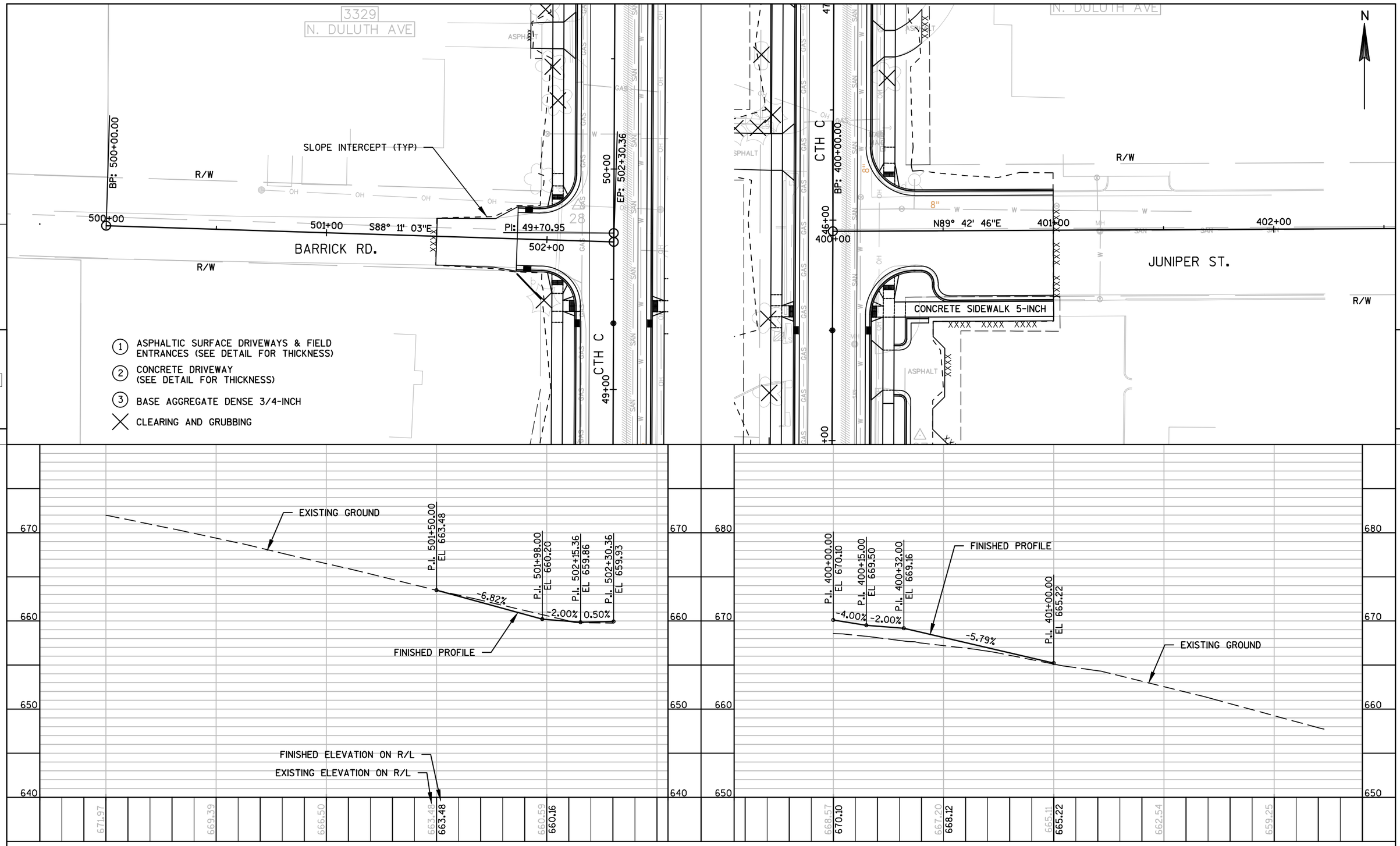

PROJECT NO: 4997-00-64	HWY: CTH C	COUNTY: DOOR	PLAN AND PROFILE: BARRICK RD., JUNIPER ST.	SHEET 97	E

FILE NAME : L:\PROJECTS\12642\DWG\4997-00-63\SHEETSPLAN\050103_PP.DWG
LAYOUT NAME - 050103_PP - 050109_PP
PLOT DATE : 7/24/2017 12:54 PM PLOT BY : MOYER, TIM PLOT NAME : _____ PLOT SCALE : 1" = 40'_XREF
WISDOT/CADDS SHEET 40

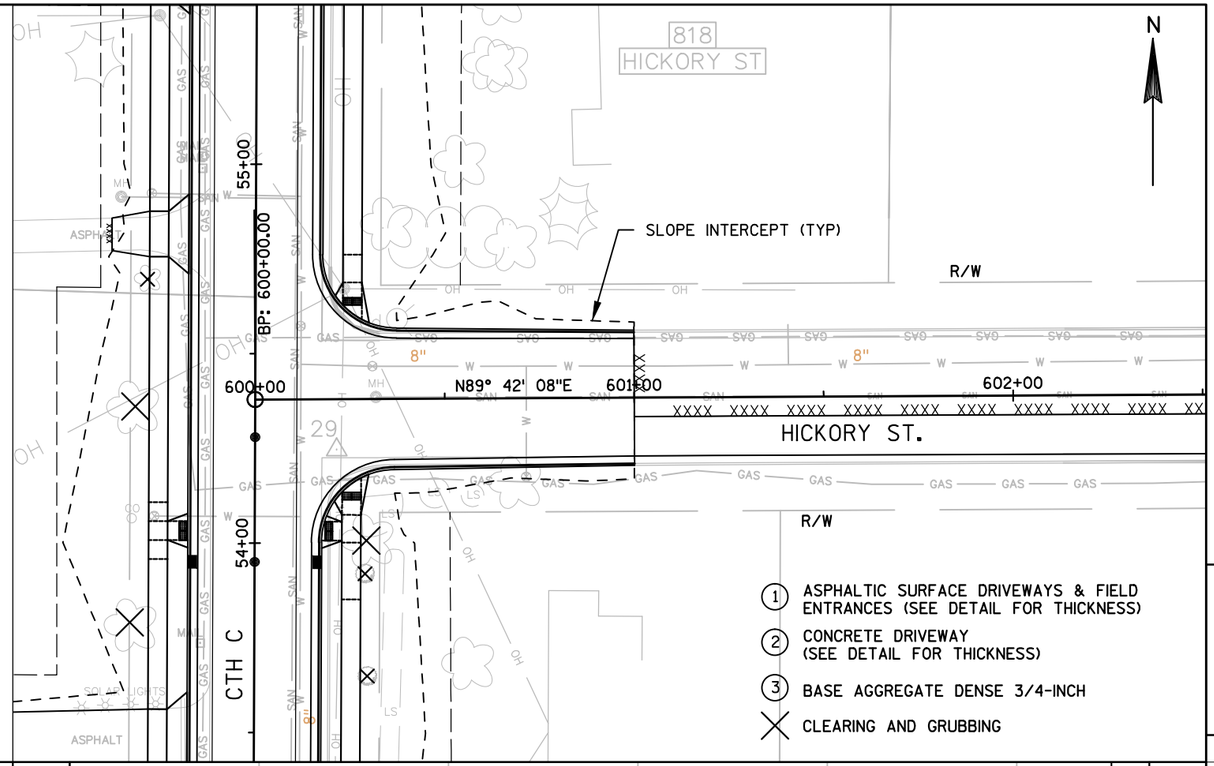

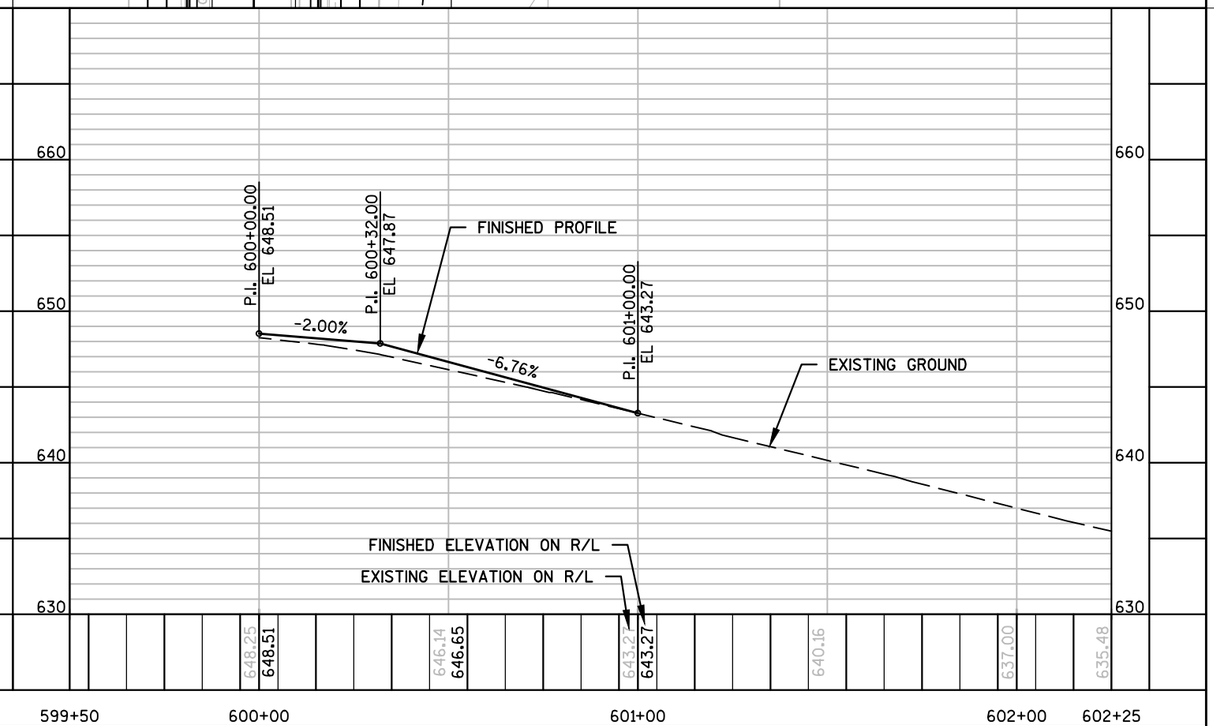

PROJECT NO: 4997-00-64	HWY: CTH C	COUNTY: DOOR	PLAN AND PROFILE: HICKORY ST.	SHEET 98	E

Standard Detail Drawing List

08A05-19A	INLET COVERS TYPE A, H, A-S, H-S & Z
08A05-19B	INLET COVERS TYPE B, B-A, C, MS, MS-A, & WM
08A05-19D	INLET COVER TYPE BW, MANHOLE COVERS, TYPE K, J, J-S, L & M
08A09-02	CATCH BASINS 2X3-FT AND 2.5X3-FT
08B09-02	MANHOLES 3-FT, 4-FT, 5-FT, 6-FT, 7-FT AND 8-FT DIAMETER
08C07-02	INLETS 2X2-FT, 2X2.5-FT, 2X3-FT AND 2.5X3-FT
08C08-02	INLETS MEDIAN 1 AND 2 GRATE
08D01-19	CONCRETE CURB, CONCRETE CURB AND GUTTER AND TIES
08D05-18A	CURB RAMPS TYPES 1 AND 1-A
08D05-18B	CURB RAMPS TYPES 2 AND 3
08D05-18C	CURB RAMPS TYPES 4A AND 4A1
08D05-18D	CURB RAMPS TYPE 4B AND 4B1
08D05-18E	CURB RAMPS TYPES 5, 6, 7A, 7B & 8
08E09-06	SILT FENCE
08E10-02	INLET PROTECTION TYPE A, B, C AND D
08E11-02	TURBIDITY BARRIER
08F04-07	JOINT TIES FOR CONCRETE PIPE AND CONCRETE COLLAR DETAIL
15C02-06A	BARRICADES AND SIGNS FOR MAINLINE CLOSURES
15C02-06B	BARRICADES AND SIGNS FOR MAINLINE CLOSURES
15C03-03	BARRICADES AND SIGNS FOR SIDEROAD CLOSURES
15C05-03	TRAFFIC CONTROL, ADVANCE WARNING SIGNS 40 M.P.H. OR LESS
15C07-13A	PAVEMENT MARKING SYMBOLS
15C07-13B	PAVEMENT MARKING WORDS
15C07-13C	PAVEMENT MARKING ARROWS
15C07-13E	PAVEMENT MARKING FOR BIKE LANES
15C08-17B	PAVEMENT MARKING (TURN LANES)
15C12-05	TRAFFIC CONTROL FOR LANE CLOSURE WITH FLAGGING OPERATION
15C29-05A	BICYCLE LANE MARKING
15C29-05B	PAVEMENT MARKING FOR SHARED LANE 35 MPH OR LESS
15C35-01A	PAVEMENT MARKING (INTERSECTIONS)
15D30-03A	TRAFFIC CONTROL, PEDESTRIAN ACCOMMODATION
15D30-03B	TRAFFIC CONTROL, TEMPORARY ADA COMPLIANT PEDESTRIAN ACCOMMODATION
15D30-03C	TRAFFIC CONTROL, PEDESTRIAN ACCOMMODATION

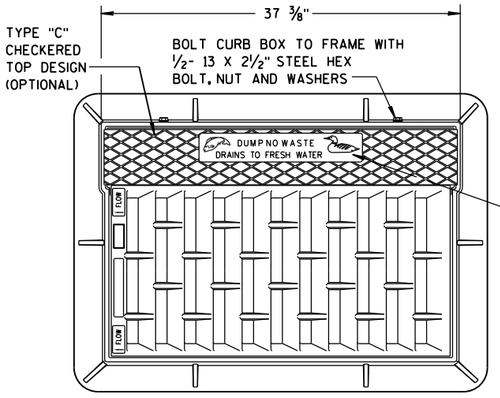

NOTE:
GRATE IS REVERSIBLE.

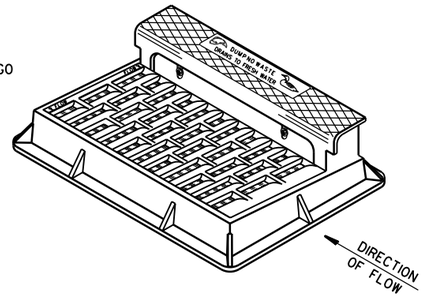

NOTE: CURB BOX HEIGHT ADJUSTABLE 6" TO 9"

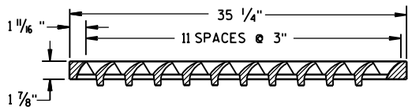

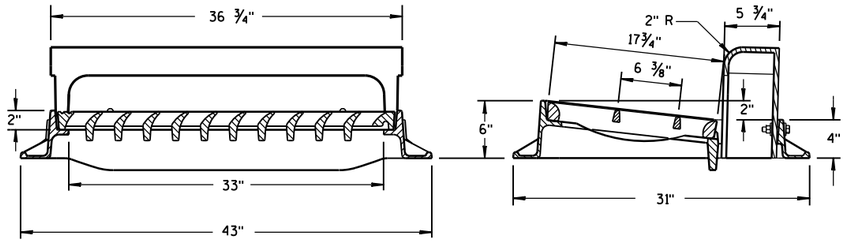

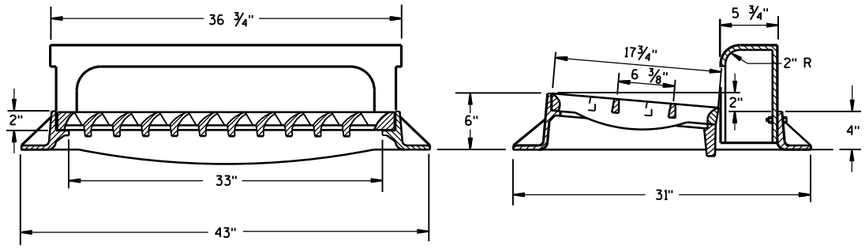

TYPE "H"

NOTE: EITHER CASTING IS ACCEPTABLE

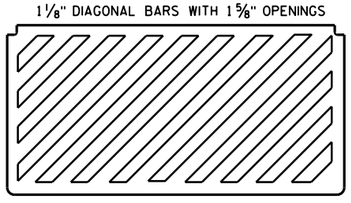

SPECIAL GRATE FOR TYPE "H" COVER

(MEASURES 35 1/4" X 17 3/4" X 2")

(NOTED AS TYPE H-S ON DRAINAGE TABLE)

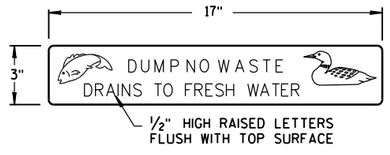

LOGO DETAIL

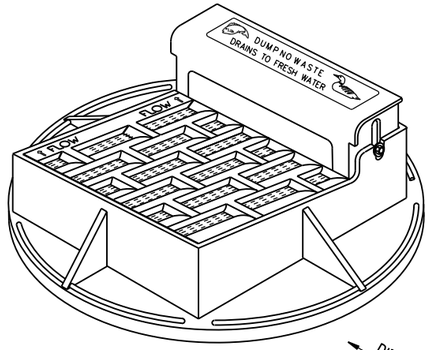

NOTE: CURB BOX ADJUSTABLE 4" TO 9"

NOTE:
GRATE IS REVERSIBLE.

GENERAL NOTES

DETAILS OF CONSTRUCTION, MATERIALS AND WORKMANSHIP NOT SHOWN ON THIS DRAWING SHALL CONFORM TO THE PERTINENT REQUIREMENTS OF THE STANDARD SPECIFICATIONS AND THE APPLICABLE SPECIAL PROVISIONS.

DETAIL DRAWINGS FOR PROPOSED ALTERNATE DESIGNS FOR CATCH BASIN, MANHOLE AND INLET COVERS SHALL BE SUBMITTED TO THE ENGINEER FOR APPROVAL PROVIDING THAT SUCH ALTERNATE DESIGNS MAKE PROVISION FOR EQUIVALENT CAPACITY AND STRENGTH.

ROUND FRAMES AND COVERS SHALL HAVE CONTINUOUSLY MACHINED BEARING SURFACES TO PREVENT ROCKING AND RATTLING.

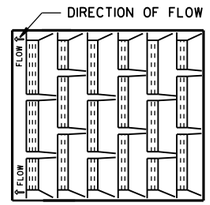

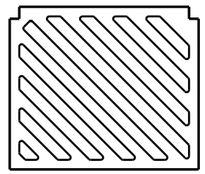

SPECIAL GRATE FOR TYPE "A" COVER

(MEASURES 19 3/4" X 17" X 1 7/8")

(NOTED AS TYPE A-S ON DRAINAGE TABLE)

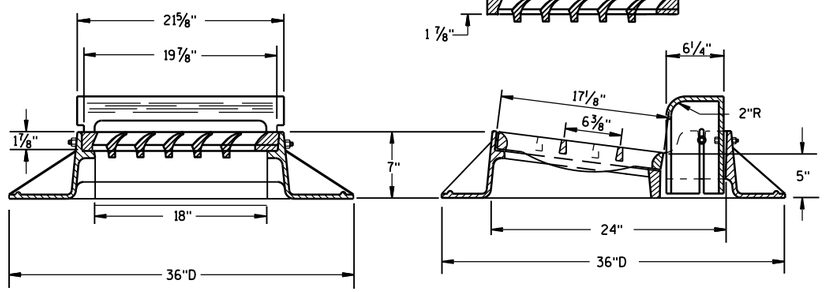

TYPE "A"

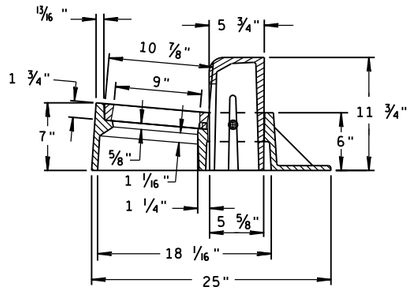

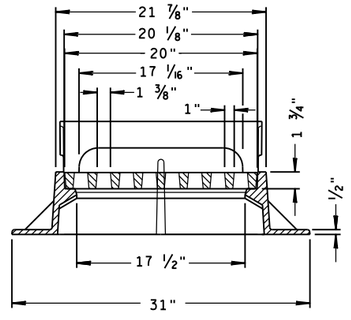

TYPE "Z"

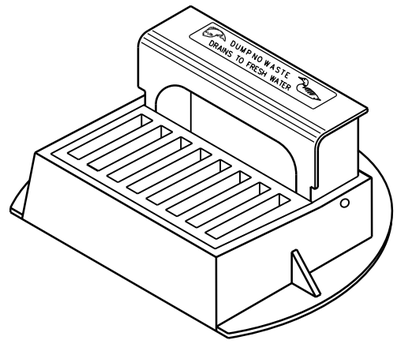

INLET COVERS
TYPE A, H, A-S, H-S & Z

STATE OF WISCONSIN
DEPARTMENT OF TRANSPORTATION

APPROVED
11-27-13 — DATE
/S/ Jerry H. Zogg — ROADWAY STANDARDS ENGINEER
FHWA

6

S.D.D. 8 A 5-19a

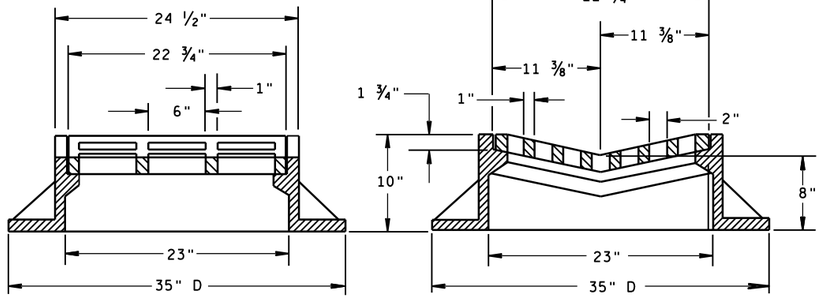

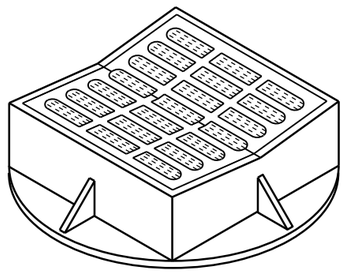

TYPE "B"

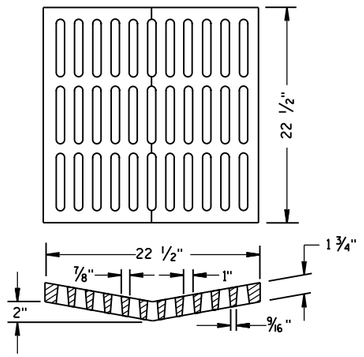

ALTERNATIVE GRATE FOR TYPE "B" COVER

USE WHERE PEDESTRIAN OR BICYCLE TRAFFIC IS POSSIBLE.
NOTED AS TYPE B-A ON THE DRAINAGE TABLE

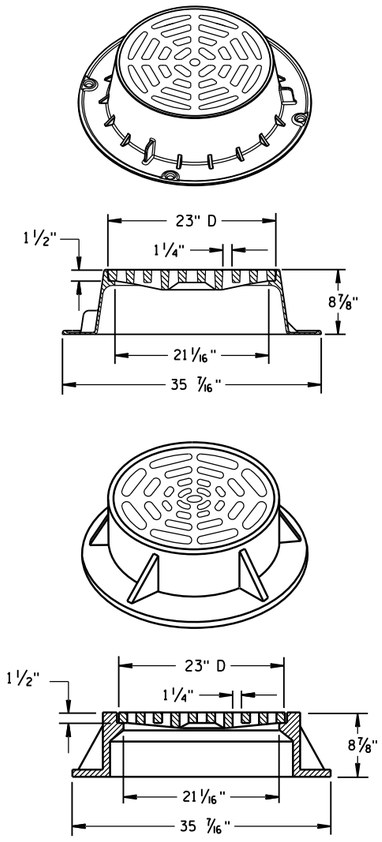

TYPE "C"

NOTE: EITHER CASTING IS ACCEPTABLE

GENERAL NOTES

DETAILS OF CONSTRUCTION, MATERIALS AND WORKMANSHIP NOT SHOWN ON THIS DRAWING SHALL CONFORM TO THE PERTINENT REQUIREMENTS OF THE STANDARD SPECIFICATIONS AND THE APPLICABLE SPECIAL PROVISIONS.

DETAIL DRAWINGS FOR PROPOSED ALTERNATE DESIGNS FOR CATCH BASIN, MANHOLE AND INLET COVERS SHALL BE SUBMITTED TO THE ENGINEER FOR APPROVAL PROVIDING THAT SUCH ALTERNATE DESIGNS MAKE PROVISION FOR EQUIVALENT CAPACITY AND STRENGTH.

ROUND FRAMES AND COVERS SHALL HAVE CONTINUOUSLY MACHINED BEARING SURFACES TO PREVENT ROCKING AND RATTLING.

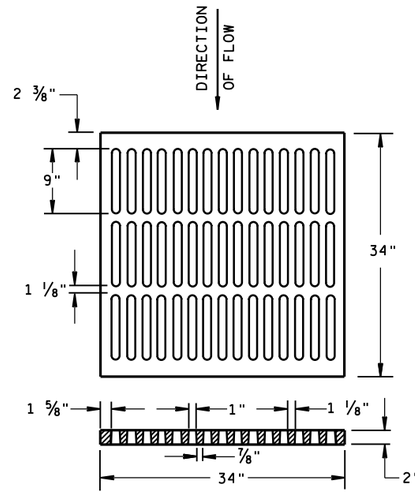

ALTERNATIVE TYPE "MS"

USE WHERE PEDESTRIAN OR BICYCLE TRAFFIC IS PERMITTED
NOTED AS TYPE MS-A ON THE DRAINAGE TABLE

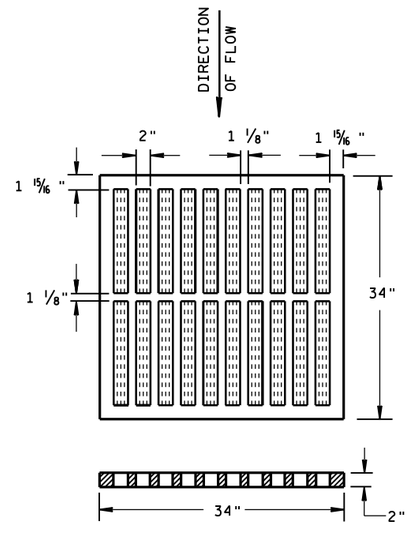

TYPE "MS"

USE ON FREEWAYS AND EXPRESSWAYS
NOTED AS TYPE MS ON DRAINAGE TABLE

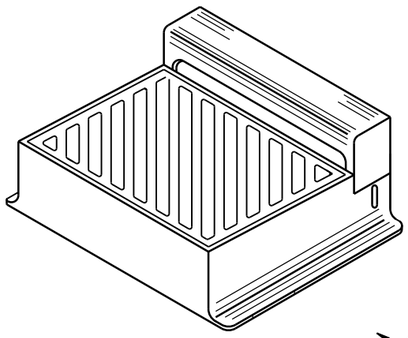

DIAGONAL SLOTS, SHALL BE ORIENTED TO THE DIRECTION OF FLOW AS ILLUSTRATED. GRATES ARE MANUFACTURED TO BE REVERSIBLE.

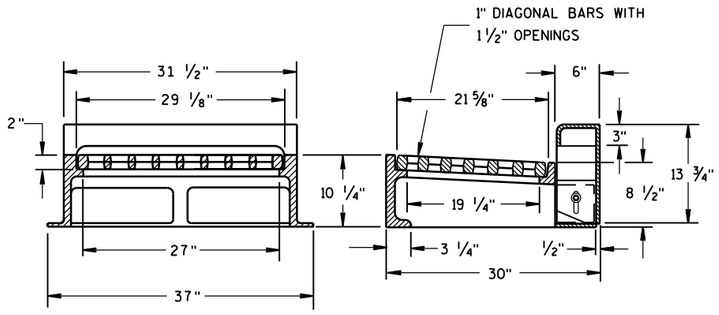

NOTE: CURB BOX HEIGHT ADJUSTABLE 6" TO 9"

TYPE "WM"

INLET COVERS
TYPE B, B-A, C,
MS, MS-A, & WM

STATE OF WISCONSIN
DEPARTMENT OF TRANSPORTATION

APPROVED
11/27/2013 — DATE
/S/ Jerry H. Zogg — ROADWAY STANDARDS DEVELOPMENT ENGINEER
FHWA

6

S.D.D. 8 A 5-19b

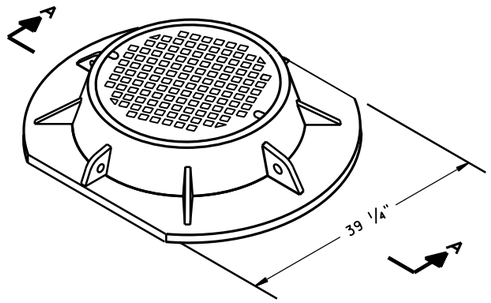

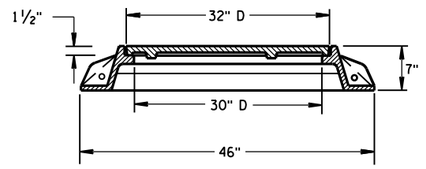

SECTION A-A
TYPE "K"

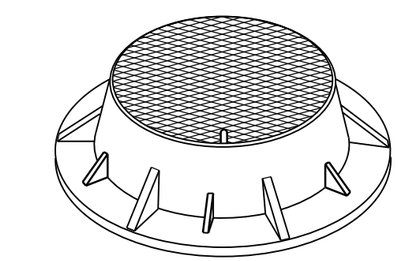

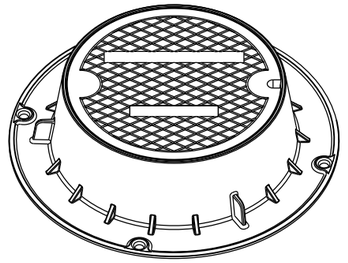

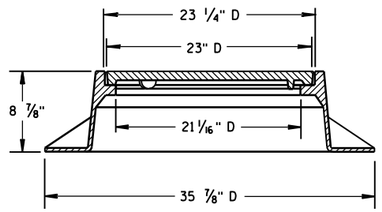

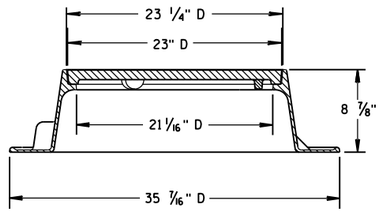

TYPE "J"
NOTE: EITHER CASTING IS ACCEPTABLE

GENERAL NOTES

DETAILS OF CONSTRUCTION, MATERIALS AND WORKMANSHIP NOT SHOWN ON THIS DRAWING SHALL CONFORM TO THE PERTINENT REQUIREMENTS OF THE STANDARD SPECIFICATIONS AND THE APPLICABLE SPECIAL PROVISIONS.

DETAIL DRAWINGS FOR PROPOSED ALTERNATE DESIGNS FOR MANHOLE COVERS SHALL BE SUBMITTED TO THE ENGINEER FOR APPROVAL PROVIDING THAT SUCH ALTERNATE DESIGNS MAKE PROVISION FOR EQUIVALENT CAPACITY AND STRENGTH.

ROUND FRAMES AND COVERS SHALL HAVE CONTINUOUSLY MACHINED BEARING SURFACES TO PREVENT ROCKING AND RATTLING.

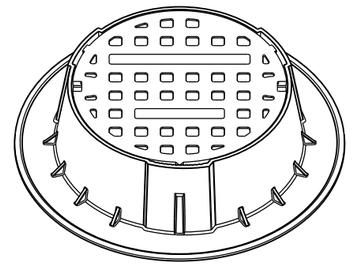

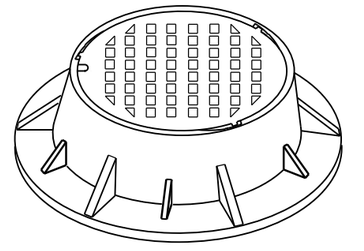

TYPE "J" SPECIAL
TYPE "B" NON-ROCKING SELF-SEAL LID
(NOTED AS TYPE J-S ON THE DRAINAGE TABLE)
NOTE: EITHER CASTING IS ACCEPTABLE

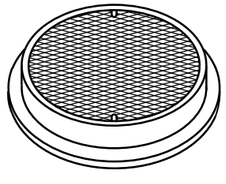

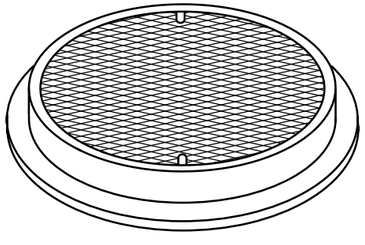

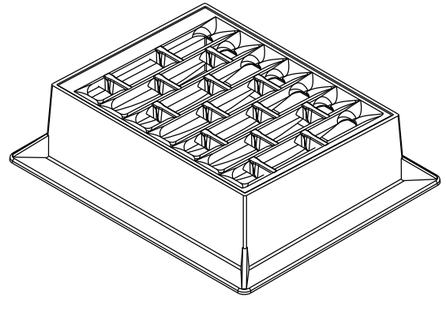

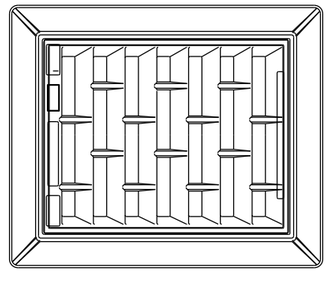

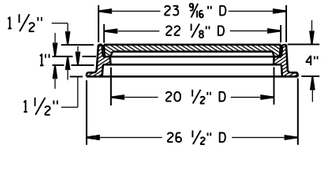

TYPE "L"

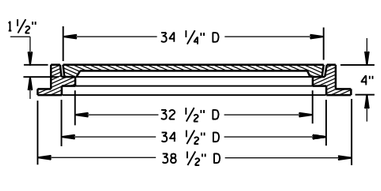

TYPE "M"

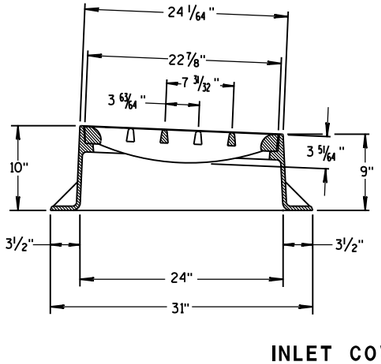

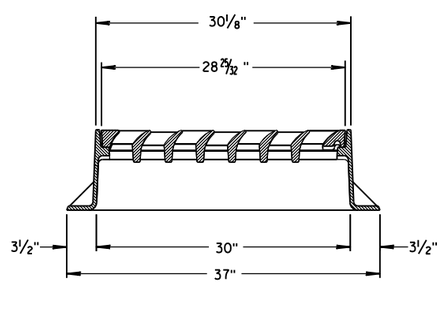

INLET COVER TYPE "BW"

INLET COVER TYPE BW
MANHOLE COVERS, TYPE K, J, J-S, L & M

STATE OF WISCONSIN
DEPARTMENT OF TRANSPORTATION

APPROVED
11/27/2013
DATE
FHWA

/S/ Jerry H. Zogg
ROADWAY STANDARDS DEVELOPMENT ENGINEER

6

S.D.D. 8 A 5-19d

6

S.D.D. 8 A 5-19d

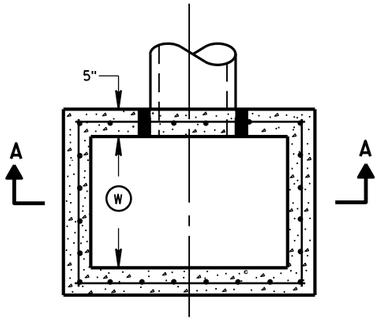

PLAN VIEW

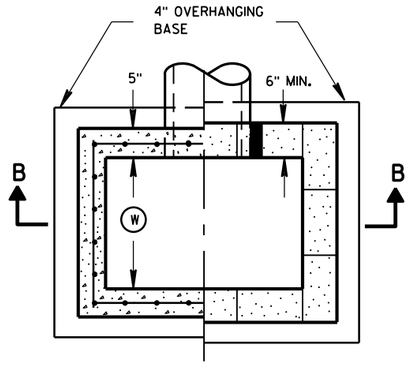

PLAN VIEW

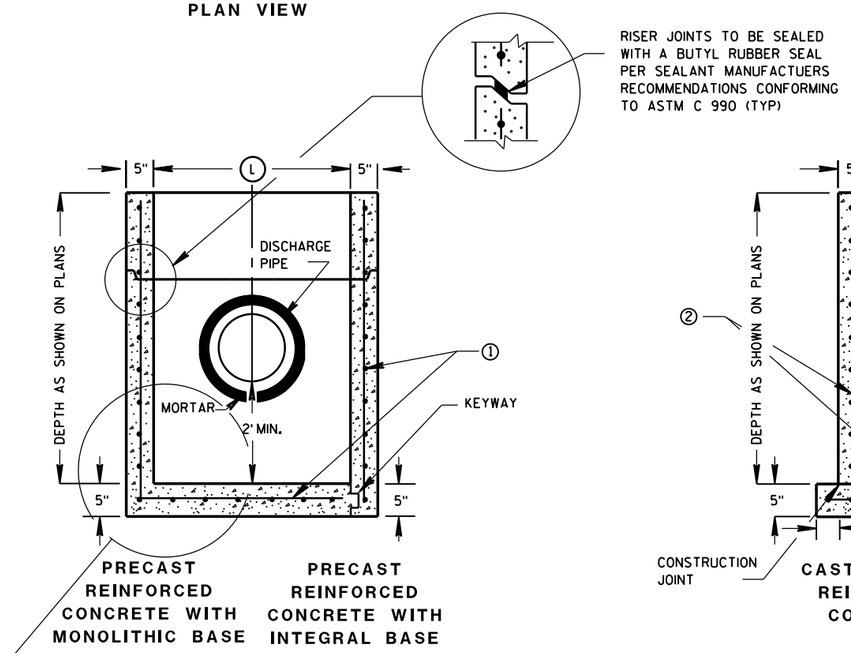

SECTION A-A

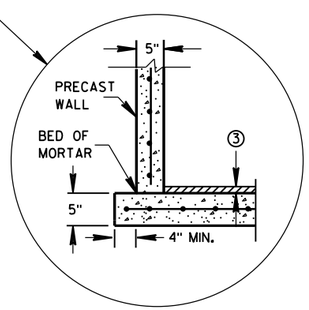

SEPARATE PRECAST REINFORCED CONCRETE BASE OPTION

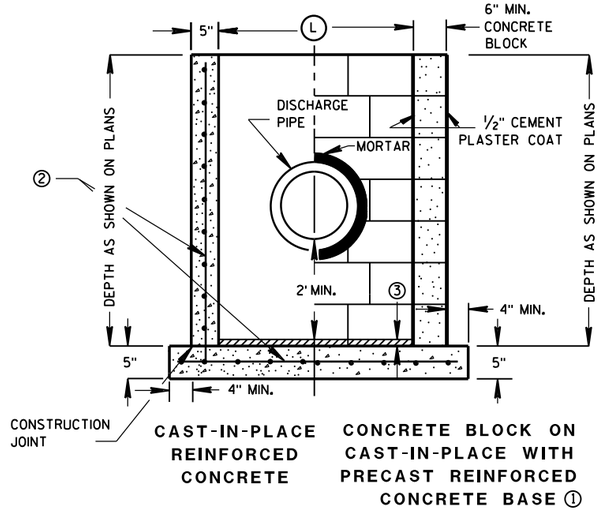

SECTION B-B

GENERAL NOTES

DETAILS OF CONSTRUCTION, MATERIALS AND WORKMANSHIP NOT SHOWN ON THIS DRAWING SHALL CONFORM TO THE PERTINENT REQUIREMENTS OF THE STANDARD SPECIFICATIONS AND THE APPLICABLE SPECIAL PROVISIONS.

UNLESS OTHERWISE AUTHORIZED IN WRITING BY THE ENGINEER, THE CONTRACTOR SHALL NOT ORDER AND DELIVER PRECAST CATCH BASIN UNITS REQUIRED FOR THE PROJECT UNTIL A LIST OF SIZES IS FURNISHED BY THE ENGINEER.

DETAILED DRAWINGS FOR PROPOSED ALTERNATE DESIGNS FOR UNDERGROUND DRAINAGE STRUCTURES SHALL BE SUBMITTED TO THE ENGINEER FOR APPROVAL PROVIDING THAT SUCH ALTERNATE DESIGNS MAKE PROVISION FOR EQUIVALENT CAPACITY AND STRENGTH.

ALL PRECAST CATCH BASIN UNITS SHALL CONFORM TO THE PERTINENT REQUIREMENTS OF ASTM C 913.

ALL DRAINAGE STRUCTURES ARE DESIGNATED ON THE PLANS AS "MANHOLES 3X3-L", "CATCH BASINS 4-B", "INLETS 2X3-H", ETC. THE FIRST NUMBERS DESIGNATES THE SIZE OF THE STRUCTURE, AND THE FOLLOWING LETTER DESIGNATES THE TYPE OF COVER TO BE USED TO COMPRISE THE COMPLETE UNIT.

BASES SHALL BE PLACED ON A BED OF MATERIAL AT LEAST 6 INCHES IN DEPTH, WHICH MEETS THE REQUIREMENTS OF FOUNDATION BACKFILL. THIS BEDDING SHALL BE COMPACTED AND PROVIDE UNIFORM SUPPORT FOR THE ENTIRE AREA OF THE BASE.

ALL BAR STEEL REINFORCEMENT SHALL BE EMBEDDED 2 INCHES CLEAR UNLESS OTHERWISE SHOWN OR NOTED.

PRECAST REINFORCED RISERS SHALL HAVE A TONGUE AND GROOVE JOINT WITH TONGUE UP OR DOWN.

4" OVERHANGING BASES ARE REQUIRED FOR CAST-IN-PLACE REINFORCED CONCRETE AND CONCRETE BLOCK INSTALLATIONS.
4" OVERHANG IS REQUIRED WHEN SEPARATE PRECAST BASE IS PROVIDED.
OVERHANG IS NOT REQUIRED ON PRECAST STRUCTURES WITH AN INTEGRAL OR MONOLITHIC BASE.

MAXIMUM INSIDE PIPE DIAMETER DETERMINED BY 3" CLEARANCE ON EACH SIDE OF THE OUTSIDE WALL OF THE PIPE. SEE DETAIL "A". ASSUMES PIPE ENTERS PERPENDICULAR TO THE STRUCTURE.

① FOR PRECAST CATCH BASINS PROVIDE REINFORCING STEEL IN ACCORDANCE TO ASTM C 913.

② CONTRACTOR TO PROVIDE DRAWING(S) STAMPED BY A PROFESSIONAL ENGINEER FOR STEEL REINFORCING DESIGN FOR CAST-IN-PLACE STRUCTURES.

③ 1" CONCRETE KEY POURED AFTER INSTALLATION. 2' SUMP MEASURED FROM TOP OF KEY.

CATCH BASIN COVER MATRIX

CATCH BASIN SIZE		INLET COVER TYPE	F	ALL H'S
	WIDTH (W) (FT)	LENGTH (L) (FT)		
2X3-FT	2	3		X
2.5X3-FT	2.5	3	X	

PIPE MATRIX

CATCH BASIN SIZE	MAXIMUM INSIDE PIPE DIAMETER FOR TWO PIPES	
	WIDTH (IN)	LENGTH (IN)
2X3-FT	12	24
2.5X3-FT	18	24

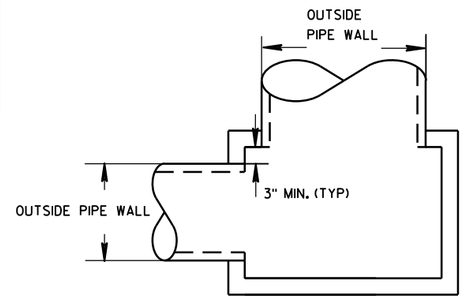

DETAIL "A"

CATCH BASINS 2X3-FT AND 2.5X3-FT

CATCH BASINS 2X3-FT AND 2.5X3-FT

STATE OF WISCONSIN
DEPARTMENT OF TRANSPORTATION

APPROVED
Sept., 2016 — DATE
FHWA

/S/ Rodney Taylor
ROADWAY STANDARDS UNIT SUPERVISOR

6

S.D.D. 8 A 9-2

6

S.D.D. 8 A 9-2

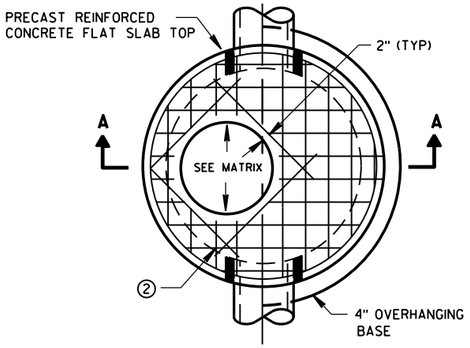

PLAN VIEW CIRCULAR OPENING

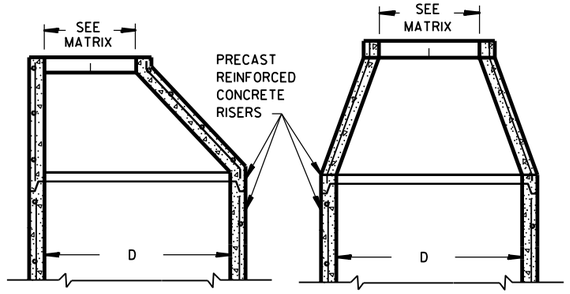

OPTIONAL PRECAST REINFORCED CONCRETE ECCENTRIC TOP

OPTIONAL PRECAST REINFORCED CONCRETE CONCENTRIC TOP

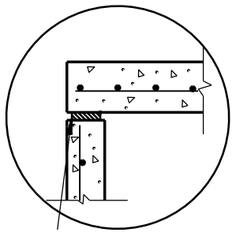

TOP WITH PLAIN END JOINT

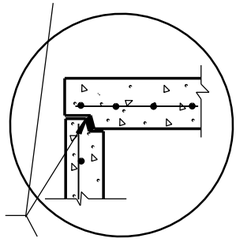

JOINTS TO BE SEALED WITH A BUTYL RUBBER SEAL PER SEALANT MANUFACTURERS RECOMMENDATIONS CONFORMING TO ASTM C990 (TYP)

TOP WITH TONGUE AND GROOVE JOINT

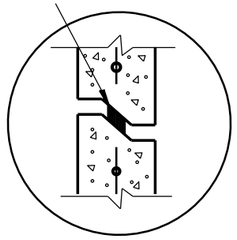

RISER WITH TONGUE AND GROOVE JOINT

DETAIL "B"

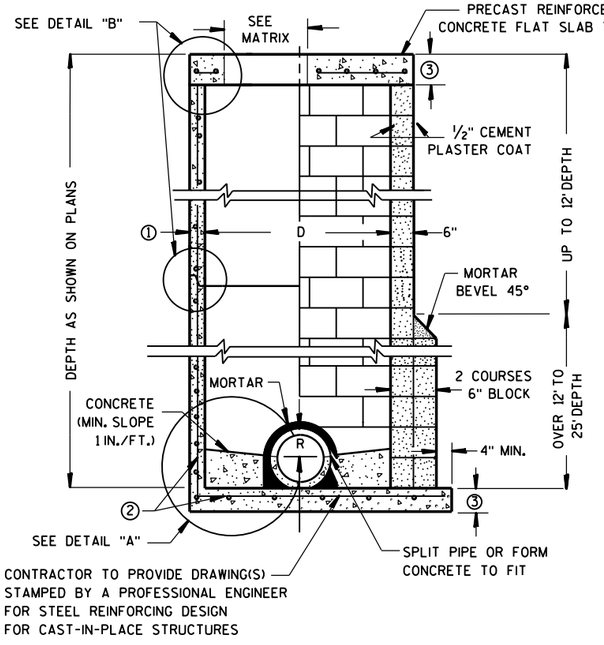

PRECAST REINFORCED CONCRETE WITH MONOLITHIC BASE

CONCRETE BLOCK WITH CAST-IN-PLACE OR PRECAST REINFORCED CONCRETE BASE ②

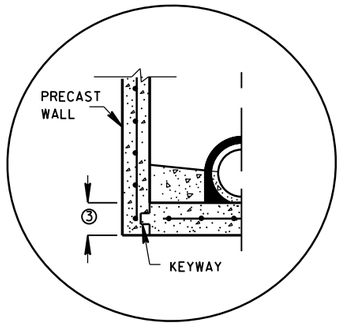

PRECAST REINFORCED CONCRETE WITH INTEGRAL BASE OPTION

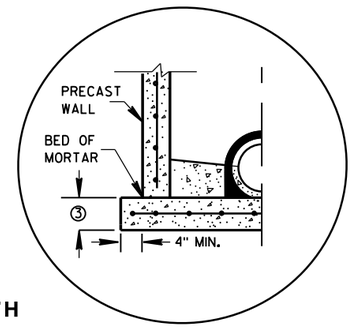

SEPARATE PRECAST REINFORCED CONCRETE BASE OPTION

DETAIL "A"

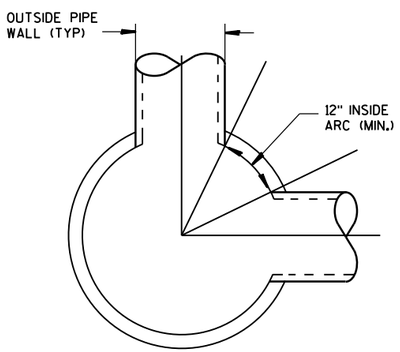

DETAIL "C"

GENERAL NOTES

DETAILS OF CONSTRUCTION, MATERIALS AND WORKMANSHIP NOT SHOWN ON THIS DRAWING SHALL CONFORM TO THE PERTINENT REQUIREMENTS OF THE STANDARD SPECIFICATIONS AND THE APPLICABLE SPECIAL PROVISIONS.

UNLESS OTHERWISE AUTHORIZED IN WRITING BY THE ENGINEER, THE CONTRACTOR SHALL NOT ORDER AND DELIVER PRECAST MANHOLE UNITS REQUIRED FOR THE PROJECT UNTIL A LIST OF SIZES IS FURNISHED BY THE ENGINEER.

DETAILED DRAWINGS FOR PROPOSED ALTERNATE DESIGNS FOR UNDERGROUND DRAINAGE STRUCTURES SHALL BE SUBMITTED TO THE ENGINEER FOR APPROVAL PROVIDING THAT SUCH ALTERNATE DESIGNS MAKE PROVISION FOR EQUIVALENT CAPACITY AND STRENGTH.

ALL DRAINAGE STRUCTURES ARE DESIGNATED ON THE PLANS AS "MANHOLES 3X3-L", "CATCH BASINS 4-B", "INLETS 2X3-H", ETC. THE FIRST NUMBERS DESIGNATE THE SIZE OF THE STRUCTURE, AND THE FOLLOWING LETTER DESIGNATES THE TYPE OF COVER TO BE USED TO COMPRISE THE COMPLETE UNIT.

BASES SHALL BE PLACED ON A BED OF MATERIAL AT LEAST 6 INCHES IN DEPTH, WHICH MEETS THE REQUIREMENTS OF FOUNDATION BACKFILL. THIS BEDDING SHALL BE COMPACTED AND PROVIDE UNIFORM SUPPORT FOR THE ENTIRE AREA OF THE BASE.

PRECAST REINFORCED CONE TOPS (ECCENTRIC OR CONCENTRIC) OR PRECAST REINFORCED FLAT SLAB TOPS MAY BE USED ON CONCRETE BLOCK STRUCTURES.

ECCENTRIC CONE TOPS MAY BE USED ON ALL STRUCTURES, AND CONCENTRIC CONE TOPS SHALL BE USED ONLY ON STRUCTURES 5 FEET OR LESS IN DEPTH, UNLESS OTHERWISE DIRECTED BY THE ENGINEER.

STEPS MEETING AASHTO M199 AND THE FOLLOWING REQUIREMENTS SHALL BE INSTALLED IN ALL STRUCTURES OVER 5 FEET IN DEPTH: 16 INCH C-C MAXIMUM SPACING; PROJECT A MINIMUM CLEAR DISTANCE OF 4 INCHES FROM THE WALL AT THE POINT OF EMBEDMENT; MINIMUM LENGTH OF 10 INCHES; MINIMUM WALL EMBEDMENT OF 3 INCHES. FERROUS METAL STEPS NOT PAINTED OR TREATED TO RESIST CORROSION SHALL HAVE A MINIMUM CROSS SECTIONAL DIMENSION OF 1 INCH.

STEPS OF APPROVED POLYPROPYLENE PLASTIC COATED REINFORCEMENT BAR ARE ACCEPTABLE. REINFORCING BAR MUST BE A MINIMUM OF ½" AND MEET THE REQUIREMENTS OF ASTM A615.

CERTIFICATION SHALL BE PROVIDED THAT INSTALLED STEPS WHEN TESTED IN ACCORDANCE WITH SECTION 10 OF AASHTO T280 CAN WITHSTAND A VERTICAL LOAD OF 800 LBS. AND A HORIZONTAL LOAD OF 400 LBS.

ALL BAR STEEL REINFORCEMENT SHALL BE EMBEDDED 2 INCHES CLEAR UNLESS OTHERWISE SHOWN OR NOTED.

CONCRETE BLOCK WILL NOT BE PERMITED FOR STRUCTURES GREATER THAN 4 FEET IN DIAMETER.

PRECAST REINFORCED RISERS SHALL HAVE A TONGUE AND GROOVE JOINT WITH TONGUE UP OR DOWN.

ALL PRECAST MANHOLE UNITS SHALL CONFORM TO THE PERTINENT REQUIREMENTS OF AASHTO DESIGNATION M 199.

4" OVERHANGING BASES ARE REQUIRED FOR ALL CONCRETE BLOCK INSTALLATIONS. 4" OVERHANG IS REQUIRED WHEN SEPARATE PRECAST BASE IS PROVIDED. OVERHANG IS NOT REQUIRED ON PRECAST STRUCTURES WITH AN INTEGRAL OR MONOLITHIC BASE.

FOR ADDITIONAL CONFIGURATIONS, MAINTAIN A MINIMUM OF 12 INCHES AS MEASURED FROM THE INSIDE OF THE STRUCTURE WALL BETWEEN THE OUTSIDE PIPE WALLS OF ADJACENT PIPES. SEE DETAIL "C".

① MINIMUM WALL THICKNESS SHALL BE 4 INCHES FOR 3-FT, 5 INCHES FOR 4-FT, 6 INCHES FOR 5-FT, 7 INCHES FOR 6-FT, 8 INCHES FOR 7-FT AND 9 INCHES FOR 8-FT DIAMETER PRECAST MANHOLES.

② FOR PRECAST MANHOLES PROVIDE REINFORCING STEEL IN ACCORDANCE TO AASHTO M199.

③ PRECAST FLAT SLAB TOPS AND BASES WITH A DIAMETER OF 48" AND LESS SHALL HAVE A MINIMUM THICKNESS OF 6". PRECAST FLAT SLAB TOPS AND BASES WITH A DIAMETER LARGER THAN 48" SHALL HAVE A MINIMUM THICKNESS OF 8".

MANHOLE COVER OPENING MATRIX

MANHOLE COVER TYPE	C	ALL J'S	K	L	M
OPENING SIZE (FT)					
2 DIA.	X	X		X	
3 DIA.			X		X

PIPE MATRIX

MANHOLE SIZE	MAXIMUM INSIDE PIPE DIAMETER FOR TWO PIPES	
	180° SEPARATION (IN)	90° SEPARATION (IN)
3-FT	15	12
4-FT	24	18
5-FT	36	24
6-FT	42	36
7-FT	48	36
8-FT	60	42

MANHOLES 3-FT, 4-FT, 5-FT, 6-FT, 7-FT AND 8-FT DIAMETER

STATE OF WISCONSIN
DEPARTMENT OF TRANSPORTATION

APPROVED

Sept., 2016
DATE

/S/ Rodney Taylor
ROADWAY STANDARDS DEVELOPMENT
UNIT SUPERV

FHWA

MANHOLES 3-FT, 4-FT, 5-FT, 6-FT, 7-FT AND 8-FT DIAMETER

S.D.D. 8 B 9-2

6

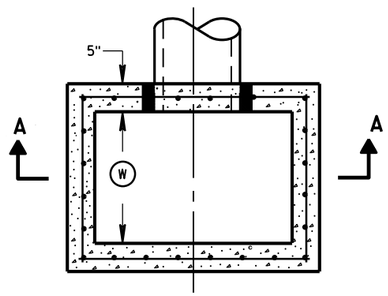

PLAN VIEW

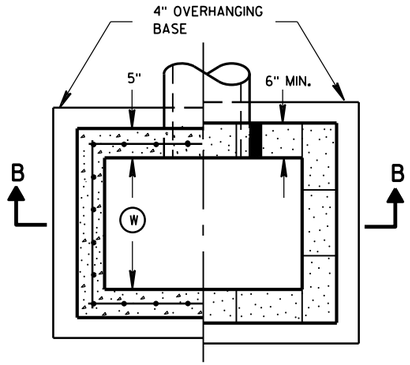

PLAN VIEW

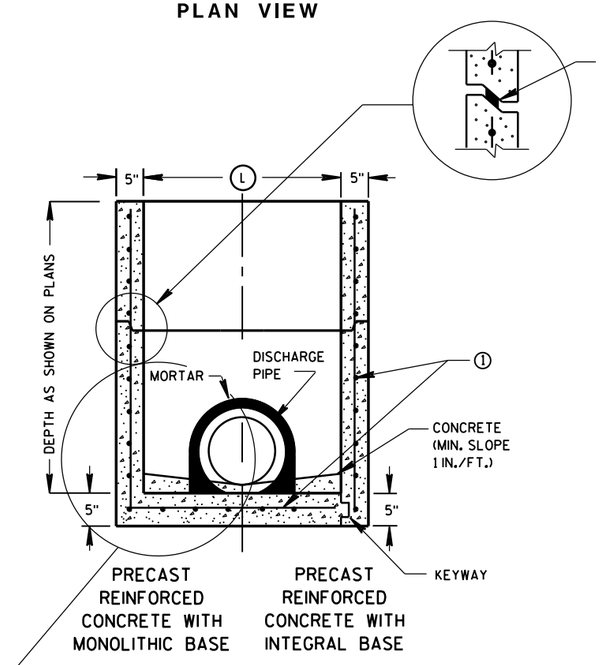

SECTION A-A

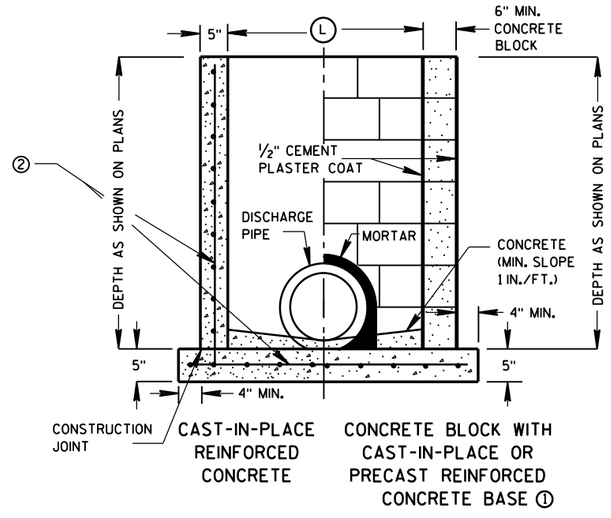

SECTION B-B

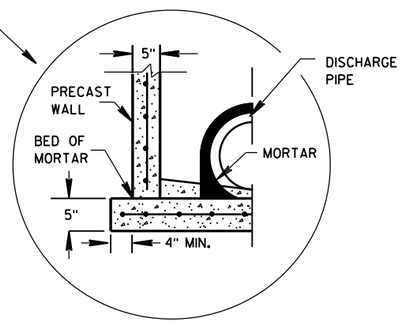

SEPARATE PRECAST REINFORCED CONCRETE BASE OPTION

GENERAL NOTES

DETAILS OF CONSTRUCTION, MATERIALS AND WORKMANSHIP NOT SHOWN ON THIS DRAWING SHALL CONFORM TO THE PERTINENT REQUIREMENTS OF THE STANDARD SPECIFICATIONS AND THE APPLICABLE SPECIAL PROVISIONS.

UNLESS OTHERWISE AUTHORIZED IN WRITING BY THE ENGINEER, THE CONTRACTOR SHALL NOT ORDER AND DELIVER PRECAST INLET UNITS REQUIRED FOR THE PROJECT UNTIL A LIST OF SIZES IS FURNISHED BY THE ENGINEER.

DETAILED DRAWINGS FOR PROPOSED ALTERNATE DESIGNS FOR UNDERGROUND DRAINAGE STRUCTURES SHALL BE SUBMITTED TO THE ENGINEER FOR APPROVAL PROVIDING THAT SUCH ALTERNATE DESIGNS MAKE PROVISION FOR EQUIVALENT CAPACITY AND STRENGTH.

ALL PRECAST INLET UNITS SHALL CONFORM TO THE PERTINENT REQUIREMENTS OF ASTM C 913.

ALL DRAINAGE STRUCTURES ARE DESIGNATED ON THE PLANS AS "MANHOLES 3X3-L", "CATCH BASINS 4-B", "INLETS 2X3-H", ETC. THE FIRST NUMBERS DESIGNATES THE SIZE OF THE STRUCTURE, AND THE FOLLOWING LETTER DESIGNATES THE TYPE OF COVER TO BE USED TO COMPRISE THE COMPLETE UNIT.

BASES SHALL BE PLACED ON A BED OF MATERIAL AT LEAST 6 INCHES IN DEPTH, WHICH MEETS THE REQUIREMENTS OF FOUNDATION BACKFILL. THIS BEDDING SHALL BE COMPACTED AND PROVIDE UNIFORM SUPPORT FOR THE ENTIRE AREA OF THE BASE.

ALL BAR STEEL REINFORCEMENT SHALL BE EMBEDDED 2 INCHES CLEAR UNLESS OTHERWISE SHOWN OR NOTED.

PRECAST REINFORCED RISERS SHALL HAVE A TONGUE AND GROOVE JOINT WITH TONGUE UP OR DOWN.

4" OVERHANGING BASES ARE REQUIRED FOR CAST-IN-PLACE REINFORCED CONCRETE AND CONCRETE BLOCK INSTALLATIONS.
4" OVERHANG IS REQUIRED WHEN SEPARATE PRECAST BASE IS PROVIDED.
OVERHANG IS NOT REQUIRED ON PRECAST STRUCTURES WITH AN INTEGRAL OR MONOLITHIC BASE.

MAXIMUM INSIDE PIPE DIAMETER DETERMINED BY 3 INCH CLEARANCE ON EACH SIDE OF THE OUTSIDE WALL OF THE PIPE. SEE DETAIL "A". ASSUMES PIPE ENTERS PERPENDICULAR TO THE STRUCTURE.

① FOR PRECAST INLETS PROVIDE REINFORCING STEEL IN ACCORDANCE TO ASTM C 913.

② CONTRACTOR TO PROVIDE DRAWING(S) STAMPED BY A PROFESSIONAL ENGINEER FOR STEEL REINFORCING DESIGN FOR CAST-IN-PLACE STRUCTURES.

INLET COVER MATRIX

INLET SIZE		INLET COVER TYPE	ALL A'S	ALL B'S	BW	F	ALL H'S	S	T	V	WM
	WIDTH (W) (FT)	LENGTH (L) (FT)									
2X2-FT	2	2	X	X				X		X	
2X2.5-FT	2	2.5			X			X	X	X	X
2X3-FT	2	3					X				
2.5X3-FT	2.5	3				X					

PIPE MATRIX

INLET SIZE	MAXIMUM INSIDE PIPE DIAMETER	
	WIDTH (IN)	LENGTH (IN)
2X2-FT	12	12
2X2.5-FT	12	18
2X3-FT	12	24
2.5X3-FT	18	24

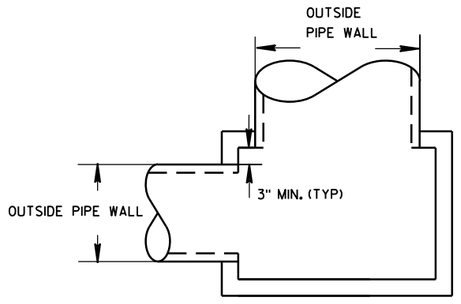

DETAIL "A"

INLETS 2X2-FT, 2X2.5-FT, 2X3-FT AND 2.5X3-FT

STATE OF WISCONSIN
DEPARTMENT OF TRANSPORTATION

APPROVED
Sept., 2016
DATE
/S/ Rodney Taylor
ROADWAY STANDARDS D IT
UNIT SUPERVIS
FHWA

6
S.D.D. 8 C 7-2

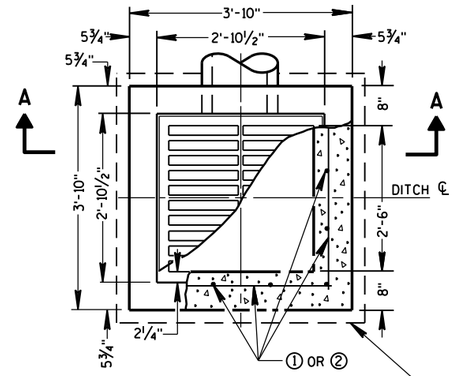

PLAN VIEW

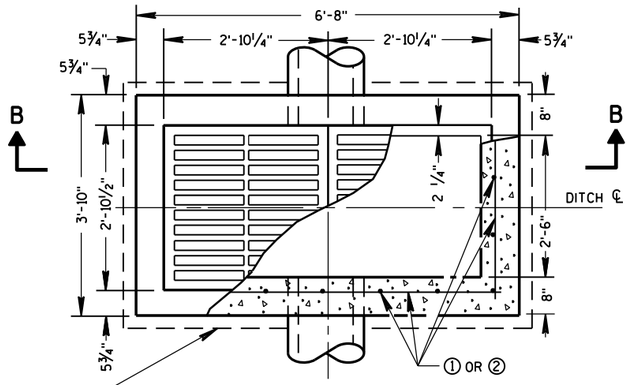

PLAN VIEW

4" OVERHANGING BASE ON REINFORCED CAST-IN-PLACE CONCRETE INLETS

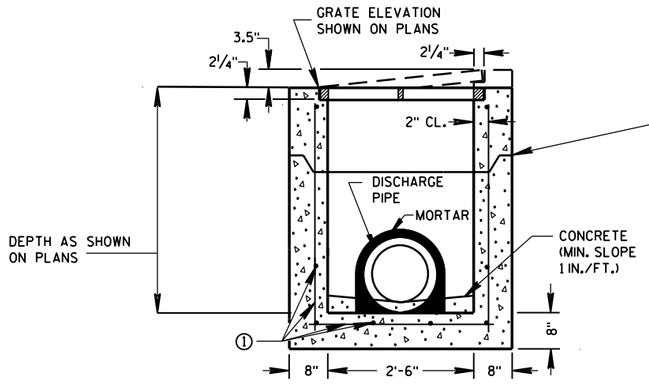

PRECAST REINFORCED CONCRETE SECTION A-A

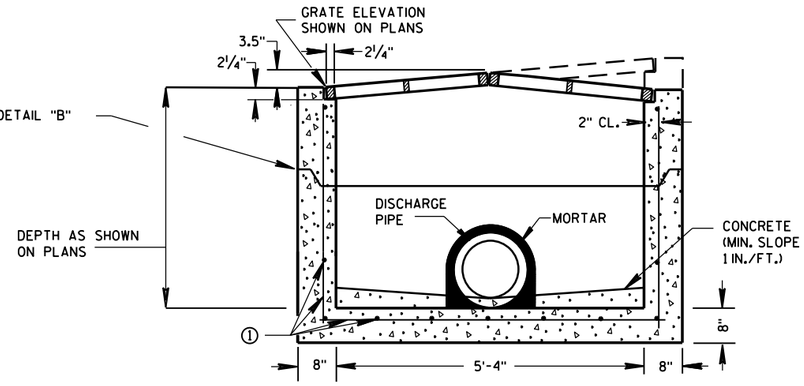

PRECAST REINFORCED CONCRETE SECTION B-B

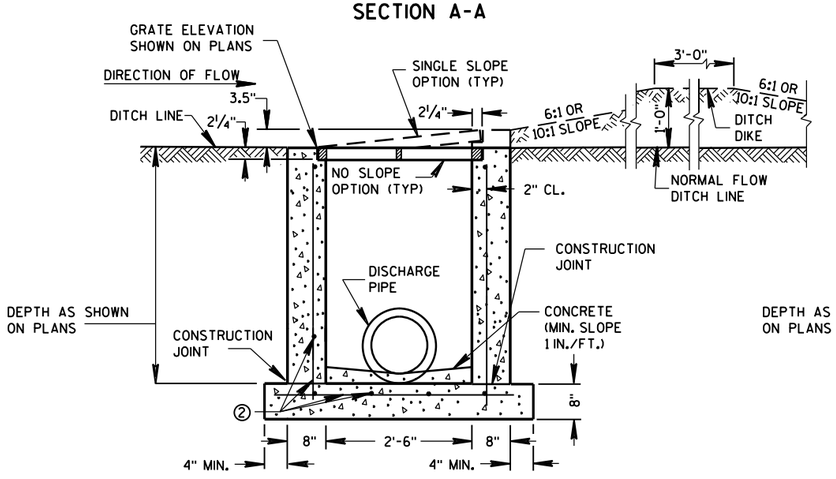

REINFORCED CAST-IN-PLACE CONCRETE SECTION A-A

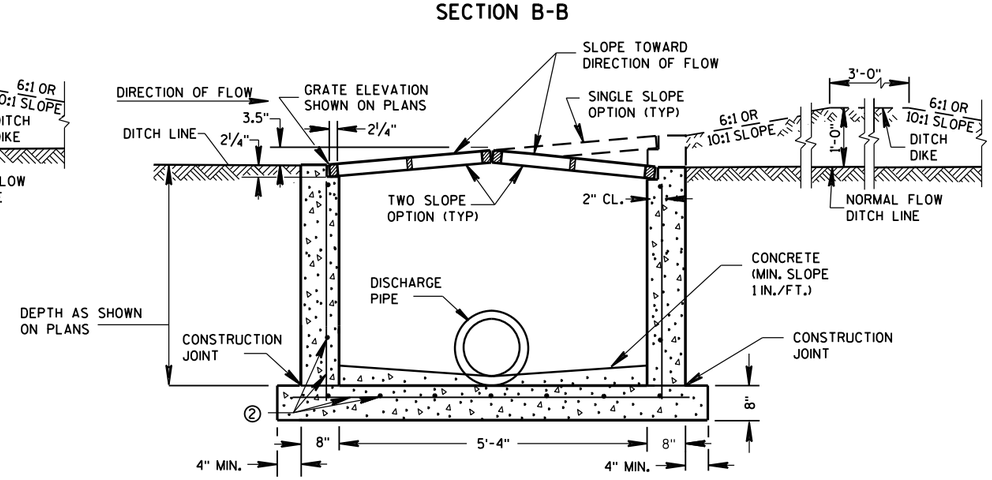

REINFORCED CAST-IN-PLACE CONCRETE SECTION B-B

GENERAL NOTES

DETAILS OF CONSTRUCTION, MATERIALS AND WORKMANSHIP NOT SHOWN ON THIS DRAWING SHALL CONFORM TO THE PERTINENT REQUIREMENTS OF THE STANDARD SPECIFICATIONS AND THE APPLICABLE SPECIAL PROVISIONS.

UNLESS OTHERWISE AUTHORIZED IN WRITING BY THE ENGINEER, THE CONTRACTOR SHALL NOT ORDER AND DELIVER PRECAST INLET UNITS REQUIRED FOR THE PROJECT UNTIL A LIST OF SIZES IS FURNISHED BY THE ENGINEER.

DETAILED DRAWINGS FOR PROPOSED ALTERNATE DESIGNS FOR INLETS WHICH MAY INCLUDE PRECAST REINFORCED CONCRETE INLETS, SHALL BE SUBMITTED TO THE ENGINEER FOR APPROVAL PROVIDING THAT SUCH ALTERNATE DESIGNS MAKE PROVISION FOR EQUIVALENT CAPACITY AND STRENGTH.

ALL MEDIAN INLETS ARE DESIGNATED ON THE PLANS AS "INLETS, IG-MS", ETC. THE FIRST NUMBER AND LETTER DESIGNATE THE TYPE OF STRUCTURE, AND THE FOLLOWING LETTERS DESIGNATE THE TYPE OF COVER TO BE USED TO COMPRISE THE COMPLETE UNIT.

BASES SHALL BE PLACED ON A BED OF MATERIAL AT LEAST 6 INCHES IN DEPTH, WHICH MEETS THE REQUIREMENTS OF FOUNDATION BACKFILL. THIS BEDDING SHALL BE COMPACTED AND PROVIDE UNIFORM SUPPORT FOR THE ENTIRE AREA OF THE BASE.

ALL BAR STEEL REINFORCEMENT SHALL BE EMBEDDED 2 INCHES CLEAR UNLESS OTHERWISE SHOWN OR NOTED.

PRECAST REINFORCED RISERS SHALL HAVE A TONGUE AND GROOVE JOINT WITH TONGUE UP OR DOWN.

ALL PRECAST INLET UNITS SHALL CONFORM TO THE PERTINENT REQUIREMENTS OF ASTM C 913.

MAXIMUM INSIDE PIPE DIAMETER DETERMINED BY 3" CLEARANCE ON EACH SIDE OF THE OUTSIDE WALL OF THE PIPE. SEE DETAIL "A". ASSUMES PIPE ENTERS PERPENDICULAR TO THE STRUCTURE.

① FOR PRECAST INLETS PROVIDE REINFORCING STEEL IN ACCORDANCE TO ASTM C 913.

② CONTRACTOR TO PROVIDE DRAWING(S) STAMPED BY A PROFESSIONAL ENGINEER FOR STEEL REINFORCING DESIGN FOR CAST-IN-PLACE STRUCTURES.

PIPE MATRIX

	MAXIMUM INSIDE PIPE DIAMETER	
INLET SIZE	WIDTH (IN)	LENGTH (IN)
1 GRATE	18	18
2 GRATE	18	42

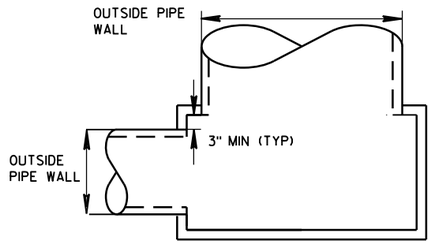

DETAIL "A"

JOINTS TO BE SEALED WITH A BUTYL RUBBER SEAL PER SEALANT MANUFACTURERS RECOMMENDATIONS CONFORMING TO ASTM C 990 (TYP)

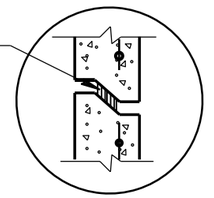

DETAIL "B"

INLETS MEDIAN 1 GRATE

INLETS MEDIAN 2 GRATE

INLETS MEDIAN 1 AND 2 GRATE

STATE OF WISCONSIN
DEPARTMENT OF TRANSPORTATION

APPROVED
Sept., 2016 — DATE
/S/ Rodney Taylor — ROADWAY STANDARDS UNIT SUPERVI ENT
FHWA

6
S.D.D. 8 C 8-2

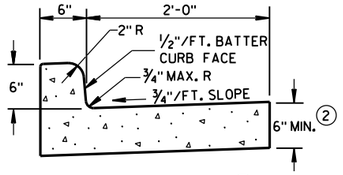

TYPES A & D ①

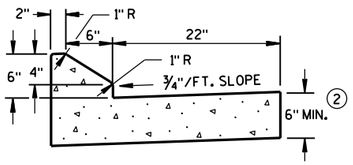

6" SLOPED CURB TYPES G & J ①

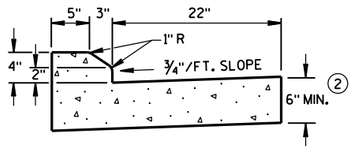

4" SLOPED CURB TYPES G & J ①

CONCRETE CURB & GUTTER 30"

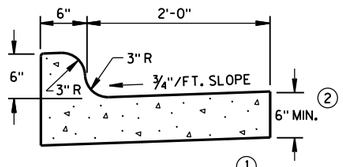

TYPES K & L ①

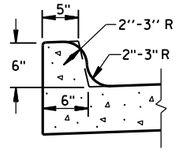

OPTIONAL CURB SHAPE FOR TYPES K & L ①

CONCRETE CURB & GUTTER 30"

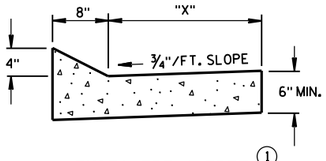

TYPES TBT & TBTT ①

CONCRETE CURB & GUTTER

TBT & TBTT	"X"
30"	22"
36"	28"

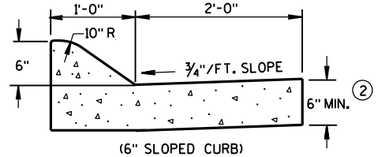

(6" SLOPED CURB)

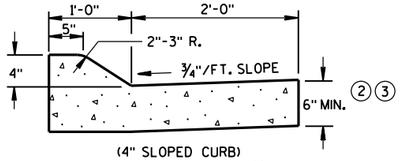

(4" SLOPED CURB)

TYPES A & D ①

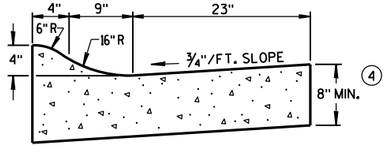

4" SLOPED CURB TYPES R & T ①⑤

CONCRETE CURB & GUTTER 36"

GENERAL NOTES

DETAILS OF CONSTRUCTION, MATERIALS AND WORKMANSHIP NOT SHOWN ON THIS DRAWING SHALL CONFORM TO THE PERTINENT REQUIREMENTS OF THE CONTRACT.

PAVEMENT TIES AND TIE BARS SHALL BE EPOXY COATED IN CONFORMANCE WITH SUBSECTION 505.2.6.2 OF THE STANDARD SPECIFICATIONS.

INTEGRAL CURB & GUTTER SHALL CONFORM TO THE DETAILS SHOWN FOR CONCRETE CURB & GUTTER INCLUDING THE TRANSVERSE GUTTER SLOPE. A LONGITUDINAL CONSTRUCTION JOINT IS NOT REQUIRED WITH INTEGRAL CURB AND GUTTER.

WHERE THE TRANSVERSE JOINTS IN THE PAVEMENT ARE REQUIRED TO BE SEALED, THE JOINTS IN THE INTEGRAL CURB AND GUTTER SHALL BE SEALED TO THE FACE OF CURB WITH THE SAME TYPE OF SEALANT. THE COST OF FURNISHING AND INSTALLING THIS SEALANT SHALL BE INCIDENTAL TO THE ITEM CONCRETE CURB AND GUTTER.

UNLESS OTHERWISE SHOWN ON THE TYPICAL CROSS SECTIONS, THE BASE AGGREGATE AND COMMON EXCAVATION LIMITS ARE 2'-0" BEHIND THE BACK OF CURBS.

① TIE BARS ARE REQUIRED FOR CURB AND GUTTER TYPES A, G, K, R AND TBTT.

② THE BOTTOM OF CURB AND GUTTER MAY BE CONSTRUCTED EITHER LEVEL OR PARALLEL TO THE SLOPE OF THE SUBGRADE OR BASE AGGREGATE PROVIDED A 6" MINIMUM GUTTER THICKNESS IS MAINTAINED.

③ USE 8" MINIMUM GUTTER THICKNESS WHEN USED WITH AN ADJACENT CONCRETE TRUCK APRON PLACED BEHIND BACK OF CURB.

④ THE BOTTOM OF CURB AND GUTTER MAY BE CONSTRUCTED EITHER LEVEL OR PARALLEL TO THE SLOPE OF THE SUBGRADE OR BASE AGGREGATE PROVIDED A 8" MINIMUM GUTTER THICKNESS IS MAINTAINED.

⑤ THE FACE OF CURB IS 6" FROM THE BACK OF CURB.

⑥ WHEN REVERSE SLOPE GUTTER IS REQUIRED, THE LOCATION(S) WILL BE SHOWN ELSEWHERE IN THE PLAN.

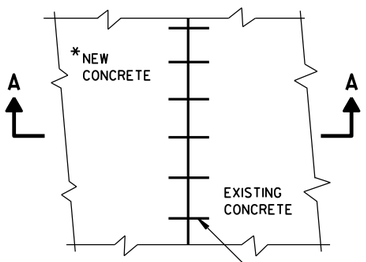

*NEW CURB & GUTTER, SURFACE DRAINS, CONCRETE PAVEMENT OR OTHER NEW CONCRETE.

PLAN VIEW

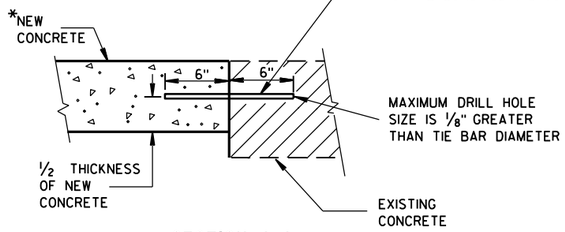

SECTION A-A

TIE BARS DRILLED INTO EXISTING PAVEMENT

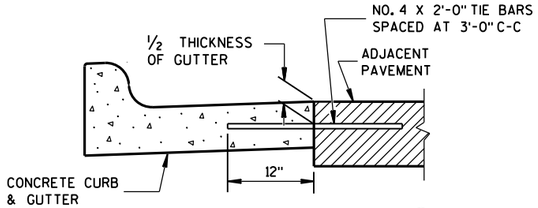

TYPICAL TIE BAR LOCATION ①

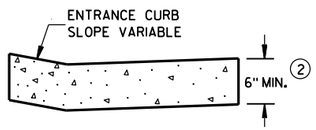

DRIVEWAY ENTRANCE CURB

(WHEN DIRECTED BY THE ENGINEER)

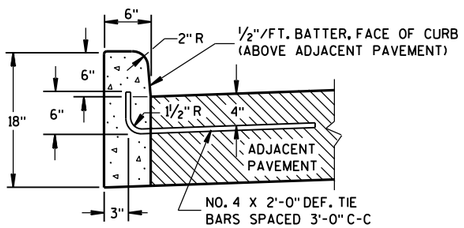

① TYPES A & D

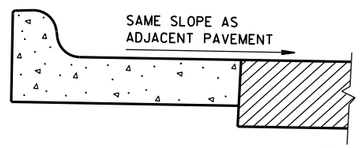

⑥ REVERSE SLOPE GUTTER

(TYPICAL FOR ALL CURB & GUTTER TYPES)

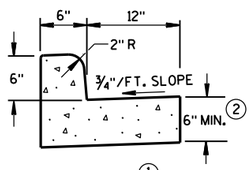

① TYPES A & D

CONCRETE CURB & GUTTER 18"

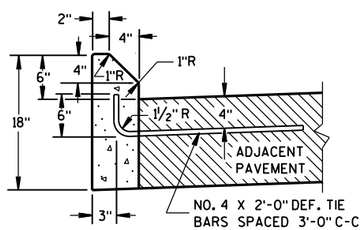

① TYPES G & J

CONCRETE CURB

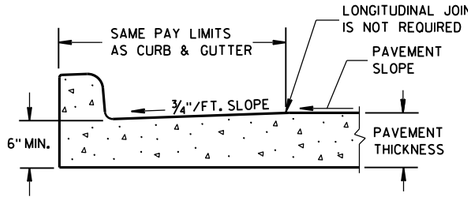

PARTIAL SECTION OF PAVEMENT WITH INTEGRAL CURB & GUTTER

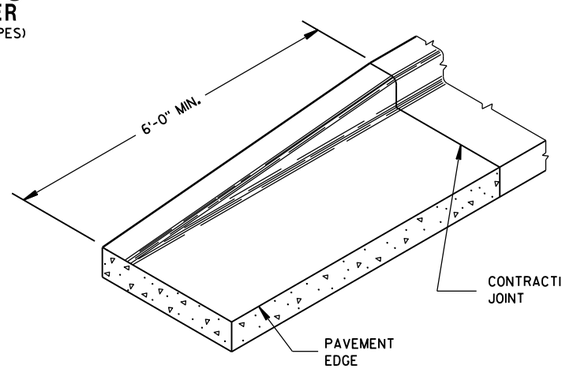

END SECTION CURB & GUTTER

CONCRETE CURB, CONCRETE CURB & GUTTER AND TIES

STATE OF WISCONSIN
DEPARTMENT OF TRANSPORTATION

APPROVED

June, 2016 — DATE

/S/ Jerry H. Zogg — ROADWAY STANDARDS DEVELOPMENT ENGINEER

FHWA

6

S.D.D. 8 D 1-19

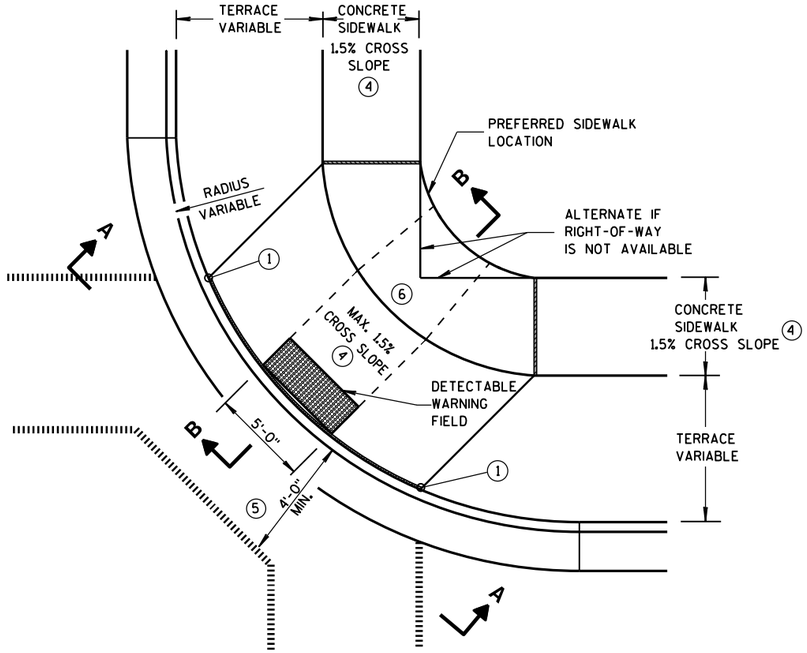

PLAN VIEW

TYPE 1 RAMP

(CENTER OF CORNER RADIUS)

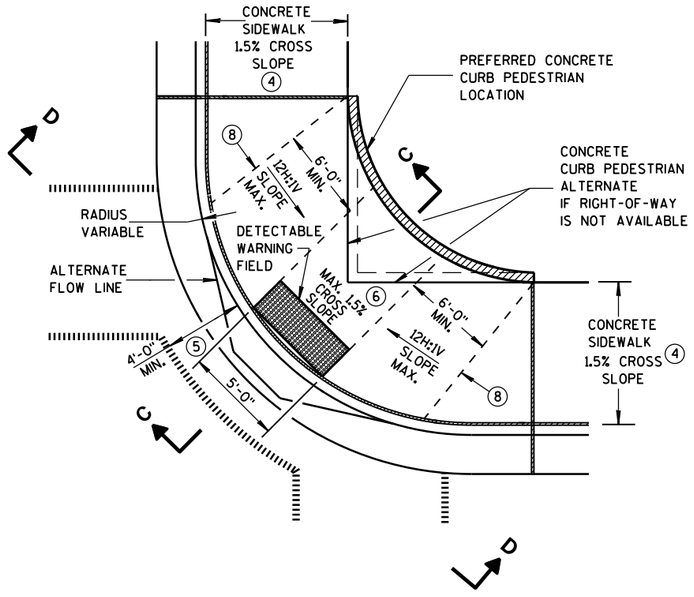

PLAN VIEW

TYPE 1-A RAMP

(NO TERRACE)

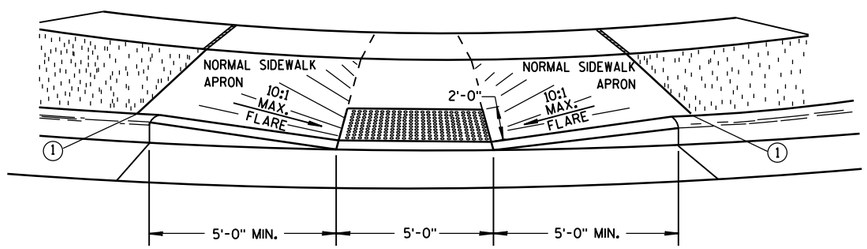

VIEW A-A

** WIDTH SHOWN ELSEWHERE IN THE PLANS

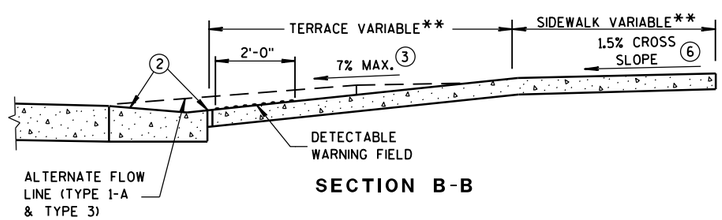

SECTION B-B

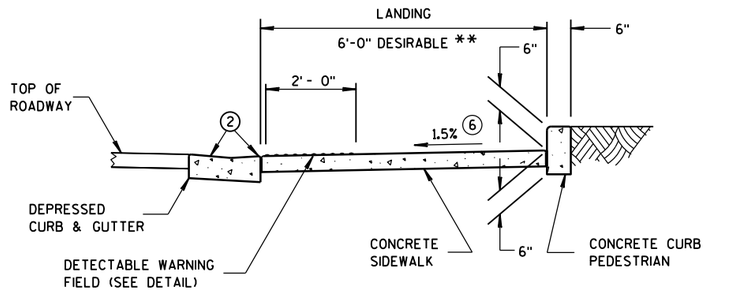

SECTION C-C

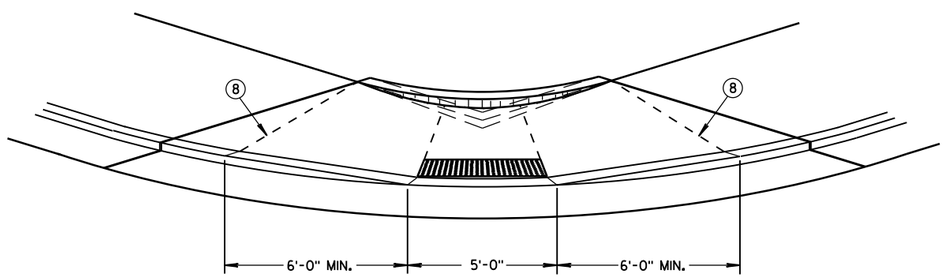

VIEW D-D

GENERAL NOTES

DETAILS OF CONSTRUCTION, MATERIALS AND WORKMANSHIP NOT SHOWN ON THIS DRAWING SHALL CONFORM TO THE PERTINENT REQUIREMENTS OF THE STANDARD SPECIFICATIONS AND THE APPLICABLE SPECIAL PROVISIONS.

WHEN NECESSARY, THE SIDEWALK ELEVATION MAY BE LOWERED TO MEET THE HIGH POINT ON THE RAMP.

TYPE 1 RAMPS SHALL HAVE A NORMAL SIDEWALK APRON AND CURB ON BOTH SIDES OF RAMP.

DETECTABLE WARNING FIELD SHALL BE MEASURED AND PAID BY THE SQUARE FOOT AS "CURB RAMP DETECTABLE WARNING FIELD". THE CONCRETE PEDESTRIAN CURB, IF NEEDED, SHALL BE MEASURED AND PAID BY THE LINEAL FOOT AS "CONCRETE CURB PEDESTRIAN". CONCRETE SIDEWALK IN THE CURB RAMP AREA SHALL BE MEASURED AND PAID BY THE SQUARE FOOT AS CONCRETE SIDEWALK, INCLUDING THE AREA UNDER THE DETECTABLE WARNING FIELD.

SELECT CURB RAMP DETECTABLE WARNING FIELD MATERIALS AND DEVICES FROM THE DEPARTMENT'S APPROVED MATERIALS LIST. THE COLOR OF THE DETECTABLE WARNING FIELD IS SPECIFIED ELSEWHERE AND IS INCIDENTAL TO THE BID ITEM OF "CURB RAMP DETECTABLE WARNING FIELD".

DETECTABLE WARNING FIELDS THAT ARE INSTALLED AS A GROUP OR SIDE BY SIDE, SHALL BE FROM THE SAME MANUFACTURER.

SURFACE TEXTURE OF THE RAMP SHALL BE OBTAINED BY COARSE BROOMING TRANSVERSE TO THE SLOPE OF THE RAMP.

(1) THIS POINT IS AN EXTENSION OF OUTSIDE EDGE OF APPROACHING SIDEWALK WHERE IT MEETS THE BACK OF CONCRETE CURB. POINT LOCATION MAY BE ADJUSTED TO ALIGN WITH BEGINNING OF FULL-HEIGHT CURB IF THIS DISTANCE IS SHORT.

(2) GRADE CHANGE BETWEEN GUTTER FLAG SLOPE AND THE CURB RAMP SLOPE SHALL NOT EXCEED 11%. MAXIMUM GUTTER FLAG SLOPE IS 4%. PROVIDE LONGITUDINAL DRAINAGE AROUND CURB AND AWAY FROM CURB RAMP. NO VERTICAL LIPS OR DISCONTINUITIES GREATER THAN 1/4-INCH ARE ALLOWED. SLOPE OF CURB HEAD OPENING SHALL NOT EXCEED 7%.

(3) ABSOLUTE MAXIMUM 12H:1V (8.33%) CURB RAMP SLOPE IS ALLOWABLE WITH FLATTENED GUTTER FLAG SLOPE AND NOT TO EXCEED 11% GRADE CHANGE.

(4) ±0.5% CONSTRUCTION TOLERANCE IN SIDEWALK CROSS SLOPE. THE SIDEWALK CROSS SLOPE SHALL NOT EXCEED 2% WITHOUT PRIOR APPROVAL FROM THE ENGINEER.

(5) PROVIDE A LEVEL LANDING IN THE STREET AND GUTTER AREA. (2% MAXIMUM SLOPE IN ANY DIRECTION). WHEN THE GUTTER SLOPE EXCEEDS 2%, CONSTRUCT THE LEVEL LANDING IN THE STREET AREA.

(6) PROVIDE A LEVEL LANDING (MAXIMUM 2% SLOPE) IN ANY DIRECTION OF PEDESTRIAN TRAVEL. STANDARD LANDING SIZE IS 5 FEET X 5 FEET.

(8) PROVIDE GRADE BREAK PERPENDICULAR TO DIRECTION OF WHEELCHAIR TRAVEL.

LEGEND

- 1/2" EXPANSION JOINT-SIDEWALK
- CONTRACTION JOINT FIELD LOCATED
- PAVEMENT MARKING CROSSWALK (WHITE)
- ALTERNATIVE LAYOUT

CURB RAMPS TYPES 1 AND 1-A

STATE OF WISCONSIN
DEPARTMENT OF TRANSPOI

6

S.D.D. 8 D 5-18a

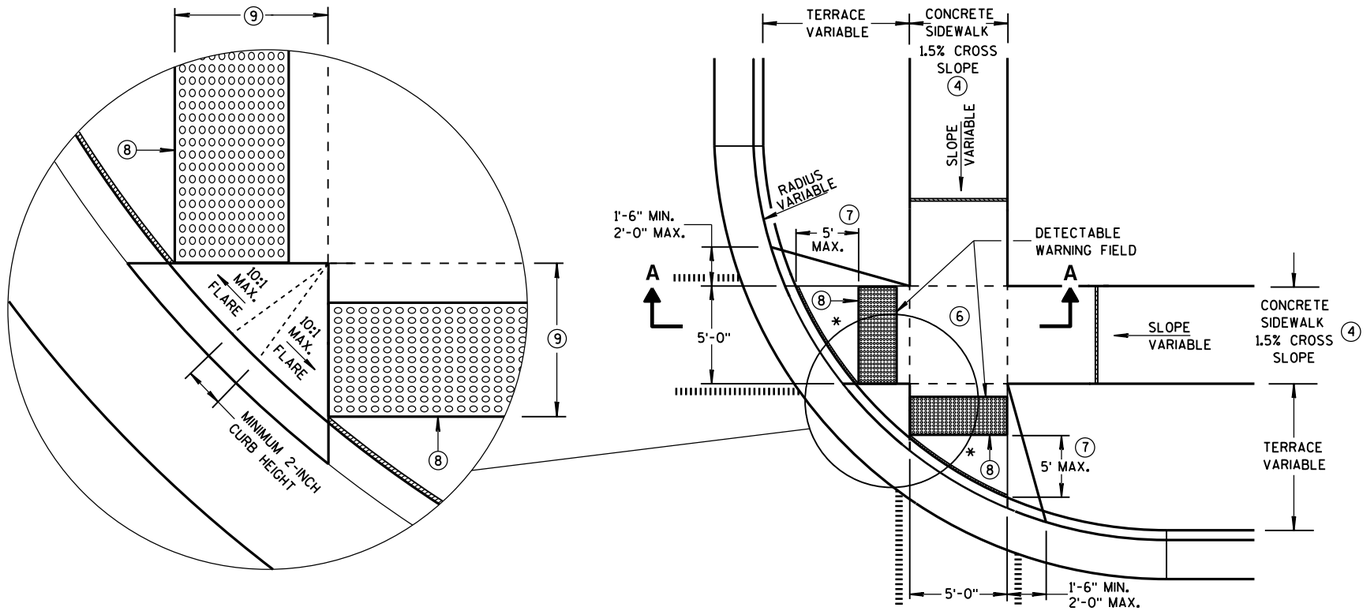

PLAN VIEW

TYPE 2 RAMP

(ON LINE WITH SIDEWALK)

* MAXIMUM 2.0% SLOPE IN ALL DIRECTIONS IN FRONT OF GRADE BREAK

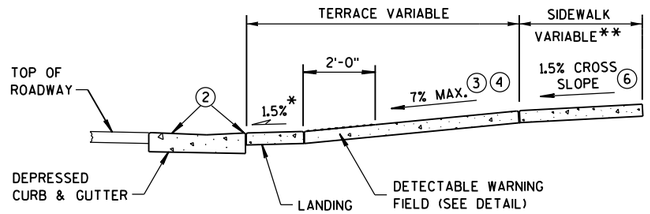

SECTION A-A

** WIDTH SHOWN ELSEWHERE IN THE PLANS

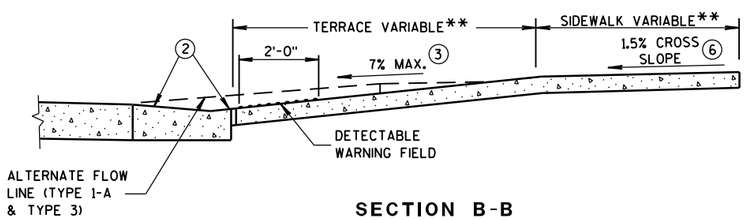

SECTION B-B

GENERAL NOTES

DETECTABLE WARNING FIELDS THAT ARE INSTALLED AS A GROUP OR SIDE BY SIDE, SHALL BE FROM THE SAME MANUFACTURER.

(2) GRADE CHANGE BETWEEN GUTTER FLAG SLOPE AND THE CURB RAMP SLOPE SHALL NOT EXCEED 11%. MAXIMUM GUTTER FLAG SLOPE IS 4%. PROVIDE LONGITUDINAL DRAINAGE AROUND CURB AND AWAY FROM CURB RAMP. NO VERTICAL LIPS OR DISCONTINUITIES GREATER THAN 1/4-INCH ARE ALLOWED. SLOPE OF CURB HEAD OPENING SHALL NOT EXCEED 7%.

(3) ABSOLUTE MAXIMUM 12H:1V (8.33%) CURB RAMP SLOPE IS ALLOWABLE WITH FLATTENED GUTTER FLAG SLOPE AND NOT TO EXCEED 11% GRADE CHANGE.

(4) ±0.5% CONSTRUCTION TOLERANCE IN SIDEWALK CROSS SLOPE. THE SIDEWALK CROSS SLOPE SHALL NOT EXCEED 2% WITHOUT PRIOR APPROVAL FROM THE ENGINEER.

(6) PROVIDE A LEVEL LANDING (MAXIMUM 2% SLOPE) IN ANY DIRECTION OF PEDESTRIAN TRAVEL. STANDARD LANDING SIZE IS 5 FEET X 5 FEET.

(7) WHEN THIS DISTANCE EXCEEDS 5 FEET, STAGGER ADDITIONAL DETECTABLE WARNING PANEL FORWARD TO REDUCE THIS DISTANCE. PROVIDE MINIMUM 12-INCH ROW OVERLAP TO AVOID SIDESTEP OF DOME DETECTION. USE EQUAL-SIZE PANELS TO DEVELOP OVERLAPPING, STAGGERED ROWS. ALIGN DOMES BETWEEN OVERLAPPING ROWS AND IN DIRECTION OF PEDESTRIAN TRAVEL.

(8) PROVIDE GRADE BREAK PERPENDICULAR TO DIRECTION OF WHEELCHAIR TRAVEL.

(9) WHEN THIS DISTANCE IS LESS THAN 6'-0", IT MAY BE DIFFICULT TO ACHIEVE A 7% SLOPE OR FLATTER ALONG THE RAMP. REDUCE CURB HEIGHT IN TRIANGLE AREA TO ACHIEVE 7% SLOPE OR FLATTER ON RAMP. CONSTRUCT 2-INCH MINIMUM CURB HEIGHT BETWEEN 10:1 FLARES.

LEGEND

- ½" EXPANSION JOINT-SIDEWALK
- CONTRACTION JOINT FIELD LOCATED
- PAVEMENT MARKING CROSSWALK (WHITE)
- ALTERNATIVE LAYOUT

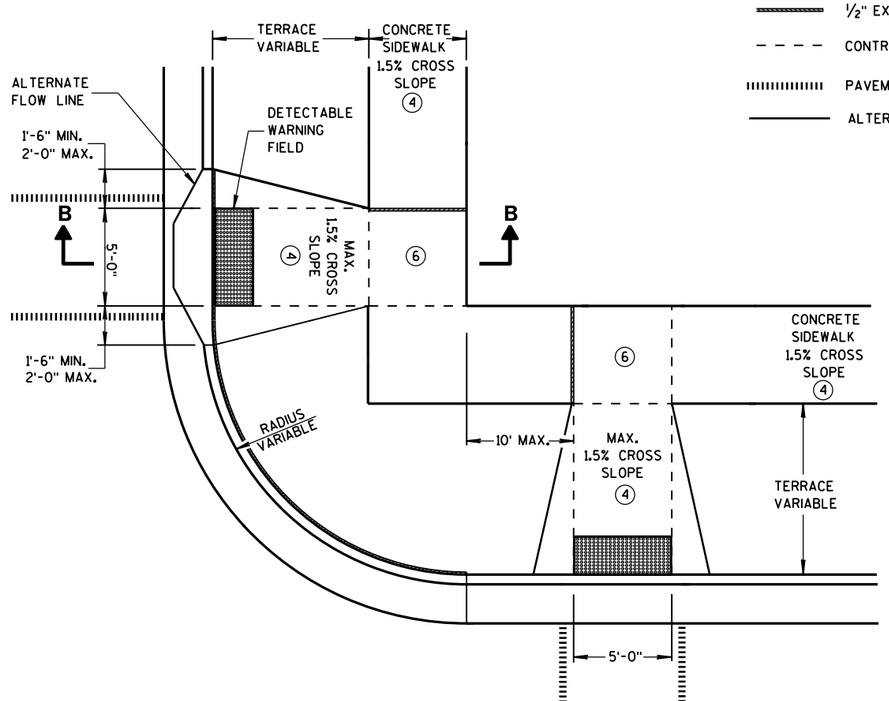

PLAN VIEW

TYPE 3 RAMP

(OUTSIDE OF CROSSWALK AREA)

CURB RAMPS TYPES 2 AND 3

STATE OF WISCONSIN
DEPARTMENT OF TRANSPO

6

S.D.D. 8 D 5-18b

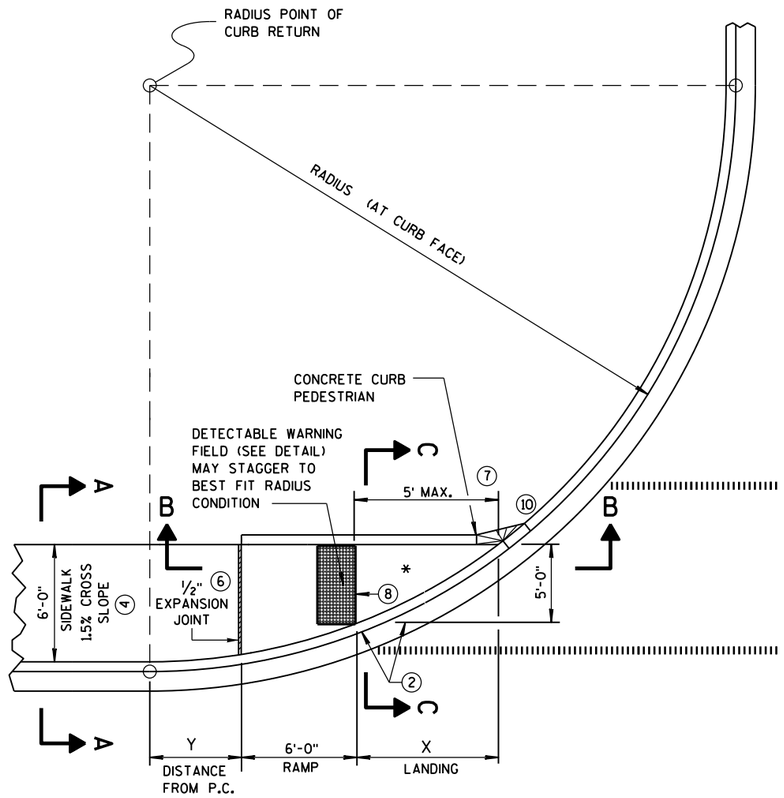

CURB RAMP TYPE 4A

PLAN VIEW

RADIUS (AT CURB FACE)	X	Y
20 FEET	7'-11"	0'-2"
30 FEET	10'-2¾"	1'-7½"
40 FEET	12'-1¼"	2'-10"
50 FEET	13'-8¾"	3'-10¾"
60 FEET	15'-2"	4'-10¼"

INTERMEDIATE RADII CAN BE INTERPOLATED

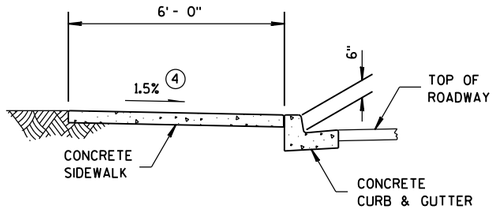

SECTION A-A FOR TYPE 4A

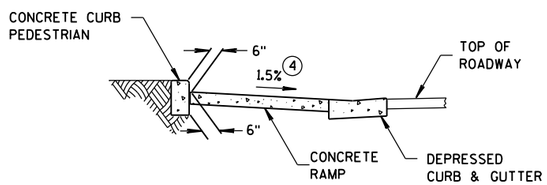

SECTION C-C FOR TYPE 4A

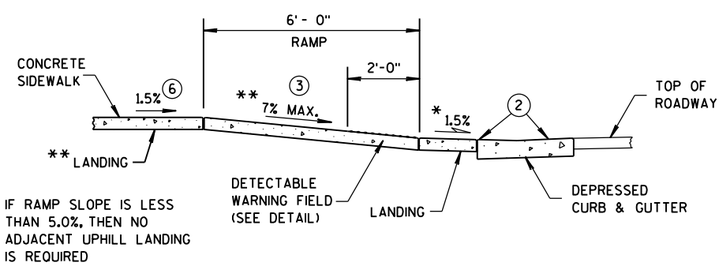

** IF RAMP SLOPE IS LESS THAN 5.0%, THEN NO ADJACENT UPHILL LANDING IS REQUIRED

SECTION B-B FOR TYPE 4A

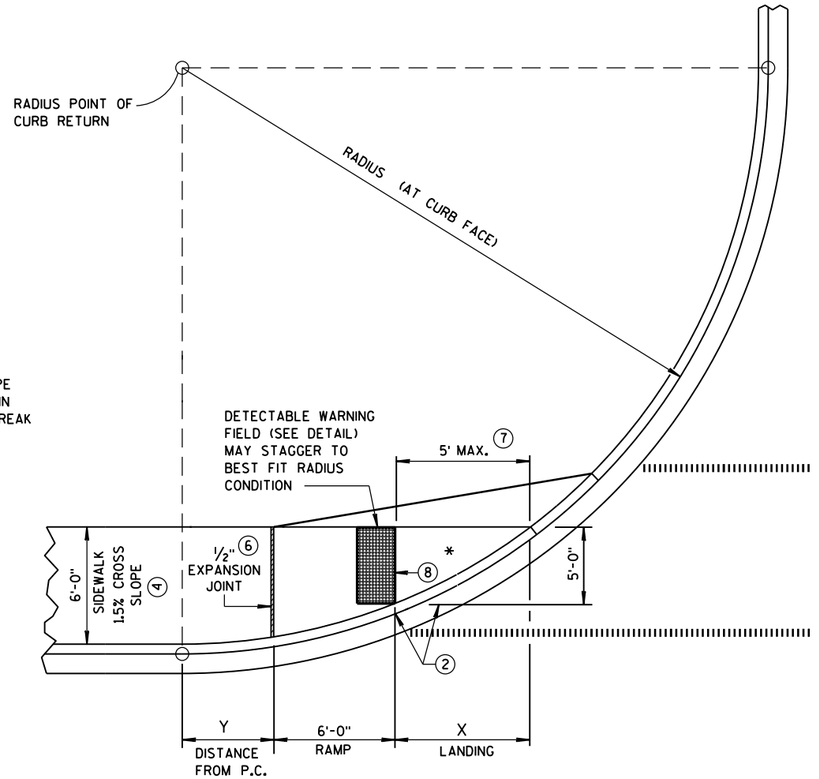

* MAXIMUM 2.0% SLOPE IN ALL DIRECTIONS IN FRONT OF GRADE BREAK

CURB RAMP TYPE 4A1

PLAN VIEW

GENERAL NOTES

AVOID PLACING DRAINAGE STRUCTURES, JUNCTION BOXES OR OTHER OBSTRUCTIONS IN FRONT OF RAMP ACCESS AREAS.

DETECTABLE WARNING FIELDS THAT ARE INSTALLED AS A GROUP OR SIDE BY SIDE, SHALL BE FROM THE SAME MANUFACTURER.

(2) GRADE CHANGE BETWEEN GUTTER FLAG SLOPE AND THE CURB RAMP SLOPE SHALL NOT EXCEED 11%. MAXIMUM GUTTER FLAG SLOPE IS 4%. PROVIDE LONGITUDINAL DRAINAGE AROUND CURB AND AWAY FROM CURB RAMP. NO VERTICAL LIPS OR DISCONTINUITIES GREATER THAN 1/4-INCH ARE ALLOWED. SLOPE OF CURB HEAD OPENING SHALL NOT EXCEED 7%.

(3) ABSOLUTE MAXIMUM 12H:1V (8.33%) CURB RAMP SLOPE IS ALLOWABLE WITH FLATTENED GUTTER FLAG SLOPE AND NOT TO EXCEED 11% GRADE CHANGE.

(4) ±0.5% CONSTRUCTION TOLERANCE IN SIDEWALK CROSS SLOPE. THE SIDEWALK CROSS SLOPE SHALL NOT EXCEED 2% WITHOUT PRIOR APPROVAL FROM THE ENGINEER.

(6) PROVIDE A LEVEL LANDING (MAXIMUM 2% SLOPE) IN ANY DIRECTION OF PEDESTRIAN TRAVEL. STANDARD LANDING SIZE IS 5 FEET X 5 FEET.

(7) WHEN THIS DISTANCE EXCEEDS 5 FEET, STAGGER ADDITIONAL DETECTABLE WARNING PANEL FORWARD TO REDUCE THIS DISTANCE. PROVIDE MINIMUM 12-INCH ROW OVERLAP TO AVOID SIDESTEP OF DOME DETECTION. USE EQUAL-SIZE PANELS TO DEVELOP OVERLAPPING, STAGGERED ROWS. ALIGN DOMES BETWEEN OVERLAPPING ROWS AND IN DIRECTION OF PEDESTRIAN TRAVEL.

(8) PROVIDE GRADE BREAK PERPENDICULAR TO DIRECTION OF WHEELCHAIR TRAVEL.

(10) INSTALL TRANSITION NOSE. (INCIDENTAL TO OTHER PAY ITEMS). DO NOT MARK TRANSITION NOSE.

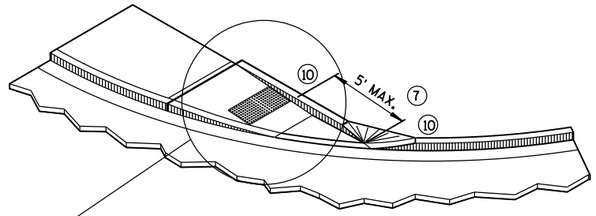

ISOMETRIC VIEW FOR TYPE 4A

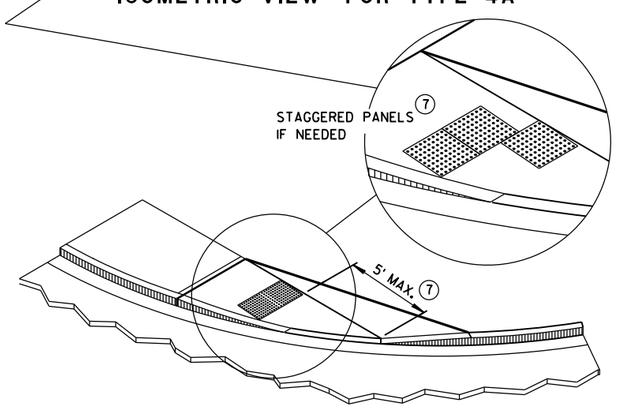

ISOMETRIC VIEW FOR TYPE 4A1

LEGEND

- ½" EXPANSION JOINT-SIDEWALK
- CONTRACTION JOINT FIELD LOCATED
- PAVEMENT MARKING CROSSWALK (WHITE)

CURB RAMPS
TYPES 4A AND 4A1

STATE OF WISCONSIN
DEPARTMENT OF TRANSPOR

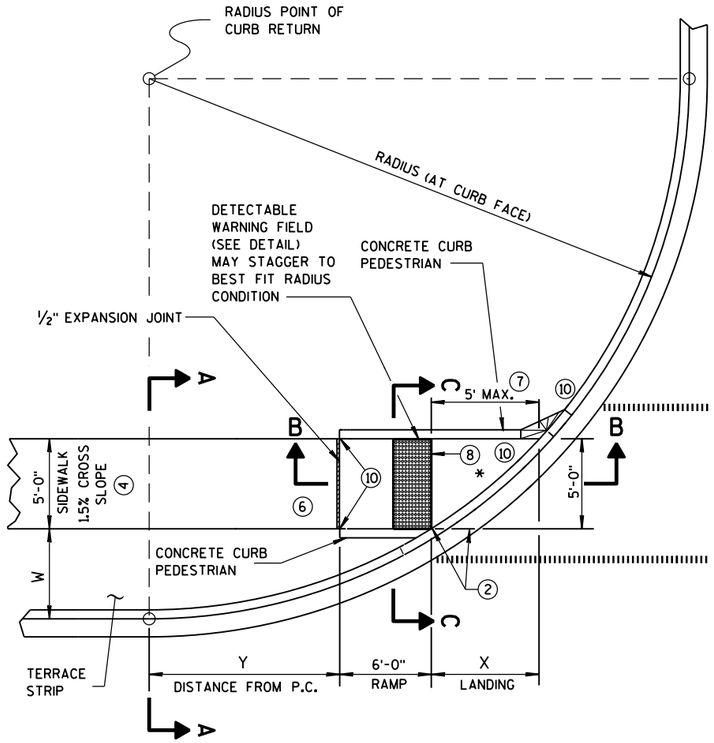

CURB RAMP TYPE 4B
PLAN VIEW

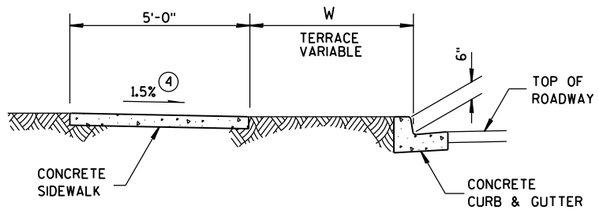

SECTION A-A FOR TYPE 4B

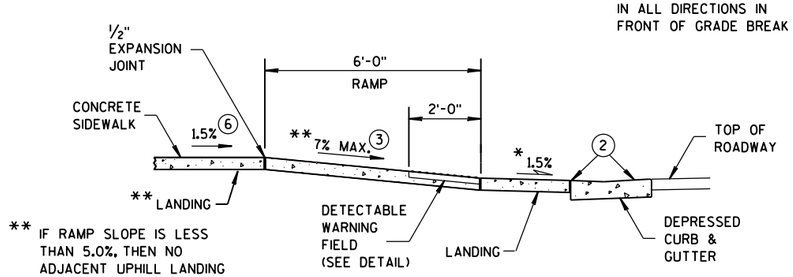

SECTION B-B FOR TYPE 4B

LEGEND

½" EXPANSION JOINT-SIDEWALK

CONTRACTION JOINT FIELD LOCATED

PAVEMENT MARKING CROSSWALK (WHITE)

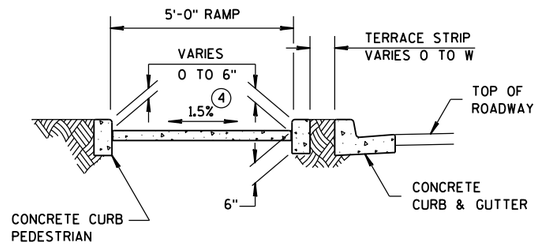

SECTION C-C FOR TYPE 4B

RADIUS (AT CURB FACE)	W = 3'-0"		W = 4'-0"		W = 5'-0"		W = 6'-0"		W = 7'-0"	
	X	Y	X	Y	X	Y	X	Y	X	Y
20 FEET	5'-9¾"	3'-6½"	4'-11½"	5'-1¾"	4'-3¼"	6'-5½"	3'-8¾"	7'-6¾"	3'-3"	8'-6¼"
30 FEET	7'-9¼"	5'-10½"	6'-9½"	7'-11¼"	6'-0¼"	9'-8"	5'-5"	11'-1¾"	4'-10¾"	12'-5¾"
40 FEET	9'-4"	7'-10"	8'-2¾"	10'-3"	7'-4¾"	12'-3¾"	6'-8½"	14'-1¼"	6'-1¾"	15'-8½"
50 FEET	10'-8"	9'-6½"	9'-5½"	12'-3¼"	8'-6½"	14'-7½"	7'-9¾"	16'-8¼"	7'-2½"	18'-6¼"
60 FEET	11'-10¼"	11'-0¾"	10'-6½"	14'-1¼"	9'-6½"	16'-8½"	8'-9¼"	18'-11¾"	8'-1½"	21'-0½"

INTERMEDIATE RADII CAN BE INTERPOLATED

GENERAL NOTES

AVOID PLACING DRAINAGE STRUCTURES, JUNCTION BOXES OR OTHER OBSTRUCTIONS IN FRONT OF RAMP ACCESS AREAS.

DETECTABLE WARNING FIELDS THAT ARE INSTALLED AS A GROUP OR SIDE BY SIDE, SHALL BE FROM THE SAME MANUFACTURER.

(2) GRADE CHANGE BETWEEN GUTTER FLAG SLOPE AND THE CURB RAMP SLOPE SHALL NOT EXCEED 11%. MAXIMUM GUTTER FLAG SLOPE IS 4%. PROVIDE LONGITUDINAL DRAINAGE AROUND CURB AND AWAY FROM CURB RAMP. NO VERTICAL LIPS OR DISCONTINUITIES GREATER THAN ¼-INCH ARE ALLOWED. SLOPE OF CURB HEAD OPENING SHALL NOT EXCEED 7%.

(3) ABSOLUTE MAXIMUM 12H:1V (8.33%) CURB RAMP SLOPE IS ALLOWABLE WITH FLATTENED GUTTER FLAG SLOPE AND NOT TO EXCEED 11% GRADE CHANGE.

(4) ±0.5% CONSTRUCTION TOLERANCE IN SIDEWALK CROSS SLOPE. THE SIDEWALK CROSS SLOPE SHALL NOT EXCEED 2% WITHOUT PRIOR APPROVAL FROM THE ENGINEER.

(6) PROVIDE A LEVEL LANDING (MAXIMUM 2% SLOPE) IN ANY DIRECTION OF PEDESTRIAN TRAVEL. STANDARD LANDING SIZE IS 5 FEET X 5 FEET.

(7) WHEN THIS DISTANCE EXCEEDS 5 FEET, STAGGER ADDITIONAL DETECTABLE WARNING PANEL FORWARD TO REDUCE THIS DISTANCE. PROVIDE MINIMUM 12-INCH ROW OVERLAP TO AVOID SIDESTEP OF DOME DETECTION. USE EQUAL-SIZE PANELS TO DEVELOP OVERLAPPING, STAGGERED ROWS. ALIGN DOMES BETWEEN OVERLAPPING ROWS AND IN DIRECTION OF PEDESTRIAN TRAVEL.

(8) PROVIDE GRADE BREAK PERPENDICULAR TO DIRECTION OF WHEELCHAIR TRAVEL.

(10) INSTALL TRANSITION NOSE. (INCIDENTAL TO OTHER PAY ITEMS). DO NOT MARK TRANSITION NOSE.

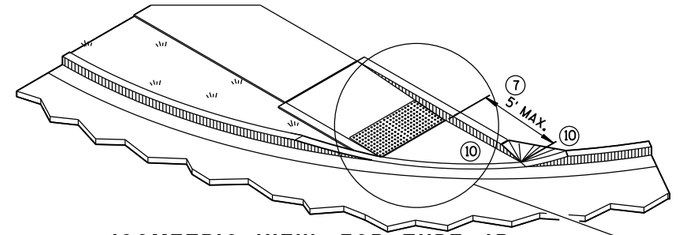

ISOMETRIC VIEW FOR TYPE 4B

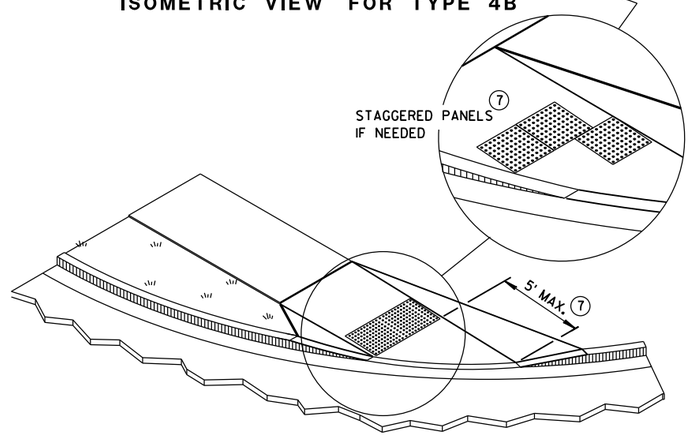

ISOMETRIC VIEW FOR TYPE 4B1

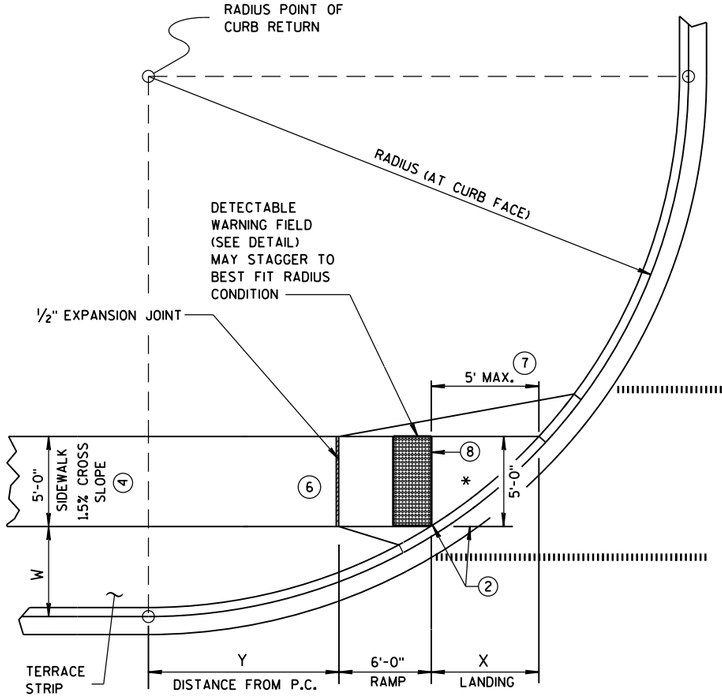

CURB RAMP TYPE 4B1
PLAN VIEW

CURB RAMPS TYPE 4B AND 4B1

STATE OF WISCONSIN
DEPARTMENT OF TRANSPOI

6

S.D.D. 8 D 5-18d

6

S.D.D. 8 D 5-18d

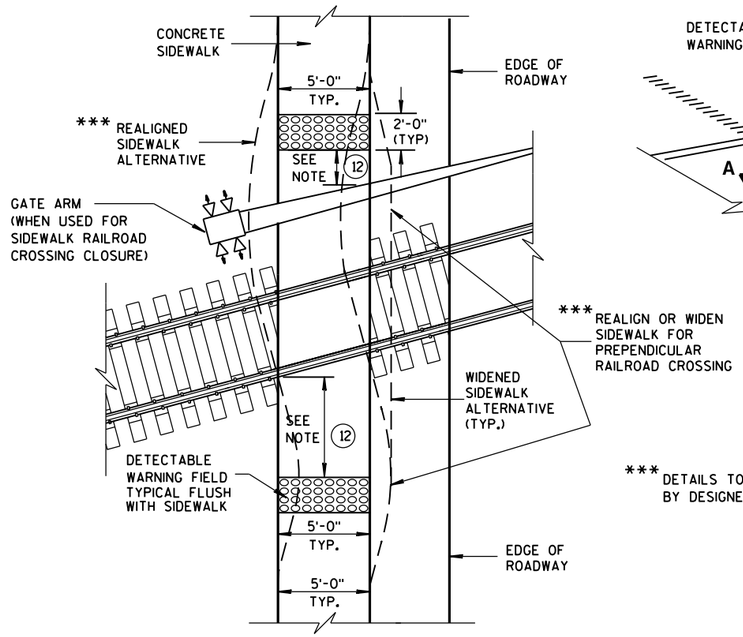

*** DETAILS TO BE DETERMINED BY DESIGNER

TYPE 8
DETECTABLE WARNINGS AT RAILROAD CROSSING

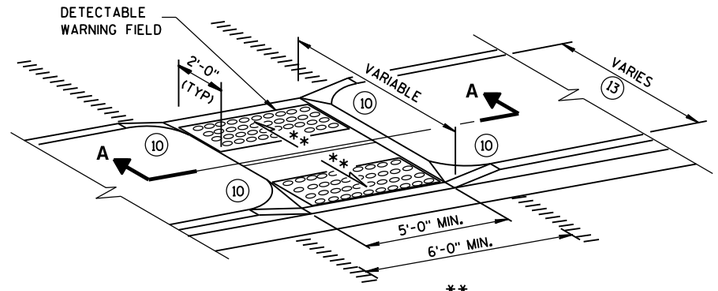

** 1% MIN. (PROVIDE DRAINAGE)

MEDIAN ISLAND NON-ELEVATED CROSSING
TYPE 5

GENERAL NOTES

SIDEWALK CROSS SLOPE SHALL NOT EXCEED 2%.

DETECTABLE WARNING FIELDS THAT ARE INSTALLED AS A GROUP OR SIDE BY SIDE, SHALL BE FROM THE SAME MANUFACTURER.

(2) GRADE CHANGE BETWEEN GUTTER FLAG SLOPE AND THE CURB RAMP SLOPE SHALL NOT EXCEED 11%. MAXIMUM GUTTER FLAG SLOPE IS 4%. PROVIDE LONGITUDINAL DRAINAGE AROUND CURB AND AWAY FROM CURB RAMP. NO VERTICAL LIPS OR DISCONTINUITIES GREATER THAN 1/4-INCH ARE ALLOWED. SLOPE OF CURB HEAD OPENING SHALL NOT EXCEED 7%.

(3) ABSOLUTE MAXIMUM 12H:1V (8.33%) CURB RAMP SLOPE IS ALLOWABLE WITH FLATTENED GUTTER FLAG SLOPE AND NOT TO EXCEED 11% GRADE CHANGE.

(4) ±0.5% CONSTRUCTION TOLERANCE IN SIDEWALK CROSS SLOPE. THE SIDEWALK CROSS SLOPE SHALL NOT EXCEED 2% WITHOUT PRIOR APPROVAL FROM THE ENGINEER.

(6) PROVIDE A LEVEL LANDING (MAXIMUM 2% SLOPE) IN ANY DIRECTION OF PEDESTRIAN TRAVEL. STANDARD LANDING SIZE IS 5 FEET X 5 FEET.

(10) INSTALL TRANSITION NOSE. (INCIDENTAL TO OTHER PAY ITEMS). DO NOT MARK TRANSITION NOSE.

(11) SLOPE SIDEWALK TOWARD LANDING AS SHOWN WHERE THERE IS NO TERRACE OR WHERE THE TERRACE WIDTH IS LESS THAN 6 FEET WIDE.

(12) THE EDGE OF THE DETECTABLE WARNING FIELD NEAREST TO A RAILROAD CROSSING SHALL BE 1.5 FEET ± 0.1' FROM THE FACE OF THE GATE ARM IF THE GATE ARM EXTENDS ACROSS THE SIDEWALK. WHERE THERE IS NO PEDESTRIAN GATE, THE EDGE OF THE DETECTABLE WARNING FIELD NEAREST TO THE RAILROAD CROSSING SHALL BE 15 FEET FROM THE NEAREST RAIL.

(13) DO NOT INSTALL DETECTABLE WARNING FIELDS IF MEDIAN WIDTH BETWEEN BACK OF CURBS IS LESS THAN 6 FEET.

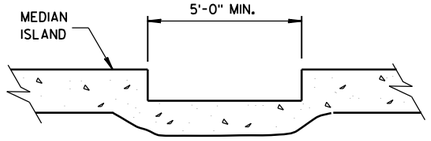

SECTION A-A

	MIN.	MAX.
A	1.6"	2.4"
B	0.65"	1.5"
C	*	*
D	0.9"	1.4"

* THE C DIMENSION IS 50% TO 65% OF THE D DIMENSION.

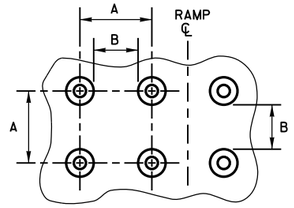

PLAN VIEW

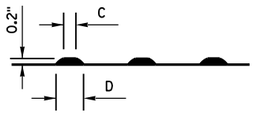

ELEVATION VIEW

TRUNCATED DOMES
DETECTABLE WARNING PATTERN DETAIL

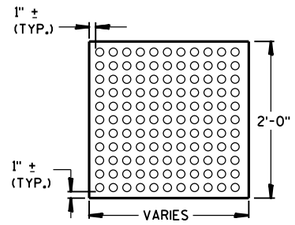

PLAN VIEW
DETECTABLE WARNING FIELD (TYPICAL)

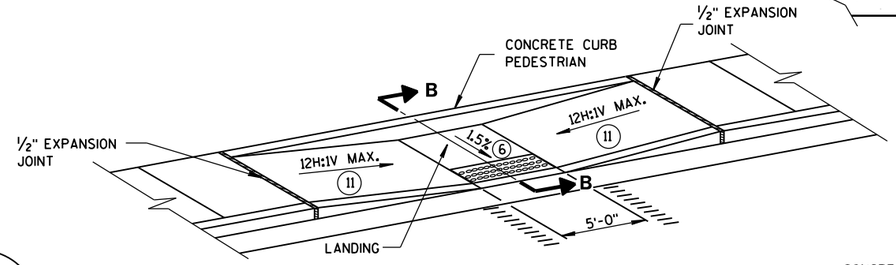

MID-BLOCK CROSSING
TYPE 7A

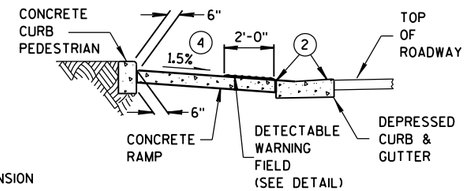

SECTION B-B

REFER TO GENERAL NOTES (2) AND (3) FOR ALL ISLAND CURB RAMPS

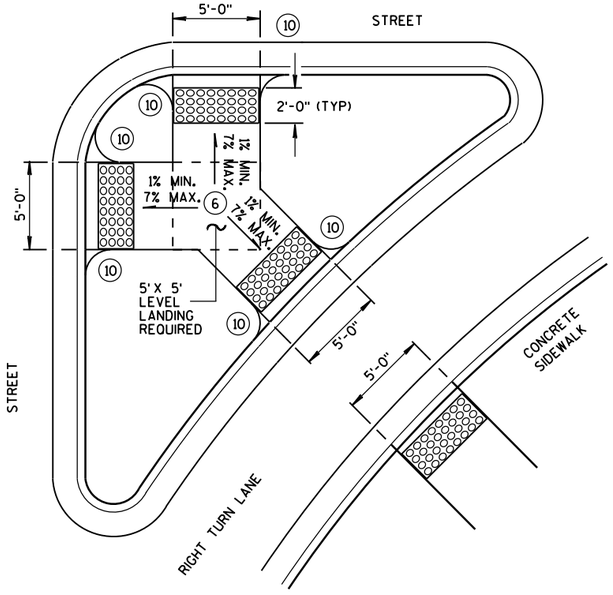

TYPE 6
DETECTABLE WARNING AT ISLANDS

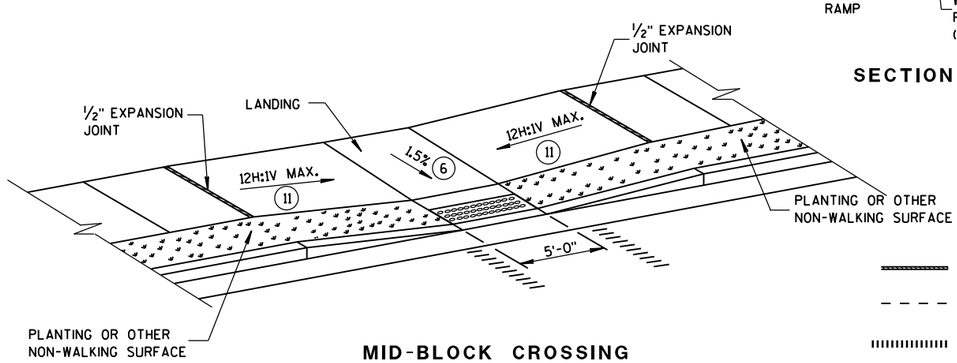

MID-BLOCK CROSSING
TYPE 7B

NOTE: THESE PARALLEL AND PARALLEL/PERPENDICULAR CURB RAMPS MAY BE USED AT INTERSECTIONS AND MID BLOCK LOCATIONS.

LEGEND

- 1/2" EXPANSION JOINT-SIDEWALK
- CONTRACTION JOINT FIELD LOCATED
- PAVEMENT MARKING CROSSWALK (WHITE)

CURB RAMPS
TYPES 5, 6, 7A, 7B & 8

STATE OF WISCONSIN
DEPARTMENT OF TRANSPORTATION

APPROVED
Sept., 2016
DATE
FHWA

/S/ Rodney Taylor
ROADWAY STANDARDS UNIT SUPERV

ENT

6

S.D.D. 8 D 5-18e

6

S.D.D. 8 D 5-18e

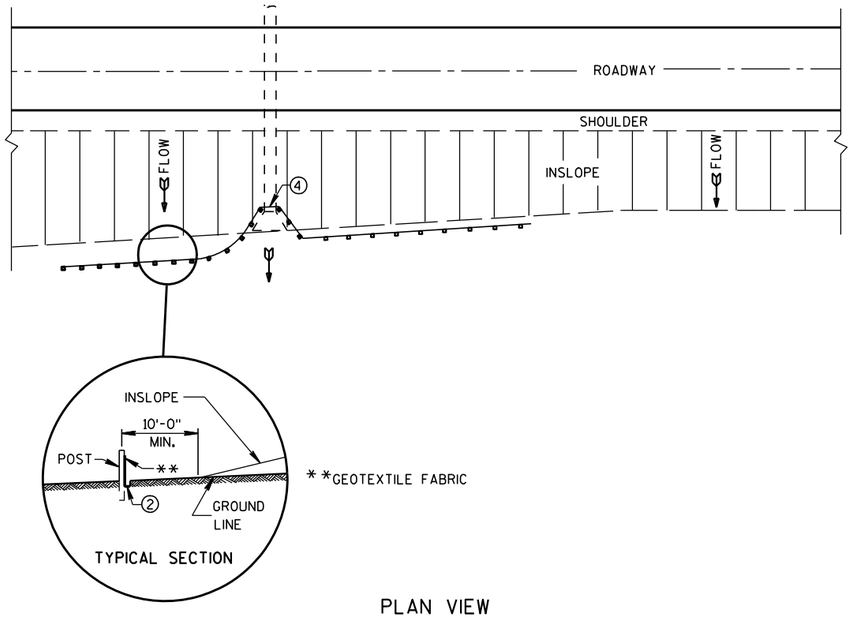

PLAN VIEW

TYPICAL APPLICATION OF SILT FENCE

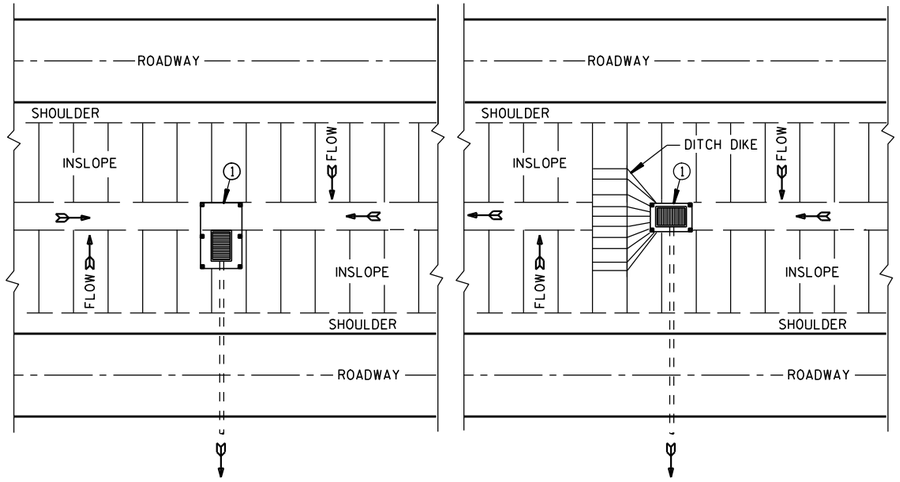

PLAN VIEW

SILT FENCE AT MEDIAN SURFACE DRAINS

GENERAL NOTES

DETAILS OF CONSTRUCTION NOT SHOWN ON THIS DRAWING SHALL CONFORM TO THE PERTINENT REQUIREMENTS OF THE STANDARD SPECIFICATIONS AND APPLICABLE SPECIAL PROVISIONS.

① HORIZONTAL BRACE REQUIRED WITH 2" X 4" WOODEN FRAME OR EQUIVALENT AT TOP OF POSTS.

② FOR MANUAL INSTALLATIONS THE TRENCH SHALL BE A MINIMUM OF 4" WIDE & 6" DEEP TO BURY AND ANCHOR THE GEOTEXTILE FABRIC. FOLD MATERIAL TO FIT TRENCH AND BACKFILL & COMPACT TRENCH WITH EXCAVATED SOIL.

③ WOOD POSTS SHALL BE A MINIMUM SIZE OF 1⅛" X 1⅛" OF OAK OR HICKORY.

④ SILT FENCE TO EXTEND ACROSS THE TOP OF THE PIPE.

⑤ CONSTRUCT SILT FENCE FROM A CONTINUOUS ROLL IF POSSIBLE BY CUTTING LENGTHS TO AVOID JOINTS. IF A JOINT IS NECESSARY USE ONE OF THE FOLLOWING TWO METHODS; A) OVERLAP THE END POSTS AND TWIST, OR ROTATE, AT LEAST 180 DEGREES, B) HOOK THE END OF EACH SILT FENCE LENGTH.

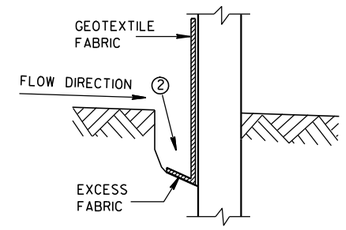

TRENCH DETAIL

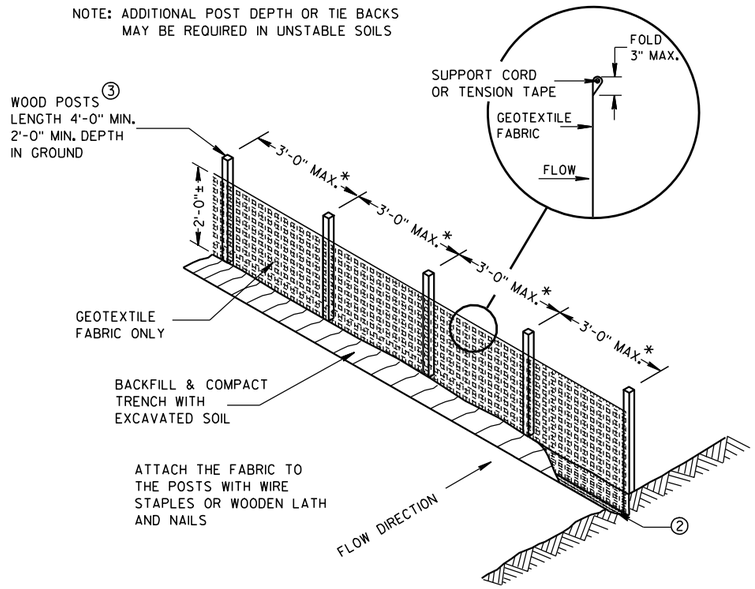

SILT FENCE

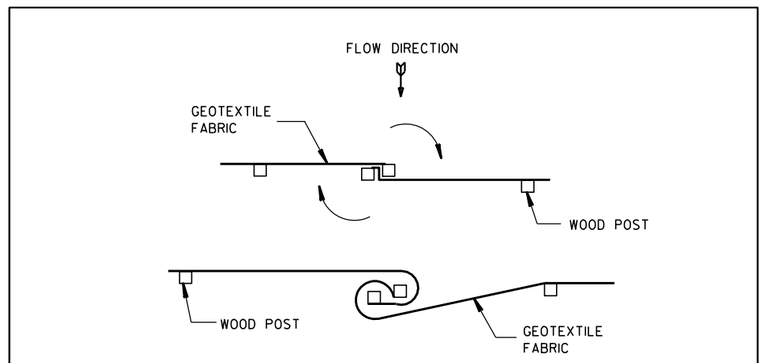

JOINING TWO LENGTHS OF SILT FENCE ⑤

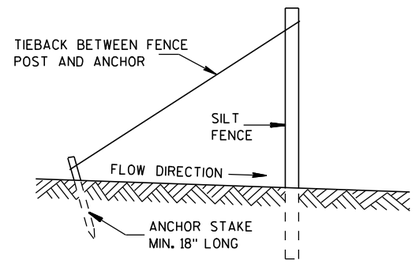

SILT FENCE TIE BACK

(WHEN REQUIRED BY THE ENGINEER)

SILT FENCE

STATE OF WISCONSIN
DEPARTMENT OF TRANSPORTATION

APPROVED
4-29-05 DATE
/S/ Beth Cannestra
CHIEF ROADWAY DEVELOPMENT ENGINEER
FHWA

6

S.D.D. 8 E 9-6

6

S.D.D. 8 E 9-6

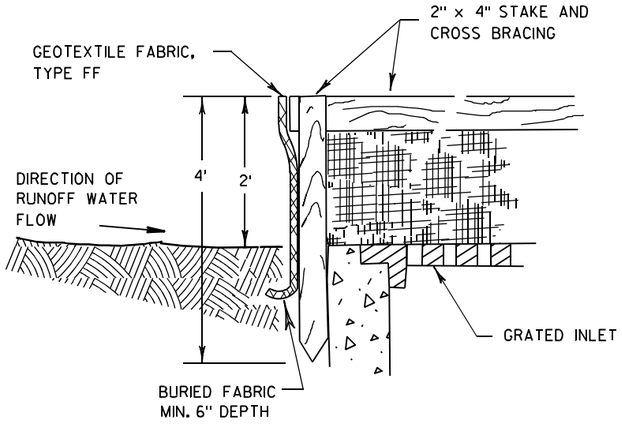

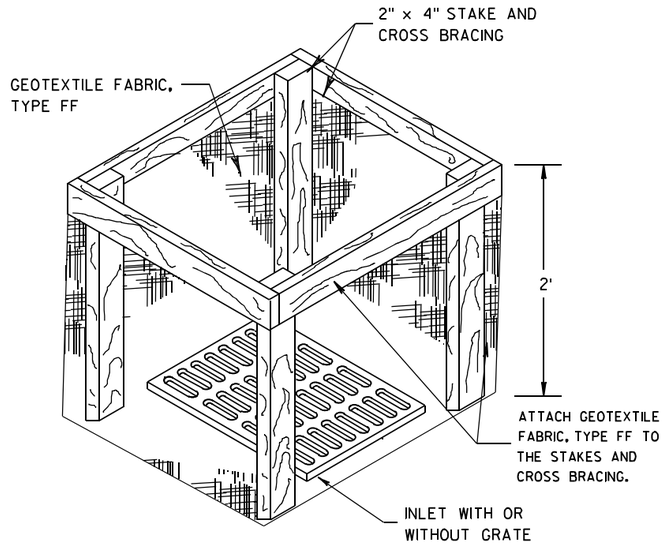

INLET PROTECTION, TYPE A

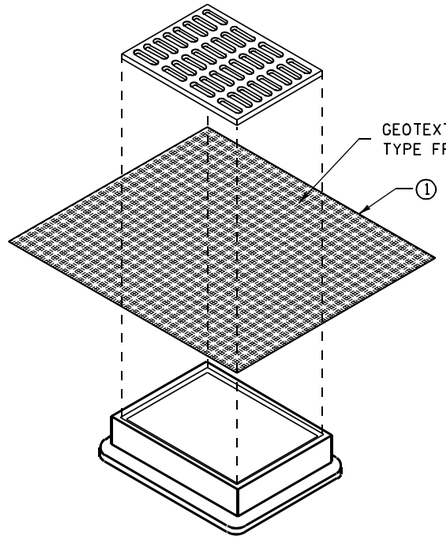

INLET PROTECTION, TYPE B
(WITHOUT CURB BOX)

(CAN BE INSTALLED IN ANY INLET WITHOUT A CURB BOX)

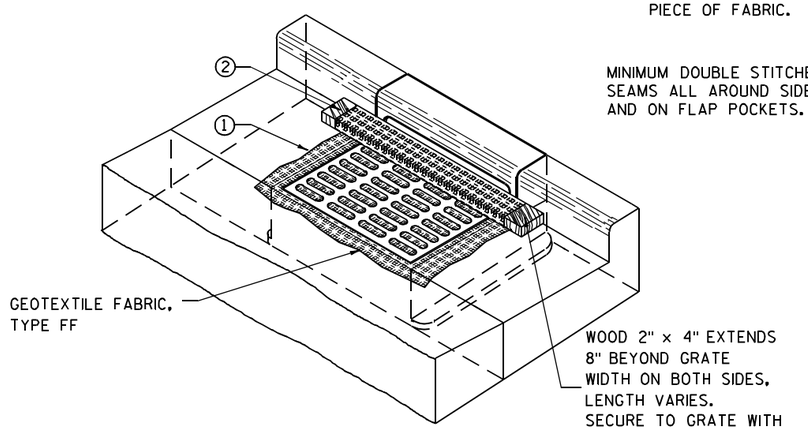

INLET PROTECTION, TYPE C (WITH CURB BOX)

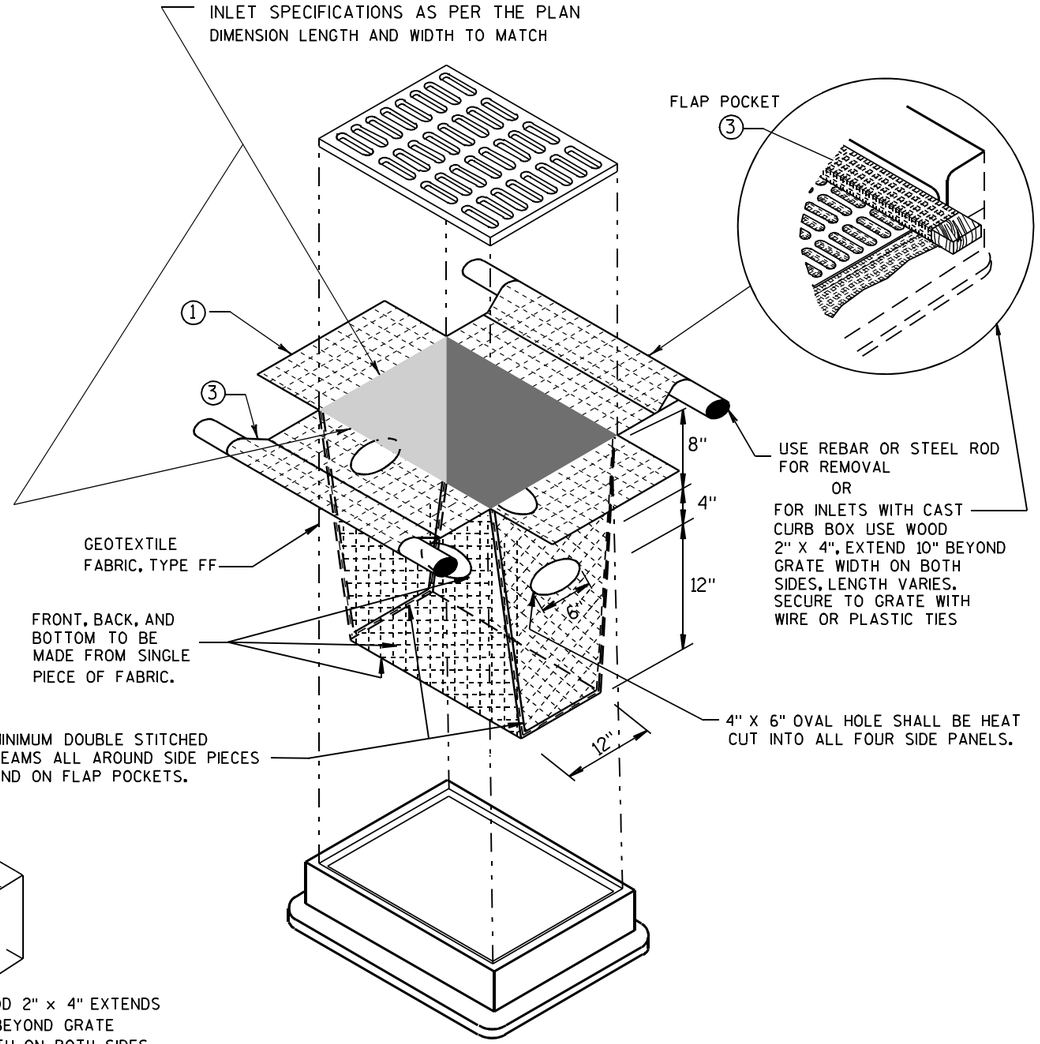

INLET PROTECTION, TYPE D

(CAN BE INSTALLED IN ANY INLET TYPE WITH
OR WITHOUT A CURB BOX AS PER NOTE ②)

GENERAL NOTES

INLET PROTECTION DEVICES SHALL BE MAINTAINED OR REPLACED AT THE DIRECTION OF THE ENGINEER.

MANUFACTURED ALTERNATIVES APPROVED AND LISTED ON THE DEPARTMENT'S EROSION CONTROL PRODUCT ACCEPTABILITY LIST MAY BE SUBSTITUTED.

WHEN REMOVING OR MAINTAINING INLET PROTECTION, CARE SHALL BE TAKEN SO THAT THE SEDIMENT TRAPPED ON THE GEOTEXTILE FABRIC DOES NOT FALL INTO THE INLET. ANY MATERIAL FALLING INTO THE INLET SHALL BE REMOVED IMMEDIATELY.

① FINISHED SIZE, INCLUDING FLAP POCKETS WHERE REQUIRED, SHALL EXTEND A MINIMUM OF 10" AROUND THE PERIMETER TO FACILITATE MAINTENANCE OR REMOVAL.

② FOR INLET PROTECTION, TYPE C (WITH CURB BOX), AN ADDITIONAL 18" OF FABRIC IS WRAPPED AROUND THE WOOD AND SECURED WITH STAPLES. THE WOOD SHALL NOT BLOCK THE ENTIRE HEIGHT OF THE CURB BOX OPENING.

③ FLAP POCKETS SHALL BE LARGE ENOUGH TO ACCEPT WOOD 2X4.

INSTALLATION NOTES

TYPE B & C

TRIM EXCESS FABRIC IN THE FLOW LINE TO WITHIN 3" OF THE GRATE.

THE CONTRACTOR SHALL DEMONSTRATE A METHOD OF MAINTENANCE, USING A SEWN FLAP, HAND HOLDS OR OTHER METHOD TO PREVENT ACCUMULATED SEDIMENT FROM ENTERING THE INLET.

TYPE D

DO NOT INSTALL INLET PROTECTION TYPE D IN INLETS SHALLOWER THAN 30", MEASURED FROM THE BOTTOM OF THE INLET TO THE TOP OF THE GRATE.

TRIM EXCESS FABRIC IN THE FLOW LINE TO WITHIN 3" OF THE GRATE.

THE INSTALLED BAG SHALL HAVE A MINIMUM SIDE CLEARANCE, BETWEEN THE INLET WALLS AND THE BAG, MEASURED AT THE BOTTOM OF THE OVERFLOW HOLES, OF 3". WHERE NECESSARY THE CONTRACTOR SHALL CINCH THE BAG, USING PLASTIC ZIP TIES, TO ACHIEVE THE 3" CLEARANCE. THE TIES SHALL BE PLACED AT A MAXIMUM OF 4" FROM THE BOTTOM OF THE BAG.

INLET PROTECTION
TYPE A, B, C, AND D

STATE OF WISCONSIN
DEPARTMENT OF TRANSPORTATION

APPROVED
10/16/02
DATE
/S/ Beth Cannestra
CHIEF ROADWAY DEVELOPMENT ENGINEER
FHWA

6
S.D.D. 8 E 10-2

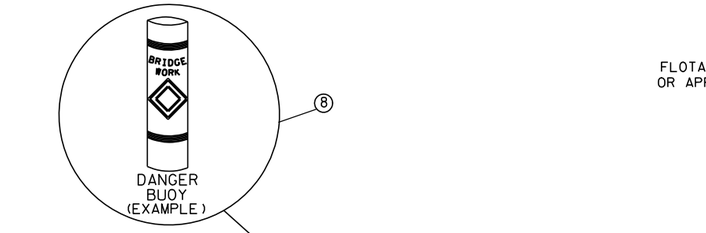

SECTION B-B

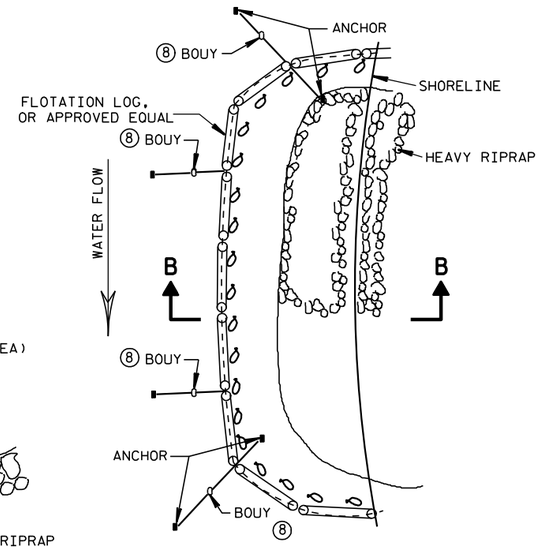

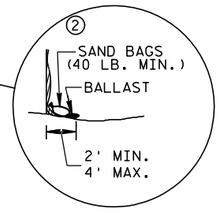

TURBIDITY BARRIER FLOAT ALTERNATIVE
CAUTION - SEE NOTE 6

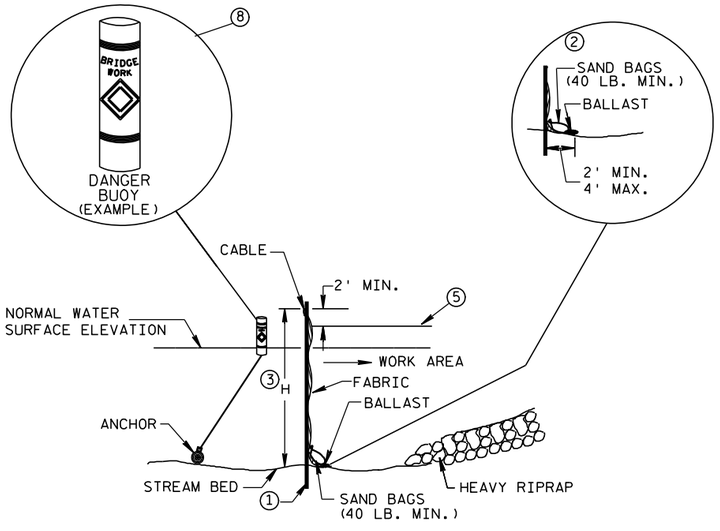

SECTION A-A

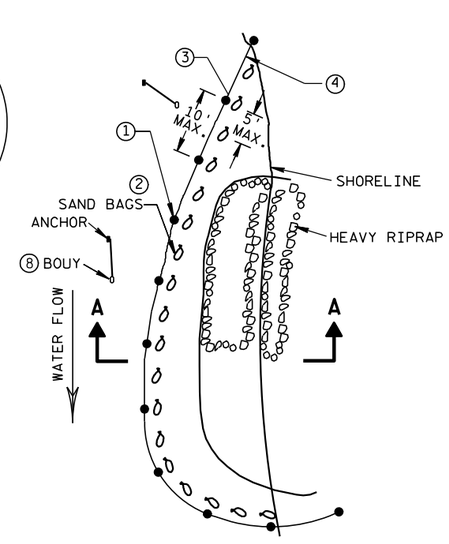

PLAN VIEW

TURBIDITY BARRIER STANDARD POST INSTALLATION

TURBIDITY BARRIER PLACEMENT DETAILS

GENERAL NOTES

DETAILS OF CONSTRUCTION, MATERIALS AND WORKMANSHIP NOT SHOWN ON THIS DRAWING SHALL CONFORM TO THE PERTINENT REQUIREMENTS OF THE STANDARD SPECIFICATIONS AND THE APPLICABLE SPECIAL PROVISIONS.

TURBIDITY BARRIER MAY BE REMOVED AT THE ENGINEERS DISCRETION, WHEN PERMANENT EROSION CONTROL MEASURES HAVE BEEN ESTABLISHED.

① DRIVEN STEEL POSTS, PIPES, OR CHANNELS. LENGTH SHALL BE SUFFICIENT TO SECURELY SUPPORT BARRIER AT HIGH WATER ELEVATIONS.

② SANDBAGS TO BE USED AS ADDITIONAL BALLAST WHEN ORDERED BY THE ENGINEER TO MEET ADVERSE FIELD CONDITIONS. SPACE AS APPROPRIATE FOR SITE CONDITIONS.

③ WHEN BARRIER HEIGHT, H, EXCEEDS 8 FT., POST SPACING MAY NEED TO BE DECREASED.

④ IN WATERWAYS SUBJECT TO FLUCTUATING WATER ELEVATIONS, PROVISIONS SHOULD BE MADE TO ALLOW THE WATER TO EQUALIZE ON EACH SIDE OF THE BARRIER. THIS MAY BE ACCOMPLISHED BY LEAVING A PORTION OF THE BARRIER OPEN ON THE UPSTREAM END.

⑤ ESTIMATED HIGH WATER ELEVATION DURING CONSTRUCTION PERIOD. MIMIMUM BARRIER HEIGHT SHALL BE 2'GREATER THAN EITHER THE 02 ELEVATION OR THE ESTIMATED HIGH WATER ELEVATION DURING CONSTRUCTION, WICHEVER IS GREATER.

⑥ FLOAT ALTERNATIVE WILL ONLY BE ALLOWED WITH WRITTEN APPROVAL OF THE ENGINEER, AND IS MEANT FOR LOCATIONS WHERE BED ROCK PREVENTS THE INSTALLATION OF POSTS.

⑦ ALLOW SUFFICIENT SLACK VERTICALLY AND HORIZONTALLY SO THAT SEDIMENT BUILD UP WILL NOT SEPARATE OR LOWER THE TURBIDITY BARRIER.

⑧ USE AS DIRECTED BY COAST GUARD OR DNR PERMIT WHEN WORKING IN NAVIGABLE WATERWAYS.

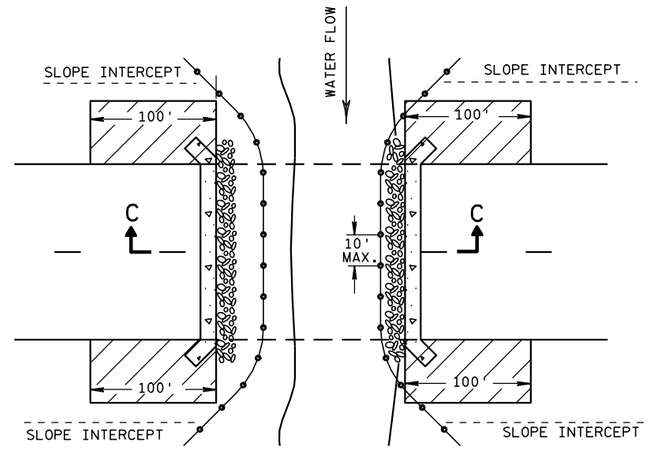

PLAN VIEW

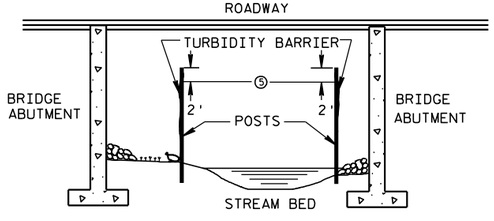

SECTION C-C

TURBIDITY BARRIER DETAIL SHOWING TYPICAL PLACEMENT AT STRUCTURES

TURBIDITY BARRIER

STATE OF WISCONSIN
DEPARTMENT OF TRANSPORTATION

APPROVED
6/04/02 DATE
/S/ Beth Cannestra CHIEF ROADWAY DEVELOPMENT ENGINEER
FHWA

6

S.D.D. 8 E 11-2

6

S.D.D. 8 E 11-2

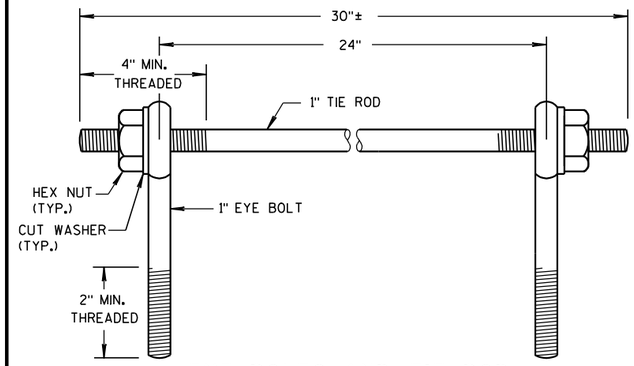

EYE BOLTS AND TIE ROD

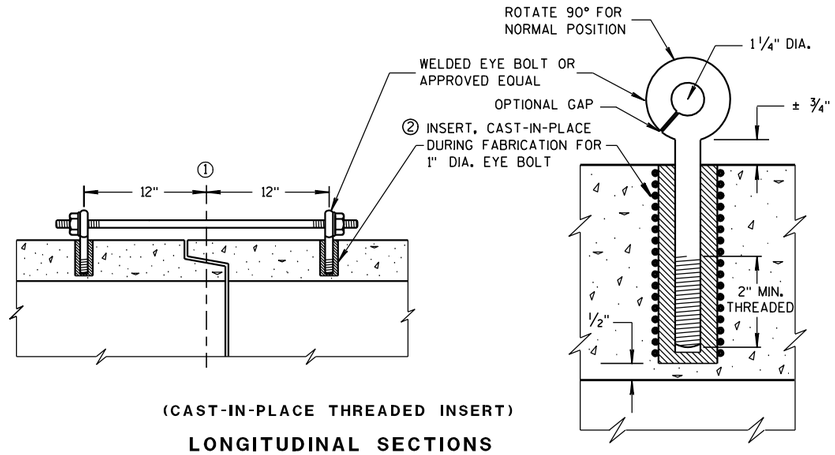

(CAST-IN-PLACE THREADED INSERT)

LONGITUDINAL SECTIONS

EYE BOLT AND TIE ROD ASSEMBLY (ALTERNATE NO. 1)

GENERAL NOTES

DETAILS OF CONSTRUCTION, MATERIALS, AND WORKMANSHIP NOT SHOWN ON THIS DRAWING SHALL CONFORM TO THE PERTINENT REQUIREMENTS OF THE STANDARD SPECIFICATIONS AND APPLICABLE SPECIAL PROVISIONS.

CONCRETE CULVERT AND STORM SEWER PIPE SHALL BE TIED TOGETHER IN THE MANNER ILLUSTRATED BY THIS DETAIL AT LOCATIONS DESIGNATED IN THE STANDARD SPECIFICATIONS AND THE PLAN. THE CONTRACTOR MAY USE EITHER ALTERNATE 1, 2 OR 3 FOR DRAINAGE STRUCTURES. ONLY ALTERNATE 1 AND 3 MAY BE USED FOR CATTLE PASSES, UNLESS OTHERWISE STATED IN THE CONTRACT. THE MATERIALS, FABRICATION AND WORK NECESSARY TO TIE THE PIPE BY THIS DETAIL WILL BE CONSIDERED INCIDENTAL TO THE PIPE AND APRON ENDWALLS IF REQUIRED.

DETAILED DRAWINGS FOR PROPOSED ALTERNATE DESIGNS FOR JOINT TIES SHALL BE SUBMITTED TO THE ENGINEER FOR APPROVAL.

JOINT TIES TO BE HOT-DIP GALVANIZED PER ASTM A 153.

① ℄ OF TONGUE AND GROOVE OR BELL AND SPIGOT JOINTS.

② THE INSIDE OF THE THREADED INSERTS SHALL BE CLEAN TO ALLOW THE INSERTION OF THREADED EYE BOLTS.

③ HOLES SHALL BE CAST-IN-PLACE OR DRILLED 12 INCHES FROM ℄ OF TONGUE AND GROOVE.

④ BOLT PROJECTION INSIDE OF PIPE SHALL NOT EXCEED 2 INCHES.

⑤ OPENING TO BE ROD DIAMETER PLUS 1 INCH.

⑥ LENGTH ADEQUATE TO EXTEND TO WITHIN 1/2 INCH OF THE INNER SURFACE OF THE PIPE.

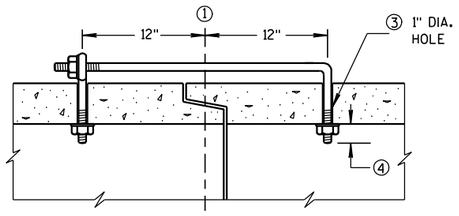

(TONGUE & GROOVE PIPE)

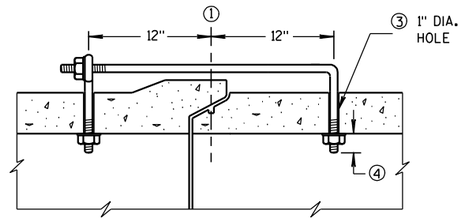

(MODIFIED BELL PIPE)

LONGITUDINAL SECTION

EYE BOLT DIMENSION TABLE

PIPE SIZE	L = LENGTH	
	TONGUE & GROOVE PIPE	MODIFIED BELL PIPE
18" TO 24"	4 1/2"	6 1/4"
30"	5"	7"
36"	5 1/2"	7"
42"	6"	
48"	6 1/2"	
60"	7 1/2"	
66"	8"	

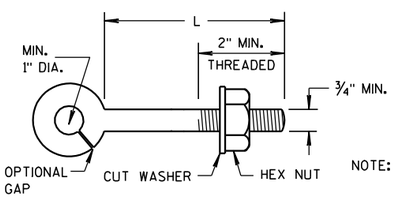

NOTE:

EYE BOLT

NOTE: TWO EYE BOLTS MAY BE USED WITH A 30" LONG THREADED ROD IN LIEU OF THE 90° BENT TIE ROD.

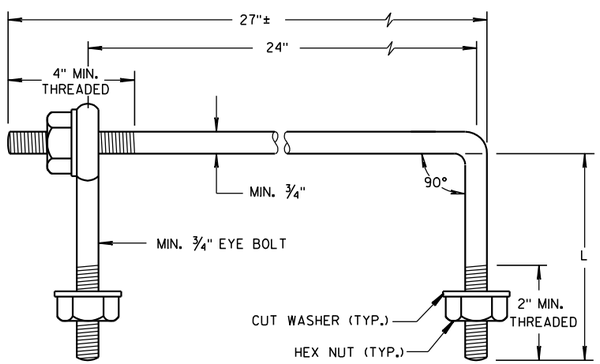

EYE BOLT AND TIE ROD

(JOINT TIES FOR 18" TO 66" DIA. CONCRETE PIPE)

EYE BOLT AND TIE ROD ASSEMBLY (ALTERNATE NO. 2)

ADJUSTABLE TIE ROD TABLE

PIPE DIAMETER	TIE ROD DIAMETER	D	L_1	N
12-60	5/8	5/8	5	1/2
66-84	3/4	3/4	5	1/2
90-108	1	1	7	1 1/16

DIMENSIONS SHOWN ARE IN INCHES

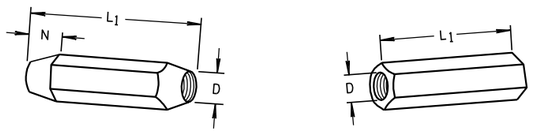

TAPERED PLAIN

RIGHT AND LEFT THREADS

SLEEVE NUTS

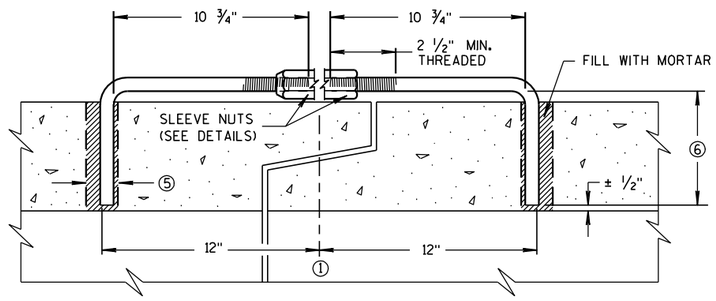

LONGITUDINAL SECTION

(JOINT TIES FOR 12" TO 108" DIA. CONCRETE PIPE)

ADJUSTABLE TIE ROD (ALTERNATE NO. 3)

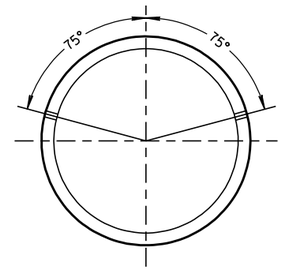

PLACEMENT OF (2) CAST-IN-PLACE INSERTS OR HOLES DURING FABRICATION FOR PIPE SECTIONS REQUIRING TIE RODS

TRANSVERSE SECTION

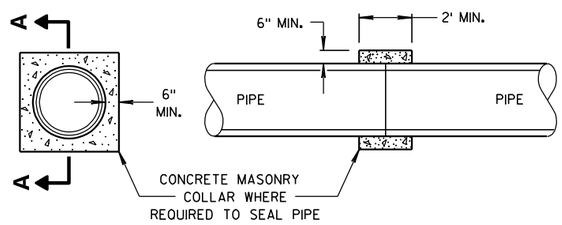

SECTION A-A

CONCRETE COLLAR DETAIL

JOINT TIES FOR CONCRETE PIPE AND CONCRETE COLLAR DETAIL

STATE OF WISCONSIN
DEPARTMENT OF TRANSPORTATION

APPROVED
6/5/2012 — DATE
/S/ Jerry H. Zogg — ROADWAY STANDARDS ENGINEER
FHWA

6

S.D.D. 8 F 4-7

6

S.D.D. 8 F 4-7

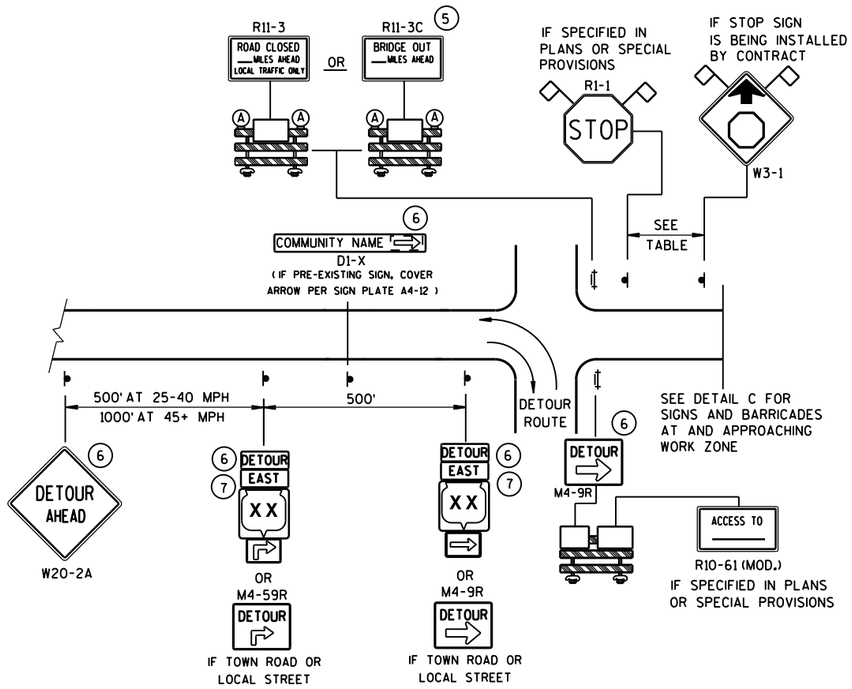

DETAIL A
MAINLINE CLOSURE WITH POSTED DETOUR

WORK ZONE GREATER THAN ½ MILE FROM DETOUR ROUTE (1000 FEET IF URBAN)

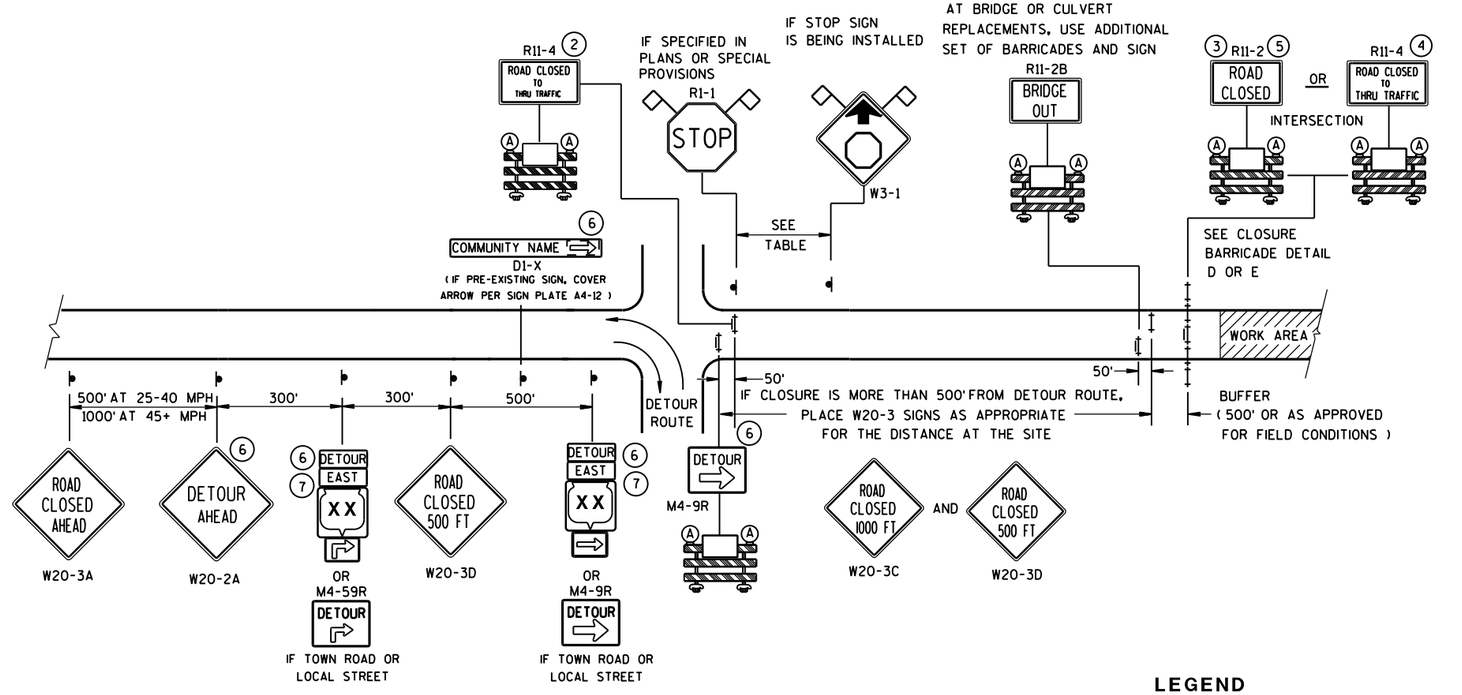

DETAIL B
MAINLINE CLOSURE WITH POSTED DETOUR

WORK ZONE LESS THAN ½ MILE FROM DETOUR ROUTE (1000 FEET IF URBAN)

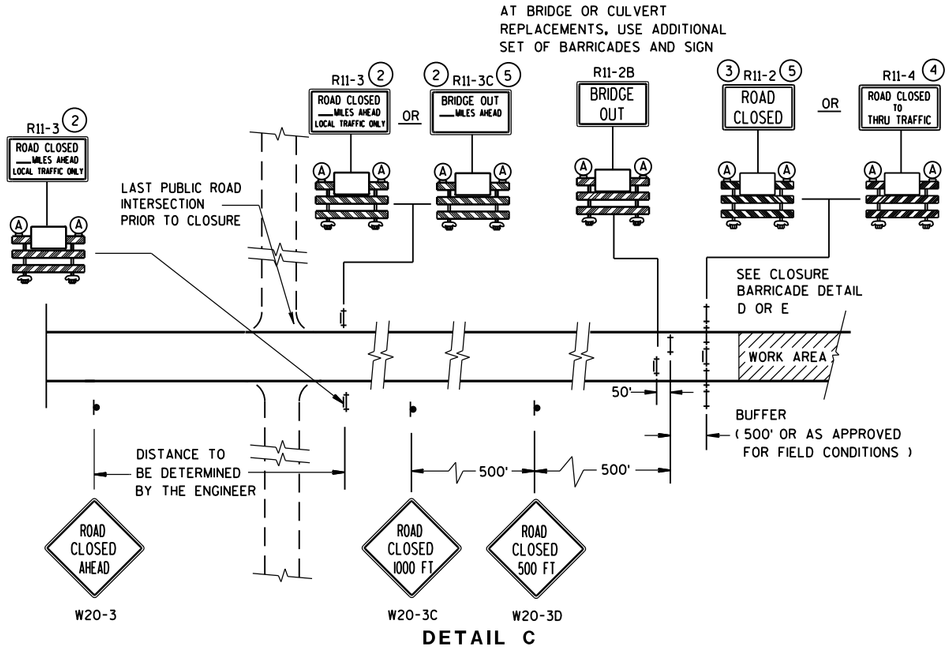

DETAIL C
MAINLINE CLOSURE, NO POSTED DETOUR

SPEED LIMIT (MPH)	"STOP AHEAD" ADVANCE WARNING DISTANCE (FT)
25	200
30	200
35	350
40	350
45	500
50	550
55	750

LEGEND

- SIGN ON PERMANENT SUPPORT
- TYPE III BARRICADE
- TYPE III BARRICADE WITH ATTACHED SIGN
- (A) TYPE "A" WARNING LIGHT (FLASHING)
- WORK AREA
- DETOUR / EAST — M4-8 / M3-X
- XX — M1-4; COUNTY XX — M1-5A; XX — M1-6
- M05-1 OR M06-1
- FLAGS, 16" X 16" MIN., (ORANGE)

SEE SDD 15C2-SHEET "**b**" FOR GENERAL NOTES AND FOOTNOTES (1) THROUGH (7)

BARRICADES AND SIGNS FOR MAINLINE CLOSURES

STATE OF WISCONSIN
DEPARTMENT OF TRANSPORTATION

Sept. 2015 — DATE
/S/ Peter Amakobe Atepe
STATEWIDE WORK ZONE TRAFFIC SAFETY ENGINEER
FHWA

S.D.D. 15 C 2-6a

S.D.D. 15 C 2-6a

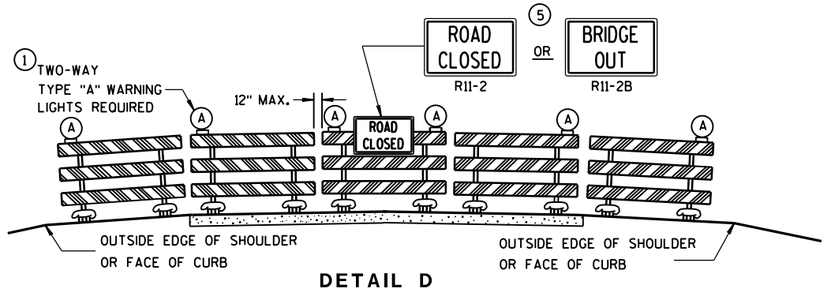

DETAIL D

ROAD CLOSURE BARRICADE DETAIL

APPROACH VIEW

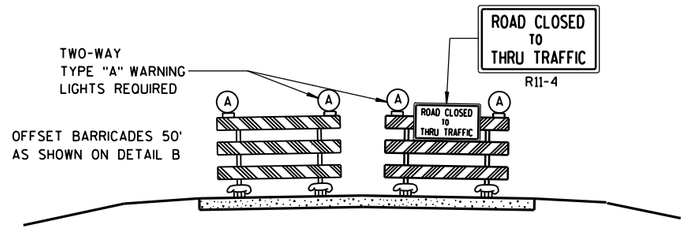

DETAIL E

LANE CLOSURE BARRICADE DETAIL

APPROACH VIEW

SEE SDD 15C2-SHEET "**a**" FOR LEGEND

GENERAL NOTES

THE EXACT NUMBER, LOCATION, AND SPACING OF ALL SIGNS AND BARRICADES SHALL BE ADJUSTED TO FIT FIELD CONDITIONS AS APPROVED BY THE ENGINEER.

ANY SIGNS TEMPORARY OR EXISTING, WHICH CONFLICT WITH TRAFFIC CONTROL "IN USE" SHALL BE REMOVED OR COVERED AS NEEDED AND AS APPROVED BY THE ENGINEER.

THE SPACING BETWEEN TRAFFIC CONTROL SIGNS SHOULD BE ADJUSTED TO NOT CONFLICT WITH AND SHOULD PROVIDE A DESIRABLE MINIMUM OF 200 FEET CLEARANCE TO EXISTING SIGNS THAT WILL REMAIN IN PLACE.

BARRICADES THAT MUST BE MOVED FOR A WORK OPERATION SHALL BE IMMEDIATELY RE-ESTABLISHED UPON COMPLETION OF THE OPERATION OR, FOR CONTINUING OPERATIONS, AT THE END OF EACH WORKING DAY.

SIGNS THAT WILL BE IN PLACE LESS THAN 7 CONTINUOUS DAYS AND NIGHTS MAY BE MOUNTED ON PORTABLE SUPPORTS.

ALL TYPE III BARRICADES SHALL HAVE RAILS REFLECTORIZED ON BOTH FACES. STRIPES SHALL BE PROPERLY SLOPED DOWN TOWARD THE TRAFFIC SIDE OR AS SHOWN IN THE ROAD CLOSURE BARRICADE DETAIL D FOR FULL ROAD CLOSURES.

TYPE "A" LOW-INTENSITY FLASHING WARNING LIGHTS SHALL BE VISIBLE ON BOTH SIDES OF THE BARRICADE.

THE R11-2, R11-3, M4-9, R11-4 AND R10-61 SIGNS PLACED ON BARRICADES SHALL COVER NO MORE THAN THE TOP RAIL. THE SIGNS SHALL NOT COVER ANY PORTION OF THE MIDDLE OR BOTTOM RAILS.

"WO AND "MO" SIGNS ARE THE SAME AS "W" AND "M" SIGNS EXCEPT THE BACKGROUND IS ORANGE.

ALL SIGNS SHALL BE 48" X 48" UNLESS OTHERWISE NOTED BELOW:
- R11-2 SHALL BE 48" X 30".
- R11-3, R11-4 AND R10-61 SHALL BE 60" X 30".
- M4-9 SHALL BE 30" X 24".
- M3-X SHALL BE 24" X 12". (36" X 18" IF NEEDED TO MATCH EXISTING SIGNS.)
- M4-8 SHALL BE 24" X 12". (30" X 15" IF NEEDED TO MATCH EXISTING SIGNS.)
- M1-4, M1-5A, AND M1-6 SHALL BE 24" X 24". (36" X 36" IF NEEDED TO MATCH EXISTING SIGNS.)
- M05-1 AND M06-1 SHALL BE 21" X 21". (30" X 30" IF NEEDED TO MATCH EXISTING SIGNS.)
- D1-X SHALL BE AS SHOWN ON SPECIFIC PROJECT SIGNING DETAIL SHEETS.
- R1-1 SHALL BE 36" X 36".

(1) TWO WARNING LIGHTS SHALL BE PROVIDED ON THE CENTER BARRICADE AND A MINIMUM OF ONE WARNING LIGHT SHALL BE PROVIDED ON EACH OF THE OTHER BARRICADES WITHIN THE ROADWAY LIMITS. SPACING OF THE WARNING LIGHTS SHALL BE UNIFORM TO THE EDGE OF ROADWAY AS SHOWN (APPROX. 8-FOOT LIGHT SPACING).

(2) THESE SIGNS AND BARRICADES ARE NOT REQUIRED IF ROAD CLOSURE BEGINS AT INTERSECTION.

(3) FOR ROAD CLOSURE WITHOUT LOCAL ACCESS TO PROJECT, SEE ROAD CLOSURE BARRICADE DETAIL D.

(4) FOR ROAD CLOSURE WITH LOCAL ACCESS TO PROJECT, SEE LANE CLOSURE BARRICADE DETAIL E.

(5) FOR BRIDGE OR CULVERT REPLACEMENTS, SUBSTITUTE "BRIDGE OUT" INSTEAD OF "ROAD CLOSED" ON R11-2 AND R11-3 SIGNS.

(6) INSTALL DETOUR AND COMMUNITY GUIDE SIGNS AND ARROWS ONLY IF SPECIFIED IN THE CONTRACT. IF THERE ARE EXISTING ROUTE MARKER ASSEMBLIES THAT WILL REMAIN IN PLACE, ADJUST THE LOCATION OF THE DETOUR ROUTE SIGNS TO CORRESPOND WITH THE EXISTING ASSEMBLIES. MODIFY EXISTING SIGNS WHERE POSSIBLE. SEE SPECIFIC PROJECT DETOUR SIGNING DETAIL SHEETS. IF DETOUR SIGNS ARE BEING INSTALLED BY OTHERS, PLACE THE CONTRACTED TRAFFIC CONTROL SIGNS TO ALLOW FOR PLACEMENT OF ALL WARNING, DETOUR AND GUIDE SIGNS AS SHOWN.

(7) "EAST" CARDINAL DIRECTION MARKERS AND RIGHT TURN ARROWS ARE SHOWN. USE OTHER CARDINAL DIRECTIONS AND ARROWS AS APPROPRIATE.

BARRICADES AND SIGNS FOR MAINLINE CLOSURES

STATE OF WISCONSIN
DEPARTMENT OF TRANSPORTATION

Sept. 2015 — DATE

/S/ Peter Amakobe Atepe
STATEWIDE WORK ZO SAFETY ENGI — FIC

FHWA

6

S.D.D. 15 C 2-6b

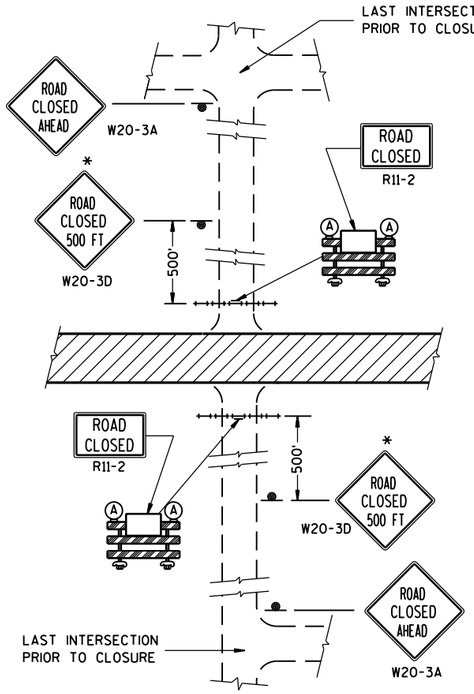

DETAIL 1

(NO ACCESS TO PROJECT)

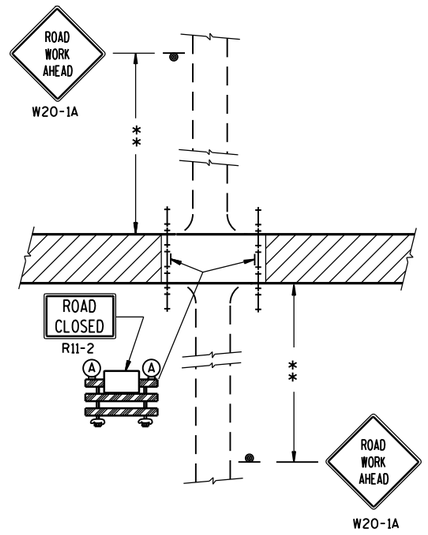

DETAIL 2

(PUBLIC CROSS-TRAFFIC MAINTAINED.
NO ACCESS TO PROJECT).

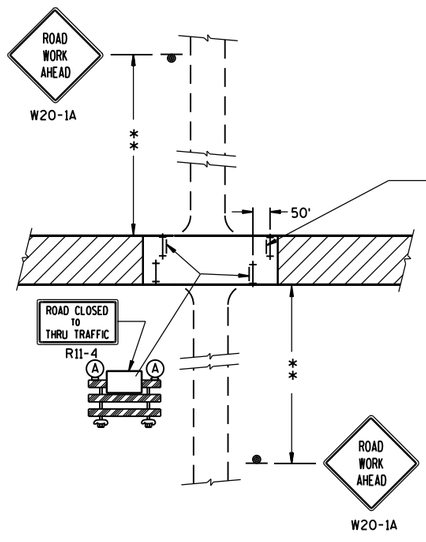

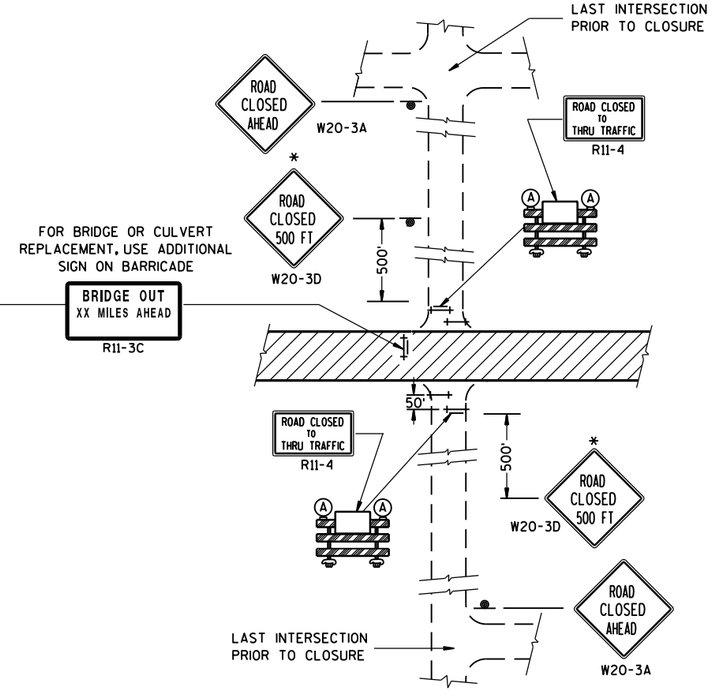

DETAIL 3

(PUBLIC CROSS-TRAFFIC MAINTAINED. CONTRACTOR, LOCAL BUSINESS AND RESIDENT ACCESS).

DETAIL 4

(CONTRACTOR, LOCAL BUSINESS AND RESIDENT ACCESS TO PROJECT)

GENERAL NOTES

THE EXACT NUMBER, LOCATION, AND SPACING OF ALL SIGNS AND BARRICADES SHALL BE ADJUSTED TO FIT FIELD CONDITIONS AS APPROVED BY THE ENGINEER.

ANY SIGNS TEMPORARY OR EXISTING, WHICH CONFLICT WITH TRAFFIC CONTROL "IN USE" SHALL BE REMOVED OR COVERED AS NEEDED AND AS APPROVED BY THE ENGINEER.

THE SPACING BETWEEN TRAFFIC CONTROL SIGNS SHOULD BE ADJUSTED TO NOT CONFLICT WITH AND SHOULD PROVIDE A DESIRABLE MINIMUM OF 200 FEET CLEARANCE TO EXISTING SIGNS THAT WILL REMAIN IN PLACE.

IF A "STOP" SIGN MUST BE REMOVED FOR A WORK OPERATION, A TEMPORARY "STOP" SIGN SHALL BE PLACED PRIOR TO THE SIGN REMOVAL, OR A FLAGGER SHALL BE PROVIDED UNTIL THE SIGN IS RE-ESTABLISHED.

BARRICADES THAT MUST BE MOVED FOR A WORK OPERATION SHALL BE IMMEDIATELY RE-ESTABLISHED UPON COMPLETION OF THE OPERATION OR, FOR CONTINUING OPERATIONS, AT THE END OF EACH WORKING DAY.

SIGNS THAT WILL BE IN PLACE LESS THAN 7 CONTINUOUS DAYS AND NIGHTS MAY BE MOUNTED ON PORTABLE SUPPORTS.

ALL TYPE III BARRICADES SHALL HAVE RAILS REFLECTORIZED ON BOTH FACES. STRIPES SHALL BE PROPERLY SLOPED DOWN TOWARD THE TRAFFIC SIDE OR AS SHOWN IN THE ROAD CLOSURE BARRICADE DETAIL D FOR FULL ROAD CLOSURES.

TYPE "A" LOW-INTENSITY FLASHING WARNING LIGHTS SHALL BE VISIBLE ON BOTH SIDES OF THE BARRICADE.

THE R11-2, R11-3 AND R11-4 SIGNS PLACED ON BARRICADES SHALL COVER NO MORE THAN THE TOP RAIL. THE SIGNS SHALL NOT COVER ANY PORTION OF THE MIDDLE OR BOTTOM RAILS.

ALL SIGNS SHALL BE 48" X 48" UNLESS OTHERWISE NOTED BELOW:
R11-2 SHALL BE 48" X 30".
R11-4 AND R11-3 SHALL BE 60" X 30".

*OMIT THE "ROAD CLOSED 500 FT." SIGN IF THE LAST INTERSECTION IS 500 FT. OR LESS FROM THE WORK ZONE.

**500' MAX. OR AT LAST INTERSECTION WHICHEVER IS CLOSER.

LEGEND

- SIGN ON PERMANENT SUPPORT
- TYPE III BARRICADE
- TYPE III BARRICADE WITH ATTACHED SIGN
- (A) TYPE "A" WARNING LIGHT (FLASHING)
- WORK AREA

BARRICADES AND SIGNS FOR SIDEROAD CLOSURES

STATE OF WISCONSIN
DEPARTMENT OF TRANSPORTATION

APPROVED
Sept. 2015 — DATE
/S/ Peter Amakobe Atepe
STATEWIDE WORK ZO[illegible]FIC SAFETY ENGI[illegible]
FHWA

6

S.D.D. 15 C 3-3

6

S.D.D. 15 C 3-3

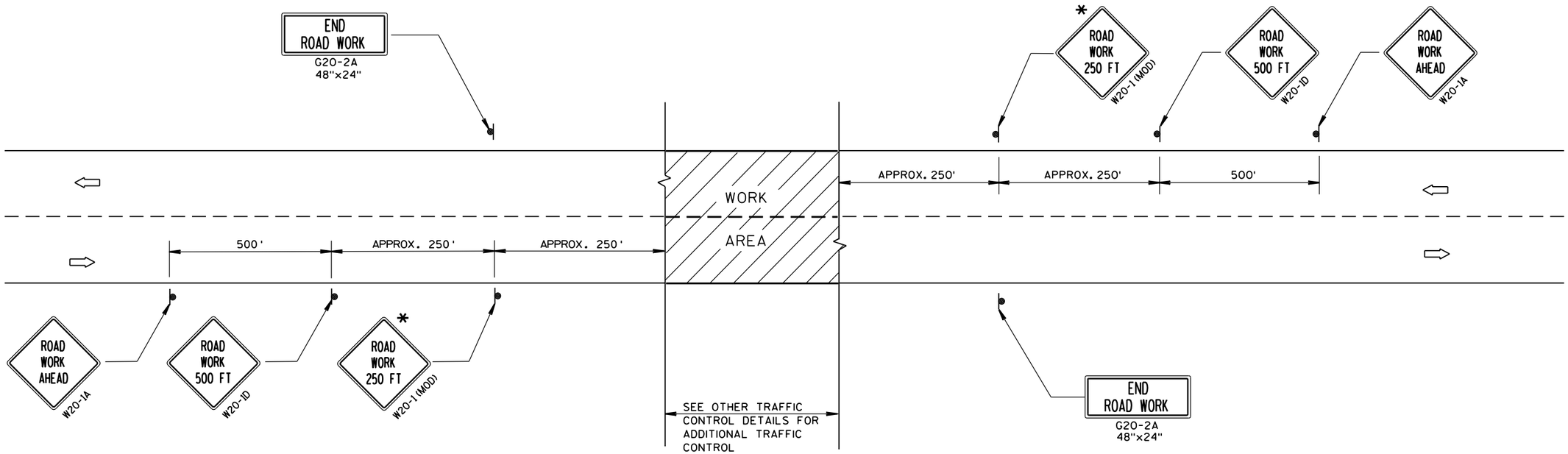

TYPICAL SIDEROAD APPROACH WARNING SIGN DETAIL

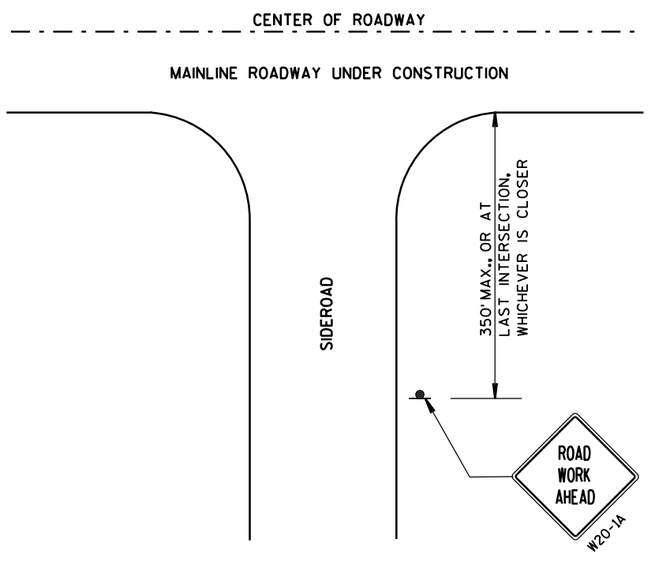

GENERAL NOTES

THE EXACT NUMBER, LOCATION, AND SPACING OF ALL SIGNS AND DEVICES SHALL BE ADJUSTED TO FIT FIELD CONDITIONS.

THE SPACING BETWEEN TRAFFIC CONTROL SIGNS SHOULD BE ADJUSTED TO NOT CONFLICT WITH AND SHOULD PROVIDE A DESIRABLE MINIMUM OF 200 FEET CLEARANCE TO EXISTING SIGNS THAT WILL REMAIN IN PLACE.

ALL SIGNS ARE 48"x48" UNLESS OTHERWISE NOTED. IF NECESSARY DUE TO SPACE CONSTRAINTS, 36"x36" SIGNS MAY BE USED INSTEAD OF 48"x48" SIGNS.

SIGNS THAT WILL BE IN PLACE LESS THAN 7 CONTINUOUS DAYS AND NIGHTS MAY BE MOUNTED ON PORTABLE SUPPORTS.

IF A "STOP" SIGN MUST BE REMOVED FOR A WORK OPERATION, A TEMPORARY "STOP" SIGN SHALL BE PLACED PRIOR TO THE SIGN REMOVAL, OR A FLAGGER SHALL BE PROVIDED UNTIL THE SIGN IS RE-ESTABLISHED.

* THE THIRD W20-1 SIGN IS REQUIRED ONLY IF THERE IS AN INTERSECTION BETWEEN THE "ROAD WORK 500 FT" SIGN AND THE WORK ZONE. ADJUST THE PLACEMENT OF THIS SIGN BASED ON INTERSECTION LOCATION AND OTHER FIELD CONDITIONS.

LEGEND

- SIGN ON PERMANENT SUPPORT
- DIRECTION OF TRAFFIC
- WORK AREA

TRAFFIC CONTROL, ADVANCE WARNING SIGNS 40 M.P.H. OR LESS TWO-WAY UNDIVIDED ROAD OPEN TO TRAFFIC

STATE OF WISCONSIN
DEPARTMENT OF TRANSPORTATION

APPROVED
Sept. 2015 — DATE
/S/ Peter Amakobe Atepe
STATEWIDE WORK ZOI SAFETY ENGIN — IC
FHWA

6

S.D.D. 15 C 5-3

GENERAL NOTES

DETAILS OF INSTALLATION, MATERIALS AND WORKMANSHIP NOT SHOWN ON THIS DRAWING SHALL CONFORM TO THE PERTINENT REQUIREMENTS OF THE STANDARD SPECIFICATIONS AND APPLICABLE SPECIAL PROVISIONS.

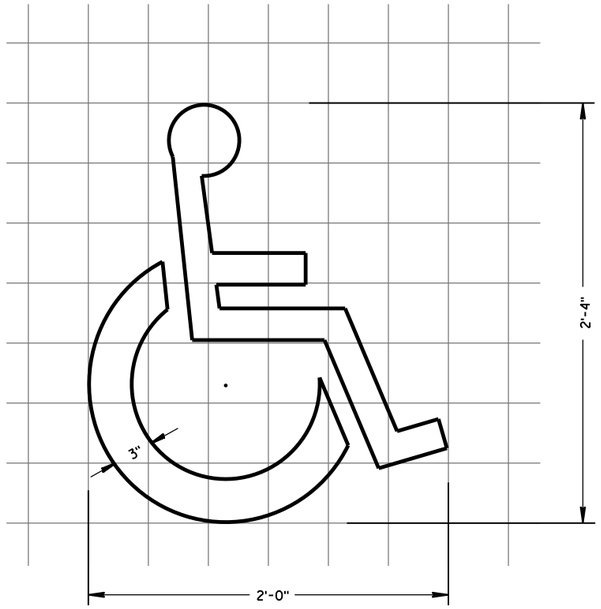

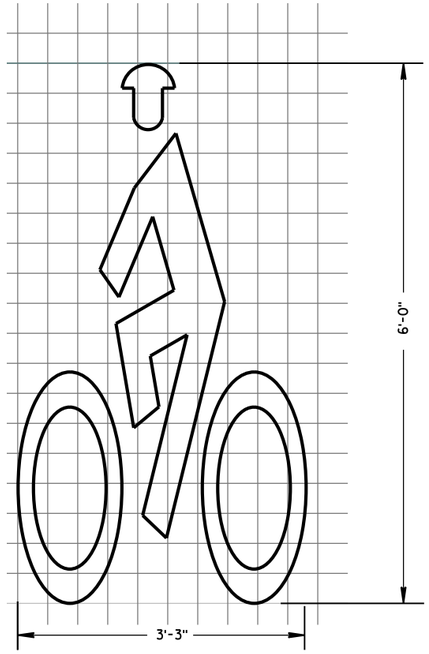

BIKE CROSSING SYMBOL

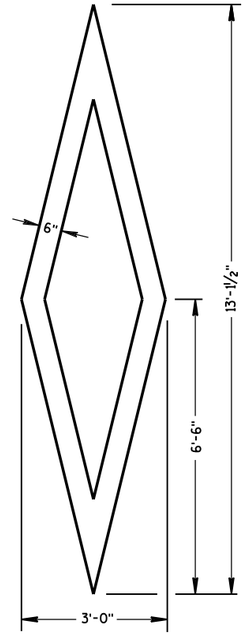

PREFERENTIAL LANE SYMBOL

PAVEMENT MARKING SYMBOLS

STATE OF WISCONSIN
DEPARTMENT OF TRANSPORTATION

APPROVED

4/18/16	/S/ Matthew R. Rauch
DATE	STATE SIGNING AND MARK EER

FHWA

6

S.D.D. 15 C 7-13a

GENERAL NOTES

DETAILS OF INSTALLATION, MATERIALS AND WORKMANSHIP NOT SHOWN ON THIS DRAWING SHALL CONFORM TO THE PERTINENT REQUIREMENTS OF THE STANDARD SPECIFICATIONS AND APPLICABLE SPECIAL PROVISIONS.

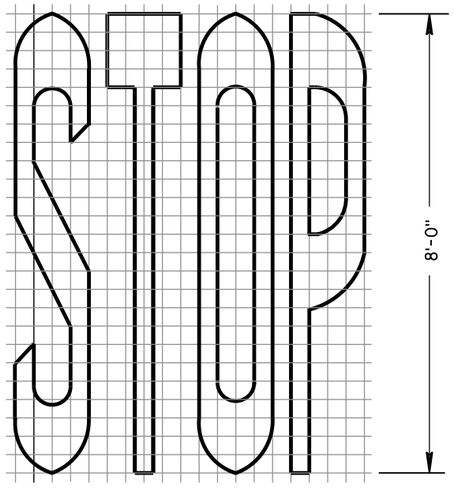

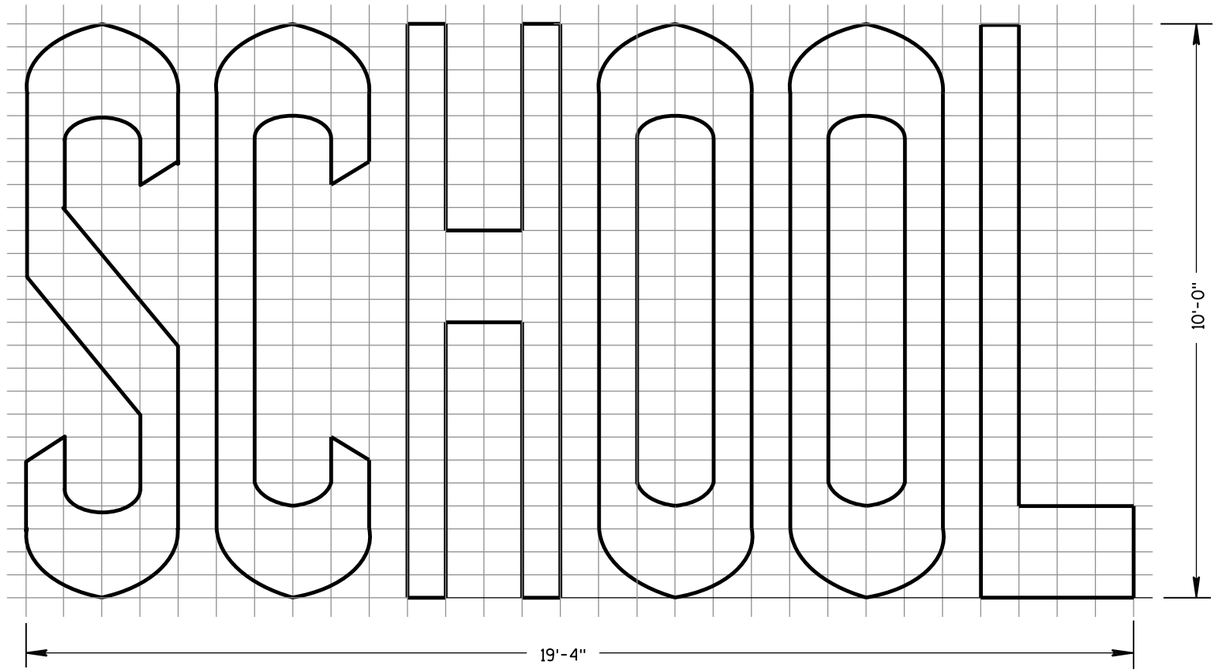

TWO-LANE

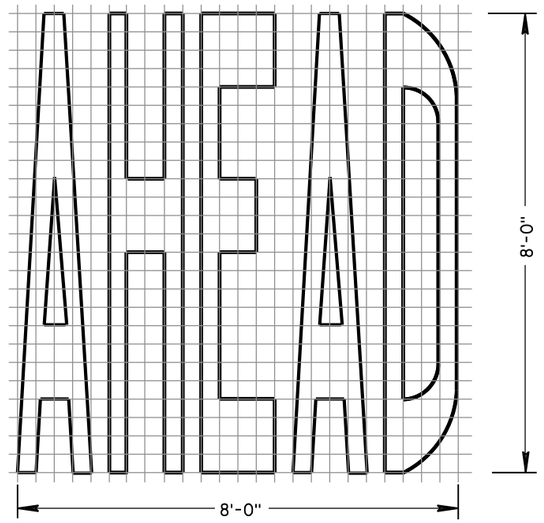

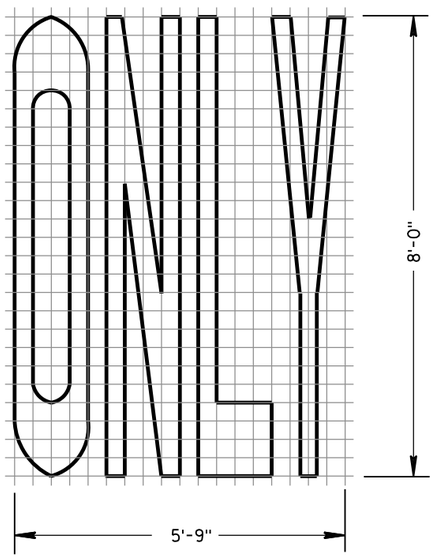

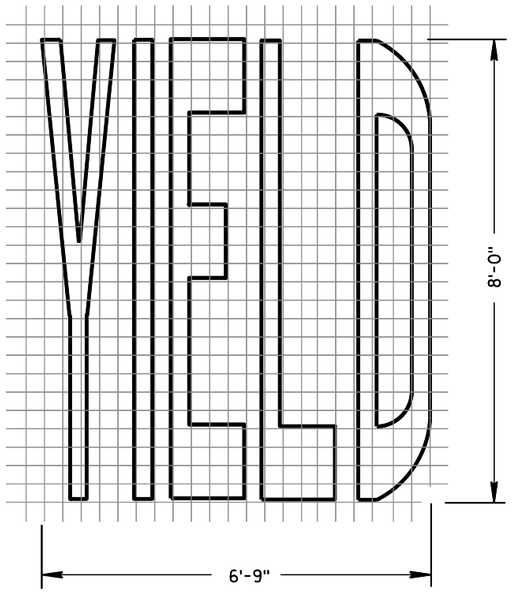

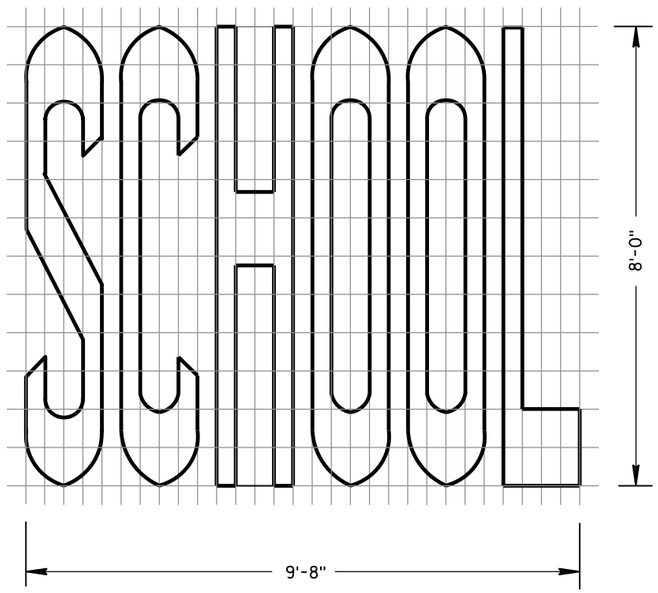

SINGLE-LANE

PAVEMENT MARKING WORDS

STATE OF WISCONSIN
DEPARTMENT OF TRANSPORTATION

APPROVED

4-18-16	/S/ Matthew R. Rauch	
DATE	STATE SIGNING AND MARK	EER

FHWA

6

S.D.D. 15 C 7-13b

6

S.D.D. 15 C 7-13b

GENERAL NOTES

DETAILS OF INSTALLATION, MATERIALS AND WORKMANSHIP NOT SHOWN ON THIS DRAWING SHALL CONFORM TO THE PERTINENT REQUIREMENTS OF THE STANDARD SPECIFICATIONS AND APPLICABLE SPECIAL PROVISIONS.

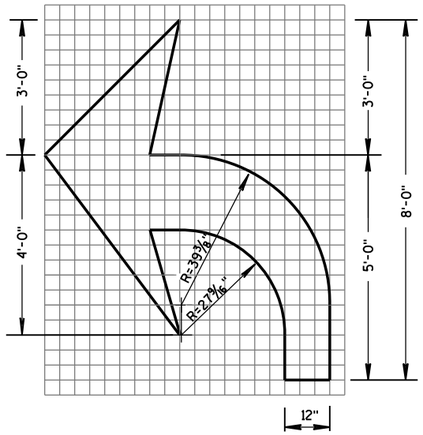

TYPE 2

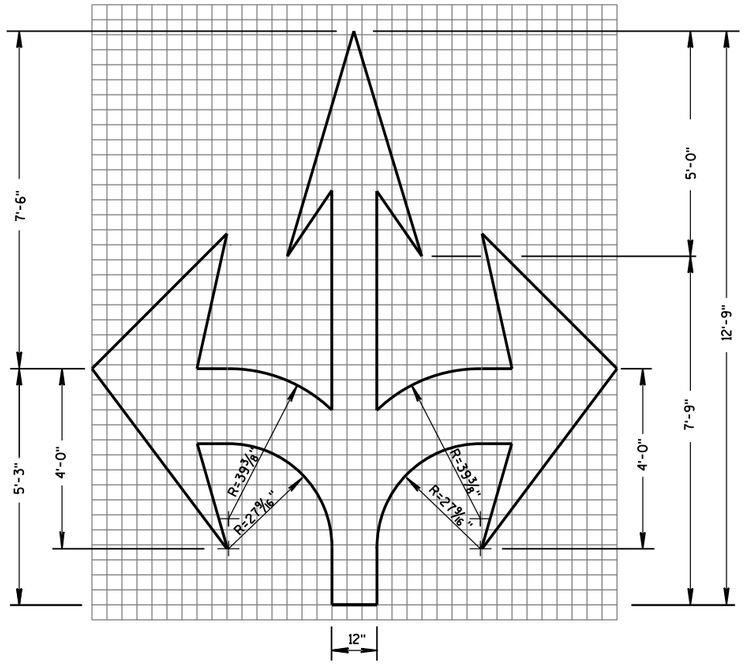

TYPE 6

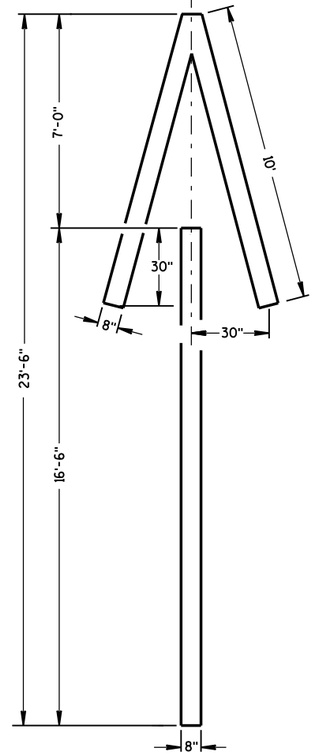

TYPE 4

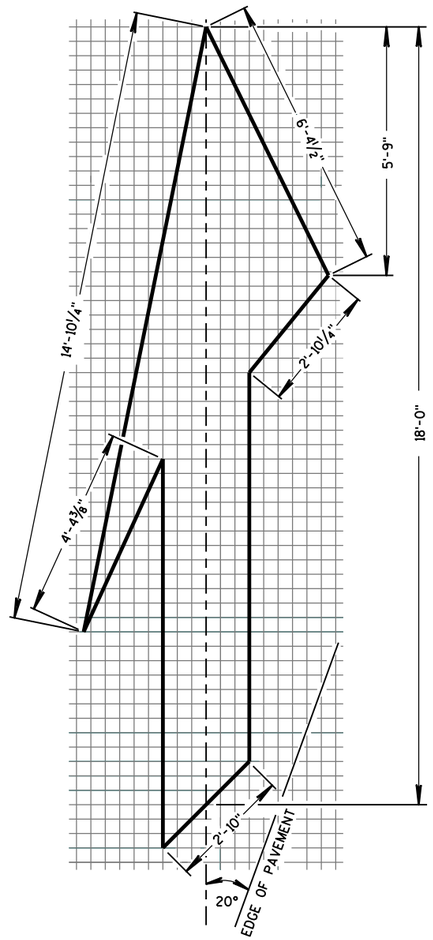

TYPE 5 LANE DROP ARROW

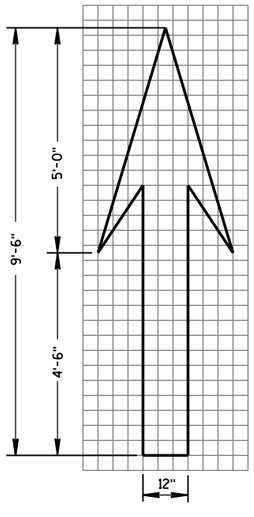

TYPE 1

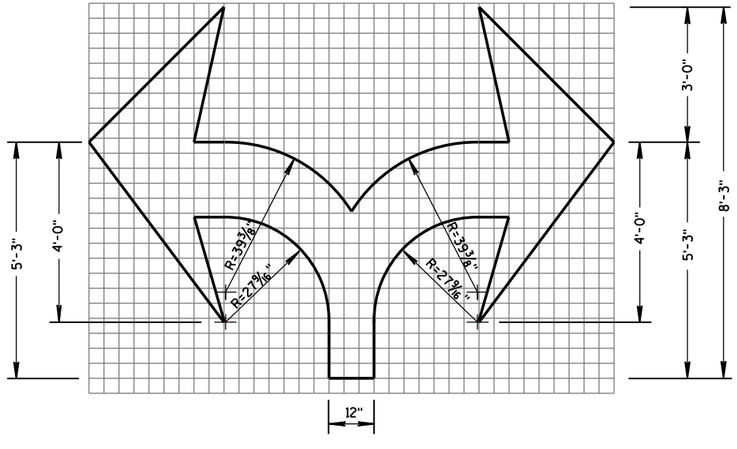

TYPE 7

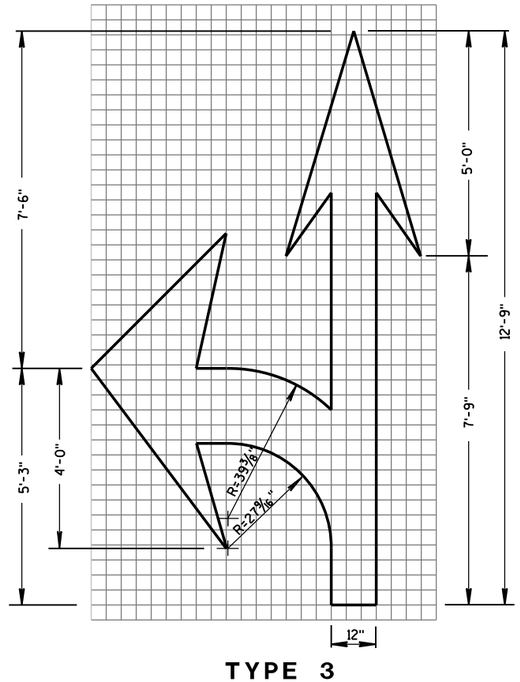

TYPE 3

PAVEMENT MARKING ARROWS

STATE OF WISCONSIN
DEPARTMENT OF TRANSPORTATION

APPROVED
4-18-16
DATE
/S/ Matthew R. Rauch
STATE SIGNING AND MAR
ENGINEER
FHWA

6

S.D.D. 15 C 7-13c

6

S.D.D. 15 C 7-13c

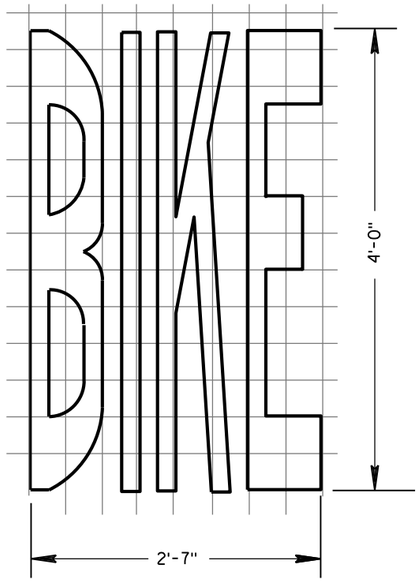

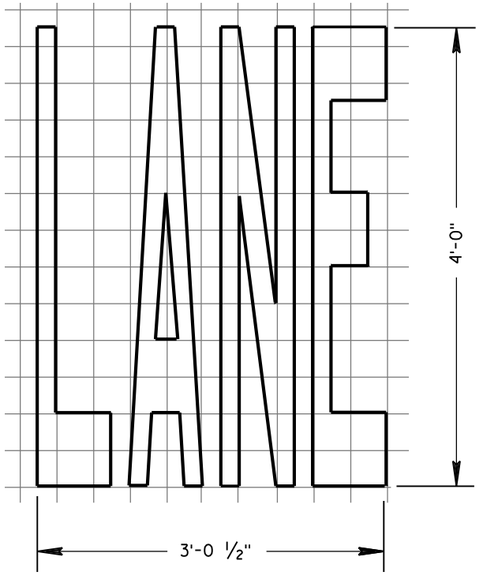

BIKE LANE WORDS

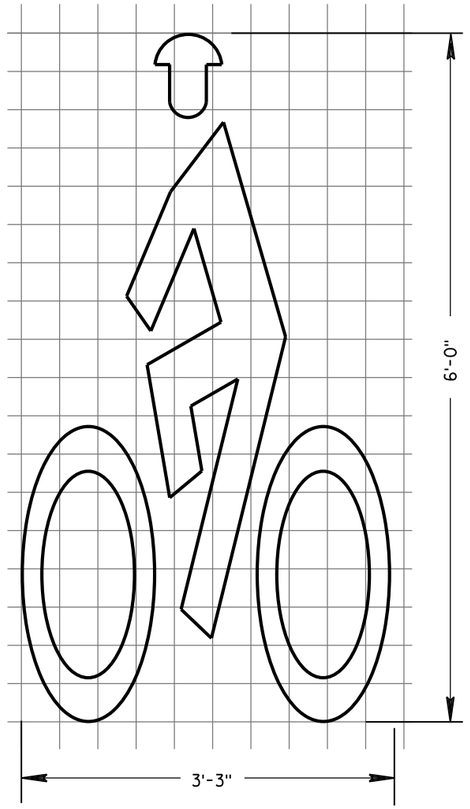

BIKE LANE SYMBOL

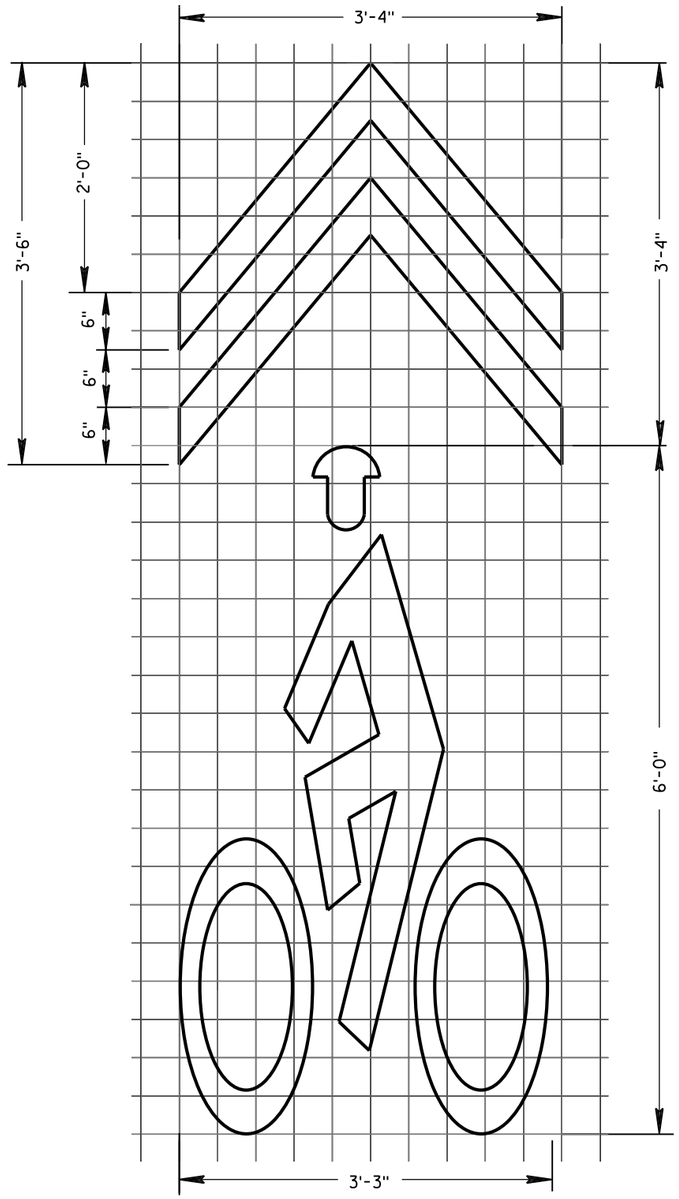

BIKE SYMBOL FOR SHARED LANE

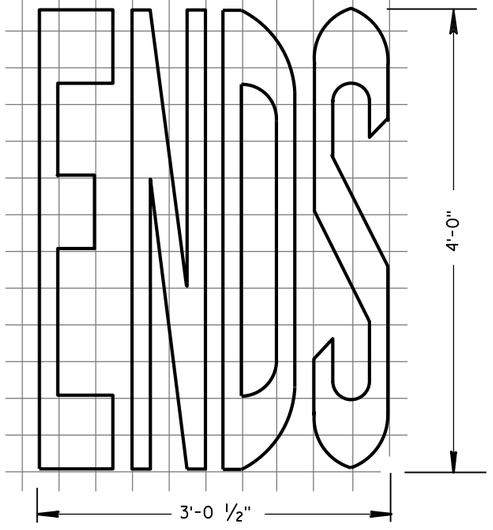

BIKE LANE WORDS

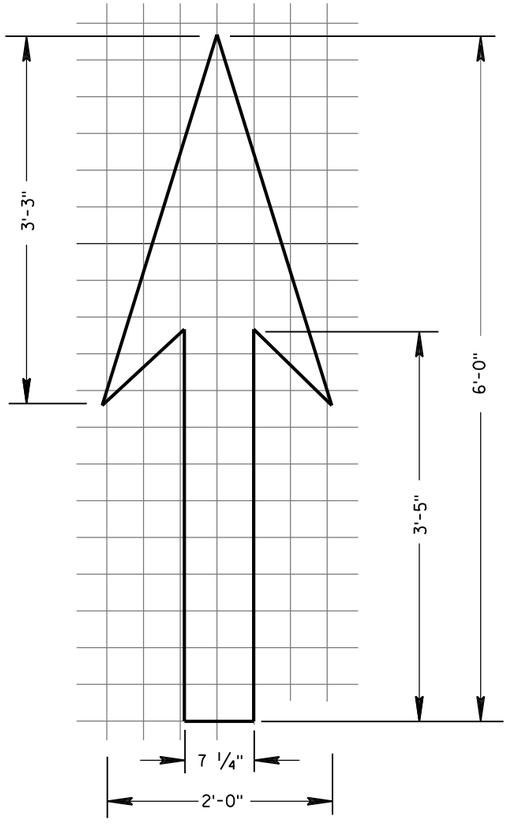

BIKE LANE ARROW

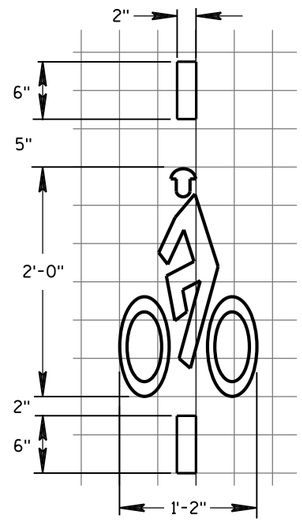

BICYCLE DETECTOR PAVEMENT MARKING

GENERAL NOTES

DETAILS OF INSTALLATION, MATERIALS AND WORKMANSHIP NOT SHOWN ON THIS DRAWING SHALL CONFORM TO THE PERTINENT REQUIREMENTS OF THE STANDARD SPECIFICATIONS AND APPLICABLE SPECIAL PROVISIONS.

PAVEMENT MARKING FOR BIKE LANES

STATE OF WISCONSIN
DEPARTMENT OF TRANSPORTATION

APPROVED

4-18-2016
DATE

/S/ Matthew R. Rauch
STATE SIGNING AND MARK ENGINEER

FHWA

6

S.D.D. 15 C 7-13e

6

S.D.D. 15 C 7-13e

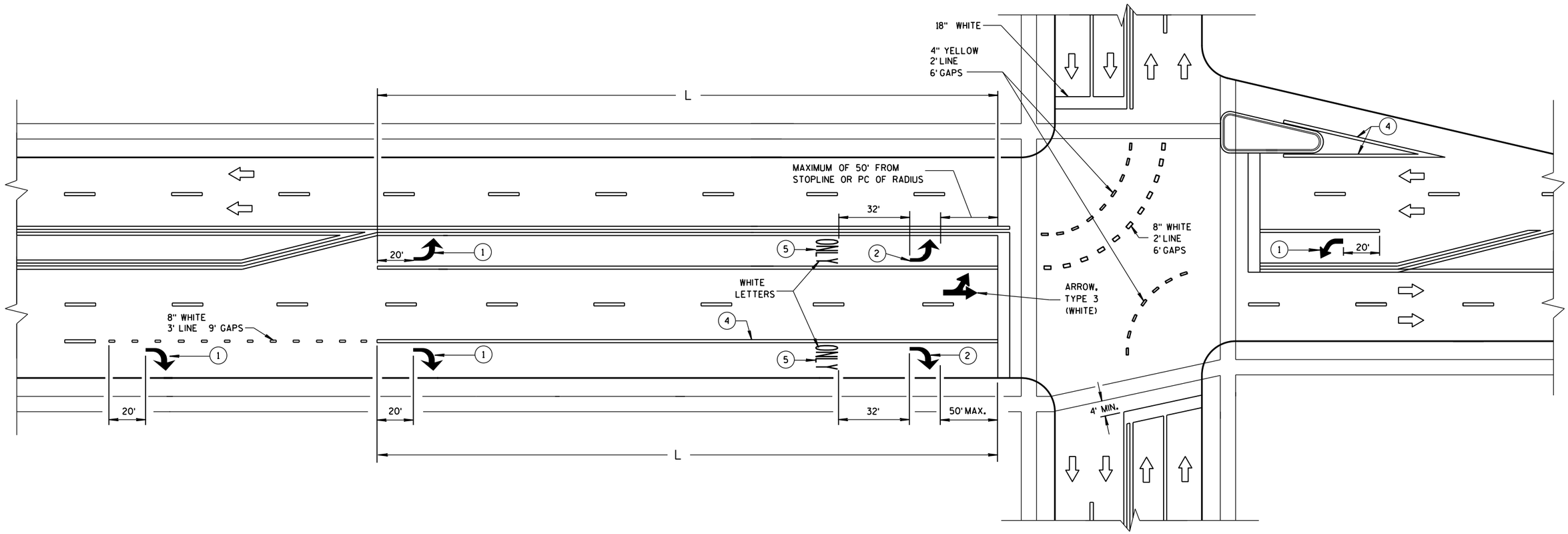

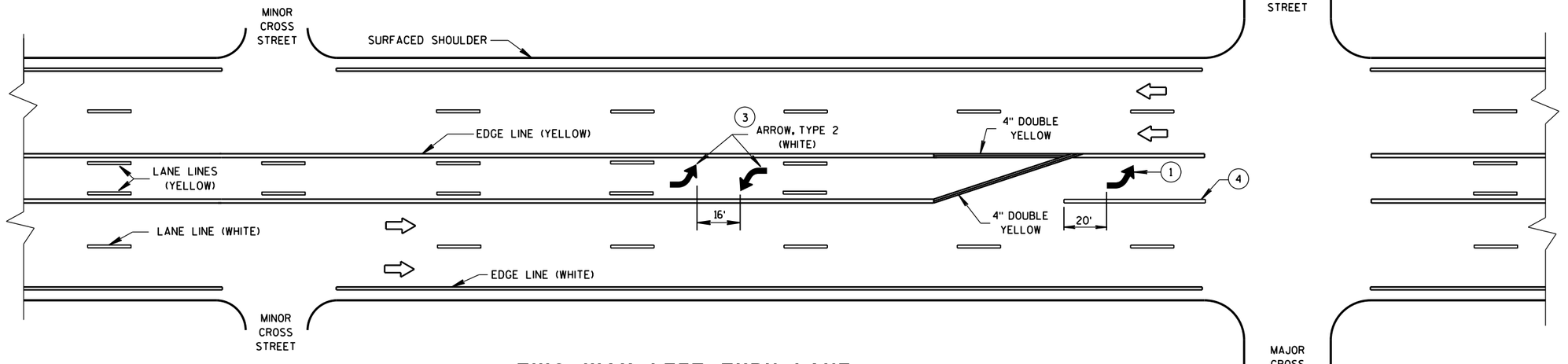

GENERAL NOTES

(1) REQUIRED ARROW, TYPE 2 (WHITE).

(2) REQUIRED ARROW, TYPE 2 (WHITE) WHEN L IS GREATER THAN 78 FEET AND LESS THAN OR EQUAL TO 166 FEET.

(3) A SET OF ARROWS IS REQUIRED EVERY 400 FEET OR NEAR INTERSECTIONS OR DRIVEWAYS WITH TURNING TRAFFIC.

(4) 8" WHITE

(5) REQUIRED WORD ONLY WHEN L IS GREATER THAN 166 FEET.

NOTE:
ARROW SYMBOL (⇨)
SHOWS DIRECTION OF TRAVEL

L = LENGTH OF TURN BAY

TWO WAY LEFT TURN LANE

PAVEMENT MARKING (TURN LANES)

STATE OF WISCONSIN
DEPARTMENT OF TRANSPOI

6

S.D.D. 15 C 8-17b

S.D.D. 15 C 8-17b

LEGEND

- SIGN ON PORTABLE OR PERMANENT SUPPORT
- DIRECTION OF TRAFFIC
- WORK AREA
- FLAGGER, EQUIPPED WITH STOP/SLOW PADDLE FASTENED ON SUPPORT STAFF

SIGN AND TEMPORARY RUMBLE STRIP ARRAY SPACING TABLE

SPEED LIMIT	SPACING A
25-35 MPH	200'
35-40 MPH	350'
45-55 MPH	500'

USE OF THE "BE PREPARED TO STOP" SIGN IS OPTIONAL. WHEN USED, THIS SIGN SHALL BE LOCATED BETWEEN THE W20-7A AND W20-4A SIGNS, USING SPACING A.

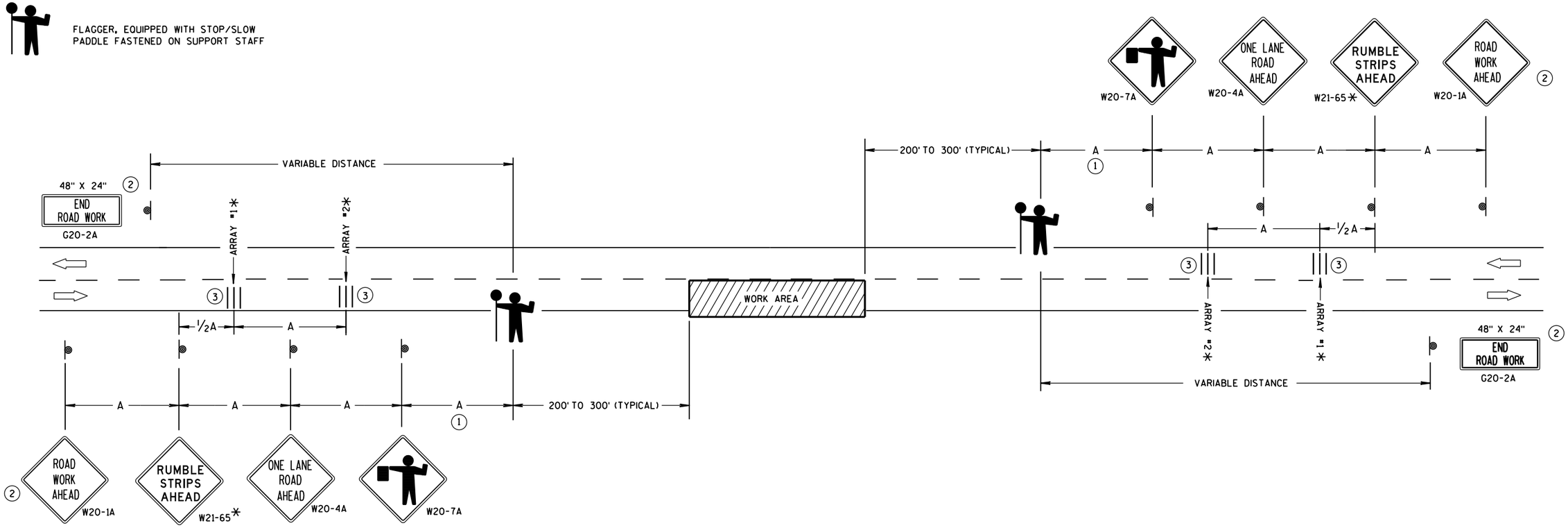

TRAFFIC CONTROL FOR LANE CLOSURE WITH FLAGGING OPERATION

GENERAL NOTES

DETAILS OF TRAFFIC CONTROL DEVICES AND INSTALLATION NOT SHOWN ON THIS DRAWING SHALL CONFORM TO THE PERTINENT REQUIREMENTS OF THE STANDARD SPECIFICATIONS, THE SPECIAL PROVISIONS, AND THE MANUAL ON UNIFORM TRAFFIC CONTROL DEVICES.

THE EXACT NUMBER, LOCATION AND SPACING OF ALL SIGNS AND DEVICES (AND THE LOCATION OF ALL FLAGGERS) SHALL BE ADJUSTED TO FIT FIELD CONDITIONS AS APPROVED BY THE ENGINEER.

THE FIRST ADVANCE WARNING SIGN SHOULD TYPICALLY BE LOCATED IN ADVANCE OF THE ANTICIPATED TRAFFIC BACKUP OR QUEUE.

"WO" SIGNS ARE THE SAME AS "W" SIGNS EXCEPT THE BACKGROUND IS ORANGE.

WHEN A SIDE ROAD OR RAMP INTERSECTS THE FACILITY ON WHICH THE WORK IS BEING PERFORMED, ADDITIONAL TRAFFIC CONTROLS SHALL BE PROVIDED AS SPECIFIED IN THE PLANS AND/OR THE SPECIAL PROVISIONS OR AS APPROVED BY THE ENGINEER.

INSTALL TEMPORARY RUMBLE STRIPS PER MANUFACTURER'S RECOMMENDATIONS.

PLACE ADVANCE SIGNING PRIOR TO INSTALLING TEMPORARY RUMBLE STRIPS.

ALL SIGNS ARE 48" X 48" UNLESS OTHERWISE NOTED.

FLAGGERS SHALL BE IN SIGHT OF EACH OTHER OR IN DIRECT COMMUNICATION AT ALL TIMES. THEY SHALL BE EQUIPPED WITH STOP/SLOW PADDLES FASTENED ON SUPPORT STAFFS. WHEN THE FLAGGING OPERATION IS NOT IN EFFECT, REMOVE TEMPORARY RUMBLE STRIPS PRIOR TO COVERING OR REMOVING ALL ADVANCE SIGNING.

* UTILIZE TEMPORARY RUMBLE STRIPS WHEN FLAGGING OPERATION IS ANTICIPATED TO BE STATIONARY IN EXCESS OF TWO HOURS.

(1) FOR A MOVING WORK OPERATION, SIGNING AND TEMPORARY RUMBLE STRIPS (IF USED) SHALL BE REESTABLISHED (AS SIMULTANEOUSLY AS PRACTICAL) AT APPROXIMATELY 3,500 FOOT INTERVALS IN THE MOVING WORK OPERATION OR AS APPROVED BY THE ENGINEER.

(2) SIGN NOT REQUIRED IF FLAGGING OPERATION OCCURS WITHIN A SIGNED ROAD WORK ZONE AREA.

(3) EACH TEMPORARY RUMBLE STRIP ARRAY CONSISTS OF THREE RUMBLE STRIPS SPACED ACCORDING TO MANUFACTURER'S RECOMMENDATION, PLACED TRANSVERSE ACROSS THE LANE AT LOCATIONS SHOWN.

TRAFFIC CONTROL FOR LANE CLOSURE WITH FLAGGING OPERATION

STATE OF WISCONSIN
DEPARTMENT OF TRANSPORTATION

APPROVED
December, 2016 — /S/ Andrew Heldtke
DATE — WORK ZONE ENG
FHWA

6
S.D.D. 15 C 12-5

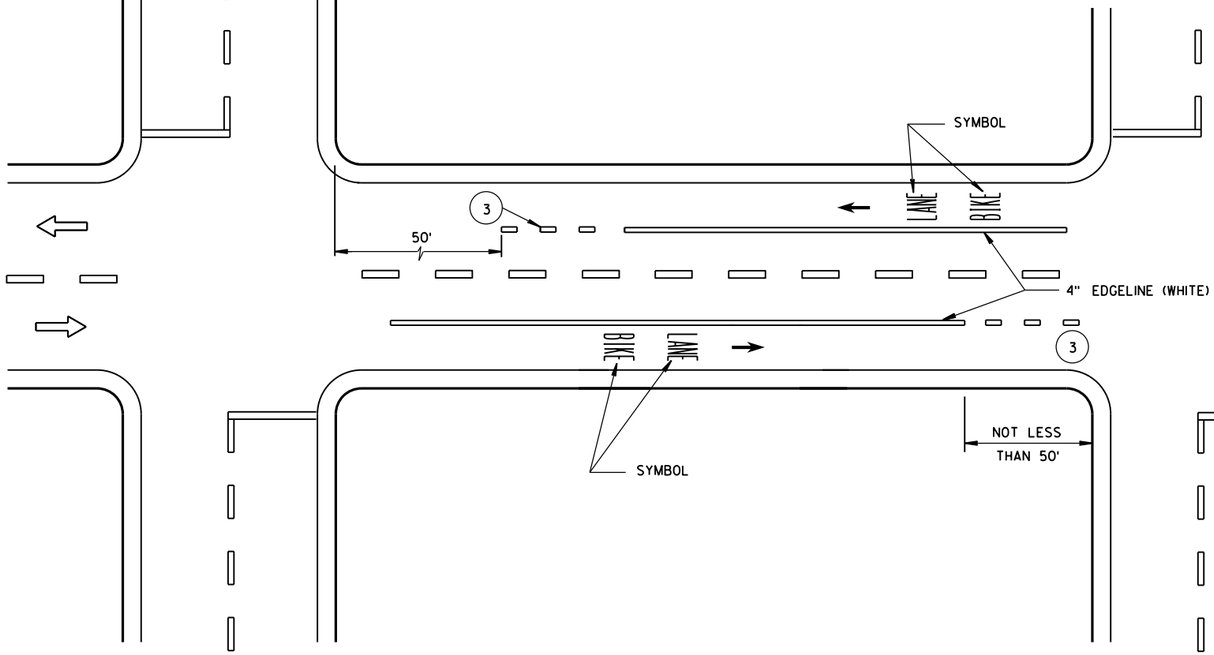

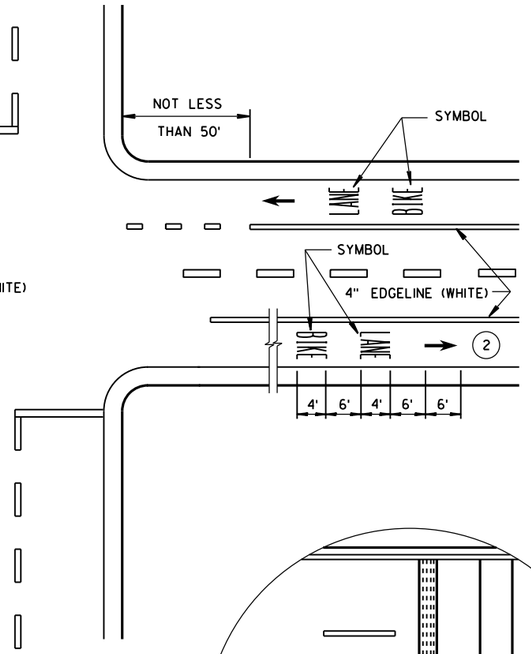

DESIGNATED BICYCLE LANE
NO PARKING

GENERAL NOTES

1. DETAILS OF CONSTRUCTION NOT SHOWN ON THIS DRAWING SHALL CONFORM TO STANDARD SPECIFICATIONS AND SPECIAL PROVISIONS.
2. MINIMUM OF ONE PER BLOCK. MAXIMUM OF 250 FEET.
3. DOTTED LINES (3'LINE, 9'GAP) SHOULD BE USED 50 FEET TO 200 FEET IN ADVANCE OF AN INTERSECTION WHERE THERE IS NO RIGHT TURN ONLY LANE AND THERE IS HEAVY RIGHT TURN TRAFFIC OR THERE IS A NEAR-SIDE BUS STOP. AT OTHER INTERSECTIONS WHERE RIGHT TURN TRAFFIC IS LIGHT TO MODERATE, A SOLID LINE CAN BE USED UP TO THE INTERSECTION.
4. IF SIGNED AND/OR MARKED AS A BICYCLE FACILITY INCLUDE SECOND LINE OF LINE-SPACE MARKING, OTHERWISE DO NOT.
5. BIKE ACCOMODATION FOR CONCRETE PAVEMENT IS 5 FEET WIDE. BIKE ACCOMODATION FOR ASPHALT PAVEMENT IS A MINIMUM OF 4 FEET. USE 5 FEET AT ≥45 MPH.
6. OMIT THESE MARKINGS FOR WIDER TURN LANE APPLICATIONS (MINIMUM OF 15 FEET WIDE TURN LANE).
7. REFER TO CONTRACT PLANS FOR LANE WIDTH.

⇨ DIRECTION OF TRAVEL

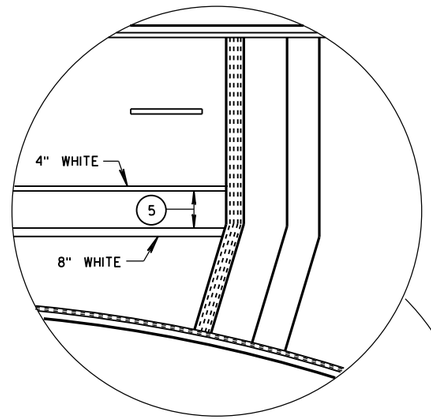

4 LANE DIVIDED WITHOUT ISLAND

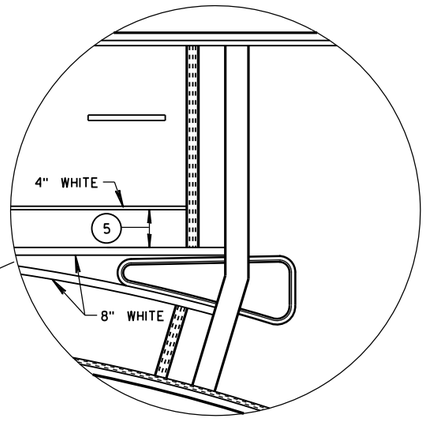

4 LANE DIVIDED WITH ISLAND

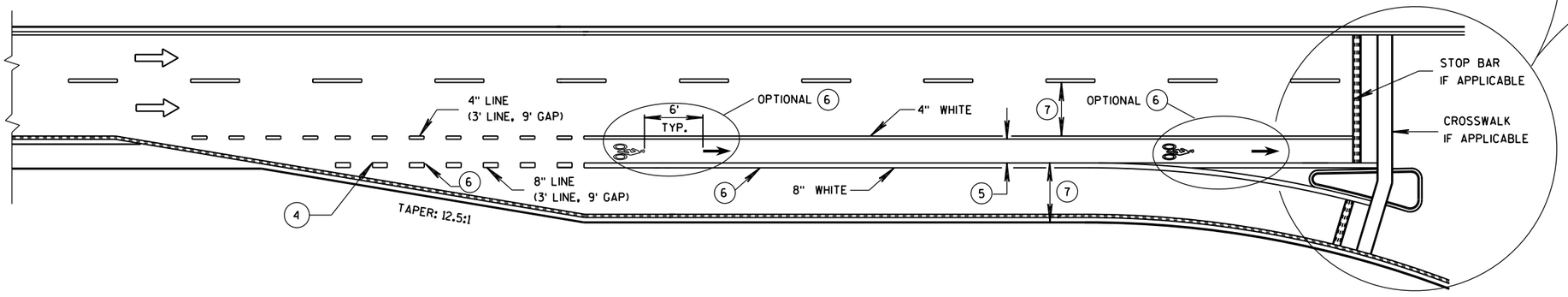

BIKE LANE - FOR 2-LANE ROADWAYS AND 4-LANE DIVIDED ROADWAYS
(4-LANE DIVIDED WITH RIGHT TURN LANE SHOWN)

BICYCLE LANE MARKING

STATE OF WISCONSIN
DEPARTMENT OF TRANSPORTATION

APPROVED
12-2016 DATE
/S/ Matthew R. Rauch
STATE SIGNING AND MARKING ENGINEER
FHWA

6

S.D.D. 15 C 29-5a

6

S.D.D. 15 C 29-5a

GENERAL NOTES

(1) MINIMUM OF ONE PER BLOCK, MAXIMUM OF 250 FEET.

(2) OR TO EDGE OF PAVEMENT WITHOUT CURB.

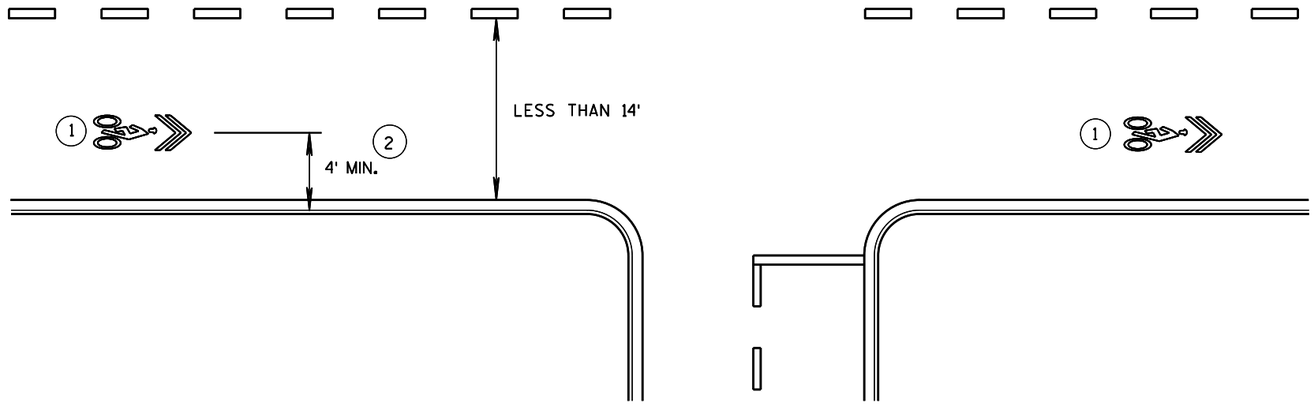

WITHOUT PARKING

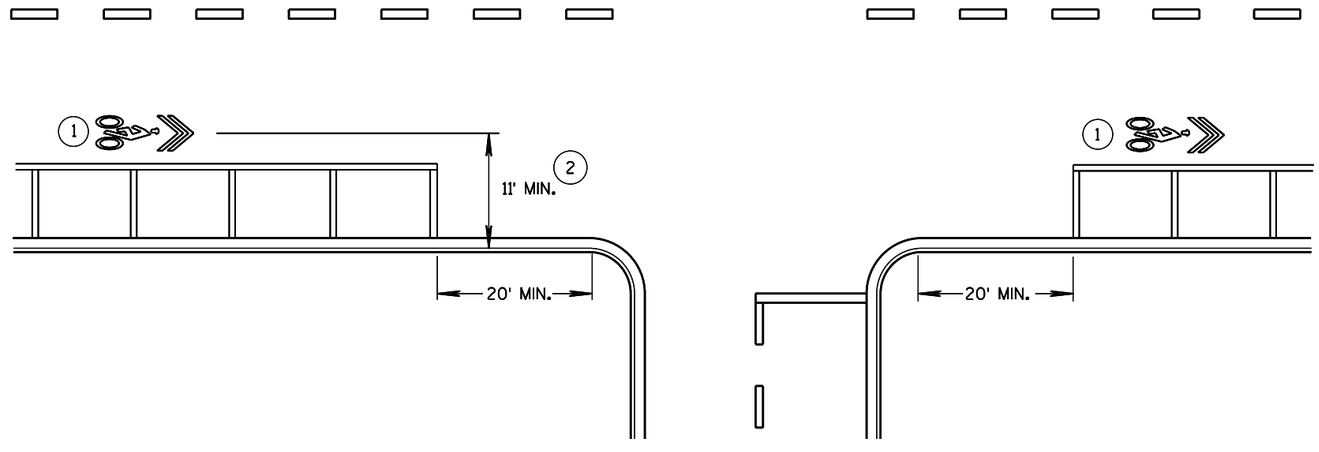

WITH PARKING

PAVEMENT MARKING FOR
SHARED LANE
35 MPH OR LESS

STATE OF WISCONSIN
DEPARTMENT OF TRANSPORTATION

APPROVED
12-2016
DATE
/S/ Matthew R. Rauch
STATE SIGNING AND MARK 128 EER
FHWA

6

S.D.D. 15 C 29-5b

6

S.D.D. 15 C 29-5b

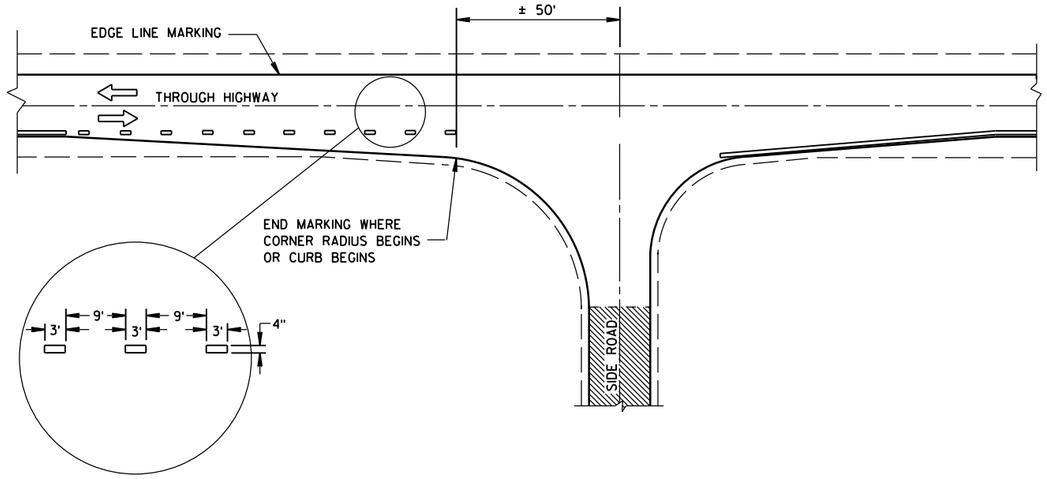

MINOR INTERSECTION WITHOUT CURBS

GENERAL NOTES

EDGE LINES SHALL BE OMITTED THROUGH INTERSECTIONS. EDGE LINES SHALL BE CONTINUED THROUGH DRIVEWAYS.

(1) WHEN DISTANCE "A" IS LESS THAN 250 FEET, OMIT LANE LINE.

(2) WHEN DISTANCE "B" IS LESS THAN 100 FEET, OMIT CHANNELIZING LANE LINE.

(3) BARRIER LINE ENDS AT SIDE ROAD PAVEMENT/SURFACE EDGE EXTENSION.

(4) BARRIER LINE STARTS 500 FEET PRIOR TO THE BYPASS TAPER.

ARROW SYMBOL (⇨) SHOWS DIRECTION OF TRAVEL

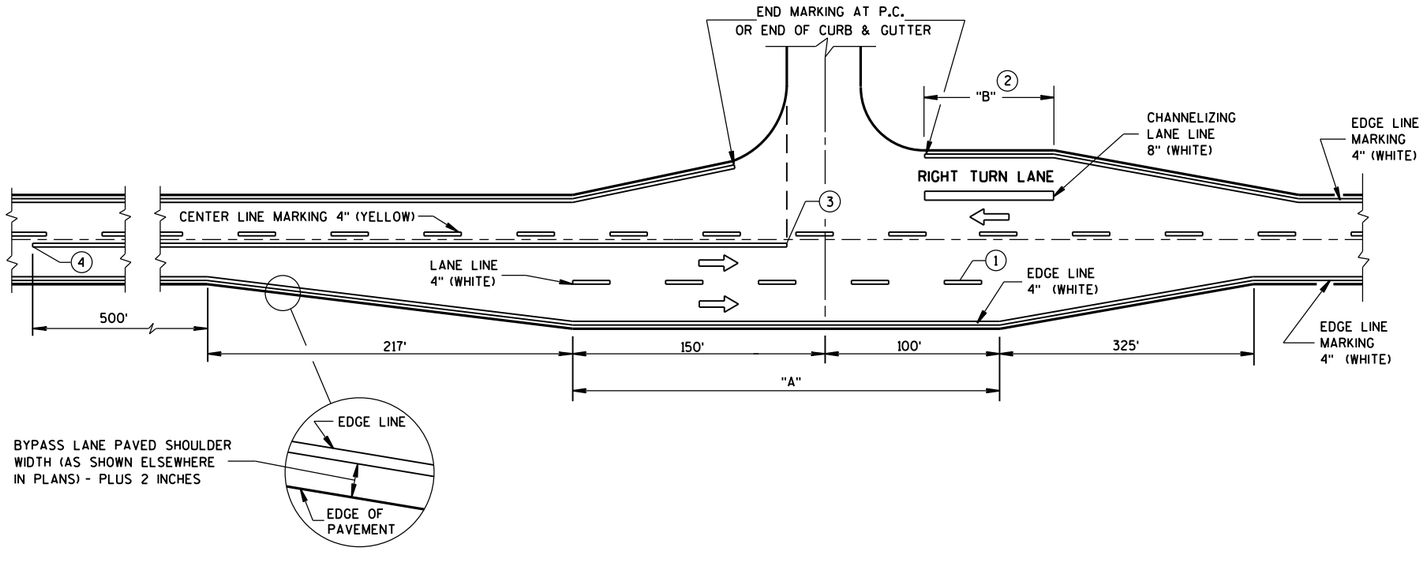

MAJOR INTERSECTIONS

(INTERSECTION WITH FULL RIGHT TURN LANE OR BYPASS LANES)

PAVEMENT MARKING
(INTERSECTIONS)

STATE OF WISCONSIN
DEPARTMENT OF TRANSPOI

6

S.D.D. 15 C 35-1a

NOTE: MAY BE USED ON ROADWAY WITH POSTED SPEED OF LESS THAN 40 MPH.

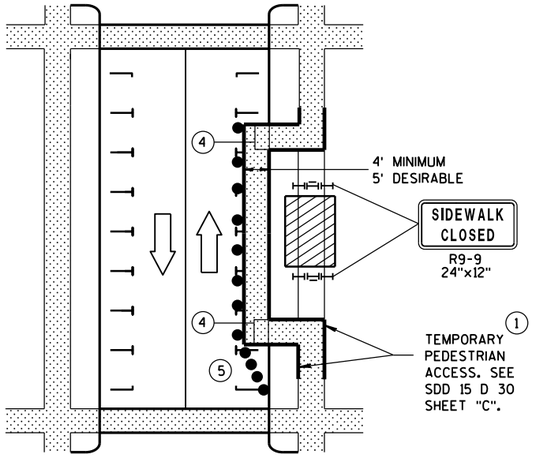

MID-BLOCK SIDEWALK CLOSURE IN PARKING LANE

NOTE: LAYOUT SAME AS ABOVE.

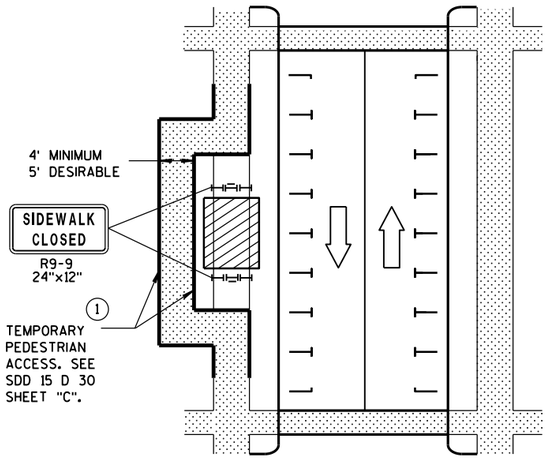

SIDEWALK DIVERSION

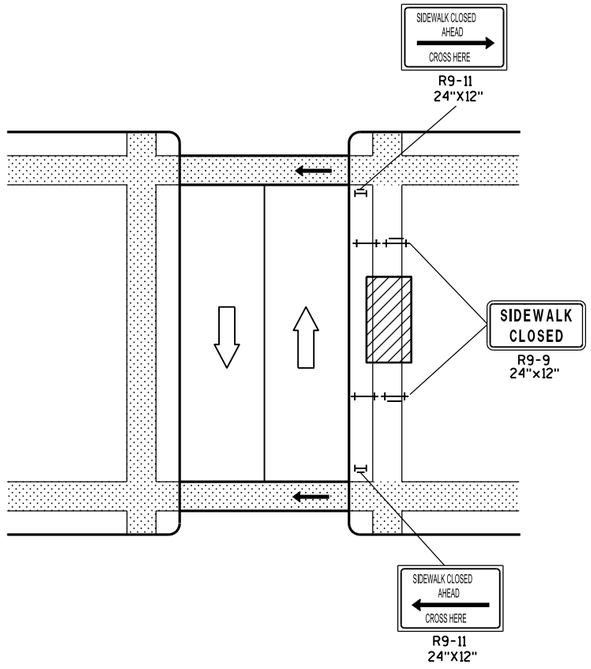

MID-BLOCK SIDEWALK CLOSURE

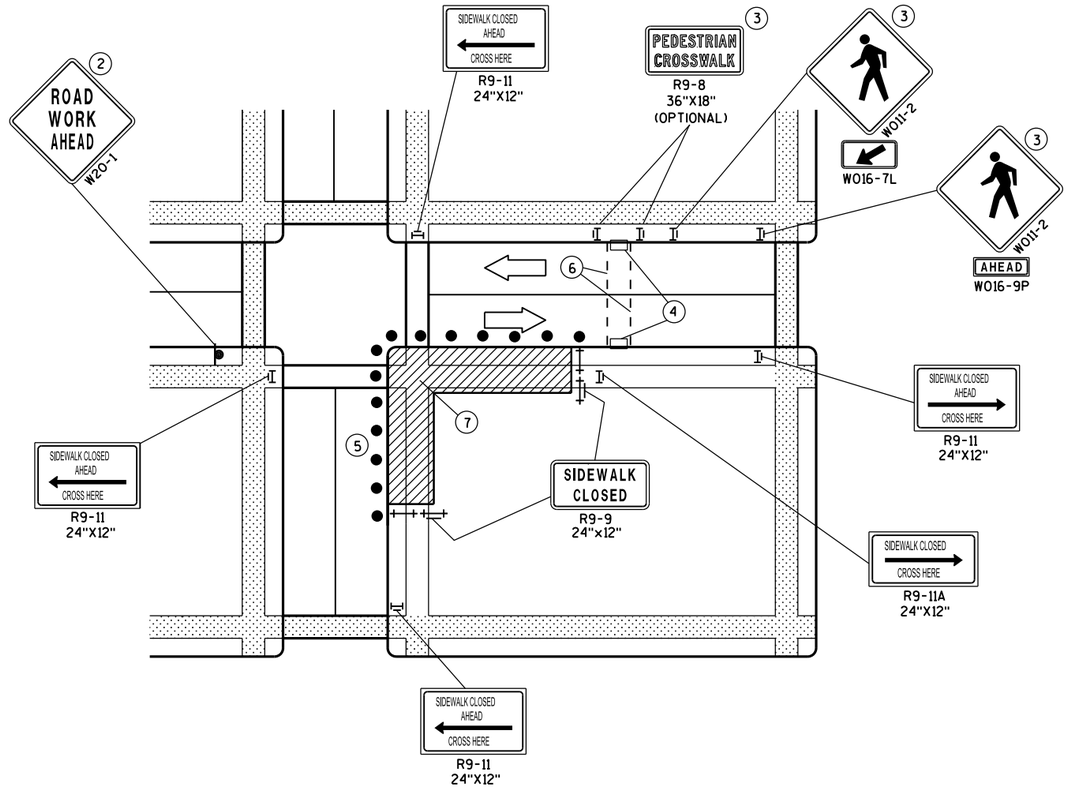

CORNER SIDEWALK CLOSURE WITH TEMPORARY CROSSWALK

GENERAL NOTES

WHEN CLOSING OR RELOCATING CROSSWALKS OR SIDEWALKS, PROVIDE DETECABLE TEMPORARY FACILITIES AND INCLUDE ACCESSIBILITY FEATURES CONSISTENT WITH EXISTING PEDESTRIAN FACILITIES.

TEMPORARY TRAFFIC CONTROL DEVICES FOR PEDESTRIANS ARE SHOWN. OTHER DEVICES MAY BE NECESSARY TO CONTROL VEHICULAR TRAFFIC. STAGE WORK, AS NECESSARY, TO PROVIDE A TEMPORARY PEDESTRIAN ACCESS ROUTE AT ALL TIMES. FOR ROADWAYS WITH NO AVAILABLE DETOURS, MAINTAIN ONE OPEN SIDEWALK AT ALL TIMES.

"WO" SIGN IS THE SAME AS "W" SIGN EXCEPT THE BACKGROUND IS ORANGE.

FOR NIGHTTIME CLOSURE USE TYPE "A" FLASHING WARNING LIGHTS ON BARRICADES, SUPPORTING SIGNS AND CLOSING SIDEWALK. USE TYPE "C" STEADY BURN LIGHTS ON CHANNELIZING DEVICES SEPARATING THE WORK AREA FROM VEHICULAR TRAFFIC.

PEDESTRIAN TRAFFIC SIGNAL DISPLAY CONTROLLING CLOSED CROSSWALK SHALL BE COVERED OR DEACTIVATED.

POST MOUNTED SIGNS LOCATED ADJACENT TO A SIDEWALK SHALL HAVE A 7 FOOT MINIMUM CLEARANCE FROM THE BOTTOM OF THE SIGN TO THE SIDEWALK SURFACE.

ALTERNATE SIDEWALK WORK BETWEEN LEFT AND RIGHT SIDE OF ROADWAY TO MAINTAIN PEDESTRIAN ACCESS.

(1) IF SIDEWALK CLOSURE AFFECTS AN ACCESSIBLE AND DETECTABLE FACILITY, MAINTAIN ACCESSIBILITY AND DETECTABILITY ALONG THE ALTERNATE PEDESTRIAN ROUTE.

(2) "ROAD WORK AHEAD" SIGNS ARE NOT REQUIRED IF THE SIDEWALK CLOSURE OCCURS WITHIN A LARGER WORK ZONE WHERE ADVANCE WARNING SIGNS ARE ALREADY PRESENT, OR IF THE WORK AREA AND EQUIPMENT ARE MORE THAN 2 FEET BEHIND THE CURB.

(3) IF TEMPORARY PEDESTRIAN CROSSWALK IS NOT PROVIDED, OMIT R9-8 AND W011-2 SIGN ASSEMBLIES. IF PROVIDED INCLUDE ON BOTH SIDES OF THE CROSSWALK.

(4) TEMPORARY CURB RAMPS. SEE SDD 15 D 30 SHEET "B".

(5) DRUMS OR BARRICADES AT 25 FOOT SPACING. STREET PARKING SHALL BE PROHIBITED FOR AT LEAST 50 FEET IN ADVANCE OF THE MID-BLOCK CROSSWALK.

(6) TEMPORARY PAVEMENT MARKING FOR CROSSWALK LINES.

(7) LIMIT WORK TO ONE QUADRANT AT A TIME TO MINIMIZE PEDESTRIAN DISRUPTION.

LEGEND

- SIGN ON PERMANENT SUPPORT
- UNDER PEDESTRIAN TRAFFIC
- WORK AREA
- PEDESTRIAN CHANNELIZATION DEVICE
- TYPE II BARRICADE WITH/WITHOUT SIGN (ALL WITH ONE WARNING LIGHT, TYPE A, LOW-INTENSITY FLASHING)
- TYPE III BARRICADE WITH/WITHOUT SIGN (ALL WITH ONE WARNING LIGHT, TYPE A, LOW-INTENSITY FLASHING)
- DIRECTION OF TRAFFIC
- TRAFFIC CONTOL DRUM

TRAFFIC CONTROL, PEDESTRIAN ACCOMMODATION

STATE OF WISCONSIN
DEPARTMENT OF TRANSPOI

6

S.D.D. 15 D 30-3a

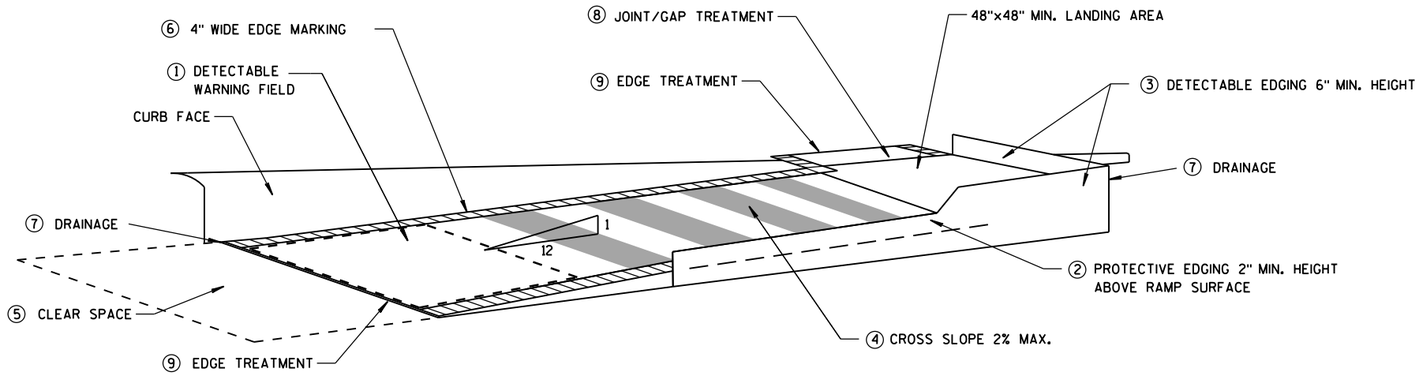

TEMPORARY CURB RAMP PARALLEL TO CURB

GENERAL NOTES

NOTIFY THE BUS COMPANY 7 DAYS IN ADVANCE OF THE BUS STOP RELOCATION.

ALTERNATE SIDEWALK WORK BETWEEN LEFT AND RIGHT SIDE OF ROADWAY TO MAINTAIN PEDESTRIAN ACCESS.

① CURB RAMPS SHALL BE 48" MIN. WIDTH WITH A FIRM, STABLE AND SLIP RESISTANT SURFACE. INSTALL CONTRASTING DETECTABLE WARNING FIELD AT PEDESTRIAN STREET CROSSINGS. REFER TO SDD 8D5 SHEET "E".

② PROTECTIVE EDGING WITH A 2" MIN. HEIGHT SHALL BE INSTALLED WHEN A CURB RAMP OR LANDING PLATFORM HAS A VERTICAL DROP OF 6" OR GREATER OR HAS A SIDE APRON SLOPE STEEPER THAN 1:3 (33%). PROTECTIVE EDGING SHOULD BE CONSIDERED WHEN CURB RAMPS OR LANDING PLATFORMS HAVE A VERTICAL DROP OF 3" OR MORE.

③ DETECTABLE EDGING WITH 6" MIN. HEIGHT AND CONTRASTING COLOR SHALL BE INSTALLED ON ALL CURB RAMP LANDINGS WHERE THE WALKWAY CHANGES DIRECTION (TURNS).

④ CURB RAMPS AND LANDINGS SHALL HAVE A 1:50 (2%) MAX. CROSS-SLOPE.

⑤ CLEAR SPACE OF 48"X48" MIN. SHALL BE PROVIDED ABOVE AND BELOW THE CURB RAMP.

⑥ THE CURB RAMP WALKWAY EDGE SHALL BE MARKED WITH A YELLOW COLOR, 4" WIDE MARKING, UNLESS A CONTRASTING DETECTABLE WARNING FIELD IS PROVIDED.

⑦ DO NOT RESTRICT WATER FLOW IN THE GUTTER SYSTEM.

⑧ LATERAL JOINTS OR GAPS BETWEEN SURFACES SHALL BE LESS THAN 1/2" WIDTH.

⑨ CHANGES BETWEEN SURFACE HEIGHTS SHALL NOT EXCEED 1/2". LATERAL EDGES SHALL BE VERTICAL UP TO 1/4" HIGH, AND BEVELED AT 1:2 BETWEEN 1/4" AND 1/2".

⑩ 5' WIDE MIN. WITH PEDSETRIAN SAFETY FENCE, 10' WIDE MIN. WITHOUT PEDESTRIAN SAFETY FENCE.

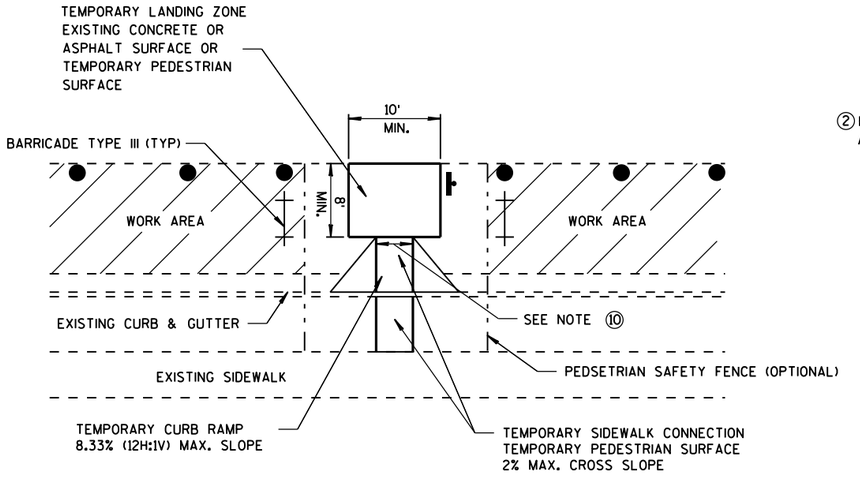

TEMPORARY BUS STOP PAD

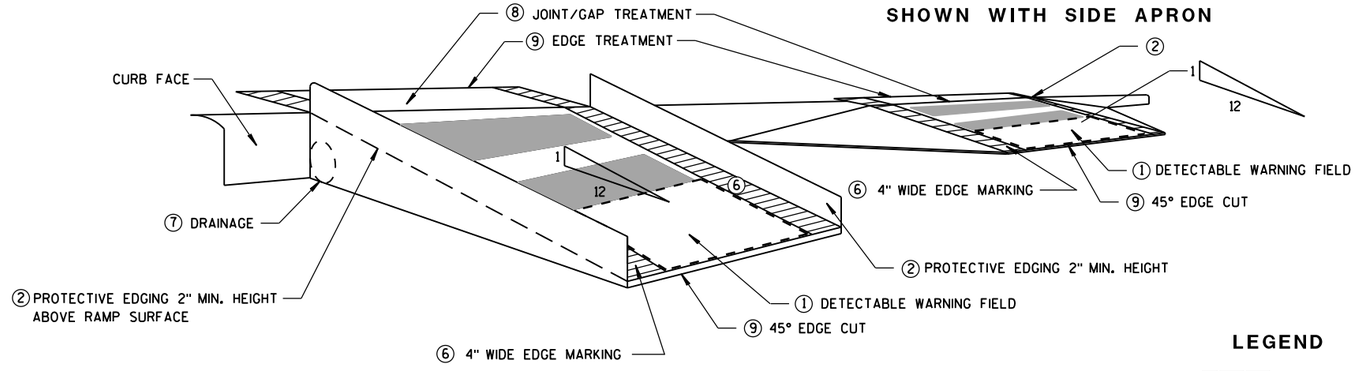

SHOWN WITH PROTECTIVE EDGE

TEMPORARY CURB RAMP PERPENDICULAR TO CURB

LEGEND

WORK AREA

TYPE III BARRICADE

TRAFFIC CONTOL DRUM

TRAFFIC CONTROL, TEMPORARY ADA COMPLIANT PEDESTRIAN ACCOMMODATION

STATE OF WISCONSIN
DEPARTMENT OF TRANSPORTATION

APPROVED

June 2016 — DATE

/S/ Peter Amakobe Atepe — STATEWIDE WORK ZO SAFETY ENGI IC

FHWA

6

S.D.D. 15 D 30-3b

6

S.D.D. 15 D 30-3b

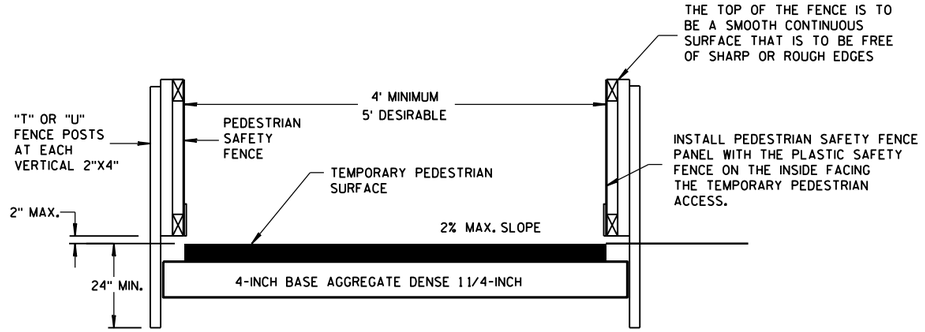

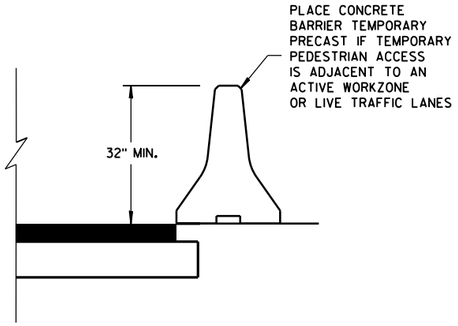

TEMPORARY PEDESTRIAN ACCESS

GENERAL NOTES

(1) INTERCHANGEABLE WITH THE PEDESTRIAN SAFETY FENCE.

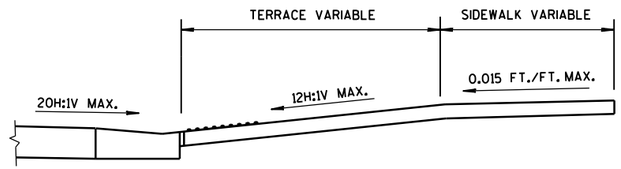

SECTION A-A

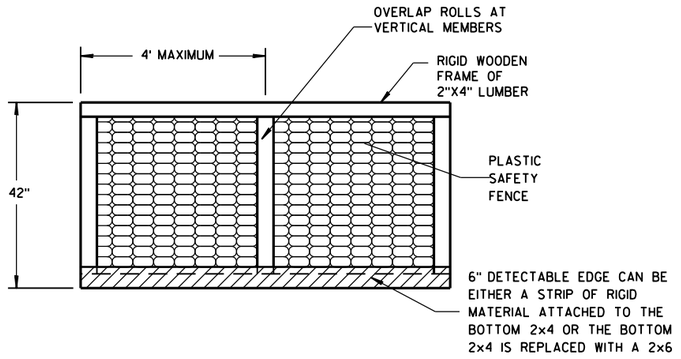

PEDESTRIAN SAFETY FENCE

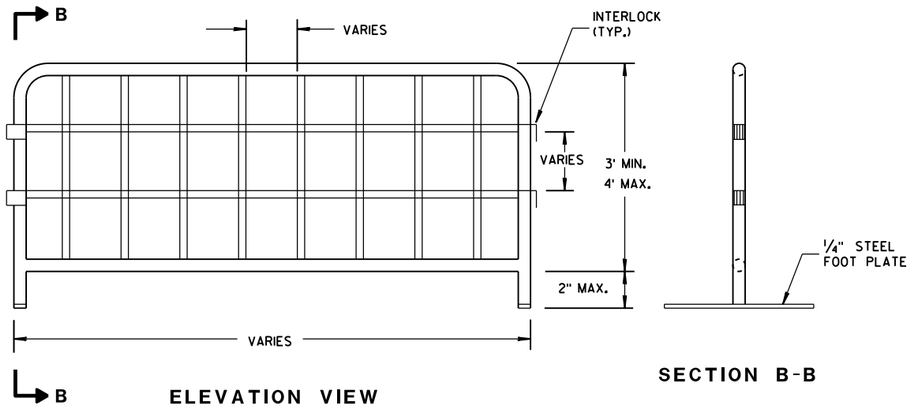

ELEVATION VIEW

SECTION B-B

TEMPORARY PEDESTRIAN STEEL BARRICADE (1)

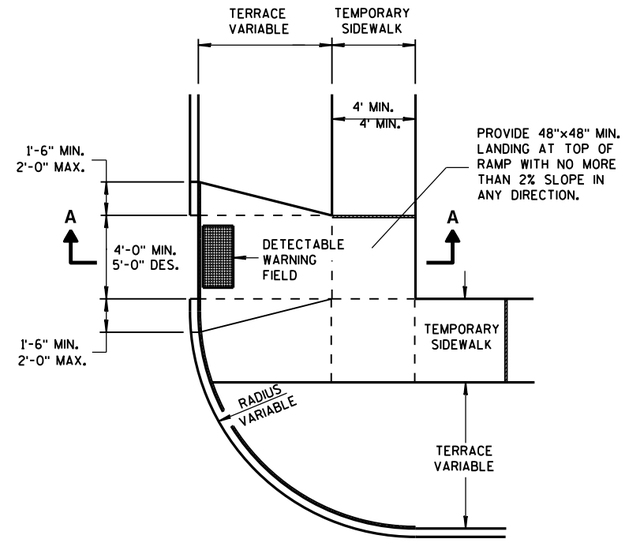

PLAN VIEW

TEMPORARY TYPE 3 RAMP

(OUTSIDE OF CROSSWALK AREA)

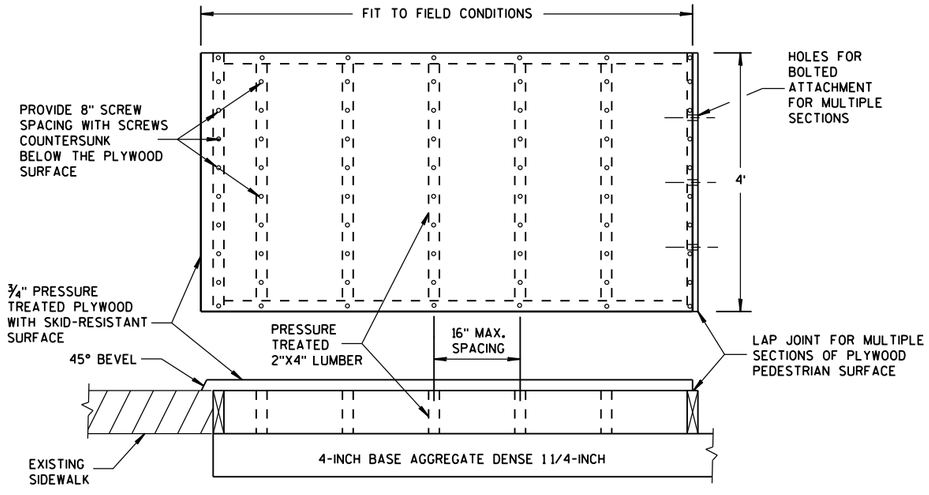

TEMPORARY PEDESTRIAN SURFACE PLYWOOD

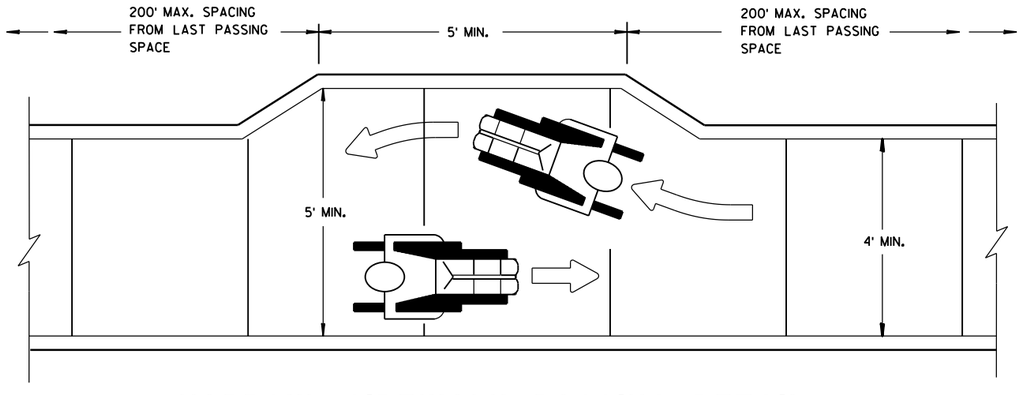

NARROW SIDEWALK PASSING DETAIL

TRAFFIC CONTROL, PEDESTRIAN ACCOMMODATION

STATE OF WISCONSIN
DEPARTMENT OF TRANSPORTATION

APPROVED
June 2016
DATE
/S/ Peter Amakobe Atepe
STATEWIDE WORK ZON IC
SAFETY ENGIN
FHWA

6

S.D.D. 15 D 30-3c

6

S.D.D. 15 D 30-3c

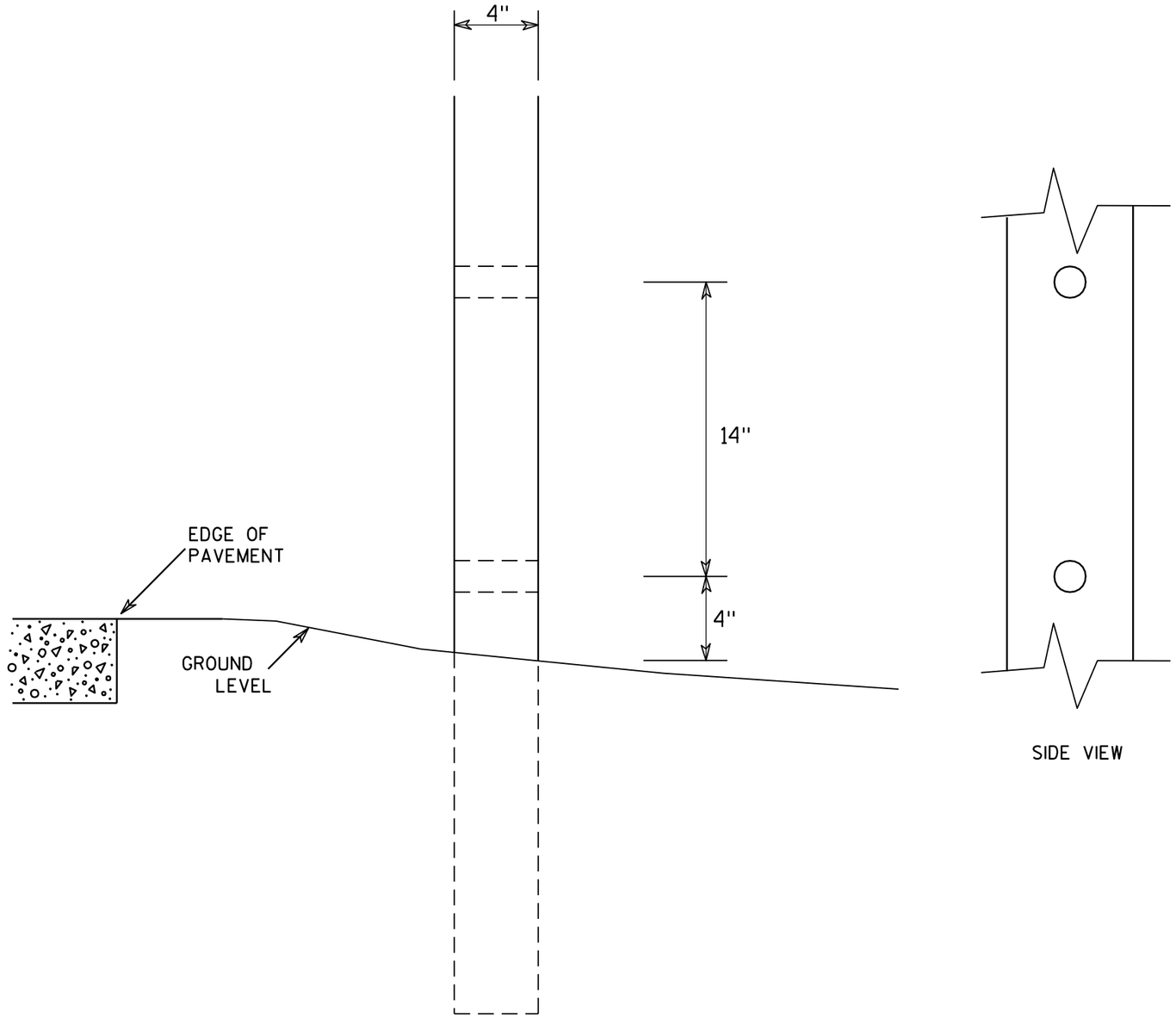

SIDE VIEW

GENERAL NOTES

1. All 4 x 6 Wood Posts shall be modified by having two 1½" diameter holes drilled perpendicular to the roadway centerline.

7

7

4 X 6 WOOD POST MODIFICATIONS

WISCONSIN DEPT OF TRANSPORTATION

APPROVED Chester J Spang
for State Traffic Engineer

DATE 3/27/97 PLATE NO. A4-11.2

PROJECT NO:	HWY:	COUNTY:		SHEET NO: 133	E

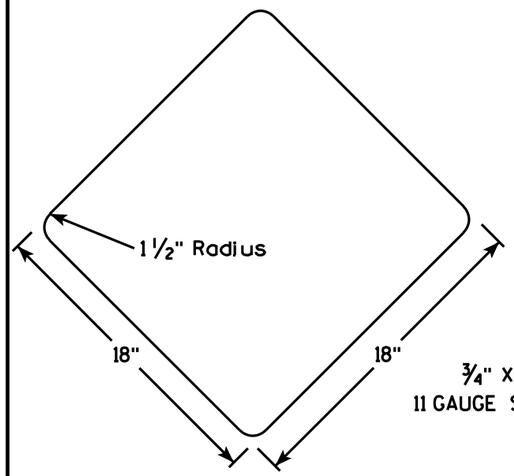

SIGN DETAIL

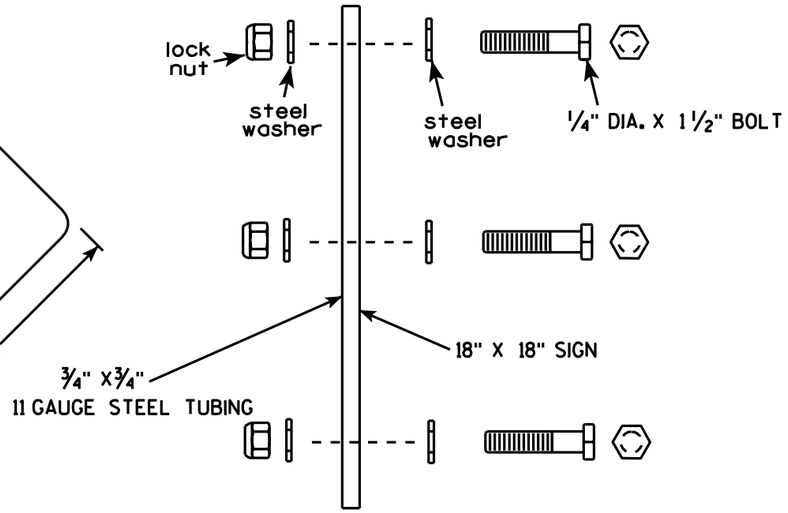

FLAG BOLTING PROCEDURE

GENERAL NOTES

1. ALL MATERIAL TO BE APPROVED BY ENGINEER BEFORE INSTALLATION.
2. SEE SIGN PLATE A4-8 FOR HARDWARE REQUIREMENTS.
3. SIGN IS TYPE II, TYPE F REFLECTIVE- REFERENCE WisDOT STANDARD. SPECIFICATION FOR HIGHWAY AND STRUCTURE CONSTRUCTION LATEST EDITION.
4. SIGN COLOR - ORANGE
5. SIGN CORNERS SHALL BE ROUNDED
6. BRACKET SHALL BE ENTIRELY PRIMED AND PAINTED WITH TWO COATS OF A BLACK POWDER COATED ENAMEL PAINT.

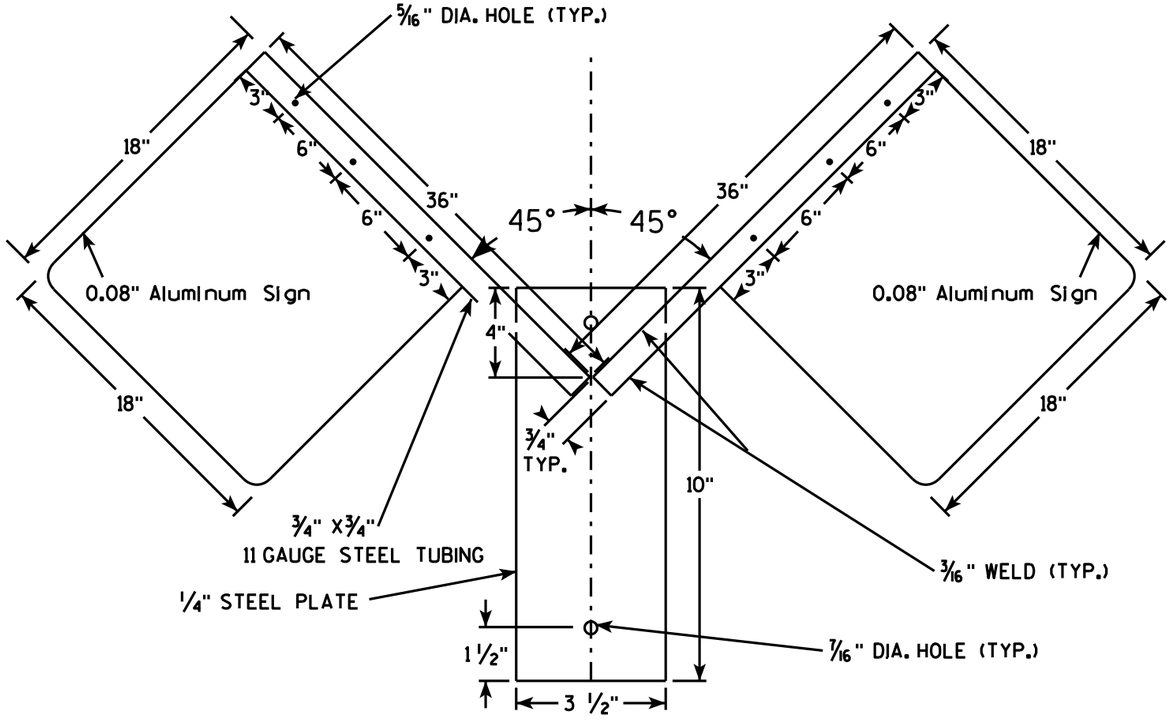

BACK VIEW

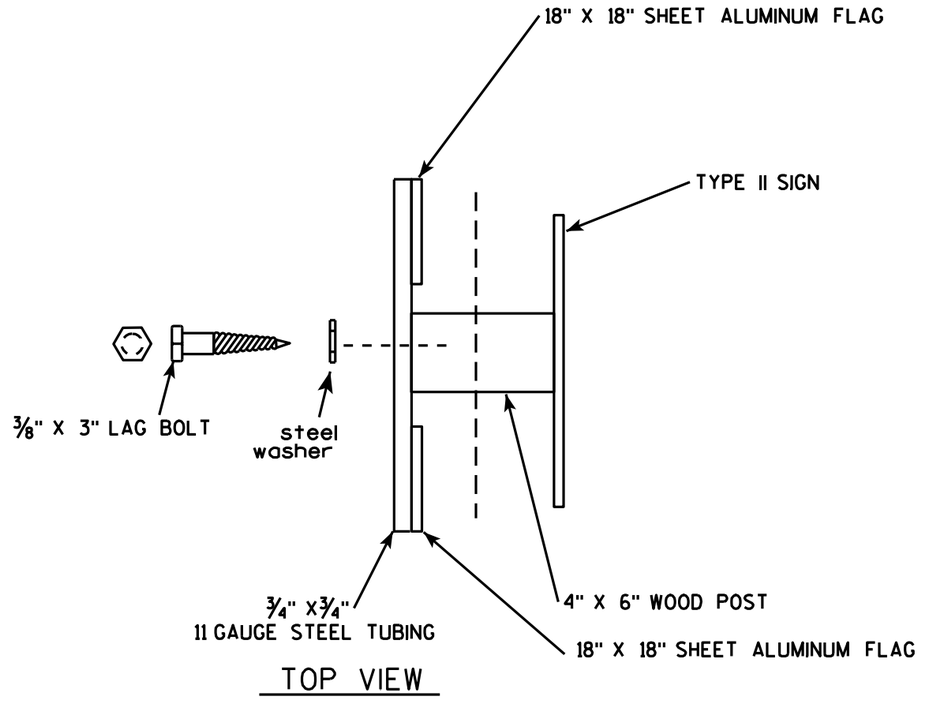

TOP VIEW

TYPICAL INSTALLATION OF PERMANENT TYPE II SIGN FLAGS

WISCONSIN DEPT OF TRANSPORTATION

APPROVED Matthew R Rauch
for State Traffic Engineer

DATE 5/15/13 PLATE NO. A4-15.3

PROJECT NO:	HWY:	COUNTY:		SHEET NO: 134	E

URBAN AREA

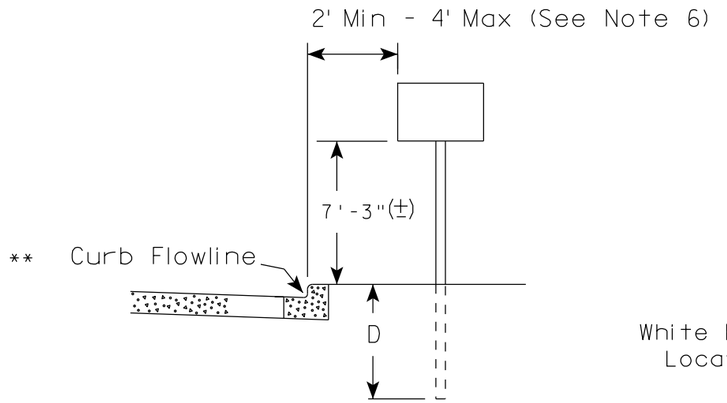

RURAL AREA (See Note 2)

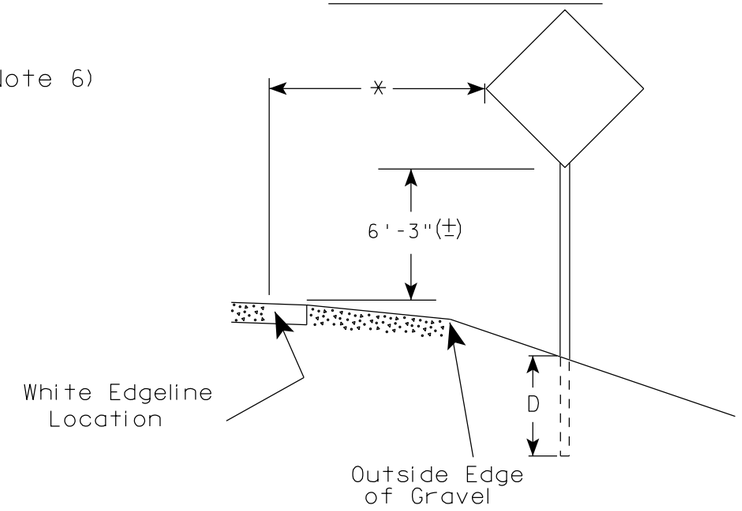

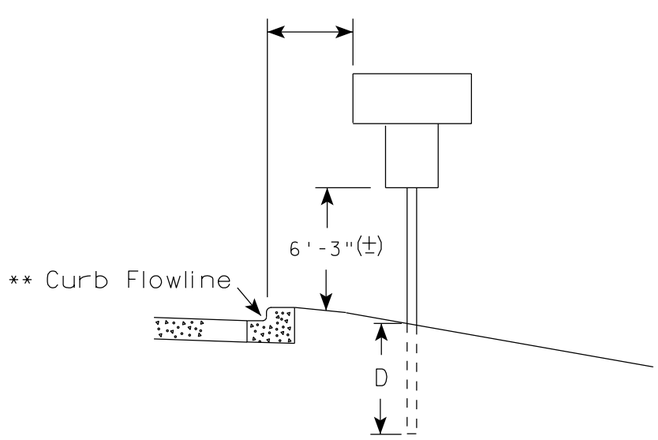

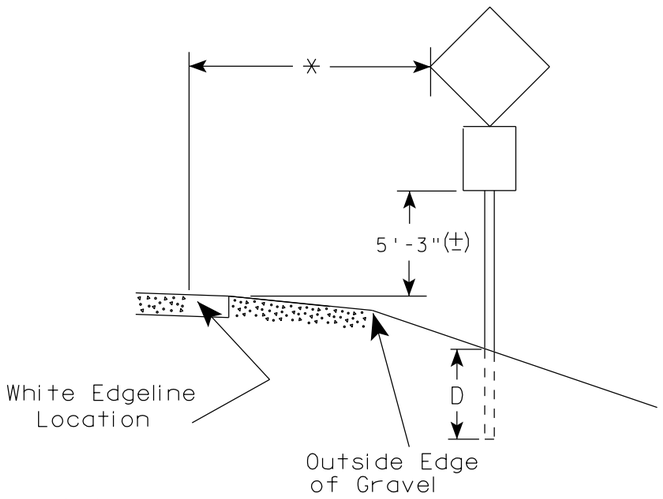

** The existence of curb and gutter does not in itself mandate the vertical clearance illustrated. That height is typically measured where there is sidewalk adjacent to the roadway or parking is permitted. In the absence of sidewalk vertical clearance is measured from the top of the curb. Offset of signs is measured from the flow line.

* 6 feet from edge of a paved shoulder or 12 feet from the edge of pavement (edge line location) or 2 feet from outside edge of gravel, whichever is greater unless directed by project engineer.

POST EMBEDMENT DEPTH

Area of Sign Installation (Sq. Ft.)	D (Min)
20 or Less	4'
Greater than 20	5'

GENERAL NOTES

1. Signs wider than 4 feet or 20 sq.ft or larger, shall be mounted on multiple posts. Refer to plate A4-4.
2. If signs are mounted on barrier wall, see A4-10 sign plate.
3. For expressways and freeways, mounting height is 7'- 3" (±) or 6'-3" (±) depending upon existence of a sub-sign.
4. Minimum mounting height for J assemblies (A2-1S) is 7'-3" (±) or 6'-3" (±) per urban or rural detail respectively.
5. Minimum mounting height for signs mounted on traffic signal poles is 5'- 3" (±).
6. Offset distance shall be consistent with existing signs or consistent throughout length of project.
7. The (±) tolerance for mounting height is 3 inches.
8. Folding signs shall be mounted at a height of 5'-3" (±) or as directd by the Engineer.
9. The Double Arrow sign (W12-1) shall be mounted at a height of 2'-3" (±). The Chevron sign (W1-8), Roundabout Chevron panel (R6-4B), Enhanced Reference Markers, Clearance Markers (W5-52), Mile Markers (D10 series), In Road Object Markers (W5-54) & End of Road Markers (W5-56) shall be mounted at a height of 4'-3" (±).

TYPICAL INSTALLATION OF PERMANENT TYPE II SIGNS ON SINGLE POSTS

WISCONSIN DEPT OF TRANSPORTATION

APPROVED Matthew R Rauch
for State Traffic Engineer

DATE 7/23/15 PLATE NO. A4-3.20

PROJECT NO:	HWY:	COUNTY:		SHEET NO:	E

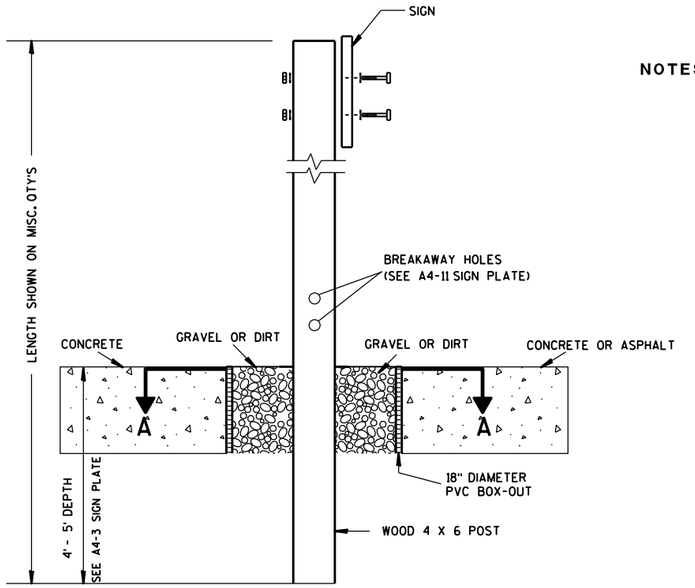

ELEVATION VIEW

DETAIL OF WOOD 4 X 6 SIGN POST IN BOX-OUT

NOTES:
1. ALL MATERIAL TO BE APPROVED BY ENGINEER PRIOR TO INSTALLATION
2. SEE SIGN PLATE A4-8 FOR SIGN HARDWARE REQUIREMENTS
3. 18 INCH X 18 INCH SQUARE BOX-OUTS MAY BE USED FOR INSTALLATIONS IN EXISTING CONCRETE OR ASPHALT LOCATIONS.

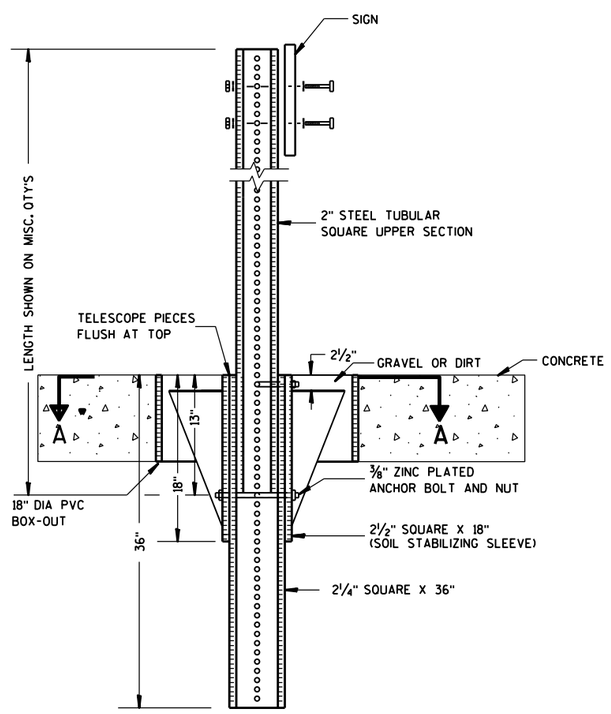

ELEVATION VIEW

DETAIL OF STEEL 2 X 2 SIGN POST IN BOX-OUT

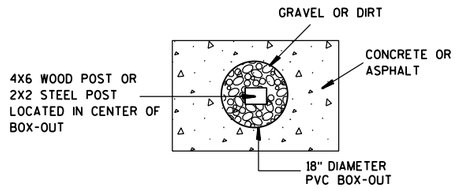

PLAN VIEW

FOR NEW CONCRETE/ASPHALT INSTALLATIONS

SIGN POST BOX-OUTS A4-3B

WISCONSIN DEPT OF TRANSPORTATION

APPROVED Matthew R Rauch
for State Traffic Engineer

DATE 1/27/14 PLATE NO. A4-3B.1

PROJECT NO:	HWY:	COUNTY:		SHEET NO:	E

FILE NAME : C:\CAEFiles\Projects\tr_stdplate\A43B.DGN PLOT DATE : 27-JAN-2014 09:48 PLOT BY : mscsja PLOT NAME : PLOT SCALE : 13.659812:1.000000 WISDOT/CADDS SHEET 42

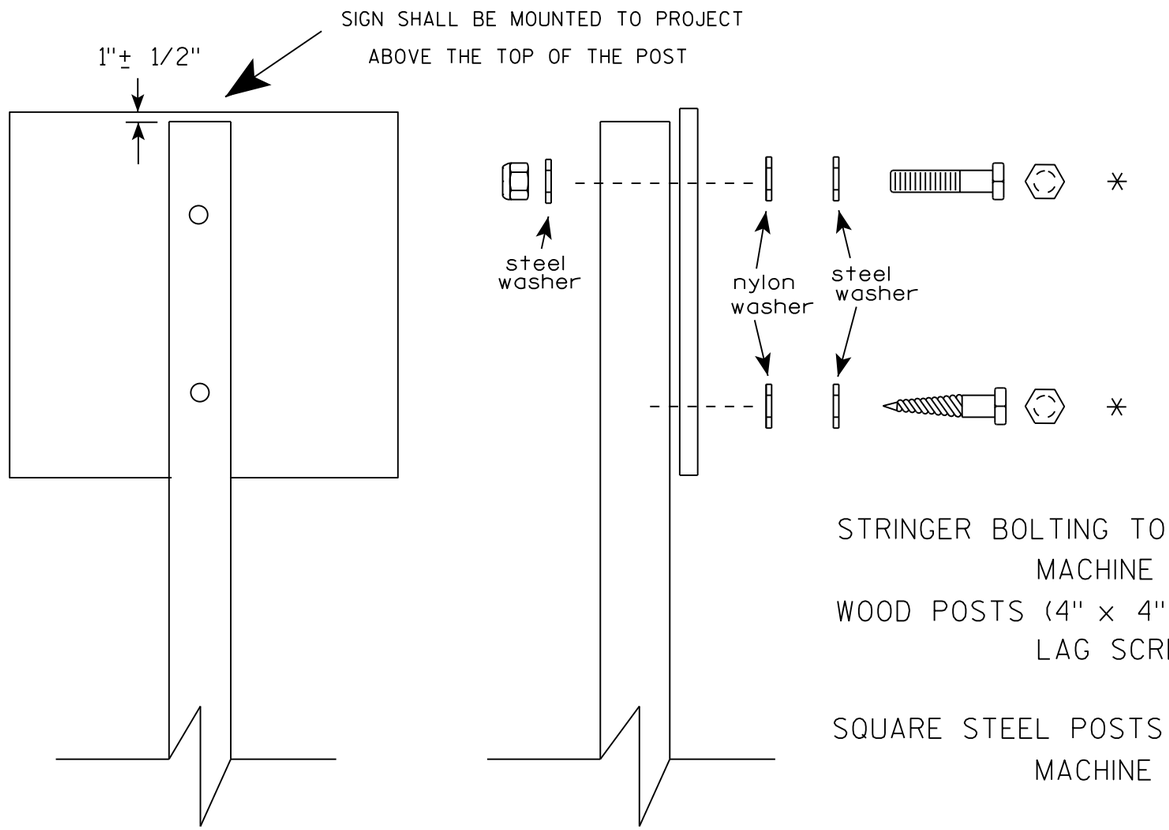

Nuts, bolts and lags used for mounting signs shall have hexagonal heads and shall be either :

a. Hot dip galvanized in accordance with ASTM Designation: A 153, Class D, or SC 3
b. Electro-galvanized in accordance with ASTM Designation : B 633, TYPE III, SC 3.

Threads on bolts and nuts shall be manufactured with sufficient allowance for the cadmium plate or galvanized coating to permit the nuts to run freely on the bolts.

STRINGER BOLTING TO ALUMINUM SIGNS (SEE SIGN PLATE A4-18)
MACHINE BOLTS - 5/16" X 1-3/4" Length w/ lock nuts
WOOD POSTS (4" x 4" or 4" x 6")
LAG SCREWS - 3/8" X 3" (NO STRINGERS ON BACK OF SIGN)
3/8" X 4" (STRINGERS ON BACK OF SIGN)
SQUARE STEEL POSTS (2" x 2")
MACHINE BOLTS - 3/8" X 3-1/4" Length w/ nuts (NO STRINGER ON BACK OF SIGN)
3/8" X 5" Length w/ nuts (STRINGERS ON BACK OF SIGN)
RIVETS - 9/32 " (6605-9-6) BULB-TITE, TRI-FOLD, ALUMINUM BODY/MANDREL
O.D. FLANGE .720-.765 INCH, GRIP RANGE .042-.375 INCH
WASHERS (ALL POSTS) -
1-1/4" O.D. X 3/8" I.D. X 1/16" STEEL
1-1/4" O.D. X 3/8" I.D. X .080 NYLON

* Two different fastening systems are shown for illustration purposes. On any individual sign, either one or the other system shall be used. Actual number of fasteners per sign varies with the sign area, but normally there are two. For a single post installation, all signs greater than 9 sq. ft. require the use of 3 fasteners.

ATTACHMENT OF SIGNS TO POSTS

WISCONSIN DEPT OF TRANSPORTATION

APPROVED Matthew R Rauch
For State Traffic Engineer

DATE 8/11/16 PLATE NO. A4-8.8

PROJECT NO: SHEET NO: E

FILE NAME : C:\CADfiles\Projects\tr_stdplate\A48.DGN PLOT DATE : 11-AUG-2016 11:35 PLOT BY : $$ plotuser $$

D12-50

NOTES

1. Sign is Type II - Type H Reflective - reference WIS DOT Standard Specification for HIGHWAY and STRUCTURE CONSTRUCTION latest edition.
2. Color:
   Background - Blue
   Message - White
3. Message Series - B for Line 1
   Series C for Lines 2 & 3
4. Corners may be square or rounded when base material is plywood but borders shall be rounded as shown. When base material is metal, the corners and borders shall be rounded.
5. Substitute appropriate LOGO which may not exceed 12 inches by 12 inches, see TGM policy 2-4-48.1 for acceptable logos.

Metric equivalent for this sign is:

SIZE	
1	
2	900 mm X 900 mm
3	
4	
5	

SIZE	A	B	C	D	E	F	G	H	I	J	K	L	M	N	O	P	Q	R	S	T	U	V	W	X	Y	Z	Area sq. ft.	Area m2
1																												
2	36		1 3/8	1/2	5/8	4	12	13 1/4	12	2	1 1/4	13 5/8	13														9.0	0.81
3																												
4																												
5																												

STANDARD SIGN
D12-50

WISCONSIN DEPT OF TRANSPORTATION

APPROVED Matthew R Rauch
For State Traffic Engineer

DATE 2/09/09 PLATE NO. D12-50.2

PROJECT NO:	HWY:	COUNTY:		SHEET NO: 138	E

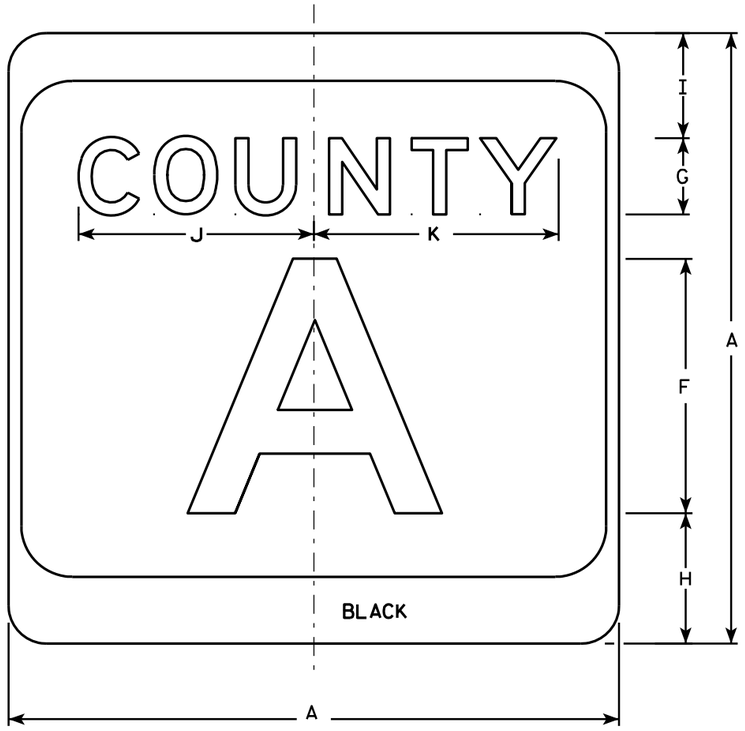

M1-5A

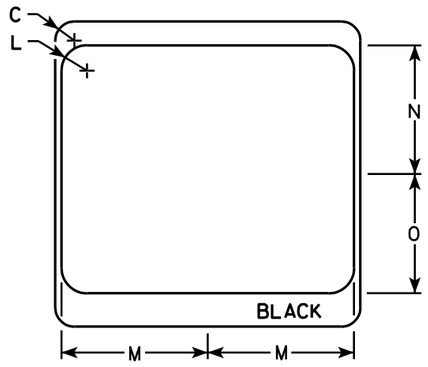

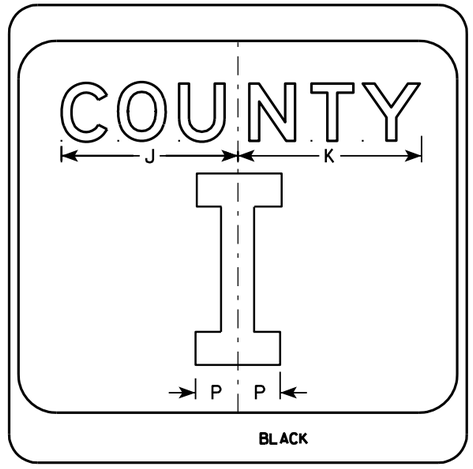

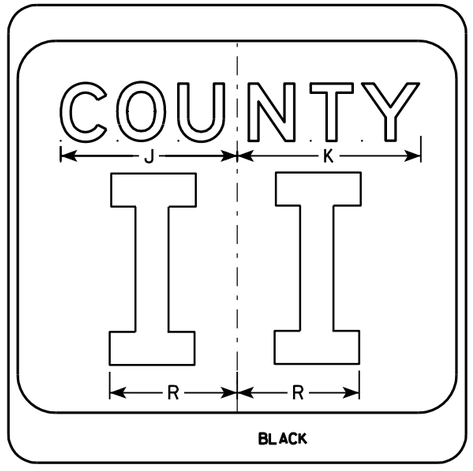

NOTES

1. Sign is Type II - see Note 7 - reference WIS DOT Standard Specification for HIGHWAY and STRUCTURE CONSTRUCTION latest edition.
2. Color:
   Background - White & Black - See Note 7
   Message - Black
3. Message Series - see Note 5
4. Corners may be square or rounded when base material is plywood but borders shall be rounded as shown. When base material is metal, the corners and borders shall be rounded.
5. Message Series E for 1 letter.
   Message Series D for 2 letters unless message is too big then Series C.
   Message Series C for 3 letters unless message is too big then Series B.
6. Substitute appropriate letters & optically center to achieve proper balance.
7. Permanent Signs
   Background - Type H Reflective
   Detour or temporary Signs
   Background - Reflective

SIZE	A	B	C	D	E	F	G	H	I	J	K	L	M	N	O	P	Q	R	S	T	U	V	W	X	Y	Z	Area sq. ft.
1																											
2	24		1 1/2			10	3	5 1/8	4 1/8	9 1/4	9 5/8	2	11 1/2	10 1/8	9 3/8	2 1/4		6 5/8									4.0
3	36		2 1/4			16	4	7 5/8	5 5/8	12 1/4	12 7/8	3	17 1/8	15 1/4	14	3 3/8		10									9.0
4	36		2 1/4			16	4	7 5/8	5 5/8	12 1/4	12 7/8	3	17 1/8	15 1/4	14	3 3/8		10									9.0
5	36		2 1/4			16	4	7 5/8	5 5/8	12 1/4	12 7/8	3	17 1/8	15 1/4	14	3 3/8		10									9.0

CTH MARKER
M1-5A FOR ASSEMBLIES

WISCONSIN DEPT OF TRANSPORTATION

APPROVED Matthew R Rauch
for State Traffic Engineer

DATE 9/27/11 PLATE NO. M1-5A.8

PROJECT NO: | HWY: | COUNTY: | SHEET NO: 139 | E

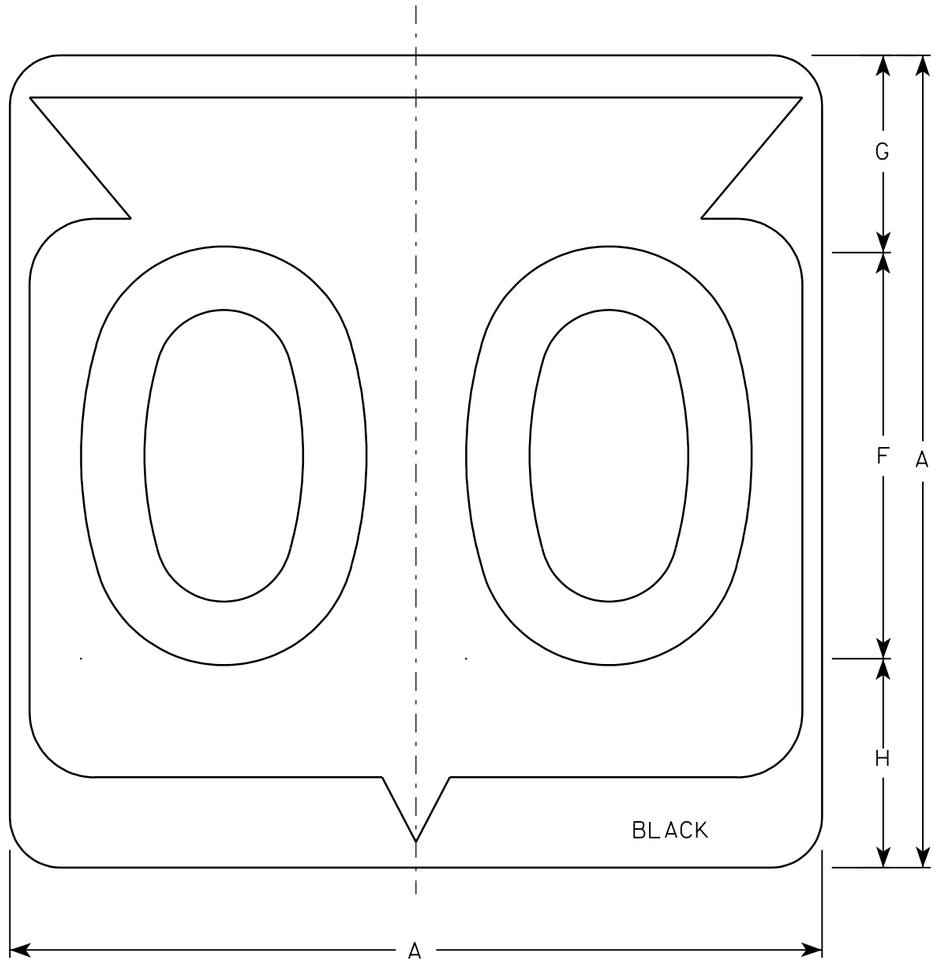

M1-6

NOTES

1. Sign is Type II - See Note 6 - reference WIS DOT Standard Specification for HIGHWAY and STRUCTURE CONSTRUCTION latest edition.
2. Color:
   Background - White & Black - See Note 6
   Message - Black
3. Message Series - See note 5
4. Corners may be square or rounded when base material is plywood but borders shall be rounded as shown. When base material is metal, the corners and borders shall be rounded.
5. Substitute appropriate Series numerals and adjust spacing as per plate A10-1.
6. Permanent Signs
   Background - Type H Reflective
   Detour or temporary Signs
   Background - Reflective

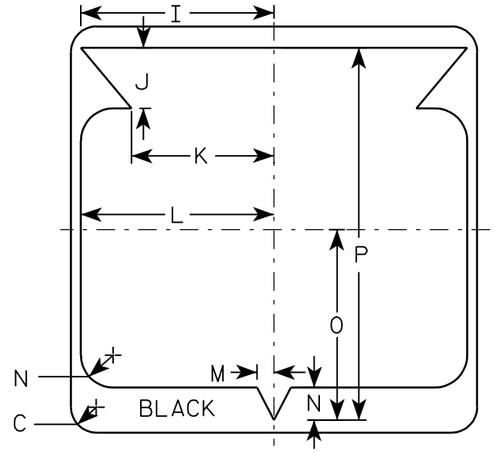

Metric equivalent for this sign is:

SIZE	
1	
2	600 mm X 600 mm
3	900 mm X 900 mm
4	900 mm X 900 mm
5	900 mm X 900 mm

SIZE	A	B	C	D	E	F	G	H	I	J	K	L	M	N	O	P	Q	R	S	T	U	V	W	X	Y	Z	Area sq. ft.	Area m2
1																												
2	24		1 1/2			12	5 1/2	6 1/2	10 1/4	2 1/2	8 7/8	11 1/2	1	1 7/8	11 1/4	21 7/8											4.0	.36
3	36		2 1/4			18	8 3/4	9 1/4	15 3/8	5 3/8	12 5/8	17 1/8	1 1/2	2 7/8	16 7/8	33											9.0	.81
4	36		2 1/4			18	8 3/4	9 1/4	15 3/8	5 3/8	12 5/8	17 1/8	1 1/2	2 7/8	16 7/8	33											9.0	.81
5	36		2 1/4			18	8 3/4	9 1/4	15 3/8	5 3/8	12 5/8	17 1/8	1 1/2	2 7/8	16 7/8	33											9.0	.81

STATE ROUTE MARKER M1-6 FOR ASSEMBLIES

WISCONSIN DEPT OF TRANSPORTATION

APPROVED Chester J Spang for State Traffic Engineer

DATE 3/20/02 PLATE NO. M1-6.9

PROJECT NO:	HWY:	COUNTY:		SHEET NO: 140	E

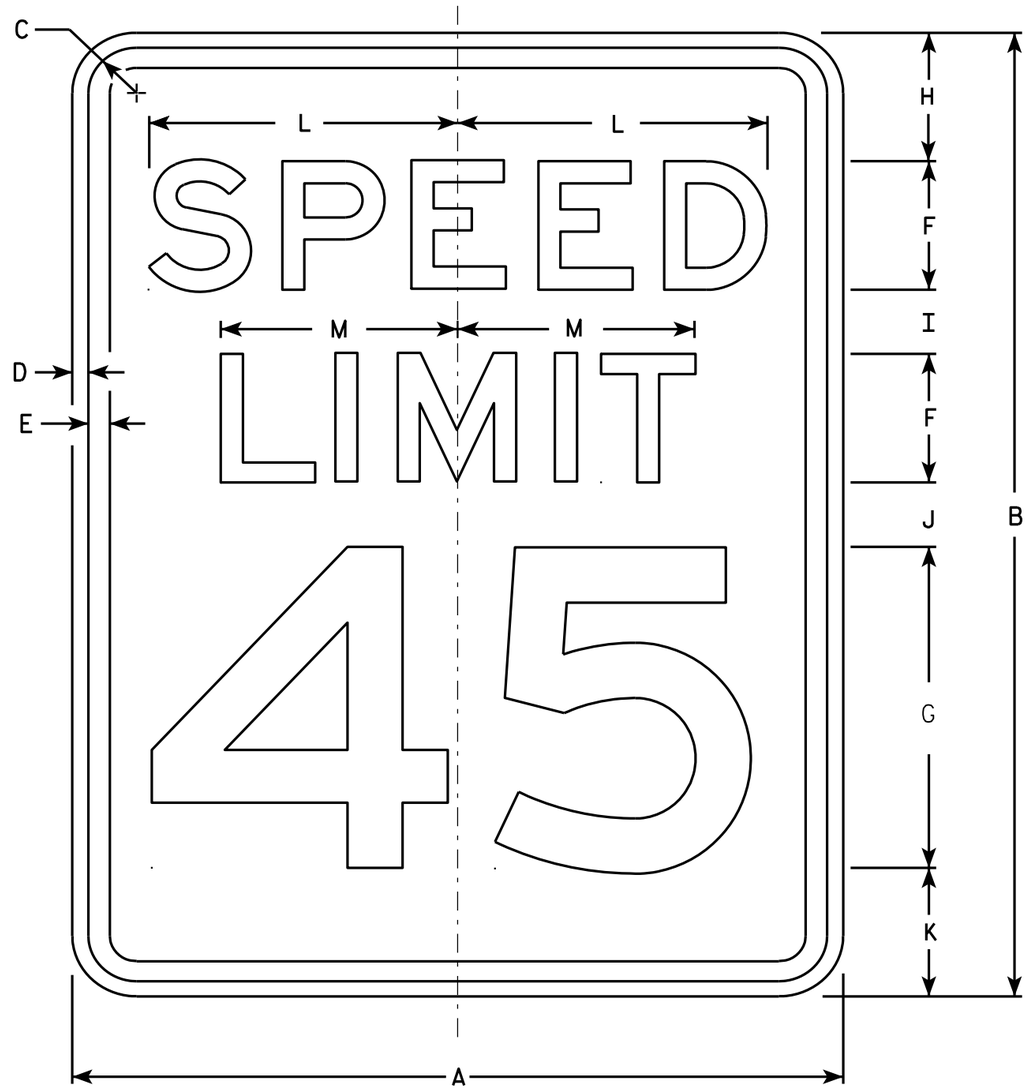

R2-1

NOTES

1. Sign is Type II - Type H Reflective - reference WIS DOT Standard Specification for HIGHWAY and STRUCTURE CONSTRUCTION latest edition.
2. Color:
   Background - White
   Message - Black
3. Message Series - E
4. Corners may be square or rounded when base material is plywood but borders shall be rounded as shown. When base material is metal, the corners and borders shall be rounded.
5. Substitute appropriate numerals and optically adjust spacing to achieve proper balance.

SIZE	A	B	C	D	E	F	G	H	I	J	K	L	M	N	O	P	Q	R	S	T	U	V	W	X	Y	Z	Area sq. ft.
1	18	24	1 1/8	3/8	1/2	3	8	3	2	2	3	7 1/4	5 1/2														3.0
2S	24	30	1 1/8	3/8	1/2	4	10	3	2 1/4	3 3/8	3 3/8	9 5/8	7 3/8														5.0
2M	30	36	1 3/8	1/2	5/8	5	12	5	2 1/2	2 1/2	4	12	9 1/4														7.5
3	36	48	1 3/8	1/2	5/8	6	14	6	5	5	6	14 3/8	11														12.0
4	36	48	1 3/8	1/2	5/8	6	14	6	5	5	6	14 3/8	11														12.0
5	48	60	2 1/4	3/4	1	8	20	6	4 1/2	6 3/4	6 3/4	19 1/4	14 5/8														20.0

STANDARD SIGN
R2-1

WISCONSIN DEPT OF TRANSPORTATION

APPROVED Matthew R Rauch
for State Traffic Engineer

DATE 5/26/10 PLATE NO. R2-1.13

PROJECT NO: | HWY: | COUNTY: | SHEET NO: 146 | E

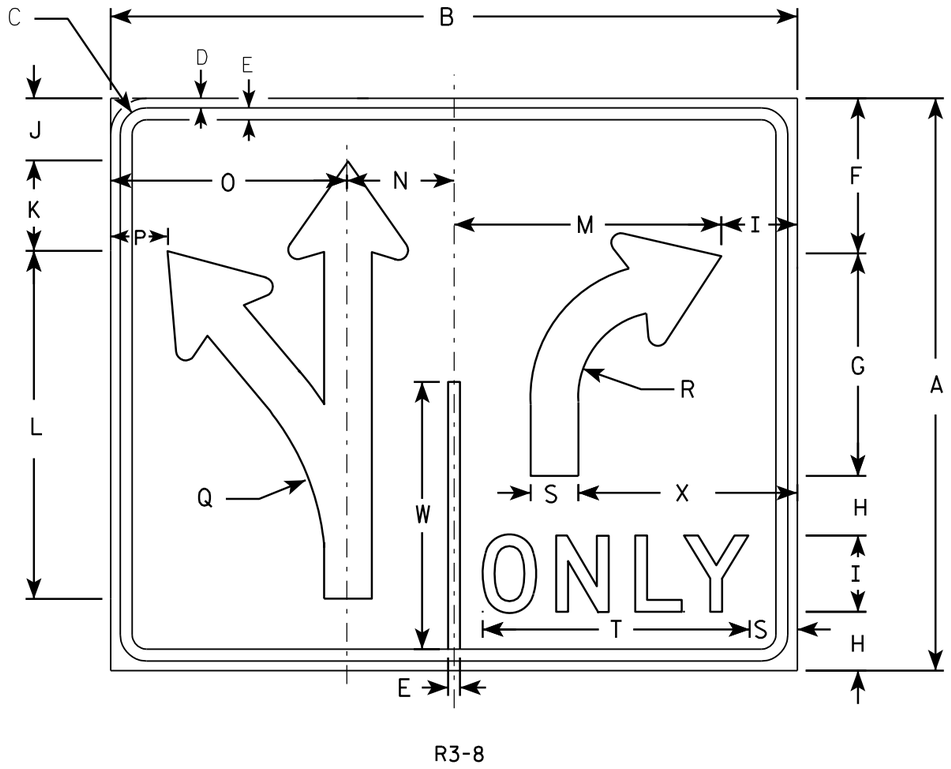

R3-8

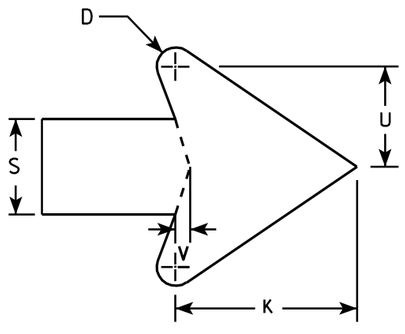

ARROW DETAIL

NOTES

1. Sign is Type II - Type H Reflective - reference WIS DOT Standard Specification for HIGHWAY and STRUCTURE CONSTRUCTION latest edition.
2. Color:
   Background - WHITE
   Message - BLACK
3. Message Series - D
4. Corners may be square or rounded when base material is plywood but borders shall be rounded as shown. When base material is metal, the corners and borders shall be rounded.

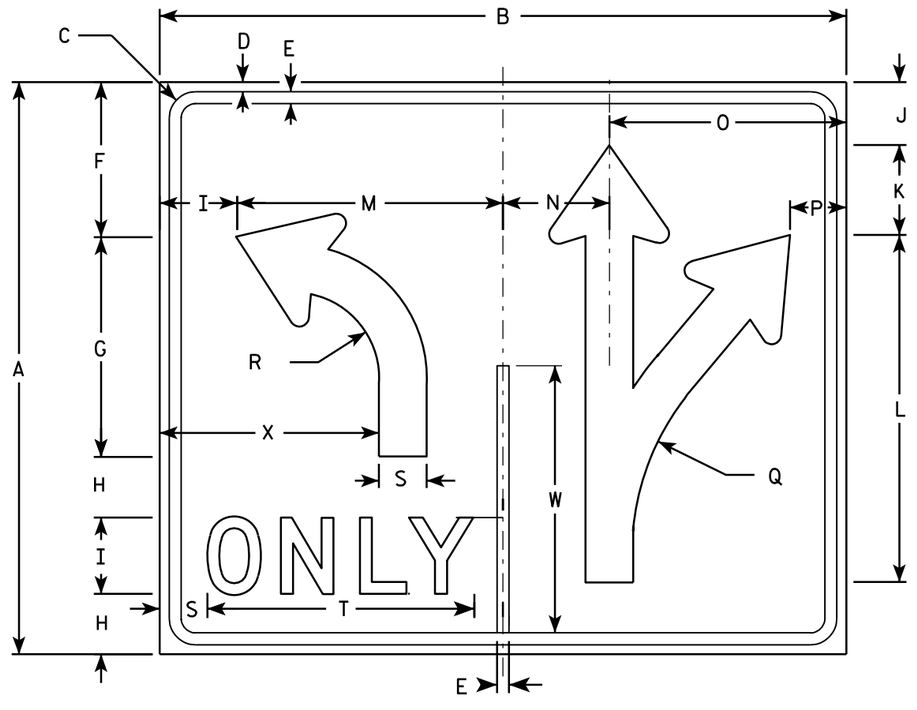

R3-8A

SIZE	A	B	C	D	E	F	G	H	I	J	K	L	M	N	O	P	Q	R	S	T	U	V	W	X	Y	Z	Area sq. ft.
1																											
2S	30	36	1 3/8	1/2	5/8	8 1/8	11 5/8	3 1/8	4	3 1/4	4 3/4	18 1/4	14	5 5/8	12 3/8	3	13 1/4	4 1/2	2 1/2	14	2 5/8	3/8	14	11 1/2			7.5
2M	30	36	1 3/8	1/2	5/8	8 1/8	11 5/8	3 1/8	4	3 1/4	4 3/4	18 1/4	14	5 5/8	12 3/8	3	13 1/4	4 1/2	2 1/2	14	2 5/8	3/8	14	11 1/2			7.5
3																											
4	48	54	2 1/4	3/4	1	13 1/4	18 1/2	5 1/8	6	5 1/4	7 1/8	29 1/8	21	8 3/8	18 5/8	4 3/8	21 7/8	7 1/4	3 3/4	20 5/8	4	5/8	22 3/8	17 1/4			18.0
5	48	54	2 1/4	3/4	1	13 1/4	18 1/2	5 1/8	6	5 1/4	7 1/8	29 1/8	21	8 3/8	18 5/8	4 3/8	21 7/8	7 1/4	3 3/4	20 5/8	4	5/8	22 3/8	17 1/4			18.0

STANDARD SIGN
R3-8 & R3-8A

WISCONSIN DEPT OF TRANSPORTATION

APPROVED Matthew R Rauch
for State Traffic Engineer

DATE 3/18/2011 PLATE NO. R3-8.5

PROJECT NO:	HWY:	COUNTY:		SHEET NO: 147	E

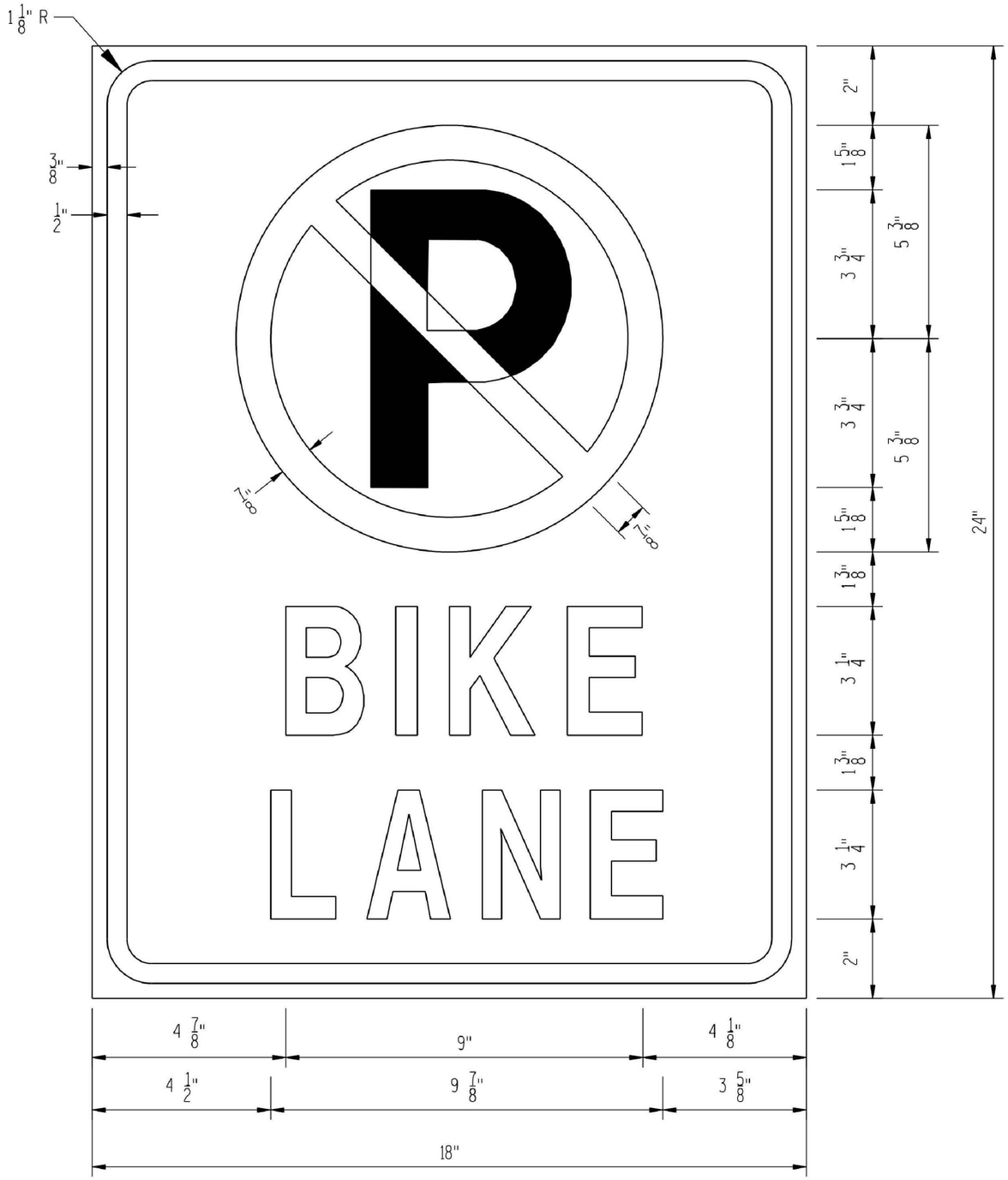

NOTES:

1. Sign is Type II - Type H Reflective - reference WIS DOT Standard Specification for HIGHWAY and STRUCTURE CONSTRUCTION latest edition.

2. Color:
   Background - White
   Message - Red
   "P" - Black

3. Message Series:
   Message is Series C.
   "P" is Series E Modified

4. Corners may be square or rounded when base material is plywood but borders shall be rounded as shown. When base material is metal, the corners and borders shall be rounded.

STANDARD SIGN R7-9A

PROJECT NO: 4997-00-64	HWY: CTH C	COUNTY: DOOR	SIGN PLATE DETAILS	SHEET 148	E

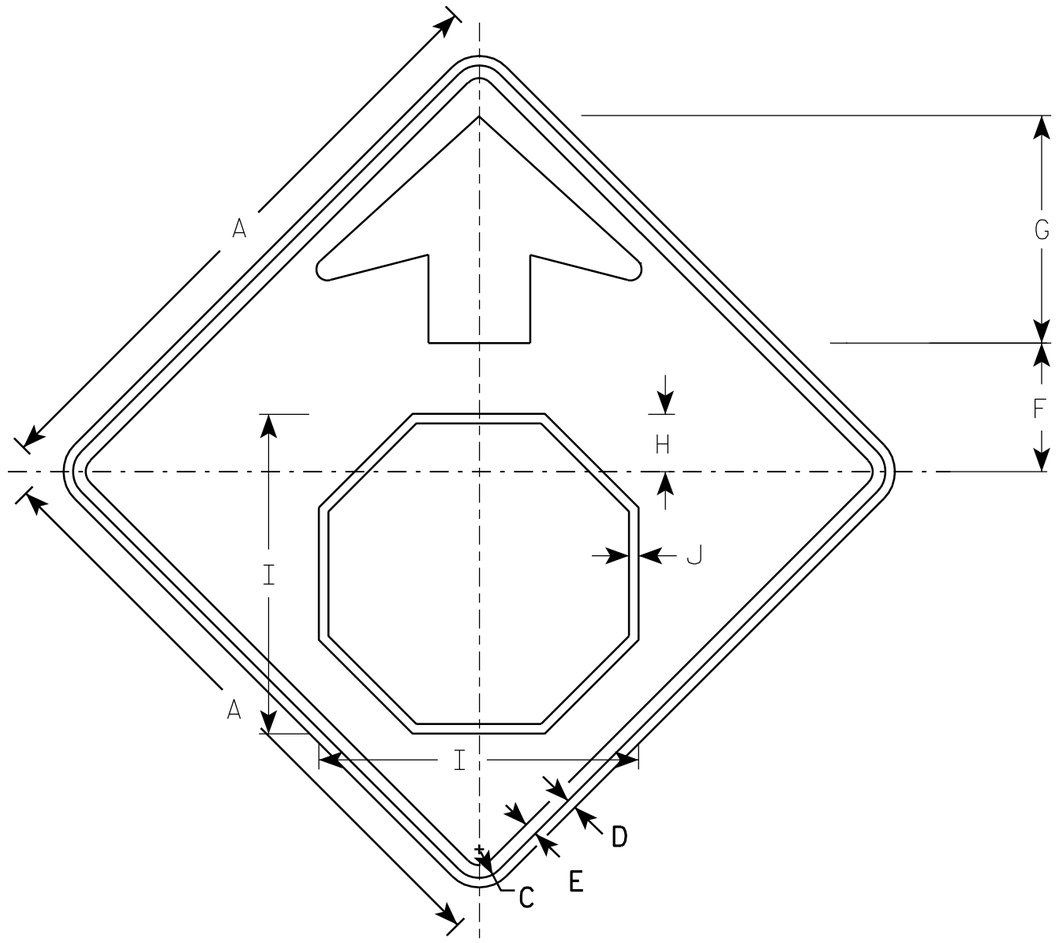

W3-1

NOTES

1. All Signs Type II - Type F Reflective - reference WIS DOT Standard Specification for HIGHWAY and STRUCTURE CONSTRUCTION latest edition.
2. Color:
   Background - YELLOW
   Arrow & Border - BLACK
   Stop Symbol - WHITE BORDER ON RED BACKGROUND

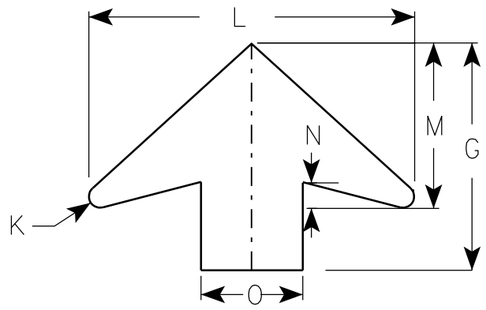

ARROW DETAIL

SIZE	A	B	C	D	E	F	G	H	I	J	K	L	M	N	O	P	Q	R	S	T	U	V	W	X	Y	Z	Area sq. ft.
1	30		1 3/8	1/2	5/8	6 1/4	11 1/4	2 7/8	15 3/4	1/2	1/2	16	8	1 1/4	5												6.25
2S	36		1 5/8	5/8	3/4	7 1/2	13 1/2	3 1/2	19	5/8	5/8	19 1/4	9 3/4	1 5/8	6												9.0
2M	36		1 5/8	5/8	3/4	7 1/2	13 1/2	3 1/2	19	5/8	5/8	19 1/4	9 3/4	1 5/8	6												9.0
3	36		1 5/8	5/8	3/4	7 1/2	13 1/2	3 1/2	19	5/8	5/8	19 1/4	9 3/4	1 5/8	6												9.0
4	48		2 1/4	3/4	1	10	17 7/8	4 1/2	25 1/8	3/4	7/8	25 5/8	13	2	8												16.0
5	48		2 1/4	3/4	1	10	17 7/8	4 1/2	25 1/8	3/4	7/8	25 5/8	13	2	8												16.0

STANDARD SIGN
W3-1

WISCONSIN DEPT OF TRANSPORTATION

APPROVED Matthew R Rauch
for State Traffic Engineer

DATE 6/7/10 PLATE NO. W3-1.12

PROJECT NO:

SHEET NO: 149 E

W4-4P

NOTES

1. Sign is Type II - Type F Reflective - reference WIS DOT Standard Specification for HIGHWAY and STRUCTURE CONSTRUCTION latest edition.
2. Color:
   Background - Yellow
   Message - Black
3. Message Series - B
4. Corners may be square or rounded when base material is plywood but borders shall be rounded as shown. When base material is metal, the corners and borders shall be rounded.

SIZE	A	B	C	D	E	F	G	H	I	J	K	L	M	N	O	P	Q	R	S	T	U	V	W	X	Y	Z	Area sq. ft.
1																											
2S	24	12	1 1/8	3/8	3/8	3	2 1/4	1 1/2	8	1 1/2	3/8	10	6 1/4	2 1/4	2 1/4	6 1/4											2.0
2M	24	12	1 1/8	3/8	3/8	3	2 1/4	1 1/2	8	1 1/2	3/8	10	6 1/4	2 1/4	2 1/4	6 1/4											2.0
3	36	15	1 1/8	3/8	1/2	4	2 5/8	1 3/4	10 3/4	2 3/8	3/8	13 1/2	8 3/8	3	3 1/8	8 3/8											3.75
4	42	18	1 1/8	3/8	1/2	5	3	2	13 3/8	3 1/8	3/8	16 7/8	10 1/2	3 5/8	3 7/8	10 3/8											5.25
5																											

STANDARD SIGN
W4-4P

WISCONSIN DEPT OF TRANSPORTATION

APPROVED Matthew R Rauch
for State Traffic Engineer

DATE 03/12/13 PLATE NO. W4-4P.2

PROJECT NO:	HWY:	COUNTY:		SHEET NO: 150	E

CTH C RESURFACE - 14+50 TO 29+50

Station	Cut Area (Sq.ft.)	Cut Volume (Cu.yd.)	Reusable Volume (Cu.yd.)	Fill Area (Sq.ft.)	Fill Volume (Cu.yd.)	Cum. Cut Vol. (Cu.yd.)	Cum. Reusable Vol. (Cu.yd.)	Cum. Fill Vol. (Cu.yd.)	Cum. Net Vol. (Cu.yd.)
14+50.000	0	0	0	0	0	0	0	0	0
15+00.000	18.03	16.69	16.69	1.86	1.72	16.69	16.69	1.72	14.98
15+50.000	0.03	16.72	16.72	19.75	20	33.42	33.42	21.72	11.69
16+00.000	0.14	0.15	0.15	12.81	30.15	33.57	33.57	51.87	-18.3
16+50.000	1.54	1.55	1.55	8.17	19.42	35.12	35.12	71.3	-36.17
17+00.000	2.01	3.29	3.29	14.2	20.71	38.42	38.42	92	-53.58
17+50.000	2.24	3.94	3.94	7.2	19.81	42.35	42.35	111.82	-69.46
18+00.000	6.13	7.75	7.75	1.96	8.48	50.1	50.1	120.3	-70.19
18+50.000	15.71	20.22	20.22	0.31	2.1	70.32	70.32	122.4	-52.08
19+00.000	8.98	22.86	22.86	0.39	0.65	93.18	93.18	123.05	-29.87
19+13.893	9.19	4.68	4.68	0.41	0.21	97.86	97.86	123.25	-25.4
19+50.000	13.46	15.14	15.14	0	0.27	113	113	123.52	-10.52
20+00.000	7.02	18.96	18.96	0.07	0.06	131.96	131.96	123.58	8.38
20+50.000	5.4	11.5	11.5	1.78	1.71	143.46	143.46	125.3	18.17
20+75.000	7.68	6.06	6.06	6.27	3.73	149.52	149.52	129.02	20.49
21+00.000	5.31	6.02	6.02	5.18	5.3	155.53	155.53	134.32	21.21
21+50.000	4.2	8.81	8.81	3.41	7.95	164.34	164.34	142.27	22.07
22+21.215	9.49	18.06	18.06	5.56	11.83	182.4	182.4	154.1	28.3
22+50.000	7.63	9.13	9.13	5.19	5.73	191.53	191.53	159.83	31.69
22+80.000	12.59	11.23	11.23	9.05	7.91	202.76	202.76	167.74	35.02
23+00.000	12.46	9.28	9.28	13.2	8.24	212.04	212.04	175.98	36.05
23+50.000	14.93	25.36	25.36	0.38	12.57	237.4	237.4	188.56	48.84
23+75.000	15.33	14.01	14.01	0.2	0.27	251.41	251.41	188.82	62.58
24+00.000	12.04	12.67	12.67	0.28	0.22	264.08	264.08	189.04	75.03
24+15.000	12.36	6.78	6.78	0.05	0.09	270.85	270.85	189.13	81.72
24+50.000	15.28	17.92	17.92	0.05	0.06	288.77	288.77	189.19	99.58
24+68.294	14.47	10.08	10.08	0.1	0.05	298.85	298.85	189.24	109.61
25+00.000	27.3	24.53	24.53	1.44	0.9	323.38	323.38	190.15	133.23
25+32.000	50.83	46.3	46.3	2.28	2.21	369.68	369.68	192.35	177.33
25+50.000	30.18	27.01	27.01	3.94	2.08	396.69	396.69	194.43	202.26
26+00.000	21.24	47.62	47.62	12.67	15.39	444.3	444.3	209.82	234.49
26+38.000	22.72	30.94	30.94	0.51	9.28	475.24	475.24	219.09	256.15
26+50.000	11.59	7.62	7.62	0.52	0.23	482.87	482.87	219.32	263.54
27+00.000	17.63	27.05	27.05	1.42	1.8	509.92	509.92	221.13	288.79
27+50.000	12.81	28.18	28.18	1.8	2.99	538.1	538.1	224.11	313.99
28+00.000	22.59	32.78	32.78	0	1.67	570.88	570.88	225.78	345.09
28+50.000	21.68	40.99	40.99	0.05	0.04	611.86	611.86	225.83	386.04
29+00.000	28.16	46.15	46.15	0.14	0.17	658.01	658.01	226	432.01

CTH C RECONSTRUCTION - 29+50 - 62+77

Station	Cut Area (Sq.ft.)	Cut Volume (Cu.yd.)	Reusable Volume (Cu.yd.)	Fill Area (Sq.ft.)	Fill Volume (Cu.yd.)	Cum. Cut Vol. (Cu.yd.)	Cum. Reusable Vol. (Cu.yd.)	Cum. Fill Vol. (Cu.yd.)	Cum. Net Vol. (Cu.yd.)
29+50.207	66.25	87.78	87.78	2.69	2.63	745.79	745.79	228.63	517.16
29+79.000	64.31	69.61	69.61	2.52	2.78	815.4	815.4	231.41	583.99
30+00.000	61.08	48.76	48.76	3.31	2.27	864.16	864.16	233.67	630.49
30+50.000	66.34	117.98	117.98	3.7	6.49	982.14	982.14	240.16	741.98
30+72.000	74.42	57.35	57.35	1.99	2.32	1039.49	1039.49	242.48	797.01
31+00.000	61.49	70.47	70.47	5.5	3.88	1109.96	1109.96	246.36	863.6
31+12.000	63.86	27.85	27.85	8.15	3.03	1137.81	1137.81	249.4	888.42
31+50.000	48.55	79.1	79.1	36.97	31.75	1216.91	1216.91	281.15	935.76
32+00.000	50.49	91.7	91.7	35.63	67.22	1308.62	1308.62	348.37	960.24
32+25.000	54.95	48.81	48.81	40.22	35.11	1357.43	1357.43	383.48	973.95
32+50.000	61.67	53.99	53.99	41.6	37.88	1411.42	1411.42	421.36	990.06
32+90.000	97.85	118.17	118.17	1.07	31.6	1529.59	1529.59	452.96	1076.63
33+00.000	99.54	36.55	36.55	1.38	0.45	1566.14	1566.14	453.42	1112.73
33+50.000	66.19	153.46	153.46	21.42	21.12	1719.6	1719.6	474.54	1245.06
34+00.000	99.19	153.13	153.13	7.88	27.14	1872.73	1872.73	501.67	1371.06
34+34.000	110.61	132.09	132.09	0.47	5.26	2004.82	2004.82	506.93	1497.89
34+50.000	89.68	59.34	59.34	15.48	4.73	2064.17	2064.17	511.66	1552.51
35+00.000	75.58	153.02	153.02	29.3	41.46	2217.19	2217.19	553.12	1664.07
35+50.000	59.55	125.13	125.13	38.21	62.51	2342.31	2342.31	615.63	1726.68
35+84.434	59.73	76.07	76.07	8.19	29.59	2418.38	2418.38	645.22	1773.16
36+00.000	66.31	36.33	36.33	4.27	3.59	2454.71	2454.71	648.81	1805.9
36+50.000	113.08	166.1	166.1	1.86	5.68	2620.81	2620.81	654.49	1966.32
36+60.492	102.52	41.89	41.89	3.29	1	2662.7	2662.7	655.5	2007.2
36+87.164	34.99	67.92	67.92	8.32	5.74	2730.62	2730.62	661.23	2069.39
37+00.000	48.8	19.92	19.92	7.32	3.72	2750.54	2750.54	664.95	2085.59
37+50.000	55.68	96.74	96.74	6.04	12.37	2847.28	2847.28	677.32	2169.96
37+60.000	59.18	21.27	21.27	0.76	1.26	2868.55	2868.55	678.58	2189.97
38+00.000	40.11	73.55	73.55	25.76	19.64	2942.11	2942.11	698.23	2243.88
38+15.000	55.62	26.59	26.59	70.89	26.85	2968.7	2968.7	725.08	2243.62
38+50.000	65.5	78.5	78.5	71.94	92.58	3047.2	3047.2	817.65	2229.55
39+00.000	83.64	138.09	138.09	52.3	115.04	3185.29	3185.29	932.7	2252.6
39+41.953	77.38	125.1	125.1	18.41	54.93	3310.39	3310.39	987.63	2322.76
39+50.000	82.4	23.81	23.81	14.98	4.98	3334.2	3334.2	992.61	2341.6
39+57.854	85.71	24.45	24.45	17.62	4.74	3358.65	3358.65	997.35	2361.31
39+67.015	144.77	39.1	39.1	4.13	3.69	3397.76	3397.76	1001.04	2396.72
40+00.000	332.82	291.73	291.73	0	2.52	3689.48	3689.48	1003.56	2685.93
40+41.019	46.65	288.25	288.25	40.31	30.62	3977.73	3977.73	1034.18	2943.55
40+50.000	43.6	15.01	15.01	25.53	10.95	3992.74	3992.74	1045.13	2947.61
40+51.859	44.11	3.02	3.02	21.77	1.63	3995.76	3995.76	1046.76	2949
41+00.000	38.04	73.24	73.24	43	57.74	4069	4069	1104.5	2964.5
41+16.000	46.67	25.1	25.1	17.29	17.87	4094.1	4094.1	1122.36	2971.73
41+37.000	46.68	36.3	36.3	11.92	11.36	4130.4	4130.4	1133.72	2996.68
41+50.000	37.47	20.26	20.26	22.38	8.26	4150.66	4150.66	1141.98	3008.68
42+00.000	33.49	65.71	65.71	15.72	35.27	4216.37	4216.37	1177.25	3039.11
42+50.000	30.67	59.41	59.41	14.97	28.41	4275.77	4275.77	1205.66	3070.11
42+84.000	32.51	39.78	39.78	11.09	16.41	4315.55	4315.55	1222.07	3093.48
43+00.000	30.45	18.66	18.66	7.78	5.59	4334.21	4334.21	1227.66	3106.55
43+42.000	20.78	39.84	39.84	12.43	15.73	4374.05	4374.05	1243.39	3130.66
43+50.000	26.96	7.07	7.07	8.01	3.03	4381.12	4381.12	1246.42	3134.71
44+00.000	31.73	54.34	54.34	12.45	18.94	4435.47	4435.47	1265.35	3170.11
44+50.000	23.25	50.91	50.91	17.62	27.84	4486.38	4486.38	1293.19	3193.19
44+77.000	29.22	26.24	26.24	25.86	21.74	4512.61	4512.61	1314.93	3197.68
45+00.000	44.63	31.45	31.45	18.76	19	4544.07	4544.07	1333.93	3210.13
45+32.237	0	26.65	26.65	36.68	33.1	4570.71	4570.71	1367.03	3203.68
45+50.000	50.67	16.67	16.67	16.1	17.36	4587.38	4587.38	1384.39	3202.99
45+57.237	49.57	13.43	13.43	24.72	5.47	4600.82	4600.82	1389.86	3210.95

TABLE CONTINUED ON NEXT PAGE.

TABLE CONTINUED FROM PREVIOUS PAGE.

CTH C RECONSTRUCTION - 29+50 - 62+77

Station	Cut Area (Sq.ft.)	Cut Volume (Cu.yd.)	Reusable Volume (Cu.yd.)	Fill Area (Sq.ft.)	Fill Volume (Cu.yd.)	Cum. Cut Vol. (Cu.yd.)	Cum. Reusable Vol. (Cu.yd.)	Cum. Fill Vol. (Cu.yd.)	Cum. Net Vol. (Cu.yd.)
46+00.000	68.45	93.46	93.46	3.43	22.29	4694.28	4694.28	1412.16	3282.12
46+33.240	33.13	62.53	62.53	13.5	10.42	4756.8	4756.8	1422.58	3334.23
46+50.000	10.2	13.45	13.45	18.16	9.83	4770.25	4770.25	1432.4	3337.85
46+80.000	5.89	8.94	8.94	22.29	22.48	4779.19	4779.19	1454.88	3324.31
47+00.000	1.65	2.79	2.79	26.16	17.95	4781.98	4781.98	1472.82	3309.16
47+12.000	2.06	0.82	0.82	20.41	10.35	4782.81	4782.81	1483.17	3299.63
47+43.000	4.38	3.7	3.7	20.63	23.56	4786.51	4786.51	1506.74	3279.77
47+50.000	7.77	1.58	1.58	15.86	4.73	4788.08	4788.08	1511.47	3276.62
47+78.000	16.47	12.57	12.57	49.05	33.66	4800.65	4800.65	1545.13	3255.52
48+00.000	25.71	17.19	17.19	24.51	29.97	4817.83	4817.83	1575.09	3242.74
48+40.000	60.21	63.65	63.65	1.53	19.28	4881.48	4881.48	1594.38	3287.11
48+50.000	69.1	23.95	23.95	3.49	0.93	4905.43	4905.43	1595.31	3310.12
49+00.000	51.91	112.05	112.05	5.63	8.45	5017.48	5017.48	1603.76	3413.72
49+12.853	50.2	24.3	24.3	5.44	2.64	5041.79	5041.79	1606.4	3435.39
49+37.853	49.68	46.24	46.24	4.23	4.48	5088.03	5088.03	1610.88	3477.15
49+50.000	52.83	23.06	23.06	5.23	2.13	5111.09	5111.09	1613.01	3498.08
49+97.876	49.64	90.85	90.85	29.9	31.15	5201.93	5201.93	1644.15	3557.78
50+00.000	47.99	3.84	3.84	31.86	2.43	5205.77	5205.77	1646.58	3559.19
50+50.000	51.74	92.34	92.34	24.08	51.8	5298.11	5298.11	1698.38	3599.73
50+60.000	62.25	21.11	21.11	20.08	8.18	5319.22	5319.22	1706.56	3612.66
51+00.000	47.51	81.31	81.31	21.16	30.54	5400.53	5400.53	1737.11	3663.42
51+37.000	61.34	74.59	74.59	11.09	22.1	5475.11	5475.11	1759.2	3715.91
51+50.000	61.58	29.59	29.59	13.19	5.85	5504.71	5504.71	1765.05	3739.66
52+00.000	77.77	129.03	129.03	19.9	30.64	5633.73	5633.73	1795.69	3838.04
52+50.000	83.56	149.37	149.37	28.08	44.43	5783.11	5783.11	1840.12	3942.99
53+00.000	73.62	145.53	145.53	2.8	28.59	5928.64	5928.64	1868.71	4059.93
53+50.000	76.54	139.04	139.04	33.21	33.35	6067.68	6067.68	1902.06	4165.62
54+00.000	87.42	151.82	151.82	11.76	41.64	6219.5	6219.5	1943.7	4275.8
54+00.210	87.31	0.68	0.68	11.71	0.09	6220.18	6220.18	1943.79	4276.39
54+50.000	130.39	200.73	200.73	0.03	10.82	6420.91	6420.91	1954.61	4466.3
54+76.213	55.07	90.03	90.03	23.61	11.48	6510.94	6510.94	1966.09	4544.86
54+82.000	54.35	11.72	11.72	35.18	6.3	6522.67	6522.67	1972.39	4550.28
55+00.000	53.8	36.05	36.05	26.04	20.41	6558.72	6558.72	1992.79	4565.92
55+50.000	80.53	124.39	124.39	23.74	46.09	6683.1	6683.1	2038.88	4644.22
55+78.000	61.19	73.49	73.49	7.7	16.3	6756.59	6756.59	2055.19	4701.41
56+00.000	57.02	48.16	48.16	7.69	6.27	6804.75	6804.75	2061.46	4743.29
56+50.000	91.05	137.1	137.1	0.16	7.27	6941.85	6941.85	2068.73	4873.13
56+60.000	92.18	33.93	33.93	0.15	0.06	6975.78	6975.78	2068.78	4907
57+00.000	81.96	129	129	4.04	3.11	7104.78	7104.78	2071.89	5032.89
57+50.000	87.86	157.24	157.24	0.87	4.55	7262.02	7262.02	2076.44	5185.58
57+68.000	90.16	59.34	59.34	2.03	0.96	7321.36	7321.36	2077.4	5243.96
58+00.000	85.41	104.04	104.04	3.76	3.43	7425.4	7425.4	2080.83	5344.57
58+13.000	97.12	43.94	43.94	8.61	2.98	7469.35	7469.35	2083.81	5385.54
58+50.000	98.95	134.34	134.34	1.53	6.94	7603.69	7603.69	2090.75	5512.93
59+00.000	47.33	135.44	135.44	18.33	18.39	7739.13	7739.13	2109.14	5629.99
59+42.000	49.3	75.15	75.15	40.23	45.55	7814.28	7814.28	2154.69	5659.59
59+50.000	43.54	13.75	13.75	49.96	13.36	7828.03	7828.03	2168.05	5659.98
60+00.000	42.59	79.75	79.75	49.93	92.49	7907.78	7907.78	2260.54	5647.24
60+50.000	49.26	85.05	85.05	16.37	61.39	7992.83	7992.83	2321.93	5670.9
60+63.000	51.59	24.28	24.28	14.53	7.44	8017.11	8017.11	2329.37	5687.74
61+00.000	49.09	68.98	68.98	13.03	18.88	8086.09	8086.09	2348.25	5737.84
61+37.000	58.37	73.63	73.63	11.09	16.52	8159.72	8159.72	2364.77	5794.95
61+50.000	58.37	28.11	28.11	17.63	6.91	8187.82	8187.82	2371.68	5816.14
61+88.000	64.88	86.73	86.73	3.12	14.6	8274.56	8274.56	2386.29	5888.27
62+00.000	63.28	28.48	28.48	2.17	1.18	8303.04	8303.04	2387.46	5915.57
62+22.598	52.95	48.64	48.64	16.69	7.89	8351.67	8351.67	2395.35	5956.32
62+50.000	57.35	55.97	55.97	17.43	17.31	8407.64	8407.64	2412.67	5994.98
62+59.128	69.11	21.38	21.38	12.92	5.13	8429.02	8429.02	2417.8	6011.22
62+77.117	132.71	67.23	67.23	0	4.3	8496.25	8496.25	2422.1	6074.15

MAPLE STREET

Station	Cut Area (Sq.ft.)	Cut Volume (Cu.yd.)	Reusable Volume (Cu.yd.)	Fill Area (Sq.ft.)	Fill Volume (Cu.yd.)	Cum. Cut Vol. (Cu.yd.)	Cum. Reusable Vol. (Cu.yd.)	Cum. Fill Vol. (Cu.yd.)	Cum. Net Vol. (Cu.yd.)
310+23.790	53.93	0	0	8.68	0	0	0	0	0
310+50.000	97.03	73.27	73.27	0	4.21	73.27	73.27	4.21	69.06
311+00.000	178.51	255.12	255.12	0	0	328.4	328.4	4.21	324.18
311+50.000	252.93	399.48	399.48	0	0	727.88	727.88	4.21	723.66
312+00.000	309.17	520.46	520.46	0.01	0.01	1248.34	1248.34	4.22	1244.12
312+50.000	320.69	583.21	583.21	0.11	0.11	1831.55	1831.55	4.33	1827.21
313+00.000	402.55	669.67	669.67	0	0.1	2501.21	2501.21	4.43	2496.78
313+50.000	473.93	811.55	811.55	0	0	3312.77	3312.77	4.43	3308.33
314+00.000	254.82	674.77	674.77	0.26	0.24	3987.54	3987.54	4.67	3982.86
314+22.366	204.19	190.11	190.11	12.51	5.29	4177.65	4177.65	9.96	4167.69
315+50.000	54.45	611.31	611.31	6.54	45.03	4788.96	4788.96	54.99	4733.97
316+00.000	8.32	58.12	58.12	0.31	6.35	4847.07	4847.07	61.34	4785.74
316+50.000	12.09	18.9	18.9	0.03	0.32	4865.97	4865.97	61.65	4804.32
317+00.000	52.01	59.35	59.35	0.06	0.08	4925.33	4925.33	61.74	4863.59
317+50.000	1.07	49.15	49.15	1.92	1.83	4974.48	4974.48	63.57	4910.91
318+00.000	7.53	7.96	7.96	0.51	2.26	4982.44	4982.44	65.83	4916.61

BEGIN MILL AND OVERLAY
MATCH AT STA. 11+53.45

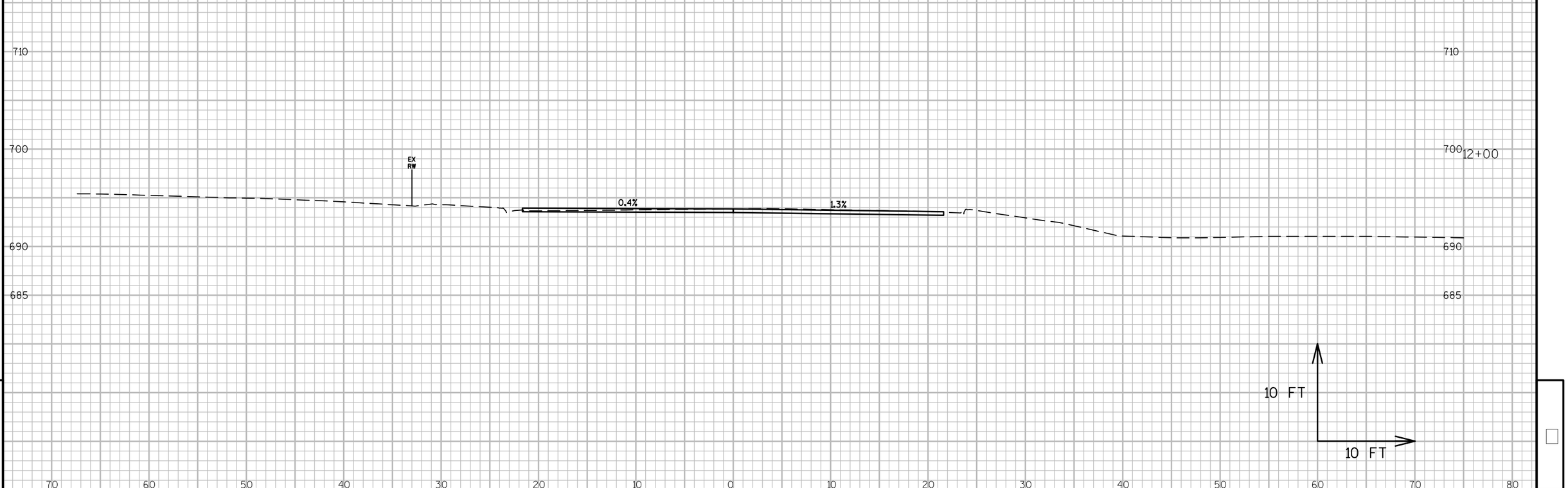

PROJECT NO: 4997-00-64	HWY: CTH C	COUNTY: DOOR	CROSS SECTIONS: CTH C	SHEET 153	E

FILE NAME : L:\PROJECTS\12642\DWG\4997-00-63\SHEETSPLAN\090201_XS.DWG
LAYOUT NAME - 090201_XS - 090201_XS
PLOT DATE : 7/24/2017 11:44 AM PLOT BY : MOYER, TIM PLOT NAME : PLOT SCALE : 1 IN:10 FT
WISDOT/CADDS SHEET 49

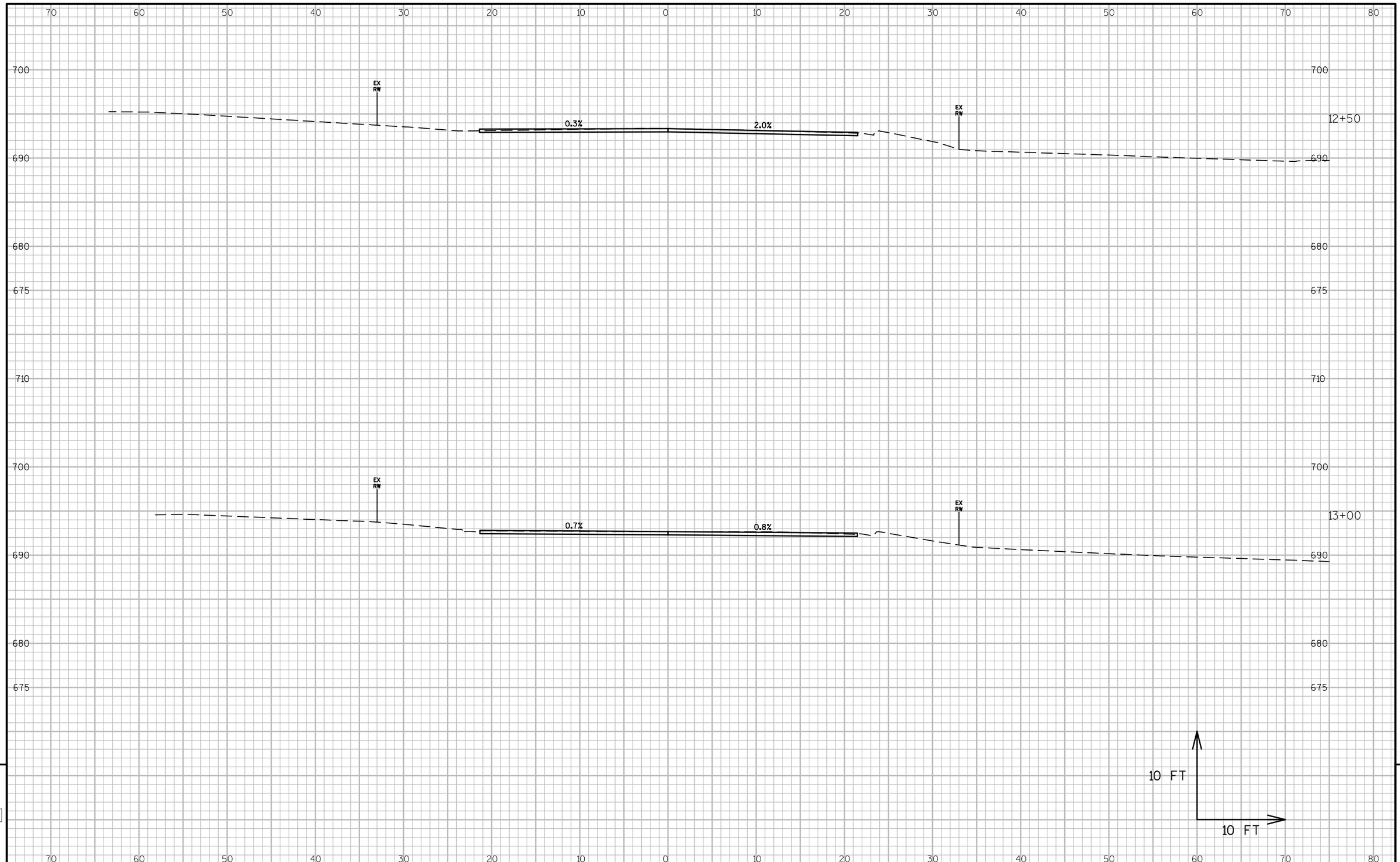

PROJECT NO: 4997-00-64	HWY: CTH C	COUNTY: DOOR	CROSS SECTIONS: CTH C	SHEET 154	E

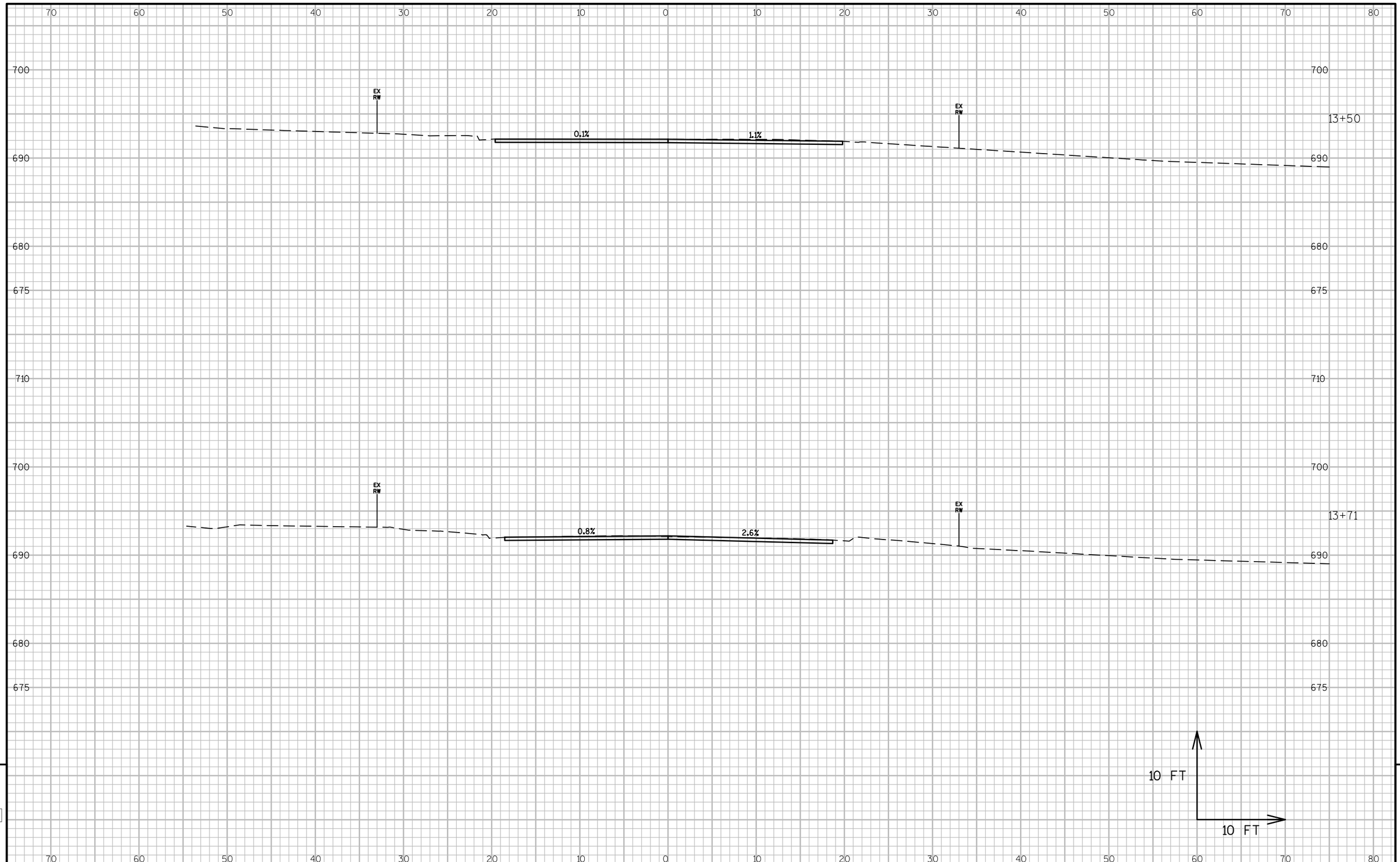

PROJECT NO: 4997-00-64	HWY: CTH C	COUNTY: DOOR	CROSS SECTIONS: CTH C	SHEET 155	E

FILE NAME : L:\PROJECTS\12642\DWG\4997-00-63\SHEETSPLAN\090201_XS.DWG
LAYOUT NAME - 090201_XS - 090203_XS

PLOT DATE : 7/24/2017 11:44 AM PLOT BY : MOYER, TIM PLOT NAME : PLOT SCALE : 1 IN:10 FT

WISDOT/CADDS SHEET 49

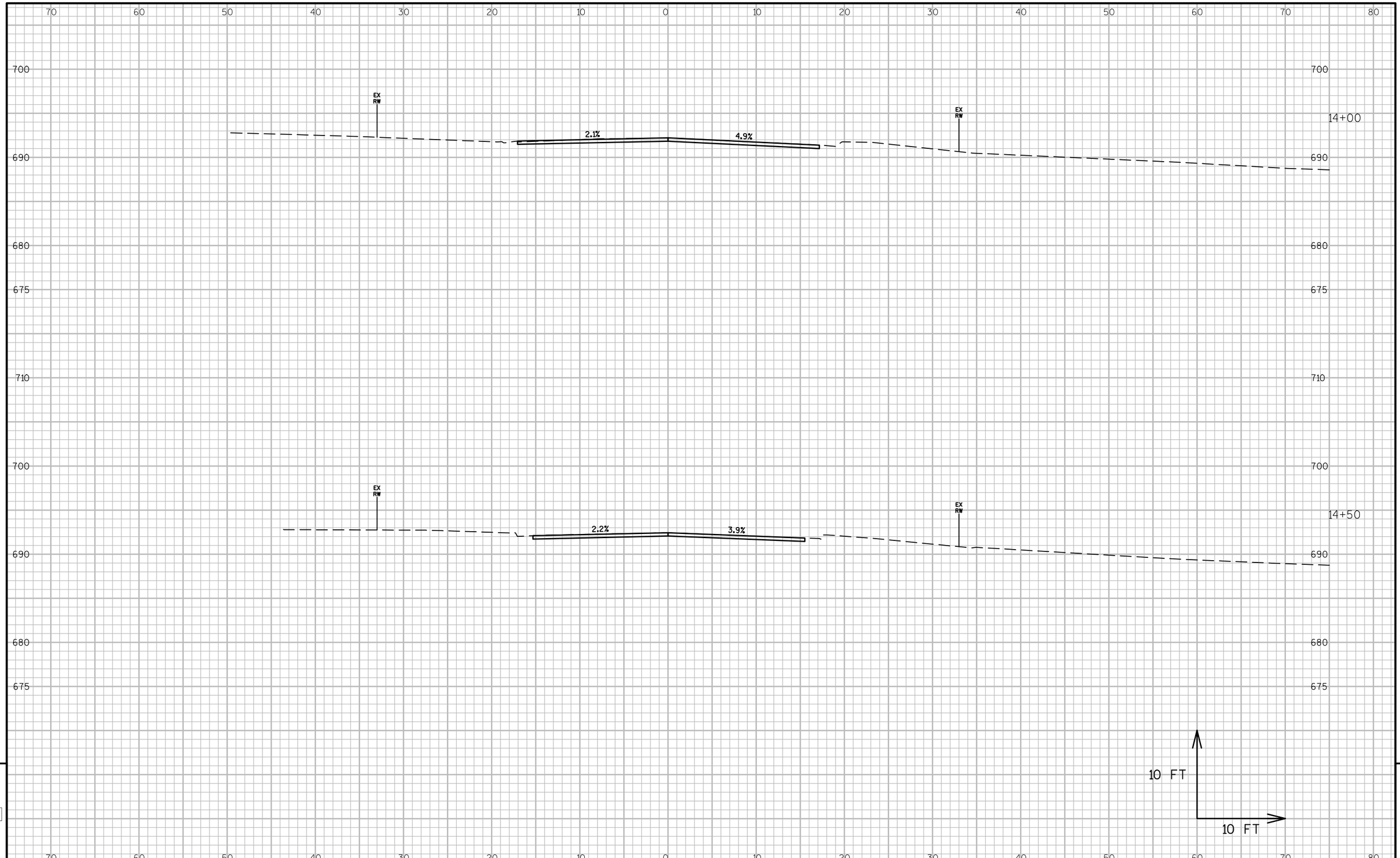

PROJECT NO: 4997-00-64	HWY: CTH C	COUNTY: DOOR	CROSS SECTIONS: CTH C	SHEET 156	E

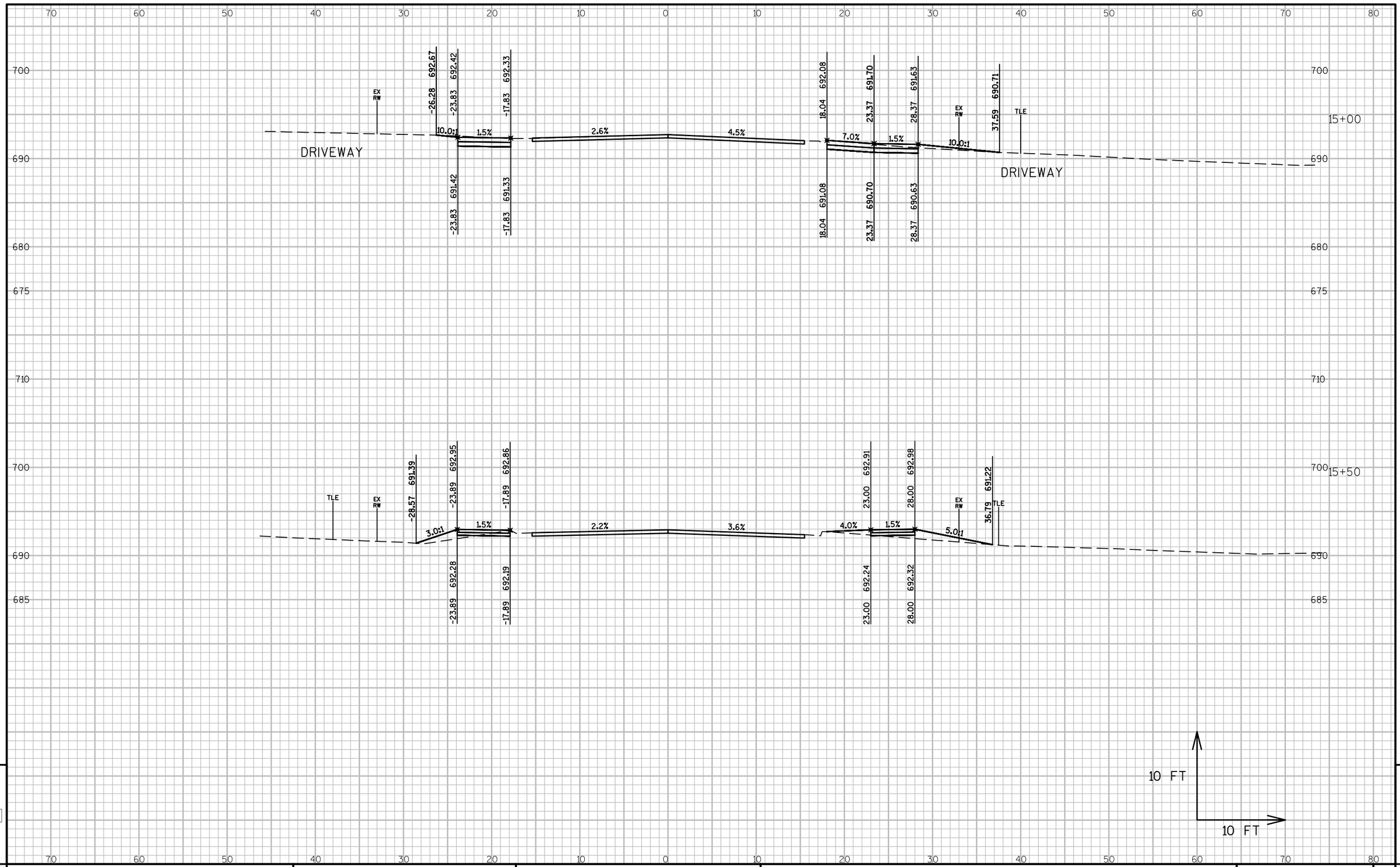

PROJECT NO: 4997-00-64	HWY: CTH C	COUNTY: DOOR	CROSS SECTIONS: CTH C	SHEET 157	E

FILE NAME : L:\PROJECTS\12642\DWG\4997-00-63\SHEETSPLAN\090201_XS.DWG
LAYOUT NAME - 090201_XS - 090205_XS

PLOT DATE : 7/24/2017 11:44 AM PLOT BY : MOYER, TIM PLOT NAME : PLOT SCALE : 1 IN:10 FT

WISDOT/CADDS SHEET 49

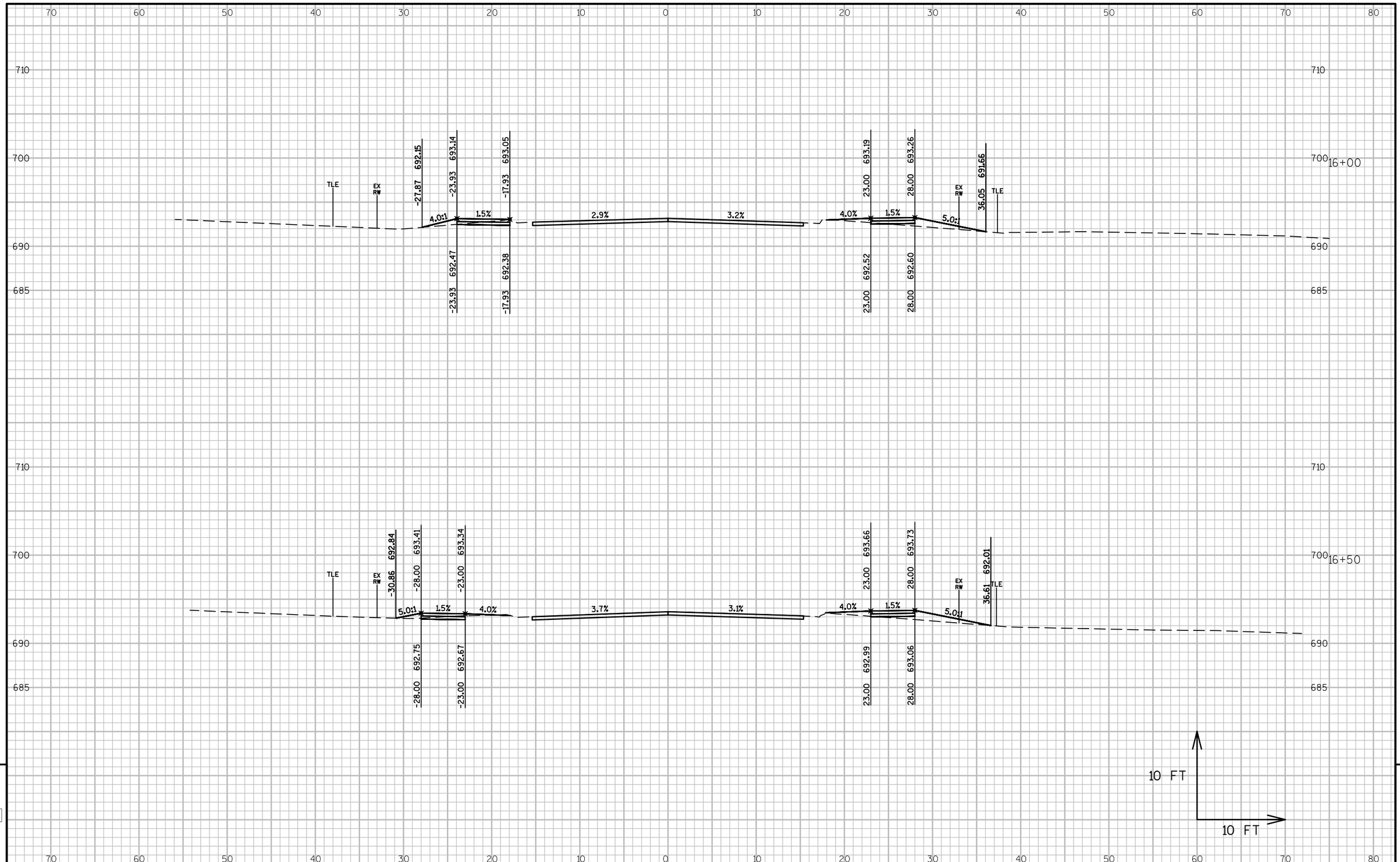

PROJECT NO: 4997-00-64	HWY: CTH C	COUNTY: DOOR	CROSS SECTIONS: CTH C	SHEET 158	E

FILE NAME : L:\PROJECTS\12642\DWG\4997-00-63\SHEETSPLAN\090201_XS.DWG
LAYOUT NAME - 090201_XS - 090206_XS

PLOT DATE : 7/24/2017 11:45 AM PLOT BY : MOYER, TIM PLOT NAME : PLOT SCALE : 1 IN:10 FT

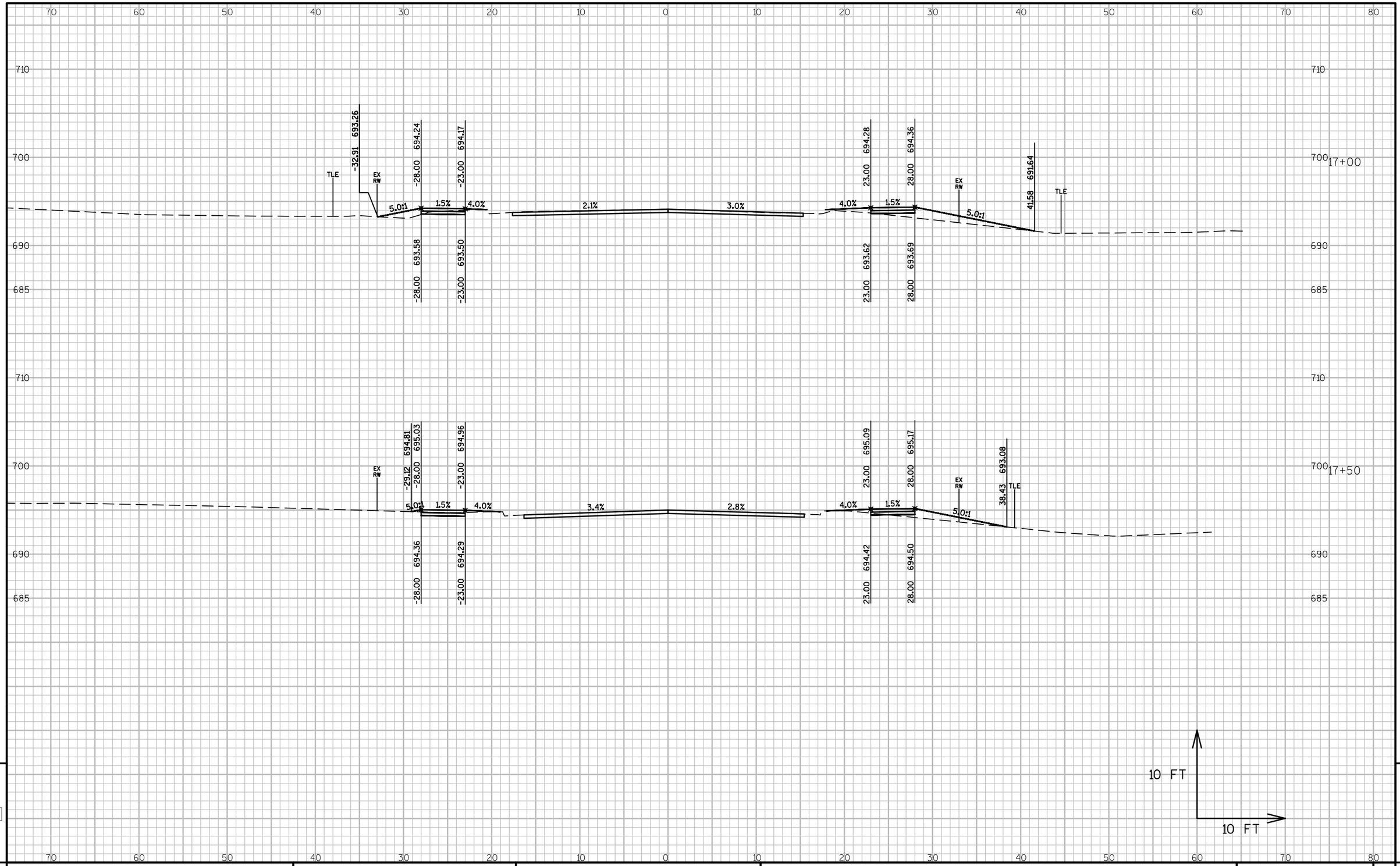

PROJECT NO: 4997-00-64	HWY: CTH C	COUNTY: DOOR	CROSS SECTIONS: CTH C	SHEET 159	E

FILE NAME : L:\PROJECTS\12642\DWG\4997-00-63\SHEETSPLAN\090201_XS.DWG
LAYOUT NAME - 090201_XS - 090207_XS

PLOT DATE : 7/24/2017 11:45 AM PLOT BY : MOYER, TIM PLOT NAME : PLOT SCALE : 1 IN:10 FT

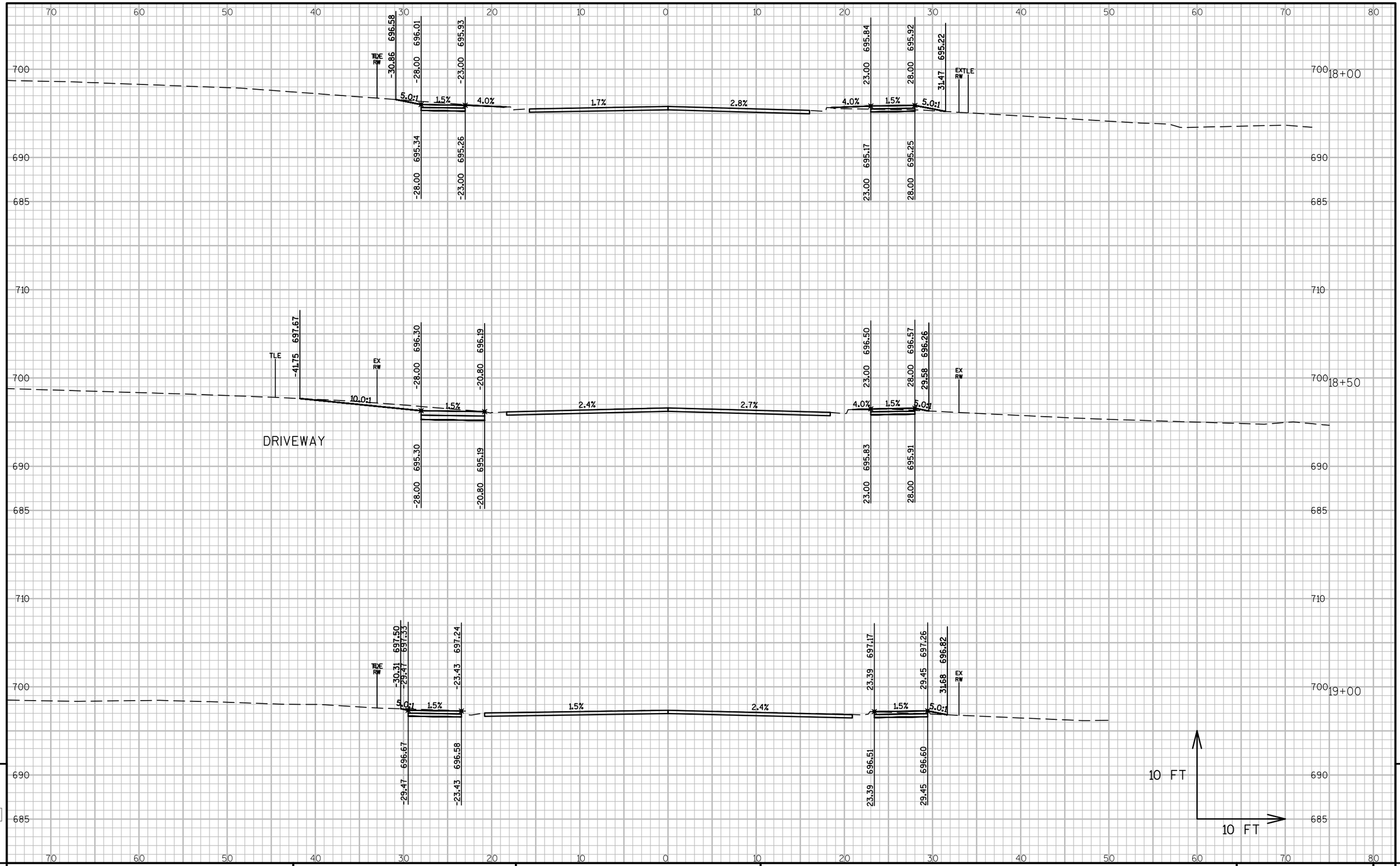

PROJECT NO: 4997-00-64	HWY: CTH C	COUNTY: DOOR	CROSS SECTIONS: CTH C	SHEET 160	E

FILE NAME : L:\PROJECTS\12642\DWG\4997-00-63\SHEETSPLAN\090201_XS.DWG
LAYOUT NAME - 090201_XS - 090208_XS

PLOT DATE : 7/24/2017 11:45 AM PLOT BY : MOYER, TIM PLOT NAME : PLOT SCALE : 1 IN:10 FT

WISDOT/CADDS SHEET 49

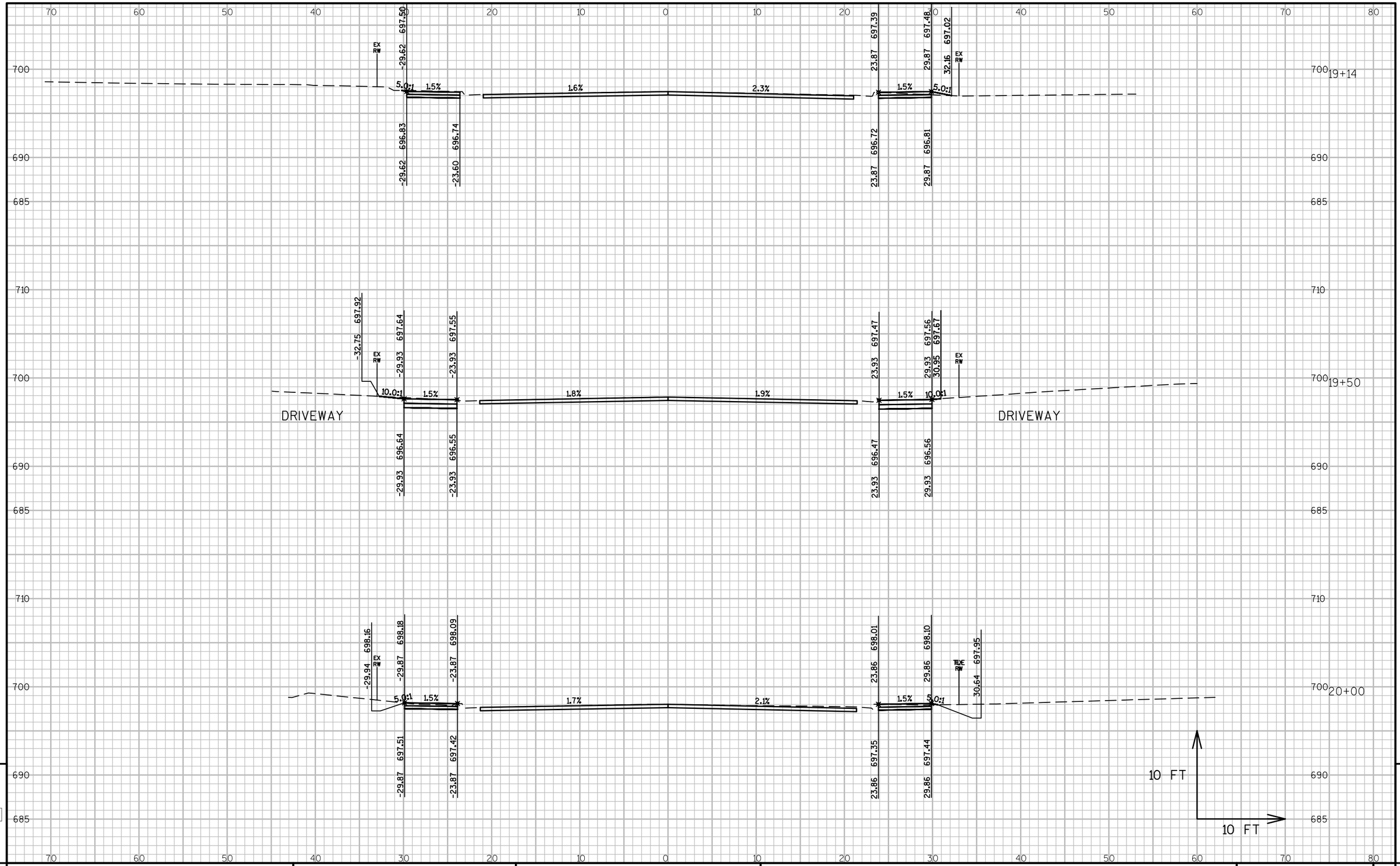

PROJECT NO: 4997-00-64	HWY: CTH C	COUNTY: DOOR	CROSS SECTIONS: CTH C	SHEET 161	E

FILE NAME : L:\PROJECTS\12642\DWG\4997-00-63\SHEETSPLAN\090201_XS.DWG
LAYOUT NAME - 090201_XS - 090209_XS

PLOT DATE : 7/24/2017 11:45 AM PLOT BY : MOYER, TIM PLOT NAME : PLOT SCALE : 1 IN:10 FT

WISDOT/CADDS SHEET 49

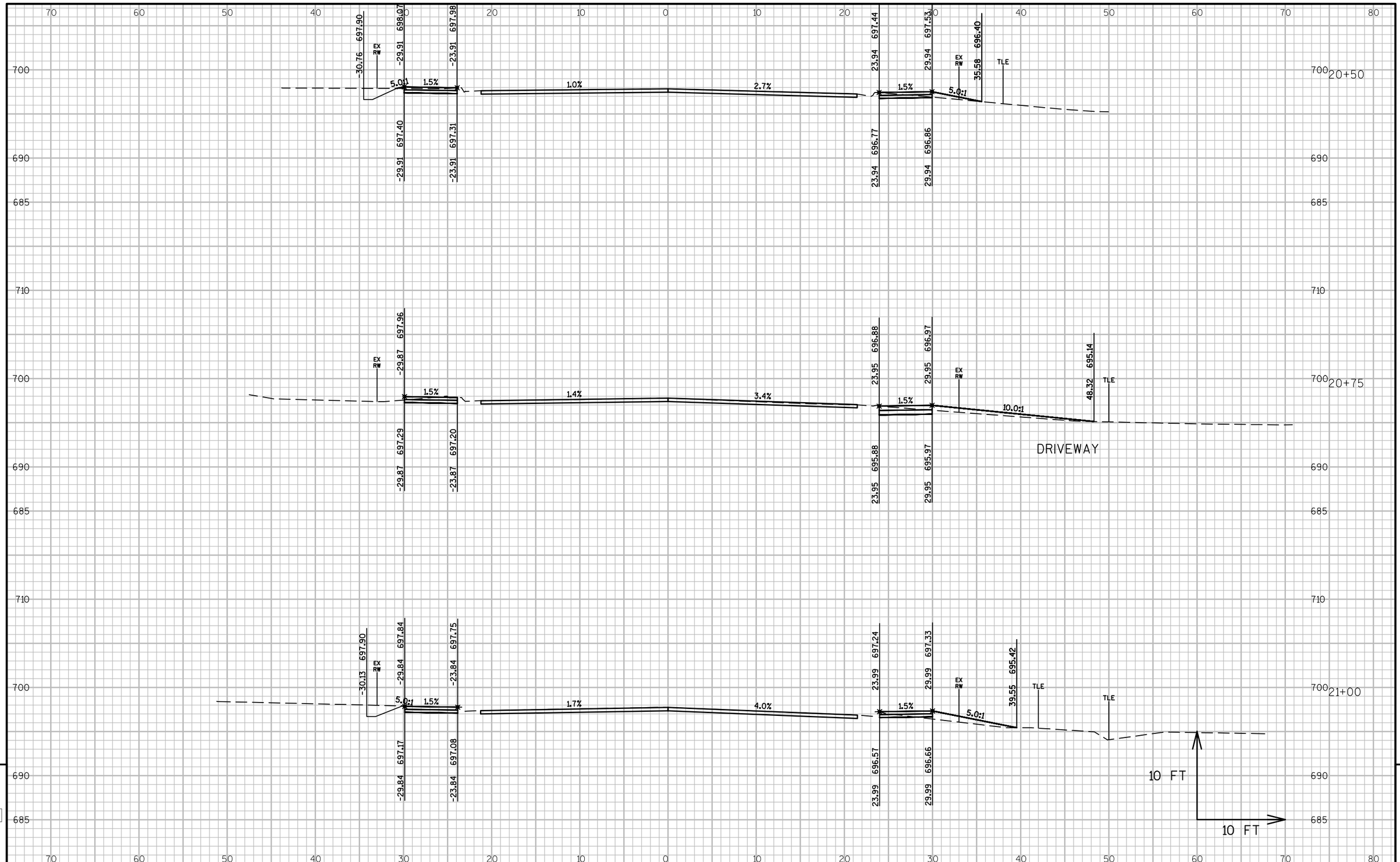

PROJECT NO: 4997-00-64	HWY: CTH C	COUNTY: DOOR	CROSS SECTIONS: CTH C	SHEET 162 E

FILE NAME : L:\PROJECTS\12642\DWG\4997-00-63\SHEETSPLAN\090201_XS.DWG
LAYOUT NAME - 090201_XS - 090210_XS

PLOT DATE : 7/24/2017 11:45 AM PLOT BY : MOYER, TIM PLOT NAME : PLOT SCALE : 1 IN:10 FT

WISDOT/CADDS SHEET 49

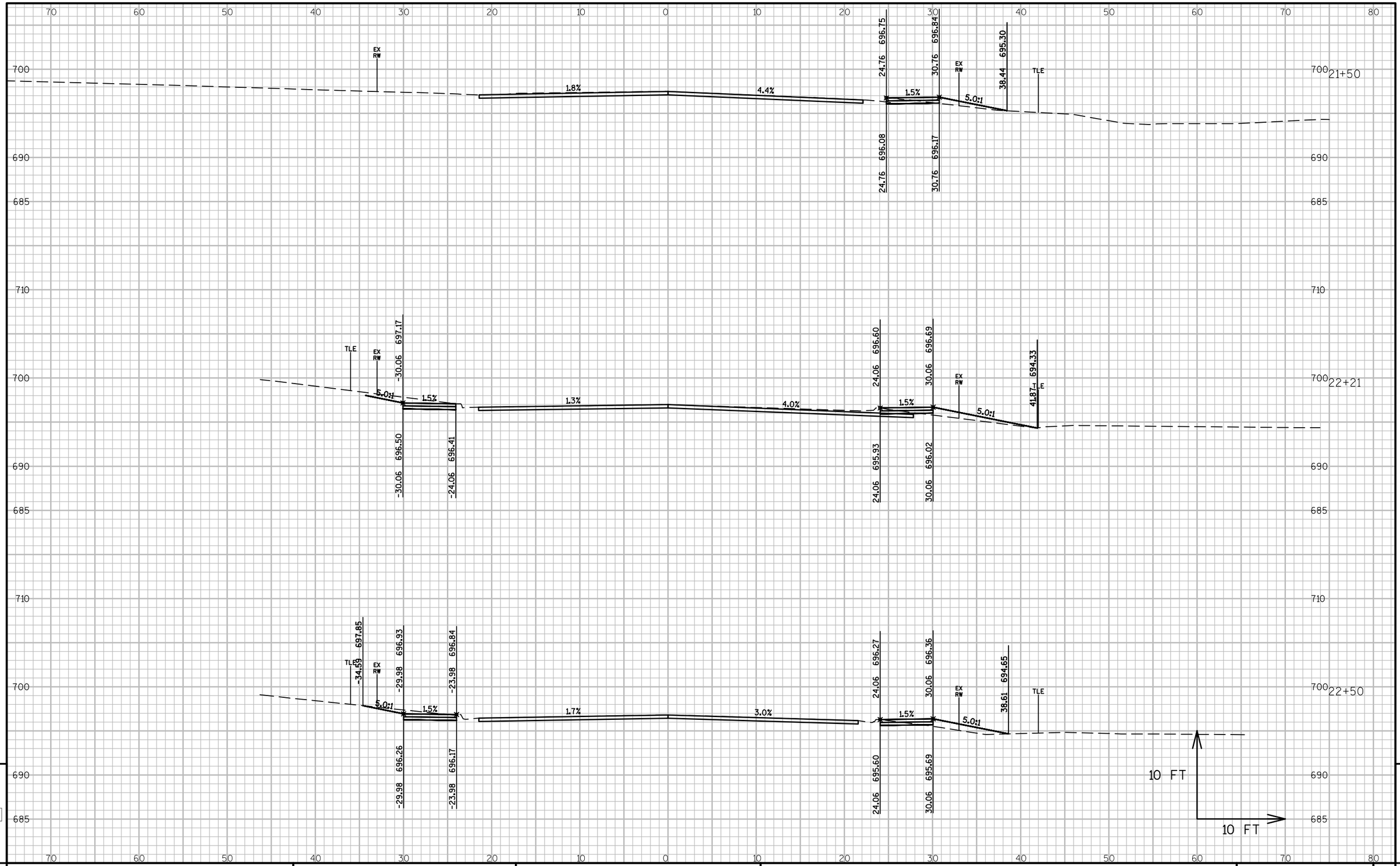

PROJECT NO: 4997-00-64	HWY: CTH C	COUNTY: DOOR	CROSS SECTIONS: CTH C	SHEET 163	E

FILE NAME : L:\PROJECTS\12642\DWG\4997-00-63\SHEETSPLAN\090201_XS.DWG
LAYOUT NAME - 090201_XS - 090211_XS

PLOT DATE : 7/24/2017 11:45 AM PLOT BY : MOYER, TIM PLOT NAME : PLOT SCALE : 1 IN:10 FT

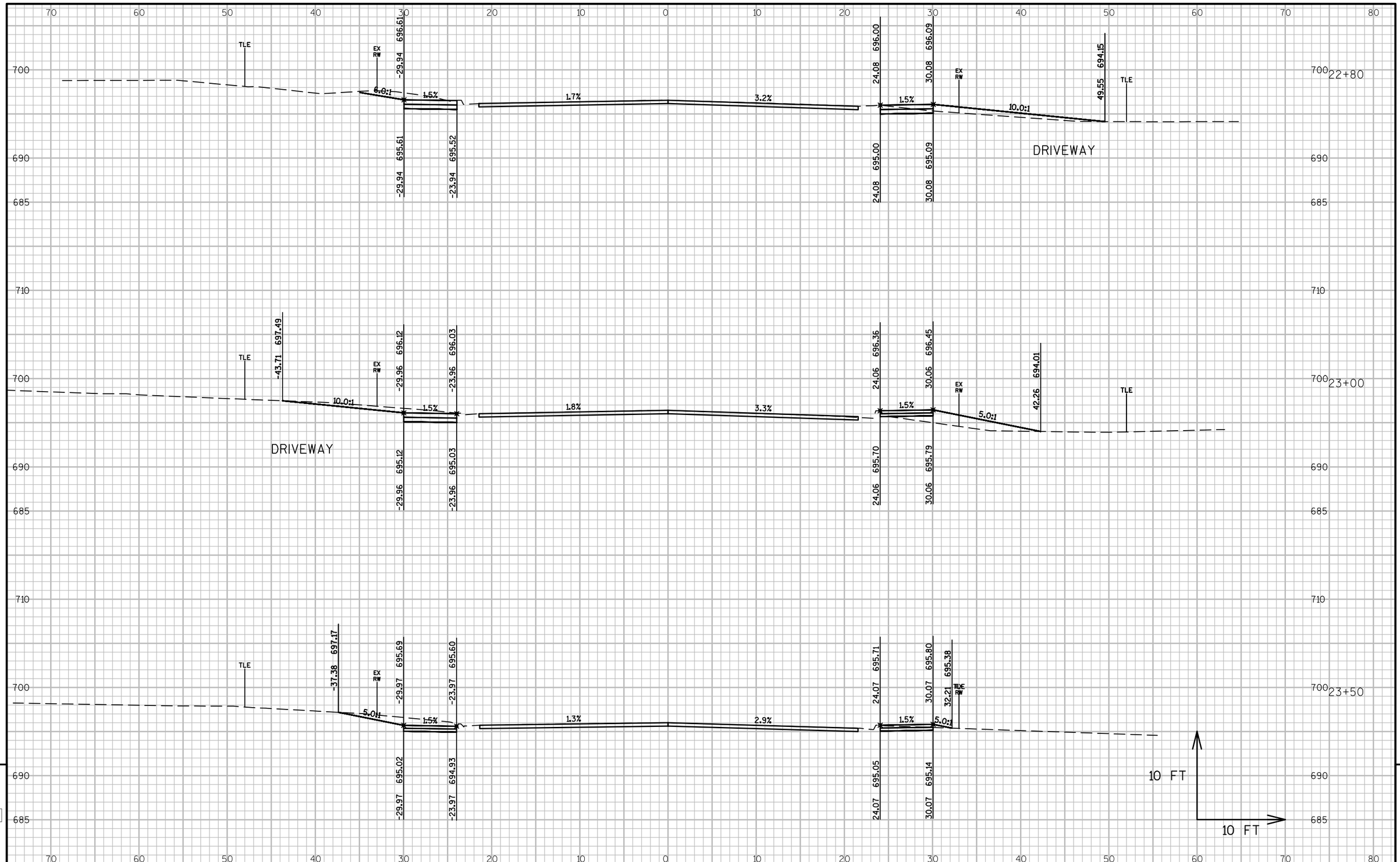

PROJECT NO: 4997-00-64	HWY: CTH C	COUNTY: DOOR	CROSS SECTIONS: CTH C	SHEET 164 E

FILE NAME : L:\PROJECTS\12642\DWG\4997-00-63\SHEETSPLAN\090201_XS.DWG
LAYOUT NAME - 090201_XS - 090212_XS

PLOT DATE : 7/24/2017 11:46 AM PLOT BY : MOYER, TIM PLOT NAME : PLOT SCALE : 1 IN:10 FT

WISDOT/CADDS SHEET 49

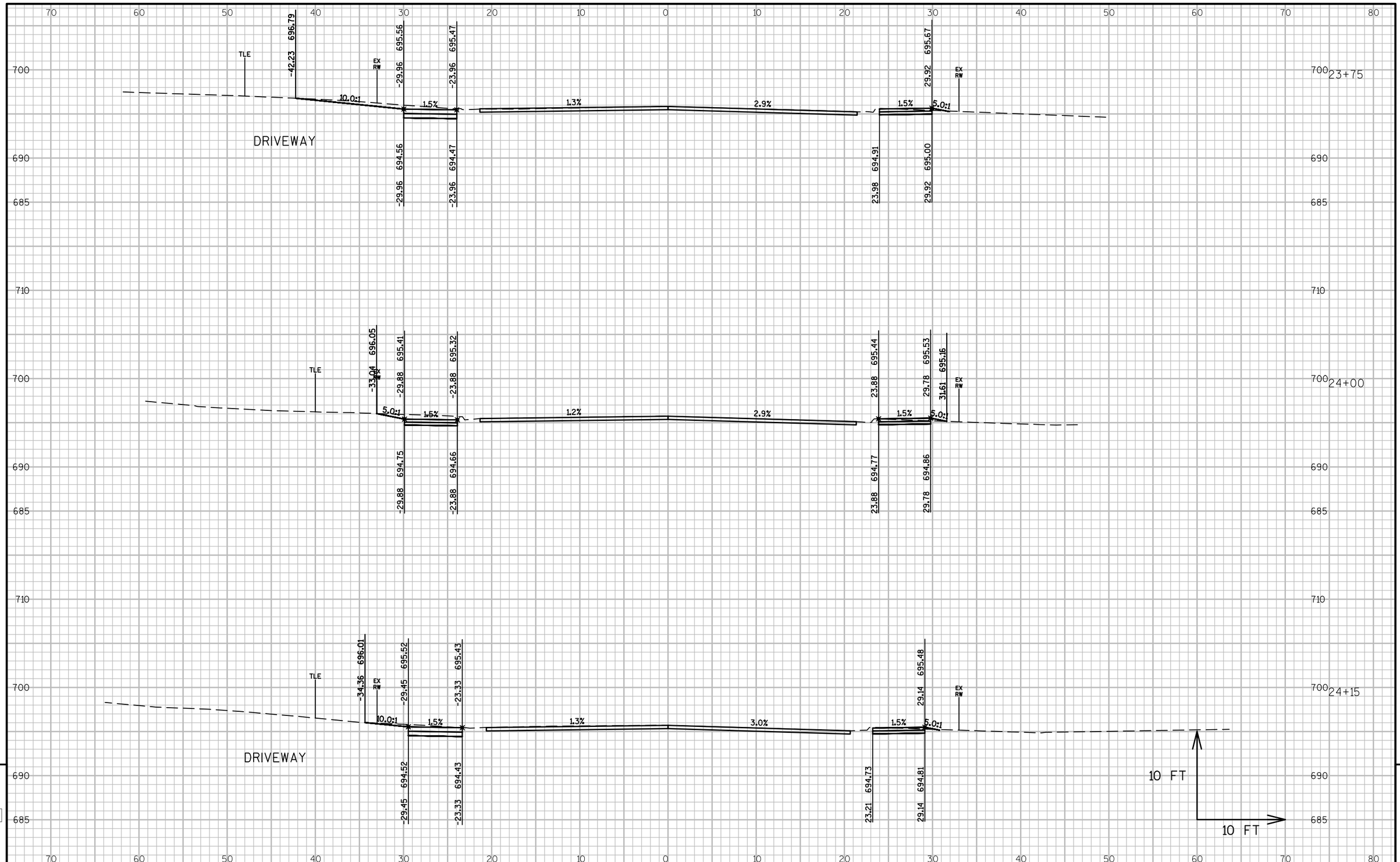

PROJECT NO: 4997-00-64	HWY: CTH C	COUNTY: DOOR	CROSS SECTIONS: CTH C	SHEET 165 E

FILE NAME : L:\PROJECTS\12642\DWG\4997-00-63\SHEETSPLAN\090201_XS.DWG
LAYOUT NAME - 090201_XS - 090213_XS

PLOT DATE : 7/24/2017 11:46 AM PLOT BY : MOYER, TIM PLOT NAME : PLOT SCALE : 1 IN:10 FT

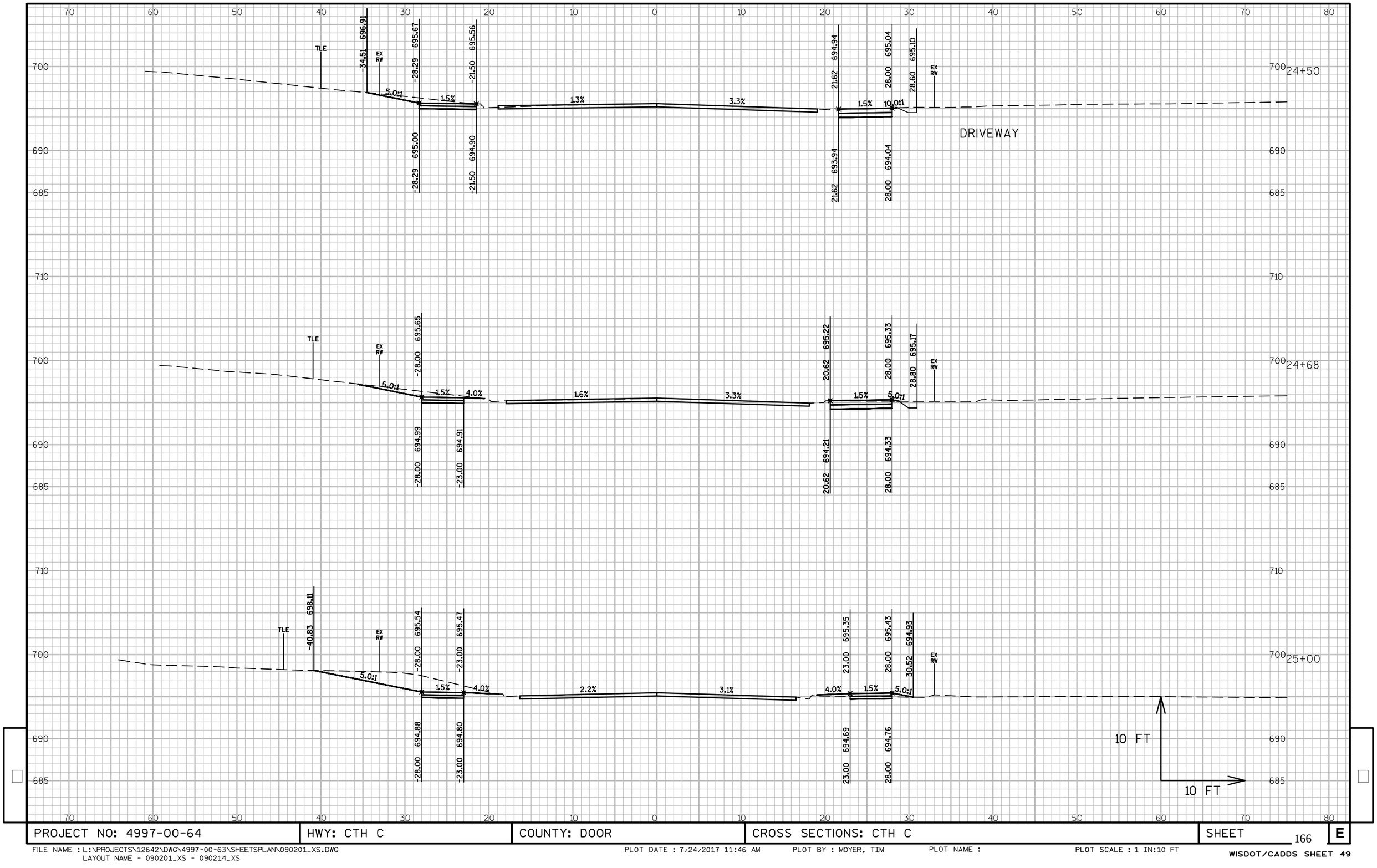

PROJECT NO: 4997-00-64	HWY: CTH C	COUNTY: DOOR	CROSS SECTIONS: CTH C	SHEET 166 E

FILE NAME : L:\PROJECTS\12642\DWG\4997-00-63\SHEETSPLAN\090201_XS.DWG
LAYOUT NAME - 090201_XS - 090214_XS

PLOT DATE : 7/24/2017 11:46 AM PLOT BY : MOYER, TIM PLOT NAME : PLOT SCALE : 1 IN:10 FT

WISDOT/CADDS SHEET 49

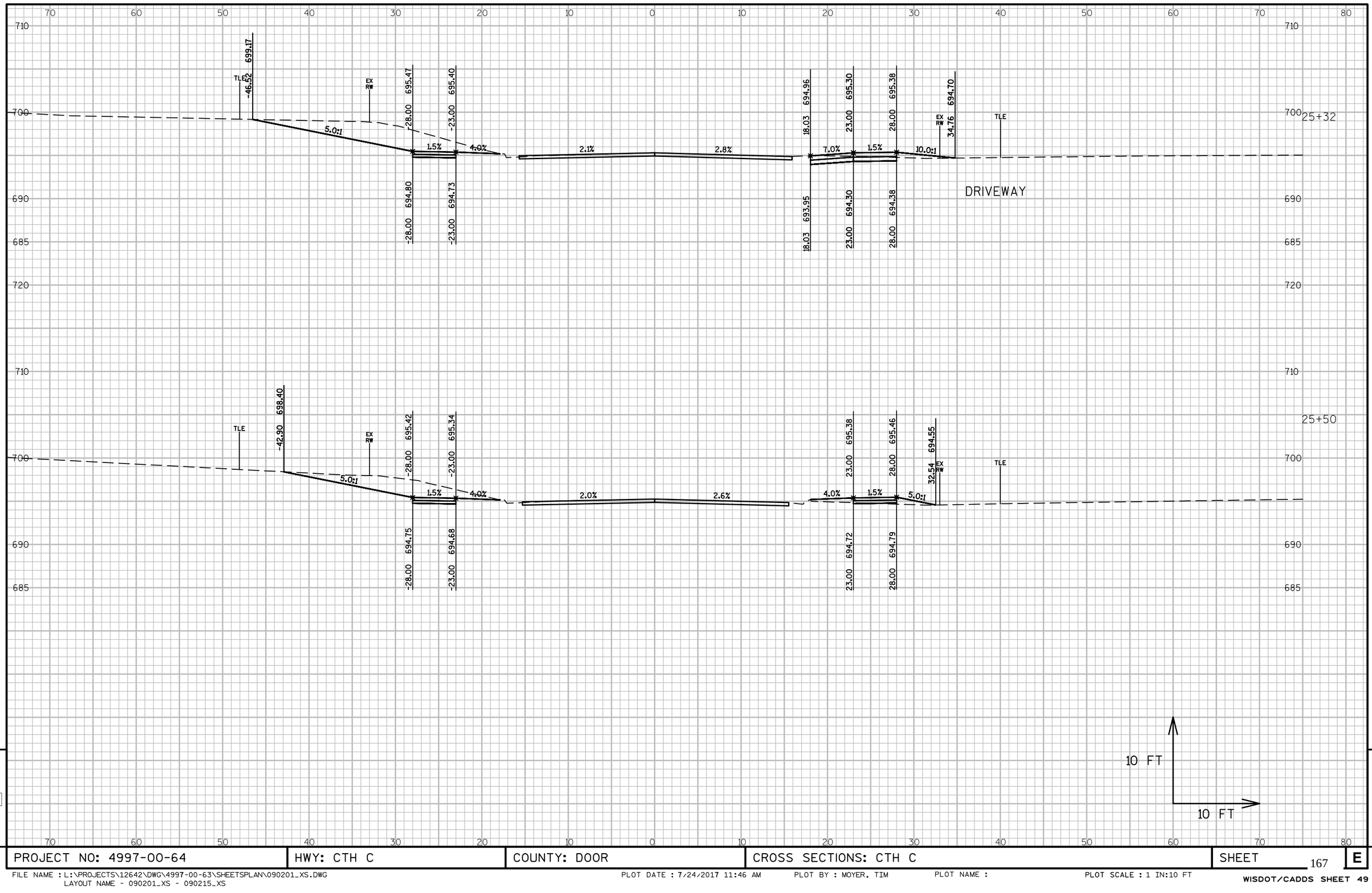

PROJECT NO: 4997-00-64	HWY: CTH C	COUNTY: DOOR	CROSS SECTIONS: CTH C	SHEET 167	E

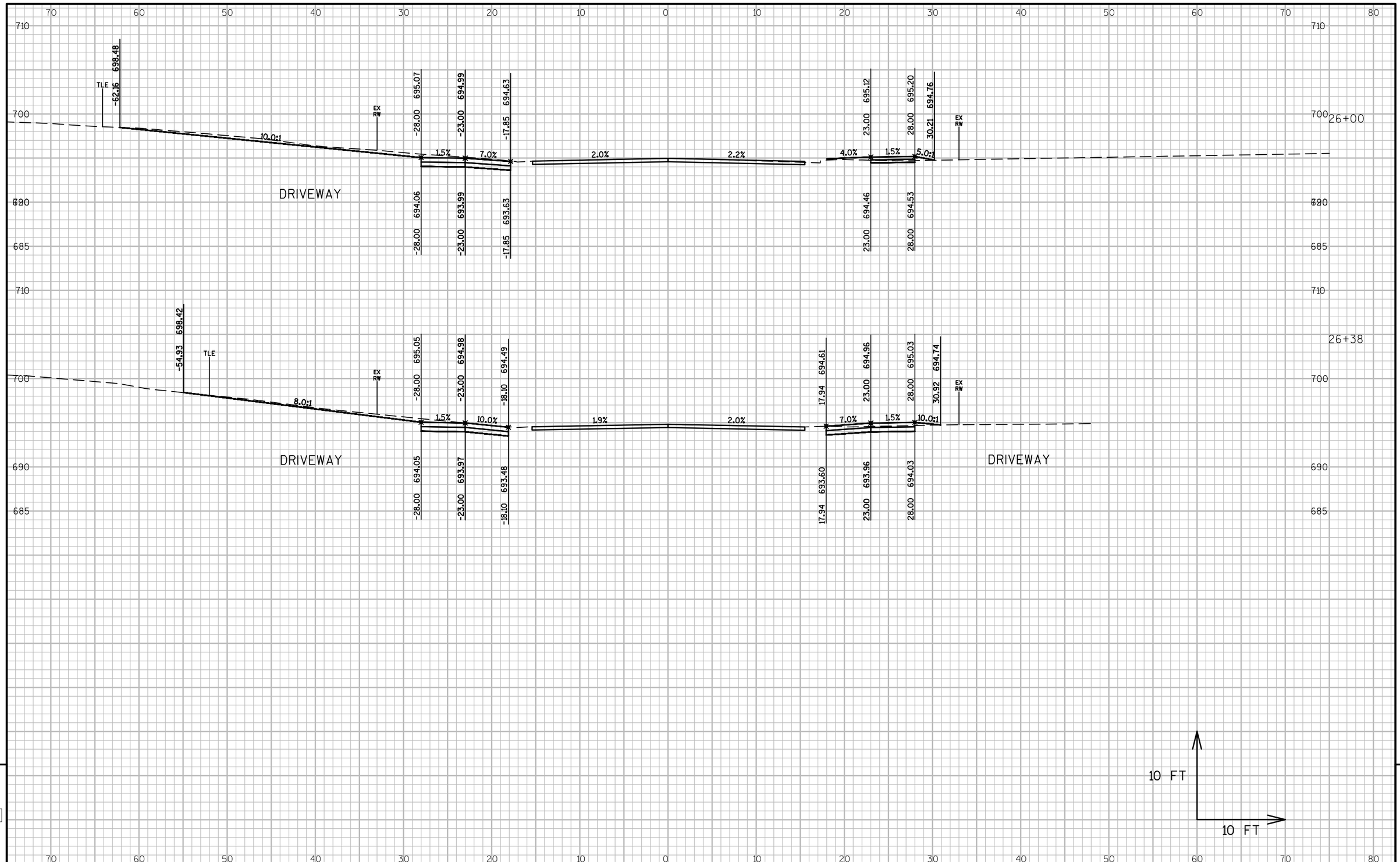

PROJECT NO: 4997-00-64	HWY: CTH C	COUNTY: DOOR	CROSS SECTIONS: CTH C	SHEET 168 E

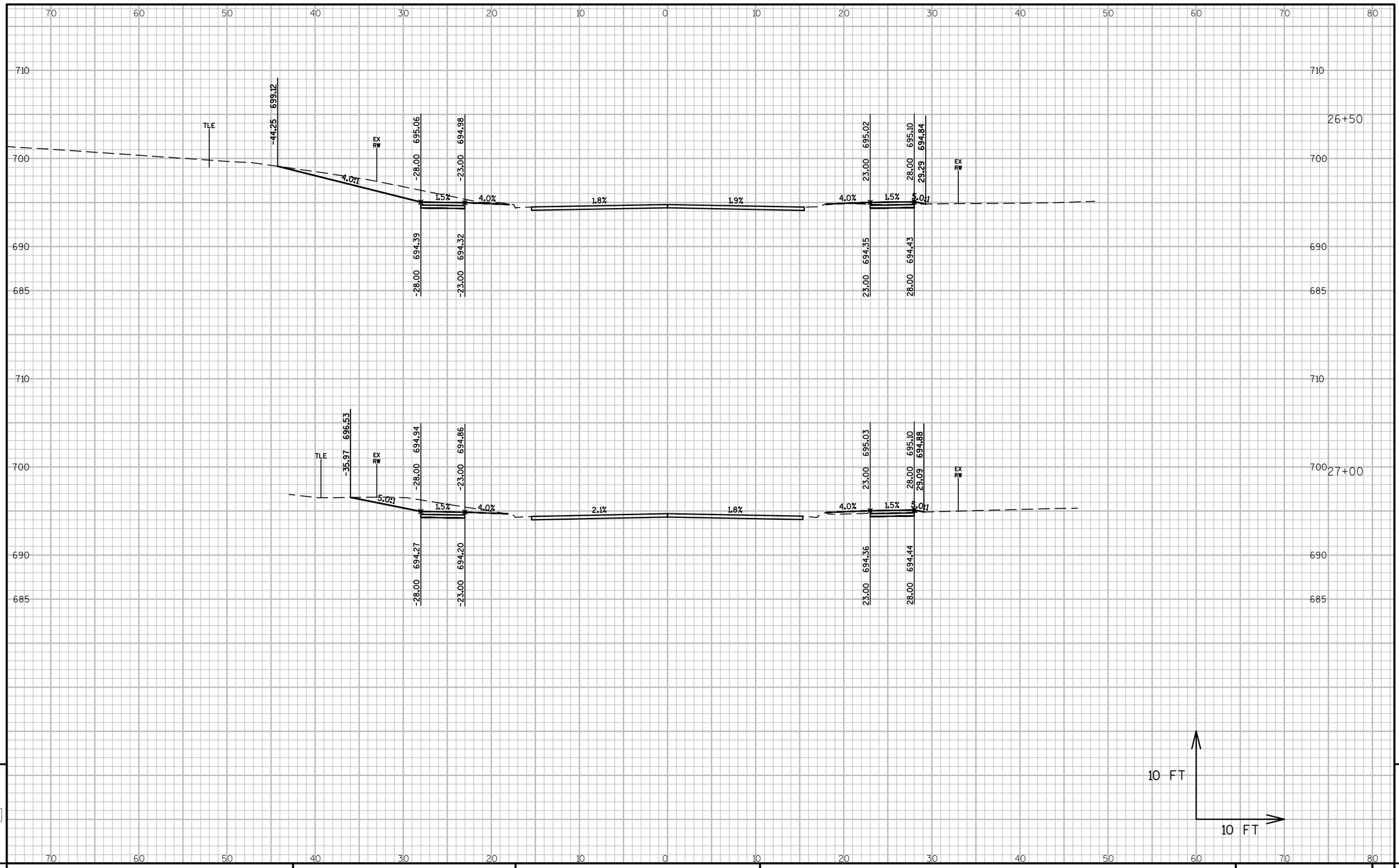

PROJECT NO: 4997-00-64	HWY: CTH C	COUNTY: DOOR	CROSS SECTIONS: CTH C	SHEET 169	E

FILE NAME : L:\PROJECTS\12642\DWG\4997-00-63\SHEETSPLAN\090201_XS.DWG
LAYOUT NAME - 090201_XS - 090217_XS
PLOT DATE : 7/24/2017 11:47 AM PLOT BY : MOYER, TIM PLOT NAME : PLOT SCALE : 1 IN:10 FT
WISDOT/CADDS SHEET 49

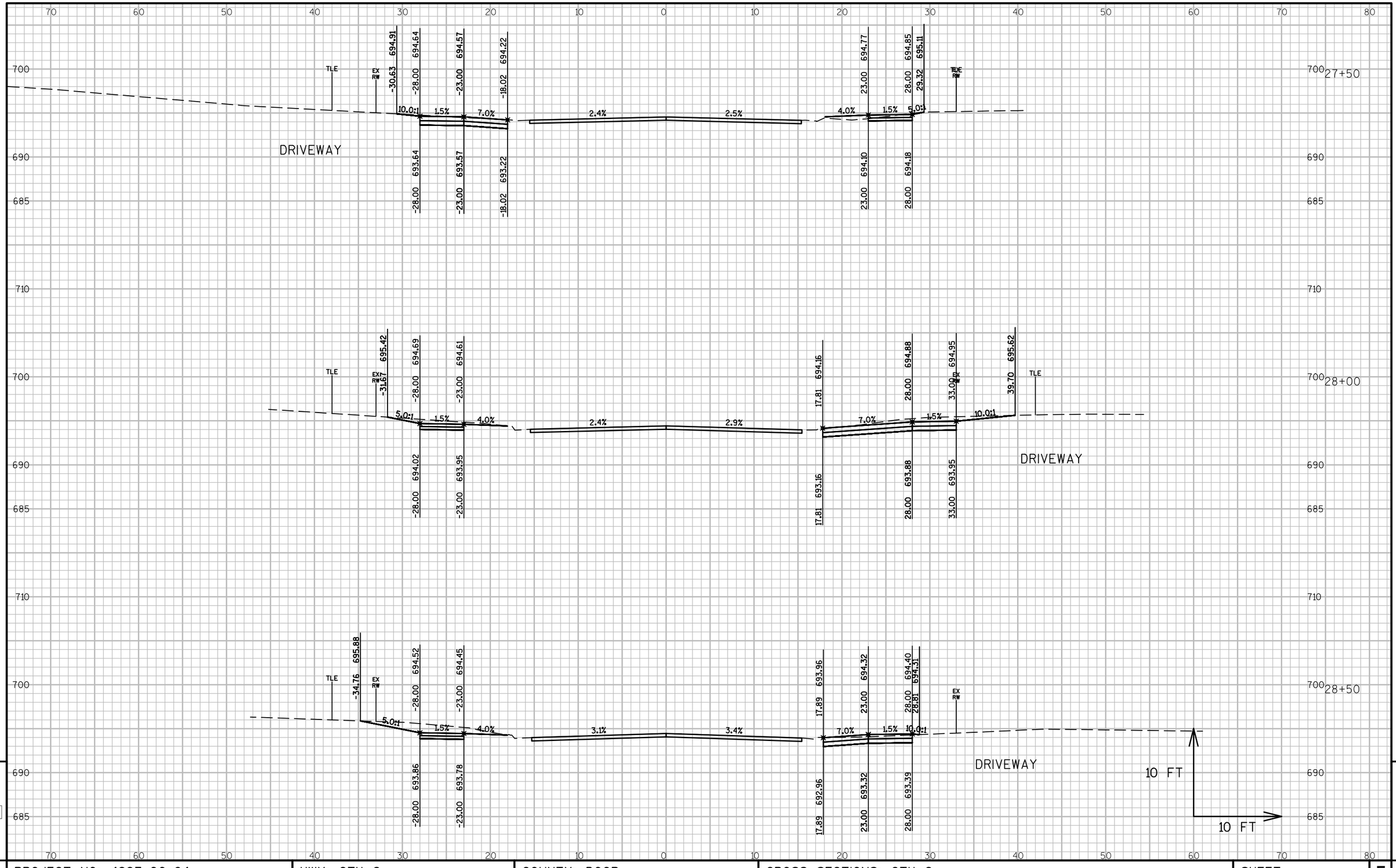

PROJECT NO: 4997-00-64	HWY: CTH C	COUNTY: DOOR	CROSS SECTIONS: CTH C	SHEET 170	E

FILE NAME : L:\PROJECTS\12642\DWG\4997-00-63\SHEETSPLAN\090201_XS.DWG
LAYOUT NAME - 090201_XS - 090218_XS

PLOT DATE : 7/24/2017 11:47 AM PLOT BY : MOYER, TIM PLOT NAME : PLOT SCALE : 1 IN:10 FT

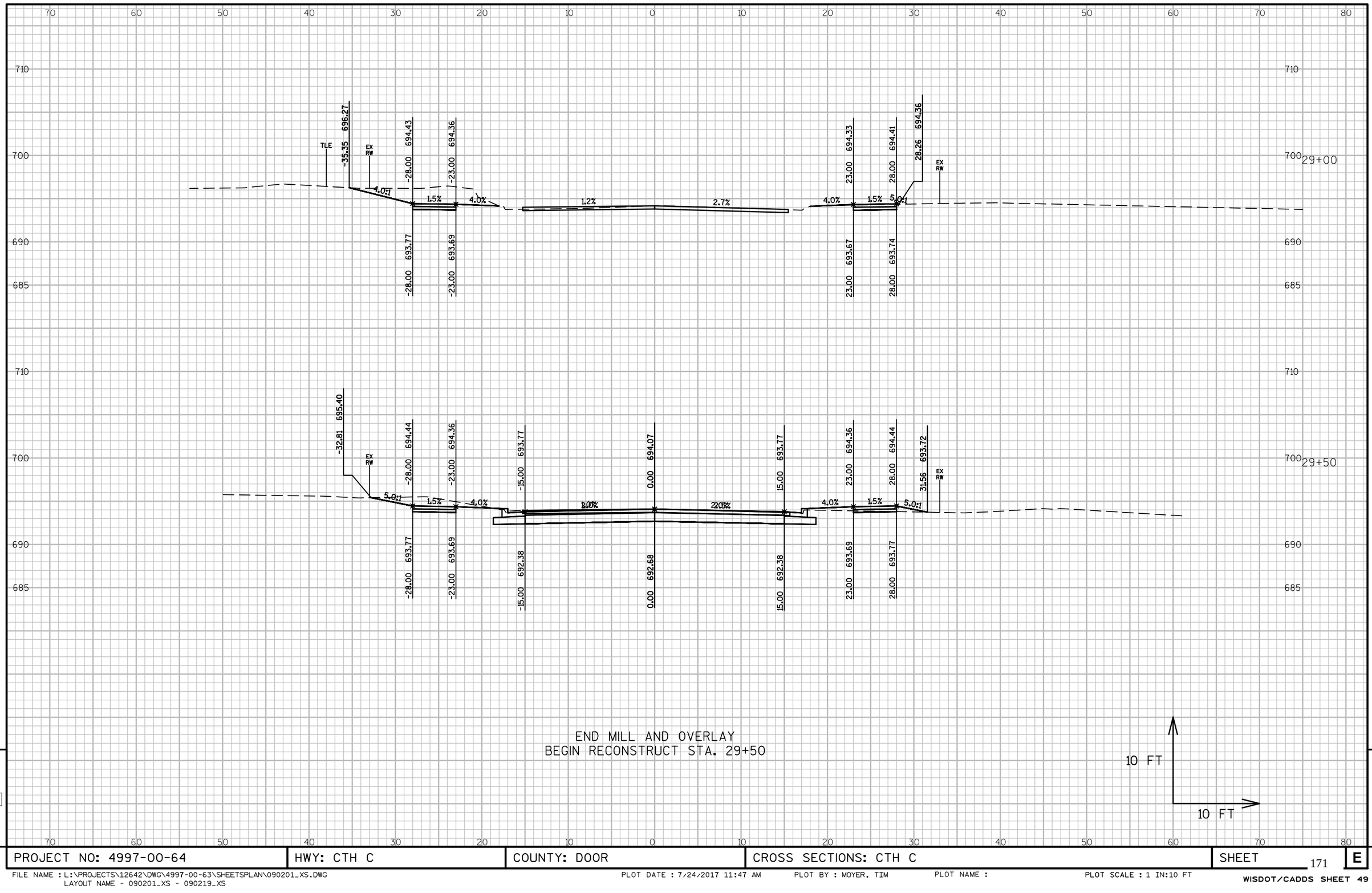

PROJECT NO: 4997-00-64	HWY: CTH C	COUNTY: DOOR	CROSS SECTIONS: CTH C	SHEET 171	E

FILE NAME : L:\PROJECTS\12642\DWG\4997-00-63\SHEETSPLAN\090201_XS.DWG
LAYOUT NAME - 090201_XS - 090219_XS
PLOT DATE : 7/24/2017 11:47 AM PLOT BY : MOYER, TIM PLOT NAME : PLOT SCALE : 1 IN:10 FT
WISDOT/CADDS SHEET 49

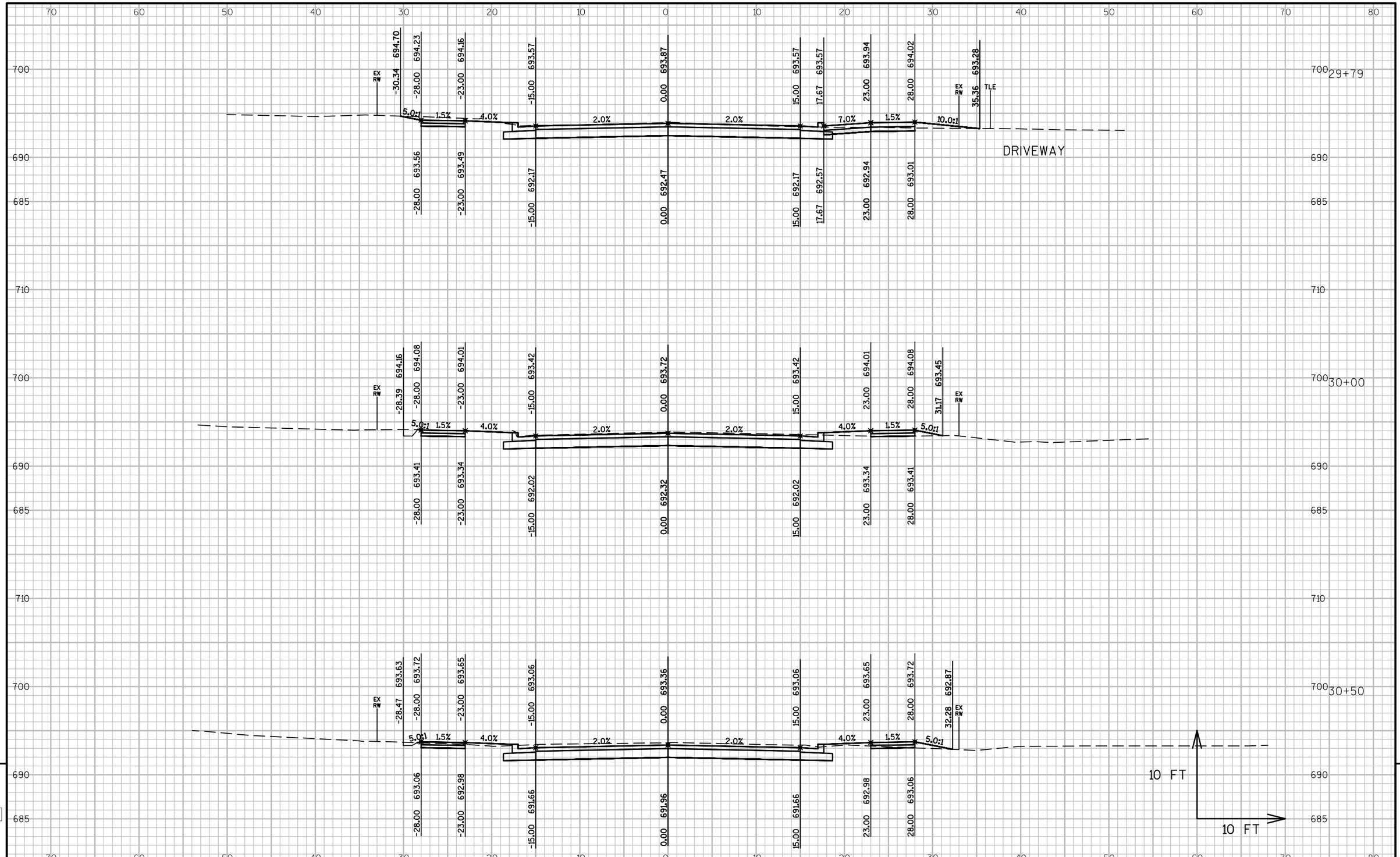

PROJECT NO: 4997-00-64	HWY: CTH C	COUNTY: DOOR	CROSS SECTIONS: CTH C	SHEET 172	E

FILE NAME : L:\PROJECTS\12642\DWG\4997-00-63\SHEETSPLAN\090201_XS.DWG
LAYOUT NAME - 090201_XS - 090220_XS

PLOT DATE : 7/24/2017 11:47 AM PLOT BY : MOYER, TIM PLOT NAME : PLOT SCALE : 1 IN:10 FT

WISDOT/CADDS SHEET 49

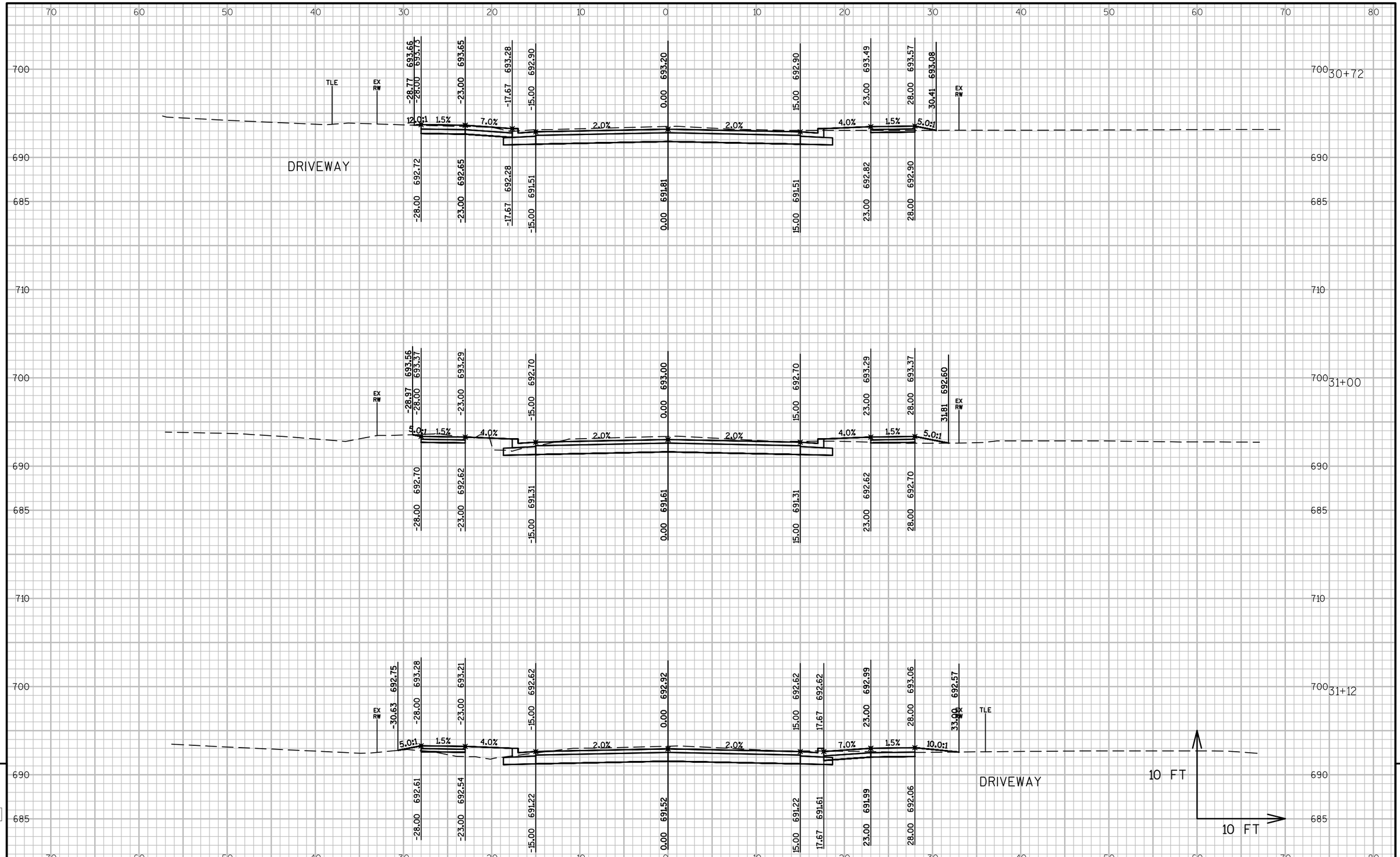

PROJECT NO: 4997-00-64	HWY: CTH C	COUNTY: DOOR	CROSS SECTIONS: CTH C	SHEET 173	E

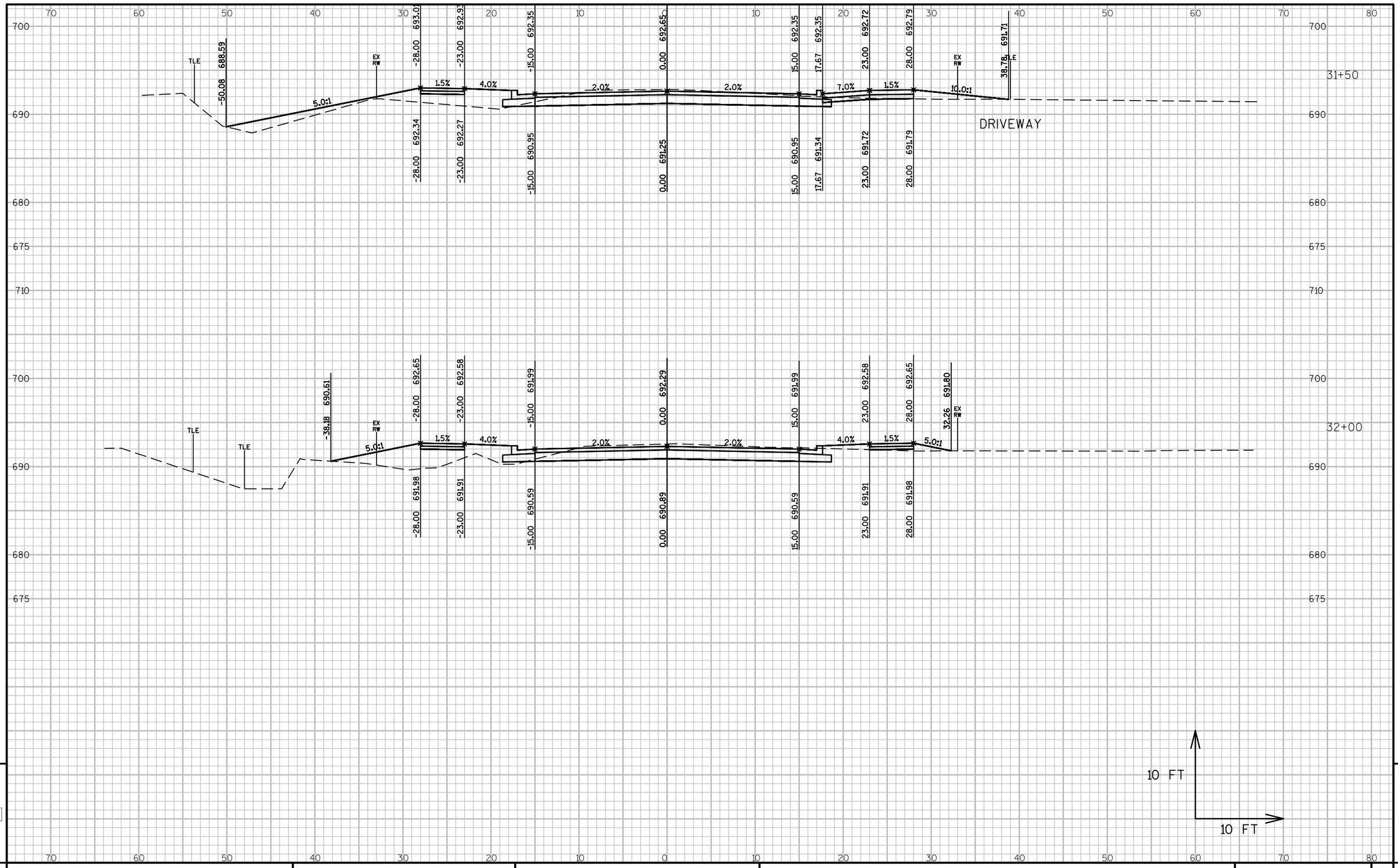

PROJECT NO: 4997-00-64	HWY: CTH C	COUNTY: DOOR	CROSS SECTIONS: CTH C	SHEET 174	E

FILE NAME : L:\PROJECTS\12642\DWG\4997-00-63\SHEETSPLAN\090201_XS.DWG
LAYOUT NAME - 090201_XS - 090222_XS

PLOT DATE : 7/24/2017 11:47 AM PLOT BY : MOYER, TIM PLOT NAME : PLOT SCALE : 1 IN:10 FT

WISDOT/CADDS SHEET 49

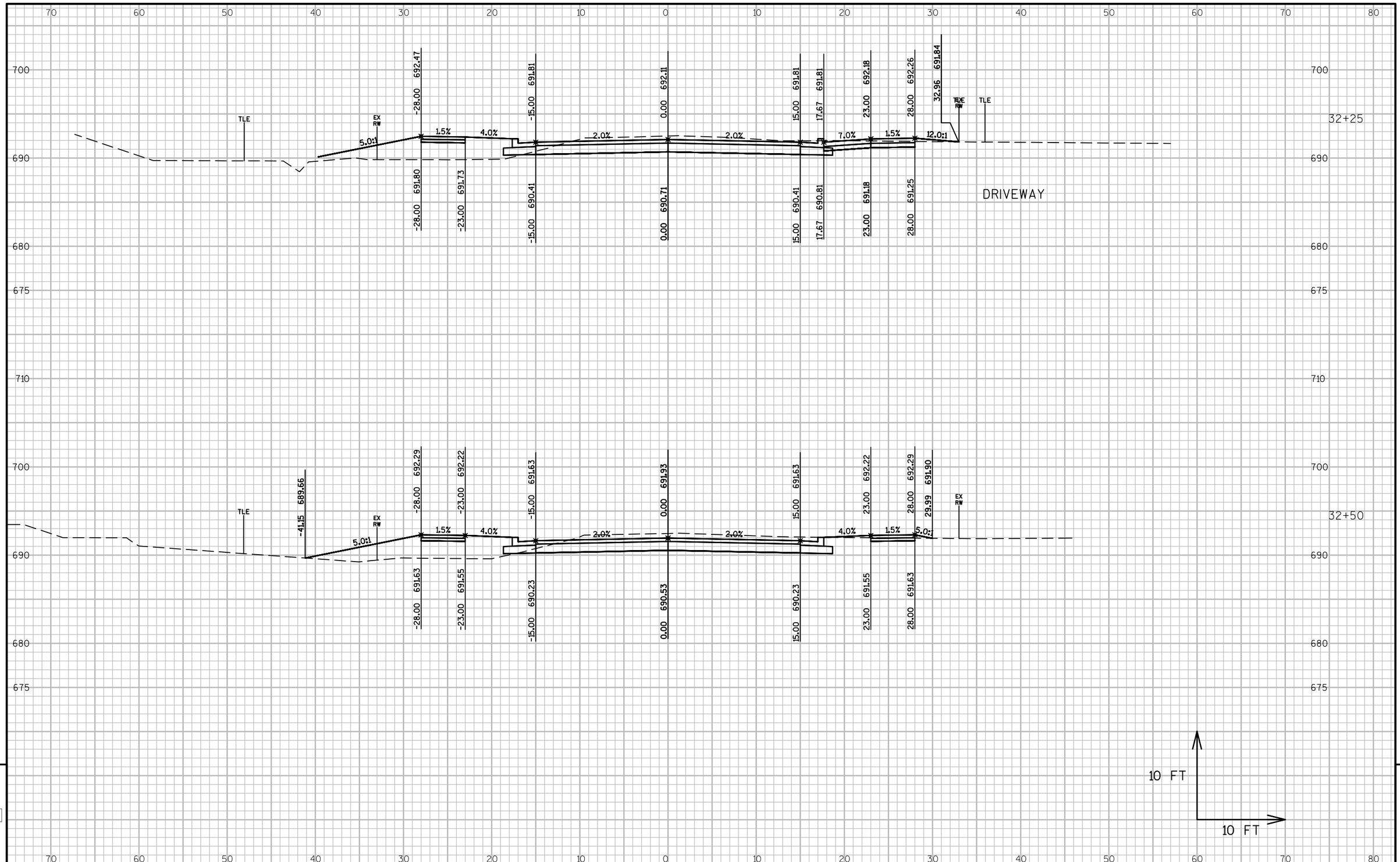

PROJECT NO: 4997-00-64	HWY: CTH C	COUNTY: DOOR	CROSS SECTIONS: CTH C	SHEET 175	E

FILE NAME : L:\PROJECTS\12642\DWG\4997-00-63\SHEETSPLAN\090201_XS.DWG
LAYOUT NAME - 090201_XS - 090223_XS
PLOT DATE : 7/24/2017 11:48 AM PLOT BY : MOYER, TIM PLOT NAME : PLOT SCALE : 1 IN:10 FT
WISDOT/CADDS SHEET 49

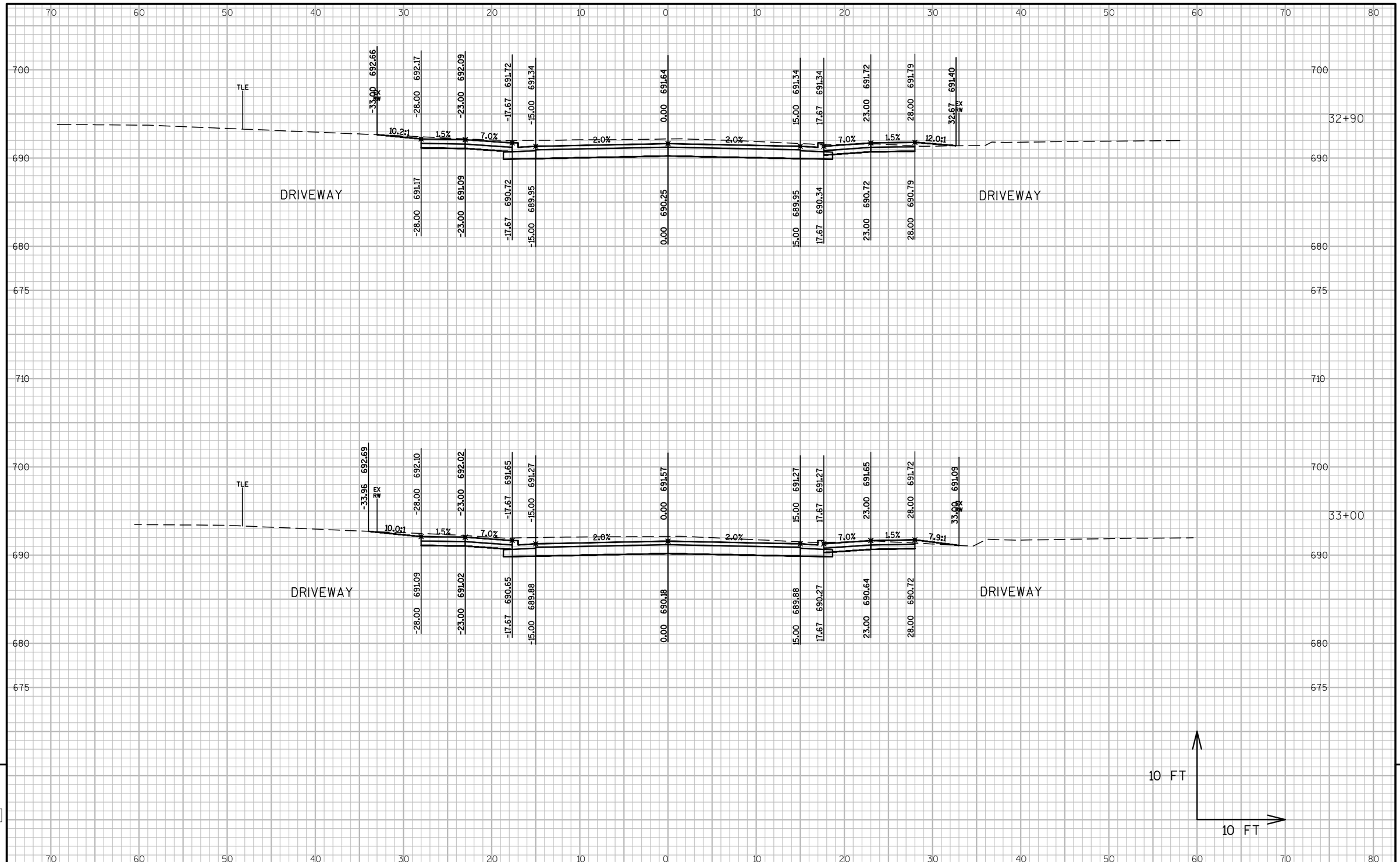

PROJECT NO: 4997-00-64	HWY: CTH C	COUNTY: DOOR	CROSS SECTIONS: CTH C	SHEET 176 E

FILE NAME : L:\PROJECTS\12642\DWG\4997-00-63\SHEETSPLAN\090201_XS.DWG
LAYOUT NAME - 090201_XS - 090224_XS

PLOT DATE : 7/24/2017 11:48 AM PLOT BY : MOYER, TIM PLOT NAME : PLOT SCALE : 1 IN:10 FT

WISDOT/CADDS SHEET 49

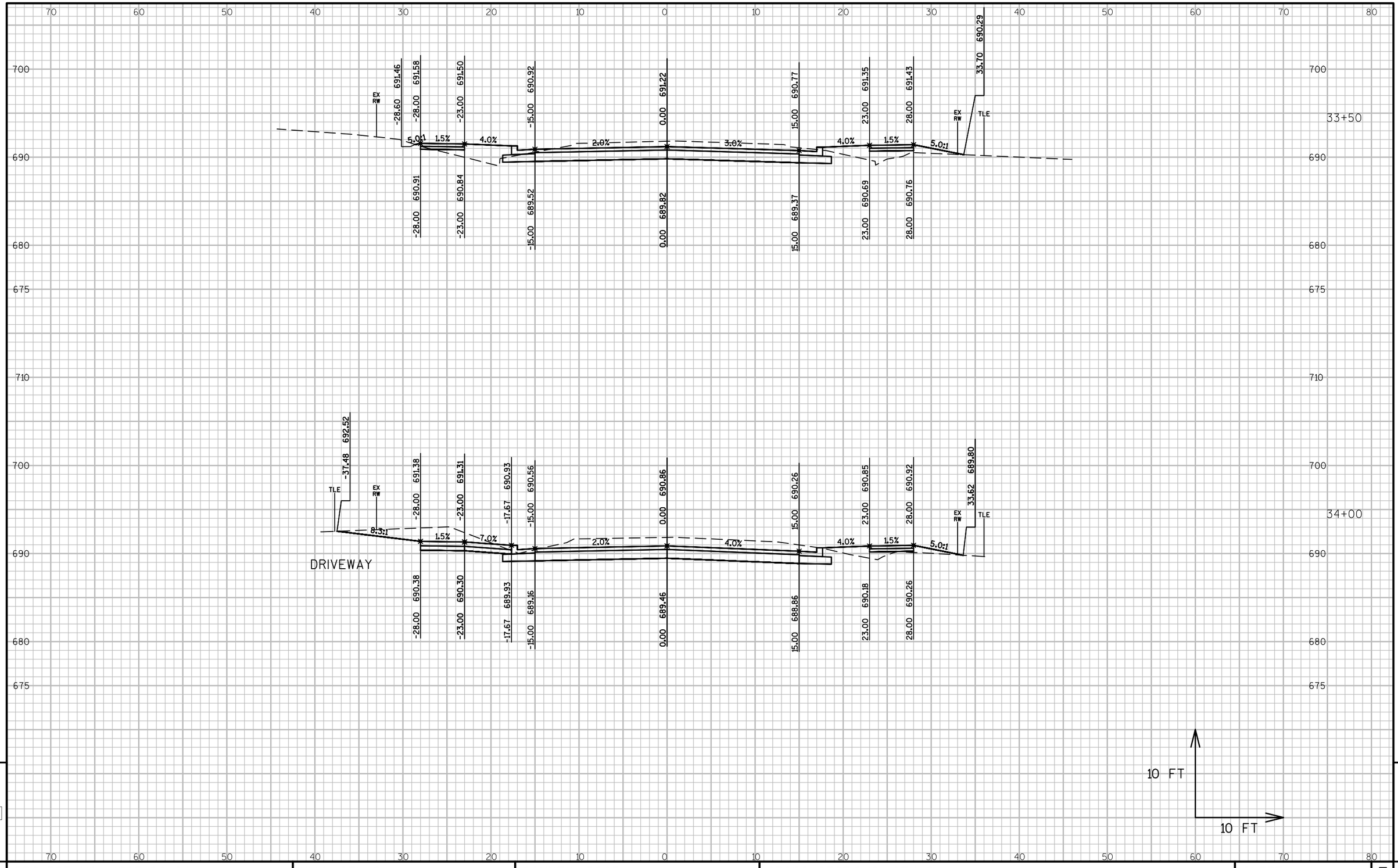

PROJECT NO: 4997-00-64	HWY: CTH C	COUNTY: DOOR	CROSS SECTIONS: CTH C	SHEET 177	E

FILE NAME : L:\PROJECTS\12642\DWG\4997-00-63\SHEETSPLAN\090201_XS.DWG
LAYOUT NAME - 090201_XS - 090225_XS

PLOT DATE : 7/24/2017 11:48 AM PLOT BY : MOYER, TIM PLOT NAME : PLOT SCALE : 1 IN:10 FT

WISDOT/CADDS SHEET 49

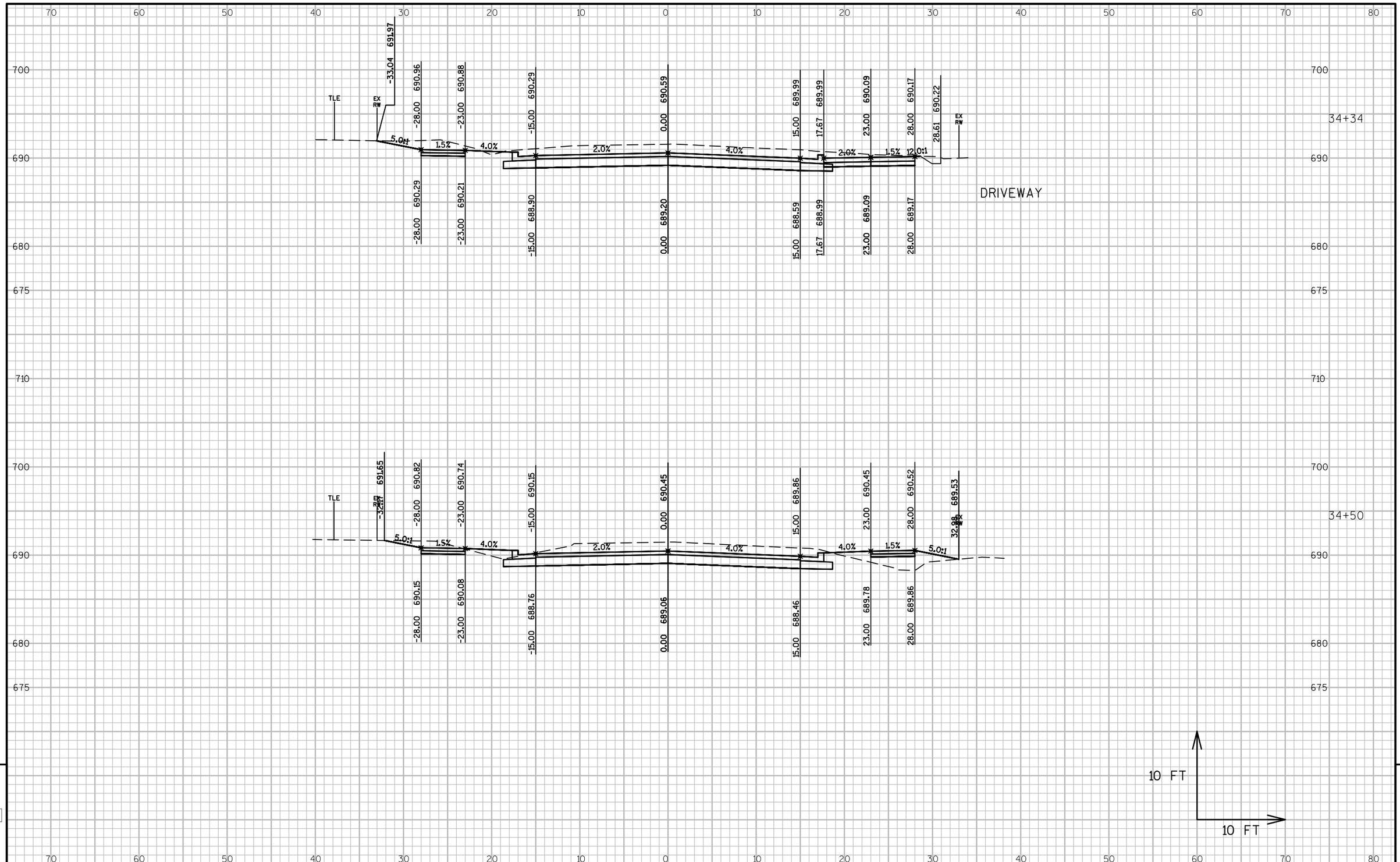

PROJECT NO: 4997-00-64	HWY: CTH C	COUNTY: DOOR	CROSS SECTIONS: CTH C	SHEET 178 E

FILE NAME : L:\PROJECTS\12642\DWG\4997-00-63\SHEETSPLAN\090201_XS.DWG
LAYOUT NAME - 090201_XS - 090226_XS
PLOT DATE : 7/24/2017 11:48 AM PLOT BY : MOYER, TIM PLOT NAME : PLOT SCALE : 1 IN:10 FT
WISDOT/CADDS SHEET 49

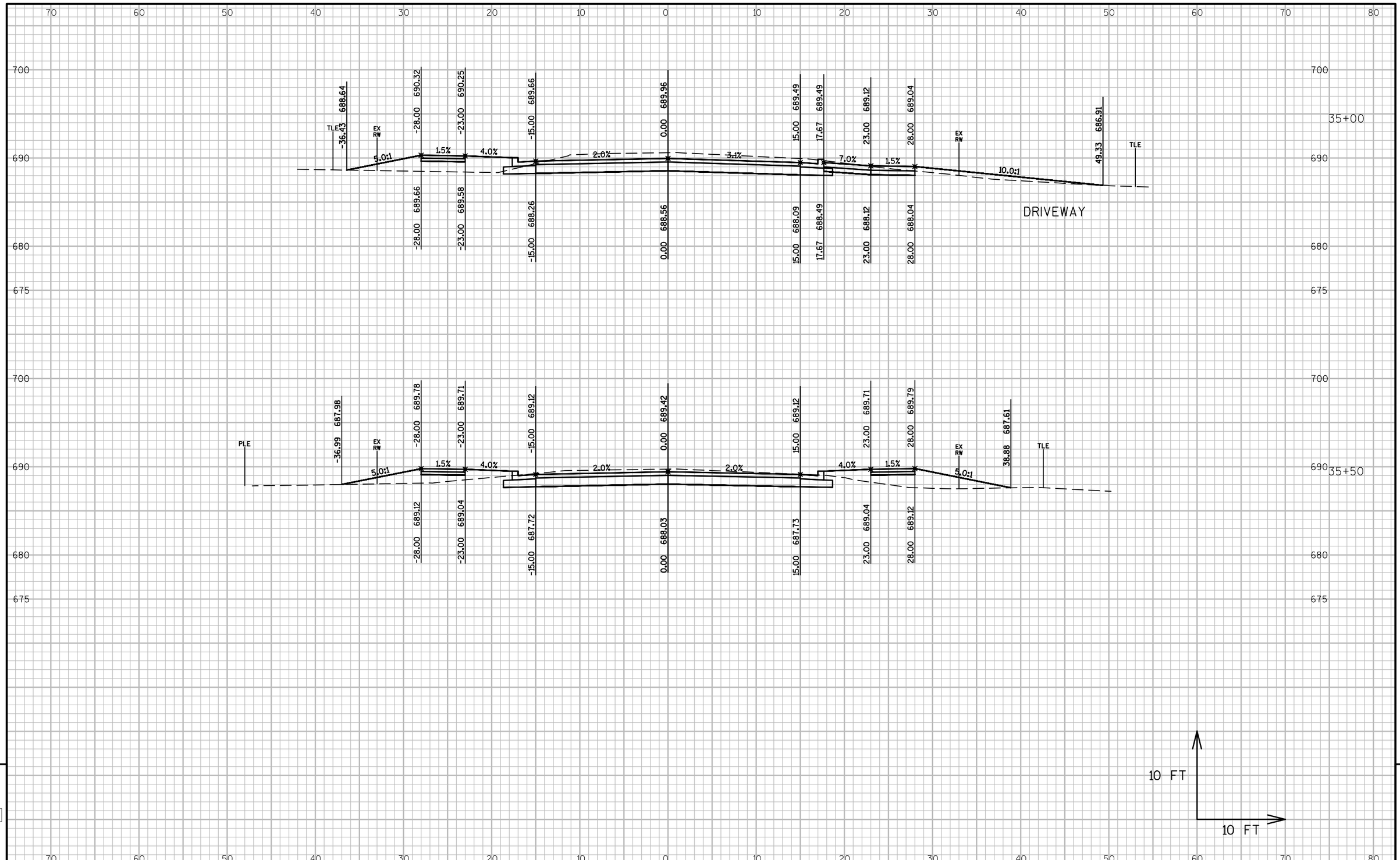

PROJECT NO: 4997-00-64	HWY: CTH C	COUNTY: DOOR	CROSS SECTIONS: CTH C	SHEET 179	E

FILE NAME : L:\PROJECTS\12642\DWG\4997-00-63\SHEETSPLAN\090201_XS.DWG
LAYOUT NAME - 090201_XS - 090227_XS

PLOT DATE : 7/24/2017 11:48 AM PLOT BY : MOYER, TIM PLOT NAME : PLOT SCALE : 1 IN:10 FT

WISDOT/CADDS SHEET 49

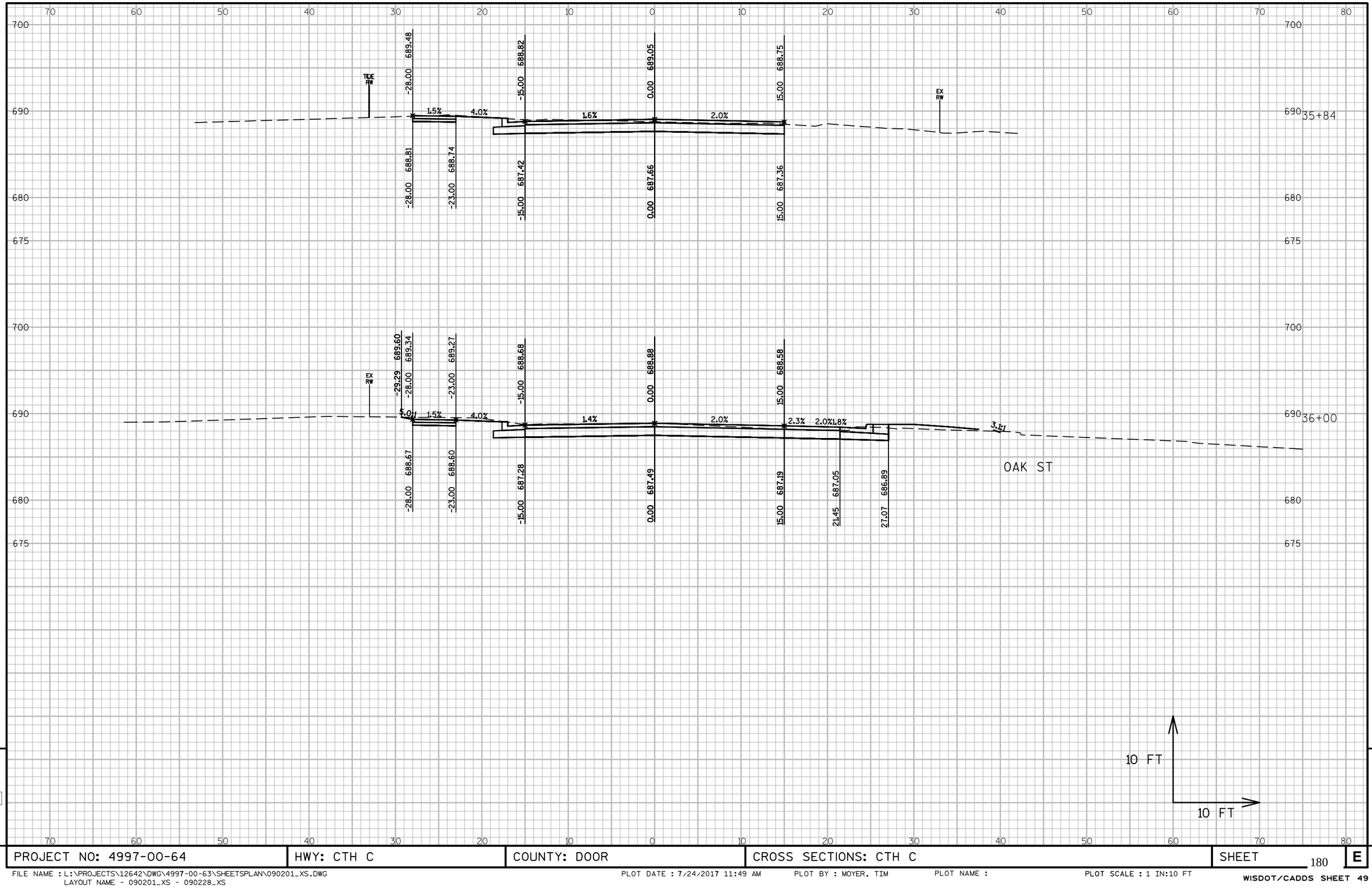

PROJECT NO: 4997-00-64	HWY: CTH C	COUNTY: DOOR	CROSS SECTIONS: CTH C	SHEET 180	E

FILE NAME : L:\PROJECTS\12642\DWG\4997-00-63\SHEETSPLAN\090201_XS.DWG
LAYOUT NAME - 090201_XS - 090228_XS

PLOT DATE : 7/24/2017 11:49 AM PLOT BY : MOYER, TIM PLOT NAME : PLOT SCALE : 1 IN:10 FT

WISDOT/CADDS SHEET 49

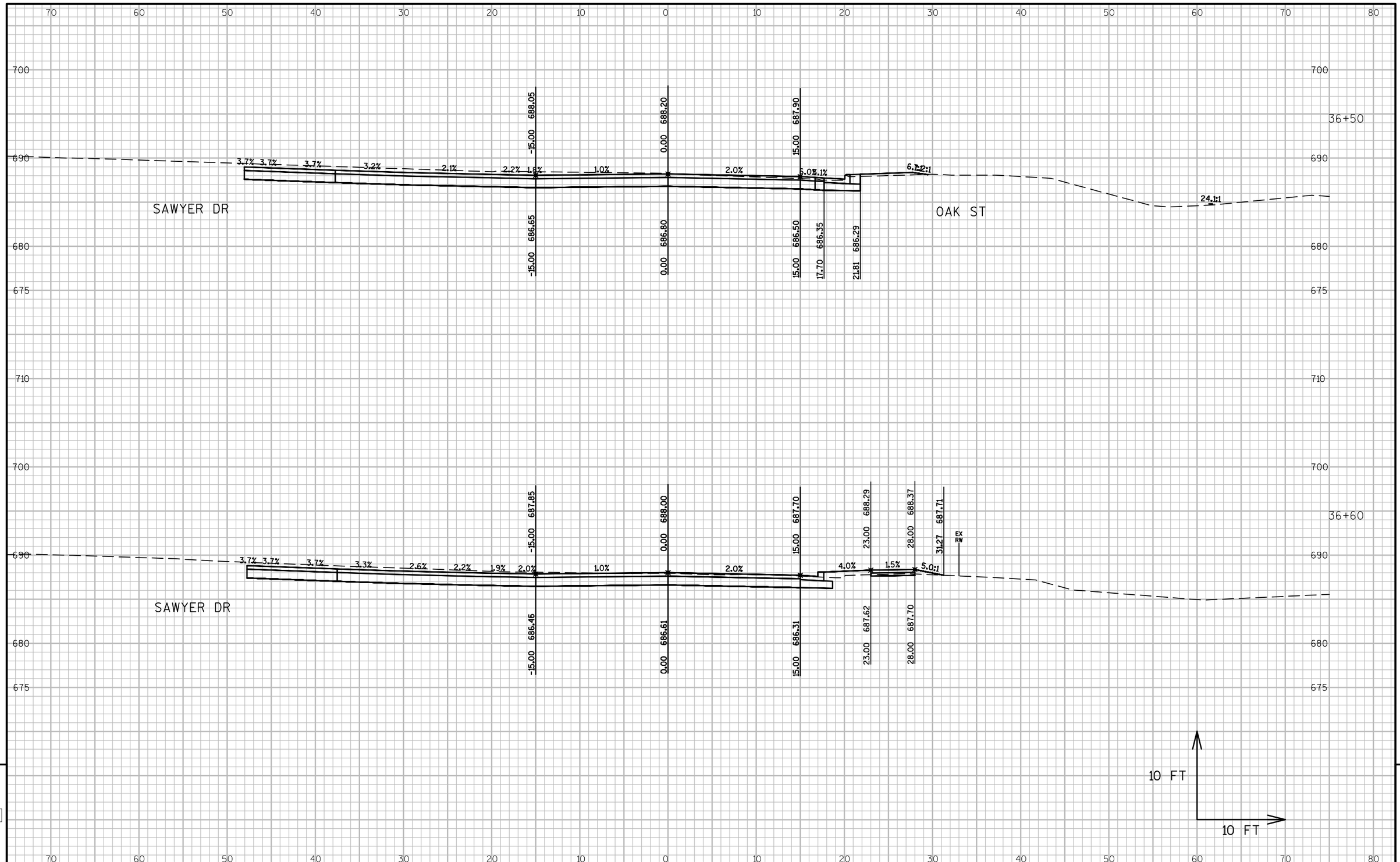

PROJECT NO: 4997-00-64	HWY: CTH C	COUNTY: DOOR	CROSS SECTIONS: CTH C	SHEET 181	E

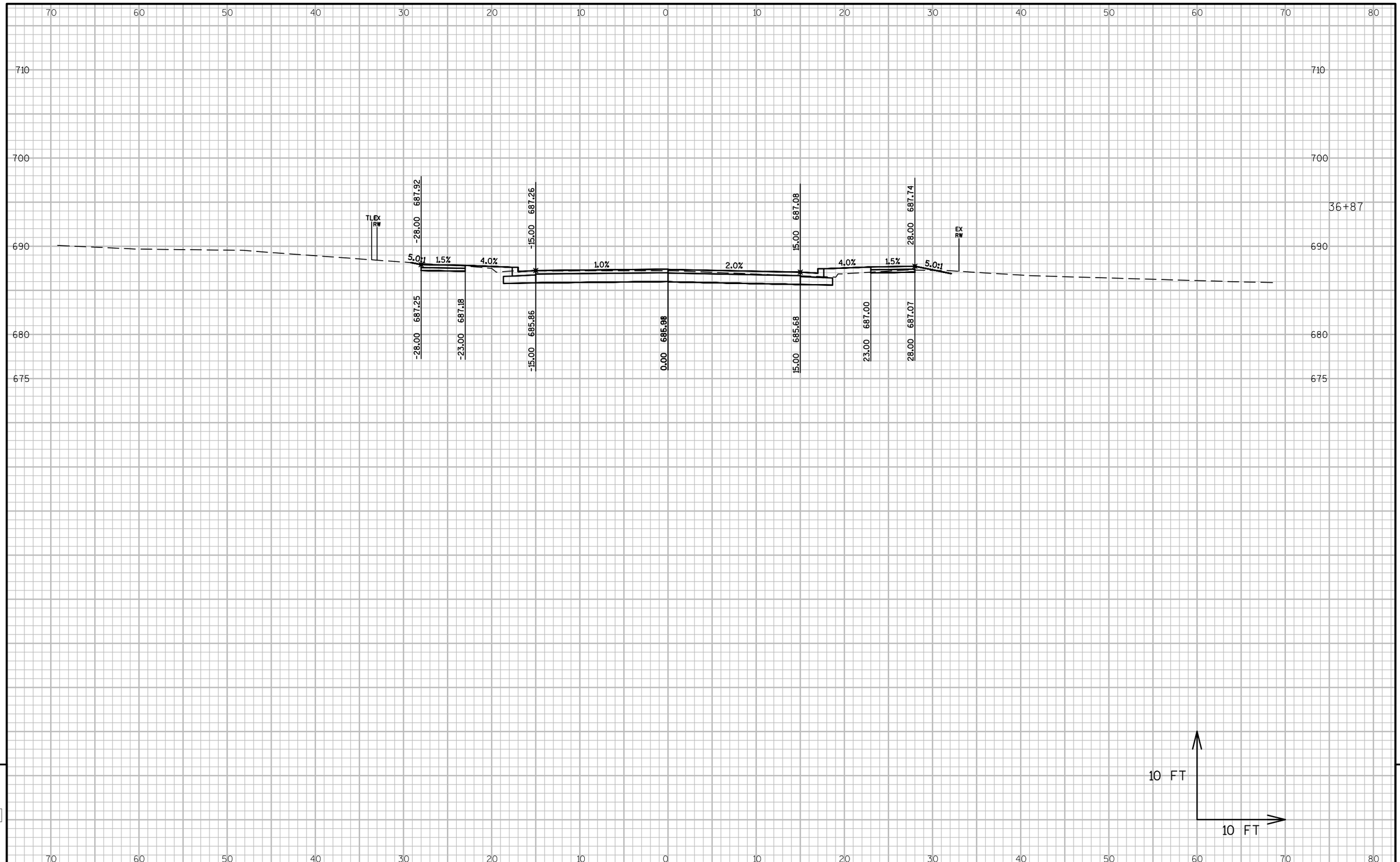

PROJECT NO: 4997-00-64	HWY: CTH C	COUNTY: DOOR	CROSS SECTIONS: CTH C	SHEET 182	E

FILE NAME : L:\PROJECTS\12642\DWG\4997-00-63\SHEETSPLAN\090201_XS.DWG
LAYOUT NAME - 090201_XS - 090230_XS

PLOT DATE : 7/24/2017 11:49 AM PLOT BY : MOYER, TIM PLOT NAME : PLOT SCALE : 1 IN:10 FT

WISDOT/CADDS SHEET 49

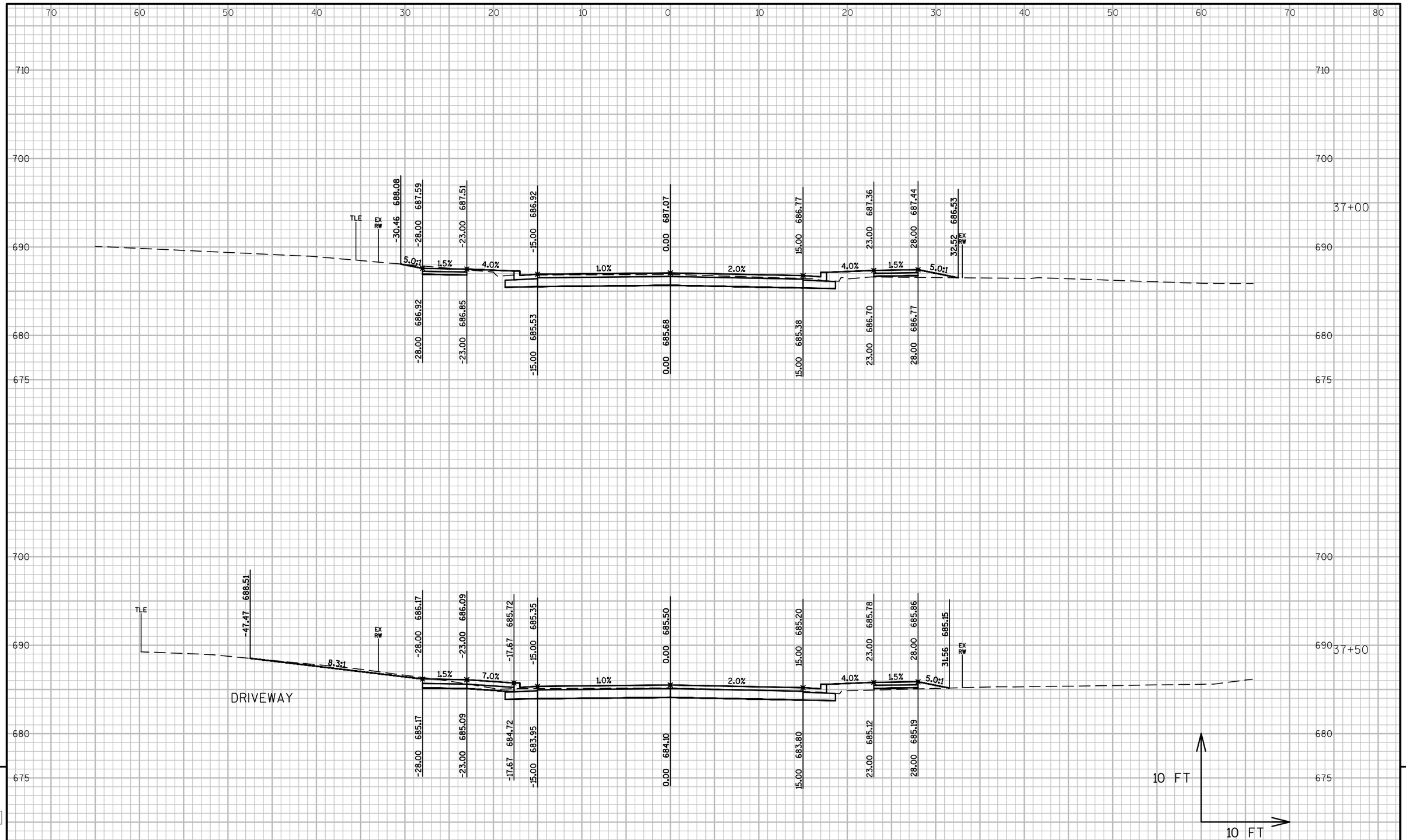

PROJECT NO: 4997-00-64	HWY: CTH C	COUNTY: DOOR	CROSS SECTIONS: CTH C	SHEET 183 E

FILE NAME : L:\PROJECTS\12642\DWG\4997-00-63\SHEETSPLAN\090201_XS.DWG
LAYOUT NAME - 090201_XS - 090231_XS

PLOT DATE : 7/24/2017 11:49 AM PLOT BY : MOYER, TIM PLOT NAME : PLOT SCALE : 1 IN:10 FT

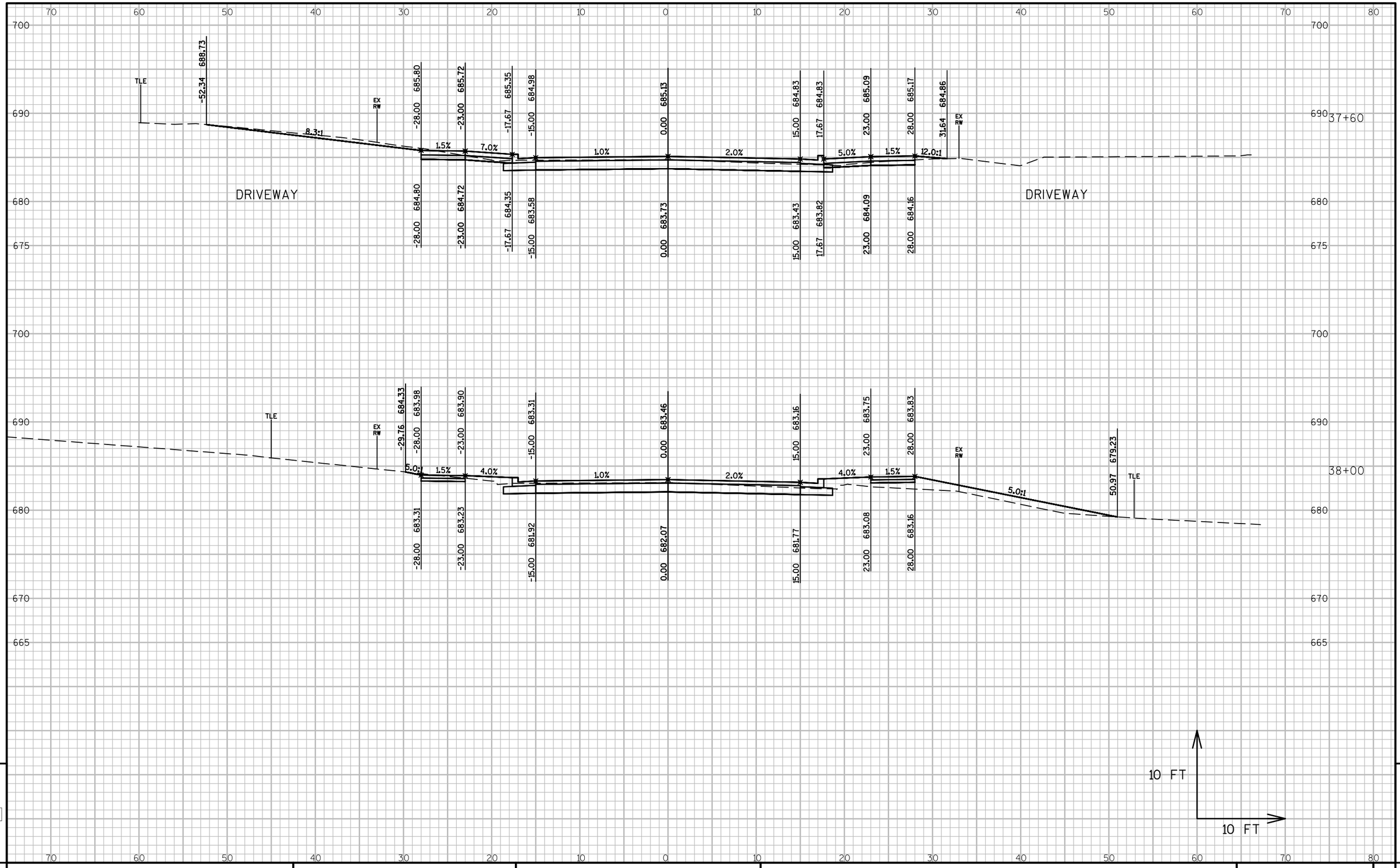

PROJECT NO: 4997-00-64	HWY: CTH C	COUNTY: DOOR	CROSS SECTIONS: CTH C	SHEET 184	E

FILE NAME : L:\PROJECTS\12642\DWG\4997-00-63\SHEETSPLAN\090201_XS.DWG
LAYOUT NAME - 090201_XS - 090232_XS
PLOT DATE : 7/24/2017 11:49 AM PLOT BY : MOYER, TIM PLOT NAME : PLOT SCALE : 1 IN:10 FT
WISDOT/CADDS SHEET 49

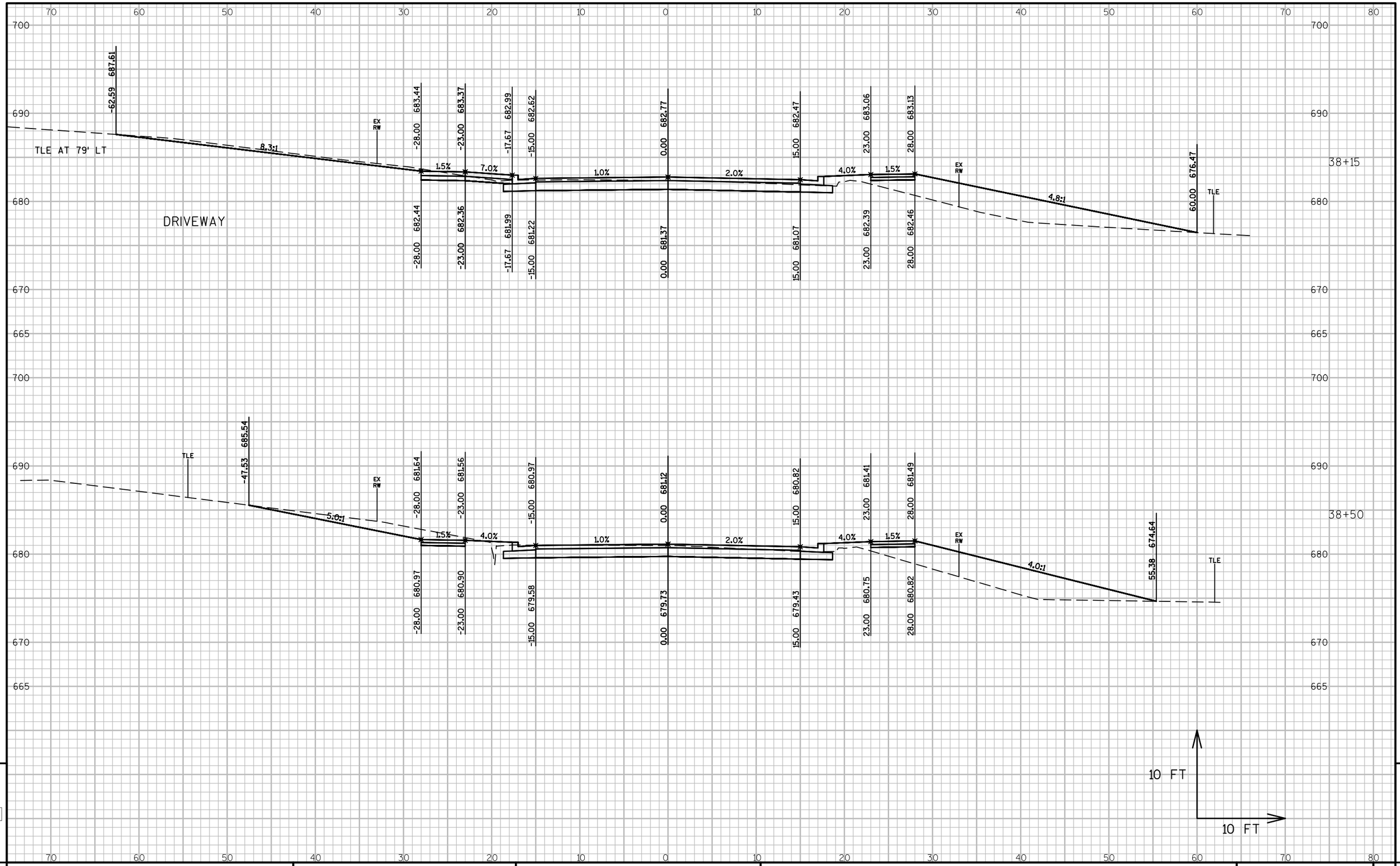

PROJECT NO: 4997-00-64	HWY: CTH C	COUNTY: DOOR	CROSS SECTIONS: CTH C	SHEET 185	E

FILE NAME : L:\PROJECTS\12642\DWG\4997-00-63\SHEETSPLAN\090201_XS.DWG
LAYOUT NAME - 090201_XS - 090233_XS
PLOT DATE : 7/24/2017 11:49 AM PLOT BY : MOYER, TIM PLOT NAME : PLOT SCALE : 1 IN:10 FT
WISDOT/CADDS SHEET 49

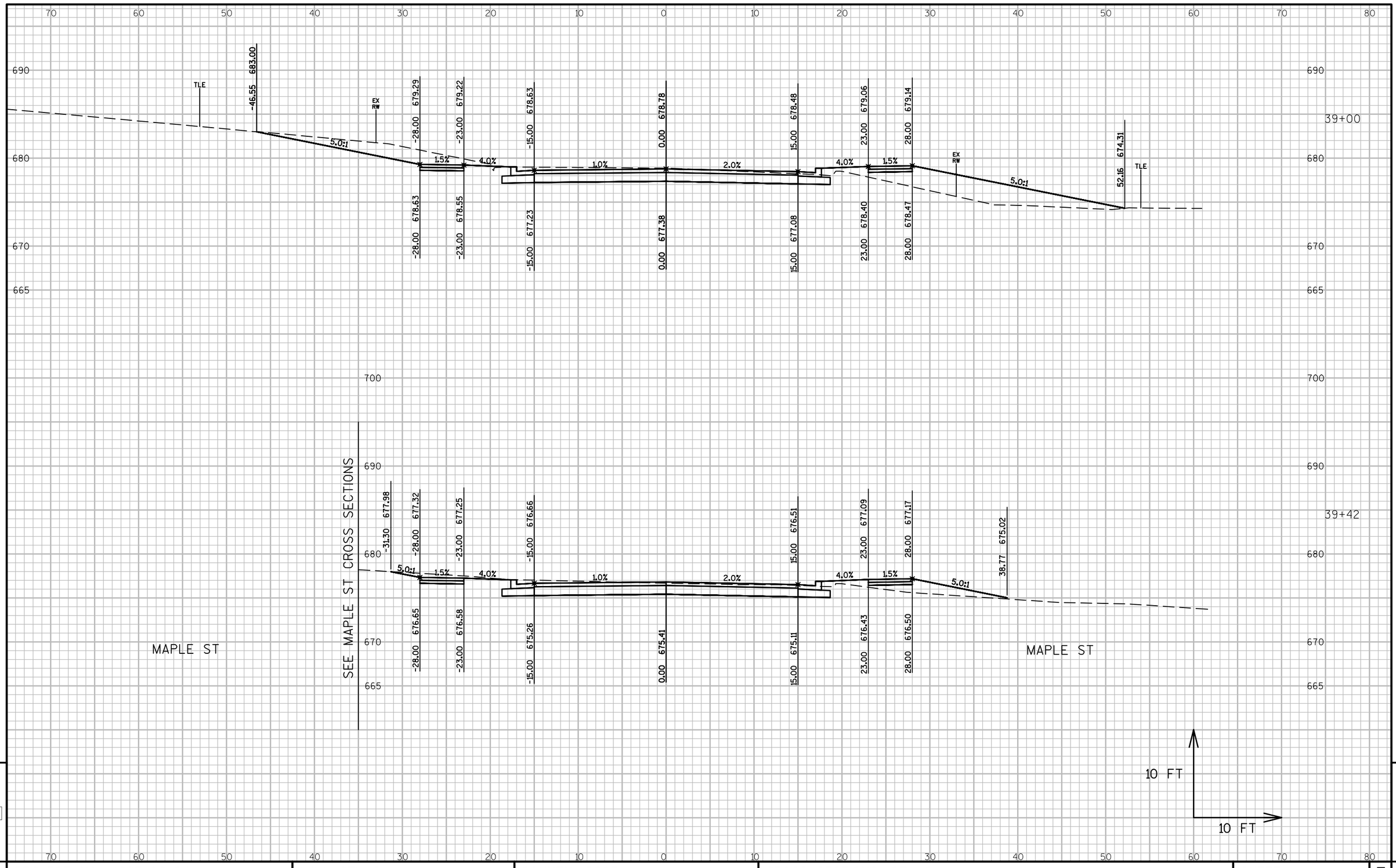

PROJECT NO: 4997-00-64	HWY: CTH C	COUNTY: DOOR	CROSS SECTIONS: CTH C	SHEET 186	E

FILE NAME : L:\PROJECTS\12642\DWG\4997-00-63\SHEETSPLAN\090201_XS.DWG
LAYOUT NAME - 090201_XS - 090234_XS

PLOT DATE : 7/24/2017 11:50 AM PLOT BY : MOYER, TIM PLOT NAME : PLOT SCALE : 1 IN:10 FT

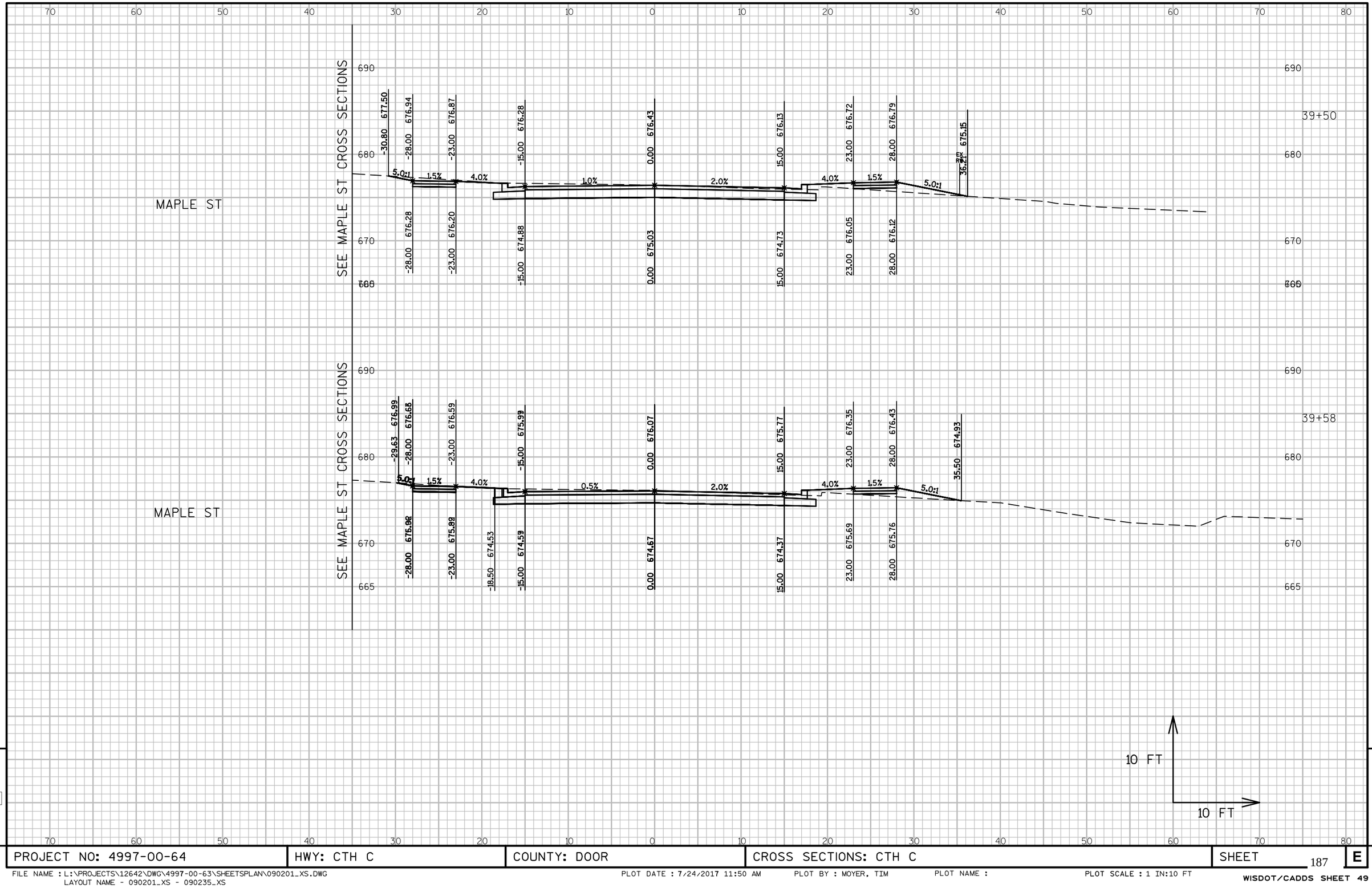

PROJECT NO: 4997-00-64	HWY: CTH C	COUNTY: DOOR	CROSS SECTIONS: CTH C	SHEET 187	E

FILE NAME : L:\PROJECTS\12642\DWG\4997-00-63\SHEETSPLAN\090201_XS.DWG
LAYOUT NAME - 090201_XS - 090235_XS
PLOT DATE : 7/24/2017 11:50 AM PLOT BY : MOYER, TIM PLOT NAME : PLOT SCALE : 1 IN:10 FT
WISDOT/CADDS SHEET 49

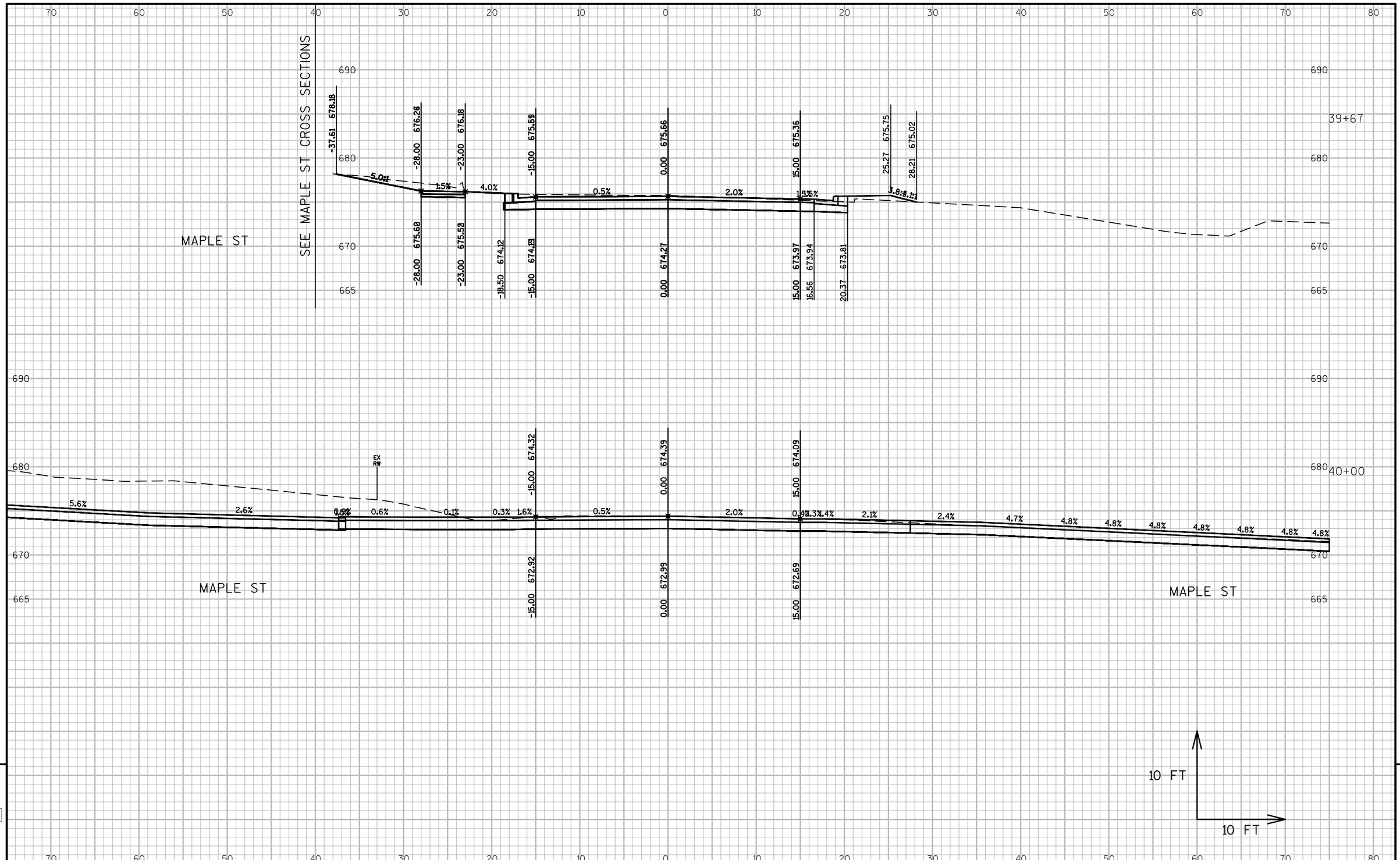

PROJECT NO: 4997-00-64	HWY: CTH C	COUNTY: DOOR	CROSS SECTIONS: CTH C	SHEET 188	E

FILE NAME : L:\PROJECTS\12642\DWG\4997-00-63\SHEETSPLAN\090201_XS.DWG
LAYOUT NAME - 090201_XS - 090236_XS

PLOT DATE : 7/24/2017 11:50 AM PLOT BY : MOYER, TIM PLOT NAME : PLOT SCALE : 1 IN:10 FT

WISDOT/CADDS SHEET 49

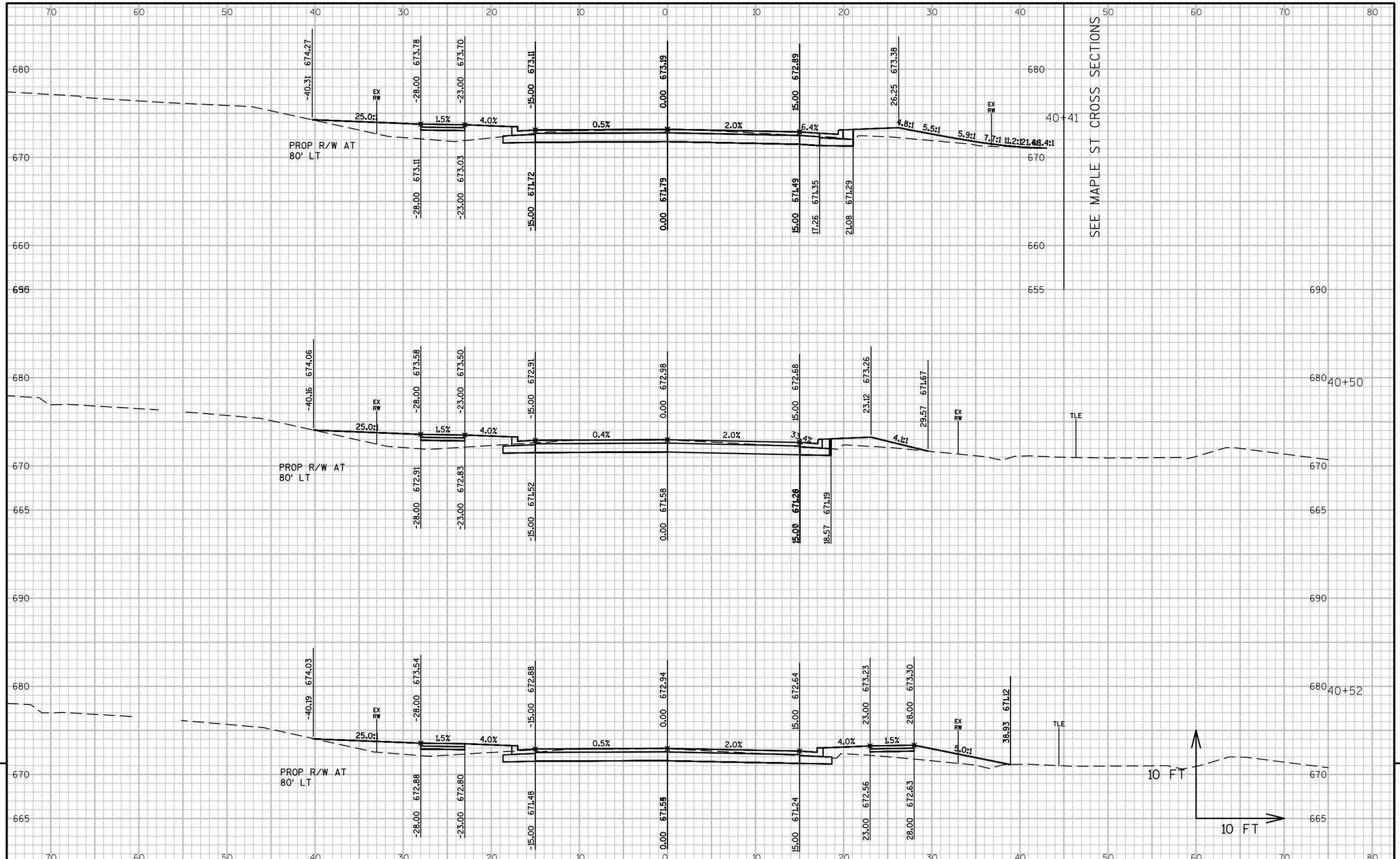

9

9

PROJECT NO: 4997-00-64	HWY: CTH C	COUNTY: DOOR	CROSS SECTIONS: CTH C	SHEET 189	E

FILE NAME : L:\PROJECTS\12642\DWG\4997-00-63\SHEETSPLAN\090201_XS.DWG
LAYOUT NAME - 090201_XS - 090237_XS

PLOT DATE : 7/26/2017 3:36 PM PLOT BY : MOYER, TIM PLOT NAME : PLOT SCALE : 1 IN:10 FT

WISDOT/CADDS SHEET 49

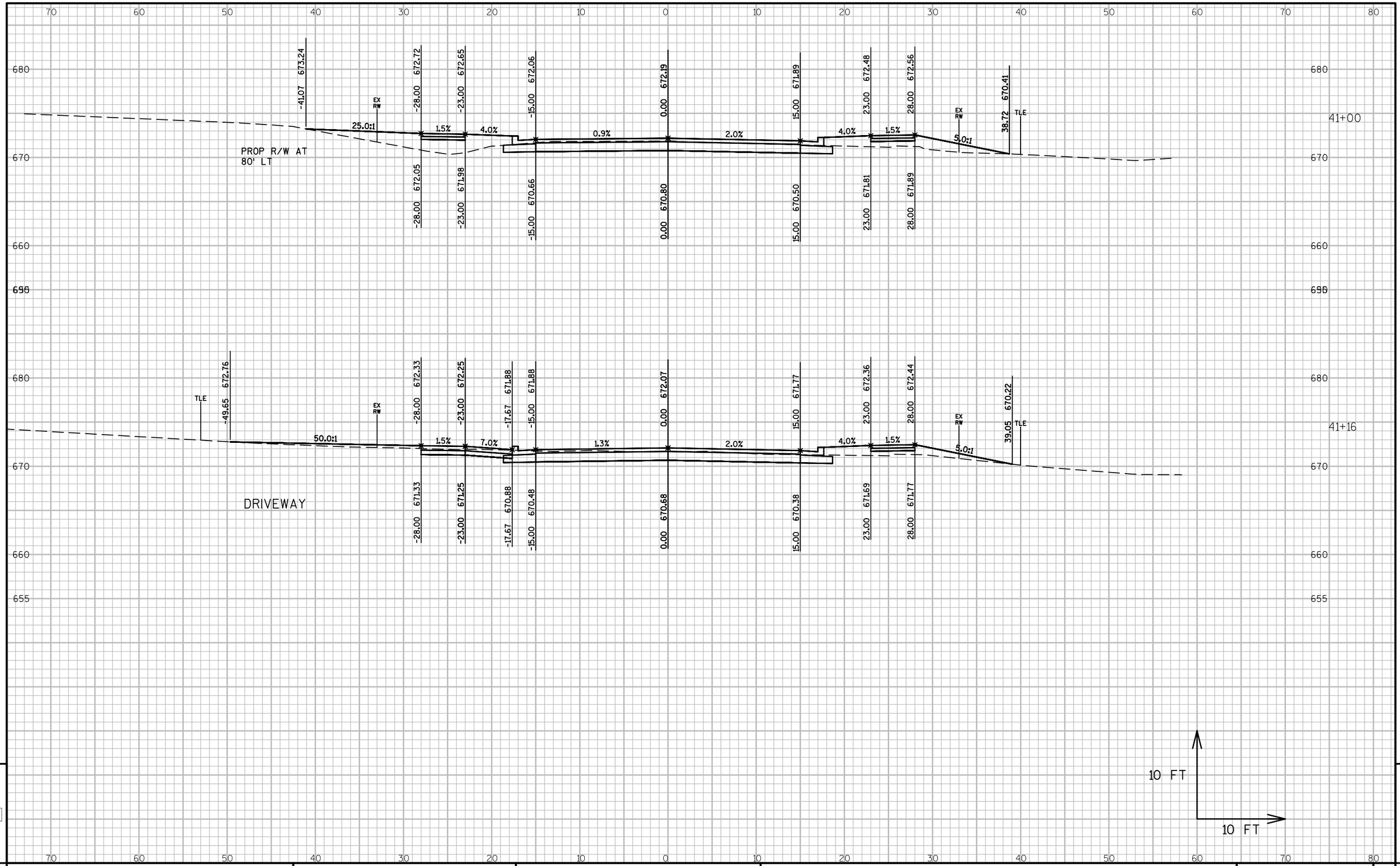

PROJECT NO: 4997-00-64	HWY: CTH C	COUNTY: DOOR	CROSS SECTIONS: CTH C	SHEET 190	E

FILE NAME : L:\PROJECTS\12642\DWG\4997-00-63\SHEETSPLAN\090201_XS.DWG
LAYOUT NAME - 090201_XS - 090238_XS

PLOT DATE : 7/24/2017 11:50 AM PLOT BY : MOYER, TIM PLOT NAME : PLOT SCALE : 1 IN:10 FT

WISDOT/CADDS SHEET 49

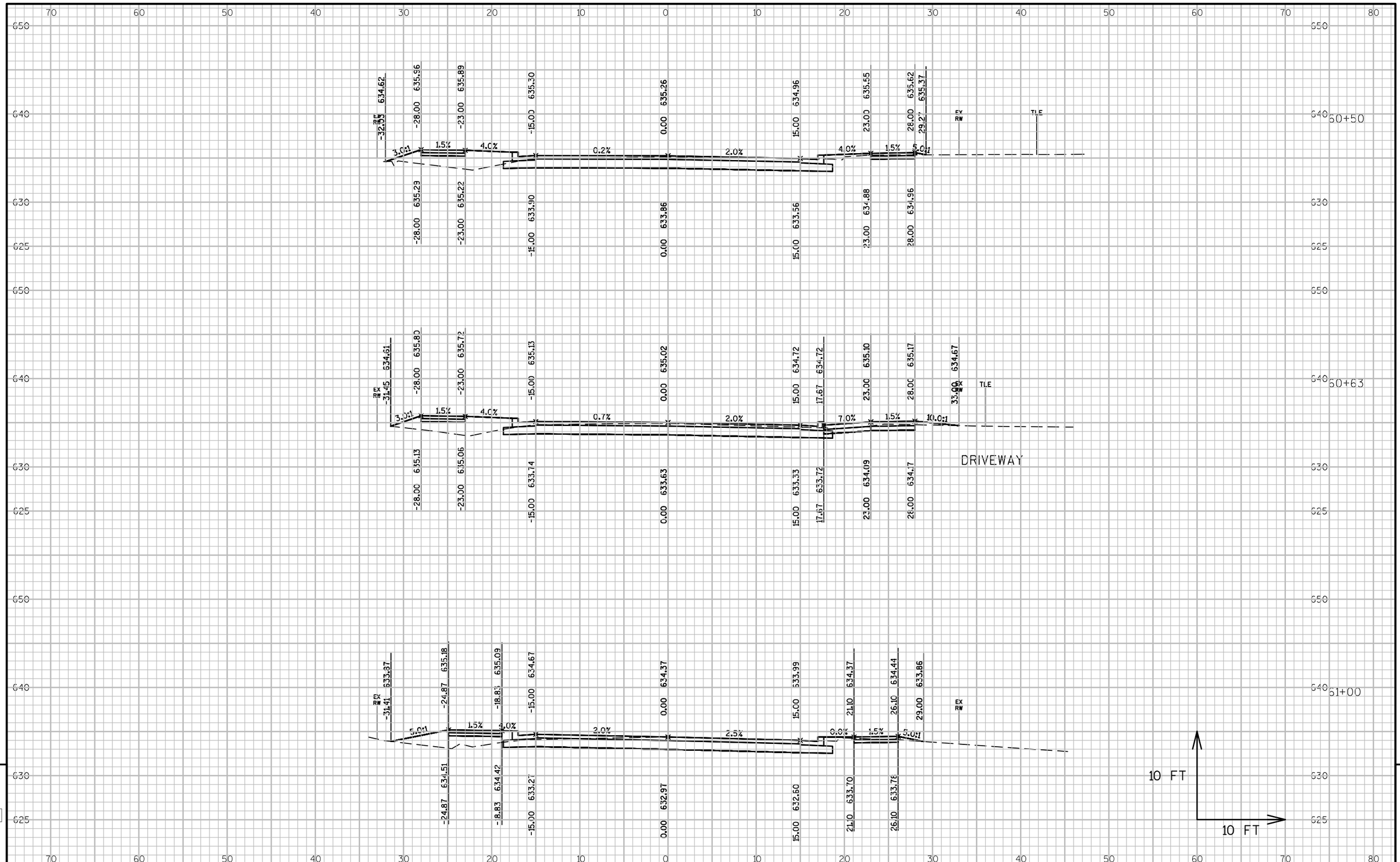

PROJECT NO: 4997-00-64	HWY: CTH C	COUNTY: DOOR	CROSS SECTIONS: CTH C	SHEET 191 E

FILE NAME : L:\PROJECTS\12642\DWG\4997-00-63\SHEETSPLAN\090201_XS.DWG
LAYOUT NAME - 090201_XS - 090268_XS

PLOT DATE : 7/24/2017 11:51 AM PLOT BY : MOYER, TIM PLOT NAME : PLOT SCALE : 1 IN:10 FT

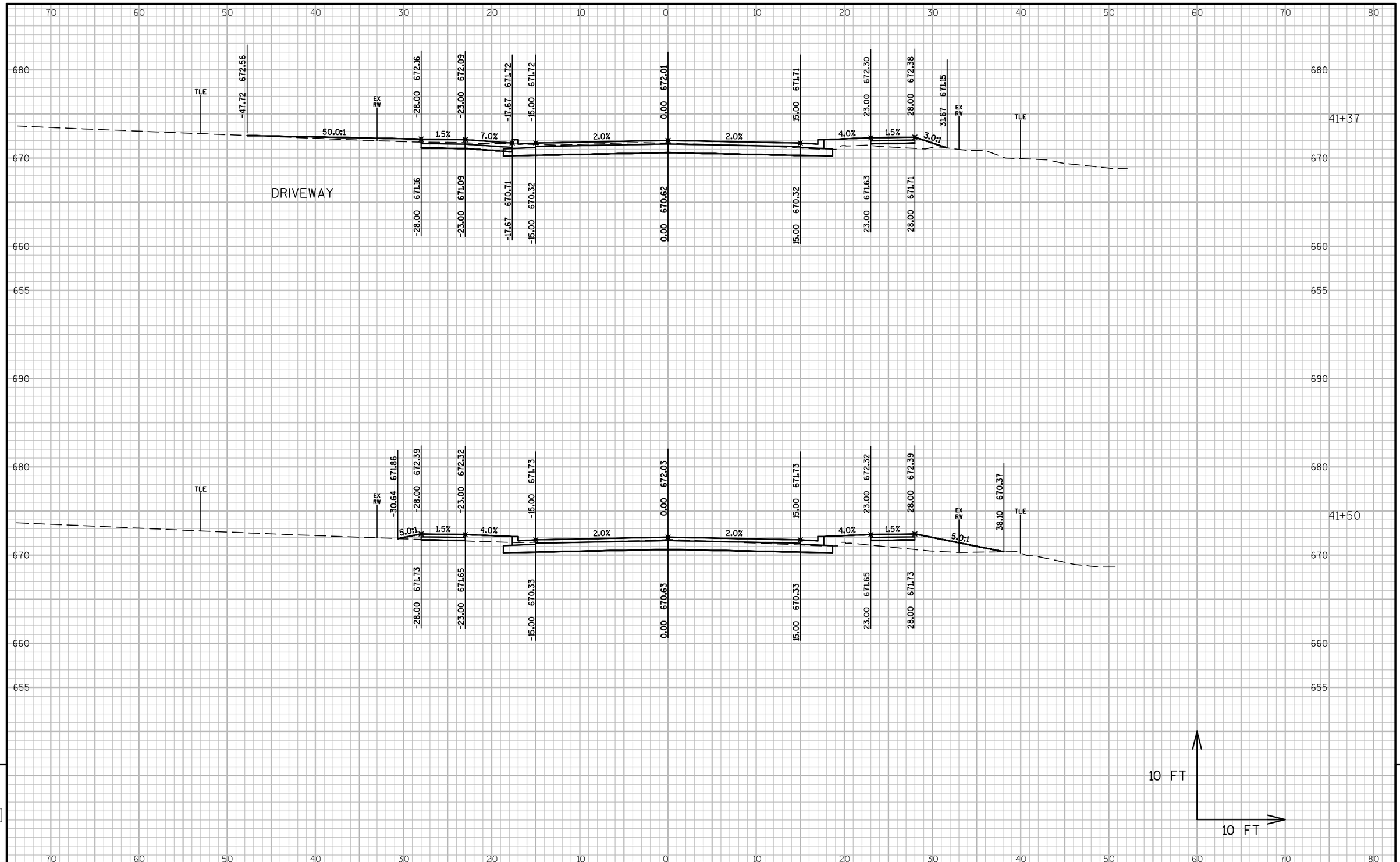

PROJECT NO: 4997-00-64	HWY: CTH C	COUNTY: DOOR	CROSS SECTIONS: CTH C	SHEET 192	E

FILE NAME : L:\PROJECTS\12642\DWG\4997-00-63\SHEETSPLAN\090201_XS.DWG
LAYOUT NAME - 090201_XS - 090239_XS
PLOT DATE : 7/24/2017 11:51 AM PLOT BY : MOYER, TIM PLOT NAME : PLOT SCALE : 1 IN:10 FT
WISDOT/CADDS SHEET 49

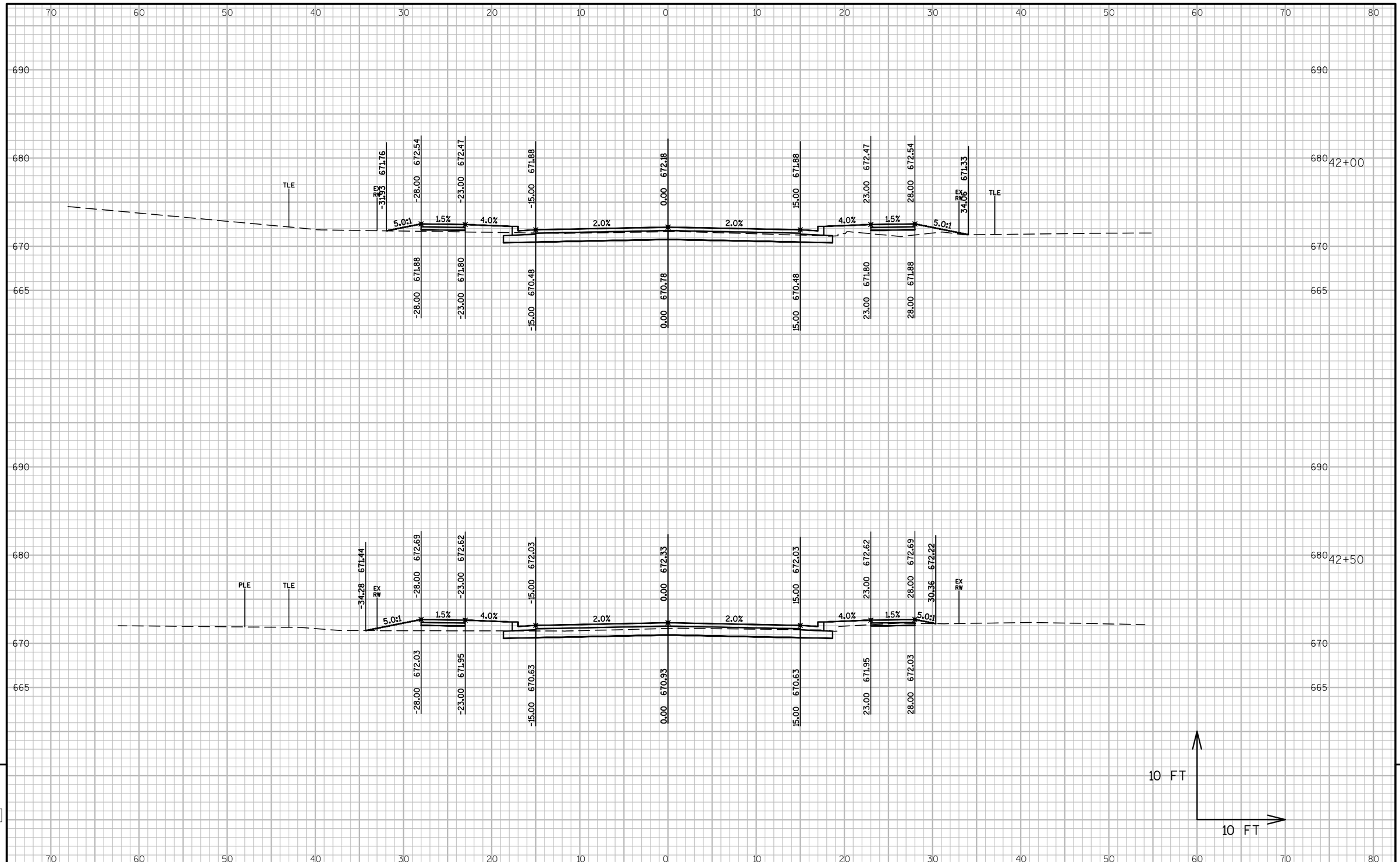

PROJECT NO: 4997-00-64	HWY: CTH C	COUNTY: DOOR	CROSS SECTIONS: CTH C	SHEET 193 E

FILE NAME : L:\PROJECTS\12642\DWG\4997-00-63\SHEETSPLAN\090201_XS.DWG
LAYOUT NAME - 090201_XS - 090240_XS
PLOT DATE : 7/24/2017 11:51 AM PLOT BY : MOYER, TIM PLOT NAME : PLOT SCALE : 1 IN:10 FT
WISDOT/CADDS SHEET 49

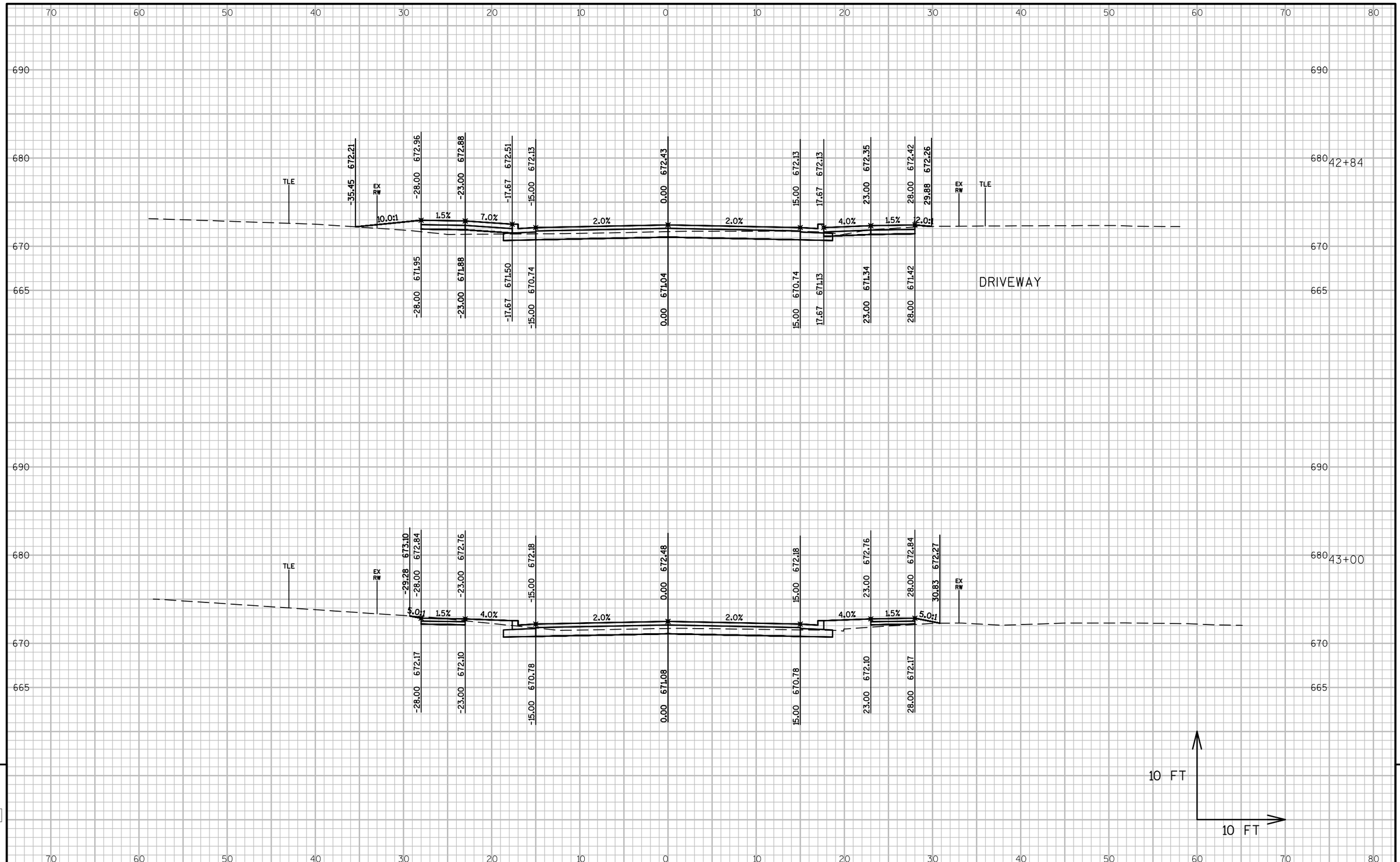

PROJECT NO: 4997-00-64	HWY: CTH C	COUNTY: DOOR	CROSS SECTIONS: CTH C	SHEET 194 E

FILE NAME : L:\PROJECTS\12642\DWG\4997-00-63\SHEETSPLAN\090201_XS.DWG
LAYOUT NAME - 090201_XS - 090241_XS

PLOT DATE : 7/24/2017 11:51 AM PLOT BY : MOYER, TIM PLOT NAME : PLOT SCALE : 1 IN:10 FT

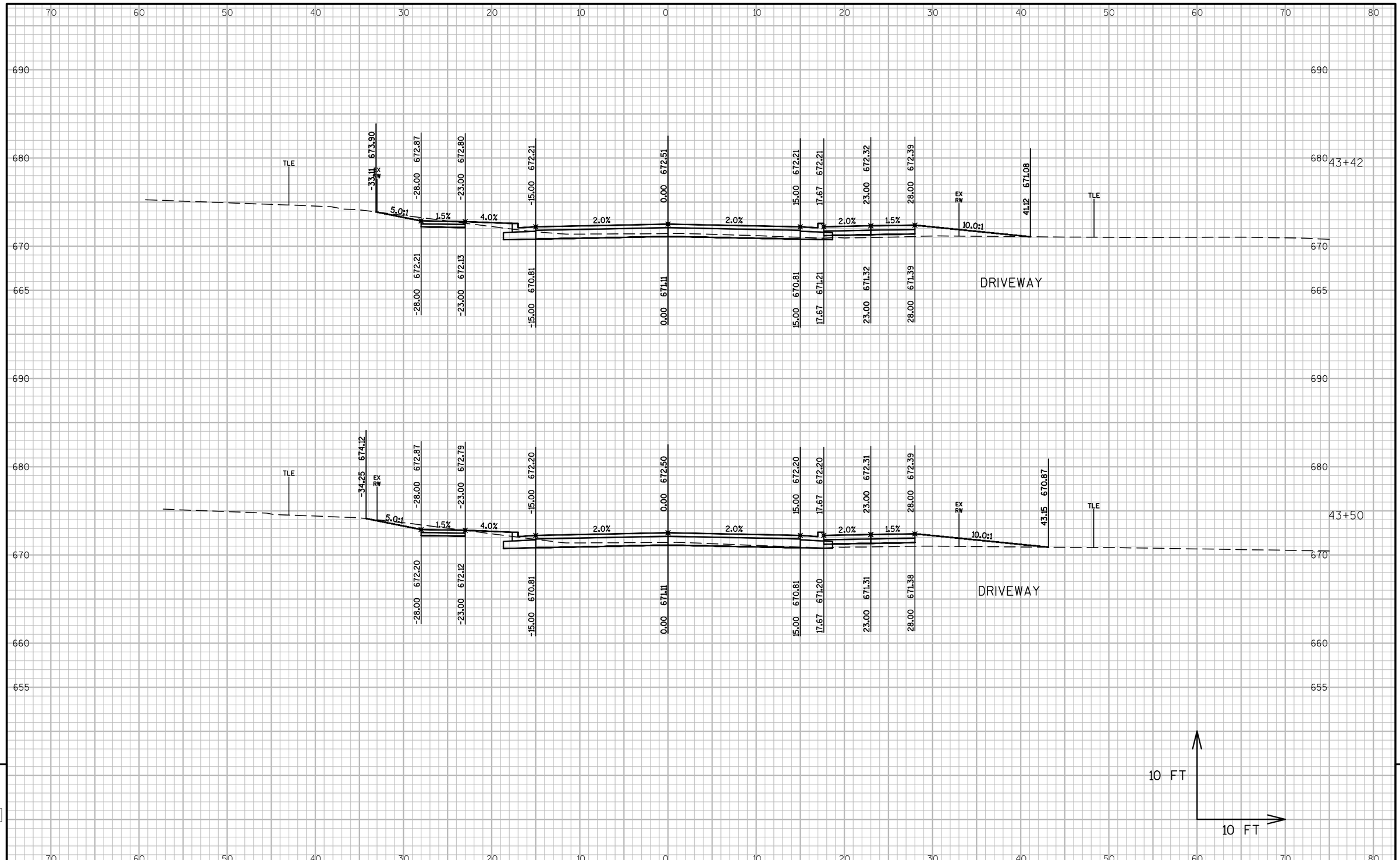

PROJECT NO: 4997-00-64	HWY: CTH C	COUNTY: DOOR	CROSS SECTIONS: CTH C	SHEET 195	E

FILE NAME : L:\PROJECTS\12642\DWG\4997-00-63\SHEETSPLAN\090201_XS.DWG
LAYOUT NAME - 090201_XS - 090242_XS

PLOT DATE : 7/24/2017 11:51 AM PLOT BY : MOYER, TIM PLOT NAME : PLOT SCALE : 1 IN:10 FT

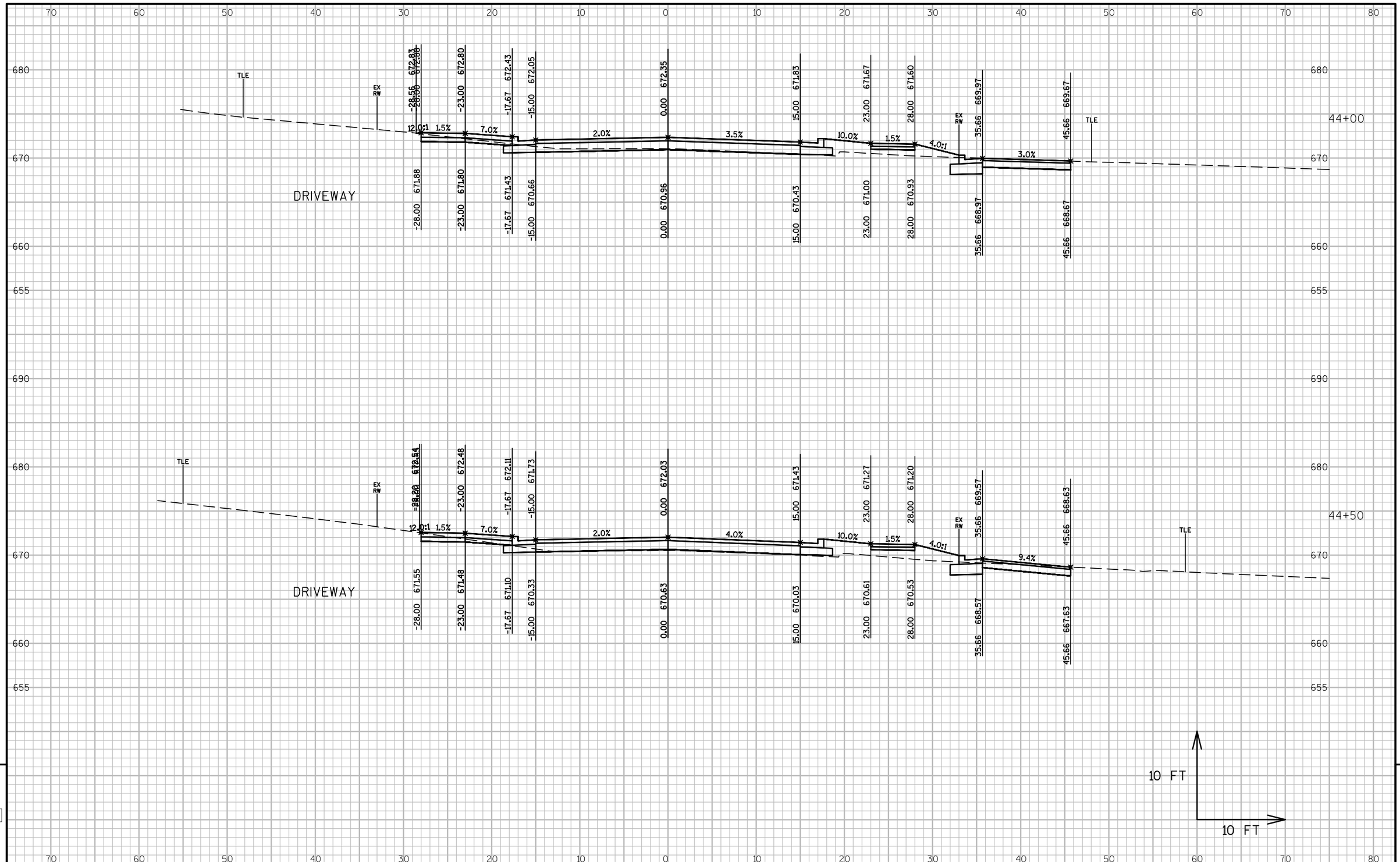

PROJECT NO: 4997-00-64	HWY: CTH C	COUNTY: DOOR	CROSS SECTIONS: CTH C	SHEET 196 E

FILE NAME : L:\PROJECTS\12642\DWG\4997-00-63\SHEETSPLAN\090201_XS.DWG
LAYOUT NAME - 090201_XS - 090243_XS

PLOT DATE : 7/24/2017 11:51 AM PLOT BY : MOYER, TIM PLOT NAME : PLOT SCALE : 1 IN:10 FT

WISDOT/CADDS SHEET 49

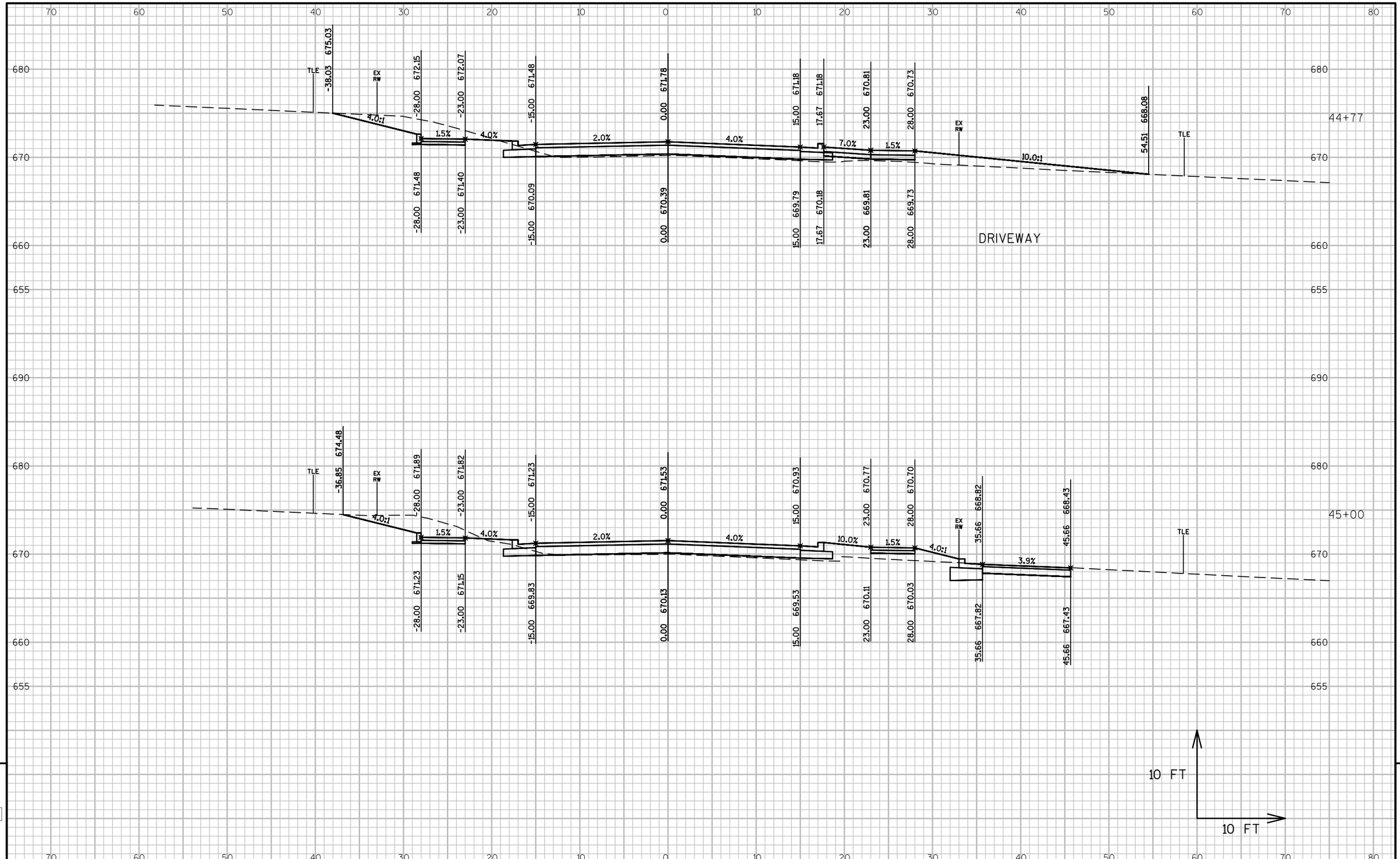

PROJECT NO: 4997-00-64	HWY: CTH C	COUNTY: DOOR	CROSS SECTIONS: CTH C	SHEET 197	E

FILE NAME : L:\PROJECTS\12642\DWG\4997-00-63\SHEETSPLAN\090201_XS.DWG
LAYOUT NAME - 090201_XS - 090244_XS

PLOT DATE : 7/24/2017 11:52 AM PLOT BY : MOYER, TIM PLOT NAME : PLOT SCALE : 1 IN:10 FT

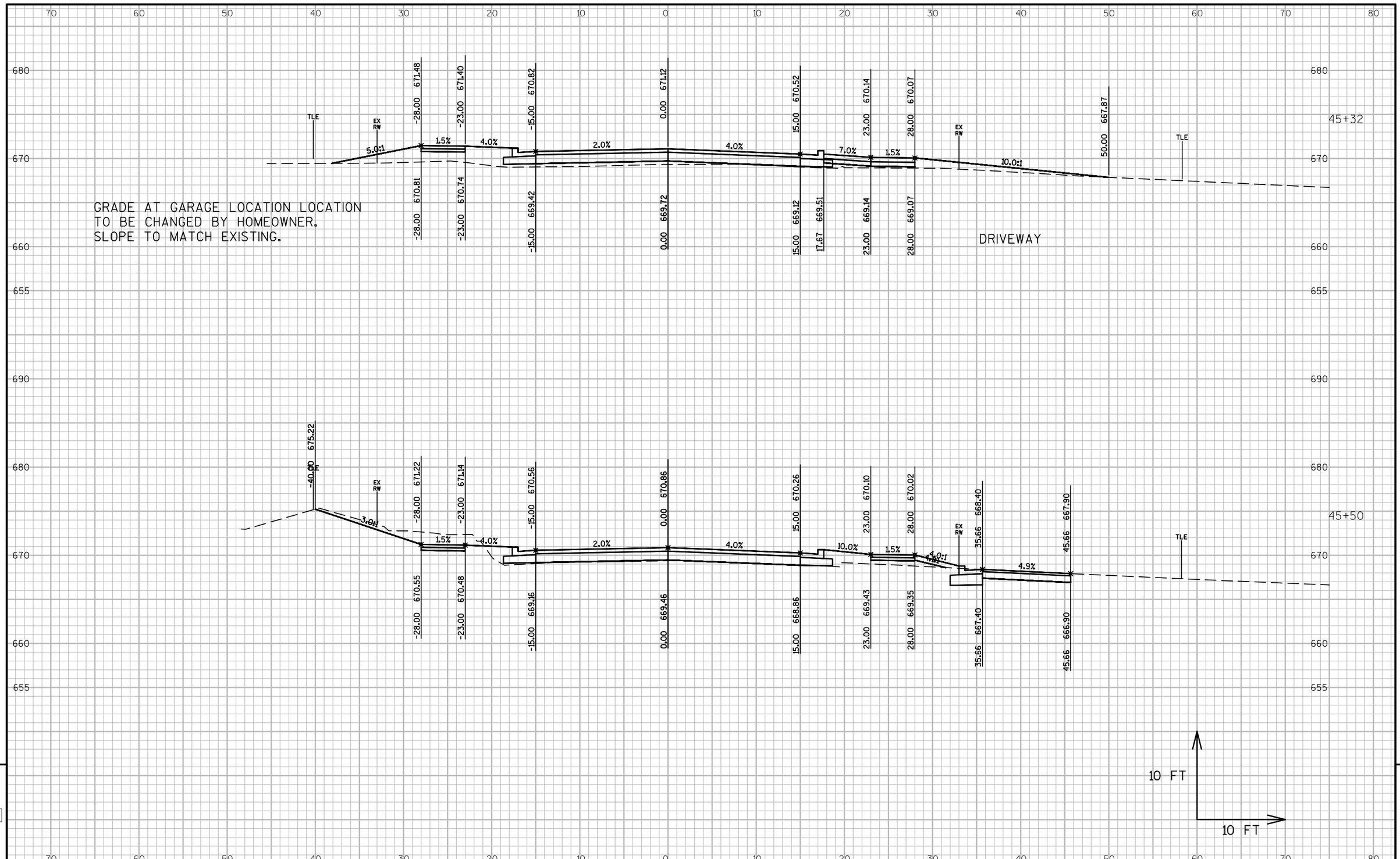

PROJECT NO: 4997-00-64	HWY: CTH C	COUNTY: DOOR	CROSS SECTIONS: CTH C	SHEET 198	E

FILE NAME : L:\PROJECTS\12642\DWG\4997-00-63\SHEETSPLAN\090201_XS.DWG
LAYOUT NAME - 090201_XS - 090245_XS

PLOT DATE : 7/24/2017 11:52 AM PLOT BY : MOYER, TIM PLOT NAME : PLOT SCALE : 1 IN:10 FT

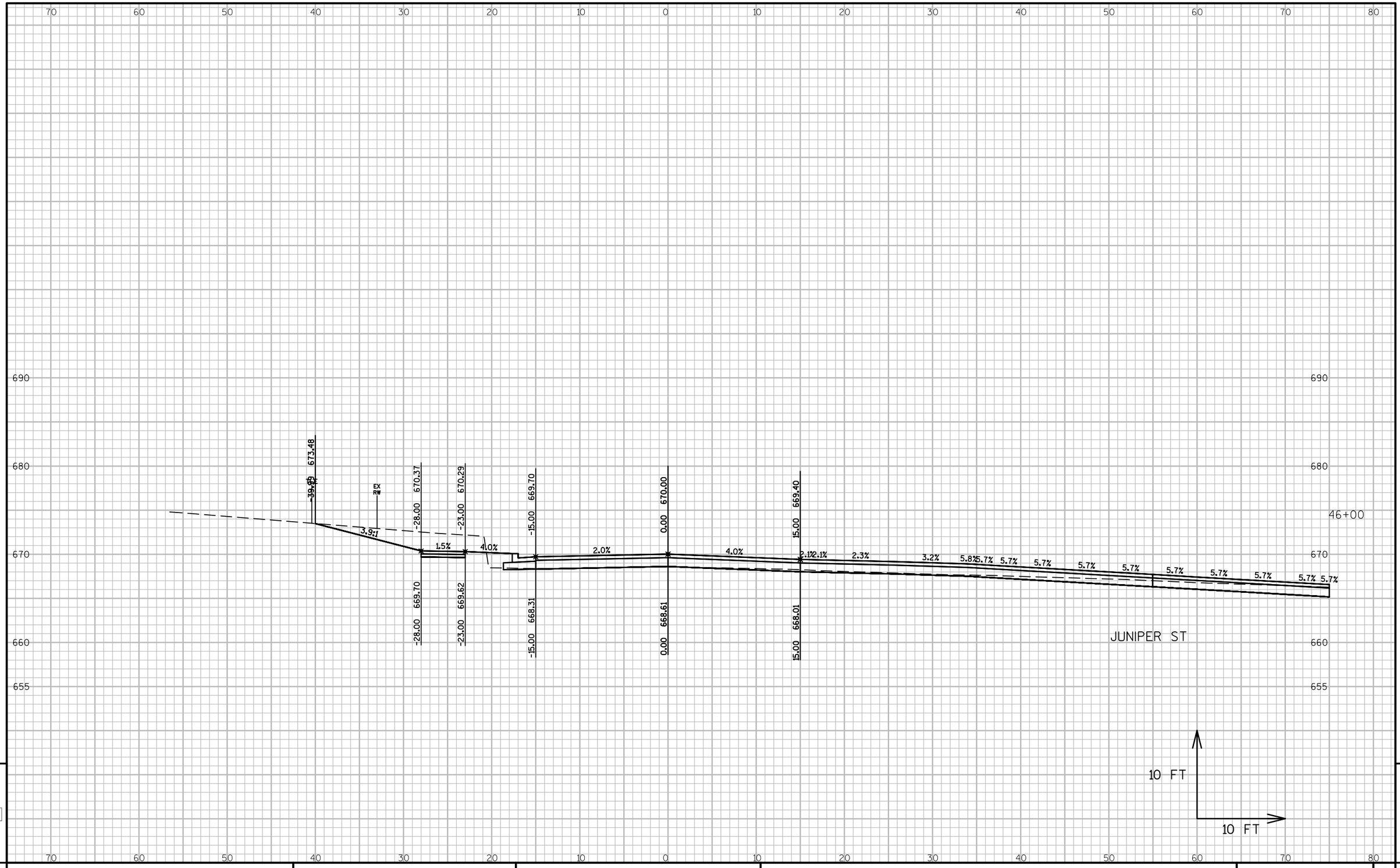

PROJECT NO: 4997-00-64	HWY: CTH C	COUNTY: DOOR	CROSS SECTIONS: CTH C	SHEET 199	E

FILE NAME : L:\PROJECTS\12642\DWG\4997-00-63\SHEETSPLAN\090201_XS.DWG
LAYOUT NAME - 090201_XS - 090246_XS

PLOT DATE : 7/24/2017 11:52 AM PLOT BY : MOYER, TIM PLOT NAME : PLOT SCALE : 1 IN:10 FT

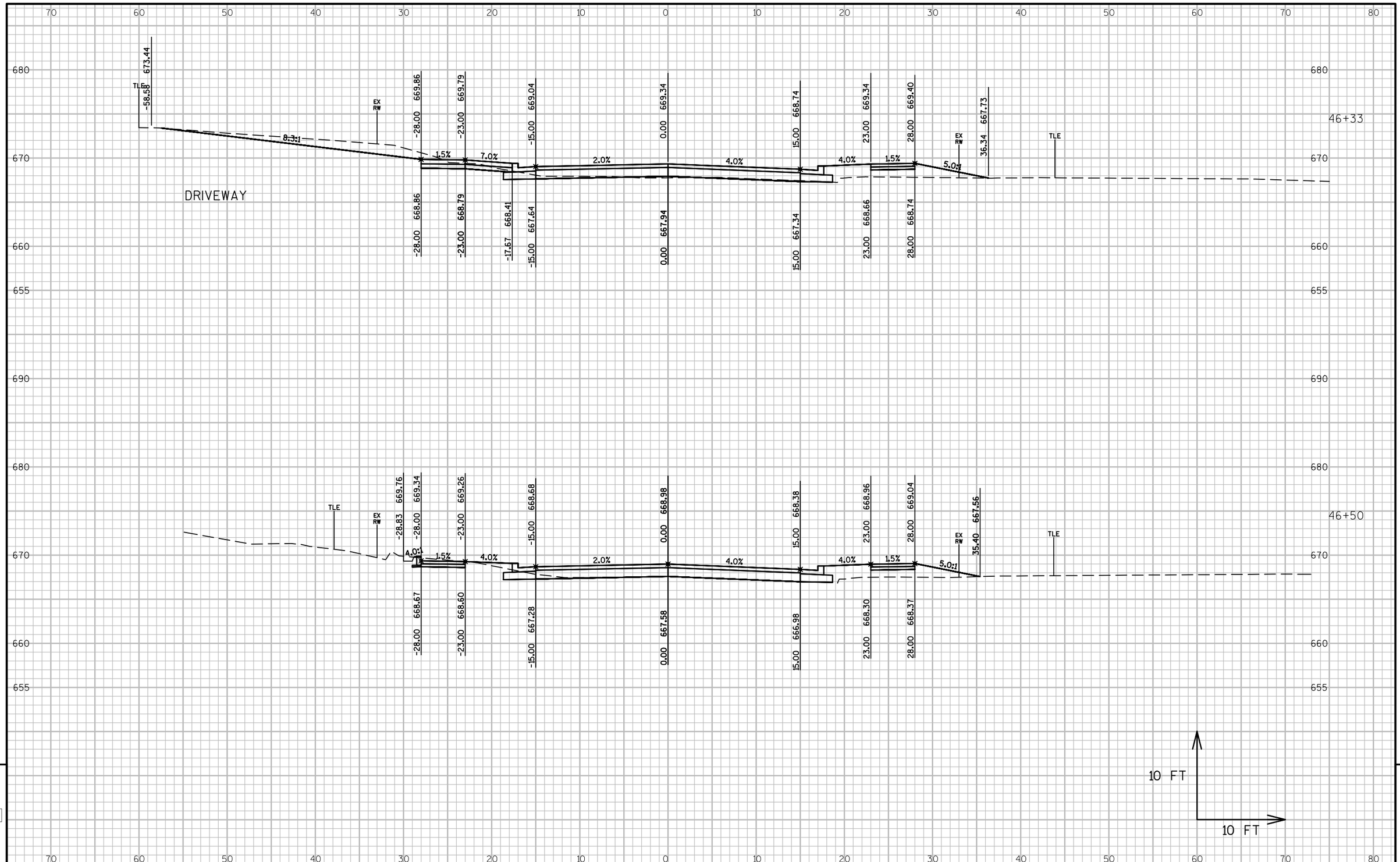

PROJECT NO: 4997-00-64	HWY: CTH C	COUNTY: DOOR	CROSS SECTIONS: CTH C	SHEET 200 E

FILE NAME : L:\PROJECTS\12642\DWG\4997-00-63\SHEETSPLAN\090201_XS.DWG
LAYOUT NAME - 090201_XS - 090247_XS

PLOT DATE : 7/24/2017 11:52 AM PLOT BY : MOYER, TIM PLOT NAME : PLOT SCALE : 1 IN:10 FT

WISDOT/CADDS SHEET 49

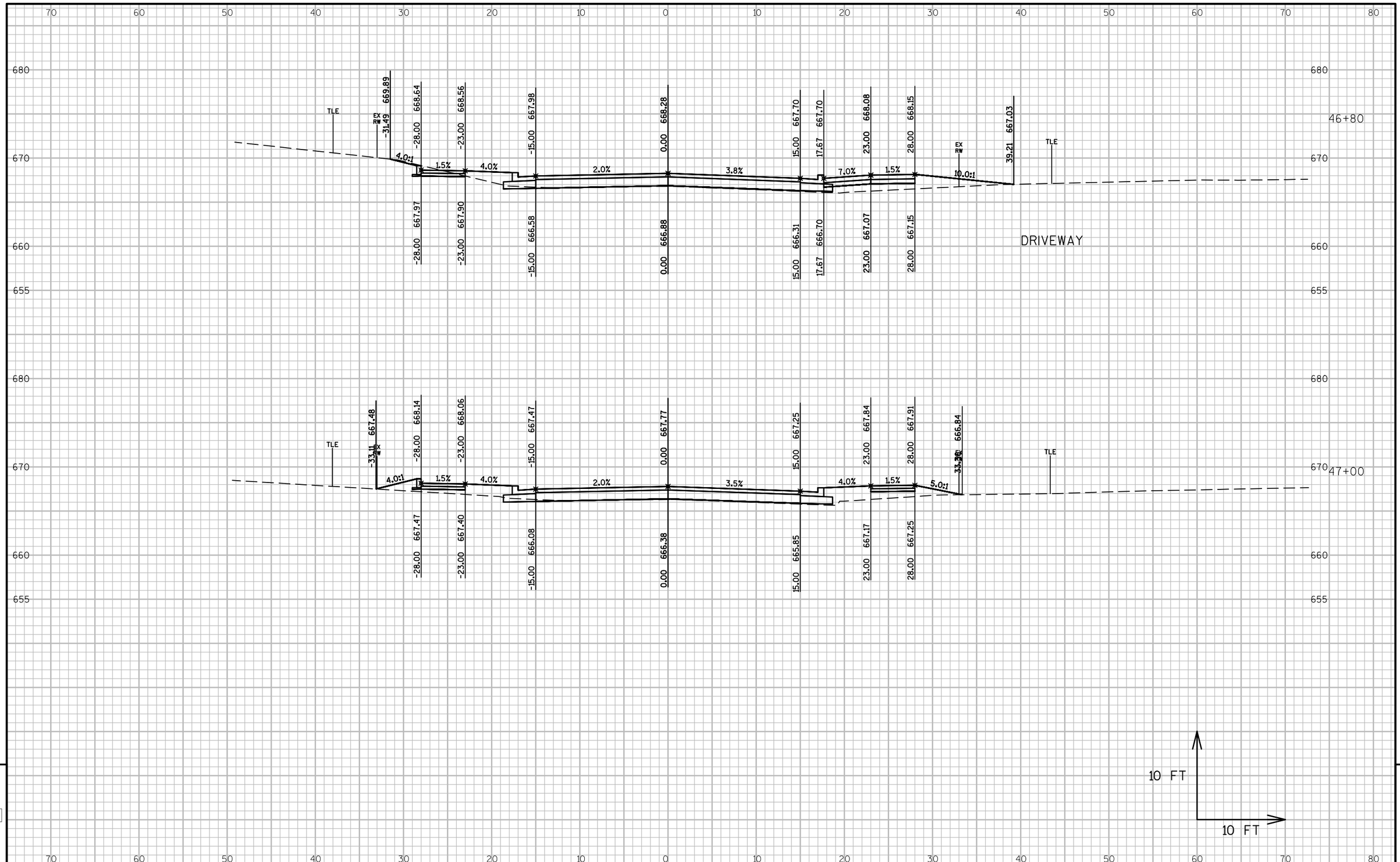

PROJECT NO: 4997-00-64	HWY: CTH C	COUNTY: DOOR	CROSS SECTIONS: CTH C	SHEET 201	E

FILE NAME : L:\PROJECTS\12642\DWG\4997-00-63\SHEETSPLAN\090201_XS.DWG
LAYOUT NAME - 090201_XS - 090248_XS

PLOT DATE : 7/24/2017 11:52 AM PLOT BY : MOYER, TIM PLOT NAME : PLOT SCALE : 1 IN:10 FT

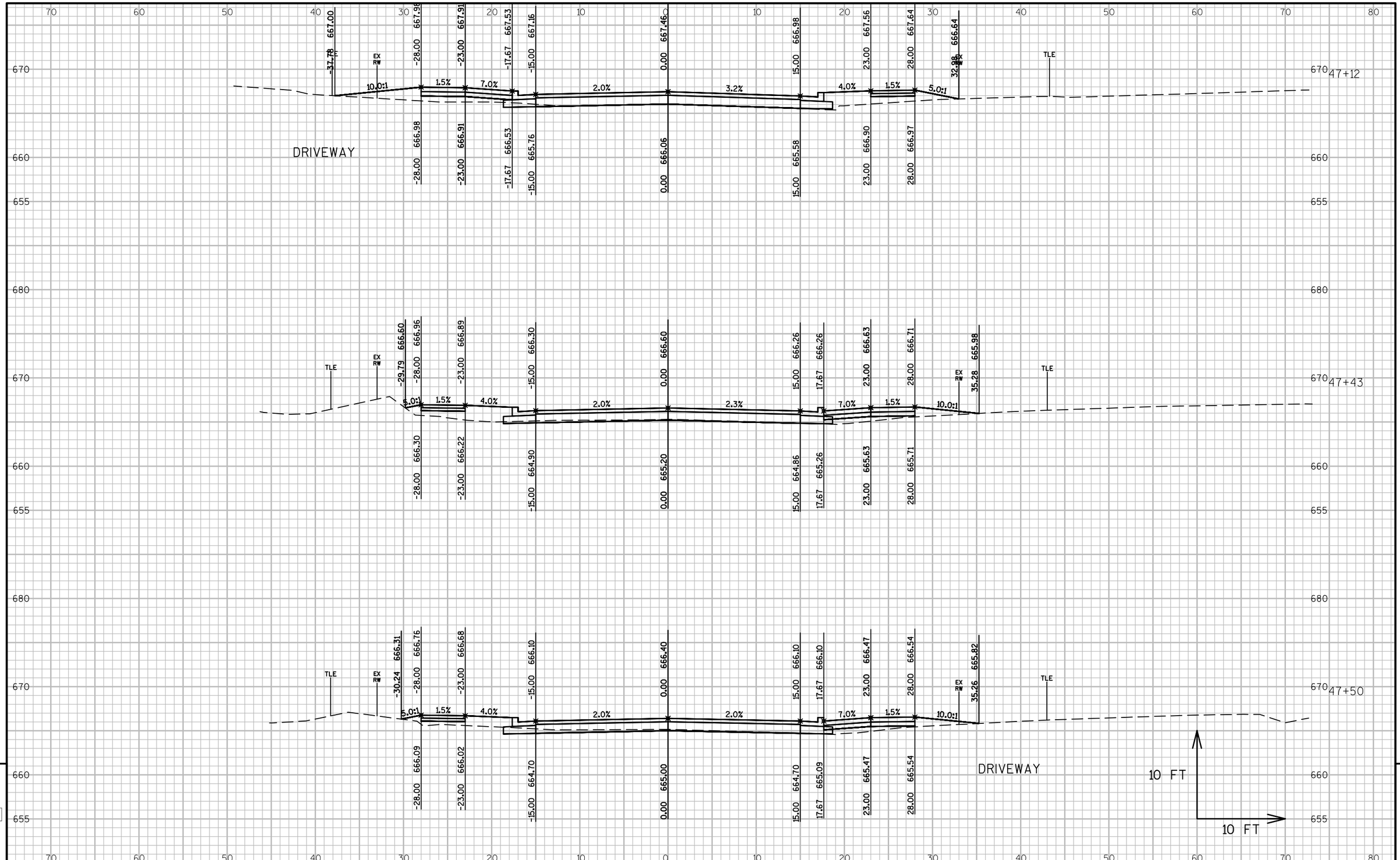

PROJECT NO: 4997-00-64	HWY: CTH C	COUNTY: DOOR	CROSS SECTIONS: CTH C	SHEET 202	E

FILE NAME : L:\PROJECTS\12642\DWG\4997-00-63\SHEETSPLAN\090201_XS.DWG
LAYOUT NAME - 090201_XS - 090249_XS

PLOT DATE : 7/24/2017 11:53 AM PLOT BY : MOYER, TIM PLOT NAME : PLOT SCALE : 1 IN:10 FT

WISDOT/CADDS SHEET 49

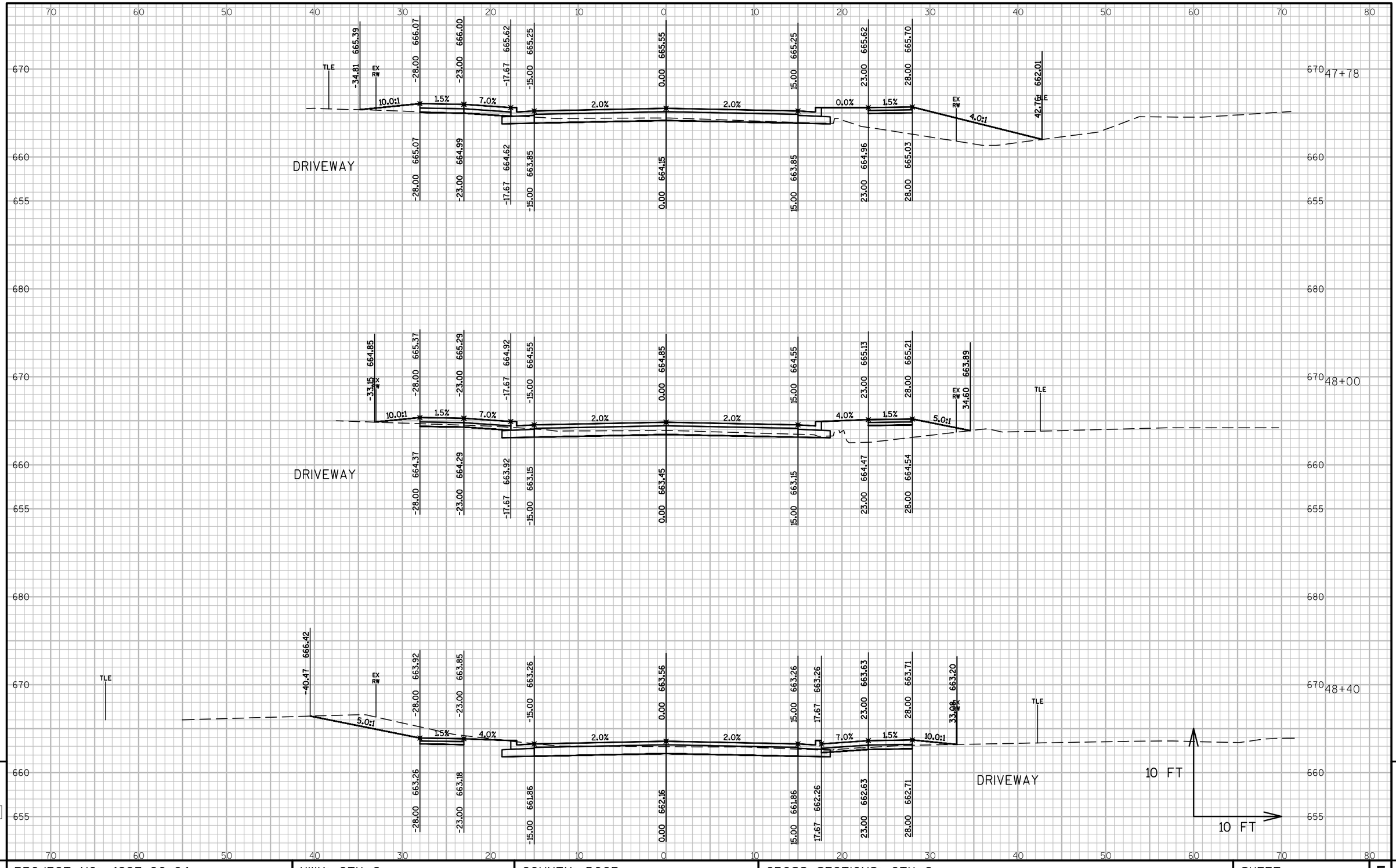

PROJECT NO: 4997-00-64	HWY: CTH C	COUNTY: DOOR	CROSS SECTIONS: CTH C	SHEET 203	E

FILE NAME : L:\PROJECTS\12642\DWG\4997-00-63\SHEETSPLAN\090201_XS.DWG
LAYOUT NAME - 090201_XS - 090250_XS

PLOT DATE : 7/24/2017 11:53 AM PLOT BY : MOYER, TIM PLOT NAME : PLOT SCALE : 1 IN:10 FT

WISDOT/CADDS SHEET 49

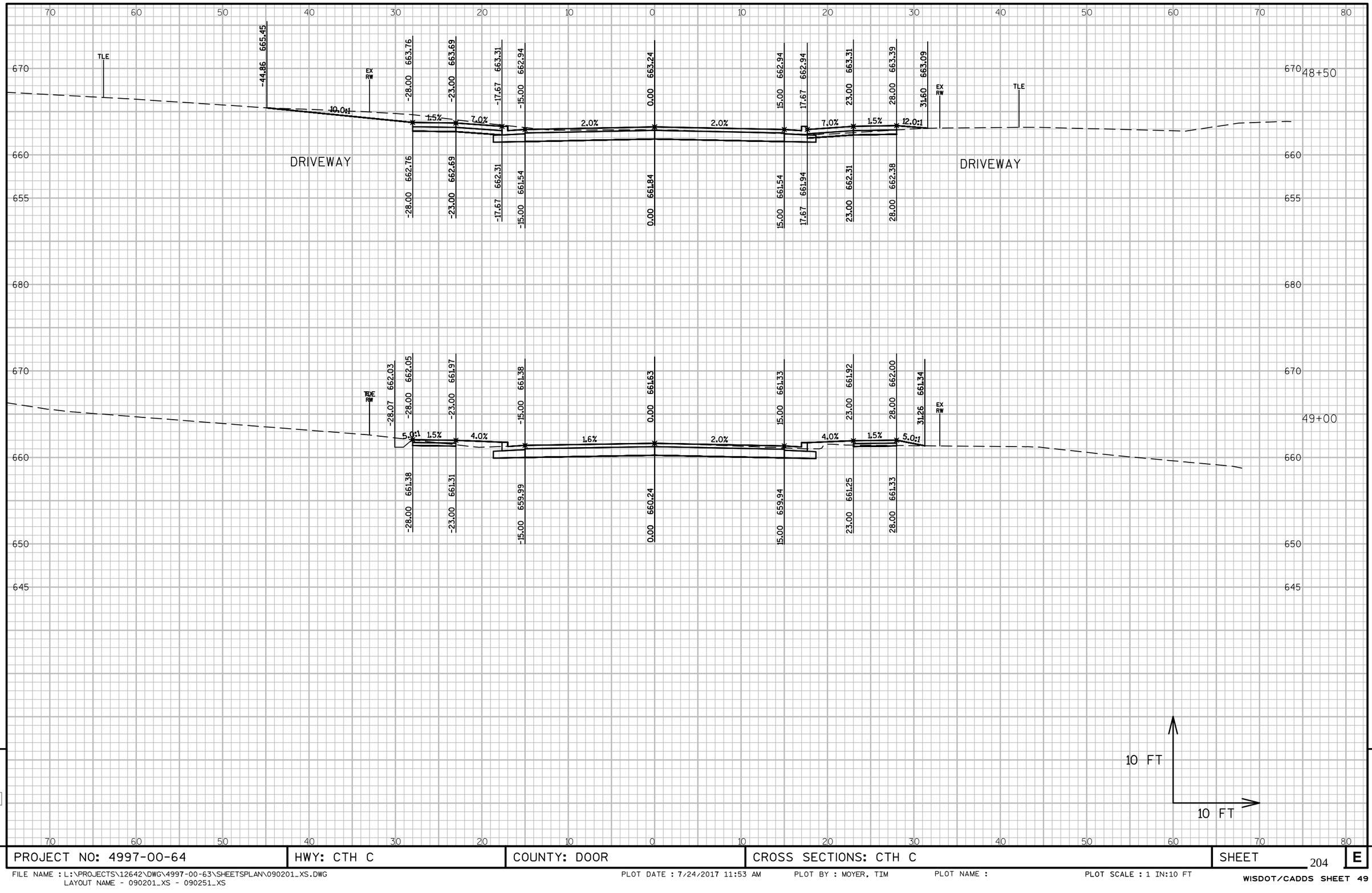

PROJECT NO: 4997-00-64	HWY: CTH C	COUNTY: DOOR	CROSS SECTIONS: CTH C	SHEET 204	E

FILE NAME : L:\PROJECTS\12642\DWG\4997-00-63\SHEETSPLAN\090201_XS.DWG
LAYOUT NAME - 090201_XS - 090251_XS

PLOT DATE : 7/24/2017 11:53 AM PLOT BY : MOYER, TIM PLOT NAME : PLOT SCALE : 1 IN:10 FT

WISDOT/CADDS SHEET 49

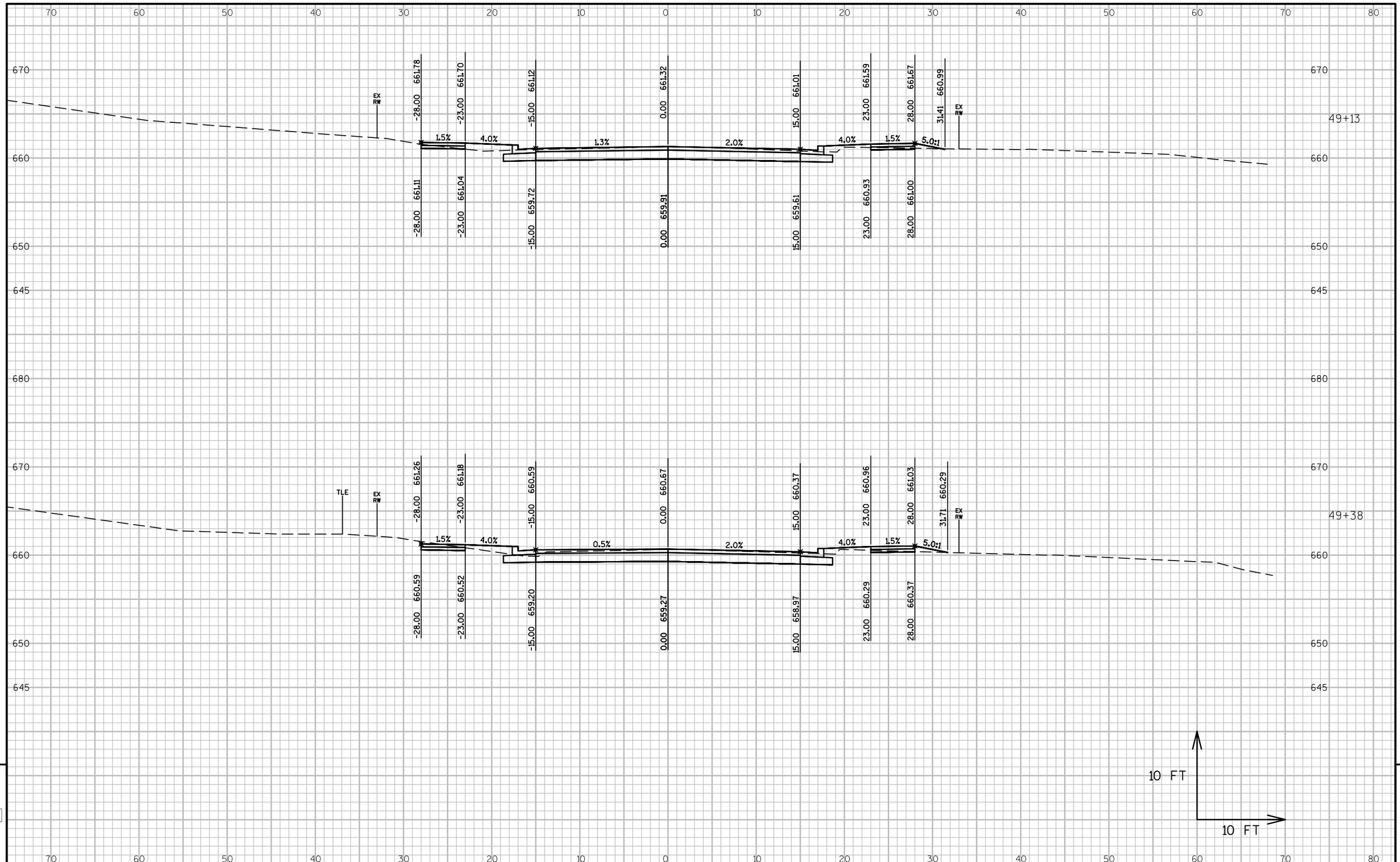

PROJECT NO: 4997-00-64	HWY: CTH C	COUNTY: DOOR	CROSS SECTIONS: CTH C	SHEET 205	E

FILE NAME : L:\PROJECTS\12642\DWG\4997-00-63\SHEETSPLAN\090201_XS.DWG
LAYOUT NAME - 090201_XS - 090252_XS

PLOT DATE : 7/24/2017 11:53 AM PLOT BY : MOYER, TIM PLOT NAME : PLOT SCALE : 1 IN:10 FT

WISDOT/CADDS SHEET 49

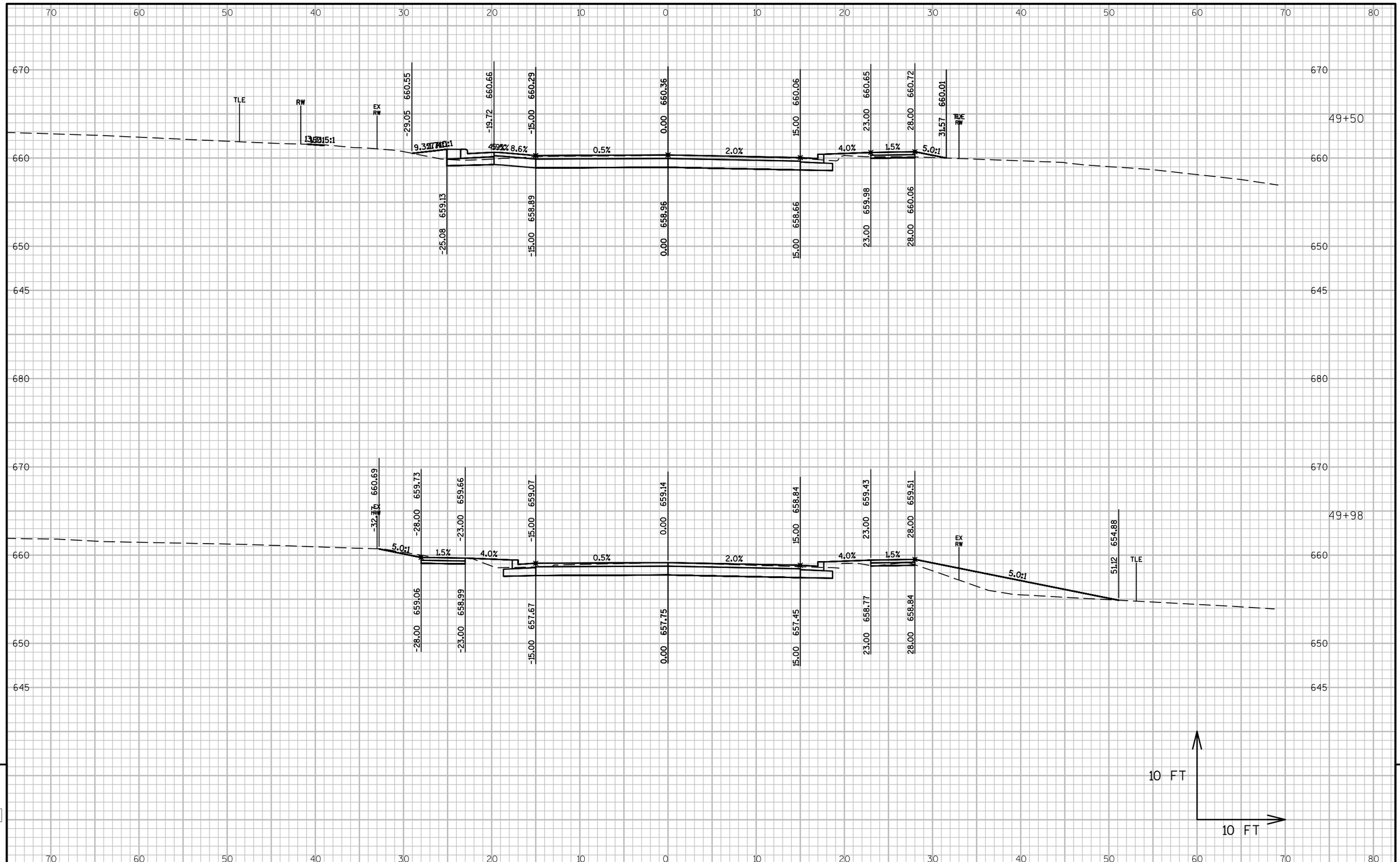

PROJECT NO: 4997-00-64	HWY: CTH C	COUNTY: DOOR	CROSS SECTIONS: CTH C	SHEET 206	E

FILE NAME : L:\PROJECTS\12642\DWG\4997-00-63\SHEETSPLAN\090201_XS.DWG
LAYOUT NAME - 090201_XS - 090253_XS

PLOT DATE : 7/24/2017 11:53 AM PLOT BY : MOYER, TIM PLOT NAME : PLOT SCALE : 1 IN:10 FT

WISDOT/CADDS SHEET 49

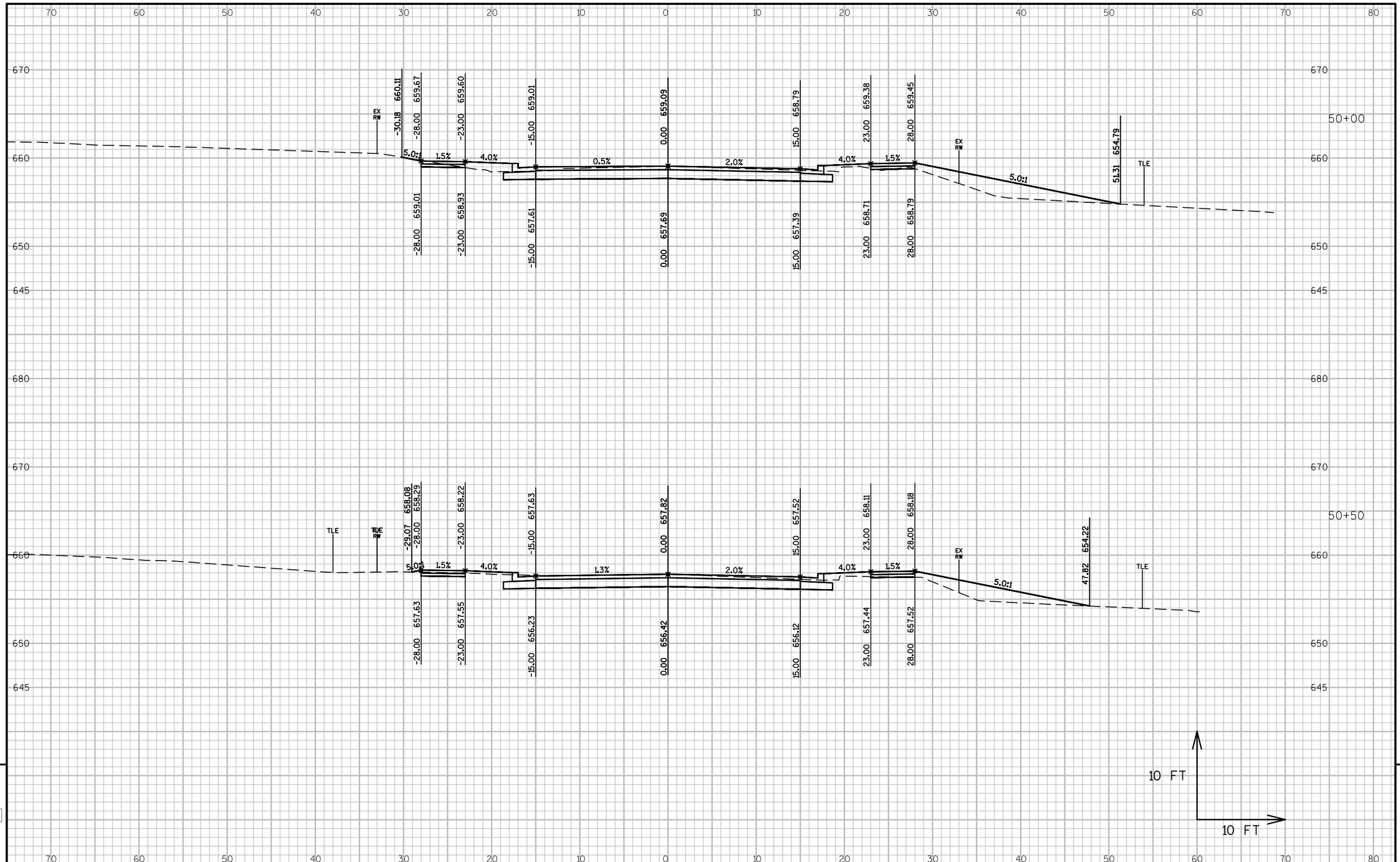

PROJECT NO: 4997-00-64	HWY: CTH C	COUNTY: DOOR	CROSS SECTIONS: CTH C	SHEET 207	E

FILE NAME : L:\PROJECTS\12642\DWG\4997-00-63\SHEETSPLAN\090201_XS.DWG
LAYOUT NAME - 090201_XS - 090254_XS

PLOT DATE : 7/24/2017 11:53 AM PLOT BY : MOYER, TIM PLOT NAME : PLOT SCALE : 1 IN:10 FT

WISDOT/CADDS SHEET 49

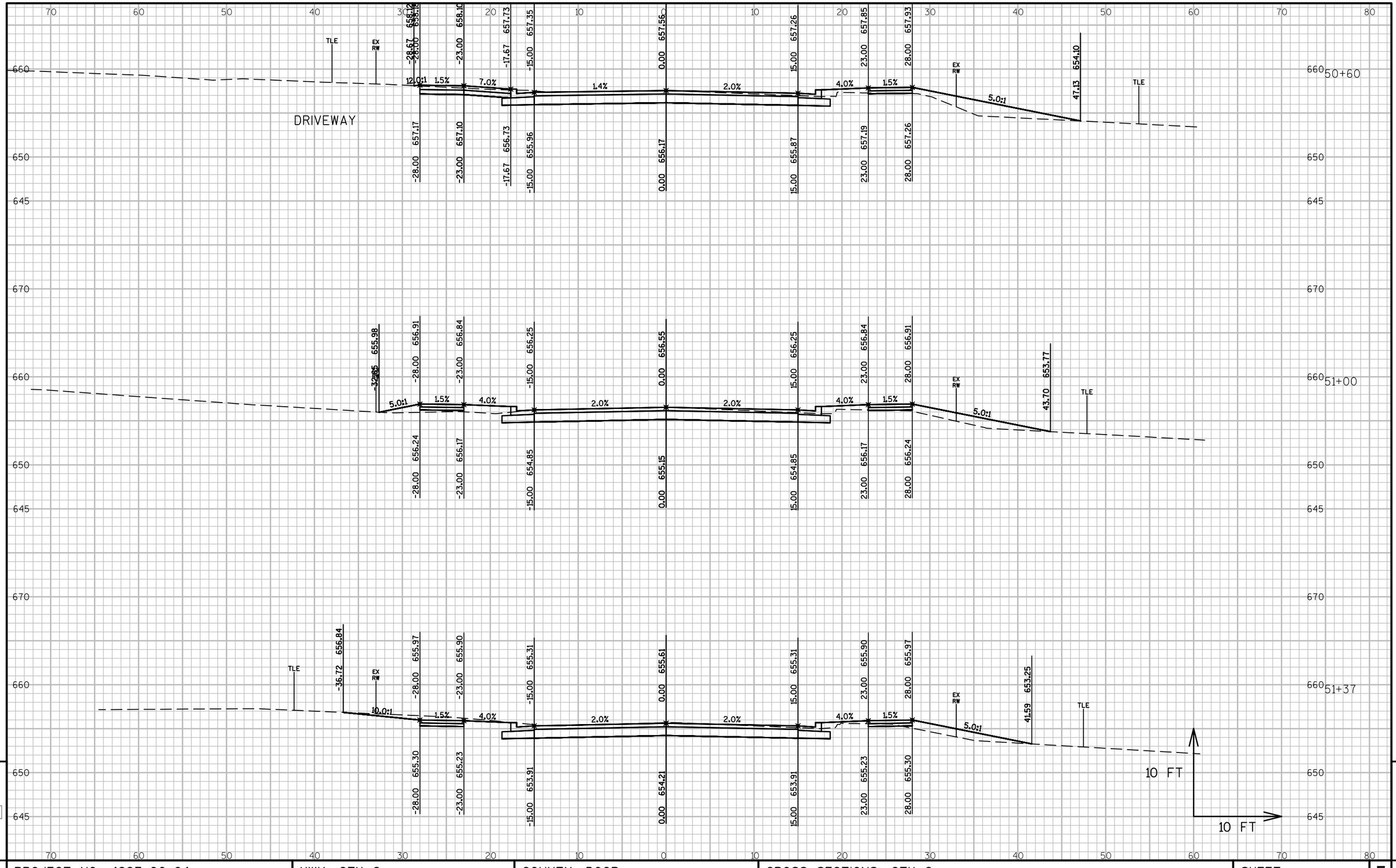

PROJECT NO: 4997-00-64	HWY: CTH C	COUNTY: DOOR	CROSS SECTIONS: CTH C	SHEET 208	E

FILE NAME : L:\PROJECTS\12642\DWG\4997-00-63\SHEETSPLAN\090201_XS.DWG
LAYOUT NAME - 090201_XS - 090255_XS

PLOT DATE : 7/24/2017 11:54 AM PLOT BY : MOYER, TIM PLOT NAME : PLOT SCALE : 1 IN:10 FT

WISDOT/CADDS SHEET 49

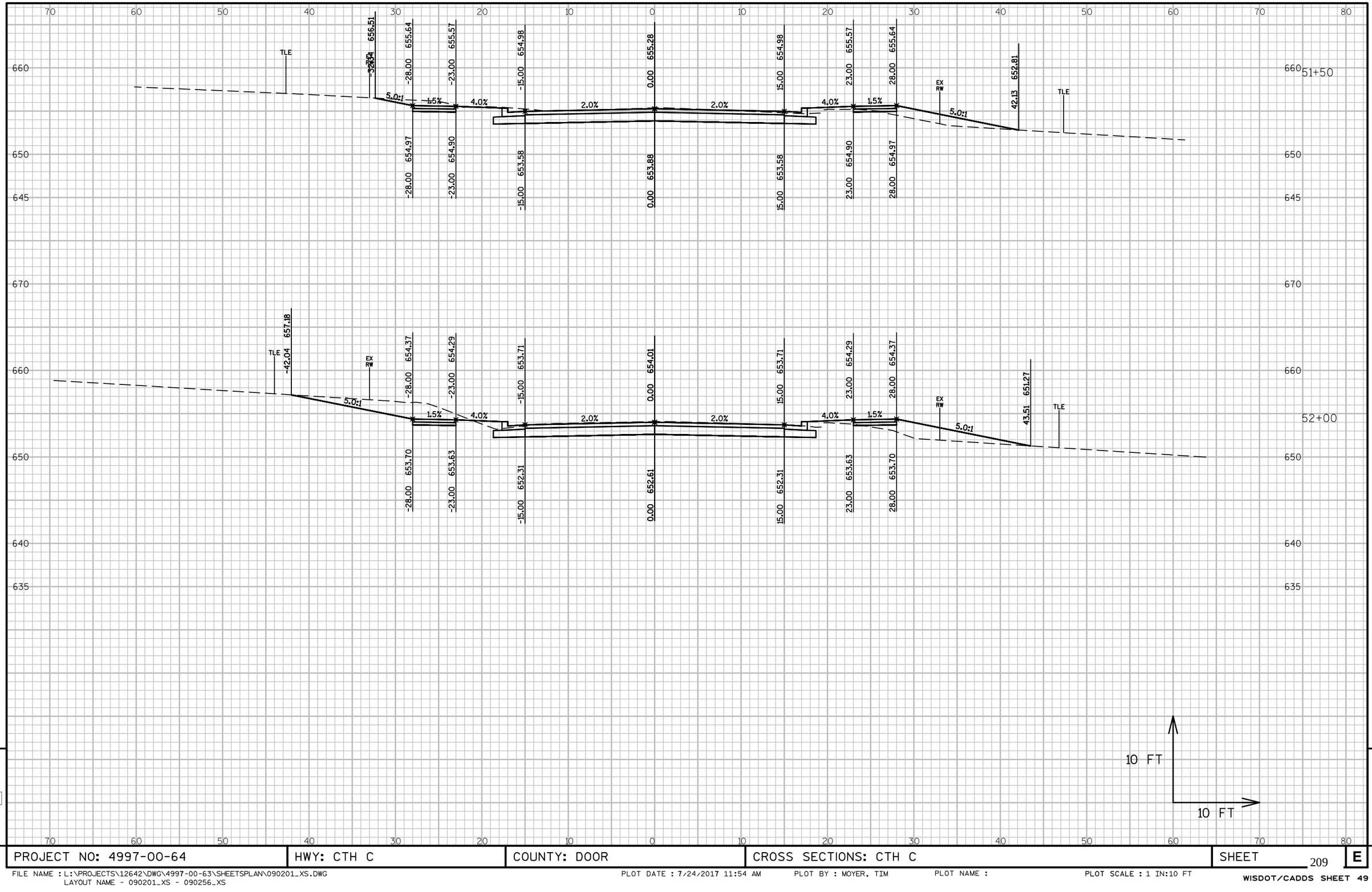

PROJECT NO: 4997-00-64	HWY: CTH C	COUNTY: DOOR	CROSS SECTIONS: CTH C	SHEET 209	E

FILE NAME : L:\PROJECTS\12642\DWG\4997-00-63\SHEETSPLAN\090201_XS.DWG
LAYOUT NAME - 090201_XS - 090256_XS

PLOT DATE : 7/24/2017 11:54 AM PLOT BY : MOYER, TIM PLOT NAME : PLOT SCALE : 1 IN:10 FT

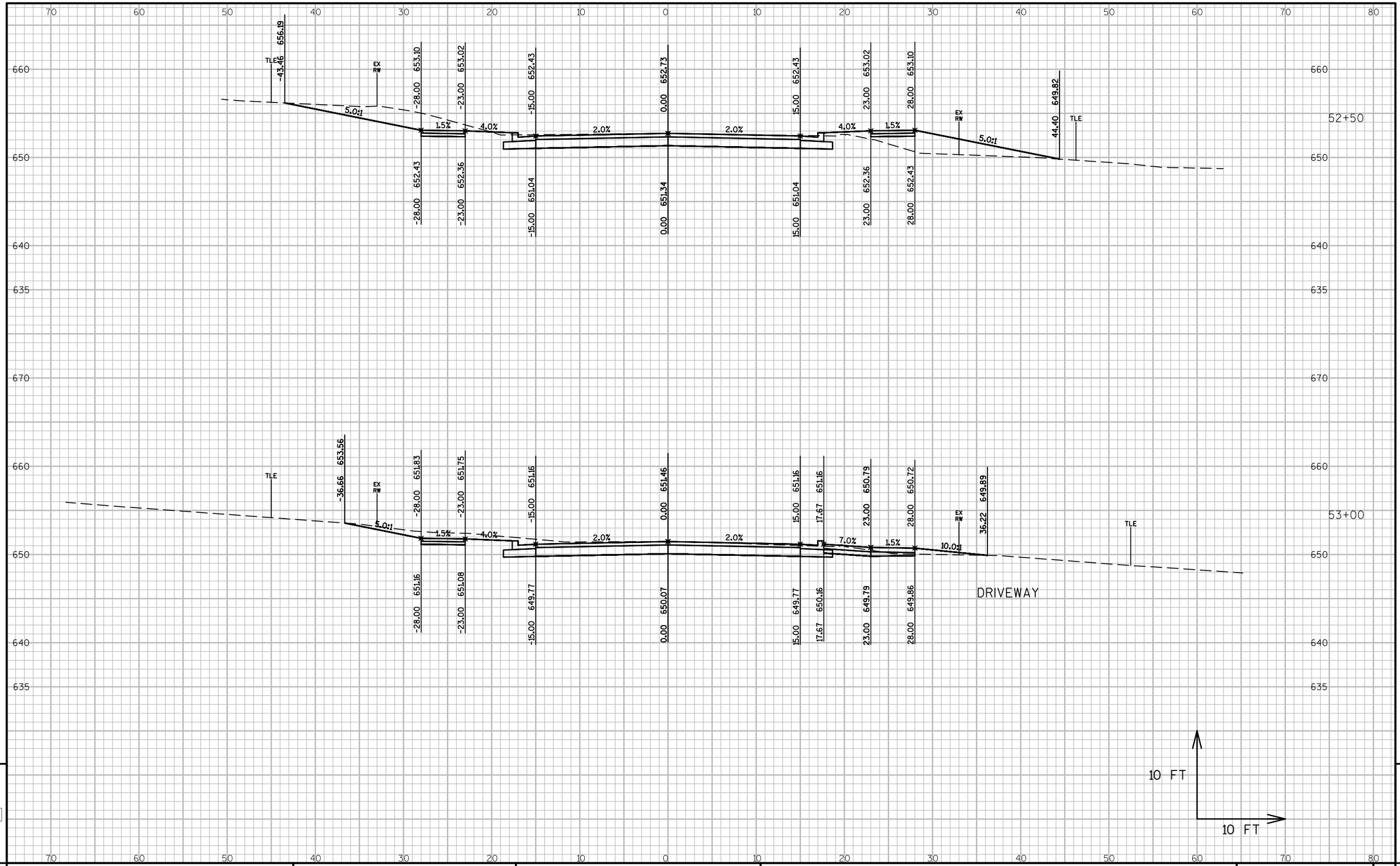

PROJECT NO: 4997-00-64	HWY: CTH C	COUNTY: DOOR	CROSS SECTIONS: CTH C	SHEET 210	E

FILE NAME : L:\PROJECTS\12642\DWG\4997-00-63\SHEETSPLAN\090201_XS.DWG
LAYOUT NAME - 090201_XS - 090257_XS

PLOT DATE : 7/24/2017 11:54 AM PLOT BY : MOYER, TIM PLOT NAME : PLOT SCALE : 1 IN:10 FT

WISDOT/CADDS SHEET 49

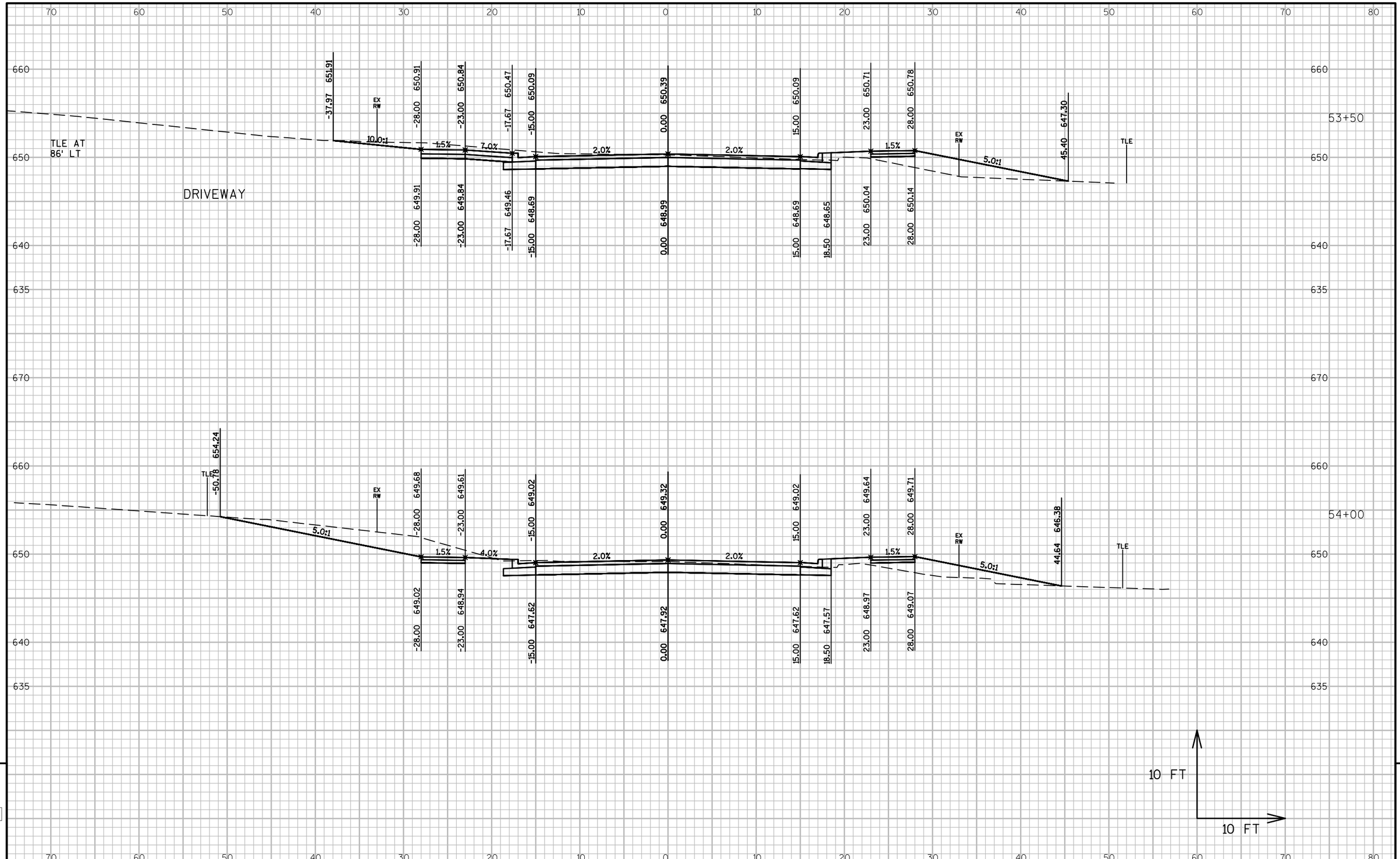

PROJECT NO: 4997-00-64	HWY: CTH C	COUNTY: DOOR	CROSS SECTIONS: CTH C	SHEET 211	E

FILE NAME : L:\PROJECTS\12642\DWG\4997-00-63\SHEETSPLAN\090201_XS.DWG
LAYOUT NAME - 090201_XS - 090258_XS

PLOT DATE : 7/24/2017 11:54 AM PLOT BY : MOYER, TIM PLOT NAME : PLOT SCALE : 1 IN:10 FT

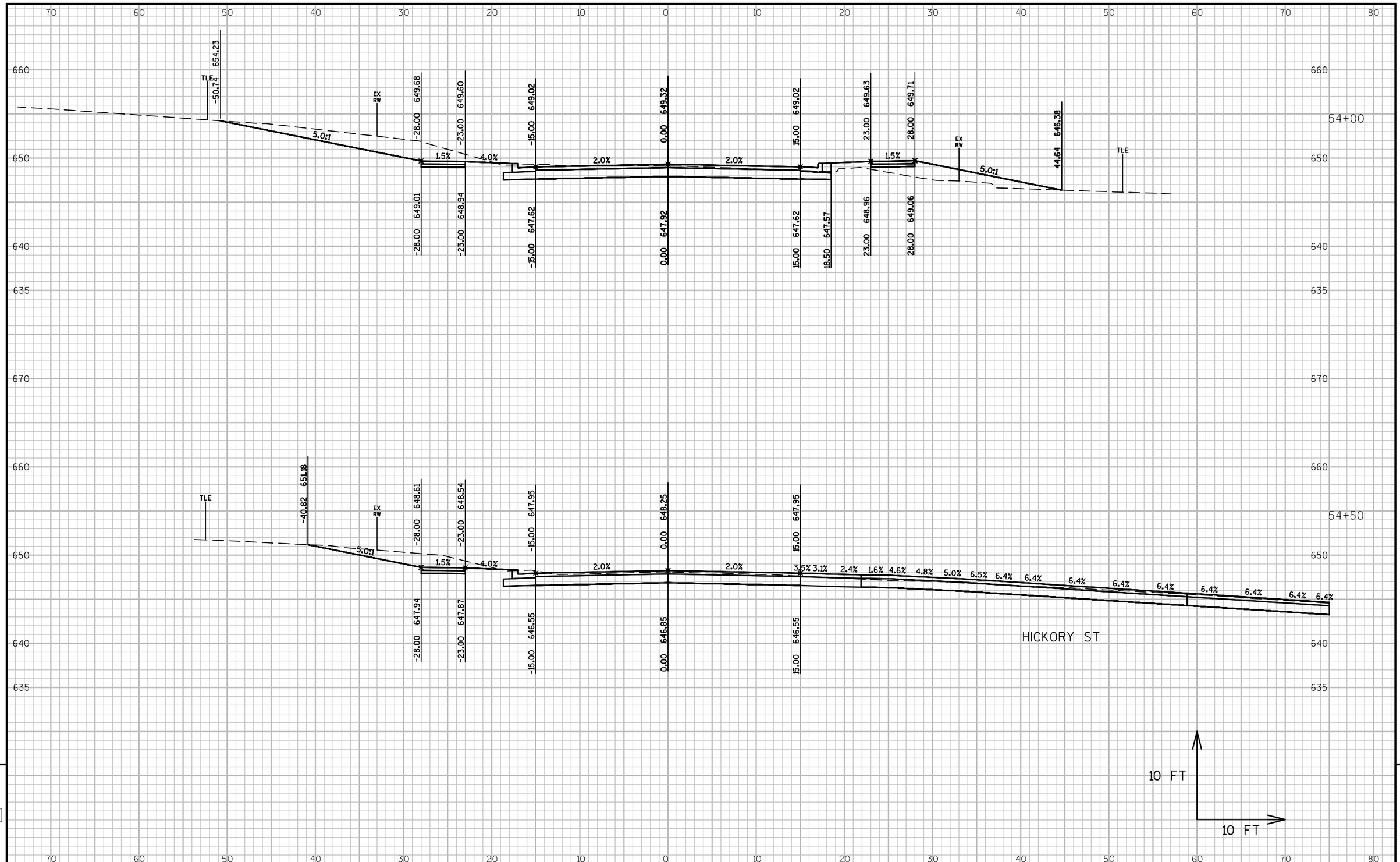

PROJECT NO: 4997-00-64	HWY: CTH C	COUNTY: DOOR	CROSS SECTIONS: CTH C	SHEET 212 E

FILE NAME : L:\PROJECTS\12642\DWG\4997-00-63\SHEETSPLAN\090201_XS.DWG
LAYOUT NAME - 090201_XS - 090259_XS

PLOT DATE : 7/24/2017 11:54 AM PLOT BY : MOYER, TIM PLOT NAME : PLOT SCALE : 1 IN:10 FT

WISDOT/CADDS SHEET 49

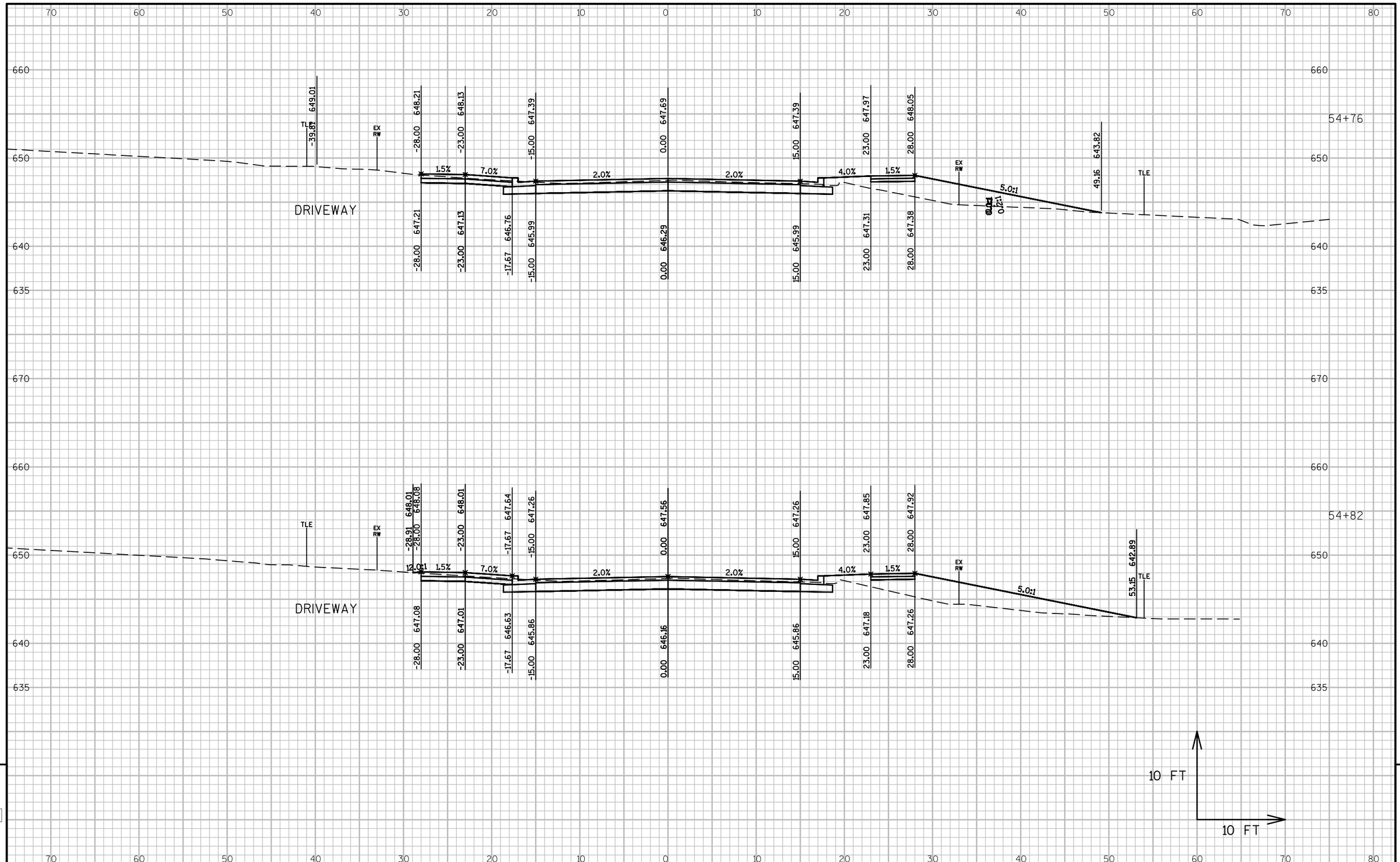

PROJECT NO: 4997-00-64	HWY: CTH C	COUNTY: DOOR	CROSS SECTIONS: CTH C	SHEET 213 E

FILE NAME : L:\PROJECTS\12642\DWG\4997-00-63\SHEETSPLAN\090201_XS.DWG
LAYOUT NAME - 090201_XS - 090260_XS

PLOT DATE : 7/24/2017 11:55 AM PLOT BY : MOYER, TIM PLOT NAME : PLOT SCALE : 1 IN:10 FT

WISDOT/CADDS SHEET 49

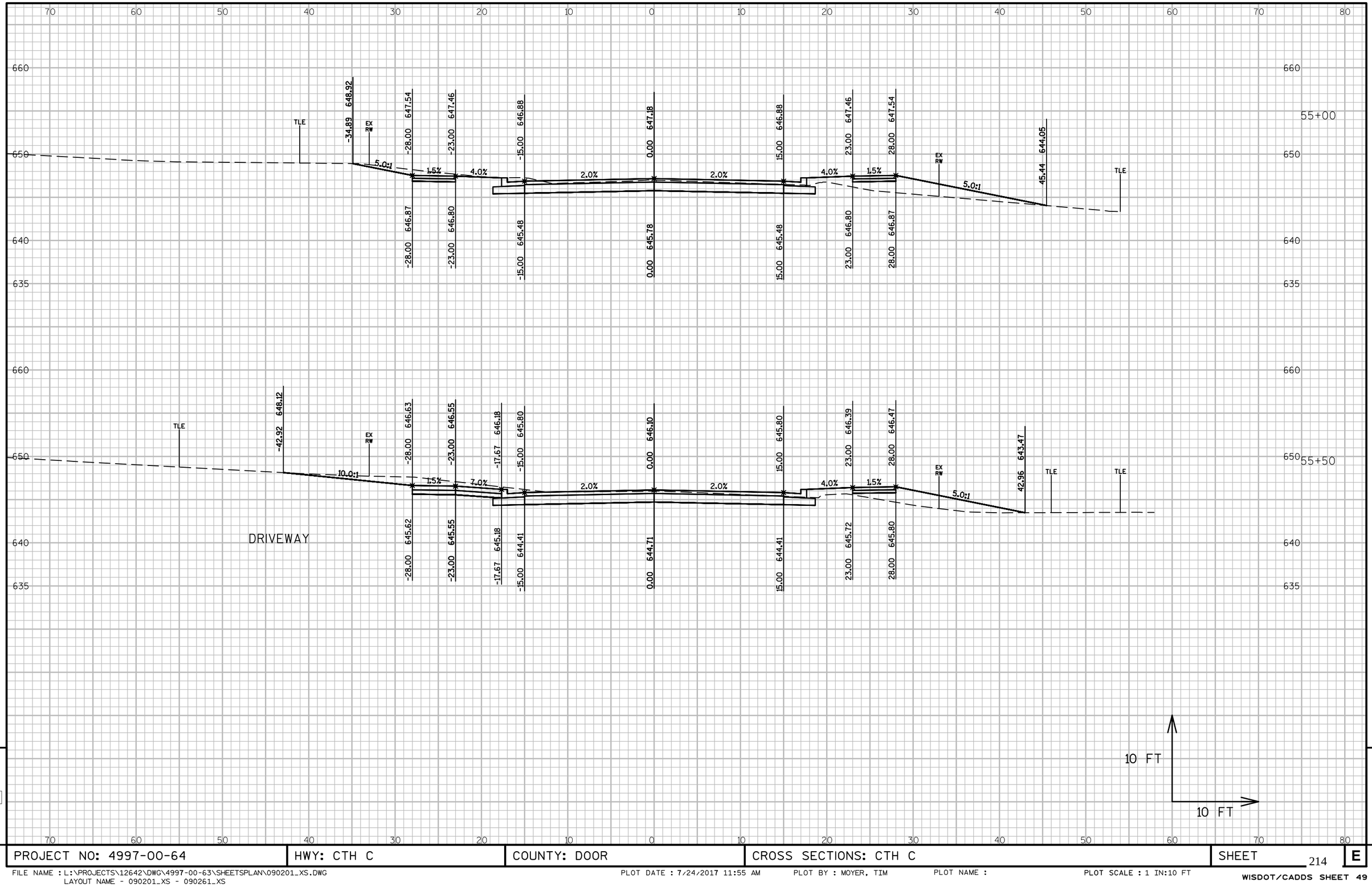

PROJECT NO: 4997-00-64	HWY: CTH C	COUNTY: DOOR	CROSS SECTIONS: CTH C	SHEET 214	E

FILE NAME : L:\PROJECTS\12642\DWG\4997-00-63\SHEETSPLAN\090201_XS.DWG
LAYOUT NAME - 090201_XS - 090261_XS

PLOT DATE : 7/24/2017 11:55 AM PLOT BY : MOYER, TIM PLOT NAME : PLOT SCALE : 1 IN:10 FT

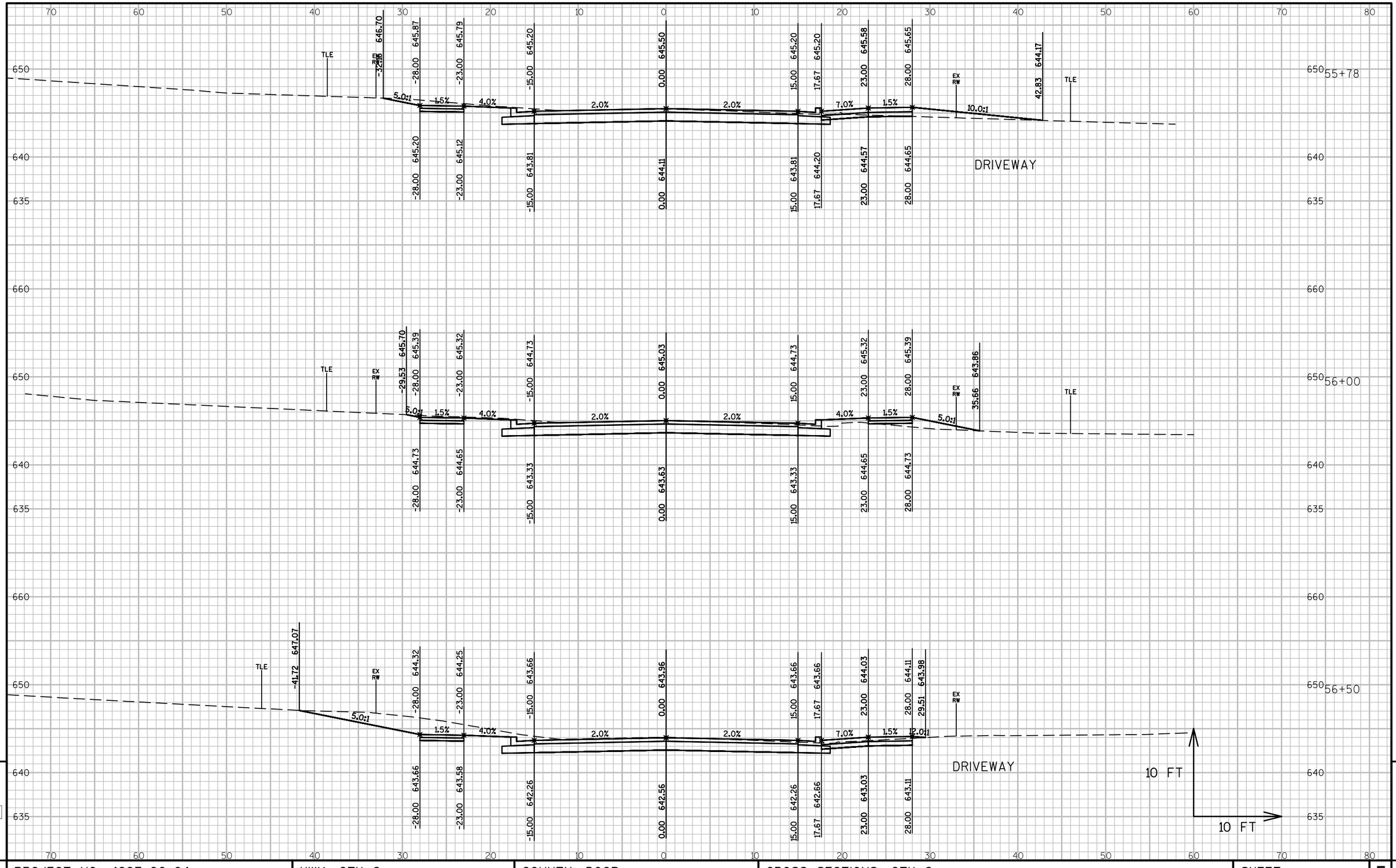

PROJECT NO: 4997-00-64	HWY: CTH C	COUNTY: DOOR	CROSS SECTIONS: CTH C	SHEET 215	E

FILE NAME : L:\PROJECTS\12642\DWG\4997-00-63\SHEETSPLAN\090201_XS.DWG
LAYOUT NAME - 090201_XS - 090262_XS

PLOT DATE : 7/24/2017 11:55 AM PLOT BY : MOYER, TIM PLOT NAME : PLOT SCALE : 1 IN:10 FT

WISDOT/CADDS SHEET 49

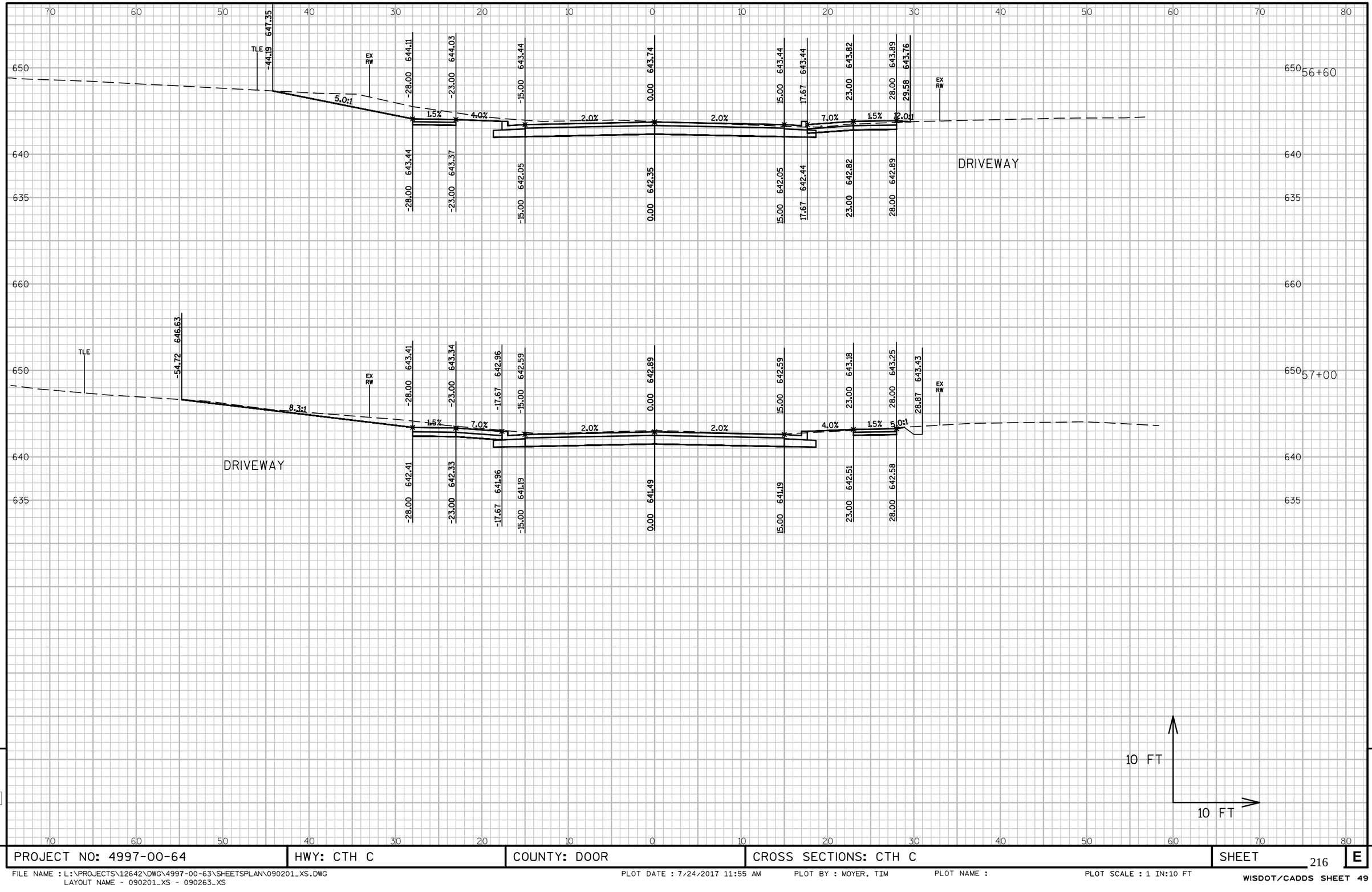

PROJECT NO: 4997-00-64	HWY: CTH C	COUNTY: DOOR	CROSS SECTIONS: CTH C	SHEET 216	E

FILE NAME : L:\PROJECTS\12642\DWG\4997-00-63\SHEETSPLAN\090201_XS.DWG
LAYOUT NAME - 090201_XS - 090263_XS

PLOT DATE : 7/24/2017 11:55 AM PLOT BY : MOYER, TIM PLOT NAME : PLOT SCALE : 1 IN:10 FT

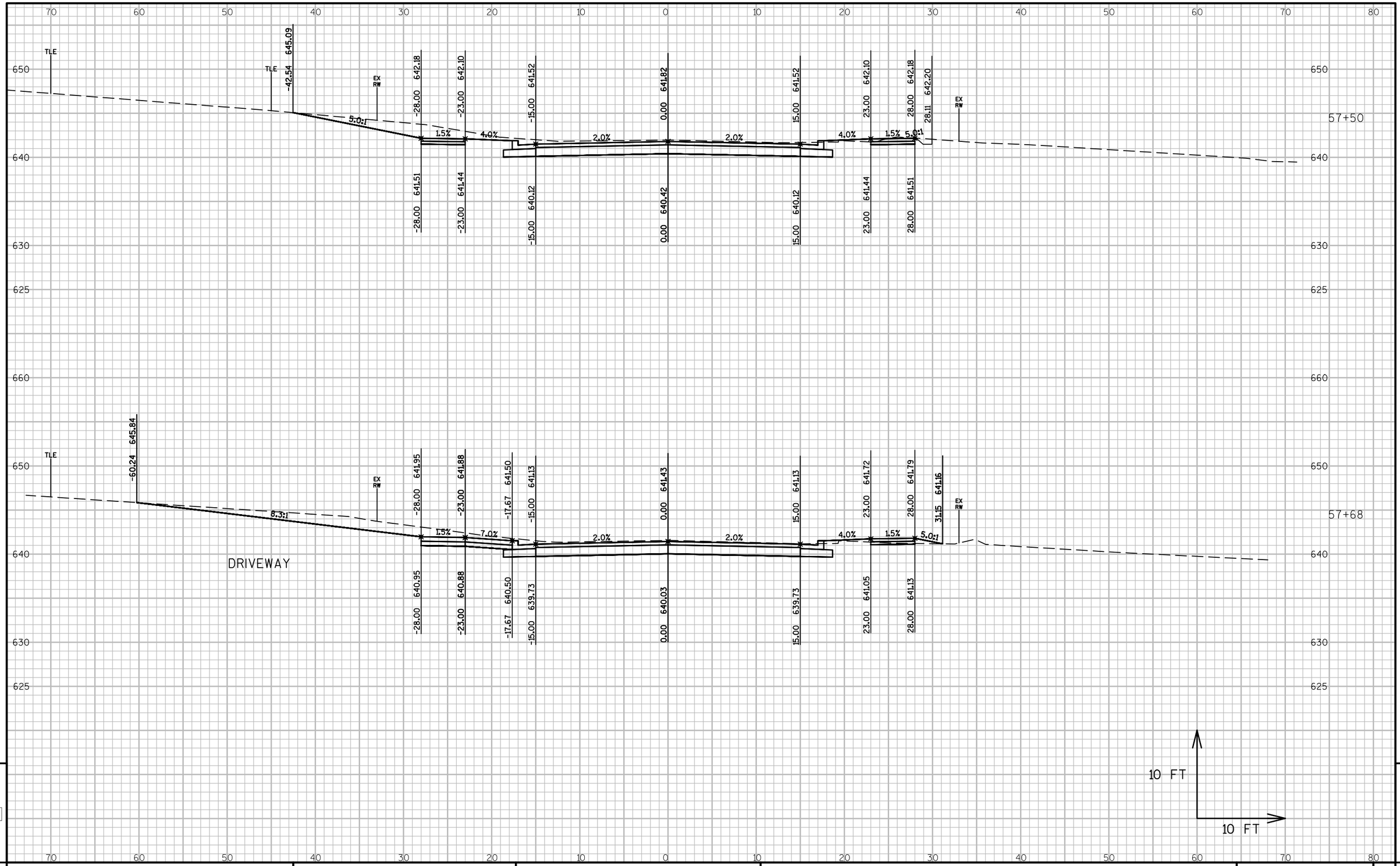

PROJECT NO: 4997-00-64	HWY: CTH C	COUNTY: DOOR	CROSS SECTIONS: CTH C	SHEET 217	E

FILE NAME : L:\PROJECTS\12642\DWG\4997-00-63\SHEETSPLAN\090201_XS.DWG
LAYOUT NAME - 090201_XS - 090264_XS

PLOT DATE : 7/24/2017 11:55 AM PLOT BY : MOYER, TIM PLOT NAME : PLOT SCALE : 1 IN:10 FT

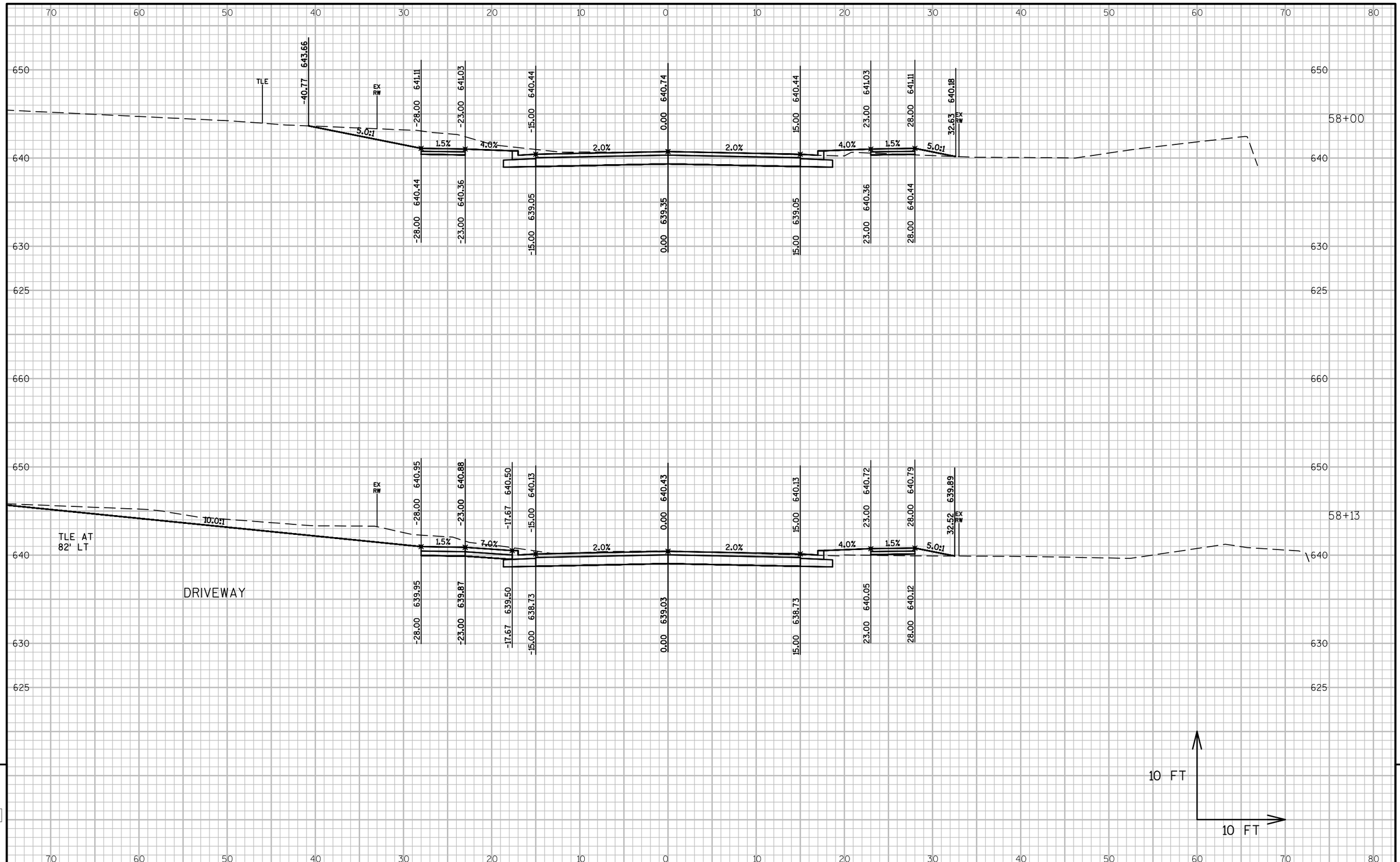

PROJECT NO: 4997-00-64	HWY: CTH C	COUNTY: DOOR	CROSS SECTIONS: CTH C	SHEET 218 E

FILE NAME : L:\PROJECTS\12642\DWG\4997-00-63\SHEETSPLAN\090201_XS.DWG
LAYOUT NAME - 090201_XS - 090265_XS
PLOT DATE : 7/24/2017 11:55 AM PLOT BY : MOYER, TIM PLOT NAME : PLOT SCALE : 1 IN:10 FT
WISDOT/CADDS SHEET 49

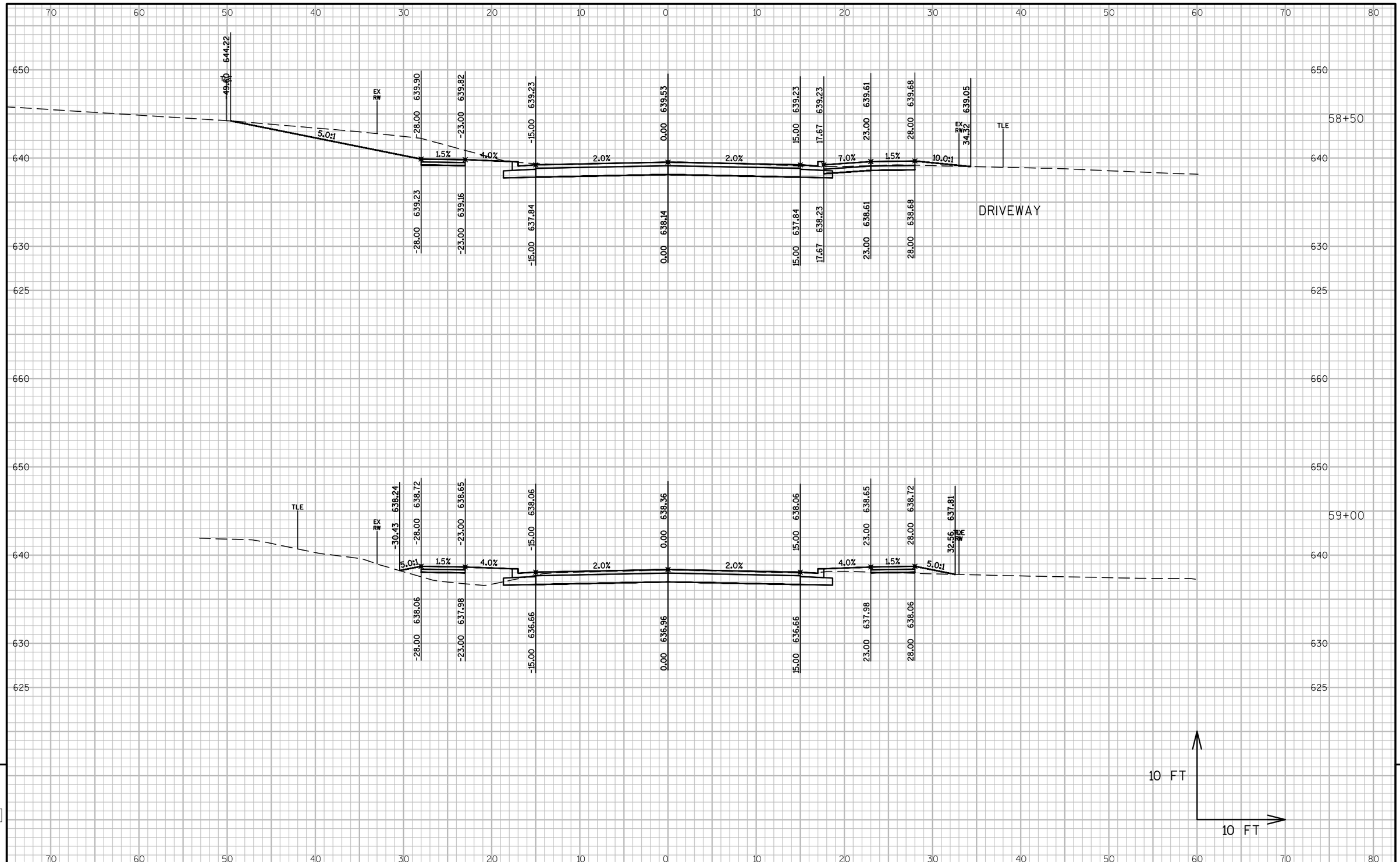

PROJECT NO: 4997-00-64	HWY: CTH C	COUNTY: DOOR	CROSS SECTIONS: CTH C	SHEET 219	E

FILE NAME : L:\PROJECTS\12642\DWG\4997-00-63\SHEETSPLAN\090201_XS.DWG
LAYOUT NAME - 090201_XS - 090266_XS
PLOT DATE : 7/24/2017 11:56 AM PLOT BY : MOYER, TIM PLOT NAME : PLOT SCALE : 1 IN:10 FT
WISDOT/CADDS SHEET 49

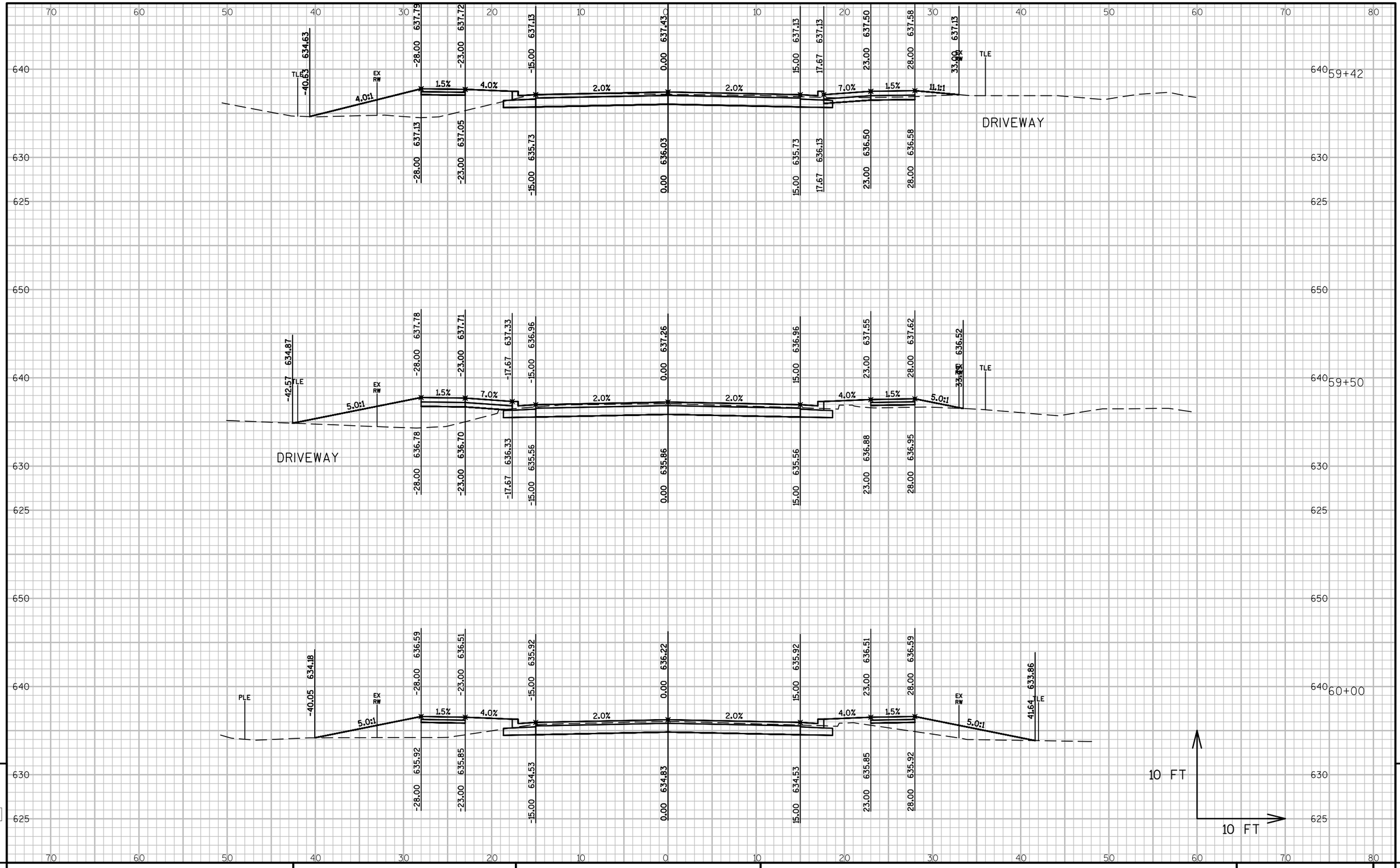

PROJECT NO: 4997-00-64	HWY: CTH C	COUNTY: DOOR	CROSS SECTIONS: CTH C	SHEET 220	E

FILE NAME : L:\PROJECTS\12642\DWG\4997-00-63\SHEETSPLAN\090201_XS.DWG
LAYOUT NAME - 090201_XS - 090267_XS

PLOT DATE : 7/24/2017 11:56 AM PLOT BY : MOYER, TIM PLOT NAME : PLOT SCALE : 1 IN:10 FT

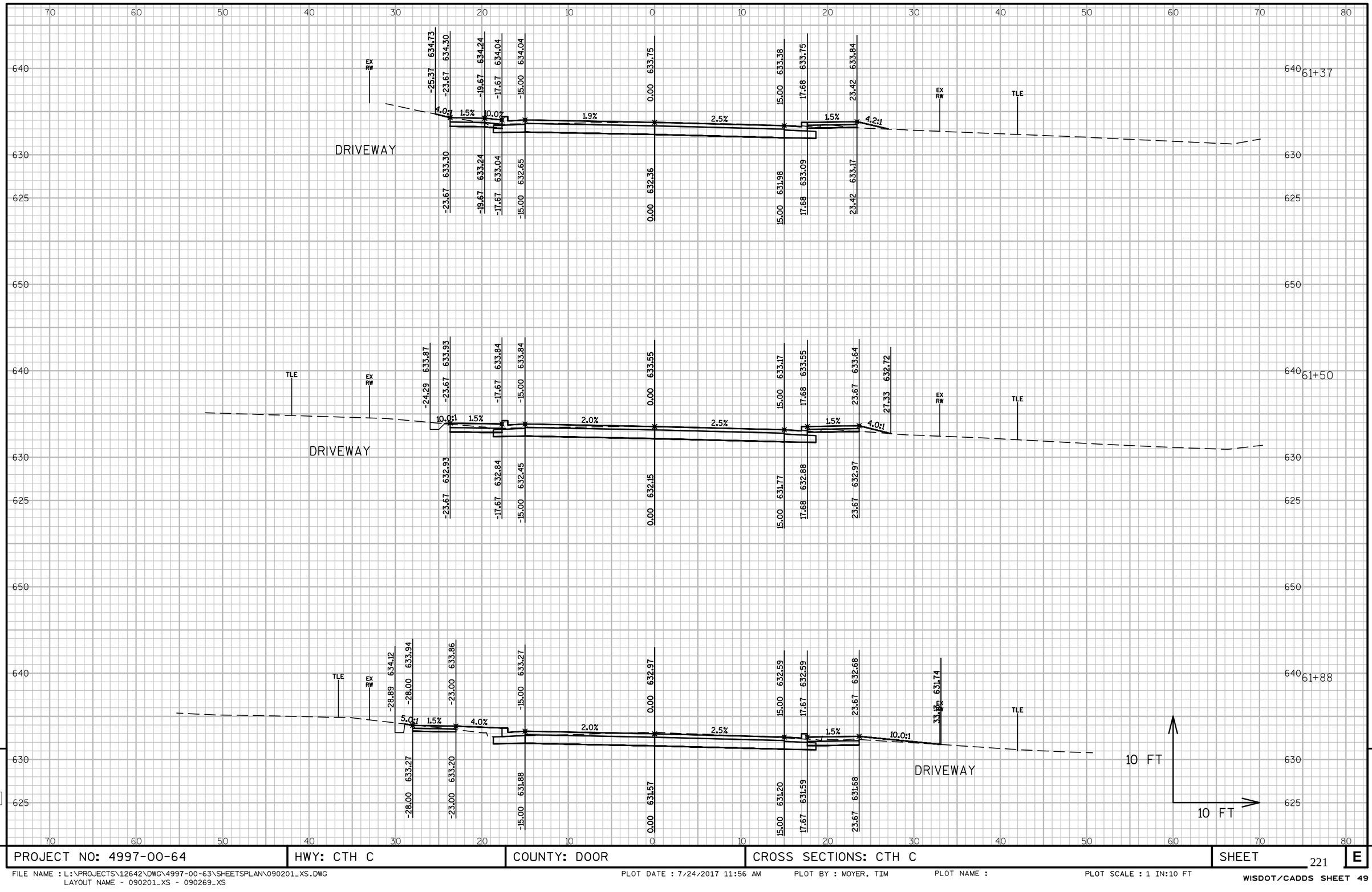

PROJECT NO: 4997-00-64	HWY: CTH C	COUNTY: DOOR	CROSS SECTIONS: CTH C	SHEET 221	E

FILE NAME : L:\PROJECTS\12642\DWG\4997-00-63\SHEETSPLAN\090201_XS.DWG
LAYOUT NAME - 090201_XS - 090269_XS

PLOT DATE : 7/24/2017 11:56 AM PLOT BY : MOYER, TIM PLOT NAME : PLOT SCALE : 1 IN:10 FT

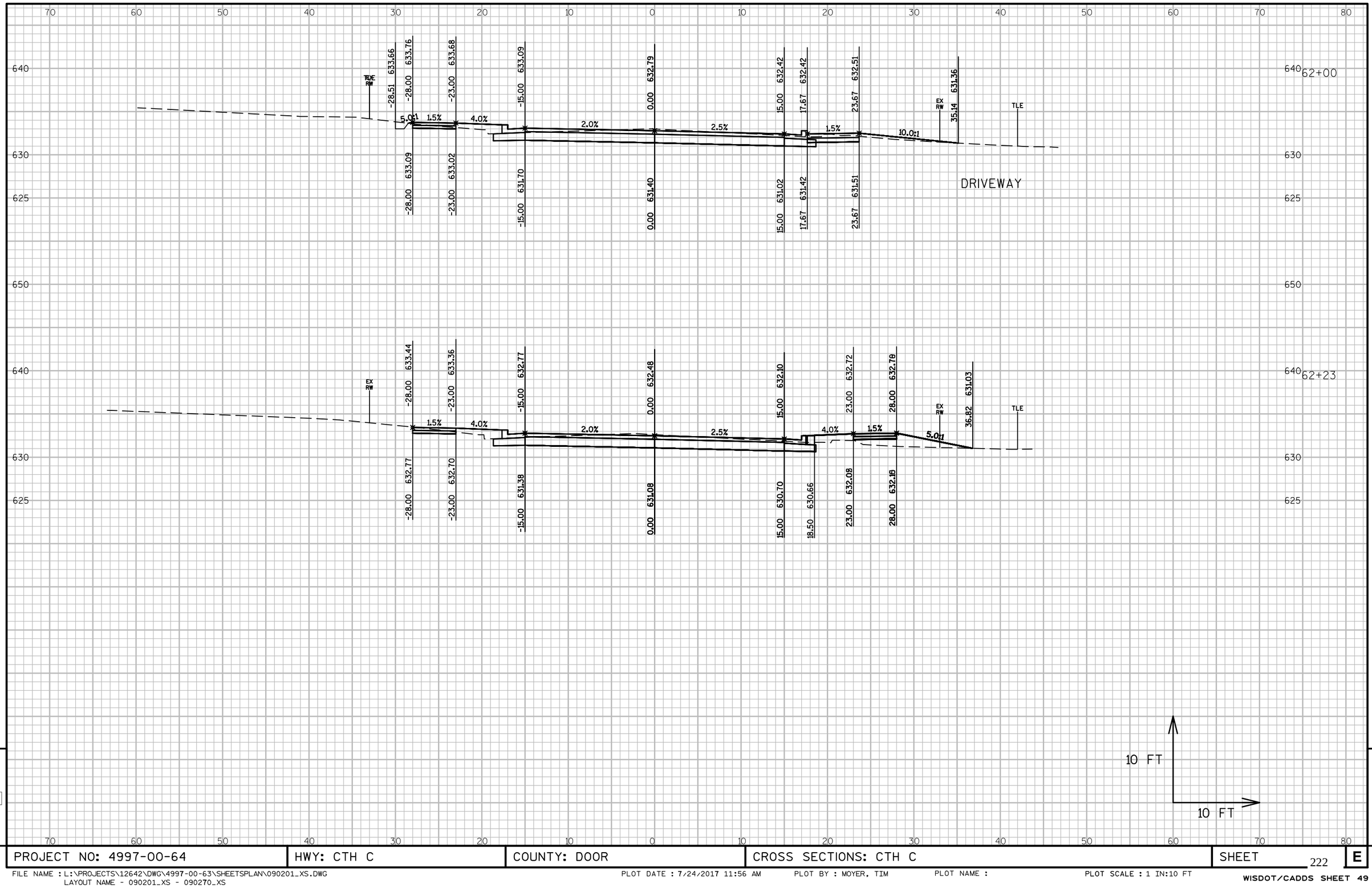

PROJECT NO: 4997-00-64	HWY: CTH C	COUNTY: DOOR	CROSS SECTIONS: CTH C	SHEET 222	E

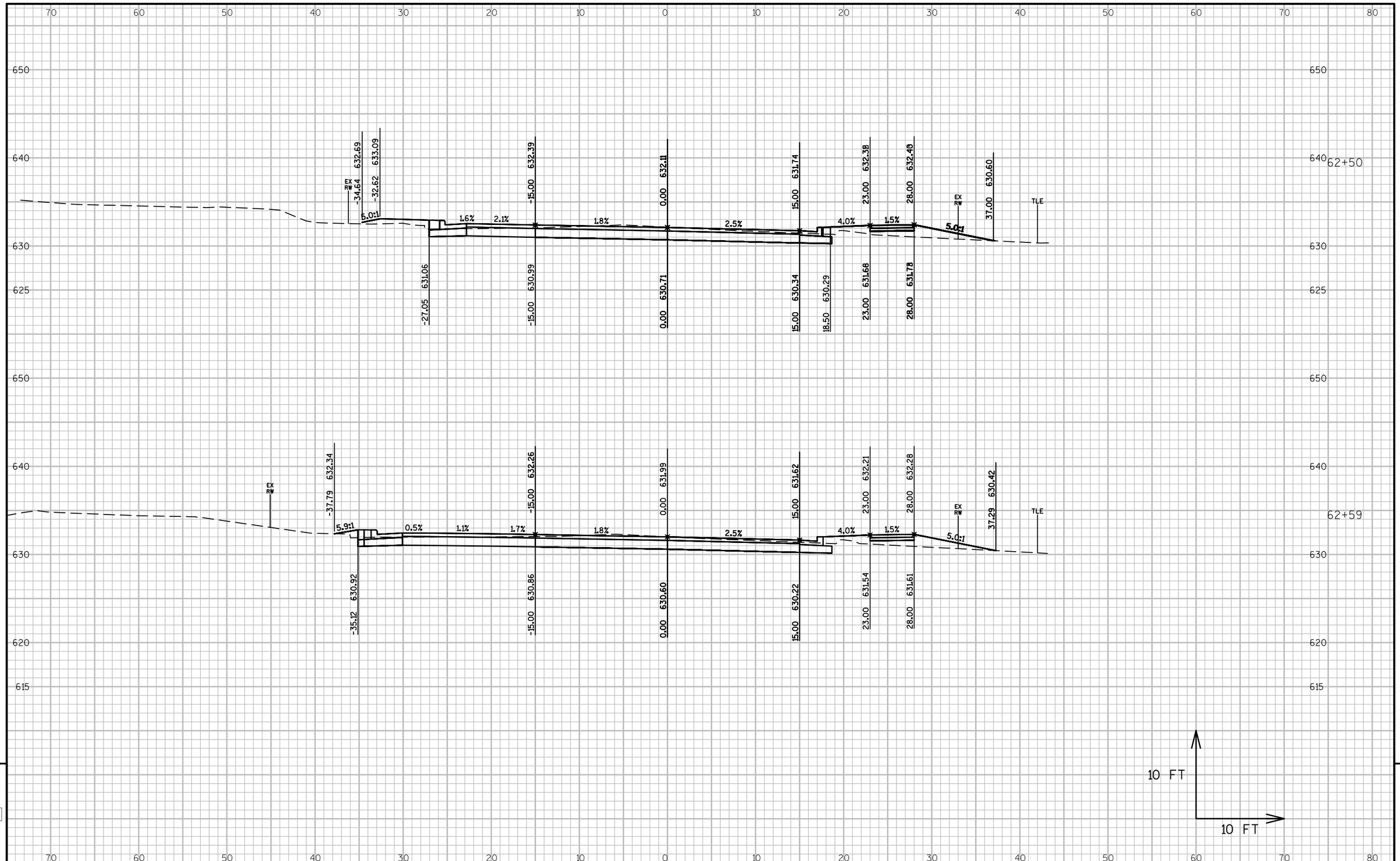

PROJECT NO: 4997-00-64	HWY: CTH C	COUNTY: DOOR	CROSS SECTIONS: CTH C	SHEET 223 E

FILE NAME : L:\PROJECTS\12642\DWG\4997-00-63\SHEETSPLAN\090201_XS.DWG
LAYOUT NAME - 090201_XS - 090271_XS
PLOT DATE : 7/24/2017 11:56 AM PLOT BY : MOYER, TIM PLOT NAME : PLOT SCALE : 1 IN:10 FT
WISDOT/CADDS SHEET 49

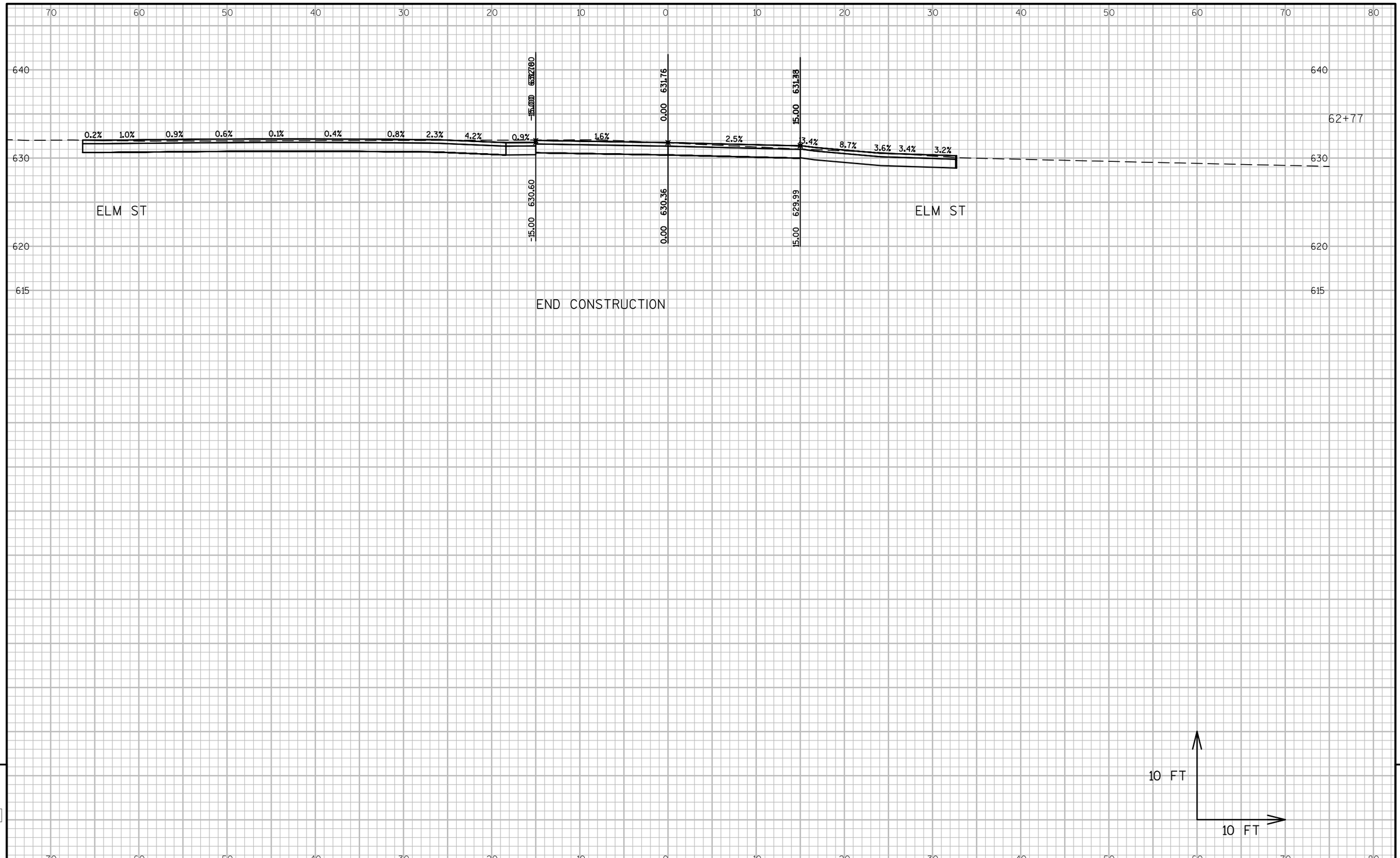

PROJECT NO: 4997-00-64	HWY: CTH C	COUNTY: DOOR	CROSS SECTIONS: CTH C	SHEET 224	E

FILE NAME : L:\PROJECTS\12642\DWG\4997-00-63\SHEETSPLAN\090201_XS.DWG
LAYOUT NAME - 090201_XS - 090272_XS

PLOT DATE : 7/24/2017 11:57 AM PLOT BY : MOYER, TIM PLOT NAME : PLOT SCALE : 1 IN:10 FT

WISDOT/CADDS SHEET 49

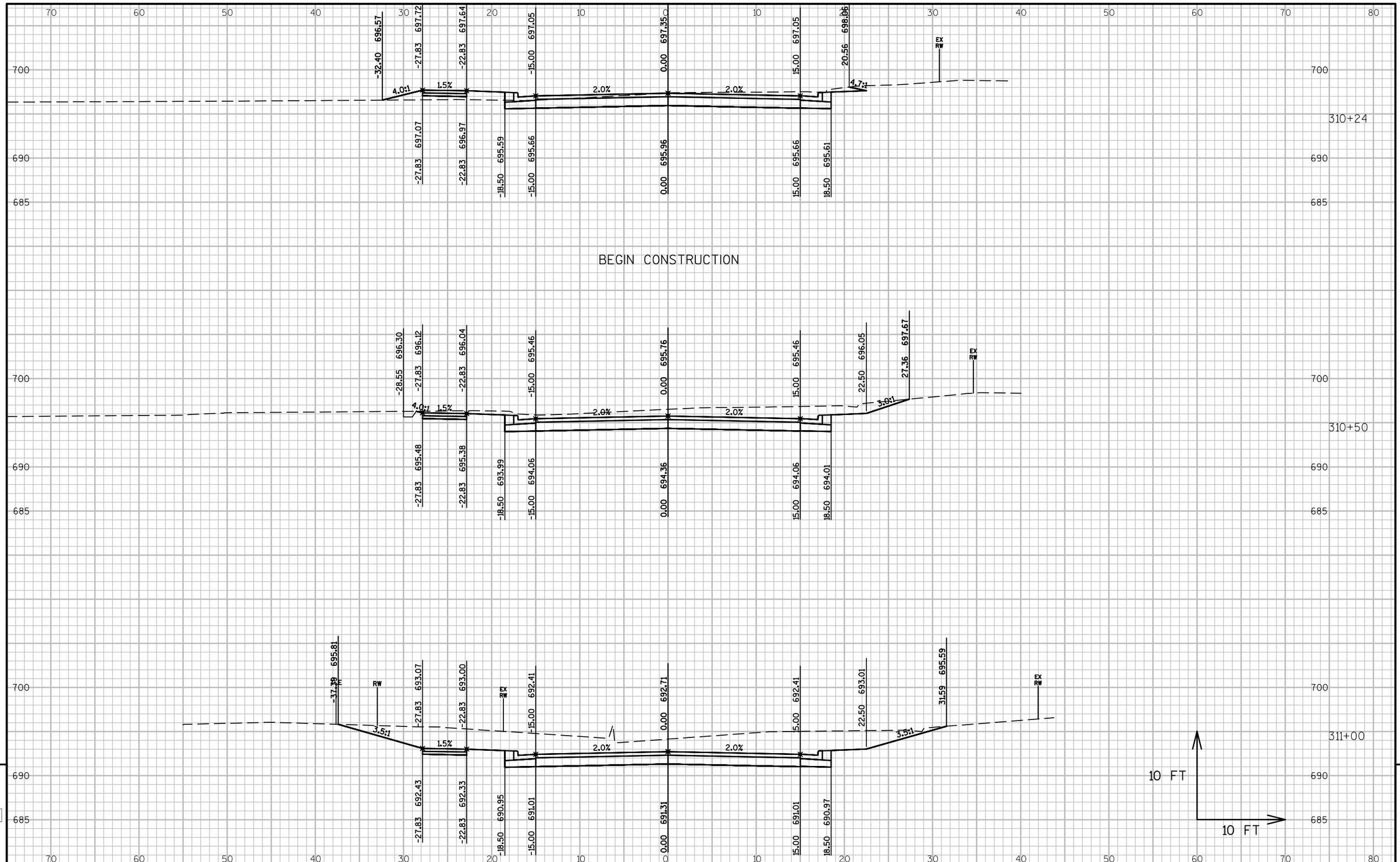

PROJECT NO: 4997-00-64	HWY: CTH C	COUNTY: DOOR	CROSS SECTIONS: MAPLE ST.	SHEET 225	E

FILE NAME : L:\PROJECTS\12642\DWG\4997-00-63\SHEETSPLAN\090201_XS_MAPLE.DWG
LAYOUT NAME - 090201_XS_MAPLE - 090201_XS
PLOT DATE : 7/24/2017 12:05 PM PLOT BY : MOYER, TIM PLOT NAME : PLOT SCALE : 1 IN:10 FT
WISDOT/CADDS SHEET 49

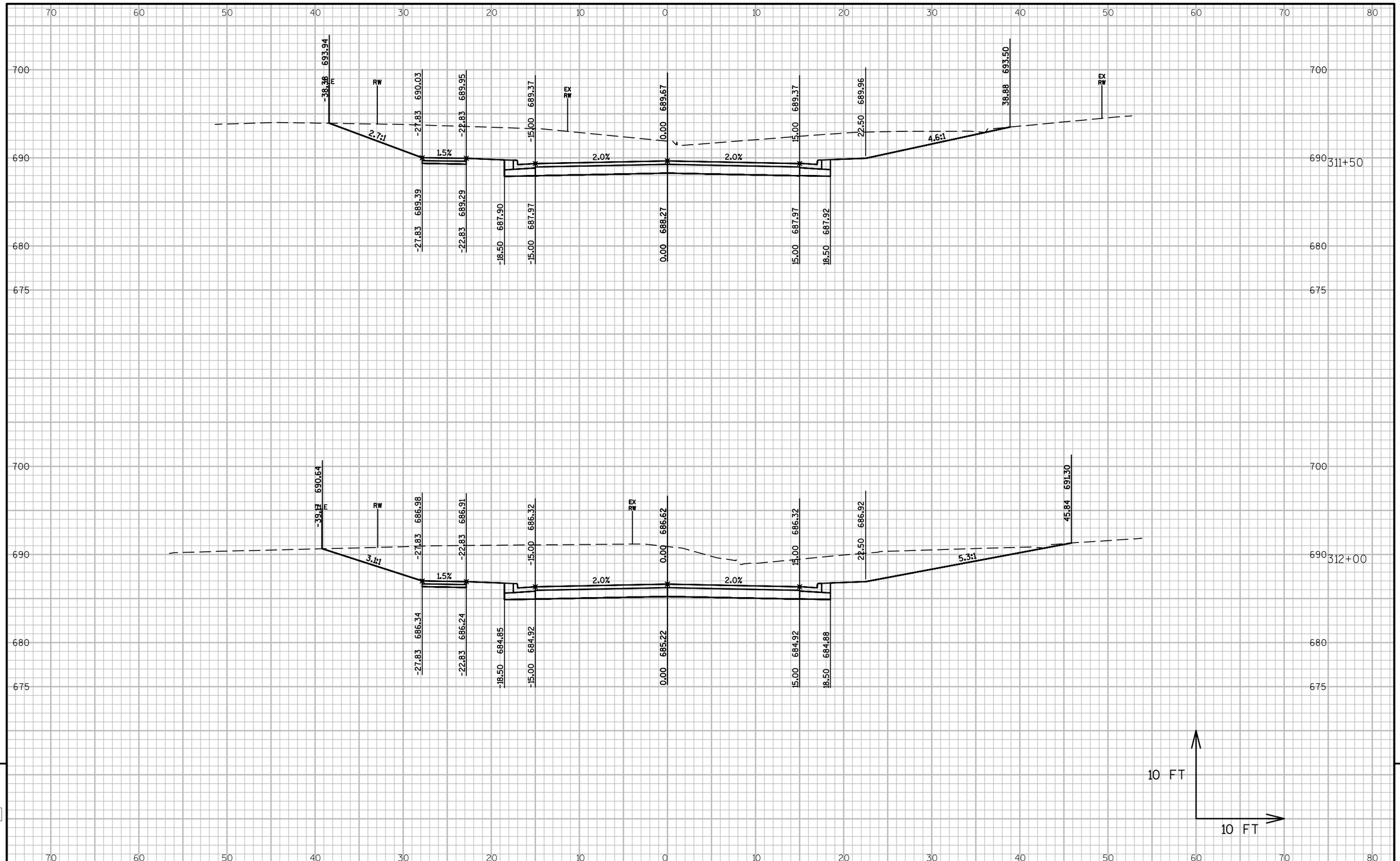

PROJECT NO: 4997-00-64	HWY: CTH C	COUNTY: DOOR	CROSS SECTIONS: MAPLE ST.	SHEET 226 E

FILE NAME : L:\PROJECTS\12642\DWG\4997-00-63\SHEETSPLAN\090201_XS_MAPLE.DWG
LAYOUT NAME - 090201_XS_MAPLE - 090202_XS

PLOT DATE : 7/24/2017 12:05 PM PLOT BY : MOYER, TIM PLOT NAME : PLOT SCALE : 1 IN:10 FT

WISDOT/CADDS SHEET 49

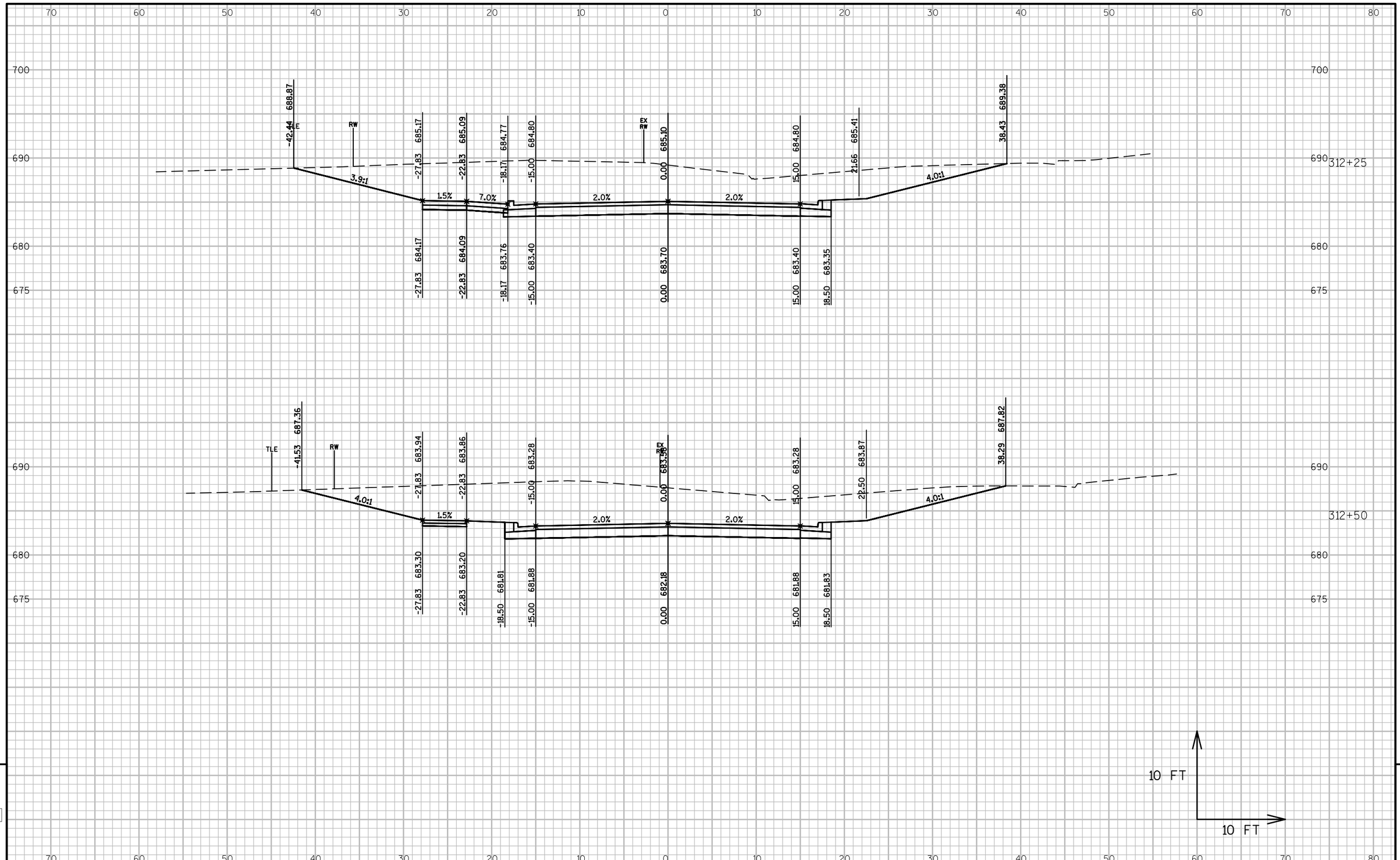

PROJECT NO: 4997-00-64	HWY: CTH C	COUNTY: DOOR	CROSS SECTIONS: MAPLE ST.	SHEET 227	E

FILE NAME : L:\PROJECTS\12642\DWG\4997-00-63\SHEETSPLAN\090201_XS_MAPLE.DWG
LAYOUT NAME - 090201_XS_MAPLE - 090203_XS

PLOT DATE : 7/24/2017 12:05 PM PLOT BY : MOYER, TIM PLOT NAME : PLOT SCALE : 1 IN:10 FT

WISDOT/CADDS SHEET 49

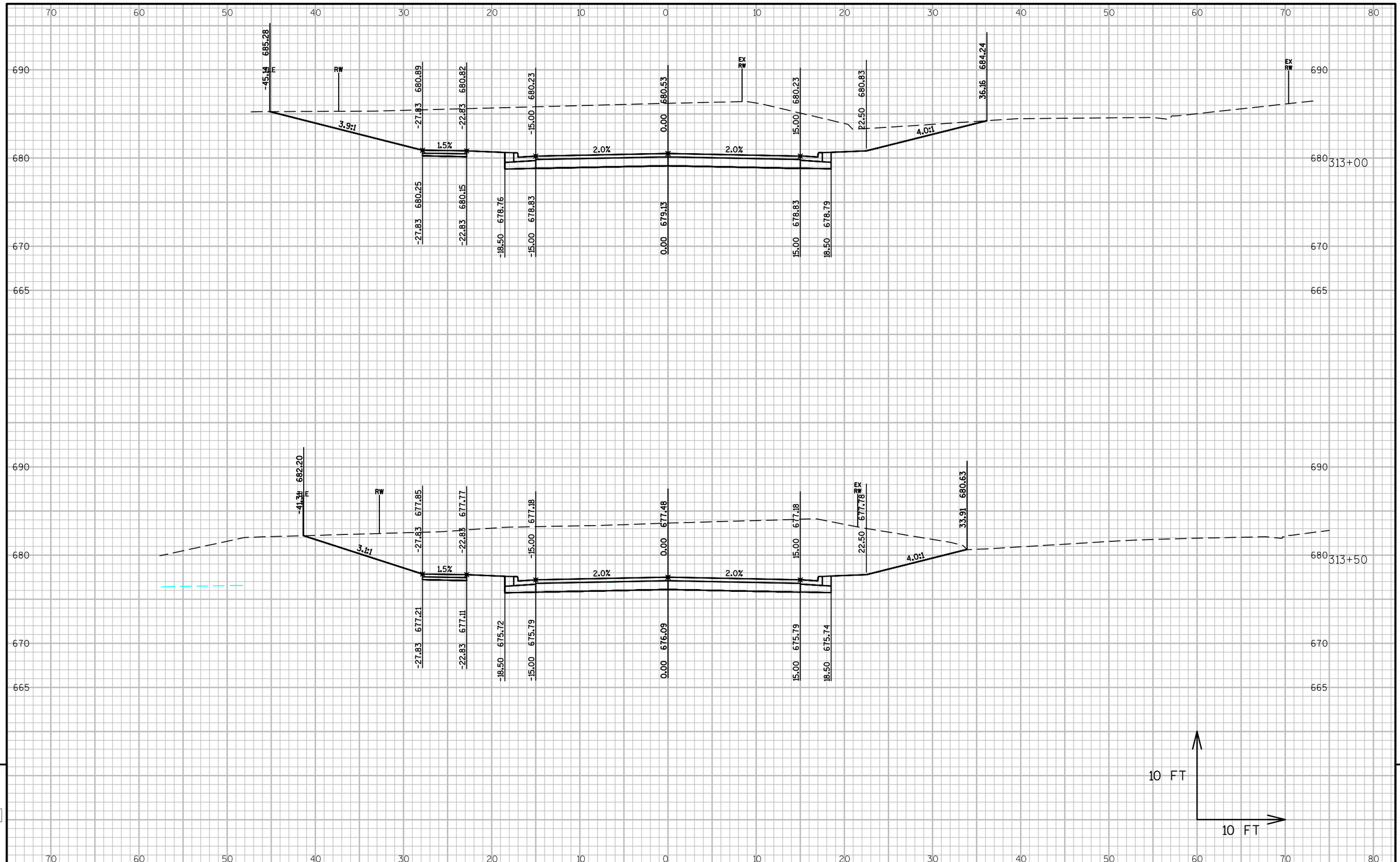

PROJECT NO: 4997-00-64	HWY: CTH C	COUNTY: DOOR	CROSS SECTIONS: MAPLE ST.	SHEET 228	E

FILE NAME : L:\PROJECTS\12642\DWG\4997-00-63\SHEETSPLAN\090201_XS_MAPLE.DWG
LAYOUT NAME - 090201_XS_MAPLE - 090204_XS

PLOT DATE : 7/24/2017 12:05 PM PLOT BY : MOYER, TIM PLOT NAME : PLOT SCALE : 1 IN:10 FT

WISDOT/CADDS SHEET 49

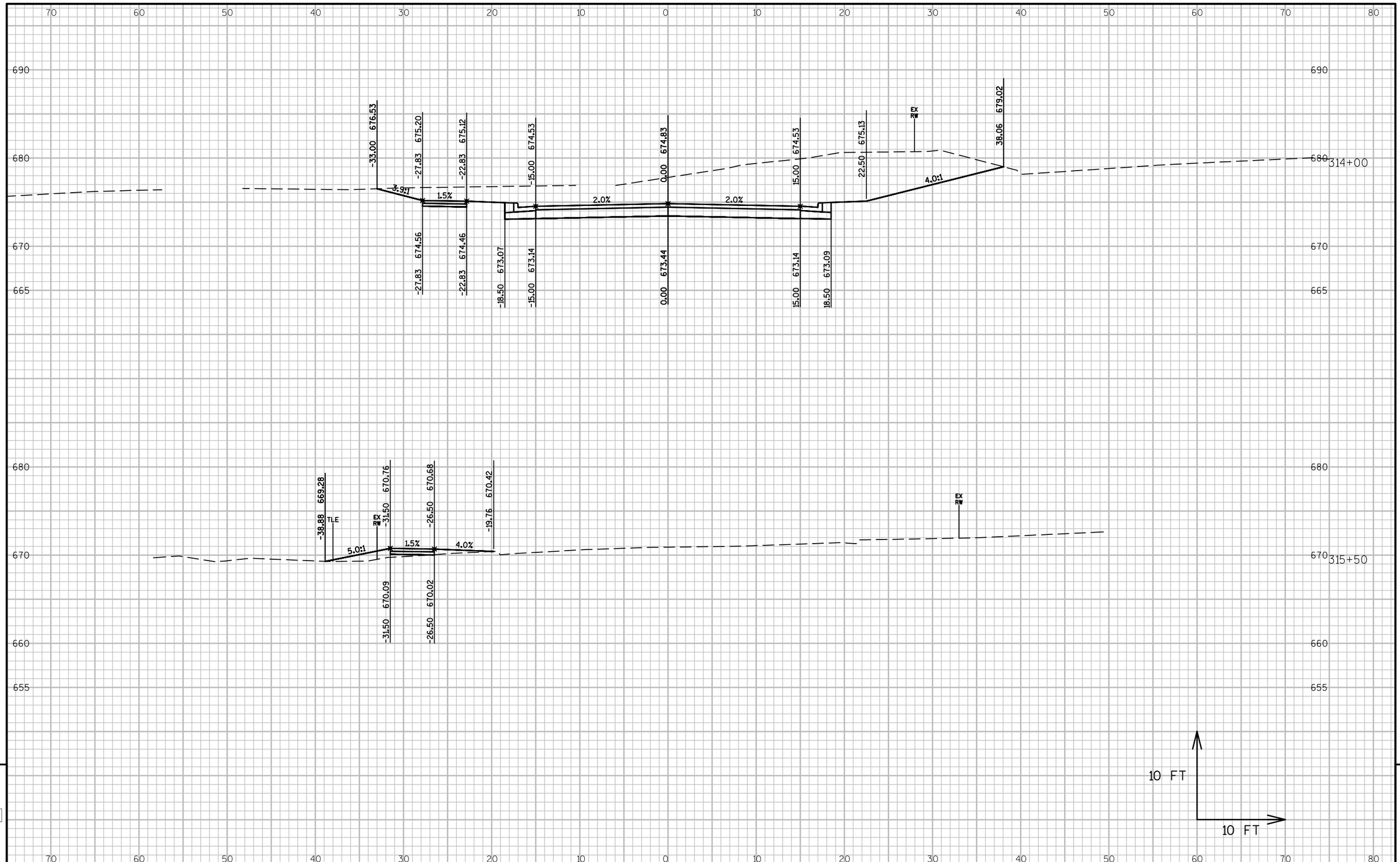

PROJECT NO: 4997-00-64	HWY: CTH C	COUNTY: DOOR	CROSS SECTIONS: MAPLE ST.	SHEET 229	E

FILE NAME : L:\PROJECTS\12642\DWG\4997-00-63\SHEETSPLAN\090201_XS_MAPLE.DWG
LAYOUT NAME - 090201_XS_MAPLE - 090205_XS
PLOT DATE : 7/24/2017 12:05 PM PLOT BY : MOYER, TIM PLOT NAME : PLOT SCALE : 1 IN:10 FT
WISDOT/CADDS SHEET 49

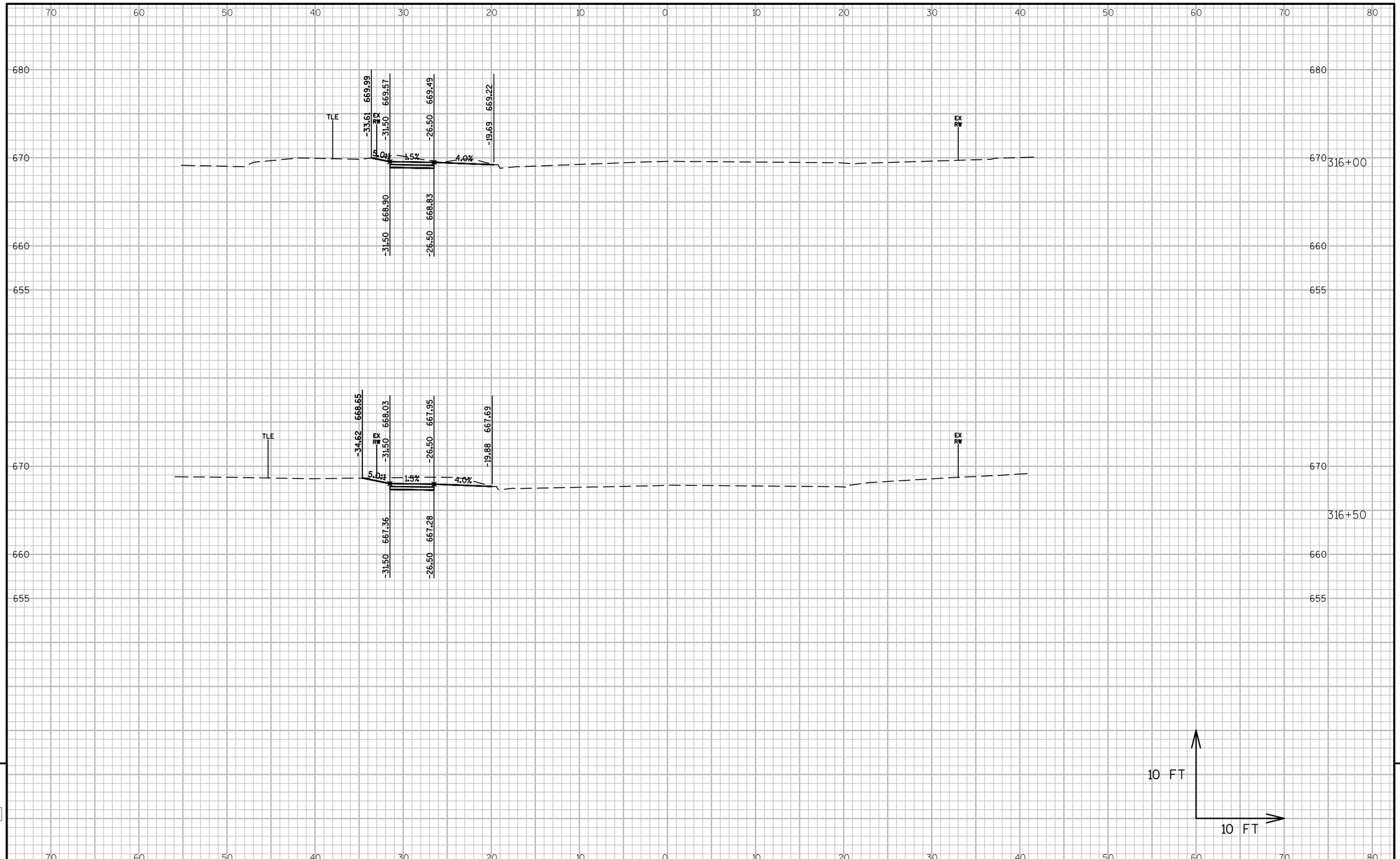

PROJECT NO: 4997-00-64	HWY: CTH C	COUNTY: DOOR	CROSS SECTIONS: MAPLE ST.	SHEET 230	E

FILE NAME : L:\PROJECTS\12642\DWG\4997-00-63\SHEETSPLAN\090201_XS_MAPLE.DWG
LAYOUT NAME - 090201_XS_MAPLE - 090206_XS

PLOT DATE : 7/24/2017 12:05 PM PLOT BY : MOYER, TIM PLOT NAME : PLOT SCALE : 1 IN:10 FT

WISDOT/CADDS SHEET 49

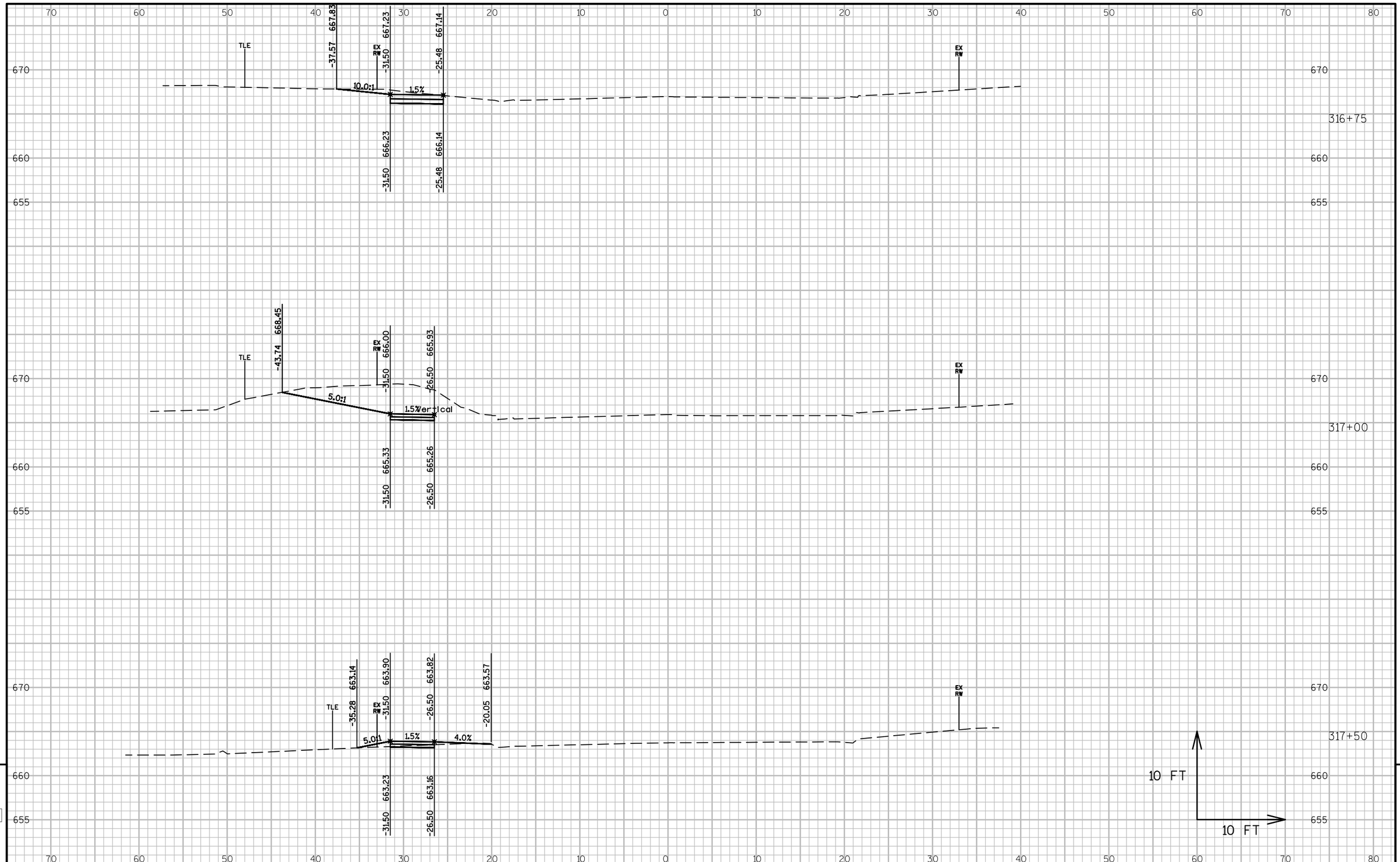

PROJECT NO: 4997-00-64	HWY: CTH C	COUNTY: DOOR	CROSS SECTIONS: MAPLE ST.	SHEET 231	E

FILE NAME : L:\PROJECTS\12642\DWG\4997-00-63\SHEETSPLAN\090201_XS_MAPLE.DWG
LAYOUT NAME - 090201_XS_MAPLE - 090207_XS
PLOT DATE : 7/24/2017 12:05 PM PLOT BY : MOYER, TIM PLOT NAME : PLOT SCALE : 1 IN:10 FT
WISDOT/CADDS SHEET 49

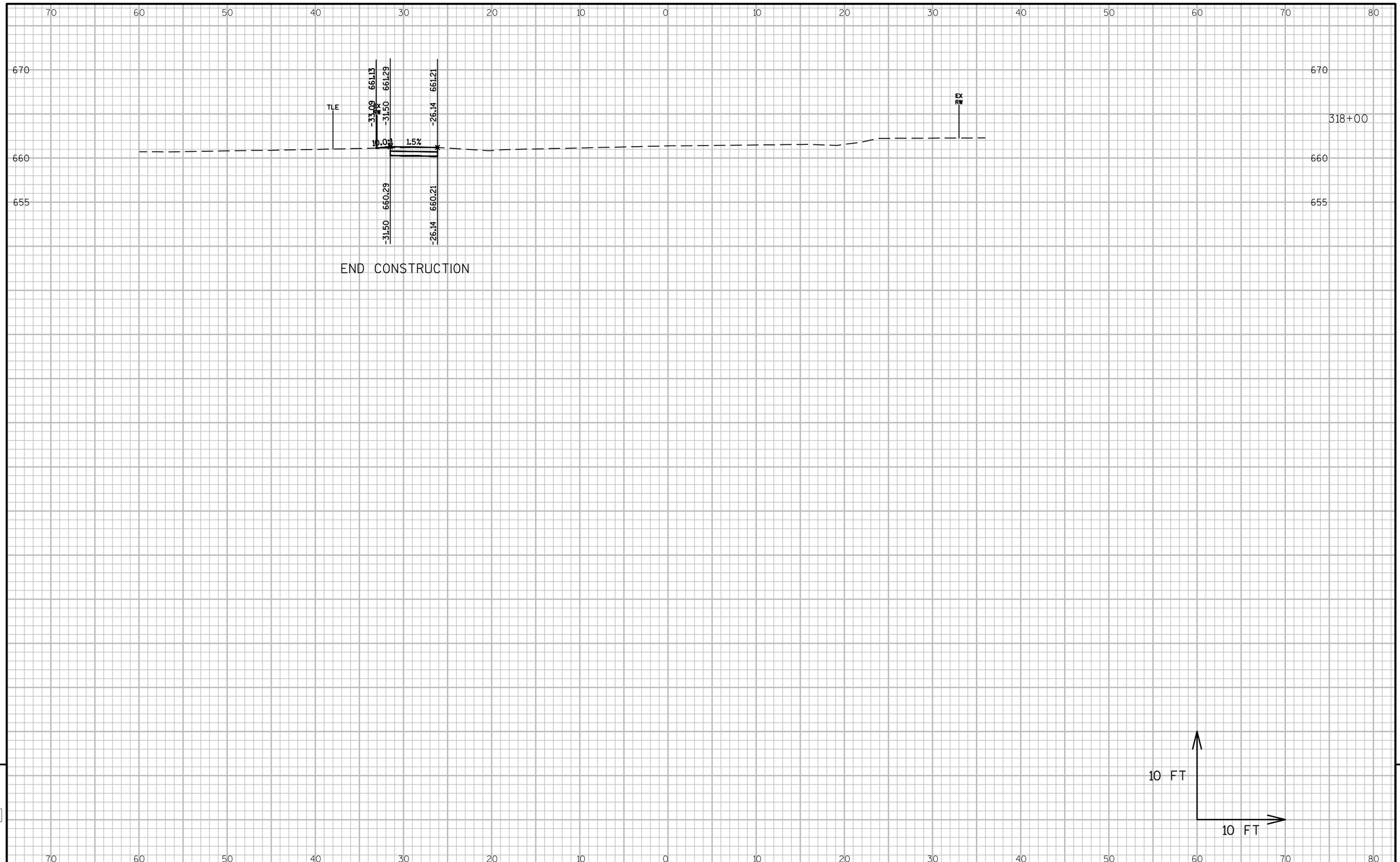

PROJECT NO: 4997-00-64	HWY: CTH C	COUNTY: DOOR	CROSS SECTIONS: MAPLE ST.	SHEET 232	E

FILE NAME : L:\PROJECTS\12642\DWG\4997-00-63\SHEETSPLAN\090201_XS_MAPLE.DWG
LAYOUT NAME - 090201_XS_MAPLE - 090208_XS
PLOT DATE : 7/24/2017 12:05 PM PLOT BY : MOYER, TIM PLOT NAME : PLOT SCALE : 1 IN:10 FT
WISDOT/CADDS SHEET 49

Notes

Wisconsin Department of Transportation

Dedicated people creating transportation solutions
through innovation and exceptional service.

http://www.dot.wisconsin.gov