LAX

DEC 2017

PROJECT ID: 5144-01-75/76

WITH:

COUNTY: MONROE

07

ORDER OF SHEETS

TOTAL SHEETS = 498

STATE PROJECT	FEDERAL PROJECT	
	PROJECT	CONTRACT
5144-01-75	WISC 2018005	1
5144-01-76		

STATE OF WISCONSIN
DEPARTMENT OF TRANSPORTATION

PLAN OF PROPOSED IMPROVEMENT

IH 90 - STH 16 // CITY OF SPARTA

RIVER ROAD TO STH 16 — STH 27 — MONROE COUNTY

STATE PROJECT NUMBER 5144-01-75

RIVER ROAD TO STH 16 — STH 27 — MONROE COUNTY

STATE PROJECT NUMBER 5144-01-76

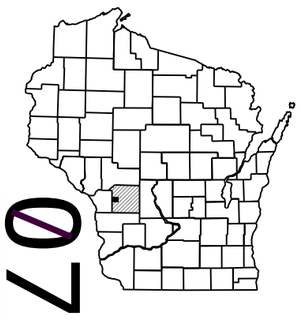

N

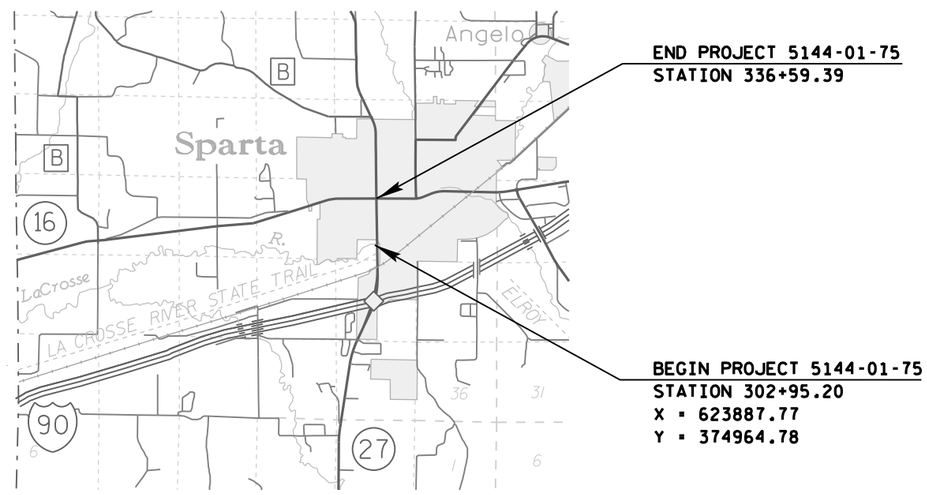

DESIGN DESIGNATION

A.A.D.T. (2016)	=	16,000
A.A.D.T. (2036)	=	20,400
D.H.V.	=	2,081
D.D.	=	64136
T.	=	10.8%
DESIGN SPEED	=	30 MPH
ESALS	=	4,200,000

CONVENTIONAL SYMBOLS

PLAN

CORPORATE LIMITS
PROPERTY LINE
LOT LINE
LIMITED HIGHWAY EASEMENT
EXISTING RIGHT OF WAY
PROPOSED OR NEW R/W LINE
SLOPE INTERCEPT
REFERENCE LINE
EXISTING CULVERT
PROPOSED CULVERT (Box or Pipe)
COMBUSTIBLE FLUIDS — CAUTION
MARSH AREA
WOODED OR SHRUB AREA

PROFILE

GRADE LINE
ORIGINAL GROUND
MARSH OR ROCK PROFILE (To be noted as such) — ROCK
SPECIAL DITCH — LABEL
GRADE ELEVATION — 95.36
CULVERT (Profile View)

UTILITIES

ELECTRIC — E
FIBER OPTIC — FO
GAS — G
SANITARY SEWER — SAN
STORM SEWER — SS
TELEPHONE — T
WATER — W
UTILITY PEDESTAL
POWER POLE
TELEPHONE POLE

LAYOUT

SCALE 0 — 1 MI.

TOTAL NET LENGTH OF CENTERLINE = 0.637 MI.

HORIZONTAL POSITIONS SHOWN ARE WISCONSIN COUNTY COORDINATES, MONROE COUNTY, IN U.S. SURVEY FEET.

ELEVATIONS SHOWN ON THIS PLAN ARE REFERENCED TO THE NORTH AMERICAN VERTICAL DATUM OF 1988 (12) (NAVD 88 (12))

STATE OF WISCONSIN
DEPARTMENT OF TRANSPORTATION

PREPARED BY

Surveyor	WISDOT
Designer	PAUL VALENTI
Project Manager	ANTHONY VANDER WIELEN
Regional Examiner	ANTHONY VANDER WIELEN
Regional Supervisor	JOE GREGAS III
C.O. Examiner	

APPROVED FOR THE DEPARTMENT

DATE: 08-01-2017 (Signature)

E

GENERAL NOTES

- THE LOCATIONS OF EXISTING AND PROPOSED UTILITY INSTALLATIONS AS SHOWN ON THE PLANS ARE APPROXIMATE. THERE ARE UTILITY FACILITIES WITHIN THE PROJECT AREA THAT ARE NOT SHOWN ON THE PLANS. THE CONTRACTOR SHALL COORDINATE HIS CONSTRUCTION ACTIVITIES WITH A CALL TO DIGGERS HOTLINE AND/OR A DIRECT CALL TO THE UTILITIES THAT HAVE FACILITIES IN THE AREA. NOT ALL UTILITIES ARE MEMBERS OF DIGGERS HOTLINE.
- D.O.T. BRIDGE BENCHMARK MONUMENT TO BE FURNISHED BY THE STATE AND PLACED BY THE CONTRACTOR AS DIRECTED BY THE ENGINEER.
- RIGHT OF WAY LINES SHOWN ON THE CROSS SECTIONS ARE APPROXIMATE.
- ALL RADII ARE MEASURED TO EDGE OF PAVEMENT UNLESS OTHERWISE SHOWN OR NOTED ON THE PLAN.
- CONSTRUCT INSIDE EDGE OF SIDEWALK 1/2 INCH HIGHER THAN TOP OF CURB WHEN THEY ARE ADJACENT TO EACH OTHER.
- PRIOR TO THE PLACEMENT OF STEEL PLATE BEAM GUARD OR MGS GUARDRAIL, THE SHOULDERS SHALL BE IN PLACE, SHAPED AND COMPACTED UNLESS SHOWN OTHERWISE.
- THE CONTRACTOR'S PAVING OPERATIONS SHALL BE CONSISTENT WITH THE PLAN TYPICAL SECTIONS AND CONSTRUCTED TO PREVENT HMA LONGITUDINAL JOINTS FROM BEING LOCATED WITHIN A DRIVING, TURNING, BIKE OR PARKING LANE.
- HMA PAVEMENT WEIGHT CALCULATIONS ARE BASED ON 110 LB/SY/IN.
- ASPHALT MATERIAL FOR PLANT MIXES HAS BEEN ESTIMATED AT 5.5% OF THE HMA PAVEMENT.
- CONTRACTOR WILL BE RESPONSIBLE FOR RESHAPING AND SEEDING ANY PREVIOUSLY GRASSED AREAS WHICH ARE DISTURBED BY HIS OPERATION OUTSIDE OF THE NORMAL CONSTRUCTION LIMITS.
- TOPSOIL SHALL BE PLACED 1 INCH BELOW THE TOP OF ADJACENT CONCRETE CURBS OR SIDEWALKS.
- THE QUANTITY OF THE ITEMS FOR EROSION PROTECTION INCLUDES AN UNDISTRIBUTED AMOUNT FOR PROTECTION, CONTROL AND ABATEMENT OF WATER POLLUTION RESULTING FROM SOIL EROSION. THE DISTRIBUTION AND LOCATION OF THESE MATERIALS ARE TO BE DETERMINED BY THE ENGINEER.
- DISTURBED AREAS WITHIN THE RIGHT OF WAY ARE TO BE TOPSOILED (SALVAGED), FERTILIZED, SEEDED AND MULCHED AS DIRECTED BY THE ENGINEER.

ORDER OF SECTION 2 SHEETS

2

DIGGERS HOTLINE
Dial 811 or (800) 242-8511
www.DiggersHotline.com

DNR LIAISON

KAREN KALVELAGE
ENVIRONMENTAL ANALYSIS & REVIEW SPECIALIST
WISCONSIN DEPT. OF NATURAL RESOURCES
WEST CENTRAL REGION
3550 MORMON COULEE ROAD
LA CROSSE, WI 54601
608-785-9115

CITY OF SPARTA

MAYOR RONALD BUTTON
PHONE: (608) 487-7347
EMAIL: MAYOR@SPARTAWISCONSIN.ORG

MARK VAN WORMER
DIRECTOR OF PUBLIC WORKS
201 W OAK STREET
SPARTA, WI 54656
PHONE: (608) 269-4340 ext. 228
EMAIL: DPW@SPARTAWISCONSIN.COM

DESIGN CONTACTS

ANTHONY M. VANDER WIELEN, P.E.
PROJECT MANAGER
WISDOT SW REGION
3550 MORMON COULEE ROAD
LA CROSSE, WI 54601
608-789-7878

PAUL M. VALENTI, P.E.
PROJECT DESIGNER
WISDOT SW REGION
3550 MORMON COULEE ROAD
LA CROSSE, WI 54601
608-785-9053

MATT MORROW, P.E.
PROJECT DESIGNER (ROBERTS ROAD, CITY UTILITIES)
PROJECT 5144-01-76
MSA PROFESSIONAL SERVICES, INC.
1230 SOUTH BOULEVARD
BARABOO, WI 53913
608-355-8889

ROBERT JACK, P.E.
PROJECT DESIGNER (ROUNDABOUT)
PROJECT 5144-01-75
STRAND ASSOCIATES, INC.
910 W WINGRA DRIVE
MADISON, WI 53715
608-251-2129 ext. 1007

VANCE POWERS, P.E.
PROJECT DESIGNER (LIGHTING, LANDSCAPING)
PROJECT 5144-01-75
SHORT ELLIOTT HENDRICKSON, INC.
1701 WEST KNAPP STREET SUITE B
RICE LAKE, WI 54868
715-236-4000

UTILITY CONTACTS

CENTURYLINK
COMMUNICATIONS LINE
ATTN: JEROD HOEL
135 N. BONSON STREET
PLATTEVILLE, WI
PHONE: (608) 342-4350
MOBILE: (608) 642-0345
EMAIL: JEROD.HOEL@CENTURYLINK.COM

CHARTER COMMUNICATIONS
COMMUNICATIONS LINE
ATTN: PERRY MCCLELLAN
1228 12TH AVE SOUTH
ONALASKA, WI 54650
PHONE: (608) 317-6213
EMAIL: PERRY.MCCLELLAN@CHARTER.COM

LEMONWIER VALLEY TELEPHONE
COMMUNICATIONS LINE
ATTN: BEN GRILLEY
127 US HWY 12
P.O. BOX 267
CAMP DOUGLAS, WI 54618
PHONE: (608) 427-6515 EXT. 121
MOBILE: (608) 542-0186
EMAIL: BEN.GRILLEY@GETLYNXX.COM

WISCONSIN INDEPENDENT NETWORK
COMMUNICATIONS LINE
ATTN: JOHN LOUIS
800 WISCONSIN AVENUE
BUILDING D02, SUITE 219 MB# 107
EAU CLAIRE, WI 54703
PHONE: (715) 838-4012
MOBILE: (715) 864-2918
EMAIL: JLOUIS@WINS.NET

XCEL ENERGY - TRANSMISSION
ATTN: BRUCE ZEMKE
414 NICOLLET MALL - 5TH FLOOR
MINNEAPOLIS, MN 55401
PHONE: (612) 330-7815
MOBILE: (651) 214-2620
EMAIL: BRUCE.M.ZEMKE@XCELENERGY.COM

XCEL ENERGY - ELECTRICITY
ATTN: KAYE CROOK
1003 S BLACK RIVER STREET
SPARTA, WI 54656
PHONE: (608) 789-3622
EMAIL: KAYE.M.CROOK@XCELENERGY.COM

WE ENERGIES - GAS/PETROLEUM
ATTN: TRAVIS KAHL
1921 8TH STREET SOUTH
WISCONSIN RAPIDS, WI 54494
PHONE: (715) 421-7256
MOBILE: (715) 498-6180
EMAIL: TRAVIS.KAHL@WE-ENERGIES.COM

CITY OF SPARTA - SANITARY SEWER
ATTN: MARK VAN WORMER
201 W OAK STREET
SPARTA, WI 54656
PHONE: (608) 269-4340 ext. 228
EMAIL: DPW@SPARTAWISCONSIN.COM

CITY OF SPARTA - WATER MAIN
ATTN: MARK VAN WORMER
201 W OAK STREET
SPARTA, WI 54656
PHONE: (608) 269-4340 ext. 228
EMAIL: DPW@SPARTAWISCONSIN.COM

2

STANDARD ABBREVIATIONS

AC	ACRE	LC.	LONG CHORD
AGG	AGGREGATE	LS	LUMP SUM
<	ANGLE	M.P.	MARKER POST
AE, AEW	APRON ENDWALL	MGAL	1000 GALLONS
ASPH.	ASPHALTIC	N.C.	NORMAL CROWN
A.D.T.	AVERAGE DAILY TRAFFIC	N	NORTH
A.A.D.T.	ANNUAL AVERAGE DAILY TRAFFIC	NB	NORTHBOUND
B.F.	BACK FACE	NOR	NORMAL
BM	BENCHMARK	NO.	NUMBER
BTWN	BETWEEN	PAV'T	PAVEMENT
CTR.	CENTER	P.L.E.	PERMANENT LIMITED EASEMENT
C/L	CENTER LINE	P.C.	POINT OF CURVATURE
Δ	CENTRAL ANGLE OR DELTA	P.I.	POINT OF INTERSECTION
C.E.	COMMERCIAL ENTRANCE	P.T.	POINT OF TANGENCY
CONST.	CONSTRUCTION	PCC	PORTLAND CEMENT CONCRETE
CMCP	CORRUGATED METAL CULVERT PIPE	P.E.	PRIVATE ENTRANCE
CMP	CORRUGATED METAL PIPE	PGL	PROFILE GRADE LINE
CO.	COUNTY	P.L.	PROPERTY LINE
CTH	COUNTY TRUNK HIGHWAY	R	RADIUS OR RANGE
CR.	CREEK	R/L	REFERENCE LINE
CABC	CRUSHED AGGREGATE BASE COURSE	R.C.C.P.	REINFORCED CONCRETE CULVERT PIPE
CY	CUBIC YARD	REQ'D	REQUIRED
CP	CONTROL POINT OR CULVERT PIPE	RT	RIGHT
C&G	CURB AND GUTTER	R.H.F.	RIGHT HAND FORWARD
D	DEGREE OF CURVE	R/W	RIGHT OF WAY
D.H.V.	DESIGN HOURLY VOLUME	RD.	ROAD
DIA.	DIAMETER	SHLD.	SHOULDER(S)
D.D.	DIRECTIONAL DISTRIBUTION	SHR.	SHRINKAGE
DISCH.	DISCHARGE	S	SOUTH
DMS	DYNAMIC MESSAGE SIGN	SB	SOUTHBOUND
EA	EACH	S.F.	SQUARE FOOT (FEET)
E	EAST	SDD	STANDARD DETAIL DRAWING(S)
EB	EASTBOUND	STH	STATE TRUNK HIGHWAY
ELEC.	ELECTRIC(AL), ELEC. CABLE	STA.	STATION
EL., ELEV.	ELEVATION	S.E.	SUPERELEVATION
ESALS	EQUIVALENT SINGLE AXLE LOADS	S/L	SURVEY LINE
EXC.	EXCAVATION	SYM	SYMMETRICAL
EXIST	EXISTING	T.	PERCENT TRUCKS
F.F.	FACE TO FACE	TEL.	TELEPHONE
FERT.	FERTILIZER	TEMP.	TEMPORARY
F.E.	FIELD ENTRANCE	T.L.E.	TEMPORARY LIMITED EASEMENT
F/L, F.L.	FLOW LINE	T.O.C.	TOP OF CURB
GALV.	GALVANIZE	TYP	TYPICAL
H.S.	HIGH STRENGTH	UNCL.	UNCLASSIFIED
CWT	HUNDRED WEIGHT	U.G.	UNDERGROUND (CABLE)
INL	INLET	VAR	VARIABLE
INTER.	INTERSECTION	V.C.	VERTICAL CURVE
IH	INTERSTATE HIGHWAY	V.P.C.	VERTICAL POINT OF CURVATURE
JT.	JOINT	V.P.I.	VERTICAL POINT OF INTERSECTION
LT	LEFT	V.P.T.	VERTICAL POINT OF TANGENCY
L.H.F.	LEFT HAND FORWARD	Wt.	WEIGHT
L.	LENGTH OF CURVE	W	WEST
L.F.	LINEAR FOOT(FEET)	WB	WESTBOUND

PROJECT BENCHMARKS

NUMBER	ELEV	DESCRIPTION
1000	775.68	CHISELED X ON NW RIMBOLT OF FIRE HYDRANT LOCATED ON NW CORNER OF RIVER ROAD & ROBERTS ROAD.
1001	776.44	REBAR IN CENTER OF CONCRETE SLAB +/- 140' SOUTH OF W AVERILL STREET CENTERLINE AND +/- 30' WEST OF ROBERTS ROAD CENTERLINE.
1002	778.44	CHISELED X ON NW RIMBOLT OF FIRE HYDRANT LOCATED ON NE CORNER OF W AVERILL STREET & ROBERTS ROAD.
1003	778.82	CHISELED X ON SE RIMBOLT OF FIRE HYDRANT LOCATED ON NW CORNER OF ROBERTS ROAD AND HEOSCHLER DRIVE.
1004	780.89	CHISELED X ON SW RIMBOLT OF FIRE HYDRANT ON WEST SIDE OF STH 27 (S BLACK RIVER STREET) +/- 600' NORTH OF W AVERILL STREET IN FRONT OF 716 S BLACK RIVER STREET.
1005	781.75	CHISELED X ON NW RIMBOLT OF FIRE HYDRANT ON NORTH SIDE OF MAPLE AVENUE +/- 500' WEST OF STH 27, BETWEEN 1010 MAPLE AVE & 900 MAPLE AVE.
1006	782.22	CHISELED X ON NE RIMBOLT OF FIRE HYDRANT LOCATED ON NW CORNER OF STH 27 AND MAPLE AVENUE.
1007	784.14	CHISELED SQUARE ON NE CORNER OF CONCRETE APRON AT NW CORNER OF 803 W WISCONSIN ST.
1008	785.42	CHISELED X ON NW RIMBOLT OF FIRE HYDRANT LOCATED ON NW QUADRANT OF STH 16 & STH 27.
1009	786.10	CHISELED X ON NW RIMBOLT OF FIRE HYDRANT ON NORTH SIDE OF STH 16 +/- 300' EAST OF STH 16 & STH 27 INTERSECTION, IN FRONT OF 712 W WISCONSIN
1010	780.96	CHISELED X ON SW RIMBOLT OF FIRE HYDRANT LOCATED ON NW CORNER OF MAPLE AVENUE AND BELMONT AVENUE.
1011	778.55	CHISELED X ON NW RIMBOLT OF FIRE HYDRANT ON NORTH SIDE OF W AVERILL STREET +/- 200' EAST OF STH 27, NORTH OF 803 S BLACK RIVER STREET.
1012	776.36	CHISELED X ON SE BOLT OF EAST POST OF KWIK TRIP SIGN LOCATED AT THE NW CORNER OF STH 27 & RIVER ROAD.
1013	779.92	CHISELED SQUARE ON EAST END OF DRIVE THRU CONCRETE ISLAND AT BURGER KING (906 S BLACK RIVER ST) +/- 300' NORTH OF W AVERILL STREET AND +/- 100' WEST OF STH 27 CENTERLINE.
1014	779.49	CHISELED SQUARE ON EAST END OF EAST POST CONCRETE OF MARTIN WAREHOUSING SIGN +/- 300' SOUTH OF MAPLE AVENUE AND +/- 50' WEST OF STH 27 CENTERLINE.

2

ROADWAY SOIL BORING SUMMARY TABLE

Boring #	STA.	Offset	Bituminous	Concrete	Sand/gravel	Subgrade
5	304+75	3' LT	7.5		7	Sand
6	306+87	15' LT			16	Sand
6A	306+87	6' LT	6		6	Sand
7	311+09	3' RT	5.5		8	Sand
8	316+37	5' RT	7.5		5	Sand
9	321+65	15' LT	5		6	Sand
9A	321+65	6' LT	4.5		10	Sand
10	326+93	3' LT	4.5		7	Sand
		Average Depths	5.8		8.1	

NOTES:
DATE BORINGS TAKEN: 8/14/2002
ALL DEPTHS ARE IN INCHES
FOR REFERENCE PURPOSES ONLY
ALL OFFSETS ARE FROM EXISTING CENTERLINE

ALIGNMENT DESIGNATION	ROADWAY SEGMENT	PROJECT ID
NONE	STH 27	5144-01-75
NB	NORTHBOUND STH 27	5144-01-75
SB	SOUTHBOUND STH 27	5144-01-75
EB	EASTBOUND STH 16	5144-01-75
WB	WESTBOUND STH 16	5144-01-75
R	RIVER ROAD	5144-01-75 & 76
AV	W AVERILL STREET	5144-01-75 & 76
MA	MAPLE AVENUE	5144-01-75
HL	HILL STREET	5144-01-75
RO	ROBERTS ROAD	5144-01-75 & 76
HO	HOESCHLER DRIVE	5144-01-76

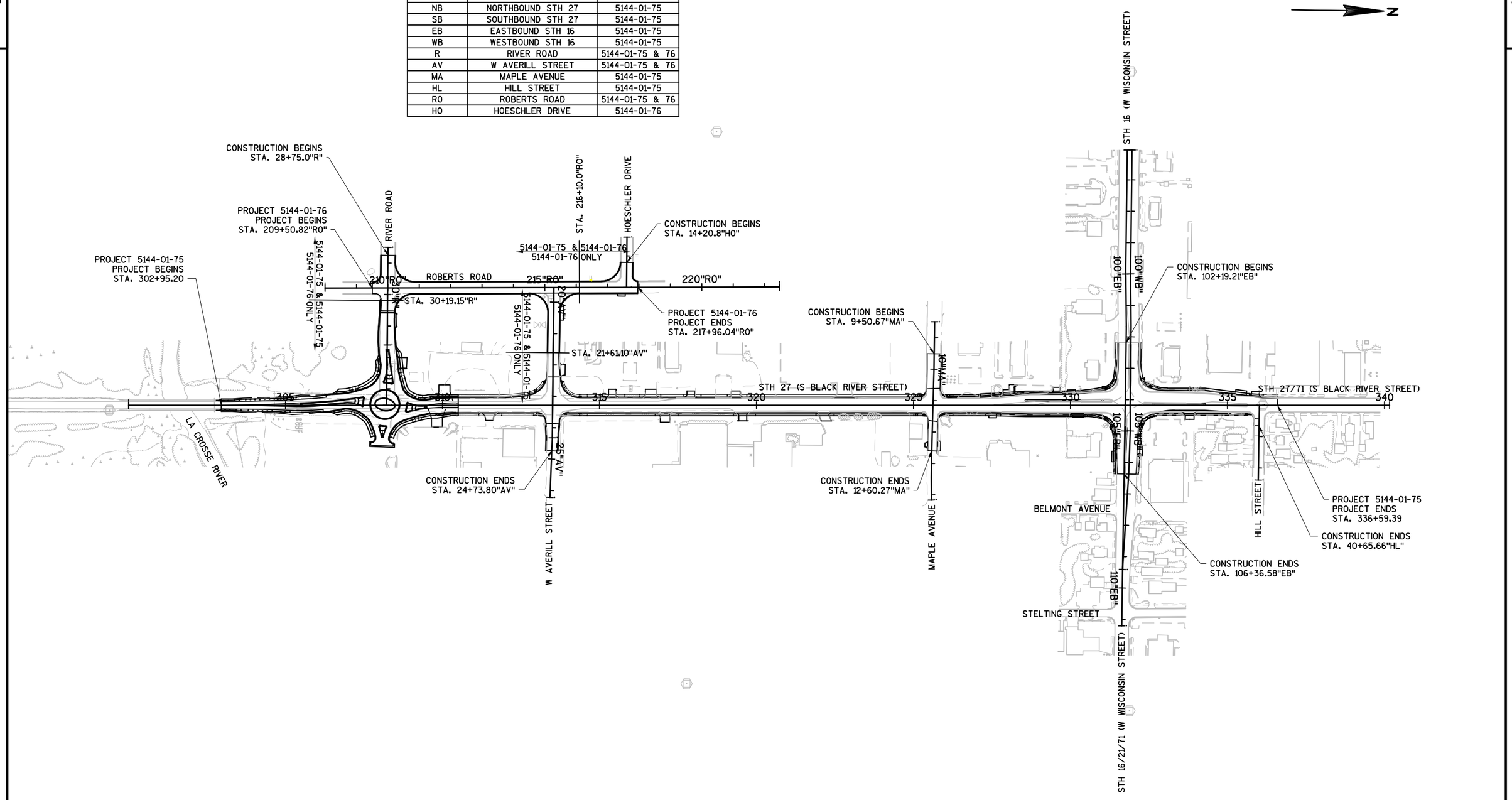

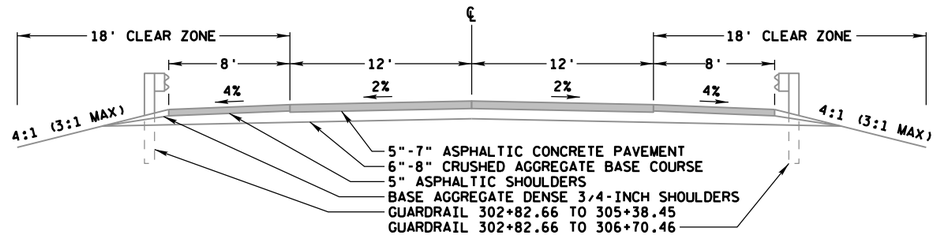

EXISTING TYPICAL SECTION - STH 27

STATION 303+05.77 TO STATION 317+44.33

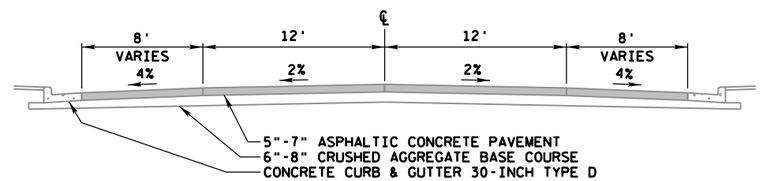

EXISTING TYPICAL SECTION - STH 27

STATION 317+44.33 TO STATION 325+90.99

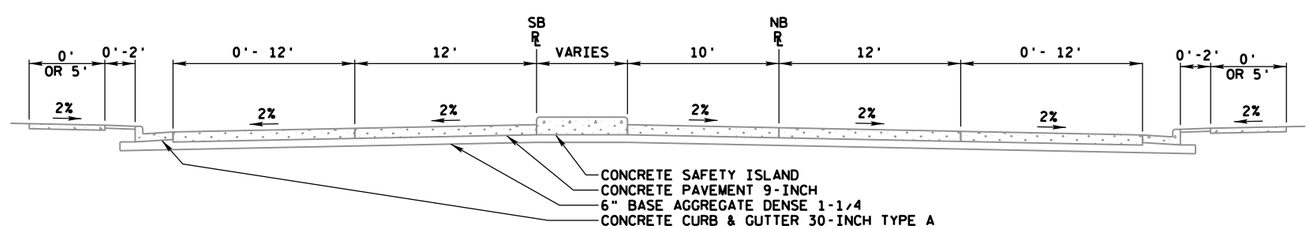

EXISTING TYPICAL SECTION - STH 27

STATION 325+90.99 TO STATION 336+42.43

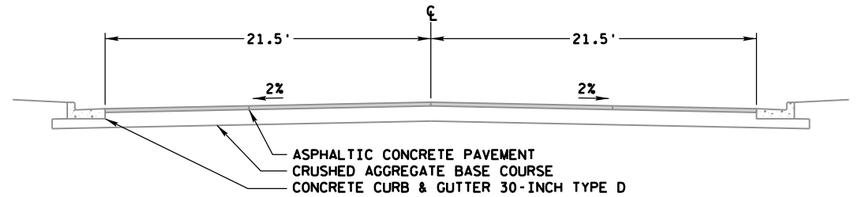

EXISTING TYPICAL SECTION - RIVER ROAD

STATION 30+58.33'R' TO STATION 33+11.22'R'

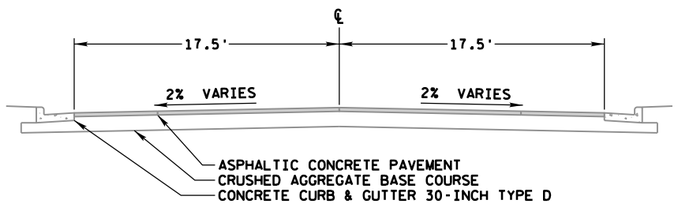

EXISTING TYPICAL SECTION - WEST AVERILL STREET

STATION 21+61.10'AV' TO STATION 22+74.06'AV'

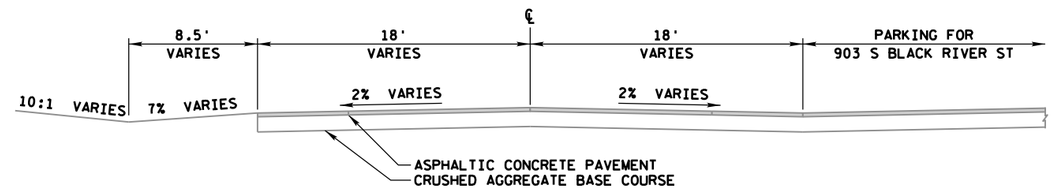

EXISTING TYPICAL SECTION - WEST AVERILL STREET

STATION 23+71.74'AV' TO STATION 24+73.80'AV'

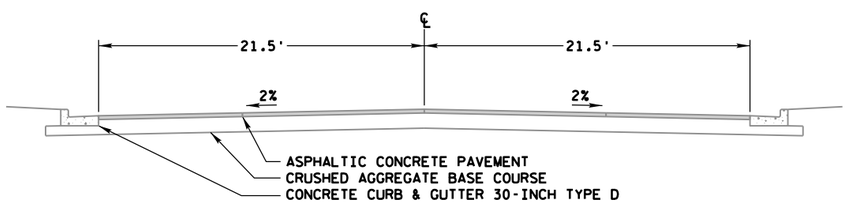

EXISTING TYPICAL SECTION - MAPLE AVENUE

STATION 9+50.67'MA' TO STATION 10+74.09'MA'

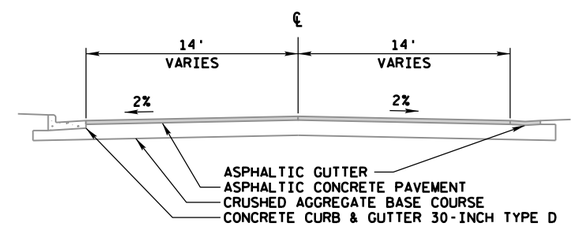

EXISTING TYPICAL SECTION - MAPLE AVENUE

STATION 11+50.39'MA' TO STATION 12+60.27'MA'

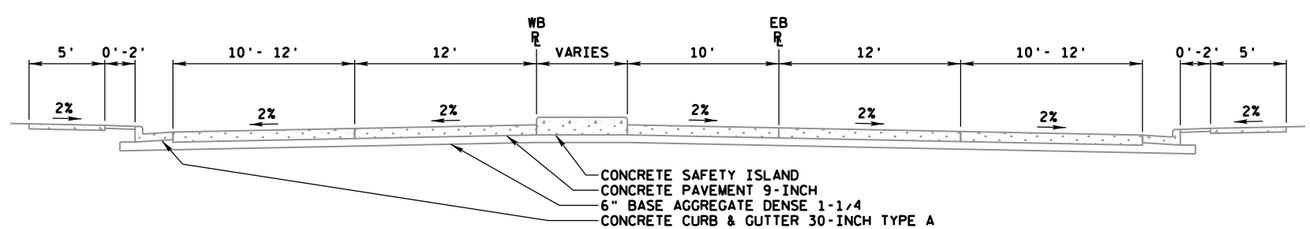

EXISTING TYPICAL SECTION - STH 16

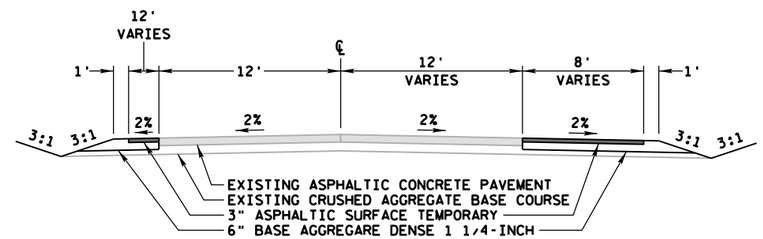

TEMPORARY WIDENING TYPICAL SECTION - STH 27

STATION 304+16.08 TO STATION 319+90.89

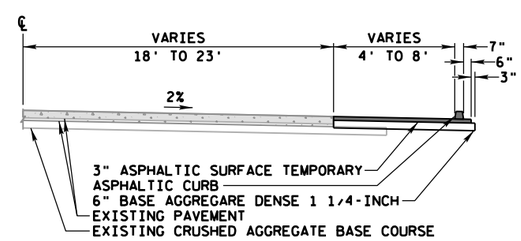

TEMPORARY WIDENING TYPICAL SECTION - STH 27

STATION 319+90.89 TO STATION 331+24.00

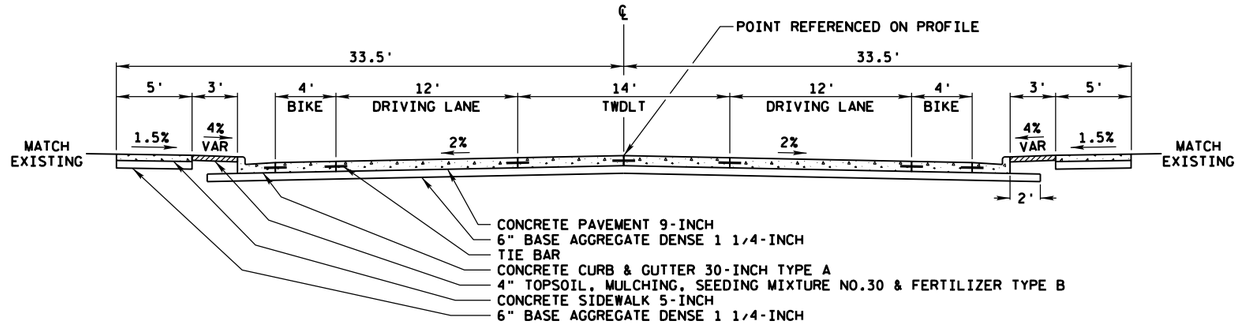

FINISHED TYPICAL SECTION - STH 27

STATION 310+50.00 TO STATION 326+92.39
STATION 334+27.87 TO STATION 336+59.38

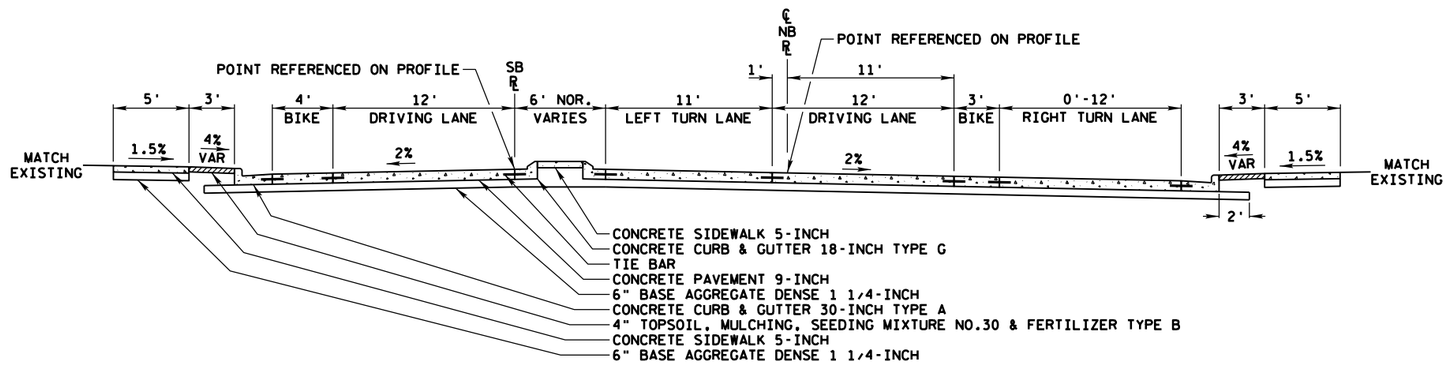

FINISHED TYPICAL SECTION - STH 27

STATION 326+92.39 TO STATION 332+38.41

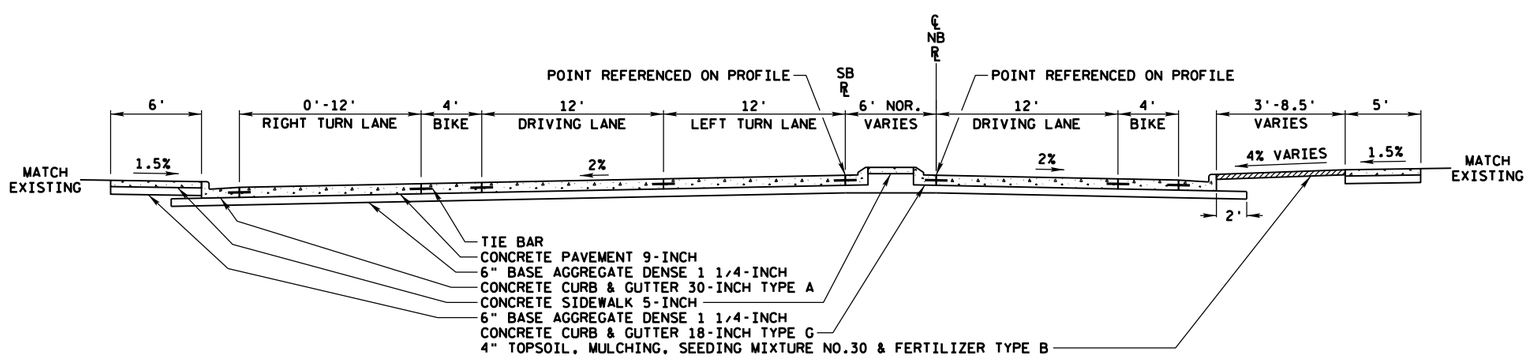

FINISHED TYPICAL SECTION - STH 27

STATION 332+38.41 TO STATION 334+27.87

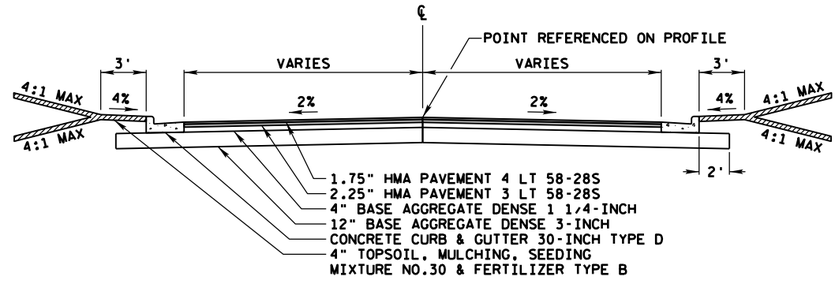

FINISHED TYPICAL SECTION - RIVER ROAD, W AVERILL STREET, MAPLE AVENUE

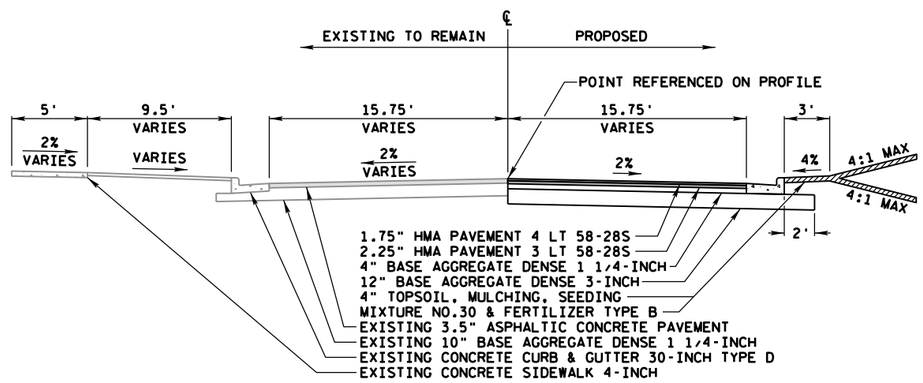

FINISHED TYPICAL SECTION - HILL STREET

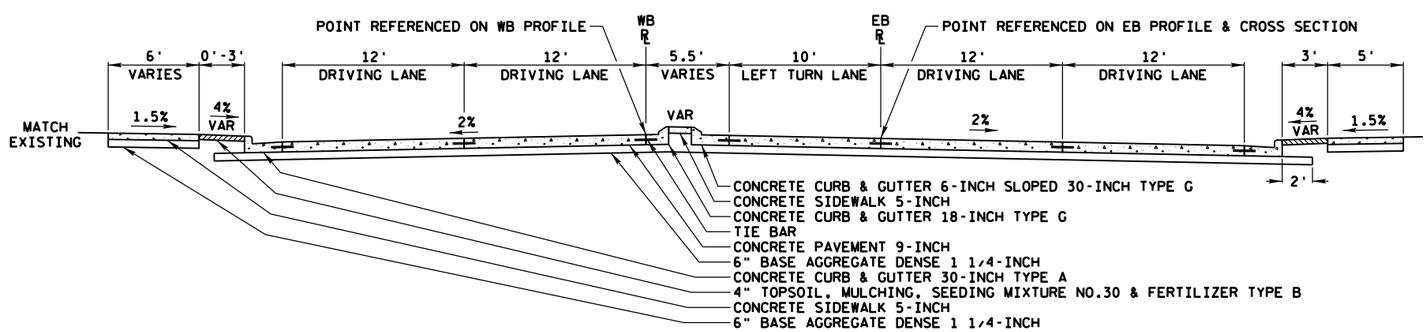

FINISHED TYPICAL SECTION - STH 16

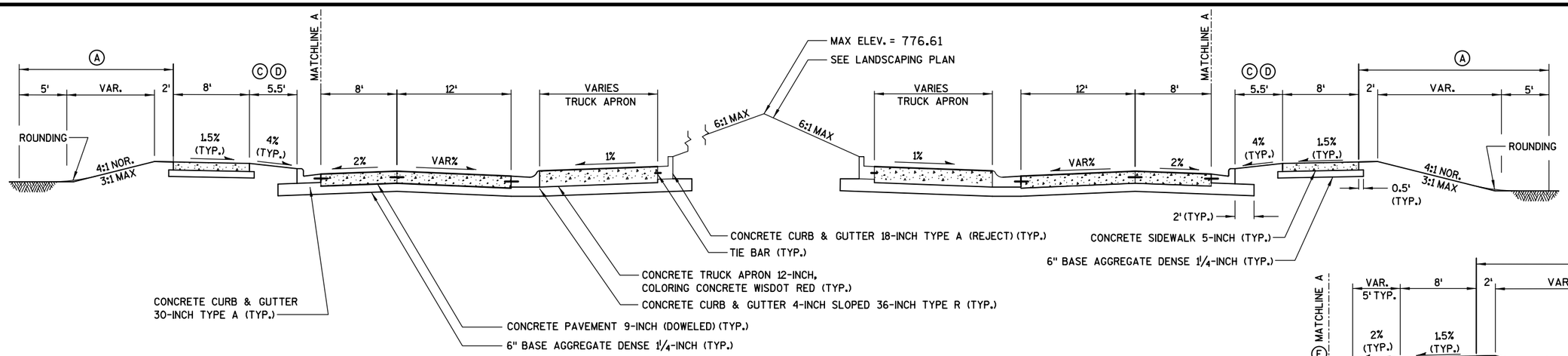

TYPICAL FINISHED SECTION THROUGH ROUNDABOUT

STA. 307+49 - STA. 308+85

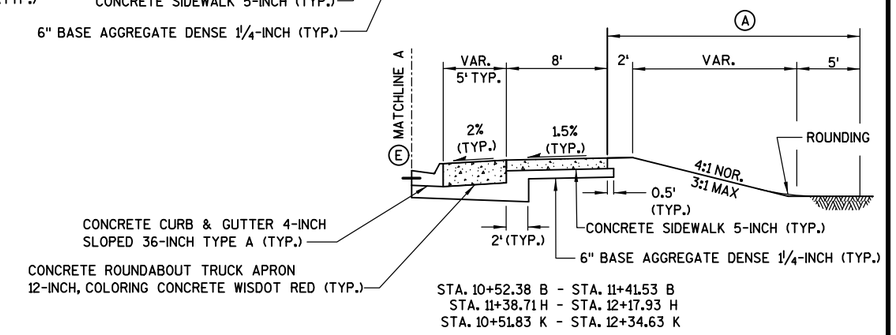

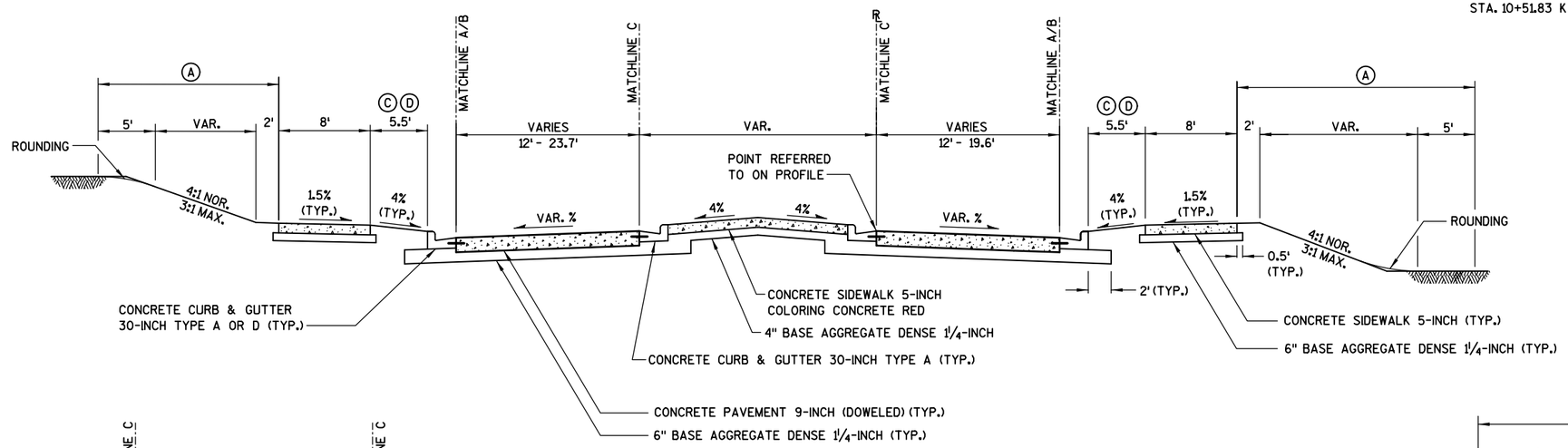

TYPICAL FINISHED SECTION STH 27 AND RIVER ROAD

STA. 305+47.72 - STA. 307+49.17; (STA. 12+52.56 M - STA. 14+57.50 M)
STA. 308+84.98 - STA. 309+51.08; (STA. 10+00.00 F - STA. 10+73.84 F)
STA. 31+74.42 RR - STA. 32+82.53 RR
STA. 10+00.00 D - STA. 10+41.19 D

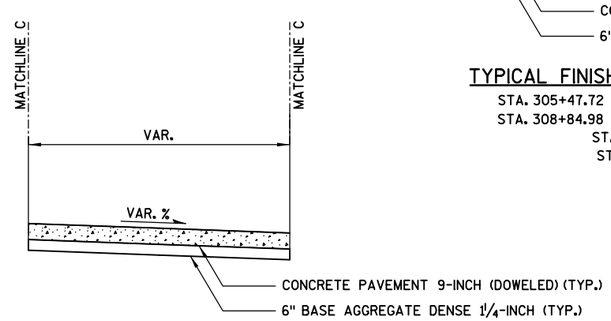

STA. 302+95.20 - STA. 305+47.72; (STA. 10+00.00 M - STA. 12+52.56 M)
STA. 309+51.08 - STA. 310+50.00; (STA. 10+73.84 F - STA. 11+72.89 F)
STA. 30+58.30 RR - STA. 31+74.42 RR
STA. 10+41.19 D - STA. 10+66.74 D

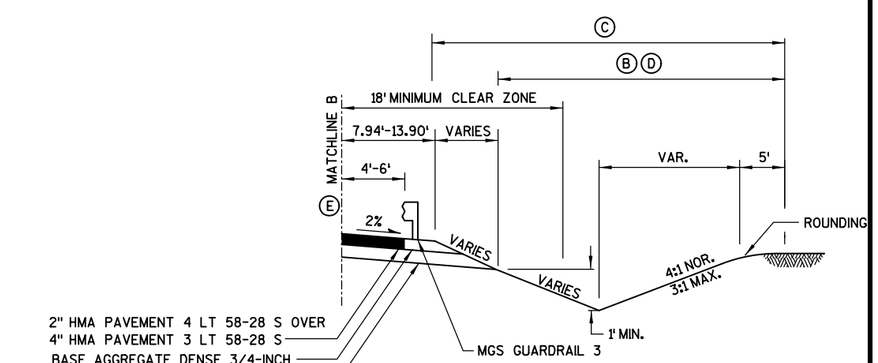

STA. 302+95 - STA. 306+20 (RT); (STA. 10+00 M - STA. 13+23 M RT)
STA. 302+95 - STA. 306+29 (LT); (STA. 10+00 M - STA. 13+37 M RT)

(A) SALVAGED TOPSOIL, MULCHING, SEEDING MIXTURE NO. 30 & FERTILIZER TYPE B

(B) SALVAGED TOPSOIL & MULCHING

(C) SEEDING MIXTURE NO. 30 & FERTILIZER TYPE B

(D) EROSION MAT CLASS I TYPE B

(E) REVERSED FOR SOUTHBOUND LANES

PROJECT NO: 5144-01-75	HWY: STH 27	COUNTY: MONROE	TYPICAL SECTIONS	SHEET 10	E

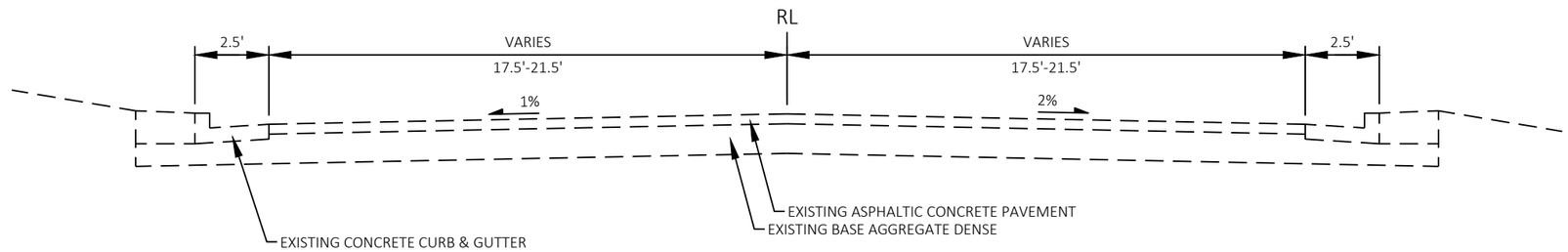

EXISTING TYPICAL SECTION

STA 208+75.00RO - STA 210+40.00RO
STA 214+92.00RO - STA 217+96.04RO
STA 14+20.80HO - STA 14+82.50HO
STA 19+71.09AV - STA 21+61.10AV
STA 28+98.10R - STA 29+61.67R
STA 29+96.67R - STA 30+58.33R

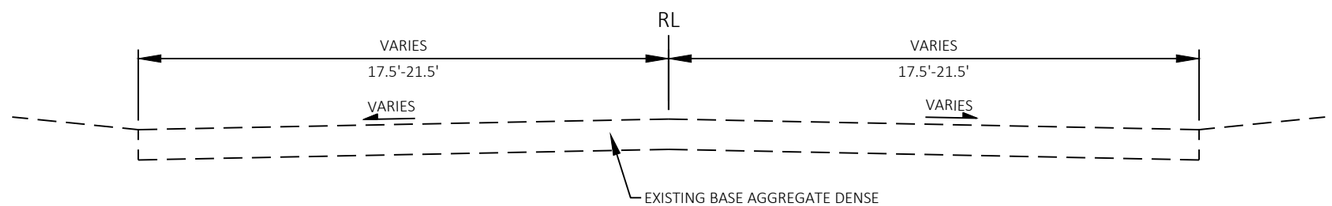

EXISTING TYPICAL SECTION

STA 210+40.00RO - STA 214+92.00RO

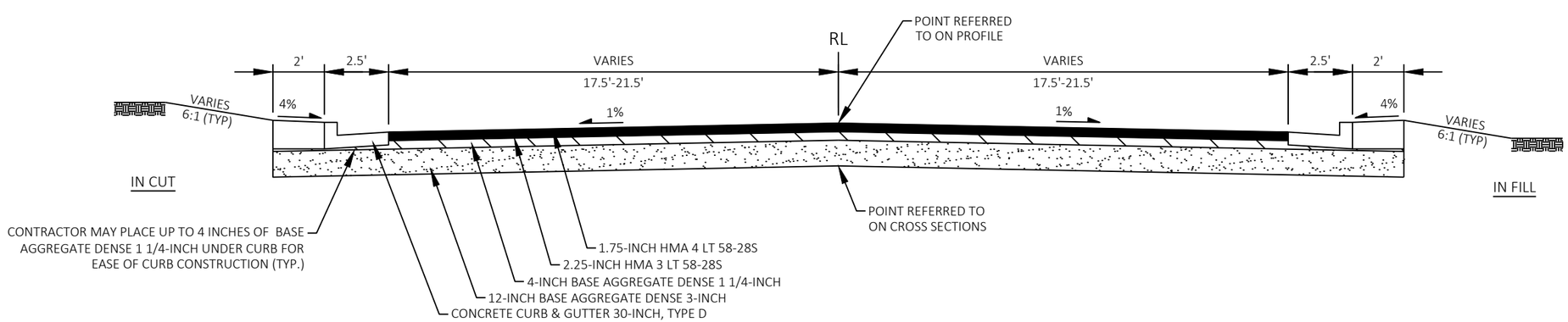

FINISHED TYPICAL SECTION

STA 208+75.00RO - STA 217+96.04RO
STA 14+20.80HO - STA 14+82.50HO
STA 19+71.09AV - STA 21+61.10AV
STA 28+98.10R - STA 29+61.67R
STA 29+96.67R - STA 30+58.33R

2

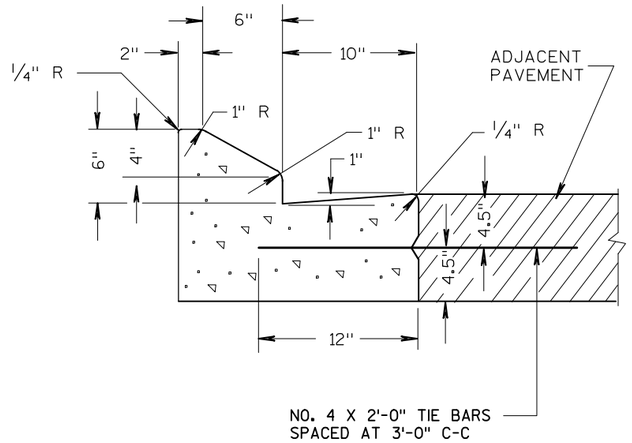

CONCRETE CURB & GUTTER,
18-INCH, TYPE G

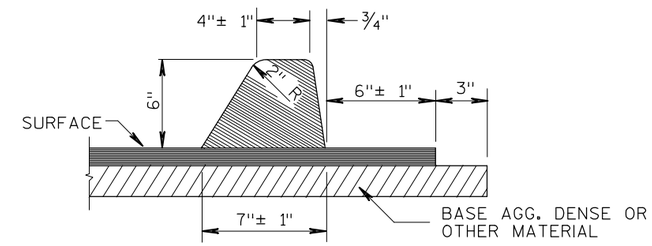

ASPHALTIC CURB DETAIL

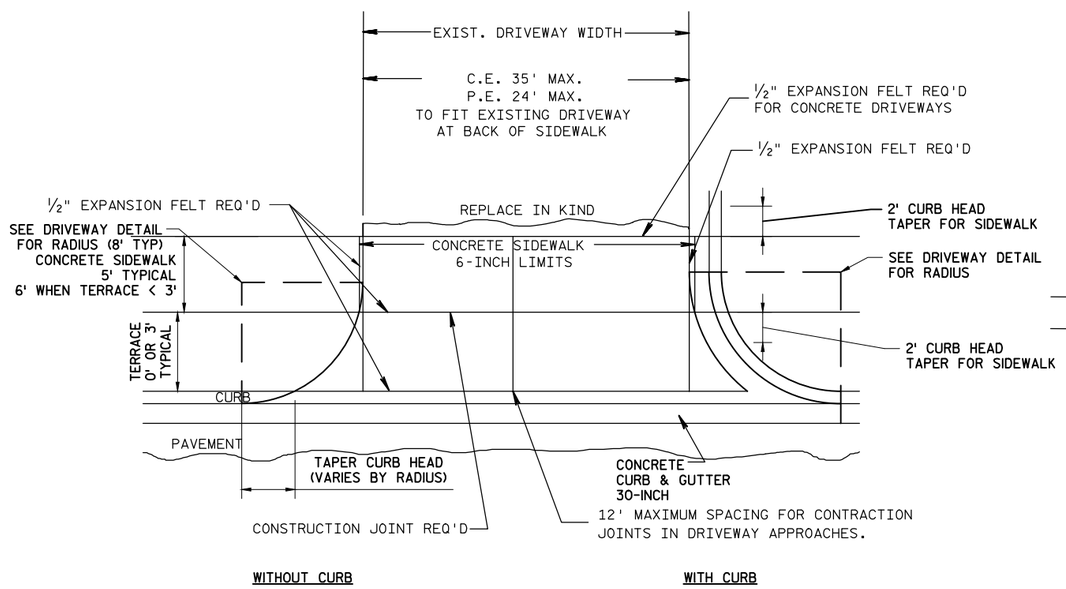

PLAN VIEW

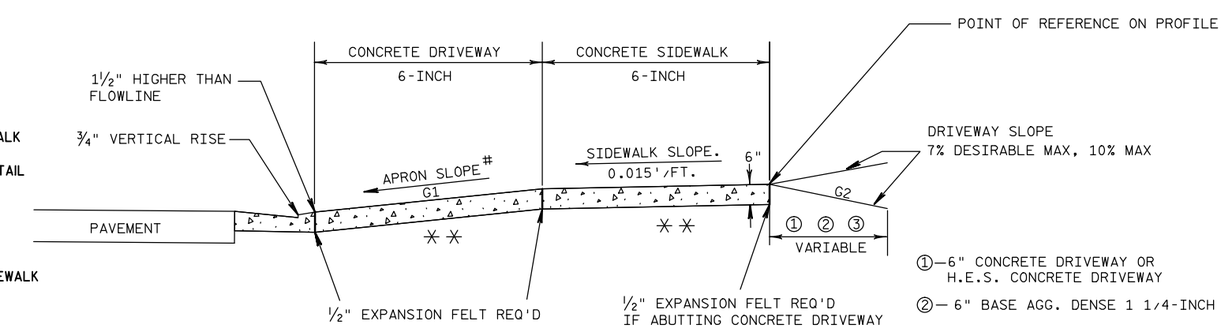

TYPICAL SIDEWALK SECTION

① — 6" CONCRETE DRIVEWAY OR H.E.S. CONCRETE DRIVEWAY

② — 6" BASE AGG. DENSE 1 1/4-INCH

③ — 4" BASE AGG. DENSE 1 1/4-INCH BASE WITH 2" ASPHALTIC SURFACE

✳✳ = 6" BASE AGG. DENSE 1 1/4-INCH REQ'D UNDER CONCRETE DRWY

#

TERRACE WIDTH	APRON SLOPE (G1) MIN %	DESIRABLE %	MAX %
3 FT	7.0	8.5	9.0
4 FT	5.0	7.0	9.0
5 FT	4.0	7.0	9.0
6 FT	4.0	7.0	9.0
7 FT	3.5	7.0	9.0
8 FT	3.0	7.0	9.0

NOTE: ALGEBRAIC DIFFERENCE BETWEEN TANGENT GRADES G1 & G2 TO NOT EXCEED 15%

DEPRESS SIDEWALK PROFILE IF DRIVEWAY APRON EXCEEDS MAX SLOPE

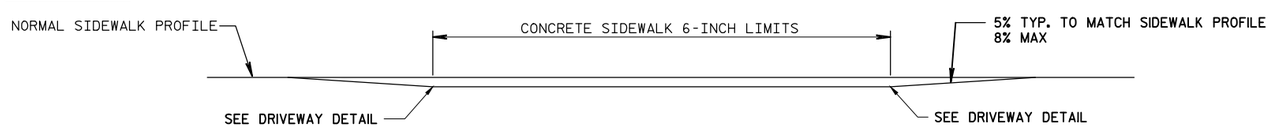

DEPRESSED SIDEWALK PROFILE DETAIL

DRIVEWAY ENTRANCE DETAIL WITH SIDEWALK, CURB & GUTTER

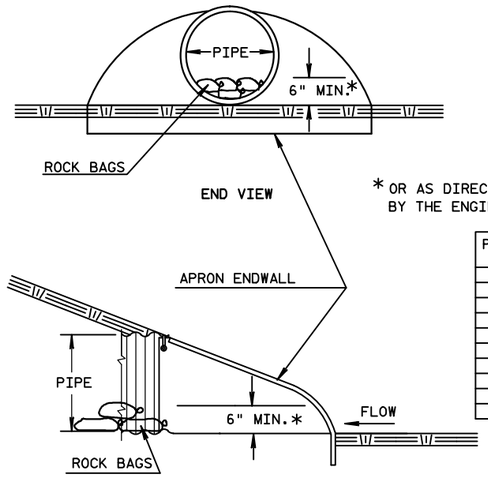

* OR AS DIRECTED BY THE ENGINEER

PIPE SIZE INCHES	NUMBER OF BAGS
12	2
15	2
18	2
24	2
30	3
36	3
42	4
48	4
54	5
60	6

CULVERT PIPE CHECK

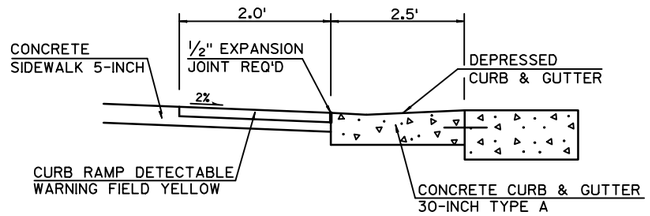

SECTION A-A

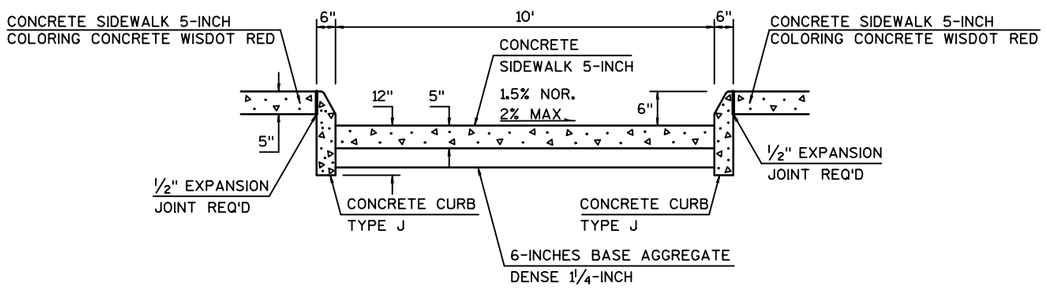

SECTION B-B

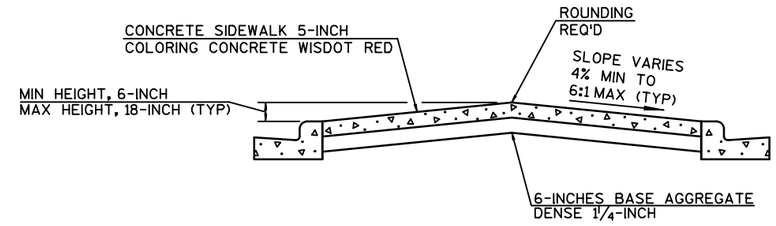

SECTION C-C

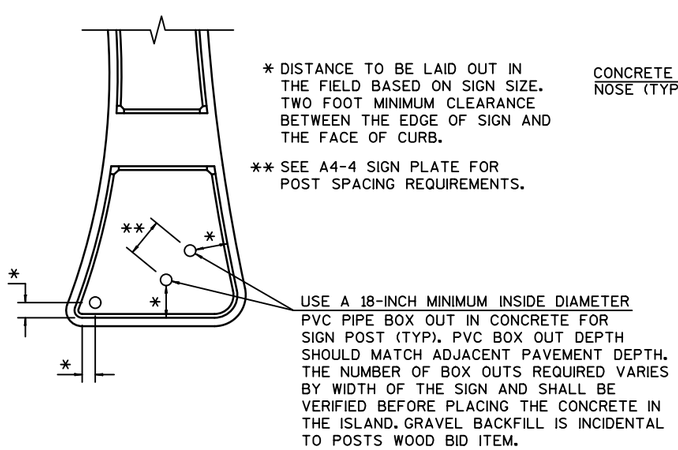

CENTER AND SPLITTER ISLAND SIGN LOCATION DETAIL (TYP)

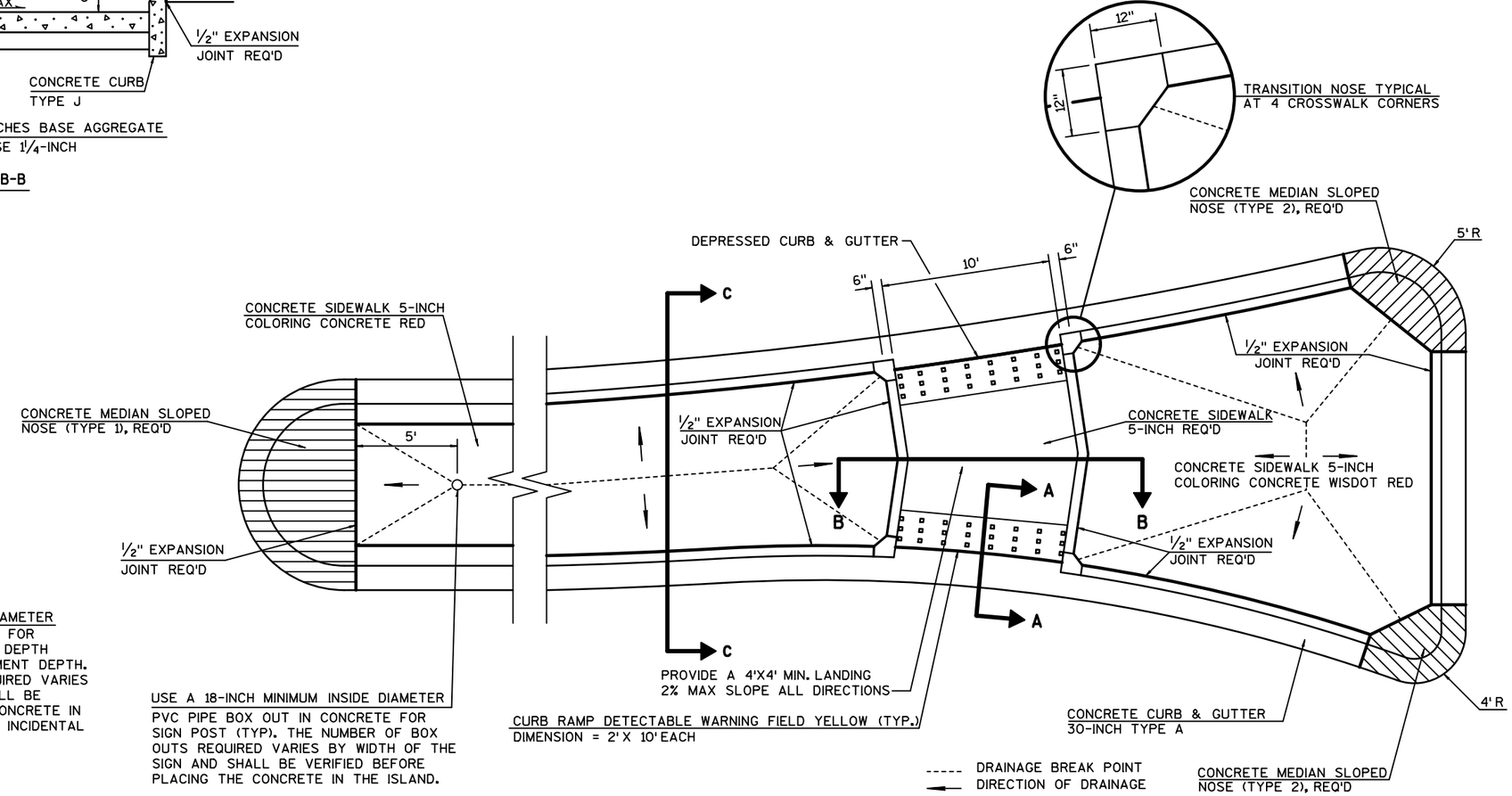

SPLITTER ISLAND DETAIL

NOTE: INSTALL TRANSITION NOSE.
(INCIDENTAL TO OTHER PAY ITEMS.)
DO NOT MARK TRANSITION NOSE.
USE FULL DETECTABLE WARNING PANELS

2

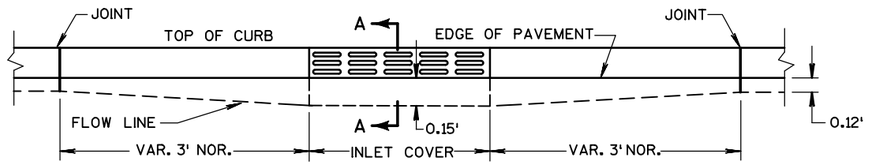

ELEVATION

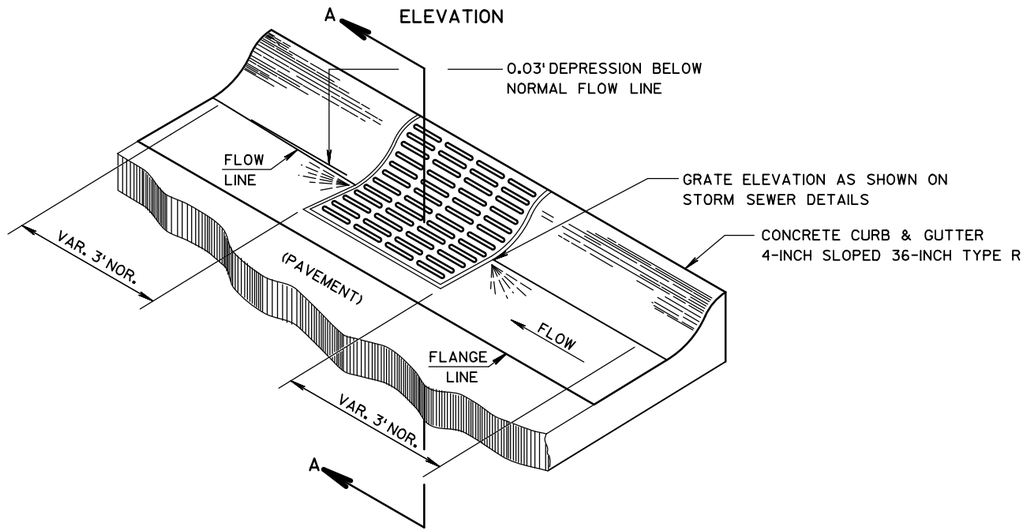

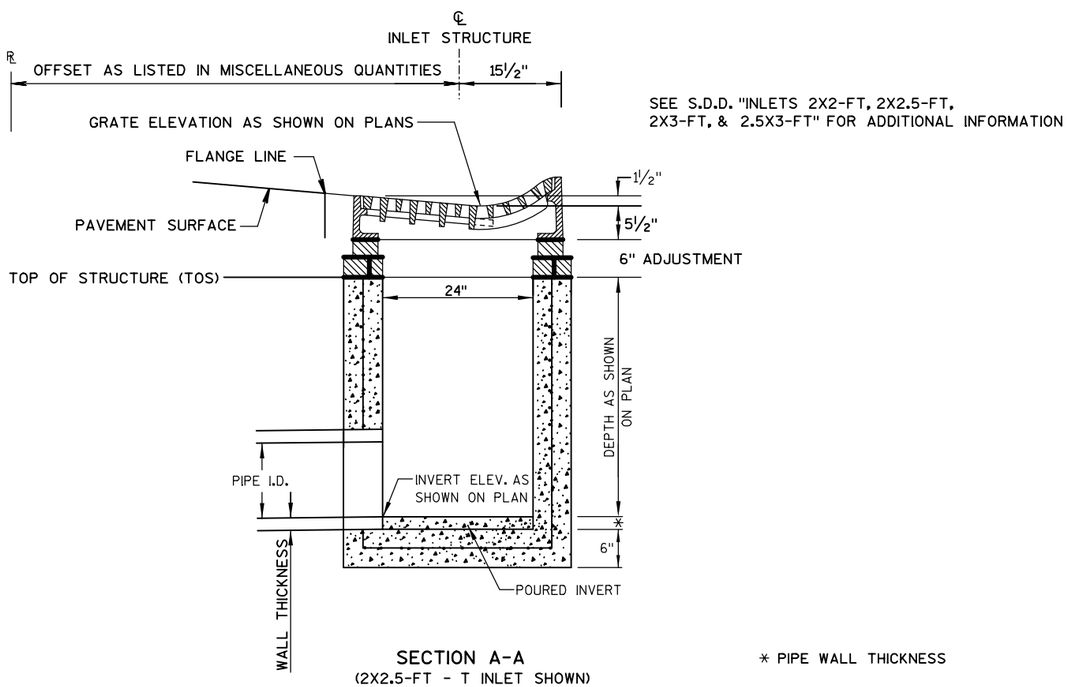

SECTION A-A
(2X2.5-FT - T INLET SHOWN)

* PIPE WALL THICKNESS

DETAIL OF CONCRETE CURB AND GUTTER 4-INCH SLOPED 36-INCH TYPE R AT INLETS

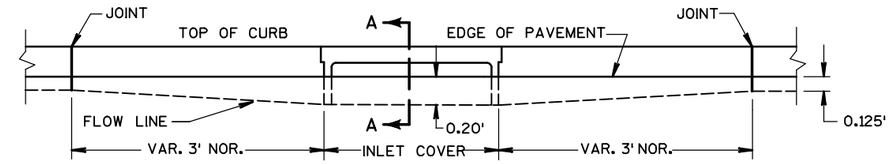

ELEVATION

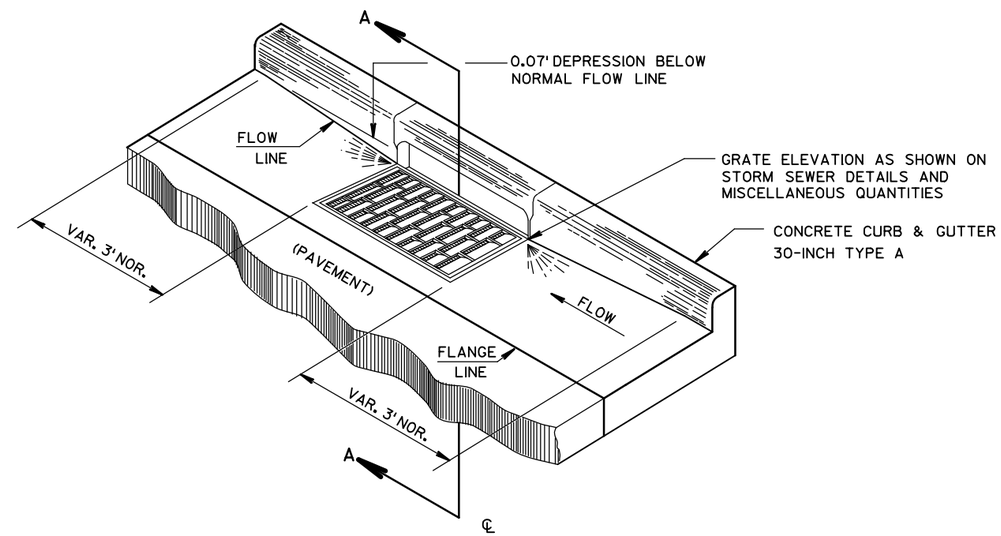

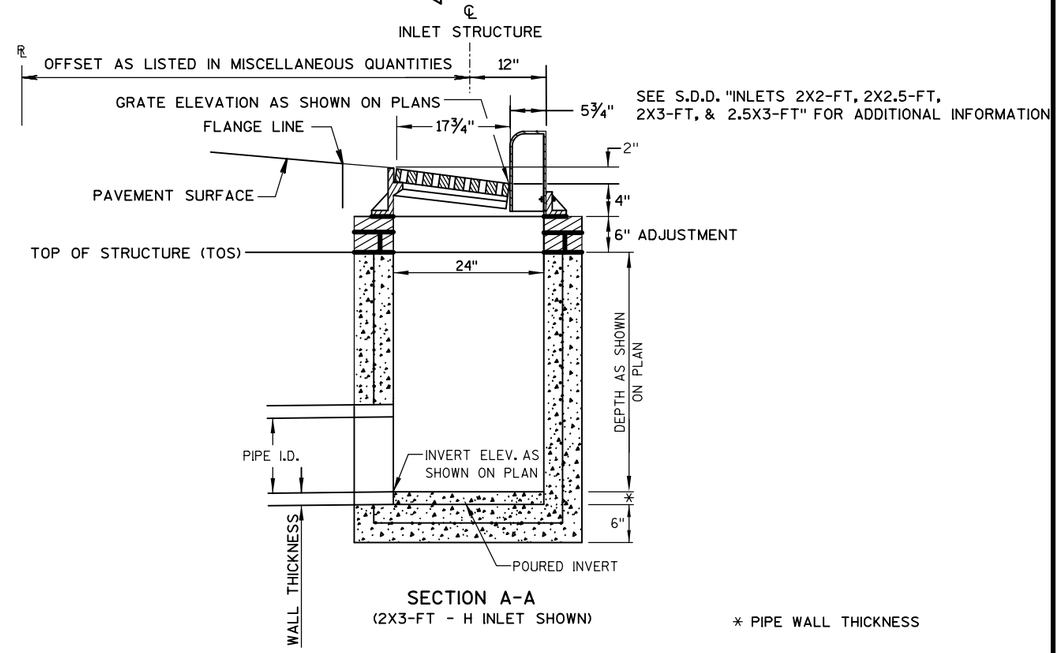

SECTION A-A
(2X3-FT - H INLET SHOWN)

* PIPE WALL THICKNESS

DETAIL OF CONCRETE CURB AND GUTTER 30-INCH TYPE A AT INLETS

2

PROJECT NO: 5144-01-75	HWY: STH 27	COUNTY: MONROE	CONSTRUCTION DETAILS	SHEET 15	E

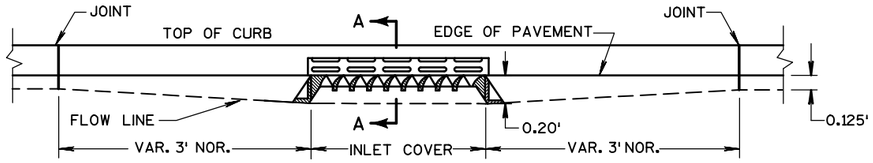

ELEVATION

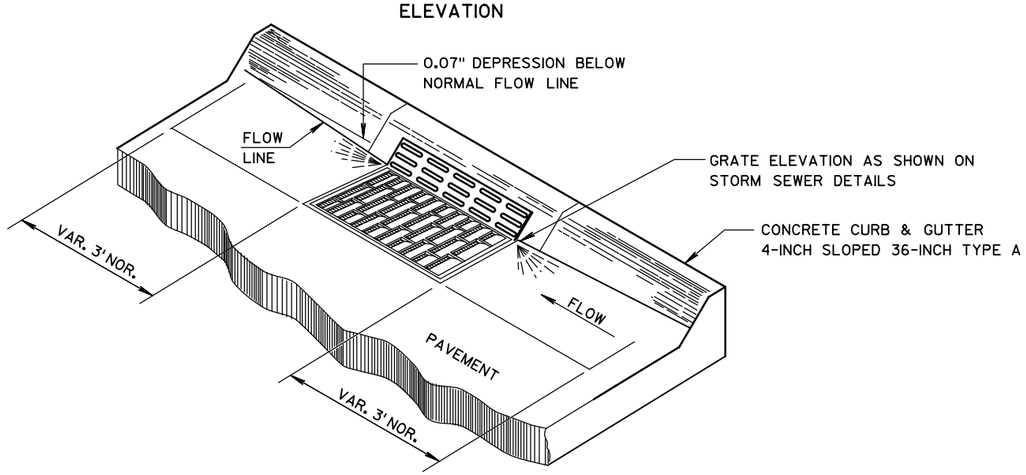

DETAIL OF CURB AND GUTTER AT INLETS

(2x3-FT - HM INLET SHOWN)

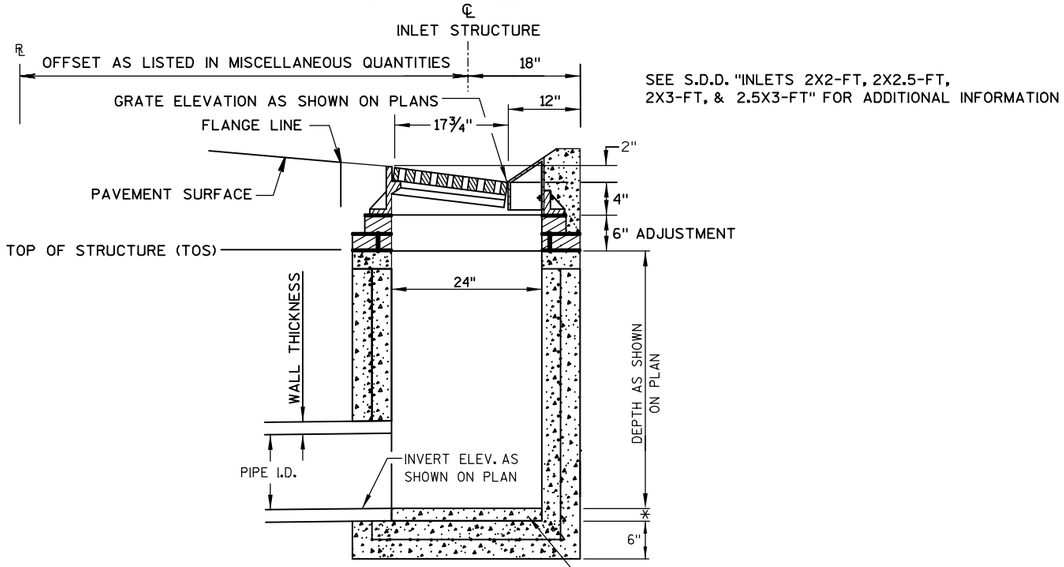

SEE S.D.D. "INLETS 2X2-FT, 2X2.5-FT, 2X3-FT, & 2.5X3-FT" FOR ADDITIONAL INFORMATION

SECTION A-A
(2X3-FT - HM INLET SHOWN)

* PIPE WALL THICKNESS

CONCRETE CURB AND GUTTER 4-INCH SLOPED 36-INCH TYPE A AT INLETS

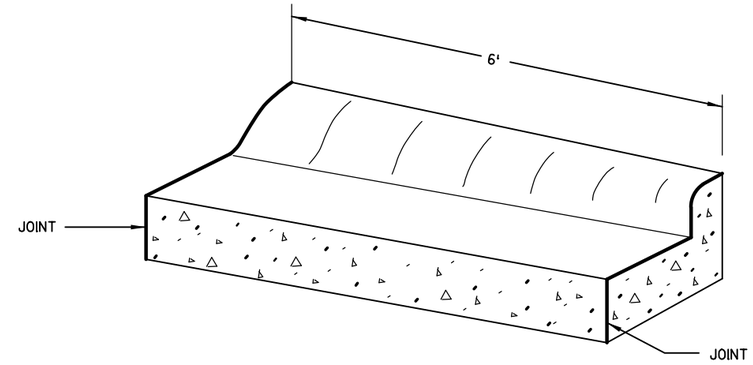

TRANSITION DETAIL

CONCRETE CURB & GUTTER 4-INCH SLOPED 36-INCH TYPE A TO
CONCRETE CURB & GUTTER 30-INCH TYPE A (TO BE MEASURED AND PAID
FOR AS CONCRETE CURB & GUTTER 4-INCH SLOPED 36-INCH TYPE A)

LOCATIONS:
10+52.38 B
11+41.53 B
11+38.71 H
12+17.93 H
10+51.83 K
12+34.63 K

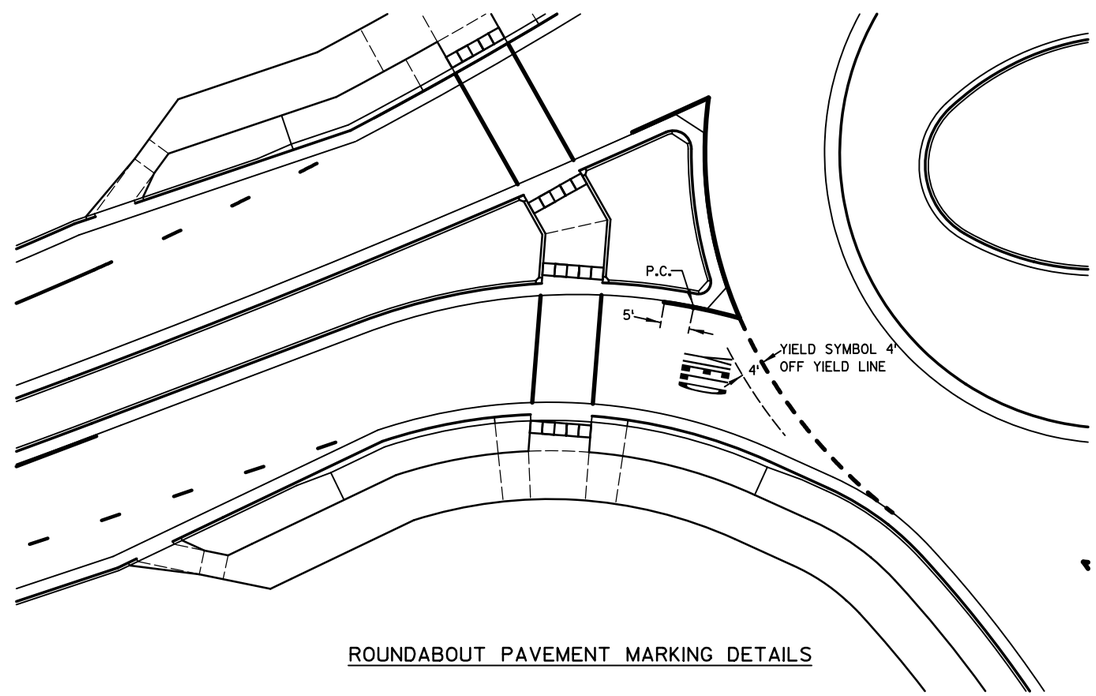

ROUNDABOUT PAVEMENT MARKING DETAILS

2

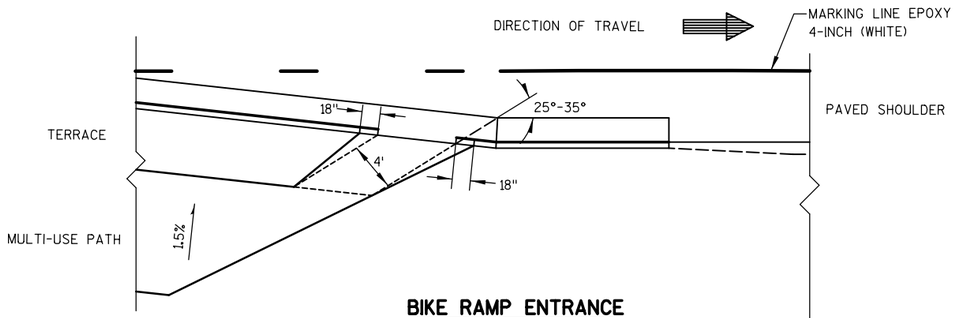

BIKE RAMP ENTRANCE

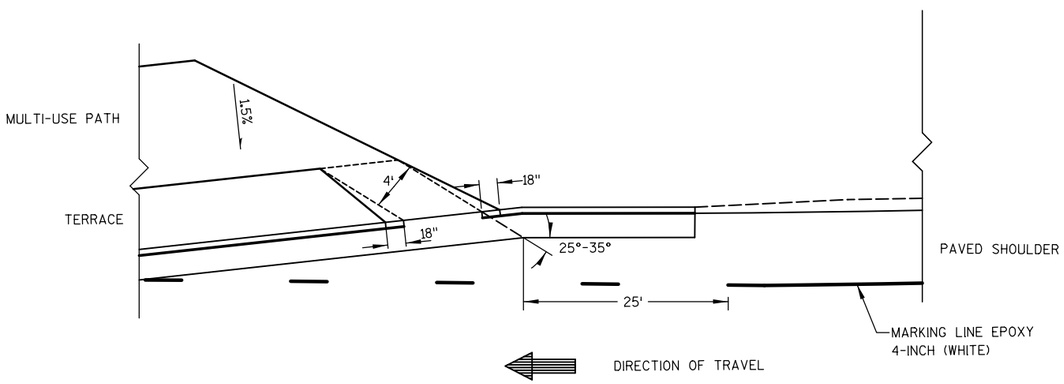

BIKE RAMP EXIT

BIKE RAMP ENTRANCE AND EXIT

2

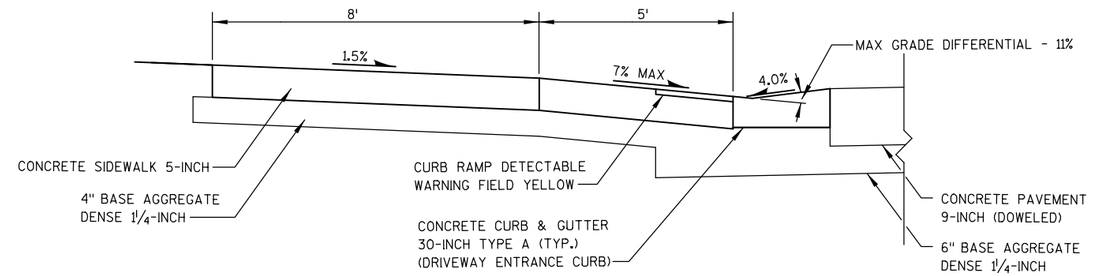

SECTION A-A

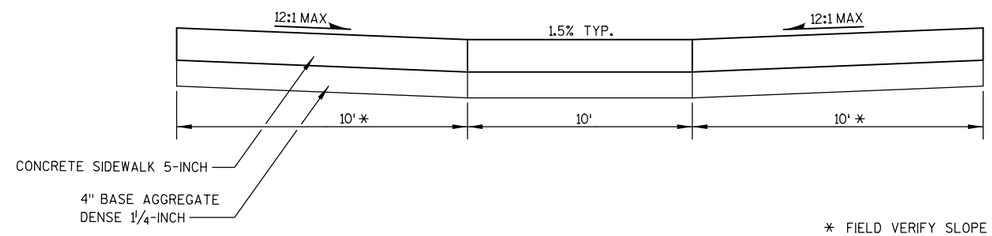

* FIELD VERIFY SLOPE DOES NOT EXCEED 12:1.
ADJUST DISTANCE ACCORDINGLY.

SECTION B-B

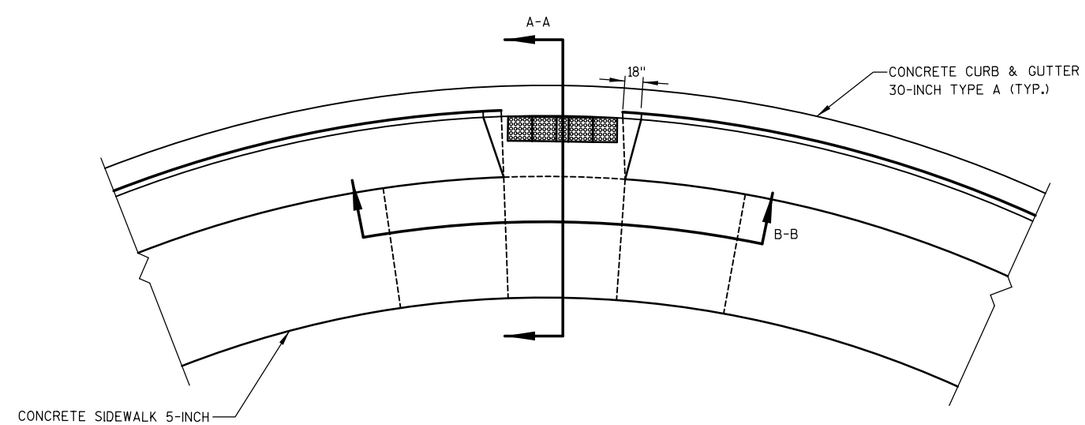

CURB RAMP DETAIL

SEE S.D.D. CURB RAMPS FOR ADDITIONAL INFORMATION

PROJECT NO:5144-01-75	HWY:STH 27	COUNTY:MONROE	CONSTRUCTION DETAILS	SHEET 17	E

NOTE:
ALL CUTS MADE TO RUBBER ADJUSTMENT RINGS WILL BE PERPENDICULAR AND PROVIDE A TIGHT JOINT.

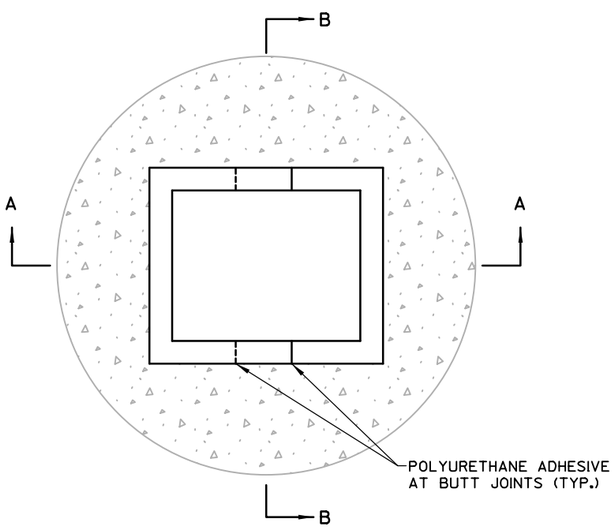

PLAN VIEW

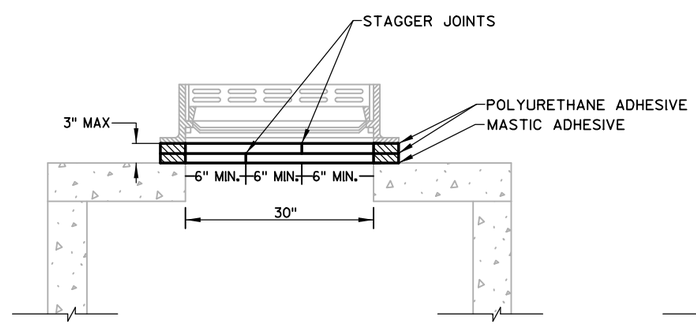

SECTION A-A

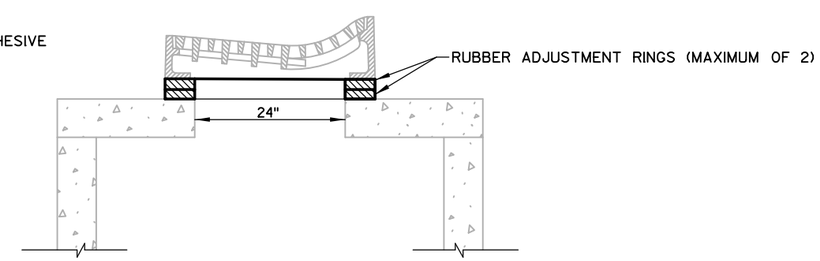

SECTION B-B

RUBBER RING CUTTING DETAIL FOR INLET COVERS TYPE T

PROJECT NO:5144-01-75	HWY:STH 27	COUNTY:MONROE	CONSTRUCTION DETAILS	SHEET 18	E

2

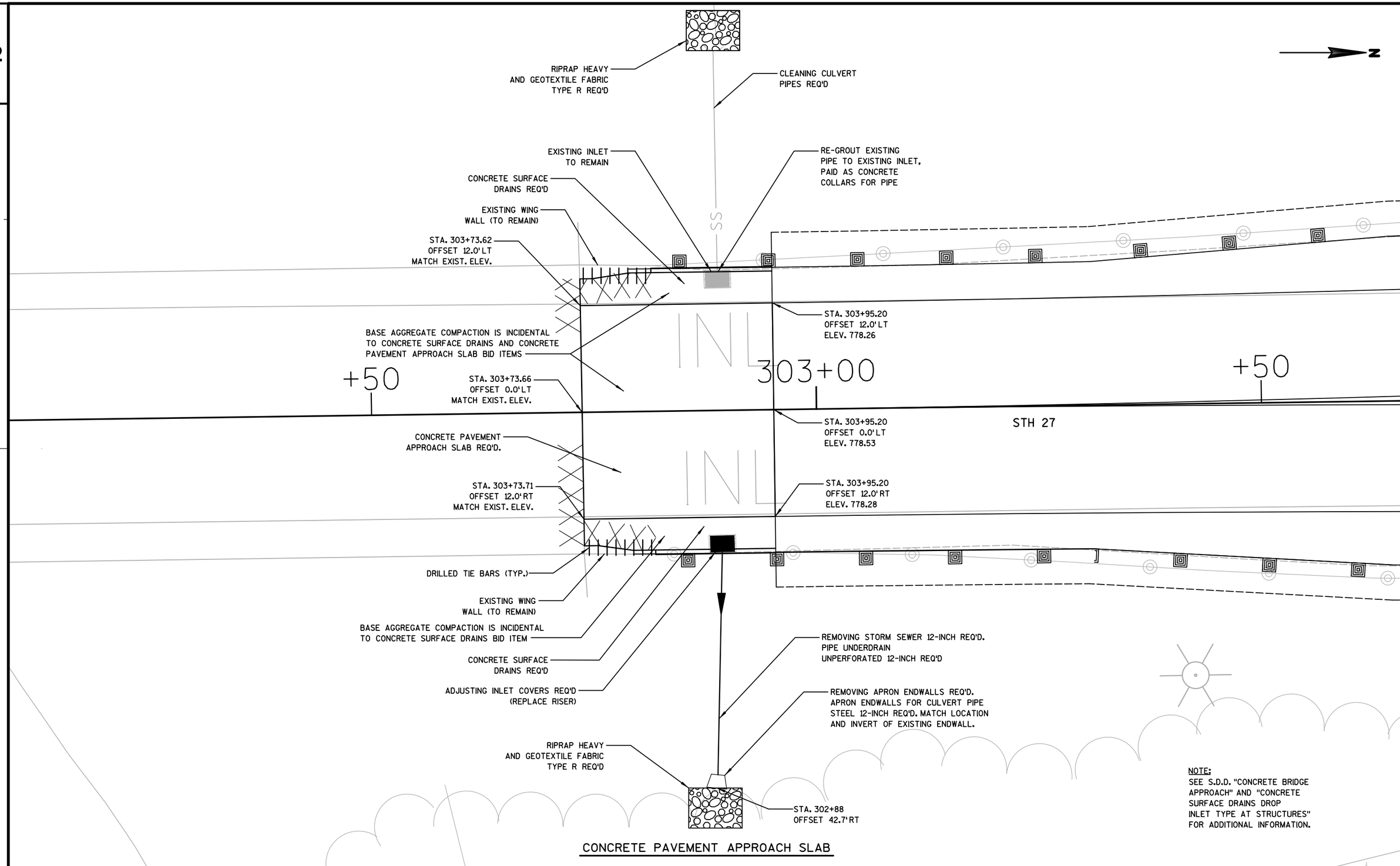

NOTE:
SEE S.D.D. "CONCRETE BRIDGE APPROACH" AND "CONCRETE SURFACE DRAINS DROP INLET TYPE AT STRUCTURES" FOR ADDITIONAL INFORMATION.

CONCRETE PAVEMENT APPROACH SLAB

2

PROJECT NO: 5144-01-75	HWY: STH 27	COUNTY: MONROE	CONSTRUCTION DETAILS	SHEET 19	E

2

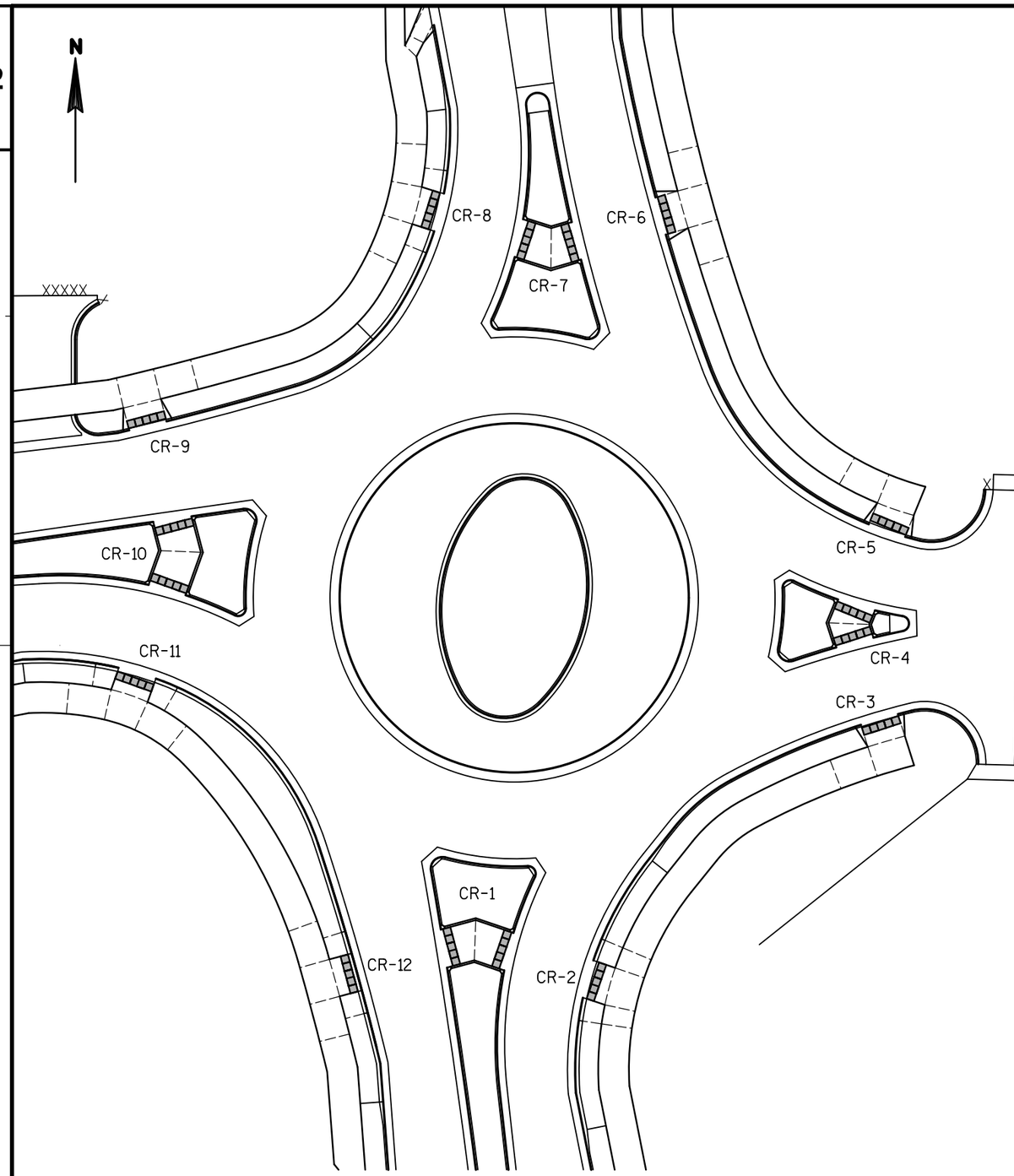

CURB RAMP OVERVIEW

CR-1 POINTS			
POINT NO.	STATION	OFFSET	ELEVATION
CR-100	12+89.60 L	0' RT	772.98
CR-101	12+84.60 L	0' RT	773.05
CR-102	12+84.65 L	2.5' RT	772.98
CR-103	12+74.72 L	3.52' RT	773.13
CR-104	12+74.66 L	3.0' RT	773.12
CR-105	12+74.56 L	0' RT	773.19
CR-106	12+69.56 L	0' RT	773.26
CR-107	12+75.32 L	9.31' RT	773.22
CR-108	12+85.52 L	11.34' RT	773.11
CR-109	14+34.91 M	2.5' LT	772.78
CR-110	14+39.89 M	0' RT	772.79
CR-111	14+34.89 M	0' RT	772.85
CR-112	14+25.22 M	3.37' LT	772.92
CR-113	14+25.17 M	2.93' LT	772.91
CR-114	14+25.04 M	0' RT	772.98
CR-115	14+20.04 M	0' TR	773.05

(A) 6.25% GUTTER SLOPE

(B) 4.0% GUTTER SLOPE

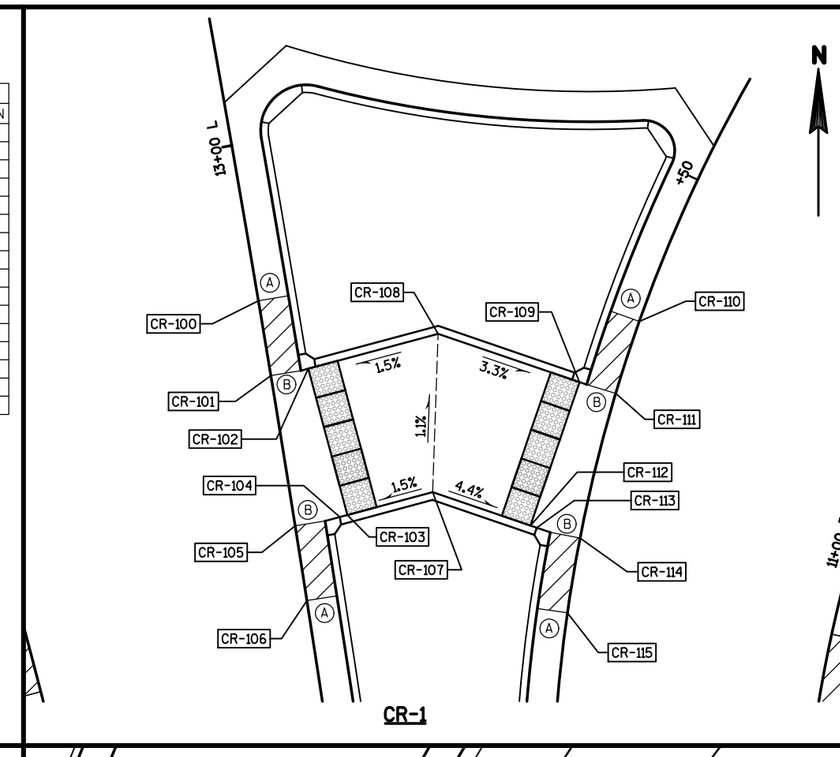

CR-1

CR-2 POINTS			
POINT NO.	STATION	OFFSET	ELEVATION
CR-200	11+10.51 B	0' RT	772.55
CR-201	11+10.51 B	3' RT	772.76
CR-202	11+10.51 B	8' RT	772.86
CR-203	11+10.51 B	16' RT	772.98
CR-204	11+04.38 B	16' RT	772.83
CR-205	11+04.38 B	8' RT	772.71
CR-206	11+04.38 B	3.58' RT	772.58
CR-207	11+04.38 B	3' RT	772.57
CR-208	11+04.38 B	0' RT	772.63
CR-209	10+94.01 B	0' RT	772.77
CR-210	10+94.01 B	3' RT	772.71
CR-211	10+93.37 B	8' RT	772.86
CR-212	10+93.37 B	16' RT	772.96
CR-213	10+87.87 B	16' RT	773.28
CR-214	10+87.87 B	8' RT	773.16
CR-215	10+87.87 B	3' RT	773.06
CR-216	10+87.87 B	0' RT	772.85

(A) 6.25% GUTTER SLOPE

(B) 4.0% GUTTER SLOPE

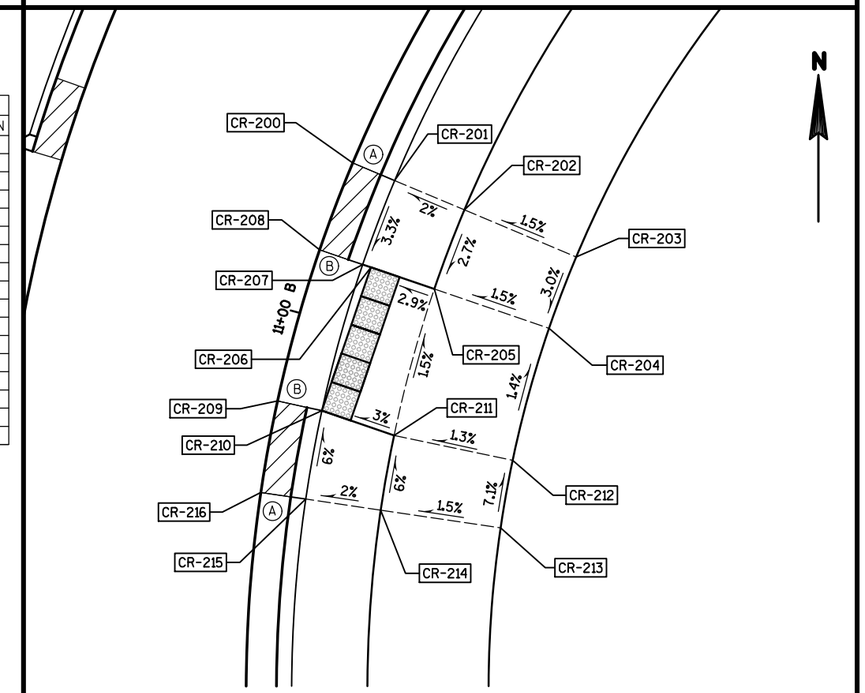

CR-2

PROJECT NO: 5144-01-75	HWY: STH 27	COUNTY: MONROE	CONSTRUCTION DETAILS	SHEET 20	E

2

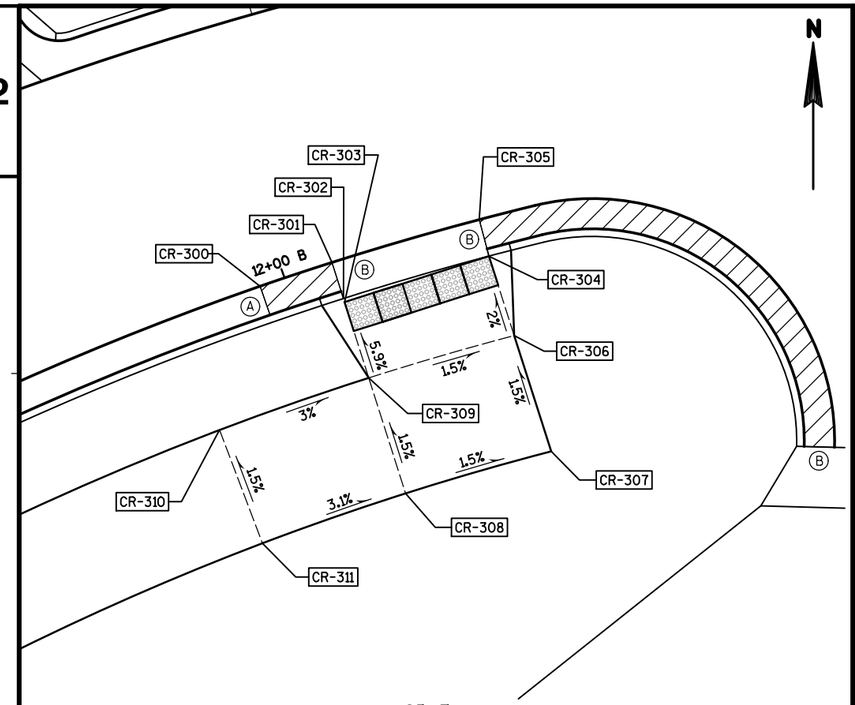

CR-3

CR-3 POINTS			
POINT NO.	STATION	OFFSET	ELEVATION
CR-300	11+98.30 B	0'RT	772.93
CR-301	12+03.30 B	0'RT	772.95
CR-302	12+03.30 B	2.5'RT	772.88
CR-303	12+03.30 B	2.75'RT	772.88
CR-304	12+13.43 B	2.5'RT	772.93
CR-305	12+13.43 B	0'RT	773.00
CR-306	12+13.72 B	8'RT	773.04
CR-307	12+14.17 B	16'RT	773.16
CR-308	12+03.30 B	16'RT	773.31
CR-309	12+03.30 B	8'RT	773.19
CR-310	11+92.43 B	8'RT	773.50
CR-311	11+92.43 B	16'RT	773.62

(A) 6.25% GUTTER SLOPE

(B) 4.0% GUTTER SLOPE

CR-5 POINTS			
POINT NO.	STATION	OFFSET	ELEVATION
CR-500	10+54.77 E	16'RT	773.77
CR-501	10+42.61 E	16'RT	773.57
CR-502	10+30.41 E	16'RT	773.42
CR-503	10+31.61 E	8'RT	773.30
CR-504	10+42.61 E	8'RT	773.45
CR-505	10+54.77 E	8'RT	773.65
CR-506	10+42.61 E	3.07'RT	773.12
CR-507	10+42.61 E	2.5'RT	773.11
CR-508	10+42.61 E	0'RT	773.18
CR-509	10+32.30 E	0'RT	773.30
CR-510	10+32.30 E	2.5'RT	773.23
CR-511	10+25.30 E	0'RT	773.38
CR-512	10+47.61 E	0'RT	773.13

(A) 6.25% GUTTER SLOPE

(B) 4.0% GUTTER SLOPE

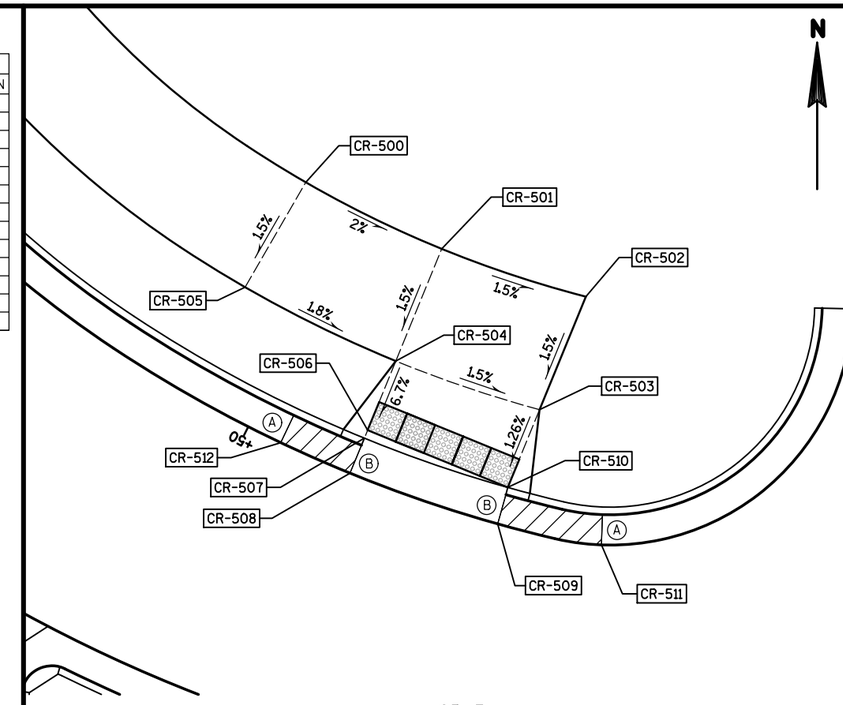

CR-5

2

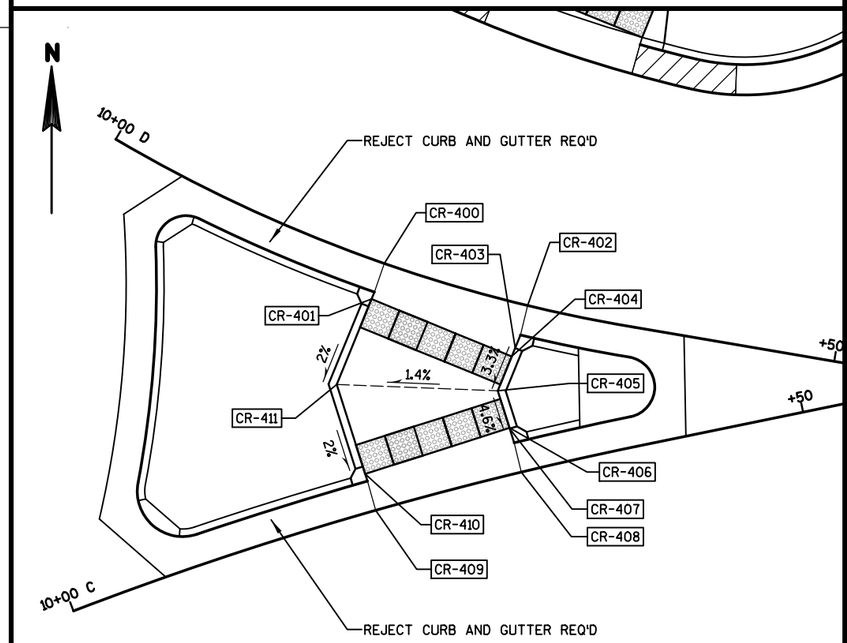

CR-4

CR-4 POINTS			
POINT NO.	STATION	OFFSET	ELEVATION
CR-400	10+19.57 D	0'RT	773.41
CR-401	10+19.54 D	2.5'RT	773.45
CR-402	10+29.43 D	0'RT	773.56
CR-403	10+29.29 D	2.92'RT	773.60
CR-404	10+29.20 D	3.5'RT	773.56
CR-405	10+28.86 D	5.93'RT	773.48
CR-406	10+30.90 C	3.02'LT	773.36
CR-407	10+30.91 C	2.96'LT	773.34
CR-408	10+30.98 C	0'LT	773.30
CR-409	10+21.04 C	0'LT	773.18
CR-410	10+21.03 C	2.5'LT	773.21
CR-411	10+20.84 C	8.7'LT	773.33

(A) 6.25% GUTTER SLOPE

(B) 4.0% GUTTER SLOPE

CR-6 POINTS			
POINT NO.	STATION	OFFSET	ELEVATION
CR-600	11+50.90 E	0'RT	773.75
CR-601	11+40.85 E	0'RT	773.65
CR-602	11+40.85 E	2.5'RT	773.58
CR-603	11+50.90 E	2.5'RT	773.68
CR-604	11+51.04 E	8'RT	773.95
CR-605	11+61.37 E	8'RT	774.45
CR-606	11+61.37 E	16'RT	774.57
CR-607	11+51.04 E	16'RT	774.07
CR-608	11+40.88 E	16'RT	773.92
CR-609	11+30.55 E	16'RT	774.28
CR-610	11+30.55 E	8'RT	774.16
CR-611	11+40.88 E	8'RT	773.80
CR-612	11+40.85 E	2.64'RT	773.58
CR-613	11+61.37 E	0'RT	773.85
CR-614	11+35.85 E	0'RT	773.60

(A) 6.25% GUTTER SLOPE

(B) 4.0% GUTTER SLOPE

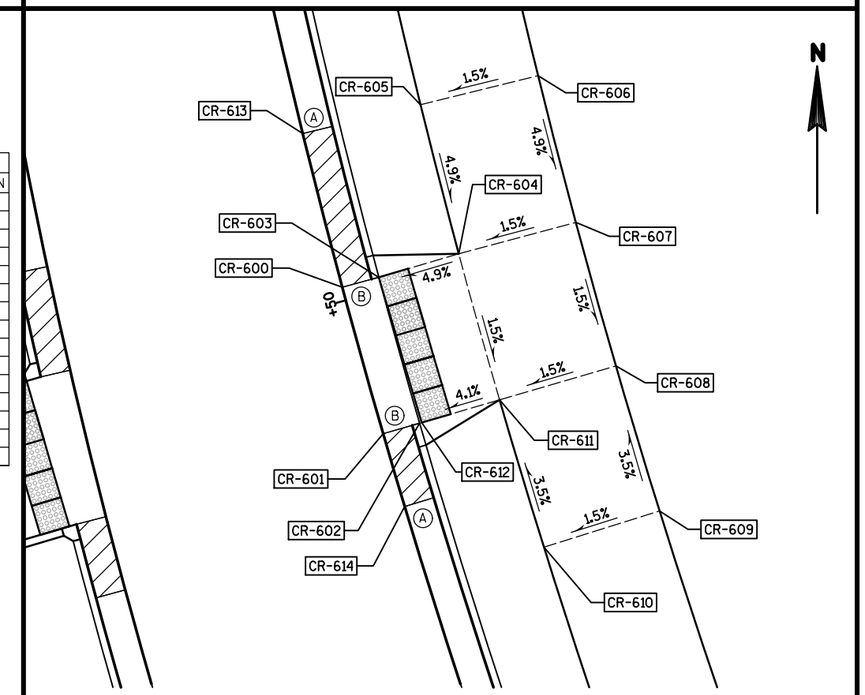

CR-6

PROJECT NO: 5144-01-75	HWY: STH 27	COUNTY: MONROE	CONSTRUCTION DETAILS	SHEET 21	E

2

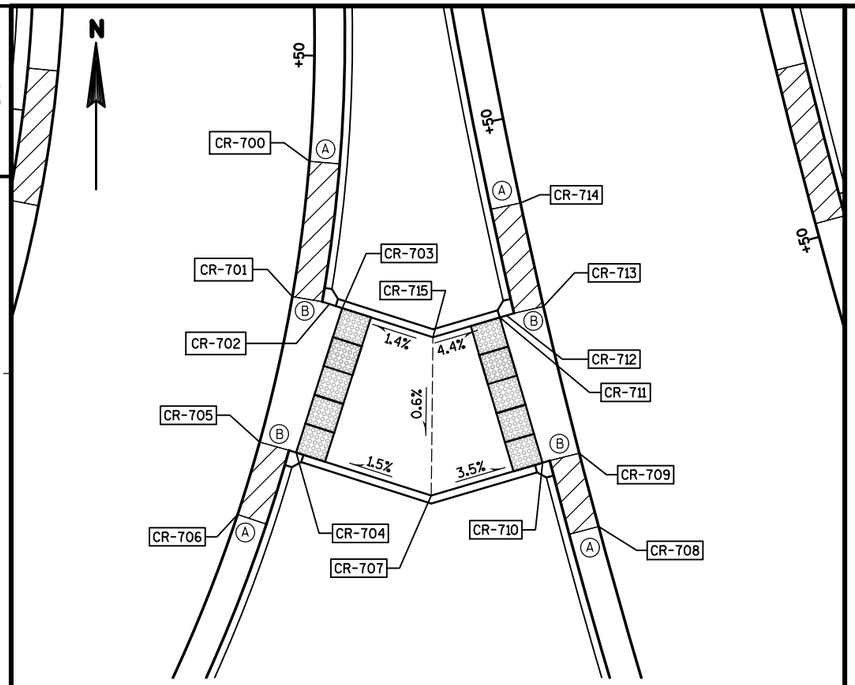

CR-7

CR-7 POINTS			
POINT NO.	STATION	OFFSET	ELEVATION
CR-700	10+43.00 G	0'RT	774.20
CR-701	10+34.00 G	0'RT	774.11
CR-702	10+33.94 G	2.5'RT	774.04
CR-703	10+33.82 G	3.37'RT	774.05
CR-704	10+24.14 G	2.5'RT	773.94
CR-705	10+24.16 G	0'RT	774.01
CR-706	10+19.16 G	0'RT	773.95
CR-707	10+27.09 F	10.16'LT	774.08
CR-708	10+22.36 F	0'RT	773.82
CR-709	10+27.36 F	0'RT	773.88
CR-710	10+27.35 F	2.5'LT	773.81
CR-711	10+37.27 F	2.97'LT	773.94
CR-712	10+37.30 F	2.5'LT	773.93
CR-713	10+37.33 F	0'RT	774.00
CR-714	10+44.33 F	0'RT	774.08
CR-715	10+37.00 F	7.56'LT	774.14

(A) 6.25% GUTTER SLOPE

(B) 4.0% GUTTER SLOPE

CR-9 POINTS			
POINT NO.	STATION	OFFSET	ELEVATION
CR-900	10+60.08 H	0'RT	773.11
CR-901	10+75.13 H	0'RT	773.03
CR-902	10+85.15 H	0'RT	772.98
CR-903	10+90.15 H	0'RT	772.96
CR-904	10+75.12 H	2.5'LT	772.96
CR-905	10+74.97 H	8.0'LT	773.35
CR-906	10+60.30 H	8.0'LT	773.55
CR-907	10+61.08 H	16.0'LT	773.66
CR-908	10+74.99 H	16.0'LT	773.47
CR-909	10+85.10 H	16.0'LT	773.42
CR-910	10+95.31 H	16.0'LT	773.69
CR-911	10+95.28 H	8.0'LT	773.57
CR-912	10+85.07 H	8.0'LT	773.30
CR-913	10+85.15 H	2.5'LT	772.91

(A) 6.25% GUTTER SLOPE

(B) 4.0% GUTTER SLOPE

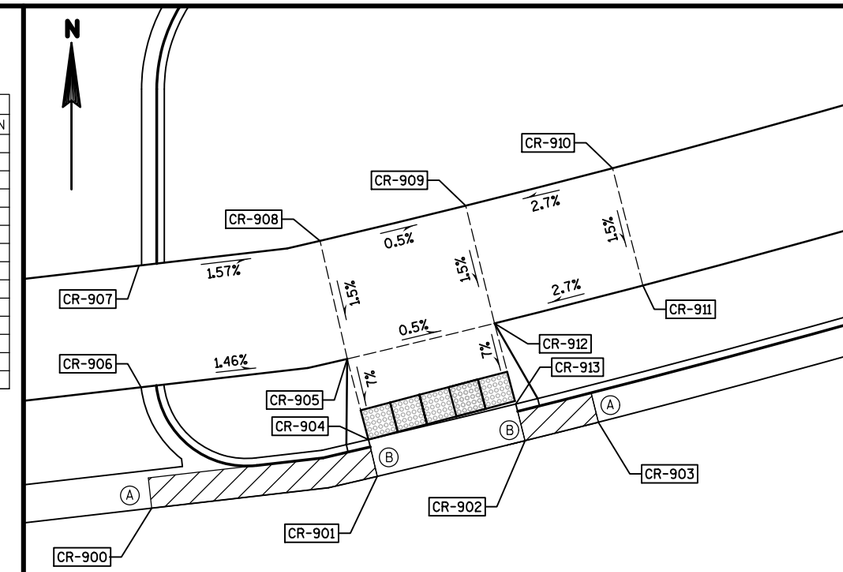

CR-9

2

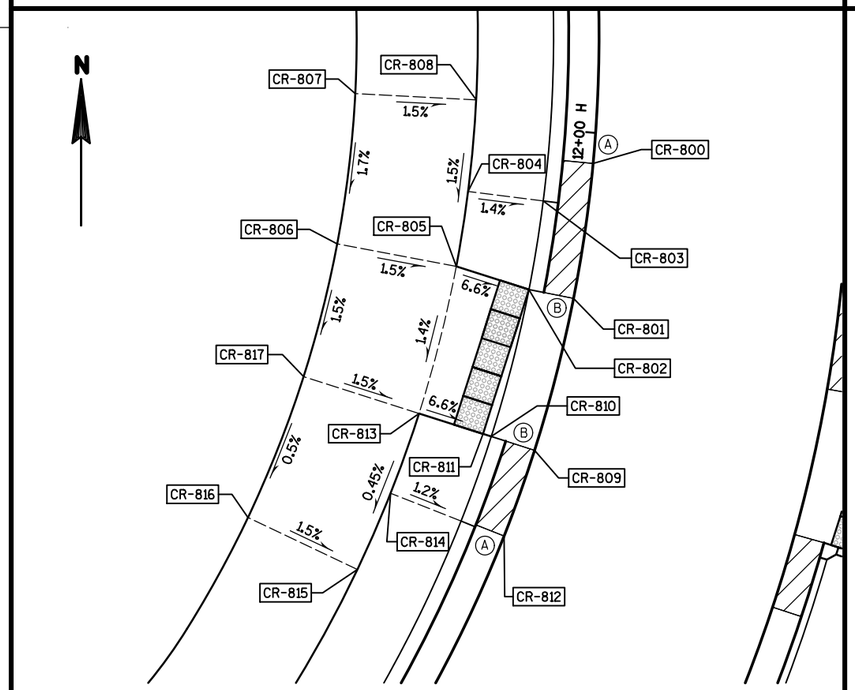

CR-8

CR-8 POINTS			
POINT NO.	STATION	OFFSET	ELEVATION
CR-800	11+97.98 H	0'RT	773.95
CR-801	11+88.98 H	0'RT	773.86
CR-802	11+88.98 H	3'LT	773.80
CR-803	11+95.11 H	3'LT	774.14
CR-804	11+95.11 H	8'LT	774.21
CR-805	11+89.61 H	8'LT	774.13
CR-806	11+89.61 H	16'LT	774.25
CR-807	12+01.77 H	16'LT	774.42
CR-808	12+01.77 H	8'LT	774.30
CR-809	11+78.61 H	0'RT	773.75
CR-810	11+78.61 H	3'LT	773.69
CR-811	11+78.61 H	3.58'LT	773.70
CR-812	11+72.61 H	0'RT	773.69
CR-813	11+78.61 H	8'LT	773.99
CR-814	11+72.47 H	8'LT	773.96
CR-815	11+66.45 H	8'LT	773.94
CR-816	11+66.45 H	16'LT	774.06
CR-817	11+78.61 H	16'LT	774.11

(A) 6.25% GUTTER SLOPE

(B) 4.0% GUTTER SLOPE

CR-10 POINTS			
POINT NO.	STATION	OFFSET	ELEVATION
CR-1000	12+20.11 I	0'RT	773.52
CR-1001	12+38.11 I	0'RT	773.42
CR-1002	12+38.17 I	2.5'RT	773.35
CR-1003	12+38.30 I	3.65'RT	773.37
CR-1004	12+48.18 I	0'RT	773.37
CR-1005	12+48.23 I	2.5'RT	773.30
CR-1006	12+49.29 I	11.62'RT	773.44
CR-1007	13+39.00 I	9.70'RT	773.46
CR-1008	12+36.19 J	3.2'LT	773.28
CR-1009	12+36.11 J	2.5'LT	773.27
CR-1010	12+45.90 J	2.5'LT	773.21
CR-1011	12+45.89 J	0'RT	773.28
CR-1012	12+36.05 J	0'RT	773.34
CR-1013	12+21.05 J	0'RT	773.43

(A) 6.25% GUTTER SLOPE

(B) 4.0% GUTTER SLOPE

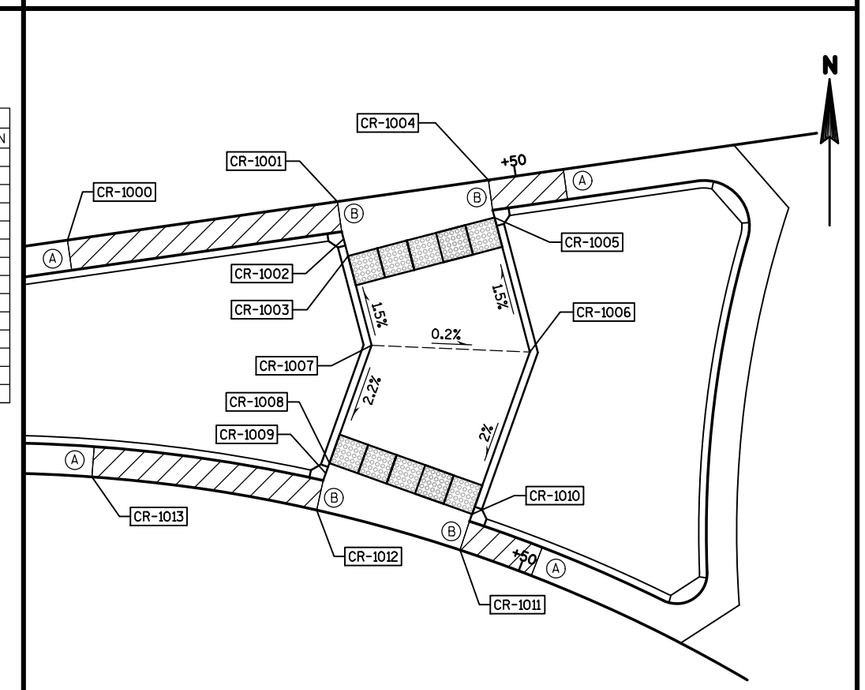

CR-10

PROJECT NO: 5144-01-75	HWY: STH 27	COUNTY: MONROE	CONSTRUCTION DETAILS	SHEET 22	E

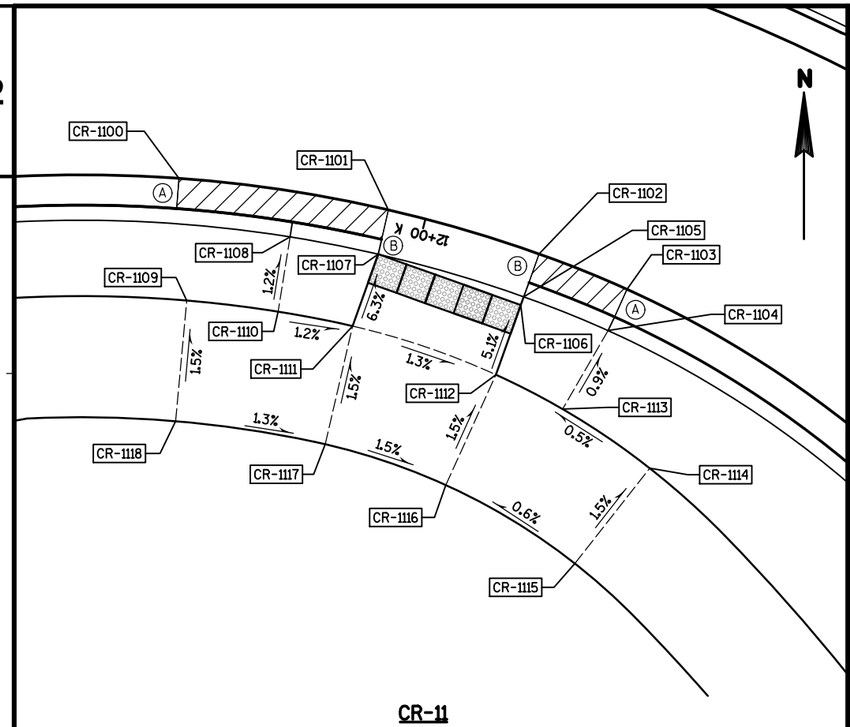

CR-11

CR-11 POINTS			
POINT NO.	STATION	OFFSET	ELEVATION
CR-1100	12+16.52 K	0'RT	773.11
CR-1101	12+02.52 K	0'RT	773.03
CR-1102	11+92.15 K	0'RT	772.96
CR-1103	11+85.90 K	0'RT	772.92
CR-1104	11+85.91 K	3'LT	773.13
CR-1105	11+92.15 K	3'LT	772.90
CR-1106	11+92.15 K	3.58'LT	772.91
CR-1107	12+02.52 K	3'LT	772.97
CR-1108	12+08.66 K	3'LT	773.29
CR-1109	12+15.32 K	8'LT	773.42
CR-1110	12+08.66 K	8'LT	773.35
CR-1111	12+03.16 K	8'LT	773.29
CR-1112	11+92.15 K	8.46'LT	773.16
CR-1113	11+86.60 K	8.96'LT	773.18
CR-1114	11+78.63 K	9.82'LT	773.22
CR-1115	11+80.09 K	17.73'LT	773.34
CR-1116	11+92.98 K	16.43'LT	773.28
CR-1117	12+03.22 K	16'LT	773.41
CR-1118	12+15.38 K	16'LT	773.54

(A) 6.25% GUTTER SLOPE

(B) 4.0% GUTTER SLOPE

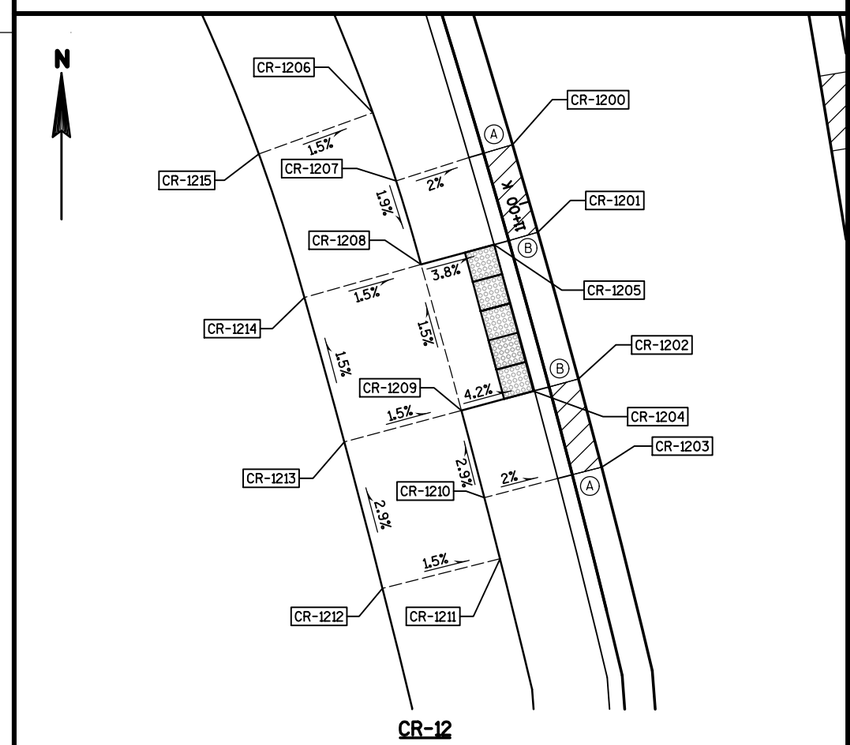

CR-12

CR-12 POINTS			
POINT NO.	STATION	OFFSET	ELEVATION
CR-1200	11+03.90 K	0'RT	772.74
CR-1201	10+97.89 K	0'RT	772.81
CR-1202	10+87.84 K	0'RT	772.94
CR-1203	10+81.83 K	0'RT	773.02
CR-1204	10+87.84 K	3.07'LT	772.88
CR-1205	10+97.89 K	3'LT	772.75
CR-1206	11+08.58 K	8.25'LT	772.99
CR-1207	11+03.77 K	8.05'LT	773.05
CR-1208	10+97.96 K	8'LT	772.94
CR-1209	10+87.84 K	8'LT	773.09
CR-1210	10+81.83 K	8'LT	773.26
CR-1211	10+77.61 K	8'LT	773.38
CR-1212	10+77.61 K	16'LT	773.50
CR-1213	10+87.84 K	16'LT	773.21
CR-1214	10+97.96 K	16'LT	773.06
CR-1215	11+08.13 K	16.23'LT	773.11

(A) 6.25% GUTTER SLOPE

(B) 4.0% GUTTER SLOPE

2

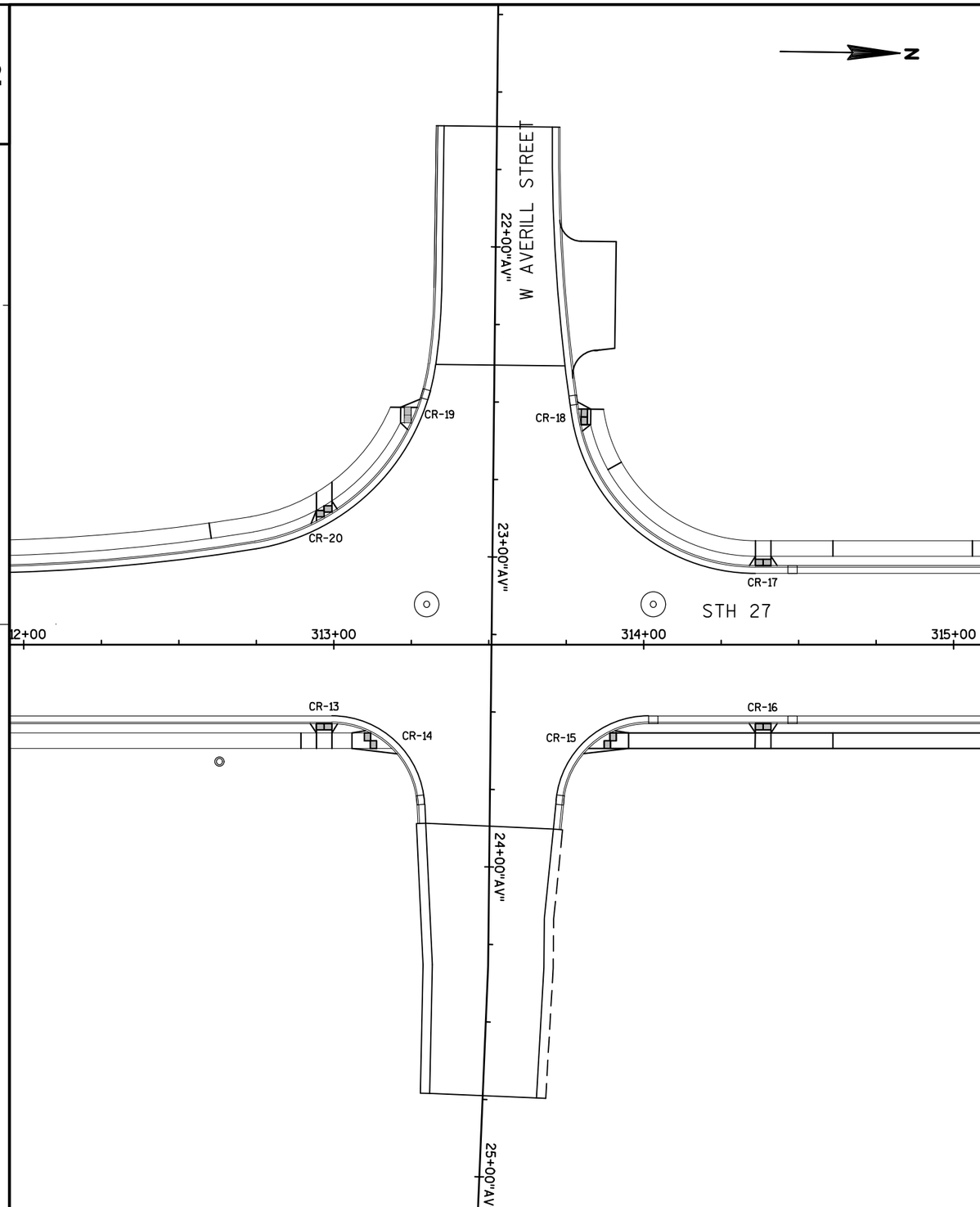

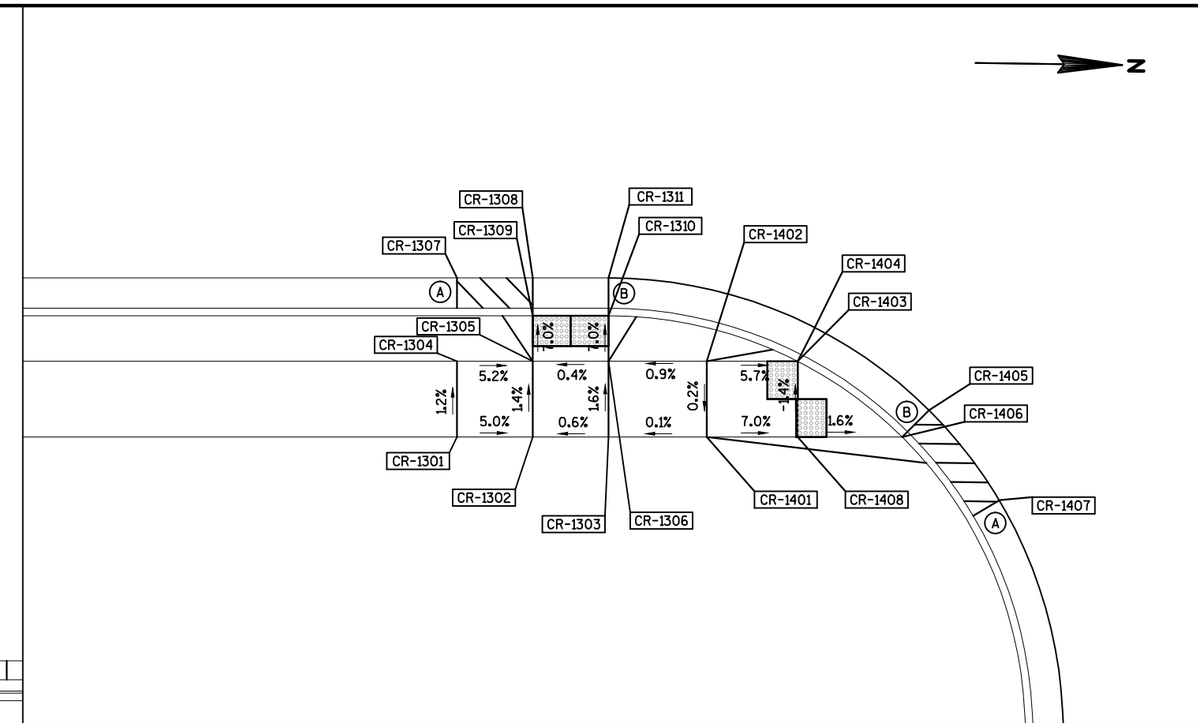

2

CR-13 & CR-14 POINTS			
POINT NO.	STATION	OFFSET	ELEVATION
CR-1301	312+89.41	33.5' RT	776.53
CR-1302	312+94.41	33.5' RT	776.28
CR-1303	312+99.41	33.5' RT	776.31
CR-1304	312+89.41	28.5' RT	776.47
CR-1305	312+94.41	28.5' RT	776.21
CR-1306	312+99.41	28.5' RT	776.23
CR-1307	312+89.41	23.0' RT	776.05
CR-1308	312+94.41	23.0' RT	776.08
CR-1309	312+94.41	25.5' RT	776.00
CR-1310	312+99.41	25.5' RT	776.02
CR-1311	312+99.41	23.0' RT	776.10
CR-1401	313+05.90	33.5' RT	776.30
CR-1402	313+05.90	28.5' RT	776.29
CR-1403	313+11.90	28.5' RT	775.87
CR-1404	313+13.04	26.27' RT	775.95
CR-1405	313+20.57	31.73' RT	775.85
CR-1406	313+18.80	33.5' RT	775.77
CR-1407	313+25.20	37.67' RT	775.77
CR-1408	313+11.90	33.5' RT	775.88

(A) 6.25% GUTTER SLOPE

(B) 4.0% GUTTER SLOPE

PROJECT NO:5144-01-75	HWY:STH 27	COUNTY:MONROE	CONSTRUCTION DETAIL - STH 27 & W AVERILL STREET	SHEET 24	E

2

CR-15 & CR-16 POINTS			
POINT NO.	STATION	OFFSET	ELEVATION
CR-1501	313+75.87	37.62' RT	776.07
CR-1502	313+78.83	33.5' RT	776.14
CR-1503	313+82.23	33.5' RT	776.10
CR-1504	313+89.14	28.5' RT	776.24
CR-1505	313+88.00	26.27' RT	776.32
CR-1506	313+95.00	23.74' RT	776.55
CR-1507	313+89.14	33.5' RT	776.20
CR-1508	313+95.14	33.5' RT	776.62
CR-1509	313+95.14	28.5' RT	776.66
CR-1601	314+31.08	23.0' RT	776.88
CR-1602	314+36.08	23.0' RT	776.90
CR-1603	314+36.08	25.5' RT	776.82
CR-1604	314+41.03	25.5' RT	776.85
CR-1605	314+41.03	23.0' RT	776.93
CR-1606	314+46.03	23.0' RT	776.95
CR-1607	314+36.03	28.5' RT	777.03
CR-1608	314+41.03	28.5' RT	777.06
CR-1609	314+35.95	33.5' RT	777.10
CR-1610	314+41.03	33.5' RT	777.13
CR-1611	314+61.03	33.5' RT	777.47
CR-1612	314+61.03	28.5' RT	777.39

(A) 6.25% GUTTER SLOPE

(B) 4.0% GUTTER SLOPE

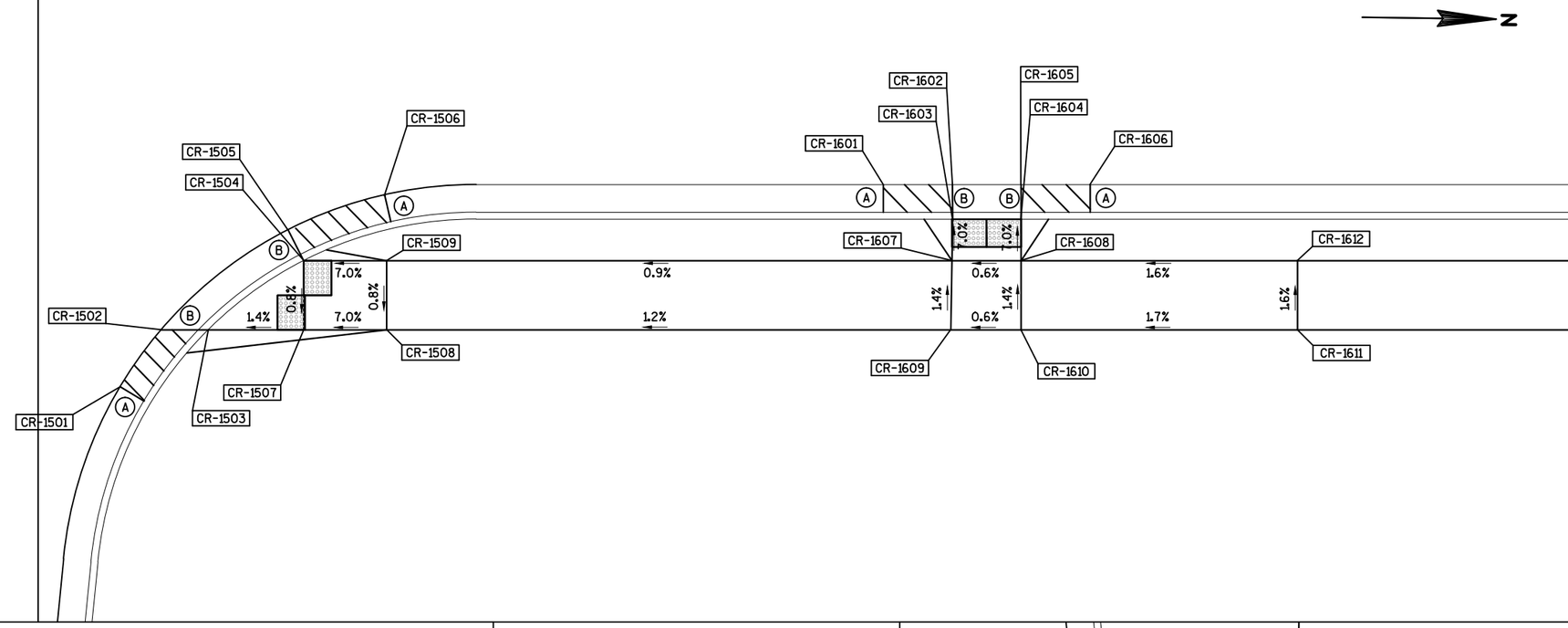

CR-17 POINTS			
POINT NO.	STATION	OFFSET	ELEVATION
CR-1701	314+31.04	23.21' LT	776.81
CR-1702	314+36.03	23.0' LT	776.90
CR-1703	314+36.03	25.5' LT	776.82
CR-1704	314+41.03	25.5' LT	776.82
CR-1705	314+41.03	23.0' LT	776.90
CR-1706	314+46.03	23.0' LT	776.95
CR-1707	314+36.03	28.5' LT	777.03
CR-1708	314+41.03	28.5' LT	777.03
CR-1709	314+36.03	33.5' LT	777.11
CR-1710	314+41.03	33.5' LT	777.11
CR-1711	314+61.03	33.5' LT	777.46
CR-1712	314+61.03	28.5' LT	777.38

(A) 6.25% GUTTER SLOPE

(B) 4.0% GUTTER SLOPE

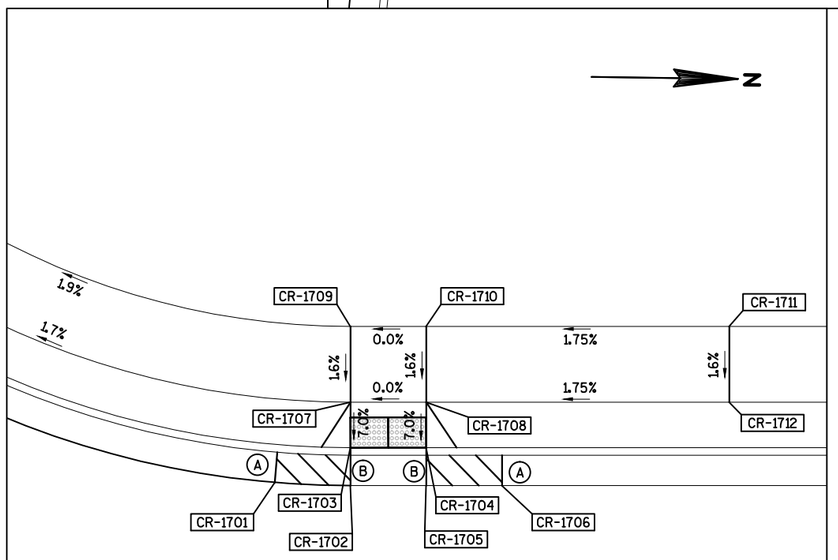

CR-18 POINTS			
POINT NO.	STATION	OFFSET	ELEVATION
CR-1801	22+50.84"AV"	24.55' LT	775.31
CR-1802	22+51.99"AV"	24.72' LT	775.32
CR-1803	22+51.99"AV"	27.25' LT	775.25
CR-1804	22+56.99"AV"	28.16' LT	775.33
CR-1805	22+56.99"AV"	25.60' LT	775.40
CR-1806	22+61.81"AV"	26.84' LT	775.48
CR-1807	22+51.99"AV"	28.15' LT	775.26
CR-1808	22+51.99"AV"	31.23' LT	775.48
CR-1809	22+56.99"AV"	31.23' LT	775.54
CR-1810	22+51.98"AV"	35.34' LT	775.54
CR-1811	22+56.98"AV"	36.39' LT	775.62
CR-1812	22+68.97"AV"	41.29' LT	776.13
CR-1813	22+71.46"AV"	36.95' LT	776.07

(A) 6.25% GUTTER SLOPE

(B) 4.0% GUTTER SLOPE

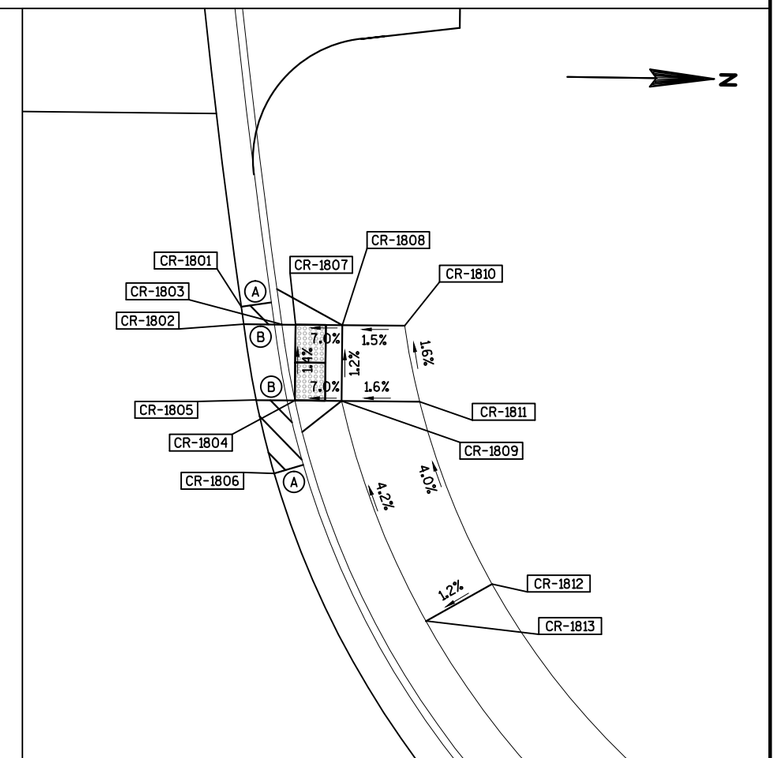

PROJECT NO:5144-01-75	HWY:STH 27	COUNTY:MONROE	CONSTRUCTION DETAIL - STH 27 & W AVERILL STREET	SHEET 25	E

FILE NAME : N:\PDS\C3D\51440105\SHEETSPLAN\021101_ID.DWG
LAYOUT NAME - 021011A_CD

PLOT DATE : 9/6/2017 10:56 AM PLOT BY : VALENTI, PAUL M PLOT NAME : PLOT SCALE : **********

WISDOT/CADDS SHEET 42

2

CR-19 POINTS			
POINT NO.	STATION	OFFSET	ELEVATION
CR-1901	22+49.55"AV"	21.32' RT	775.23
CR-1902	22+52.02"AV"	22.13' RT	775.25
CR-1903	22+52.02"AV"	24.78' RT	775.18
CR-1904	22+57.02"AV"	26.80' RT	775.23
CR-1905	22+57.02"AV"	24.07' RT	775.30
CR-1906	22+61.53"AV"	26.22' RT	775.34
CR-1907	22+52.02"AV"	26.80' RT	775.21
CR-1908	22+52.02"AV"	30.11' RT	775.44
CR-1909	22+57.02"AV"	30.11' RT	775.46
CR-1910	22+52.02"AV"	33.35' RT	775.49
CR-1911	22+57.03"AV"	35.71' RT	775.54

(A) 6.25% GUTTER SLOPE

(B) 4.0% GUTTER SLOPE

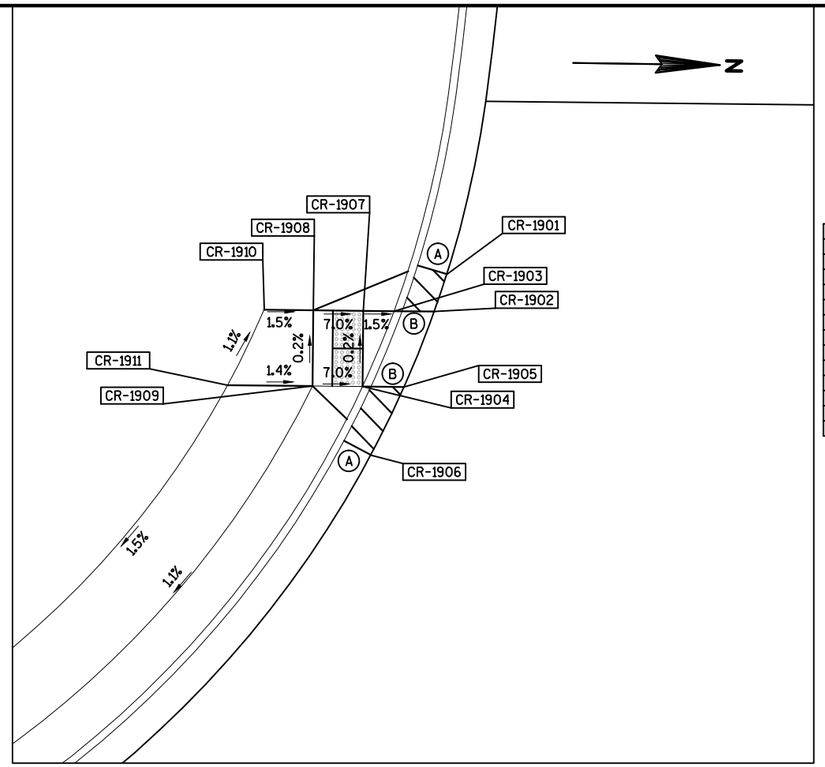

CR-20 POINTS			
POINT NO.	STATION	OFFSET	ELEVATION
CR-2001	313+03.62	42.54' LT	775.62
CR-2002	312+99.41	39.83' LT	775.66
CR-2003	312+99.41	42.76' LT	775.57
CR-2004	312+94.41	39.92' LT	775.62
CR-2005	312+94.41	37.13' LT	775.71
CR-2006	312+89.85	35.09' LT	775.76
CR-2007	312+99.41	46.33' LT	775.82
CR-2008	312+94.41	43.32' LT	775.71
CR-2009	312+99.41	52.46' LT	775.91
CR-2010	312+94.41	49.08' LT	775.79
CR-2011	312+59.78	39.23' LT	776.44
CR-2012	312+60.48	34.28' LT	776.36

(A) 6.25% GUTTER SLOPE

(B) 4.0% GUTTER SLOPE

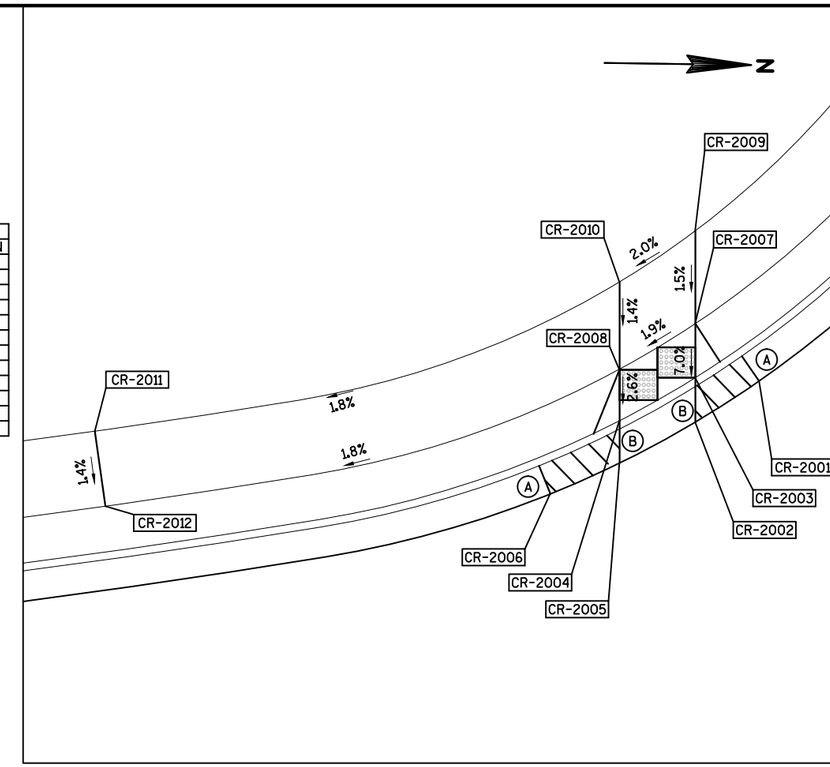

2

PROJECT NO:5144-01-75	HWY:STH 27	COUNTY:MONROE	CONSTRUCTION DETAIL - STH 27 & W AVERILL STREET	SHEET 26	E

FILE NAME : N:\PDS\C3D\51440105\SHEETSPLAN\021101_ID.DWG
LAYOUT NAME - 021011B_CD

PLOT DATE : 9/6/2017 10:57 AM PLOT BY : VALENTI, PAUL M PLOT NAME : PLOT SCALE : **********

WISDOT/CADDS SHEET 42

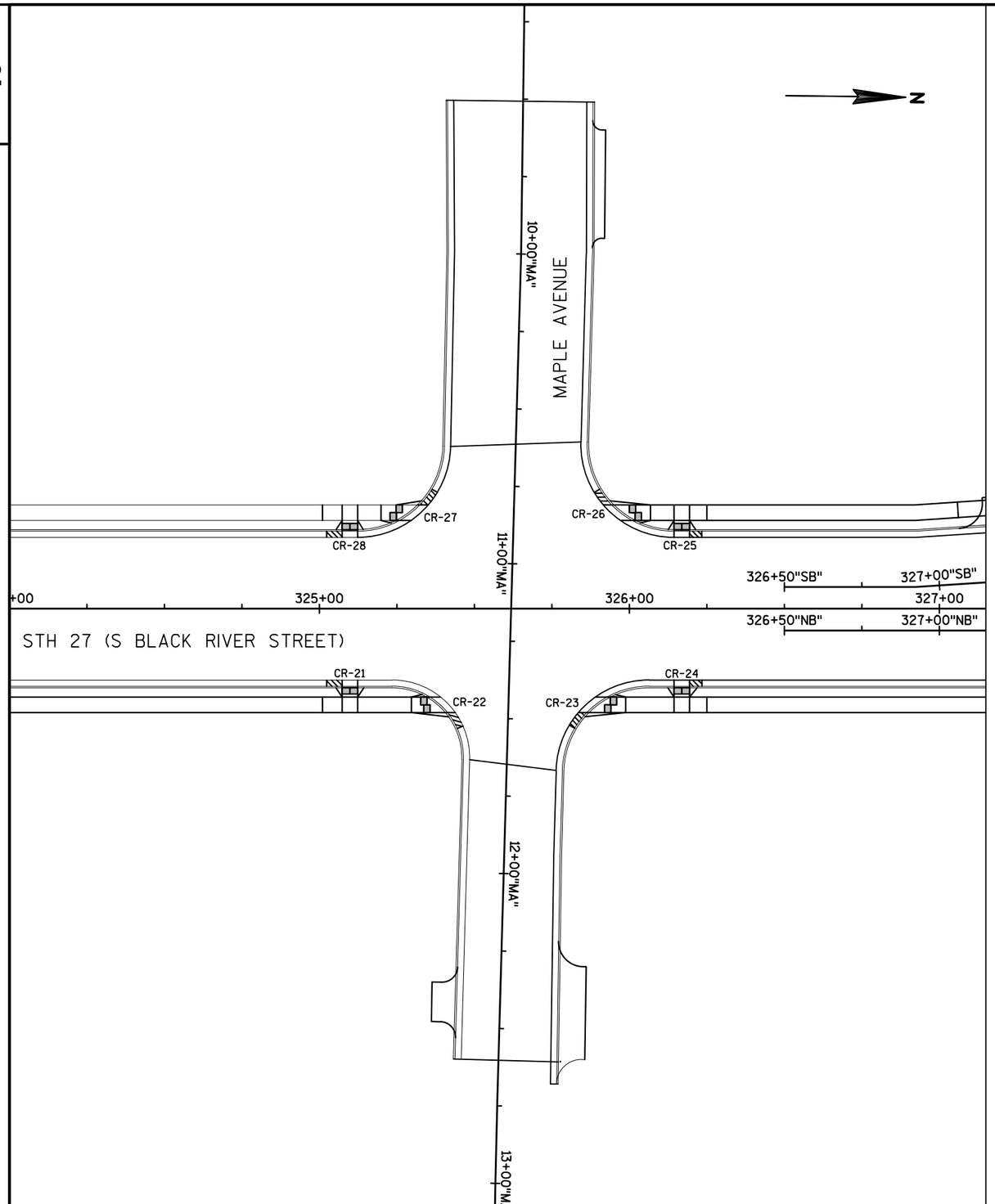

CR-21 & CR-22 POINTS			
POINT NO.	STATION	OFFSET	ELEVATION
CR-2101	325+02.33	23.0' RT	779.68
CR-2102	325+07.33	23.0' RT	779.71
CR-2103	325+07.33	25.5' RT	779.63
CR-2104	325+12.33	25.5' RT	779.66
CR-2105	325+12.33	23.0' RT	779.75
CR-2106	325+07.33	28.5' RT	779.84
CR-2107	325+12.33	28.5' RT	779.88
CR-2108	325+07.33	33.5' RT	779.92
CR-2109	325+12.33	33.5' RT	779.95
CR-2110	325+01.00	33.5' RT	780.24
CR-2111	325+01.00	28.5' RT	780.17
CR-2201	325+46.32	37.84' RT	779.53
CR-2202	325+43.84	33.5' RT	779.60
CR-2203	325+40.68	33.5' RT	779.62
CR-2204	325+34.71	28.5' RT	779.67
CR-2205	325+39.12	28.5' RT	779.73
CR-2206	325+34.70	33.5' RT	779.70
CR-2207	325+29.68	33.5' RT	780.06
CR-2208	325+29.68	28.5' RT	780.03

(A) 6.25% GUTTER SLOPE

(B) 4.0% GUTTER SLOPE

CR-23 & CR-24 POINTS			
POINT NO.	STATION	OFFSET	ELEVATION
CR-2301	325+80.65	37.56' RT	779.66
CR-2302	325+83.57	33.5' RT	779.81
CR-2303	325+86.98	33.5' RT	779.85
CR-2304	325+93.88	28.5' RT	779.99
CR-2305	325+89.06	28.5' RT	780.00
CR-2306	325+93.88	33.5' RT	779.96
CR-2307	325+98.82	28.5' RT	780.34
CR-2308	325+98.82	33.5' RT	780.30
CR-2401	326+23.37	23.0' RT	780.37
CR-2402	326+19.37	23.0' RT	780.35
CR-2403	326+19.37	25.5' RT	780.27
CR-2404	326+14.37	25.5' RT	780.24
CR-2405	326+14.37	23.0' RT	780.32
CR-2406	326+19.37	28.5' RT	780.48
CR-2407	326+14.37	28.5' RT	780.46
CR-2408	326+19.37	33.5' RT	780.55
CR-2409	326+14.37	33.5' RT	780.53
CR-2410	326+25.00	28.5' RT	780.87
CR-2411	326+25.00	33.5' RT	780.95

(A) 6.25% GUTTER SLOPE

(B) 4.0% GUTTER SLOPE

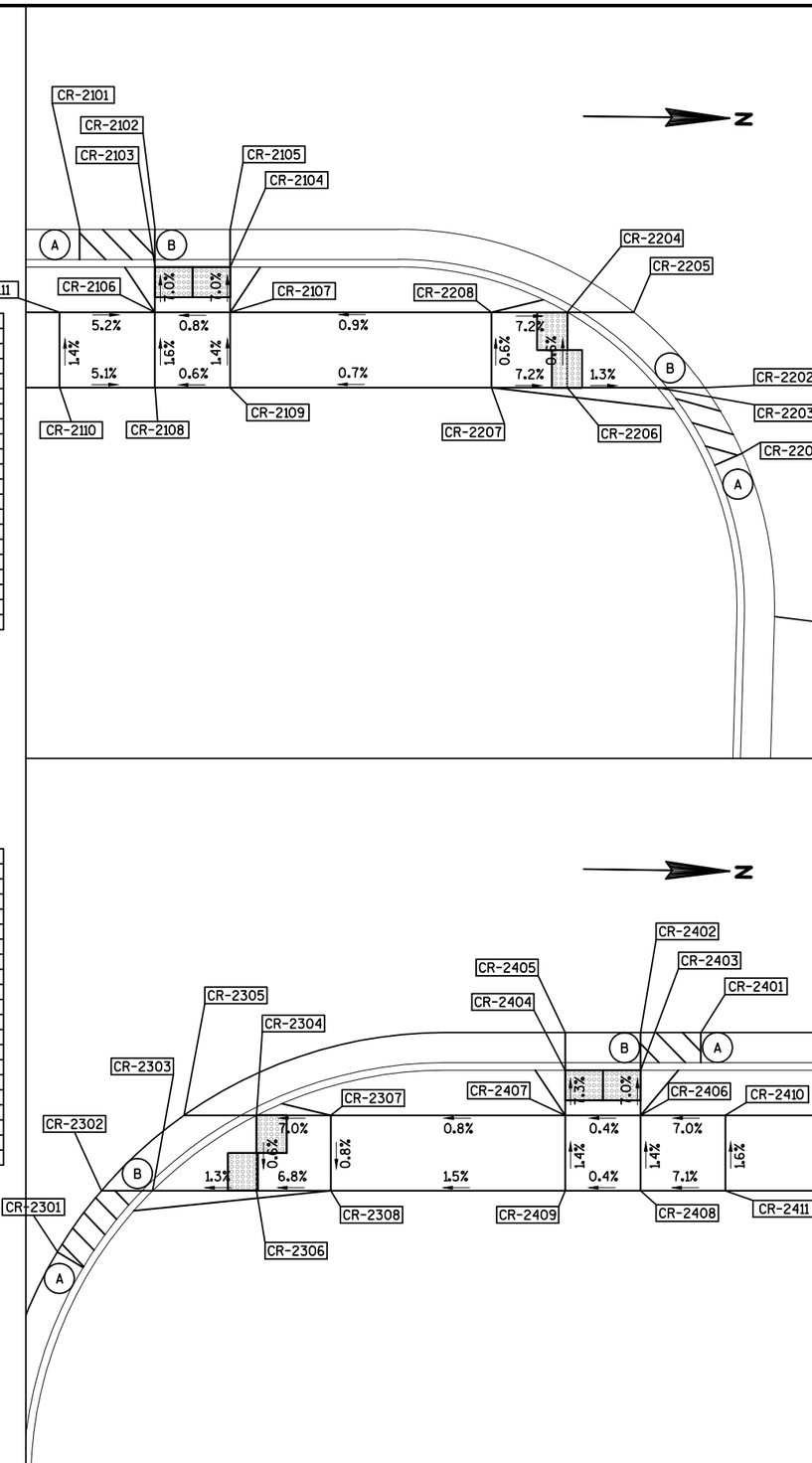

CR-25 & CR-26 POINTS			
POINT NO.	STATION	OFFSET	ELEVATION
CR-2501	326+23.34	23.0' LT	780.37
CR-2502	326+19.37	23.0' LT	780.35
CR-2503	326+19.37	25.5' LT	780.37
CR-2504	326+14.37	25.5' LT	780.24
CR-2505	326+14.37	23.0' LT	780.32
CR-2506	326+19.37	28.5' LT	780.58
CR-2507	326+14.37	28.5' LT	780.46
CR-2508	326+19.37	33.5' LT	780.65
CR-2509	326+14.37	33.5' LT	780.53
CR-2510	326+25.00	33.5' LT	780.95
CR-2511	326+25.00	28.5' LT	780.87
CR-2601	325+88.65	37.56' LT	779.72
CR-2602	325+91.57	33.5' LT	779.86
CR-2603	325+94.98	33.5' LT	779.89
CR-2604	326+01.89	28.5' LT	780.03
CR-2605	325+97.06	28.5' LT	780.04
CR-2606	326+01.88	33.5' LT	780.00
CR-2607	326+06.82	28.5' LT	780.38
CR-2608	326+06.82	33.5' LT	780.34

(A) 6.25% GUTTER SLOPE

(B) 4.0% GUTTER SLOPE

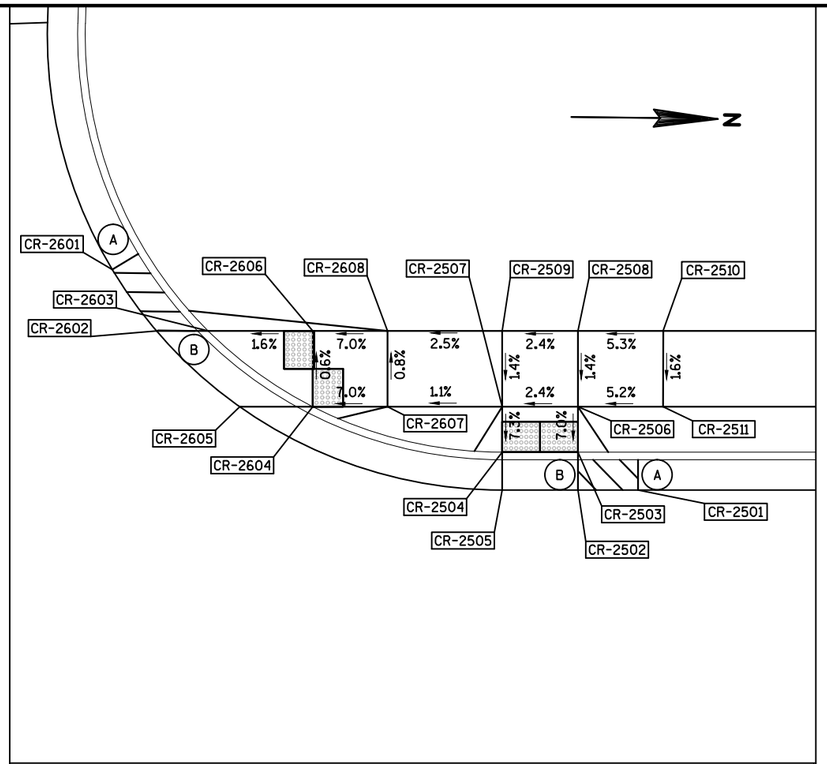

CR-27 & CR-28 POINTS			
POINT NO.	STATION	OFFSET	ELEVATION
CR-2701	325+38.05	37.56' LT	779.48
CR-2702	325+35.13	33.5' LT	779.55
CR-2703	325+31.72	33.5' LT	779.57
CR-2704	325+24.82	28.5' LT	779.67
CR-2705	325+29.64	28.5' LT	779.69
CR-2706	325+24.82	33.5' LT	779.67
CR-2707	325+19.89	28.5' LT	780.02
CR-2708	325+19.89	33.5' LT	780.02
CR-2801	325+02.33	23.0' LT	779.68
CR-2802	325+07.33	23.0' LT	779.71
CR-2803	325+07.33	25.5' LT	779.63
CR-2804	325+12.33	25.5' LT	779.67
CR-2805	325+12.33	23.0' LT	779.74
CR-2806	325+07.33	28.5' LT	779.84
CR-2807	325+12.33	28.5' LT	779.88
CR-2808	325+07.33	33.5' LT	779.92
CR-2809	325+12.33	33.5' LT	779.95
CR-2810	325+01.00	28.5' LT	780.17
CR-2811	325+01.00	33.5' LT	780.24

(A) 6.25% GUTTER SLOPE

(B) 4.0% GUTTER SLOPE

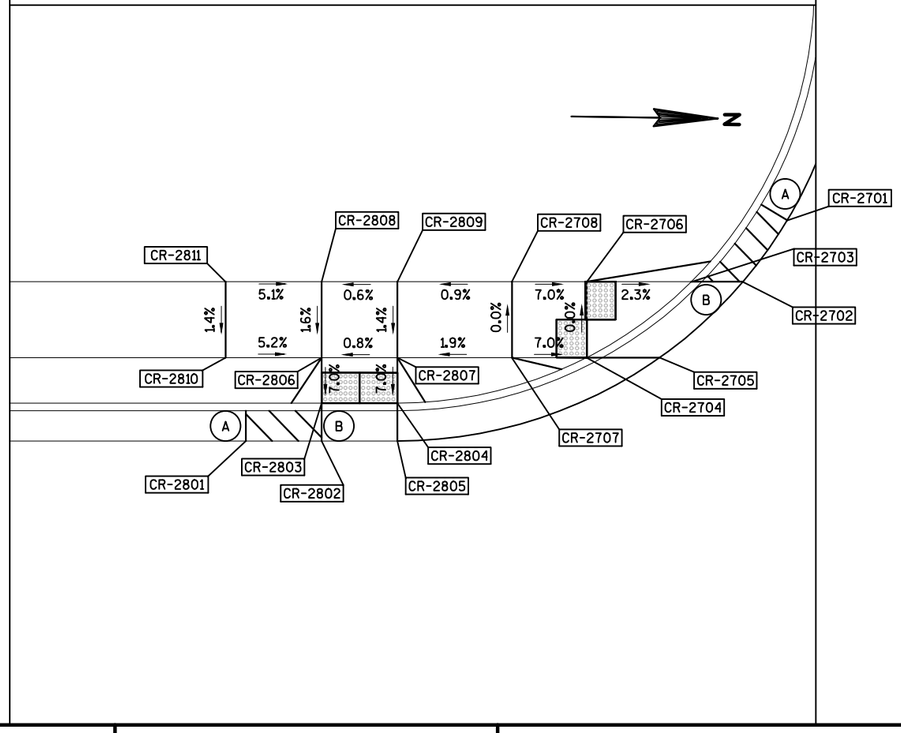

2

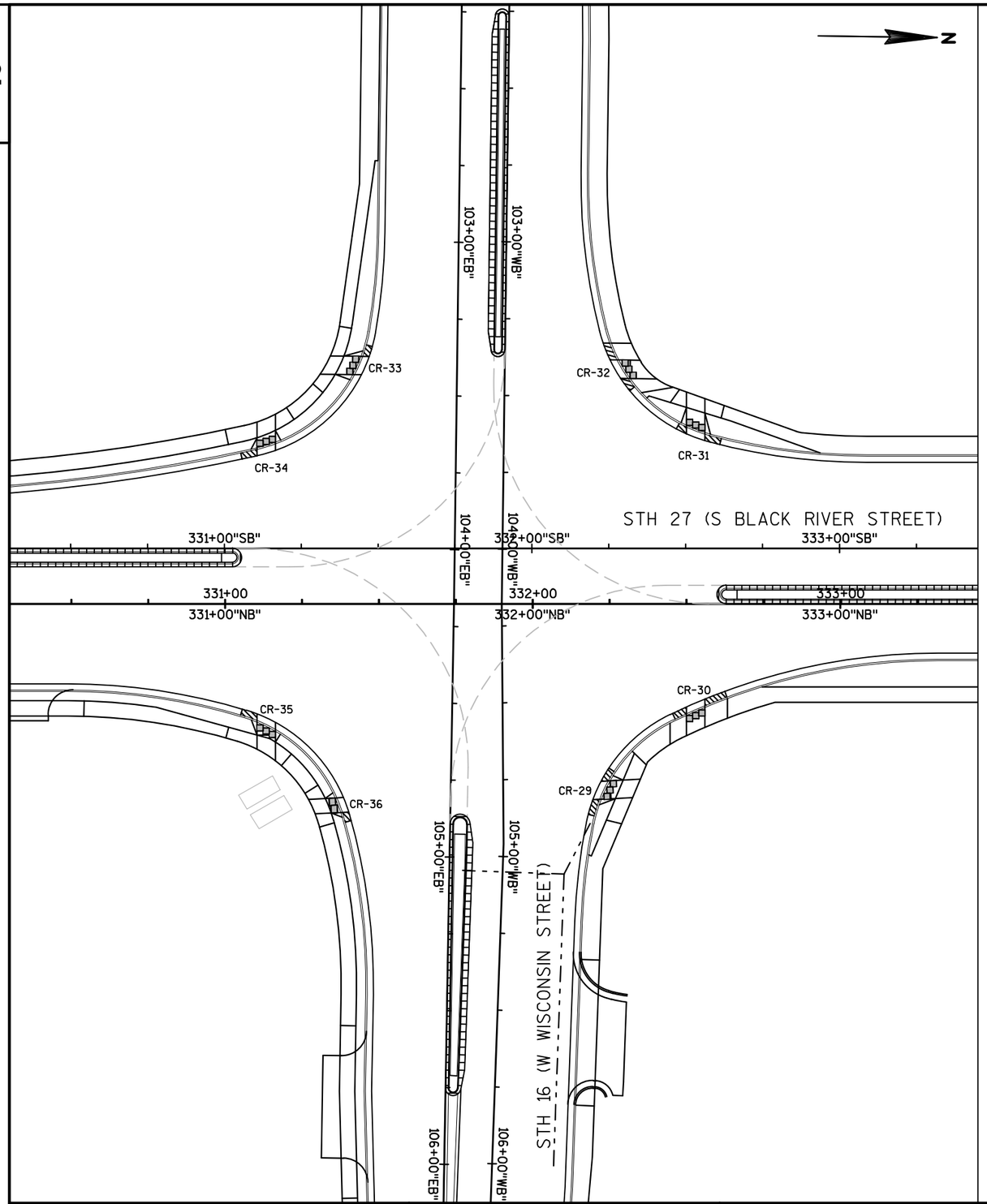

CR-29 POINTS			
POINT NO.	STATION	OFFSET	ELEVATION
CR-2901	104+71.51"WB"	34.43' LT	783.05
CR-2902	104+75.80"WB"	31.85' LT	783.11
CR-2903	104+75.64"WB"	34.8' LT	783.01
CR-2904	104+81.63"WB"	31.87' LT	783.09
CR-2905	104+81.75"WB"	29.14' LT	783.18
CR-2906	104+86.51"WB"	27.61' LT	783.24
CR-2907	104+81.50"WB"	35.05' LT	783.14
CR-2908	104+75.45"WB"	39.07' LT	783.31
CR-2909	104+81.43"WB"	36.50' LT	783.24
CR-2910	104+75.22"WB"	44.61' LT	783.39
CR-2911	104+81.20"WB"	42.05' LT	783.32
CR-2912	104+66.79"WB"	42.78' LT	783.32
CR-2913	104+70.56"WB"	46.61' LT	783.34
CR-2914	104+88.41"WB"	33.51' LT	783.43
CR-2915	104+89.68"WB"	38.41' LT	783.51

(A) 6.25% GUTTER SLOPE

(B) 4.0% GUTTER SLOPE

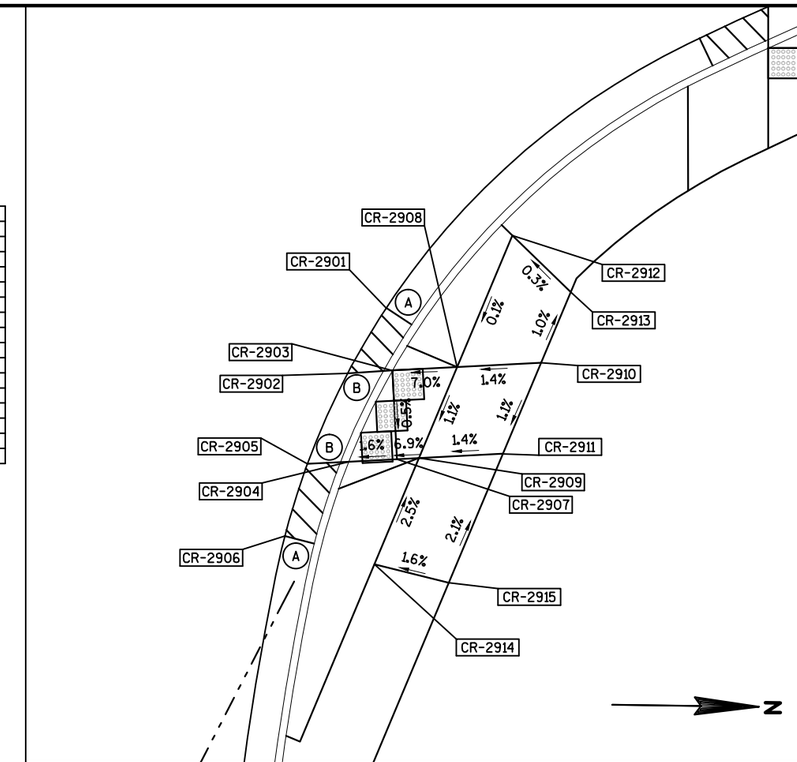

CR-30 POINTS			
POINT NO.	STATION	OFFSET	ELEVATION
CR-3001	332+45.56"NB"	35.64' RT	782.79
CR-3002	332+50.10"NB"	33.54' RT	782.87
CR-3003	332+50.10"NB"	36.28' RT	782.77
CR-3004	332+56.10"NB"	33.66' RT	782.88
CR-3005	332+56.10"NB"	30.96' RT	782.98
CR-3006	332+62.56"NB"	28.44' RT	783.09
CR-3007	332+56.10"NB"	36.28' RT	782.92
CR-3008	332+50.10"NB"	42.89' RT	782.87
CR-3009	332+56.10"NB"	40.18' RT	782.98
CR-3010	332+44.80"NB"	38.82' RT	783.14
CR-3011	332+44.81"NB"	45.69' RT	783.22
CR-3012	332+63.43"NB"	30.79' RT	783.46
CR-3013	332+63.43"NB"	37.20' RT	783.45

(A) 6.25% GUTTER SLOPE

(B) 4.0% GUTTER SLOPE

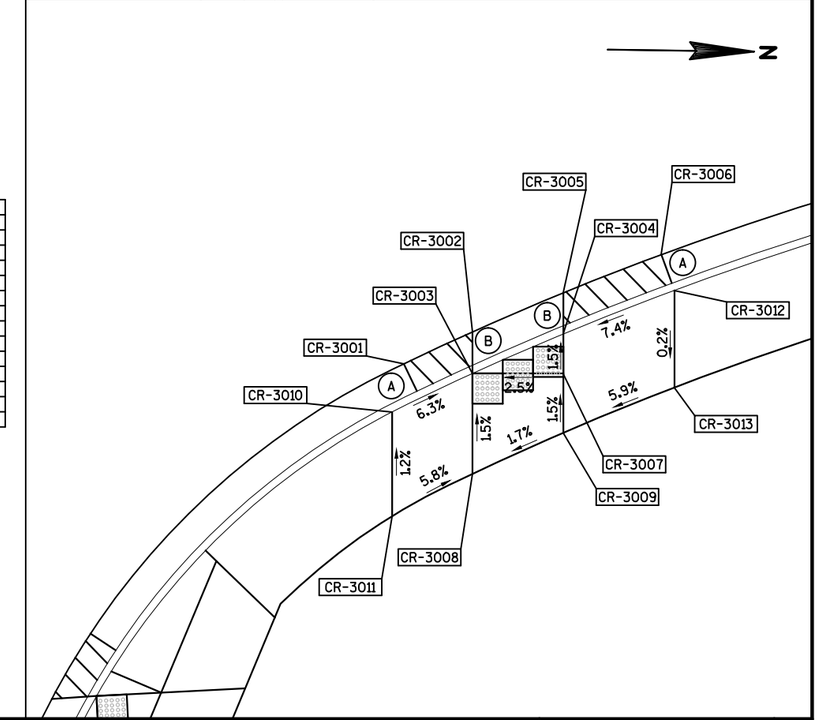

PROJECT NO:5144-01-75	HWY:STH 27	COUNTY:MONROE	CONSTRUCTION DETAIL - STH 27 & STH 16	SHEET 29	E

2

CR-31 & CR-32 POINTS			
POINT NO.	STATION	OFFSET	ELEVATION
CR-3101	332+61.07"SB"	33.80' LT	783.05
CR-3102	332+56.23"SB"	35.07' LT	783.02
CR-3103	332+56.23"SB"	37.69' LT	782.93
CR-3104	332+50.23"SB"	40.03' LT	782.88
CR-3105	332+50.23"SB"	37.28' LT	782.97
CR-3106	332+46.94"SB"	38.89' LT	782.94
CR-3107	332+56.23"SB"	40.03' LT	782.96
CR-3108	332+56.23"SB"	44.06' LT	783.25
CR-3109	332+50.23"SB"	45.90' LT	783.29
CR-3110	332+56.23"SB"	48.76' LT	783.32
CR-3111	332+50.23"SB"	50.90' LT	783.36
CR-3112	332+61.50"SB"	42.45' LT	783.33
CR-3113	332+62.54"SB"	46.50' LT	783.40
CR-3114	332+44.96"SB"	47.50' LT	783.38
CR-3115	332+47.98"SB"	51.71' LT	783.43
CR-3201	103+32.52"WB"	31.89' LT	783.39
CR-3202	103+37.95"WB"	34.19' LT	783.32
CR-3203	103+37.95"WB"	37.00' LT	783.22
CR-3204	103+43.96"WB"	40.77' LT	783.13
CR-3205	103+43.95"WB"	37.70' LT	783.23
CR-3206	103+47.94"WB"	40.73' LT	783.18
CR-3207	103+37.95"WB"	40.78' LT	783.28
CR-3208	103+37.95"WB"	43.93' LT	783.33
CR-3209	103+43.96"WB"	49.53' LT	783.26
CR-3210	103+32.52"WB"	34.56' LT	783.65
CR-3211	103+32.52"WB"	41.03' LT	783.70
CR-3212	103+48.50"WB"	44.60' LT	783.51
CR-3213	103+46.65"WB"	54.89' LT	783.48

(A) 6.25% GUTTER SLOPE

(B) 4.0% GUTTER SLOPE

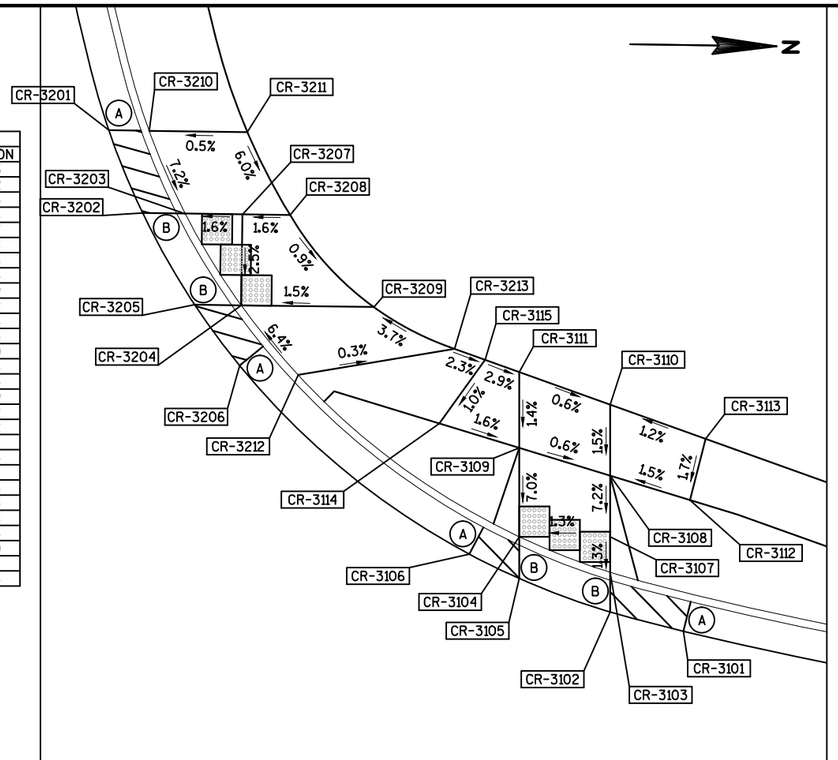

CR-33 POINTS			
POINT NO.	STATION	OFFSET	ELEVATION
CR-3301	103+34.24"EB"	27.63' RT	783.19
CR-3302	103+37.49"EB"	28.59' RT	783.16
CR-3303	103+37.48"EB"	31.24' RT	783.07
CR-3304	103+43.47"EB"	33.84' RT	783.02
CR-3305	103+43.48"EB"	31.04' RT	783.11
CR-3306	103+37.48"EB"	33.84' RT	783.11
CR-3307	103+37.48"EB"	36.75' RT	783.32
CR-3308	103+43.47"EB"	39.49' RT	783.42
CR-3309	103+37.48"EB"	41.22' RT	783.40
CR-3310	103+43.47"EB"	44.46' RT	783.49
CR-3311	103+28.45"EB"	34.44' RT	783.77
CR-3312	103+27.80"EB"	38.40' RT	783.83
CR-3313	103+49.51"EB"	43.50' RT	783.53
CR-3314	103+46.67"EB"	46.80' RT	783.58

(A) 6.25% GUTTER SLOPE

(B) 4.0% GUTTER SLOPE

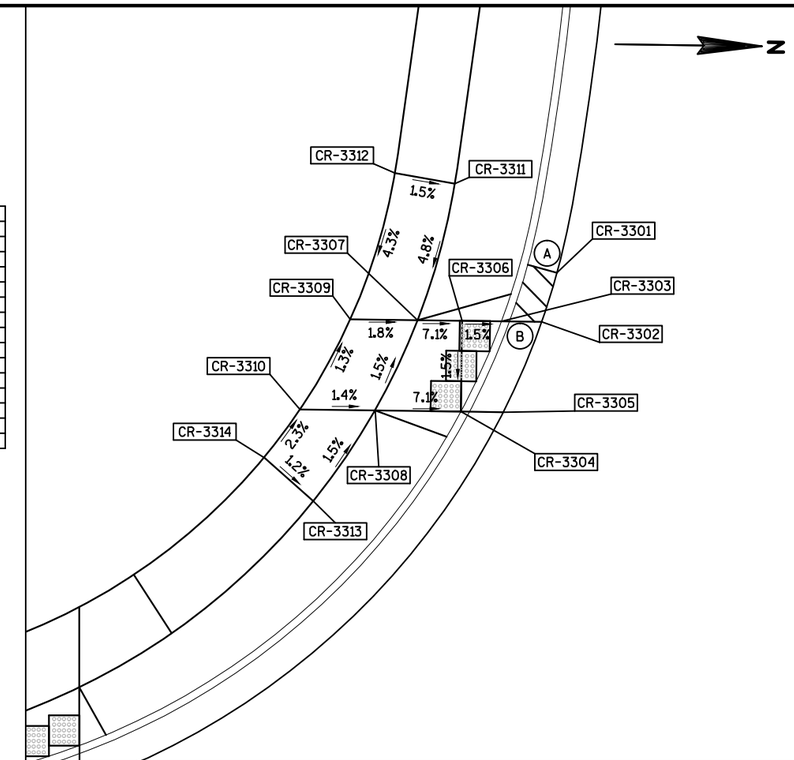

2

CR-34 POINTS			
POINT NO.	STATION	OFFSET	ELEVATION
CR-3701	335+57.31"NB"	16.0' RT	785.85
CR-3702	335+62.86"NB"	16.0' RT	785.89
CR-3703	335+62.55"NB"	18.5' RT	785.80
CR-3704	335+67.13"NB"	18.62' RT	785.82
CR-3705	335+67.44"NB"	16.14' RT	785.89
CR-3706	335+66.96"NB"	20.0' RT	785.88
CR-3707	335+62.30"NB"	20.48' RT	785.92
CR-3708	335+66.82"NB"	21.06' RT	785.90
CR-3709	335+61.74"NB"	25.0' RT	785.98
CR-3710	335+66.33"NB"	25.0' RT	785.96
CR-3711	335+57.31"NB"	18.5' RT	786.23
CR-3712	335+57.31"NB"	25.0' RT	786.12
CR-3713	335+60.50"NB"	18.5' RT	786.25
CR-3714	335+67.07"NB"	19.07' RT	785.82
CR-3801	335+84.02"NB"	29.49' RT	785.88
CR-3802	335+81.81"NB"	25.0' RT	785.85
CR-3903	335+78.72"NB"	25.0' RT	785.76
CR-3904	335+72.20"NB"	20.0' RT	785.78
CR-3905	335+77.11"NB"	20.0' RT	785.84
CR-3906	335+72.20"NB"	25.0' RT	785.86

(A) 6.25% GUTTER SLOPE

(B) 4.0% GUTTER SLOPE

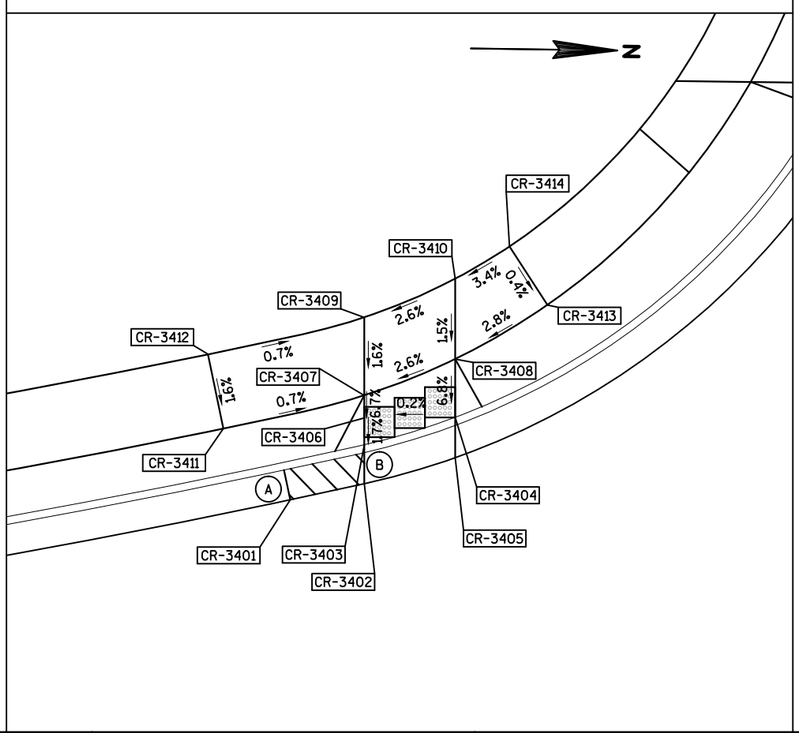

CR-35 & CR-36 POINTS			
POINT NO.	STATION	OFFSET	ELEVATION
CR-3501	331+05.73"NB"	34.26' RT	782.58
CR-3502	331+10.47"NB"	35.83' RT	782.63
CR-3503	331+10.47"NB"	38.52' RT	782.56
CR-3504	331+16.47"NB"	41.47' RT	782.63
CR-3505	331+16.47"NB"	38.60' RT	782.70
CR-3506	331+10.47"NB"	41.47' RT	782.60
CR-3507	331+10.47"NB"	42.71' RT	782.69
CR-3508	331+16.47"NB"	44.98' RT	782.88
CR-3509	331+10.47"NB"	47.30' RT	782.76
CR-3510	331+16.47"NB"	51.08' RT	782.97
CR-3511	331+01.29"NB"	40.17' RT	782.93
CR-3512	331+00.32"NB"	43.62' RT	783.00
CR-3513	331+21.67"NB"	48.86' RT	783.10
CR-3514	331+18.39"NB"	52.64' RT	783.07
CR-3601	104+81.23"EB"	34.84' RT	783.03
CR-3602	104+81.45"EB"	37.49' RT	782.94
CR-3603	104+86.15"EB"	35.60' RT	783.00
CR-3604	104+85.97"EB"	33.02' RT	783.08
CR-3605	104+88.69"EB"	32.19' RT	783.11
CR-3606	104+86.26"EB"	37.16' RT	783.02
CR-3607	104+81.67"EB"	40.72' RT	783.17
CR-3608	104+86.36"EB"	38.70' RT	783.13
CR-3609	104+82.04"EB"	46.18' RT	783.25
CR-3610	104+86.72"EB"	43.92' RT	783.20
CR-3611	104+77.35"EB"	43.18' RT	783.28
CR-3612	104+80.07"EB"	47.38' RT	783.24
CR-3613	104+89.55"EB"	37.67' RT	783.21
CR-3614	104+90.98"EB"	42.46' RT	783.32

(A) 6.25% GUTTER SLOPE

(B) 4.0% GUTTER SLOPE

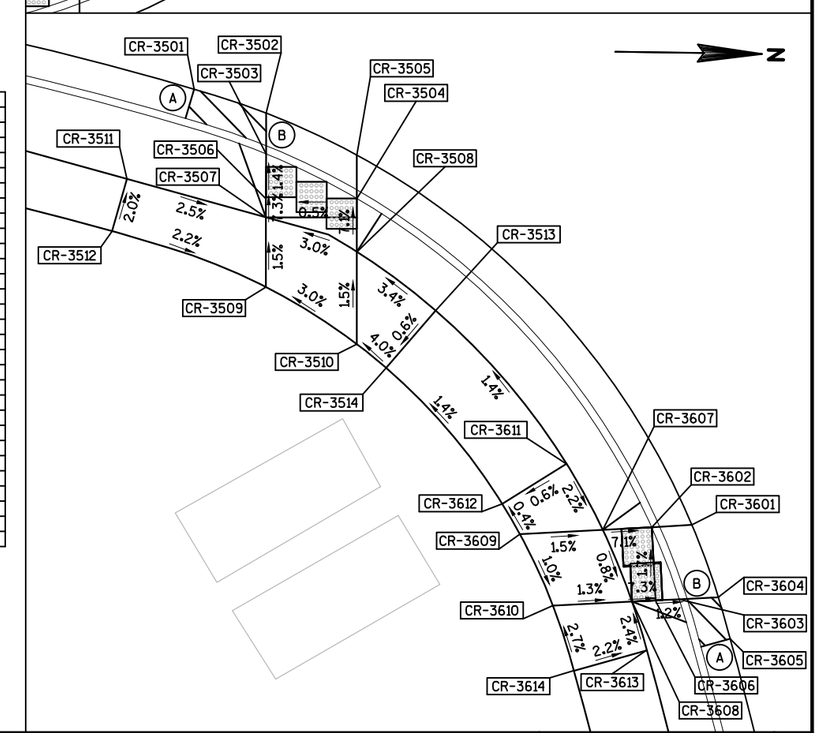

PROJECT NO:5144-01-75	HWY:STH 27	COUNTY:MONROE	CONSTRUCTION DETAIL - STH 27 & STH 16	SHEET 30	E

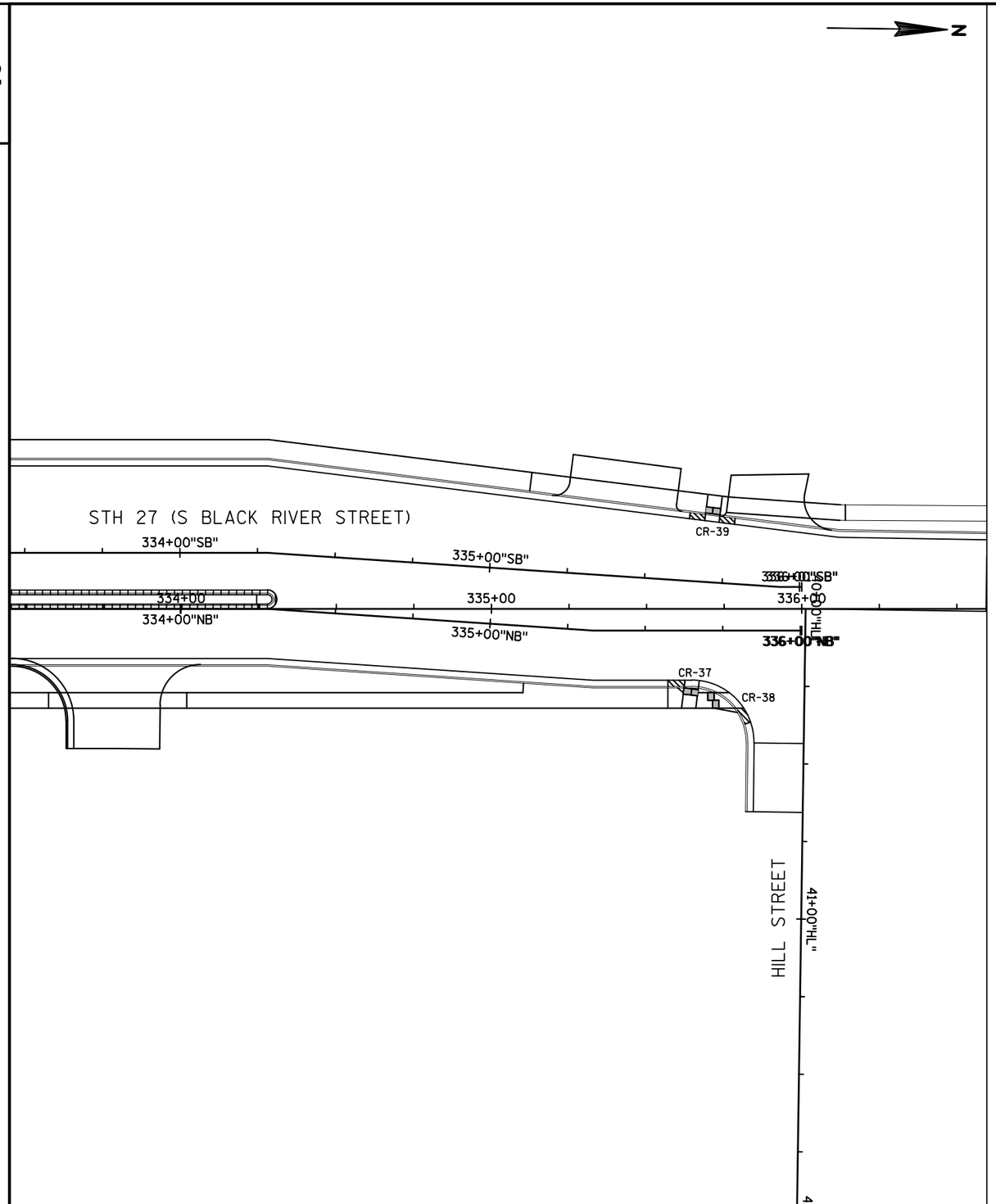

CR-37 & CR-38 POINTS			
POINT NO.	STATION	OFFSET	ELEVATION
CR-3701	335+57.31"NB"	16.0' RT	785.85
CR-3702	335+62.86"NB"	16.0' RT	785.89
CR-3703	335+62.55"NB"	18.5' RT	785.80
CR-3704	335+67.13"NB"	18.62' RT	785.82
CR-3705	335+67.44"NB"	16.14' RT	785.89
CR-3706	335+66.96"NB"	20.0' RT	785.88
CR-3707	335+62.30"NB"	20.48' RT	785.92
CR-3708	335+66.82"NB"	21.06' RT	785.90
CR-3709	335+61.74"NB"	25.0' RT	785.98
CR-3710	335+66.33"NB"	25.0' RT	785.96
CR-3711	335+57.31"NB"	18.5' RT	786.23
CR-3712	335+57.31"NB"	25.0' RT	786.12
CR-3713	335+60.50"NB"	18.5' RT	786.25
CR-3714	335+67.07"NB"	19.07' RT	785.82
CR-3801	335+84.02"NB"	29.49' RT	785.88
CR-3802	335+81.81"NB"	25.0' RT	785.85
CR-3803	335+78.72"NB"	25.0' RT	785.76
CR-3804	335+72.20"NB"	20.0' RT	785.78
CR-3805	335+77.11"NB"	20.0' RT	785.84
CR-3806	335+72.20"NB"	25.0' RT	785.86

(A) 6.25% GUTTER SLOPE

(B) 4.0% GUTTER SLOPE

CR-39 POINTS			
POINT NO.	STATION	OFFSET	ELEVATION
CR-3901	335+63.14"SB"	20.03' LT	785.82
CR-3902	335+68.13"SB"	19.74' LT	785.85
CR-3903	335+68.28"SB"	22.23' LT	785.73
CR-3904	335+72.88"SB"	21.97' LT	785.78
CR-3905	335+72.74"SB"	19.47' LT	785.89
CR-3906	335+77.73"SB"	19.18' LT	785.92
CR-3907	335+68.39"SB"	24.23' LT	785.77
CR-3908	335+73.00"SB"	23.96' LT	785.81
CR-3909	335+68.63"SB"	28.22' LT	785.85
CR-3910	335+73.23"SB"	27.96' LT	785.89

(A) 6.25% GUTTER SLOPE

(B) 4.0% GUTTER SLOPE

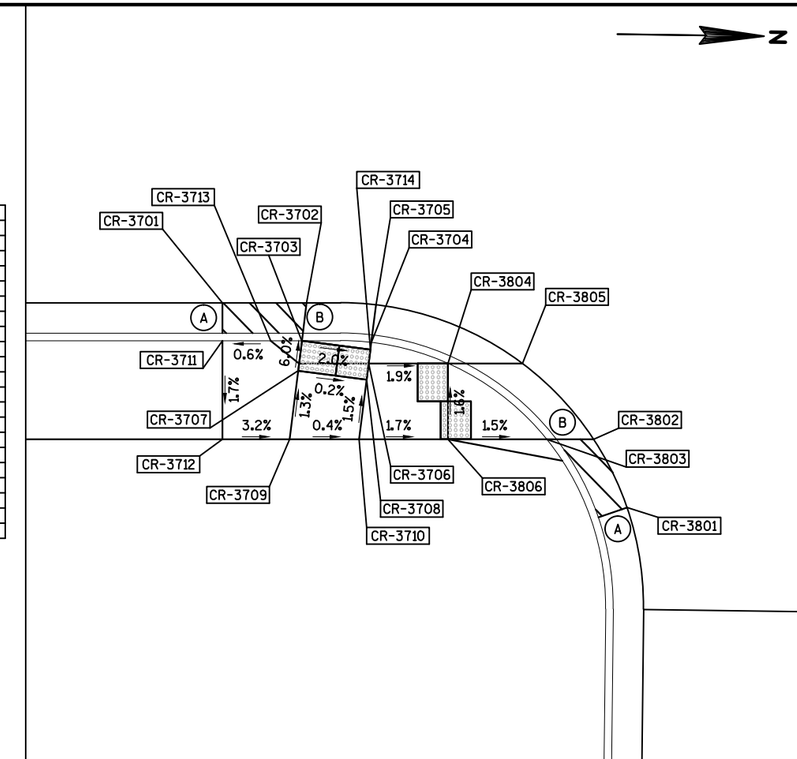

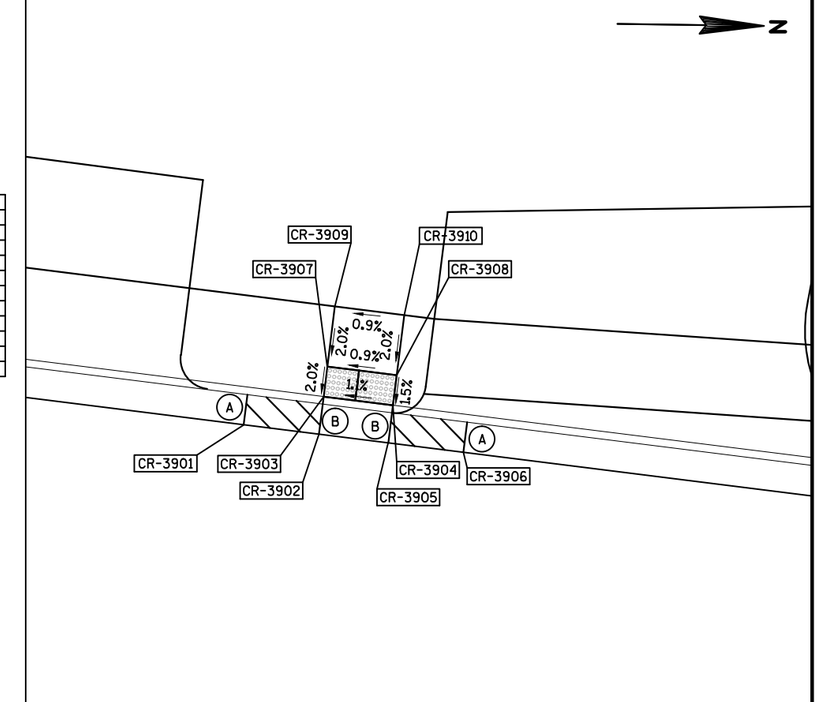

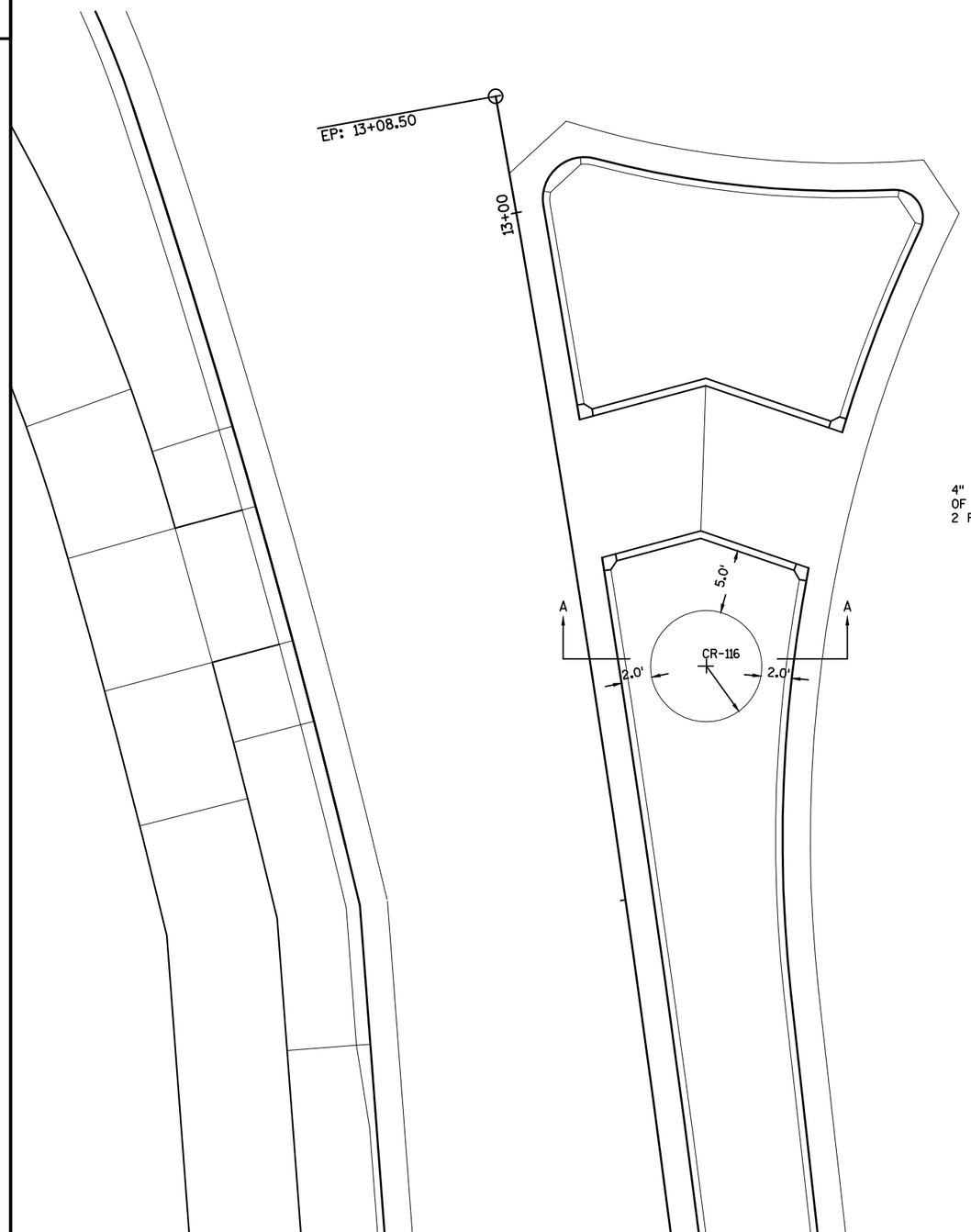

RADIUS POINT TABLE				
POINT NUMBER	STATION	OFFSET	RADIUS	CORRDINATES
CR-116	12+65.71	8.2' RT	4.0'	Y= 375382.352 X= 623868.410

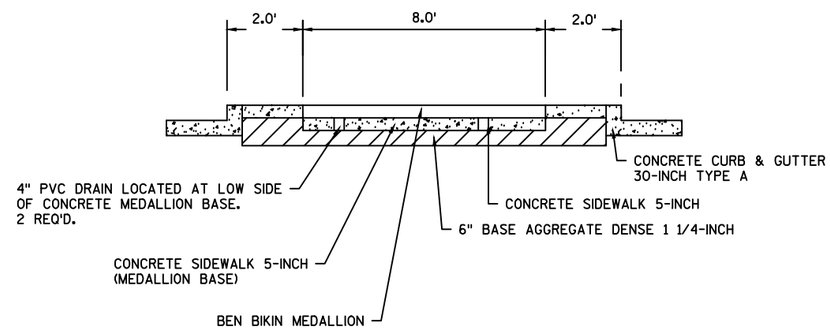

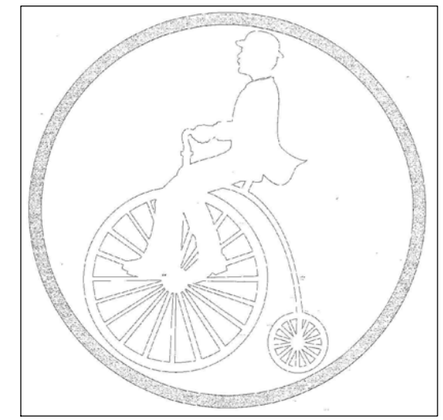

PROPOSED BEN BIKIN MEDALLION

PROJECT NO:5144-01-75	HWY:STH 27	COUNTY:MONROE	DETAIL - CR-1	SHEET 32	E

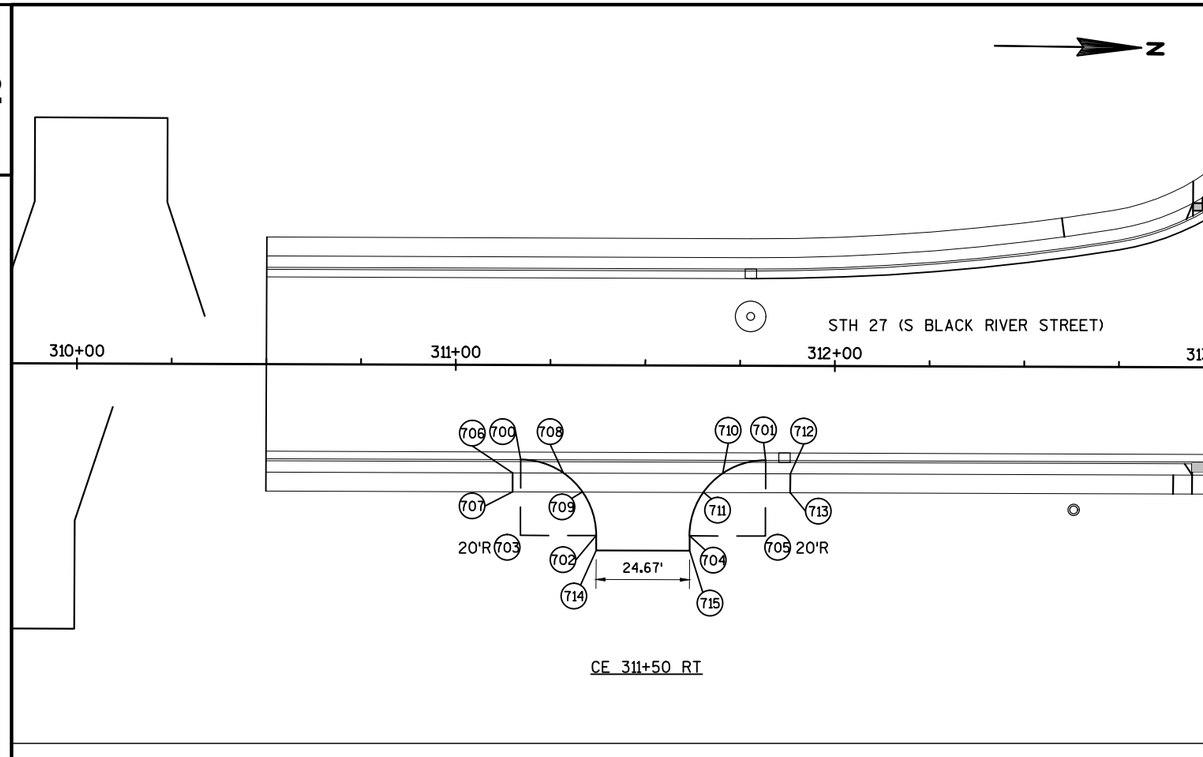

CE 311+50 RT

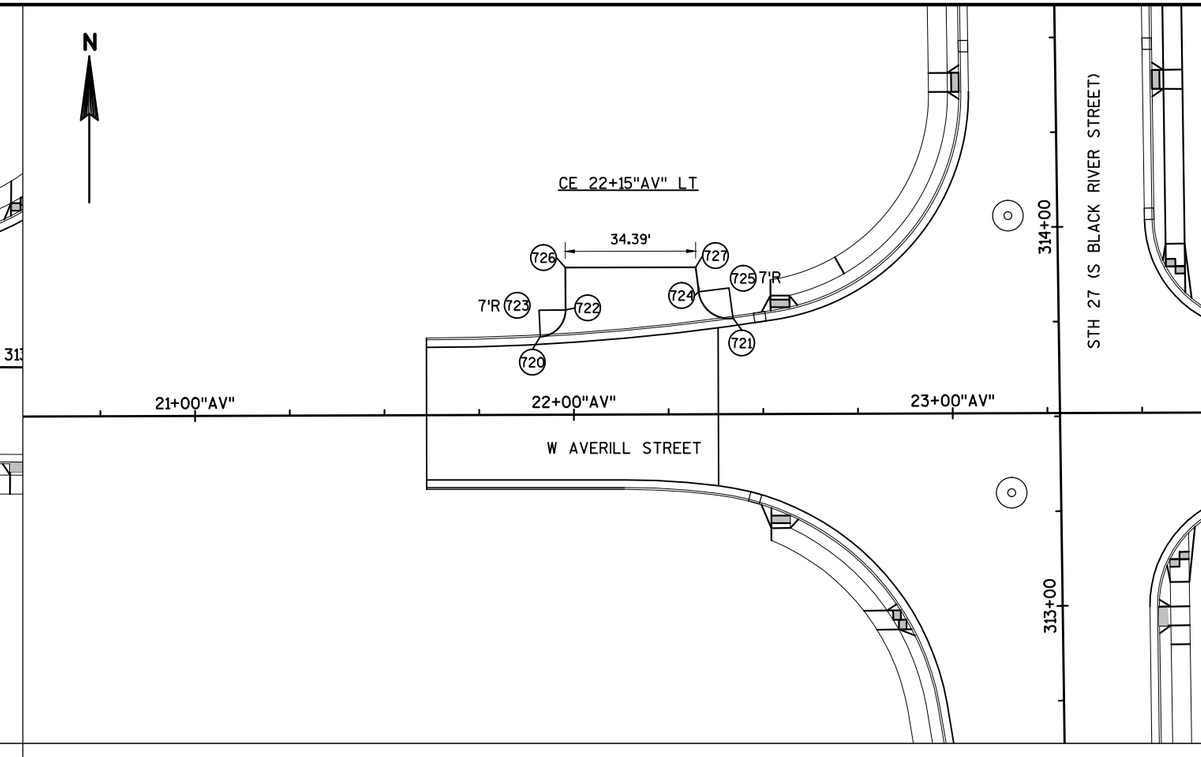

CE 22+15"AV" LT

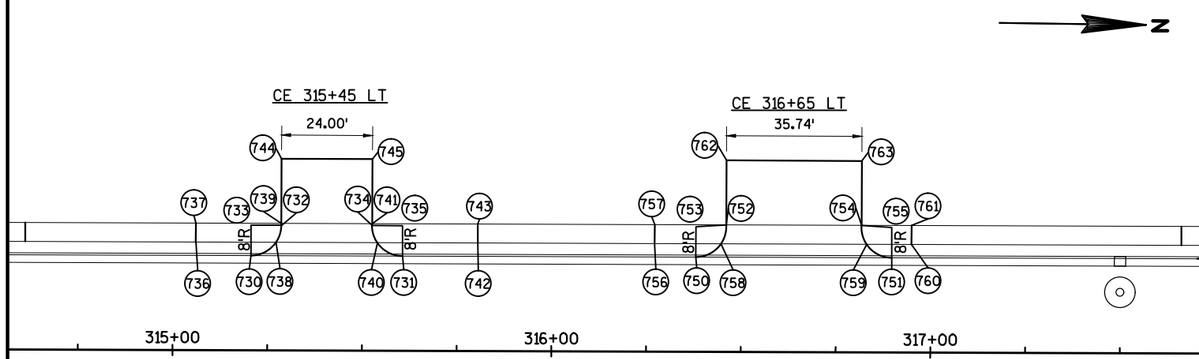

CE 315+45 LT

CE 316+65 LT

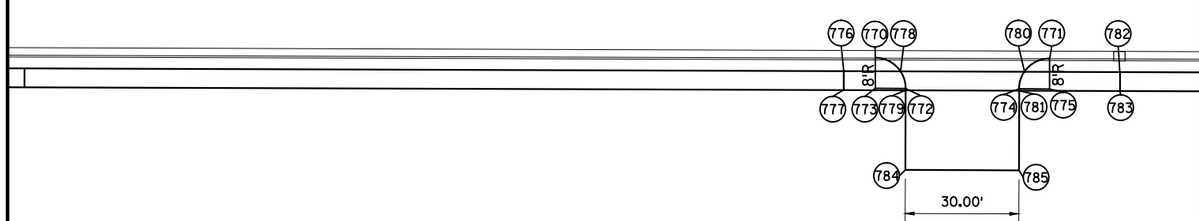

CE 317+10 RT

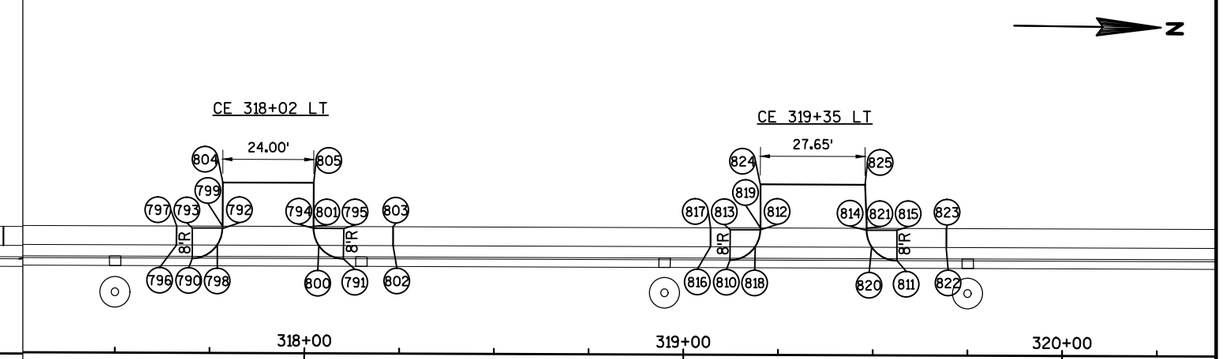

CE 318+02 LT

CE 319+35 LT

CE 319+56 RT

PROJECT NO:5144-01-75	HWY:STH 27	COUNTY:MONROE	CONSTRUCTION DETAILS	SHEET 33	E

2

LAYOUT POINTS - DRIVEWAYS

PT	STATION	OFFSET	ELEV	EASTING	NORTHING	REMARKS
	CE 311+50 RT					
700	311+17.18	25' RT	775.00	623901.23	375787.03	20'R
701	311+81.85	25' RT	775.39	623900.33	375851.70	20'R
702	311+37.18	45' RT	776.29	623920.95	375807.31	20'R
703	311+61.85	45' RT	776.40	623920.60	375831.98	20'R
704	311+17.18	45' RT	-	623921.23	375787.31	20'R
705	311+81.85	45' RT	-	623920.32	375851.98	20'R
706	311+15.06	28.5' RT	775.55	623904.76	375784.96	FRONT OF SIDEWALK
707	311+15.06	33.5' RT	775.63	623909.76	375785.03	BACK OF SIDEWALK
708	311+28.49	28.5' RT	775.33	623904.57	375798.38	FRONT OF SIDEWALK
709	311+33.55	33.5' RT	775.44	623909.50	375803.52	BACK OF SIDEWALK
710	311+70.55	28.5' RT	775.59	623903.98	375840.45	FRONT OF SIDEWALK
711	311+65.49	33.5' RT	775.64	623909.05	375835.46	BACK OF SIDEWALK
712	311+88.37	28.5' RT	775.93	623903.73	375858.26	FRONT OF SIDEWALK
713	311+88.37	33.5' RT	776.00	623908.73	375858.33	BACK OF SIDEWALK
714	311+37.18	48.90' RT	776.58	623924.84	375807.37	MATCH EXISTING
715	311+61.85	48.88' RT	776.64	623924.49	375832.04	MATCH EXISTING
	CE 22+15"AV" LT					
720	21+91.24"AV"	20.60' LT	775.78	623735.84	376040.50	7'R
721	22+42.10"AV"	25.32' LT	775.26	623786.68	376045.39	7'R
722	21+97.89"AV"	27.59' LT	776.69	623742.47	376047.50	7'R
723	21+90.89"AV"	27.60' LT	-	623735.47	376047.49	7'R
724	22+33.08"AV"	32.27' LT	776.68	623777.64	376052.31	7'R
725	22+41.03"AV"	33.24' LT	-	623785.58	376053.31	7'R
726	21+97.90"AV"	38.84' LT	777.49	623742.44	376058.75	MATCH EXISTING
727	22+32.29"AV"	38.77' LT	777.40	623776.83	376058.80	MATCH EXISTING
	CE 315+45 LT					
730	315+20.60	25' LT	777.04	623845.58	376189.71	8'R
731	315+60.60	25' LT	777.15	623845.01	376229.70	8'R
732	315+28.60	33' LT	777.27	623837.46	376197.59	8'R
733	315+20.60	33' LT	-	623837.58	376189.60	8'R
734	315+52.60	33' LT	777.32	623837.13	376221.59	8'R
735	315+60.60	33' LT	-	623837.01	376229.59	8'R
736	315+06.06	28.5' LT	777.53	623842.28	376175.12	FRONT OF SIDEWALK
737	315+06.06	33.5' LT	777.60	623837.28	376175.05	BACK OF SIDEWALK
738	315+27.21	28.5' LT	777.20	623841.98	376196.27	FRONT OF SIDEWALK
739	315+28.60	33.5' LT	777.28	623836.96	376197.59	BACK OF SIDEWALK
740	315+53.98	28.5' LT	777.26	623841.61	376223.04	FRONT OF SIDEWALK
741	315+52.60	33.5' LT	777.33	623836.63	376221.58	BACK OF SIDEWALK
742	315+80.48	28.5' LT	777.73	623841.24	376249.53	FRONT OF SIDEWALK
743	315+80.48	33.5' LT	777.80	623836.24	376249.46	BACK OF SIDEWALK
744	315+28.60	50.57' LT	777.26	623819.90	376197.34	MATCH EXISTING
745	315+52.60	50.56' LT	777.98	623819.57	376221.35	MATCH EXISTING
	CE 316+65 LT					
750	316+38.05	25' LT	777.09	623843.93	376307.15	8'R
751	316+89.76	25' LT	776.85	623843.20	376358.85	8'R
752	316+46.04	33.5' LT	777.44	623835.32	376315.01	8'R, BACK OF SIDEWALK
753	316+38.05	33' LT	-	623835.93	376307.04	8'R
754	316+81.77	33.5' LT	777.26	623834.81	376350.75	8'R, BACK OF SIDEWALK
755	316+89.76	33' LT	777.37	623835.20	376358.74	8'R
756	316+27.17	28.5' LT	777.69	623840.58	376296.22	FRONT OF SIDEWALK
757	316+27.17	33.5' LT	777.76	623835.58	376296.15	BACK OF SIDEWALK
758	316+44.67	28.5' LT	777.37	623840.33	376313.71	FRONT OF SIDEWALK
759	316+83.14	28.5' LT	777.17	623839.79	376352.19	FRONT OF SIDEWALK
760	316+94.96	28.5' LT	777.39	623839.63	376364.00	FRONT OF SIDEWALK
761	316+94.96	33.5' LT	777.47	623834.63	376363.93	BACK OF SIDEWALK
762	316+46.04	50.52' LT	778.57	623818.29	376314.78	MATCH EXISTING
763	316+891.78	50.51' LT	778.76	623817.80	376350.52	MATCH EXISTING
	CE 317+10 RT					
770	316+85.63	25' RT	776.84	623893.25	376355.42	8'R
771	317+31.63	25' RT	776.67	623892.61	376401.42	8'R
772	316+93.63	33' RT	777.26	623901.14	376363.53	8'R
773	316+85.63	33' RT	-	623901.25	376355.53	8'R
774	317+23.63	33' RT	777.14	623900.72	376393.53	8'R
775	317+31.63	33' RT	-	623900.61	376401.53	8'R
776	316+77.25	28.5' RT	777.48	623896.87	376347.10	FRONT OF SIDEWALK
777	316+77.25	33.5' RT	777.55	623901.87	376347.17	BACK OF SIDEWALK
778	316+92.24	28.5' RT	777.20	623896.66	376362.08	FRONT OF SIDEWALK
779	316+93.63	33.5' RT	777.27	623901.64	376363.54	BACK OF SIDEWALK
780	317+25.01	28.5' RT	777.07	623896.20	376394.85	FRONT OF SIDEWALK
781	317+23.63	33.5' RT	777.15	623901.22	376393.54	BACK OF SIDEWALK
782	317+50.17	28.5' RT	777.26	623895.85	376420.01	FRONT OF SIDEWALK
783	317+50.17	33.5' RT	777.34	623900.85	376420.08	BACK OF SIDEWALK
784	316+93.63	54.49' RT	779.61	623922.63	376363.84	MATCH EXISTING
785	317+23.63	54.50' RT	779.42	623922.22	376393.83	MATCH EXISTING
	CE 318+02 LT					
790	317+70.32	25' LT	776.67	623842.07	376439.40	8'R
791	318+10.32	25' LT	776.84	623841.51	376479.40	8'R
792	317+78.32	33' LT	777.07	623833.96	376447.29	8'R
793	317+70.32	33' LT	-	623834.07	376439.29	8'R
794	318+02.32	33' LT	777.17	623833.62	376471.29	8'R
795	318+10.32	33' LT	-	623833.51	376479.29	8'R
796	317+66.17	28.5' LT	777.16	623838.63	376435.20	FRONT OF SIDEWALK
797	317+66.17	33.5' LT	777.24	623833.62	376435.13	BACK OF SIDEWALK
798	317+76.93	28.5' LT	777.00	623838.48	376445.97	FRONT OF SIDEWALK
799	317+78.32	33.5' LT	777.08	623833.46	376447.28	BACK OF SIDEWALK
800	318+03.70	28.5' LT	777.11	623838.10	376472.74	FRONT OF SIDEWALK
801	318+02.32	33.5' LT	777.18	623833.12	376471.28	BACK OF SIDEWALK
802	318+23.31	28.5' LT	777.48	623837.83	376492.34	FRONT OF SIDEWALK
803	318+23.31	33.5' LT	777.55	623832.83	376492.27	BACK OF SIDEWALK
804	317+78.32	45' LT	778.23	623821.96	376447.13	MATCH EXISTING
805	318+02.32	45' LT	778.32	623821.62	376471.12	MATCH EXISTING

LAYOUT POINTS - DRIVEWAYS

PT	STATION	OFFSET	ELEV	EASTING	NORTHING	REMARKS
	CE 319+35 LT					
810	319+12.28	25' LT	777.34	623840.08	376581.35	8'R
811	319+56.31	25' LT	777.56	623839.46	376625.38	8'R
812	319+20.28	33' LT	777.76	623831.97	376589.24	8'R
813	319+12.28	33' LT	-	623832.08	376581.24	8'R
814	319+48.31	33' LT	777.89	623831.57	376617.27	8'R
815	319+56.31	33' LT	-	623831.46	376625.27	8'R
816	319+07.10	28.5' LT	777.70	623836.65	376576.12	FRONT OF SIDEWALK
817	319+07.10	33.5' LT	777.92	623831.65	376576.05	BACK OF SIDEWALK
818	319+18.90	28.5' LT	777.68	623836.48	376587.92	FRONT OF SIDEWALK
819	319+20.28	33.5' LT	777.76	623831.47	376589.23	BACK OF SIDEWALK
820	319+49.70	28.5' LT	777.83	623836.05	376618.71	FRONT OF SIDEWALK
821	319+48.31	33.5' LT	777.90	623831.07	376617.26	BACK OF SIDEWALK
822	319+69.36	28.5' LT	778.22	623835.78	376638.37	FRONT OF SIDEWALK
823	319+69.36	33.5' LT	778.30	623830.78	376638.30	BACK OF SIDEWALK
824	319+20.22	45' LT	778.57	623819.97	376589.01	MATCH EXISTING
825	319+47.87	45' LT	778.84	623819.58	376616.66	MATCH EXISTING
	CE 319+56 RT					
830	319+35.56	25' RT	777.48	623889.75	376605.33	8'R
831	319+76.56	25' RT	777.67	623889.17	376646.33	8'R
832	319+43.56	33' RT	777.76	623897.63	376613.44	8'R
833	319+35.56	33' RT	-	623897.74	376605.44	8'R
834	319+68.56	33' RT	777.89	623897.28	376638.44	8'R
835	319+76.56	33' RT	-	623897.17	376646.44	8'R
836	319+26.14	28.5' RT	778.00	623893.38	376595.97	FRONT OF SIDEWALK
837	319+26.14	33.5' RT	778.07	623898.38	376596.04	BACK OF SIDEWALK
838	319+42.18	28.5' RT	777.68	623893.15	376611.99	FRONT OF SIDEWALK
839	319+43.56	33.5' RT	777.77	623898.13	376613.45	BACK OF SIDEWALK
840	319+69.95	28.5' RT	777.83	623892.76	376639.76	FRONT OF SIDEWALK
841	319+68.56	33.5' RT	777.90	623897.78	376638.45	BACK OF SIDEWALK
842	319+96.55	28.5' RT	778.32	623892.39	376666.37	FRONT OF SIDEWALK
843	319+96.55	33.5' RT	778.39	623897.39	376666.44	BACK OF SIDEWALK
844	319+43.56	49.59' RT	778.59	623914.22	376613.68	MATCH EXISTING
845	319+68.56	49.60' RT	778.63	623913.88	376638.67	MATCH EXISTING
	CE 322+15 RT					
850	321+88.61	25' RT	777.65	623886.19	376858.35	10'R
851	322+35.46	25' RT	777.77	623885.54	376905.20	5'R
852	321+97.79	31.04' RT	778.07	623892.10	376867.62	10'R
853	321+88.61	35' RT	-	623896.19	376858.49	10'R
854	322+30.88	32.00' RT	778.18	623892.60	376900.72	5'R
855	322+35.46	30' RT	-	623890.54	376905.27	5'R
856	321+89.60	28.5' RT	778.12	623889.68	376859.40	FRONT OF SIDEWALK
857	321+89.60	33.5' RT	778.21	623894.68	376859.47	BACK OF SIDEWALK
858	321+96.21	28.5' RT	778.02	623889.59	376866.00	FRONT OF SIDEWALK
859	321+98.85	33.5' RT	778.11	623894.55	376868.72	BACK OF SIDEWALK
860	322+30.69	28.5' RT	778.13	623889.10	376900.48	FRONT OF SIDEWALK
861	322+31.53	33.5' RT	778.22	623894.09	376901.39	BACK OF SIDEWALK
862	322+47.07	28.5' RT	778.40	623888.87	376916.86	FRONT OF SIDEWALK
863	322+47.07	33.5' RT	778.48	623893.87	376916.93	BACK OF SIDEWALK
864	322+05.99	50' RT	780.03	623910.95	376876.09	MATCH EXISTING
865	322+38.74	50' RT	779.86	623910.49	376908.83	MATCH EXISTING
	CE 9+77"MA" LT					
870	9+56.65"MA"	22.61' LT	780.20	623698.07	377255.40	3'R
871	9+97.64"MA"	22.98' LT	779.82	623739.06	377255.82	3'R
872	9+59.62"MA"	25.64' LT	780.60	623701.04	377258.43	3'R
873	9+56.62"MA"	25.61' LT	-	623698.04	377258.40	3'R
874	9+94.61"MA"	25.97' LT	780.41	623736.03	377258.81	3'R
875	9+97.61"MA"	25.98' LT	-	623739.03	377258.82	3'R
876	9+59.61"MA"	26.70' LT	780.69	623701.03	377259.49	MATCH EXISTING
877	9+94.61"MA"	26.83' LT	780.54	623736.03	377259.67	MATCH EXISTING
	CE 12+42"MA" RT					
880	12+30.60"MA"	14' RT	779.35	623971.83	377215.56	5'R
881	12+53.39"MA"	14' RT	779.29	623994.61	377215.23	5'R
882	12+35.60"MA"	19' RT	779.65	623976.76	377210.49	5'R
883	12+30.60"MA"	19' RT	-	623971.76	377210.56	5'R
884	12+48.39"MA"	19' RT	779.56	623989.54	377210.30	5'R
885	12+53.39"MA"	19' RT	-	623994.54	377210.23	5'R
886	12+35.60"MA"	22.09' RT	779.77	623976.71	377207.40	MATCH EXISTING
887	12+48.39"MA"	21.93' RT	779.68	623989.50	377207.38	MATCH EXISTING

LAYOUT POINTS - DRIVEWAYS

PT	STATION	OFFSET	ELEV	EASTING	NORTHING	REMARKS
	CE 12+45"MA" LT					
890	12+21.42"MA"	18.38' LT	779.26	623963.11	377248.06	8'R
891	12+67.40"MA"	19.0' LT	779.35	624009.10	377248.04	8'R
892	12+29.31"MA"	26.48' LT	780.64	623971.11	377256.05	8'R
893	12+21.31"MA"	26.38' LT	-	623963.11	377256.06	8'R
894	12+59.30"MA"	26.90' LT	780.56	624001.10	377256.04	8'R
895	12+67.29"MA"	27.00' LT	-	624009.10	377256.04	8'R
896	12+29.30"MA"	27.46' LT	780.76	623971.12	377257.04	MATCH EXISTING
897	12+59.28"MA"	27.84' LT	780.65	624001.10	377256.98	MATCH EXISTING
	CE 327+31"SB" LT					
900	327+07.62"SB"	17.96' LT	780.78	623827.99	377375.37	8'R
901	327+58.62"SB"	17.96' LT	781.02	623823.89	377426.21	8'R
902	327+15.62"SB"	25.96' LT	780.81	623819.37	377382.70	8'R
903	327+07.62"SB"	25.96' LT	-	623820.02	377374.73	8'R
904	327+50.62"SB"	25.96' LT	781.02	623816.56	377417.59	8'R
905	327+58.62"SB"	25.96' LT	-	623815.91	377425.56	8'R
906	327+07.54"SB"	21.46' LT	781.29	623824.51	377375.01	FRONT OF SIDEWALK
907	327+07.54"SB"	26.46' LT	781.31	623819.53	377374.61	BACK OF SIDEWALK
908	327+14.24"SB"	21.46' LT	780.78	623823.97	377381.68	FRONT OF SIDEWALK
909	327+15.62"SB"	26.46' LT	780.81	623818.88	377382.66	BACK OF SIDEWALK
910	327+52.01"SB"	21.46' LT	781.01	623820.93	377419.33	FRONT OF SIDEWALK
911	327+50.62"SB"	26.46' LT	781.03	623816.06	377417.55	BACK OF SIDEWALK
912	327+59.73"SB"	21.46' LT	781.42	623820.31	377427.03	FRONT OF SIDEWALK
913	327+59.73"SB"	26.46' LT	781.65	623815.32	377426.63	BACK OF SIDEWALK
914	327+15.62"SB"	27.38' LT	780.63	623817.97	377382.59	MATCH EXISTING
915	327+50.62"SB"	27.23' LT	780.62	623815.30	377417.49	MATCH EXISTING
	CE 327+55"NB" RT					
920	327+32.05"NB"	18' RT	780.83	623878.57	377401.75	8'R
921	327+71.05"NB"	19.85' RT	780.97	623878.57	377442.02	8'R
922	327+40.05"NB"	26' RT	781.21	623886.45	377409.86	8'R
923	327+32.05"NB"	26' RT	-	623886.56	377401.86	8'R
924	327+62.32"NB"	27.06' RT	781.32	623886.45	377433.91	8'R
925	327+70.29"NB"	27.82' RT	-	623886.57	377441.91	8'R
926	327+30.23"NB"	21.5' RT	781.12	623882.09	377399.97	FRONT OF SIDEWALK
927	327+30.23"NB"	26.5' RT	781.45	623887.09	377400.04	BACK OF SIDEWALK
928	327+38.67"NB"	21.5' RT	781.14	623881.97	377408.41	FRONT OF SIDEWALK
929	327+40.05"NB"	26.5' RT	781.22	623886.95	377409.87	BACK OF SIDEWALK
930	327+64.13"NB"	22.71' RT	781.26	623881.97	377435.36	FRONT OF SIDEWALK
931	327+62.28"NB"	27.55' RT	781.33	623886.94	377433.90	BACK OF SIDEWALK
932	327+75.88"NB"	23.83' RT	781.57	623882.14	377447.16	FRONT OF SIDEWALK
933	327+75.40"NB"	28.80' RT	781.67	623887.14	377447.09	BACK OF SIDEWALK
934	327+40.05"NB"	33' RT	781.83	623893.45	377409.96	MATCH EXISTING
935	327+61.69"NB"	33.69' RT	781.63	623893.12	377433.81	MATCH EXISTING
	CE 327+95"SB" LT					
940	327+77.70"SB"	15.96' LT	781.22	623824.34	377445.38	10'R
941	328+32.45"SB"	15.96' LT	781.55	623819.93	377499.96	10'R
942	327+87.69"SB"	25.63' LT	781.25	623813.90	377454.57	10'R
943	327+77.70"SB"	25.96' LT	-	623814.38	377444.58	10'R
944	328+22.47"SB"	26.63' LT	781.46	623810.11	377489.16	10'R
945	328+33.52"SB"	25.96' LT	-	623809.97	377499.15	10'R
946	327+79.95"SB"	21.46' LT	781.68	623818.68	377447.19	FRONT OF SIDEWALK
947	327+79.95"SB"	26.46' LT	781.72	623813.70	377446.79	BACK OF SIDEWALK
948	327+86.63"SB"	21.46' LT	781.22	623818.14	377453.84	FRONT OF SIDEWALK
949	327+87.72"SB"	26.46' LT	781.25	623813.07	377454.53	BACK OF SIDEWALK
950	328+23.52"SB"	21.46' LT	781.44	623815.17	377490.62	FRONT OF SIDEWALK
951	328+22.46"SB"	26.46' LT	781.46	623810.27	377489.16	BACK OF SIDEWALK
952	328+31.23"SB"	21.46' LT	781.79	623814.55	377498.30	FRONT OF SIDEWALK
953	328+31.23"SB"	26.46' LT	781.84	623809.57	377497.90	BACK OF SIDEWALK
954	327+88.04"SB"	35.93' LT	780.86	623803.61	377454.08	MATCH EXISTING
955	328+07.22"SB"	35.28' LT	780.99	623802.71	377473.25	MATCH EXISTING
956	328+08.60"SB"	51.20' LT	781.23	623786.74	377473.34	MATCH EXISTING
957	328+23.35"SB"	39.70' LT	781.39	623797.01	377488.97	10'R
958	328+34.51"SB"	48.96' LT	781.39	623786.88	377499.35	10'R; MATCH EXISTING
959	328+33.32"SB"	39.03' LT	-	623796.87	377498.97	10'R

2

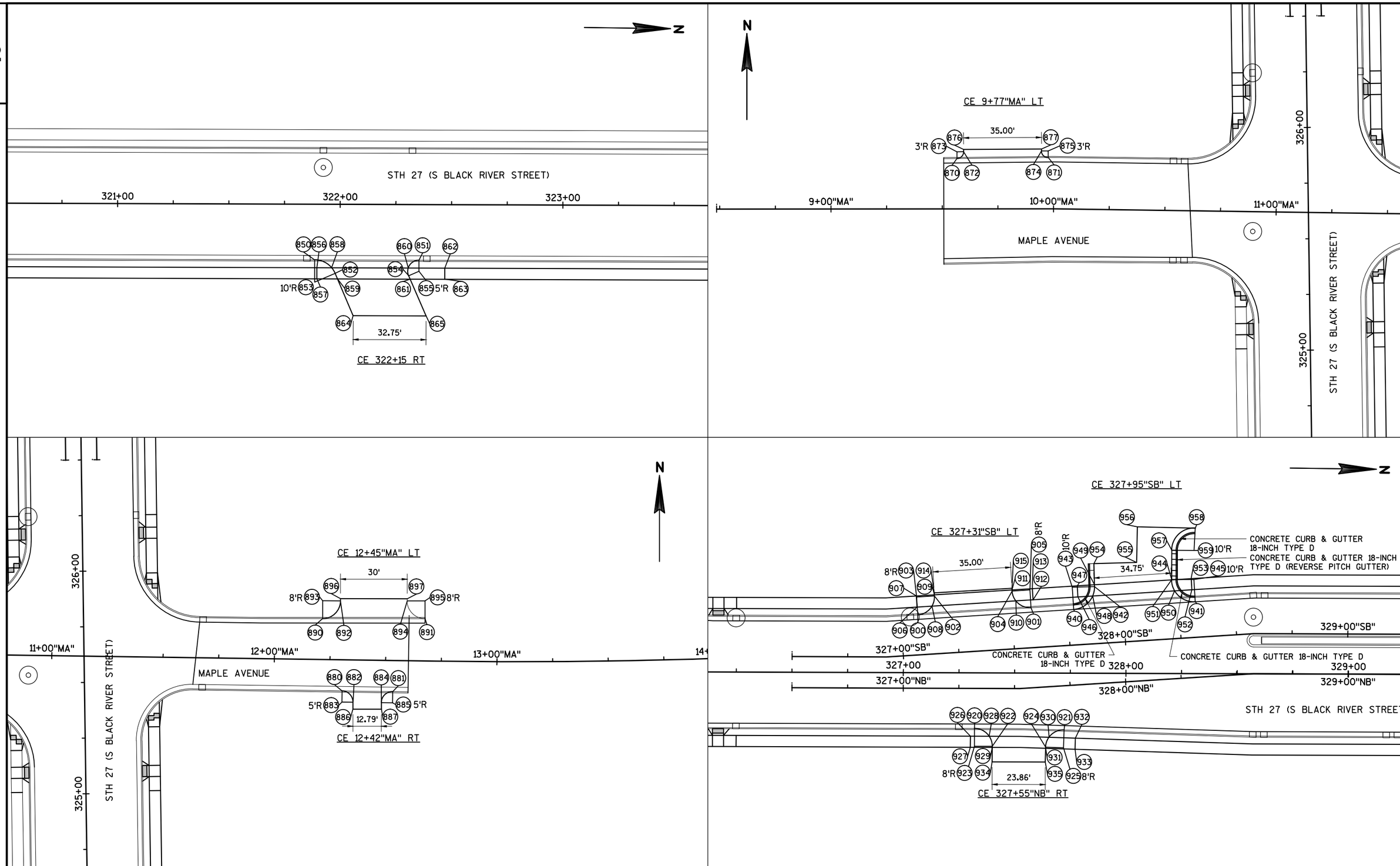

PROJECT NO:5144-01-75	HWY:STH 27	COUNTY:MONROE	CONSTRUCTION DETAILS	SHEET 35	E

FILE NAME : N:\PDS\C3D\51440105\SHEETSPLAN\021231_PD.DWG
LAYOUT NAME - 021023-CD
PLOT DATE : 7/27/2017 8:21 AM PLOT BY : VALENTI, PAUL M PLOT NAME : PLOT SCALE : **********

WISDOT/CADDS SHEET 42

2

LAYOUT POINTS - DRIVEWAYS

PT	STATION	OFFSET	ELEV	EASTING	NORTHING	REMARKS
CE 322+15 RT						
850	321+88.61	25' RT	777.65	623886.19	376858.35	10'R
851	322+35.46	25' RT	777.77	623885.54	376905.20	5'R
852	321+97.79	31.04' RT	778.07	623892.10	376867.62	10'R
853	321+88.61	35' RT	-	623896.19	376858.49	10'R
854	322+30.88	32.00' RT	778.18	623892.60	376900.72	5'R
855	322+35.46	30' RT	-	623890.54	376905.27	5'R
856	321+89.60	28.5' RT	778.12	623889.68	376859.40	FRONT OF SIDEWALK
857	321+89.60	33.5' RT	778.21	623894.68	376859.47	BACK OF SIDEWALK
858	321+96.21	28.5' RT	778.02	623889.59	376866.00	FRONT OF SIDEWALK
859	321+98.85	33.5' RT	778.11	623894.55	376868.72	BACK OF SIDEWALK
860	322+30.69	28.5' RT	778.13	623889.10	376900.48	FRONT OF SIDEWALK
861	322+31.53	33.5' RT	778.22	623894.09	376901.39	BACK OF SIDEWALK
862	322+47.07	28.5' RT	778.40	623888.87	376916.86	FRONT OF SIDEWALK
863	322+47.07	33.5' RT	778.48	623893.87	376916.93	BACK OF SIDEWALK
864	322+05.99	50' RT	780.03	623910.95	376876.09	MATCH EXISTING
865	322+38.74	50' RT	779.86	623910.49	376908.83	MATCH EXISTING
CE 9+77"MA" LT						
870	9+56.65"MA"	22.61' LT	780.20	623698.07	377255.40	3'R
871	9+97.64"MA"	22.98' LT	779.82	623739.06	377255.82	3'R
872	9+59.62"MA"	25.64' LT	780.60	623701.04	377258.43	3'R
873	9+56.62"MA"	25.61' LT	-	623698.04	377258.40	3'R
874	9+94.61"MA"	25.97' LT	780.41	623736.03	377258.81	3'R
875	9+97.61"MA"	25.98' LT	-	623739.03	377258.82	3'R
876	9+59.61"MA"	26.70' LT	780.69	623701.03	377259.49	MATCH EXISTING
877	9+94.61"MA"	26.83' LT	780.54	623736.03	377259.67	MATCH EXISTING
CE 12+42"MA" RT						
880	12+30.60"MA"	14' RT	779.35	623971.83	377215.56	5'R
881	12+53.39"MA"	14' RT	779.29	623994.61	377215.23	5'R
882	12+35.60"MA"	19' RT	779.65	623976.76	377210.49	5'R
883	12+30.60"MA"	19' RT	-	623971.76	377210.56	5'R
884	12+48.39"MA"	19' RT	779.56	623989.54	377210.30	5'R
885	12+53.39"MA"	19' RT	-	623994.54	377210.23	5'R
886	12+35.60"MA"	22.09' RT	779.77	623976.71	377207.40	MATCH EXISTING
887	12+48.39"MA"	21.93' RT	779.68	623989.50	377207.38	MATCH EXISTING
CE 12+45"MA" LT						
890	12+21.42"MA"	18.38' LT	779.26	623963.11	377248.06	8'R
891	12+67.40"MA"	19.0' LT	779.35	624009.10	377248.04	8'R
892	12+29.31"MA"	26.48' LT	780.64	623971.11	377256.05	8'R
893	12+21.31"MA"	26.38' LT	-	623963.11	377256.06	8'R
894	12+59.30"MA"	26.90' LT	780.56	624001.10	377256.04	8'R
895	12+67.29"MA"	27.00' LT	-	624009.10	377256.04	8'R
896	12+29.30"MA"	27.46' LT	780.76	623971.12	377257.04	MATCH EXISTING
897	12+59.28"MA"	27.84' LT	780.65	624001.10	377256.98	MATCH EXISTING
CE 327+31"SB" LT						
900	327+07.62"SB"	17.96' LT	780.78	623827.99	377375.37	8'R
901	327+58.62"SB"	17.96' LT	781.02	623823.89	377426.21	8'R
902	327+15.62"SB"	25.96' LT	780.81	623819.37	377382.70	8'R
903	327+07.62"SB"	25.96' LT	-	623820.02	377374.73	8'R
904	327+50.62"SB"	25.96' LT	781.02	623816.56	377417.59	8'R
905	327+58.62"SB"	25.96' LT	-	623815.91	377425.56	8'R
906	327+07.54"SB"	21.46' LT	781.29	623824.51	377375.01	FRONT OF SIDEWALK
907	327+07.54"SB"	26.46' LT	781.31	623819.53	377374.61	BACK OF SIDEWALK
908	327+14.24"SB"	21.46' LT	780.78	623823.97	377381.68	FRONT OF SIDEWALK
909	327+15.62"SB"	26.46' LT	780.81	623818.88	377382.66	BACK OF SIDEWALK
910	327+52.01"SB"	21.46' LT	781.01	623820.93	377419.33	FRONT OF SIDEWALK
911	327+50.62"SB"	26.46' LT	781.03	623816.06	377417.55	BACK OF SIDEWALK
912	327+59.73"SB"	21.46' LT	781.42	623820.31	377427.03	FRONT OF SIDEWALK
913	327+59.73"SB"	26.46' LT	781.65	623815.32	377426.63	BACK OF SIDEWALK
914	327+15.62"SB"	27.38' LT	780.63	623817.97	377382.59	MATCH EXISTING
915	327+50.62"SB"	27.23' LT	780.62	623815.30	377417.49	MATCH EXISTING

LAYOUT POINTS - DRIVEWAYS

PT	STATION	OFFSET	ELEV	EASTING	NORTHING	REMARKS
CE 327+55"NB" RT						
920	327+32.05"NB"	18' RT	780.83	623878.57	377401.75	8'R
921	327+71.05"NB"	19.85' RT	780.97	623878.57	377442.02	8'R
922	327+40.05"NB"	26' RT	781.21	623886.45	377409.86	8'R
923	327+32.05"NB"	26' RT	-	623886.56	377401.86	8'R
924	327+62.32"NB"	27.06' RT	781.32	623886.45	377433.91	8'R
925	327+70.29"NB"	27.82' RT	-	623886.57	377441.91	8'R
926	327+30.23"NB"	21.5' RT	781.12	623882.09	377399.97	FRONT OF SIDEWALK
927	327+30.23"NB"	26.5' RT	781.45	623887.09	377400.04	BACK OF SIDEWALK
928	327+38.67"NB"	21.5' RT	781.14	623881.97	377408.41	FRONT OF SIDEWALK
929	327+40.05"NB"	26.5' RT	781.22	623886.95	377409.87	BACK OF SIDEWALK
930	327+64.13"NB"	22.71' RT	781.26	623881.97	377435.36	FRONT OF SIDEWALK
931	327+62.28"NB"	27.55' RT	781.33	623886.94	377433.90	BACK OF SIDEWALK
932	327+75.88"NB"	23.83' RT	781.57	623882.14	377447.16	FRONT OF SIDEWALK
933	327+75.40"NB"	28.80' RT	781.67	623887.14	377447.09	BACK OF SIDEWALK
934	327+40.05"NB"	33' RT	781.83	623893.45	377409.96	MATCH EXISTING
935	327+61.69"NB"	33.69' RT	781.63	623893.12	377433.81	MATCH EXISTING
CE 327+95"SB" LT						
940	327+77.70"SB"	15.96' LT	781.22	623824.34	377445.38	10'R
941	328+32.45"SB"	15.96' LT	781.55	623819.93	377499.96	10'R
942	327+87.69"SB"	25.63' LT	781.25	623813.90	377454.57	10'R
943	327+77.70"SB"	25.96' LT	-	623814.38	377444.58	10'R
944	328+22.47"SB"	26.63' LT	781.46	623810.11	377489.16	10'R
945	328+33.52"SB"	25.96' LT	-	623809.97	377499.15	10'R
946	327+79.95"SB"	21.46' LT	781.68	623818.68	377447.19	FRONT OF SIDEWALK
947	327+79.95"SB"	26.46' LT	781.72	623813.70	377446.79	BACK OF SIDEWALK
948	327+86.63"SB"	21.46' LT	781.22	623818.14	377453.84	FRONT OF SIDEWALK
949	327+87.72"SB"	26.46' LT	781.25	623813.07	377454.53	BACK OF SIDEWALK
950	328+23.52"SB"	21.46' LT	781.44	623815.17	377490.62	FRONT OF SIDEWALK
951	328+22.46"SB"	26.46' LT	781.46	623810.27	377489.16	BACK OF SIDEWALK
952	328+31.23"SB"	21.46' LT	781.79	623814.55	377498.30	FRONT OF SIDEWALK
953	328+31.23"SB"	26.46' LT	781.84	623809.57	377497.90	BACK OF SIDEWALK
954	327+88.04"SB"	35.93' LT	780.86	623803.61	377454.08	MATCH EXISTING
955	328+07.22"SB"	35.28' LT	780.99	623802.71	377473.25	MATCH EXISTING
956	328+08.60"SB"	51.20' LT	781.23	623786.74	377473.34	MATCH EXISTING
957	328+23.35"SB"	39.70' LT	781.39	623797.01	377488.97	10'R
958	328+34.51"SB"	48.96' LT	781.39	623786.88	377499.35	10'R; MATCH EXISTING
959	328+33.32"SB"	39.03' LT	-	623796.87	377498.97	10'R

2

PROJECT NO:5144-01-75	HWY:STH 27	COUNTY:MONROE	CONSTRUCTION DETAILS	SHEET 36	E

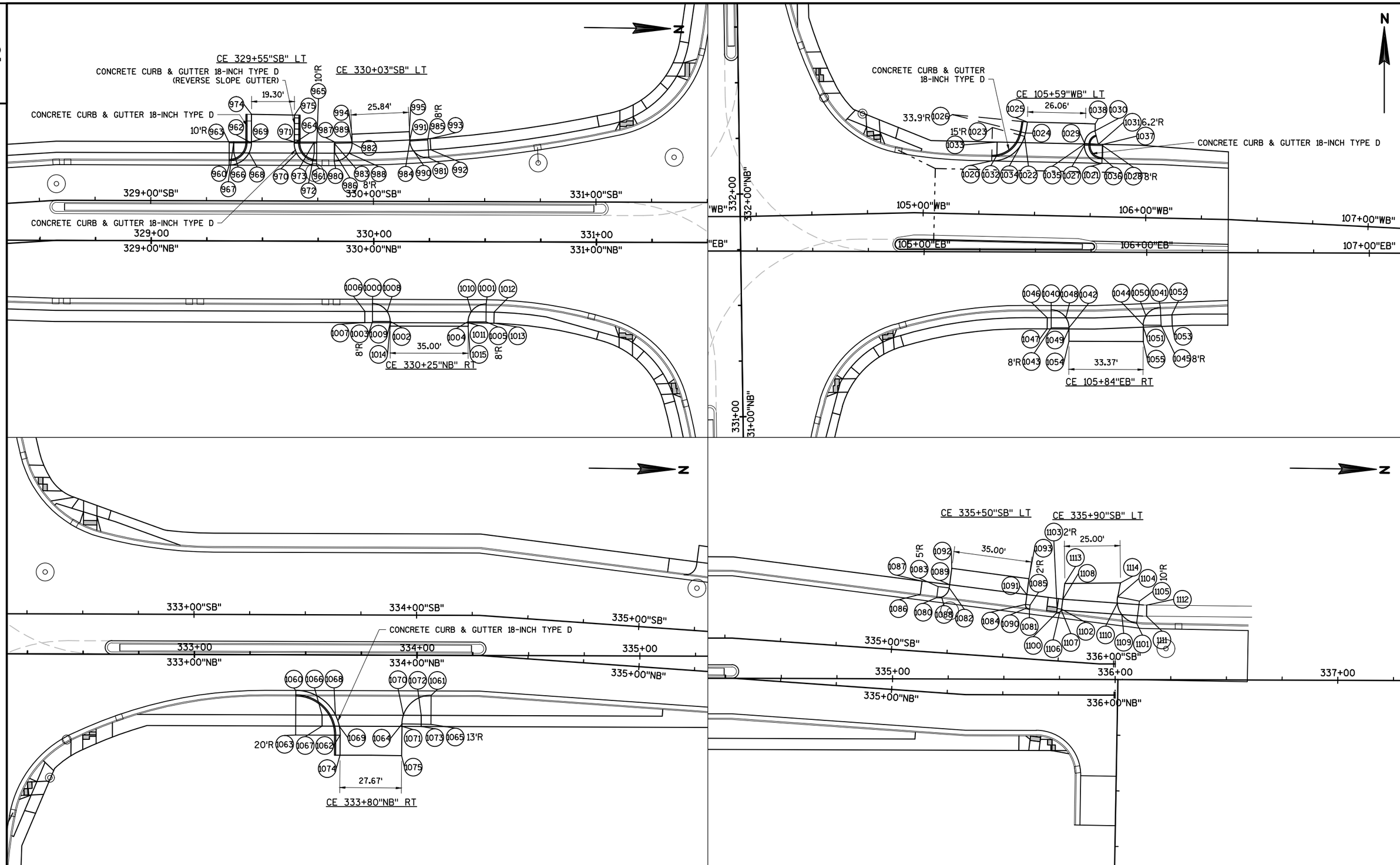

PROJECT NO:5144-01-75	HWY:STH 27	COUNTY:MONROE	CONSTRUCTION DETAILS	SHEET 37	E

FILE NAME : N:\PDS\C3D\51440105\SHEETSPLAN\021231_PD.DWG
LAYOUT NAME - 021025-CD
PLOT DATE : 7/27/2017 8:22 AM PLOT BY : VALENTI, PAUL M PLOT NAME : PLOT SCALE : **********

WISDOT/CADDS SHEET 42

2

LAYOUT POINTS - DRIVEWAYS

PT	STATION	OFFSET	ELEV	EASTING	NORTHING	REMARKS
CE 329+55"SB" LT						
960	329+35.12"SB"	16' LT	782.18	623816.73	377603.60	10'R
961	329+74.42"SB"	16' LT	782.40	623816.17	377642.90	10'R
962	329+45.12"SB"	26' LT	782.19	623806.59	377613.46	10'R
963	329+35.12"SB"	26' LT	-	623806.73	377603.46	10'R
964	329+64.42"SB"	26' LT	782.30	623806.32	377632.76	10'R
965	329+74.42"SB"	26' LT	-	623806.17	377642.76	10'R
966	329+37.20"SB"	21.5' LT	782.67	623811.20	377605.60	FRONT OF SIDEWALK
967	329+37.20"SB"	26.5' LT	782.74	623806.20	377605.53	BACK OF SIDEWALK
968	329+44.05"SB"	21.5' LT	782.16	623811.10	377612.45	FRONT OF SIDEWALK
969	329+45.12"SB"	26.5' LT	782.20	623806.09	377613.45	BACK OF SIDEWALK
970	329+65.49"SB"	21.5' LT	782.29	623810.80	377633.89	FRONT OF SIDEWALK
971	329+64.42"SB"	26.5' LT	782.31	623805.82	377632.75	BACK OF SIDEWALK
972	329+73.32"SB"	21.5' LT	782.89	623810.69	377641.72	FRONT OF SIDEWALK
973	329+73.32"SB"	26.5' LT	782.95	623805.69	377641.65	BACK OF SIDEWALK
974	329+45.12"SB"	38.86' LT	781.78	623793.72	377613.28	MATCH EXISTING
975	329+64.42"SB"	38.61' LT	781.89	623793.71	377632.58	MATCH EXISTING
CE 330+03"SB" LT						
980	329+82.32"SB"	18.00' LT	782.35	623814.06	377650.76	8'R
981	330+24.87"SB"	19.61' LT	782.57	623811.86	377693.29	8'R
982	329+90.30"SB"	26.13' LT	782.50	623805.82	377658.63	8'R
983	329+82.30"SB"	26.00' LT	-	623806.06	377650.63	8'R
984	330+16.30"SB"	27.11' LT	782.58	623804.48	377684.61	8'R
985	330+24.29"SB"	27.59' LT	-	623803.89	377692.59	8'R
986	329+82.57"SB"	21.5' LT	782.85	623810.56	377650.97	FRONT OF SIDEWALK
987	329+82.57"SB"	26.5' LT	782.98	623805.56	377650.90	BACK OF SIDEWALK
988	329+88.95"SB"	21.55' LT	782.51	623810.42	377657.34	FRONT OF SIDEWALK
989	329+90.29"SB"	26.57' LT	782.50	623805.38	377658.62	BACK OF SIDEWALK
990	330+17.99"SB"	22.65' LT	782.57	623808.91	377686.37	FRONT OF SIDEWALK
991	330+16.27"SB"	27.55' LT	782.58	623804.03	377684.58	BACK OF SIDEWALK
992	330+25.76"SB"	23.18' LT	783.04	623808.27	377694.13	FRONT OF SIDEWALK
993	330+25.39"SB"	28.17' LT	783.16	623803.29	377693.69	BACK OF SIDEWALK
994	329+90.24"SB"	30.09' LT	782.51	623801.86	377658.51	MATCH EXISTING
995	330+16.05"SB"	31.32' LT	782.46	623800.27	377684.30	MATCH EXISTING
CE 330+25"NB" RT						
1000	329+99.63"NB"	28' RT	782.14	623877.81	377669.11	8'R
1001	330+50.71"NB"	28.01' RT	782.39	623877.10	377720.18	8'R
1002	330+07.63"NB"	36' RT	782.28	623885.70	377677.22	8'R
1003	329+99.63"NB"	36' RT	-	623885.81	377669.22	8'R
1004	330+42.63"NB"	36.01' RT	782.58	623885.22	377712.22	8'R
1005	330+50.63"NB"	36.01' RT	-	623885.10	377720.22	8'R
1006	329+96.22"NB"	31.5' RT	782.54	623881.36	377665.74	FRONT OF SIDEWALK
1007	329+96.22"NB"	36.5' RT	782.73	623886.36	377665.81	BACK OF SIDEWALK
1008	330+06.25"NB"	31.5' RT	782.20	623881.22	337675.77	FRONT OF SIDEWALK
1009	330+07.63"NB"	36.5' RT	782.29	623886.20	377677.23	BACK OF SIDEWALK
1010	330+44.02"NB"	31.5' RT	782.52	623880.69	377713.54	FRONT OF SIDEWALK
1011	330+42.63"NB"	36.5' RT	782.58	623885.71	377712.22	BACK OF SIDEWALK
1012	330+54.31"NB"	31.58' RT	783.01	623880.62	377723.83	FRONT OF SIDEWALK
1013	330+54.17"NB"	36.57' RT	783.08	623885.62	377723.76	BACK OF SIDEWALK
1014	330+07.63"NB"	38' RT	782.26	623887.70	377677.25	MATCH EXISTING
1015	330+42.63"NB"	38' RT	782.66	623887.21	377712.24	MATCH EXISTING
CE 105+59"WB" LT						
1020	105+30.26"WB"	24' LT	783.53	623960.11	377884.06	15'R
1021	105+79.83"WB"	24' LT	783.74	624009.67	377882.96	8'R
1022	105+44.79"WB"	35.28' LT	783.76	623974.88	377895.02	15'R
1023	105+30.26"WB"	39' LT	-	623960.44	377899.06	15'R
1024	105+45.19"WB"	36.84' LT	783.51	623975.32	377896.56	33.9'R
1025	105+45.94"WB"	41.78' LT	783.42	623976.18	377901.49	33.9'R; MATCH EXISTING
1026	105+12.12"WB"	44.40' LT	-	623942.43	377904.86	33.9'R
1027	105+71.83"WB"	31.96' LT	783.70	624001.84	377891.09	8'R
1028	105+79.83"WB"	32' LT	-	624009.84	377890.96	8'R
1029	105+71.82"WB"	32.75' LT	783.73	624001.86	377891.90	6.2'R
1030	105+76.38"WB"	38.49' LT	784.27	624006.54	377897.53	6.2'R; MATCH EXISTING
1031	105+78.01"WB"	32.52' LT	-	624008.03	377891.52	6.2'R
1032	105+32.54"WB"	26.5' LT	783.92	623962.45	377886.51	BACK OF CURB; FRONT OF SIDEWALK
1033	105+32.54"WB"	32.5' LT	783.91	623962.58	377892.51	BACK OF SIDEWALK
1034	105+43.77"WB"	32.5' LT	783.59	623973.81	377892.26	BACK OF SIDEWALK
1035	105+71.82"WB"	32.5' LT	783.71	624001.85	377891.64	BACK OF SIDEWALK
1036	105+80.01"WB"	26.5' LT	784.11	624009.91	377885.46	BACK OF CURB; FRONT OF SIDEWALK
1037	105+80.01"WB"	32.5' LT	784.13	624010.04	377891.46	BACK OF SIDEWALK
1038	105+76.38"WB"	41.64' LT	784.49	624006.61	377900.67	MATCH EXISTING

LAYOUT POINTS - DRIVEWAYS

PT	STATION	OFFSET	ELEV	EASTING	NORTHING	REMARKS
CE 105+84"EB" RT						
1040	105+57.21"EB"	26' RT	783.51	623986.87	377817.11	8'R
1041	106+06.24"EB"	24.74' RT	783.64	624035.90	377818.21	8'R
1042	105+65.21"EB"	34' RT	783.94	623994.84	377809.09	8'R
1043	105+57.21"EB"	34' RT	-	623986.84	377809.11	8'R
1044	105+98.58"EB"	32.73' RT	784.00	624028.22	377810.24	8'R
1045	106+06.58"EB"	32.73' RT	-	624036.22	377810.21	8'R
1046	105+55.42"EB"	29.5' RT	783.97	623985.07	377813.62	FRONT OF SIDEWALK
1047	105+55.42"EB"	34.5' RT	784.18	623985.05	377808.62	BACK OF SIDEWALK
1048	105+63.83"EB"	29.5' RT	783.88	623993.47	377813.59	FRONT OF SIDEWALK
1049	105+65.21"EB"	34.5' RT	783.95	623994.84	377808.59	BACK OF SIDEWALK
1050	106+99.79"EB"	28.52' RT	783.94	624029.43	377814.45	FRONT OF SIDEWALK
1051	105+98.58"EB"	33.57' RT	784.01	624028.21	377809.40	BACK OF SIDEWALK
1052	106+11.41"EB"	28.02' RT	784.14	624041.06	377814.91	FRONT OF SIDEWALK
1053	106+11.62"EB"	33.02' RT	784.26	624041.25	377809.91	BACK OF SIDEWALK
1054	105+65.21"EB"	40' RT	784.09	623994.82	377803.09	MATCH EXISTING
1055	105+98.58"EB"	40' RT	784.58	624028.19	377802.97	MATCH EXISTING
CE 333+80"NB" RT						
1060	333+45.70"NB"	16' RT	784.34	623860.96	378014.98	20'R
1061	334+06.51"NB"	18' RT	784.91	623862.10	378075.81	13'R
1062	333+65.70"NB"	36' RT	784.92	623880.67	378035.25	20'R
1063	333+45.70"NB"	36' RT	-	623880.95	378015.26	20'R
1064	333+93.51"NB"	30.87' RT	785.15	623875.15	378062.99	13'R
1065	334+06.51"NB"	31' RT	-	623875.10	378075.99	13'R
1066	333+57.56"NB"	27' RT	784.56	623871.79	378026.99	FRONT OF SIDEWALK
1067	333+57.56"NB"	32' RT	785.25	623876.79	378027.06	BACK OF SIDEWALK
1068	333+63.56"NB"	27' RT	784.76	623871.70	378032.99	FRONT OF SIDEWALK
1069	333+65.30"NB"	32' RT	784.85	623876.68	378034.79	BACK OF SIDEWALK
1070	333+94.14"NB"	27' RT	785.10	623871.27	378063.57	FRONT OF SIDEWALK
1071	333+93.50"NB"	32' RT	785.17	623876.28	378063.00	BACK OF SIDEWALK
1072	334+02.10"NB"	27' RT	785.54	623871.16	378071.53	FRONT OF SIDEWALK
1073	334+02.10"NB"	32' RT	785.76	623876.16	378071.60	BACK OF SIDEWALK
1074	333+65.70"NB"	45' RT	785.24	623889.67	378035.38	MATCH EXISTING
1075	333+93.37"NB"	45.14' RT	785.90	623889.42	378063.05	MATCH EXISTING
CE 335+50"SB" LT						
1080	335+18.66"SB"	24.60' LT	785.72	623805.98	378188.48	5'R
1081	335+60.59"SB"	22.25' LT	785.72	623810.56	378230.23	2'R
1082	335+23.94"SB"	29.30' LT	785.53	623801.56	378194.00	5'R
1083	335+18.95"SB"	29.59' LT	-	623801.01	378189.03	5'R
1084	335+58.71"SB"	24.34' LT	785.71	623808.35	378228.56	2'R
1085	335+60.70"SB"	24.22' LT	-	623808.57	378230.45	2'R
1086	335+11.20"SB"	25.54' LT	785.82	623804.66	378181.08	BACK OF CURB; FRONT OF SIDEWALK
1087	335+11.55"SB"	31.52' LT	785.79	623798.70	378181.74	BACK OF SIDEWALK
1088	335+20.86"SB"	24.98' LT	785.44	623805.72	378190.70	BACK OF CURB; FRONT OF SIDEWALK
1089	335+24.02"SB"	30.80' LT	785.55	623800.07	378194.16	BACK OF SIDEWALK
1090	335+59.35"SB"	22.75' LT	785.69	623809.97	378229.02	BACK OF CURB; FRONT OF SIDEWALK
1091	335+58.96"SB"	58.96' LT	785.78	623803.92	378228.95	BACK OF SIDEWALK
1092	335+24.45"SB"	38.20' LT	786.32	623792.70	378194.98	MATCH EXISTING
1093	335+59.38"SB"	35.96' LT	786.39	623796.77	378229.74	MATCH EXISTING
CE 335+90"SB" LT						
1100	335+72.85"SB"	21.47' LT	785.81	623811.96	378242.43	2'R
1101	336+09.59	25.30' LT	786.29	623815.95	378278.49	10'R
1102	335+74.96"SB"	23.35' LT	785.82	623810.19	378244.64	2'R
1103	335+72.97"SB"	23.46' LT	-	623809.97	378242.65	2'R
1104	336+01.03	37.16' LT	786.42	623804.21	378269.76	10'R
1105	336+10.84	35.22' LT	-	623806.01	378279.60	10'R
1106	335+74.20"SB"	21.89' LT	785.82	623811.61	378243.80	BACK OF CURB; FRONT OF SIDEWALK
1107	335+74.87"SB"	22.85' LT	785.80	623810.68	378244.52	FRONT OF SIDEWALK
1108	335+75.22"SB"	27.84' LT	785.94	623805.72	378245.14	BACK OF SIDEWALK
1109	336+67.39	29.15' LT	786.08	623812.20	378271.74	FRONT OF SIDEWALK
1110	336+00.88	34.30' LT	786.14	623807.07	378269.65	BACK OF SIDEWALK
1111	336+14.04	28.48' LT	786.63	623812.71	378282.89	FRONT OF SIDEWALK
1112	336+14.06	33.48' LT	786.76	623807.71	378282.85	BACK OF SIDEWALK
1113	335+75.63"SB"	34.92' LT	786.52	623798.67	378245.92	MATCH EXISTING
1114	335+02.26	43.42' LT	787.05	623797.94	378270.91	MATCH EXISTING

2

2

POINT NO.	STATION	OFFSET	ELEV.	Y	X	REMARKS
100	10+00.00 M	0.00'RT	778.53	374,964.78	623,887.77	CENTERLINE
101	10+00.00 M	4680.00'LT	---	374,899.09	619,208.24	R=4680'
102	12+56.31 M	18.00'RT	774.86	375,221.28	623,907.10	EDGE OF ASPHALT
103	12+94.04 M	12.95'LT	774.97	375,257.72	623,874.47	---
104	12+82.59 M	30.88'LT	774.62	375,245.51	623,857.35	EDGE OF ASPHALT
105	12+94.08 M	24.95'LT	774.73	375,256.80	623,862.51	EDGE OF PAVEMENT
106	12+26.80 M	724.36'LT	---	375,203.16	623,164.57	R=700'
107	10+35.68 M	16.25'LT	777.67	375,000.33	623,871.14	EDGE OF ASPHALT
108	10+69.03 M	18.93'LT	777.17	375,033.78	623,868.29	EDGE OF ASPHALT
109	10+36.00 M	16.00'RT	777.74	375,000.90	623,903.42	EDGE OF ASPHALT
110	10+69.58 M	18.00'RT	777.26	375,034.39	623,905.22	EDGE OF ASPHALT
111	11+73.86 M	18.00'RT	775.90	375,138.35	623,905.98	EDGE OF ASPHALT; BEGIN EAT
112	11+97.41 M	25.58'LT	775.62	375,162.59	623,862.78	EDGE OF ASPHALT; BEGIN EAT
113	12+26.99 M	25.90'RT	774.41	375,191.34	623,914.73	EDGE OF AGGREGATE
114	11+89.29 M	694.17'LT	---	375,165.18	623,194.15	R= 721'
115	12+50.25 M	37.53'LT	774.33	375,215.01	623,851.60	EDGE OF AGGREGATE
116	13+95.34 M	1191.63'LT	---	375,235.15	622,691.32	R=1160.5'
117	12+00.23 M	29.74'LT	775.19	375,165.48	623,858.67	EDGE OF AGGREGATE
118	12+24.97 M	33.02'LT	774.83	375,190.27	623,855.79	EDGE OF AGGREGATE
119	11+76.99 M	21.93'RT	775.47	375,141.42	623,909.96	EDGE OF AGGREGATE
120	12+02.05 M	23.33'RT	774.94	375,166.45	623,911.77	EDGE OF AGGREGATE

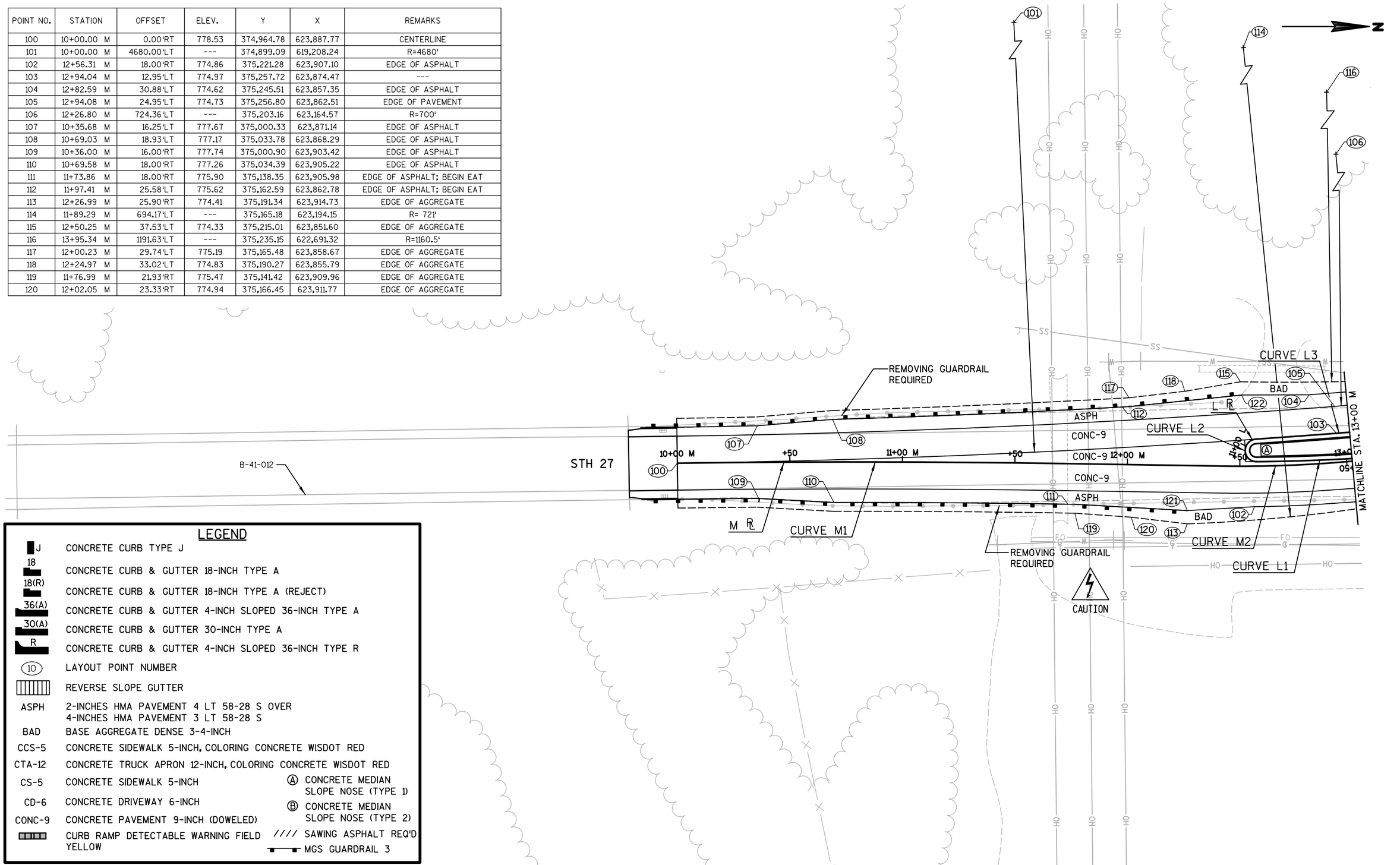

2

PROJECT NO: 5144-01-75	HWY: STH 27	COUNTY: MONROE	LAYOUT DETAILS	SHEET 39	E

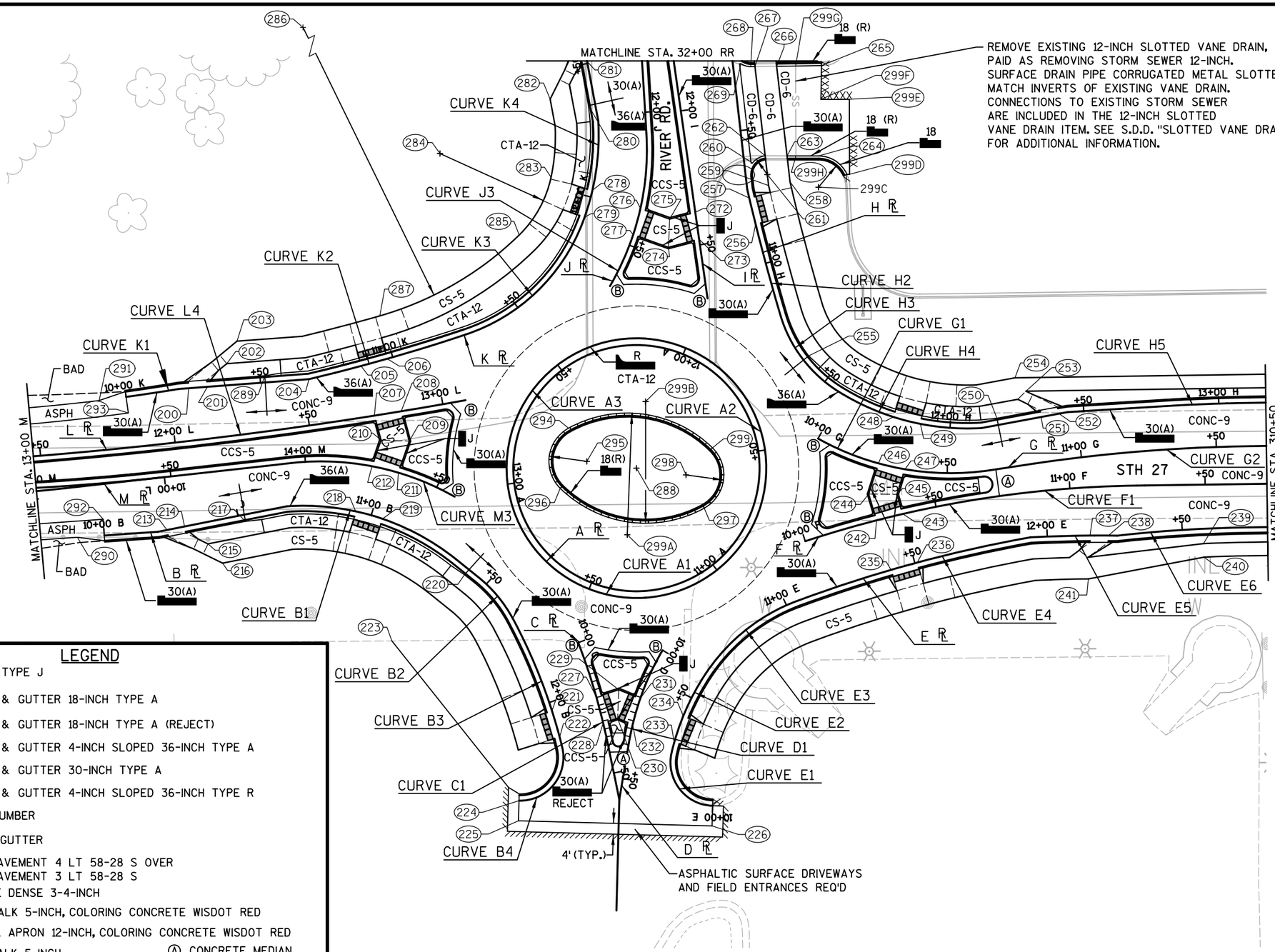

REMOVE EXISTING 12-INCH SLOTTED VANE DRAIN, PAID AS REMOVING STORM SEWER 12-INCH. SURFACE DRAIN PIPE CORRUGATED METAL SLOTTED 12-INCH REQ'D. MATCH INVERTS OF EXISTING VANE DRAIN. CONNECTIONS TO EXISTING STORM SEWER ARE INCLUDED IN THE 12-INCH SLOTTED VANE DRAIN ITEM. SEE S.D.D. "SLOTTED VANE DRAIN" FOR ADDITIONAL INFORMATION.

LEGEND

J	CONCRETE CURB TYPE J
18	CONCRETE CURB & GUTTER 18-INCH TYPE A
18(R)	CONCRETE CURB & GUTTER 18-INCH TYPE A (REJECT)
36(A)	CONCRETE CURB & GUTTER 4-INCH SLOPED 36-INCH TYPE A
30(A)	CONCRETE CURB & GUTTER 30-INCH TYPE A
R	CONCRETE CURB & GUTTER 4-INCH SLOPED 36-INCH TYPE R
(10)	LAYOUT POINT NUMBER
	REVERSE SLOPE GUTTER
ASPH	2-INCHES HMA PAVEMENT 4 LT 58-28 S OVER 4-INCHES HMA PAVEMENT 3 LT 58-28 S
BAD	BASE AGGREGATE DENSE 3-4-INCH
CCS-5	CONCRETE SIDEWALK 5-INCH, COLORING CONCRETE WISDOT RED
CTA-12	CONCRETE TRUCK APRON 12-INCH, COLORING CONCRETE WISDOT RED
CS-5	CONCRETE SIDEWALK 5-INCH
CD-6	CONCRETE DRIVEWAY 6-INCH
CONC-9	CONCRETE PAVEMENT 9-INCH (DOWELED)
	CURB RAMP DETECTABLE WARNING FIELD YELLOW
Ⓐ	CONCRETE MEDIAN SLOPE NOSE (TYPE 1)
Ⓑ	CONCRETE MEDIAN SLOPE NOSE (TYPE 2)
////	SAWING ASPHALT REQ'D
	MGS GUARDRAIL 3

NOTE: PLAN DETAIL POINTS 270 AND 271 NOT USED

PROJECT NO: 5144-01-75	HWY: STH 27	COUNTY: MONROE	LAYOUT DETAILS	SHEET 40	E

2

POINT NO.	STATION	OFFSET	ELEV.	Y	X	REMARKS
200	10+23.37 K	0.00'RT	773.74	375,320.97	623,848.83	CURB RAMP OPENING
201	10+30.32 K	0.00'RT	773.65	375,327.89	623,848.31	CURB RAMP OPENING
202	10+38.12 K	8.00'LT	---	375,335.07	623,839.75	FOS
203	10+42.52 K	16.00'LT	---	375,338.87	623,831.44	BOS
204	10+67.99 K	0.00'RT	773.19	375,365.46	623,845.49	---
205	10+87.84 K	0.00'RT	772.94	375,384.71	623,840.62	CURB RAMP OPENING
206	10+97.84 K	0.00'RT	772.82	375,394.35	623,837.95	CURB RAMP OPENING
207	12+74.35 L	0.00'RT	773.20	375,389.64	623,858.97	CURB RAMP OPENING
208	12+84.40 L	0.00'RT	773.06	375,399.56	623,857.37	CURB RAMP OPENING
209	14+35.25 M	12.36'LT	---	375,402.52	623,868.37	FOC
210	14+26.06 M	10.13'LT	---	375,392.07	623,868.02	FOC
211	14+34.81 M	0.00'RT	772.86	375,398.51	623,880.08	CURB RAMP OPENING
212	14+24.76 M	0.00'RT	772.99	375,388.76	623,877.69	CURB RAMP OPENING
213	10+23.30 B	0.00'RT	773.61	375,312.98	623,901.24	CURB RAMP OPENING
214	10+29.91 B	0.00'RT	773.54	375,319.47	623,899.96	CURB RAMP OPENING
215	10+37.16 B	8.00'RT	---	375,328.13	623,906.40	FOS
216	10+41.09 B	16.00'RT	---	375,333.54	623,913.49	BOS
217	10+52.38 B	2.50'RT	---	375,341.99	623,898.06	CURB AND GUTTER TRANSITION
218	10+94.01 B	0.00'RT	772.77	375,382.69	623,894.36	CURB RAMP OPENING
219	11+04.38 B	0.00'RT	772.63	375,392.67	623,897.14	CURB RAMP OPENING
220	11+41.53 B	2.50'RT	---	375,422.94	623,917.79	CURB AND GUTTER TRANSITION
221	12+03.30 B	0.00'RT	773.30	375,455.30	623,968.15	CURB RAMP OPENING
222	12+13.43 B	0.00'RT	773.00	375,458.13	623,977.87	CURB RAMP OPENING
223	11+35.92 B	38.38'RT	---	375,396.12	623,942.26	MATCH EXISTING GROUND
224	10+59.28 D	37.05'RT	---	375,443.10	624,001.33	MATCH EXISTING GROUND
225	10+66.74 D	37.05'RT	773.04	375,442.91	624,008.78	MATCH EXISTING GROUND
226	10+66.74 D	34.54'LT	773.51	375,514.47	624,010.66	MATCH EXISTING GROUND
227	10+21.11 C	0.00'RT	773.19	375,471.69	623,962.93	CURB RAMP OPENING
228	10+31.12 C	0.00'RT	773.30	375,474.22	623,972.61	CURB RAMP OPENING
229	10+20.84 C	8.70'LT	---	375,479.98	623,960.28	FOC
230	10+30.72 C	5.58'LT	---	375,479.55	623,970.91	FOC
231	10+19.67 D	0.00'RT	773.41	375,487.93	623,963.53	CURB RAMP OPENING
232	10+29.73 D	0.00'RT	773.56	375,485.11	623,973.18	CURB RAMP OPENING
233	10+32.30 E	0.00'RT	773.30	375,500.48	623,979.77	CURB RAMP OPENING
234	10+42.61 E	0.00'RT	773.18	375,503.82	623,970.03	CURB RAMP OPENING
235	11+40.85 E	0.00'RT	773.65	375,580.64	623,916.01	CURB RAMP OPENING
236	11+50.90 E	0.00'RT	773.75	375,590.32	623,913.31	CURB RAMP OPENING
237	12+15.80 E	0.00'RT	774.31	375,654.17	623,903.33	CURB RAMP OPENING
238	12+22.57 E	0.00'RT	774.36	375,660.94	623,903.32	CURB RAMP OPENING
239	12+57.59 E	5.50'RT	---	375,696.11	623,906.30	FOS
240	12+57.59 E	10.50'RT	---	375,696.35	623,911.30	BOS
241	12+15.02 E	16.00'RT	---	375,653.53	623,919.33	BOS
242	10+27.43 F	0.00'RT	773.88	375,575.24	623,897.69	CURB RAMP OPENING
243	10+37.45 F	0.00'RT	774.00	375,584.96	623,895.32	CURB RAMP OPENING
244	10+27.09 F	10.16'LT	---	375,572.37	623,887.94	FOC
245	10+37.00 F	7.56'LT	---	375,582.83	623,888.06	FOC
246	10+24.24 G	0.00'RT	774.01	375,575.98	623,876.63	CURB RAMP OPENING
247	10+34.28 G	0.00'RT	774.11	375,585.78	623,878.81	CURB RAMP OPENING
248	11+78.61 H	0.00'LT	773.75	375,581.46	623,859.44	CURB RAMP OPENING
249	11+88.98 H	0.00'RT	773.86	375,591.50	623,862.02	CURB RAMP OPENING
250	12+17.93 H	2.50'LT	---	375,619.78	623,859.96	CURB AND GUTTER TRANSITION
251	12+34.09 H	0.00'RT	774.27	375,636.13	623,859.46	CURB RAMP OPENING
252	12+40.72 H	0.00'RT	774.32	375,642.64	623,858.24	CURB RAMP OPENING
253	12+30.28 H	10.40'LT	---	375,630.47	623,849.93	FOS
254	12+27.24 H	16.00'LT	---	375,626.46	623,844.98	BOS
255	11+38.71 H	2.50'LT	---	375,550.22	623,836.87	CURB AND GUTTER TRANSITION
256	10+85.18 H	0.00'RT	772.98	375,530.59	623,788.28	CURB RAMP OPENING
257	10+75.18 H	0.00'RT	773.03	375,528.25	623,778.56	CURB RAMP OPENING
258	10+70.93 H	16.00'LT	---	375,543.28	623,772.56	BOS
259	10+72.27 H	8.00'LT	---	375,535.38	623,773.92	FOS
260	10+62.40 H	3.00'LT	---	375,535.38	623,773.92	---
261	10+67.30 H	8.00'LT	---	375,534.92	623,769.88	R=7'

POINT NO.	STATION	OFFSET	ELEV.	Y	X	REMARKS
262	10+60.30 H	8.00'LT	773.55	375,534.11	623,762.92	---
263	10+61.25 H	16.00'LT	773.66	375,542.17	623,762.95	---
264	10+62.59 H	27.55'LT	774.39	375,553.80	623,762.95	---
265	10+29.59 H	32.49'LT	---	375,554.92	623,729.60	MATCH EXISTING PAVEMENT
266	10+27.91 H	16.00'LT	773.82	375,554.92	623,729.60	---
267	10+27.10 H	8.00'LT	773.71	375,530.31	623,729.94	---
268	10+26.94 H	6.42'LT	---	375,528.72	623,729.96	---
269	10+25.41 H	3.00'LT	---	375,525.15	623,728.84	---
272	12+37.88 I	0.00'RT	773.42	375,508.26	623,783.81	CURB RAMP OPENING
273	12+47.95 I	0.00'RT	773.37	375,509.68	623,793.77	CURB RAMP OPENING
274	12+46.12 J	13.85'LT	---	375,498.36	623,796.74	FOC
275	12+37.08 J	11.42'LT	---	375,498.81	623,786.29	FOC
276	12+35.81 J	0.00'RT	773.34	375,487.99	623,782.42	CURB RAMP OPENING
277	12+45.84 J	0.00'RT	773.28	375,485.31	623,792.09	CURB RAMP OPENING
278	12+02.52 K	0.00'RT	773.03	375,470.24	623,775.72	CURB RAMP OPENING
279	11+92.15 K	0.00'RT	772.96	375,467.33	623,785.67	CURB RAMP OPENING
280	12+34.63 K	2.50'LT	---	375,468.80	623,744.36	CURB AND GUTTER TRANSITION
281	12+50.79 K	0.00'RT	773.27	375,468.27	623,728.01	CURB RAMP OPENING
282	12+39.59 K	16.00'LT	---	375,454.61	623,741.98	BOS
283	12+04.09 K	16.00'LT	---	375,454.93	623,770.86	BOS
284	12+04.09 K	58.00'LT	---	375,413.85	623,762.11	R=42'
285	11+72.65 K	18.68'LT	---	375,443.16	623,792.19	BOS
286	10+99.62 K	138.00'LT	---	375,358.03	623,704.81	R=122'
287	10+99.62 K	16.00'LT	---	375,391.64	623,822.09	BOS
288	12+71.84 A	48.00'LT	776.48	375,486.50	623,878.39	---
289	10+51.83 K	2.50'LT	---	375,349.16	623,844.21	CURB AND GUTTER TRANSITION
290	13+13.18 M	18.56'RT	773.95	375,279.86	623,903.97	EDGE OF ASPHALT
291	11+73.57 L	18.42'LT	774.07	375,287.92	623,853.37	EDGE OF ASPHALT
292	13+23.38 M	12.96'RT	774.05	375,289.38	623,897.28	EDGE OF CONCRETE
293	11+83.89 L	12.72'LT	774.17	375,302.65	623,897.28	EDGE OF CONCRETE
294	12+68.54 A	18.88'LT	773.08	375,461.42	623,863.61	---
295	12+87.54 A	29.49'LT	---	375,468.17	623,875.87	R=14'
296	13+06.55 A	18.88'LT	772.86	375,458.36	623,885.86	---
297	11+17.74 A	18.88'LT	773.78	375,511.59	623,893.17	---
298	11+36.75 A	29.49'LT	---	375,504.84	623,880.91	R=14'
299	11+55.75 A	18.88'LT	774.01	375,514.65	623,870.92	---
299A	10+61.35 A	23.13'LT	---	375,483.12	623,903.03	R=45'
299B	12+12.15 A	23.13'LT	---	375,489.89	623,853.75	R=45'
299C	10+77.15 H	25.79'LT	---	375,553.80	623,774.52	R=10.6'
299D	10+75.06 H	38.12'LT	---	375,565.34	623,769.74	MATCH EXISTING PAVEMENT
299E	10+43.12 H	41.27'LT	---	375,565.19	623,742.04	MATCH EXISTING PAVEMENT
299F	10+41.95 H	30.85'LT	---	375,554.71	623,742.07	MATCH EXISTING PAVEMENT
299G	10+28.62 H	22.98'LT	774.25	375,545.36	623,729.73	VANE DRAIN GRATE
299H	10+61.63 H	19.26'LT	773.87	375,545.45	623,762.95	VANE DRAIN GRATE

2

2

POINT NO.	STATION	OFFSET	ELEV.	Y	X	REMARKS
300	10+29.16 I	22.54'LT	---	375,512.47	623,576.04	MATCH EXISTING PAVEMENT
301	10+36.62 I	82.07'LT	---	375,572.04	623,583.19	R= 60'
302	10+39.16 I	22.08'LT	773.47	375,512.06	623,586.06	PAVEMENT STRUCTURE TRANSITION
303	10+37.59 I	24.57'LT	---	375,514.55	623,584.48	---
304	10+31.61 I	38.75'LT	---	375,528.69	623,578.41	R=15.4'
305	10+45.66 I	32.49'LT	---	375,522.50	623,592.50	MATCH EXISTING PAVEMENT
306	10+82.51 I	32.23'LT	---	375,522.87	623,628.30	MATCH EXISTING PAVEMENT
307	10+97.30 I	37.67'LT	---	375,528.97	623,642.18	R=15.1'
308	10+90.47 I	24.00'LT	---	375,514.98	623,636.33	---
309	10+87.62 I	21.50'LT	773.64	375,512.35	623,633.68	---
310	11+49.74 I	21.50'LT	773.46	375,517.33	623,693.94	CURB RAMP OPENING
311	11+57.99 I	21.50'LT	773.42	375,518.33	623,701.91	CURB RAMP OPENING
312	10+07.73 H	8.00'LT	773.96	375,527.60	623,710.53	FOS
313	10+14.10 H	16.00'LT	774.05	375,536.43	623,715.57	BOS
314	10+20.43 H	16.00'LT	774.02	375,537.45	623,722.04	BOS
315	10+20.97 H	7.03'LT	---	375,528.64	623,723.96	R=6'
316	10+30.31 J	21.62'RT	---	375,467.57	623,576.35	MATCH EXISTING PAVEMENT
317	10+40.45 J	21.45'RT	773.47	375,467.22	623,586.31	PAVEMENT STRUCTURE TRANSITION
318	10+84.17 J	21.50'RT	773.63	375,464.85	623,629.97	---
319	11+73.35 J	21.09'RT	773.29	375,467.05	623,721.50	CURB RAMP OPENING
320	10+94.05 I	32.45'LT	774.13	375,523.59	623,639.36	EDGE TRUCK APRON
321	11+04.84 I	24.00'LT	---	375,515.77	623,650.26	EDGE TRUCK APRON

NOTE:
COORDINATE CONCRETE CURB & GUTTER CONSTRUCTION IN THE NORTHEAST QUADRANT WITH CONCRETE CURB & GUTTER CONSTRUCTION FOR ROBERTS ROAD INTERSECTION.

* MATCH EXISTING CURB HEAD HEIGHT

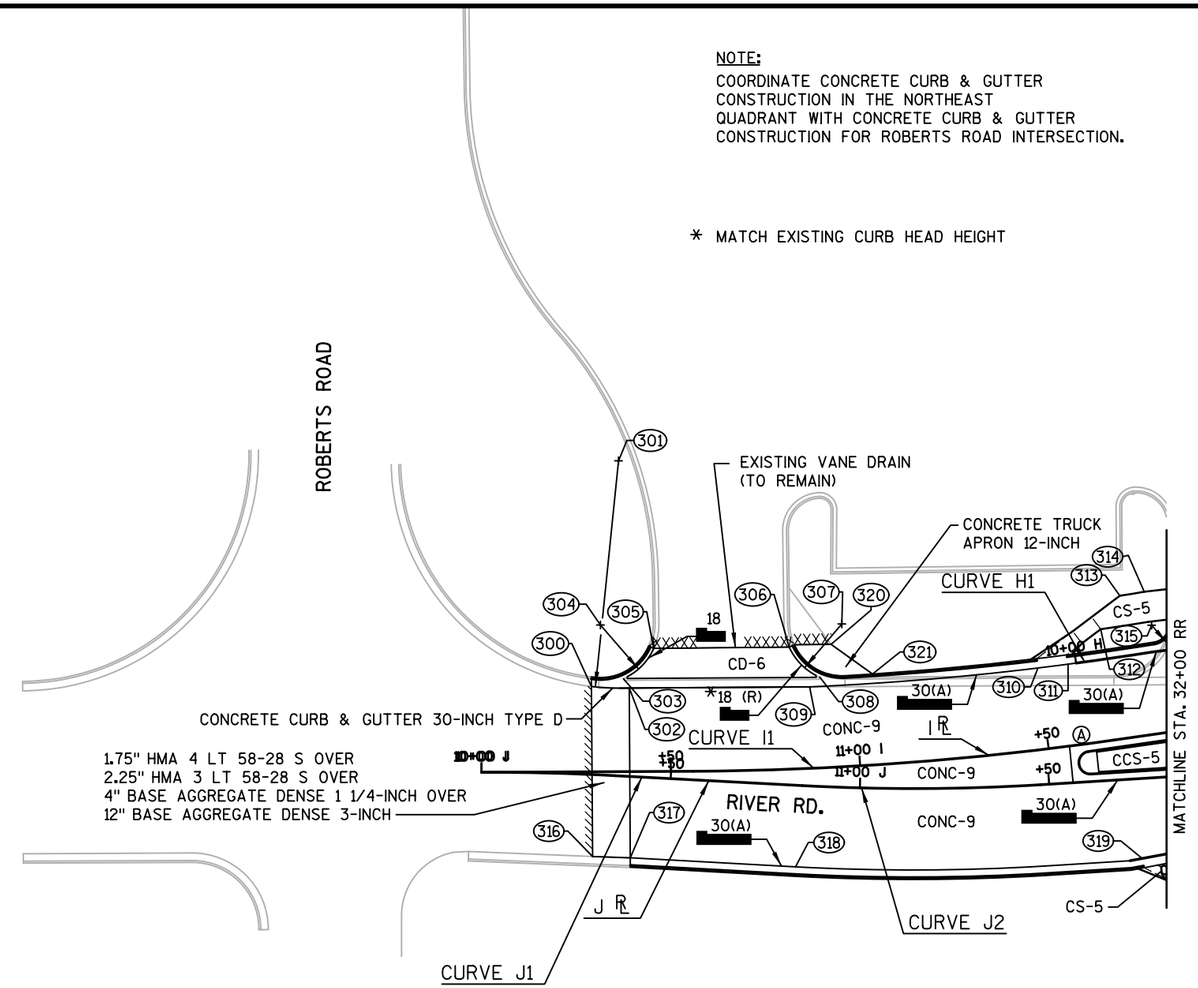

LEGEND

J	CONCRETE CURB TYPE J
18	CONCRETE CURB & GUTTER 18-INCH TYPE A
18(R)	CONCRETE CURB & GUTTER 18-INCH TYPE A (REJECT)
36(A)	CONCRETE CURB & GUTTER 4-INCH SLOPED 36-INCH TYPE A
30(A)	CONCRETE CURB & GUTTER 30-INCH TYPE A
R	CONCRETE CURB & GUTTER 4-INCH SLOPED 36-INCH TYPE R
(10)	LAYOUT POINT NUMBER
	REVERSE SLOPE GUTTER
ASPH	2-INCHES HMA PAVEMENT 4 LT 58-28 S OVER 4-INCHES HMA PAVEMENT 3 LT 58-28 S
BAD	BASE AGGREGATE DENSE 3-4-INCH
CCS-5	CONCRETE SIDEWALK 5-INCH, COLORING CONCRETE WISDOT RED
CTA-12	CONCRETE TRUCK APRON 12-INCH, COLORING CONCRETE WISDOT RED
CS-5	CONCRETE SIDEWALK 5-INCH
CD-6	CONCRETE DRIVEWAY 6-INCH
CONC-9	CONCRETE PAVEMENT 9-INCH (DOWELED)
	CURB RAMP DETECTABLE WARNING FIELD YELLOW
Ⓐ	CONCRETE MEDIAN SLOPE NOSE (TYPE 1)
Ⓑ	CONCRETE MEDIAN SLOPE NOSE (TYPE 2)
////	SAWING ASPHALT REQ'D
	MGS GUARDRAIL 3

2

PROJECT NO:5144-01-75	HWY:STH 27	COUNTY:MONROE	LAYOUT DETAILS	SHEET 42	E

2

A LINE

CURVE A1
P.I. = 10+89.24 A
Y = 375,489.34
X = 623,958.53
DELTA = 106° 27'55.82" (LT)
D = 119° 21'58.35"
T = 64.24
L = 89.19
R = 48.00
P.C. = 10+25.00 A
Y = 375,449.09
X = 623,908.46
P.T. = 11+14.19 A
Y = 375,525.95
X = 623,905.74

CURVE A2
P.I. = 12+00.38 A
Y = 375,575.06
X = 623,834.92
DELTA = 121° 46'10.26" (LT)
D = 119° 21'58.35"
T = 86.19
L = 102.01
R = 48.00
P.C. = 11+14.19 A
Y = 375,525.95
X = 623,905.74
P.T. = 12+16.21 A
Y = 375,488.99
X = 623,830.45

CURVE A3
P.I. = 13+23.42 A
Y = 375,381.92
X = 623,824.89
DELTA = 131° 45'53.91" (LT)
D = 119° 21'58.35"
T = 107.22
L = 110.39
R = 48.00
P.C. = 12+16.21 A
Y = 375,488.99
X = 623,830.45
P.T. = 13+26.59 A
Y = 375,449.09
X = 623,908.46

E LINE

CURVE E1
P.I. = 10+19.64 E
Y = 375,495.03
X = 624,002.69
DELTA = 101° 40'06.72" (RT)
D = 358° 05'55.04"
T = 19.64
L = 28.39
R = 16.00
P.C. = 10+00.00 E
Y = 375,514.67
X = 624,003.20
P.T. = 10+28.39 E
Y = 375,499.50
X = 623,983.56

CURVE E2
P.I. = 10+44.52 E
Y = 375,503.18
X = 623,967.85
DELTA = 20° 19'34.32" (RT)
D = 63° 39'43.12"
T = 16.13
L = 31.93
R = 90.00
P.C. = 10+28.39 E
Y = 375,499.50
X = 623,983.56
P.T. = 10+60.32 E
Y = 375,512.08
X = 623,954.40

CURVE E3
P.I. = 10+83.18 E
Y = 375,524.70
X = 623,935.33
DELTA = 36° 10'14.07" (RT)
D = 81° 51'04.01"
T = 22.86
L = 44.19
R = 70.00
P.C. = 10+60.32 E
Y = 375,512.08
X = 623,954.40
P.T. = 11+04.51 E
Y = 375,546.13
X = 623,927.39

CURVE E4
P.I. = 11+49.26 E
Y = 375,588.10
X = 623,911.84
DELTA = 10° 13'46.42" (RT)
D = 11° 27'32.96"
T = 44.75
L = 89.27
R = 500.00
P.C. = 11+04.51 E
Y = 375,546.13
X = 623,927.39
P.T. = 11+93.78 E
Y = 375,632.16
X = 623,903.98

CURVE E5
P.I. = 12+09.85 E
Y = 375,648.20
X = 623,903.15
DELTA = 3° 43'32.23" (RT)
D = 11° 35'54.01"
T = 16.07
L = 32.12
R = 494.00
P.C. = 11+93.78 E
Y = 375,632.16
X = 623,903.98
P.T. = 12+25.90 E
Y = 375,664.27
X = 623,903.35

CURVE E6
P.I. = 12+50.31 E
Y = 375,688.52
X = 623,900.62
DELTA = 5° 38'05.38" (RT)
D = 11° 33'05.65"
T = 24.41
L = 48.78
R = 496.00
P.C. = 12+25.90 E
Y = 375,664.27
X = 623,903.35
P.T. = 12+74.68 E
Y = 375,712.93
X = 623,900.28

P.I. = 12+81.58 E
Y = 375,719.83
X = 623,900.18

2

B LINE

P.I. = 10+00.00 B
Y = 375,289.79
X = 623,903.27

P.I. = 10+20.00 B
Y = 375,309.75
X = 623,901.88

CURVE B1
P.I. = 11+03.60 B
Y = 375,392.35
X = 623,890.04
DELTA = 42° 45'08.23" (RT)
D = 63° 39'43.12"
T = 35.23
L = 67.16
R = 90.00
P.C. = 10+68.38 B
Y = 375,357.21
X = 623,892.51
P.T. = 11+35.53 B
Y = 375,419.83
X = 623,912.08

CURVE B2
P.I. = 11+56.23 B
Y = 375,435.97
X = 623,925.03
DELTA = 22° 56'07.26" (RT)
D = 114° 35'29.61"
T = 10.14
L = 20.01
R = 50.00
P.C. = 11+46.08 B
Y = 375,428.06
X = 623,918.68
P.T. = 11+66.10 B
Y = 375,440.79
X = 623,933.96

CURVE B3
P.I. = 11+91.80 B
Y = 375,452.98
X = 623,956.58
DELTA = 14° 38'38.73" (RT)
D = 28° 38'52.40"
T = 25.70
L = 51.12
R = 200.00
P.C. = 11+66.10 B
Y = 375,440.79
X = 623,933.96
P.T. = 12+17.21 B
Y = 375,459.07
X = 623,981.55

CURVE B4
P.I. = 12+38.14 B
Y = 375,464.02
X = 624,001.87
DELTA = 105° 11'23.19" (RT)
D = 358° 05'55.04"
T = 20.92
L = 29.37
R = 16.00
P.C. = 12+17.21 B
Y = 375,459.07
X = 623,981.55
P.T. = 12+46.59 B
Y = 375,443.10
X = 624,001.33

F LINE

CURVE F1
P.I. = 10+62.83 F
Y = 375,608.59
X = 623,885.74
DELTA = 17° 25'30.78" (RT)
D = 13° 58'28.49"
T = 62.83
L = 124.69
R = 410.00
P.C. = 10+00.00 F
Y = 375,548.91
X = 623,905.39
P.T. = 11+24.69 F
Y = 375,671.42
X = 623,884.85

P.I. = 11+72.89 F
Y = 375,719.61
X = 623,884.18

G LINE

CURVE G1
P.I. = 10+34.18 G
Y = 375,583.43
X = 623,884.17
DELTA = 37° 44'37.57" (LT)
D = 57° 17'44.81"
T = 34.18
L = 65.88
R = 100.00
P.C. = 10+00.00 G
Y = 375,553.62
X = 623,867.44
P.T. = 10+65.88 G
Y = 375,617.24
X = 623,879.15

CURVE G2
P.I. = 11+22.60 G
Y = 375,673.35
X = 623,870.83
DELTA = 7° 38'03.78" (RT)
D = 9° 32'57.47"
T = 40.03
L = 79.95
R = 600.00
P.C. = 10+82.57 G
Y = 375,633.75
X = 623,876.70
P.T. = 11+62.51 G
Y = 375,713.38
X = 623,870.26

P.I. = 11+68.55 G
Y = 375,719.41
X = 623,870.18

C LINE

CURVE C1
P.I. = 10+19.43 C
Y = 375,471.97
X = 623,961.05
DELTA = 9° 19'44.69" (RT)
D = 24° 03'25.24"
T = 19.43
L = 38.78
R = 238.17
P.C. = 10+00.00 C
Y = 375,465.02
X = 623,942.91
P.T. = 10+38.78 C
Y = 375,475.88
X = 623,980.09

P.I. = 10+60.00 C
Y = 375,480.17
X = 624,000.95

H LINE

CURVE H1
P.I. = 10+10.22 H
Y = 375,519.97
X = 623,714.15
DELTA = 1° 31'06.52" (LT)
D = 7° 25'52.89"
T = 10.22
L = 20.73
R = 771.00
P.C. = 10+00.00 H
Y = 375,518.61
X = 623,704.02
P.T. = 10+20.43 H
Y = 375,521.59
X = 623,724.23

CURVE H2
P.I. = 10+95.91 H
Y = 375,532.88
X = 623,798.76
DELTA = 3° 33'37.98" (LT)
D = 7° 23'34.81"
T = 24.09
L = 48.16
R = 775.00
P.C. = 10+71.82 H
Y = 375,527.49
X = 623,775.28
P.T. = 11+19.98 H
Y = 375,539.73
X = 623,821.85

CURVE H3
P.I. = 11+38.96 H
Y = 375,545.12
X = 623,840.05
DELTA = 41° 34'06.02" (LT)
D = 114° 34'36.14"
T = 18.98
L = 36.28
R = 50.00
P.C. = 11+19.98 H
Y = 375,539.73
X = 623,821.85
P.T. = 11+56.26 H
Y = 375,561.23
X = 623,850.09

CURVE H4
P.I. = 11+84.93 H
Y = 375,585.56
X = 623,865.25
DELTA = 35° 20'32.18" (LT)
D = 63° 40'02.79"
T = 28.67
L = 55.51
R = 89.99
P.C. = 11+56.26 H
Y = 375,561.23
X = 623,850.09
P.T. = 12+11.77 H
Y = 375,614.18
X = 623,863.54

P.I. = 12+44.02 H
Y = 375,645.89
X = 623,857.64

CURVE H5
P.I. = 12+97.33 H
Y = 375,699.11
X = 623,854.46
DELTA = 2° 36'45.80" (RT)
D = 9° 18'04.55"
T = 14.05
L = 28.09
R = 616.00
P.C. = 12+83.29 H
Y = 375,685.08
X = 623,855.30
P.T. = 13+11.38 H
Y = 375,713.15
X = 623,854.27

P.I. = 13+17.41 H
Y = 375,719.18
X = 623,854.18

D LINE

CURVE D1
P.I. = 10+18.52 D
Y = 375,486.78
X = 623,961.67
DELTA = 20° 58'57.89" (LT)
D = 57° 17'44.81"
T = 18.52
L = 36.62
R = 100.00
P.C. = 10+00.00 D
Y = 375,496.16
X = 623,945.70
P.T. = 10+36.62 D
Y = 375,483.75
X = 623,979.94

P.I. = 10+57.94 D
Y = 375,480.17
X = 624,000.95

P.I. = 10+98.93
Y = 375,479.10
X = 624,041.93

I LINE

P.I. = 10+00.00 I
Y = 375,489.76
X = 623,547.02

CURVE I1
P.I. = 11+11.62 I
Y = 375,490.39
X = 623,658.65
DELTA = 7° 48'10.85" (LT)
D = 7° 00'15.75"
T = 55.79
L = 111.40
R = 818.00
P.C. = 10+55.84 I
Y = 375,490.08
X = 623,602.86
P.T. = 11+67.24 I
Y = 375,498.27
X = 623,713.87

P.I. = 12+70.08 I
Y = 375,512.81
X = 623,815.68

J LINE

CURVE J1
P.I. = 10+17.68 J
Y = 375,489.86
X = 623,564.70
DELTA = 3° 22'28.96" (RT)
D = 9° 32'57.47"
T = 17.68
L = 35.34
R = 600.00
P.C. = 10+00.00 J
Y = 375,489.76
X = 623,547.02
P.T. = 10+35.34 J
Y = 375,488.92
X = 623,582.35

CURVE J2
P.I. = 11+16.25 J
Y = 375,484.61
X = 623,663.15
DELTA = 6° 33'14.93" (LT)
D = 10° 25'02.69"
T = 31.49
L = 62.91
R = 550.00
P.C. = 10+84.76 J
Y = 375,486.29
X = 623,631.70
P.T. = 11+47.68 J
Y = 375,486.53
X = 623,694.58

CURVE J3
P.I. = 12+38.13 J
Y = 375,492.06
X = 623,784.86
DELTA = 33° 48'18.18" (RT)
D = 57° 17'44.81"
T = 30.39
L = 59.00
R = 100.00
P.C. = 12+07.74 J
Y = 375,490.20
X = 623,754.53
P.T. = 12+66.74 J
Y = 375,476.72
X = 623,811.10

2

K LINE

CURVE K1
P.I. = 10+09.91 K
Y = 375,307.66
X = 623,850.73
DELTA = 1° 38' 13.28" (LT)
D = 8° 15' 21.15"
T = 9.91
L = 19.83
R = 694.00
P.C. = 10+00.00 K
Y = 375,297.83
X = 623,852.08
P.T. = 10+19.83 K
Y = 375,317.44
X = 623,849.09

CURVE K2
P.I. = 10+98.04 K
Y = 375,394.70
X = 623,838.52
DELTA = 4° 55' 01.64" (LT)
D = 8° 11' 06.40"
T = 30.06
L = 60.07
R = 700.00
P.C. = 10+67.99 K
Y = 375,365.46
X = 623,845.49
P.T. = 11+28.06 K
Y = 375,423.23
X = 623,829.08

CURVE K3
P.I. = 11+61.18 K
Y = 375,454.66
X = 623,818.66
DELTA = 50° 37' 58.22" (LT)
D = 81° 51' 04.01"
T = 33.11
L = 61.86
R = 70.00
P.C. = 11+28.06 K
Y = 375,423.23
X = 623,829.08
P.T. = 11+89.92 K
Y = 375,466.55
X = 623,787.76

CURVE K4
P.I. = 12+09.50 K
Y = 375,473.58
X = 623,769.49
DELTA = 24° 32' 38.73" (LT)
D = 63° 39' 43.12"
T = 19.58
L = 38.55
R = 90.00
P.C. = 11+89.92 K
Y = 375,466.55
X = 623,787.76
P.T. = 12+28.48 K
Y = 375,472.39
X = 623,749.95

P.I. = 12+60.72 K
Y = 375,466.44
X = 623,718.25

L LINE

CURVE L1
P.I. = 10+45.06 L
Y = 375,267.21
X = 623,886.70
DELTA = 5° 51' 43.11" (RT)
D = 6° 30' 39.18"
T = 45.06
L = 90.03
R = 880.00
P.C. = 10+00.00 L
Y = 375,311.99
X = 623,881.72
P.T. = 10+90.03 L
Y = 375,222.16
X = 623,887.09

CURVE L2
P.I. = 12+55.23 L
Y = 375,056.97
X = 623,888.49
DELTA = 176° 31' 57.57" (RT)
D = 1145° 54' 56.12"
T = 165.19
L = 15.41
R = 5.00
P.C. = 10+90.03 L
Y = 375,222.16
X = 623,887.09
P.T. = 11+05.44 L
Y = 375,221.77
X = 623,877.10

CURVE L3
P.I. = 11+23.46 L
Y = 375,239.75
X = 623,875.86
DELTA = 0° 26' 28.93" (LT)
D = 1° 13' 27.37"
T = 18.03
L = 36.05
R = 4,680.00
P.C. = 11+05.44 L
Y = 375,221.77
X = 623,877.10
P.T. = 11+41.49 L
Y = 375,257.72
X = 623,874.47

CURVE L4
P.I. = 12+25.07 L
Y = 375,341.05
X = 623,868.07
DELTA = 5° 47' 57.69" (LT)
D = 3° 28' 20.90"
T = 83.58
L = 167.01
R = 1,650.00
P.C. = 11+41.49 L
Y = 375,257.72
X = 623,874.47
P.T. = 13+08.50 L
Y = 375,423.31
X = 623,853.28

M LINE

CURVE M1
P.I. = 10+85.64 M
Y = 375,050.41
X = 623,886.57
DELTA = 1° 43' 17.53" (RT)
D = 1° 00' 18.68"
T = 85.64
L = 171.26
R = 5,700.00
P.C. = 10+00.00 M
Y = 374,964.78
X = 623,887.77
P.T. = 11+71.26 M
Y = 375,136.04
X = 623,887.94

CURVE M2
P.I. = 12+76.21 M
Y = 375,240.97
X = 623,889.62
DELTA = 7° 15' 55.76" (LT)
D = 10° 25' 02.69"
T = 34.92
L = 69.74
R = 550.00
P.C. = 12+41.29 M
Y = 375,206.05
X = 623,889.06
P.T. = 13+11.03 M
Y = 375,275.67
X = 623,885.76

CURVE M3
P.I. = 14+27.18 M
Y = 375,391.11
X = 623,872.92
DELTA = 35° 58' 22.42" (RT)
D = 57° 17' 44.81"
T = 32.47
L = 62.78
R = 100.00
P.C. = 13+94.72 M
Y = 375,358.84
X = 623,876.51
P.T. = 14+57.50 M
Y = 375,419.33
X = 623,888.97

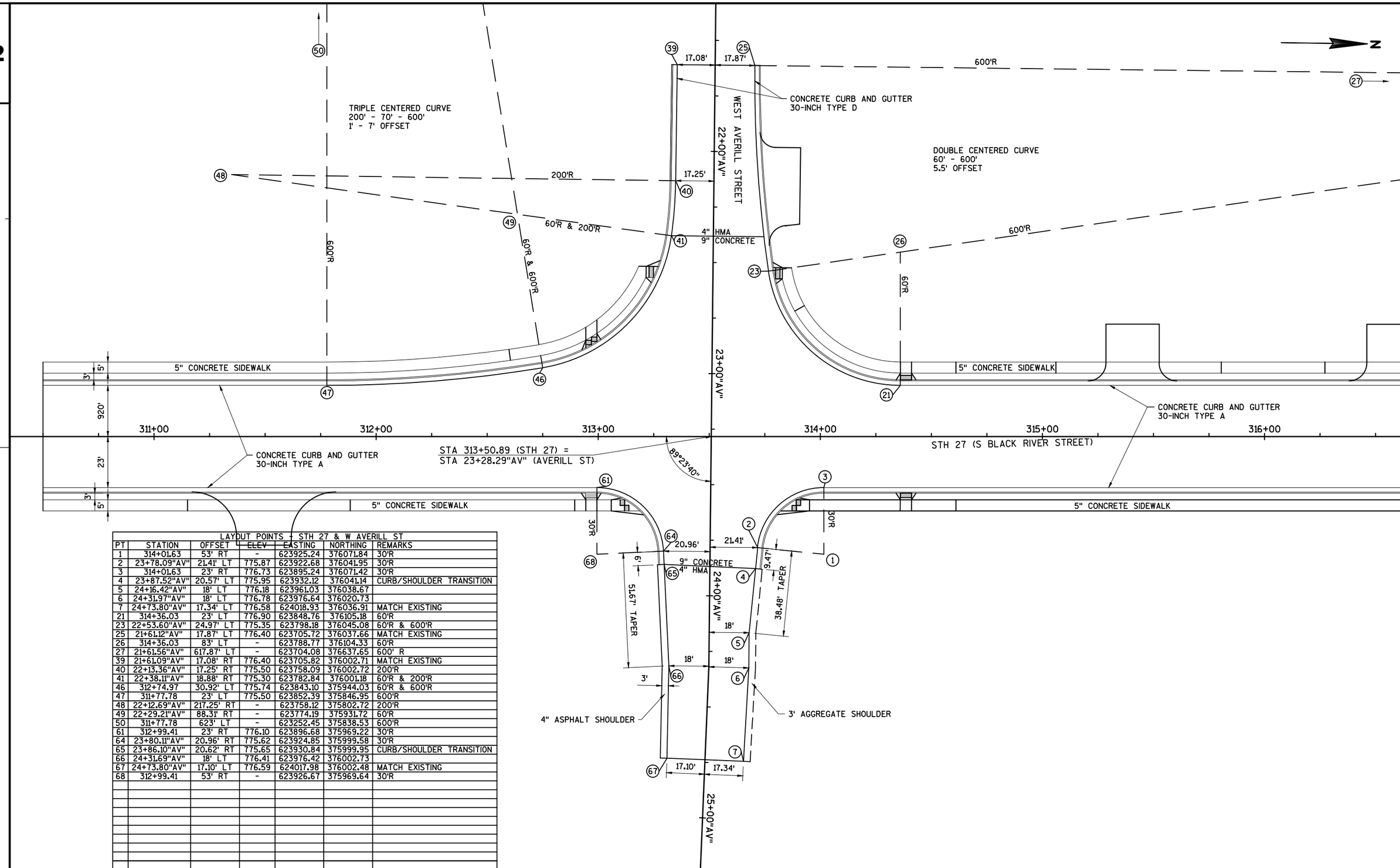

LAYOUT POINTS - STH 27 & W AVERILL ST

PT	STATION	OFFSET	~~ELEV~~	~~EASTING~~	NORTHING	REMARKS
1	314+01.63	53' RT	-	623925.24	376071.84	30'R
2	23+78.09"AV"	21.41' LT	775.87	623922.68	376041.95	30'R
3	314+01.63	23' RT	776.73	623895.24	376071.42	30'R
4	23+87.52"AV"	20.57' LT	775.95	623932.12	376041.14	CURB/SHOULDER TRANSITION
5	24+16.42"AV"	18' LT	776.18	623961.03	376038.67	
6	24+31.97"AV"	18' LT	776.78	623976.64	376020.73	
7	24+73.80"AV"	17.34' LT	776.58	624018.93	376036.91	MATCH EXISTING
21	314+36.03	23' LT	776.90	623848.76	376105.18	60'R
23	22+53.60"AV"	24.97' LT	775.35	623798.18	376045.08	60'R & 600'R
25	21+61.12"AV"	17.87' LT	776.40	623705.72	376037.66	MATCH EXISTING
26	314+36.03	83' LT	-	623788.77	376104.33	60'R
27	21+61.56"AV"	617.87' LT	-	623704.08	376637.65	600' R
39	21+61.09"AV"	17.08' RT	776.40	623705.82	376002.71	MATCH EXISTING
40	22+13.36"AV"	17.25' RT	775.50	623758.09	376002.72	200'R
41	22+38.11"AV"	18.88' RT	775.30	623782.84	376001.18	60'R & 200'R
46	312+74.97	30.92' LT	775.74	623843.10	375944.03	60'R & 600'R
47	311+77.78	23' LT	775.50	623852.39	375846.95	600'R
48	22+12.69"AV"	217.25' RT	-	623758.12	375802.72	200'R
49	22+29.21"AV"	88.31' RT	-	623774.19	375931.72	60'R
50	311+77.78	623' LT	-	623252.45	375838.53	600'R
61	312+99.41	23' RT	776.10	623896.68	375969.22	30'R
64	23+80.11"AV"	20.96' RT	775.62	623924.85	375999.58	30'R
65	23+86.10"AV"	20.62' RT	775.65	623930.84	375999.95	CURB/SHOULDER TRANSITION
66	24+31.69"AV"	18' LT	776.41	623976.42	376002.73	
67	24+73.80"AV"	17.10' LT	776.59	624017.98	376002.48	MATCH EXISTING
68	312+99.41	53' RT	-	623926.67	375969.64	30'R

PROJECT NO:5144-01-75	HWY:STH 27	COUNTY:MONROE	INTERSECTION DETAIL - STH 27 & W AVERILL STREET	SHEET 45	E

FILE NAME : N:\PDS\C3D\51440105\SHEETSPLAN\021101_ID.DWG
LAYOUT NAME - 021101_ID
PLOT DATE : 7/27/2017 8:26 AM PLOT BY : VALENTI, PAUL M PLOT NAME : PLOT SCALE : 1 IN:40 FT

LAYOUT POINTS - STH 27 & MAPLE AVENUE						
PT	STATION	OFFSET	ELEV	EASTING	NORTHING	REMARKS
100	9+50.67"MA"	22.38' RT	780.31	623692.15	377210.40	MATCH EXISTING
101	10+62.70"MA"	21' RT	779.35	623803.85	377210.95	30'R
104	325+12.33	23' LT	779.75	623833.65	377181.37	30'R
106	10+62.94"MA"	51' RT	-	623803.66	377180.95	30'R
115	9+99.30"MA"	21.49' RT	780.00	623740.78	377211.35	
116	12+60.27"MA"	12' RT	779.37	624001.52	377217.13	MATCH EXISTING
117	11+63.58"MA"	12' RT	779.44	623904.85	377218.51	25'R
120	325+23.48	23' RT	779.82	623879.49	377193.16	25'R
123	325+23.48	48' RT	-	623904.49	377193.52	25'R
132	12+60.27"MA"	16.91' LT	779.27	624001.94	377246.05	MATCH EXISTING
133	11+66.24"MA"	16' LT	779.34	623907.90	377246.47	30'R
136	326+06.37	23' RT	780.28	623878.33	377276.05	30' R
139	11+66.24"MA"	46' LT	-	623908.33	377276.47	30'R
148	11+93.67"MA"	16' LT	779.25	623935.33	377246.08	
149	9+50.67"MA"	20.55' LT	780.35	623692.10	377253.33	MATCH EXISTING
150	10+60.05"MA"	21' LT	779.35	623801.80	377252.98	30'R
153	326+14.37	23' LT	780.32	623832.22	377283.40	30'R
163	326+14.37	53' LT	-	623802.22	377282.98	30'R
164	9+99.30"MA"	21' LT	780.01	623740.73	377253.84	
165	326+93.45"SB"	16' LT	780.71	623831.13	377361.41	
166	327+52.39"NB"	16' RT	781.01	623876.28	377422.05	
167	328+55.89"NB"	26' RT	781.47	623877.81	377527.08	
168	328+57.62"NB"	12' LT	782.23	623839.81	377526.55	3'R
169	328+57.62"NB"	15' LT	-	623836.81	377526.51	3'R
170	328+57.76"SB"	16' LT	781.71	623817.81	377526.24	
171	329+81.04"SB"	16' LT	782.44	623816.08	377649.51	600'R
172	329+81.04"SB"	616' LT	-	623216.14	377641.09	600'R

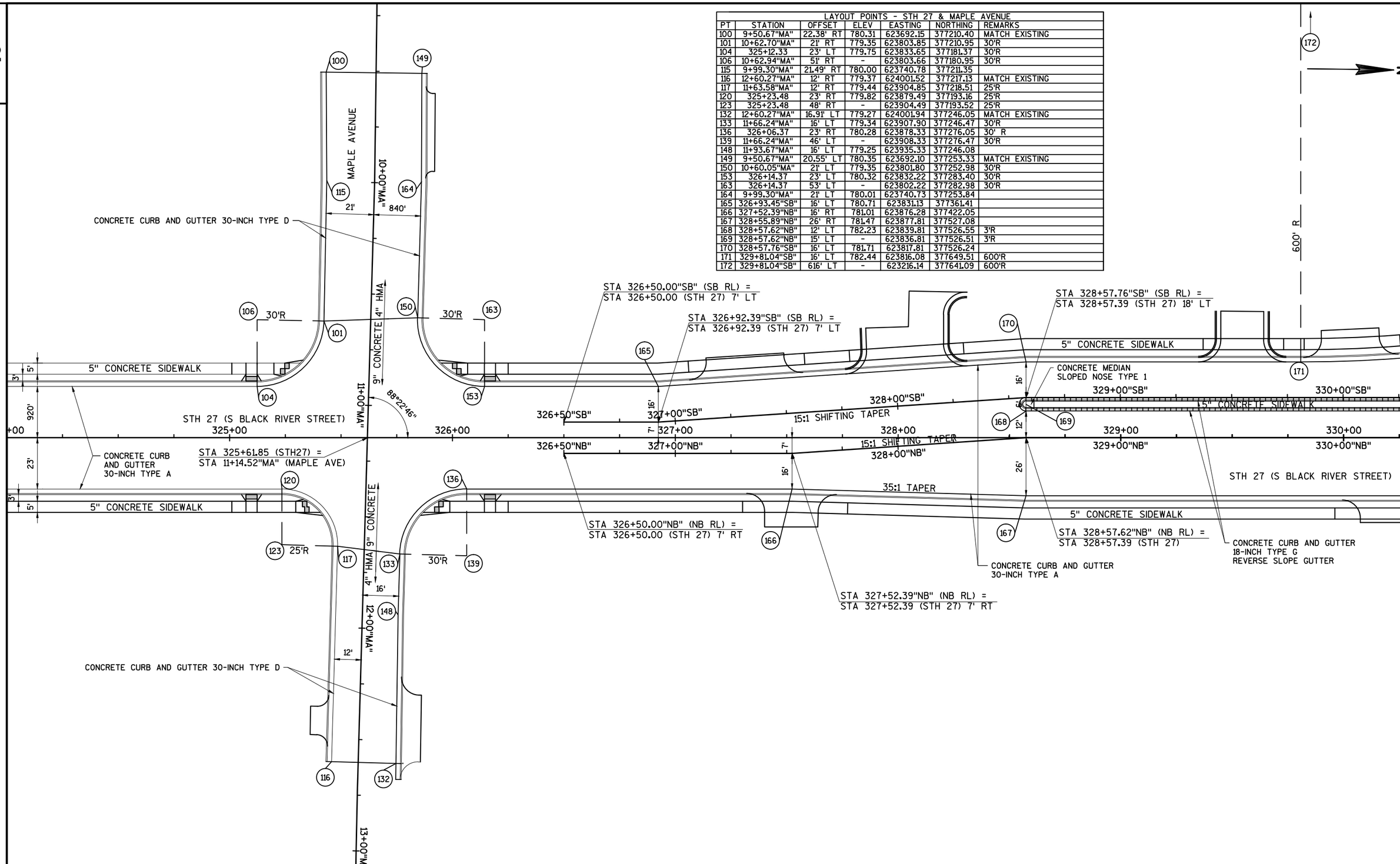

PROJECT NO:5144-01-75	HWY:STH 27	COUNTY:MONROE	INTERSECTION LAYOUT DETAIL STH 27 & MAPLE AVENUE	SHEET 46	E

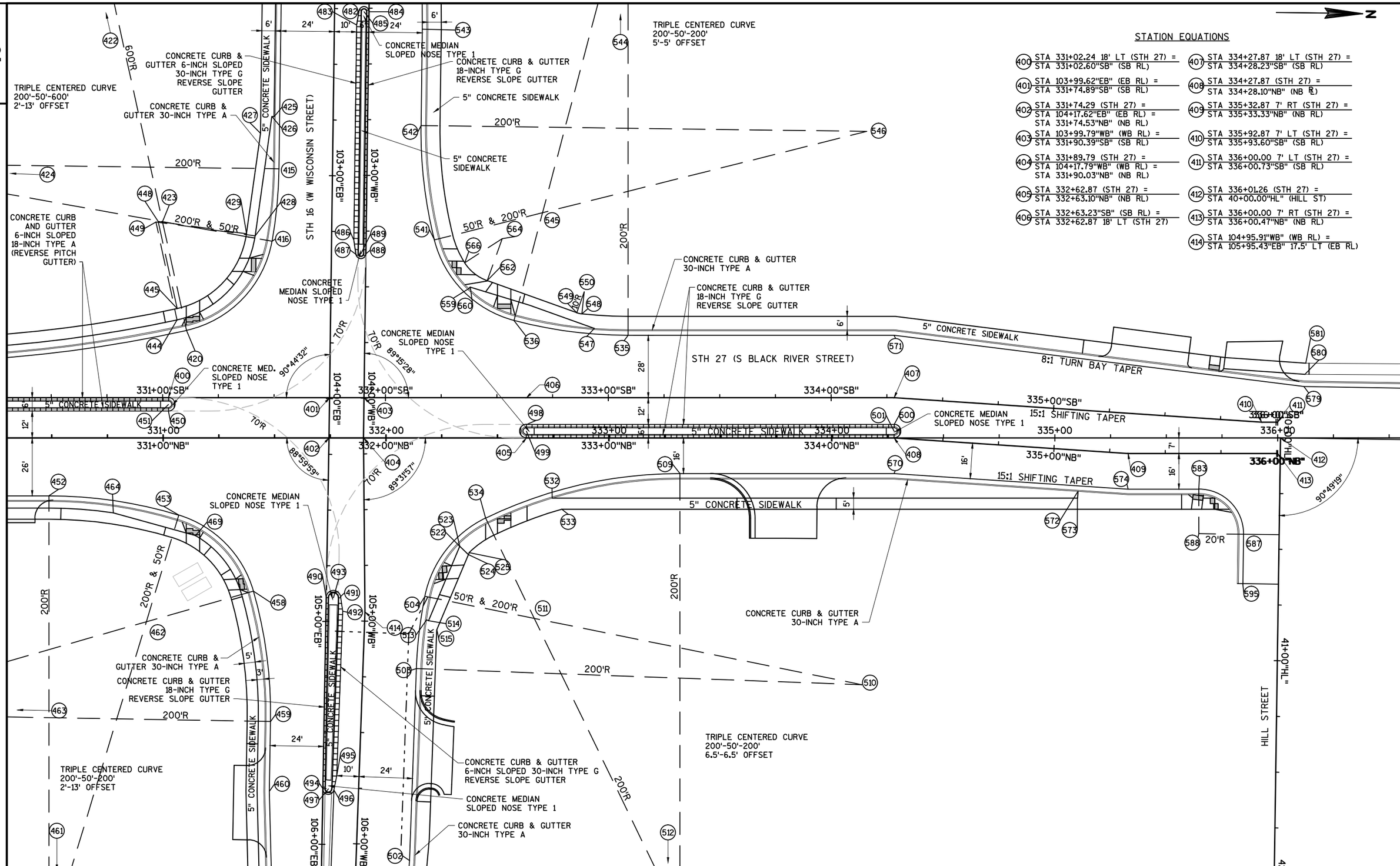

PROJECT NO:5144-01-75	HWY:STH 27	COUNTY:MONROE	INTERSECTION LAYOUT DETAIL - STH 27 & STH 16	SHEET 47	E

2

LAYOUT POINTS - STH 27 & STH 16

PT	STATION	OFFSET	ELEV	EASTING	NORTHING	REMARKS
400	331+02.60"SB"	0' LT	783.45	623830.37	377771.29	3'R
405	332+63.10"NB"	0' LT	783.72	623846.12	377932.16	3'R
408	334+28.10"NB"	0' LT	785.51	623843.80	378097.14	3'R
415	102+97.18"EB"	24' RT	783.47	623726.95	377819.46	200'R
416	103+29.73"EB"	26.67' RT	783.22	623759.50	377816.83	50'R & 200'R
420	331+10.72"SB"	30.18' LT	782.88	623800.08	377778.98	50'R & 600'R
422	329+81.04"SB"	616' LT	-	623216.14	377641.09	600'R
423	103+21.59"EB"	76' RT	-	623751.42	377767.49	50'R
424	102+97.18"EB"	224' RT	-	623727.17	377619.46	200'R
425	102+73.81"EB"	26.5' RT	783.98	623703.58	377816.93	FRONT OF SIDEWALK AT BC
426	102+73.81"EB"	27.51' RT	784.02	623703.58	377815.93	FRONT OF SIDEWALK
427	102+81.39"EB"	32.5' RT	784.14	623711.17	377810.94	BACK OF SIDEWALK
428	103+27.42"EB"	34.30' RT	783.79	623757.20	377809.19	FRONT OF SIDEWALK; 45'R
429	103+26.55"EB"	38.22' RT	783.86	623756.33	377805.27	BACK OF SIDEWALK; 40'R
444	331+06.46"SB"	34.88' LT	782.96	623795.44	377774.66	FRONT OF SIDEWALK; 45'R
445	331+06.52"SB"	40.01' LT	783.04	623790.31	377774.65	BACK OF SIDEWALK; 40'R
448	330+98.01"SB"	79.09' LT	-	623751.35	377765.58	40'R
449	330+96.97"SB"	78.87' LT	-	623751.59	377764.55	45'R
450	331+02.47"NB"	12' LT	783.57	623836.37	377771.37	3'R
451	331+02.47"NB"	15' LT	-	623833.37	377771.33	3'R
452	330+48.86"NB"	26' RT	782.50	623875.12	377718.30	200'R
453	331+07.10"NB"	34.67' RT	782.60	623882.97	377776.66	50'R & 200'R
458	104+86.94"EB"	32.71' RT	783.09	623916.57	377810.64	50'R & 200'R
459	105+45.33"EB"	24' RT	783.58	623974.99	377819.15	200'R
460	105+76.58"EB"	24' RT	783.73	624006.25	377819.05	
461	330+48.86"NB"	226' RT	-	624075.10	377721.11	200'R
462	330+92.54"NB"	82.5' RT	-	623931.00	377762.77	50'R
463	105+45.33"EB"	224' RT	-	623974.30	377619.16	200'R
464	330+77.70"NB"	33.65' RT	783.11	623882.37	377747.25	FRONT OF SIDEWALK
469	331+14.60"NB"	43.85' RT	782.79	623892.05	377784.28	FRONT OF SIDEWALK
482	102+25.86"EB"	11.03' LT	784.73	623655.59	377854.41	2.25'R
483	102+32.22"EB"	10' LT	784.68	623661.95	377853.39	
484	102+26.60"WB"	0' LT	784.47	623655.94	377858.88	2.25' R
485	102+26.22"EB"	13.25' LT	-	623655.95	377856.63	2.25'R
486	103+28.78"EB"	10' LT	784.22	623758.51	377853.49	
487	103+35.14"EB"	11.03' LT	784.10	623764.87	377854.53	2.25'R
488	103+35.16"WB"	0' LT	783.97	623764.51	377859.00	2.25'R
489	103+34.78"EB"	13.25' LT	-	623764.51	377856.75	2.25'R
490	104+89.25"EB"	0' LT	783.84	623918.99	377843.35	3.25'R
491	104+88.93"WB"	10.86' RT	784.03	623918.50	377849.81	3.25'R
492	104+95.47"WB"	10' RT	784.06	623925.02	377850.83	
493	104+89.36"WB"	14.09' RT	784.52	623919.00	377846.60	3.25'R
494	105+75.10"EB"	0' LT	784.20	624004.84	377843.05	2.5'R
495	105+69.79"WB"	10' RT	784.39	623998.88	377849.19	
496	105+76.24"WB"	11.04' RT	784.41	624005.30	377848.01	2.5'R
497	105+75.84"WB"	13.51' RT	-	624004.85	377845.55	2.5'R
498	332+63.23"SB"	12' RT	783.91	623840.12	377932.07	3'R
499	332+63.10"NB"	3' LT	-	623843.12	377932.11	3'R
500	334+29.03"SB"	11.97' LT	785.63	623837.80	378097.06	3'R
501	334+28.10"NB"	3' LT	-	623840.80	378097.10	3'R
502	106+06.67"WB"	24' RT	783.79	624036.50	377882.37	
503	105+20.46"WB"	24' RT	783.49	623950.32	377884.28	200'R
504	104+89.10"WB"	27.00' RT	783.27	623917.83	377887.66	50'R & 200'R
509	333+31.99"NB"	16' RT	784.17	623861.15	378001.27	200'R
510	105+20.46"WB"	224' RT	-	623954.74	378084.23	200'R
511	104+96.05"WB"	76' RT	-	623927.06	377936.80	50'R
512	333+31.99"NB"	216' RT	-	624061.13	378004.07	200'R
513	104+98.45"WB"	27.73' RT	783.73	623928.40	377888.49	FRONT OF SIDEWALK
514	104+98.81"WB"	28.67' RT	783.74	623928.77	377889.42	FRONT OF SIDEWALK
515	105+02.81"WB"	32.5' RT	783.84	623932.85	377893.16	BACK OF SIDEWALK
522	104+66.09"WB"	42.07' RT	783.32	623894.49	377902.22	FRONT OF SIDEWALK
523	104+66.79"WB"	42.78' RT	783.32	623895.18	377902.95	FRONT OF SIDEWALK
524	104+70.56"WB"	46.61' RT	783.34	623898.86	377906.86	BACK OF SIDEWALK
525	104+69.65"WB"	47.00' RT	783.34	623897.95	377907.23	BACK OF SIDEWALK
532	332+74.68"NB"	27' RT	783.66	623872.95	377944.11	FRONT OF SIDEWALK
533	332+78.92"NB"	32' RT	783.81	623877.89	377948.43	BACK OF SIDWALK
534	332+44.82"NB"	36' RT	782.78	623882.37	377914.38	50'R & 200'R
535	333+08.88"SB"	28' LT	783.51	623799.48	377977.15	200'R
536	332+57.67"SB"	34.67' LT	783.03	623793.53	377925.86	50'R & 200'R
541	103+28.56"WB"	30.67' LT	783.44	623757.88	377889.66	50'R & 200'R
542	102+77.36"WB"	24' LT	783.74	623706.68	377882.94	200'R
543	102+34.11"WB"	24' LT	783.91	623663.44	377882.89	
544	333+08.88"WB"	228' LT	-	623599.50	377975.35	200'R
545	332+70.48"SB"	83' LT	-	623745.02	377937.98	50'R
546	102+77.36"WB"	224' LT	-	623706.46	378082.94	200'R
547	332+93.71"SB"	31.08' LT	783.71	623796.61	377961.94	FRONT OF SIDEWALK
548	332+88.11"SB"	37.63' LT	783.74	623790.14	377956.25	BACK OF SIDEWALK; 10'R
549	332+85.83"SB"	38.16' LT	783.71	623789.65	377953.96	BACK OF SIDEWALK; 10'R
550	332+89.20"SB"	47.57' LT	-	623780.19	377957.20	10'R
559	332+37.36"SB"	49.95' LT	783.48	623779.54	377905.34	FRONT OF SIDEWALK
560	332+38.02"SB"	49.63' LT	783.50	623778.85	377905.99	FRONT OF SIDEWALK
562	103+46.53"WB"	54.56' LT	783.47	623775.82	377913.58	BACK OF SIDEWALK; 20'R
564	103+27.62"WB"	61.06' LT	-	623756.90	377920.06	20'R
566	103+38.65"WB"	44.38' LT	783.32	623767.95	377903.39	BACK OF SIDEWALK; 20'R
570	334+29.16"NB"	15.96' RT	785.19	623859.80	378097.36	
571	334+28.23"SB"	28' LT	784.83	623797.80	378096.49	
572	335+12.03"NB"	18.46' RT	785.98	623866.65	378179.98	FRONT OF SIDEWALK
573	335+12.03"NB"	21.46' RT	786.02	623869.64	378179.83	FRONT OF SIDEWALK
574	335+33.33"NB"	16' RT	785.71	623865.32	378202.45	

LAYOUT POINTS - STH 27 & STH 16

PT	STATION	OFFSET	ELEV	EASTING	NORTHING	REMARKS
579	336+11.87	23' LT	786.19	623818.22	378280.80	
580	336+12.25	28.49' LT	786.54	623812.72	378281.11	FRONT OF SIDEWALK
581	336+12.61	33.49' LT	786.70	623807.72	378281.39	BACK OF SIDEWALK
583	335+65.11"NB"	16' RT	785.90	623864.88	378234.22	20'R
587	40+43.45"HL"	16.0' RT	785.91	623884.82	378254.50	20'R
588	335+65.11"NB"	36' RT	-	623884.88	378234.50	20'R

2

PT. NO.	STATION	OFFSET
100	209+50.71	17.94' RT
102	209+78.14	36.19' RT
103	209+77.71	78.95' RT
104	210+20.71	79.38' RT
105	210+83.21	80.00' RT
106	210+83.21	17.50' RT
107	209+50.92	16.80' LT
108	209+51.56	16.79' LT
109	209+51.55	44.29' LT
110	209+79.05	43.95' LT
111	209+79.52	81.33' LT
112	210+22.52	80.79' LT
113	210+85.01	80.00' LT
114	210+85.01	17.50' LT

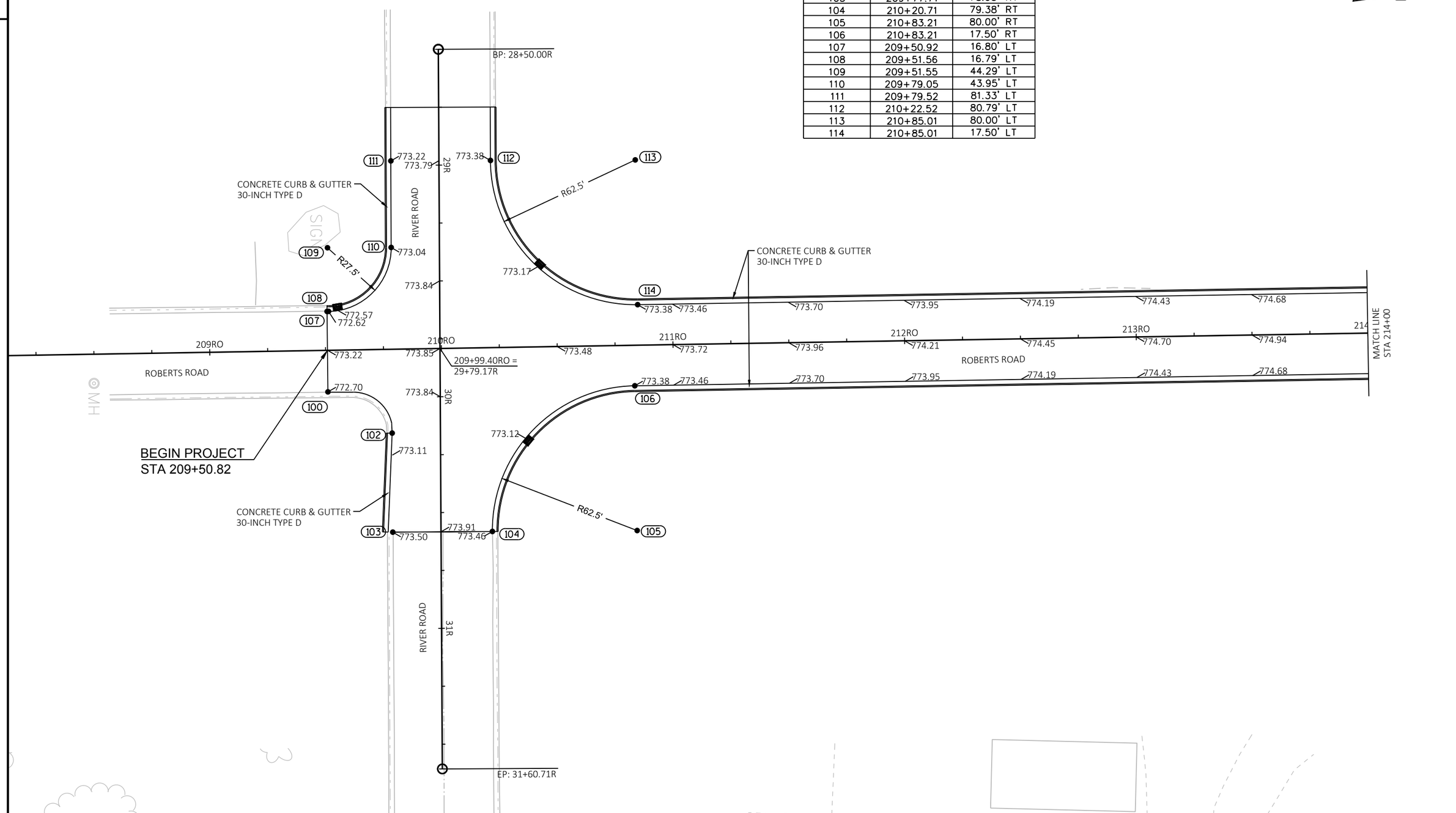

PROJECT NO: 5144-01-75 & 5144-01-76	HWY: STH 27	COUNTY: MONROE	INTERSECTION DETAILS	SHEET 49	E

FILE NAME : P:\50S\51\00051029\CADD\C3D\SHEETSPLAN\021101_ID.DWG
LAYOUT NAME - 021101_id
PLOT DATE : 7/13/2017 8:12 AM PLOT BY : BRAD LEE PLOT NAME : PLOT SCALE : ##########

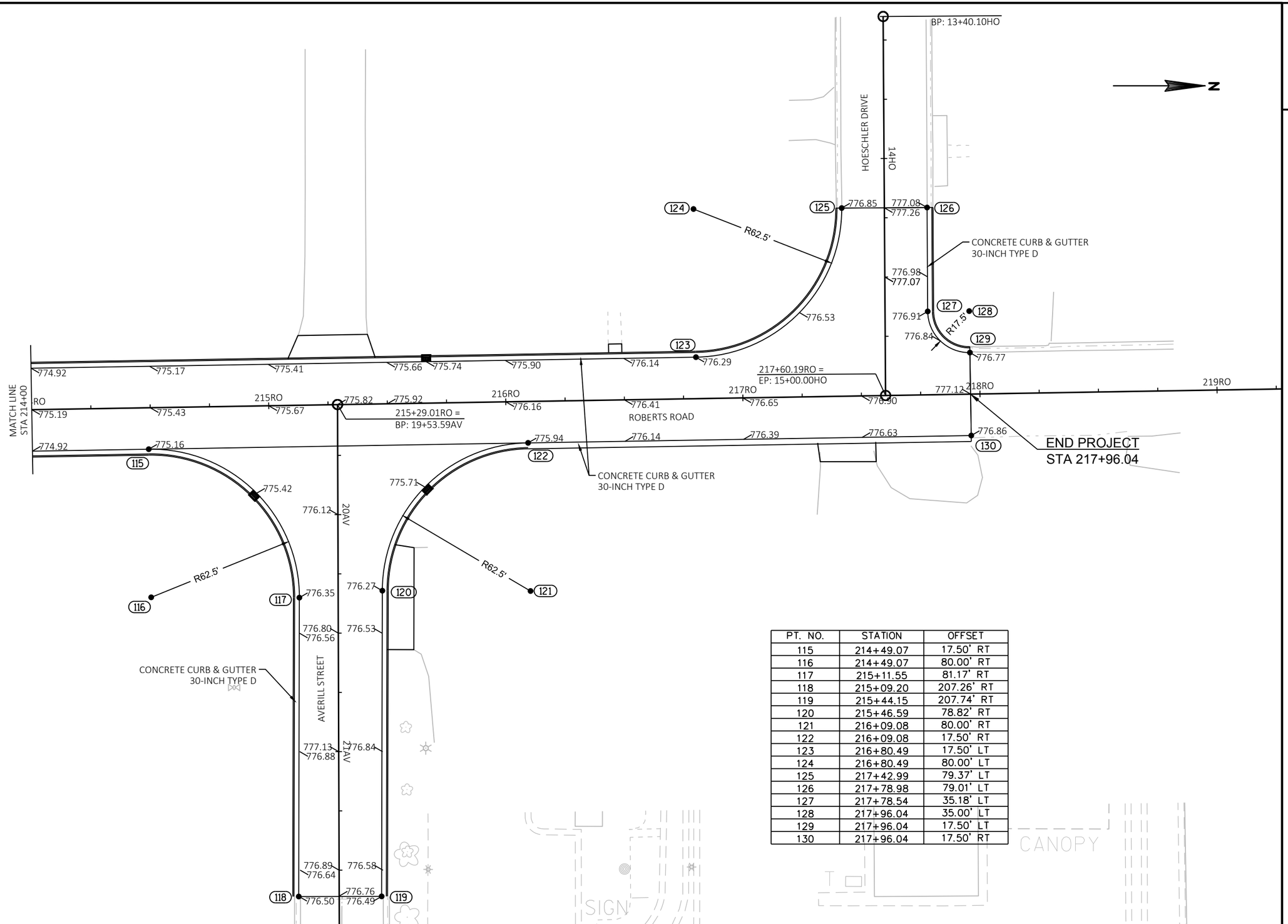

PT. NO.	STATION	OFFSET
115	214+49.07	17.50' RT
116	214+49.07	80.00' RT
117	215+11.55	81.17' RT
118	215+09.20	207.26' RT
119	215+44.15	207.74' RT
120	215+46.59	78.82' RT
121	216+09.08	80.00' RT
122	216+09.08	17.50' RT
123	216+80.49	17.50' LT
124	216+80.49	80.00' LT
125	217+42.99	79.37' LT
126	217+78.98	79.01' LT
127	217+78.54	35.18' LT
128	217+96.04	35.00' LT
129	217+96.04	17.50' LT
130	217+96.04	17.50' RT

2

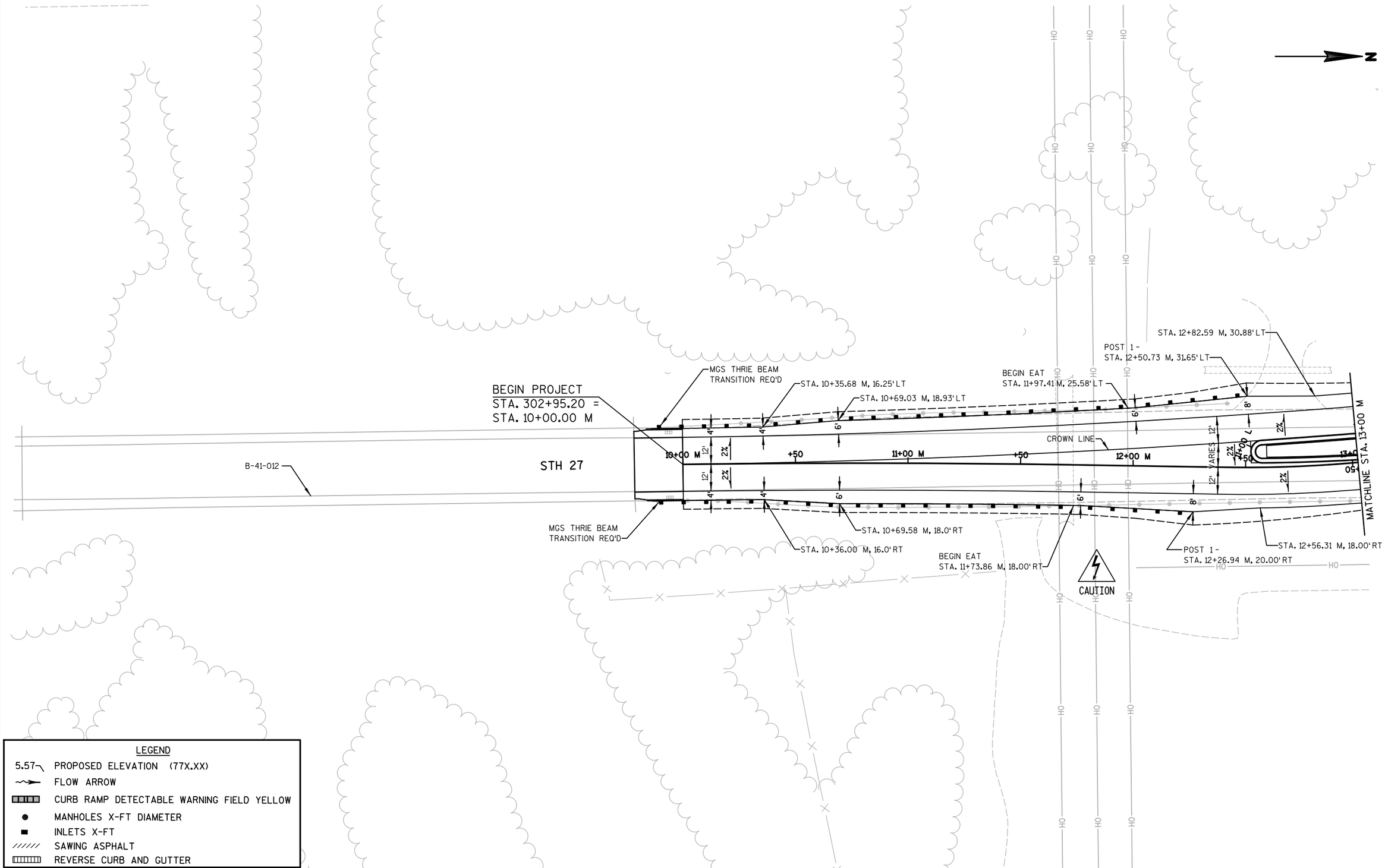

LEGEND

- 5.57 PROPOSED ELEVATION (77X.XX)
- FLOW ARROW
- CURB RAMP DETECTABLE WARNING FIELD YELLOW
- MANHOLES X-FT DIAMETER
- INLETS X-FT
- SAWING ASPHALT
- REVERSE CURB AND GUTTER

2

PROJECT NO:5144-01-75	HWY:STH 27	COUNTY:MONROE	PLAN DETAILS	SHEET 51	E

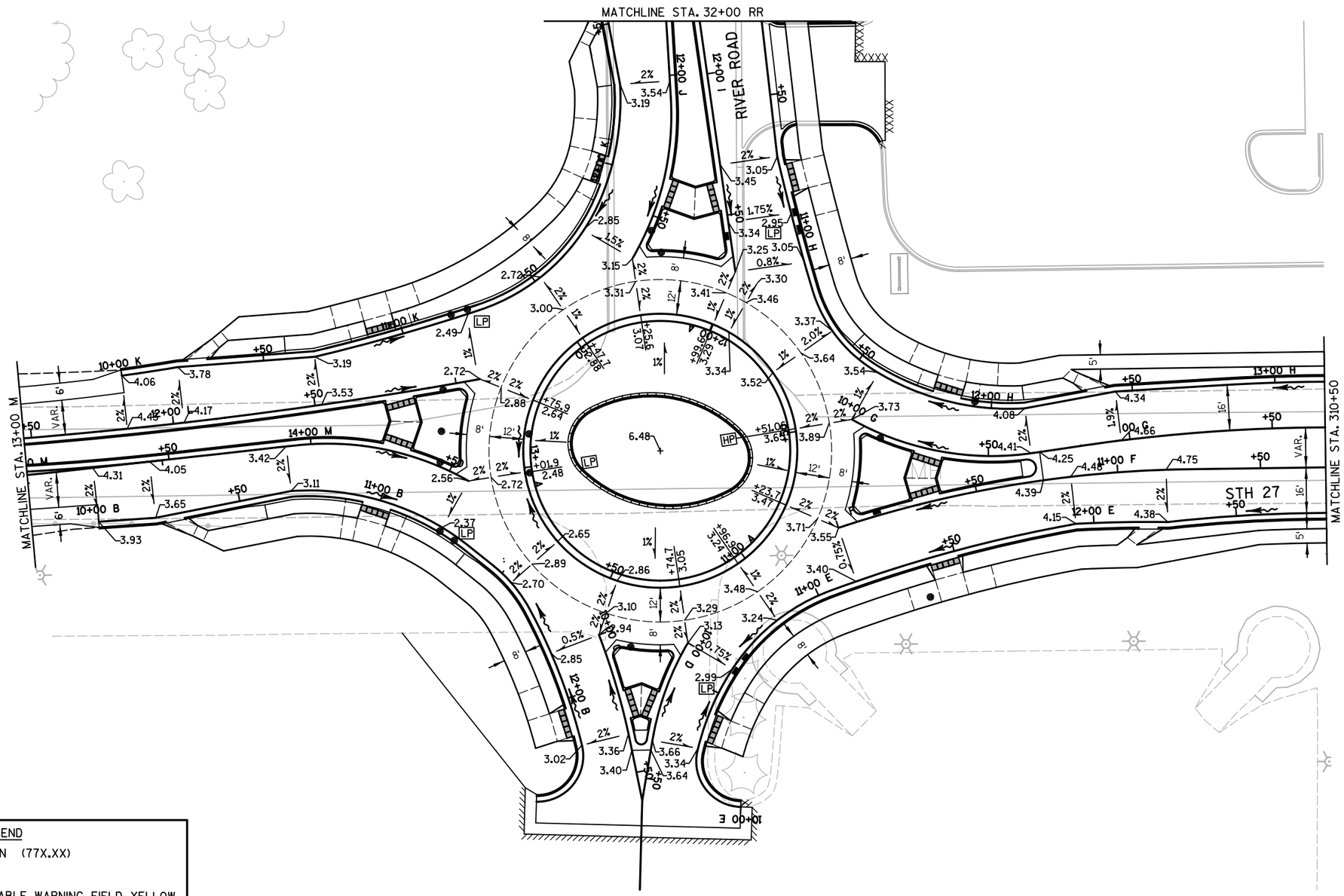

LEGEND

- 5.57 PROPOSED ELEVATION (77X.XX)
- FLOW ARROW
- CURB RAMP DETECTABLE WARNING FIELD YELLOW
- MANHOLES X-FT DIAMETER
- INLETS X-FT
- SAWING ASPHALT
- REVERSE CURB AND GUTTER

PROJECT NO:5144-01-75	HWY:STH 27	COUNTY:MONROE	PLAN DETAILS	SHEET 52	E

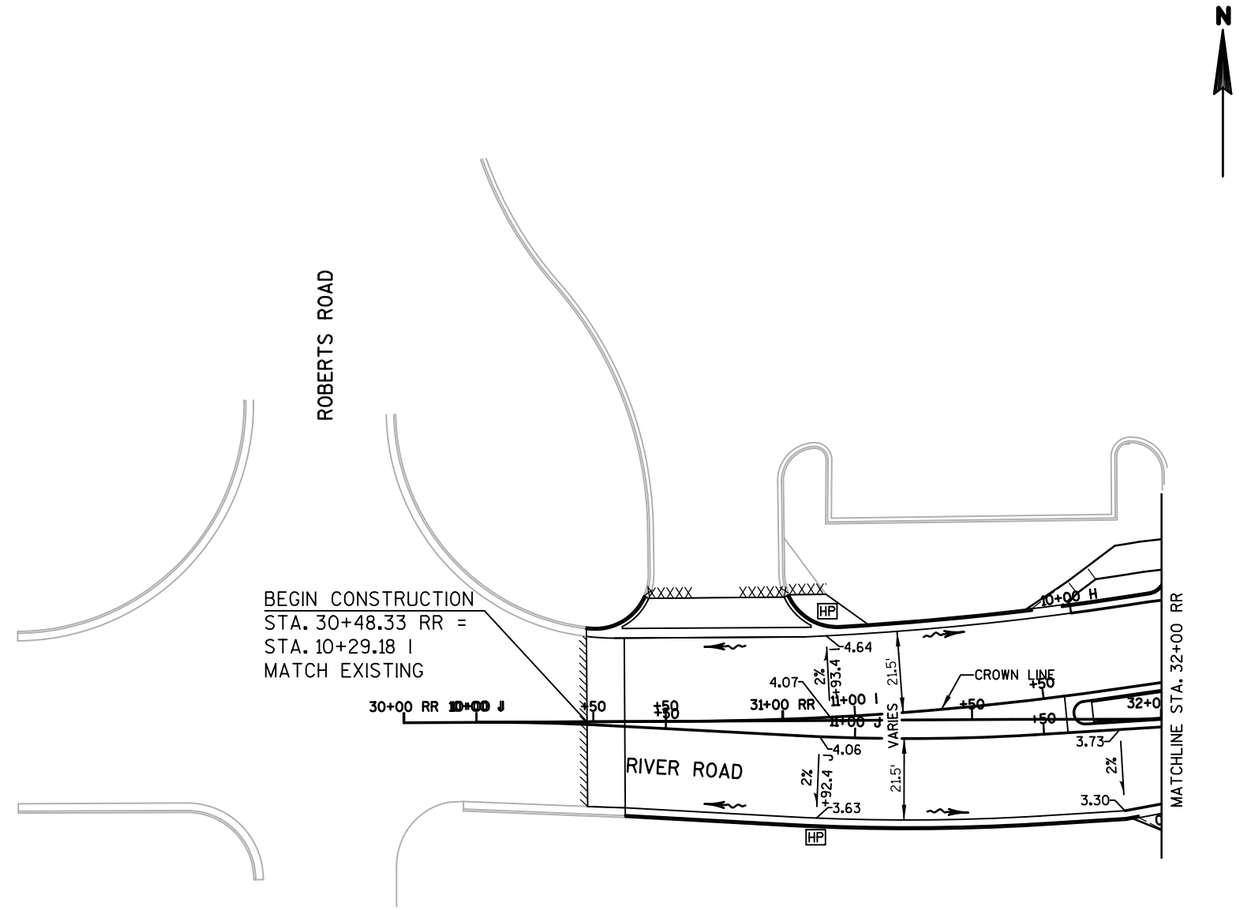

LEGEND

- 5.57 PROPOSED ELEVATION (77X.XX)
- FLOW ARROW
- CURB RAMP DETECTABLE WARNING FIELD YELLOW
- MANHOLES X-FT DIAMETER
- INLETS X-FT
- SAWING ASPHALT
- REVERSE CURB AND GUTTER

PROJECT NO:5144-01-75	HWY:STH 27	COUNTY:MONROE	PLAN DETAILS	SHEET 53	E

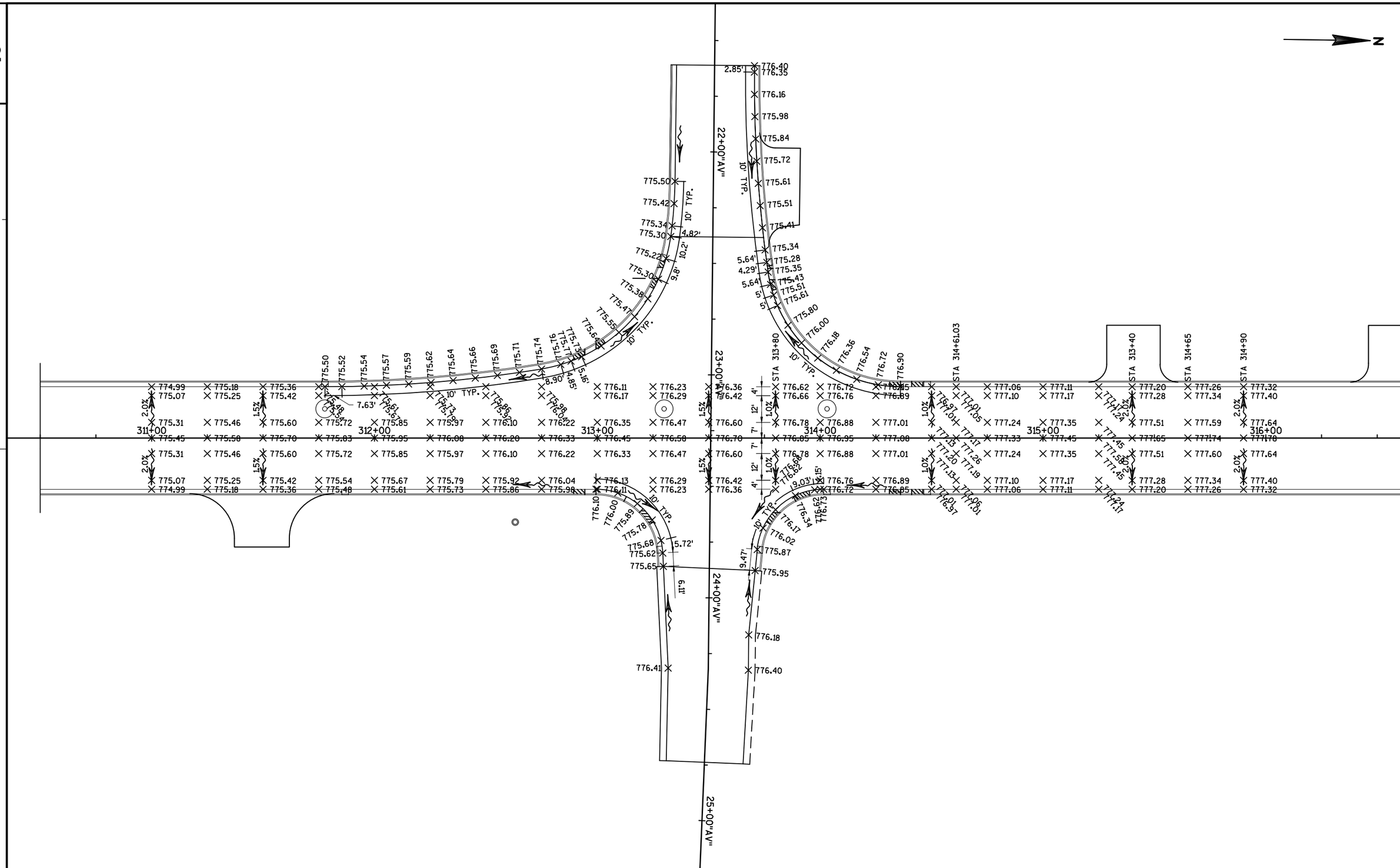

PROJECT NO:5144-01-75	HWY:STH 27	COUNTY:MONROE	INTERSECTION PAVEMENT ELEVATION DETAIL - W AVERILL STREET	SHEET 54	E

FILE NAME : N:\PDS\C3D\51440105\SHEETSPLAN\021101_ID.DWG
LAYOUT NAME - 021201_PD

PLOT DATE : 7/27/2017 8:36 AM PLOT BY : VALENTI, PAUL M PLOT NAME : PLOT SCALE : 1 IN:40 FT

WISDOT/CADDS SHEET 42

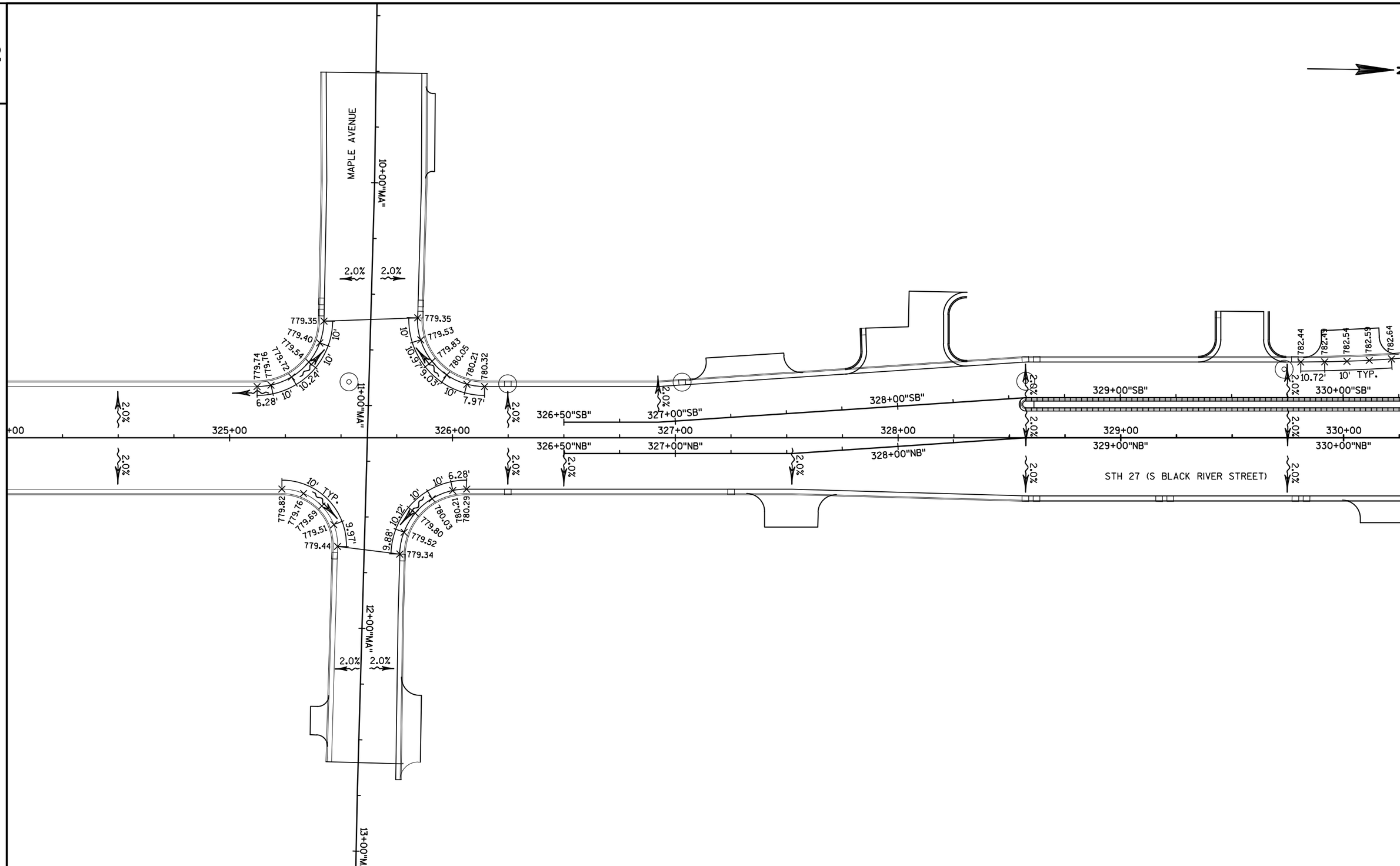

PROJECT NO:5144-01-75	HWY:STH 27	COUNTY:MONROE	INTERSECTION PAVEMENT ELEVATION DETAIL STH 27 & MAPLE AVE	SHEET 55	E

FILE NAME : N:\PDS\C3D\51440105\SHEETSPLAN\021121_ID.DWG
LAYOUT NAME - 021221_PD
PLOT DATE : 7/27/2017 8:37 AM PLOT BY : VALENTI, PAUL M PLOT NAME : PLOT SCALE : 77/256" = 1'-0"_XREF

WISDOT/CADDS SHEET 42

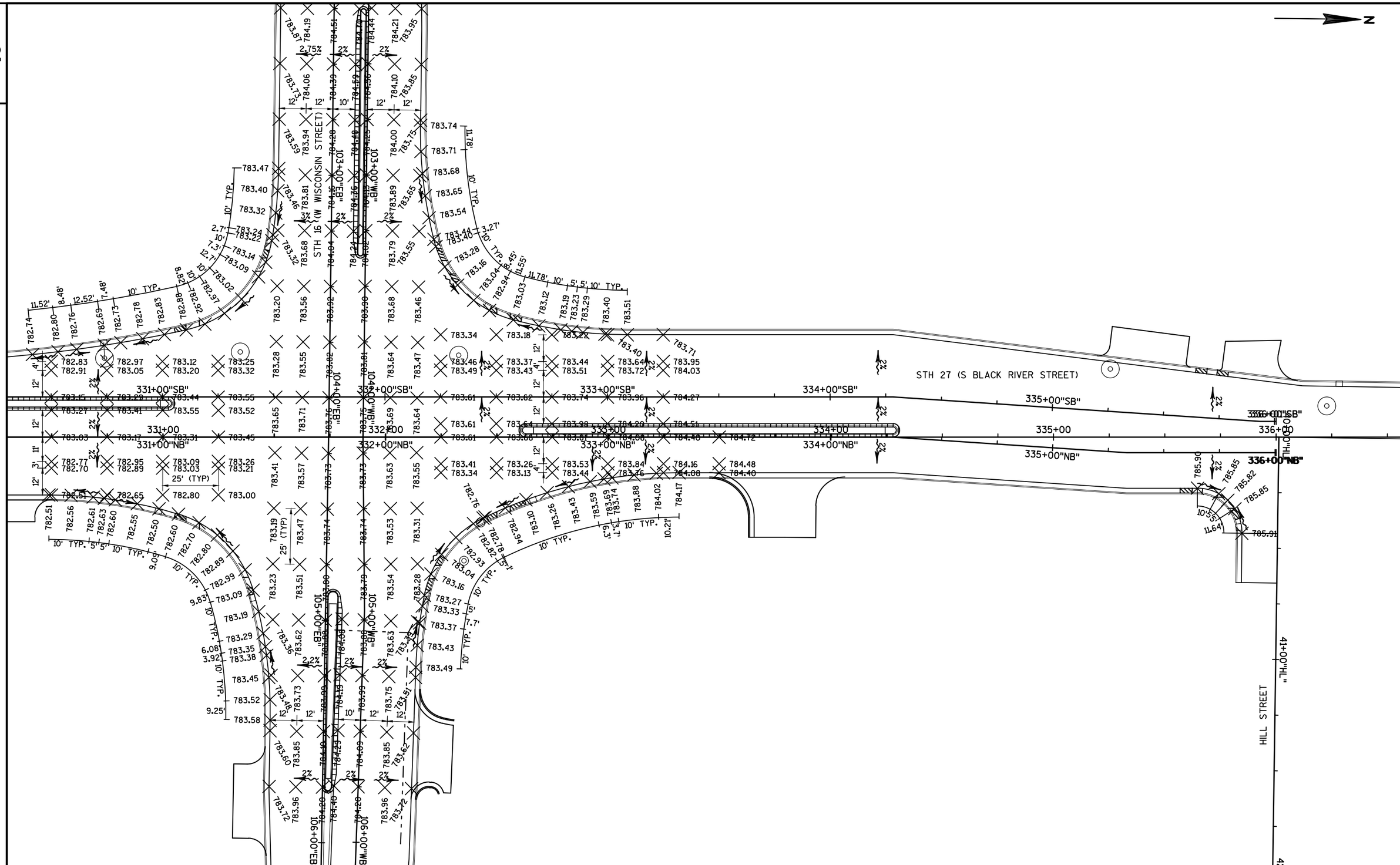

PROJECT NO:5144-01-75	HWY:STH 27	COUNTY:MONROE	INTERSECTION PAVEMENT ELEVATION DETAIL - STH 27 & STH 16	SHEET 56	E

LEGEND

EROSION MAT URBAN CLASS I, TYPE B

INLET PROTECTION

SURFACE WATER FLOW

N

EXISTING R/W

EXISTING R/W

BP: 28+50.00R

29R

R/W

SIGN

SLOPE INTERCEPT

EXISTING R/W

EXISTING R/W

209RO

210RO

211RO

212RO

213RO

214

ROBERTS ROAD

MATCH LINE
STA 214+00RO

30R

MH

EXISTING R/W

EXISTING R/W

SLOPE INTERCEPT

R/W

EXISTING R/W

RIVER ROAD

31R

EXISTING R/W

EP: 31+60.71R

PROJECT NO: 5144-01-75 & 5144-01-76	HWY: STH 27	COUNTY: MONROE	EROSION CONTROL	SHEET 57	E

FILE NAME : P:\50S\51\00051029\CADD\C3D\SHEETSPLAN\022001_EC.DWG
LAYOUT NAME - 022001_ec

PLOT DATE : 7/25/2017 1:00 PM PLOT BY : BRAD LEE PLOT NAME : PLOT SCALE : 1 IN:40 FT

2

LEGEND

EROSION MAT URBAN CLASS I, TYPE B

INLET PROTECTION

SURFACE WATER FLOW

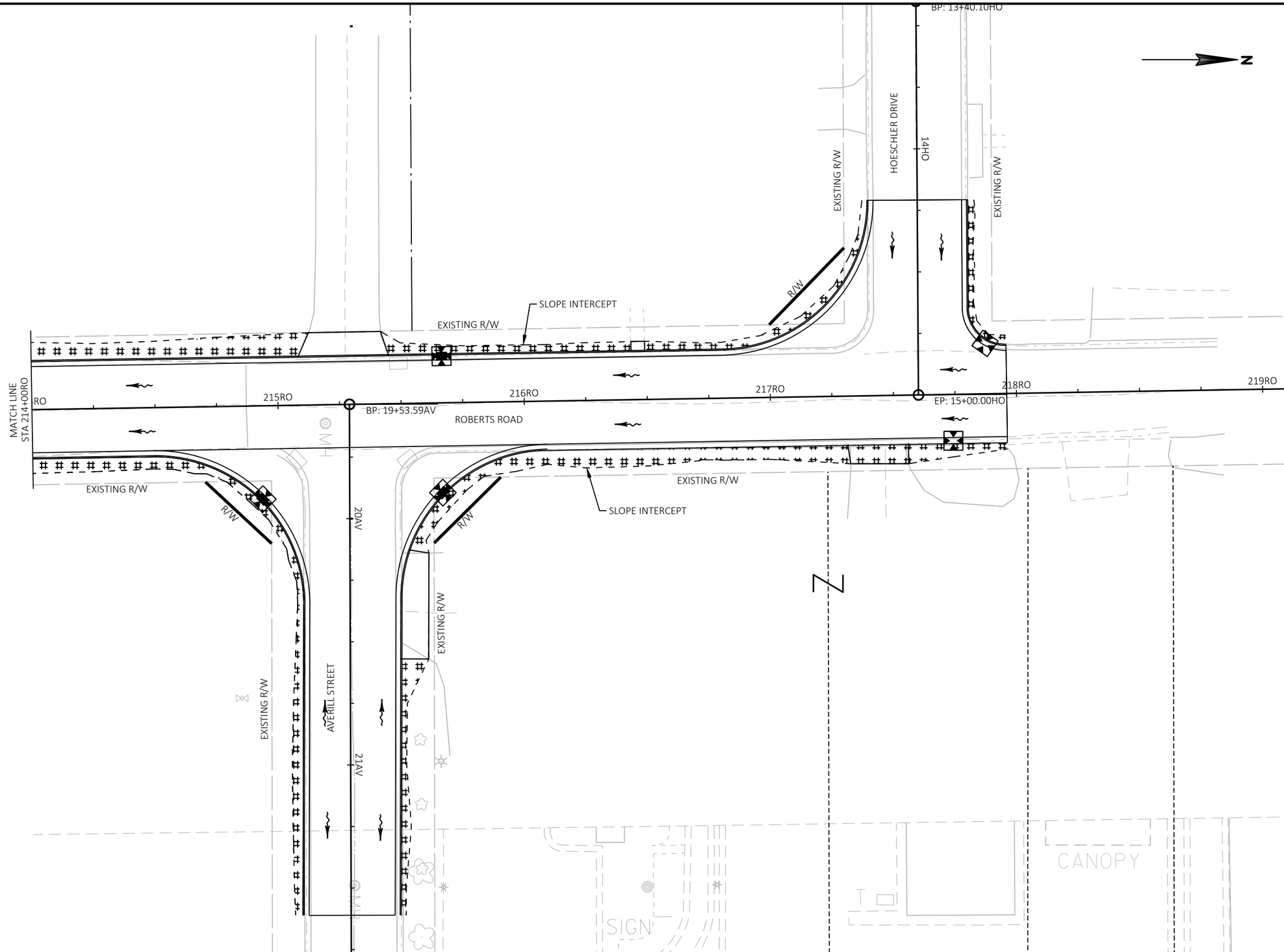

2

PROJECT NO: 5144-01-75 & 5144-01-76	HWY: STH 27	COUNTY: MONROE	EROSION CONTROL	SHEET 58	E

FILE NAME : P:\50S\51\00051029\CADD\C3D\SHEETSPLAN\022001_EC.DWG
LAYOUT NAME - 022002_ec

PLOT DATE : 7/25/2017 1:00 PM PLOT BY : BRAD LEE PLOT NAME : PLOT SCALE : 1 IN:40 FT

WISDOT/CADDS SHEET 42

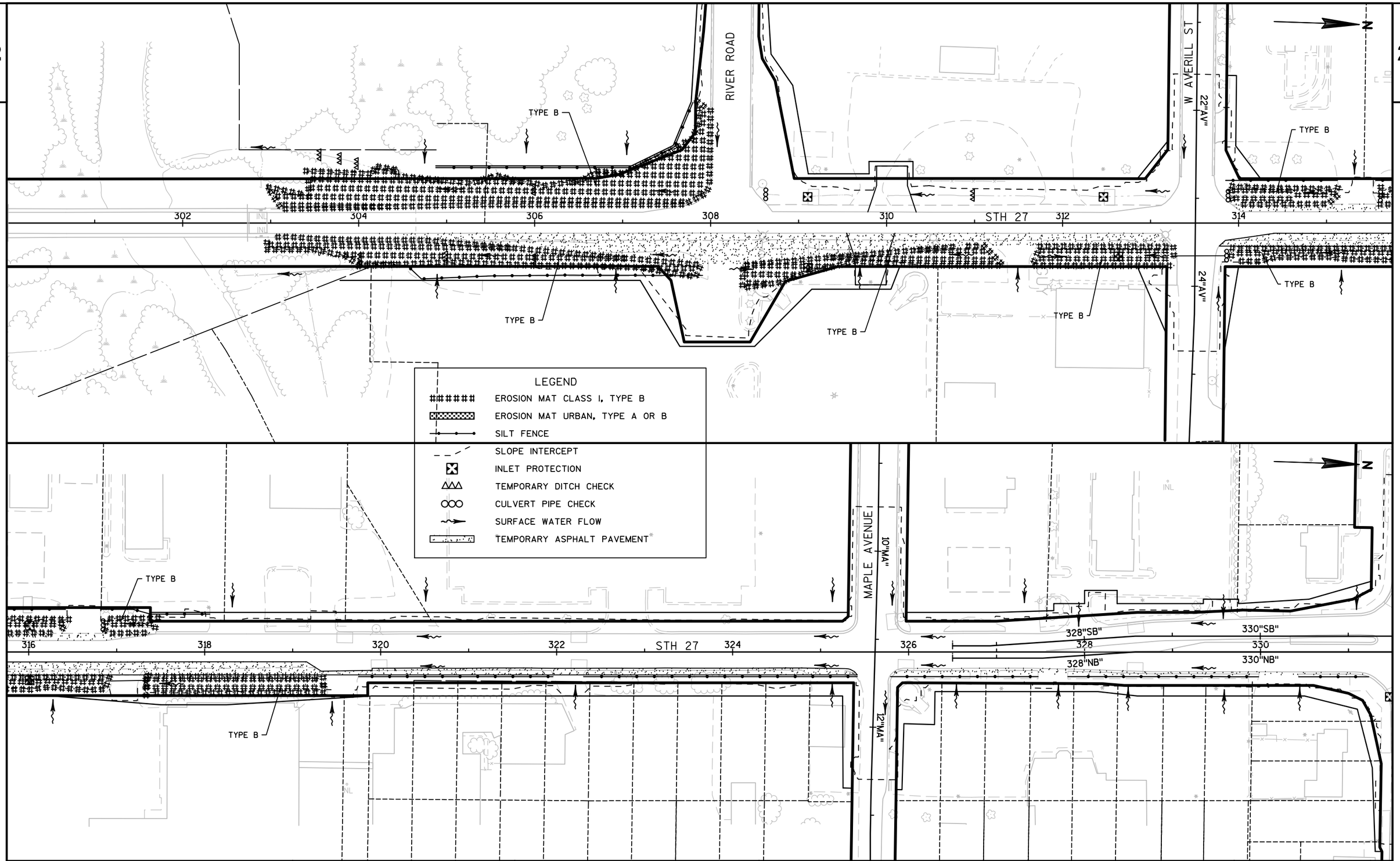

PROJECT NO:5144-01-75	HWY:STH 27	COUNTY:MONROE	EROSION CONTROL PLAN - STAGE 1C	SHEET 59	E

FILE NAME : N:\PDS\C3D\51440105\SHEETSPLAN\022001-EC1.DWG
LAYOUT NAME - 022001-EC1
PLOT DATE : 9/6/2017 1:05 PM PLOT BY : VALENTI, PAUL M PLOT NAME : PLOT SCALE : 1 IN:100 FT

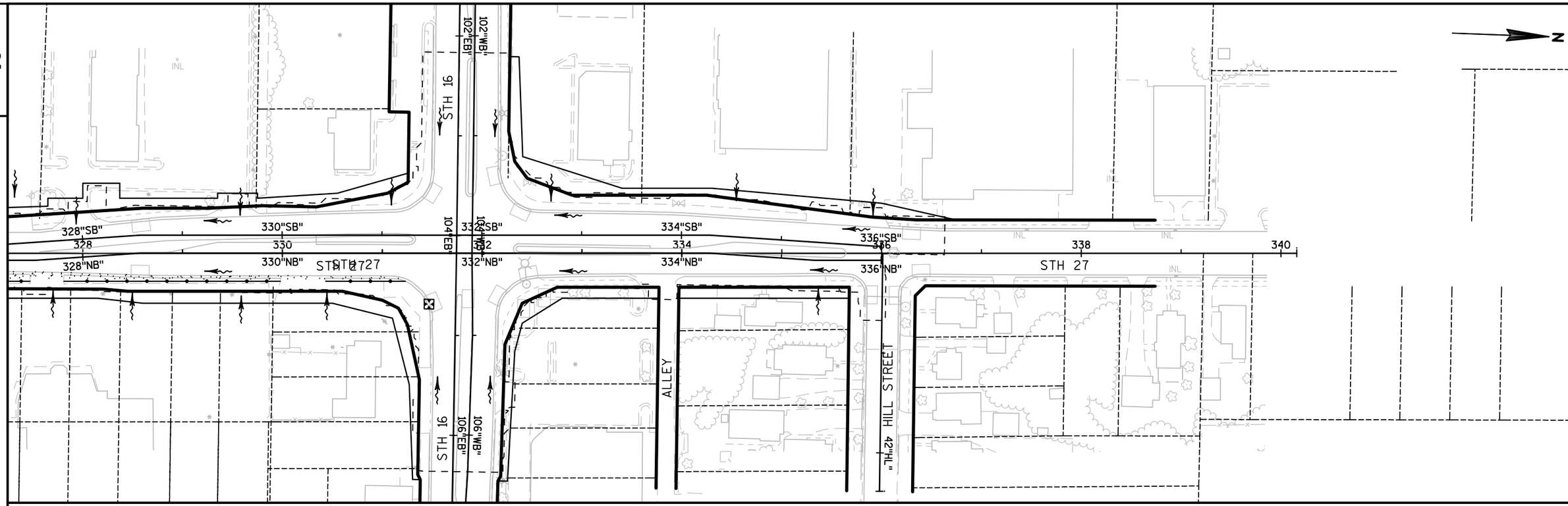

LEGEND

######	EROSION MAT CLASS I, TYPE B
	EROSION MAT URBAN, TYPE A OR B
	SILT FENCE
	SLOPE INTERCEPT
	INLET PROTECTION
	TEMPORARY DITCH CHECK
	CULVERT PIPE CHECK
	SURFACE WATER FLOW
	TEMPORARY ASPHALT PAVEMENT

PROJECT NO:5144-01-75	HWY:STH 27	COUNTY:MONROE	EROSION CONTROL PLAN - STAGE 1C	SHEET 60	E

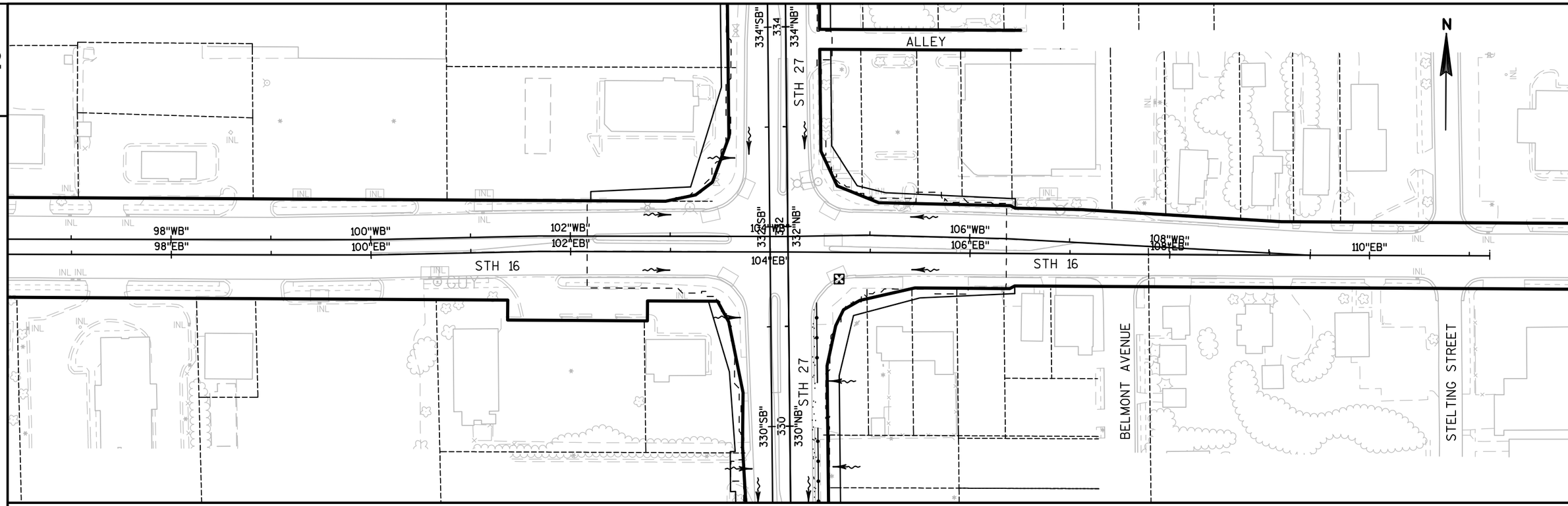

LEGEND

######	EROSION MAT CLASS I, TYPE B
	EROSION MAT URBAN, TYPE A OR B
	SILT FENCE
	SLOPE INTERCEPT
	INLET PROTECTION
	TEMPORARY DITCH CHECK
	CULVERT PIPE CHECK
	SURFACE WATER FLOW
	TEMPORARY ASPHALT PAVEMENT

PROJECT NO:5144-01-75	HWY:STH 27	COUNTY:MONROE	EROSION CONTROL PLAN - STAGE 1C	SHEET 61	E

2

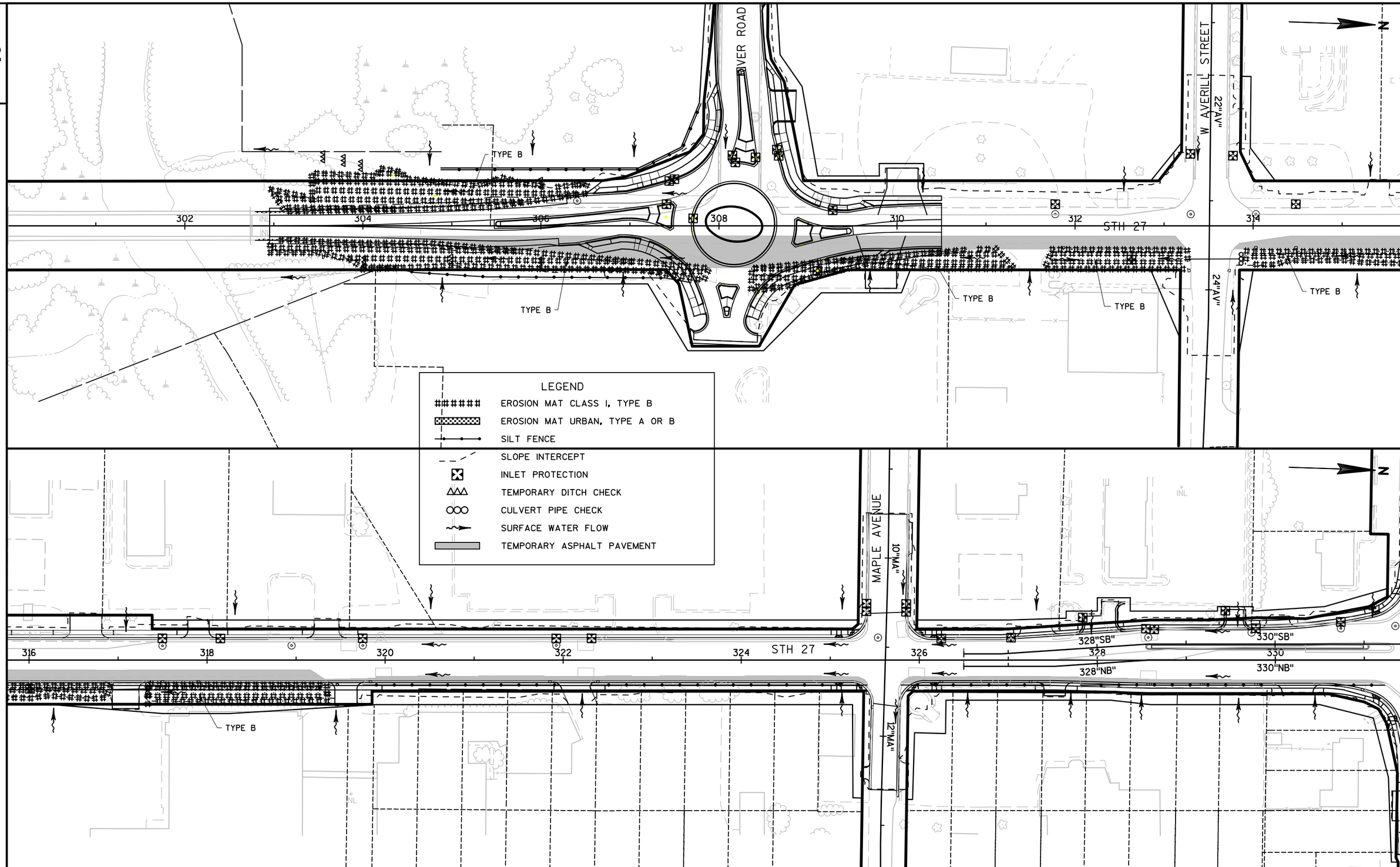

2

PROJECT NO:5144-01-75	HWY:STH 27	COUNTY:MONROE	EROSION CONTROL PLAN - STAGE 2 & 2B	SHEET 62	E

FILE NAME : N:\PDS\C3D\51440105\SHEETSPLAN\022001-EC2.DWG
LAYOUT NAME - 022001-EC2
PLOT DATE : 9/6/2017 1:00 PM PLOT BY : VALENTI, PAUL M PLOT NAME : PLOT SCALE : 1 IN:100 FT

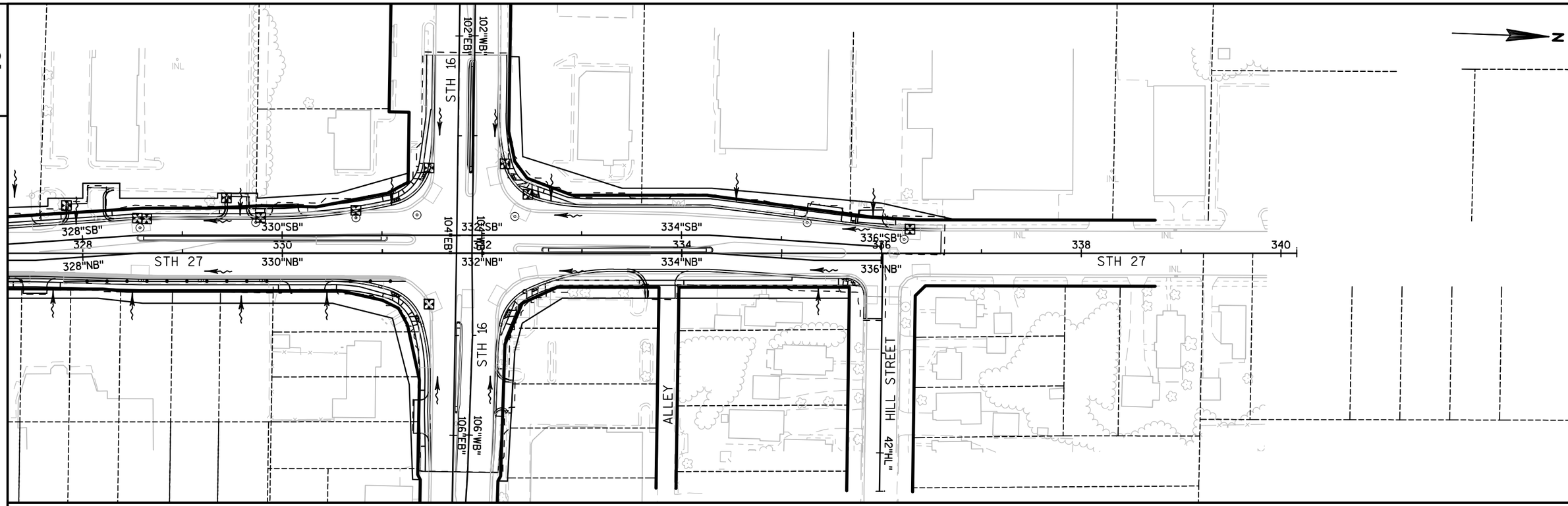

LEGEND

######	EROSION MAT CLASS I, TYPE B
	EROSION MAT URBAN, TYPE A OR B
	SILT FENCE
	SLOPE INTERCEPT
	INLET PROTECTION
	TEMPORARY DITCH CHECK
	CULVERT PIPE CHECK
	SURFACE WATER FLOW
	TEMPORARY ASPHALT PAVEMENT

PROJECT NO:5144-01-75	HWY:STH 27	COUNTY:MONROE	EROSION CONTROL PLAN - STAGE 2 & 2B	SHEET 63	E

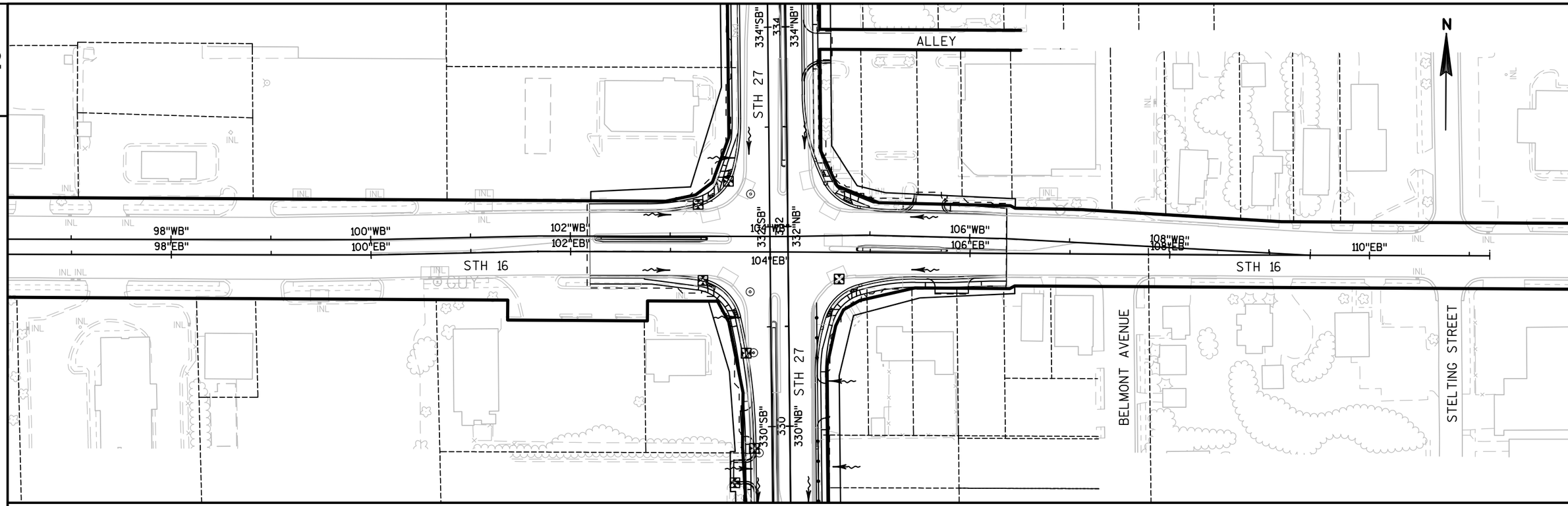

LEGEND

- ###### EROSION MAT CLASS I, TYPE B
- EROSION MAT URBAN, TYPE A OR B
- SILT FENCE
- SLOPE INTERCEPT
- INLET PROTECTION
- TEMPORARY DITCH CHECK
- CULVERT PIPE CHECK
- SURFACE WATER FLOW
- TEMPORARY ASPHALT PAVEMENT

PROJECT NO:5144-01-75	HWY:STH 27	COUNTY:MONROE	EROSION CONTROL PLAN - STAGE 2 & 2B	SHEET 64	E

FILE NAME : N:\PDS\C3D\51440105\SHEETSPLAN\022001-EC2.DWG
LAYOUT NAME - 022003-EC2
PLOT DATE : 9/6/2017 12:58 PM PLOT BY : VALENTI, PAUL M PLOT NAME : PLOT SCALE : 1 IN:100 FT

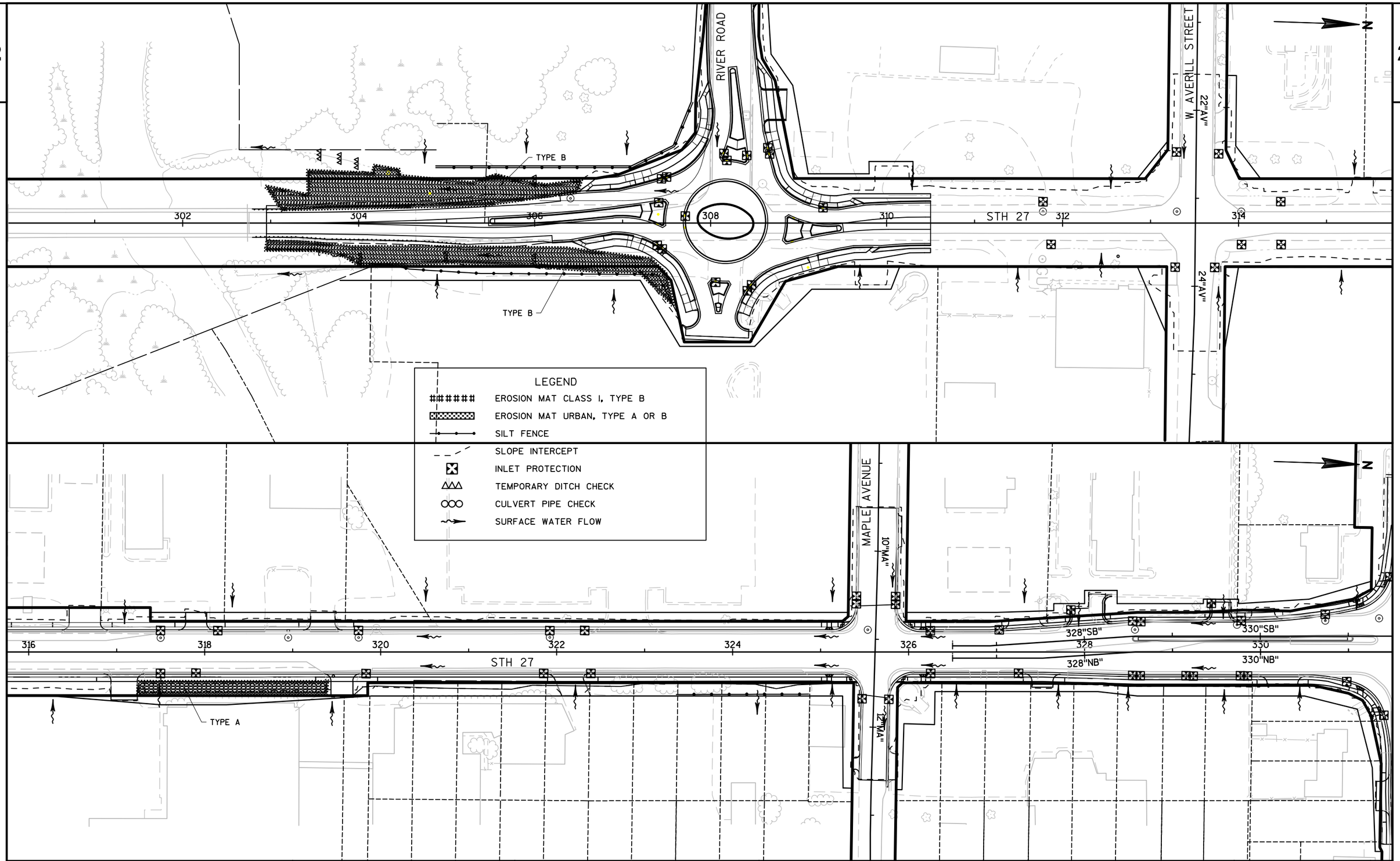

PROJECT NO:5144-01-75	HWY:STH 27	COUNTY:MONROE	EROSION CONTROL PLAN - STAGE 3	SHEET 65	E

FILE NAME : N:\PDS\C3D\51440105\SHEETSPLAN\022001-EC3.DWG
LAYOUT NAME - 022001-EC3
PLOT DATE : 9/6/2017 12:51 PM PLOT BY : VALENTI, PAUL M PLOT NAME : PLOT SCALE : 1 IN:100 FT

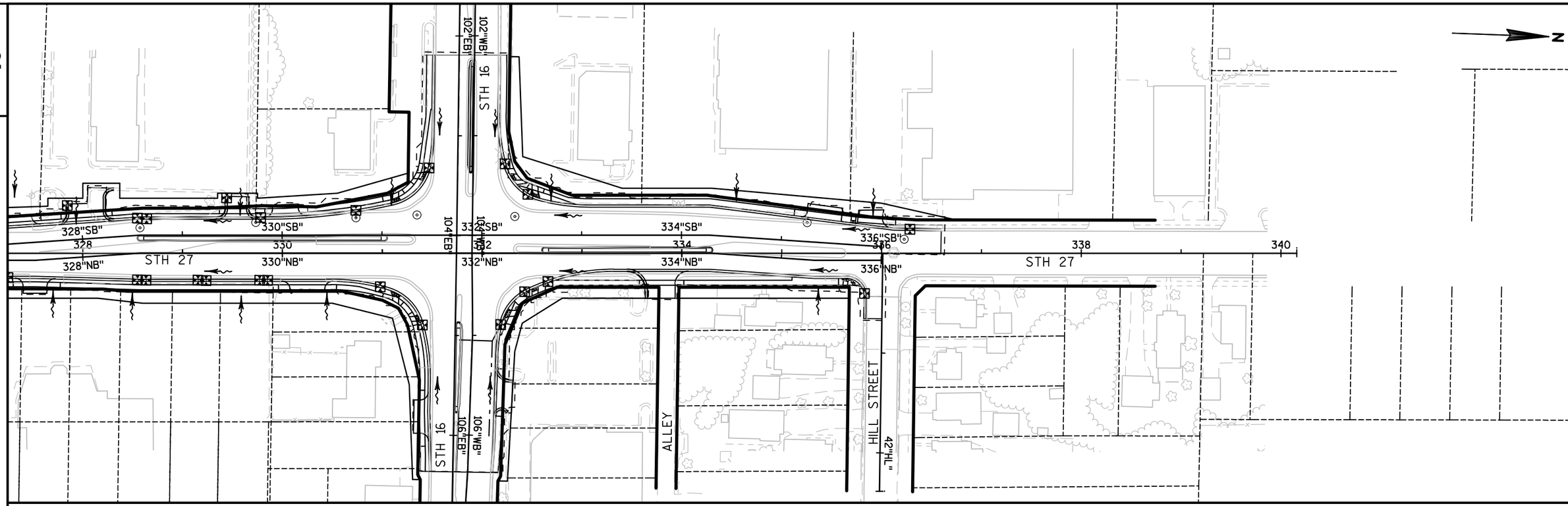

LEGEND

- ###### EROSION MAT CLASS I, TYPE B
- EROSION MAT URBAN, TYPE A OR B
- SILT FENCE
- SLOPE INTERCEPT
- INLET PROTECTION
- TEMPORARY DITCH CHECK
- CULVERT PIPE CHECK
- SURFACE WATER FLOW

PROJECT NO:5144-01-75	HWY:STH 27	COUNTY:MONROE	EROSION CONTROL PLAN - STAGE 3	SHEET 66	E

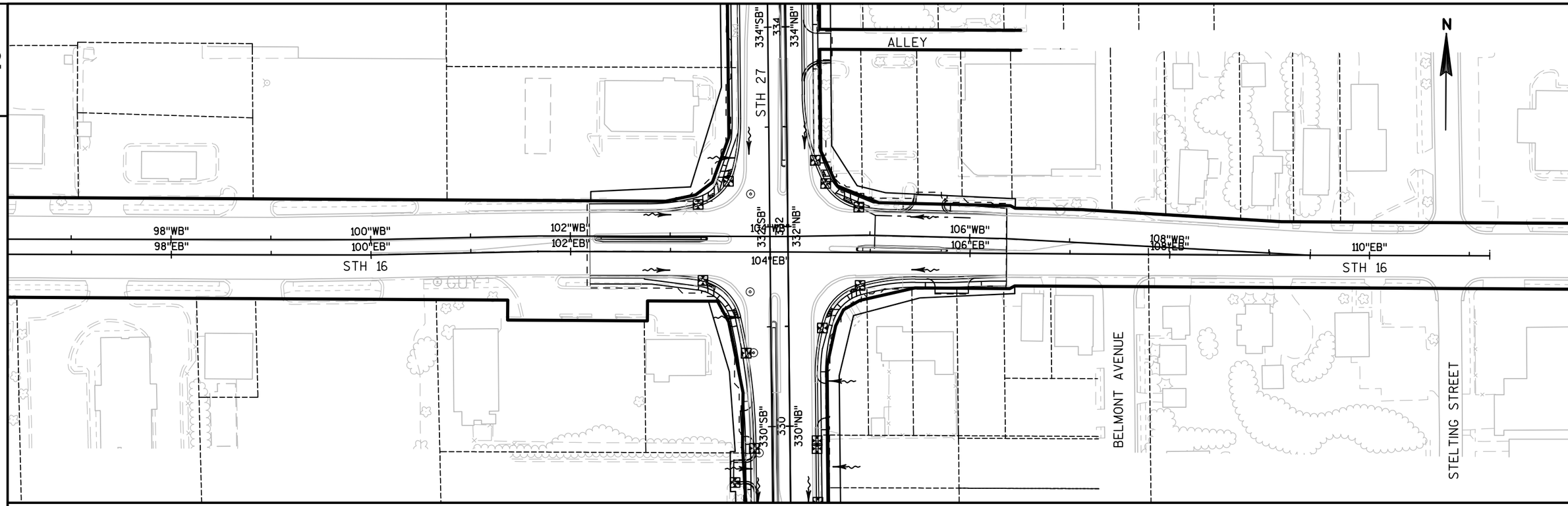

LEGEND

######	EROSION MAT CLASS I, TYPE B
	EROSION MAT URBAN, TYPE A OR B
	SILT FENCE
	SLOPE INTERCEPT
	INLET PROTECTION
	TEMPORARY DITCH CHECK
	CULVERT PIPE CHECK
	SURFACE WATER FLOW

PROJECT NO:5144-01-75	HWY:STH 27	COUNTY:MONROE	EROSION CONTROL PLAN - STAGE 3	SHEET 67	E

BENCHMARKS		
NO.	ELEV.	DESCRIPTION
1012	776.36	CHISELED X ON SE BOLT OF EAST POST OF KWIK TRIP SIGN LOCATED AT THE NW CORNER OF STH 27 & RIVER ROAD

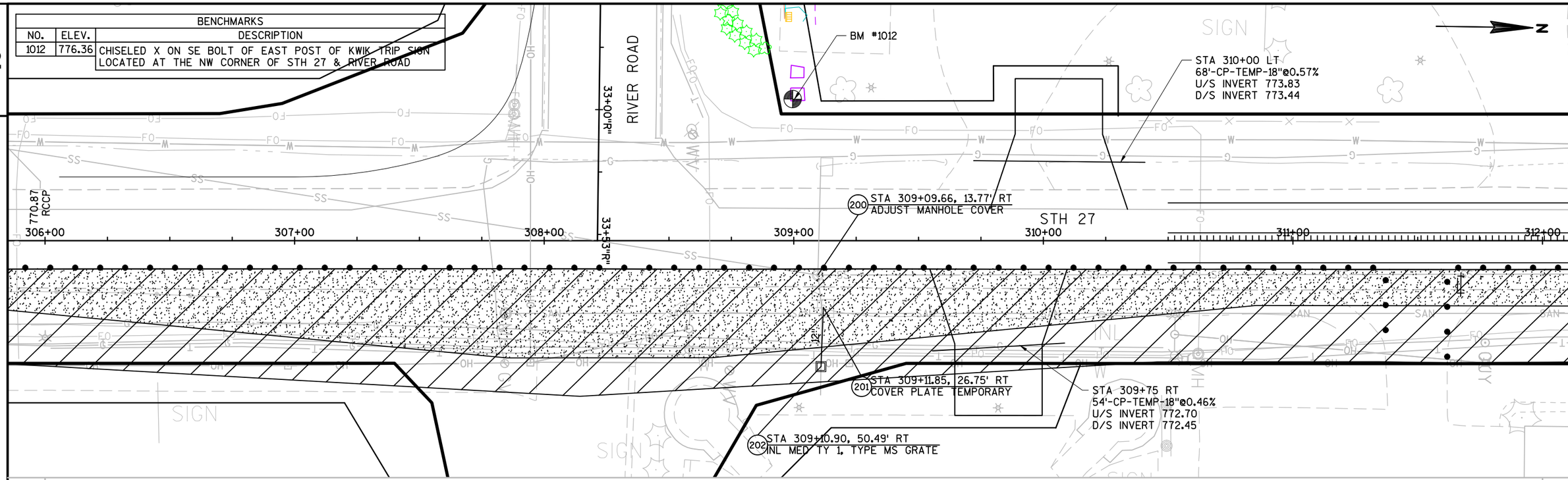

PROJECT NO:5144-01-75	HWY:STH 27	COUNTY:MONROE	STORM SEWER - STAGE 1C	SHEET 68	E

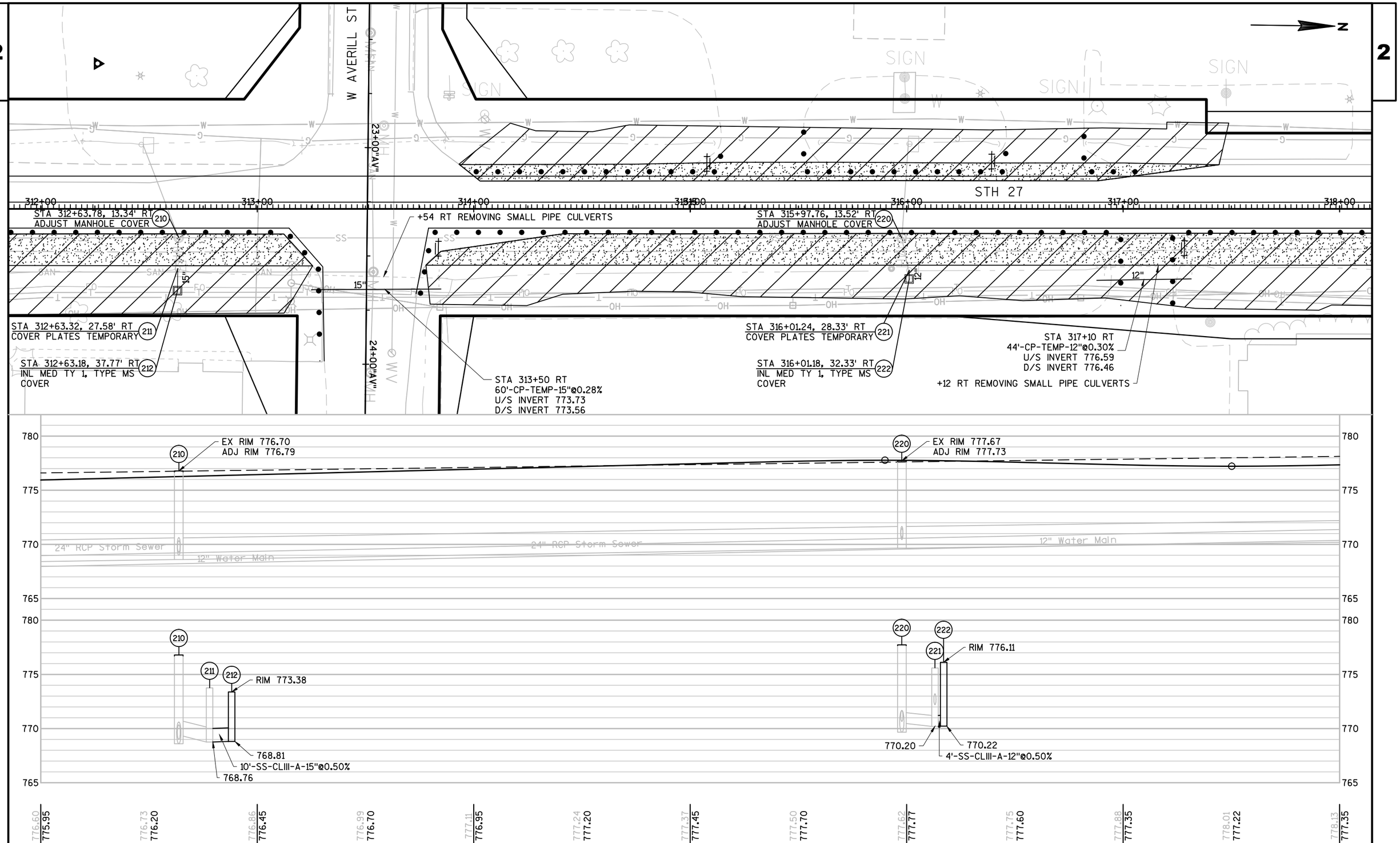

PROJECT NO:5144-01-75	HWY:STH 27	COUNTY:MONROE	STORM SEWER - STAGE 1C	SHEET 69	E

FILE NAME : N:\PDS\C3D\51440105\SHEETSPLAN\022503_SS_S1.DWG
LAYOUT NAME - 022503_SS_S1 - 022503
PLOT DATE : 7/27/2017 10:34 AM PLOT BY : VALENTI, PAUL M PLOT NAME : PLOT SCALE : 1" = 40'_XREF

BENCHMARKS		
NO.	ELEV.	DESCRIPTION
1004	780.09	CHISELED X ON SW RIMBOLT OF FIRE HYDRANT ON WEST SIDE OF STH 27 (S BLACK RIVER STREET) +/- 600' NORTH OF W AVERILL STREET IN FRONT OF 716 S BLACK RIVER STREET
1014	779.49	CHISELED SQUARE ON EAST END OF EAST POST CONCRETE OF MARTIN WAREHOUSING SIGN +/- 300' S OF MAPLE AVE AND +/- 50' W OF STH 27 CENTERLINE

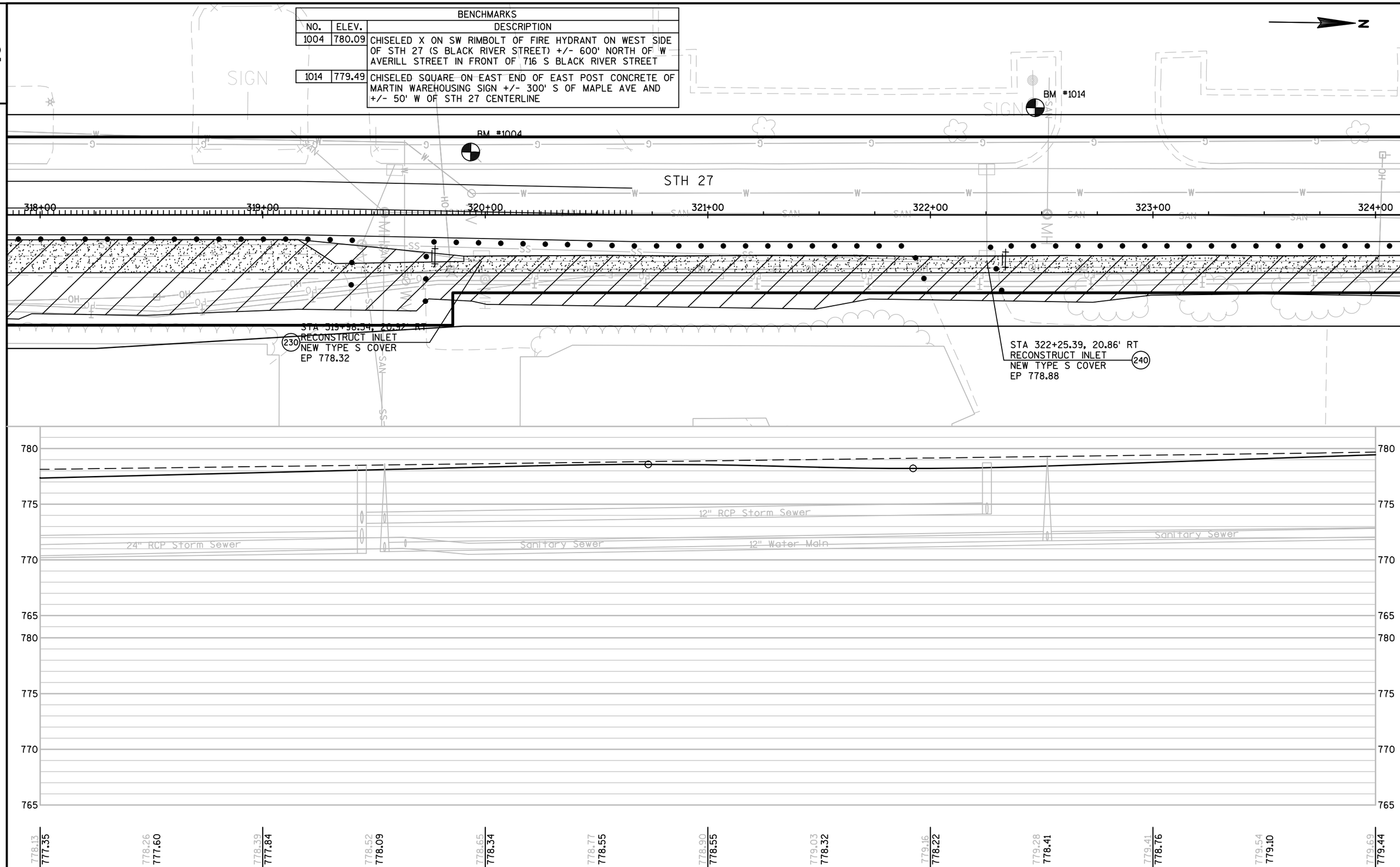

PROJECT NO:5144-01-75	HWY:STH 27	COUNTY:MONROE	STORM SEWER - STAGE 1C	SHEET 70	E

FILE NAME : N:\PDS\C3D\51440105\SHEETSPLAN\022504_SS_S1.DWG
LAYOUT NAME - 022504_SS_S1 - 022504
PLOT DATE : 7/27/2017 10:42 AM PLOT BY : VALENTI, PAUL M PLOT NAME : PLOT SCALE : 77/256" = 1'-0"_XREF

BENCHMARKS		
NO.	ELEV.	DESCRIPTION
1006	782.22	CHISELED X ON NE RIMBOLT OF FIRE HYDRANT LOCATED ON NW CORNER OF STH 27 AND MAPLE AVENUE.

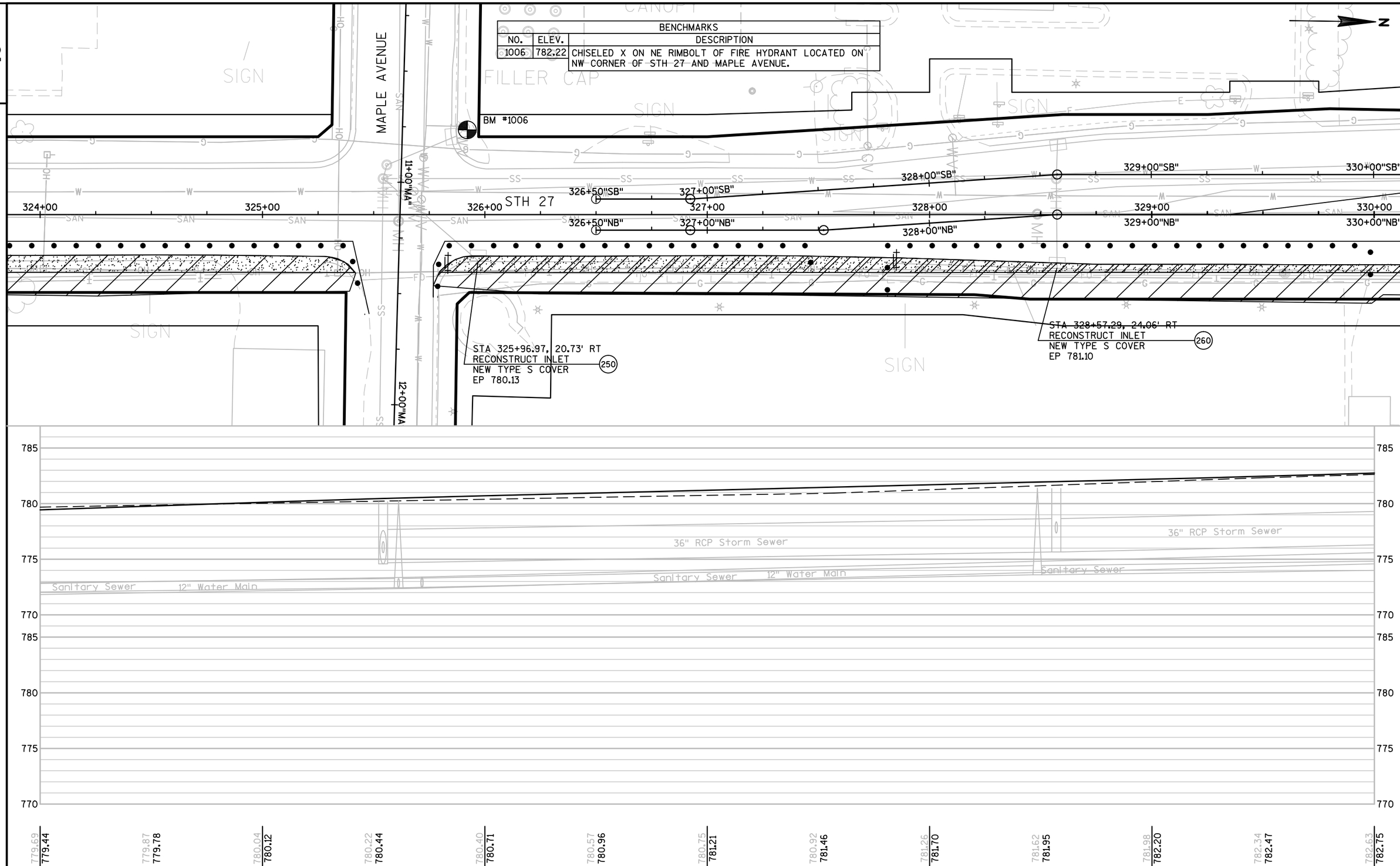

PROJECT NO:5144-01-75	HWY:STH 27	COUNTY:MONROE	STORM SEWER - STAGE 1C	SHEET 71	E

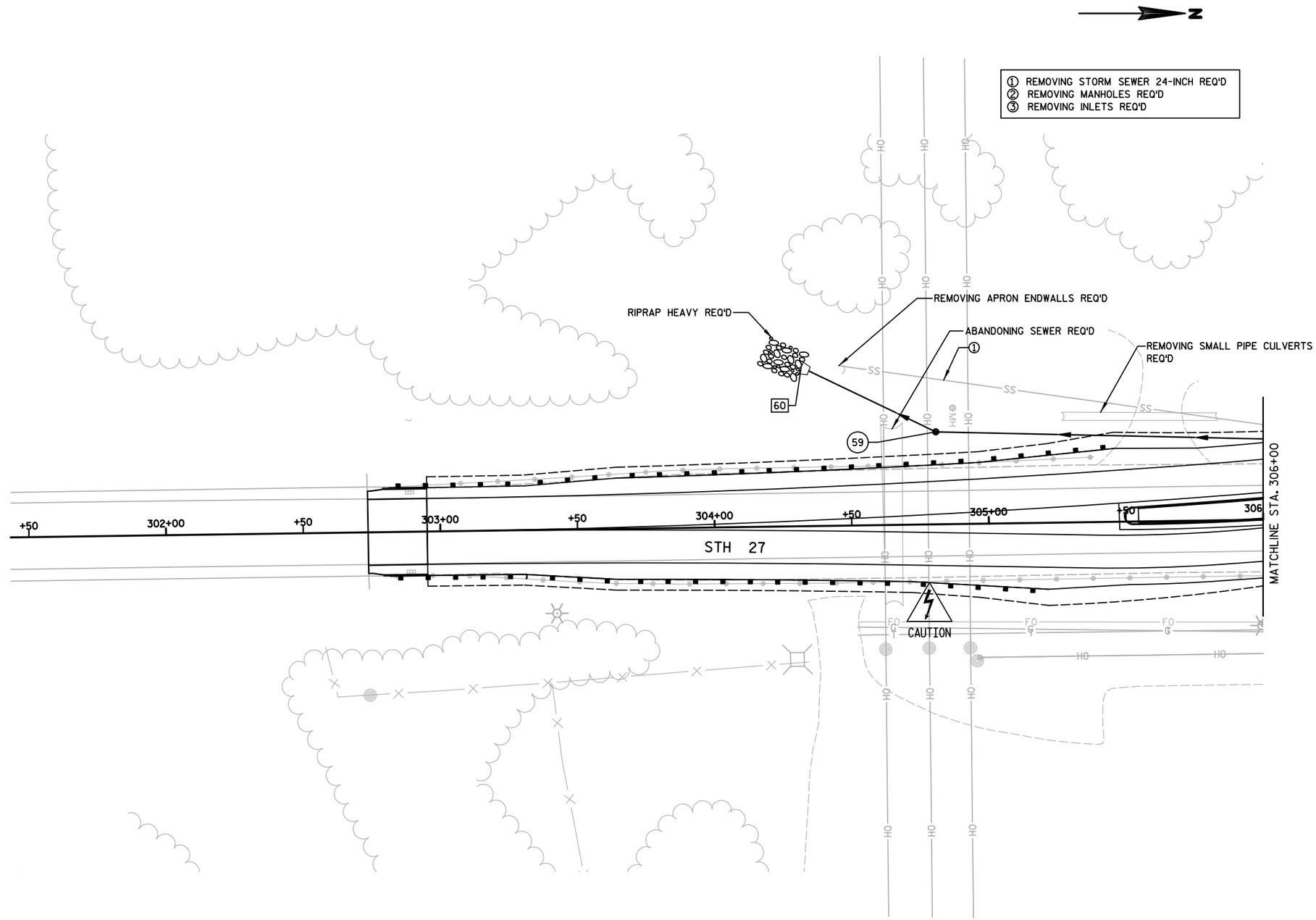

NOTES:

STATIONS AND OFFSETS ARE TO THE CENTER OF STRUCTURES OR TO THE APRON END OF ENDWALLS.

PIPE LENGTHS ARE MEASURED TO THE CENTER OF STRUCTURES AND TO THE END OF PIPE AT APRON ENDWALLS (DOES NOT INCLUDE LENGTH OF ENDWALL).

STRUCT NO.	STATION	OFFSET	C-C (FT)	TO STRUCT	INLET TYPE & COVER		MH TYPE & COVER		RIM/ GRATE ELEV.	T.O.S. ELEV.	DEPTH (FT)	DISCHARGE PIPE SIZE (IN)	INLET ELEV.	DISCHARGE ELEV.	LENGTH (FT)	SLOPE (%)	REMARKS
60	304+32.33	57.7' LT	--	--	--	--	--	--	--	--	--	60	761.20	--	--	--	APRON ENDWALLS FOR CPRC 60-INCH REQ'D
59	304+81.10	33.7' LT	46.1	60	--	--	9-FOOT	J	773.35	772.10	9.19	60	762.91	761.20	46	3.71%	

PROJECT NO:5144-01-75	HWY:STH 27	COUNTY:MONROE	STORM SEWER SHEETS	SHEET 72	E

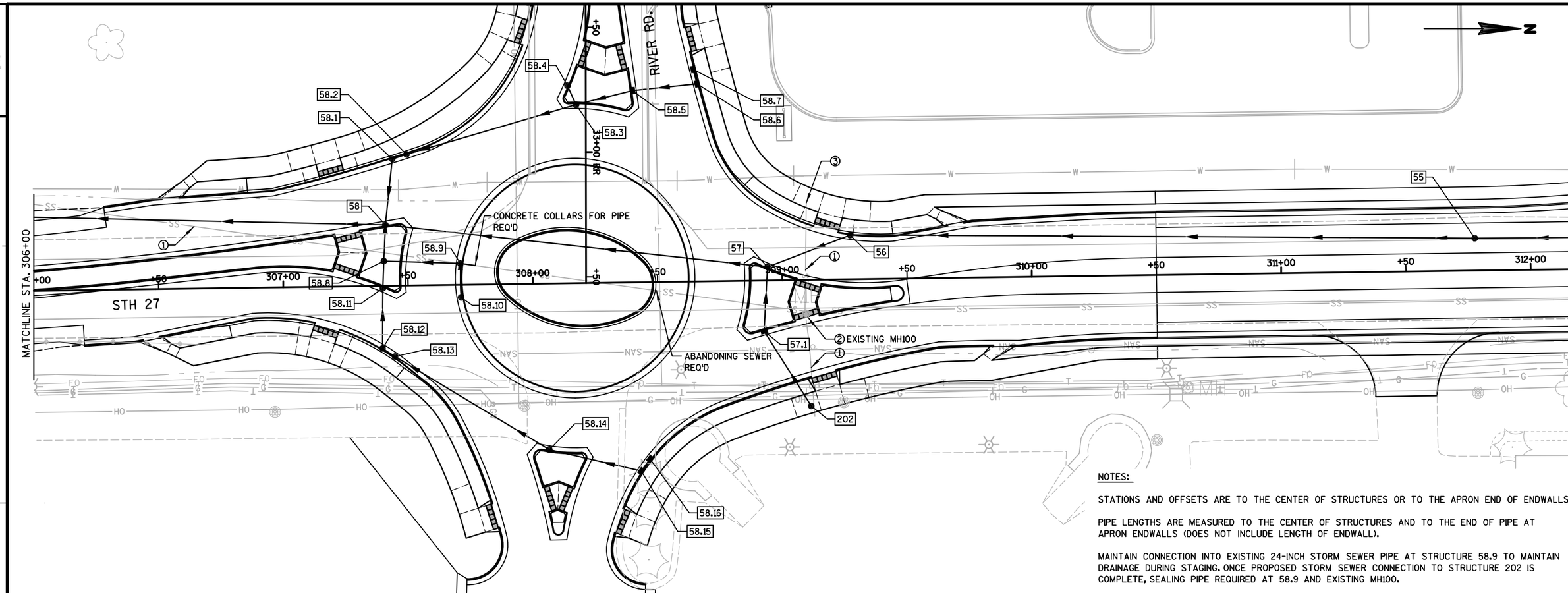

NOTES:

STATIONS AND OFFSETS ARE TO THE CENTER OF STRUCTURES OR TO THE APRON END OF ENDWALLS.

PIPE LENGTHS ARE MEASURED TO THE CENTER OF STRUCTURES AND TO THE END OF PIPE AT APRON ENDWALLS (DOES NOT INCLUDE LENGTH OF ENDWALL).

MAINTAIN CONNECTION INTO EXISTING 24-INCH STORM SEWER PIPE AT STRUCTURE 58.9 TO MAINTAIN DRAINAGE DURING STAGING. ONCE PROPOSED STORM SEWER CONNECTION TO STRUCTURE 202 IS COMPLETE, SEALING PIPE REQUIRED AT 58.9 AND EXISTING MH100.

STRUCT NO.	STATION	OFFSET	C-C (FT)	TO STRUCT	INLET TYPE & COVER		MH TYPE & COVER		RIM/ GRATE ELEV.	T.O.S. ELEV.	DEPTH (FT)	DISCHARGE PIPE SIZE (IN)	INLET ELEV.	DISCHARGE ELEV.	LENGTH (FT)	SLOPE (%)	REMARKS
58	12+95.18 L	1.5' RT	260.3	59	--	H-S	8-FOOT	--	772.78	771.95	7.70	60	764.25	762.91	260	0.51%	FLAT TOP SLAB REQ'D
58.1	11+18.00 K	1.5' LT	26.5	58	--	HM-S	4-FOOT	--	772.44	771.61	3.09	15	768.52	768.39	27	0.49%	FLAT TOP SLAB REQ'D
58.2	11+24.01 K	1.5' LT	6.0	58.1	--	HM-S	4-FOOT	--	772.37	771.54	2.99	15	768.55	768.52	6	0.50%	FLAT TOP SLAB REQ'D
58.3	12+60.24 J	7.8' LT	70.8	58.2	--	H-S	4-FOOT	--	773.05	772.22	3.30	15	768.92	768.55	71	0.52%	FLAT TOP SLAB REQ'D
58.4	12+55.03 J	1.5' LT	8.4	58.3	--	H-S	4-FOOT	--	773.10	772.27	3.31	15	768.96	768.92	8	0.48%	FLAT TOP SLAB REQ'D
58.5	12+57.31 I	1.5' RT	23.4	58.3	2x3-FT	H-S	--	--	773.20	772.37	3.33	15	769.04	768.92	23	0.51%	
58.6	10+98.26 H	1.5' LT	26.0	58.5	2x3-FT	H-S	--	--	772.86	772.03	2.86	15	769.17	769.04	26	0.50%	
58.7	10+92.25 H	1.5' LT	6.0	58.6	2x3-FT	H-S	--	--	772.83	772.00	2.80	12	769.20	769.17	6	0.50%	
58.8	14+42.34 M	11.7' LT	14.5	58	--	--	5-FOOT	J	773.24	771.99	6.02	24	765.97	765.90	15	0.50%	
58.9	12+88.00 A	1.5' LT	30.7	58.8	--	T	5-FOOT	--	772.38	771.71	5.59	24	766.12	765.97	31	0.50%	FLAT TOP SLAB REQ'D; RUBBER ADJUSTMENT RISER RINGS REQ'D
STUB	12+88.00 A	7.6' LT	6.0	58.9	--	--	--	--	--	--	--	24	766.18	766.12	6	1.00%	CONNECT INTO EXISTING 24"
58.10	13+02.11 A	1.5' LT	13.6	58.9	--	T	4-FOOT	--	772.36	771.69	3.34	15	768.35	768.26	14	0.66%	FLAT TOP SLAB REQ'D; RUBBER ADJUSTMENT RISER RINGS REQ'D
58.11	14+45.80 M	1.5' LT	10.9	58.8	--	H-S	4-FOOT	--	772.59	771.76	3.66	15	768.10	768.00	11	0.92%	FLAT TOP SLAB REQ'D
58.12	11+23.62 B	1.5' RT	24.1	58.11	--	HM-S	4-FOOT	--	772.25	771.42	3.20	15	768.22	768.10	24	0.50%	FLAT TOP SLAB REQ'D
58.13	11+29.72 B	1.5' RT	6.0	58.12	--	HM-S	4-FOOT	--	772.31	771.48	3.08	15	768.40	768.22	6	3.00%	FLAT TOP SLAB REQ'D
58.14	10+07.62 C	9.0' LT	72.2	58.13	--	H-S	4-FOOT	--	772.89	772.06	3.30	12	768.76	768.40	72	0.50%	FLAT TOP SLAB REQ'D
58.15	10+59.73 E	1.5' RT	37.9	58.14	2x3-FT	H-S	--	--	772.87	772.04	3.09	12	768.95	768.76	38	0.50%	
58.16	10+65.84 E	1.5' RT	6.0	58.15	2x3-FT	H-S	--	--	772.93	772.10	3.12	12	768.98	768.95	6	0.50%	
57	10+11.70 G	1.5' RT	154.0	58	--	H-S	9-FOOT	--	773.74	772.91	8.02	60	764.89	764.25	154	0.42%	FLAT TOP SLAB REQ'D
57.1	10+14.43 F	1.5' LT	25.8	57	2x3-FT	H-S	--	--	773.60	772.77	4.95	12	767.82	767.69	26	0.50%	
202	11+37.44 E	13.2' RT	35.4	57.1	--	--	3-FOOT	J	774.32	773.07	5.07	12	768.00	767.82	35	0.51%	
56	11+94.03 H	1.5' LT	35.4	57	--	HM	9-FOOT	--	773.78	772.95	7.88	60	765.07	764.89	35	0.51%	FLAT TOP SLAB REQ'D

① REMOVING STORM SEWER 24-INCH REQ'D
② REMOVING MANHOLES REQ'D
③ REMOVING INLETS REQ'D

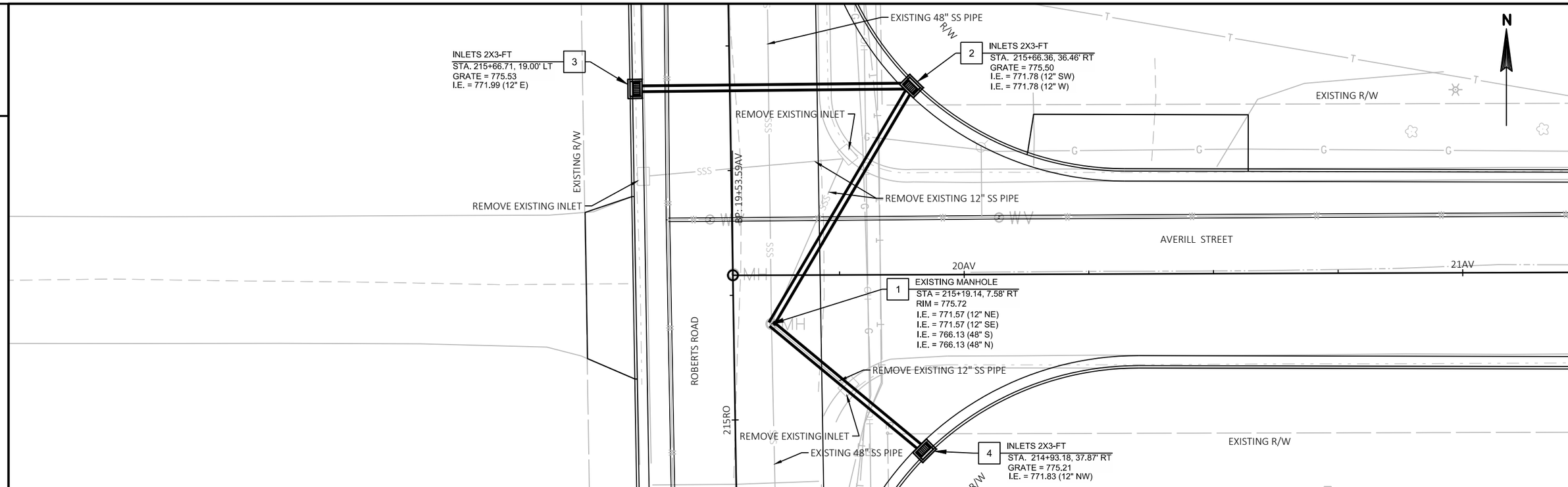

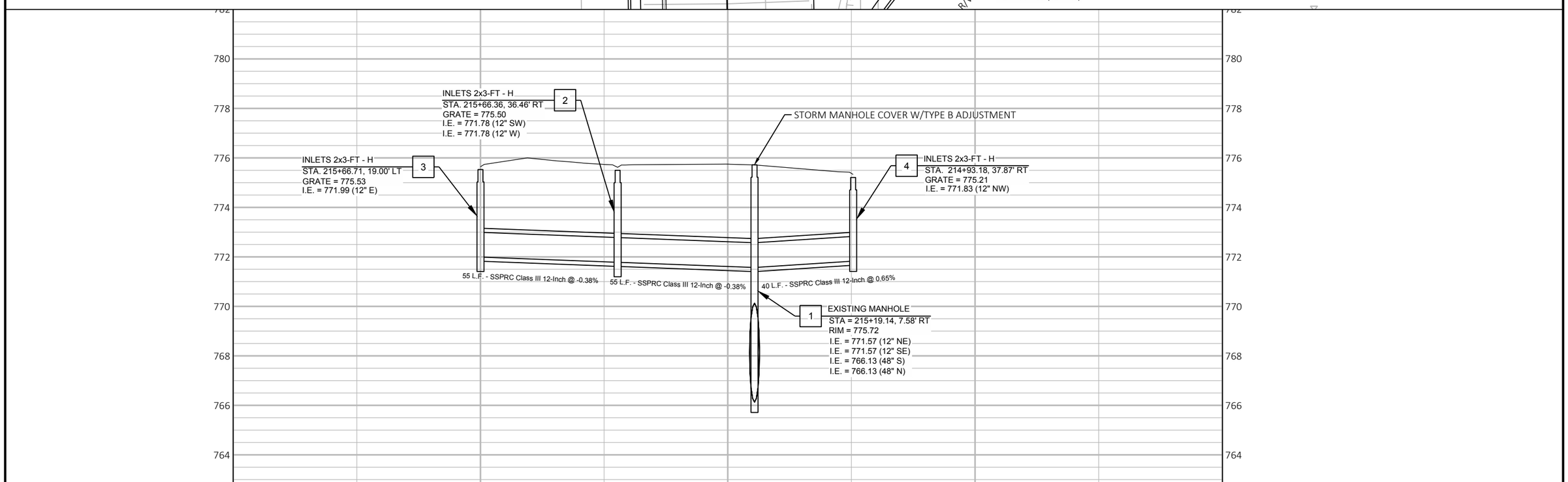

PROJECT NO: 5144-01-75 & 5144-01-76	HWY: STH 27	COUNTY: MONROE	STORM SEWER	SHEET 74	E

FILE NAME : P:\50S\51\00051029\CADD\C3D\SHEETSPLAN\ROBERTS STORM.DWG
LAYOUT NAME - 022502_ss
PLOT DATE : 7/13/2017 8:13 AM PLOT BY : BRAD LEE PLOT NAME : PLOT SCALE : ##########

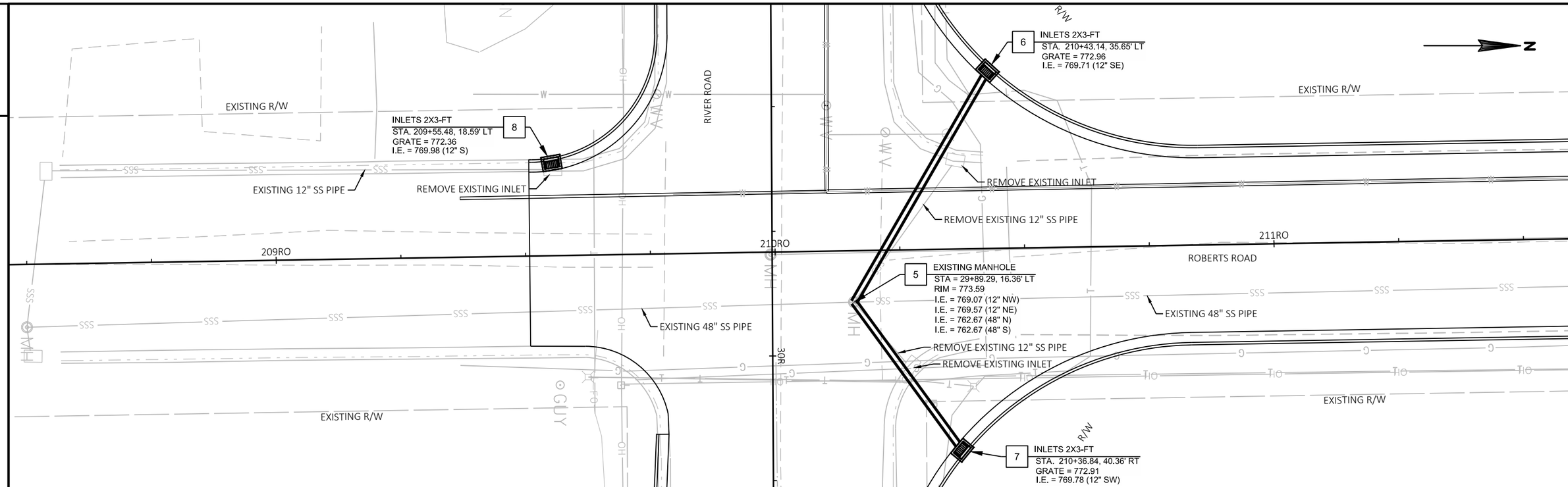

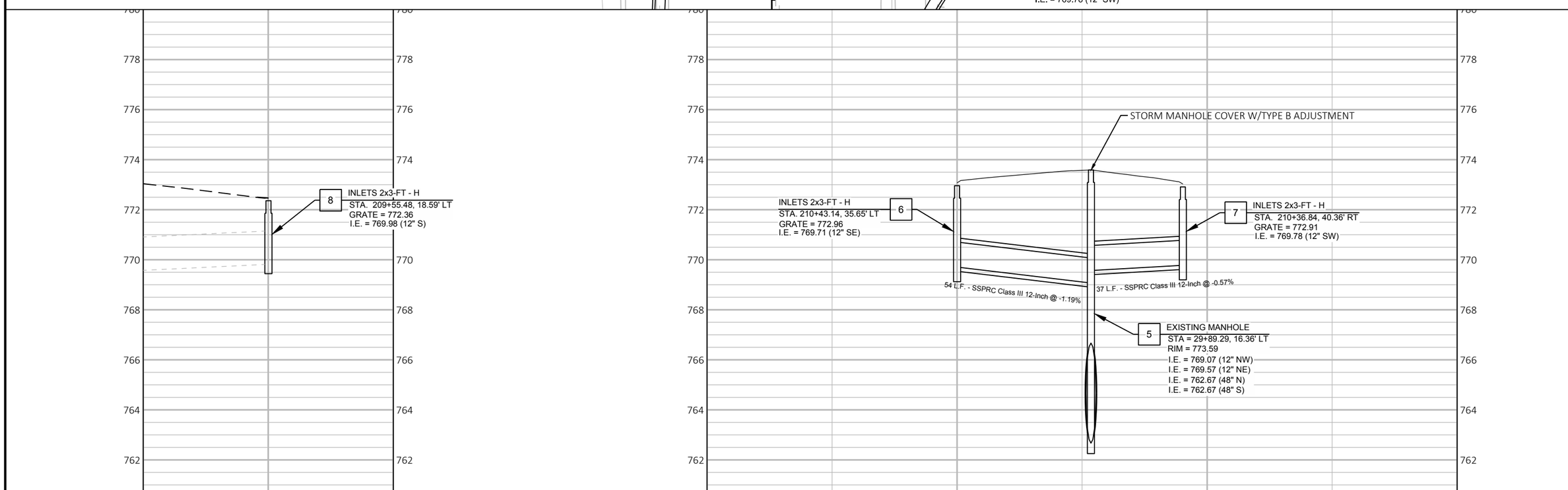

PROJECT NO: 5144-01-75 & 5144-01-76	HWY: STH 27	COUNTY: MONROE	STORM SEWER	SHEET 75	E

BENCHMARKS		
NO.	ELEV.	DESCRIPTION
1012	776.36	CHISELED X ON SE BOLT OF EAST POST OF KWIK TRIP SIGN LOCATED AT THE NW CORNER OF STH 27 & RIVER ROAD

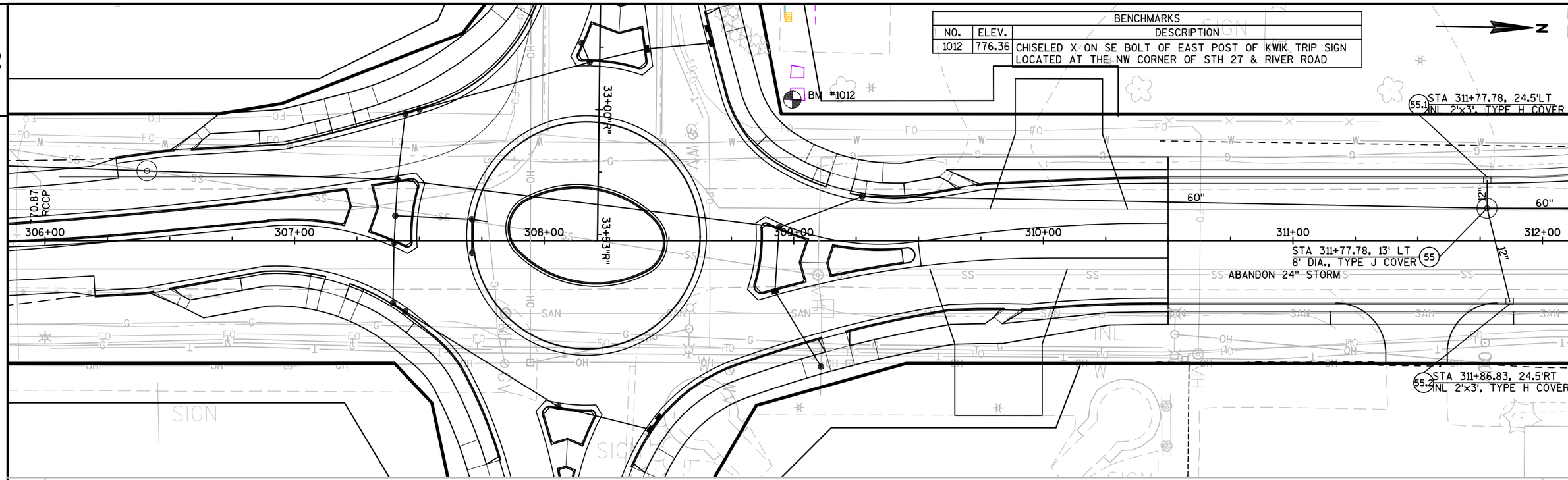

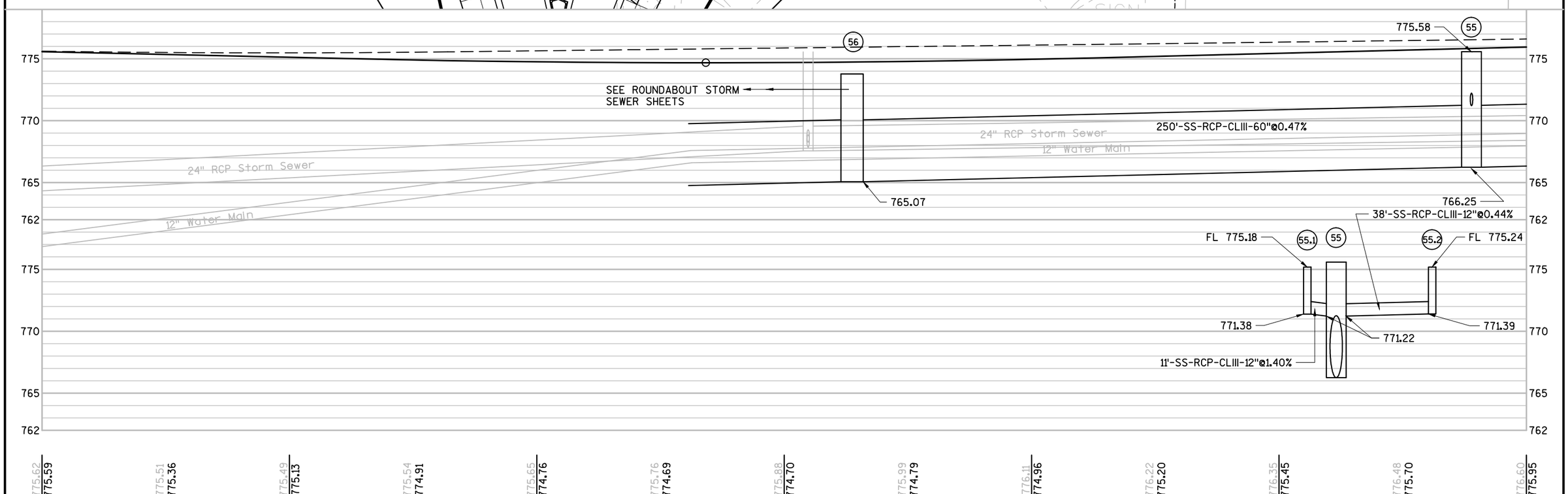

PROJECT NO:5144-01-75	HWY:STH 27	COUNTY:MONROE	STORM SEWER	SHEET 76	E

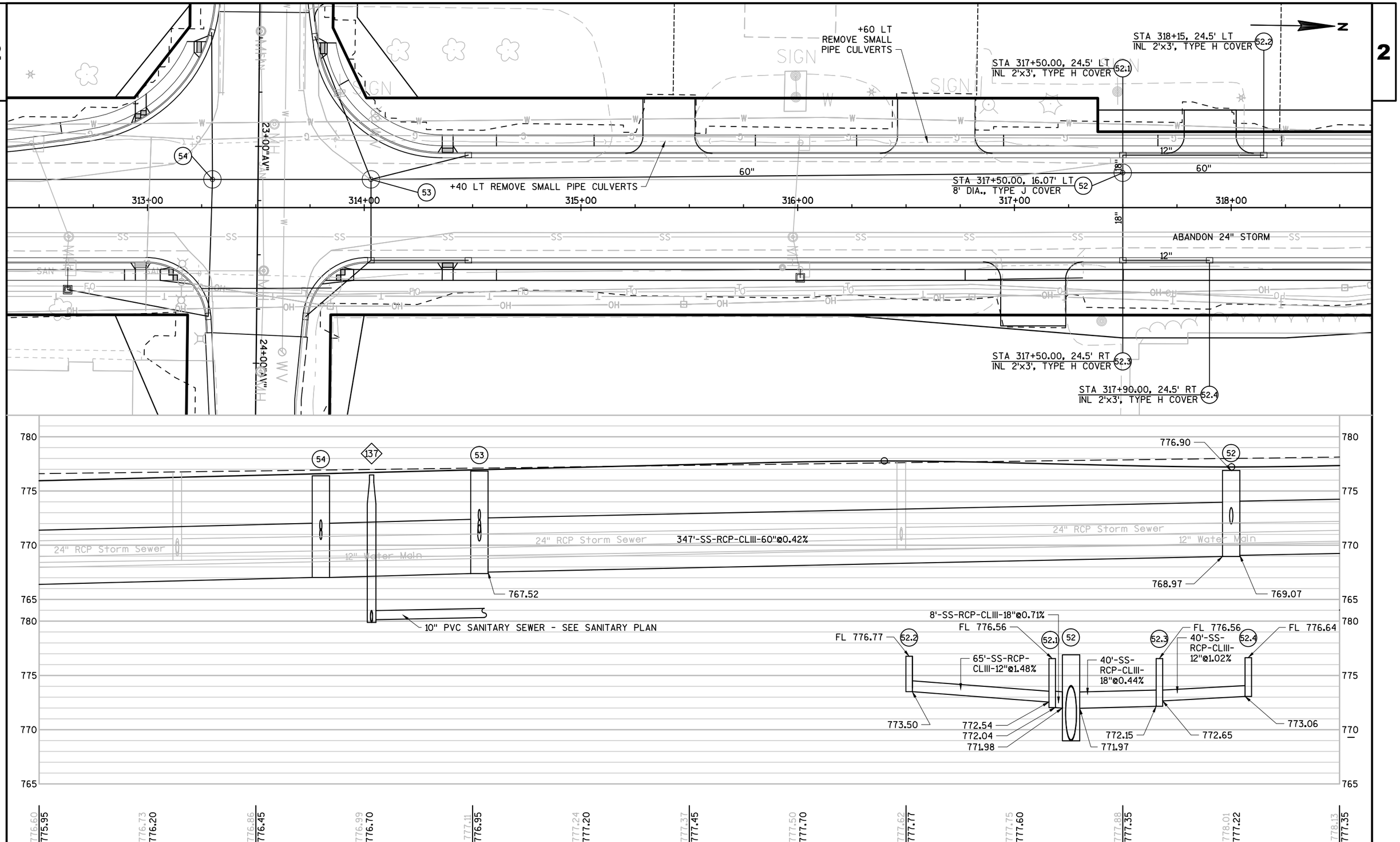

PROJECT NO:5144-01-75	HWY:STH 27	COUNTY:MONROE	STORM SEWER	SHEET 77	E

FILE NAME : N:\PDS\C3D\51440105\SHEETSPLAN\022503A_SS_ND.DWG
LAYOUT NAME - 022503A
PLOT DATE : 7/27/2017 11:34 AM PLOT BY : VALENTI, PAUL M PLOT NAME : PLOT SCALE : 1" = 40'_XREF

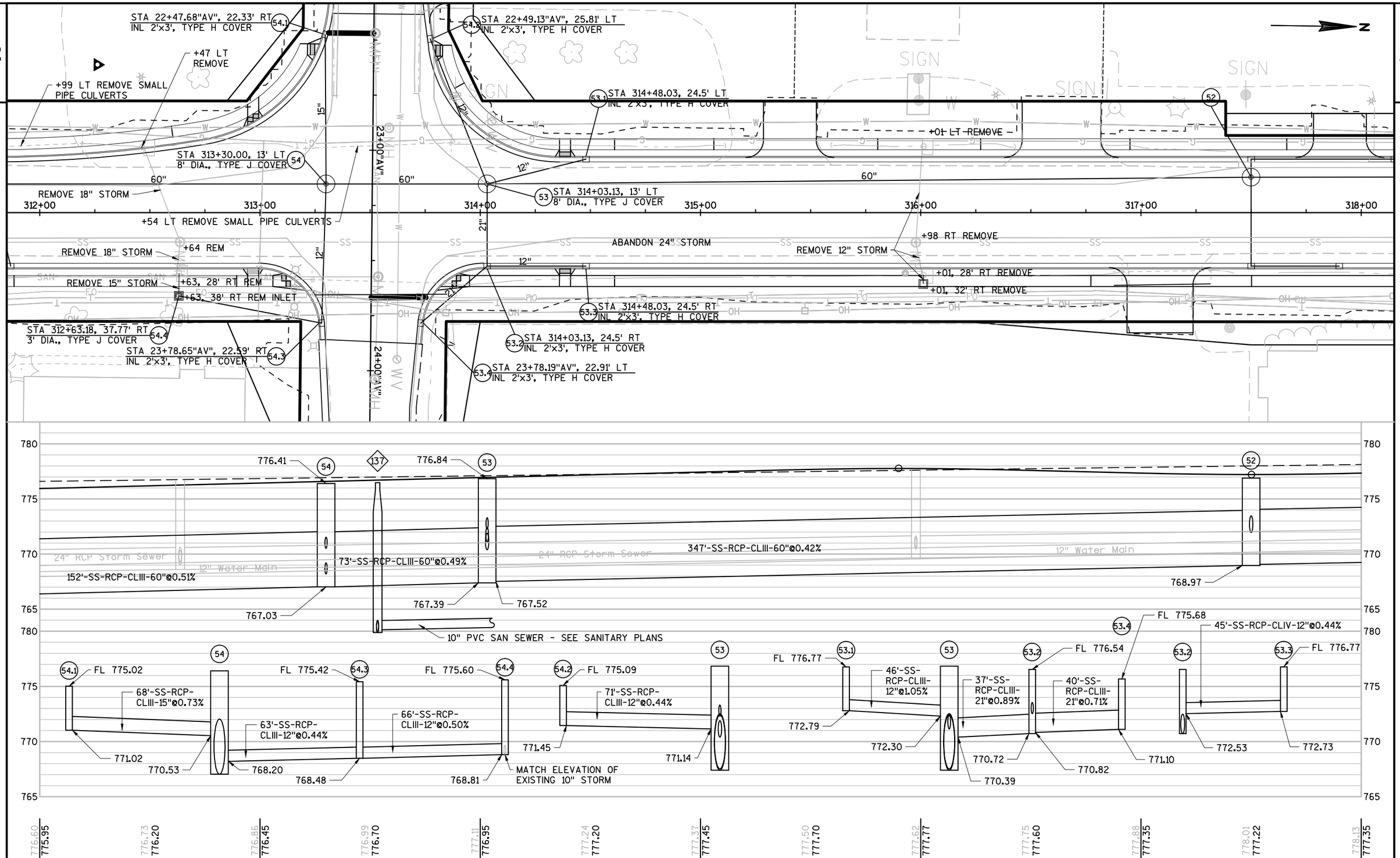

PROJECT NO:5144-01-75	HWY:STH 27	COUNTY:MONROE	STORM SEWER	SHEET 78	E

FILE NAME : N:\PDS\C3D\51440105\SHEETSPLAN\022503_SS_ND.DWG
LAYOUT NAME - 022503
PLOT DATE : 7/27/2017 11:13 AM PLOT BY : VALENTI, PAUL M PLOT NAME : PLOT SCALE : 77/256" = 1'-0"_XREF

BENCHMARKS		
NO.	ELEV.	DESCRIPTION
1004	780.09	CHISELED X ON SW RIMBOLT OF FIRE HYDRANT ON WEST SIDE OF STH 27 (S BLACK RIVER STREET) +/- 600' NORTH OF W AVERILL STREET IN FRONT OF 716 S BLACK RIVER STREET

BENCHMARKS		
NO.	ELEV.	DESCRIPTION
1014	779.49	CHISELED SQUARE ON EAST END OF EAST POST CONCRETE OF MARTIN WAREHOUSING SIGN +/- 300' S OF MAPLE AVE AND +/- 50' W OF STH 27 CENTERLINE

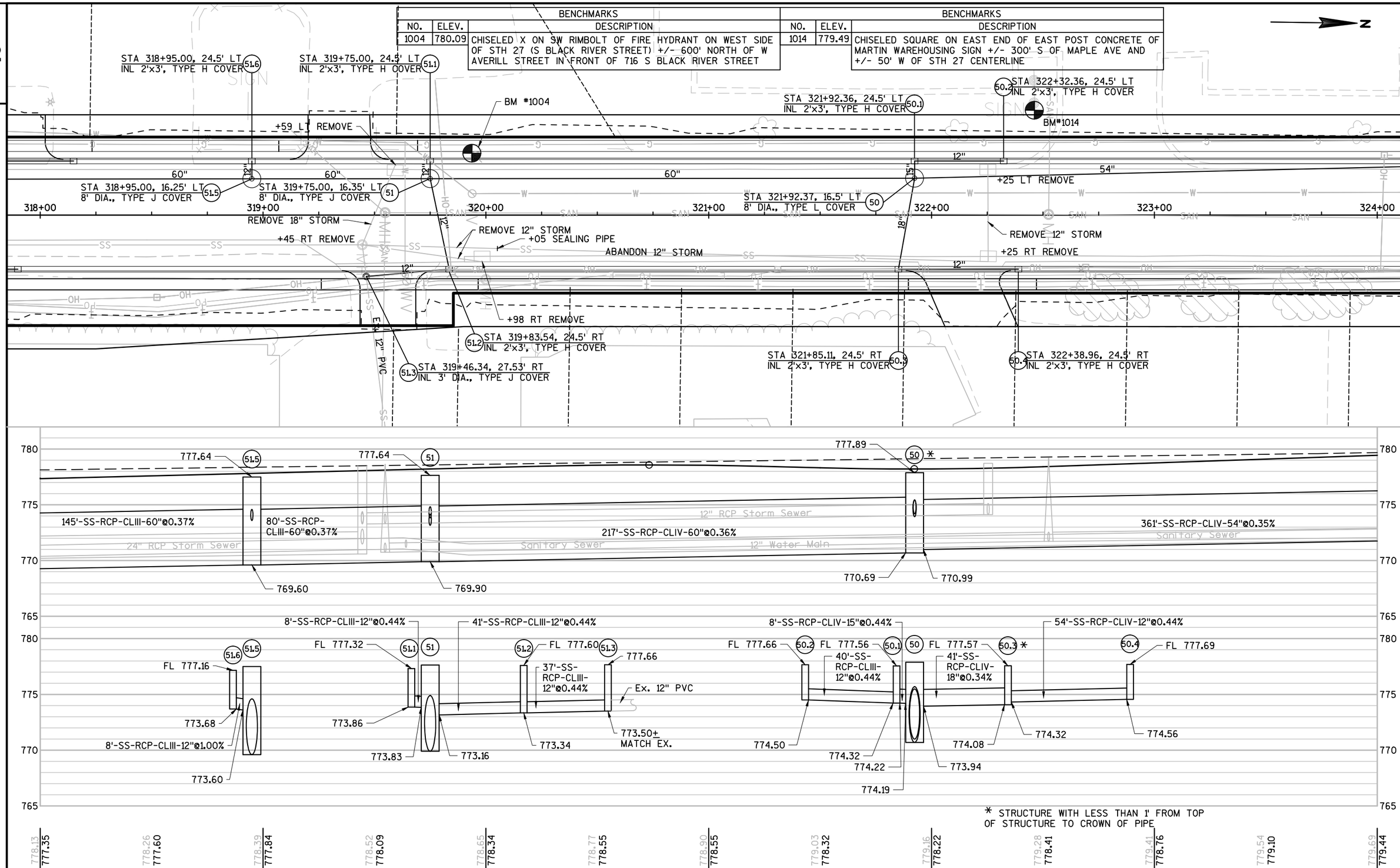

PROJECT NO:5144-01-75	HWY:STH 27	COUNTY:MONROE	STORM SEWER	SHEET 79	E

FILE NAME : N:\PDS\C3D\51440105\SHEETSPLAN\022504_SS_ND.DWG
LAYOUT NAME - 022504
PLOT DATE : 7/27/2017 11:36 AM PLOT BY : VALENTI, PAUL M PLOT NAME : PLOT SCALE : 1:40_XREF

BENCHMARKS		
NO.	ELEV.	DESCRIPTION
1006	782.22	CHISELED X ON NE RIMBOLT OF FIRE HYDRANT LOCATED ON NW CORNER OF STH 27 AND MAPLE AVENUE.

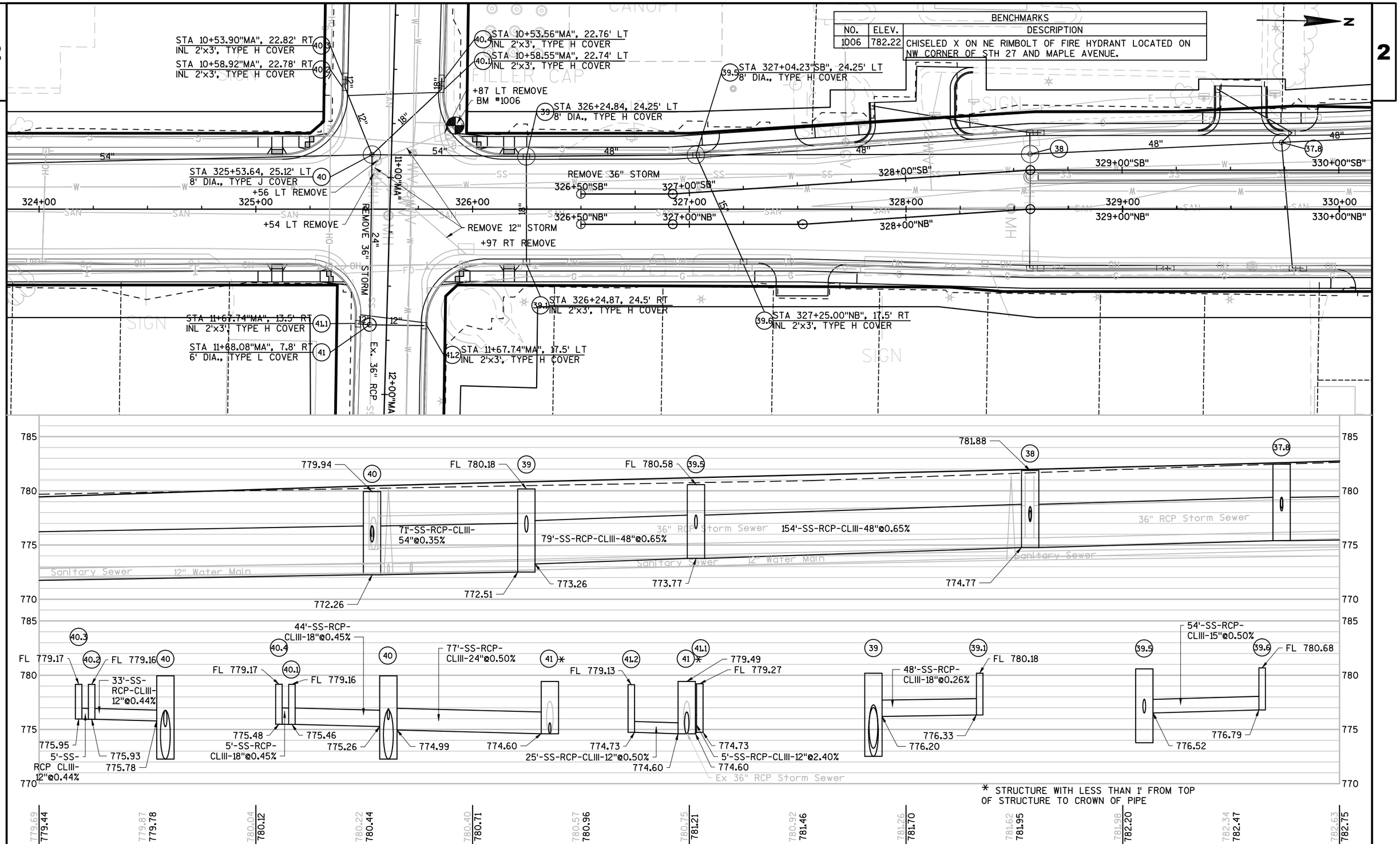

PROJECT NO:5144-01-75	HWY:STH 27	COUNTY:MONROE	STORM SEWER	SHEET 80	E

FILE NAME : N:\PDS\C3D\51440105\SHEETSPLAN\022505_SS_ND.DWG
LAYOUT NAME - 022505
PLOT DATE : 7/27/2017 1:04 PM PLOT BY : VALENTI, PAUL M PLOT NAME : PLOT SCALE : 1" = 40'_XREF

BENCHMARKS		
NO.	ELEV.	DESCRIPTION
1006	782.22	CHISELED X ON NE RIMBOLT OF FIRE HYDRANT LOCATED ON NW CORNER OF STH 27 AND MAPLE AVENUE.

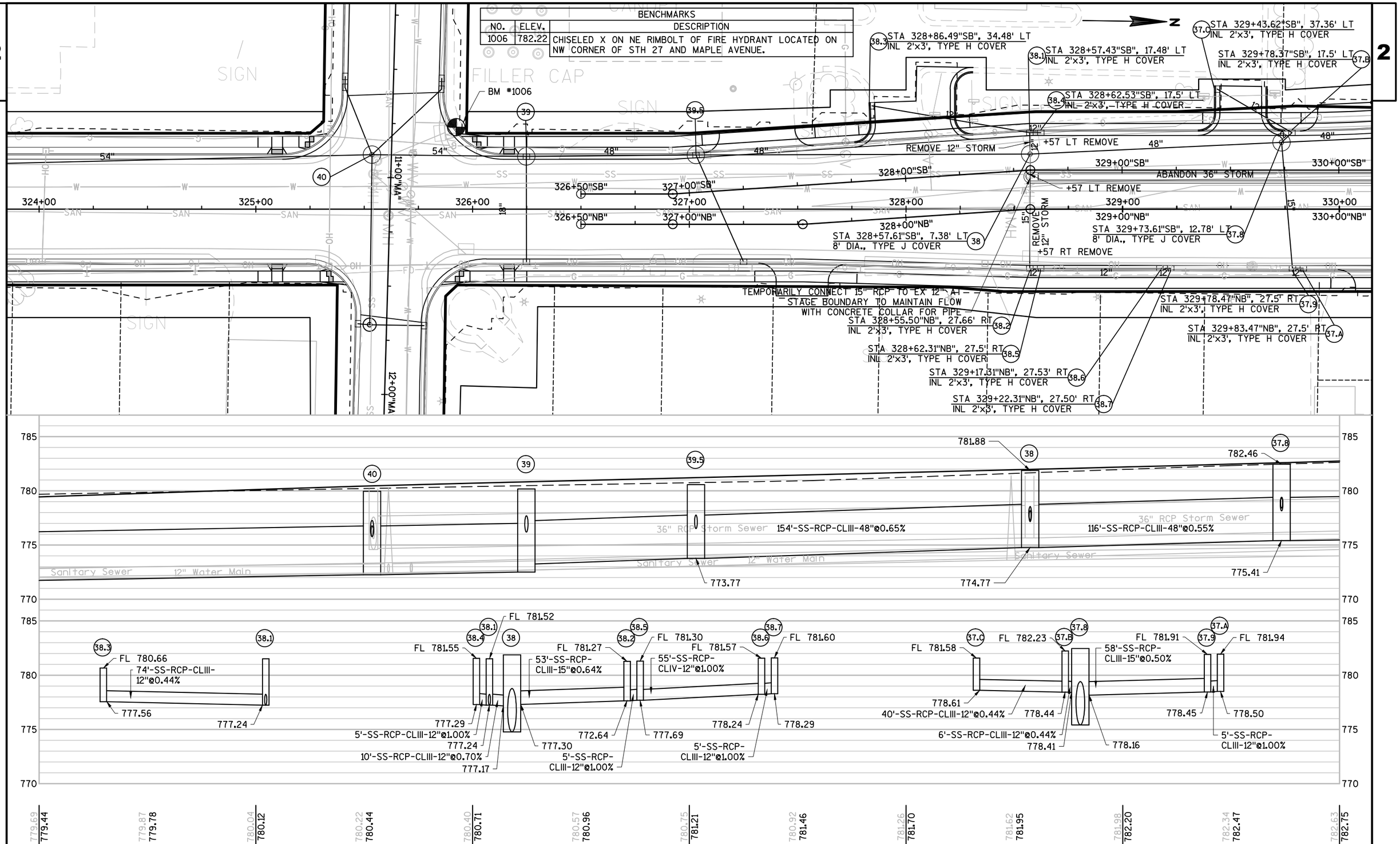

PROJECT NO:5144-01-75	HWY:STH 27	COUNTY:MONROE	STORM SEWER	SHEET 81	E

FILE NAME : N:\PDS\C3D\51440105\SHEETSPLAN\022505A_SS_ND.DWG
LAYOUT NAME - 022505A
PLOT DATE : 7/27/2017 1:14 PM PLOT BY : VALENTI, PAUL M PLOT NAME : PLOT SCALE : 1" = 40'_XREF

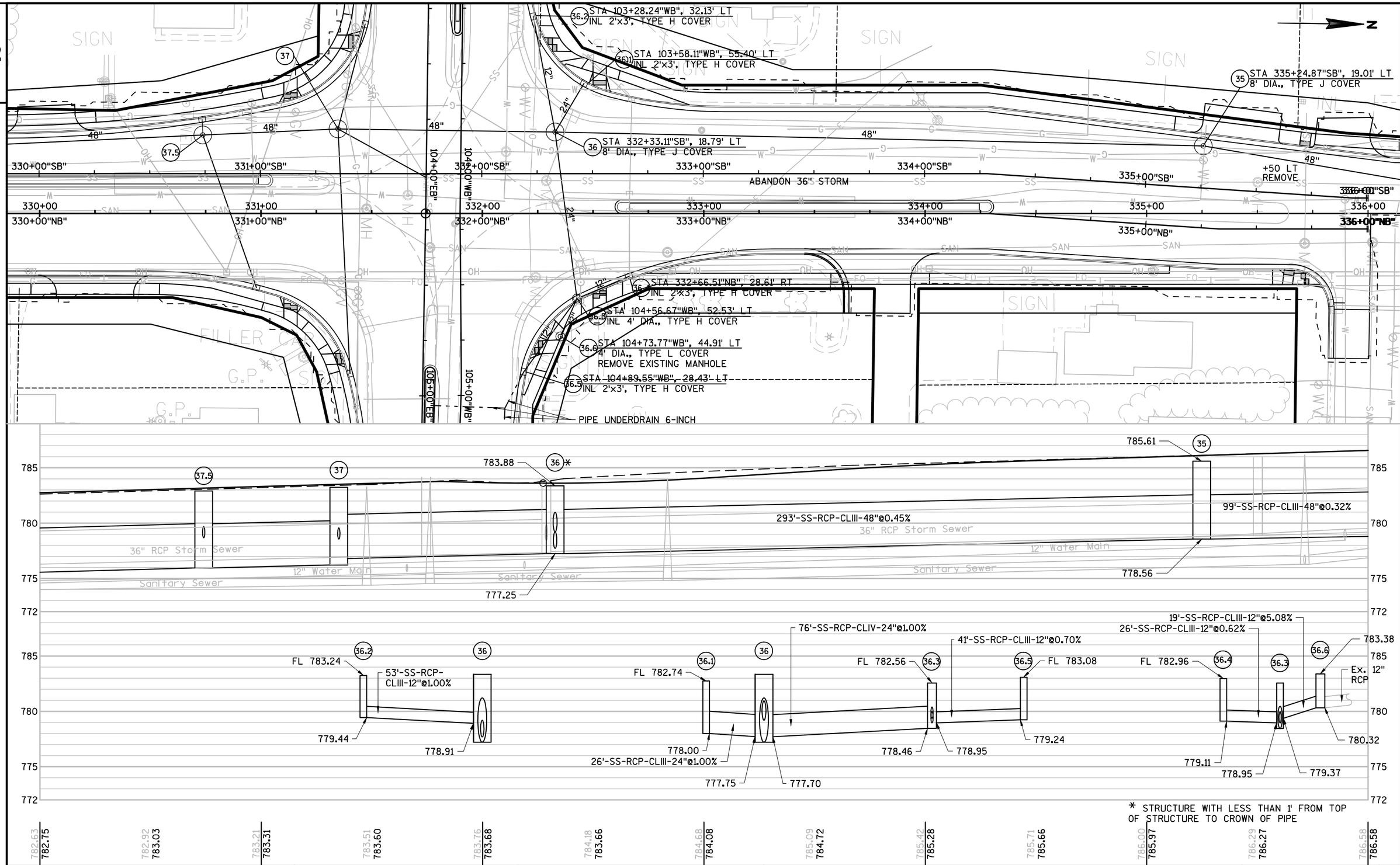

PROJECT NO:5144-01-75	HWY:STH 27	COUNTY:MONROE	STORM SEWER	SHEET 82	E

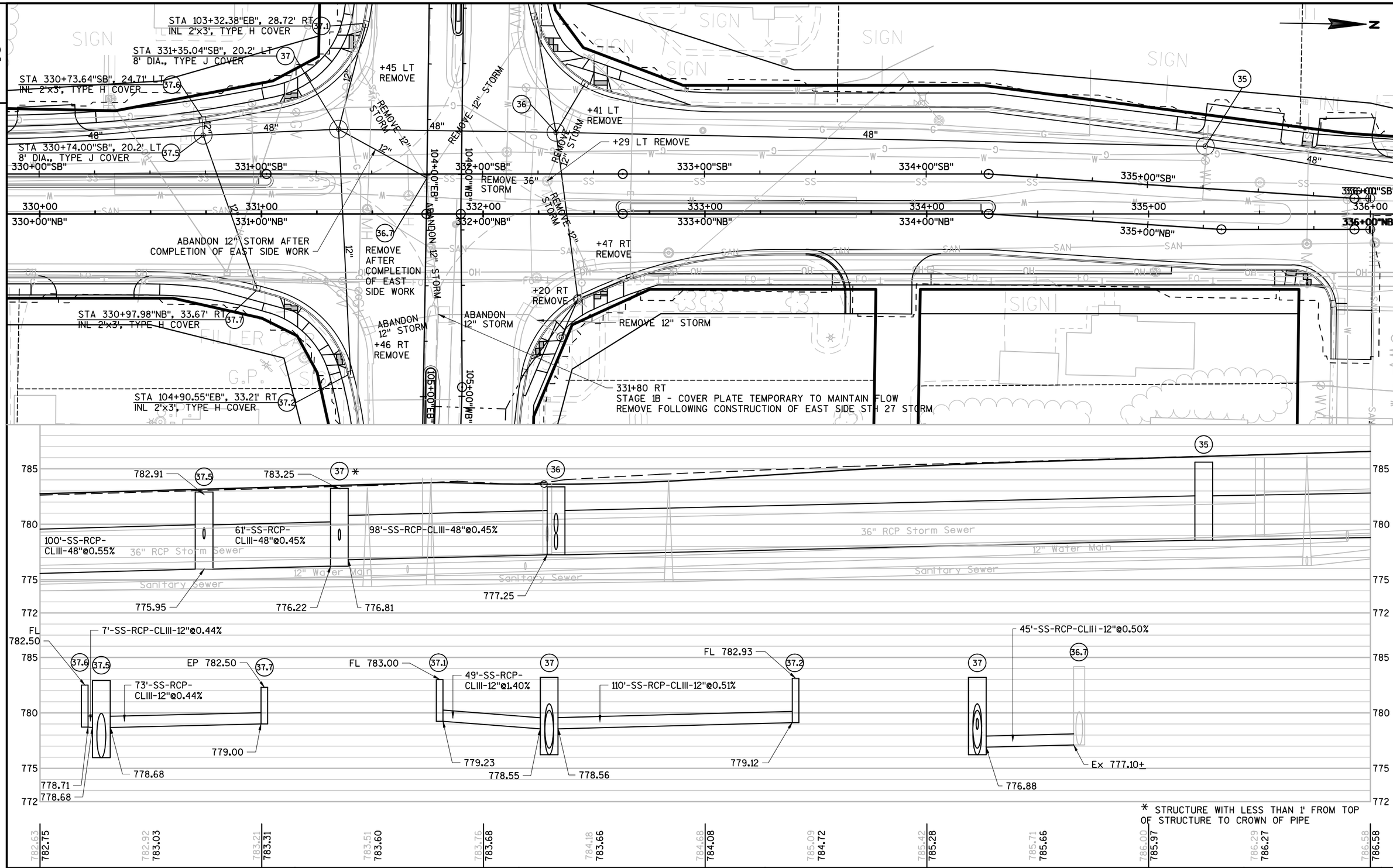

PROJECT NO:5144-01-75	HWY:STH 27	COUNTY:MONROE	STORM SEWER	SHEET 83	E

FILE NAME : N:\PDS\C3D\51440105\SHEETSPLAN\022506_SS_ND.DWG
LAYOUT NAME - 022506
PLOT DATE : 7/27/2017 1:25 PM PLOT BY : VALENTI, PAUL M PLOT NAME : PLOT SCALE : 1" = 40'_XREF

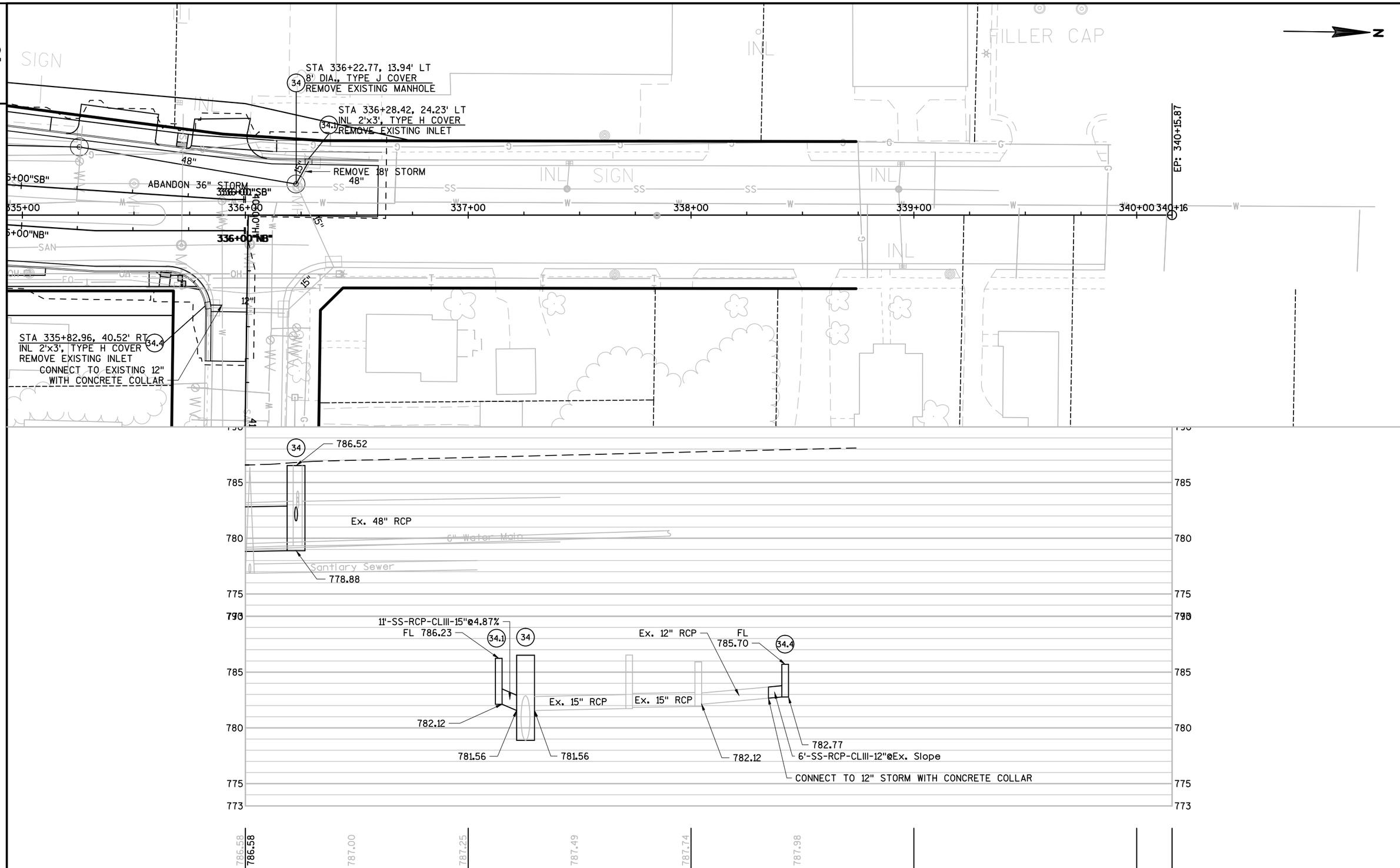

PROJECT NO:5144-01-75	HWY:STH 27	COUNTY:MONROE	STORM SEWER	SHEET 84	E

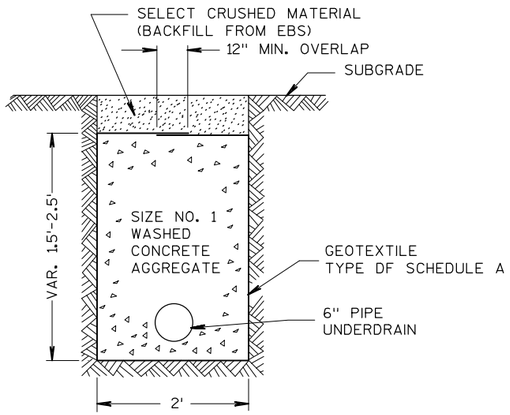

SECTION A-A
(WITH PIPE UNDERDRAIN)

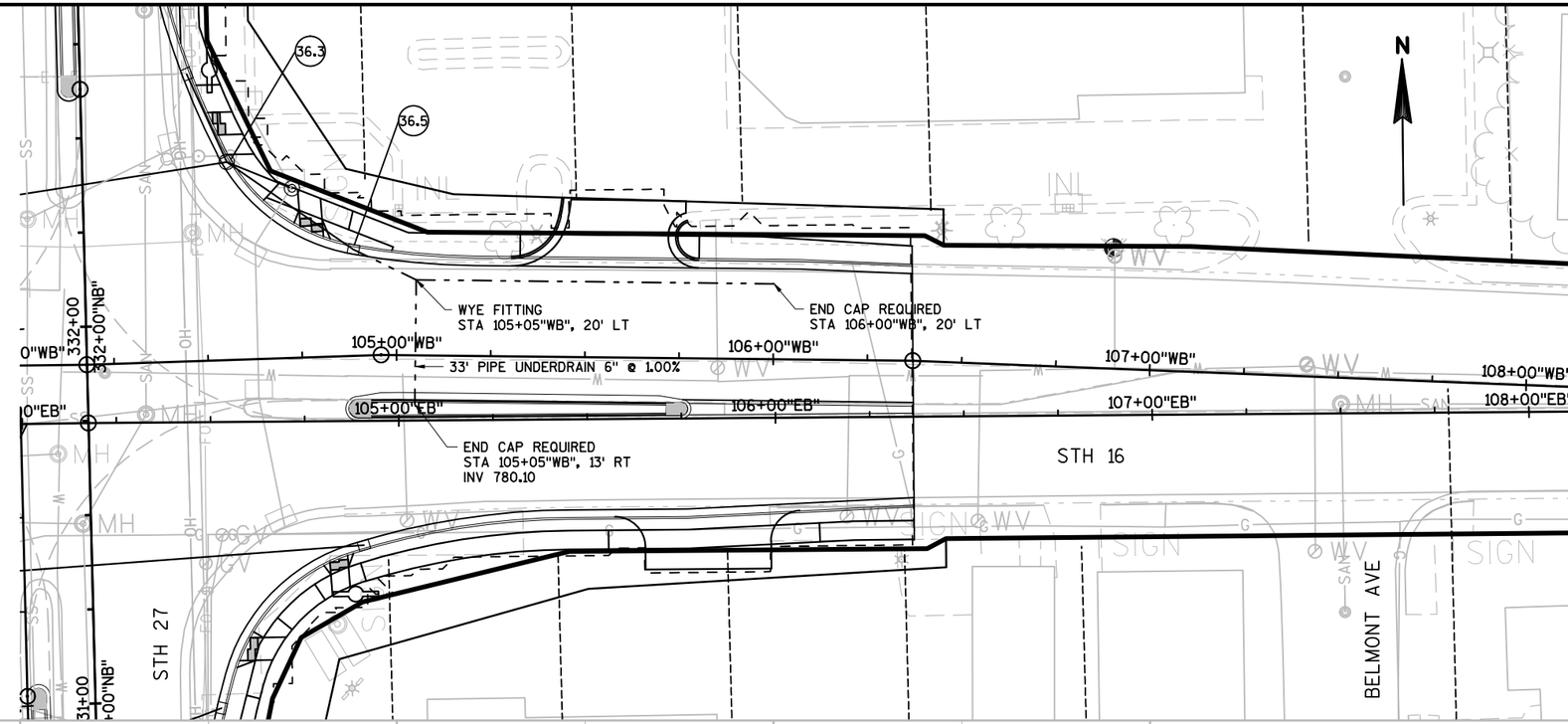

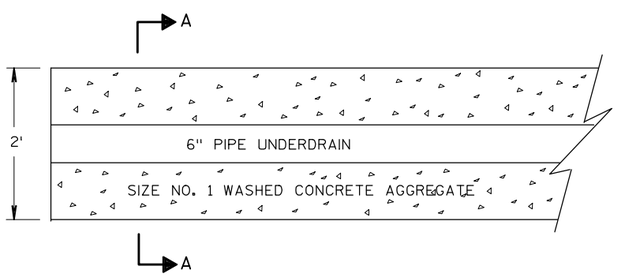

PLAN VIEW
UNDERDRAIN DETAIL

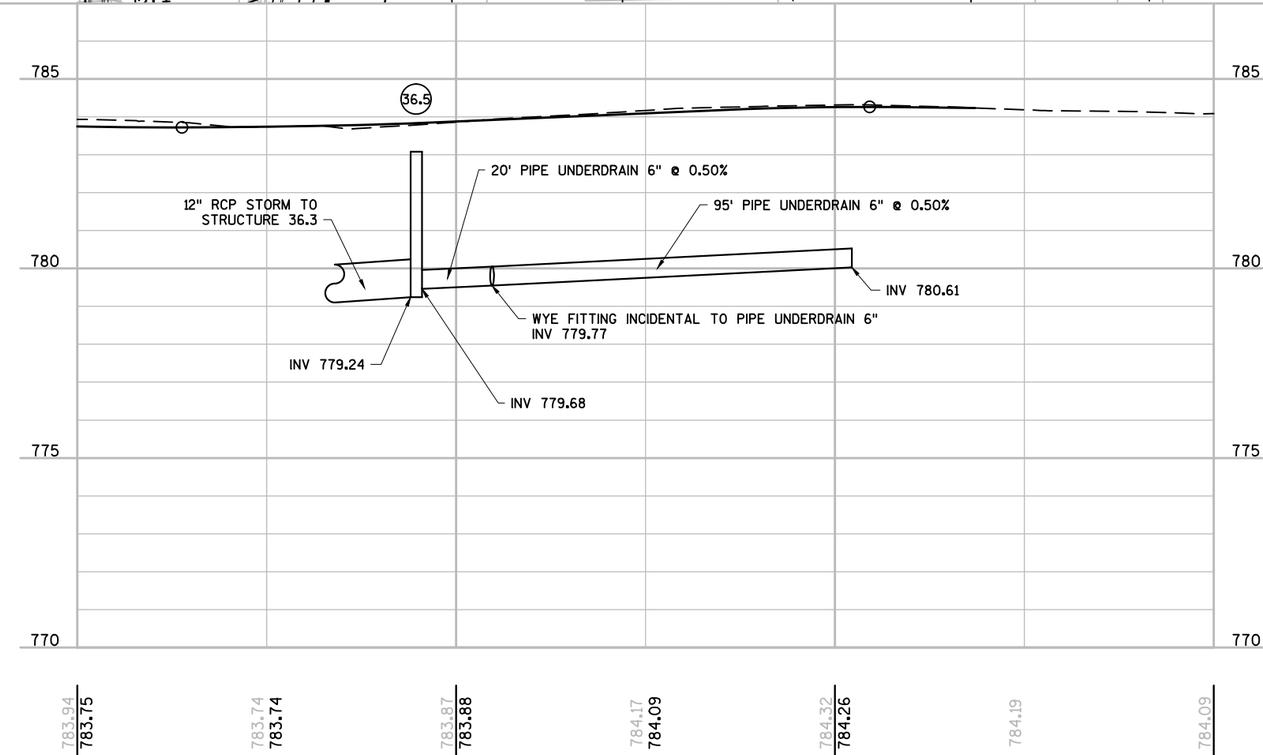

2

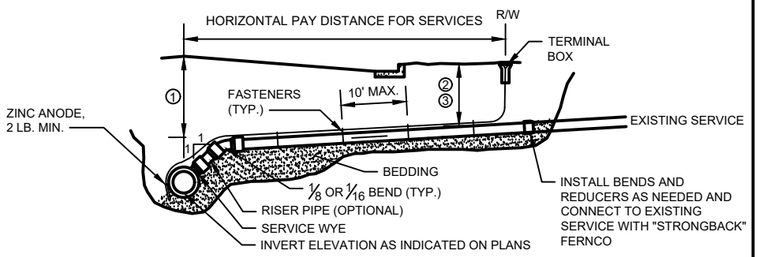

ELEVATION VIEW

NOTES FOR LATERAL INSTALLATION:
1. MINIMUM DEPTH OF COVER UNDER ROADWAY = 7 FEET.
2. MINIMUM DEPTH OF COVER UNDER GRASS AREAS = 6 FEET.
3. MINIMUM DEPTH OF COVER UNDER GRASS AREAS WITH FROST PROTECTION = 3 FEET 6 INCHES.
4. LATERAL SLOPES SHALL BE 1/8 INCH PER FOOT MINIMUM AND 1/2 INCH PER FOOT MAXIMUM.

NOTES FOR TRACER WIRE INSTALLATION:
1. THE TRACER WIRE SHALL REMAIN CONTINUOUS TO THE GREATEST EXTENT POSSIBLE.
2. NO. 12 GAUGE GREEN INSULATED COPPER TRACER WIRE SHALL BE INSTALLED WITH THE NON-CONDUCTIVE SERVICE. PIPE TRACER WIRE TERMINAL BOXES SHALL BE INSTALLED DIRECTLY ABOVE THE SEWER MAIN OR AS DETERMINED BY THE ENGINEER OR OWNER. TRACER WIRE INSTALLATION REQUIRES ACCESS POINTS AT LEAST EVERY 300 FEET.
3. TRACER WIRE SHALL BE RESTRAINED BY CABLE-TIES, TAPE, OR BY NON-CORRESIVE FASTENER APPROVED BY THE OWNER, INSTALLED EVERY 10 FEET ALONG SERVICE. DO NOT WRAP TRACER WIRE AROUND THE PIPE.
4. TRACER WIRE SHALL RUN FROM THE WYE AND TERMINATED IN A FLUSH MOUNTED TERMINAL BOX WITH A CAST IRON LOCKABLE TOP. SPLICES IN TRACER WIRE SHOULD BE MADE WITH SPLIT BOLT OR COMPRESSION-TYPE CONNECTORS. WIRE NUTS SHALL NOT BE USED. A WATER-PROOF CONNECTION IS NECESSARY TO PREVENT CORROSION. TERMINAL BOX SHALL BE VALVCO, OR APPROVED EQUAL.

SANITARY SEWER SERVICE DETAIL
NO SCALE

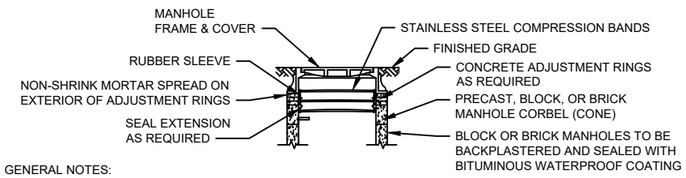

GENERAL NOTES:
1. THE SEAL SHALL EXTEND FROM THE CASTING TO THE CORBEL (CONE). SEAL EXTENSIONS SHALL BE USED AS REQUIRED.
2. AN INTERNAL ADAPTOR SEAL RING MAY BE USED IN LIEU OF THE RUBBER SLEEVE. THE INTERNAL ADAPTOR SEAL RING SHALL BE INSTALLED PER MANUFACTURER'S INSTRUCTIONS.
3. INTERNAL RUBBER SLEEVE FRAME/CHIMNEY SEALS REQUIRED ON NEW SANITARY MANHOLES AND NEW SANITARY DROP MANHOLES. COSTS FOR SEALS TO BE INCLUDED IN UNIT PRICE BID FOR THE RESPECTIVE MANHOLES.

INTERNAL RUBBER SLEEVE FRAME/CHIMNEY SEAL

MANHOLE WATERPROOFING DETAIL
NO SCALE

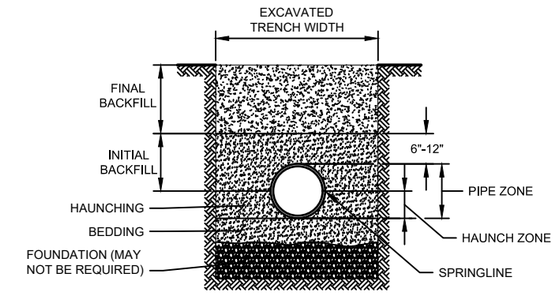

GENERAL NOTES:
1. DETAILS OF CONSTRUCTION NOT SHOWN ON THIS DRAWING SHALL CONFORM TO ASTM D2321.
2. CLASS 1A EMBEDMENT MATERIAL SHALL BE CLEAN, OPEN GRADED CRUSHED STONE, ROCK OR GRAVEL.
3. CLASS 1B EMBEDMENT MATERIAL SHALL BE CLEAN, DENSE GRADED CRUSHED STONE AND SAND/STONE MIXTURES.
4. NO PARTICLES LARGER THAN 1 1/2 -INCHES SHALL BE USED IN THE PIPE EMBEDMENT.
5. DO NOT USE CLASS 1A MATERIAL WHERE CONDITIONS MAY CAUSE MIGRATION OF FINES FROM ADJACENT SOIL AND LOSS OF PIPE SUPPORT.
6. CLASS 1 MATERIAL IS SUITABLE AS FOUNDATION AND FOR REPLACING OVER-EXCAVATED AND UNSTABLE TRENCH BOTTOM. INSTALL AND COMPACT IN 6-INCH MAXIMUM LAYERS.
7. INSTALL BEDDING IN 6-INCH MAXIMUM LAYERS. LEVEL FINAL GRADE BY HAND. MINIMUM DEPTH 4 INCH (6 INCH IN ROCK CUTS).
8. INSTALL AND COMPACT HAUNCHING IN 6-INCH MAXIMUM LAYERS. WORK IN AROUND PIPE BY HAND TO PROVIDE UNIFORM SUPPORT.
9. INSTALL AND COMPACT INITIAL BACKFILL TO A MINIMUM OF 6 INCH ABOVE PIPE CROWN.
10. EMBEDMENT COMPACTION:

CLASS 1A: PLACE AND WORK BY HAND TO INSURE ALL EXCAVATED VOIDS AND HAUNCH AREAS ARE FILLED. FOR HIGH DENSITIES USE VIBRATORY COMPACTORS. CLASS 1B: MINIMUM DENSITY 85% STANDARD PROCTOR. USE HAND TAMPERS OR VIBRATORY COMPACTORS.

CLASS I - FLEXIBLE PIPE EMBEDMENT DETAIL
NO SCALE

2

TYPE	W (FT)
1	4
2	5
3	6

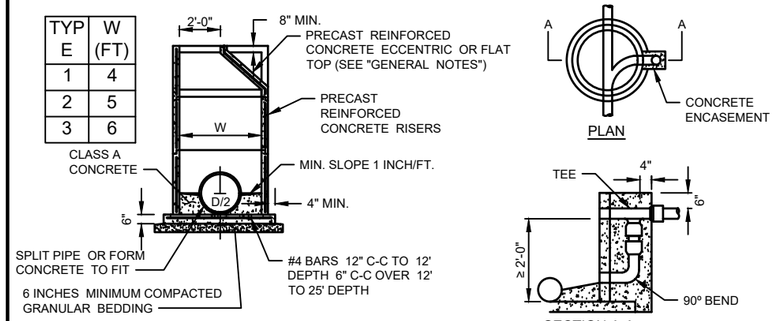

DROP ASSEMBLY DETAIL

GENERAL NOTES:
1. DETAILS OF CONSTRUCTION, MATERIALS AND WORKMANSHIP NOT SHOWN ON THIS DRAWING AND THE APPLICABLE SPECIAL CONDITIONS SHALL CONFORM TO THE PERTINENT REQUIREMENTS OF THE STANDARD SANITARY SEWER UTILITY AND WATER UTILITY SPECIFICATIONS FOR WISDOT LET PROJECTS, CITY OF SPARTA, MONROE COUNTY, WISCONSIN, MAY 2017.
2. DETAILED DRAWINGS FOR PROPOSED ALTERNATE DESIGNS FOR UNDERGROUND STRUCTURES SHALL BE SUBMITTED TO THE ENGINEER FOR APPROVAL PROVIDING THAT SUCH ALTERNATE DESIGNS MAKE PROVISION FOR EQUIVALENT CAPACITY AND STRENGTH.
3. PRECAST REINFORCED BASES SHALL BE PLACED ON A BED OF MATERIAL AT LEAST 6 INCHES IN DEPTH, WHICH MEETS THE REQUIREMENTS FOR GRANULAR BACKFILL. THIS BEDDING SHALL BE COMPACTED AND PROVIDE UNIFORM SUPPORT FOR THE ENTIRE AREA OF THE BASE.
4. ECCENTRIC CONE TOPS SHALL BE USED ON ALL STRUCTURES 5 FEET OR GREATER IN DEPTH, AND FLAT TOPS SHALL BE USED ONLY ON STRUCTURES LESS THAN 5 FEET IN DEPTH, UNLESS DIRECTED BY THE ENGINEER.
5. PRECAST REINFORCED CONCRETE RISERS MAY BE PLACED WITH TONGUE UP OR DOWN.
6. ALL PRECAST INLET UNITS SHALL CONFORM TO THE PERTINENT REQUIREMENTS OF AASHTO DESIGNATION M 199.
7. DROP CONNECTIONS SHALL BE USED WHEN THE PIPE INVERT IS MORE THAN 2 FEET ABOVE THE MANHOLE INVERT. PRECAST STRUCTURE MANWAY CLEAR OPENING SHALL MATCH CASTING - REFER TO STANDARD SANITARY SEWER UTILITY AND WATER UTILITY SPECIFICATIONS FOR WISDOT LET PROJECTS, CITY OF SPARTA, MONROE COUNTY, WISCONSIN, MAY, 2017.

SANITARY MANHOLE DETAIL
NO SCALE

SANITARY SEWER NOTES

1. CONTRACTOR SHALL PROVIDE AND MAINTAIN ALL PROPER BARRICADES, LIGHTS, SIGNAGE AND WATCHMEN, OR OTHER TRAFFIC CONTROL MEASURES NECESSARY TO PROPERLY PROTECT PERSONS, ANIMALS AND PROPERTY DURING ALL SANITARY SEWER AND FORCE MAIN CONSTRUCTION.
2. ALL OPEN CUT TRENCHES SHALL BE PROTECTED IN ACCORDANCE WITH APPLICABLE RULES, LAWS AND REGULATIONS OF FEDERAL, STATE AND MUNICIPAL ORDINANCES, BUT SHALL NOT BE LESS THAN THE STANDARDS AND REGULATIONS ESTABLISHED BY THE DEPARTMENT OF LABOR, OSHA 29 CFR, PART 1926.
3. ALL OPEN TRENCHES SHALL BE BACK FILLED AT THE END OF EACH WORKING DAY, UNLESS THE TRENCH IS SUITABLY BARRICADED IN ACCORDANCE WITH THE STANDARDS AND REGULATIONS ESTABLISHED BY THE DEPARTMENT OF LABOR, OSHA 29 CFR, PART 1926.
4. INSTALL ALL BOUNDARY SILT FENCE AND EROSION BALES FOR EROSION CONTROL IN ACCORDANCE WITH THE CONSTRUCTION DRAWINGS. INSTALL ALL BOUNDARY SILT FENCE PRIOR TO ANY CONSTRUCTION WORK.
5. SANITARY SEWER SHALL BE CONSTRUCTED WITH COVER INDICATED. INSTANCES WHERE COVER CANNOT BE PROVIDED DUE TO PHYSICAL CONSTRAINTS OR CONFLICTS SHALL BE EVALUATED AND MODIFIED BY THE ENGINEER.
6. CONTRACTOR SHALL PERFORM LOW PRESSURE AIR AND DEFLECTION TESTS FOR ACCEPTANCE IN THE PRESENCE OF THE ENGINEER, IN ACCORDANCE WITH THE GREAT LAKES-UPPER MISSISSIPPI RIVER BOARD OF STATE AND PROVISIONAL PUBLIC HEALTH AND ENVIRONMENTAL MANAGERS DESIGN STANDARDS, CURRENT EDITION. (TEN STATES STANDARDS) SEWERS THAT CAN NOT BE AIR TESTED DUE TO LIVE SERVICE CONNECTIONS SHALL BE TELEVISED.
7. ALL SANITARY SEWER AND LATERAL CONNECTIONS SHALL BE IN ACCORDANCE WITH THE TEN STATES STANDARDS.

2

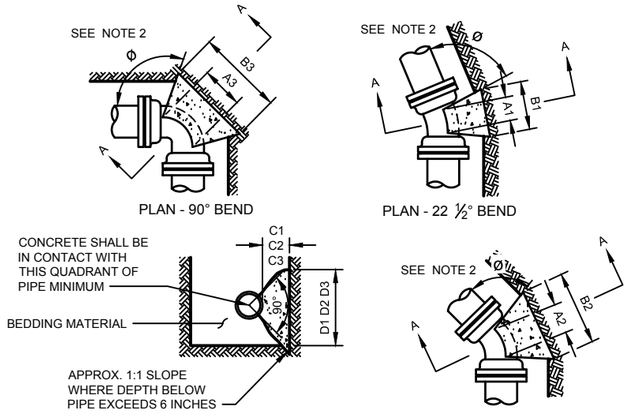

NOTES:

1. DIMENSIONS IN TABLE ARE BASED ON A WATER PRESSURE OF 150 P.S.I. AND AN EARTH RESISTANCE OF 2 TONS PER SQ. FT. INFORM THE ENGINEER IF PRESSURES EXCEED 150 PSI, OR ON-SITE SOIL DOES NOT MEET THIS CONDITION.
2. DIMENSION C1 C2 C3 SHOULD BE LARGE ENOUGH TO MAKE ANGLE Ø EQUAL TO OR LARGER THAN 45°.
3. DIMENSION A1 A2 A3 SHOULD BE AS LARGE AS POSSIBLE WITHOUT INTERFERING WITH THE MECHANICAL JOINT.
4. BUTTRESS TO BE POURED AGAINST FIRM UNDISTURBED SOIL, OR DISTURBED SOIL COMPACTED TO 95% OF MODIFIED PROCTOR DENSITY, ASTM D1557.
5. ALL BUTTRESSED FITTINGS SHALL BE WRAPPED IN POLYETHYLENE.
6. CONCRETE SHALL HAVE A MINIMUM 7-DAY COMPRESSIVE STRENGTH OF 2000 PSI.
7. IN ADDITION TO BUTTRESS, ALL JOINTS SURROUNDING BENDS SHALL BE RESTRAINED WITH WEDGE ACTION RESTRAINING GLANDS.

BUTTRESS DIMENSIONS

PIPE SIZE	22½° BENDS		45° BENDS		90° BENDS	
	B1	D1	B2	D2	B3	D3
6"	1'-0"	1'-0"	1'-0"	1'-0"	1'-4"	1'-2"
8"	1'-0"	1'-0"	1'-4"	1'-2"	1'-10"	1'-6"
10"	1'-2"	1'-2"	1'-7"	1'-7"	2'-3"	1'-10"
12"	1'-4"	1'-4"	1'-10"	1'-10"	2'-8"	2'-3"
16"	1'-10"	1'-8"	2'-6"	2'-4"	3'-10"	2'-10"
20"	2'-4"	2'-0"	3'-3"	2'-10"	5'-0"	3'-4"
24"	2'-10"	2'-4"	4'-0"	3'-3"	6'-4"	3'-10"

BUTTRESS FOR BENDS DETAIL

NO SCALE

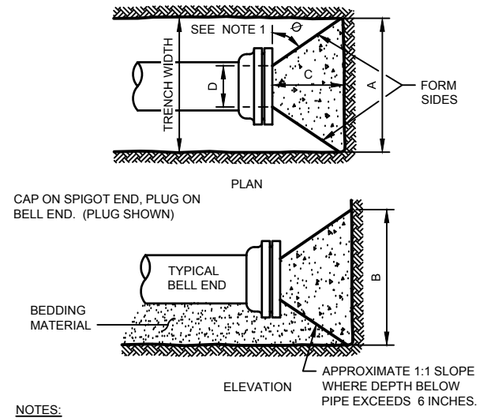

BUTTRESS DIMENSIONS

DIA.	A	B	C	D
6"	1'-6"	1'-2"	SEE NOTE NO. 1	SEE NOTE NO. 2
8"	2'-0"	1'-4"		
12"	2'-5"	1'-10"		
16"	3'-4"	2'-4"		
20"	4'-3"	2'-10"		
24"	5'-2"	3'-4"		
30"	6'-9"	4'-0"		

NOTES:

1. DIMENSION 'C' SHOULD BE LARGE ENOUGH TO MAKE ANGLE Ø EQUAL TO OR LARGER THAN 45°.
2. DIMENSION 'D' EQUALS APPROX. I.D. OF PIPE LESS 2 INCHES. THE CONCRETE SHOULD NOT INTERFERE WITH THE MECHANICAL JOINTS.
3. WHERE BUTTRESSES ARE NOT POSSIBLE BECAUSE OF POOR SOIL CONDITIONS OR LACK OF ROOM, WEDGE ACTION RESTRAINING GLANDS SHALL BE PERMITTED.
4. BUTTRESS DIMENSIONS ARE BASED ON A SOIL RESISTANCE OF TWO TONS PER SQ. FT. AND A WATER PRESSURE OF 150 PSI. INFORM THE ENGINEER IF ON-SITE SOIL DOES NOT MEET THIS CONDITION OR PRESSURES EXCEED 150 PSI.
5. BUTTRESS TO BE POURED AGAINST FIRM UNDISTURBED SOIL, OR DISTURBED SOIL COMPACTED TO 95% OF MODIFIED PROCTOR DENSITY, ASTM D1557.
6. CONCRETE SHALL HAVE A MINIMUM 7-DAY COMPRESSIVE STRENGTH OF 2000 PSI.
7. ALL POURED BUTTRESSED FITTINGS SHALL BE WRAPPED IN POLYETHYLENE.
8. NO WOOD BUTTRESS ALLOWED.

BUTTRESS FOR PLUGS DETAIL

NO SCALE

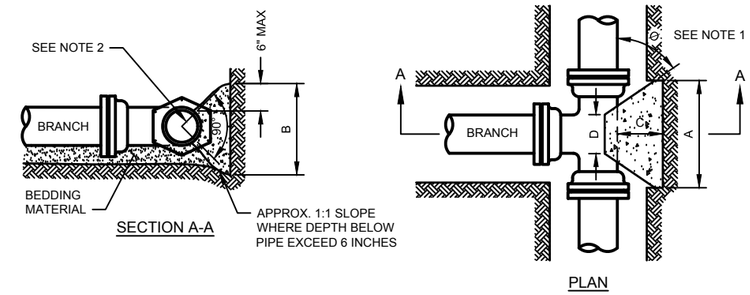

NOTES:

1. DIMENSION 'C' SHOULD BE LARGE ENOUGH TO MAKE ANGLE Ø GREATER THAN OR EQUAL TO 45°.
2. CONCRETE SHOULD BEAR ON THIS QUADRANT OF PIPE AT A MINIMUM.
3. DIMENSION 'D' SHOULD BE AS LARGE AS POSSIBLE BUT CONCRETE SHOULD NOT INTERFERE WITH MECHANICAL JOINTS.
4. BUTTRESS DIMENSIONS ARE BASED ON A SOIL RESISTANCE OF TWO TONS PER SQ. FT. AND A WATER PRESSURE OF 150 PSI. INFORM THE ENGINEER IF ON-SITE SOIL DOES NOT MEET THIS CONDITION OR PRESSURES EXCEED 150 PSI.
5. BUTTRESS TO BE PLACED AGAINST FIRM UNDISTURBED SOIL, OR DISTURBED SOIL COMPACTED TO 95%%% OF MODIFIED PROCTOR DENSITY, ASTM D1557.
6. CONCRETE SHALL HAVE A MINIMUM 7-DAY COMPRESSIVE STRENGTH OF 2000 PSI.
7. ALL POURED BUTTRESSED FITTINGS SHALL BE WRAPPED IN POLYETHYLENE.
8. IN ADDITION TO BUTTRESSES, ALL JOINTS SURROUNDING TEES SHALL BE RESTRAINED WITH WEDGE ACTION RESTRAINING GLANDS.

BUTTRESS DIMENSIONS

DIA.	A	B	C	D
6"	1'-3"	1'-0"	SEE NOTE NO. 1	SEE NOTE NO. 3
8"	1'-6"	1'-4"		
10"	1'-10"	1'-8"		
12"	2'-3"	2'-0"		
16"	3'-2"	2'-6"		
20"	4'-0"	3'-0"		
24"	5'-3"	3'-4"		

DIA. = BRANCH DIAMETER

BUTTRESS FOR TEES DETAIL

NO SCALE

2

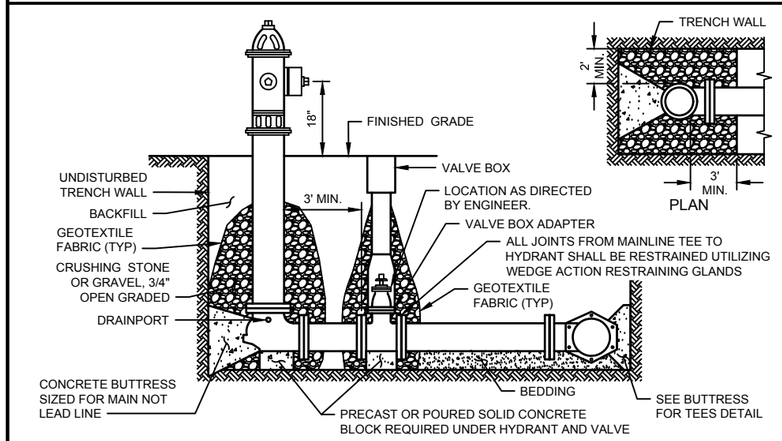

HYDRANT AND LEAD CONNECTION DETAIL

NO SCALE

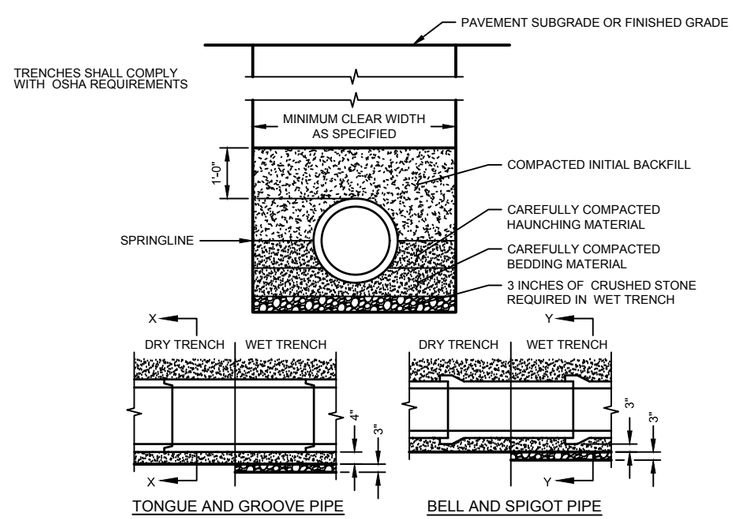

GENERAL NOTES:

1. BEDDING AND HAUNCHING MATERIAL SHALL BE WELL-GRADED 3/4 TO 1/4 INCH CRUSHED STONE OR OTHER NON-COHESIVE MATERIAL NOT SUBJECT TO MIGRATION AND FREE OF DEBRIS, ORGANIC MATERIAL, AND LARGE STONES.
2. BEDDING MATERIAL TO BE PLACED BEFORE SETTING PIPE, 4 INCH MINIMUM UNDER BARREL WITH 3 INCH MINIMUM UNDER BELL.
3. INITIAL BACKFILL SHALL BE DENSELY COMPACTED, NON-COHESIVE FINELY DIVIDED MATERIAL FREE OF DEBRIS, ORGANIC MATERIAL, AND LARGE STONES.
4. IN ROCK OR OTHER UNCOMPRESSIBLE MATERIALS, THE TRENCH SHALL BE OVEREXCAVATED A MINIMUM OF 6-INCHES AND REFILLED WITH GRANULAR MATERIAL.

CLASS "B" EMBEDMENT FOR RIGID PIPE DETAIL

NO SCALE

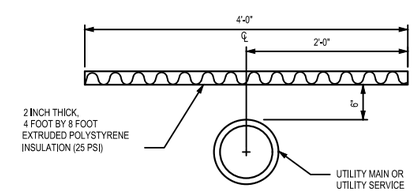

STANDARD INSTALLATION

PIPE INSULATION DETAIL

SCALE: NONE

2

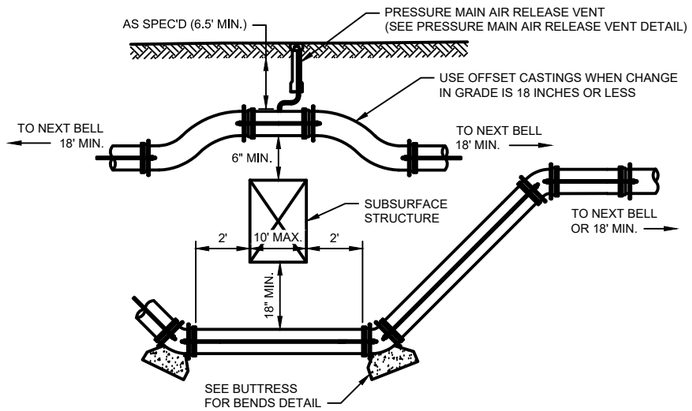

GENERAL NOTES:

1. FITTINGS TO BE WRAPPED WITH POLYETHYLENE BEFORE PLACEMENT OF RODDING AND BUTTRESSES.
2. ALL FITTINGS SHALL BE RODDED OR CONNECTED TO THE PIPE WITH AN APPROVED WEDGE ACTION THRUST RESTRAINING GLAND. RODS SHALL BE STAINLESS STEEL OR BITUMINOUS COATED, AND A MINIMUM OF 1 INCH IN DIAMETER.
3. LOCATIONS OF EXISTING MAINS ARE APPROXIMATE. LENGTH REQUIRED TO BE LOWERED WILL BE DETERMINED IN THE FIELD.
4. MAINS SHALL BE INSULATED IF COVER IS LESS THAN 6.5 FEET.

PRESSURE MAIN OFFSET DETAIL

NO SCALE

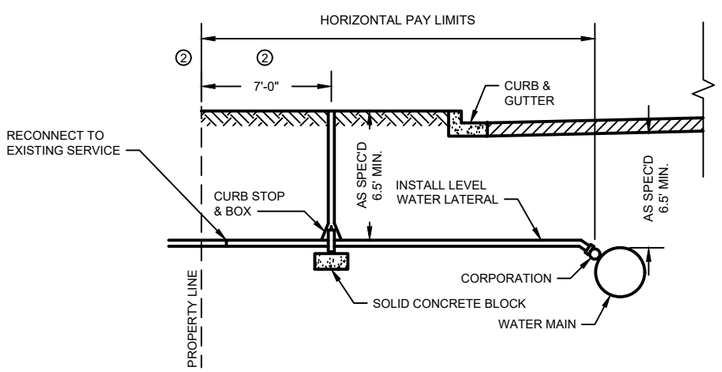

GENERAL NOTES:

1. SEE PLANS AND STANDARD SANITARY SEWER UTILITY AND WATER UTILITY SPECIFICATIONS FOR WISDOT LET PROJECTS, CITY OF SPARTA, MONROE COUNTY, WISCONSIN, MAY 2017 FOR SIZE AND TYPE OF CURB STOP AND BOX, CORPORATION AND SERVICE LINE.
2. COMMUNITY STANDARDS SHALL SUPERSEDE THE DIMENSIONS FROM THE PROPERTY LINE.

WATER SERVICE DETAIL

NO SCALE

GENERAL NOTES:

1. DETAILS OF CONSTRUCTION, MATERIALS AND WORKMANSHIP NOT SHOWN ON THIS DRAWING AND THE APPLICABLE SPECIAL CONDITIONS SHALL CONFORM TO THE PERTINENT REQUIREMENTS OF THE STANDARD SANITARY SEWER UTILITY AND WATER UTILITY SPECIFICATIONS FOR WISDOT LET PROJECTS, CITY OF SPARTA, MONROE COUNTY, WISCONSIN, MAY 2017.
2. DETAILED DRAWINGS FOR PROPOSED ALTERNATE DESIGNS FOR UNDERGROUND STRUCTURES SHALL BE SUBMITTED TO THE ENGINEER FOR APPROVAL PROVIDING THAT SUCH ALTERNATE DESIGNS MAKE PROVISION FOR EQUIVALENT CAPACITY AND STRENGTH.
3. PRECAST REINFORCED BASES SHALL BE PLACED ON A BED OF MATERIAL AT LEAST 6 INCHES IN DEPTH, WHICH MEETS THE REQUIREMENTS FOR GRANULAR BACKFILL. THIS BEDDING SHALL BE COMPACTED AND PROVIDE UNIFORM SUPPORT FOR THE ENTIRE AREA OF THE BASE.
4. ECCENTRIC CONE TOPS SHALL BE USED ON ALL STRUCTURES 5 FEET OR GREATER IN DEPTH, AND FLAT TOPS SHALL BE USED ONLY ON STRUCTURES LESS THAN 5 FEET IN DEPTH, UNLESS DIRECTED BY THE ENGINEER.
5. PRECAST REINFORCED CONCRETE RISERS MAY BE PLACED WITH TONGUE UP OR DOWN.
6. ALL PRECAST INLET UNITS SHALL CONFORM TO THE PERTINENT REQUIREMENTS OF AASHTO DESIGNATION M 199.
7. DROP CONNECTIONS SHALL BE USED WHEN THE PIPE INVERT IS MORE THAN 2 FEET ABOVE THE MANHOLE INVERT. PRECAST STRUCTURE MANWAY CLEAR OPENING SHALL MATCH CASTING - REFER TO STANDARD SANITARY SEWER UTILITY AND WATER UTILITY SPECIFICATIONS FOR WISDOT LET PROJECTS, CITY OF SPARTA, MONROE COUNTY, WISCONSIN, MAY 2017.

2

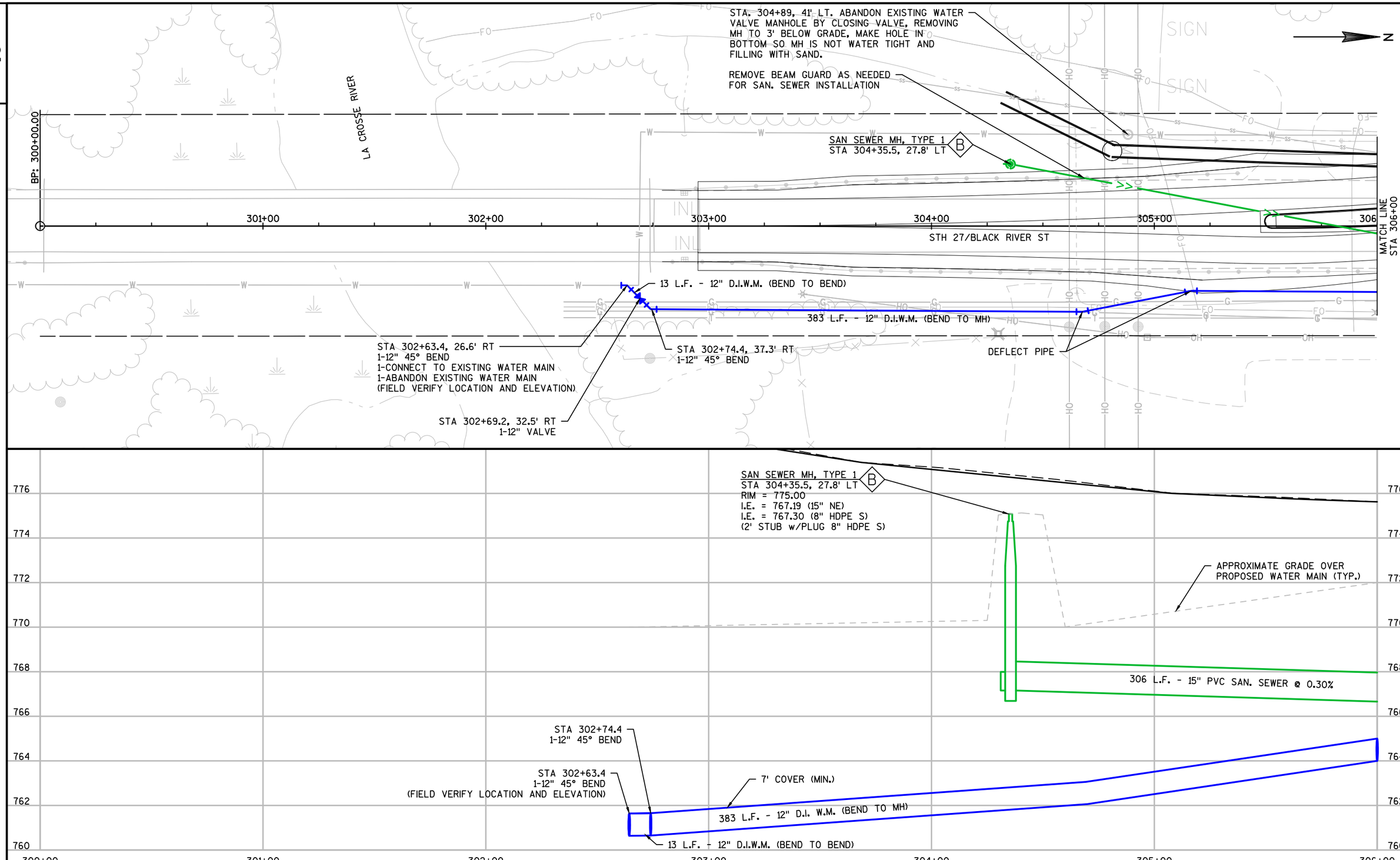

PROJECT NO: 5144-01-75 & 5144-01-76	HWY: STH 27	COUNTY: MONROE	PLAN AND PROFILE: SANITARY & WATER	SHEET 89	E

FILE NAME : P:\50S\51\00051029\CADD\C3D\SHEETSPLAN\WATER & SAN.DWG
LAYOUT NAME - 023016_UP
PLOT DATE : 9/7/2017 10:50 AM PLOT BY : BRAD LEE PLOT NAME : PLOT SCALE : 1 IN:40 FT

2

STA 308+61, 45' LT
1-REMOVE HYDRANT
1-REMOVE VALVE BOX
1-6" PLUG, INSTALL IN VALVE

STA 307+84.6, 29.2' RT REMOVE EXISTING SAN. MH, CONNECT TO EXISTING 15" SAN. SEWER WITH 15"X15" PVC SLEEVE (FIELD VERIFY SIZE BEFORD ORDERING MATERIAL)

8" D.I.W.M., SEE RIVER ROAD PLAN FOR DETAILS

STA 308+97.9, 39.1' LT
1-8" 45° BEND
52 L.F. - 8" D.I.W.M.
(BEND TO VALVE)

STA 309+49.2, 40.5' LT
1-8" VALVE
3 L.F. - 8" D.I.W.M.

STA 309+52.8, 40.5' LT
1-12" X 8" REDUCER
3 L.F. - 12" D.I.W.M.

STA 309+55.4, 40.5' LT
1-12" TEE
3 L.F. - 12" D.I.W.M.

STA 309+58.7, 40.5' LT
1-12" VALVE
1-CONNECT TO EXISTING WM AT 309+76.7, 40.5' LT
1-ABANDON EXISTING WATER MAIN

STA 309+55.4, 32' LT
1-12" 22.5° BEND

75 L.F. - 12" D.I.W.M. (TEE TO BEND)

STH 27/BLACK RIVER ST

MATCH LINE STA 306+00

MATCH LINE STA 312+00

SAN SEWER MH, TYPE 1
STA 307+35.9, 29.2' RT

EP: 33+52.51

BP: 35+00.00

292 L.F. - 12" D.I.W.M. (MH TO BEND)

STA 309+55.4, 33.8' RT &
STA 309+50.4, 38.8' RT
2-12" 45° BEND
8 L.F. - 12" D.I.W.M.

STA 306+58.0, 29.9' RT
1-WATER VALVE MH, TYPE 2
1-12" VALVE
2-1" CORPORATIONS

DEFLECT PIPE, WM TO BE 8' (MIN.) CENTER-CENTER FROM SAN. SEWER MAIN

STA. 308+74.3, 54.0' RT
1-1" CORP., CURB STOP, BOX AND RECONNECT
15 L.F. - 1" WATER SERVICE

EXISTING SAN. SEWER MH
STA. 310+40, 29.2' RT
SAN. MH COVER, TYPE J
W/TYPE B ADJUSTMENT
(FIELD VERIFY LOCATION AND ELEVATION)

306+00 307+00 308+00 309+00 310+00 311+00 312

774 772 770 768 766 764 762 760 758

WATER VALVE MH, TYPE 2
STA 306+58, 29.9' RT
RIM = 774.10
T.O.P. = 767.00 (12" D.I.)
MH INSIDE BOTTOM=764.60
1-12"-VALVE
2-1" CORPORATIONS W/1' COPPER SERVICE STUB

SAN SEWER MH, TYPE 1
STA 307+35.9, 29.2' RT
RIM = 772.70
I.E. = 766.27 (15" SW)
I.E. = 766.27 (15" N)

PROPOSED STORM SEWER INLET

PROPOSED STORM SEWER

306 L.F. - 15" PVC SAN. SEWER @ 0.30%

49 L.F. - 15" PVC SAN. SEWER @ 0.47%

STA 307+84.6 REMOVE EXISTING SAN. MH, CONNNECT TO EXISTING 15" SAN SEWER W/15"X15" PVC SLEEVE

STA 308+97.9
8" - 45° BEND
T/P = 766.50

8 D.I.W.M., SEE ROBERTS ROAD PLAN FOR DETAILS

STA 308+88.3
8" - 22.5° BEND

PROPOSED STORM SEWER, WM TO BE 1.5' CLEAR BELOW STORM SEWER (TYP.)

STA 309+52.8 12" X 8" REDUCER

PROPOSED STORM SEWER

STA 309+55.4 1-12" TEE

STA 309+58.7 12" T/P = 766.85 (FIELD VERIFY LOCATION AND ELEVATION)

EXISTING 12" WATER MAIN

EXISTING 15" SAN. SEWER

292 L.F. - 12" D.I.W.M. (MH TO BEND)

7' COVER (MIN.)

75 L.F. - 12" D.I.W.M. (TEE TO 45° BEND)
8 L.F. - 12" D.I.W.M. (45° BEND TO 45° BEND)
1-12" 22.5° BEND. T/P 762.85
2-12" 45° BENDS, T/P 762.85 & 765.00
WM TO BE 1.5' CLEAR (MIN.) BELOW STORM AND SAN. SEWER PIPES

PROJECT NO: 5144-01-75 & 5144-01-76	HWY: STH 27	COUNTY: MONROE	PLAN AND PROFILE: SANITARY & WATER	SHEET 90	E

2

STA 314+05.9, 44.0' LT
1-REMOVE HYDRANT
1-REMOVE VALVE BOX
1-6" PLUG, INSTALL IN VALVE (FIELD VERIFY LOCATION AND ELEVATION)

STA 316+97.0, 35' LT
1-12" 45° BEND
1-CONNECT TO EXISTING WM
1-ABANDON EXISTING WM
(FIELD VERIFY LOCATION AND ELEVATION)

STA 317+02.0, 38' LT
1-12" 45° BEND

49 L.F. - 8" PVC SAN. SEWER AND CONNECTION

PLE, CITY OF SPARTA

N

AVERILL ST

23+00 SAN

24+00 SAN

MATCH LINE STA 312+00

312+00 313+00 314+00 315+00 316+00 317+00 318

SAN SEWER MH, TYPE 1
STA 313+53.4, 0.0' RT
137

SEE AVERILL STREET PLAN FOR SEWER AND WATER DETAILS

STH 27/BLACK RIVER ST

95A SAN SEWER MH, TYPE 1
STA 316+00.0, 0.0' RT

MATCH LINE STA 318+00

50 L.F. - 8" PVC SAN. SEWER AND CONNECTION

138 SAN. SEWER MH, TYPE 1
STA 23+57.9, 4.0' LT.

SAN SEWER MH, TYPE 1
STA 313+53.4, 0.0' RT
RIM = 776.82
I.E. = 763.14 (10" N)
I.E. = 762.89 (15" E)
I.E. = 762.99 (15" W)
137

RELOCATE WATER MAIN TO 1.5' CLEAR (MIN.) BELOW PROPOSED STORM SEWER MAIN, SEE AVERILL STREET PLAN SHEET FOR DETAILS

PROPOSED STORM SEWER, WM TO BE 1.5' CLEAR BELOW STORM SEWER

95A SAN SEWER MH, TYPE 1
STA 316+00.0, 0.0' RT
RIM = 777.77
I.E. = 764.22 (10" N)
I.E. = 764.12 (10" S)

PROPOSED STORM SEWER

STA 316+97 & STA. 317+02
2-12" 45° BENDS, T/P = 769.2,
1-CONNECT TO EXISTING WM
1-ABANDON EXISTING WM
(FIELD VERIFY ELEVATION AND LOCATION)

247 L.F. - 10" PVC SAN SEWER @ 0.40%

355 L.F. - 10" PVC SAN. SEWER @ 0.44%

778 776 774 772 770 768 766 764 762

312+00 313+00 314+00 315+00 316+00 317+00 318+00

PROJECT NO: 5144-01-75 & 5144-01-76	HWY: STH 27	COUNTY: MONROE	PLAN AND PROFILE: SANITARY & WATER	SHEET 91	E

FILE NAME : P:\50S\51\00051029\CADD\C3D\SHEETSPLAN\WATER & SAN.DWG
LAYOUT NAME - 023018_UP
PLOT DATE : 9/6/2017 11:06 AM PLOT BY : BRAD LEE PLOT NAME : PLOT SCALE : 1 IN:40 FT

2

37 L.F. - 12" D.I.W.M. (TEE TO TEE)

STA 319+64.2, 38' LT
1-12"X8" TEE
1-8" VALVE

268 L.F. - 12" D.I.W.M.
(TEE TO EXISTING)

STA. 319+25, 43' LT
1-10" X 6" WYE & RECONNECT
45 L.F. - 6" SEWER SERVICE
INSTALL BELOW STORM SEWER

STA 319+95, 27' LT
1-REMOVE HYDRANT
STA. 319+94, 8' LT
1-REMOVE VALVE BOX

STA 319+99.7, 28' LT
1-HYDRANT W/EXTENSION
BURY LINE ELEV.=778.40
1-12"X6" TEE
1-6" VALVE & BOX
10' L.F. - 6" D.I.W.M.

CAUTION, 8" GAS MAIN

STA. 322+53, 43' LT
1-10" X 6" WYE & RECONNECT
45 L.F. - 6" SEWER SERVICE
INSTALL BELOW STORM SEWER

PLE, CITY OF SPARTA

323 L.F. - 12" D.I.W.M. (BEND TO TEE)

39 L.F. - 12" D.I.W.M.
(BEND TO EXISTING WM)

STA 323+25.2, 35' LT
1-12" 45° BEND

STA 323+22, 38' LT
1-12" 45° BEND

STA 323+45.0, 14' LT
1-12" 45° BEND

STA 323+50.0, 10.1' LT
1-12" 45° BEND
1-CONNECT TO EXISTING WM
1-ABANDON EXISTING WM
(FIELD VERIFY LOCATION
AND ELEVATION)

MATCH LINE
STA 318+00

PLE, CITY OF SPARTA

STA 319+64.2, 36 LT, 32' LT, 9' LT, & 5' LT
4-8" 45° BENDS

SAN SEWER MH, TYPE 1
STA 319+54.8, 1.1' LT
95

75 L.F. - 8" D.I.W.M. (TEE TO EXISTING WM)

STH 27/BLACK RIVER ST

96 SAN SEWER MH, TYPE 1
STA 322+52.5, 0.3' LT

MATCH LINE
STA 324+00

ABANDON EXISTING SAN. SEWER

SAN SEWER MH, TYPE 1
STA 319+54.0, 47.0' RT.
CONNECT TO EXISTING
10" SAN. SEWER
94A

STA 319+64.5, 35' RT
1-8" SLEEVE
1-CONNECT TO EXISTING WM EAST OF REPAIR SLEEVE
1-ABANDON EXISTING WM
(FIELD VERIFY LOCATION AND ELEVATION)

SAN SEWER MH, TYPE 1
STA 319+54.0, 47.0' RT
RIM = 778.48
I.E. = 770.75 (10" E EXISTING)
CONNECT TO EXISTING MAIN
94A

SAN SEWER MH, TYPE 1
STA 319+54.8, 1.1' LT
RIM = 778.09
I.E. = 765.90 (10" N)
I.E. = 765.80 (10" S)
95

PROPOSED STORM SEWER, WM TO
BE 1.5' CLEAR BELOW STORM PIPES

PROPOSED STORM SEWER

STA 319+64.2
12" X 8" TEE
12" T/P = 770.57

STA 319+99.7
12" X 6" TEE
12" T/P = 770.69

7' COVER (MIN.)

STA 319+52.9 12" T/P = 770.53, FIELD
VERIFY ELEVATION AND LOCATION

EXISTING 12" WATER MAIN

75 L.F. - 8" D.I.W.M. (TEE TO EXISTING)
2-8" 45° BENDS. T/P 767.5
1-8" 45° BEND, T/P 770.5
WM TO BE 1.5' CLEAR (MIN.) BELOW STORM PIPE
AND 0.50' CLEAR ABOVE SAN. SEWER PIPE

298 L.F. - 10" PVC SAN. SEWER @ 0.37%

355 L.F. - 10" PVC SAN. SEWER @ 0.50%

96 SAN SEWER MH, TYPE 1
STA 322+52.5, 0.3' LT
RIM = 778.43
I.E. = 767.09 (10" N)
I.E. = 766.99 (10" S)

PROPOSED
STORM
SEWER

STA 323+22
1-12" 45° BEND
12" T/P = 771.80

STA 323+50.0
1-12" 45° BEND
FIELD VERIFY ELEV.
AND LOCATION

1.5' CLEAR (MIN.) BELOW
STORM SEWER MAIN

309 L.F. - 10" PVC
SAN. SEWER @ 0.40%

STA 323+25.2 35' LT
1-12" 45° BEND
12" T/P = 768.00

STA 323+45.0, 14' LT
1-12" 45° BEND
12" T/P = 768.00

780 778 776 774 772 770 768 766 764

318+00 319+00 320+00 321+00 322+00 323+00 324+00

PROJECT NO: 5144-01-75 & 5144-01-76	HWY: STH 27	COUNTY: MONROE	PLAN AND PROFILE: SANITARY & WATER	SHEET 92	E

2

STA. 327+12, 38' LT
1-10" X 6" WYE & RECONNECT
33 L.F. - 6" SEWER SERVICE
INSTALL BELOW STORM SEWER

PROPOSED WATER MAIN AND
SANITARY SEWER MAIN, SEE
MAPLE STREET PLAN FOR DETAILS

STA 325+91, 39' LT
1-REMOVE HYDRANT
1-REMOVE VALVE BOX
1-ABANDON EXISTING WATER MAIN

STA. 328+10, 34.5' LT
1-1" CORP., CURB STOP, BOX & RECONNECT
44 L.F. - 1" WATER SERVICE
INSTALL BELOW STORM SEWER

MAPLE AVE

MATCH LINE
STA 324+00

MATCH LINE
STA 330+00

SAN SEWER MH, TYPE 1
STA 325+61.2, 2.9' RT
97

SAN SEWER MH, TYPE 1
STA 328+48.5, 0.2' LT
98

STH 27/BLACK RIVER ST

STA. 325+70. 10' LT.
3-REPLACE TOP AND ADJUST 3
EXISTING WATER VALVE BOXES

11+00

12+00

+00 325+00 326+00 327+00 328+00 329+00 330

SAN SEWER MH, TYPE 1
STA 325+61.2, 2.9' RT
97
RIM = 780.34
I.E. = 768.42 (10" N)
I.E. = 768.32 (10" S)
I.E. = 768.52 (8" W)

SAN SEWER MH, TYPE 1
STA 328+48.5, 0.2' LT
98
RIM = 781.92
I.E. = 769.51 (10" S)
I.E. = 769.71 (10" N)
I.E. = 773.74 (10" N)
OUTSIDE DROP, RECONNECT
TO 8" SAN.

PROPOSED STORM SEWER

PROPOSED STORM SEWER

EXISTING 8" SAN. SEWER

5 L.F. - 10" PVC SAN. SEWER @ 0.40%
CONNECT TO EXISTING 8" SAN. SEWER
W/FERNCO

PROPOSED WATER MAIN, SEE
MAPLE STREET PLAN FOR DETAILS

287 L.F. - 10" PVC SAN. SEWER @ 0.38%

309 L.F. - 10" PVC SAN. SEWER @ 0.40%

782 780 778 776 774 772 770 768 766

324+00 325+00 326+00 327+00 328+00 329+00 330+00

PROJECT NO: 5144-01-75 & 5144-01-76	HWY: STH 27	COUNTY: MONROE	PLAN AND PROFILE: SANITARY & WATER	SHEET 93	E

FILE NAME : P:\50S\51\00051029\CADD\C3D\SHEETSPLAN\WATER & SAN.DWG
LAYOUT NAME - 023020_UP
PLOT DATE : 7/13/2017 8:05 AM PLOT BY : BRAD LEE PLOT NAME : PLOT SCALE : 1 IN:40 FT

2

STA. 332+57.0, 57.0' LT
1-1" CORP., CURB STOP, BOX & RECONNECT
42 L.F. - 1" WATER SERVICE
36 L.F. - 6-INCH SANITARY SEWER SERVICE
RELOCATE AROUND PROPOSED STORM INLET

STA. 335+16.70, 34.5' LT
1-1" CORP., CURB STOP, BOX & RECONNECT
51 L.F. - 1" WATER SERVICE
RELOCATE SOUTH OF PROPOSED STORM MANHOLE
AND INSTALL BELOW STORM SEWER REMOVE
EXISTING CURB BOX & WATER VALVE BOX

STA. 335+89.9. 6.6' LT.
1-REPLACE TOP AND ADJUST
EXISTING WATER VALVE BOX

MATCH LINE
STA 330+00

MAPLE AVE

104+00

331+00 332+00 333+00 334+00 335+00 336+00

PI. 104+17.52

STH 27/BLACK RIVER ST

FILLER CAP

EXISTING SAN. SEWER MH 19
STA. 335+71.7, 13.70' RT.
SAN. MH COVER, TYPE J W/TYPE B
ADJUSTMENT, MATCH PROPOSED
SURFACE, ELEV. +-

EXISTING SAN. SEWER MH 20
STA. 336+02.10, 12.800' RT.
SAN. MH COVER, TYPE J W/TYPE B
ADJUSTMENT, MATCH PROPOSED
SURFACE, ELEV. +-

2

786 784 782 780 778 776 774 772

330+00 331+00 332+00 333+00 334+00 335+00 336+00

782.66 782.93 783.30 783.53 783.78 784.18 784.68 785.09 785.37 785.70 786.03 786.25 786.58

PROJECT NO: 5144-01-75 & 5144-01-76	HWY: STH 27	COUNTY: MONROE	PLAN AND PROFILE: SANITARY & WATER	SHEET 94	E

FILE NAME : P:\50S\51\00051029\CADD\C3D\SHEETSPLAN\WATER & SAN.DWG
LAYOUT NAME - 023021_UP
PLOT DATE : 7/13/2017 8:06 AM PLOT BY : BRAD LEE PLOT NAME : PLOT SCALE : 1 IN:40 FT

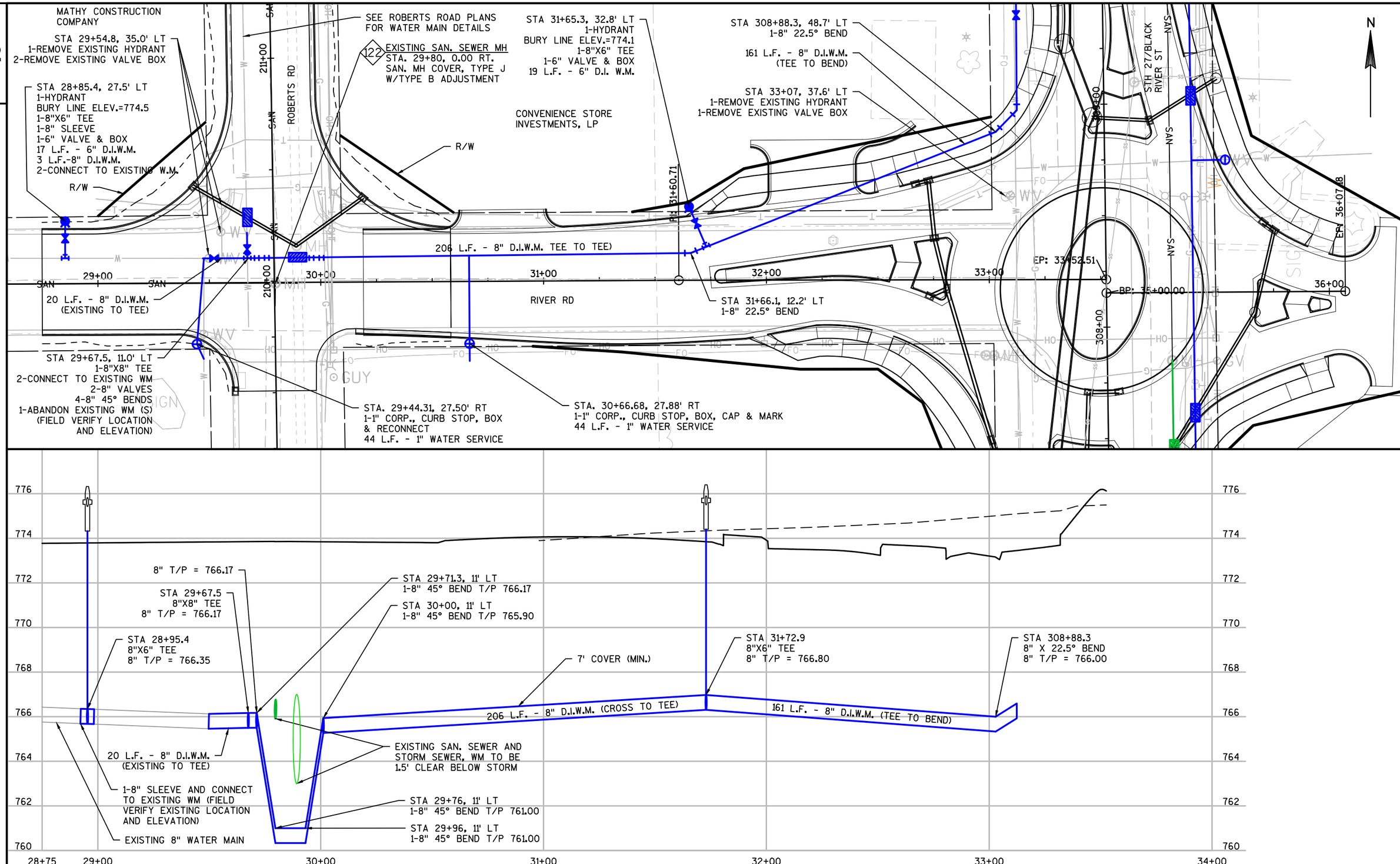

PROJECT NO: 5144-01-75 & 5144-01-76	HWY: STH 27	COUNTY: MONROE	PLAN AND PROFILE: SANITARY & WATER	SHEET 95	E

FILE NAME : P:\50S\51\00051029\CADD\C3D\SHEETSPLAN\WATER & SAN.DWG
LAYOUT NAME - 023023_UP
PLOT DATE : 7/13/2017 8:06 AM PLOT BY : BRAD LEE PLOT NAME : PLOT SCALE : 1 IN:40 FT

2

STA 19+48, 10' LT
1-REMOVE EXISTING VALVE BOX.

STA 20+04, 26' LT
1-REMOVE EXISTING HYDRANT
2-REMOVE EXISTING VALVE BOX.

STA 21+86.3, 27.0' LT
1-HYDRANT
BURY LINE ELEV.=777.4
1-8"X6" TEE
1-6" VALVE & BOX
1-8" VALVE & BOX
14 L.F. - 6" D.I. W.M.
(FIELD VERIFY LOCATION
AND ELEVATION)

STA 22+93.0 - 23+27.0, 14' LT
1-8" VALVE
4-8" 45° BEND
1-CONNECT TO EXISTING WM
1-ABANDON EXISTING WM

STA 22+89.9, 12.0' LT
2-8" 45° BENDS
1-CONNECT TO EXISTING WM
1-ABANDON EXISTING WM
(FIELD VERIFY LOCATION
AND ELEVATION)

164 L.F. - 8" D.I.W.M.
(CROSS TO REDUCER)

STA 24+46, 14.0' LT
1-8"X6" REDUCER
2-6" 45° BENDS
10 L.F.-6" D.I.W.M.
1-6" SLEEVE
1-CONNECT TO EXISTING WM
1-ABANDON EXISTING WM
(FIELD VERIFY LOCATION AND
ELEVATION)

STA. 24+38.8, 26.4' RT
1-2" CORP., CURB STOP, BOX
& RECONNECT
47 L.F. - 2" WATER SERVICE
(FIELD VERIFY LOCATION)

SEE ROBERTS ROAD PLAN
FOR WATER MAIN DETAILS

25 L.F. - 8" PVC SAN.
SEWER AND CONNECTION

246 L.F. - 8" D.I.W.M.
(TEE TO TEE)

104 L.F. - 8" D.I.W.M.
(TEE TO EXISTING)

124 SAN SEWER MH, TYPE 1
STA 19+57.7, 0.2' LT

SAN SEWER MH, TYPE 1
STA 21+49.0, 0' LT 136

STA. 22+46, 0.0 LT
1-REMOVE EXISTING SAN. MANHOLE #137

STA. 22+89.9, 7.4' LT REMOVE
EXISTING WATER MANHOLE, INSTALL
VALVE BOX ON EXISTING VALVE

SAN SEWER MH, TYPE 1
STA 313+53.4, 0.0' RT 137

139 EXISTING SAN. SEWER MH
STA. 24+04.0, 1.6' LT.
SAN. MH COVER, TYPE J W/TYPE B
ADJUSTMENT, MATCH PROPOSED
SURFACE, ELEV. 776.33+-

138 SAN. SEWER MH, TYPE 1
STA 23+57.9, 4.0' LT.

PI: 24+31.97

ROBERTS RD
STH 27/BLACK RIVER RD
AVERILL ST
BP: 19+53.59
216+00
215+00
314+00
313+00
20+00
21+00
22+00
23+00
24+00

124 SAN SEWER MH, TYPE 1
STA 19+57.7, 0.2' LT
RIM = 775.79
I.E. = 764.27 (15" N)
I.E. = 764.27 (15" E)
I.E. = 764.27 (12" S)

SAN SEWER MH, TYPE 1 136
STA 21+49.0, 0' LT
RIM = 776.91
I.E. = 763.57 (15" E)
I.E. = 763.62 (15" W)
I.E. = 766.07 (8" N)
VERIFY NORTH PIPE SIZE
BEFORE ORDERING MANHOLE

SAN SEWER MH, TYPE 1 137
STA 313+53.4, 0.0' RT
RIM = 776.49
I.E. = 763.14 (10" N)
I.E. = 762.89 (15" E)
I.E. = 762.99 (15" W)

138 SAN SEWER MH, TYPE 1
STA 313+53.7, 29.1' RT
RIM = 776.28
I.E. = 762.39 (15" E)
I.E. = 763.36 (15" S)
I.E. = 762.64 (15" W)

STA 215+42
1-8" TEE
T/P = 768.00
FIELD VERIFY LOCATION AND ELEVATION
OF EXISTING WATERMAIN AND STORM PIPE

STA 19+52.3, 14' LT
1-8' 45° BEND, T/P 766.50
STA 19+57.3, 14' LT
1-8" 45° BEND T/P 764.40 PROVIDE 1.5'
CLEAR BELOW EXISTING STORM SEWER AND
0.5' CLEAR ABOVE SANITARY SEWER MAIN

STA 21+86.3
1-8"X6" TEE
8" T/P = 767.50

PROPOSED STORM SEWER,
WM TO BE 1.5' CLEAR
BELOW STORM SEWER

STA 22+95, 14' LT
1-8" 45° BEND T/P 766.88

STA 22+89.9 8" T/P =
766.88 (FIELD VERIFY
LOCATION AND ELEVATION)

CONNECT TO EXISTING 6"
WATER MAIN W/2-6" 45°
BENDS

STA 24+46-8"X6" REDUCER
FIELD VERIFY EXISTING
LOCATION AND
ELEVATION/T/P = 769.58

STA. 23+27, 14' LT
1-8" 45° BENDT/P = 767.95

EXISTING 6"
WATER MAIN

164 L.F. - 8" D.I.W.M.
(CROSS TO REDUCER)

248 L.F. - 8" D.I.W.M. (TEE TO TEE)

195 L.F. - 15" PVC SAN. SEWER @ 0.34%

104 L.F. - 8" D.I.W.M.
(TEE TO CROSS)

179 L.F. - 15" PVC SAN. SEWER @ 0.34%

STA. 23+05, 14' LT &
STA. 23+21, 14' LT
2-8"-45° BENDS
T/P = 765.15

29 L.F. - 15" PVC SAN SEWER @ 1.34%
AND CONNECT TO EXISTING MANHOLE (VERIFY SIZE AND LOCATION BEFORE BUILDING MH 137)

PROPOSED SAN. SEWER
WM TO BE 0.5' CLEAR
ABOVE SAN. SEWER

EXISTING 15"
SAN. SEWER

778 776 774 772 770 768 766 764 762

19+00 20+00 21+00 22+00 23+00 24+00 24+75

PROJECT NO: 5144-01-75 & 5144-01-76	HWY: STH 27	COUNTY: MONROE	PLAN AND PROFILE: SANITARY & WATER	SHEET 96	E

FILE NAME : P:\50S\51\00051029\CADD\C3D\SHEETSPLAN\WATER & SAN.DWG
LAYOUT NAME - 023024_UP
PLOT DATE : 9/6/2017 11:06 AM PLOT BY : BRAD LEE PLOT NAME : PLOT SCALE : 1 IN:40 FT

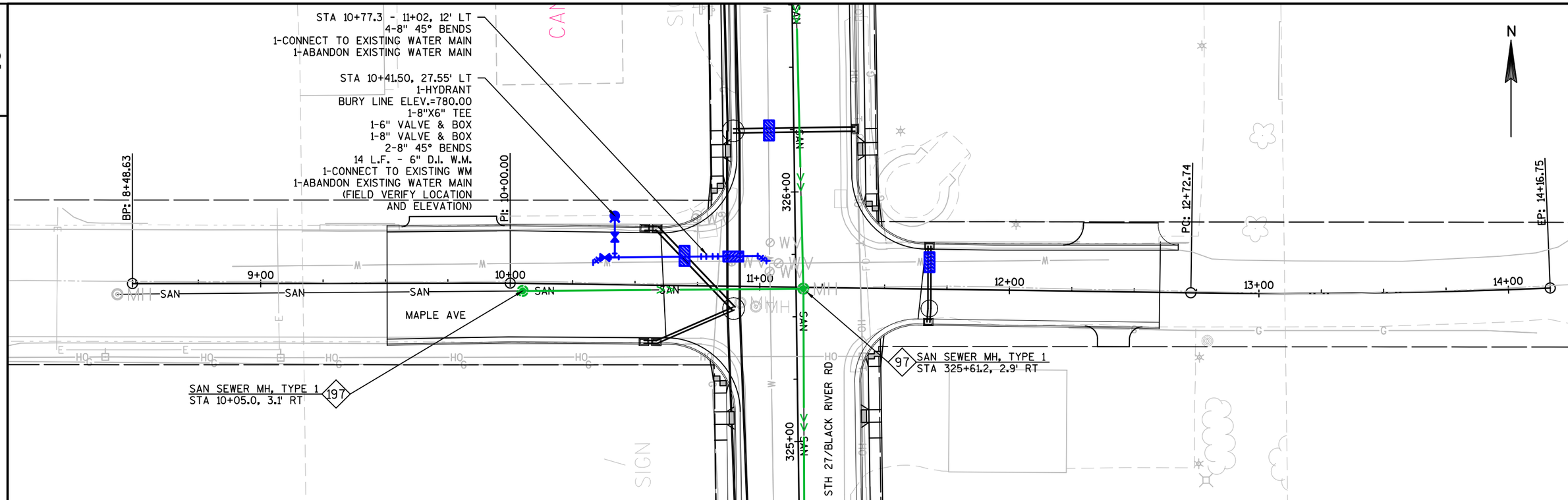

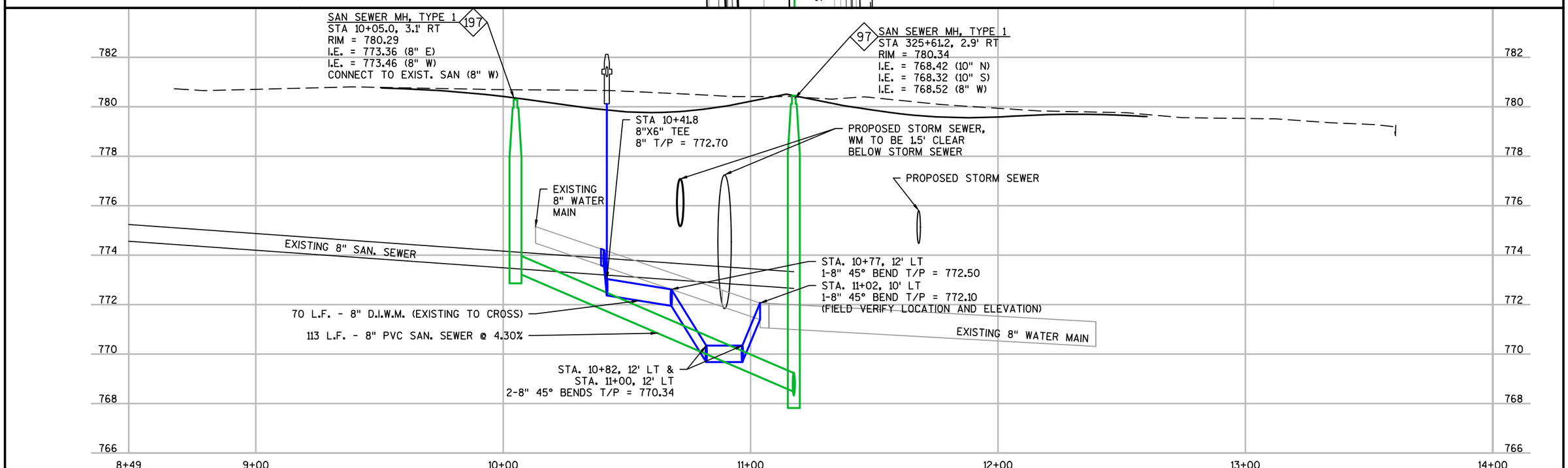

PROJECT NO: 5144-01-75 & 5144-01-76	HWY: STH 27	COUNTY: MONROE	PLAN AND PROFILE: SANITARY & WATER	SHEET 97	E

2

STA. 103+71, 36' LT TO
STA 103+90, 36.0' LT
4-8" 45° BENDS
1-8" SLEEVE
22 L.F.-8" D.I.W.M.
2-CONNECT TO EXISTING WM
2-ABANDON EXISTING WM
(FIELD VERIFY EXISTING
LOCATION AND ELEVATION)

STA 103+19.3, 54.27' LT
1-HYDRANT, W/ 12" EXTENSION
BURY LINE ELEV.=784.05
1-REMOVE EXISTING HYDRANT
9 L.F. - 6" D.I.W.M.
3-WATER BOX TOP AND ADJ.
1-CONNECT TO EXISTING W.M.
1-ADJUST EXISTING VALVE
BOX TO MATCH NEW PAVEMENT
(FIELD VERIFY EXISTING LOCATION
AND ELEVATION)

PI: 101+67.35

STH 27/BLACK RIVER RD

STH 16/WISCONSIN ST

332+09
PI: 104+17.62

176 EXISTING SAN. SEWER MH
STA. 332+83.5, 17.6' RT.
SAN. MH COVER, TYPE J W/TYPE B
ADJUSTMENT, MATCH PROPOSED
SURFACE

57 EXISTING SAN. SEWER MH
STA. 331+76.0, 15.5' RT.
SAN. MH COVER, TYPE J W/TYPE B
ADJUSTMENT, MATCH PROPOSED
SURFACE

56 EXISTING SAN. SEWER MH
STA. 331+47.6, 2' LT.
SAN. MH COVER, TYPE J W/TYPE B
ADJUSTMENT, MATCH PROPOSED
SURFACE

STA. 332+10.4, 28.8' LT REMOVE
EXISTING WATER MANHOLE, INSTALL
VALVE BOX ON EXISTING VALVE

STA. 331+66.4, 8.2' LT REMOVE
EXISTING WATER MANHOLE, INSTALL
VALVE BOX ON EXISTING VALVE

STA. 330+95.7, 49.70' LT
1-1" CORP., CURB STOP, BOX & RECONNECT
46 L.F. - 1" WATER SERVICE

101+00 102+00 103+00 104+00 105+00 106+00 107+00

N

2

788 786 784 782 780 778 776 774 772

PROPOSED STORM SEWER,
WM TO BE 1.5' CLEAR
BELOW STORM SEWER

STA 103+71, 36' LT
1-8" 45° BEND, T/P = 776.30
(FIELD VERIFY EXISTING LOCATION
AND ELEVATION)

EXISTING 8" WATER MAIN

EXISTING 8" WATER MAIN

STA. 103+74, 35' LT &
STA. 103+84, 35' LT
2-8" 45° BENDS T/P = 774.60

STA. 103+88, 36' LT
1-8" 45° BEND, T/P = 776.40
(FIELD VERIFY EXISTING LOCATION AND ELEVATION)

102+00 103+00 104+00 105+00 106+00 107+00

PROJECT NO: 5144-01-75 & 5144-01-76	HWY: STH 27	COUNTY: MONROE	PLAN AND PROFILE: SANITARY & WATER	SHEET 98	E

2

KENTON BROTHERS, LLC

SEE HOESCHLER DR PLAN SHEET FOR WATER MAIN DETAILS

STA. 217+26, 44' LT
1-1" CORP., CURB STOP, BOX & RECONNECT
30 L.F. - 1" WATER SERVICE
(FIELD VERIFY LOCATION)

R/W

STA. 217+18, 44' LT
1-12" X 6" WYE & RECONNECT
44 L.F. - 6" SEWER SERVICE
(FIELD VERIFY LOCATION)

STA 215+30, 12' LT TO STA. 215+33.5, 15' LT
2-8" 45° BENDS
1-8" SLEEVE
1-CONNECT TO EXISTING WM
1-ABANDON EXISTING WM
(FIELD VERIFY LOCATION AND ELEVATION)

STA 215+38, 15' LT
1-8" VALVE

STA 215+42, 15' LT
1-8" x 8" TEE

STA 215+46, 15' LT
1-8" VALVE

STA. 217+88, 29.5' LT
1-REMOVE EXISTING HYDRANT
2-REMOVE EXISTING VALVE BOX

STA 217+72.0, 13' LT
1-8" TEE
1-8" VALVE

STA. 217+85, 13' LT TO STA 217+87.0, 10.9' LT
2-8" 45° BENDS
1-8" SLEEVE
1-CONNECT TO EXISTING WM
1-ABANDON EXISTING WM
(FIELD VERIFY SIZE, LOCATION AND ELEVATION)

HOESCHLER DR

14+00

N

213+00 214+00 215+00 216+00 217+00 218+00 219+00

BP: 19+58.59

EP: 15+00.00

SAN SEWER MH, TYPE 1
STA 19+57.7, 0.2' LT
124

ROBERTS RD

SAN SEWER MH, TYPE 1
STA 217+61.3 0.6' RT
125

R/W

R/W

20+00

AVERILL ST.

CONVENIENCE STORE INVESTMENTS, LP

SPARTA COOPERATIVE SERVICES

SEE AVERILL STREET PLAN FOR SANITARY SEWER & WATER MAIN DETAILS

2

SAN SEWER MH, TYPE 1
STA 19+57.7, 0.2' LT
RIM = 775.79
I.E. = 764.27 (15" N)
I.E. = 764.27 (15" E)
I.E. = 764.27 (12" S)
CONNECT TO EXIST. SAN. (12" S)
124

STA 215+30
1-8" 45° BEND
8" T/P = 768.75
(FIELD VERIFY LOCATION AND ELEVATION)

STA 215+33.5
1-8" 45° BEND
8" T/P = 768.00

STA 215+42
1-8" TEE
8" T/P = 768.00
(INSTALL BELOW EXISTING WM)

SAN SEWER MH, TYPE 1
STA 217+61.3, 0.6' RT
RIM = 776.94
I.E. = 765.20 (8" N)
I.E. = 765.20 (15" S)
I.E. = 765.20 (12" W)
(CONNECT TO SAN. SEWER NORTH & WEST, FIELD VERIFY N PIPE SIZE, ELEVATION AND LOCATION)
125

7' COVER (MIN.)

STA 217+72.0
1-8" TEE T/P = 768.80
(INSTALL BELOW EXISTING WM)

STA 217+87.0
1-8" 45° BEND T/P = 769.80
(FIELD VERIFY LOCATION AND ELEVATION)

STA 217+85.0
1-8" 45° BEND T/P = 769.00

260 L.F. - 8" D.I.W.M. (TEE TO EXISTING)

14 L.F. - 8" D.I.W.M. (END TO TEE)

232 L.F. - 15" PVC SAN. SEWER @ 0.40%

EXISTING 8" SAN. SEWER

778 776 774 772 770 768 766 764 762

213+00 214+00 215+00 216+00 217+00 218+00 219+00

PROJECT NO: 5144-01-75 & 5144-01-76	HWY: STH 27	COUNTY: MONROE	PLAN AND PROFILE: ROBERTS RD UTILITY PLAN	SHEET 99	E

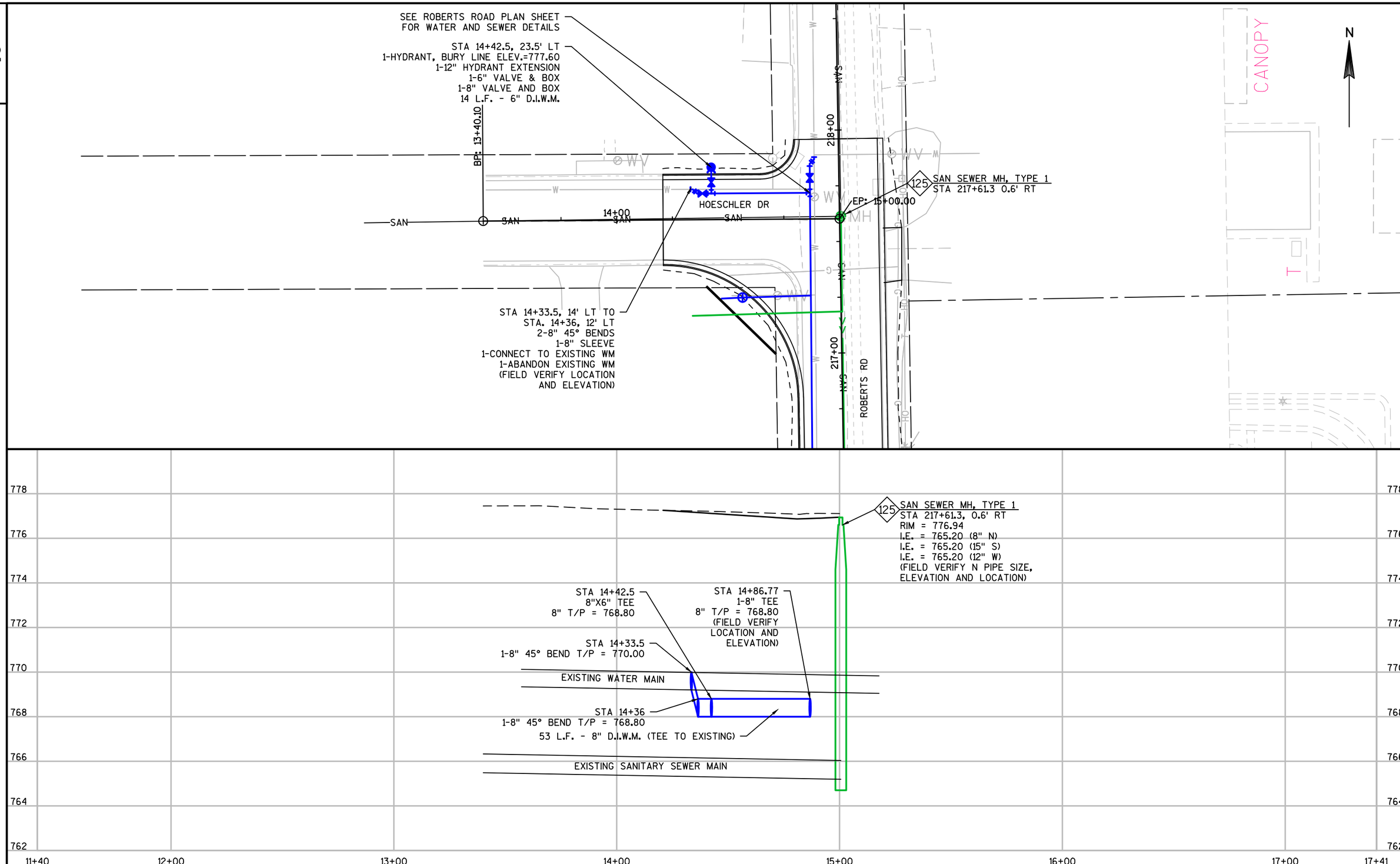

PROJECT NO: 5144-01-75 & 5144-01-76	HWY: STH 27	COUNTY: MONROE	PLAN AND PROFILE: ROBERTS RD UTILITY PLAN	SHEET 100	E

2

PLAN DATA CHART

SYMBOL	COMMON NAME	SCIENTIFIC NAME	TYPE	AVERAGE MATURE HEIGHT	PLANT SPACING	SIZE WHEN PLANTED	ROOT ZONE MODE	MINIMUM SIZE BALL/POT DIAMETER	MINIMUM SIZE BALL/POT DEPTH	MINIMUM SIZE ROOT SPREAD	MINIMUM SIZE PLANT HOLE DIAMETER	MINIMUM SIZE PLANT HOLE DEPTH	QUANTITY EACH	FERTILIZER UNITS REQUIRED	RODENT PROTECTION REQUIRED	MULCH RING REQUIRED	NOTES
AS	APPLE SERVICEBERRY "AUTUMN BRILLIANCE"	AMELANCHIER GRANDIFLORA "AUTUMN BRILLIANCE"	3T	15'-25'	15'-0" OC	6'-8"	B & B	24"	18"		48"	24"	2	4	NO	BED	3 STEMS MIN
JP	JUNIPER, PFITZER "KALLAY'S COMPACT"	JUNIPERUS CHINENSIS "PFITZERIANA KALLAY"	3E	2'-3'	6'-0" OC	24" SP/#3	CONT	12"	12"		36"	18"	16	2	NO	BED	
FR	FEATHER REED GRASS "KARL FOERSTER"	CALAMAGROSTIS X, ACUTFLORA "KARL FOERSTER"	IV	24"-54"	30" OC	1 GAL	CONT	8"	10"		16"	10"	51	1	NO	BED	
PD	PRAIRIE DROPSEED	SPOROBOLUS HETEROLEPSIS	IV	18"-30"	18" OC	1 GAL	CONT	8"	10"		16"	10"	93	1	NO	BED	

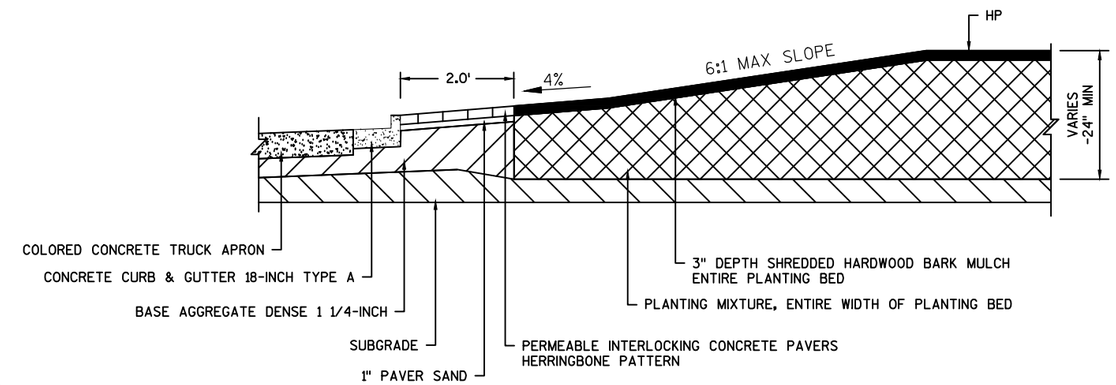

PLANTING BED DETAIL
NOT TO SCALE

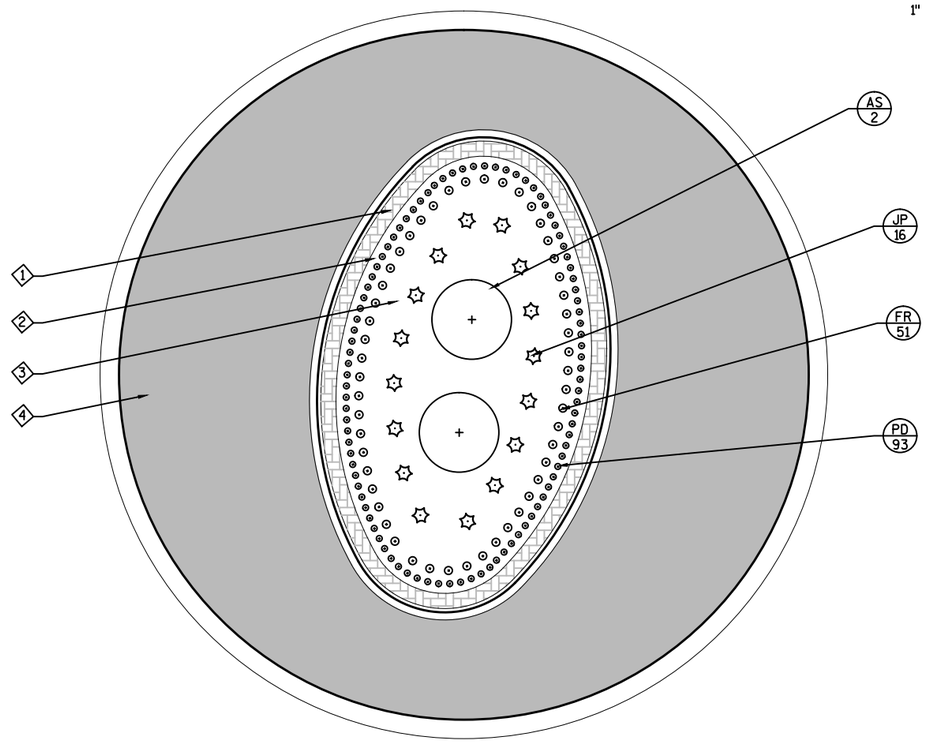

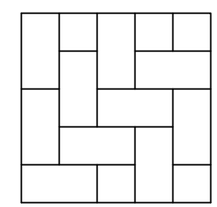

HERRINGBONE PATTERN
NOT TO SCALE

LEGEND

- HW / 1 — PLANT SYMBOL / QUANTITY
- DECIDUOUS SHRUB
- EVERGREEN SHRUB
- ORNAMENTAL GRASS
- 1 INTERLOCKING PAVERS
- 2 PLANTING MIXTURE
- 3 SHREDDED HARDWOOD BARK MULCH
- 4 COLORED CONCRETE TRUCK APRON

PLANT KEY

AS	APPLE SERVICEBERRY "AUTUMN BRILLIANCE"
JP	JUNIPER, PFITZER "KALLAY'S COMPACT"
FR	FEATHER REED GRASS, "KARL FOERSTER"
PD	PRAIRIE DROPSEED

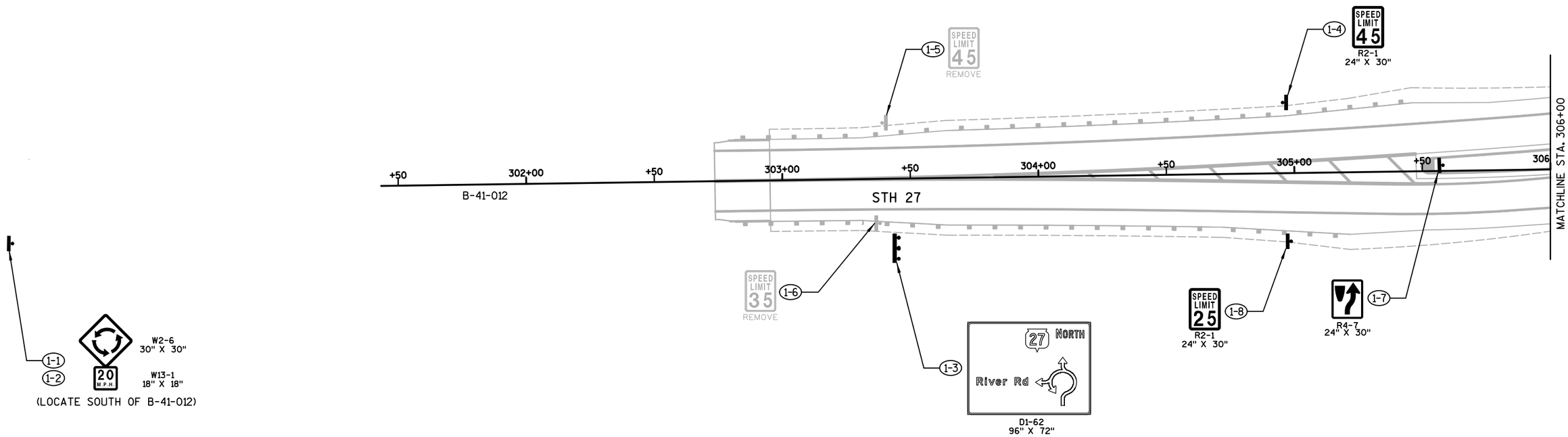

LEGEND

- PROPOSED SIGN MOUNTED ON POST(S)
- (x-xx) DENOTES SIGN NUMBER
- (R) REMOVABLE SIGN POST
- SIGN FLAGS TEMPORARY (INCIDENTIAL TO PROPOSED SIGN)

PROJECT NO: 5144-01-75	HWY: STH 27	COUNTY: MONROE	SIGNING	SHEET 102	E

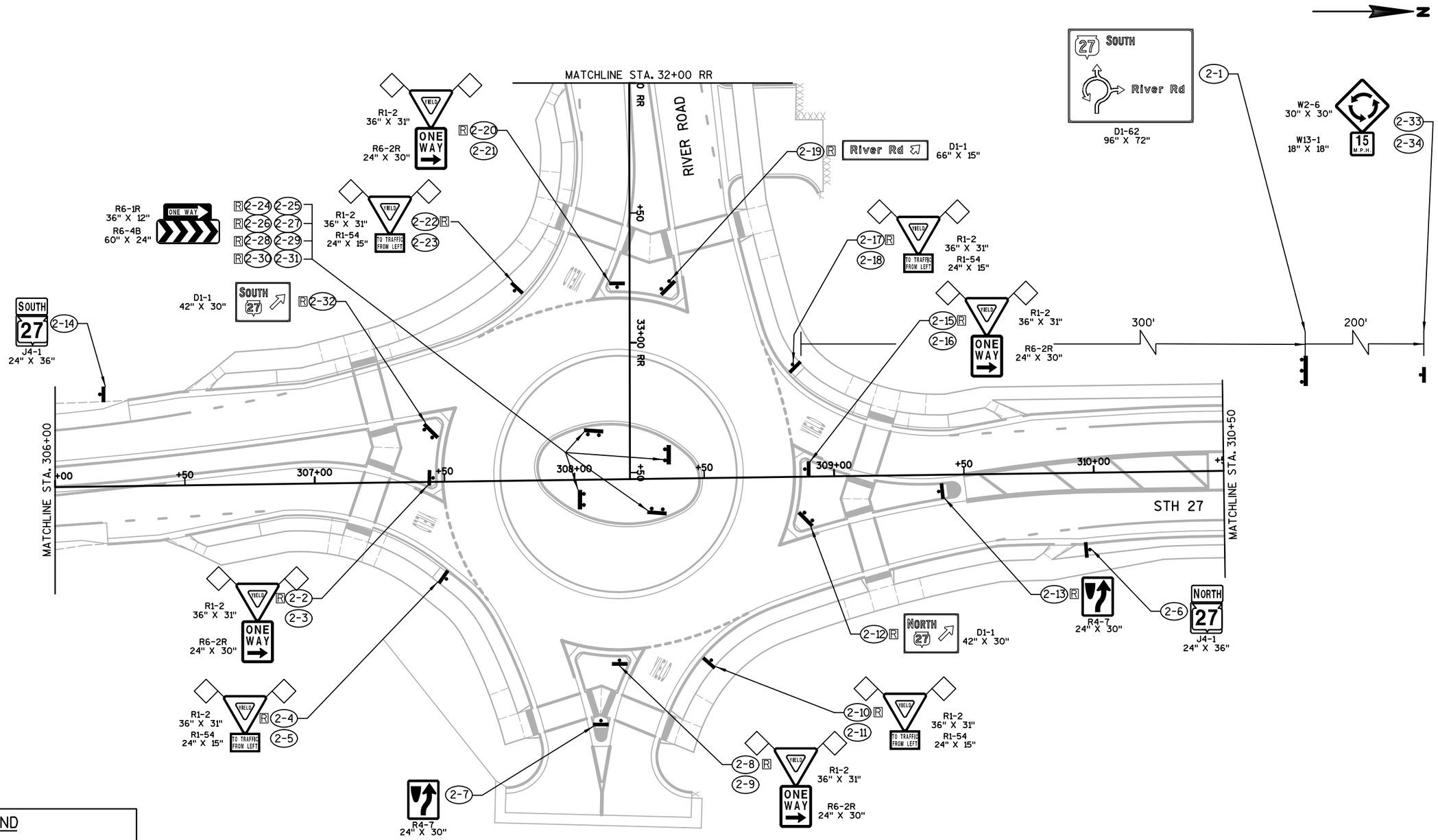

LEGEND

- PROPOSED SIGN MOUNTED ON POST(S)
- (X-XX) DENOTES SIGN NUMBER
- [R] REMOVABLE SIGN POST
- ◇ ◇ SIGN FLAGS TEMPORARY (INCIDENTIAL TO PROPOSED SIGN)

PROJECT NO:5144-01-75	HWY:STH 27	COUNTY:MONROE	SIGNING	SHEET 103	E

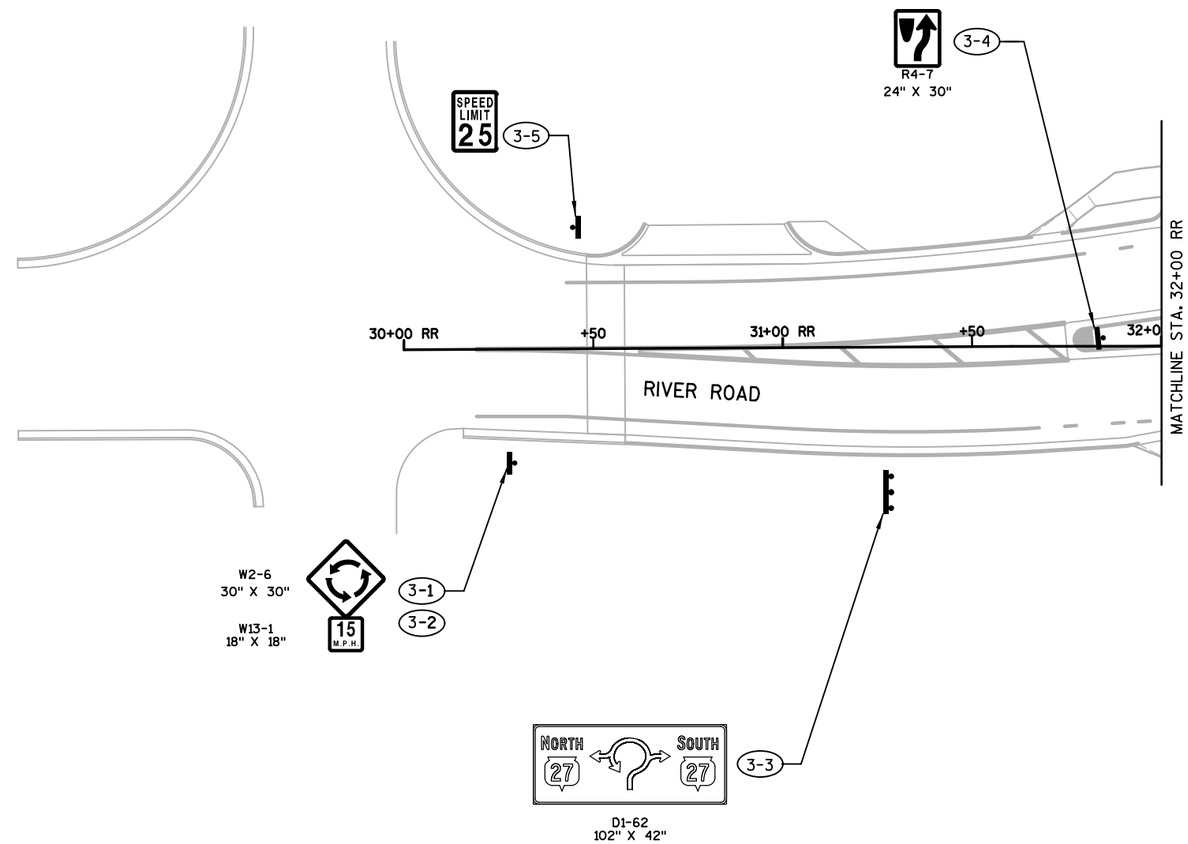

LEGEND

- PROPOSED SIGN MOUNTED ON POST(S)
- (x-xx) DENOTES SIGN NUMBER
- R REMOVABLE SIGN POST
- SIGN FLAGS TEMPORARY (INCIDENTIAL TO PROPOSED SIGN)

PROJECT NO:5144-01-75	HWY:STH 27	COUNTY:MONROE	SIGNING	SHEET 104	E

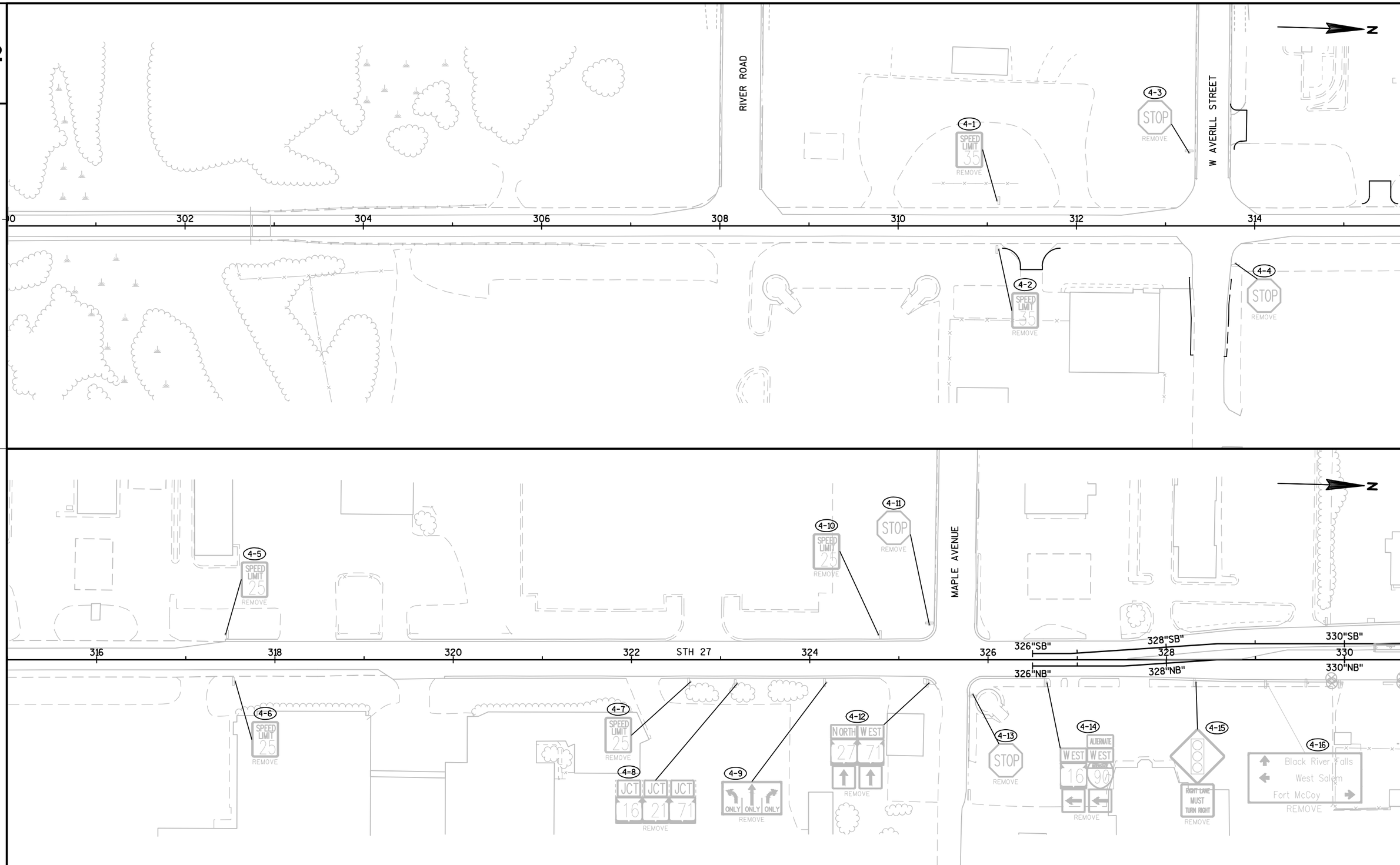

PROJECT NO:5144-01-75	HWY:STH 27	COUNTY:MONROE	PERMANENT SIGNING PLAN - STH 27 REMOVALS	SHEET 105	E

FILE NAME : N:\PDS\C3D\51440105\SHEETSPLAN\023200_PS.DWG
LAYOUT NAME - 023200_PS - 023201_PS

PLOT DATE : 7/27/2017 12:42 PM PLOT BY : VALENTI, PAUL M PLOT NAME : PLOT SCALE : 1" = 100'_XREF

WISDOT/CADDS SHEET 44

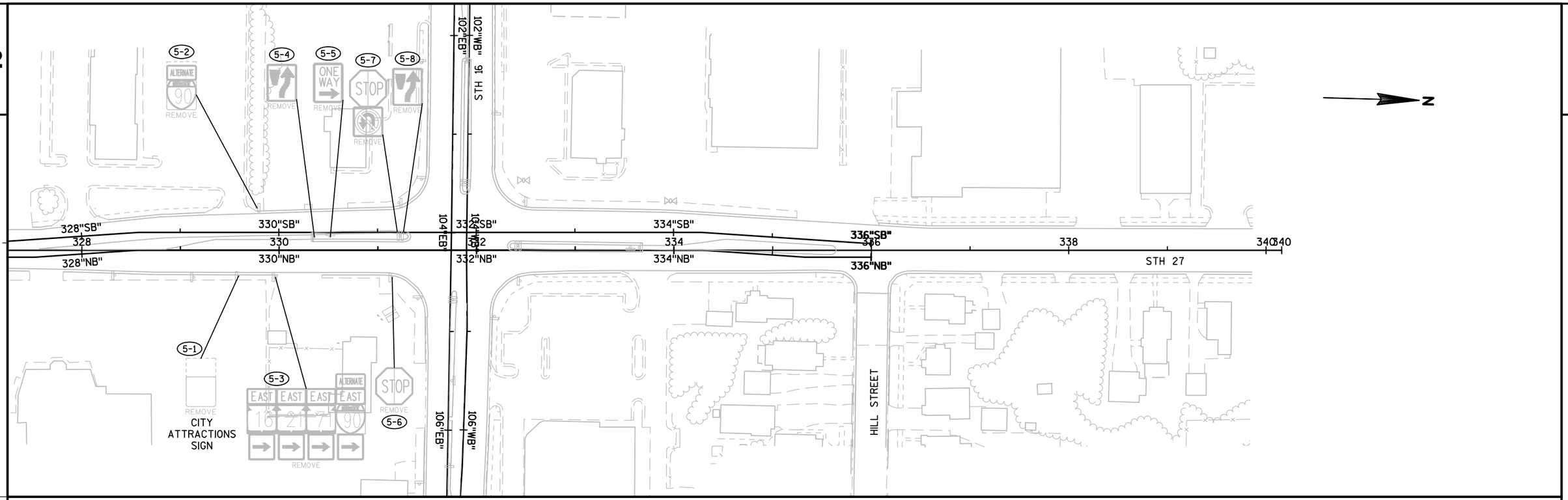

PROJECT NO:5144-01-75	HWY:STH 27	COUNTY:MONROE	PERMANENT SIGNING PLAN - STH 27 REMOVALS	SHEET 106	E

FILE NAME : N:\PDS\C3D\51440105\SHEETSPLAN\023200_PS.DWG
LAYOUT NAME - 023200_PS - 023202_PS
PLOT DATE : 7/27/2017 12:43 PM PLOT BY : VALENTI, PAUL M PLOT NAME : PLOT SCALE : 1" = 100'_XREF

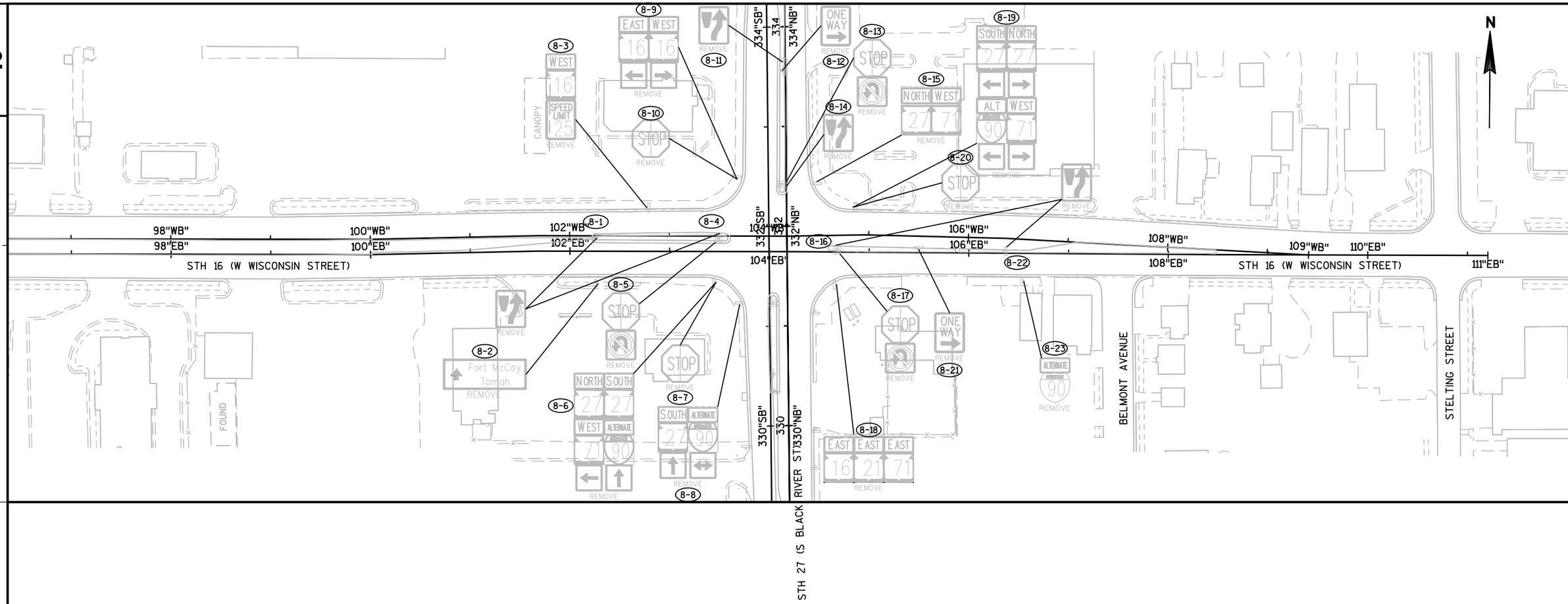

PROJECT NO:5144-01-75	HWY:STH 27	COUNTY:MONROE	PERMANENT SIGNING PLAN - STH 16 REMOVALS	SHEET 107	E

FILE NAME : N:\PDS\C3D\51440105\SHEETSPLAN\023210_PS.DWG
LAYOUT NAME - 023210_PS - 023211_PS
PLOT DATE : 7/27/2017 12:25 PM PLOT BY : VALENTI, PAUL M PLOT NAME : PLOT SCALE : 1" = 100'_XREF

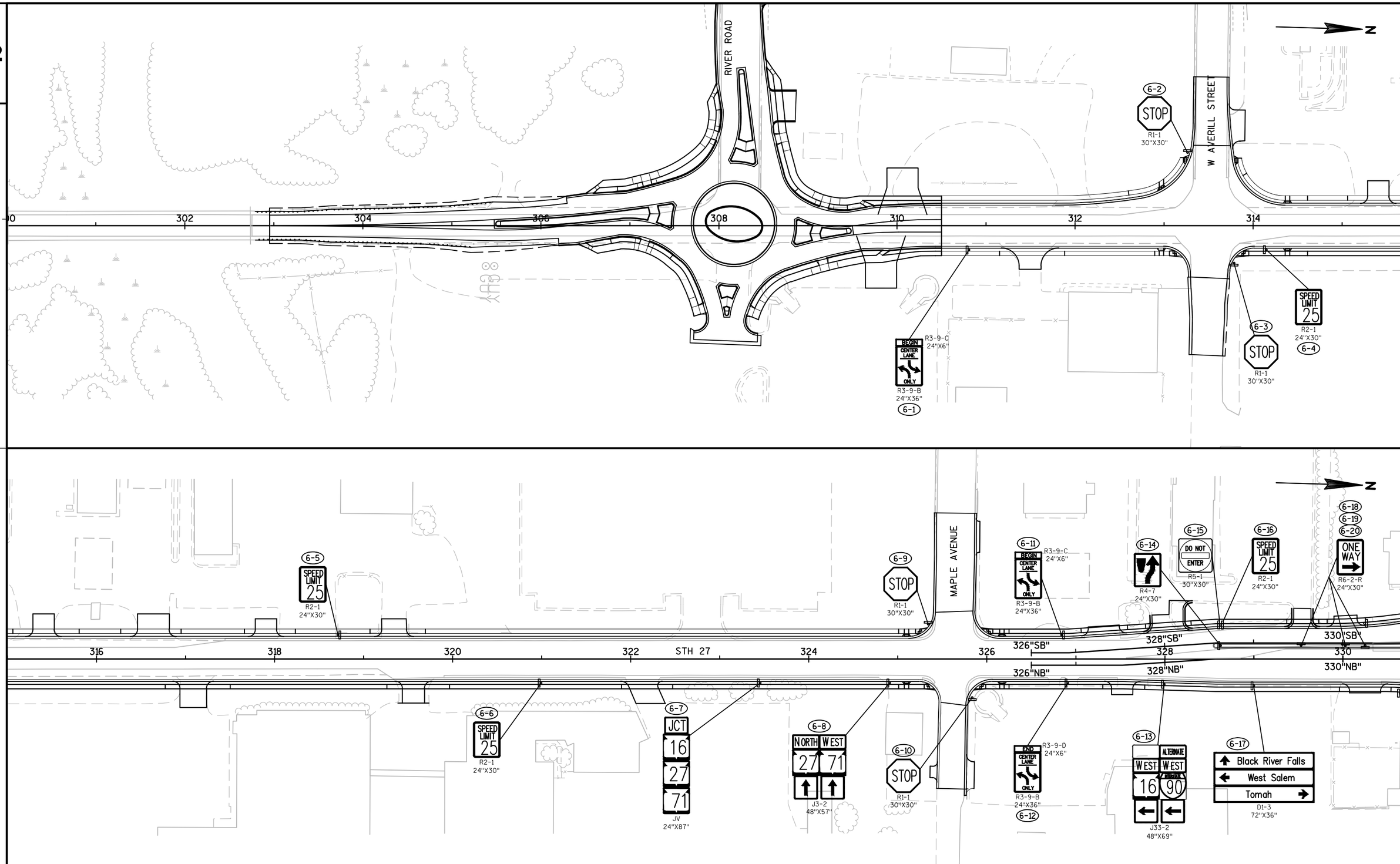

PROJECT NO:5144-01-75	HWY:STH 27	COUNTY:MONROE	PERMANENT SIGNING PLAN - STH 27	SHEET 108	E

FILE NAME : N:\PDS\C3D\51440105\SHEETSPLAN\023200_PS.DWG
LAYOUT NAME - 023200_PS - 023221_PS
PLOT DATE : 8/7/2017 7:20 AM PLOT BY : VALENTI, PAUL M PLOT NAME : PLOT SCALE : 1:100_XREF

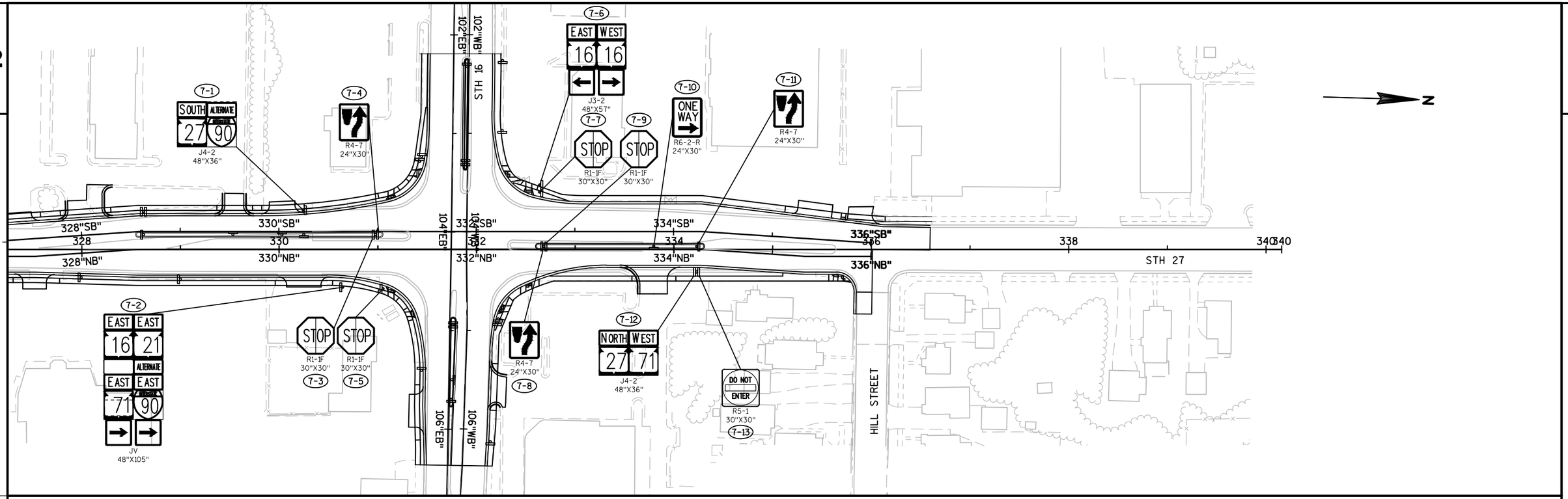

PROJECT NO:5144-01-75	HWY:STH 27	COUNTY:MONROE	PERMANENT SIGNING PLAN - STH 27	SHEET 109	E

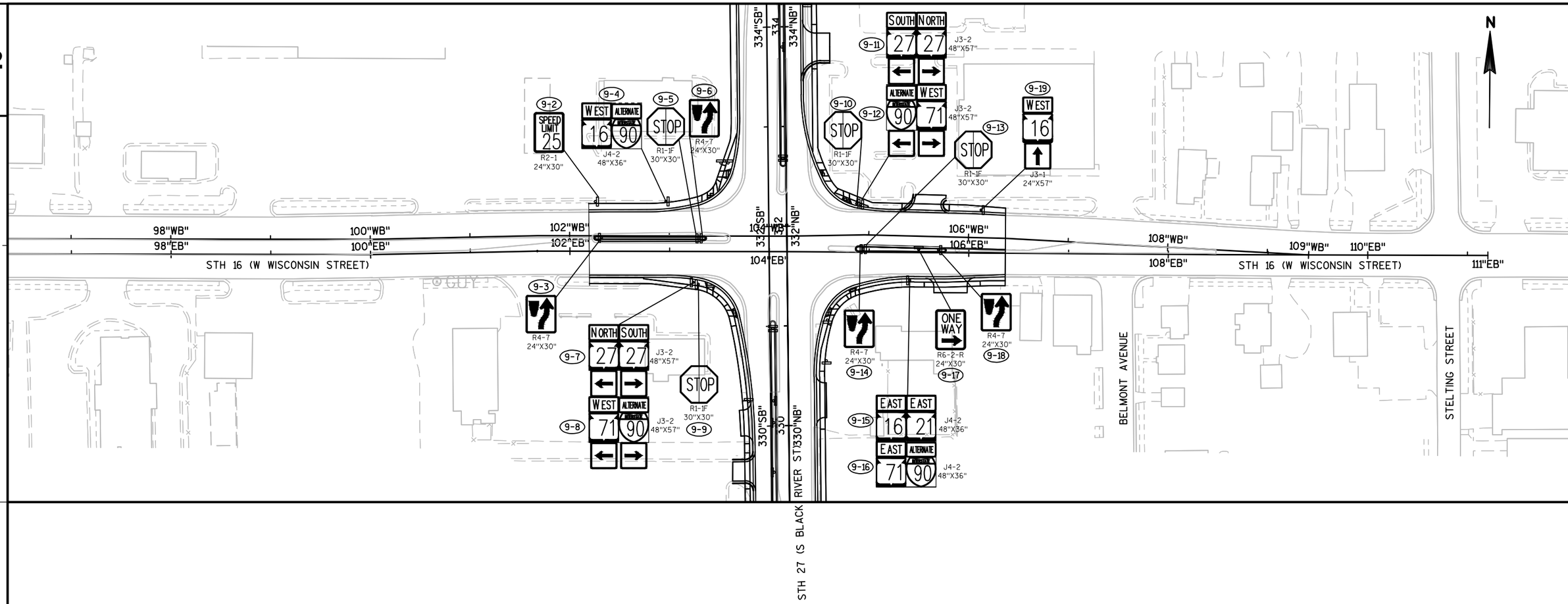

PROJECT NO:5144-01-75	HWY:STH 27	COUNTY:MONROE	PERMANENT SIGNING PLAN - STH 16	SHEET 110	E

FILE NAME : N:\PDS\C3D\51440105\SHEETSPLAN\023210_PS.DWG
LAYOUT NAME - 023210_PS - 023231_PS
PLOT DATE : 7/27/2017 12:26 PM PLOT BY : VALENTI, PAUL M PLOT NAME : PLOT SCALE : 1" = 100'_XREF

2

GENERAL NOTES: LIGHTING

1. ALL CONDUCTORS SHALL BE COPPER (CU), (2)#8 (LIGHTING), (3)#6 (RECEPTACLES), & (1)#8 GND UNLESS OTHERWISE NOTED.
2. LIGHT LOCATIONS ARE TO THE CENTER OF THE BASE.
3. ROUTE CONDUIT RUNS IN HARMONY WITH PERMANENT SIGNING PLAN TO AVOID CONFLICTS WITH SIGN POSTS.
4. "CONDUIT RIGID NONMETALLIC SCHEDULE 40 xx-INCH" ABBREVIATED AS "NMC" FOR DRAWING CLARITY.

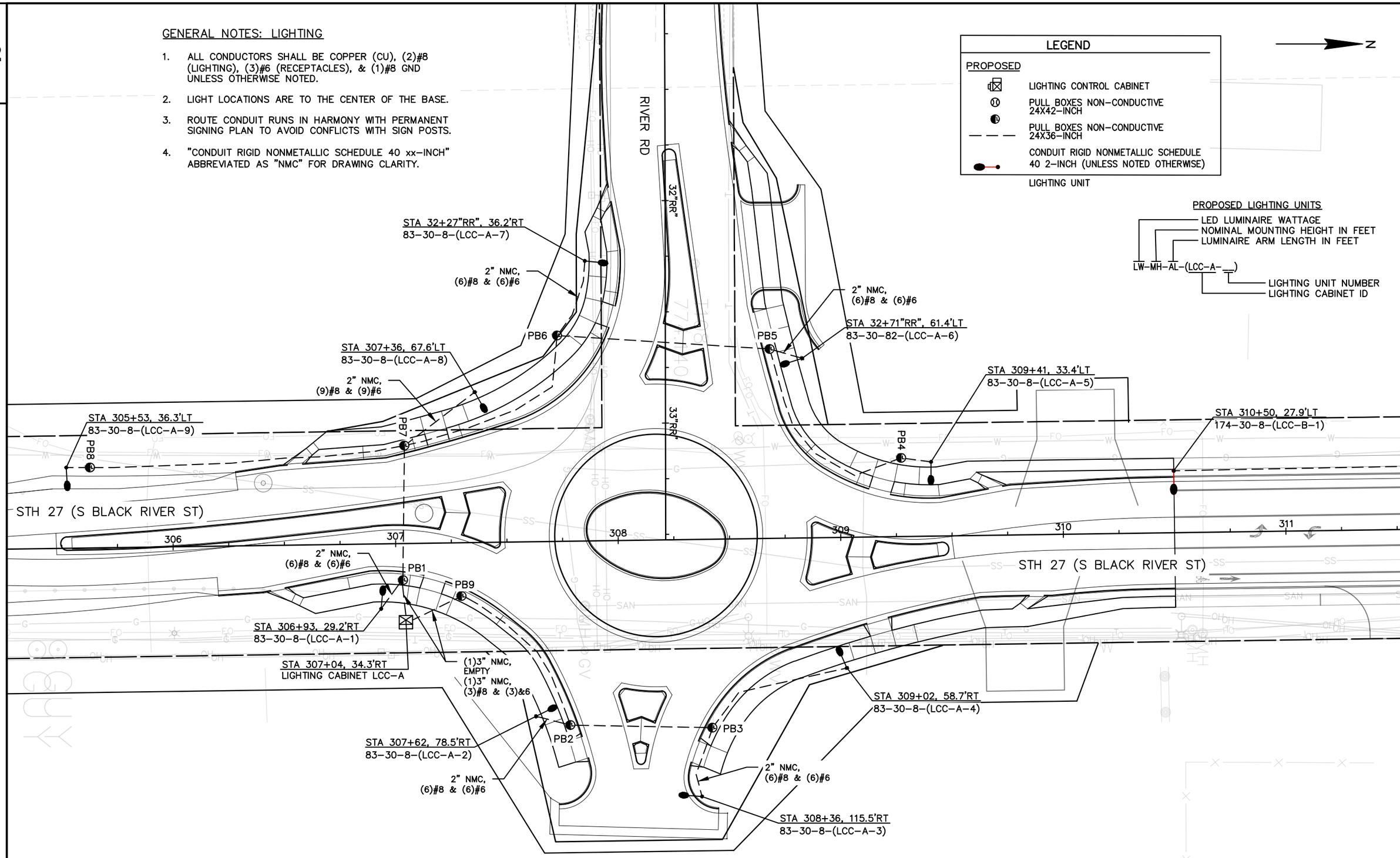

2

PROJECT NO:5144-01-75	HWY:STH 27	COUNTY:MONROE	LIGHTING PLAN	SHEET 111	E

2

STA 310+50, 27.9'LT
174-30-8-(LCC-B-1)

PB21

W AVERILL ST

23rd AV

PB23

STA 314+50, 27.7'LT
174-30-8-(LCC-B-3)

311 312 313 314 315 316

STH 27 (S BLACK RIVER ST)

STA 312+49, 27.7'RT
174-30-8-(LCC-B-2)

PB22

W AVERILL ST

24th AV

PB24

STA 316+34, 27.7'RT
174-30-8-(LCC-B-4)

PROPOSED LIGHTING UNITS

LED LUMINAIRE WATTAGE
NOMINAL MOUNTING HEIGHT IN FEET
LUMINAIRE ARM LENGTH IN FEET

LW-MH-AL-(LCC-A-__)

LIGHTING UNIT NUMBER
LIGHTING CABINET ID

N

LEGEND

PROPOSED

- LIGHTING CONTROL CABINET
- PULL BOXES NON-CONDUCTIVE 24X42-INCH
- PULL BOXES NON-CONDUCTIVE 24X36-INCH
- CONDUIT RIGID NONMETALLIC SCHEDULE 40 2-INCH (UNLESS NOTED OTHERWISE)
- LIGHTING UNIT

STA 318+46, 27.6'LT
174-30-8-(LCC-B-5)

PB25

PB27

STA 322+71, 27.6'LT
174-30-8-(LCC-B-7)

2" NMC,
(6)#8 & (6)#6

PB29

317 318 319 320 321 322

(1)3" NMC,
EMPTY
(1)3" NMC,
(9)#8 & (9)&6

STH 27 (S BLACK RIVER ST)

PB26

PB28

STA 320+54, 27.7'RT
174-30-8-(LCC-B-6)

STA 318+67, 36.9'RT
LIGHTING CABINET LCC-B

(1)3" NMC,
EMPTY
(1)3" NMC,
(3)#8 & (3)&6

GENERAL NOTES: LIGHTING

1. ALL CONDUCTORS SHALL BE COPPER (CU), (2)#8 (LIGHTING), (3)#6 (RECEPTACLES), & (1)#8 GND UNLESS OTHERWISE NOTED.
2. LIGHT LOCATIONS ARE TO THE CENTER OF THE BASE.
3. ROUTE CONDUIT RUNS IN HARMONY WITH PERMANENT SIGNING PLAN TO AVOID CONFLICTS WITH SIGN POSTS.
4. "CONDUIT RIGID NONMETALLIC SCHEDULE 40 xx-INCH" ABBREVIATED AS "NMC" FOR DRAWING CLARITY.

PROJECT NO:5144-01-75	HWY:STH 27	COUNTY:MONROE	LIGHTING PLAN	SHEET 112	E

2

MAPLE AVE

FILLER CAP

STA 326+99, 28.1'LT
174-30-8-(LCC-B-9)

PB31

PB33

11"MA"

323 324 325 326 327 328

STH 27 (S BLACK RIVER ST)

STA 324+84, 27.7'RT
174-30-8-(LCC-B-8)

PB30

PB32

PB34

MAPLE AVE

12"MA"

PROPOSED LIGHTING UNITS

LED LUMINAIRE WATTAGE
NOMINAL MOUNTING HEIGHT IN FEET
LUMINAIRE ARM LENGTH IN FEET

LW-MH-AL-(LCC-A-__)

LIGHTING UNIT NUMBER
LIGHTING CABINET ID

N

LEGEND

PROPOSED

- LIGHTING CONTROL CABINET
- PULL BOXES NON-CONDUCTIVE 24X42-INCH
- PULL BOXES NON-CONDUCTIVE 24X36-INCH
- CONDUIT RIGID NONMETALLIC SCHEDULE 40 2-INCH (UNLESS NOTED OTHERWISE)
- LIGHTING UNIT

GENERAL NOTES: LIGHTING

1. ALL CONDUCTORS SHALL BE COPPER (CU), (2)*8 (LIGHTING), (3)*6 (RECEPTACLES), & (1)*8 GND UNLESS OTHERWISE NOTED.
2. LIGHT LOCATIONS ARE TO THE CENTER OF THE BASE.
3. ROUTE CONDUIT RUNS IN HARMONY WITH PERMANENT SIGNING PLAN TO AVOID CONFLICTS WITH SIGN POSTS.
4. "CONDUIT RIGID NONMETALLIC SCHEDULE 40 xx-INCH" ABBREVIATED AS "NMC" FOR DRAWING CLARITY.

STH 16
(W WISCONSIN ST)

104"EB"

STA 326+99, 28.1'LT
174-30-8-(LCC-B-9)

327 328 329 330 331 332 333

STH 27 (S BLACK RIVER ST)

STA 329+14, 30.7'RT
174-30-8-(LCC-B-10)

FILLER CAP

G.P.

105"EB"

PROJECT NO:5144-01-75	HWY:STH 27	COUNTY:MONROE	LIGHTING PLAN	SHEET 113	E

2

GENERAL NOTES

BASES SHALL BE EXCAVATED BY USE OF A CIRCULAR AUGER EXCEPT WHEN EXCAVATING WITHIN 18–INCHES OF UNDERGROUND UTILITIES. WHEN EXCAVATING WITHIN 18–INCHES OF UTILITIES THE BASE SHALL BE DUG BY HAND.

TOP SURFACES OF CONCRETE BASES SHALL BE TROWEL FINISHED AND LEVEL.

CONDUIT SIZES AND LOCATIONS SHALL BE AS SHOWN ON THE PLANS.

THE FINAL OR TERMINATING CONCRETE BASE IN A CONDUIT RUN SHALL HAVE A 6" EXIT STUB INSTALLED FOR FUTURE CABLING USE. THE EXIT STUB SHALL BE SIZED AS USED THROUGHOUT THE CONDUIT RUN AS SHOWN AT THE ENTRANCE OF THE BASE.

MINIMUM BENDING RADIUS OF CONDUIT IS EQUAL TO 6 X THE DIAMETER.

CONDUIT HEIGHT ABOVE CONCRETE BASES SHALL BE 1 INCH. ALL METALLIC CONDUIT ENDS SHALL BE REAMED AND THREADED.

ALL CONDUIT ENDS AT THE TOP OF CONCRETE BASES SHALL BE CAPPED IF METALLIC OR PLUGGED IF NONMETALLIC IMMEDIATELY AFTER PLACEMENT AND BEFORE CONCRETE IS POURED. CONDUITS IN WHICH WIRE OR CABLE IS NOT INSTALLED SHALL REMAIN CAPPED OR PLUGGED.

BELL ENDS SHALL BE INSTALLED ON ALL PVC CONDUIT EXPOSED AT THE TOP OF CONCRETE BASES BEFORE INSTALLATION OF CABLE OR WIRE.

ENDS OF CONDUIT INSTALLED BELOW GRADE FOR FUTURE USE SHALL BE CAPPED IF METALLIC OR PLUGGED IF NONMETALLIC.

WHEN REQUIRED TO CONNECT NONMETALLIC CONDUIT TO METALLIC CONDUIT, ONLY ADAPTER FITTINGS, U.L. LISTED FOR ELECTRICAL USE, SHALL BE USED.

IF A BASE REQUIRES A DEEP FORM BECAUSE OF LOOSE DIRT OR FILL, THE FORM SHALL BE REMOVED BEFORE BACKFILLING AROUND THE BASE. BACKFILL SHALL BE TAMPED TIGHT AGAINST THE BARE CONCRETE BASE IN LAYERS OF 1 FOOT OR LESS.

A NO. 4 AWG, STRANDED COPPER EQUIPMENT GROUNDING CONDUCTOR SHALL BE EXOTHERMICALLY WELDED TO THE EQUIPMENT GROUNDING ELECTRODE (GROUND ROD).

THE EQUIPMENT GROUNDING CONDUCTOR SHALL ENTER THE BASE THROUGH A 1 INCH CONDUIT INSTALLED FOR GROUNDING PURPOSES, LEAVING A 4 FOOT COIL OF WIRE ABOVE THE CONCRETE BASE. THE EQUIPMENT GROUNDING CONDUCTOR SHALL BE NEATLY COILED AND THE COILS TIED TOGETHER.

ANCHOR RODS SHALL BE PROVIDED BY POLE SUPPLIER. TWO GALVANIZED HEX NUTS & WASHERS PER ANCHOR BOLT.

WELDING OF THE ANCHOR RODS TO THE CAGE IS UNACCEPTABLE. TIE WIRES SHALL BE USED.

BAR STEEL REINFORCEMENT SHALL BE COATED WITH POWERED EPOXY RESIN IN ACCORDANCE WITH SECTION 505 OF THE STANDARD SPECIFICATIONS (LATEST EDITION).

1. THE MINIMUM DEPTH OF CONDUIT EXITING THE CONCRETE BASE AND INSTALLED BELOW THE TRAVELED WAY SHALL BE 24 INCHES. THE MINIMUM DEPTH OF CONDUIT EXITING THE CONCRETE BASE THAT IS NOT INSTALLED BELOW THE TRAVELED WAY SHALL BE 18 INCHES. THE MAXIMUM DEPTH OF ALL CONDUIT SHALL BE 36 INCHES EXCEPT WITH WRITTEN APPROVAL BY THE ENGINEER.
2. ANCHOR RODS BY POLE SUPPLIER. TWO GALVANIZED HEX NUTS & WASHERS PER ANCHOR BOLT.
3. (6) NO. 4 X 4'–8" BAR STEEL REINFORCEMENT.
4. (5) NO. 4 X 6'–2" BAR STEEL REINFORCEMENT @ 1'–0" C–C.
5. 2'–0".
6. BOLT CIRCLE PER POLE MANUFACTURER'S REQUIREMENTS.
7. 1'–6".

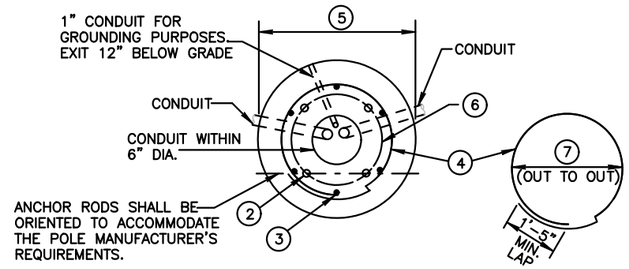

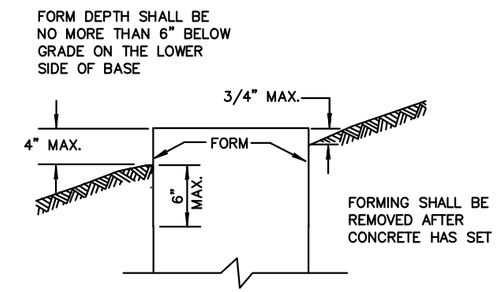

FORMING DETAIL

QUANTITY REQUIREMENTS	
APPROX. CUBIC YARDS OF CONCRETE	0.6
LBS. OF HOOP BAR STEEL	21
LBS. OF VERTICAL BAR STEEL	18

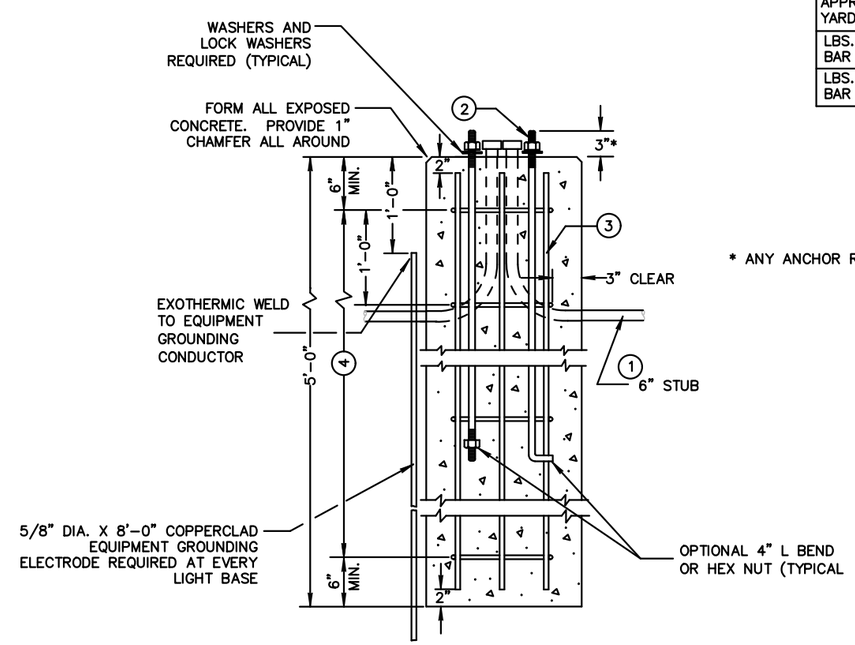

* ANY ANCHOR ROD PROJECTION SHALL BE PER MANUFACTURER'S REQUIREMENTS.

CONCRETE BASE TYPE SPECIAL

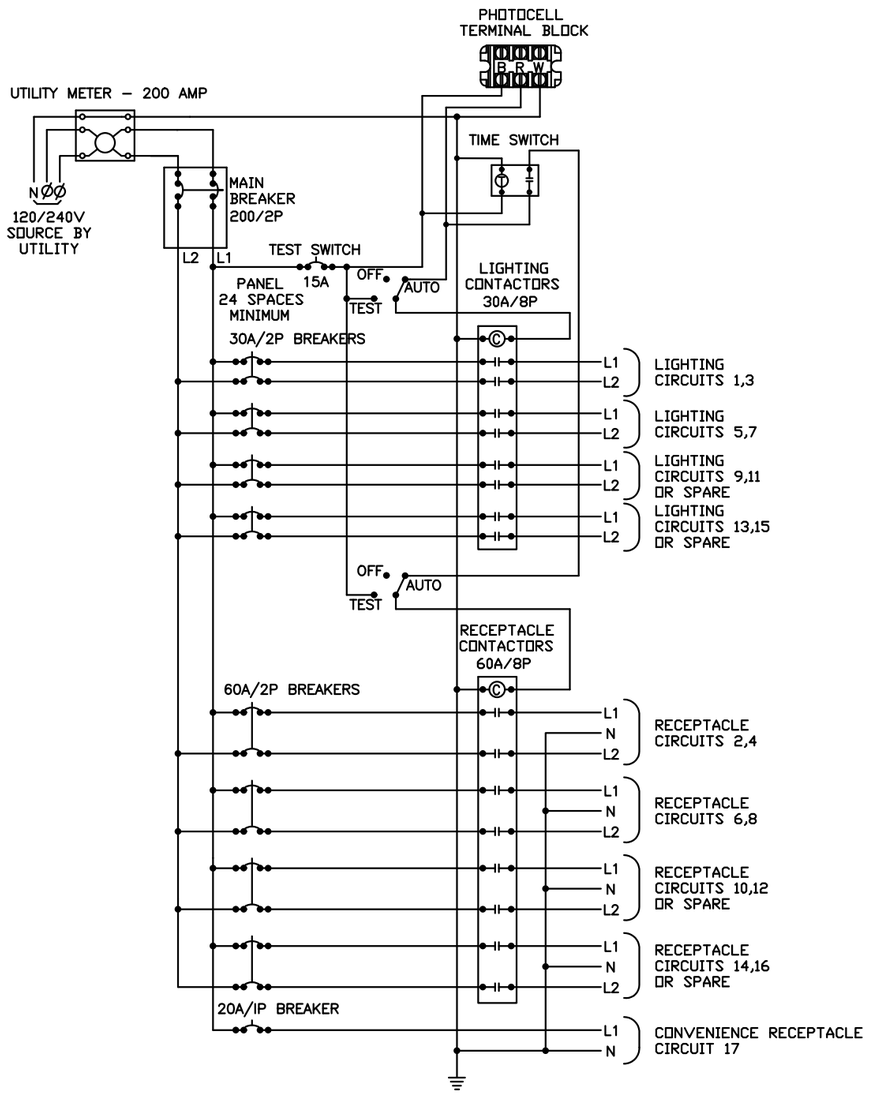

LIGHTING CONTROL CABINET "A" & "B" SCHEMATIC

EQUIPMENT SCHEDULE

SYMBOL	DESCRIPTION	LAMP SOURCE	MOUNTING	OPTICS	MANUFACTURER & SERIES #
	LIGHTING UNIT TYPE SPECIAL TEARDROP STYLE LED LUMINAIRE ON FLUTED ALUMINUM POLE WITH 20A WR–RATED GFCI RECEPTACLE AND METTALLIC IN–USE COVER	83 WATT LED 4000K	30' POLE ON CONCRETE LIGHT BASE TYPE SPECIAL	TYPE III	HOLOPHANE – LUMINAIRE: MPL2–P20S–40K–AS–BK–BG–3–S–SS–DIM FITTER: BHDF13–200–BK–P7 ARM: BHC96/1–CA/BK W/ DECORATIVE SCROLL POLE: WD–A–30–L6J–17–P08–ABG–BK–FGFUS–SBKH
	LIGHTING UNIT TYPE SPECIAL 1 TEARDROP STYLE LED LUMINAIRE ON FLUTED ALUMINUM POLE WITH 20A WR–RATED GFCI RECEPTACLE AND METTALLIC IN–USE COVER	174 WATT LED 4000K	30' POLE ON CONCRETE LIGHT BASE TYPE SPECIAL	TYPE III	HOLOPHANE – LUMINAIRE: MPL2–P50S–40K–AS–BK–BG–3–S–SS–DIM FITTER: BHDF13–200–BK–P7 ARM: BHC96/1–CA/BK–W/ DECORATIVE SCROLL POLE: WD–A–30–L6J–17–P08–ABG–BK–FGFUS–SBKH

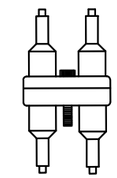

DETAIL "A"
BREAKAWAY DOUBLE
POLE WITH WATERPROOF
INSULATING BOOT

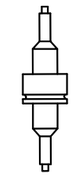

DETAIL "B"
BREAKAWAY
SINGLE POLE WITH
WATERPROOF
INSULATING BOOT

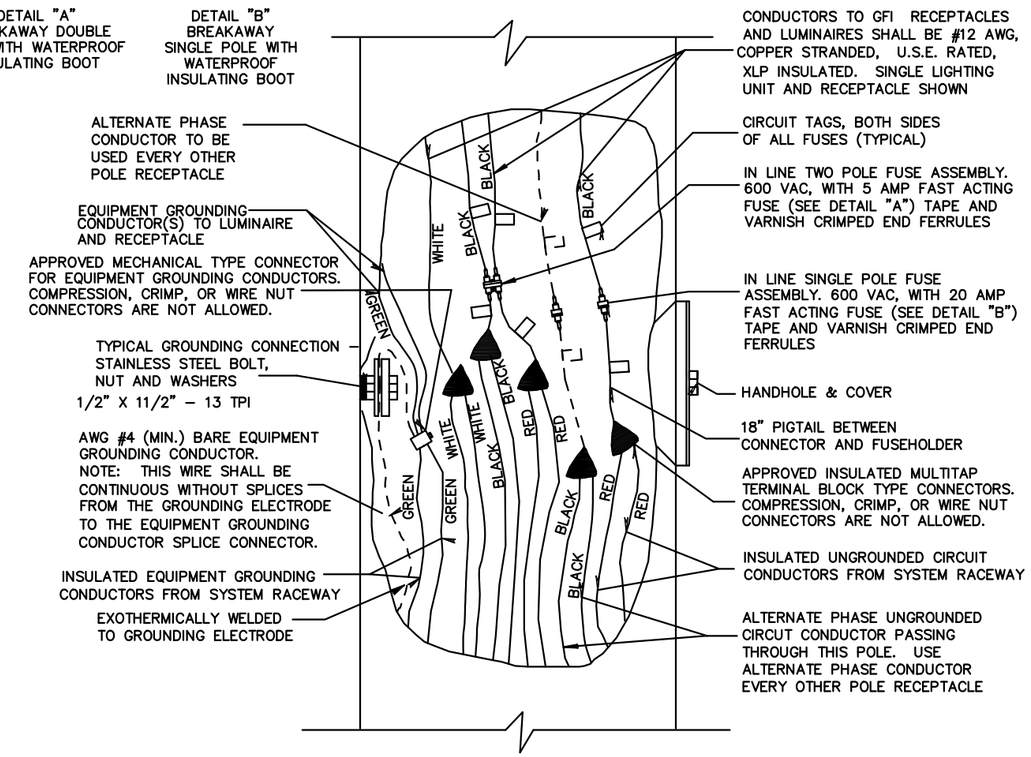

2 WIRE – 240 VAC (UNGROUNDED CONDUCTOR)
AND
3 WIRE – 120 VAC (UNGROUNDED CONDUCTOR)
WITH GROUNDED CONDUCTOR AND
WITH EQUIPMENT GROUNDING CONDUCTOR
FOR GFI RECEPTACLES

NOTE: REFER TO S.D.D. "NON–FREEWAY LIGHTING UNIT POLE WIRING" FOR FUSING INFORMATION

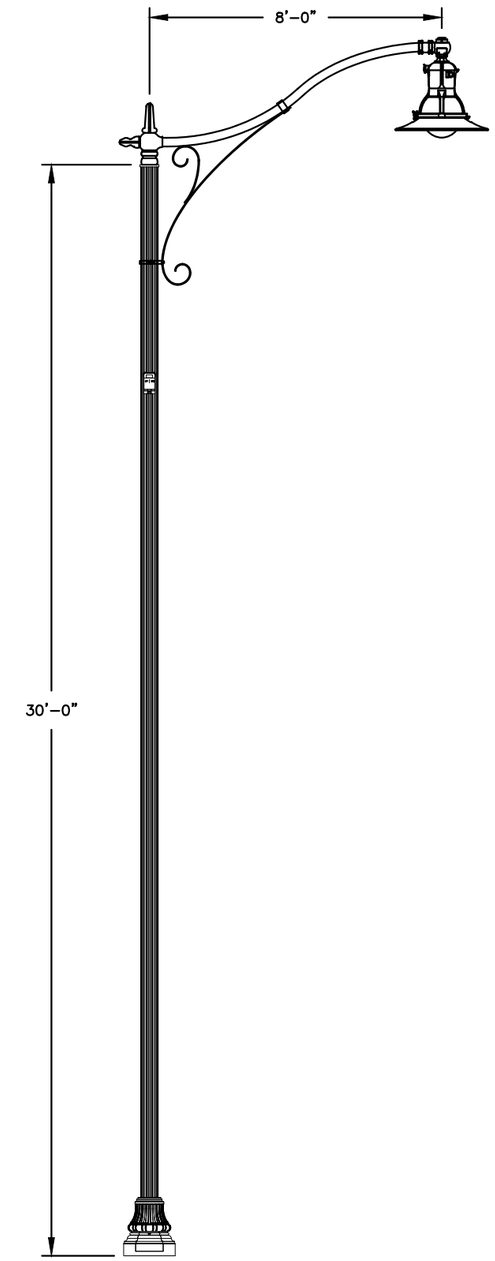

LIGHTING UNIT TYPE SPECIAL & SPECIAL 1 DETAIL

PROJECT NO:5144-01-75	HWY:STH 27	COUNTY:MONROE	LIGHTING DETAILS	SHEET 116	E

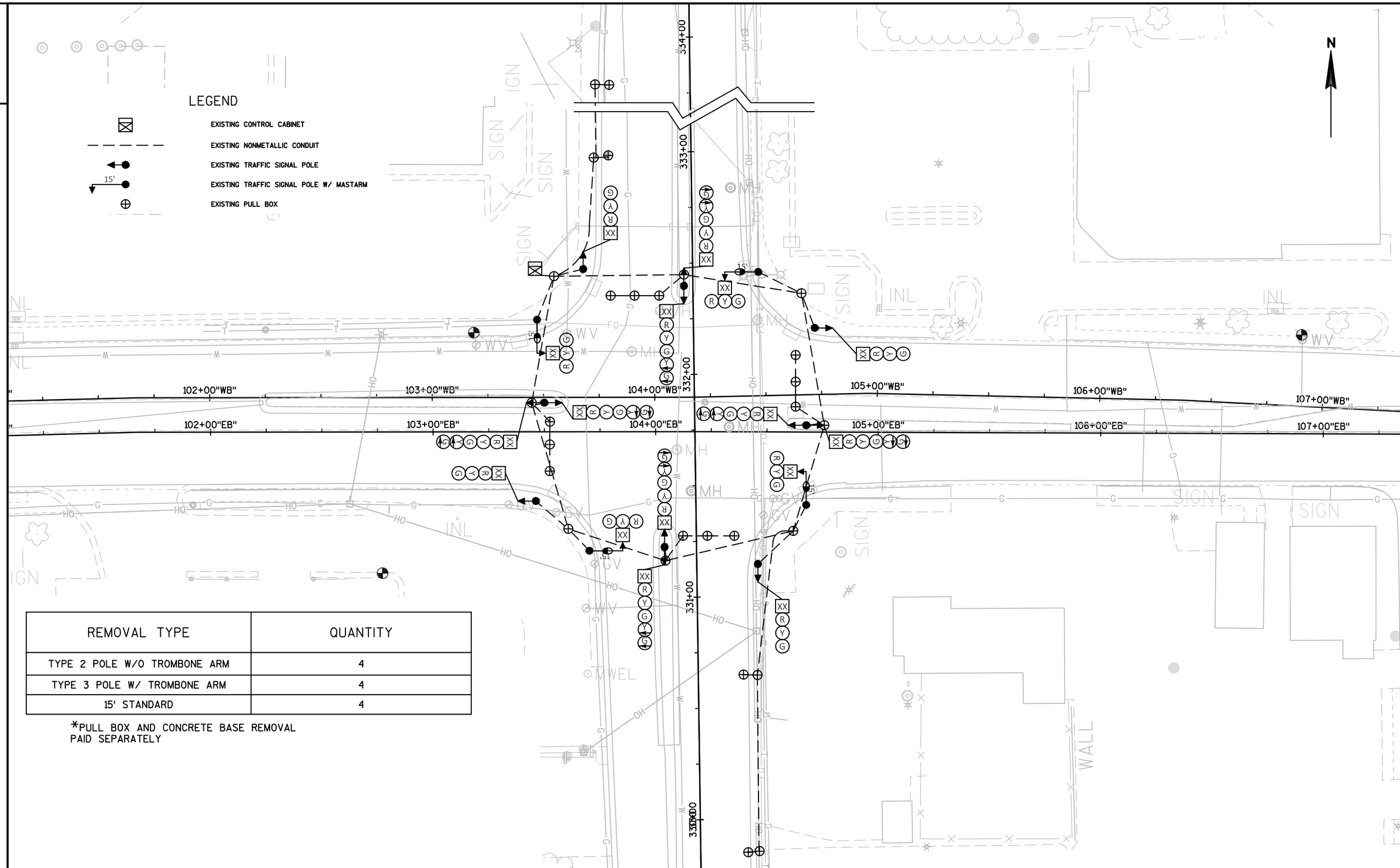

REMOVAL TYPE	QUANTITY
TYPE 2 POLE W/O TROMBONE ARM	4
TYPE 3 POLE W/ TROMBONE ARM	4
15' STANDARD	4

*PULL BOX AND CONCRETE BASE REMOVAL PAID SEPARATELY

2

LEGEND

- WOOD POLE, TYPE 4
- TEMPORARY LUMINAIRE
- TEMPORARY SIGNAL HEAD
- CABLE - OVERHEAD
- XX SIGNAL HEAD NUMBER
- VIDEO DETECTION AREA
- R RED CIRCULAR INDICATOR
- Y YELLOW CIRCULAR INDICATOR
- G GREEN CIRCULAR INDICATOR
- R RED ARROW
- Y YELLOW ARROW
- G GREEN ARROW

LANE DESIGNATION FOR INFO ONLY

NOTE: ALL LENSES ARE 12-INCH
GRAYSHADE REPRESENTS EXISTING

NOTES:

1. FINAL LOCATION OF ALL WOOD POLES SHALL BE AS DIRECTED BY THE ENGINEER
2. FOR THRU INDICATIONS, MOUNT ONE SIGNAL HEAD DIRECTLY ABOVE RECEIVING LANE AND THE OTHER SIGNAL HEAD 8' TO THE RIGHT
3. FOR LEFT INDICATIONS, MOUNT ONE SIGNAL HEAD DIRECTLY IN FRONT OF TURNING LANE AND THE OTHER SIGNAL HEAD 8' TO THE LEFT
4. MAINTAIN PROPER SIGNAL HEAD LOCATIONS THROUGH EACH CONSTRUCTION STAGE
5. ALL EXISTING SIGNAL HEADS SHALL BE REMOVED OR TURNED PRIOR TO TURNING ON TEMPORARY SIGNALS

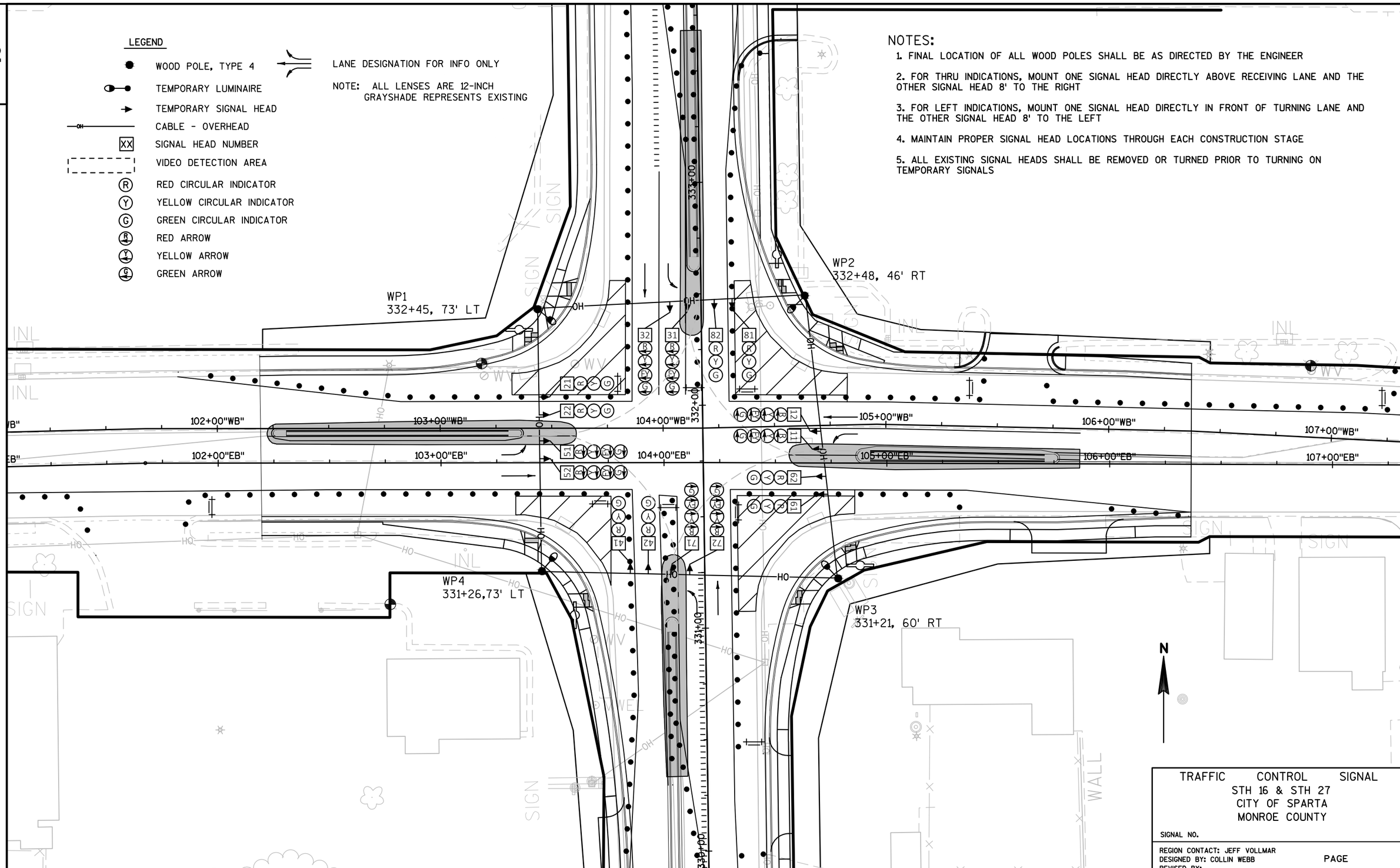

TRAFFIC CONTROL SIGNAL
STH 16 & STH 27
CITY OF SPARTA
MONROE COUNTY

SIGNAL NO.

REGION CONTACT: JEFF VOLLMAR
DESIGNED BY: COLLIN WEBB
REVISED BY:

PAGE

PROJECT NO:5144-01-75	HWY:STH 27	COUNTY:MONROE	TEMPORARY TRAFFIC SIGNAL PLAN	SHEET	E

FILE NAME : N:\PDS\C3D\51440105\DESIGN\TRAFFIC\024101-ST.DWG
LAYOUT NAME - 024101-ST
PLOT DATE : 7/27/2017 12:32 PM PLOT BY : VALENTI, PAUL M PLOT NAME : PLOT SCALE : 1 IN:40 FT

WISDOT/CADDS SHEET 42

2

LEGEND

- SERVICE POLE
- CONTROL CABINET
- NONMETALLIC CONDUIT 2", UNLESS OTHERWISE NOTED
- LOOP DETECTOR CONDUIT 1" NONMETALLIC
- SIGNAL HEAD, TRAFFIC SIGNAL STANDARD, PEDESTAL BASE
- (XX) MONOTUBE BASE, POLE, 35'-55' ARM
- PEDESTRIAN HEAD WITH PUSH BUTTON
- PUSH BUTTON
- LUMINAIRE, TRAFFIC POLE, TRANSFORMER BASE
- LOOP DETECTOR IN 1" NONMETALLIC CONDUIT WITH 12" PULL BOX
- LOOP DETECTOR IN 1" NONMETALLIC CONDUIT WITH SIDE PULL
- (X) PULL BOX, 24" X 42"
- XX SIGNAL HEAD NUMBER
- (R) RED CIRCULAR INDICATOR
- (Y) YELLOW CIRCULAR INDICATOR
- (G) GREEN CIRCULAR INDICATOR
- (RA) RED ARROW
- (YA) YELLOW ARROW
- (GA) GREEN ARROW
- XX PEDESTRIAN SIGNAL FACE 16-INCH
- LANE DESIGNATION FOR INFO ONLY

NOTE: ALL LENSES ARE 12-INCH
GRAYSHADE REPRESENTS EXISTING

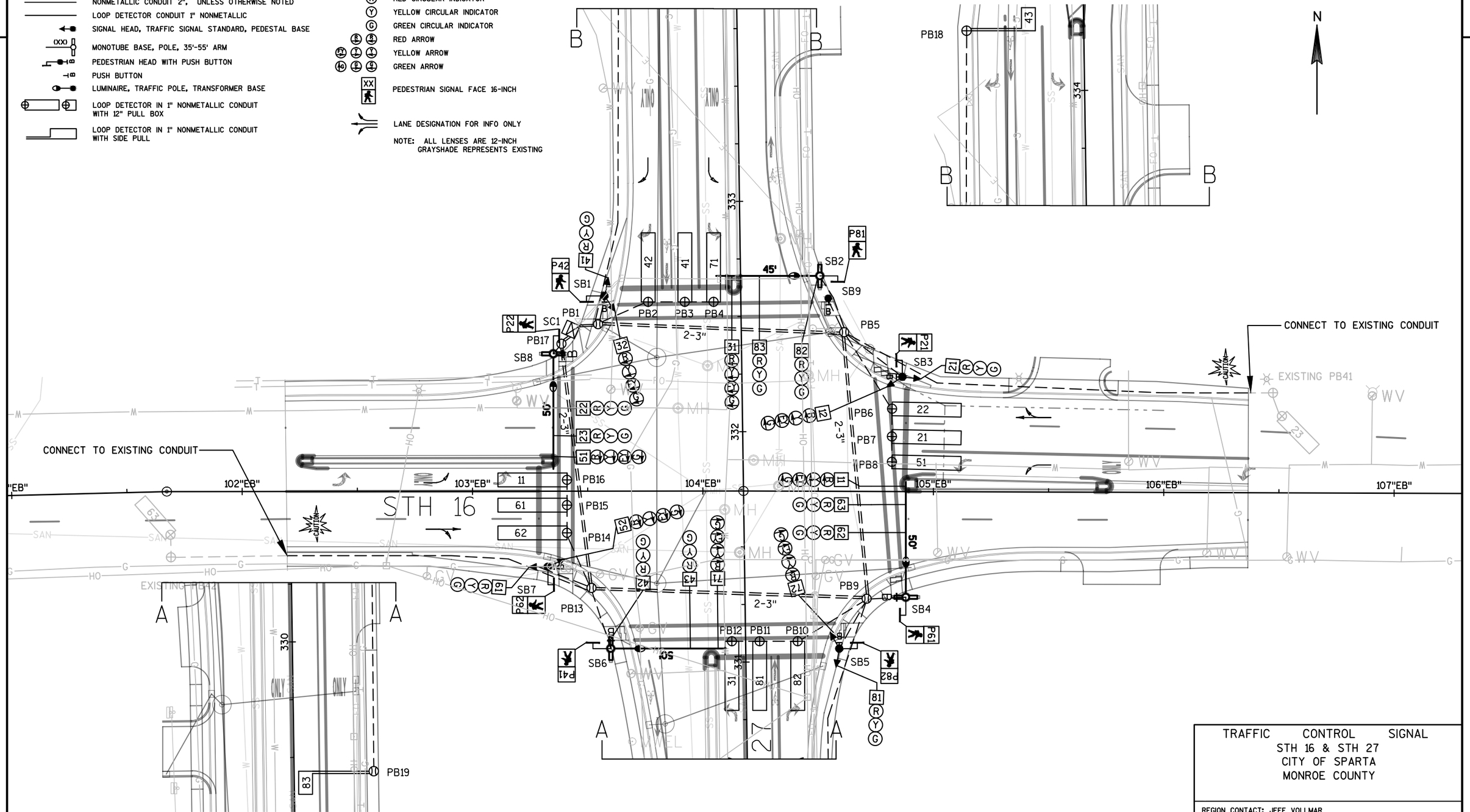

TRAFFIC CONTROL SIGNAL
STH 16 & STH 27
CITY OF SPARTA
MONROE COUNTY

REGION CONTACT: JEFF VOLLMAR
DESIGNED BY: COLLIN WEBB
REVISED BY:

PAGE

PROJECT NO: 5144-01-75	HWY: STH 27	COUNTY: MONROE	TRAFFIC SIGNAL PLAN	SHEET 119	E

FILE NAME : N:\PDS\C3D\51440105\DESIGN\TRAFFIC\024201-SP.DWG PLOT DATE : 7/27/2017 2:39 PM PLOT BY : VALENTI, PAUL M PLOT NAME :

WISDOT/CADDS SHEET 42

2

STH 27 AT STH 16

HOME RUN	JUMPER	CABLE	BASE #	INDICATION / WIRE COLOR											
				BLACK	WHITE	RED	GREEN	ORANGE	BLUE	WHITE/BLK	RED/BLK	GREEN/BLK	ORANGE/BLK	BLUE/BLK	BLK/WHITE
SC1 - SB1		12/C	SB1	4-DW	NEUTRAL	4-RED	4-GRN	4-YEL	4-WALK	2-PB	3-R-ARROW	3-G-ARROW	3-Y-ARROW	3-FY-ARROW	
SC1 - SB2		12/C	SB2	8-DW	NEUTRAL	8-RED	8-GRN	8-YEL	8-WALK		3-R-ARROW	3-G-ARROW	3-Y-ARROW	3-FY-ARROW	
SC1 - SB3		12/C	SB3	2-DW	NEUTRAL	2-RED	2-YEL	2-GRN	2-WALK	8-PB	1-R-ARROW	1-G-ARROW	1-Y-ARROW	1-FY-ARROW	
SC1 - SB4		12/C	SB4	6-DW	NEUTRAL	6-RED	6-GRN	6-YEL	6-WALK	8-PB	1-R-ARROW	1-G-ARROW	1-Y-ARROW	1-FY-ARROW	
SC1 - SB5		12/C	SB5	8-DW	NEUTRAL	8-RED	8-GRN	8-YEL	8-WALK	6-PB	7-R-ARROW	7-G-ARROW	7-Y-ARROW	7-FY-ARROW	
SC1- SB6		12/C	SB6	4-DW	NEUTRAL	4-RED	4-GRN	4-YEL	4-WALK	6-PB	7-R-ARROW	7-G-ARROW	7-Y-ARROW	7-FY-ARROW	
SC1 - SB7		12/C	SB7	6-DW	NEUTRAL	6-RED	6-GRN	6-YEL	6-WALK	4-PB	5-R-ARROW	5-G-ARROW	5-Y-ARROW	5-FY-ARROW	
SC1 - SB8		12/C	SB8	2-DW	NEUTRAL	2-RED	2-GRN	2-YEL	2-WALK	4-PB	5-R-ARROW	5-G-ARROW	5-Y-ARROW	5-FY-ARROW	
SC1 - SB9		5/C	SB9	2-PB	NEUTRAL										

TRAFFIC CONTROL SIGNAL
STH 16 & STH 27
CITY OF SPARTA
MONROE COUNTY

REGION CONTACT: ANDREW WINGA
DESIGNED BY: COLLIN WEBB
REVISED BY:

PAGE XX OF XX

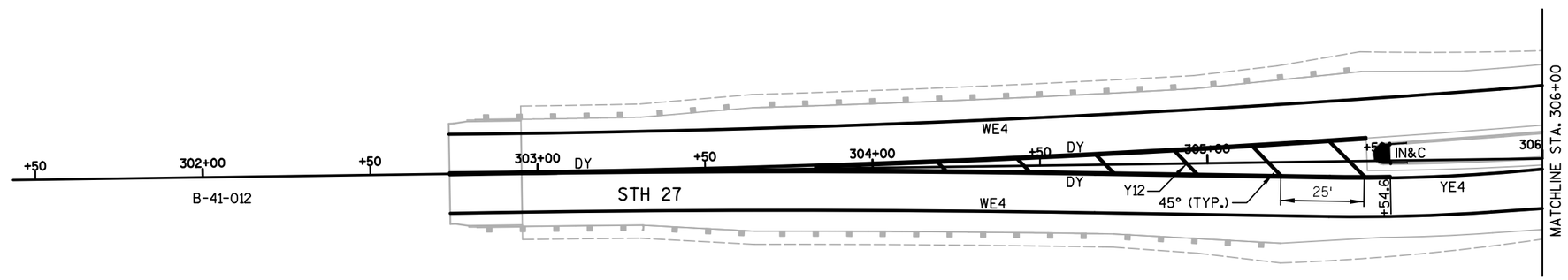

PAVEMENT MARKING LEGEND

DY	MARKING LINE EPOXY 4-INCH (DOUBLE YELLOW)
YE4	MARKING LINE EPOXY 4-INCH (YELLOW)
WE4	MARKING LINE EPOXY 4-INCH (WHITE)
WS-9	MARKING LINE EPOXY 4-INCH (WHITE SKIP, 3' SEG., 9' GAP)
W8	MARKING LINE EPOXY 8-INCH (WHITE)
Y12	MARKING DIAGONAL EPOXY 12-INCH (YELLOW) (DIAGONAL)
WS-2	MARKING YIELD LINE EPOXY 18-INCH (WHITE SKIP, 2' SEG., 2' GAP)
WC12	MARKING CROSSWALK EPOXY TRANSVERSE LINE 6-INCH (WHITE)
WO	MARKING WORD EPOXY
IN	MARKING ISLAND NOSE EPOXY (YELLOW)
C	MARKING CURB EPOXY (YELLOW)

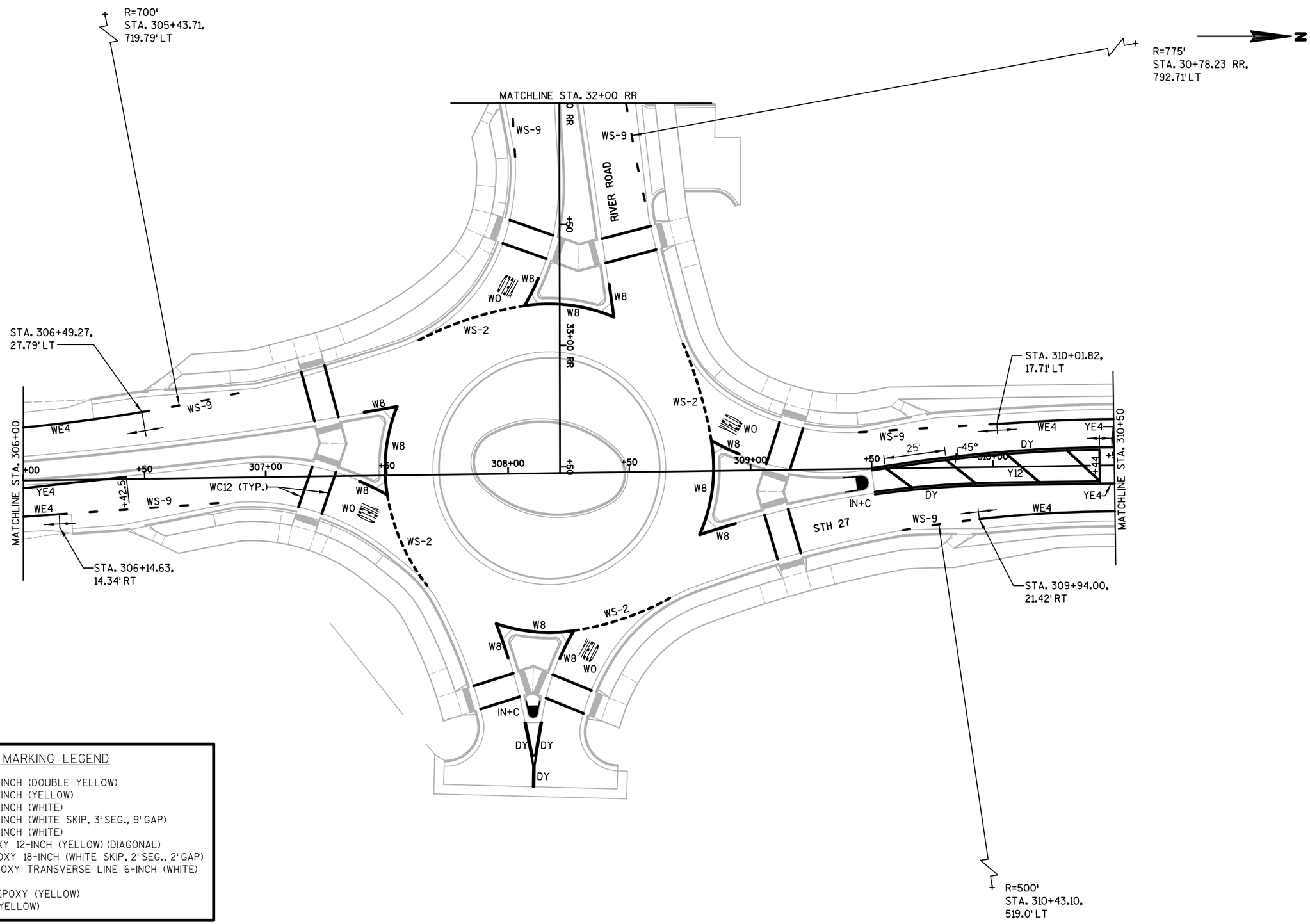

PAVEMENT MARKING LEGEND

DY	MARKING LINE EPOXY 4-INCH (DOUBLE YELLOW)
YE4	MARKING LINE EPOXY 4-INCH (YELLOW)
WE4	MARKING LINE EPOXY 4-INCH (WHITE)
WS-9	MARKING LINE EPOXY 4-INCH (WHITE SKIP, 3' SEG., 9' GAP)
W8	MARKING LINE EPOXY 8-INCH (WHITE)
Y12	MARKING DIAGONAL EPOXY 12-INCH (YELLOW) (DIAGONAL)
WS-2	MARKING YIELD LINE EPOXY 18-INCH (WHITE SKIP, 2' SEG., 2' GAP)
WC12	MARKING CROSSWALK EPOXY TRANSVERSE LINE 6-INCH (WHITE)
WO	MARKING WORD EPOXY
IN	MARKING ISLAND NOSE EPOXY (YELLOW)
C	MARKING CURB EPOXY (YELLOW)

PROJECT NO: 5144-01-75	HWY: STH 27	COUNTY: MONROE	PAVEMENT MARKING	SHEET 122	E

2

2

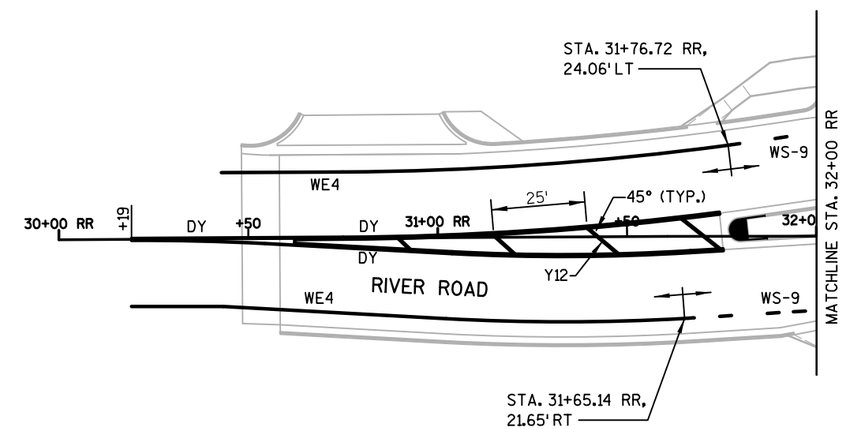

PAVEMENT MARKING LEGEND

DY	MARKING LINE EPOXY 4-INCH (DOUBLE YELLOW)
YE4	MARKING LINE EPOXY 4-INCH (YELLOW)
WE4	MARKING LINE EPOXY 4-INCH (WHITE)
WS-9	MARKING LINE EPOXY 4-INCH (WHITE SKIP, 3' SEG., 9' GAP)
W8	MARKING LINE EPOXY 8-INCH (WHITE)
Y12	MARKING DIAGONAL EPOXY 12-INCH (YELLOW)(DIAGONAL)
WS-2	MARKING YIELD LINE EPOXY 18-INCH (WHITE SKIP, 2' SEG., 2' GAP)
WC12	MARKING CROSSWALK EPOXY TRANSVERSE LINE 6-INCH (WHITE)
WO	MARKING WORD EPOXY
IN	MARKING ISLAND NOSE EPOXY (YELLOW)
C	MARKING CURB EPOXY (YELLOW)

2

PAVEMENT MARKING LEGEND

DY	MARKING LINE EPOXY 4-INCH (DOUBLE YELLOW)
YE4	MARKING LINE EPOXY 4-INCH (YELLOW)
YE4S-37.5	MARKING LINE EPOXY 4-INCH (YELLOW SKIP, 12.5' SEG., 37.5' GAP)
WE4	MARKING LINE EPOXY 4-INCH (WHITE)
WE4S-9	MARKING LINE EPOXY 4-INCH (WHITE SKIP, 3' SEG., 9' GAP)
WE4S-37.5	MARKING LINE EPOXY 4-INCH (WHITE SKIP, 12.5' SEG., 37.5' GAP)
WE8	MARKING LINE EPOXY 8-INCH (WHITE)
WE8S-9	MARKING LINE EPOXY 8-INCH (WHITE SKIP, 3' SEG., 9' GAP)
YE12	MARKING DIAGONAL EPOXY 12-INCH (YELLOW) (DIAGONAL)
WE6	MARKING CROSSWALK EPOXY TRAVERSE LINE 6-INCH (WHITE)
WE18	MARKING STOP LINE EPOXY 18-INCH (WHITE STOP BAR)
WO	MARKING WORD EPOXY
IN	MARKING ISLAND NOSE EPOXY (YELLOW)
C	MARKING CURB EPOXY (YELLOW)
A(TYPE)	MARKING ARROWS EPOXY (WHITE, TYPE)
S(TYPE)	MARKING SYMBOLS EPOXY (WHITE, TYPE)

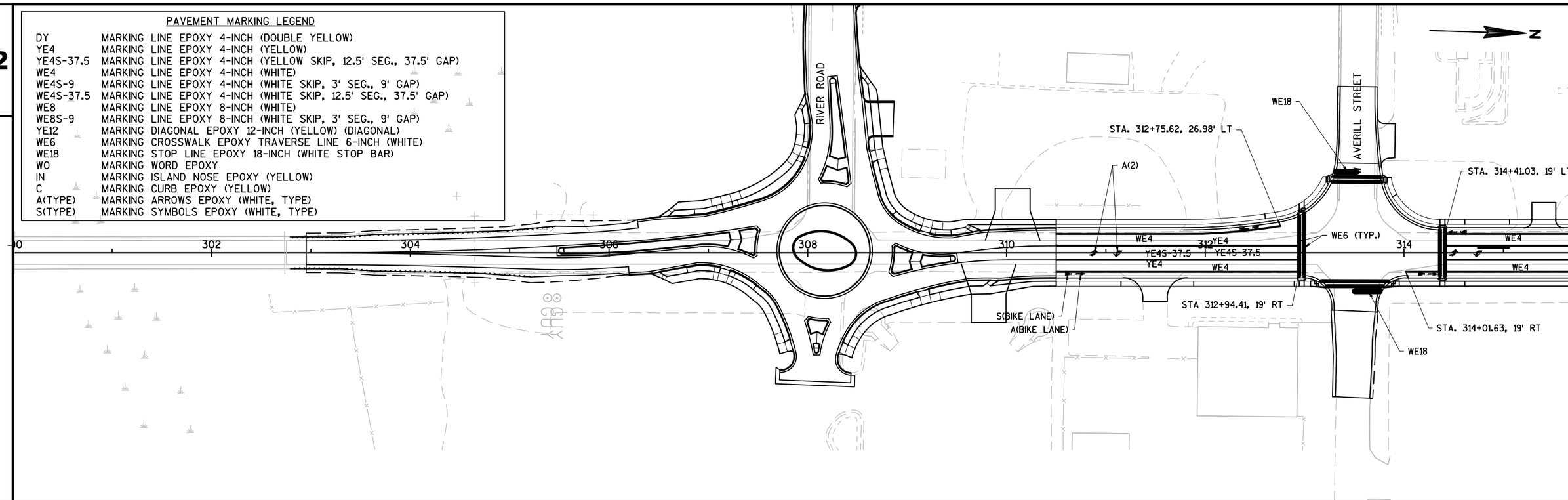

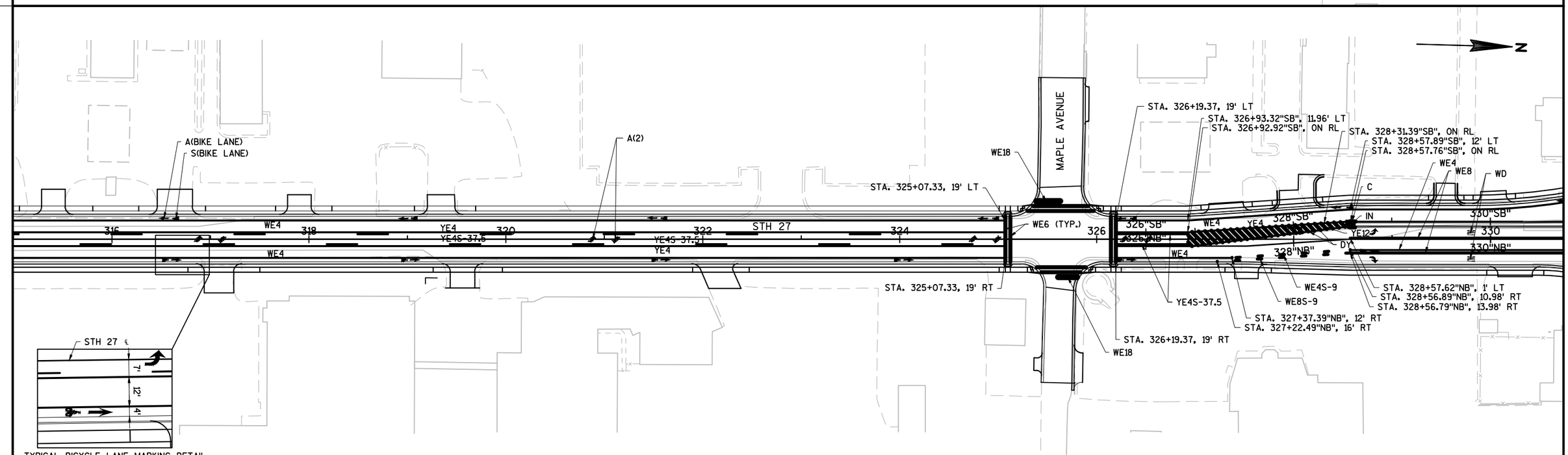

PROJECT NO:5144-01-75	HWY:STH 27	COUNTY:MONROE	PAVEMENT MARKING PLAN - STH 27	SHEET 124	E

FILE NAME : N:\PDS\C3D\51440105\SHEETSPLAN\024500_PM.DWG
LAYOUT NAME - 024500_PM - 024501_PM
PLOT DATE : 7/27/2017 2:35 PM PLOT BY : VALENTI, PAUL M PLOT NAME : PLOT SCALE : 1" = 100'_XREF

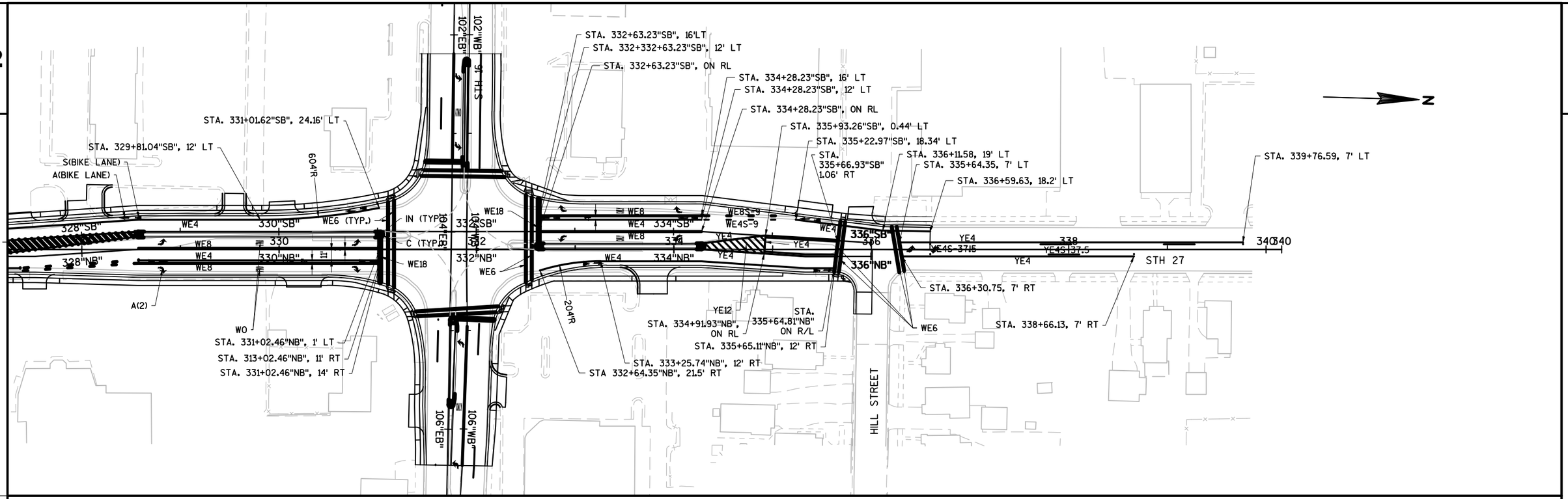

PAVEMENT MARKING LEGEND

DY	MARKING LINE EPOXY 4-INCH (DOUBLE YELLOW)
YE4	MARKING LINE EPOXY 4-INCH (YELLOW)
YE4S-37.5	MARKING LINE EPOXY 4-INCH (YELLOW SKIP, 12.5' SEG., 37.5' GAP)
WE4	MARKING LINE EPOXY 4-INCH (WHITE)
WE4S-9	MARKING LINE EPOXY 4-INCH (WHITE SKIP, 3' SEG., 9' GAP)
WE4S-37.5	MARKING LINE EPOXY 4-INCH (WHITE SKIP, 12.5' SEG., 37.5' GAP)
WE8	MARKING LINE EPOXY 8-INCH (WHITE)
WE8S-9	MARKING LINE EPOXY 8-INCH (WHITE SKIP, 3' SEG., 9' GAP)
YE12	MARKING DIAGONAL EPOXY 12-INCH (YELLOW) (DIAGONAL)
WE6	MARKING CROSSWALK EPOXY TRAVERSE LINE 6-INCH (WHITE)
WE18	MARKING STOP LINE EPOXY 18-INCH (WHITE STOP BAR)
WO	MARKING WORD EPOXY
IN	MARKING ISLAND NOSE EPOXY (YELLOW)
C	MARKING CURB EPOXY (YELLOW)
A(TYPE)	MARKING ARROWS EPOXY (WHITE, TYPE)
S(TYPE)	MARKING SYMBOLS EPOXY (WHITE, TYPE)

PROJECT NO:5144-01-75	HWY:STH 27	COUNTY:MONROE	PAVEMENT MARKING PLAN - STH 27	SHEET 125	E

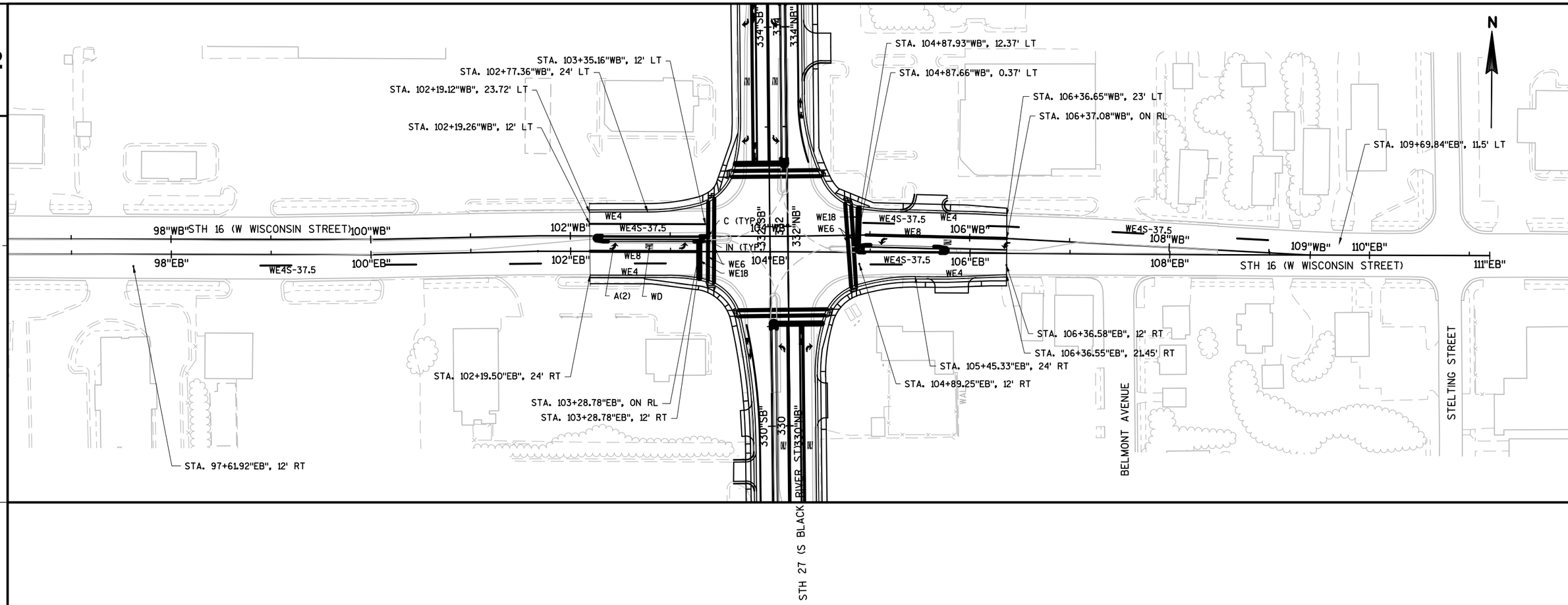

PAVEMENT MARKING LEGEND	
DY	MARKING LINE EPOXY 4-INCH (DOUBLE YELLOW)
YE4	MARKING LINE EPOXY 4-INCH (YELLOW)
YE4S-37.5	MARKING LINE EPOXY 4-INCH (YELLOW SKIP, 12.5' SEG., 37.5' GAP)
WE4	MARKING LINE EPOXY 4-INCH (WHITE)
WE4S-9	MARKING LINE EPOXY 4-INCH (WHITE SKIP, 3' SEG., 9' GAP)
WE4S-37.5	MARKING LINE EPOXY 4-INCH (WHITE SKIP, 12.5' SEG., 37.5' GAP)
WE8	MARKING LINE EPOXY 8-INCH (WHITE)
WE8S-9	MARKING LINE EPOXY 8-INCH (WHITE SKIP, 3' SEG., 9' GAP)
YE12	MARKING DIAGONAL EPOXY 12-INCH (YELLOW) (DIAGONAL)
WE6	MARKING CROSSWALK EPOXY TRAVERSE LINE 6-INCH (WHITE)
WE18	MARKING STOP LINE EPOXY 18-INCH (WHITE STOP BAR)
WO	MARKING WORD EPOXY
IN	MARKING ISLAND NOSE EPOXY (YELLOW)
C	MARKING CURB EPOXY (YELLOW)
A(TYPE)	MARKING ARROWS EPOXY (WHITE, TYPE)
S(TYPE)	MARKING SYMBOLS EPOXY (WHITE, TYPE)

PROJECT NO:5144-01-75	HWY:STH 27	COUNTY:MONROE	PAVEMENT MARKING PLAN - STH 16	SHEET 126	E

2

LEGEND

- TYPE III BARRICADE
- TYPE III BARRICADE WTH ATTACHED SIGN
- SIGN ON PERMANENT SUPPORT
- WORK AREA
- DIRECTION OF TRAFFIC

NOTE:

ADDITIONAL TRAFFIC CONTROL DEVICES MAY BE REQUIRED AND/OR LAYOUT DETAILS MODIFIED DEPENDING ON SITE CONDITIONS AS DIRECTED BY THE ENGINEER. ALL CHANGES TO THE TRAFFIC CONTROL PLAN SHALL BE REVIEWED WITH THE PROJECT ENGINEER.

SIGN FACE LAYOUTS SHALL BE IN ACCORDANCE WITH THE FEDERAL HIGHWAY ADMINISTRATION MANUAL OF STANDARD HIGHWAY SIGNS, UNLESS OTHERWISE NOTED.

"WO" SIGNS ARE THE SAME AS "W" SIGNS EXCEPT THAT THE BACKGROUND IS ORANGE.

UTILIZE S.D.D. "BARRICADES & SIGNS FOR MAINLINE CLOSURES"

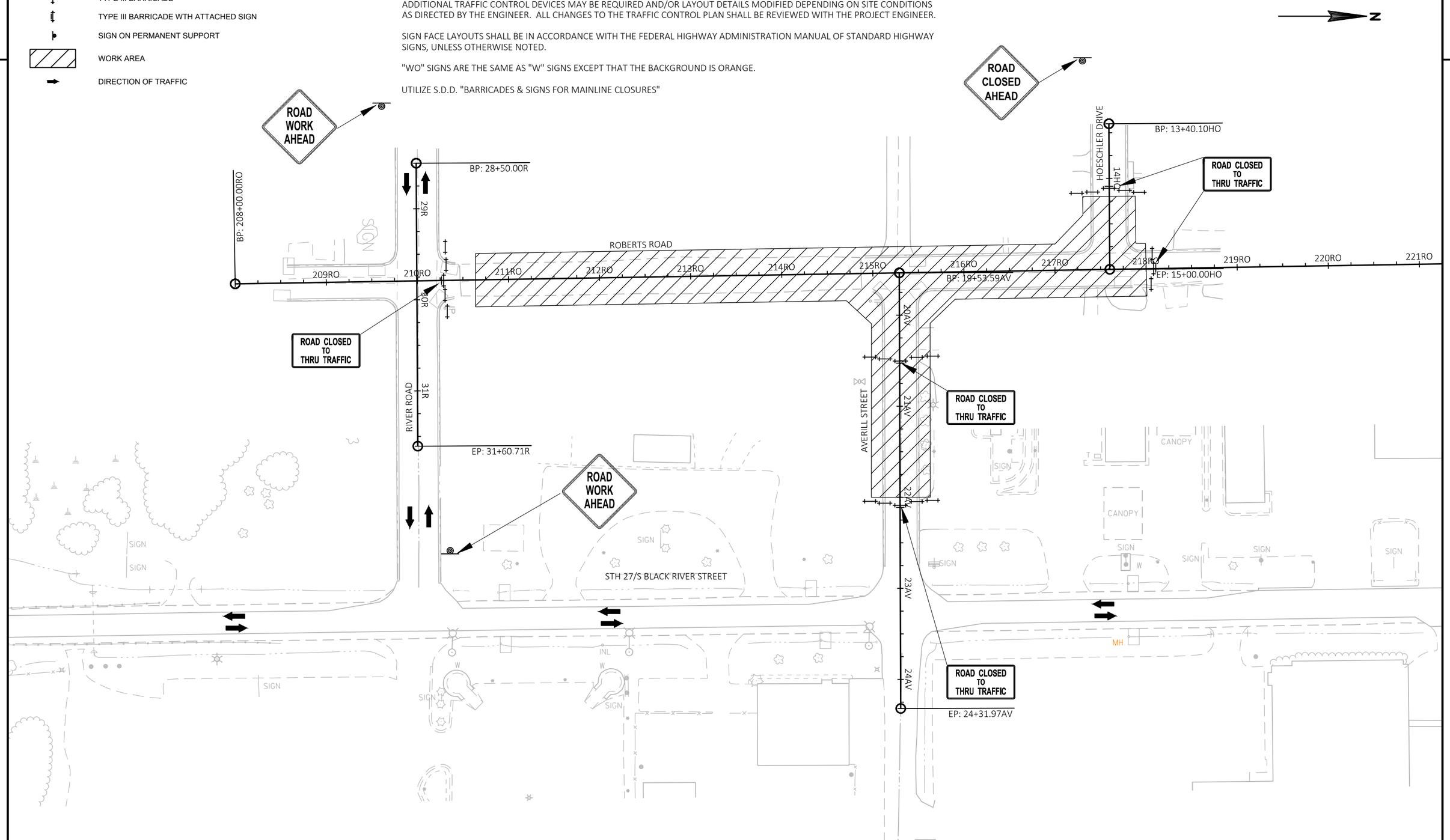

PROJECT NO: 5144-01-75 & 5144-01-76	HWY: STH 27	COUNTY: MONROE	TRAFFIC CONTROL - STAGE 1A.1	SHEET 127	E

2

LEGEND

- TYPE III BARRICADE
- TYPE III BARRICADE WTH ATTACHED SIGN
- SIGN ON PERMANENT SUPPORT
- WORK AREA
- DIRECTION OF TRAFFIC

NOTE:

ADDITIONAL TRAFFIC CONTROL DEVICES MAY BE REQUIRED AND/OR LAYOUT DETAILS MODIFIED DEPENDING ON SITE CONDITIONS AS DIRECTED BY THE ENGINEER. ALL CHANGES TO THE TRAFFIC CONTROL PLAN SHALL BE REVIEWED WITH THE PROJECT ENGINEER.

SIGN FACE LAYOUTS SHALL BE IN ACCORDANCE WITH THE FEDERAL HIGHWAY ADMINISTRATION MANUAL OF STANDARD HIGHWAY SIGNS, UNLESS OTHERWISE NOTED.

"WO" SIGNS ARE THE SAME AS "W" SIGNS EXCEPT THAT THE BACKGROUND IS ORANGE.

UTILIZE S.D.D. "BARRICADES & SIGNS FOR MAINLINE CLOSURES"

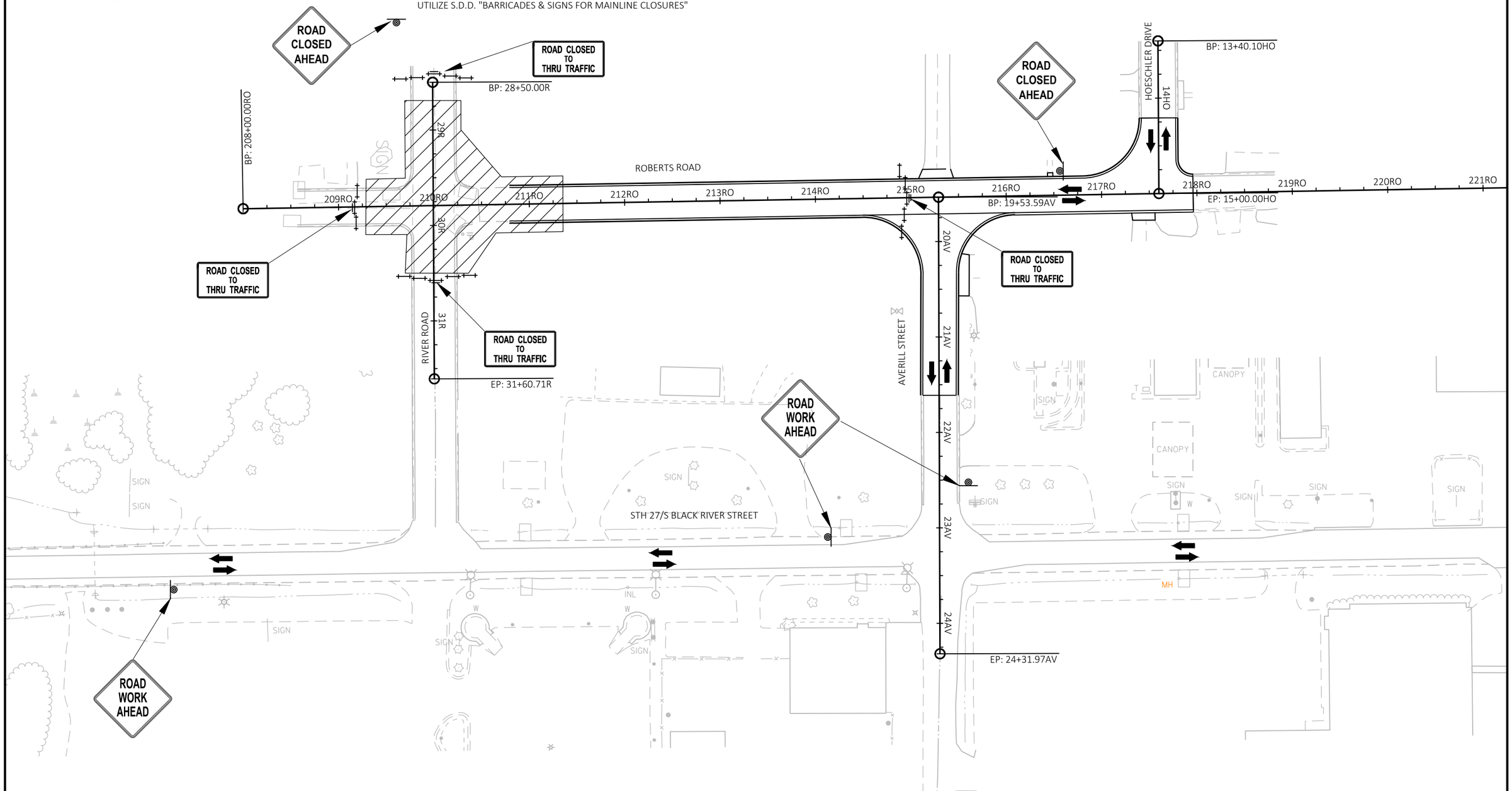

PROJECT NO: 5144-01-75 & 5144-01-76	HWY: STH 27	COUNTY: MONROE	TRAFFIC CONTROL - STAGE 1A.2	SHEET 128	E

FILE NAME : P:\50S\51\00051029\CADD\C3D\SHEETSPLAN\025002_TC.DWG
LAYOUT NAME - 025002_tc
PLOT DATE : 7/13/2017 8:14 AM PLOT BY : BRAD LEE PLOT NAME : PLOT SCALE : ##########

2

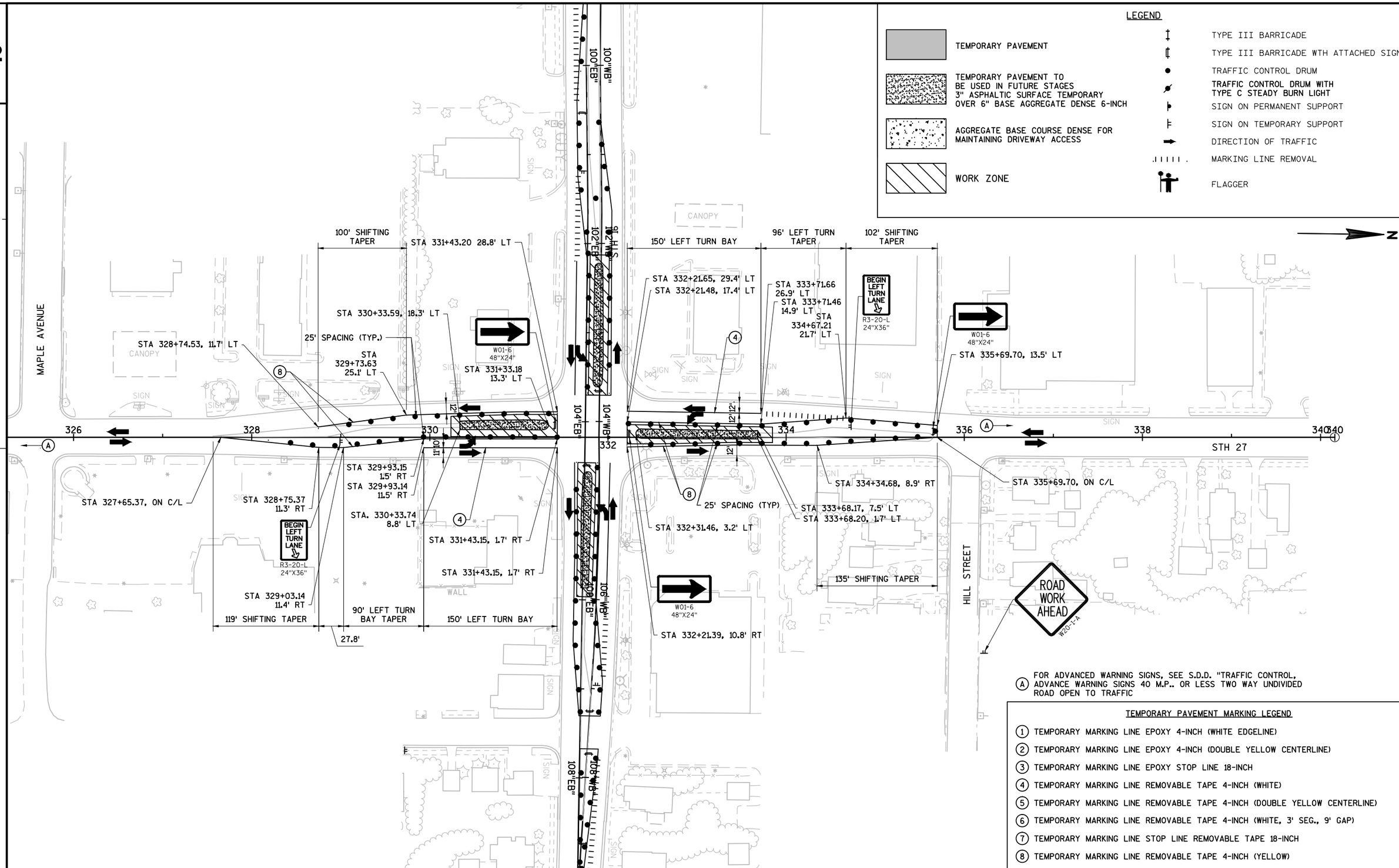

(A) FOR ADVANCED WARNING SIGNS, SEE S.D.D. "TRAFFIC CONTROL, ADVANCE WARNING SIGNS 40 M.P.. OR LESS TWO WAY UNDIVIDED ROAD OPEN TO TRAFFIC

TEMPORARY PAVEMENT MARKING LEGEND

1. TEMPORARY MARKING LINE EPOXY 4-INCH (WHITE EDGELINE)
2. TEMPORARY MARKING LINE EPOXY 4-INCH (DOUBLE YELLOW CENTERLINE)
3. TEMPORARY MARKING LINE EPOXY STOP LINE 18-INCH
4. TEMPORARY MARKING LINE REMOVABLE TAPE 4-INCH (WHITE)
5. TEMPORARY MARKING LINE REMOVABLE TAPE 4-INCH (DOUBLE YELLOW CENTERLINE)
6. TEMPORARY MARKING LINE REMOVABLE TAPE 4-INCH (WHITE, 3' SEG., 9' GAP)
7. TEMPORARY MARKING LINE STOP LINE REMOVABLE TAPE 18-INCH
8. TEMPORARY MARKING LINE REMOVABLE TAPE 4-INCH (YELLOW)

PROJECT NO:5144-01-75	HWY:STH 27	COUNTY:MONROE	TRAFFIC STAGING PLAN - STH 27 - STAGE 1B PART 1	SHEET 129	E

LEGEND

- TEMPORARY PAVEMENT
- TEMPORARY PAVEMENT TO BE USED IN FUTURE STAGES 3" ASPHALTIC SURFACE TEMPORARY OVER 6" BASE AGGREGATE DENSE 6-INCH
- AGGREGATE BASE COURSE DENSE FOR MAINTAINING DRIVEWAY ACCESS
- WORK ZONE
- TYPE III BARRICADE
- TYPE III BARRICADE WTH ATTACHED SIGN
- TRAFFIC CONTROL DRUM
- TRAFFIC CONTROL DRUM WITH TYPE C STEADY BURN LIGHT
- SIGN ON PERMANENT SUPPORT
- SIGN ON TEMPORARY SUPPORT
- DIRECTION OF TRAFFIC
- MARKING LINE REMOVAL
- FLAGGER

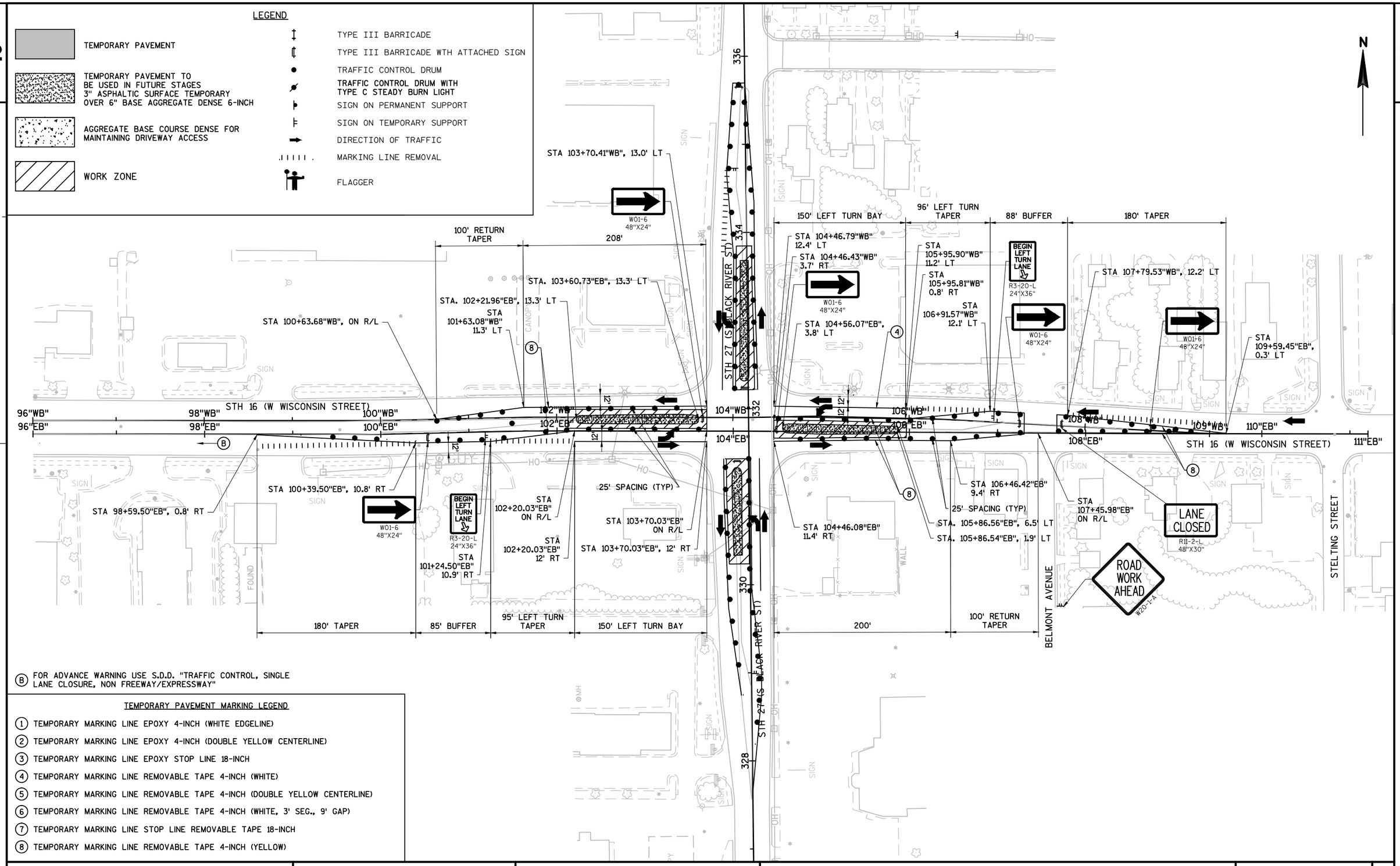

(B) FOR ADVANCE WARNING USE S.D.D. "TRAFFIC CONTROL, SINGLE LANE CLOSURE, NON FREEWAY/EXPRESSWAY"

TEMPORARY PAVEMENT MARKING LEGEND

1. TEMPORARY MARKING LINE EPOXY 4-INCH (WHITE EDGELINE)
2. TEMPORARY MARKING LINE EPOXY 4-INCH (DOUBLE YELLOW CENTERLINE)
3. TEMPORARY MARKING LINE EPOXY STOP LINE 18-INCH
4. TEMPORARY MARKING LINE REMOVABLE TAPE 4-INCH (WHITE)
5. TEMPORARY MARKING LINE REMOVABLE TAPE 4-INCH (DOUBLE YELLOW CENTERLINE)
6. TEMPORARY MARKING LINE REMOVABLE TAPE 4-INCH (WHITE, 3' SEG., 9' GAP)
7. TEMPORARY MARKING LINE STOP LINE REMOVABLE TAPE 18-INCH
8. TEMPORARY MARKING LINE REMOVABLE TAPE 4-INCH (YELLOW)

PROJECT NO:5144-01-75	HWY:STH 27	COUNTY:MONROE	TRAFFIC STAGING PLAN - STH 16 - STAGE 1B PART 1	SHEET 130	E

2

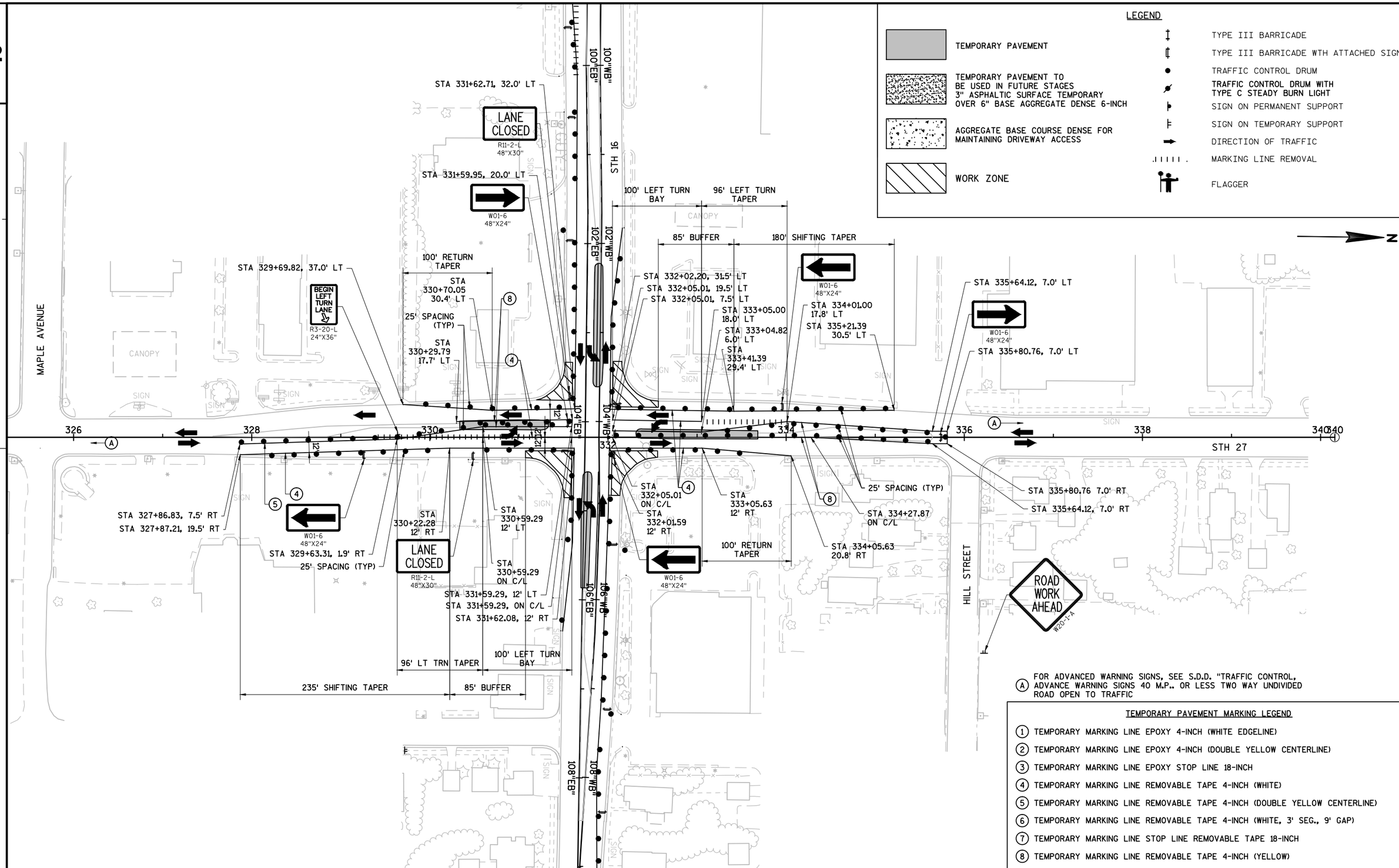

(A) FOR ADVANCED WARNING SIGNS, SEE S.D.D. "TRAFFIC CONTROL, ADVANCE WARNING SIGNS 40 M.P.. OR LESS TWO WAY UNDIVIDED ROAD OPEN TO TRAFFIC

TEMPORARY PAVEMENT MARKING LEGEND

1. TEMPORARY MARKING LINE EPOXY 4-INCH (WHITE EDGELINE)
2. TEMPORARY MARKING LINE EPOXY 4-INCH (DOUBLE YELLOW CENTERLINE)
3. TEMPORARY MARKING LINE EPOXY STOP LINE 18-INCH
4. TEMPORARY MARKING LINE REMOVABLE TAPE 4-INCH (WHITE)
5. TEMPORARY MARKING LINE REMOVABLE TAPE 4-INCH (DOUBLE YELLOW CENTERLINE)
6. TEMPORARY MARKING LINE REMOVABLE TAPE 4-INCH (WHITE, 3' SEG., 9' GAP)
7. TEMPORARY MARKING LINE STOP LINE REMOVABLE TAPE 18-INCH
8. TEMPORARY MARKING LINE REMOVABLE TAPE 4-INCH (YELLOW)

PROJECT NO:5144-01-75	HWY:STH 27	COUNTY:MONROE	TRAFFIC STAGING PLAN - STH 27 - STAGE 1B PART 2	SHEET 131	E

2

LEGEND

- TEMPORARY PAVEMENT
- TEMPORARY PAVEMENT TO BE USED IN FUTURE STAGES 3" ASPHALTIC SURFACE TEMPORARY OVER 6" BASE AGGREGATE DENSE 6-INCH
- AGGREGATE BASE COURSE DENSE FOR MAINTAINING DRIVEWAY ACCESS
- WORK ZONE
- TYPE III BARRICADE
- TYPE III BARRICADE WTH ATTACHED SIGN
- TRAFFIC CONTROL DRUM
- TRAFFIC CONTROL DRUM WITH TYPE C STEADY BURN LIGHT
- SIGN ON PERMANENT SUPPORT
- SIGN ON TEMPORARY SUPPORT
- DIRECTION OF TRAFFIC
- MARKING LINE REMOVAL
- FLAGGER

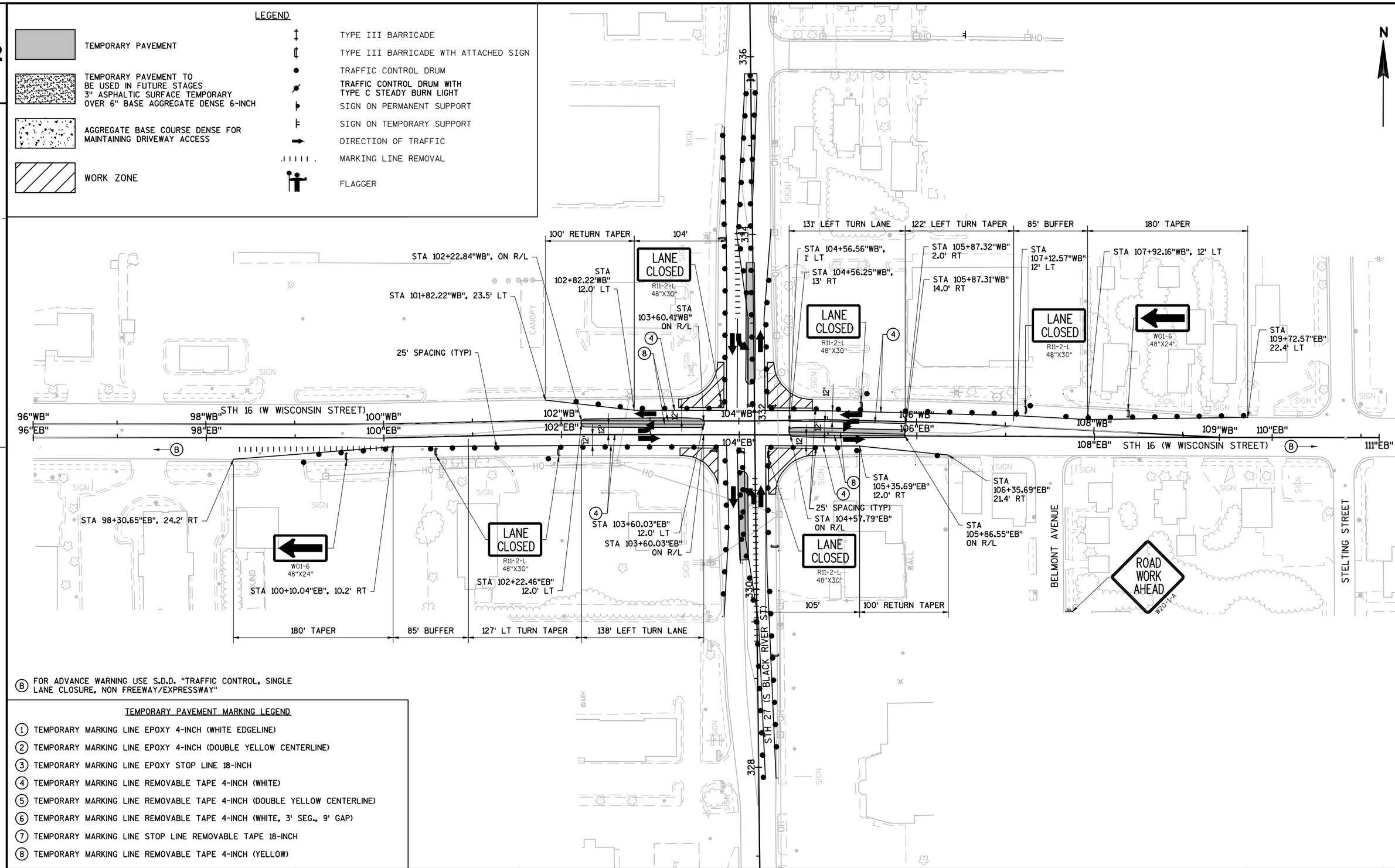

(B) FOR ADVANCE WARNING USE S.D.D. "TRAFFIC CONTROL, SINGLE LANE CLOSURE, NON FREEWAY/EXPRESSWAY"

TEMPORARY PAVEMENT MARKING LEGEND

1. TEMPORARY MARKING LINE EPOXY 4-INCH (WHITE EDGELINE)
2. TEMPORARY MARKING LINE EPOXY 4-INCH (DOUBLE YELLOW CENTERLINE)
3. TEMPORARY MARKING LINE EPOXY STOP LINE 18-INCH
4. TEMPORARY MARKING LINE REMOVABLE TAPE 4-INCH (WHITE)
5. TEMPORARY MARKING LINE REMOVABLE TAPE 4-INCH (DOUBLE YELLOW CENTERLINE)
6. TEMPORARY MARKING LINE REMOVABLE TAPE 4-INCH (WHITE, 3' SEG., 9' GAP)
7. TEMPORARY MARKING LINE STOP LINE REMOVABLE TAPE 18-INCH
8. TEMPORARY MARKING LINE REMOVABLE TAPE 4-INCH (YELLOW)

PROJECT NO:5144-01-75	HWY:STH 27	COUNTY:MONROE	TRAFFIC STAGING PLAN - STH 16 - STAGE 1B PART 2	SHEET 132	E

2

LEGEND

- TEMPORARY PAVEMENT
- TEMPORARY PAVEMENT TO BE USED IN FUTURE STAGES 3" ASPHALTIC SURFACE TEMPORARY OVER 6" BASE AGGREGATE DENSE 1¼-INCH
- WORK ZONE
- AREA MAINTAINED FOR TURNING VEHICLES
- DRUM WITH/WITHOUT LIGHT, TYPE C
- SIGN MOUNTED ON TEMPORARY SUPPORT
- BARRICADES TYPE III WITH/WITHOUT SIGN
- REMOVING PAVEMENT MARKINGS
- TRAFFIC FLOW ARROW
- SAWING ASPHALT
- XXXXX SAWING CONCRETE

TEMPORARY PAVEMENT MARKING LEGEND

1. TEMPORARY MARKING LINE EPOXY 4-INCH (WHITE EDGELINE)
2. TEMPORARY MARKING LINE EPOXY 4-INCH (DOUBLE YELLOW CENTERLINE)
3. TEMPORARY MARKING STOP LINE EPOXY 18-INCH
4. TEMPORARY MARKING LINE REMOVABLE TAPE 4-INCH (WHITE)
5. TEMPORARY MARKING LINE REMOVABLE TAPE 4-INCH (DOUBLE YELLOW CENTERLINE)
6. TEMPORARY MARKING LINE REMOVABLE TAPE 4-INCH (WHITE, 3' SEG., 9' GAP)
7. TEMPORARY MARKING STOP LINE REMOVABLE TAPE 18-INCH
8. TEMPORARY MARKING LINE REMOVABLE TAPE 4-INCH (YELLOW)

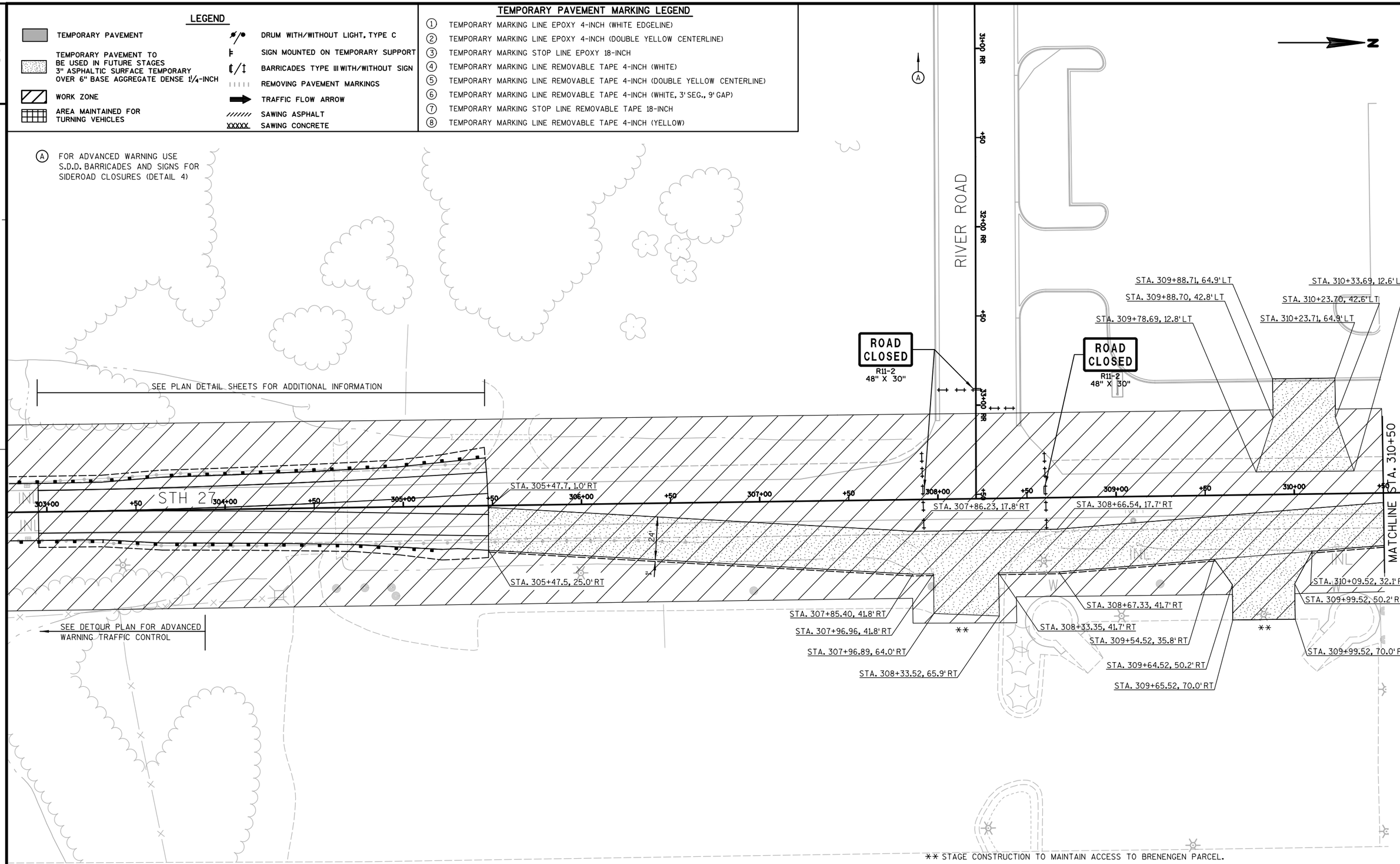

2

PROJECT NO: 5144-01-75	HWY: STH 27	COUNTY: MONROE	CONSTRUCTION STAGING - STAGE 1C - CLOSURE	SHEET	E

FILE NAME : S:\MAD\1000--1099\1089\415\Micros\Plan\026001_S1c.dgn PLOT DATE : 7/14/2017 PLOT BY : _username_ PLOT NAME : PLOT SCALE : $$.....plotscale.....$$ WISDOT/CADDS SHEET 42

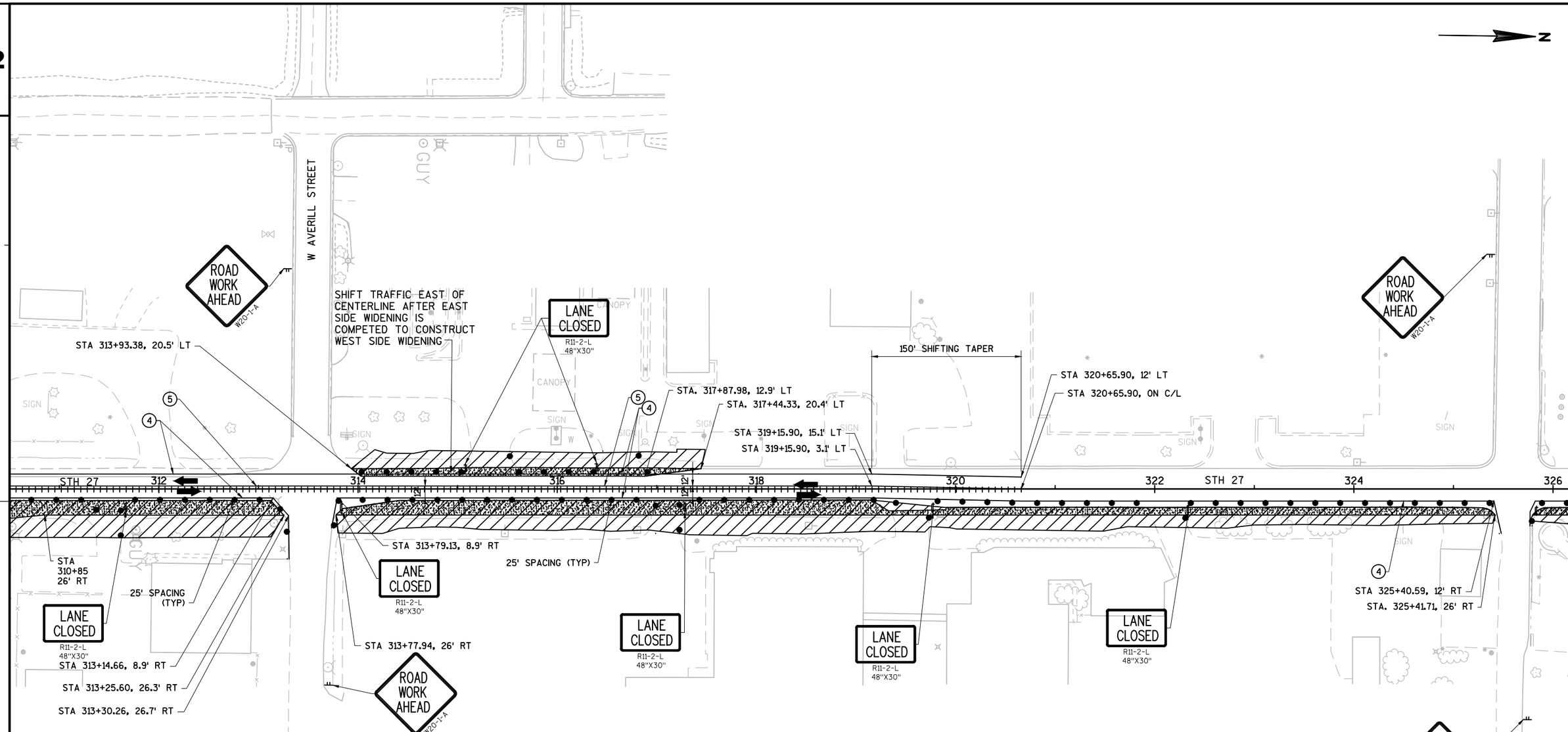

LEGEND

- TEMPORARY PAVEMENT
- TEMPORARY PAVEMENT TO BE USED IN FUTURE STAGES 3" ASPHALTIC SURFACE TEMPORARY OVER 6" BASE AGGREGATE DENSE 6-INCH
- AGGREGATE BASE COURSE DENSE FOR MAINTAINING DRIVEWAY ACCESS
- WORK ZONE
- TYPE III BARRICADE
- TYPE III BARRICADE WTH ATTACHED SIGN
- TRAFFIC CONTROL DRUM
- TRAFFIC CONTROL DRUM WITH TYPE C STEADY BURN LIGHT
- SIGN ON PERMANENT SUPPORT
- SIGN ON TEMPORARY SUPPORT
- DIRECTION OF TRAFFIC
- MARKING LINE REMOVAL
- FLAGGER

TEMPORARY PAVEMENT MARKING LEGEND

1. TEMPORARY MARKING LINE EPOXY 4-INCH (WHITE EDGELINE)
2. TEMPORARY MARKING LINE EPOXY 4-INCH (DOUBLE YELLOW CENTERLINE)
3. TEMPORARY MARKING LINE EPOXY STOP LINE 18-INCH
4. TEMPORARY MARKING LINE REMOVABLE TAPE 4-INCH (WHITE)
5. TEMPORARY MARKING LINE REMOVABLE TAPE 4-INCH (DOUBLE YELLOW CENTERLINE)
6. TEMPORARY MARKING LINE REMOVABLE TAPE 4-INCH (WHITE, 3' SEG., 9' GAP)
7. TEMPORARY MARKING LINE STOP LINE REMOVABLE TAPE 18-INCH
8. TEMPORARY MARKING LINE REMOVABLE TAPE 4-INCH (YELLOW)

PROJECT NO:5144-01-75	HWY:STH 27	COUNTY:MONROE	TRAFFIC STAGING PLAN - STH 27 - STAGE 1C	SHEET 134	E

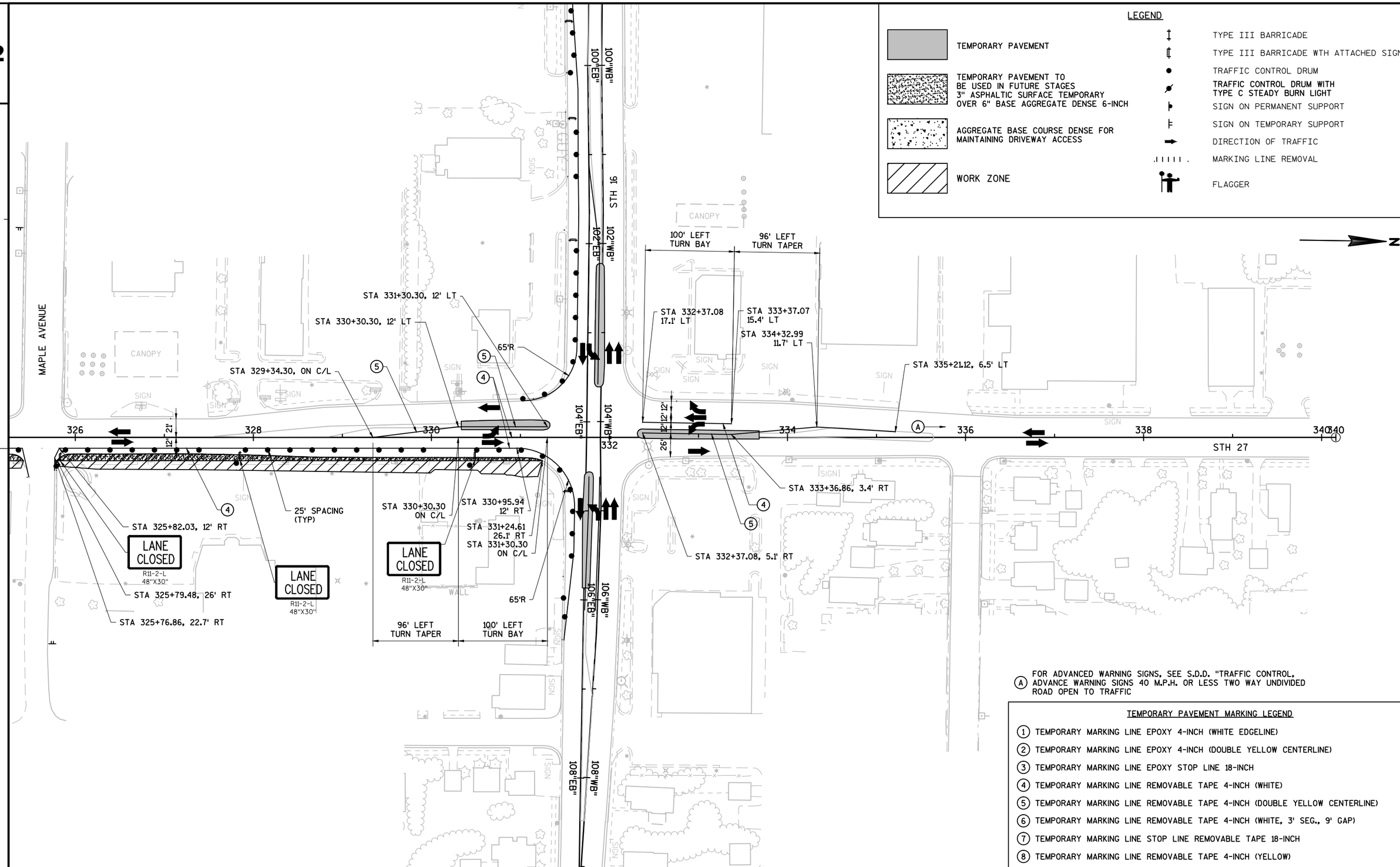

PROJECT NO:5144-01-75	HWY:STH 27	COUNTY:MONROE	TRAFFIC STAGING PLAN - STH 27 - STAGE 1C	SHEET 135	E

FILE NAME : N:\PDS\C3D\51440105\SHEETSPLAN\026001_S1C.DWG
LAYOUT NAME - FULLSIZE-026002_S1C
PLOT DATE : 7/27/2017 2:55 PM PLOT BY : VALENTI, PAUL M PLOT NAME : PLOT SCALE : 1 IN:100 FT

LEGEND

- TEMPORARY PAVEMENT
- TEMPORARY PAVEMENT TO BE USED IN FUTURE STAGES 3" ASPHALTIC SURFACE TEMPORARY OVER 6" BASE AGGREGATE DENSE 6-INCH
- AGGREGATE BASE COURSE DENSE FOR MAINTAINING DRIVEWAY ACCESS
- WORK ZONE
- TYPE III BARRICADE
- TYPE III BARRICADE WTH ATTACHED SIGN
- TRAFFIC CONTROL DRUM
- TRAFFIC CONTROL DRUM WITH TYPE C STEADY BURN LIGHT
- SIGN ON PERMANENT SUPPORT
- SIGN ON TEMPORARY SUPPORT
- DIRECTION OF TRAFFIC
- MARKING LINE REMOVAL
- FLAGGER

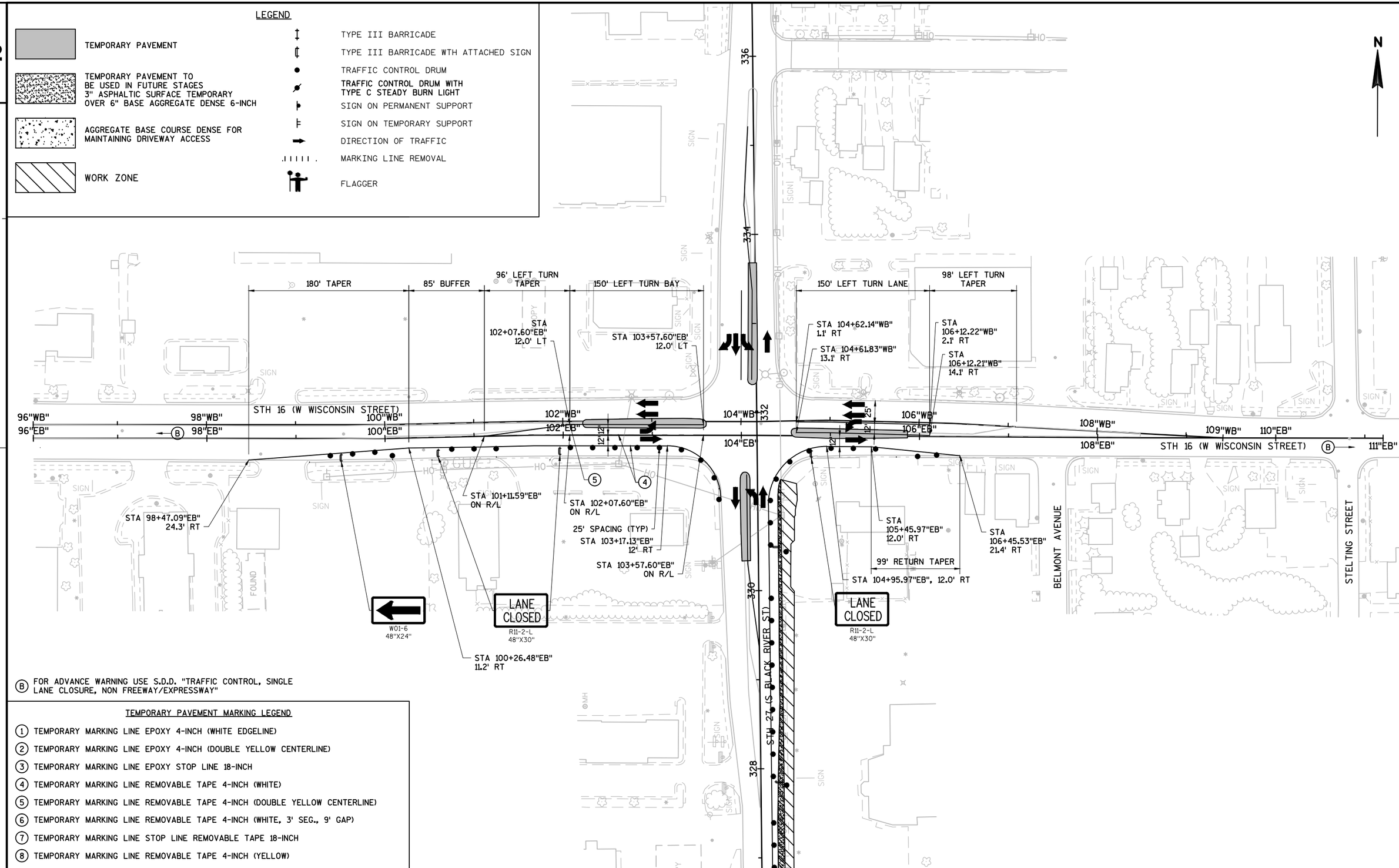

(B) FOR ADVANCE WARNING USE S.D.D. "TRAFFIC CONTROL, SINGLE LANE CLOSURE, NON FREEWAY/EXPRESSWAY"

TEMPORARY PAVEMENT MARKING LEGEND

1. TEMPORARY MARKING LINE EPOXY 4-INCH (WHITE EDGELINE)
2. TEMPORARY MARKING LINE EPOXY 4-INCH (DOUBLE YELLOW CENTERLINE)
3. TEMPORARY MARKING LINE EPOXY STOP LINE 18-INCH
4. TEMPORARY MARKING LINE REMOVABLE TAPE 4-INCH (WHITE)
5. TEMPORARY MARKING LINE REMOVABLE TAPE 4-INCH (DOUBLE YELLOW CENTERLINE)
6. TEMPORARY MARKING LINE REMOVABLE TAPE 4-INCH (WHITE, 3' SEG., 9' GAP)
7. TEMPORARY MARKING LINE STOP LINE REMOVABLE TAPE 18-INCH
8. TEMPORARY MARKING LINE REMOVABLE TAPE 4-INCH (YELLOW)

PROJECT NO:5144-01-75	HWY:STH 27	COUNTY:MONROE	TRAFFIC STAGING PLAN - STH 16 - STAGE 1C	SHEET 136	E

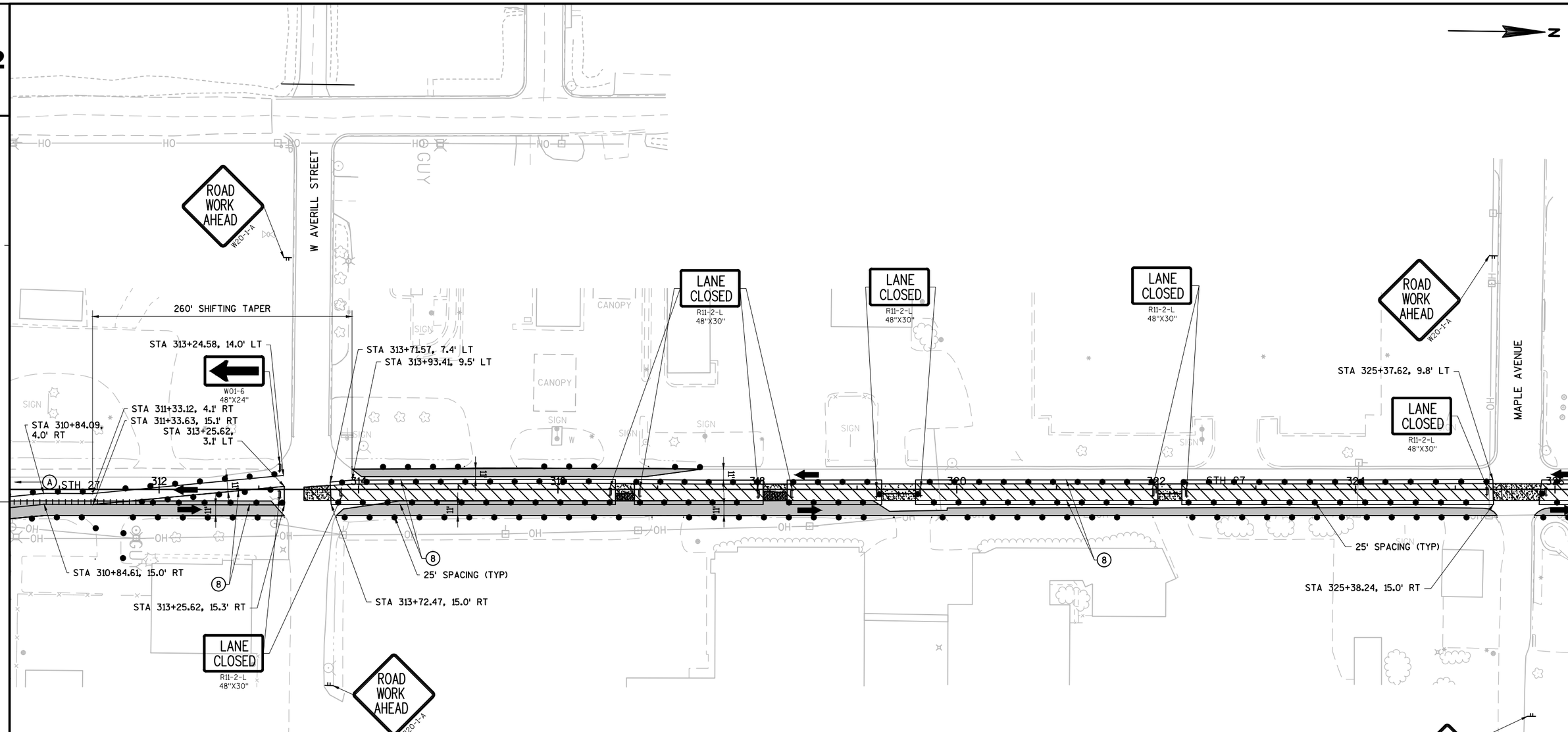

LEGEND

- TEMPORARY PAVEMENT
- TEMPORARY PAVEMENT TO BE USED IN FUTURE STAGES 3" ASPHALTIC SURFACE TEMPORARY OVER 6" BASE AGGREGATE DENSE 6-INCH
- AGGREGATE BASE COURSE DENSE FOR MAINTAINING DRIVEWAY ACCESS
- WORK ZONE
- TYPE III BARRICADE
- TYPE III BARRICADE WTH ATTACHED SIGN
- TRAFFIC CONTROL DRUM
- TRAFFIC CONTROL DRUM WITH TYPE C STEADY BURN LIGHT
- SIGN ON PERMANENT SUPPORT
- SIGN ON TEMPORARY SUPPORT
- DIRECTION OF TRAFFIC
- MARKING LINE REMOVAL
- FLAGGER

(A) FOR ADVANCED WARNING SIGNS, SEE S.D.D. "TRAFFIC CONTROL, ADVANCE WARNING SIGNS 40 M.P.H. OR LESS TWO WAY UNDIVIDED ROAD OPEN TO TRAFFIC

TEMPORARY PAVEMENT MARKING LEGEND

1. TEMPORARY MARKING LINE EPOXY 4-INCH (WHITE EDGELINE)
2. TEMPORARY MARKING LINE EPOXY 4-INCH (DOUBLE YELLOW CENTERLINE)
3. TEMPORARY MARKING LINE EPOXY STOP LINE 18-INCH
4. TEMPORARY MARKING LINE REMOVABLE TAPE 4-INCH (WHITE)
5. TEMPORARY MARKING LINE REMOVABLE TAPE 4-INCH (DOUBLE YELLOW CENTERLINE)
6. TEMPORARY MARKING LINE REMOVABLE TAPE 4-INCH (WHITE, 3' SEG., 9' GAP)
7. TEMPORARY MARKING LINE STOP LINE REMOVABLE TAPE 18-INCH
8. TEMPORARY MARKING LINE REMOVABLE TAPE 4-INCH (YELLOW)

PROJECT NO:5144-01-75	HWY:STH 27	COUNTY:MONROE	TRAFFIC STAGING PLAN - STH 27 - STAGE 1D	SHEET 137	E

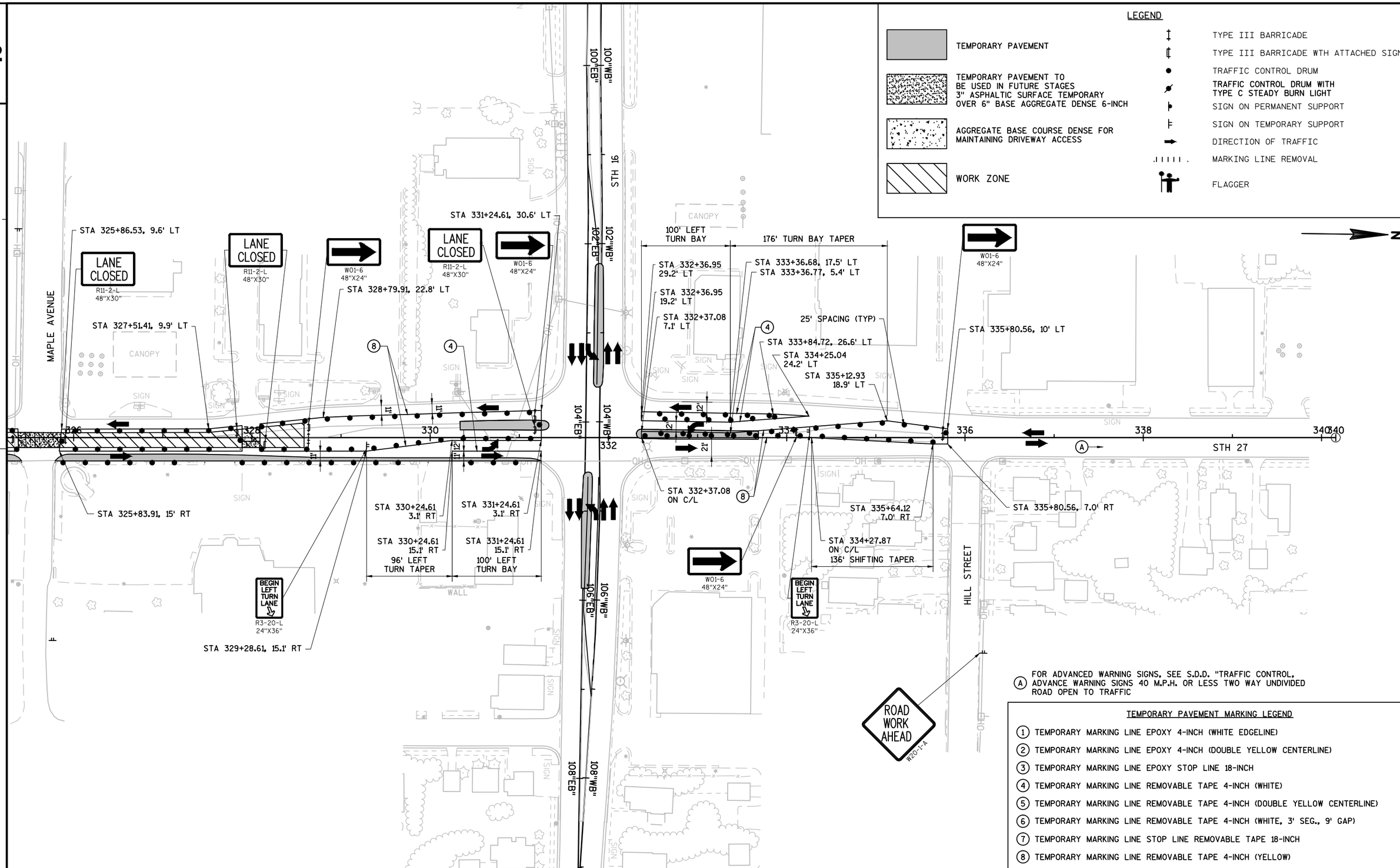

(A) FOR ADVANCED WARNING SIGNS, SEE S.D.D. "TRAFFIC CONTROL, ADVANCE WARNING SIGNS 40 M.P.H. OR LESS TWO WAY UNDIVIDED ROAD OPEN TO TRAFFIC

TEMPORARY PAVEMENT MARKING LEGEND

1. TEMPORARY MARKING LINE EPOXY 4-INCH (WHITE EDGELINE)
2. TEMPORARY MARKING LINE EPOXY 4-INCH (DOUBLE YELLOW CENTERLINE)
3. TEMPORARY MARKING LINE EPOXY STOP LINE 18-INCH
4. TEMPORARY MARKING LINE REMOVABLE TAPE 4-INCH (WHITE)
5. TEMPORARY MARKING LINE REMOVABLE TAPE 4-INCH (DOUBLE YELLOW CENTERLINE)
6. TEMPORARY MARKING LINE REMOVABLE TAPE 4-INCH (WHITE, 3' SEG., 9' GAP)
7. TEMPORARY MARKING LINE STOP LINE REMOVABLE TAPE 18-INCH
8. TEMPORARY MARKING LINE REMOVABLE TAPE 4-INCH (YELLOW)

PROJECT NO:5144-01-75	HWY:STH 27	COUNTY:MONROE	TRAFFIC STAGING PLAN - STH 27 - STAGE 1D	SHEET 138	E

LEGEND

- TEMPORARY PAVEMENT
- TEMPORARY PAVEMENT TO BE USED IN FUTURE STAGES 3" ASPHALTIC SURFACE TEMPORARY OVER 6" BASE AGGREGATE DENSE 6-INCH
- AGGREGATE BASE COURSE DENSE FOR MAINTAINING DRIVEWAY ACCESS
- WORK ZONE
- TYPE III BARRICADE
- TYPE III BARRICADE WTH ATTACHED SIGN
- TRAFFIC CONTROL DRUM
- TRAFFIC CONTROL DRUM WITH TYPE C STEADY BURN LIGHT
- SIGN ON PERMANENT SUPPORT
- SIGN ON TEMPORARY SUPPORT
- DIRECTION OF TRAFFIC
- MARKING LINE REMOVAL
- FLAGGER

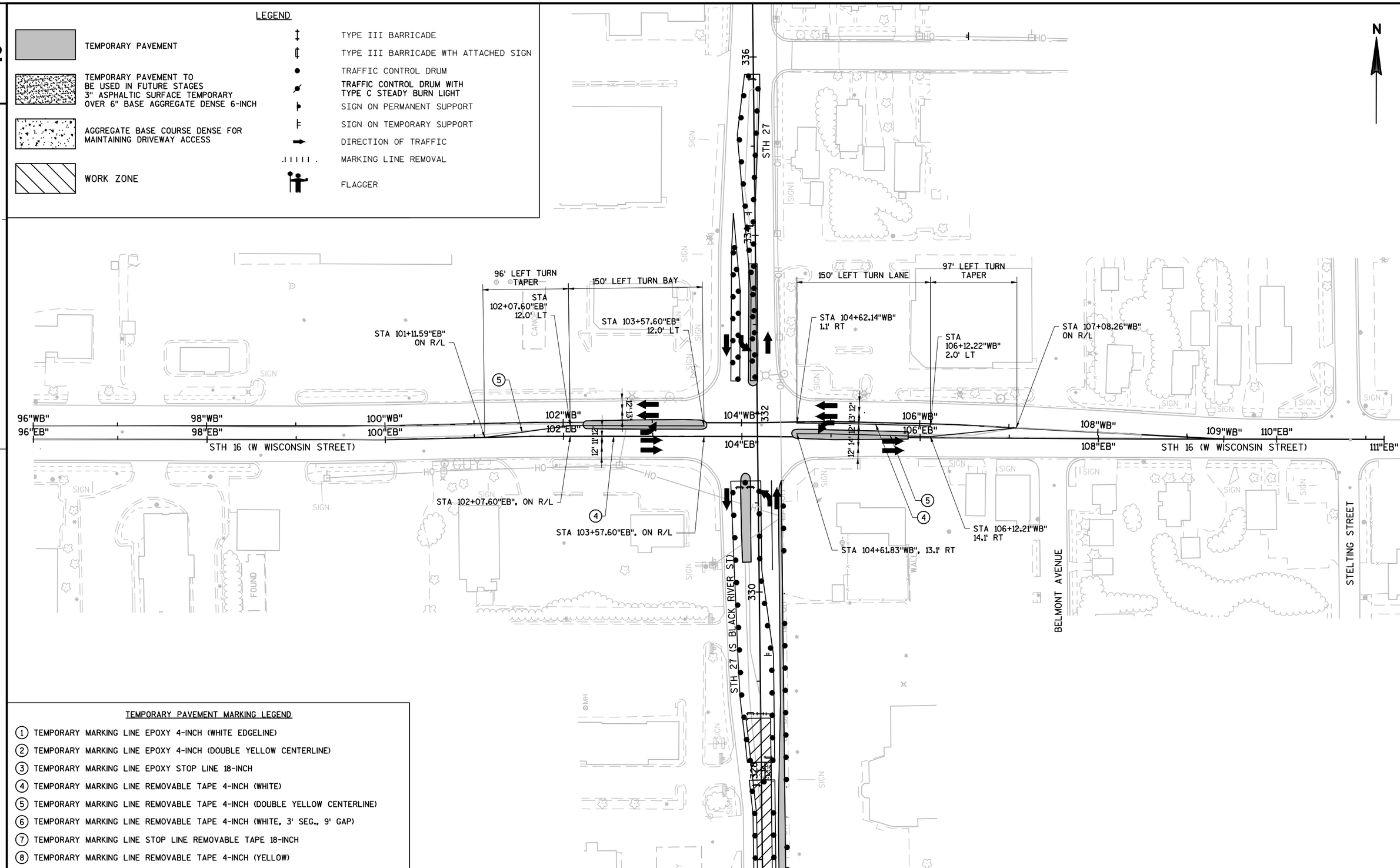

TEMPORARY PAVEMENT MARKING LEGEND

1. TEMPORARY MARKING LINE EPOXY 4-INCH (WHITE EDGELINE)
2. TEMPORARY MARKING LINE EPOXY 4-INCH (DOUBLE YELLOW CENTERLINE)
3. TEMPORARY MARKING LINE EPOXY STOP LINE 18-INCH
4. TEMPORARY MARKING LINE REMOVABLE TAPE 4-INCH (WHITE)
5. TEMPORARY MARKING LINE REMOVABLE TAPE 4-INCH (DOUBLE YELLOW CENTERLINE)
6. TEMPORARY MARKING LINE REMOVABLE TAPE 4-INCH (WHITE, 3' SEG., 9' GAP)
7. TEMPORARY MARKING LINE STOP LINE REMOVABLE TAPE 18-INCH
8. TEMPORARY MARKING LINE REMOVABLE TAPE 4-INCH (YELLOW)

PROJECT NO:5144-01-75	HWY:STH 27	COUNTY:MONROE	TRAFFIC STAGING PLAN - STH 16 - STAGE 1D	SHEET 139	E

2

LEGEND

- TEMPORARY PAVEMENT
- TEMPORARY PAVEMENT TO BE USED IN FUTURE STAGES 3" ASPHALTIC SURFACE TEMPORARY OVER 6" BASE AGGREGATE DENSE 1¼-INCH
- WORK ZONE
- AREA MAINTAINED FOR TURNING VEHICLES
- DRUM WITH/WITHOUT LIGHT, TYPE C
- SIGN MOUNTED ON TEMPORARY SUPPORT
- BARRICADES TYPE III WITH/WITHOUT SIGN
- REMOVING PAVEMENT MARKINGS
- TRAFFIC FLOW ARROW
- SAWING ASPHALT
- SAWING CONCRETE

TEMPORARY PAVEMENT MARKING LEGEND

1. TEMPORARY MARKING LINE EPOXY 4-INCH (WHITE EDGELINE)
2. TEMPORARY MARKING LINE EPOXY 4-INCH (DOUBLE YELLOW CENTERLINE)
3. TEMPORARY MARKING STOP LINE EPOXY 18-INCH
4. TEMPORARY MARKING LINE REMOVABLE TAPE 4-INCH (WHITE)
5. TEMPORARY MARKING LINE REMOVABLE TAPE 4-INCH (DOUBLE YELLOW CENTERLINE)
6. TEMPORARY MARKING LINE REMOVABLE TAPE 4-INCH (WHITE, 3' SEG., 9' GAP)
7. TEMPORARY MARKING STOP LINE REMOVABLE TAPE 18-INCH
8. TEMPORARY MARKING LINE REMOVABLE TAPE 4-INCH (YELLOW)

(A) SEE S.D.D. "TRAFFIC CONTROL, ADVANCED WARNING 45 M.P.H. OR GREATER, TWO WAY UNDIVIDED ROAD OPEN TO TRAFFIC" FOR ADDITIONAL INFORMATION

(B) FOR ADVANCED WARNING USE S.D.D. BARRICADES AND SIGNS FOR SIDEROAD CLOSURES (DETAIL 1)

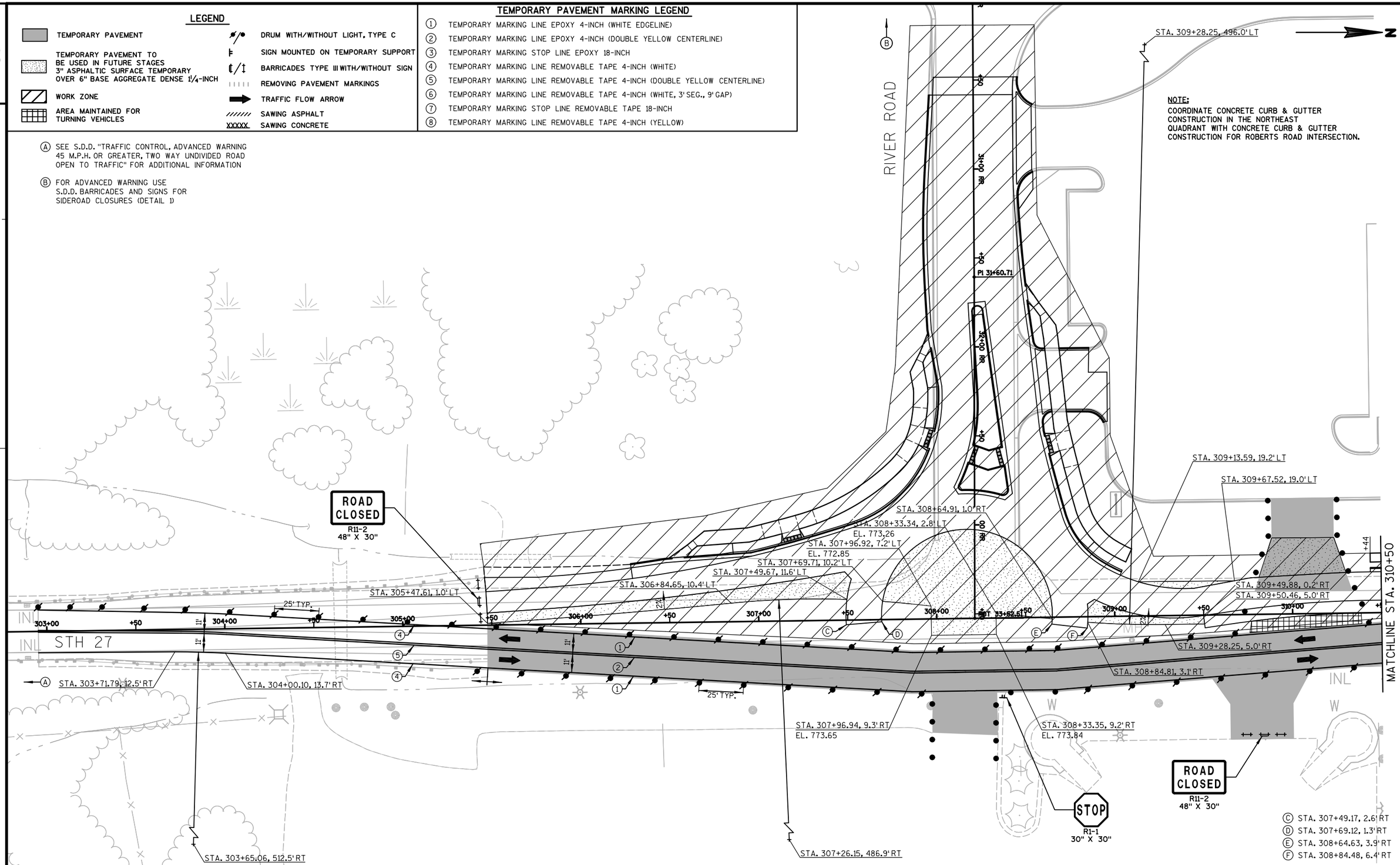

2

PROJECT NO: 5144-01-75	HWY: STH 27	COUNTY: MONROE	CONSTRUCTION STAGING - STAGE 2	SHEET 140	E

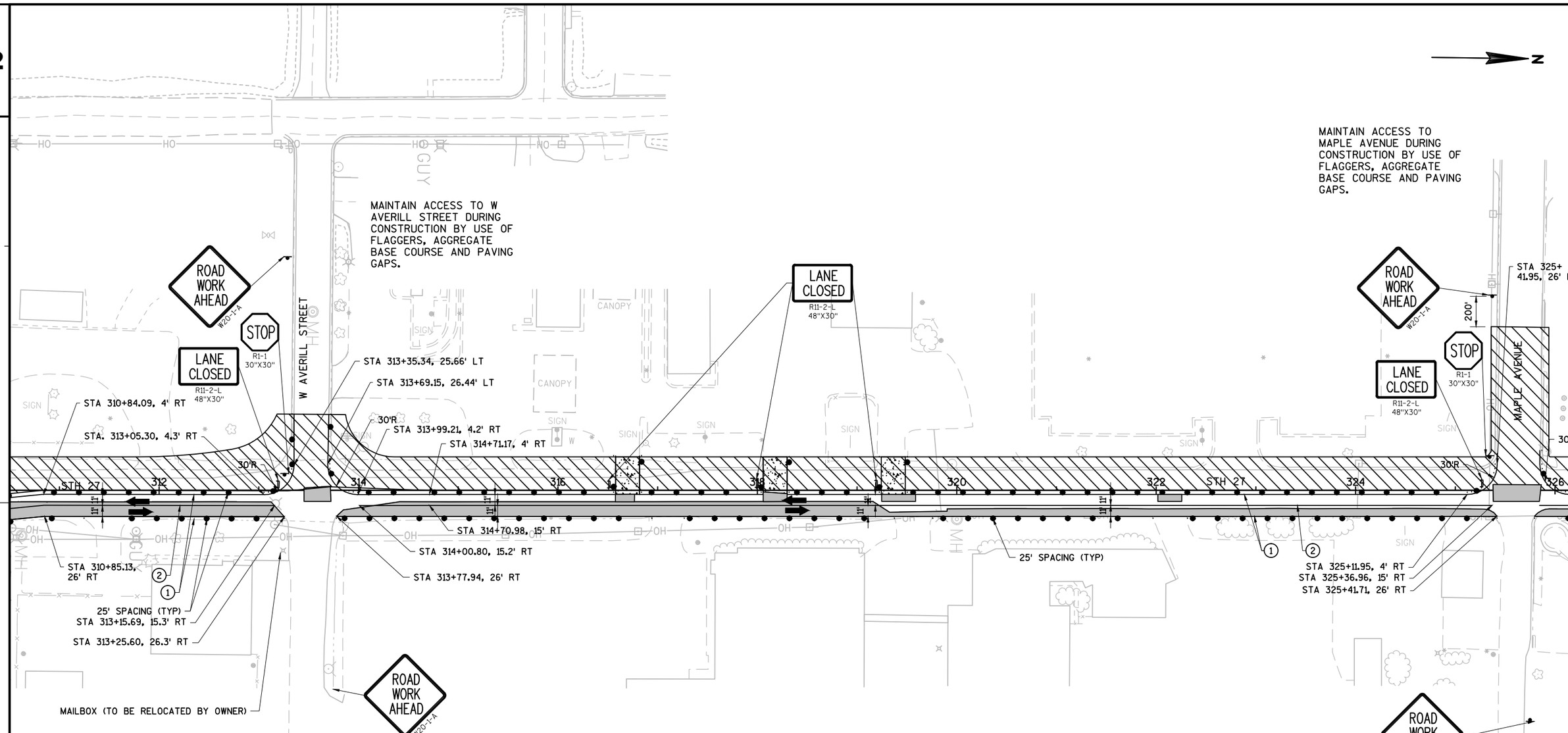

LEGEND

- TEMPORARY PAVEMENT
- TEMPORARY PAVEMENT TO BE USED IN FUTURE STAGES 3" ASPHALTIC SURFACE TEMPORARY OVER 6" BASE AGGREGATE DENSE 6-INCH
- AGGREGATE BASE COURSE DENSE FOR MAINTAINING DRIVEWAY ACCESS
- WORK ZONE
- TYPE III BARRICADE
- TYPE III BARRICADE WTH ATTACHED SIGN
- TRAFFIC CONTROL DRUM
- TRAFFIC CONTROL DRUM WITH TYPE C STEADY BURN LIGHT
- SIGN ON PERMANENT SUPPORT
- SIGN ON TEMPORARY SUPPORT
- DIRECTION OF TRAFFIC
- MARKING LINE REMOVAL
- FLAGGER

TEMPORARY PAVEMENT MARKING LEGEND

1. TEMPORARY MARKING LINE EPOXY 4-INCH (WHITE EDGELINE)
2. TEMPORARY MARKING LINE EPOXY 4-INCH (DOUBLE YELLOW CENTERLINE)
3. TEMPORARY MARKING LINE EPOXY STOP LINE 18-INCH
4. TEMPORARY MARKING LINE REMOVABLE TAPE 4-INCH (WHITE)
5. TEMPORARY MARKING LINE REMOVABLE TAPE 4-INCH (DOUBLE YELLOW CENTERLINE)
6. TEMPORARY MARKING LINE REMOVABLE TAPE 4-INCH (WHITE, 3' SEG., 9' GAP)
7. TEMPORARY MARKING LINE STOP LINE REMOVABLE TAPE 18-INCH
8. TEMPORARY MARKING LINE REMOVABLE TAPE 4-INCH (YELLOW)

PROJECT NO:5144-01-75	HWY:STH 27	COUNTY:MONROE	TRAFFIC CONTROL STH 27 - STAGE 2	SHEET 141	E

2

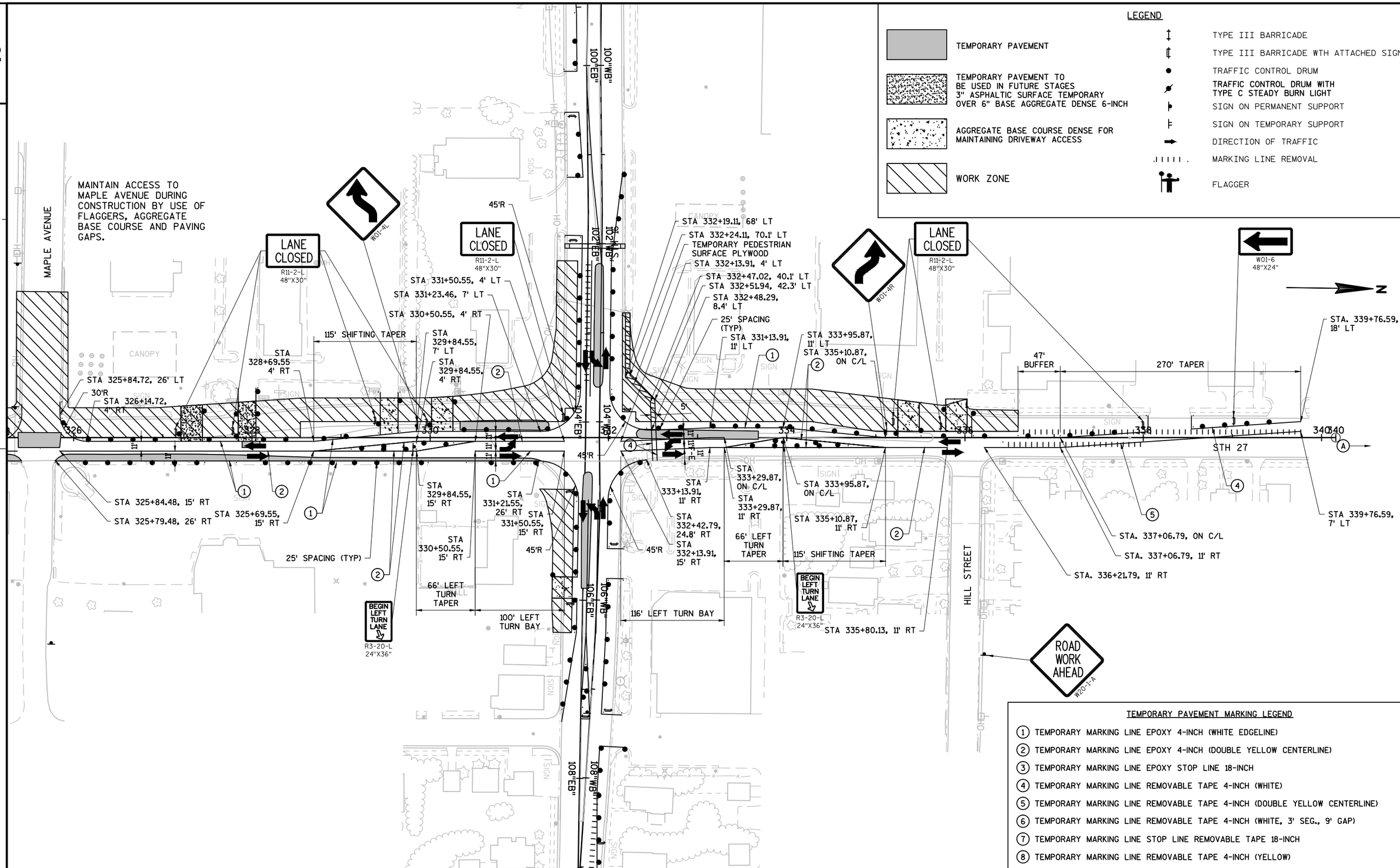

2

PROJECT NO:5144-01-75	HWY:STH 27	COUNTY:MONROE	TRAFFIC CONTROL STH 27 - STAGE 2	SHEET 142	E

FILE NAME : N:\PDS\C3D\51440105\SHEETSPLAN\026001_S2.DWG
LAYOUT NAME - FULLPLAN-026002
PLOT DATE : 7/27/2017 3:16 PM PLOT BY : VALENTI, PAUL M PLOT NAME : PLOT SCALE : 1 IN:100 FT

2

LEGEND

- TEMPORARY PAVEMENT
- TEMPORARY PAVEMENT TO BE USED IN FUTURE STAGES 3" ASPHALTIC SURFACE TEMPORARY OVER 6" BASE AGGREGATE DENSE 6-INCH
- AGGREGATE BASE COURSE DENSE FOR MAINTAINING DRIVEWAY ACCESS
- WORK ZONE
- TYPE III BARRICADE
- TYPE III BARRICADE WTH ATTACHED SIGN
- TRAFFIC CONTROL DRUM
- TRAFFIC CONTROL DRUM WITH TYPE C STEADY BURN LIGHT
- SIGN ON PERMANENT SUPPORT
- SIGN ON TEMPORARY SUPPORT
- DIRECTION OF TRAFFIC
- MARKING LINE REMOVAL
- FLAGGER

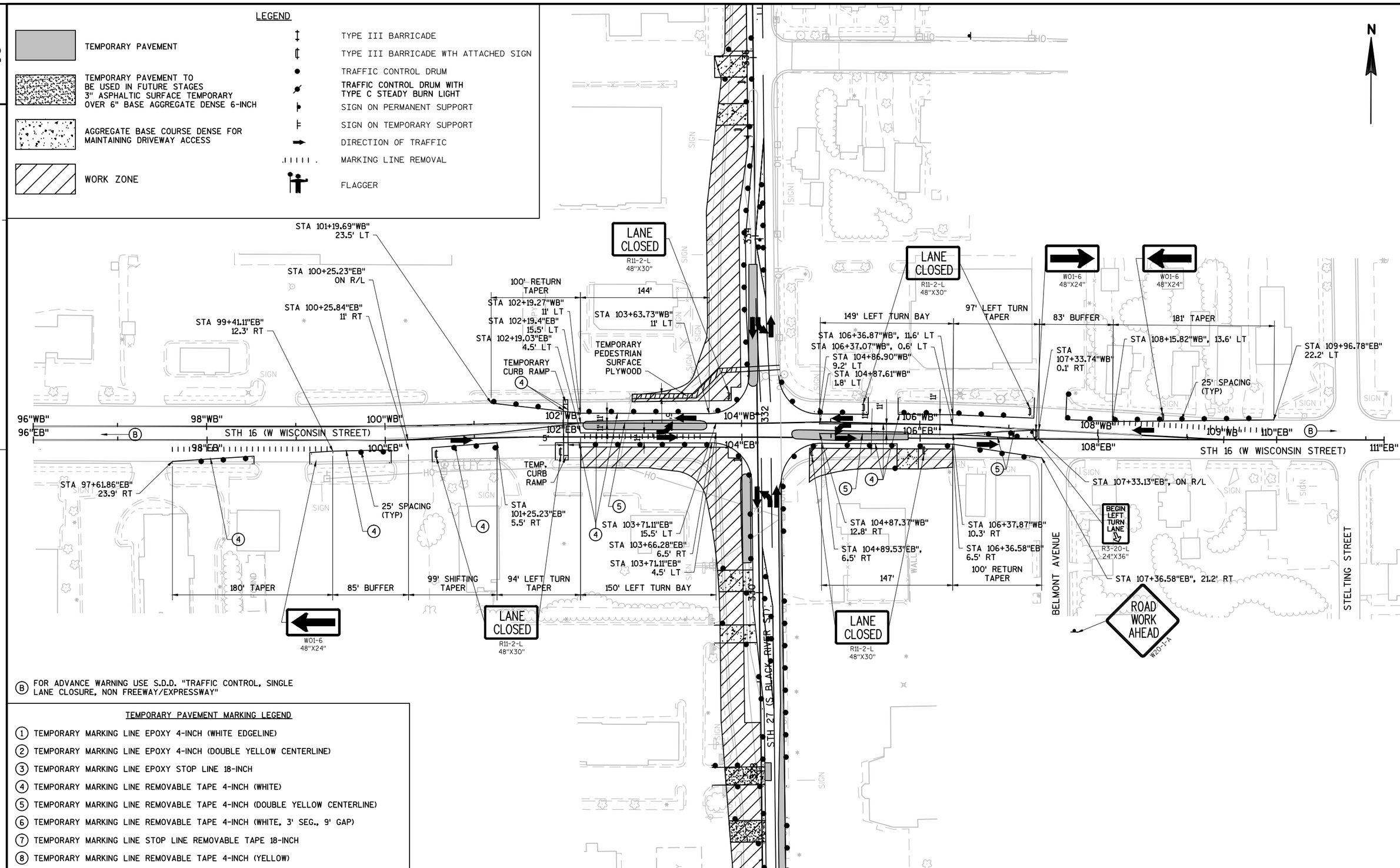

(B) FOR ADVANCE WARNING USE S.D.D. "TRAFFIC CONTROL, SINGLE LANE CLOSURE, NON FREEWAY/EXPRESSWAY"

TEMPORARY PAVEMENT MARKING LEGEND

1. TEMPORARY MARKING LINE EPOXY 4-INCH (WHITE EDGELINE)
2. TEMPORARY MARKING LINE EPOXY 4-INCH (DOUBLE YELLOW CENTERLINE)
3. TEMPORARY MARKING LINE EPOXY STOP LINE 18-INCH
4. TEMPORARY MARKING LINE REMOVABLE TAPE 4-INCH (WHITE)
5. TEMPORARY MARKING LINE REMOVABLE TAPE 4-INCH (DOUBLE YELLOW CENTERLINE)
6. TEMPORARY MARKING LINE REMOVABLE TAPE 4-INCH (WHITE, 3' SEG., 9' GAP)
7. TEMPORARY MARKING LINE STOP LINE REMOVABLE TAPE 18-INCH
8. TEMPORARY MARKING LINE REMOVABLE TAPE 4-INCH (YELLOW)

PROJECT NO:5144-01-75	HWY:STH 27	COUNTY:MONROE	TRAFFIC CONTROL - STH 16 - STAGE 2	SHEET 143	E

2

LEGEND

- TEMPORARY PAVEMENT
- TEMPORARY PAVEMENT TO BE USED IN FUTURE STAGES 3" ASPHALTIC SURFACE TEMPORARY OVER 6" BASE AGGREGATE DENSE 1¼-INCH
- WORK ZONE
- AREA MAINTAINED FOR TURNING VEHICLES
- DRUM WITH/WITHOUT LIGHT, TYPE C
- SIGN MOUNTED ON TEMPORARY SUPPORT
- BARRICADES TYPE III WITH/WITHOUT SIGN
- REMOVING PAVEMENT MARKINGS
- TRAFFIC FLOW ARROW
- SAWING ASPHALT
- SAWING CONCRETE

TEMPORARY PAVEMENT MARKING LEGEND

1. TEMPORARY MARKING LINE EPOXY 4-INCH (WHITE EDGELINE)
2. TEMPORARY MARKING LINE EPOXY 4-INCH (DOUBLE YELLOW CENTERLINE)
3. TEMPORARY MARKING STOP LINE EPOXY 18-INCH
4. TEMPORARY MARKING LINE REMOVABLE TAPE 4-INCH (WHITE)
5. TEMPORARY MARKING LINE REMOVABLE TAPE 4-INCH (DOUBLE YELLOW CENTERLINE)
6. TEMPORARY MARKING LINE REMOVABLE TAPE 4-INCH (WHITE, 3' SEG., 9' GAP)
7. TEMPORARY MARKING STOP LINE REMOVABLE TAPE 18-INCH
8. TEMPORARY MARKING LINE REMOVABLE TAPE 4-INCH (YELLOW)

(A) SEE S.D.D. "TRAFFIC CONTROL, ADVANCED WARNING 45 M.P.H. OR GREATER, TWO WAY UNDIVIDED ROAD OPEN TO TRAFFIC" FOR ADDITIONAL INFORMATION

(B) SEE S.D.D. "TRAFFIC CONTROL, ADVANCED WARNING 40 M.P.H. OR LESS, TWO WAY UNDIVIDED ROAD OPEN TO TRAFFIC" FOR ADDITIONAL INFORMATION

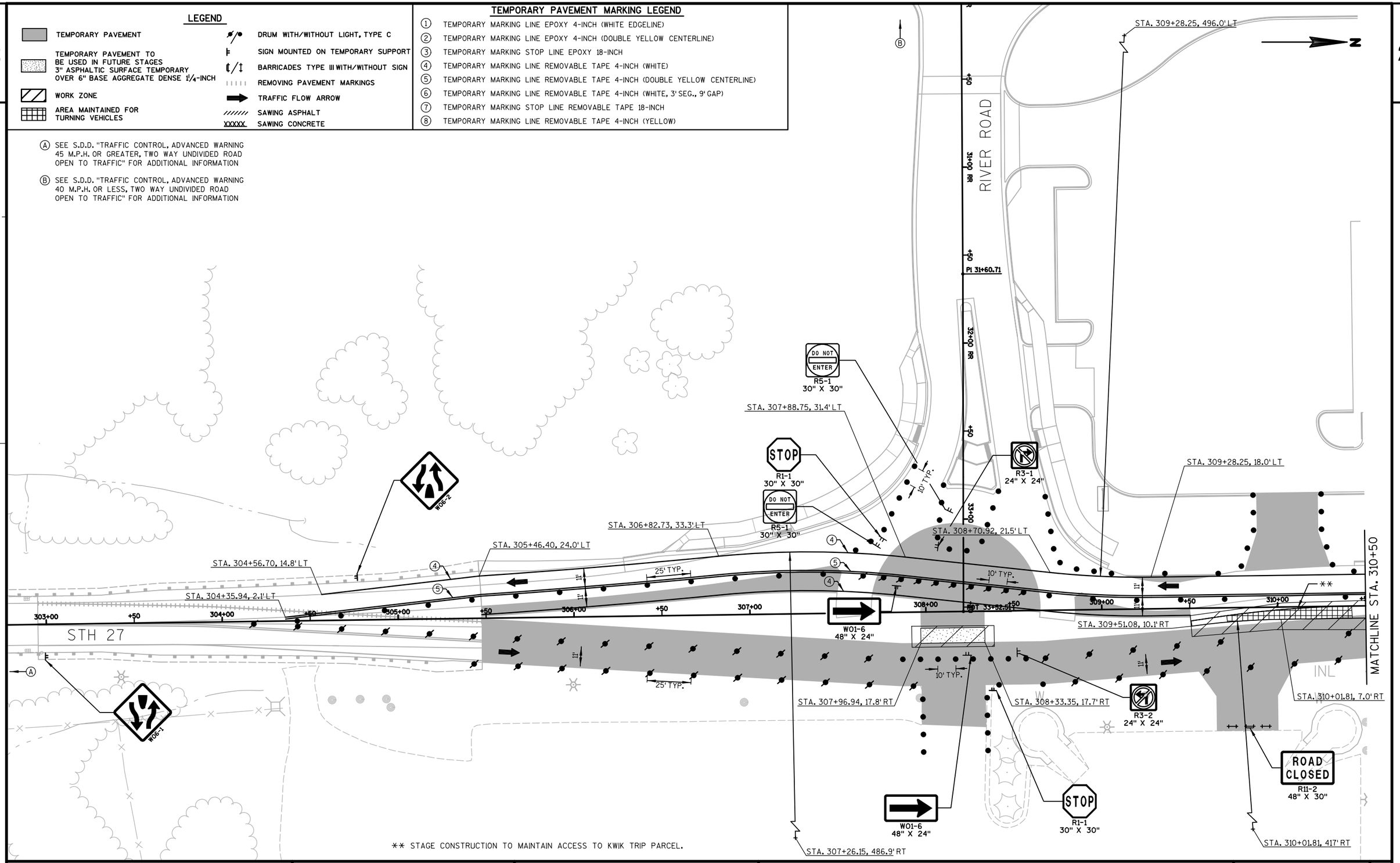

2

PROJECT NO: 5144-01-75	HWY: STH 27	COUNTY: MONROE	CONSTRUCTION STAGING - STAGE 2B	SHEET 144	E

2

MAINTAIN ACCESS TO MAPLE AVENUE DURING CONSTRUCTION BY USE OF FLAGGERS, AGGREGATE BASE COURSE AND PAVING GAPS.

ROAD WORK AHEAD W20-1-A

STOP R1-1 30"X30"

LANE CLOSED R11-2-L 48"X30"

W AVERILL STREET

STA 310+72.91, 7' LT

STA 313+33.44, 12' LT

STA 314+09.13, 7.4' LT

80'R

STA 314+36.90, 23' LT

STA 314+36.03, 10' LT

365' SHIFTING TAPER

STA 318+41.46, 4' RT

STA 318+11.03, 15' RT

25' SPACING (TYP)

STA 310+84.61, 15' RT

STA 313+25.60, 26.3' RT

STA 313+33.32, 15.3' RT

MAILBOX (TO BE RELOCATED BY OWNER)

STA 314+33.51, 15.1' RT

STA 314+08.93, 11.8' RT

STA 313+77.94, 26' RT

STA 325+41.95, 26' RT

200'

MAPLE AVENUE

30'R

STA 325+11.95, 4' RT

STA 325+36.96, 15' RT

STA 325+41.71, 26' RT

STH 27

CANOPY

SIGN

HO GUY

OH

HW

CU

N

LEGEND

- TEMPORARY PAVEMENT
- TEMPORARY PAVEMENT TO BE USED IN FUTURE STAGES 3" ASPHALTIC SURFACE TEMPORARY OVER 6" BASE AGGREGATE DENSE 6-INCH
- AGGREGATE BASE COURSE DENSE FOR MAINTAINING DRIVEWAY ACCESS
- WORK ZONE
- TYPE III BARRICADE
- TYPE III BARRICADE WTH ATTACHED SIGN
- TRAFFIC CONTROL DRUM
- TRAFFIC CONTROL DRUM WITH TYPE C STEADY BURN LIGHT
- SIGN ON PERMANENT SUPPORT
- SIGN ON TEMPORARY SUPPORT
- DIRECTION OF TRAFFIC
- MARKING LINE REMOVAL
- FLAGGER

TEMPORARY PAVEMENT MARKING LEGEND

1. TEMPORARY MARKING LINE EPOXY 4-INCH (WHITE EDGELINE)
2. TEMPORARY MARKING LINE EPOXY 4-INCH (DOUBLE YELLOW CENTERLINE)
3. TEMPORARY MARKING LINE EPOXY STOP LINE 18-INCH
4. TEMPORARY MARKING LINE REMOVABLE TAPE 4-INCH (WHITE)
5. TEMPORARY MARKING LINE REMOVABLE TAPE 4-INCH (DOUBLE YELLOW CENTERLINE)
6. TEMPORARY MARKING LINE REMOVABLE TAPE 4-INCH (WHITE, 3' SEG., 9' GAP)
7. TEMPORARY MARKING LINE STOP LINE REMOVABLE TAPE 18-INCH
8. TEMPORARY MARKING LINE REMOVABLE TAPE 4-INCH (YELLOW)

PROJECT NO:5144-01-75	HWY:STH 27	COUNTY:MONROE	TRAFFIC STAGING PLAN - STAGE 2B	SHEET 145	E

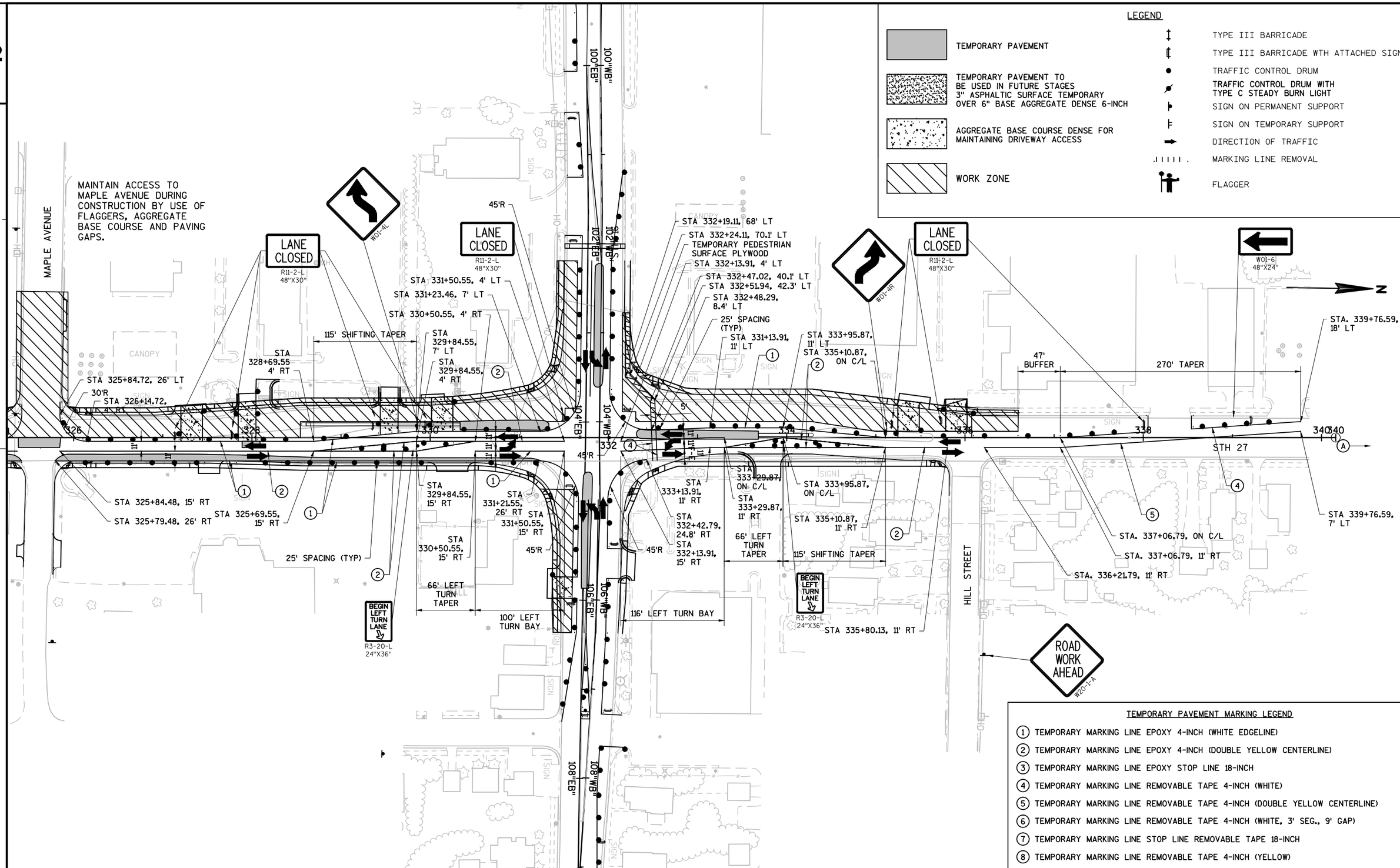

PROJECT NO:5144-01-75	HWY:STH 27	COUNTY:MONROE	TRAFFIC STAGING PLAN - STAGE 2B	SHEET 146	E

LEGEND

- TEMPORARY PAVEMENT
- TEMPORARY PAVEMENT TO BE USED IN FUTURE STAGES 3" ASPHALTIC SURFACE TEMPORARY OVER 6" BASE AGGREGATE DENSE 6-INCH
- AGGREGATE BASE COURSE DENSE FOR MAINTAINING DRIVEWAY ACCESS
- WORK ZONE
- TYPE III BARRICADE
- TYPE III BARRICADE WTH ATTACHED SIGN
- TRAFFIC CONTROL DRUM
- TRAFFIC CONTROL DRUM WITH TYPE C STEADY BURN LIGHT
- SIGN ON PERMANENT SUPPORT
- SIGN ON TEMPORARY SUPPORT
- DIRECTION OF TRAFFIC
- MARKING LINE REMOVAL
- FLAGGER

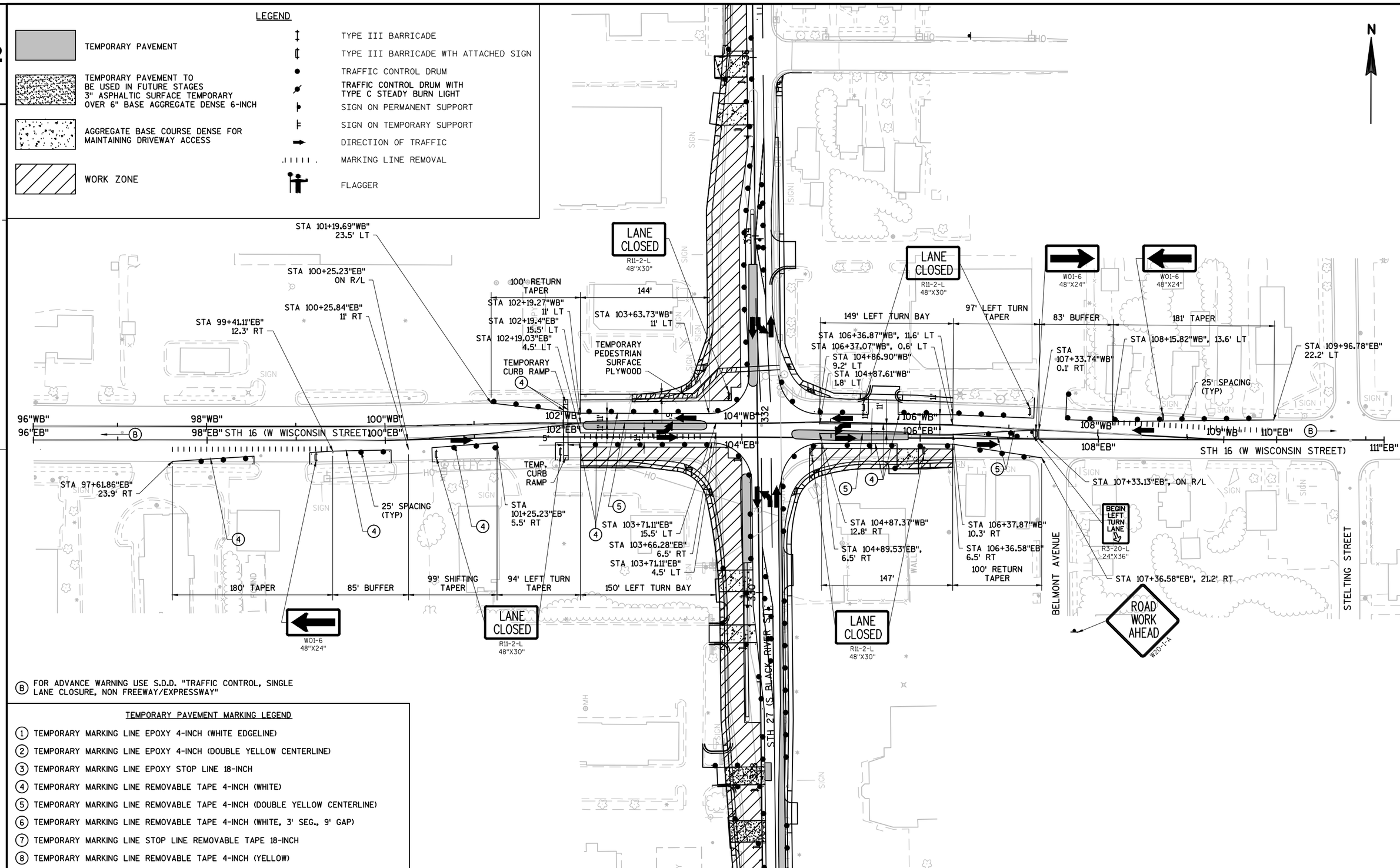

(B) FOR ADVANCE WARNING USE S.D.D. "TRAFFIC CONTROL, SINGLE LANE CLOSURE, NON FREEWAY/EXPRESSWAY"

TEMPORARY PAVEMENT MARKING LEGEND

1. TEMPORARY MARKING LINE EPOXY 4-INCH (WHITE EDGELINE)
2. TEMPORARY MARKING LINE EPOXY 4-INCH (DOUBLE YELLOW CENTERLINE)
3. TEMPORARY MARKING LINE EPOXY STOP LINE 18-INCH
4. TEMPORARY MARKING LINE REMOVABLE TAPE 4-INCH (WHITE)
5. TEMPORARY MARKING LINE REMOVABLE TAPE 4-INCH (DOUBLE YELLOW CENTERLINE)
6. TEMPORARY MARKING LINE REMOVABLE TAPE 4-INCH (WHITE, 3' SEG., 9' GAP)
7. TEMPORARY MARKING LINE STOP LINE REMOVABLE TAPE 18-INCH
8. TEMPORARY MARKING LINE REMOVABLE TAPE 4-INCH (YELLOW)

PROJECT NO:5144-01-75	HWY:STH 27	COUNTY:MONROE	TRAFFIC STAGING PLAN - STH 16 - STAGE 2B	SHEET 147	E

2

LEGEND

- TEMPORARY PAVEMENT
- TEMPORARY PAVEMENT TO BE USED IN FUTURE STAGES 3" ASPHALTIC SURFACE TEMPORARY OVER 6" BASE AGGREGATE DENSE 1¼-INCH
- WORK ZONE
- AREA MAINTAINED FOR TURNING VEHICLES
- DRUM WITH/WITHOUT LIGHT, TYPE C
- SIGN MOUNTED ON TEMPORARY SUPPORT
- BARRICADES TYPE III WITH/WITHOUT SIGN
- REMOVING PAVEMENT MARKINGS
- TRAFFIC FLOW ARROW
- SAWING ASPHALT
- SAWING CONCRETE

TEMPORARY PAVEMENT MARKING LEGEND

1. TEMPORARY MARKING LINE EPOXY 4-INCH (WHITE EDGELINE)
2. TEMPORARY MARKING LINE EPOXY 4-INCH (DOUBLE YELLOW CENTERLINE)
3. TEMPORARY MARKING STOP LINE EPOXY 18-INCH
4. TEMPORARY MARKING LINE REMOVABLE TAPE 4-INCH (WHITE)
5. TEMPORARY MARKING LINE REMOVABLE TAPE 4-INCH (DOUBLE YELLOW CENTERLINE)
6. TEMPORARY MARKING LINE REMOVABLE TAPE 4-INCH (WHITE, 3' SEG., 9' GAP)
7. TEMPORARY MARKING STOP LINE REMOVABLE TAPE 18-INCH
8. TEMPORARY MARKING LINE REMOVABLE TAPE 4-INCH (YELLOW)

(A) SEE S.D.D. "TRAFFIC CONTROL, ADVANCED WARNING 45 M.P.H. OR GREATER, TWO WAY UNDIVIDED ROAD OPEN TO TRAFFIC" FOR ADDITIONAL INFORMATION

(B) SEE S.D.D. "TRAFFIC CONTROL, ADVANCED WARNING 40 M.P.H. OR LESS, TWO WAY UNDIVIDED ROAD OPEN TO TRAFFIC" FOR ADDITIONAL INFORMATION

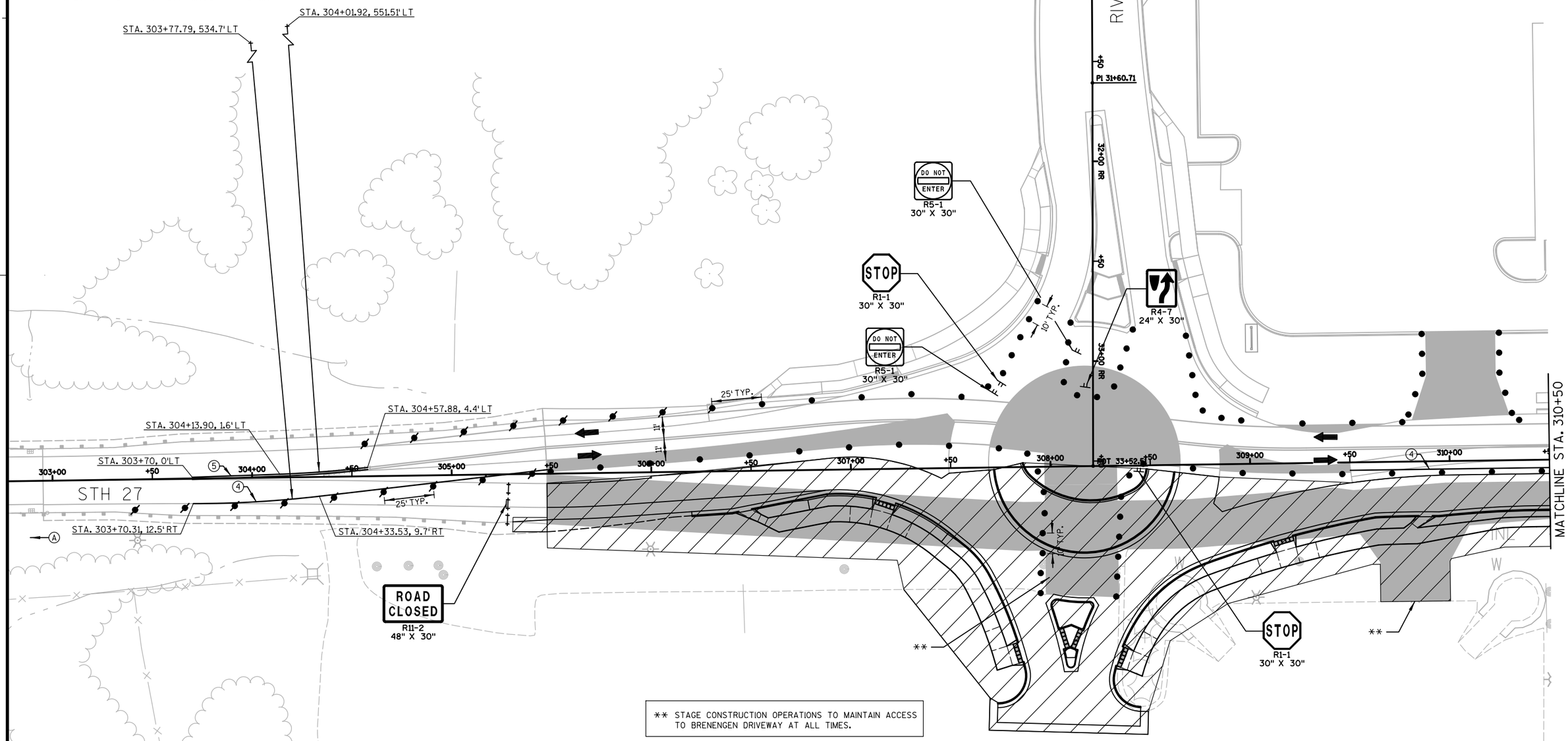

** STAGE CONSTRUCTION OPERATIONS TO MAINTAIN ACCESS TO BRENENGEN DRIVEWAY AT ALL TIMES.

2

PROJECT NO: 5144-01-75	HWY: STH 27	COUNTY: MONROE	CONSTRUCTION STAGING - STAGE 3	SHEET 148	E

2

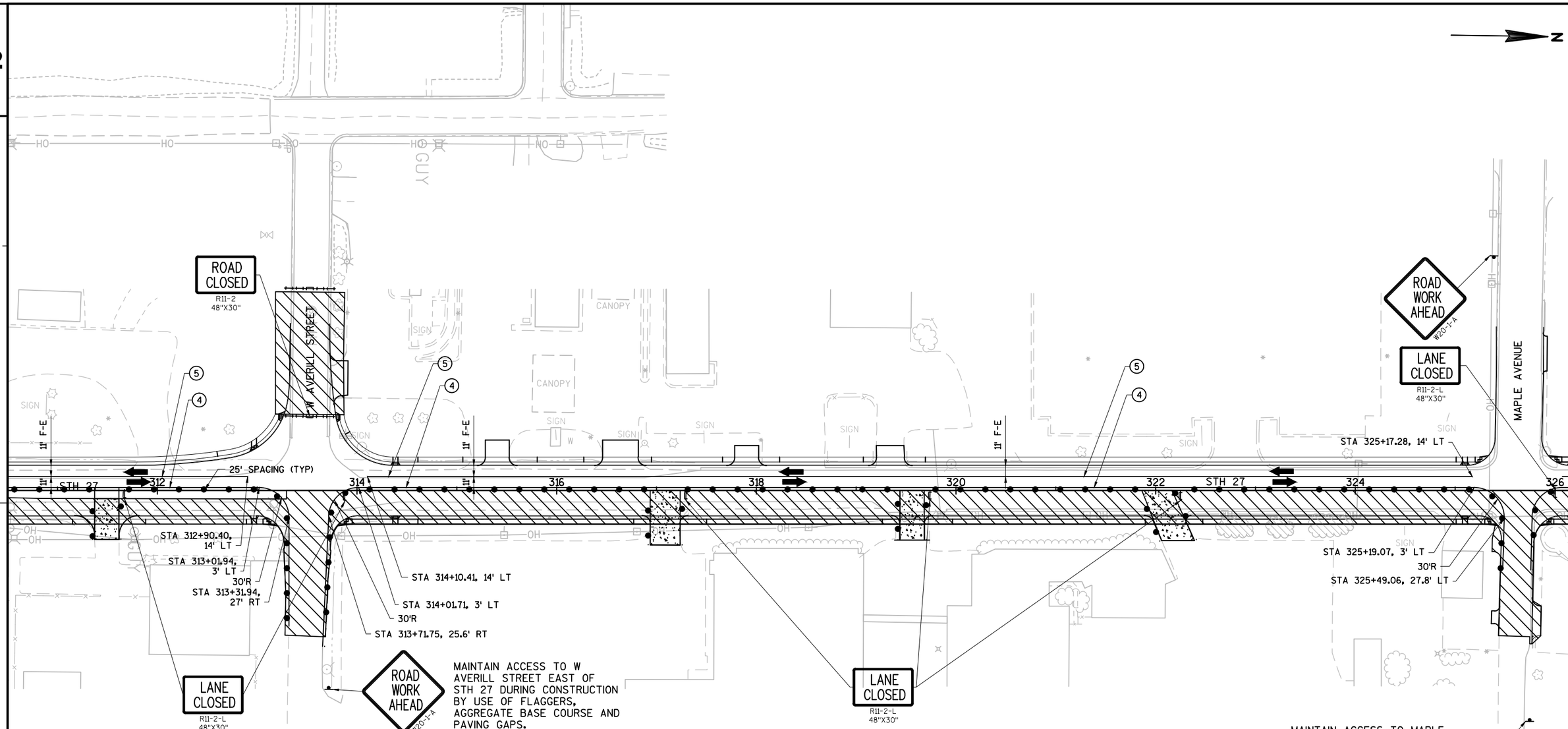

2

LEGEND

- TEMPORARY PAVEMENT
- TEMPORARY PAVEMENT TO BE USED IN FUTURE STAGES 3" ASPHALTIC SURFACE TEMPORARY OVER 6" BASE AGGREGATE DENSE 6-INCH
- AGGREGATE BASE COURSE DENSE FOR MAINTAINING DRIVEWAY ACCESS
- WORK ZONE
- TYPE III BARRICADE
- TYPE III BARRICADE WTH ATTACHED SIGN
- TRAFFIC CONTROL DRUM
- TRAFFIC CONTROL DRUM WITH TYPE C STEADY BURN LIGHT
- SIGN ON PERMANENT SUPPORT
- SIGN ON TEMPORARY SUPPORT
- DIRECTION OF TRAFFIC
- MARKING LINE REMOVAL
- FLAGGER

TEMPORARY PAVEMENT MARKING LEGEND

1. TEMPORARY MARKING LINE EPOXY 4-INCH (WHITE EDGELINE)
2. TEMPORARY MARKING LINE EPOXY 4-INCH (DOUBLE YELLOW CENTERLINE)
3. TEMPORARY MARKING LINE EPOXY STOP LINE 18-INCH
4. TEMPORARY MARKING LINE REMOVABLE TAPE 4-INCH (WHITE)
5. TEMPORARY MARKING LINE REMOVABLE TAPE 4-INCH (DOUBLE YELLOW CENTERLINE)
6. TEMPORARY MARKING LINE REMOVABLE TAPE 4-INCH (WHITE, 3' SEG., 9' GAP)
7. TEMPORARY MARKING LINE STOP LINE REMOVABLE TAPE 18-INCH
8. TEMPORARY MARKING LINE REMOVABLE TAPE 4-INCH (YELLOW)

PROJECT NO:5144-01-75	HWY:STH 27	COUNTY:MONROE	TRAFFIC STAGING PLAN - STAGE 3	SHEET 149	E

2

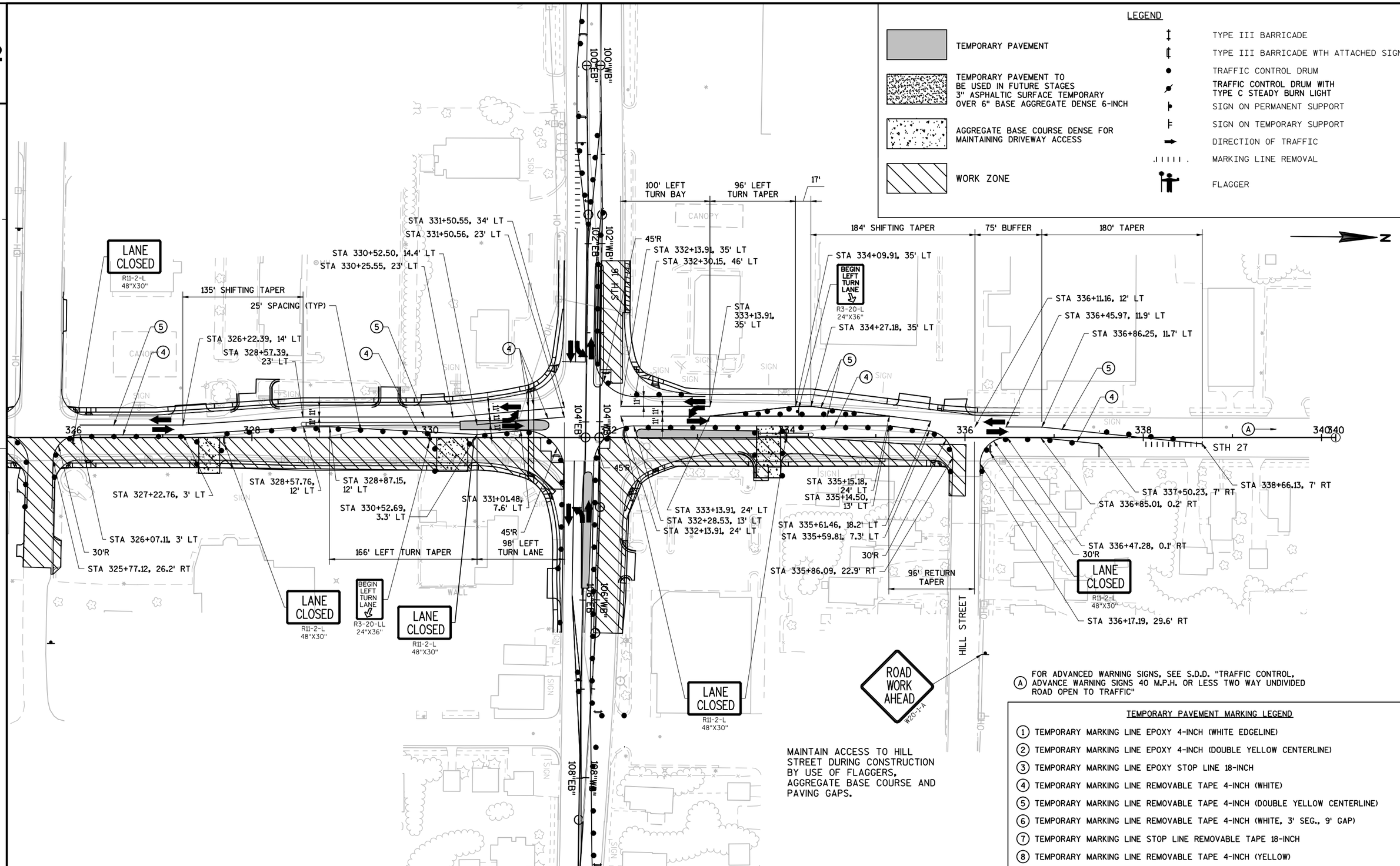

(A) FOR ADVANCED WARNING SIGNS, SEE S.D.D. "TRAFFIC CONTROL, ADVANCE WARNING SIGNS 40 M.P.H. OR LESS TWO WAY UNDIVIDED ROAD OPEN TO TRAFFIC"

MAINTAIN ACCESS TO HILL STREET DURING CONSTRUCTION BY USE OF FLAGGERS, AGGREGATE BASE COURSE AND PAVING GAPS.

TEMPORARY PAVEMENT MARKING LEGEND

1. TEMPORARY MARKING LINE EPOXY 4-INCH (WHITE EDGELINE)
2. TEMPORARY MARKING LINE EPOXY 4-INCH (DOUBLE YELLOW CENTERLINE)
3. TEMPORARY MARKING LINE EPOXY STOP LINE 18-INCH
4. TEMPORARY MARKING LINE REMOVABLE TAPE 4-INCH (WHITE)
5. TEMPORARY MARKING LINE REMOVABLE TAPE 4-INCH (DOUBLE YELLOW CENTERLINE)
6. TEMPORARY MARKING LINE REMOVABLE TAPE 4-INCH (WHITE, 3' SEG., 9' GAP)
7. TEMPORARY MARKING LINE STOP LINE REMOVABLE TAPE 18-INCH
8. TEMPORARY MARKING LINE REMOVABLE TAPE 4-INCH (YELLOW)

PROJECT NO:5144-01-75	HWY:STH 27	COUNTY:MONROE	TRAFFIC STAGING PLAN - STAGE 3	SHEET 150	E

LEGEND

- TEMPORARY PAVEMENT
- TEMPORARY PAVEMENT TO BE USED IN FUTURE STAGES 3" ASPHALTIC SURFACE TEMPORARY OVER 6" BASE AGGREGATE DENSE 6-INCH
- AGGREGATE BASE COURSE DENSE FOR MAINTAINING DRIVEWAY ACCESS
- WORK ZONE
- TYPE III BARRICADE
- TYPE III BARRICADE WTH ATTACHED SIGN
- TRAFFIC CONTROL DRUM
- TRAFFIC CONTROL DRUM WITH TYPE C STEADY BURN LIGHT
- SIGN ON PERMANENT SUPPORT
- SIGN ON TEMPORARY SUPPORT
- DIRECTION OF TRAFFIC
- MARKING LINE REMOVAL
- FLAGGER

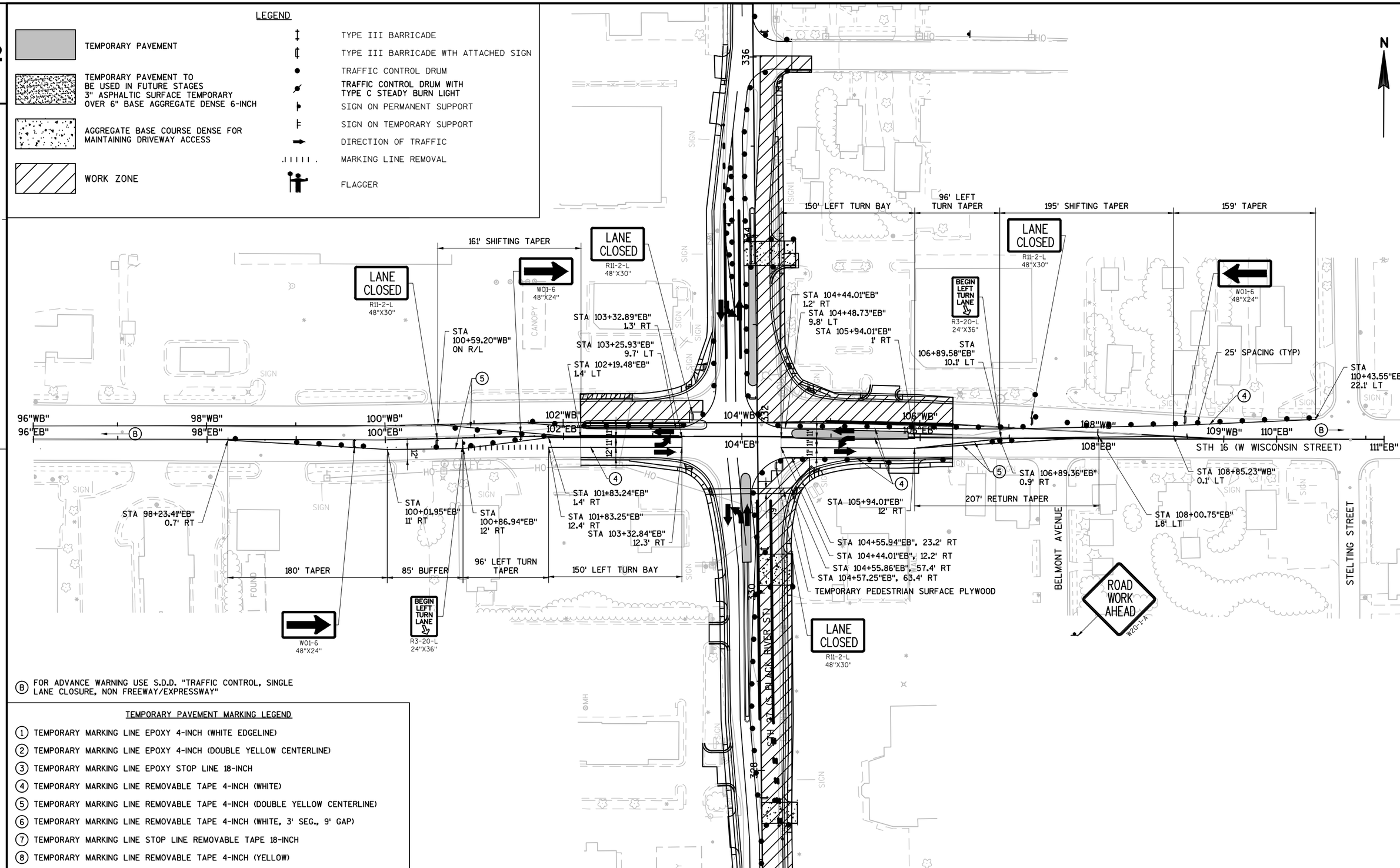

(B) FOR ADVANCE WARNING USE S.D.D. "TRAFFIC CONTROL, SINGLE LANE CLOSURE, NON FREEWAY/EXPRESSWAY"

TEMPORARY PAVEMENT MARKING LEGEND

1. TEMPORARY MARKING LINE EPOXY 4-INCH (WHITE EDGELINE)
2. TEMPORARY MARKING LINE EPOXY 4-INCH (DOUBLE YELLOW CENTERLINE)
3. TEMPORARY MARKING LINE EPOXY STOP LINE 18-INCH
4. TEMPORARY MARKING LINE REMOVABLE TAPE 4-INCH (WHITE)
5. TEMPORARY MARKING LINE REMOVABLE TAPE 4-INCH (DOUBLE YELLOW CENTERLINE)
6. TEMPORARY MARKING LINE REMOVABLE TAPE 4-INCH (WHITE, 3' SEG., 9' GAP)
7. TEMPORARY MARKING LINE STOP LINE REMOVABLE TAPE 18-INCH
8. TEMPORARY MARKING LINE REMOVABLE TAPE 4-INCH (YELLOW)

PROJECT NO:5144-01-75	HWY:STH 27	COUNTY:MONROE	TRAFFIC STAGING PLAN - STH 16 - STAGE 3	SHEET 151	E

2

LEGEND

- TEMPORARY PAVEMENT
- TEMPORARY PAVEMENT TO BE USED IN FUTURE STAGES 3" ASPHALTIC SURFACE TEMPORARY OVER 6" BASE AGGREGATE DENSE 1¼-INCH
- WORK ZONE
- AREA MAINTAINED FOR TURNING VEHICLES
- DRUM WITH/WITHOUT LIGHT, TYPE C
- SIGN MOUNTED ON TEMPORARY SUPPORT
- BARRICADES TYPE III WITH/WITHOUT SIGN
- REMOVING PAVEMENT MARKINGS
- TRAFFIC FLOW ARROW
- SAWING ASPHALT
- SAWING CONCRETE

TEMPORARY PAVEMENT MARKING LEGEND

1. TEMPORARY MARKING LINE EPOXY 4-INCH (WHITE EDGELINE)
2. TEMPORARY MARKING LINE EPOXY 4-INCH (DOUBLE YELLOW CENTERLINE)
3. TEMPORARY MARKING STOP LINE EPOXY 18-INCH
4. TEMPORARY MARKING LINE REMOVABLE TAPE 4-INCH (WHITE)
5. TEMPORARY MARKING LINE REMOVABLE TAPE 4-INCH (DOUBLE YELLOW CENTERLINE)
6. TEMPORARY MARKING LINE REMOVABLE TAPE 4-INCH (WHITE, 3' SEG., 9' GAP)
7. TEMPORARY MARKING STOP LINE REMOVABLE TAPE 18-INCH
8. TEMPORARY MARKING LINE REMOVABLE TAPE 4-INCH (YELLOW)

(A) SEE S.D.D. "TRAFFIC CONTROL, ADVANCED WARNING 45 M.P.H. OR GREATER, TWO WAY UNDIVIDED ROAD OPEN TO TRAFFIC" FOR ADDITIONAL INFORMATION

(B) SEE S.D.D. "TRAFFIC CONTROL, ADVANCED WARNING 40 M.P.H. OR LESS, TWO WAY UNDIVIDED ROAD OPEN TO TRAFFIC" FOR ADDITIONAL INFORMATION

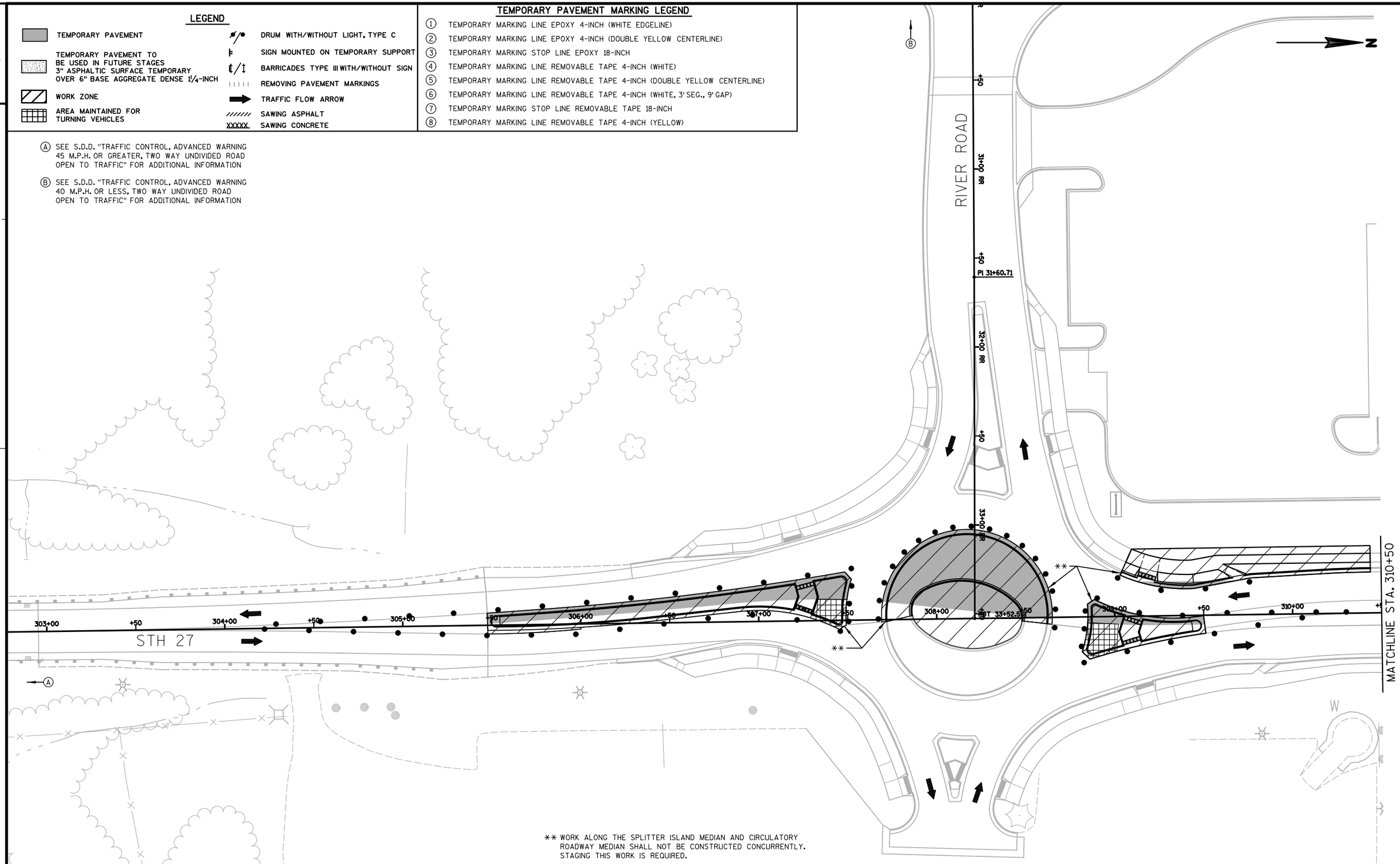

** WORK ALONG THE SPLITTER ISLAND MEDIAN AND CIRCULATORY ROADWAY MEDIAN SHALL NOT BE CONSTRUCTED CONCURRENTLY. STAGING THIS WORK IS REQUIRED.

2

PROJECT NO: 5144-01-75	HWY: STH 27	COUNTY: MONROE	CONSTRUCTION STAGING - STAGE 4	SHEET 152	E

2

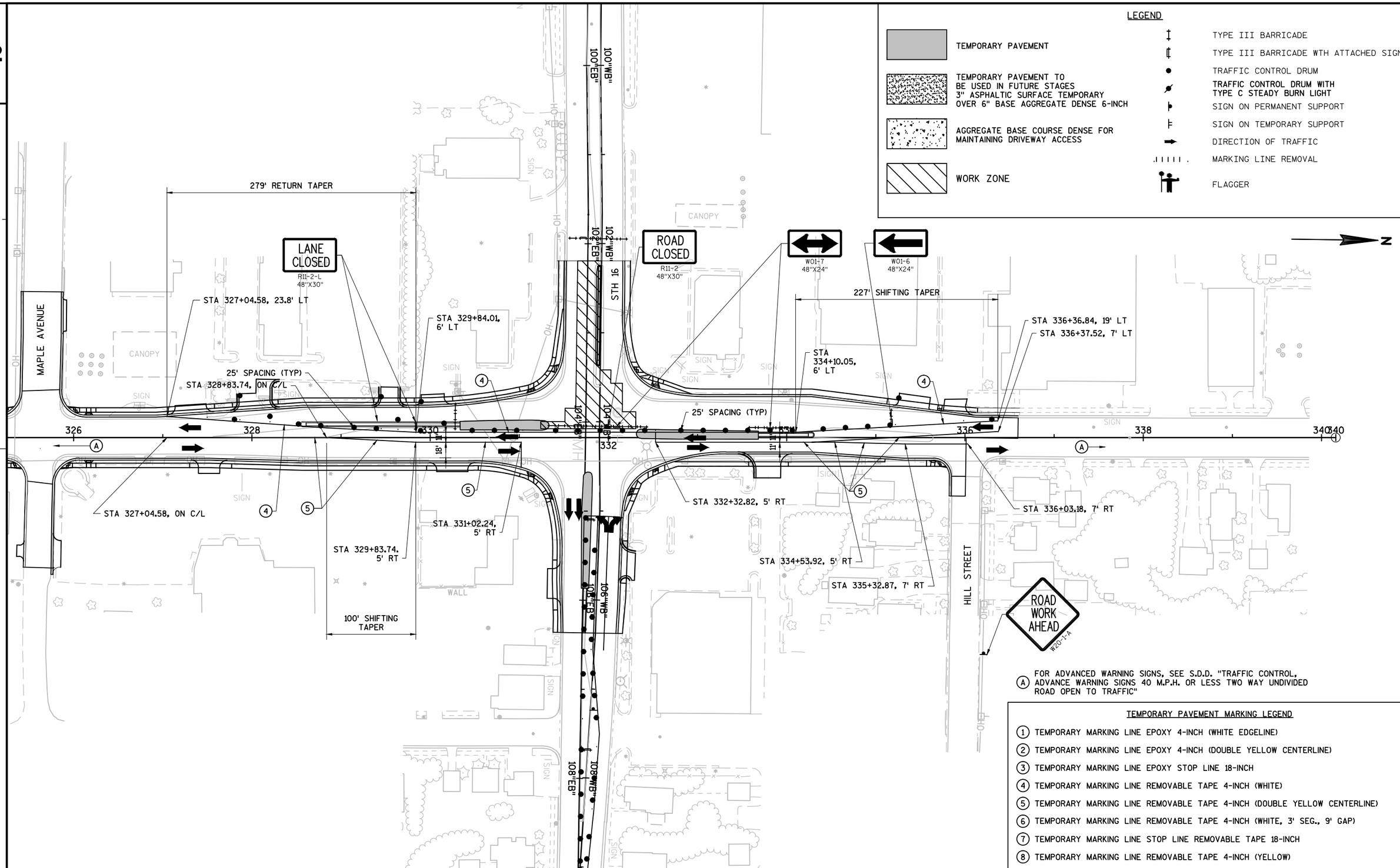

(A) FOR ADVANCED WARNING SIGNS, SEE S.D.D. "TRAFFIC CONTROL, ADVANCE WARNING SIGNS 40 M.P.H. OR LESS TWO WAY UNDIVIDED ROAD OPEN TO TRAFFIC"

TEMPORARY PAVEMENT MARKING LEGEND

1. TEMPORARY MARKING LINE EPOXY 4-INCH (WHITE EDGELINE)
2. TEMPORARY MARKING LINE EPOXY 4-INCH (DOUBLE YELLOW CENTERLINE)
3. TEMPORARY MARKING LINE EPOXY STOP LINE 18-INCH
4. TEMPORARY MARKING LINE REMOVABLE TAPE 4-INCH (WHITE)
5. TEMPORARY MARKING LINE REMOVABLE TAPE 4-INCH (DOUBLE YELLOW CENTERLINE)
6. TEMPORARY MARKING LINE REMOVABLE TAPE 4-INCH (WHITE, 3' SEG., 9' GAP)
7. TEMPORARY MARKING LINE STOP LINE REMOVABLE TAPE 18-INCH
8. TEMPORARY MARKING LINE REMOVABLE TAPE 4-INCH (YELLOW)

PROJECT NO:5144-01-75	HWY:STH 27	COUNTY:MONROE	TRAFFIC STAGING PLAN-STH 27-STAGE 5A-STH 16W DETOUR	SHEET 153	E

LEGEND

- TEMPORARY PAVEMENT
- TEMPORARY PAVEMENT TO BE USED IN FUTURE STAGES 3" ASPHALTIC SURFACE TEMPORARY OVER 6" BASE AGGREGATE DENSE 6-INCH
- AGGREGATE BASE COURSE DENSE FOR MAINTAINING DRIVEWAY ACCESS
- WORK ZONE
- TYPE III BARRICADE
- TYPE III BARRICADE WTH ATTACHED SIGN
- TRAFFIC CONTROL DRUM
- TRAFFIC CONTROL DRUM WITH TYPE C STEADY BURN LIGHT
- SIGN ON PERMANENT SUPPORT
- SIGN ON TEMPORARY SUPPORT
- DIRECTION OF TRAFFIC
- MARKING LINE REMOVAL
- FLAGGER

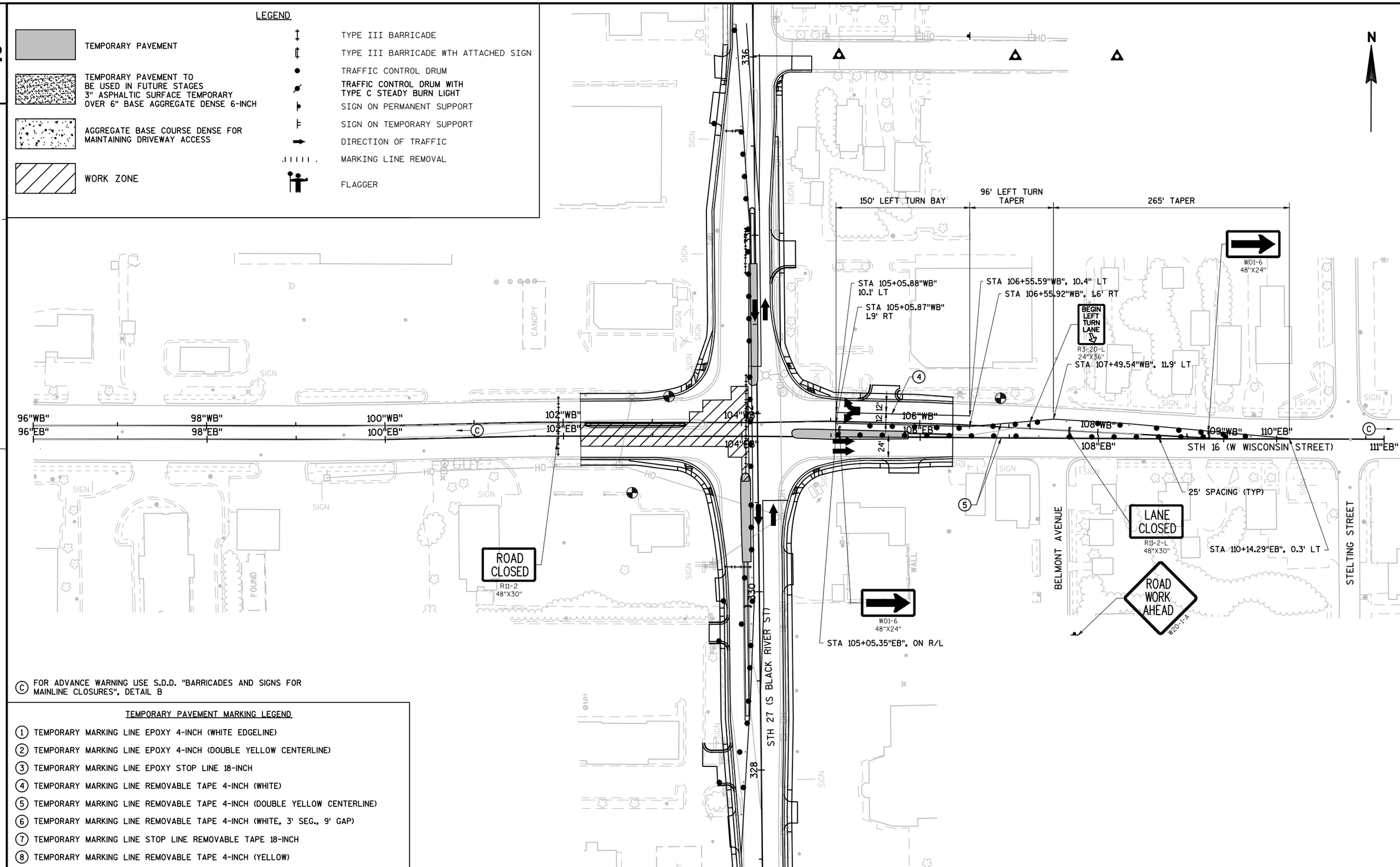

(C) FOR ADVANCE WARNING USE S.D.D. "BARRICADES AND SIGNS FOR MAINLINE CLOSURES", DETAIL B

TEMPORARY PAVEMENT MARKING LEGEND

1. TEMPORARY MARKING LINE EPOXY 4-INCH (WHITE EDGELINE)
2. TEMPORARY MARKING LINE EPOXY 4-INCH (DOUBLE YELLOW CENTERLINE)
3. TEMPORARY MARKING LINE EPOXY STOP LINE 18-INCH
4. TEMPORARY MARKING LINE REMOVABLE TAPE 4-INCH (WHITE)
5. TEMPORARY MARKING LINE REMOVABLE TAPE 4-INCH (DOUBLE YELLOW CENTERLINE)
6. TEMPORARY MARKING LINE REMOVABLE TAPE 4-INCH (WHITE, 3' SEG., 9' GAP)
7. TEMPORARY MARKING LINE STOP LINE REMOVABLE TAPE 18-INCH
8. TEMPORARY MARKING LINE REMOVABLE TAPE 4-INCH (YELLOW)

PROJECT NO:5144-01-75	HWY:STH 27	COUNTY:MONROE	TRAFFIC STAGING PLAN-STH 16-STAGE 5A-STH 16W DETOUR	SHEET 154	E

2

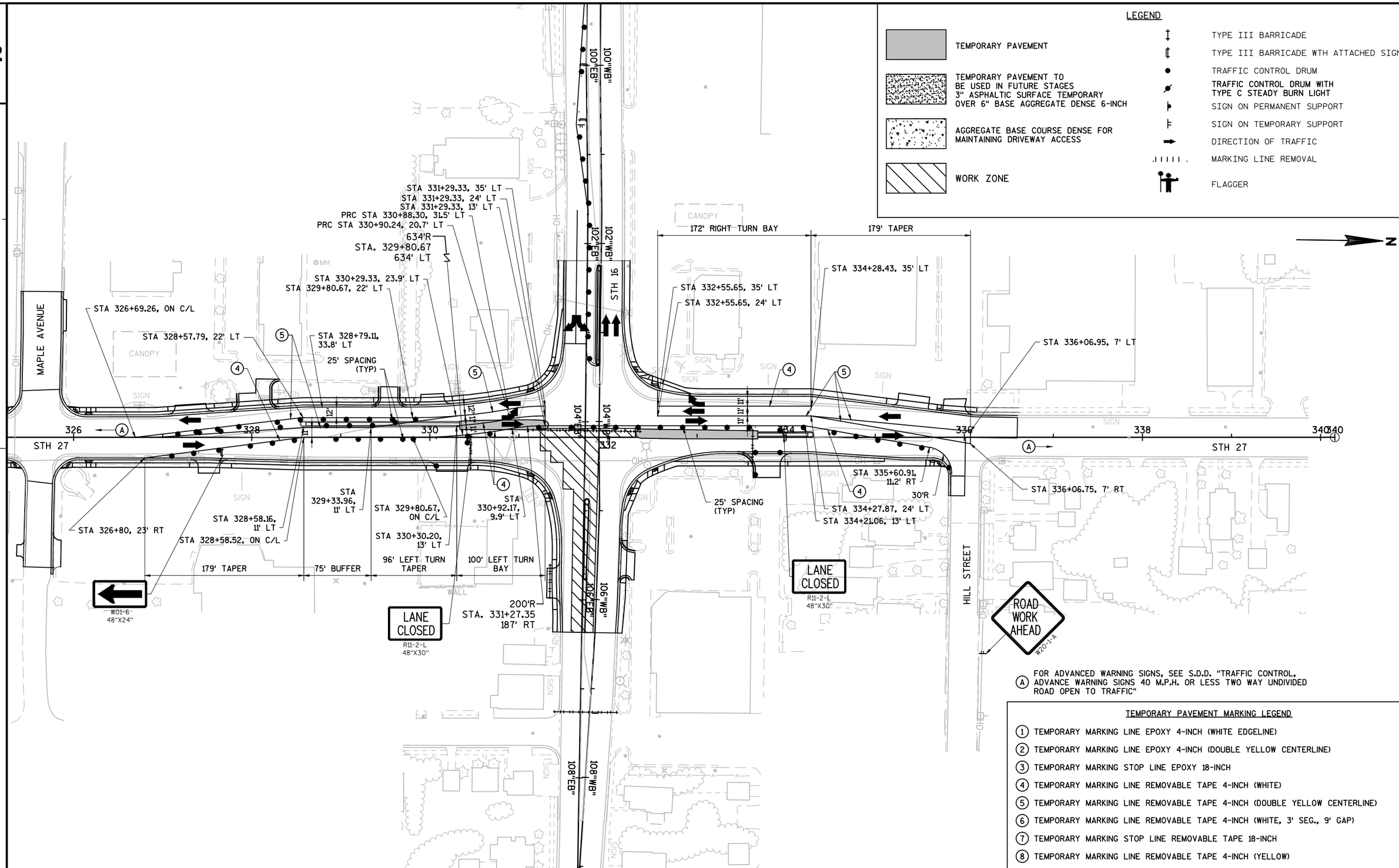

2

PROJECT NO:5144-01-75	HWY:STH 27	COUNTY:MONROE	TRAFFIC STAGING PLAN-STH 27-STAGE 5B-STH 16E DETOUR	SHEET 155	E

FILE NAME : N:\PDS\C3D\51440105\SHEETSPLAN\026001_S4B.DWG
LAYOUT NAME - FULLSIZE-026002_S5B
PLOT DATE : 7/27/2017 5:11 PM PLOT BY : VALENTI, PAUL M PLOT NAME : PLOT SCALE : 1 IN:100 FT

LEGEND

- TEMPORARY PAVEMENT
- TEMPORARY PAVEMENT TO BE USED IN FUTURE STAGES 3" ASPHALTIC SURFACE TEMPORARY OVER 6" BASE AGGREGATE DENSE 6-INCH
- AGGREGATE BASE COURSE DENSE FOR MAINTAINING DRIVEWAY ACCESS
- WORK ZONE
- TYPE III BARRICADE
- TYPE III BARRICADE WTH ATTACHED SIGN
- TRAFFIC CONTROL DRUM
- TRAFFIC CONTROL DRUM WITH TYPE C STEADY BURN LIGHT
- SIGN ON PERMANENT SUPPORT
- SIGN ON TEMPORARY SUPPORT
- DIRECTION OF TRAFFIC
- MARKING LINE REMOVAL
- FLAGGER

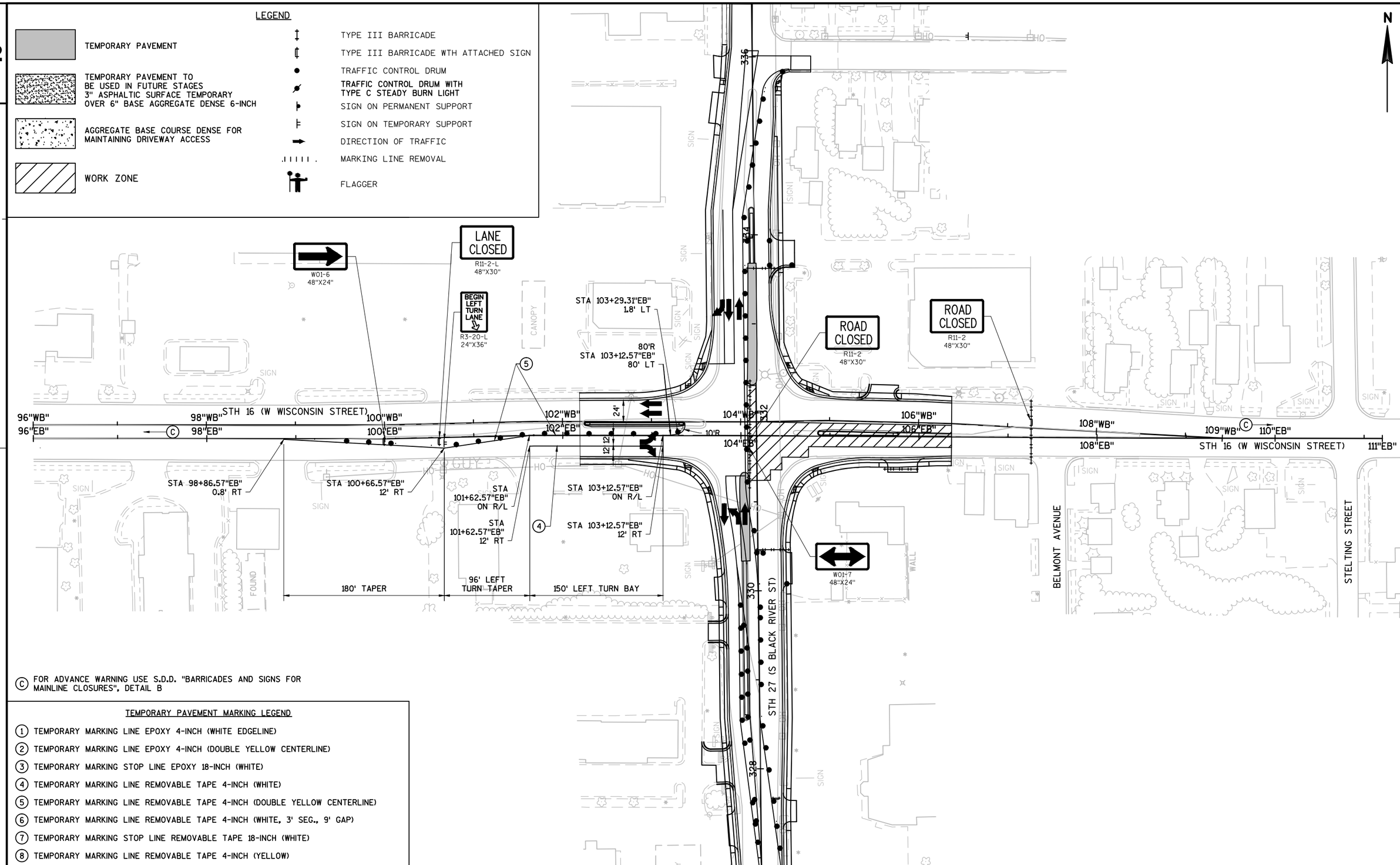

(C) FOR ADVANCE WARNING USE S.D.D. "BARRICADES AND SIGNS FOR MAINLINE CLOSURES", DETAIL B

TEMPORARY PAVEMENT MARKING LEGEND

1. TEMPORARY MARKING LINE EPOXY 4-INCH (WHITE EDGELINE)
2. TEMPORARY MARKING LINE EPOXY 4-INCH (DOUBLE YELLOW CENTERLINE)
3. TEMPORARY MARKING STOP LINE EPOXY 18-INCH (WHITE)
4. TEMPORARY MARKING LINE REMOVABLE TAPE 4-INCH (WHITE)
5. TEMPORARY MARKING LINE REMOVABLE TAPE 4-INCH (DOUBLE YELLOW CENTERLINE)
6. TEMPORARY MARKING LINE REMOVABLE TAPE 4-INCH (WHITE, 3' SEG., 9' GAP)
7. TEMPORARY MARKING STOP LINE REMOVABLE TAPE 18-INCH (WHITE)
8. TEMPORARY MARKING LINE REMOVABLE TAPE 4-INCH (YELLOW)

PROJECT NO:5144-01-75	HWY:STH 27	COUNTY:MONROE	TRAFFIC STAGING PLAN-STH 16-STAGE 5B-STH 16E DETOUR	SHEET 156	E

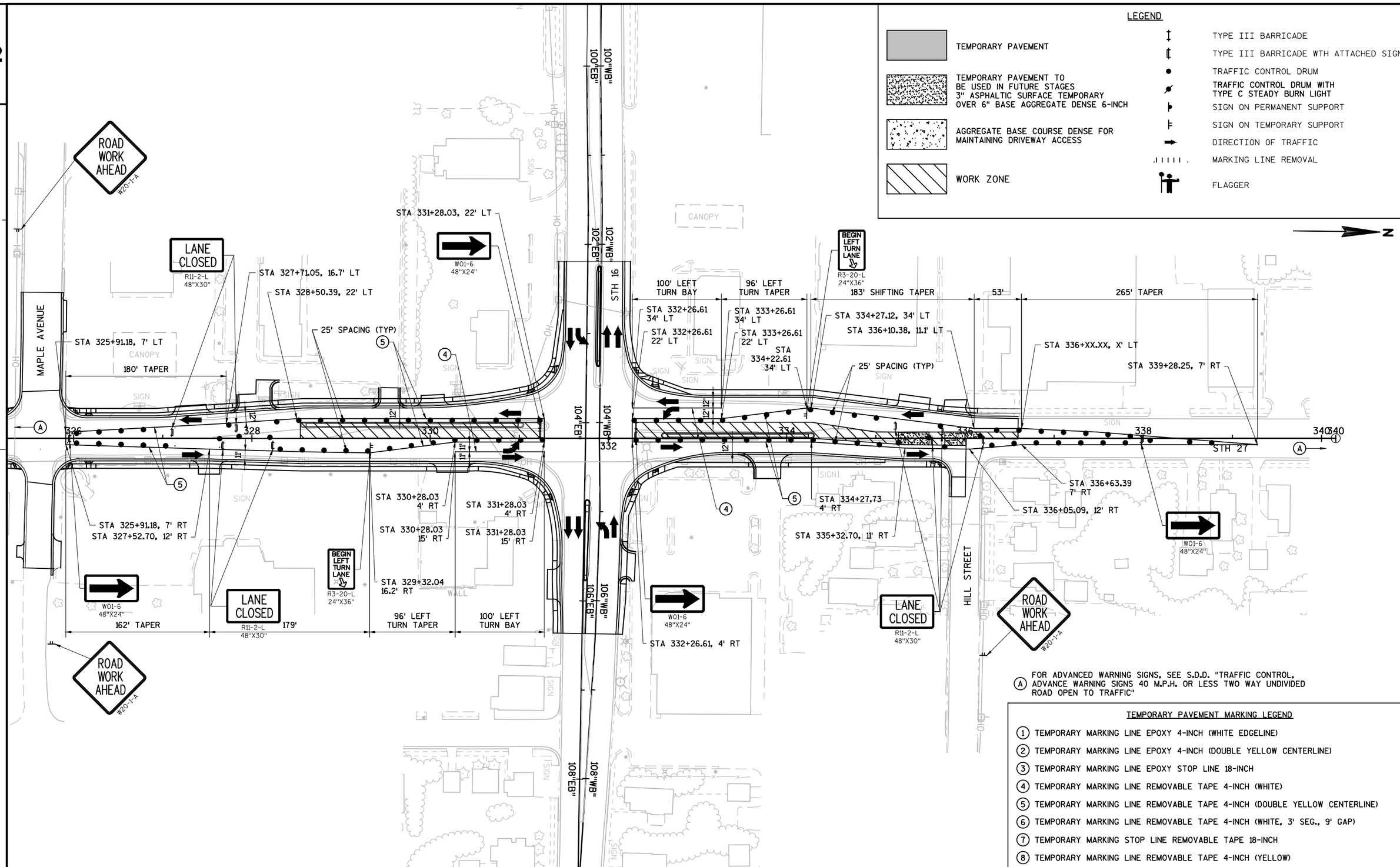

(A) FOR ADVANCED WARNING SIGNS, SEE S.D.D. "TRAFFIC CONTROL, ADVANCE WARNING SIGNS 40 M.P.H. OR LESS TWO WAY UNDIVIDED ROAD OPEN TO TRAFFIC"

TEMPORARY PAVEMENT MARKING LEGEND

1. TEMPORARY MARKING LINE EPOXY 4-INCH (WHITE EDGELINE)
2. TEMPORARY MARKING LINE EPOXY 4-INCH (DOUBLE YELLOW CENTERLINE)
3. TEMPORARY MARKING LINE EPOXY STOP LINE 18-INCH
4. TEMPORARY MARKING LINE REMOVABLE TAPE 4-INCH (WHITE)
5. TEMPORARY MARKING LINE REMOVABLE TAPE 4-INCH (DOUBLE YELLOW CENTERLINE)
6. TEMPORARY MARKING LINE REMOVABLE TAPE 4-INCH (WHITE, 3' SEG., 9' GAP)
7. TEMPORARY MARKING STOP LINE REMOVABLE TAPE 18-INCH
8. TEMPORARY MARKING LINE REMOVABLE TAPE 4-INCH (YELLOW)

PROJECT NO:5144-01-75	HWY:STH 27	COUNTY:MONROE	TRAFFIC STAGING PLAN - STH 27 - STAGE 6	SHEET 157	E

LEGEND

- TEMPORARY PAVEMENT
- TEMPORARY PAVEMENT TO BE USED IN FUTURE STAGES 3" ASPHALTIC SURFACE TEMPORARY OVER 6" BASE AGGREGATE DENSE 6-INCH
- AGGREGATE BASE COURSE DENSE FOR MAINTAINING DRIVEWAY ACCESS
- WORK ZONE
- TYPE III BARRICADE
- TYPE III BARRICADE WTH ATTACHED SIGN
- TRAFFIC CONTROL DRUM
- TRAFFIC CONTROL DRUM WITH TYPE C STEADY BURN LIGHT
- SIGN ON PERMANENT SUPPORT
- SIGN ON TEMPORARY SUPPORT
- DIRECTION OF TRAFFIC
- MARKING LINE REMOVAL
- FLAGGER

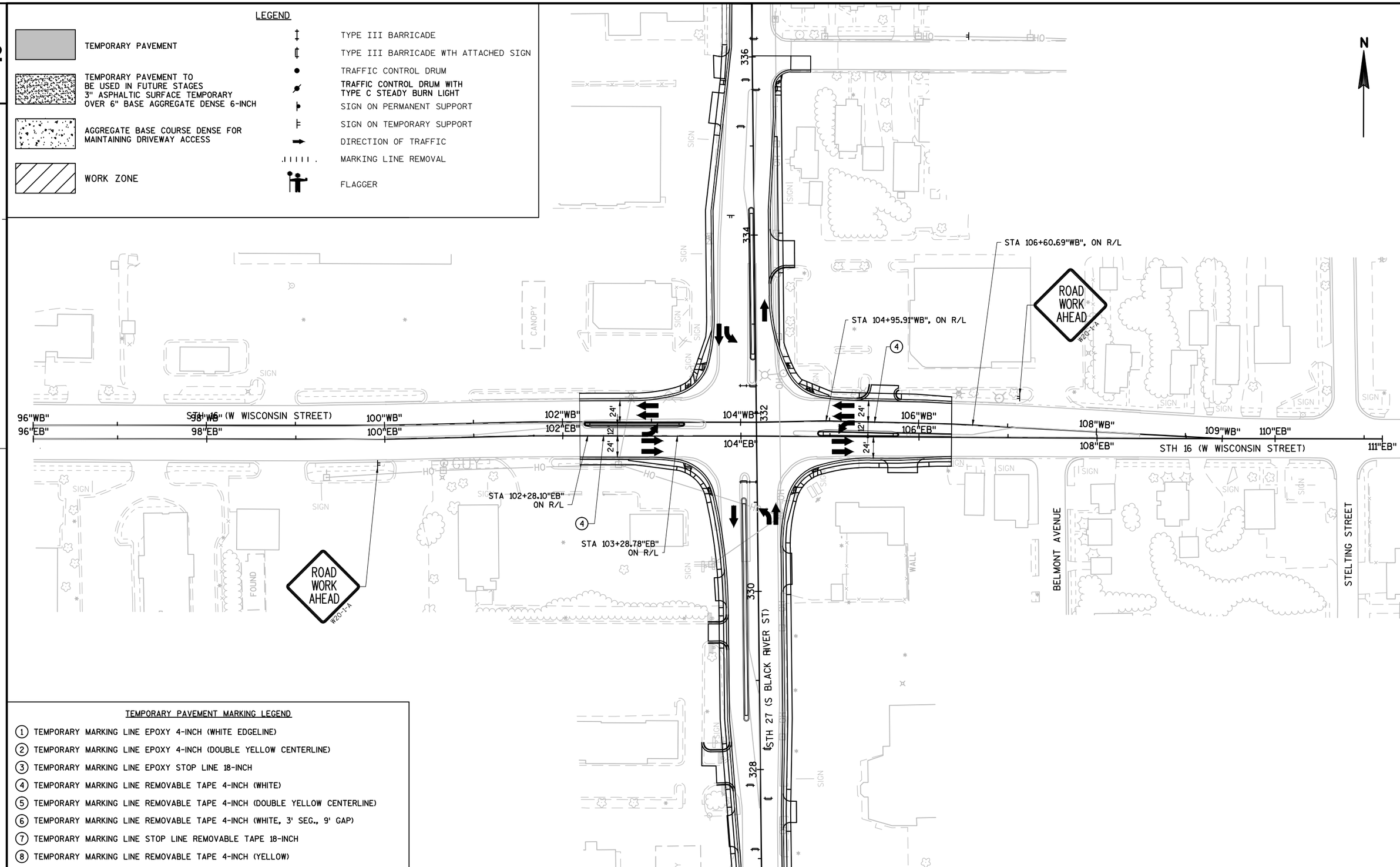

TEMPORARY PAVEMENT MARKING LEGEND

1. TEMPORARY MARKING LINE EPOXY 4-INCH (WHITE EDGELINE)
2. TEMPORARY MARKING LINE EPOXY 4-INCH (DOUBLE YELLOW CENTERLINE)
3. TEMPORARY MARKING LINE EPOXY STOP LINE 18-INCH
4. TEMPORARY MARKING LINE REMOVABLE TAPE 4-INCH (WHITE)
5. TEMPORARY MARKING LINE REMOVABLE TAPE 4-INCH (DOUBLE YELLOW CENTERLINE)
6. TEMPORARY MARKING LINE REMOVABLE TAPE 4-INCH (WHITE, 3' SEG., 9' GAP)
7. TEMPORARY MARKING LINE STOP LINE REMOVABLE TAPE 18-INCH
8. TEMPORARY MARKING LINE REMOVABLE TAPE 4-INCH (YELLOW)

PROJECT NO:5144-01-75	HWY:STH 27	COUNTY:MONROE	TRAFFIC STAGING PLAN - STH 16 - STAGE 6	SHEET 158	E

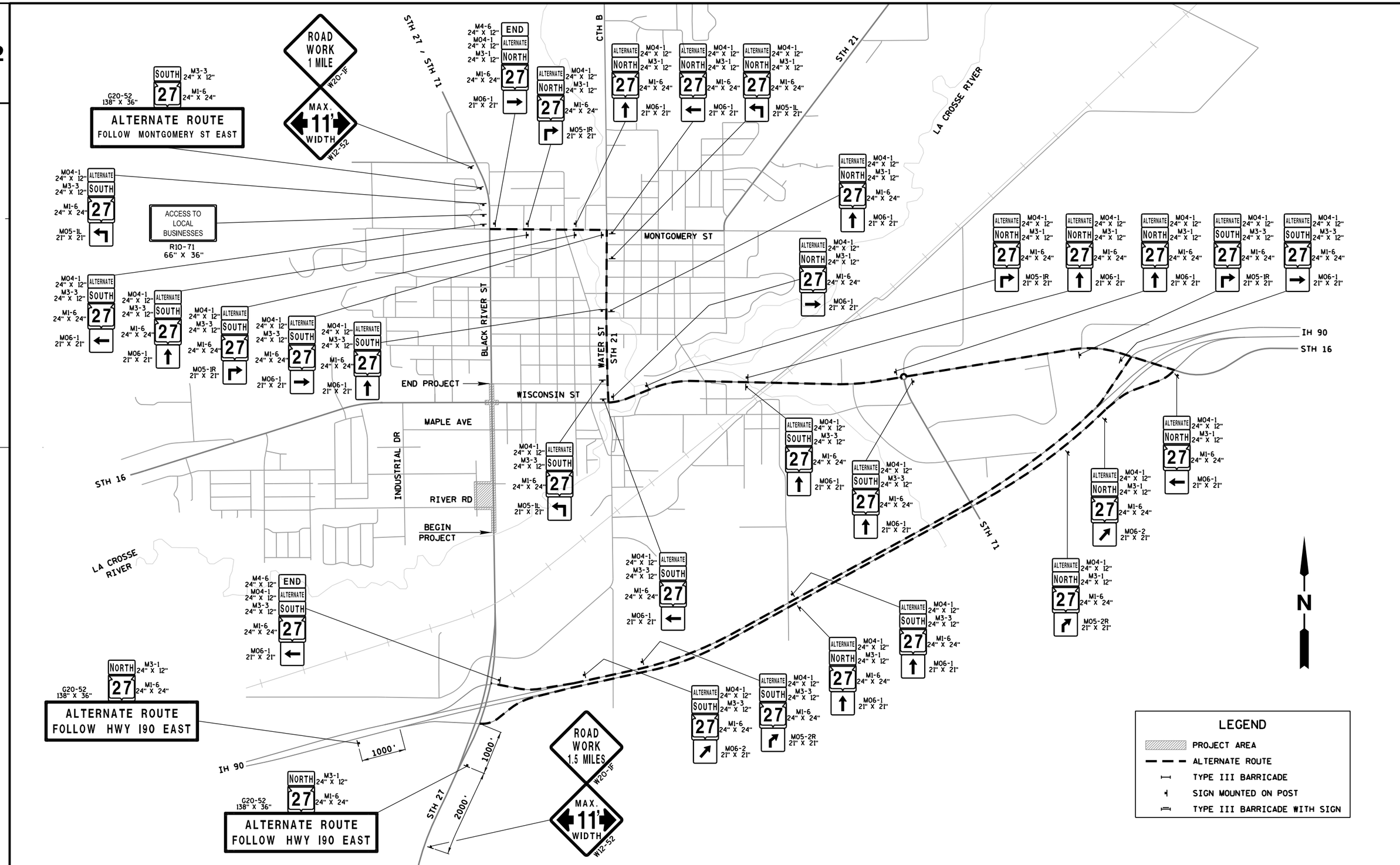

PROJECT NO: 5144-01-75	HWY: STH 27	COUNTY: MONROE	ALTERNATE ROUTE SIGNING	SHEET 159	E

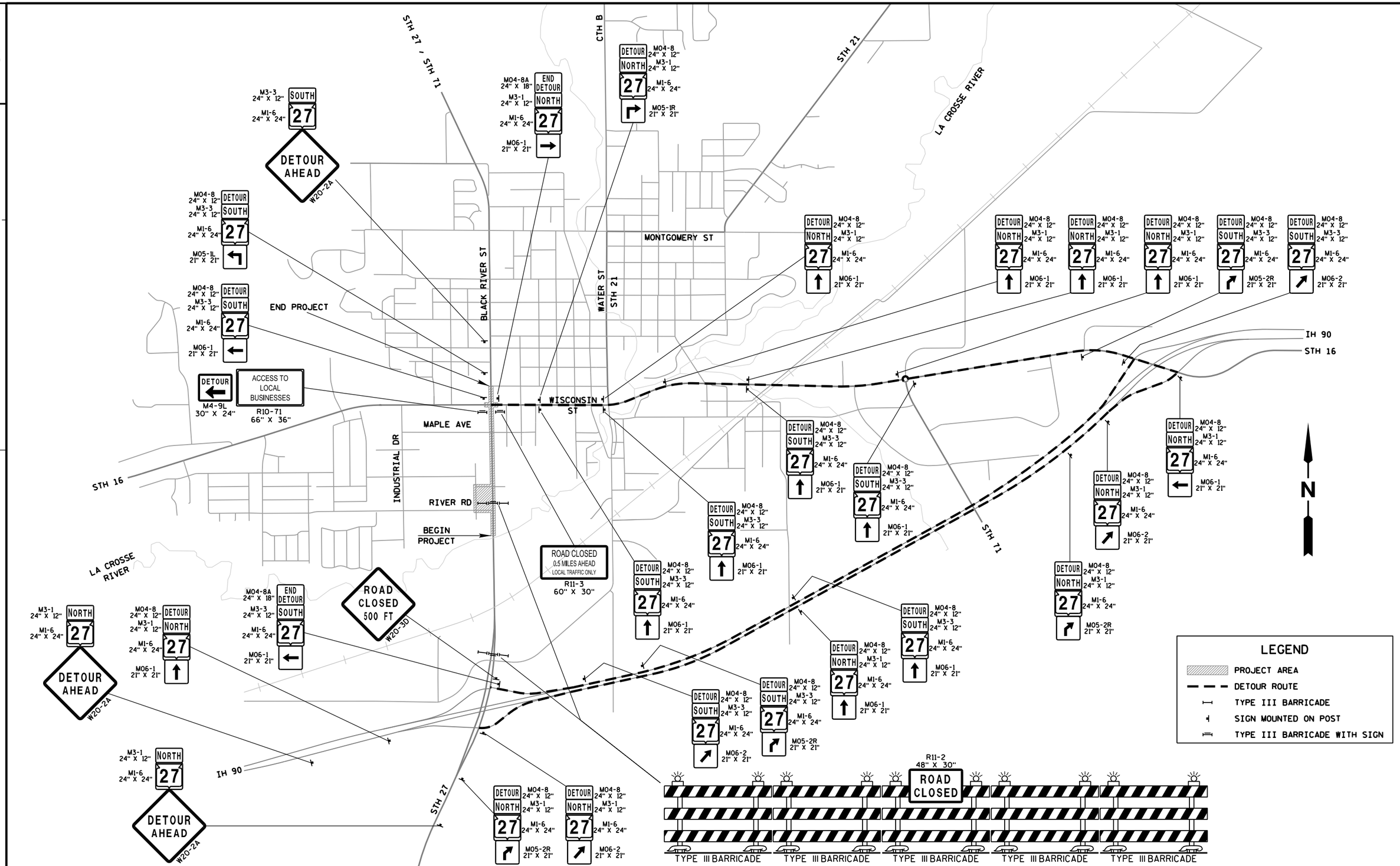

PROJECT NO: 5144-01-75	HWY: STH 27	COUNTY: MONROE	DETOUR - STAGE 1C STH 27 CLOSURE	SHEET 160	E

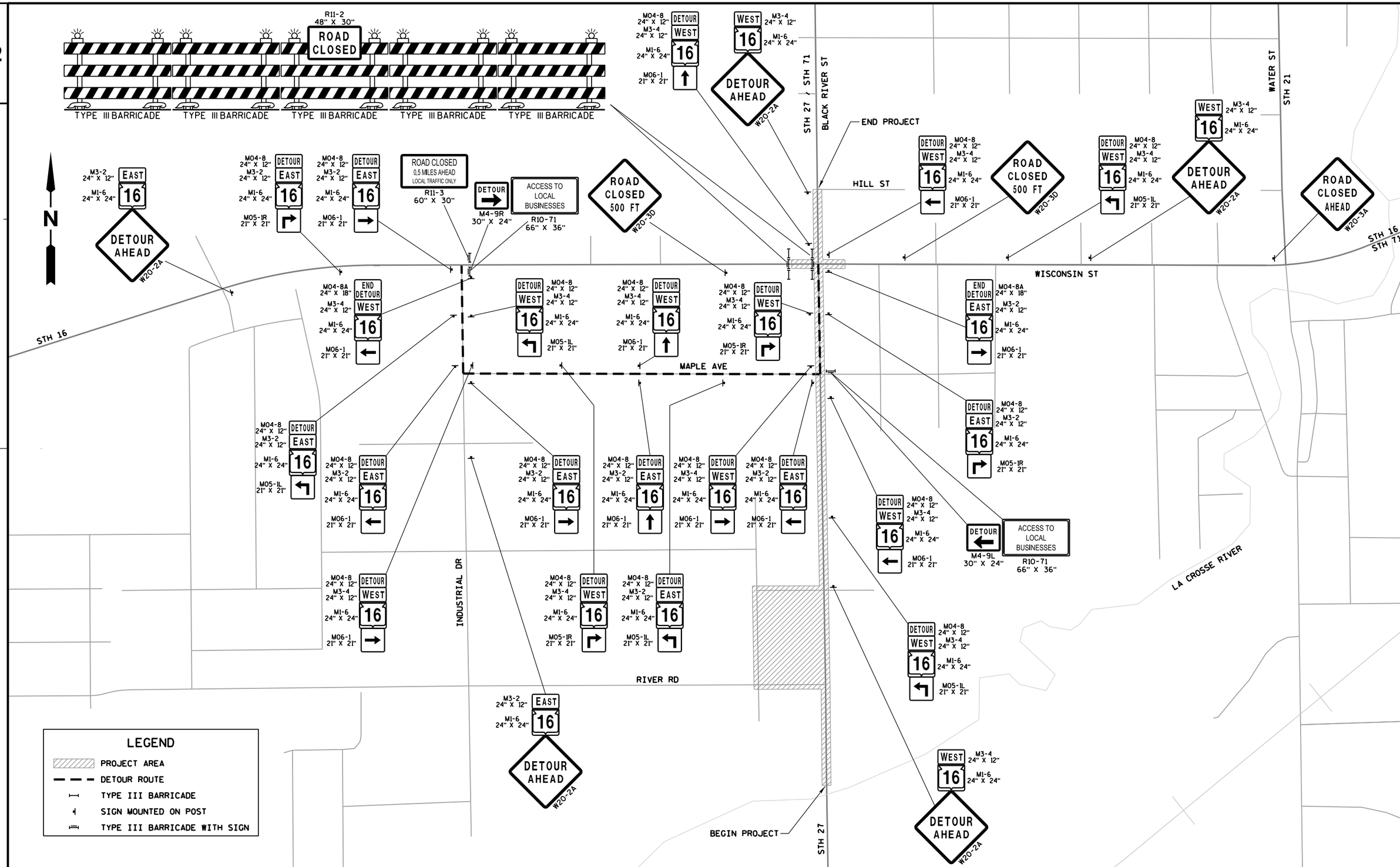

PROJECT NO: 5144-01-75	HWY: STH 27	COUNTY: MONROE	DETOUR - STAGE 2 STH 16 & STH 27 INTERSECTION	SHEET 161	E

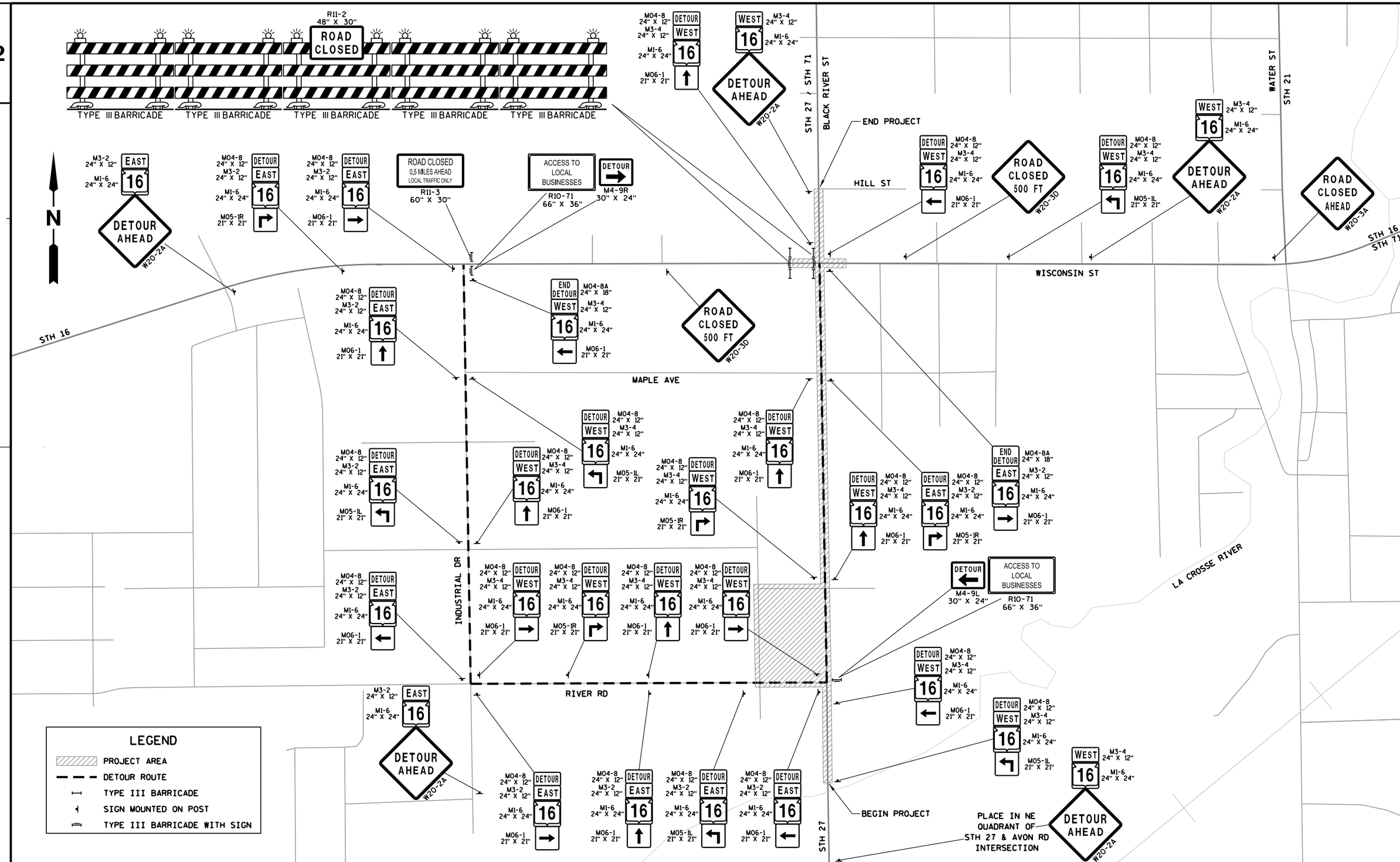

PROJECT NO: 5144-01-75	HWY: STH 27	COUNTY: MONROE	DETOUR - STAGE 5A	SHEET 162	E

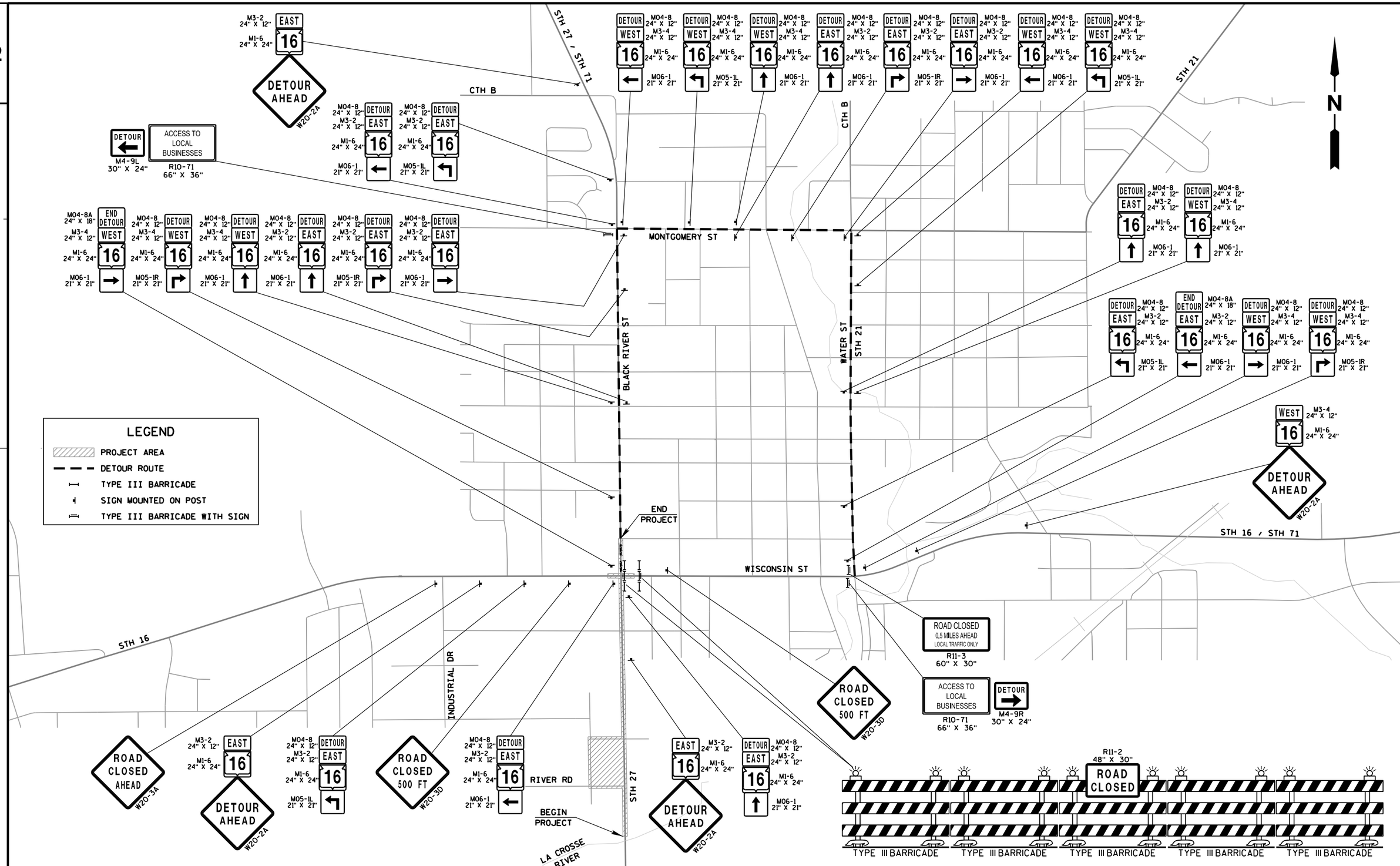

PROJECT NO: 5144-01-75	HWY: STH 27	COUNTY: MONROE	DETOUR - STAGE 5B	SHEET 163	E

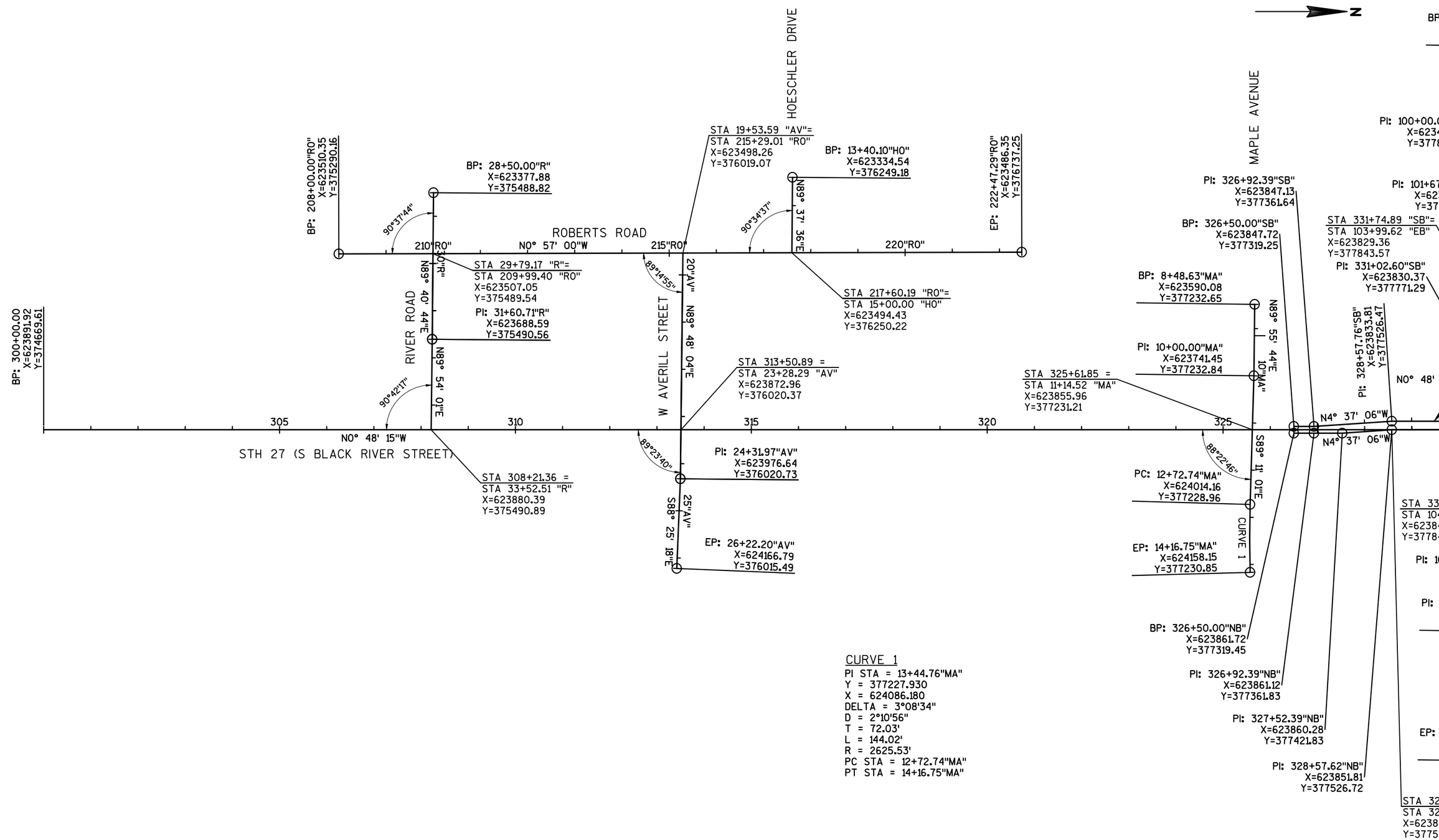

CURVE 1
PI STA = 13+44.76"MA"
Y = 377227.930
X = 624086.180
DELTA = 3°08'34"
D = 2°10'56"
T = 72.03'
L = 144.02'
R = 2625.53'
PC STA = 12+72.74"MA"
PT STA = 14+16.75"MA"

PROJECT NO:5144-01-75 & 5144-01-76	HWY:STH 27	COUNTY:MONROE	ALIGNMENT DETAILS	SHEET 164	E

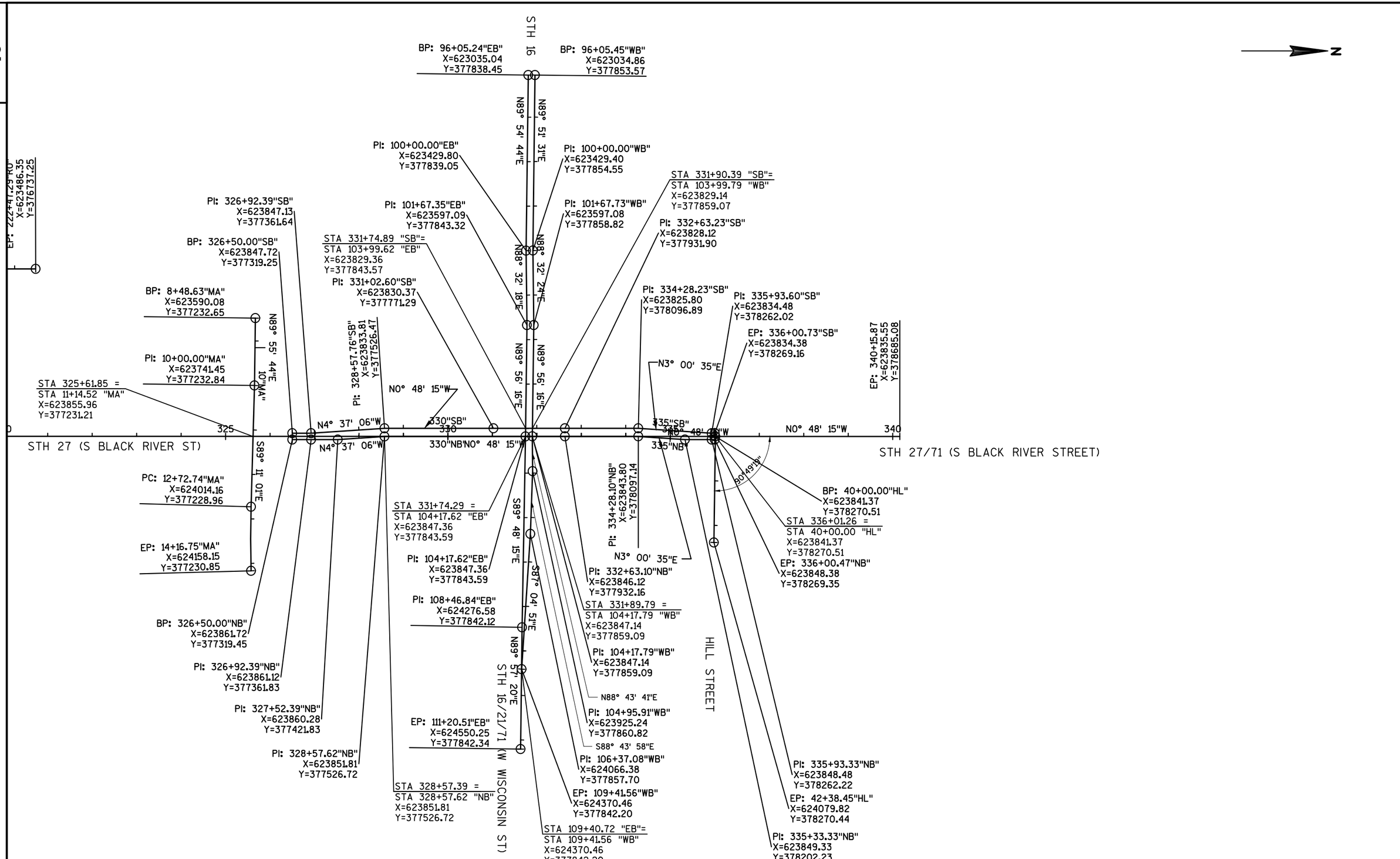

2

PROJECT NO:5144-01-75 & 5144-01-76	HWY:STH 27	COUNTY:MONROE	ALIGNMENT DETAILS	SHEET 165	E

2

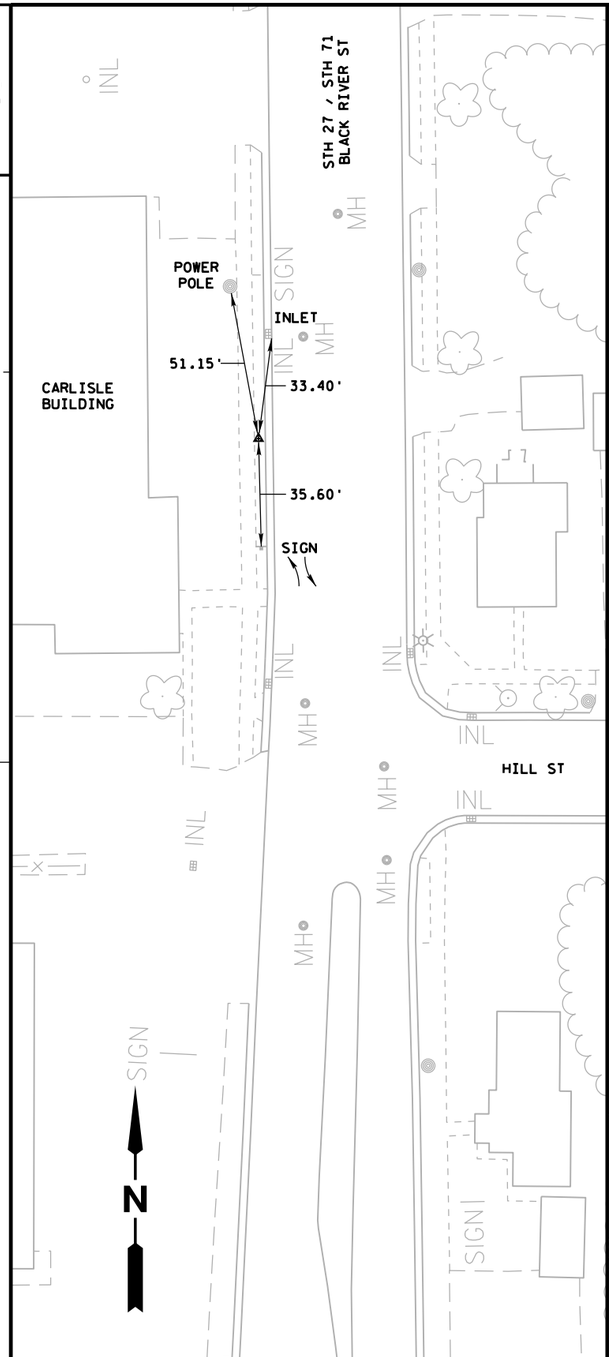

CONTROL POINT 910
X=623812.838,Y=378379.806
FENO MARKER (ALUMINUM CAP)
LOCATED +/- 100 FEET NORTH OF HILL STREET
WEST OF STH 27 BETWEEN BACK OF CURB AND SIDEWALK

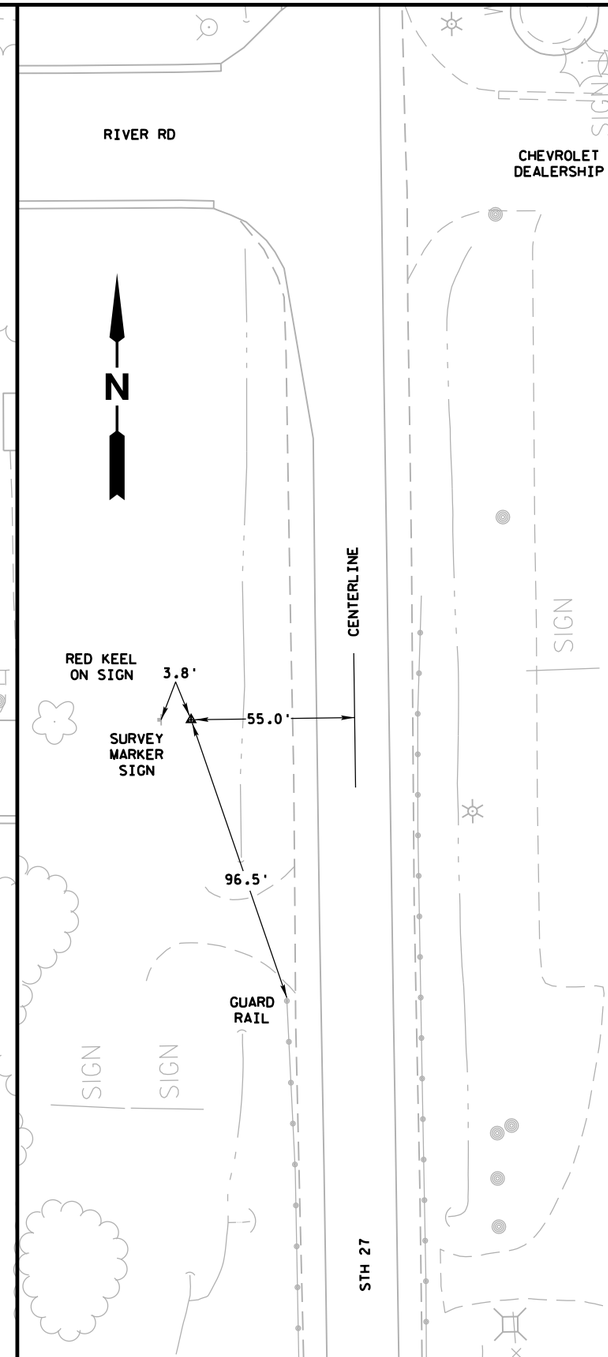

CONTROL POINT 911
X=623829.086,Y=375299.336
FENO MARKER (ALUMINUM CAP)
LOCATED +/- 200 FEET SOUTH OF RIVER ROAD
WEST OF STH 27 ACROSS FROM CHEVROLET DEALERSHIP

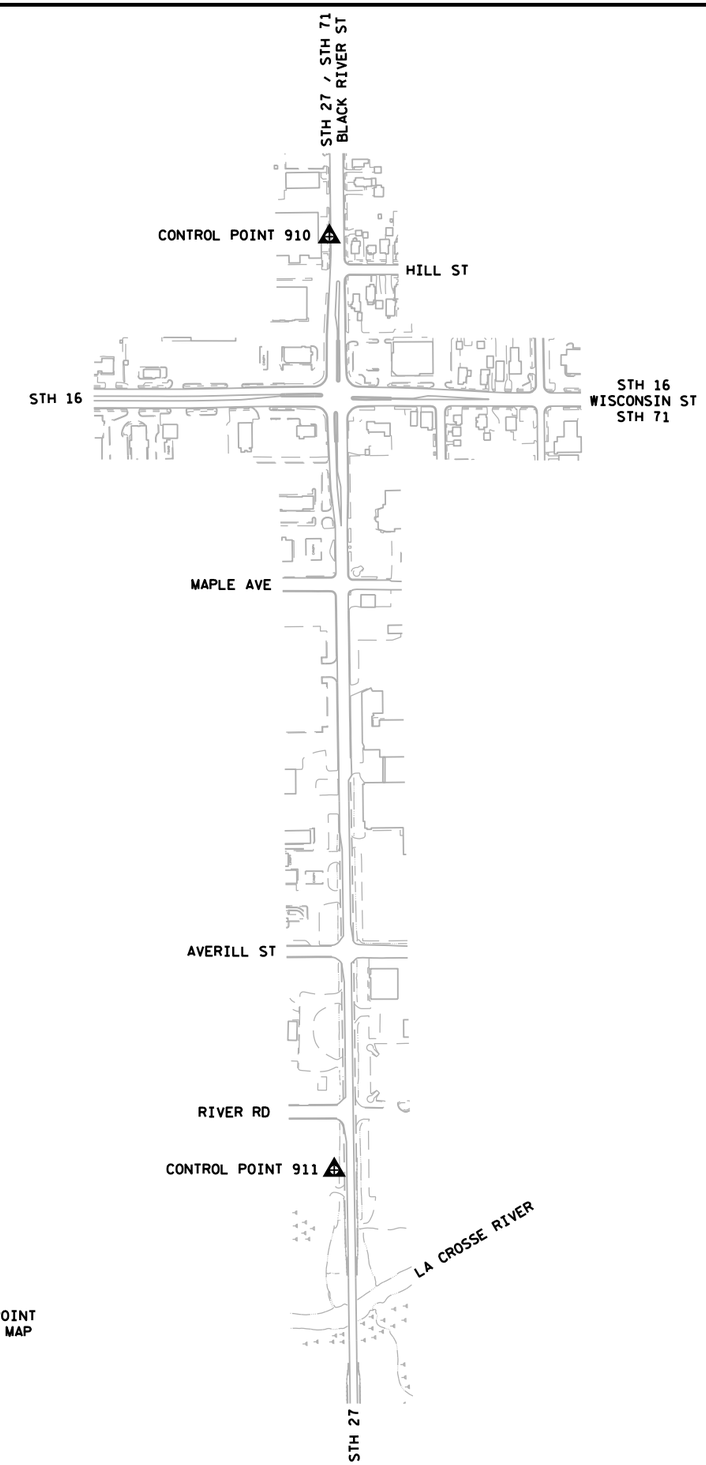

CONTROL POINT
LOCATION MAP

2

PROJECT NO: 5144-01-75	HWY: STH 27	COUNTY: MONROE	ALIGNMENT DETAILS - CONTROL POINTS	SHEET 166	E

Estimate Of Quantities

Line	Item	Item Description	Unit	Total	5144-01-75 Qty	5144-01-76 Qty
0002	201.0105	Clearing	STA	2.000	2.000	
0004	201.0205	Grubbing	STA	2.000	2.000	
0006	203.0100	Removing Small Pipe Culverts	EACH	9.000	9.000	
0008	204.0100	Removing Pavement	SY	8,870.000	8,870.000	
0010	204.0150	Removing Curb & Gutter	LF	6,240.000	6,240.000	
0012	204.0155	Removing Concrete Sidewalk	SY	1,639.000	1,639.000	
0014	204.0165	Removing Guardrail	LF	644.000	644.000	
0016	204.0195	Removing Concrete Bases	EACH	12.000	12.000	
0018	204.0210	Removing Manholes	EACH	12.000	12.000	
0020	204.0220	Removing Inlets	EACH	28.000	22.000	6.000
0022	204.0245	Removing Storm Sewer (size) 01. 12-INCH	LF	749.000	604.000	145.000
0024	204.0245	Removing Storm Sewer (size) 02. 15-INCH	LF	10.000	10.000	
0026	204.0245	Removing Storm Sewer (size) 03. 18-INCH	LF	114.000	114.000	
0028	204.0245	Removing Storm Sewer (size) 04. 24-INCH	LF	450.000	450.000	
0030	204.0245	Removing Storm Sewer (size) 05. 36-INCH	LF	426.000	426.000	
0032	204.0280	Sealing Pipes	EACH	4.000	4.000	
0034	204.0291.S	Abandoning Sewer	CY	402.000	402.000	
0036	204.9060.S	Removing (item description) 01. Traffic Signal Units STH 16 & STH 27	EACH	1.000	1.000	
0038	204.9060.S	Removing (item description) 02. FIRE HYDRANT	EACH	9.000		9.000
0040	204.9060.S	Removing (item description) 03. SANITARY MANHOLE	EACH	5.000		5.000
0042	204.9060.S	Removing (item description) 04. VALVE BOX	EACH	14.000		14.000
0044	204.9060.S	Removing (item description) 05. Apron End Walls	EACH	2.000	2.000	
0046	205.0100	Excavation Common	CY	28,527.000	27,653.000	874.000
0048	213.0100	Finishing Roadway (project) 01. 5144-01-75	EACH	1.000	1.000	
0050	213.0100	Finishing Roadway (project) 02. 5144-01-76	EACH	1.000		1.000
0052	305.0110	Base Aggregate Dense 3/4-Inch	TON	152.000	152.000	
0054	305.0120	Base Aggregate Dense 1 1/4-Inch	TON	16,903.000	16,518.000	385.000
0056	305.0130	Base Aggregate Dense 3-Inch	TON	6,151.000	4,886.000	1,265.000
0058	312.0110	Select Crushed Material	TON	2,863.000	2,783.000	80.000
0060	405.0100	Coloring Concrete WisDOT Red	CY	266.000	266.000	
0062	415.0090	Concrete Pavement 9-Inch	SY	23,145.000	23,145.000	
0064	415.0210	Concrete Pavement Gaps	EACH	24.000	24.000	
0066	415.0410	Concrete Pavement Approach Slab	SY	57.000	57.000	
0068	415.5110.S	Concrete Pavement Joint Layout	LS	1.000	1.000	
0070	416.0160	Concrete Driveway 6-Inch	SY	111.000		111.000
0072	416.0180	Concrete Driveway 8-Inch	SY	1,193.000	1,193.000	
0074	416.0512	Concrete Truck Apron 12-Inch	SY	651.000	651.000	
0076	416.0610	Drilled Tie Bars	EACH	16.000	16.000	
0078	416.1010	Concrete Surface Drains	CY	4.000	4.000	

Line	Item	Item Description	Unit	Total	5144-01-75 Qty	5144-01-76 Qty
0080	440.4410	Incentive IRI Ride	DOL	3,928.000	3,928.000	
0082	455.0605	Tack Coat	GAL	2,846.000	2,113.000	733.000
0084	460.5223	HMA Pavement 3 LT 58-28 S	TON	978.000	796.000	182.000
0086	460.5224	HMA Pavement 4 LT 58-28 S	TON	732.000	591.000	141.000
0088	465.0120	Asphaltic Surface Driveways and Field Entrances	TON	53.000	53.000	
0090	465.0125	Asphaltic Surface Temporary	TON	945.000	945.000	
0092	465.0310	Asphaltic Curb	LF	561.000	561.000	
0094	520.2012	Culvert Pipe Temporary 12-Inch	LF	44.000	44.000	
0096	520.2015	Culvert Pipe Temporary 15-Inch	LF	60.000	60.000	
0098	520.2018	Culvert Pipe Temporary 18-Inch	LF	122.000	122.000	
0100	520.8000	Concrete Collars for Pipe	EACH	4.000	4.000	
0102	520.8700	Cleaning Culvert Pipes	EACH	1.000	1.000	
0104	521.1012	Apron Endwalls for Culvert Pipe Steel 12-Inch	EACH	1.000	1.000	
0106	521.2005.S	Surface Drain Pipe Corrugated Metal Slotted (inch) 01. 12-Inch	LF	33.000	33.000	
0108	522.1060	Apron Endwalls for Culvert Pipe Reinforced Concrete 60-Inch	EACH	1.000	1.000	
0110	601.0120	Concrete Curb Type J	LF	126.000	126.000	
0112	601.0405	Concrete Curb & Gutter 18-Inch Type A	LF	250.000	250.000	
0114	601.0409	Concrete Curb & Gutter 30-Inch Type A	LF	7,370.000	7,370.000	
0116	601.0411	Concrete Curb & Gutter 30-Inch Type D	LF	2,922.000	848.000	2,074.000
0118	601.0413	Concrete Curb & Gutter 6-Inch Sloped 30-Inch Type G	LF	207.000	207.000	
0120	601.0551	Concrete Curb & Gutter 4-Inch Sloped 36-Inch Type A	LF	344.000	344.000	
0122	601.0580	Concrete Curb & Gutter 4-Inch Sloped 36-Inch Type R	LF	435.000	435.000	
0124	602.0410	Concrete Sidewalk 5-Inch	SF	40,255.000	40,255.000	
0126	602.0505	Curb Ramp Detectable Warning Field Yellow	SF	602.000	602.000	
0128	606.0300	Riprap Heavy	CY	22.000	22.000	
0130	608.0312	Storm Sewer Pipe Reinforced Concrete Class III 12-Inch	LF	1,660.000	1,419.000	241.000
0132	608.0315	Storm Sewer Pipe Reinforced Concrete Class III 15-Inch	LF	460.000	460.000	
0134	608.0318	Storm Sewer Pipe Reinforced Concrete Class III 18-Inch	LF	145.000	145.000	
0136	608.0321	Storm Sewer Pipe Reinforced Concrete Class III 21-Inch	LF	77.000	77.000	
0138	608.0324	Storm Sewer Pipe Reinforced Concrete Class III 24-Inch	LF	155.000	155.000	
0140	608.0348	Storm Sewer Pipe Reinforced Concrete Class III 48-Inch	LF	1,000.000	1,000.000	
0142	608.0354	Storm Sewer Pipe Reinforced Concrete Class III 54-Inch	LF	71.000	71.000	

Line	Item	Item Description	Unit	Total	5144-01-75 Qty	5144-01-76 Qty
0144	608.0360	Storm Sewer Pipe Reinforced Concrete Class III 60-Inch	LF	1,547.000	1,547.000	
0146	608.0412	Storm Sewer Pipe Reinforced Concrete Class IV 12-Inch	LF	54.000	54.000	
0148	608.0415	Storm Sewer Pipe Reinforced Concrete Class IV 15-Inch	LF	8.000	8.000	
0150	608.0418	Storm Sewer Pipe Reinforced Concrete Class IV 18-Inch	LF	41.000	41.000	
0152	608.0424	Storm Sewer Pipe Reinforced Concrete Class IV 24-Inch	LF	76.000	76.000	
0154	608.0454	Storm Sewer Pipe Reinforced Concrete Class IV 54-Inch	LF	361.000	361.000	
0156	608.0460	Storm Sewer Pipe Reinforced Concrete Class IV 60-Inch	LF	217.000	217.000	
0158	608.3012	Storm Sewer Pipe Class III-A 12-Inch	LF	28.000	28.000	
0160	608.3015	Storm Sewer Pipe Class III-A 15-Inch	LF	10.000	10.000	
0162	611.0430	Reconstructing Inlets	EACH	4.000	4.000	
0164	611.0530	Manhole Covers Type J	EACH	22.000	19.000	3.000
0166	611.0545	Manhole Covers Type L	EACH	3.000	3.000	
0168	611.0624	Inlet Covers Type H	EACH	58.000	52.000	6.000
0170	611.0636	Inlet Covers Type HM-S	EACH	5.000	5.000	
0172	611.0639	Inlet Covers Type H-S	EACH	14.000	14.000	
0174	611.0642	Inlet Covers Type MS	EACH	3.000	3.000	
0176	611.0651	Inlet Covers Type S	EACH	4.000	4.000	
0178	611.0652	Inlet Covers Type T	EACH	2.000	2.000	
0180	611.2003	Manholes 3-FT Diameter	EACH	3.000	3.000	
0182	611.2004	Manholes 4-FT Diameter	EACH	10.000	10.000	
0184	611.2005	Manholes 5-FT Diameter	EACH	2.000	2.000	
0186	611.2006	Manholes 6-FT Diameter	EACH	1.000	1.000	
0188	611.2007	Manholes 7-FT Diameter	EACH	1.000	1.000	
0190	611.2008	Manholes 8-FT Diameter	EACH	17.000	17.000	
0192	611.3004	Inlets 4-FT Diameter	EACH	1.000	1.000	
0194	611.3230	Inlets 2x3-FT	EACH	60.000	54.000	6.000
0196	611.3901	Inlets Median 1 Grate	EACH	3.000	3.000	
0198	611.8110	Adjusting Manhole Covers	EACH	6.000	3.000	3.000
0200	611.8115	Adjusting Inlet Covers	EACH	1.000	1.000	
0202	611.8120.S	Cover Plates Temporary	EACH	4.000	4.000	
0204	612.0106	Pipe Underdrain 6-Inch	LF	148.000	148.000	
0206	612.0212	Pipe Underdrain Unperforated 12-Inch	LF	26.000	26.000	
0208	614.2300	MGS Guardrail 3	LF	325.000	325.000	
0210	614.2500	MGS Thrie Beam Transition	LF	78.000	78.000	

Line	Item	Item Description	Unit	Total	5144-01-75 Qty	5144-01-76 Qty
0212	614.2610	MGS Guardrail Terminal EAT	EACH	2.000	2.000	
0214	619.1000	Mobilization	EACH	1.000	0.850	0.150
0216	620.0100	Concrete Corrugated Median	SF	260.000	260.000	
0218	620.0300	Concrete Median Sloped Nose	SF	665.000	665.000	
0220	624.0100	Water	MGAL	576.000	548.000	28.000
0222	625.0100	Topsoil	SY	9,900.000	8,417.000	1,483.000
0224	627.0200	Mulching	SY	5,765.000	5,765.000	
0226	628.1504	Silt Fence	LF	3,906.000	3,906.000	
0228	628.1520	Silt Fence Maintenance	LF	3,906.000	3,906.000	
0230	628.1905	Mobilizations Erosion Control	EACH	5.000	5.000	
0232	628.1910	Mobilizations Emergency Erosion Control	EACH	10.000	10.000	
0234	628.2004	Erosion Mat Class I Type B	SY	6,317.000	6,317.000	
0236	628.2006	Erosion Mat Urban Class I Type A	SY	293.000	293.000	
0238	628.2008	Erosion Mat Urban Class I Type B	SY	3,201.000	1,966.000	1,235.000
0240	628.7005	Inlet Protection Type A	EACH	14.000	6.000	8.000
0242	628.7015	Inlet Protection Type C	EACH	44.000	34.000	10.000
0244	628.7020	Inlet Protection Type D	EACH	33.000	33.000	
0246	628.7504	Temporary Ditch Checks	LF	81.000	81.000	
0248	628.7555	Culvert Pipe Checks	EACH	12.000	12.000	
0250	628.7560	Tracking Pads	EACH	11.000	11.000	
0252	629.0210	Fertilizer Type B	CWT	8.000	6.000	2.000
0254	630.0130	Seeding Mixture No. 30	LB	202.000	166.000	36.000
0256	630.0200	Seeding Temporary	LB	183.000	183.000	
0258	632.0101	Trees (species) (size) (root) 01. Apple Serviceberry "Autumn Brilliance" B&B 6-FT	EACH	2.000	2.000	
0260	632.0201	Shrubs (species) (size) (root) 02. Juniper Pfitzer "Kallay's Compact" Container 24-Inch Spread	EACH	16.000	16.000	
0262	632.9101	Landscape Planting Surveillance and Care Cycles	EACH	26.000	26.000	
0264	633.5200	Markers Culvert End	EACH	2.000	2.000	
0266	634.0614	Posts Wood 4x6-Inch X 14-FT	EACH	14.000	14.000	
0268	634.0616	Posts Wood 4x6-Inch X 16-FT	EACH	18.000	18.000	
0270	634.0618	Posts Wood 4x6-Inch X 18-FT	EACH	3.000	3.000	
0272	634.0620	Posts Wood 4x6-Inch X 20-FT	EACH	2.000	2.000	
0274	634.0622	Posts Wood 4x6-Inch X 22-FT	EACH	5.000	5.000	
0276	634.0809	Posts Tubular Steel 2x2-Inch X 9.5-FT	EACH	1.000	1.000	
0278	634.0811	Posts Tubular Steel 2x2-Inch X 11-FT	EACH	24.000	24.000	
0280	634.0885	Posts Tubular Steel 2x2-Inch X 8.5-FT	EACH	8.000	8.000	
0282	637.2210	Signs Type II Reflective H	SF	788.130	788.130	
0284	637.2230	Signs Type II Reflective F	SF	25.500	25.500	
0286	638.2602	Removing Signs Type II	EACH	55.000	55.000	

Line	Item	Item Description	Unit	Total	5144-01-75 Qty	5144-01-76 Qty
0288	638.3000	Removing Small Sign Supports	EACH	43.000	43.000	
0290	642.5401	Field Office Type D	EACH	1.000	1.000	
0292	643.0300	Traffic Control Drums	DAY	56,293.000	56,237.000	56.000
0294	643.0420	Traffic Control Barricades Type III	DAY	6,275.000	5,491.000	784.000
0296	643.0705	Traffic Control Warning Lights Type A	DAY	6,222.000	5,102.000	1,120.000
0298	643.0715	Traffic Control Warning Lights Type C	DAY	9,233.000	9,233.000	
0300	643.0800	Traffic Control Arrow Boards	DAY	286.000	286.000	
0302	643.0900	Traffic Control Signs	DAY	42,354.000	41,738.000	616.000
0304	643.1051	Traffic Control Signs PCMS with Cellular Communications	DAY	554.000	554.000	
0306	643.5000	Traffic Control	EACH	1.000	1.000	
0308	644.1420.S	Temporary Pedestrian Surface Plywood	SF	1,730.000	1,730.000	
0310	644.1601.S	Temporary Curb Ramp	EACH	4.000	4.000	
0312	644.1616.S	Temporary Pedestrian Safety Fence	LF	692.000	692.000	
0314	645.0111	Geotextile Type DF Schedule A	SY	158.000	158.000	
0316	645.0120	Geotextile Type HR	SY	58.000	58.000	
0318	646.1020	Marking Line Epoxy 4-Inch	LF	13,674.000	13,674.000	
0320	646.3020	Marking Line Epoxy 8-Inch	LF	1,090.000	1,090.000	
0322	646.5020	Marking Arrow Epoxy	EACH	49.000	49.000	
0324	646.5120	Marking Word Epoxy	EACH	11.000	11.000	
0326	646.5220	Marking Symbol Epoxy	EACH	23.000	23.000	
0328	646.6120	Marking Stop Line Epoxy 18-Inch	LF	255.000	255.000	
0330	646.6220	Marking Yield Line Epoxy 18-Inch	EACH	89.000	89.000	
0332	646.7120	Marking Diagonal Epoxy 12-Inch	LF	666.000	666.000	
0334	646.7420	Marking Crosswalk Epoxy Transverse Line 6-Inch	LF	1,867.000	1,867.000	
0336	646.8120	Marking Curb Epoxy	LF	254.000	254.000	
0338	646.8220	Marking Island Nose Epoxy	EACH	12.000	12.000	
0340	646.9000	Marking Removal Line 4-Inch	LF	3,770.000	3,770.000	
0342	649.0120	Temporary Marking Line Epoxy 4-Inch	LF	12,120.000	12,120.000	
0344	649.0150	Temporary Marking Line Removable Tape 4-Inch	LF	66,717.000	66,717.000	
0346	650.4000	Construction Staking Storm Sewer	EACH	107.000	101.000	6.000
0348	650.4500	Construction Staking Subgrade	LF	12,951.000	12,643.000	308.000
0350	650.5000	Construction Staking Base	LF	4,690.000	4,382.000	308.000
0352	650.5500	Construction Staking Curb Gutter and Curb & Gutter	LF	2,925.000	851.000	2,074.000
0354	650.6000	Construction Staking Pipe Culverts	EACH	4.000	4.000	
0356	650.7000	Construction Staking Concrete Pavement	LF	8,713.000	8,713.000	
0358	650.8500	Construction Staking Electrical Installations (project) 01. 5144-01-75	LS	1.000	1.000	
0360	650.9910	Construction Staking Supplemental Control (project) 01. 5144-01-75	LS	1.000	1.000	

Line	Item	Item Description	Unit	Total	5144-01-75 Qty	5144-01-76 Qty
0362	650.9920	Construction Staking Slope Stakes	LF	10,621.000	10,313.000	308.000
0364	652.0225	Conduit Rigid Nonmetallic Schedule 40 2-Inch	LF	5,473.000	5,473.000	
0366	652.0235	Conduit Rigid Nonmetallic Schedule 40 3-Inch	LF	1,059.000	1,059.000	
0368	652.0800	Conduit Loop Detector	LF	1,024.000	1,024.000	
0370	653.0105	Pull Boxes Steel 12x24-Inch	EACH	12.000	12.000	
0372	653.0164	Pull Boxes Non-Conductive 24x42-Inch	EACH	30.000	30.000	
0374	654.0101	Concrete Bases Type 1	EACH	5.000	5.000	
0376	654.0113	Concrete Bases Type 13	EACH	4.000	4.000	
0378	654.0217	Concrete Control Cabinet Bases Type 9 Special	EACH	1.000	1.000	
0380	654.0224	Concrete Control Cabinet Bases Type L24	EACH	2.000	2.000	
0382	655.0210	Cable Traffic Signal 3-14 AWG	LF	135.000	135.000	
0384	655.0230	Cable Traffic Signal 5-14 AWG	LF	733.000	733.000	
0386	655.0260	Cable Traffic Signal 12-14 AWG	LF	1,377.000	1,377.000	
0388	655.0305	Cable Type UF 2-12 AWG Grounded	LF	678.000	678.000	
0390	655.0610	Electrical Wire Lighting 12 AWG	LF	4,740.000	4,740.000	
0392	655.0620	Electrical Wire Lighting 8 AWG	LF	15,255.000	15,255.000	
0394	655.0625	Electrical Wire Lighting 6 AWG	LF	15,255.000	15,255.000	
0396	655.0700	Loop Detector Lead In Cable	LF	3,132.000	3,132.000	
0398	655.0800	Loop Detector Wire	LF	4,274.000	4,274.000	
0400	656.0200	Electrical Service Meter Breaker Pedestal (location) 01. STH 16	LS	1.000	1.000	
0402	656.0200	Electrical Service Meter Breaker Pedestal (location) 02. Roundabout Lighting	LS	1.000	1.000	
0404	656.0200	Electrical Service Meter Breaker Pedestal (location) 03. Mainline Lighting	LS	1.000	1.000	
0406	657.0100	Pedestal Bases	EACH	5.000	5.000	
0408	657.0405	Traffic Signal Standards Aluminum 3.5-FT	EACH	1.000	1.000	
0410	657.0425	Traffic Signal Standards Aluminum 15-FT	EACH	4.000	4.000	
0412	658.0173	Traffic Signal Face 3S 12-Inch	EACH	12.000	12.000	
0414	658.0174	Traffic Signal Face 4S 12-Inch	EACH	8.000	8.000	
0416	658.0416	Pedestrian Signal Face 16-Inch	EACH	8.000	8.000	
0418	658.0500	Pedestrian Push Buttons	EACH	9.000	9.000	
0420	658.5069	Signal Mounting Hardware (location) 01. STH 27 & STH 16 Intersection	LS	1.000	1.000	
0422	659.1125	Luminaires Utility LED C	EACH	4.000	4.000	
0424	659.2124	Lighting Control Cabinets 120/240 24-Inch	EACH	2.000	2.000	
0426	661.0200	Temporary Traffic Signals for Intersections (location) 01. STH 16	LS	1.000	1.000	
0428	690.0150	Sawing Asphalt	LF	8,092.000	7,957.000	135.000
0430	690.0250	Sawing Concrete	LF	3,916.000	3,910.000	6.000
0432	ASP.1T0A	On-the-Job Training Apprentice at $5.00/HR	HRS	2,000.000	2,000.000	

Line	Item	Item Description	Unit	Total	5144-01-75 Qty	5144-01-76 Qty
0434	ASP.1T0G	On-the-Job Training Graduate at $5.00/HR	HRS	1,320.000	1,320.000	
0436	SPV.0035	Special 01. ROCK EXCAVATION FOR UTILITIES	CY	100.000		100.000
0438	SPV.0035	Special 02. IMPORTED GRANULAR BACKFILL FOR SANITARY SEWER	CY	300.000		300.000
0440	SPV.0035	Special 03. IMPORTED GRANULAR BACKFILL FOR WATER MAIN	CY	200.000		200.000
0442	SPV.0035	Special 04. Planting Mixture	CY	110.000	110.000	
0444	SPV.0060	Special 01. Concrete Bases Type Special	EACH	19.000	19.000	
0446	SPV.0060	Special 02. Poles Over Height Type 13	EACH	4.000	4.000	
0448	SPV.0060	Special 03. Monotube Arms 45-FT	EACH	1.000	1.000	
0450	SPV.0060	Special 04. Monotube Arms 50-FT	EACH	3.000	3.000	
0452	SPV.0060	Special 05. Lunimaire Arms Steel 15-FT	EACH	4.000	4.000	
0454	SPV.0060	Special 06. Traffic Signal Controller Actuated 8 Phase	EACH	1.000	1.000	
0456	SPV.0060	Special 07. Perennials Feather Reed Grass Karl Foerster CG 1 Gal	EACH	51.000	51.000	
0458	SPV.0060	Special 08. Black Paint Traffic Signal Controller Cabinet	EACH	1.000	1.000	
0460	SPV.0060	Special 09. WATER MANHOLE	EACH	1.000		1.000
0462	SPV.0060	Special 10. WATER MANHOLE COVER TYPE J SPECIAL	EACH	1.000		1.000
0464	SPV.0060	Special 11. ADJUST WATER VALVE BOX WITH NEW BOX TOP	EACH	9.000		9.000
0466	SPV.0060	Special 12. INSTALL WATER VALVE BOX ON EXISTING VALVE	EACH	5.000		5.000
0468	SPV.0060	Special 13. WATER VALVE AND BOX 6-INCH	EACH	6.000		6.000
0470	SPV.0060	Special 14. WATER VALVE AND BOX 8-INCH	EACH	10.000		10.000
0472	SPV.0060	Special 15. WATER VALVE AND BOX 12-INCH	EACH	4.000		4.000
0474	SPV.0060	Special 16. TEE 12-INCH X 12-INCH X 12-INCH	EACH	1.000		1.000
0476	SPV.0060	Special 17. TEE 12-INCH X 8-INCH X 12-INCH	EACH	1.000		1.000
0478	SPV.0060	Special 18. TEE 12-INCH X 6-INCH X 12-INCH	EACH	1.000		1.000
0480	SPV.0060	Special 19. TEE 8-INCH X 6-INCH X 8-INCH	EACH	5.000		5.000
0482	SPV.0060	Special 20. TEE 8-INCH X 8-INCH X 8-INCH	EACH	3.000		3.000
0484	SPV.0060	Special 21. BEND 45 DEGREE 12-INCH	EACH	10.000		10.000
0486	SPV.0060	Special 22. BEND 22.5 DEGREE 12-INCH	EACH	1.000		1.000
0488	SPV.0060	Special 23. BEND 22.5 DEGREE 8-INCH	EACH	2.000		2.000
0490	SPV.0060	Special 24. BEND 45 DEGREE 8-INCH	EACH	29.000		29.000
0492	SPV.0060	Special 25. Manholes 9-FT Diameter	EACH	3.000	3.000	
0494	SPV.0060	Special 26. BEND 45 DEGREE 6-INCH	EACH	2.000		2.000
0496	SPV.0060	Special 27. REDUCER 8-INCH X 6-INCH	EACH	3.000		3.000
0498	SPV.0060	Special 28. REDUCER 12-INCH X 8-INCH	EACH	1.000		1.000
0500	SPV.0060	Special 29. SLEEVE 6-INCH	EACH	1.000		1.000
0502	SPV.0060	Special 30. SLEEVE 8-INCH	EACH	6.000		6.000

Line	Item	Item Description	Unit	Total	5144-01-75 Qty	5144-01-76 Qty
0504	SPV.0060	Special 31. PLUG 6-INCH	EACH	2.000		2.000
0506	SPV.0060	Special 32. CORPORATION & CURB STOP & BOX & RECONNECT/CAP (SET) 1-INCH	EACH	8.000		8.000
0508	SPV.0060	Special 33. FIRE HYDRANT EXTENSION 12-INCH	EACH	3.000		3.000
0510	SPV.0060	Special 34. FIRE HYDRANT EXTENSION 6-INCH	EACH	2.000		2.000
0512	SPV.0060	Special 35. FIRE HYDRANT	EACH	7.000		7.000
0514	SPV.0060	Special 36. CONNECT TO EXISTING WATER MAIN	EACH	19.000		19.000
0516	SPV.0060	Special 37. SANITARY MANHOLE TYPE I	EACH	13.000		13.000
0518	SPV.0060	Special 38. SANITARY SEWER MANHOLE TYPE I WITH OUTSIDE DROP	EACH	1.000		1.000
0520	SPV.0060	Special 39. SANITARY SEWER 15-INCH X 15-INCH PVC PIPE SLEEVE	EACH	1.000		1.000
0522	SPV.0060	Special 40. SANITARY SEWER 8-INCH DIA. X 2-FT STUB WITH PLUG	EACH	1.000		1.000
0524	SPV.0060	Special 41. SANITARY SEWER WYE 8-INCH MAIN X 6-INCH /W TRACER WIRE AND TERMINAL BOX	EACH	2.000		2.000
0526	SPV.0060	Special 42. SANITARY SEWER WYE 10-INCH MAIN X 6-INCH /W TRACER WIRE AND TERMINAL BOX	EACH	3.000		3.000
0528	SPV.0060	Special 43. SANITARY SEWER WYE 12-INCH MAIN X 6-INCH /W TRACER WIRE AND TERMINAL BOX	EACH	1.000		1.000
0530	SPV.0060	Special 44. CONNECT TO EXISTING SANTIARY SEWER MANHOLE	EACH	1.000		1.000
0532	SPV.0060	Special 45. CONNECT TO EXISTING SANITARY SEWER MAIN	EACH	8.000		8.000
0534	SPV.0060	Special 46. SANITARY MANHOLE COVERS TYPE J	EACH	22.000		22.000
0536	SPV.0060	Special 47. ADJUST SANITARY MANHOLES TYPE A	EACH	8.000		8.000
0538	SPV.0060	Special 48. ABANDON WATER MANHOLE	EACH	4.000		4.000
0540	SPV.0060	Special 49. RIGID INSULATION 4-FT X 8-FT X 2-INCH	EACH	34.000		34.000
0542	SPV.0060	Special 50. Black Paint Poles Over Height Type 13	EACH	4.000	4.000	
0544	SPV.0060	Special 51. Black Paint Monotube Arms 45-FT	EACH	1.000	1.000	
0546	SPV.0060	Special 52. Black Paint Monotube Arms 50-FT	EACH	3.000	3.000	
0548	SPV.0060	Special 53. Black Paint Luminaire Arms 15-FT	EACH	4.000	4.000	
0550	SPV.0060	Special 54. Black Paint Pedestal Bases	EACH	5.000	5.000	
0552	SPV.0060	Special 55. Perennials, Prairie Dropseed CG 1 Gal	EACH	93.000	93.000	
0554	SPV.0060	Special 56. Black Paint Traffic Signal Standard Aluminum 3.5'	EACH	1.000	1.000	
0556	SPV.0060	Special 57. Black Paint Traffic Signal Standard Aluminum 15'	EACH	4.000	4.000	
0558	SPV.0060	Special 58. Lighting Unit Type Special	EACH	10.000	10.000	
0560	SPV.0060	Special 59. Lighting Unit Type Special 1	EACH	9.000	9.000	
0562	SPV.0060	Special 60. ADJUST WATER VALVE BOX TOP	EACH	10.000		10.000
0564	SPV.0060	Special 61. CORPORATION & CURB STOP & BOX &	EACH	1.000		1.000

Line	Item	Item Description	Unit	Total	5144-01-75 Qty	5144-01-76 Qty
		RECONNECT/CAP (SET) 2-INCH				
0566	SPV.0060	Special 62. Black Paint Luminaires Utility LED C	EACH	4.000	4.000	
0568	SPV.0060	Special 63. Black Paint Lighting Control Cabinet	EACH	2.000	2.000	
0570	SPV.0060	Special 64. ABANDON EXISTING WATER MAIN	EACH	16.000		16.000
0572	SPV.0060	Special 65. ABANDON EXISTING SANITARY SEWER	EACH	2.000		2.000
0574	SPV.0090	Special 01. Concrete Curb And Gutter 18-Inch Type G	LF	1,047.000	1,047.000	
0576	SPV.0090	Special 02. WATER MAIN DUCTILE IRON 6-INCH	LF	127.000		127.000
0578	SPV.0090	Special 03. WATER MAIN DUCTILE IRON 8-INCH	LF	1,495.000		1,495.000
0580	SPV.0090	Special 04. WATER MAIN DUCTILE IRON 12-INCH	LF	1,502.000		1,502.000
0582	SPV.0090	Special 05. SANITARY SEWER PIPE PVC 8-INCH	LF	138.000		138.000
0584	SPV.0090	Special 06. SANITARY SEWER PIPE PVC 10-INCH	LF	1,501.000		1,501.000
0586	SPV.0090	Special 08. SANITARY SEWER PIPE PVC 15-INCH	LF	990.000		990.000
0588	SPV.0090	Special 09. SANITARY SEWER SERVICE 4-INCH	LF	50.000		50.000
0590	SPV.0090	Special 10. SANITARY SEWER SERVICE 6-INCH	LF	253.000		253.000
0592	SPV.0090	Special 11. WATER SERVICE 1-INCH COPPER	LF	416.000		416.000
0594	SPV.0090	Special 12. WATER SERVICE 2-INCH COPPER	LF	47.000		47.000
0596	SPV.0105	Special 03. BYPASS PUMPING AND FLOW MANAGEMENT	LS	1.000		1.000
0598	SPV.0105	Special 04. CONSTRUCTION STAKING WATER MAIN	LS	1.000		1.000
0600	SPV.0105	Special 05. CONSTRUCITON STAKING SANITARY SEWER	LS	1.000		1.000
0602	SPV.0105	Special 06. 4" PVC Drain	LS	1.000	1.000	
0604	SPV.0105	Special 07. Ben Bikin Medallion	LS	1.000	1.000	
0606	SPV.0165	Special 01. Permeable Interlocking Concrete Pavers	SF	330.000	330.000	
0608	SPV.0180	Special 01. Shredded Hardwood Bark Mulch	SY	165.000	165.000	

3

CLEARING AN GRUBBING SUMMARY

CATEGORY	STATION	TO	STATION	LOCATION	CLEARING 201.0105 STA	GRUBBING 201.0205 STA	REMARKS
5144-01-75	STAGE 1C						
0010	322+00	-	324+00	RT	2	2	
			PROJECT 5144-01-75 TOTAL 0010		2	2	

REMOVING SMALL PIPE CULVERTS

CATEGORY	STATION	LOCATION	203.0100 EACH	REMARKS
5144-01-75	STAGE 1C			
0010	305+55	LT	1	18" X 56' CMCP
0010	308+21	LT	1	18" X 75' CMCP
0010	309+82	LT	1	18" X 40' CMCP
0010	313+54	RT	1	18" X 60' CMCP
0010	317+12	RT	1	12" X 40' RCCP
	STAGE 2			
0010	31199	LT	1	12" X 41' CMCP
0010	313+54	LT	1	18" X 66' CMCP
0010	315+40	LT	1	12" X 48' CMCP
0010	316+60	LT	1	12" X 40' CMCP
		PROJECT 5144-01-75 TOTAL 0010	9	

SPECIAL (01. ROCK EXCAVATION FOR UTILITIES)

CATEGORY	STATION	LOCATION	SPV.0035.01 CY	REMARKS
5144-01-76				
0030		UNDISTRIBUTED	100	
		PROJECT 5144-01-76 TOTAL 0030	100	

REMOVING PAVEMENT

CATEGORY	STATION	TO	STATION	LOCATION	204.0100 SY	REMARKS
5144-01-75	STAGE 2/2B					
	STH 27					
0010	327+58	-	331+15	LT	1202	
0010	332+16	-	336+60	LT	1058	
0010	CE 327+95"SB"			LT	34	
0010	CE 329+55"SB"			LT	33	
	STH 16					
0010	102+19"EB"	-	104+00"EB"	RT	357	
0010	104+76"EB"	-	106+37"EB"	RT	175	
0010	103+70"EB"	-	104+00"EB"	LT & RT	209	STORM SEWER CROSSING UNDER CLOSURE
	STAGE 3					
	STH 27					
0010	325+90	-	331+50	RT	1278	
0010	332+56	-	336+01	RT	785	
0010	CE 333+80"NB"			RT	79	
	STH 16					
0010	102+20"WB"	-	103+56"WB"	LT	318	
0010	104+18"WB"	-	106+37"WB"	LT	739	
0010	CE 105+59"WB"			LT	24	
	STAGE 5A					
	STH 16					
0010	102+19"EB"	-	103+70"EB"	LT & RT	392	
0010	103+99"EB"	-	104+07"EB"	LT & RT	95	
	STAGE 5B					
	STH 16					
0010	104+07"EB"	-	106+37"EB"	LT & RT	837	
	STAGE 6					
	STH 27					
0010	328+54	-	331+24	LT	539	
0010	332+31	-	336+59	LT & RT	716	
			PROJECT 5144-01-75 TOTAL 0010		8870	

3

3

REMOVING CURB & GUTTER

CATEGORY	STATION	TO	STATION	LOCATION	204.0150 LF	REMARKS
5144-01-75	STAGE 1B					
	STH 27					
0010	330+34	-	331+33	LT	214	
0010	332+31	-	333+68	LT	289	
	STH 16					
0010	102+22"EB"	-	103+61"EB"	LT	288	
0010	104+56"EB"	-	105+86"EB"	LT	275	
			SUBTOTAL STAGE 1B		1066	
5144-01-75	STAGE 1C					
	STH 27	-				
0010	308+34	-	308+44	RT	80	
0010	31990	-	32542	RT	552	
0010	32579	-	33125	RT	546	
			SUBTOTAL STAGE 1C		1178	
5144-01-75	STAGE 2					
	STH 27					
0010	31744	-	32542	LT	798	
0010	325+85	-	331+15	LT	530	
0010	332+16	-	336+60	LT	444	
0010	CE 322+80			LT	76	
0010	CE 327+95"SB"			LT	73	
0010	CE 329+55"SB"			LT	20	
	STH 16					
0010	102+19"EB"	-	103+77"EB"	RT	177	
0010	104+76"EB"	-	106+37"EB"	RT	161	
	W AVERILL STREET					
0010	22+52"AV"	-	22+74"AV"	LT	22	
0010	22+52"AV"	-	22+74"AV"	RT	22	
	MAPLE AVENUE					
0010	9+51"MA"	-	10+77"MA"	LT	126	
0010	9+51"MA"	-	10+77"MA"	RT	126	
	RIVER ROAD					
0010	30+19"R"	-	33+11"R"	RT	290	
0010	30+19"R"	-	33+11"R"	LT	290	
			SUBTOTAL STAGE 2		3155	
5144-01-75	STAGE 3					
	STH 27					
0010	33216	-	33585	RT	369	
0010	CE 333+80"NB"			RT	38	
	STH 16					
0010	102+19"WB"	-	103+32"WB"	LT	113	
0010	104+83"WB"	-	106+37"WB"	LT	154	
0010	CE 105+59"WB"			LT	40	
	MAPLE AVENUE					
0010	11+40"MA"	-	12+67"MA"	LT	127	
			SUBTOTAL STAGE 3		841	
			PROJECT 5144-01-75 TOTAL 0010		6240	

REMOVING CONCRETE SIDEWALK

CATEGORY	STATION	TO	STATION	LOCATION	204.0155 SY	REMARKS
5144-01-75	STAGE 1B					
	STH 27					
0010	330+34	-	331+33	LT	59	MEDIAN SURFACE
0010	332+31	-	333+68	LT	73	MEDIAN SURFACE
	STH 16					
0010	102+22"EB"	-	103+61"EB"	LT	68	MEDIAN SURFACE
0010	104+56"EB"	-	105+86"EB"	LT	59	MEDIAN SURFACE
			SUBTOTAL STAGE 1B		259	
5144-01-75	STAGE 2					
	STH 27					
0010	327+50	-	331+14	LT	210	
0010	332+55	-	335+24	LT	228	
0010	336+06	-	336+55	LT	27	
	STH 16					
0010	102+19"EB"	-	103+76"EB"	RT	127	
0010	104+45"EB"	-	106+36"EB"	RT	268	
0010	102+77"WB"	-	103+74"WB"	LT	113	
			SUBTOTAL STAGE 2		973	
5144-01-75	STAGE 3					
	STH 27					
0010	332+56	-	333+58	RT	55	
0010	333+93	-	335+81	RT	168	
	STH 16					
0010	102+19"WB"	-	102+77"WB"	LT	52	
0010	104+43"WB"	-	105+41"WB"	LT	97	
0010	105+74"WB"	-	106+37"WB"	LT	35	
			SUBTOTAL STAGE 3		407	
			PROJECT 5144-01-75 TOTAL 0010		1639	

REMOVING GUARDRAIL

CATEGORY	STATION	TO	STATION	LOCATION	204.0165 LF	REMARKS
5144-01-75						
0010	30282	-	30539	LT	257	
0010	30282	-	30670	RT	387	
			PROJECT 5144-01-75 TOTAL 0010		644	

3

3

REMOVING CONCRETE BASES

CATEGORY	STATION	LOCATION	204.0195 EACH	REMARKS
5144-01-75				
0010	331+14	RT	1	
0010	331+21	LT	1	
0010	331+23	LT	1	MEDIAN
0010	332+42	LT	1	MEDIAN
0010	332+44	RT	1	
0010	332+48	LT	1	
0010	103+46"EB"	RT	1	
0010	103+47"EB"	LT	1	
0010	103+49"EB"	LT	1	MEDIAN
0010	104+68"EB"	LT	1	MEDIAN
0010	104+68"EB"	RT	1	
0010	104+71"EB"	LT	1	
	PROJECT 5144-01-75 TOTAL 0010		12	

3

3

SAW CUTS

CATEGORY	STATION TO	STATION	LOCATION	ASPHALT 690.0150 LF	CONCRETE 690.0250 LF	REMARKS
5144-01-76	STAGE 1A					
	W AVERILL STREET					
0010	CE 20+35		LT	45		
	ROBERTS ROAD					
0010	CE 215+27		LT	30		
0010	216+44 -	216+49	LT		6	SIDEWALK LEFT
0010	CE 217+44		RT	24		
	HOESCHLER DRIVE					
0010	14+20		LT & RT	36		BEGIN CONSTRUCTION
5144-01-75	STAGE 1A					
	W AVERILL STREET					
0010	21+61"AV"		LT & RT	36		STAGE BOUNDARY
	RIVER ROAD					
0010	28+75"R"		LT & RT	43		BEGIN CONSTRUCTION
0010	30+59"R"		LT & RT	43		STAGE BOUNDARY
	ROBERTS ROAD					
0010	209+50.82		LT & RT	35		BEGIN CONSTRUCTION
0010	217+96.04		LT & RT	35		END CONSTRUCTION
5144-01-75	STAGE 1B					
	STH 27					
0010	330+34 -	331+33	LT		215	
0010	332+31 -	333+68	LT		290	
	STH 16					
0010	102+23"EB" -	103+60"EB"	LT		290	
0010	104+56"EB" -	105+87"EB"	LT		275	
5144-01-75	STAGE 1C					
	STH 27					
0010	302+74 -	302+82	LT & RT		46	APPROACH SLAB
0010	325+88 -	331+35	RT	710		PROPERTY SIDE PARKING LOTS
5144-01-75	STAGE 1D					
0010	313+46 -	328+58	LT & RT	2828	240	SANITARY SEWER TRENCH
5144-01-75	STAGE 2					
	STH 27					
0010	310+50 -	318+41	LT	791		STAGE BOUNDARY
0010	CE 315+45		LT	40		
0010	CE 316+65		LT	40		
0010	CE 318+30		LT	62		
	RIVER ROAD					
0010	30+19"R"		LT & RT	45		
0010	30+63"R" -	31+12"R"	LT		48	CE FOR KWIK TRIP
0010	32+00"R" -	32+43"R"	LT		55	CE FOR KWIK TRIP

SAW CUTS

CATEGORY	STATION TO	STATION	LOCATION	ASPHALT 690.0150 LF	CONCRETE 690.0250 LF	REMARKS
5144-01-75	STAGE 2B					
	STH 27					
0010	310+50 -	313+30	RT	280		STAGE BOUNDARY
0010	318+41 -	327+58	LT	917		STAGE BOUNDARY
0010	327+58 -	336+60	LT		902	STAGE BOUNDARY
0010	329+84 -	331+39	LT	186		PROPERTY SIDE PARKING LOTS
0010	332+27 -	336+00	LT	412		PROPERTY SIDE PARKING LOTS
0010	335+84 -	336+60	LT & RT	150	16	END CONSTRUCTION
0010	CE 319+35		LT	28		
0010	CE 322+80		LT	46	6	
0010	CE 326+25		LT	59		
0010	CE 327+31"SB"		LT	58		
0010	CE 327+95"SB"		LT	62	6	
0010	CE 329+55"SB"		LT	20	6	
0010	CE 330+03"SB"		LT	26		
0010	CE 330+50"SB"		LT	45		
0010	CE 335+50"SB"		LT	35		
0010	CE 335+90"SB"		LT	25		
	STH 16					
0010	102+19"EB"		LT & RT		82	BEGIN CONSTRUCTION
0010	102+19"EB" -	104+00"EB"	RT		181	STAGE BOUNDARY
0010	102+77"WB" -	104+00"WB"	LT		123	STAGE BOUNDARY
0010	104+76"EB" -	106+37"EB"	RT		161	STAGE BOUNDARY
0010	106+37"EB"		LT & RT		77	END CONSTRUCTION
0010	CE 105+84"EB"		RT	35		
	MAPLE AVENUE					
0010	9+51"MA"		LT & RT	43	6	BEGIN CONSTRUCTION
0010	CE 9+77"MA"		LT	35		
5144-01-75	STAGE 3					
0010	307+26 -	308+43	RT	110	3	
0010	331+90 -	336+01	RT		411	STAGE BOUNDARY
0010	CE 311+50		RT	35		
0010	CE 317+10		RT	50		
0010	CE 319+56		RT	35		
0010	CE 322+15		RT	33		
0010	CE 327+55"NB"		RT	35		
0010	CE 330+25"NB"		RT	35		
0010	CE 333+80"NB"		RT	28	3	
	STH 16					
0010	102+19"WB" -	103+56"WB"	LT		137	STAGE BOUNDARY
0010	104+17"WB" -	106+37"WB"	LT		220	STAGE BOUNDARY
0010	CE 105+59"WB"		LT	32	6	
	W AVERILL ST					
0010	23+86"AV" -	24+74"AV"	RT	87		MATCH IN PARKING AREA
0010	24+74"AV"		RT	34		END CONSTRUCTION
0010	CE 22+15"AV"		LT	35		
	MAPLE AVENUE					
0010	12+60"MA"		LT & RT	38		END CONSTRUCTION
0010	CE 12+42"MA"		RT	13		
0010	CE 12+45"MA"		LT	52		
5144-01-75	STAGE 5A					
0010	331+31 -	332+30	LT		99	STAGE BOUNDARY
			PROJECT 5144-01-75 TOTAL 0010	7957	3910	
			PROJECT 5144-01-76 TOTAL 0010	135	6	

3

PROJECT NO: 5144-01-75 & 5144-01-76	HWY: STH 27	COUNTY: MONROE	MISCELLANEOUS QUANTITIES	SHEET NO: 179	E

STORM SEWER REMOVAL SUMMARY

CATEGORY	STATION	TO	STATION	LOCATION	REMOVING MANHOLES 204.0210 EACH	REMOVING INLETS 204.0220 EACH	REMOVING STORM SEWER 12-INCH 204.0245.01 LF	15-INCH 204.0245.02 LF	18-INCH 204.0245.03 LF	24-INCH 204.0245.04 LF	36-INCH 204.0245.05 LF	SEALING PIPES 204.0280 EACH	ABANDONING SEWER 204.0291.S CY	REMARKS
5144-01-75														
0010	302+89			RT			26							
0010	304+46	-	307+77	LT						335				
0010	304+65			LT & RT								2	70	72' PIPE; APPROX 67' LENGTH
0010	307+77	-	308+86	LT & RT									13	24" PIPE; APPROX 110' LENGTH
0010	308+86			RT								1		24" PIPE
0010	308+86	-	309+10	LT						25				
0010	309+08	-	309+09	LT						45				
0010	309+08	-	309+12	RT						45				
0010	309+09			RT	1									STRUCTURE 200
0010	309+10			LT		1								
0010	309+12			RT		1								STRUCTURE 201
0010	309+12	-	312+64	RT									41	24" PIPE; APPROX 354' LENGTH
0010	10+28"H"	-	10+61"H"	LT			35							
0010	312+64			RT	1									STRUCTURE 210
0010	312+47			LT		1								
0010	312+47		312+64	LT					46					
0010	312+63			28' RT		1								STRUCTURE 211
0010	312+63			38' RT		1								STRUCTURE 212
0010	312+63 38' RT	-	312+63 28' RT	RT				10						
0010	312+63	-	312+64	RT					14					
0010	312+64	-	315+98	RT									39	24" PIPE; APPROX 334' LENGTH
0010	315+98			RT	1									STRUCTURE 220
0010	315+98	-	316+01	RT			15							
0010	316+01			28' RT		1								STRUCTURE 221
0010	316+01	-	316+01	RT			4							
0010	316+01			32' RT		1								STRUCTURE 222
0010	315+98	-	316+01	LT			44							
0010	315+98	-	319+45	RT									40	24" PIPE; APPROX 347' LENGTH
0010	319+45			RT	1									
0010	319+45	-	319+59	LT					39					
0010	319+45	-	319+46	RT			14							
0010	319+45	-	319+98	RT			54							
0010	319+98			RT		1								
0010	319+45	-	322+25	RT			61					1	8	12" PIPE; APPROX 280' ABANDON
0010	322+25			RT		1								
0010	322+25			LT & RT			44							
0010	322+25			LT		1								
0010	325+54			LT & RT							69			
0010	325+54			LT	1									
0010	325+54	-	325+56	LT			6							
0010	325+56			LT	1									
0010	325+56	-	325+87	LT			34							
0010	325+87			LT		1								
0010	325+54	-	325+97	LT & RT			56							
0010	325+97			RT		1								
0010	325+54	-	328+57	LT							303			
0010	328+57			16' LT	1									
0010	328+57			LT			18							
0010	328+57			34' LT		1								
0010	328+57			LT & RT			40							
0010	328+57			RT		1								
0010	328+57	-	331+74	LT									83	36" PIPE; APPROX 318' LENGTH
0010	331+74			LT	1									STRUCTURE 36.7
0010	331+74	-	331+45	LT			56							
0010	331+45			LT		1								
0010	331+74	-	331+35	LT									1	12" PIPE; APPROX 46' LENGTH
0010	331+74	-	331+80	LT & RT									2	12" PIPE; APPROX 62' LENGTH
PROJECT 5144-01-75 PAGE SUBTOTAL 0010					8	15	507	10	99	450	372	4	297	

3

3

PROJECT NO: 5144-01-75 & 5144-01-76 | **HWY: STH 27** | **COUNTY: MONROE** | **MISCELLANEOUS QUANTITIES** | **SHEET NO:** 180 | **E**

3

STORM SEWER REMOVAL SUMMARY

CATEGORY	STATION	TO	STATION	LOCATION	REMOVING MANHOLES 204.0210 EACH	REMOVING INLETS 204.0220 EACH	REMOVING STORM SEWER 12-INCH 204.0245.01 LF	15-INCH 204.0245.02 LF	18-INCH 204.0245.03 LF	24-INCH 204.0245.04 LF	36-INCH 204.0245.05 LF	SEALING PIPES 204.0280 EACH	ABANDONING SEWER 204.0291.S CY	REMARKS
5144-01-75														
0010	331+80			RT		1								
0010	331+80	-	331+46	RT									1	12" PIPE; APPROX 35' LENGTH
0010	331+46			RT		1								
0010	331+80	-	332+20	RT									1	12" PIPE; APPROX 41' LENGTH
0010	332+20			RT		1								
0010	332+20	-	104+74"WB"	RT			18							
0010	104+74"WB"			44.9' LT	1									STRUCTURE 36.6
0010	331+74	-	332+29	LT							54			
0010	332+29			LT	1									
0010	332+29	-	332+41	LT			34							
0010	332+41			LT		1								
0010	332+29	-	332+47	LT & RT			45							
0010	332+47			RT		1								
0010	332+29	-	335+50	LT									84	36" PIPE; APPROX 321' LENGTH
0010	335+50			LT	1									
0010	335+50	-	336+28	LT									19	36" PIPE; APPROX 73' LENGTH
0010	336+28			LT	1									STRUCTURE 34
0010	336+28	-	336+23	LT					15					
0010	336+23			LT		1								STRUCTURE 34.1
0010	335+83			RT		1								STRUCTURE 34.4
5144-01-76	ROBERTS ROAD													
0010	209+55.48			LT		1								
0010	29+89.3"R"	-	210+27	LT & RT			17							
0010	210+27			RT		1								
0010	29+89.3"R"	-	210+37.1	LT			34							
0010	210+37.1			LT		1								
0010	215+06.9			RT		1								
0010	215+06.9	-	215+19.1	RT			19							
0010	215+19.1	-	215+52.8	RT			36							
0010	215+49	-	215+52.8	RT			39							
0010	215+49			LT		1								
0010	215+52.8			RT		1								
PROJECT 5144-01-75 PAGE SUBTOTAL 0010					4	7	97	0	15	0	54	0	105	
PROJECT 5144-01-75, TOTAL 0010					12	22	604	10	114	450	426	4	402	
PROJECT 5144-01-76, TOTAL 0010					0	6	145	0	0	0	0	0	0	

REMOVING (05. APRON END WALLS)

CATEGORY	STATION	LOCATION	204.9060.S.05 EACH	REMARKS
5144-01-75				
0010	302+88	RT	1	12-INCH
0010	304+46	RT	1	24-INCH
PROJECT 5144-01-75 TOTAL 0010			2	

3

3

REMOVING WATER MAIN STRUCTURES

CATEGORY	STATION	LOCATION	REMOVING FIRE HYDRANT 204.9060.S.02 EACH	REMOVING VALVE BOX 204.9060.S.04 EACH	ABANDON WATER MANHOLE SPV.0060.48 EACH	REMARKS
5144-01-76	STH 27					
0020	304+89	41' LT			1	
0020	308+61	45' LT	1	1		INCLUDES NEARBY AUXILIARY HYD. VALVE
0020	314+05.90	44' LT	1	1		INCLUDES NEARBY AUXILIARY HYD. VALVE
0020	319+95	27' LT	1	1		INCLUDES NEARBY AUXILIARY HYD. VALVE
0020	325+91	39' LT	1	1		INCLUDES NEARBY AUXILIARY HYD. VALVE
0020	331+66.40	8.2' LT			1	
0020	332+10.40	28.8' LT			1	
	STH 16					
0020	103+19.3"EB"	54.27 LT	1			
	W AVERILL STREET					
0020	19+48"AV"	10' LT		1		
0020	20+04"AV"	26' LT	1	2		INCLUDES NEARBY AUXILIARY HYD. VALVE
0020	22+89.9"AV"	7.4' LT			1	INCLUDES NEARBY AUXILIARY HYD. VALVE
	RIVER ROAD					
0020	29+54.8"R"	35' LT	1	2		INCLUDES NEARBY AUXILIARY HYD. VALVE
0020	33+07.0"R"	37.6' LT	1	1		INCLUDES NEARBY AUXILIARY HYD. VALVE
	ROBERTS ROAD					
0020	217+88"RO"	29.5' LT	1	2		INCLUDES NEARBY AUXILIARY HYD. VALVE
	UNDISTRIBUTED			2		
	PROJECT 5144-01-76, TOTAL 0020		9	14	4	

REMOVING (03. SANITARY MANHOLE)

CATEGORY	STRUCTURE NUMBER	STATION	LOCATION	204.9060.S.03 EACH	REMARKS
5144-01-76					
0030	184	307+84.6	29.2' RT	1	
0030	137	22+46"AV"	ON C/L	1	
0030	96	322+52.5	0.3' LT	1	
0030	97	325+61.2	2.9' RT	1	
0030	98	328+48.5	0.2' LT	1	
		PROJECT 5144-01-76, TOTAL 0030		5	

SPECIAL (65. ABANDON EXISTING SANITARY SEWER MAIN)

CATEGORY	STATION	LOCATION	SPV.0060.65 EACH	REMARKS
5144-01-76				
0030	31954.8	RT	2	MH 95 TO MH 94A
	PROJECT 5144-01-76, TOTAL 0030		2	

SPECIAL (64. ABANDON EXISTING WATER MAIN)

CATEGORY	STATION	LOCATION	SPV.0060.64 EACH	REMARKS
5144-01-76				
0020	30263.4	26.6' RT	1	
0020	30958.7	40.5' LT	1	
0020	31697	35' LT	1	
0020	31964.5	35' RT	1	
0020	32350	10' LT	1	
0020	32591	39' LT	1	
0020	29+52"R"	11' LT	1	
0020	22+89.9"AV"	12' LT	2	
0020	24+02"AV"	12' LT	1	
0020	10+32"MA"	10' LT	1	
0020	103+71"EB"	36' LT	1	
0020	103+88"EB"	36' LT	1	
0020	21530	12' LT	1	
0020	21787	10.9' LT	1	
0020	1433.5	14' LT	1	
	PROJECT 5144-01-76, TOTAL 0020		16	

3

PAVEMENT SUMMARY

CATEGORY	STATION TO STATION	LOCATION	BASE AGGREGATE DENSE 3/4-INCH 305.0110 TON	BASE AGGREGATE DENSE 1 1/4-INCH 305.0120 TON	BASE AGGREGATE DENSE 3-INCH 305.0130 TON	CONCRETE COLORING WISDOT RED 405.0100 CY	CONCRETE PAVEMENT 9-INCH 415.0090 SY	CONCRETE PAVEMENT GAPS 415.0210 EACH	CONCRETE PAVEMENT APPROACH SLAB 415.0410 SY	CONCRETE DRIVEWAYS 6-INCH 416.0160 SY	CONCRETE DRIVEWAYS 8-INCH 416.0180 SY	CONCRETE ROUNDABOUT TRUCK APRON 12-INCH 416.0512 SY	CONCRETE SIDEWALK 5-INCH 602.0410 SF	ASPHALT TACK COAT 455.0605 GAL	ASPHALT PAVEMENT 3 LT 58-28 S 460.5223 TON	ASPHALT PAVEMENT 4 LT 58-28 S 460.5224 TON	ASPHALT DRIVEWAYS & FIELD ENT 465.0120 TON	ASPHALT SURFACE TEMPORARY 465.0125 TON	ASPHALT CURB 465.0310 LF	CONSTRUCTION STAKING SUBGRADE 650.4500 LF	CONSTRUCTION STAKING BASE 650.5000 LF	CONSTRUCTION STAKING CONCRETE PAVEMENT 650.7000 LF	CONSTRUCTION STAKING SLOPE STAKES 650.9920 LF	REMARKS
5144-01-75	STAGE 1A																							
	W AVERILL STREET																							
0010	19+71.09"AV" - 21+61.10"AV"			210	780									462	114	89				190	190			
	RIVER ROAD																							
0010	28+75"R" - 29+62.12"R"	LT & RT		120	420									266	66	51				87	87			
0010	30+15"R" - 30+30"R"	RT		3														1	15					SE RIVER & ROBERTS CURB MATCH
	ROBERTS ROAD																							
0010	209+50.8"RO" - 216+10"RO"	LT & RT		750	2345									1281	317	246				659	659			
0010	UNDISTRIBUTED			160	130																			
	SUBTOTAL STAGE 1A 5144-01-75 0010		0	1243	3675	0	0	0	0	0	0	0	0	2009	497	386	0	1	15	936	936	0	0	
5144-01-76	STAGE 1A																							
	W AVERILL STREET																							
0010	CE 20+35"AV"	LT		22						50														
	RIVER ROAD																							
0010	29+97.2"R" - 30+58.33"R"	LT & RT		90	330									197	49	38				61	61		61	
	ROBERTS ROAD																							
0010	CE 215+27"RO"	LT		17						37														
0010	216+10"RO" - 217+96.1"RO"	LT & RT		165	665									364	90	70				186	186		186	
0010	216+44"RO" - 216+49"RO"	LT		1						3														SIDEWALK LEFT
0010	CE 217+44"RO"	RT		10						21														
	HOESCHLER DRIVE																							
0010	14+20.8"HO" - 14+82.6"HO"	LT & RT		80	270									172	43	33				61	61		61	
	SUBTOTAL STAGE 1A 5144-01-76 0010		0	385	1265	0	0	0	0	111	0	0	0	733	182	141	0	0	0	308	308	0	308	
5144-01-75	STAGE 1B																							
	STH 27																							
0010	330+34 - 331+33	LT		38														19						
0010	332+31 - 333+68	LT		50														25						
	STH 16																							
0010	102+21"EB" - 103+61"EB"	LT		51														25						
0010	104+56"EB" - 105+86"EB"	LT		47														24						
	SUBTOTAL STAGE 1B 5144-01-75 0010		0	186	0	0	0	0	0	0	0	0	0	0	0	0	0	93	0	0	0	0	0	
5144-01-75	STAGE 1C																							
	STH 27																							
0010	302+74 - 302+95	LT & RT							57															
0010	302+95 - 305+48	LT & RT	110	470			785							16	72	36				253		253	253	INCLUDES ASPHALT SHOULDER
0010	305+48 - 310+50	LT & RT		479														237		502	502		502	TEMPORARY WIDENING
0010	310+50 - 313+25	RT		148														73		275	275		275	TEMPORARY WIDENING
0010	313+78 - 325+42	LT & RT		544														269		1164	1164		1164	TEMPORARY WIDENING
0010	325+79 - 331+25	RT		124														62	546	546	546		546	TEMPORARY WIDENING
0010	307+97 - 308+43	RT		15													5							BRENENGEN ENTRANCE
0010	CE 309+75	RT		87														29						TEMP BRENENGEN ENTRANCE
0010	CE 310+00	LT		79														26						TEMP KWIK TRIP ENTRANCE
	SUBTOTAL STAGE 1C 5144-01-75 0010		110	1780	0	0	785	0	57	0	0	0	0	16	72	36	5	641	546	2740	2487	253	2740	
5144-01-75	STAGE 1D																							
	STH 27																							
0010	313+45 - 313+72	LT & RT		14														7						W AVERILL ST INTERSECTION
0010	316+58 - 316+77	LT & RT		12														3						TEMP CE 316+65 LT
0010	318+06 - 318+30	LT & RT		15														4						TEMP CE 318+30 LT
0010	319+25 - 319+59	LT & RT		21														4						TEMP CE 319+35 LT
0010	322+12 - 322+26	LT & RT		15														3						TEMP CE 322+15 RT
0010	325+38 - 325+87	LT & RT		29														15						MAPLE AVE INTERSECTION
0010	327+89 - 328+09	LT & RT		16														3						TEMP CE 327+95 LT
0010	UNDISTRIBUTED AGG FOR ACCESS MAINTENANCE			65																				
	SUBTOTAL STAGE 1D 5144-01-75 0010		0	187	0	0	0	0	0	0	0	0	0	0	0	0	0	39	0	0	0	0	0	
5144-01-75	STAGE 2																							
	ROUNDABOUT																							
0010	305+48 - 310+50	LT & RT	20	940			1350													502		502	502	
0010	305+48 - 306+29	LT												3	13	6					81			ASPHALT SHOULDER
0010	305+48 - 307+50	LT		58														29			121			TEMPORARY PAVEMENT
0010	307+70 - 308+65	LT & RT		144														71			95			TEMPORARY PAVEMENT
0010	308+85 - 309+68	LT & RT		20														10			83			TEMPORARY PAVEMENT
0010	10+57"K" - 12+29"K"	LT				33						98												
0010	10+21"K" - 12+59"K"	LT											1690											
0010	10+80"J" - 11+03"J"	RT										11												
0010	11+63"J" - 12+61"J"	LT				15							1170											
0010	9+90"H" - 13+17"H"	LT											1050											
	STH 27																							
0010	310+50 - 318+41	LT		986			2273	4					3900							791		791	791	
0010	CE 315+45	LT		24							71													
0010	CE 316+65	LT		35							104													
0010	CE 317+85	LT		19							26						3							
0010	CE 310+00	LT		79														26						TEMP KWIK TRIP ENTRANCE
0010	311+37 - 311+61	LT & RT		17																				TEMP CE 311+50 RT
0010	318+06 - 318+30	LT & RT		32																				TEMP CE 318+30 LT
	RIVER ROAD																							
0010	30+43"R" - 32+78"R"	LT & RT		640	44		1100													235		235	235	
0010	30+43"R" - 30+56"R"	RT & LT												3	6	5				13	13		13	
0010	30+56"R" - 31+05"R"	LT									40													WEST KWIK TRIP ENTRANCE
0010	31+93"R" - 32+66"R"	LT									135													EAST KWIK TRIP ENTRANCE
0010	UNDISTRIBUTED AGG FOR ACCESS MAINTENANCE			64																				
	SUBTOTAL STAGE 2 5144-01-75 0010		20	3058	44	48	4723	4	0	0	376	109	7810	6	19	11	3	136	0	1541	393	1528	1541	
	PROJECT 5144-01-75 PAGE SUBTOTAL 0010		130	6454	3719	48	5508	4	57	0	376	109	7810	2031	588	433	8	910	561	5217	3816	1781	4281	
	PROJECT 5144-01-76 PAGE SUBTOTAL 0010		0	385	1265	0	0	0	0	111	0	0	0	733	182	141	0	0	0	308	308	0	308	

3

3

PROJECT NO: 5144-01-75 & 5144-01-76 | **HWY: STH 27** | **COUNTY: MONROE** | **MISCELLANEOUS QUANTITIES** | **SHEET NO:** 183 | **E**

FILE NAME : 030201-MQ.PPT PLOT DATE : _____ PLOT BY : _____ PLOT NAME : _____ ORIGINATOR : DIST _ PLOT SCALE : 1:1

3

PAVEMENT SUMMARY

CATEGORY	STATION TO	STATION	LOCATION	BASE AGGREGATE DENSE 3/4-INCH 305.0110 TON	BASE AGGREGATE DENSE 1 1/4-INCH 305.0120 TON	BASE AGGREGATE DENSE 3-INCH 305.0130 TON	CONCRETE COLORING WISDOT RED 405.0100 CY	CONCRETE PAVEMENT 9-INCH 415.0090 SY	CONCRETE PAVEMENT GAPS 415.0210 EACH	CONCRETE PAVEMENT APPROACH SLAB 415.0410 SY	CONCRETE DRIVEWAYS 6-INCH 416.0160 SY	CONCRETE DRIVEWAYS 8-INCH 416.0180 SY	CONCRETE ROUNDABOUT TRUCK APRON 12-INCH 416.0512 SY	CONCRETE SIDEWALK 5-INCH 602.0410 SF	ASPHALT TACK COAT 455.0605 GAL	ASPHALT PAVEMENT 3 LT 58-28 S 460.5223 TON	ASPHALT PAVEMENT 4 LT 58-28 S 460.5224 TON	ASPHALT DRIVEWAYS & FIELD ENT 465.0120 TON	ASPHALT SURFACE TEMPORARY 465.0125 TON	ASPHALT CURB 465.0310 LF	CONSTRUCTION STAKING SUBGRADE 650.4500 LF	CONSTRUCTION STAKING BASE 650.5000 LF	CONSTRUCTION STAKING CONCRETE PAVEMENT 650.7000 LF	CONSTRUCTION STAKING SLOPE STAKES 650.9920 LF	REMARKS
5144-01-75	STAGE 2B																								
	ROUNDABOUT																								
0010	309+51 -	310+50	RT		19			58													99		99	99	
0010	307+97 -	308+33	RT		11														6		36	36		36	TEMPORARY PAVEMENT
	STH 27																								
0010	310+50 -	313+29	LT & RT		193			580													279		279		
0010	318+41 -	331+52"SB"	LT & RT		1572			3595	5					6298							1311		1311	1311	
0010	332+16"SB" -	336+59	LT		600			1366	2					2882							443		443	443	
0010	CE 319+35		LT		22							30						4							
0010	CE 327+31"SB"		LT		13							38													
0010	CE 327+95"SB"		LT		36							45						7							
0010	CE 329+55"SB"		LT		18							27						3							
0010	CE 330+03"SB"		LT		13							39													
0010	CE 335+50"SB"		LT		18							26						3							
0010	CE 335+90"SB"		LT		15							22						2							
0010	316+58 -	316+82	LT		33																				TEMP CE 316+65 LT
0010	319+24 -	319+48	LT		33																				TEMP CE 319+35 LT
0010	327+20 -	327+44	LT		36																				TEMP CE 327+31 LT
0010	327+85 -	328+05	LT		33																				TEMP CE 327+95 LT
0010	329+44 -	329+64	LT		30																				TEMP CE 329+55 LT
0010	330+02 -	330+26	LT		34																				TEMP CE 330+03 LT
0010	335+24 -	335+49	LT		30																				TEMP CE 335+50 LT
0010	335+78 -	336+02	LT		32																				TEMP CE 335+90 LT
	STH 16																								
0010	102+19"EB" -	103+85"EB"	RT		117			227						548							166		166	166	
0010	104+76"EB" -	106+36"EB"	RT		126			237	1					836							160		160	160	
0010	CE 105+84"EB"		RT		19							34						2							
0010	105+74"EB" -	105+98"EB"	RT		20																				TEMP CE 105"EB"+84 RT
	MAPLE AVENUE																								
0010	9+51"MA" -	10+63"MA"	LT & RT		141	383									26	65	50				112	112		112	
0010	CE 9+77"MA"		LT		5							16													
0010	UNDISTRIBUTED AGG FOR ACCESS MAINTENANCE				140																				
	SUBTOTAL STAGE 2B 5144-01-75 0010			0	3359	383	0	6063	8	0	0	277	0	10564	26	65	50	21	6	0	2606	148	2458	2327	
5144-01-75	STAGE 3																								
	ROUNDABOUT																								
0010	305+48 -	310+50	RT	15	790			1210													502		502	502	
0010	305+48 -	306+20	RT												2	11	5					72			ASPHALT SHOULDER
0010	10+05"D" -	10+67"D"	LT & RT		170			275													62	62		62	BRENENGEN ENTRANCE LEG
0010	10+58"B" -	11+35"B"	RT				11						34												
0010	11+38"A" -	12+98"A"	LT				77						230												
0010	10+21"B" -	12+15"B"	RT											1440											
0010	10+06"D" -	10+34"D"	RT				4							330											
0010	10+30"E" -	12+82"E"	RT											1910											
0010	10+70"D"		LT & RT															5							BRENENGEN ENTRANCE
	STH 27																								
0010	310+50 -	331+50"NB"	RT		2431			5508	8					9929							2100		2100	2100	
0010	332+14"NB" -	336+01	RT		418			920	1					1888							387		387	387	
0010	CE 309+75		RT		87														29						TEMP BRENENGEN ENTRANCE
0010	CE 311+50		RT		28							85													
0010	CE 317+10		RT		34							85						2							
0010	CE 319+56		RT		24							71													
0010	CE 322+15		RT		31							33						7							
0010	CE 327+55"NB"		RT		14							32						1							
0010	CE 330+25"NB"		RT		14							42													
0010	CE 333+80"NB"		RT		33							65						4							
0010	311+37 -	311+61	RT		37																				TEMP CE 311+50 RT
0010	316+94 -	317+24	RT		61																				TEMP CE 317+10 RT
0010	319+44 -	319+68	RT		45																				TEMP CE 319+56 RT
0010	321+86 -	322+39	RT		58																				TEMP CE 322+15 RT
0010	327+40 -	327+64	RT		35																				TEMP CE 327+55 RT
0010	330+07 -	330+42	RT		49																				TEMP CE 330+25 RT
0010	333+66 -	333+93	RT		58																				TEMP CE 333+80 RT
	STH 16																								
0010	102+19"WB" -	103+56"WB"	LT		149			351						350							137		137	137	
0010	104+18"WB" -	106+37"WB"	LT		262			601	1					998							219		219	219	
0010	CE 105+59"WB"		LT		21							33						3							
	W AVERILL STREET																								
0010	21+61"AV" -	22+52"AV"	LT & RT		123	231		68							16	39	30				91	77	14	91	
0010	23+86"AV" -	24+74"AV"	LT & RT	7	92	303									21	51	40				88	88		88	
0010	CE 22+15"AV"		LT		22							48						2							
	MAPLE AVENUE																								
0010	11+64"MA" -	12+60"MA"	LT & RT		83	221									15	37	29				96	96		96	
0010	CE 12+42"MA"		RT		4							13													
0010	CE 12+45"MA"		RT		11							33													
	HILL STREET																								
0010	40+43"HL" -	40+66"HL"	RT		13	29									2	5	4				23	23		23	
0010	UNDISTRIBUTED AGG FOR ACCESS MAINTENANCE				215																				
	SUBTOTAL STAGE 3 5144-01-75 0010			22	5412	784	92	8933	10	0	0	540	264	16845	56	143	108	24	29	0	3705	418	3359	3705	
	PROJECT 5144-01-75 PAGE SUBTOTAL 0010			22	8771	1167	92	14996	18	0	0	817	264	27409	82	208	158	45	35	0	6311	566	5817	6032	
	PROJECT 5144-01-76 PAGE SUBTOTAL 0010			0	0	0	0	0	0	0	0	0	0	0	0	0	0	0	0	0	0	0	0	0	

3

3

PAVEMENT SUMMARY

CATEGORY	STATION TO	STATION	LOCATION	BASE AGGREGATE DENSE 3/4-INCH 305.0110 TON	BASE AGGREGATE DENSE 1 1/4-INCH 305.0120 TON	BASE AGGREGATE DENSE 3-INCH 305.0130 TON	CONCRETE COLORING WISDOT RED 405.0100 CY	CONCRETE PAVEMENT 9-INCH 415.0090 SY	CONCRETE PAVEMENT GAPS 415.0210 EACH	CONCRETE PAVEMENT APPROACH SLAB 415.0410 SY	CONCRETE DRIVEWAYS 6-INCH 416.0160 SY	CONCRETE DRIVEWAYS 8-INCH 416.0180 SY	CONCRETE ROUNDABOUT TRUCK APRON 12-INCH 416.0512 SY	CONCRETE SIDEWALK 5-INCH 602.0410 SF	ASPHALT TACK COAT 455.0605 GAL	ASPHALT PAVEMENT 3 LT 58-28 S 460.5223 TON	ASPHALT PAVEMENT 4 LT 58-28 S 460.5224 TON	ASPHALT DRIVEWAYS & FIELD ENT 465.0120 TON	ASPHALT SURFACE TEMPORARY 465.0125 TON	ASPHALT CURB 465.0310 LF	CONSTRUCTION STAKING SUBGRADE 650.4500 LF	CONSTRUCTION STAKING BASE 650.5000 LF	CONSTRUCTION STAKING CONCRETE PAVEMENT 650.7000 LF	CONSTRUCTION STAKING SLOPE STAKES 650.9920 LF	REMARKS
5144-01-75	STAGE 4 ROUNDABOUT																								
0010	11+07"L" -	13+03"L"	RT		65																				
0010	10+05"G" -	10+61"G"	RT		30																				
0010	11+16"H" -	12+44"H"	LT		20																				
0010	11+38"A" -	12+98"A"	LT				83						250												
0010	11+45"H" -	12+12"H"	LT				9						28												
0010	11+07"L" -	13+03"L"	RT				25							1600											
0010	12+74"L" -	12+86"L"	RT											175											
0010	10+05"G" -	10+61"G"	RT				9							600											
0010	10+24"G" -	10+34"G"	RT											155											
0010	10+69"H" -	13+17"H"	LT											950											
0020	MEDIAN				15																				BASE FOR CONCRETE PAVERS
	SUBTOTAL STAGE 4 5144-01-75 0010			0	115	0	126	0	0	0	0	0	278	3480	0	0	0	0	0	0	0	0	0	0	
	SUBTOTAL STAGE 4 5144-01-75 0020			0	15	0	0	0	0	0	0	0	0	0	0	0	0	0	0	0	0	0	0	0	
5144-01-75	STAGE 5A STH 16																								
0010	102+19"EB" -	104+07"EB"	LT & RT		283			744						150							188		188		
	SUBTOTAL STAGE 5A 5144-01-75 0010			0	283	0	0	744	0	0	0	0	0	150	0	0	0	0	0	0	188	0	188	0	
5144-01-75	STAGE 5B STH 16																								
0010	104+07"EB" -	106+37"EB"	LT & RT		337			914						219							230		230		
	SUBTOTAL STAGE 5B 5144-01-75 0010			0	337	0	0	914	0	0	0	0	0	219	0	0	0	0	0	0	230	0	230	0	
5144-01-75	STAGE 6 STH 27																								
0010	328+55"NB" -	331+24"NB"	LT		222			374						713							269		269		
0010	332+31"NB" -	336+59	LT & RT		268			609	2					474							428		428		
0010	335+26"NB" -	335+60"NB"	LT & RT		27																				TEMP CE 335+50 LT
0010	335+77 -	336+17	LT & RT		26																				TEMP CE 335+90 LT
	SUBTOTAL STAGE 6 5144-01-75 0010			0	543	0	0	983	2	0	0	0	0	1187	0	0	0	0	0	0	697	0	697	0	
	PROJECT 5144-01-75 PAGE SUBTOTAL 0010			0	1278	0	126	2641	2	0	0	0	278	5036	0	0	0	0	0	0	1115	0	1115	0	
	PROJECT 5144-01-75 PAGE SUBTOTAL 0020			0	15	0	0	0	0	0	0	0	0	0	0	0	0	0	0	0	0	0	0	0	
	PROJECT 5144-01-76 PAGE SUBTOTAL 0010			0	0	0	0	0	0	0	0	0	0	0	0	0	0	0	0	0	0	0	0	0	
	PROJECT 5144-01-75, TOTAL 0010			152	16503	4886	266	23145	24	57	0	1193	651	40255	2113	796	591	53	945	561	12643	4382	8713	10313	
	PROJECT 5144-01-75, TOTAL 0020			0	15	0	0	0	0	0	0	0	0	0	0	0	0	0	0	0	0	0	0	0	
	PROJECT 5144-01-76, TOTAL 0010			0	385	1265	0	0	0	0	111	0	0	0	733	182	141	0	0	0	308	308	0	308	

SELECT CRUSHED MATERIAL

CATEGORY	STATION TO	STATION	LOCATION	312.0110 TON	REMARKS
5144-01-75	STH 16				
0010	105+00"WB" -	106+50"WB"	LT & RT	267	
0010	UNDISTRIBUTED			2516	
			PROJECT 5144-01-75 TOTAL 0010	2783	
5144-01-76					
0010	UNDISTRIBUTED			80	
			PROJECT 5144-01-76 TOTAL 0010	80	

CONCRETE SURFACE DRAINS

CATEGORY	STATION	TO	STATION	LOCATION	416.1010 CY	REMARKS
5144-01-75						
0010	302+74	-	302+95	LT & RT	4	
				PROJECT 5144-01-75 TOTAL 0010	4	

INCENTIVE IRI RIDE

CATEGORY	STATION TO	STATION	LOCATION	440.4410 DOL	REMARKS
5144-01-75	STH 27				
0010	30296 -	33660		2548	
	STH 16				
0010	102+19"EB" -	106+36"EB"		632	
	RIVER ROAD				
0010	30+19"R" -	33+52"R"		252	
	W AVERILL STREET				
0010	21+61"AV" -	24+74"AV"		237	
	MAPLE AVENUE				
0010	9+51"MA" -	12+60"MA"		234	
	HILL STREET				
0010	40+00"HL" -	40+66"HL"		25	
			PROJECT 5144-01-75 TOTAL 0010	3928	

DRILLED TIE BARS

CATEGORY	STATION	TO	STATION	LOCATION	416.0610 EACH	REMARKS
5144-01-75						
0010	302+74	-	302+82	LT & RT	16	
				TOTAL 0010	16	

3

PROJECT NO: 5144-01-75 & 5144-01-76	HWY: STH 27	COUNTY: MONROE	MISCELLANEOUS QUANTITIES	SHEET NO:	E

FILE NAME : 030201-MQ.PPT PLOT DATE : _____ PLOT BY : _____ PLOT NAME : _____ ORIGINATOR : DIST _ PLOT SCALE : 1:1

3

TEMPORARY DRAINAGE SUMMARY

CATEGORY	STR NO	STATION	LOCATION	CULVERT PIPE TEMPORARY 12-INCH 520.2012 LF	CULVERT PIPE TEMPORARY 15-INCH 520.2015 LF	CULVERT PIPE TEMPORARY 18-INCH 520.2018 LF	CONSTR STAKING PIPE CULV 650.6000 EACH	STORM SEWER CLASS III TYPE A 12-INCH 608.3012 LF	STORM SEWER CLASS III TYPE A 15-INCH 608.3015 LF	RECONSTRUCT INLETS 611.0430 EACH	INLET COVERS TYPE MS 611.0642 EACH	INLET COVERS TYPE S 611.0651 EACH	INLETS MEDIAN 1 GRATE 611.3901 EACH	COVER PLATES TEMPORARY 611.8120.S EACH	REMARKS
5144-01-75		STAGE 1B													
0010		331+80	45.4' RT											1	
5144-01-75		STAGE 1C													
0010	200	309+09.66	13.77' RT											1	
0010	201	309+10.90	50.49' RT					24			1		1		
0010		309+75.00	RT			54	1								TEMP DRIVEWAY TO BRENENGEN
0010		310+00.00	LT			68	1								TEMP DRIVEWAY TO KWIK TRIP
0010	211	312+63.32	27.58' RT											1	
0010	212	312+63.18	37.77' RT						10		1		1		
0010		313+50.00	RT		60		1								W AVERILL STREET EAST LEG
0010	221	316+01.24	28.33' RT											1	
0010	222	316+01.18	32.33' RT					4			1		1		
0010		317+10.00	RT	44			1								DRIVEWAY TO NORTHERN ENGRAVING
0010	230	319+98.34	20.92' RT							1		1			
0010	240	322+25.39	20.86' RT							1		1			
0010	250	325+96.97	20.73' RT							1		1			
0010	260	328+57.29	24.06' RT							1		1			
		PROJECT 5144-01-75 TOTAL 0010		44	60	122	4	28	10	4	3	4	3	4	

CLEANING CULVERT PIPES

CATEGORY	STATION	LOCATION	520.8700 EACH	REMARKS
5144-01-75				
0010	302+89	LT	1	
		TOTAL 0010	1	

ADJUSTING INLET COVERS

CATEGORY	STATION	LOCATION	611.8115 EACH	REMARKS
5144-01-75				
0010	302+89	LT	1	
		PROJECT 5144-01-75 TOTAL 0010	1	

APRON ENDWALLS FOR CULVERT PIPE STEEL 12-INCH

CATEGORY	STATION	LOCATION	521.1012 EACH	REMARKS
5144-01-75				
0010	302+88	RT	1	
		TOTAL 0010	1	

DRAINAGE STRUCTURE SUMMARY

CATEGORY	STRUCT. NO.	STATION	LOCATION	CONCRETE COLLAR FOR PIPE 520.8000 EACH	APRON ENDWALL CPRC 60-INCH 522.1060 EACH	MANHOLE COVERS TYPE J 611.0530 EACH	MANHOLE COVERS TYPE L 611.0545 EACH	INLET COVERS TYPE H 611.0624 EACH	INLET COVERS TYPE HM-S 611.0636 EACH	INLET COVERS TYPE H-S 611.0639 EACH	INLET COVERS TYPE T 611.0652 EACH	MANHOLES 3-FT 611.2003 EACH	MANHOLES 4-FT 611.2004 EACH	MANHOLES 5-FT 611.2005 EACH	MANHOLES 6-FT 611.2006 EACH	MANHOLES 7-FT 611.2007 EACH	MANHOLES 8-FT 611.2008 EACH	MANHOLES 9-FT SPV.0060.25 EACH	INLETS 4-FT 611.3004 EACH	INLETS 2X3-FT 611.3230 EACH	CONSTRUCT STAKING STORM SEW 650.4000 EACH	REMARKS
5144-01-76	Stage 1A																					
0010	1	215+19.14	7.58' RT			1																
0010	2	215+66.36	36.46' RT					1												1	1	
0010	3	215+66.71	19.0' LT					1												1	1	
0010	4	214+93.18	37.87' RT					1												1	1	
0010	5	29+89.29"R"	16.36' LT			1																
0010	6	210+43.14	35.65' LT					1												1	1	
0010	7	210+36.84	40.36' RT					1												1	1	
0010	8	209+55.48	18.59' LT					1												1	1	
0010		212+75	ON C/L			1																
		SUBTOTAL STAGE 1A 5144-01-76 0010		0	0	3	0	6	0	0	0	0	0	0	0	0	0	0	0	6	6	
5144-01-75	Stage 1C																					
	TEMPORARY STRUCTURES																				7	
0010		302+89	LT	1																	1	LAYOUT FOR 12" CS AEW
0010	60	304+23.33	57.7' LT		1																1	
0010	59	304+81.10	33.7' LT			1												1			1	
0010	58	12+95.18 L	1.5' RT							1							1				1	FLAT SLAB TOP REQ'D
0010	58.8	14+42.34 M	11.7' LT			1								1							1	
0010	58.9	12+88.00 A	1.5' LT								1			1							1	FLAT SLAB TOP REQ'D; RUBBER ADJUSTMENT RISER RINGS REQ'D
0010	STUB	307+77	LT	1																		CONNECT TO EXISTING 24"
0010	57	10+11.70 G	1.5' RT							1								1			1	FLAT SLAB TOP REQ'D
		SUBTOTAL STAGE 1C 5144-01-75 0010		2	1	2	0	0	0	2	1	0	0	2	0	0	1	2	0	0	14	
5144-01-75	Stage 2																					
0010	58.1	11+18.00 K	1.5' LT						1				1								1	FLAT SLAB TOP REQ'D
0010	58.2	11+24.01 K	1.5' LT						1				1								1	FLAT SLAB TOP REQ'D
0010	58.3	12+60.24 J	7.8' LT							1			1								1	FLAT SLAB TOP REQ'D
0010	58.4	12+55.03 J	1.5' LT							1			1								1	FLAT SLAB TOP REQ'D
0010	58.5	12+57.31 I	1.5' RT							1										1	1	
0010	58.6	10+98.26 H	1.5' LT							1										1	1	
0010	58.7	10+92.25 H	1.5' LT							1										1	1	
0010	56	11+94.03 H	1.5' LT						1									1			1	FLAT SLAB TOP REQ'D
0010	55	311+77.78	13' LT			1											1				1	FLAT SLAB TOP REQ'D
0010	55.1	311+77.78	24.5' LT					1		1											1	
0010	54	313+30.00	13' LT			1											1				1	FLAT SLAB TOP REQ'D
0010	54.1	22+47.68"AV"	22.33' RT					1												1	1	
0010	54.2	22+49.13"AV"	25.81' LT					1												1	1	
0010	53	314+03.13	13' LT			1											1				1	FLAT SLAB TOP REQ'D
0010	53.1	314+48.03	24.5' LT					1												1	1	
0010	52	317+50.00	16.07' LT			1											1				1	FLAT SLAB TOP REQ'D
0010	52.1	317+50.00	24.5' LT					1												1	1	
0010	52.2	318+15.00	24.5' LT					1												1	1	
0010	51.5	318+95.00	16.25' LT			1											1				1	FLAT SLAB TOP REQ'D
0010	51.6	318+95.00	24.5' LT					1												1	1	
		SUBTOTAL STAGE 2 5144-01-75 0010		0	0	5	0	7	3	6	0	0	4	0	0	0	5	1	0	9	20	
5144-01-75	Stage 2B																					
0010	51	319+75.00	16.35' LT			1											1				1	FLAT SLAB TOP REQ'D
0010	51.1	319+75.00	24.5' LT					1												1	1	
0010	50	321+92.37	16.5' LT				1										1				1	FLAT SLAB TOP REQ'D
0010	50.1	321+92.36	24.5' LT					1												1	1	
0010	50.2	322+32.36	24.5' LT					1												1	1	
0010	40	325+53.64	25.12' LT			1											1				1	FLAT SLAB TOP REQ'D
0010	40.1	10+58.56"MA"	22.74' LT					1												1	1	
0010	40.4	10+53.56"MA"	22.76' LT					1												1	1	
0010	40.2	10+58.92"MA"	22.78' RT					1												1	1	
0010	40.3	10+53.90"MA"	22.82' RT					1												1	1	
0010	39	326+24.84	24.25' LT					1									1				1	FLAT STAB TOP REQ'D
0010	39.5	327+04.23"SB"	24.25' LT					1									1				1	FLAT SLAB TOP REQ'D
0010	38	328+57.61"SB"	7.38' LT			1											1				1	FLAT SLAB TOP REQ'D
0010	38.1	328+57.43"SB"	17.48' LT					1												1	1	
0010	38.3	328+86.49"SB"	34.48' LT					1												1	1	
0010	38.4	328+62.53"SB"	17.5' LT					1												1	1	
0010	STUB	328+62.53"SB"	6' RT	1																		CONNECT TO EXISTING 12" STORM
0010	37.8	329+73.61"SB"	12.78' LT			1											1				1	FLAT SLAT TOP REQ'D
0010	37.B	329+78.37"SB"	17.5' LT					1												1	1	
0010	37.C	329+43.65"SB"	37.36' LT					1												1	1	
0010	37.5	330+74.00"SB"	20.2' LT			1											1				1	FLAT SLAB TOP REQ'D
0010	37.6	330+73.64"SB"	24.71' LT					1												1	1	
0010	37	331+35.04"SB"	20.2' LT			1														1	1	
0010	37.1	103+32.38"EB"	28.72' RT					1												1	1	
0010	36	332+33.11"SB"	18.79' LT			1											1				1	
0010	36.1	103+58.11"WB"	55.40' LT					1												1	1	
0010	36.2	103+28.24"WB"	32.13' LT					1												1	1	
0010	35	335+24.87"SB"	19.01' LT			1											1				1	FLAT SLAB TOP REQ'D
0010	34	336+22.77	13.94' LT			1											1				1	FLAT SLAB TOP REQ'D
0010	34.1	336+28.42	24.23' LT					1												1	1	
		SUBTOTAL STAGE 2B 5144-01-75 0010		1	0	9	1	19	0	0	0	0	0	0	0	0	11	0	0	18	29	
		PROJECT 5144-01-75 PAGE SUBTOTAL 0010		3	1	16	1	26	3	8	1	0	4	2	0	0	17	3	0	27	63	
		PROJECT 5144-01-76 PAGE SUBTOTAL 0010		0	0	3	0	6	0	0	0	0	0	0	0	0	0	0	0	6	6	

3

3

3

DRAINAGE STRUCTURE SUMMARY

CATEGORY	STRUCT. NO.	STATION	LOCATION	CONCRETE COLLAR FOR PIPE 520.8000 EACH	APRON ENDWALL CPRC 60-INCH 522.1060 EACH	MANHOLE COVERS TYPE J 611.0530 EACH	MANHOLE COVERS TYPE L 611.0545 EACH	INLET COVERS TYPE H 611.0624 EACH	INLET COVERS TYPE HM-S 611.0636 EACH	INLET COVERS TYPE H-S 611.0639 EACH	INLET COVERS TYPE T 611.0652 EACH	MANHOLES 3-FT 611.2003 EACH	MANHOLES 4-FT 611.2004 EACH	MANHOLES 5-FT 611.2005 EACH	MANHOLES 6-FT 611.2006 EACH	MANHOLES 7-FT 611.2007 EACH	MANHOLES 8-FT 611.2008 EACH	MANHOLES 9-FT SPV.0060.25 EACH	INLETS 4-FT 611.3004 EACH	INLETS 2X3-FT 611.3230 EACH	CONSTRUCT STAKING STORM SEW 650.4000 EACH	REMARKS
5144-01-75	Stage 3																					
0010	58.11	14+45.80 M	1.5' LT							1			1								1	FLAT SLAB TOP REQ'D
0010	58.12	11+23.62 B	1.5' RT						1				1								1	FLAT SLAB TOP REQ'D
0010	58.13	11+29.72 B	1.5' RT						1				1								1	FLAT SLAB TOP REQ'D
0010	58.14	10+07.62 C	9.0' LT							1			1								1	FLAT SLAB TOP REQ'D
0010	58.15	10+59.73 E	1.5' RT							1										1	1	
0010	58.16	10+65.84 E	1.5' RT							1										1	1	
0010	57.1	10+14.43 F	1.5' LT							1										1	1	
0010	202	11+37.44 E	13.2' RT			1						1									1	
0010	55.2	311+86.83	24.5' RT					1		1											1	
0010	54.4	312+63.18	37.8' RT			1						1									1	
0010	54.3	23+78.65"AV"	22.59' RT					1												1	1	
0010	53.2	314+03.13	24.5' RT					1												1	1	
0010	53.3	314+48.03	24.5' RT					1												1	1	
0010	53.4	23+78.19"AV"	22.91' LT					1												1	1	
0010	52.3	317+50.00	24.5' RT					1												1	1	
0010	52.4	317+90.00	24.5' RT					1												1	1	
0010	51.2	319+83.54	24.5' RT					1												1	1	
0010	51.3	319+46.34	27.53' RT			1						1									1	
0010	50.3	321+85.11	24.5' RT					1												1	1	
0010	50.4	322+38.96	24.5' RT					1												1	1	
0010	41	11+68.08"MA"	7.8' RT				1								1	1					1	FLAT SLAB TOP REQ'D
0010	41.1	11+67.74"MA"	13.5' RT					1												1	1	
0010	41.2	11+67.74"MA"	17.5' LT					1												1	1	
0010	39.1	326+24.87	24.5' RT					1												1	1	
0010	39.6	327+25.00"NB"	17.5' RT					1												1	1	
0010	38.2	328+55.50"NB"	27.66' RT					1												1	1	
0010	38.5	328+62.31"NB"	27.5' RT					1												1	1	
0010	38.6	329+17.31"NB"	27.53' RT					1												1	1	
0010	38.7	329+22.31"NB"	27.5' RT					1												1	1	
0010	37.9	329+78.47"NB"	27.5' RT					1												1	1	
0010	37.A	329+83.47"NB"	27.5' RT					1												1	1	
0010	37.7	330+97.97"NB"	33.67' RT					1												1	1	
0010	37.2	104+90.55"EB"	33.21' RT					1												1	1	
0010	36.3	104+56.67"WB"	52.53' LT					1										1			1	FLAT SLAB TOP REQ'D
0010	36.4	332+66.51"NB"	28.61' RT					1												1	1	
0010	36.5	104+89.55"WB"	28.43' LT					1												1	1	
0010	36.6	104+73.77"WB"	44.91' LT				1						1								1	FLAT SLAB TOP REQ'D
0010	34.4	335+82.96	40.52' RT	1				1												1		CONNECT TO EXISTING 12" STORM
		SUBTOTAL STAGE 3 5144-01-75 0010		1	0	3	2	26	2	6	0	3	5	0	1	1	0	0	1	27	37	
5144-01-75	Stage 4																					
0010	58.10	13+02.11 A	1.5' LT								1		1								1	FLAT SLAB TOP REQ'D; RUBBER ADJUSTMENT RISER RINGS REQ'D
		SUBTOTAL STAGE 4 5144-01-75 0010		0	0	0	0	0	0	0	1	0	1	0	0	0	0	0	0	0	1	
		PROJECT 5144-01-75 PAGE SUBTOTAL 0010		1	0	3	2	26	2	6	1	3	6	0	1	1	0	0	1	27	38	
		PROJECT 5144-01-76 PAGE SUBTOTAL 0010		0	0	0	0	0	0	0	0	0	0	0	0	0	0	0	0	0	0	
		PROJECT 5144-01-75 TOTAL 0010		4	1	19	3	52	5	14	2	3	10	2	1	1	17	3	1	54	101	
		PROJECT 5144-01-76 TOTAL 0010		0	0	3	0	6	0	0	0	0	0	0	0	0	0	0	0	6	6	

MARKERS CULVERT END

CATEGORY	STATION	LOCATION	633.5200 EACH	REMARKS
0010	302+88	40.9' RT	1	
0010	304+32.33	57.7' LT	1	
		TOTAL 0010	2	

PERMANENT EROSION CONTROL - RIPRAP

CATEGORY	STATION	LOCATION	RIPRAP HEAVY 606.0300 CY	GEOTEXTILE TYPE HR 645.0120 SY	REMARKS
5144-01-75					
0010	302+88	45' RT	2	8	
0010	302+89	43' LT	2	8	
0010	304+32	58' LT	18	42	STRUCTURE 60 - STORM OUTLET
	PROJECT 5144-01-75 TOTAL 0010		22	58	

ADJUSTING MANHOLE COVERS

CATEGORY	STR NO	STATION	LOCATION	611.8110 EACH	REMARKS
5144-01-76		STAGE 1A			
0010	1	215+19.14	7.58' RT	1	
0010	5	29+89.29"R"	16.36' LT	1	
0010		212+75	ON C/L	1	
		STAGE 1C			
5144-01-75		STH 27			
0010	200	309+09.66	13.77' LT	1	
0010	210	312+63.78	13.34' RT	1	
0010	220	315+97.76	13.52' RT	1	
		PROJECT 5144-01-75 TOTAL 0010		3	
		PROJECT 5144-01-76 TOTAL 0010		3	

3

3

STORM SEWER SUMMARY

CATEGORY	FROM STRUCTURE	TO STRUCTURE	REINFORCED CONCRETE CLASS III 12-INCH 608.0312 LF	15-INCH 608.0315 LF	18-INCH 608.0318 LF	21-INCH 608.0321 LF	24-INCH 608.0324 LF	48-INCH 608.0348 LF	54-INCH 608.0354 LF	60-INCH 608.0360 LF	REINFORCED CONCRETE CLASS IV 12-INCH 608.0412 LF	15-INCH 608.0415 LF	18-INCH 608.0418 LF	24-INCH 608.0424 LF	54-INCH 608.0454 LF	60-INCH 608.0460 LF	REMARKS
5144-01-76	Stage 1A																
0010	1	2	55														
0010	2	3	55														
0010	1	4	40														
0010	5	6	54														
0010	5	7	37														
SUBTOTAL STAGE 1A 5144-01-76 0010			241	0	0	0	0	0	0	0	0	0	0	0	0	0	
5144-01-75	Stage 1C																
0010	59	60								51							
0010	58	59								260							
0010	58.8	58					15										
0010	58.9	58.8					31										
0010	STUB	58.9					6										
0010	57	58								154							
SUBTOTAL STAGE 1C 5144-01-75 0010			0	0	0	0	52	0	0	465	0	0	0	0	0	0	
5144-01-75	Stage 2																
0010	58.1	58		27													
0010	58.2	58.1		6													
0010	58.3	58.2		71													
0010	58.4	58.3		8													
0010	58.5	58.3		23													
0010	58.6	58.5		26													
0010	58.7	58.6	6														
0010	57.1	57	13														PLUG AT STAGE BOUNDARY
0010	56	57								35							
0010	55	56								250							
0010	55.1	55	11														
0010	55.2	55	17														PLUG AT STAGE BOUNDARY
0010	54	55								152							
0010	54.1	54		68													
0010	54.3	54	12														PLUG AT STAGE BOUNDARY
0010	53	54								73							
0010	54.2	53	71														
0010	53.1	53	46														
0010	53.2	53				17											PLUG AT STAGE BOUNDARY
0010	52	53								347							
0010	52.1	52			8												
0010	52.2	52.1	65														
0010	52.3	52			16												PLUG AT STAGE BOUNDARY
0010	51.5	52								145							
0010	51.6	51.5	8														
0010	36.7	37	45														
SUBTOTAL STAGE 2 5144-01-75 0010			249	229	24	17	0	0	0	1002	0	0	0	0	0	0	
PAGE SUBTOTAL 5144-01-75 0010			249	229	24	17	52	0	0	1467	0	0	0	0	0	0	
PAGE SUBTOTAL 5144-01-76 0010			241	0	0	0	0	0	0	0	0	0	0	0	0	0	

3

STORM SEWER SUMMARY

CATEGORY	FROM STRUCTURE	TO STRUCTURE	REINFORCED CONCRETE CLASS III 12-INCH 608.0312 LF	15-INCH 608.0315 LF	18-INCH 608.0318 LF	21-INCH 608.0321 LF	24-INCH 608.0324 LF	48-INCH 608.0348 LF	54-INCH 608.0354 LF	60-INCH 608.0360 LF	REINFORCED CONCRETE CLASS IV 12-INCH 608.0412 LF	15-INCH 608.0415 LF	18-INCH 608.0418 LF	24-INCH 608.0424 LF	54-INCH 608.0454 LF	60-INCH 608.0460 LF	REMARKS
5144-01-75	Stage 2B																
0010	55.2	55	9														PLUG AT STAGE BOUNDARY
0010	54.3	54	12														PLUG AT STAGE BOUNDARY
0010	53.2	53				11											PLUG AT STAGE BOUNDARY
0010	51	51.5								80							
0010	51.1	51	8														
0010	51.2	51	17														PLUG AT STAGE BOUNDARY
0010	50	51														217	
0010	50.1	50										8					
0010	50.2	50.1	40														
0010	50.3	50											16				
0010	40	50													361		
0010	40.1	40			44												
0010	40.4	40.1			5												
0010	40.2	40	33														
0010	40.3	40.2	5														
0010	40	41					25										PLUG AT STAGE BOUNDARY
0010	39	40							71								
0010	39.1	39			24												PLUG AT STAGE BOUNDARY
0010	39.5	39						79									
0010	39.6	39.5		15													
0010	38	39.5						154									
0010	38.1	38	10														
0010	38.3	38	74														
0010	38.4	38.1	5														
0010	38.2	38		12													TEMPORARY CONNECTION TO 12"
0010	37.8	38						116									
0010	37.B	37.8	6														
0010	37.C	37.B	40														
0010	37.9	37.8		12													PLUG AT STAGE BOUNDARY
0010	37.5	37.8						100									
0010	37.6	37.5	7														
0010	37.7	37.5	17														PLUG AT STAGE BOUNDARY
0010	37	37.5						61									
0010	37.1	37	49														
0010	37.2	37	20														PLUG AT STAGE BOUNDARY
0010	36	37						98									
0010	36.1	36					26										
0010	36.2	36	53														
0010	36.3	36												18			PLUG AT STAGE BOUNDARY
0010	35	36						293									
0010	34	35						99									
0010	34.1	34		11													
SUBTOTAL STAGE 2B 5144-01-75 0010			405	50	73	11	51	1000	71	80	0	8	16	18	361	217	
PAGE SUBTOTAL 5144-01-75 0010			405	50	73	11	51	1000	71	80	0	8	16	18	361	217	
PAGE SUBTOTAL 5144-01-76 0010			0	0	0	0	0	0	0	0	0	0	0	0	0	0	

SURFACE DRAIN PIPE CORRUGATED METAL SLOTTED (12-INCH)

CATEGORY	STATION	TO	STATION	LOCATION	521.2005.S.01 LF	REMARKS
5144-01-75						
0010	32+02"R"	-	32+37"R"	LT	33	CE FOR KWIK TRIP
PROJECT 5144-01-75 TOTAL 0010					33	

3

STORM SEWER SUMMARY

CATEGORY	FROM STRUCTURE	TO STRUCTURE	REINFORCED CONCRETE CLASS III 12-INCH 608.0312 LF	15-INCH 608.0315 LF	18-INCH 608.0318 LF	21-INCH 608.0321 LF	24-INCH 608.0324 LF	48-INCH 608.0348 LF	54-INCH 608.0354 LF	60-INCH 608.0360 LF	REINFORCED CONCRETE CLASS IV 12-INCH 608.0412 LF	15-INCH 608.0415 LF	18-INCH 608.0418 LF	24-INCH 608.0424 LF	54-INCH 608.0454 LF	60-INCH 608.0460 LF	REMARKS
5144-01-75	Stage 3																
0010	58.11	58.8		11													
0010	58.12	58.11		24													
0010	58.13	58.12		6													
0010	58.14	58.13	72														
0010	58.15	58.14	38														
0010	58.16	58.15	6														
0010	57.1	57	13														
0010	202	57.1	35														
0010	55.2	55	12														
0010	54.4	54.3	66														
0010	54.3	54	39														
0010	53.2	53				9											
0010	53.4	53.2				40											
0010	53.3	53.2	45														
0010	52.3	52			24												
0010	52.4	52.3	40														
0010	51.2	51	24														
0010	51.3	51.2	37														
0010	50.3	50											25				
0010	50.4	50.3									54						
0010	40	41					52										
0010	41.1	41	5														
0010	41.2	41	25														
0010	39.1	39			24												
0010	39.6	39.5		39													
0010	38.2	38		41													
0010	38.5	38.2	5														
0010	38.6	38.5	55														
0010	38.7	38.6	5														
0010	37.9	37.8		46													
0010	37.A	37.9	5														
0010	37.7	37.5	56														
0010	37.2	37	90														
0010	36.3	36												58			
0010	36.4	36.3	26														
0010	36.5	36.3	41														
0010	36.6	36.3	19														
0010	34.4	COLLAR	6														
SUBTOTAL STAGE 3 5144-01-75 0010			765	167	48	49	52	0	0	0	54	0	25	58	0	0	
5144-01-75	Stage 4																
0010	58.10	58.9		14													
SUBTOTAL STAGE 4 5144-01-75 0010			0	14	0	0	0	0	0	0	0	0	0	0	0	0	
PAGE SUBTOTAL 5144-01-75 0010			765	181	48	49	52	0	0	0	54	0	25	58	0	0	
PAGE SUBTOTAL 5144-01-76 0010			0	0	0	0	0	0	0	0	0	0	0	0	0	0	
PROJECT 5144-01-75 TOTAL 0010			1419	460	145	77	155	1000	71	1547	54	8	41	76	361	217	
PROJECT 5144-01-76 TOTAL 0010			241	0	0	0	0	0	0	0	0	0	0	0	0	0	

PIPE UNDERDRAIN SUMMARY

CATEGORY	STATION TO	STATION	LOCATION	PIPE UNDERDRAIN 6-INCH 612.0106 LF	GEOTEXTILE TYPE DF SCHEDULE A 645.0111 SY	REMARKS
5144-01-75	STH 16					
0010	104+90"WB" -	105+05"WB"	LT	20	22	
0010	105+05"WB" -	106+00"WB"	LT	95	98	
0010	105+05"WB"		LT & RT	33	38	
PROJECT 5144-01-75 TOTAL 0010				148	158	

PIPE UNDERDRAIN UNPERFORATED 12-INCH

CATEGORY	STATION	LOCATION	612.0212 LF	REMARKS
5144-01-75				
0010	302+89	LT	26	
PROJECT 5144-01-75 TOTAL 0010			26	

3

PROJECT NO: 5144-01-75 & 5144-01-76	HWY: STH 27	COUNTY: MONROE	MISCELLANEOUS QUANTITIES	SHEET NO:	E

CURB & GUTTER SUMMARY

CATEGORY	STATION TO STATION	LOCATION	CONCRETE CURB TYPE J 601.0120 LF	CONCRETE CURB AND GUTTER 18-INCH TYPE A 601.0405 LF	30-INCH TYPE A 601.0409 LF	30-INCH TYPE D 601.0411 LF	30-INCH 6" SLOPED TYPE G 601.0413 LF	36-INCH 4" SLOPED TYPE A 601.0551 LF	36-INCH 4" SLOPED TYPE R 601.0580 LF	18-INCH TYPE G SPV.0090.01 LF	CONSTRUCTION STAKING CURB GUTTER CURB & GUTTER 650.5500 LF	REMARKS
5144-01-76	STAGE 1A											
	W AVERILL STREET											
0010	20+32.18"AV" - 216+09.08	LT & RT				94					94	ROBERTS/AVERILL NE RADIUS
0010	20+32.18"AV" - 21+61.11"AV"	LT				129					129	
0010	20+34.96"AV" - 21+61.07"AV"	RT				127					127	
0010	20+34.96"AV" - 214+49.07	RT				97					97	ROBERTS/AVERILL SE RADIUS
	RIVER ROAD											
0010	28+74.96"R" - 29+35.54"R"	RT				61					61	
0010	28+75.04"R" - 28+98.14"R"	LT				23					23	
0010	28+98.14"R" - 210+85.01	LT				96					96	ROBERTS/RIVER NW RADIUS
0010	29+35.54"R" - 209+50.93	RT & LT				39					39	ROBERTS/RIVER SW RADIUS
0010	30+58.57"R" 210+83.21	LT & RT				95					95	ROBERTS/RIVER NE RADIUS
	ROBERTS ROAD											
0010	210+85.01 - 216+80.49	LT				596					596	
0010	210+83.21 - 214+49.07	RT				366					366	
0010	216+09.08 - 217+96.04	RT				187					187	
0010	216+80.49 - 14+20.80	LT & RT				95					95	ROBERTS/HOESCHLER SW RADIUS
0010	217+96.04 - 14+64.64	LT				25					25	ROBERTS/HOESCHLER NW RADIUS
	HOESCHLER ROAD											
0010	14+20.81 - 14+64.64	LT				44					44	
	SUBTOTAL STAGE 1A 5144-01-76 0010		0	0	0	2074	0	0	0	0	2074	
	STAGE 2											
5144-0175	ROUNDABOUT											
0010	10+00"K" - 10+52"K"	LT			52							
0010	10+51"K" - 12+35"K"	LT						180				
0010	30+43"R" - 32+16"R"	RT			160	13					13	
0010	30+43"R" - 33+09"R"	LT			255	10					13	
0010	30+54"R" - 30+62"R"	LT		14								
0010	31+01"R" - 31+10"R"	LT		16								
0010	31+97"R" - 32+01"R"	LT		26								
0010	32+36"R" - 32+43"R"	LT		33								
0010	32+55"R" - 32+69"R	LT	39									
0010	11+63"J" - 12+60"J"	LT			97							
0010	11+62"I" - 12+62"I"	RT			100							
0010	12+05"A" - 12+21"A"	RT			23							
0010	11+39"H" - 11+69"H"	LT						29				
	STH 27											
0010	309+76 - 310+50	LT			6							COMPLETED IN STAGE 4
0010	310+50 - 313+31	LT			311							
0010	313+77 - 319+00	LT			562							
	W AVERILL STREET											
0010	21+61"AV" - 22+38"AV"	RT				77					77	
0010	21+61"AV" - 22+38"AV"	LT				77					77	
	SUBTOTAL STAGE 2 5144-01-75 0010		39	89	1566	177	0	209	0	0	180	
	PROJECT 5144-01-75 PAGE SUBTOTAL 0010		39	89	1566	177	0	209	0	0	180	
	PROJECT 5144-01-76 PAGE SUBTOTAL 0010		0	0	0	2074	0	0	0	0	2074	

3

3

3

CURB & GUTTER SUMMARY

CATEGORY	STATION TO	STATION	LOCATION	CONCRETE CURB TYPE J 601.0120 LF	CONCRETE CURB AND GUTTER 18-INCH TYPE A 601.0405 LF	30-INCH TYPE A 601.0409 LF	30-INCH TYPE D 601.0411 LF	30-INCH 6" SLOPED TYPE G 601.0413 LF	36-INCH 4" SLOPED TYPE A 601.0551 LF	36-INCH 4" SLOPED TYPE R 601.0580 LF	18-INCH TYPE G SPV.0090.01 LF	CONSTRUCTION STAKING CURB GUTTER CURB & GUTTER 650.5500 LF	REMARKS
	STAGE 2B												
5144-01-75	STH 27												
0010	319+00 -	325+40	LT			612							
0010	325+86 -	331+47"SB"	LT			598							
0010	332+24"SB" -	336+60	LT			455							
	CE 327+95"SB"		LT				62					62	
	CE 329+55"SB"		LT				51					51	
	STH 16												
0010	102+19"EB" -	103+30"EB"	RT			110							
0010	102+77"WB" -	103+28"WB"	LT			51							DRILL TIE BARS IN STAGE 3
0010	104+76"EB" -	106+37"EB"	RT			162							
	MAPLE AVENUE												
0010	9+50"MA" -	10+63"MA"	RT				112					112	
0010	9+50"MA" -	10+63"MA"	LT				110					110	
	SUBTOTAL STAGE 2B 5144-01-75 0010			0	0	1988	335	0	0	0	0	335	
	STAGE 3												
5144-01-75	ROUNDABOUT												
0010	10+19"D" -	10+29"D"	RT	21									
0010	11+38"A" -	12+98"A"	LT							135			
0010	11+38"A" -	12+95"A"	LT		77								
0010	10+00"B" -	10+52"B"	RT			53							
0010	10+52"B" -	11+42"B"	RT						87				
0010	11+42"B" -	12+47"B"	RT			100							
0010	10+08"C" -	10+35"C"	RT			27							
0010	10+07"D" -	10+35"D"	RT			26							
0010	10+58"A" -	10+69"A"	RT			16							
0010	10+00"E" -	12+82"E"	RT			270							
	STH 27												
0010	310+50 -	313+28	RT			298							
0010	313+73 -	325+46	RT			1209							
0010	325+76 -	331+34"NB"	RT			579							
0010	332+19"NB" -	335+18"NB"	RT			395							
0010	CE 333+80"NB"		RT				37					37	
	STH 16												
0010	102+19"WB" -	102+77"WB"	LT			58							
0010	104+90"WB" -	106+36"WB"	LT			149							
0010	CE 105+59"WB"		LT				39					39	
	MAPLE AVENUE												
0010	11+64"MA" -	12+60"MA"	RT				137					137	
0010	11+66"MA" -	12+67"MA"	LT				101					101	
	HILL STREET												
0010	40+43"HL" -	40+46"HL"	RT				22					22	
	SUBTOTAL STAGE 3 5144-01-75 0010			21	77	3180	336	0	87	135	0	336	
	PROJECT 5144-01-75 PAGE SUBTOTAL 0010			21	77	5168	671	0	87	135	0	671	
	PROJECT 5144-01-76 PAGE SUBTOTAL 0010			0	0	0	0	0	0	0	0	0	

3

CURB & GUTTER SUMMARY

CATEGORY	STATION TO	STATION	LOCATION	CONCRETE CURB TYPE J 601.0120 LF	CONCRETE CURB AND GUTTER 18-INCH TYPE A 601.0405 LF	30-INCH TYPE A 601.0409 LF	30-INCH TYPE D 601.0411 LF	30-INCH 6" SLOPED TYPE G 601.0413 LF	36-INCH 4" SLOPED TYPE A 601.0551 LF	36-INCH 4" SLOPED TYPE R 601.0580 LF	18-INCH TYPE G SPV.0090.01 LF	CONSTRUCTION STAKING CURB GUTTER CURB & GUTTER 650.5500 LF	REMARKS
	STAGE 4												
5144-01-75	ROUNDABOUT												
0010	12+74"L" -	12+86"L"	RT	35									
0010	10+24"G" -	10+34"G"	RT	31									
0010	11+38"A" -	12+98"A"	LT							150			
0010	11+69"H" -	12+18"H"	LT						48				
0010	11+07"L" -	13+00"L"	RT			195				150			
0010	12+59"M" -	14+50"M"	LT			190							
0010	10+09"F" -	10+67"F"	LT			58							
0010	10+07"G" -	10+61"F"	RT			55							
0010	12+18"H" -	12+44"H"	LT			26							
0010	12+81"A" -	12+97"A"	RT			22							
0010	11+30"A" -	11+46"A"	RT			23							
0010	11+38"A" -	12+95"A"	LT		84								
	STH 27												
0010	309+76 -	310+50	LT			67							
	SUBTOTAL STAGE 4 5144-01-75 0010			66	84	636	0	0	48	300	0	0	
	STAGE 5A												
5144-01-75	STH 16												
0010	102+26"EB" -	103+35"EB"	LT					109			116		
	STAGE 5B												
	STH 16												
0010	104+89"EB" -	105+75"EB"	LT					98			86		
	SUBTOTAL STAGE 5A & 5B 5144-01-75 0010			0	0	0	0	207	0	0	202	0	
	STAGE 6												
5144-01-75	STH 27												
0010	328+58"NB" -	331+02"NB"	LT								502		
0010	332+63"NB" -	334+28"NB"	LT								343		
	SUBTOTAL STAGE 6 5144-01-75 0010			0	0	0	0	0	0	0	845	0	
	PROJECT 5144-01-75 PAGE SUBTOTAL 0010			66	84	636	0	207	48	300	1047	0	
	PROJECT 5144-01-76 PAGE SUBTOTAL 0010			0	0	0	0	0	0	0	0	0	
	PROJECT 5144-01-75 TOTAL 0010			126	250	7370	848	207	344	435	1047	851	
	PROJECT 5144-01-76 TOTAL 0010			0	0	0	2074	0	0	0	0	2074	

3

CURB RAMP DETECTABLE WARNING FIELD YELLOW

CATEGORY	STATION	LOCATION	602.0505 SF	REMARKS
5144-01-75	ROUNDABOUT			
0010	10+93"K"	LT	20	
0010	11+97"K"	LT	20	
0010	12+41"J"	LT	20	
0010	12+43"I"	RT	20	
0010	10+80"H"	LT	20	
0010	10+99"B"	RT	20	
0010	12+08"B"	RT	20	
0010	10+26"C"	LT	20	
0010	10+24"D"	RT	20	
0010	10+37"E"	RT	20	
0010	11+47"E"	RT	20	
0010	12+79"L"	RT	20	
0010	14+30"M"	LT	20	
0010	10+32"F"	LT	20	
0010	10+29"G"	RT	20	
0010	11+84"H"	LT	20	
5144-01-75	W AVERILL STREET			
0010	31297	LT	10	
0010	31297	RT	10	
0010	31438	LT	10	
0010	31438	RT	10	
0010	22+54"AV"	LT	10	
0010	22+54"AV"	RT	10	
0010	23+59"AV"	LT	10	
0010	23+59"AV"	RT	10	
5144-01-75	MAPLE AVENUE			
0010	32510	LT	10	
0010	32510	RT	10	
0010	32617	LT	10	
0010	32617	RT	10	
0010	10+82"MA"	LT	10	
0010	10+82"MA"	RT	10	
0010	11+45"MA"	LT	10	
0010	11+45"MA"	RT	10	
5144-01-75	STH 16			
0010	331+13"NB"	RT	12	
0010	331+14"SB"	LT	12	
0010	332+53"NB"	RT	12	
0010	332+53"SB"	LT	12	
0010	103+40"EB"	RT	12	
0010	103+41"WB"	LT	12	
0010	104+84"EB"	RT	10	
0010	104+79"WB"	LT	12	
5144-01-75	HILL STREET			
0010	335+65"NB"	RT	9	
0010	335+71"SB"	LT	9	
0010	40+30"HL"	RT	10	
	PROJECT 5144-01-75 TOTAL 0010		602	

CONCRETE MEDIAN SLOPED NOSE

CATEGORY	STATION	LOCATION	620.0300 SF	REMARKS
5144-01-75	ROUNDABOUT			
0010	11+56"J"	LT	70	TYPE 1
0010	12+59"J"	LT	15	TYPE 2
0010	12+62"I"	RT	20	TYPE 2
0010	10+06"C"	LT	20	TYPE 2
0010	10+05"D"	RT	15	TYPE 2
0010	10+38"D"	RT	55	TYPE 1
0010	11+00"L"	RT	70	TYPE 1
0010	13+03"L"	RT	20	TYPE 2
0010	14+52"M"	LT	15	TYPE 2
0010	10+07"F"	LT	20	TYPE 2
0010	10+70"F"	LT	70	TYPE 1
0010	10+05"G"	RT	15	TYPE 2
5144-01-75	STH 16 INTERSECTION			
0010	328+58"NB"	LT	35	TYPE 1
0010	331+03"NB"	LT	35	TYPE 1
0010	332+63"NB"	LT	35	TYPE 1
0010	334+28"NB"	LT	35	TYPE 1
0010	103+35"EB"	LT	30	TYPE 1
0010	102+26"EB"	LT	30	TYPE 1
0010	104+89"WB"	RT	30	TYPE 1
0010	105+76"WB"	RT	30	TYPE 1
	PROJECT 5144-01-75 TOTAL 0010		665	

CONCRETE CORRUGATED MEDIAN

CATEGORY	STATION	TO	STATION	LOCATION	620.0100 SF	REMARKS
5144-01-75	STH 16					
0010	105+75"EB"	-	106+36"EB"	LT	260	
	PROJECT 5144-01-75 TOTAL 0010				260	

3

3

MGS GUARDRAIL SUMMARY

CATEGORY	STATION	TO	STATION	LOCATION	MGS GUARDRAIL 3 614.2300 LF	MGS GUARDRAIL TERMINAL EAT 614.2610 EACH	MGS THRIE BEAM TRANSITION 614.2500 LF	REMARKS
5144-01-75	STAGE 1C							
0010	302+79	-	305+46	LT	175	1	39	
0010	302+79	-	305+21	RT	150	1	39	
		PROJECT 5144-01-75 TOTAL 0010			325	2	78	

WATER

CATEGORY	STATION	APPLICATIONS	PER APPLICATION MGAL	TOTAL 624.0100 MGAL	REMARKS
	BASE AGGREGATE				
5144-01-76					
0010	STAGE 1A			20	
5144-01-75					
0010	STAGE 1A			59	
0010	STAGE 1B			3	
0010	STAGE 1C			23	
0010	STAGE 1D			3	
0010	STAGE 2			38	
0010	STAGE 2B			45	
0010	STAGE 3			75	
0010	STAGE 4			2	
0010	STAGE 5A			4	
0010	STAGE 5B			5	
0010	STAGE 6			7	
	DUST CONTROL				APPLICATION RATE ESTIMATED
5144-01-76					AT ONCE PER CALENDAR WEEK
0010	STAGE 1A	4	2	8	
5144-01-75					
0010	STAGE 1A	4	5	20	
0010	STAGE 1B	1	1	1	
0010	STAGE 1C	3	5	15	
0010	STAGE 1D	3	1	3	
0010	STAGE 2	4	5	20	
0010	STAGE 2B	5	12	60	
0010	STAGE 3	7	23	161	
0010	STAGE 4	1	1	1	
0010	STAGE 5A	1	1	1	
0010	STAGE 5B	1	1	1	
0010	STAGE 6	1	1	1	
		PROJECT 5144-01-75 TOTAL 0010		548	
		PROJECT 5144-01-76 TOTAL 0010		28	

3

FINISHING ITEMS SUMMARY

CATEGORY	STATION TO STATION	LOCATION	TOPSOIL 625.0100 SY	MULCHING 627.0200 SY	FERTILZER TYPE B 629.0210 CWT	SEEDING MIX 30 630.0130 LB	REMARKS
5144-01-75	STAGE 2						
0010	RIVER ROAD	SOUTH SIDE	281	281	0.21	6	
0010	RIVER ROAD	NORTH SIDE	214	214	0.14	4	
	STH 27						
0010	RIVER ROAD - W AVERILL ST	WEST SIDE	430	430	0.28	8	
0010	RIVER ROAD - W AVERILL ST	TERRACE LT	160	160	0.14	4	
0010	W AVERILL ST - MAPLE AVE	WEST SIDE	721	721	0.49	14	
0010	W AVERILL ST - MAPLE AVE	TERRACE LT	460	460	0.35	10	
0010	MAPLE AVE - STH 16	TERRACE LT	220	220	0.14	4	
0010	STH 16 - HILL ST	TERRACE LT	40	40	0.07	2	
	SUBTOTAL STAGE 2 5144-01-75 0010		2526	2526	2	52	
	STAGE 3						
5144-01-75	STH 27						
0010	SOUTH OF RIVER ROAD	EAST SIDE	1047	0	0.70	20	EROSION MAT URBAN CL 1 TY B
0010	SOUTH OF RIVER ROAD	WEST SIDE	1312	0	0.84	24	EROSION MAT URBAN CL 1 TY B
0010	RIVER ROAD - W AVERILL ST	EAST SIDE	817	817	0.56	16	
0010	RIVER ROAD - W AVERILL ST	TERRACE RT	160	160	0.14	4	
0010	W AVERILL ST - MAPLE AVE	EAST SIDE	1198	905	0.77	22	PORTIONS E MAT URBAN CL 1 TY A
0010	W AVERILL ST - MAPLE AVE	TERRACE RT	460	460	0.35	10	
0010	MAPLE AVE - STH 16	TERRACE RT	220	220	0.14	4	
0010	STH 16 - HILL ST	EAST SIDE	290	290	0.21	6	
0010	STH 16 - HILL ST	TERRACE RT	207	207	0.14	4	
	STH 16						
0010	WEST OF STH 27	TERRACE RT	100	100	0.07	2	
0010	EAST OF STH 27	TERRACE RT	80	80	0.07	2	
	SUBTOTAL STAGE 3 5144-01-75 0010		5891	3239	4	114	
	PROJECT 5144-01-75 TOTAL 0010		8417	5765	6	166	
5144-01-76	STAGE 1A						
0010	28+75"R" - 29+60"R"	SOUTH SIDE	43		0.07	2	EROSION MAT URBAN CL 1 TY B
0010	28+75"R" - 29+58"R"	NORTH SIDE	91		0.07	2	EROSION MAT URBAN CL 1 TY B
0010	30+16"R" - 30+58"R"	SOUTH SIDE	18		0.07	2	EROSION MAT URBAN CL 1 TY B
0010	210+23"RO" - 215+09"RO"	EAST SIDE	477		0.35	10	EROSION MAT URBAN CL 1 TY B
0010	210+85"RO" - 217+40"RO"	WEST SIDE	519		0.35	10	EROSION MAT URBAN CL 1 TY B
0010	215+53"RO" - 217+96"RO"	EAST SIDE	204		0.14	4	EROSION MAT URBAN CL 1 TY B
0010	20+35"AV" - 21+61"AV"	SOUTH SIDE	63		0.07	2	EROSION MAT URBAN CL 1 TY B
0010	20+57"AV" - 21+61"AV"	NORTH SIDE	46		0.07	2	EROSION MAT URBAN CL 1 TY B
0010	14+20"HO" - 14+80"HO"	NORTH SIDE	22		0.07	2	EROSION MAT URBAN CL 1 TY B
	PROJECT 5144-01-76 TOTAL 0010		1483	0	2	36	

ROUNDABOUT LANDSCAPING SUMMARY

CATEGORY	STATION	LOCATION	TREES APPLE SERVICEBERRY AUTUMN BRILLIANCE B&B,6-FOOT 632.0101 EACH	SHRUBS JUNIPER PFITZER KALLAY'S COMPACT CONTAINER 24-IN SPREAD 632.0201 EACH	LANDSCAPE PLANTING SURVEILLANCE AND CARE CYCLES 632.9101 EACH	PLANTING MIXTURE SPV.0035.04 CY	PERENNIALS REED GRASS KARL FOERSTER CG 1 GAL SPV.0060.07 EACH	PERENNIALS PRAIRIE DROPSEED CG 1 GAL SPV.0060.55 EACH	4" PVC DRAIN SPV.0105.06 LS	BEN BIKIN MEDALLION SPV.0105.07 LS	PERMEABLE INTERLOCKING CONCRETE PAVERS SPV.0165.01 SF	SHREDDED HARDWOOD BARK MULCH SPV.0180.01 SY	REMARKS
5144-01-75													
0020		ROUNDABOUT MEDIAN	2	16	26	110	51	93			330	165	
0020	12+65.71"L"	8.2' RT							1	1			
	PROJECT 5144-01-75 TOTAL 0020		2	16	26	110	51	93	1	1	330	165	

3

3

3

EROSION CONTROL - SURFACE ITEMS

CATEGORY	STATION TO	STATION	LOCATION	EROSION MAT CLASS 1 TYPE B 628.2004 SY	EROSION MAT URBAN CLASS 1 TYPE A 628.2006 SY	EROSION MAT URBAN CLASS 1 TYPE B 628.2008 SY	TEMPORARY SEEDING 630.0200 LB	REMARKS
5144-01-76	STAGE 1A							
0010	28+75"R" -	29+60"R"	RT			36		
0010	28+75"R" -	29+58"R"	LT			76		
0010	30+16"R" -	30+58"R"	RT			15		
0010	210+23"RO" -	215+09"RO"	RT			398		
0010	210+85"RO" -	217+40"RO"	LT			432		
0010	215+53"RO" -	217+96"RO"	RT			170		
0010	20+35"AV" -	21+61"AV"	RT			52		
0010	20+57"AV" -	21+61"AV"	LT			38		
0010	14+20"HO" -	14+80"HO"	LT			18		
	SUBTOTAL STAGE 1A 5144-01-76 0010			0	0	1235	0	
5144-01-75	STAGE 1C							
0010	302+95 -	307+83	RT	961			27	
0010	302+96 -	308+00	LT	2055			57	
0010	308+36 -	311+32	RT	536			15	
0010	311+66 -	313+27	RT	375			12	
0010	313+90 -	315+12	LT	237			9	
0010	313+90 -	316+92	RT	408			12	
0010	315+61 -	316+44	LT	139			6	
0010	316+88 -	317+45	LT	102			3	
0010	317+33 -	319+36	RT	411			12	
	SUBTOTAL STAGE 1C 5144-01-75 0010			5224	0	0	153	
5144-01-75	STAGE 2 & 2B							
0010	302+96 -	308+00	LT	1093			30	
	SUBTOTAL STAGE 2 & 2B 5144-01-75 0010			1093	0	0	30	
5144-01-75	STAGE 3							
0010	302+95 -	307+56	RT			873		
0010	302+96	306+52	LT			1093		
0010	317+25	319+38	RT		293			
	SUBTOTAL STAGE 3 5144-01-75 0010			0	293	1966	0	
	PROJECT 5144-01-75 TOTAL 0010			6317	293	1966	183	
	PROJECT 5144-01-76 TOTAL 0020			0	0	1235	0	

3

3

EROSION CONTROL - SILT FENCE

CATEGORY	STATION TO	STATION	LOCATION	SILT FENCE 628.1504 LF	MAINTENANCE 628.1520 LF	REMARKS
5144-01-75	STAGE 1C					
0010	301+14 -	307+91	RT	382	382	
0010	304+88 -	307+80	LT	331	331	
0010	313+85 -	315+12	LT	127	127	
0010	315+55 -	316+42	LT	87	87	
0010	316+82 -	318+06	LT	124	124	
0010	319+75 -	321+96	RT	221	221	
0010	322+30 -	325+42	RT	312	312	
0010	325+79 -	329+98	RT	419	419	
0010	330+43 -	331+23	RT	80	80	
	UNDISTRIBUTED			521	521	
	SUBTOTAL STAGE 1C 5144-01-75 0010			2604	2604	
5144-01-75	STAGE 2 & 2B					
0010	UNDISTRIBUTED			651	651	
	SUBTOTAL STAGE 2 & 2B 5144-01-75 0010			651	651	
5144-01-75	STAGE 3					
0010	UNDISTRIBUTED			651	651	
	SUBTOTAL STAGE 2 & 2B 5144-01-75 0010			651	651	
	PROJECT 5144-01-75 TOTAL 0010			3906	3906	

MOBILIZATIONS EROSION CONTROL

CATEGORY	STATION	LOCATION	628.1905 EACH	REMARKS
5144-01-75				
0010	STAGE 1A		1	
0010	STAGE 1C		1	
0010	STAGE 2		1	
0010	STAGE 2B		1	
0010	STAGE 3		1	
	PROJECT 5144-01-75 TOTAL 0010		5	

MOBILIZATIONS EMERGENCY EROSION CONTROL

CATEGORY	STATION	LOCATION	628.1910 EACH	REMARKS
5144-01-75				
0010	STAGE 1A		1	
0010	STAGE 1C/1D		1	
0010	STAGE 2/2B		3	
0010	STAGE 3		3	
0010	STAGE 5A/5B		1	
0010	STAGE 6		1	
	PROJECT 5144-01-75 TOTAL 0010		10	

TRACKING PADS

CATEGORY	STATION	LOCATION	628.7560 EACH	REMARKS
5144-01-75				
0010	STAGE 1A UNDISTRIBUTED		2	
0010	STAGE 1B UNDISTRIBUTED		1	
0010	STAGE 1C UNDISTRIBUTED		2	
0030	STAGE 1D UNDISTRIBUTED		1	
0010	STAGE 2 UNDISTRIBUTED		2	
0010	STAGE 3 UNDISTRIBUTED		2	
0010	STAGE 5/5A UNDISTRIBUTED		1	
	PROJECT 5144-01-75 TOTAL 0010		11	

3

3

EROSION CONTROL - INLET AND CHANNEL

CATEGORY	STATION	LOCATION	INLET PROTECTION TYPE A 628.7005 EACH	INLET PROTECTION TYPE C 628.7015 EACH	INLET PROTECTION TYPE D 628.7020 EACH	TEMP DITCH CHECKS 628.7504 LF	CULVERT PIPE CHECKS 628.7555 EACH	REMARKS
5144-01-76	STAGE 1A							
0010	208+50"RO"	LT		1				
0010	208+54"RO"	RT		1				
0010	209+55"RO"	LT	1	1				
0010	210+36"RO"	RT	1	1				
0010	210+43"RO"	LT	1	1				
0010	214+93"RO"	RT	1	1				
0010	215+66"RO"	RT	1	1				
0010	215+66"RO"	LT	1	1				
0010	217+74"RO"	RT	1	1				
0010	217+87"RO"	LT	1	1				
SUBTOTAL STAGE 1A 5144-01-76 0010			8	10	0	0	0	
5144-01-75	STAGE 1C							
0010	303+57	LT				15		
0010	303+80	LT				15		
0010	304+00	LT				15		
0010	304+03	RT				12		
0010	305+01	RT				12		
0010	306+01	RT				12		
0010	308+62	LT					2	18" PIPE
0010	309+08	LT	1					
0010	309+09	RT	1					
0010	312+46	LT	1					
0010	312+63	RT	1					
0010	313+85	RT					2	15" PIPE
0010	313+87	LT					2	18" PIPE
0010	315+60	LT					2	12" PIPE
0010	316+01	LT	1					
0010	316+01	RT	1					
0010	316+84	LT					2	12" PIPE
0010	317+31	RT					2	12" PIPE
0010	331+46	RT			1			
SUBTOTAL STAGE 1C 5144-01-75 0010			6	0	1	81	12	
5144-01-75	STAGE 2 & 2B							
0010	307+41	LT		1				
0010	307+44	LT			1			
0010	307+50	LT			1			
0010	307+71	LT		1				
0010	308+16	LT			1			
0010	308+18	LT			1			
0010	308+39	LT		1				
0010	308+65	LT			1			
0010	308+66	LT			1			
0010	309+28	LT		1				
0010	311+77	LT		1				
0010	313+28	LT		1				
0010	313+76	LT		1				
0010	314+48	LT		1				
0010	317+50	LT			1			
0010	318+15	LT			1			
0010	319+75	LT		1				
0010	321+92	LT			1			
0010	322+32	LT			1			
0010	325+42	LT			2			
0010	325+85	LT			2			
0010	326+25	LT		1				
0010	327+03	LT		1				
0010	327+83	LT		1				
0010	328+59	LT			2			
0010	329+44	LT		1				
0010	329+78	LT		1				
0010	330+73	LT		1				
0010	331+46	LT		1				
0010	332+23	LT			1			
0010	332+46	LT			1			
0010	336+29	LT		1				
SUBTOTAL STAGE 2 & 2B 5144-01-75 0010			0	17	18	0	0	

3

EROSION CONTROL - INLET AND CHANNEL

CATEGORY	STATION	LOCATION	INLET PROTECTION TYPE A 628.7005 EACH	INLET PROTECTION TYPE C 628.7015 EACH	INLET PROTECTION TYPE D 628.7020 EACH	TEMP DITCH CHECKS 628.7504 LF	CULVERT PIPE CHECKS 628.7555 EACH	REMARKS
5144-01-75	STAGE 3							
0010	307+39	RT			1			
0010	307+45	RT			1			
0010	308+06	RT		1				
0010	308+42	RT			1			
0010	308+46	RT			1			
0010	311+87	RT		1				
0010	313+28	RT		1				
0010	313+74	RT		1				
0010	314+02	RT			1			
0010	314+48	RT			1			
0010	317+50	RT			1			
0010	317+90	RT			1			
0010	319+84	RT		1				
0010	321+85	RT			1			
0010	322+39	RT			1			
0010	325+47	RT		1				
0010	325+78	RT		1				
0010	326+25	RT		1				
0010	327+25	RT		1				
0010	328+59	RT			2			
0010	329+19	RT		2				
0010	329+81	RT		2				
0010	330+98	RT		1				
0010	331+40	RT		1				
0010	332+19	RT		1				
0010	332+42	RT			1			
0010	332+66	RT			1			
0010	335+83	RT		1				
SUBTOTAL STAGE 3 5144-01-75 0010			0	17	14	0	0	
PROJECT 5144-01-75 TOTAL 0010			6	34	33	81	12	
PROJECT 5144-01-76 TOTAL 0010			8	10	0	0	0	

3

PERMANENT SIGNING SUMMARY

CATEGORY	SIGN NO	APPROX STATION	LOC.	SIGN CODE	SIGN MESSAGE	SIGN SIZE (W X H) INCHES	SIGNS TYPE II REFLECTIVE H 637.2210 SF	SIGNS TYPE II REFLECTIVE F 637.2230 SF	POSTS WOOD 4X6-INCH 14-FT 634.0614 EACH	16-FT 634.0616 EACH	18-FT 634.0618 EACH	20-FT 634.0620 EACH	22-FT 634.0622 EACH	POSTS TUBULAR STEEL 2X2-INCH 9.5-FT 634.0809 EACH	11-FT 634.0811 EACH	8.5-FT 634.0885 EACH	REMOVING SIGNS TYPE II 638.2602 EACH	REMOVING SMALL SIGN SUPPORTS 638.3000 EACH	REMARKS
5144-01-75																			
0010	1-1	---	RT	W2-6	CIRCULAR INTERSECITON SIGN	30 x 30		6.25	0	1	0	0	0	0	0	0			LOCATE SOUTH OF STRUCTURE B-41-021
0010	1-2	---	RT	W13-1	ADVISORY SPEED PLATE (YELLOW BACK)	18 x 18		2.25											MOUNT BELOW SIGN 1-1
0010	1-3	303+44	RT	D1-62	ROUNDABOUT DESTINATION - DIRECTION SIGN	96 x 72	48.00		0	0	0	1	1	0	0	0			
0010	1-4	304+98	LT	R2-1	SPEED LIMIT 45 MPH	24 x 30	5.00		0	1	0	0	0	0	0	0			
0010	1-5	303+41	LT	---	SPEED LIMIT 45 MPH	0 x 0											1	1	REMOVAL ONLY
0010	1-6	303+36	RT	---	SPEED LIMIT 35 MPH	0 x 0											1	1	REMOVAL ONLY
0010	1-7	305+58	MED	R4-7	KEEP RIGHT	24 x 30	5.00		1	0	0	0	0	0	0	0			
0010	2-1	311+88	LT	D1-62	ROUNDABOUT DESTINATION - DIRECTION SIGN	96 x 72	48.00		0	0	1	1	0	0	0	0			
0010	2-2	307+56	MED	R1-2	YIELD	36 x 31	3.88		0	0	0	0	0	0	1	0			TWO TEMP. 18-INCH X 18-INCH ORANGE FLAGS REQ'D (INCIDENTAL TO SIGN)
0010	2-3	307+56	MED	R6-2R	ONE WAY RIGHT ARROW	24 x 30	5.00												MOUNT BELOW SIGN 2-2
0010	2-4	307+50	RT	R1-2	YIELD	36 x 31	3.88		0	0	0	0	0	0	1	0			TWO TEMP. 18-INCH X 18-INCH ORANGE FLAGS REQ'D (INCIDENTAL TO SIGN)
0010	2-5	307+50	RT	R1-54	TO TRAFFIC FROM LEFT	24 x 15	2.50												MOUNT BELOW SIGN 2-4
0010	2-6	309+98	RT	J4-1	REASSURANCE ASSEMBLY (1 HEADED ROUTE PANEL)	24 x 36	6.00		0	1	0	0	0	0	0	0			
0010	2-7	308+09	MED	R4-7	KEEP RIGHT	24 x 30	5.00		1	0	0	0	0	0	0	0			
0010	2-8	308+16	MED	R1-2	YIELD	36 x 31	3.88		0	0	0	0	0	0	1	0			TWO TEMP. 18-INCH X 18-INCH ORANGE FLAGS REQ'D (INCIDENTAL TO SIGN)
0010	2-9	308+16	MED	R6-2R	ONE WAY RIGHT ARROW	24 x 30	5.00												MOUNT BELOW SIGN 2-8
0010	2-10	308+52	RT	R1-2	YIELD	36 x 31	3.88		0	0	0	0	0	0	1	0			TWO TEMP. 18-INCH X 18-INCH ORANGE FLAGS REQ'D (INCIDENTAL TO SIGN)
0010	2-11	308+52	RT	R1-54	TO TRAFFIC FROM LEFT	24 x 15	2.50												MOUNT BELOW SIGN 2-10
0010	2-12	308+90	MED	D1-1	ONE DESTINATION (ARROW)	42 x 30	8.75		0	0	0	0	0	0	1	0			
0010	2-13	309+40	MED	R4-7	KEEP RIGHT	24 x 30	5.00		0	0	0	0	0	0	1	0			
0010	2-14	309+40	RT	J4-1	REASSURANCE ASSEMBLY (1 HEADED ROUTE PANEL)	24 x 36	6.00		0	1	0	0	0	0	0	0			
0010	2-15	308+89	MED	R1-2	YIELD	36 x 31	3.88		0	0	0	0	0	0	1	0			TWO TEMP. 18-INCH X 18-INCH ORANGE FLAGS REQ'D (INCIDENTAL TO SIGN)
0010	2-16	308+89	MED	R6-2R	ONE WAY RIGHT ARROW	24 x 30	5.00												MOUNT BELOW SIGN 2-15
0010	2-17	308+85	LT	R1-2	YIELD	36 x 31	3.88		0	0	0	0	0	0	1	0			TWO TEMP. 18-INCH X 18-INCH ORANGE FLAGS REQ'D (INCIDENTAL TO SIGN)
0010	2-18	308+85	LT	R1-54	TO TRAFFIC FROM LEFT	24 x 15	2.50												MOUNT BELOW SIGN 2-17
0010	2-19	32+78"R"	MED	D1-1	ONE DESTINATION (ARROW)	66 x 15	6.88		0	0	0	0	0	1	0	0			
0010	2-20	32+79"R"	MED	R1-2	YIELD	36 x 31	3.88		0	0	0	0	0	0	1	0			TWO TEMP. 18-INCH X 18-INCH ORANGE FLAGS REQ'D (INCIDENTAL TO SIGN)
0010	2-21	32+79"R"	MED	R6-2R	ONE WAY RIGHT ARROW	24 x 30	5.00												MOUNT BELOW SIGN 2-20
0010	2-22	307+78	LT	R1-2	YIELD	36 x 31	3.88		0	0	0	0	0	0	1	0			TWO TEMP. 18-INCH X 18-INCH ORANGE FLAGS REQ'D (INCIDENTAL TO SIGN)
0010	2-23	307+78	LT	R1-54	TO TRAFFIC FROM LEFT	24 x 15	2.50												MOUNT BELOW SIGN 2-22
0010	2-24	308+02	MED	R6-4B	ROUNDABOUT CHEVRON BANK	60 x 24	10.00		0	0	0	0	0	0	0	2			4-FT MOUNTING HEIGHT FROM TRUCK APRON TO BOTTOM OF CHEVRON SIGN
0010	2-25	308+02	MED	R6-1R	ONE WAY RIGHT ARROW	36 x 12	5.00												MOUNT ABOVE SIGN 2-22
0010	2-26	308+07	MED	R6-4B	ROUNDABOUT CHEVRON BANK	60 x 24	10.00		0	0	0	0	0	0	0	2			4-FT MOUNTING HEIGHT FROM TRUCK APRON TO BOTTOM OF CHEVRON SIGN
0010	2-27	308+07	MED	R6-1R	ONE WAY RIGHT ARROW	36 x 12	5.00												MOUNT ABOVE SIGN 2-22
0010	2-28	308+32	MED	R6-4B	ROUNDABOUT CHEVRON BANK	60 x 24	10.00		0	0	0	0	0	0	0	2			4-FT MOUNTING HEIGHT FROM TRUCK APRON TO BOTTOM OF CHEVRON SIGN
0010	2-29	308+32	MED	R6-1R	ONE WAY RIGHT ARROW	36 x 12	5.00												MOUNT ABOVE SIGN 2-22
0010	2-30	308+36	MED	R6-4B	ROUNDABOUT CHEVRON BANK	60 x 24	10.00		0	0	0	0	0	0	0	2			4-FT MOUNTING HEIGHT FROM TRUCK APRON TO BOTTOM OF CHEVRON SIGN
0010	2-31	308+36	MED	R6-1R	ONE WAY RIGHT ARROW	36 x 12	5.00												MOUNT ABOVE SIGN 2-22
0010	2-32	307+45	MED	D1-1	ONE DESTINATION (ARROW)	42 x 30	8.75		0	0	0	0	0	0	1	0			
0010	2-33	313+88	LT	W2-6	CIRCULAR INTERSECITON SIGN	30 x 30		6.25	1	0	0	0	0	0	0	0			
0010	2-34	313+88	LT	W13-1	ADVISORY SPEED PLATE (YELLOW BACK)	18 x 18		2.25											MOUNT BELOW SIGN 2-33
0010	3-1	30+29"R"	RT	W2-6	CIRCULAR INTERSECITON SIGN	30 x 30		6.25	0	1	0	0	0	0	0	0			
0010	3-2	30+29"R"	RT	W13-1	ADVISORY SPEED PLATE (YELLOW BACK)	18 x 18		2.25											MOUNT BELOW SIGN 3-1
0010	3-3	31+28"R"	RT	D1-62	ROUNDABOUT DESTINATION - DIRECTION SIGN	102 x 42	29.75		0	2	0	0	0	0	0	0			
0010	3-4	31+85"R"	MED	R4-7	KEEP RIGHT	24 x 30	5.00		1	0	0	0	0	0	0	0			
0010	3-5	30+45"R"	LT	R2-1	SPEED LIMIT 25 MPH	24 x 30	5.00		1	0	0	0	0	0	0	0			
0010	4-1	311+15	LT	R2-1	SPEED LIMIT 35 MPH	0 x 0											1	1	REMOVAL ONLY
0010	4-2	311+15	RT	R2-1	SPEED LIMIT 35 MPH	0 x 0											1	1	REMOVAL ONLY
0010	4-3	313+20	LT	R1-1	STOP	0 x 0											1	1	REMOVAL ONLY
0010	4-4	313+80	RT	R1-1	STOP	0 x 0											1	1	REMOVAL ONLY
0010	4-5	317+50	LT	R2-1	SPEED LIMIT 25 MPH	0 x 0											1	1	REMOVAL ONLY
0010	4-6	317+50	RT	R2-1	SPEED LIMIT 25 MPH	0 x 0											1	1	REMOVAL ONLY
0010	4-7	322+65	RT	R2-1	SPEED LIMIT 25 MPH	0 x 0											1	1	REMOVAL ONLY
0010	4-8	323+15	RT	J1-3	REASSURANCE ASSEMBLY	0 x 0											1	1	REMOVAL ONLY
0010	4-9	324+15	RT	R3-8-W	VARIOUS ONLYS	0 x 0											1	0	REMOVAL ONLY; MOUNTED ON UTILITY POLE
0010	4-10	324+80	LT	R2-1	SPEED LIMIT 25 MPH	0 x 0											1	1	REMOVAL ONLY
0010	4-11	325+30	LT	R1-1	STOP	0 x 0											1	1	REMOVAL ONLY
0010	4-12	325+30	RT	J3-2	REASSURANCE ASSEMBLY	0 x 0											1	1	REMOVAL ONLY
0010	4-13	325+85	RT	R1-1	STOP	0 x 0											1	1	REMOVAL ONLY
0010	4-14	326+65	RT	J3-2	REASSURANCE ASSEMBLY	0 x 0											1	1	REMOVAL ONLY
0010	4-15	328+30	RT	W3-3	TRAFFIC SIGNALS AHEAD SYMBOL	0 x 0											1	1	REMOVAL ONLY
0010				W3-7-R	RIGHT LANE MUSH TURN RIGHT	0 x 0											1	1	REMOVAL ONLY
0010	4-16	329+95	RT	D1-3	THREE DESTINATION (ARROW)	0 x 0											1	1	REMOVAL ONLY
0010	5-1	329+55	RT		CITY ATTRACTIONS SIGN	0 x 0											1	1	REMOVAL ONLY
0010	5-2	329+80	LT	J1-1	ALTERNATE ROUTE ASSEMBLY	0 x 0											1	1	REMOVAL ONLY
0010	5-3	329+95	RT	J3-4	REASSURANCE ASSEMBLY	0 x 0											1	1	REMOVAL ONLY
0010	5-4	330+30	MED	R4-7	KEEP RIGHT SYMBOL	0 x 0											1	1	REMOVAL ONLY
0010	5-5	330+55	MED	R6-2-R	ONE WAY ARROW RIGHT	0 x 0											1	1	REMOVAL ONLY
0010	5-6	331+15	RT	R1-1-F	STOP (FOLDING SIGN)	0 x 0											1	1	REMOVAL ONLY
0010	5-7	331+20	MED	R1-1-F	STOP (FOLDING SIGN)	0 x 0											1	1	REMOVAL ONLY
0010				R3-4	NO U-TURN SYMBOL	0 x 0											1	0	REMOVAL ONLY
0010	5-8	331+20	MED	R4-7	KEEP RIGHT SYMBOL	0 x 0											1	1	REMOVAL ONLY
0010	6-1	310+80	RT	R3-9-C	BEGIN	24 x 6	1.00		0	1	0	0	0	0	0	0			
0010				R3-9-B	CENTER LANE LEFT TURN ONLY (W/ ARROWS)	24 x 36	6.00												MOUNT BELOW SIGN 6-1
0010	6-2	313+25	LT	R1-1	STOP	30 x 30	6.25		1	0	0	0	0	0	0	0			
0010	6-3	313+80	RT	R1-1	STOP	30 x 30	6.25		1	0	0	0	0	0	0	0			
0010	6-4	314+15	RT	R2-1	SPEED LIMIT 25 MPH	24 x 30	5.00		1	0	0	0	0	0	0	0			
0010	6-5	318+70	LT	R2-1	SPEED LIMIT 25 MPH	24 x 30	5.00		1	0	0	0	0	0	0	0			
0010	6-6	321+00	RT	R2-1	SPEED LIMIT 25 MPH	24 x 30	5.00		1	0	0	0	0	0	0	0			
0010	6-7	323+45	RT	JV	REASSURANCE ASSEMBLY (3 ROUTE VERTICAL PANEL)	24 x 87	14.50		0	0	0	0	1	0	0	0			
0010	6-8	324+90	RT	J3-2	REASSURANCE ASSEMBLY (1 HEADED 2 ROUTE PANEL W/ ARROWS)	48 x 57	19.00		0	1	0	0	0	0	0	0			
0010	6-9	325+30	LT	R1-1	STOP SIGN	30 x 30	6.25		1	0	0	0	0	0	0	0			
0010	6-10	325+80	RT	R1-1	STOP SIGN	30 x 30	6.25		1	0	0	0	0	0	0	0			
0010	6-11	326+85	LT	R3-9-C	BEGIN	24 x 6	1.00		0	1	0	0	0	0	0	0			
0010				R3-9-B	CENTER LANE LEFT TURN ONLY (W/ ARROWS)	24 x 36	6.00												MOUNT BELOW SIGN 6-11
					PAGE SUBTOTAL 5144-01-75 0010		400.63	25.50	12.00	10.00	1.00	2.00	2.00	1.00	11.00	8.00	28.00	26.00	

3

3

PROJECT NO: 5144-01-75 & 5144-01-76 | **HWY: STH 27** | **COUNTY: MONROE** | **MISCELLANEOUS QUANTITIES** | **SHEET NO:** 202 | **E**

FILE NAME : 030201-MQ.PPT PLOT DATE : _____ PLOT BY : _____ PLOT NAME : _____ ORIGINATOR : DIST _ PLOT SCALE : 1:1

PERMANENT SIGNING SUMMARY

CATEGORY	SIGN NO	APPROX STATION	LOC.	SIGN CODE	SIGN MESSAGE	SIGN SIZE (W X H) INCHES	SIGNS TYPE II REFLECTIVE H 637.2210 SF	SIGNS TYPE II REFLECTIVE F 637.2230 SF	POSTS WOOD 4X6-INCH 14-FT 634.0614 EACH	16-FT 634.0616 EACH	18-FT 634.0618 EACH	20-FT 634.0620 EACH	22-FT 634.0622 EACH	POSTS TUBULAR STEEL 2X2-INCH 9.5-FT 634.0809 EACH	11-FT 634.0811 EACH	8.5-FT 634.0885 EACH	REMOVING SIGNS TYPE II 638.2602 EACH	REMOVING SMALL SIGN SUPPORTS 638.3000 EACH	REMARKS
5144-01-75																			
0010	6-12	326+85	RT	R3-9-D	END	24 x 6	1.00		0	1	0	0	0	0	0	0			
0010				R3-9-B	CENTER LANE LEFT TURN ONLY (W/ ARROWS)	24 x 36	6.00												MOUNT BELOW SIGN 6-12
0010	6-13	328+00	RT	J33-2	REASSURANCE ASSEMBLY (2 HEADED 2 ROUTE PANEL W/ ARROWS)	48 x 69	23.00		0	0	1	0	0	0	0	0			
0010	6-14	328+62	MED	R4-7	KEEP RIGHT SYMBOL	24 x 30	5.00		0	0	0	0	0	0	1	0			
0010	6-15	328+62	LT	R5-1	DO NOT ENTER	30 x 30	6.25		1	0	0	0	0	0	0	0			
0010	6-16	328+62	LT	R2-1	SPEED LIMIT 25 MPH	24 x 30	5.00		0	0	0	0	0	0	0	0			MOUNTED ON SAME POST AS 6-15
0010	6-17	329+00	RT	D1-3	THREE DESTINATION (ARROW)	72 x 36	18.00		0	2	0	0	0	0	0	0			
0010	6-18	329+53	MED	R6-2-R	ONE WAY RIGHT	24 x 30	5.00		0	0	0	0	0	0	1	0			
0010	6-19	330+03	MED	R6-2-R	ONE WAY RIGHT	24 x 30	5.00		0	0	0	0	0	0	1	0			
0010	6-20	330+25	MED	R6-2-R	ONE WAY RIGHT	24 x 30	5.00		0	0	0	0	0	0	1	0			
0010	7-1	330+25	LT	J4-2	REASSURANCE ASSEMBLY (1 HEADED 2 ROUTE PANEL)	48 x 36	12.00		0	1	0	0	0	0	0	0			
0010	7-2	330+60	RT	JV	REASSURANCE ASSEMBLY (1 HEADED 2 ROUTE PANEL W/ ARROWS STACKED)	48 x 105	35.00		0	0	0	0	1	0	0	0			
0010	7-3	330+95	MED	R1-1-F	STOP (FOLDING SIGN)	30 x 30	6.25		0	0	0	0	0	0	1	0			
0010	7-4	330+95	MED	R4-7	KEEP RIGHT SYMBOL	24 x 30	5.00		0	0	0	0	0	0	0	0			MOUNTED TO SAME POST AS SIGN 7-3
0010	7-5	331+05	RT	R1-1-F	STOP (FOLDING SIGN)	30 x 30	6.25		0	0	0	0	0	0	0	0			MOUNTED TO TRAFFIC SIGNAL POST
0010	7-6	332+65	LT	J3-2	REASSURANCE ASSEMBLY (1 HEADED 2 ROUTE PANEL W/ ARROWS)	48 x 57	19.00		0	1	0	0	0	0	0	0			
0010	7-7	332+65	LT	R1-1-F	STOP (FOLDING SIGN)	30 x 30	6.25		0	0	0	0	0	0	0	0			MOUNTED TO TRAFFIC SIGNAL POST
0010	7-8	332+67	MED	R4-7	KEEP RIGHT SYMBOL	24 x 30	5.00		0	0	0	0	0	0	1	0			
0010	7-9	332+67	MED	R1-1-F	STOP (FOLDING SIGN)	30 x 30	6.25		0	0	0	0	0	0	0	0			MOUNTED TO SAME POST AS SIGN 7-8
0010	7-10	333+80	MED	R6-2-R	ONE WAY SYMBOL RIGHT	24 x 30	5.00		0	0	0	0	0	0	1	0			
0010	7-11	334+24	MED	R4-7	KEEP RIGHT SYMBOL	24 x 30	5.00		0	0	0	0	0	0	1	0			
0010	7-12	334+22	RT	J4-2	REASSURANCE ASSEMBLY (1 HEADED 2 ROUTE PANEL)	48 x 36	12.00		0	1	0	0	0	0	0	0			
0010	7-13	334+22	RT	R5-1	DO NOT ENTER	30 x 30	6.25		0	0	0	0	0	0	0	0			MOUNTED TO SAME POST AS SIGN 7-12
0010	8-1	102+25"EB"	MED	R4-7	KEEP RIGHT SYMBOL	0 x 0											1	1	REMOVAL ONLY
0010	8-2	102+27"EB"	RT	D1-3	DESTINATION DIRECTION	0 x 0											1	1	REMOVAL ONLY
0010	8-3	102+80"WB"	LT	J4-1	REASSURANCE ASSEMBLY	0 x 0											1	1	REMOVAL ONLY
0010				R2-1	SPEED LIMIT 25 MPH	0 x 0											1	1	REMOVAL ONLY
0010	8-4	103+50"EB"	MED	R4-7	KEEP RIGHT SYMBOL	0 x 0											1	0	REMOVAL ONLY; MOUNTED ON TRAFFIC SIGNAL POST
0010	8-5	103+50"EB"	MED	R1-1-F	STOP (FOLDING SIGN)	0 x 0											1	0	REMOVAL ONLY; MOUNTED ON TRAFFIC SIGNAL POST
0010		103+50"EB"	MED	R3-4	NO U-TURN SYMBOL	0 x 0											1	0	REMOVAL ONLY; MOUNTED ON TRAFFIC SIGNAL POST
0010	8-6	103+46"EB"	RT		REASSURANCE ASSEMBLY	0 x 0											1	0	REMOVAL ONLY; MOUNTED ON TRAFFIC SIGNAL POST
0010	8-7	103+46"EB"	RT	R1-1-F	STOP (FOLDING SIGN)	0 x 0											1	0	REMOVAL ONLY; MOUNTED ON TRAFFIC SIGNAL POST
0010	8-8	103+70"EB"	RT		REASSURANCE ASSEMBLY	0 x 0											1	1	REMOVAL ONLY
0010	8-9	103+65"WB"	LT		REASSURANCE ASSEMBLY	0 x 0											1	1	REMOVAL ONLY
0010	8-10	103+65"WB"	LT	R1-1-F	STOP (FOLDING SIGN)	0 x 0											1	1	REMOVAL ONLY
0010	8-11	333+65	MED	R4-7	KEEP RIGHT SYMBOL	0 x 0											1	1	REMOVAL ONLY
0010	8-12	333+50	MED	R6-2-R	ONE WAY RIGHT	0 x 0											1	1	REMOVAL ONLY
0010	8-13	332+42	MED	R1-1-F	STOP (FOLDING SIGN)	0 x 0											1	0	REMOVAL ONLY; MOUNTED ON TRAFFIC SIGNAL POST
0010				R3-4	NO U-TURN SYMBOL	0 x 0											1	0	REMOVAL ONLY; MOUNTED ON TRAFFIC SIGNAL POST
0010	8-14	332+42	MED	R4-7	KEEP RIGHT SYMBOL	0 x 0											1	1	REMOVAL ONLY
0010	8-15	104+45"WB"	LT		REASSURANCE ASSEMBLY	0 x 0											1	1	REMOVAL ONLY
0010	8-16	104+67"EB"	MED	R4-7	KEEP RIGHT SYMBOL	0 x 0											1	1	REMOVAL ONLY
0010	8-17	104+67"EB"	MED	R1-1-F	STOP (FOLDING SIGN)	0 x 0											1	1	REMOVAL ONLY
0010			MED	R3-4	NO U-TURN SYMBOL	0 x 0											1	1	REMOVAL ONLY
0010	8-18	104+65"EB"	RT		REASSURANCE ASSEMBLY	0 x 0											1	0	REMOVAL ONLY; MOUNTED ON TRAFFIC SIGNAL POST
0010	8-19	104+85"WB"	LT		REASSURANCE ASSEMBLY	0 x 0											1	0	REMOVAL ONLY; MOUNTED ON TRAFFIC SIGNAL POST
0010	8-20	104+85"WB"	LT	R1-1-F	STOP (FOLDING SIGN)	0 x 0											1	0	REMOVAL ONLY; MOUNTED ON TRAFFIC SIGNAL POST
0010	8-21	105+50"EB"	MED		ONE WAY RIGHT	0 x 0											1	1	REMOVAL ONLY
0010	8-22	106+65"EB"	MED	R4-7	KEEP RIGHT SYMBOL	0 x 0											1	1	REMOVAL ONLY
0010	8-23	106+55"EB"	RT	J4-1	REASSURANCE ASSEMBLY	0 x 0											1	1	REMOVAL ONLY
0010	9-2	102+25"WB"	LT	R2-1	SPEED LIMIT 25 MPH	24 x 30	5.00		1	0	0	0	0	0	0	0			MOUNTED ON SAME POST AS SIGN 9-1
0010	9-3	102+30"EB"	MED	R4-7	KEEP RIGHT SYMBOL	24 x 30	5.00		0	0	0	0	0	0	1	0			
0010	9-4	102+95"WB"	LT	J4-2	REASSURANCE ASSEMBLY (1 HEADED 2 ROUTE PANEL)	48 x 36	12.00		0	1	0	0	0	0	0	0			
0010	9-5	103+30"EB"	MED	R1-1-F	STOP (FOLDING SIGN)	30 x 30	6.25		0	0	0	0	0	0	1	0			
0010	9-6	103+30"EB"	MED	R4-7	KEEP RIGHT SYMBOL	24 x 30	5.00		0	0	0	0	0	0	0	0			MOUNTED ON SAME POST AS SIGN 9-5
0010	9-7	103+25"EB"	RT	J3-2	REASSURANCE ASSEMBLY (1 HEADED 2 ROUTE PANEL /W ARROWS)	48 x 57	19.00		0	0	0	0	1	0	0	0			
0010	9-8	103+25"EB"	RT	J3-2	REASSURANCE ASSEMBLY (1 HEADED 2 ROUTE PANEL /W ARROWS)	48 x 57	19.00		0	0	0	0	0	0	0	0			MOUNTED ON SAME POST AS SIGN 9-7
0010	9-9	103+28"EB"	RT	R1-1-F	STOP (FOLDING SIGN)	30 x 30	6.25		0	0	0	0	0	0	0	0			MOUNTED ON TRAFFIC SIGNAL POST
0010	9-10	104+88"WB"	LT	R1-1-F	STOP (FOLDING SIGN)	30 x 30	6.25		0	0	0	0	0	0	0	0			MOUNTED ON TRAFFIC SIGNAL POST
0010	9-11	104+92"WB"	LT	J3-2	REASSURANCE ASSEMBLY (1 HEADED 2 ROUTE PANEL /W ARROWS)	48 x 57	19.00		0	0	0	0	1	0	0	0			
0010	9-12	104+92"WB"	LT	J3-2	REASSURANCE ASSEMBLY (1 HEADED 2 ROUTE PANEL /W ARROWS)	48 x 57	19.00		0	0	0	0	0	0	0	0			MOUNTED ON SAME POST AS SIGN 9-11
0010	9-13	104+95"EB"	MED	R1-1-F	STOP (FOLDING SIGN)	30 x 30	6.25		0	0	0	0	0	0	1	0			
0010	9-14	104+95"EB"	MED	R4-7	KEEP RIGHT SYMBOL	24 x 30	5.00		0	0	0	0	0	0	0	0			MOUNTED ON SAME POST AS SIGN 9-13
0010	9-15	105+40"EB"	RT	J4-2	REASSURANCE ASSEMBLY (1 HEADED 2 ROUTE PANEL)	48 x 36	12.00		0	0	1	0	0	0	0	0			
0010	9-16	105+40"EB"	RT	J4-2	REASSURANCE ASSEMBLY (1 HEADED 2 ROUTE PANEL)	48 x 36	12.00		0	0	0	0	0	0	0	0			MOUNTED ON SAME POST AS SIGN 9-15
0010	9-17	105+50"EB"	MED	R6-2-R	ONE WAY RIGHT	24 x 30	6.25		0	0	0	0	0	0	1	0			
0010	9-18	105+70"EB"	MED	R4-7	KEEP RIGHT SYMBOL	24 x 30	6.25		0	0	0	0	0	0	1	0			
0010	9-19	106+15"WB"	LT	J3-1	REASSURANCE ASSEMBLY (1 HEADED ROUTE PANEL /W ARROW)	24 x 57	9.50		0	1	0	0	0	0	0	0			
					PAGE SUBTOTAL 5144-01-75 0010		388	0	2	8	2	0	3	0	13	0	27	17	
					PROJECT 5144-01-75 TOTAL 0010		788.13	25.50	14	18	3	2	5	1	24	8	55	43	

3

3

TRAFFIC CONTROL SUMMARY

CATEGORY	STATION TO	STATION	DURATION (DAYS)	DRUMS 643.0300 EACH	DRUMS 643.0300 DAY	BARRICADES TYPE III 643.0420 EACH	BARRICADES TYPE III 643.0420 DAY	WARNING LIGHTS TYPE A 643.0705 EACH	WARNING LIGHTS TYPE A 643.0705 DAY	WARNING LIGHTS TYPE C 643.0715 EACH	WARNING LIGHTS TYPE C 643.0715 DAY	ARROW BOARDS 643.0800 EACH	ARROW BOARDS 643.0800 DAY	SIGNS 643.0900 EACH	SIGNS 643.0900 DAY	SIGNS PCMS CELLULAR COMM 643.1051 EACH	SIGNS PCMS CELLULAR COMM 643.1051 DAY	REMARKS
5144-01-75																		
0010	ALTERNATE ROUTE		190		0		0		0		0		0	136	25840			
	SUBTOTAL ALTERNATE ROUTE 5144-01-75 0010				0		0		0		0		0		25840		0	
5144-01-76	STAGE 1A																	
0010	ROBERTS ROAD		28	2	56	28	784	40	1120		0		0	22	616		0	
	SUBTOTAL STAGE 1A 5144-01-76 0010				56		784		1120		0		0		616		0	
5144-01-75	STAGE 1B PART 1																	
	STH 27																	
0010	327+57 -	335+70	5	62	310	3	15	6	30	11	55		0	14	70	1	5	
	STH 16																	
0010	98+60"EB" -	109+60"EB"	5	80	400	6	30	8	40	15	75		0	29	145		0	
	STAGE 1B PART 2																	
	STH 27						0											
0010	327+87 -	335+81	3	102	306	6	18	8	24	20	60		0	16	48	1	3	
	STH 16																	
0010	98+60"EB" -	109+73"EB"	3	67	201	8	24	8	24	16	48	2	6	28	84		0	
	SUBTOTAL STAGE 1B 5144-01-75 0010				1217		87		118		238		6		347		8	
5144-01-75	STAGE 1C																	
0010	DETOUR		21		0		0		0		0		0	116	2436		0	
	STH 27																	
0010	302+95 -	310+50	21		0	10	210	12	252		0		0		0	1	21	
0010	310+50 -	334+50	21	101	2121	10	210	8	168		0		0	20	420	1	21	
	STH 16																	
0010	98+60"EB" -	107+00"EB"	21	30	630	4	84	4	84	9	189	2	42	24	504		0	
	RIVER ROAD																	
0010	30+43"R" -	33+50"R"	21		0	2	42	4	84		0		0	5	105	1	21	
	SUBTOTAL STAGE 1C 5144-01-75 0010				2751		546		588		189		42		3465		63	
5144-01-75	STAGE 1D																	
	STH 27																	
0010	302+95 -	310+50	21	74	1554	10	210	12	252	52	1092		0	7	147	1	21	
0010	310+50 -	336+00	21	356	7476	22	462	18	378	14	294		0	41	861	1	21	
	RIVER ROAD																	
0010	30+43"R" -	33+50"R"	21		0	2	42	4	84		0		0	5	105	1	21	
	SUBTOTAL STAGE 1D 5144-01-75 0010				9030		714		714		1386		0		1113		63	
5144-01-75	STAGE 2																	
	STH 16 CLOSURE DETOUR		3		0		0		0		0		0	111	333		0	
	STH 27																	
0010	302+95 -	310+50	28	74	2072	6	168	4	112	52	1456		0	7	196	1	28	
0010	310+50 -	339+80	28	227	6356	14	392	8	224	11	308		0	27	756	1	28	
	STH 16																	
0010	97+50"EB" -	110+00"EB"	28	82	2296	13	364	14	392	20	560	2	56	33	924		0	
	RIVER ROAD																	
0010	30+43"R" -	33+50"R"	28		0	5	140	6	168		0		0	4	112	1	28	
	SUBTOTAL STAGE 2 5144-01-75 0010				10724		1064		896		2324		56		2321		84	
5144-01-75	STAGE 2B																	
	STH 27																	
0010	302+95 -	310+50	35	100	3500	3	105		0	16	560		0	10	350	1	35	
0010	310+50 -	339+80	35	215	7525	17	595	10	350	30	1050		0	32	1120	1	35	
	STH 16																	
0010	97+50"EB" -	110+00"EB"	35	82	2870	13	455	14	490	20	700	2	70	33	1155		0	
	RIVER ROAD																	
0010	30+43"R" -	33+50"R"	35	25	875		0		0		0		0	8	280	1	35	
	SUBTOTAL STAGE 2B 5144-01-75 0010				14770		1155		840		2310		70		2905		105	
	PAGE SUBTOTAL 5144-01-75 0010				38492		3566		3156		6447		174		35991		323	
	PAGE SUBTOTAL 5144-01-76 0010				56		784		1120		0		0		616		0	

3

3

PROJECT NO: 5144-01-75 & 5144-01-76	HWY: STH 27	COUNTY: MONROE	MISCELLANEOUS QUANTITIES	SHEET NO:	E

3

TRAFFIC CONTROL SUMMARY

CATEGORY	STATION TO	STATION	DURATION (DAYS)	DRUMS 643.0300 EACH	DRUMS 643.0300 DAY	TYPE III 643.0420 EACH	TYPE III 643.0420 DAY	WARNING LIGHTS TYPE A 643.0705 EACH	WARNING LIGHTS TYPE A 643.0705 DAY	WARNING LIGHTS TYPE C 643.0715 EACH	WARNING LIGHTS TYPE C 643.0715 DAY	ARROW BOARDS 643.0800 EACH	ARROW BOARDS 643.0800 DAY	SIGNS 643.0900 EACH	SIGNS 643.0900 DAY	SIGNS PCMS CELLULAR COMM 643.1051 EACH	SIGNS PCMS CELLULAR COMM 643.1051 DAY	REMARKS
5144-01-75	STAGE 3																	
	STH 27																	
0010	302+95 -	310+50	49	61	2989		0		0	16	784		0	7	343	1	49	
0010	310+50 -	338+70	49	158	7742	20	980	20	980	14	686		0	23	1127	1	49	
	STH 16																	
0010	98+20"EB" -	110+43"EB"	49	72	3528	8	392	10	490	19	931	2	98	31	1519		0	
	RIVER ROAD																	
0010	30+43"R" -	33+50"R"	49	25	1225		0		0		0		0	8	392	1	49	
	SUBTOTAL STAGE 3 5144-01-75 0010				15484		1372		1470		2401		98		3381		147	
5144-01-75	STAGE 4																	
	STH 27																	
0010	302+95 -	310+50	7	68	476		0		0		0		0	4	28	1	7	
	RIVER ROAD																	
0010	30+43"R" -	33+50"R"	7		0		0		0		0		0	4	28	1	7	
	SUBTOTAL STAGE 4 5144-01-75 0010				476		0		0		0		0		56		14	
5144-01-75	STAGE 5A																	
	DETOUR		7		0		0		0		0		0	132	924		0	
	STH 27																	
0010	325+95 -	336+40	7	36	252	29	203	22	154	9	63		0	11	77	2	14	
	STH 16																	
0010	102+19"EB" -	110+15"EB"	7	22	154	11	77	6	42	11	77	1	7	15	105	1	7	
	SUBTOTAL STAGE 5A 5144-01-75 0010				406		280		196		140		7		1106		21	
5144-01-75	STAGE 5B																	
	DETOUR		7		0		0		0		0		0	122	854		0	
	STH 27																	
0010	326+15 -	336+10	7	71	497	17	119	16	112	9	63		0	14	98	2	14	
	STH 16																	
0010	98+70"EB" -	107+30"EB"	7	18	126	8	56	12	84	8	56	1	7	13	91	1	7	
	SUBTOTAL STAGE 5B 5144-01-75 0010				623		175		196		119		7		1043		21	
5144-01-75	STAGE 6																	
	STH 27																	
0010	325+90 -	339+30	7	108	756	14	98	12	84	18	126		0	23	161	2	14	
	STH 16																	
0010	98+70"EB" -	107+30"EB"	7		0		0		0		0		0		0	2	14	
	SUBTOTAL STAGE 6 5144-01-75 0010				756		98		84		126		0		161		28	
	PAGE SUBTOTAL 5144-01-75 0010				17745		1925		1946		2786		112		5747		231	
	PAGE SUBTOTAL 5144-01-76 0010				0		0		0		0		0		0		0	
	PROJECT 5144-01-05 TOTAL 0010				56237		5491		5102		9233		286		41738		554	
	PROJECT 5144-01-76 TOTAL 0010				56		784		1120		0		0		616		0	

3

3

TRAFFIC CONTROL - PEDESTIRAN ACCOMODATIONS

CATEGORY	STATION	LOCATION	TEM0PORARY PEDESTRIAN SURFACE PLYWOOD 644.1420.S SF	TEM0PORARY PEDESTRIAN SAFETY FENCE 644.1616.S LF	TEMPORARY CURB RAMP 644.1601.S EACH	REMARKS
5144-01-75	STAGE 2					
0010	STH 16 & STH 27	INTERSECTION	665	266	2	
5144-01-75	STAGE 2B					
0010	STH 16 & STH 27	INTERSECTION	665	266	2	
5144-01-75	STAGE 3					
0010	STH 16 & STH 27	INTERSECTION	400	160		
	PROJECT 5144-01-75 TOTAL 0010		1730	692	4	

3

3

TRAFFIC CONTROL - TEMPORARY PAVEMENT MARKINGS

CATEGORY	STATION TO	STATION	LOCATION	MARKING LINE REMOVAL 4-INCH 646.9000 LF	TEMPORARY MARKING LINE REMOVEABLE TAPE 4-INCH 649.0150 LF	TEMPORARY MARKING LINE EPOXY 4-INCH 649.0120 LF	REMARKS
5144-01-75	STAGE 1B PART 1						
	STH 27			100			
0010	327+57 -	335+70	LT & RT		300		WHITE
					1365		YELLOW
	STH 16			550			
0010	98+60"EB" -	109+60"EB"	LT & RT		300		WHITE
					1887		YELLOW
5144-01-75	STAGE 1B PART 2						
	STH 27			370			
0010	327+87 -	335+81	LT & RT		1100		WHITE
					1280		YELLOW
	STH 16			180			
0010	98+60"EB" -	109+73"EB"	LT & RT		1775		WHITE
					540		YELLOW
	SUBTOTAL STAGE 1B 5144-01-75 0010			1200	8547	0	
5144-01-75	STAGE 1C						
	STH 27			1020			
0010	310+50 -	334+50	LT & RT		4430		WHITE
					4750		YELLOW
	STH 16						
0010	98+60"EB" -	107+00"EB"	LT & RT		1015		WHITE
					800		YELLOW
	SUBTOTAL STAGE 1C 5144-01-75 0010			1020	10995	0	
5144-01-75	STAGE 1D						
	STH 27			150			
0010	310+50 -	336+00			490		WHITE
					4750		YELLOW
	STH 16						
0010	101+12"EB" -	107+08"EB"			300		WHITE
					1000		YELLOW
	SUBTOTAL STAGE 1D 5144-01-75 0010			150	6540	0	
5144-01-75	STAGE 2						
	STH 27			500			
0010	302+95 -	310+50	LT & RT		505	1010	WHITE
					505	1010	YELLOW
0010	310+50 -	339+80	LT & RT		370	4800	WHITE
					710	5300	YELLOW
	STH 16			500			
0010	97+50"EB" -	110+00"EB"	LT & RT		2100		WHITE
					1400		YELLOW
	SUBTOTAL STAGE 2 5144-01-75 0010			1000	5590	12120	

TRAFFIC CONTROL - TEMPORARY PAVEMENT MARKINGS

CATEGORY	STATION TO	STATION	LOCATION	MARKING LINE REMOVAL 4-INCH 646.9000 LF	TEMPORARY MARKING LINE REMOVEABLE TAPE 4-INCH 649.0150 LF	TEMPORARY MARKING LINE EPOXY 4-INCH 649.0120 LF	REMARKS
5144-01-75	STAGE 2B						
	STH 27			300			
0010	302+95 -	310+50	LT & RT		1000		WHITE
					1230		YELLOW
0010	310+50 -	318+40	LT & RT		790		WHITE
					1580		YELLOW
	SUBTOTAL STAGE 2B 5144-01-75 0010			300	4600	0	
5144-01-75	STAGE 3						
	STH 27			100			
0010	302+95 -	310+50	LT & RT		175		WHITE
					280		YELLOW
0010	310+50 -	338+70	LT & RT		3000		WHITE
					5900		YELLOW
	STH 16						
0010	98+20"EB" -	110+43"EB"	LT & RT		1400		WHITE
					2200		YELLOW
	SUBTOTAL STAGE 3 5144-01-75 0010			100	12955	0	
5144-01-75	STAGE 5A						
	STH 27						
0010	325+95 -	336+40	LT & RT		950		WHITE
					1950		YELLOW
	STH 16						
0010	102+19"EB" -	110+15"EB"	LT & RT		150		WHITE
					4000		YELLOW
	SUBTOTAL STAGE 5A 5144-01-75 0010			0	7050	0	
	STAGE 5B						
	STH 27						
0010	326+15 -	336+10	LT & RT		1200		WHITE
					2650		YELLOW
	STH 16						
0010	98+70"EB" -	107+30"EB"	LT & RT		150		WHITE
					920		YELLOW
	SUBTOTAL STAGE 5B 5144-01-75 0010			0	4920	0	
5144-01-75	STAGE 6						
	STH 27						
0010	325+90 -	339+30	LT & RT		200		WHITE
					5100		YELLOW
	STH 16						
0010	98+70"EB" -	107+30"EB"	LT & RT		220		WHITE
					0		YELLOW
	SUBTOTAL STAGE 6 5144-01-75 0010			0	5520	0	
	PROJECT 5144-01-75 TOTAL 0010			3770	66717	12120	

3

EPOXY PAVEMENT MARKING SUMMARY

CATEGORY	STATION	TO	STATION	LOCATION	COLOR	STYLE	4-INCH 646.1020 LF	8-INCH 646.3020 LF	ARROWS 646.5020 EACH	SYMBOLS 646.5220 EACH	WORDS 646.5120 EACH	CURB 646.8120 LF	YIELD LINE 18-INCH 646.6220 LF	STOP LINE 18-INCH 646.6120 LF	ISLAND NOSE 646.8220 EACH	DIAGONAL 12-INCH 646.7120 LF	CROSSWALK 6-INCH 646.7420 LF	REMARKS
5144-01-75	ROUNDABOUT																	
0010	302+95	-	307+80	LT & RT	WHITE	SOLID	675	64			1						79	
0010	302+95	-	307+80	LT & RT	YELLOW	SOLID	95					22			1	55		
0010	302+95	-	307+80	LT & RT	YELLOW	DOUBLE SOLID	850											
0010	302+95	-	307+80	LT & RT	WHITE	SKIP 3' SEG. 9' GAP	30											
0010	302+95	-	307+80	LT & RT	WHITE	2' SEG., 2' GAP							22					
0010	307+80	-	308+80	LT & RT	YELLOW	DOUBLE SOLID	82											
0010	307+80	-	308+80	LT & RT	YELLOW	SOLID						10			1			
0010	307+80	-	308+80	LT & RT	WHITE	SOLID		60			1						68	
0010	307+80	-	308+80	LT & RT	WHITE	2' SEG., 2' GAP							22					
0010	308+80	-	310+50	LT & RT	WHITE	SOLID	105	68			1		21				74	
0010	308+80	-	310+50	LT & RT	YELLOW	SOLID	25					22			1	65		
0010	308+80	-	310+50	LT & RT	YELLOW	DOUBLE SOLID	375											
0010	308+80	-	310+50	LT & RT	WHITE	SKIP 3' SEG. 9' GAP	36											
5144-01-75	STH 27																	
0010	310+50	-	312+94	LT & RT	WHITE	SOLID	488		2	2							124	
0010	310+50	-	312+94	LT & RT	YELLOW	SOLID	488		2									
0010	310+50	-	312+94	LT & RT	YELLOW	SKIP 12.5' SEG, 37.5' GAP	122											
0010	314+02	-	325+07	RT	WHITE	SOLID	1105		5	5								
0010	314+41	-	325+07	LT	WHITE	SOLID	1066		5	5								
0010	314+41	-	325+07	LT & RT	WHITE	SOLID											92	
0010	314+41	-	325+07	LT & RT	YELLOW	SOLID	2132		8									
0010	314+41	-	325+07	LT & RT	YELLOW	SKIP 12.5' SEG, 37.5' GAP	533											
0010	326+19	-	331+02"SB"	LT	WHITE	SOLID	483		3	3								
0010	326+19	-	327+37"NB"	RT	WHITE	SOLID	118		1	1								
0010	326+19	-	326+92	LT & RT	YELLOW	SOLID	73		2									
0010	326+19	-	326+92	LT & RT	YELLOW	SKIP 12.5' SEG, 37.5' GAP	18											
0010	326+92	-	328+58	LT & RT	YELLOW	DOUBLE SOLID	664											
0010	326+92	-	328+58	LT & RT	YELLOW	SOLID						20			1	351		
0010	327+37"NB"	-	328+57"NB"	RT	WHITE	SKIP 3' SEG., 9' GAP	60											
0010	328+57"NB"	-	331+02"NB"	RT	WHITE	SOLID	245	245	4	2	2			45				
0010	328+57"NB"	-	331+02"NB"	LT	WHITE	SOLID	245		2		1							
0010	331+02"NB"			LT	YELLOW	SOLID						20			1			
0010	331+07"NB"			LT & RT	WHITE	SOLID											176	
0010	332+58"NB"			LT & RT	WHITE	SOLID											178	
0010	332+63"SB"	-	334+28"SB"	LT	WHITE	SOLID	165	165	4	2	1			45				
0010	332+63"SB"	-	334+28"SB"	RT	WHITE	SOLID		165	2		1							
0010	332+63"SB"			RT	YELLOW	SOLID						20			1			
0010	332+64"NB"	-	335+65"NB"	RT	WHITE	SOLID	301		2	2								
0010	334+28"SB"	-	334+93"SB"	RT	YELLOW	SOLID						20			1	160		
0010	334+28"SB"	-	335+23"SB"	LT	WHITE	SKIP 3' SEG., 9' GAP	48											
0010	334+28"SB"	-	334+93"SB"	RT	YELLOW	DOUBLE SOLID	260											
0010	334+93"SB"	-	335+65"SB"	LT & RT	YELLOW	SOLID	144											
0010	334+93"SB"	-	335+65"SB"	LT & RT	YELLOW	SKIP 12.5' SEG, 37.5' GAP	36											
0010	335+23"SB"	-	335+65"SB"	LT	WHITE	SOLID	42		1	1								
0010	335+65"SB"			LT & RT	WHITE	SOLID											104	
0010	335+70"SB"	-	336+60	LT	WHITE	SOLID	90											
0010	336+29	-	339+77	LT	YELLOW	SOLID	348		2									
0010	336+29	-	339+77	LT	YELLOW	SKIP 12.5' SEG, 37.5' GAP	87											
0010	336+31	-	338+66	RT	YELLOW	SOLID	235											
0010	336+31	-	338+66	RT	YELLOW	SKIP 12.5' SEG, 37.5' GAP	59											
0010	336+25		336+30	LT & RT	WHITE	SOLID											90	
5144-01-75	STH 16																	
0010	97+62"EB"	-	103+29"EB"	RT	WHITE	SKIP 12.5' SEG, 37.5' GAP	142											
0010	102+19"EB"	-	103+29"EB"	RT	WHITE	SOLID	110											
0010	102+19"EB"	-	103+29"EB"	LT	WHITE	SOLID		110	2		1							
0010	102+19"WB"	-	103+45"WB"	LT	WHITE	SOLID	126											
0010	102+19"WB"	-	103+45"WB"	LT	WHITE	SKIP 12.5' SEG, 37.5' GAP	32											
0010	102+19"EB"			LT	YELLOW	SOLID						23			1			
0010	103+29"EB"			LT & RT	WHITE	SOLID								37			168	
0010	103+29"EB"			LT	YELLOW	SOLID						23			1			
0010	104+88"WB"			LT & RT	WHITE	SOLID								38			168	
0010	104+88"WB"	-	106+37"WB"	LT & RT	WHITE	SOLID	149	149	2		1							
0010	104+88"WB"	-	109+70"WB"	LT	WHITE	SKIP 12.5' SEG, 37.5' GAP	121											
0010	104+88"EB"			LT	YELLOW	SOLID						27			1			
0010	104+89"EB"	-	106+37"EB"	RT	WHITE	SKIP 12.5' SEG, 37.5' GAP	37											
0010	104+89"EB"	-	106+37"EB"	RT	WHTIE	SOLID	148											
0010	105+75"EB"			RT	YELLOW	SOLID						24			1			
5144-01-75	RIVER ROAD																	
0010	30+43"R"	-	33+00"R"	LT & RT	WHITE	SOLID	305	64			1		24				80	
0010	30+43"R"	-	33+00"R"	LT & RT	YELLOW	DOUBLE SOLID	540											
0010	30+43"R"	-	33+00"R"	LT & RT	WHITE	SKIP 3' SEG. 9' GAP	36											
0010	30+43"R"	-	33+00"R"	LT & RT	YELLOW	SOLID						23			1	35		
5144-01-75	W AVERILL STREET																	
0010	WEST APPROACH			LT & RT	WHITE	SOLID								21			98	
0010	EAST APPROACH			LT & RT	WHITE	SOLID								25			134	
5144-01-75	MAPLE AVENUE																	
0010	WEST APPROACH			LT & RT	WHITE	SOLID								24			134	
0010	EAST APPROACH			LT & RT	WHITE	SOLID								20			100	
						PROJECT 5144-01-75 TOTAL 0010	13674	1090	49	23	11	254	89	255	12	666	1867	

3

3

PROJECT NO: 5144-01-75 & 5144-01-76 | **HWY: STH 27** | **COUNTY: MONROE** | **MISCELLANEOUS QUANTITIES** | **SHEET NO:** 208 | **E**

3

Signal Bases

Category	Station	Dir	Location	654.0101 Concrete Bases Type 1 EACH	654.0113 Concrete Bases Type 13 EACH	SPV.0060.01 Concrete Bases Type Special EACH	Description
5144-01-75							
0010	332 + 60	LEFT	59	1			SB1
0010	332 + 67	RIGHT	34		1		SB2
0010	332 + 23	RIGHT	70	1			SB3
0010	331 + 27	RIGHT	70		1		SB4
0010	331 + 5	RIGHT	41	1			SB5
0010	331 + 8	LEFT	60		1		SB6
0010	331 + 43	LEFT	85	1			SB7
0010	332 + 35	LEFT	82		1		SB8
0010	332 + 57	RIGHT	38	1			SB9
0030	305 + 52.50	LEFT	36.29			1	LCC-A-9
0030	307 + 36.43	LEFT	67.58			1	LCC-A-8
0030	32 + 27.05"R"	RIGHT	36.16			1	LCC-A-7
0030	32 + 71.01"R"	LEFT	61.42			1	LCC-A-6
0030	309 + 41.03	LEFT	33.38			1	LCC-A-5
0030	309 + 01.95	RIGHT	58.72			1	LCC-A-4
0030	308 + 36.06	RIGHT	115.55			1	LCC-A-3
0030	307 + 61.97	RIGHT	78.48			1	LCC-A-2
0030	306 + 93.06	RIGHT	29.18			1	LCC-A-1
0040	310 + 50	LEFT	28			1	LCC-B-1
0040	312 + 50	RIGHT	28			1	LCC-B-2
0040	314 + 50	LEFT	28			1	LCC-B-3
0040	316 + 34	RIGHT	28			1	LCC-B-4
0040	318 + 46	LEFT	28			1	LCC-B-5
0040	320 + 54	RIGHT	28			1	LCC-B-6
0040	322 + 71	LEFT	28			1	LCC-B-7
0040	324 + 84	RIGHT	28			1	LCC-B-8
0040	327 + 99	LEFT	28			1	LCC-B-9
0040	329 + 14	RIGHT	31			1	LCC-B-10
PROJECT 5144-01-75 TOTAL 0010				**5**	**4**	**0**	
PROJECT 5144-01-75 TOTAL 0030				**0**	**0**	**9**	
PROJECT 5144-01-75 TOTAL 0040				**0**	**0**	**10**	

Pull Boxes

Category	Station	Dir	Location	653.0105 Pull Boxes Steel 12"x24" EACH	653.0164 Pull Boxes Non-Conductive 24"x42" EACH	Description
5144-01-75						
0030	307 + 06.87	RIGHT	16.68		1	PB-1
0030	307 + 77.41	RIGHT	82.65		1	PB-2
0030	308 + 41.17	RIGHT	84.69		1	PB-3
0030	309 + 27.60	LEFT	35.37		1	PB-4
0030	308 + 69.29	LEFT	85.11		1	PB-5
0030	307 + 73.85	LEFT	92.53		1	PB-6
0030	307 + 03.00	LEFT	44.03		1	PB-7
0030	305 + 63.18	LEFT	36.14		1	PB-8
0030	307 + 29.00	RIGHT	24.00		1	PB-9
0010	332 + 48	LEFT	62		1	PB1
0010	332 + 57	LEFT	40	1		PB2
0010	332 + 57	LEFT	24	1		PB3
0010	332 + 57	LEFT	12	1		PB4
0010	332 + 43	RIGHT	45		1	PB5
0010	332 + 09	RIGHT	65	1		PB6
0010	331 + 97	RIGHT	65	1		PB7
0010	331 + 86	RIGHT	65	1		PB8
0010	331 + 27	RIGHT	53		1	PB9
0010	331 + 09	RIGHT	23	1		PB10
0010	331 + 09	RIGHT	6	1		PB11
0010	331 + 09	LEFT	6	1		PB12
0010	331 + 33	LEFT	67		1	PB13
0010	331 + 57	LEFT	77	1		PB14
0010	331 + 69	LEFT	77	1		PB15
0010	331 + 80	LEFT	77	1		PB16
0010	332 + 39	LEFT	78		1	PB17
0010	332 + 14	RIGHT	230			Existing PB41
0010	331 + 49	LEFT	249			Existing PB42
0010	334 + 27	LEFT	51		1	PB18
0010	329 + 44	RIGHT	35		1	PB19
0040	312 + 84	LEFT	47		1	PB21
0040	313 + 04	RIGHT	37		1	PB22
0040	314 + 04	LEFT	48		1	PB23
0040	313 + 95	RIGHT	36		1	PB24
0040	316 + 98	LEFT	36		1	PB25
0040	318 + 60	RIGHT	36		1	PB26
0040	318 + 75	LEFT	27		1	PB27
0040	318 + 75	RIGHT	36		1	PB28
0040	321 + 00	LEFT	27		1	PB29
0040	323 + 00	RIGHT	27		1	PB30
0040	325 + 18	LEFT	27		1	PB31
0040	325 + 25	RIGHT	28		1	PB32
0040	326 + 10	LEFT	27		1	PB33
0040	326 + 04	RIGHT	28		1	PB34
PROJECT 5144-01-75 TOTAL 0010				**12**	**7**	
PROJECT 5144-01-75 TOTAL 0030				**0**	**9**	
PROJECT 5144-01-75 TOTAL 0040				**0**	**14**	

3

3

Electrical items Category	Station	Dir	Location	656.0200 Electrical Service Meter Breaker Pedestal STH 16 LS	656.0200 Electrical Service Meter Breaker Pedestal Lighting Cabinet LS	650.8500 Construction Staking Electrical Installations 5144-01-75 LS	658.5069 Signal Mounting Hardware LS	654.0217 Concrete Control Cabinet Bases Type 9 Special EACH	SPV.0060.06 Traffic Signal Controller Actuated 8 Phase EACH	204.9060.S.01 Removing Traffic Signal Units EACH	654.0224 Concrete Control Cabinet Bases Type L24 EACH	659.2124 Lighting Control Cabinets 120/240 24-inch EACH	661.0200 Temporary Traffic Signals for Intersection LS	Description
0010	332 + 45	LEFT	73	1			1	1	1	1				SC1
0030	307 + 4.11	RIGHT	34.33		1						1	1		LCC-A
0040	318 + 67	RIGHT	37		1						1	1		LCC-B
0010	332 + 45	LEFT	73			1								Project
0010	STH 16 & STH 27 INTERSECTION												1	
PROJECT 5144-01-75 TOTAL 0010				**1**	**0**	**1**	**1**	**1**	**1**	**1**	**0**	**0**	**1**	
PROJECT 5144-01-75 TOTAL 0030				**0**	**1**	**0**	**0**	**0**	**0**	**0**	**1**	**1**	**0**	
PROJECT 5144-01-75 TOTAL 0040				**0**	**1**	**0**	**0**	**0**	**0**	**0**	**1**	**1**	**0**	

Poles, Arms & Equipment, Black Paint Category	Station	Dir	Location	SPV.0060.08 Black Paint Traffic Signal Controller Cabinet EACH	SPV.0060.50 Black Paint Poles Over Height Type 13 EACH	SPV.0060.51 Black Paint Monotube Arms 45-FT EACH	SPV.0060.52 Black Paint Monotube Arms 50-FT EACH	SPV.0060.53 Black Paint Luminarie Arms Steel 15-FT EACH	SPV.0060.54 Black Paint Pedestal Bases EACH	SPV.0060.56 Black Paint Traffic Signal Standard Aluminum 3.5' EACH	SPV.0060.57 Black Paint Traffic Signal Standard Aluminum 15' EACH	SPV.0060.62 Black Paint Luminaire Utility LED Category C EACH	SPV.0060.63 Black Paint Lighting Controller Cabinet EACH	Desc
5144-01-75														
0020	332 + 60	LEFT	59						1		1			SB1
0020	332 + 67	RIGHT	34		1	1		1				1		SB2
0020	332 + 23	RIGHT	70						1		1			SB3
0020	331 + 27	RIGHT	70		1		1	1				1		SB4
0020	331 + 5	RIGHT	41						1		1			SB5
0020	331 + 8	LEFT	60		1		1	1				1		SB6
0020	331 + 43	LEFT	85						1		1			SB7
0020	332 + 35	LEFT	82		1		1	1				1		SB8
0020	332 + 57	RIGHT	38						1	1				SB9
0020	332 + 45	RIGHT	73	1										SC1
0030	307 + 4.11	RIGHT	34.33										1	LCC-A
0040	318 + 67	RIGHT	37										1	LCC-B
PROJECT 5144-01-75 TOTAL 0020				**1**	**4**	**1**	**3**	**4**	**5**	**1**	**4**	**4**	**0**	
PROJECT 5144-01-75 TOTAL 0030				**0**	**0**	**0**	**0**	**0**	**0**	**0**	**0**	**0**	**1**	
PROJECT 5144-01-75 TOTAL 0040				**0**	**0**	**0**	**0**	**0**	**0**	**0**	**0**	**0**	**1**	

3

3

Poles, Arms & Equipment

Category	Station	Dir	Location	SPV.0060.02 Poles Over Height Type 13 EACH	SPV.0060.03 Monotube Arms 45-FT EACH	SPV.0060.04 Monotube Arms 50-FT EACH	SPV.0060.05 Luminaire Arms Steel 15-FT EACH	657.0100 Pedestal Bases EACH	657.0405 Traffic Signal Standard Aluminum 3.5' EACH	657.0425 Traffic Signal Standard Aluminum 15' EACH	658.0173 Traffic Signal Face 3S 12-Inch EACH	658.0174 Traffic Signal Face 4S 12-Inch EACH	658.0500 Pedestrian Push Button EACH	658.0416 Pedestrian Signal Face 16-Inch EACH	659.1125 Luminaires Utility LED C EACH	SPV.0060.58 Lighting Unit Type Special EACH	SPV.0060.59 Lighting Unit Type Special 1 EACH	Desc
5144-01-75																		
0010	332 + 60	LEFT	59					1		1	1	1	1	1				SB1
0010	332 + 67	RIGHT	34	1	1		1				2	1	1	1	1			SB2
0010	332 + 23	RIGHT	70					1		1	1	1	1	1				SB3
0010	331 + 27	RIGHT	70	1		1	1				2	1	1	1	1			SB4
0010	331 + 5	RIGHT	41					1		1	1	1	1	1				SB5
0010	331 + 8	LEFT	60	1		1	1				2	1	1	1	1			SB6
0010	331 + 43	LEFT	85					1		1	1	1	1	1				SB7
0010	332 + 35	LEFT	82	1		1	1				2	1	1	1	1			SB8
0010	332 + 57	RIGHT	38					1	1				1					SB9
0030	305 + 53	LEFT	36.29														1	LCC-A-9
0030	307 + 36.43	LEFT	67.58														1	LCC-A-8
0030	32 + 27.05"R"	RIGHT	36.16														1	LCC-A-7
0030	32 + 71.01"R"	LEFT	61.42														1	LCC-A-6
0030	309 + 41.03	LEFT	33.38														1	LCC-A-5
0030	309 + 1.95	RIGHT	58.72														1	LCC-A-4
0030	308 + 36.06	RIGHT	115.55														1	LCC-A-3
0030	307 + 61.97	RIGHT	78.48														1	LCC-A-2
0030	306 + 93.06	RIGHT	29.18														1	LCC-A-1
0040	310 + 50	LEFT	28													1		LCC-B-1
0040	312 + 50	RIGHT	28													1		LCC-B-2
0040	314 + 50	LEFT	28													1		LCC-B-3
0040	316 + 34	RIGHT	28													1		LCC-B-4
0040	318 + 46	LEFT	28													1		LCC-B-5
0040	320 + 54	RIGHT	28													1		LCC-B-6
0040	322 + 71	LEFT	28													1		LCC-B-7
0040	324 + 84	RIGHT	28													1		LCC-B-8
0040	327 + 99	LEFT	28													1		LCC-B-9
0040	329 + 14	RIGHT	31													1		LCC-B-10
PROJECT 5144-01-75 TOTAL 0010				**4**	**1**	**3**	**4**	**5**	**1**	**4**	**12**	**8**	**9**	**8**	**4**	**0**	**0**	
PROJECT 5144-01-75 TOTAL 0030				**0**	**0**	**0**	**0**	**0**	**0**	**0**	**0**	**0**	**0**	**0**	**0**	**0**	**9**	
PROJECT 5144-01-75 TOTAL 0040				**0**	**0**	**0**	**0**	**0**	**0**	**0**	**0**	**0**	**0**	**0**	**0**	**10**	**0**	

3

Street Light Wire

Category	Station	to	Station	655.0610* Electrical Wire Lighting 12 AWG LF	655.0620 Electrical Wire Lighting 8 AWG LF	655.0625 Electrical Wire Lighting 6 AWG LF	Description
5144-01-75							
0030	305 + 52.50			216			LCC-A-1 Up Pole
0030	307 + 36.43			216			LCC-A-2 Up Pole
0030	32 + 27.05"R"			216			LCC-A-3 Up Pole
0030	32 + 71.01"R"			216			LCC-A-4 Up Pole
0030	309 + 41.03			216			LCC-A-5 Up Pole
0030	309 + 01.95			216			LCC-A-6 Up Pole
0030	308 + 36.06			216			LCC-A-7 Up Pole
0030	307 + 61.97			216			LCC-A-8 Up Pole
0030	306 + 93.06			216			LCC-A-9 Up Pole
0030	307 + 04.11	to	305 + 52.50		168	168	LCC-A to LCC-A-1
0030	306 + 93.06	to	307 + 61.97		447	447	LCC-A-1 to LCC-A-8
0030	307 + 61.97	to	306 + 93.06		666	666	LCC-A-8 to LCC-A-9
0030	307 + 61.97	to	308 + 36.06		606	606	LCC-A-8 to LCC-A-7
0030	308 + 36.06	to	309 + 1.95		531	531	LCC-A-7 to LCC-A-6
0030	309 + 01.95	to	309 + 41.03		462	462	LCC-A-6 to LCC-A-5
0030	307 + 04.11	to	307 + 36.43		471	471	LCC-A to LCC-A-2
0030	307 + 36.43	to	32 + 27.05"R"		429	429	LCC-A-2 to LCC-A-3
0030	32 + 27.05"R"	to	32 + 71.01"R"		369	369	LCC-A-3 to LCC-A-4
0040	318 + 67.00	to	316 + 34.00		762	762	LCC-B to LCC-B-4
0040	316 + 34.00	to	312 + 50.0		1245	1245	LCC-B-4 to LCC-B-2
0040	318 + 67.00	to	318 + 46.00		297	297	LCC-B to LCC-B-5
0040	318 + 46.00	to	314 + 50.00		1245	1245	LCC-B-5 to LCC-B-3
0040	314 + 50.00	to	310 + 50.00		1317	1317	LCC-B-3 to LBB-B-1
0040	318 + 67.00	to	320 + 54.00		621	621	LCC-B to LCC-B-6
0040	320 + 54.00	to	324 + 84.00		1350	1350	LCC-B-6 to LCC-B-8
0040	324 + 84.00	to	329 + 14.00		1383	1383	LCC-B-8 to LCC-B-10
0040	318 + 67.00	to	322 + 71.00		1512	1512	LCC-B to LCC-B-7
0040	322 + 71.00	to	327 + 99.00		1374	1374	LCC-B-7 to LCC-B-9
0040	310 + 50			216			LCC-B-1 Up Pole
0040	312 + 50			216			LCC-B-2 Up Pole
0040	314 + 50			216			LCC-B-3 Up Pole
0040	316 + 34			216			LCC-B-4 Up Pole
0040	318 + 46			216			LCC-B-5 Up Pole
0040	320 + 54			216			LCC-B-6 Up Pole
0040	322 + 71			216			LCC-B-7 Up Pole
0040	324 + 84			216			LCC-B-8 Up Pole
0040	327 + 99			216			LCC-B-9 Up Pole
0040	329 + 14			216			LCC-B-10 Up Pole
PROJECT 5144-01-75 TOTAL 0030				**1944**	**4149**	**4149**	
PROJECT 5144-01-75 TOTAL 0040				**2160**	**11106**	**11106**	

3

Category	Station	to Station	655.0210 Cable Traffic Signal 3-14 AWG LF	655.0230 Cable Traffic Signal 5-14 AWG LF	655.0260 Cable Traffic Signal 12-14 AWG LF	655.0305 Cable Type UF 2-12 AWG Grounded LF	655.0610* Elecrtrical Wire Traffic Lighting 12 AWG LF	655.0700 Loop Dectector Lead in Cable LF	655.0800 Loop Detector Wire LF	Description
Signal Wire										
5144-01-75										
0010	332 + 57								274	PB2 LOOP 42
0010	332 + 57								306	PB3 LOOP 41
0010	332 + 57								330	PB4 LOOP 71
0010	332 + 09								302	PB6 LOOP 22
0010	331 + 97								326	PB7 LOOP 21
0010	331 + 86								350	PB8 LOOP 51
0010	331 + 09								296	PB10 LOOP 82
0010	331 + 09								330	PB11 LOOP 81
0010	331 + 09								354	PB12 LOOP 31
0010	331 + 57								278	PB14 LOOP 62
0010	331 + 69								302	PB15 LOOP 61
0010	331 + 80								326	PB16 LOOP 11
0010	334 + 27								235	PB18 LOOP 43
0010	329 + 44								265	PB19 LOOP 83
0010	332 + 60		15	40						SB1 - Up Pole
0010	332 + 67		15	81			159			SB2 - Up Pole
0010	332 + 23		15	40						SB3 - Up Pole
0010	331 + 27		15	120			159			SB4 - Up Pole
0010	331 + 5		15	40						SB5 - Up Pole
0010	331 + 8		15	86			159			SB6 - Up Pole
0010	331 + 43		15	40						SB7 - Up Pole
0010	332 + 35		15	120			159			SB8 - Up Pole
0010	332 + 57		15							SB9 - Up Pole
0010	332 + 45	to 332 + 60			46					SC1 to SB1
0010	332 + 45	to 332 + 67			177					SC1 to SB2
0010	332 + 45	to 332 + 23			182					SC1 to SB3
0010	332 + 45	to 331 + 27			294					SC1 to SB4
0010	332 + 45	to 331 + 5			303					SC1 to SB5
0010	332 + 45	to 331 + 8			172					SC1 to SB6
0010	332 + 45	to 331 + 43			168					SC1 to SB7
0010	332 + 45	to 332 + 35			35					SC1 to SB8
0010	332 + 45	to 332 + 57		166						SC1 to SB9
0010	332 + 45	to 332 + 67				177				SC1 to SB2
0010	332 + 45	to 331 + 27				294				SC1 to SB4
0010	332 + 45	to 331 + 8				172				SC1 to SB6
0010	332 + 45	to 332 + 35				35				SC1 to SB8
0010	332 + 45	to 332 + 48						29		SC1 to PB1
0010	332 + 45	to 332 + 48						29		SC1 to PB1
0010	332 + 45	to 332 + 48						29		SC1 to PB1
0010	332 + 45	to 332 + 43						146		SC1 to PB5
0010	332 + 45	to 332 + 43						146		SC1 to PB5
0010	332 + 45	to 332 + 43						146		SC1 to PB5
0010	332 + 45	to 331 + 27						272		SC1 to PB9
0010	332 + 45	to 331 + 27						272		SC1 to PB9
0010	332 + 45	to 331 + 27						272		SC1 to PB9
0010	332 + 45	to 331 + 33						142		SC1 to PB13
0010	332 + 45	to 331 + 33						142		SC1 to PB13
0010	332 + 45	to 331 + 33						142		SC1 to PB13
0010	332 + 45	to 332 + 14						344		SC1 to Existing PB41
0010	332 + 45	to 331 + 49						336		SC1 to Existing PB42
0010	332 + 45	to 334 + 27						219		SC1 to PB18
0010	332 + 45	to 329 + 44						466		SC1 to PB19
PROJECT 5144-01-75 TOTAL 0010			**135**	**733**	**1377**	**678**	**636**	**3132**	**4274**	

3

PROJECT NO: 5144-01-75 & 5144-01-76	HWY: STH 27	COUNTY: MONROE	MISCELLANEOUS QUANTITIES	SHEET NO: 213	E

3

Electrical Conduit				652.0225 Conduit Rigid Nonmetallic Schedule 40 2-Inch	652.0235 Conduit Rigid Nonmetallic Schedule 40 3-Inch	652.0800 Conduit Loop Detector	
Category	Station	to	Station	LF	LF	LF	Description
5144-01-75							
0010	332 + 57					72	LOOP 42 - PB2
0010	332 + 57					72	LOOP 41 - PB3
0010	332 + 57					72	LOOP 71 - PB4
0010	332 + 9					72	LOOP 22 - PB6
0010	331 + 97					72	LOOP 21 - PB7
0010	331 + 86					72	LOOP 51 - PB8
0010	331 + 9					72	LOOP 82 - PB10
0010	331 + 9					72	LOOP 81 - PB11
0010	331 + 9					72	LOOP 31 - PB12
0010	331 + 57					72	LOOP 62 - PB14
0010	331 + 69					72	LOOP 61 - PB15
0010	331 + 80					72	LOOP 11 - PB16
0010	334 + 27					75	LOOP 43 - PB18
0010	329 + 44					85	LOOP 83 - PB19
0010	332 + 45	to	332 + 48		23		SC1 to PB1
0010	332 + 48	to	332 + 43		214		PB1 to PB5
0010	332 + 43	to	331 + 27		233		PB5 to PB9
0010	331 + 27	to	331 + 33		239		PB9 to PB13
0010	331 + 33	to	332 + 39		214		PB13 to PB17
0010	332 + 39	to	332 + 45		16		PB17 to SC1
0010	332 + 48	to	332 + 60	13			PB1 to SB1
0010	332 + 43	to	332 + 67	27			PB5 to SB2
0010	332 + 43	to	332 + 23	32			PB5 to SB3
0010	331 + 27	to	331 + 27	17			PB9 to SB4
0010	331 + 27	to	331 + 05	26			PB9 to SB5
0010	331 + 33	to	331 + 08	26			PB13 to SB6
0010	331 + 33	to	331 + 43	22			PB13 to SB7
0010	332 + 39	to	332 + 35	6			PB17 to SB8
0010	332 + 48	to	332 + 57	24			PB1 to PB2
0010	332 + 57	to	332 + 57	16			PB2 to PB3
0010	332 + 57	to	332 + 57	13			PB3 to PB4
0010	332 + 43	to	332 + 09	40			PB5 to PB6
0010	332 + 09	to	331 + 97	13			PB6 to PB7
0010	331 + 97	to	331 + 86	12			PB7 to PB8
0010	331 + 27	to	331 + 09	36			PB9 to PB10
0010	331 + 09	to	331 + 09	17			PB10 to PB11
0010	331 + 09	to	331 + 09	13			PB11 to PB12
0010	331 + 33	to	331 + 57	27			PB13 to PB14
0010	331 + 57	to	331 + 69	13			PB14 to PB15
0010	331 + 69	to	331 + 80	12			PB15 to PB16
0010	332 + 43	to	332 + 14	188			PB5 to Existing PB41
0010	331 + 33	to	331 + 49	184			PB13 to Existing PB42
0030	307 + 04.11	to	307 + 06.87		36		LCC-A to PB-1
0030	307 + 04.11	to	307 + 29.00		54		LCC-A to PB-9
0030	307 + 06.87	to	306 + 93.06	16			PB-1 to LCC-A-1
0030	307 + 06.87	to	307 + 03.00	59			PB-1 to PB-7
0030	307 + 03.00	to	305 + 63.18	136			PB-7 to PB-8
0030	305 + 63.18	to	305 + 52.50	8			PB-8 to LCC-A-9
0030	307 + 03.00	to	307 + 36.43	37			PB-7 to LCC-A-8
0030	307 + 04.56	to	307 + 73.85	91			PB-7 to PB-6
0030	307 + 73.85	to	32 + 27.05"R"	34			PB-6 to LCC-A-7
0030	307 + 73.85	to	308 + 69.29	92			PB-6 to PB-5
0030	308 + 69.29	to	32 + 71.01"R"	12			PB-5 to LCC-A-6
0030	308 + 69.29	to	309 + 27.60	91			PB-5 to PB-4
0003	309 + 27.60	to	309 + 41.03	11			PB-4 to LCC-A-5
0030	307 + 29.00	to	307 + 77.41	76			PB-9 to PB-2
0030	307 + 77.41	to	307 + 61.97	13			PB-2 to LCC-A-2
0030	307 + 77.41	to	308 + 41.17	60			PB-2 to PB-3
0030	308 + 41.17	to	308 + 36.06	30			PB-3 to LCC-A-3
0030	308 + 41.17	to	309 + 01.95	67			PB-3 to LCC-A-4

Electrical Conduit				652.0225 Conduit Rigid Nonmetallic Schedule 40 2-Inch	652.0235 Conduit Rigid Nonmetallic Schedule 40 3-Inch	652.0800 Conduit Loop Detector	
Category	Station	to	Station	LF	LF	LF	Description
0040	332 + 48	to	334 + 27	180			PB1 to PB18
0040	331 + 27	to	329 + 44	184			PB9 to PB19
0040	332 + 43	to	332 + 57	16			PB5 to SB9
0040	318 + 67	to	318 + 60		16		LC1 to PB26
0040	318 + 67	to	318 + 75		14		LC1 to PB28
0040	318 + 75	to	318 + 75	63			PB28 to PB27
0040	318 + 60	to	316 + 34	227			PB26 to LB4
0040	316 + 34	to	313 + 95	240			LB4 to PB24
0040	313 + 95	to	313 + 04	92			PB24 to PB22
0040	313 + 04	to	312 + 50	55			PB22 to LB2
0040	318 + 75	to	318 + 46	30			PB27 to LB5
0040	318 + 46	to	316 + 98	149			LB5 to PB25
0040	316 + 98	to	314 + 50	249			PB25 to LB3
0040	314 + 50	to	314 + 04	51			LB3 to PB23
0040	314 + 04	to	312 + 84	121			PB23 to PB21
0040	312 + 84	to	310 + 50	235			PB21 to LB1
0040	318 + 75	to	321 + 00	225			PB27 to PB29
0040	321 + 00	to	322 + 71	172			PB29 to LB7
0040	322 + 71	to	325 + 18	248			LB7 to PB31
0040	325 + 18	to	326 + 10	92			PB31 to PB33
0040	326 + 10	to	327 + 99	190			PB33 to LB9
0040	318 + 75	to	320 + 54	180			PB28 to LB6
0040	320 + 54	to	323 + 00	247			LB6 to PB30
0040	323 + 00	to	324 + 84	185			PB30 to LB8
0040	324 + 84	to	325 + 25	42			LB8 to PB32
0040	325 + 25	to	326 + 04	79			PB32 to PB34
0040	326 + 04	to	329 + 14	311			PB34 to LB10
			PROJECT 5144-01-75 TOTAL 0010	**777**	**939**	**1024**	
			PROJECT 5144-01-75 TOTAL 0030	**833**	**90**	**0**	
			PROJECT 5144-01-75 TOTAL 0040	**3863**	**30**	**0**	

3

3

SPEICAL (03. IMPORTED GRANULAR BACKFILL FOR WATER MAIN)

CATEGORY	STATION	LOCATION	SPV.0035.03 CY	REMARKS
5144-01-76				
0020		UNDISTRIBUTED	200	
	PROJECT 5144-01-76 TOTAL 0020		200	

WATER MANHOLE SUMMARY

CATEGORY	STRUCTURE NUMBER	STATION	LOCATION	WATER MANHOLE SPV.0060.09 EACH	WATER MANHOLE COVER TYPE J SPECIAL SPV.0060.10 EACH	REMARKS
5144-01-76						
0020	1	306+58	29.9' RT	1	1	
		PROJECT 5144-01-76 TOTAL 0020		1	1	

SPECIAL (49. RIGID INSULATION 4-FT X 8-FT X 2-INCH)

CATEGORY	STATION	LOCATION	SPV.0060.49 EACH	REMARKS
5144-01-76				
0020	307+60.9	39.1' RT	1	
0020	309+03.2	39.1' RT	1	
0020	309+55.40	33.8' RT	1	
0020	319+64.20	38' RT	1	
0020	323+45.00	14' LT	1	
0020	326+24.7	10' LT	1	
0020	327+09.8	10' LT	1	
0020	328+10	25' LT	1	
0020	328+56.2	10' LT	1	
0020	329+75.4	9' LT	1	
0020	330+83.3	8' LT	1	
0020	330+95.7	36.7' LT	1	
0020	331+36.2	8' LT	1	
0020	332+57	63.9' LT	2	
0020	335+16.7	30.9' LT	1	
0020	29+67"R"	11' LT	1	
0020	29+76"R"	11' LT	1	
0020	22+09"AV"	12' LT	3	
0020	22+93"AV"	12' LT	3	
0020	10+77"MA"	12' LT	1	
0020	11+00"MA"	10' LT	1	
0020	11+68.3"MA"	10.6' LT	1	
0020	103+71"EB"	36' LT	1	
0020	215+42"RO"	15' LT	1	
0020	215+46"RO"	15' LT	1	
	PROJECT 5144-01-76 TOTAL 0020		30	
0030	307+45.00	29' RT	1	
0030	317+12.00	16' LT	1	
0030	319+44.20	16.4' LT	1	
0030	322+48.50	18' LT	1	
	PROJECT 5144-01-76 TOTAL 0030		4	

WATER MAIN PIPE SUMMARY

CATEGORY	STATION TO STATION	LOCATION	WATER MAIN DUCTILE IRON 6-INCH SPV.0090.02 LF	8-INCH SPV.0090.03 LF	12-INCH SPV.0090.04 LF	REMARKS
5144-01-76						
0020	302+63.40 - 302+74.00	RT			13	CONNECT TO EXIST. S
0020	302+74.40 - 306+58.00	RT			383	
0020	306+58.00 - 309+50.40	RT			292	
0020	309+50.40 - 309+55.40	RT			8	
0020	309+55.40 - 309+55.40	RT & LT			75	
0020	309+55.40 - 309+58.70	LT			21	CONNECT TO EXIST. N
0020	309+55.40 - 309+52.80	LT			3	
0020	309+52.80 - 309+49.20	LT		3		
0020	309+49.20 - 309+02.10	LT		52		
0020	316+97.00 - 319+64.20	LT			268	CONNECT TO EXIST. S
0020	319+64.20 - 319+99.70	LT			37	
0020	319+99.70 - 323+22.00	LT			323	
0020	323+22.00 - 323+50.00	LT			39	
0020	319+64.20 - 319+64.50	LT & RT		75		CONNECT TO EXIST. E
0020	319+99.70 - 319+99.70	LT	10			HYDRANT LEAD
0020	28+85.4"R" - 28+88.4"R"	LT		3		
0020	28+85.4"R" - 28+85.4"R"	LT	17			HYDRANT LEAD
0020	29+47"R" - 29+67"R"	LT		20		CONNECT TO EXIST. W
0020	29+67"R" - 31+72"R"	LT		206		
0020	31+72"R" - 31+65.3"R"	LT	19			HYDRANT LEAD
0020	31+72"R" - 309+02.10	LT		161		
0020	19+38"AV" - 21+86.3"AV"	LT		248		
0020	21+86.3"AV" - 22+89.9"AV"	LT		104		
0020	21+86.3"AV" - 21+86.3"AV"	LT	14			HYDRANT LEAD
0020	22+89.9"AV" - 23+53"AV"	LT		164		
0020	24+53"AV" - 24+59"AV"	LT	10			
0020	10+32"MA" - 11+02"MA"	LT		70		CONNECT TO EXIST. E & W
0020	10+41.5"MA" - 10+41.5"MA"	LT	14			HYDRANT LEAD
0020	103+19.3"EB" - 103+19.3"EB"	LT	9			HYDRANT LEAD
0020	103+71"EB" - 103+90"EB"	LT		22		
0020	215+30"RO" - 217+90"RO"	LT		260		
0020	14+33.5"HO" - 14+86.77"HO"	LT		53		CONNECT TO EXIST. W
0020	14+42.5"HO" - 14+42.5"HO"	LT	14			HYDRANT LEAD
0020	215+18"RO" - 215+30"RO"	LT		14		
0020	UNDISTRIBUTED		20	40	40	
	PROJECT 5144-01-76 TOTAL 0020		127	1495	1502	

3

3

WATER APPURTENANCES SUMMARY

CATEGORY	STATION	LOCATION	ADJUST WATER VALVE BOX WITH NEW BOX TOP SPV.0060.11 EACH	INSTALL WATER VALVE BOX ON EXISTING VALVE SPV.0060.12 EACH	ADJUST WATER VALVE BOX TOP SPV.0060.60 EACH	WATER VALVE AND BOX 6-INCH SPV.0060.13 EACH	WATER VALVE AND BOX 8-INCH SPV.0060.14 EACH	WATER VALVE AND BOX 12-INCH SPV.0060.15 EACH	FIRE HYDRANT EXTENSION 12-INCH SPV.0060.33 EACH	FIRE HYDRANT EXTENSION 6-INCH SPV.0060.34 EACH	FIRE HYDRANT SPV.0060.35 EACH	CONNECT TO EXISTING WATER MAIN SPV.0060.36 EACH	REMARKS
5144-01-76													
0020	302+63.4	26.6' RT										1	
0020	302+74.4	37.3' RT											
0020	302+69.2	41' LT						1					
0020	309+50.4	38.8' RT											
0020	309+55.4	33.8' RT											
0020	309+49.2	40.5' LT						1					
0020	309+52.8	40.5' LT											
0020	309+55.4	40.5' LT											
0020	309+58.7	40.5' LT						1				1	
0020	309+55.4	32' LT											
0020	309+02.1	40.7' LT											
0020	306+58	29.9' RT						1					
0020	316+97.0	35' LT										1	
0020	317+02.0	38' LT											
0020	319+64.2	38' LT											
0020	319+64.5	35' RT										1	
0020	319+64.2	36' LT											
0020	319+64.2	32' LT											
0020	319+64.2	9' LT											
0020	319+64.2	5' LT											
0020	319+99.7	38' LT											
0020	319+99.7	32' LT				1							
0020	319+99.7	28' LT							1		1		
0020	323+22	38' LT											
0020	323+25.2	38' LT											
0020	323+45.0	14' LT											
0020	323+50.0	10' LT										1	
0020	28+85.4"R"	27.5' LT									1		
0020	28+85.4"R"	11' LT										2	
0020	28+85.4"R"	20' LT				1							
0020	29+52"R"	11' LT					1					1	
0020	29+67"R"	11' LT											
0020	29+71.3"R"	11' LT											
0020	29+76.0"R"	11' LT											
0020	29+96.0"R"	11' LT											
0020	30+00"R"	11' LT											
0020	29+67.5"R"	14' LT					1						
0020	29+67.5"R"	16' LT										1	
0020	31+66.1"R"	12.2' LT											
0020	31+69.0"R"	24' LT				1							
0020	31+65.3"R"	32.8' LT									1		
0020	308+91.2	51.7' LT											
0020	21+55.0"AV"	14' LT					1						
0020	21+59.0"AV"	14' LT											
0020	21+59.0"AV"	24' LT				1							
0020	21+59.0"AV"	27' LT									1		
0020	22+89.9"AV"	12' LT										2	
0020	22+88.9"AV"	12' LT											
PAGE SUBTOTAL 5144-01-76 0020			0	0	0	4	3	4	1	0	4	11	

3

PROJECT NO: 5144-01-75 & 5144-01-76	HWY: STH 27	COUNTY: MONROE	MISCELLANEOUS QUANTITIES	SHEET NO:	E

WATER APPURTENANCES SUMMARY

CATEGORY	STATION	LOCATION	ADJUST WATER VALVE BOX WITH NEW BOX TOP SPV.0060.11 EACH	INSTALL WATER VALVE BOX ON EXISTING VALVE SPV.0060.12 EACH	ADJUST WATER VALVE BOX TOP SPV.0060.60 EACH	WATER VALVE AND BOX 6-INCH SPV.0060.13 EACH	WATER VALVE AND BOX 8-INCH SPV.0060.14 EACH	WATER VALVE AND BOX 12-INCH SPV.0060.15 EACH	FIRE HYDRANT EXTENSION 12-INCH SPV.0060.33 EACH	FIRE HYDRANT EXTENSION 6-INCH SPV.0060.34 EACH	FIRE HYDRANT SPV.0060.35 EACH	CONNECT TO EXISTING WATER MAIN SPV.0060.36 EACH	REMARKS
5144-01-76													
0020	22+85.9"AV"	14' LT											
0020	22+95.0"AV"	12' LT											
0020	22+09.0"AV"	12' LT					1						
0020	23+05.0"AV"	14' LT											
0020	23+21.0"AV"	14' LT											
0020	23+27.0"AV"	14' LT											
0020	24+45.6"AV"	14' LT					1						
0020	24+54.3"AV"	14' LT											
0020	24+56.3"AV"	14' LT											
0020	24+60.0"AV"	12' LT										1	
0020	10+32.0"MA"	10' LT										1	
0020	10+34.0"MA"	12' LT											
0020	10+38.5"MA"	12' LT					1						
0020	10+41.5"MA"	12' LT											
0020	10+41.5"MA"	18' LT				1							
0020	10+41.5"MA"	27.55' LT									1		
0020	10+77.0"MA"	12' LT											
0020	10+82.0"MA"	12' LT											
0020	11+00.0"MA"	12' LT											
0020	11+02.0"MA"	10' LT											
0020	103+19.3"EB"	54.27' LT	3						1		1	1	
0020	103+71.0"EB"	36' LT										1	
0020	103+74.0"EB"	35' LT											
0020	103+84.0"EB"	35' LT											
0020	103+88.0"EB"	36' LT										1	
0020	215+30.0"RO"	12' LT										1	
0020	215+33.5"RO"	15' LT											
0020	215+38.0"RO"	15' LT					1						
0020	215+42.0"RO"	15' LT											
0020	215+46.0"RO"	15' LT					1						
0020	217+72.0"RO"	13' LT											
0020	217+75.0"RO"	13' LT					1						
0020	217+85.0"RO"	13' LT											
0020	217+87.0"RO"	10.9' LT										1	
0020	14+33.5"HO"	14' LT										1	
0020	14+36.0"HO"	12' LT											
0020	14+39.5"HO"	12' LT					1						
0020	14+42.5"HO"	12' LT											
0020	14+42.5"HO"	16' LT				1							
0020	14+42.5"HO"	23.5' LT							1		1		
0020	308+61	45' LT											
0020	314+05.9	44' LT											
0020	22+89.9"AV"	7.4' LT		1									
0020	325+70	10' LT	3										INCLUDES 2 NEARBY VALVE BOXES
0020	332+10.4	28.8' LT		1									
0020	331+66.4	8.2' LT		1									
0020	UNDISTRIBUTED		3	2	10					2			
	PAGE SUBTOTAL 5144-01-76 0020		9	5	10	2	7	0	2	2	3	8	
	PROJECT 5144-01-76 TOTAL 0020		9	5	10	6	10	4	3	2	7	19	

3

3

PROJECT NO: 5144-01-75 & 5144-01-76 | **HWY: STH 27** | **COUNTY: MONROE** | **MISCELLANEOUS QUANTITIES** | **SHEET NO:** 217 | **E**

WATER FITTINGS SUMMARY

			TEES					BENDS					REDUCERS		SLEEVES		PLUG	
			12-INCH X 12-INCH X 12-INCH	12-INCH X 8-INCH X 12-INCH	12-INCH X 6-INCH X 12-INCH	8-INCH X 6-INCH X 8-INCH	8-INCH X 8-INCH X 8-INCH	45 DEGREE 12-INCH	22.5 DEGREE 12-INCH	22.5 DEGREE 8-INCH	45 DEGREE 8-INCH	45 DEGREE 6-INCH	8-INCH X 6-INCH	12-INCH X 8-INCH	6-INCH	8-INCH	6-INCH	
CATEGORY	STATION	LOCATION	SPV.0060.16	SPV.0060.17	SPV.0060.18	SPV.0060.19	SPV.0060.20	SPV.0060.21	SPV.0060.22	SPV.0060.23	SPV.0060.24	SPV.0060.26	SPV.0060.27	SPV.0060.28	SPV.0060.29	SPV.0060.30	SPV.0060.31	
			EACH	EACH	EACH	EACH	EACH	EACH	EACH	EACH	EACH	EACH	EACH	EACH	EACH	EACH	EACH	REMARKS
5144-01-76																		
0020	302+63.4	26.6' RT						1										
0020	302+74.4	37.3' RT						1										
0020	302+69.2	41' LT																
0020	309+50.4	38.8' RT						1										
0020	309+55.4	33.8' RT						1										
0020	309+49.2	40.5' LT																
0020	309+52.8	40.5' LT												1				
0020	309+55.4	40.5' LT	1															
0020	309+58.7	40.5' LT																
0020	309+55.4	32' LT							1									
0020	308+97.9	40.7' LT									1							
0020	306+58	29.9' RT																
0020	316+97.0	35' LT						1										
0020	317+02.0	38' LT						1										
0020	319+64.2	38' LT		1														
0020	319+64.5	35' RT														1		
0020	319+64.2	36' LT									1							
0020	319+64.2	32' LT									1							
0020	319+64.2	9' LT									1							
0020	319+64.2	5' LT									1							
0020	319+99.7	38' LT			1													
0020	319+99.7	32' LT																
0020	319+99.7	28' LT																
0020	323+22	38' LT						1										
0020	323+25.2	38' LT						1										
0020	323+45.0	14' LT						1										
0020	323+50.0	10' LT						1										
0020	28+85.4"R"	27.5' LT																
0020	28+85.4"R"	11' LT				1										1		
0020	28+85.4"R"	20' LT																
0020	29+52"R"	11' LT																
0020	29+67"R"	11' LT					1											
0020	29+71.3"R"	11' LT									1							
0020	29+76.0"R"	11' LT									1							
0020	29+96.0"R"	11' LT									1							
0020	30+00"R"	11' LT									1							
0020	29+67.5"R"	14' LT																
0020	29+67.5"R"	16' LT																
0020	31+66.1"R"	12.2' LT								1								
0020	31+69.0"R"	24' LT				1												
0020	31+65.3"R"	32.8' LT																
0020	308+83.3	48.70' LT								1								
0020	21+55.0"AV"	14' LT																
0020	21+59.0"AV"	14' LT				1												
0020	21+59.0"AV"	24' LT																
0020	21+59.0"AV"	27' LT																
0020	22+89.9"AV"	12' LT																
0020	22+88.9"AV"	12' LT									1							
PAGE SUBTOTAL 5144-01-76 0020			1	1	1	3	1	10	1	2	10	0	0	1	0	2	0	

3

3

PROJECT NO: 5144-01-75 & 5144-01-76	HWY: STH 27	COUNTY: MONROE	MISCELLANEOUS QUANTITIES	SHEET NO: 218	E

WATER FITTINGS SUMMARY

CATEGORY	STATION	LOCATION	TEES 12-INCH X 12-INCH X 12-INCH SPV.0060.16 EACH	TEES 12-INCH X 8-INCH X 12-INCH SPV.0060.17 EACH	TEES 12-INCH X 6-INCH X 12-INCH SPV.0060.18 EACH	TEES 8-INCH X 6-INCH X 8-INCH SPV.0060.19 EACH	TEES 8-INCH X 8-INCH X 8-INCH SPV.0060.20 EACH	BENDS 45 DEGREE 12-INCH SPV.0060.21 EACH	BENDS 22.5 DEGREE 12-INCH SPV.0060.22 EACH	BENDS 22.5 DEGREE 8-INCH SPV.0060.23 EACH	BENDS 45 DEGREE 8-INCH SPV.0060.24 EACH	BENDS 45 DEGREE 6-INCH SPV.0060.26 EACH	REDUCERS 8-INCH X 6-INCH SPV.0060.27 EACH	REDUCERS 12-INCH X 8-INCH SPV.0060.28 EACH	SLEEVES 6-INCH SPV.0060.29 EACH	SLEEVES 8-INCH SPV.0060.30 EACH	PLUG 6-INCH SPV.0060.31 EACH	REMARKS
5144-01-76																		
0020	22+85.9"AV"	14' LT									1							
0020	22+95.0"AV"	12' LT									1							
0020	22+09.0"AV"	12' LT																
0020	23+05.0"AV"	14' LT									1							
0020	23+21.0"AV"	14' LT									1							
0020	23+27.0"AV"	14' LT									1							
0020	24+45.6"AV"	14' LT																
0020	24+54.3"AV"	14' LT											1					
0020	24+56.3"AV"	14' LT										1						
0020	24+60.0"AV"	12' LT										1			1			
0020	10+32.0"MA"	10' LT											1					
0020	10+34.0"MA"	12' LT											1					
0020	10+38.5"MA"	12' LT																
0020	10+41.5"MA"	12' LT				1												
0020	10+41.5"MA"	18' LT																
0020	10+41.5"MA"	27.55' LT																
0020	10+77.0"MA"	12' LT									1							
0020	10+82.0"MA"	12' LT									1							
0020	11+00.0"MA"	12' LT									1							
0020	11+02.0"MA"	10' LT									1							
0020	103+19.3"EB"	54.27' LT																
0020	103+71.0"EB"	36' LT									1							
0020	103+74.0"EB"	35' LT									1							
0020	103+84.0"EB"	35' LT									1							
0020	103+88.0"EB"	36' LT									1					1		
0020	215+30.0"RO"	12' LT									1					1		
0020	215+33.5"RO"	15' LT									1							
0020	215+38.0"RO"	15' LT																
0020	215+42.0"RO"	15' LT					1											
0020	215+46.0"RO"	15' LT																
0020	217+72.0"RO"	13' LT					1											
0020	217+75.0"RO"	13' LT																
0020	217+85.0"RO"	13' LT									1							
0020	217+87.0"RO"	10.9' LT									1					1		
0020	14+33.5"HO"	14' LT									1					1		
0020	14+36.0"HO"	12' LT									1							
0020	14+39.5"HO"	12' LT																
0020	14+42.5"HO"	12' LT				1												
0020	14+42.5"HO"	16' LT																
0020	14+42.5"HO"	23.5' LT																
0020	308+61	45' LT															1	
0020	314+05.9	44' LT															1	
0020	22+89.9"AV"	7.4' LT																
0020	325+70	10' LT																
0020	332+10.4	28.8' LT																
0020	331+66.4	8.2' LT																
0020	UNDISTRIBUTED																	
	PAGE SUBTOTAL 5144-01-76 0020		0	0	0	2	2	0	0	0	19	2	3	0	1	4	2	
	PROJECT 5144-01-76 TOTAL 0020		1	1	1	5	3	10	1	2	29	2	3	1	1	6	2	

3

3

SPECIAL (02. IMPORTED GRANULAR BACKFILL FOR SANITARY SEWER)

CATEGORY	STATION	LOCATION	SPV.0035.02 CY	REMARKS
5144-01-76				
0030		UNDISTRIBUTED	300	
	PROJECT 5144-01-76 TOTAL 0030		300	

3

3

SANITARY MANHOLE SUMMARY

CATEGORY	STRUCTURE NUMBER	STATION	LOCATION	SANITARY SEWER MANHOLE TYPE 1 SPV.0060.37 EACH	SANITARY SEWER MANHOLE TYPE 1 OUTSIDE DROP SPV.0060.38 EACH	SANITARY MANHOLE COVERS TYPE J SPV.0060.46 EACH	ADJUSTING SANITARY MANHOLES TYPE A SPV.0060.47 EACH	REMARKS
5144-01-76								
0030	A	307+35.90	29.2' RT	1		1		
0030	B	304+35.50	27.8' LT	1		1		
0030	137	313+53.40	ON C/L	1		1		
0030	95	319+54.80	1.1' LT	1		1		
0030	95A	316+00.00	ON C/L	1		1		
0030	94A	319+54.00	47' RT	1		1		
0030	96	322+52.50	0.3' LT	1		1		
0030	97	325+61.20	2.9' RT	1		1		
0030	98	328+48.50	0.2' LT		1	1		
0030	124	19+57.7"AV"	0.2' LT	1		1		
0030	136	21+49"AV"	ON C/L	1		1		
0030	197	10+05"MA"	3.1' RT	1		1		
0030	125	217+61.30	0.6' RT	1		1		
0030	183	310+40.00	29.2' RT			1	1	
0030	122	29+80"R"	ON C/L			1	1	
0030	138	23+57.9"AV"	4' LT	1		1		
0030	139	24+04"AV"	1.6' LT			1	1	
0030	56	331+47.60	2' LT			1	1	
0030	57	331+76.00	15.5' RT			1	1	
0030	56	332+83.40	17.6' RT			1	1	
0030	19	335+71.70	13.7' RT			1	1	
0030	20	336+02.10	12.8' RT			1	1	
		PROJECT 5144-01-76 TOTAL 0030		13	1	22	8	

3

SANITARY SEWER PIPE SUMMARY

CATEGORY	FROM STRUCTURE	TO STRUCTURE	SANITARY SEWER PIPE 8-INCH SPV.0090.05 LF	SANITARY SEWER PIPE 10-INCH SPV.0090.06 LF	SANITARY SEWER PIPE 15-INCH SPV.0090.08 LF	REMARKS
5144-01-76						
0030	B	A			306	
0030	A	CONNECT N.			49	
0030	137	95A		247		
0030	95A	95		355		
0030	95	96		298		
0030	96	97		309		
0030	97	98		287		
0030	98	CONNECT N.		5		
0030	124	136			195	
0030	136	137			179	
0030	137	138			29	
0030	197	97	113			
0030	124	125			232	
0030	136	CONNECT N.	25			
PROJECT 5144-01-76 TOTAL 0030			138	1501	990	

SANITARY SEWER APPURTENANCES

CATEGORY	STATION	LOCATION	SANITARY SEWER 15-INCH X 15-INCH PVC PIPE SLEEVE SPV.0060.39 EACH	SANITARY SEWER 8-INCH DIA. X 2-FT STUB W/ PLUG SPV.0060.40 EACH	CONNECT TO EXISTING SANITARY MH SPV.0060.44 EACH	CONNECT TO EXISTING SANITARY MAIN SPV.0060.45 EACH	BYPASS PUMPING FLOW MANAGEMENT SPV.0105.03 LS	REMARKS
5144-01-76								
0030	307+84.60	29.2' RT	1			1		
0030	328+55.00	ON C/L				1		
0030	21+49"AV"	25' LT				1		
0030	304+35.50	27.8' LT		1				
0030	23+57.9"AV"	4' LT			1			
0030	319+54.00	47' RT				1		
0030	328+48.50	0.2' LT				1		CONNECT TO EXISTING 8" W/ 10" X 8" FERNCO
0030	19+57.7"AV"	0.2' LT				1		
0030	217+61.30	0.6' RT				2		
0030	ENTIRE PROJECT						1	
PROJECT 5144-01-76 TOTAL 0030			1	1	1	8	1	

3

SANITARY LATERAL AND WATER SERVICE SUMMARY

CATEGORY	STATION	LOCATION	ADDRESS	WATER SERVICES: CORPORATION & CURB STOP BOX & RECON CAP (SET) 1-INCH SPV.0060.32 EACH	WATER SERVICES: CORPORATION & CURB STOP BOX & RECON CAP (SET) 2-INCH SPV.0060.61 EACH	WATER SERVICES: SERVICE 1-INCH COPPER SPV.0090.11 LF	WATER SERVICES: SERIVCE 2-INCH COPPER SPV.0090.12 LF	SANITARY SEWER LATERALS: WYE /W TRACER WIRE AND TERMINAL BOX: 8-INCH MAIN X 6-INCH SPV.0060.41 EACH	SANITARY SEWER LATERALS: WYE /W TRACER WIRE AND TERMINAL BOX: 10-INCH MAIN X 6-INCH SPV.0060.42 EACH	SANITARY SEWER LATERALS: WYE /W TRACER WIRE AND TERMINAL BOX: 12-INCH MAIN X 6-INCH SPV.0060.43 EACH	SANITARY SEWER LATERALS: SERVICE 4-INCH SPV.0090.09 LF	SANITARY SEWER LATERALS: SERVICE 6-INCH SPV.0090.10 LF	REMARKS
5144-01-76													
0020	308+74	LT	1015 S BLACK RIVER ST	1		15							
0020	328+10	LT	930 S BLACK RIVER ST	1		44							INSTALL BELOW PROPOSED STORM SEWER
0020	29+44.31"R"	RT	1204 ROBERTS ROAD	1		44							
0020	30+66.68"R"	RT	1010 RIVER ROAD	1		44							
0020	217+26"RO"	LT	930 ROBERTS ROAD	1		30							
0020	335+17	LT	530 S BLACK RIVER ST	1		51							INSTALL BELOW PROPOSED STORM SEWER; MOVE SOUTH TO MISS PROPSED STORM SEWER
0020	330+96	LT	801 W WISCONSIN ST	1		46							INSTALL BELOW PROPOSED STORM SEWER
0020	332+57	LT	802 W WISCONSIN ST	1		42							
0020	24+38.8"AV"	RT	1003 S BLACK RIVER ST		1		47						
0030	319+25	LT	885 S BLACK RIVER ST						1			45	INSTALL BELOW PROPOSED STORM SEWER
0030	322+53	LT	1014 S BLACK RIVER ST						1			45	INSTALL BELOW PROPOSED STORM SEWER
0030	327+12	LT	930 S BLACK RIVER ST						1			33	INSTALL BELOW PROPOSED STORM SEWER
0030	217+18"RO"	LT	930 ROBERTS ROAD							1		44	
0030	332+57	LT	802 W WISCONSIN ST									36	
			UNDISTRIBUTED			100		2			50	50	
			PROJECT 5144-01-76 TOTAL 0020	8	1	416	47	0	0	0	0	0	
			PROJECT 5144-01-76 TOTAL 0030	0	0	0	0	2	3	1	50	253	

3

STATE OF WISCONSIN
DEPARTMENT OF TRANSPORTATION
TRANSPORTATION PROJECT PLAT TITLE SHEET
PROJECT 5144-01-21
SPARTA
IH-90-STH 16
CITY OF SPARTA- RIVER RD TO STH 16
MONROE COUNTY

4

CONVENTIONAL SYMBOLS

SECTION LINE
QUARTER LINE
SIXTEENTH LINE
NEW REFERENCE LINE
NEW R/W LINE
EXISTING R/W OR HE LINE
PROPERTY LINE
LOT, TIE & OTHER MINOR LINES
SLOPE INTERCEPT
CORPORATE LIMITS
UNDERGROUND FACILITY (COMMUNICATIONS, ELECTRIC, ETC) — W (TYPE)
NEW R/W (FEE OR HE) (HATCHING VARIES BY OWNER)
TEMPORARY LIMITED EASEMENT AREA
EASEMENT AREA (PERMANENT LIMITED OR RESTRICTED DEVELOPMENT)
TRANSMISSION STRUCTURES
BUILDING — TO BE REMOVED
BRIDGE

SECTION CORNER SYMBOL (18, 23, 24, 16, 15, 9)
SECTION CORNER MONUMENT
GEODETIC SURVEY MONUMENT
SIXTEENTH CORNER MONUMENT
SIGN
OFF-PREMISE SIGN (I-25)

R/W MONUMENT (TO BE SET)
NON-MONUMENTED R/W POINT
FOUND IRON PIN (1-INCH UNLESS NOTED) IP

	COMPENSABLE	NON-COMPENSABLE
ELECTRIC POLE		
TELEPHONE POLE		
PEDESTAL (LABEL TYPE) (TV, TEL, ELEC, ETC.)		

ACCESS RESTRICTED BY ACQUISITION
NO ACCESS (BY STATUTORY AUTHORITY)
ACCESS RESTRICTED (BY PREVIOUS PROJECT OR CONTROL)
NO ACCESS (NEW HIGHWAY)
PARCEL NUMBER 25
UTILITY NUMBER 40
PARALLEL OFFSETS

CONVENTIONAL ABBREVIATIONS

ACCESS RIGHTS	AR	POINT OF CURVATURE	PC
ACRES	AC	POINT OF COMPOUND CURVE	PCC
AHEAD	AH	POINT OF INTERSECTION	PI
ALUMINUM	ALUM	PROPERTY LINE	PL
AND OTHERS	ET AL	RECORDED AS	(100')
BACK	BK	REEL / IMAGE	R/I
BEGINNING POINT	BP	REFERENCE LINE	R/L
BLOCK	BLK	REMAINING	REM
CENTERLINE	C/L	RESTICTIVE DEVELOPMENT EASEMENT	RDE
CERTIFIED SURVEY MAP	CSM	RIGHT	RT
CONCRETE	CONC	RIGHT OF WAY	R/W
CORNER	COR	SECTION	SEC
COUNTY	CO	SEPTIC VENT	SEPV
COUNTY TRUNK HIGHWAY	CTH	SQUARE FEET	SF
DISTANCE	DIST	STATE TRUNK HIGHWAY	STH
END POINT	EP	STATION	STA
DOCUMENT NUMBER	DOC	TELEPHONE PEDESTAL	TP
EASEMENT	EASE	TEMPORARY LIMITED EASEMENT	TLE
EXISTING	EX	TRANSPORTATION PROJECT PLAT	TPP
GAS VALVE	GV	UNITED STATES HIGHWAY	USH
GRID NORTH	GN	VOLUME	V
HIGHWAY EASEMENT	HE		
IDENTIFICATION	ID		
LAND CONTRACT	LC		
LEFT	LT		
MONUMENT	MON		
NATIONAL GEODETIC SURVEY	NGS		
NUMBER	NO		
OUTLOT	OL		
PAGE	P		
POINT OF TANGENCY	PT		
PERMANENT LIMITED EASEMENT	PLE		
POINT OF BEGINNING	POB		

CURVE DATA

LONG CHORD	LCH
LONG CHORD BEARING	LCB
RADIUS	R
DEGREE OF CURVE	D
CENTRAL ANGLE	Δ/DELTA
LENGTH OF CURVE	L
TANGENT	T
DIRECTION AHEAD	DA
DIRECTION BACK	DB

CONVENTIONAL UTILITY SYMBOLS

WATER	W
GAS	G
TELEPHONE	T
OVERHEAD TRANSMISSION LINES	OH
ELECTRIC	E
CABLE TELEVISION	TV
FIBER OPTIC	FO
SANITARY SEWER	SAN
STORM SEWER	SS

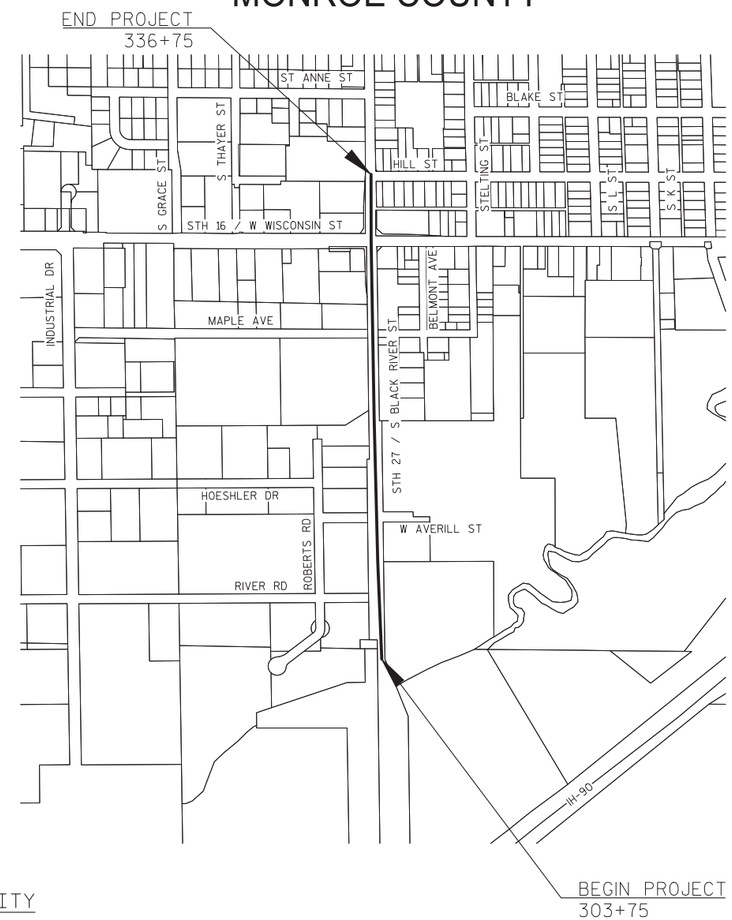

LAYOUT
SCALE 0 500 FT

THE NOTES,CONVENTIONAL SIGNS, AND ABBREVIATIONS ARE ASSOCIATED WITH EACH TRANSPORTATION PROJECT PLAT FOR PROJECT 5144-01-21

NOTES:

POSITIONS SHOWN ON THIS PLAT ARE WISCONSIN COUNTY COORDINATES, MONROE COUNTY, NAD83(1991), IN U.S. SURVEY FEET. VALUES ARE GRID COORDINATES, GRID BEARINGS, AND GRID DISTANCES. GRID DISTANCES MAY BE USED AS GROUND DISTANCES.

ALL NEW RIGHT-OF-WAY MONUMENTS WILL BE TYPE 2 (TYPICALLY ¾" X 24" IRON REBARS), UNLESS OTHERWISE NOTED, AND WILL BE PLACED PRIOR TO THE COMPLETION OF THE PROJECT.

ALL RIGHT-OF-WAY LINES DEPICTED IN THE NON-ACQUISITION AREAS ARE INTENDED TO RE-ESTABLISH EXISTING RIGHT-OF-WAY LINES AS DETERMINED FROM PREVIOUS PROJECTS, OTHER RECORDED DOCUMENTS, OR FROM CENTERLINE OF EXISTING PAVEMENTS.

RIGHT-OF-WAY BOUNDARIES ARE DEFINED WITH COURSES OF THE PERIMETER OF THE HIGHWAY LANDS REFERENCED TO THE U.S. PUBLIC LAND SURVEY SYSTEM OR OTHER "SURVEYS" OF PUBLIC RECORD.

DIMENSIONING FOR THE NEW RIGHT-OF-WAY IS MEASURED ALONG AND PERPENDICULAR TO THE NEW REFERENCE LINES.

A TEMPORARY LIMITED EASEMENT (TLE) IS A RIGHT FOR CONSTRUCTION PURPOSES, AS DEFINED HEREIN, INCLUDING THE RIGHT TO OPERATE NECESSARY EQUIPMENT THEREON, THE RIGHT OF INGRESS AND EGRESS, AS LONG AS REQUIRED FOR SUCH PUBLIC PURPOSE, INCLUDING THE RIGHT TO PRESERVE, PROTECT, REMOVE, OR PLANT THEREON ANY VEGETATION THAT THE HIGHWAY AUTHORITIES MAY DEEM DESIRABLE. ALL (TLEs) ON THIS PLAT EXPIRE AT THE COMPLETION OF THE CONSTRUCTION PROJECT FOR WHICH THIS INSTRUMENT IS GIVEN.

PROPERTY LINES SHOWN ON THIS PLAT ARE DRAWN FROM DATA DERIVED FROM MAPS AND DOCUMENTS OF PUBLIC RECORD AND/OR EXISTING OCCUPATIONAL LINES. THIS PLAT MAY NOT BE A TRUE REPRESENTATION OF EXISTING PROPERTY LINES, EXCLUDING RIGHT-OF-WAY, AND SHOULD NOT BE USED AS A SUBSTITUTE FOR AN ACCURATE FIELD SURVEY.

FOR THE LATEST ACCESS/DRIVEWAY INFORMATION, CONTACT THE PLANNING UNIT OF THE WISCONSIN DEPARTMENT OF TRANSPORTATION OFFICE IN THE CITY OF LACROSSE

EXISTING HIGHWAY RIGHT-OF-WAY SHOWN HEREIN IS BASED ON THE FOLLOWING POINTS OF REFERENCE: RW PROJECT 7062-02-21, PROJECT T07-1(4), RW PROJECT 7062-1-21, TPP 7062-04-22-4.01.

4

RESERVED FOR REGISTER OF DEEDS
PROJECT NUMBER 5144-01-21 - 4.01
SHEET 2 OF 2

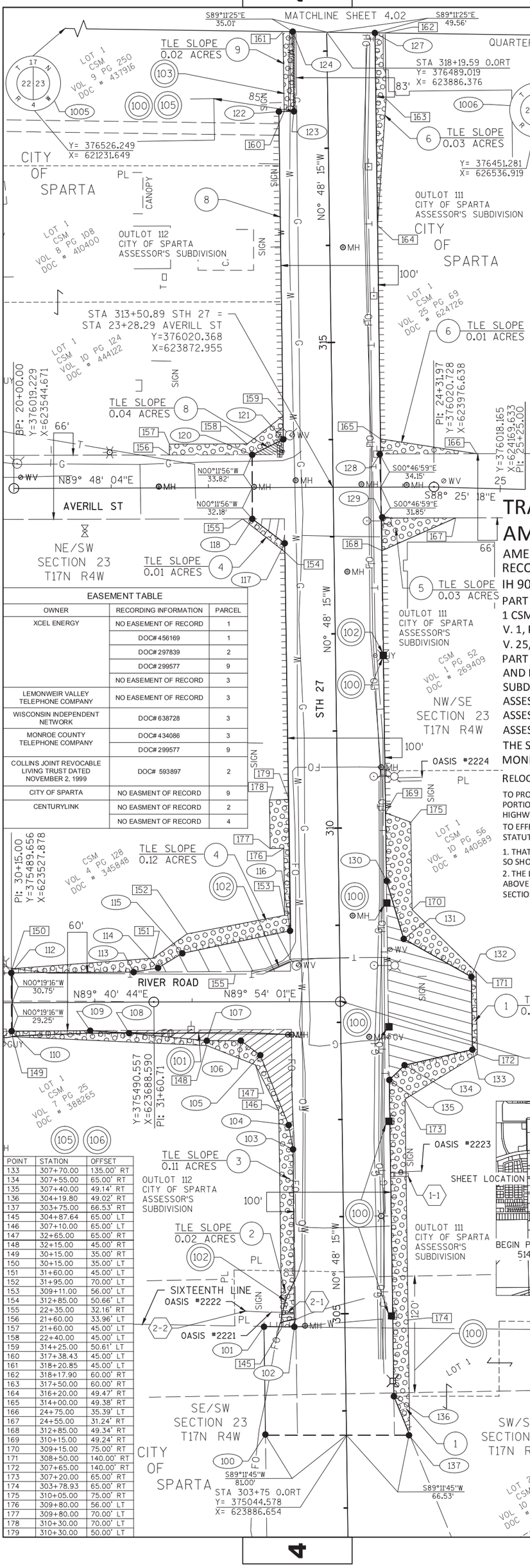

FOR ADDITIONAL INFORMATION REFER TO THE TITLE SHEET, RECORDED IN THE OFFICE OF THE REGISTER OF DEEDS IN MONROE COUNTY AS SHEET 2 OF 2 OF DOCUMENT 656686

DOCUMENT #659117

WAS ACCEPTED FOR RECORDING IN THE OFFICE OF THE REGISTER OF DEEDS IN MONROE COUNTY, WI. AT 8:54 A.M. ON AUG 15, 2016 AND WAS FILED IN MAP FILE 302B.

224

RESERVED FOR REGISTER OF DEEDS
PROJECT NUMBER 5144-01-21 -4.01
AMENDMENT 1

UTILITY INTEREST REQUIRED

UTILITY NUMBER	UTILITY OWNER (S)	INTEREST REQUIRED
100	XCEL ENERGY	RELEASE OF RIGHTS
101	LEMONWEIR VALLEY TELEPHONE COMAPNY	RELEASE OF RIGHTS
102	CENTURYLINK	RELEASE OF RIGHTS
103	CITY OF SPARTA (WATER)	RELEASE OF RIGHTS
105	MONROE COUNTY TELEPHONE COMPANY	RELEASE OF RIGHTS
106	WISCONSIN INDEPENDENT NETWORK LLC.	RELEASE OF RIGHTS

SCHEDULE OF LANDS & INTERESTS REQUIRED

AREA SHOWN IN THE TOTAL ACRES COLUMN MAY BE APPROXIMATE AND ARE DERIVED FROM TAX ROLLS OR OTHER AVAILABLE SOURCES AND MAY NOT INCLUDE LANDS OF THE OWNER WHICH ARE NOT CONTIGUOUS TO THE AREA TO BE ACQUIRED

PARCEL NUMBER	OWNER (S)	INTEREST REQUIRED	R/W ACRES REQUIRED			TLE ACRES
			NEW	EXISTING	TOTAL	
1	TIME ENTERPRISE, INC. . FAIRWAY	FEE/AR/TLE	0.23	-	0.23	0.27
2	SURVIOR'S TRUST UNDER THE COLLINS JOINT REVOCABLE TRUST DATED NOVEMBER 2, 1999 AND MAJORIE COLLINS GRANTOR RETAINED ANNUITY TRUST FAIRWAY	AR/TLE	---	0.02	0.02	0.02
3	M&S MCP, LLC	FEE/AR/TLE	0.08	-	0.08	0.11
4	CONVENIENCE STORE INVESTMENT, A WISCONSIN LIMITED PARTNERSHIP	FEE/AR/TLE	0.09	-	0.09	0.13
5	SPARTA INDUSTRIAL SITES, INC.	AR/TLE	---	-	-	0.03
6	NORTHERN ENGRAVING CORP. A WISCONSIN CORPORATION	AR/TLE	---	-	-	0.04
8	SPARTA COOPERATIVE SERVICES	FEE/AR/TLE	0.01	-	0.01	0.04
9	GOLDRIDGE GROUP A WISCONSIN GENERAL PARNERSHIP CONSITIN OF GERARD M. KOEHN AND STEVEN L. STAMM	FEE/AR/TLE	0.01	-	0.01	0.02

TRANSPORTATION PROJECT PLAT 5144-01-21-4.01 AMENDMENT NO. 1

AMENDS PARCEL 4 OF TRANSPORTATION PROJECT PLAT 5144-01-21-4.01 RECORDED AS DOCUMENT NO. 656686

IH 90 STH 16/CITY OF SPARTA RIVER ROAD TO STH 16

PART OF LOTS 1 AND 2 OF CSM V. 10 P. 56, DOC. 440589, SW 1/4 OF THE SE 1/4, PART OF LOT 1 CSM V. 10, P. 56, DOC. 440589, OUTLOT 111, ASSESSOR'S SUBDIVISION, AND PART OF CSM V. 1, P. 52, DOC. 269409, OUTLOT 111, ASSESSOR'S SUBDIVISION, AND PART OF LOT 1 OF CSM V. 25, P. 69, DOC. 624726, OUTLOT 111, ASSESSOR'S SUBDIVISION, NW 1/4 OF THE SE 1/4, PART OF LOT 1 OF CSM V. 9, P. 250, DOC. 437916, OUTLOT 112, ASSESSOR'S SUBDIVISION, AND PART OF LOT 1 OF CSM V. 8, P. 108, DOC. 410400, OUTLOT 112, ASSESSOR'S SUBDIVISION, AND PART OF LOT 1 OF CSM V. 10, P. 124, DOC. 444122, OUTLOT 112, ASSESSOR'S SUBDIVISION, AND PART OF CSM V. 4, P. 128, DOC. 345848, OUTLOT 112, ASSESSOR'S SUBDIVISION, AND PART OF LOT 1 OF CSM V. 7, P. 25, DOC. 388265, OUTLOT 112 ASSESSOR'S SUBDIVISION, AND PART OF OUTLOT 112, ASSESSOR'S SUBDIVISION, NE 1/4 OF THE SW 1/4, ALL IN SECTION 23, TOWNSHIP 17 NORTH, RANGE 4 WEST, CITY OF SPARTA, MONROE COUNTY, WISCONSIN.

RELOCATION ORDER STH 27

TO PROPERLY ESTABLISH, LAY OUT, WIDEN, ENLARGE, EXTEND, CONSTRUCT, RECONSTRUCT, IMPROVE, OR MAINTAIN A PORTION OF THE HIGHWAY DESIGNATED ABOVE THE CITY OF SPARTA DEEMS IT NECESSARY TO RELOCATE OR CHANGE SAID HIGHWAY AND ACQUIRE CERTAIN LANDS AND INTERESTS OR RIGHTS IN LANDS FOR THE ABOVE PROJECT.

TO EFFECT THIS CHANGE, PURSUANT TO AUTHORITY GRANTED UNDER SECTION 84.02 (3), 84.09, AND 84.30, WISCONSIN STATUTES, THE DEPARTMENT OF TRANSPORTATION HEREBY ORDERS THAT:

1. THAT PORTION OF SAID HIGHWAY AS SHOWN ON THIS PLAT IS LAID OUT AND ESTABLISHED TO THE LINES AND WIDTHS AS SO SHOWN FOR THE ABOVE PROJECT
2. THE LANDS OR INTERESTS OR RIGHTS IN LANDS AS SHOWN ON THIS PLAT ARE REQUIRED BY THE DEPARTMENT FOR THE ABOVE PROJECT AND SHALL BE ACQUIRED IN THE NAME OF THE STATE OF WISCONSIN, PURSUANT TO THE PROVISIONS OF SECTION 84.09 (1) OR (2), WISCONSIN STATUTES

EASEMENT TABLE

OWNER	RECORDING INFORMATION	PARCEL
XCEL ENERGY	NO EASEMENT OF RECORD	1
	DOC# 456169	1
	DOC# 297839	2
	DOC# 299577	9
	NO EASEMENT OF RECORD	3
LEMONWEIR VALLEY TELEPHONE COMPANY	NO EASEMENT OF RECORD	3
WISCONSIN INDEPENDENT NETWORK	DOC# 638728	3
MONROE COUNTY TELEPHONE COMPANY	DOC# 434086	3
	DOC# 299577	9
COLLINS JOINT REVOCABLE LIVING TRUST DATED NOVEMBER 2, 1999	DOC# 593897	2
CITY OF SPARTA	NO EASMENT OF RECORD	9
CENTURYLINK	NO EASMENT OF RECORD	2
	NO EASMENT OF RECORD	4

SCHEDULE OF SIGN STRUCTURES

SIGN NUMBER	SIGN OWNER	OASIS NO.
1-1	FAIRWAY TIME ENTERPRISE, INC.	2223
2-1	FAIRWAY SURVIVOR'S TRUST UNDER THE COLLINS JOINT REVOCABLE TRUST DATED NOVEMBER 2, 1999 AND MAJORIE COLLINS GRANTOR RETAINED ANNUITY TRUST	2221
2-2	FAIRWAY SURVIVOR'S TRUST UNDER THE COLLINS JOINT REVOCABLE TRUST DATED NOVEMBER 2, 1999 AND MAJORIE COLLINS GRANTOR RETAINED ANNUITY TRUST	2222

COURSE	BEARING	DISTANCE	POINT	STATION	OFFSET
1006-127	N 89° 11' 25" W	2621.25	99	303+75.00	1.05' LT
1005-124	S 89° 11' 25" E	2599.98'	100	303+75.00	81.00' LT
100-101	N 0° 46' 59" W	112.90'	101	304+87.90	80.96' LT
101-102	S 89° 04' 39" E	30.01	102	304+86.99	50.96' LT
102-103	N 0° 46' 59" W	183.00	103	306+70.00	50.89' LT
103-104	N 10° 8' 46" W	25.34'	104	306+95.00	55.00' LT
104-105	N 22° 4' 45" W	77.67'	105	32+70.00	55.00' RT
105-106	N 53° 13' 47" W	25.00'	106	32+50.00	40.00' RT
106-107	S 89° 54' 1" W	35.00'	107	32+15.00	40.00' RT
107-108	N 84° 27' 2" W	80.27'	108	31+35.00	32.00' RT
108-109	N 86° 20' 31" W	40.10'	109	30+95.00	29.22' RT
109-110	S 89° 39' 29" W	80.00'	110	30+15.00	29.25' RT
112-113	N 89° 39' 29" E	125.00'	112	30+15.00	30.75' LT
113-114	N 80° 13' 38" E	25.48'	113	31+40.00	30.80' LT
114-115	N 58° 56' 12" E	29.15'	114	31+65.00	35.00' LT
115-116	N 78° 10' 12" E	113.17'	115	31+90.00	50.00' LT
116-117	N 0° 46' 59" W	399.00'	116	308+95.00	50.80' LT
117-118	N 52° 58' 57" W	41.73'	117	312+94.00	50.66' LT
120-121	N 63° 41' 36" E	35.80'	118	22+45.00	32.18' RT
121-122	N 0° 46' 59" W	337.43'	120	22+45.00	33.82' LT
122-123	N 89° 13' 1" E	15.49'	121	314+01.00	50.62' LT
123-124	N 0° 48' 15" W	82.14'	122	317+38.44	50.49' LT
127-128	S 0° 46' 59" E	433.66'	123	317+38.43	35.00' LT
129-130	S 0° 46' 59" E	373.52'	124	318+20.57	35.00' LT
130-131	S 16° 26' 0" E	62.30'	126	314+01.00	55.00' LT
131-132	S 60° 42' 11" E	79.76'	127	318+18.19	49.54' RT
132-133	S 0° 48' 15" E	75.00'	128	313+84.53	49.38' RT
133-134	S 77° 6' 3" W	71.59'	129	313+18.52	49.35' RT
134-135	S 45° 47' 40" W	21.83'	130	309+45.00	49.21' RT
135-136	S 0° 46' 59" E	320.20'	131	308+85.00	66.00' RT
136-137	S 22° 9' 32" E	48.10'	132	308+45.00	135.00' RT

POINT	STATION	OFFSET
133	307+70.00	135.00' RT
134	307+55.00	65.00' RT
135	307+40.00	49.14' RT
136	304+19.80	49.02' RT
137	303+75.00	66.53' RT
145	304+87.64	65.00' LT
146	307+10.00	65.00' LT
147	32+65.00	65.00' RT
148	32+15.00	45.00' RT
149	30+15.00	35.00' RT
150	30+15.00	35.00' LT
151	31+60.00	45.00' LT
152	31+95.00	70.00' LT
153	309+11.00	56.00' LT
154	312+85.00	50.66' LT
155	22+35.00	32.16' RT
156	21+60.00	33.96' LT
157	21+60.00	45.00' LT
158	22+40.00	45.00' LT
159	314+25.00	50.61' LT
160	317+38.43	45.00' LT
161	318+20.85	45.00' LT
162	318+17.90	60.00' RT
163	317+50.00	60.00' RT
164	316+20.00	49.47' RT
165	314+00.00	49.38' RT
166	24+75.00	35.39' LT
167	24+55.00	31.24' RT
168	312+85.00	49.34' RT
169	310+15.00	49.24' RT
170	309+15.00	75.00' RT
171	308+50.00	140.00' RT
172	307+65.00	140.00' RT
173	307+20.00	65.00' RT
174	303+78.93	65.00' RT
175	310+05.00	75.00' RT
176	309+80.00	56.00' LT
177	309+80.00	70.00' LT
178	310+30.00	70.00' LT
179	310+30.00	50.00' LT

STATE OF WISCONSIN DEPARTMENT OF TRANSPORTATION

I, JASON L CANCE PROFESSIONAL LAND SURVEYOR, HEREBY CERTIFY THAT IN FULL COMPLIANCE WITH THE PROVISIONS OF SECTION 84.095 OF THE WISCONSIN STATUTES AND UNDER THE DIRECTION OF THE DEPARTMENT OF TRANSPORTATION, I HAVE SURVERED THIS TRANSPORTATION PROJECT PLAT AND SUCH PLAT CORRECTLY REPRESENTS ALL EXTERIOR BOUNDARIES OF THE SURVEYED LAND.

WISCONSIN JASON L. CANCE S-2688 CHIPPEWA FALLS WI LAND SURVEYOR

SIGNATURE: DATE: 8/04/16
PRINT NAME: JASON L. CANCE
REGISTRATION NUMBER: S-2688

THIS PLAT AND RELOCATION ORDER ARE APPROVED FOR THE WISCONSIN DEPARTMENT OF TRANSPORTATION SOUTHWEST REGION LACROSSE OFFICE

SIGNATURE: DATE: 8/8/16
PRINT NAME: CORY SCHLAGEL

SEH

FILE NAME : P:\UZ\W\WITSW\129126\C3D\5144010S\SHEETSPLAN\4.01.DWG
PLOT DATE : 8/3/2016 3:19 PM PLOT BY : SEH PLOT NAME : PLOT SCALE : ========== 5144-01-21 4.01

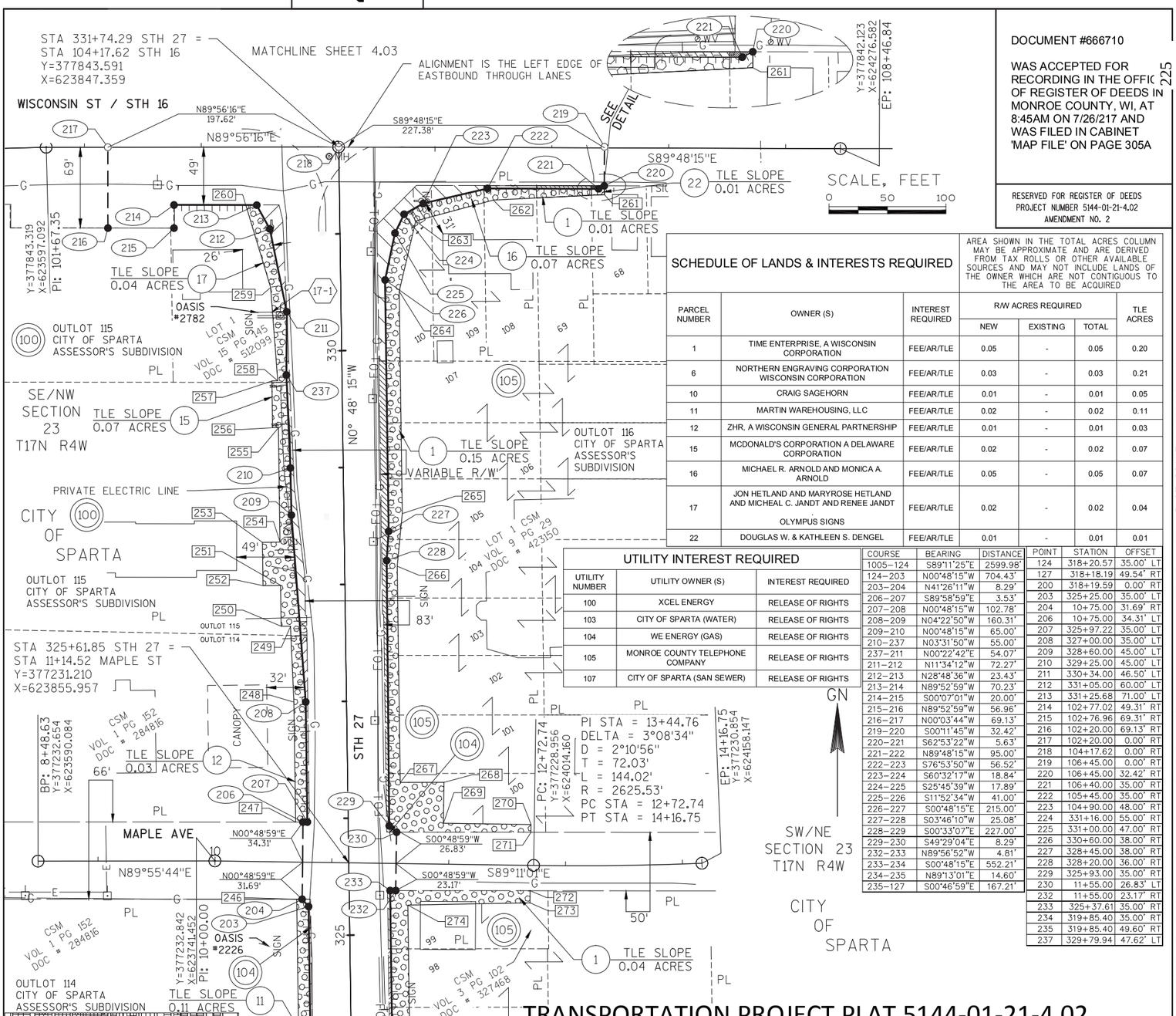

DOCUMENT #666710

WAS ACCEPTED FOR RECORDING IN THE OFFIC OF REGISTER OF DEEDS IN MONROE COUNTY, WI, AT 8:45AM ON 7/26/217 AND WAS FILED IN CABINET 'MAP FILE' ON PAGE 305A

225

RESERVED FOR REGISTER OF DEEDS
PROJECT NUMBER 5144-01-21-4.02
AMENDMENT NO. 2

SCHEDULE OF LANDS & INTERESTS REQUIRED

AREA SHOWN IN THE TOTAL ACRES COLUMN MAY BE APPROXIMATE AND ARE DERIVED FROM TAX ROLLS OR OTHER AVAILABLE SOURCES AND MAY NOT INCLUDE LANDS OF THE OWNER WHICH ARE NOT CONTIGUOUS TO THE AREA TO BE ACQUIRED

PARCEL NUMBER	OWNER (S)	INTEREST REQUIRED	R/W ACRES REQUIRED			TLE ACRES
			NEW	EXISTING	TOTAL	
1	TIME ENTERPRISE, A WISCONSIN CORPORATION	FEE/AR/TLE	0.05	-	0.05	0.20
6	NORTHERN ENGRAVING CORPORATION WISCONSIN CORPORATION	FEE/AR/TLE	0.03	-	0.03	0.21
10	CRAIG SAGEHORN	FEE/AR/TLE	0.01	-	0.01	0.05
11	MARTIN WAREHOUSING, LLC	FEE/AR/TLE	0.02	-	0.02	0.11
12	ZHR, A WISCONSIN GENERAL PARTNERSHIP	FEE/AR/TLE	0.01	-	0.01	0.03
15	MCDONALD'S CORPORATION A DELAWARE CORPORATION	FEE/AR/TLE	0.02	-	0.02	0.07
16	MICHAEL R. ARNOLD AND MONICA A. ARNOLD	FEE/AR/TLE	0.05	-	0.05	0.07
17	JON HETLAND AND MARYROSE HETLAND AND MICHEAL C. JANDT AND RENEE JANDT OLYMPUS SIGNS	FEE/AR/TLE	0.02	-	0.02	0.04
22	DOUGLAS W. & KATHLEEN S. DENGEL	FEE/AR/TLE	0.01	-	0.01	0.01

UTILITY INTEREST REQUIRED

UTILITY NUMBER	UTILITY OWNER (S)	INTEREST REQUIRED
100	XCEL ENERGY	RELEASE OF RIGHTS
103	CITY OF SPARTA (WATER)	RELEASE OF RIGHTS
104	WE ENERGY (GAS)	RELEASE OF RIGHTS
105	MONROE COUNTY TELEPHONE COMPANY	RELEASE OF RIGHTS
107	CITY OF SPARTA (SAN SEWER)	RELEASE OF RIGHTS

COURSE	BEARING	DISTANCE
1005–124	S89°11'25"E	2599.98'
124–203	N00°48'15"W	704.43'
203–204	N41°26'11"W	8.29'
206–207	S89°58'59"E	3.53'
207–208	N00°48'15"W	102.78'
208–209	N04°22'50"W	160.31'
209–210	N00°48'15"W	65.00'
210–237	N03°31'50"W	55.00'
237–211	N00°22'42"E	54.07'
211–212	N11°34'12"W	72.27'
212–213	N28°48'36"W	23.43'
213–214	N89°52'59"W	70.23'
214–215	S00°07'01"W	20.00'
215–216	N89°52'59"W	56.96'
216–217	N00°03'44"W	69.13'
219–220	S00°11'45"W	32.42'
220–221	S62°53'22"W	5.63'
221–222	N89°48'15"W	95.00'
222–223	S76°53'50"W	56.52'
223–224	S60°32'17"W	18.84'
224–225	S25°45'39"W	17.89'
225–226	S11°52'34"W	41.00'
226–227	S00°48'15"E	215.00'
227–228	S03°46'10"W	25.08'
228–229	S00°33'07"E	227.00'
229–230	S49°29'04"E	8.29'
232–233	N89°56'52"W	4.81'
233–234	S00°48'15"E	552.21'
234–235	N89°13'01"E	14.60'
235–127	S00°46'59"E	167.21'

POINT	STATION	OFFSET
124	318+20.57	35.00' LT
127	318+18.19	49.54' RT
200	318+19.59	0.00' RT
203	325+25.00	35.00' LT
204	10+75.00	31.69' RT
206	10+75.00	34.31' LT
207	325+97.22	35.00' LT
208	327+00.00	35.00' LT
209	328+60.00	45.00' LT
210	329+25.00	45.00' LT
211	330+34.00	46.50' LT
212	331+05.00	60.00' LT
213	331+25.68	71.00' LT
214	102+77.02	49.31' RT
215	102+76.96	69.31' RT
216	102+20.00	69.13' RT
217	102+20.00	0.00' RT
218	104+17.62	0.00' RT
219	106+45.00	0.00' RT
220	106+45.00	32.42' RT
221	106+40.00	35.00' RT
222	105+45.00	35.00' RT
223	104+90.00	48.00' RT
224	331+16.00	55.00' RT
225	331+00.00	47.00' RT
226	330+60.00	38.00' RT
227	328+45.00	38.00' RT
228	328+20.00	36.00' RT
229	325+93.00	35.00' RT
230	11+55.00	26.83' LT
232	11+55.00	23.17' RT
233	325+37.61	35.00' RT
234	319+85.40	35.00' RT
235	319+85.40	49.60' RT
237	329+79.94	47.62' LT

TRANSPORTATION PROJECT PLAT 5144-01-21-4.02 AMENDMENT NO.2

AMENDS PARCEL 17 OF TRANSPORTATION PROJECT PLAT 5144-01-21-4.02 RECORDED AS DOCUMENT NO.657212

IH 90 STH 16/CITY OF SPARTA RIVER ROAD TO STH 16

PART OF LOT 1 CSM, VOL. 6, PG. 118, DOC NO. 380595 LOCATED IN OUTLOT 113 OF ASSESSOR'S SUBDIVISION; PART OF LOT 1 VOL 6 PG 118 DOC NO. 380595 AND PART OF CSM VOL. 1, PG. 152, DOC NO. 284816, LOCATED IN OUTLOT 114 OF ASSESSORS SUBDIVISION; PART OF LOT 1 CSM, VOL. 15, PG. 145, DOC NO. 512099, LOCATED IN OUTLOT 115 OF ASSESSOR'S SUBDIVISION; PART OF OUTLOT 115 OF ASSESSOR'S SUBDIVISION ALSO LOCATED IN SE 1/4 OF THE NW 1/4; PART OF LOTS 1 AND 2 CSM, VOL. 25 PG. 69, DOC NO. 624726, LOCATED IN OUTLOT 117 OF ASSESSOR'S SUBDIVISION; PART OF OUTLOT 117 OF ASSESSORS SUBDIVISION; PART OF LOT 1 VOL. 25 PG. 69, DOC NO. 624726, LOCATED IN LOTS 89,90,91,92,93,94,95,96,97 & 98 OF BELMONT GARDENS ADDITION; PART OF CSM VOL. 3 PG. 102, DOC NO. 327468, LOCATED IN LOT 99 BELMONT GARDENS ADDITION; PART OF LOT 1 CSM VOL. 9 PG. 29, DOC NO. 423150, LOCATED IN LOTS 100,101,102,103,104,105,106 & 107 BELMONT GARDENS ADDITION; PART OF LOTS 68,69 & 108,109 & 110 BELMONT GARDENS ADDITION ALL LOCATED IN OUTLOT 116 ALSO LOCATED IN SW/NE; ALL LOCATED IN SECTION 23, TOWNSHIP 17 NORTH, RANGE 4 WEST, CITY OF SPARTA, MONROE COUNTY, WISCONSIN.

RELOCATION ORDER STH 27.

TO PROPERLY ESTABLISH, LAY OUT, WIDEN, ENLARGE, EXTEND, CONSTRUCT, RECONSTRUCT, IMPROVE, OR MAINTAIN A PORTION OF THE HIGHWAY DESIGNATED ABOVE THE CITY OF SPARTA DEEMS IT NECESSARY TO RELOCATE OR CHANGE SAID HIGHWAY AND ACQUIRE CERTAIN LANDS AND INTERESTS OR RIGHTS IN LANDS FOR THE ABOVE PROJECT.

TO EFFECT THIS CHANGE, PURSUANT TO AUTHORITY GRANTED UNDER SECTION 84.02 (3), 84.09, AND 84.30, WISCONSIN STATUTES, THE DEPARTMENT OF TRANSPORTATION HEREBY ORDERS THAT:

1. THAT PORTION OF SAID HIGHWAY AS SHOWN ON THIS PLAT IS LAID OUT AND ESTABLISHED TO THE LINES AND WIDTHS AS SO SHOWN FOR THE ABOVE PROJECT
2. THE LANDS OR INTERESTS OR RIGHTS IN LANDS AS SHOWN ON THIS PLAT ARE REQUIRED BY THE DEPARTMENT FOR THE ABOVE PROJECT AND SHALL BE ACQUIRED IN THE NAME OF THE STATE OF WISCONSIN, PURSUANT TO THE PROVISIONS OF SECTION 84.09 (1) OR (2), WISCONSIN STATUTES

EASEMENT TABLE

OWNER	RECORDING INFORMATION	PARCEL
CITY OF SPARTA (WATER)	NO EASEMENT OF RECORD	10
	DOC# 301138	10
MONROE COUNTY TELEPHONE COMPANY	DOC# 352831	6
	DOC# 353088	6
	DOC# 352831	10
	DOC# 352517	1
	DOC# 352018	1
XCEL ENERGY	DOC# 201607	6
	DOC# 268730	6
	DOC# 181060	15 & 17
CITY OF SPARTA (SANITARY SEWER)	DOC# 273961	6
WE ENERGY (GAS)	NO EASEMENT OF RECORD	1

POINT	STATION	OFFSET	POINT	STATION	OFFSET	POINT	STATION	OFFSET
245	318+20.85	45.00' LT	256	329+35.00	60.00' LT	267	326+30.00	45.00' RT
246	325+31.36	45.00' LT	257	329+75.00	60.00' LT	268	11+95.00	70.00' LT
247	325+97.36	45.00' LT	258	329+75.00	55.00' LT	269	11+95.00	35.00' LT
248	327+00.00	45.00' LT	259	330+55.00	60.00' LT	270	12+70.00	35.00' LT
249	327+65.00	47.00' LT	260	103+38.00	49.50' RT	271	12+70.00	28.36' LT
250	327+65.00	55.00' LT	261	106+45.00	40.00' RT	272	12+70.00	21.64' RT
251	328+00.00	55.00' LT	262	105+50.00	45.00' RT	273	12+70.00	32.00' RT
252	328+00.00	70.00' LT	263	331+10.00	65.00' RT	274	325+25.00	50.00' RT
253	328+37.00	70.00' LT	264	330+50.00	50.00' RT	275	319+90.00	50.00' RT
254	328+37.00	55.00' LT	265	328+60.00	50.00' RT	276	318+17.90	60.00' RT
255	329+35.00	55.00' LT	266	328+15.00	45.00' RT			

SCHEDULE OF SIGN STRUCTURES

SIGN NUMBER	SIGN OWNER	OASIS NO.
17-1	OLYMPUS SIGNS JON HETLAND AND MARYROSE HETLAND AND MICHEAL C. JANDT AND RENEE JANDT	2782

FOR ADDITIONAL INFORMATION REFER TO THE TITLE SHEET, RECORDED IN THE OFFICE OF THE REGISTER OF DEEDS IN MONROE COUNTY AS SHEET 2 OF 2 OF DOCUMENT 656686

SEH

STATE OF WISCONSIN DEPARTMENT OF TRANSPORTATION

I, JASON L CANCE PROFESSIONAL LAND SURVEYOR, HEREBY CERTIFY THAT IN FULL COMPLIANCE WITH THE PROVISIONS OF SECTION 84.095 OF THE WISCONSIN STATUTES AND UNDER THE DIRECTION OF THE DEPARTMENT OF TRANSPORTATION, I HAVE SURVEYED THIS TRANSPORTATION PROJECT PLAT AND SUCH PLAT CORRECTLY REPRESENTS ALL EXTERIOR BOUNDARIES OF THE SURVEYED LAND.

WISCONSIN JASON L. CANCE S-2688 CHIPPEWA FALLS WI LAND SURVEYOR

SIGNATURE: DATE: 07/13/17
PRINT NAME: JASON L. CANCE
REGISTRATION NUMBER: S-2688

THIS PLAT AND RELOCATION ORDER ARE APPROVED FOR THE WISCONSIN DEPARTMENT OF TRANSPORTATION SOUTHWEST REGION LACROSSE OFFICE

SIGNATURE: Cory Schlagel DATE: 07/19/17
PRINT NAME: CORY SCHLAGEL

TRANSPORTATION PROJECT PLAT 5144-01-21-4.03

IH 90 STH 16/CITY OF SPARTA RIVER ROAD TO STH 16

PART OF LOTS 13,14,15,16 & 17, BLOCK 2, STELTING SUBDIVISION, LOT 1 CSM, V. 18, P. 47, DOC. 544910, OUTLOT 132, ASSESSOR'S SUBDIVISON, AND PART OF LOT 12, BLOCK 1, STELTING SUBDIVISION, OUTLOT 132, ASSESSOR'S SUBDIVISION, NW 1/4 OF THE NE 1/4, PART OF CSM V. 4, P. 38, DOC. 345472, OUTLOT 133, ASSESSOR'S SUBDIVISION, AND PART OF LOT 1, CSM, V. 9, P. 261, DOC. NO. 438042, OUTLOT 133, ASSESSOR'S SUBDIVISION, PART OF LOT 1, CSM, V. 9, P. 261, DOC. NO. 438042, OUTLOT 135, ASSESSOR'S SUBDIVISION, NE 1/4 OF THE NW 1/4, ALL IN SECTION 23, TOWNSHIP 17 NORTH, RANGE 4 WEST, CITY OF SPARTA, MONROE COUNTY, WISCONSIN.

DOCUMENT # 657213

WAS ACCEPTED FOR RECORDING IN THE OFFICE OF THE REGISTER OF DEEDS IN MONROE COUNTY, WI AT 9:00 A.M. ON MAY 23, 2016 AND WAS FILED IN MAP FILE 301A

226

RESERVED FOR REGISTER OF DEEDS
PROJECT NUMBER 5144-01-21 -4.03

RELOCATION ORDER STH 27

TO PROPERLY ESTABLISH, LAY OUT, WIDEN, ENLARGE, EXTEND, CONSTRUCT, RECONSTRUCT, IMPROVE, OR MAINTAIN A PORTION OF THE HIGHWAY DESIGNATED ABOVE THE CITY OF SPARTA DEEMS IT NECESSARY TO RELOCATE OR CHANGE SAID HIGHWAY AND ACQUIRE CERTAIN LANDS AND INTERESTS OR RIGHTS IN LANDS FOR THE ABOVE PROJECT.

TO EFFECT THIS CHANGE, PURSUANT TO AUTHORITY GRANTED UNDER SECTION 84.02 (3), 84.09, AND 84.30, WISCONSIN STATUTES, THE DEPARTMENT OF TRANSPORTATION HEREBY ORDERS THAT:

1. THAT PORTION OF SAID HIGHWAY AS SHOWN ON THIS PLAT IS LAID OUT AND ESTABLISHED TO THE LINES AND WIDTHS AS SO SHOWN FOR THE ABOVE PROJECT
2. THE LANDS OR INTERESTS OR RIGHTS IN LANDS AS SHOWN ON THIS PLAT ARE REQUIRED BY THE DEPARTMENT FOR THE ABOVE PROJECT AND SHALL BE ACQUIRED IN THE NAME OF THE STATE OF WISCONSIN, PURSUANT TO THE PROVISIONS OF SECTION 84.09 (1) OR (2), WISCONSIN STATUTES

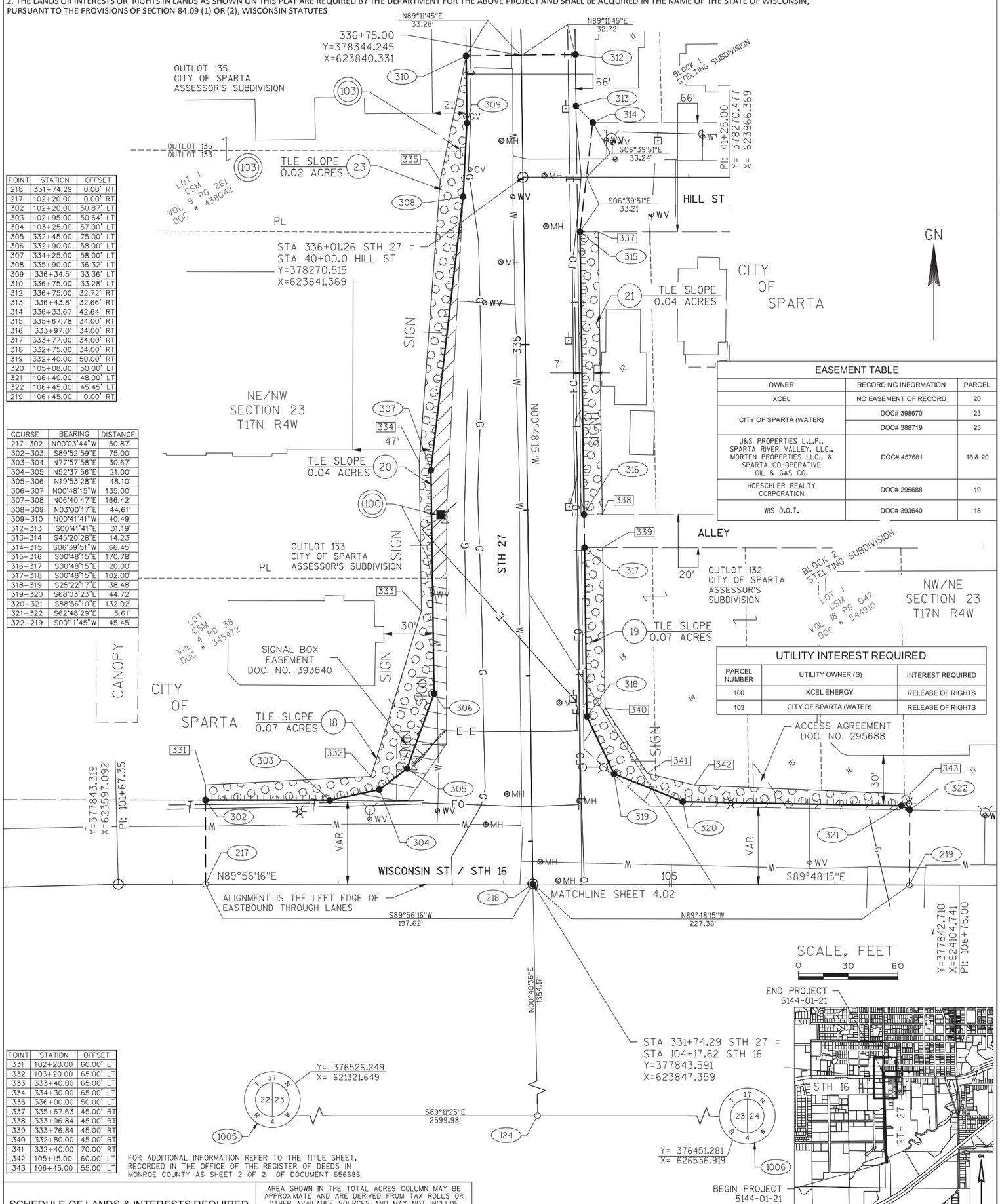

POINT	STATION	OFFSET
218	331+74.29	0.00' RT
217	102+20.00	0.00' RT
302	102+20.00	50.87' LT
303	102+95.00	50.64' LT
304	103+25.00	57.00' LT
305	332+45.00	75.00' LT
306	332+90.00	58.00' LT
307	334+25.00	58.00' LT
308	335+90.00	36.32' LT
309	336+34.51	33.36' LT
310	336+75.00	33.28' LT
312	336+75.00	32.72' RT
313	336+43.81	32.66' RT
314	336+33.67	42.64' RT
315	335+67.78	34.00' RT
316	333+97.01	34.00' RT
317	333+77.00	34.00' RT
318	332+75.00	34.00' RT
319	332+40.00	50.00' RT
320	105+08.00	50.00' LT
321	106+40.00	48.00' LT
322	106+45.00	45.45' LT
219	106+45.00	0.00' RT

COURSE	BEARING	DISTANCE
217–302	N00°03'44"W	50.87'
302–303	S89°52'59"E	75.00'
303–304	N77°57'58"E	30.67'
304–305	N52°37'56"E	21.00'
305–306	N19°53'28"E	48.10'
306–307	N00°48'15"W	135.00'
307–308	N06°40'47"E	166.42'
308–309	N03°00'17"E	44.61'
309–310	N00°41'41"W	40.49'
312–313	S00°41'41"E	31.19'
313–314	S45°20'28"E	14.23'
314–315	S06°39'51"W	66.45'
315–316	S00°48'15"E	170.78'
316–317	S00°48'15"E	20.00'
317–318	S00°48'15"E	102.00'
318–319	S25°22'17"E	38.48'
319–320	S68°03'23"E	44.72'
320–321	S88°56'10"E	132.02'
321–322	S62°48'29"E	5.61'
322–219	S00°11'45"W	45.45'

POINT	STATION	OFFSET
331	102+20.00	60.00' LT
332	103+20.00	65.00' LT
333	333+40.00	65.00' LT
334	334+30.00	65.00' LT
335	336+00.00	50.00' LT
337	335+67.63	45.00' RT
338	333+96.84	45.00' RT
339	333+76.84	45.00' RT
340	332+80.00	45.00' RT
341	332+40.00	70.00' RT
342	105+15.00	60.00' LT
343	106+45.00	55.00' LT

FOR ADDITIONAL INFORMATION REFER TO THE TITLE SHEET, RECORDED IN THE OFFICE OF THE REGISTER OF DEEDS IN MONROE COUNTY AS SHEET 2 OF 2 OF DOCUMENT 656686

EASEMENT TABLE

OWNER	RECORDING INFORMATION	PARCEL
XCEL	NO EASEMENT OF RECORD	20
CITY OF SPARTA (WATER)	DOC# 398670	23
	DOC# 388719	23
J&S PROPERTIES L.L.P., SPARTA RIVER VALLEY, LLC., MORTEN PROPERTIES LLC., & SPARTA CO-OPERATIVE OIL & GAS CO.	DOC# 457681	18 & 20
HOESCHLER REALTY CORPORATION	DOC# 295688	19
WIS D.O.T.	DOC# 393640	18

UTILITY INTEREST REQUIRED

PARCEL NUMBER	UTILITY OWNER (S)	INTEREST REQUIRED
100	XCEL ENERGY	RELEASE OF RIGHTS
103	CITY OF SPARTA (WATER)	RELEASE OF RIGHTS

SCHEDULE OF LANDS & INTERESTS REQUIRED

AREA SHOWN IN THE TOTAL ACRES COLUMN MAY BE APPROXIMATE AND ARE DERIVED FROM TAX ROLLS OR OTHER AVAILABLE SOURCES AND MAY NOT INCLUDE LANDS OF THE OWNER WHICH ARE NOT CONTIGUOUS TO THE AREA TO BE ACQUIRED

PARCEL NUMBER	OWNER (S)	INTEREST REQUIRED	R/W ACRES REQUIRED			TLE ACRES
			NEW	EXISTING	TOTAL	
18	A-94 LLC, A WISCONSIN LIABILITY COMPANY	FEE/AR/TLE	0.04	-	0.04	0.07
19	SPARTA CK, LLC, A WISCONSIN LIMITED LIABILITY COMPANY	FEE/AR/TLE	0.02	-	0.02	0.07
20	CHERRY SQUARE, LLC, A WISCONSIN LIABILITY PARTNERSHIP	FEE/AR/TLE	0.03	-	0.03	0.04
21	GARY L EDWARDS AND LORENE R EDWARDS 2003 REVOCABLE TRUST dtd 2-25-2013	FEE/AR/TLE	0.01	-	0.01	0.04
23	SPARTA BRUSH COMPANY	FEE/TLE	0.01	-	0.01	0.02

STATE OF WISCONSIN DEPARTMENT OF TRANSPORTATION

I, JASON L CANCE PROFESSIONAL LAND SURVEYOR, HEREBY CERTIFY THAT IN FULL COMPLIANCE WITH THE PROVISIONS OF SECTION 84.095 OF THE WISCONSIN STATUTES AND UNDER THE DIRECTION OF THE DEPARTMENT OF TRANSPORTATION, I HAVE SURVEYED THIS TRANSPORTATION PROJECT PLAT AND SUCH PLAT CORRECTLY REPRESENTS ALL EXTERIOR BOUNDARIES OF THE SURVEYED LAND.

WISCONSIN JASON L. CANCE S-2688 CHIPPEWA FALLS WI LAND SURVEYOR

SIGNATURE: DATE: 05/10/16
PRINT NAME: JASON L. CANCE
REGISTRATION NUMBER: S-2688

THIS PLAT AND RELOCATION ORDER ARE APPROVED FOR THE WISCONSIN DEPARTMENT OF TRANSPORTATION SOUTHWEST REGION LACROSSE OFFICE

SIGNATURE: Cory Schlagel DATE: 5-12-16
PRINT NAME: CORY SCHLAGEL

SEH

FILE NAME : P:\UZ\W\WITSW\129126\C3D\5144010S\SHEETSPLAN\4.03.DWG
PLOT DATE : 5/12/2016 7:30 AM
PLOT BY : SEH
PLOT SCALE : ==========
PLOT NAME : 5144-01-21 4.03

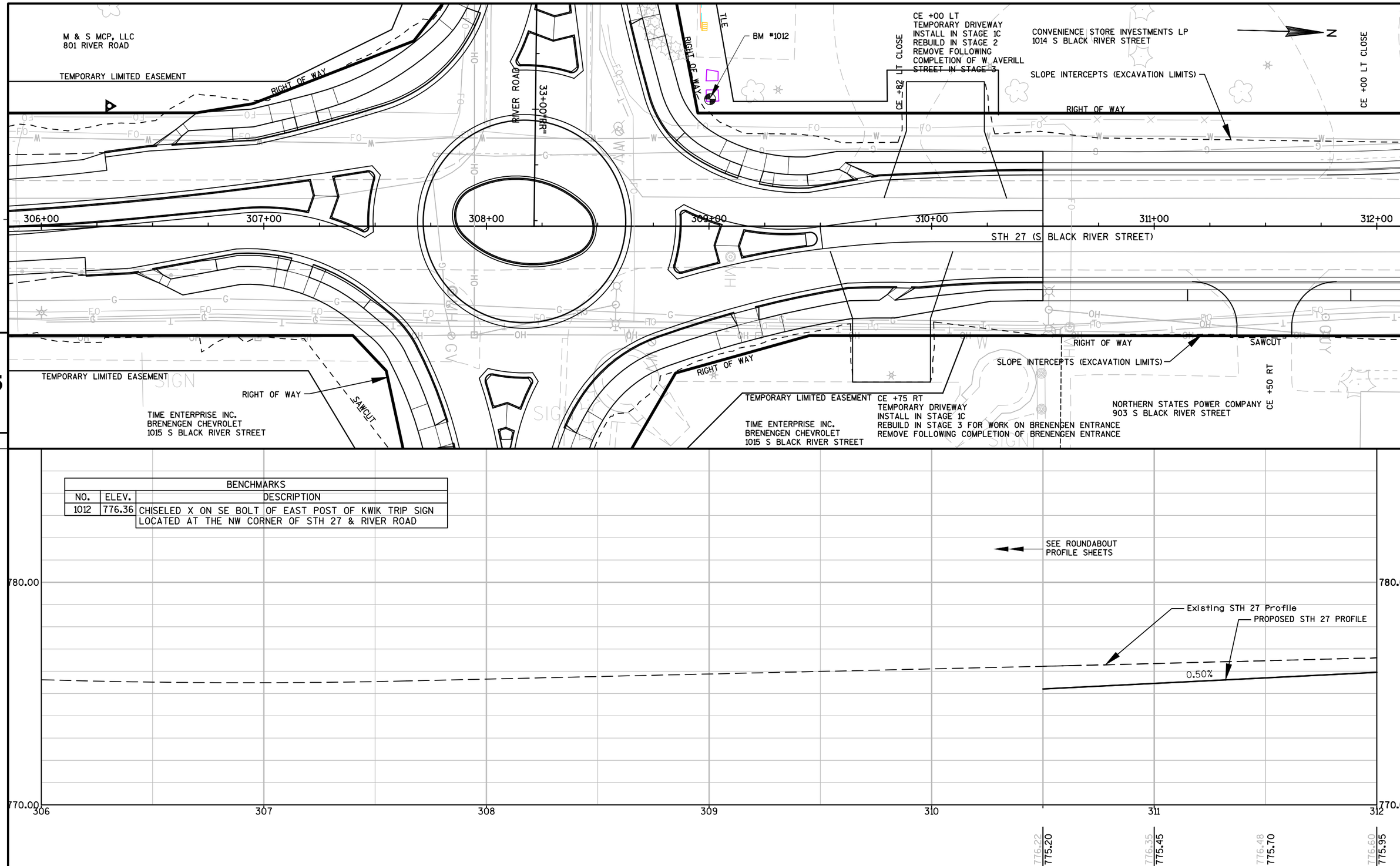

BENCHMARKS		
NO.	ELEV.	DESCRIPTION
1012	776.36	CHISELED X ON SE BOLT OF EAST POST OF KWIK TRIP SIGN LOCATED AT THE NW CORNER OF STH 27 & RIVER ROAD

PROJECT NO: 5144-01-75	HWY: STH 27	COUNTY: MONROE	PLAN AND PROFILE: PLAN & PROFILE STH 27	SHEET 227	E

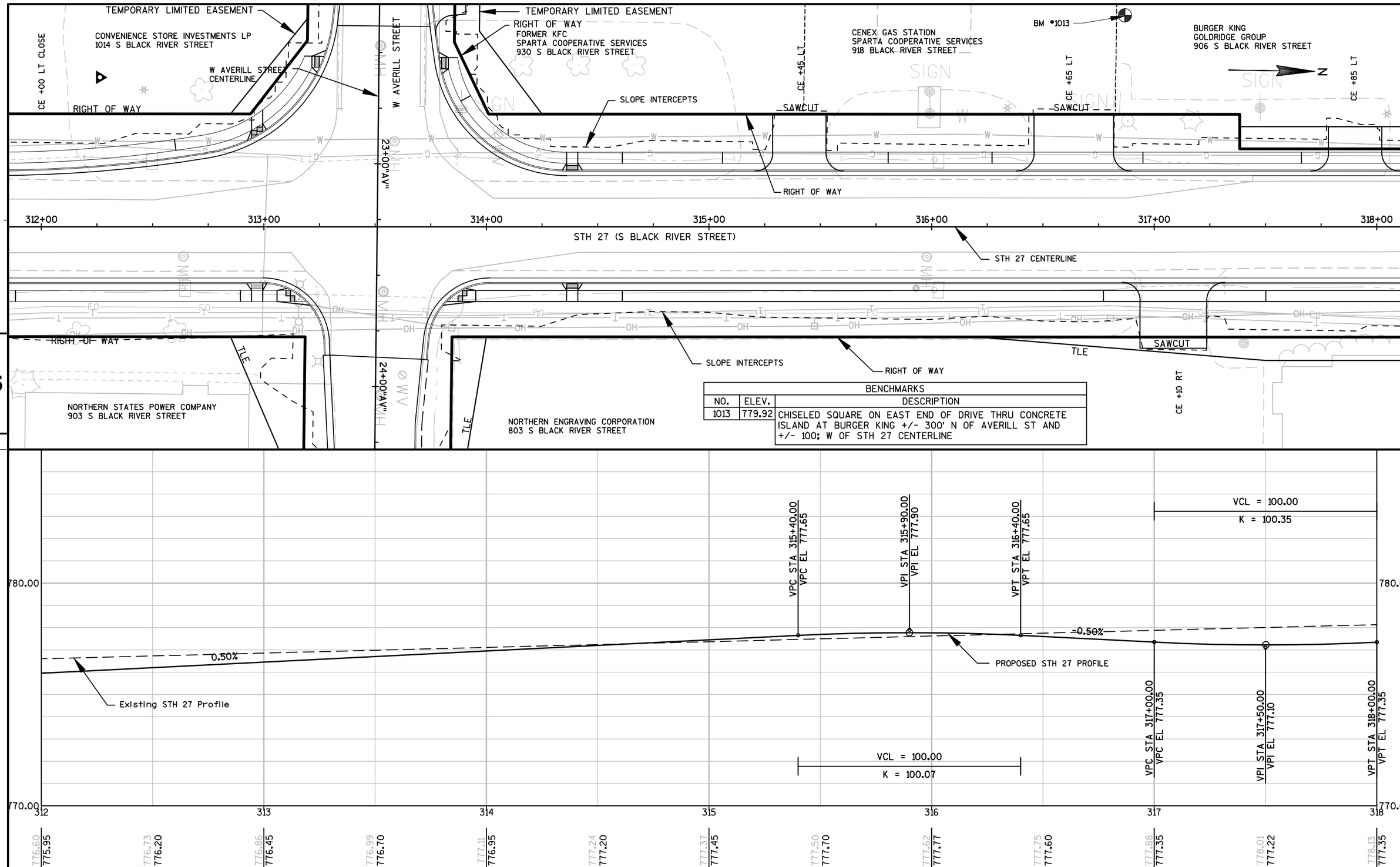

BENCHMARKS		
NO.	ELEV.	DESCRIPTION
1013	779.92	CHISELED SQUARE ON EAST END OF DRIVE THRU CONCRETE ISLAND AT BURGER KING +/- 300' N OF AVERILL ST AND +/- 100; W OF STH 27 CENTERLINE

PROJECT NO: 5144-01-75	HWY: STH 27	COUNTY: MONROE	PLAN AND PROFILE: PLAN & PROFILE STH 27	SHEET 228	E

FILE NAME : N:\PDS\C3D\51440105\SHEETSPLAN\05013_20SCALE_PP.DWG PLOT DATE : 7/28/2017 7:26 AM PLOT BY : VALENTI, PAUL M PLOT NAME : PLOT SCALE : 77/256" = 1'-0"_XREF

WISDOT/CADDS SHEET 44

BENCHMARKS		
NO.	ELEV.	DESCRIPTION
1004	780.09	CHISELED X ON SW RIMBOLT OF FIRE HYDRANT ON WEST SIDE OF STH 27 (S BLACK RIVER STREET) +/- 600' NORTH OF W AVERILL STREET IN FRONT OF 716 S BLACK RIVER STREET
1014	779.49	CHISELED SQUARE ON EAST END OF EAST POST CONCRETE OF MARTIN WAREHOUSING SIGN +/- 300' S OF MAPLE AVE AND +/- 50' W OF STH 27 CENTERLINE

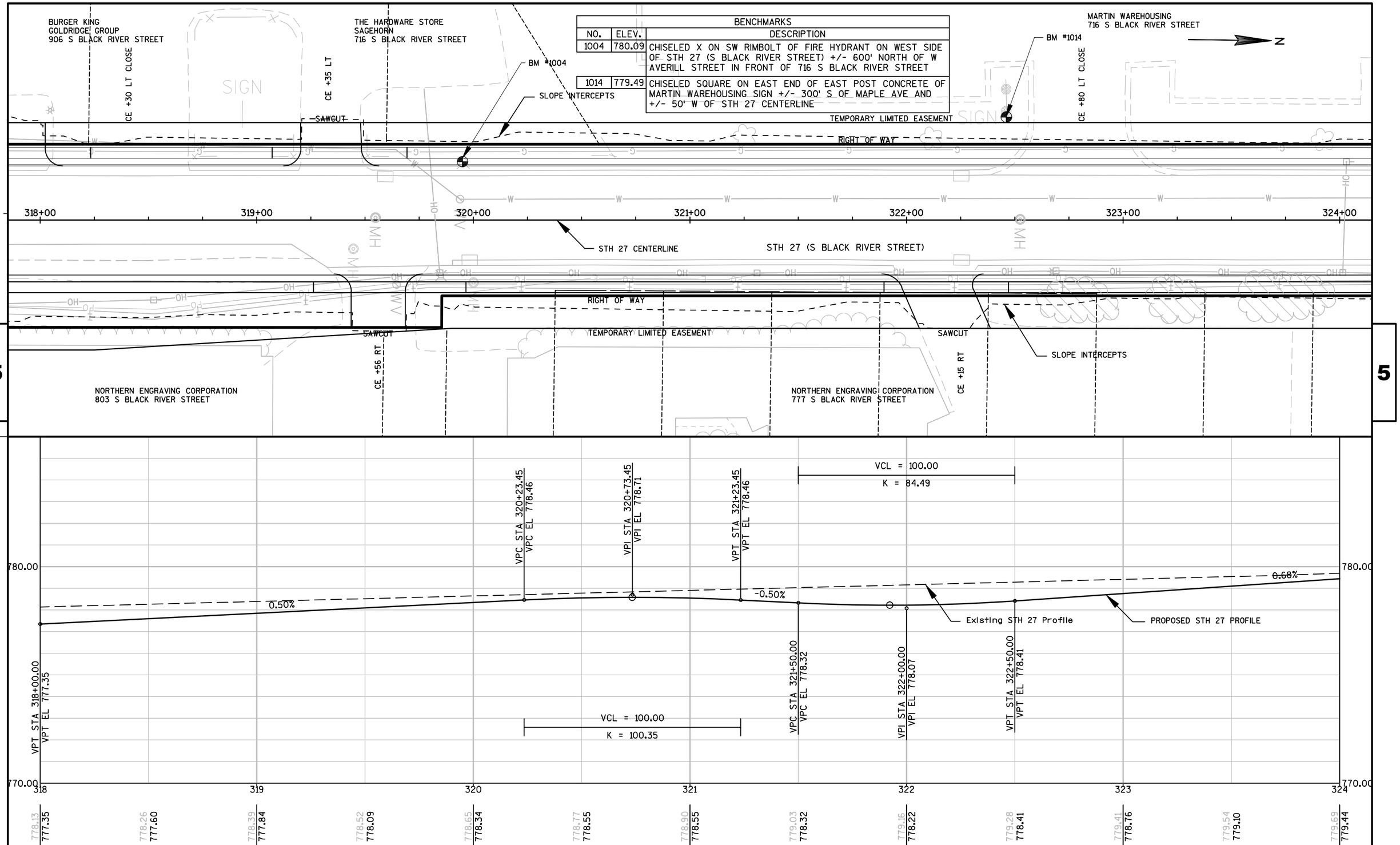

PROJECT NO:5144-01-75	HWY:STH 27	COUNTY:MONROE	PLAN AND PROFILE: PLAN & PROFILE STH 27	SHEET 229	E

BENCHMARKS		
NO.	ELEV.	DESCRIPTION
1006	782.22	CHISELED X ON NE RIMBOLT OF FIRE HYDRANT LOCATED ON NW CORNER OF STH 27 AND MAPLE AVENUE.

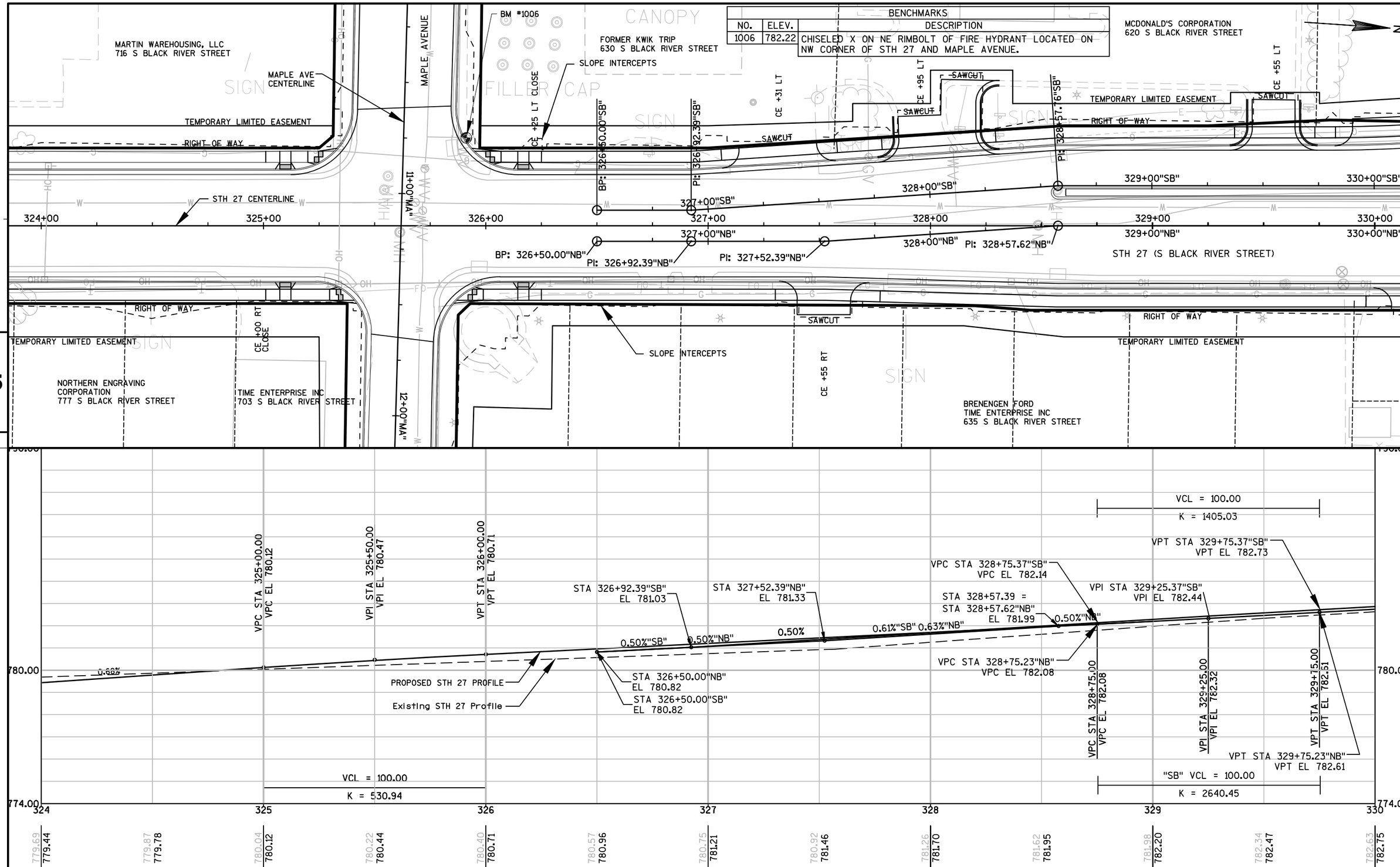

PROJECT NO:5144-01-75	HWY:STH 27	COUNTY:MONROE	PLAN AND PROFILE: PLAN & PROFILE STH 27	SHEET 230	E

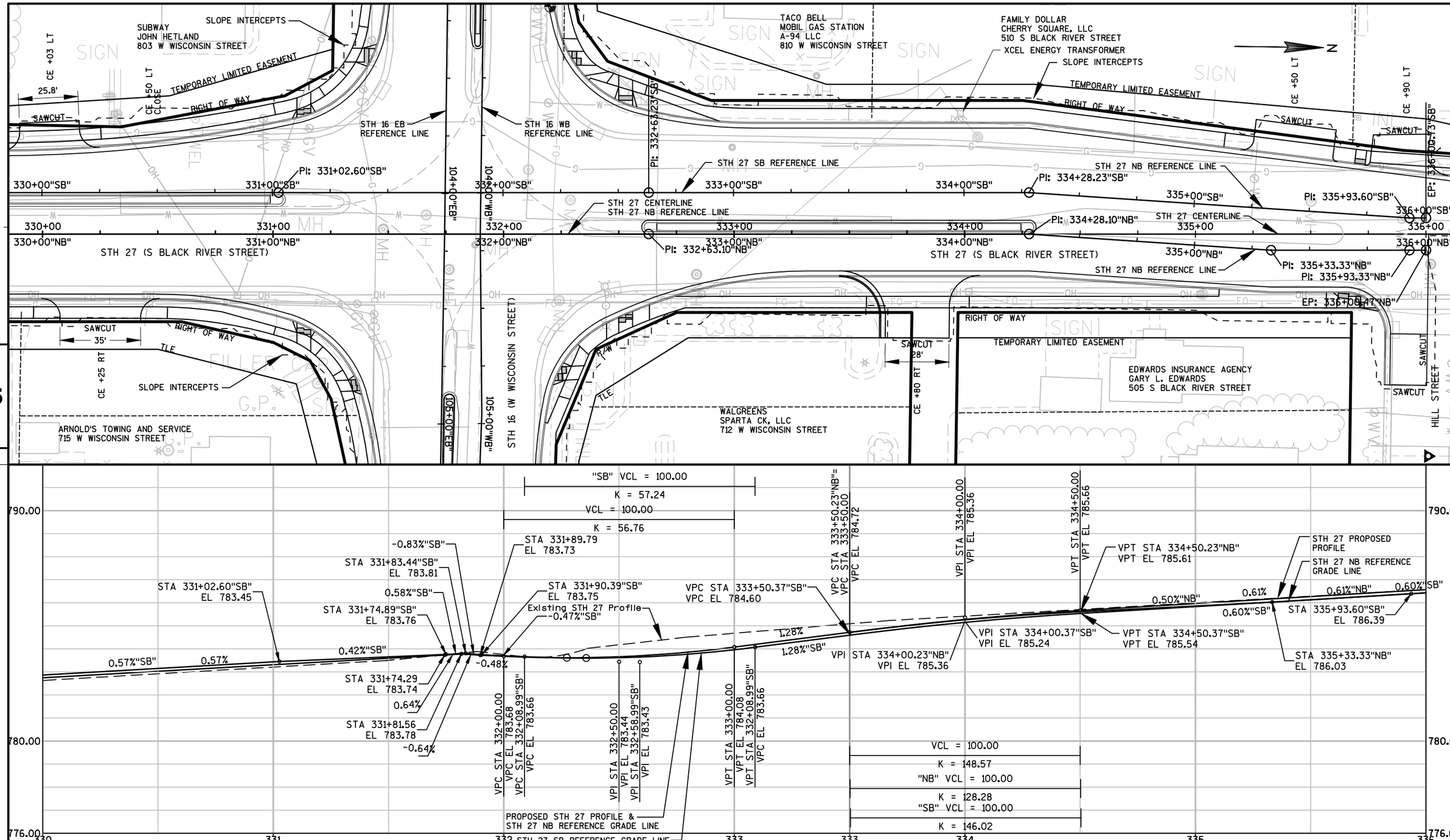

PROJECT NO:5144-01-75	HWY:STH 27	COUNTY:MONROE	PLAN AND PROFILE: PLAN & PROFILE STH 27	SHEET 231	E

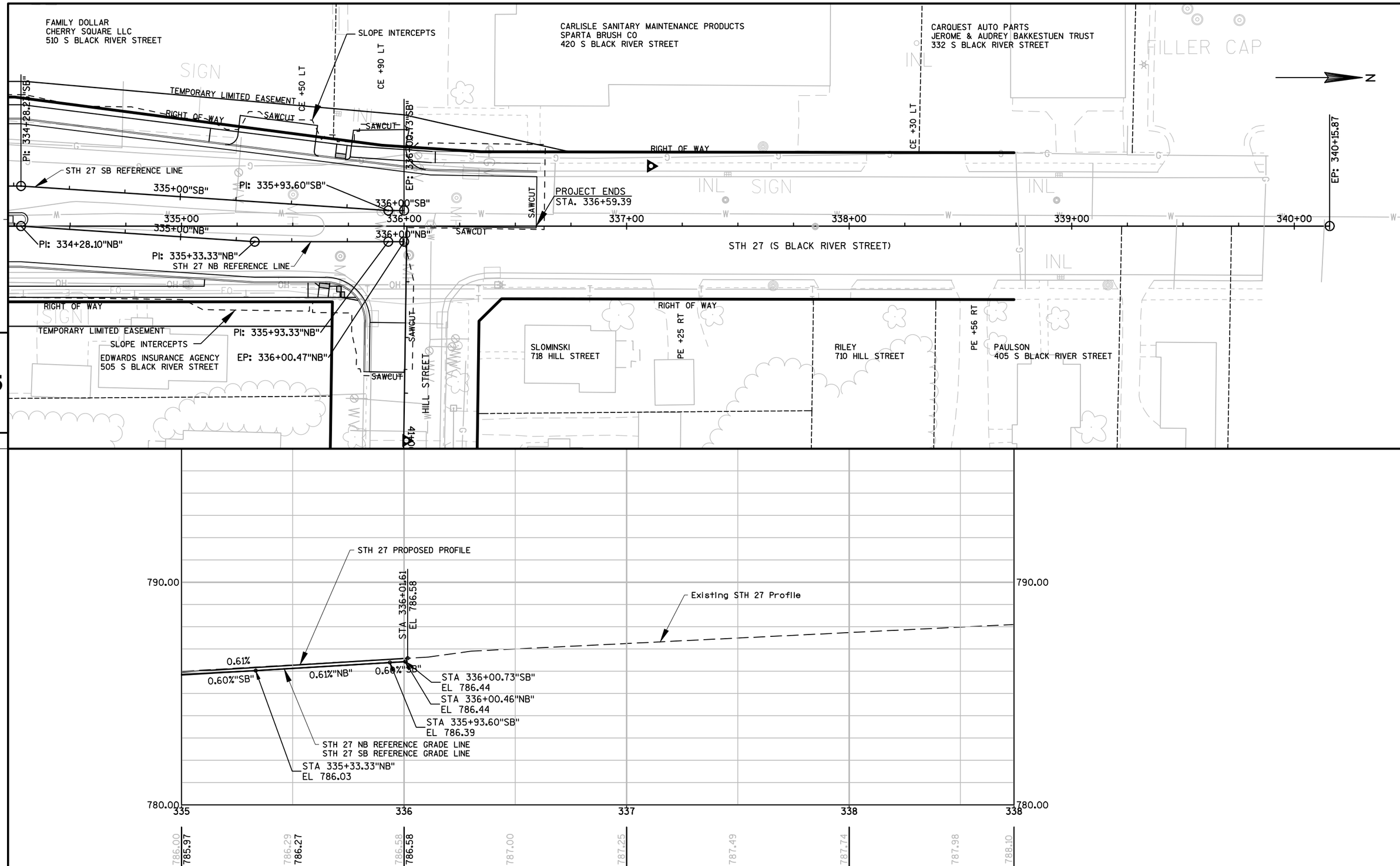

PROJECT NO:5144-01-75	HWY:STH 27	COUNTY:MONROE	PLAN AND PROFILE: PLAN & PROFILE STH 27	SHEET 232	E

BENCHMARKS		
NO.	ELEV.	DESCRIPTION
1007	784.14	CHISELED SQUARE ON NE CORNER OF CONCRETE APRON AT CORNER OF 803 W WISCONSIN STREET.
1008	785.42	CHISELED X ON NW RIMBOLT OF FIRE HYDRANT LOCATED ON NW QUADRANT OF STH 16 & STH 27.

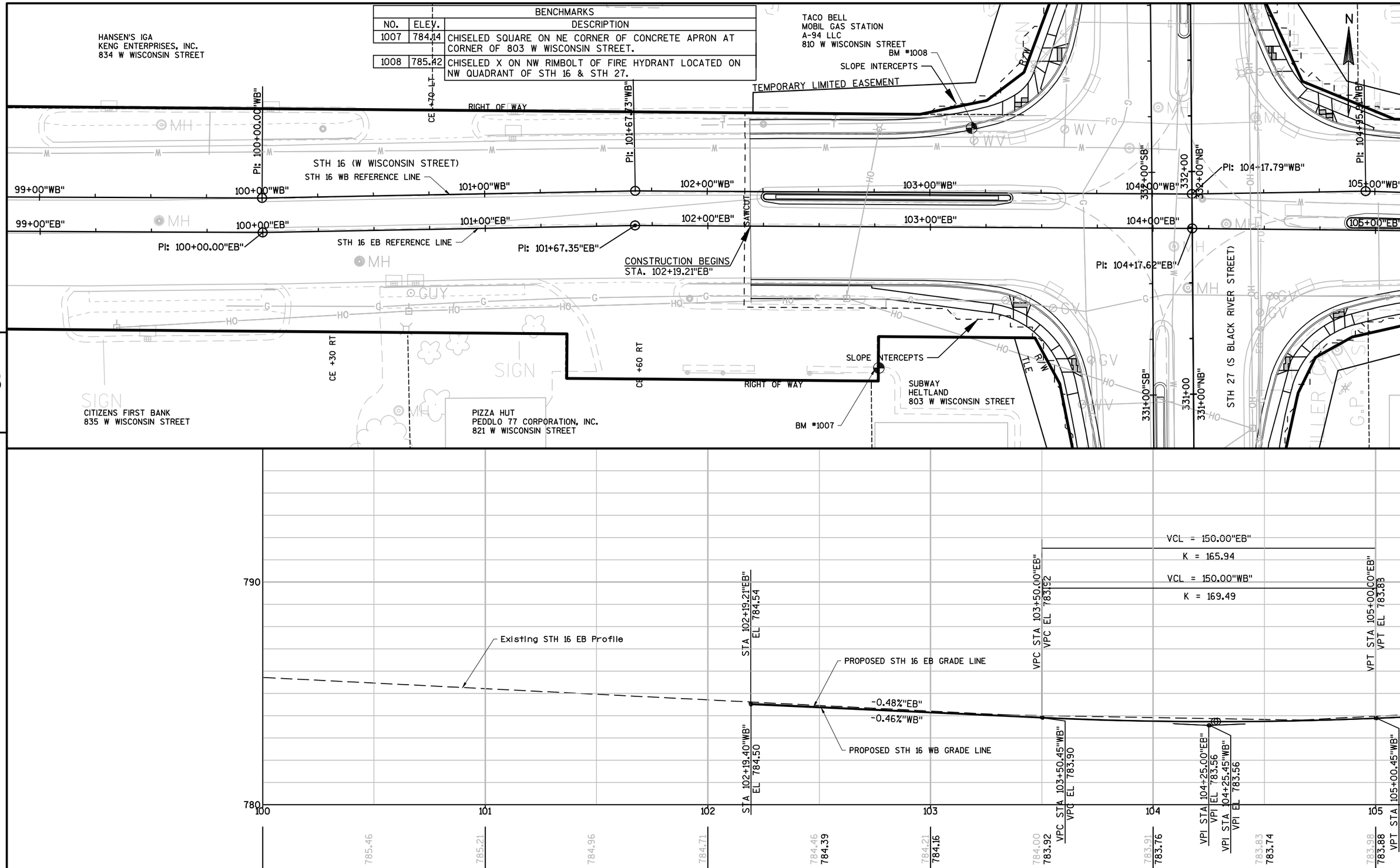

PROJECT NO: 5144-01-75	HWY: STH 27	COUNTY: MONROE	PLAN AND PROFILE: PLAN & PROFILE STH 16	SHEET 233	E

FILE NAME : N:\PDS\C3D\51440105\SHEETSPLAN\050201_PP.DWG
LAYOUT NAME - 050201
PLOT DATE : 7/28/2017 8:10 AM PLOT BY : VALENTI, PAUL M PLOT NAME : PLOT SCALE : 1:40_XREF

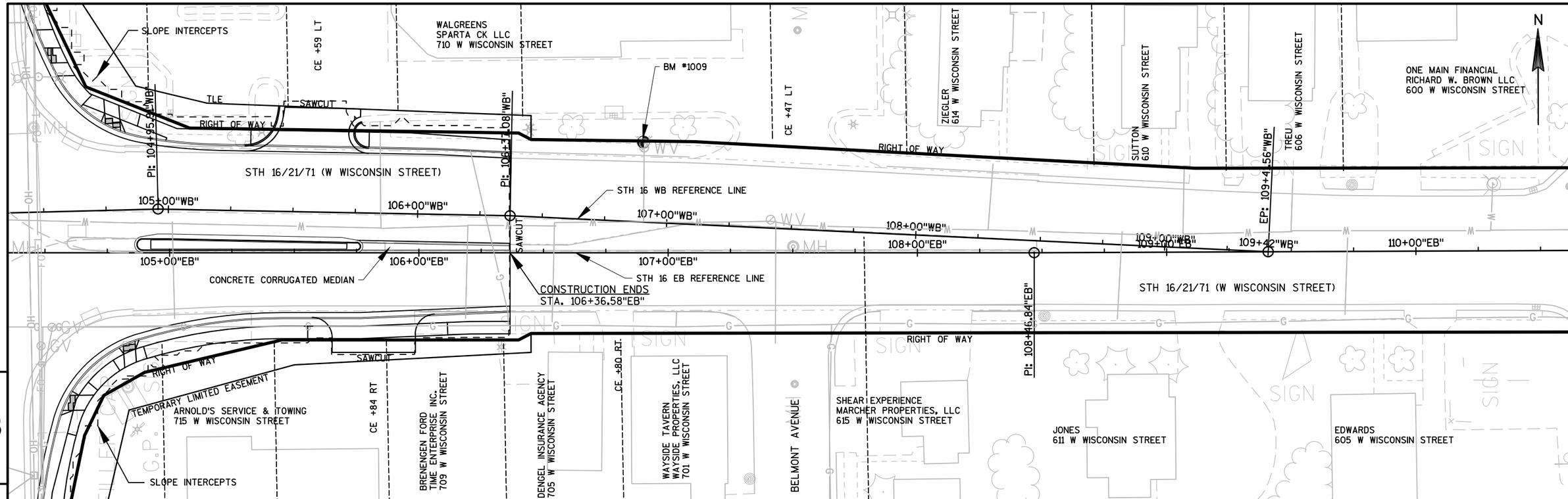

BENCHMARKS		
NO.	ELEV.	DESCRIPTION
1009	786.10	CHISELED X ON NW RIMBOLT OF FIRE HYDRANT ON NORTH SIDE OF STH 16 +/- 300' EAST OF STH 16 & STH 27 INTERSECTION, IN FRONT OF 712 W WISCONSIN ST.

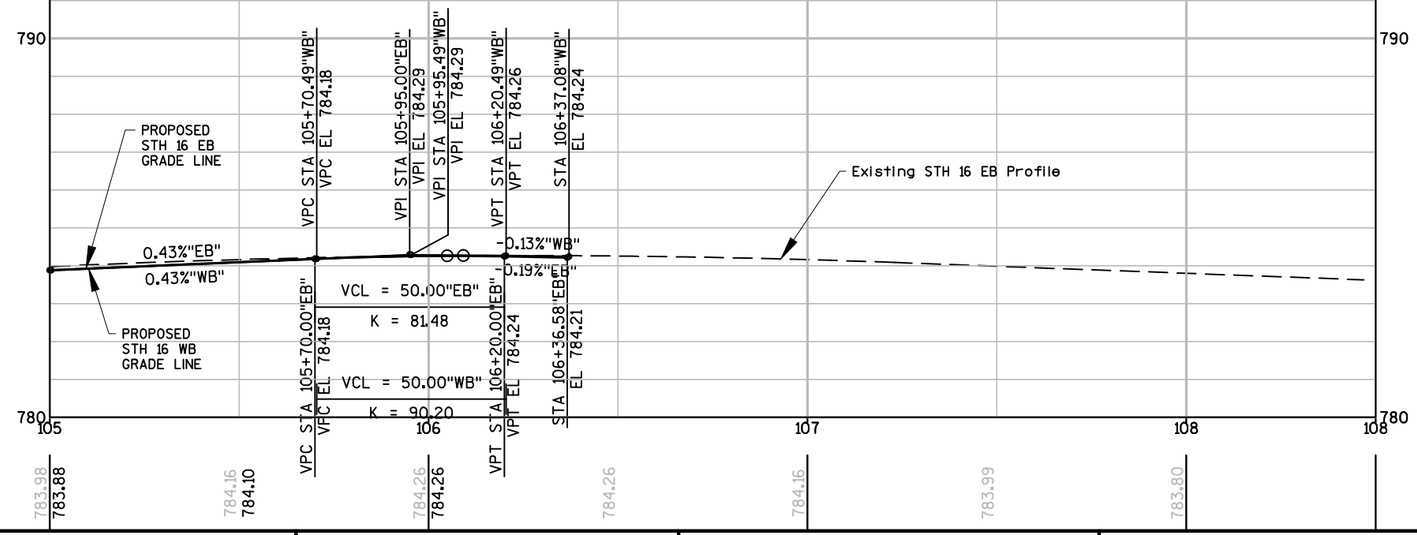

PROJECT NO: 5144-01-75	HWY: STH 27	COUNTY: MONROE	PLAN AND PROFILE: PLAN & PROFILE STH 16	SHEET 234	E

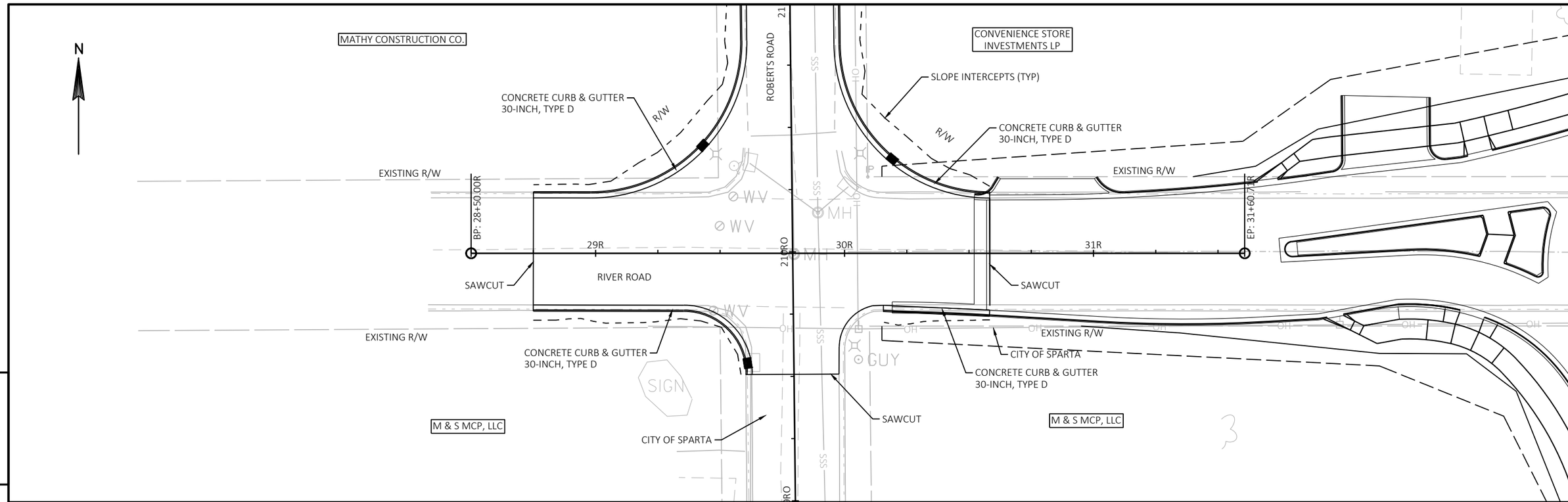

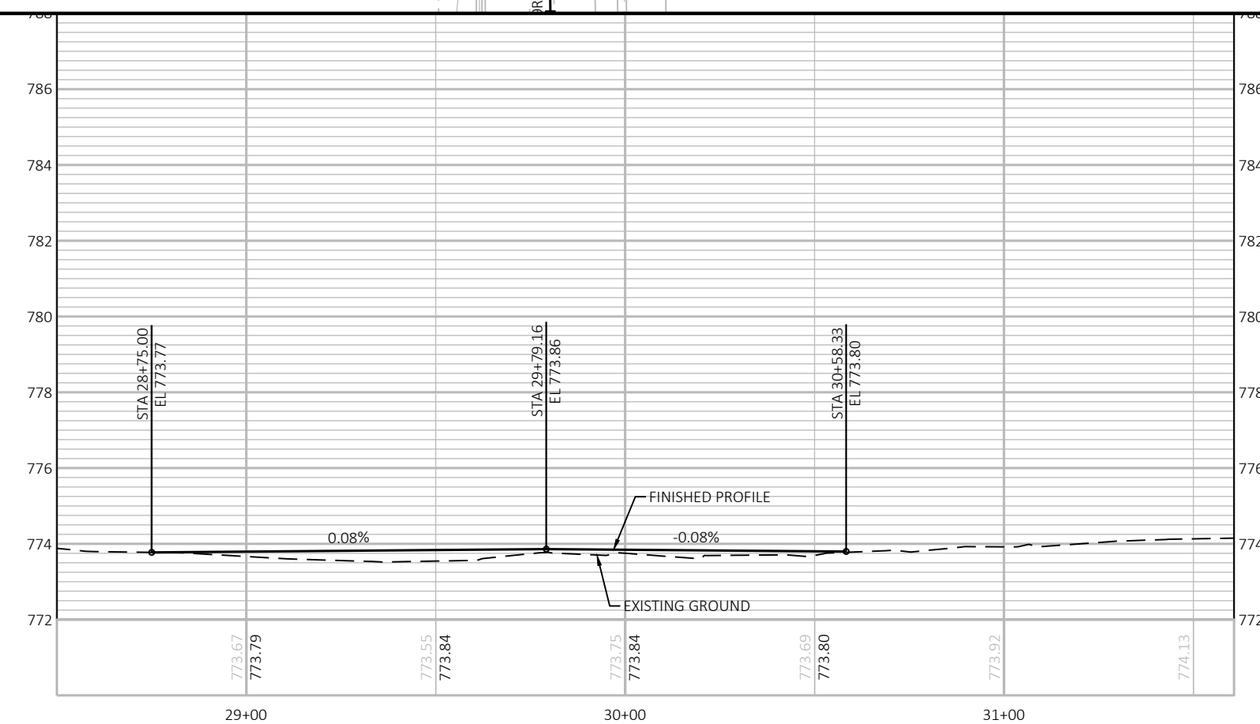

PROJECT NO: 5144-01-75 & 5144-01-76	HWY: STH 27	COUNTY: MONROE	PLAN AND PROFILE: RIVER ROAD	SHEET 235	E

FILE NAME : P:\50S\51\00051029\CADD\C3D\DESIGN\ALIPROFS\ALIPROF-ROBERTSRD-CITY.DWG
LAYOUT NAME - 050103_pp
PLOT DATE : 7/13/2017 8:15 AM PLOT BY : BRAD LEE PLOT NAME : PLOT SCALE : ##########

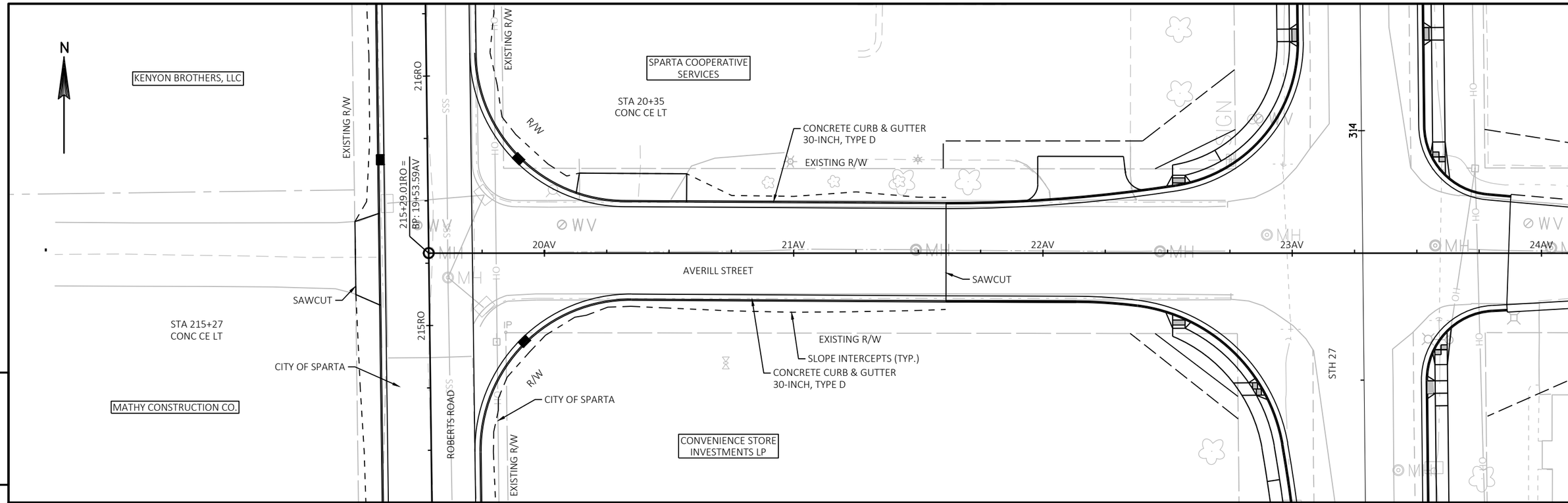

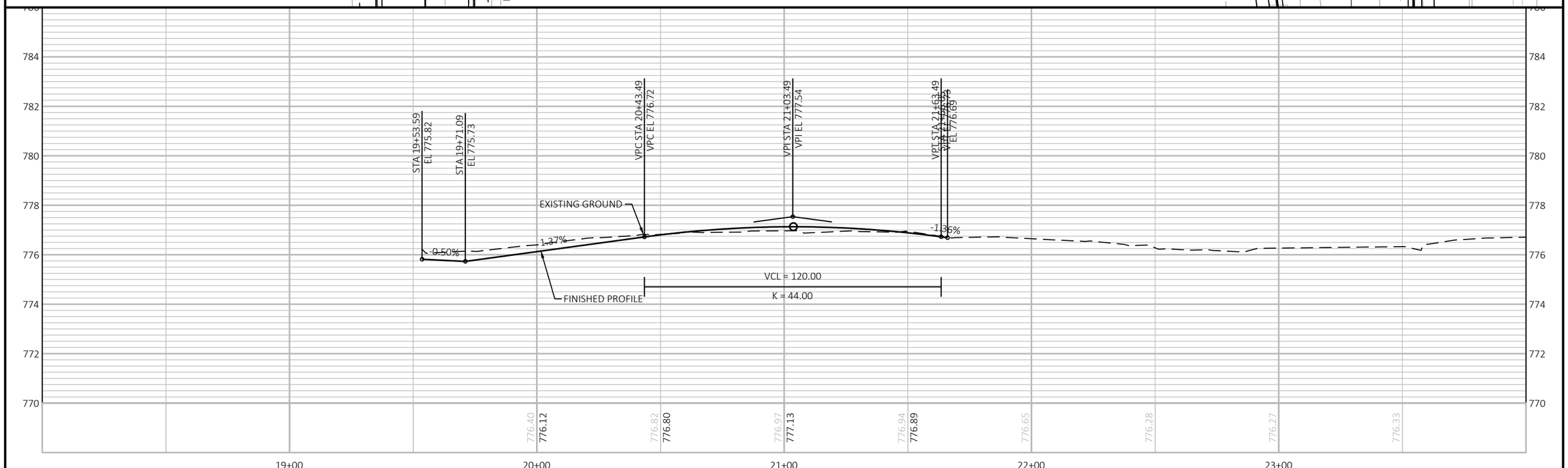

PROJECT NO: 5144-01-75 & 5144-01-76	HWY: STH 27	COUNTY: MONROE	PLAN AND PROFILE: AVERILL ST	SHEET 236	E

FILE NAME : P:\50S\51\00051029\CADD\C3D\DESIGN\ALIPROFS\ALIPROF-ROBERTSRD-CITY.DWG
LAYOUT NAME - 050104_pp
PLOT DATE : 7/13/2017 8:15 AM PLOT BY : BRAD LEE PLOT NAME : PLOT SCALE : ##########

BENCHMARKS		
NO.	ELEV.	DESCRIPTION
1002	778.44	CHISELED X ON NW RIMBOLT OF FIRE HYDRANT LOCATED ON NE CORNER OF W AVERILL STREET & ROBERTS ROAD
1011	778.55	CHISELED X ON NW RIMBOLT OF FIRE HYDRANT ON NORTH SIDE OF W AVERILL STREET +/- 200' EAST OF STH 27, NORTH OF 803 S BLACK RIVER STREET.

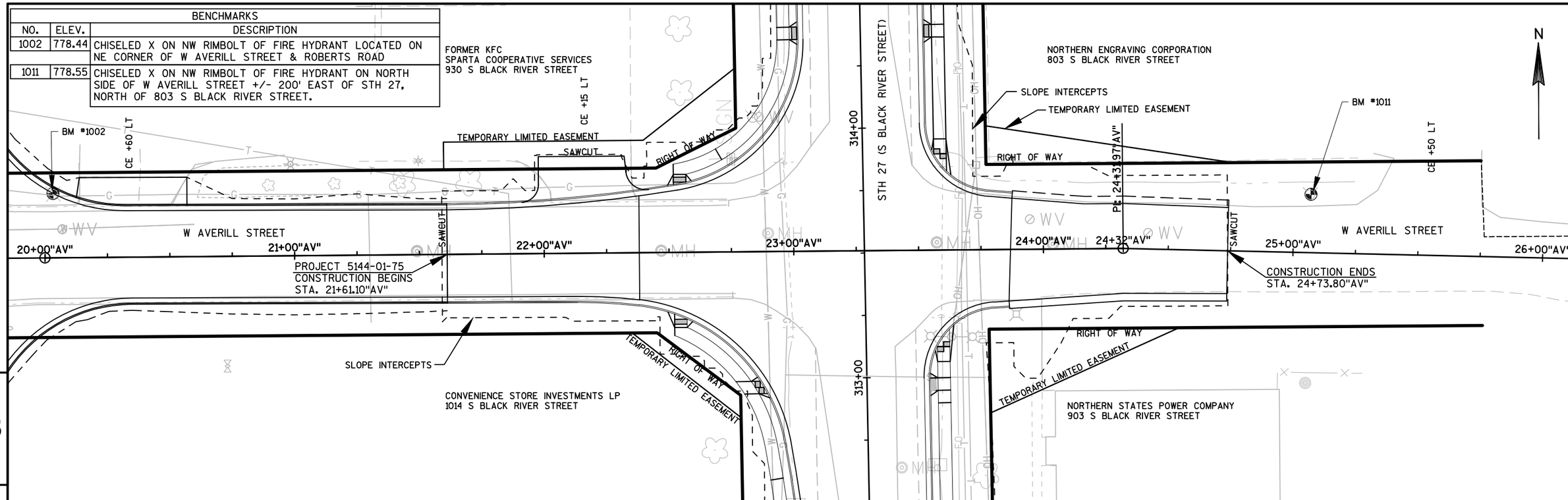

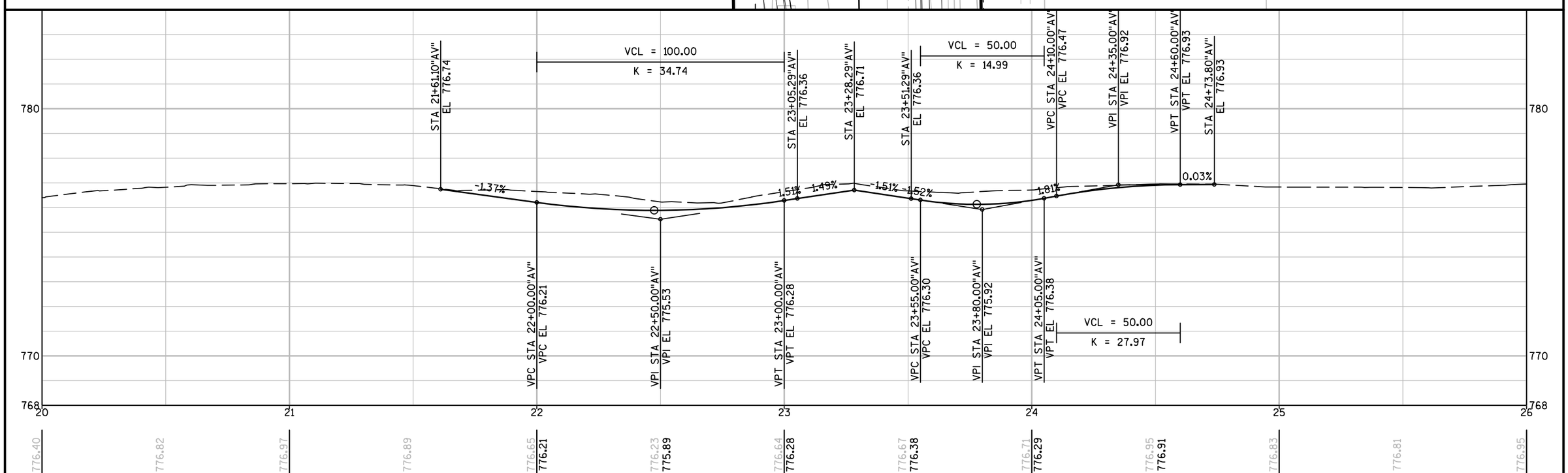

PROJECT NO: 5144-01-75	HWY: STH 27	COUNTY: MONROE	PLAN AND PROFILE: PLAN & PROFILE W AVERILL STREET	SHEET 237	E

BENCHMARKS		
NO.	ELEV.	DESCRIPTION
1006	782.22	CHISELED X ON NE RIMBOLT OF FIRE HYDRANT LOCATED ON NW CORNER OF STH 27 AND MAPLE AVENUE.
1010	780.96	CHISELED X ON SW RIMBOLT OF FIRE HYDRANT LOCATED ON NW CORNER OF MAPLE AVENUE AND BELMONT AVENUE.

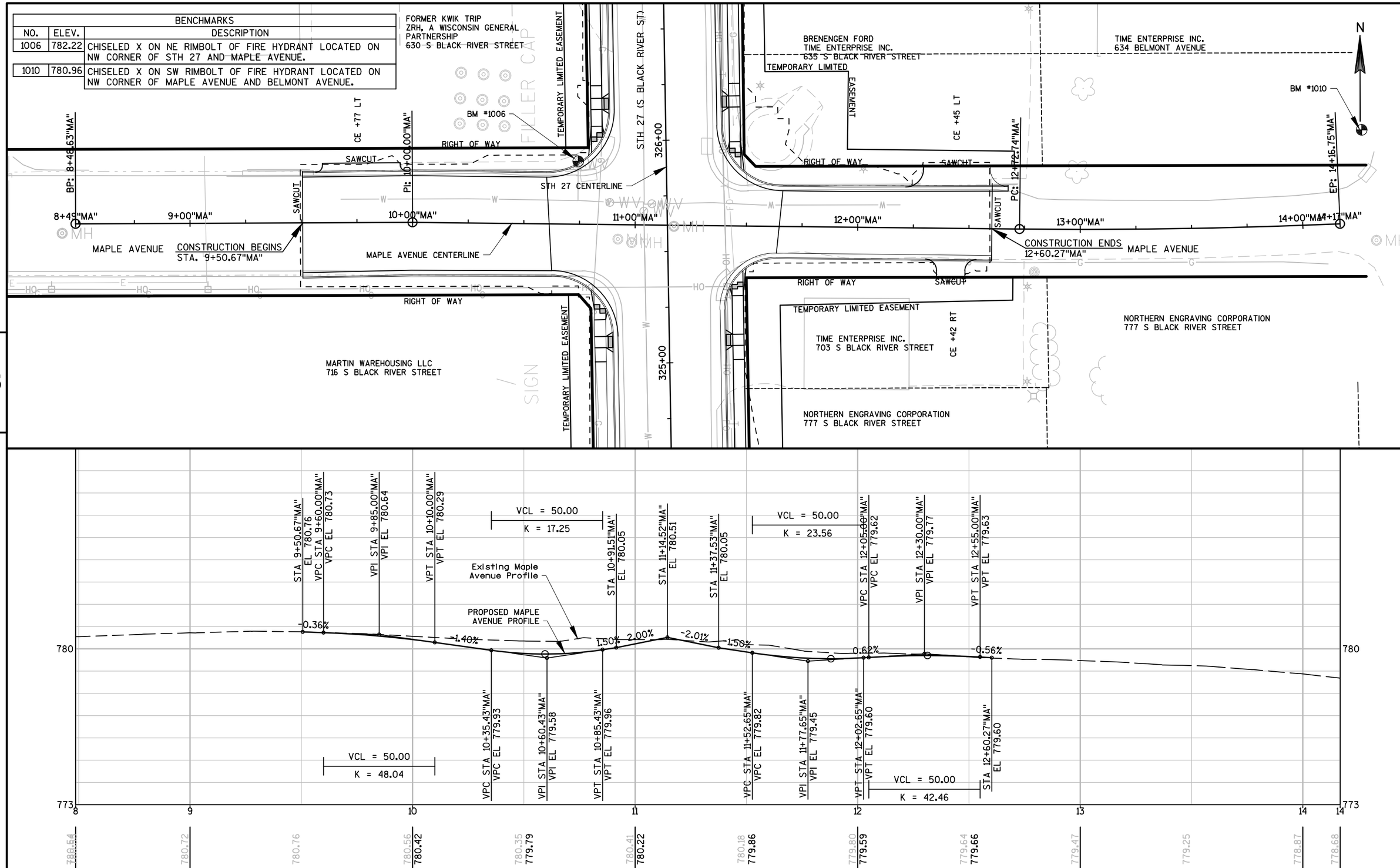

PROJECT NO:5144-01-75	HWY:STH 27	COUNTY:MONROE	PLAN AND PROFILE: PLAN & PROFILE MAPLE AVENUE	SHEET 238	E

FILE NAME : N:\PDS\C3D\51440105\SHEETSPLAN\050501_PP.DWG
LAYOUT NAME - 050501
PLOT DATE : 7/28/2017 8:42 AM PLOT BY : VALENTI, PAUL M PLOT NAME : PLOT SCALE : 1:40_XREF

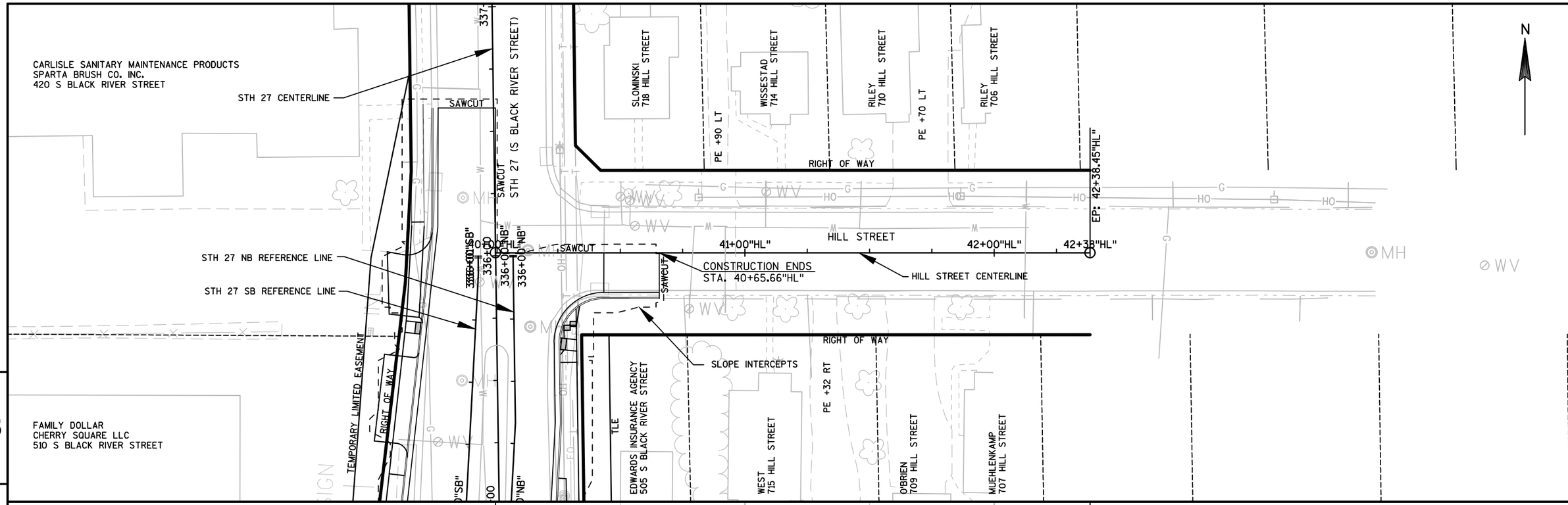

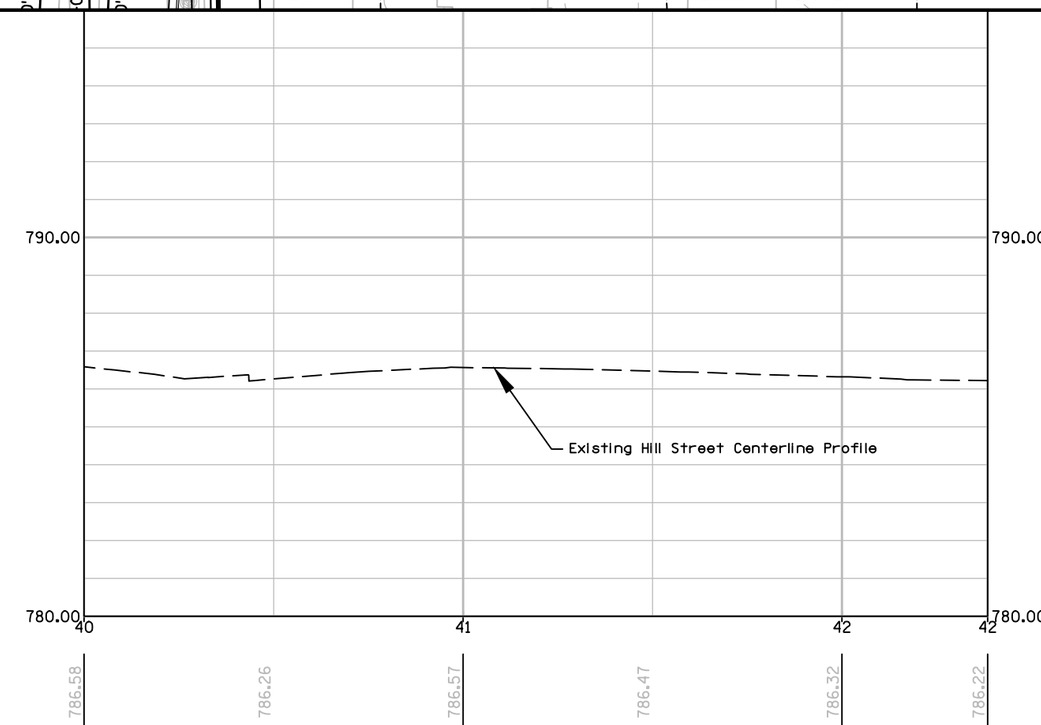

PROJECT NO:5144-01-75	HWY:STH 27	COUNTY:MONROE	PLAN AND PROFILE: PLAN & PROFILE HILL STREET	SHEET 239	E

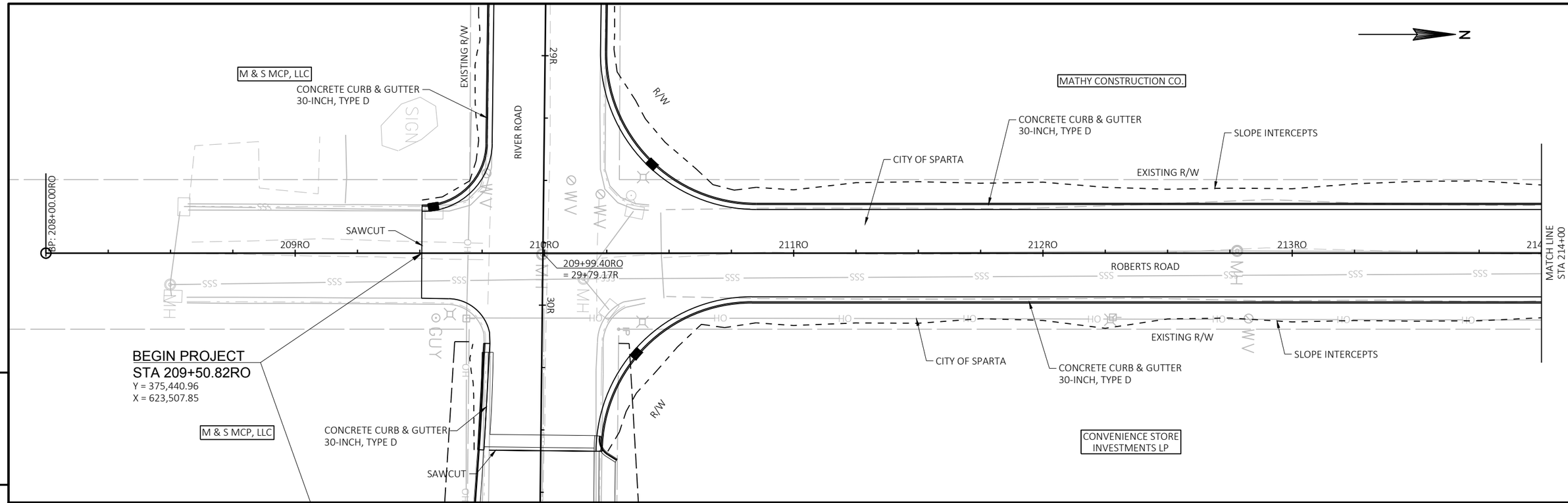

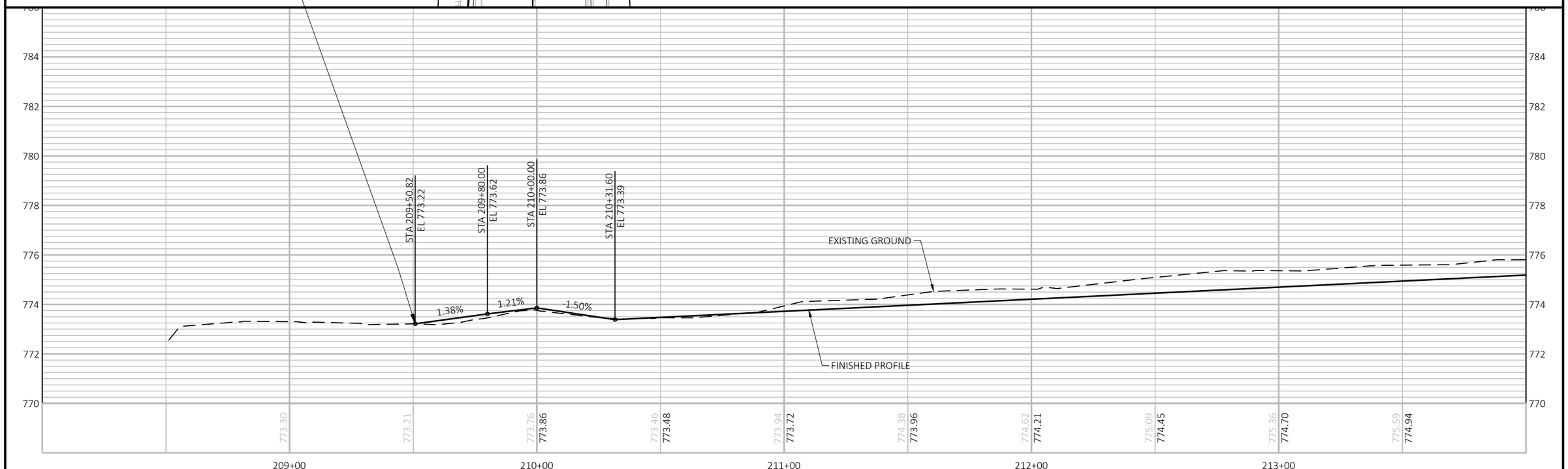

PROJECT NO: 5144-01-75 & 5144-01-76	HWY: STH 27	COUNTY: MONROE	PLAN AND PROFILE: ROBERTS ROAD	SHEET 240	E

FILE NAME : P:\50S\51\00051029\CADD\C3D\DESIGN\ALIPROFS\ALIPROF-ROBERTSRD-CITY.DWG
LAYOUT NAME - 050101_pp
PLOT DATE : 7/13/2017 8:15 AM PLOT BY : BRAD LEE PLOT NAME : PLOT SCALE : ##########

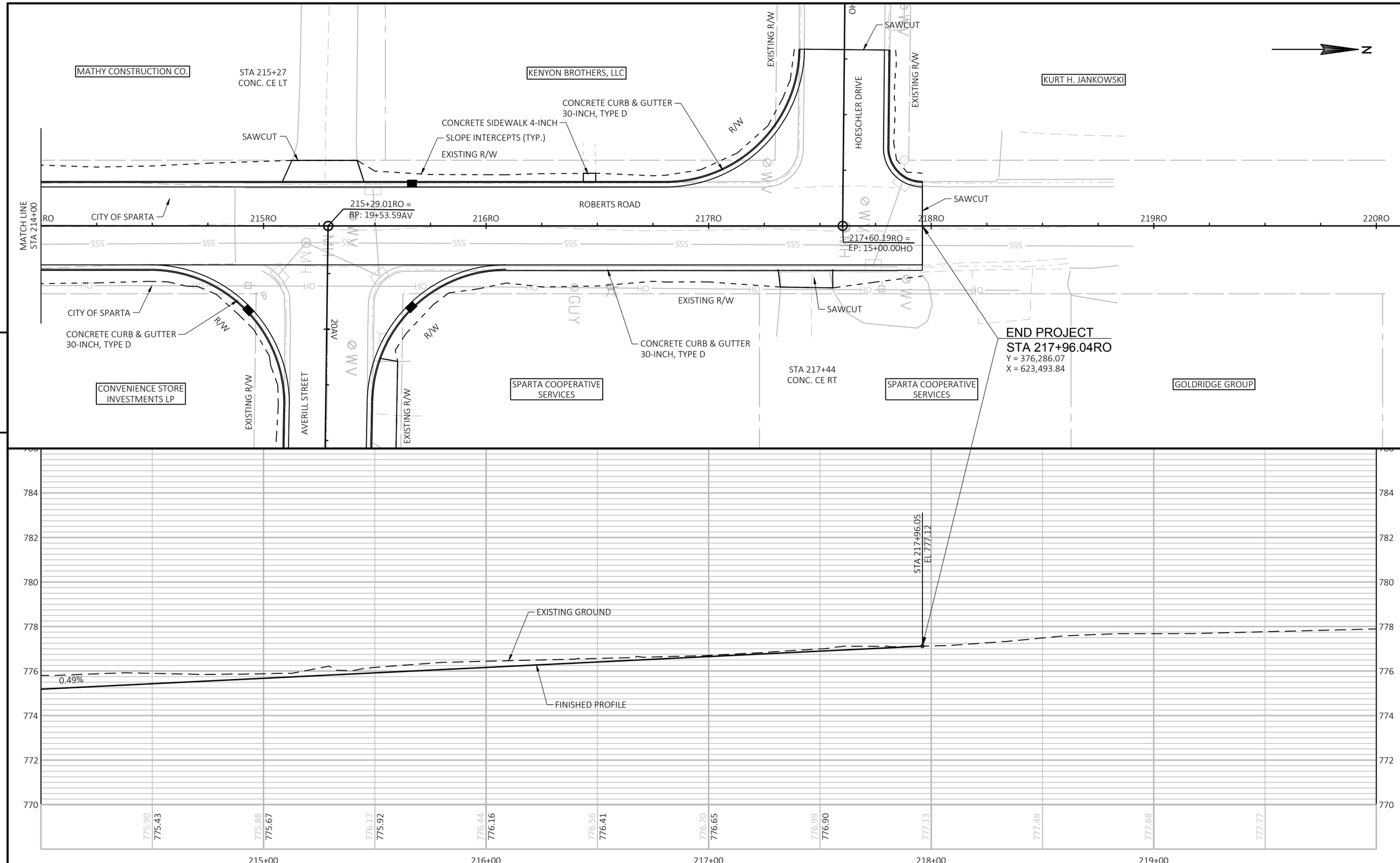

PROJECT NO: 5144-01-75 & 5144-01-76	HWY: STH 27	COUNTY: MONROE	PLAN AND PROFILE: ROBERTS ROAD	SHEET 241	E

FILE NAME : P:\50S\51\00051029\CADD\C3D\DESIGN\ALIPROFS\ALIPROF-ROBERTSRD-CITY.DWG
LAYOUT NAME - 050102_pp
PLOT DATE : 7/13/2017 8:15 AM
PLOT BY : BRAD LEE
PLOT NAME :
PLOT SCALE : ##########

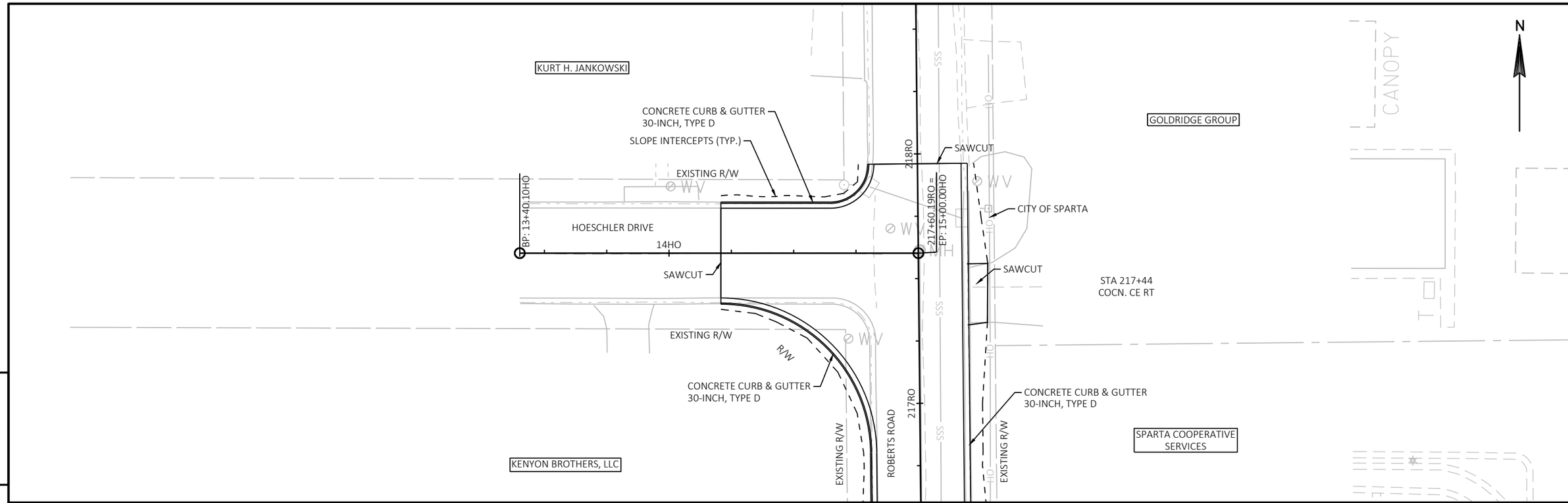

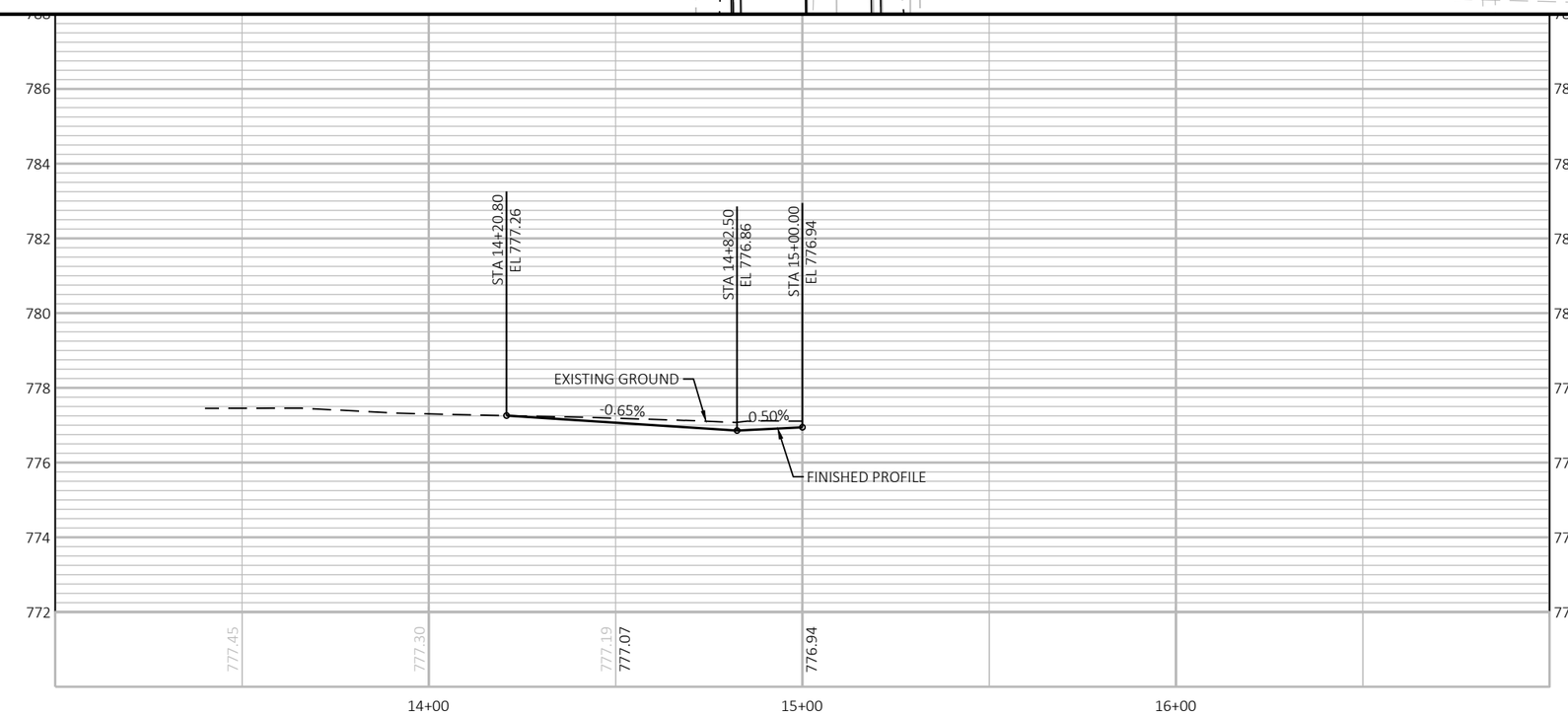

PROJECT NO: 5144-01-75 & 5144-01-76	HWY: STH 27	COUNTY: MONROE	PLAN AND PROFILE: HOESCHLER DR	SHEET 242	E

FILE NAME : P:\50S\51\00051029\CADD\C3D\DESIGN\ALIPROFS\ALIPROF-ROBERTSRD-CITY.DWG
LAYOUT NAME - 050105_pp
PLOT DATE : 7/13/2017 8:15 AM PLOT BY : BRAD LEE PLOT NAME : PLOT SCALE : ##########

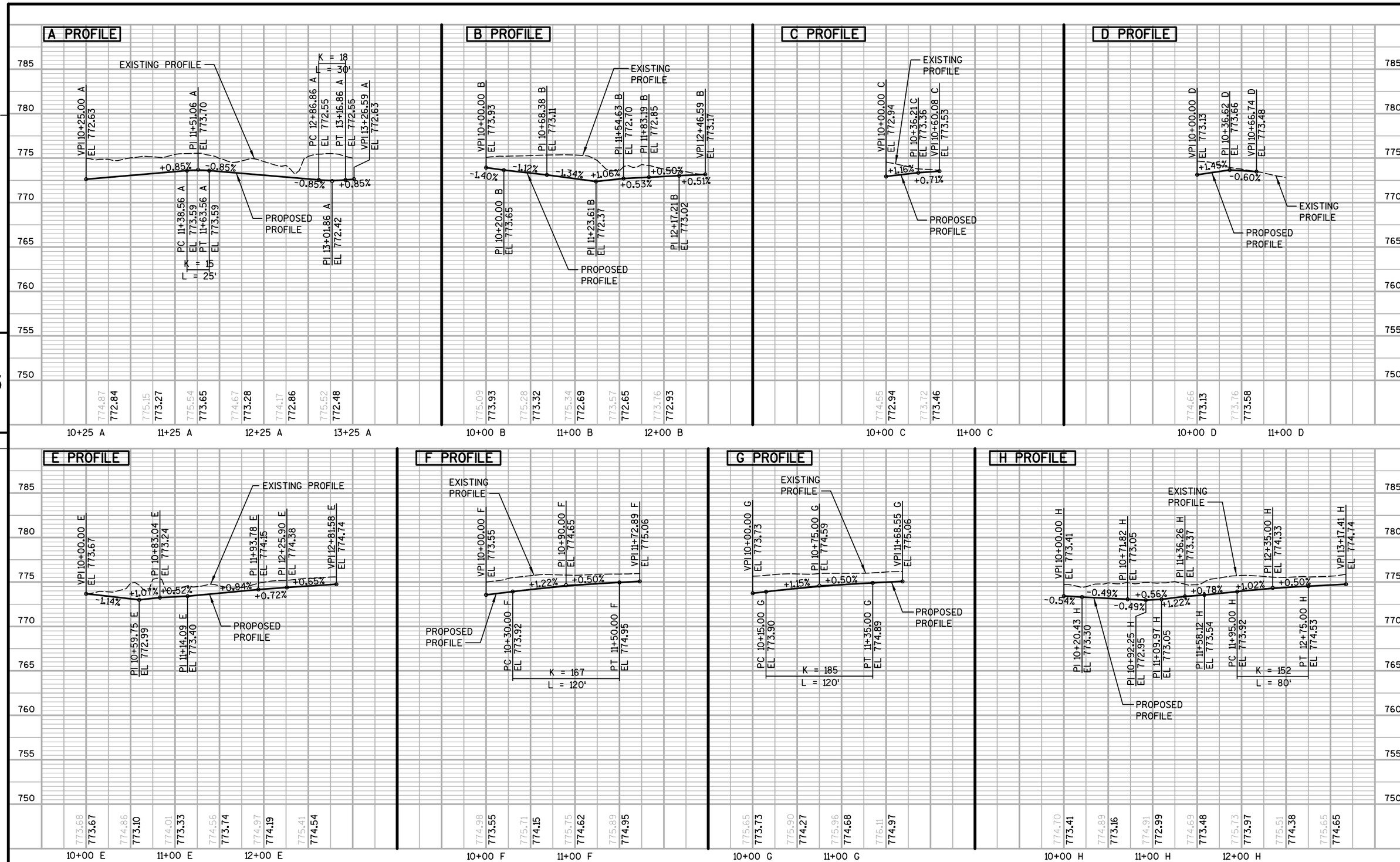

PROJECT NO: 5144-01-75	HWY: STH 27	COUNTY: MONROE	PROFILES - ROUNDABOUT	SHEET 243	E

FILE NAME : S:\MAD\1000--1099\1089\415\Micros\Plan\050101_pp.dgn PLOT DATE : 7/14/2017 PLOT BY : _username_ PLOT NAME : PLOT SCALE : $$.....plotscale.....$$ WISDOT/CADDS SHEET 46

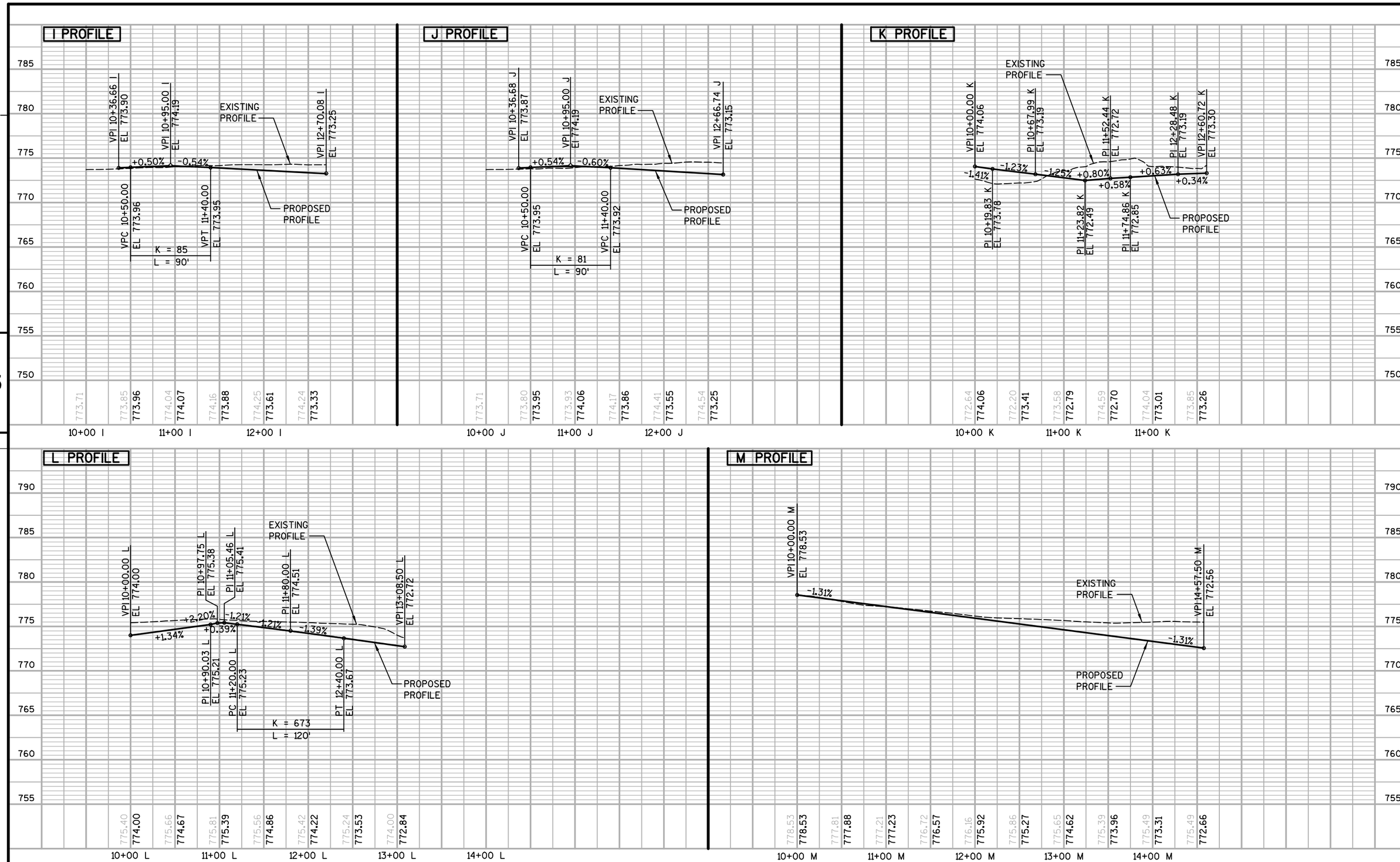

PROJECT NO: 5144-01-75	HWY: STH 27	COUNTY: MONROE	PROFILES - ROUNDABOUT	SHEET 244	E

FILE NAME : S:\MAD\1000--1099\1089\415\Micros\Plan\050102_pp.dgn PLOT DATE : 7/14/2017 PLOT BY : _username_ PLOT NAME : PLOT SCALE : $$.....plotscale.....$$ WISDOT/CADDS SHEET 46

Standard Detail Drawing List

08A05-19A	INLET COVERS TYPE A, H, A-S, H-S & Z
08A05-19B	INLET COVERS TYPE B, B-A, C, MS, MS-A, & WM
08A05-19C	INLET COVERS TYPE F, HM, HM-S, S, T, V, HM-GJ, & HM-GJ-S
08A05-19D	INLET COVER TYPE BW, MANHOLE COVERS, TYPE K, J, J-S, L & M
08B09-02	MANHOLES 3-FT, 4-FT, 5-FT, 6-FT, 7-FT AND 8-FT DIAMETER
08C06-02	INLETS 3-FT AND 4-FT DIAMETER
08C07-02	INLETS 2X2-FT, 2X2.5-FT, 2X3-FT AND 2.5X3-FT
08C08-02	INLETS MEDIAN 1 AND 2 GRATE
08D01-19	CONCRETE CURB, CONCRETE CURB AND GUTTER AND TIES
08D03-06	CONCRETE SURFACE DRAINS DROP INLET TYPE AT STRUCTURES
08D05-18A	CURB RAMPS TYPES 1 AND 1-A
08D05-18B	CURB RAMPS TYPES 2 AND 3
08D05-18C	CURB RAMPS TYPES 4A AND 4A1
08D05-18D	CURB RAMPS TYPE 4B AND 4B1
08D05-18E	CURB RAMPS TYPES 5, 6, 7A, 7B & 8
08D14-01	SLOTTED VANE DRAIN
08E08-03	TYPICAL INSTALLATIONS OF EROSION BALES / TEMPORARY DITCH CHECKS
08E09-06	SILT FENCE
08E10-02	INLET PROTECTION TYPE A, B, C AND D
08E14-01	TRACKING PAD
08F01-11	APRON ENDWALLS FOR CULVERT PIPE
08F04-07	JOINT TIES FOR CONCRETE PIPE AND CONCRETE COLLAR DETAIL
09B02-10	CONDUIT
09B04-11	PULL BOX
09B16-01	PULL BOX NON-CONDUCTIVE
09C02-07	CONCRETE BASES, TYPES 1, 2, 5, & 6
09C03-04	TRANSFORMER/PEDESTAL BASES
09C06-07	CONCRETE CONTROL CABINET BASE, TYPE 9, SPECIAL
09C12-09A	CONCRETE BASE TYPE 13
09C12-09B	CONCRETE BASE TYPE 13
09C14-02	CONCRETE CONTROL CABINET BASE, TYPE L
09D01-05	CABINET SERVICE INSTALLATION (METER BREAKER PEDESTAL)
09D02-03	SIGNAL CONTROL CABINET
09D04-02	LIGHTING CONTROL CABINET 120/240 VOLT
09E01-14G	HARDWARE DETAILS FOR POLE MOUNTINGS
09E03-05	NON-FREEWAY LIGHTING UNIT POLE WIRING
09E06-05	TRAFFIC SIGNAL STANDARD POLY BRACKET MOUNTINGS (TYPICAL) 13 FT. OR 15 FT.
09E07-05	TRAFFIC SIGNAL STANDARD PEDESTRIAN AND FLASHER TYPICAL MOUNTING DETAILS
09E12-01D	OVER HEIGHT TYPE 13 POLE 35'-55' MONOTBE ARM
09E12-01E	GENERAL NOTES AND HARDWARE DETAILS FOR OVER HEIGHT TYPE 9, 10, 12 & 13 POLES WITH MONOTUBE ARMS
09F09-04	LOOP DETECTOR PLACED IN CRUSHED AGGREGATE BASE (NEW CONCRETE PAVEMENT)
09G01-04A	SPAN WIRE TEMPORARY TRAFFIC SIGNAL
09G01-04B	SPAN WIRE TEMPORARY TRAFFIC SIGNAL
09G01-04C	SPAN WIRE TEMPORARY TRAFFIC SIGNAL
09G01-04D	SPAN WIRE TEMPORARY TRAFFIC SIGNAL
09G01-04E	SPAN WIRE TEMPORARY TRAFFIC SIGNAL
09G01-04F	SPAN WIRE TEMPORARY TRAFFIC SIGNAL
09G01-04G	SPAN WIRE TEMPORARY TRAFFIC SIGNAL
11B01-05	CONCRETE CORRUGATED MEDIAN
11B02-02	CONCRETE MEDIAN NOSE
13B02-08A	CONCRETE PAVEMENT APPROACH SLAB
13C01-18	CONCRETE PAVEMENT LONGITUDINAL JOINTS AND TIES
13C18-05A	CONCRETE PAVEMENT JOINTING
13C18-05B	CONCRETE PAVEMENT STEEL REINFORCEMENT
13C18-05C	CONCRETE PAVEMENT JOINT TYPES
13C18-05D	CONCRETE PAVEMENT JOINTING AT UTILITY FIXTURES
13C18-05E	CONCRETE PAVEMENT JOINTING AND STEEL REINFORCEMENT IN ROUNDABOUTS
14A02-01	TREE PLANTING DETAIL
14B42-05A	MIDWEST GUARDRAIL SYSTEM (MGS) GUARDRAIL
14B42-05B	MIDWEST GUARDRAIL SYSTEM (MGS) GUARDRAIL
14B42-05C	MIDWEST GUARDRAIL SYSTEM (MGS) GUARDRAIL
14B42-05D	MIDWEST GUARDRAIL SYSTEM (MSG) GUARDRAIL
14B44-02A	MIDWEST GUARDRAIL SYSTEM ENERGY ABSORBING TERMINAL (MGS)
14B44-02B	MIDWEST GUARDRAIL SYSTEM ENERGY ABSORBING TERMINAL (MGS)
14B44-02C	MIDWEST GUARDRAIL SYSTEM ENERGY ABSORBING TERMINAL (MGS)
14B45-04A	MIDWEST GUARDRAIL SYSTEM THRIE BEAM TRANSITION (MGS)
14B45-04B	MIDWEST GUARDRAIL SYSTEM THRIE BEAM TRANSITION (MGS)

6

Standard Detail Drawing List

14B45-04C	MIDWEST GUARDRAIL SYSTEM THRIE BEAM TRANSITION (MGS)
14B45-04D	MIDWEST GUARDRAIL SYSTEM THRIE BEAM TRANSITION (MGS)
14B45-04E	MIDWEST GUARDRAIL SYSTEM THRIE BEAM TRANSITION (MGS)
14B45-04F	MIDWEST GUARDRAIL SYSTEM THRIE BEAM TRANSITION (MGS)
14B45-04G	MIDWEST GUARDRAIL SYSTEM THRIE BEAM TRANSITION (MGS)
14B45-04H	MIDWEST GUARDRAIL SYSTEM THRIE BEAM TRANSITION (MGS)
14B45-04I	MIDWEST GUARDRAIL SYSTEM THRIE BEAM TRANSITION (MGS)
14B45-04J	MIDWEST GUARDRAIL SYSTEM THRIE BEAM TRANSITION (MGS)
14B45-04K	MIDWEST GUARDRAIL SYSTEM THRIE BEAM TRANSITION (MGS)
14B45-04L	MIDWEST GUARDRAIL SYSTEM THRIE BEAM TRANSITION (MGS)
15A03-02A	FLEXIBLE MARKER POST FOR CULVERT END
15A03-02B	FLEXIBLE MARKER POST FOR CULVERT END
15C02-06A	BARRICADES AND SIGNS FOR MAINLINE CLOSURES
15C02-06B	BARRICADES AND SIGNS FOR MAINLINE CLOSURES
15C03-03	BARRICADES AND SIGNS FOR SIDEROAD CLOSURES
15C04-03	TRAFFIC CONTROL, ADVANCE WARNING SIGNS 45 M.P.H. OR GREATER TWO-WAY UNDIVIDED ROAD OPEN TO TRAFFIC
15C05-03	TRAFFIC CONTROL, ADVANCE WARNING SIGNS 40 M.P.H. OR LESS
15C07-14A	PAVEMENT MARKING SYMBOLS
15C07-14B	PAVEMENT MARKING WORDS
15C07-14C	PAVEMENT MARKING ARROWS
15C07-14D	ROUNDABOUT ARROWS
15C07-14E	PAVEMENT MARKING FOR BIKE LANES
15C08-18A	LONGITUDINAL MARKING (MAINLINE)
15C08-18B	PAVEMENT MARKING (TURN LANES)
15C11-07B	CHANNELIZING DEVICES DRUMS, CONES, BARRICADES AND VERTICAL PANELS
15C27-02B	PAVEMENT MARKING (ISLANDS)
15C29-05A	BICYCLE LANE MARKING
15C33-02	STOP LINE AND CROSSWALK PAVEMENT MARKING
15D30-03A	TRAFFIC CONTROL, PEDESTRIAN ACCOMMODATION
15D30-03B	TRAFFIC CONTROL, TEMPORARY ADA COMPLIANT PEDESTRIAN ACCOMMODATION
15D30-03C	TRAFFIC CONTROL, PEDESTRIAN ACCOMMODATION
15D38-01A	TEMPORARY TRAFFIC CONTROL FIXED MESSAGE SIGNS
15D38-01B	ATTACHMENT OF SIGNS TO POSTS

6

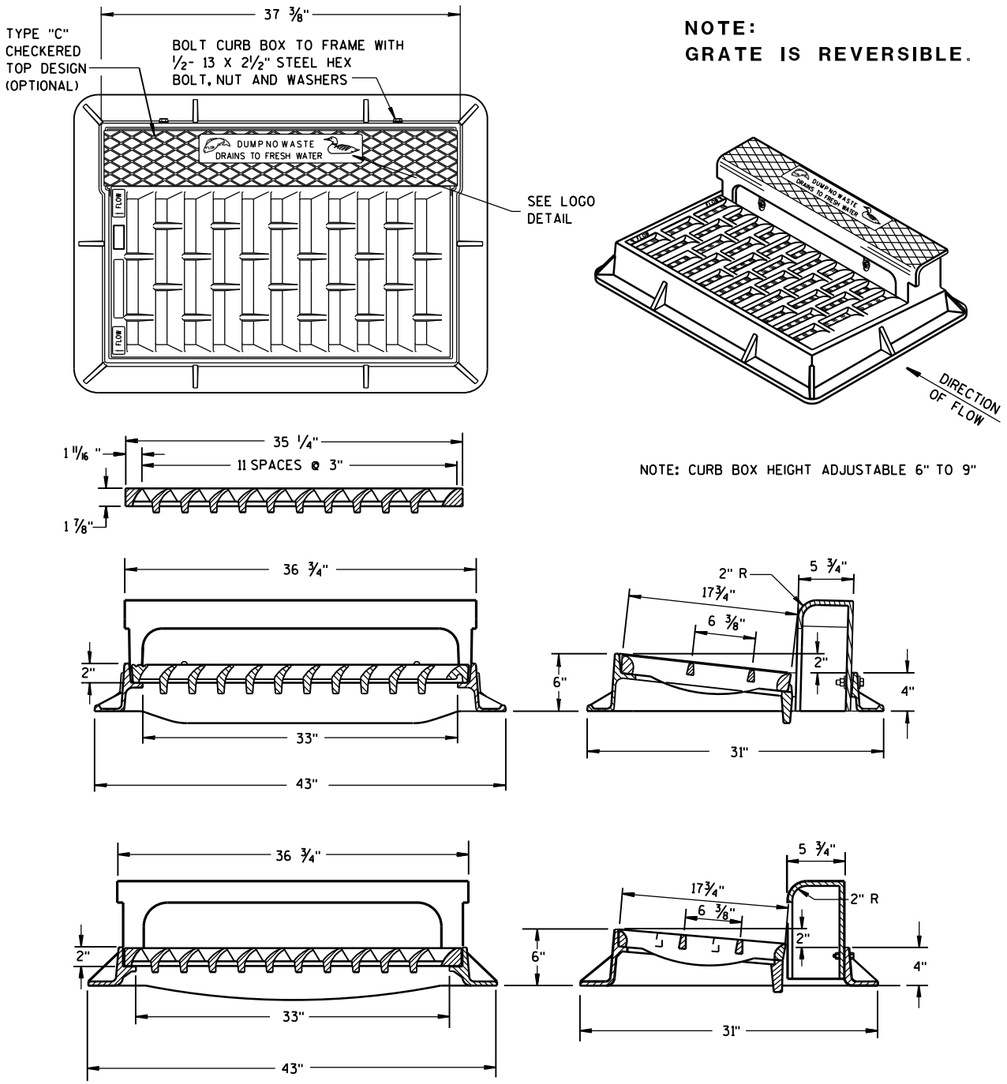

NOTE:
GRATE IS REVERSIBLE.

NOTE: CURB BOX HEIGHT ADJUSTABLE 6" TO 9"

TYPE "H"

NOTE: EITHER CASTING IS ACCEPTABLE

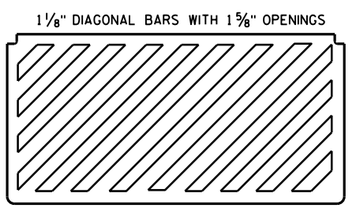

SPECIAL GRATE FOR TYPE "H" COVER

(MEASURES 35 1/4" X 17 3/4" X 2")

(NOTED AS TYPE H-S ON DRAINAGE TABLE)

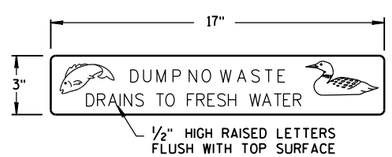

LOGO DETAIL

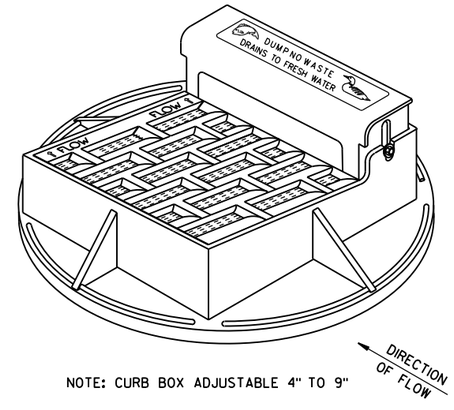

NOTE: CURB BOX ADJUSTABLE 4" TO 9"

NOTE:
GRATE IS REVERSIBLE.

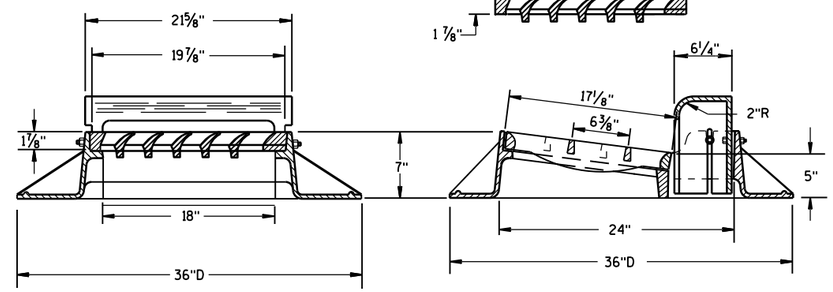

TYPE "A"

GENERAL NOTES

DETAILS OF CONSTRUCTION, MATERIALS AND WORKMANSHIP NOT SHOWN ON THIS DRAWING SHALL CONFORM TO THE PERTINENT REQUIREMENTS OF THE STANDARD SPECIFICATIONS AND THE APPLICABLE SPECIAL PROVISIONS.

DETAIL DRAWINGS FOR PROPOSED ALTERNATE DESIGNS FOR CATCH BASIN, MANHOLE AND INLET COVERS SHALL BE SUBMITTED TO THE ENGINEER FOR APPROVAL PROVIDING THAT SUCH ALTERNATE DESIGNS MAKE PROVISION FOR EQUIVALENT CAPACITY AND STRENGTH.

ROUND FRAMES AND COVERS SHALL HAVE CONTINUOUSLY MACHINED BEARING SURFACES TO PREVENT ROCKING AND RATTLING.

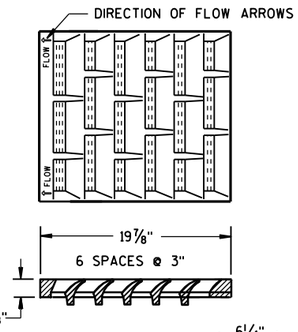

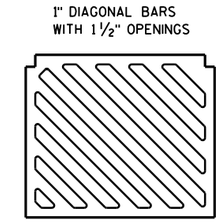

SPECIAL GRATE FOR TYPE "A" COVER

(MEASURES 19 3/4" X 17" X 1 7/8")

(NOTED AS TYPE A-S ON DRAINAGE TABLE)

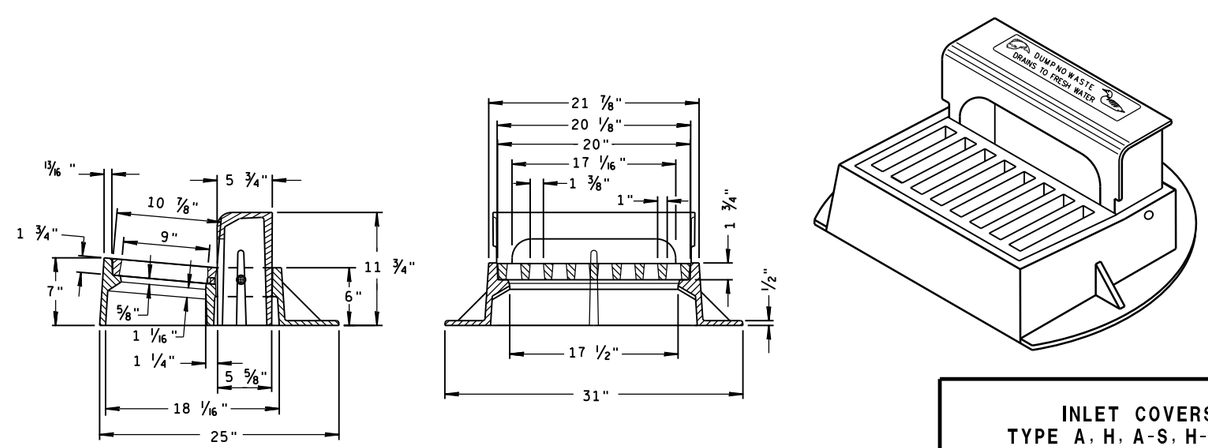

TYPE "Z"

INLET COVERS
TYPE A, H, A-S, H-S & Z

STATE OF WISCONSIN
DEPARTMENT OF TRANSPORTATION

APPROVED
11-27-13 /S/ Jerry H. Zogg
DATE ROADWAY STANDARDS DEVELOPMENT ENGINEER
FHWA

6

S.D.D. 8 A 5-19a

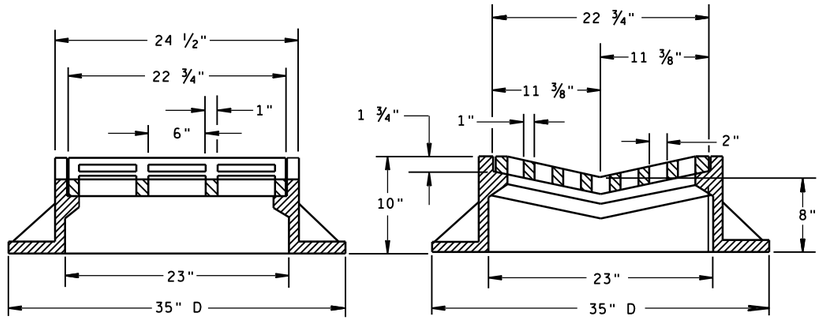

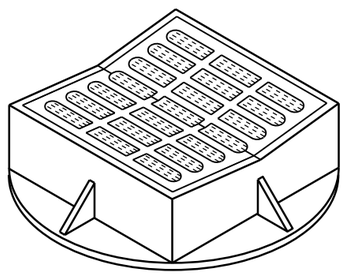

TYPE "B"

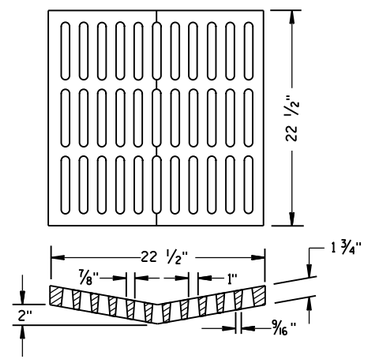

ALTERNATIVE GRATE FOR TYPE "B" COVER

USE WHERE PEDESTRIAN OR BICYCLE TRAFFIC IS POSSIBLE.

NOTED AS TYPE B-A ON THE DRAINAGE TABLE

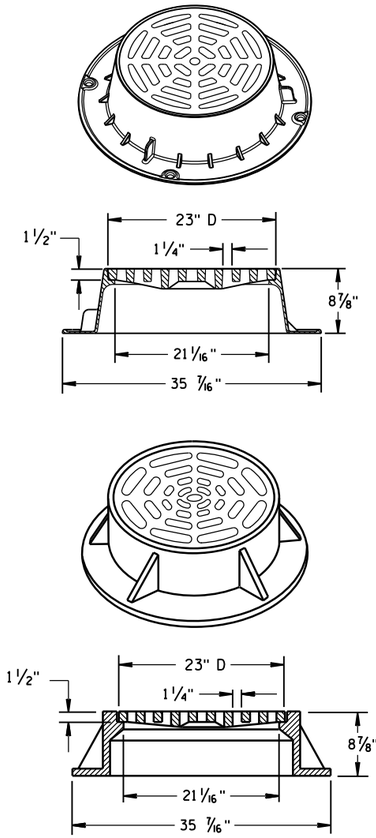

TYPE "C"

NOTE: EITHER CASTING IS ACCEPTABLE

GENERAL NOTES

DETAILS OF CONSTRUCTION, MATERIALS AND WORKMANSHIP NOT SHOWN ON THIS DRAWING SHALL CONFORM TO THE PERTINENT REQUIREMENTS OF THE STANDARD SPECIFICATIONS AND THE APPLICABLE SPECIAL PROVISIONS.

DETAIL DRAWINGS FOR PROPOSED ALTERNATE DESIGNS FOR CATCH BASIN, MANHOLE AND INLET COVERS SHALL BE SUBMITTED TO THE ENGINEER FOR APPROVAL PROVIDING THAT SUCH ALTERNATE DESIGNS MAKE PROVISION FOR EQUIVALENT CAPACITY AND STRENGTH.

ROUND FRAMES AND COVERS SHALL HAVE CONTINUOUSLY MACHINED BEARING SURFACES TO PREVENT ROCKING AND RATTLING.

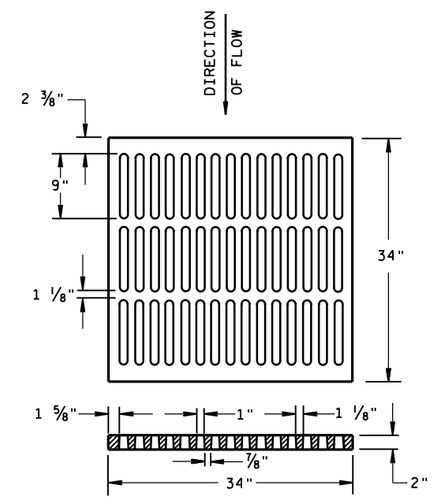

ALTERNATIVE TYPE "MS"

USE WHERE PEDESTRIAN OR BICYCLE TRAFFIC IS PERMITTED

NOTED AS TYPE MS-A ON THE DRAINAGE TABLE

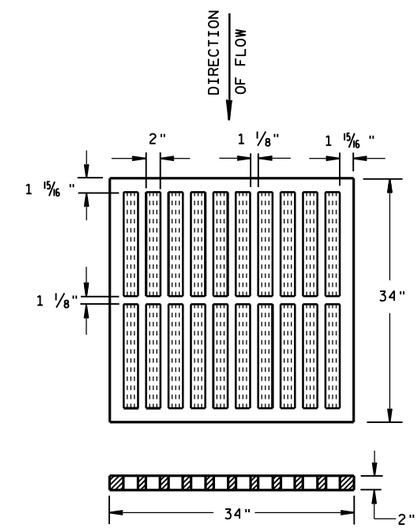

TYPE "MS"

USE ON FREEWAYS AND EXPRESSWAYS

NOTED AS TYPE MS ON DRAINAGE TABLE

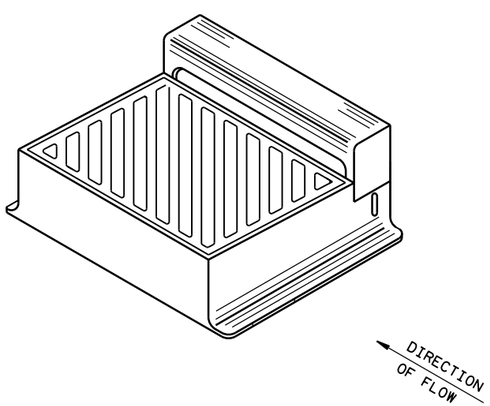

DIAGONAL SLOTS, SHALL BE ORIENTED TO THE DIRECTION OF FLOW AS ILLUSTRATED. GRATES ARE MANUFACTURED TO BE REVERSIBLE.

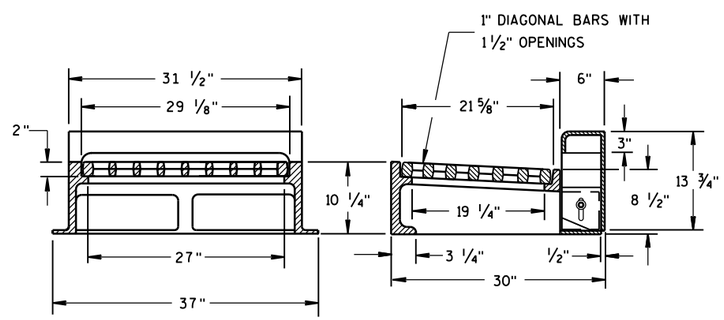

NOTE: CURB BOX HEIGHT ADJUSTABLE 6" TO 9"

TYPE "WM"

6

6

S.D.D. 8 A 5-19b

S.D.D. 8 A 5-19b

INLET COVERS
TYPE B, B-A, C, MS, MS-A, & WM

STATE OF WISCONSIN
DEPARTMENT OF TRANSPORTATION

APPROVED

11/27/2013 — DATE

/S/ Jerry H. Zogg — ROADWAY STANDARDS DEVELOPMENT ENGINEER

FHWA

GENERAL NOTES

DETAILS OF CONSTRUCTION, MATERIALS AND WORKMANSHIP NOT SHOWN ON THIS DRAWING SHALL CONFORM TO THE PERTINENT REQUIREMENTS OF THE STANDARD SPECIFICATIONS AND THE APPLICABLE SPECIAL PROVISIONS.

DETAIL DRAWINGS FOR PROPOSED ALTERNATE DESIGNS FOR INLET COVERS SHALL BE SUBMITTED TO THE ENGINEER FOR APPROVAL PROVIDING THAT SUCH ALTERNATE DESIGNS MAKE PROVISION FOR EQUIVALENT CAPACITY AND STRENGTH.

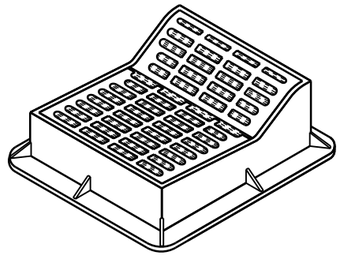

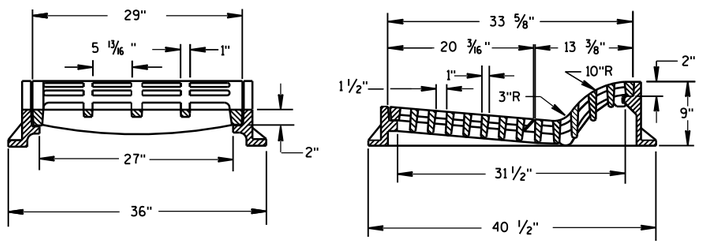

TYPE "F"

USE WITH TYPES A & D CONCRETE CURB & GUTTER, 36 INCH.

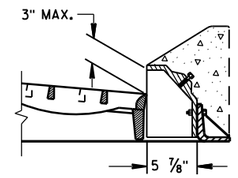

ALTERNATIVE CURB BOX FOR TYPE "HM" COVER

USE WITH TYPES G & J CONCRETE CURB & GUTTER, 30 INCH
NOTED AS TYPE HM-GJ ON DRAINAGE TABLE

NOTE:
SPECIAL GRATE FOR THE
TYPE "H" COVER MAY ALSO BE
USED FOR THE TYPE "HM-GJ" COVER
NOTED AS TYPE HM-GJ-S ON DRAINAGE TABLE

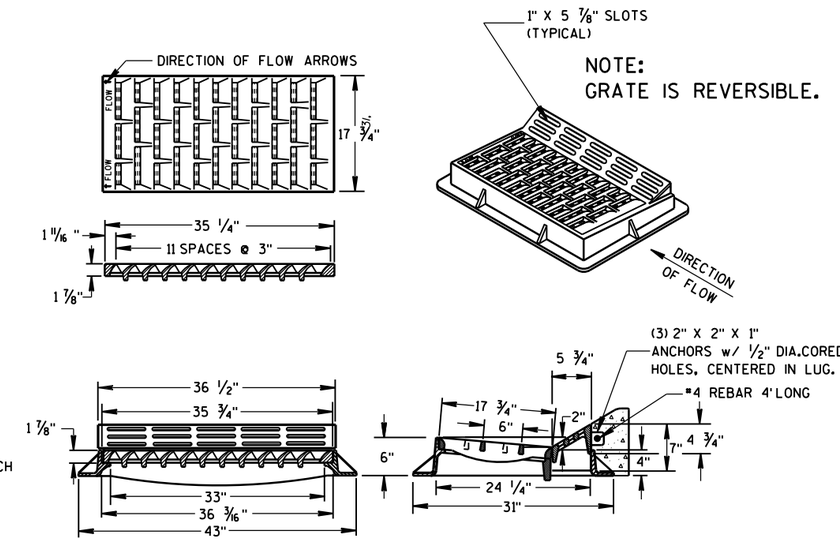

TYPE "HM"

USE WITH TYPES A & D CONCRETE CURB & GUTTER, 36 INCH.

NOTE:
SPECIAL GRATE FOR THE
TYPE "H" COVER MAY ALSO BE
USED FOR THE TYPE "HM" COVER
NOTED AS TYPE HM-S ON DRAINAGE TABLE

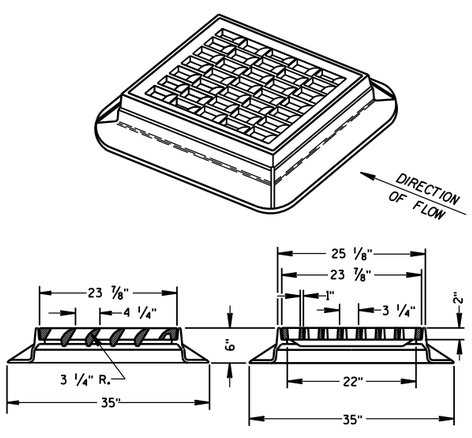

TYPE "S"

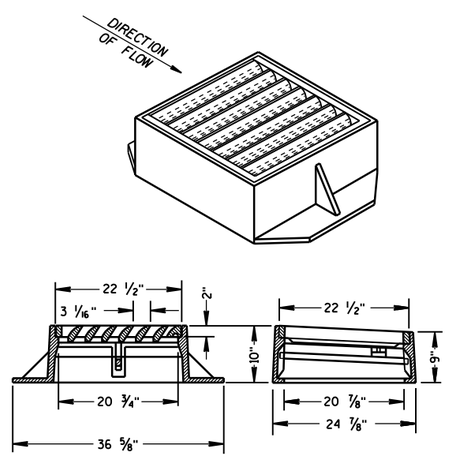

TYPE "V"

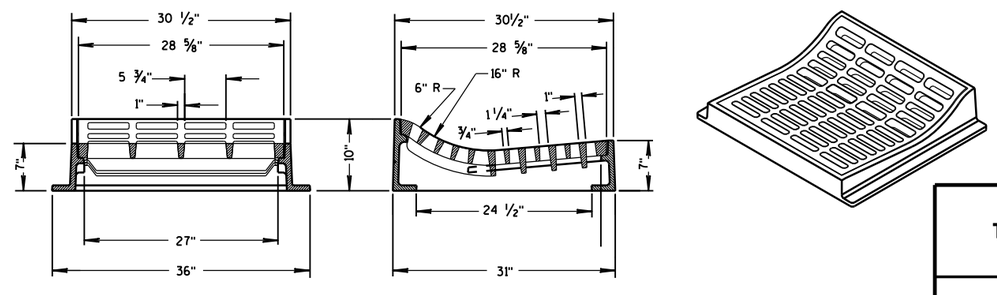

TYPE "T"

USE WITH TYPES R & T CONCRETE CURB & GUTTER, 36 INCH.

INLET COVERS
TYPE F, HM, HM-S, S, T, V, HM-GJ, & HM-GJ-S

STATE OF WISCONSIN
DEPARTMENT OF TRANSPORTATION

APPROVED
11/27/2013 — DATE
/S/ Jerry H. Zogg — ROADWAY STANDARDS DEVELOPMENT ENGINEER
FHWA

6

S.D.D. 8 A 5-19c

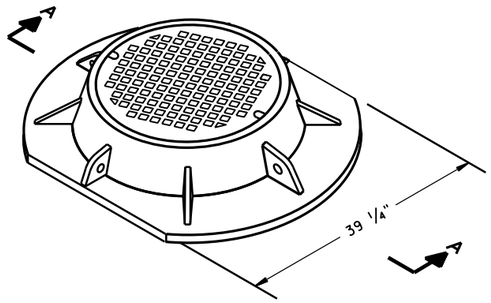

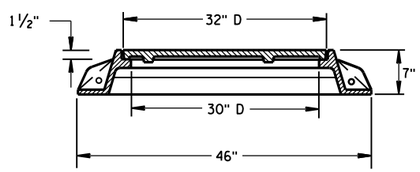

SECTION A-A
TYPE "K"

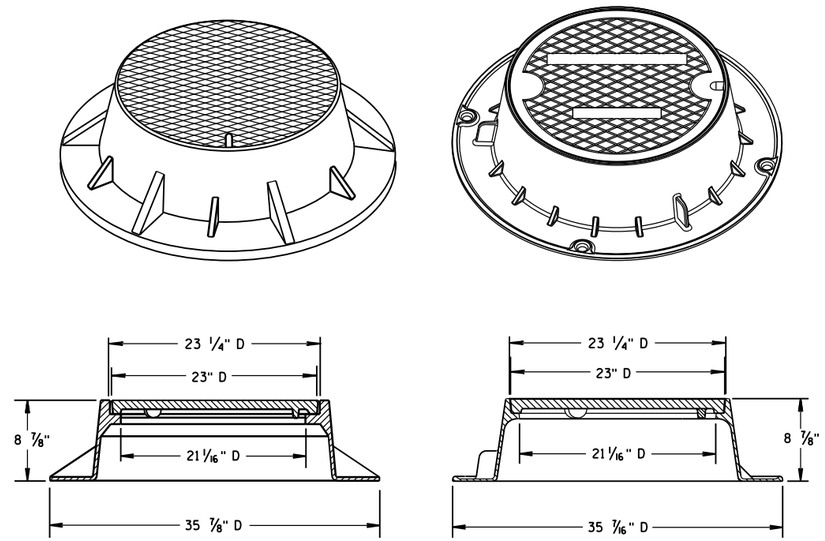

TYPE "J"
NOTE: EITHER CASTING IS ACCEPTABLE

GENERAL NOTES

DETAILS OF CONSTRUCTION, MATERIALS AND WORKMANSHIP NOT SHOWN ON THIS DRAWING SHALL CONFORM TO THE PERTINENT REQUIREMENTS OF THE STANDARD SPECIFICATIONS AND THE APPLICABLE SPECIAL PROVISIONS.

DETAIL DRAWINGS FOR PROPOSED ALTERNATE DESIGNS FOR MANHOLE COVERS SHALL BE SUBMITTED TO THE ENGINEER FOR APPROVAL PROVIDING THAT SUCH ALTERNATE DESIGNS MAKE PROVISION FOR EQUIVALENT CAPACITY AND STRENGTH.

ROUND FRAMES AND COVERS SHALL HAVE CONTINUOUSLY MACHINED BEARING SURFACES TO PREVENT ROCKING AND RATTLING.

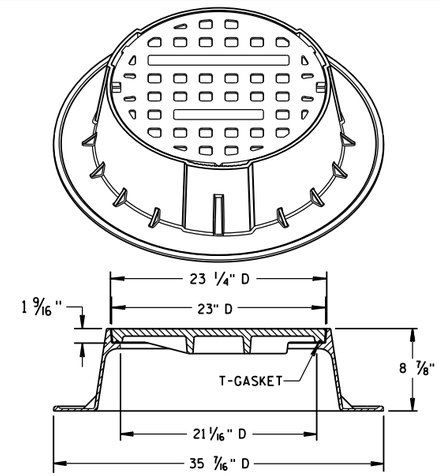

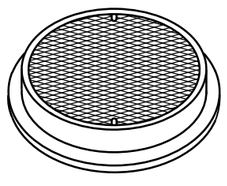

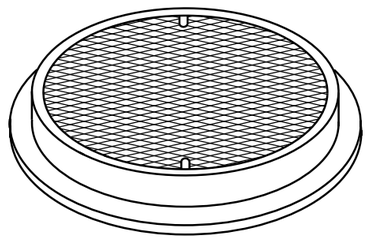

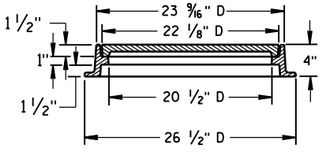

TYPE "L"

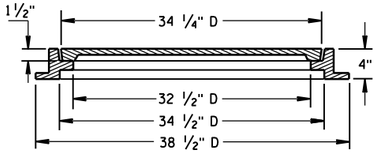

TYPE "M"

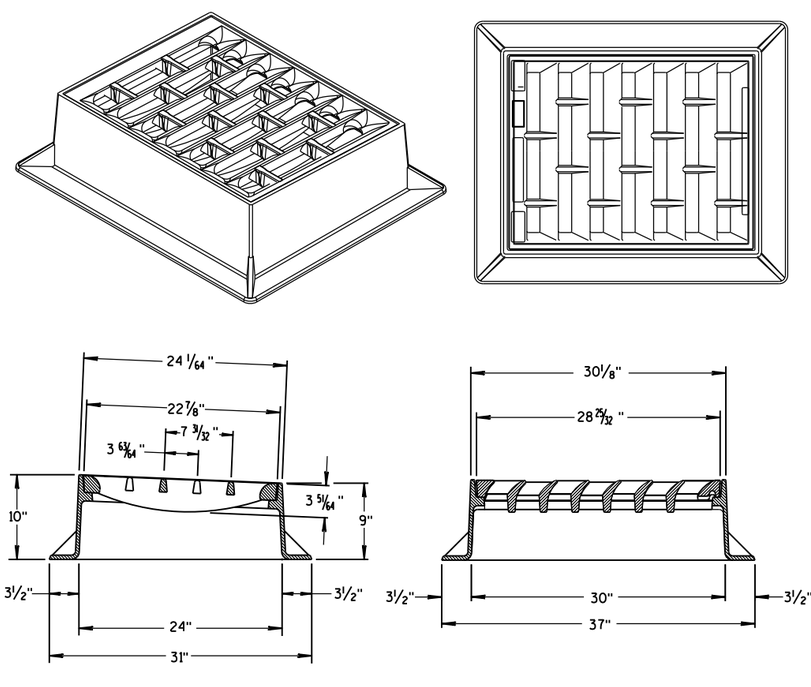

INLET COVER TYPE "BW"

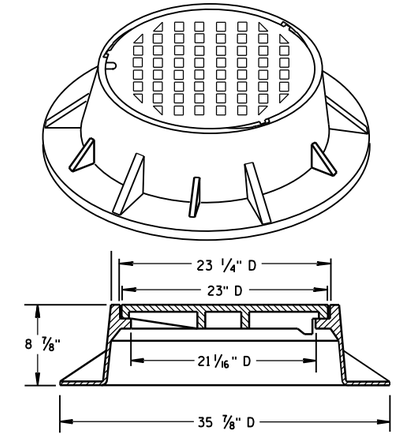

TYPE "J" SPECIAL
TYPE "B" NON-ROCKING SELF-SEAL LID
(NOTED AS TYPE J-S ON THE DRAINAGE TABLE)
NOTE: EITHER CASTING IS ACCEPTABLE

INLET COVER TYPE BW MANHOLE COVERS, TYPE K, J, J-S, L & M	
STATE OF WISCONSIN DEPARTMENT OF TRANSPORTATION	
APPROVED 11/27/2013 DATE FHWA	/S/ Jerry H. Zogg ROADWAY STANDARDS DEVELOPMENT ENGINEER

6
S.D.D. 8 A 5-19d

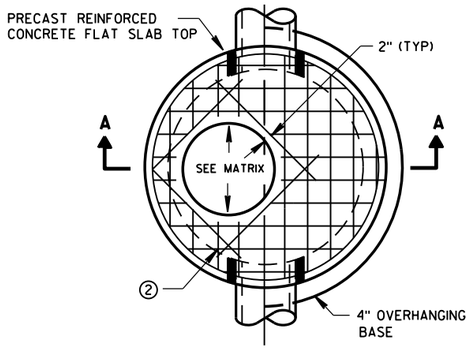

PLAN VIEW CIRCULAR OPENING

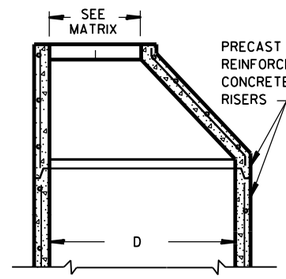

OPTIONAL PRECAST REINFORCED CONCRETE ECCENTRIC TOP

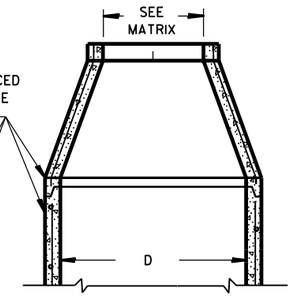

OPTIONAL PRECAST REINFORCED CONCRETE CONCENTRIC TOP

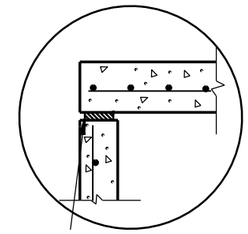

TOP WITH PLAIN END JOINT

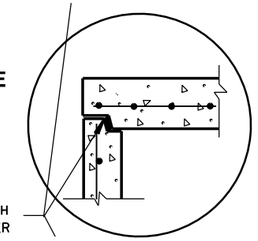

JOINTS TO BE SEALED WITH A BUTYL RUBBER SEAL PER SEALANT MANUFACTURERS RECOMMENDATIONS CONFORMING TO ASTM C990 (TYP)

TOP WITH TONGUE AND GROOVE JOINT

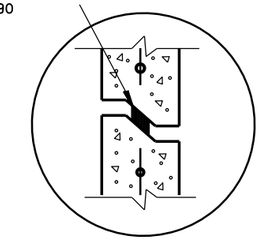

RISER WITH TONGUE AND GROOVE JOINT

DETAIL "B"

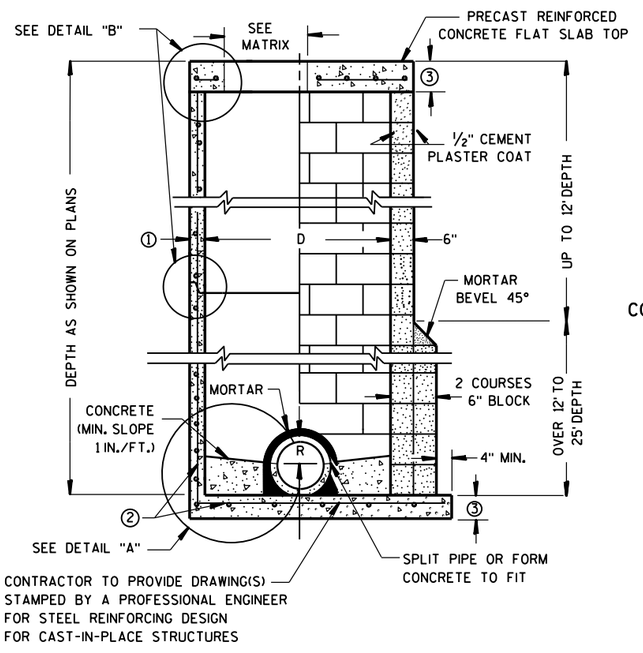

PRECAST REINFORCED CONCRETE WITH MONOLITHIC BASE

CONCRETE BLOCK WITH CAST-IN-PLACE OR PRECAST REINFORCED CONCRETE BASE ②

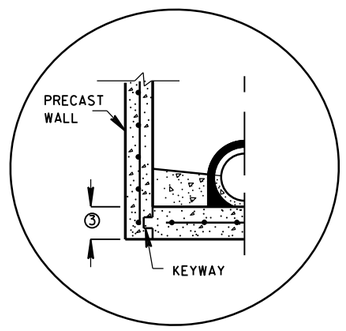

PRECAST REINFORCED CONCRETE WITH INTEGRAL BASE OPTION

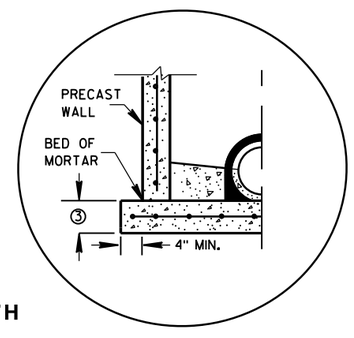

SEPARATE PRECAST REINFORCED CONCRETE BASE OPTION

DETAIL "A"

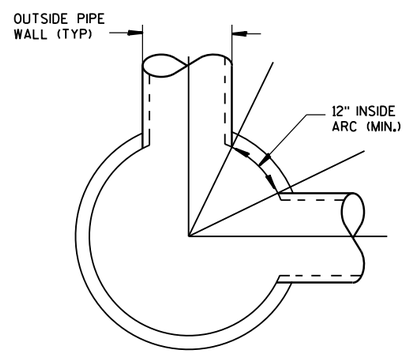

DETAIL "C"

GENERAL NOTES

DETAILS OF CONSTRUCTION, MATERIALS AND WORKMANSHIP NOT SHOWN ON THIS DRAWING SHALL CONFORM TO THE PERTINENT REQUIREMENTS OF THE STANDARD SPECIFICATIONS AND THE APPLICABLE SPECIAL PROVISIONS.

UNLESS OTHERWISE AUTHORIZED IN WRITING BY THE ENGINEER, THE CONTRACTOR SHALL NOT ORDER AND DELIVER PRECAST MANHOLE UNITS REQUIRED FOR THE PROJECT UNTIL A LIST OF SIZES IS FURNISHED BY THE ENGINEER.

DETAILED DRAWINGS FOR PROPOSED ALTERNATE DESIGNS FOR UNDERGROUND DRAINAGE STRUCTURES SHALL BE SUBMITTED TO THE ENGINEER FOR APPROVAL PROVIDING THAT SUCH ALTERNATE DESIGNS MAKE PROVISION FOR EQUIVALENT CAPACITY AND STRENGTH.

ALL DRAINAGE STRUCTURES ARE DESIGNATED ON THE PLANS AS "MANHOLES 3X3-L", "CATCH BASINS 4-B", "INLETS 2X3-H", ETC. THE FIRST NUMBERS DESIGNATE THE SIZE OF THE STRUCTURE, AND THE FOLLOWING LETTER DESIGNATES THE TYPE OF COVER TO BE USED TO COMPRISE THE COMPLETE UNIT.

BASES SHALL BE PLACED ON A BED OF MATERIAL AT LEAST 6 INCHES IN DEPTH, WHICH MEETS THE REQUIREMENTS OF FOUNDATION BACKFILL. THIS BEDDING SHALL BE COMPACTED AND PROVIDE UNIFORM SUPPORT FOR THE ENTIRE AREA OF THE BASE.

PRECAST REINFORCED CONE TOPS (ECCENTRIC OR CONCENTRIC) OR PRECAST REINFORCED FLAT SLAB TOPS MAY BE USED ON CONCRETE BLOCK STRUCTURES.

ECCENTRIC CONE TOPS MAY BE USED ON ALL STRUCTURES, AND CONCENTRIC CONE TOPS SHALL BE USED ONLY ON STRUCTURES 5 FEET OR LESS IN DEPTH, UNLESS OTHERWISE DIRECTED BY THE ENGINEER.

STEPS MEETING AASHTO M199 AND THE FOLLOWING REQUIREMENTS SHALL BE INSTALLED IN ALL STRUCTURES OVER 5 FEET IN DEPTH: 16 INCH C-C MAXIMUM SPACING; PROJECT A MINIMUM CLEAR DISTANCE OF 4 INCHES FROM THE WALL AT THE POINT OF EMBEDMENT; MINIMUM LENGTH OF 10 INCHES; MINIMUM WALL EMBEDMENT OF 3 INCHES. FERROUS METAL STEPS NOT PAINTED OR TREATED TO RESIST CORROSION SHALL HAVE A MINIMUM CROSS SECTIONAL DIMENSION OF 1 INCH.

STEPS OF APPROVED POLYPROPYLENE PLASTIC COATED REINFORCEMENT BAR ARE ACCEPTABLE. REINFORCING BAR MUST BE A MINIMUM OF ½" AND MEET THE REQUIREMENTS OF ASTM A615.

CERTIFICATION SHALL BE PROVIDED THAT INSTALLED STEPS WHEN TESTED IN ACCORDANCE WITH SECTION 10 OF AASHTO T280 CAN WITHSTAND A VERTICAL LOAD OF 800 LBS. AND A HORIZONTAL LOAD OF 400 LBS.

ALL BAR STEEL REINFORCEMENT SHALL BE EMBEDDED 2 INCHES CLEAR UNLESS OTHERWISE SHOWN OR NOTED.

CONCRETE BLOCK WILL NOT BE PERMITED FOR STRUCTURES GREATER THAN 4 FEET IN DIAMETER.

PRECAST REINFORCED RISERS SHALL HAVE A TONGUE AND GROOVE JOINT WITH TONGUE UP OR DOWN.

ALL PRECAST MANHOLE UNITS SHALL CONFORM TO THE PERTINENT REQUIREMENTS OF AASHTO DESIGNATION M 199.

4" OVERHANGING BASES ARE REQUIRED FOR ALL CONCRETE BLOCK INSTALLATIONS. 4" OVERHANG IS REQUIRED WHEN SEPARATE PRECAST BASE IS PROVIDED. OVERHANG IS NOT REQUIRED ON PRECAST STRUCTURES WITH AN INTEGRAL OR MONOLITHIC BASE.

FOR ADDITIONAL CONFIGURATIONS, MAINTAIN A MINIMUM OF 12 INCHES AS MEASURED FROM THE INSIDE OF THE STRUCTURE WALL BETWEEN THE OUTSIDE PIPE WALLS OF ADJACENT PIPES. SEE DETAIL "C".

① MINIMUM WALL THICKNESS SHALL BE 4 INCHES FOR 3-FT, 5 INCHES FOR 4-FT, 6 INCHES FOR 5-FT, 7 INCHES FOR 6-FT, 8 INCHES FOR 7-FT AND 9 INCHES FOR 8-FT DIAMETER PRECAST MANHOLES.

② FOR PRECAST MANHOLES PROVIDE REINFORCING STEEL IN ACCORDANCE TO AASHTO M199.

③ PRECAST FLAT SLAB TOPS AND BASES WITH A DIAMETER OF 48" AND LESS SHALL HAVE A MINIMUM THICKNESS OF 6". PRECAST FLAT SLAB TOPS AND BASES WITH A DIAMETER LARGER THAN 48" SHALL HAVE A MINIMUM THICKNESS OF 8".

MANHOLE COVER OPENING MATRIX

MANHOLE COVER TYPE	C	ALL J'S	K	L	M
OPENING SIZE (FT)					
2 DIA.	X	X		X	
3 DIA.			X		X

PIPE MATRIX

MANHOLE SIZE	MAXIMUM INSIDE PIPE DIAMETER FOR TWO PIPES	
	180° SEPARATION (IN)	90° SEPARATION (IN)
3-FT	15	12
4-FT	24	18
5-FT	36	24
6-FT	42	36
7-FT	48	36
8-FT	60	42

MANHOLES 3-FT, 4-FT, 5-FT, 6-FT, 7-FT AND 8-FT DIAMETER

STATE OF WISCONSIN
DEPARTMENT OF TRANSPORTATION

APPROVED
Sept., 2016 — DATE
/S/ Rodney Taylor — ROADWAY STANDARDS DEVELOPMENT UNIT SUPERV
FHWA

6

S.D.D. 8 B 9-2

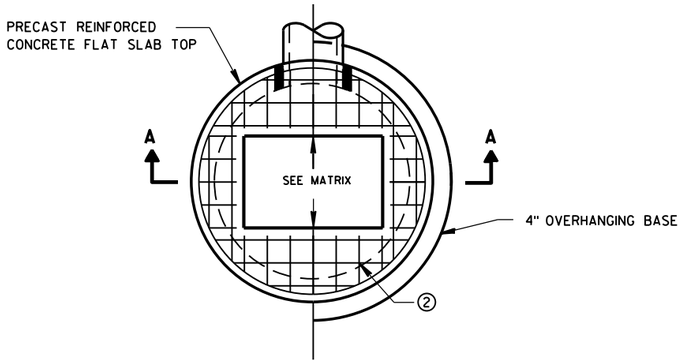

PLAN VIEW RECTANGULAR OPENING

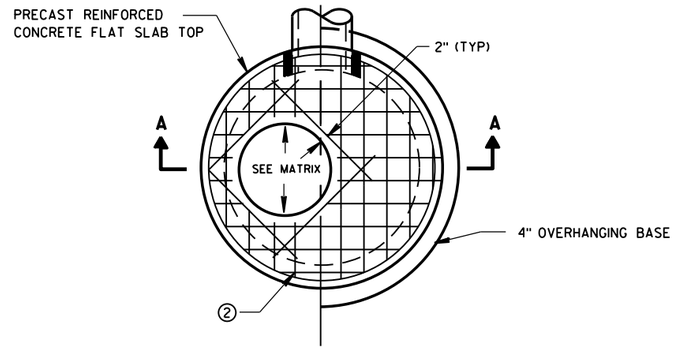

PLAN VIEW CIRCULAR OPENING

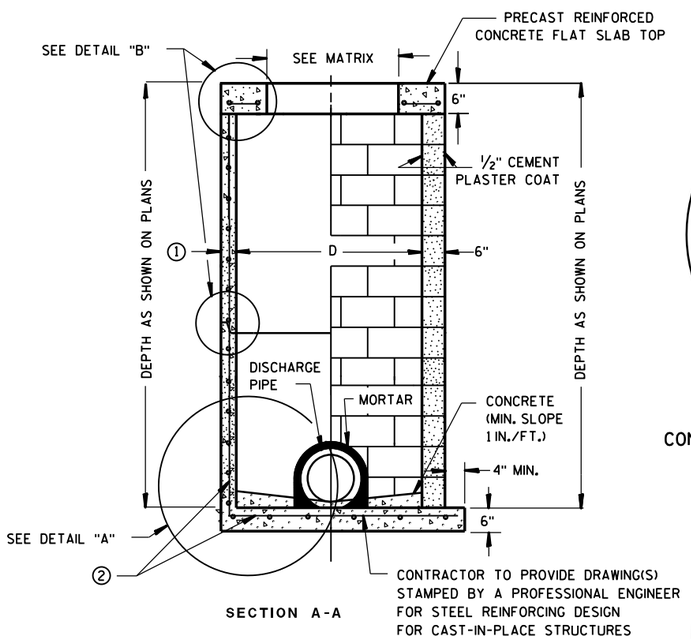

SECTION A-A

PRECAST REINFORCED CONCRETE WITH MONOLITHIC BASE

CONCRETE BLOCK WITH CAST-IN-PLACE OR PRECAST REINFORCED CONCRETE BASE ②

CIRCULAR INLETS W/ FLAT TOP

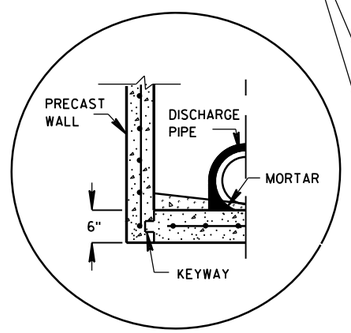

PRECAST REINFORCED CONCRETE WITH INTEGRAL BASE OPTION

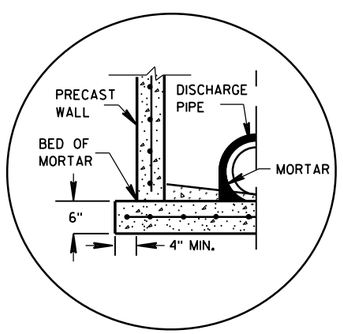

SEPARATE PRECAST REINFORCED CONCRETE BASE OPTION

DETAIL "A"

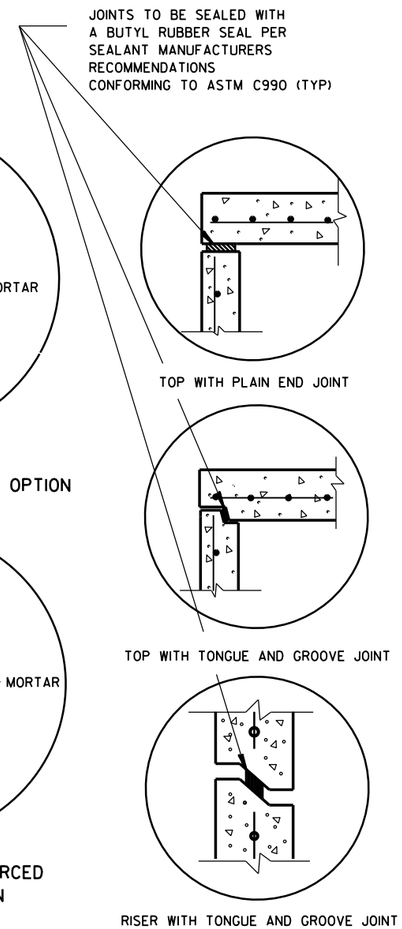

DETAIL "B"

GENERAL NOTES

DETAILS OF CONSTRUCTION, MATERIALS AND WORKMANSHIP NOT SHOWN ON THIS DRAWING SHALL CONFORM TO THE PERTINENT REQUIREMENTS OF THE STANDARD SPECIFICATIONS AND THE APPLICABLE SPECIAL PROVISIONS.

UNLESS OTHERWISE AUTHORIZED IN WRITING BY THE ENGINEER, THE CONTRACTOR SHALL NOT ORDER AND DELIVER PRECAST INLET UNITS REQUIRED FOR THE PROJECT UNTIL A LIST OF SIZES IS FURNISHED BY THE ENGINEER.

DETAILED DRAWINGS FOR PROPOSED ALTERNATE DESIGNS FOR UNDERGROUND DRAINAGE STRUCTURES SHALL BE SUBMITTED TO THE ENGINEER FOR APPROVAL PROVIDING THAT SUCH ALTERNATE DESIGNS MAKE PROVISION FOR EQUIVALENT CAPACITY AND STRENGTH.

ALL DRAINAGE STRUCTURES ARE DESIGNATED ON THE PLANS AS "MANHOLES 3X3-L", "CATCH BASINS 4-B", "INLETS 2X3-H", ETC. THE FIRST NUMBERS DESIGNATE THE SIZE OF THE STRUCTURE, AND THE FOLLOWING LETTER DESIGNATES THE TYPE OF COVER TO BE USED TO COMPRISE THE COMPLETE UNIT.

BASES SHALL BE PLACED ON A BED OF MATERIAL AT LEAST 6 INCHES IN DEPTH, WHICH MEETS THE REQUIREMENTS OF FOUNDATION BACKFILL. THIS BEDDING SHALL BE COMPACTED AND PROVIDE UNIFORM SUPPORT FOR THE ENTIRE AREA OF THE BASE.

ALL BAR STEEL REINFORCEMENT SHALL BE EMBEDDED 2 INCHES CLEAR UNLESS OTHERWISE SHOWN OR NOTED.

ALL PRECAST INLET UNITS SHALL CONFORM TO THE PERTINENT REQUIREMENTS OF AASHTO DESIGNATION M199.

PRECAST REINFORCED RISERS SHALL HAVE A TONGUE AND GROOVE JOINT WITH TONGUE UP OR DOWN.

4" OVERHANGING BASES ARE REQUIRED FOR ALL CONCRETE BLOCK INSTALLATIONS. 4" OVERHANG IS REQUIRED WHEN SEPARATE PRECAST BASE IS PROVIDED. OVERHANG IS NOT REQUIRED ON PRECAST STRUCTURES WITH AN INTEGRAL OR MONOLITHIC BASE.

FOR ADDITIONAL CONFIGURATIONS, MAINTAIN A MINIMUM OF 12 INCHES AS MEASURED FROM THE INSIDE OF THE STRUCTURE WALL BETWEEN THE OUTSIDE PIPE WALLS OF ADJACENT PIPES. SEE DETAIL "C".

① MINIMUM WALL THICKNESS SHALL BE 4-IN FOR 3-FT DIAMETER AND 5-IN FOR 4-FT DIAMETER PRECAST INLETS.

② FOR PRECAST CATCH BASINS PROVIDE REINFORCING STEEL IN ACCORDANCE TO AASHTO M199.

INLET COVER OPENING MATRIX

	INLET COVER TYPE	ALL A'S	ALL B'S	BW	C	F	ALL H'S	S	T	V	WM	Z
INLET SIZE	OPENING SIZE (FT)											
3-FT	2 DIA.				X							X
	2X2	X	X					X		X		
4-FT	2 DIA.				X							X
	2X2	X	X					X		X		
	2X2.5			X				X	X	X	X	
	2X3						X					
	2.5X3					X						

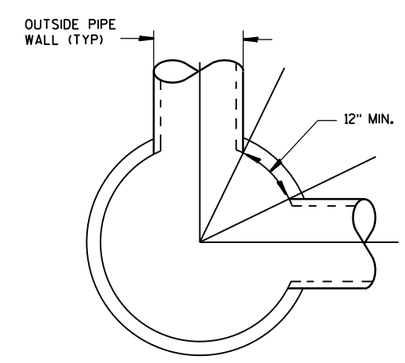

DETAIL "C"

PIPE MATRIX

INLET SIZE	MAXIMUM INSIDE PIPE DIAMETER FOR TWO PIPES	
	180° SEPARATION (IN)	90° SEPARATION (IN)
3-FT	15	12
4-FT	24	18

INLETS 3-FT AND 4-FT DIAMETER

INLETS 3-FT
AND 4-FT DIAMETER

STATE OF WISCONSIN
DEPARTMENT OF TRANSPORTATION

APPROVED
Sept., 2016 — /S/ Rodney Taylor
DATE — ROADWAY STANDARDS DEVELOPMENT UNIT SUPERVISOR
FHWA

6

6

S.D.D. 8 C 6-2

S.D.D. 8 C 6-2

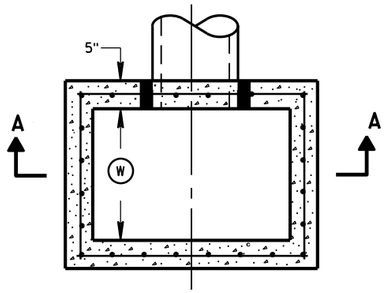

PLAN VIEW

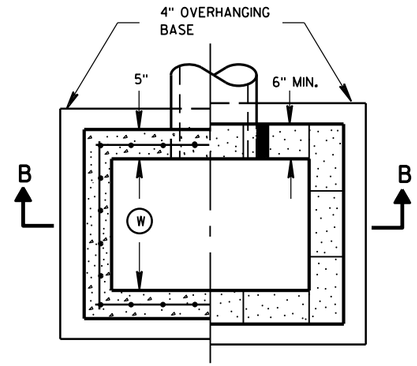

PLAN VIEW

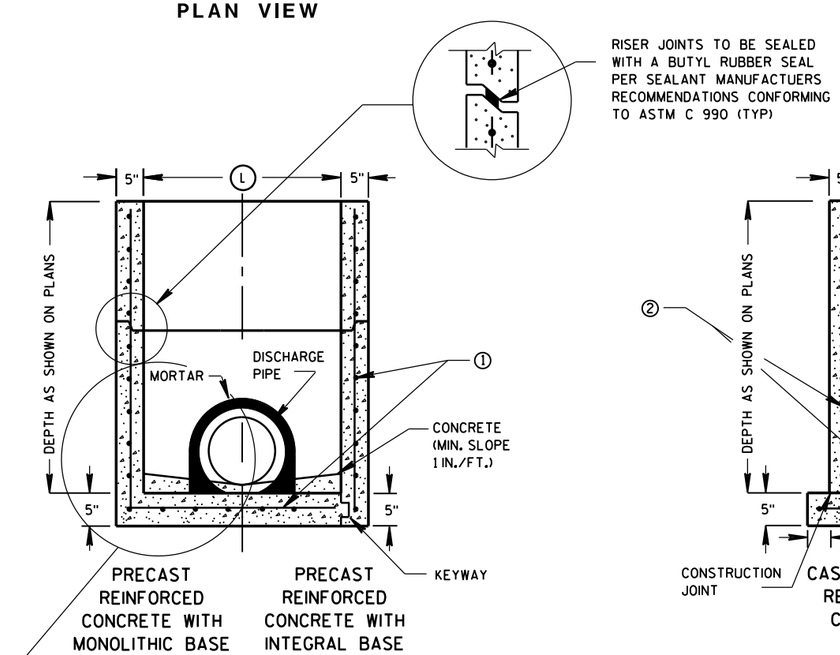

SECTION A-A

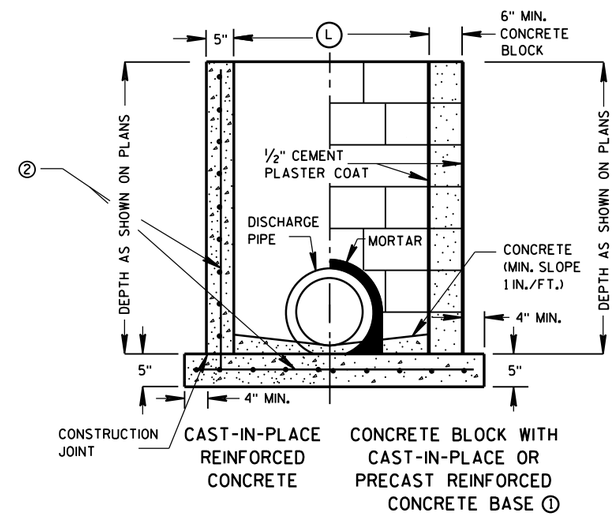

SECTION B-B

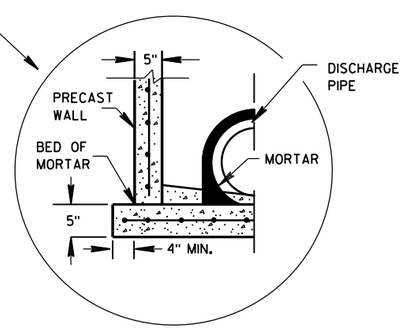

SEPARATE PRECAST REINFORCED CONCRETE BASE OPTION

GENERAL NOTES

DETAILS OF CONSTRUCTION, MATERIALS AND WORKMANSHIP NOT SHOWN ON THIS DRAWING SHALL CONFORM TO THE PERTINENT REQUIREMENTS OF THE STANDARD SPECIFICATIONS AND THE APPLICABLE SPECIAL PROVISIONS.

UNLESS OTHERWISE AUTHORIZED IN WRITING BY THE ENGINEER, THE CONTRACTOR SHALL NOT ORDER AND DELIVER PRECAST INLET UNITS REQUIRED FOR THE PROJECT UNTIL A LIST OF SIZES IS FURNISHED BY THE ENGINEER.

DETAILED DRAWINGS FOR PROPOSED ALTERNATE DESIGNS FOR UNDERGROUND DRAINAGE STRUCTURES SHALL BE SUBMITTED TO THE ENGINEER FOR APPROVAL PROVIDING THAT SUCH ALTERNATE DESIGNS MAKE PROVISION FOR EQUIVALENT CAPACITY AND STRENGTH.

ALL PRECAST INLET UNITS SHALL CONFORM TO THE PERTINENT REQUIREMENTS OF ASTM C 913.

ALL DRAINAGE STRUCTURES ARE DESIGNATED ON THE PLANS AS "MANHOLES 3X3-L", "CATCH BASINS 4-B", "INLETS 2X3-H", ETC. THE FIRST NUMBERS DESIGNATES THE SIZE OF THE STRUCTURE, AND THE FOLLOWING LETTER DESIGNATES THE TYPE OF COVER TO BE USED TO COMPRISE THE COMPLETE UNIT.

BASES SHALL BE PLACED ON A BED OF MATERIAL AT LEAST 6 INCHES IN DEPTH, WHICH MEETS THE REQUIREMENTS OF FOUNDATION BACKFILL. THIS BEDDING SHALL BE COMPACTED AND PROVIDE UNIFORM SUPPORT FOR THE ENTIRE AREA OF THE BASE.

ALL BAR STEEL REINFORCEMENT SHALL BE EMBEDDED 2 INCHES CLEAR UNLESS OTHERWISE SHOWN OR NOTED.

PRECAST REINFORCED RISERS SHALL HAVE A TONGUE AND GROOVE JOINT WITH TONGUE UP OR DOWN.

4" OVERHANGING BASES ARE REQUIRED FOR CAST-IN-PLACE REINFORCED CONCRETE AND CONCRETE BLOCK INSTALLATIONS.
4" OVERHANG IS REQUIRED WHEN SEPARATE PRECAST BASE IS PROVIDED.
OVERHANG IS NOT REQUIRED ON PRECAST STRUCTURES WITH AN INTEGRAL OR MONOLITHIC BASE.

MAXIMUM INSIDE PIPE DIAMETER DETERMINED BY 3 INCH CLEARANCE ON EACH SIDE OF THE OUTSIDE WALL OF THE PIPE. SEE DETAIL "A". ASSUMES PIPE ENTERS PERPENDICULAR TO THE STRUCTURE.

① FOR PRECAST INLETS PROVIDE REINFORCING STEEL IN ACCORDANCE TO ASTM C 913.

② CONTRACTOR TO PROVIDE DRAWING(S) STAMPED BY A PROFESSIONAL ENGINEER FOR STEEL REINFORCING DESIGN FOR CAST-IN-PLACE STRUCTURES.

INLET COVER MATRIX

INLET SIZE		INLET COVER TYPE	ALL A'S	ALL B'S	BW	F	ALL H'S	S	T	V	WM
	WIDTH (W) (FT)	LENGTH (L) (FT)									
2X2-FT	2	2	X	X				X		X	
2X2.5-FT	2	2.5			X			X	X	X	X
2X3-FT	2	3					X				
2.5X3-FT	2.5	3				X					

PIPE MATRIX

INLET SIZE	MAXIMUM INSIDE PIPE DIAMETER	
	WIDTH (IN)	LENGTH (IN)
2X2-FT	12	12
2X2.5-FT	12	18
2X3-FT	12	24
2.5X3-FT	18	24

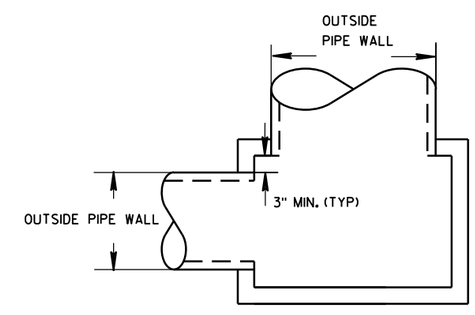

DETAIL "A"

INLETS 2X2-FT, 2X2.5-FT, 2X3-FT AND 2.5X3-FT

INLETS 2X2-FT, 2X2.5-FT, 2X3-FT AND 2.5X3-FT

STATE OF WISCONSIN
DEPARTMENT OF TRANSPORTATION

APPROVED
Sept., 2016 — DATE
/S/ Rodney Taylor
ROADWAY STANDARDS D IT
UNIT SUPERVIS
FHWA

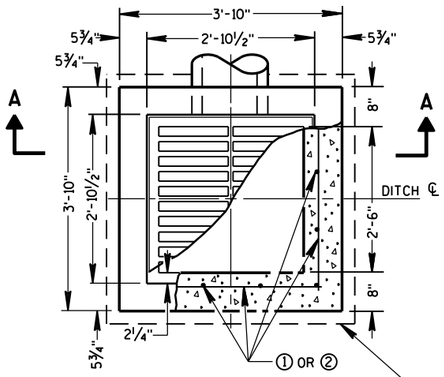

PLAN VIEW

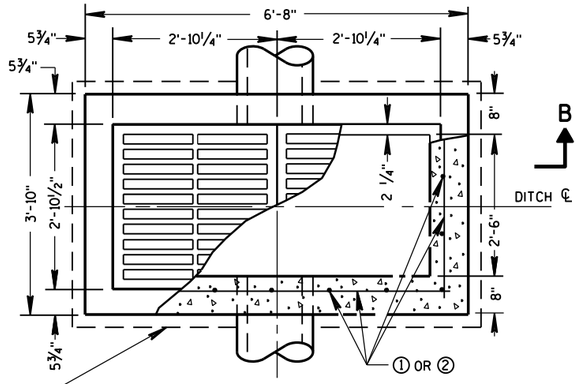

PLAN VIEW

4" OVERHANGING BASE ON REINFORCED CAST-IN-PLACE CONCRETE INLETS

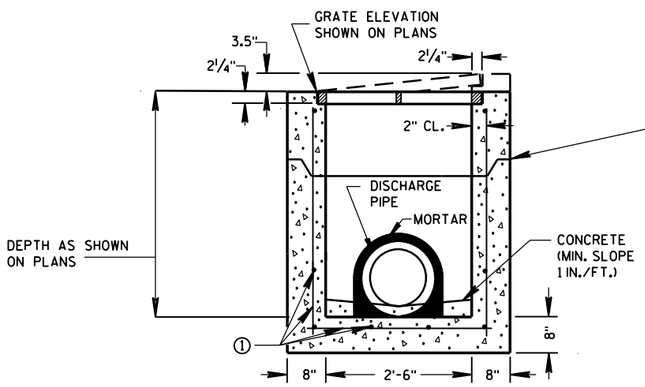

PRECAST REINFORCED CONCRETE SECTION A-A

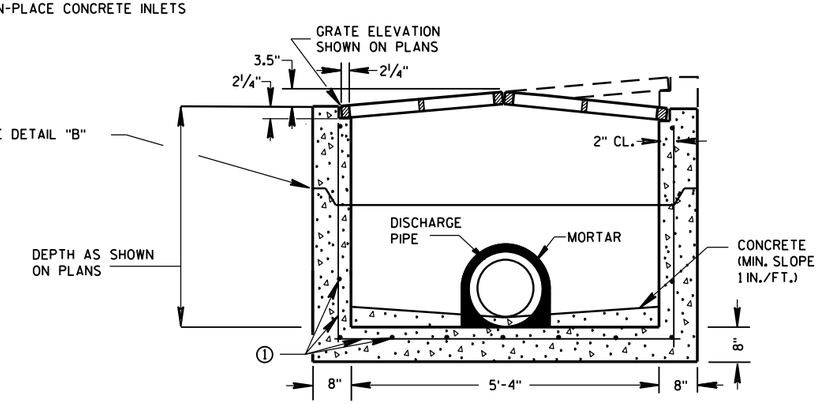

PRECAST REINFORCED CONCRETE SECTION B-B

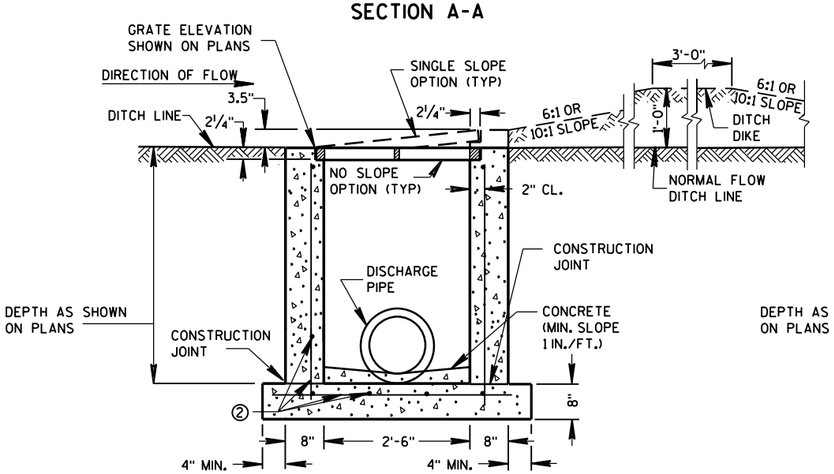

REINFORCED CAST-IN-PLACE CONCRETE SECTION A-A

INLETS MEDIAN 1 GRATE

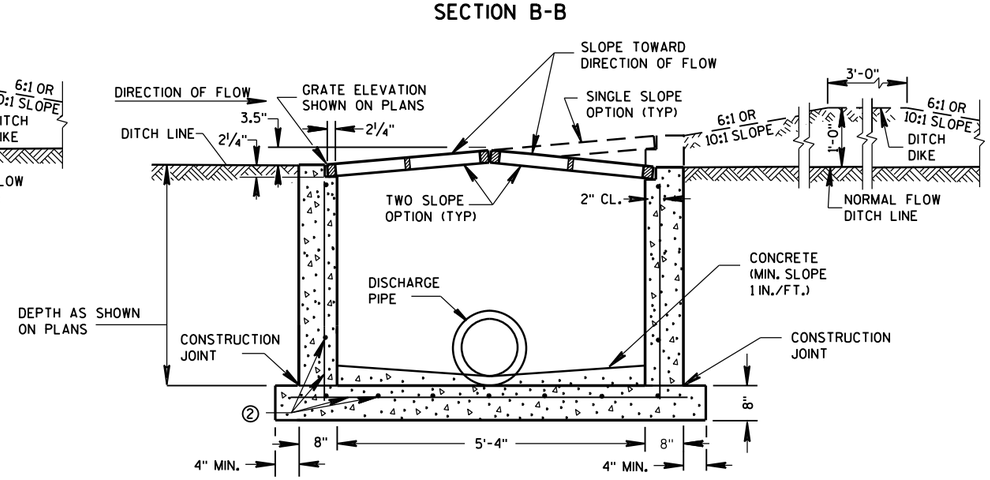

REINFORCED CAST-IN-PLACE CONCRETE SECTION B-B

INLETS MEDIAN 2 GRATE

GENERAL NOTES

DETAILS OF CONSTRUCTION, MATERIALS AND WORKMANSHIP NOT SHOWN ON THIS DRAWING SHALL CONFORM TO THE PERTINENT REQUIREMENTS OF THE STANDARD SPECIFICATIONS AND THE APPLICABLE SPECIAL PROVISIONS.

UNLESS OTHERWISE AUTHORIZED IN WRITING BY THE ENGINEER, THE CONTRACTOR SHALL NOT ORDER AND DELIVER PRECAST INLET UNITS REQUIRED FOR THE PROJECT UNTIL A LIST OF SIZES IS FURNISHED BY THE ENGINEER.

DETAILED DRAWINGS FOR PROPOSED ALTERNATE DESIGNS FOR INLETS WHICH MAY INCLUDE PRECAST REINFORCED CONCRETE INLETS, SHALL BE SUBMITTED TO THE ENGINEER FOR APPROVAL PROVIDING THAT SUCH ALTERNATE DESIGNS MAKE PROVISION FOR EQUIVALENT CAPACITY AND STRENGTH.

ALL MEDIAN INLETS ARE DESIGNATED ON THE PLANS AS "INLETS, 1G-MS", ETC. THE FIRST NUMBER AND LETTER DESIGNATE THE TYPE OF STRUCTURE, AND THE FOLLOWING LETTERS DESIGNATE THE TYPE OF COVER TO BE USED TO COMPRISE THE COMPLETE UNIT.

BASES SHALL BE PLACED ON A BED OF MATERIAL AT LEAST 6 INCHES IN DEPTH, WHICH MEETS THE REQUIREMENTS OF FOUNDATION BACKFILL. THIS BEDDING SHALL BE COMPACTED AND PROVIDE UNIFORM SUPPORT FOR THE ENTIRE AREA OF THE BASE.

ALL BAR STEEL REINFORCEMENT SHALL BE EMBEDDED 2 INCHES CLEAR UNLESS OTHERWISE SHOWN OR NOTED.

PRECAST REINFORCED RISERS SHALL HAVE A TONGUE AND GROOVE JOINT WITH TONGUE UP OR DOWN.

ALL PRECAST INLET UNITS SHALL CONFORM TO THE PERTINENT REQUIREMENTS OF ASTM C 913.

MAXIMUM INSIDE PIPE DIAMETER DETERMINED BY 3" CLEARANCE ON EACH SIDE OF THE OUTSIDE WALL OF THE PIPE. SEE DETAIL "A". ASSUMES PIPE ENTERS PERPENDICULAR TO THE STRUCTURE.

① FOR PRECAST INLETS PROVIDE REINFORCING STEEL IN ACCORDANCE TO ASTM C 913.

② CONTRACTOR TO PROVIDE DRAWING(S) STAMPED BY A PROFESSIONAL ENGINEER FOR STEEL REINFORCING DESIGN FOR CAST-IN-PLACE STRUCTURES.

PIPE MATRIX

	MAXIMUM INSIDE PIPE DIAMETER	
INLET SIZE	WIDTH (IN)	LENGTH (IN)
1 GRATE	18	18
2 GRATE	18	42

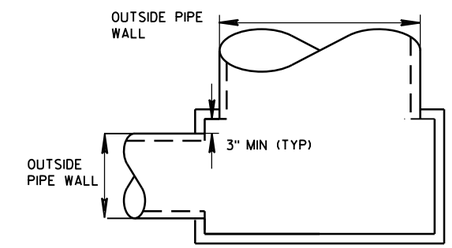

DETAIL "A"

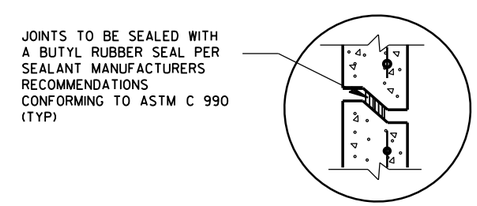

DETAIL "B"

INLETS MEDIAN 1 AND 2 GRATE

STATE OF WISCONSIN
DEPARTMENT OF TRANSPORTATION

APPROVED
Sept., 2016 — DATE
/S/ Rodney Taylor — ROADWAY STANDARDS UNIT SUPERVI
FHWA

6

S.D.D. 8 C 8-2

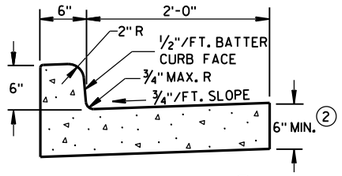

TYPES A & D ①

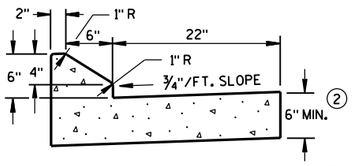

6" SLOPED CURB TYPES G & J ①

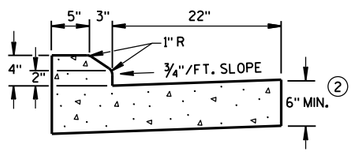

4" SLOPED CURB TYPES G & J ①

CONCRETE CURB & GUTTER 30"

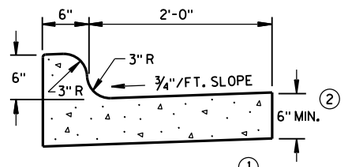

TYPES K & L ①

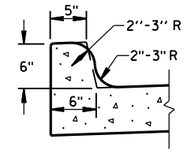

OPTIONAL CURB SHAPE FOR TYPES K & L ①

CONCRETE CURB & GUTTER 30"

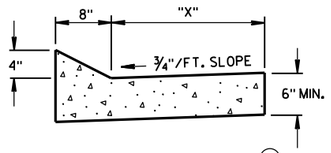

TYPES TBT & TBTT ①

CONCRETE CURB & GUTTER

TBT & TBTT	"X"
30"	22"
36"	28"

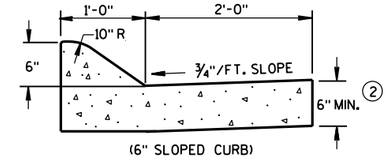

(6" SLOPED CURB)

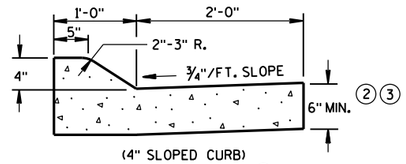

(4" SLOPED CURB)

TYPES A & D ①

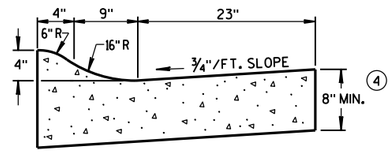

4" SLOPED CURB TYPES R & T ①⑤

CONCRETE CURB & GUTTER 36"

GENERAL NOTES

DETAILS OF CONSTRUCTION, MATERIALS AND WORKMANSHIP NOT SHOWN ON THIS DRAWING SHALL CONFORM TO THE PERTINENT REQUIREMENTS OF THE CONTRACT.

PAVEMENT TIES AND TIE BARS SHALL BE EPOXY COATED IN CONFORMANCE WITH SUBSECTION 505.2.6.2 OF THE STANDARD SPECIFICATIONS.

INTEGRAL CURB & GUTTER SHALL CONFORM TO THE DETAILS SHOWN FOR CONCRETE CURB & GUTTER INCLUDING THE TRANSVERSE GUTTER SLOPE. A LONGITUDINAL CONSTRUCTION JOINT IS NOT REQUIRED WITH INTEGRAL CURB AND GUTTER.

WHERE THE TRANSVERSE JOINTS IN THE PAVEMENT ARE REQUIRED TO BE SEALED, THE JOINTS IN THE INTEGRAL CURB AND GUTTER SHALL BE SEALED TO THE FACE OF CURB WITH THE SAME TYPE OF SEALANT. THE COST OF FURNISHING AND INSTALLING THIS SEALANT SHALL BE INCIDENTAL TO THE ITEM CONCRETE CURB AND GUTTER.

UNLESS OTHERWISE SHOWN ON THE TYPICAL CROSS SECTIONS, THE BASE AGGREGATE AND COMMON EXCAVATION LIMITS ARE 2'-0" BEHIND THE BACK OF CURBS.

① TIE BARS ARE REQUIRED FOR CURB AND GUTTER TYPES A, G, K, R AND TBTT.

② THE BOTTOM OF CURB AND GUTTER MAY BE CONSTRUCTED EITHER LEVEL OR PARALLEL TO THE SLOPE OF THE SUBGRADE OR BASE AGGREGATE PROVIDED A 6" MINIMUM GUTTER THICKNESS IS MAINTAINED.

③ USE 8" MINIMUM GUTTER THICKNESS WHEN USED WITH AN ADJACENT CONCRETE TRUCK APRON PLACED BEHIND BACK OF CURB.

④ THE BOTTOM OF CURB AND GUTTER MAY BE CONSTRUCTED EITHER LEVEL OR PARALLEL TO THE SLOPE OF THE SUBGRADE OR BASE AGGREGATE PROVIDED A 8" MINIMUM GUTTER THICKNESS IS MAINTAINED.

⑤ THE FACE OF CURB IS 6" FROM THE BACK OF CURB.

⑥ WHEN REVERSE SLOPE GUTTER IS REQUIRED, THE LOCATION(S) WILL BE SHOWN ELSEWHERE IN THE PLAN.

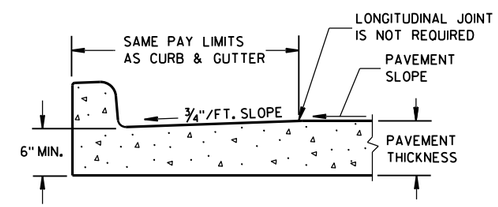

PARTIAL SECTION OF PAVEMENT WITH INTEGRAL CURB & GUTTER

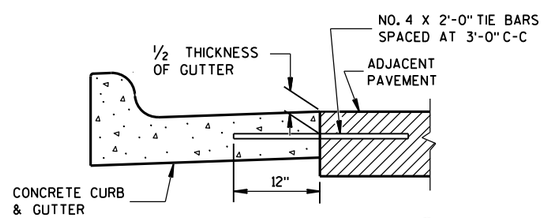

TYPICAL TIE BAR LOCATION ①

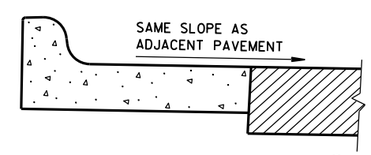

REVERSE SLOPE GUTTER ⑥
(TYPICAL FOR ALL CURB & GUTTER TYPES)

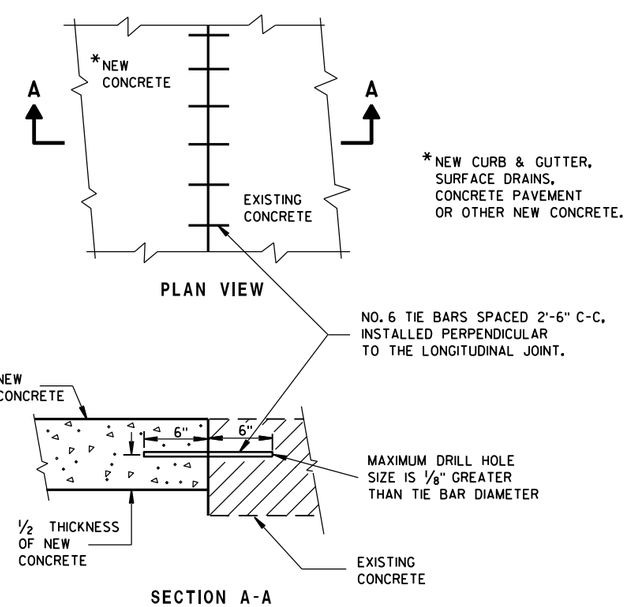

PLAN VIEW

SECTION A-A

TIE BARS DRILLED INTO EXISTING PAVEMENT

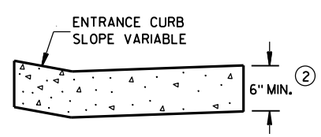

DRIVEWAY ENTRANCE CURB
(WHEN DIRECTED BY THE ENGINEER)

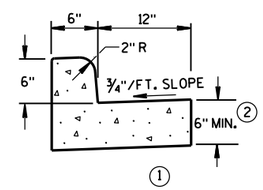

① TYPES A & D

CONCRETE CURB & GUTTER 18"

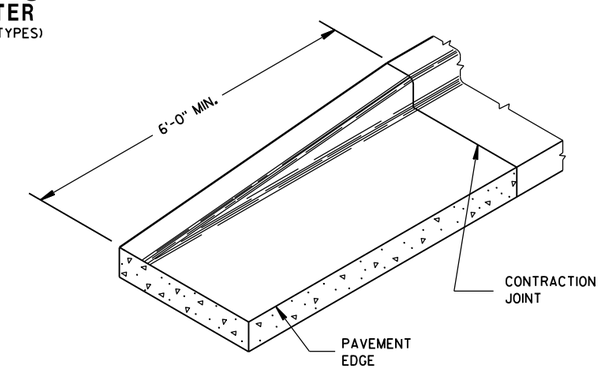

END SECTION CURB & GUTTER

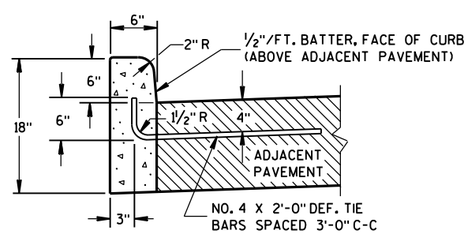

① TYPES A & D

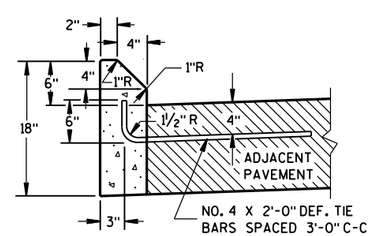

① TYPES G & J

CONCRETE CURB

CONCRETE CURB, CONCRETE CURB & GUTTER AND TIES

STATE OF WISCONSIN
DEPARTMENT OF TRANSPORTATION

APPROVED
June, 2016 — DATE
/S/ Jerry H. Zogg — ROADWAY STANDARDS DEVELOPMENT ENGINEER
FHWA

6

6

S.D.D. 8 D 1-19

S.D.D. 8 D 1-19

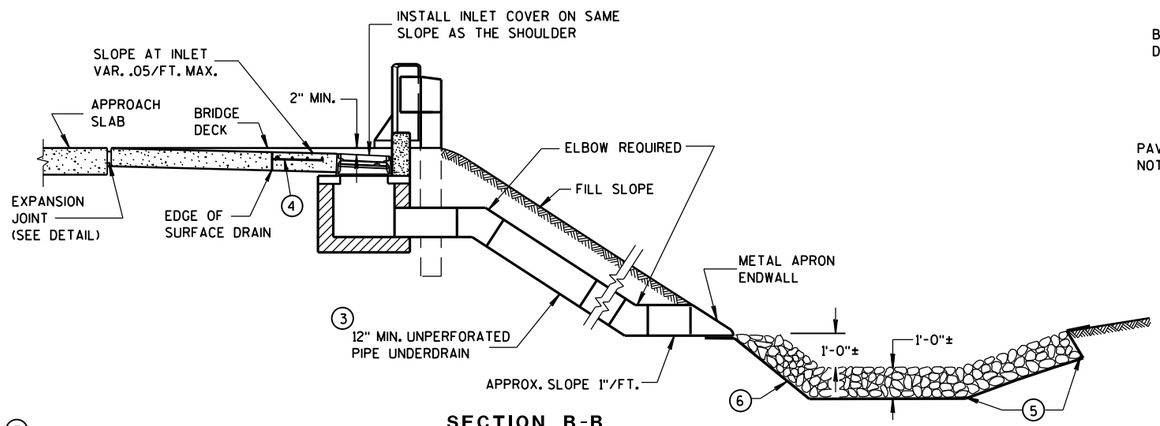

SECTION B-B

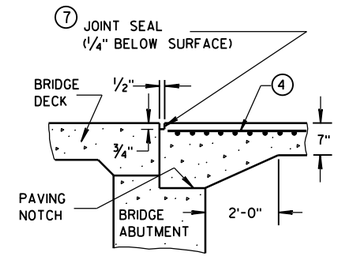

SECTION D-D

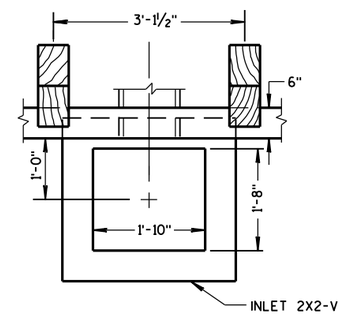

PLAN VIEW

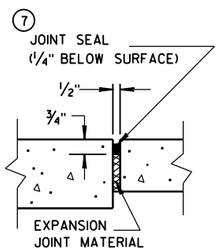

EXPANSION JOINT DETAIL

GENERAL NOTES

DETAILS OF CONSTRUCTION, MATERIALS, AND WORKMANSHIP NOT SHOWN ON THIS DRAWING SHALL CONFORM TO THE PERTINENT REQUIREMENTS OF THE STANDARD SPECIFICATIONS AND THE APPLICABLE SPECIAL PROVISIONS.

ALL STEEL REINFORCEMENT SHALL BE EMBEDDED 2 INCHES CLEAR UNLESS OTHERWISE SHOWN OR NOTED.

1. NO. 4 X 2'-0" TIE BARS SPACED AT 3'-0" CENTERS TO BE USED ONLY WHEN ADJACENT TO P.C. CONCRETE.
2. NO. 4 X 2'-0" TIE BARS SPACED AT 12" CENTERS TO BE PLACED BY BRIDGE CONTRACTOR, OR DRILLED TIE BARS PLACED AS DIRECTED BY THE ENGINEER.
3. THE PIPE UNDERDRAIN MAY BE ANY ONE OF THE SIX MATERIALS LISTED IN THE STANDARD SPECIFICATIONS SECTION 612.2 EXCEPT DRAIN TILE.
4. MINIMUM REINFORCEMENT SHALL BE 6" X 6" - W4.0 X W4.0 OR NO. 3 BARS LONGITUDINAL AND TRANSVERSE SPACING 12" C-C.
5. LIMITS OF ADDITIONAL RIPRAP WHEN SPECIAL DITCH IS REQUIRED.
6. GEOTEXTILE FABRIC, TYPE 'R'
7. HOT POURED SEALANT UNLESS OTHERWISE SPECIFIED.
8. THIS DIMENSION MAY VARY DEPENDING ON THE SPACING OF POSTS FOR THE STEEL PLATE BEAM GUARD. THE TYPICAL LOCATION FOR THE SURFACE DRAIN IS WHERE THE POST SPACING WIDENS TO 3'-1 1/2".
9. SEE CURRENT STANDARD DETAIL DRAWINGS 8A5 AND 8C7 FOR DETAILS.

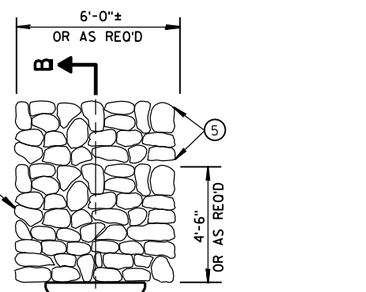

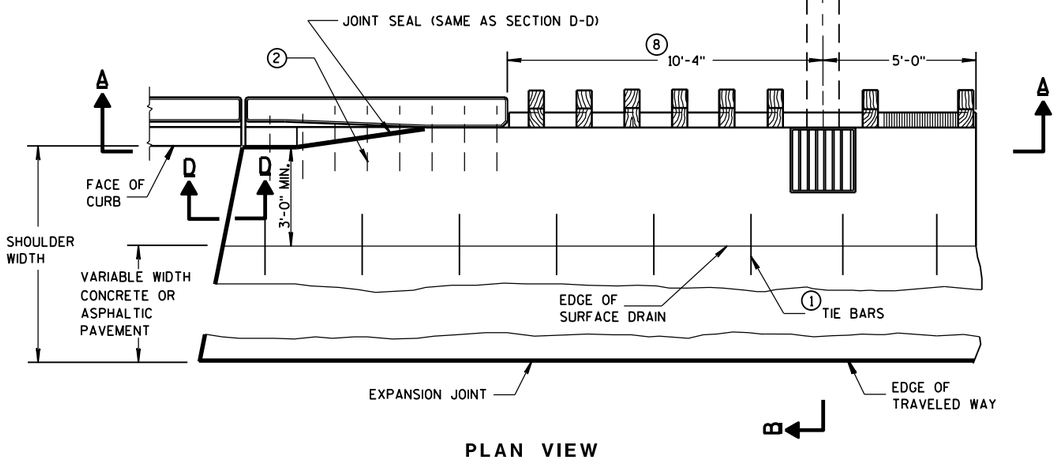

PLAN VIEW

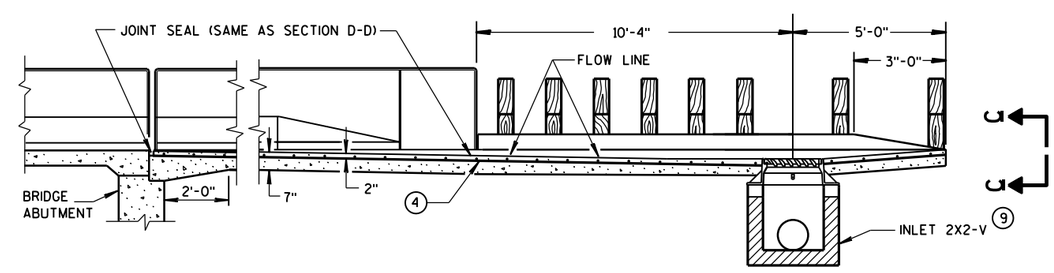

SECTION A-A

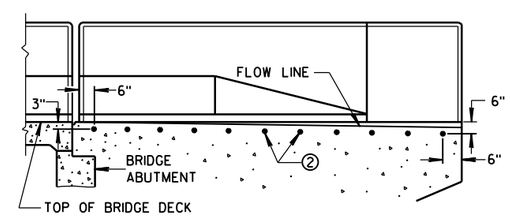

LOCATION OF TIE BARS IN WINGWALL

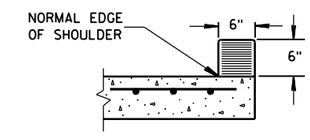

SECTION C-C

CONCRETE SURFACE DRAINS
DROP INLET TYPE
AT STRUCTURES

STATE OF WISCONSIN
DEPARTMENT OF TRANSPORTATION

APPROVED
9/4/08 — DATE
/S/ Jerry H. Zogg — ROADWAY STANDARDS ENGINEER
FHWA

6

S.D.D. 8 D 3-6

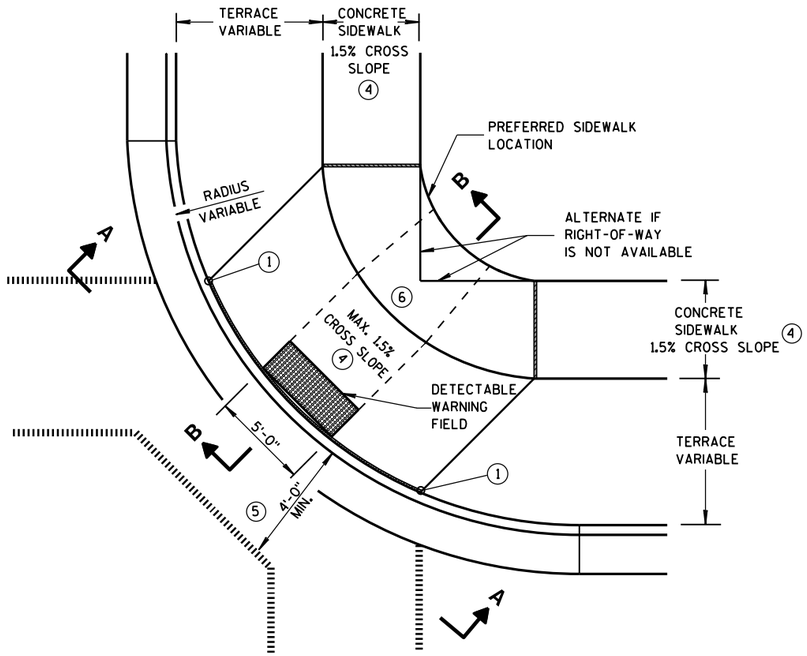

PLAN VIEW

TYPE 1 RAMP

(CENTER OF CORNER RADIUS)

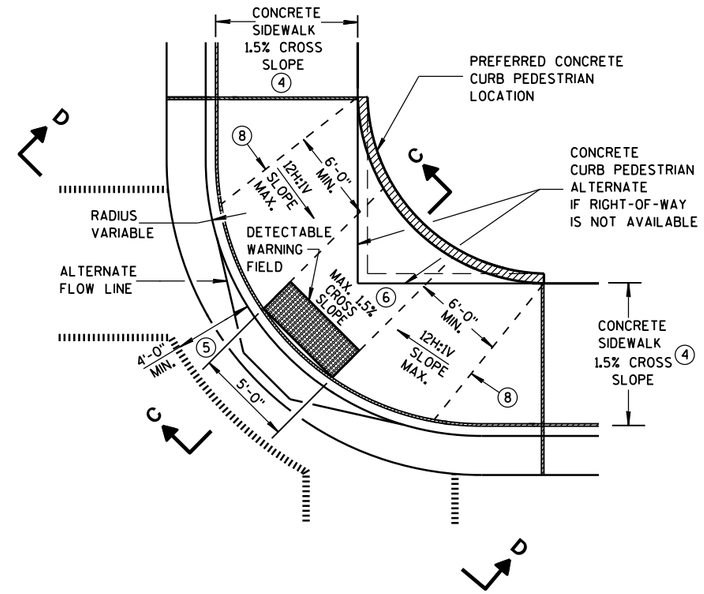

PLAN VIEW

TYPE 1-A RAMP

(NO TERRACE)

GENERAL NOTES

DETAILS OF CONSTRUCTION, MATERIALS AND WORKMANSHIP NOT SHOWN ON THIS DRAWING SHALL CONFORM TO THE PERTINENT REQUIREMENTS OF THE STANDARD SPECIFICATIONS AND THE APPLICABLE SPECIAL PROVISIONS.

WHEN NECESSARY, THE SIDEWALK ELEVATION MAY BE LOWERED TO MEET THE HIGH POINT ON THE RAMP.

TYPE 1 RAMPS SHALL HAVE A NORMAL SIDEWALK APRON AND CURB ON BOTH SIDES OF RAMP.

DETECTABLE WARNING FIELD SHALL BE MEASURED AND PAID BY THE SQUARE FOOT AS "CURB RAMP DETECTABLE WARNING FIELD". THE CONCRETE PEDESTRIAN CURB, IF NEEDED, SHALL BE MEASURED AND PAID BY THE LINEAL FOOT AS "CONCRETE CURB PEDESTRIAN". CONCRETE SIDEWALK IN THE CURB RAMP AREA SHALL BE MEASURED AND PAID BY THE SQUARE FOOT AS CONCRETE SIDEWALK, INCLUDING THE AREA UNDER THE DETECTABLE WARNING FIELD.

SELECT CURB RAMP DETECTABLE WARNING FIELD MATERIALS AND DEVICES FROM THE DEPARTMENT'S APPROVED MATERIALS LIST. THE COLOR OF THE DETECTABLE WARNING FIELD IS SPECIFIED ELSEWHERE AND IS INCIDENTAL TO THE BID ITEM OF "CURB RAMP DETECTABLE WARNING FIELD".

DETECTABLE WARNING FIELDS THAT ARE INSTALLED AS A GROUP OR SIDE BY SIDE, SHALL BE FROM THE SAME MANUFACTURER.

SURFACE TEXTURE OF THE RAMP SHALL BE OBTAINED BY COARSE BROOMING TRANSVERSE TO THE SLOPE OF THE RAMP.

(1) THIS POINT IS AN EXTENSION OF OUTSIDE EDGE OF APPROACHING SIDEWALK WHERE IT MEETS THE BACK OF CONCRETE CURB. POINT LOCATION MAY BE ADJUSTED TO ALIGN WITH BEGINNING OF FULL-HEIGHT CURB IF THIS DISTANCE IS SHORT.

(2) GRADE CHANGE BETWEEN GUTTER FLAG SLOPE AND THE CURB RAMP SLOPE SHALL NOT EXCEED 11%. MAXIMUM GUTTER FLAG SLOPE IS 4%. PROVIDE LONGITUDINAL DRAINAGE AROUND CURB AND AWAY FROM CURB RAMP. NO VERTICAL LIPS OR DISCONTINUITIES GREATER THAN 1/4-INCH ARE ALLOWED. SLOPE OF CURB HEAD OPENING SHALL NOT EXCEED 7%.

(3) ABSOLUTE MAXIMUM 12H:1V (8.33%) CURB RAMP SLOPE IS ALLOWABLE WITH FLATTENED GUTTER FLAG SLOPE AND NOT TO EXCEED 11% GRADE CHANGE.

(4) ±0.5% CONSTRUCTION TOLERANCE IN SIDEWALK CROSS SLOPE. THE SIDEWALK CROSS SLOPE SHALL NOT EXCEED 2% WITHOUT PRIOR APPROVAL FROM THE ENGINEER.

(5) PROVIDE A LEVEL LANDING IN THE STREET AND GUTTER AREA. (2% MAXIMUM SLOPE IN ANY DIRECTION). WHEN THE GUTTER SLOPE EXCEEDS 2%, CONSTRUCT THE LEVEL LANDING IN THE STREET AREA.

(6) PROVIDE A LEVEL LANDING (MAXIMUM 2% SLOPE) IN ANY DIRECTION OF PEDESTRIAN TRAVEL. STANDARD LANDING SIZE IS 5 FEET X 5 FEET.

(8) PROVIDE GRADE BREAK PERPENDICULAR TO DIRECTION OF WHEELCHAIR TRAVEL.

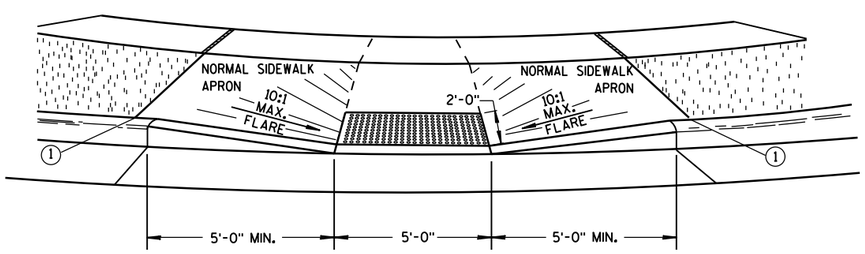

VIEW A-A

** WIDTH SHOWN ELSEWHERE IN THE PLANS

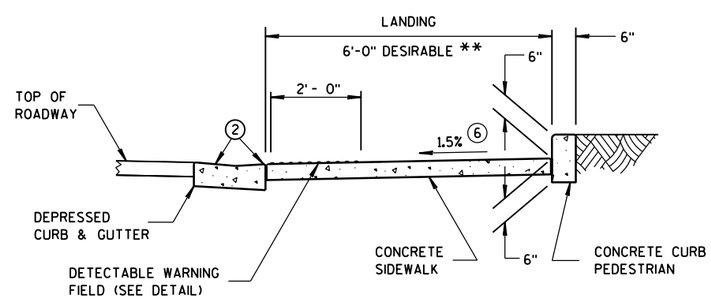

SECTION C-C

LEGEND

- 1/2" EXPANSION JOINT-SIDEWALK
- CONTRACTION JOINT FIELD LOCATED
- PAVEMENT MARKING CROSSWALK (WHITE)
- ALTERNATIVE LAYOUT

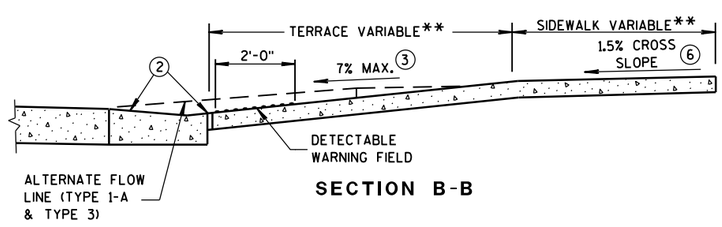

SECTION B-B

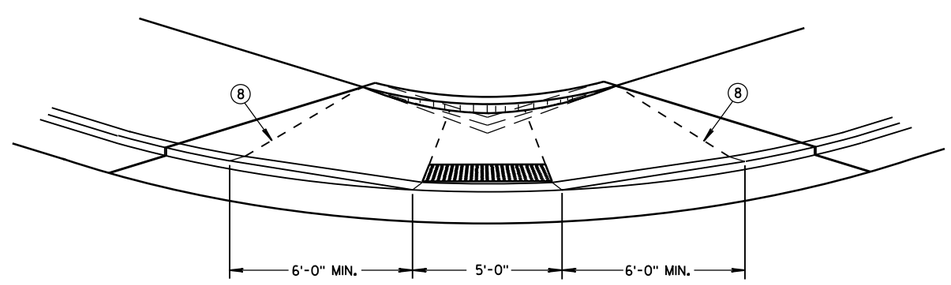

VIEW D-D

CURB RAMPS
TYPES 1 AND 1-A

STATE OF WISCONSIN
DEPARTMENT OF TRANSPORTATION

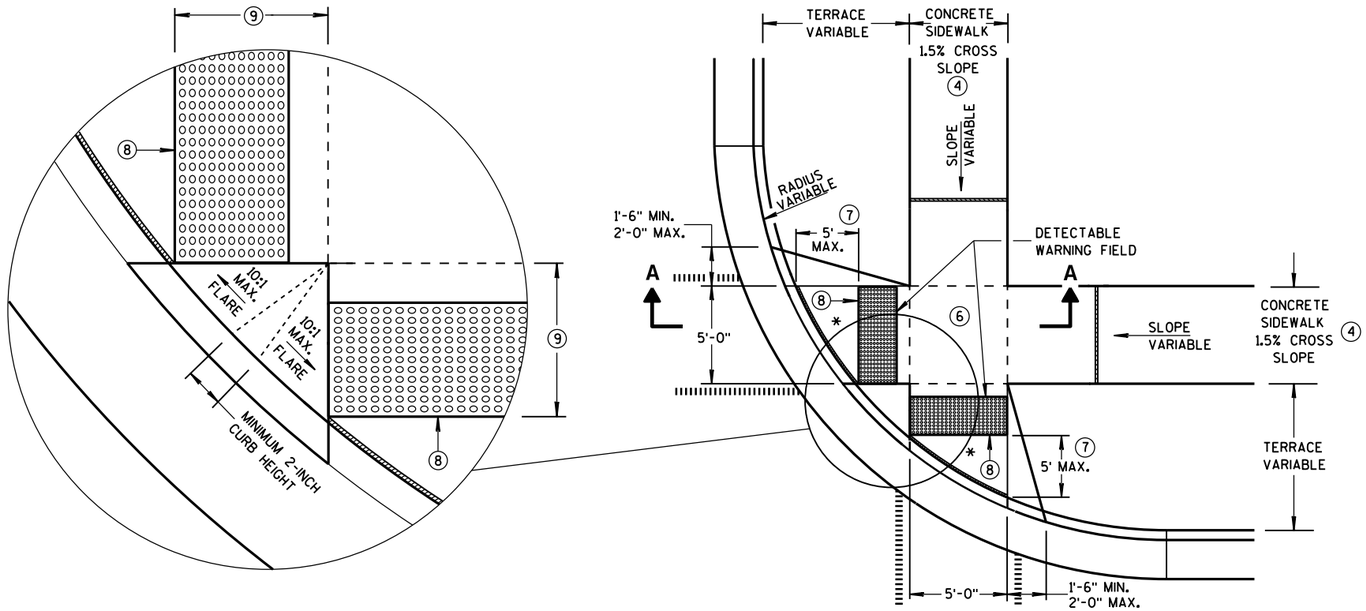

PLAN VIEW
TYPE 2 RAMP
(ON LINE WITH SIDEWALK)

* MAXIMUM 2.0% SLOPE IN ALL DIRECTIONS IN FRONT OF GRADE BREAK

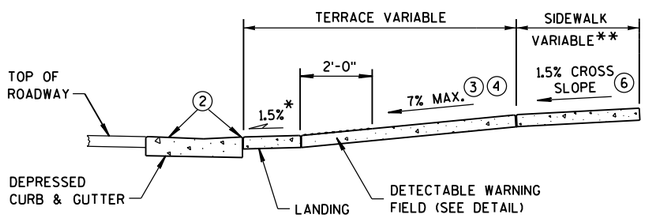

SECTION A-A

** WIDTH SHOWN ELSEWHERE IN THE PLANS

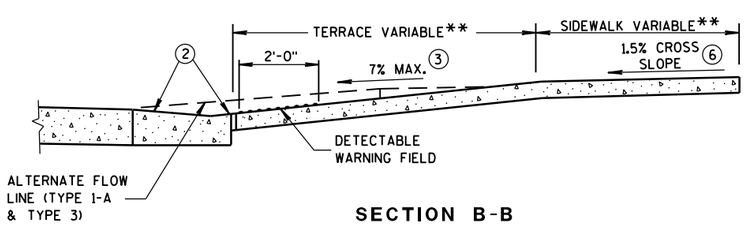

SECTION B-B

GENERAL NOTES

DETECTABLE WARNING FIELDS THAT ARE INSTALLED AS A GROUP OR SIDE BY SIDE, SHALL BE FROM THE SAME MANUFACTURER.

(2) GRADE CHANGE BETWEEN GUTTER FLAG SLOPE AND THE CURB RAMP SLOPE SHALL NOT EXCEED 11%. MAXIMUM GUTTER FLAG SLOPE IS 4%. PROVIDE LONGITUDINAL DRAINAGE AROUND CURB AND AWAY FROM CURB RAMP. NO VERTICAL LIPS OR DISCONTINUITIES GREATER THAN 1/4-INCH ARE ALLOWED. SLOPE OF CURB HEAD OPENING SHALL NOT EXCEED 7%.

(3) ABSOLUTE MAXIMUM 12H:1V (8.33%) CURB RAMP SLOPE IS ALLOWABLE WITH FLATTENED GUTTER FLAG SLOPE AND NOT TO EXCEED 11% GRADE CHANGE.

(4) ±0.5% CONSTRUCTION TOLERANCE IN SIDEWALK CROSS SLOPE. THE SIDEWALK CROSS SLOPE SHALL NOT EXCEED 2% WITHOUT PRIOR APPROVAL FROM THE ENGINEER.

(6) PROVIDE A LEVEL LANDING (MAXIMUM 2% SLOPE) IN ANY DIRECTION OF PEDESTRIAN TRAVEL. STANDARD LANDING SIZE IS 5 FEET X 5 FEET.

(7) WHEN THIS DISTANCE EXCEEDS 5 FEET, STAGGER ADDITIONAL DETECTABLE WARNING PANEL FORWARD TO REDUCE THIS DISTANCE. PROVIDE MINIMUM 12-INCH ROW OVERLAP TO AVOID SIDESTEP OF DOME DETECTION. USE EQUAL-SIZE PANELS TO DEVELOP OVERLAPPING, STAGGERED ROWS. ALIGN DOMES BETWEEN OVERLAPPING ROWS AND IN DIRECTION OF PEDESTRIAN TRAVEL.

(8) PROVIDE GRADE BREAK PERPENDICULAR TO DIRECTION OF WHEELCHAIR TRAVEL.

(9) WHEN THIS DISTANCE IS LESS THAN 6'-0", IT MAY BE DIFFICULT TO ACHIEVE A 7% SLOPE OR FLATTER ALONG THE RAMP. REDUCE CURB HEIGHT IN TRIANGLE AREA TO ACHIEVE 7% SLOPE OR FLATTER ON RAMP. CONSTRUCT 2-INCH MINIMUM CURB HEIGHT BETWEEN 10:1 FLARES.

LEGEND

- 1/2" EXPANSION JOINT-SIDEWALK
- CONTRACTION JOINT FIELD LOCATED
- PAVEMENT MARKING CROSSWALK (WHITE)
- ALTERNATIVE LAYOUT

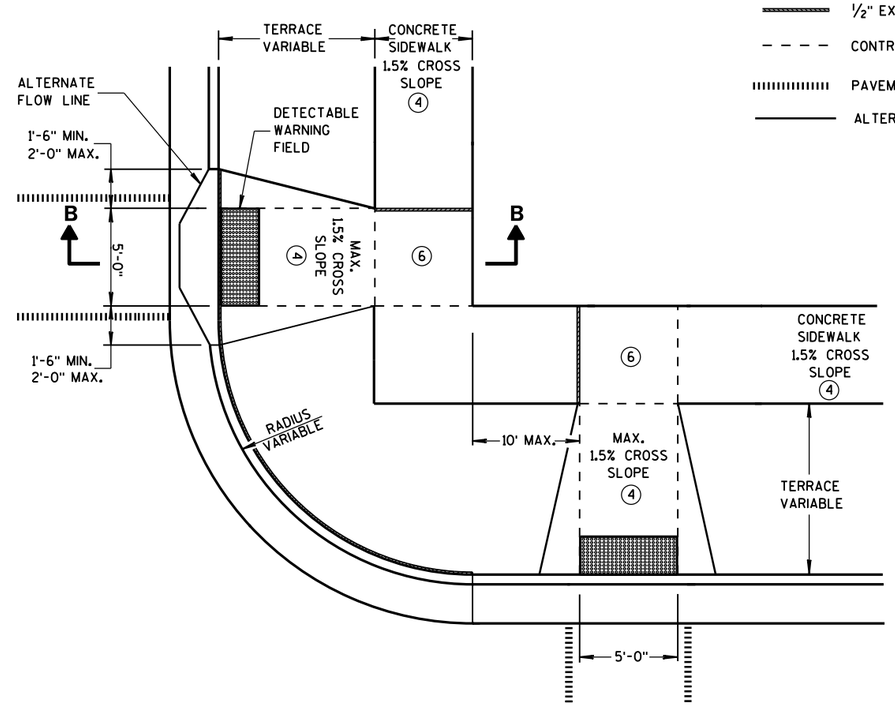

PLAN VIEW
TYPE 3 RAMP
(OUTSIDE OF CROSSWALK AREA)

CURB RAMPS TYPES 2 AND 3

STATE OF WISCONSIN
DEPARTMENT OF TRANSPO

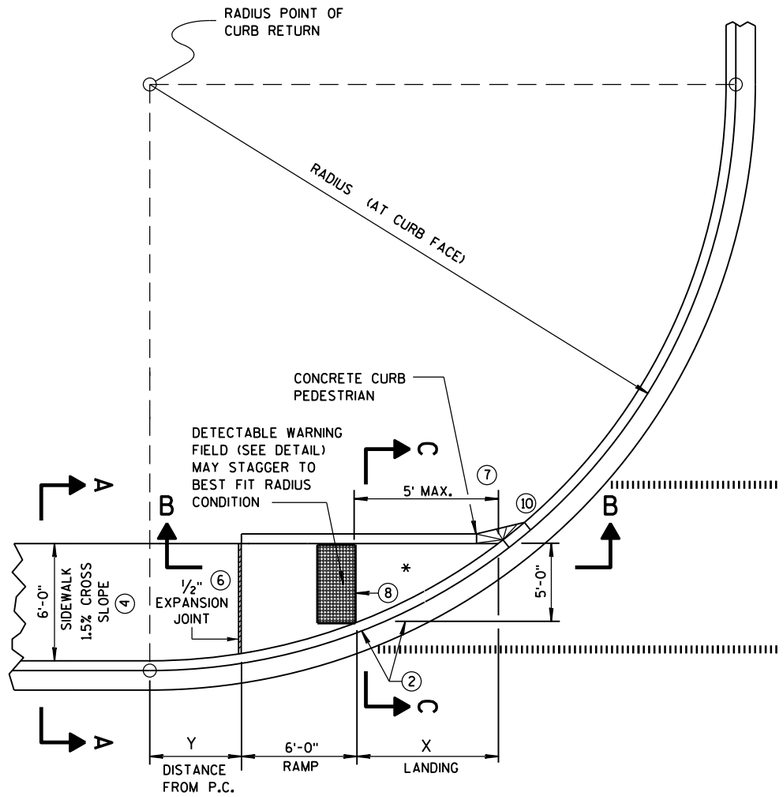

CURB RAMP TYPE 4A
PLAN VIEW

RADIUS (AT CURB FACE)	X	Y
20 FEET	7'-11"	0'-2"
30 FEET	10'-2¾"	1'-7½"
40 FEET	12'-1¼"	2'-10"
50 FEET	13'-8¾"	3'-10¾"
60 FEET	15'-2"	4'-10¼"

INTERMEDIATE RADII CAN BE INTERPOLATED

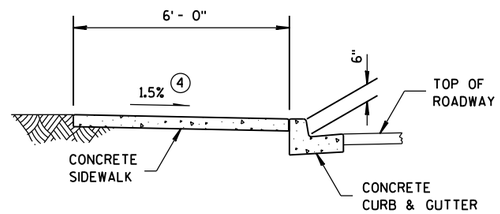

SECTION A-A FOR TYPE 4A

GENERAL NOTES

AVOID PLACING DRAINAGE STRUCTURES, JUNCTION BOXES OR OTHER OBSTRUCTIONS IN FRONT OF RAMP ACCESS AREAS.

DETECTABLE WARNING FIELDS THAT ARE INSTALLED AS A GROUP OR SIDE BY SIDE, SHALL BE FROM THE SAME MANUFACTURER.

(2) GRADE CHANGE BETWEEN GUTTER FLAG SLOPE AND THE CURB RAMP SLOPE SHALL NOT EXCEED 11%. MAXIMUM GUTTER FLAG SLOPE IS 4%. PROVIDE LONGITUDINAL DRAINAGE AROUND CURB AND AWAY FROM CURB RAMP. NO VERTICAL LIPS OR DISCONTINUITIES GREATER THAN ¼-INCH ARE ALLOWED. SLOPE OF CURB HEAD OPENING SHALL NOT EXCEED 7%.

(3) ABSOLUTE MAXIMUM 12H:1V (8.33%) CURB RAMP SLOPE IS ALLOWABLE WITH FLATTENED GUTTER FLAG SLOPE AND NOT TO EXCEED 11% GRADE CHANGE.

(4) ±0.5% CONSTRUCTION TOLERANCE IN SIDEWALK CROSS SLOPE. THE SIDEWALK CROSS SLOPE SHALL NOT EXCEED 2% WITHOUT PRIOR APPROVAL FROM THE ENGINEER.

(6) PROVIDE A LEVEL LANDING (MAXIMUM 2% SLOPE) IN ANY DIRECTION OF PEDESTRIAN TRAVEL. STANDARD LANDING SIZE IS 5 FEET X 5 FEET.

(7) WHEN THIS DISTANCE EXCEEDS 5 FEET, STAGGER ADDITIONAL DETECTABLE WARNING PANEL FORWARD TO REDUCE THIS DISTANCE. PROVIDE MINIMUM 12-INCH ROW OVERLAP TO AVOID SIDESTEP OF DOME DETECTION. USE EQUAL-SIZE PANELS TO DEVELOP OVERLAPPING, STAGGERED ROWS. ALIGN DOMES BETWEEN OVERLAPPING ROWS AND IN DIRECTION OF PEDESTRIAN TRAVEL.

(8) PROVIDE GRADE BREAK PERPENDICULAR TO DIRECTION OF WHEELCHAIR TRAVEL.

(10) INSTALL TRANSITION NOSE. (INCIDENTAL TO OTHER PAY ITEMS). DO NOT MARK TRANSITION NOSE.

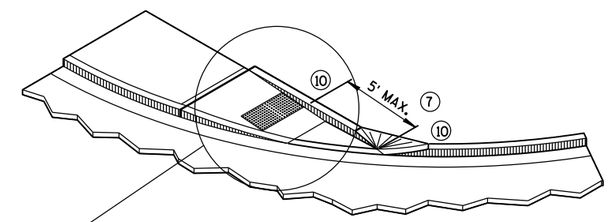

ISOMETRIC VIEW FOR TYPE 4A

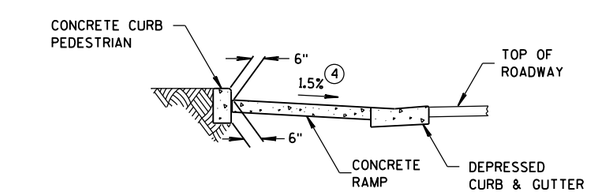

SECTION C-C FOR TYPE 4A

* MAXIMUM 2.0% SLOPE IN ALL DIRECTIONS IN FRONT OF GRADE BREAK

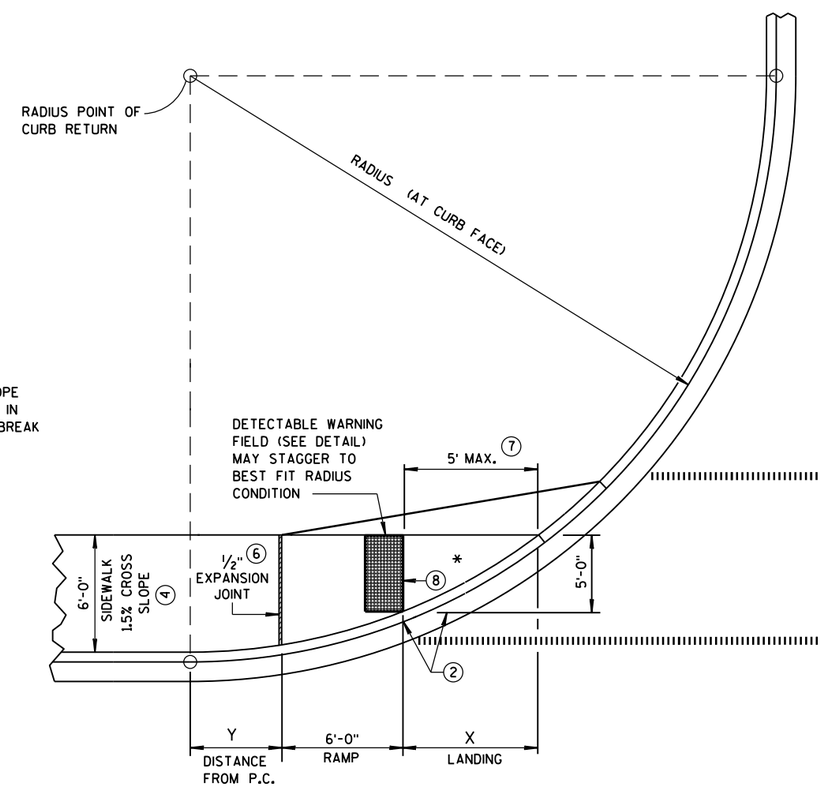

CURB RAMP TYPE 4A1
PLAN VIEW

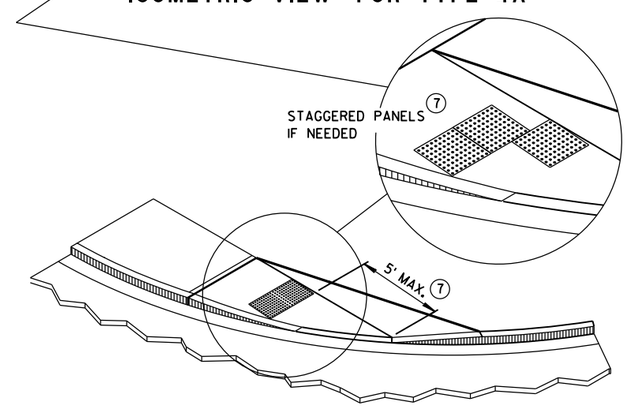

ISOMETRIC VIEW FOR TYPE 4A1

LEGEND

- ½" EXPANSION JOINT-SIDEWALK
- CONTRACTION JOINT FIELD LOCATED
- PAVEMENT MARKING CROSSWALK (WHITE)

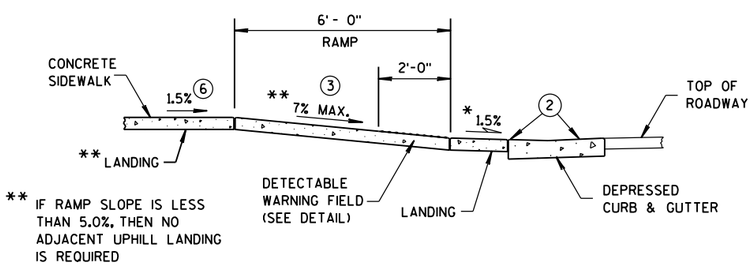

** IF RAMP SLOPE IS LESS THAN 5.0%, THEN NO ADJACENT UPHILL LANDING IS REQUIRED

SECTION B-B FOR TYPE 4A

CURB RAMPS
TYPES 4A AND 4A1

STATE OF WISCONSIN
DEPARTMENT OF TRANSPO

6

S.D.D. 8 D 5-18c

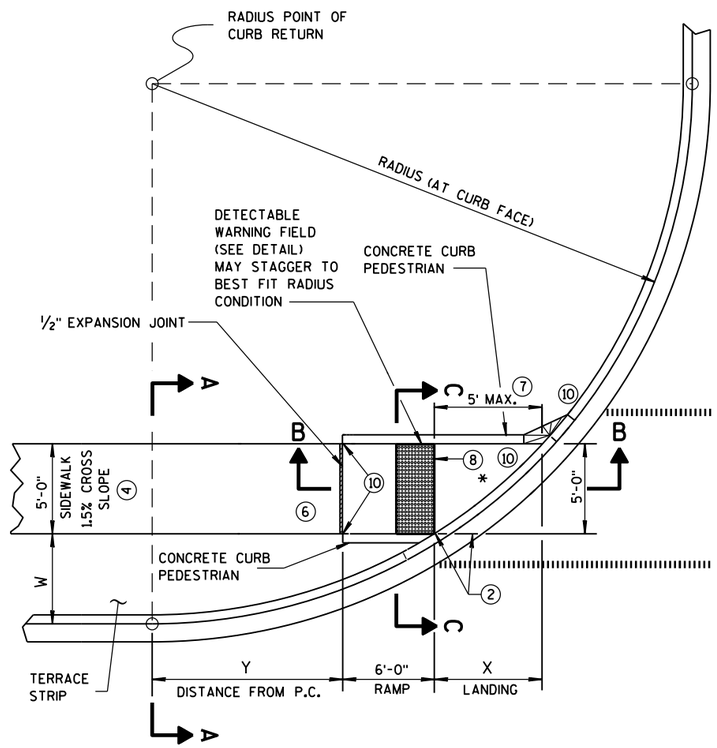

CURB RAMP TYPE 4B
PLAN VIEW

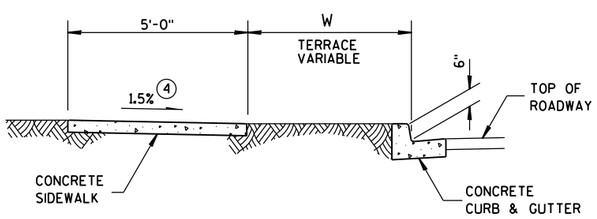

SECTION A-A FOR TYPE 4B

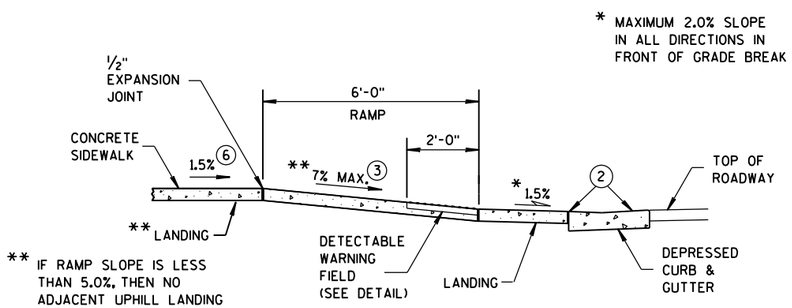

SECTION B-B FOR TYPE 4B

LEGEND

- ½" EXPANSION JOINT-SIDEWALK
- CONTRACTION JOINT FIELD LOCATED
- PAVEMENT MARKING CROSSWALK (WHITE)

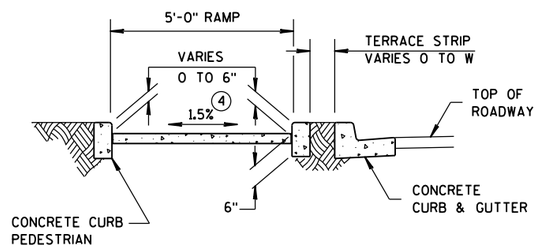

SECTION C-C FOR TYPE 4B

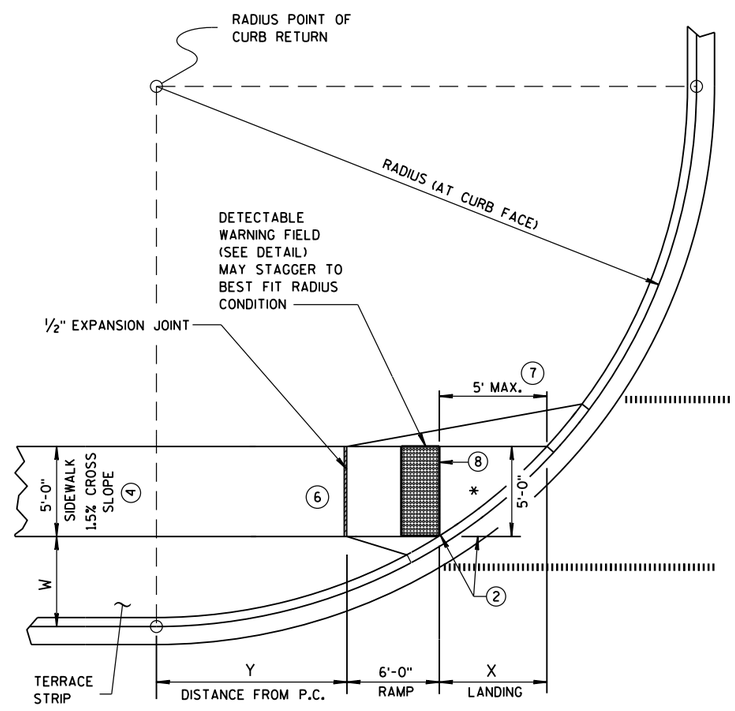

CURB RAMP TYPE 4B1
PLAN VIEW

RADIUS (AT CURB FACE)	W = 3' - 0"		W = 4' - 0"		W = 5' - 0"		W = 6' - 0"		W = 7' - 0"	
	X	Y	X	Y	X	Y	X	Y	X	Y
20 FEET	5'-9¾"	3'-6½"	4'-11½"	5'-1¾"	4'-3¼"	6'-5½"	3'-8¾"	7'-6¾"	3'-3"	8'-6¼"
30 FEET	7'-9¼"	5'-10½"	6'-9½"	7'-11¼"	6'-0¼"	9'-8"	5'-5"	11'-1¾"	4'-10¾"	12'-5¾"
40 FEET	9'-4"	7'-10"	8'-2¾"	10'-3"	7'-4¾"	12'-3¾"	6'-8½"	14'-1¼"	6'-1¾"	15'-8½"
50 FEET	10'-8"	9'-6½"	9'-5½"	12'-3¼"	8'-6½"	14'-7½"	7'-9¾"	16'-8¼"	7'-2½"	18'-6¼"
60 FEET	11'-10¼"	11'-0¾"	10'-6½"	14'-1¼"	9'-6½"	16'-8½"	8'-9¼"	18'-11¾"	8'-1½"	21'-0½"

INTERMEDIATE RADII CAN BE INTERPOLATED

GENERAL NOTES

AVOID PLACING DRAINAGE STRUCTURES, JUNCTION BOXES OR OTHER OBSTRUCTIONS IN FRONT OF RAMP ACCESS AREAS.

DETECTABLE WARNING FIELDS THAT ARE INSTALLED AS A GROUP OR SIDE BY SIDE, SHALL BE FROM THE SAME MANUFACTURER.

(2) GRADE CHANGE BETWEEN GUTTER FLAG SLOPE AND THE CURB RAMP SLOPE SHALL NOT EXCEED 11%. MAXIMUM GUTTER FLAG SLOPE IS 4%. PROVIDE LONGITUDINAL DRAINAGE AROUND CURB AND AWAY FROM CURB RAMP. NO VERTICAL LIPS OR DISCONTINUITIES GREATER THAN ¼-INCH ARE ALLOWED. SLOPE OF CURB HEAD OPENING SHALL NOT EXCEED 7%.

(3) ABSOLUTE MAXIMUM 12H:1V (8.33%) CURB RAMP SLOPE IS ALLOWABLE WITH FLATTENED GUTTER FLAG SLOPE AND NOT TO EXCEED 11% GRADE CHANGE.

(4) ±0.5% CONSTRUCTION TOLERANCE IN SIDEWALK CROSS SLOPE. THE SIDEWALK CROSS SLOPE SHALL NOT EXCEED 2% WITHOUT PRIOR APPROVAL FROM THE ENGINEER.

(6) PROVIDE A LEVEL LANDING (MAXIMUM 2% SLOPE) IN ANY DIRECTION OF PEDESTRIAN TRAVEL. STANDARD LANDING SIZE IS 5 FEET X 5 FEET.

(7) WHEN THIS DISTANCE EXCEEDS 5 FEET, STAGGER ADDITIONAL DETECTABLE WARNING PANEL FORWARD TO REDUCE THIS DISTANCE. PROVIDE MINIMUM 12-INCH ROW OVERLAP TO AVOID SIDESTEP OF DOME DETECTION. USE EQUAL-SIZE PANELS TO DEVELOP OVERLAPPING, STAGGERED ROWS. ALIGN DOMES BETWEEN OVERLAPPING ROWS AND IN DIRECTION OF PEDESTRIAN TRAVEL.

(8) PROVIDE GRADE BREAK PERPENDICULAR TO DIRECTION OF WHEELCHAIR TRAVEL.

(10) INSTALL TRANSITION NOSE. (INCIDENTAL TO OTHER PAY ITEMS). DO NOT MARK TRANSITION NOSE.

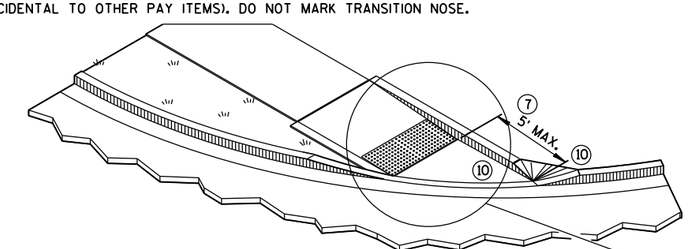

ISOMETRIC VIEW FOR TYPE 4B

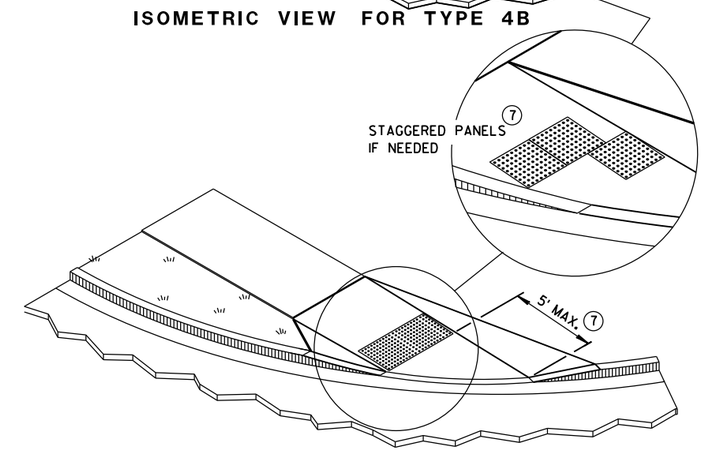

ISOMETRIC VIEW FOR TYPE 4B1

CURB RAMPS
TYPE 4B AND 4B1

STATE OF WISCONSIN
DEPARTMENT OF TRANSPOI

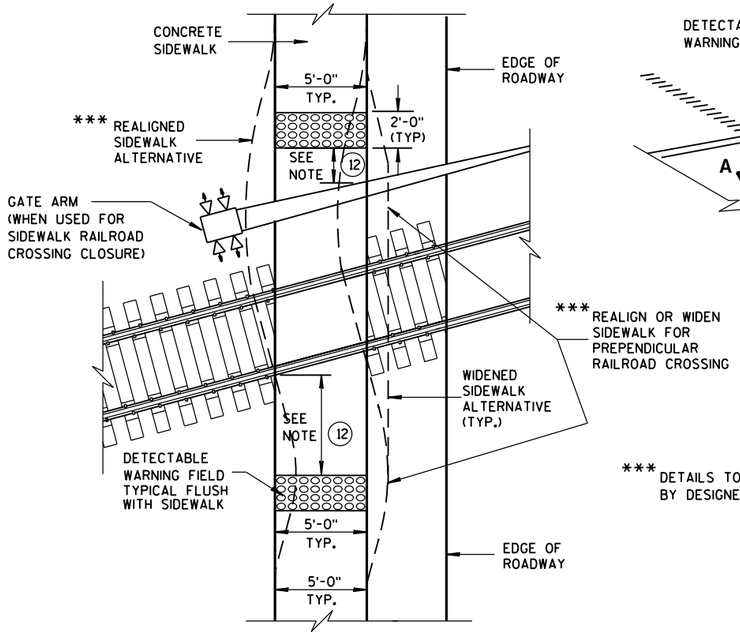

TYPE 8
DETECTABLE WARNINGS AT RAILROAD CROSSING

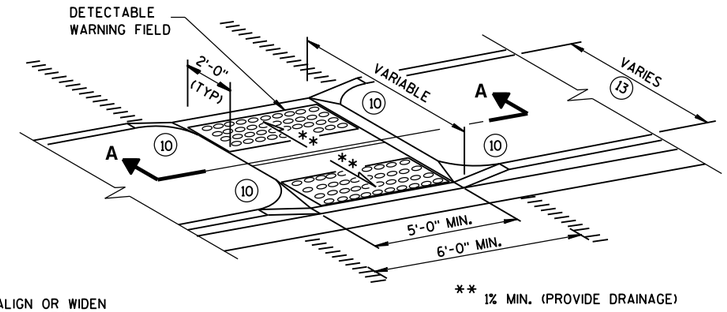

*** DETAILS TO BE DETERMINED BY DESIGNER

MEDIAN ISLAND NON-ELEVATED CROSSING
TYPE 5

GENERAL NOTES

SIDEWALK CROSS SLOPE SHALL NOT EXCEED 2%.

DETECTABLE WARNING FIELDS THAT ARE INSTALLED AS A GROUP OR SIDE BY SIDE, SHALL BE FROM THE SAME MANUFACTURER.

(2) GRADE CHANGE BETWEEN GUTTER FLAG SLOPE AND THE CURB RAMP SLOPE SHALL NOT EXCEED 11%. MAXIMUM GUTTER FLAG SLOPE IS 4%. PROVIDE LONGITUDINAL DRAINAGE AROUND CURB AND AWAY FROM CURB RAMP. NO VERTICAL LIPS OR DISCONTINUITIES GREATER THAN 1/4-INCH ARE ALLOWED. SLOPE OF CURB HEAD OPENING SHALL NOT EXCEED 7%.

(3) ABSOLUTE MAXIMUM 12H:1V (8.33%) CURB RAMP SLOPE IS ALLOWABLE WITH FLATTENED GUTTER FLAG SLOPE AND NOT TO EXCEED 11% GRADE CHANGE.

(4) ±0.5% CONSTRUCTION TOLERANCE IN SIDEWALK CROSS SLOPE. THE SIDEWALK CROSS SLOPE SHALL NOT EXCEED 2% WITHOUT PRIOR APPROVAL FROM THE ENGINEER.

(6) PROVIDE A LEVEL LANDING (MAXIMUM 2% SLOPE) IN ANY DIRECTION OF PEDESTRIAN TRAVEL. STANDARD LANDING SIZE IS 5 FEET X 5 FEET.

(10) INSTALL TRANSITION NOSE. (INCIDENTAL TO OTHER PAY ITEMS). DO NOT MARK TRANSITION NOSE.

(11) SLOPE SIDEWALK TOWARD LANDING AS SHOWN WHERE THERE IS NO TERRACE OR WHERE THE TERRACE WIDTH IS LESS THAN 6 FEET WIDE.

(12) THE EDGE OF THE DETECTABLE WARNING FIELD NEAREST TO A RAILROAD CROSSING SHALL BE 1.5 FEET ± 0.1' FROM THE FACE OF THE GATE ARM IF THE GATE ARM EXTENDS ACROSS THE SIDEWALK. WHERE THERE IS NO PEDESTRIAN GATE, THE EDGE OF THE DETECTABLE WARNING FIELD NEAREST TO THE RAILROAD CROSSING SHALL BE 15 FEET FROM THE NEAREST RAIL.

(13) DO NOT INSTALL DETECTABLE WARNING FIELDS IF MEDIAN WIDTH BETWEEN BACK OF CURBS IS LESS THAN 6 FEET.

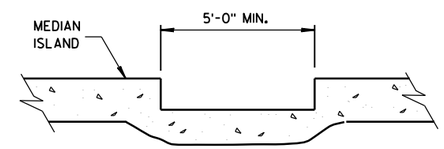

SECTION A-A

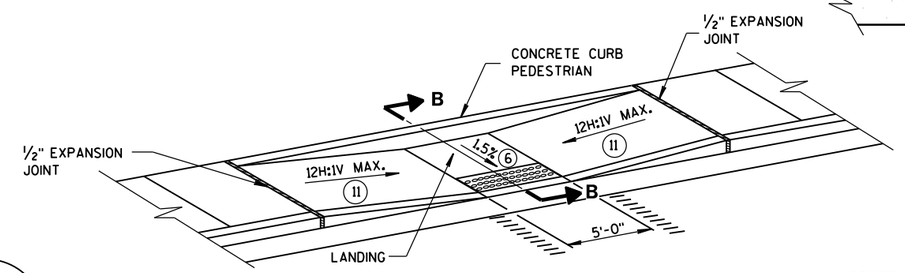

MID-BLOCK CROSSING
TYPE 7A

	MIN.	MAX.
A	1.6"	2.4"
B	0.65"	1.5"
C	*	*
D	0.9"	1.4"

* THE C DIMENSION IS 50% TO 65% OF THE D DIMENSION.

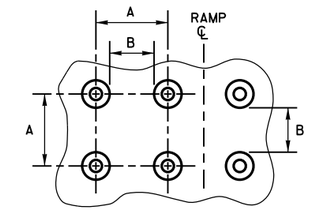

PLAN VIEW

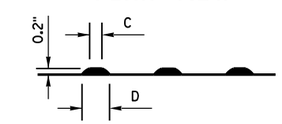

ELEVATION VIEW

TRUNCATED DOMES
DETECTABLE WARNING PATTERN DETAIL

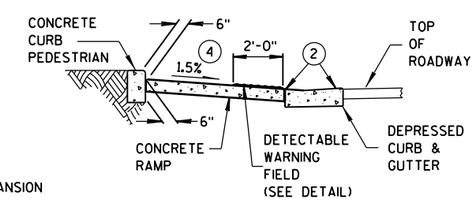

SECTION B-B

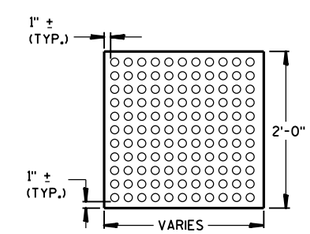

PLAN VIEW
DETECTABLE WARNING FIELD (TYPICAL)

REFER TO GENERAL NOTES (2) AND (3) FOR ALL ISLAND CURB RAMPS

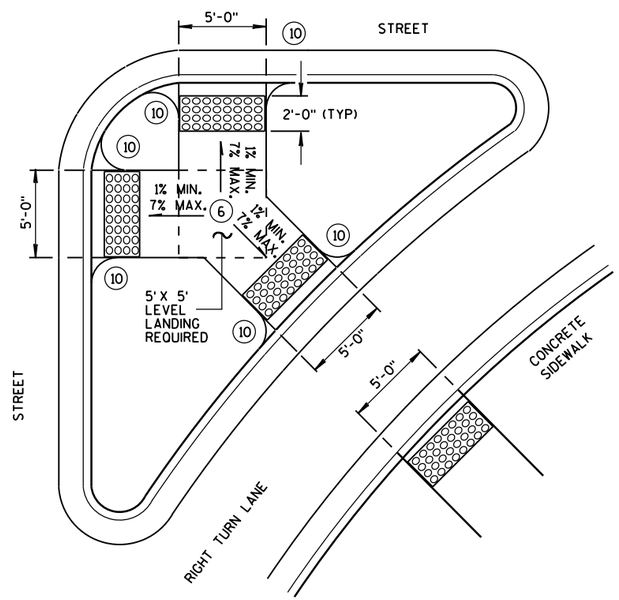

TYPE 6
DETECTABLE WARNING AT ISLANDS

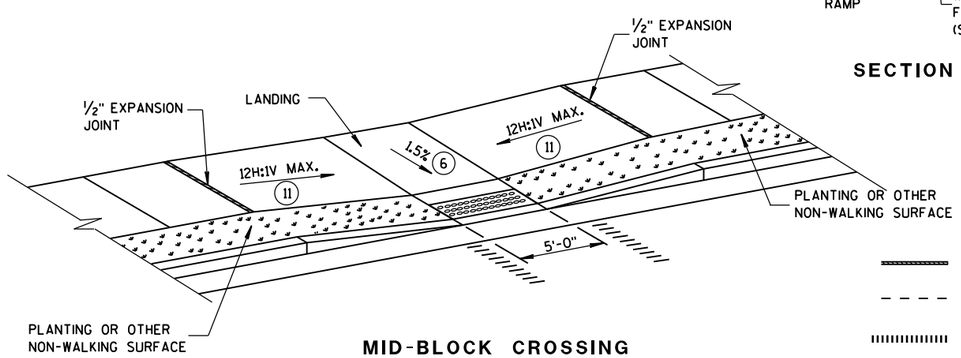

MID-BLOCK CROSSING
TYPE 7B

NOTE: THESE PARALLEL AND PARALLEL/PERPENDICULAR CURB RAMPS MAY BE USED AT INTERSECTIONS AND MID BLOCK LOCATIONS.

LEGEND

- 1/2" EXPANSION JOINT-SIDEWALK
- CONTRACTION JOINT FIELD LOCATED
- PAVEMENT MARKING CROSSWALK (WHITE)

CURB RAMPS
TYPES 5, 6, 7A, 7B & 8

STATE OF WISCONSIN
DEPARTMENT OF TRANSPORTATION

APPROVED
Sept., 2016 — DATE
/S/ Rodney Taylor — ROADWAY STANDARDS UNIT SUPERV
FHWA — ENT

6

S.D.D. 8 D 5-18e

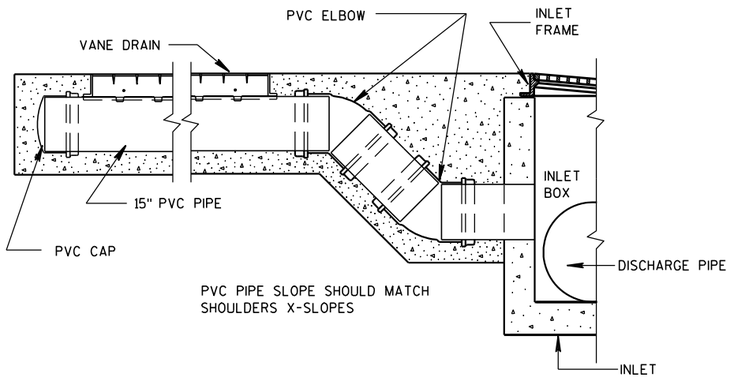

TYPICAL SLOTTED VANE DRAIN CONFIGURATION

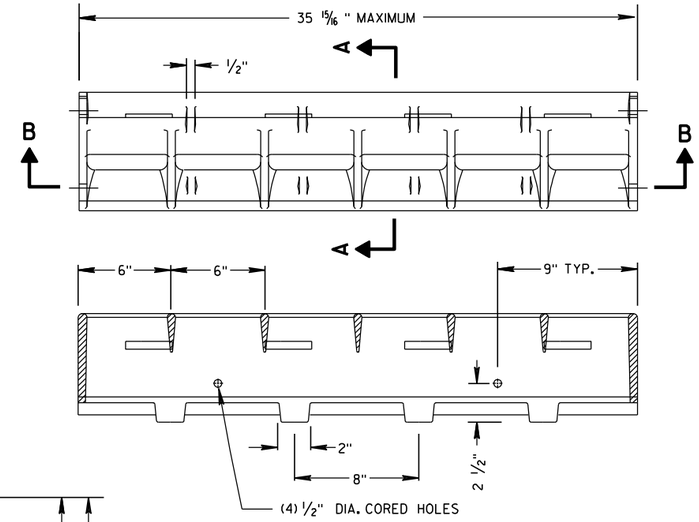

SECTION B-B

SLOTTED VANE DRAIN DETAIL

(APPROXIMATE WEIGHT 87 LBS.)

GENERAL NOTES

DETAILS OF CONSTRUCTION, MATERIALS AND WORKMANSHIP NOT SHOWN ON THIS DRAWING SHALL CONFORM TO THE PERTINENT REQUIREMENTS OF THE STANDARD SPECIFICATIONS AND THE APPLICABLE SPECIAL PROVISIONS.

ENCASEMENT: THE ENCASING MATERIAL AROUND THE PIPE SHALL BE IN ACCORDANCE WITH SPECIFICATIONS OF 501.4.3.3 FOR CONCRETE PAVEMENT.

THE PIPE USED SHALL BE A 15" DIAMETER SDR-35 POLYVINYL CHLORIDE SEWER PIPE. THE PIPE SHALL CONFORM TO THE REQUIREMENTS SET FORTH IN STANDARD SPECIFICATION 612.2.6

SURFACE DRAIN: BEFORE PAVING OVER THE DRAIN, COVER THE TOP OF THE DRAIN TO KEEP MATERIAL OUT OF THE PIPE. THE FINISHED GRADE SHOULD BE FLUSH WITH THE TOP OF THE DRAIN.

THE ANGLE OF THE DRAIN TO THE FLOW OF WATER SHOULD BE AS CLOSE TO 90° AS POSSIBLE.

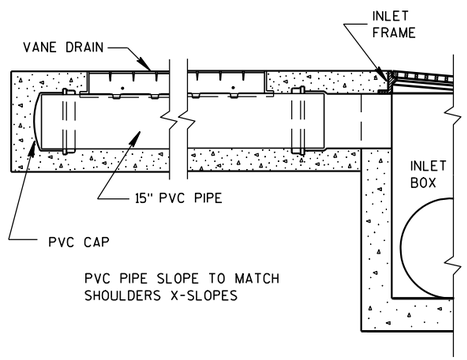

TYPICAL SLOTTED VANE DRAIN CONFIGURATION

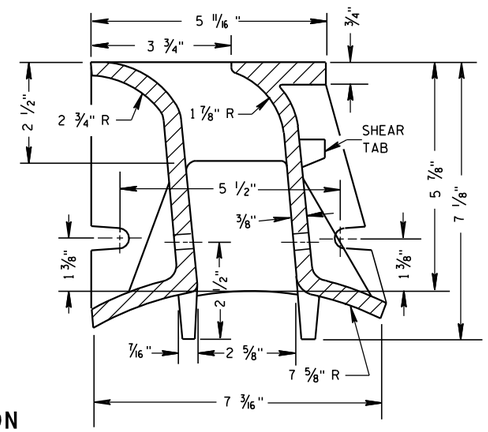

SECTION A-A

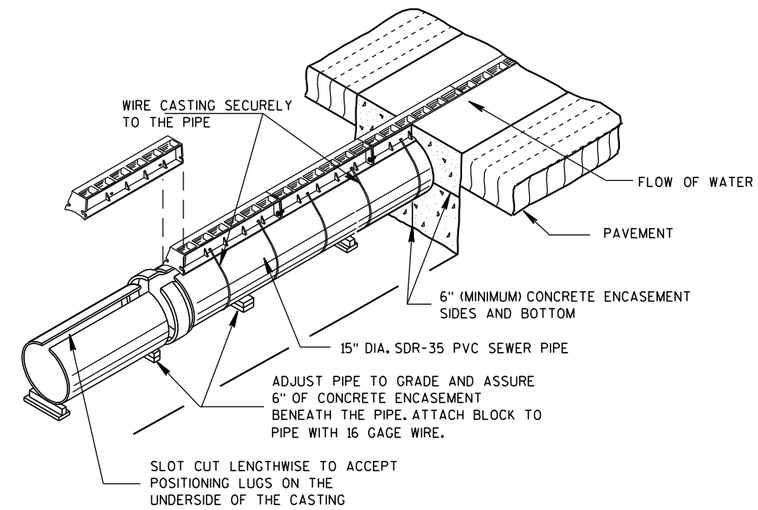

INSTALLATION OF SLOTTED VANE DRAIN

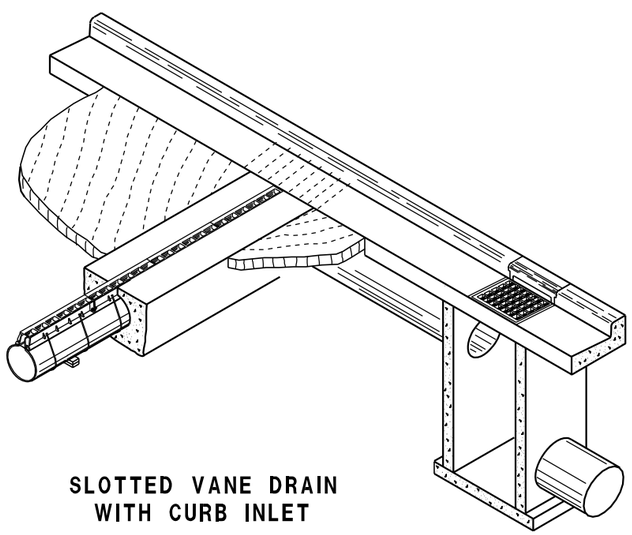

SLOTTED VANE DRAIN WITH CURB INLET

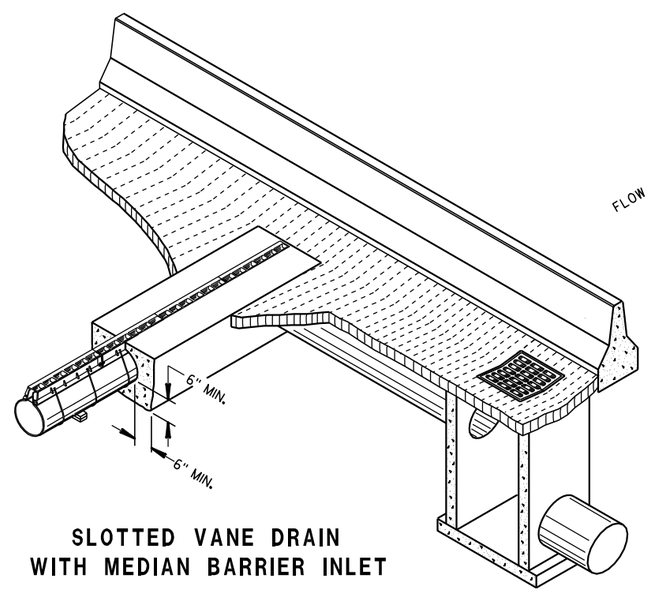

SLOTTED VANE DRAIN WITH MEDIAN BARRIER INLET

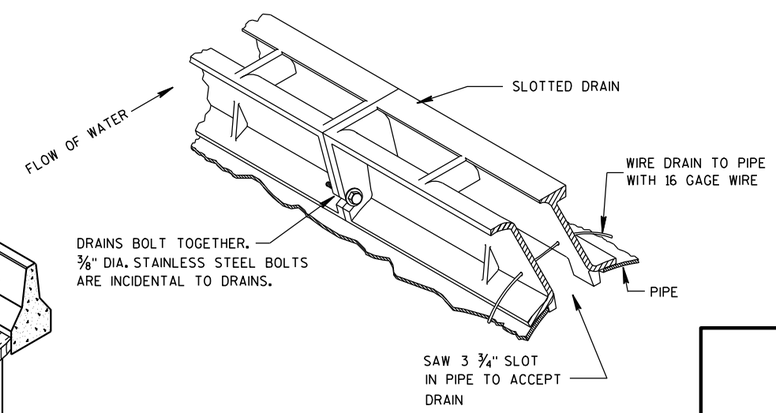

ISOMETRIC VIEW

SLOTTED VANE DRAIN
STATE OF WISCONSIN DEPARTMENT OF TRANSPORTATION
APPROVED 6/13/00 — DATE /S/ Rory L. Rhinehart — CHIEF ROADWAY DEVELOPMENT ENGINEER FHWA

6

6

S.D.D. 8 D 14-1

S.D.D. 8 D 14-1

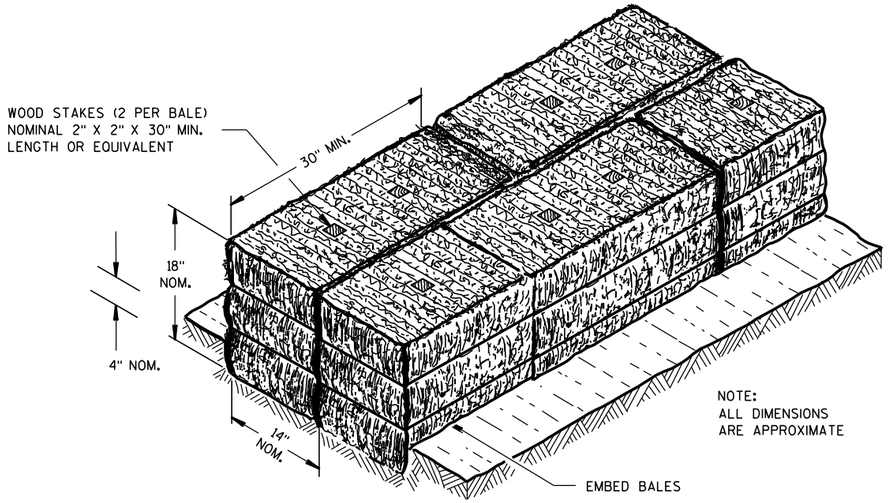

SECTION A-A

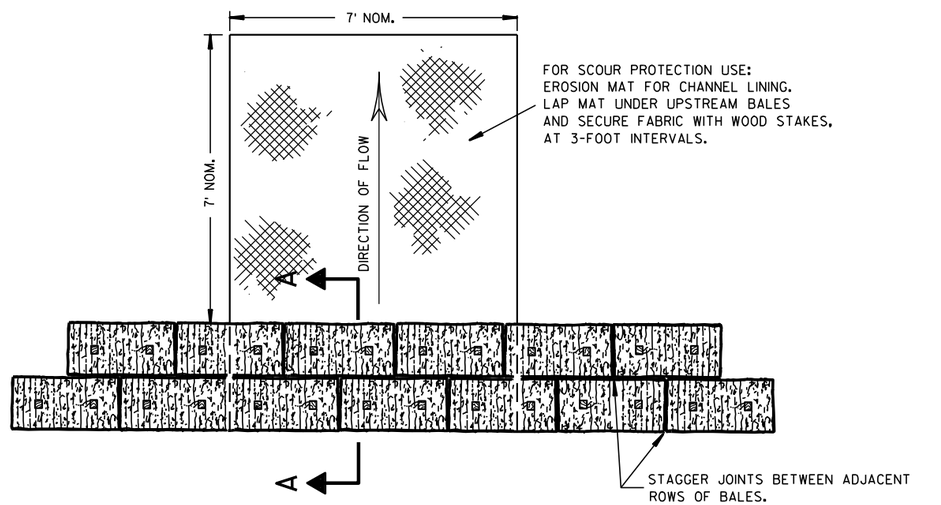

PLAN VIEW

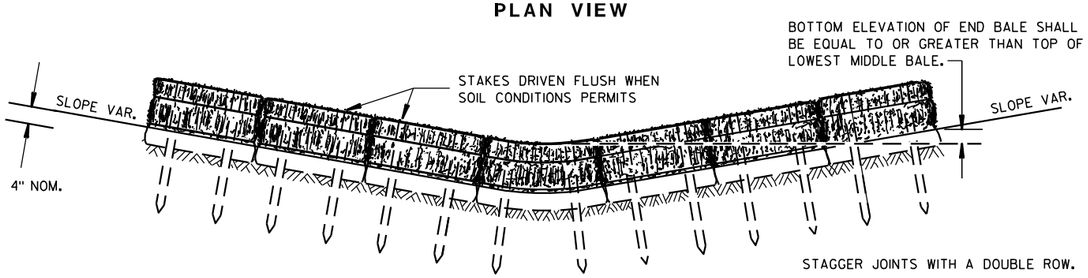

FRONT ELEVATION

TEMPORARY DITCH CHECK USING EROSION BALES ①

GENERAL NOTES

DETAILS OF CONSTRUCTION, MATERIALS AND WORKMANSHIP NOT SHOWN ON THIS DRAWING SHALL CONFORM TO THE PERTINENT REQUIREMENTS OF THE STANDARD SPECIFICATIONS AND THE APPLICABLE SPECIAL PROVISIONS.

① TEMPORARY DITCH CHECKS EITHER EROSION BALES OR MANUFACTURED SHALL BE PAID FOR UNDER THE BID ITEM OF TEMPORARY DITCH CHECK. THE DEPARTMENT WILL NOT PAY FOR TEMPORARY DITCH CHECKS CONSTRUCTED OF A SINGLE ROW OF EROSION BALES.

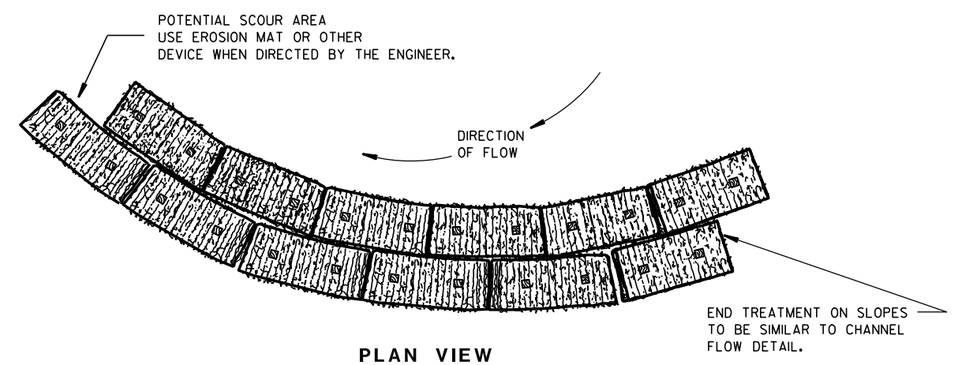

PLAN VIEW

WHEN ALTERING THE DIRECTION OF FLOW

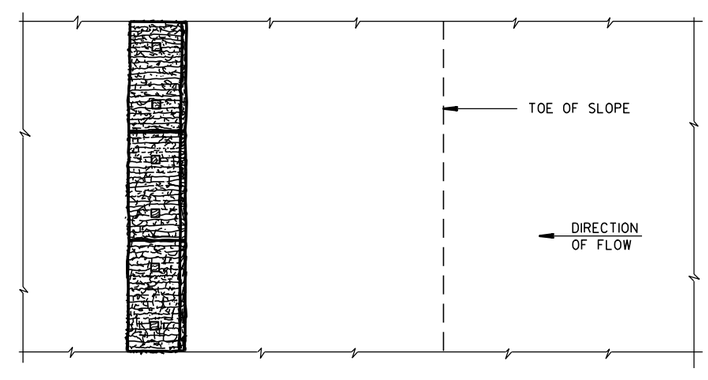

PLAN VIEW

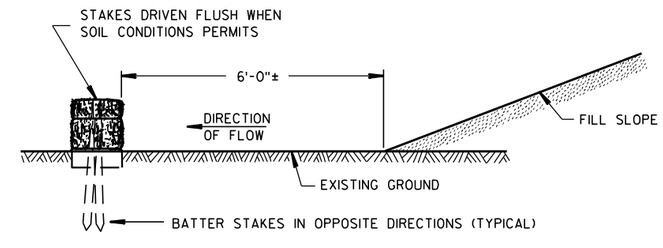

FRONT ELEVATION

WHEN EXISTING GROUND SLOPES AWAY FROM FILL SLOPE

EROSION BALES FOR SHEET FLOW

TYPICAL INSTALLATIONS OF EROSION BALES / TEMPORARY DITCH CHECKS

STATE OF WISCONSIN
DEPARTMENT OF TRANSPORTATION

APPROVED
6/04/02 — DATE
/S/ Beth Cann — CHIEF ROADWAY DEVELOPMENT ENGINEER
FHWA

6

6

S.D.D. 8 E 8-3

S.D.D. 8 E 8-3

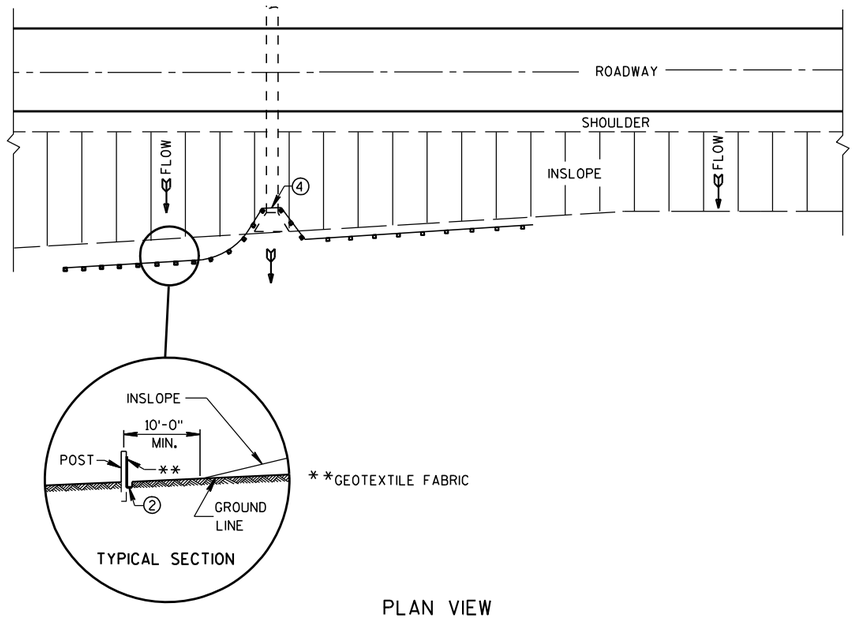

PLAN VIEW

TYPICAL APPLICATION OF SILT FENCE

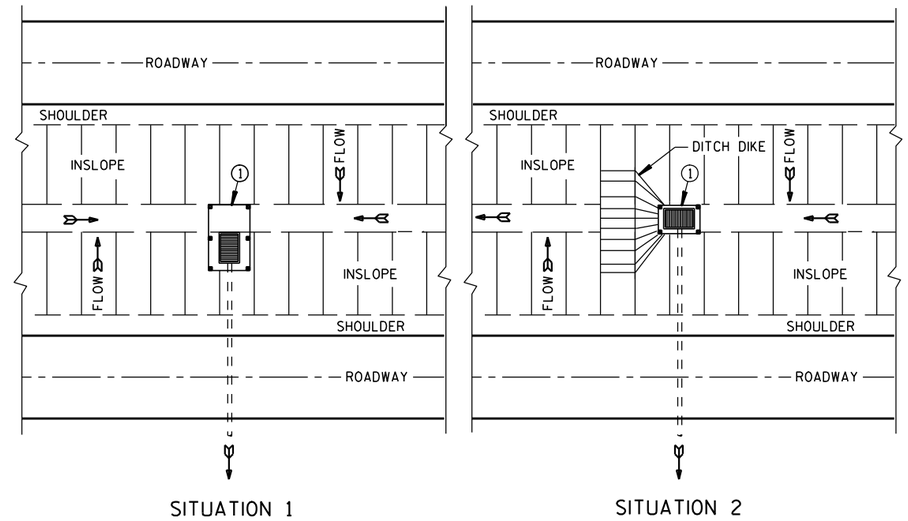

PLAN VIEW

SILT FENCE AT MEDIAN SURFACE DRAINS

GENERAL NOTES

DETAILS OF CONSTRUCTION NOT SHOWN ON THIS DRAWING SHALL CONFORM TO THE PERTINENT REQUIREMENTS OF THE STANDARD SPECIFICATIONS AND APPLICABLE SPECIAL PROVISIONS.

① HORIZONTAL BRACE REQUIRED WITH 2" X 4" WOODEN FRAME OR EQUIVALENT AT TOP OF POSTS.

② FOR MANUAL INSTALLATIONS THE TRENCH SHALL BE A MINIMUM OF 4" WIDE & 6" DEEP TO BURY AND ANCHOR THE GEOTEXTILE FABRIC. FOLD MATERIAL TO FIT TRENCH AND BACKFILL & COMPACT TRENCH WITH EXCAVATED SOIL.

③ WOOD POSTS SHALL BE A MINIMUM SIZE OF 1⅛" X 1⅛" OF OAK OR HICKORY.

④ SILT FENCE TO EXTEND ACROSS THE TOP OF THE PIPE.

⑤ CONSTRUCT SILT FENCE FROM A CONTINUOUS ROLL IF POSSIBLE BY CUTTING LENGTHS TO AVOID JOINTS. IF A JOINT IS NECESSARY USE ONE OF THE FOLLOWING TWO METHODS; A) OVERLAP THE END POSTS AND TWIST, OR ROTATE, AT LEAST 180 DEGREES. B) HOOK THE END OF EACH SILT FENCE LENGTH.

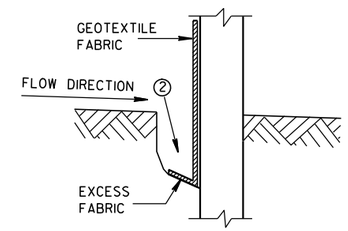

TRENCH DETAIL

NOTE: ADDITIONAL POST DEPTH OR TIE BACKS MAY BE REQUIRED IN UNSTABLE SOILS

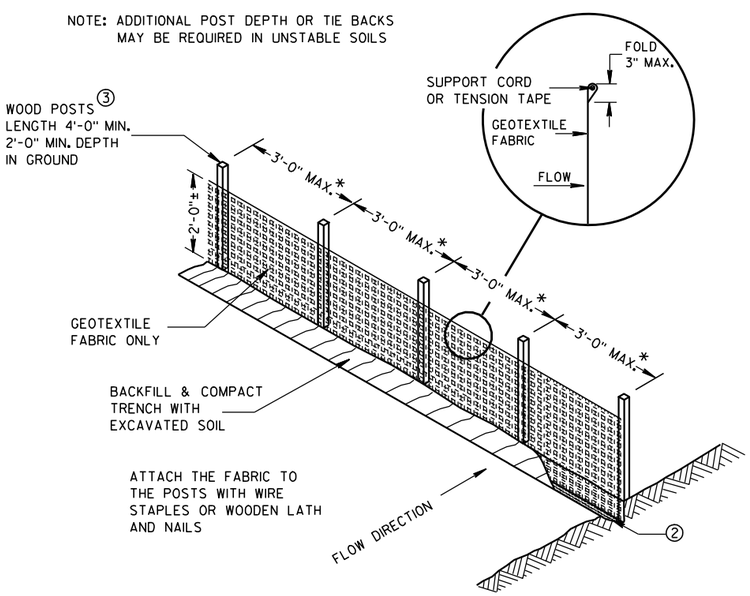

*NOTE: 8'-0" POST SPACING ALLOWED IF A WOVEN GEOTEXTILE FABRIC IS USED.

SILT FENCE

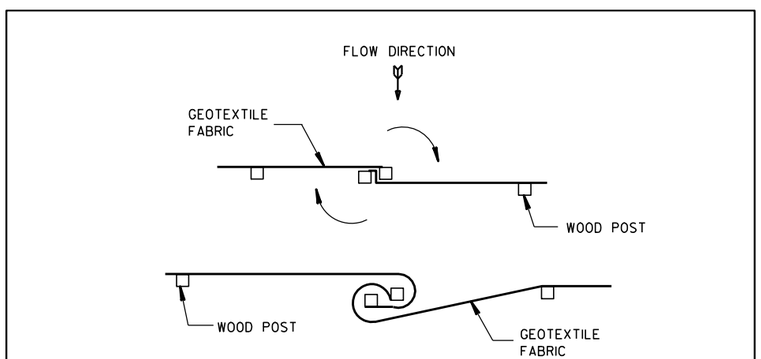

TWIST METHOD

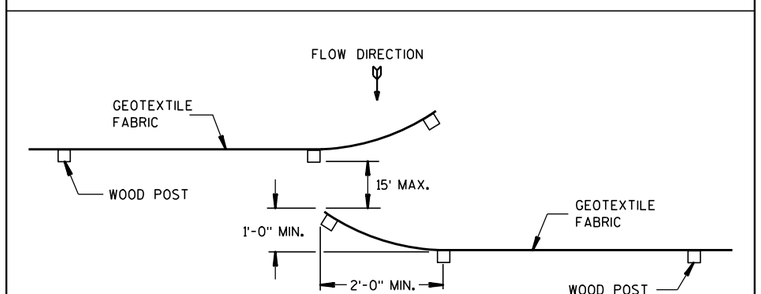

HOOK METHOD

JOINING TWO LENGTHS OF SILT FENCE ⑤

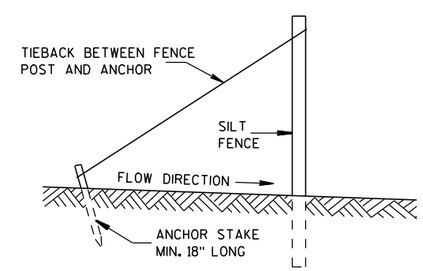

SILT FENCE TIE BACK

(WHEN REQUIRED BY THE ENGINEER)

SILT FENCE
STATE OF WISCONSIN DEPARTMENT OF TRANSPORTATION
APPROVED 4-29-05 DATE — /S/ Beth Cann-- CHIEF ROADWAY DEVELOP ENGINEER FHWA

6

6

S.D.D. 8 E 9-6

S.D.D. 8 E 9-6

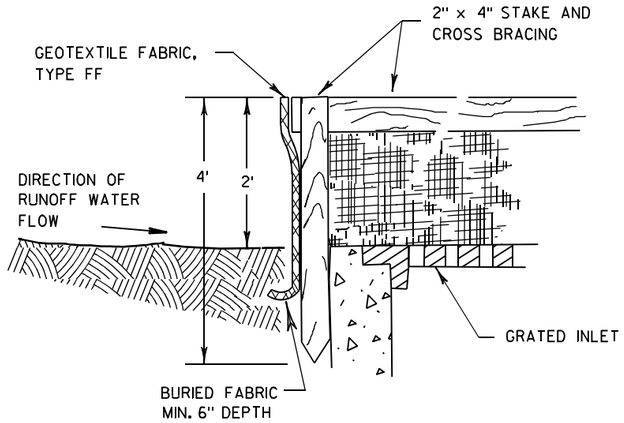

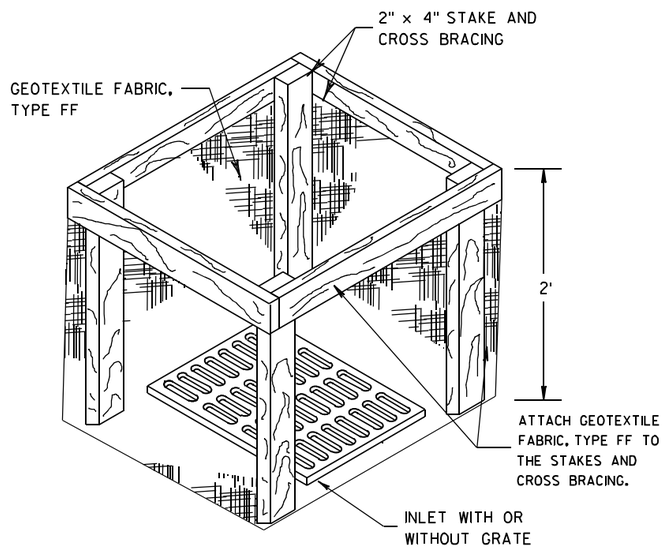

INLET PROTECTION, TYPE A

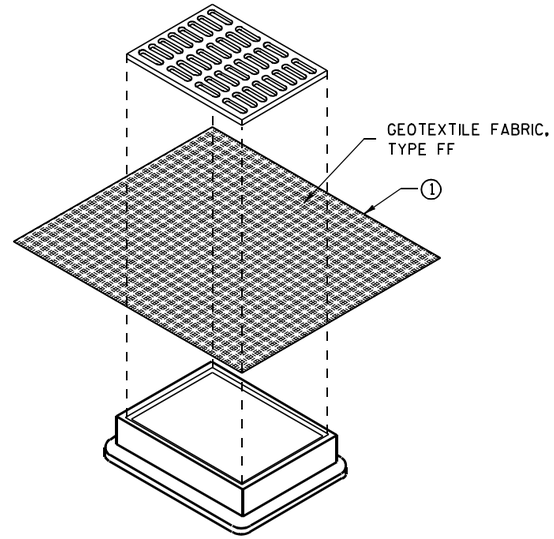

INLET PROTECTION, TYPE B (WITHOUT CURB BOX)

(CAN BE INSTALLED IN ANY INLET WITHOUT A CURB BOX)

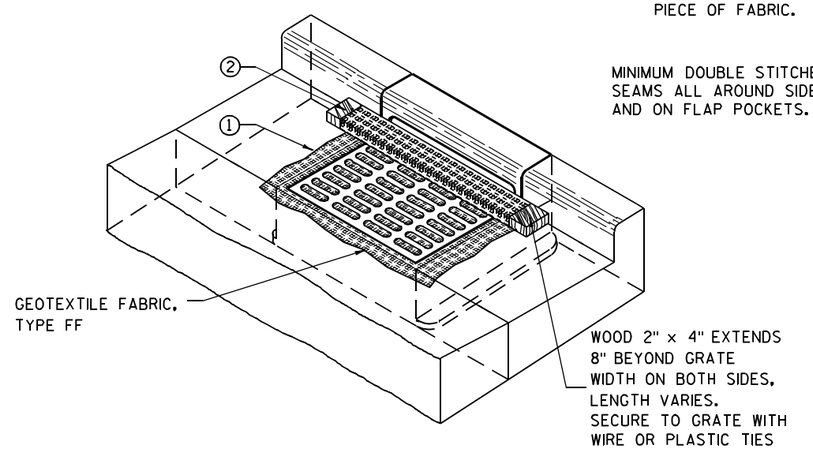

INLET PROTECTION, TYPE C (WITH CURB BOX)

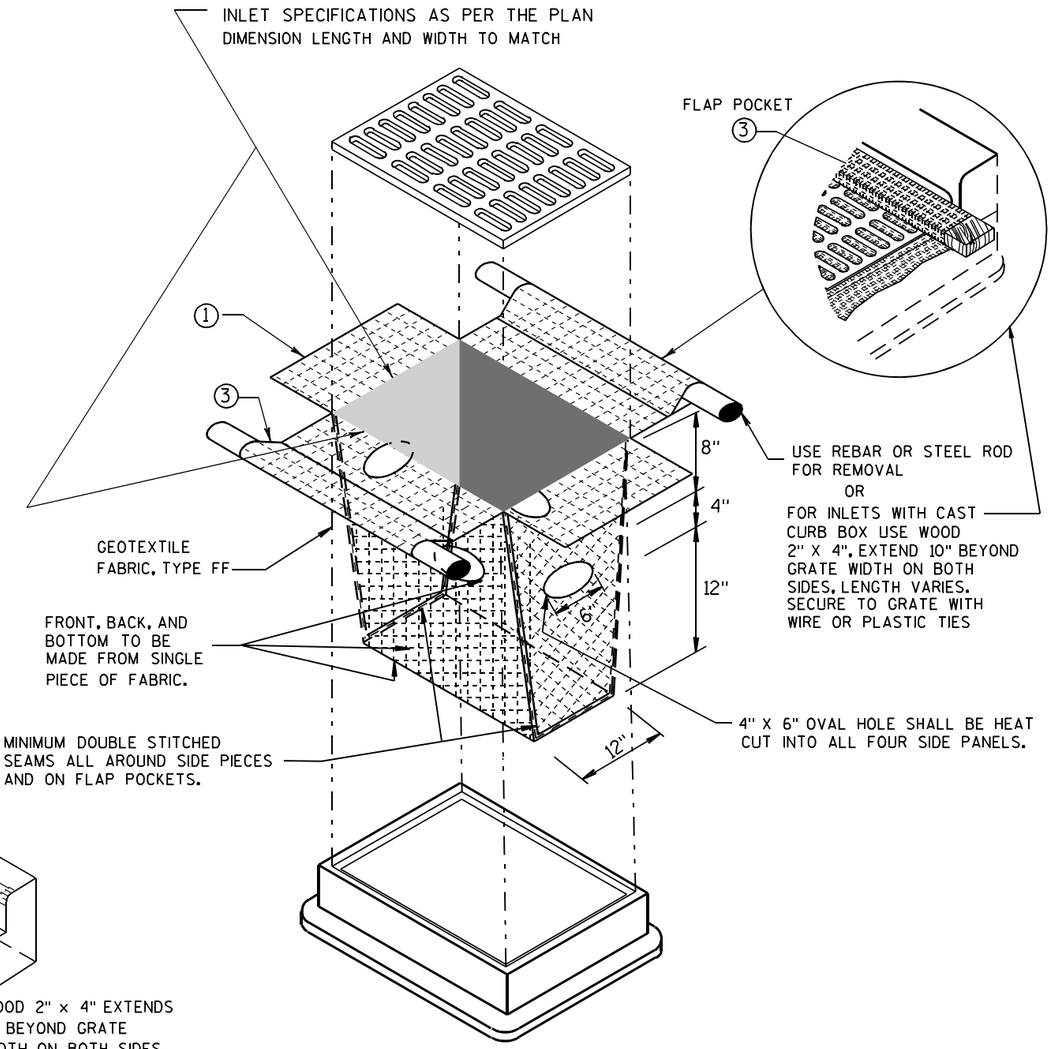

INLET PROTECTION, TYPE D

(CAN BE INSTALLED IN ANY INLET TYPE WITH OR WITHOUT A CURB BOX AS PER NOTE ②)

GENERAL NOTES

INLET PROTECTION DEVICES SHALL BE MAINTAINED OR REPLACED AT THE DIRECTION OF THE ENGINEER.

MANUFACTURED ALTERNATIVES APPROVED AND LISTED ON THE DEPARTMENT'S EROSION CONTROL PRODUCT ACCEPTABILITY LIST MAY BE SUBSTITUTED.

WHEN REMOVING OR MAINTAINING INLET PROTECTION, CARE SHALL BE TAKEN SO THAT THE SEDIMENT TRAPPED ON THE GEOTEXTILE FABRIC DOES NOT FALL INTO THE INLET. ANY MATERIAL FALLING INTO THE INLET SHALL BE REMOVED IMMEDIATELY.

① FINISHED SIZE, INCLUDING FLAP POCKETS WHERE REQUIRED, SHALL EXTEND A MINIMUM OF 10" AROUND THE PERIMETER TO FACILITATE MAINTENANCE OR REMOVAL.

② FOR INLET PROTECTION, TYPE C (WITH CURB BOX), AN ADDITIONAL 18" OF FABRIC IS WRAPPED AROUND THE WOOD AND SECURED WITH STAPLES. THE WOOD SHALL NOT BLOCK THE ENTIRE HEIGHT OF THE CURB BOX OPENING.

③ FLAP POCKETS SHALL BE LARGE ENOUGH TO ACCEPT WOOD 2X4.

INSTALLATION NOTES

TYPE B & C

TRIM EXCESS FABRIC IN THE FLOW LINE TO WITHIN 3" OF THE GRATE.

THE CONTRACTOR SHALL DEMONSTRATE A METHOD OF MAINTENANCE, USING A SEWN FLAP, HAND HOLDS OR OTHER METHOD TO PREVENT ACCUMULATED SEDIMENT FROM ENTERING THE INLET.

TYPE D

DO NOT INSTALL INLET PROTECTION TYPE D IN INLETS SHALLOWER THAN 30", MEASURED FROM THE BOTTOM OF THE INLET TO THE TOP OF THE GRATE.

TRIM EXCESS FABRIC IN THE FLOW LINE TO WITHIN 3" OF THE GRATE.

THE INSTALLED BAG SHALL HAVE A MINIMUM SIDE CLEARANCE, BETWEEN THE INLET WALLS AND THE BAG, MEASURED AT THE BOTTOM OF THE OVERFLOW HOLES, OF 3". WHERE NECESSARY THE CONTRACTOR SHALL CINCH THE BAG, USING PLASTIC ZIP TIES, TO ACHIEVE THE 3" CLEARANCE. THE TIES SHALL BE PLACED AT A MAXIMUM OF 4" FROM THE BOTTOM OF THE BAG.

INLET PROTECTION
TYPE A, B, C, AND D

STATE OF WISCONSIN
DEPARTMENT OF TRANSPORTATION

APPROVED
10/16/02 — DATE
/S/ Beth Cannestra
CHIEF ROADWAY DEVELOPMENT ENGINEER
FHWA

6

S.D.D. 8 E 10-2

GENERAL NOTES

DETAILS OF CONSTRUCTION, MATERIALS AND WORKMANSHIP NOT SHOWN ON THIS DRAWING SHALL CONFORM TO THE PERTINENT REQUIREMENTS OF THE STANDARD SPECIFICATIONS AND THE APPLICABLE SPECIAL PROVISIONS.

TRACKING PAD SHALL BE INSPECTED DAILY. DEFICIENT AREAS SHALL BE REPAIRED OR REPLACED IMMEDIATELY.

TRACKING PAD TO BE REMOVED AFTER CONSTRUCTION IS COMPLETED.

TRACKING PAD SHALL BE THE FULL WIDTH OF THE EGRESS POINT.

SURFACE WATER MUST BE PREVENTED FROM PASSING THROUGH THE TRACKING PAD. FLOWS SHALL BE DIVERTED AWAY, AROUND OR CONVEYED UNDER THE TRACKING PAD.

CULVERT PIPE OR OTHER BMP USED TO DIVERT WATER AWAY, AROUND OR UNDER THE TRACKING PAD SHALL BE DESIGNED TO CONVEY THE 2 YEAR - 24 HOUR EVENT.

THE COST OF ADDITIONAL BMP TO DIVERT WATER ARE INCIDENTAL TO THE TRACKING PAD BID ITEM.

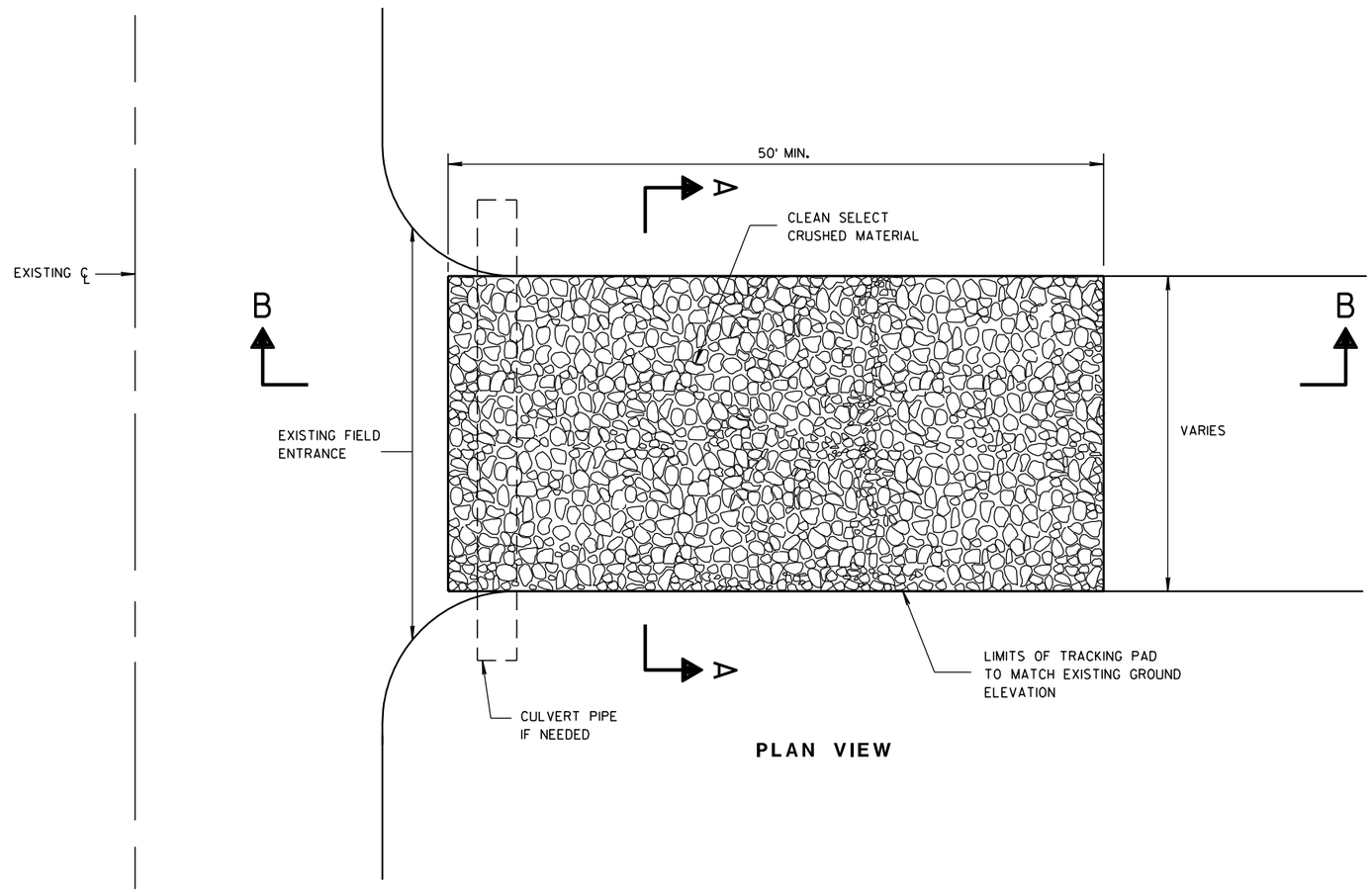

PLAN VIEW

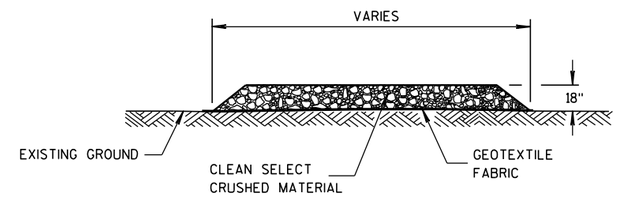

SECTION A-A

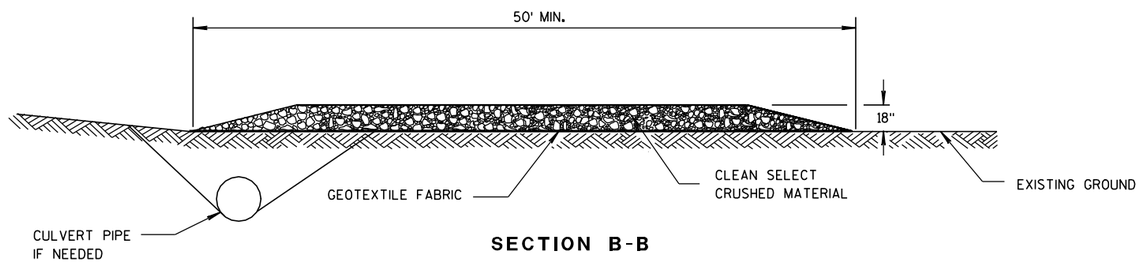

SECTION B-B

TRACKING PAD

6

6

S.D.D. 8 E 14-1

S.D.D. 8 E 14-1

TRACKING PAD

STATE OF WISCONSIN
DEPARTMENT OF TRANSPORTATION

APPROVED

3/24/2011	/S/ Jerry H. Zona	
DATE	ROADWAY STANDARDS ENGINEER	ENT

FHWA

METAL APRON ENDWALLS

PIPE DIA. (IN.)	MIN. THICK. (Inches) STEEL	MIN. THICK. (Inches) ALUM.	DIMENSIONS (Inches) A (±1")	B (MAX.)	H (±1")	L (±1 1/2")	L1 ①	L2 ①	W (±2")	APPROX. SLOPE	BODY
12	.064	.060	6	6	6	21	12	17 1/2	24	2 1/2 to 1	1 Pc.
15	.064	.060	7	8	6	26	14	21 3/4	30	2 1/2 to 1	1 Pc.
18	.064	.060	8	10	6	31	15	28 1/4	36	2 1/2 to 1	1 Pc.
21	.064	.060	9	12	6	36	18	29 5/8	42	2 1/2 to 1	1 Pc.
24	.064	.075	10	13	6	41	18	37 1/4	48	2 1/2 to 1	1 Pc.
30	.079	.075	12	16	8	51	18	52 1/4	60	2 1/2 to 1	1 Pc.
36	.079	.105	14	19	9	60	24	59 3/4	72	2 1/2 to 1	2 Pc.
42	.109	.105	16	22	11	69	24	75 5/8	84	2 1/2 to 1	2 Pc.
48	.109	.105	18	27	12	78	24	81	90	2 1/4 to 1	3 Pc.
54	.109	.105	18	30	12	84	30	85 1/2	102	2 1/4 to 1	3 Pc.
60	.109×	.105×	18	33	12	87	—	—	114	2 to 1	3 Pc.
66	.109×	.105×	18	36	12	87	—	—	120	2 to 1	3 Pc.
72	.109×	.105×	18	39	12	87	—	—	126	2 to 1	3 Pc.
78	.109×	.105×	18	42	12	87	—	—	132	1 1/2 to 1	3 Pc.
84	.109×	.105×	18	45	12	87	—	—	138	1 1/2 to 1	3 Pc.
90	.109×	.105×	18	37	12	87	—	—	144	1 1/2 to 1	3 Pc.
96	.109×	.105×	18	35	12	87	—	—	150	1 1/2 to 1	3 Pc.

× EXCEPT CENTER PANEL
SEE GENERAL NOTES

REINFORCED CONCRETE APRON ENDWALLS

PIPE DIA. (IN.)	DIMENSIONS (Inches) T	A	B	C	D	E	G	APPROX. SLOPE
12	2	4	24	48 7/8	72 7/8	24	2	3 to 1
15	2 1/4	6	27	46	73	30	2 1/4	3 to 1
18	2 1/2	9	27	46	73	36	2 1/2	3 to 1
21	2 3/4	9	36	37 1/2	73 1/2	42	2 3/4	3 to 1
24	3	9 1/2	43 1/2	30	73 1/2	48	3	3 to 1
27	3 1/4	10 1/2	49 1/2	24	73 1/2	54	3 1/4	3 to 1
30	3 1/2	12	54	19 3/4	73 1/2	60	3 1/2	3 to 1
36	4	15	63	34 3/4	97 3/4	72	4	3 to 1
42	4 1/2	21	63	35	98	78	4 1/2	3 to 1
48	5	24	72	26	98	84	5	3 to 1
54	5 1/2	27	65	*33 1/4-**35	*98 1/4-**100	90	5 1/2	2 2/5 to 1
60	6	*30-**35	60	39	99	96	5	2 to 1
66	6 1/2	*24-**30	*72-**78	*21-**27	99	102	5 1/2	2 to 1
72	7	*24-**36	78	21	99	108	6	2 to 1
78	7 1/2	*24-**36	78	21	99	114	6 1/2	2 to 1
84	8	36	90 1/2	21	111 1/2	120	6 1/2	1 1/2 to 1
90	8 1/2	41	87 1/2	24	111 1/2	132	6 1/2	1 1/2 to 1

*MINIMUM
**MAXIMUM

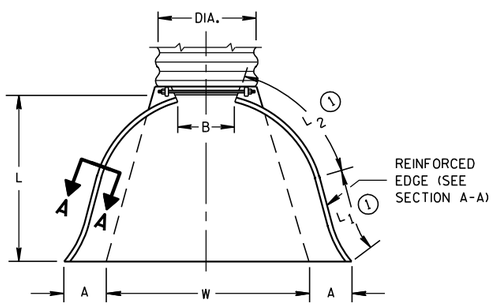

PLAN VIEW

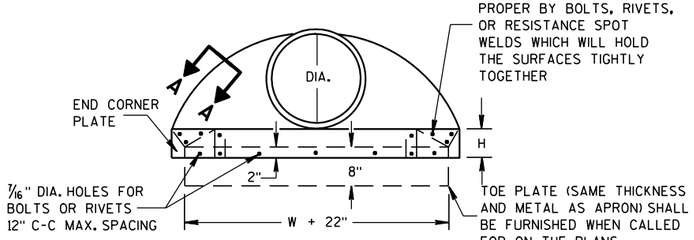

END VIEW

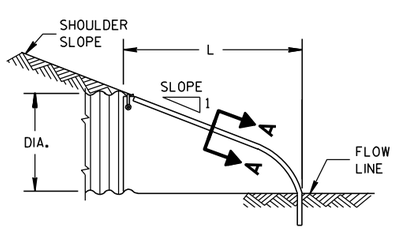

SIDE ELEVATION

METAL ENDWALLS

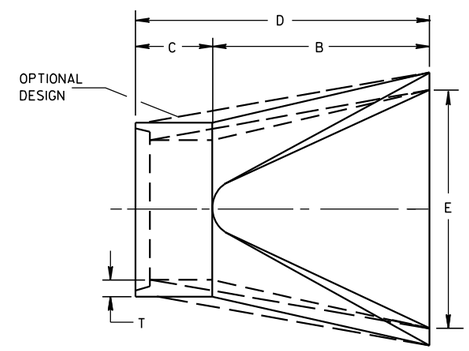

PLAN

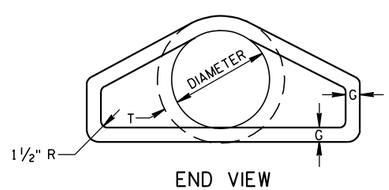

END VIEW

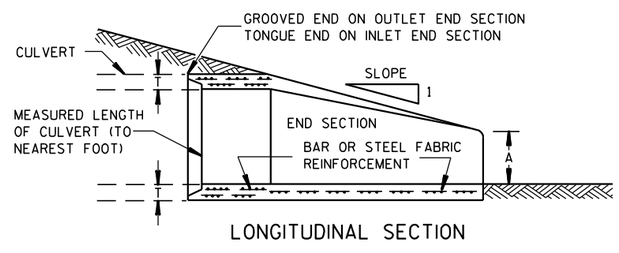

LONGITUDINAL SECTION

CONCRETE ENDWALLS

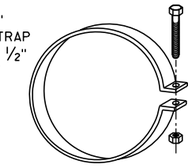

ALTERNATE FOR TYPE 1 CONNECTION

END SECTION CONNECTOR STRAP

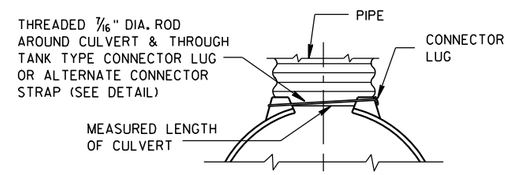

TYPE 1
FOR 12" THRU 24" CORR. PIPE

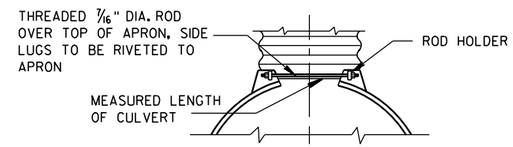

TYPE 2
FOR 30" THRU 96" CORR. PIPE

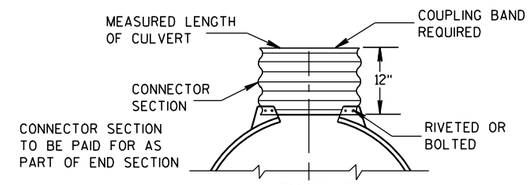

TYPE 3
FOR 42" THRU 96" CORR. PIPE

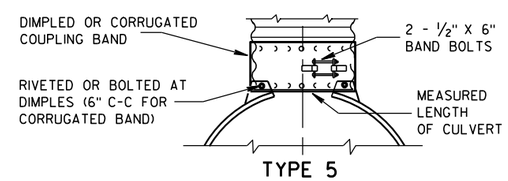

TYPE 5
ALTERNATE FOR:
ALL SIZES CORRUGATED CIRCULAR PIPE

NOTE: DIMPLED BAND FITS OVER OUTSIDE OF ENDWALL, AND CORRUGATED BAND FITS INSIDE ENDWALL. DIMPLED BAND MAY BE USED WITH HELICALLY CORRUGATED PIPE.

FOR CIRCUMFERENTIALLY CORRUGATED PIPE USE ENDWALL CONNECTION DETAILS 1, 2, 3 OR 5 AS APPLICABLE.

FOR HELICALLY CORRUGATED PIPE USE ENDWALL CONNECTION DETAILS 1, 2 OR 5.

FOR HELICALLY CORRUGATED PIPES WITH TWO CIRCUMFERENTIAL CORRUGATIONS AT EACH END USE ENDWALL CONNECTION DETAILS 1, 2 OR 3.

CONNECTION DETAILS

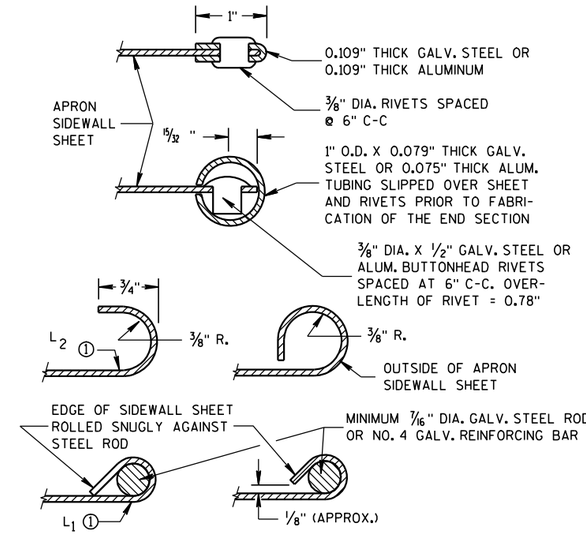

SECTION A-A

GENERAL NOTES

DETAILS OF CONSTRUCTION, MATERIALS AND WORKMANSHIP NOT SHOWN ON THIS DRAWING SHALL CONFORM TO THE PERTINENT REQUIREMENTS OF THE STANDARD SPECIFICATIONS AND THE APPLICABLE SPECIAL PROVISIONS.

CONCRETE CULVERT ENDWALLS MAY NOT BE USED WITH GALVANIZED STEEL OR ALUMINUM CULVERT PIPE OR VISE VERSA. GALVANIZED STEEL OR ALUMINUM ENDWALLS SHALL NORMALLY BE INSTALLED ON CULVERT PIPE OF THE SAME METAL.

ALL THREE PIECE STEEL APRON ENDWALLS FOR 60" DIAMETER PIPE AND LARGER SHALL HAVE 0.109" SIDES AND 0.138" CENTER PANELS. ALL THREE PIECE ALUMINUM APRON ENDWALLS FOR 60" DIAMETER PIPE AND LARGER SHALL HAVE 0.105" SIDES AND 0.134" CENTER PANELS. THE WIDTH OF CENTER PANELS SHALL BE GREATER THAN 20 PERCENT OF THE PIPE PERIMETER.

LAP SEAMS SHALL BE TIGHTLY JOINED BY GALVANIZED RIVETS OR BOLTS FOR STEEL UNITS AND ALUMINUM RIVETS AND BOLTS FOR ALUMINUM UNITS. FOR THE 60" THROUGH 96" DIAMETER APRON ENDWALL SIZES, THE REINFORCED EDGES AND CENTER PANEL SEAMS SHALL BE FURTHER REINFORCED WITH GALVANIZED STEEL OR ALUMINUM STIFFENER ANGLES. THE ANGLES SHALL BE ATTACHED BY GALVANIZED NUTS AND BOLTS FOR STEEL UNITS AND ALUMINUM NUTS AND BOLTS FOR ALUMINUM UNITS.

WHERE TWO OR MORE PIPES WITH APRON ENDWALLS ARE LAID ADJACENT TO EACH OTHER, THEY SHALL BE SEPARATED BY A DISTANCE SUFFICIENT TO PROVIDE A MINIMUM CLEARANCE OF 6 INCHES BETWEEN APRON ENDWALLS.

① FOR PIPE SIZES UP TO 60" DIAMETER, A 180° ROLLED EDGE MAY BE USED INSTEAD OF STEEL ROD REINFORCEMENT. SEE SECTION A-A.

APRON ENDWALLS FOR CULVERT PIPE

STATE OF WISCONSIN
DEPARTMENT OF TRANSPORTATION

APPROVED
11/30/94 — DATE
/S/ Rory L. Rhinesmith — CHIEF ROADWAY DEVELOPMENT ENGINEER
FHWA

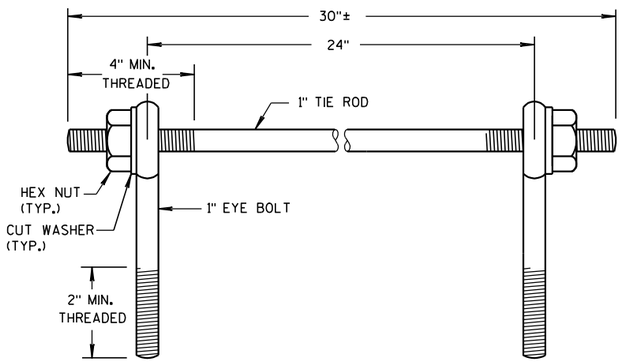

EYE BOLTS AND TIE ROD

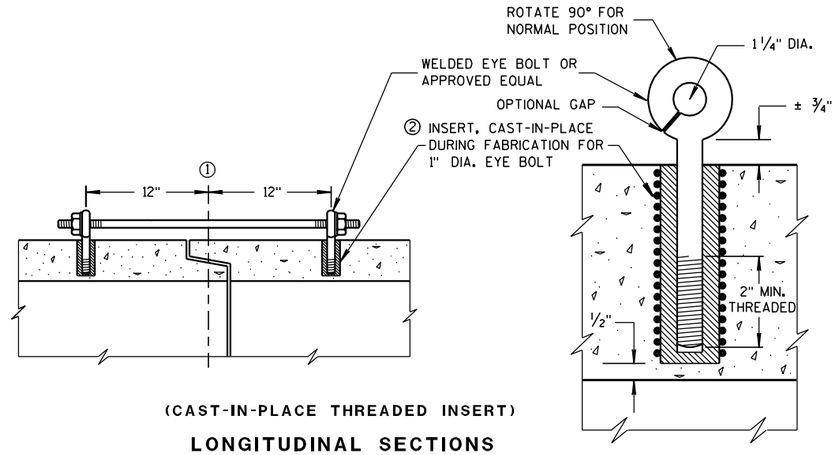

(CAST-IN-PLACE THREADED INSERT)

LONGITUDINAL SECTIONS

EYE BOLT AND TIE ROD ASSEMBLY (ALTERNATE NO. 1)

GENERAL NOTES

DETAILS OF CONSTRUCTION, MATERIALS, AND WORKMANSHIP NOT SHOWN ON THIS DRAWING SHALL CONFORM TO THE PERTINENT REQUIREMENTS OF THE STANDARD SPECIFICATIONS AND APPLICABLE SPECIAL PROVISIONS.

CONCRETE CULVERT AND STORM SEWER PIPE SHALL BE TIED TOGETHER IN THE MANNER ILLUSTRATED BY THIS DETAIL AT LOCATIONS DESIGNATED IN THE STANDARD SPECIFICATIONS AND THE PLAN. THE CONTRACTOR MAY USE EITHER ALTERNATE 1, 2 OR 3 FOR DRAINAGE STRUCTURES. ONLY ALTERNATE 1 AND 3 MAY BE USED FOR CATTLE PASSES, UNLESS OTHERWISE STATED IN THE CONTRACT. THE MATERIALS, FABRICATION AND WORK NECESSARY TO TIE THE PIPE BY THIS DETAIL WILL BE CONSIDERED INCIDENTAL TO THE PIPE AND APRON ENDWALLS IF REQUIRED.

DETAILED DRAWINGS FOR PROPOSED ALTERNATE DESIGNS FOR JOINT TIES SHALL BE SUBMITTED TO THE ENGINEER FOR APPROVAL.

JOINT TIES TO BE HOT-DIP GALVANIZED PER ASTM A 153.

① ℄ OF TONGUE AND GROOVE OR BELL AND SPIGOT JOINTS.

② THE INSIDE OF THE THREADED INSERTS SHALL BE CLEAN TO ALLOW THE INSERTION OF THREADED EYE BOLTS.

③ HOLES SHALL BE CAST-IN-PLACE OR DRILLED 12 INCHES FROM ℄ OF TONGUE AND GROOVE.

④ BOLT PROJECTION INSIDE OF PIPE SHALL NOT EXCEED 2 INCHES.

⑤ OPENING TO BE ROD DIAMETER PLUS 1 INCH.

⑥ LENGTH ADEQUATE TO EXTEND TO WITHIN 1/2 INCH OF THE INNER SURFACE OF THE PIPE.

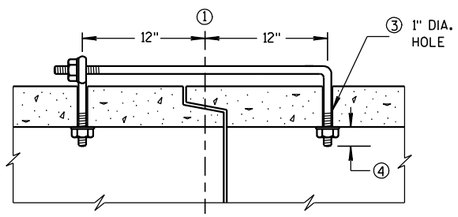

(TONGUE & GROOVE PIPE)

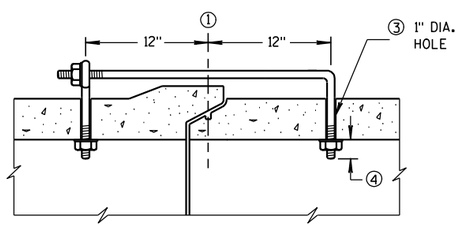

(MODIFIED BELL PIPE)

LONGITUDINAL SECTION

EYE BOLT DIMENSION TABLE

PIPE SIZE	L = LENGTH	
	TONGUE & GROOVE PIPE	MODIFIED BELL PIPE
18" TO 24"	4 1/2"	6 1/4"
30"	5"	7"
36"	5 1/2"	7"
42"	6"	
48"	6 1/2"	
60"	7 1/2"	
66"	8"	

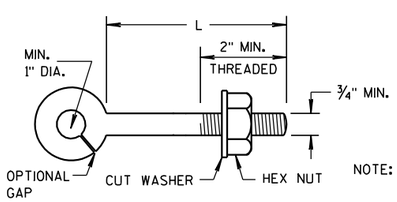

EYE BOLT

NOTE:

NOTE: TWO EYE BOLTS MAY BE USED WITH A 30" LONG THREADED ROD IN LIEU OF THE 90° BENT TIE ROD.

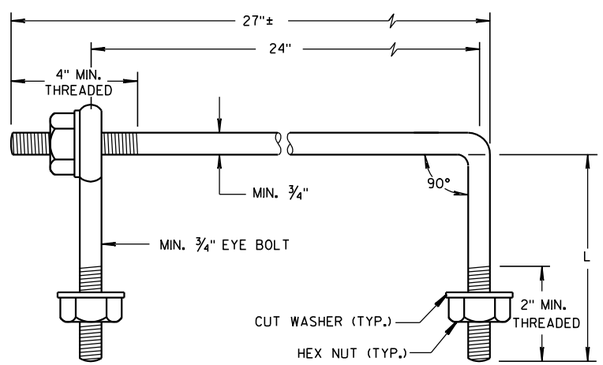

EYE BOLT AND TIE ROD

(JOINT TIES FOR 18" TO 66" DIA. CONCRETE PIPE)

EYE BOLT AND TIE ROD ASSEMBLY (ALTERNATE NO. 2)

ADJUSTABLE TIE ROD TABLE

PIPE DIAMETER	TIE ROD DIAMETER	D	L_1	N
12-60	5/8	5/8	5	1/2
66-84	3/4	3/4	5	1/2
90-108	1	1	7	1 7/16

DIMENSIONS SHOWN ARE IN INCHES

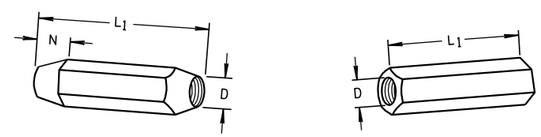

TAPERED PLAIN

RIGHT AND LEFT THREADS

SLEEVE NUTS

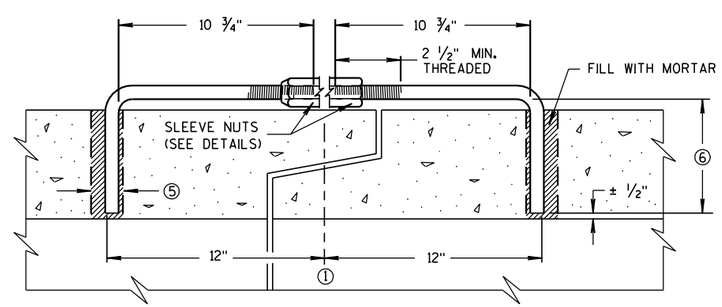

LONGITUDINAL SECTION

(JOINT TIES FOR 12" TO 108" DIA. CONCRETE PIPE)

ADJUSTABLE TIE ROD (ALTERNATE NO. 3)

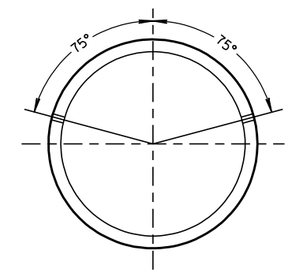

PLACEMENT OF (2) CAST-IN-PLACE INSERTS OR HOLES DURING FABRICATION FOR PIPE SECTIONS REQUIRING TIE RODS

TRANSVERSE SECTION

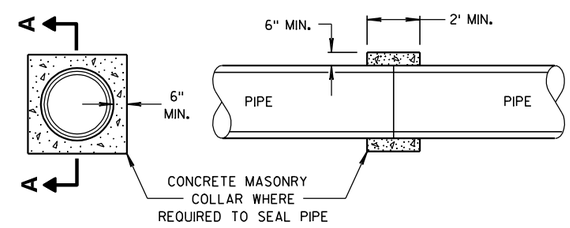

SECTION A-A

CONCRETE COLLAR DETAIL

JOINT TIES FOR CONCRETE PIPE AND CONCRETE COLLAR DETAIL

STATE OF WISCONSIN
DEPARTMENT OF TRANSPORTATION

APPROVED
6/5/2012 /S/ Jerry H. Zogg
DATE ROADWAY STANDARDS DEVELOPMENT ENGINEER
FHWA

6

S.D.D. 8 F 4-7

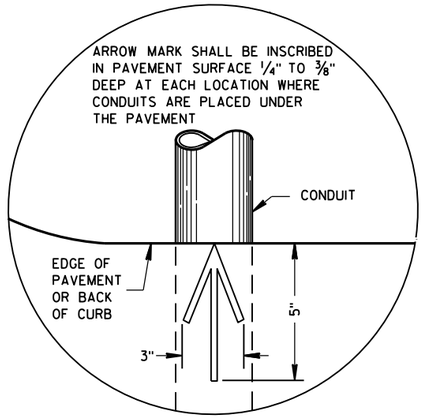

PLAN VIEW

ARROW MARK

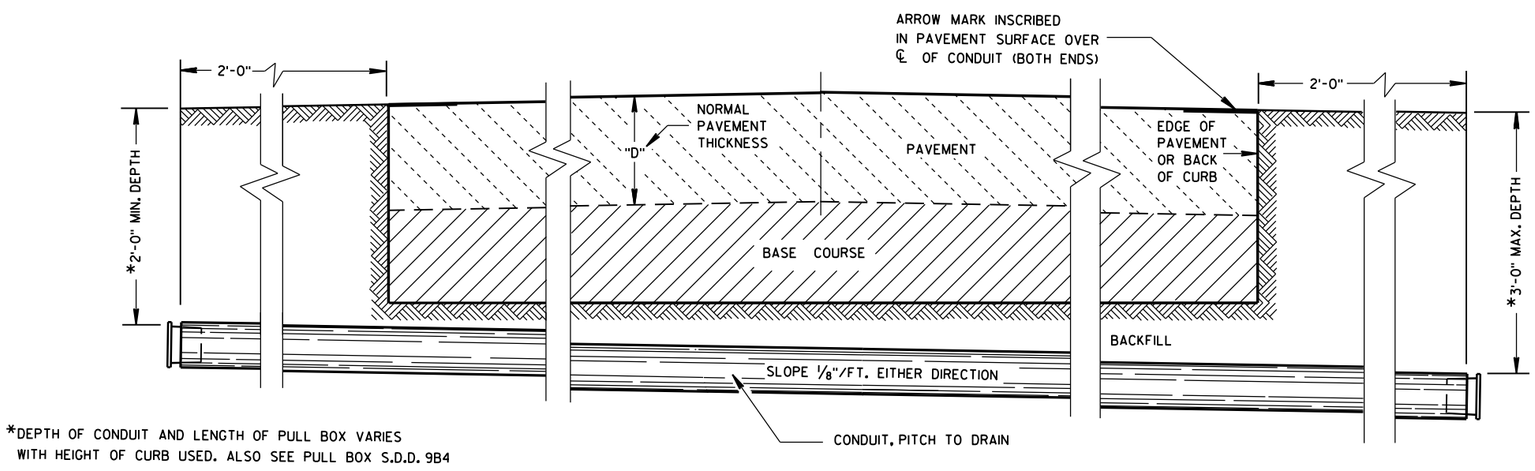

*DEPTH OF CONDUIT AND LENGTH OF PULL BOX VARIES WITH HEIGHT OF CURB USED. ALSO SEE PULL BOX S.D.D. 9B4

SIDE ELEVATION

DETAIL FOR CONDUIT UNDER PAVED HIGHWAYS

GENERAL NOTES

DETAILS OF CONSTRUCTION, MATERIALS AND WORKMANSHIP NOT SHOWN ON THIS DRAWING SHALL CONFORM TO THE PERTINENT REQUIREMENTS OF THE CONTRACT.

METALLIC (STANDARD SPECIFICATION 652.2.2) OR NONMETALLIC (STANDARD SPECIFICATION 652.2.3) CONDUIT SHALL BE FURNISHED AND PLACED AS SHOWN.

DEPTH OF CONDUIT INSTALLED BELOW THE TRAVELED WAY SHALL BE 24 INCHES MINIMUM AND 36 INCHES MAXIMUM.

DEPTH OF CONDUIT INSTALLED THAT IS NOT BELOW THE TRAVELED WAY SHALL BE 18 INCHES MINIMUM AND 36 INCHES MAXIMUM.

ANY EXCEPTION TO THE MAXIMUM DEPTH SHALL BE ONLY WITH THE WRITTEN APPROVAL OF THE ENGINEER.

THE TRENCH SHALL NOT BE BACKFILLED PRIOR TO INSPECTION OF THE CONDUIT.

ALL METALLIC CONDUIT RACEWAY ENDS SHALL BE REAMED AND THREADED.

ALL METALLIC CONDUIT IN WHICH WIRE OR CABLE IS TO BE INSTALLED SHALL BE BUSHED WITH APPROVED THREADED BUSHINGS BEFORE INSTALLATION OF THE WIRE OR CABLE.

ALL METALLIC CONDUITS IN WHICH WIRE OR CABLE IS NOT TO BE INSTALLED SHALL BE CAPPED WITH THREADED PROTECTIVE CAPS, AS APPROVED BY THE ENGINEER.

ALL NONMETALLIC CONDUIT SHALL BE CAPPED OR PLUGGED IMMEDIATELY AFTER INSTALLATION AND SHALL REMAIN CAPPED OR PLUGGED UNTIL WIRE/CABLES ARE INSTALLED.

NONMETALLIC CONDUITS IN WHICH WIRE OR CABLE IS NOT BEING INSTALLED SHALL REMAIN CAPPED OR PLUGGED.

BENDING OF PVC ELECTRICAL CONDUIT SHALL BE ACCOMPLISHED BY USING A BLANKET OR EMERSION TYPE TANK DESIGNED FOR THE PURPOSE OF BENDING PVC ELECTRICAL CONDUIT.

ALL CUT ENDS SHALL BE TRIMMED INSIDE AND OUTSIDE TO REMOVE ALL ROUGH EDGES ON NONMETALLIC CONDUIT. (SEE NEC 347.5)

WHEN REQUIRED TO CONNECT NONMETALLIC CONDUIT TO METALLIC CONDUIT, ONLY U.L. LISTED ADAPTER FITTINGS SHALL BE USED.

PRIOR TO CONDUIT ACCEPTANCE, CONDUIT CAPS OR PLUGS SHALL BE REMOVED, AND THE CAPS, PLUGS AND CONDUIT ENDS SHALL BE THOROUGHLY CLEANED AND THEN THE CAPS OR PLUGS REINSTALLED TO ENSURE THAT THE CAPS OR PLUGS CAN BE EASILY REMOVED IN THE FUTURE.

ALL CONDUIT BEING FURNISHED AND INSTALLED SHALL HAVE THE U.L. LABEL FIRMLY ATTACHED.

CONDUIT RUNS SHALL BE THE SAME SIZE OF CONDUIT FROM ONE END TO THE OTHER (FROM PULL BOX TO PULL BOX-OR-JUNCTION BOX TO JUNCTION BOX-OR-BASE TO BASE, ETC.).

TRACER WIRE SHALL BE INSTALLED AS STATED IN THE STANDARD SPECIFICATION, ITEM 652.3.1.1.

ALL CONDUIT RUNS SHALL BE STRAIGHT (WITHOUT BENDS) FROM PULL BOX TO PULL BOX, PULL BOX TO BASE AND BASE TO BASE AS SHOWN ON THE PLANS.

CONDUIT	
STATE OF WISCONSIN DEPARTMENT OF TRANSPORTATION	
APPROVED March, 2017 DATE	/S/ Ahmet Demirbilek STATE ELECTRICAL
FHWA	

TABLE OF NOMINAL DIMENSIONS AND WEIGHTS

DIMENSION IN INCHES		CORRUGATED STEEL PIPE								
PIPE DIAMETER (INSIDE)	A	12	12	12	18	18	18	24	24	24
PIPE LENGTH **	B	24	30	36	24	30	36	36	42	48
WALL THICKNESS	C	0.064	0.064	0.064	0.064	0.064	0.064	0.064	0.064	0.064
COVER	D	10 1/4	10 1/4	10 1/4	16 1/4	16 1/4	16 1/4	22 1/4	22 1/4	22 1/4
FRAME	E	14 1/2	14 1/2	14 1/2	20 1/2	20 1/2	20 1/2	26 1/2	26 1/2	26 1/2
FRAME	F	8 1/2	8 1/2	8 1/2	14 1/2	14 1/2	14 1/2	20 1/2	20 1/2	20 1/2
FRAME	G	11 1/2	11 1/2	11 1/2	17 1/2	17 1/2	17 1/2	23 1/2	23 1/2	23 1/2
WEIGHT IN POUNDS *										
FRAME AND COVER		60	60	60	110	110	110	155	155	155

* THE ACTUAL WEIGHT OF THE MANHOLE FRAME AND COVER MAY VARY WITHIN 5 PERCENT PLUS OR MINUS OF THE WEIGHTS SHOWN.

** NORMALLY USED LENGTHS. THE PROJECT ENGINEER SHALL DETERMINE IF PIPE LENGTHS, OTHER THAN THOSE SPECIFIED, SHALL BE USED, TO A MAXIMUM OF 48" (CONTINUOUS LENGTH, NON-SPLICED). THE ADDITIONAL LENGTH SHALL BE INCIDENTAL TO THE PULL BOX BID PRICE.

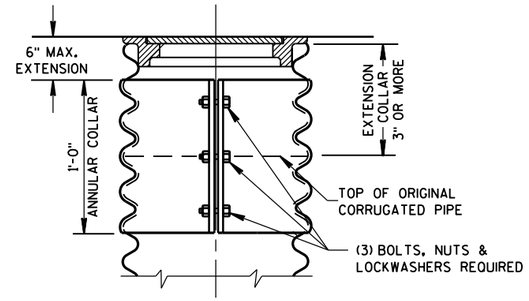

CORRUGATED PIPE EXTENDER

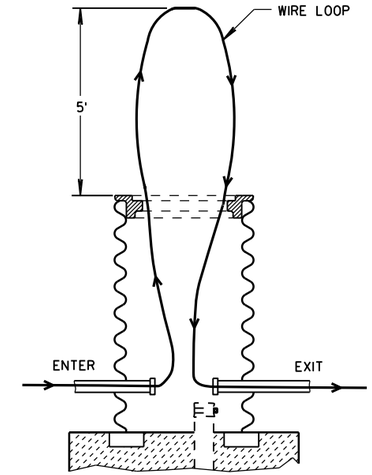

MEASUREMENT DETAIL FOR WIRE/CABLE IN THE PULL BOX

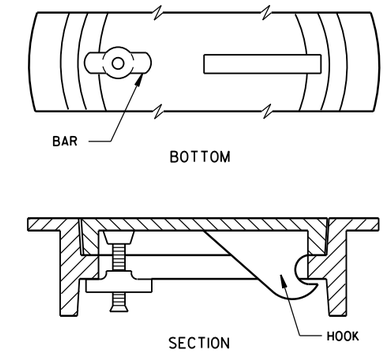

ALTERNATE COVER (LOCKING)

TIGHTENING BAR TYPE

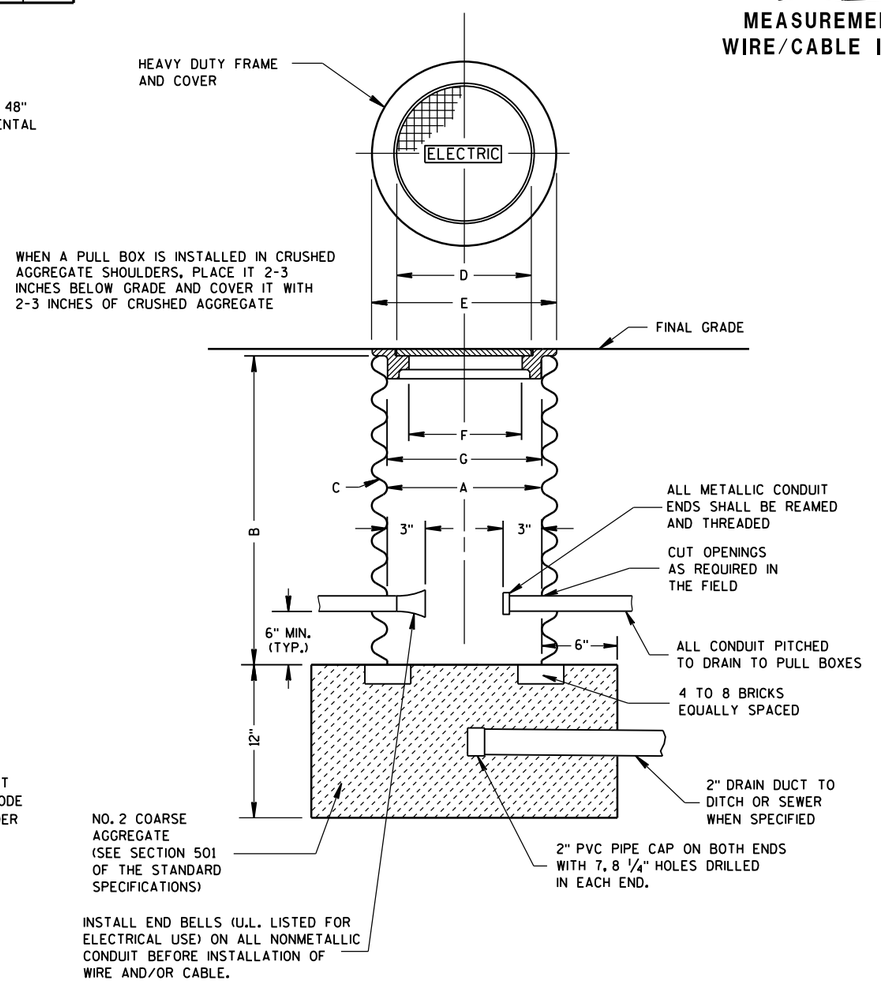

PULL BOX

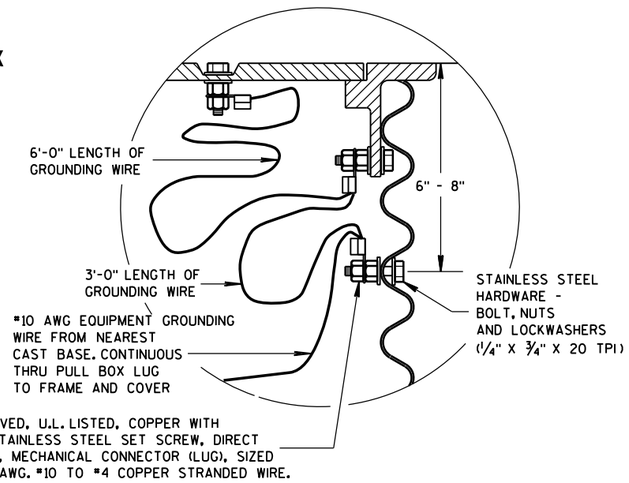

EQUIPMENT GROUNDING LUG AND LOCATION IN STEEL PULL BOXES

GENERAL NOTES

DETAILS OF CONSTRUCTION, MATERIALS AND WORKMANSHIP NOT SHOWN ON THIS DRAWING SHALL CONFORM TO THE PERTINENT REQUIREMENTS OF THE CONTRACT.

ALL FRAMES AND COVERS SHALL BE HEAVY DUTY TYPE, SUITABLE FOR VEHICULAR TRAFFIC LOADS.

PULL BOXES LOCATED IN THE ROADWAYS SHALL HAVE LOCKING COVERS.

ENTRANCE HOLES INTO PULL BOXES SHALL BE CUT WITH A CIRCULAR HOLE SAW OR HYDRAULIC CONDUIT PUNCH. HOLE SIZE SHALL BE THE OUTSIDE DIAMETER OF THE CONDUIT THAT IS TO FIT IN THE OPENING PLUS NO MORE THAN 1/4".

THE CONTRACTOR SHALL NOT INSTALL WIRE IN ANY PULL BOX UNTIL ITS INSTALLATION HAS BEEN INSPECTED AND ACCEPTED BY THE ENGINEER.

GROUNDING LUGS (MECHANICAL CONNECTORS) SHALL BE U.L. LISTED AND APPROVED FOR USE WITH COPPER WIRE.

ALL METALLIC CONDUIT IN WHICH WIRE AND/OR CABLE IS TO BE INSTALLED, SHALL BE BUSHED BEFORE INSTALLATION OF THE WIRE AND/OR CABLE.

WHEN PULL BOXES ARE INSTALLED FOR FUTURE USE, DO NOT INSTALL THE EQUIPMENT GROUNDING LUG. THE EQUIPMENT GROUNDING LUG, THE EQUIPMENT GROUNDING ELECTRODE AND THE EQUIPMENT GROUNDING CONDUCTOR SHALL BE REQUIRED AND INSTALLED UNDER A FUTURE WIRING CONTRACT.

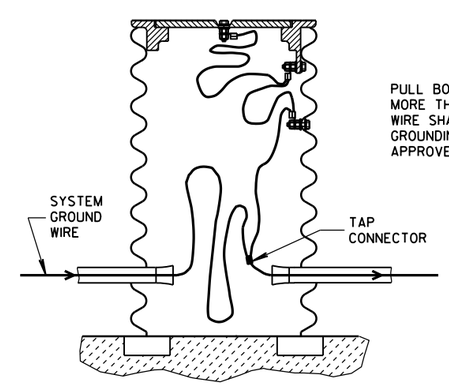

EQUIPMENT GROUNDING LUG AND LOCATION IN STEEL PULL BOXES

PULL BOX

STATE OF WISCONSIN
DEPARTMENT OF TRANSPORTATION

APPROVED
Sept. 2014 — DATE
/S/ Ahmet Demirbilek — STATE ELECTRICAL
FHWA

TABLE OF NOMINAL DIMENSIONS AND WEIGHTS

DIMENSION IN INCHES		NON-CONDUCTIVE PULL BOX	
BOX DIAMETER ** (INSIDE)	A	24	24
BOX OVERALL OUTSIDE DIAMETER	B	27	27
BOX LENGTH	C	36	42
FRAME OPENING	D	22 1/2	22 1/2
WEIGHT IN POUNDS *			
COVER		50	50
BOX ONLY		75	85

* THE ACTUAL WEIGHT OF THE COVER OR BOX ONLY MAY VARY NOT TO EXCEED 100 LBS INDIVIDUALLY.

** DIAMETER VARIES FROM TOP TO BOTTOM WITH THE DIAMETER LARGER AT THE BOTTOM TO PREVENT FROST HEAVE

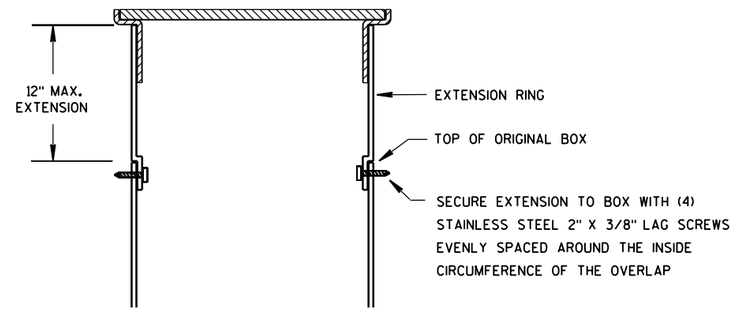

BOX EXTENSION

INSTALLED IN SOD OR CRUSHED AGGREGATE

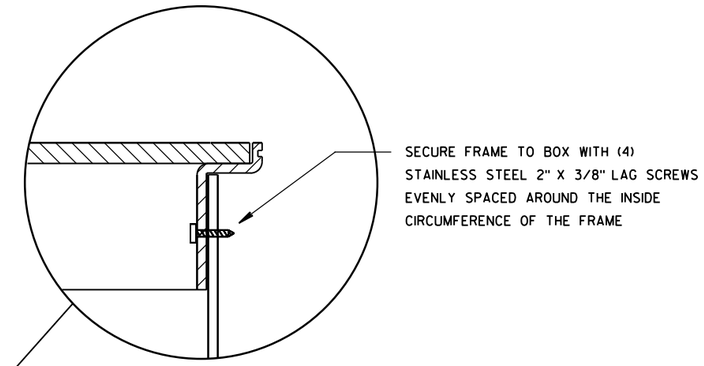

INSTALLED IN SIDEWALK

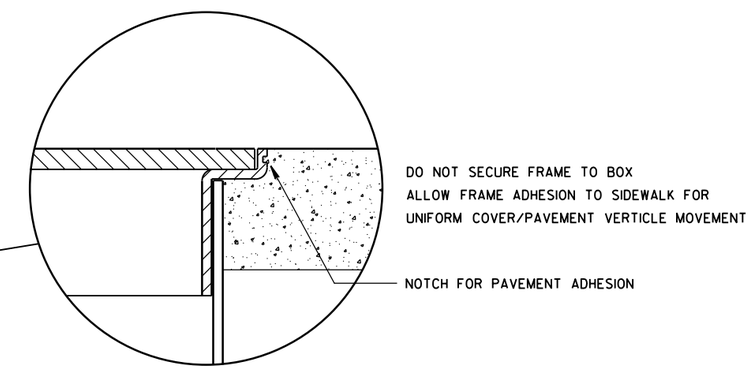

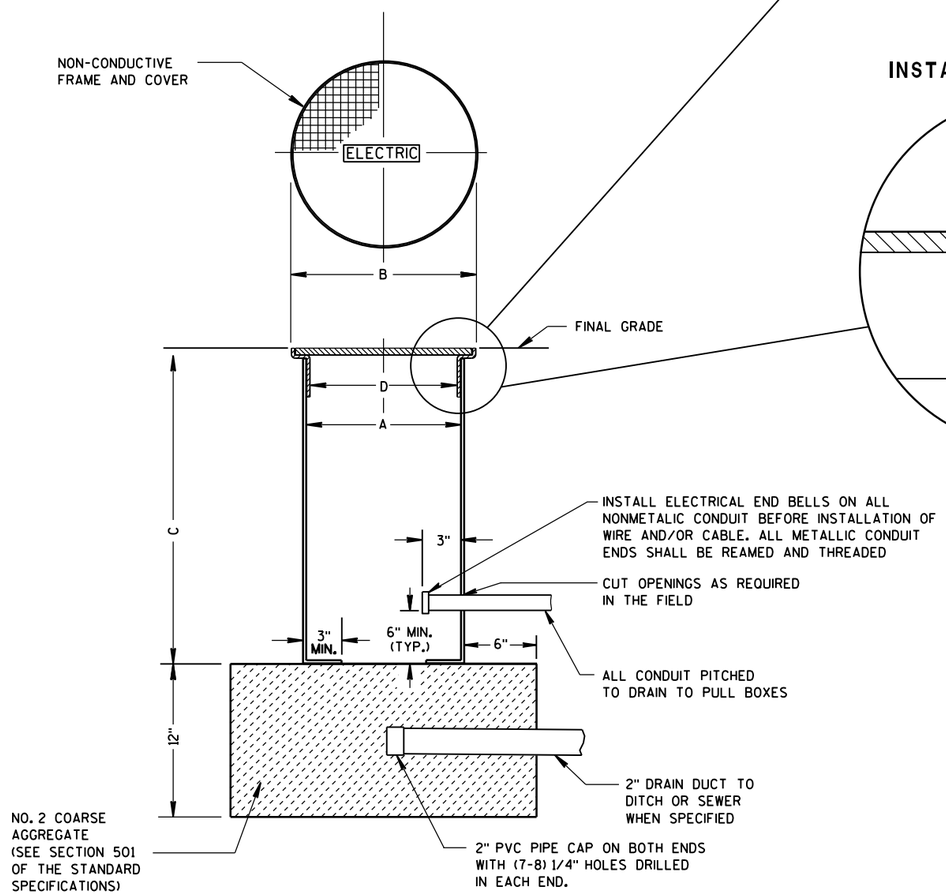

NON-CONDUCTIVE PULL BOX

GENERAL NOTES

DETAILS OF CONSTRUCTION, MATERIALS AND WORKMANSHIP NOT SHOWN ON THIS DRAWING SHALL CONFORM TO THE PERTINENT REQUIREMENTS OF THE CONTRACT.

ALL BOXES, FRAMES AND COVERS SHALL BE SUITABLE FOR TIER 15 LOADING AS SPECIFIED IN ANSI/SCTE 77.

PROVIDE AN OPENING FOR TOOL ASSISTED COVER REMOVAL NOT LARGE ENOUGH TO PERMIT PASSAGE OF A SPHERE MORE THAN 1/2" DIAMETER

ENSURE COVER SURFACE IS SKID RESISTANT WITH A COEFFICIENT OF FRICTION OF AT LEAST 0.5 AND VERTICAL SURFACE DICONTINUITIES LESS THAN 1/4".

COVER SHALL BE MAGNETICALLY LOCATABLE.

BOXES AND EXTENSIONS ARE TRIMMABLE FOR CUSTOM LENGTHS. TRIMMED PIECES SHALL MAINTAIN A UNIFORM LENGTH.

ENTRANCE HOLES INTO PULL BOXES SHALL BE CUT WITH A CIRCULAR HOLE SAW OR HYDRAULIC CONDUIT PUNCH. HOLE SIZE SHALL BE THE OUTSIDE DIAMETER OF THE CONDUIT THAT IS TO FIT IN THE OPENING PLUS NO MORE THAN 1/4".

THE CONTRACTOR SHALL NOT INSTALL WIRE IN ANY PULL BOX UNTIL ITS INSTALLATION HAS BEEN INSPECTED AND ACCEPTED BY THE ENGINEER.

ALL METALLIC CONDUIT IN WHICH WIRE AND/OR CABLE IS TO BE INSTALLED, SHALL BE BUSHED BEFORE INSTALLATION OF THE WIRE AND/OR CABLE.

ENTIRE BOX MUST BE CONSTRUCTED OF NON-CONDUCTIVE MATERIALS WITH THE EXCEPTION OF STAINLESS STEEL FASTENERS AND MAGNETIC LOCATABLE DEVICE.

WHEN A PULL BOX IS INSTALLED IN CRUSHED AGGREGATE SHOULDERS, PLACE IT 2-3 INCHES BELOW GRADE AND COVER IT WITH 2-3 INCHES OF CRUSHED AGGREGATE

LABEL ON COVER SHALL READ "ELECTRIC" FOR SIGNAL AND LIGHTING SYSTEMS, "WISDOT ITS" FOR COMMUNICATIONS AND ITS EQUIPMENT SYSTEMS.

PULL BOX
NON-CONDUCTIVE

STATE OF WISCONSIN
DEPARTMENT OF TRANSPORTATION

APPROVED
May 2017 — DATE
/S/ Ahmet Demirbilek — STATE ELECTRICAL
FHWA

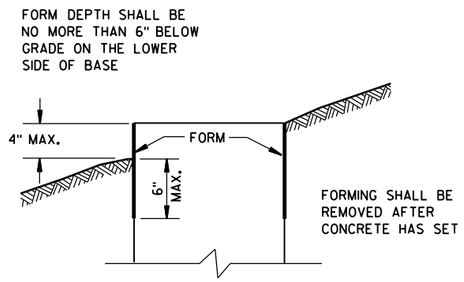

FORMING DETAIL

QUANTITY REQUIREMENTS	CONCRETE BASE TYPE		
	1	2	5 & 6
APPROX. CUBIC YARDS OF CONCRETE	0.40	0.57	0.40
LBS. OF HOOP BAR STEEL	NONE	23	16
LBS. OF VERTICAL BAR STEEL	NONE	60	18

GENERAL NOTES

DETAILS OF CONSTRUCTION, MATERIALS AND WORKMANSHIP NOT SHOWN ON THIS DRAWING SHALL CONFORM TO THE PERTINENT REQUIREMENTS OF THE CONTRACT.

BASES SHALL BE EXCAVATED BY USE OF A CIRCULAR AUGER.

TOP SURFACES OF CONCRETE BASES SHALL BE TROWEL FINISHED SMOOTH AND LEVEL.

CONDUIT SIZES AND LOCATIONS SHALL BE AS SHOWN ON THE PLANS.

THE FINAL OR TERMINATING CONCRETE BASE IN A CONDUIT RUN SHALL HAVE A 6" EXIT STUB INSTALLED FOR FUTURE CABLING USE. THE EXIT STUB SHALL BE SIZED AS USED THROUGHOUT THE CONDUIT RUN AS SHOWN AT THE ENTRANCE OF THE BASE.

MINIMUM BENDING RADIUS OF CONDUIT IS EQUAL TO 6 X THE DIAMETER.

CONDUIT HEIGHT ABOVE CONCRETE BASES SHALL BE 1 INCH. ALL METALLIC CONDUIT ENDS SHALL BE REAMED AND THREADED.

ALL CONDUIT ENDS AT THE TOP OF CONCRETE BASES SHALL BE CAPPED IF METALLIC OR PLUGGED IF NONMETALLIC IMMEDIATELY AFTER PLACEMENT AND BEFORE CONCRETE IS POURED. CONDUITS IN WHICH WIRE OR CABLE IS NOT INSTALLED SHALL REMAIN CAPPED OR PLUGGED.

GENERAL NOTES (CONTINUED)

BELL ENDS SHALL BE INSTALLED ON ALL PVC CONDUIT EXPOSED AT THE TOP OF CONCRETE BASES BEFORE INSTALLATION OF CABLE OR WIRE.

ENDS OF CONDUIT INSTALLED BELOW GRADE FOR FUTURE USE SHALL BE CAPPED IF METALLIC OR PLUGGED IF NONMETALLIC.

WHEN REQUIRED TO CONNECT NONMETALLIC CONDUIT TO METALLIC CONDUIT, ONLY ADAPTER FITTINGS, U.L. LISTED FOR ELECTRICAL USE, SHALL BE USED.

IF A BASE REQUIRES A DEEP FORM BECAUSE OF LOOSE DIRT OR FILL, THE FORM SHALL BE REMOVED BEFORE BACKFILLING AROUND THE BASE. BACKFILL SHALL BE TAMPED TIGHT AGAINST THE BARE CONCRETE BASE IN LAYERS OF 1 FOOT OR LESS.

A NO. 4 AWG, STRANDED COPPER EQUIPMENT GROUNDING CONDUCTOR SHALL BE EXOTHERMICALLY WELDED TO THE EQUIPMENT GROUNDING ELECTRODE (GROUND ROD) FOR TYPE 1, TYPE 2, TYPE 5, AND TYPE 6 BASES.

THE EQUIPMENT GROUNDING CONDUCTOR SHALL BE FURNISHED AND INSTALLED TO ENTER THE BASE OF THE TYPE 2 AND TYPE 5 BASES THROUGH A 1 INCH CONDUIT INSTALLED FOR GROUNDING PURPOSES, LEAVING A 4 FOOT COIL OF WIRE ABOVE THE CONCRETE BASE. THE EQUIPMENT GROUNDING CONDUCTOR SHALL BE NEATLY COILED AND THE COILS TIED TOGETHER.

ANCHOR RODS SHALL BE THREADED 12" IN LENGTH ON EACH END OF THE ROD. ANCHOR RODS SHALL BE MANUFACTURED IN ACCORDANCE WITH SECTION 654.2.1 OF THE STANDARD SPECIFICATIONS.

WASHERS AND LOCK WASHERS ARE REQUIRED ON ALL ANCHOR RODS.

WHEN ANCHOR RODS USING THE ALTERNATE "L" BEND ARE FURNISHED, THE 4" "L" BEND SHALL BE IN ADDITION TO THE SPECIFIED ANCHOR ROD BAR LENGTH. THE "L" BEND END SHALL NOT BE THREADED.

ANCHOR RODS SHALL BE INSTALLED WITH MISALIGNMENTS OF LESS THAN 1:40 FROM VERTICAL.

WELDING OF THE ANCHOR RODS TO THE CAGE IS UNACCEPTABLE. TIE WIRES SHALL BE USED.

BAR STEEL REINFORCEMENT SHALL BE COATED WITH POWDERED EPOXY RESIN IN ACCORDANCE WITH SECTION 505 OF THE STANDARD SPECIFICATIONS (LATEST EDITION).

(1) THE MINIMUM DEPTH OF CONDUIT EXITING THE CONCRETE BASE AND INSTALLED BELOW THE TRAVELED WAY SHALL BE 24 INCHES. THE MINIMUM DEPTH OF CONDUIT EXITING THE CONCRETE BASE THAT IS NOT INSTALLED BELOW THE TRAVELED WAY SHALL BE 18 INCHES. THE MAXIMUM DEPTH OF ALL CONDUIT SHALL BE 36 INCHES EXCEPT WITH WRITTEN APPROVAL BY THE ENGINEER.

(2) (4) 1" DIA. X 3'-6" ANCHOR RODS.

(3) (4) 1" DIA. X 5'-0" ANCHOR RODS.

(4) (6) NO. 6 X 6'-8" BAR STEEL REINFORCEMENT.

(5) (7) NO. 4 X 5'-1" BAR STEEL REINFORCEMENT @ 1'-0" C-C.

(6) (4) 1" DIA. X 3'-6" ANCHOR RODS.

(7) (6) NO.4 X 4'-8" BAR STEEL REINFORCEMENT.

(8) (5) NO. 4 X 5'-1" BAR STEEL REINFORCEMENT @ 1'-0" C-C.

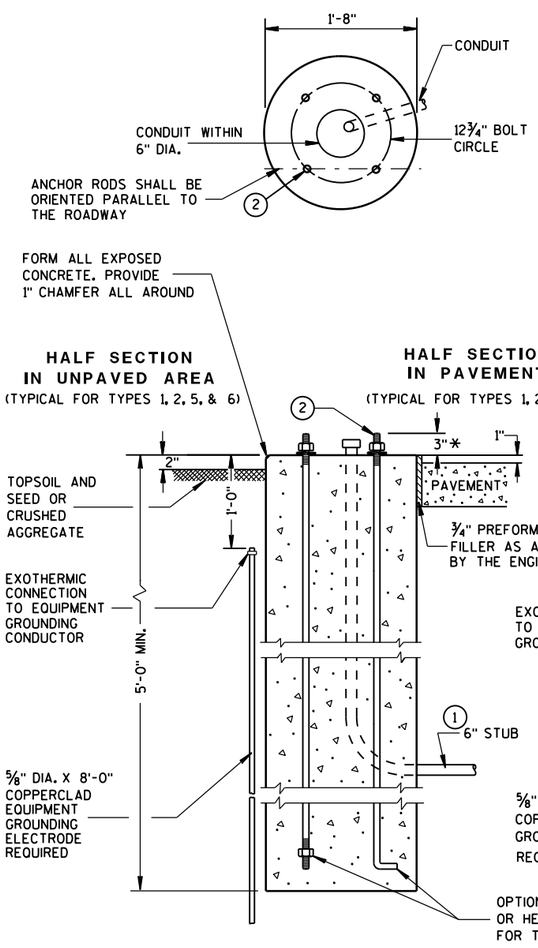

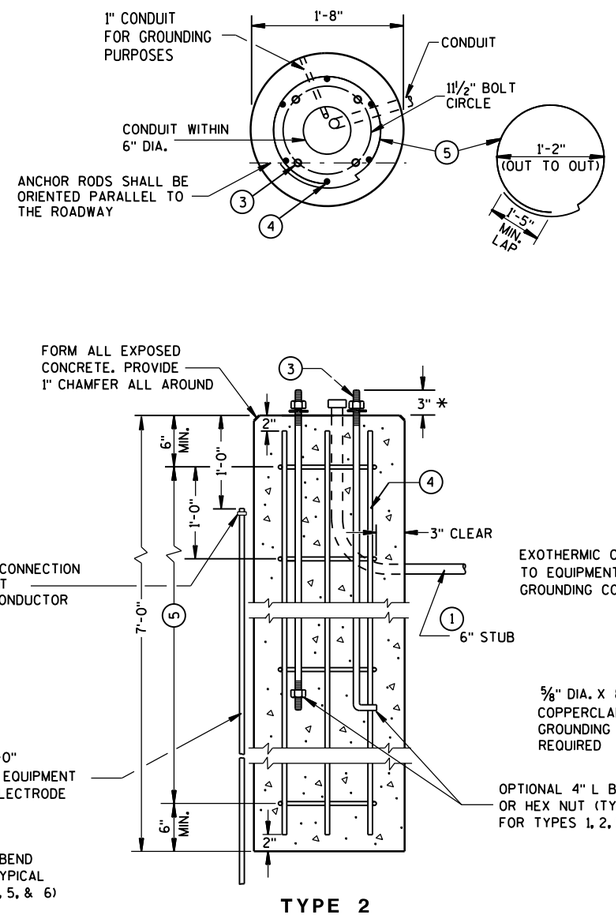

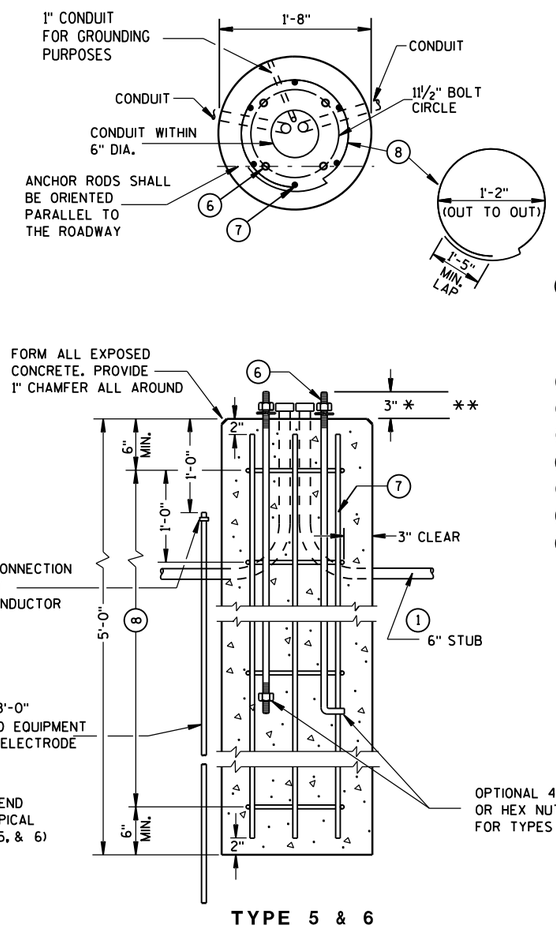

CONCRETE BASES

* ANY ANCHOR ROD PROJECTION SHORTER THAN 2¾" OR LONGER THAN 3¼" SHALL REQUIRE THE BASE TO BE REMOVED AND REPLACED AT THE CONTRACTORS EXPENSE.

** FOR NONBREAKAWAY INSTALLATIONS, 4½" ± ANCHOR ROD PROJECTION WITH THE USE OF LEVELING NUTS. RODENT SCREEN REQUIRED.

CONCRETE BASES, TYPES 1, 2, 5, & 6

STATE OF WISCONSIN
DEPARTMENT OF TRANSPORTATION

APPROVED
Sept. 2014 — /S/ Ahmet Demirbilek
DATE — STATE ELECTRICAL
FHWA

S.D.D. 9 C 2-7

GENERAL NOTES

DETAILS OF CONSTRUCTION, MATERIALS AND WORKMANSHIP NOT SHOWN ON THIS DRAWING SHALL CONFORM TO THE PERTINENT REQUIREMENTS OF THE CONTRACT.

FOUR (4) BOLTS SHALL BE FURNISHED WITH EACH TRANSFORMER BASE. BOLTS SHALL BE 1" DIAMETER, 4" IN LENGTH, WITH WASHERS, LOCK WASHERS AND NUTS. BOLTS, NUTS AND WASHERS SHALL BE MANUFACTURED IN ACCORDANCE WITH SECTION 641.2.2 OF THE STANDARD SPECIFICATIONS.

LEVELING SHIMS, IF NEEDED, SHALL BE DESIGNED FOR THE PURPOSE AND USED UNDER CAST BASES WHEN PLUMBING POLES OR STANDARDS DURING INSTALLATION. THE USE OF WASHERS IN LIEU OF PROPER LEVELING SHIMS IS NOT ACCEPTABLE.

SHIM LENGTH SHALL BE LONG ENOUGH TO COMPLETELY COVER THE AREA UNDER THE LENGTH AND WIDTH OF THE BASE MOUNTING FLANGE.

DOUBLE NUTTING IS NOT ACCEPTABLE FOR LEVELING OR MOUNTING PURPOSES.

A NEMA APPROVED, U.L. LISTED, COPPER WITH BRASS OR STAINLESS STEEL SET SCREW, DIRECT BURY RATED, MECHANICAL CONNECTOR (LUG), SIZED TO ACCEPT AWG. #10 TO #4 COPPER STRANDED WIRE SHALL BE FURNISHED AND INSTALLED IN THE PEDESTAL AND TRANSFORMER BASES.

THE MECHANICAL CONNECTOR SHALL BE INSTALLED USING A 1/4" - 20 (TPI) STAINLESS STEEL HEX HEAD BOLT OF SUFFICIENT LENGTH TO FIRMLY ATTACH THE LUG TO THE BASE.

SHOULD THE MANNER OF ATTACHMENT OF THE LUG REQUIRE WASHERS, HEX NUTS, LOCK WASHER - THEY SHALL BE STAINLESS STEEL AS IS THE BOLT. THE MANNER OF ATTACHMENT SHALL NOT BLOCK ACCESSIBILITY TO WIRE PLACEMENT IN THE CONNECTOR.

PEDESTAL BASE COLLAR THREADING SHALL BE TAPERED AND IN ACCORDANCE WITH NATIONAL PIPE THREADING DIMENSIONS.

BASE COLLAR THREADING SHALL EXTEND INTO THE BASE COLLAR WITH SUFFICIENT DEPTH TO ACCEPT THE INSTALLATION OF TRAFFIC SIGNAL STANDARDS TO A DEPTH OF 1 1/2", THEN TIGHTENING TO A POINT OF BEING IMMOVABLE.

THE ACCESS DOOR SHALL BE OF THE SAME MATERIAL AS THE BASE.

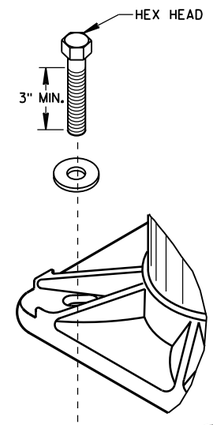

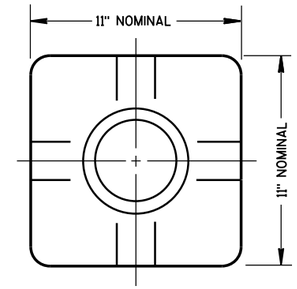

TOP VIEW
(PEDESTAL BASE)

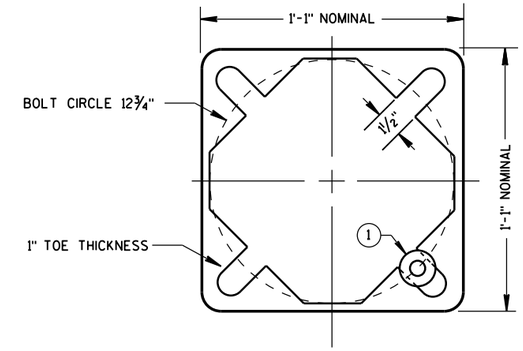

BOTTOM VIEW
(PEDESTAL BASE)

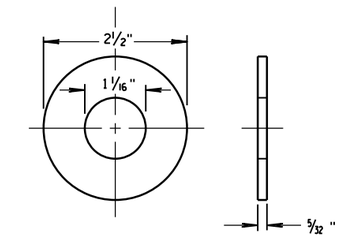

ZINC COATED STEEL WASHER
TO BE PROVIDED BY THE CONTRACTOR

PEDESTAL BASE WASHER (1)

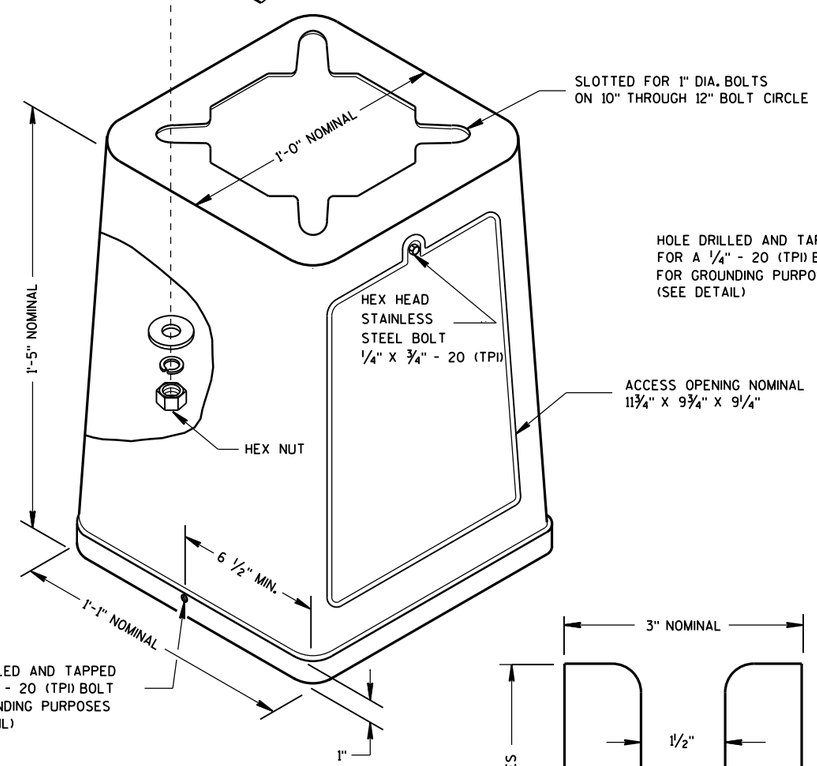

ISOMETRIC VIEW

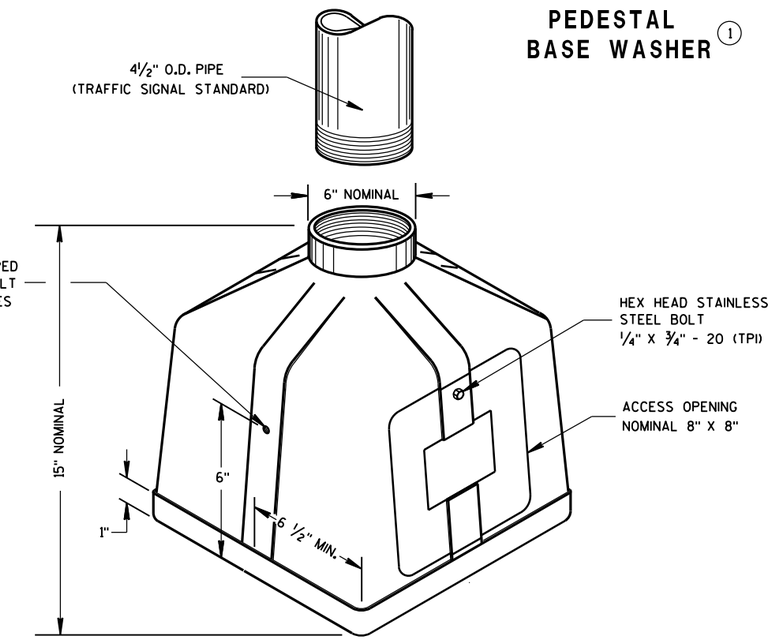

ISOMETRIC VIEW
PEDESTAL BASE

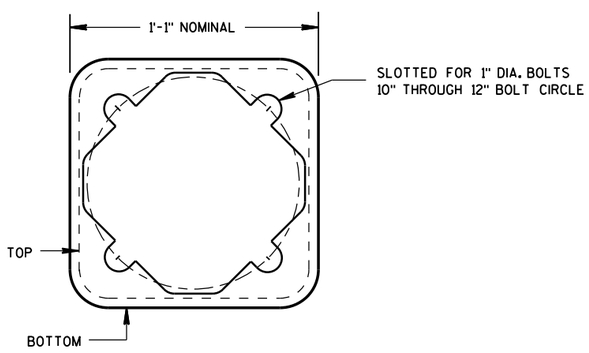

BOTTOM VIEW
(TRANSFORMER BASE)

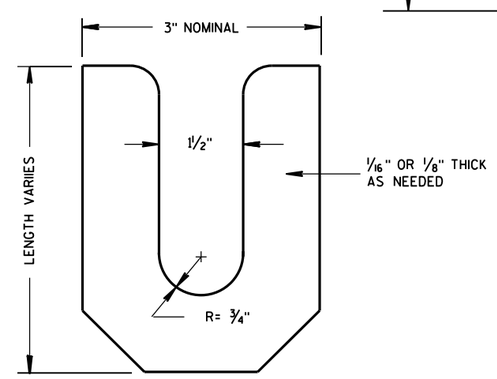

LEVELING SHIM

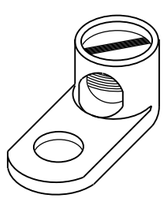

TYPICAL MECHANICAL CONNECTOR LUG

TO BE FURNISHED WITH EACH BASE

TRANSFORMER BASE

INTENDED FOR USE WITH TYPE 2, 3, 4, 5 & 6 POLES

TRANSFORMER/PEDESTAL BASES	
STATE OF WISCONSIN DEPARTMENT OF TRANSPORTATION	
APPROVED Sept. 2014 DATE	/S/ Ahmet Demirbilek STATE ELECTRICAL
FHWA	

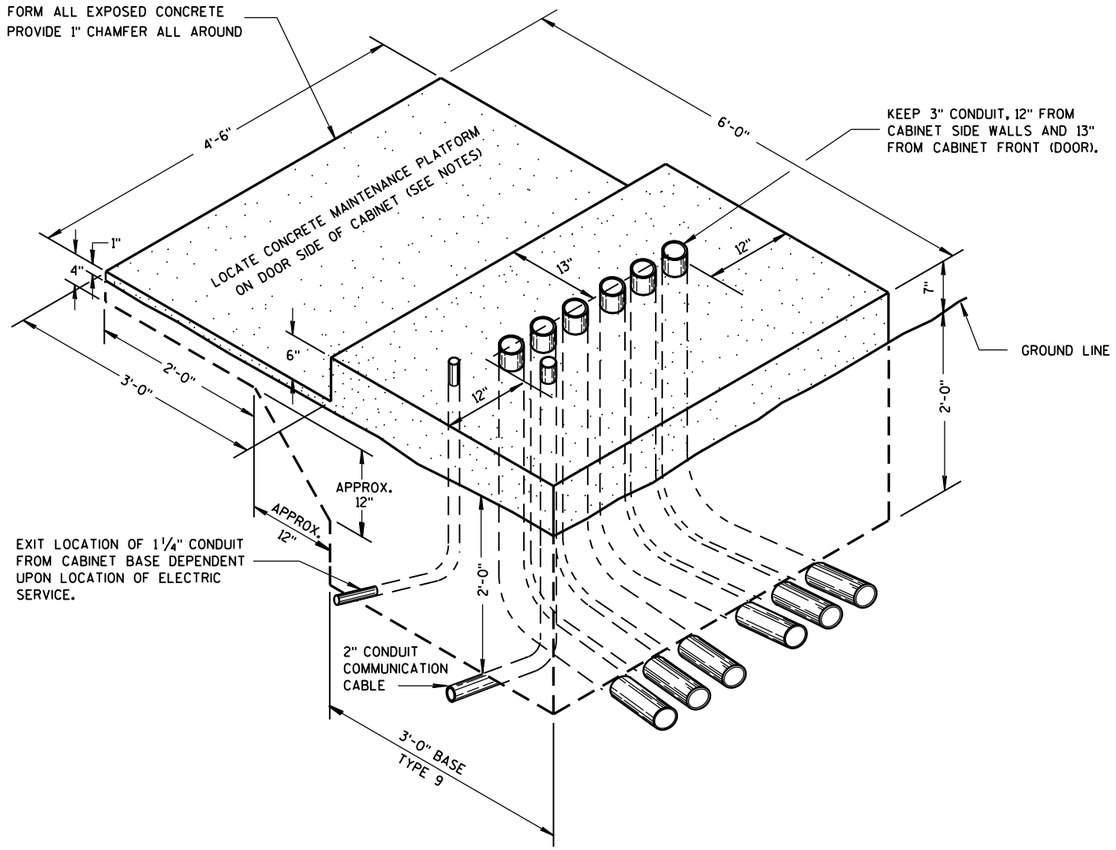

ISOMETRIC VIEW

TYPE 9, SPECIAL

(C.Y. CONCRETE = APPROX. 1.56)

GENERAL NOTES

DETAILS OF CONSTRUCTION, MATERIALS AND WORKMANSHIP NOT SHOWN ON THIS DRAWING SHALL CONFORM TO THE PERTINENT REQUIREMENTS OF THE CONTRACT.

INSTALL FOUR 1/2 INCH MINIMUM DIAMETER X 4 INCH MINIMUM LENGTH STAINLESS STEEL APPROVED CONCRETE MASONRY ANCHORS WITH A PULLOUT STRENGTH OF 9,000 LBS. TO ANCHOR THE CABINET TO TYPE 6, 7, 8, AND 9 BASES. THE ANCHOR STUDS SHALL BE LOCATED AS DIRECTED BY THE ENGINEER TO PROPERLY ANCHOR THE CONTROL CABINET TO THE BASE.

WHEN REQUIRED TO CONNECT NONMETALLIC CONDUIT TO METALLIC CONDUIT, ONLY ADAPTER FITTINGS, U.L. LISTED FOR ELECTRICAL USE, SHALL BE USED.

CONDUIT HEIGHT ABOVE THE CONCRETE BASE SHALL BE 1 INCH.

DEPTH OF CONDUIT INSTALLED BELOW THE TRAVELED WAY SHALL BE 24 INCHES MINIMUM AND 36 INCHES MAXIMUM.

DEPTH OF CONDUIT INSTALLED THAT IS NOT BELOW THE TRAVELED WAY SHALL BE 18 INCHES MINIMUM AND 36 INCHES MAXIMUM.

ANY EXCEPTION TO THE MAXIMUM DEPTH SHALL BE ONLY WITH THE WRITTEN APPROVAL OF THE ENGINEER.

CONTROL CABINET BASE TOP SURFACE SHALL BE TROWEL FINISHED SMOOTH AND LEVEL.

MAINTENANCE PLATFORM SHALL BE FLOAT OR BROOM FINISHED AND BE LEVEL.

MAINTENANCE PLATFORMS ARE NOT REQUIRED WHEN THE SURROUNDING AREA IS PAVED.

MINIMUM BENDING RADIUS OF CONDUIT = 6 X THE DIAMETER.

ALL METALLIC CONDUIT ENDS SHALL BE REAMED AND THREADED.

CAP ALL BELOW GRADE METALLIC CONDUIT ENDS IN WHICH WIRE OR CABLE IS NOT BEING INSTALLED.

PLUG ALL BELOW GRADE NONMETALLIC CONDUIT ENDS IN WHICH WIRE OR CABLE IS NOT BEING INSTALLED.

ALL CONDUIT ENDS AT THE TOP OF CONCRETE BASES SHALL BE CAPPED IF METALLIC OR PLUGGED IF NONMETALLIC IMMEDIATELY AFTER PLACEMENT AND BEFORE CONCRETE IS POURED. CONDUITS IN WHICH WIRE OR CABLE IS NOT BEING INSTALLED SHALL REMAIN CAPPED OR PLUGGED.

CONDUIT EXITING THE CONCRETE BASE (SIX THREE INCH) SHALL TERMINATE IN PULL BOXES AS SHOWN ON THE PLANS.

CONCRETE FORM DEPTH BELOW FINISHED GRADE SHALL BE 6" MAXIMUM. CONCRETE FORMS SHALL BE REMOVED AFTER CONCRETE HAS SET.

BELL ENDS SHALL BE INSTALLED ON ALL PVC CONDUIT EXPOSED AT THE TOP OF THE CONCRETE BASE BEFORE INSTALLATION OF CABLE OR WIRE.

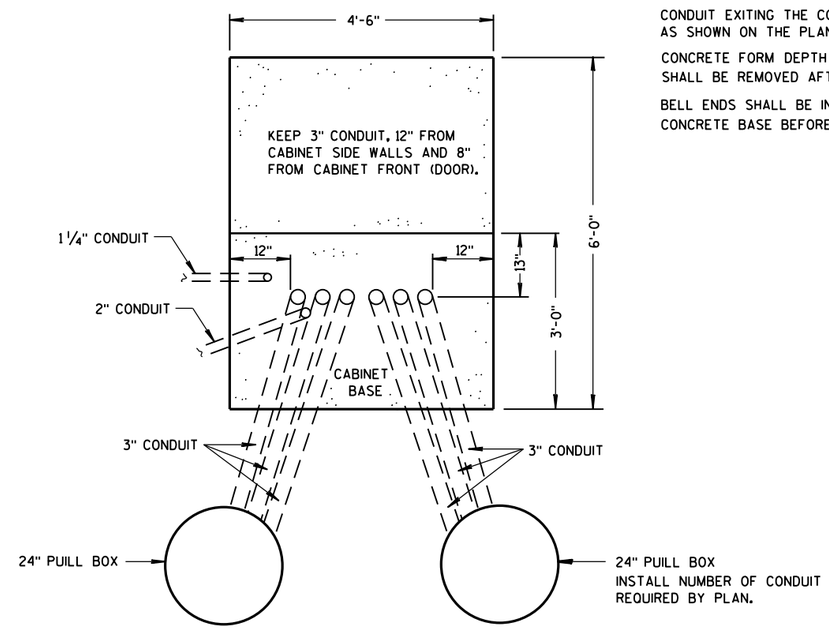

PLAN VIEW

CONCRETE CONTROL CABINET BASE, TYPE 9, SPECIAL

CONCRETE CONTROL CABINET BASE, TYPE 9, SPECIAL

STATE OF WISCONSIN
DEPARTMENT OF TRANSPORTATION

APPROVED
Sept. 2014 — /S/ Ahmet Demirbilek
DATE — STATE ELECTRICAL
FHWA

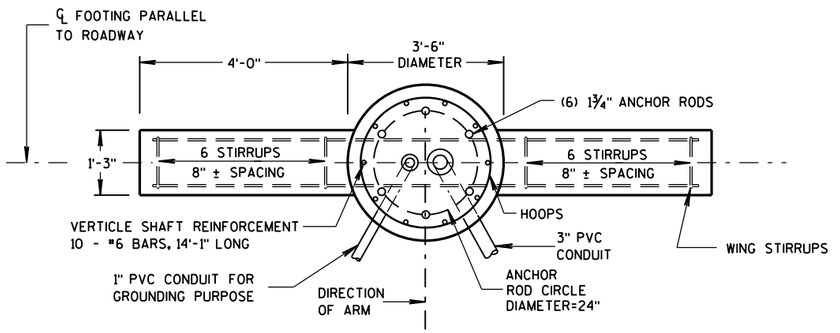

PLAN VIEW

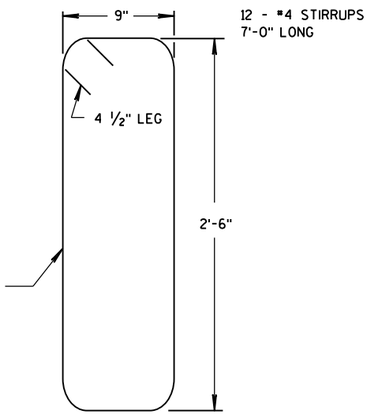

WING STIRRUP

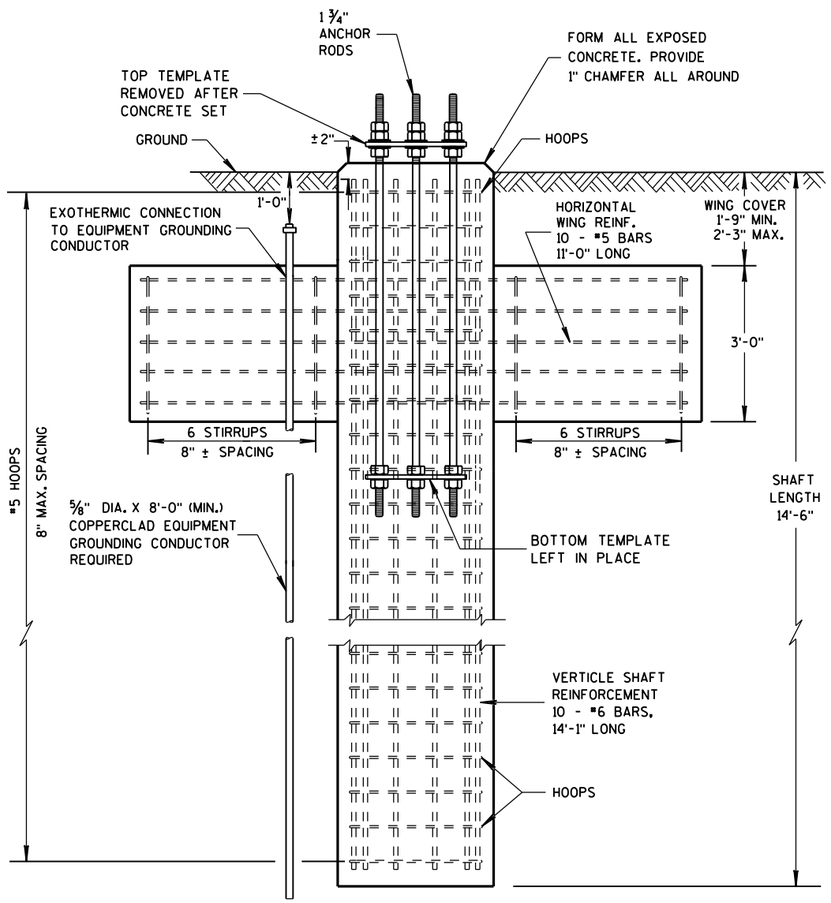

ELEVATION VIEW*

* CONDUITS ARE NOT SHOWN ON THIS VIEW FOR CLARITY

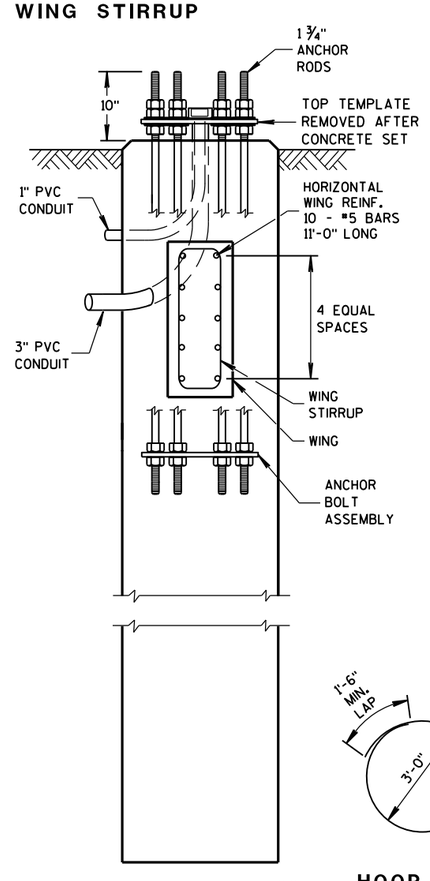

SIDE VIEW**

** HOOPS AND VERTICAL SHAFT REINFORCEMENT NOT SHOWN ON THIS VIEW FOR CLARITY

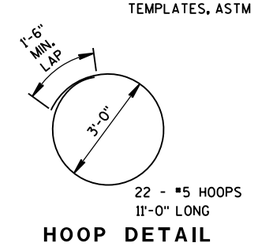

HOOP DETAIL

GENERAL NOTES

DETAILS OF CONSTRUCTION, MATERIALS AND WORKMANSHIP NOT SHOWN ON THIS DRAWING SHALL CONFORM TO THE PERTINENT REQUIREMENTS OF THE CONTRACT.

ORIENT ANCHOR RODS IN FOOTING AND PROVIDE ANCHOR ROD PROJECTION ABOVE TOP OF CONCRETE FOOTING BASE PER THIS SHEET.

BENDING DIMENSIONS FOR REINFORCING BARS ARE OUT TO OUT.

USE 3" CLEAR FOR ALL REINFORCEMENT UNLESS NOTED OTHERWISE.

THE CONTRACTOR IS RESPONSIBLE FOR MAKING HIS OWN DETERMINATION AS TO THE TYPE AND LOCATION OF THE UNDERGROUND UTILITIES AS MAY BE NECESSARY TO AVOID DAMAGE THERETO.

WELDING OF ANCHOR RODS TO THE CAGE IS UNACCEPTABLE. TEMPLATES SHALL BE USED.

BASES (SHAFT), BELOW THE WING, SHALL BE EXCAVATED BY THE USE OF A CIRCULAR AUGER. IF A BASE REQUIRES A DEEP FORM BECAUSE OF LOOSE SOIL, THE FORM SHALL BE REMOVED BEFORE BACKFILLING AROUNG THE BASE. BACKFILL SHALL BE TAMPED TIGHT AGAINST THE BARE CONCRETE BASE IN LAYERS OF 1 FOOT OR LESS.

TOP SURFACE OF THE CONCRETE BASE SHALL BE TROWEL FINISHED AND LEVEL.

CONDUIT SIZE AND LOCATIONS SHALL BE AS SHOWN ON THE PLANS.

MINIMUM BENDING RADIUS OF CONDUIT IS EQUAL TO 6 X THE DIAMETER.

CONDUIT HEIGHT ABOVE CONCRETE BASE SHALL BE 4½" INCHES. ALL METALLIC CONDUIT ENDS SHALL BE REAMED AND THREADED. NONMETALLIC CONDUIT SHALL HAVE BELL ENDS INSTALLED. ALL CONDUIT SHALL SLOPE TO PULL BOX.

ALL CONDUIT ENDS AT THE TOP OF THE BASES SHALL BE CAPPED IF METALLIC OR PLUGGED IF NONMETALLIC IMMEDIATELY AFTER PLACEMENT AND BEFORE CONCRETE IS POURED. CONDUITS IN WHICH WIRE OR CABLE IS NOT INSTALLED SHALL REMAIN CAPPED OR PLUGGED.

BELL ENDS SHALL BE INSTALLED ON ALL PVC CONDUIT EXPOSED AT THE TOP OF CONCRETE BASES BEFORE INSTALLATION OF CABLE OR WIRE.

WHEN REQUIRED TO CONNECT NONMETALLIC CONDUIT TO METALLIC CONDUIT, ONLY ADAPTOR FITTINGS, UL LISTED FOR ELECTRICAL USE, SHALL BE USED.

A NO. 4 AWG, STRANDED COPPER EQUIPMENT GROUNDING CONDUCTOR SHALL BE EXOTHERMICALLY WELDED TO THE EQUIPMENT GROUNDING ELECTRODE (GROUND ROD).

THE EQUIPMENT GROUNDING CONDUCTOR SHALL BE FURNISHED AND INSTALLED TO ENTER THE BASE THROUGH A 1-INCH CONDUIT INSTALLED FOR GROUNDING PURPOSES, LEAVING A 4-FOOT COIL OF WIRE ABOVE THE CONCRETE BASE, THE EQUIPMENT GROUNDING CONDUCTOR SHALL BE NEATLY COILED AND THE COILS TIED TOGETHER.

BAR STEEL REINFORCEMENT SHALL BE COATED WITH POWDERED EPOXY RESIN IN ACCORDANCE WITH SECTION 505 OF THE STANDARD SPECIFICATIONS.

THE MINIMUM DEPTH OF CONDUIT EXITING THE CONCRETE BASE AND INSTALLED BELOW THE TRAVEL WAY SHALL BE 24-INCHES. THE MINIMUM DEPTH OF CONDUIT EXITING THE CONCRETE BASE THAT IS NOT INSTALLED BELOW THE TRAVELED WAY SHALL BE 18-INCHES. THE MAXIMUM DEPTH OF ALL CONDUIT SHALL BE 36-INCHES, (GREATER THAN 36-INCHES IF INSTALLED IN BREAKER-RUN), EXCEPT WITH THE WRITTEN APPROVAL OF THE ENGINEER.

ANCHOR RODS SHALL BE INSTALLED WITH MISALIGNMENTS OF LESS THAN 1:40 FROM VERTICAL.

CONCRETE MASONRY	fc=3,500 p.s.i.
HIGH STRENGTH BAR STEEL REINFORCEMENT, GRADE 60	fy=60,000 p.s.i.
ANCHOR RODS, ASTM F1554 GRADE 55 (IN ACCORDANCE WITH SECTION 641.2.2.3 OF THE STANDARD SPECIFICATIONS	fy=55,000 p.s.i.
TEMPLATES, ASTM A709 GRADE 36	fy=36,000 p.s.i.

(FOR TYPE 12 & 13 & OVER HEIGHT (OH) POLES)

CONCRETE = 6.3 C.Y.
H.S. REINFORCEMENT = 635 LBS.

TO BE USED WHEN GROUND ELEVATION AT BASE EQUALS OR IS GREATER THAN HIGH POINT OF ROADWAY ELEVATION.
SEE S.D.D. 9C13-2 WHEN GROUND ELEVATION AT BASE IS LOWER THAN HIGH POINT OF ROADWAY ELEVATION.

CONCRETE BASE TYPE 13

STATE OF WISCONSIN
DEPARTMENT OF TRANSPO

6

S.D.D. 9 C 12-9a

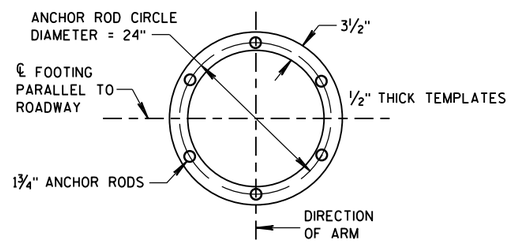

TOP AND BOTTOM TEMPLATES

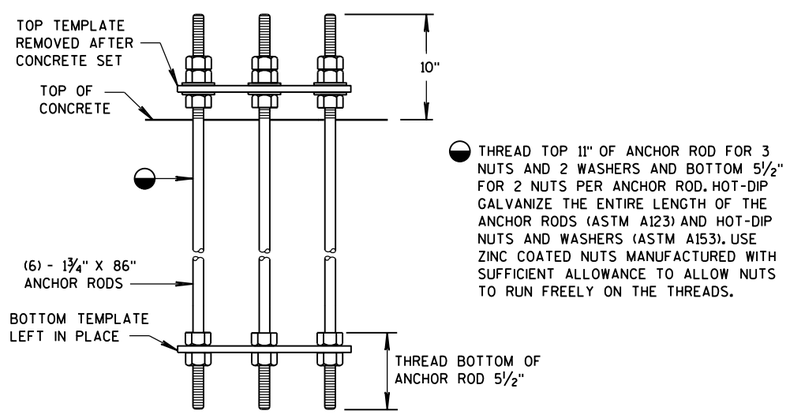

ANCHOR BOLT ASSEMBLY DETAIL

CONCRETE BASE TYPE 13 ANCHOR ASSEMBLY

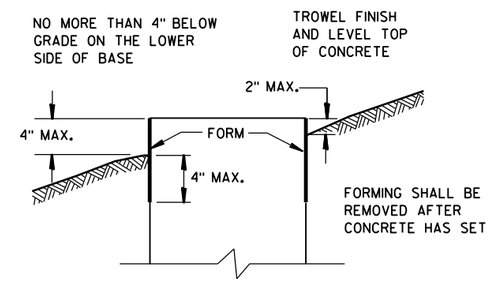

FORMING DETAIL

6

6

S.D.D. 9 C 12-9b

S.D.D. 9 C 12-9b

CONCRETE BASE TYPE 13

STATE OF WISCONSIN
DEPARTMENT OF TRANSPORTATION

APPROVED
May 2017
DATE
/S/ Ahmet Demirbilek
STATE ELECTRICAL
FHWA

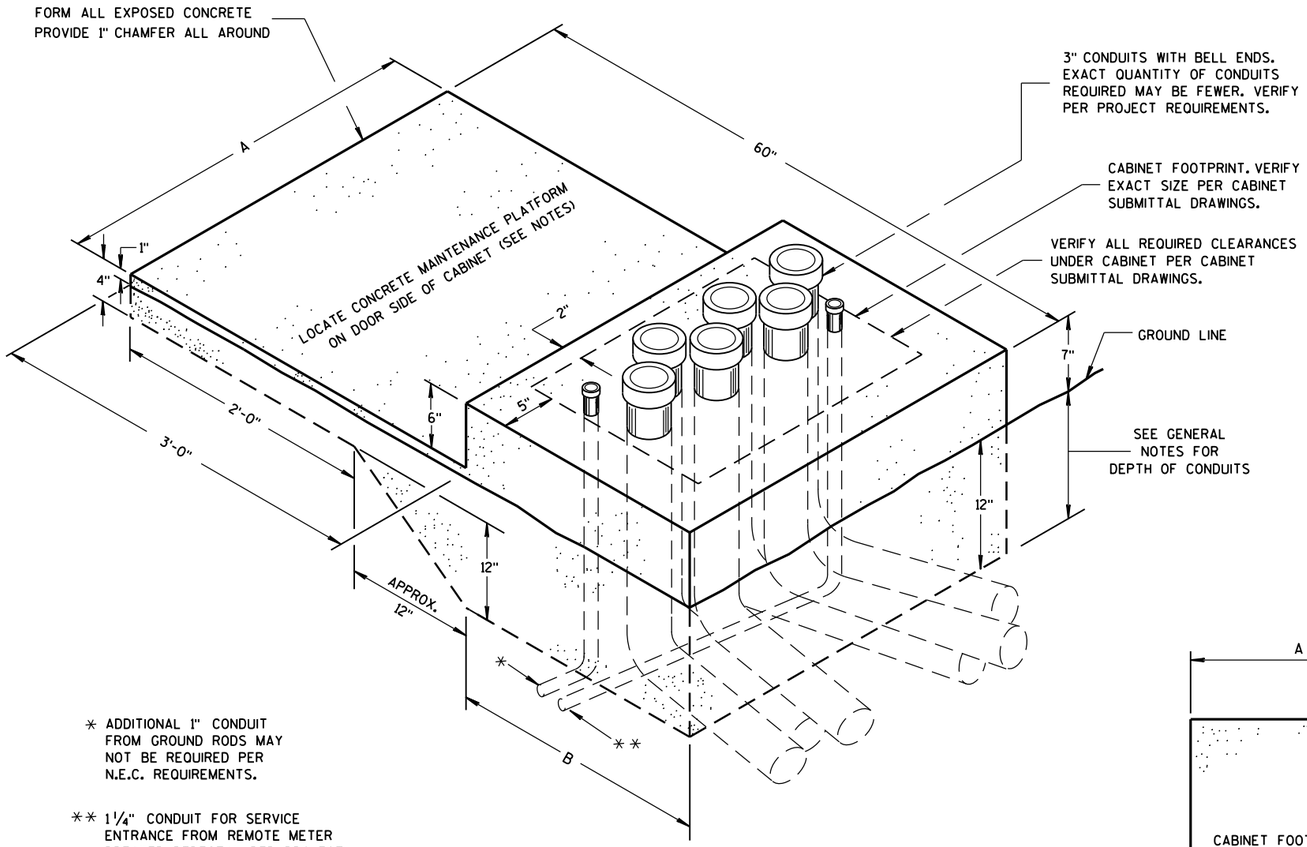

* ADDITIONAL 1" CONDUIT FROM GROUND RODS MAY NOT BE REQUIRED PER N.E.C. REQUIREMENTS.

** 1¼" CONDUIT FOR SERVICE ENTRANCE FROM REMOTE METER BREAKER PEDESTAL PER PROJECT REQUIREMENTS. VERIFY LOCATION OF CONDUIT DEPENDENT UPON LOCATION OF INCOMING FEEDER AND FOR EASE OF CONNECTION TO LOAD CENTER.

ISOMETRIC VIEW

CONCRETE CONTROL CABINET BASE, TYPE L

(C.Y. CONCRETE = APPROX. 0.4)

CONCRETE BASE TYPE	CABINET WIDTH	DIMENSIONS		MAXIMUM 3" CONDUITS
		A	B	
L24	24"	34"	24"	4
L30	30"	40"	24"	6

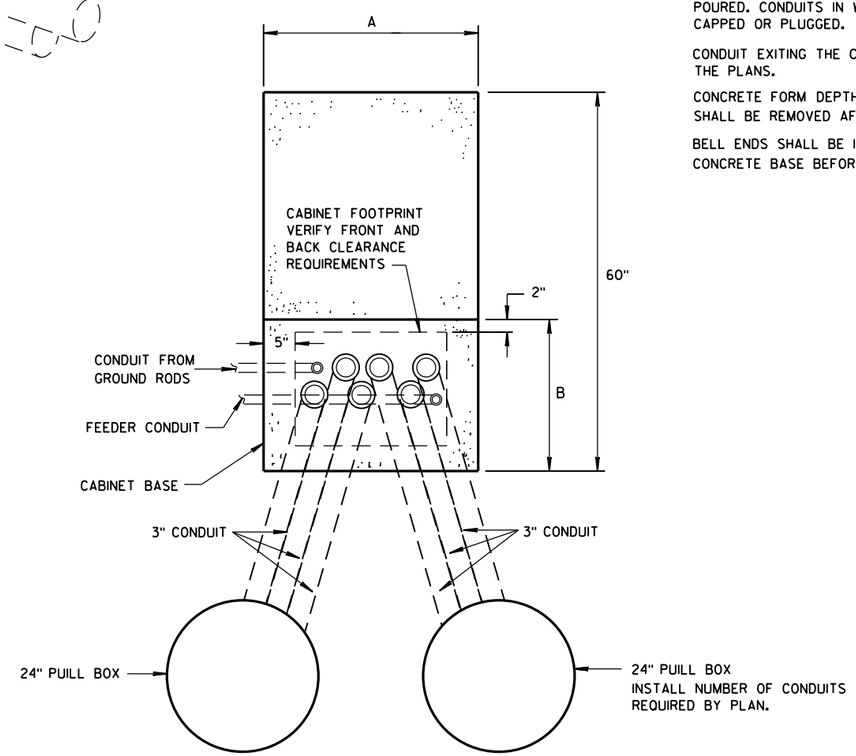

PLAN VIEW

CONCRETE CONTROL CABINET BASE, TYPE L

GENERAL NOTES

DETAILS OF CONSTRUCTION, MATERIALS AND WORKMANSHIP NOT SHOWN ON THIS DRAWING SHALL CONFORM TO THE PERTINENT REQUIREMENTS OF THE CONTRACT.

INSTALL FOUR STAINLESS STEEL APPROVED CONCRETE MASONRY ANCHORS TO ANCHOR THE CABINET BASES. THE ANCHORS SHALL BE LOCATED AS DIRECTED BY THE ENGINEER TO PROPERLY ANCHOR THE CONTROL CABINET TO THE BASE.

WHEN REQUIRED TO CONNECT NONMETALLIC CONDUIT TO METALLIC CONDUIT, ONLY ADAPTER FITTINGS, U.L. LISTED FOR ELECTRICAL USE, SHALL BE USED.

CONDUIT HEIGHT ABOVE THE CONCRETE BASE SHALL BE 1 INCH.

DEPTH OF CONDUIT INSTALLED BELOW THE TRAVELED WAY SHALL BE 24 INCHES MINIMUM AND 36 INCHES MAXIMUM.

DEPTH OF CONDUIT INSTALLED THAT IS NOT BELOW THE TRAVELED WAY SHALL BE 18 INCHES MINIMUM AND 36 INCHES MAXIMUM.

ANY EXCEPTION TO THE MAXIMUM DEPTH SHALL BE ONLY WITH THE WRITTEN APPROVAL OF THE ENGINEER.

CONTROL CABINET BASE TOP SURFACE SHALL BE TROWEL FINISHED SMOOTH AND LEVEL.

MAINTENANCE PLATFORM SHALL BE FLOAT OR BROOM FINISHED AND BE LEVEL.

MAINTENANCE PLATFORMS ARE NOT REQUIRED WHEN THE SURROUNDING AREA IS PAVED.

MINIMUM BENDING RADIUS OF CONDUIT = 6 X THE DIAMETER.

ALL METALLIC CONDUIT ENDS SHALL BE REAMED AND THREADED.

CAP ALL BELOW GRADE METALLIC CONDUIT ENDS IN WHICH WIRE OR CABLE IS NOT BEING INSTALLED.

PLUG ALL BELOW GRADE NONMETALLIC CONDUIT ENDS IN WHICH WIRE OR CABLE IS NOT BEING INSTALLED.

ALL CONDUIT ENDS AT THE TOP OF CONCRETE BASES SHALL BE CAPPED IF METALLIC OR PLUGGED IF NONMETALLIC IMMEDIATELY AFTER PLACEMENT AND BEFORE CONCRETE IS POURED. CONDUITS IN WHICH WIRE OR CABLE IS NOT BEING INSTALLED SHALL REMAIN CAPPED OR PLUGGED.

CONDUIT EXITING THE CONCRETE BASE SHALL TERMINATE IN PULL BOXES AS SHOWN ON THE PLANS.

CONCRETE FORM DEPTH BELOW FINISHED GRADE SHALL BE 6" MAXIMUM. CONCRETE FORMS SHALL BE REMOVED AFTER CONCRETE HAS SET.

BELL ENDS SHALL BE INSTALLED ON ALL PVC CONDUIT EXPOSED AT THE TOP OF THE CONCRETE BASE BEFORE INSTALLATION OF CABLE OR WIRE.

6

6

CONCRETE CONTROL
CABINET BASE, TYPE L

STATE OF WISCONSIN
DEPARTMENT OF TRANSPORTATION

APPROVED
Nov. 2014 — DATE
/S/ Thomas Gonring — STATE LIGHTING ENGINE — WYS
FHWA

S.D.D. 9 C 14-2

S.D.D. 9 C 14-2

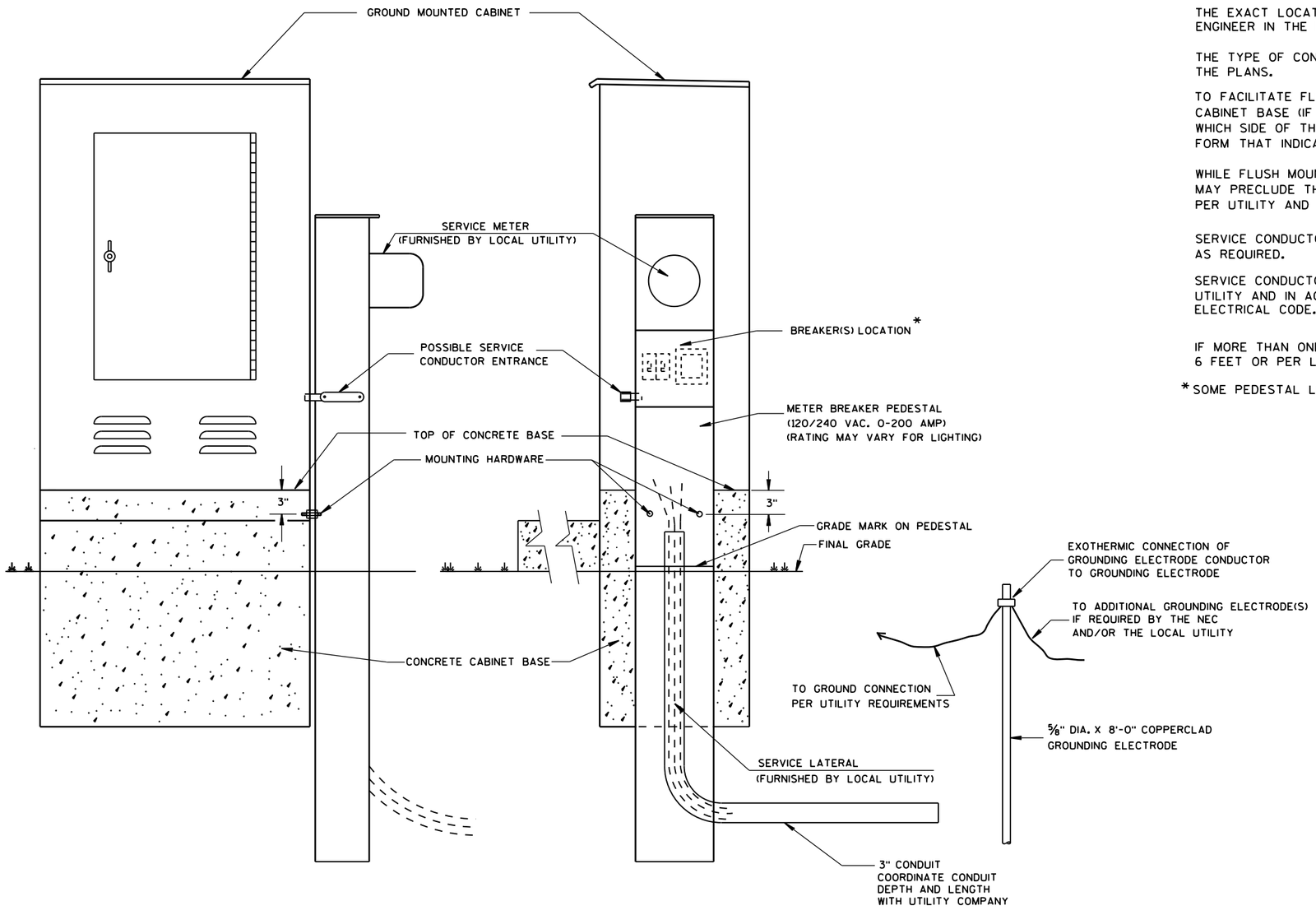

TYPICAL CABINET SERVICE INSTALLATION

GENERAL NOTES

DETAILS OF CONSTRUCTION, MATERIALS AND WORKMANSHIP NOT SHOWN ON THIS DRAWING SHALL CONFORM TO THE PERTINENT REQUIREMENTS OF THE CONTRACT.

THE EXACT LOCATION OF THE METER BREAKER PEDESTAL SHALL BE DETERMINED BY THE ENGINEER IN THE FIELD.

THE TYPE OF CONCRETE CABINET BASE TO BE INSTALLED SHALL BE AS CALLED FOR IN THE PLANS.

TO FACILITATE FLUSH MOUNTING OF THE METER BREAKER PEDESTAL AGAINST THE SIDE OF THE CABINET BASE (IF FLUSH MOUNTING POSSIBLE. CONFER WITH THE LOCAL UTILITY TO DETERMINE WHICH SIDE OF THE CONCRETE BASE THE ELECTRICAL SERVICE LATERAL WILL APPROACH. THEN FORM THAT INDICATED SIDE FOR FULL SIDE DEPTH.

WHILE FLUSH MOUNTING IS THE MOST DESIRABLE MOUNTING CONFIGURATION UTILITY REQUIREMENTS MAY PRECLUDE THIS OPTION. CONTRACTOR MUST PROVIDE UTILITY APPROVED PEDESTAL AND INSTALL PER UTILITY AND MANUFACTURERS REQUIREMENTS.

SERVICE CONDUCTOR ENTRANCES SHALL BE RIGID METALLIC CONDUIT, NIPPLES AND/OR CONDULETS AS REQUIRED.

SERVICE CONDUCTOR ENTRANCES SHALL BE SIZED AND LOCATED AS REQUIRED BY THE LOCAL UTILITY AND IN ACCORDANCE WITH APPROPRIATE ARTICLES OF THE LATEST ACCEPTED NATIONAL ELECTRICAL CODE.

IF MORE THAN ONE GROUNDING ELECTRODE IS REQUIRED, THE DISTANCE APART SHALL BE 6 FEET OR PER LOCAL UTILITY REGULATIONS.

*SOME PEDESTAL LIGHTING PLANS SHOW MAIN LUGS ONLY.

6

6

CABINET SERVICE INSTALLATION
(METER BREAKER PEDESTAL)

STATE OF WISCONSIN
DEPARTMENT OF TRANSPORTATION

APPROVED
Sept. 2014 — /S/ Ahmet Demirbilek
DATE — STATE ELECTRICAL
FHWA

S.D.D. 9 D 1-5

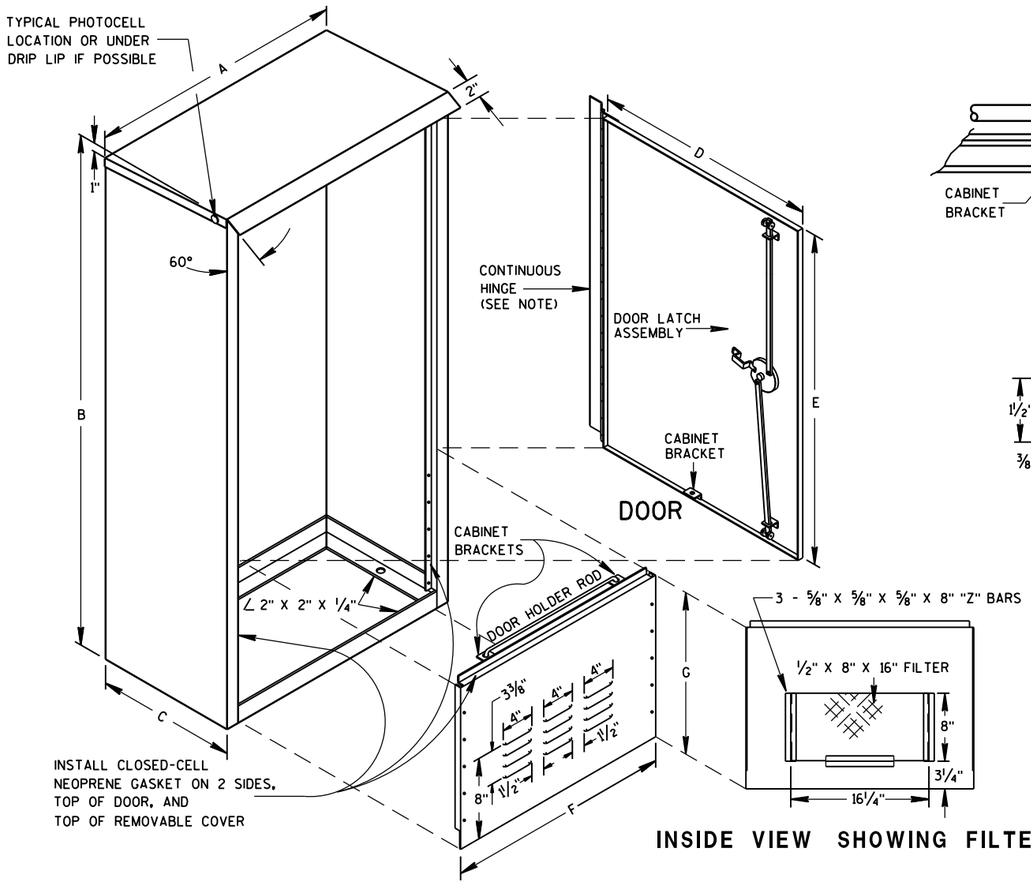

INSIDE VIEW SHOWING FILTER

REMOVABLE COVER

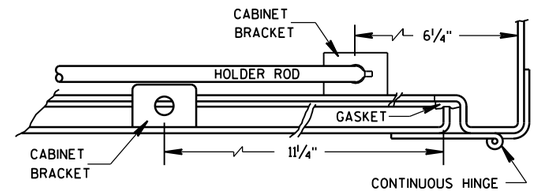

HINGE & DOOR HOLDER

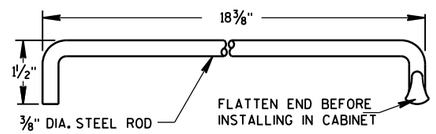

HOLDER ROD

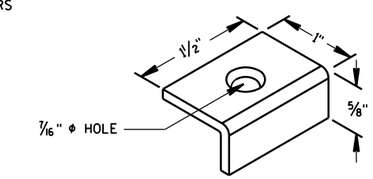

CABINET BRACKET

GENERAL NOTES

DETAILS OF CONSTRUCTION, MATERIALS AND WORKMANSHIP NOT SHOWN ON THIS DRAWING SHALL CONFORM TO THE PERTINENT REQUIREMENTS OF THE STANDARD SPECIFICATIONS AND APPLICABLE SPECIAL PROVISIONS.

PRIME WITH PHOSPHATE TREATMENT AND PRIMER.

FINISH EXTERIOR SURFACES WITH RUSTOLEUM #906 SILVER GRAY OR APPROVED EQUAL.

FINISH INTERIOR WITH RUSTOLEUM #2766 HIGH GLOSS WHITE ENAMEL OR APPROVED EQUAL.

ALL SHEET METAL PARTS SHALL BE .125 INCH THICK ALUMINUM.

ALL SEAMS SHALL BE CONTINUOUSLY WELDED.

ALUMINUM SHALL BE TYPE 5052-H32.

CONTINUOUS HINGE SHALL BE HEAVY GAUGE ALUMINUM WITH 1/4" DIAMETER STAINLESS STEEL HINGE PIN. HINGE IS SECURED WITH 1/4" X 20 TPI STAINLESS STEEL CARRIAGE BOLTS AND STAINLESS STEEL NYLOCK NUTS.

A SINGLE PHOTOCELL SHALL BE LOCATED ON THE NORTH-NORTHEAST SIDE OF THE CABINET UNLESS OTHERWISE CALLED FOR IN THE SPECIAL PROVISIONS. THE PHOTOCELL SHALL BE PLACED AS SHOWN AND SHALL BE LISTED ON THE DEPARTMENTS APPROVED PRODUCTS LIST.

DOOR LATCH ASSEMBLY TO BE PROVIDED WITH THREE-POINT LOCKING MECHANISM.

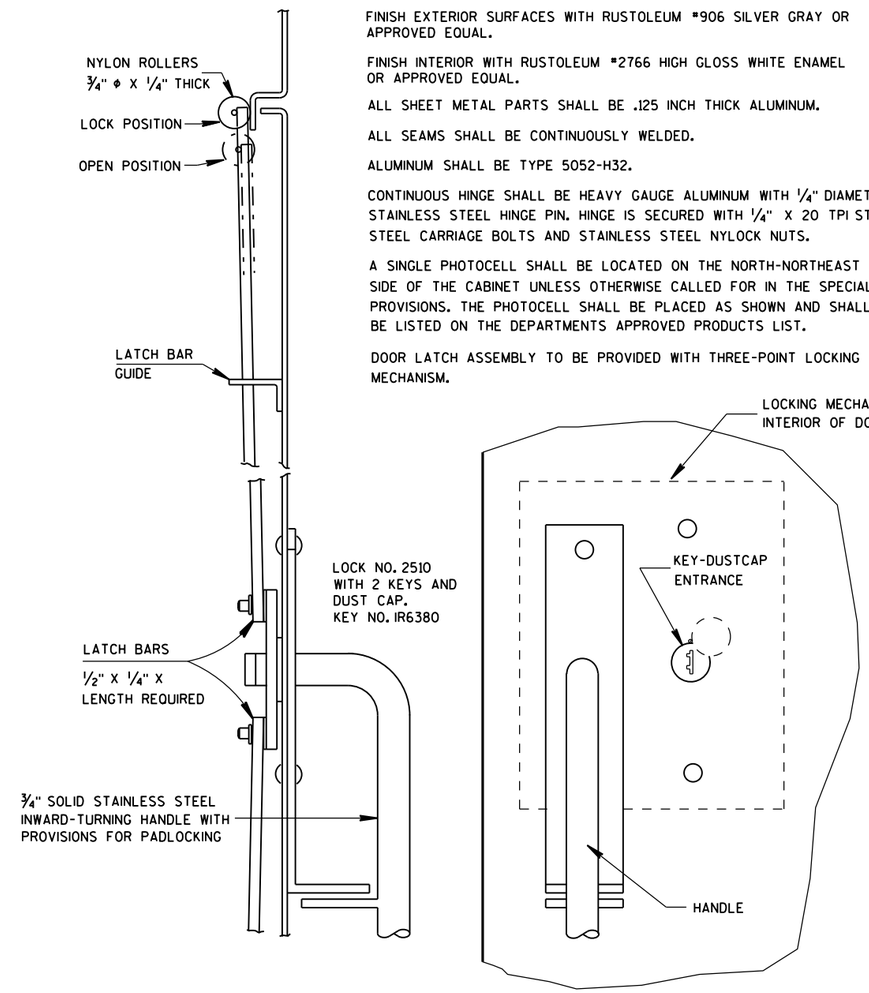

SIDE VIEW

FRONT VIEW

LATCH ASSEMBLY

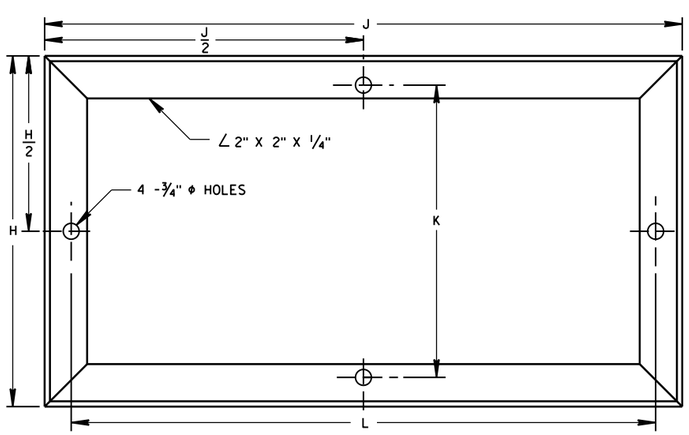

MOUNTING BASE

TABLE OF DIMENSIONS (INCHES)

MARK	CABINET TYPE		
	3060	3860	3866
A	30	38	38
B	60	60	66
C	16 1/2	16 1/2	24
D	26 1/2	34 3/4	33 3/4
E	38 3/4	38 3/4	38 3/4
F	26 1/2	34 3/4	33 3/4
G	19	19	25
H	16 1/2	16 1/2	24
H/2	8 1/4	8 1/4	12
J	30	38	38
J/2	15	19	19
K	13 3/4	13 3/4	21 1/4
L	27 1/2	35 1/2	35 1/2

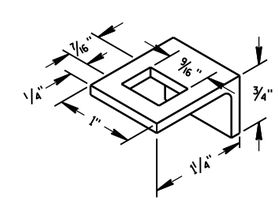

LATCH BAR GUIDE

SIGNAL CONTROL CABINET

STATE OF WISCONSIN
DEPARTMENT OF TRANSPORTATION

APPROVED
Sept. 2014 — DATE
/S/ Ahmet Demirbilek — STATE ELECTRICAL
FHWA

6

6

S.D.D. 9 D 2-3

S.D.D. 9 D 2-3

GENERAL NOTES

DETAILS OF CONSTRUCTION, MATERIALS AND WORKMANSHIP NOT SHOWN ON THIS DRAWING SHALL CONFORM TO THE PERTINENT REQUIREMENTS OF THE STANDARD SPECIFICATIONS AND APPLICABLE SPECIAL PROVISIONS.

ALL INTERNAL ELECTRICAL COMPONENTS WILL BE PRE-WIRED BY THE CABINET FABRICATOR.

ALL CONDUIT ENTRIES SHALL BE SEALED WITH AN APPROPRIATE DUCT SEALING COMPOUND.

ORIENT PHOTOCELL AWAY FROM AMBIENT LIGHT SOURCES AND ONCOMING TRAFFIC HEADLIGHTS.

THE CONTRACTOR SHALL TOUCH UP ANY DAMAGE TO THE ANODIZED FINISH CAUSED BY THE INSTALLATION PROCESS. COLOR MATCH PAINT SHALL BE USED.

A COMPLETE LIGHTING OR ELECTRICAL PLAN SHALL BE SECURELY PLACED IN THE DOCUMENT HOLDER ATTACHED TO THE DOOR.

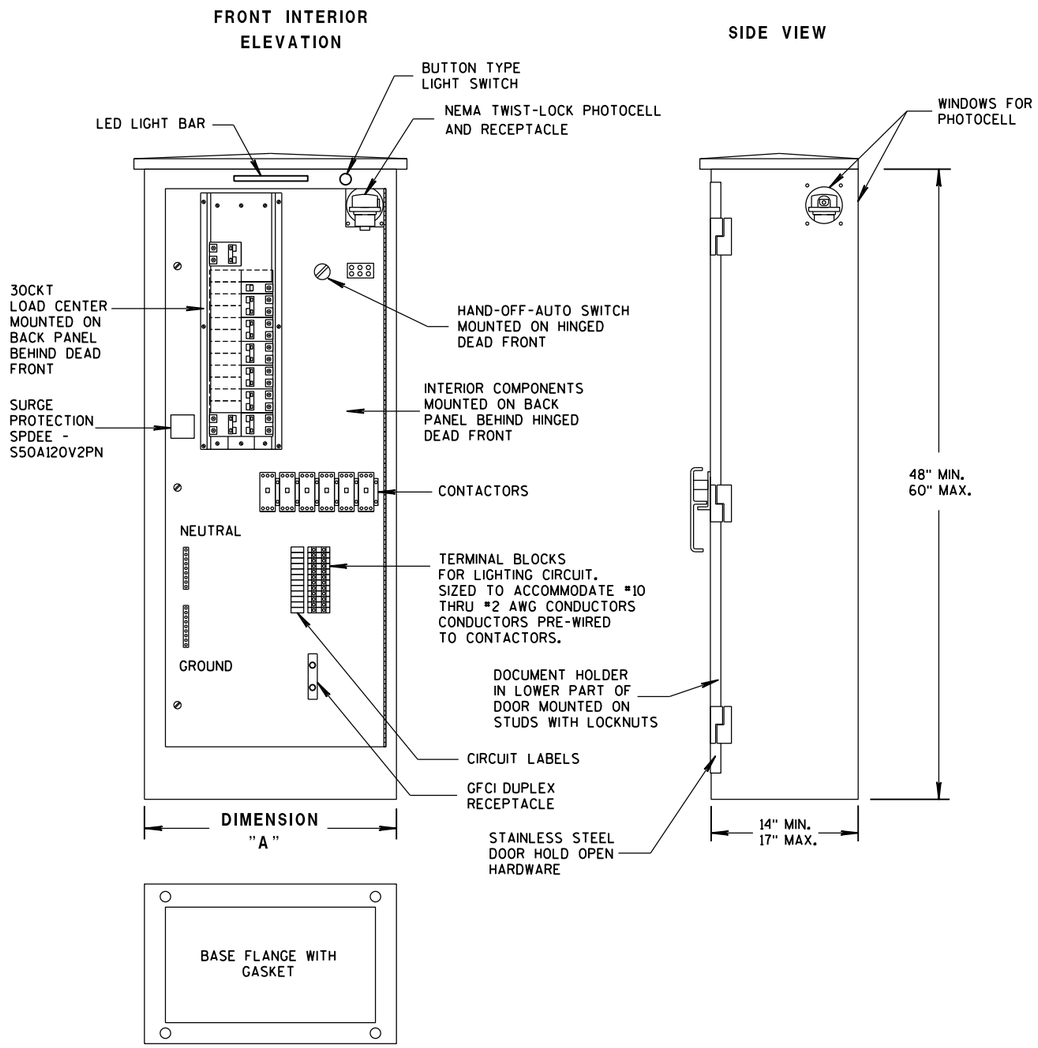

TABLE OF DIMENSIONS (INCHES)

CONCRETE BASE TYPE	CABINET WIDTH	DIMENSION "A"
L24	24"	24"
L30	30"	30"

LIGHTING CONTROL CABINET

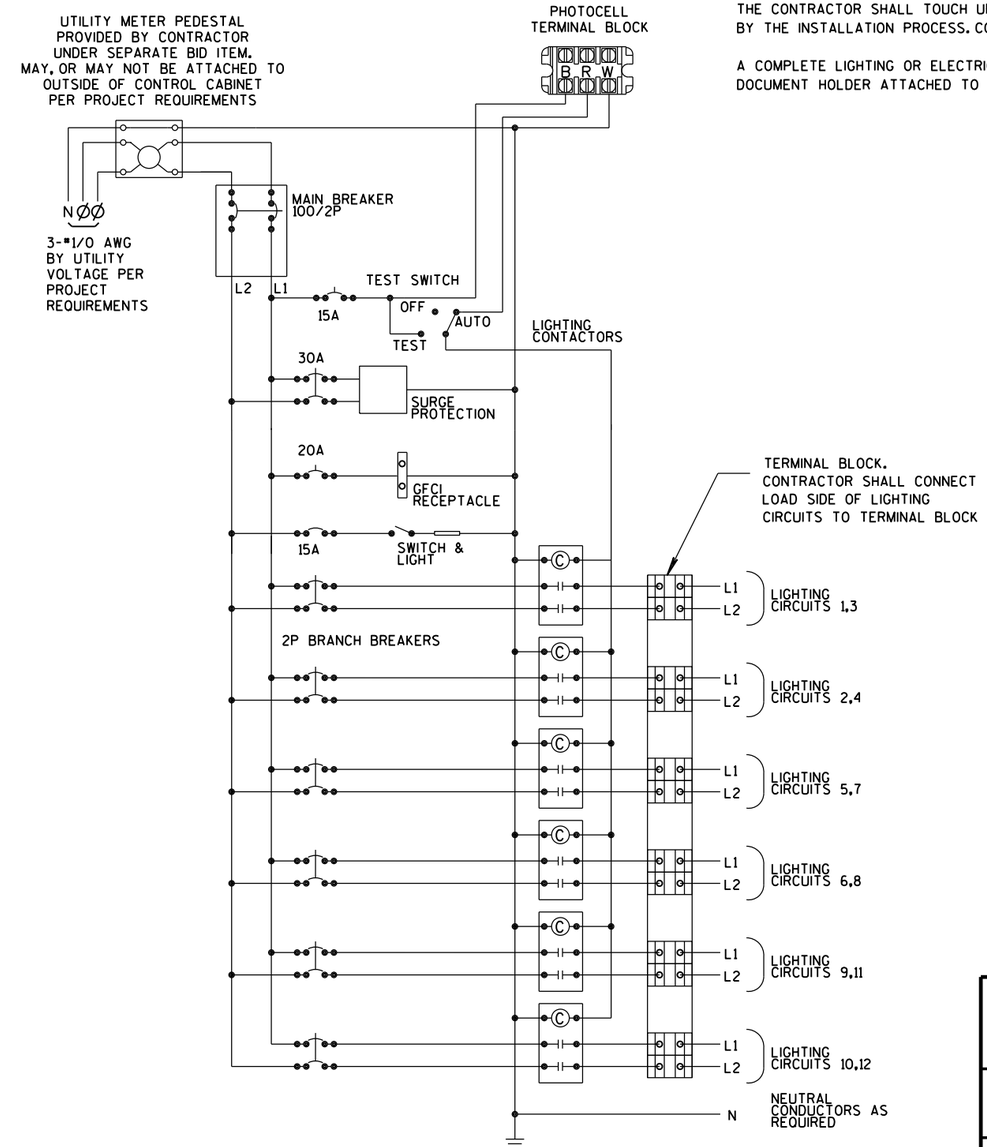

CONTROL CABINET SCHEMATIC

LIGHTING CONTROL CABINET
120/240 VOLT

STATE OF WISCONSIN
DEPARTMENT OF TRANSPORTATION

APPROVED
Sept. 2014 — DATE
/S/ Thomas Gonring — STATE LIGHTING ENGINEER
FHWA

6

S.D.D. 9 D 4-2

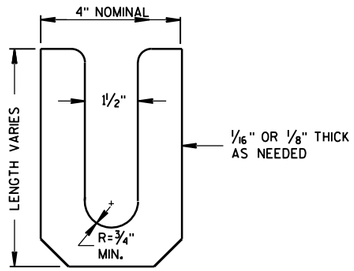

LEVELING SHIM (13)

SHALL BE ALUMINUM

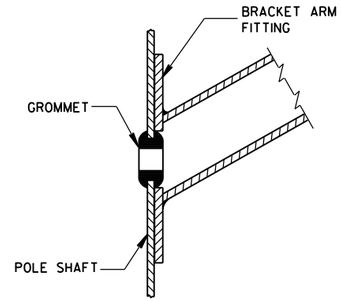

TYPICAL APPLICATION OF GROMMET IN POLE SHAFT

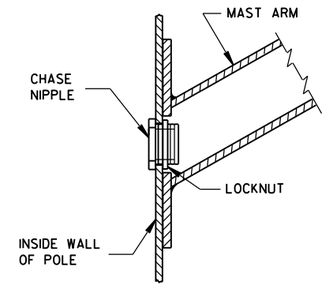

TYPICAL APPLICATION OF CHASE NIPPLE IN POLE SHAFT

GENERAL NOTES

CLAMP BOLT-NUT TIGHTENING TORQUE SHALL BE INDICATED BY INDENT STAMPING (1/2 INCH NUMERALS AND LETTERS) OR WEATHERPROOF PRINTING ON THE INSIDE OF THE CLAMP THAT IS WELDED TO THE ARM MEMBER.

(10) 4.5" I.D. FOR LUMINAIRE MAST ARM CLAMP.
6.625" I.D. FOR TROMBONE MAST ARM CLAMP.

(11) INDIVIDUAL BASE PLATE ANCHOR ROD COVERS. (4 REQUIRED)

(12) BASE PLATE SLOTTED TO ACCEPT 11" THROUGH 12" BOLT CIRCLE USING 1" DIAMETER ANCHOR RODS.

(13) LEVELING SHIMS, DESIGNED FOR THE PURPOSE, SHALL BE USED WHEN PLUMBING POLES. THE USE OF WASHERS IN LIEU OF PROPER LEVELING SHIMS IS NOT ACCEPTABLE. LEVELING SHIMS SHALL BE USED ONLY BETWEEN THE TOP OF THE CONCRETE BASE AND A METALLIC BASE PLATE.

SHIMS SHALL BE LONG ENOUGH AND WIDE ENOUGH TO COMPLETELY COVER THE AREA UNDER THE LENGTH AND WIDTH OF THE BASE MOUNTING FLANGE.

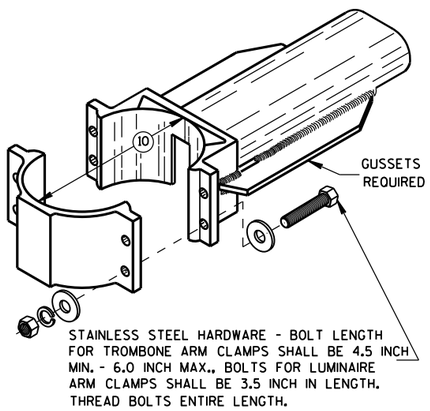

TYPICAL TROMBONE MAST ARM AND SINGLE LUMINAIRE MAST ARM MOUNTING CLAMP

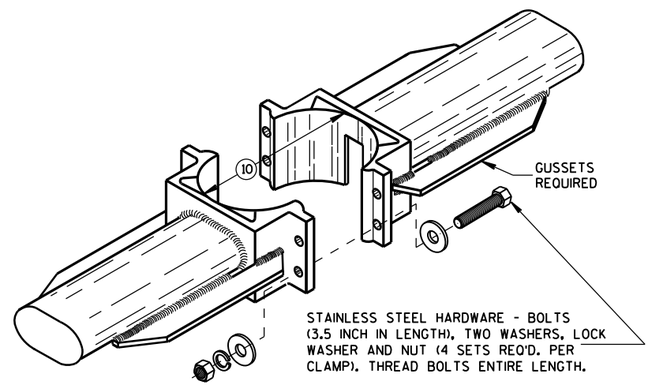

TYPICAL LUMINAIRE MAST ARM (DOUBLE) MOUNTING BRACKETS

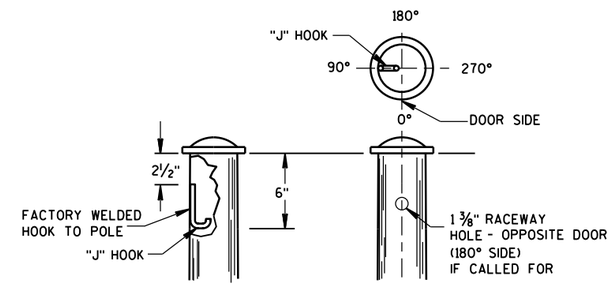

TYPICAL "J" HOOK LOCATION

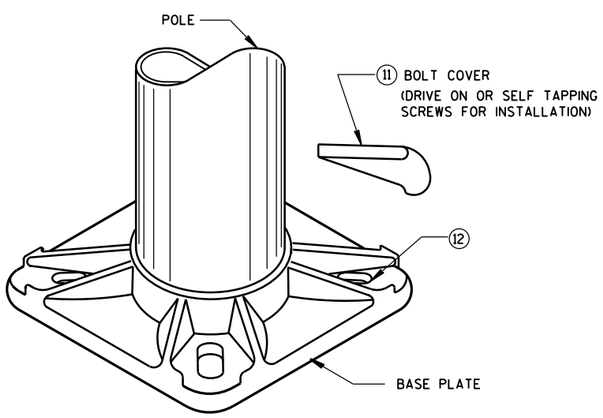

BASE PLATE

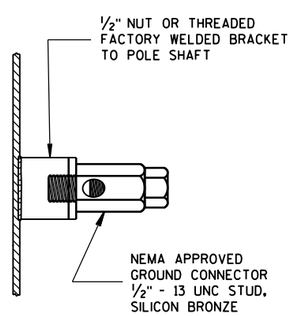

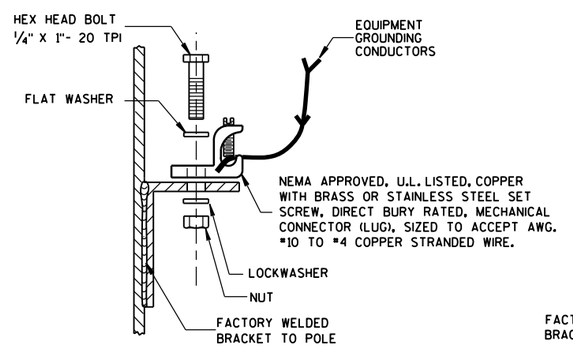

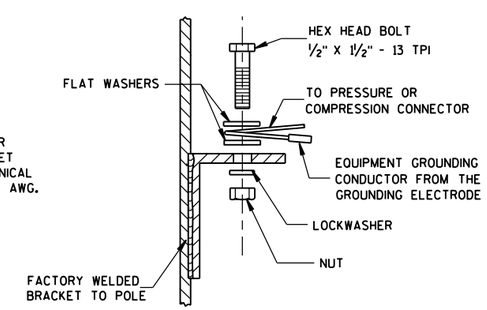

TYPICAL GROUNDING CONNECTIONS

NUT, BOLT AND WASHERS SHALL BE STAINLESS STEEL

HARDWARE DETAILS FOR POLE MOUNTINGS

STATE OF WISCONSIN
DEPARTMENT OF TRANSPORTATION

APPROVED
Feb. 2015 — DATE
/S/ Ahmet Demirbilek — STATE ELECTRICAL
FHWA

6

S.D.D. 9 E 1-14g

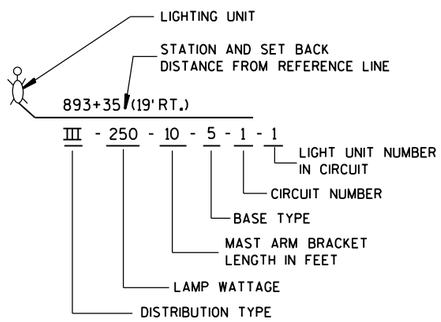

LIGHTING UNIT CODE
(TYPICAL)

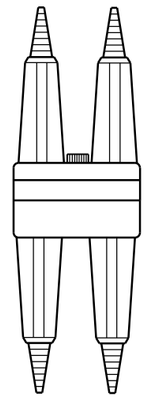

DETAIL "A"
BREAKAWY DOUBLE POLE WITH WATERPROOF INSULATING BOOT

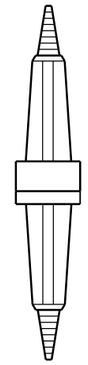

DETAIL "B"
BREAKAWY SINGLE POLE WITH WATERPROOF INSULATING BOOT

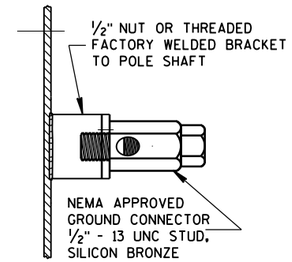

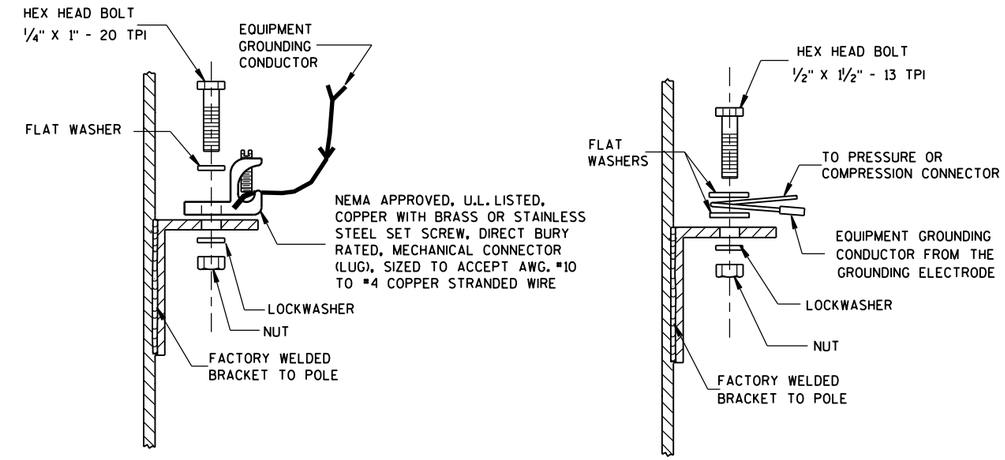

TYPICAL GROUNDING CONNECTIONS
NUT, BOLT, WASHERS AND LOCKWASHERS SHALL BE STAINLESS STEEL

GENERAL NOTES
DETAILS OF CONSTRUCTION, MATERIALS AND WORKMANSHIP NOT SHOWN ON THIS DRAWING SHALL CONFORM TO THE PERTINENT REQUIREMENTS OF THE CONTRACT.

THE EQUIPMENT GROUNDING CONNECTOR SHALL BE TAPED WITH 3 WRAPS (MINIMUM) OF APPROVED RUBBER TAPE AND THEN 3 WRAPS (MINIMUM) OF APPROVED VINYL TAPE TO COVER SHARP WIRE ENDS AFTER THE CONNECTION IS COMPLETED.

WHEN TRANSFORMER BASES ARE USED, ALL WIRING CONNECTIONS SHALL OCCUR WITHIN THE TRANSFORMER BASES.

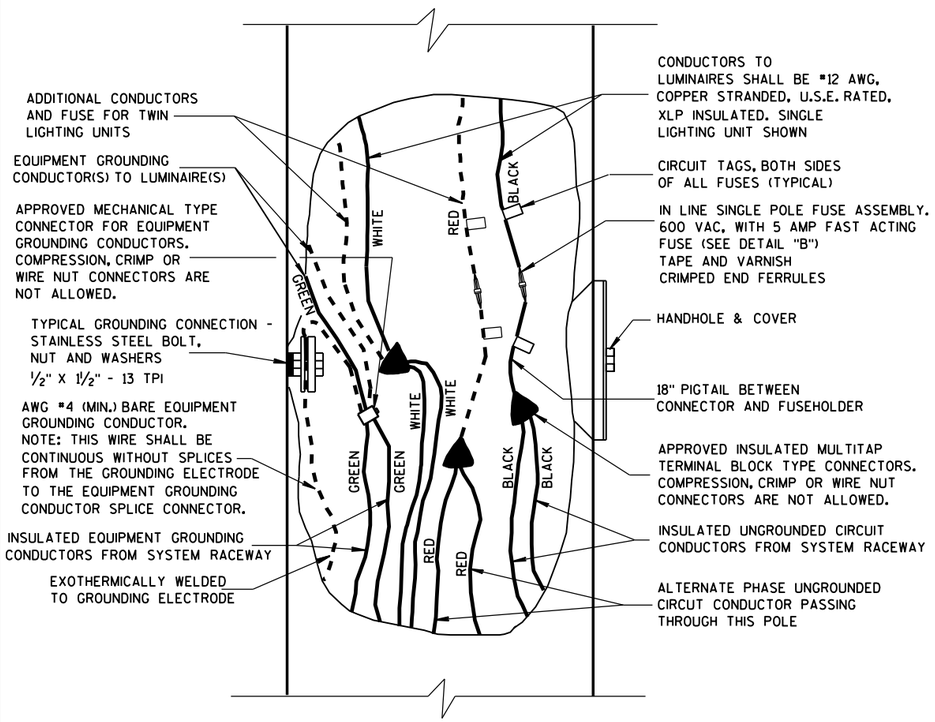

3 WIRE - 120, 240 OR 480 VAC (UNGROUNDED CONDUCTOR) WITH GROUNDED CONDUCTOR AND WITH EQUIPMENT GROUNDING CONDUCTOR

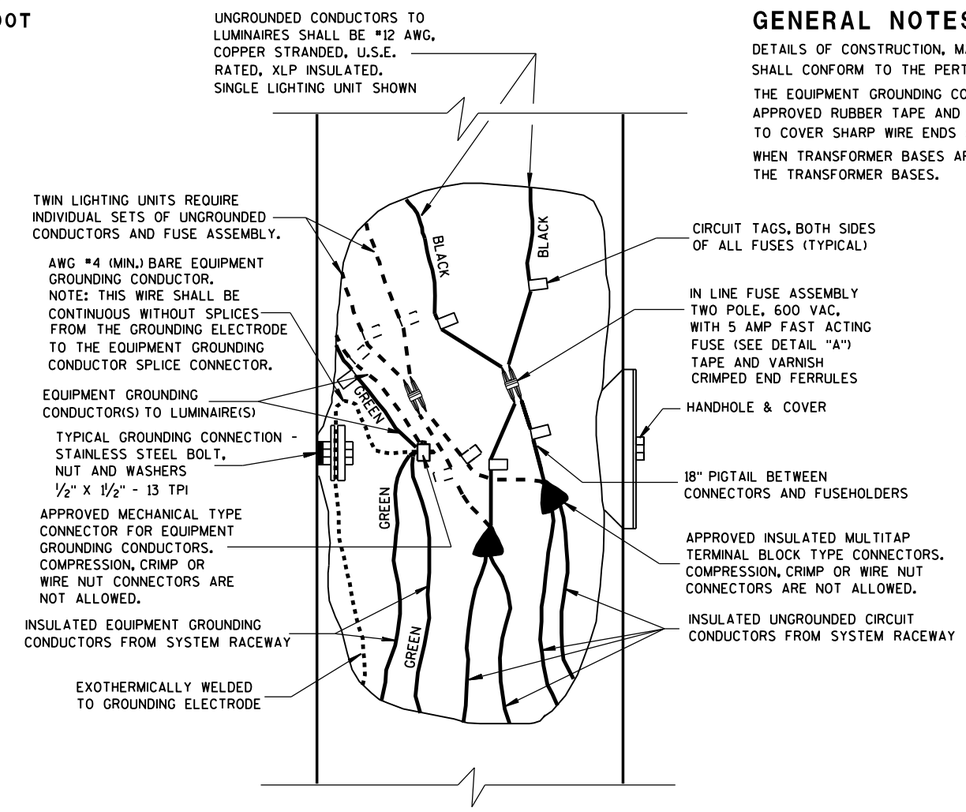

2 WIRE - 240 OR 480 VAC (UNGROUNDED CONDUCTORS) WITH EQUIPMENT GROUNDING CONDUCTOR

NON-FREEWAY LIGHTING UNIT POLE WIRING	
STATE OF WISCONSIN DEPARTMENT OF TRANSPORTATION	
APPROVED Sept. 2014 DATE	/S/ Ahmet Demirbilek STATE ELECTRICAL
FHWA	

6

6

S.D.D. 9 E 3-5

S.D.D. 9 E 3-5

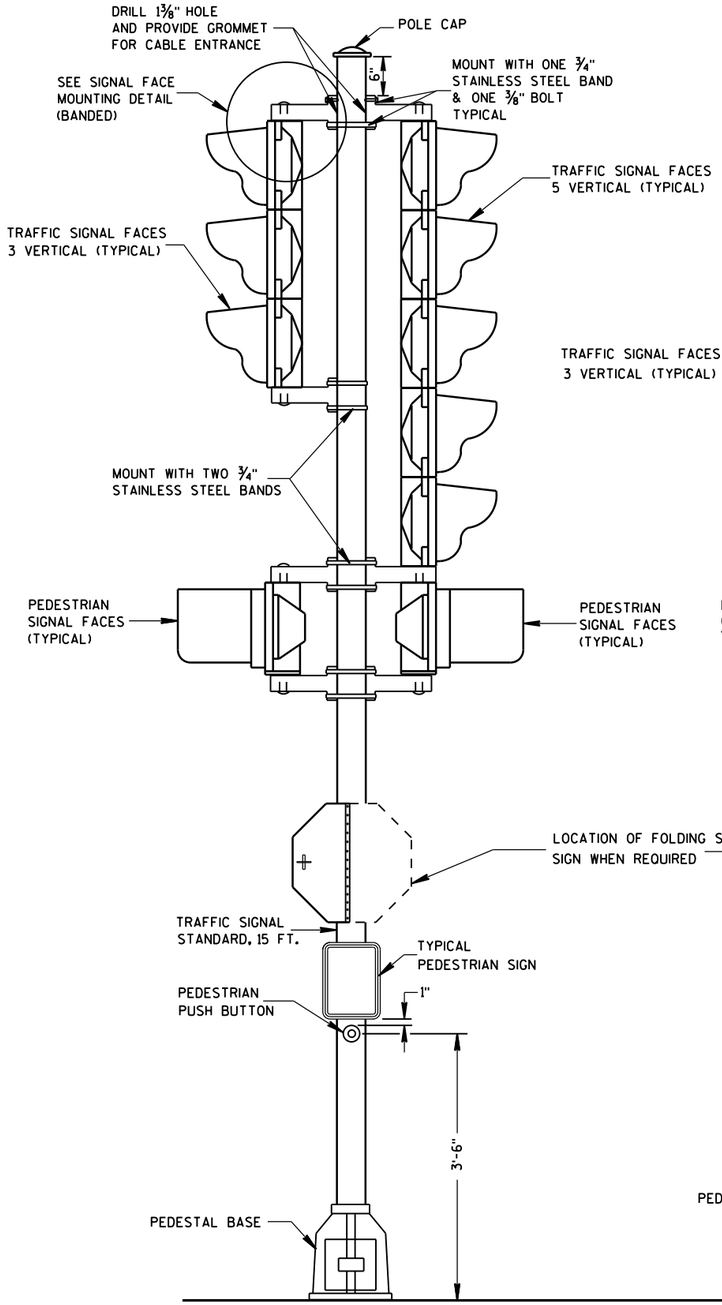

TRAFFIC SIGNAL STANDARD-15 FT.

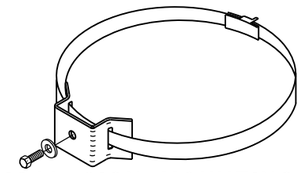

TYPICAL SIGN MOUNTING BAND
(TOP AND BOTTOM OF SIGN)

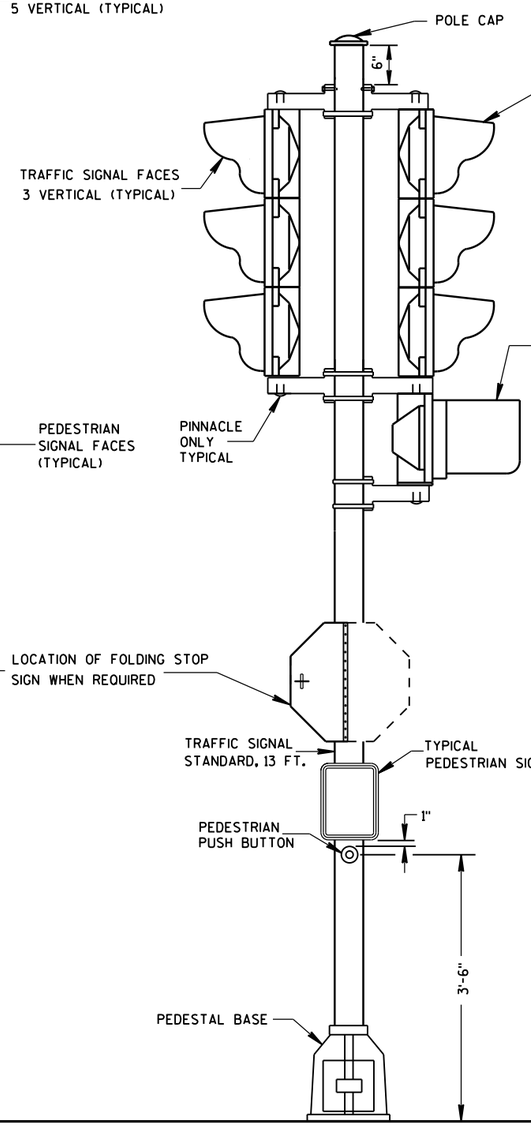

TRAFFIC SIGNAL STANDARD-13 FT.

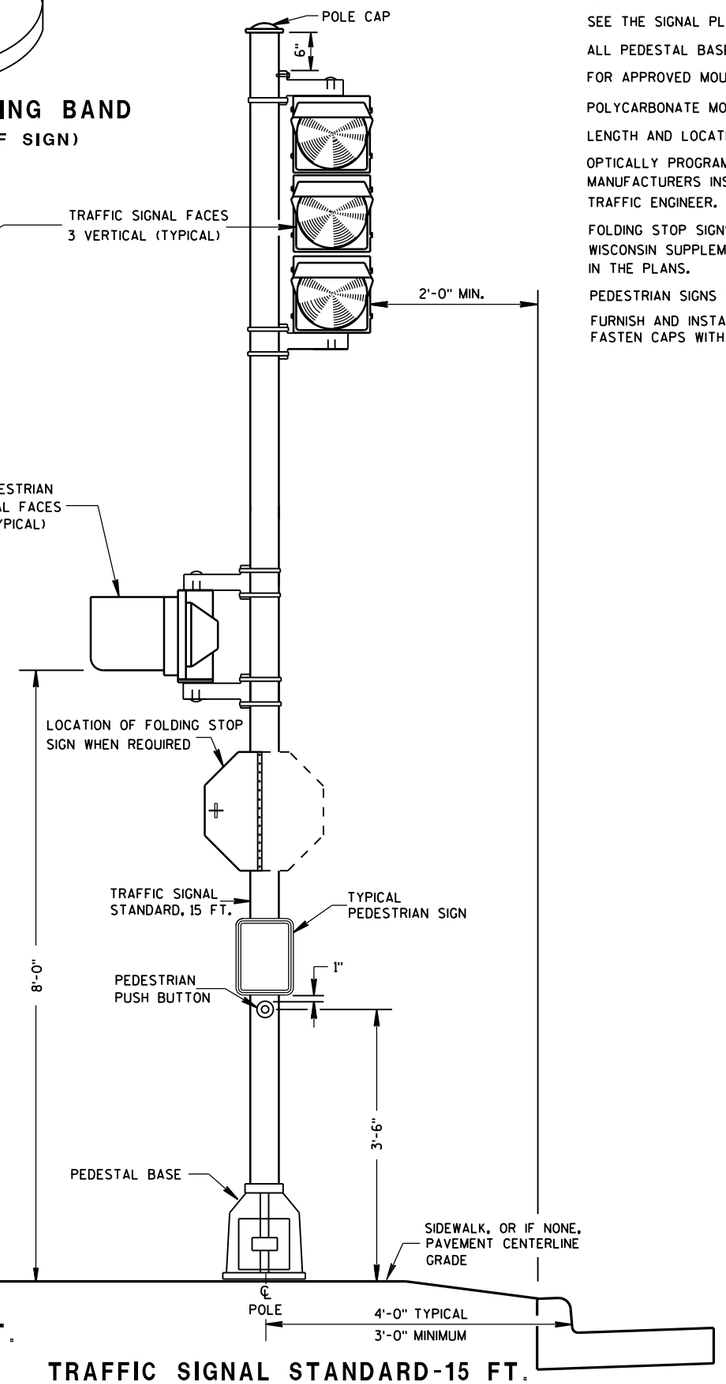

TRAFFIC SIGNAL STANDARD-15 FT.
3M MOUNTING (TYPICAL)

GENERAL NOTES

DETAILS OF CONSTRUCTION, MATERIALS AND WORKMANSHIP NOT SHOWN ON THIS DRAWING SHALL CONFORM TO THE PERTINENT REQUIREMENTS OF THE CONTRACT.

SEE THE SIGNAL PLAN FOR REQUIRED SIGNAL FACE SIZES.

ALL PEDESTAL BASES SHALL BE MOUNTED ON CONCRETE BASE - TYPE 1.

FOR APPROVED MOUNTING HARDWARE, SEE THE CONTRACT SPECIAL PROVISIONS.

POLYCARBONATE MOUNTING BRACKETS SHALL BE USED.

LENGTH AND LOCATION OF TRAFFIC SIGNAL STANDARDS SHALL BE AS SHOWN ON THE PLANS.

OPTICALLY PROGRAMMED SIGNAL FACES SHALL BE MASKED IN ACCORDANCE WITH MANUFACTURERS INSTRUCTIONS, AND UNDER THE DIRECTIONS OF THE REGION TRAFFIC ENGINEER.

FOLDING STOP SIGNS SHALL BE IN ACCORDANCE WITH THE MUTCD AND/OR THE LATEST WISCONSIN SUPPLEMENT. THE SIGNS SHALL BE SIZED AND LOCATED AS CALLED FOR IN IN THE PLANS.

PEDESTRIAN SIGNS SHALL BE AS DESIGNATED IN THE PLANS.

FURNISH AND INSTALL VENTILATED, CAST, METALLIC (ALUMINUM ALLOY) CAPS. FASTEN CAPS WITH ONE (1) ¼" X ¾" - 20 TPI STAINLESS STEEL, HEX HEAD BOLT.

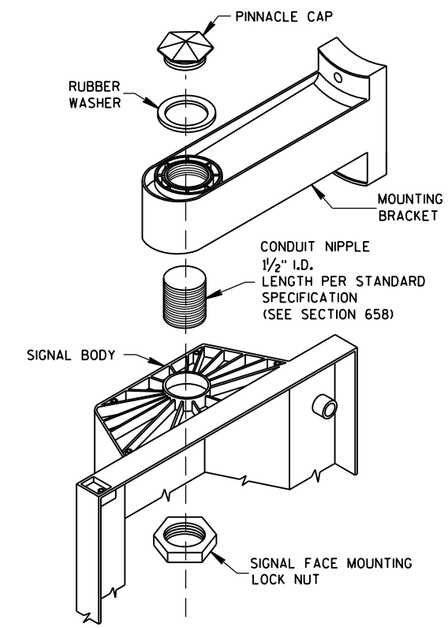

SIGNAL FACE MOUNTING DETAIL
(BANDED)

TRAFFIC SIGNAL STANDARD POLY BRACKET MOUNTINGS (TYPICAL) 13 FT. OR 15 FT.	
STATE OF WISCONSIN DEPARTMENT OF TRANSPORTATION	
APPROVED 2/28/2013 DATE	/S/ Ahmet Demirbilek STATE ELECTRICAL
FHWA	

6

S.D.D. 9 E 6-5

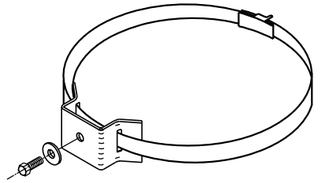

TYPICAL SIGN MOUNTING BAND

(TOP AND BOTTOM OF SIGN)

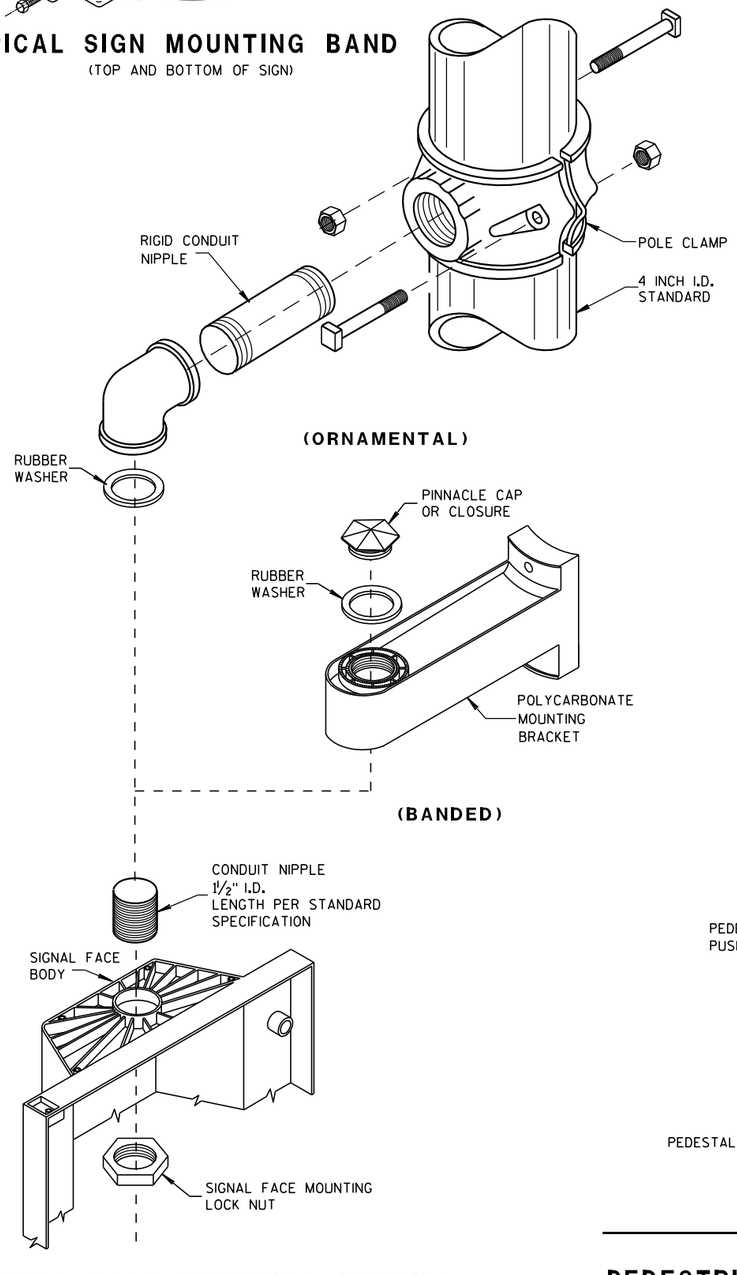

SIGNAL FACE MOUNTING DETAILS

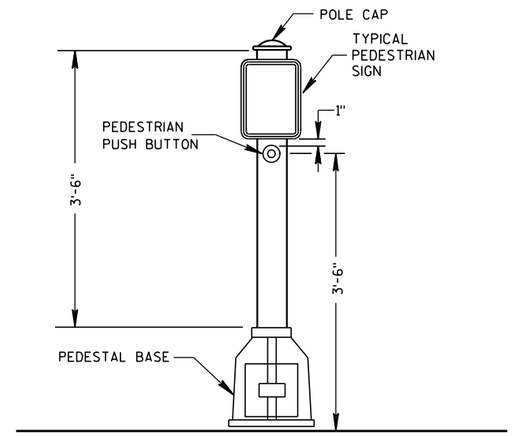

PEDESTRIAN PUSH BUTTON TYPICAL MOUNTING

GENERAL NOTES

DETAILS OF CONSTRUCTION, MATERIALS AND WORKMANSHIP NOT SHOWN ON THIS DRAWING SHALL CONFORM TO THE PERTINENT REQUIREMENTS OF THE CONTRACT.

SEE THE SIGNAL PLAN FOR REQUIRED SIGNAL FACE SIZES.

LOCATIONS SHALL BE AS SHOWN ON THE PLANS.

ALL PEDESTAL BASES SHALL BE MOUNTED ON CONCRETE BASE - TYPE 1.

FOR APPROVED MOUNTING HARDWARE, SEE THE CONTRACT SPECIFICATIONS.

POLYCARBONATE SIGNAL FACE MOUNTING BRACKETS SHALL BE USED UNLESS ORNAMENTAL POLE CLAMPS ARE SPECIFIED.

LENGTH OF TRAFFIC STANDARDS SHALL BE AS SHOWN ON THE PLANS.

MOUNTINGS AND BRACKETS SHALL BE AS SHOWN ON THE PLANS OR DESCRIBED IN THE SPECIAL PROVISIONS (BY THE DISTRICT TRAFFIC ENGINEER).

PEDESTRIAN SIGNS SHALL BE AS DESIGNATED IN THE PLANS.

FURNISH AND INSTALL VENTILATED, CAST, METALLIC (ALUMINUM ALLOY) CAPS. FASTEN CAPS WITH ONE (1) ¼" X ¾" - 20 TPI STAINLESS STEEL, HEX HEAD BOLT.

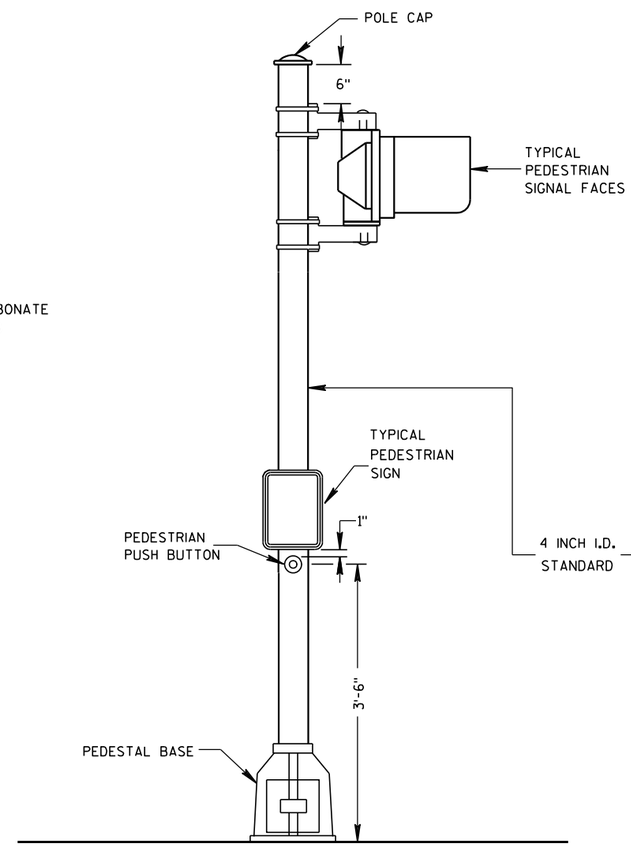

PEDESTRIAN FACE STANDARD-10 FT.

(WALK-DON'T WALK)

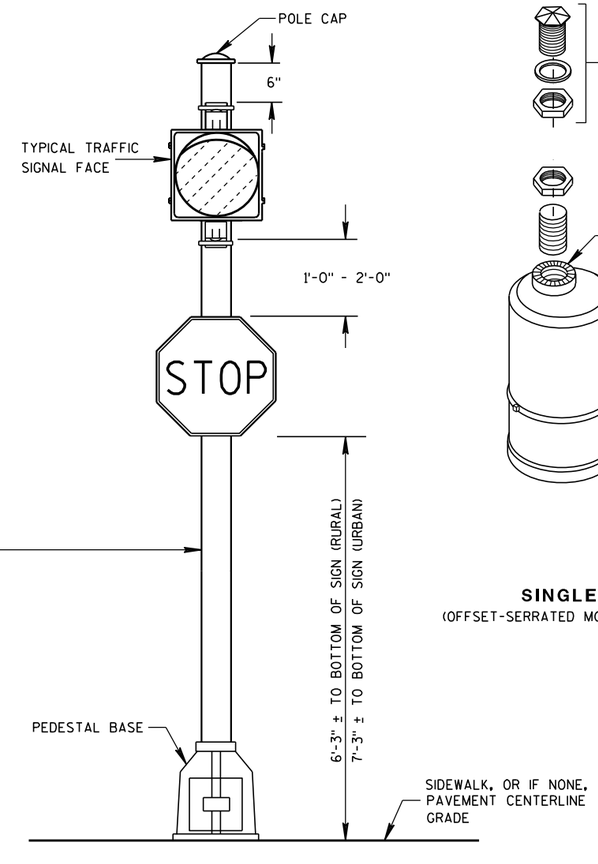

STANDARD FLASHER.

10 FOOT, 13 FOOT OR 15 FOOT AS REQUIRED

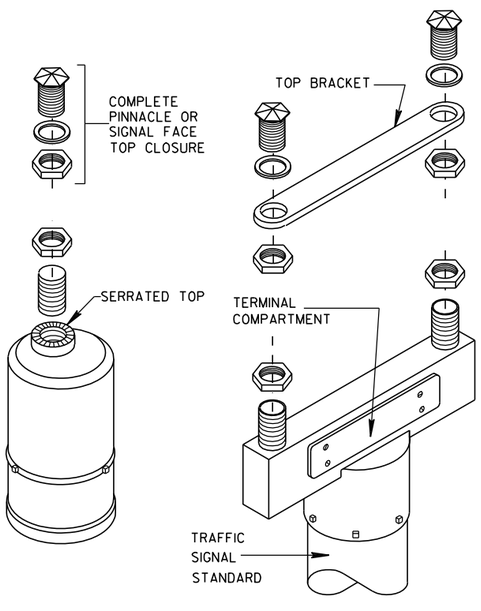

SINGLE
(OFFSET-SERRATED MOUNTING)

DOUBLE
(SERRATED MOUNTING)

SLIPFITTERS

TRAFFIC SIGNAL STANDARD PEDESTRIAN AND FLASHER TYPICAL MOUNTING DETAILS

STATE OF WISCONSIN
DEPARTMENT OF TRANSPORTATION

APPROVED

5/11/10 — DATE
/S/ John Corbin — STATE ELECTRICAL ENGI
284
HWYS
FHWA

6

6

S.D.D. 9 E 7-5

S.D.D. 9 E 7-5

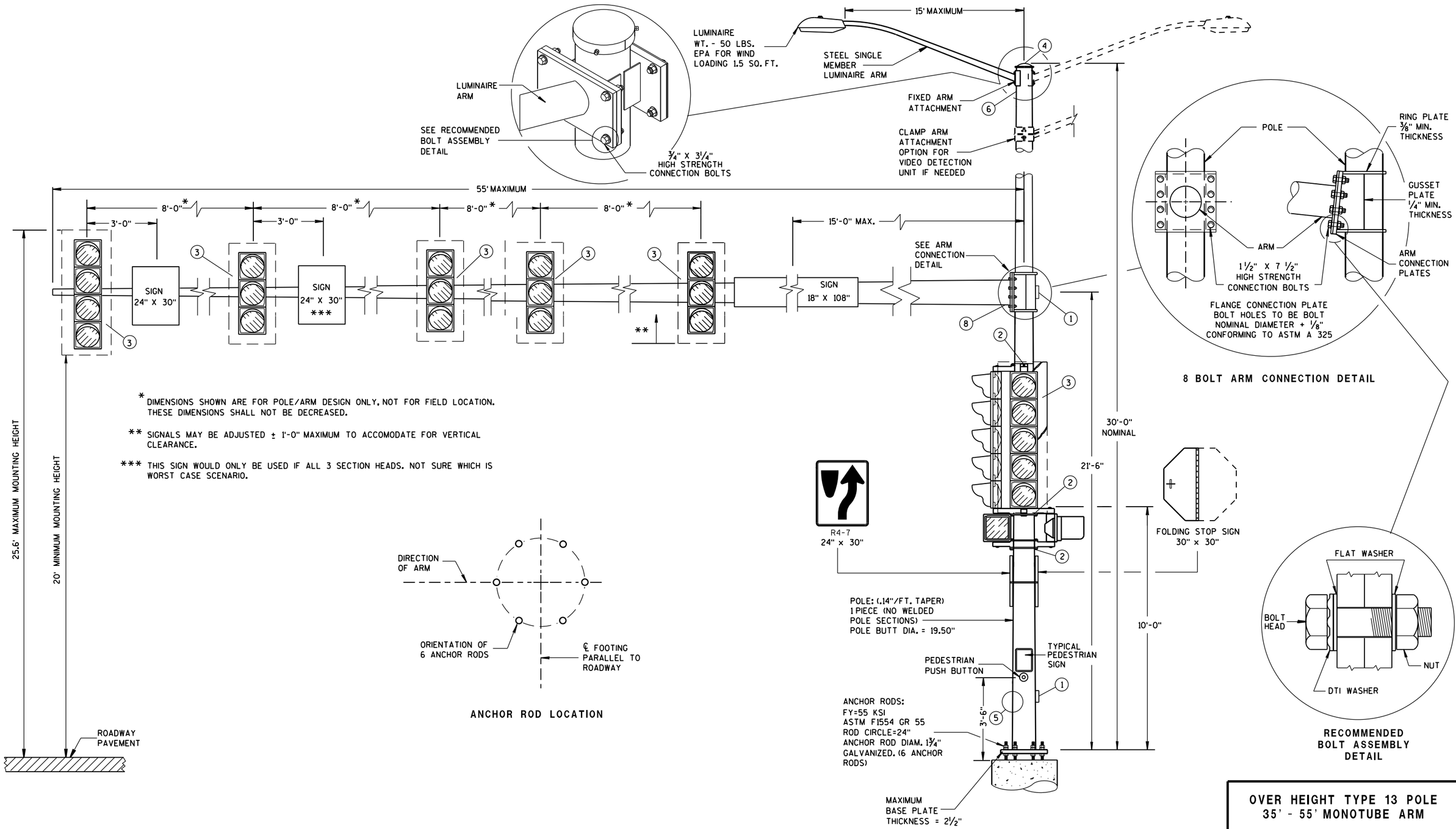

* DIMENSIONS SHOWN ARE FOR POLE/ARM DESIGN ONLY. NOT FOR FIELD LOCATION. THESE DIMENSIONS SHALL NOT BE DECREASED.

** SIGNALS MAY BE ADJUSTED ± 1'-0" MAXIMUM TO ACCOMODATE FOR VERTICAL CLEARANCE.

*** THIS SIGN WOULD ONLY BE USED IF ALL 3 SECTION HEADS. NOT SURE WHICH IS WORST CASE SCENARIO.

(MAXIMUM LOAD)

OVER HEIGHT TYPE 13 POLE 35'- 55' MONOTUBE ARM

OVER HEIGHT TYPE 13 POLE 35' - 55' MONOTUBE ARM
STATE OF WISCONSIN DEPARTMENT OF TRANSPORTATION
APPROVED May, 2017 DATE — /S/ Ahmet Demirbilek STATE ELECTRICAL — FHWA

GENERAL NOTES

DETAILS OF CONSTRUCTION, MATERIALS AND WORKMANSHIP NOT SHOWN ON THIS DRAWING SHALL CONFORM TO THE PERTINENT REQUIREMENTS OF THE CONTRACT.

OVER HEIGHT POLE TYPES 9 AND 10 ARE FOR ARM LENGTHS 15-FOOT TO 30-FOOT.

OVER HEIGHT POLE TYPES 12 AND 13 ARE FOR ARM LENGTHS 35-FOOT TO 55-FOOT.

MONOTUBE POLE AND ARM SHALL BE GALVANIZED STEEL.

RING-STIFFENED BUILT-UP BOX TYPE OF ATTACHMENT FOR TRAFFIC SIGNAL ARM.

ONE (1) PIECE POLE CONSTRUCTION (NO WELDED POLE SECTIONS).

STANDARD STRAIGHT ARM DESIGN (3 % ± RISE).

SECTION 657, POLES OF THE STANDARD SPECIFICATIONS SHALL APPLY TO THIS DRAWING.

PROVIDE WIREWAY THRU POLE WALL AND ARM CONNECTION PLATES. PROVIDE ROUND, SMOOTH INSIDE SURFACE.

MANUFACTURER'S SUBMITTED POLE DESIGNS AND DRAWINGS SHALL BE SIGNED AND STAMPED BY A REGISTERED PROFESSIONAL ENGINEER AND CERTIFIED AS BEING IN COMPLIANCE WITH THE AASHTO LRFD SPECIFICATIONS FOR STRUCTURAL SUPPORTS FOR HIGHWAY SIGNS, LUMINAIRES, AND TRAFFIC SIGNAL 2015 1ST EDITION (INCLUDING 2017 INTERIM REVISIONS) AND ALL PERTINENT WISDOT SPECIFICATIONS AND DRAWINGS FOR TRAFFIC AND LIGHTING STRUCTURES AND AS FOLLOWS:

- CATEGORY III FATIGUE LOADS OF GALLOPING, TRUCK GUSTS (AT 45 MPH VEHICLE VELOCITY) AND NATURAL WIND GUSTS FOR DESIGN OF TYPE 9 AND TYPE 10 STRUCTURES.
- CATEGORY II FATIGUE LOADS OF GALLOPING, TRUCK GUSTS (AT 45 MPH VEHICLE VELOCITY) AND NATURAL WIND GUSTS FOR DESIGN OF TYPE 12 AND TYPE 13 STRUCTURES.
- 90 MPH (3-SECOND GUST) WIND SPEED AND A 50 YEAR DESIGN LIFE.

SECURE THE OPENING BELOW THE BASE PLATE WITH STAINLESS STEEL OR GALVANIZED STEEL MESH AND SECURE THE MESH WITH 3/4" S.S. BANDING AROUND THE LEVELING NUTS.

INDENT PRINT (NOMINAL 1/2" HIGH) THE POLE LENGTH AND FIRST TWO LETTERS OF THE MANUFACTURERS NAME ON TWO SIDES OF THE BASE PLATE 180 DEGREES APART, BEFORE GALVANIZING. THE ARM SHALL BE IDENTIFIED WITH THE SAME INFORMATION BY INDENT PRINT.

SIGNAL FACE SHALL BE MOUNTED 6 INCHES (NOMINAL) FROM THE END OF THE MONOTUBE ARM OR AS SHOWN ON THE PLAN CONSTRUCTION DETAIL OR AS DIRECTED BY THE PROJECT ENGINEER/ELECTRICAL OPERATIONS PERSONNEL. MOUNT ALL LIKE HEADS AT SAME ELEVATION.

SIGN MOUNTING BRACKETS SHALL BE FURNISHED IN ACCORDANCE WITH SECTION 637 OF THE STANDARD SPECIFICATIONS FOR HIGHWAY AND STRUCTURE CONSTRUCTION.

6

(1) DESIGN FOR MAXIMUM ALLOWABLE HANDHOLE WITH COVER ASSEMBLY WITH TWO 1/4" X 3/4" - 20 TPI STAINLESS STEEL HEX HEAD BOLTS.

(2) SIGNAL MOUNTING BRACKETS FOR POLE MOUNTING, MOUNT WITH CAP SCREW AND BANDING, (SEE SPECIFICATIONS SEC. 658).

(3) SECURELY MOUNT BACKPLATES, PROJECTING 5" BEYOND ALL SIDES OF THE SIGNAL FACE HOUSING, PER MANUFACTURERS RECOMMENDATIONS.

(4) THE TOP OF THE POLE SHAFT AND THE END OF THE MONOTUBE ARM SHALL BE EQUIPPED WITH A REMOVABLE, VENTILATED CAP HELD SECURELY IN PLACE WITH SET SCREWS.

(5) FACTORY-WELDED BRACKET FOR GROUNDING LUG, OPPOSITE HANDHOLE, (LUG AND HARDWARE PAID UNDER SEPARATE ITEM). PROVIDE HOLE IN BRACKET FOR 1/4" X 3/4" - 20 TPI STAINLESS STEEL HEX HEAD BOLT.

(6) FACTORY-WELDED "J" HOOK FOR STRAIN RELIEF FOR POLE LUMINAIRE WIRE.

(7) INSTALL STRUCTURAL IDENTIFICATION PLAQUES.

STRUCTURAL IDENTIFICATION PLAQUES SHALL BE PLACED ON THE POLES IN THE SAME DIRECTION AS THE ARM.

MOUNTING HEIGHT SHALL BE 6'-0" ABOVE THE CURB OR SHOULDER. ADJUST IF IT IS KNOWN THAT REQUIRED TRAFFIC SIGNS WILL BE OBSTRUCTED.

(8) FACTORY DRILLED 1/2" DRAIN HOLE 2" FROM FLANGE CONNECTION PLATE.

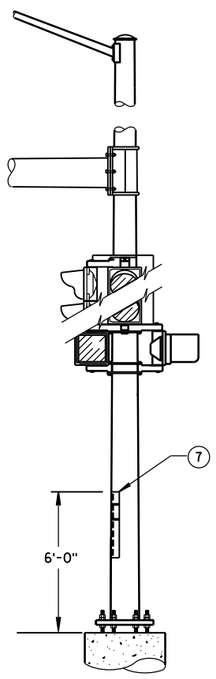

STRUCTURAL IDENTIFICATION PLAQUE PLACEMENT

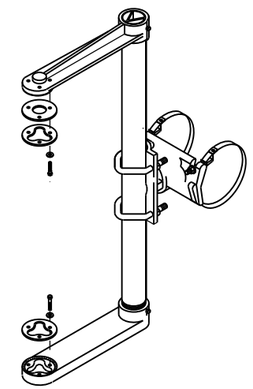

SIGNAL FACE MOUNTING BRACKET DETAIL FOR MONOTUBE ARM

(MOUNT PER MANUFACTURER'S RECOMMENDATION)

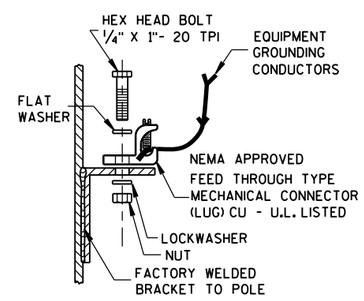

TYPICAL GROUNDING CONNECTIONS (5)

NUT, BOLT AND WASHERS SHALL BE STAINLESS STEEL

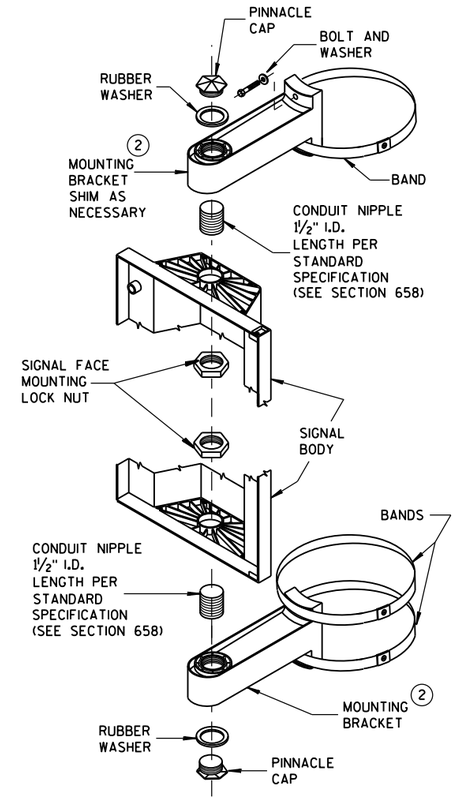

SIGNAL FACE VERTICAL MOUNTING DETAIL

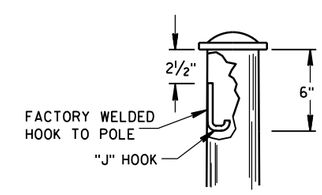

"J" HOOK WIRE SUPPORT (6)

6

GENERAL NOTES AND HARDWARE DETAILS FOR OVER HEIGHT TYPE 9, 10, 12 & 13 POLES WITH MONOTUBE ARMS	
STATE OF WISCONSIN DEPARTMENT OF TRANSPORTATION	
APPROVED May 2017 DATE	/S/ Ahmet Demirbilek STATE ELECTRICAL
FHWA	

S.D.D. 9 E 12-1e

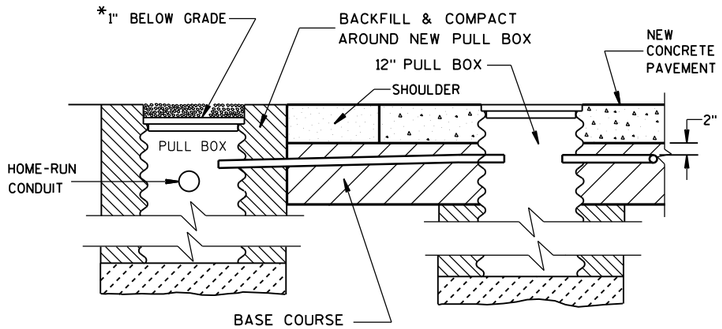

SECTION A-A

NO CURB & GUTTER

LOOP DETECTOR INSTALLATION DETAILS

*RECESS PULL BOX SO THAT THE COVER IS 3" BELOW GRADE IN SHOULDER AREAS OF CRUSHED AGGREGATE. BACKFILL OVER COVER WITH THE CRUSHED AGGREGATE TO BRING THE AREA TO GRADE LEVEL.

GENERAL NOTES

DETAILS OF CONSTRUCTION, MATERIALS AND WORKMANSHIP NOT SHOWN ON THIS DRAWING SHALL CONFORM TO THE PERTINENT REQUIREMENTS OF THE CONTRACT.

LOOP SIZE, LOCATION, NUMBER OF TURNS OF WIRE AND ASSOCIATED SIGNAL PHASE SHALL BE AS SHOWN ON THE PLANS.

PITCH LEAD OUT CONDUIT TO DRAIN TO ROADSIDE PULL BOX.

SPLICES SHALL BE INSTALLED BY USING CAST IN PLACE SPLICE KITS LISTED ON THE DEPARTMENTS APPROVED PRODUCTS LIST OR AN ENGINEER APPROVED EQUAL. NON-INSULATED BUTT SPLICES TO FIT #12 AWG STRANDED WIRE SHALL BE USED. SPLICES SHALL BE SOLDERED AND INSULATED FROM EACH OTHER AS PER INSTRUCTIONS INCLUDED IN THE SPLICE KIT.

MEASURE GROUND RESISTANCE USING A MEGGER. REPLACE LOOP WIRE NOT ATTAINING A READING OF INFINITY TO GROUND.

AFTER SPLICING THE LOOP WIRE TO THE LOOP LEAD-IN CABLE, THE CONTRACTOR SHALL MEASURE INDUCTANCE, GROUND RESISTANCE AND WIRE RESISTANCE AT THE CABINET END OF THE LEAD-IN CABLE AND FURNISH A COPY OF THE READINGS TO THE PROJECT ENGINEER FOR EVALUATION.

LOOP DETECTOR LEADS SHALL BE IDENTIFIED WITH THEIR ASSOCIATED LOOP BY USE OF WATERPROOF TAGS AT BOTH ENDS OF THE CABLE. A LISTING OF THE CABLE IDENTIFICATION PER INDIVIDUAL LOOP LEAD-IN SHALL BE PLACED IN THE CABINET.

THE #12 AWG LOOP WIRE FROM THE LOOP TO THE ROADSIDE PULL BOX, SHALL BE HAND TWISTED AT LEAST 3 TWISTS PER FOOT BEFORE INSTALLATION.

SPLICES OF LOOP WIRE TO LEAD-IN CABLE SHALL BE MADE ONLY IN PULL BOXES AT THE SIDE OF THE ROAD.

THE #12 AWG LOOP WIRE SHALL BE INSTALLED FROM THE ROADSIDE PULL BOX, THROUGH THE LOOP DUCT, BACK TO THE ROADSIDE PULL BOX, AND BE INSTALLED IN ONE, NON-SPLICED, CONTINUOUS LENGTH.

PROTECTION OF THE CONDUIT, CONDULET AND PULL BOX SHALL BE REQUIRED AFTER INSTALLATION AND BEFORE THE NEW CONCRETE PAVEMENT IS PLACED.

12" PULL BOXES IN PAVEMENT SHALL BE CORRUGATED STEEL ONLY.

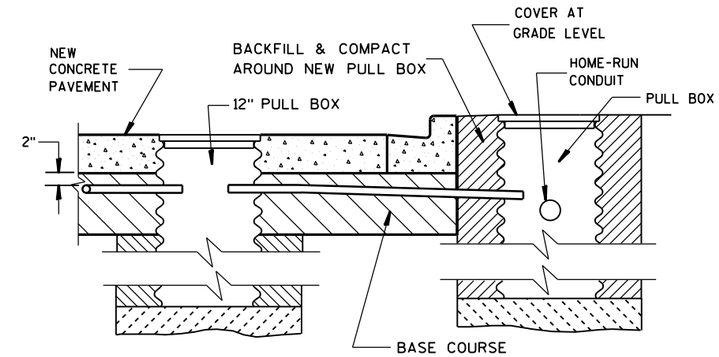

SECTION B-B

CURB & GUTTER

LOOP DETECTOR INSTALLATION DETAILS

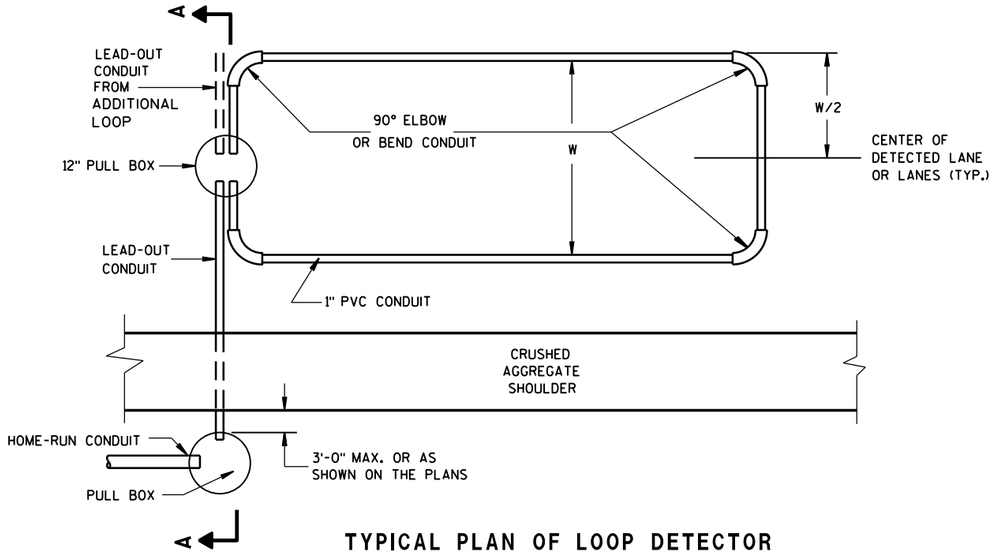

TYPICAL PLAN OF LOOP DETECTOR

WITH 12" PULLBOX

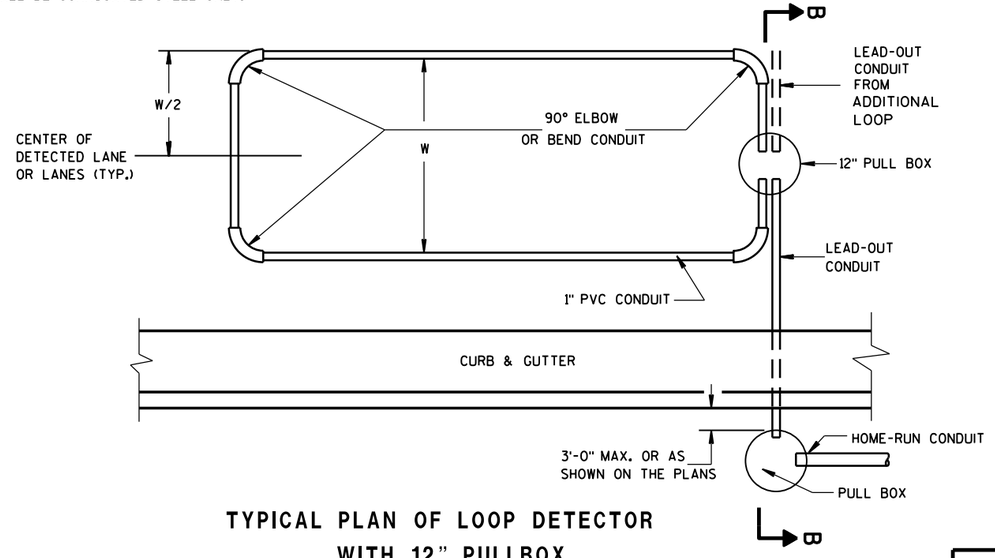

TYPICAL PLAN OF LOOP DETECTOR

WITH 12" PULLBOX

6

6

S.D.D. 9 F 9-4

S.D.D. 9 F 9-4

LOOP DETECTOR PLACED IN CRUSHED AGGREGATE BASE (NEW CONCRETE PAVEMENT)

STATE OF WISCONSIN
DEPARTMENT OF TRANSPORTATION

APPROVED

Sept. 2014 — DATE

/S/ Ahmet Demirbilek — STATE ELECTRICAL

FHWA

GENERAL NOTES

DETAILS OF CONSTRUCTION, MATERIALS AND WORKMANSHIP NOT SHOWN ON THIS DRAWING SHALL CONFORM TO THE PERTINENT REQUIREMENTS OF THE CONTRACT.

1. WOOD POLES SHALL BE CLASS 4. LENGTH DETERMINED BY SIGNAL PLAN.

2. SIGNAL FACES:
   A. ALL SECTIONS SHALL BE 12" AND POLYCARBONATE.
   B. EACH SHALL CONTAIN A 5" WIDE DULL BLACK POLYCARBONATE BACKPLATE.
   C. EACH SHALL BE WIRED FROM THE TOP SIGNAL MOUNTING BRACKET.
   D. NEAR RIGHT SIGNAL FACE SUSPENDED ON THE TETHER (NO BACKPLATE) SHALL NOT BE OVER THE TRAVELED WAY. IF THE POLE IS WITHIN 5 FEET OF THE TRAVELED WAY MOUNT THE SIGNAL FACE ON THE WOOD POLE WITH BACKPLATE.

3. SPAN WIRE:
   A. EACH SPAN WIRE SHALL BE INDIVIDUALLY DOWN GUYED.
   B. SIGNAL AND LIGHTING CABLES SHALL ONLY BE ATTACHED TO THE UPPER SPAN WIRE.
   C. THE SIGNAL ASSEMBY SHALL HAVE A 17' MIN. HEIGHT ABOVE THE ROADWAY. THIS SHALL BE MEASURED AFTER THE SPAN WIRE INSTALLATION IS COMPLETED WITH ALL CABLES AND SIGNAL FACES IN PLACE. MAINTAIN MINIMUM AND MAXIMUM HEIGHTS AS ROADWAY WORK PROGRESSES.

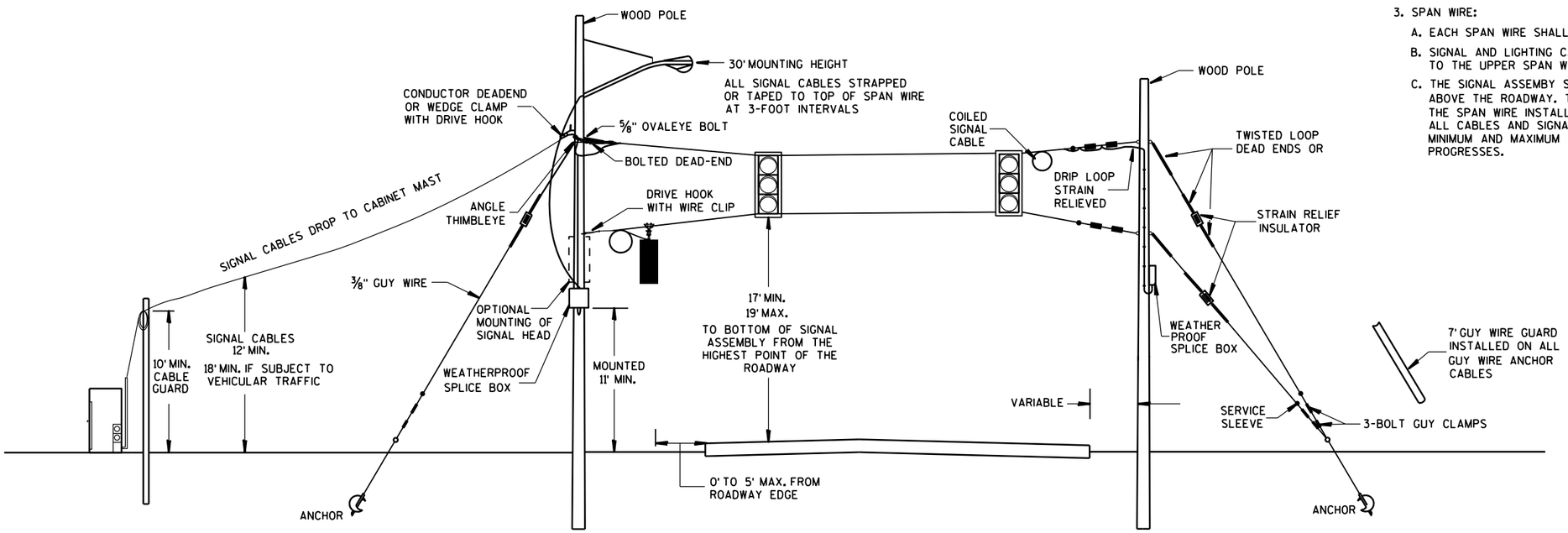

SPAN WIRE
TEMPORARY SIGNALS

MINIMUM POLE LENGTHS	POLE BURIEL DEPTHS
25'	5'
30'	6'
35'	7'
40'	8'
45'	9'

SPAN WIRE
TEMPORARY TRAFFIC SIGNAL

STATE OF WISCONSIN
DEPARTMENT OF TRANSPORTATION

APPROVED
June, 2015 — DATE
/S/ Ahmet Demirbilek — STATE ELECTRICAL
FHWA

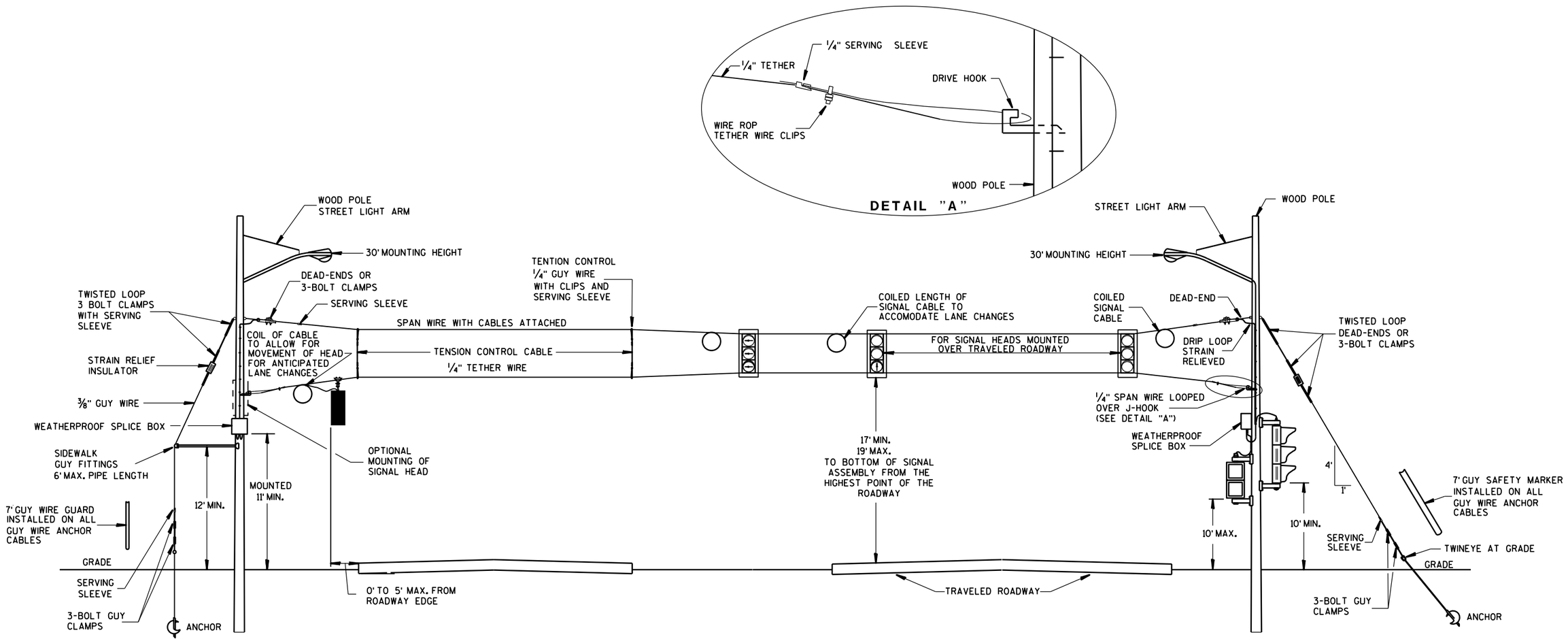

GENERAL NOTES

DETAILS OF CONSTRUCTION, MATERIALS AND WORKMANSHIP NOT SHOWN ON THIS DRAWING SHALL CONFORM TO THE PERTINENT REQUIREMENTS OF THE CONTRACT.

1. WOOD POLES SHALL BE CLASS 4. LENGTH DETERMINED BY SIGNAL PLAN.
2. SIGNAL FACES:
   - A. ALL SECTIONS SHALL BE 12" AND POLYCARBONATE.
   - B. EACH SHALL CONTAIN A 5" WIDE DULL BLACK POLYCARBONATE BACKPLATE.
   - C. EACH SHALL BE WIRED FROM THE TOP SIGNAL MOUNTING BRACKET.
   - D. NEAR RIGHT SIGNAL FACE SUSPENDED ON THE TETHER (NO BACKPLATE) SHALL NOT BE OVER THE TRAVELED WAY. IF THE POLE IS WITHIN 5 FEET OF THE TRAVELED WAY MOUNT THE SIGNAL FACE ON THE WOOD POLE WITH BACKPLATE.
   - E. FAR INDICATION SHALL BE MAINTAINED OVER CENTER OF TRAFFIC LANE.
3. SPAN WIRE:
   - A. EACH SPAN WIRE SHALL BE INDIVIDUALLY DOWN GUYED.
   - B. SIGNAL AND LIGHTING CABLES SHALL ONLY BE ATTACHED TO THE UPPER SPAN WIRE.
   - C. THE SIGNAL ASSEMBY SHALL HAVE A 17' MIN. HEIGHT ABOVE THE ROADWAY. THIS SHALL BE MEASURED AFTER THE SPAN WIRE INSTALLATION IS COMPLETED WITH ALL CABLES AND SIGNAL FACES IN PLACE. MAINTAIN MINIMUM AND MAXIMUM HEIGHTS AS ROADWAY WORK PROGRESSES.

SPAN WIRE
TEMPORARY SIGNALS
4 LANE ROADWAYS

MINIMUM POLE LENGTHS	CLASS	MIN. BURIAL DEPTHS
25'	V	5'
30'	V	6'
35'	IV	7'
40'	IV	8'
45'	IV	9'

SPAN WIRE
TEMPORARY TRAFFIC SIGNAL

STATE OF WISCONSIN
DEPARTMENT OF TRANSPORTATION

APPROVED
June, 2015 — DATE
/S/ Ahmet Demirbilek — STATE ELECTRICAL
FHWA

6

S.D.D. 9 G 1-4b

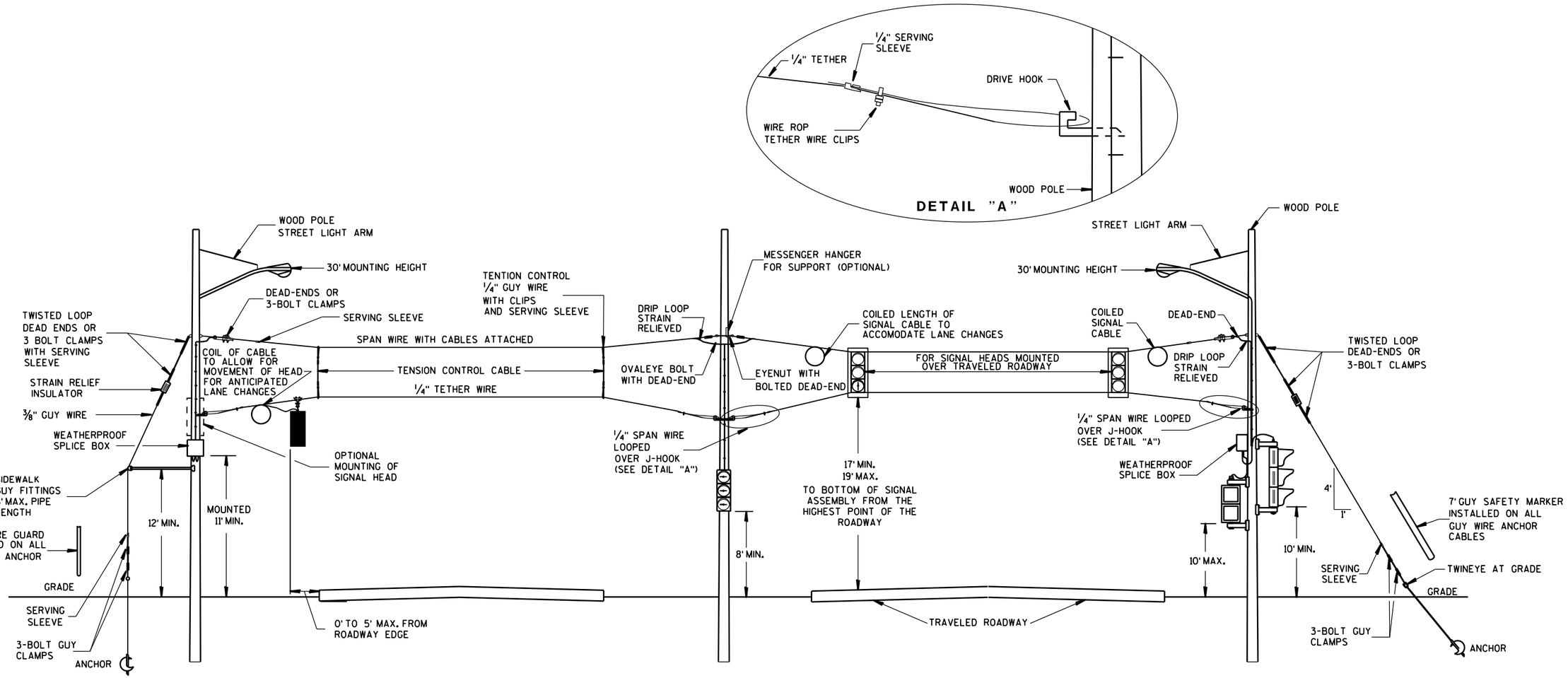

SPAN WIRE
TEMPORARY SIGNALS
4 LANE ROADWAYS

GENERAL NOTES

DETAILS OF CONSTRUCTION, MATERIALS AND WORKMANSHIP NOT SHOWN ON THIS DRAWING SHALL CONFORM TO THE PERTINENT REQUIREMENTS OF THE CONTRACT.

1. WOOD POLES SHALL BE CLASS 4. LENGTH DETERMINED BY SIGNAL PLAN.

2. SIGNAL FACES:
   A. ALL SECTIONS SHALL BE 12" AND POLYCARBONATE.
   B. EACH SHALL CONTAIN A 5" WIDE DULL BLACK POLYCARBONATE BACKPLATE.
   C. EACH SHALL BE WIRED FROM THE TOP SIGNAL MOUNTING BRACKET.
   D. NEAR RIGHT SIGNAL FACE SUSPENDED ON THE TETHER (NO BACKPLATE) SHALL NOT BE OVER THE TRAVELED WAY. IF THE POLE IS WITHIN 5 FEET OF THE TRAVELED WAY MOUNT THE SIGNAL FACE ON THE WOOD POLE WITH BACKPLATE.
   E. FAR INDICATION SHALL BE MAINTAINED OVER CENTER OF TRAFFIC LANE.

3. SPAN WIRE:
   A. EACH SPAN WIRE SHALL BE INDIVIDUALLY DOWN GUYED.
   B. SIGNAL AND LIGHTING CABLES SHALL ONLY BE ATTACHED TO THE UPPER SPAN WIRE.
   C. THE SIGNAL ASSEMBY SHALL HAVE A 17' MIN. HEIGHT ABOVE THE ROADWAY. THIS SHALL BE MEASURED AFTER THE SPAN WIRE INSTALLATION IS COMPLETED WITH ALL CABLES AND SIGNAL FACES IN PLACE. MAINTAIN MINIMUM AND MAXIMUM HEIGHTS AS ROADWAY WORK PROGRESSES.

MINIMUM POLE LENGTHS	CLASS	MIN. BURIAL DEPTHS
25'	V	5'
30'	V	6'
35'	IV	7'
40'	IV	8'
45'	IV	9'

SPAN WIRE
TEMPORARY TRAFFIC SIGNAL

STATE OF WISCONSIN
DEPARTMENT OF TRANSPORTATION

APPROVED
June, 2015 — DATE
/S/ Ahmet Demirbilek — STATE ELECTRICAL
FHWA

6

S.D.D. 9 G 1-4c

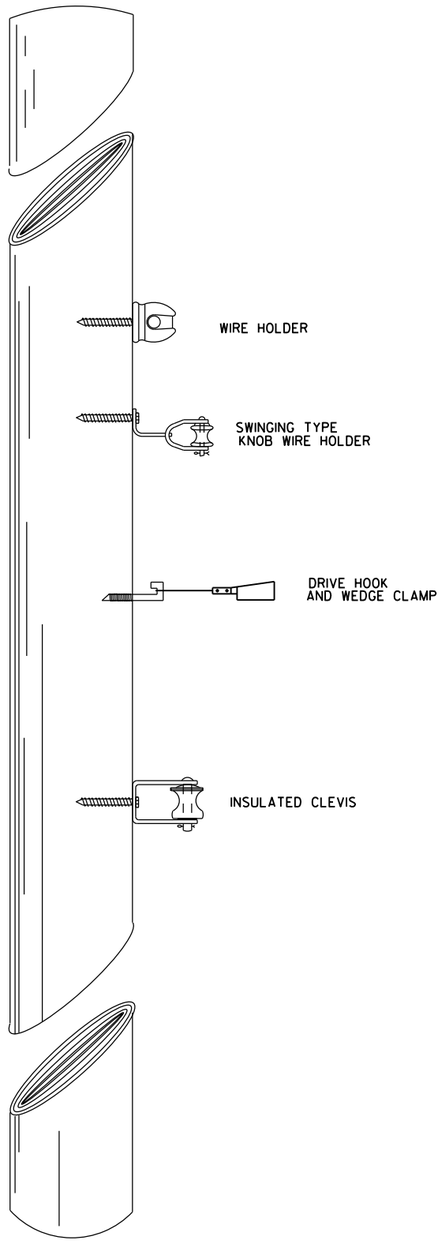

TYPICAL CABLE HANGERS

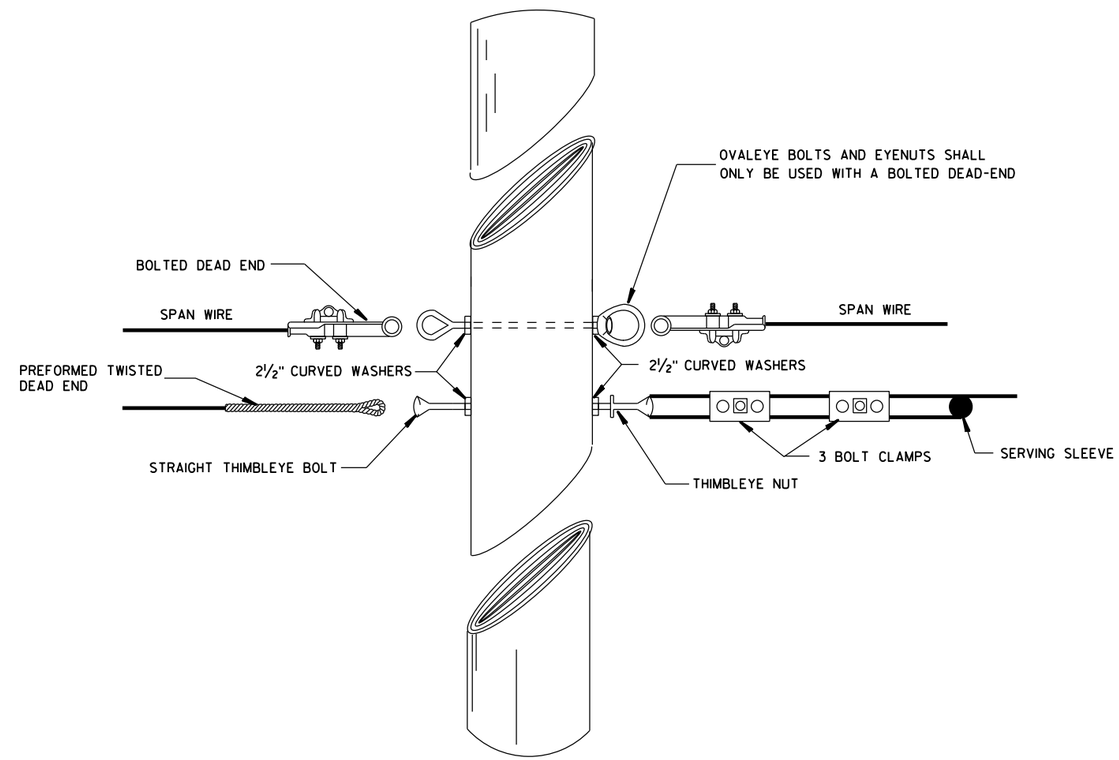

TYPICAL DEAD-ENDING

6

6

SPAN WIRE
TEMPORARY TRAFFIC SIGNAL

STATE OF WISCONSIN
DEPARTMENT OF TRANSPORTATION

APPROVED
June, 2015 — DATE
/S/ Ahmet Demirbilek — STATE ELECTRICAL
FHWA

S.D.D. 9 G 1-4d

S.D.D. 9 G 1-4d

GENERAL NOTES

1. USE ¾" DRILL IN WOOD POLE TO PROVIDE HOLE FOR ⅝" BOLTS.
2. SAFTY LOOP REQUIRED ON EACH END OF ALL SPAN WIRES.

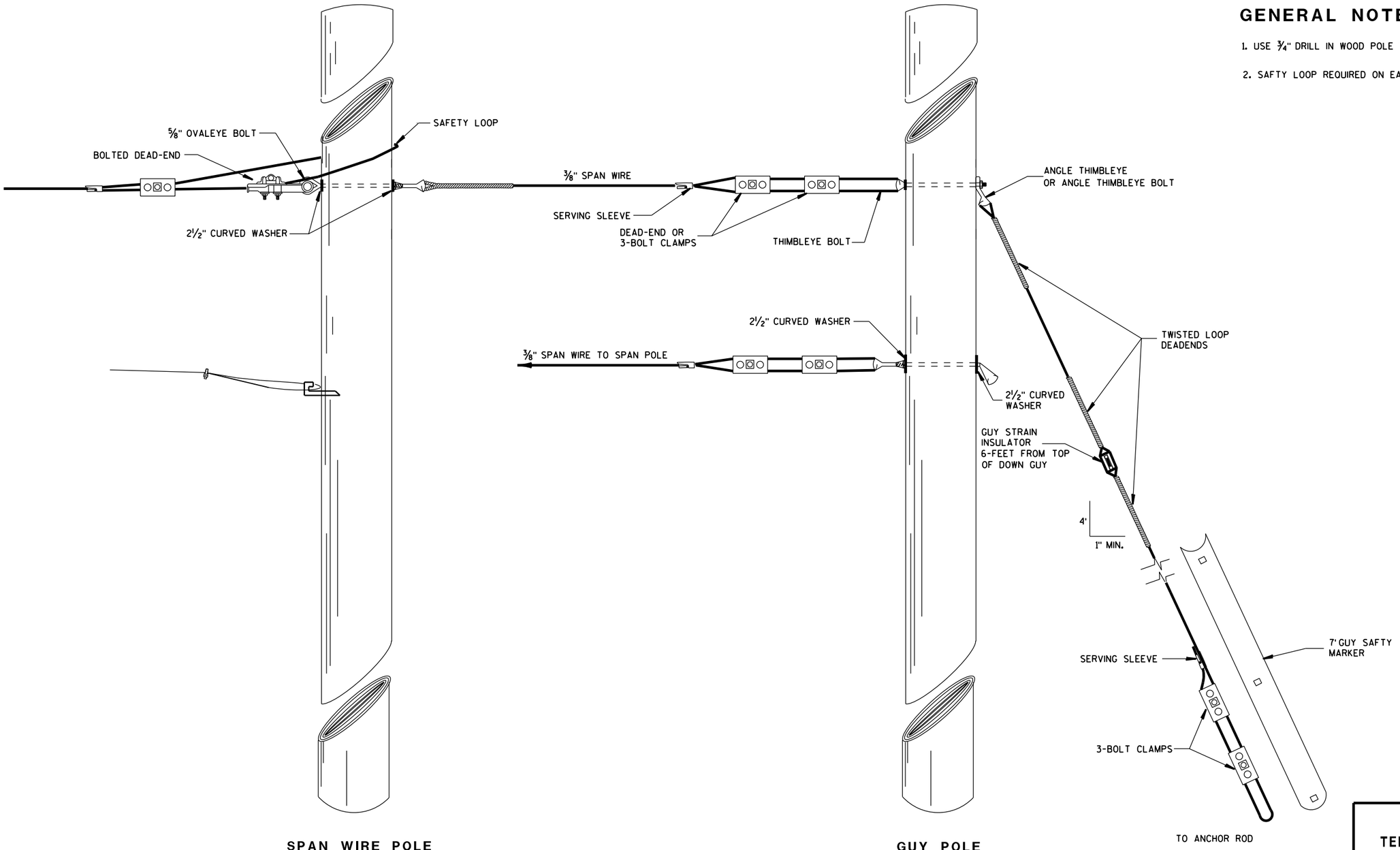

SPAN WIRE POLE

GUY POLE

TYPICAL DEAD-ENDINGS OR GUYING

SPAN WIRE TEMPORARY TRAFFIC SIGNAL
STATE OF WISCONSIN DEPARTMENT OF TRANSPORTATION
APPROVED June, 2015 — DATE /S/ Ahmet Demirbilek — STATE ELECTRICAL FHWA

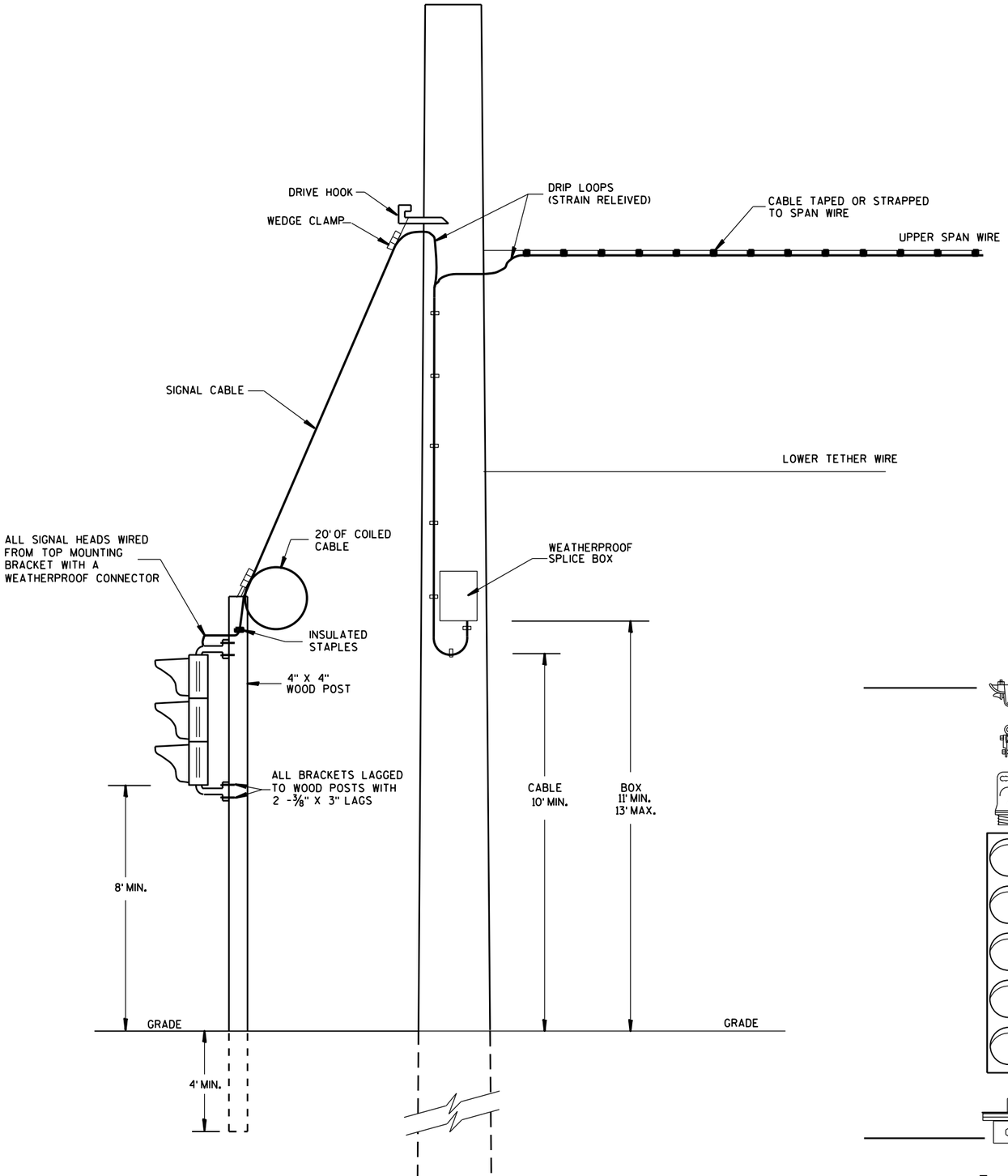

TYPICAL DROP TO TEMPORARY MOVEABLE SIGNAL

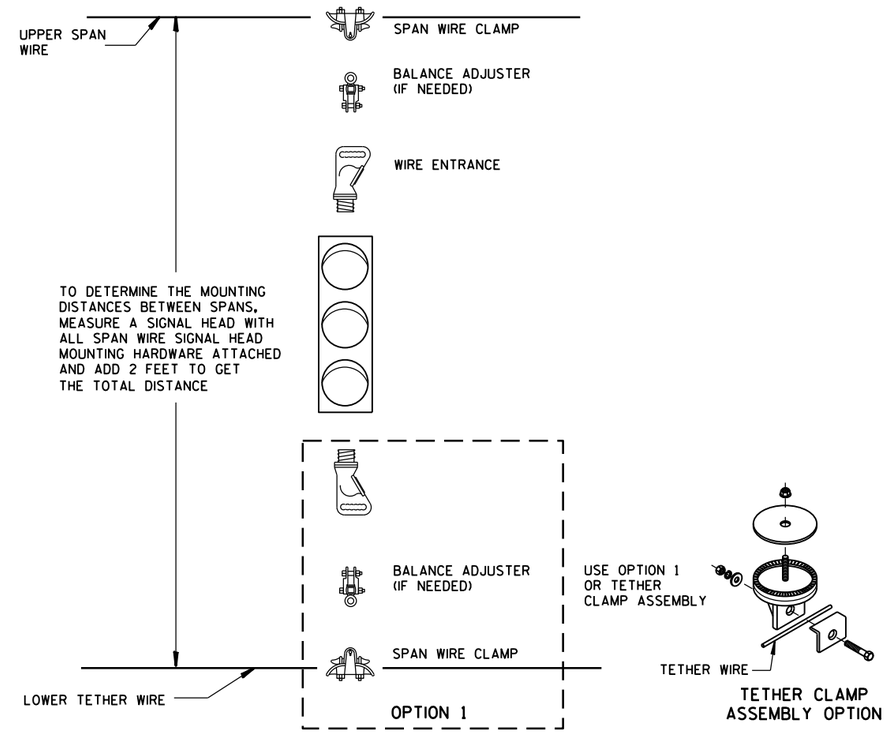

TYPICAL SPAN WIRE MOUNTING HARDWARE

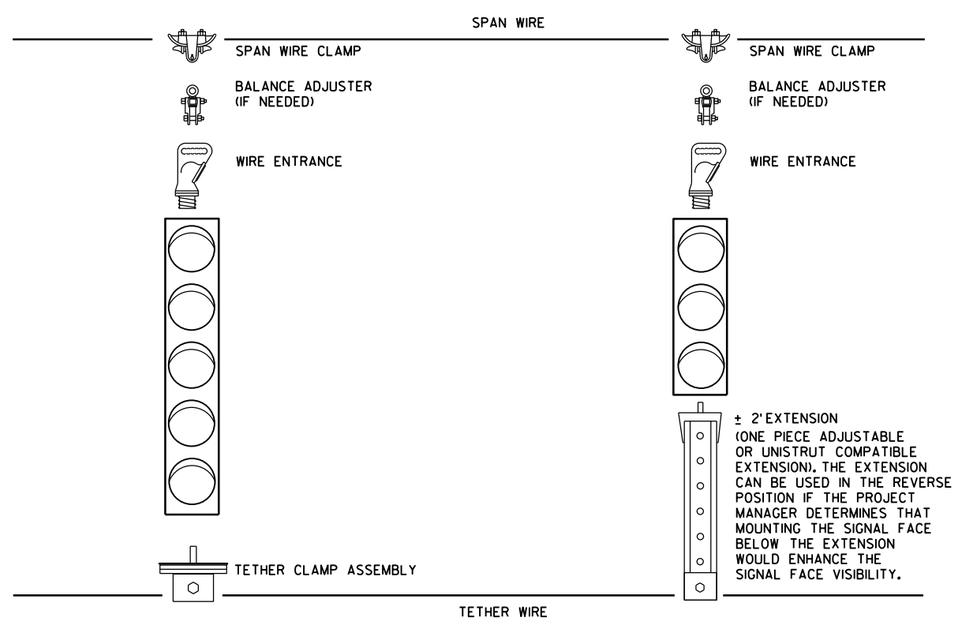

5 SECTION VERTICAL WITH 3 SECTION
VERTICAL ON ONE SPAN WIRE

SPAN WIRE
TEMPORARY TRAFFIC SIGNAL

STATE OF WISCONSIN
DEPARTMENT OF TRANSPORTATION

APPROVED
June, 2015 — DATE
/S/ Ahmet Demirbilek — STATE ELECTRICAL
FHWA

6

6

S.D.D. 9 G 1-4f

S.D.D. 9 G 1-4f

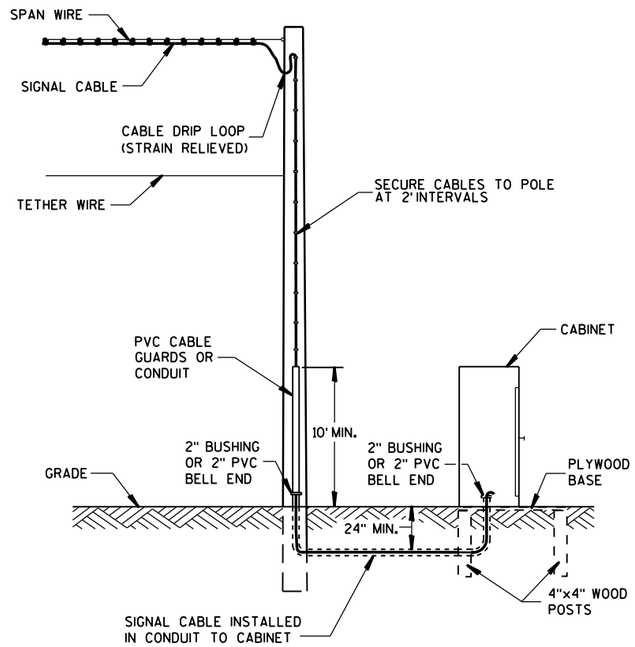

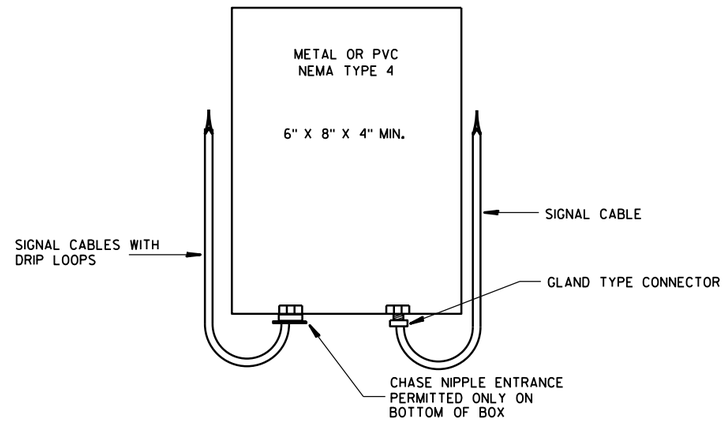

SPLICE BOX

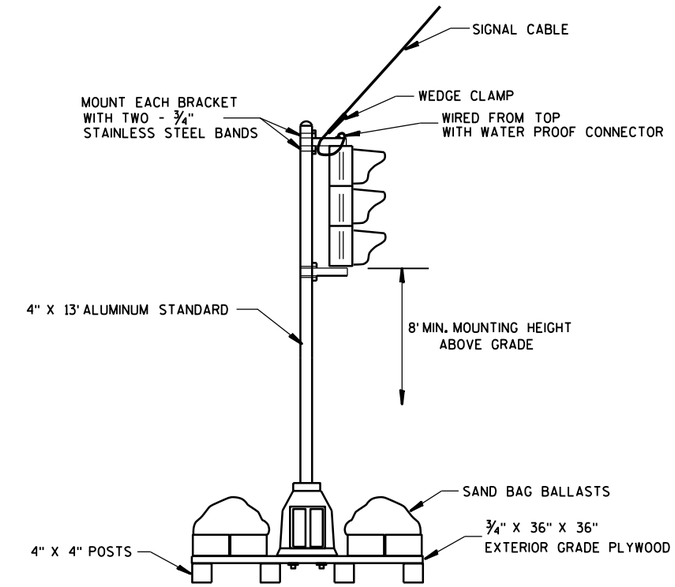

TYPICAL SKID TYPE TEMPORARY

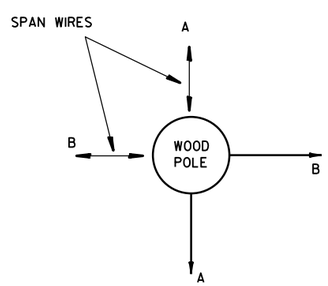

ALL DOWN OR SIDEWALK GUYS SHALL BE INSTALLED IN THE OPPOSITE DIRECTION OF THE STRAIN OF THE SPAN WIRE

CORNER POLES

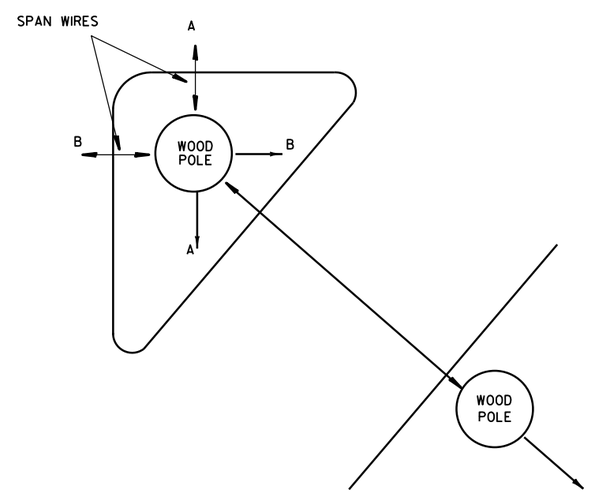

ISLAND POLES

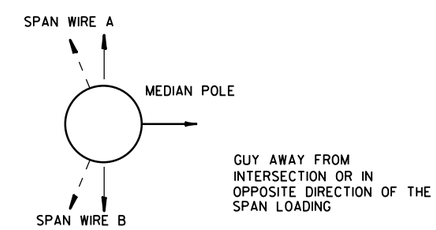

MEDIAN POLES

SPAN WIRE
TEMPORARY TRAFFIC SIGNAL

STATE OF WISCONSIN
DEPARTMENT OF TRANSPORTATION

APPROVED
June, 2015 — /S/ Ahmet Demirbilek
DATE — STATE ELECTRICAL
FHWA

6

6

S.D.D. 9 G 1-4g

S.D.D. 9 G 1-4g

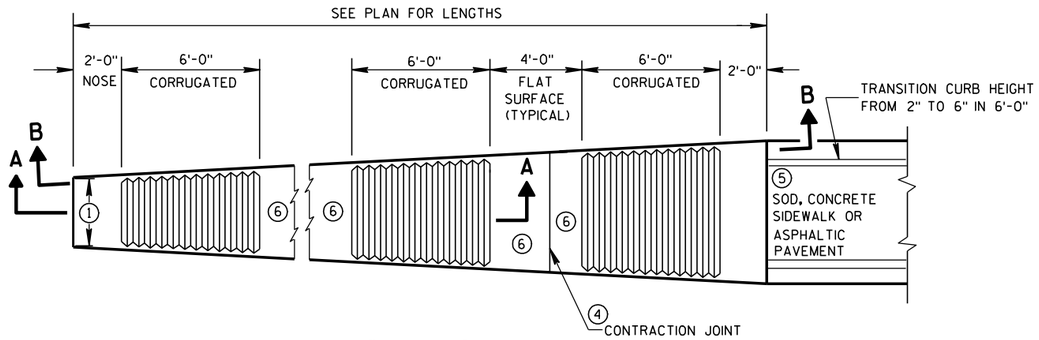

PLAN VIEW

VARIABLE WIDTH CONCRETE CORRUGATED MEDIAN

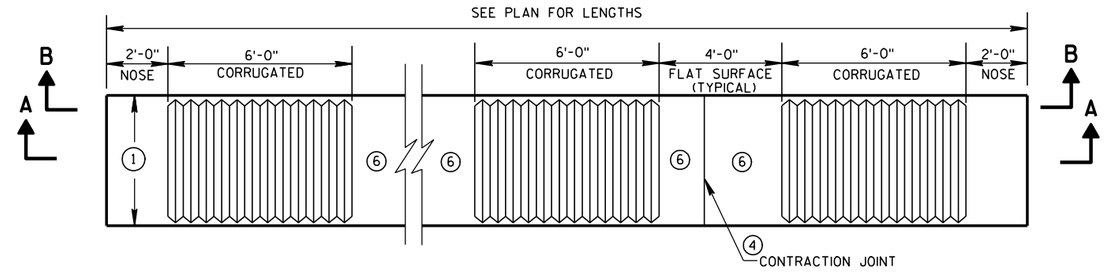

PLAN VIEW

UNIFORM WIDTH CONCRETE CORRUGATED MEDIAN

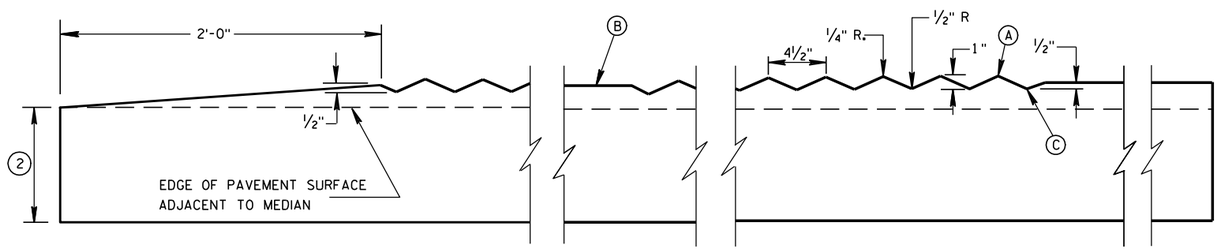

SECTION A-A

LONGITUDINAL SECTION

GENERAL NOTES

1. SEE PLANS FOR CONSTANT OR VARIABLE WIDTH.
2. THE DEPTH OF THE CONCRETE CORRUGATED MEDIAN SHALL BE 9-INCHES UNLESS SHOWN OTHERWISE IN THE PLAN.
   ADJACENT PAVEMENT STRUCTURE DETAILS ARE SHOWN IN THE PLAN. TYPICAL OPTIONS ARE:
   (1) NEW OR EXISTING CONCRETE PAVEMENT.
   (2) ASPHALTIC CONCRETE OVER NEW OR EXISTING CONCRETE BASE COURSE, OR PAVEMENT.
   (3) ASPHALTIC PAVEMENT OVER BASE AGGREGATE DENSE.
3. TIE BARS OR PAVEMENT TIES REQUIRED IN NEW CONCRETE PAVEMENT OR CONCRETE BASE COURSE. TIE BARS SHALL BE NO. 4 X 2'-0" SPACED AT 2'-0" C-C.
   INSTALL TIE BARS TO MAINTAIN A MINIMUM OF 3-INCHES OF COVER BETWEEN THE TIE BAR AND THE CONCRETE SURFACE (BOTTOM AND TOP).
   PAVEMENT TIES REQUIRED IN EXISTING CONCRETE PAVEMENT OR CONCRETE BASE COURSE, PAVEMENT TIES SHALL BE NO. 6 X 1'-0" SPACED AT 3'-0" C-C INSTALLED ON A HORIZONTAL SKEW OF 6:1. THE DIRECTION OF SKEW SHALL ALTERNATE AFTER EVERY ONE OR TWO BARS.
4. CONCRETE CORRUGATED MEDIAN CONTRACTION JOINTS SHALL BE CONSTRUCTED TO MATCH THE JOINTS IN ADJACENT CONCRETE PAVEMENT. WHERE ADJACENT PAVEMENT IS ASPHALT WITH BASE AGGREGATE DENSE. TRANSVERSE CONTRACTION JOINTS SHALL BE PROVIDED AT 20 FOOT INTERVALS.
5. SURFACE TYPE AND DETAILS ARE DEFINED ELSEWHERE IN THE PLAN.
6. YELLOW MARKING ON FLAT SURFACE WHEN MEDIAN SEPARATES OPPOSING TRAFFIC.

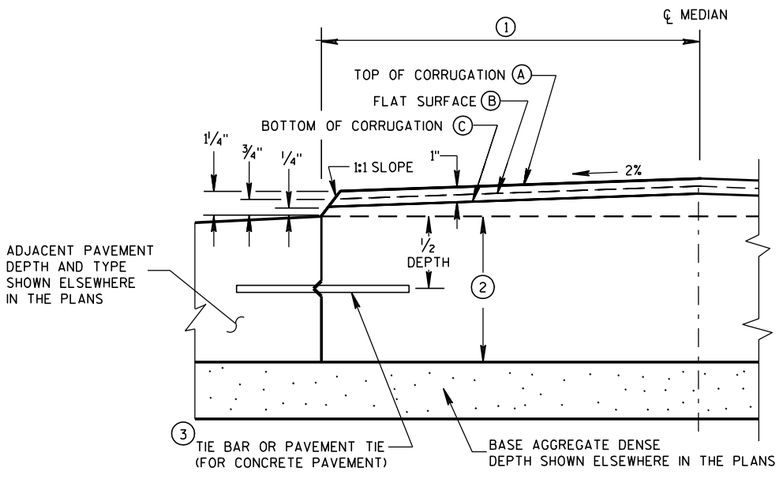

HALF CROSS SECTION

CONCRETE CORRUGATED MEDIAN AND ADJACENT PAVEMENT

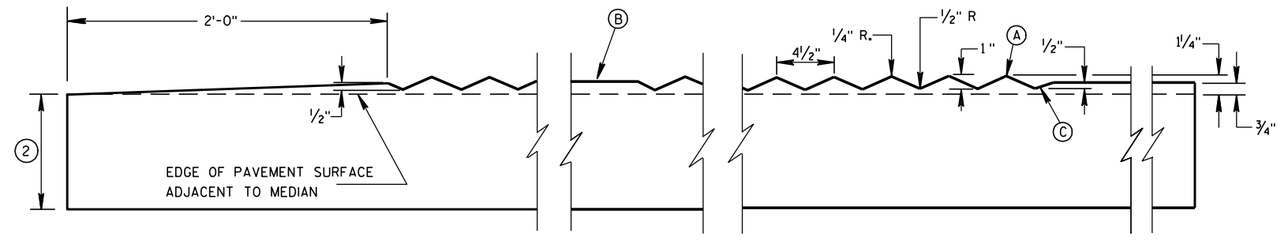

SECTION B-B

LONGITUDINAL SECTION

CONCRETE CORRUGATED MEDIAN	
STATE OF WISCONSIN DEPARTMENT OF TRANSPORTATION	
APPROVED	
12/17/07 DATE	/S/ Jerry H. Zogg ROADWAY STANDARDS DEVELOPMENT ENGINEER
FHWA	

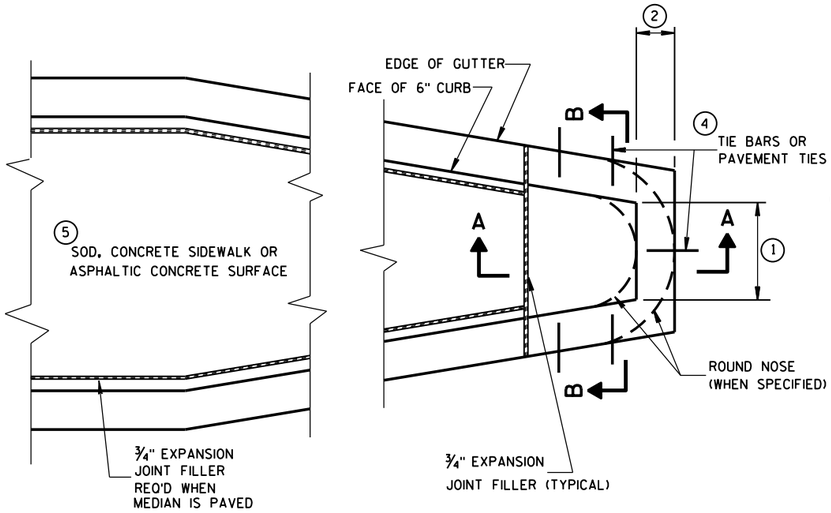

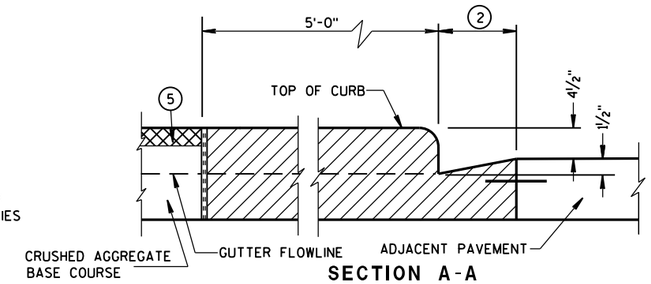

SECTION A-A

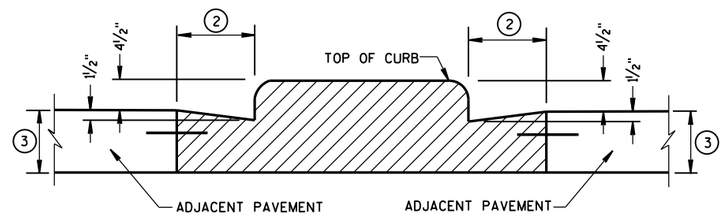

SECTION B-B

CONCRETE MEDIAN BLUNT NOSE DETAIL

GENERAL NOTES

DETAILS OF CONSTRUCTION, MATERIALS AND WORKMANSHIP NOT SHOWN ON THIS DRAWING SHALL CONFORM TO THE PERTINENT REQUIREMENTS OF THE STANDARD SPECIFICATIONS AND THE APPLICABLE SPECIAL PROVISIONS.

1. SEE PLAN FOR MEDIAN NOSE WIDTH AND RADIUS (FOR ROUND NOSE ALTERNATE).
2. WIDTH OF GUTTER TO MATCH EXISTING ADJACENT GUTTER OR AS SPECIFIED ELSEWHERE IN THE PLAN.
3. DEPTH EQUAL TO ADJACENT PAVEMENT. ADJACENT PAVEMENT STRUCTURE DETAILS ARE SHOWN ON THE PLAN. TYPICAL OPTIONS ARE:
   (1) NEW OR EXISTING CONCRETE PAVEMENT.
   (2) ASPHALTIC CONCRETE PAVEMENT OVER NEW OR EXISTING CONCRETE BASE COURSE.
   (3) ASPHALTIC CONCRETE PAVEMENT OVER CRUSHED AGGREGATE BASE COURSE.
4. TIE BARS OR PAVEMENT TIES REQUIRED IN NEW CONCRETE PAVEMENT OR CONCRETE BASE COURSE. TIE BARS SHALL BE NO. 4 X 2'-0" SPACED AT 2'-0" C-C.

   PAVEMENT TIES REQUIRED IN EXISTING CONCRETE BASE COURSE. PAVEMENT TIES SHALL BE NO. 6 X 1'-0" SPACED AT 3'-0" C-C INSTALLED ON A HORIZONTAL SKEW OF 6:1. THE DIRECTION OF SKEW SHALL ALTERNATE AFTER EVERY ONE OR TWO BARS.
5. SURFACE TYPE AND DETAILS ARE SHOWN ELSEWHERE IN THE PLAN.

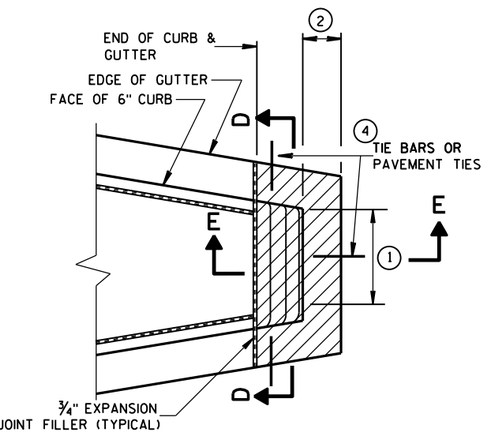

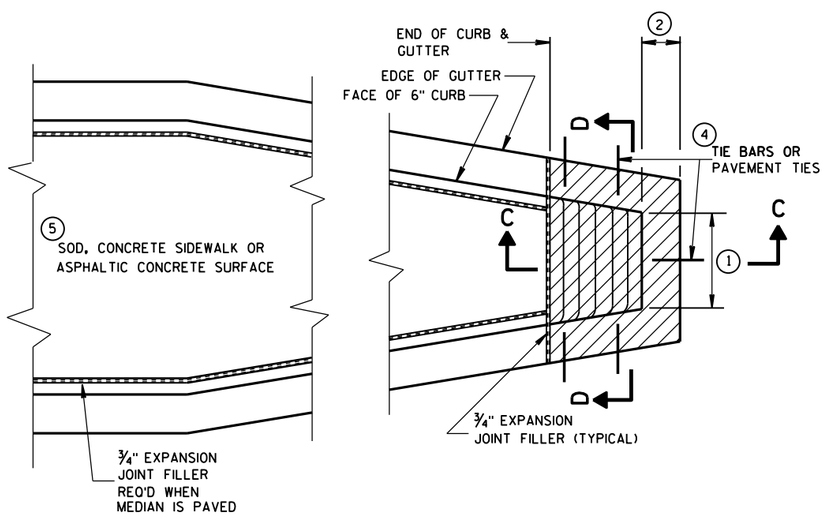

CONCRETE MEDIAN SLOPED NOSE TYPE 1

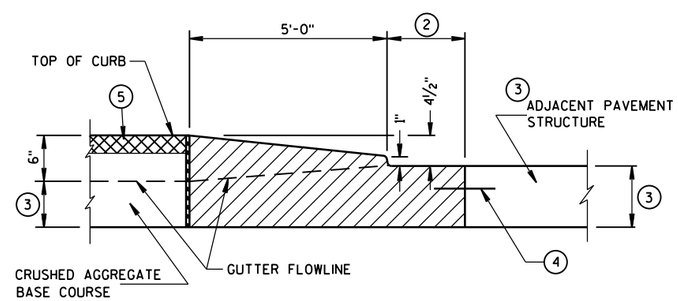

SECTION C-C

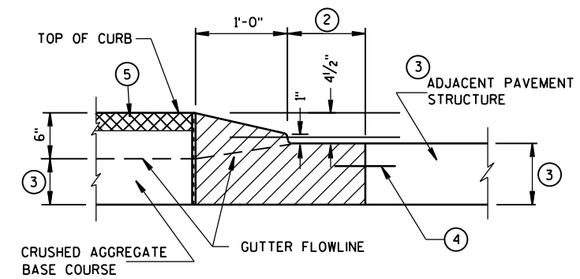

SECTION E-E

CONCRETE MEDIAN SLOPED NOSE TYPE 2

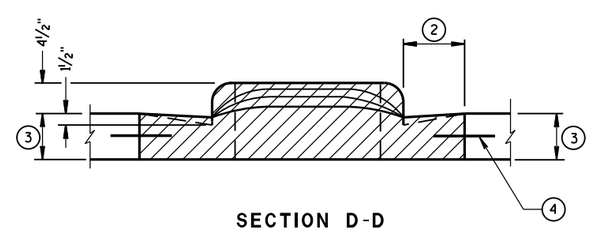

SECTION D-D

CONCRETE MEDIAN NOSE	
STATE OF WISCONSIN DEPARTMENT OF TRANSPORTATION	
APPROVED 6/8/2006 DATE	/S/ Jerry H. Zogg ROADWAY STANDARDS DEVELOPMENT ENGINEER
FHWA	

*(RS) = REINFORCED CONCRETE SLAB
*(PS) = PAVED CONCRETE SHOULDER OR CONCRETE DRAINAGE SLAB (SEE DETAILS ELSEWHERE IN THE PLAN)
*(NRS) = NON-REINFORCED CONCRETE SLAB

***STANDARD DOWEL BAR DIAMETER (SEE SDD 13C11, & SDD 13C13)

Ⓐ STANDARD CONTRACTION JOINT NORMAL TO ℄ OR ℄

Ⓑ STANDARD LONGITUDINAL JOINT WITH TIE BARS.

Ⓒ 1½" EXPANSION JOINT WITH DOWEL BARS NORMAL TO ℄ OR ℄

GENERAL NOTES

THE CONTRACTOR MAY SPLICE NO. 6 BARS IN THE APPROACH SLAB FOR SKEWED STRUCTURES ONLY. STAGGER SPLICES WITH A MAXIMUM OF ONE SPLICE PER BAR. THE LENGTH OF LAP IS 20 INCHES.

TACK WELD DOWEL BARS TO THE BASKETS ON ALTERNATE ENDS.

① THE CONTRACTOR MAY USE NO. 4 BARS SPACED AT 2'-0" C-C IN BOTH THE LONGITUDINAL AND TRANSVERSE DIRECTIONS FOR TOP REINFORCEMENT AS AN ALTERNATIVE TO THE WELDED WIRE FABRIC.

② THE CONTRACTOR MAY OMIT TIE BARS BETWEEN REINFORCED SLABS WHERE SLAB REINFORCEMENT BARS EXTEND ACROSS THE CENTERLINE OR REFERENCE LINE.

③ DO NOT CONSTRUCT AN EXPANSION JOINT OR INSTALL DOWEL BARS WHEN ABUTTING AN HMA PAVEMENT.

④ USE A JOINT SEALANT MEETING THE REQUIREMENTS OF ASTM D6690.

⑤ PLACE EXPANSION CAP ON THE END OF THE DOWEL THAT IS NOT TACK WELDED TO THE BASKET. DO NOT FORCE DOWEL BAR PAST THE DOWEL STOP.

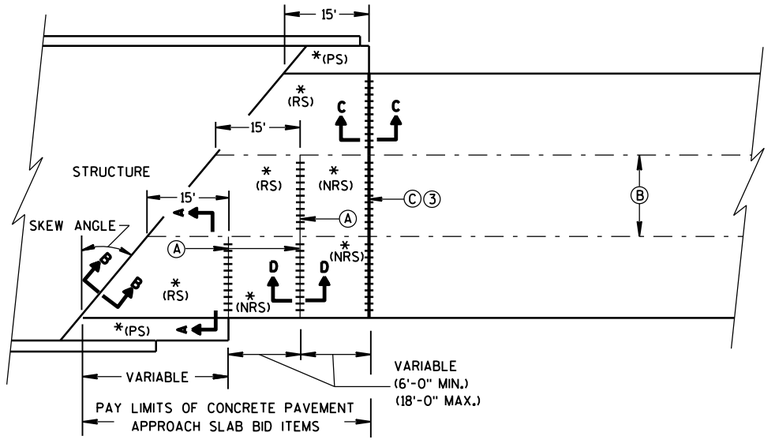

SKEWED APPROACH
(PAVEMENT MORE THAN 2 LANES)

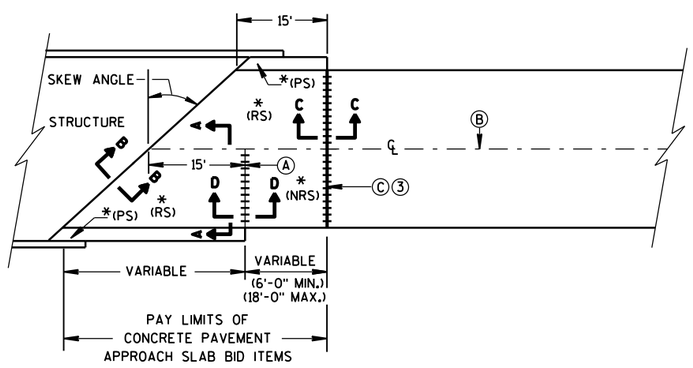

SKEWS >20°
(PAVEMENT WIDTH ≤30')

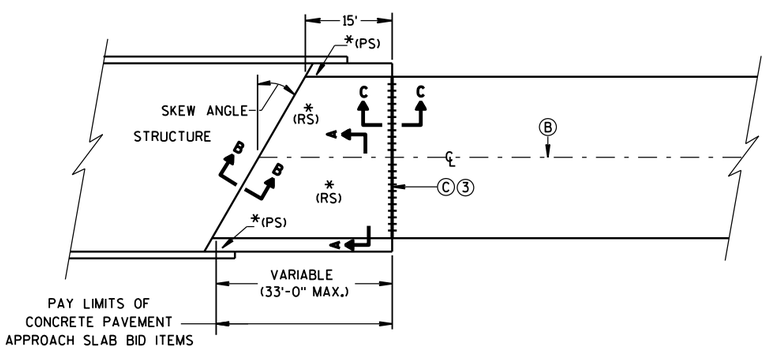

SKEWS ≤20°
(PAVEMENT WIDTH ≤30')

APPROACH SLAB AND ADJACENT PAVEMENT

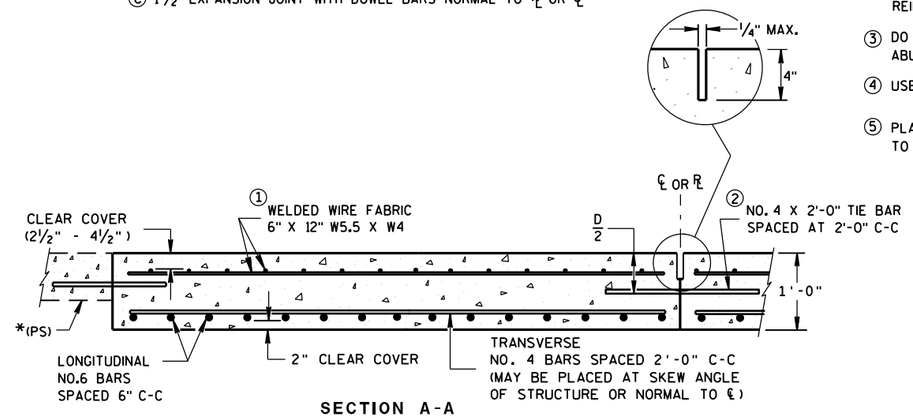

SECTION A-A
REINFORCEMENT POSITIONING DETAIL

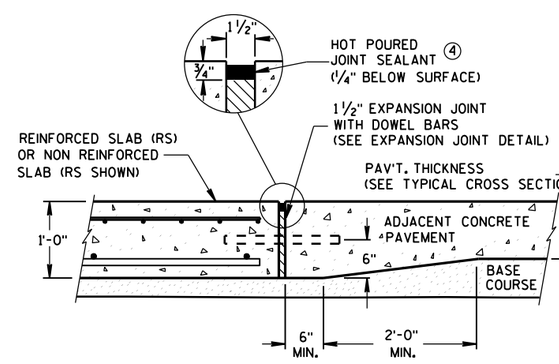

SECTION C-C
TRANSITION DETAIL
APPROACH SLAB TO ADJACENT PAVEMENT

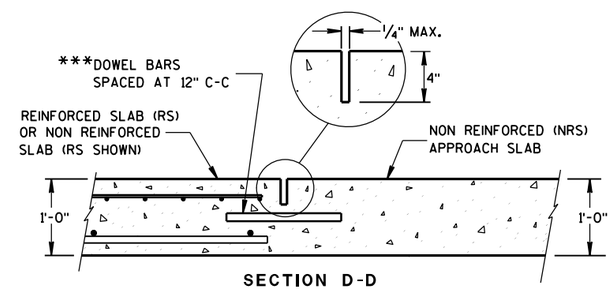

SECTION D-D
CONTRACTION JOINT

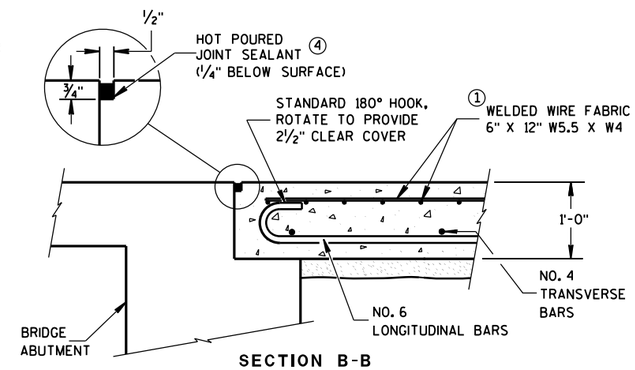

SECTION B-B
BEND DETAIL
BOTTOM REINFORCEMENT

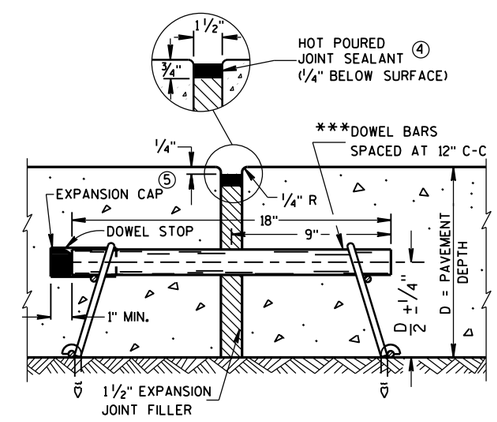

EXPANSION JOINT DETAIL

CONCRETE PAVEMENT APPROACH SLAB	
STATE OF WISCONSIN DEPARTMENT OF TRANSPORTATION	
APPROVED June, 2015 DATE	/S/ Peter Kemp, P.E. PAVEMENT SUPER
FHWA	

6

6

S.D.D. 13 B 2-8a

S.D.D. 13 B 2-8a

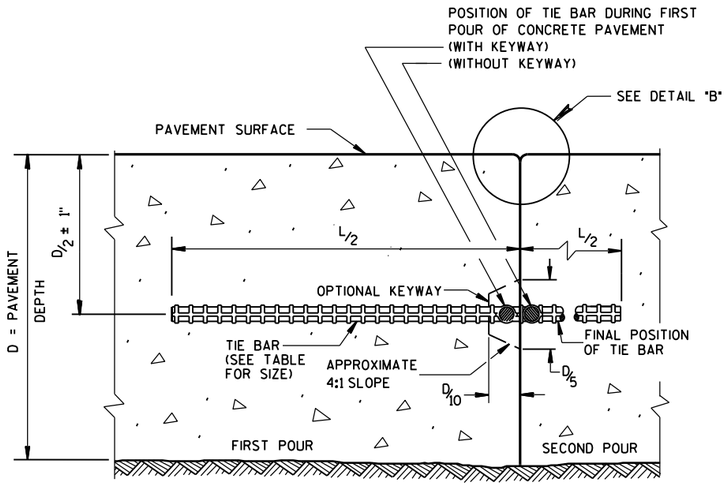

CONSTRUCTION JOINT

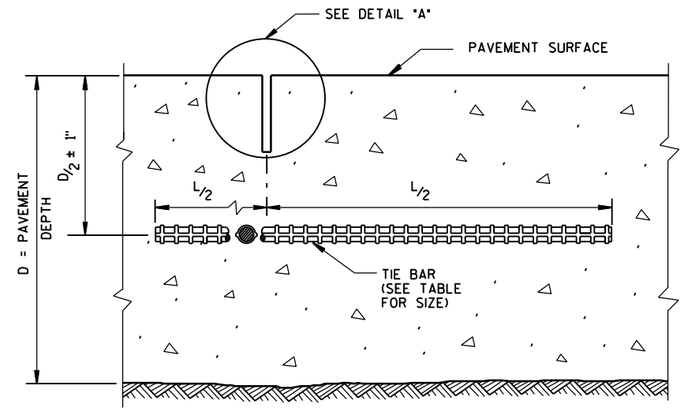

SAWED JOINT

GENERAL NOTES

DO NOT SEAL OR FILL LONGITUDINAL JOINTS.

CREATE A LONGITUDINAL JOINT FOR PAVEMENT WIDTHS GREATER THAN 15 FEET.

CORRELATE LONGITUDINAL JOINTS WITH LANE LINES WHEN POSSIBLE.

(1) ANCHOR TIE BARS INTO DRILLED HOLES WITH AN EPOXY.

(2) PAVEMENT THAT WAS IN PLACE PRIOR TO THE CONTRACT.

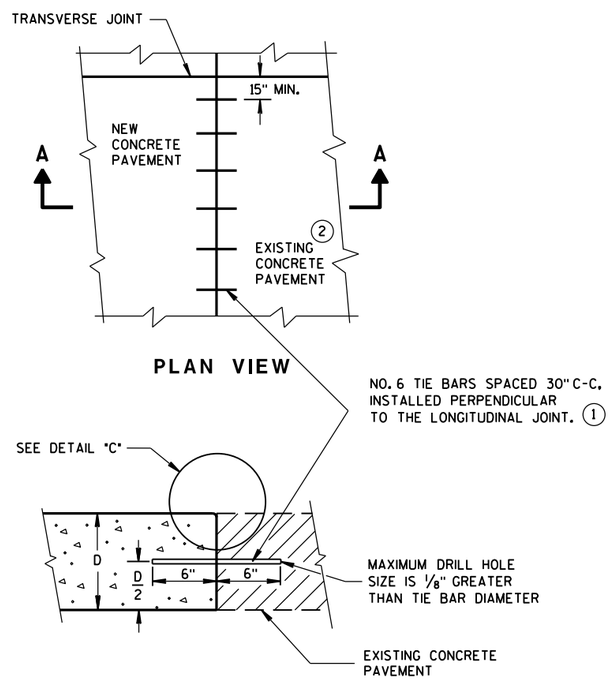

PLAN VIEW

SECTION A-A
LONGITUDINAL CONSTRUCTION JOINT TIE BARS ANCHORED INTO EXISTING PAVEMENT

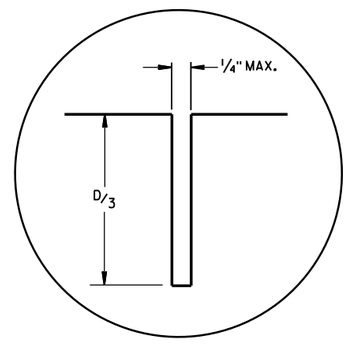

DETAIL "A"

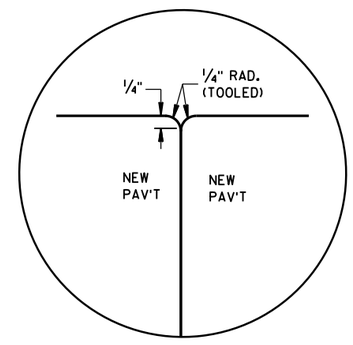

DETAIL "B"

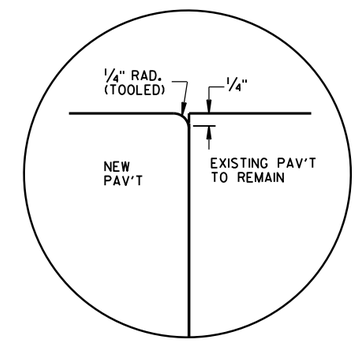

DETAIL "C"

TIE BAR TABLE

PAVEMENT DEPTH (D)	TIE BAR SIZE	TIE BAR LENGTH (L)	MAX. TIE BAR SPACING
< 10 1/2"	NO. 4	30"	36"
≥ 10 1/2"	NO. 5	36"	36"
	NO. 4 *	30"	24" **

* SUBSTITUTE BENT BARS AT LONGITUDINAL JOINTS WHEN EQUIPMENT LIMITATIONS DURING CONSTRUCTION WARRANT (e.g. AUXILIARY LANES OR TURN LANES)

** CONFORM TO 15" MINUMUM SPACING FROM TRANSVERSE JOINTS; SPACING BETWEEN TIE BARS WILL BE 30" AT TRANSVERSE JOINTS.

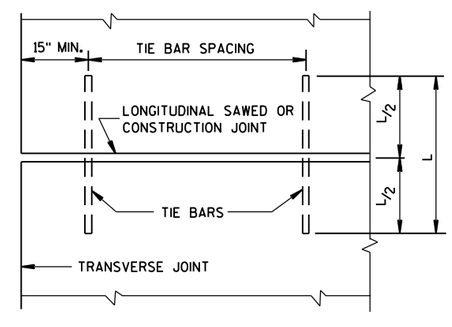

PLAN VIEW
SHOWING LOCATION OF TIE BARS

CONCRETE PAVEMENT
LONGITUDINAL JOINTS AND TIES

STATE OF WISCONSIN
DEPARTMENT OF TRANSPORTATION

APPROVED
June, 2015 — /S/ Peter Kemp, P.E.
DATE — PAVEMENT SUPER
FHWA

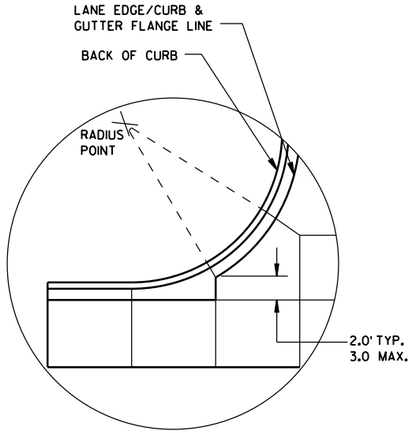

DETAIL "A"

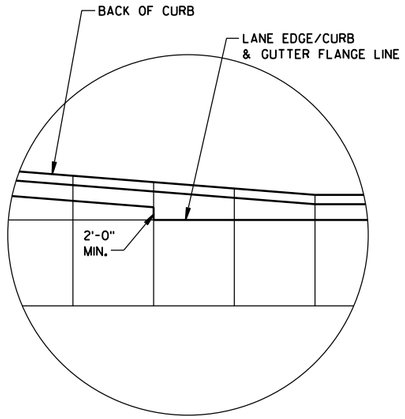

DETAIL "B"

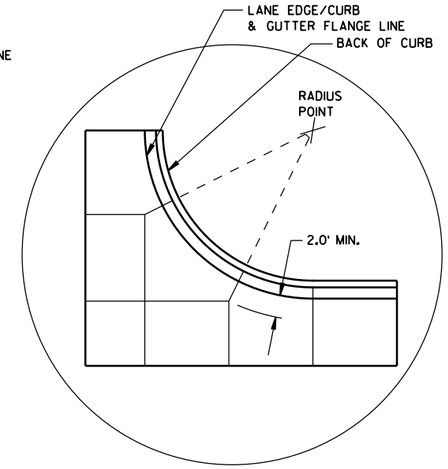

DETAIL "C"

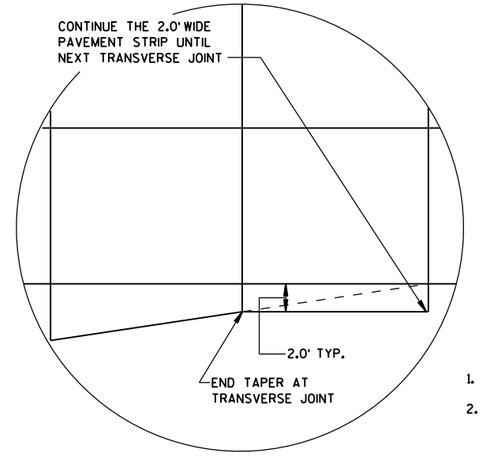

DETAIL "D"

GENERAL NOTES

THE PRIMARY ROADWAY CONTROLS THE TRANSVERSE JOINT PATTERN.

ALIGN NEW JOINTS WITH EXISTING JOINTS OR CRACKS.

CONSTRUCT TRANSVERSE JOINTS PERPENDICULAR TO THE ROADWAY.

ADJUST TRANSVERSE JOINTS TO ALIGN WITH UTILITY FIXTURES (E.G. MANHOLES AND INLETS) IN THE PAVEMENT STRUCTURE WHEN POSSIBLE. WATER VALVES DO NOT REQUIRE JOINT ADJUSTMENT.

AVOID SLABS LESS THAN 2 FEET WIDE OR GREATER THAN 15 FEET WIDE.

SEE TABLE FOR TRANSVERSE JOINT SPACING. JOINT SPACING SPECIFIED IS MAXIMUM AND ACTUAL SPACING CAN BE ADJUSTED TO ACCOMMODATE INTERSECTIONS.

AVOID ANGLES LESS THAN 60° BY DOGLEGGING JOINTS THROUGH CURVE RADIUS POINTS. USE 90° ANGLES WHEN POSSIBLE.

CORRELATE LONGITUDINAL JOINTS WITH LANE LINES WHEN POSSIBLE.

1. PROVIDE TRANSVERSE JOINTS AT ALL PAVEMENT WIDTH CHANGES.
2. CONSTRUCT DOWELED EXPANSION JOINT ON THE SIDE ROAD OF AN INTERSECTION IF THE SIDE ROAD IS CONCRETE PAVEMENT AND GREATER THAN 300 FEET IN LENGTH. ALIGN EXPANSION JOINT WITH EDGE OF RADIUS.
3. THE ENGINEER MAY APPROVE SLIGHT VARIATIONS FROM THESE JOINTING DETAILS.

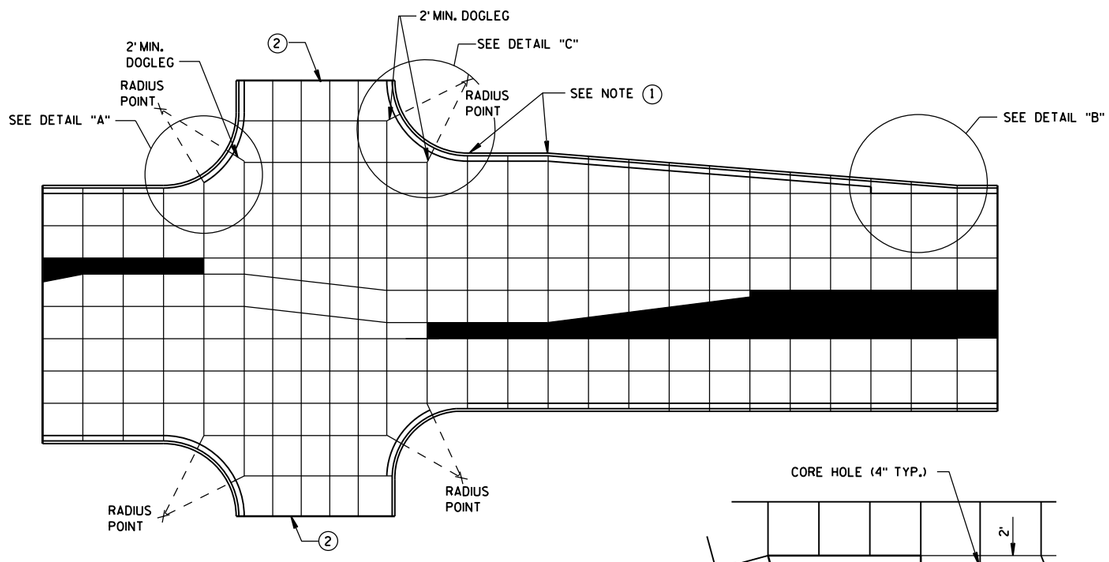

STANDARD INTERSECTION

PAVEMENT DEPTH AND JOINT SPACING TABLE

PAVEMENT DEPTH (D)	CONTRACTION JOINT SPACING
6", 6½"	12'
7", 7½"	14'
8" & ABOVE	15'

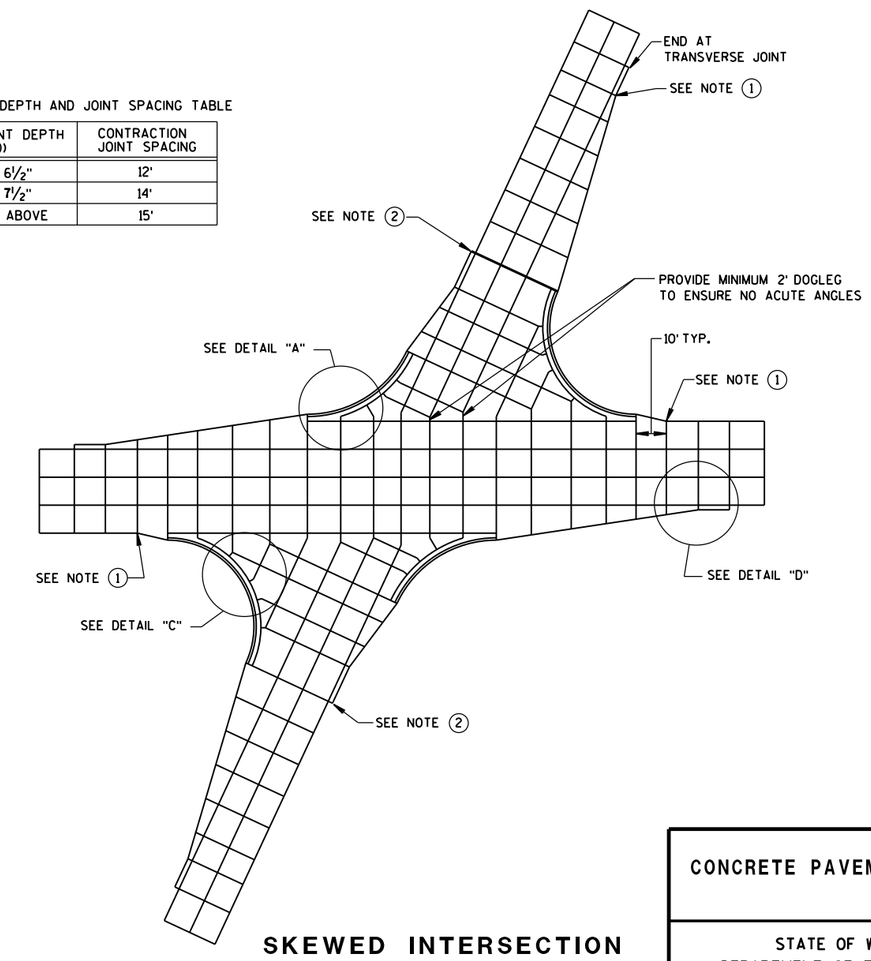

SKEWED INTERSECTION

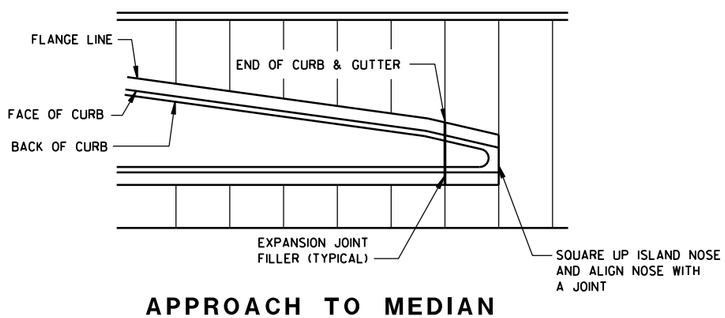

APPROACH TO MEDIAN

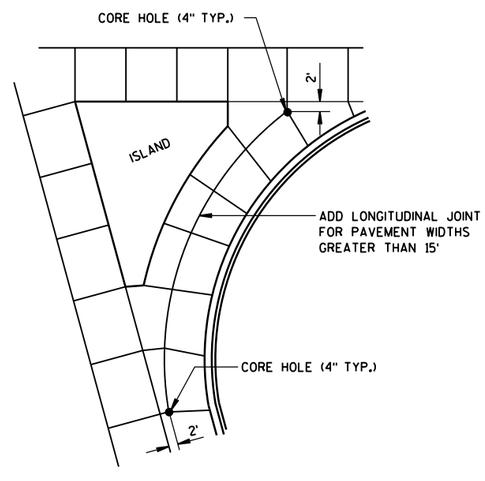

LARGE RIGHT TURN

CONCRETE PAVEMENT JOINTING

STATE OF WISCONSIN
DEPARTMENT OF TRANSPORTATION

6

S.D.D. 13 C 18-5a

LEGEND

POTENTIAL DOWELED EXPANSION JOINT

DOWELED JOINT

TIED JOINT

GENERAL NOTES

USE AN EXPANSION JOINT FILLER MEETING THE REQUIREMENTS OF STANDARD SPECIFICATION 415.

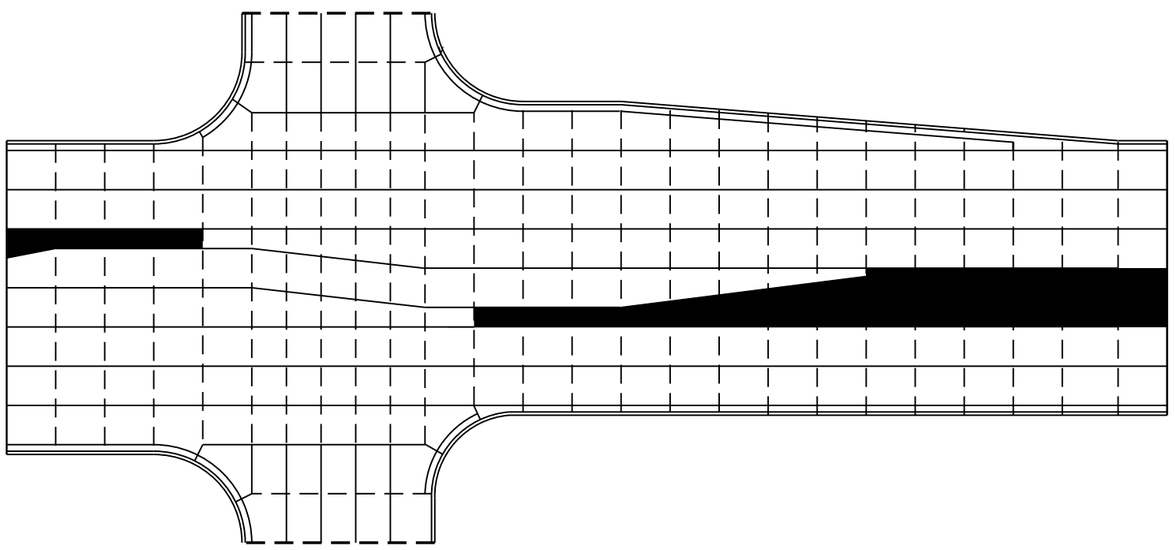

STANDARD INTERSECTION

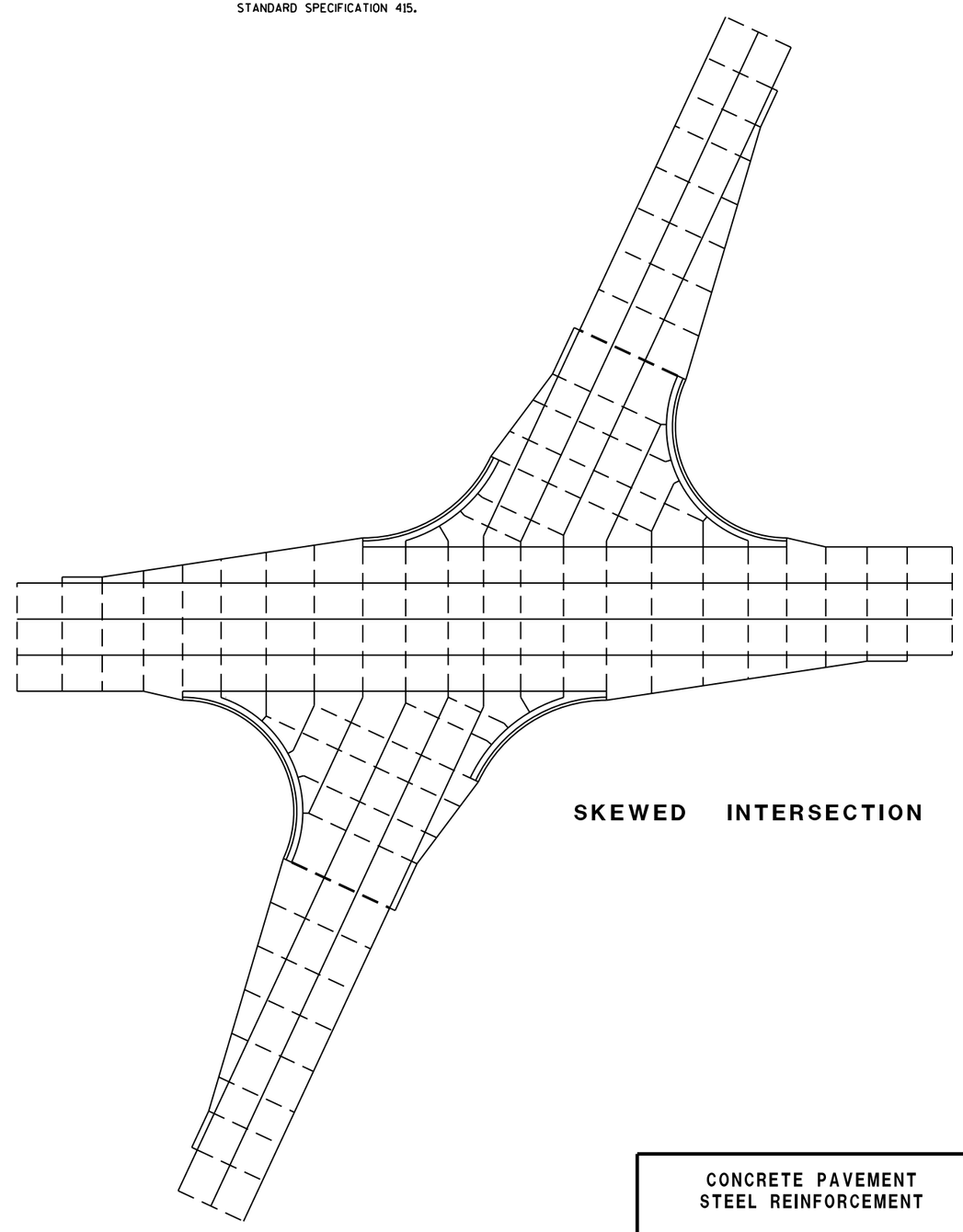

SKEWED INTERSECTION

CONCRETE PAVEMENT
STEEL REINFORCEMENT

STATE OF WISCONSIN
DEPARTMENT OF TRANSPORTATION

6

S.D.D. 13 C 18-5b

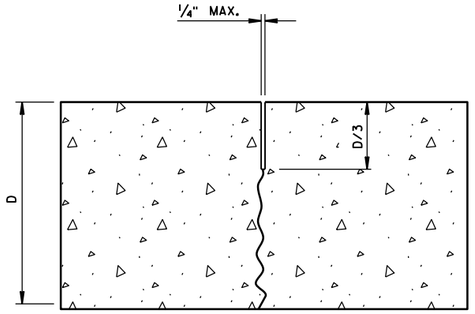

UNDOWELED-TRANSVERSE

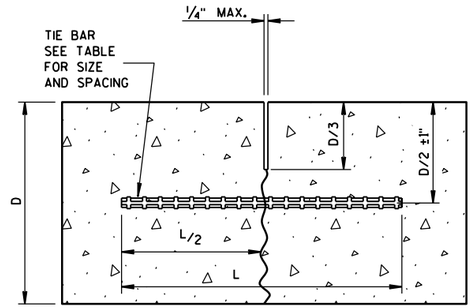

TIED LONGITUDINAL

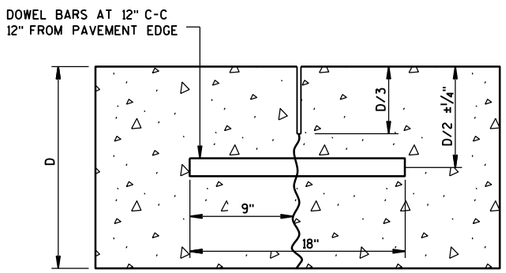

DOWELED-TRANSVERSE

CONTRACTION JOINTS

SEE NOTE (2)

TIE BAR TABLE

PAVEMENT DEPTH (D)	TIE BAR SIZE	TIE BAR LENGTH (L)	MAX. TIE BAR SPACING
< 10 1/2"	NO. 4	30"	36"
≥ 10 1/2"	NO. 5	36"	36"
	NO. 4*	30"	24"**

* SUBSTITUTE BENT BARS AT LONGITUDINAL JOINTS WHEN EQUIPMENT LIMITATIONS DURING CONSTRUCTION WARRANT (e.g. AUXILIARY LANES OR TURN LANES)

** CONFORM TO 15" MINUMUM SPACING FROM TRANSVERSE JOINTS; SPACING BETWEEN TIE BARS WILL BE 30" AT TRANSVERSE JOINTS.

GENERAL NOTES

1. USE DOWELED EXPANSION JOINTS ON SIDE ROADS AT INTERSECTIONS (TO ISOLATE THE SIDE ROAD FROM THE THROUGH STREET) IF THE SIDE ROAD IS CONCRETE PAVEMENT AND GREATER THAN 300 FEET IN LENGTH.
2. SPACE CONTRACTION JOINTS IN ACCORDANCE WITH 13C4, 13C11 OR 13C13.
3. LOCATE CONSTRUCTION JOINTS A MINIMUM OF 6 FEET FROM THE NEAREST CONTRACTION JOINT AND ALIGN PARALLEL TO CONTRACTION JOINTS.
4. CONSTRUCTION JOINTS CAN BE FORMED OR SAWED.
5. IF JOINT IS FORMED, PROVIDE A 1/4-INCH RADIUS.
6. ANCHOR TIE BARS INTO DRILLED HOLES WITH AN EPOXY.

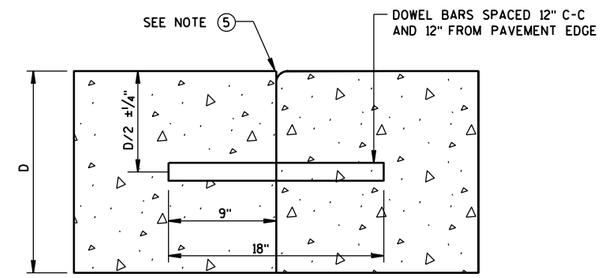

DOWELED TRANSVERSE (3)

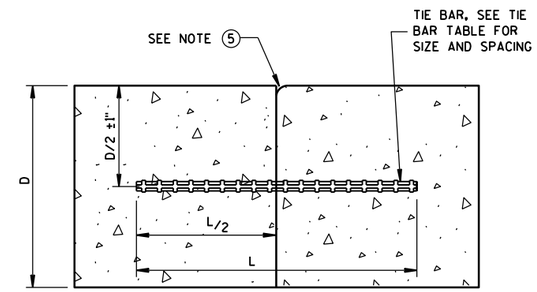

TIED LONGITUDINAL

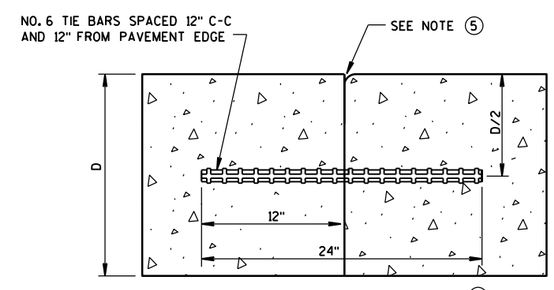

TIED TRANSVERSE (3)

(FOR USE ON NON-DOWELED PAVEMENTS ONLY)

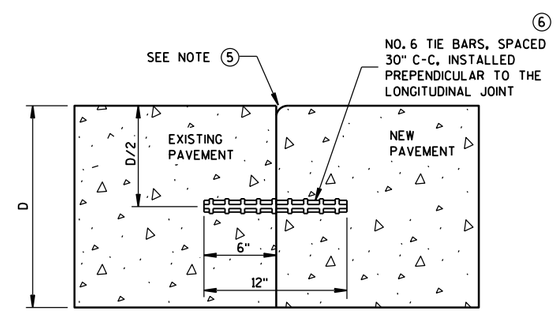

TIED LONGITUDINAL TO EXISTING

CONSTRUCTION JOINTS

SEE NOTE (4)

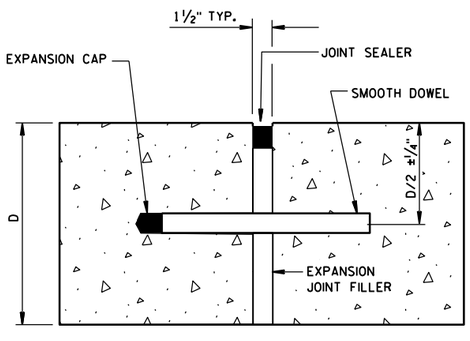

DOWELED-TRANSVERSE

SEE NOTE (1)

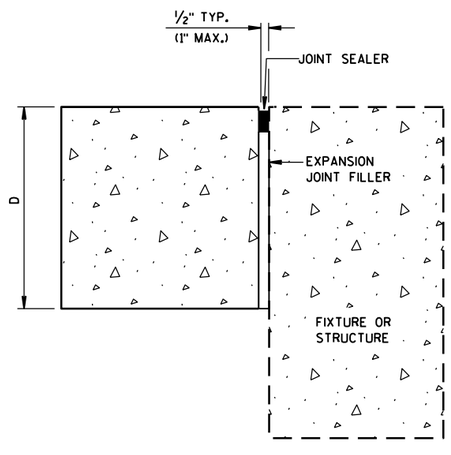

UNTIED-LONGITUDINAL

EXPANSION JOINTS

CONCRETE PAVEMENT
JOINT TYPES

STATE OF WISCONSIN
DEPARTMENT OF TRANSPOR

6

S.D.D. 13 C 18-5c

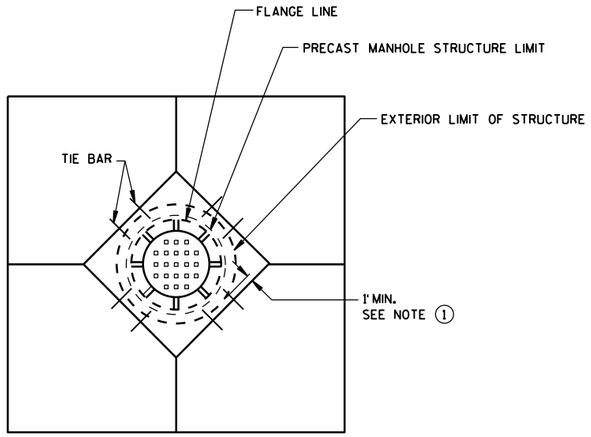

DIAGONAL MANHOLE BOXOUT FOR CONSTRUCTION JOINTS

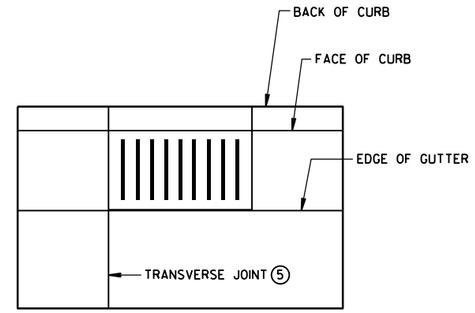

INLET WITH TRANSVERSE JOINT

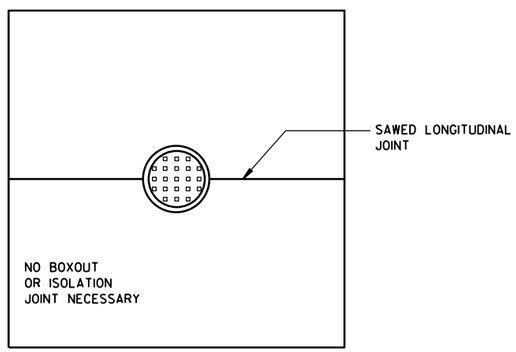

MANHOLE WITH LONGITUDINAL JOINT

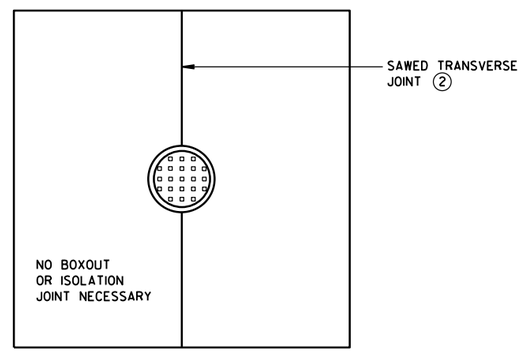

MANHOLE WITH TRANSVERSE JOINT

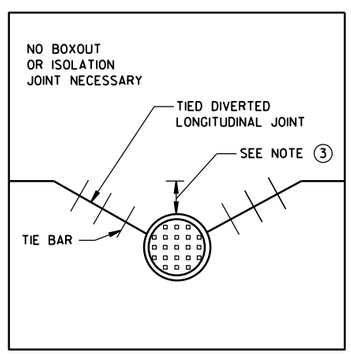

MANHOLE WITH DIVERTED LONGITUDINAL CONTRACTION JOINT

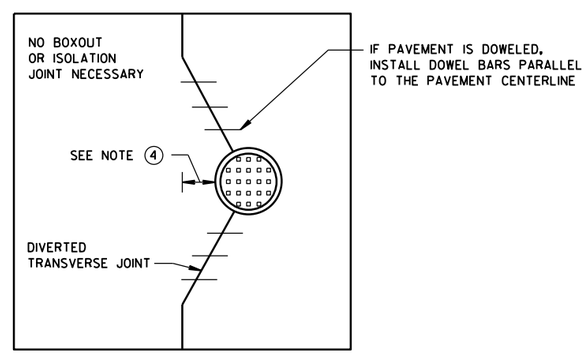

MANHOLE WITH DIVERTED TRANSVERSE CONTRACTION JOINT

GENERAL NOTES

1. USE BOXOUTS WHEN UTILITY STRUCTURE IS IN THE PATH OF CONSTRUCTION JOINTS. PROVIDE A 1-FOOT MINIMUM CLEARANCE BETWEEN THE EXTERIOR LIMIT OF THE STRUCTURE TO THE DIAMOND BOXOUT.
2. ADJUST TRANSVERSE JOINT TO INTERSECT MANHOLE IF POSSIBLE.
3. IF DISTANCE BETWEEN THE LONGITUDINAL JOINT AND THE EDGE OF MANHOLE IS 2 FEET OR LESS, DIVERT THE LONGITUDIAL JOINT AT A 2:1 TAPER RATE TO THE CENTER OF THE MANHOLE. IF THE DISTANCE IS GREATER THAN 2 FEET, DO NOT DIVERT THE JOINT AND SAW AS NORMAL. PLACE REBAR REINFORCEMENT AROUND THE MANHOLE.
4. IF DISTANCE FROM THE EDGE OF THE MANHOLE TO THE NEAREST TRANSVERSE JOINT IS 4 FEET OR LESS, REDIRECT JOINT TO INTERSECT THE CENTER OF THE MANHOLE. IF DISTANCE IS GREATER THAN 4 FEET, DO NOT DIVERT THE JOINT AND SAW AS NORMAL. PLACE REBAR REINFORCEMENT AROUND THE MANHOLE.
5. ALIGN TRANSVERSE JOINT WITH ONE EDGE OF INLET WHEN PRACTICAL.

CONCRETE PAVEMENT
JOINTING AT UTILITY FIXTURES

STATE OF WISCONSIN
DEPARTMENT OF TRANSPORTATION

APPROVED
December, 2016 /S/ Peter Kemp, P.E.
DATE PAVEMENT SUPER
FHWA

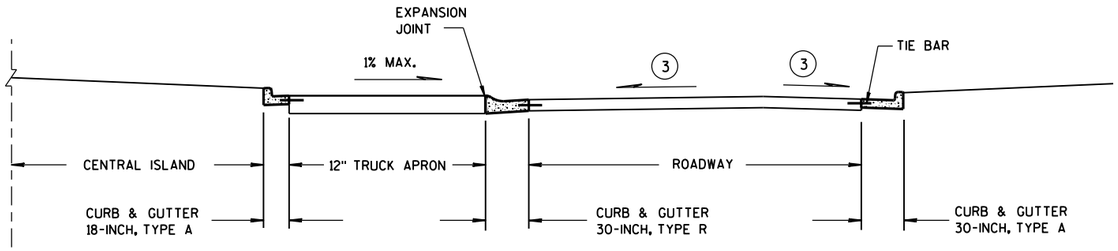

SECTION A-A

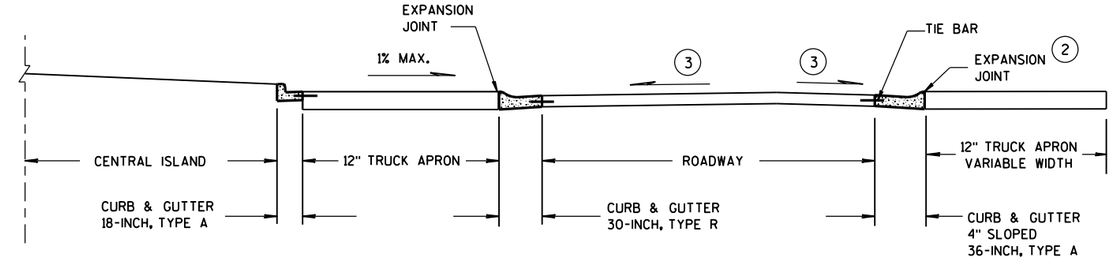

SECTION B-B

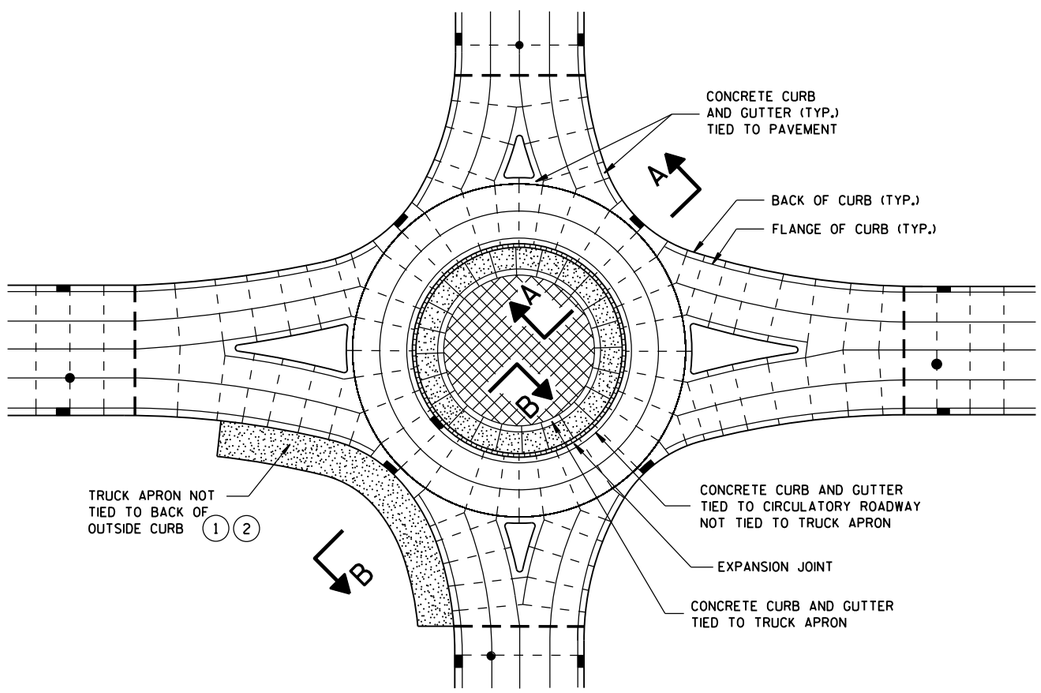

ISOLATED CIRCLE JOINT LAYOUT FOR ROUNDABOUTS

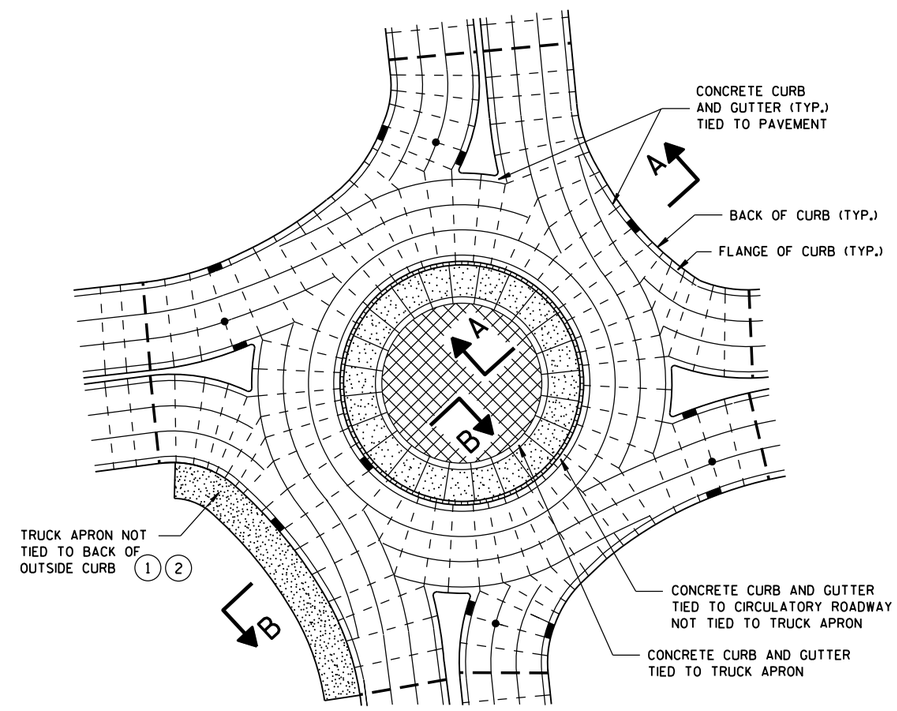

PINWHEEL JOINT LAYOUT FOR ROUNDABOUTS

GENERAL NOTES

MAXIMUM JOINT SPACING IS IN ACCORDANCE WITH THE TABLE SHOWN ON SDD 13C18 SHEET "a".

USE AN EXPANSION JOINT FILLER MEETING THE REQUIREMENTS OF STANDARD SPECIFICATION 415.

DO NOT DOWEL OR TIE THE TRUCK APRON TRANSVERSE JOINTS.

1. DESIGNER DETERMINES SIZE AND LOCATION(S) OF TRUCK APRON TO ACCOMMODATE TRACKING OF OVERSIZE/OVERWEIGHT VEHICLES.
2. TIE THE OUTSIDE TRUCK APRON TO THE BACK SIDE OF CURB ONLY WHEN ENTIRE TRUCK APRON WIDTH IS LESS THAN 3 FEET.
3. CONFORM TO PLAN CONSTRUCTION DETAILS FOR CIRCULATORY ROADWAY CROSS SLOPE.

LEGEND

- DOWELED JOINT
- TIED JOINT
- EXPANSION JOINT
- POTENTIAL DOWELED EXPANSION JOINT
- TRUCK APRON
- CENTRAL ISLAND
- UTILITY STRUCTURES

CONCRETE PAVEMENT JOINTING AND STEEL REINFORCEMENT IN ROUNDABOUTS

STATE OF WISCONSIN
DEPARTMENT OF TRANSPORTATION

APPROVED
December, 2016 — DATE
/S/ Peter Kemp, P.E. — PAVEMENT SUPE
FHWA

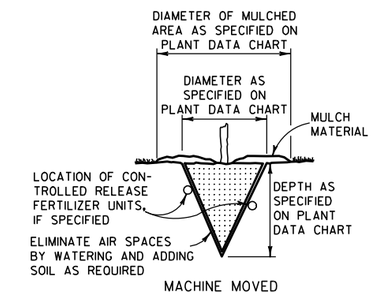

MACHINE MOVED

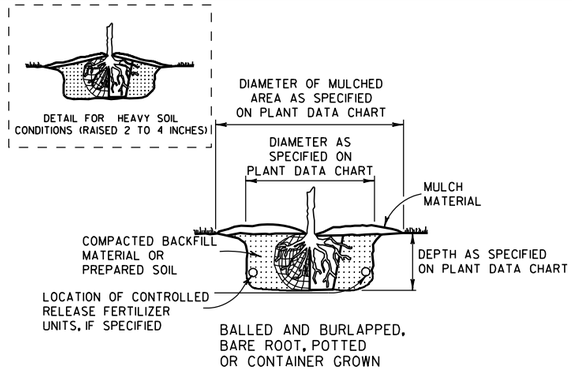

BALLED AND BURLAPPED, BARE ROOT, POTTED OR CONTAINER GROWN

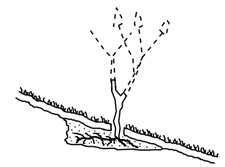

ACCOMMODATE ROOTS (SMOOTH AND STAGHORN SUMAC)

NOTE:
1) ENGINEER SHALL REQUIRE 3 SLITS IN POT TO SPEED DETERIORATION
2) METAL, PLASTIC OR OTHER NONDEGRADABLE POTS SHALL BE REMOVED PRIOR TO PLANTING

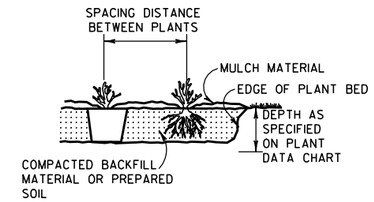

PREPARED BED (BARE ROOT AND POTTED)

PLANTING

TOP VIEW

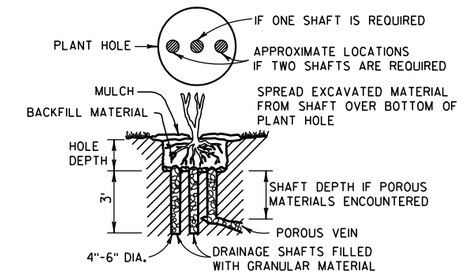

NOTE:
DRAINAGE SHAFT AS SPECIFIED ON PLANT DATA CHART

DRAINING

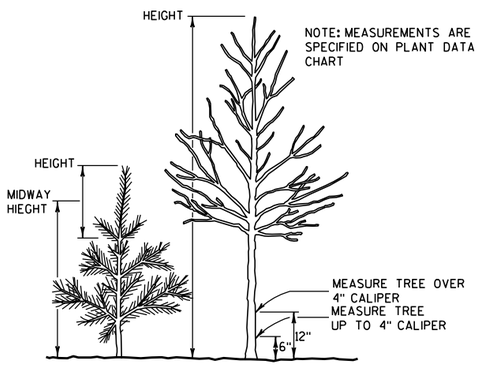

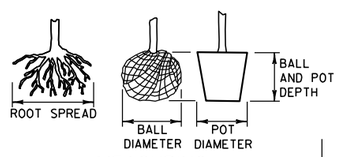

MEASURING

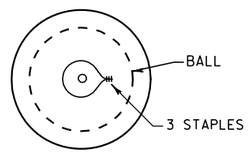

TOP VIEW

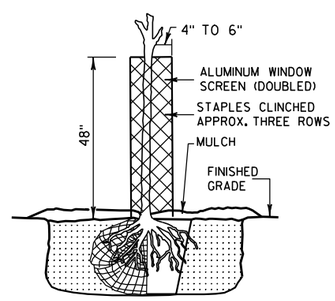

RODENT PROTECTION

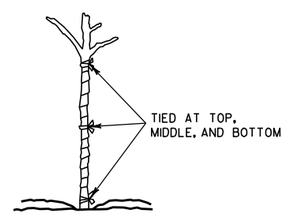

WRAPPING

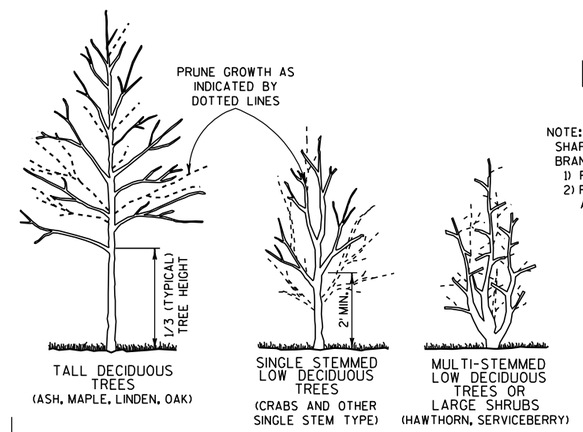

NOTE: WHEN PRUNING, PRESERVE CHARACTER AND SHAPE OF TREE. AVOID LEAVING STUBS - REMOVE BRANCH OR TWIG BACK TO THE NEAREST CROTCH
1) PRUNE TO REMOVE DEAD AND BROKEN BRANCHES
2) PRUNE TO REMOVE BRANCHES THAT TOUCH OR ARE TOO CLOSE TO OTHER BRANCHES

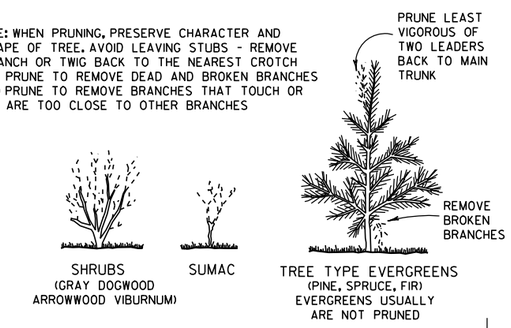

PRUNING

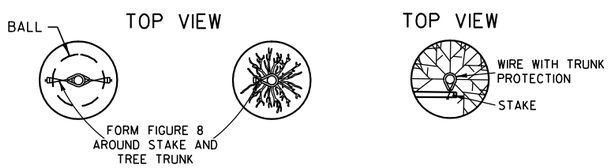

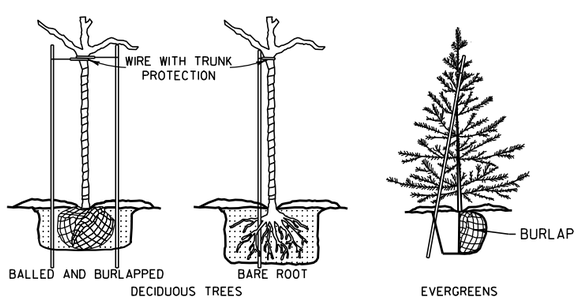

NOTE: BRACING STAKE
1) SHALL BE DRIVEN INTO THE GROUND AS CLOSE TO THE TREE AS POSSIBLE WITHOUT DAMAGING THE BRANCHES.
2) MAY BE DRIVEN AT SUCH AN ANGLE THAT IT DOES NOT PENETRATE THE BALL OR POT.
3) SHALL NOT PROTRUDE ABOVE THE TOP OF THE TREE; AND
4) SHALL HAVE A HOLE NEAR THE TOP TO HOLD THE WIRE IN PLACE.

BRACING

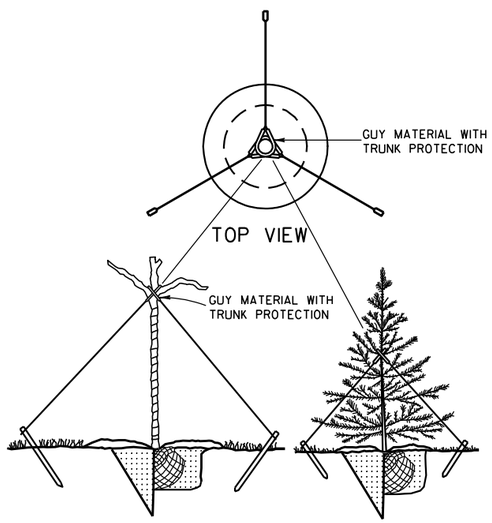

GUYING

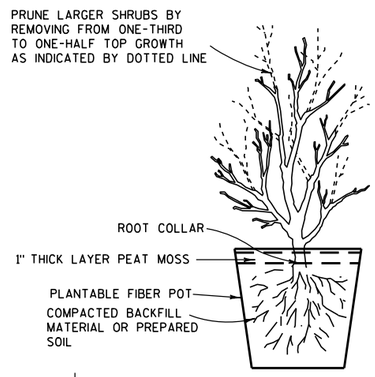

POTTING

NOTES

DETAILS OF CONSTRUCTION NOT SHOWN ON THIS DRAWING SHALL CONFORM TO THE PERTINENT REQUIREMENTS OF THE STANDARD SPECIFICATIONS AND THE APPLICABLE SPECIAL PROVISIONS.

BRACING, WRAPPING, GUYING, RODENT PROTECTION, FERTILIZER AND MULCH SHALL BE USED ONLY WHEN SPECIFIED ON THE PLANT DATA CHART (PART OF PLAN) OR SPECIAL PROVISIONS.

TREE PLANTING DETAIL

STATE OF WISCONSIN
DEPARTMENT OF TRANSPORTATION

APPROVED
4/11/94 — DATE
/S/ Rory L. Rhinesmith — CHIEF METHODS DEVELOPMENT ENGINEER
FHWA

① WOOD OR STEEL POSTS (w6X9 OR w6X8.5) MAY BE USED. DO NOT INTERMIX WOOD AND STEEL POSTS. INSTALL STEEL POSTS WITH HOLES ON APPROACHING TRAFFIC SIDE.

② USE WOOD OR APPROVED PLASTIC BLOCKOUTS. WOOD BLOCKOUTS MAY BE CONSTRUCTED OUT OF TWO OR MORE WOOD BLOCKOUTS. SEE ALTERNATE WOOD BLOCKOUT DETAIL. DIMENSIONS OF APPROVED PLASTIC BLOCKOUTS MAY VARY.

③ IF ROCK IS ENCOUNTERED DURING EXCAVATION, PROVIDE A HOLE 12 INCHES IN DIAMETER EXTENDING 20 INCHES DEEP INTO THE ROCK. PLACE APPROXIMATELY 2½ INCHES OF GRANULAR MATERIAL IN THE BOTTOM OF THE HOLE. CUT THE POSTS THE TO LENGTH AMD INSTALL. BACKFILL WITH EXCAVATED MATERIAL AND COMPACT. BACKFILL IS TO BE FREE OF LARGE ROCKS.

④ WHEN THE DISTANCE FROM BACK OF POST TO SHOULDER HINGE POINT IS LESS THAN 2 FEET INSTALL LONGER POST AT HALF POST SPACING (K).

⑤ FOR NEW MGS INSTALLATION TOP OF W-BEAM RAIL TOLERANCE IS ± 1". FOR EXISTING MGS INSTALLATION TOP OF W-BEAM IS BETWEEN 27¾" TO 32".

⑥ WHEN USING STEEL POST AND WOOD BLOCKOUTS INSTALL FOUR 16D GALVANIZED NAILS. INSTALL NAILS AT THE BACK CORNERS OF THE BLOCK AND BEND THE NAILS OVER THE FLANGE OF THE STEEL POST.

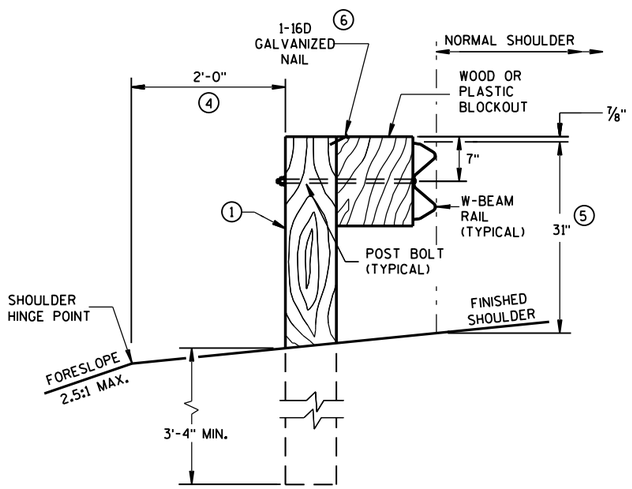

END VIEW

LOCATED ALONG A ROADWAY SHOULDER STANDARD INSTALLATION

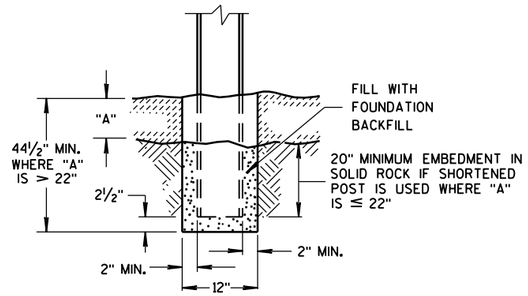

END VIEW

SETTING STEEL OR WOOD POST IN ROCK ③

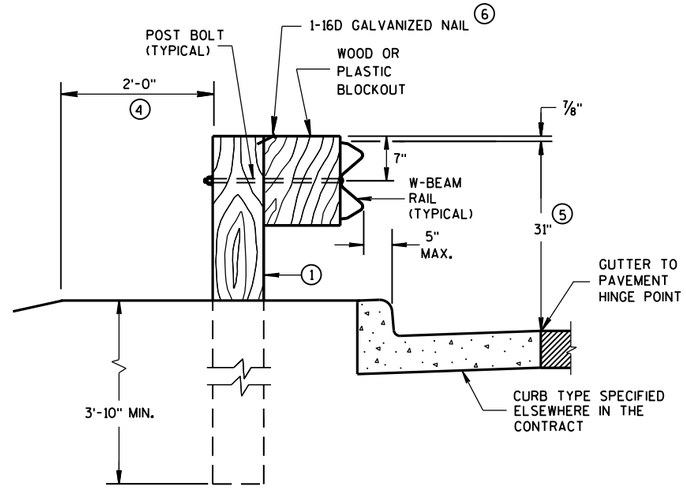

END VIEW

LOCATED ALONG A CURBED ROADWAY

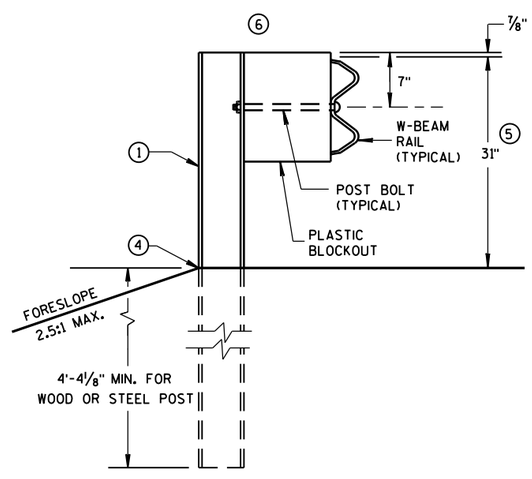

END VIEW

MGS LONGER POST AT HALFPOST SPACING W BEAM (K)

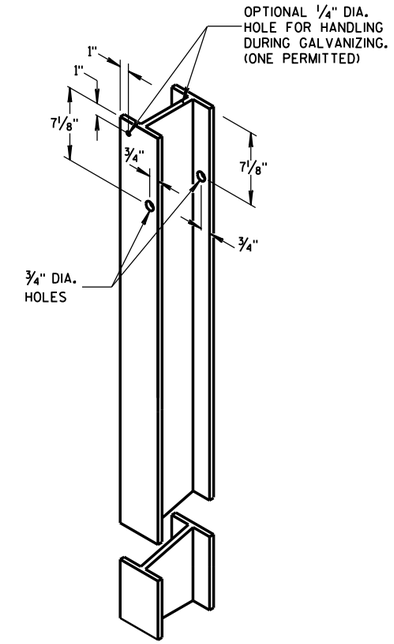

STEEL POST & HOLE PUNCHING DETAIL (w6X9) ①

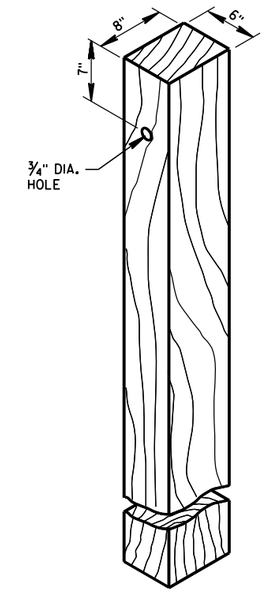

WOOD POST (6" X 8") NOMINAL ①

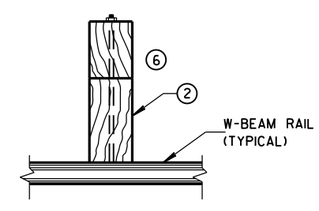

PLAN VIEW

WOOD POST, BLOCKOUT & BEAM

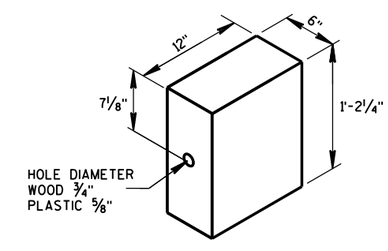

WOOD OR PLASTIC BLOCKOUT ②

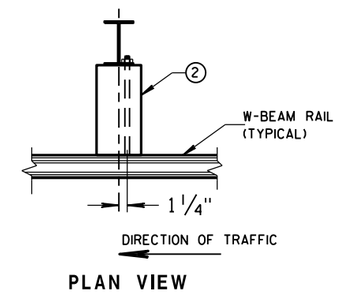

PLAN VIEW

STEEL POST, PLASTIC BLOCKOUT & BEAM

MIDWEST GUARDRAIL SYSTEM (MGS) GUARDRAIL

STATE OF WISCONSIN
DEPARTMENT OF TRANSPOI

6

S.D.D. 14 B 42-5a

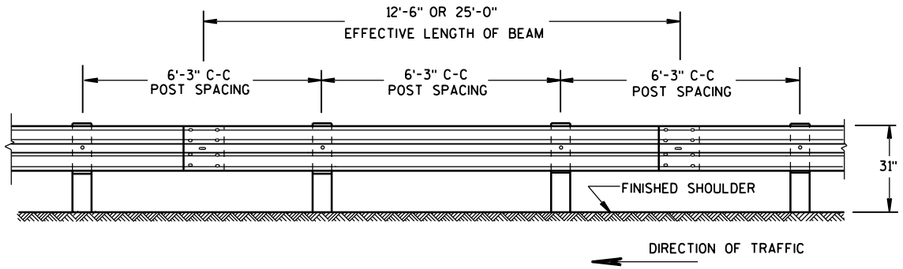

FRONT VIEW

POST SPACING STANDARD INSTALLATION

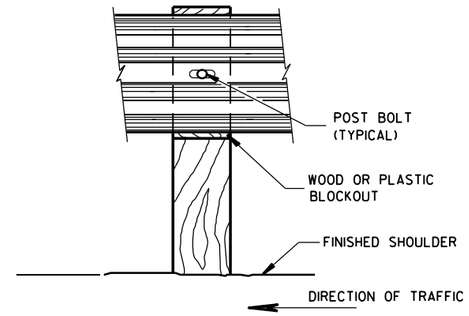

FRONT VIEW AT WOOD POST

GENERAL NOTES

(8) DO NOT INSTALL REFLECTORS ON THE FIRST 50 FEET OF THE APPROACH END OF THE ENERGY ABSORBING TERMINAL. RAIL SPLICE LOCATIONS ARE THE ONLY ACCEPTABLE LOCATIONS FOR REFLECTORS.

(11) 25 FEET OF HALF POST SPACING IS REQUIRED ON APPROACH AND DEPARTURE ENDS OF QUARTER POST SPACING.

POST BOLTS ARE A 5/8" DIAMETER ASTM A307 GUARDRAIL BOLT. A POST BOLT REQUIRES 5/8" DIAMETER A563A DOUBLE RECESSED (DR) HEAVY HEX NUT AND 5/8" DIAMETER F844 FLAT WASHER. POST BOLTS MAY BE LONGER IF MULTIPLE BLOCKOUTS ARE BEING USED.

GUARD RAIL SPLICE BOLTS ARE A 5/8" DIAMETER ASTM A307 GUARDRAIL HEAD BOLT. A GUARDRAIL SPLICE BOLT REQUIRES 5/8" DIAMETER A563A DOUBLE RECESSED (DR) HEAVY HEX NUT.

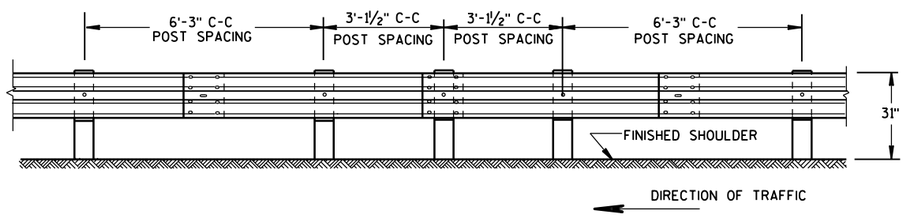

FRONT VIEW

HALF POST SPACING (HS) AND HALF POST SPACING WITH LONGER POSTS (K)

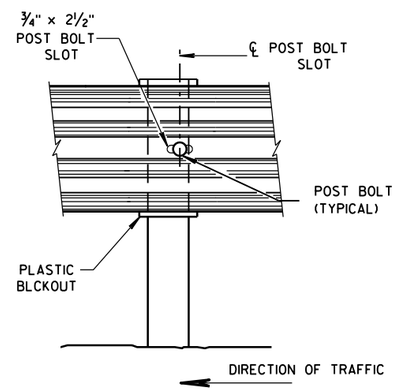

FRONT VIEW AT STEEL POST

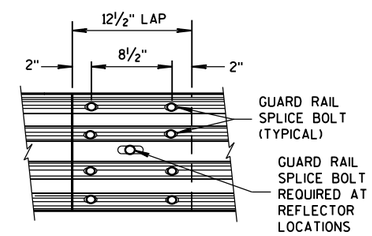

FRONT VIEW

MID-SPAN BEAM SPLICE

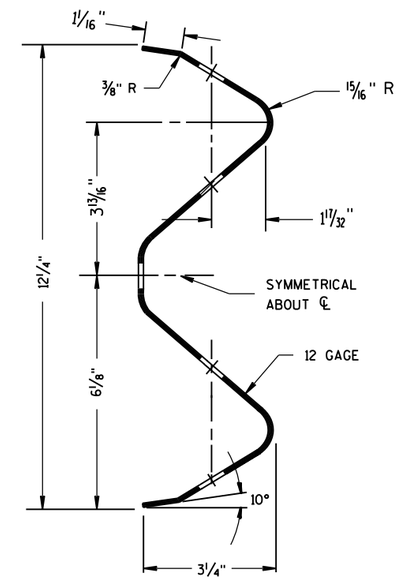

SECTION THRU W-BEAM RAIL

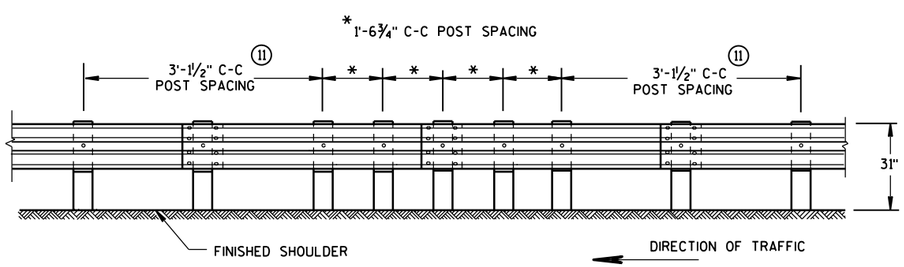

FRONT VIEW

QUARTER POST SPACING (QS)

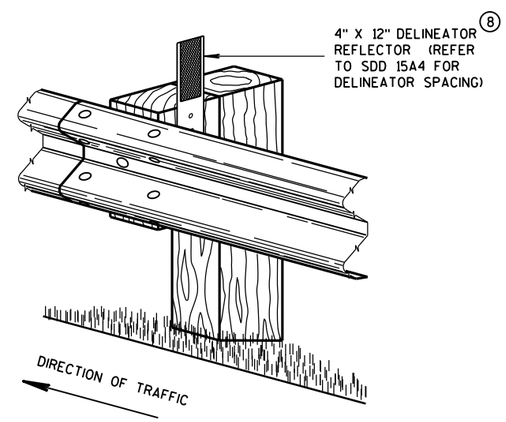

ONE SIDED REFLECTOR DETAIL AND TYPICAL INSTALLATION

MIDWEST GUARDRAIL SYSTEM (MGS) GUARDRAIL

STATE OF WISCONSIN
DEPARTMENT OF TRANSPO

6

6

S.D.D. 14 B 42-5b

S.D.D. 14 B 42-5b

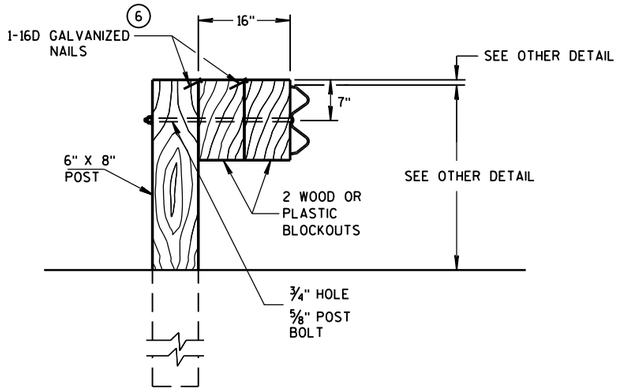

DETAIL FOR 16" BLOCKOUT DEPTH

IT IS ACCEPTABLE TO USE BLOCKOUTS UP TO 16" DEEP TO INCREASE THE POST OFFSET TO AVOID UNDERGROUND OBSTACLES. THERE IS NO LIMIT TO THE NUMBER OF POSTS THAT CAN HAVE ADDITIONAL BLOCKOUTS UP TO 16" DEEP.

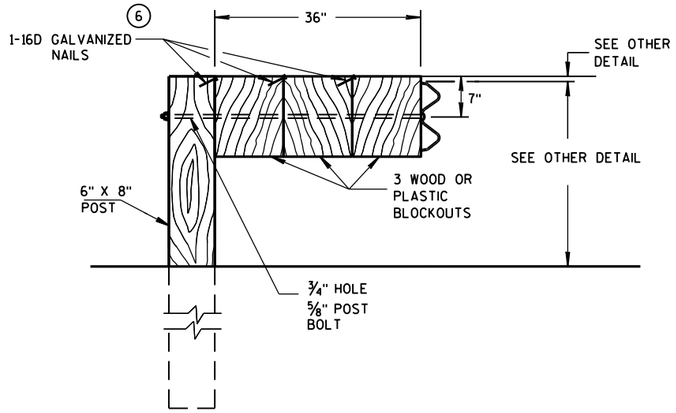

DETAIL FOR 36" BLOCKOUT DEPTH

NOTES: UNDER SPECIAL CIRCUMSTANCES, SUCH AS AVOIDING OBSTACLES THAT ARE NOT RELOCATED, IT IS ACCEPTABLE TO INSTALL ADDITIONAL BLOCKOUTS TO OBTAIN UP TO 36" DEPTH FOR ONE OR TWO POSTS IN A SECTION OF GUARDRAIL.

DO NOT USE 16" OR 36" BLOCKOUTS IF IT CAUSES THE POST TO BE DRIVEN BEYOND SHOULDER HINGE POINT OR CAUSES A FIXED OBJECT TO BE WITHIN THE DEFLECTION DISTANCE OF THE BARRIER.

NOTE: 1. ALL FILLETS SHALL HAVE A MINIMUM RADIUS OF 1/16".
2. IF THE BOLT EXTENDS MORE THAN 1/4" FROM THE NUT THE BOLT SHOULD BE TRIMMED BACK.

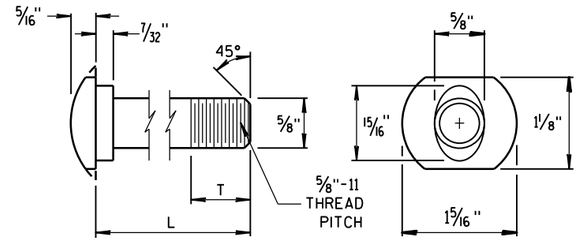

POST BOLT TABLE

L	T (MIN.)
1 1/4"	1 1/8"
2"	1 3/4"
10"	4"
14"	4 1/16"
18"	4"
21"	4 1/16"
25"	4"

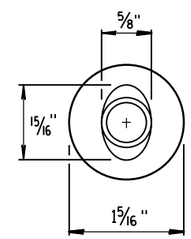

ALTERNATE BOLT HEAD

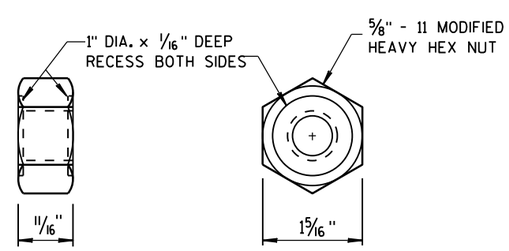

POST BOLT, SPLICE BOLT AND RECESS NUT

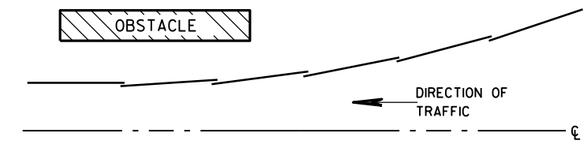

PLAN VIEW

BEAM LAPPING DETAIL

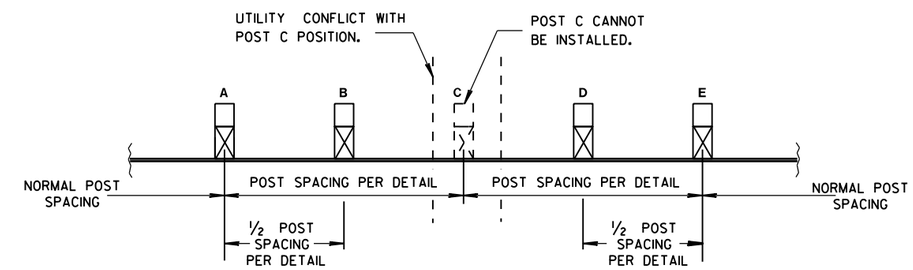

POST DRIVING FOR CONTINUOUS UNDERGROUND OBSTRUCTION

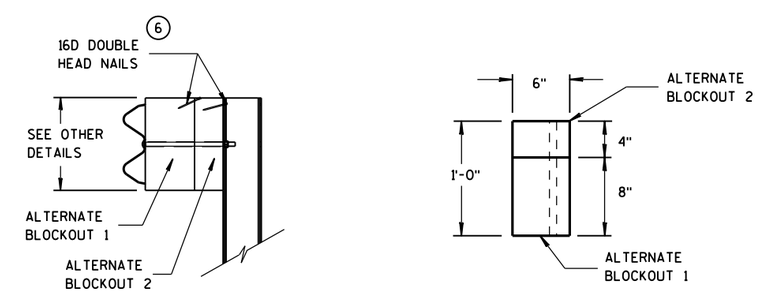

SIDE VIEW TOP VIEW

ALTERNATE WOOD BLOCKOUT DETAIL

MIDWEST GUARDRAIL SYSTEM (MGS) GUARDRAIL

STATE OF WISCONSIN
DEPARTMENT OF TRANSPOR

S.D.D. 14 B 42-5c

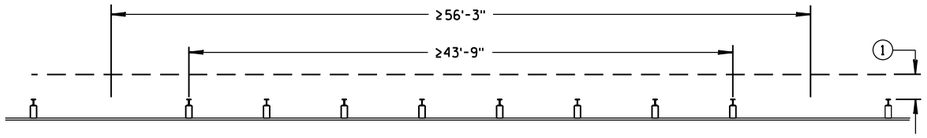

MISSING POST IN NORMAL BEAM GUARD RUN

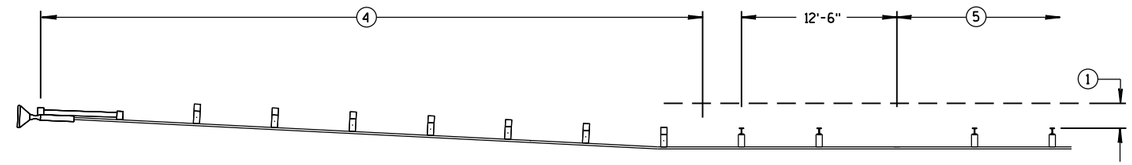

MISSING POST IN NORMAL BEAM GUARD RUN NEAR EAT

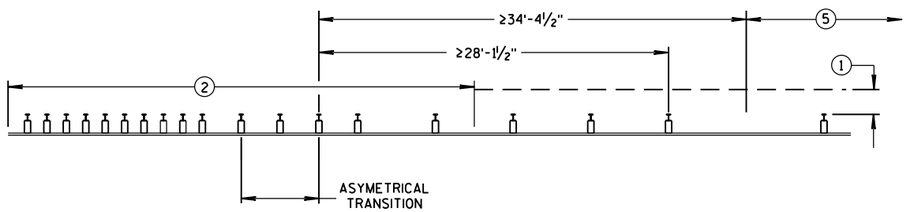

MISSING POST NEAR APPROACH THRIE BEAM TRANSITION

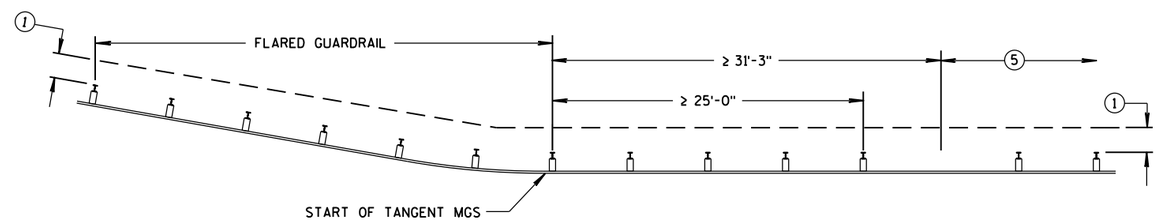

MISSING POST IN NORMAL BEAM GUARD RUN
NEAR FLARED BEAM GUARD

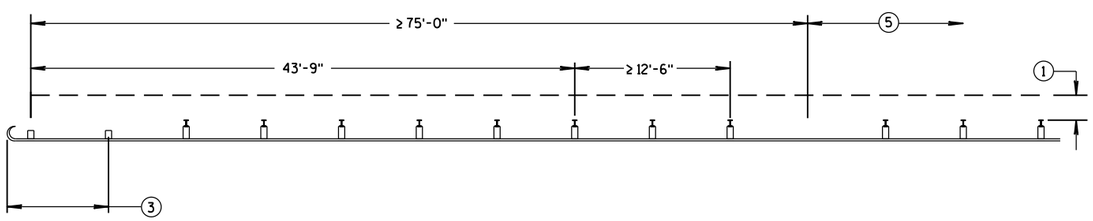

MISSING POST IN NORMAL BEAM GUARD RUN
NEAR TYPE 2 TERMINAL

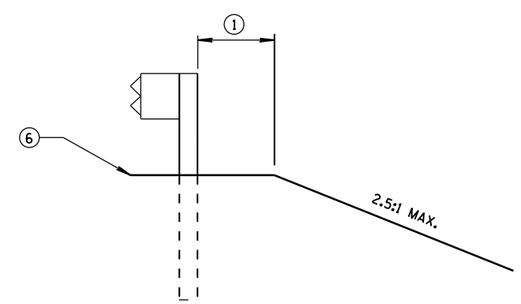

CROSS SECTION VIEW

1. MINIMUM OF 2 FEET OF GRADING BEHIND POST.
2. SEE SDD 14B45 FOR MORE DETAILS.
3. SEE SDD 14B47 FOR MORE DETAILS.
4. SEE SDD 14B44 FOR MORE DETAILS.
5. SEE MISSING POST IN NORMAL BEAM GUARD RUN FOR DISTANCE TO NEXT MISSING POST AND AREA FOR WELL DRAINED, COMPACTED SOILS.
6. SEE PLAN FOR SHOULDER DESIGN.

MIDWEST GUARDRAIL SYSTEM
(MGS) GUARDRAIL

STATE OF WISCONSIN
DEPARTMENT OF TRANSPORTATION

APPROVED
June 2017 — DATE
/S/ Rodney Taylor
ROADWAY STANDARDS DEVELOPMENT UNIT SUPERVISOR
FHWA

6

S.D.D. 14 B 42-5d

GENERAL NOTES

(A) THE SLOPE IN THE AREA BOUNDED BY THE GRADELINE, THE HINGE POINT LINE (HPL), AND THE CLEAR ZONE LIMITS (CZL) SHALL BE 4:1 OR FLATTER.

(B) AFTER FINAL ASSEMBLY, RECHECK CABLE TO BE SURE IT IS TAUT AND HAS NOT RELAXED.

(C) DIFFERENT MANUFACTURES REQUIRE DIFFERENT PERFORATED W-BEAM RAIL END PANELS. SEE MANUFACTURES INFORMATION.

(D) THE TOP OF THE STEEL TUBE ON POST 1 AND POST 2 SHALL NOT BE MORE THAN 3" ABOVE THE FINISH GROUND ELEVATION.

(F) ATTACH ALUMINUM SHEET TO E.A.T. HEAD USING 4 STAINLESS STEEL SELF-TAPPING SCREWS. ONE SCREW PER CORNER.

(G) 1/2" DIAMETER X 3" LONG LAG BOLT AND WASHER.

(H) HARDWARE VARIES BETWEEN DIFFERENT MANUFACTURES. SEE MANUFACTURE'S DRAWING FOR INFORMATION.

(I) DIMENSIONS MAY VARY. SEE MANUFACTURE'S INFORMATION.

SEE SDD 14B42 FOR MORE INFORMATION.

* DO NOT ATTACH BLOCKOUTS TO POSTS 1 AND 2.

DO NOT INSTALL REFLECTORS ON THE FIRST 50 FEET OF THE APPROACH END OF THE ENERGY ABSORBING TERMINAL.

W-BEAM RAIL SPLICES ARE LOCATED AT POST NUMBER 3, AND BETWEEN POST 5 AND 6, BETWEEN POSTS 7 AND 8, AND MIDDLE OF THE SPAN AFTER POST 9.

THE CENTER OF THE UPPER 3 1/2" DIAMETER HOLE ON POST NUMBER 3 THROUGH POST 9 IS TO BE FLUSH WITH THE GROUND LINE UP TO A MAXIMUM OF 2" ABOVE GROUND LINE.

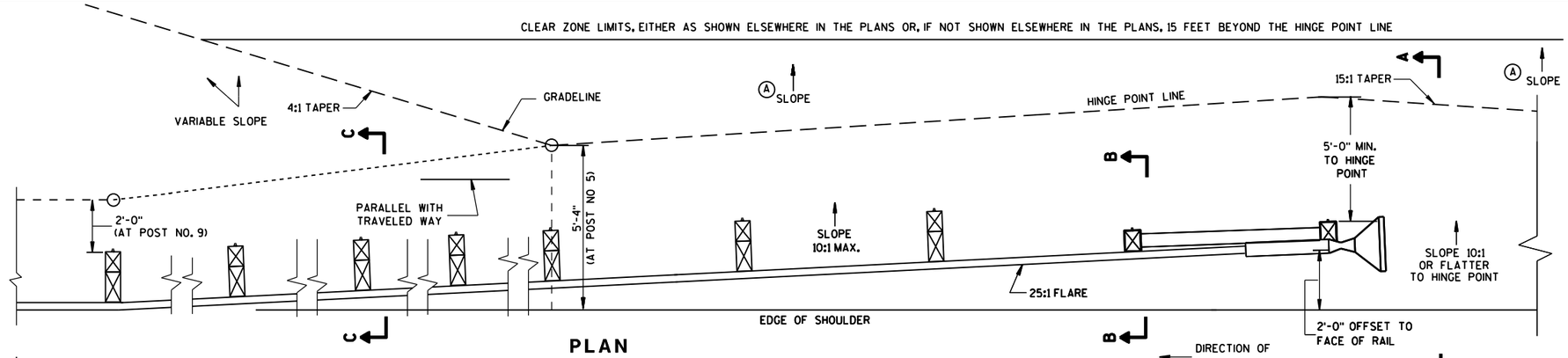

PLAN

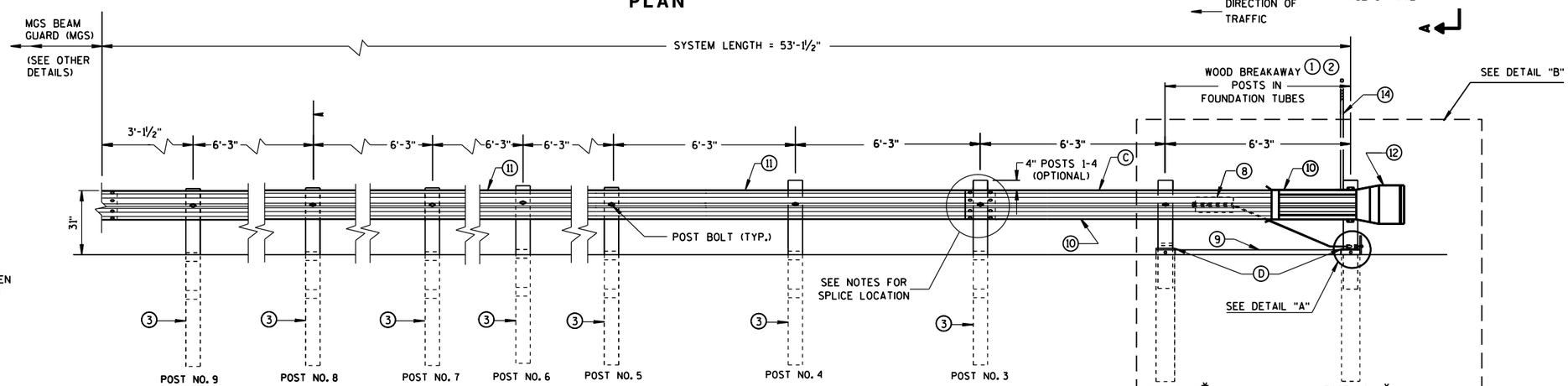

ELEVATION

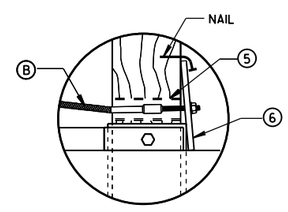

DETAIL "A"

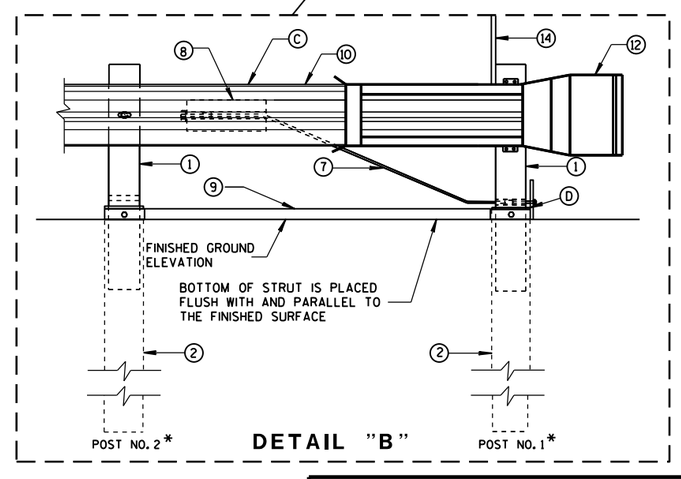

DETAIL "B"

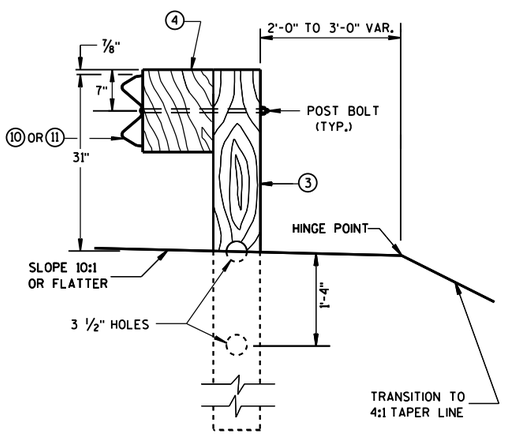

SECTION C-C
TYPICAL AT POST NOS. 3-9

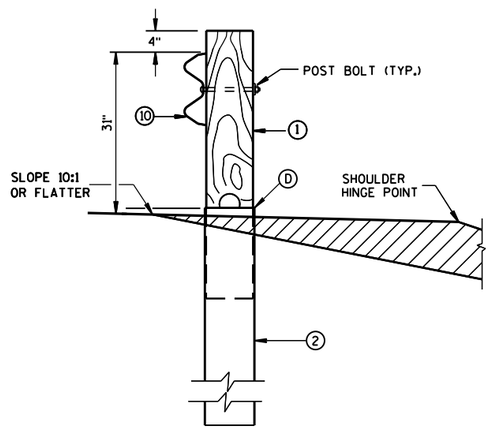

SECTION B-B
TYPICAL AT POST NO. 2*

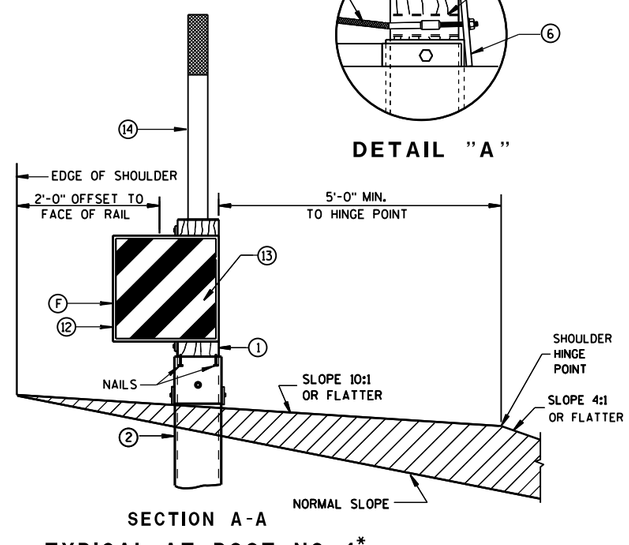

SECTION A-A
TYPICAL AT POST NO. 1*

MIDWEST GUARDRAIL SYSTEM ENERGY ABSORBING TERMINAL (MGS)

STATE OF WISCONSIN
DEPARTMENT OF TRANSPO

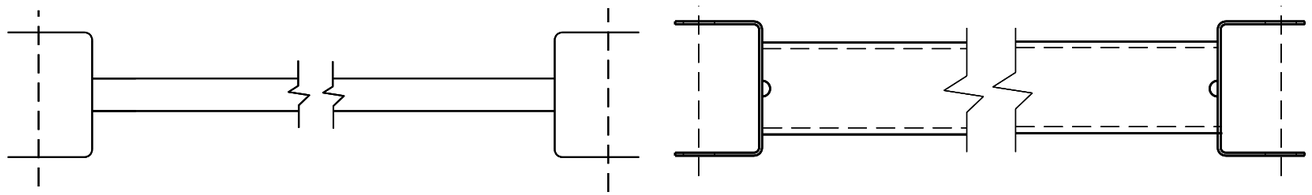

GENERIC GROUND STRUT (9) (H)

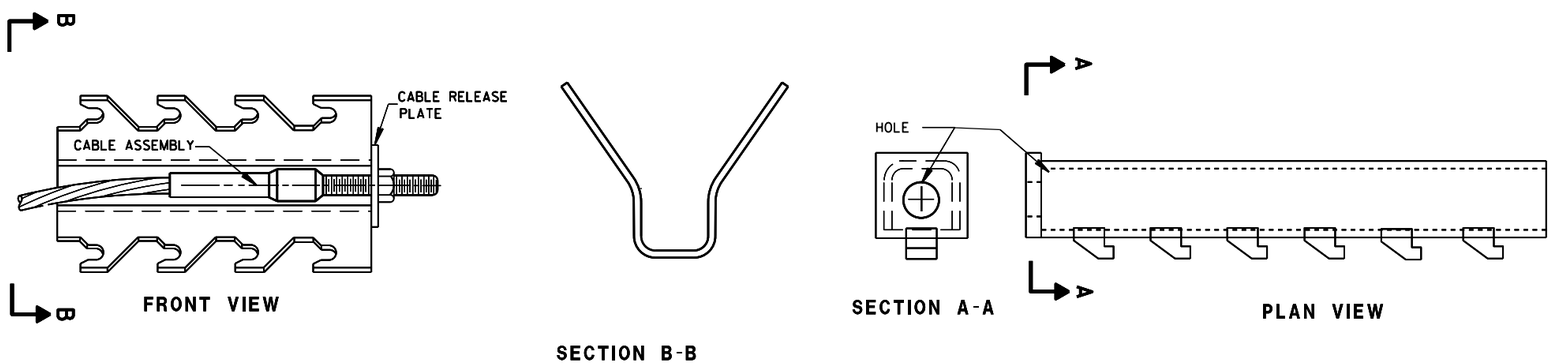

GENERIC ANCHOR CABLE BOX (8) (H)

BILL OF MATERIALS

PART NO.	DESCRIPTION MATERIALS PROVIDED BY MGS EAT MANUFACTURER. SEE MANUFACTURER'S DETAILS FOR MORE INFORMATION.
1	WOOD BREAKAWAY POST
2	6" X 8" X 0.188", 6'-0" LONG FOUNDATION TUBE AT POSTS 1 AND 2
3	WOOD CRT
4	WOOD BLOCKOUT
5	PIPE SLEEVE
6	BEARING PLATE
7	BCT CABLE ASSEMBLY
8	ANCHOR CABLE BOX
9	GROUND STRUT
10	PERFORATED W-BEAM RAIL END PANEL, 12'-6" LONG.
11	STANDARD W-BEAM RAIL. MULTIPLE SECTIONS REQUIRED. SECTIONS VARY IN LENGTH.
12	END SECTION EAT
13	0.040" ALUMINUM SHEET WITH REFLECTIVE SHEETING TYPE F PER SECTION 637 OF THE STANDARD SPECIFICATIONS
14	EAT MARKER POST - YELLOW (SEE APPROVED PRODUCTS LIST)

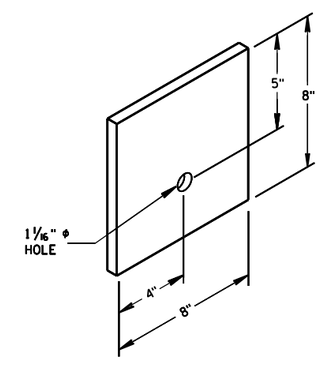

BEARING PLATE (6)

MIDWEST GUARDRAIL SYSTEM
ENERGY ABSORBING TERMINAL
(MGS)

STATE OF WISCONSIN
DEPARTMENT OF TRANSPOI

6

S.D.D. 14 B 44-2b

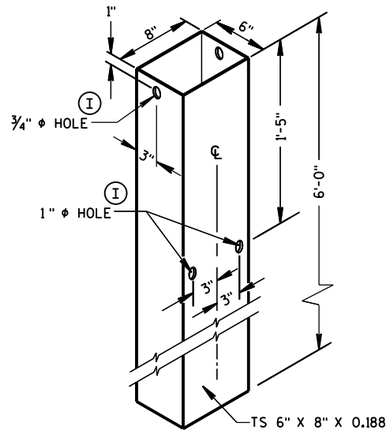

FOUNDATION TUBE (2)

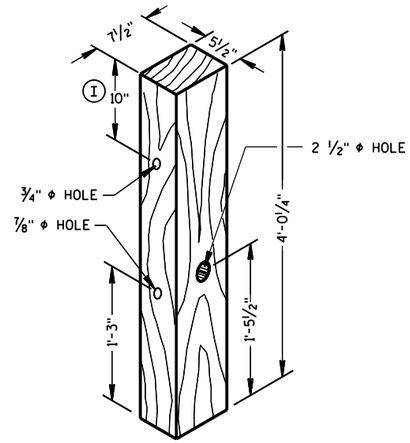

POSTS NUMBER 1 AND 2

WOOD BREAKAWAY POST (1)

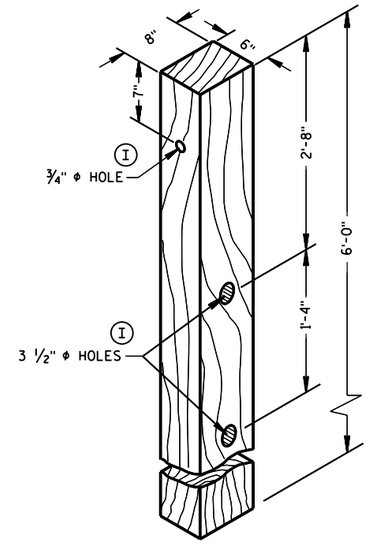

POSTS NUMBER 3-9

WOOD CRT POST (3)

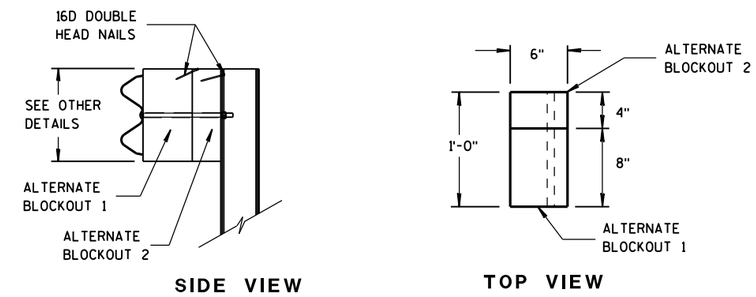

ALTERNATE WOOD BLOCKOUT DETAIL

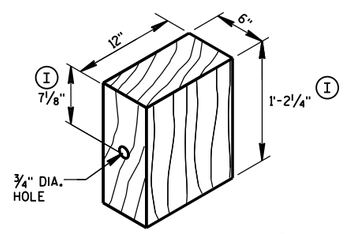

WOOD BLOCKOUT (4)

REQ'D. AT ALL POSTS EXCEPT POST NO'S 1 & 2

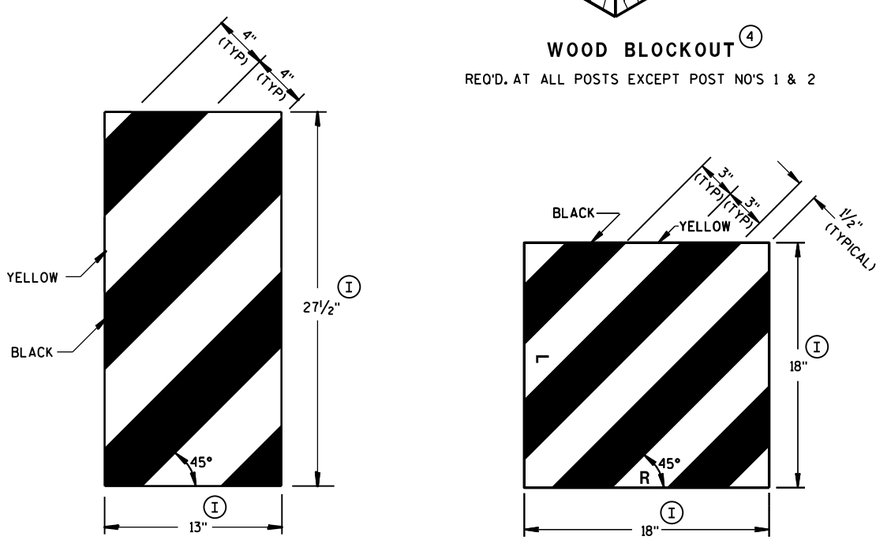

GENERIC REFLECTIVE SHEETING (13) (H)

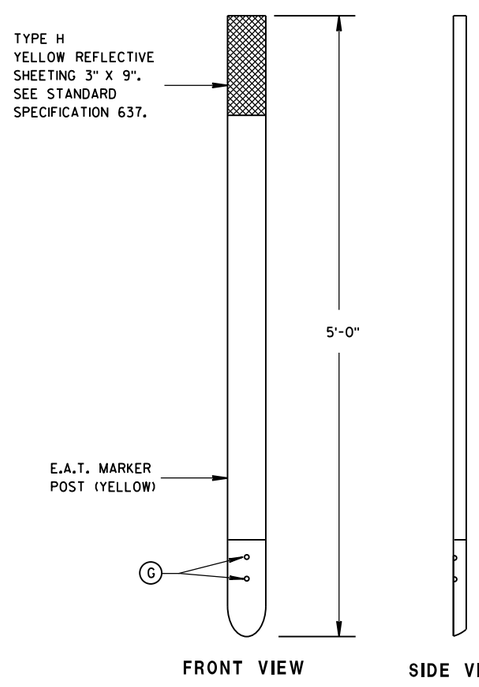

E.A.T. MARKER POST (14)

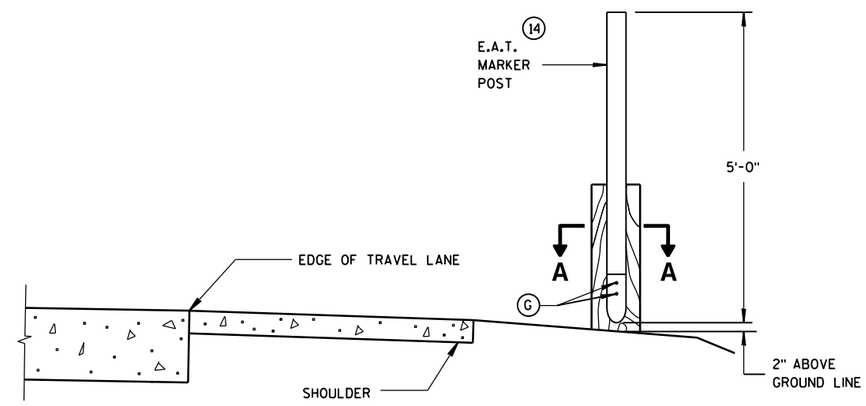

TYPICAL INSTALLATION OF E.A.T. MARKER POST BACKSIDE OF POST NO. 1

(E.A.T. AND RAIL REMOVED FOR CLARITY)

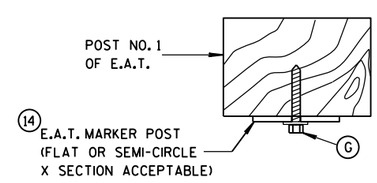

SECTION A-A

MIDWEST GUARDRAIL SYSTEM ENERGY ABSORBING TERMINAL (MGS)

STATE OF WISCONSIN
DEPARTMENT OF TRANSPORTATION

APPROVED
June 2014 — DATE
/S/ Jerry H. Zogg — ROADWAY STANDARDS DEVELOPMENT ENGINEER
FHWA

6

6

S.D.D. 14 B 44-2c

S.D.D. 14 B 44-2c

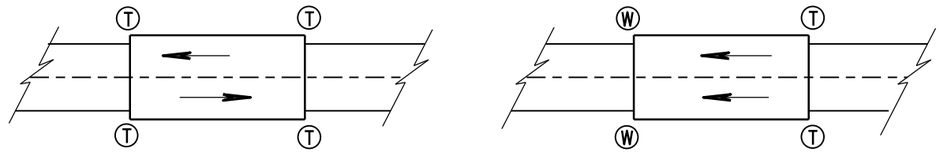

TWO WAY TRAFFIC

ONE WAY TRAFFIC

(T) THRIE BEAM CONNECTION

(W) W-BEAM CONNECTION WHEN REQUIRED

TYPICAL LOCATIONS OF THRIE BEAM AND W-BEAM CONNECTIONS TO BRIDGE

GENERAL NOTES

IF ROCK IS ENCOUNTERED, REMOVE ROCK TO FULL DEPTH OF POST PLUS 2½", AND 12" DIAMETER AROUND POST. SEE 14B42 FOR MORE DETAILS.

TRANSITION USES STEEL POSTS ONLY.

SEE STANDARD DETAIL DRAWING 14 B 42 FOR MORE INFORMATION.

(1) BRIDGE RAILING TYPE "W" DOES NOT REQUIRE A TERMINAL CONNECTOR.

(2) OPTIONAL CURB AND GUTTER OR DRAINAGE FEATURE SEE PLAN FOR INFORMATION.

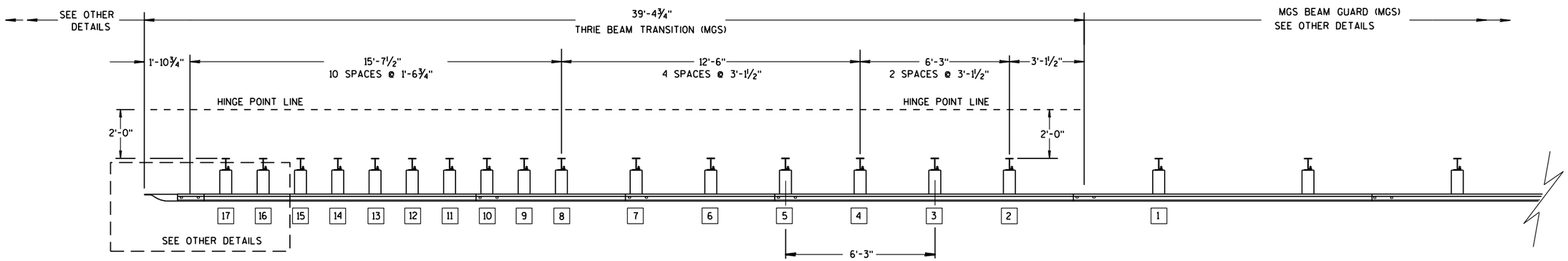

PLAN VIEW

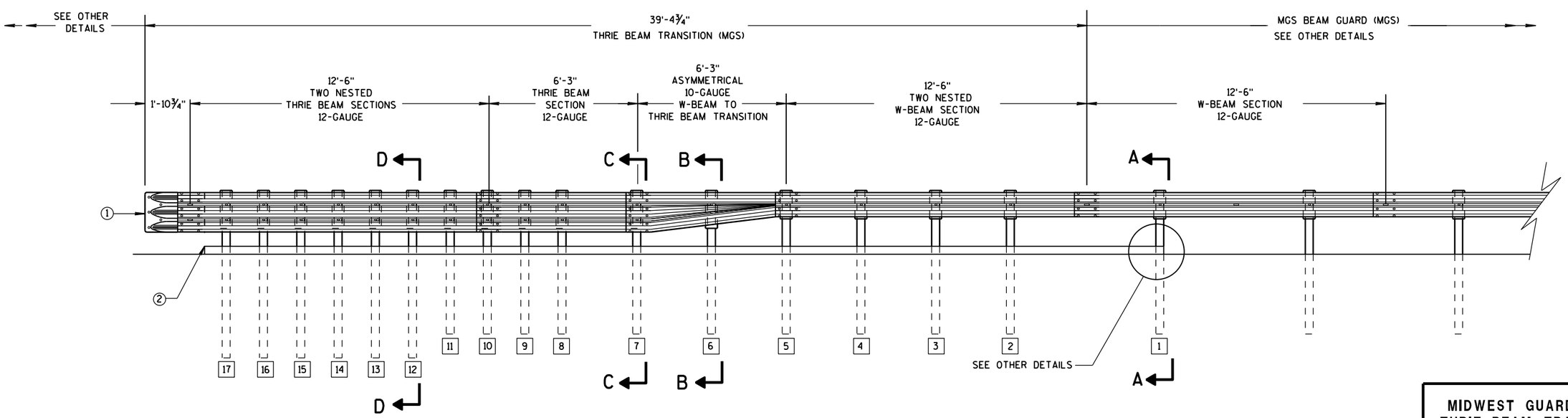

ELEVATION VIEW

MIDWEST GUARDRAIL SYSTEM THRIE BEAM TRANSITION

MIDWEST GUARDRAIL SYSTEM
THRIE BEAM TRANSITION (MGS)

STATE OF WISCONSIN
DEPARTMENT OF TRANSPORTATION

6

6

S.D.D. 14 B 45-4a

S.D.D. 14 B 45-4a

GENERAL NOTES

(2) OPTIONAL CURB AND GUTTER OR DRAINAGE_FEATURE SEE PLAN FOR INFORMATION.

(3) WHEN USING STEEL POSTS AND WOOD BLOCKOUTS INSTALL FOUR 10D GALVANIZED NAILS. INSTALL NAILS AT THE BACK CORNERS OF THE BLOCK AND BEND THE NAILS OVER THE FLANGE OF THE STEEL POST.

(4) TOLERANCE FOR TOP OF W-BEAM RAIL IS ± 1".

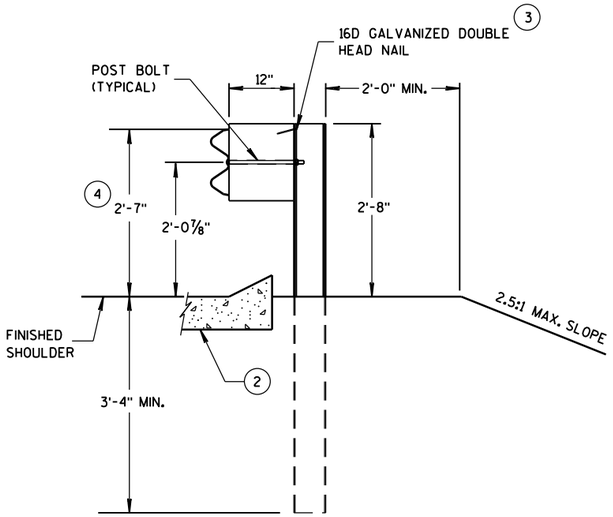

SECTION A-A
POSTS 1-5

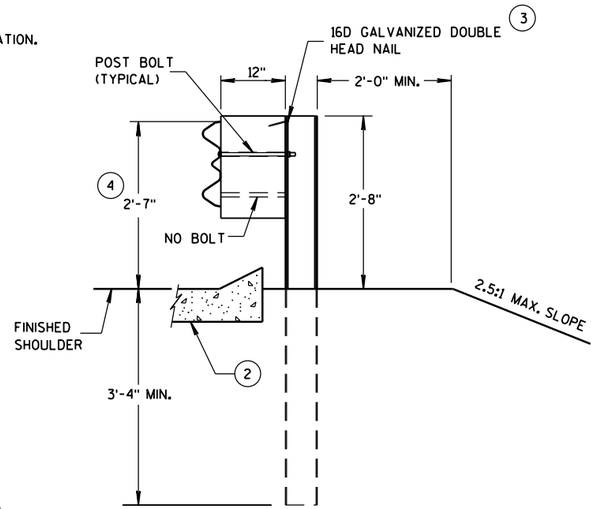

SECTION B-B
POST 6

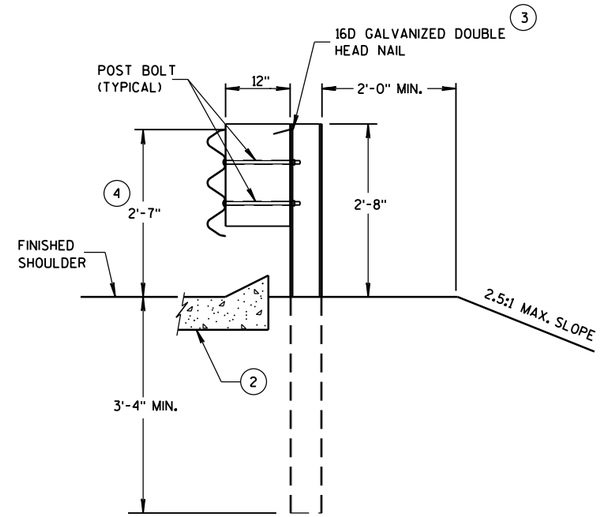

SECTION C-C
POSTS 7-11

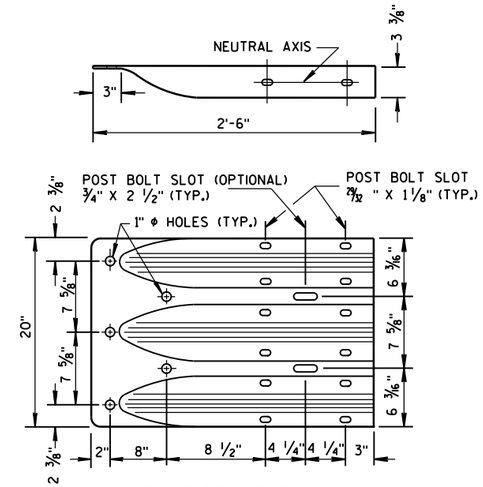

THRIE BEAM
TERMINAL CONNECTOR

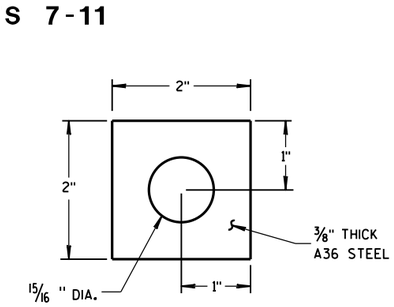

PLATE WASHER DETAIL

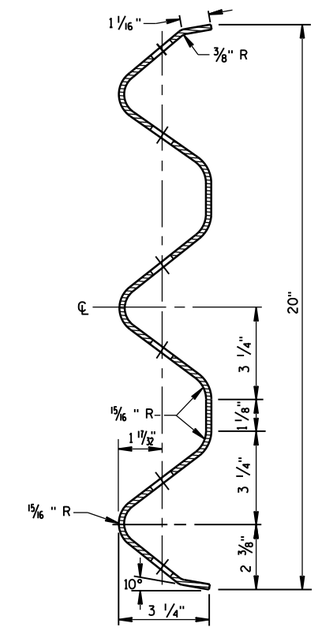

SECTION THRU THRIE
BEAM RAIL ELEMENT

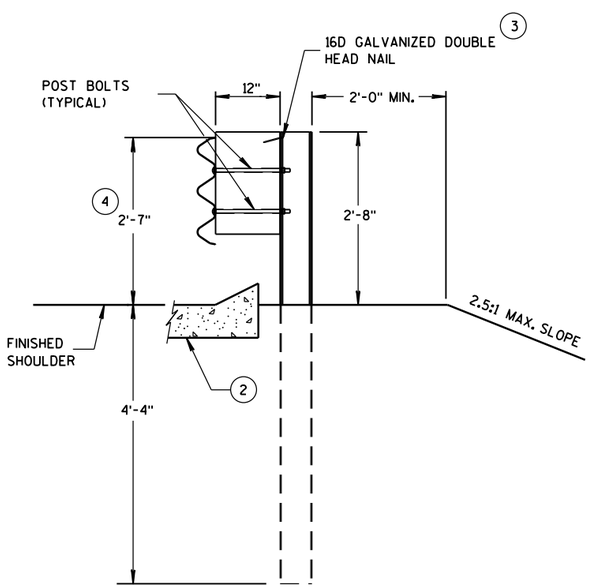

SECTION D-D
POSTS 12-17

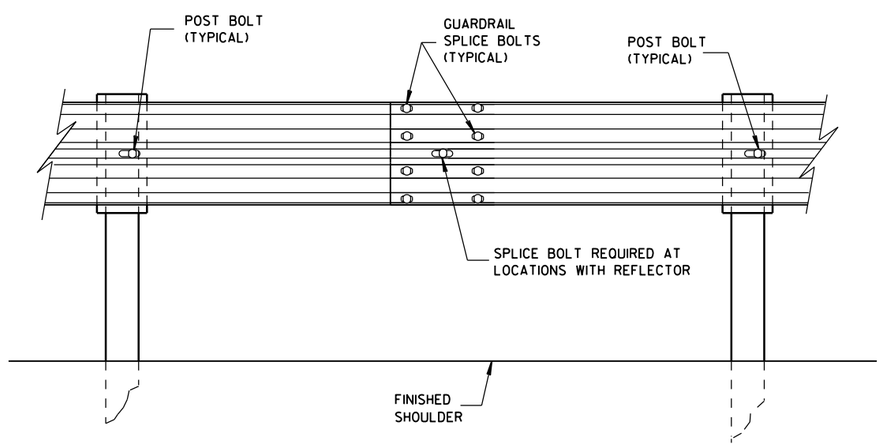

SPLICE DETAIL

MIDWEST GUARDRAIL SYSTEM
THRIE BEAM TRANSITION (MGS)

STATE OF WISCONSIN
DEPARTMENT OF TRANSPO

6

6

S.D.D. 14 B 45-4b

S.D.D. 14 B 45-4b

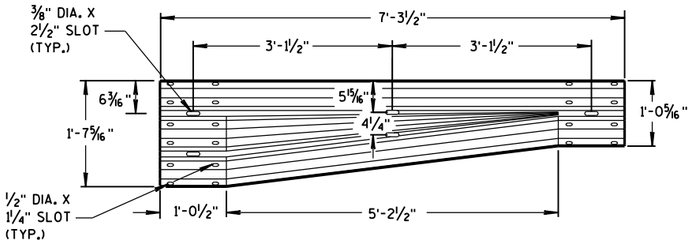

W-BEAM TO THRIE BEAM TRANSITION SECTION

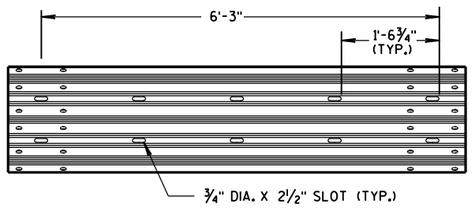

6'-3" THRIE BEAM SECTION

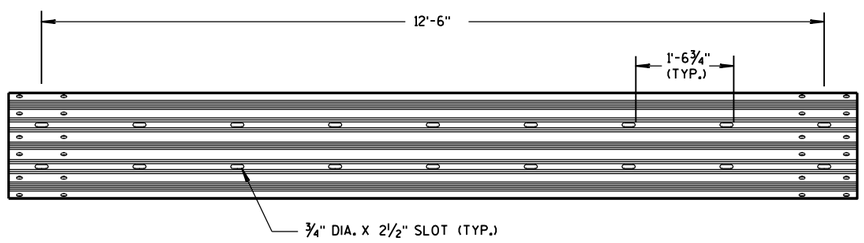

12'-6" THRIE BEAM SECTION

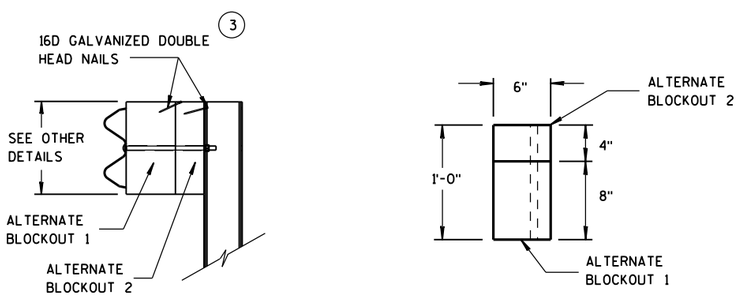

SIDE VIEW TOP VIEW

ALTERNATE WOOD BLOCKOUT DETAIL

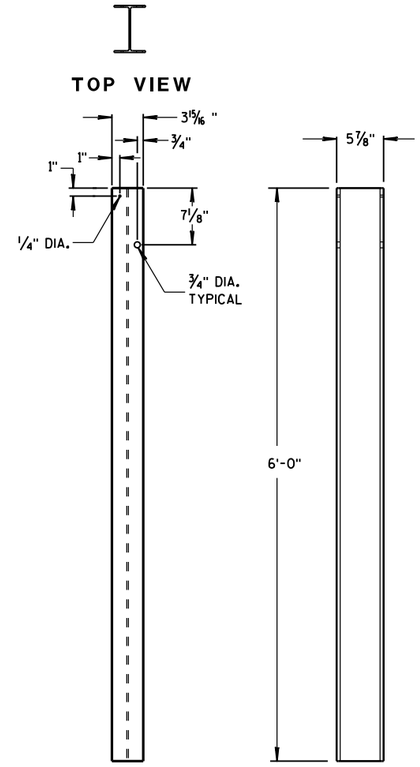

STEEL POSTS 1-5

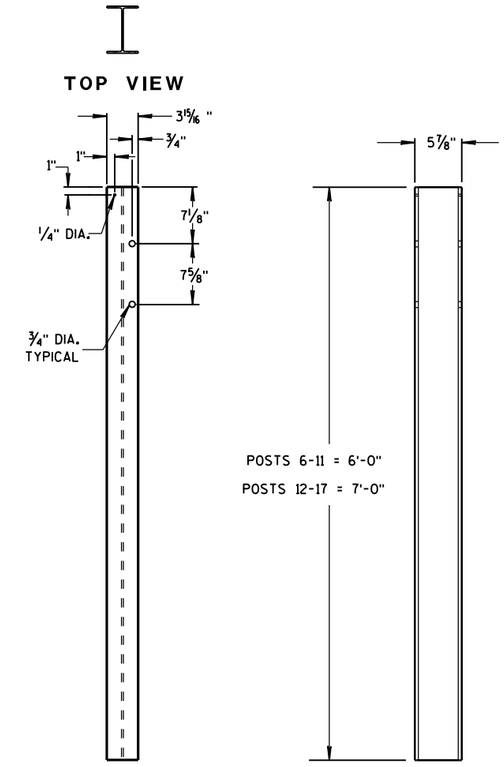

STEEL POSTS 6-17

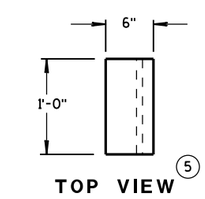

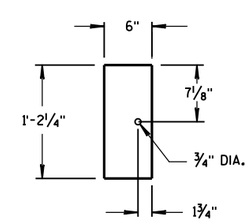

FRONT VIEW

BLOCKOUT POSTS 1-5

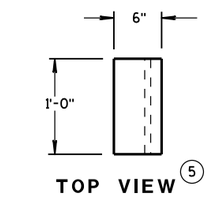

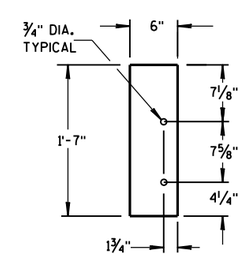

FRONT VIEW

BLOCKOUT POSTS 6-17

GENERAL NOTES

STEEL POSTS ARE W6X9 OR W6X8.5.

BOLT HOLES FOR POST ARE ON FRONT AND OF SIDE OF POST.

3 WHEN USING STEEL POSTS AND WOOD BLOCKOUTS INSTALL FOUR 16D GALVANIZED NAILS. INSTALL NAILS AT THE BACK CORNERS OF THE BLOCK AND BEND THE NAILS OVER THE FLANGE OF THE STEEL POST.

5 WOOD BLOCKS MAY BE CONSTRUCTED OUT OF 2 WOOD BLOCKS. SEE ALTERNATE WOOD BLOCK DETAIL.

MIDWEST GUARDRAIL SYSTEM
THRIE BEAM TRANSITION (MGS)

STATE OF WISCONSIN
DEPARTMENT OF TRANSPOR

S.D.D. 14 B 45-4c

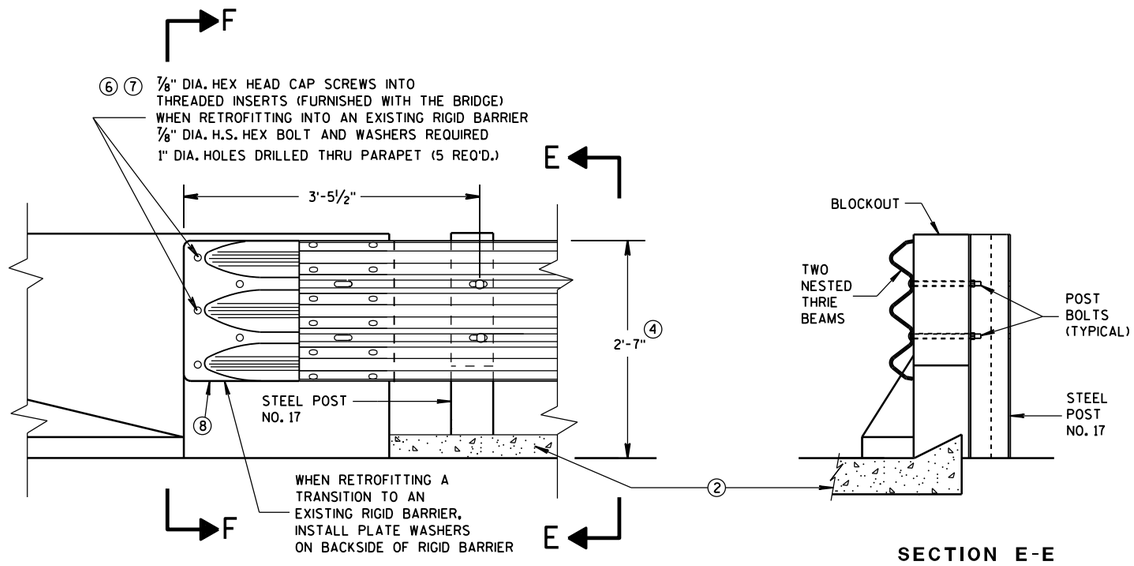

FRONT VIEW

SECTION E-E

THRIE BEAM CONNECTION TO BRIDGE PARAPET WITH SQUARE ENDS

GENERAL NOTES

THESE ARE TYPICAL CONNECTION DETAILS. ADJUST THE POSTION OF CONNECTIONS TO EXISTING BRIDGES TO FIT THE ACTUAL BRIDGE AND SITE DIMENSIONS.

② OPTIONAL CURB AND GUTTER OR DRAINAGE FEATURE SEE PLAN FOR INFORMATION.

④ TOLERANCE FOR TOP OF BEAM IS ± 1".

⑥ DRILLING BOLT HOLES THROUGH THE PARAPET, BOLTS, NUTS, WASHERS AND REPAIRING DAMAGED CONCRETE ARE INCIDENTAL TO THE CONTRACT.

⑦ BOLTS MAY BE A325 BOLTS OR A449 BOLTS. BOLT LENGTH AND THREADING LENGTH ARE TO ALLOW FOR A TIGHT CONNECTION BETWEEN RIGID BARRIER AND THRIE BEAM CONNECTION PLATE. CONTRACTOR IS TO FIELD VERIFY BOLT LENGTH AND THREAD LENGTH. ONE ROUND WASHER REQUIRED BETWEEN BOLT HEAD AND THRIE BEAM CONNECTOR PLATE. BOLTS THAT EXTEND THROUGH THE PARAPET AND OUT THE BACK FACE REQUIRE A HARDENED ROUND STEEL WASHER THAT IS 2" O.D. X 5/8" THICK AND ONE PLATE WASHER. REPAIR ANY DAMAGED CONCRETE FROM BOLT INSTALLATION.

⑧ THE RECESS FOR A W-BEAM CONNECTION, WHICH EXISTS ON SOME PARAPETS OF THIS TYPE, SHALL BE FILLED WITH A TREATED TIMBER BLOCKOUT. BLOCKOUT SIZE IS 1'-6" X 2'-0" X 3 1/2".

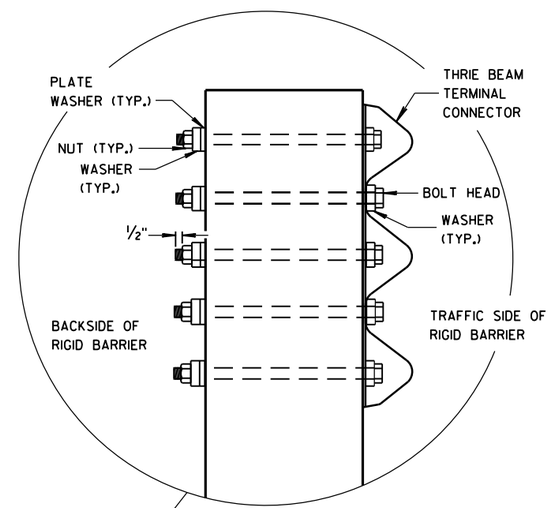

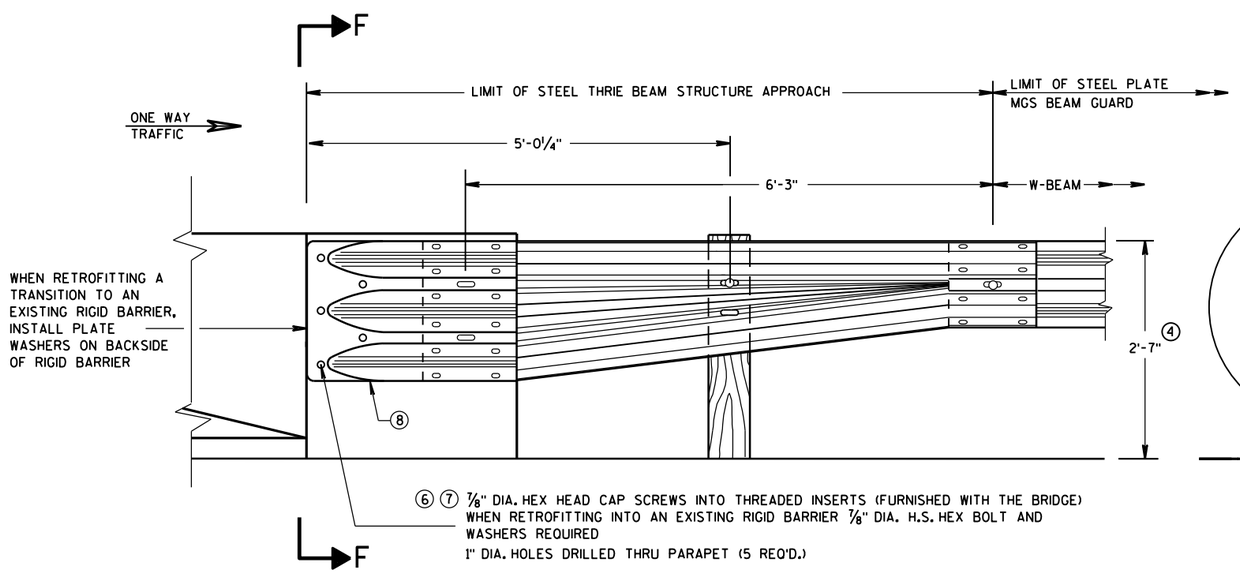

FRONT VIEW

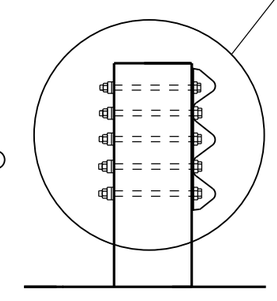

SECTION F-F

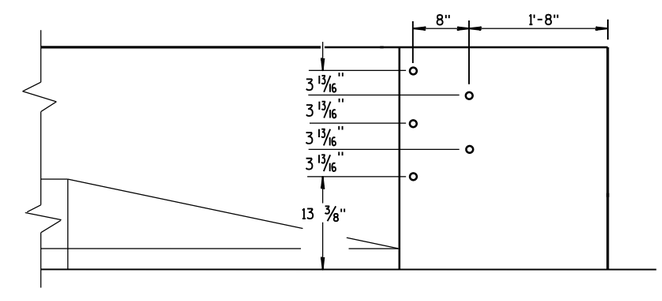

DRILL HOLE LOCATION

W BEAM TRANSITION AND CONNECTION TO BRIDGE PARAPETS WITH SQUARE ENDS

(USE ONLY ON THE TRAFFIC EXIT END OF ONE WAY BRIDGES)

MIDWEST GUARDRAIL SYSTEM
THRIE BEAM TRANSITION (MGS)

STATE OF WISCONSIN
DEPARTMENT OF TRANSPORTATION

APPROVED
June, 2015 — DATE
/S/ Jerry H. Zogg — ROADWAY STANDARDS DEVELOPMENT ENGINEER
FHWA
NT

6

6

S.D.D. 14 B 45-4d

S.D.D. 14 B 45-4d

GENERAL NOTES

THESE ARE TYPICAL CONNECTION DETAILS. ADJUST THE POSTION OF CONNECTIONS TO EXISTING BRIDGES TO FIT THE ACTUAL BRIDGE AND SITE DIMENSIONS.

(2) OPTIONAL CURB AND GUTTER OR DRAINAGE FEATURE SEE PLAN FOR INFORMATION.

(4) TOLERANCE FOR TOP OF BEAM IS ± 1".

(6) DRILLING BOLT HOLES THROUGH THE PARAPET, BOLTS, NUTS, WASHERS AND REPAIRING DAMAGED CONCRETE ARE INCIDENTAL TO THE CONTRACT.

(7) BOLTS MAY BE A325 BOLTS OR A449 BOLTS. BOLT LENGTH AND THREADING LENGTH ARE TO ALLOW FOR A TIGHT CONNECTION BETWEEN RIGID BARRIER AND THRIE BEAM CONNECTION PLATE. CONTRACTOR IS TO FIELD VERIFY BOLT LENGTH AND THREAD LENGTH. ONE ROUND WASHER REQUIRED BETWEEN BOLT HEAD AND THRIE BEAM CONNECTOR PLATE. BOLTS THAT EXTEND THROUGH THE PARAPET AND OUT THE BACK FACE REQUIRE A HARDENED ROUND STEEL WASHER THAT IS 2" O.D. X 5/8" THICK AND ONE PLATE WASHER. REPAIR ANY DAMAGED CONCRETE FROM BOLT INSTALLATION.

(8) THE RECESS FOR A W-BEAM CONNECTION, WHICH EXISTS ON SOME PARAPETS OF THIS TYPE, SHALL BE FILLED WITH A TREATED TIMBER BLOCKOUT. BLOCKOUT SIZE IS 1'-6" X 2'-0" X 3 1/2".

(9) BOLT, NUT AND WASHERS NOT REQUIRED FOR THIS LOCATION WHEN RETROFITTING AN EXISTING PAPAPET AND THE HOLE IS EITHER ABOVE PARAPET OR WITHIN 4 INCHES OF THE EDGE OF PARAPET.

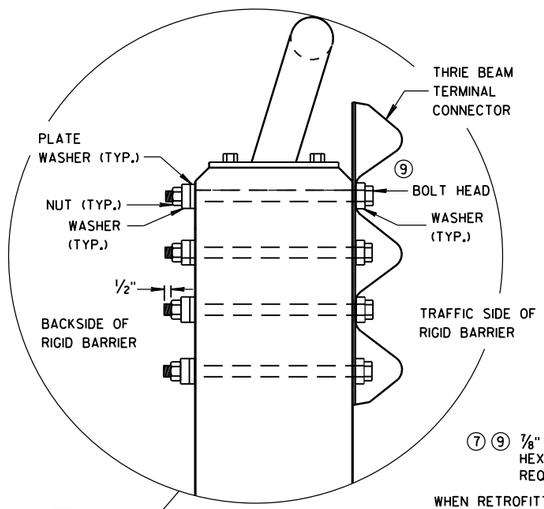

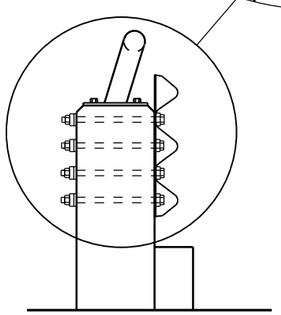

SECTION G-G

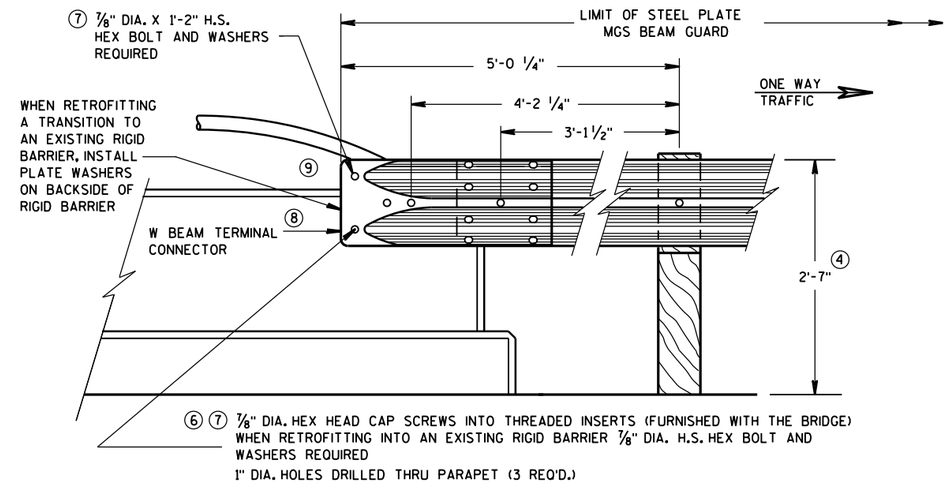

FRONT VIEW

W BEAM CONNECTION TO VERTICAL FACE PARAPET

(USE ONLY ON THE TRAFFIC EXIT END OF ONE WAY BRIDGES)

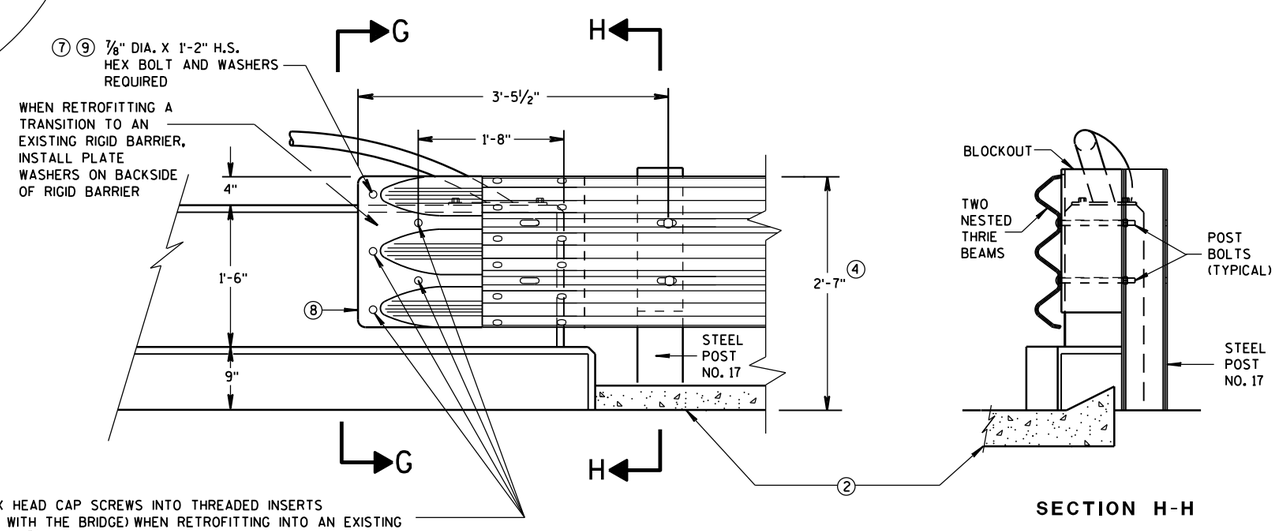

FRONT VIEW

SECTION H-H

THRIE BEAM CONNECTION TO VERTICAL FACED PARAPETS

MIDWEST GUARDRAIL SYSTEM
THRIE BEAM TRANSITION (MGS)

STATE OF WISCONSIN
DEPARTMENT OF TRANSPORTATION

APPROVED
June, 2015 — DATE
/S/ Jerry H. Zogg — ROADWAY STANDARDS DEVELOPMENT ENGINEER
FHWA
NT

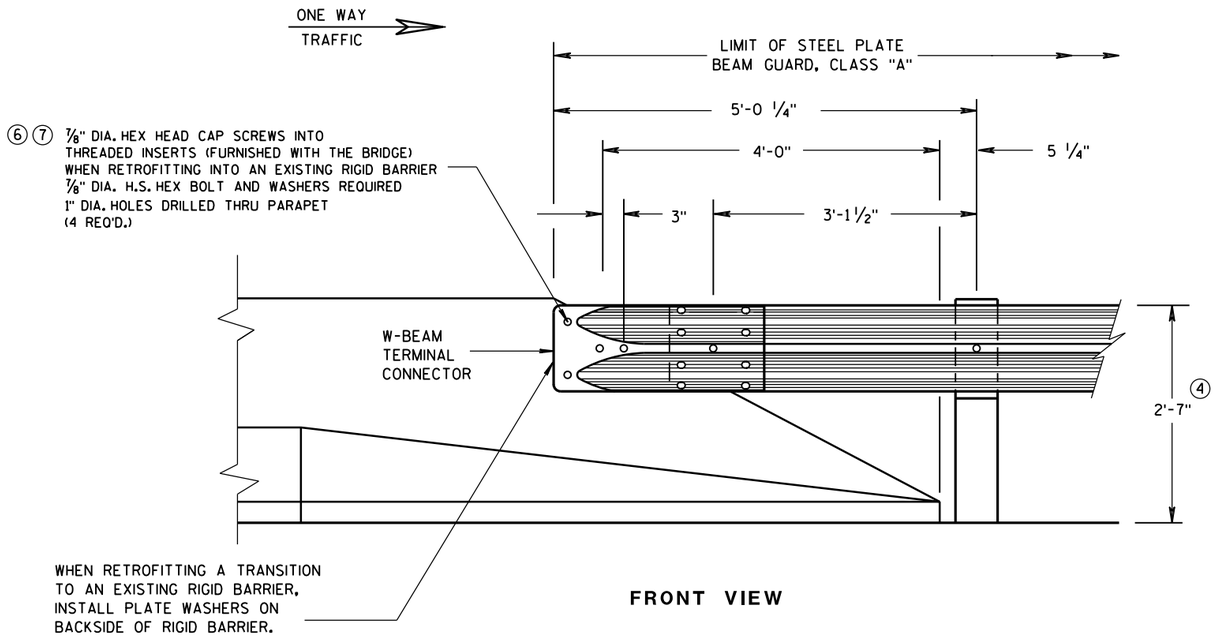

FRONT VIEW

W BEAM CONNECTION TO PARAPETS WITH SLOPED ENDS

(USE ONLY AT TRAFFIC EXIT END OF ONE WAY BRIDGE)

GENERAL NOTES

② OPTIONAL CURB AND GUTTER OR DRAINAGE FEATURE SEE PLAN FOR INFORMATION.

④ TOLERANCE FOR TOP OF BEAM IS ± 1".

⑥ DRILLING BOLT HOLES THROUGH THE PARAPET, BOLTS, NUTS, WASHERS AND REPAIRING DAMAGED CONCRETE ARE INCIDENTAL TO THE CONTRACT.

⑦ BOLTS MAY BE A325 BOLTS OR A449 BOLTS. BOLT LENGTH AND THREADING LENGTH ARE TO ALLOW FOR A TIGHT CONNECTION BETWEEN RIGID BARRIER AND THRIE BEAM CONNECTION PLATE. CONTRACTOR IS TO FIELD VERIFY BOLT LENGTH AND THREAD LENGTH. ONE ROUND WASHER REQUIRED BETWEEN BOLT HEAD AND THRIE BEAM CONNECTOR PLATE. BOLTS THAT EXTEND THROUGH THE PARAPET AND OUT THE BACK FACE REQUIRE A HARDENED ROUND STEEL WASHER THAT IS 2" O.D. X 5/8" THICK AND ONE PLATE WASHER. REPAIR ANY DAMAGED CONCRETE FROM BOLT INSTALLATION.

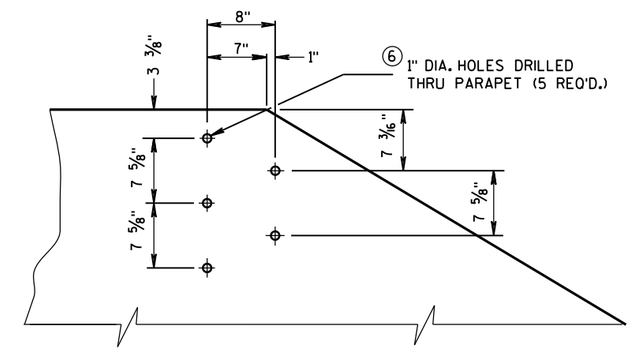

DRILL HOLE LOCATION AND PATTERN
FOR THRIE BEAM CONNECTION

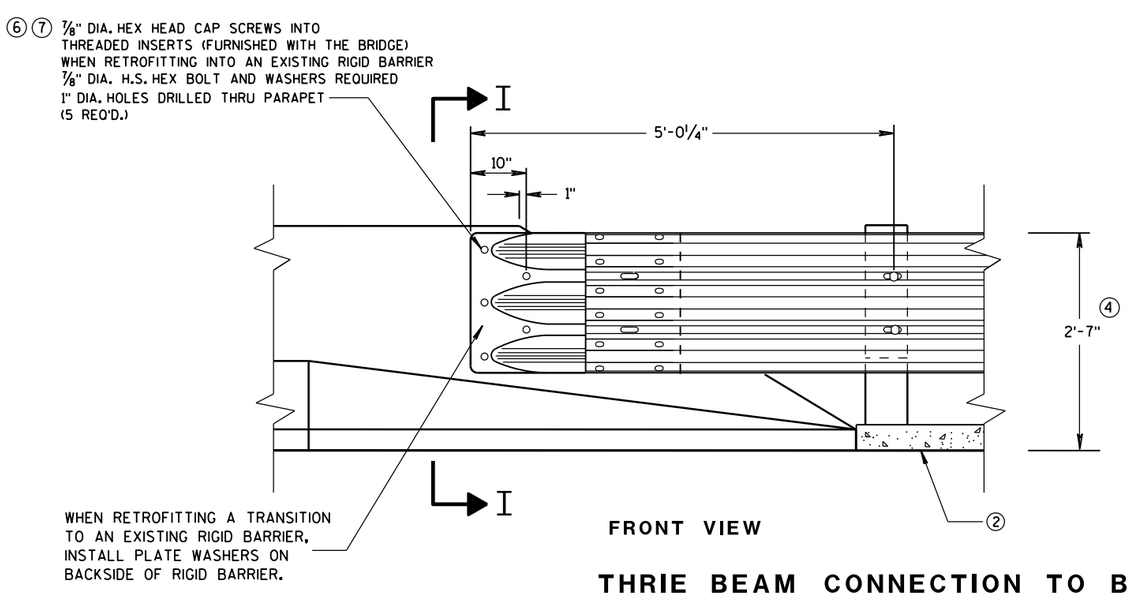

FRONT VIEW

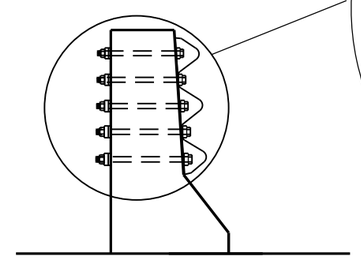

SECTION I-I

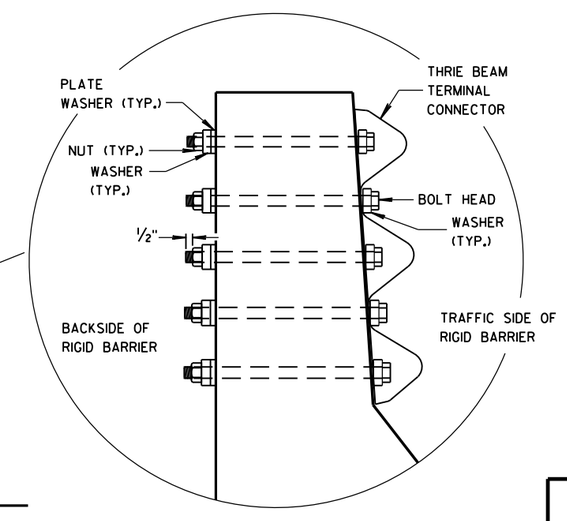

THRIE BEAM CONNECTION TO BRIDGE PARAPETS WITH SLOPED ENDS

MIDWEST GUARDRAIL SYSTEM
THRIE BEAM TRANSITION (MGS)

STATE OF WISCONSIN
DEPARTMENT OF TRANSPORTATION

APPROVED
June, 2015 — DATE
/S/ Jerry H. Zogg — ROADWAY STANDARDS DEVELOPMENT ENGINEER
FHWA

6

6

S.D.D. 14 B 45-4f

S.D.D. 14 B 45-4f

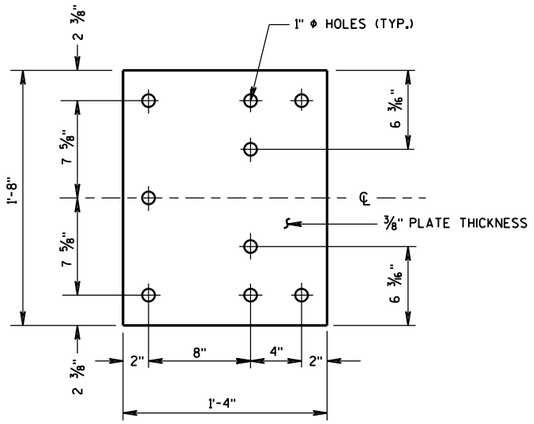

BACK-UP PLATE DETAIL

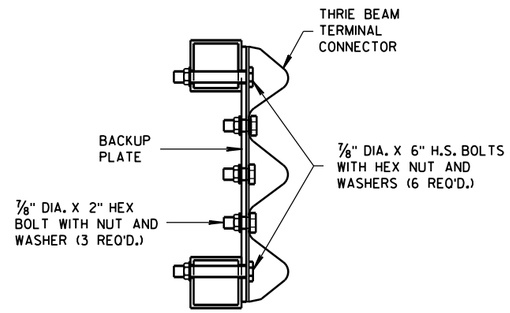

SECTION J-J

GENERAL NOTES

(4) TOLERANCE FOR TOP OF BEAM IS ± 1".

(6) DRILLING HOLES THROUGH THE PAPRPET, BOLTS, NUTS, WASHERS AND REPAIRING DAMAGED CONCRETE ARE INCIDENTAL TO THE CONTRACT.

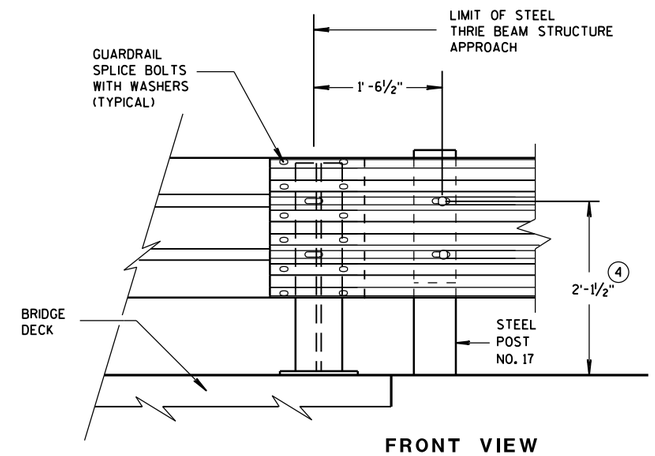

FRONT VIEW

THRIE BEAM CONNECTION TO STEEL RAILING TYPE "W"

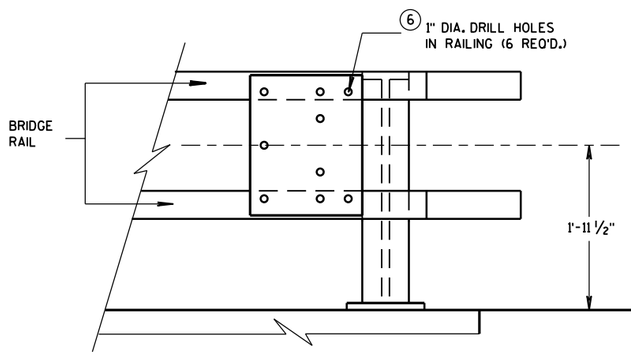

BACK-UP PLATE MOUNTING ONTO BRIDGE RAILING

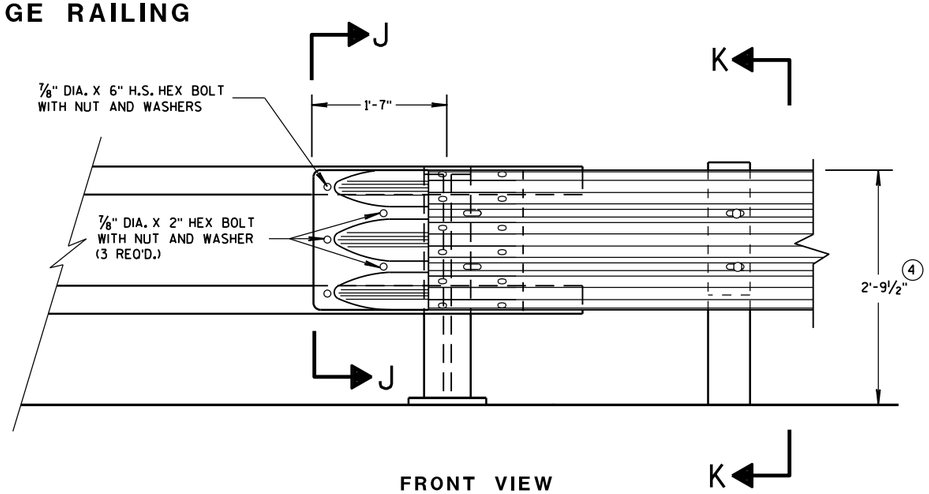

FRONT VIEW

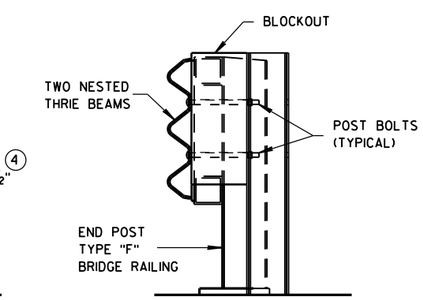

SECTION K-K

THRIE BEAM CONNECTION TO TUBULAR RAILING TYPE "F"

6

6

MIDWEST GUARDRAIL SYSTEM
THRIE BEAM TRANSITION (MGS)

STATE OF WISCONSIN
DEPARTMENT OF TRANSPORTATION

APPROVED
June, 2015 — DATE
/S/ Jerry H. Zogg — ROADWAY STANDARDS DEVELOPMENT ENGINEER
FHWA
NT

S.D.D. 14 B 45-4g

S.D.D. 14 B 45-4g

GENERAL NOTES

(4) TOLERANCE FOR TOP OF W-BEAM RAIL IS ± 1".

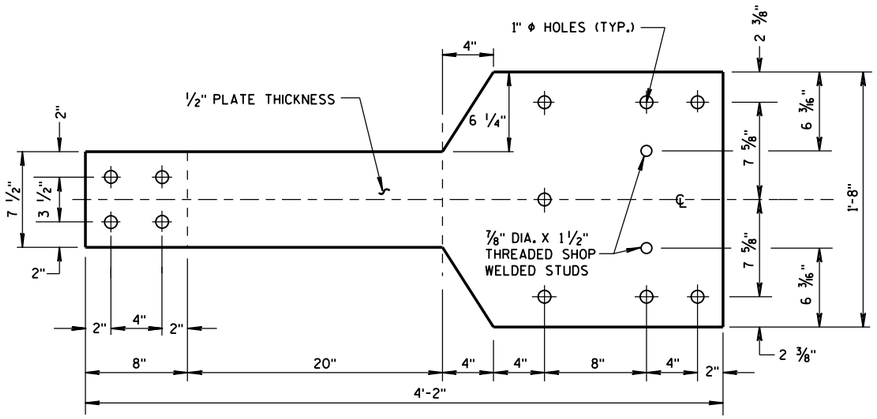

FRONT VIEW

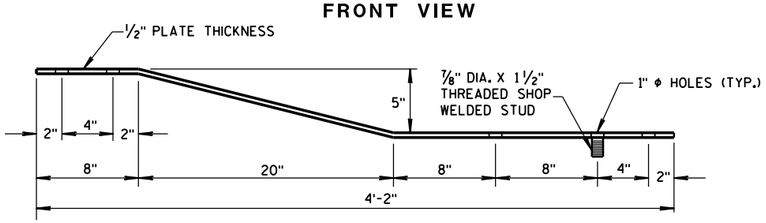

PLAN VIEW

BACK-UP PLATE DETAIL, TYPE "M"

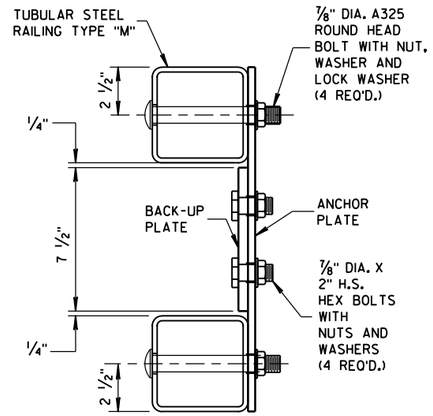

SECTION L-L

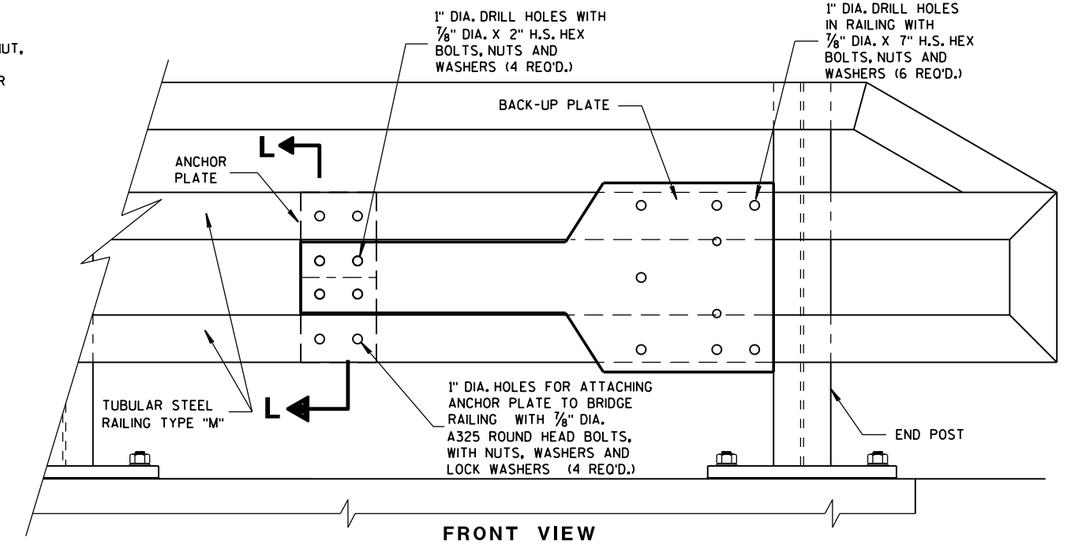

FRONT VIEW

ANCHOR AND BACK-UP PLATE MOUNTING TO BRIDGE RAILING, TYPE "M"

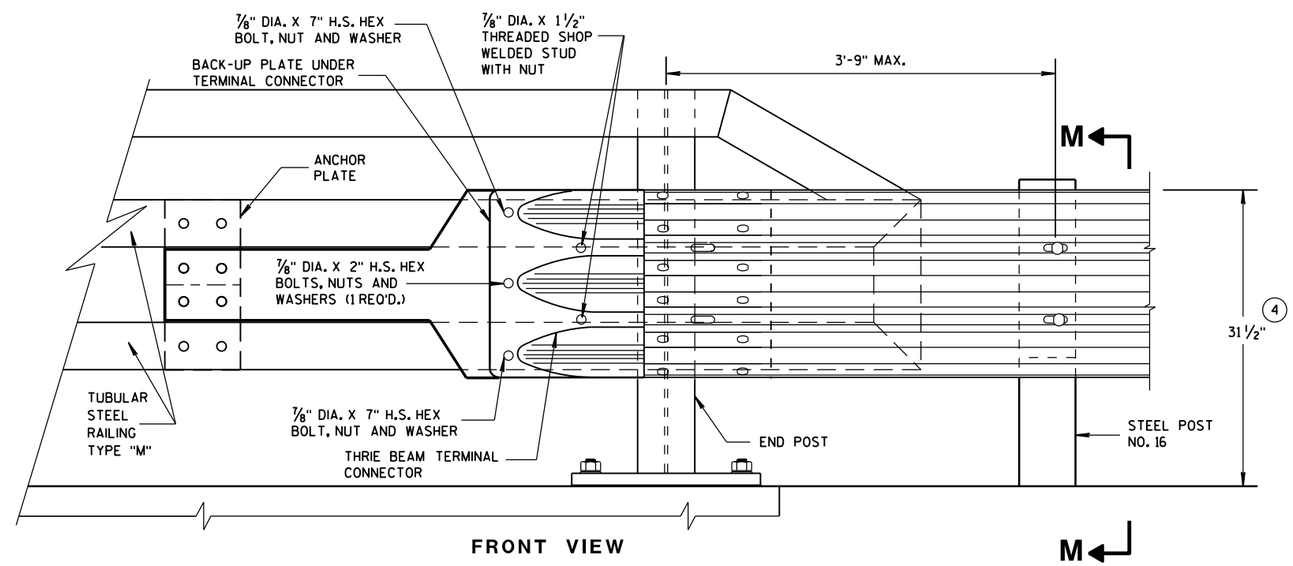

FRONT VIEW

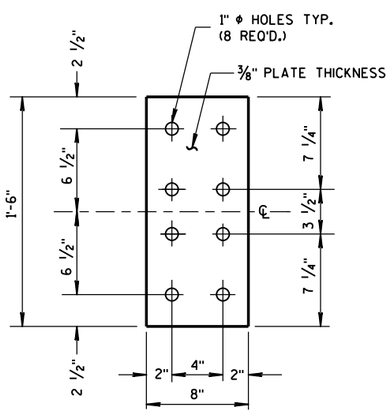

FRONT VIEW

ANCHOR PLATE DETAIL, TYPE "M"

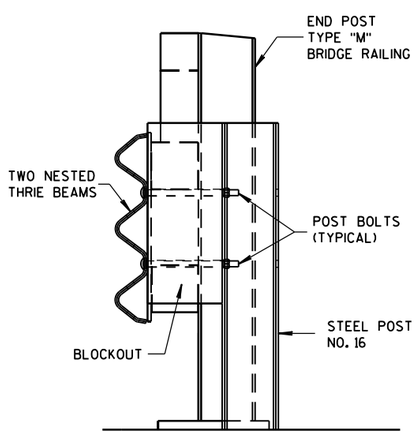

SECTION M-M

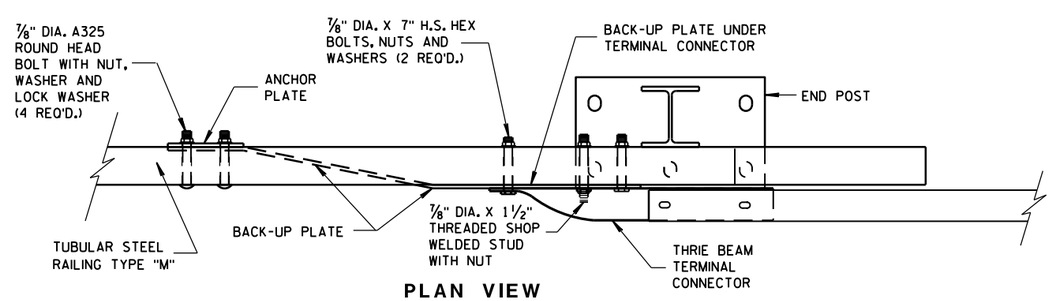

PLAN VIEW

THRIE BEAM CONNECTION TO TUBULAR RAILING, TYPE "M"

MIDWEST GUARDRAIL SYSTEM
THRIE BEAM TRANSITION (MGS)

STATE OF WISCONSIN
DEPARTMENT OF TRANSPORTATION

APPROVED
June, 2015 — DATE
/S/ Jerry H. Zogg — ROADWAY STANDARDS DEVELOPMENT ENGINEER
FHWA

6

6

S.D.D. 14 B 45-4h

S.D.D. 14 B 45-4h

GENERAL NOTES

COVER PLATE PANELS ARE 3/16" THICK.

ALL STIFFENERS ARE 1/4" THICK.

CONNECTOR PLATE SHALL BE FABRICATED FROM ASTM GRADE A36 STEEL AND GALVANIZED.

FOR GALVANIZED REQUIREMENTS, SEE SECTION 614 OF THE STANDARD SPECIFICATIONS.

ALL HOLE DIAMETERS SHALL BE 1".

FOR OPPOSITE SIDE INSTALLATION MIRROR DRAWINGS.

(10) STIFFENERS LOCATED AT THE OUTSIDE EDGES OF THE COVER PLATES SHALL BE WELDED AS FOLLOWS:
SINGLE BEVEL GROOVE WELD ON EXTERNAL SIDES AND 3/16" FILLET WELD BY 1" LONG SPACED AT 2" ON INTERNAL SIDES.

(11) STIFFENERS LOCATED ON THE INSIDE OF THE COVER PLATE SHALL BE WELDED AS FOLLOWS:
3/16" FILLET WELD BY 1" LONG SPACED AT 2".

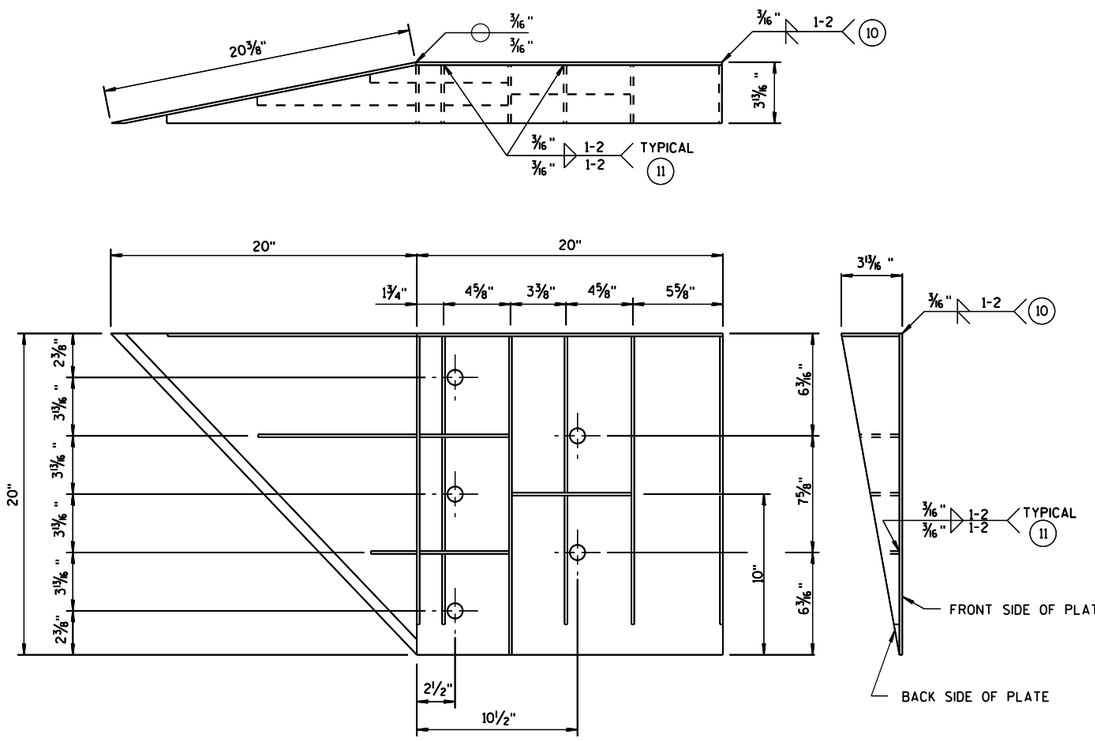

WELDING INSTRUCTION

(VIEWED FROM BACK SIDE OF PLATE)

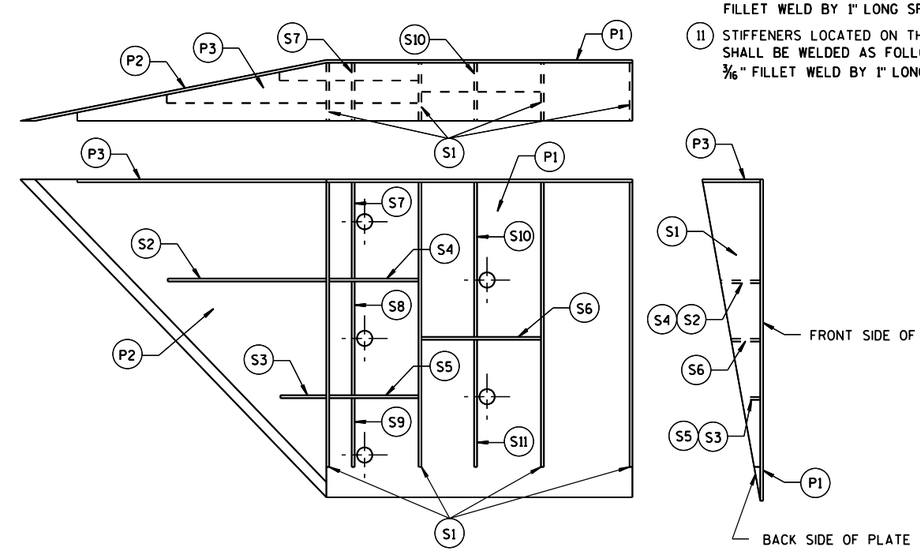

PLATE AND STIFFENER IDENTIFICATION

(VIEWED FROM BACK SIDE OF PLATE)

CONNECTOR PLATE DIMENSION (PER ASSEMBLY)				
PLATE	QUANTITY	SHAPE	SIZE (A x B x C x D)	THICKNESS
P1	1		20" x 20"	3/16"
P2	1		20" x 20" x 28 9/16"	3/16"
P3	1		39" x 3 5/8" x 20" x 19 5/16"	3/16"
S1	4		18 7/16" x 3 5/8" x 18 3/4"	1/4"
S2	1		10 1/4" x 2 7/16" x 10 3/8" x 1/2"	1/4"
S3	1		3" x 1 1/16" x 3 1/8" x 1/2"	1/4"
S4	1		6 1/8" x 2 7/16"	1/4"
S5	1		6 1/8" x 1 1/16"	1/4"
S6	1		7 3/4" x 1 3/4"	1/4"
S7	1		2 9/16" x 6" x 3 5/8" x 5 7/8"	1/4"
S8	1		1 5/32" x 7 1/2" x 2 1/2" x 7 3/8"	1/4"
S9	1		6 1/16" x 6 3/16" x 1 3/32"	1/4"
S10	1		1 7/8" x 9 7/8" x 3 5/8" x 9 11/16"	1/4"
S11	1		8 1/2" x 8 3/4" x 1 13/16"	1/4"

SINGLE SLOPE CONNECTION PLATE

MIDWEST GUARDRAIL SYSTEM
THRIE BEAM TRANSITION (MGS)

STATE OF WISCONSIN
DEPARTMENT OF TRANSPORTATION

APPROVED
June, 2015 — DATE
/S/ Jerry H. Zogg — ROADWAY STANDARDS ENGINEER
FHWA

6

S.D.D. 14 B 45-4i

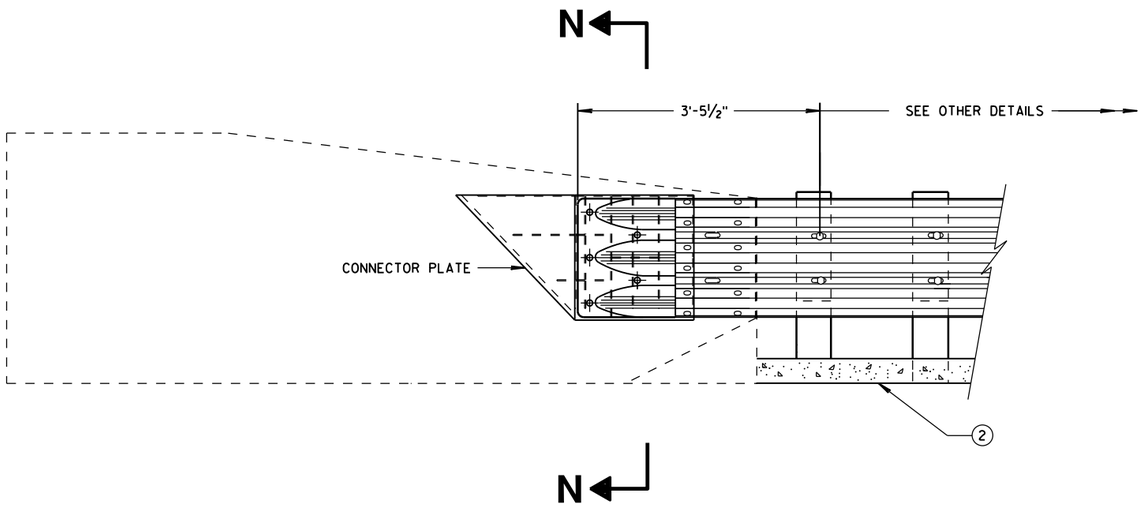

THRIE BEAM CONNECTION TO SINGLE SLOPE BARRIER

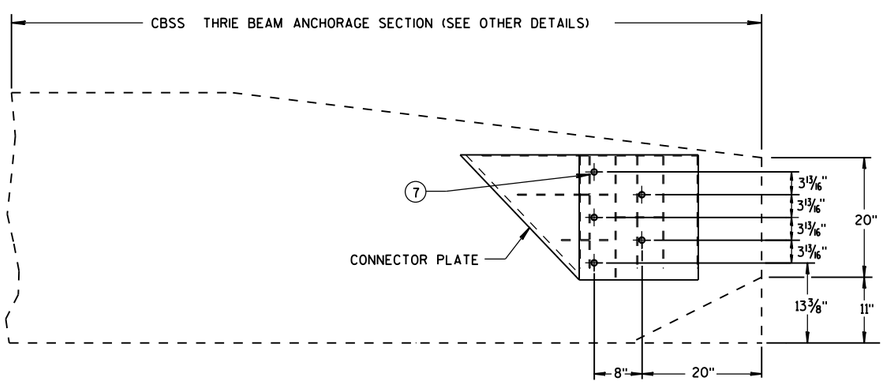

SINGLE SLOPE CONNECTION PLATE PLACEMENT

GENERAL NOTES

CONNECTOR PLATE, DRILLING BOLT HOLES THROUGH THE PARAPET, BOLTS, NUTS, WASHERS AND REPAIRING DAMAGED CONCRETE ARE INCIDENTAL TO THE CONTRACT.

(2) OPTIONAL CURB AND GUTTER OR DRAINAGE FEATURE SEE PLAN FOR INFORMATION.

(7) BOLTS MAY BE A325 BOLTS OR A449 BOLTS. BOLT LENGTH AND THREADING LENGTH ARE TO ALLOW FOR A TIGHT CONNECTION BETWEEN RIGID BARRIER AND THRIE BEAM CONNECTION PLATE. CONTRACTOR IS TO FIELD VERIFY BOLT LENGTH AND THREAD LENGTH. ONE ROUND WASHER REQUIRED BETWEEN BOLT HEAD AND THRIE BEAM CONNECTOR PLATE. BOLTS THAT EXTEND THROUGH THE PARAPET AND OUT THE BACK FACE REQUIRE A HARDENED ROUND STEEL WASHER THAT IS 2" O.D. X 5/8" THICK AND ONE PLATE WASHER. REPAIR ANY DAMAGED CONCRETE FROM BOLT INSTALLATION.

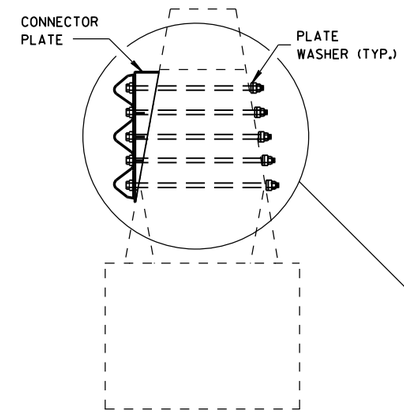

SECTION N-N

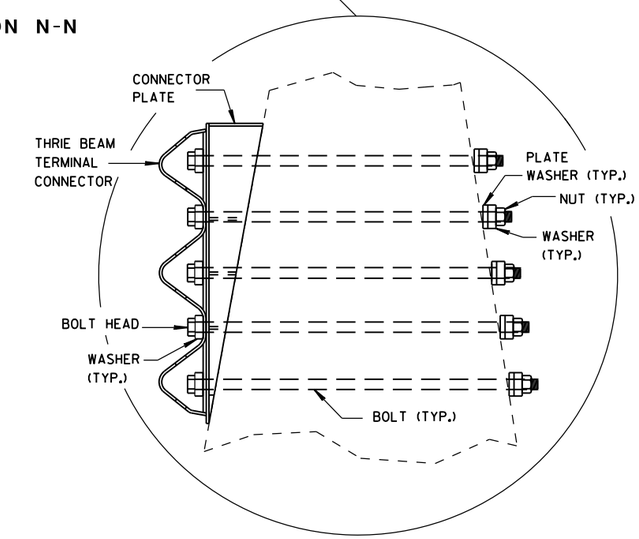

6

6

S.D.D. 14 B 45-4j

S.D.D. 14 B 45-4j

MIDWEST GUARDRAIL SYSTEM
THRIE BEAM TRANSITION (MGS)

STATE OF WISCONSIN
DEPARTMENT OF TRANSPORTATION

APPROVED
June, 2015 — DATE
/S/ Jerry H. Zogg — ROADWAY STANDARDS DEVELOPMENT ENGINEER
FHWA

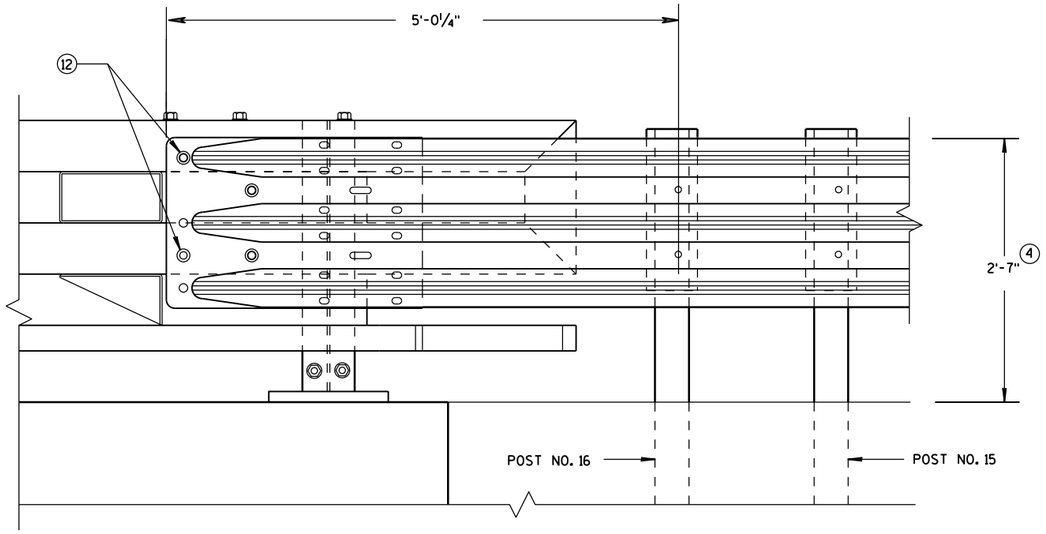

ELEVATION OF DETAIL AT NY3 END POST

THRIE BEAM RAIL ATTACHMENT

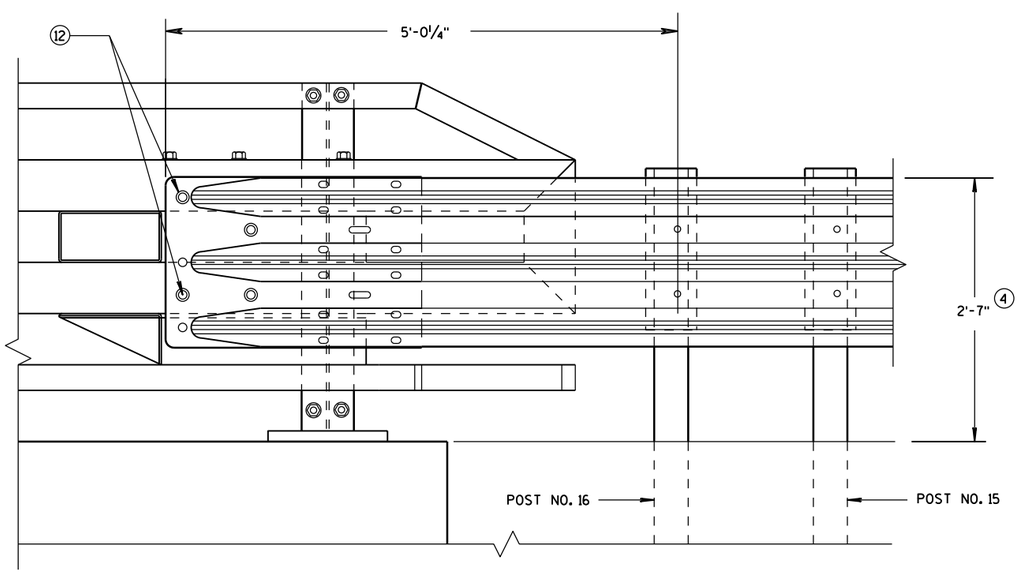

ELEVATION OF DETAIL AT NY4 END POST

THRIE BEAM RAIL ATTACHMENT

GENERAL NOTES

(4) TOLERANCE FOR TOP OF BEAM IS ± 1".

(12) BOLTS MAY BE A325 BOLTS OR A449 BOLTS. BOLT LENGTH AND THREADING LENGTH ARE TO ALLOW FOR A TIGHT CONNECTION BETWEEN RIGID BARRIER AND THRIE BEAM CONNECTION PLATE. CONTRACTOR IS TO FIELD VERIFY BOLT LENGTH AND THREAD LENGTH. ONE ROUND WASHER REQUIRED BETWEEN BOLT HEAD AND THRIE BEAM CONNECTOR PLATE. ON BACKSIDE OF PARAPET ONE ROUND WASHER, AND NUT REQUIRED. BOLT THREAD IS TO EXTEND ½-INCH BEYOND NUT.

MIDWEST GUARDRAIL SYSTEM
THRIE BEAM TRANSITION (MGS)

STATE OF WISCONSIN
DEPARTMENT OF TRANSPORTATION

APPROVED
June, 2015
DATE
FHWA

/S/ Jerry H. Zogg
ROADWAY STANDARDS DEVELOPMENT ENGINEER

NT

6

S.D.D. 14 B 45-4k

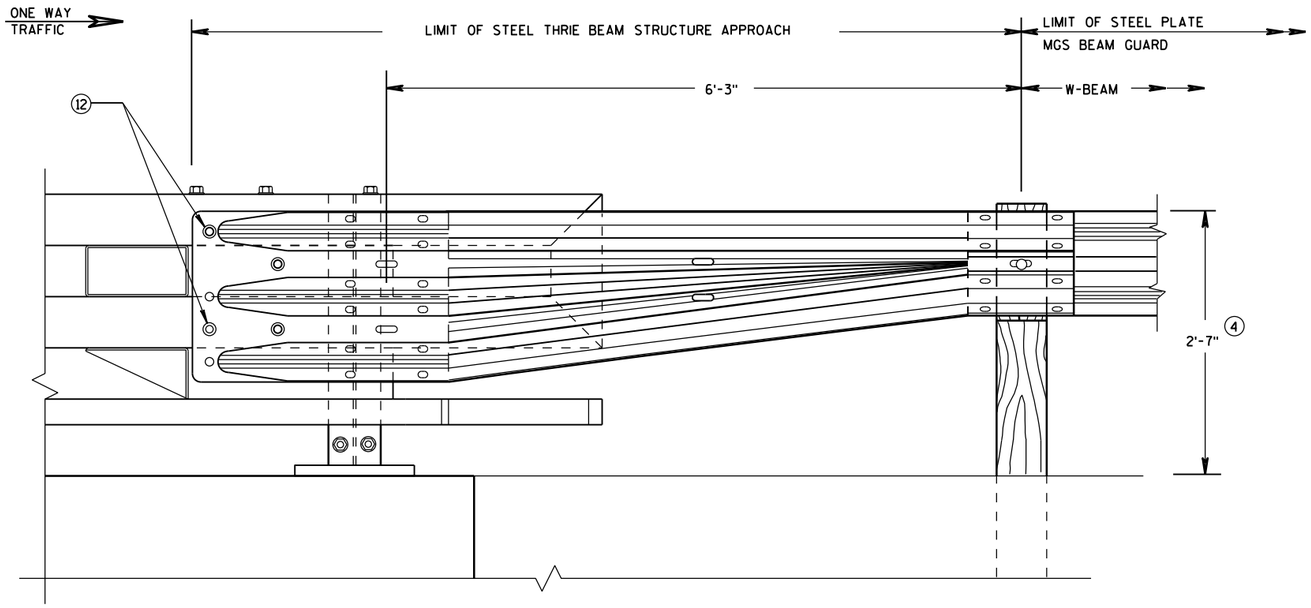

FRONT VIEW

W BEAM TRANSITION AND CONNECTION TO BRIDGE RAILING TYPE "NY3"

(USE ONLY ON THE TRAFFIC EXIT END OF ONE WAY BRIDGES)

GENERAL NOTES

(4) TOLERANCE FOR TOP OF BEAM IS ± 1".

(12) BOLTS MAY BE A325 BOLTS OR A449 BOLTS. BOLT LENGTH AND THREADING LENGTH ARE TO ALLOW FOR A TIGHT CONNECTION BETWEEN RIGID BARRIER AND THRIE BEAM CONNECTION PLATE. CONTRACTOR IS TO FIELD VERIFY BOLT LENGTH AND THREAD LENGTH. ONE ROUND WASHER REQUIRED BETWEEN BOLT HEAD AND THRIE BEAM CONNECTOR PLATE. ON BACKSIDE OF PARAPET ONE ROUND WASHER, AND NUT REQUIRED. BOLT THREAD IS TO EXTEND ½-INCH BEYOND NUT.

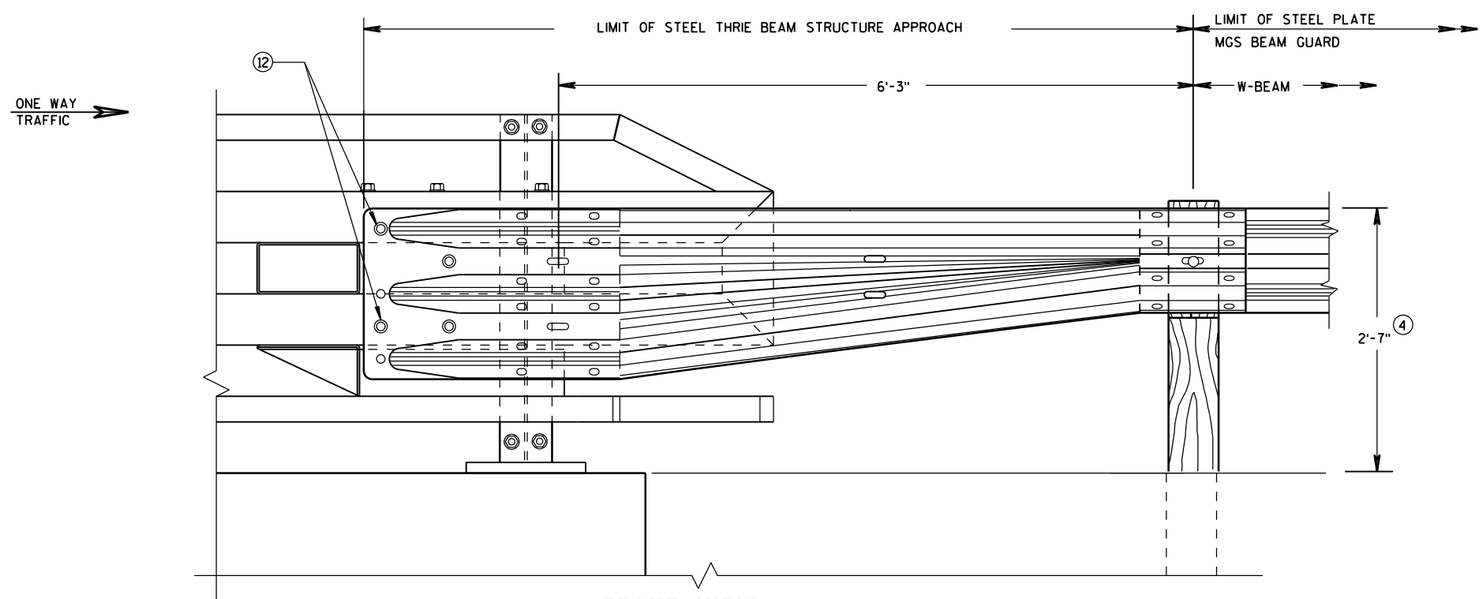

FRONT VIEW

W BEAM TRANSITION AND CONNECTION TO BRIDGE RAILING TYPE "NY4"

(USE ONLY ON THE TRAFFIC EXIT END OF ONE WAY BRIDGES)

MIDWEST GUARDRAIL SYSTEM
THRIE BEAM TRANSITION (MGS)

STATE OF WISCONSIN
DEPARTMENT OF TRANSPORTATION

APPROVED
June, 2015 — DATE
/S/ Jerry H. Zogg — ROADWAY STANDARDS DEVELOPMENT ENGINEER
FHWA

GENERAL NOTES

DETAILS OF CONSTRUCTION, MATERIALS AND WORKMANSHIP NOT SHOWN ON THIS DRAWING SHALL CONFORM TO THE PERTINENT REQUIREMENTS OF THE STANDARD SPECIFICATIONS AND THE APPLICABLE SPECIAL PROVISIONS.

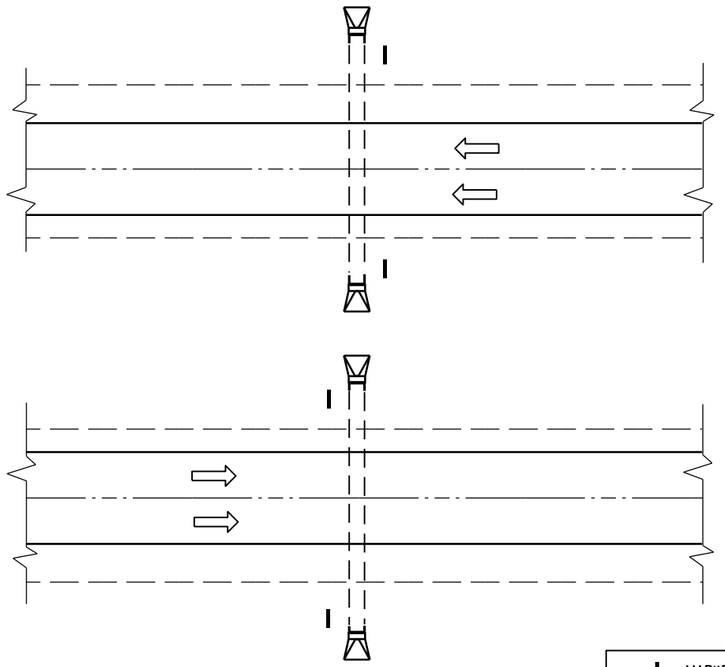

PLAN VIEW

DIVIDED HIGHWAY

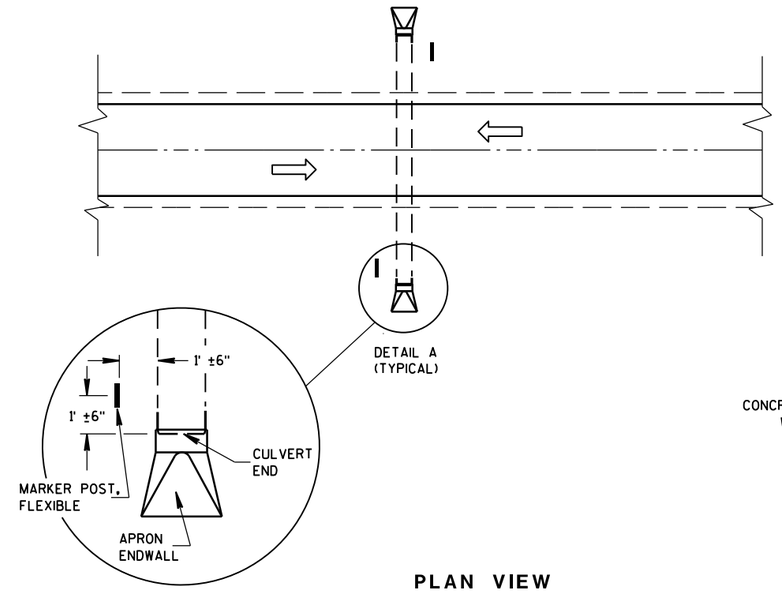

DETAIL A
(TYPICAL)

PLAN VIEW

UNDIVIDED HIGHWAY

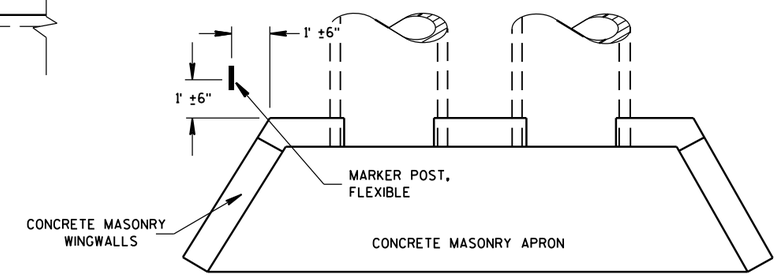

PLAN VIEW

CONCRETE MASONRY ENDWALLS FOR CULVERT PIPE AND PIPE ARCH

MARKER POST, FLEXIBLE

DIRECTION OF TRAFFIC FLOW

FLEXIBLE MARKER POST LOCATION

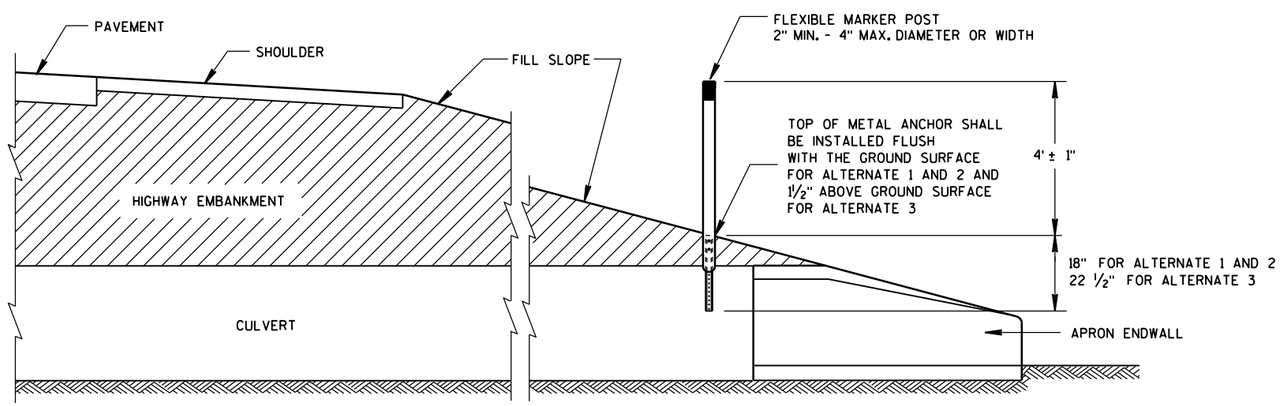

CROSS SECTION

FLEXIBLE MARKER POST

FLEXIBLE MARKER POST FOR CULVERT END

STATE OF WISCONSIN
DEPARTMENT OF TRANSPOR

6

S.D.D. 15 A 3-2a

6

S.D.D. 15 A 3-2a

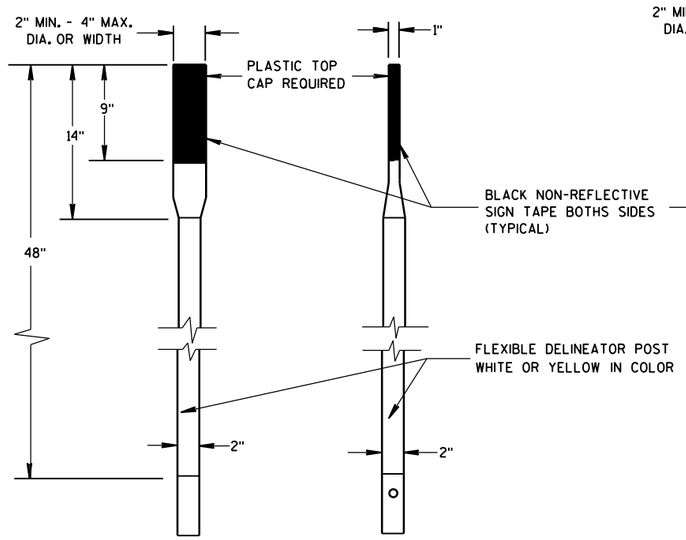

FRONT VIEW SIDE VIEW

ALTERNATE 1

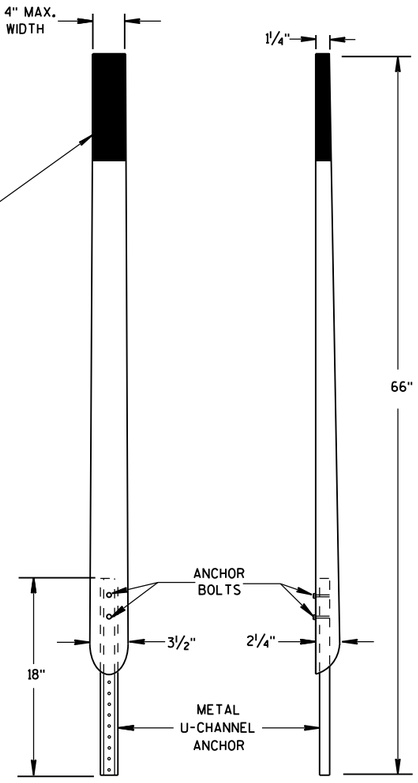

FRONT VIEW SIDE VIEW

ALTERNATE 2

FLEXIBLE MARKER POSTS

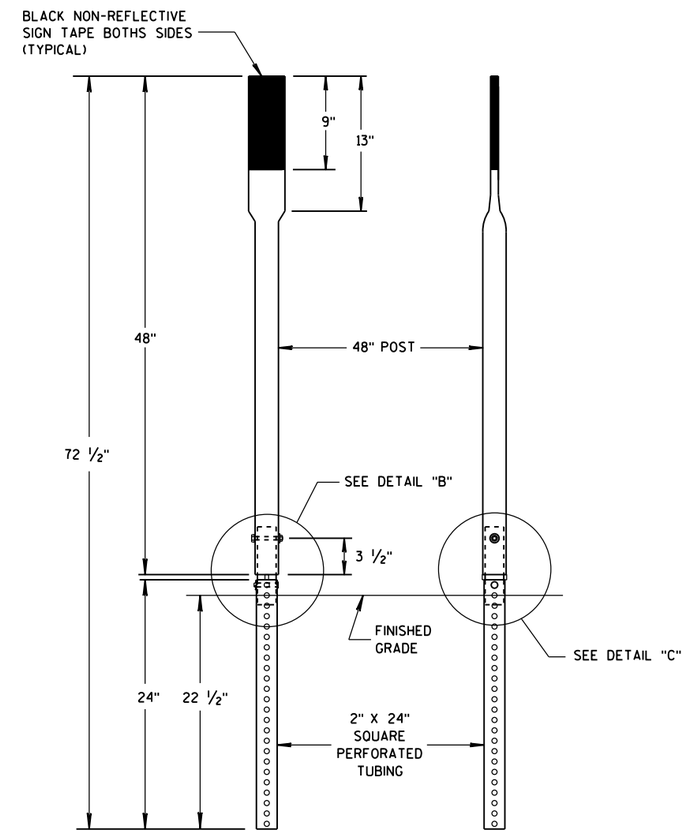

FRONT VIEW SIDE VIEW

ALTERNATE 3

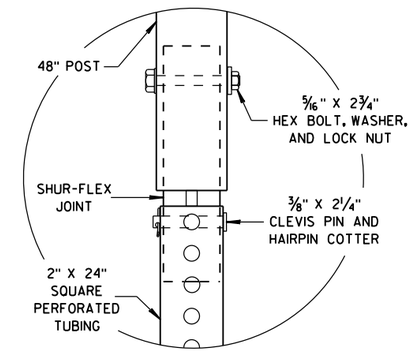

DETAIL B

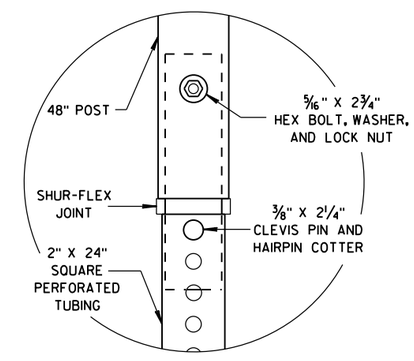

DETAIL C

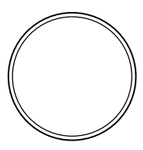

SECTION A-A

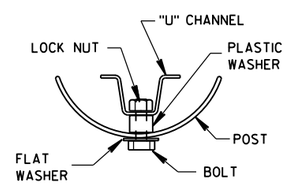

SECTION B-B

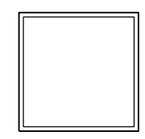

SECTION C-C

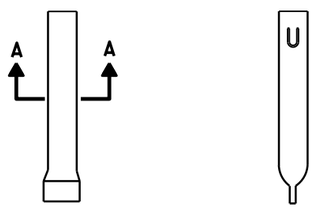

FRONT VIEW SIDE VIEW

ALTERNATE 1

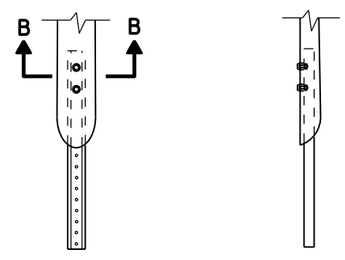

FRONT VIEW SIDE VIEW

ALTERNATE 2

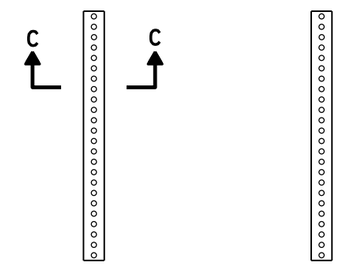

FRONT VIEW SIDE VIEW

ALTERNATE 3

FLEXIBLE MARKER POST ANCHORS

FLEXIBLE MARKER POST
FOR CULVERT END

STATE OF WISCONSIN
DEPARTMENT OF TRANSPORTATION

APPROVED
10/1/2012 /S/ Travis Feltes
DATE STATE TRAFFIC ENGINEER
FHWA

6

6

S.D.D. 15 A 3-2b

S.D.D. 15 A 3-2b

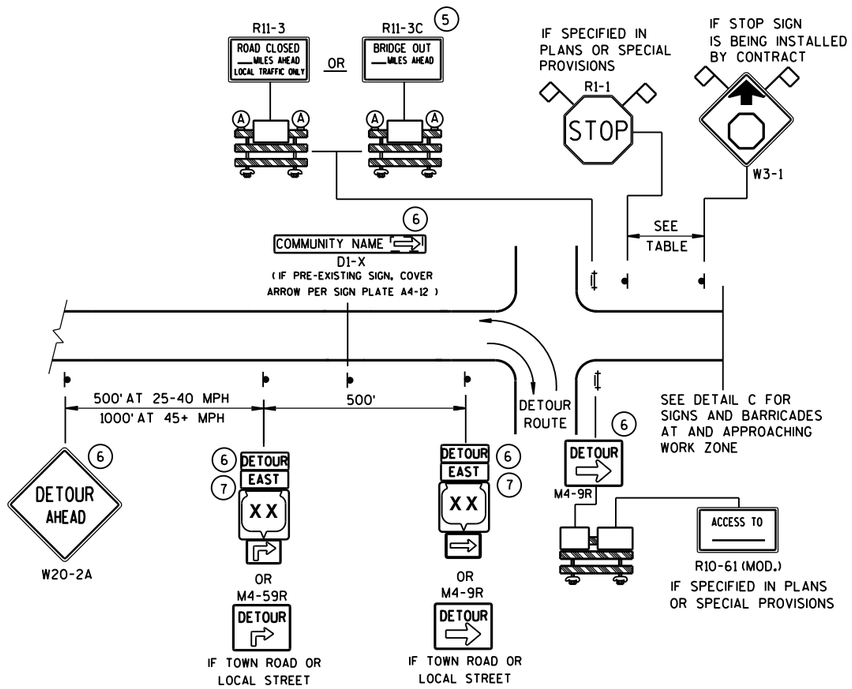

DETAIL A

MAINLINE CLOSURE WITH POSTED DETOUR

WORK ZONE GREATER THAN ½ MILE FROM DETOUR ROUTE (1000 FEET IF URBAN)

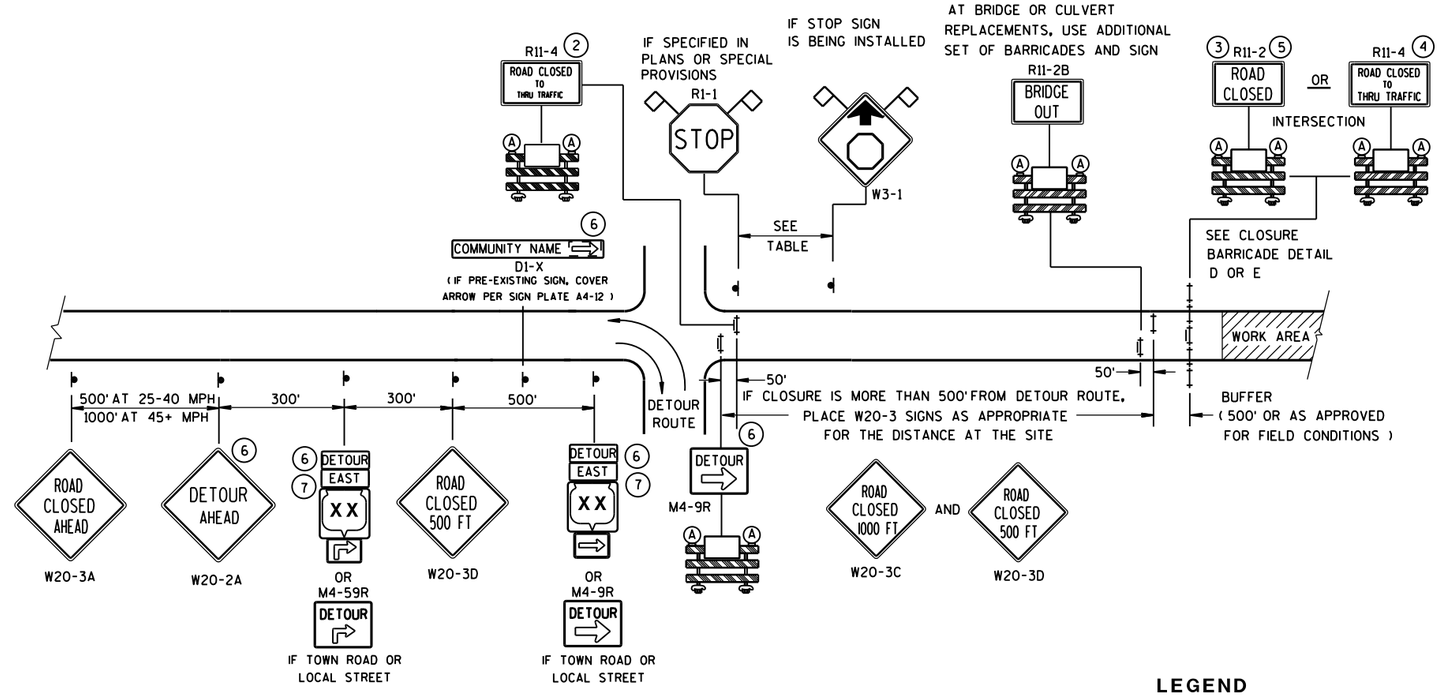

DETAIL B

MAINLINE CLOSURE WITH POSTED DETOUR

WORK ZONE LESS THAN ½ MILE FROM DETOUR ROUTE (1000 FEET IF URBAN)

LEGEND

- SIGN ON PERMANENT SUPPORT
- TYPE III BARRICADE
- TYPE III BARRICADE WITH ATTACHED SIGN
- (A) TYPE "A" WARNING LIGHT (FLASHING)
- WORK AREA
- DETOUR / EAST — M4-8 / M3-X
- XX — M1-4; COUNTY XX — M1-5A; XX — M1-6
- M05-1 OR M06-1
- FLAGS, 16" X 16" MIN., (ORANGE)

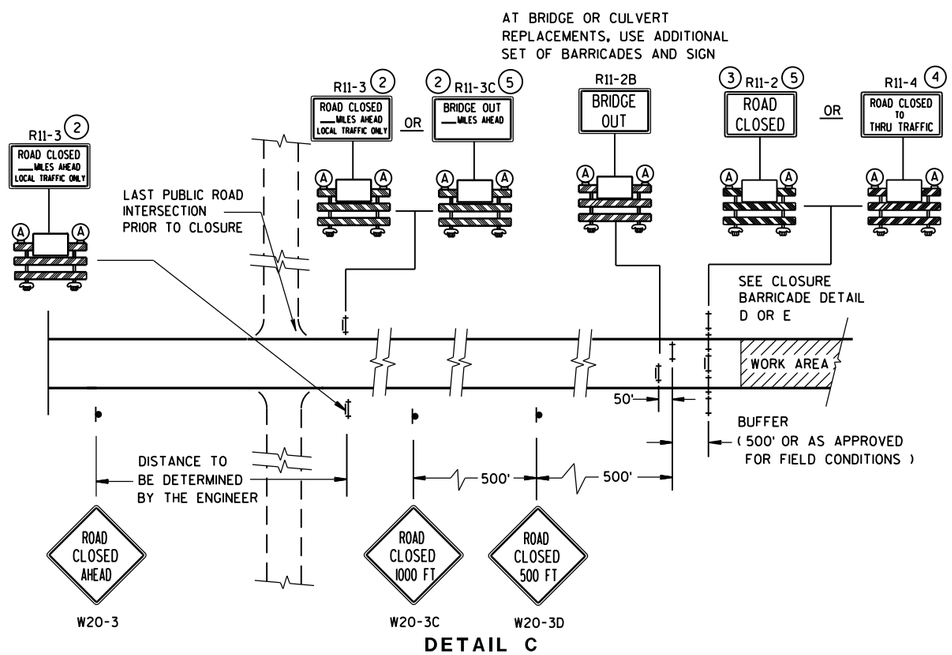

DETAIL C

MAINLINE CLOSURE, NO POSTED DETOUR

SPEED LIMIT (MPH)	"STOP AHEAD" ADVANCE WARNING DISTANCE (FT)
25	200
30	200
35	350
40	350
45	500
50	550
55	750

SEE SDD 15C2-SHEET "**b**"
FOR GENERAL NOTES
AND FOOTNOTES (1) THROUGH (7)

BARRICADES AND SIGNS FOR MAINLINE CLOSURES

STATE OF WISCONSIN
DEPARTMENT OF TRANSPORTATION

Sept. 2015 — DATE
/S/ Peter Amakobe Atepe — STATEWIDE WORK ZONE TRAFFIC SAFETY ENGINEER
FHWA

6

6

S.D.D. 15 C 2-6a

S.D.D. 15 C 2-6a

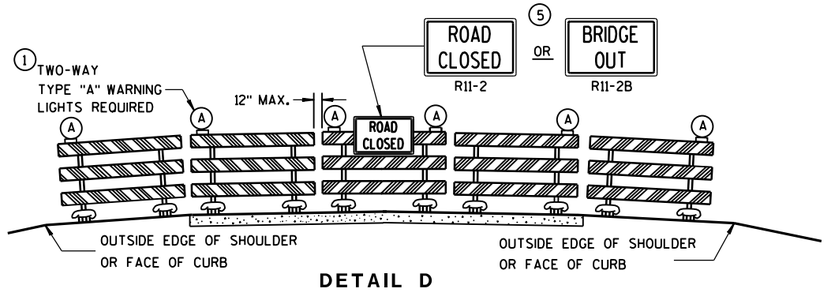

DETAIL D

ROAD CLOSURE BARRICADE DETAIL

APPROACH VIEW

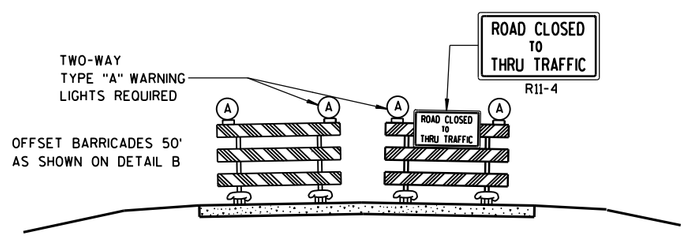

DETAIL E

LANE CLOSURE BARRICADE DETAIL

APPROACH VIEW

SEE SDD 15C2-SHEET "**a**" FOR LEGEND

GENERAL NOTES

THE EXACT NUMBER, LOCATION, AND SPACING OF ALL SIGNS AND BARRICADES SHALL BE ADJUSTED TO FIT FIELD CONDITIONS AS APPROVED BY THE ENGINEER.

ANY SIGNS TEMPORARY OR EXISTING, WHICH CONFLICT WITH TRAFFIC CONTROL "IN USE" SHALL BE REMOVED OR COVERED AS NEEDED AND AS APPROVED BY THE ENGINEER.

THE SPACING BETWEEN TRAFFIC CONTROL SIGNS SHOULD BE ADJUSTED TO NOT CONFLICT WITH AND SHOULD PROVIDE A DESIRABLE MINIMUM OF 200 FEET CLEARANCE TO EXISTING SIGNS THAT WILL REMAIN IN PLACE.

BARRICADES THAT MUST BE MOVED FOR A WORK OPERATION SHALL BE IMMEDIATELY RE-ESTABLISHED UPON COMPLETION OF THE OPERATION OR, FOR CONTINUING OPERATIONS, AT THE END OF EACH WORKING DAY.

SIGNS THAT WILL BE IN PLACE LESS THAN 7 CONTINUOUS DAYS AND NIGHTS MAY BE MOUNTED ON PORTABLE SUPPORTS.

ALL TYPE III BARRICADES SHALL HAVE RAILS REFLECTORIZED ON BOTH FACES. STRIPES SHALL BE PROPERLY SLOPED DOWN TOWARD THE TRAFFIC SIDE OR AS SHOWN IN THE ROAD CLOSURE BARRICADE DETAIL D FOR FULL ROAD CLOSURES.

TYPE "A" LOW-INTENSITY FLASHING WARNING LIGHTS SHALL BE VISIBLE ON BOTH SIDES OF THE BARRICADE.

THE R11-2, R11-3, M4-9, R11-4 AND R10-61 SIGNS PLACED ON BARRICADES SHALL COVER NO MORE THAN THE TOP RAIL. THE SIGNS SHALL NOT COVER ANY PORTION OF THE MIDDLE OR BOTTOM RAILS.

"WO AND "MO" SIGNS ARE THE SAME AS "W" AND "M" SIGNS EXCEPT THE BACKGROUND IS ORANGE.

ALL SIGNS SHALL BE 48" X 48" UNLESS OTHERWISE NOTED BELOW:

R11-2 SHALL BE 48" X 30".
R11-3, R11-4 AND R10-61 SHALL BE 60" X 30".
M4-9 SHALL BE 30" X 24".
M3-X SHALL BE 24" X 12". (36" X 18" IF NEEDED TO MATCH EXISTING SIGNS.)
M4-8 SHALL BE 24" X 12". (30" X 15" IF NEEDED TO MATCH EXISTING SIGNS.)
M1-4, M1-5A, AND M1-6 SHALL BE 24" X 24". (36" X 36" IF NEEDED TO MATCH EXISTING SIGNS.)
M05-1 AND M06-1 SHALL BE 21" X 21". (30" X 30" IF NEEDED TO MATCH EXISTING SIGNS.)
D1-X SHALL BE AS SHOWN ON SPECIFIC PROJECT SIGNING DETAIL SHEETS.
R1-1 SHALL BE 36" X 36".

1. TWO WARNING LIGHTS SHALL BE PROVIDED ON THE CENTER BARRICADE AND A MINIMUM OF ONE WARNING LIGHT SHALL BE PROVIDED ON EACH OF THE OTHER BARRICADES WITHIN THE ROADWAY LIMITS. SPACING OF THE WARNING LIGHTS SHALL BE UNIFORM TO THE EDGE OF ROADWAY AS SHOWN (APPROX. 8-FOOT LIGHT SPACING).
2. THESE SIGNS AND BARRICADES ARE NOT REQUIRED IF ROAD CLOSURE BEGINS AT INTERSECTION.
3. FOR ROAD CLOSURE WITHOUT LOCAL ACCESS TO PROJECT, SEE ROAD CLOSURE BARRICADE DETAIL D.
4. FOR ROAD CLOSURE WITH LOCAL ACCESS TO PROJECT, SEE LANE CLOSURE BARRICADE DETAIL E.
5. FOR BRIDGE OR CULVERT REPLACEMENTS, SUBSTITUTE "BRIDGE OUT" INSTEAD OF "ROAD CLOSED" ON R11-2 AND R11-3 SIGNS.
6. INSTALL DETOUR AND COMMUNITY GUIDE SIGNS AND ARROWS ONLY IF SPECIFIED IN THE CONTRACT. IF THERE ARE EXISTING ROUTE MARKER ASSEMBLIES THAT WILL REMAIN IN PLACE, ADJUST THE LOCATION OF THE DETOUR ROUTE SIGNS TO CORRESPOND WITH THE EXISTING ASSEMBLIES. MODIFY EXISTING SIGNS WHERE POSSIBLE. SEE SPECIFIC PROJECT DETOUR SIGNING DETAIL SHEETS. IF DETOUR SIGNS ARE BEING INSTALLED BY OTHERS, PLACE THE CONTRACTED TRAFFIC CONTROL SIGNS TO ALLOW FOR PLACEMENT OF ALL WARNING, DETOUR AND GUIDE SIGNS AS SHOWN.
7. "EAST" CARDINAL DIRECTION MARKERS AND RIGHT TURN ARROWS ARE SHOWN. USE OTHER CARDINAL DIRECTIONS AND ARROWS AS APPROPRIATE.

BARRICADES AND SIGNS FOR MAINLINE CLOSURES

STATE OF WISCONSIN
DEPARTMENT OF TRANSPORTATION

Sept. 2015 — DATE
/S/ Peter Amakobe Atepe — STATEWIDE WORK ZONE TRAFFIC SAFETY ENGINEER
FHWA

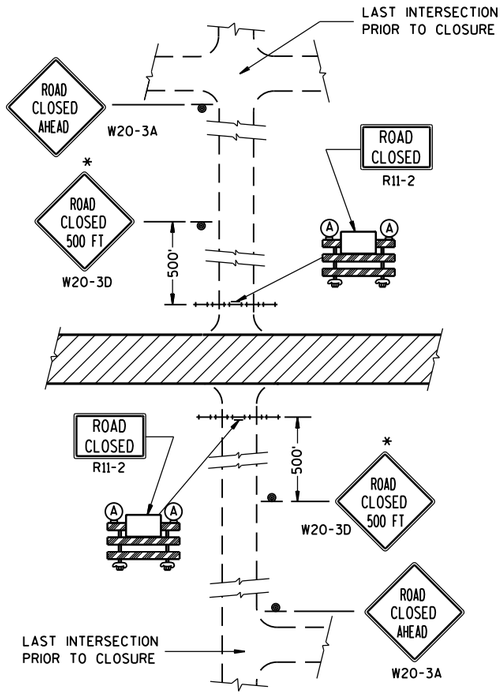

DETAIL 1

(NO ACCESS TO PROJECT)

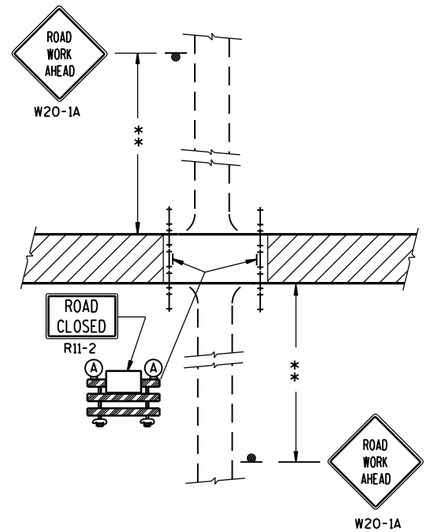

DETAIL 2

(PUBLIC CROSS-TRAFFIC MAINTAINED.
NO ACCESS TO PROJECT).

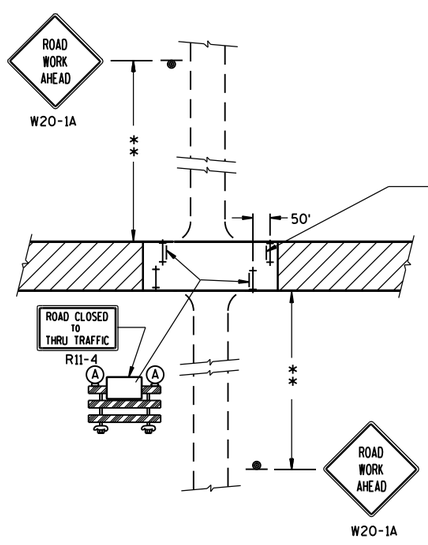

DETAIL 3

(PUBLIC CROSS-TRAFFIC MAINTAINED. CONTRACTOR,
LOCAL BUSINESS AND RESIDENT ACCESS).

FOR BRIDGE OR CULVERT
REPLACEMENT, USE ADDITIONAL
SIGN ON BARRICADE

BRIDGE OUT
XX MILES AHEAD
R11-3C

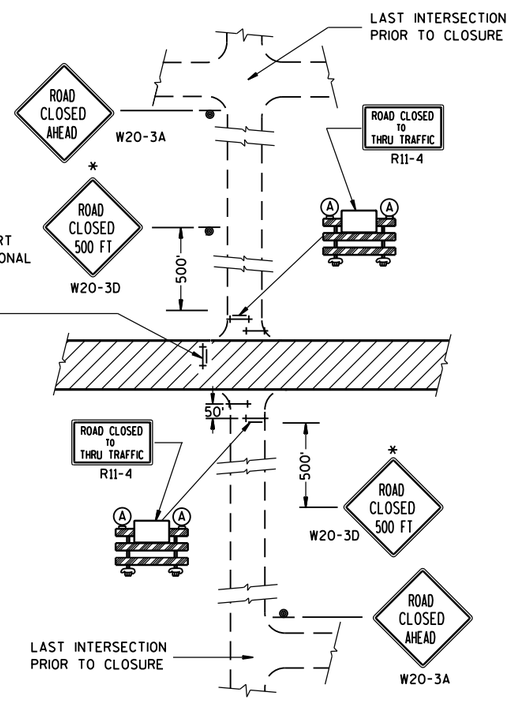

DETAIL 4

(CONTRACTOR, LOCAL BUSINESS AND
RESIDENT ACCESS TO PROJECT)

GENERAL NOTES

THE EXACT NUMBER, LOCATION, AND SPACING OF ALL SIGNS AND BARRICADES SHALL BE ADJUSTED TO FIT FIELD CONDITIONS AS APPROVED BY THE ENGINEER.

ANY SIGNS TEMPORARY OR EXISTING, WHICH CONFLICT WITH TRAFFIC CONTROL "IN USE" SHALL BE REMOVED OR COVERED AS NEEDED AND AS APPROVED BY THE ENGINEER.

THE SPACING BETWEEN TRAFFIC CONTROL SIGNS SHOULD BE ADJUSTED TO NOT CONFLICT WITH AND SHOULD PROVIDE A DESIRABLE MINIMUM OF 200 FEET CLEARANCE TO EXISTING SIGNS THAT WILL REMAIN IN PLACE.

IF A "STOP" SIGN MUST BE REMOVED FOR A WORK OPERATION, A TEMPORARY "STOP" SIGN SHALL BE PLACED PRIOR TO THE SIGN REMOVAL, OR A FLAGGER SHALL BE PROVIDED UNTIL THE SIGN IS RE-ESTABLISHED.

BARRICADES THAT MUST BE MOVED FOR A WORK OPERATION SHALL BE IMMEDIATELY RE-ESTABLISHED UPON COMPLETION OF THE OPERATION OR, FOR CONTINUING OPERATIONS, AT THE END OF EACH WORKING DAY.

SIGNS THAT WILL BE IN PLACE LESS THAN 7 CONTINUOUS DAYS AND NIGHTS MAY BE MOUNTED ON PORTABLE SUPPORTS.

ALL TYPE III BARRICADES SHALL HAVE RAILS REFLECTORIZED ON BOTH FACES. STRIPES SHALL BE PROPERLY SLOPED DOWN TOWARD THE TRAFFIC SIDE OR AS SHOWN IN THE ROAD CLOSURE BARRICADE DETAIL D FOR FULL ROAD CLOSURES.

TYPE "A" LOW-INTENSITY FLASHING WARNING LIGHTS SHALL BE VISIBLE ON BOTH SIDES OF THE BARRICADE.

THE R11-2, R11-3 AND R11-4 SIGNS PLACED ON BARRICADES SHALL COVER NO MORE THAN THE TOP RAIL. THE SIGNS SHALL NOT COVER ANY PORTION OF THE MIDDLE OR BOTTOM RAILS.

ALL SIGNS SHALL BE 48" X 48" UNLESS OTHERWISE NOTED BELOW:
R11-2 SHALL BE 48" X 30".
R11-4 AND R11-3 SHALL BE 60" X 30".

*OMIT THE "ROAD CLOSED 500 FT." SIGN IF THE LAST INTERSECTION IS 500 FT. OR LESS FROM THE WORK ZONE.

**500' MAX. OR AT LAST INTERSECTION WHICHEVER IS CLOSER.

LEGEND

- SIGN ON PERMANENT SUPPORT
- TYPE III BARRICADE
- TYPE III BARRICADE WITH ATTACHED SIGN
- (A) TYPE "A" WARNING LIGHT (FLASHING)
- WORK AREA

BARRICADES AND SIGNS FOR SIDEROAD CLOSURES

STATE OF WISCONSIN
DEPARTMENT OF TRANSPORTATION

APPROVED
Sept. 2015 — DATE
/S/ Peter Amakobe Atepe
STATEWIDE WORK ZONE TRAFFIC SAFETY ENGINEER
FHWA

6

S.D.D. 15 C 3-3

TYPICAL SIDEROAD APPROACH WARNING SIGN DETAIL

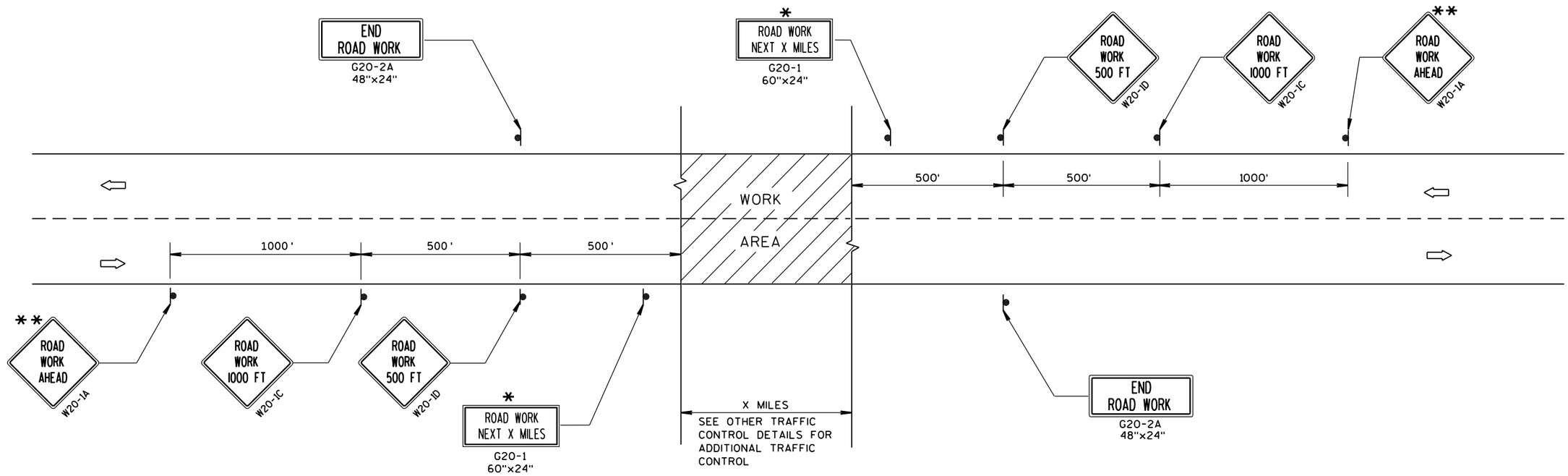

GENERAL NOTES

THE EXACT NUMBER, LOCATION, AND SPACING OF ALL SIGNS AND DEVICES SHALL BE ADJUSTED TO FIT FIELD CONDITIONS.

THE SPACING BETWEEN TRAFFIC CONTROL SIGNS SHOULD BE ADJUSTED TO NOT CONFLICT WITH AND SHOULD PROVIDE A MINIMUM OF 200 FEET (500 FEET DESIRABLE) CLEARANCE TO EXISTING SIGNS THAT WILL REMAIN IN PLACE.

ALL SIGNS ARE 48"x48" UNLESS OTHERWISE NOTED.

SIGNS THAT WILL BE IN PLACE LESS THAN 7 CONTINUOUS DAYS AND NIGHTS MAY BE MOUNTED ON PORTABLE SUPPORTS.

IF A "STOP" SIGN MUST BE REMOVED FOR A WORK OPERATION, A TEMPORARY "STOP" SIGN SHALL BE PLACED PRIOR TO THE SIGN REMOVAL, OR A FLAGGER SHALL BE PROVIDED UNTIL THE SIGN IS RE-ESTABLISHED.

* OMIT G20-1 SIGNS IF LENGTH OF WORK AREA IS 2 MILES OR LESS.

** PLACE ADDITIONAL W20-1A "ROAD WORK AHEAD" SIGN IF WORK AREA WITHIN THE PROJECT IS SEPARATED BY MORE THAN 2 MILES FROM PREVIOUS WORK AREA.

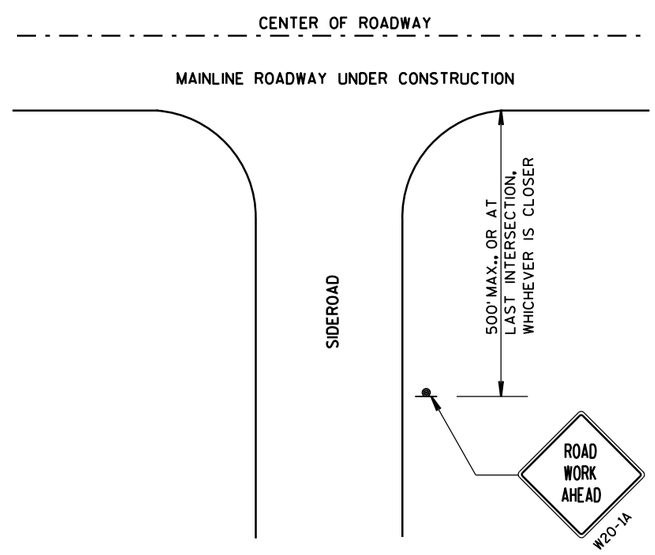

LEGEND

- SIGN ON PERMANENT SUPPORT
- DIRECTION OF TRAFFIC
- WORK AREA

TRAFFIC CONTROL, ADVANCE WARNING SIGNS 45 M.P.H. OR GREATER TWO-WAY UNDIVIDED ROAD OPEN TO TRAFFIC

STATE OF WISCONSIN
DEPARTMENT OF TRANSPORTATION

APPROVED
Sept. 2015 /S/ Peter Amakobe Atepe
DATE STATEWIDE WORK ZONE TRAFFIC SAFETY ENGINEER
FHWA

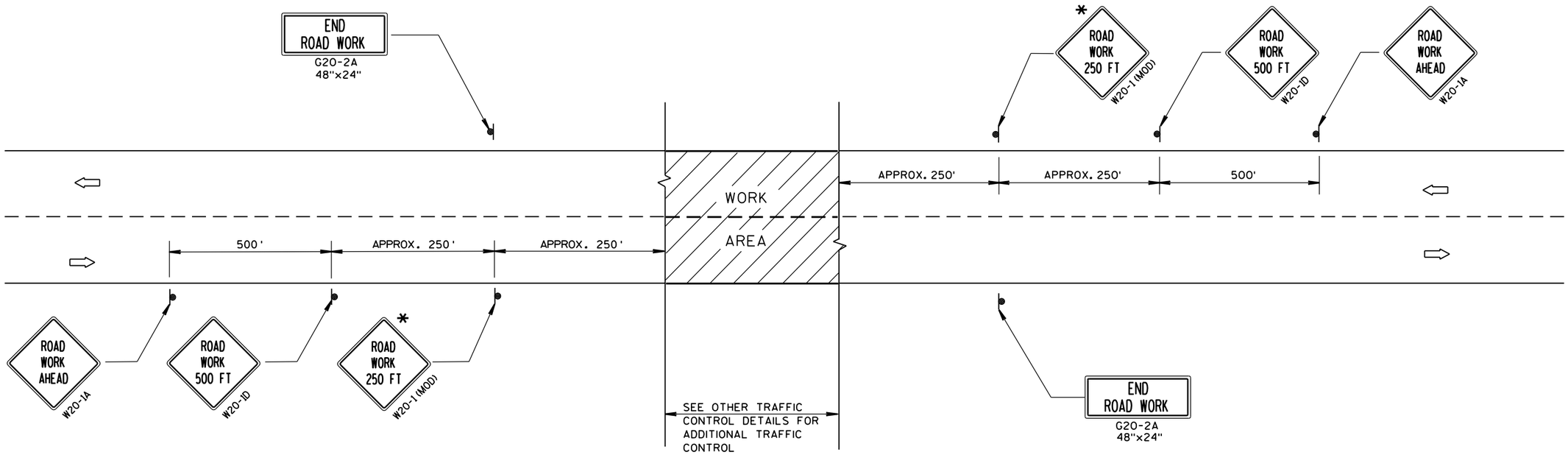

TYPICAL SIDEROAD APPROACH WARNING SIGN DETAIL

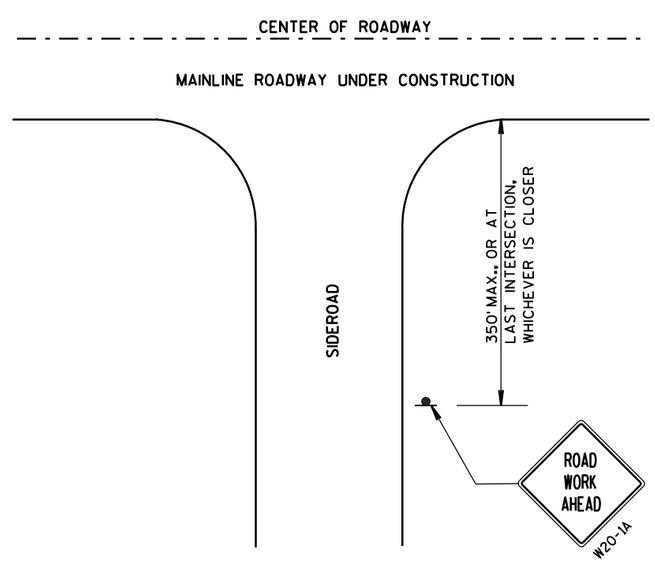

LEGEND

- SIGN ON PERMANENT SUPPORT
- DIRECTION OF TRAFFIC
- WORK AREA

GENERAL NOTES

THE EXACT NUMBER, LOCATION, AND SPACING OF ALL SIGNS AND DEVICES SHALL BE ADJUSTED TO FIT FIELD CONDITIONS.

THE SPACING BETWEEN TRAFFIC CONTROL SIGNS SHOULD BE ADJUSTED TO NOT CONFLICT WITH AND SHOULD PROVIDE A DESIRABLE MINIMUM OF 200 FEET CLEARANCE TO EXISTING SIGNS THAT WILL REMAIN IN PLACE.

ALL SIGNS ARE 48"x48" UNLESS OTHERWISE NOTED. IF NECESSARY DUE TO SPACE CONSTRAINTS, 36"x36" SIGNS MAY BE USED INSTEAD OF 48"x48" SIGNS.

SIGNS THAT WILL BE IN PLACE LESS THAN 7 CONTINUOUS DAYS AND NIGHTS MAY BE MOUNTED ON PORTABLE SUPPORTS.

IF A "STOP" SIGN MUST BE REMOVED FOR A WORK OPERATION, A TEMPORARY "STOP" SIGN SHALL BE PLACED PRIOR TO THE SIGN REMOVAL, OR A FLAGGER SHALL BE PROVIDED UNTIL THE SIGN IS RE-ESTABLISHED.

* THE THIRD W20-1 SIGN IS REQUIRED ONLY IF THERE IS AN INTERSECTION BETWEEN THE "ROAD WORK 500 FT" SIGN AND THE WORK ZONE. ADJUST THE PLACEMENT OF THIS SIGN BASED ON INTERSECTION LOCATION AND OTHER FIELD CONDITIONS.

TRAFFIC CONTROL, ADVANCE WARNING SIGNS 40 M.P.H. OR LESS TWO-WAY UNDIVIDED ROAD OPEN TO TRAFFIC

STATE OF WISCONSIN
DEPARTMENT OF TRANSPORTATION

APPROVED
Sept. 2015 — DATE
/S/ Peter Amakobe Atepe
STATEWIDE WORK ZONE SAFETY ENGINEER
FHWA

6

S.D.D. 15 C 5-3

GENERAL NOTES

DETAILS OF INSTALLATION, MATERIALS AND WORKMANSHIP NOT SHOWN ON THIS DRAWING SHALL CONFORM TO THE PERTINENT REQUIREMENTS OF THE STANDARD SPECIFICATIONS AND APPLICABLE SPECIAL PROVISIONS.

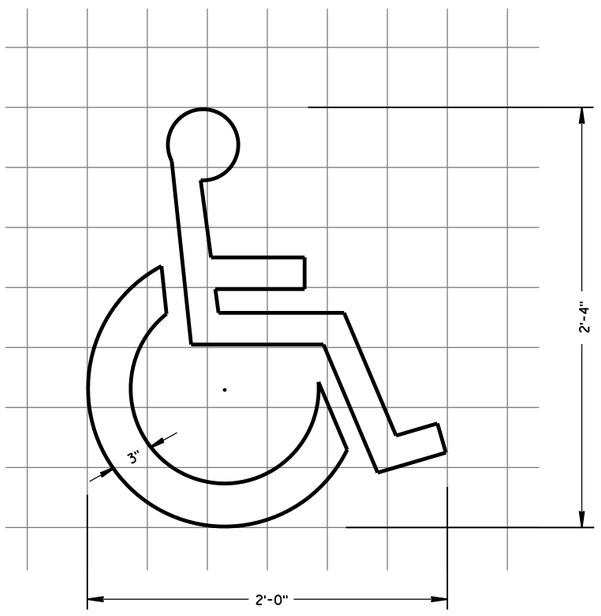

HANDICAP SYMBOL

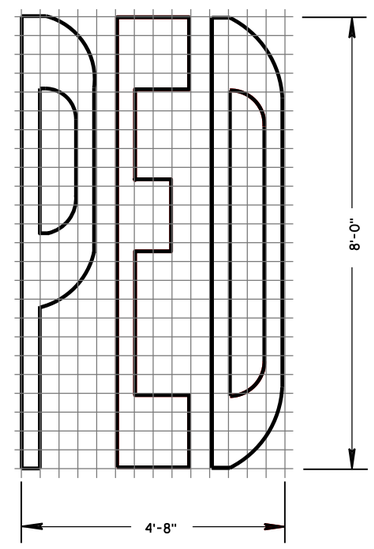

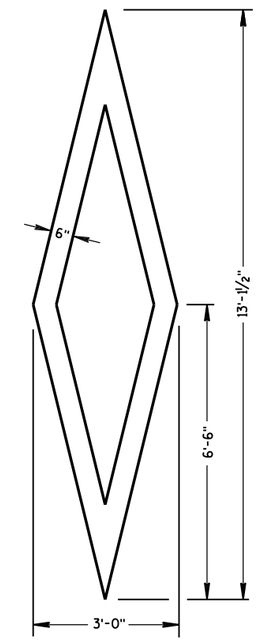

PREFERENTIAL LANE SYMBOL

6

6

PAVEMENT MARKING SYMBOLS

STATE OF WISCONSIN
DEPARTMENT OF TRANSPORTATION

APPROVED
June 2017 /S/ Matthew R. Rauch
DATE STATE SIGNING AND MARKING ENGINEER
FHWA

S.D.D. 15 C 7-14a

S.D.D. 15 C 7-14a

GENERAL NOTES

DETAILS OF INSTALLATION, MATERIALS AND WORKMANSHIP NOT SHOWN ON THIS DRAWING SHALL CONFORM TO THE PERTINENT REQUIREMENTS OF THE STANDARD SPECIFICATIONS AND APPLICABLE SPECIAL PROVISIONS.

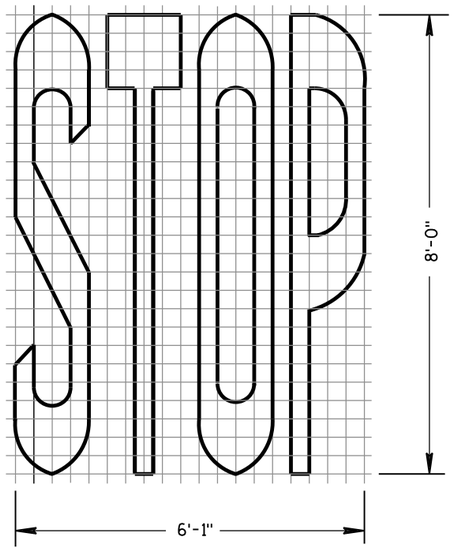

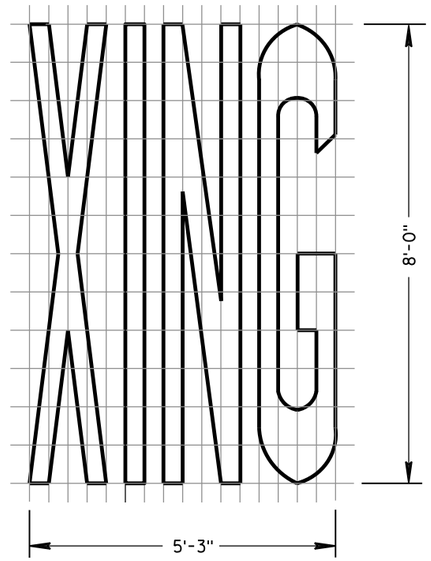

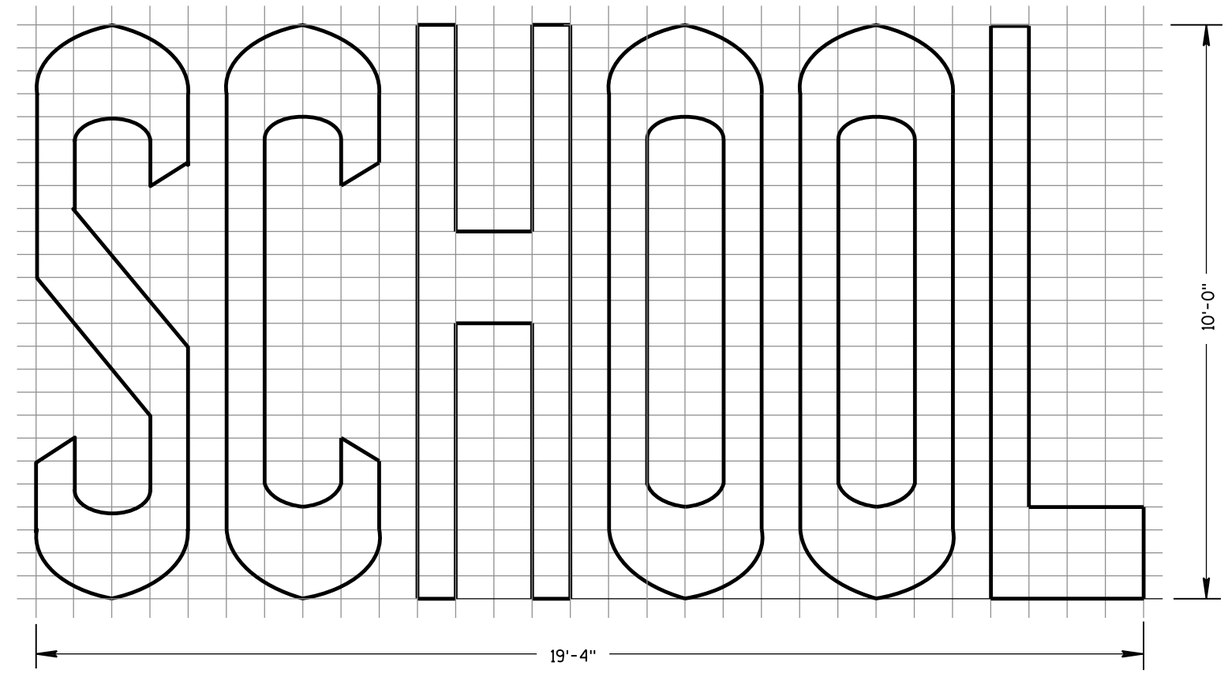

TWO-LANE

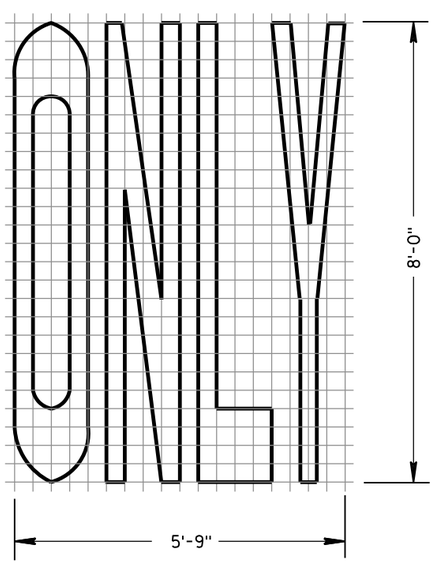

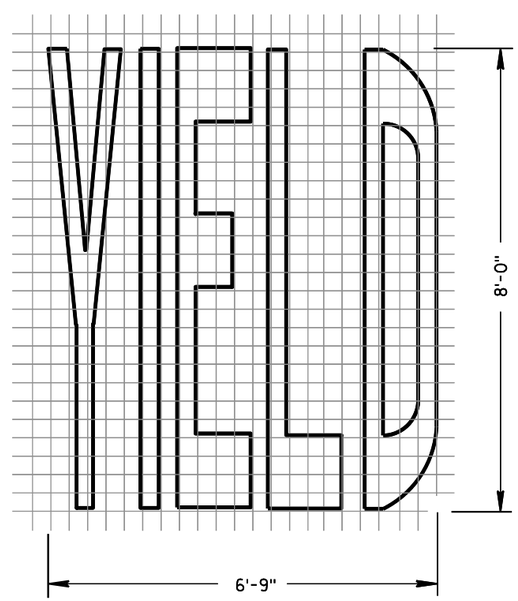

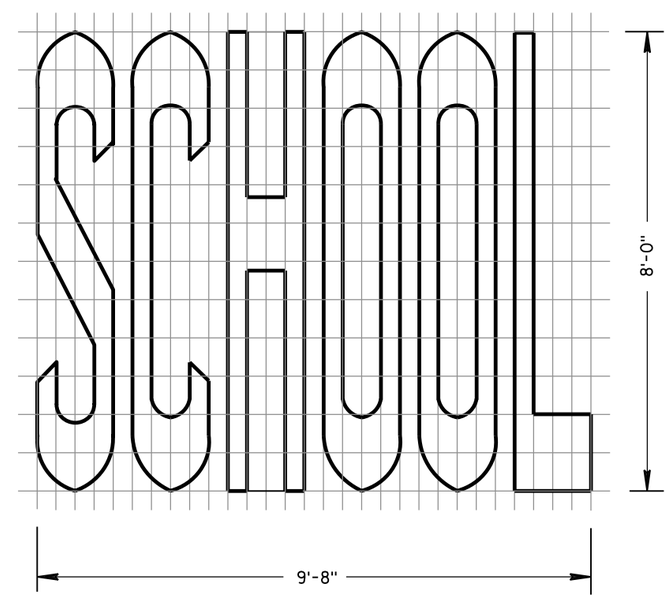

SINGLE-LANE

PAVEMENT MARKING WORDS	
STATE OF WISCONSIN DEPARTMENT OF TRANSPORTATION	
APPROVED June 2017 /S/ Matthew R. Rauch DATE STATE SIGNING AND MARK EER FHWA	

6

6

S.D.D. 15 C 7-14b

S.D.D. 15 C 7-14b

GENERAL NOTES

DETAILS OF INSTALLATION, MATERIALS AND WORKMANSHIP NOT SHOWN ON THIS DRAWING SHALL CONFORM TO THE PERTINENT REQUIREMENTS OF THE STANDARD SPECIFICATIONS AND APPLICABLE SPECIAL PROVISIONS.

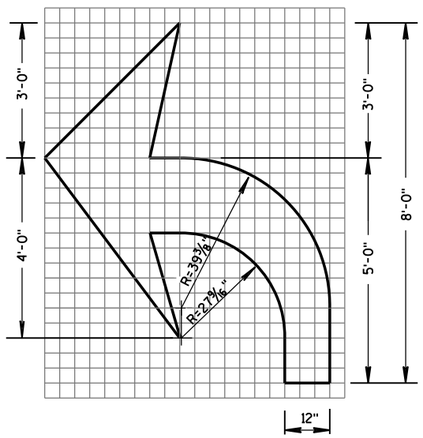

TYPE 2

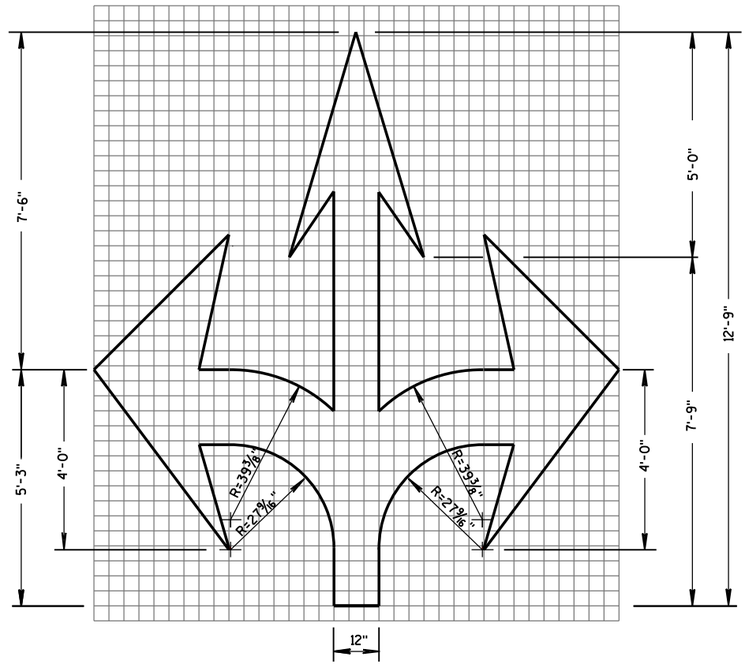

TYPE 6

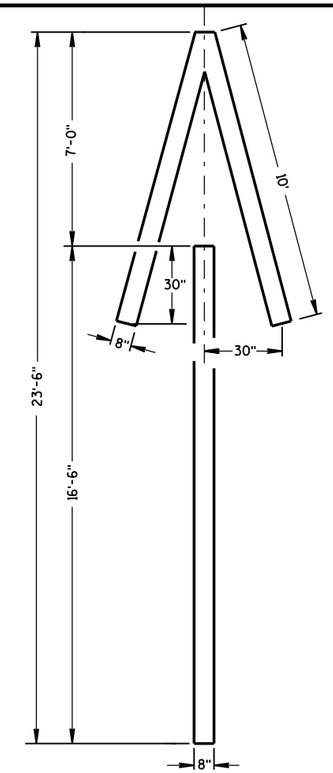

TYPE 4

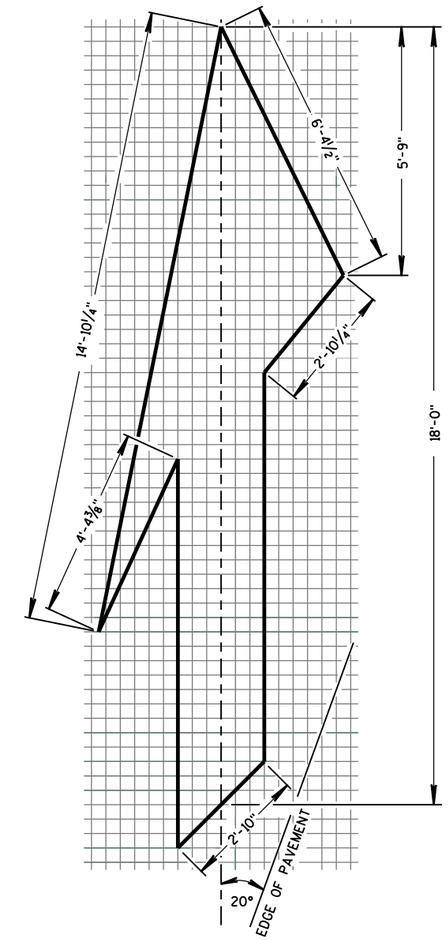

TYPE 5 LANE DROP ARROW

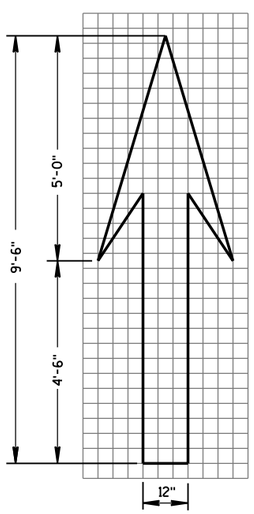

TYPE 1

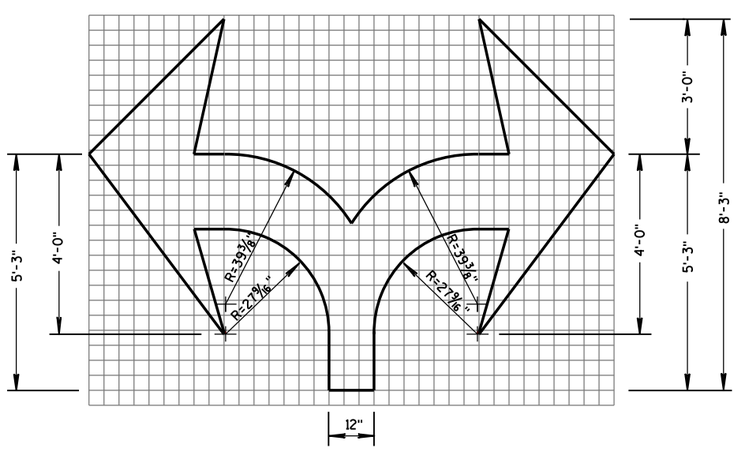

TYPE 7

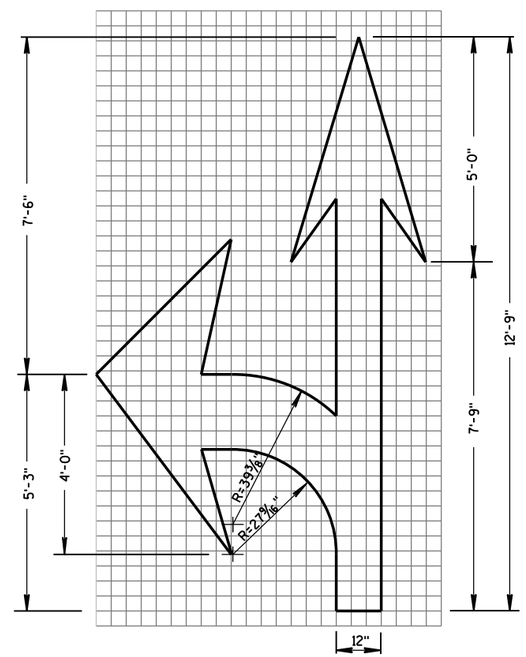

TYPE 3

PAVEMENT MARKING ARROWS

STATE OF WISCONSIN
DEPARTMENT OF TRANSPORTATION

APPROVED
June 2017 — DATE
/S/ Matthew R. Rauch — STATE SIGNING AND MAR[illegible]NEER
FHWA

6

S.D.D. 15 C 7-14c

GENERAL NOTES

DETAILS OF INSTALLATION, MATERIALS AND WORKMANSHIP NOT SHOWN ON THIS DRAWING SHALL CONFORM TO THE PERTINENT REQUIREMENTS OF THE STANDARD SPECIFICATIONS AND APPLICABLE SPECIAL PROVISIONS.

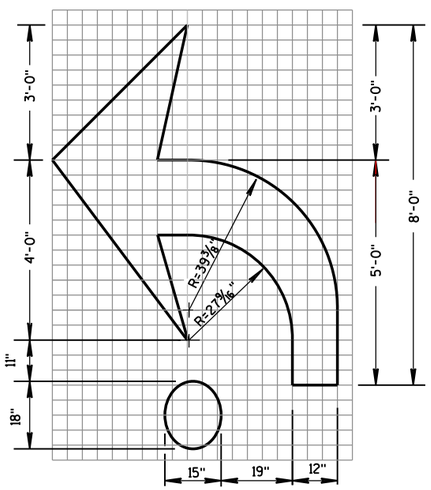

TYPE 2R

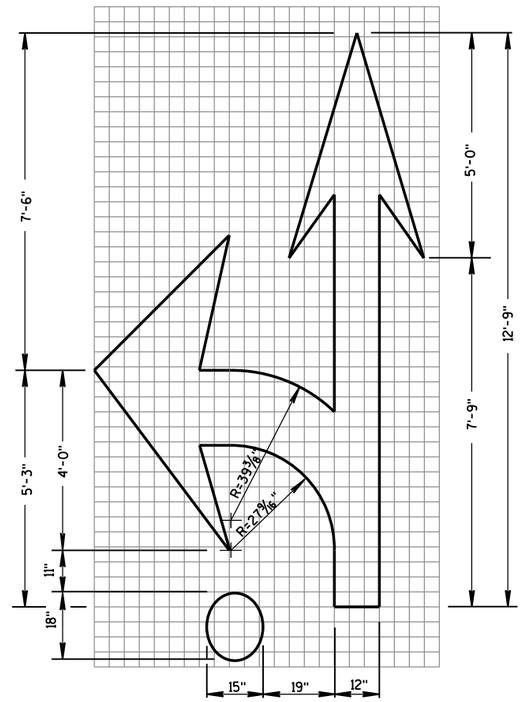

TYPE 3R

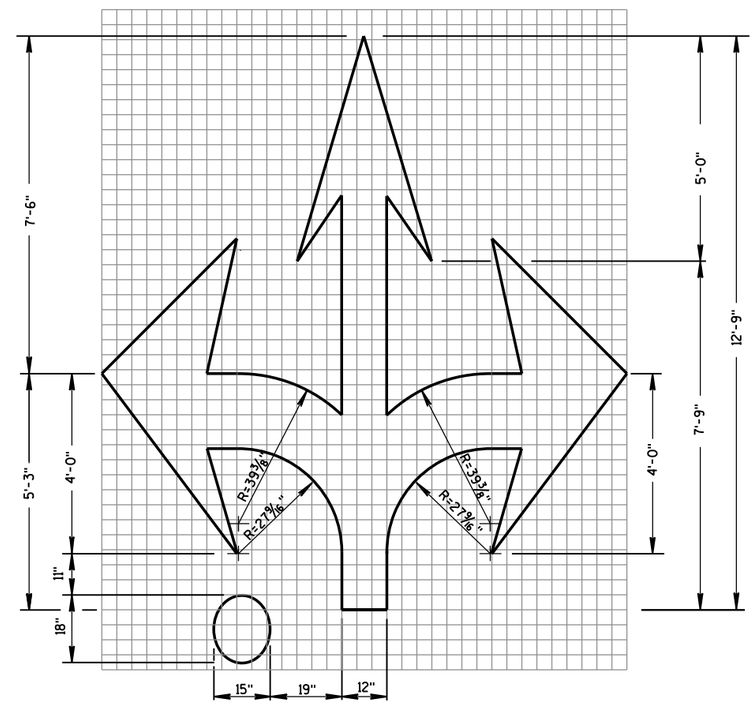

TYPE 6R

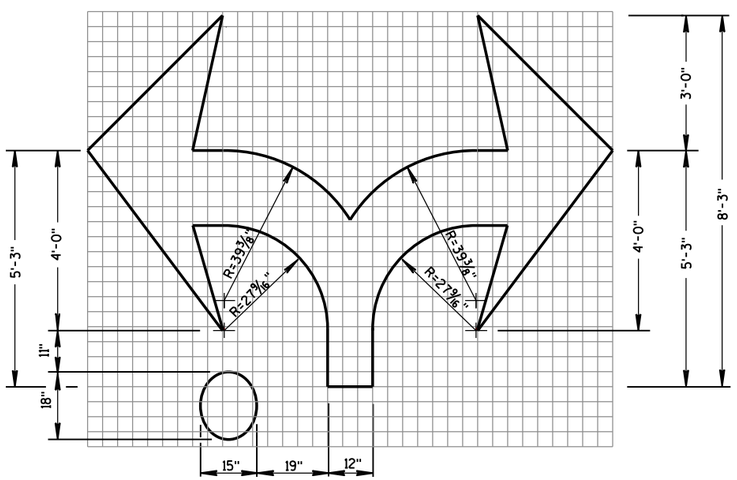

TYPE 7R

ROUNDABOUT ARROWS

STATE OF WISCONSIN
DEPARTMENT OF TRANSPORTATION

APPROVED
June 2017 — DATE
/S/ Matthew R. Rauch — STATE SIGNING AND MAR[illegible]NEER
FHWA

6

S.D.D. 15 C 7-14d

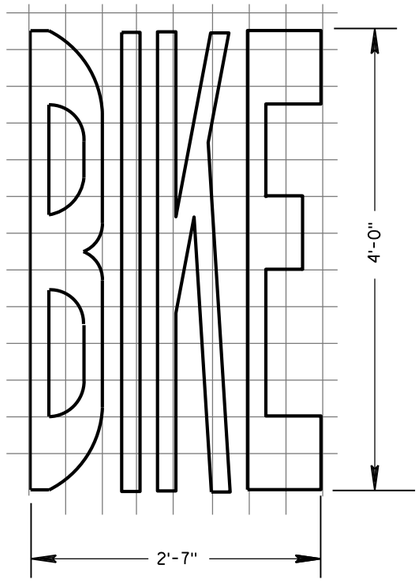

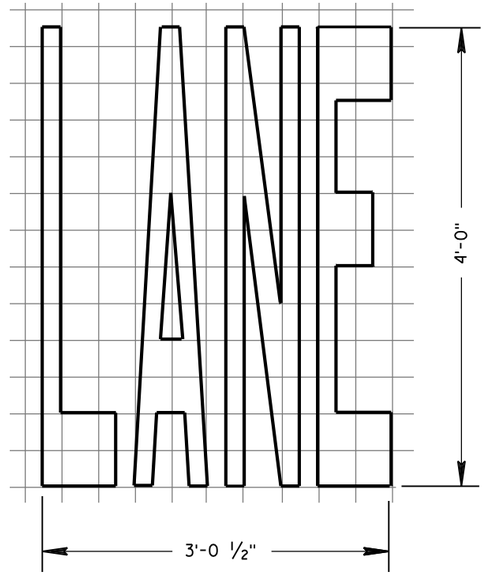

BIKE LANE WORDS

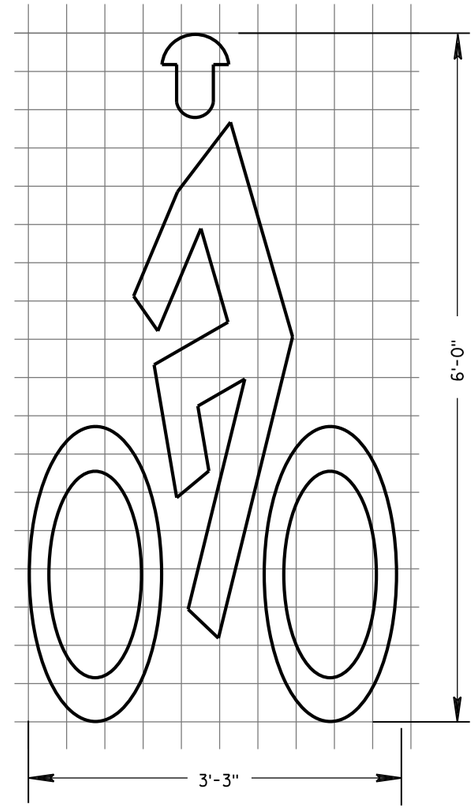

BIKE LANE SYMBOL

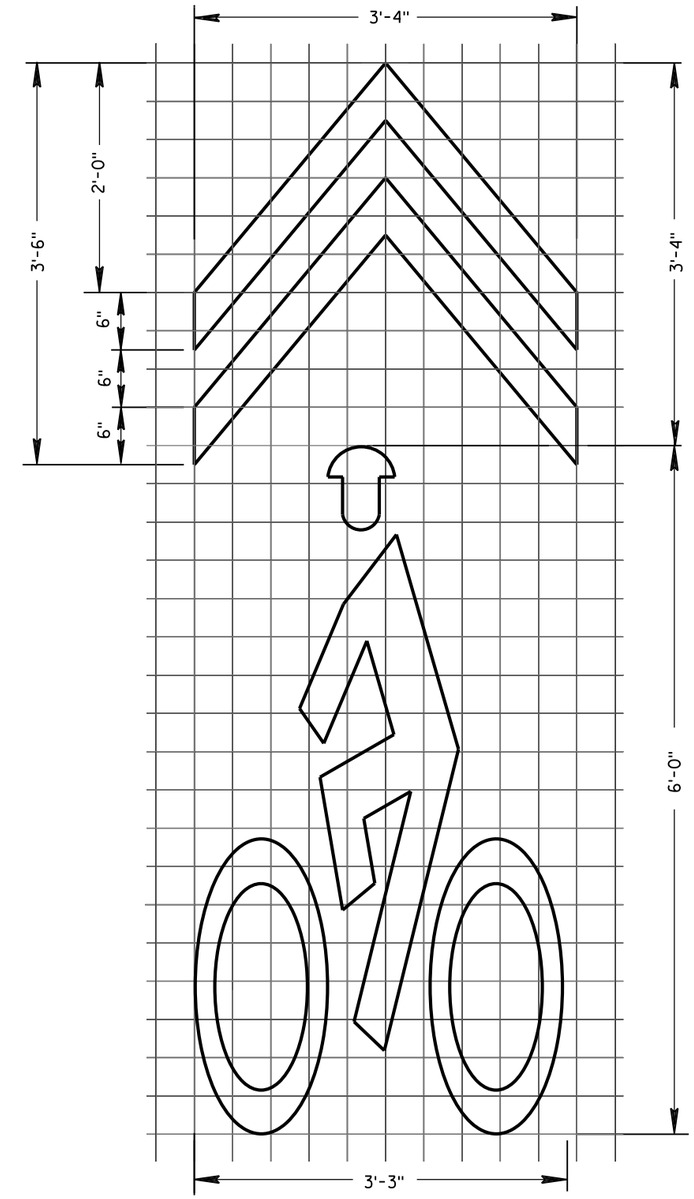

BIKE SYMBOL FOR SHARED LANE

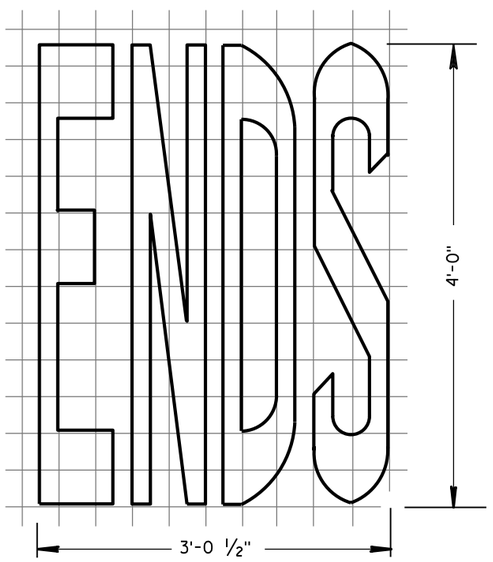

BIKE LANE WORDS

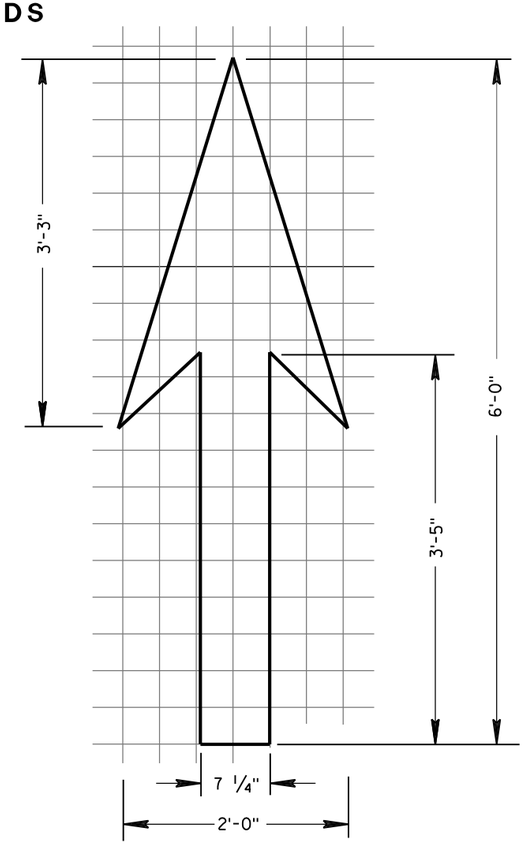

BIKE LANE ARROW

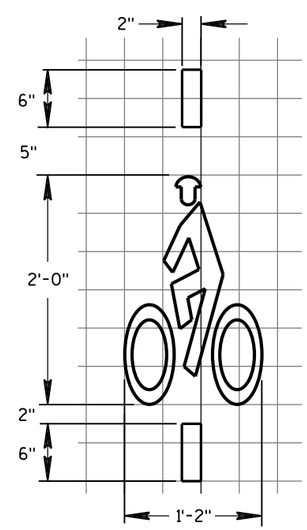

BICYCLE DETECTOR PAVEMENT MARKING

GENERAL NOTES

DETAILS OF INSTALLATION, MATERIALS AND WORKMANSHIP NOT SHOWN ON THIS DRAWING SHALL CONFORM TO THE PERTINENT REQUIREMENTS OF THE STANDARD SPECIFICATIONS AND APPLICABLE SPECIAL PROVISIONS.

PAVEMENT MARKING FOR BIKE LANES

STATE OF WISCONSIN
DEPARTMENT OF TRANSPORTATION

APPROVED
June 2017 — DATE
/S/ Matthew R. Rauch — STATE SIGNING AND MARKING ENGINEER
FHWA

6

6

S.D.D. 15 C 7-14e

S.D.D. 15 C 7-14e

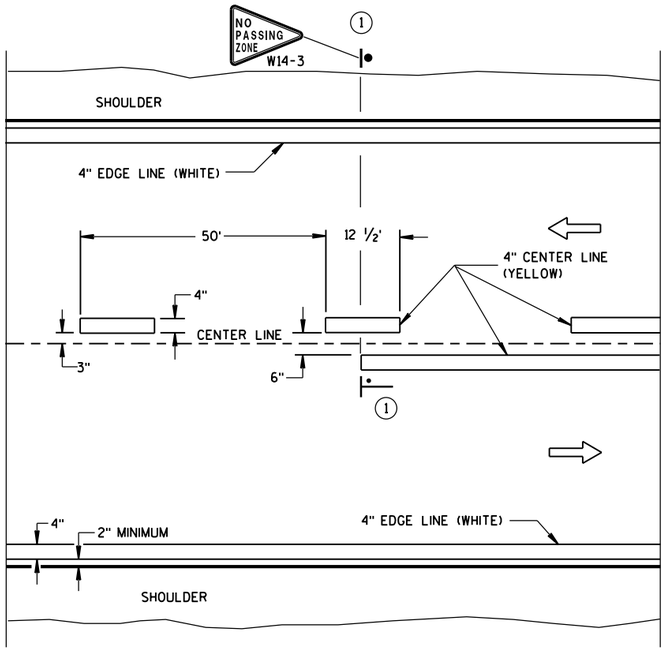

TWO WAY TRAFFIC

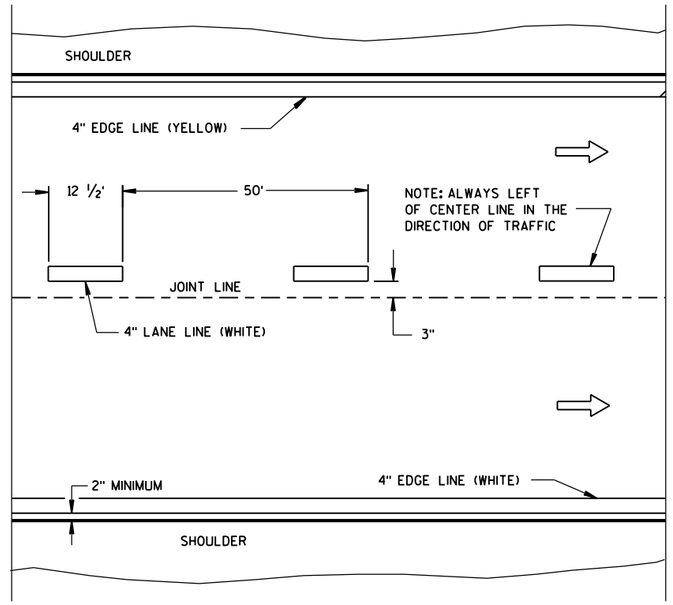

ONE WAY TRAFFIC

PERMANENT PAVEMENT MARKING

GENERAL NOTES

DETAILS OF CONSTRUCTION NOT SHOWN ON THIS DRAWING SHALL CONFORM TO STANDARD SPECIFICATIONS AND SPECIAL PROVISIONS.

(1) LOCATE THE NO PASSING ZONE W14-3 SIGN WITHIN 50 FEET OF THE "T" MARKING.

NOTE

ARROW SYMBOL (⇨) SHOWS DIRECTION OF TRAVEL

LEGEND

"T" MARKING

POST MOUNTED SIGN

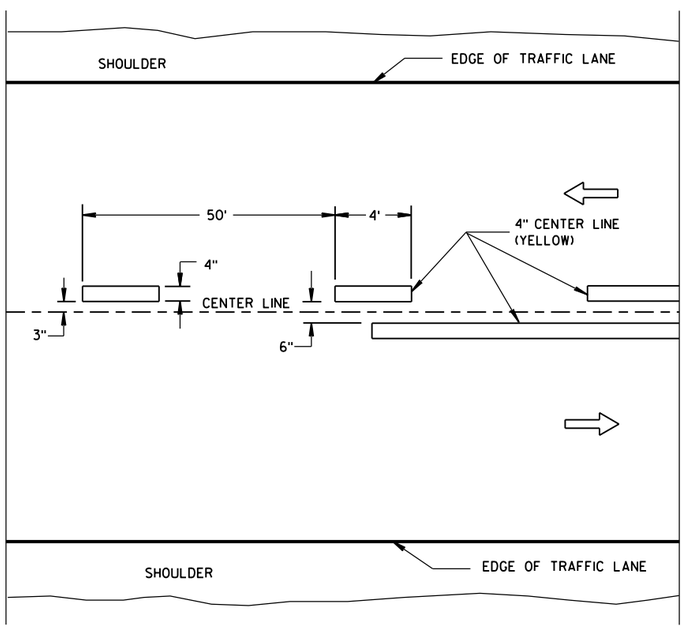

TWO WAY TRAFFIC

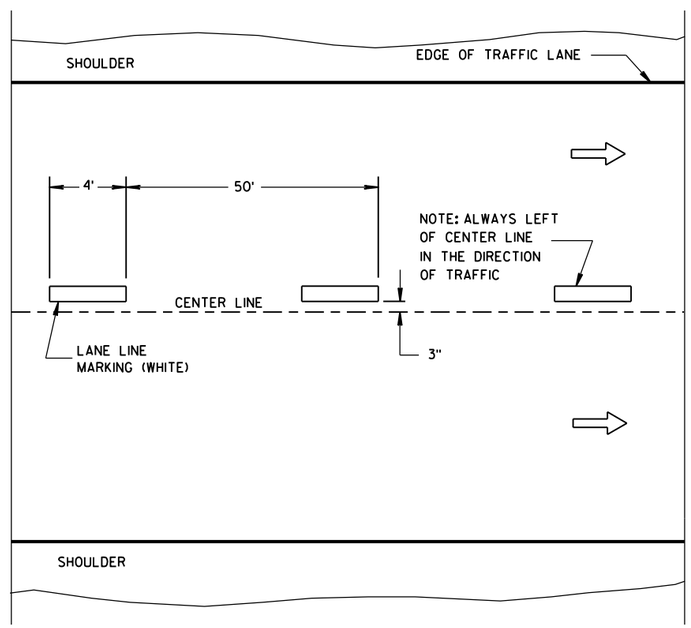

ONE WAY TRAFFIC

TEMPORARY PAVEMENT MARKING

6

6

S.D.D. 15 C 8-18a

S.D.D. 15 C 8-18a

LONGITUDINAL MARKING (MAINLINE)

STATE OF WISCONSIN
DEPARTMENT OF TRANSPORTATION

APPROVED
June 2017 /S/ Matthew R. Rauch
DATE STATE SIGNING AND MAR ;INEER
FHWA

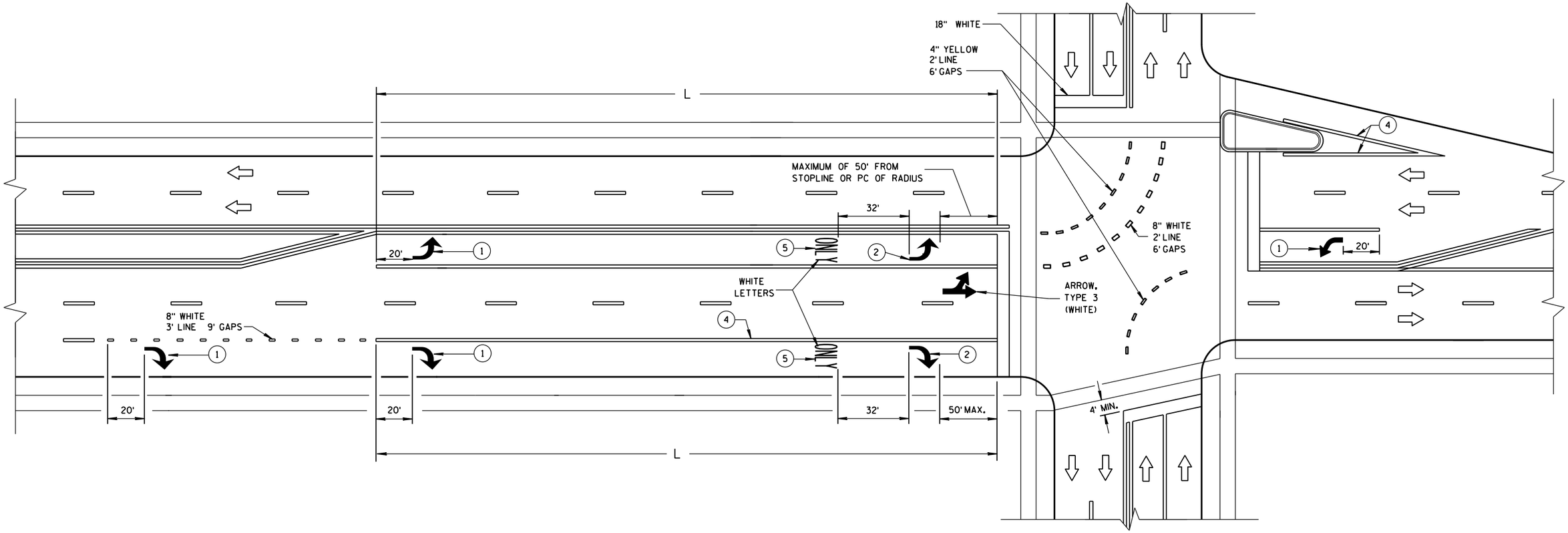

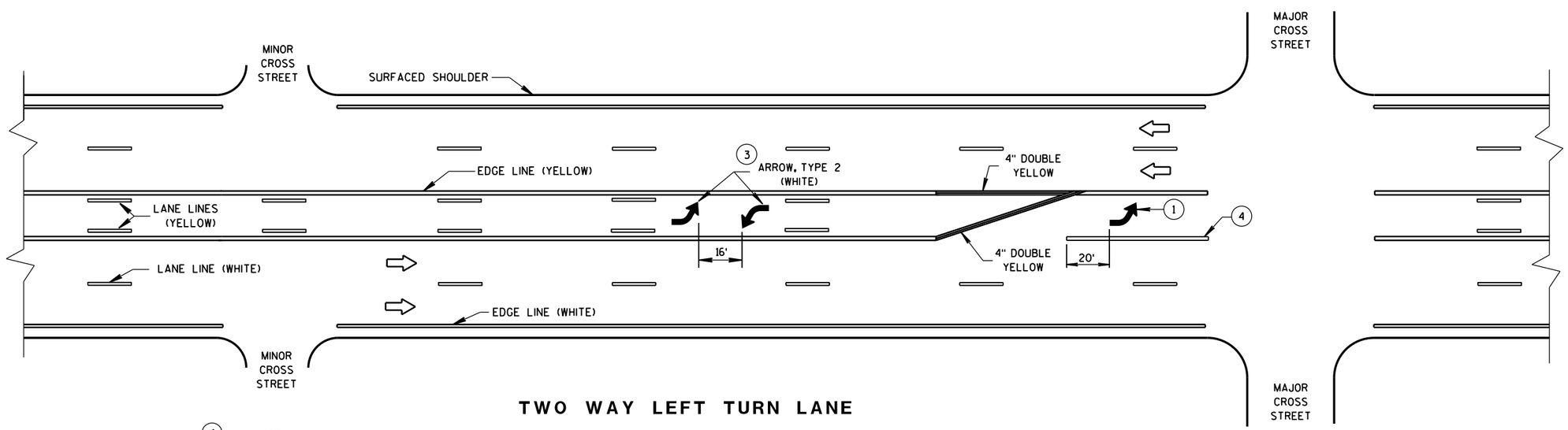

TWO WAY LEFT TURN LANE

GENERAL NOTES

1. REQUIRED ARROW, TYPE 2 (WHITE).
2. REQUIRED ARROW, TYPE 2 (WHITE) WHEN L IS GREATER THAN 78 FEET AND LESS THAN OR EQUAL TO 166 FEET.
3. A SET OF ARROWS IS REQUIRED EVERY 400 FEET OR NEAR INTERSECTIONS OR DRIVEWAYS WITH TURNING TRAFFIC.
4. 8" WHITE
5. REQUIRED WORD ONLY WHEN L IS GREATER THAN 166 FEET.

NOTE:
ARROW SYMBOL (⇨)
SHOWS DIRECTION OF TRAVEL

L = LENGTH OF TURN BAY

PAVEMENT MARKING
(TURN LANES)

STATE OF WISCONSIN
DEPARTMENT OF TRANSPOI

6

S.D.D. 15 C 8-18b

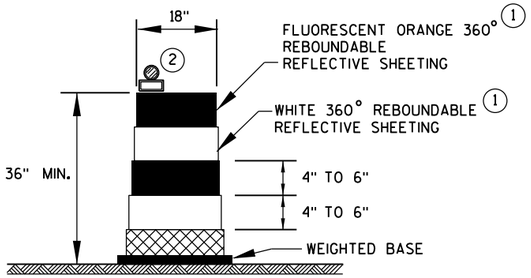

DRUM

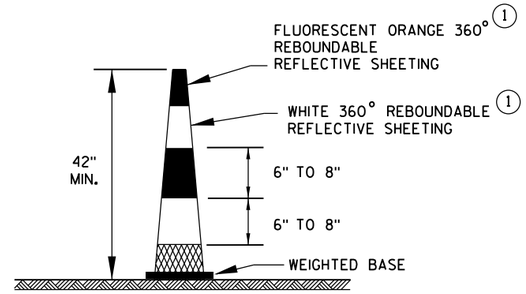

42" CONE

DO NOT USE IN TAPERS
½ SPACING OF DRUMS

GENERAL NOTES

(1) REFLECTIVE SHEETING SHALL FOLLOW THE REQUIREMENTS IN THE APPROVED PRODUCTS LISTING FOR SIGN SHEETING.

(2) LOCATION OF WARNING LIGHTS WHEN SHOWN ON THE PLAN.

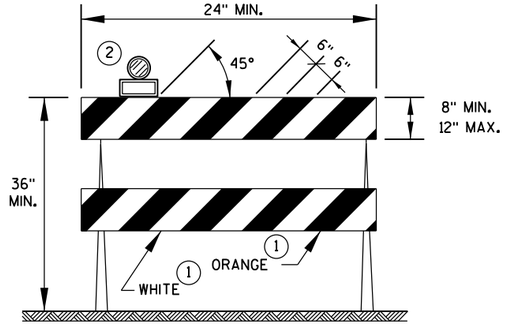

TYPE 2 BARRICADE

FOR RAILS LESS THAN 36" LONG, 4" WIDE STRIPES MAY BE USED. ALL STRIPES SHALL SLOPE DOWNWARD TO THE TRAFFIC SIDE FOR CHANNELIZATION.

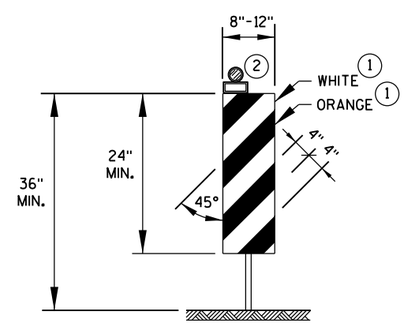

VERTICAL PANEL

THE STRIPES SHALL SLOPE DOWNWARD TO THE TRAFFIC SIDE FOR CHANNELIZATION.

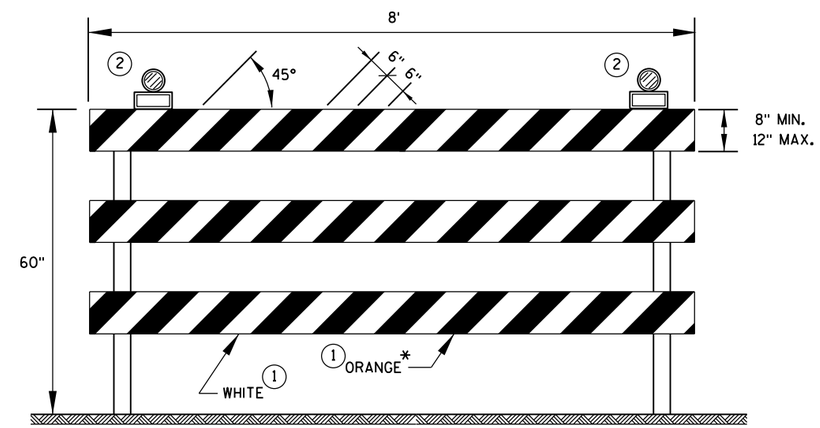

TYPE 3 BARRICADE

IF SIGN MOUNTED, DO NOT COVER MORE THAN 50% OF THE TOP TWO RAILS OR 33% OF THE TOTAL AREA OF THE THREE RAILS.

* IF USED FOR A PERMANENT APPLICATION, USE RED SHEETING.

CHANNELIZING DEVICES DRUMS, CONES, BARRICADES AND VERTICAL PANELS	
STATE OF WISCONSIN DEPARTMENT OF TRANSPORTATION	
APPROVED	
June 2017	/S/ Andrew Heldtke
DATE	WORK ZONE ENG
FHWA	

6

S.D.D. 15 C 11-7b

6

S.D.D. 15 C 11-7b

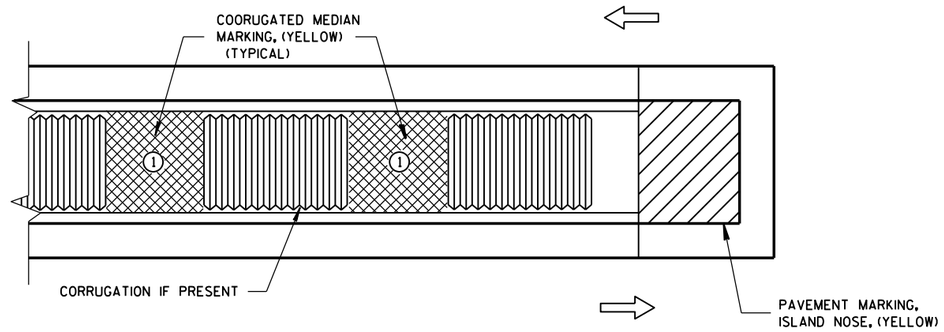

MEDIAN ISLAND WITH SQUARE BLUNT NOSE

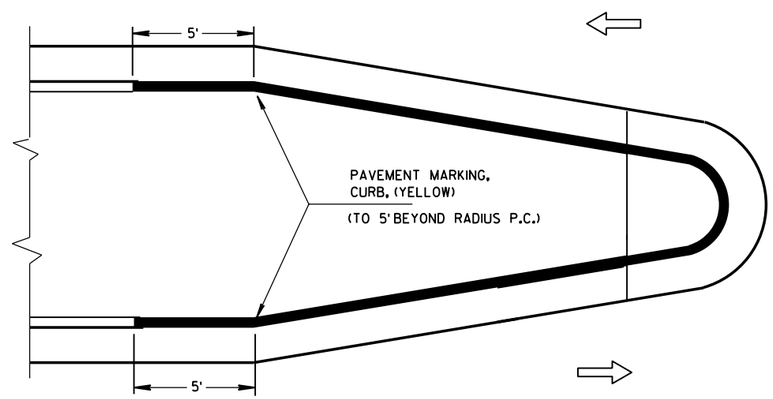

MEDIAN ISLAND WITH ROUND BLUNT NOSE

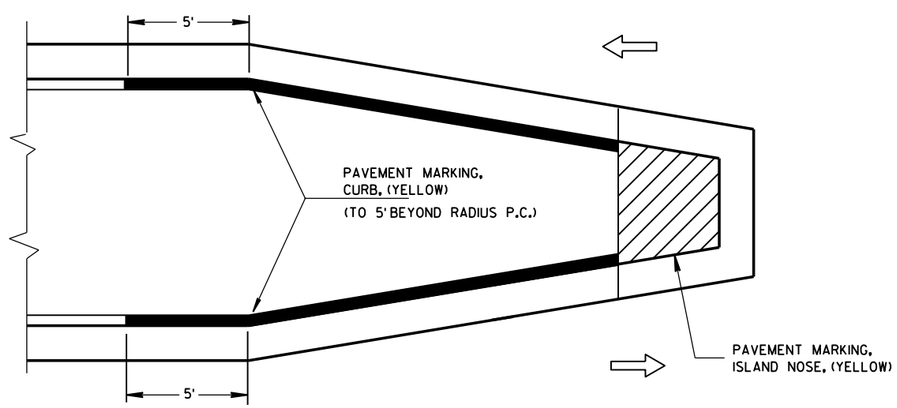

MEDIAN ISLAND WITH SLOPED NOSE

TYPICAL PLACEMENT OF PAVEMENT MARKING ON MEDIAN ISLANDS

GENERAL NOTES

1. WHEN CONCRETE CORRUGATED MEDIAN IS CONSTRUCTED TO SEPARATE TRAFFIC OPERATING IN THE OPPOSING DIRECTION YELLOW PAVEMENT MARKING SHALL BE APPLIED TO THE FLAT PORTION OF THE CONCRETE CORRUGATED MEDIAN. THE ITEM OF PAVEMENT MARKING, CONCRETE CORRUGATED MEDIAN, WILL BE MEASURED IN PLACE AND AND ACCEPTED IN ACCORDANCE WITH THE CONTRACT AND PAID FOR AT THE CONTRACT UNIT PRICE PER SQUARE FOOT.

ISLAND NOSE MARKING

CURB MARKING

CORRUGATED MEDIAN MARKING

DIRECTION OF TRAVEL

PAVEMENT MARKING
(ISLANDS)

STATE OF WISCONSIN
DEPARTMENT OF TRANSPORTATION

APPROVED

June 2017 — DATE

/S/ Matthew Rauch — STATE SIGNING AND MARK EER

FHWA

6

S.D.D. 15 C 27-2b

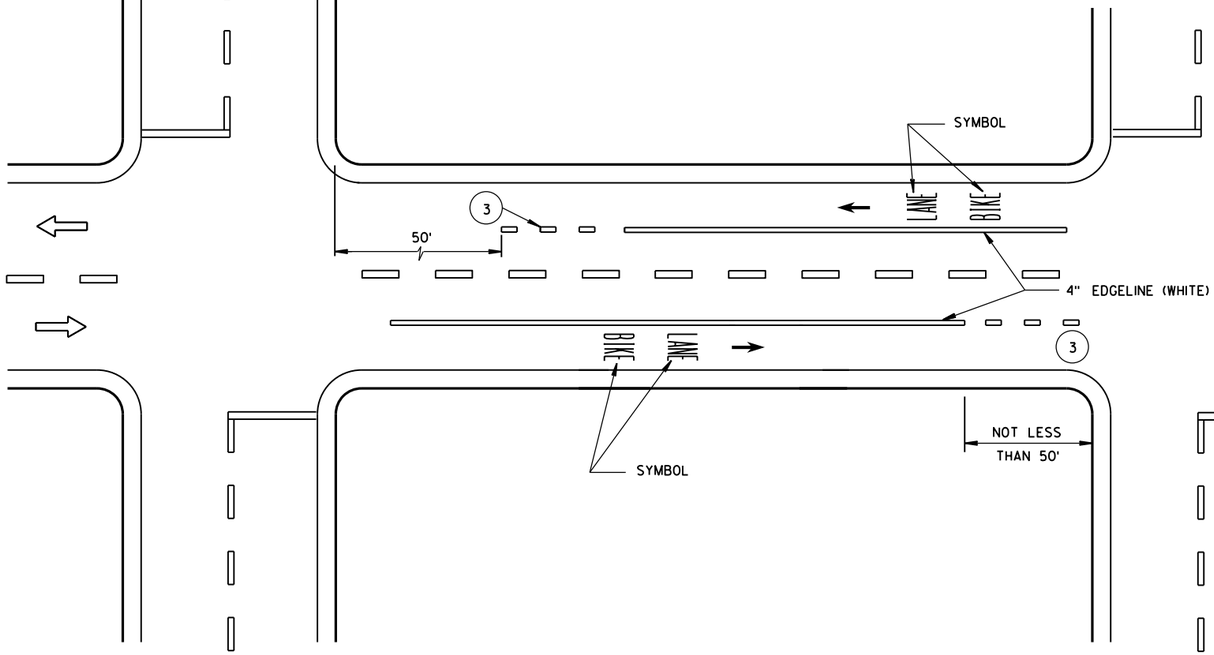

DESIGNATED BICYCLE LANE
NO PARKING

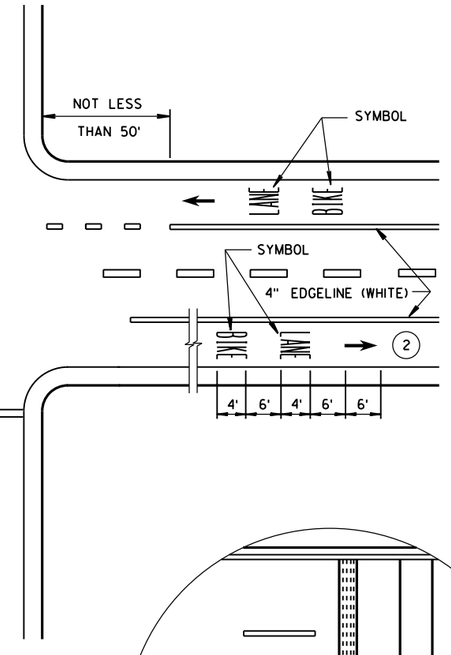

GENERAL NOTES

1. DETAILS OF CONSTRUCTION NOT SHOWN ON THIS DRAWING SHALL CONFORM TO STANDARD SPECIFICATIONS AND SPECIAL PROVISIONS.
2. MINIMUM OF ONE PER BLOCK. MAXIMUM OF 250 FEET.
3. DOTTED LINES (3' LINE, 9' GAP) SHOULD BE USED 50 FEET TO 200 FEET IN ADVANCE OF AN INTERSECTION WHERE THERE IS NO RIGHT TURN ONLY LANE AND THERE IS HEAVY RIGHT TURN TRAFFIC OR THERE IS A NEAR-SIDE BUS STOP. AT OTHER INTERSECTIONS WHERE RIGHT TURN TRAFFIC IS LIGHT TO MODERATE, A SOLID LINE CAN BE USED UP TO THE INTERSECTION.
4. IF SIGNED AND/OR MARKED AS A BICYCLE FACILITY INCLUDE SECOND LINE OF LINE-SPACE MARKING, OTHERWISE DO NOT.
5. BIKE ACCOMODATION FOR CONCRETE PAVEMENT IS 5 FEET WIDE. BIKE ACCOMODATION FOR ASPHALT PAVEMENT IS A MINIMUM OF 4 FEET. USE 5 FEET AT ≥45 MPH.
6. OMIT THESE MARKINGS FOR WIDER TURN LANE APPLICATIONS (MINIMUM OF 15 FEET WIDE TURN LANE).
7. REFER TO CONTRACT PLANS FOR LANE WIDTH.

DIRECTION OF TRAVEL

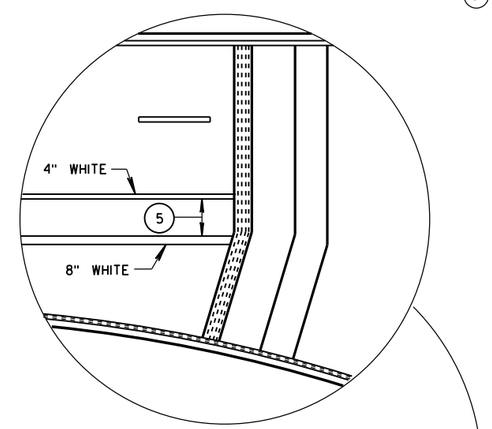

4 LANE DIVIDED WITHOUT ISLAND

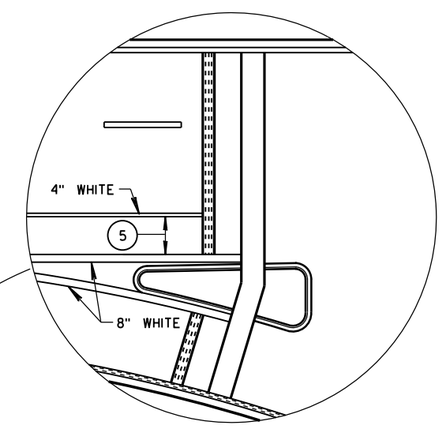

4 LANE DIVIDED WITH ISLAND

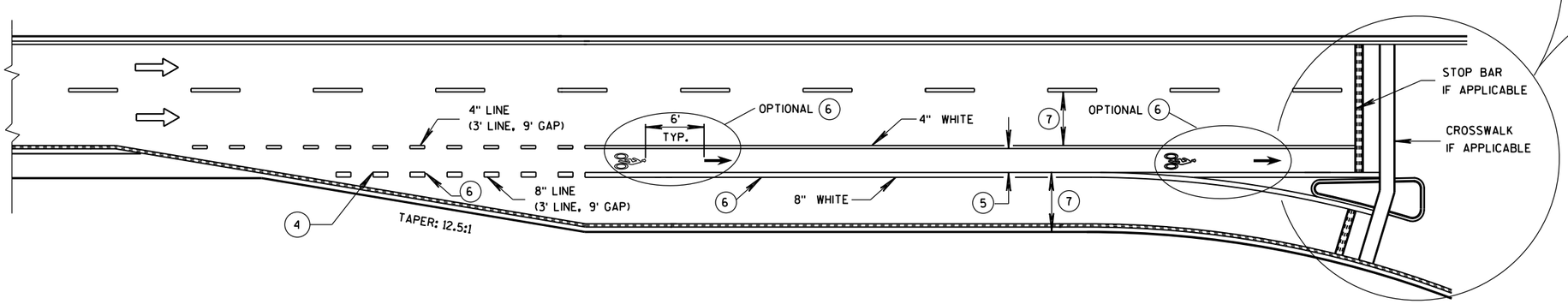

BIKE LANE - FOR 2-LANE ROADWAYS AND 4-LANE DIVIDED ROADWAYS
(4-LANE DIVIDED WITH RIGHT TURN LANE SHOWN)

BICYCLE LANE MARKING

STATE OF WISCONSIN
DEPARTMENT OF TRANSPORTATION

APPROVED
12-2016 /S/ Matthew R. Rauch
DATE STATE SIGNING AND MAR NEER
FHWA

6

6

S.D.D. 15 C 29-5a

S.D.D. 15 C 29-5a

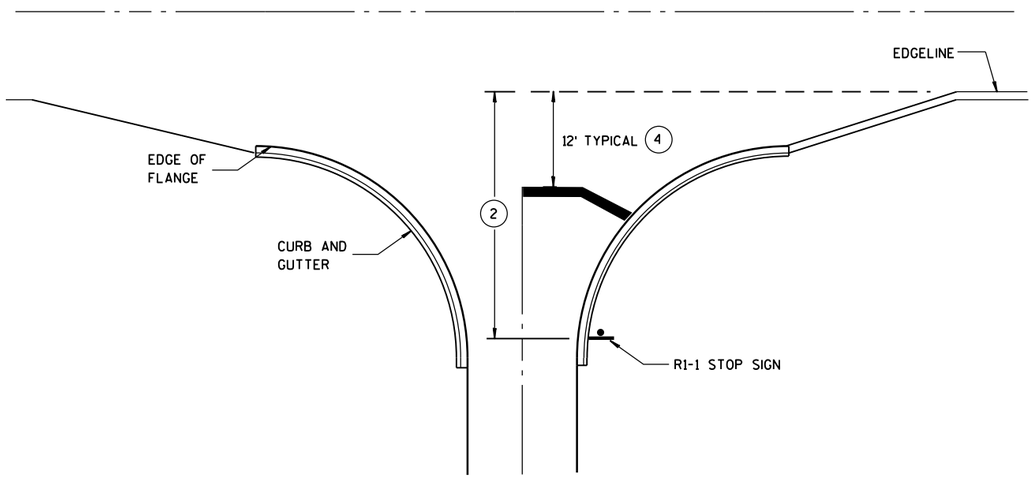

TYPICAL STOP LINE PAVEMENT MARKING WITH CURB AND GUTTER

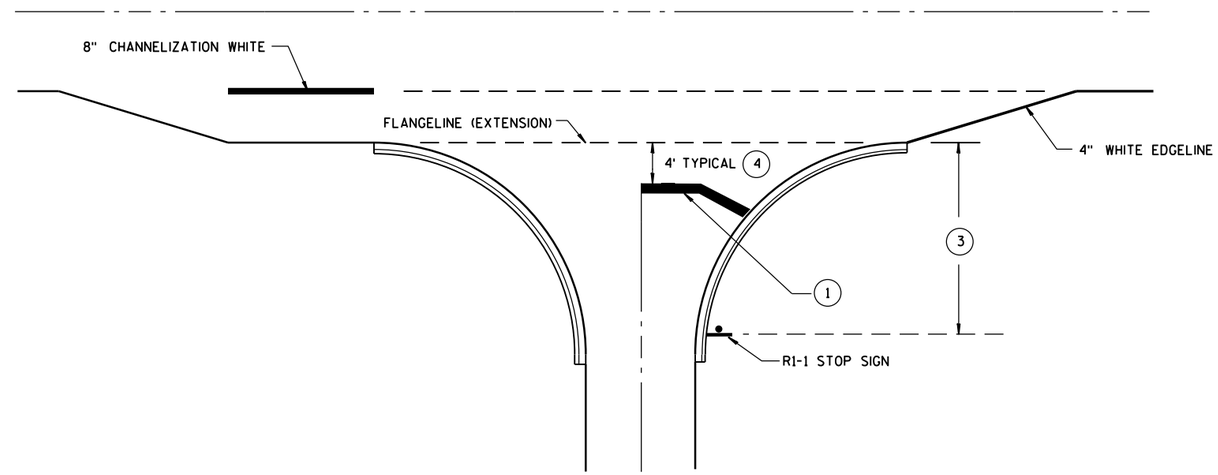

TYPICAL STOP LINE PAVEMENT MARKING FOR SIDEROADS WITH RIGHT TURN LANE

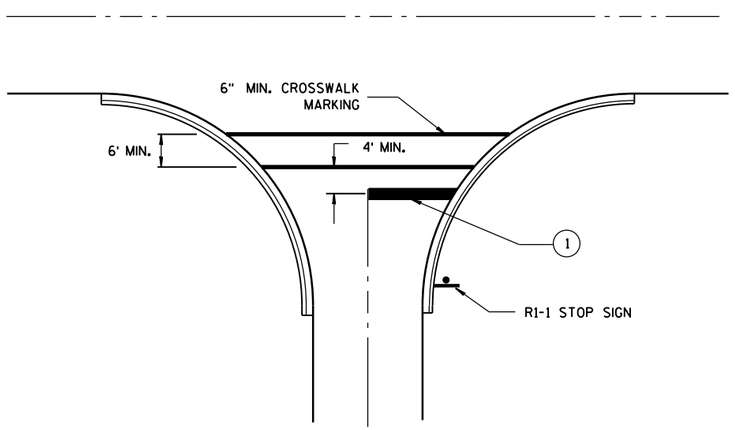

TYPICAL STOP LINE PAVEMENT MARKING FOR SIDEROADS WITH CROSSWALK MARKING

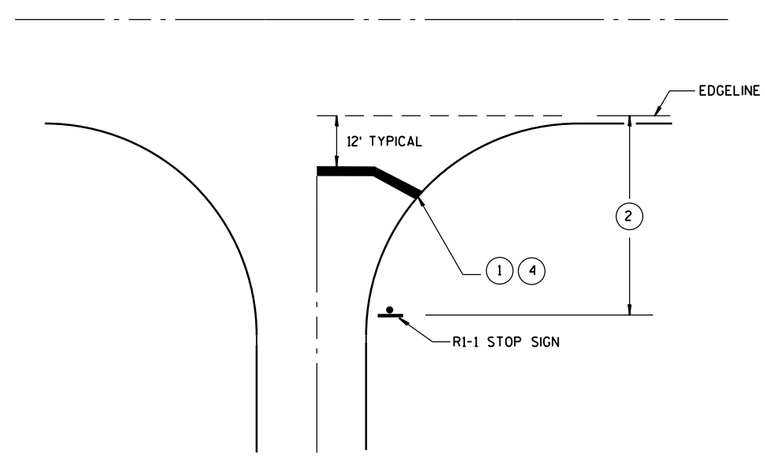

TYPICAL STOP LINE PAVEMENT MARKING WITHOUT CURB AND GUTTER

GENERAL NOTES

1. 18-INCH STOP LINES MAY BE DELETED OR ADDED BY THE PROJECT ENGINEER BASED ON VISIBILITY AND SIGHT LINES.
2. IF STOP SIGN IS LESS THAN OR EQUAL TO 40 FEET FROM THE EDGELINE THAN NO STOP LINE IS REQUIRED.
3. IF STOP SIGN IS LESS THAN OR EQUAL TO 30 FEET FROM THE FLANGELINE EXTENSION THAN NO STOP LINE IS REQUIRED.
4. MOVE CLOSER TO EDGE OF TRAVEL LANE AS NEEDED FOR VISIBILITY AND SIGHT LINES. (NO CLOSER THAN 4 FEET).

STOP LINE AND CROSSWALK PAVEMENT MARKING

STATE OF WISCONSIN
DEPARTMENT OF TRANSPORTATION

APPROVED

4-18-2016 — DATE

/S/ Matthew R. Rauch — STATE SIGNING AND MAR ... NEER

FHWA

6

S.D.D. 15 C 33-2

NOTE: MAY BE USED ON ROADWAY WITH POSTED SPEED OF LESS THAN 40 MPH.

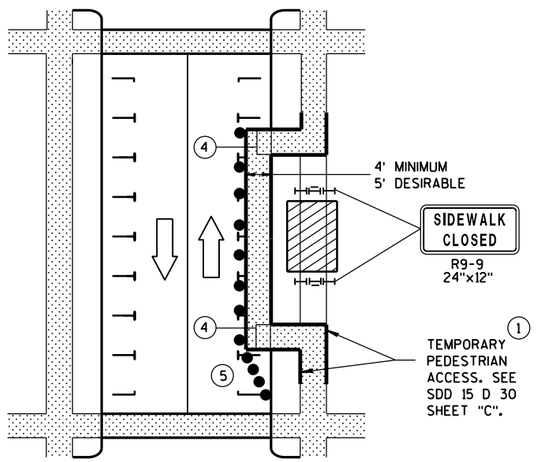

MID-BLOCK SIDEWALK CLOSURE IN PARKING LANE

NOTE: LAYOUT SAME AS ABOVE.

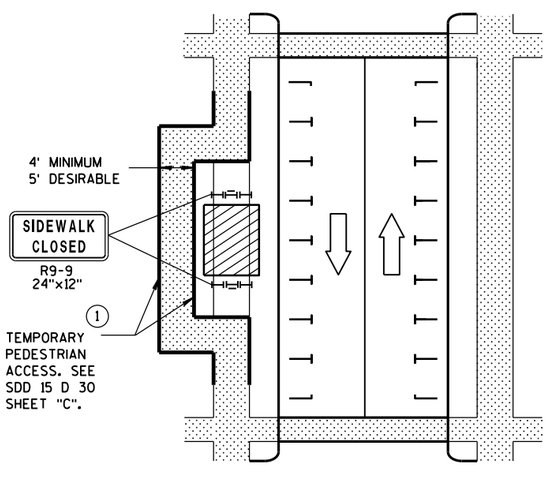

SIDEWALK DIVERSION

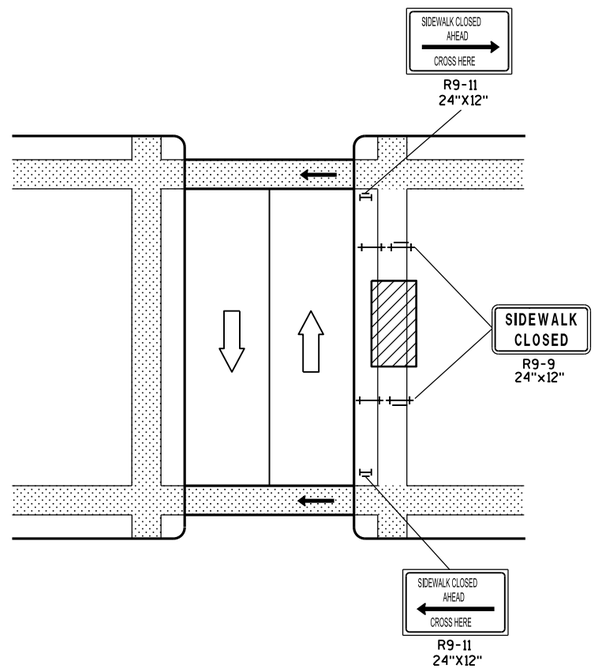

MID-BLOCK SIDEWALK CLOSURE

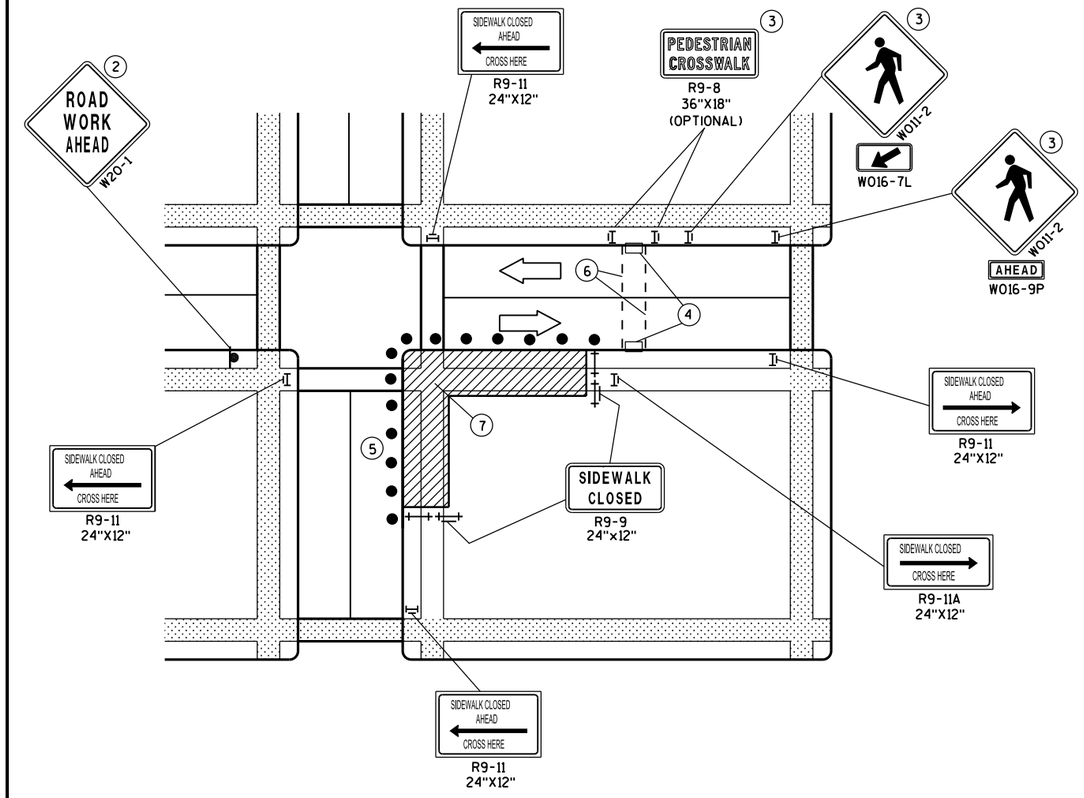

CORNER SIDEWALK CLOSURE WITH TEMPORARY CROSSWALK

GENERAL NOTES

WHEN CLOSING OR RELOCATING CROSSWALKS OR SIDEWALKS, PROVIDE DETECABLE TEMPORARY FACILITIES AND INCLUDE ACCESSIBILITY FEATURES CONSISTENT WITH EXISTING PEDESTRIAN FACILITIES.

TEMPORARY TRAFFIC CONTROL DEVICES FOR PEDESTRIANS ARE SHOWN. OTHER DEVICES MAY BE NECESSARY TO CONTROL VEHICULAR TRAFFIC. STAGE WORK, AS NECESSARY, TO PROVIDE A TEMPORARY PEDESTRIAN ACCESS ROUTE AT ALL TIMES. FOR ROADWAYS WITH NO AVAILABLE DETOURS, MAINTAIN ONE OPEN SIDEWALK AT ALL TIMES.

"WO" SIGN IS THE SAME AS "W" SIGN EXCEPT THE BACKGROUND IS ORANGE.

FOR NIGHTTIME CLOSURE USE TYPE "A" FLASHING WARNING LIGHTS ON BARRICADES, SUPPORTING SIGNS AND CLOSING SIDEWALK. USE TYPE "C" STEADY BURN LIGHTS ON CHANNELIZING DEVICES SEPARATING THE WORK AREA FROM VEHICULAR TRAFFIC.

PEDESTRIAN TRAFFIC SIGNAL DISPLAY CONTROLLING CLOSED CROSSWALK SHALL BE COVERED OR DEACTIVATED.

POST MOUNTED SIGNS LOCATED ADJACENT TO A SIDEWALK SHALL HAVE A 7 FOOT MINIMUM CLEARANCE FROM THE BOTTOM OF THE SIGN TO THE SIDEWALK SURFACE.

ALTERNATE SIDEWALK WORK BETWEEN LEFT AND RIGHT SIDE OF ROADWAY TO MAINTAIN PEDESTRIAN ACCESS.

1. IF SIDEWALK CLOSURE AFFECTS AN ACCESSIBLE AND DETECTABLE FACILITY, MAINTAIN ACCESSIBILITY AND DETECTABILITY ALONG THE ALTERNATE PEDESTRIAN ROUTE.
2. "ROAD WORK AHEAD" SIGNS ARE NOT REQUIRED IF THE SIDEWALK CLOSURE OCCURS WITHIN A LARGER WORK ZONE WHERE ADVANCE WARNING SIGNS ARE ALREADY PRESENT, OR IF THE WORK AREA AND EQUIPMENT ARE MORE THAN 2 FEET BEHIND THE CURB.
3. IF TEMPORARY PEDESTRIAN CROSSWALK IS NOT PROVIDED, OMIT R9-8 AND W011-2 SIGN ASSEMBLIES. IF PROVIDED INCLUDE ON BOTH SIDES OF THE CROSSWALK.
4. TEMPORARY CURB RAMPS. SEE SDD 15 D 30 SHEET "B".
5. DRUMS OR BARRICADES AT 25 FOOT SPACING. STREET PARKING SHALL BE PROHIBITED FOR AT LEAST 50 FEET IN ADVANCE OF THE MID-BLOCK CROSSWALK.
6. TEMPORARY PAVEMENT MARKING FOR CROSSWALK LINES.
7. LIMIT WORK TO ONE QUADRANT AT A TIME TO MINIMIZE PEDESTRIAN DISRUPTION.

LEGEND

- SIGN ON PERMANENT SUPPORT
- UNDER PEDESTRIAN TRAFFIC
- WORK AREA
- PEDESTRIAN CHANNELIZATION DEVICE
- TYPE II BARRICADE WITH/WITHOUT SIGN (ALL WITH ONE WARNING LIGHT, TYPE A, LOW-INTENSITY FLASHING)
- TYPE III BARRICADE WITH/WITHOUT SIGN (ALL WITH ONE WARNING LIGHT, TYPE A, LOW-INTENSITY FLASHING)
- DIRECTION OF TRAFFIC
- TRAFFIC CONTOL DRUM

TRAFFIC CONTROL, PEDESTRIAN ACCOMMODATION

STATE OF WISCONSIN
DEPARTMENT OF TRANSPOI

6

S.D.D. 15 D 30-3a

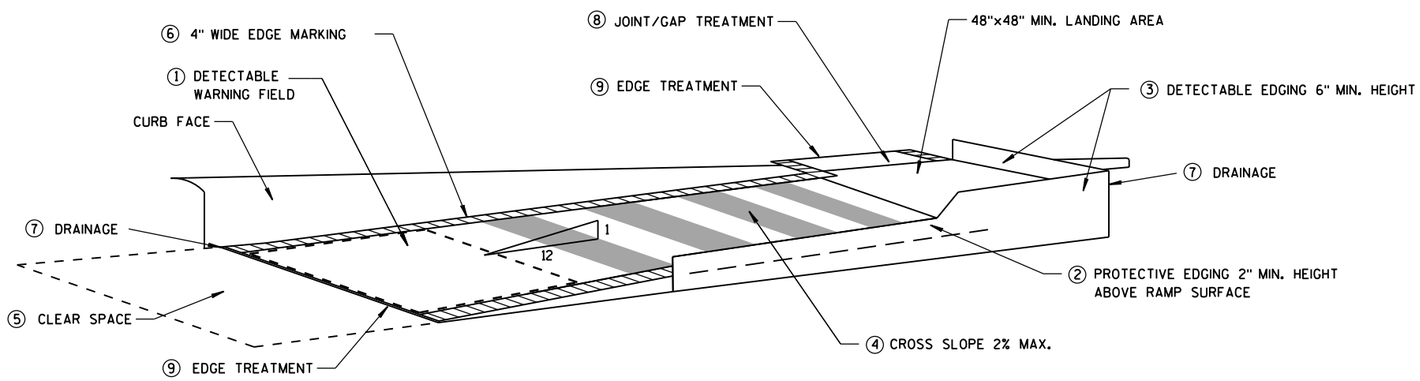

TEMPORARY CURB RAMP PARALLEL TO CURB

GENERAL NOTES

NOTIFY THE BUS COMPANY 7 DAYS IN ADVANCE OF THE BUS STOP RELOCATION.

ALTERNATE SIDEWALK WORK BETWEEN LEFT AND RIGHT SIDE OF ROADWAY TO MAINTAIN PEDESTRIAN ACCESS.

① CURB RAMPS SHALL BE 48" MIN. WIDTH WITH A FIRM, STABLE AND SLIP RESISTANT SURFACE. INSTALL CONTRASTING DETECTABLE WARNING FIELD AT PEDESTRIAN STREET CROSSINGS. REFER TO SDD 8D5 SHEET "E".

② PROTECTIVE EDGING WITH A 2" MIN. HEIGHT SHALL BE INSTALLED WHEN A CURB RAMP OR LANDING PLATFORM HAS A VERTICAL DROP OF 6" OR GREATER OR HAS A SIDE APRON SLOPE STEEPER THAN 1:3 (33%). PROTECTIVE EDGING SHOULD BE CONSIDERED WHEN CURB RAMPS OR LANDING PLATFORMS HAVE A VERTICAL DROP OF 3" OR MORE.

③ DETECTABLE EDGING WITH 6" MIN. HEIGHT AND CONTRASTING COLOR SHALL BE INSTALLED ON ALL CURB RAMP LANDINGS WHERE THE WALKWAY CHANGES DIRECTION (TURNS).

④ CURB RAMPS AND LANDINGS SHALL HAVE A 1:50 (2%) MAX. CROSS-SLOPE.

⑤ CLEAR SPACE OF 48"X48" MIN. SHALL BE PROVIDED ABOVE AND BELOW THE CURB RAMP.

⑥ THE CURB RAMP WALKWAY EDGE SHALL BE MARKED WITH A YELLOW COLOR, 4" WIDE MARKING, UNLESS A CONTRASTING DETECTABLE WARNING FIELD IS PROVIDED.

⑦ DO NOT RESTRICT WATER FLOW IN THE GUTTER SYSTEM.

⑧ LATERAL JOINTS OR GAPS BETWEEN SURFACES SHALL BE LESS THAN 1/2" WIDTH.

⑨ CHANGES BETWEEN SURFACE HEIGHTS SHALL NOT EXCEED 1/2". LATERAL EDGES SHALL BE VERTICAL UP TO 1/4" HIGH, AND BEVELED AT 1:2 BETWEEN 1/4" AND 1/2".

⑩ 5' WIDE MIN. WITH PEDSETRIAN SAFETY FENCE, 10' WIDE MIN. WITHOUT PEDESTRIAN SAFETY FENCE.

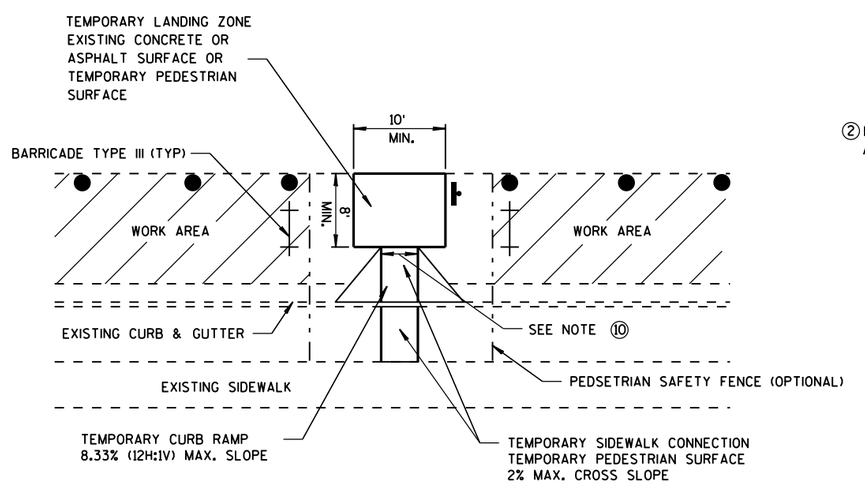

TEMPORARY BUS STOP PAD

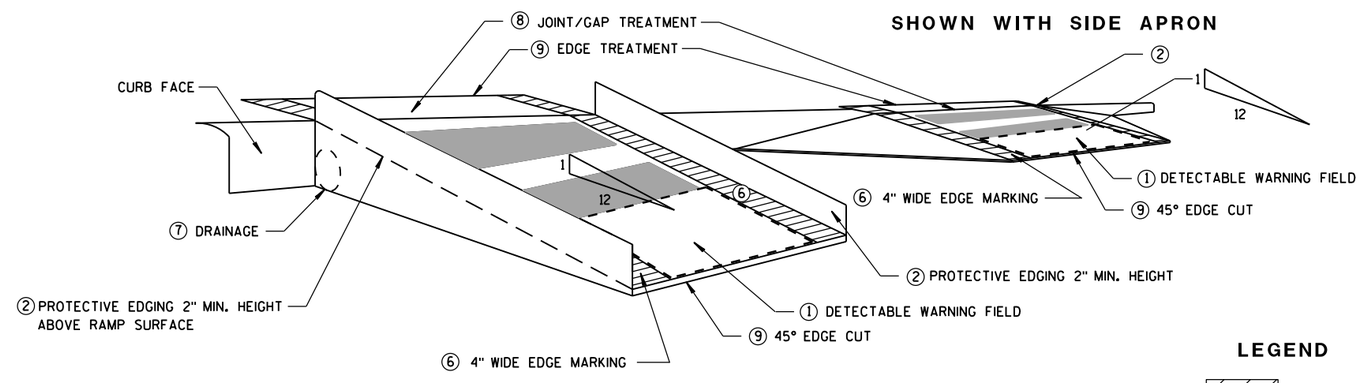

SHOWN WITH PROTECTIVE EDGE

TEMPORARY CURB RAMP PERPENDICULAR TO CURB

LEGEND

- WORK AREA
- TYPE III BARRICADE
- TRAFFIC CONTOL DRUM

TRAFFIC CONTROL, TEMPORARY ADA COMPLIANT PEDESTRIAN ACCOMMODATION

STATE OF WISCONSIN
DEPARTMENT OF TRANSPORTATION

APPROVED
June 2016 — DATE
/S/ Peter Amakobe Atepe — STATEWIDE WORK ZONE TRAFFIC SAFETY ENGINEER
FHWA

6

6

S.D.D. 15 D 30-3b

S.D.D. 15 D 30-3b

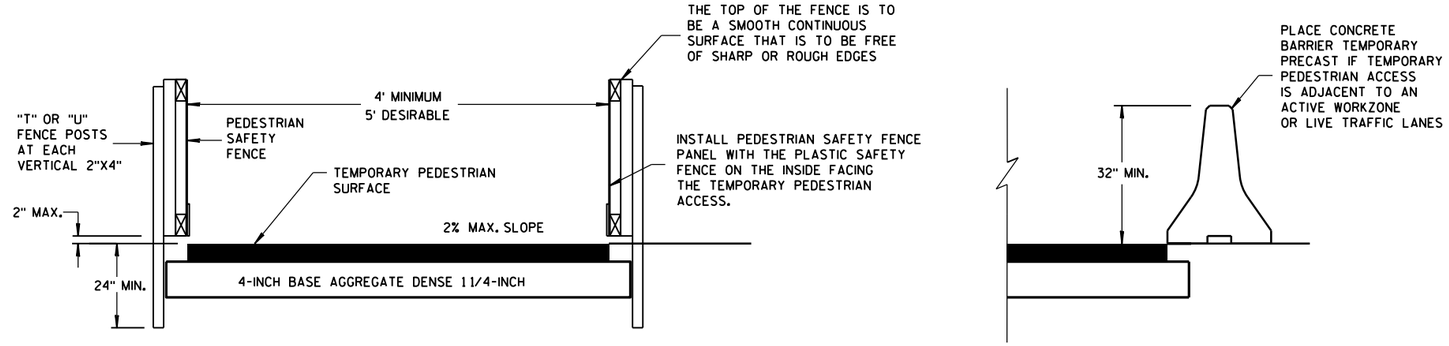

TEMPORARY PEDESTRIAN ACCESS

GENERAL NOTES

1. INTERCHANGEABLE WITH THE PEDESTRIAN SAFETY FENCE.

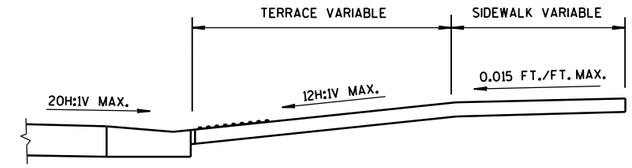

SECTION A-A

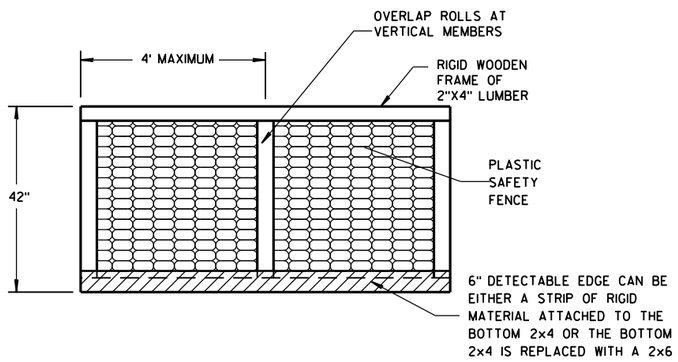

PEDESTRIAN SAFETY FENCE

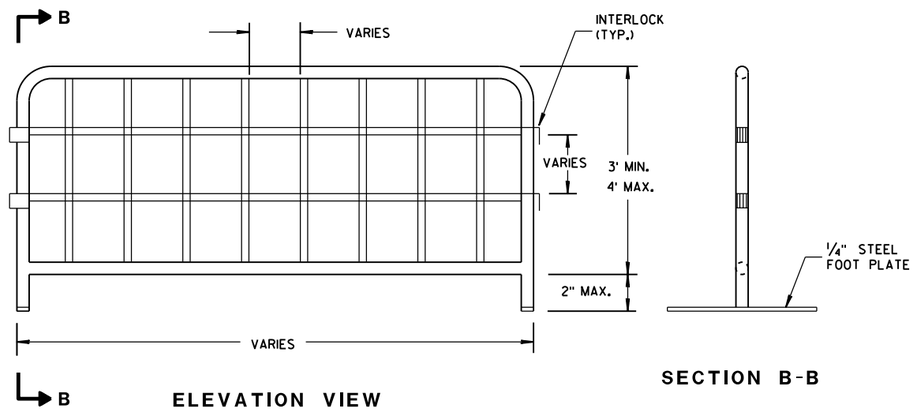

ELEVATION VIEW

SECTION B-B

TEMPORARY PEDESTRIAN STEEL BARRICADE (1)

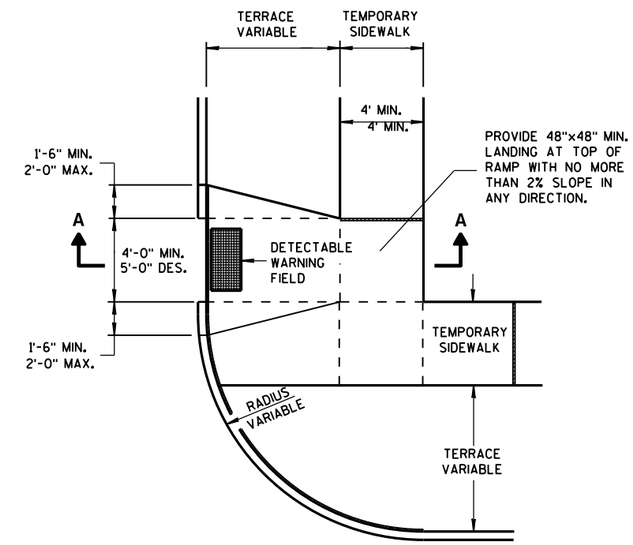

PLAN VIEW

TEMPORARY TYPE 3 RAMP

(OUTSIDE OF CROSSWALK AREA)

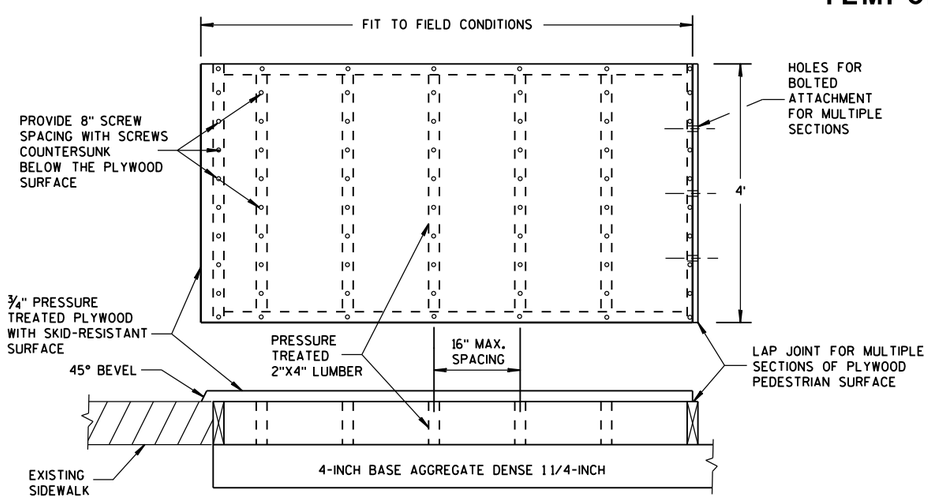

TEMPORARY PEDESTRIAN SURFACE PLYWOOD

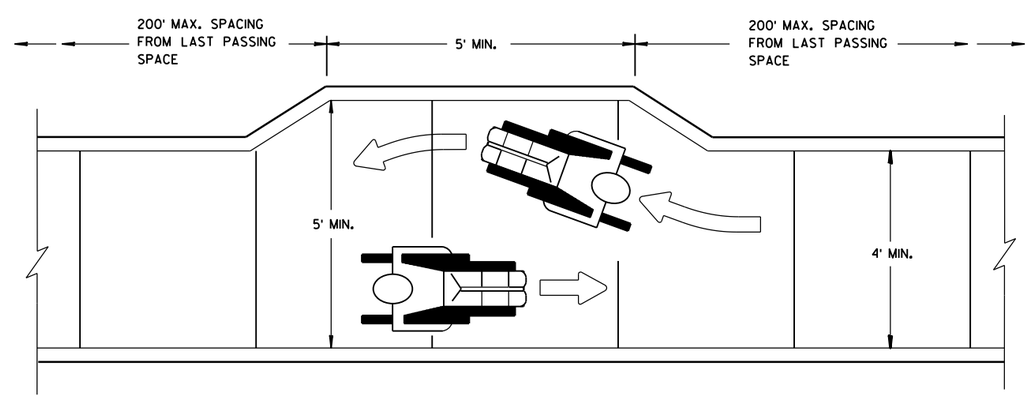

NARROW SIDEWALK PASSING DETAIL

TRAFFIC CONTROL, PEDESTRIAN ACCOMMODATION

STATE OF WISCONSIN
DEPARTMENT OF TRANSPORTATION

APPROVED
June 2016 — DATE
/S/ Peter Amakobe Atepe
STATEWIDE WORK ZONE TRAFFIC SAFETY ENGINEER
FHWA

6

S.D.D. 15 D 30-3c

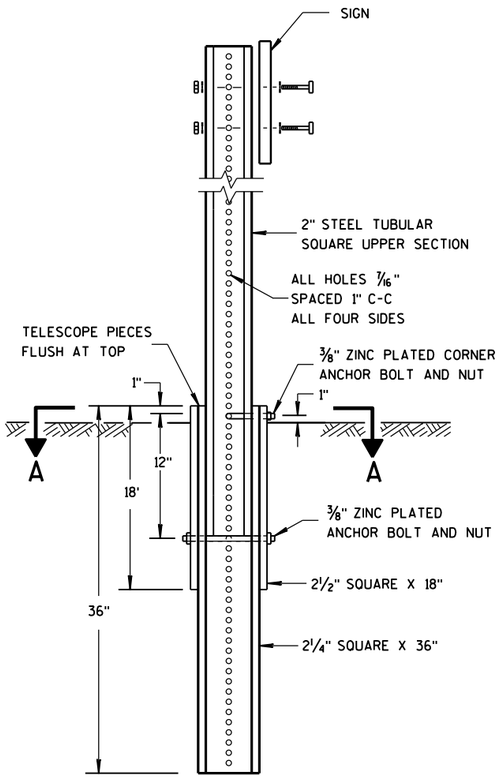

DETAIL OF TUBULAR STEEL SIGN POST

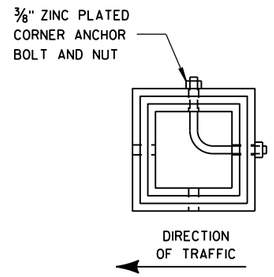

SECTION A-A

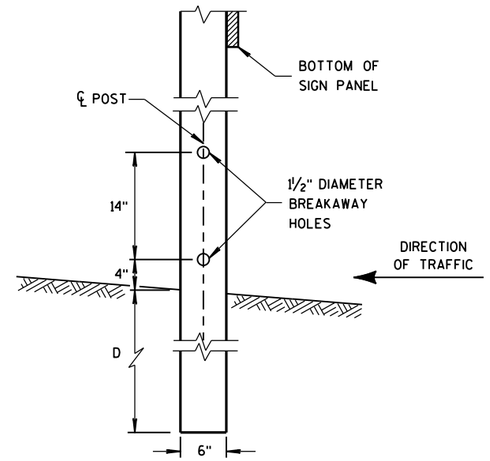

4"x6" WOOD POST MODIFICATION

GENERAL NOTES

1. 6 FEET FROM THE EDGE OF PAVEMENT (EDGE LINE LOCATION) UNLESS OTHERWISE DIRECTED BY THE PROJECT ENGINEER. LATERAL OFFSET SHOULD BE ADJUSTED TO AVOID THE DITCH FLOWLINE.
2. THE EXISTENCE OF CURB AND GUTTER DOES NOT IN ITSELF MANDATE THE VERTICAL CLEARANCE ILLUSTRATED. THAT HEIGHT IS TYPICALLY MEASURED WHERE THERE IS SIDEWALK ADJACENT TO THE ROADWAY OR PARKING IS PERMITTED. IN THE ABSENCE OF SIDEWALK, VERTICAL CLEARANCE IS MEASURED FROM THE TOP OF THE CURB. IF NO SIDEWALK AND NO PARKING, VERTICAL CLEARANCE MAY BE REDUCED TO 5 FOOT MINIMUM. OFFSET OF SIGNS IS MEASURED FROM THE CURB FLOWLINE.
3. FOR SIGNS REQUIRING 4 POSTS, SPACE INTERMEDIATE POSTS EVENLY.

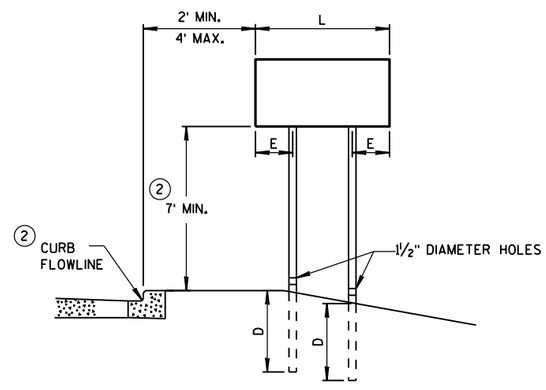

URBAN AREA

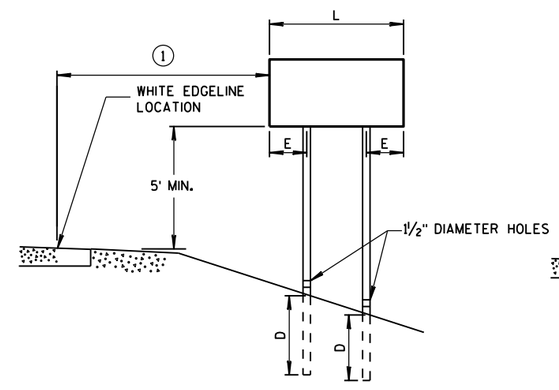

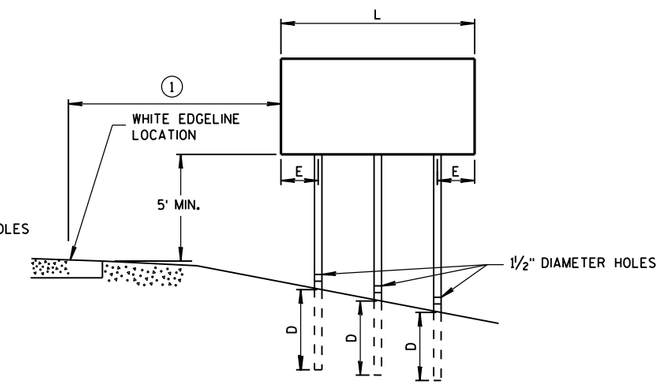

RURAL AREA

POST MOUNTING DETAIL FOR TEMPORARY TRAFFIC CONTROL FIXED MESSAGE SIGNS

TUBULAR STEEL POSTS

AREA OF SIGN INSTALLATION (SQ. FT.)	NUMBER OF REQUIRED TUBULAR STEEL POSTS
9 OR LESS	1
GREATER THAN 9 LESS THAN OR EQUAL TO 18	2
GREATER THAN 18 LESS THAN OR EQUAL TO 27	3

SIGNS WIDER THAN 3 FEET OR LARGER THAN 9 SQ. FT. SHALL BE MOUNTED ON MULTIPLE POSTS (SEE ABOVE TABLE).

SIGNS LARGER THAN 27 SQ. FT. SHALL NOT BE MOUNTED ON TUBULAR STEEL POSTS.

WOOD POST EMBEDMENT DEPTH

AREA OF SIGN INSTALLATION (SQ. FT.)	D (MIN)
20 OR LESS	4'
GREATER THAN 20	5'

4" X 6" WOOD POST

POST SPACING REQUIREMENTS		NUMBER OF WOOD POSTS REQUIRED
L	E	
48" OR LESS AND LESS THAN 20 SQ. FT.	-	1
LESS THAN 60"	12"	2
60" TO 120"	L/5	2
GREATER THAN 120" LESS THAN 168"	12"	3
168" AND GREATER	12"	4

SEE NOTE 3

TEMPORARY TRAFFIC CONTROL FIXED MESSAGE SIGNS

STATE OF WISCONSIN
DEPARTMENT OF TRANSPO

6

S.D.D. 15 D 38-1a

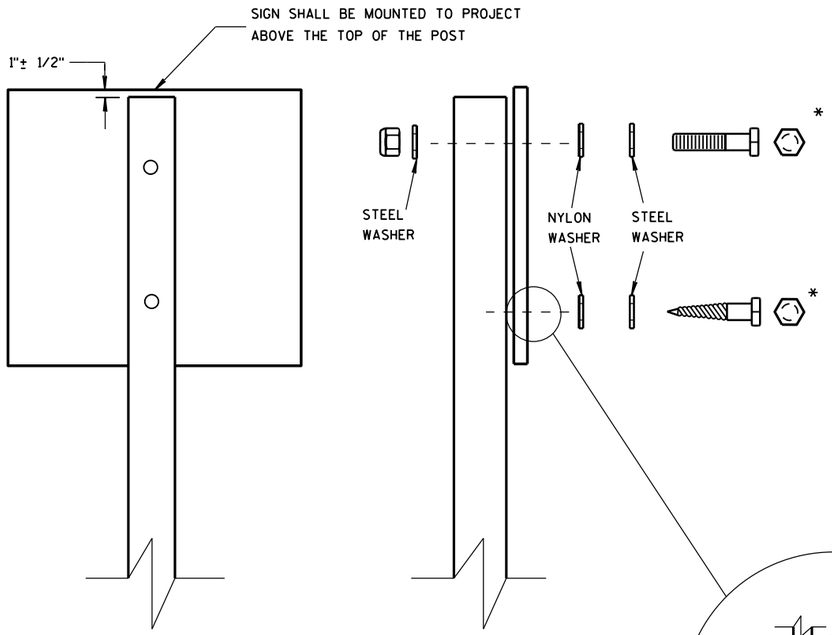

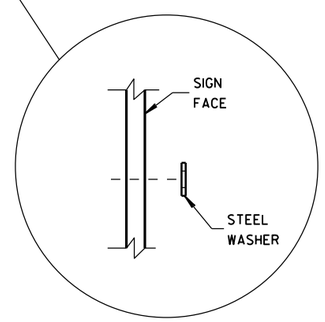

WASHER PLACEMENT WHEN SIGN HAS OTHER THAN TYPE H OR TYPE F FACE

NUTS, BOLTS AND LAGS USED FOR MOUNTING SIGNS SHALL HAVE HEXAGONAL HEADS AND SHALL BE EITHER:

A. HOT DIP GALVANIZED IN ACCORDANCE WITH ASTM DESIGNATION: A 153, CLASS D, OR SC 3

B. ELECTRO-GALVANIZED IN ACCORDANCE WITH ASTM DESIGNATION: B 633, TYPE III, SC 3

THREADS ON BOLTS AND NUTS SHALL BE MANUFACTURED WITH SUFFICIENT ALLOWANCE FOR THE CADMIUM PLATE OR GALVANIZED COATING TO PERMIT THE NUTS TO RUN FREELY ON THE BOLTS.

WOOD POSTS (4" x 4" or 4" x 6")

LAG SCREWS - 3/8" X 3"

MACHINE BOLTS - 5/16" X 6-1/2" OR 7" LENGTH W/ NUTS

SQUARE STEEL POSTS (2" x 2")

MACHINE BOLTS - 3/8" X 3-1/4" LENGTH W/ NUTS

RIVETS - 9/32" (6605-9-6) BULB-TITE, TRI-FOLD, ALUMINUM BODY/MANDREL O.D. FLANGE .720-.765 INCH, GRIP RANGE .042-.375 INCH

WASHERS (ALL POSTS) -

1-1/4" O.D. X 3/8" I.D. X 1/16" STEEL

1-1/4" O.D. X 3/8" I.D. X .080 NYLON FOR ALL TYPE H SIGNS

* TWO DIFFERENT FASTENING SYSTEMS ARE SHOWN FOR ILLUSTRATION PURPOSES. ON ANY INDIVIDUAL SIGN, EITHER ONE OR THE OTHER SYSTEM SHALL BE USED. ACTUAL NUMBER OF FASTENERS PER SIGN VARIES WITH THE SIGN AREA. FOR A SINGLE POST INSTALLATION, ALL SIGNS GREATER THAN 9 SQ. FT. REQUIRE THE USE OF 3 FASTENERS.

6

S.D.D. 15 D 38-1b

ATTACHMENT OF SIGNS TO POSTS

STATE OF WISCONSIN
DEPARTMENT OF TRANSPORTATION

APPROVED
Feb. 2015 — DATE
/S/ Travis Feltes — STATE TRAFFIC ENGINEER
FHWA

6

S.D.D. 15 D 38-1b

NOTES

1. Signs are Type II- Type H Reflective
2. Color:
   Background - Green
   Message - White
3. Message Series - C except as noted

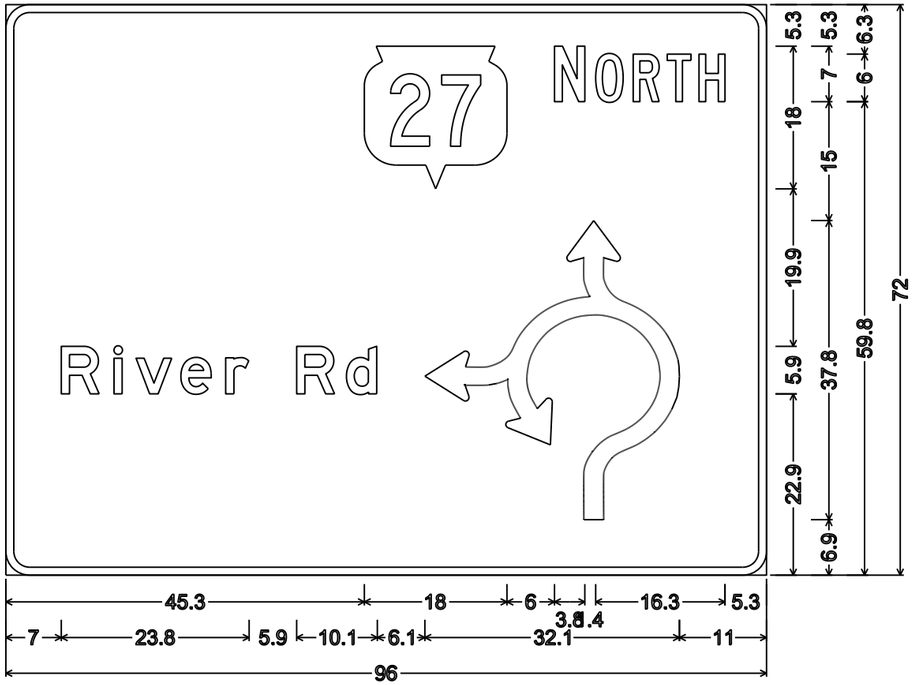

3.0" Radius, 1.0" Border,
"River" E; "Rd" E;

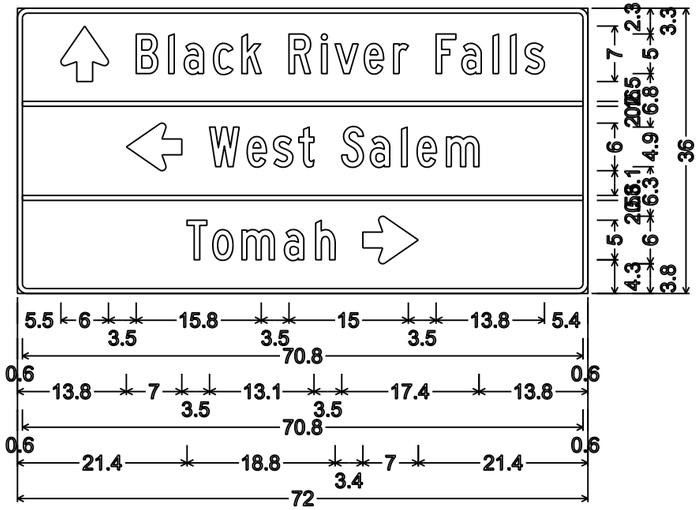

D1-3; 1.3" Radius, 0.6" Border

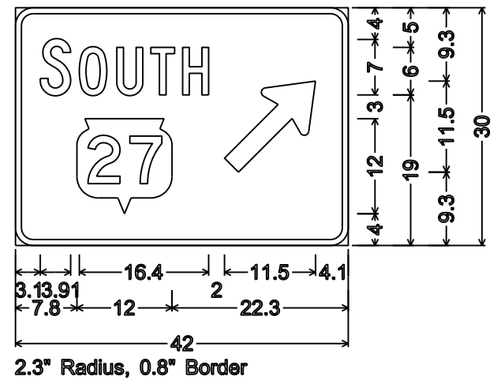

2.3" Radius, 0.8" Border

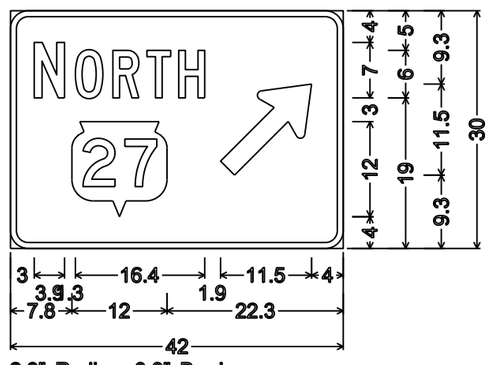

2.3" Radius, 0.8" Border

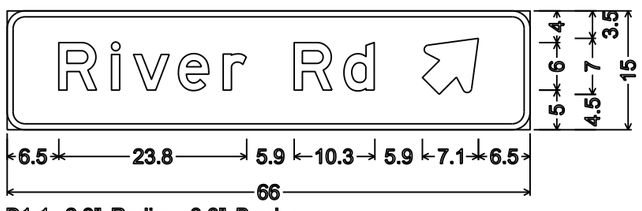

D1-1; 2.3" Radius, 0.8" Border

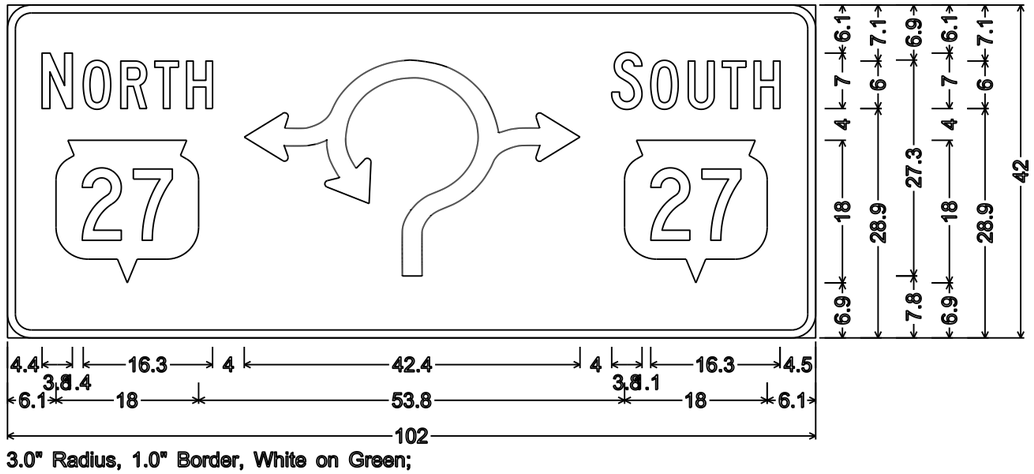

3.0" Radius, 1.0" Border, White on Green;

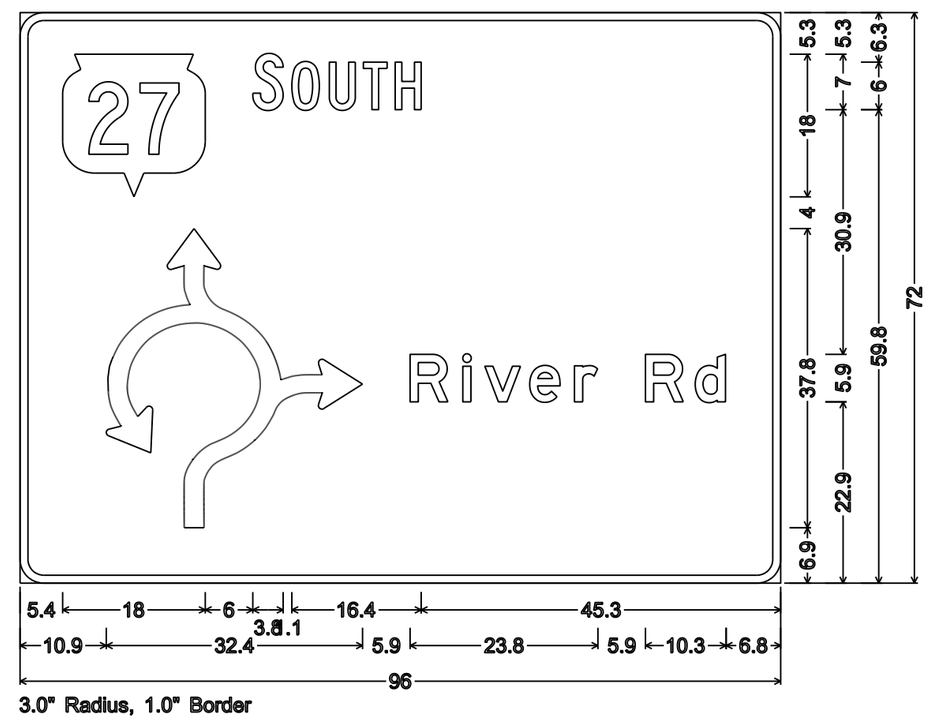

3.0" Radius, 1.0" Border
"River" E; "Rd" E;

PROJECT NO: 5144-01-75	HWY: STH 27	COUNTY: MONROE	PERMANENT SIGNING	SHEET NO:	E

TYPICAL ASSEMBLIES

J1-1

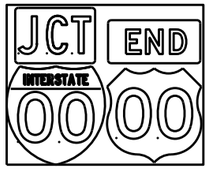

J1-2

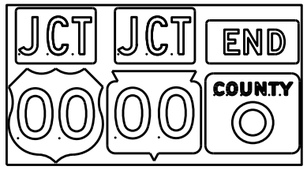

J1-3

J2-1

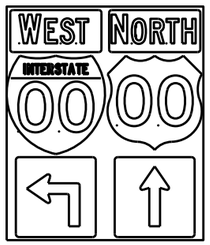

J2-2

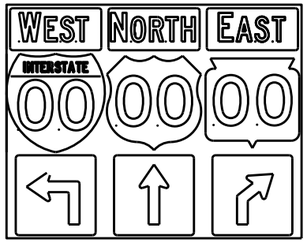

J2-3

JV

(Typical Vertical J-Assembly
See Note 10 and 11)

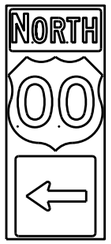

J3-1

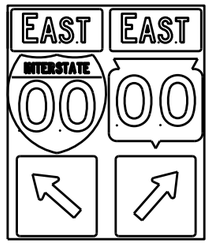

J3-2

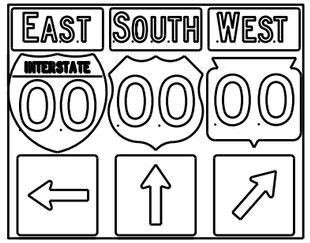

J3-3

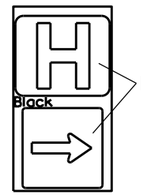

Blue Background

JH-1

J4-1

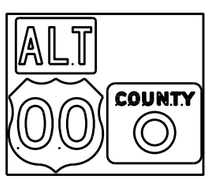

J4-2

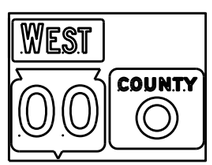

J4-2

J13-1

J12-1

J32-1

J33-1

J23-1

J22-1

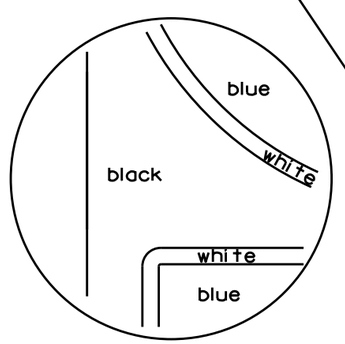

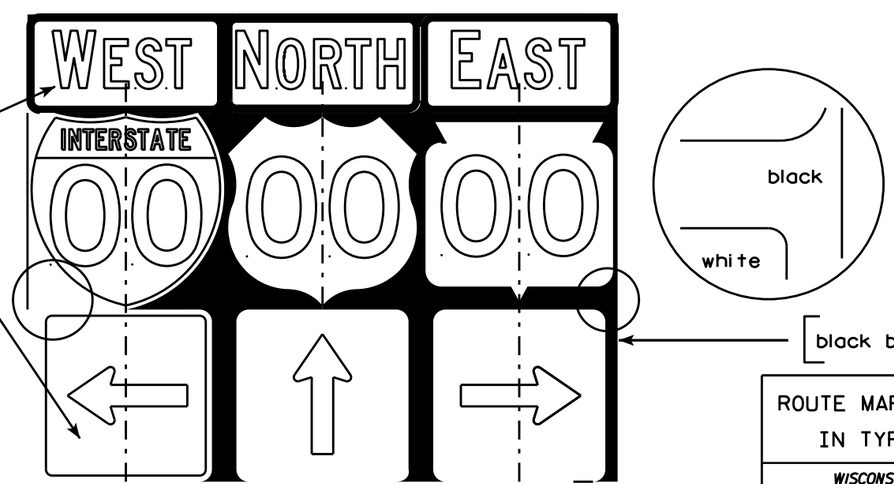

NOTES

1. Signs are Type II - Type H Reflective - reference WIS DOT Standard Specification for HIGHWAY and STRUCTURE CONSTRUCTION latest edition.
2. Color:
   Background - Black Non-reflective
   Message - see Note 5
3. Message Series - See Note 5
4. Corners shall be square or rounded if base material is plywood. If base material is metal the corners shall be rounded.
5. The colors and message spacing on each marker shall be according to the applicable route marker panel specifications.
6. Certain marker heads require the component pieces to be the same color. As an example, all the components used with an M1-1 Interstate marker shall be blue.
7. Single panel j-assemblies shall only be used with route marker shields that are same size. If the route marker shields are different size use multiple piece component.
8. Route assemblies that have 24 inch route shields and have dimensions greater than 48 inches (both vertical and horizontal) shall have one horizontal splice between the arrows and route shields. Vertical splices shall not be used on route assemblies with a horizontal dimension of 144 inches or less. The contractor shall not use more than one vertical joint per sign and the joint shall be between route shields.
9. Route assemblies that have 36 inch shields and have dimensions greater than 48 inchs (both vertical and horizontal) shall have two horizontal splices. One horizontal splice shall be between the cardinal direction and route shields and the other horizontal splice shall be between the arrows and route shields. Vertical splices shall not be used on route assemblies with a horizontal dimension of 144 or less. The contractor shall not use more than one vertical joint per sign and the joint shall be between route shields.
10. All Vertical J Assemblies are given a Sign Code of JV
11. For JV Assemblies that have a mixture of Interstate and non Interstate shields, arrows and cardinals shall be white on blue.

ROUTE MARKERS & COMPONENTS
IN TYPICAL ASSEMBLIES

WISCONSIN DEPT OF TRANSPORTATION

APPROVED Matthew R Rauch
for State Traffic Engineer

DATE 2/06/14 PLATE A2-1S.8

PROJECT NO: | SHEET NO: E

URBAN AREA

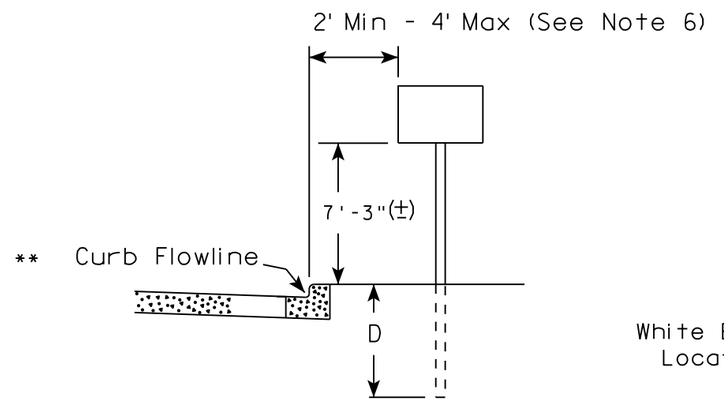

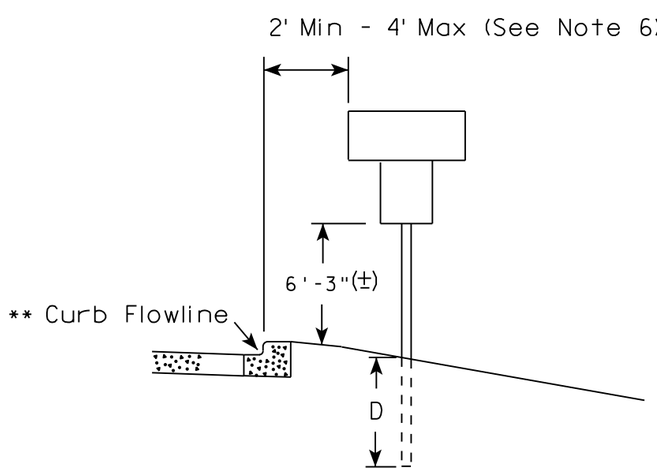

RURAL AREA (See Note 2)

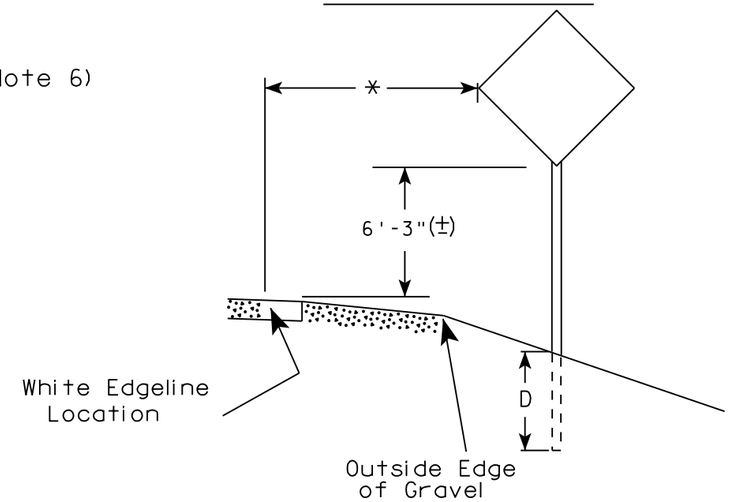

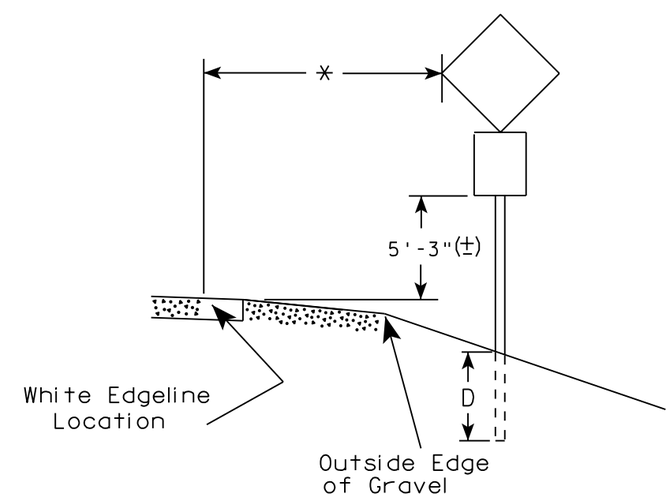

** The existence of curb and gutter does not in itself mandate the vertical clearance illustrated. That height is typically measured where there is sidewalk adjacent to the roadway or parking is permitted. In the absence of sidewalk vertical clearance is measured from the top of the curb. Offset of signs is measured from the flow line.

* 6 feet from edge of a paved shoulder or 12 feet from the edge of pavement (edge line location) or 2 feet from outside edge of gravel, whichever is greater unless directed by project engineer.

GENERAL NOTES

1. Signs wider than 4 feet or 20 sq.ft or larger, shall be mounted on multiple posts. Refer to plate A4-4.
2. If signs are mounted on barrier wall, see A4-10 sign plate.
3. For expressways and freeways, mounting height is 7'- 3" (±) or 6'-3" (±) depending upon existence of a sub-sign.
4. J-Assemblies are considered to be one sign for mounting height.
5. Minimum mounting height for signs mounted on traffic signal poles is 5'- 3" (±).
6. Offset distance shall be consistent with existing signs or consistent throughout length of project.
7. The (±) tolerance for mounting height is 3 inches.
8. Folding signs shall be mounted at a height of 5'-3" (±) or as directd by the Engineer.
9. The Double Arrow sign (W12-1) shall be mounted at a height of 2'-3" (±). The Chevron sign (W1-8), Roundabout Chevron panel (R6-4B), Enhanced Reference Markers, Clearance Markers (W5-52), Mile Markers (D10 series), In Road Object Markers (W5-54) & End of Road Markers (W5-56) shall be mounted at a height of 4'-3" (±).

POST EMBEDMENT DEPTH

Area of Sign Installation (Sq. Ft.)	D (Min)
20 or Less	4'
Greater than 20	5'

TYPICAL INSTALLATION OF PERMANENT TYPE II SIGNS ON SINGLE POSTS

WISCONSIN DEPT OF TRANSPORTATION

APPROVED Matthew R Rauch for State Traffic Engineer

DATE 8/21/17 PLATE NO. A4-3.21

7

7

PROJECT NO:	HWY:	COUNTY:		SHEET NO: 349	E

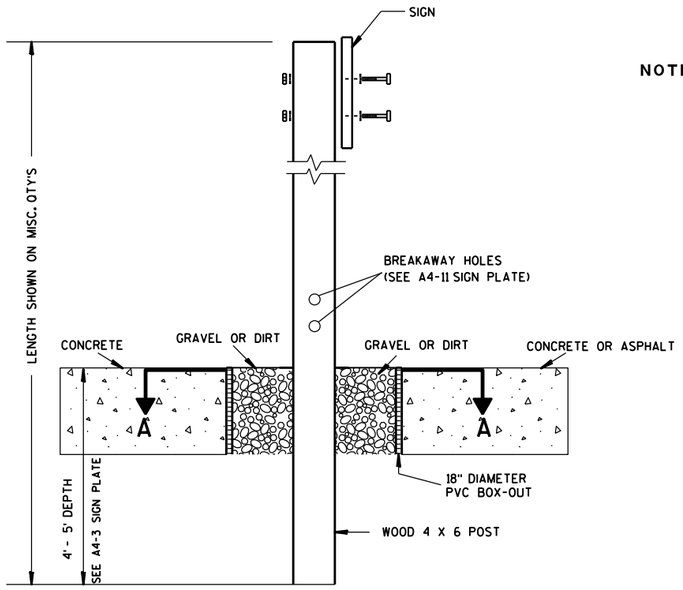

ELEVATION VIEW

DETAIL OF WOOD 4 X 6 SIGN POST IN BOX-OUT

NOTES:
1. ALL MATERIAL TO BE APPROVED BY ENGINEER PRIOR TO INSTALLATION
2. SEE SIGN PLATE A4-8 FOR SIGN HARDWARE REQUIREMENTS
3. 18 INCH X 18 INCH SQUARE BOX-OUTS MAY BE USED FOR INSTALLATIONS IN EXISTING CONCRETE OR ASPHALT LOCATIONS.

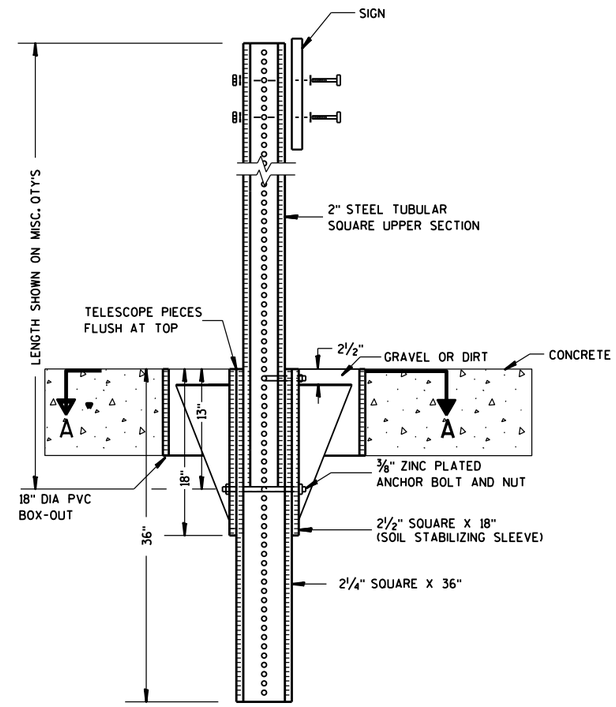

ELEVATION VIEW

DETAIL OF STEEL 2 X 2 SIGN POST IN BOX-OUT

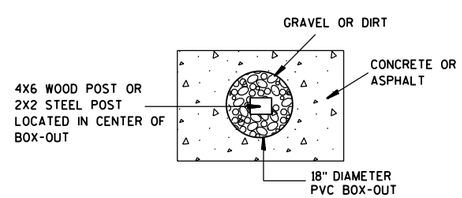

PLAN VIEW

FOR NEW CONCRETE/ASPHALT INSTALLATIONS

SIGN POST
BOX-OUTS
A4-3B

WISCONSIN DEPT OF TRANSPORTATION

APPROVED Matthew R Rauch
for State Traffic Engineer

DATE 1/27/14 PLATE NO. A4-3B.1

PROJECT NO:	HWY:	COUNTY:		SHEET NO:	E

URBAN AREA

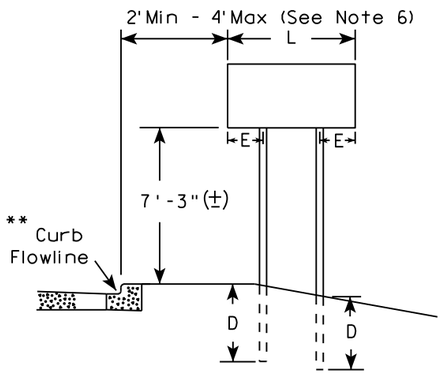

RURAL AREA (See Note 3)

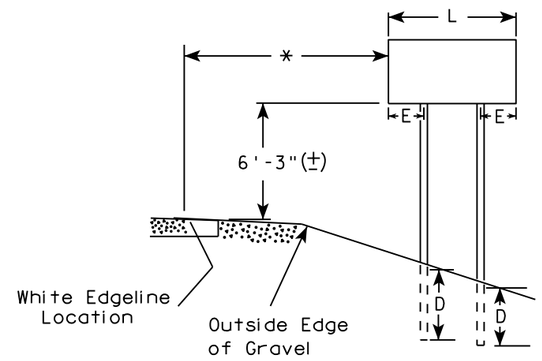

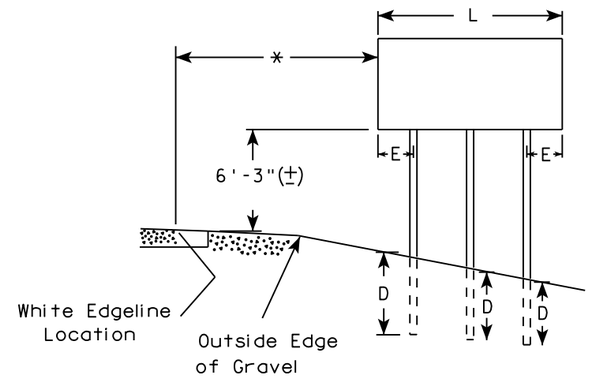

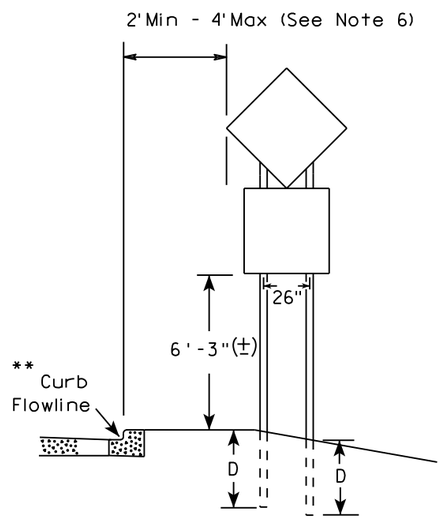

48" DIAMOND WARNING SIGN

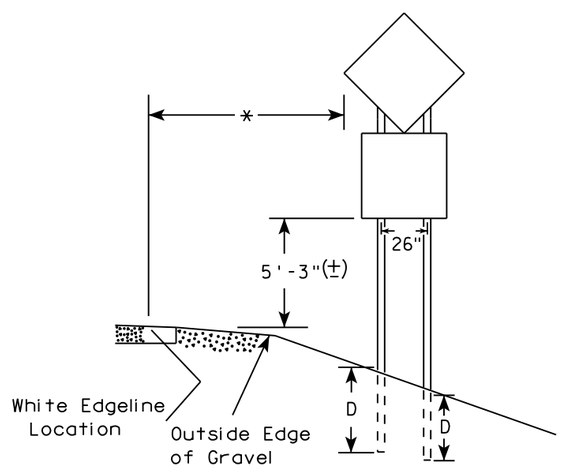

48" DIAMOND WARNING SIGN

SIGN SHAPE OTHER THAN DIAMOND (TWO POSTS REQUIRED)	
L	E
*** Greater than 48" Less than 60"	12"
60" to 108"	L/5

SIGN SHAPE OTHER THAN DIAMOND (THREE POSTS REQUIRED)	
L	E
Greater than 108" to 144"	12"

GENERAL NOTES

1. For 3 or 4 post installations, individual post spacing shall be greater than 3'-6".
2. See tables below for required number of posts.
3. For expressways and freeways, mounting height is 7'-3" (±) or 6'-3" (±) depending upon existence of sub-sign.
4. The (±) tolerance for mounting height is 3 inches.
5. J-Assemblies are considered to be one sign for mounting height.
6. Offset distance shall be consistent with existing signs or consistent throughout length of project.
7. Folding signs shall be mounted at a height of 5'-3" (±) or as directed by the engineer.
8. The Double Arrow sign (W12-1) shall be mounted at a height of 2'-3" (±). The Chevron sign (W1-8), Roundabout Chevron panel (R6-4B), Clearance Markers (W5-52), Mile Markers (D10 series), In Road Object Markers (W5-54) & End of Road Markers (W5-56) shall be mounted at a height of 4"-3" (±).

* 6 feet from edge of a paved shoulder or 12 feet from the edge of pavement (edge line location) or 2 feet from outside edge of gravel, whichever is greater unless directed by project engineer.

** The existence of curb and gutter does not in itself mandate the vertical clearance illustrated. That height is typically measured where there is sidewalk adjacent to the roadway or parking is permitted. In the absence of sidewalk vertical clearance is measured from the top of the curb. Offset of signs is measured from the flow line.

*** See A4-3 sign plate for signs 4' or less in width and less than 20 S.F. in area.

POST EMBEDMENT DEPTH

Area of Sign Installation (Sq. Ft.)	D (Min)
20 or Less	4'
Greater than 20	5'

TYPICAL INSTALLATION OF TYPE II SIGNS ON MULTIPLE POSTS

WISCONSIN DEPT OF TRANSPORTATION

APPROVED Matthew R Rauch
For State Traffic Engineer

DATE 8/21/17 PLATE NO. A4-4.15

7

7

PROJECT NO:	HWY:	COUNTY:		SHEET NO: 351	E

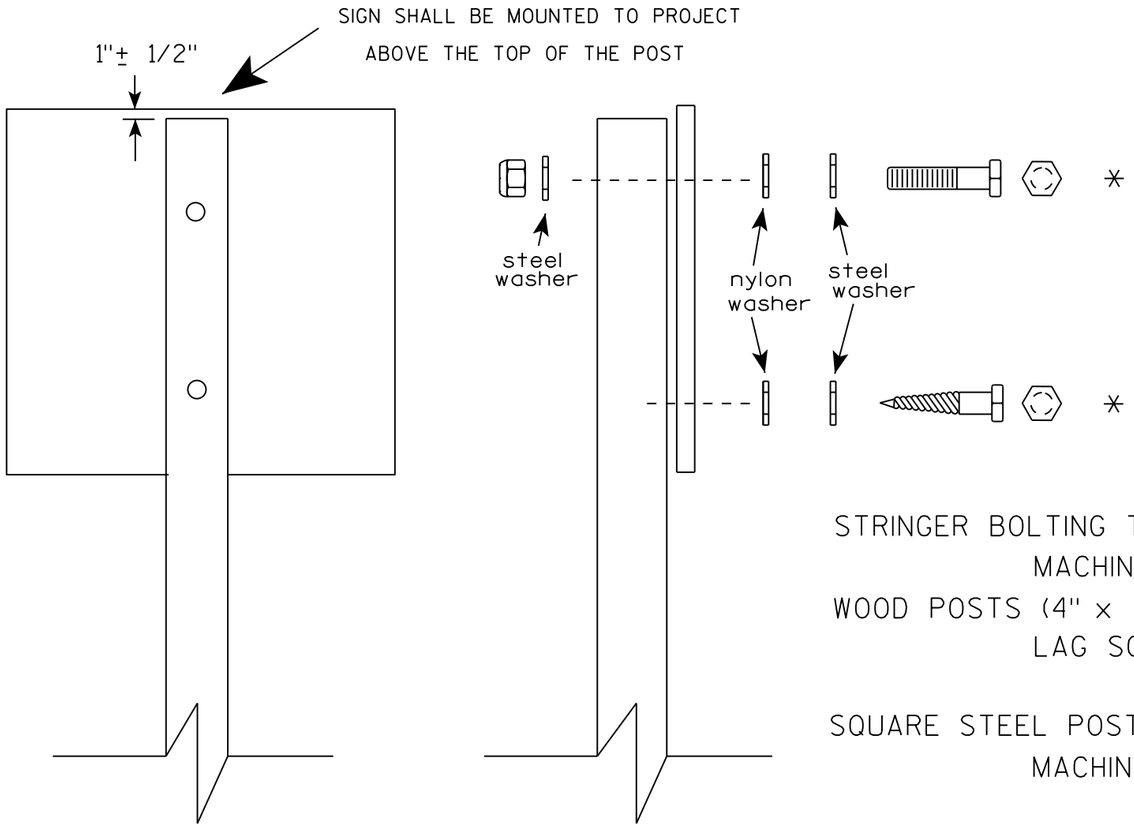

Nuts, bolts and lags used for mounting signs shall have hexagonal heads and shall be either :

a. Hot dip galvanized in accordance with ASTM Designation: A 153, Class D, or SC 3

b. Electro-galvanized in accordance with ASTM Designation : B 633, TYPE III, SC 3.

Threads on bolts and nuts shall be manufactured with sufficient allowance for the cadmium plate or galvanized coating to permit the nuts to run freely on the bolts.

STRINGER BOLTING TO ALUMINUM SIGNS (SEE SIGN PLATE A4-18)

MACHINE BOLTS - 5/16" X 1-3/4" Length w/ lock nuts

WOOD POSTS (4" x 4" or 4" x 6")

LAG SCREWS - 3/8" X 3" (NO STRINGERS ON BACK OF SIGN)

3/8" X 4" (STRINGERS ON BACK OF SIGN)

SQUARE STEEL POSTS (2" x 2")

MACHINE BOLTS - 3/8" X 3-1/4" Length w/ nuts (NO STRINGER ON BACK OF SIGN)

3/8" X 5" Length w/ nuts (STRINGERS ON BACK OF SIGN)

RIVETS - 9/32 " (6605-9-6) BULB-TITE, TRI-FOLD, ALUMINUM BODY/MANDREL

O.D. FLANGE .720-.765 INCH, GRIP RANGE .042-.375 INCH

WASHERS (ALL POSTS) -

1-1/4" O.D. X 3/8" I.D. X 1/16" STEEL

1-1/4" O.D. X 3/8" I.D. X .080 NYLON

* Two different fastening systems are shown for illustration purposes. On any individual sign, either one or the other system shall be used. Actual number of fasteners per sign varies with the sign area, but normally there are two. For a single post installation, all signs greater than 9 sq. ft. require the use of 3 fasteners.

ATTACHMENT OF SIGNS TO POSTS

WISCONSIN DEPT OF TRANSPORTATION

APPROVED Matthew R Rauch
for State Traffic Engineer

DATE 8/11/16 PLATE NO. A4-8.8

PROJECT NO: SHEET NO: E

TELESCOPIC TUBING ANCHORS
TWO PIECE SYSTEM

2 1/4" SQUARE
12 GAUGE
PERFORATED
GALVANIZED FINISH

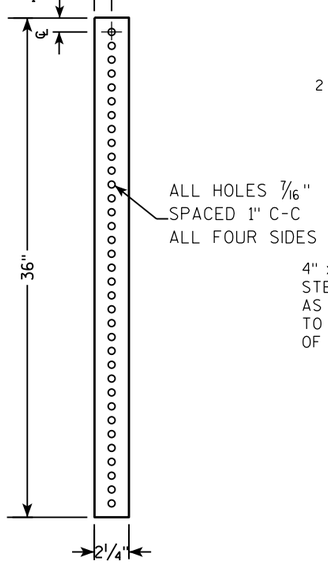

2 1/2" SQUARE
12 GAUGE
OMNI-DIRECTIONAL
PERFORATED
SOIL STABILIZING SLEEVE
GALVANIZED FINISH

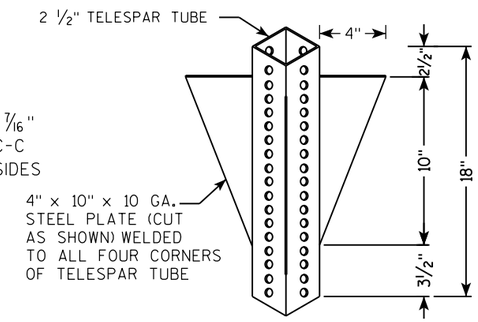

DETAIL OF TUBULAR STEEL SIGN POST
(IN POURED CONCRETE OR ASPHALT)

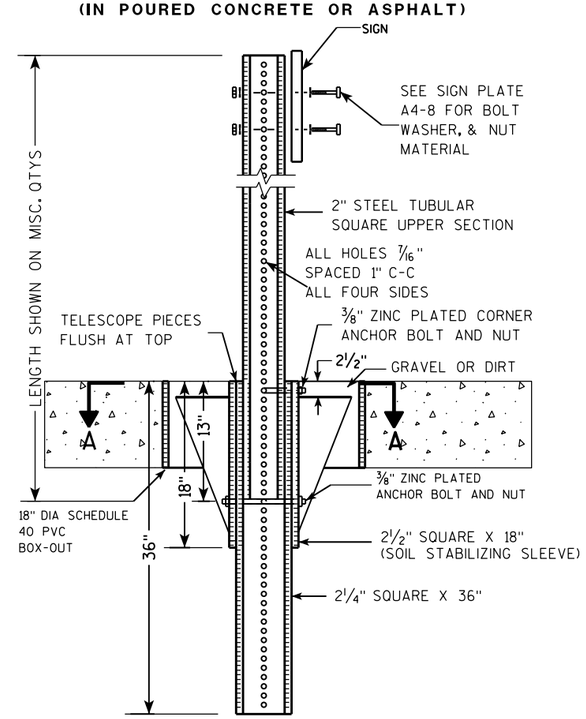

DETAIL OF TUBULAR STEEL SIGN POST
(IN LOCATIONS OTHER THAN POURED CONCRETE OR ASPHALT)

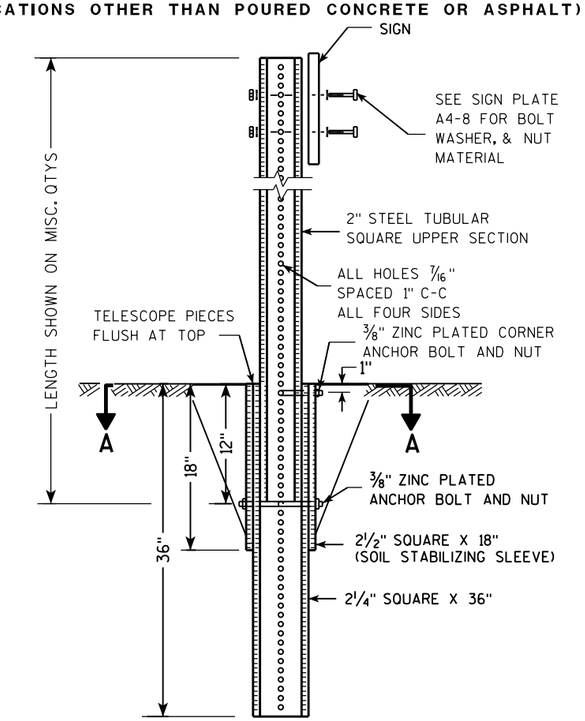

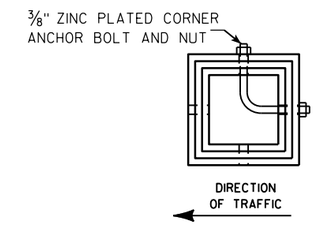

SECTION A-A

Area of Sign Installation (Sq. Ft.)	Number of Required Posts
9 or less	1
Greater than 9 less than or equal to 18	2
Greater than 18 less than or equal to 27	3

Signs wider than 3 feet or larger than 9 sq. ft shall be mounted on multiple posts (see above table).

TUBULAR STEEL
SIGN POST
A4-9

WISCONSIN DEPT OF TRANSPORTATION

APPROVED Matthew R Rauch
for State Traffic Engineer

DATE 2/05/15 PLATE A4-9.9

7 7

PROJECT NO:	HWY:	COUNTY:		SHEET NO:	E

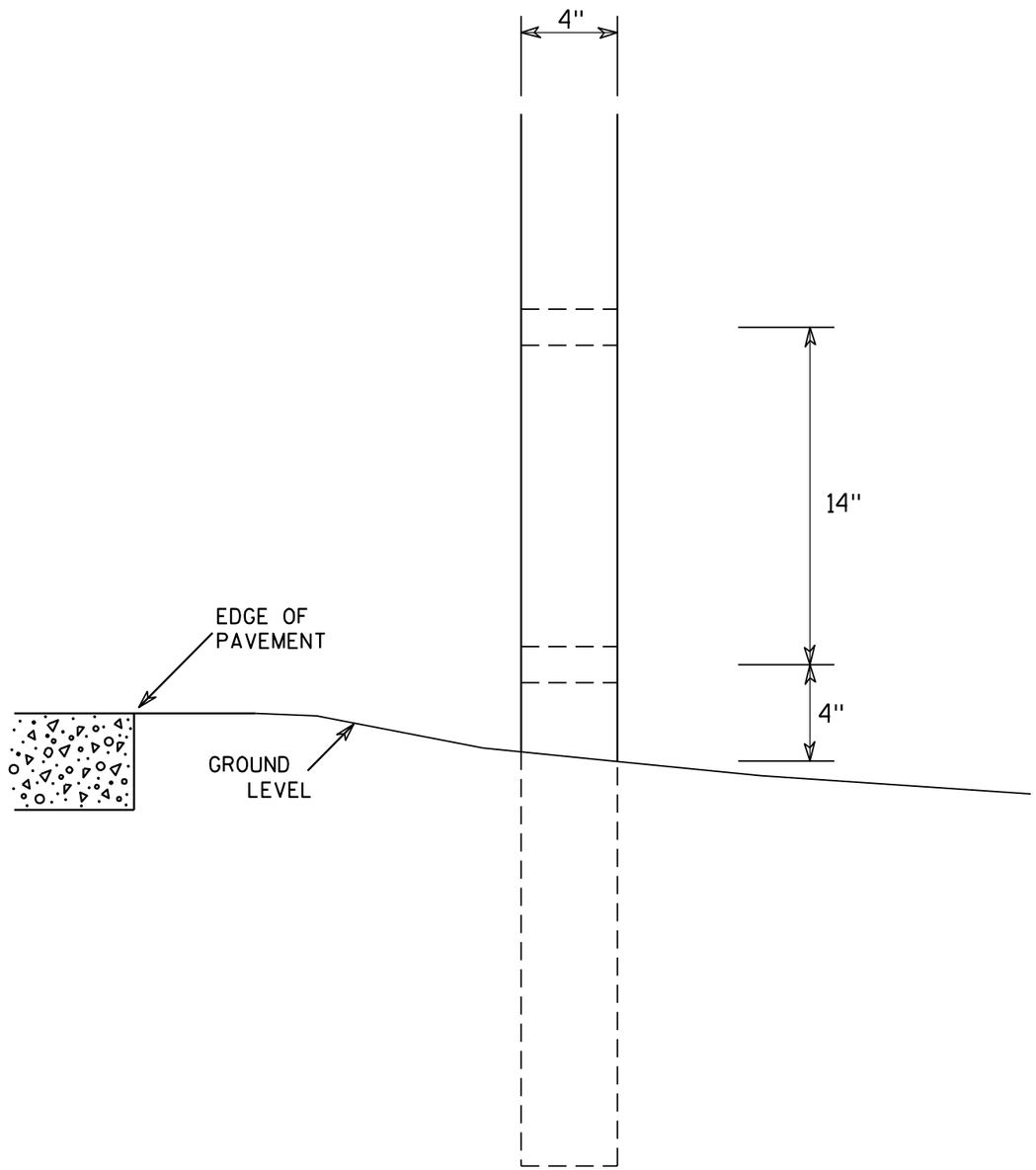

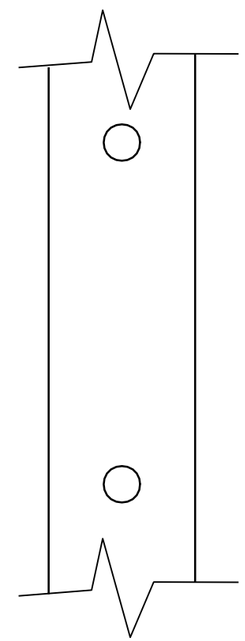

SIDE VIEW

GENERAL NOTES

1. All 4 x 6 Wood Posts shall be modified by having two 1½" diameter holes drilled perpendicular to the roadway centerline.

4 X 6 WOOD POST MODIFICATIONS

WISCONSIN DEPT OF TRANSPORTATION

APPROVED Chester J Spang for State Traffic Engineer

DATE 3/27/97 PLATE NO. A4-11.2

PROJECT NO:	HWY:	COUNTY:		SHEET NO: 354	E

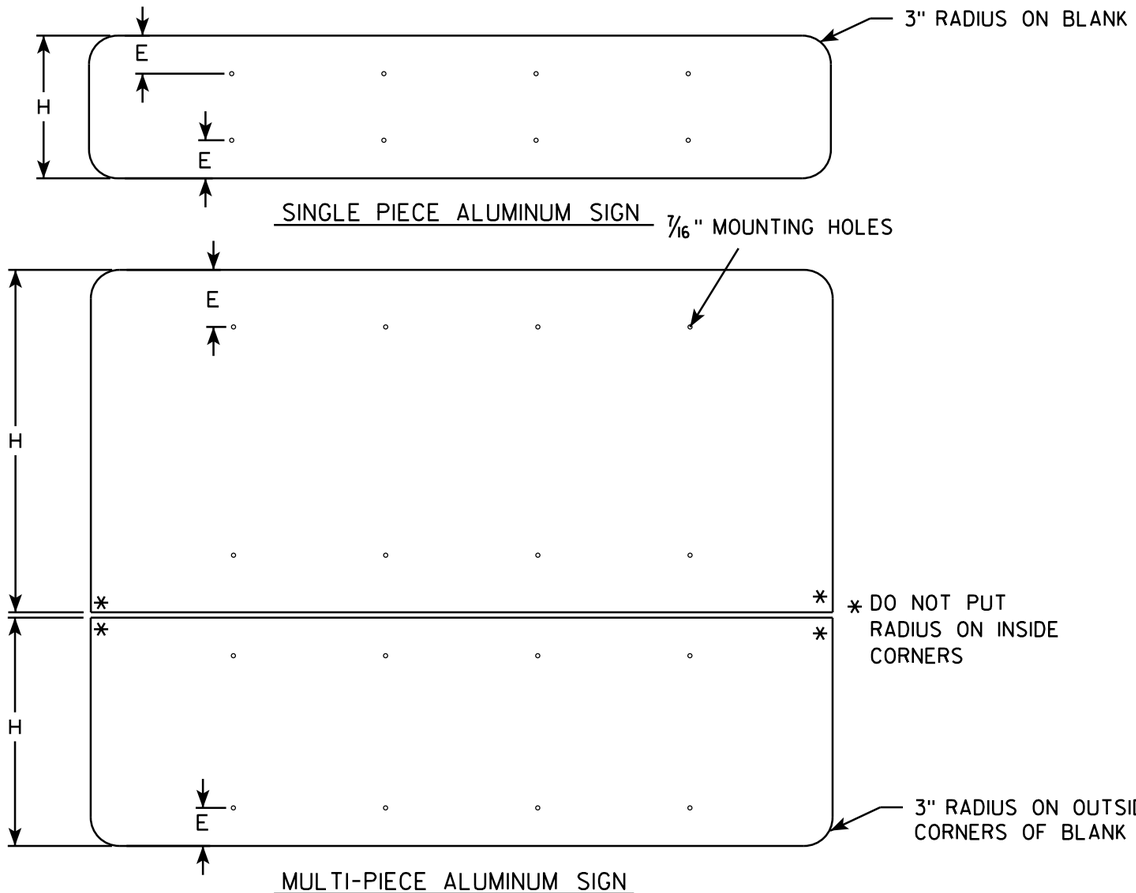

GENERAL NOTES

- ALL SIGNS OVER 60" IN WIDTH SHALL HAVE A 3" RADIUS ON THE OUTSIDE CORNERS OF THE ALUMINUM BLANK.
- MOUNTING HOLES SHALL BE 7/16" DIAMETER.
- SEE CHART FOR HOLE SPACING REQUIREMENTS
- FOR SIGN PANELS WITH DIMENSION (H) 36" AND OVER, DIMENSION E SHALL BE 6"
- FOR SIGN PANELS WITH DIMENSION (H) UNDER 36", DIMENSION E SHALL BE 4"
- SIGN STRINGER MATERIAL SHALL CONSIST OF STEEL CHANNEL POST SECTIONS, WEIGHING 1.12 LBS/FT IN ACCORDANCE WITH SECTION 633.2.1 OF THE STANDARD SPECIFICATIONS FOR HIGHWAY AND STRUCTURE CONSTRUCTION.
- SEE SIGN PLATE A4-8 FOR SIGN STRINGER BOLTING REQUIREMENTS.

SIGN WIDTH	STRINGER WIDTH	POSTS	HOLE SPACING	MOUNTING HOLES						
78"	72"	2	16"	15"	31"	47"	63"			
84"	72"	2	17"	16 1/2"	33 1/2"	50 1/2"	67 1/2"			
90"	72"	2	18"	18"	36"	54"	72"			
96"	90"	2	19"	19 1/2"	38 1/2"	57 1/2"	76 1/2"			
102"	90"	2	20"	21"	41"	61"	81"			
108"	90"	2	21"	22 1/2"	43 1/2"	64 1/2"	85 1/2"			
114"	108"	3	15"	12"	27"	42"	57"	72"	87"	102"
120"	108"	3	16"	12"	28"	44"	60"	76"	92"	108"
126"	108"	3	17"	12"	29"	46"	63"	80"	97"	114"
132"	126"	3	18"	12"	30"	48"	66"	84"	102"	120"
138"	126"	3	19"	12"	31"	50"	69"	88"	107"	126"
144"	126"	3	20"	12"	32"	52"	72"	92"	112"	132"

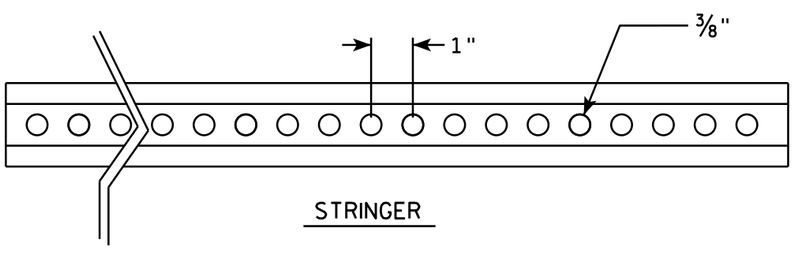

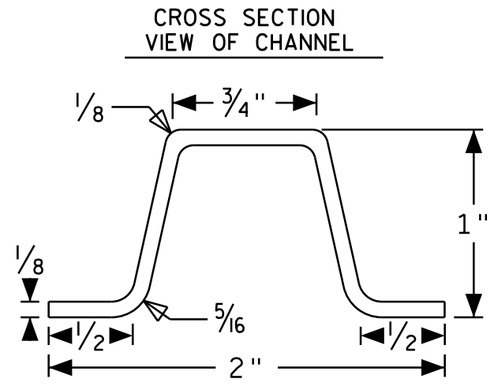

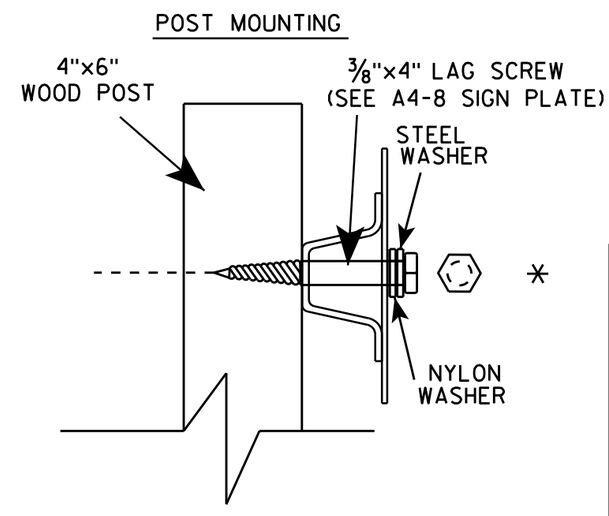

SIGN STRINGER MOUNTING REQUIREMENTS

WISCONSIN DEPT OF TRANSPORTATION

APPROVED Matthew R Rauch
for State Traffic Engineer

DATE 4/26/16 PLATE NO A4-18.1

PROJECT NO:	HWY:	COUNTY:		SHEET NO:	E

BANDING

SINGLE SIGN

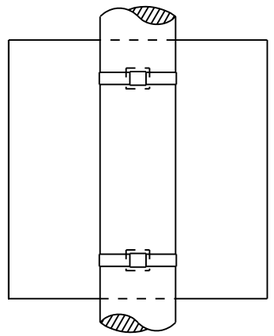

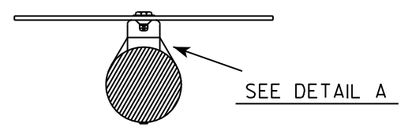

"J" ASSEMBLY

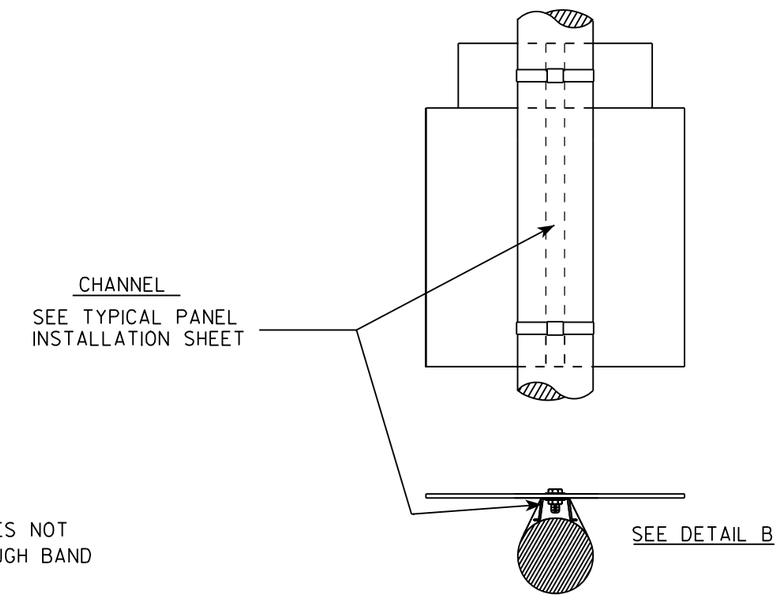

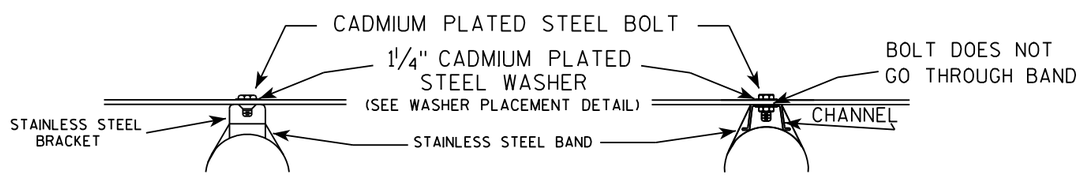

WASHER PLACEMENT

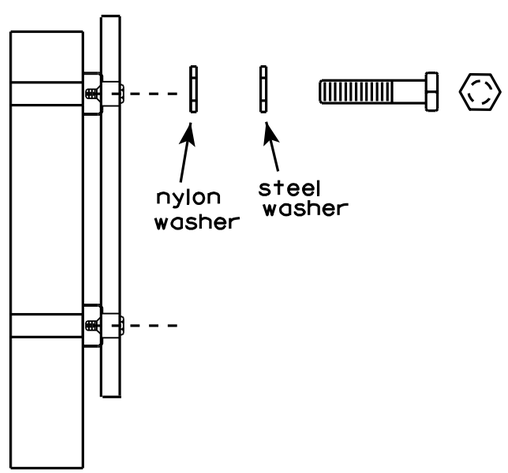

WASHERS (ALL POSTS) -

1-1/4" O.D. X 3/8" I.D. X 1/16" STEEL

1-1/4" O.D. X 3/8" I.D. X .080 NYLON

FOR ALL TYPE H SIGNS

GENERAL NOTES

1. Any sign over 3 feet in width shall use the V-Block banding method. See A5-10 standard plate.
2. Signs 3 feet or greater in height shall have three bracket bands installed. Signs less than 3 feet in height shall have two bracket bands installed.
3. Banding and assembly bracket shall be stainless steel. All bands shall be ¾" in width and 0.025" thickness.

STANDARD SIGN

SIGN BANDING DETAILS

WISCONSIN DEPT OF TRANSPORTATION

APPROVED Matthew R Rauch for State Traffic Engineer

DATE 8/16/13 PLATE NO. A5-9.3

PROJECT NO:	HWY:	COUNTY:		SHEET NO: 356	E

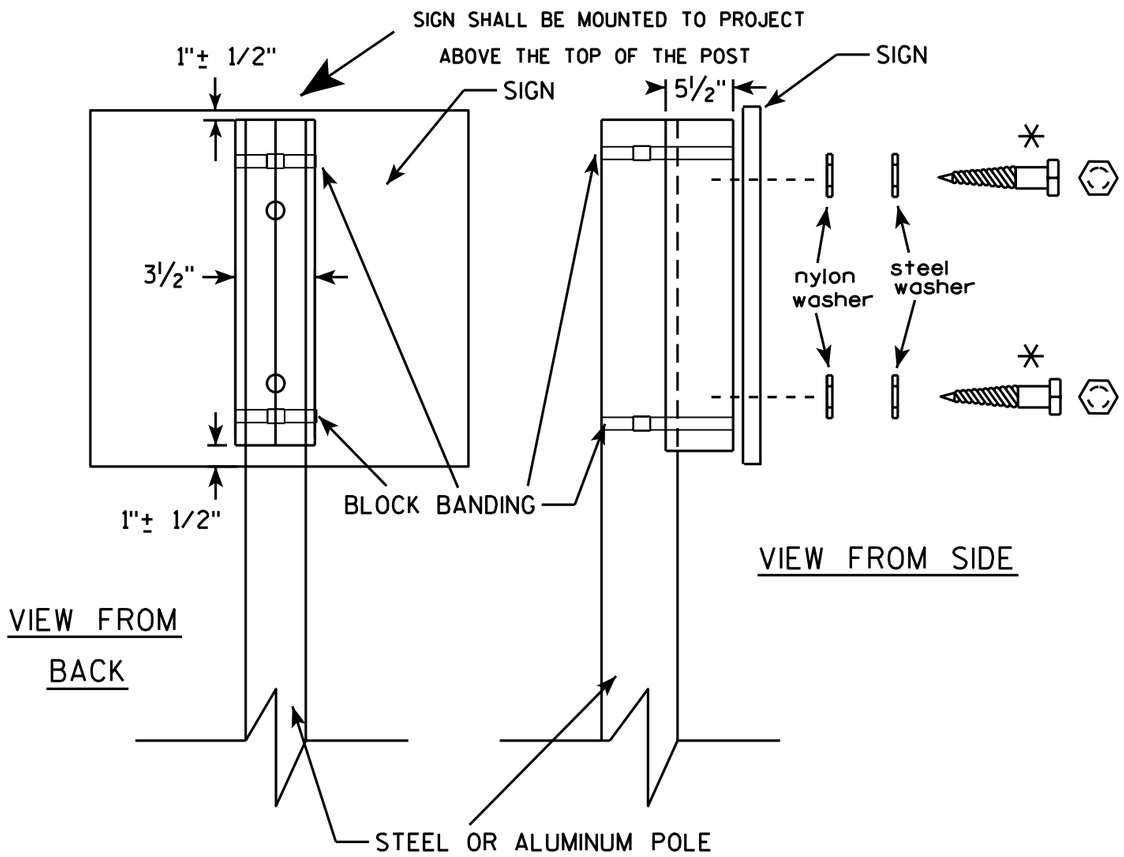

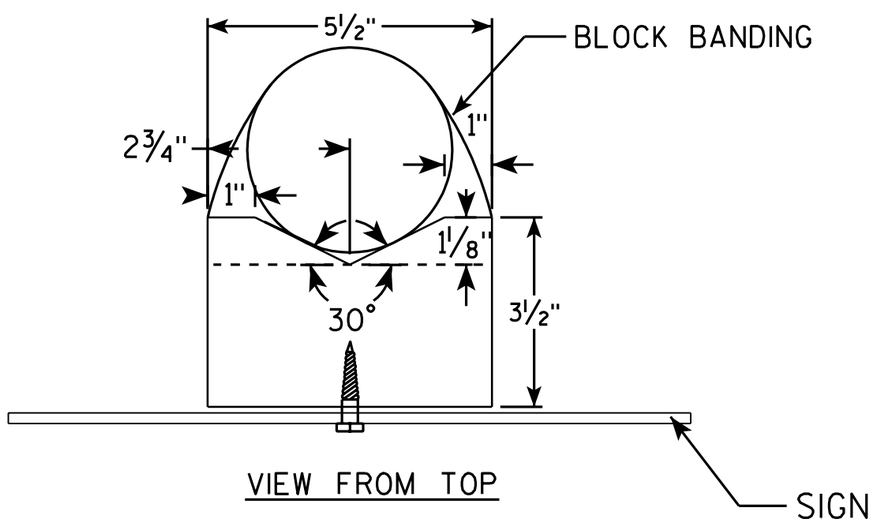

GENERAL NOTES

1. WOOD 4"X6" POST MATERIAL SHALL CONFORM TO 507.2.2 OF THE WisDOT STANDARD SPECIFICATIONS
2. BLOCK BANDING AND CLIPS SHALL BE STAINLESS STEEL, ¾" WIDTH AND 0.025" THICKNESS
3. SIGNS 3' OR GREATER IN HEIGHT SHALL UTILIZE 3 BLOCK BANDS. SIGNS UNDER 3' IN HEIGHT SHALL UTILIZE 2 BLOCK BANDS
4. ACTUAL NUMBER OF FASTENERS PER SIGN VARIES WITH THE SIGN AREA, BUT NORNALLY THERE ARE TWO. FOR SIGNS GREATER THAN 9 S.F. 3 FASTENERS SHALL BE USED.
5. ALL SIGN MOUNTING BOLTS AND WASHERS SHALL BE EITHER:
   a. Hot dip or mechanically galvanized in accordance with ASTM Designation: A 153, Class D, or
   b. Cadmium plated in accordance with ASTM Designation : B 766 TYPE 3, Class 12, or
   c. Electro-galvanized in accordance with ASTM Designation : B 633, TYPE III, SC 3.
6. ALL BOLTS SHALL HAVE HEXAGONAL HEADS.
7. STEEL WASHERS SHALL BE 1¼" O.D. X ⅜" I.D. X 1/16"
8. NYLON WASHERS SHALL BE 1¼" O.D. X ⅜" I.D. X .080 FOR TYPE H OR TYPE F FACE SIGN

✳ LAG BOLTS SHALL BE ⅜" X 2½"

BLOCK BANDING DETAIL
(V-BLOCK OPTION)

WISCONSIN DEPT OF TRANSPORTATION

APPROVED Matthew R Rauch
for State Traffic Engineer

DATE 7/12/07 PLATE NO. A5-10.1

PROJECT NO:				SHEET NO: 357	E

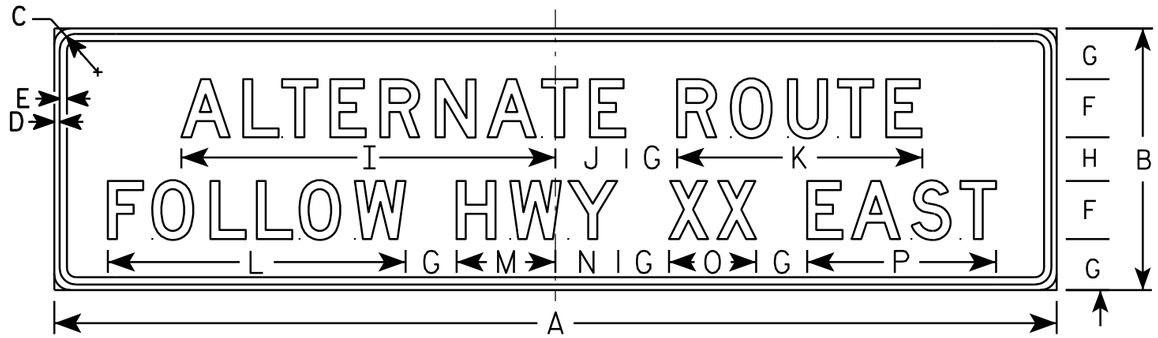

G20-52

NOTES

1. Sign is Type II - Type F Reflective - reference WIS DOT Standard Specification for HIGHWAY and STRUCTURE CONSTRUCTION latest edition.
2. Color:
   Background - Orange
   Message - Black
3. Message Series - D
4. Substitute appropriate numeral and adjust spacing to achieve proper balance.

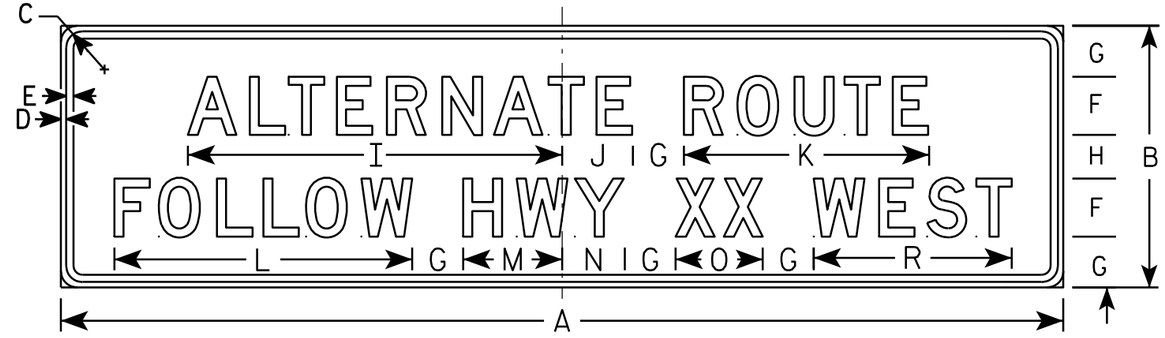

G20-52A

Metric equivalent for this sign is:

SIZE	
1	
2	
3	
4	3450 mm X 900 mm
5	

SIZE	A	B	C	D	E	F	G	H	I	J	K	L	M	N	O	P	Q	R	S	T	U	V	W	X	Y	Z	Area sq. ft.	Area m2
1																												
2																												
3																												
4	138	36	2 1/4	3/4	1	8	7	6	51 1/2	9 3/4	33 3/4	41	13 5/8	8 5/8	12	26		27 1/4									34.5	3.11
5																												

STANDARD SIGN
G20-52

WISCONSIN DEPT OF TRANSPORTATION

APPROVED Matthew R Rauch
For State Traffic Engineer

DATE 9/30/09 PLATE NO. G20-52.2

PROJECT NO:	HWY:	COUNTY:		SHEET NO: 358	E

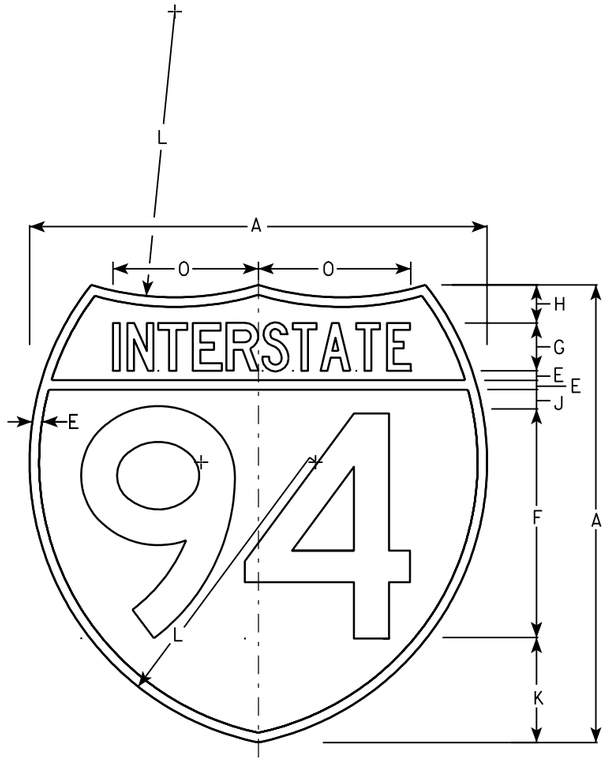

M1-1

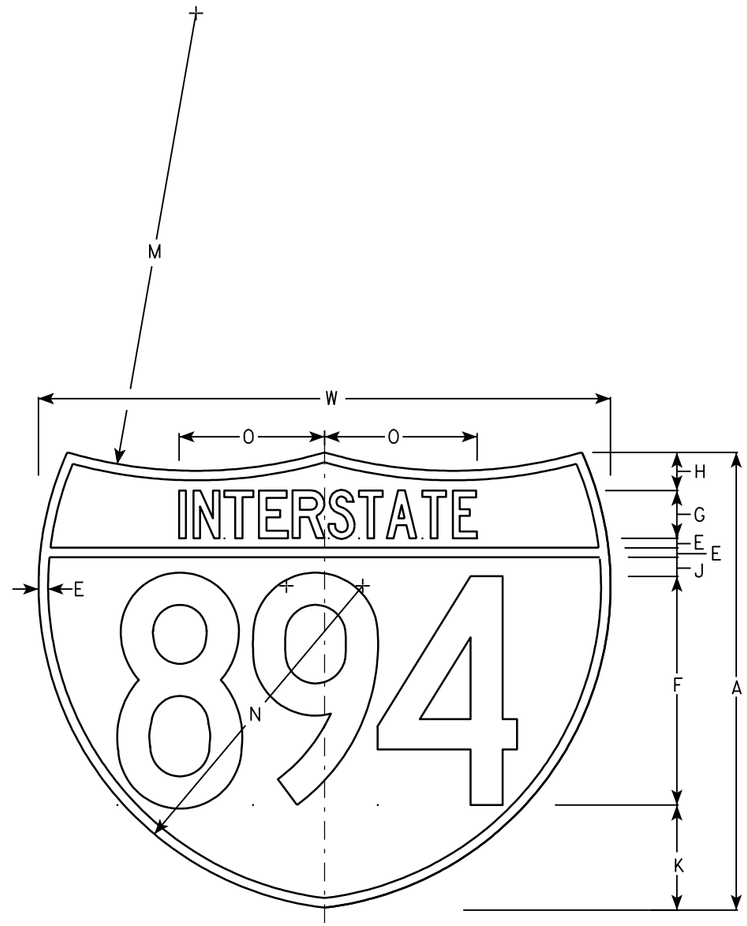

M1-1A

NOTES

1. Sign is Type II - See Note 6 - reference WIS DOT Standard Specification for HIGHWAY and STRUCTURE CONSTRUCTION latest edition.
2. Color:
   Background - Top Red - Bottom Blue (See Note 6)
   Message - White - See Note 6
3. Message Series - See note 5
4. Substitute appropriate numerals & ajust spacing as per plate A10-1.
5. M1-1 - Numerals - D
   Interstate - C
   M1-1A - All copy - C
6. Permanent Signs
   Message - Type H Reflective
   Detour or other temporary signs
   Background - Reflective
   Message - Reflective

Metric equivalent for these signs are:

SIZE	M1-1	SIZE	M1-1A
1			
2	600 mm X 600 mm	2	600 mm X 750 mm
3	900 mm X 900 mm	3	900 mm X 1125 mm
4	900 mm X 900 mm	4	900 mm X 1125 mm
5	900 mm X 900 mm	5	900 mm X 1125 mm

SIZE	A	B	C	D	E	F	G	H	I	J	K	L	M	N	O	P	Q	R	S	T	U	V	W	X	Y	M1-1 Area sq. ft.	M1-1A Area sq. ft.	M1-1 Area m2	M1-1A Area m2
1																													
2	24				½	12	2 ½	2		1	5 ½	15	24	17	7 ⅞								30			3.13	3.91	.36	.46
3	36				¾	18	3 ¾	3		1 ½	8 ¼	22 ½	36	25 ½	11 ¾								45			7.03	8.79	.81	1.05
4	36				¾	18	3 ¾	3		1 ½	8 ¼	22 ½	36	25 ½	11 ¾								45			7.03	8.79	.81	1.05
5	36				¾	18	3 ¾	3		1 ½	8 ¼	22 ½	36	25 ½	11 ¾								45			7.03	8.79	.81	1.05

INTERSTATE ROUTE MARKER
M1-1 FOR ASSEMBLIES

WISCONSIN DEPT OF TRANSPORTATION

APPROVED Matthew R Rauch
for State Traffic Engineer

DATE 08/23/05 PLATE NO. M1-1.8

PROJECT NO:	HWY:	COUNTY:		SHEET NO: 359	E

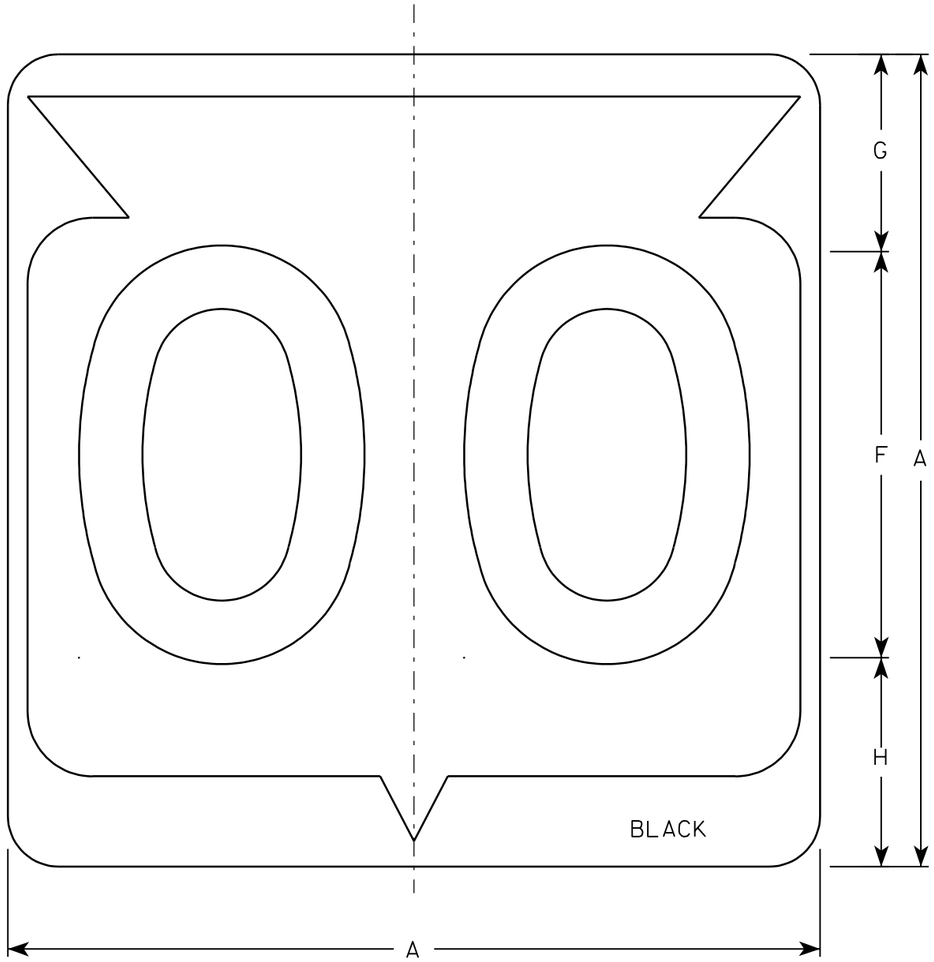

M1-6

NOTES

1. Sign is Type II - See Note 6 - reference WIS DOT Standard Specification for HIGHWAY and STRUCTURE CONSTRUCTION latest edition.
2. Color:
   Background - White & Black - See Note 6
   Message - Black
3. Message Series - See note 5
4. Corners may be square or rounded when base material is plywood but borders shall be rounded as shown. When base material is metal, the corners and borders shall be rounded.
5. Substitute appropriate Series numerals and adjust spacing as per plate A10-1.
6. Permanent Signs
   Background - Type H Reflective
   Detour or temporary Signs
   Background - Reflective

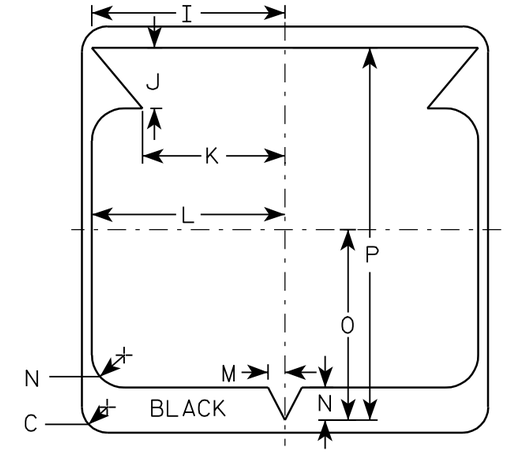

Metric equivalent for this sign is:

SIZE	
1	
2	600 mm X 600 mm
3	900 mm X 900 mm
4	900 mm X 900 mm
5	900 mm X 900 mm

SIZE	A	B	C	D	E	F	G	H	I	J	K	L	M	N	O	P	Q	R	S	T	U	V	W	X	Y	Z	Area sq. ft.	Area m2
1																												
2	24		1 1/2			12	5 1/2	6 1/2	10 1/4	2 1/2	8 7/8	11 1/2	1	1 7/8	11 1/4	21 7/8											4.0	.36
3	36		2 1/4			18	8 3/4	9 1/4	15 3/8	5 3/8	12 5/8	17 1/8	1 1/2	2 7/8	16 7/8	33											9.0	.81
4	36		2 1/4			18	8 3/4	9 1/4	15 3/8	5 3/8	12 5/8	17 1/8	1 1/2	2 7/8	16 7/8	33											9.0	.81
5	36		2 1/4			18	8 3/4	9 1/4	15 3/8	5 3/8	12 5/8	17 1/8	1 1/2	2 7/8	16 7/8	33											9.0	.81

STATE ROUTE MARKER
M1-6 FOR ASSEMBLIES

WISCONSIN DEPT OF TRANSPORTATION

APPROVED Chester J Spang
for State Traffic Engineer

DATE 3/20/02 PLATE NO. M1-6.9

PROJECT NO: | HWY: | COUNTY: | SHEET NO: 360 | E

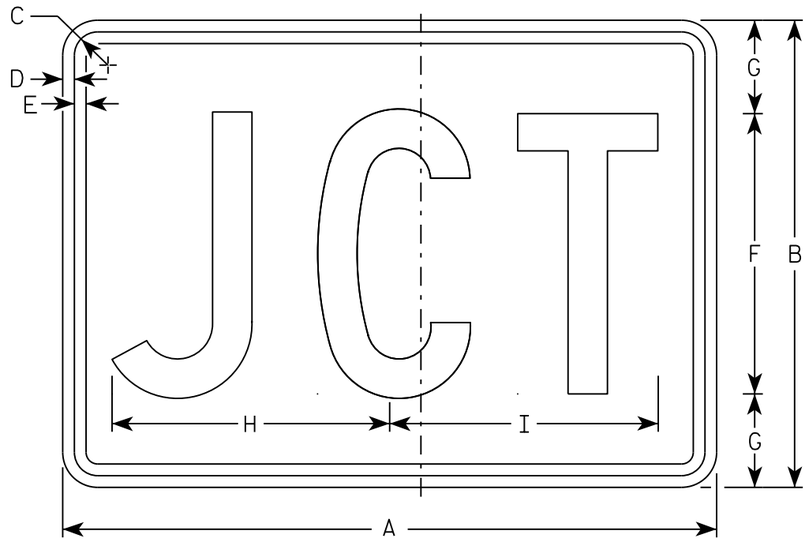

M2-1
MM2-1
MP2-1

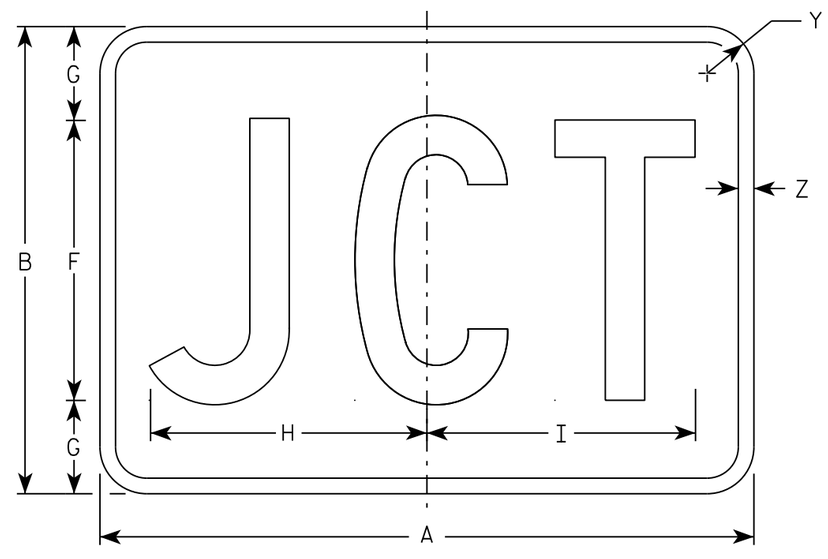

MB2-1
MK2-1
MN2-1
MR2-1

NOTES

1. Sign is Type II - Type H
2. Color:
   Background - See note 5
   Message - See note 5
3. Message Series - C
4. Corners may be square or rounded when base material is plywood but borders shall be rounded as shown. When base material is metal, the corners and borders shall be rounded.
5. M2-1 Background - White
   Message - Black
   MB2-1 Background - Blue
   Message - White
   MK2-1 Background - Green
   Message - White
   MM2-1 Background - White
   Message - Green
   MN2-1 Background - Brown
   Message - White
   MP2-1 Background - White
   Message - Blue
   MR2-1 Background - Brown
   Message - Yellow

SIZE	A	B	C	D	E	F	G	H	I	J	K	L	M	N	O	P	Q	R	S	T	U	V	W	X	Y	Z	Area sq. ft.
1																											
2	21	15	1 1/8	3/8	3/8	9	3	8 7/8	8 5/8																1 1/2	1/2	2.20
3	30	21	1 1/8	3/8	3/8	13	4	12 7/8	12 3/8																1 1/2	1/2	4.40
4	30	21	1 1/8	3/8	3/8	13	4	12 7/8	12 3/8																1 1/2	1/2	4.40
5	30	21	1 1/8	3/8	3/8	13	4	12 7/8	12 3/8																1 1/2	1/2	4.40

STANDARD SIGN
M2-1

WISCONSIN DEPT OF TRANSPORTATION

APPROVED Matthew R Rauch
for State Traffic Engineer

DATE 10/15/15 PLATE 361 M2-1.12

PROJECT NO: | HWY: | COUNTY: | SHEET NO: | E

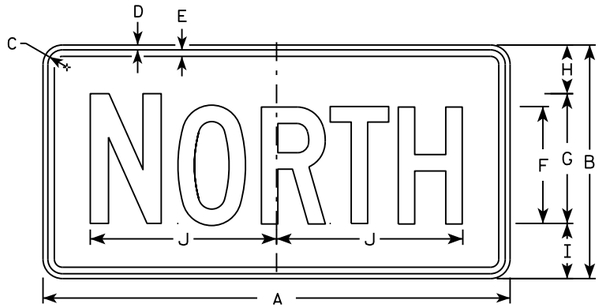

M3-1
MM3-1
MP3-1

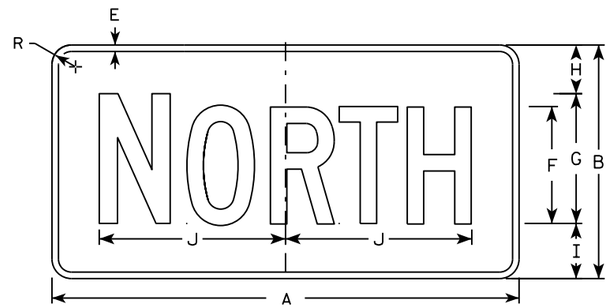

MB3-1
MK3-1
MN3-1

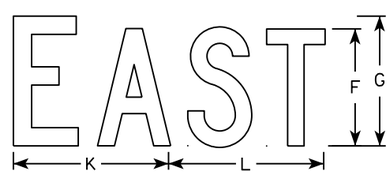

M3-2
MM3-2
MP3-2

MB3-2
MK3-2
MN3-2

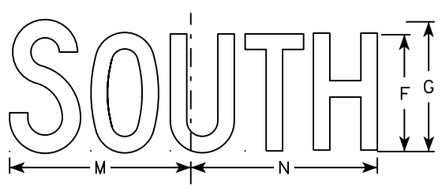

M3-3
MM3-3
MP3-3

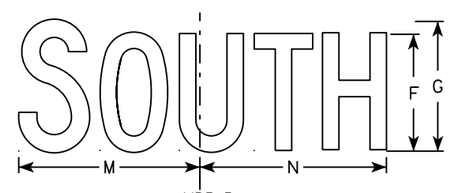

MB3-3
MK3-3
MN3-3

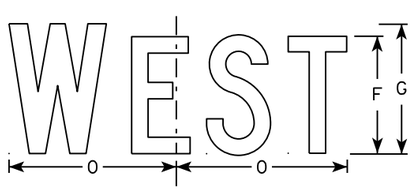

M3-4
MM3-4
MP3-4

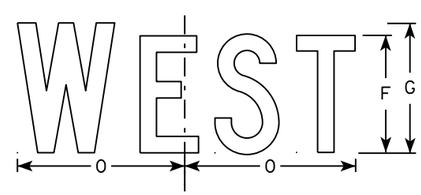

MB3-4
MK3-4
MN3-4

NOTES

1. All Signs Type II - Type H
2. Color:
   Background - See note 5
   Message - See note 5
3. Message Series - C
4. Corners may be square or rounded when base material is plywood but borders shall be rounded as shown. When base material is metal, the corners and borders shall be rounded.
5. M3-1 thru M3-4 Background - White
   Message - Black
   MB3-1 thru MB3-4 Background - Blue
   Message - White
   MK3-1 thru MK3-4 Background - Green
   Message - White
   MM3-1 thru MM3-4 Background - White
   Message - Green
   MN3-1 thru MN3-4 Background - Brown
   Message - White
   MP3-1 thru MP3-4 Background - White
   Message - Blue
6. Note the first letter of each direction is larger than the remainder of the message.

SIZE	A	B	C	D	E	F	G	H	I	J	K	L	M	N	O	P	Q	R	S	T	U	V	W	X	Y	Z	Area sq. ft.
1																											
2	24	12	1 1/8	3/8	3/8	6	7	2 1/4	2 3/4	10 1/4	7 7/8	8 3/8	10 1/4	9 3/4	8 3/4			1 1/2									2.00
3	36	18	1 1/8	3/8	1/2	9	10	3 3/4	4 1/4	14 3/8	12	12 1/8	14	14 1/8	13			1 1/2									4.5
4	36	18	1 1/8	3/8	1/2	9	10	3 3/4	4 1/4	14 3/8	12	12 1/8	14	14 1/8	13			1 1/2									4.5
5	36	18	1 1/8	3/8	1/2	9	10	3 3/4	4 1/4	14 3/8	12	12 1/8	14	14 1/8	13			1 1/2									4.5

STANDARD SIGNS
M3-1 thur M3-4
SERIES

WISCONSIN DEPT OF TRANSPORTATION

APPROVED Matthew R Rauch
for State Traffic Engineer

DATE 10/15/15 PLATE NO M3-1.14

PROJECT NO: | HWY: | COUNTY: | SHEET NO: | E

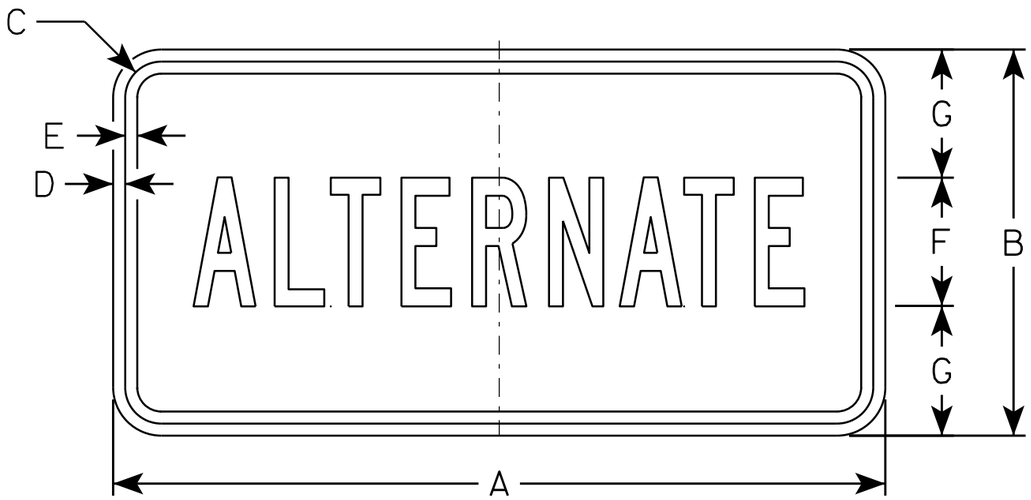

M4 - 1
M04 - 1

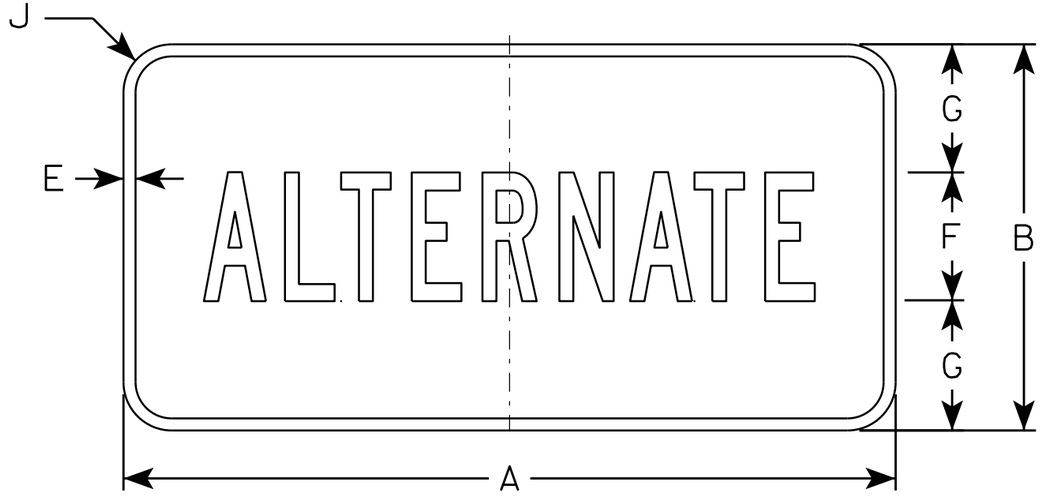

MB4 - 1

NOTES

1. Sign is Type II - Type H except as Shown
2. Color:
   Background - See Note 5
   Message - See note 5
3. Message Series - B
4. Corners may be square or rounded when base material is plywood but borders shall be rounded as shown. When base material is metal, the corners and borders shall be rounded.
5. M4-1 Background - White
   Message - Black

   MB4-1 Background - Blue
   Message - White

   M04-1 Background - Orange - Type F
   Message - Black

SIZE	A	B	C	D	E	F	G	H	I	J	K	L	M	N	O	P	Q	R	S	T	U	V	W	X	Y	Z	Area sq. ft.
1																											
2	24	12	1 1/8	3/8	3/8	4	4	9 3/4	9 1/2	1 1/2																	2.00
3	36	18	1 1/8	3/8	1/2	7	5 1/2	16 3/8	16 1/2	1 1/2																	4.5
4	36	18	1 1/8	3/8	1/2	7	5 1/2	16 3/8	16 1/2	1 1/2																	4.5
5	36	18	1 1/8	3/8	1/2	7	5 1/2	16 3/8	16 1/2	1 1/2																	4.5

STANDARD SIGN
M4 - 1

WISCONSIN DEPT OF TRANSPORTATION

APPROVED Matthew R Rauch
for State Traffic Engineer

DATE 6/30/14 PLATE '14-1.8

PROJECT NO: | HWY: | COUNTY: | SHEET NO: | E

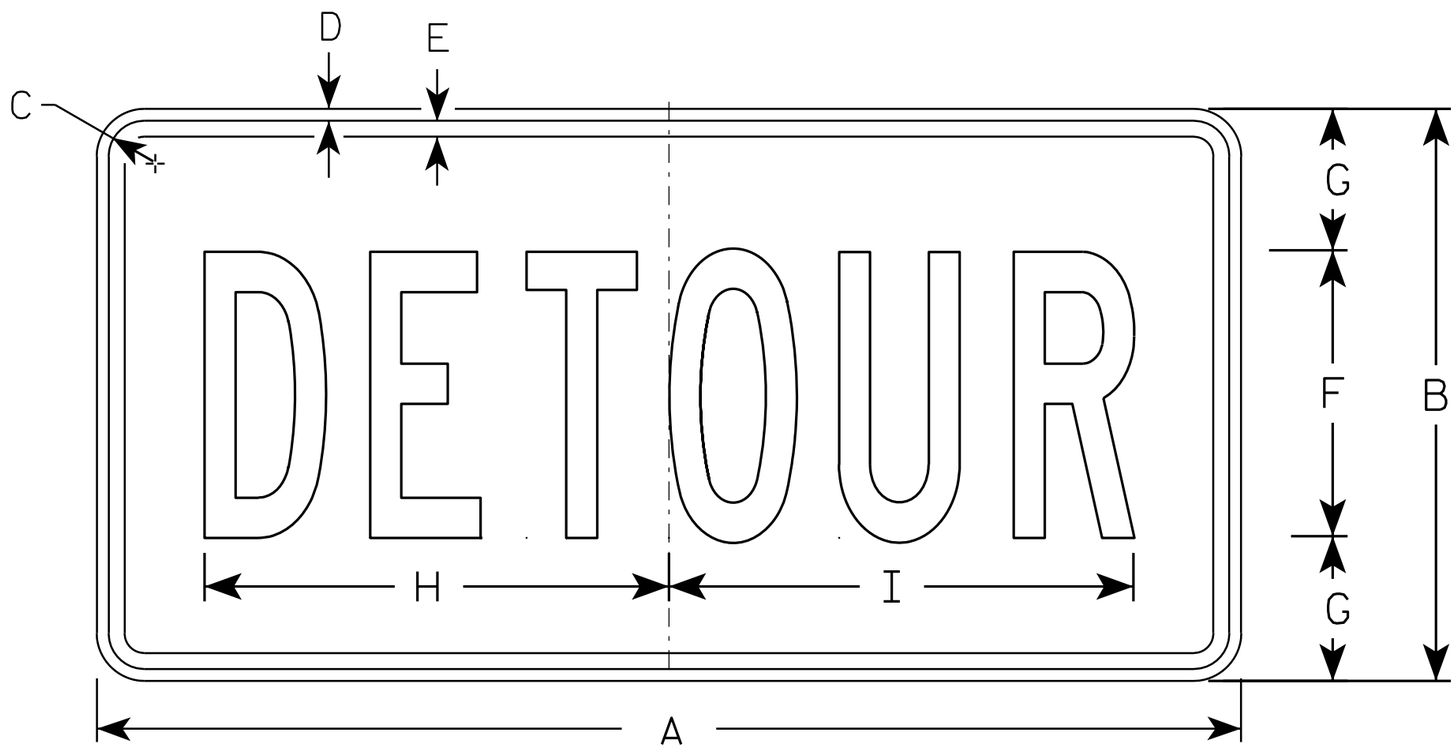

M4-8

NOTES

1. Sign is Type II - Type F Reflective - reference WIS DOT Standard Specification for HIGHWAY and STRUCTURE CONSTRUCTION latest edition.
2. Color:
   Background - Orange
   Message - Black
3. Message Series - B
4. Corners may be square or rounded when base material is plywood but borders shall be rounded as shown. When base material is metal, the corners and borders shall be rounded.

SIZE	A	B	C	D	E	F	G	H	I	J	K	L	M	N	O	P	Q	R	S	T	U	V	W	X	Y	Z	Area sq. ft.
1																											
2	24	12	1 1/8	3/8	3/8	6	3	10	10 1/4																		2.0
3	36	18	1 1/8	3/8	1/2	9	4 1/2	14 5/8	14 1/2																		4.5
4																											
5																											

STANDARD SIGN
M4-8

WISCONSIN DEPT OF TRANSPORTATION

APPROVED Matthew R Rauch
for State Traffic Engineer

DATE 11/10/10 PLATE NO. M4-8.2

PROJECT NO: | HWY: | COUNTY: | SHEET NO: 364 | E

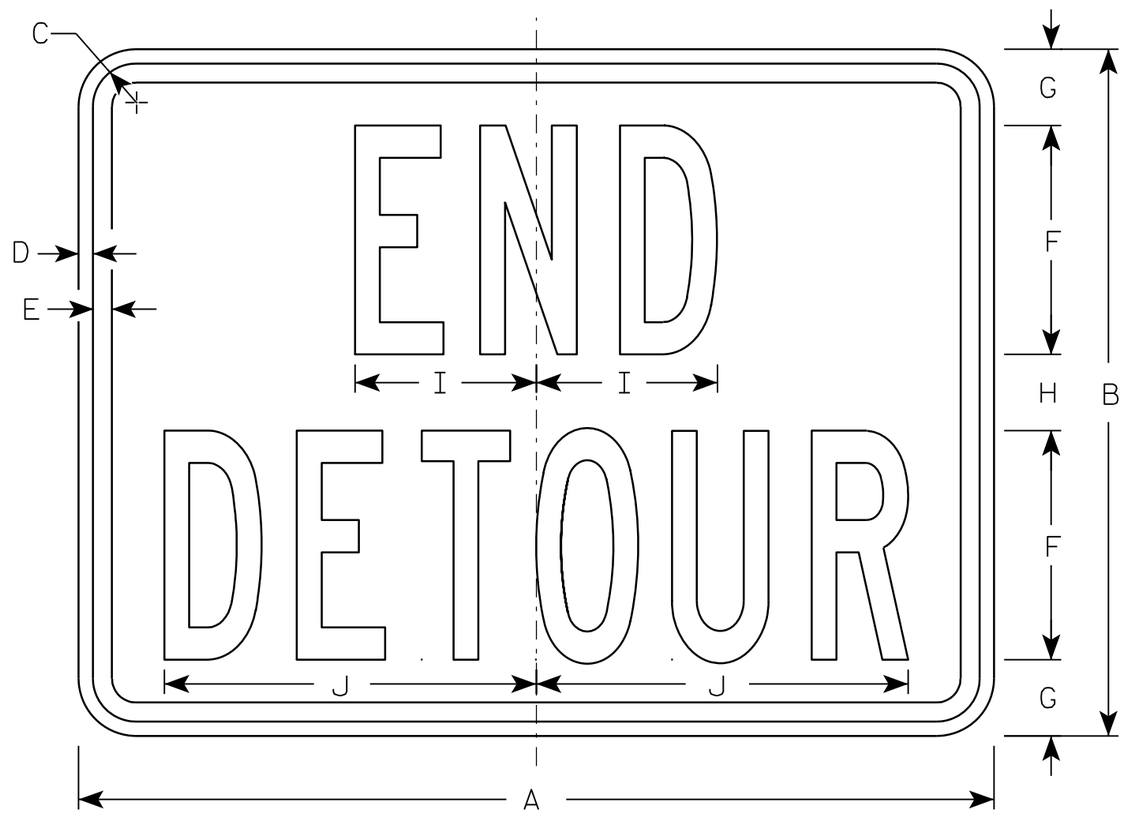

M4-8A

NOTES

1. Sign is Type II - Type F Reflective - reference WIS DOT Standard Specification for HIGHWAY and STRUCTURE CONSTRUCTION latest edition.
2. Color:
   Background - Orange
   Message - Black
3. Message Series - B
4. Corners may be square or rounded when base material is plywood but borders shall be rounded as shown. When base material is metal, the corners and borders shall be rounded.

SIZE	A	B	C	D	E	F	G	H	I	J	K	L	M	N	O	P	Q	R	S	T	U	V	W	X	Y	Z	Area sq. ft.
1																											
2	24	18	1 1/8	3/8	1/2	6	2	2	4 3/4	9 3/4																	3.0
3	30	24	1 1/8	3/8	1/2	8	2 1/2	3	6 3/4	13																	5.0
4																											
5																											

STANDARD SIGN
M4-8A

WISCONSIN DEPT OF TRANSPORTATION

APPROVED Matthew R Rauch
for State Traffic Engineer

DATE 3/9/11 PLATE NO. M4-8A.2

PROJECT NO: | HWY: | COUNTY: | SHEET NO: 365 | E

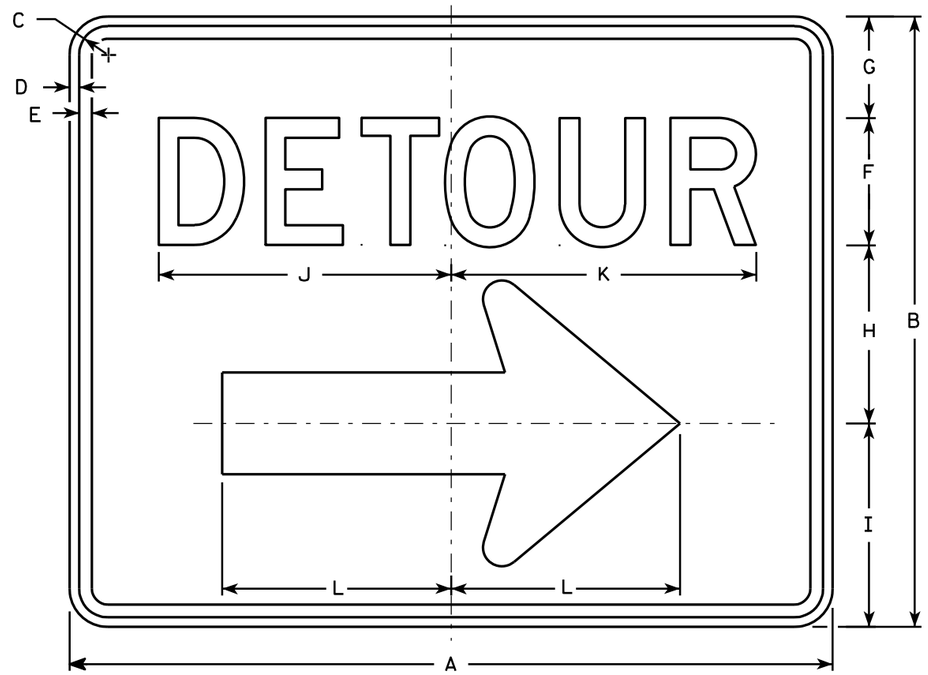

M4-9R

NOTES

1. Sign is Type II - Type F Reflective - reference WIS DOT Standard Specification for HIGHWAY and STRUCTURE CONSTRUCTION latest edition.
2. Color:
   Background - Orange
   Message - Black
3. Message Series - D
4. Corners may be square or rounded when base material is plywood but borders shall be rounded as shown. When base material is metal, the corners and borders shall be rounded.
5. M4-9L is the same as M4-9R except the arrow is reversed.

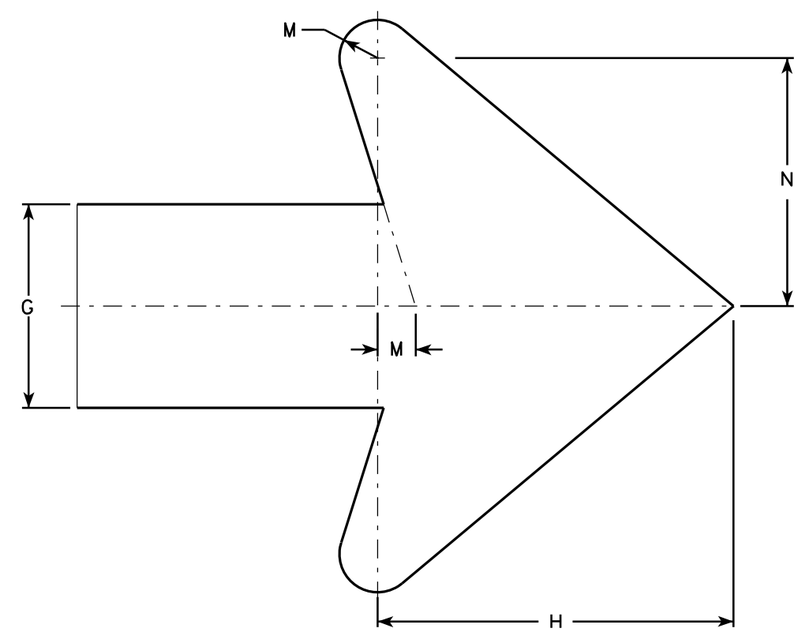

Arrow Detail

SIZE	A	B	C	D	E	F	G	H	I	J	K	L	M	N	O	P	Q	R	S	T	U	V	W	X	Y	Z	Area sq. ft.
1																											
2	30	24	1 1/8	3/8	1/2	5	4	7	8	11 1/2	12	9	3/4	4 7/8													5.00
3	30	24	1 1/8	3/8	1/2	5	4	7	8	11 1/2	12	9	3/4	4 7/8													5.00
4	48	36	1 3/8	1/2	5/8	8	6	10 1/2	11 5/8	20 5/8	20 1/2	13 1/4	1 1/8	6 7/8													12.0
5	48	36	1 3/8	1/2	5/8	8	6	10 1/2	11 5/8	20 5/8	20 1/2	13 1/4	1 1/8	6 7/8													12.0

STANDARD SIGN
M4-9 R & L

WISCONSIN DEPT OF TRANSPORTATION

APPROVED Matthew R Rauch
for State Traffic Engineer

DATE 3/9/11 PLATE NO. M4-9R.4

PROJECT NO: | HWY: | COUNTY: | SHEET NO: 366 | E

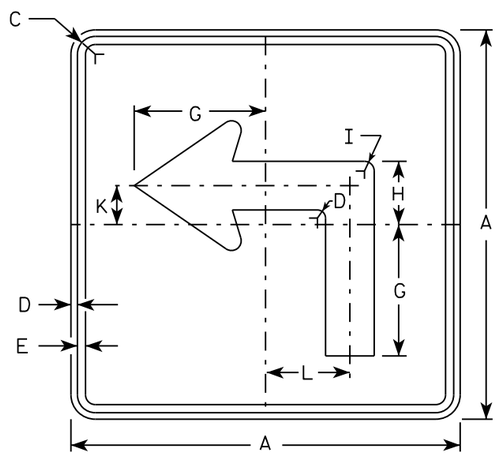

M5-1L
MM5-1L
MO5-1L
MP5-1L

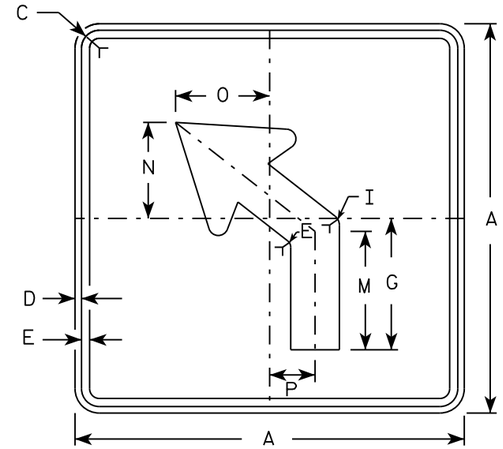

M5-2L
MM5-2L
MO5-2L
MP5-2L

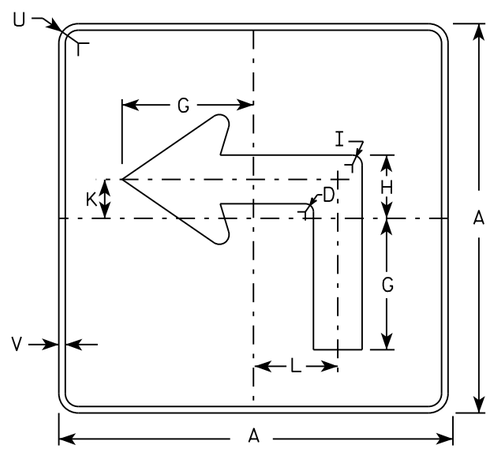

MB5-1L
MK5-1L
MN5-1L
MR5-1L

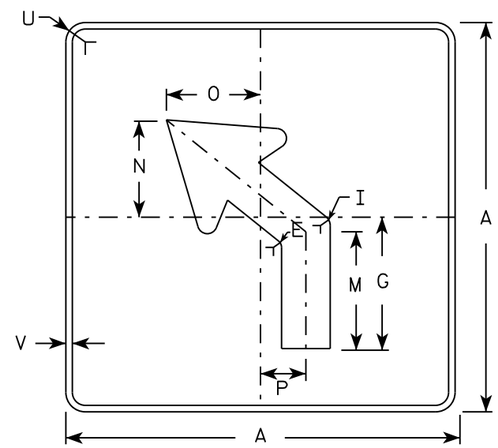

MB5-2L
MK5-2L
MN5-2L
MR5-2L

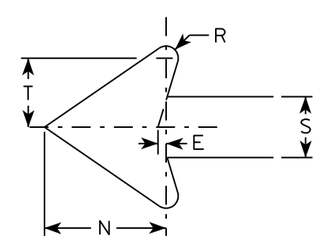

NOTES

1. Signs are Type II - Type H reflective except as shown
2. Color:
   Background - See note 4
   Message - See note 4
3. Corners may be square or rounded when base material is plywood but borders shall be rounded as shown. When base material is metal, the corners and borders shall be rounded.
4. M5-1 and M5-2 Background - White
   Message - Black
   MB5-1 and MB5-2 Background - Blue
   Message - White
   MK5-1 and MK5-2 Background - Green
   Message - White
   MM5-1 and MM5-2 Background - White
   Message - Green
   MN5-1 and MN5-2 Background - Brown
   Message - White
   MO5-1 and MO5-2 Background - Orange - Type F Reflective
   Message - Black
   MP5-1 and MP5-2 Background - White - Type H Reflective
   Message - Blue
   MR5-1 and MR5-2 Background - Brown
   Message - Yellow
5. M5-1R same as M5-1L except arrow points right.
6. M5-2R same as M5-2L except arrow tilts right.

SIZE	A	B	C	D	E	F	G	H	I	J	K	L	M	N	O	P	Q	R	S	T	U	V	W	X	Y	Z	Area sq. ft.
1																											
2	21		1 1/8	3/8	3/8		7	3 3/8	5/8		2 1/8	4 1/2	6 3/8	5 1/4	5	2 1/2		1/2	2 5/8	3	1 1/2	1/2					3.06
3	30		1 3/8	1/2	5/8		10 1/8	4 7/8	7/8		3	6 1/2	9 1/8	7 1/2	7 1/4	3 1/2		3/4	3 3/4	4 1/4	1 7/8	1/2					6.25
4	30		1 3/8	1/2	5/8		10 1/8	4 7/8	7/8		3	6 1/2	9 1/8	7 1/2	7 1/4	3 1/2		3/4	3 3/4	4 1/4	1 7/8	1/2					6.25
5	30		1 3/8	1/2	5/8		10 1/8	4 7/8	7/8		3	6 1/2	9 1/8	7 1/2	7 1/4	3 1/2		3/4	3 3/4	4 1/4	1 7/8	1/2					6.25

STANDARD SIGN
M5-1 & M5-2

WISCONSIN DEPT OF TRANSPORTATION

APPROVED Matthew R Rauch
for State Traffic Engineer

DATE 10/15/15 PLATE NO. M5-1.13

PROJECT NO:	HWY:	COUNTY:		SHEET NO:	E

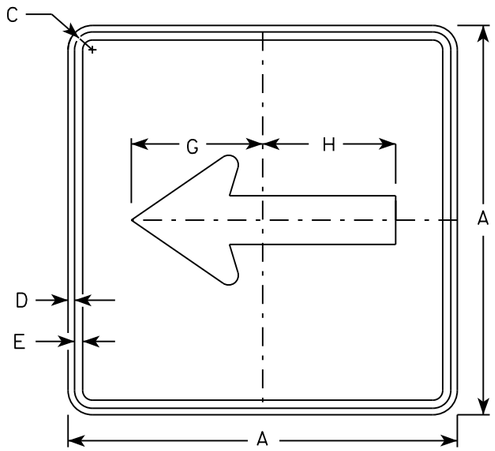

M6-1
MM6-1
MO6-1
MP6-1

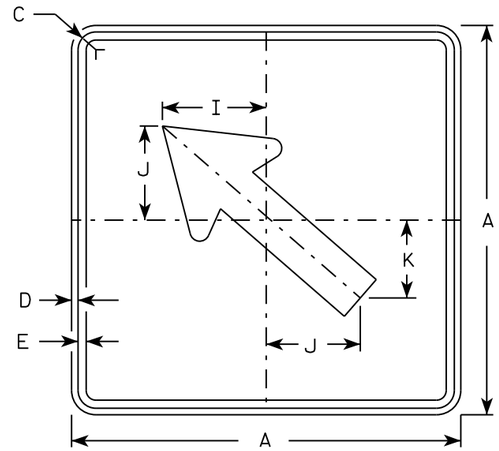

M6-2
MM6-2
MO6-2
MP6-2

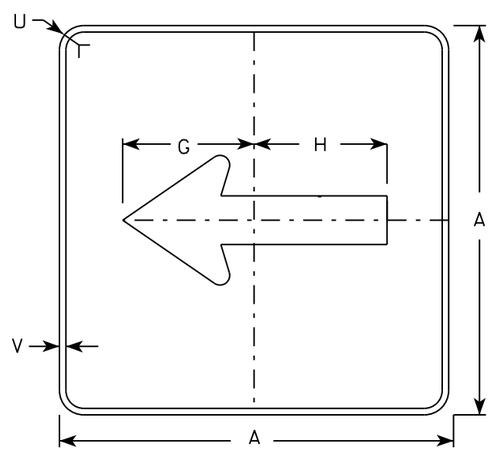

MB6-1
MK6-1
MN6-1
MR6-1

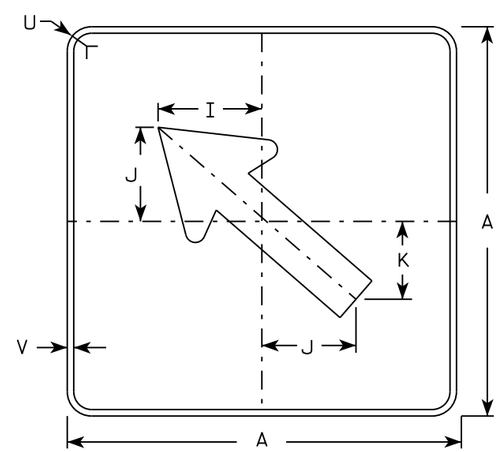

MB6-2
MK6-2
MN6-2
MR6-2

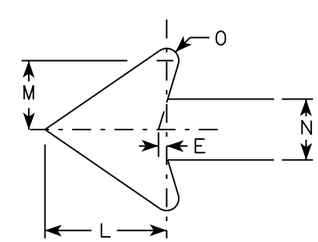

NOTES

1. Signs are Type II - Type H except as Shown
2. Color:
   Background - See note 4
   Message - See note 4
3. Corners may be square or rounded when base material is plywood but borders shall be rounded as shown. When base material is metal, the corners and borders shall be rounded.
4. M6-1 and M6-2 Background - White
   Message - Black
   MB6-1 and MB6-2 Background - Blue
   Message - White
   MK6-1 and MK6-2 Background - Green
   Message - White
   MM6-1 and MM6-2 Background - White
   Message - Green
   MN6-1 and MN6-2 Background - Brown
   Message - White
   MO6-1 and MO6-2 Background - Orange - Type F Reflective
   Message - Black
   MP6-1 and MP6-2 Background - White
   Message - Blue
   MR6-1 and MR6-2 Background - Brown
   Message - Yellow

SIZE	A	B	C	D	E	F	G	H	I	J	K	L	M	N	O	P	Q	R	S	T	U	V	W	X	Y	Z	Area sq. ft.
1																											
2	21		1 1/8	3/8	3/8		7 1/2	7 1/8	5 5/8	5	4 1/4	5 1/4	3	2 5/8	1/2						1 1/2	1/2					3.06
3	30		1 3/8	1/2	5/8		10 3/4	10 1/4	8	7 1/4	6	7 1/2	4 1/4	3 3/4	3/4						1 7/8	1/2					6.25
4	30		1 3/8	1/2	5/8		10 3/4	10 1/4	8	7 1/4	6	7 1/2	4 1/4	3 3/4	3/4						1 7/8	1/2					6.25
5	30		1 3/8	1/2	5/8		10 3/4	10 1/4	8	7 1/4	6	7 1/2	4 1/4	3 3/4	3/4						1 7/8	1/2					6.25

STANDARD SIGN
M6-1 & M6-2
SERIES

WISCONSIN DEPT OF TRANSPORTATION

APPROVED Matthew R Rauch
for State Traffic Engineer

DATE 10/15/15 PLATI 368 M6-1.15

PROJECT NO: | HWY: | COUNTY: | SHEET NO: | E

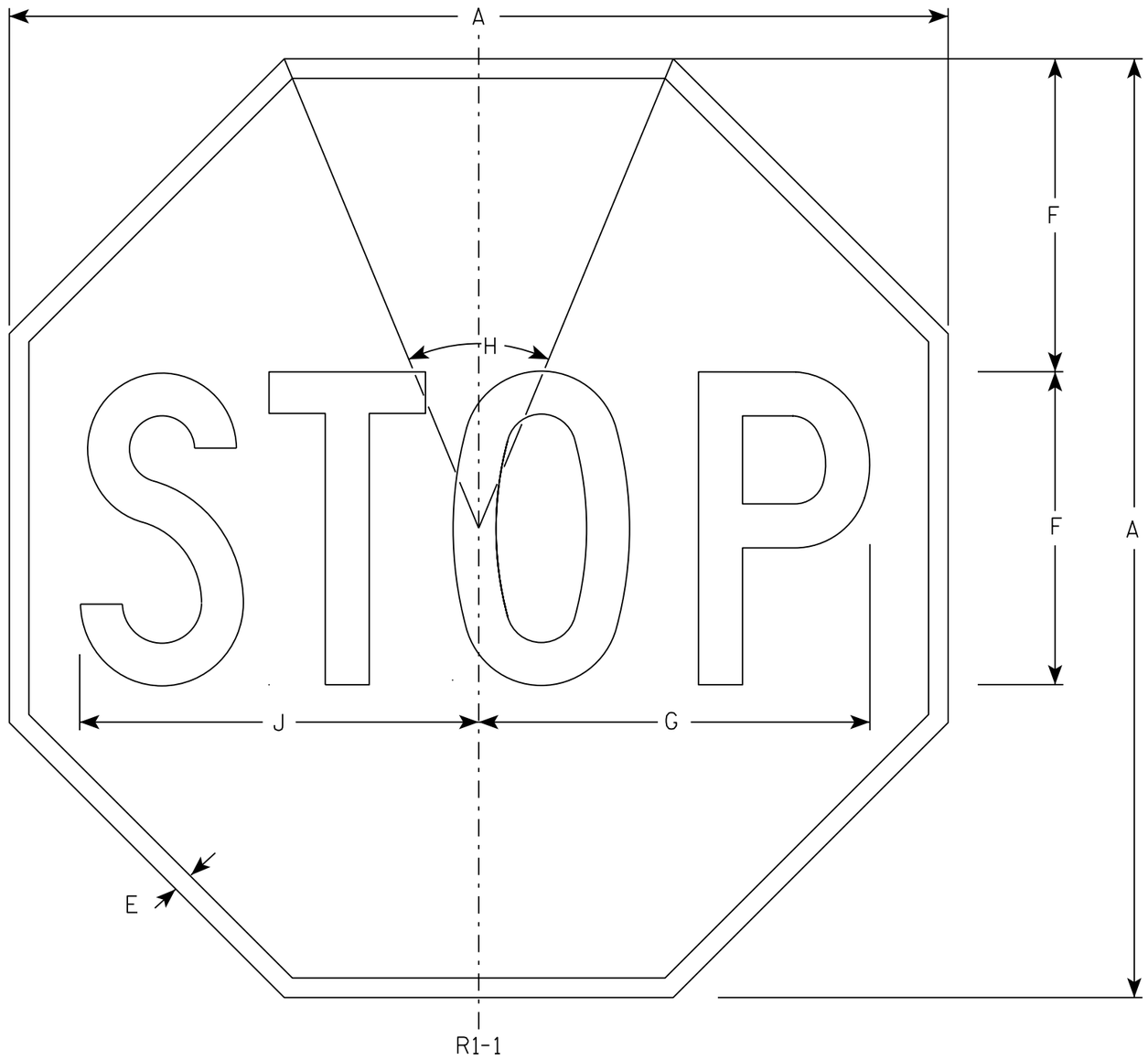

NOTES

1. Sign is Type II - Type H Reflective - reference WIS DOT Standard Specification for HIGHWAY and STRUCTURE CONSTRUCTION latest edition.
2. Color:
   Background - Red
   Message - White
3. Message Series - C

SIZE	A	B	C	D	E	F	G	H	I	J	K	L	M	N	O	P	Q	R	S	T	U	V	W	X	Y	Z	Area sq. ft.
1	30				5/8	10	12 1/2	45°		12 3/4																	5.18
2S	30				5/8	10	12 1/2	45°		12 3/4																	5.18
2M	36				3/4	12	15	45°		15 3/8																	7.46
3	36				3/4	12	15	45°		15 3/8																	7.46
4	48				1	16	20	45°		20 1/2																	13.25
5	48				1	16	20	45°		20 1/2																	13.25
6	18				3/8	6	7 3/4	45°		7 3/4																	1.86
7	12				1/4	4	5	45°		5 1/8																	0.78

STANDARD SIGN
R1-1

WISCONSIN DEPT OF TRANSPORTATION

APPROVED Matthew R Rauch
for State Traffic Engineer

DATE 11/12/15 PLATE NO. R1-1.13

PROJECT NO: | HWY: | COUNTY: | SHEET NO: 369 | E

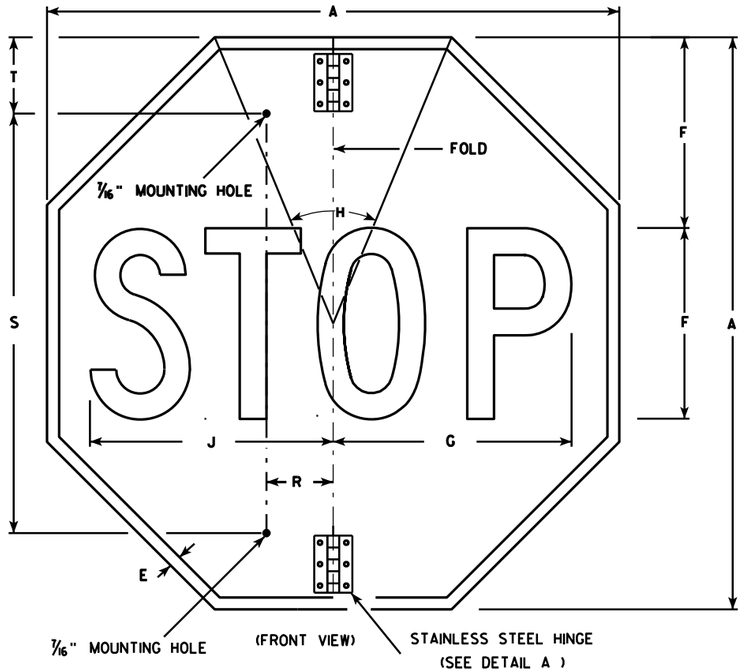

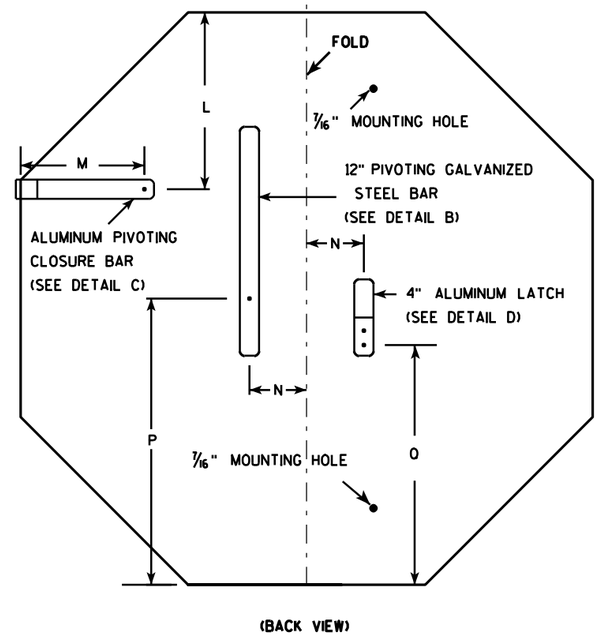

NOTES

1. Sign is Type II - Type H Reflective - reference WIS DOT Standard Specification for HIGHWAY and STRUCTURE CONSTRUCTION latest edition.
2. Color:
   Background - Red
   Message - White
3. Message Series - C
4. All hardware used on the folding STOP sign installation shall conform to 637.2.4 of the WIS DOT Standard Specification.

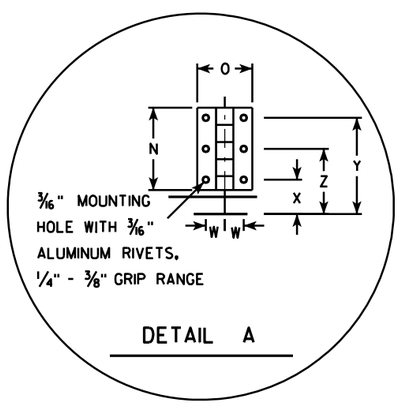

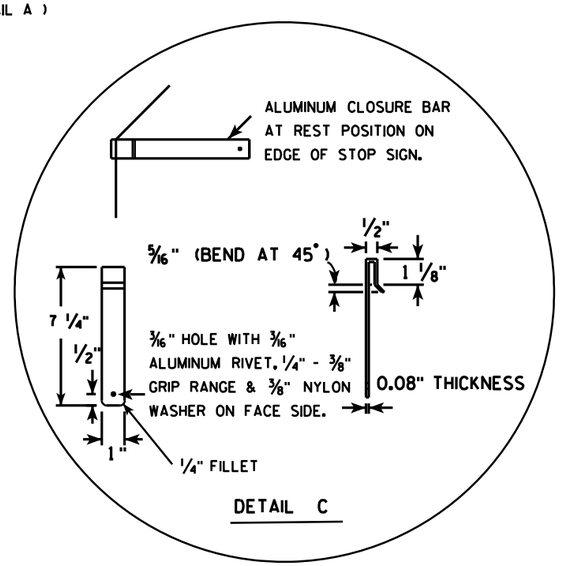

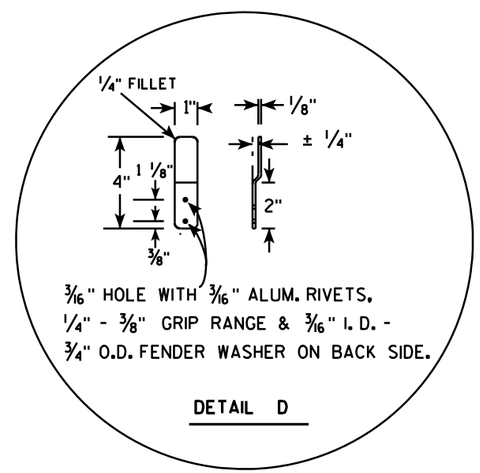

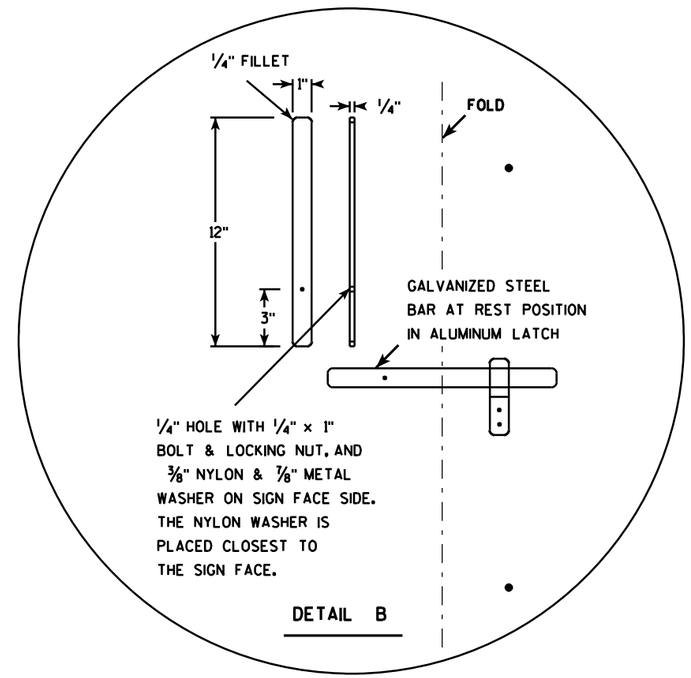

SIZE	A	B	C	D	E	F	G	H	I	J	K	L	M	N	O	P	Q	R	S	T	U	V	W	X	Y	Z	Area sq. ft.
1																											
2S	30				5/8	10	12 1/2	45		12 3/4		9 1/4	6 1/2	3	2	15	12 3/8	2 1/2	22	5			11/16	1 1/4	3 1/2	2 3/8	5.18
2M	36				3/4	12	15	45		15 3/8		11	6 1/2	3	2	18	15 3/8	2 1/2	26	5			11/16	1 1/4	3 1/2	2 3/8	7.46
3	36				3/4	12	15	45		15 3/8		11	6 1/2	3	2	18	15 3/8	2 1/2	26	5			11/16	1 1/4	3 1/2	2 3/8	7.46
4																											
5																											

STANDARD SIGN
R1-1F

WISCONSIN DEPT OF TRANSPORTATION

APPROVED Matthew R Rauch
for State Traffic Engineer

DATE 12/03/10 PLATE NO. R1-1F.3

PROJECT NO:	HWY:	COUNTY:		SHEET NO: 370	E

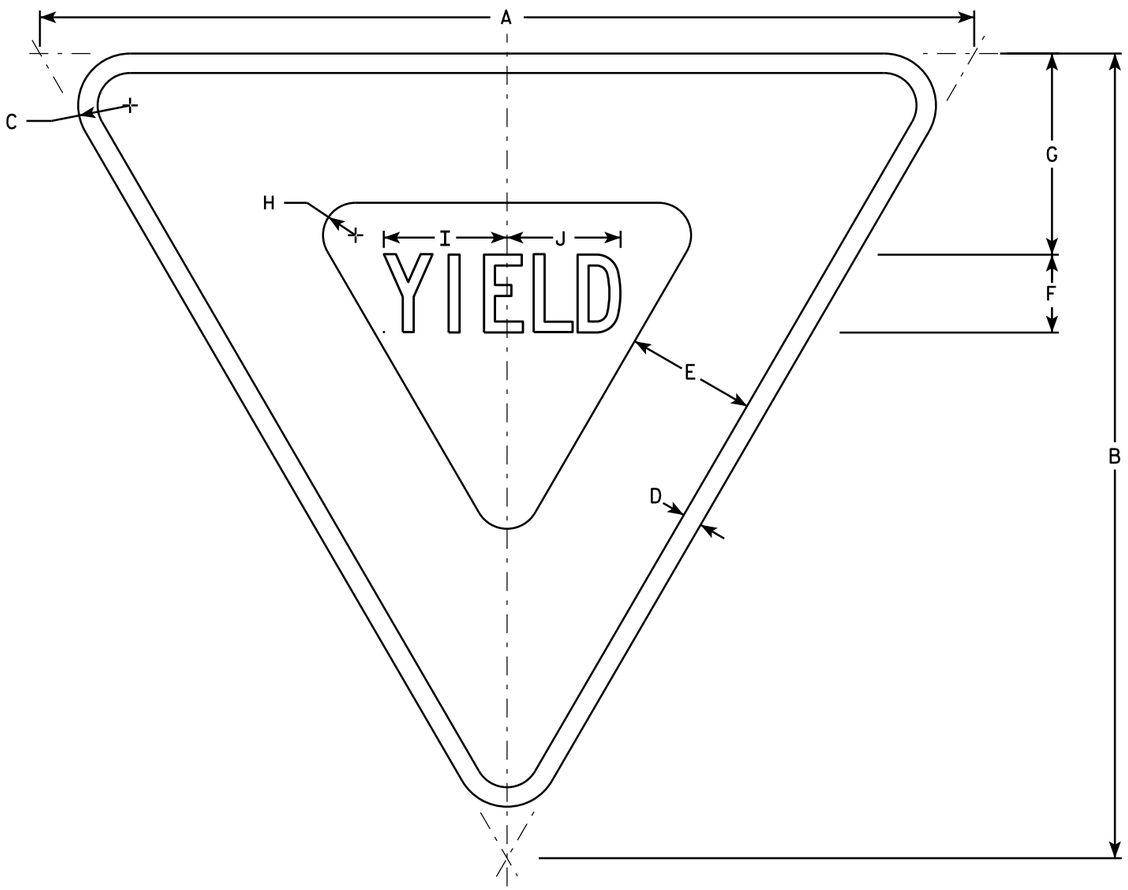

R1-2

NOTES

1. Sign is Type II - Type H Reflective - reference WIS DOT Standard Specification for HIGHWAY and STRUCTURE CONSTRUCTION latest edition.
2. Color:
   Background - White
   Message - See note 5
3. Message Series - C
4. Corners may be square or rounded when base material is plywood but borders shall be rounded as shown. When base material is metal, the corners and borders shall be rounded.
5. The border strip and word message are reflectorized red.

SIZE	A	B	C	D	E	F	G	H	I	J	K	L	M	N	O	P	Q	R	S	T	U	V	W	X	Y	Z	Area sq. ft.
1	30	26	1 1/2	5/8	4	2 1/2	6 3/8	7/8	4	3 5/8																	2.71
2S	36	31	2	3/4	5	3	7 3/4	1 1/4	4 3/4	4 3/8																	3.88
2M	48	42	3	1	6	4	9 3/4	2	6 1/4	5 7/8																	7.00
3	48	42	3	1	6	4	9 3/4	2	6 1/4	5 7/8																	7.00
4	48	42	3	1	6	4	9 3/4	2	6 1/4	5 7/8																	7.00
5	60	52	3	1 1/2	8	5	13	2 1/2	7 7/8	7 1/4																	10.83
6																											
7	18	15 1/2	1	3/8	2 1/2	1 1/2	3 7/8	5/8	2 3/8	2 1/4																	0.97

STANDARD SIGN
R1-2

WISCONSIN DEPT OF TRANSPORTATION

APPROVED Matthew R Rauch
for State Traffic Engineer

DATE 10/13/14 PLATE R1-2.12

PROJECT NO: | HWY: | COUNTY: | SHEET NO: | E

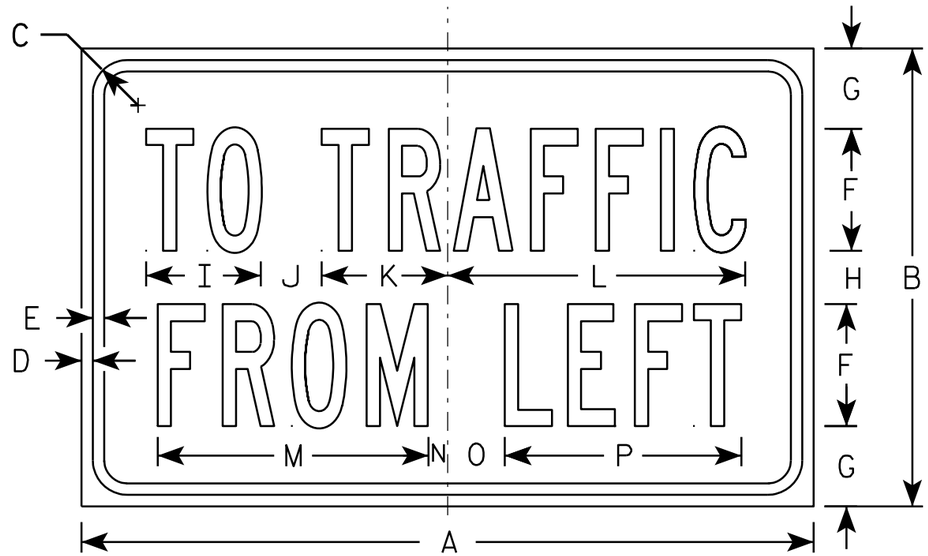

R1-54

NOTES

1. Sign is Type II - Type H Reflective - reference WIS DOT Standard Specification for HIGHWAY and STRUCTURE CONSTRUCTION latest edition.
2. Color:
   Background - White
   Message - Black
3. Message Series - B

SIZE	A	B	C	D	E	F	G	H	I	J	K	L	M	N	O	P	Q	R	S	T	U	V	W	X	Y	Z	Area sq. ft.
1																											
2S	24	15	1 1/8	3/8	3/8	4	2 5/8	1 3/4	3 3/4	2	4 1/8	9 3/4	8 7/8	5/8	1 7/8	7 3/4											2.5
2M	24	15	1 1/8	3/8	3/8	4	2 5/8	1 3/4	3 3/4	2	4 1/8	9 3/4	8 7/8	5/8	1 7/8	7 3/4											2.5
3																											
4																											
5																											

STANDARD SIGN
R1-54

WISCONSIN DEPT OF TRANSPORTATION

APPROVED Matthew R Rauch
for State Traffic Engineer

DATE 12/03/10 PLATE NO. R1-54.2

PROJECT NO:	HWY:	COUNTY:		SHEET NO: 372	E

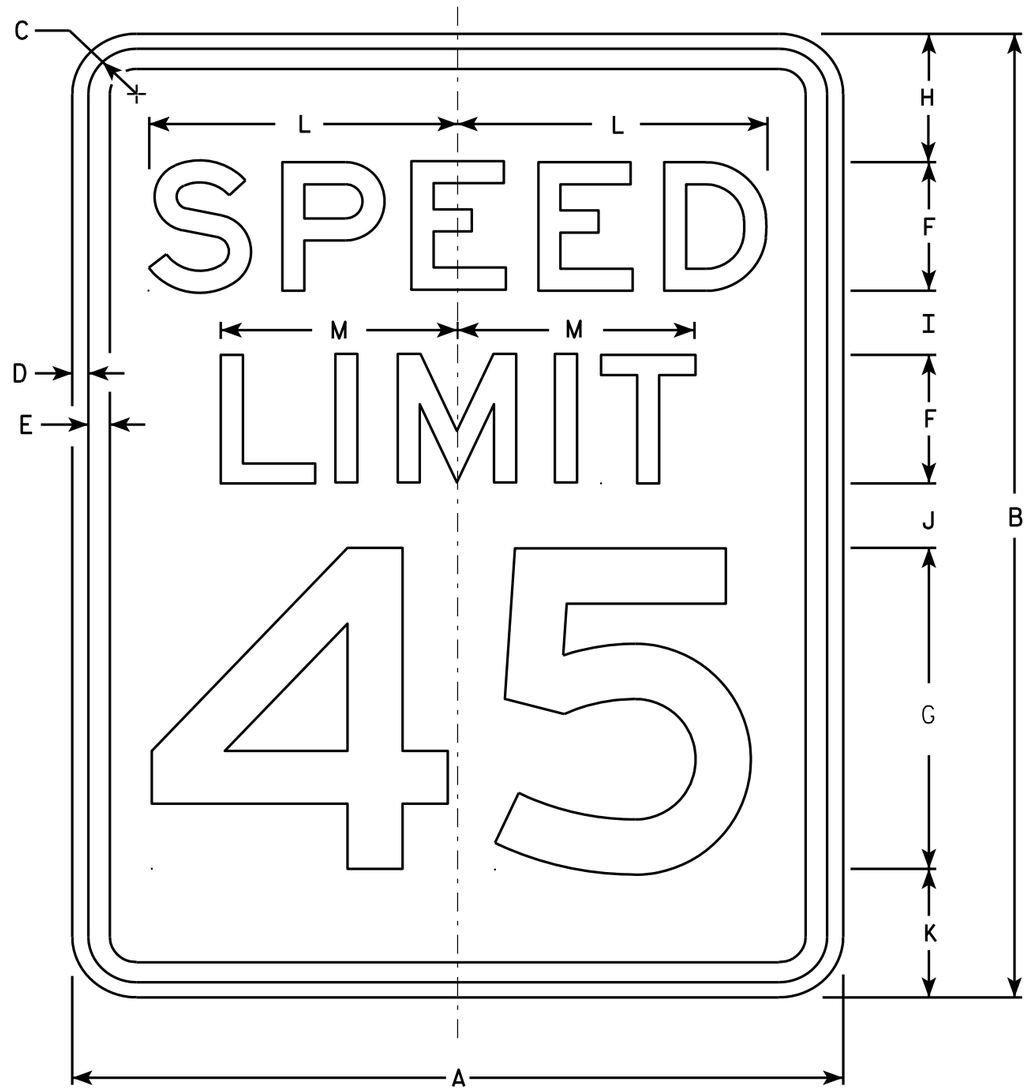

R2-1

NOTES

1. Sign is Type II - Type H Reflective - reference WIS DOT Standard Specification for HIGHWAY and STRUCTURE CONSTRUCTION latest edition.
2. Color:
   Background - White
   Message - Black
3. Message Series - E
4. Corners may be square or rounded when base material is plywood but borders shall be rounded as shown. When base material is metal, the corners and borders shall be rounded.
5. Substitute appropriate numerals and optically adjust spacing to achieve proper balance.

SIZE	A	B	C	D	E	F	G	H	I	J	K	L	M	N	O	P	Q	R	S	T	U	V	W	X	Y	Z	Area sq. ft.
1	18	24	1 1/8	3/8	1/2	3	8	3	2	2	3	7 1/4	5 1/2														3.0
2S	24	30	1 1/8	3/8	1/2	4	10	3	2 1/4	3 3/8	3 3/8	9 5/8	7 3/8														5.0
2M	30	36	1 3/8	1/2	5/8	5	12	5	2 1/2	2 1/2	4	12	9 1/4														7.5
3	36	48	1 3/8	1/2	5/8	6	14	6	5	5	6	14 3/8	11														12.0
4	36	48	1 3/8	1/2	5/8	6	14	6	5	5	6	14 3/8	11														12.0
5	48	60	2 1/4	3/4	1	8	20	6	4 1/2	6 3/4	6 3/4	19 1/4	14 5/8														20.0

STANDARD SIGN
R2-1

WISCONSIN DEPT OF TRANSPORTATION

APPROVED Matthew R Rauch
for State Traffic Engineer

DATE 5/26/10 PLATE NO. R2-1.13

PROJECT NO: | HWY: | COUNTY: | SHEET NO: 373 | E

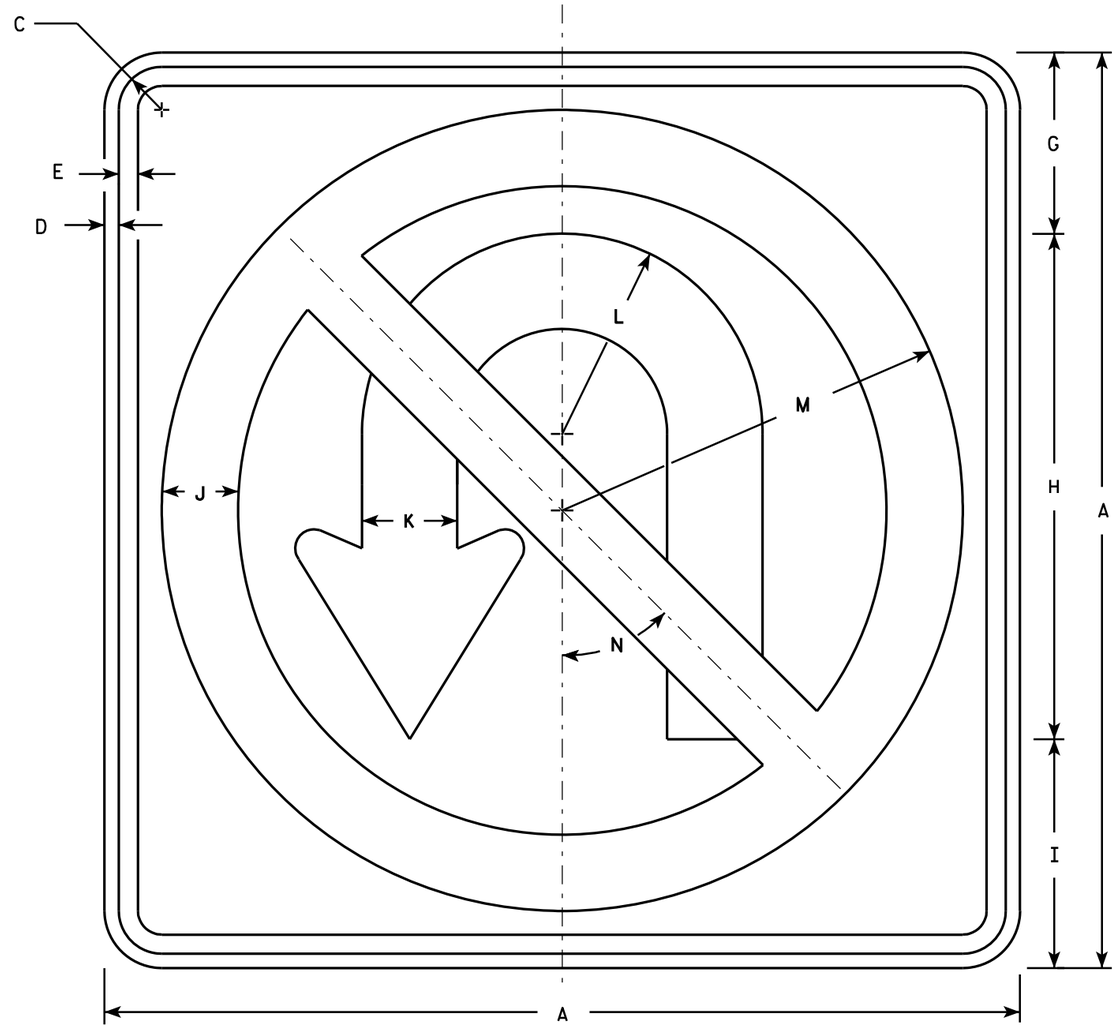

R3-4

NOTES

1. Sign is Type II - Type H Reflective - reference WIS DOT Standard Specification for HIGHWAY and STRUCTURE CONSTRUCTION latest edition.
2. Color:
   Background - White
   Message - See note 4
3. Corners may be square or rounded when base material is plywood but borders shall be rounded as shown. When base material is metal, the corners and borders shall be rounded.
4. Border & Arrow are non reflective black, the circle with diagonal bar is reflective red.

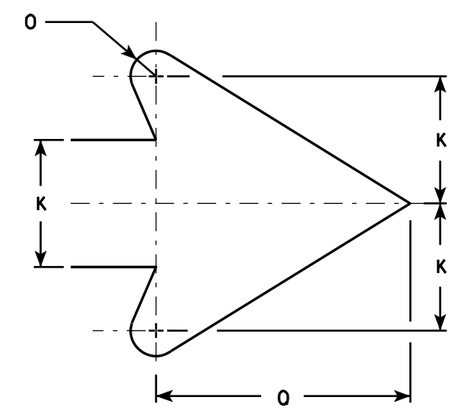

ARROW DETAIL

SIZE	A	B	C	D	E	F	G	H	I	J	K	L	M	N	O	P	Q	R	S	T	U	V	W	X	Y	Z	Area sq. ft.
1																											
2S	24		1 1/8	3/8	1/2		4 3/4	13 1/4	6	2	2 1/2	5 1/4	10 1/2	45°	1/2		5										4.0
2M	36		1 5/8	5/8	3/4		7 1/8	19 7/8	9	3	3 3/4	7 7/8	15 3/4	45°	3/4		7 5/8										9.0
3	36		1 5/8	5/8	3/4		7 1/8	19 7/8	9	3	3 3/4	7 7/8	15 3/4	45°	3/4		7 5/8										9.0
4	36		1 5/8	5/8	3/4		7 1/8	19 7/8	9	3	3 3/4	7 7/8	15 3/4	45°	3/4		7 5/8										9.0
5	36		1 5/8	5/8	3/4		7 1/8	19 7/8	9	3	3 3/4	7 7/8	15 3/4	45°	3/4		7 5/8										9.0

STANDARD SIGN
R3-4

WISCONSIN DEPT OF TRANSPORTATION

APPROVED Matthew R Rauch
for State Traffic Engineer

DATE 12/08/10 PLATE NO. R3-4.11

PROJECT NO: | HWY: | COUNTY: | SHEET NO: 374 | E

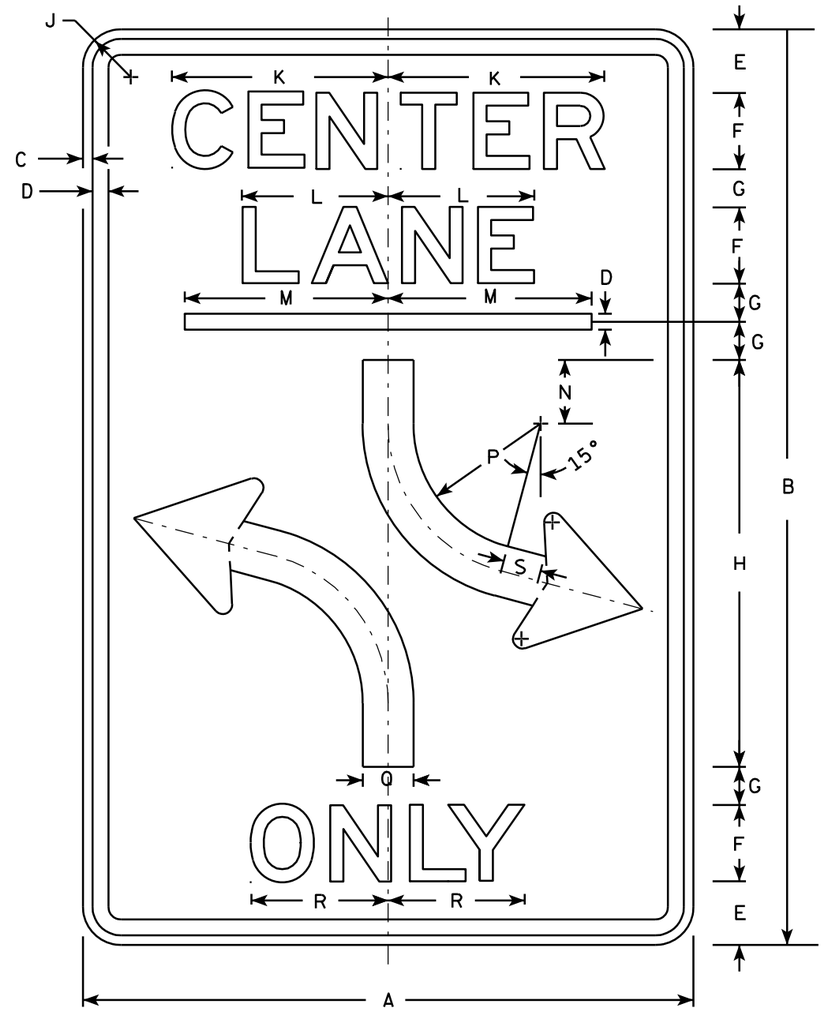

R3-9B

NOTES

1. Sign is Type II - Type H Reflective - reference WIS DOT Standard Specification for HIGHWAY and STRUCTURE CONSTRUCTION latest edition.
2. Color:
   Background - White
   Message - Black
3. Message Series - E
4. Corners may be square or rounded when base material is plywood but borders shall be rounded as shown. When base material is metal, the corners and borders shall be rounded.

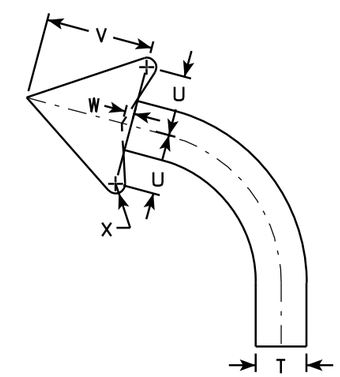

ARROW DETAIL

SIZE	A	B	C	D	E	F	G	H	I	J	K	L	M	N	O	P	Q	R	S	T	U	V	W	X	Y	Z	Area sq. ft.
1																											
2S	24	36	3/8	1/2	2 1/2	3	1 1/2	16		1 1/2	8 1/2	5 3/4	8	2 1/2		6	2	5 1/8	1 1/2		2 3/8	4 3/8	3/8				6.0
2M	24	36	3/8	1/2	2 1/2	3	1 1/2	16		1 1/2	8 1/2	5 3/4	8	2 1/2		6	2	5 1/8	1 1/2		2 3/8	4 3/8	3/8				6.0
3	36	48	5/8	7/8	3 1/2	5	1 1/2	20		2 1/4	14 1/8	9 1/2	12	3		4	3	9 7/8	2		3 1/2	6 1/8	1/2				12.0
4																											
5																											

STANDARD SIGN
R3-9B

WISCONSIN DEPT OF TRANSPORTATION

APPROVED Matthew R Rauch
for State Traffic Engineer

DATE 3/24/2011 PLATE NO. R3-9B.5

PROJECT NO: | HWY: | COUNTY: | SHEET NO: 375 | E

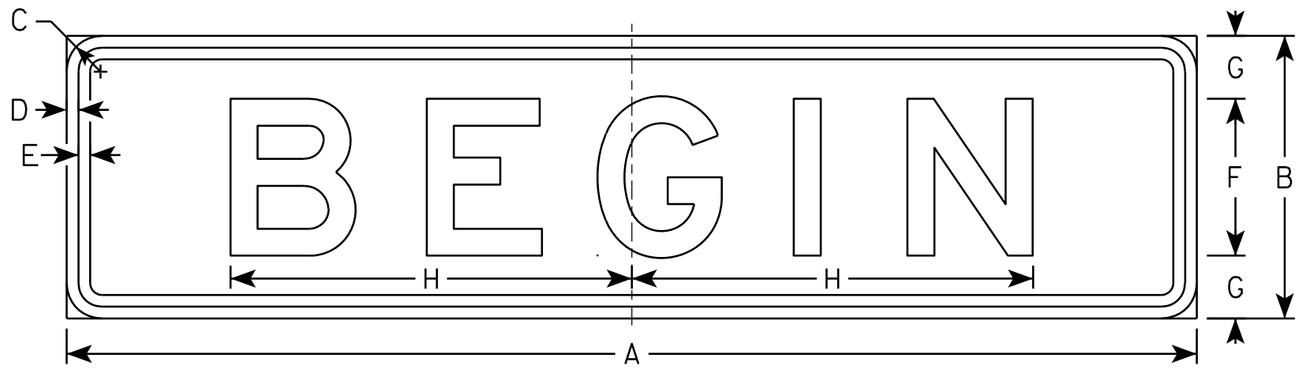

R3-9C

NOTES

1. Sign is Type II - Type H Reflective - reference WIS DOT Standard Specification for HIGHWAY and STRUCTURE CONSTRUCTION latest edition.
2. Color:
   Background - White
   Message - Black
3. Message Series - E
4. Corners may be square or rounded when base material is plywood but borders shall be rounded as shown. When base material is metal, the corners and borders shall be rounded.

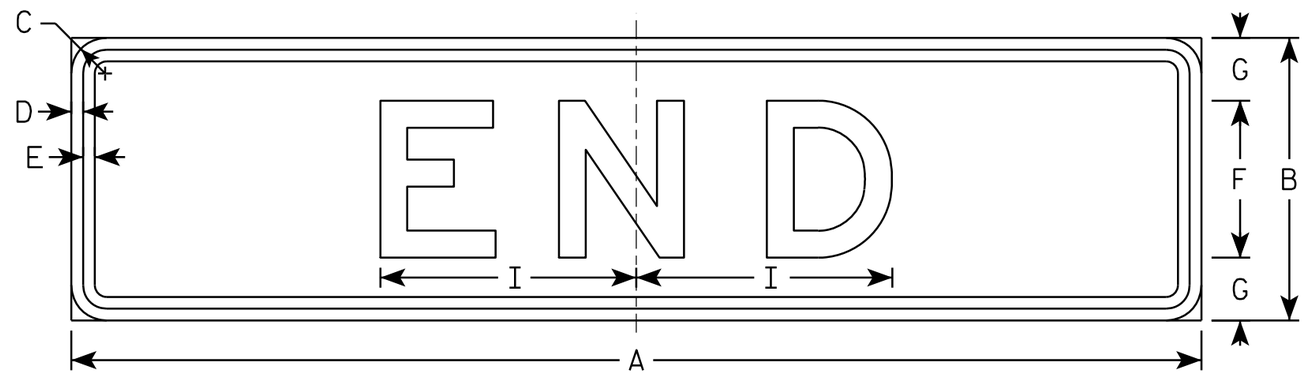

R3-9D

7

7

SIZE	A	B	C	D	E	F	G	H	I	J	K	L	M	N	O	P	Q	R	S	T	U	V	W	X	Y	Z	Area sq. ft.
1																											
2S	24	6	1 1/8	3/8	3/8	3	1 1/2	7 3/4	4 7/8																		1.0
2M	24	6	1 1/8	3/8	3/8	3	1 1/2	7 3/4	4 7/8																		1.0
3	36	9	1 1/8	3/8	3/8	5	2	12 3/4	8 1/8																		1.86
4																											
5																											

STANDARD SIGN
R3-9C & R3-9D

WISCONSIN DEPT OF TRANSPORTATION

APPROVED Matthew R Rauch
for State Traffic Engineer

DATE 3/24/2011 PLATE NO. R3-9C.2

PROJECT NO: | HWY: | COUNTY: | SHEET NO: 376 | E

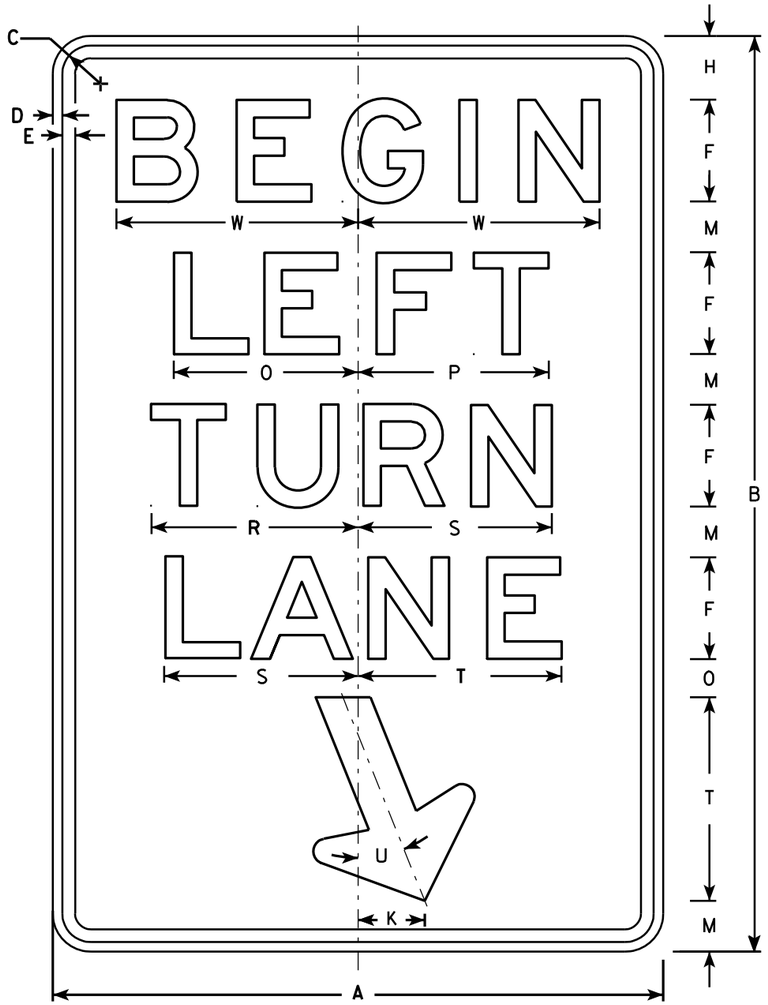

R3-20L

NOTES

1. Sign is Type II - Type H Reflective - reference WIS DOT Standard Specification for HIGHWAY and STRUCTURE CONSTRUCTION latest edition.
2. Color:
   Background - White
   Message - Black
3. Message Series - E
4. Corners may be square or rounded when base material is plywood but borders shall be rounded as shown. When base material is metal, the corners and borders shall be rounded.

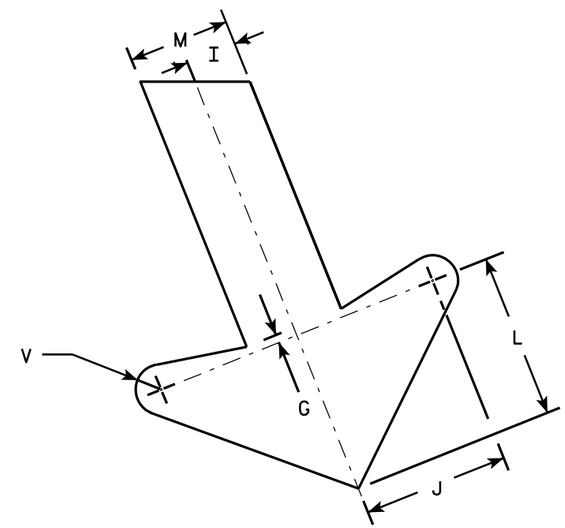

ARROW DETAIL

SIZE	A	B	C	D	E	F	G	H	I	J	K	L	M	N	O	P	Q	R	S	T	U	V	W	X	Y	Z	Area sq. ft.
1																											
2S	24	36	1 1/8	3/8	1/2	4	1/4	2 1/2	1	2 7/8	2 5/8	3 1/4	2	1 1/2	7 1/4	7 1/2		8 1/8	7 5/8	8	22°	1/2	9 1/2				6.0
2M	24	36	1 1/8	3/8	1/2	4	1/4	2 1/2	1	2 7/8	2 5/8	3 1/4	2	1 1/2	7 1/4	7 1/2		8 1/8	7 5/8	8	22°	1/2	9 1/2				6.0
3	36	54	1 3/4	1/2	5/8	6	3/8	3 3/4	1 1/2	4 1/4	4	4 7/8	3	2 1/4	10 7/8	11 1/4		12 1/4	11 1/2	12	22°	3/4	13 1/4				13.5
4																											
5																											

STANDARD SIGN
R3-20L

WISCONSIN DEPT OF TRANSPORTATION

APPROVED Matthew R Rauch
for State Traffic Engineer

DATE 10/18/10 PLATE NO. R3-20L.7

PROJECT NO: | HWY: | COUNTY: | SHEET NO: 377 | E

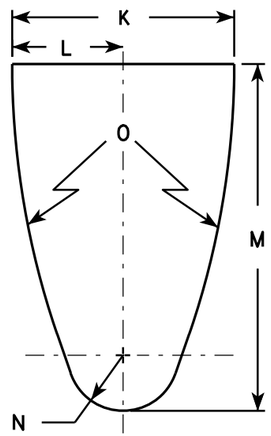

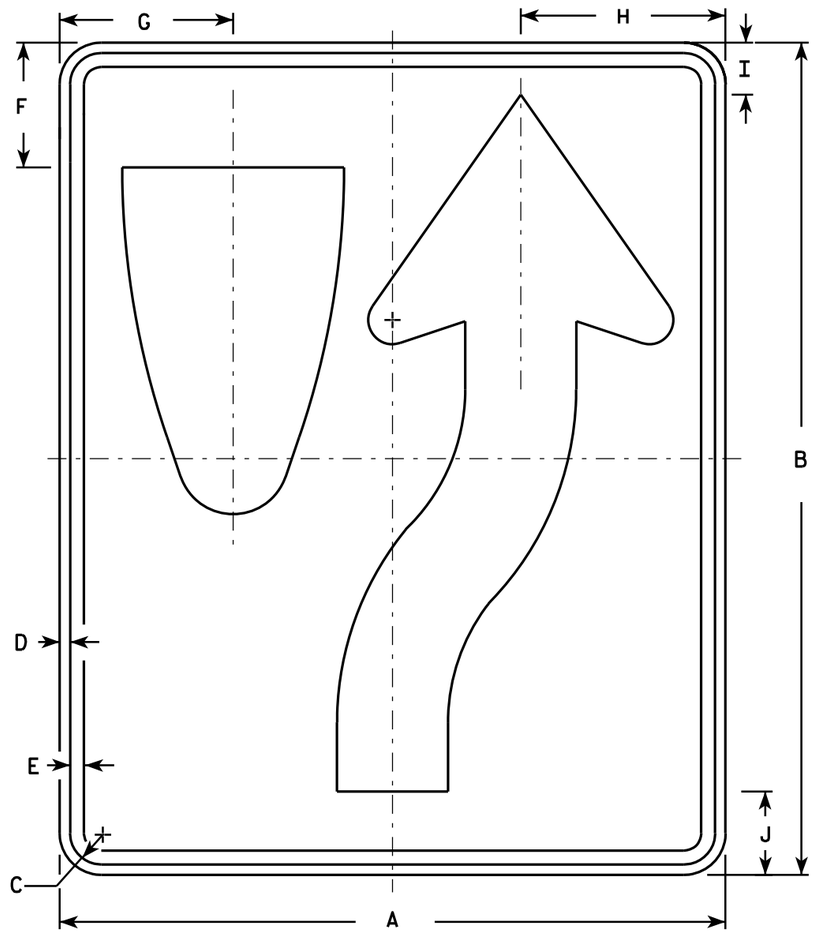

R4-7

NOTES

1. Sign is Type II - Type H Reflective - reference WIS DOT Standard Specification for HIGHWAY and STRUCTURE CONSTRUCTION latest edition. material is plywood but borders shall be rounded
2. Color:
   Background - White
   Message - Black
3. Corners may be square or rounded when base as shown. When base material is metal, the corners and borders shall be rounded.
4. R4-8 is the same as R4-7 except Legend is reversed.

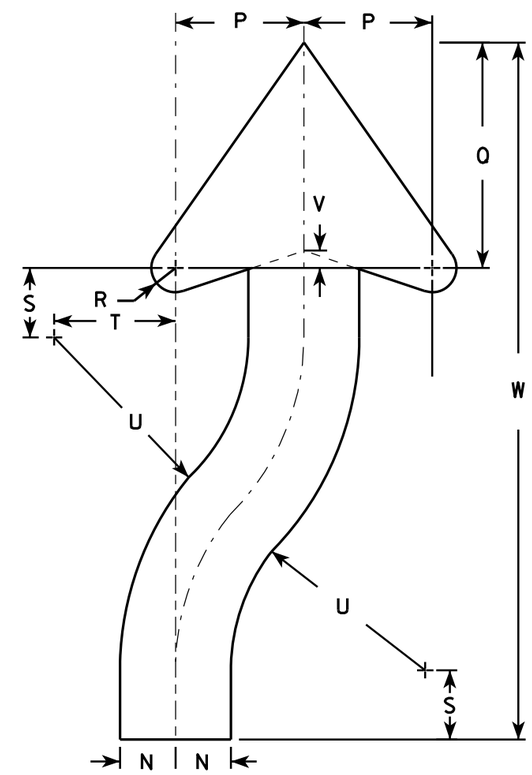

ARROW DETAIL

SIZE	A	B	C	D	E	F	G	H	I	J	K	L	M	N	O	P	Q	R	S	T	U	V	W	X	Y	Z	Area sq. ft.
1	18	24	1 1/8	3/8	1/2	3 3/8	4 3/4	5 1/2	1 3/8	2 1/4	6	3	9 3/8	1 1/2	22 1/2	3 1/2	6 1/8	5/8	1 7/8	3 1/4	6 3/4	1/2	20 3/8				3.0
2S	24	30	1 1/8	3/8	1/2	4 1/2	6 1/4	7 3/8	1 7/8	3	8	4	12 1/2	2	30	4 5/8	8 1/8	7/8	2 1/2	4 3/8	9	5/8	25 1/8				5.0
2M	24	30	1 1/8	3/8	1/2	4 1/2	6 1/4	7 3/8	1 7/8	3	8	4	12 1/2	2	30	4 5/8	8 1/8	7/8	2 1/2	4 3/8	9	5/8	25 1/8				5.0
3	36	48	1 3/4	1/2	5/8	6 3/4	9 3/8	11 1/8	2 7/8	4 1/2	12	6	18 3/4	3	45	6 7/8	12 1/4	1 1/4	3 3/4	6 5/8	13 1/2	1	40 3/4				12.0
4	36	48	1 3/4	1/2	5/8	6 3/4	9 3/8	11 1/8	2 7/8	4 1/2	12	6	18 3/4	3	45	6 7/8	12 1/4	1 1/4	3 3/4	6 5/8	13 1/2	1	40 3/4				12.0
5	48	60	2 1/4	3/4	1	9	12 1/2	14 3/4	3 3/4	6	16	8	25	4	60	9 1/4	16 1/4	1 5/8	5	8 3/4	18	1 1/4	50 1/4				20.0

STANDARD SIGN
R4-7 & R4-8

WISCONSIN DEPT OF TRANSPORTATION

APPROVED Matthew R Rauch for State Traffic Engineer

DATE 3/25/2011 PLATE NO. R4-7.8

PROJECT NO:	HWY:	COUNTY:		SHEET NO: 378	E

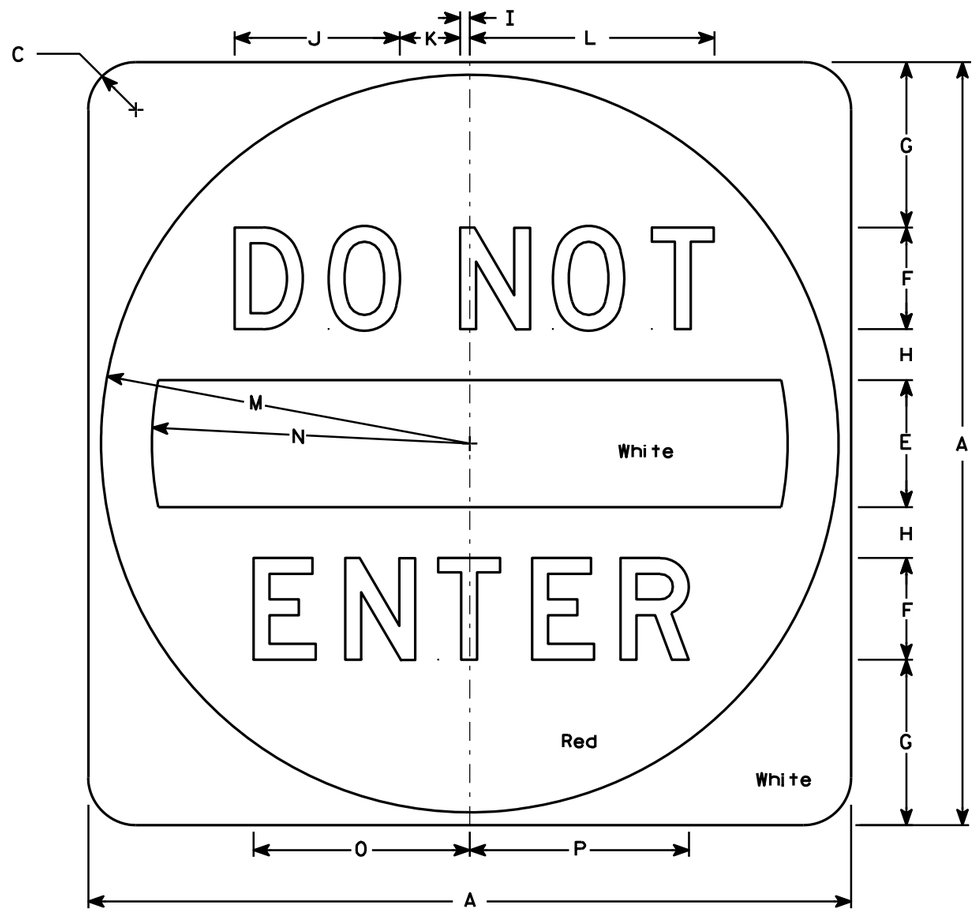

R5-1

NOTES

1. Sign is Type II - Type H Reflective - reference WIS DOT Standard Specification for HIGHWAY and STRUCTURE CONSTRUCTION latest edition.
2. Color:
   Background - See detail
   Message - White - Type H Reflective
3. Message Series - D
4. Corners may be square or rounded when base material is plywood but when base material is metal, the cornors shall be rounded.

SIZE	A	B	C	D	E	F	G	H	I	J	K	L	M	N	O	P	Q	R	S	T	U	V	W	X	Y	Z	Area sq. ft.
1																											
2S	30		1 7/8		5	4	6 1/2	2	3/8	6 1/2	2 3/8	9 5/8	14 1/2	12 1/2	8 1/2	8 5/8											6.26
2M	36		2 1/4		6	5	7 1/2	2 1/2	1/2	8 1/8	3	12 1/8	17 1/2	15	10 5/8	10 3/4											9.0
3	36		2 1/4		6	5	7 1/2	2 1/2	1/2	8 1/8	3	12 1/8	17 1/2	15	10 5/8	10 3/4											9.0
4	36		2 1/4		6	5	7 1/2	2 1/2	1/2	8 1/8	3	12 1/8	17 1/2	15	10 5/8	10 3/4											9.0
5	48		3		8	6	11	3	5/8	9 3/4	3 5/8	14 1/2	23 1/2	20	12 3/4	12 7/8											16.0

STANDARD SIGN
R5-1

WISCONSIN DEPT OF TRANSPORTATION

APPROVED Matthew R Rauch
for State Traffic Engineer

DATE 12/17/10 PLATE NO. R5-1.15

PROJECT NO: | HWY: | COUNTY: | SHEET NO: 379 | E

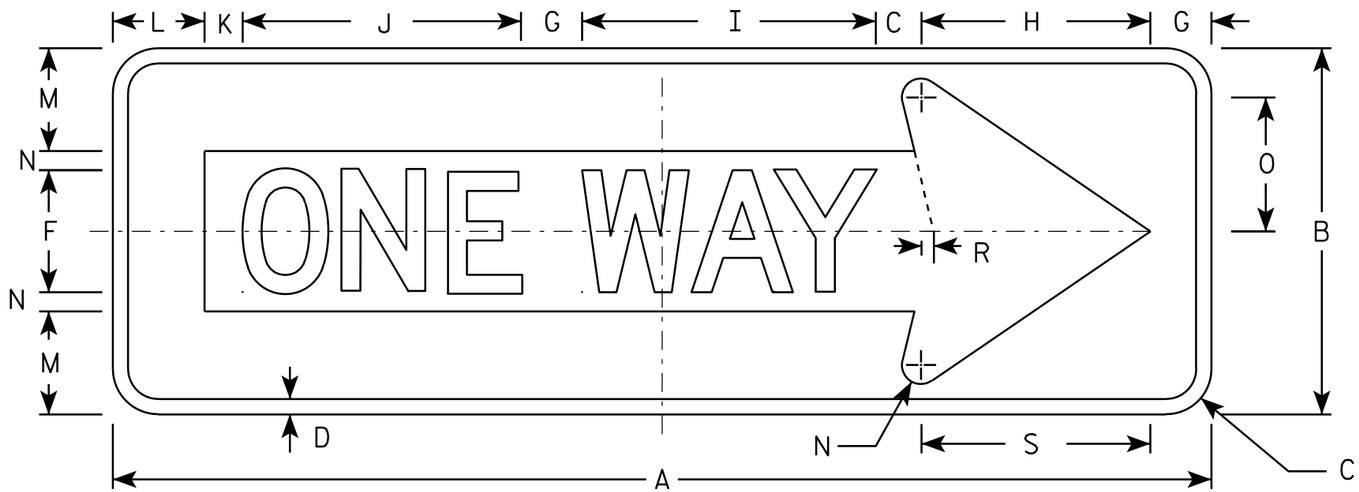

R6-1 R

NOTES

1. Sign is Type II - Type H Reflective - reference WIS DOT Standard Specification for HIGHWAY and STRUCTURE CONSTRUCTION latest edition.
2. Color:
   Background - BLACK
   Message - BLACK LEGEND & WHITE ARROW & BORDER
3. Message Series - D
4. Corners may be square or rounded when base material is plywood but borders shall be rounded as shown. When base material is metal, the corners and borders shall be rounded.

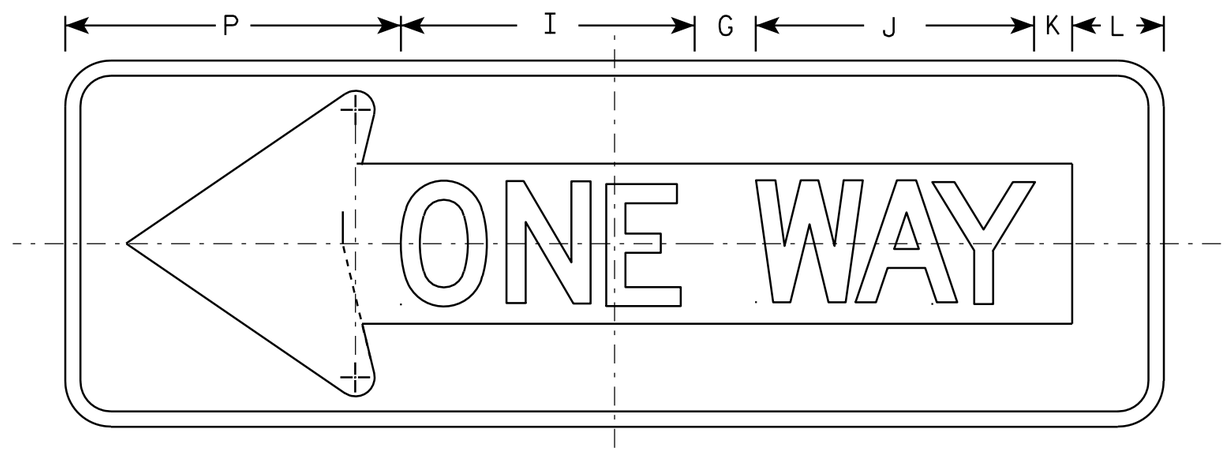

R6-1 L

SIZE	A	B	C	D	E	F	G	H	I	J	K	L	M	N	O	P	Q	R	S	T	U	V	W	X	Y	Z	Area sq. ft.
1																											
2S	36	12	1 1/2	1/2		4	2	7 1/2	9 5/8	9 1/8	1 1/4	3	3 3/8	5/8	4 3/8	11		3/8	7 1/2								3.0
2M	54	18	2 1/4	3/4		6	3	11 1/4	14 1/2	13 5/8	1 7/8	4 1/2	5	1	6 1/2	16 1/2		5/8	11 1/4								6.75
3	54	18	2 1/4	3/4		6	3	11 1/4	14 1/2	13 5/8	1 7/8	4 1/2	5	1	6 1/2	16 1/2		5/8	11 1/4								6.75
4	54	18	2 1/4	3/4		6	3	11 1/4	14 1/2	13 5/8	1 7/8	4 1/2	5	1	6 1/2	16 1/2		5/8	11 1/4								6.75
5																											

STANDARD SIGN
R6-1 L & R

WISCONSIN DEPT OF TRANSPORTATION

APPROVED Matthew R Rauch
for State Traffic Engineer

DATE 12/17/10 PLATE NO. R6-1.2

PROJECT NO:

SHEET NO: 380 E

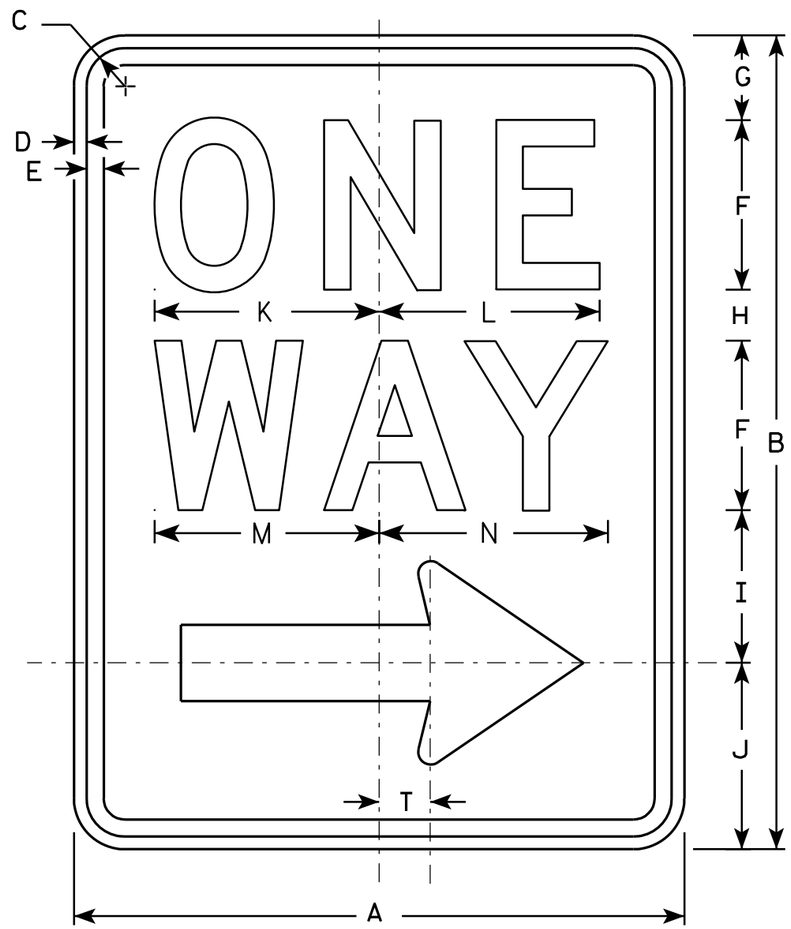

R6-2R

NOTES

1. Sign is Type II - Type H Reflective - reference WIS DOT Standard Specification for HIGHWAY and STRUCTURE CONSTRUCTION latest edition.
2. Color:
   Background - White
   Message - Black
3. Message Series - D
4. Corners may be square or rounded when base material is plywood but borders shall be rounded as shown. When base material is metal, the corners and borders shall be rounded.
5. R6-2L same as R6-2R except arrow points to the left.

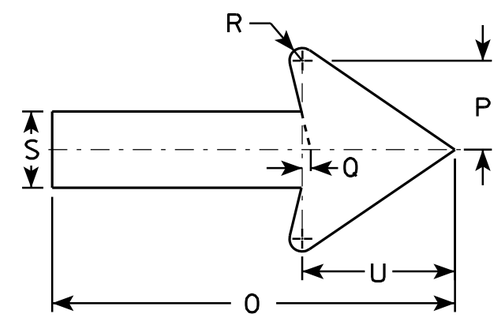

SIZE	A	B	C	D	E	F	G	H	I	J	K	L	M	N	O	P	Q	R	S	T	U	V	W	X	Y	Z
1	18	24	1 1/8	3/8	1/2	5	2 1/2	1 1/2	4 1/2	5 1/2	6 5/8	6 1/2	6 5/8	6 3/4	11 7/8	2 5/8	1/4	3/8	2 1/4	1 1/2	4 1/2					
2S	24	30	1 1/8	3/8	1/2	6	3	2 1/2	5 1/2	7	8 1/8	8 1/8	8 1/2	8 5/8	16	3 1/2	3/8	1/2	3	2	6					
2M	30	36	1 3/8	1/2	5/8	8	2 1/2	2 5/8	6 7/8	8	10 1/2	10 1/2	11 1/4	11 1/4	20	4 3/8	1/2	5/8	3 3/4	2 1/2	7 1/2					
3	36	48	1 7/8	1/2	5/8	10	5 1/4	3 1/4	9	10 1/2	12 3/4	12 3/4	13 1/4	13 1/2	24	5 5/8	1/2	3/4	4 3/4	3	9					
4	36	48	1 7/8	1/2	5/8	10	5 1/4	3 1/4	9	10 1/2	12 3/4	12 3/4	13 1/4	13 1/2	24	5 5/8	1/2	3/4	4 3/4	3	9					
5																										

STANDARD SIGN
R6-2 R&L

WISCONSIN DEPT OF TRANSPORTATION

APPROVED Matthew R Rauch
for State Traffic Engineer

DATE 11/2/10 PLATE NO. R6-2.8

PROJECT NO:	HWY:	COUNTY:		SHEET NO: 381	E

NOTES

1. Sign is Type II - Type H Reflective
2. Color:
   Background - WHITE
   Message - BLACK
3. Corners may be square or rounded when base material is plywood but borders shall be rounded as shown. When base material is metal, the corners and borders shall be rounded.

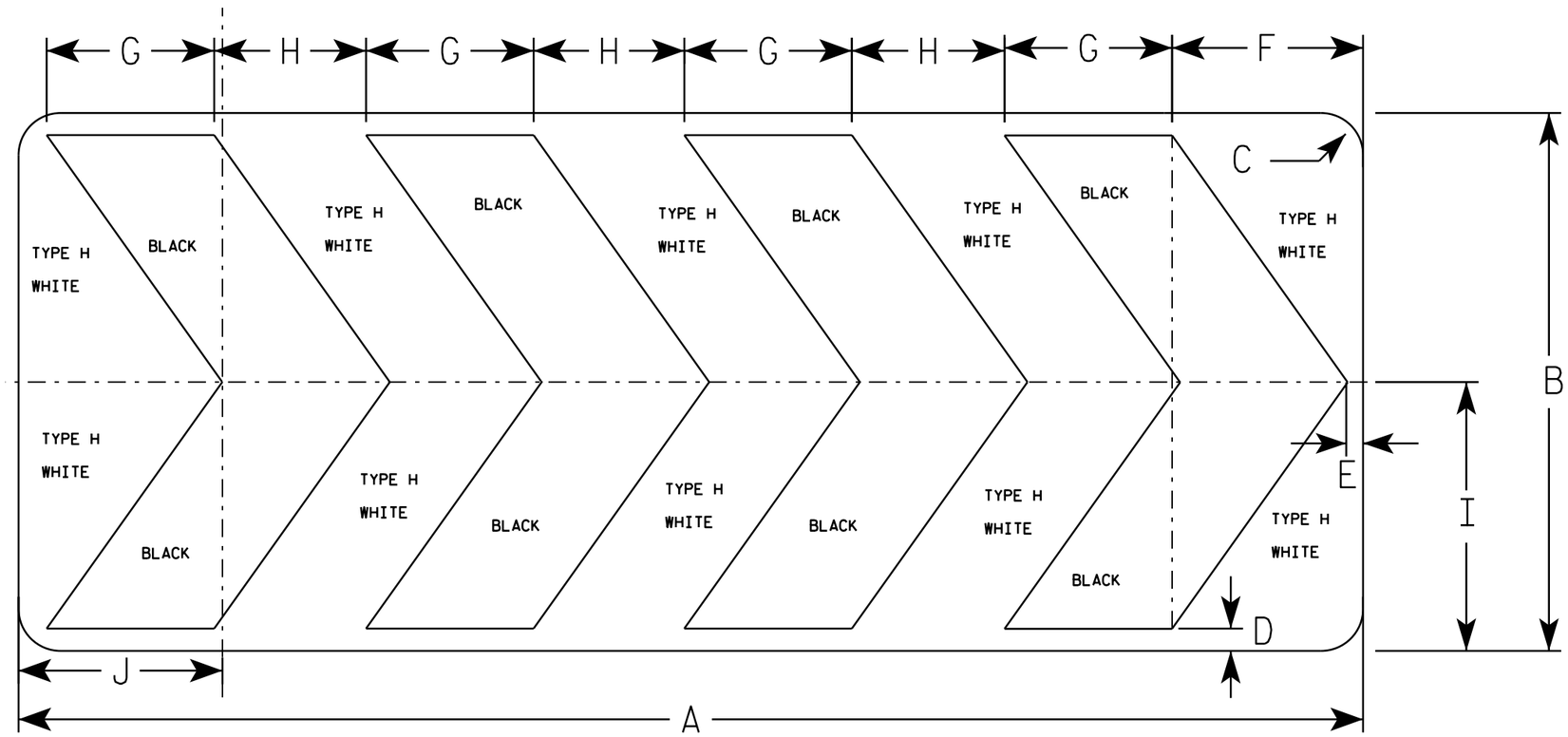

R6-4B

SIZE	A	B	C	D	E	F	G	H	I	J	K	L	M	N	O	P	Q	R	S	T	U	V	W	X	Y	Z	Area sq. ft.
1																											
2S	60	24	1 7/8	1	3/4	8 1/2	7 1/2	6 3/4	12	9 1/8																	10.0
2M	60	24	1 7/8	1	3/4	8 1/2	7 1/2	6 3/4	12	9 1/8																	10.0
3																											
4																											
5																											

STANDARD SIGN
R6-4B

WISCONSIN DEPT OF TRANSPORTATION

APPROVED Matthew R Rauch
for State Traffic Engineer

DATE 8/21/14 PLATE NO. R6-4.3

PROJECT NO: SHEET NO: E

R10-71

R10-71L

NOTES

1. Sign is Type II - Type H Reflective - reference WIS DOT Standard Specification for HIGHWAY and STRUCTURE CONSTRUCTION latest edition.
2. Color:
   Background - White
   Message - Black
3. Message Series - D
4. Corners may be square or rounded when base material is plywood but borders shall be rounded as shown. When base material is metal, the corners and borders shall be rounded.

R10-71R

SIZE	A	B	C	D	E	F	G	H	I	J	K	L	M	N	O	P	Q	R	S	T	U	V	W	X	Y	Z	R10-71L&R Area sq. ft.	R10-71 Area sq. ft.
1																												
2S	72	36	2 1/4	3/4	1	18	5	4	6	20 5/8	11 3/4	9 1/8	8 1/2	12 7/8	9 7/8	16 1/8	23 7/8	30	5 5/8	26 3/4	66	23 5/8	8 3/4	13	26 7/8	27	18.0	16.5
2M	72	36	2 1/4	3/4	1	18	5	4	6	20 5/8	11 3/4	9 1/8	8 1/2	12 7/8	9 7/8	16 1/8	23 7/8	30	5 5/8	26 3/4	66	23 5/8	8 3/4	13	26 7/8	27	18.0	16.5
3																												
4																												
5																												

STANDARD SIGN
R10-71

WISCONSIN DEPT OF TRANSPORTATION

APPROVED Matthew R Rauch
for State Traffic Engineer

DATE 4/4/11 PLATE NO. R10-71.3

PROJECT NO:

SHEET NO: 383 E

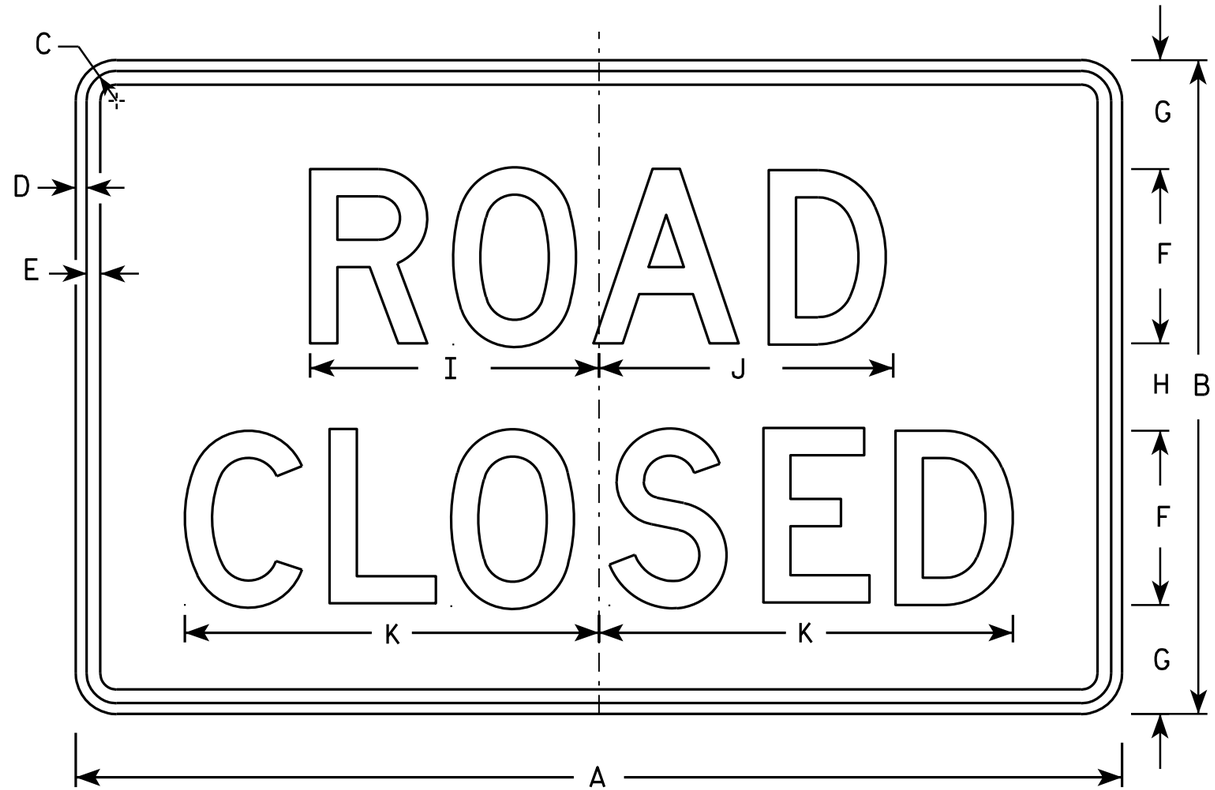

R11-2

NOTES

1. Sign is Type II - Type H Reflective - reference WIS DOT Standard Specification for HIGHWAY and STRUCTURE CONSTRUCTION latest edition.
2. Color:
   Background - White
   Message - Black
3. Message Series - D
4. Corners may be square or rounded when base material is plywood but borders shall be rounded as shown. When base material is metal, the corners and borders shall be rounded.
5. Modify the message as required.

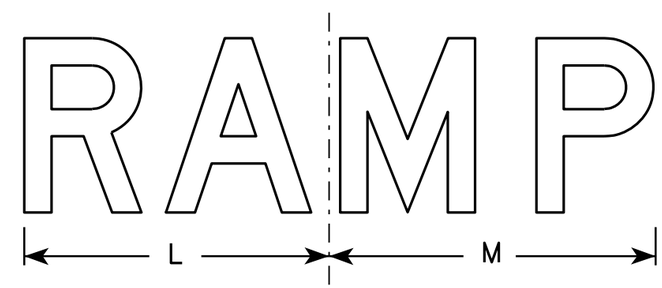

R11-2R

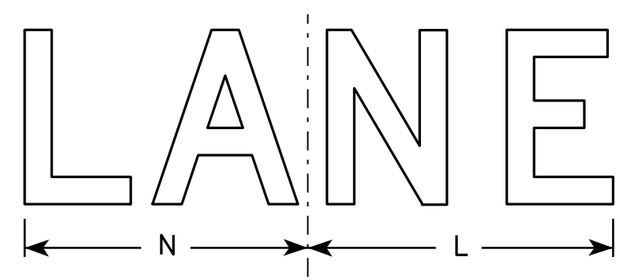

R11-2L

SIZE	A	B	C	D	E	F	G	H	I	J	K	L	M	N	O	P	Q	R	S	T	U	V	W	X	Y	Z	Area sq. ft.
1																											
2S	48	30	1 3/8	1/2	5/8	8	5	4	13 1/4	13 1/2	19	14	15	13													10.0
2M	48	30	1 3/8	1/2	5/8	8	5	4	13 1/4	13 1/2	19	14	15	13													10.0
3	48	30	1 3/8	1/2	5/8	8	5	4	13 1/4	13 1/2	19	14	15	13													10.0
4	48	30	1 3/8	1/2	5/8	8	5	4	13 1/4	13 1/2	19	14	15	13													10.0
5	48	30	1 3/8	1/2	5/8	8	5	4	13 1/4	13 1/2	19	14	15	13													10.0

STANDARD SIGN
R11-2

WISCONSIN DEPT OF TRANSPORTATION

APPROVED Matthew R Rauch
for State Traffic Engineer

DATE 4/1/11 PLATE NO. R11-2.10

PROJECT NO: | HWY: | COUNTY: | SHEET NO: 384 | E

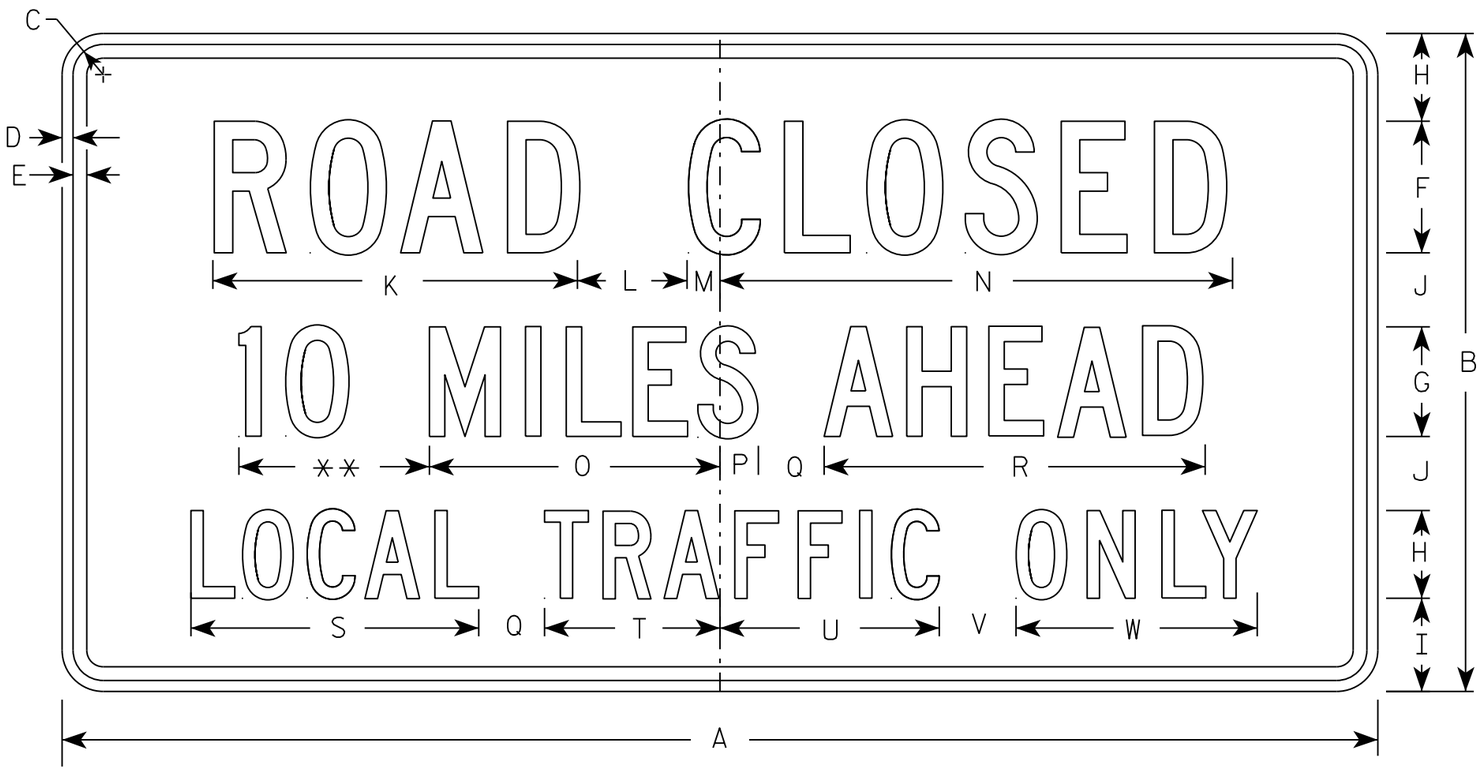

R11-3

** See Note 5

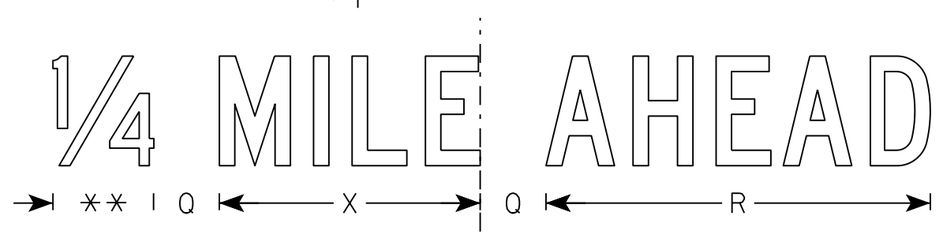

NOTES

1. Sign is Type II - Type H Reflective
2. Color:
   Background - White
   Message - Black
3. Message Series - C
4. Corners may be square or rounded when base material is plywood but borders shall be rounded as shown. When base material is metal, the corners and borders shall be rounded.
5. Substitute appropriate numerals to nearest quarter mile and optically adjust spacing to achieve proper balance.

SIZE	A	B	C	D	E	F	G	H	I	J	K	L	M	N	O	P	Q	R	S	T	U	V	W	X	Y	Z	Area sq. ft.
1	36	18	1 3/8	1/2	5/8	4	3	2 1/2	2	2	11 1/8	3	1 1/8	15 1/4	8	1 1/2	2	10 3/4	8 3/8	4 3/4	6 1/2	2	6 3/4	7 1/8			4.5
2S	60	30	1 3/8	1/2	5/8	6	5	4	4 1/4	3 3/8	16 5/8	5	1 1/2	23	13 1/4	1 3/4	3	17 3/8	13 1/8	8	10	3 1/2	11	11 7/8			12.5
2M	60	30	1 3/8	1/2	5/8	6	5	4	4 1/4	3 3/8	16 5/8	5	1 1/2	23	13 1/4	1 3/4	3	17 3/8	13 1/8	8	10	3 1/2	11	11 7/8			12.5
3																											
4																											
5																											

STANDARD SIGN
R11-3

WISCONSIN DEPT OF TRANSPORTATION

APPROVED Matthew R Rauch
for State Traffic Engineer

DATE 3/15/17 PLATE NO. R11-3.8

PROJECT NO: | HWY: | COUNTY: | SHEET NO: 385 | E

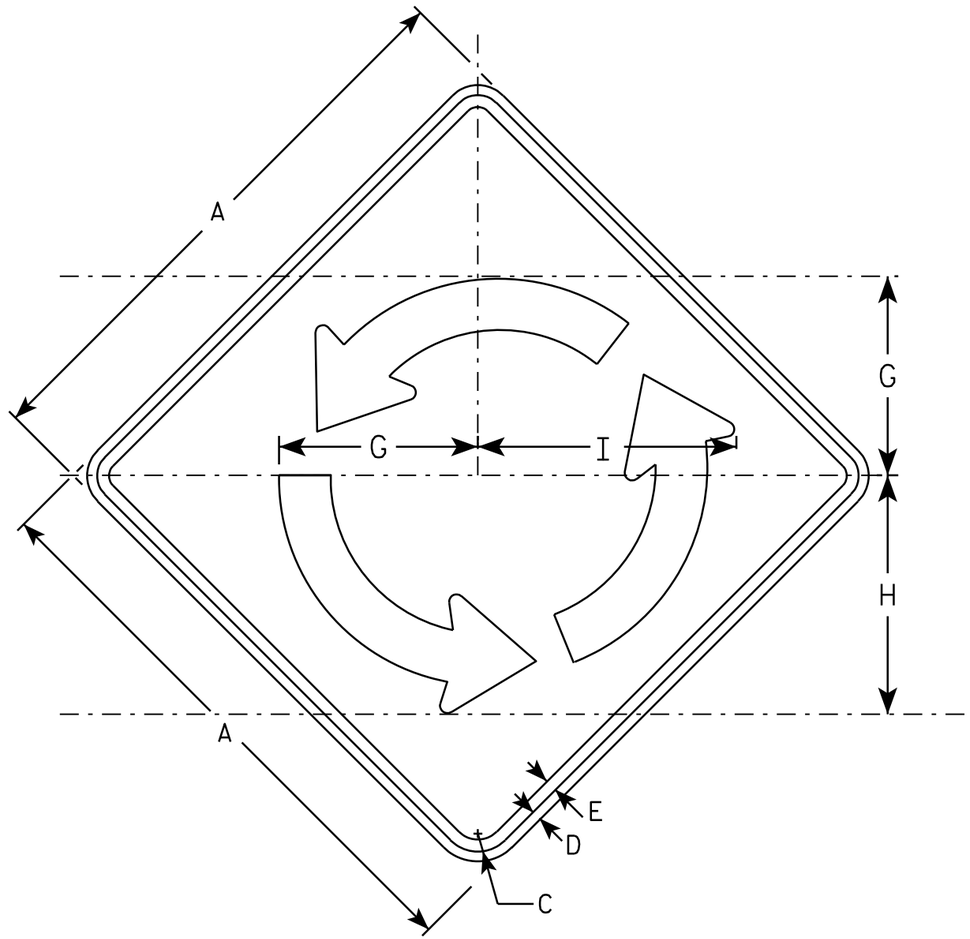

W2-6

NOTES

1. Sign is Type II - Type F Reflective - reference WIS DOT Standard Specification for HIGHWAY and STRUCTURE CONSTRUCTION latest edition.
2. Color:
   Background - YELLOW
   Message - BLACK
3. Message Series - B
4. Corners may be square or rounded when base material is plywood but borders shall be rounded as shown. When base material is metal, the corners and borders shall be rounded.

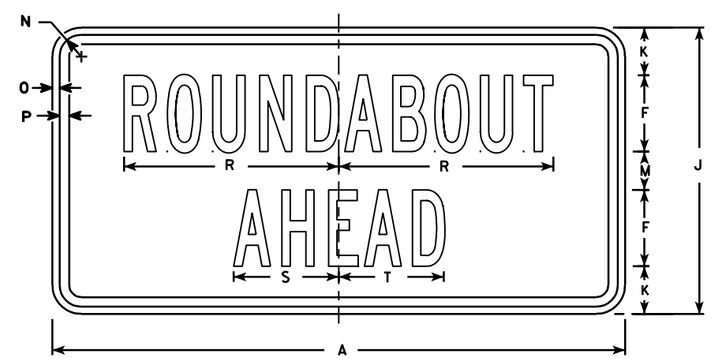

W2-6P

SIZE	A	B	C	D	E	F	G	H	I	J	K	L	M	N	O	P	Q	R	S	T	U	V	W	X	W2-6 Area sq. ft.	W2-6P Area sq. ft.
1																										
2S	30		1 3/8	1/2	5/8	4	10 3/8	12 1/2	13 1/2	15	2 1/2		2	1 1/8	3/8	1/2		11 1/4	5 1/2	5 1/2					6.25	3.12
2M	30		1 3/8	1/2	5/8	4	10 3/8	12 1/2	13 1/2	15	2 1/2		2	1 1/8	3/8	1/2		11 1/4	5 1/2	5 1/2					6.25	3.12
3	36		1 5/8	5/8	3/4	5	12 1/2	15	16 1/4	18	2 5/8		2 3/4	1 1/8	3/8	1/2		14	7	6 3/4					9.00	4.50
4	48		2 1/4	3/4	1	6	16 5/8	20	16 1/4	24	4 3/8		3 5/8	1 3/8	1/2	5/8		17	8 1/4	8 1/4					16.0	8.0
5																										

STANDARD SIGN
W2-6

WISCONSIN DEPT OF TRANSPORTATION

APPROVED Matthew R Rauch
for State Traffic Engineer

DATE 6/29/12 PLATE NO. W2-6.5

PROJECT NO:

SHEET NO: 386 E

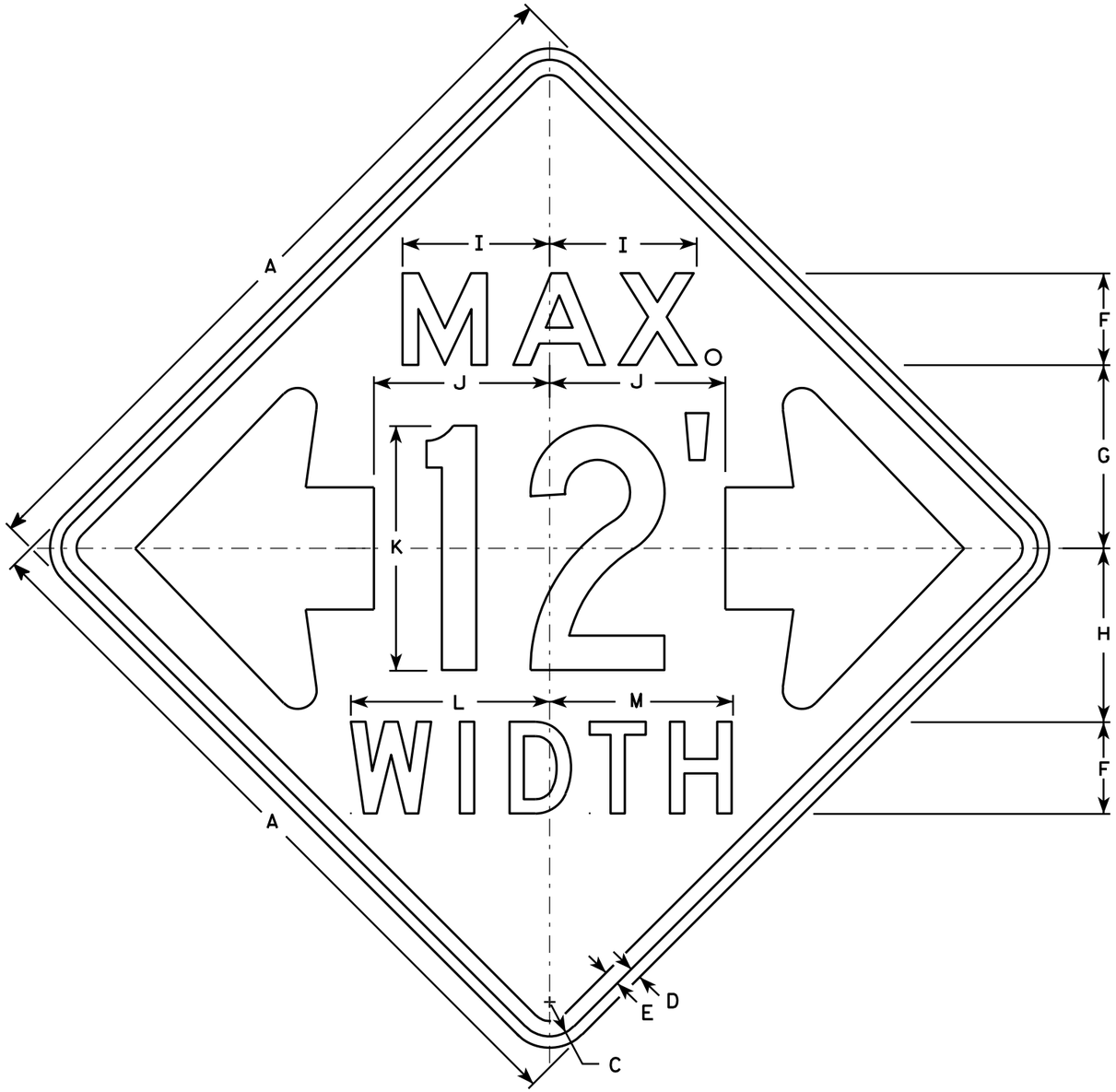

W12-52

NOTES

1. Sign is Type II - Type F Reflective - reference WIS DOT Standard Specification for HIGHWAY and STRUCTURE CONSTRUCTION latest edition.
2. Color:
   Background - Orange
   Message - Black
3. Message Series - See note 5
4. Corners may be square or rounded when base material is plywood but borders shall be rounded as shown. When base material is metal, the corners and borders shall be rounded.
5. The top line is series E, the numerals are series C, and the bottom line is series D.
6. Substitute appropriate numerals and adjust spacing as required.

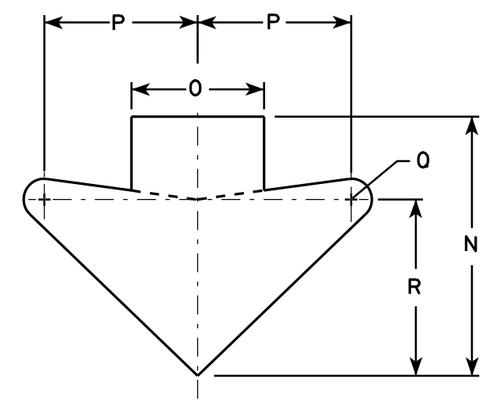

ARROW DETAIL

SIZE	A	B	C	D	E	F	G	H	I	J	K	L	M	N	O	P	Q	R	S	T	U	V	W	X	Y	Z	Area sq. ft.
1																											
2S	48		2 1/4	3/4	1	6	12	11 3/8	9 5/8	11 1/2	16	13	12	15 5/8	8	9 1/4	1 1/4	10 5/8									16.0
2M	48		2 1/4	3/4	1	6	12	11 3/8	9 5/8	11 1/2	16	13	12	15 5/8	8	9 1/4	1 1/4	10 5/8									16.0
3																											
4																											
5																											

STANDARD SIGN
W12-52

WISCONSIN DEPT OF TRANSPORTATION

APPROVED Matthew R Rauch
for State Traffic Engineer

DATE 3/16/11 PLATE NO. W12-52.7

PROJECT NO: | HWY: | COUNTY: | SHEET NO: 387 | E

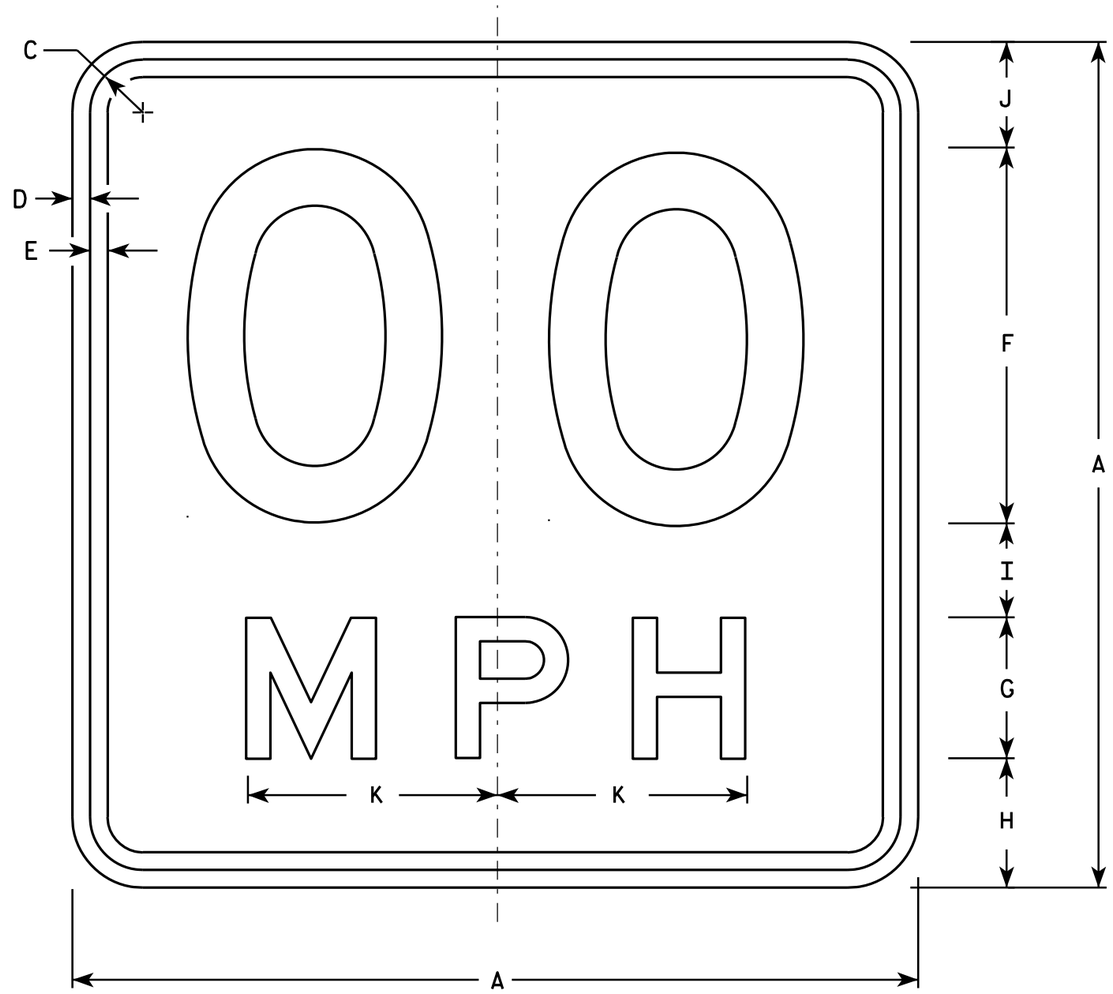

W13-1

* For 30" x 30" Warning Signs, use 18" x 18" W13-1 signs.
For 36" x 36" Warning Signs, use 24" x 24" W13-1 signs.

NOTES

1. Sign is Type II - Type F Reflective - reference WIS DOT Standard Specification for HIGHWAY and STRUCTURE CONSTRUCTION latest edition.
2. Color:
   Background - Yellow
   Message - Black
3. Message Series - See Note 6
4. Corners may be square or rounded when base material is plywood but borders shall be rounded as shown. When base material is metal, the corners and borders shall be rounded.
5. Substitute appropriate numerals and optically space about centerline to achieve proper balance.
6. Line 1 is Series D
   Line 2 is Series E

SIZE	A	B	C	D	E	F	G	H	I	J	K	L	M	N	O	P	Q	R	S	T	U	V	W	X	Y	Z	Area sq. ft.
1	18		1 1/8	3/8	3/8	8	3	2 3/4	2	2 1/4	5 3/8																2.25
* 2S	18		1 1/8	3/8	3/8	8	3	2 3/4	2	2 1/4	5 3/8																2.25
* 2M	18		1 1/8	3/8	3/8	8	3	2 3/4	2	2 1/4	5 3/8																2.25
3	24		1 1/8	3/8	1/2	10	4	4	2 3/4	3 1/4	6 5/8																4.00
4	36		1 5/8	5/8	3/4	16	6	5 1/2	4	4 1/2	10 5/8																9.00
5	36		1 5/8	5/8	3/4	16	6	5 1/2	4	4 1/2	10 5/8																9.00

STANDARD SIGN
W13-1

WISCONSIN DEPT OF TRANSPORTATION

APPROVED Matthew R Rauch
For State Traffic Engineer

DATE 5/31/12 PLATE NO. W13-1.16

PROJECT NO: | HWY: | COUNTY: | SHEET NO: 388 | E

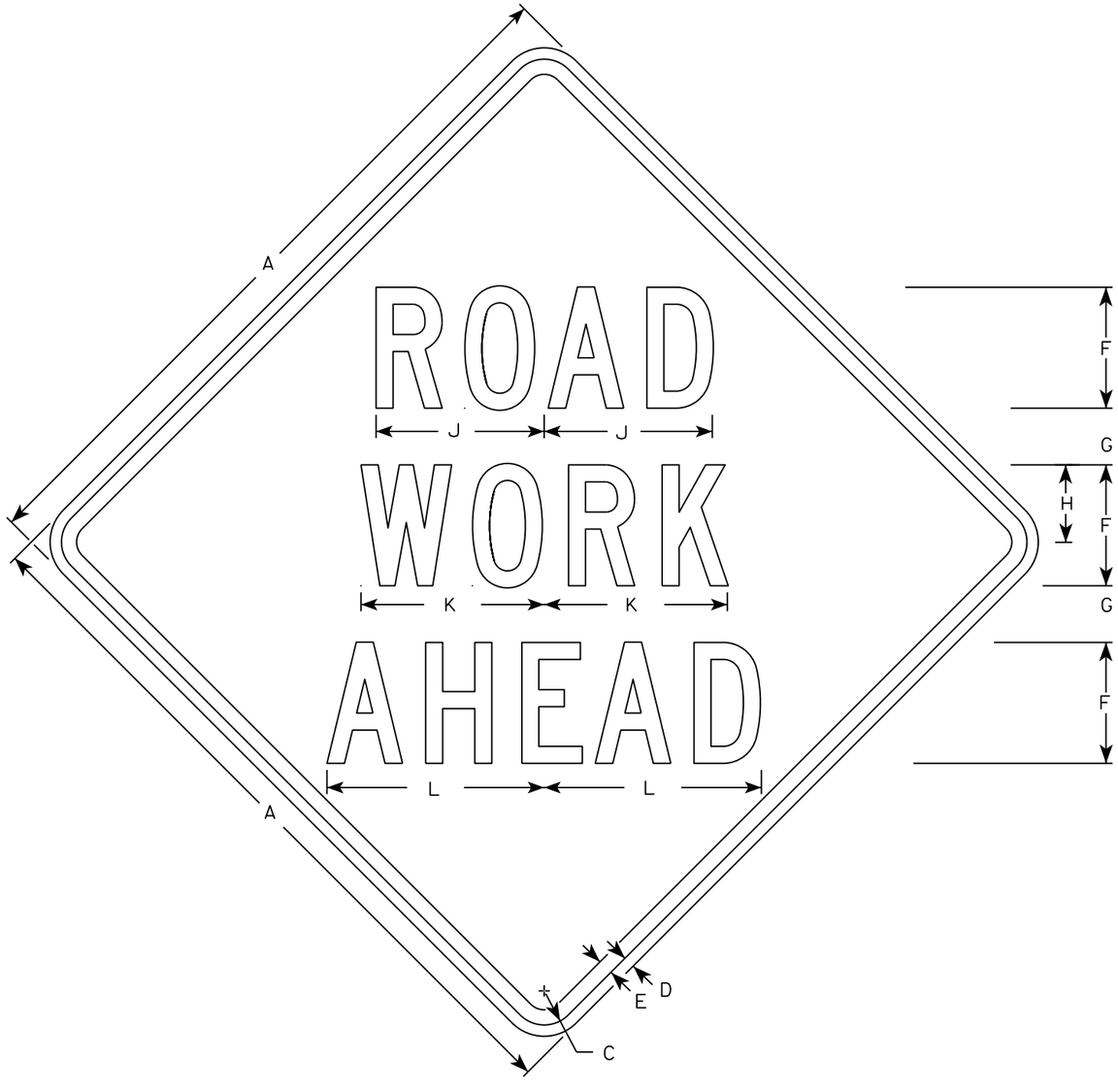

W20-1A

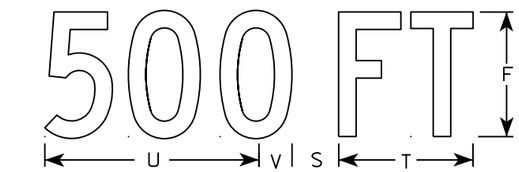

W20-1D

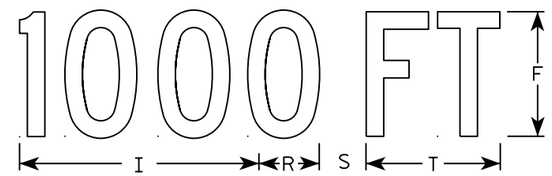

W20-1C

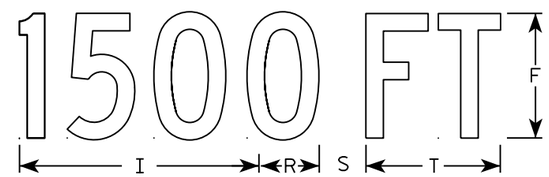

W20-1B

W20-1G

W20-1F

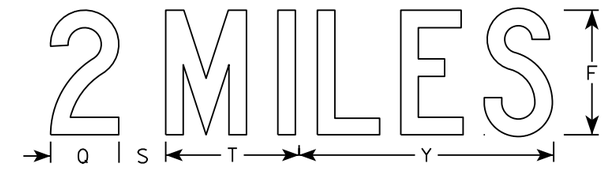

W20-1E

NOTES

1. Sign is Type II - Type F Reflective
2. Color:
   Background - Orange
   Message - Black
3. Message Series - C
4. Corners may be square or rounded when base material is plywood but borders shall be rounded as shown. When base material is metal, the corners and borders shall be rounded.

SIZE	A	B	C	D	E	F	G	H	I	J	K	L	M	N	O	P	Q	R	S	T	U	V	W	X	Y	Z	Area sq. ft.
1	36		1 3/8	1/2	5/8	5	2 5/8	3 1/4	10 1/8	7	7 5/8	8 7/8	1 1/8	4 1/2	3 1/2	9		2 1/2	2 1/4	5 5/8	9	1 3/8	8	1 3/4	10 3/4	6	9.0
2S	48		2 1/4	3/4	1	8	3 3/4	5 1/8	15 3/8	11 1/8	12 1/8	14 3/8	1 5/8	6 7/8	5 3/8	13 7/8	4 3/8	3 7/8	3	8 5/8	13 3/4	2 1/8	11 7/8	2 3/4	16 3/8	9	16.0
2M	48		2 1/4	3/4	1	8	3 3/4	5 1/8	15 3/8	11 1/8	12 1/8	14 3/8	1 5/8	6 7/8	5 3/8	13 7/8	4 3/8	3 7/8	3	8 5/8	13 3/4	2 1/8	11 7/8	2 3/4	16 3/8	9	16.0
3	48		2 1/4	3/4	1	8	3 3/4	5 1/8	15 3/8	11 1/8	12 1/8	14 3/8	1 5/8	6 7/8	5 3/8	13 7/8	4 3/8	3 7/8	3	8 5/8	13 3/4	2 1/8	11 7/8	2 3/4	16 3/8	9	16.0
4	48		2 1/4	3/4	1	8	3 3/4	5 1/8	15 3/8	11 1/8	12 1/8	14 3/8	1 5/8	6 7/8	5 3/8	13 7/8	4 3/8	3 7/8	3	8 5/8	13 3/4	2 1/8	11 7/8	2 3/4	16 3/8	9	16.0
5	48		2 1/4	3/4	1	8	3 3/4	5 1/8	15 3/8	11 1/8	12 1/8	14 3/8	1 5/8	6 7/8	5 3/8	13 7/8	4 3/8	3 7/8	3	8 5/8	13 3/4	2 1/8	11 7/8	2 3/4	16 3/8	9	16.0

STANDARD SIGN
W20-1A, B, C, D, F & G

WISCONSIN DEPT OF TRANSPORTATION

APPROVED Matthew R Rauch
for State Traffic Engineer

DATE 5/07/15 PLATE NO. W20-1.10

PROJECT NO:

SHEET NO: E

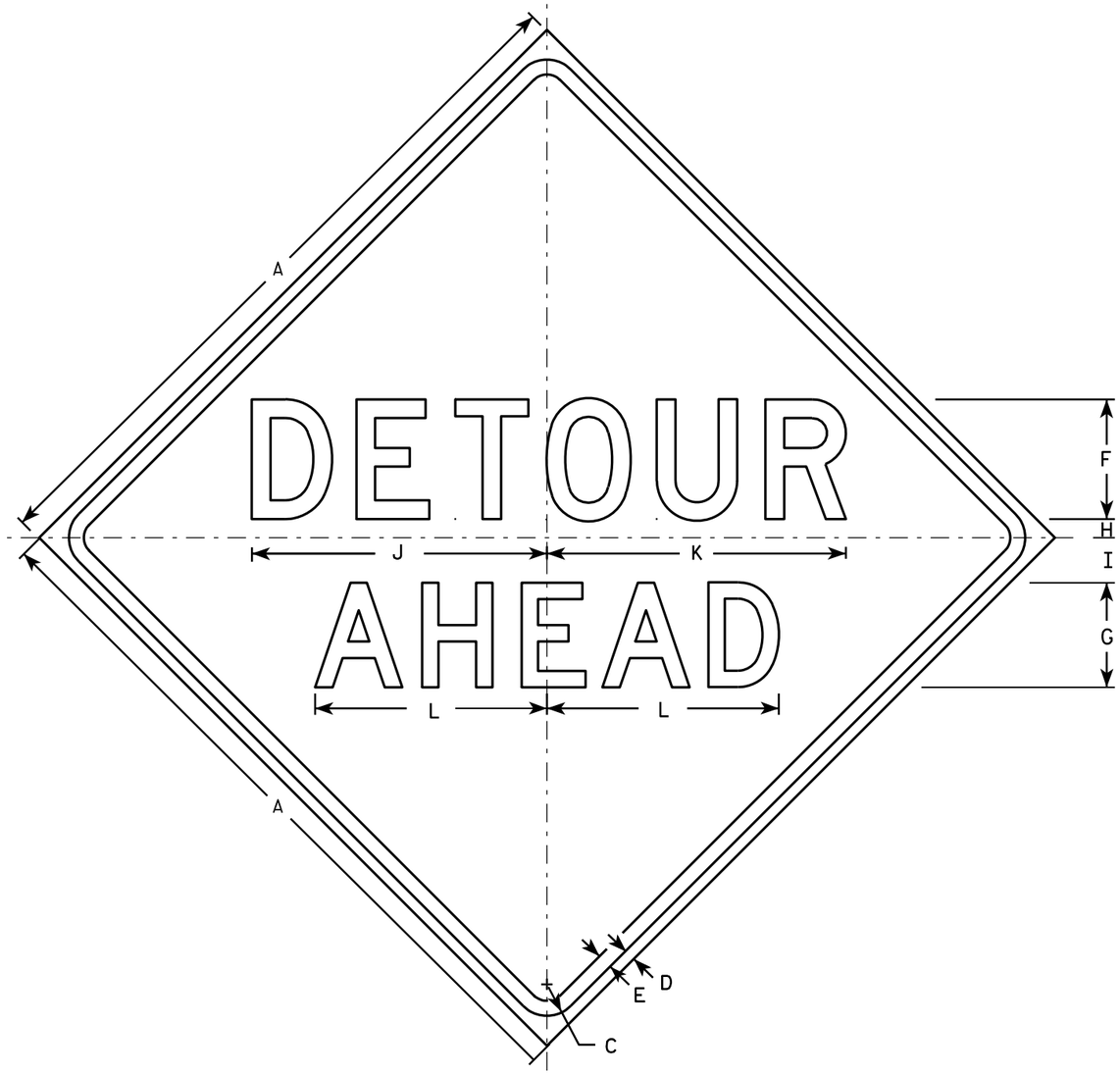

W20-2A

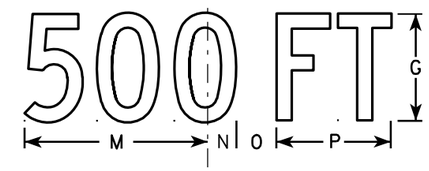

W20-2D

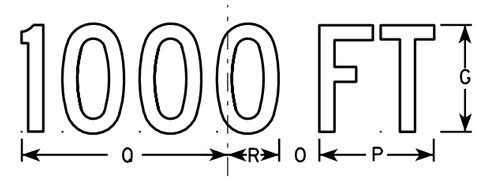

W20-2C

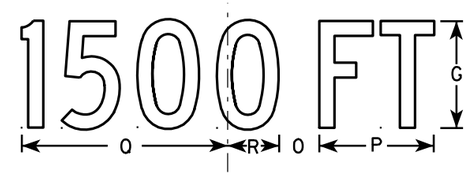

W20-2B

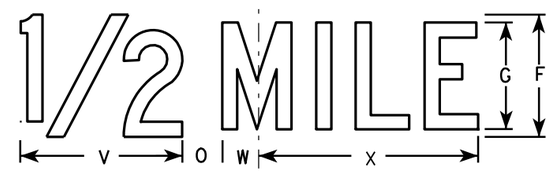

W20-2G

W20-2F

NOTES

1. Sign is Type II - Type F Reflective - reference WIS DOT Standard Specification for HIGHWAY and STRUCTURE CONSTRUCTION latest edition.
2. Color:
   Background - Orange
   Message - Black
3. Message Series - See note 5
4. Corners may be square or rounded when base material is plywood but borders shall be rounded as shown. When base material is metal, the corners and borders shall be rounded.
5. Line 1 is Series D.
   Line 2 is Series D for AHEAD and Series C for all other distances.

SIZE	A	B	C	D	E	F	G	H	I	J	K	L	M	N	O	P	Q	R	S	T	U	V	W	X	Y	Z	Area sq. ft.
1	36		1 5/8	5/8	3/4	6	5	1	2 1/4	14 3/4	15	11 5/8	9	1 3/8	1 7/8	5 5/8	10 1/8	2 1/2	1 1/8	4 1/2	3 1/2	8	1 3/4	10 3/4			9.0
2S	48		2 1/4	3/4	1	8	7	1 1/4	3	19 3/4	20	15 1/2	12	1 7/8	2 5/8	7 1/2	13 1/2	3 3/8	1 1/2	6	4 5/8	10 5/8	2 3/8	14 3/8			16.0
2M	48		2 1/4	3/4	1	8	7	1 1/4	3	19 3/4	20	15 1/2	12	1 7/8	2 5/8	7 1/2	13 1/2	3 3/8	1 1/2	6	4 5/8	10 5/8	2 3/8	14 3/8			16.0
3	48		2 1/4	3/4	1	8	7	1 1/4	3	19 3/4	20	15 1/2	12	1 7/8	2 5/8	7 1/2	13 1/2	3 3/8	1 1/2	6	4 5/8	10 5/8	2 3/8	14 3/8			16.0
4	48		2 1/4	3/4	1	8	7	1 1/4	3	19 3/4	20	15 1/2	12	1 7/8	2 5/8	7 1/2	13 1/2	3 3/8	1 1/2	6	4 5/8	10 5/8	2 3/8	14 3/8			16.0
5	48		2 1/4	3/4	1	8	7	1 1/4	3	19 3/4	20	15 1/2	12	1 7/8	2 5/8	7 1/2	13 1/2	3 3/8	1 1/2	6	4 5/8	10 5/8	2 3/8	14 3/8			16.0

STANDARD SIGN
W20-2A,B,C,D,F & G

WISCONSIN DEPT OF TRANSPORTATION

APPROVED Matthew R Rauch
for State Traffic Engineer
DATE 3/18/11 PLATE NO. W20-2.6

7

7

PROJECT NO: | HWY: | COUNTY: | SHEET NO: 390 | E

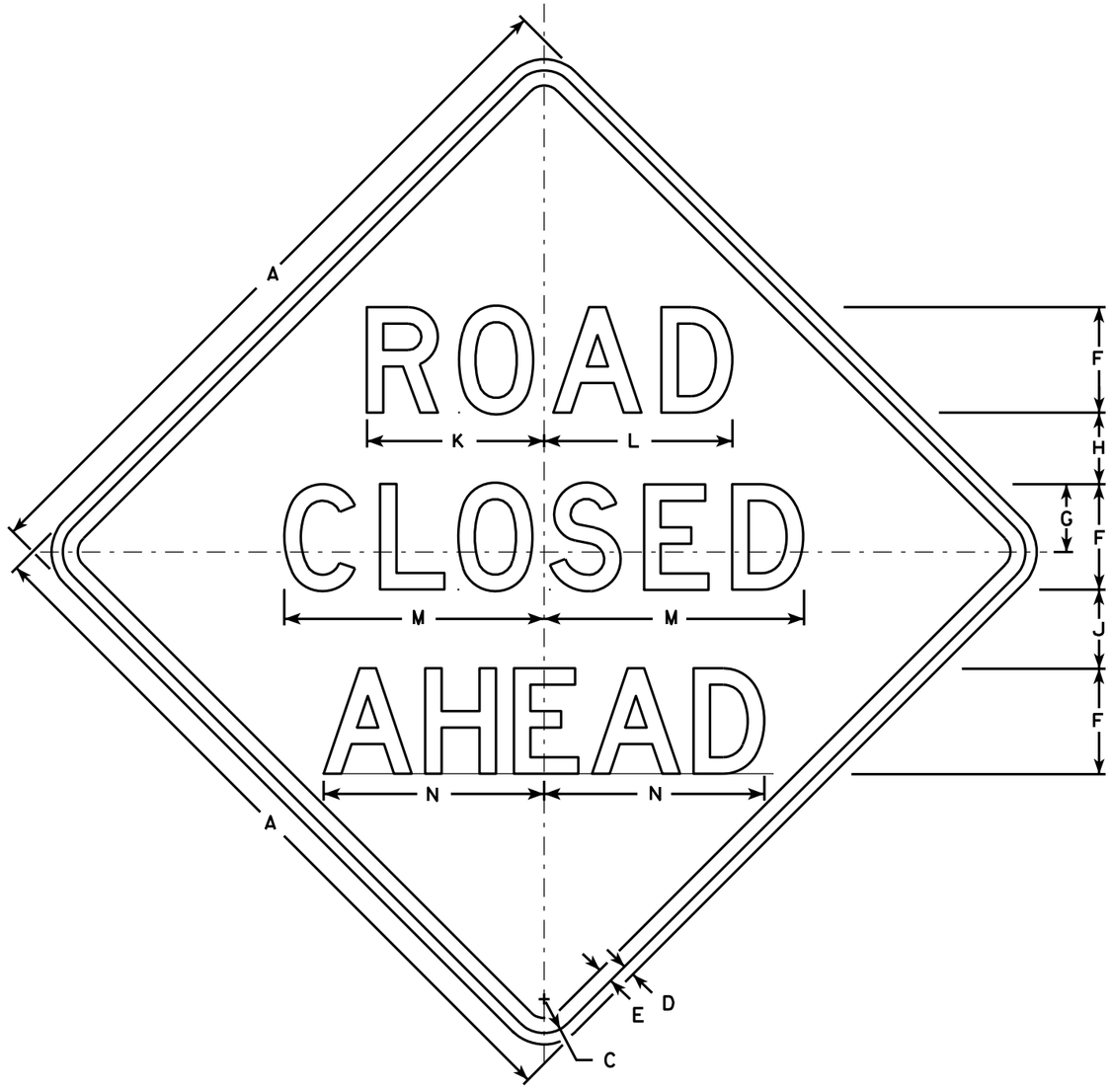

W20-3A

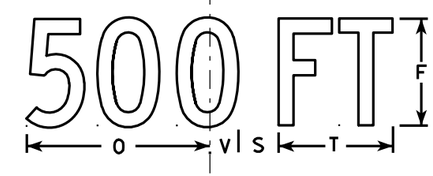

W20-3D

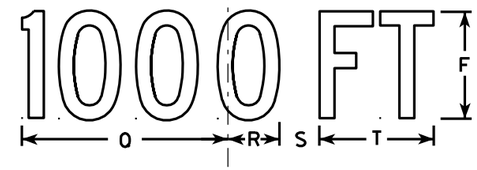

W20-3C

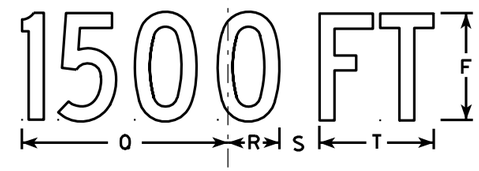

W20-3B

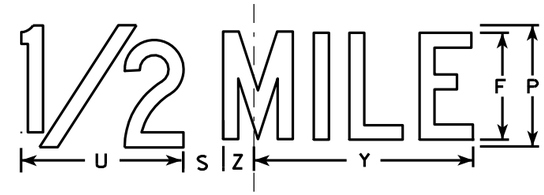

W20-3G

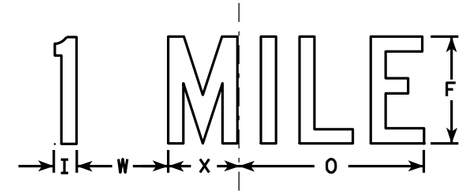

W20-3F

NOTES

1. Sign is Type II - Type F Reflective - reference WIS DOT Standard Specification for HIGHWAY and STRUCTURE CONSTRUCTION latest edition.
2. Color:
   Background - Orange
   Message - Black
3. Message Series - see note 5
4. Corners may be square or rounded when base material is plywood but borders shall be rounded as shown. When base material is metal, the corners and borders shall be rounded.
5. Lines 1 and 2 are Series D.
   Line 3 is Series D for AHEAD and Series C for all other distances.

SIZE	A	B	C	D	E	F	G	H	I	J	K	L	M	N	O	P	Q	R	S	T	U	V	W	X	Y	Z	Area sq. ft.
1	36		1 5/8	5/8	3/4	5	3 3/8	3 1/2	1 1/8	4	8 3/8	8 7/8	12 1/2	11	9	6	10 1/8	2 1/2	1 7/8	5 5/8	8	1 3/8	4 1/2	3 1/2	10 3/4	1 3/4	9.0
2S	48		2 1/4	3/4	1	7	4 1/2	4 3/4	1 1/2	5 1/4	11 3/4	12 1/2	17 1/4	14 5/8	12	8	13 1/2	3 3/8	2 5/8	7 1/2	10 5/8	1 7/8	6	4 5/8	14 3/8	2 3/8	16.0
2M	48		2 1/4	3/4	1	7	4 1/2	4 3/4	1 1/2	5 1/4	11 3/4	12 1/2	17 1/4	14 5/8	12	8	13 1/2	3 3/8	2 5/8	7 1/2	10 5/8	1 7/8	6	4 5/8	14 3/8	2 3/8	16.0
3	48		2 1/4	3/4	1	7	4 1/2	4 3/4	1 1/2	5 1/4	11 3/4	12 1/2	17 1/4	14 5/8	12	8	13 1/2	3 3/8	2 5/8	7 1/2	10 5/8	1 7/8	6	4 5/8	14 3/8	2 3/8	16.0
4	48		2 1/4	3/4	1	7	4 1/2	4 3/4	1 1/2	5 1/4	11 3/4	12 1/2	17 1/4	14 5/8	12	8	13 1/2	3 3/8	2 5/8	7 1/2	10 5/8	1 7/8	6	4 5/8	14 3/8	2 3/8	16.0
5	48		2 1/4	3/4	1	7	4 1/2	4 3/4	1 1/2	5 1/4	11 3/4	12 1/2	17 1/4	14 5/8	12	8	13 1/2	3 3/8	2 5/8	7 1/2	10 5/8	1 7/8	6	4 5/8	14 3/8	2 3/8	16.0

STANDARD SIGN
W20-3A, B, C, D, F & G

WISCONSIN DEPT OF TRANSPORTATION

APPROVED Matthew R Rauch
for State Traffic Engineer
DATE 3/18/11 PLATE NO. W20-3.7

PROJECT NO:	HWY:	COUNTY:		SHEET NO: 391	E

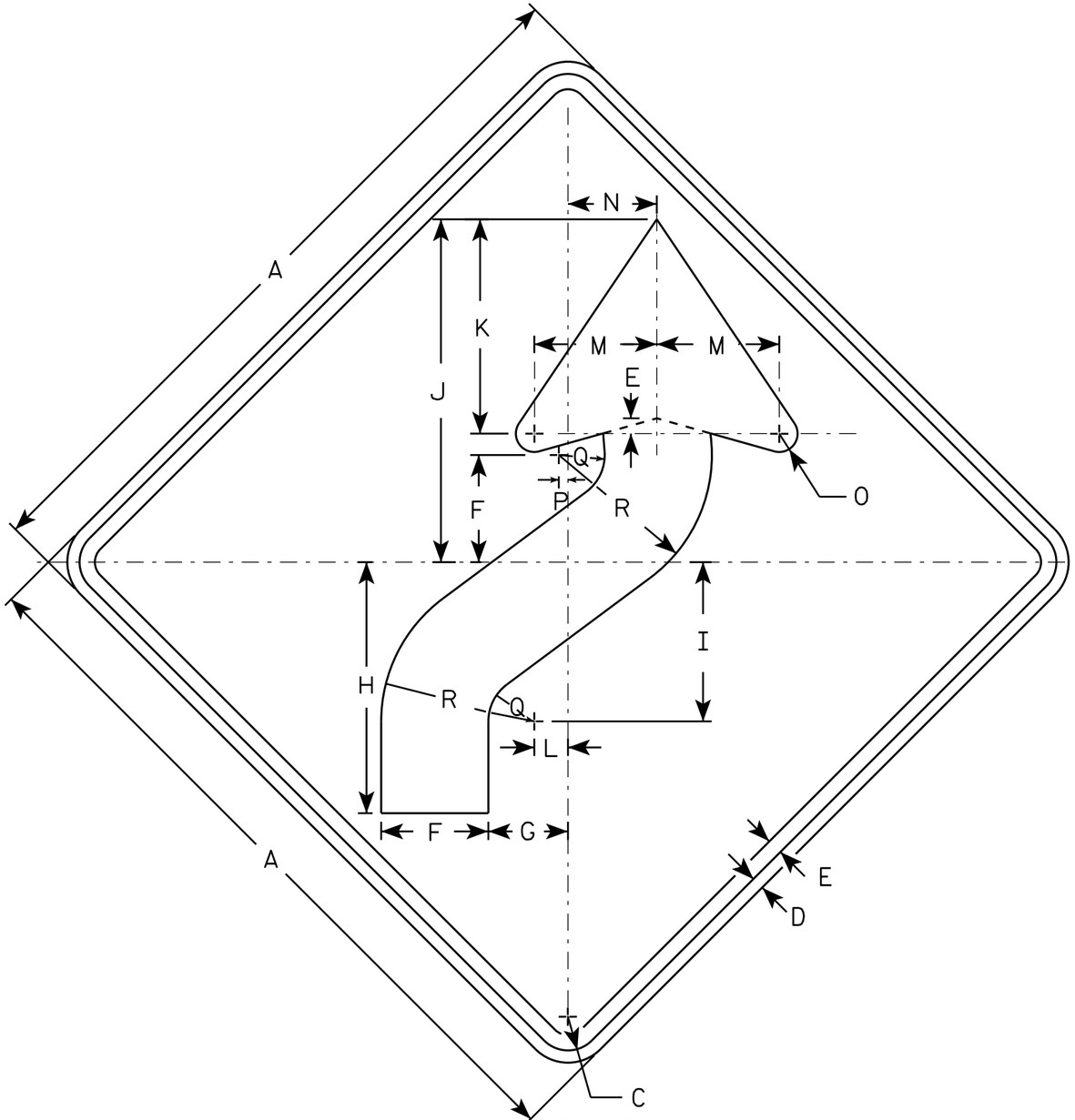

W01-4R

NOTES

1. Sign is Type II - Type F Reflective - reference WIS DOT Standard Specification for HIGHWAY and STRUCTURE CONSTRUCTION latest edition.
2. Color:
   Background - Orange
   Message - Black
3. Corners may be square or rounded when base material is plywood but borders shall be rounded as shown. When base material is metal, the corners and borders shall be rounded.
4. W01-4L is the same as W01-4R except the arrow is reversed along the vertical centerline.

SIZE	A	B	C	D	E	F	G	H	I	J	K	L	M	N	O	P	Q	R	S	T	U	V	W	X	Y	Z	Area sq. ft.
1	36		1 5/8	5/8	3/4	5 1/4	4	12 3/8	7 7/8	16 7/8	10 1/2	1 5/8	6	4 1/2	1	1/2	2 1/4	7 1/2									9.0
2S	48		2 1/4	3/4	1	7	5 1/4	16 1/2	10 1/2	22 1/2	14	2 1/4	8	6	1 1/4	5/8	3	10									16.0
2M	48		2 1/4	3/4	1	7	5 1/4	16 1/2	10 1/2	22 1/2	14	2 1/4	8	6	1 1/4	5/8	3	10									16.0
3	48		2 1/4	3/4	1	7	5 1/4	16 1/2	10 1/2	22 1/2	14	2 1/4	8	6	1 1/4	5/8	3	10									16.0
4	48		2 1/4	3/4	1	7	5 1/4	16 1/2	10 1/2	22 1/2	14	2 1/4	8	6	1 1/4	5/8	3	10									16.0
5	48		2 1/4	3/4	1	7	5 1/4	16 1/2	10 1/2	22 1/2	14	2 1/4	8	6	1 1/4	5/8	3	10									16.0

STANDARD SIGN
W01-4

WISCONSIN DEPT OF TRANSPORTATION

APPROVED Matthew R Rauch
for State Traffic Engineer

DATE 11/18/13 PLATE NO W01-4.1

PROJECT NO:	HWY:	COUNTY:		SHEET NO:	E

NOTES

1. Sign is Type II - Type F Reflective - reference WIS DOT Standard Specification for HIGHWAY and STRUCTURE CONSTRUCTION latest edition.
2. Color:
   Background - Orange
   Message - Black
3. Corners may be square or rounded when base material is plywood but borders shall be rounded as shown. When base material is metal, the corners and borders shall be rounded.

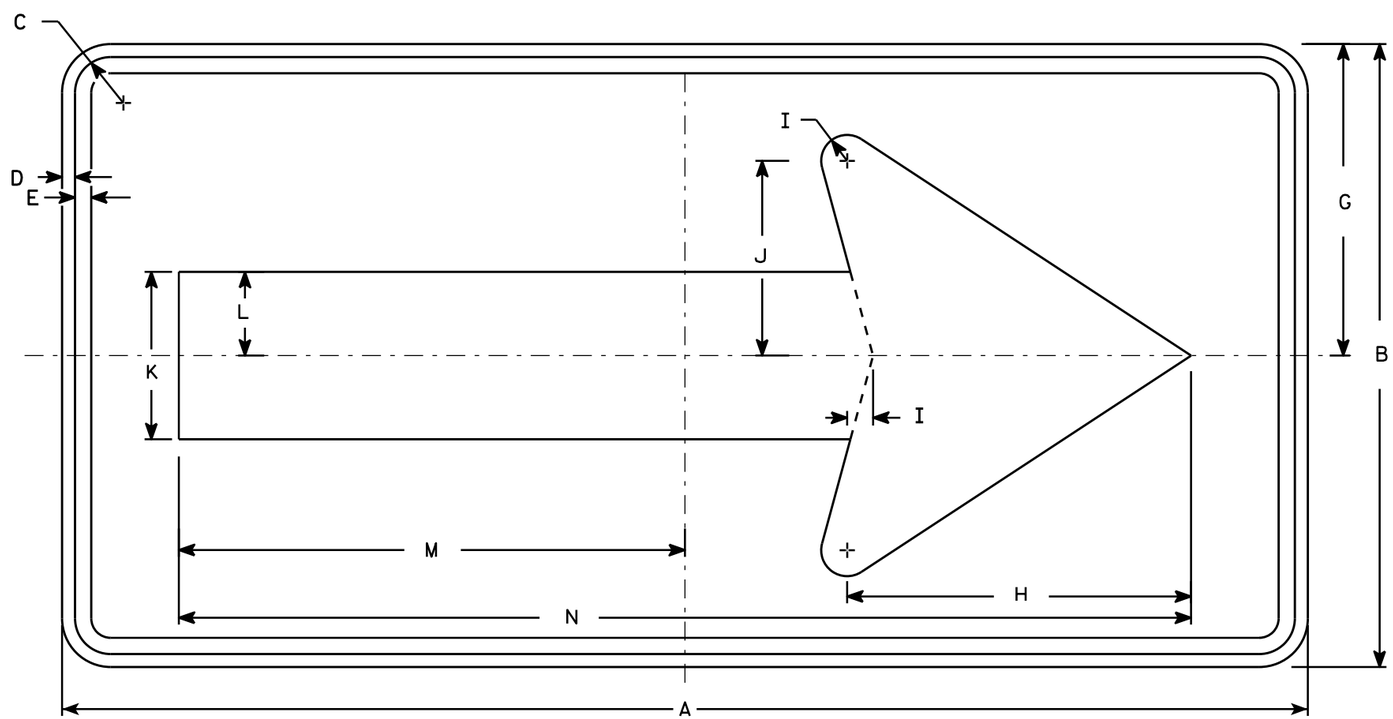

W01-6

SIZE	A	B	C	D	E	F	G	H	I	J	K	L	M	N	O	P	Q	R	S	T	U	V	W	X	Y	Z	Area sq. ft.
1																											
2S	48	24	1 3/8	1/2	5/8		12	13 1/4	1	7 1/2	6 1/2	3 1/4	19 1/2	39													8.0
2M	48	24	1 3/8	1/2	5/8		12	13 1/4	1	7 1/2	6 1/2	3 1/4	19 1/2	39													8.0
3	60	30	1 3/8	1/2	5/8		15	16 1/4	1 1/4	9 1/4	8	4	24 3/8	48 3/4													12.5
4	60	30	1 3/8	1/2	5/8		15	16 1/4	1 1/4	9 1/4	8	4	24 3/8	48 3/4													12.5
5	60	30	1 3/8	1/2	5/8		15	16 1/4	1 1/4	9 1/4	8	4	24 3/8	48 3/4													12.5

STANDARD SIGN
W01-6

WISCONSIN DEPT OF TRANSPORTATION

APPROVED Matthew R Rauch
for State Traffic Engineer

DATE 11/18/13 PLATE NO. W01-6.1

PROJECT NO: | HWY: | COUNTY: | SHEET NO: | E

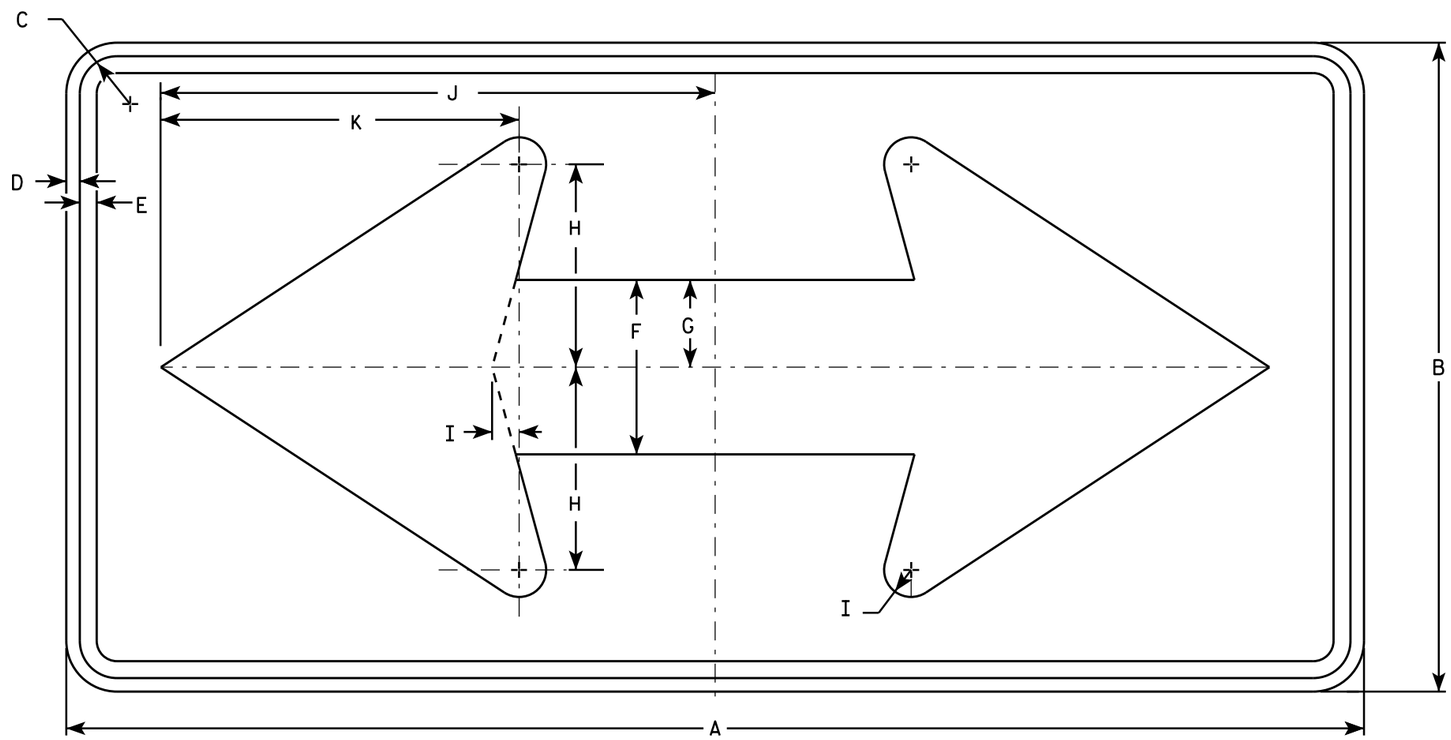

W01-7

NOTES

1. Sign is Type II - Type F Reflective - reference WIS DOT Standard Specification for HIGHWAY and STRUCTURE CONSTRUCTION latest edition.
2. Color:
   Background - Orange
   Message - Black
3. Corners may be square or rounded when base material is plywood but borders shall be rounded as shown. When base material is metal, the corners and borders shall be rounded.

SIZE	A	B	C	D	E	F	G	H	I	J	K	L	M	N	O	P	Q	R	S	T	U	V	W	X	Y	Z	Area sq. ft.
1																											
2S	48	24	1 3/8	1/2	5/8	6 1/2	3 1/4	7 1/2	1	20 1/2	13 1/4																8.0
2M	48	24	1 3/8	1/2	5/8	6 1/2	3 1/4	7 1/2	1	20 1/2	13 1/4																8.0
3	60	30	1 3/8	1/2	5/8	8	4	9 1/4	1 1/4	25 3/8	16 1/4																12.5
4	60	30	1 3/8	1/2	5/8	8	4	9 1/4	1 1/4	25 3/8	16 1/4																12.5
5	60	30	1 3/8	1/2	5/8	8	4	9 1/4	1 1/4	25 3/8	16 1/4																12.5

STANDARD SIGN
W01-7

WISCONSIN DEPT OF TRANSPORTATION

APPROVED Matthew R Rauch
For State Traffic Engineer

DATE 11/18/13 PLATE 1394 W01-7.1

PROJECT NO: | HWY: | COUNTY: | SHEET NO: | E

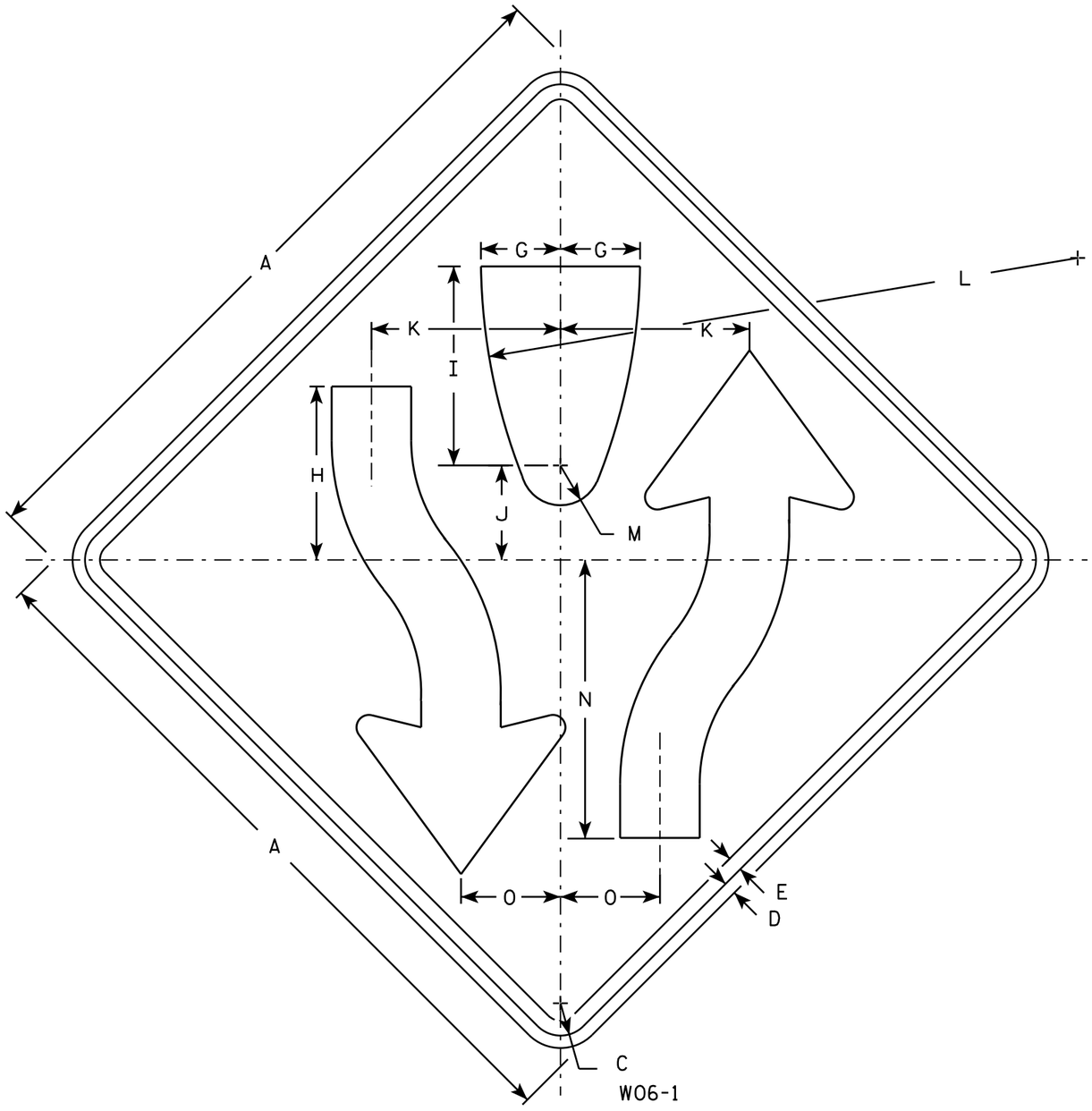

W06-1

NOTES

1. Sign is Type II - Type F Reflective - reference WIS DOT Standard Specification for HIGHWAY and STRUCTURE CONSTRUCTION latest edition.
2. Color:
   Background - Orange
   Message - Black
3. Corners may be square or rounded when base material is plywood but borders shall be rounded as shown. When base material is metal, the corners and borders shall be rounded.
4. W06-2 same as W06-1 but is rotated 180° when mounted.

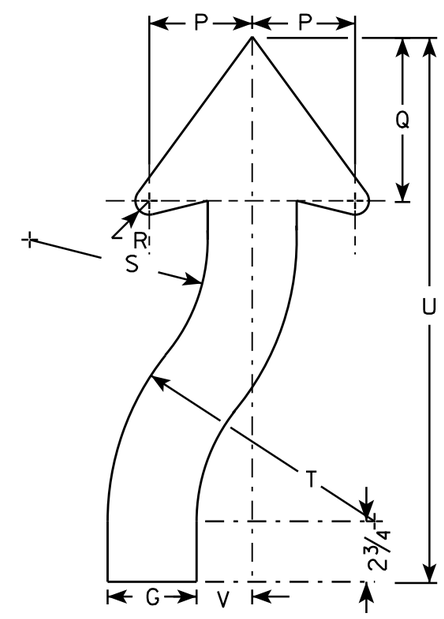

ARROW DETAIL

SIZE	A	B	C	D	E	F	G	H	I	J	K	L	M	N	O	P	Q	R	S	T	U	V	W	X	Y	Z	Area sq. ft.
1	36		1 5/8	5/8	3/4		4	8 3/4	10	4 3/4	9 1/2	30	2	14	5	4 5/8	7 3/8	7/8	8	12	24 1/2	2 1/2					9.0
2S	48		2 1/4	3/4	1		5 3/8	11 5/8	13 3/8	6 3/8	12 5/8	40	2 5/8	18 5/8	6 5/8	6 1/4	9 7/8	1 1/4	10 5/8	16	32 5/8	3 3/8					16.0
2M	48		2 1/4	3/4	1		5 3/8	11 5/8	13 3/8	6 3/8	12 5/8	40	2 5/8	18 5/8	6 5/8	6 1/4	9 7/8	1 1/4	10 5/8	16	32 5/8	3 3/8					16.0
3	48		2 1/4	3/4	1		5 3/8	11 5/8	13 3/8	6 3/8	12 5/8	40	2 5/8	18 5/8	6 5/8	6 1/4	9 7/8	1 1/4	10 5/8	16	32 5/8	3 3/8					16.0
4	48		2 1/4	3/4	1		5 3/8	11 5/8	13 3/8	6 3/8	12 5/8	40	2 5/8	18 5/8	6 5/8	6 1/4	9 7/8	1 1/4	10 5/8	16	32 5/8	3 3/8					16.0
5	48		2 1/4	3/4	1		5 3/8	11 5/8	13 3/8	6 3/8	12 5/8	40	2 5/8	18 5/8	6 5/8	6 1/4	9 7/8	1 1/4	10 5/8	16	32 5/8	3 3/8					16.0

STANDARD SIGN
W06-1 & W06-2

WISCONSIN DEPT OF TRANSPORTATION

APPROVED Matthew R Rauch
for State Traffic Engineer

DATE 11/20/13 PLATE NO W06-1.1

PROJECT NO:	HWY:	COUNTY:		SHEET NO:	E

EARTHWORK SUMMARY

CATEGORY	LOCATION	205.0100 EXCAVATION COMMON CUT	EBS EXCAVATION 5% OF CUT	UNUSABLE MATERIAL	AVAILABLE MATERIAL	REDUCED EBS IN FILL FACTOR 0.8	REDUCED EBS BACKFILL FACTOR 1.3	UNEXPANDED FILL	EXPANDED FILL FACTOR 1.25	MASS ORDINATE +/-	WASTE
		CU YD	CU YD	CU YD	CU YD	CU YD	CU YD	CU YD	CU YD		CU YD
	PROJECT 5144-01-75 STAGE 1A										
0010	ROBERTS ROAD	2778	140	0	2778			0	0	2778	2778
0010	W AVERILL STREET	514	26	0	514			1	1	513	513
0010	RIVER ROAD	124	6	0	124			0	0	124	124
	SUBTOTAL 5144-01-75 STAGE 1A	3416	172	0	3416	0	0	1	1	3415	3415
	PROJECT 5144-01-76 STAGE 1A										
0010	ROBERTS ROAD	673	34	0	673			0	0	673	673
0010	HOESCHLER DRIVE	159	8	0	159			0	0	159	159
	SUBTOTAL 5144-01-76 STAGE 1A	832	42	0	832	0	0	0	0	832	832
	TOTAL STAGE 1A	4248	214	0	4248	0	0	1	1	4247	4247
	STAGE 1B										
0010	STH 27 & STH 16 INTERSECTION	400	0	200	200			0	0	200	200
	TOTAL STAGE 1B	400	0	200	200	0	0	0	0	200	200
	STAGE 1C										
0010	STH 27 302+95 - 305+50	716	36	0	716			318	398	318	318
0010	STH 27 305+50 - 331+25	2225	0	0	2225			63	79	2146	2146
	TOTAL STAGE 1C	2941	36	0	2941	0	0	381	477	2464	2464
	STAGE 1D										
0010	STH 27	950	0	105	845			0	0	845	845
	TOTAL STAGE 1D	950	0	105	845	0	0	0	0	845	845
	STAGE 2/2B										
0010	ROUNDABOUT	2162	108	0	2162			128	160	2002	2002
0010	STH 27 STAGE 2 310+50 - 336+60	4576	229	750	3826			103	129	3697	3697
0010	STH 27 STAGE 2B 310+50 - 318+40	443	22	0	443			0	0	443	443
0010	STH 16	541	27	180	361			2	3	358	358
0010	W AVERILL STREET 22+52"AV" TO 23+05"AV"	266	13	0	266			0	0	266	266
0010	MAPLE AVENUE 9+50"MA" TO 10+90"MA"	394	20	0	394			1	1	393	393
	TOTAL STAGE 2/2B	8382	419	930	7452	0	0	234	293	7159	7159
	STAGE 3										
0010	ROUNDABOUT	2606	130	0	2606			299	374	2232	2232
0010	STH 27 310+50 - 336+60	4173	209	690	3483			167	209	3274	3274
0010	STH 16	820	41	350	470			1	1	469	469
0010	EBS STH 16 105+00"WB" TO 106+00"WB"	0	141	0	0			0	0	0	0
0010	W AVERILL STREET 21+61"AV" TO 22+52"AV"	331	17	0	331			0	0	331	331
0010	W AVERILL STREET 23+50"AV" TO 24+74"AV"	483	24	0	483			4	5	478	478
0010	MAPLE AVENUE 11+36"MA" TO 12+60"MA"	257	13	0	257			1	1	256	256
	TOTAL STAGE 3	8670	575	1040	7630	0	0	472	590	7040	7040
	STAGE 4										
0010	ROUNDABOUT	163	8	0	163			0	0	163	163
	TOTAL STAGE 4	163	8	0	163	0	0	0	0	163	163
	STAGE 5										
0010	STAGE 5A - STH 27 & STH 16 INTERSECTION	327	16	160	167			0	0	167	167
0010	STAGE 5B- STH 27 & STH 16 INTERSECTION	434	22	280	154			0	0	154	154
	TOTAL STAGE 5A	761	38	440	321	0	0	0	0	321	321
	STAGE 6										
0010	STH 27	688	34	420	268			0	0	268	268
	TOTAL STAGE 6	688	34	420	268	0	0	0	0	268	268
	CONSTRUCTION PROJECT TOTALS	27203	1324	3135	24068	0	0	1088	1361	22707	22707
	PROJECT 5144-01-75 TOTAL 0010	27653									
	PROJECT 5144-01-76 TOTAL 0010	874									

9

9

PROJECT NO: 5144-01-75 & 5144-01-76 | **HWY: STH 27** | **COUNTY: MONROE** | **EARTHWORK SUMMARY** | **SHEET NO:** 396 | **E**

FILE NAME : _____ PLOT DATE : _____ PLOT BY : _____ PLOT NAME : _____ ORG DATE : _____ ORIGINATOR : DIST _ PLOT SCALE : 1:1

EARTHWORK VOLUME REPORT - STH 27 TEMPORARY WIDENING (STAGE 1C)

Station	Cut End Area Sq. Ft.	Cut Volume Cu Yd.	Cut Reusable Volume Cu Yd.	Fill End Area Sq. Ft.	Fill Volume Cu. Yd.	Cumulative Volume Cut Cu. Yd.	Cumulative Volume Reusable Cut Cu. Yd.	Cumulative Volume Fill Cu. Yd.	Mass Ordinate Cu. Yd.
305+50.000	35.43	0	0	10.64	0	0	0	0	0
306+00.000	0	32.8	32.8	8.19	17.43	32.8	32.8	17.43	15.37
306+50.000	42.56	39.41	39.41	5.66	12.82	72.21	72.21	30.26	41.96
307+00.000	38.58	75.13	75.13	2.35	7.42	147.34	147.34	37.67	109.67
307+50.000	58.08	89.5	89.5	0	2.17	236.84	236.84	39.84	197
308+00.000	76.8	124.89	124.89	0	0	361.73	361.73	39.84	321.89
308+50.000	59.54	126.24	126.24	0	0	487.98	487.98	39.84	448.13
309+00.000	44.43	96.27	96.27	0	0	584.24	584.24	39.84	544.4
309+50.000	39.61	77.81	77.81	0	0	662.06	662.06	39.84	622.21
310+00.000	38.14	71.99	71.99	0	0	734.05	734.05	39.84	694.21
310+50.000	42.39	74.57	74.57	0	0	808.62	808.62	39.84	768.77
311+00.000	45.06	80.97	80.97	0	0	889.59	889.59	39.84	849.75
311+50.000	32.71	72.01	72.01	0	0	961.6	961.6	39.84	921.76
312+00.000	36.54	64.12	64.12	1.25	1.16	1025.72	1025.72	41	984.72
312+50.000	28.18	59.93	59.93	4.96	5.75	1085.66	1085.66	46.75	1038.91
313+00.000	27.82	51.85	51.85	3.43	7.77	1137.51	1137.51	54.52	1082.99
314+00.000	18.89	86.49	86.49	0.07	6.49	1224	1224	61.01	1162.98
314+50.000	20.85	36.79	36.79	0.18	0.23	1260.79	1260.79	61.25	1199.54
315+00.000	22.2	39.86	39.86	0	0.17	1300.64	1300.64	61.42	1239.23
315+40.000	33.81	41.49	41.49	0	0	1342.13	1342.13	61.42	1280.72
316+00.000	25.66	66.07	66.07	0.22	0.25	1408.21	1408.21	61.66	1346.54
316+50.000	27.29	49.03	49.03	0.38	0.56	1457.24	1457.24	62.23	1395.01
317+00.000	27.5	50.74	50.74	0.02	0.38	1507.97	1507.97	62.6	1445.37
317+50.000	28.93	52.25	52.25	0	0.02	1560.23	1560.23	62.62	1497.6
318+00.000	32.93	57.28	57.28	0	0	1617.51	1617.51	62.62	1554.88
318+50.000	24.98	53.62	53.62	0	0	1671.13	1671.13	62.63	1608.5
319+00.000	25.28	46.54	46.54	0	0	1717.66	1717.66	62.64	1655.02
319+50.000	20.87	42.74	42.74	0	0	1760.4	1760.4	62.64	1697.76
320+00.000	14.97	33.18	33.18	0	0	1793.58	1793.58	62.64	1730.94
320+50.000	15.05	27.8	27.8	0	0	1821.38	1821.38	62.64	1758.74
321+00.000	14.57	27.43	27.43	0.06	0.05	1848.81	1848.81	62.69	1786.12
321+50.000	13.3	25.81	25.81	0	0.05	1874.62	1874.62	62.75	1811.87
322+00.000	17.01	28.06	28.06	0	0	1902.68	1902.68	62.75	1839.93
322+20.000	16.91	12.56	12.56	0	0	1915.24	1915.24	62.75	1852.5
322+50.000	11.92	16.02	16.02	0	0	1931.26	1931.26	62.75	1868.51
323+00.000	11.1	21.31	21.31	0	0	1952.57	1952.57	62.75	1889.83
323+50.000	11.69	21.1	21.1	0	0	1973.67	1973.67	62.75	1910.92
324+00.000	9.63	19.74	19.74	0	0	1993.41	1993.41	62.75	1930.66
324+50.000	12.59	20.57	20.57	0	0	2013.98	2013.98	62.75	1951.23
325+00.000	8.08	19.14	19.14	0	0	2033.12	2033.12	62.75	1970.37
326+00.000	11.77	36.75	36.75	0	0	2069.87	2069.87	62.75	2007.12
326+50.000	11.74	21.77	21.77	0	0	2091.64	2091.64	62.75	2028.89
327+00.000	10.93	20.99	20.99	0	0	2112.63	2112.63	62.75	2049.88
327+50.000	18.69	27.43	27.43	0	0	2140.06	2140.06	62.75	2077.31
328+00.000	8.36	25.04	25.04	0	0	2165.1	2165.1	62.75	2102.35
328+50.000	5.12	12.49	12.49	0	0	2177.59	2177.59	62.75	2114.84
329+00.000	4.03	8.47	8.47	0	0	2186.06	2186.06	62.75	2123.31
329+50.000	3.86	7.31	7.31	0	0	2193.37	2193.37	62.75	2130.62
330+00.000	8.52	11.46	11.46	0	0	2204.83	2204.83	62.75	2142.08
330+25.000	8.54	7.9	7.9	0	0	2212.73	2212.73	62.75	2149.98
330+50.000	3.65	5.65	5.65	0	0	2218.38	2218.38	62.75	2155.63
331+00.000	3.73	6.84	6.84	0	0	2225.21	2225.21	62.75	2162.46

EARTHWORK VOLUME REPORT - STH 27 (STAGE 2)

Station	Cut End Area Sq. Ft.	Cut Volume Cu Yd.	Cut Reusable Volume Cu Yd.	Fill End Area Sq. Ft.	Fill Volume Cu. Yd.	Cumulative Volume Cut Cu. Yd.	Cumulative Volume Reusable Cut Cu. Yd.	Cumulative Volume Fill Cu. Yd.	Mass Ordinate Cu. Yd.
310+50.000	71.81	0	0	4.12	0	0	0	0	0
311+00.000	62.96	124.78	124.78	4.07	7.59	124.78	124.78	7.59	117.19
311+50.000	61.01	114.79	114.79	4.85	8.26	239.57	239.57	15.85	223.72
312+00.000	62.36	114.24	114.24	0	4.49	353.8	353.8	20.34	333.46
312+50.000	50.56	104.56	104.56	5.24	4.86	458.36	458.36	25.19	433.17
313+00.000	60.58	102.91	102.91	0	4.85	561.27	561.27	30.05	531.22
313+50.000	37.8	91.09	91.09	0	0	652.36	652.36	30.05	622.32
314+00.000	32.25	64.87	64.87	0	0	717.23	717.23	30.05	687.18
314+50.000	36.81	63.94	63.94	4.67	4.32	781.17	781.17	34.37	746.8
315+00.000	34.09	65.64	65.64	6.3	10.16	846.81	846.81	44.52	802.29
315+40.000	60.94	70.39	70.39	0	4.67	917.2	917.2	49.19	868.01
316+00.000	34.05	105.55	105.55	14.52	16.13	1022.75	1022.75	65.32	957.43
316+60.000	84.05	131.22	131.22	0	16.13	1153.97	1153.97	81.45	1072.52
317+10.000	61.07	134.36	134.36	0	0	1288.34	1288.34	81.45	1206.89
317+50.000	73.5	99.68	99.68	0	0	1388.01	1388.01	81.45	1306.57
317+90.000	93.24	123.51	123.51	0	0	1511.53	1511.53	81.45	1430.07
318+50.000	61.17	171.56	171.56	0	0	1683.09	1683.09	81.46	1601.63
319+00.000	65.34	117.14	117.14	0	0	1800.23	1800.23	81.46	1718.77
319+35.000	72.28	89.2	89.2	0	0	1889.43	1889.43	81.46	1807.97
320+00.000	57.96	156.77	156.77	0	0	2046.19	2046.19	81.46	1964.74
320+50.000	59.21	108.5	108.5	0	0	2154.69	2154.69	81.46	2073.23
321+00.000	57.7	108.25	108.25	0	0	2262.94	2262.94	81.46	2181.48
321+50.000	68.43	116.79	116.79	0	0	2379.73	2379.73	81.46	2298.27
322+15.000	75.39	173.12	173.12	0	0	2552.85	2552.85	81.46	2471.39
322+50.000	72.58	95.91	95.91	0	0	2648.75	2648.75	81.46	2567.3
323+00.000	62.13	124.73	124.73	0	0	2773.49	2773.49	81.46	2692.03
323+50.000	59.54	112.67	112.67	0	0	2886.16	2886.16	81.46	2804.7
324+00.000	52.02	103.3	103.3	0	0	2989.46	2989.46	81.46	2908
324+50.000	47.4	92.05	92.05	0.04	0.03	3081.51	3081.51	81.49	3000.02
325+00.000	43.88	84.51	84.51	0	0.03	3166.02	3166.02	81.53	3084.49
325+50.000	32.17	70.41	70.41	0	0	3236.44	3236.44	81.53	3154.91
326+00.000	34.02	61.29	61.29	0	0	3297.73	3297.73	81.53	3216.2
326+50.000	25.06	54.71	54.71	1.91	1.77	3352.43	3352.43	83.3	3269.14
327+00.000	25.17	46.51	46.51	2.31	3.91	3398.94	3398.94	87.21	3311.73
327+25.000	26.27	23.81	23.81	0.23	1.18	3422.75	3422.75	88.38	3334.37
327+50.000	22.55	22.6	22.6	0.38	0.28	3445.35	3445.35	88.66	3356.69
328+00.000	34.18	52.53	52.53	0	0.35	3497.88	3497.88	89.01	3408.87
328+50.000	31.9	61.19	61.19	1.82	1.68	3559.07	3559.07	90.69	3468.38
329+00.000	34.65	61.62	61.62	1.93	3.47	3620.69	3620.69	94.17	3526.53
329+50.000	52.8	80.97	80.97	0	1.79	3701.67	3701.67	95.96	3605.71
330+00.000	48.81	94.08	94.08	0	0	3795.75	3795.75	95.96	3699.79
330+25.000	44.69	43.28	43.28	3.63	1.68	3839.03	3839.03	97.64	3741.4
330+50.000	49.33	43.52	43.52	2.16	2.68	3882.56	3882.56	100.32	3782.24
331+00.000	72.78	113.06	113.06	0	2.01	3995.62	3995.62	102.33	3893.29
331+24.033	96.59	75.38	75.38	0	0	4071	4071	102.33	3968.67
332+30.611	122.17	0	0	0	0	4071	4071	102.33	3968.67
332+50.000	109.38	83.14	83.14	0	0	4154.14	4154.14	102.33	4051.81
333+00.000	103.87	197.45	197.45	0	0	4351.59	4351.59	102.33	4249.26
333+50.000	89.67	179.2	179.2	0	0	4530.79	4530.79	102.33	4428.46
333+75.000	80.24	78.66	78.66	0	0	4609.45	4609.45	102.33	4507.12
334+00.000	73.73	71.28	71.28	0	0	4680.73	4680.73	102.33	4578.4
334+50.000	73.45	136.28	136.28	0	0	4817.01	4817.01	102.33	4714.68
335+00.000	62.67	126.04	126.04	0	0	4943.05	4943.05	102.33	4840.72
335+50.000	63.45	116.78	116.78	0	0	5059.83	5059.83	102.33	4957.5
335+90.000	56.1	88.55	88.55	0	0	5148.38	5148.38	102.33	5046.05
336+00.175	55.54	21.03	21.03	0	0	5169.41	5169.41	102.33	5067.08
336+50.000	34.61	83.18	83.18	0.19	0.18	5252.59	5252.59	102.51	5150.08
336+59.376	34.73	12.04	12.04	0.03	0.04	5264.63	5264.63	102.55	5162.08

NOTES: THE STAGE 2 TABLE INCLUDES QUANTITIES OF WORK COMPLETED IN STAGE 6. DEDUCTION FOR THIS QUANTITY IS MADE IN THE EARTHWORK SUMMARY.

9

9

PROJECT NO: 5144-01-75 & 5144-01-76 | **HWY: STH 27** | **COUNTY: MONROE** | **EARTHWORK SUMMARY** | **SHEET NO:** 397 | **E**

FILE NAME : _____ PLOT DATE : _____ PLOT BY : _____ PLOT NAME : _____ ORG DATE : _____ ORIGINATOR : DIST _ PLOT SCALE : 1:1

EARTHWORK VOLUME REPORT - STH 27 (STAGE 2B)

Station	Cut			Fill		Cumulative Volume			Mass Ordinate
	End Area	Volume	Reusable Volume	End Area	Volume	Cut	Reusable Cut	Fill	
	Sq. Ft.	Cu Yd.	Cu Yd.	Sq. Ft.	Cu. Yd.	Cu. Yd.	Cu. Yd.	Cu. Yd.	Cu. Yd.
310+50.000	42.22	0	0	0	0	0	0	0	0
311+00.000	50.51	85.86	85.86	0	0	85.86	85.86	0	85.86
311+50.000	48.92	92.06	92.06	0	0	177.92	177.92	0	177.92
312+00.000	38.75	81.18	81.18	0	0	259.1	259.1	0	259.1
312+50.000	44.81	77.38	77.38	0	0	336.48	336.48	0	336.48
313+00.000	32.46	71.54	71.54	0	0	408.02	408.02	0	408.02
313+29.414	30.86	34.49	34.49	0	0	442.51	442.51	0	442.51

EARTHWORK VOLUME REPORT - STH 27 (STAGE 3)

Station	Cut			Fill		Cumulative Volume			Mass Ordinate
	End Area	Volume	Reusable Volume	End Area	Volume	Cut	Reusable Cut	Fill	
	Sq. Ft.	Cu Yd.	Cu Yd.	Sq. Ft.	Cu. Yd.	Cu. Yd.	Cu. Yd.	Cu. Yd.	Cu. Yd.
310+50.000	62.3	0	0	8.4	0	0	0	0	0
311+00.000	65.71	118.52	118.52	11.26	18.2	118.52	118.52	18.2	100.32
311+50.000	90.21	144.36	144.36	0	10.43	262.89	262.89	28.63	234.26
312+00.000	57.62	136.87	136.87	13.14	12.17	399.76	399.76	40.8	358.96
312+50.000	55.96	105.17	105.17	13.95	25.09	504.93	504.93	65.89	439.04
313+00.000	45.57	94.01	94.01	0.01	12.93	598.94	598.94	78.82	520.12
313+49.891	35.29	74.71	74.71	0	0.01	673.64	673.64	78.83	594.81
314+00.000	37.87	67.89	67.89	0	0	741.53	741.53	78.83	662.7
314+50.000	39.99	72.09	72.09	7.93	7.34	813.63	813.63	86.17	727.46
315+00.000	39.71	73.8	73.8	6.05	12.94	887.42	887.42	99.11	788.31
315+40.000	36.59	56.52	56.52	6.24	9.1	943.94	943.94	108.21	835.73
316+00.000	39.7	84.76	84.76	5.12	12.63	1028.7	1028.7	120.84	907.86
316+60.000	50.09	99.76	99.76	2.59	8.57	1128.46	1128.46	129.41	999.05
317+10.000	106.73	145.21	145.21	0	2.4	1273.67	1273.67	131.82	1141.86
317+50.000	79.24	137.76	137.76	0.13	0.1	1411.43	1411.43	131.91	1279.52
317+90.000	75.22	114.41	114.41	0.1	0.17	1525.84	1525.84	132.09	1393.76
318+50.000	68.87	160.1	160.1	0.23	0.37	1685.94	1685.94	132.45	1553.49
319+00.000	57.33	116.86	116.86	1.23	1.35	1802.8	1802.8	133.8	1669
319+35.000	55.9	73.39	73.39	0.02	0.81	1876.19	1876.19	134.61	1741.59
319+60.000	76.95	61.5	61.5	0	0	1937.7	1937.7	134.62	1803.08
320+00.000	61.57	102.6	102.6	0	0	2040.3	2040.3	134.62	1905.68
320+50.000	54.57	107.54	107.54	0	0	2147.84	2147.84	134.62	2013.22
321+00.000	58.36	104.57	104.57	0	0	2252.41	2252.41	134.63	2117.78
321+50.000	69.12	118.04	118.04	0	0	2370.44	2370.44	134.63	2235.81
322+15.000	97.92	201.06	201.06	0	0	2571.51	2571.51	134.63	2436.88
322+50.000	74.16	111.53	111.53	0	0	2683.04	2683.04	134.63	2548.41
323+00.000	61.95	126.03	126.03	0	0	2809.07	2809.07	134.63	2674.44
323+50.000	52.48	105.96	105.96	0	0	2915.02	2915.02	134.63	2780.39
324+00.000	46.74	91.87	91.87	0.15	0.14	3006.9	3006.9	134.77	2872.13
324+50.000	37.7	78.19	78.19	8.37	7.89	3085.09	3085.09	142.67	2942.42
325+00.000	35.2	67.5	67.5	0.55	8.26	3152.59	3152.59	150.93	3001.66
325+50.000	30.16	60.52	60.52	0	0.51	3213.11	3213.11	151.44	3061.67
326+00.000	29.67	55.4	55.4	0	0	3268.51	3268.51	151.44	3117.07
326+50.000	28.49	53.85	53.85	0.29	0.27	3322.36	3322.36	151.71	3170.65
327+00.000	24.04	48.64	48.64	0.35	0.6	3370.99	3370.99	152.31	3218.69
327+25.000	23.02	21.79	21.79	0.61	0.45	3392.78	3392.78	152.75	3240.03
327+50.000	30.83	24.93	24.93	0	0.28	3417.71	3417.71	153.04	3264.68
328+00.000	26.69	53.26	53.26	0.23	0.21	3470.97	3470.97	153.25	3317.72
328+50.000	29.35	51.89	51.89	1.27	1.39	3522.87	3522.87	154.64	3368.22
329+00.000	31.14	56.01	56.01	1.23	2.31	3578.88	3578.88	156.96	3421.92
329+50.000	32.74	59.15	59.15	1.24	2.28	3638.03	3638.03	159.24	3478.8
330+00.000	31.88	59.84	59.84	1.37	2.42	3697.87	3697.87	161.65	3536.22
330+25.000	39.17	32.89	32.89	0	0.63	3730.76	3730.76	162.29	3568.48
330+50.000	33.28	33.54	33.54	0.74	0.34	3764.31	3764.31	162.63	3601.68
331+00.000	54.52	81.3	81.3	0	0.68	3845.6	3845.6	163.31	3682.29
331+24.033	93.8	66.01	66.01	0	0	3911.61	3911.61	163.31	3748.29
332+30.611	88.35	0	0	0	0	3911.61	3911.61	163.31	3748.3
332+50.000	75.03	58.66	58.66	0	0	3970.27	3970.27	163.31	3806.96
333+00.000	53.51	119.02	119.02	0	0	4089.29	4089.29	163.31	3925.98
333+50.000	39.07	85.72	85.72	1.38	1.28	4175.01	4175.01	164.59	4010.42
333+75.000	58.84	45.33	45.33	0	0.64	4220.34	4220.34	165.23	4055.11
334+00.000	32.03	42.07	42.07	0.51	0.24	4262.41	4262.41	165.47	4096.94
334+50.000	35.65	62.66	62.66	0.52	0.95	4325.07	4325.07	166.42	4158.65
335+00.000	43.49	73.27	73.27	0	0.48	4398.34	4398.34	166.9	4231.44
335+50.000	47.94	84.66	84.66	0	0	4483	4483	166.9	4316.1
335+90.000	87.45	100.29	100.29	0	0	4583.29	4583.29	166.9	4416.39
336+00.000	86.66	32.24	32.24	0	0	4615.53	4615.53	166.9	4448.63

9

9

PROJECT NO: 5144-01-75	HWY: STH 27	COUNTY: MONROE	EARTHWORK SUMMARY	SHEET NO:	E

FILE NAME : _____ PLOT DATE : _____ PLOT BY : _____ PLOT NAME : _____ ORG DATE : _____ ORIGINATOR : DIST _ PLOT SCALE : 1:1

EARTHWORK VOLUME REPORT - STH 27 (STAGE 6)

Station	Cut End Area	Cut Volume	Cut Reusable Volume	Fill End Area	Fill Volume	Cumulative Volume Cut	Cumulative Volume Reusable Cut	Cumulative Volume Fill	Mass Ordinate
	Sq. Ft.	Cu Yd.	Cu Yd.	Sq. Ft.	Cu. Yd.	Cu. Yd.	Cu. Yd.	Cu. Yd.	Cu. Yd.
328+57.389	14.45	0	0	0	0	0	0	0	0
329+00.000	17.15	24.94	24.94	0	0	24.94	24.94	0	24.94
329+50.000	20.57	34.92	34.92	0	0	59.86	59.86	0	59.86
330+00.000	19.89	37.46	37.46	0	0	97.32	97.32	0	97.32
330+25.000	20.96	18.91	18.91	0	0	116.24	116.24	0	116.24
330+50.000	23.4	20.53	20.53	0	0	136.77	136.77	0	136.77
331+00.000	23.99	43.87	43.87	0	0	180.64	180.64	0	180.64
331+24.033	26.85	22.63	22.63	0	0	203.27	203.27	0	203.27
332+30.611	27.36	107	107	0	0	310.27	310.27	0	310.27
332+50.000	35.16	22.45	22.45	0	0	332.72	332.72	0	332.72
333+00.000	34.46	64.47	64.47	0	0	397.18	397.18	0	397.18
333+50.000	25.11	55.16	55.16	0	0	452.34	452.34	0	452.34
333+50.000	30.59	0	0	0	0	452.34	452.34	0	452.34
333+75.000	25.91	26.16	26.16	0	0	478.5	478.5	0	478.5
334+00.000	22.13	22.24	22.24	0	0	500.75	500.75	0	500.75
334+27.866	22.31	22.93	22.93	0	0	523.68	523.68	0	523.68
334+50.000	21.5	17.96	17.96	0	0	541.64	541.64	0	541.64
335+00.000	15.64	34.39	34.39	0	0	576.03	576.03	0	576.03
335+90.000	27.56	72.01	72.01	0	0	648.03	648.03	0	648.03
336+00.000	19.31	8.68	8.68	0	0	656.71	656.71	0	656.71
336+59.376	8.84	30.96	30.96	0	0	687.67	687.67	0	687.67

EARTHWORK VOLUME REPORT - STH 16 (STAGE 2)

Station	Cut End Area	Cut Volume	Cut Reusable Volume	Fill End Area	Fill Volume	Cumulative Volume Cut	Cumulative Volume Reusable Cut	Cumulative Volume Fill	Mass Ordinate
	Sq. Ft.	Cu Yd.	Cu Yd.	Sq. Ft.	Cu. Yd.	Cu. Yd.	Cu. Yd.	Cu. Yd.	Cu. Yd.
102+19.351	39.76	0	0	0	0	0	0	0	0
102+50.000	42.1	46.11	46.11	0	0	46.11	46.11	0	46.11
103+00.000	43.73	79.58	79.58	0.38	0.36	125.69	125.69	0.36	125.33
103+25.000	49.26	43.08	43.08	0.46	0.39	168.77	168.77	0.75	168.02
103+50.000	75.15	57.6	57.6	0	0.21	226.37	226.37	0.96	225.41
103+84.762	41.25	74.94	74.94	0	0	301.31	301.31	0.96	300.35
104+76.040	78.84	0	0	0	0	301.31	301.31	0.96	300.35
105+00.000	56.2	59.92	59.92	0	0	361.23	361.23	0.96	360.27
105+60.000	32.67	98.75	98.75	0.53	0.59	459.98	459.98	1.55	458.43
105+85.000	40.4	33.83	33.83	0	0.24	493.81	493.81	1.79	492.02
106+00.000	37.74	21.71	21.71	0	0	515.52	515.52	1.79	513.73
106+36.585	0	25.57	25.57	0	0	541.09	541.09	1.79	539.3

EARTHWORK VOLUME REPORT - STH 16 (STAGE 3)

Station	Cut End Area	Cut Volume	Cut Reusable Volume	Fill End Area	Fill Volume	Cumulative Volume Cut	Cumulative Volume Reusable Cut	Cumulative Volume Fill	Mass Ordinate
	Sq. Ft.	Cu Yd.	Cu Yd.	Sq. Ft.	Cu. Yd.	Cu. Yd.	Cu. Yd.	Cu. Yd.	Cu. Yd.
102+19.214	61.56	0	0	0	0	0	0	0	0
102+50.000	55.9	66.97	66.97	0.07	0.05	66.97	66.97	0.05	66.92
103+00.000	43.73	92.25	92.25	0.38	0.42	159.22	159.22	0.47	158.75
103+25.000	49.26	43.05	43.05	0.46	0.39	202.26	202.26	0.86	201.4
103+50.000	108.18	72.89	72.89	0	0.21	275.15	275.15	1.07	274.08
104+29.138	57.45	0	0	0	0	275.15	275.15	1.07	274.08
104+60.000	113.51	97.71	97.71	0	0	372.86	372.86	1.07	371.79
104+75.000	71.39	51.36	51.36	0	0	424.22	424.22	1.07	423.15
105+00.000	63.96	62.66	62.66	0	0	486.88	486.88	1.07	485.81
105+60.000	75.34	154.78	154.78	0	0	641.66	641.66	1.07	640.59
105+85.000	60.42	62.85	62.85	0	0	704.51	704.51	1.07	703.44
106+00.000	60.61	33.62	33.62	0	0	738.13	738.13	1.07	737.06
106+36.500	60.65	81.96	81.96	0	0	820.09	820.09	1.07	819.02

EARTHWORK VOLUME REPORT - STH 16 (STAGE 5A)

Station	Cut End Area	Cut Volume	Cut Reusable Volume	Fill End Area	Fill Volume	Cumulative Volume Cut	Cumulative Volume Reusable Cut	Cumulative Volume Fill	Mass Ordinate
	Sq. Ft.	Cu Yd.	Cu Yd.	Sq. Ft.	Cu. Yd.	Cu. Yd.	Cu. Yd.	Cu. Yd.	Cu. Yd.
102+19.026	0	0	0	0	0	0	0	0	0
102+50.000	34.09	19.56	19.56	0	0	19.56	19.56	0	19.56
103+00.000	36.49	65.36	65.36	0	0	84.91	84.91	0	84.91
103+25.000	37.6	34.3	34.3	0	0	119.21	119.21	0	119.21
103+41.399	39.11	23.3	23.3	0	0	142.51	142.51	0	142.51
103+56.242	59.55	27.12	27.12	0	0	169.63	169.63	0	169.63
103+88.084	76.89	80.46	80.46	0	0	250.08	250.08	0	250.08
103+99.917	111.39	41.26	41.26	0	0	291.34	291.34	0	291.34
104+07.415	144.01	35.46	35.46	0	0	326.81	326.81	0	326.81

EARTHWORK VOLUME REPORT - STH 16 (STAGE 5B)

Station	Cut End Area	Cut Volume	Cut Reusable Volume	Fill End Area	Fill Volume	Cumulative Volume Cut	Cumulative Volume Reusable Cut	Cumulative Volume Fill	Mass Ordinate
	Sq. Ft.	Cu Yd.	Cu Yd.	Sq. Ft.	Cu. Yd.	Cu. Yd.	Cu. Yd.	Cu. Yd.	Cu. Yd.
103+98.889	144.57	0	0	0	0	0	0	0	0
104+16.887	138.05	94.2	94.2	0	0	94.2	94.2	0	94.2
104+29.348	106.08	56.33	56.33	0	0	150.53	150.53	0	150.53
104+33.476	75.85	13.91	13.91	0	0	164.44	164.44	0	164.44
104+46.040	53.98	30.21	30.21	0	0	194.65	194.65	0	194.65
104+76.040	34.56	49.19	49.19	0	0	243.84	243.84	0	243.84
105+00.059	33.72	30.37	30.37	0	0	274.21	274.21	0	274.21
105+60.000	31.61	72.52	72.52	0	0	346.73	346.73	0	346.73
105+85.000	30.46	28.74	28.74	0	0	375.47	375.47	0	375.47
106+00.000	29.8	16.74	16.74	0	0	392.21	392.21	0	392.21
106+36.500	32.07	41.82	41.82	0	0	434.02	434.02	0	434.02

9

9

PROJECT NO: 5144-01-75 | **HWY: STH 27** | **COUNTY: MONROE** | **EARTHWORK SUMMARY** | **SHEET NO:** 399 | **E**

FILE NAME : _____ PLOT DATE : _____ PLOT BY : _____ PLOT NAME : _____ ORG DATE : _____ ORIGINATOR : DIST _ PLOT SCALE : 1:1

EARTHWORK VOLUME REPORT - W AVERILL STREET									
	Cut			Fill		Cumulative Volume			
Station	End Area	Volume	Reusable Volume	End Area	Volume	Cut	Reusable Cut	Fill	Mass Ordinate
	Sq. Ft.	Cu Yd.	Cu Yd.	Sq. Ft.	Cu. Yd.	Cu. Yd.	Cu. Yd.	Cu. Yd.	Cu. Yd.
STAGE 3									
21+61.313	64.84	0	0	0.23	0	0	0	0	0
22+00.000	106.86	123.01	123.01	0	0.16	123.01	123.01	0.16	122.84
22+20.000	120.92	84.36	84.36	0	0	207.37	207.37	0.16	207.21
22+50.000	101.71	123.68	123.68	0	0	331.05	331.05	0.16	330.89
STAGE 2									
22+75.000	148.31	115.75	115.75	0.01	0	115.75	115.75	0	115.75
23+00.000	175.62	149.97	149.97	0	0	265.72	265.72	0.01	265.71
STAGE 3									
23+55.000	271.07	454.97	454.97	7.05	7.18	0	0	0	0
23+75.000	99.29	137.17	137.17	0.97	2.97	137.17	137.17	2.97	134.2
24+00.000	116.68	99.99	99.99	0	0.45	237.16	237.16	3.42	233.74
24+50.000	78.2	180.39	180.39	0	0	417.55	417.55	3.42	414.13
24+73.119	74.04	65.18	65.18	0	0	482.73	482.73	3.42	479.31

EARTHWORK VOLUME REPORT - MAPLE AVENUE									
	Cut			Fill		Cumulative Volume			
Station	End Area	Volume	Reusable Volume	End Area	Volume	Cut	Reusable Cut	Fill	Mass Ordinate
	Sq. Ft.	Cu Yd.	Cu Yd.	Sq. Ft.	Cu. Yd.	Cu. Yd.	Cu. Yd.	Cu. Yd.	Cu. Yd.
STAGE 2									
9+50.670	71.26	0	0	0	0	0	0	0	0
9+75.000	71.91	64.51	64.51	0	0	64.51	64.51	0	64.51
10+00.000	78.83	69.79	69.79	0.01	0	134.3	134.3	0	134.29
10+50.000	101.54	167.02	167.02	0	0.01	301.31	301.31	0.01	301.3
10+75.000	97.69	92.24	92.24	1.23	0.57	393.55	393.55	0.58	392.97
STAGE 3									
11+50.000	80.08	246.9	246.9	1.64	3.99	0	0	0	0
11+60.000	63.16	26.53	26.53	0	0.3	26.53	26.53	0.3	26.23
12+00.000	64.06	94.24	94.24	0	0	120.77	120.77	0.3	120.47
12+40.000	61.8	93.23	93.23	0	0	214	214	0.3	213.7
12+60.250	52.39	42.82	42.82	0.39	0.14	256.82	256.82	0.44	256.38

STAGE 1C

STATION	DISTANCE	AREA (SF) CUT	AREA (SF) SALVAGED PAVEMENT MATERIAL	AREA (SF) FILL	AREA (SF) EBS	INCREMENTAL VOL (CY) (UNADJUSTED) CUT NOTE 1	INCREMENTAL VOL (CY) (UNADJUSTED) SALVAGED PAVEMENT MATERIAL NOTE 2	INCREMENTAL VOL (CY) (UNADJUSTED) FILL NOTE 3	INCREMENTAL VOL (CY) (UNADJUSTED) EBS	CUMULATIVE VOL (CY) CUT 1.00 NOTE 1	CUMULATIVE VOL (CY) EXPANDED FILL 1.25	MASS ORDINATE NOTE 4
10+00.00 M		61	0	0	0	0	0	0	0	0	0	0
10+50.00 M	50	57	0	15	0	109	0	14	0	109	17	92
11+00.00 M	50	56	0	53	0	105	0	42	0	214	70	144
11+50.00 M	50	130	0	37	0	172	0	83	0	386	174	212
11+76.98 M	27	69	0	57	0	99	0	47	0	486	233	253
12+00.00 M	23	69	0	54	0	59	0	48	0	544	292	252
12+00.52 M	1	69	0	54	0	1	0	1	0	546	294	252
12+01.96 M	1	70	0	53	0	4	0	3	0	549	297	252
12+25.47 M	24	76	0	53	0	64	0	46	0	613	355	258
12+26.94 M	1	78	0	52	0	4	0	3	0	617	359	258
12+50.00 M	23	131	0	17	0	89	0	29	0	706	396	311
12+50.73 M	1	132	0	17	0	4	0	0	0	710	396	314
12+52.55 M	2	47	0	16	0	6	0	1	0	716	398	318
				COLUMN TOTALS		716	0	318	0			

NOTES:

1) CUT: CUT INCLUDES UNUSABLE PAVEMENT MATERIAL
2) SALVAGED PAVEMENT MATERIAL: THIS IS NOT SHOWN IN THE CROSS SECTIONS
3) FILL: FILL DOES NOT INCLUDE UNUSABLE PAVEMENT MATERIAL
4) MASS ORDINATE: MASS ORDINATE = (CUT - SALVAGED PAVEMENT MATERIAL) - (FILL * FILL FACTOR)

M CHAIN

STATION	DISTANCE	AREA (SF) CUT	AREA (SF) SALVAGED PAVEMENT MATERIAL	AREA (SF) FILL	AREA (SF) EBS	INCREMENTAL VOL (CY) (UNADJUSTED) CUT NOTE 1	INCREMENTAL VOL (CY) (UNADJUSTED) SALVAGED PAVEMENT MATERIAL NOTE 2	INCREMENTAL VOL (CY) (UNADJUSTED) FILL NOTE 3	INCREMENTAL VOL (CY) (UNADJUSTED) EBS	CUMULATIVE VOL (CY) CUT 1.00 NOTE 1	CUMULATIVE VOL (CY) EXPANDED FILL 1.25	MASS ORDINATE NOTE 4
12+52.55 M		126	0	6	0	0	0	0	0	0	0	0
13+00.00 M	47	103	0	16	0	202	0	19	0	202	23	178
13+50.00 M	50	119	0	18	0	206	0	31	0	407	62	345
13+99.99 M	50	119	0	18	0	220	0	33	0	627	104	523
14+00.00 M	0	121	0	1	0	0	0	0	0	628	104	523
14+50.00 M	50	129	0	3	0	232	0	4	0	859	109	751
14+57.50 M	8	106	0	2	0	33	0	1	0	892	110	782
				COLUMN TOTALS		892	0	88	0			

NOTES:

1) CUT: CUT INCLUDES UNUSABLE PAVEMENT MATERIAL
2) SALVAGED PAVEMENT MATERIAL: THIS IS NOT SHOWN IN THE CROSS SECTIONS
3) FILL: FILL DOES NOT INCLUDE UNUSABLE PAVEMENT MATERIAL
4) MASS ORDINATE: MASS ORDINATE = (CUT - SALVAGED PAVEMENT MATERIAL) - (FILL * FILL FACTOR)

L CHAIN		AREA (SF)				INCREMENTAL VOL (CY) (UNADJUSTED)				CUMULATIVE VOL (CY)		
STATION	DISTANCE	CUT	SALVAGED PAVEMENT MATERIAL	FILL	EBS	CUT NOTE 1	SALVAGED PAVEMENT MATERIAL NOTE 2	FILL NOTE 3	EBS	CUT 1.00 NOTE 1	EXPANDED FILL 1.25	MASS ORDINATE NOTE 4
12+47.55 L		45	0	2	0	0	0	0	0	0	0	0
12+50.00 L	2	46	0	2	0	4	0	0	0	4	0	4
13+00.00 L	50	104	0	0	0	139	0	2	0	143	3	140
13+08.50 L	9	111	0	0	0	34	0	0	0	177	3	174
				COLUMN TOTALS		177	0	2	0			

NOTES:

1) CUT: CUT INCLUDES UNUSABLE PAVEMENT MATERIAL
2) SALVAGED PAVEMENT MATERIAL: THIS IS NOT SHOWN IN THE CROSS SECTIONS
3) FILL: FILL DOES NOT INCLUDE UNUSABLE PAVEMENT MATERIAL
4) MASS ORDINATE: MASS ORDINATE = (CUT - SALVAGED PAVEMENT MATERIAL) - (FILL * FILL FACTOR)

A CHAIN		AREA (SF)				INCREMENTAL VOL (CY) (UNADJUSTED)				CUMULATIVE VOL (CY)		
STATION	DISTANCE	CUT	SALVAGED PAVEMENT MATERIAL	FILL	EBS	CUT NOTE 1	SALVAGED PAVEMENT MATERIAL NOTE 2	FILL NOTE 3	EBS	CUT 1.00 NOTE 1	EXPANDED FILL 1.25	MASS ORDINATE NOTE 4
10+25.00 A		124	0	5	0	0	0	0	0	0	0	0
10+50.00 A	25	108	0	2	0	107	0	3	0	107	4	103
10+75.00 A	25	95	0	2	0	94	0	2	0	201	6	195
11+00.00 A	25	133	0	2	0	106	0	2	0	307	9	298
11+25.00 A	25	85	0	3	0	101	0	3	0	408	12	396
11+50.00 A	25	143	0	34	0	106	0	17	0	513	34	480
11+75.00 A	25	186	0	27	0	152	0	28	0	666	69	597
12+00.00 A	25	129	0	24	0	146	0	23	0	812	98	713
12+25.00 A	25	137	0	25	0	123	0	23	0	935	127	809
12+50.00 A	25	244	0	30	0	176	0	26	0	1,111	159	953
12+75.00 A	25	164	0	42	0	189	0	33	0	1,300	200	1,100
13+00.00 A	25	199	0	43	0	168	0	39	0	1,468	249	1,218
13+25.00 A	25	128	0	4	0	151	0	22	0	1,619	276	1,343
13+26.59 A	2	127	0	6	0	8	0	0	0	1,627	277	1,350
				COLUMN TOTALS		1,627	0	221	0			

NOTES:

1) CUT: CUT INCLUDES UNUSABLE PAVEMENT MATERIAL
2) SALVAGED PAVEMENT MATERIAL: THIS IS NOT SHOWN IN THE CROSS SECTIONS
3) FILL: FILL DOES NOT INCLUDE UNUSABLE PAVEMENT MATERIAL
4) MASS ORDINATE: MASS ORDINATE = (CUT - SALVAGED PAVEMENT MATERIAL) - (FILL * FILL FACTOR)

J CHAIN

STATION	DISTANCE	AREA (SF) CUT	AREA (SF) SALVAGED PAVEMENT MATERIAL	AREA (SF) FILL	AREA (SF) EBS	INCREMENTAL VOL (CY) (UNADJUSTED) CUT NOTE 1	INCREMENTAL VOL (CY) (UNADJUSTED) SALVAGED PAVEMENT MATERIAL NOTE 2	INCREMENTAL VOL (CY) (UNADJUSTED) FILL NOTE 3	INCREMENTAL VOL (CY) (UNADJUSTED) EBS	CUMULATIVE VOL (CY) CUT 1.00 NOTE 1	CUMULATIVE VOL (CY) EXPANDED FILL 1.25 NOTE 4	MASS ORDINATE NOTE 5
10+23.84 J		59	0	3	0	0	0	0	0	0	0	0
10+50.00 J	26	66	0	1	0	60	0	2	0	60	2	58
11+00.00 J	50	71	0	1	0	126	0	3	0	187	6	180
11+50.00 J	50	98	0	0	0	156	0	1	0	343	8	336
12+00.00 J	50	171	0	0	0	250	0	0	0	593	8	585
12+00.01 J	0	68	0	0	0	0	0	0	0	593	8	585
12+50.00 J	50	121	0	0	0	175	0	0	0	768	8	760
12+66.73 J	17	108	0	0	0	71	0	0	0	839	8	831
				COLUMN TOTALS		839	0	6	0			

NOTES:

1) CUT: CUT INCLUDES UNUSABLE PAVEMENT MATERIAL
2) SALVAGED PAVEMENT MATERIAL: THIS IS NOT SHOWN IN THE CROSS SECTIONS
3) FILL: FILL DOES NOT INCLUDE UNUSABLE PAVEMENT MATERIAL
4) MASS ORDINATE: MASS ORDINATE = (CUT - SALVAGED PAVEMENT MATERIAL) - (FILL * FILL FACTOR)

I CHAIN

STATION	DISTANCE	AREA (SF) CUT	AREA (SF) SALVAGED PAVEMENT MATERIAL	AREA (SF) FILL	AREA (SF) EBS	INCREMENTAL VOL (CY) (UNADJUSTED) CUT NOTE 1	INCREMENTAL VOL (CY) (UNADJUSTED) SALVAGED PAVEMENT MATERIAL NOTE 2	INCREMENTAL VOL (CY) (UNADJUSTED) FILL NOTE 3	INCREMENTAL VOL (CY) (UNADJUSTED) EBS	CUMULATIVE VOL (CY) CUT 1.00 NOTE 1	CUMULATIVE VOL (CY) EXPANDED FILL 1.25	MASS ORDINATE NOTE 4
12+50.00 I		112	0	0	0	0	0	0	0	0	0	0
12+70.07 I	20	112	0	0	0	83	0	0	0	83	0	83
				COLUMN TOTALS		83	0	0	0			

NOTES:

1) CUT: CUT INCLUDES UNUSABLE PAVEMENT MATERIAL
2) SALVAGED PAVEMENT MATERIAL: THIS IS NOT SHOWN IN THE CROSS SECTIONS
3) FILL: FILL DOES NOT INCLUDE UNUSABLE PAVEMENT MATERIAL
4) MASS ORDINATE: MASS ORDINATE = (CUT - SALVAGED PAVEMENT MATERIAL) - (FILL * FILL FACTOR)

F CHAIN

STATION	DISTANCE	AREA (SF) CUT	AREA (SF) SALVAGED PAVEMENT MATERIAL	AREA (SF) FILL	AREA (SF) EBS	INCREMENTAL VOL (CY) (UNADJUSTED) CUT NOTE 1	INCREMENTAL VOL (CY) (UNADJUSTED) SALVAGED PAVEMENT MATERIAL NOTE 2	INCREMENTAL VOL (CY) (UNADJUSTED) FILL NOTE 3	INCREMENTAL VOL (CY) (UNADJUSTED) EBS	CUMULATIVE VOL (CY) CUT 1.00 NOTE 1	CUMULATIVE VOL (CY) EXPANDED FILL 1.25	MASS ORDINATE NOTE 4
10+00.00 F		49	0	6	0	0	0	0	0	0	0	0
10+50.00 F	50	49	0	8	0	91	0	13	0	91	16	75
10+73.83 F	24	49	0	8	0	43	0	7	0	134	25	109
10+73.84 F	0	134	0	21	0	0	0	0	0	134	25	109
11+00.00 F	26	132	0	14	0	129	0	17	0	263	46	217
11+50.00 F	50	123	0	27	0	236	0	38	0	499	94	405
11+72.88 F	23	123	0	30	0	104	0	24	0	603	124	479
				COLUMN TOTALS		603	0	99	0			

NOTES:

1) CUT: CUT INCLUDES UNUSABLE PAVEMENT MATERIAL
2) SALVAGED PAVEMENT MATERIAL: THIS IS NOT SHOWN IN THE CROSS SECTIONS
3) FILL: FILL DOES NOT INCLUDE UNUSABLE PAVEMENT MATERIAL
4) MASS ORDINATE: MASS ORDINATE = (CUT - SALVAGED PAVEMENT MATERIAL) - (FILL * FILL FACTOR)

G CHAIN

STATION	DISTANCE	AREA (SF) CUT	AREA (SF) SALVAGED PAVEMENT MATERIAL	AREA (SF) FILL	AREA (SF) EBS	INCREMENTAL VOL (CY) (UNADJUSTED) CUT NOTE 1	INCREMENTAL VOL (CY) (UNADJUSTED) SALVAGED PAVEMENT MATERIAL NOTE 2	INCREMENTAL VOL (CY) (UNADJUSTED) FILL NOTE 3	INCREMENTAL VOL (CY) (UNADJUSTED) EBS	CUMULATIVE VOL (CY) CUT 1.00 NOTE 1	CUMULATIVE VOL (CY) EXPANDED FILL 1.25	MASS ORDINATE NOTE 4
10+00.00 G		96	0	0	0	0	0	0	0	0	0	0
10+50.00 G	50	101	0	6	0	182	0	6	0	182	7	175
10+68.06 G	18	101	0	6	0	68	0	4	0	250	12	238
				COLUMN TOTALS		250	0	10	0			

NOTES:

1) CUT: CUT INCLUDES UNUSABLE PAVEMENT MATERIAL
2) SALVAGED PAVEMENT MATERIAL: THIS IS NOT SHOWN IN THE CROSS SECTIONS
3) FILL: FILL DOES NOT INCLUDE UNUSABLE PAVEMENT MATERIAL
4) MASS ORDINATE: MASS ORDINATE = (CUT - SALVAGED PAVEMENT MATERIAL) - (FILL * FILL FACTOR)

C CHAIN

STATION	DISTANCE	AREA (SF) CUT	AREA (SF) SALVAGED PAVEMENT MATERIAL	AREA (SF) FILL	AREA (SF) EBS	INCREMENTAL VOL (CY) (UNADJUSTED) CUT NOTE 1	INCREMENTAL VOL (CY) (UNADJUSTED) SALVAGED PAVEMENT MATERIAL NOTE 2	INCREMENTAL VOL (CY) (UNADJUSTED) FILL NOTE 3	INCREMENTAL VOL (CY) (UNADJUSTED) EBS	CUMULATIVE VOL (CY) CUT 1.00 NOTE 1	CUMULATIVE VOL (CY) EXPANDED FILL 1.25	MASS ORDINATE NOTE 4
10+00.00 C		71	0	0	0	0	0	0	0	0	0	0
10+50.00 C	50	42	0	1	0	105	0	1	0	105	2	103
10+60.08 C	10	60	0	0	0	19	0	0	0	124	2	122
				COLUMN TOTALS		124	0	2	0			

NOTES:

1) CUT: CUT INCLUDES UNUSABLE PAVEMENT MATERIAL
2) SALVAGED PAVEMENT MATERIAL: THIS IS NOT SHOWN IN THE CROSS SECTIONS
3) FILL: FILL DOES NOT INCLUDE UNUSABLE PAVEMENT MATERIAL
4) MASS ORDINATE: MASS ORDINATE = (CUT - SALVAGED PAVEMENT MATERIAL) - (FILL * FILL FACTOR)

D CHAIN

STATION	DISTANCE	AREA (SF) CUT	AREA (SF) SALVAGED PAVEMENT MATERIAL	AREA (SF) FILL	AREA (SF) EBS	INCREMENTAL VOL (CY) (UNADJUSTED) CUT NOTE 1	INCREMENTAL VOL (CY) (UNADJUSTED) SALVAGED PAVEMENT MATERIAL NOTE 2	INCREMENTAL VOL (CY) (UNADJUSTED) FILL NOTE 3	INCREMENTAL VOL (CY) (UNADJUSTED) EBS	CUMULATIVE VOL (CY) CUT 1.00 NOTE 1	CUMULATIVE VOL (CY) EXPANDED FILL 1.25	MASS ORDINATE NOTE 4
10+00.00 D		75	0	0	0	0	0	0	0	0	0	0
10+50.00 D	50	46	0	0	0	112	0	0	0	112	0	112
10+50.01 D	0	97	0	0	0	0	0	0	0	112	0	112
10+70.74 D	21	97	0	0	0	61	0	0	0	173	0	173
				COLUMN TOTALS		173	0	0	0			

NOTES:

1) CUT: CUT INCLUDES UNUSABLE PAVEMENT MATERIAL
2) SALVAGED PAVEMENT MATERIAL: THIS IS NOT SHOWN IN THE CROSS SECTIONS
3) FILL: FILL DOES NOT INCLUDE UNUSABLE PAVEMENT MATERIAL
4) MASS ORDINATE: MASS ORDINATE = (CUT - SALVAGED PAVEMENT MATERIAL) - (FILL * FILL FACTOR)

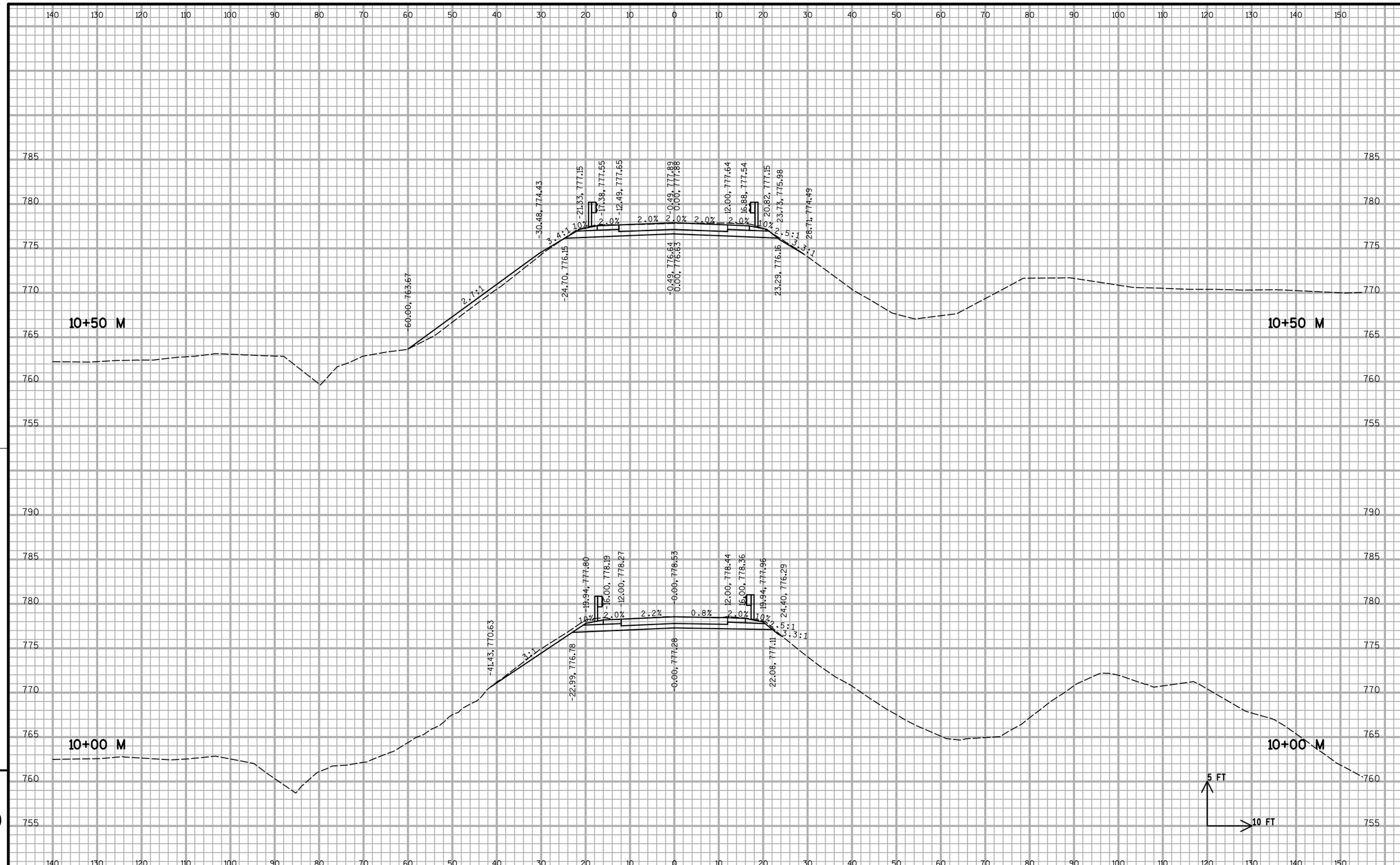

9

9

PROJECT NO:	HWY:	COUNTY:	CROSS SECTIONS: STAGE 1C	SHEET 405	E

FILE NAME : S:\MAD\1000--1099\1089\415\Micros\Plan\090201_xs_STAGE 1.dgn PLOT DATE : 7/14/2017 PLOT BY : _username_ PLOT NAME : PLOT SCALE : $$.....plotscale.....$$ WISDOT/CADDS SHEET 21

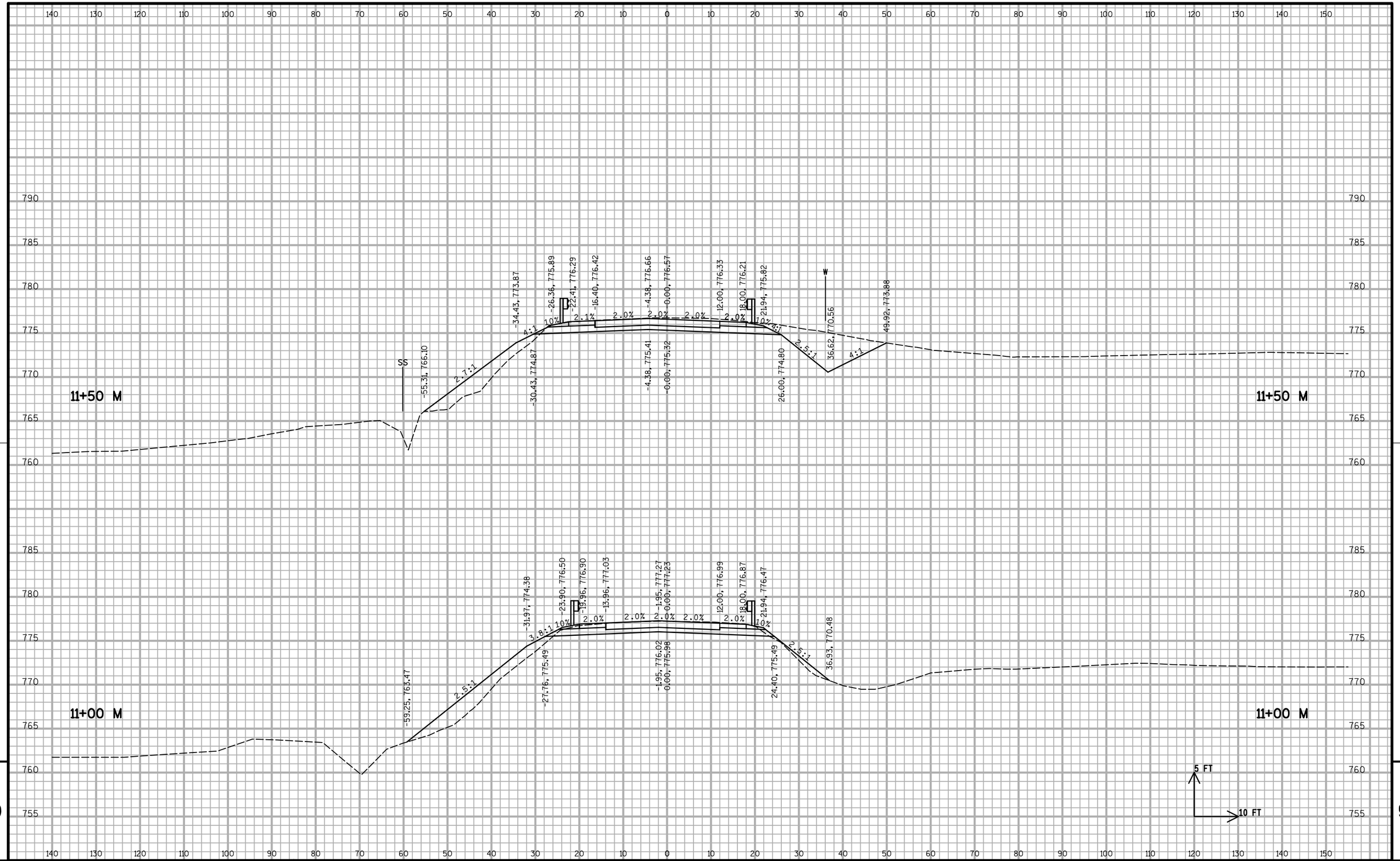

PROJECT NO:	HWY:	COUNTY:	CROSS SECTIONS: STAGE 1C	SHEET 406	E

FILE NAME : S:\MAD\1000--1099\1089\415\Micros\Plan\090201_xs_STAGE 1.dgn PLOT DATE : 7/14/2017 PLOT BY : _username_ PLOT NAME : PLOT SCALE : $$.....plotscale.....$$ WISDOT/CADDS SHEET 21

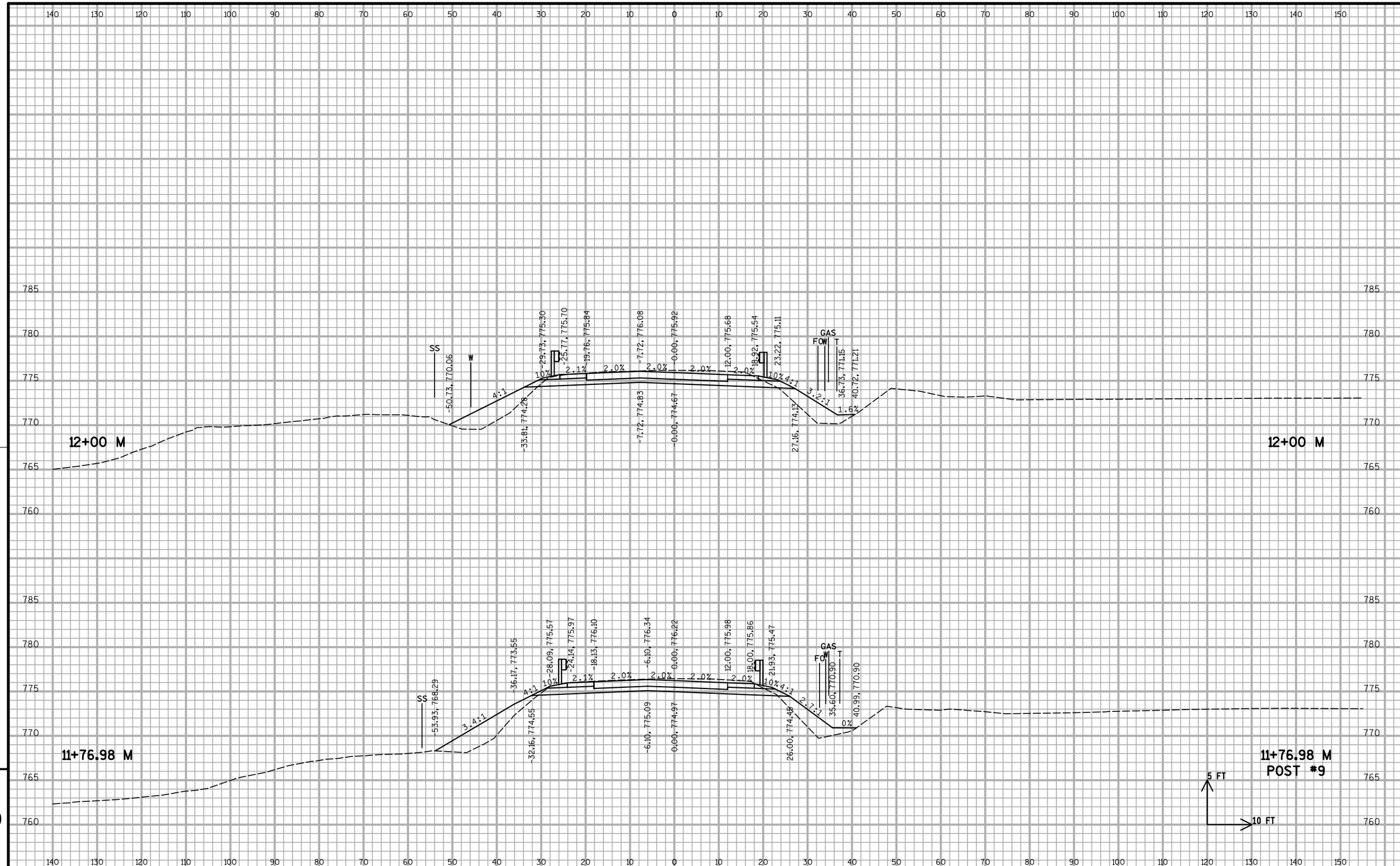

PROJECT NO:	HWY:	COUNTY:	CROSS SECTIONS: STAGE 1C	SHEET	E

FILE NAME : S:\MAD\1000--1099\1089\415\Micros\Plan\090201_xs_STAGE 1.dgn PLOT DATE : 7/14/2017 PLOT BY : _username_ PLOT NAME : PLOT SCALE : $$.....plotscale.....$$ WISDOT/CADDS SHEET 21

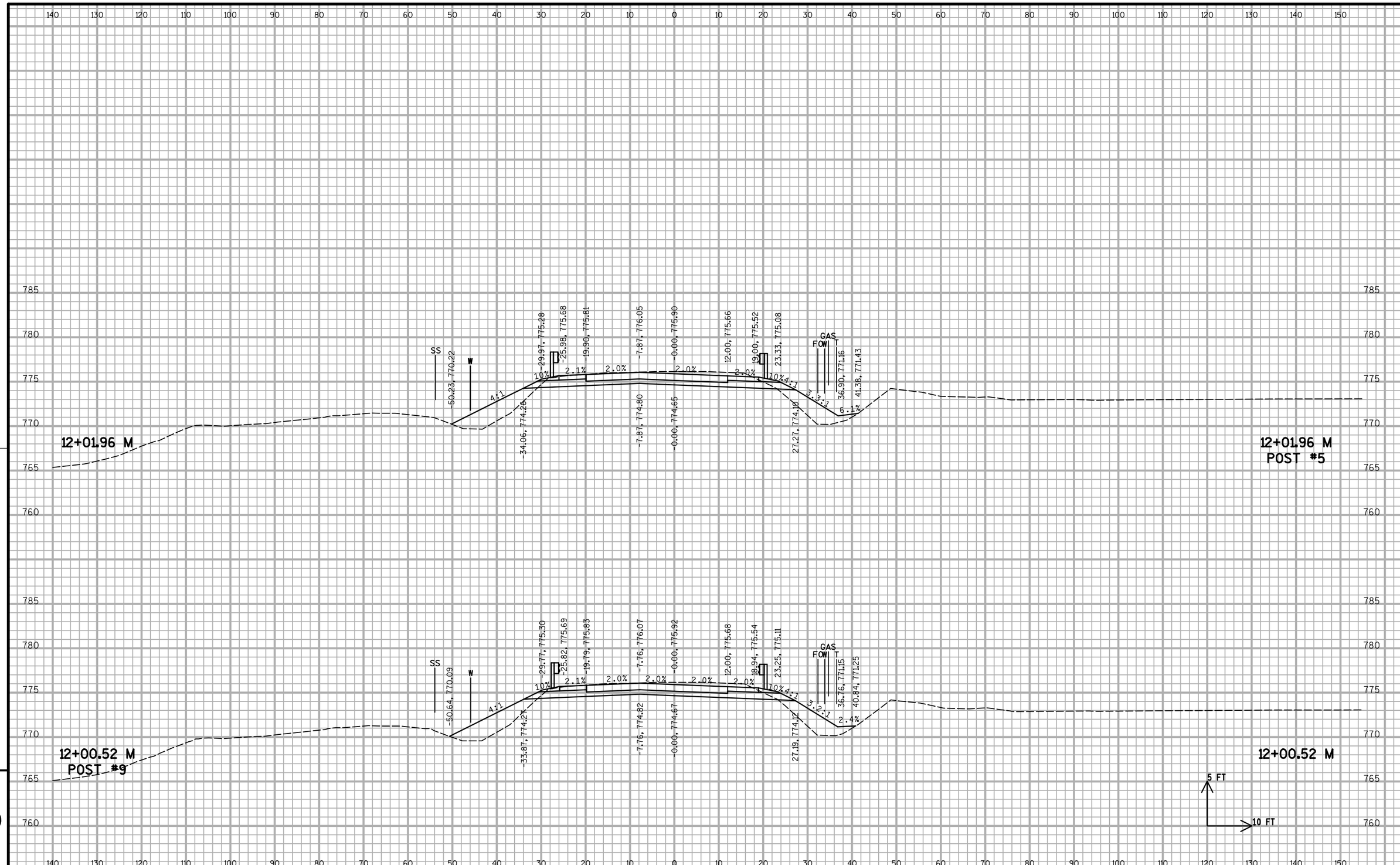

9

PROJECT NO:	HWY:	COUNTY:	CROSS SECTIONS: STAGE 1C	SHEET 408	E

FILE NAME : S:\MAD\1000--1099\1089\415\Micros\Plan\090201_xs_STAGE 1.dgn PLOT DATE : 7/14/2017 PLOT BY : _username_ PLOT NAME : PLOT SCALE : $$.....plotscale.....$$ WISDOT/CADDS SHEET 21

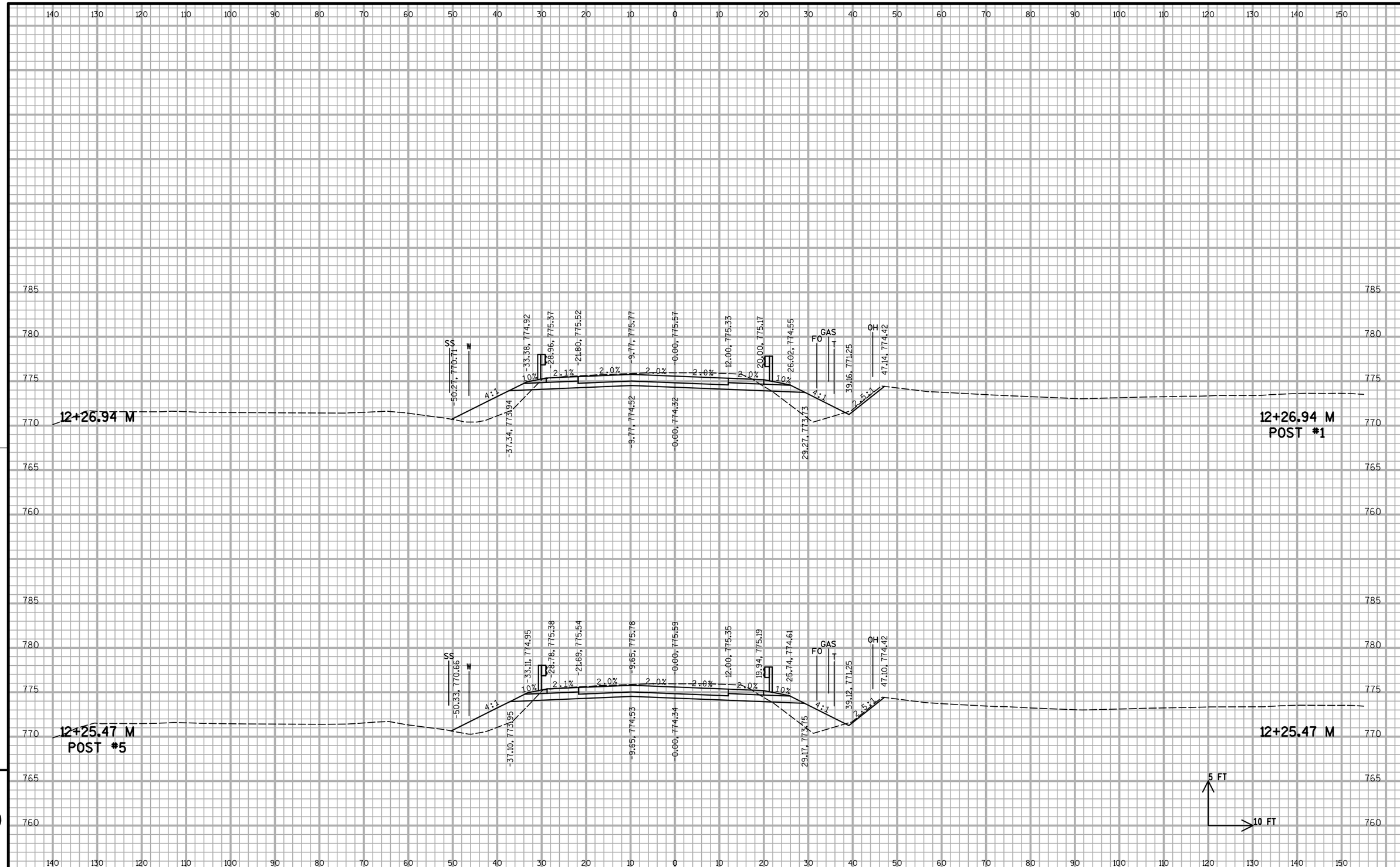

9

9

PROJECT NO:	HWY:	COUNTY:	CROSS SECTIONS: STAGE 1C	SHEET 409	E

FILE NAME : S:\MAD\1000--1099\1089\415\Micros\Plan\090201_xs_STAGE 1.dgn PLOT DATE : 7/14/2017 PLOT BY : _username_ PLOT NAME : PLOT SCALE : $$.....plotscale.....$$ WISDOT/CADDS SHEET 21

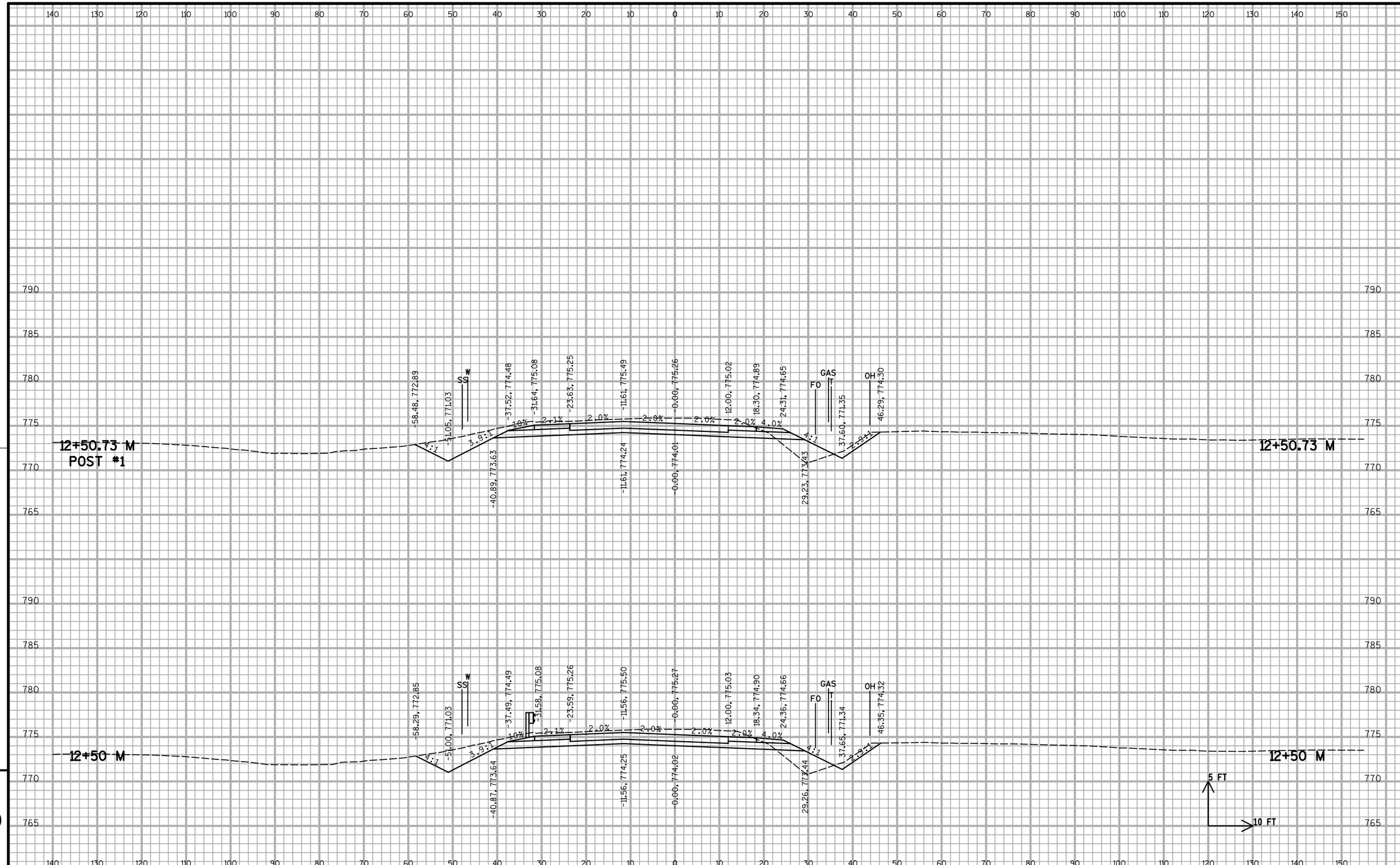

9

9

PROJECT NO:	HWY:	COUNTY:	CROSS SECTIONS: STAGE 1C	SHEET 410	E

FILE NAME : S:\MAD\1000--1099\1089\415\Micros\Plan\090201_xs_STAGE 1.dgn PLOT DATE : 7/14/2017 PLOT BY : _username_ PLOT NAME : PLOT SCALE : $$.....plotscale.....$$ WISDOT/CADDS SHEET 21

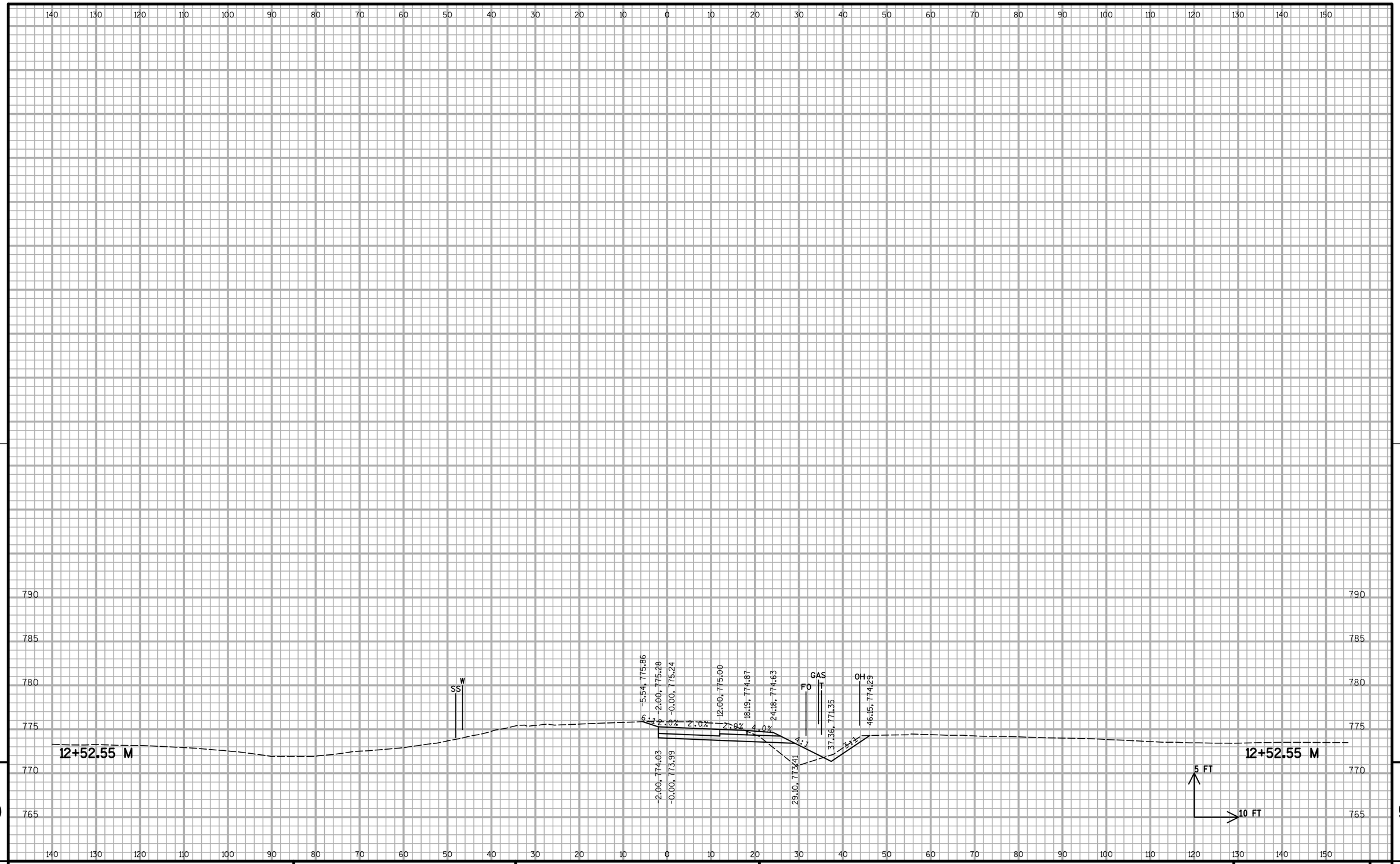

PROJECT NO:	HWY:	COUNTY:	CROSS SECTIONS: STAGE 1C	SHEET 411	E

FILE NAME : S:\MAD\1000--1099\1089\415\Micros\Plan\090201_xs_STAGE 1.dgn PLOT DATE : 7/14/2017 PLOT BY : _username_ PLOT NAME : PLOT SCALE : $$.....plotscale.....$$ WISDOT/CADDS SHEET 21

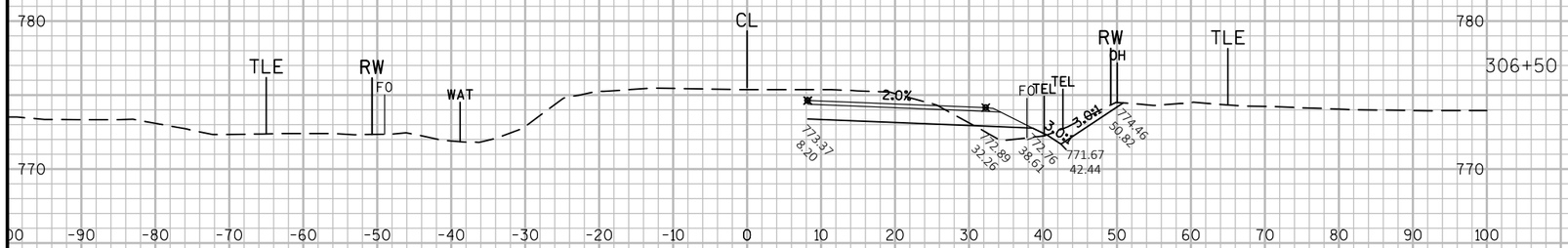

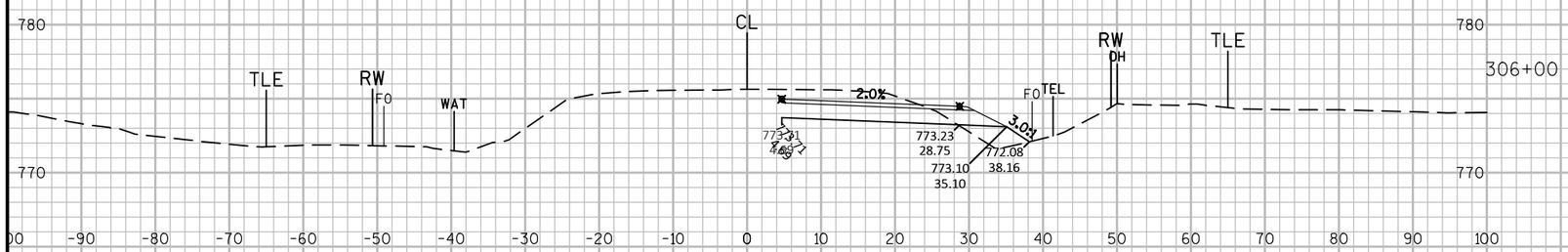

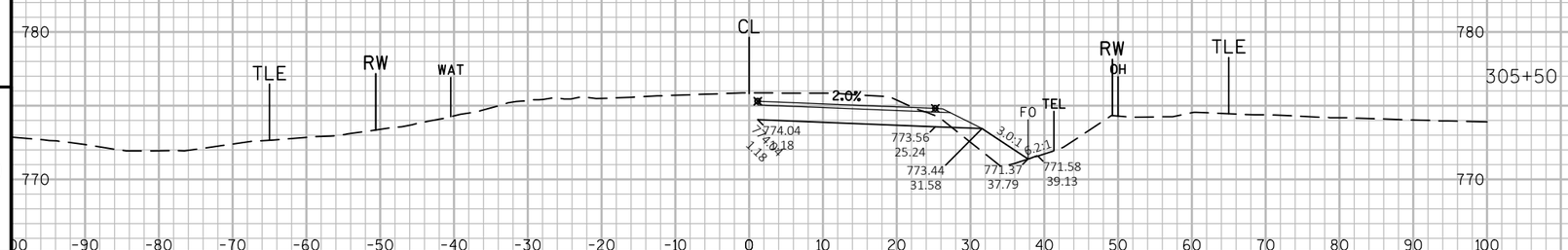

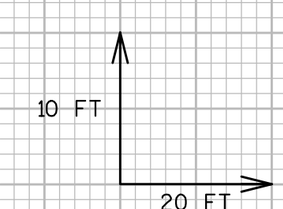

9

9

PROJECT NO:5144-01-75	HWY:STH 27	COUNTY:MONROE	CROSS SECTIONS:CROSS SECTION STH 27 STAGE 1C TEMP WIDENING	SHEET 412	E

FILE NAME : N:\PDS\C3D\51440105\SHEETSPLAN\090100_XS_TEMPWIDEN.DWG
LAYOUT NAME - 090101_XS_TW
PLOT DATE : 7/28/2017 9:39 AM PLOT BY : VALENTI, PAUL M PLOT NAME : PLOT SCALE : 1 IN:20 FT

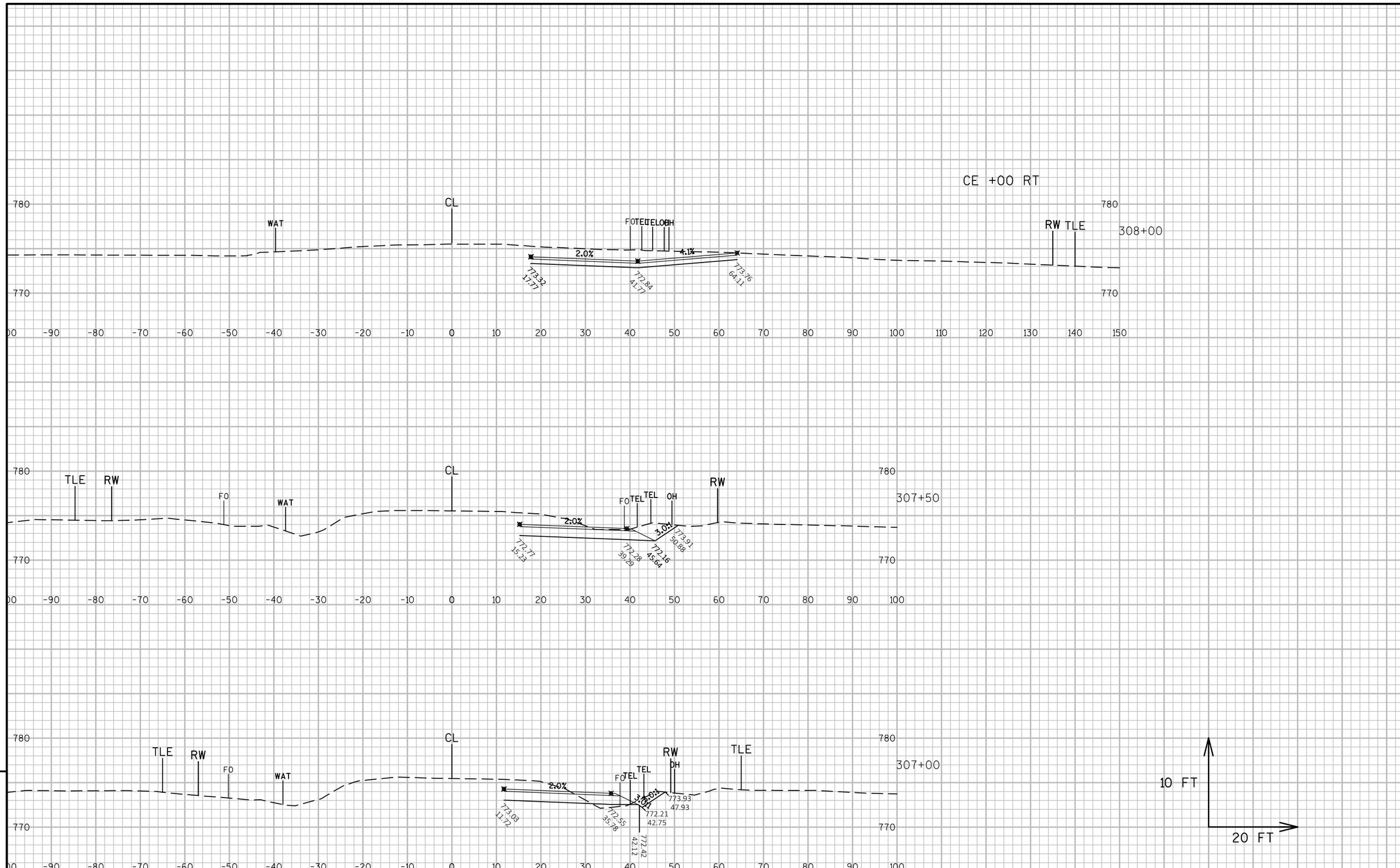

9

9

PROJECT NO:5144-01-75	HWY:STH 27	COUNTY:MONROE	CROSS SECTIONS:CROSS SECTION STH 27 STAGE 1C TEMP WIDENING	SHEET 413	E

FILE NAME : N:\PDS\C3D\51440105\SHEETSPLAN\090100_XS_TEMPWIDEN.DWG
LAYOUT NAME - 090102_XS_TW

PLOT DATE : 7/28/2017 9:40 AM PLOT BY : VALENTI, PAUL M PLOT NAME : PLOT SCALE : 1 IN:20 FT

WISDOT/CADDS SHEET 49

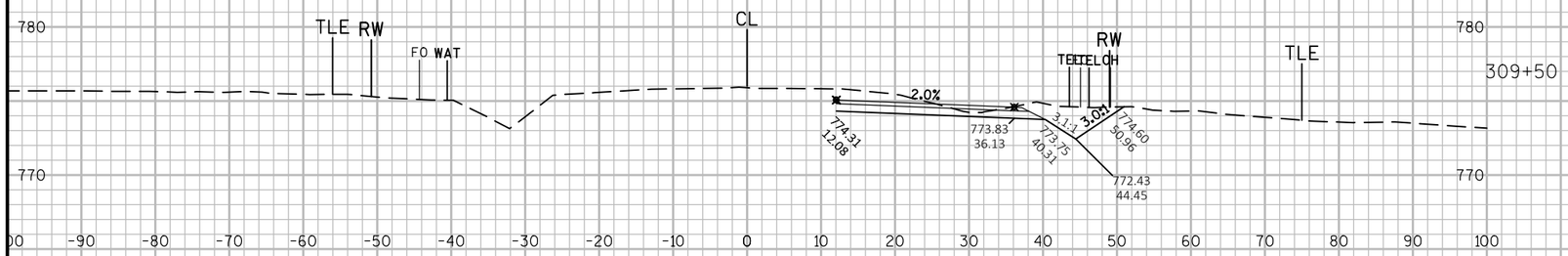

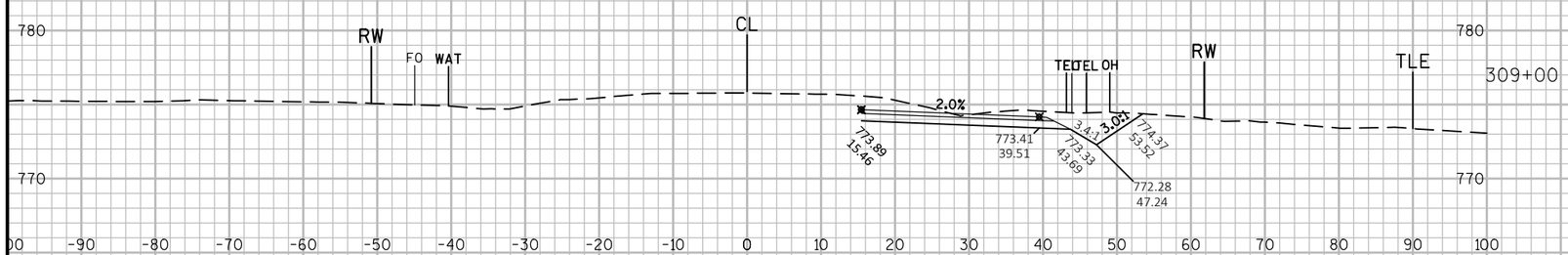

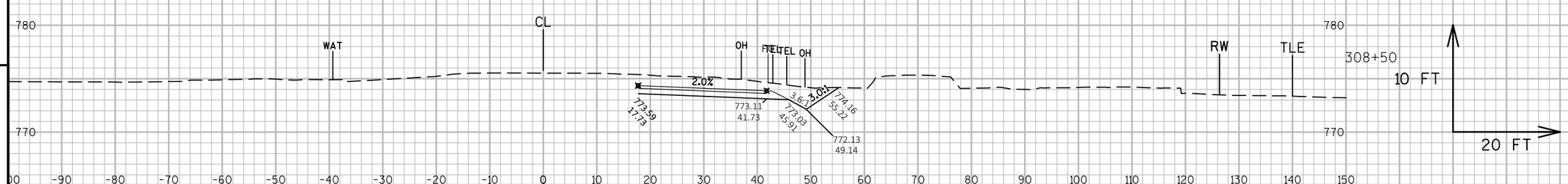

9

9

PROJECT NO:5144-01-75	HWY:STH 27	COUNTY:MONROE	CROSS SECTIONS:CROSS SECTION STH 27 STAGE 1C TEMP WIDENING	SHEET 414	E

FILE NAME : N:\PDS\C3D\51440105\SHEETSPLAN\090100_XS_TEMPWIDEN.DWG
LAYOUT NAME - 090103_XS_TW
PLOT DATE : 7/28/2017 9:40 AM PLOT BY : VALENTI, PAUL M PLOT NAME : PLOT SCALE : 1 IN:20 FT

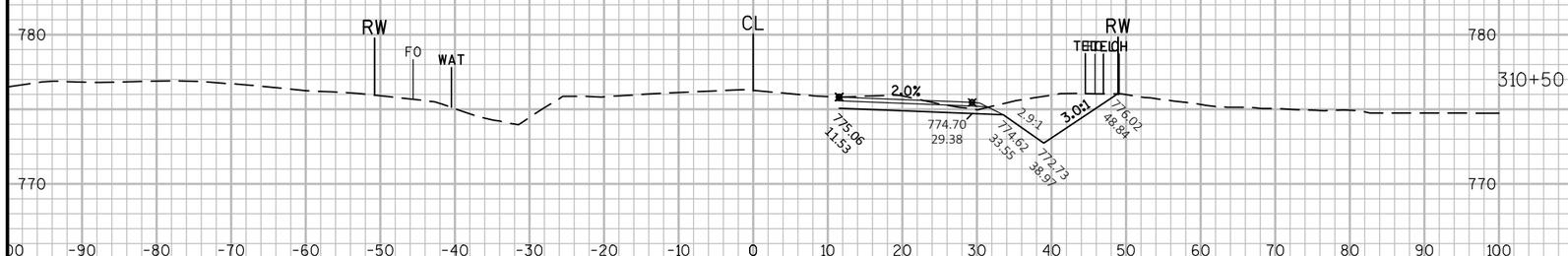

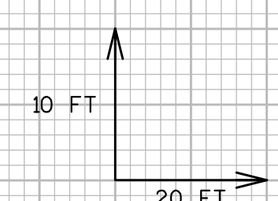

9

9

PROJECT NO:5144-01-75	HWY:STH 27	COUNTY:MONROE	CROSS SECTIONS:CROSS SECTION STH 27 STAGE 1C TEMP WIDENING	SHEET 415	E

FILE NAME : N:\PDS\C3D\51440105\SHEETSPLAN\090100_XS_TEMPWIDEN.DWG
LAYOUT NAME - 090104_XS_TW
PLOT DATE : 7/28/2017 9:41 AM PLOT BY : VALENTI, PAUL M PLOT NAME : PLOT SCALE : 1 IN:20 FT

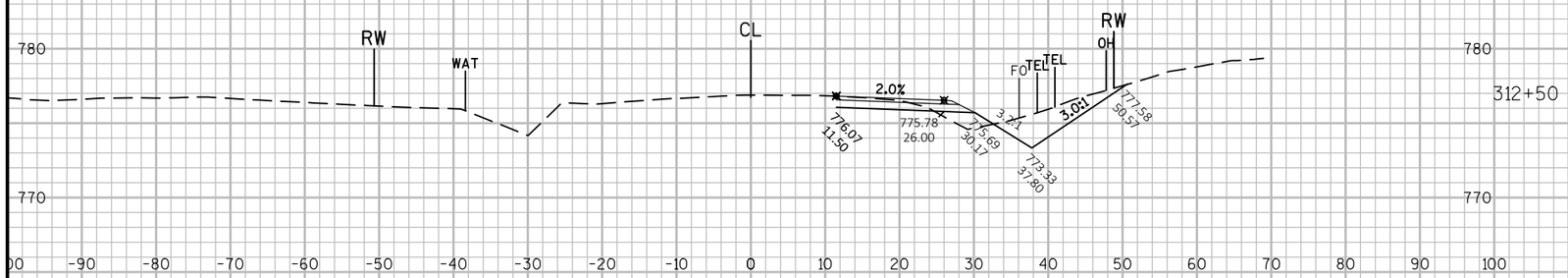

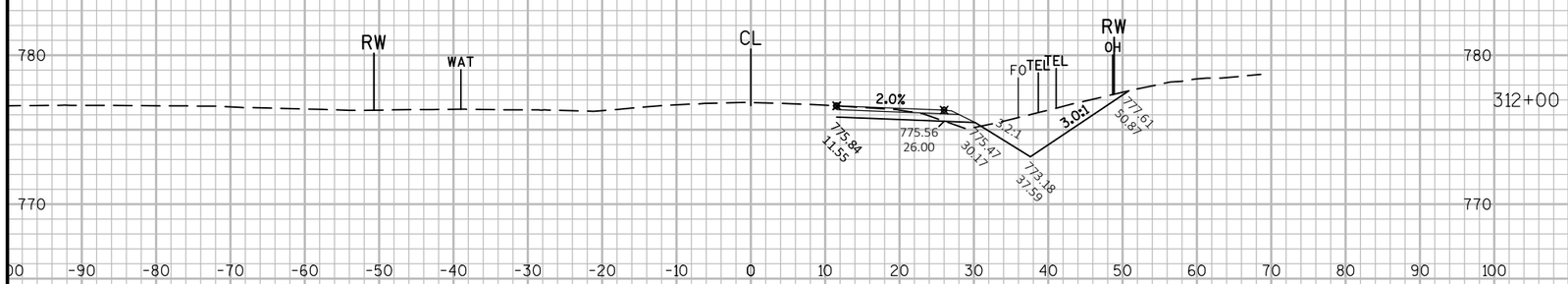

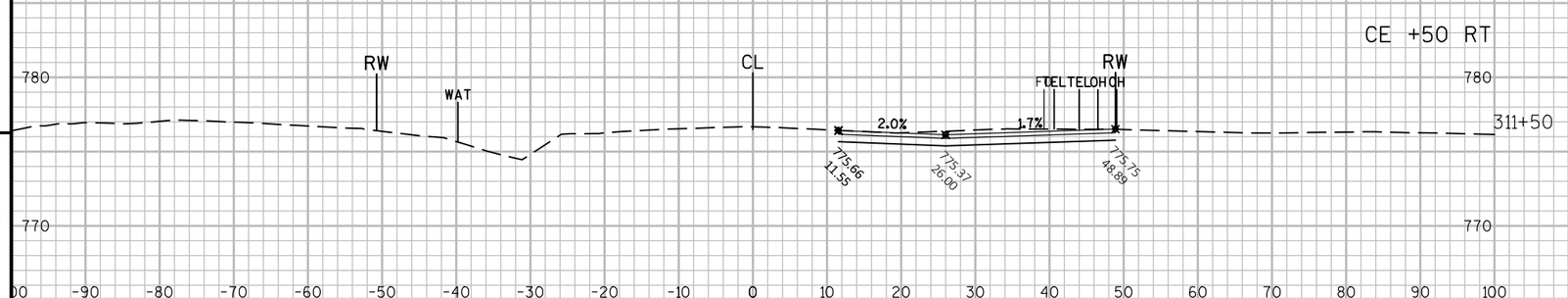

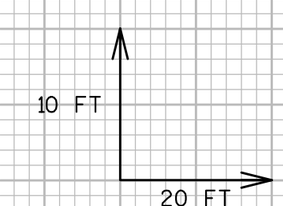

9

9

PROJECT NO:5144-01-75	HWY:STH 27	COUNTY:MONROE	CROSS SECTIONS:CROSS SECTION STH 27 STAGE 1C TEMP WIDENING	SHEET 416	E

FILE NAME : N:\PDS\C3D\51440105\SHEETSPLAN\090100_XS_TEMPWIDEN.DWG
LAYOUT NAME - 090105_XS_TW

PLOT DATE : 7/28/2017 9:41 AM PLOT BY : VALENTI, PAUL M PLOT NAME : PLOT SCALE : 1 IN:20 FT

WISDOT/CADDS SHEET 49

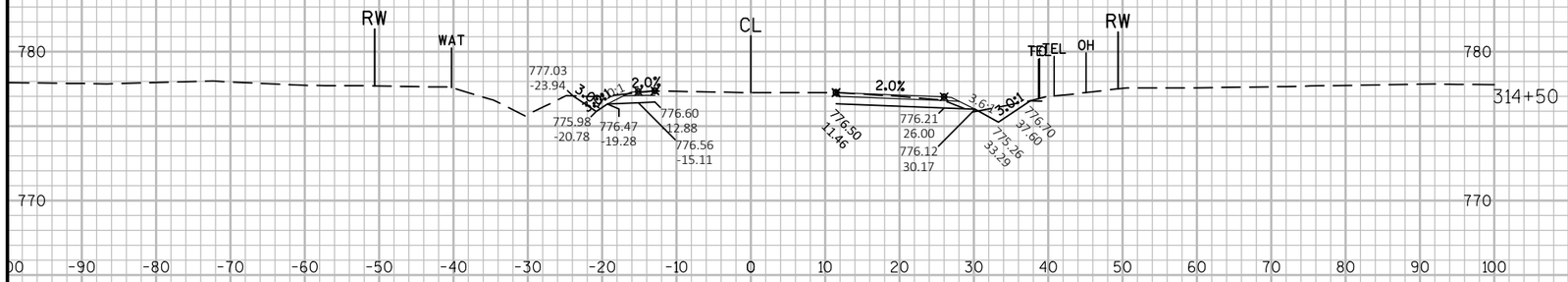

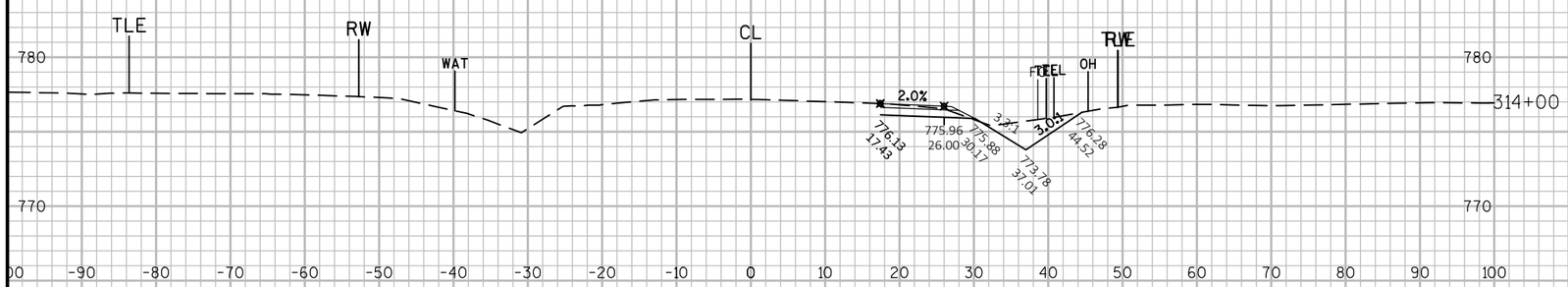

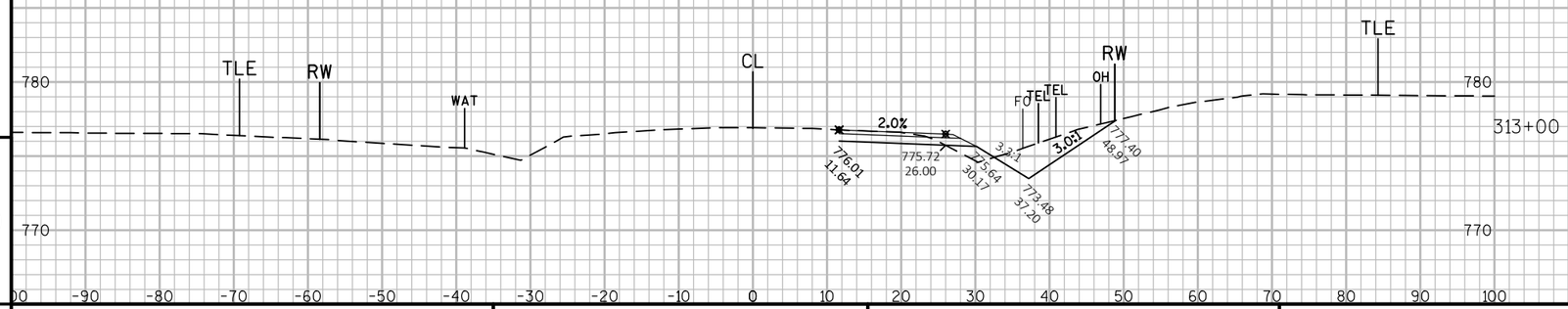

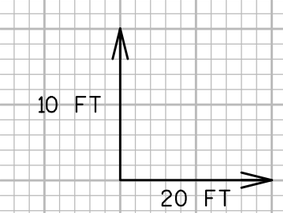

9

9

PROJECT NO:5144-01-75	HWY:STH 27	COUNTY:MONROE	CROSS SECTIONS:CROSS SECTION STH 27 STAGE 1C TEMP WIDENING	SHEET 417	E

FILE NAME : N:\PDS\C3D\51440105\SHEETSPLAN\090100_XS_TEMPWIDEN.DWG
LAYOUT NAME - 090106_XS_TW
PLOT DATE : 7/28/2017 9:41 AM PLOT BY : VALENTI, PAUL M PLOT NAME : PLOT SCALE : 1 IN:20 FT

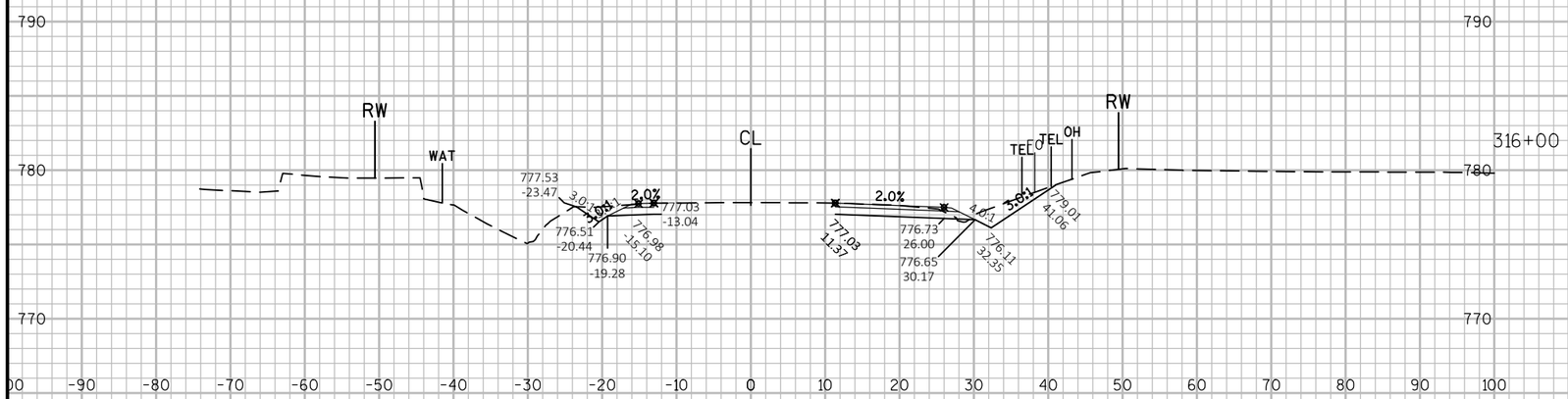

CE +45 LT

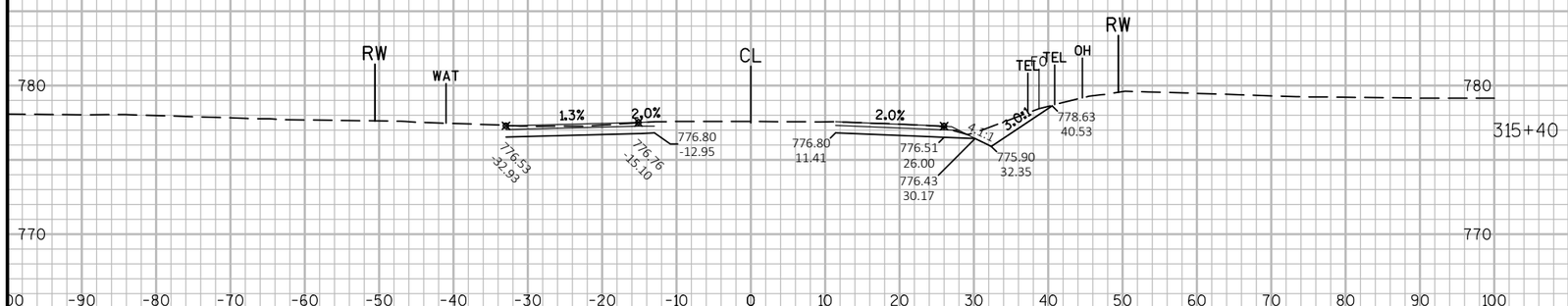

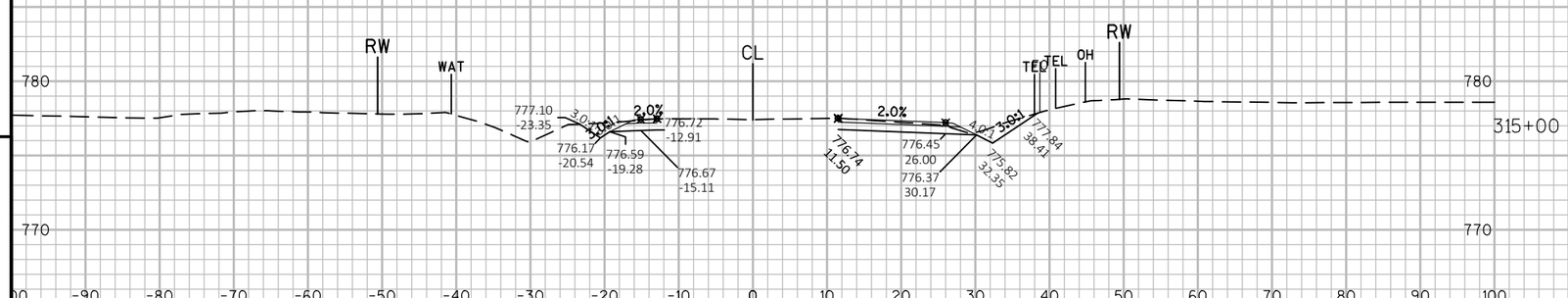

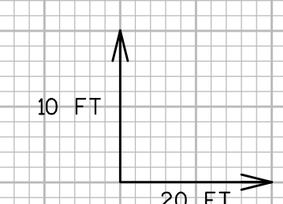

9

9

PROJECT NO:5144-01-75	HWY:STH 27	COUNTY:MONROE	CROSS SECTIONS:CROSS SECTION STH 27 STAGE 1C TEMP WIDENING	SHEET 418	E

FILE NAME : N:\PDS\C3D\51440105\SHEETSPLAN\090100_XS_TEMPWIDEN.DWG
LAYOUT NAME - 090107_XS_TW
PLOT DATE : 7/28/2017 9:42 AM PLOT BY : VALENTI, PAUL M PLOT NAME : PLOT SCALE : 1 IN:20 FT

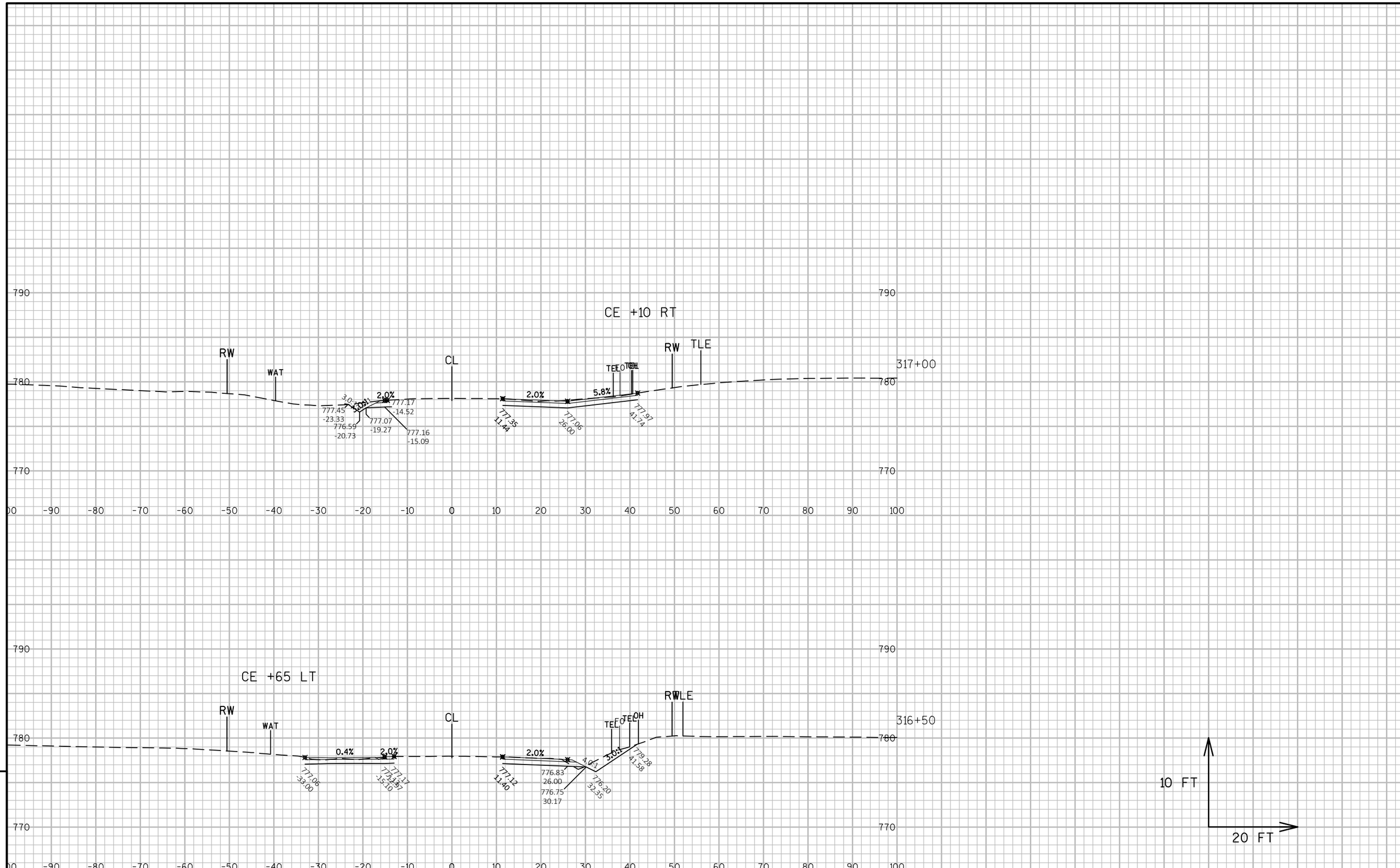

PROJECT NO:5144-01-75	HWY:STH 27	COUNTY:MONROE	CROSS SECTIONS:CROSS SECTION STH 27 STAGE 1C TEMP WIDENING	SHEET 419	E

FILE NAME : N:\PDS\C3D\51440105\SHEETSPLAN\090100_XS_TEMPWIDEN.DWG
LAYOUT NAME - 090108_XS_TW
PLOT DATE : 7/28/2017 9:43 AM PLOT BY : VALENTI, PAUL M PLOT NAME : PLOT SCALE : 1 IN:20 FT

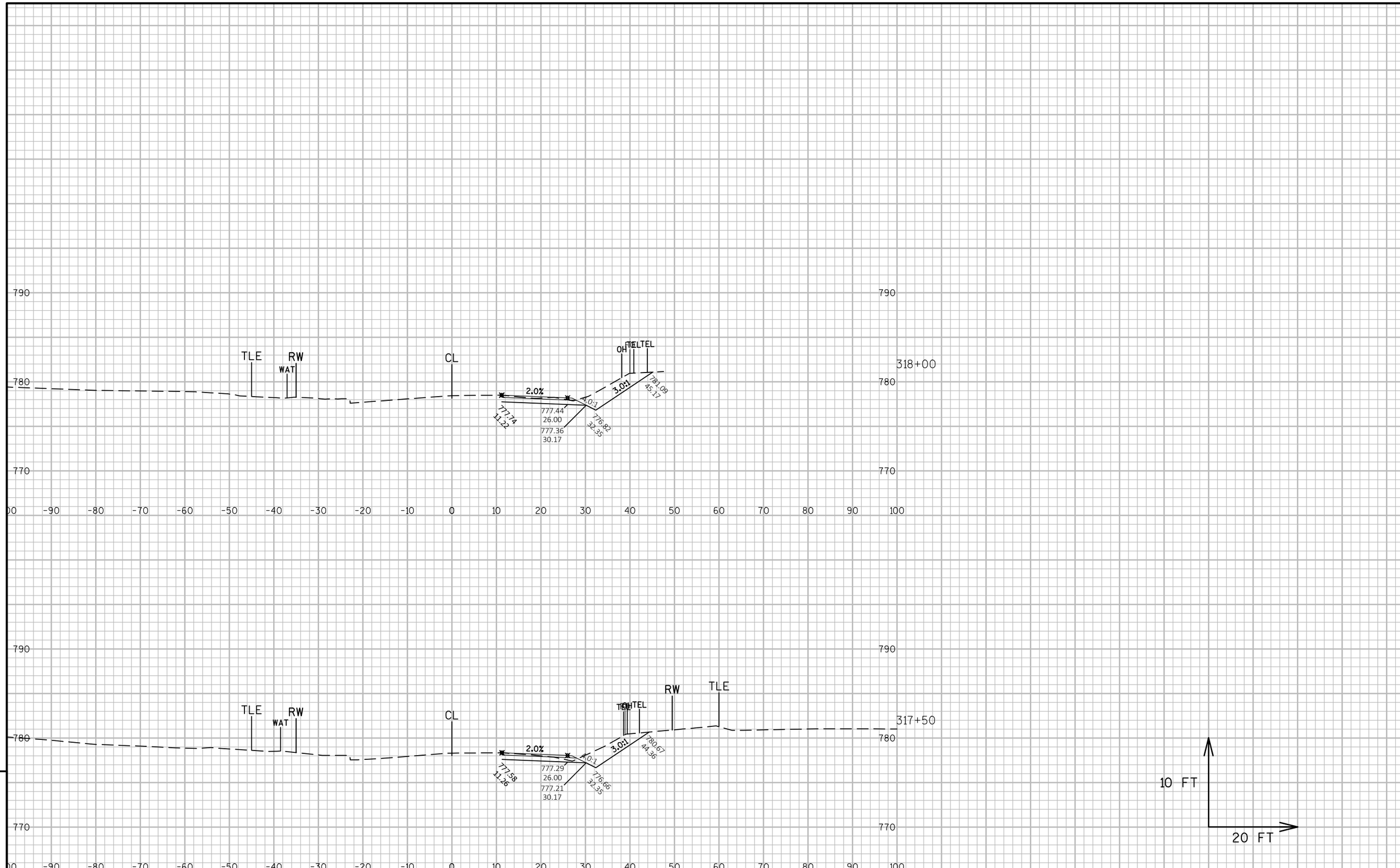

PROJECT NO:5144-01-75	HWY:STH 27	COUNTY:MONROE	CROSS SECTIONS:CROSS SECTION STH 27 STAGE 1C TEMP WIDENING	SHEET 420	E

FILE NAME : N:\PDS\C3D\51440105\SHEETSPLAN\090100_XS_TEMPWIDEN.DWG
LAYOUT NAME - 090109_XS_TW
PLOT DATE : 7/28/2017 9:43 AM PLOT BY : VALENTI, PAUL M PLOT NAME : PLOT SCALE : 1 IN:20 FT

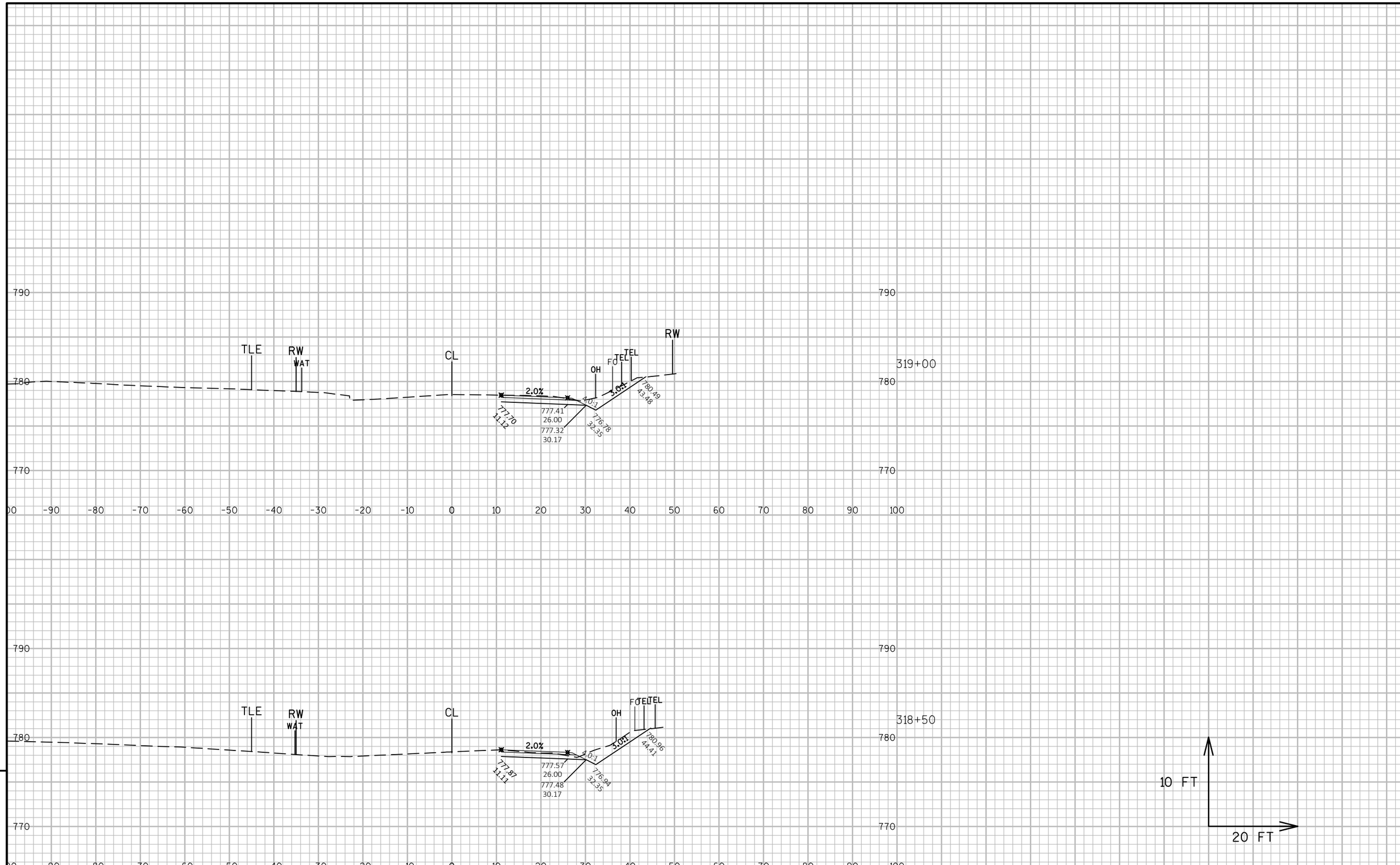

9

9

PROJECT NO:5144-01-75	HWY:STH 27	COUNTY:MONROE	CROSS SECTIONS:CROSS SECTION STH 27 STAGE 1C TEMP WIDENING	SHEET 421	E

FILE NAME : N:\PDS\C3D\51440105\SHEETSPLAN\090100_XS_TEMPWIDEN.DWG
LAYOUT NAME - 090110_XS_TW

PLOT DATE : 7/28/2017 9:44 AM PLOT BY : VALENTI, PAUL M PLOT NAME : PLOT SCALE : 1 IN:20 FT

WISDOT/CADDS SHEET 49

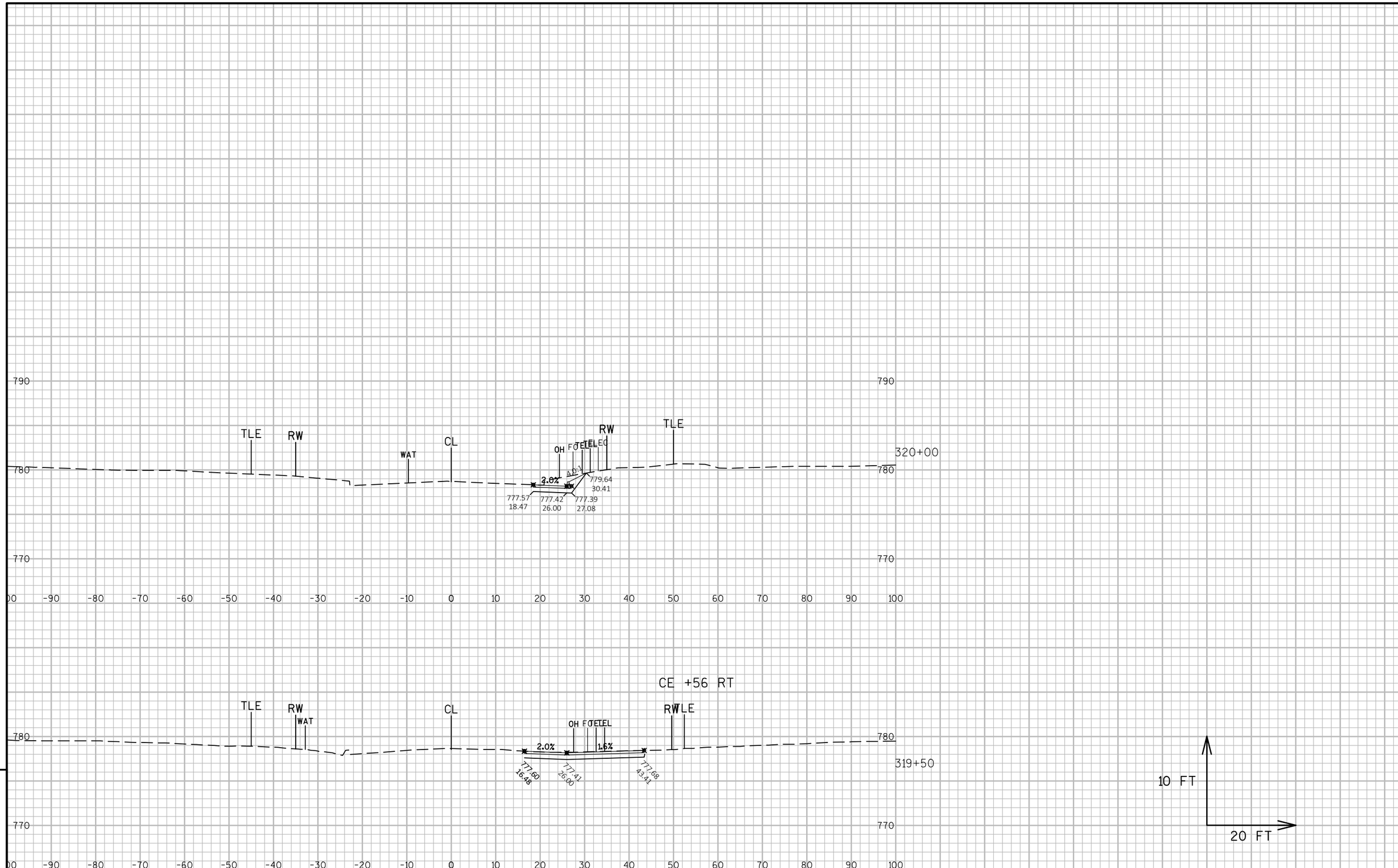

9

9

PROJECT NO:5144-01-75	HWY:STH 27	COUNTY:MONROE	CROSS SECTIONS:CROSS SECTION STH 27 STAGE 1C TEMP WIDENING	SHEET 422	E

FILE NAME : N:\PDS\C3D\51440105\SHEETSPLAN\090100_XS_TEMPWIDEN.DWG
LAYOUT NAME - 090111_XS_TW
PLOT DATE : 7/28/2017 9:44 AM PLOT BY : VALENTI, PAUL M PLOT NAME : PLOT SCALE : 1 IN:20 FT

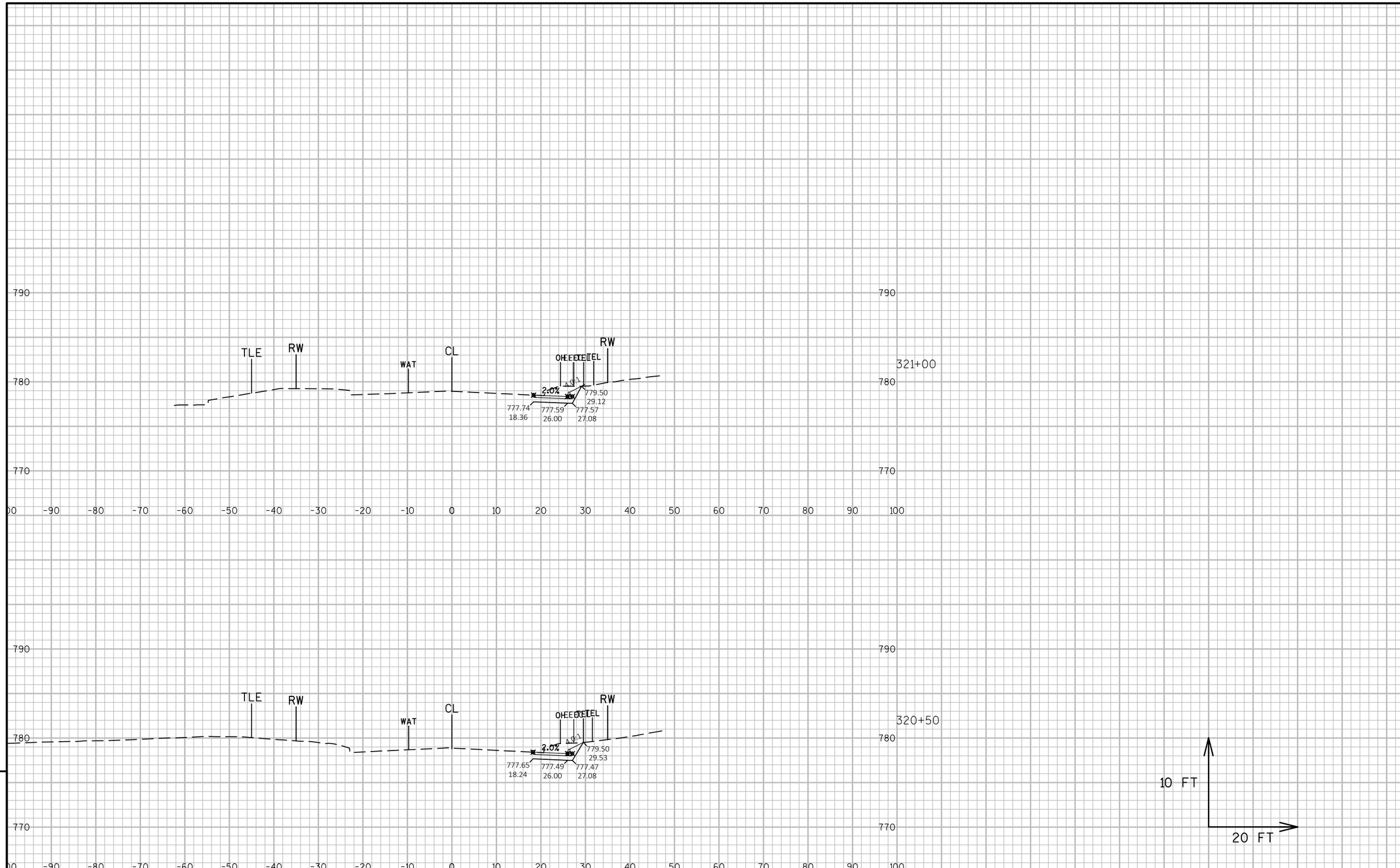

9

9

PROJECT NO:5144-01-75	HWY:STH 27	COUNTY:MONROE	CROSS SECTIONS:CROSS SECTION STH 27 STAGE 1C TEMP WIDENING	SHEET 423	E

FILE NAME : N:\PDS\C3D\51440105\SHEETSPLAN\090100_XS_TEMPWIDEN.DWG
LAYOUT NAME - 090112_XS_TW

PLOT DATE : 7/28/2017 9:44 AM PLOT BY : VALENTI, PAUL M PLOT NAME : PLOT SCALE : 1 IN:20 FT

WISDOT/CADDS SHEET 49

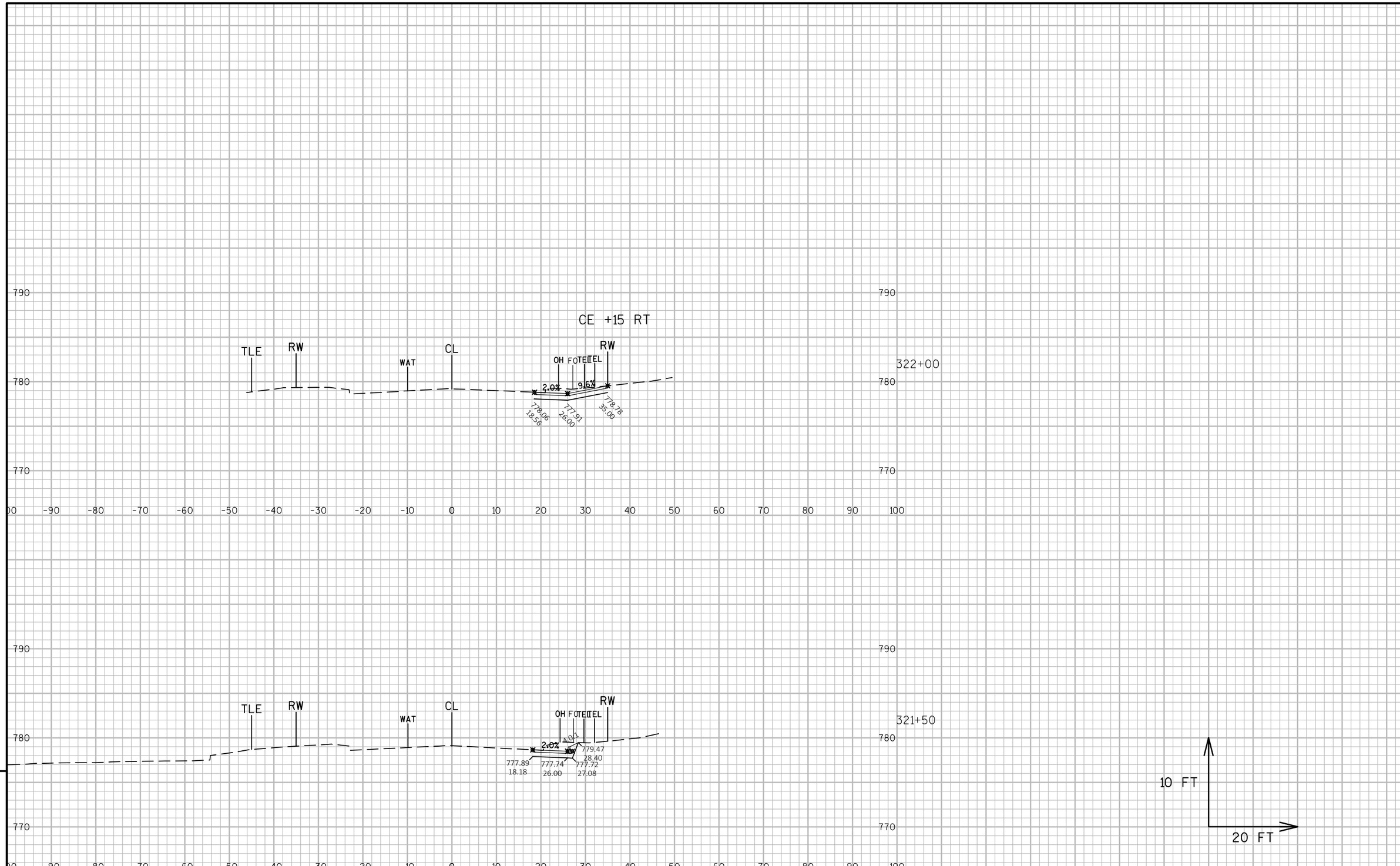

PROJECT NO:5144-01-75	HWY:STH 27	COUNTY:MONROE	CROSS SECTIONS:CROSS SECTION STH 27 STAGE 1C TEMP WIDENING	SHEET 424	E

FILE NAME : N:\PDS\C3D\51440105\SHEETSPLAN\090100_XS_TEMPWIDEN.DWG
LAYOUT NAME - 090113_XS_TW
PLOT DATE : 7/28/2017 9:45 AM PLOT BY : VALENTI, PAUL M PLOT NAME : PLOT SCALE : 1 IN:20 FT

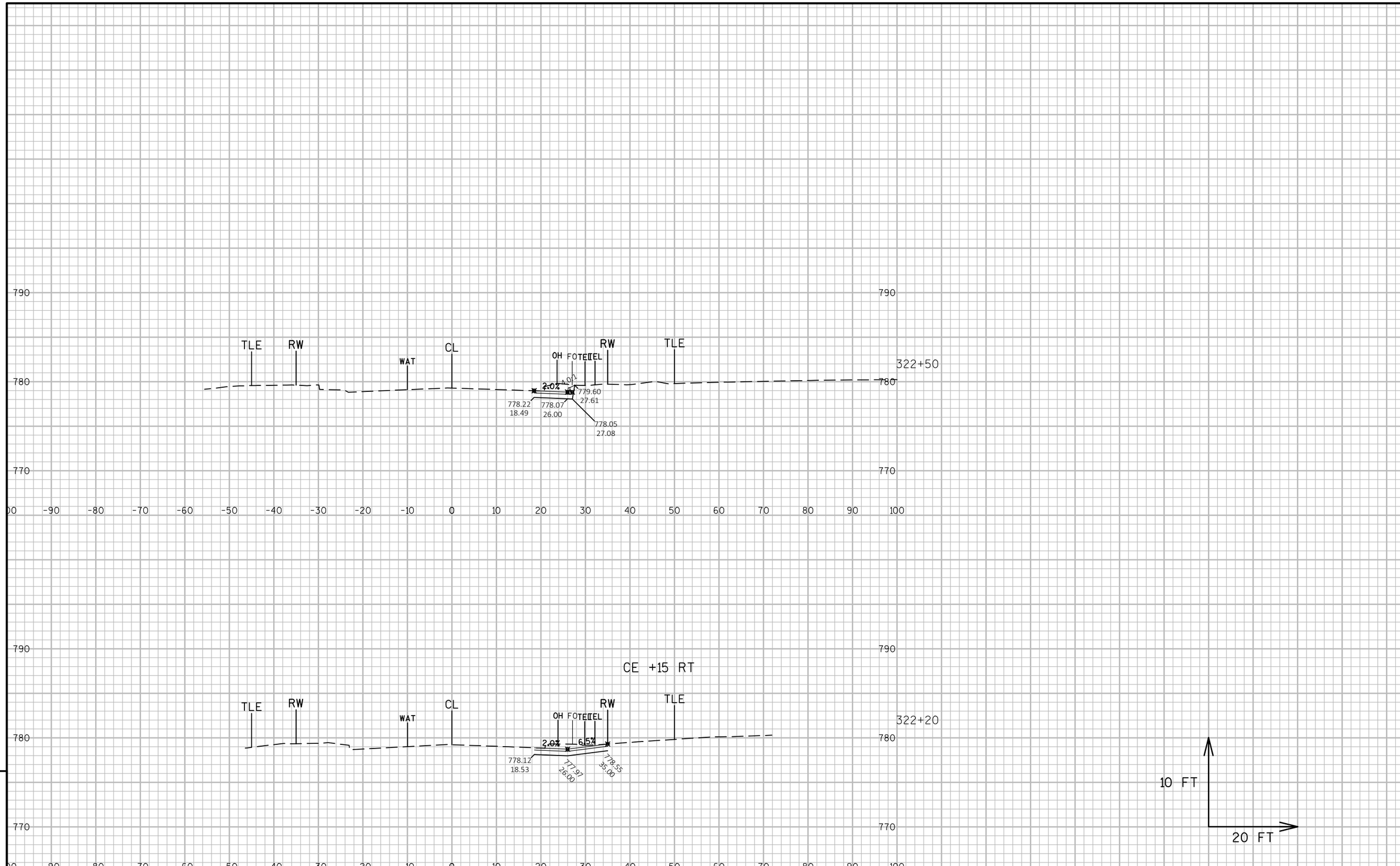

9

9

PROJECT NO:5144-01-75	HWY:STH 27	COUNTY:MONROE	CROSS SECTIONS:CROSS SECTION STH 27 STAGE 1C TEMP WIDENING	SHEET 425	E

FILE NAME : N:\PDS\C3D\51440105\SHEETSPLAN\090100_XS_TEMPWIDEN.DWG
LAYOUT NAME - 090114_XS_TW

PLOT DATE : 7/28/2017 9:45 AM PLOT BY : VALENTI, PAUL M PLOT NAME : PLOT SCALE : 1 IN:20 FT

WISDOT/CADDS SHEET 49

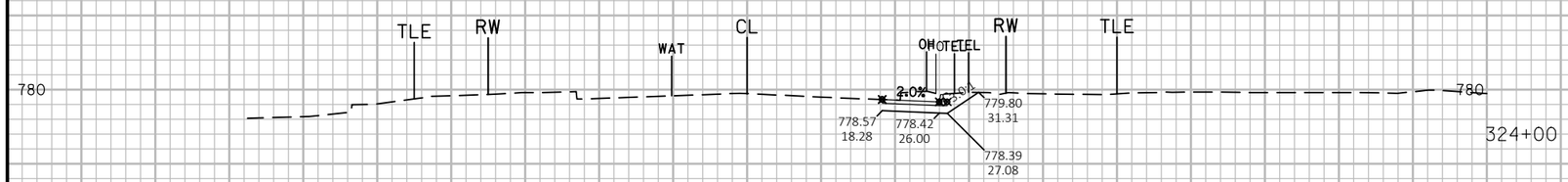

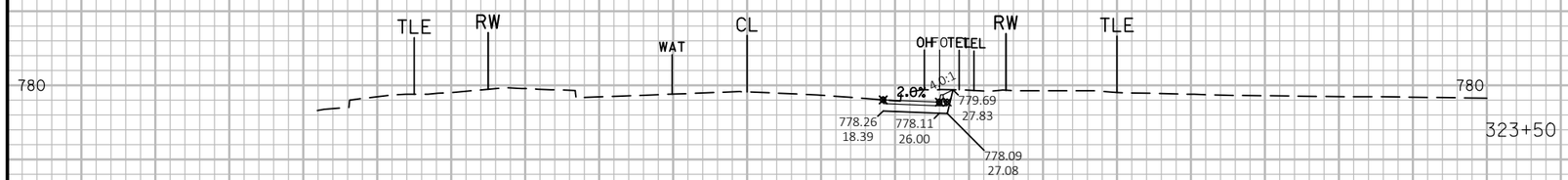

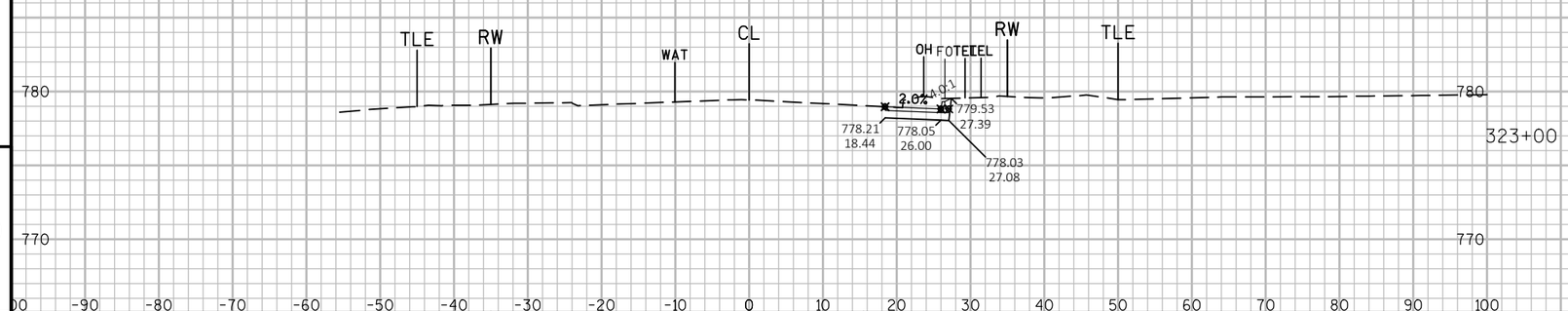

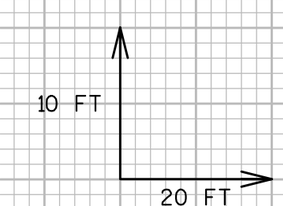

9

9

PROJECT NO:5144-01-75	HWY:STH 27	COUNTY:MONROE	CROSS SECTIONS:CROSS SECTION STH 27 STAGE 1C TEMP WIDENING	SHEET 426	E

FILE NAME : N:\PDS\C3D\51440105\SHEETSPLAN\090100_XS_TEMPWIDEN.DWG
LAYOUT NAME - 090115_XS_TW
PLOT DATE : 7/28/2017 9:46 AM PLOT BY : VALENTI, PAUL M PLOT NAME : PLOT SCALE : 1 IN:20 FT

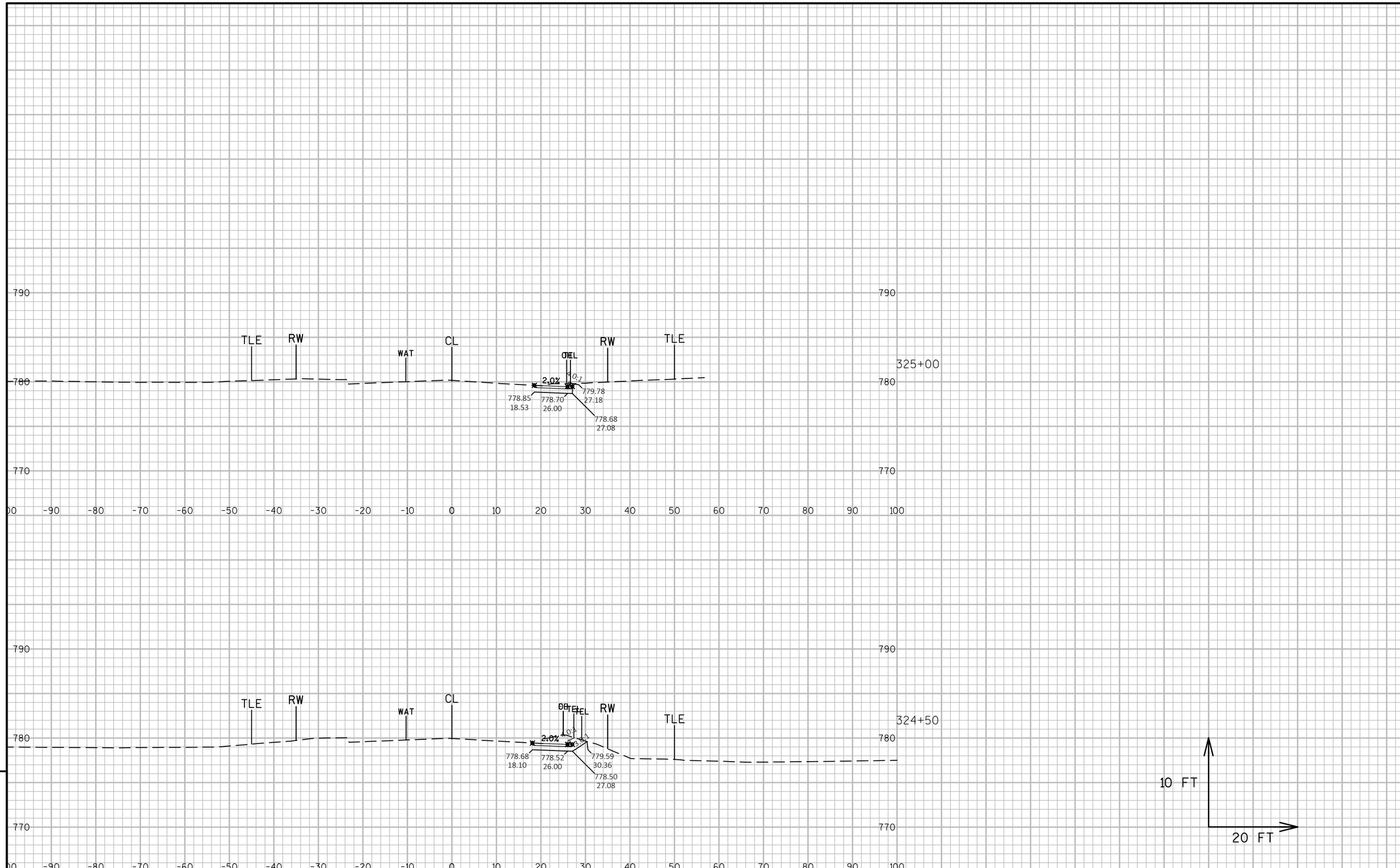

PROJECT NO:5144-01-75	HWY:STH 27	COUNTY:MONROE	CROSS SECTIONS:CROSS SECTION STH 27 STAGE 1C TEMP WIDENING	SHEET 427	E

FILE NAME : N:\PDS\C3D\51440105\SHEETSPLAN\090100_XS_TEMPWIDEN.DWG
LAYOUT NAME - 090116_XS_TW
PLOT DATE : 7/28/2017 9:46 AM PLOT BY : VALENTI, PAUL M PLOT NAME : PLOT SCALE : 1 IN:20 FT

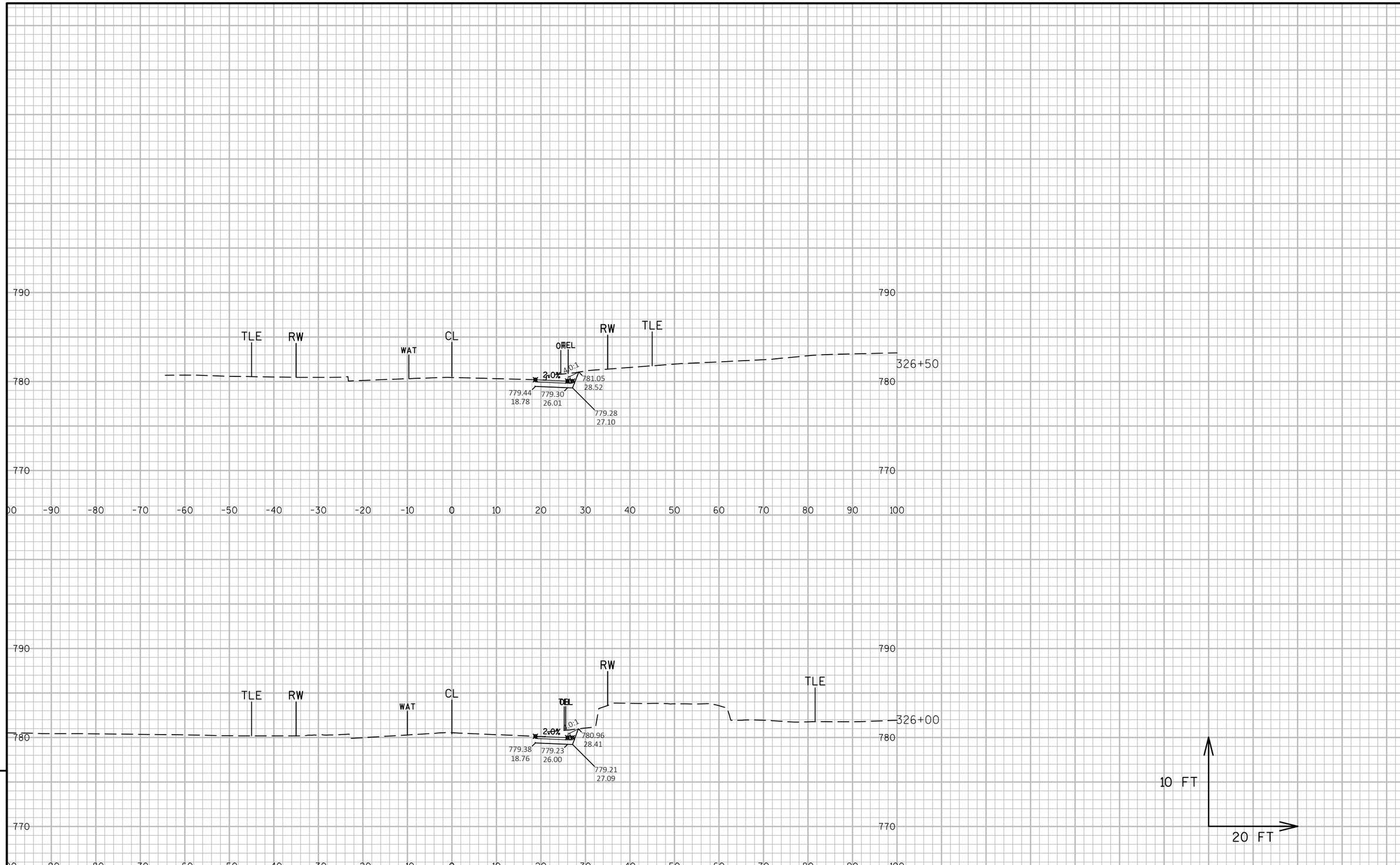

9

9

PROJECT NO:5144-01-75	HWY:STH 27	COUNTY:MONROE	CROSS SECTIONS:CROSS SECTION STH 27 STAGE 1C TEMP WIDENING	SHEET 428	E

FILE NAME : N:\PDS\C3D\51440105\SHEETSPLAN\090100_XS_TEMPWIDEN.DWG
LAYOUT NAME - 090117_XS_TW

PLOT DATE : 7/28/2017 9:46 AM PLOT BY : VALENTI, PAUL M PLOT NAME : PLOT SCALE : 1 IN:20 FT

WISDOT/CADDS SHEET 49

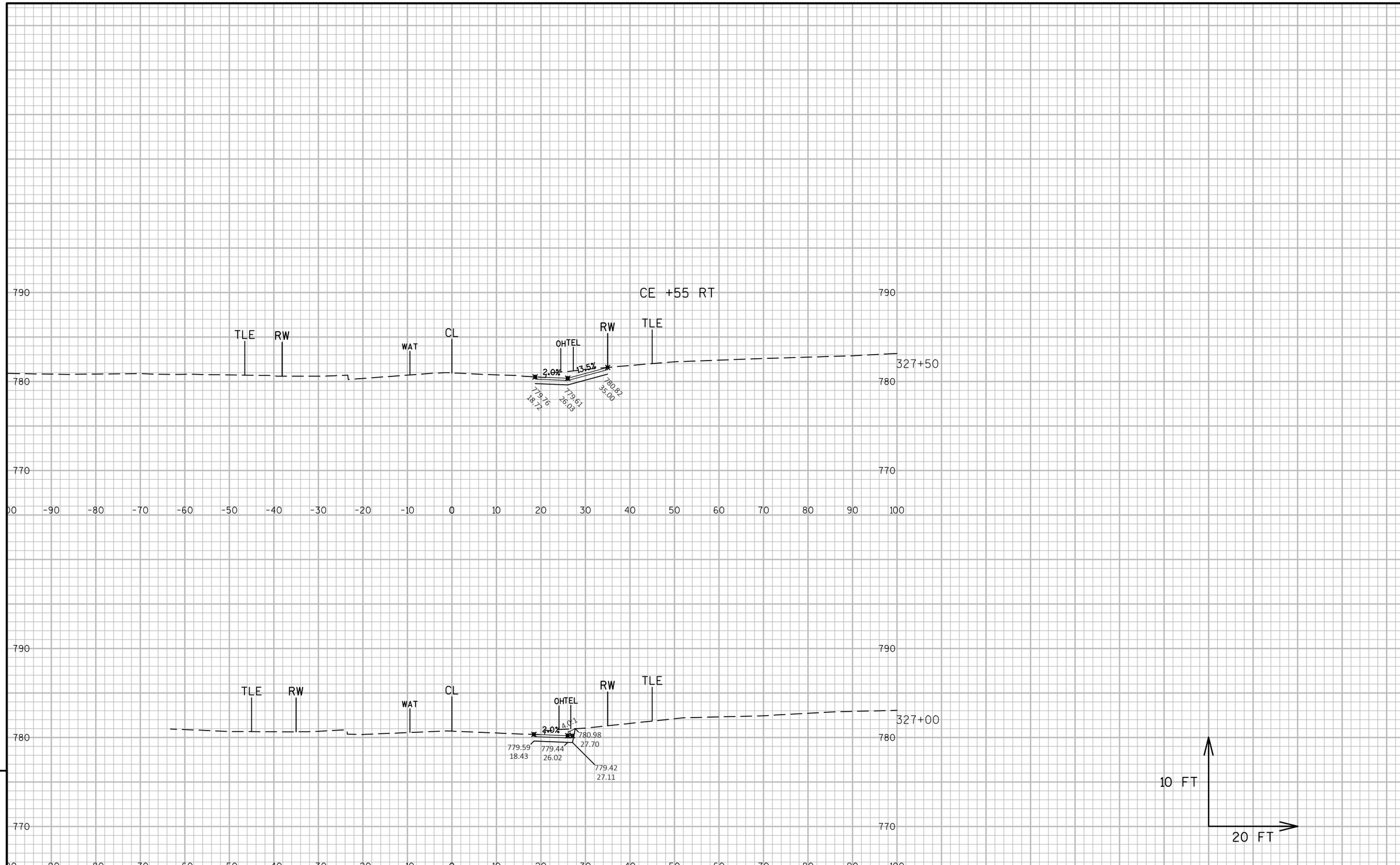

PROJECT NO:5144-01-75	HWY:STH 27	COUNTY:MONROE	CROSS SECTIONS:CROSS SECTION STH 27 STAGE 1C TEMP WIDENING	SHEET 429	E

FILE NAME : N:\PDS\C3D\51440105\SHEETSPLAN\090100_XS_TEMPWIDEN.DWG
LAYOUT NAME - 090118_XS_TW
PLOT DATE : 7/28/2017 9:47 AM PLOT BY : VALENTI, PAUL M PLOT NAME : PLOT SCALE : 1 IN:20 FT

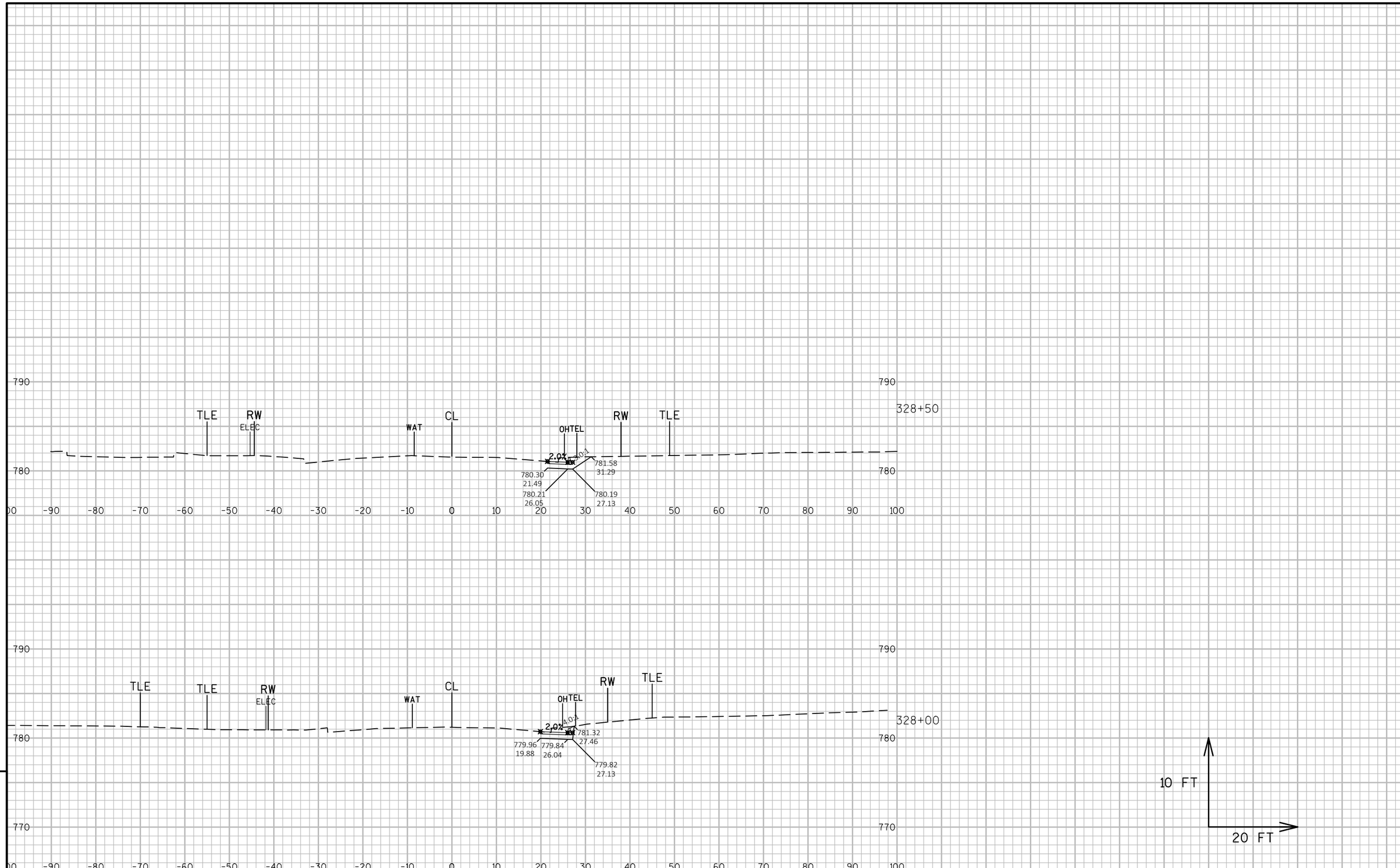

9

9

PROJECT NO:5144-01-75	HWY:STH 27	COUNTY:MONROE	CROSS SECTIONS:CROSS SECTION STH 27 STAGE 1C TEMP WIDENING	SHEET 430	E

FILE NAME : N:\PDS\C3D\51440105\SHEETSPLAN\090100_XS_TEMPWIDEN.DWG
LAYOUT NAME - 090119_XS_TW

PLOT DATE : 7/28/2017 9:47 AM PLOT BY : VALENTI, PAUL M PLOT NAME : PLOT SCALE : 1 IN:20 FT

WISDOT/CADDS SHEET 49

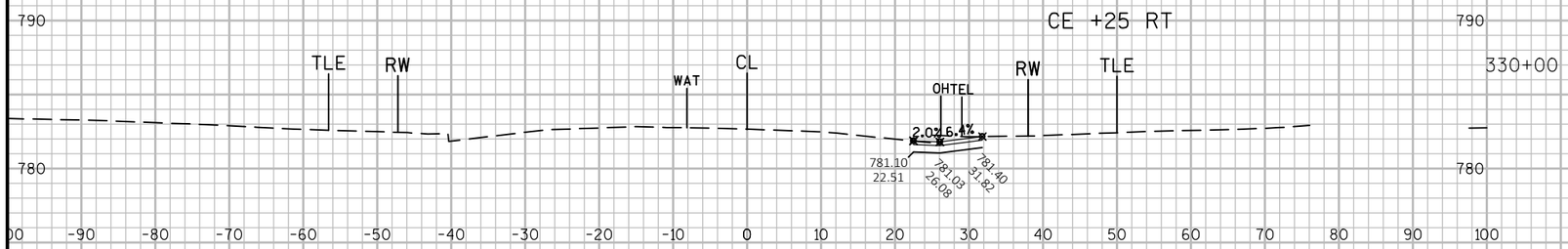

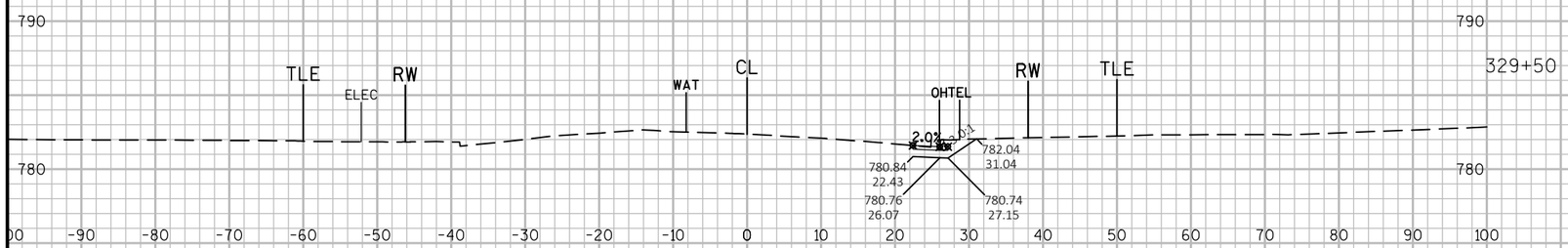

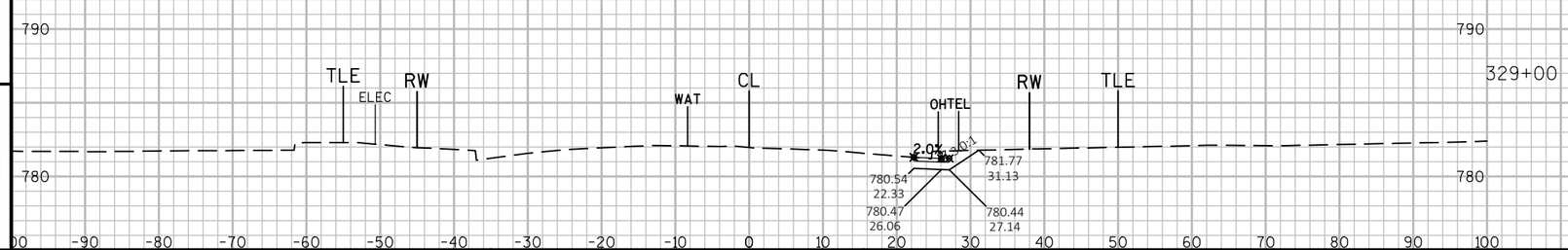

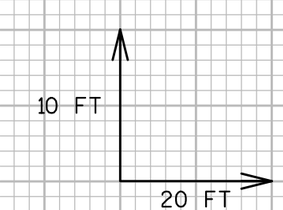

9

9

PROJECT NO:5144-01-75	HWY:STH 27	COUNTY:MONROE	CROSS SECTIONS:CROSS SECTION STH 27 STAGE 1C TEMP WIDENING	SHEET 431	E

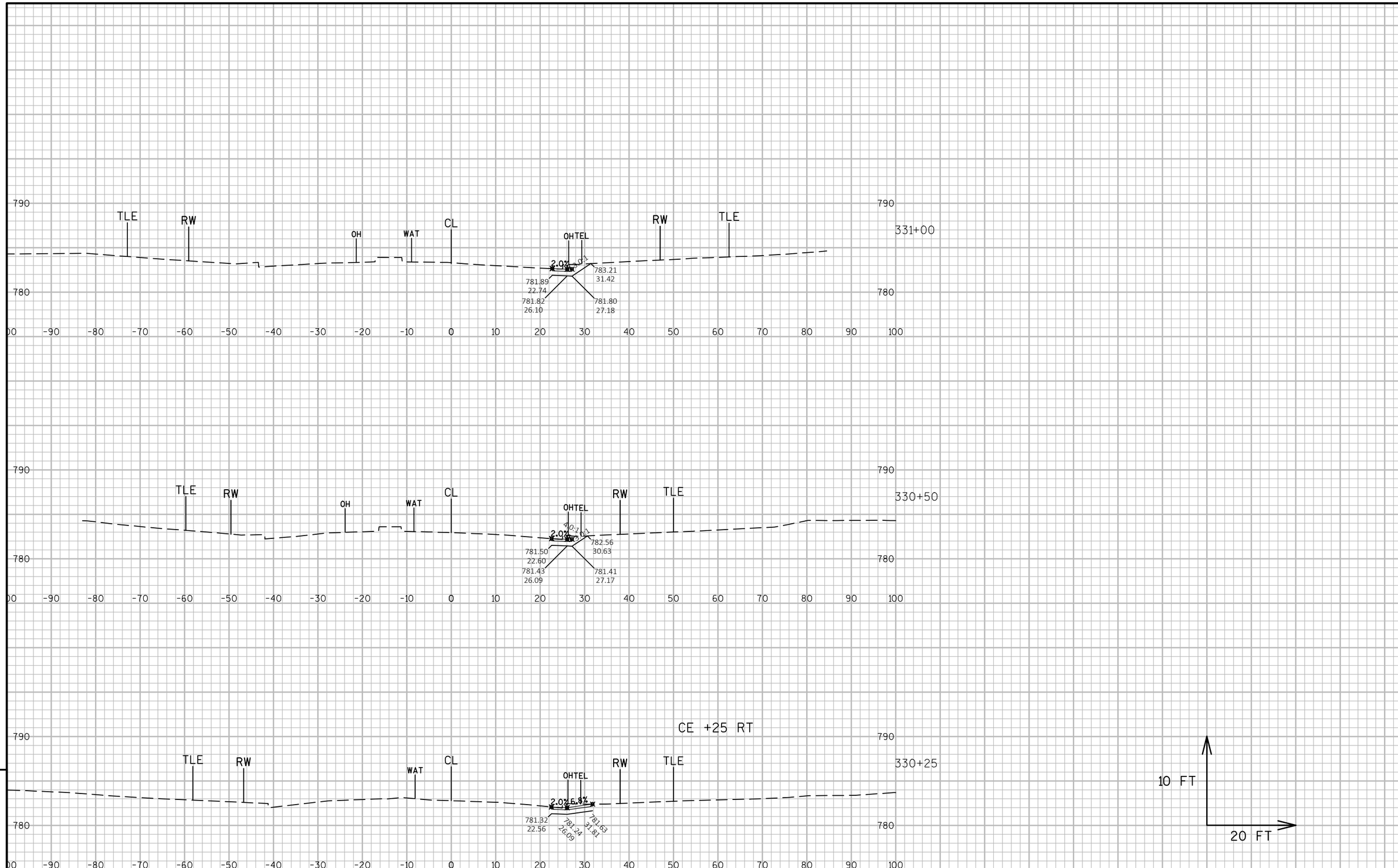

9

9

PROJECT NO:5144-01-75	HWY:STH 27	COUNTY:MONROE	CROSS SECTIONS:CROSS SECTION STH 27 STAGE 1C TEMP WIDENING	SHEET 432	E

FILE NAME : N:\PDS\C3D\51440105\SHEETSPLAN\090100_XS_TEMPWIDEN.DWG
LAYOUT NAME - 090121_XS_TW

PLOT DATE : 7/28/2017 9:48 AM PLOT BY : VALENTI, PAUL M PLOT NAME : PLOT SCALE : 1 IN:20 FT

WISDOT/CADDS SHEET 49

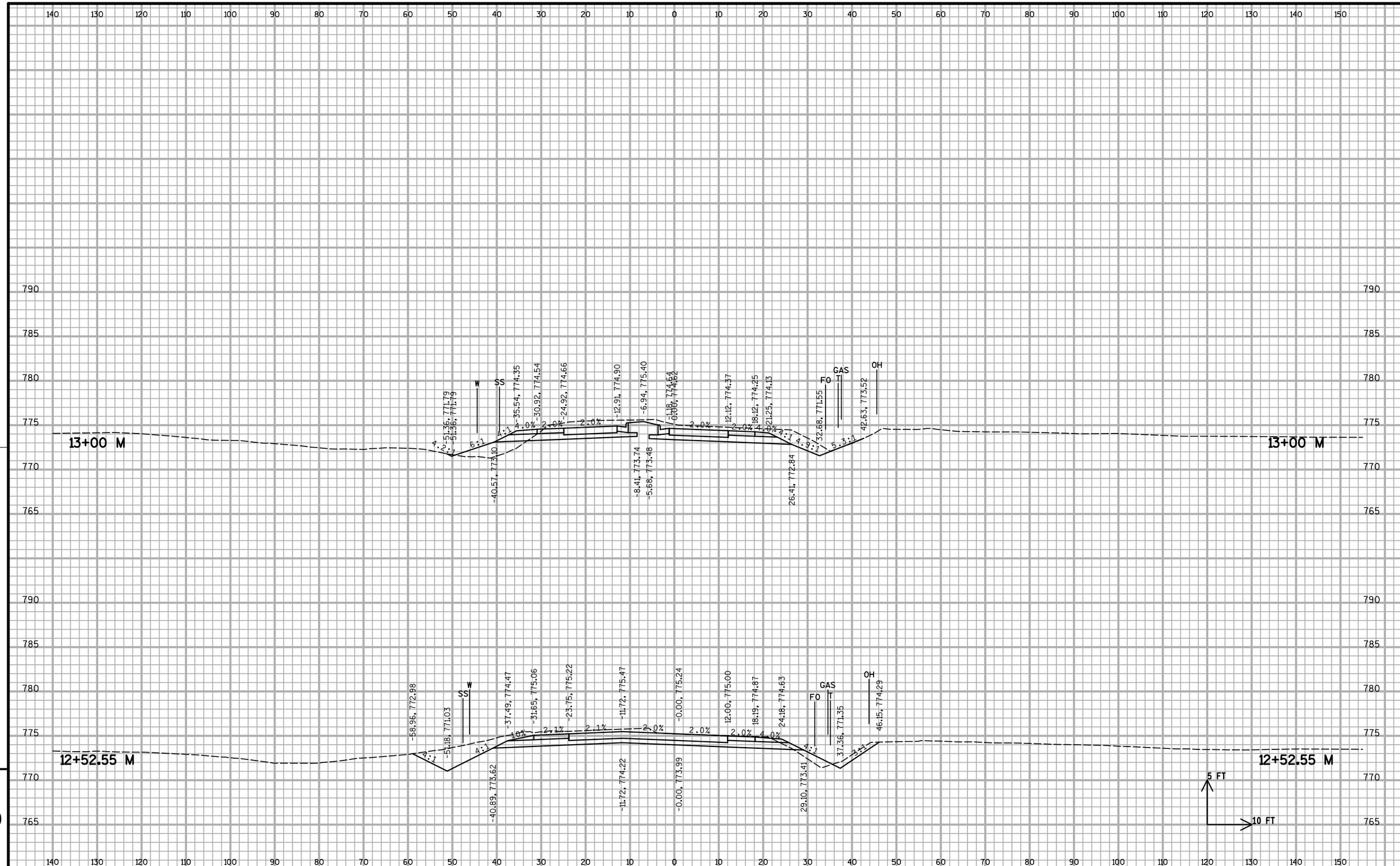

PROJECT NO: 5144-01-75	HWY: STH 27	COUNTY: MONROE	CROSS SECTIONS: CHAIN M	SHEET 433	E

FILE NAME : S:\MAD\1000--1099\1089\415\Micros\Plan\090202_xs_M.dgn PLOT DATE : 7/14/2017 PLOT BY : _username_ PLOT NAME : PLOT SCALE : $$.....plotscale.....$$ WISDOT/CADDS SHEET 21

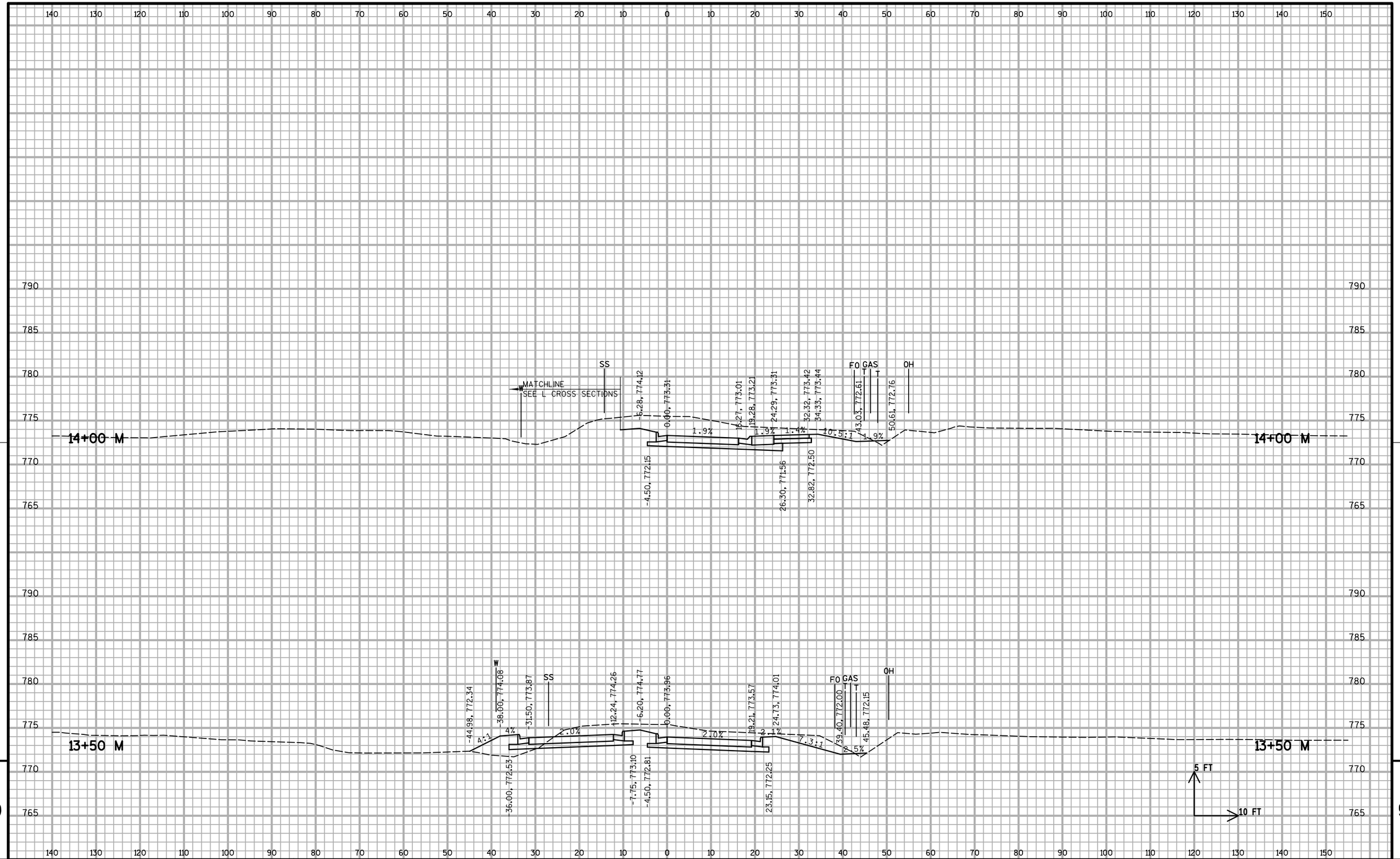

PROJECT NO: 5144-01-75	HWY: STH 27	COUNTY: MONROE	CROSS SECTIONS: CHAIN M	SHEET 434	E

FILE NAME : S:\MAD\1000--1099\1089\415\Micros\Plan\090202_xs_M.dgn PLOT DATE : 7/14/2017 PLOT BY : _username_ PLOT NAME : PLOT SCALE : $$.....plotscale.....$$ WISDOT/CADDS SHEET 21

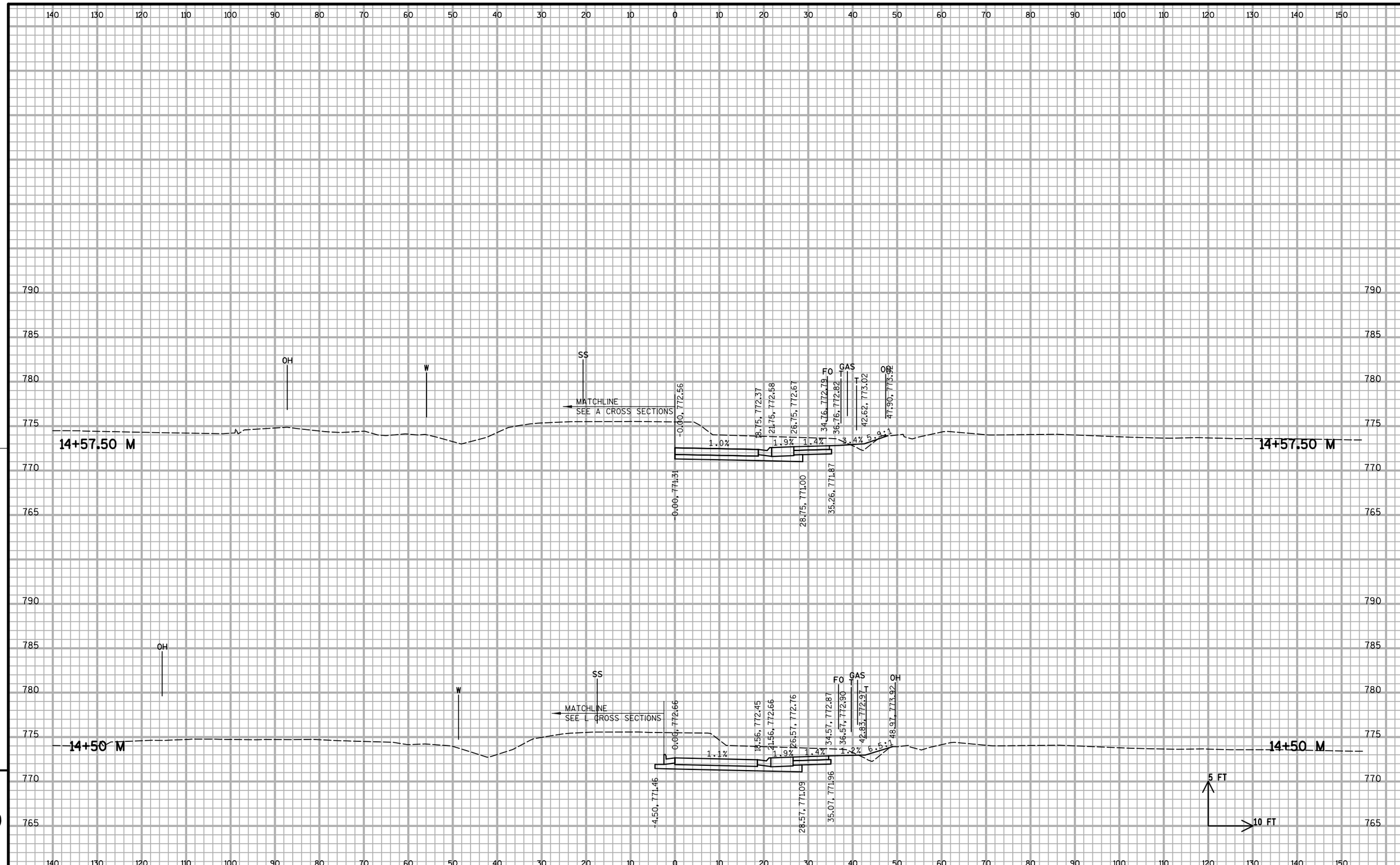

PROJECT NO: 5144-01-75	HWY: STH 27	COUNTY: MONROE	CROSS SECTIONS: CHAIN M	SHEET 435	E

FILE NAME : S:\MAD\1000--1099\1089\415\Micros\Plan\090202_xs_M.dgn PLOT DATE : 7/14/2017 PLOT BY : _username_ PLOT NAME : PLOT SCALE : $$.....plotscale.....$$ WISDOT/CADDS SHEET 21

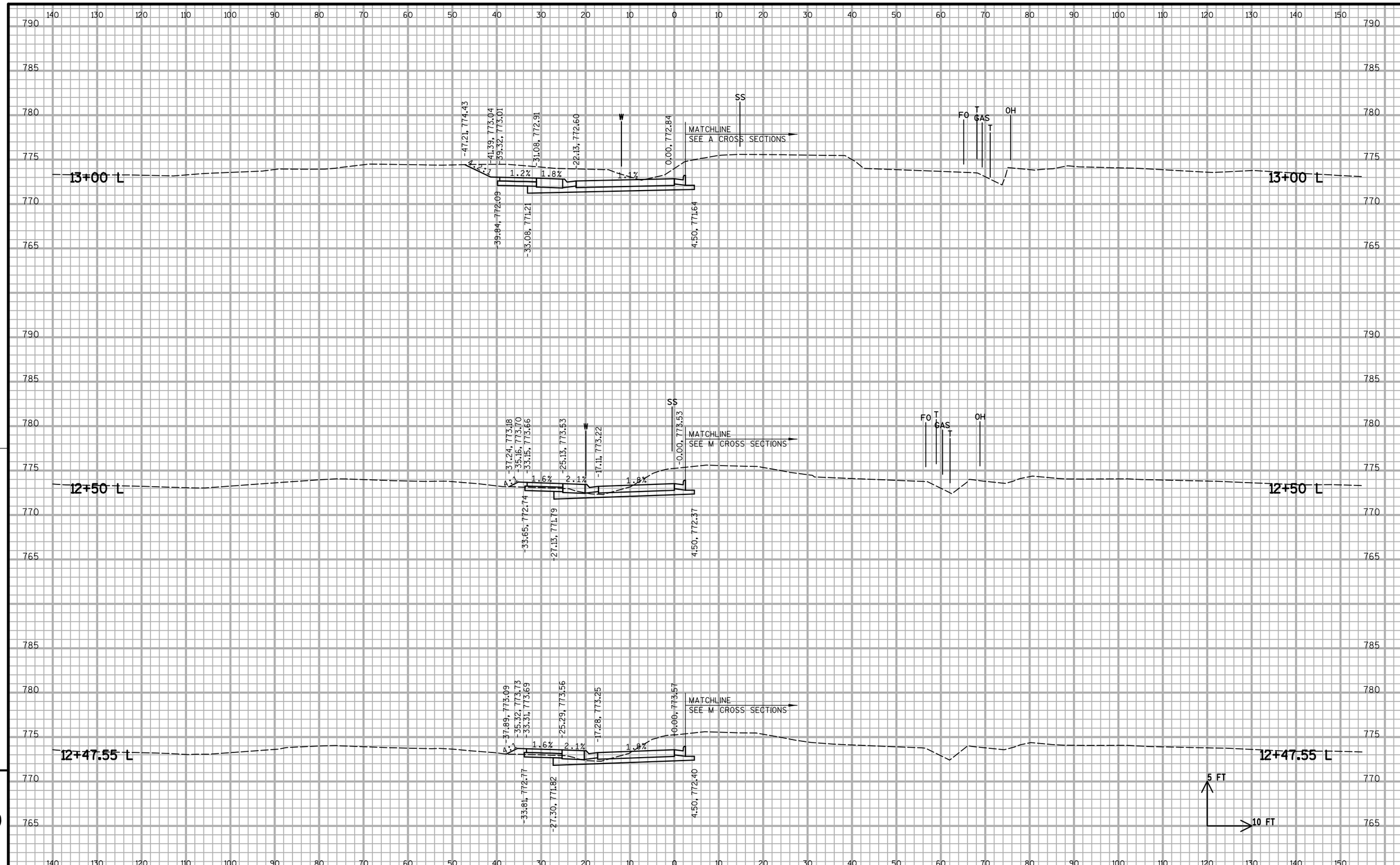

PROJECT NO: 5144-01-75	HWY: STH 27	COUNTY: MONROE	CROSS SECTIONS: CHAIN L	SHEET 436	E

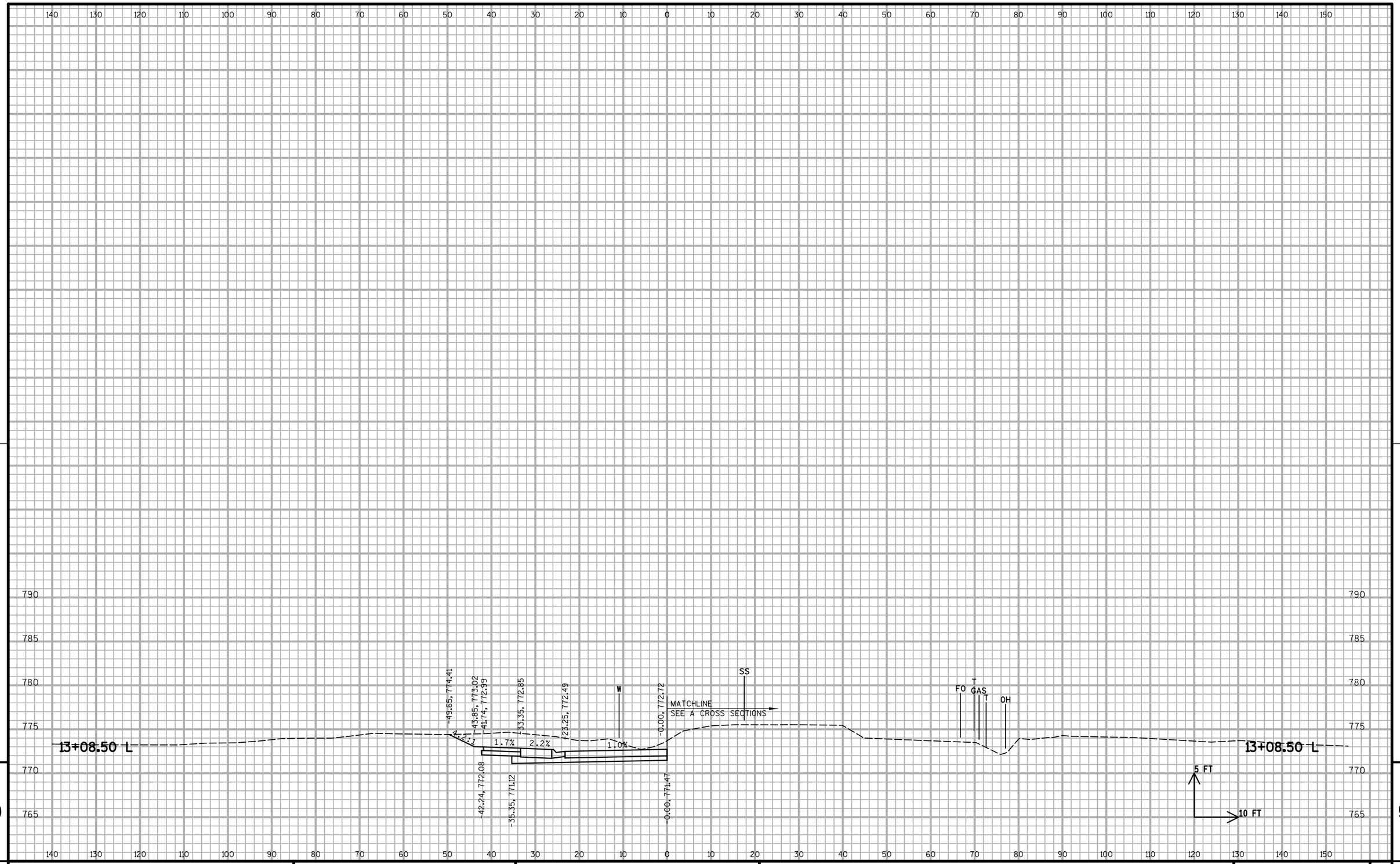

PROJECT NO: 5144-01-75	HWY: STH 27	COUNTY: MONROE	CROSS SECTIONS: CHAIN L	SHEET 437	E

FILE NAME : S:\MAD\1000--1099\1089\415\Micros\Plan\090209_xs_L.dgn PLOT DATE : 7/14/2017 PLOT BY : _username_ PLOT NAME : PLOT SCALE : $$.....plotscale.....$$ WISDOT/CADDS SHEET 21

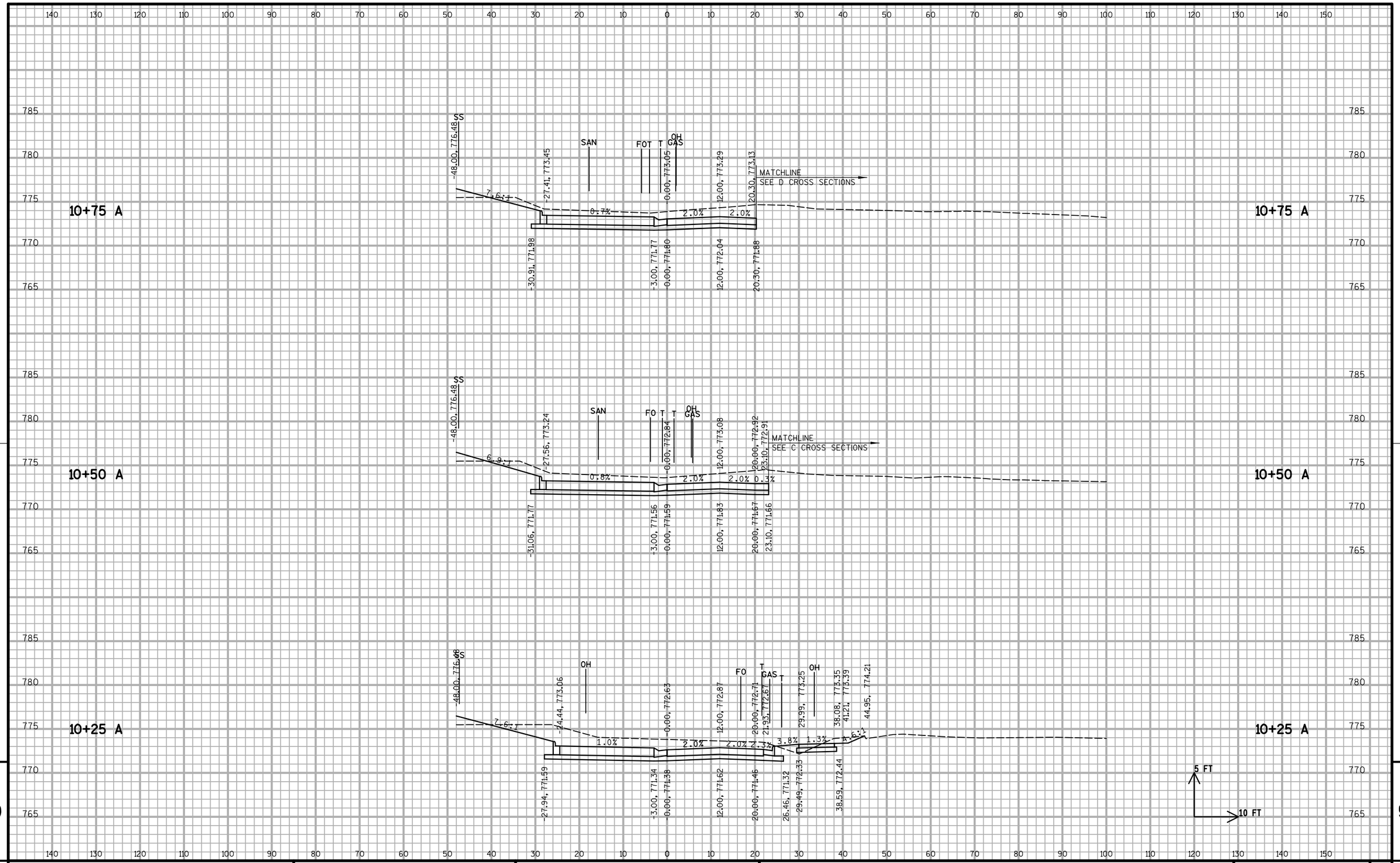

PROJECT NO: 5144-01-75	HWY: STH 27	COUNTY: MONROE	CROSS SECTIONS: CHAIN A	SHEET 438	E

FILE NAME : S:\MAD\1000--1099\1089\415\Micros\Plan\090201_xs_A.dgn PLOT DATE : 7/14/2017 PLOT BY : _username_ PLOT NAME : PLOT SCALE : $$.....plotscale.....$$ WISDOT/CADDS SHEET 21

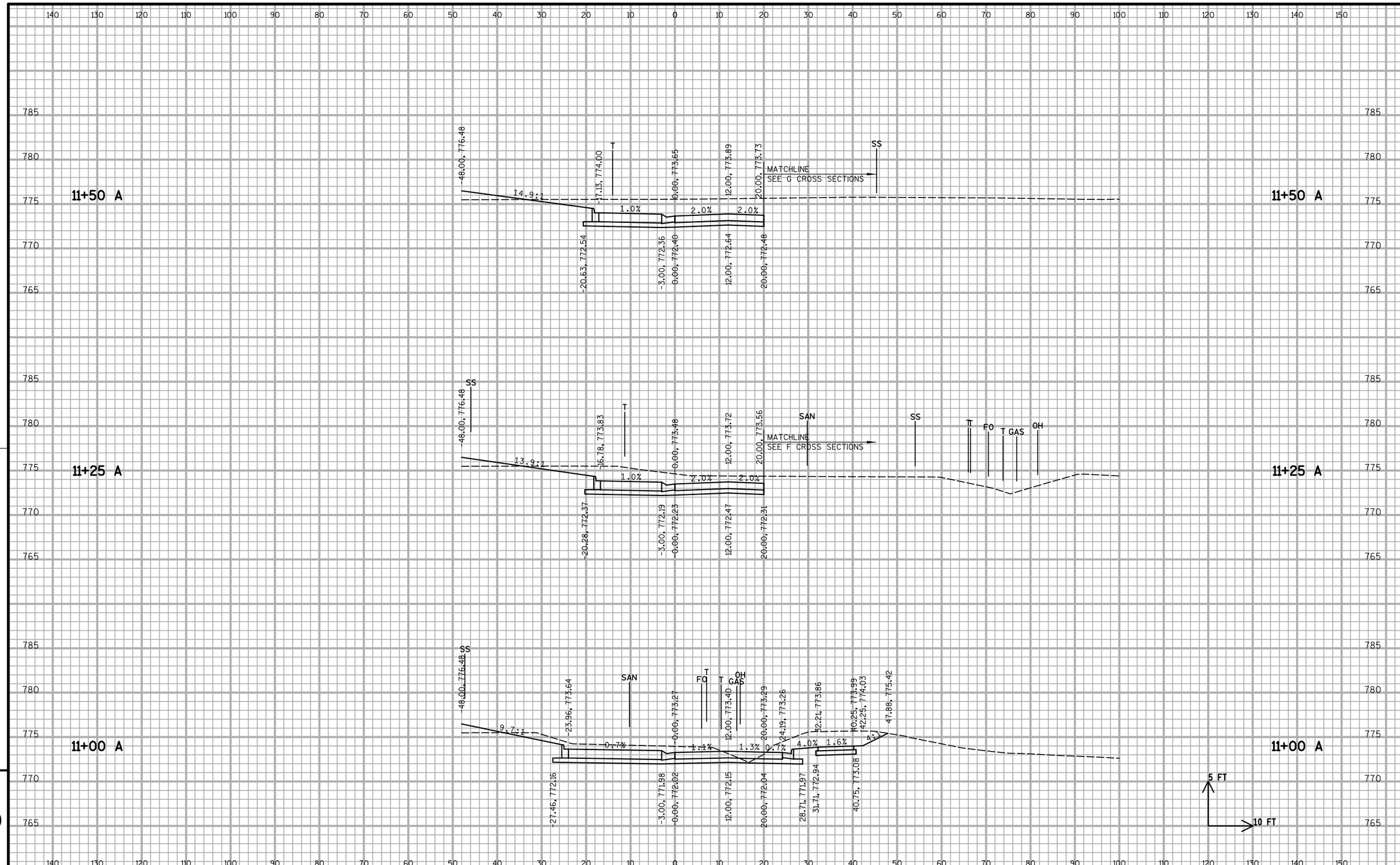

9

9

PROJECT NO: 5144-01-75	HWY: STH 27	COUNTY: MONROE	CROSS SECTIONS: CHAIN A	SHEET 439	E

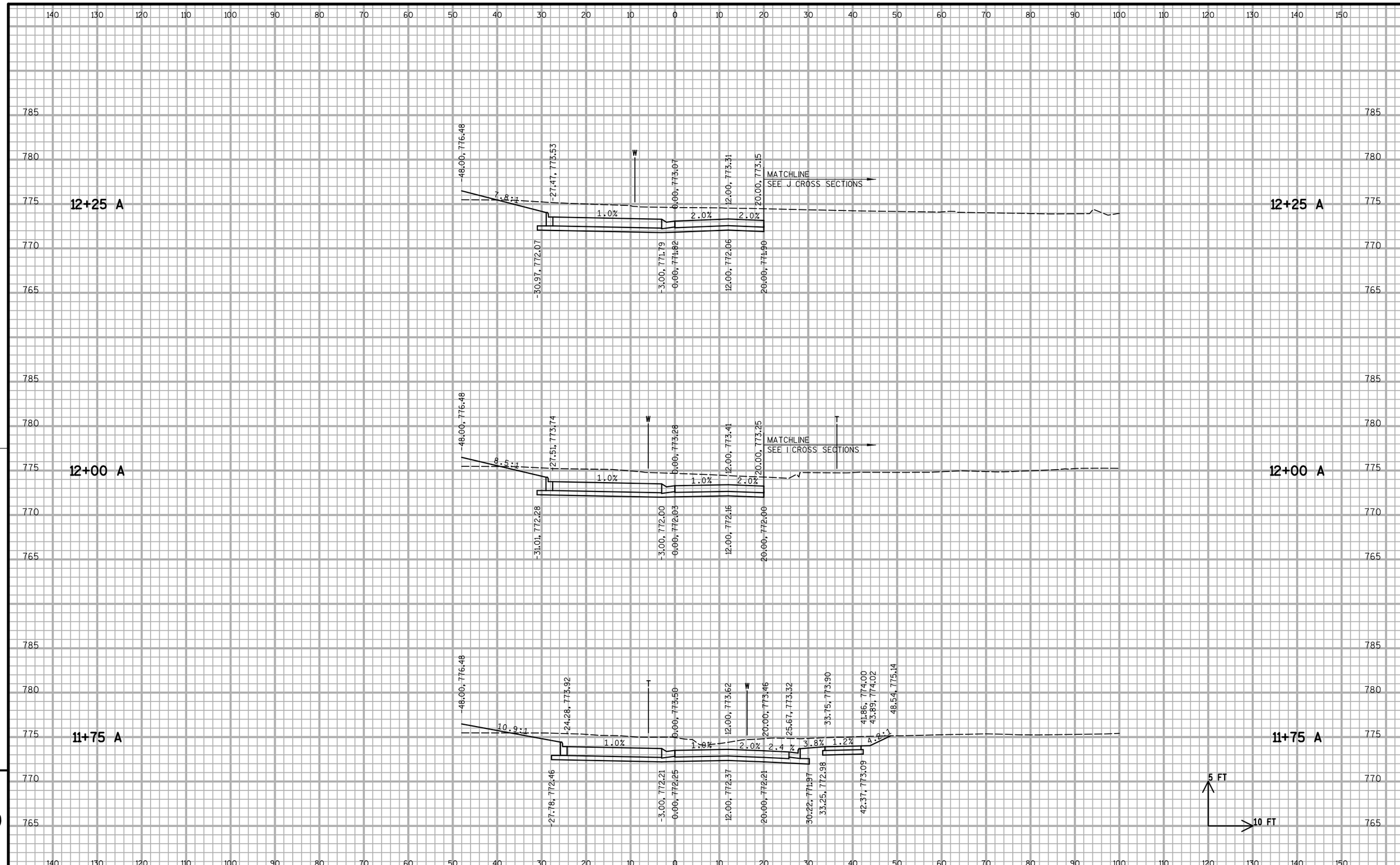

9

PROJECT NO: 5144-01-75	HWY: STH 27	COUNTY: MONROE	CROSS SECTIONS: CHAIN A	SHEET 440	E

FILE NAME : S:\MAD\1000--1099\1089\415\Micros\Plan\090201_xs_A.dgn PLOT DATE : 7/14/2017 PLOT BY : _username_ PLOT NAME : PLOT SCALE : $$.....plotscale.....$$ WISDOT/CADDS SHEET 21

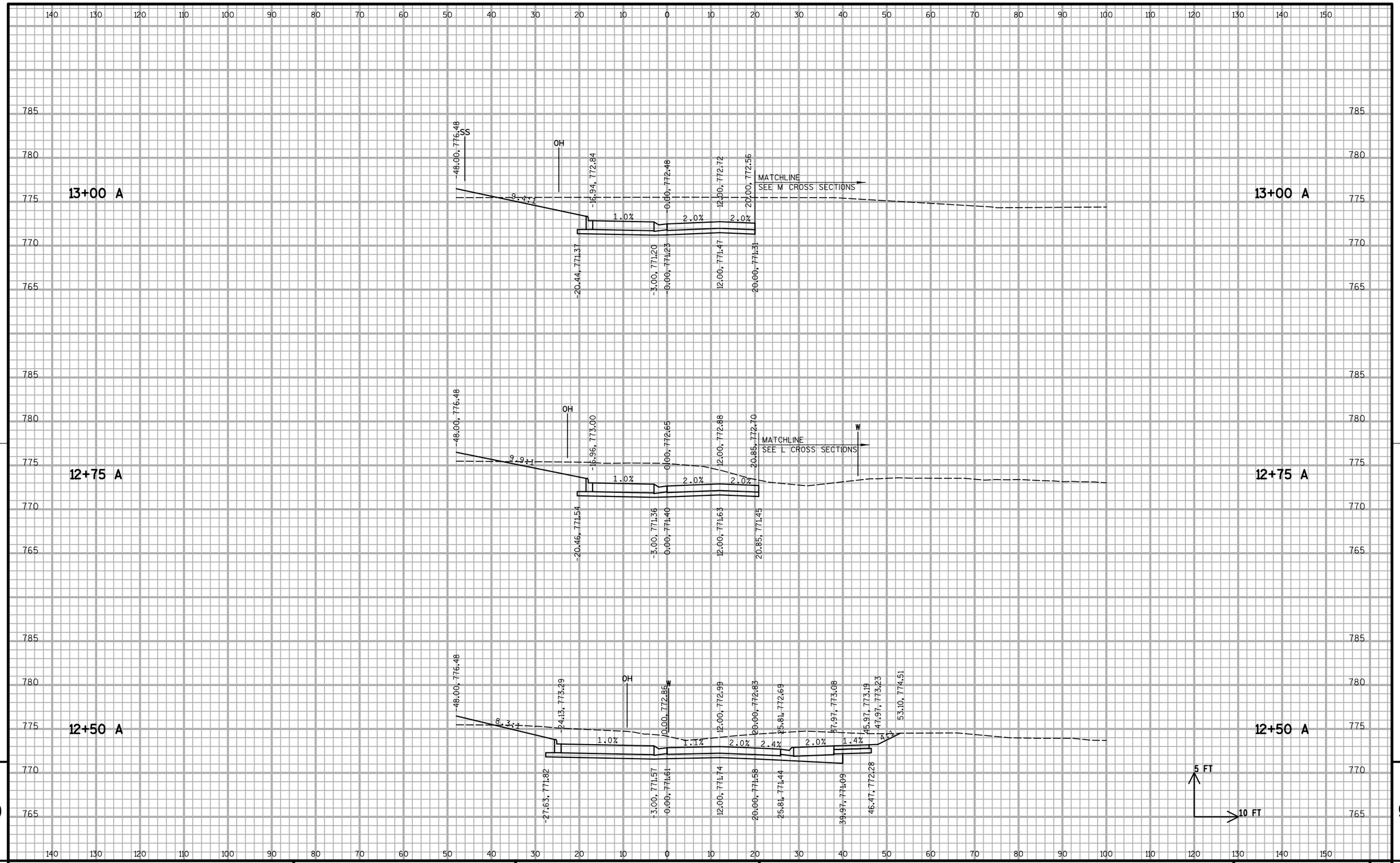

PROJECT NO: 5144-01-75	HWY: STH 27	COUNTY: MONROE	CROSS SECTIONS: CHAIN A	SHEET 441	E

FILE NAME : S:\MAD\1000--1099\1089\415\Micros\Plan\090201_xs_A.dgn PLOT DATE : 7/14/2017 PLOT BY : _username_ PLOT NAME : PLOT SCALE : $$.....plotscale.....$$ WISDOT/CADDS SHEET 21

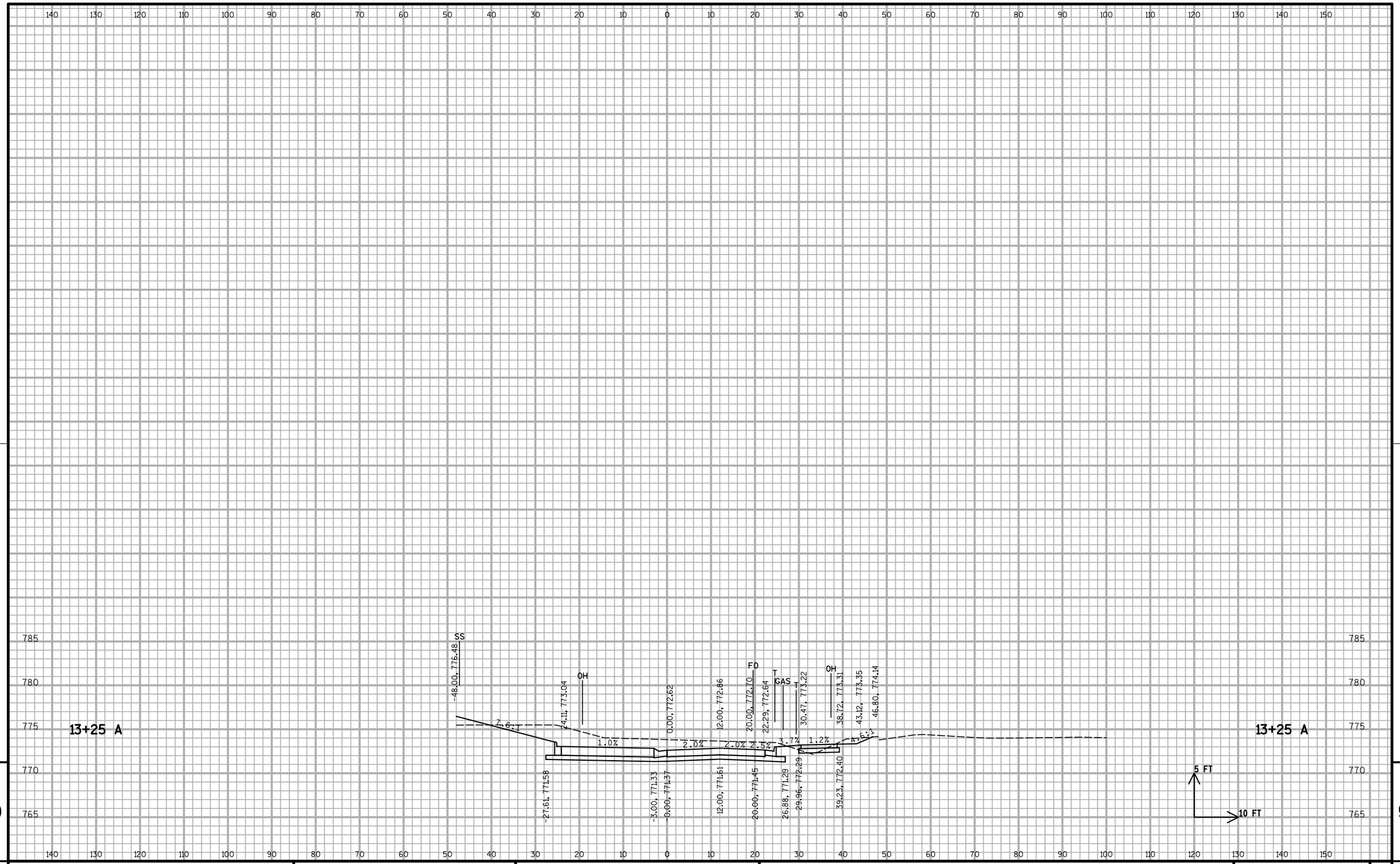

9

9

PROJECT NO:5144-01-75	HWY:STH 27	COUNTY:MONROE	CROSS SECTIONS:CHAIN A	SHEET 442	E

FILE NAME : S:\MAD\1000--1099\1089\415\Micros\Plan\090201_xs_A.dgn PLOT DATE : 7/14/2017 PLOT BY : _username_ PLOT NAME : PLOT SCALE : $$.....plotscale.....$$ WISDOT/CADDS SHEET 21

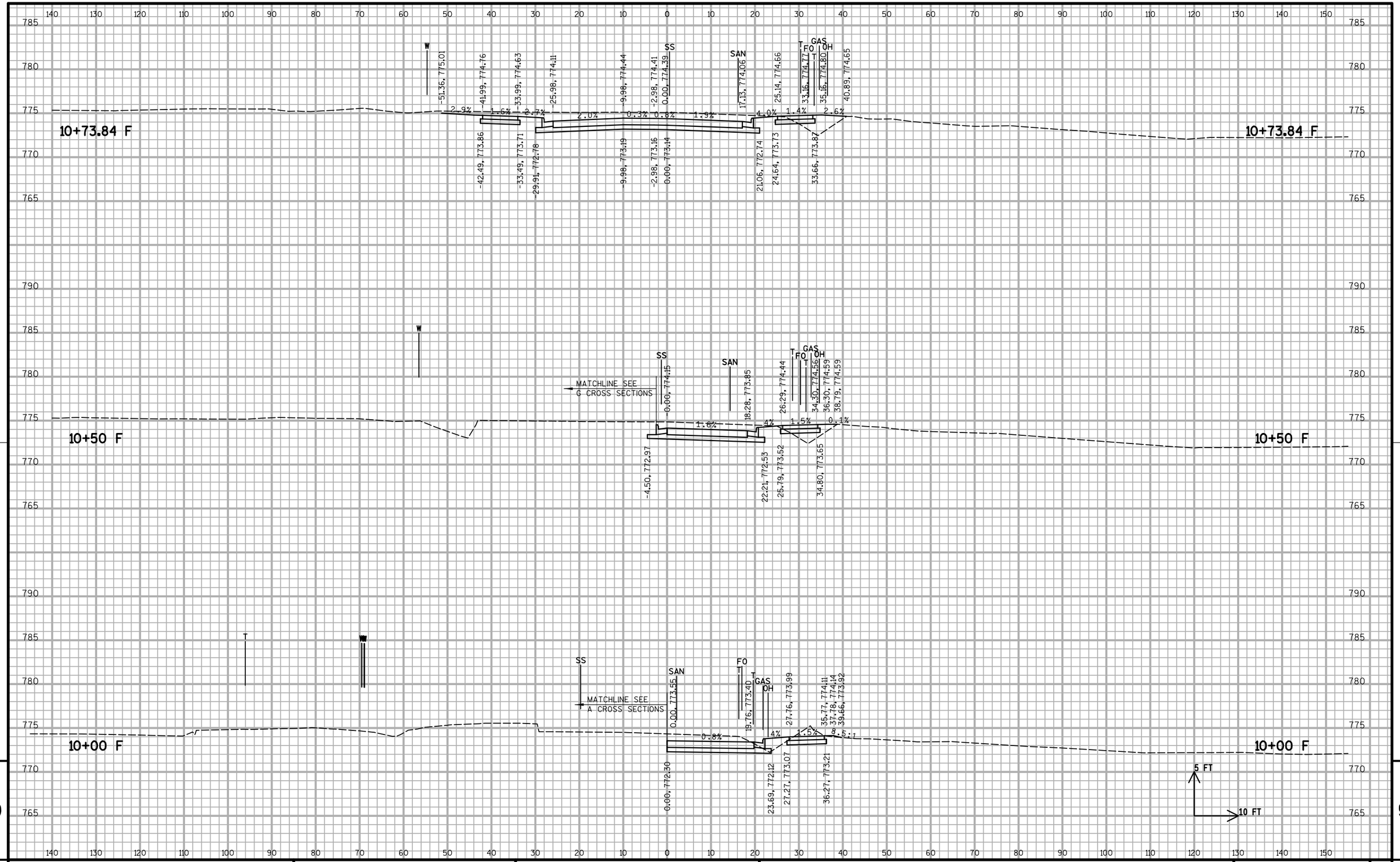

PROJECT NO:5144-01-75	HWY:STH 27	COUNTY:MONROE	CROSS SECTIONS:CHAIN F	SHEET 443	E

FILE NAME : S:\MAD\1000--1099\1089\415\Micros\Plan\090205_xs_F.dgn PLOT DATE : 7/14/2017 PLOT BY : _username_ PLOT NAME : PLOT SCALE : $$.....plotscale.....$$ WISDOT/CADDS SHEET 21

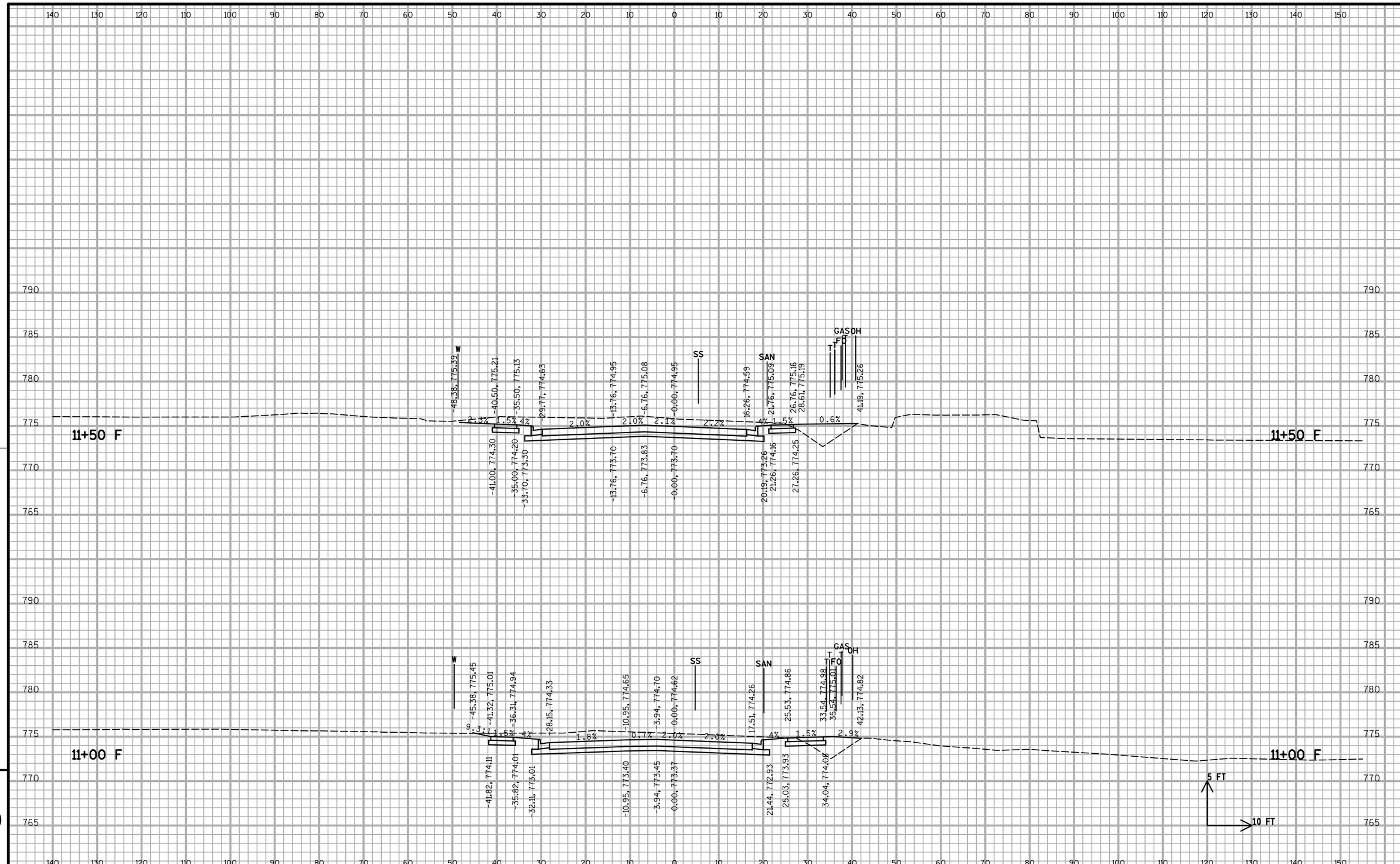

PROJECT NO: 5144-01-75	HWY: STH 27	COUNTY: MONROE	CROSS SECTIONS: CHAIN F	SHEET 444	E

FILE NAME : S:\MAD\1000--1099\1089\415\Micros\Plan\090205_xs_F.dgn PLOT DATE : 7/14/2017 PLOT BY : _username_ PLOT NAME : PLOT SCALE : $$.....plotscale.....$$ WISDOT/CADDS SHEET 21

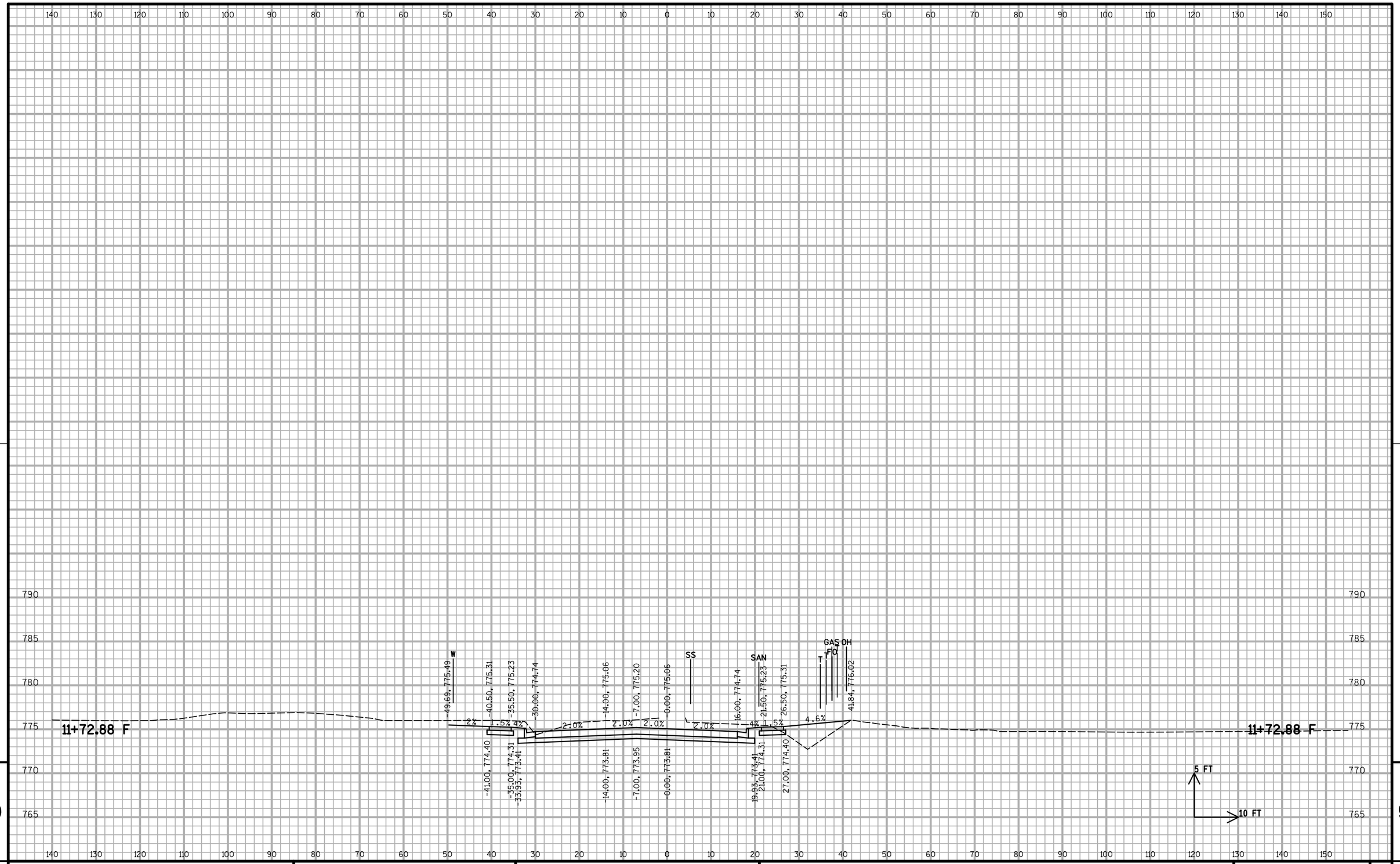

PROJECT NO: 5144-01-75	HWY: STH 27	COUNTY: MONROE	CROSS SECTIONS: CHAIN F	SHEET 445	E

FILE NAME : S:\MAD\1000--1099\1089\415\Micros\Plan\090205_xs_F.dgn PLOT DATE : 7/14/2017 PLOT BY : _username_ PLOT NAME : PLOT SCALE : $$.....plotscale.....$$ WISDOT/CADDS SHEET 21

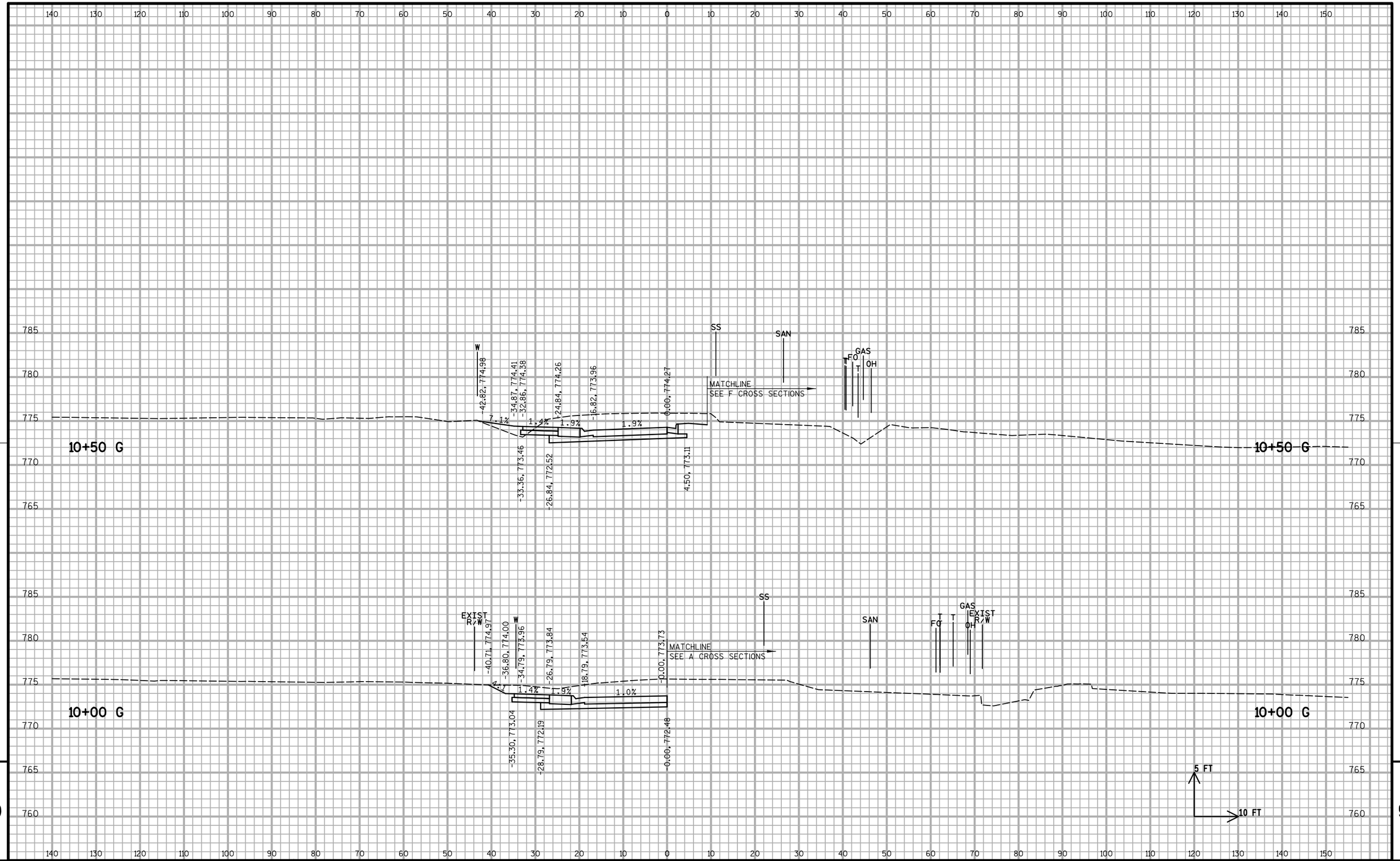

PROJECT NO:5144-01-75	HWY:STH 27	COUNTY:MONROE	CROSS SECTIONS:CHAIN G	SHEET 446	E

FILE NAME : S:\MAD\1000--1099\1089\415\Micros\Plan\090206_xs_G.dgn PLOT DATE : 7/14/2017 PLOT BY : _username_ PLOT NAME : PLOT SCALE : $$.....plotscale.....$$ WISDOT/CADDS SHEET 21

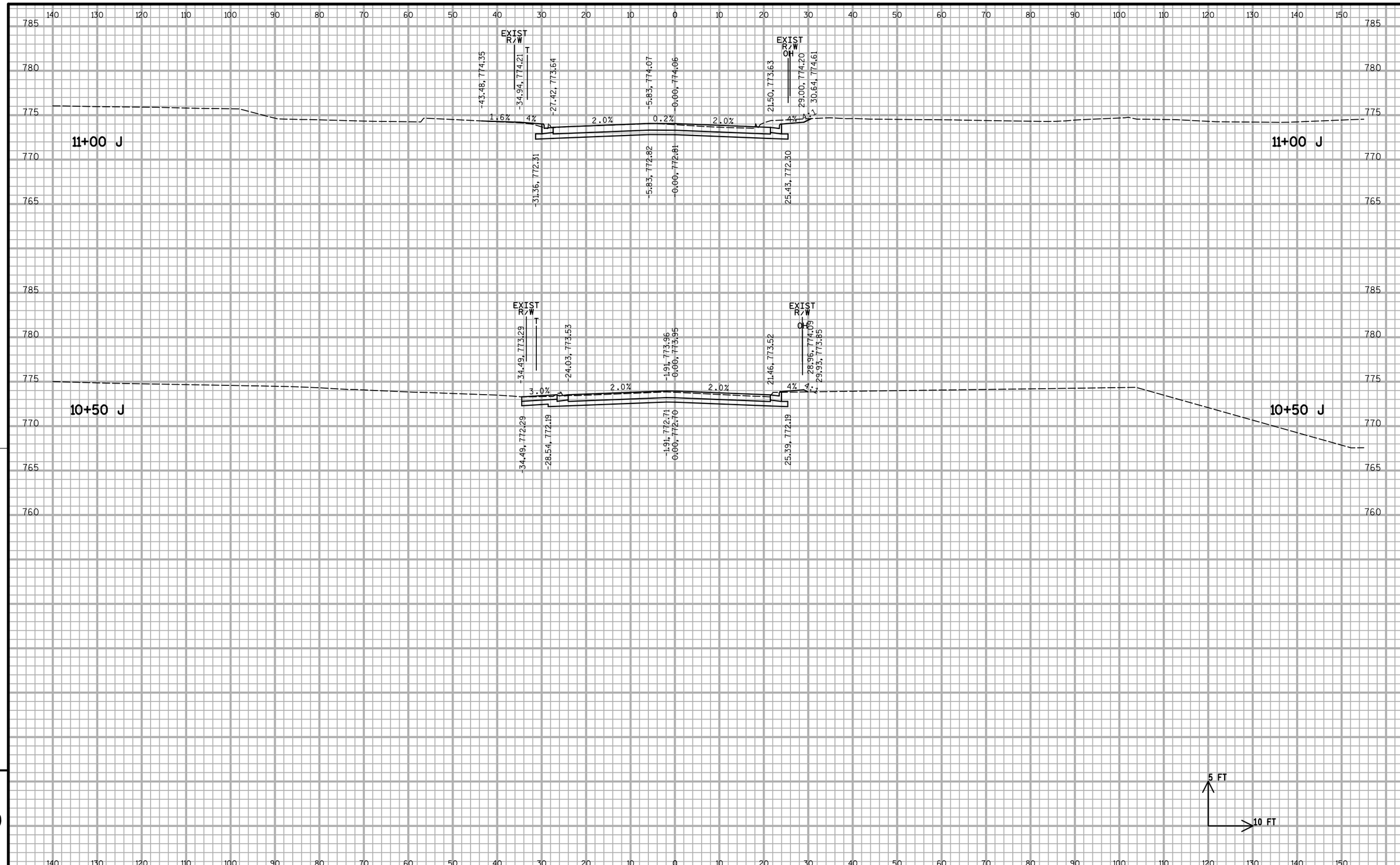

9

9

PROJECT NO:5144-01-75	HWY:STH 27	COUNTY:MONROE	CROSS SECTIONS:CHAIN J	SHEET 447	E

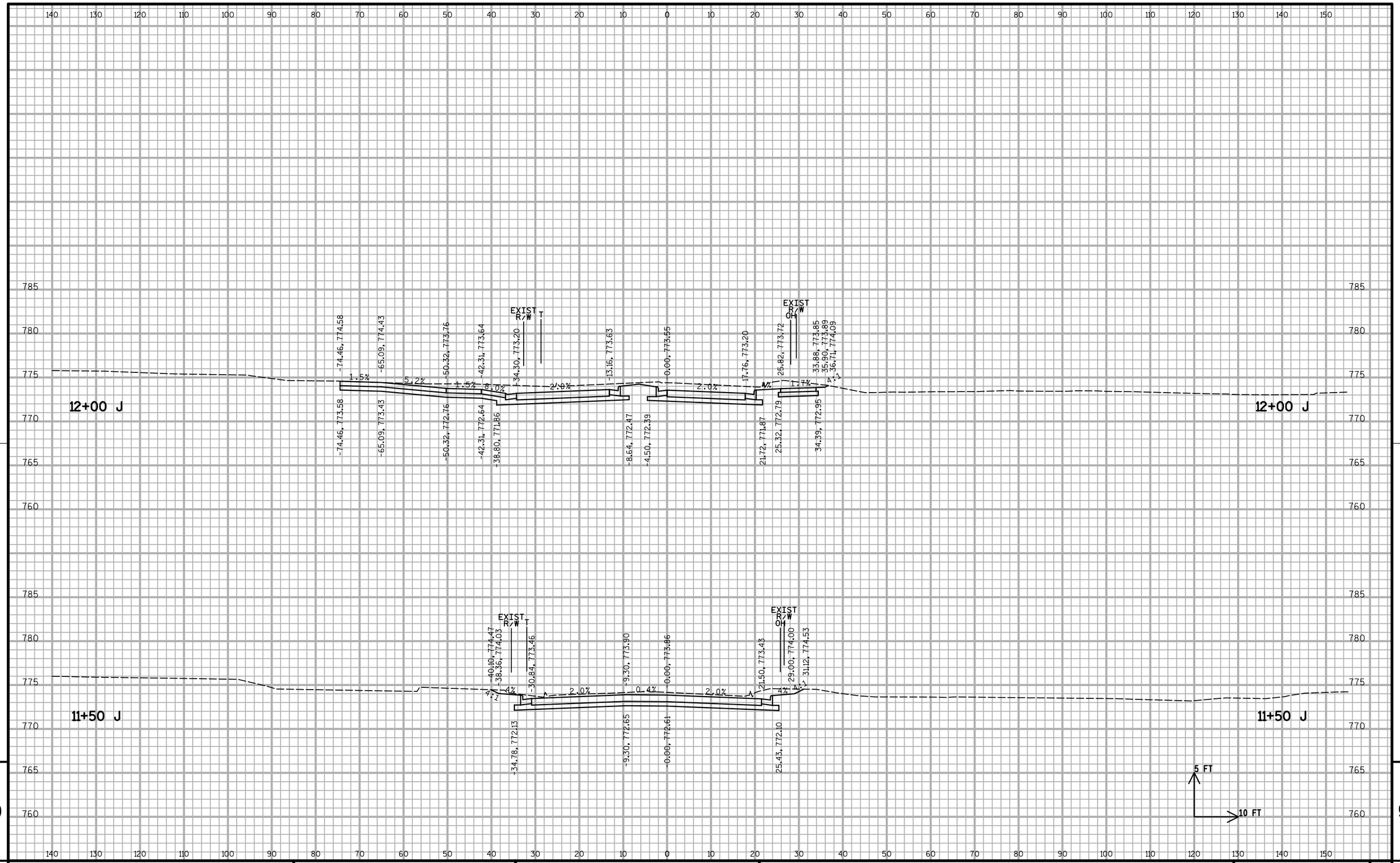

9

9

PROJECT NO: 5144-01-75	HWY: STH 27	COUNTY: MONROE	CROSS SECTIONS: CHAIN J	SHEET 448	E

FILE NAME : S:\MAD\1000--1099\1089\415\Micros\Plan\090208_xs_J.dgn PLOT DATE : 7/14/2017 PLOT BY : _username_ PLOT NAME : PLOT SCALE : $$.....plotscale.....$$ WISDOT/CADDS SHEET 21

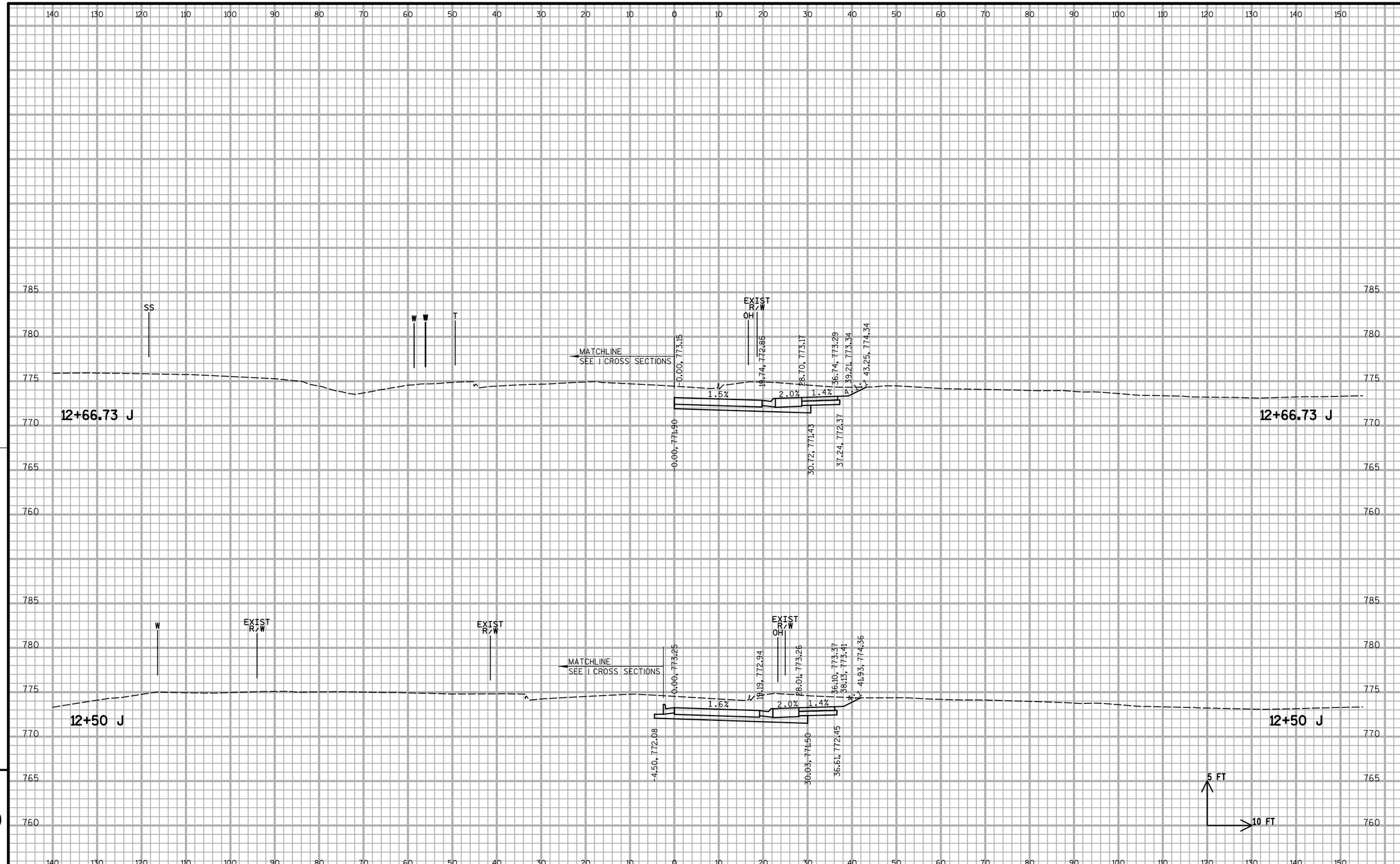

9

PROJECT NO: 5144-01-75	HWY: STH 27	COUNTY: MONROE	CROSS SECTIONS: CHAIN J	SHEET 449	E

FILE NAME : S:\MAD\1000--1099\1089\415\Micros\Plan\090208_xs_J.dgn PLOT DATE : 7/14/2017 PLOT BY : _username_ PLOT NAME : PLOT SCALE : $$.....plotscale.....$$ WISDOT/CADDS SHEET 21

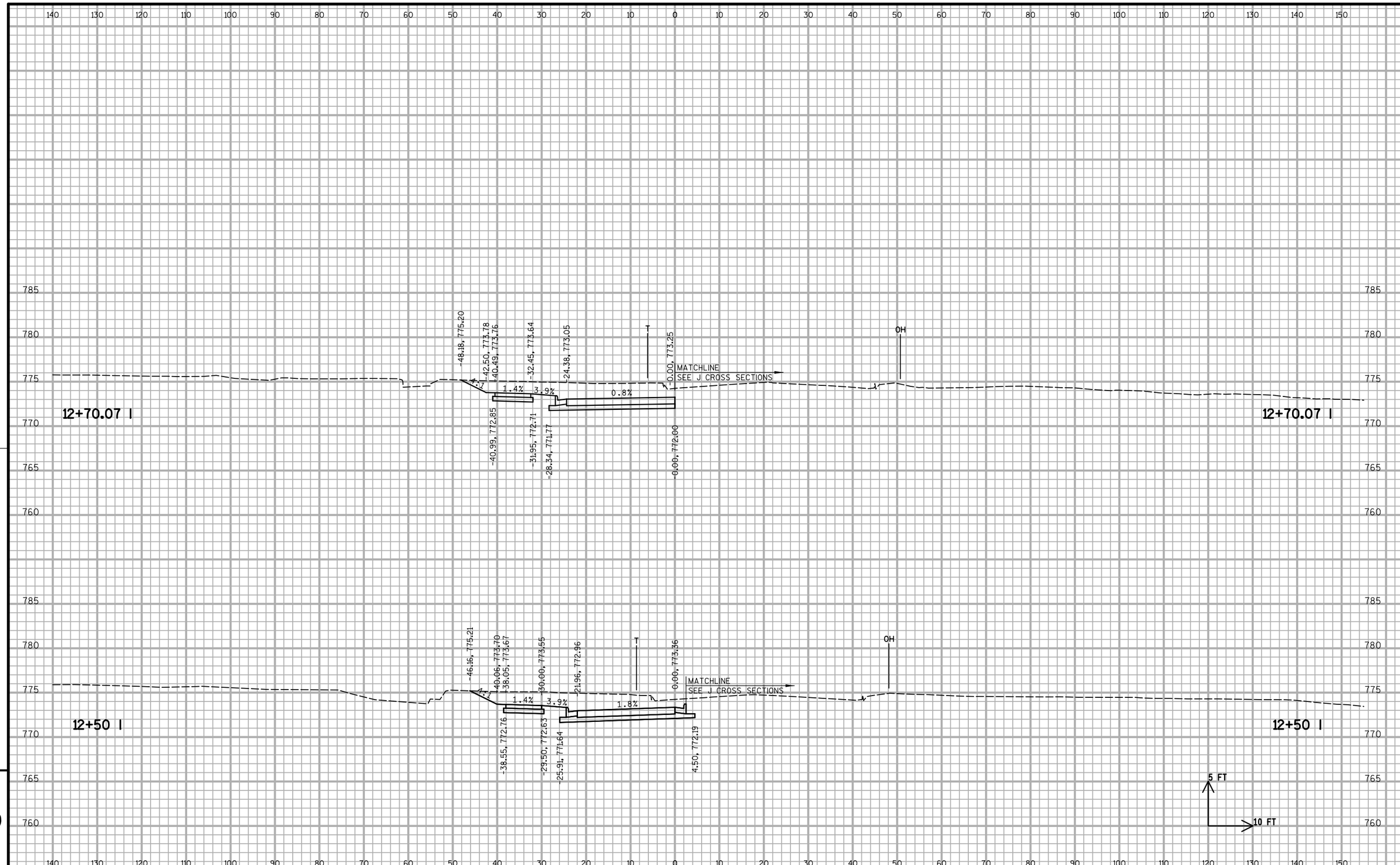

PROJECT NO:5144-01-75	HWY:STH 27	COUNTY:MONROE	CROSS SECTIONS:CHAIN I	SHEET 450	E

FILE NAME : S:\MAD\1000--1099\1089\415\Micros\Plan\090207_xs_I.dgn PLOT DATE : 7/14/2017 PLOT BY : _username_ PLOT NAME : PLOT SCALE : $$.....plotscale.....$$ WISDOT/CADDS SHEET 21

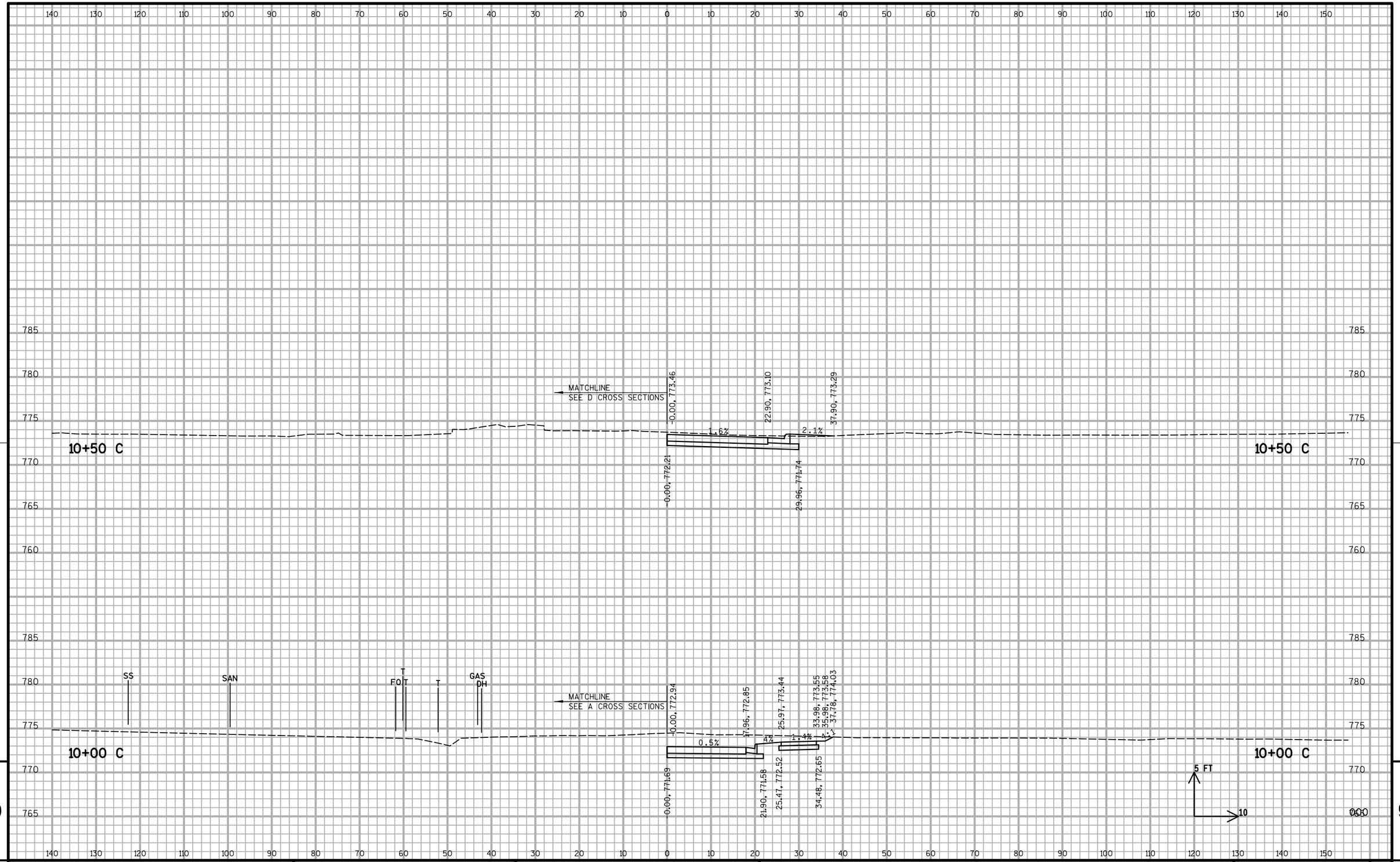

PROJECT NO: 5144-01-75	HWY: STH 27	COUNTY: MONROE	CROSS SECTIONS: CHAIN C	SHEET 451	E

FILE NAME : S:\MAD\1000--1099\1089\415\Micros\Plan\090203_xs_C.dgn PLOT DATE : 7/14/2017 PLOT BY : _username_ PLOT NAME : PLOT SCALE : $$.....plotscale.....$$ WISDOT/CADDS SHEET 21

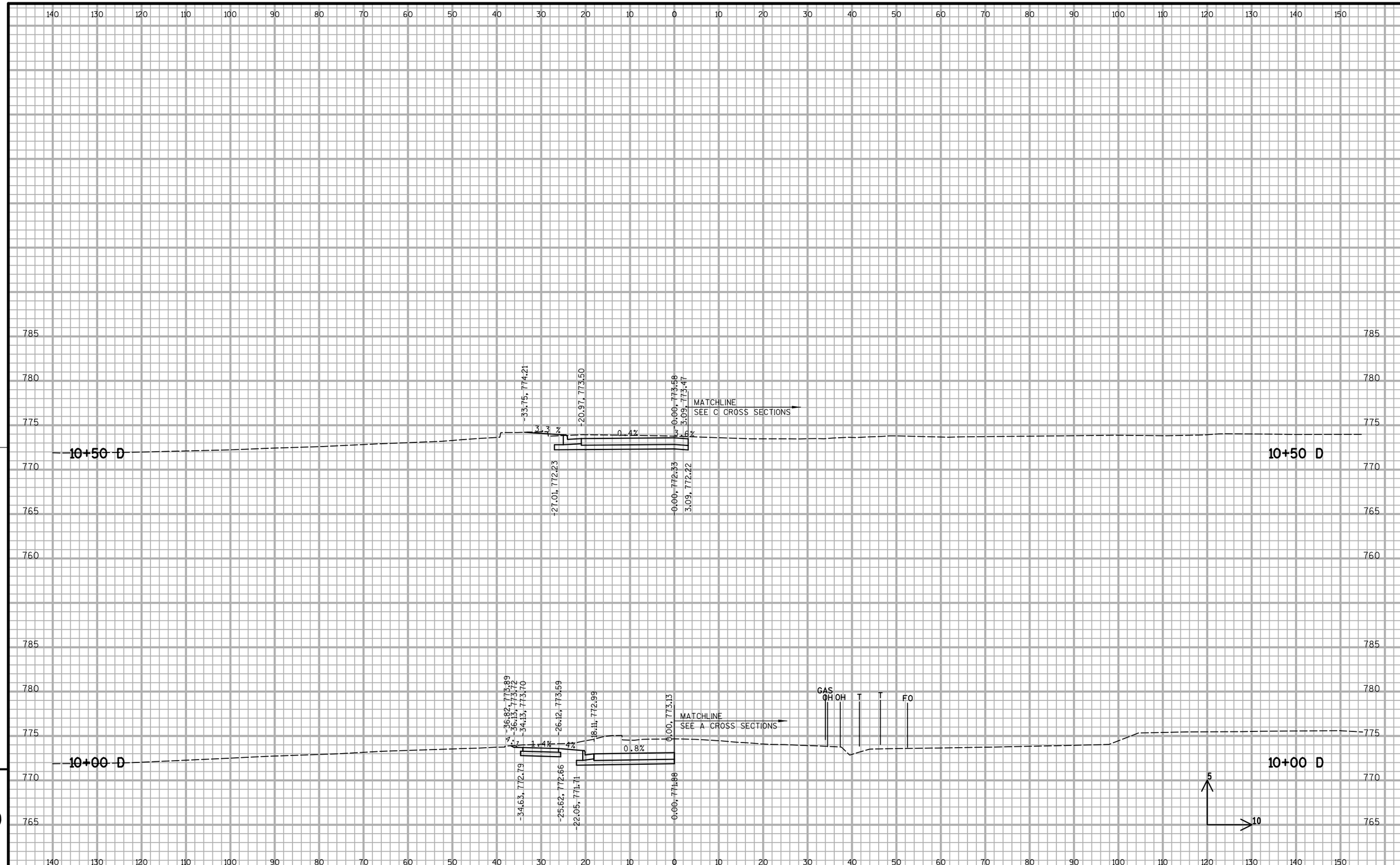

9

9

PROJECT NO:5144-01-75	HWY:STH 27	COUNTY:MONROE	CROSS SECTIONS:CHAIN D	SHEET 452	E

FILE NAME : S:\MAD\1000--1099\1089\415\Micros\Plan\090204_xs_D.dgn PLOT DATE : 7/14/2017 PLOT BY : _username_ PLOT NAME : PLOT SCALE : $$.....plotscale.....$$ WISDOT/CADDS SHEET 21

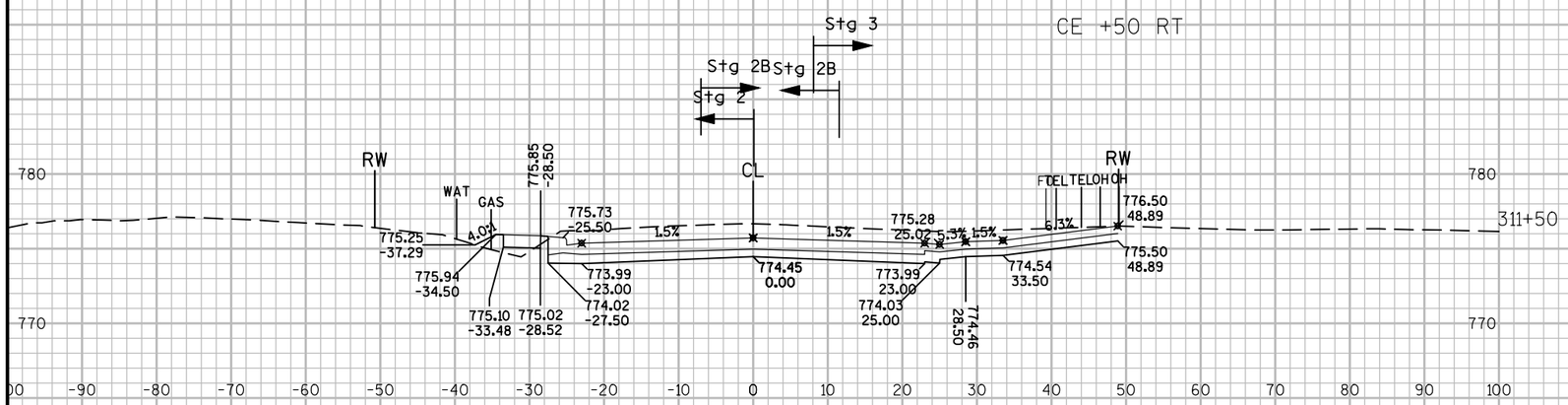

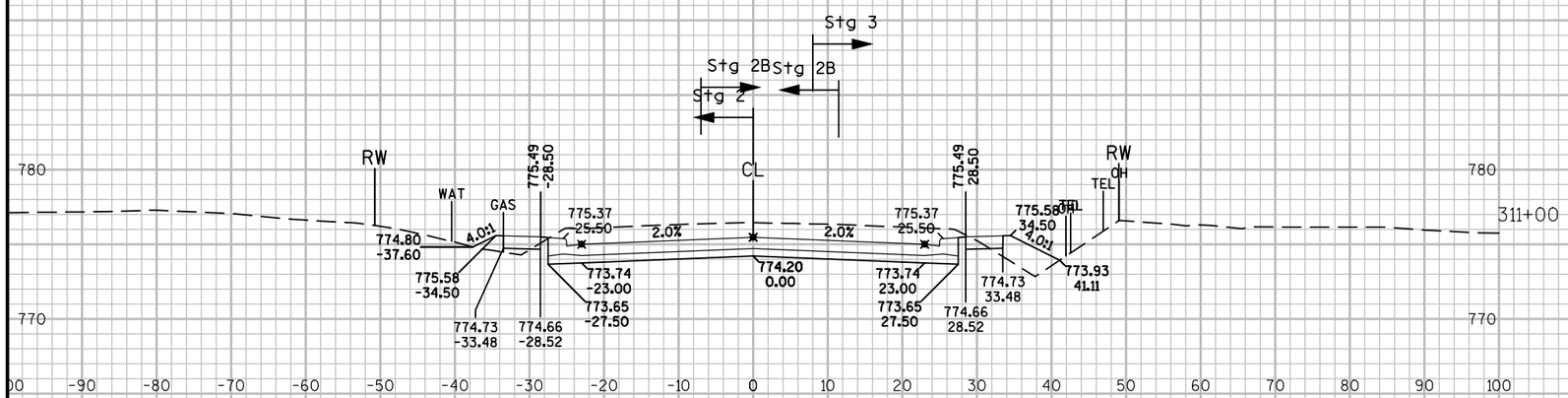

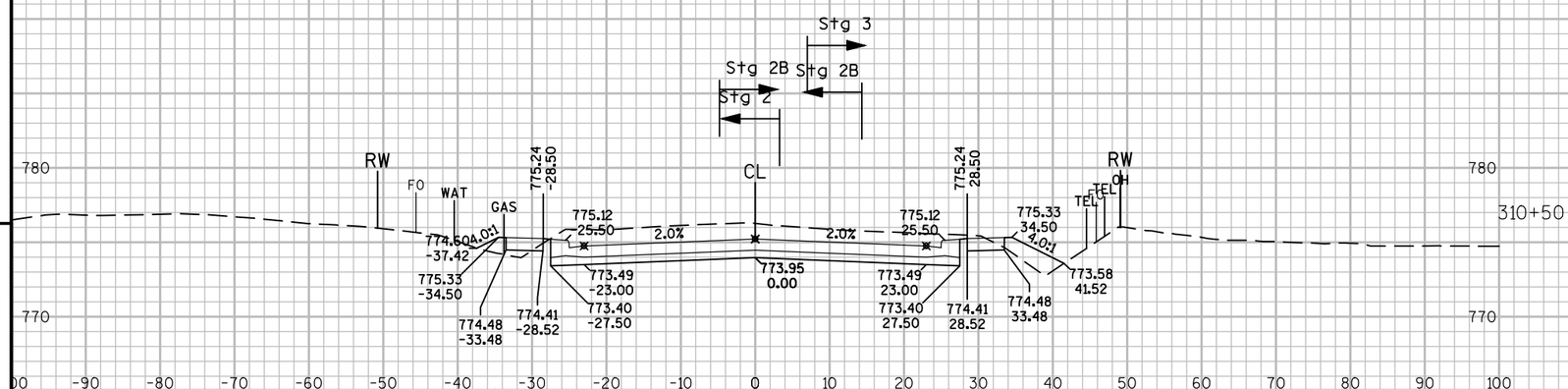

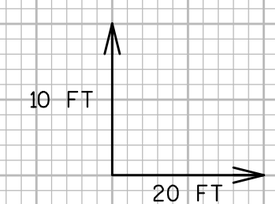

9

9

PROJECT NO:5144-01-75	HWY:STH 27	COUNTY:MONROE	CROSS SECTIONS:CROSS SECTION STH 27	SHEET 453	E

FILE NAME : N:\PDS\C3D\51440105\SHEETSPLAN\090100_XS.DWG
LAYOUT NAME - 09011_XS
PLOT DATE : 7/28/2017 10:18 AM PLOT BY : VALENTI, PAUL M PLOT NAME : PLOT SCALE : 1:20_XREF

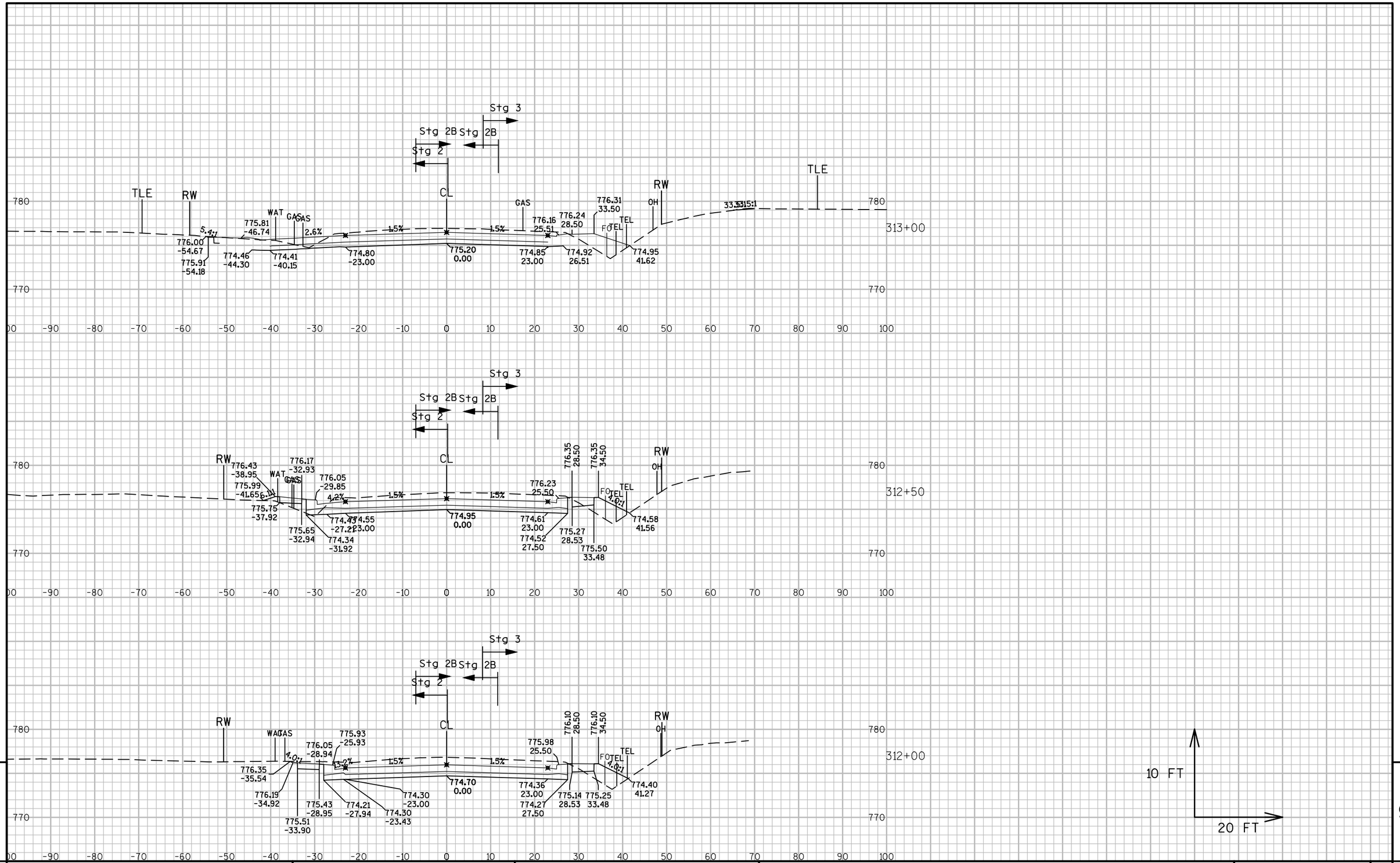

9

9

PROJECT NO:5144-01-75	HWY:STH 27	COUNTY:MONROE	CROSS SECTIONS:CROSS SECTION STH 27	SHEET 454	E

FILE NAME : N:\PDS\C3D\51440105\SHEETSPLAN\090100_XS.DWG
LAYOUT NAME - 09012_XS
PLOT DATE : 7/28/2017 10:19 AM PLOT BY : VALENTI, PAUL M PLOT NAME : PLOT SCALE : 1:20_XREF

WISDOT/CADDS SHEET 49

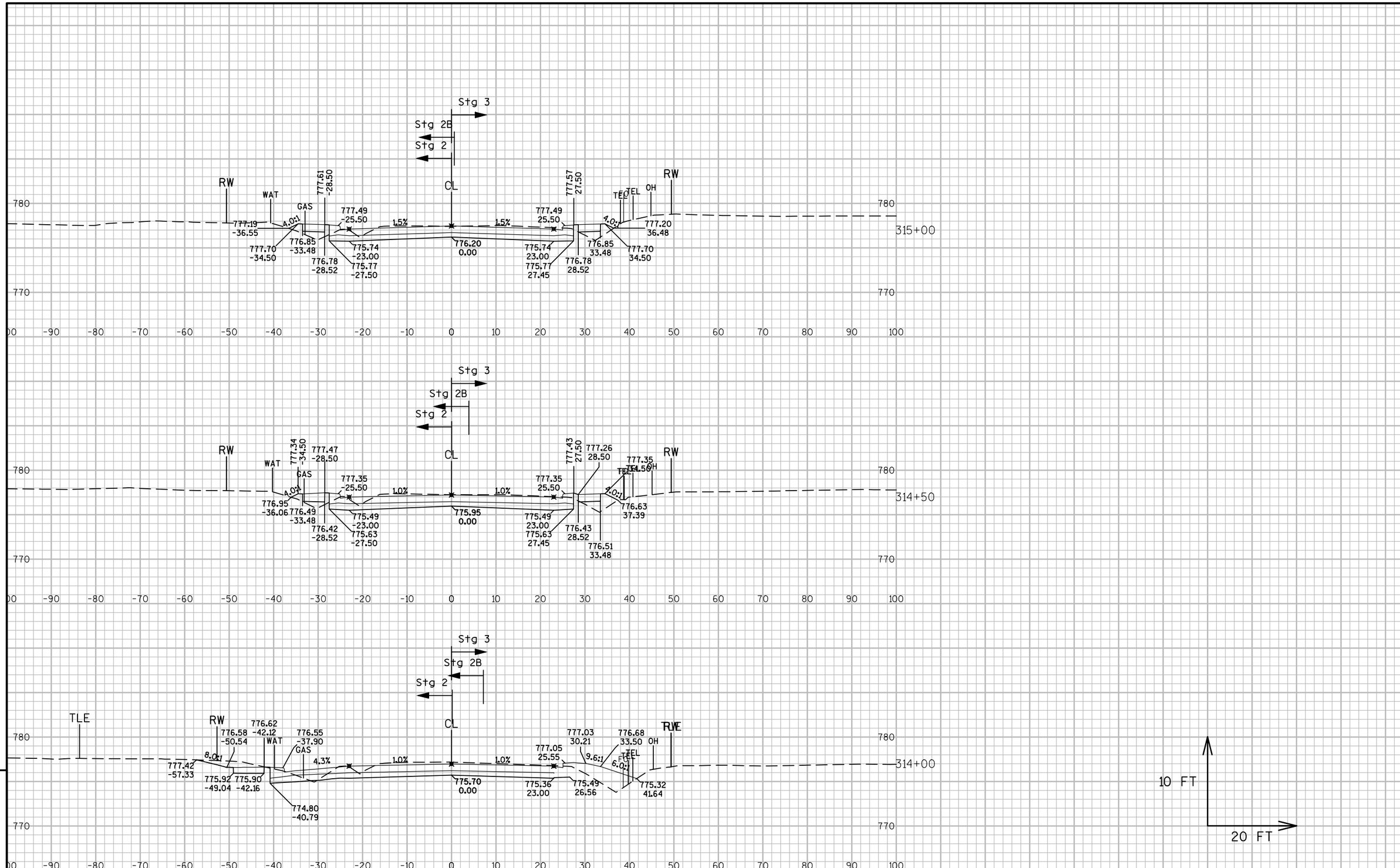

PROJECT NO:5144-01-75	HWY:STH 27	COUNTY:MONROE	CROSS SECTIONS:CROSS SECTION STH 27	SHEET 455	E

FILE NAME : N:\PDS\C3D\51440105\SHEETSPLAN\090100_XS.DWG
LAYOUT NAME - 09013_XS
PLOT DATE : 7/28/2017 10:19 AM PLOT BY : VALENTI, PAUL M PLOT NAME : PLOT SCALE : 1:20_XREF

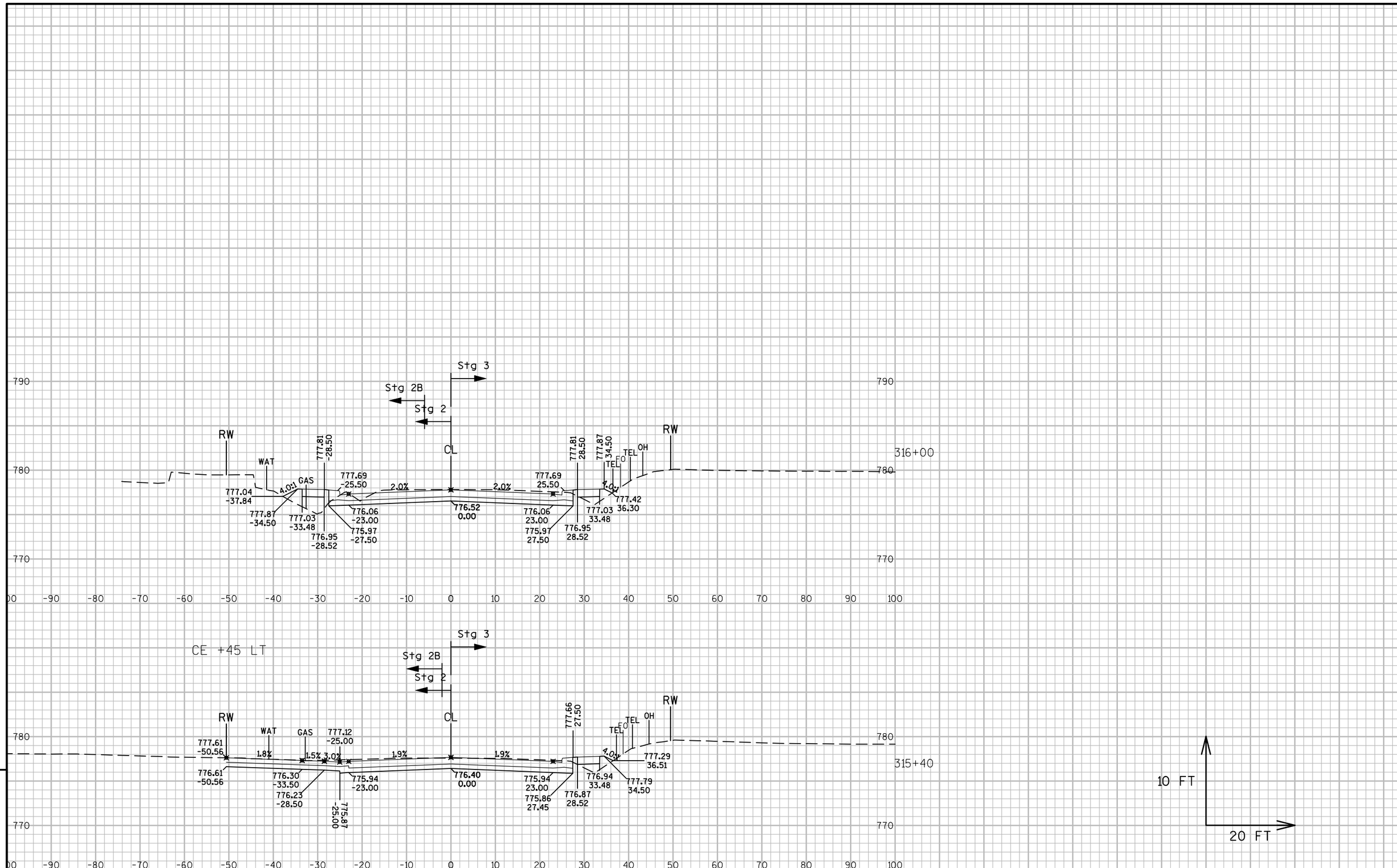

9

9

PROJECT NO:5144-01-75	HWY:STH 27	COUNTY:MONROE	CROSS SECTIONS:CROSS SECTION STH 27	SHEET 456	E

FILE NAME : N:\PDS\C3D\51440105\SHEETSPLAN\090100_XS.DWG
LAYOUT NAME - 09014_XS

PLOT DATE : 7/28/2017 10:21 AM PLOT BY : VALENTI, PAUL M PLOT NAME : PLOT SCALE : 1:20_XREF

WISDOT/CADDS SHEET 49

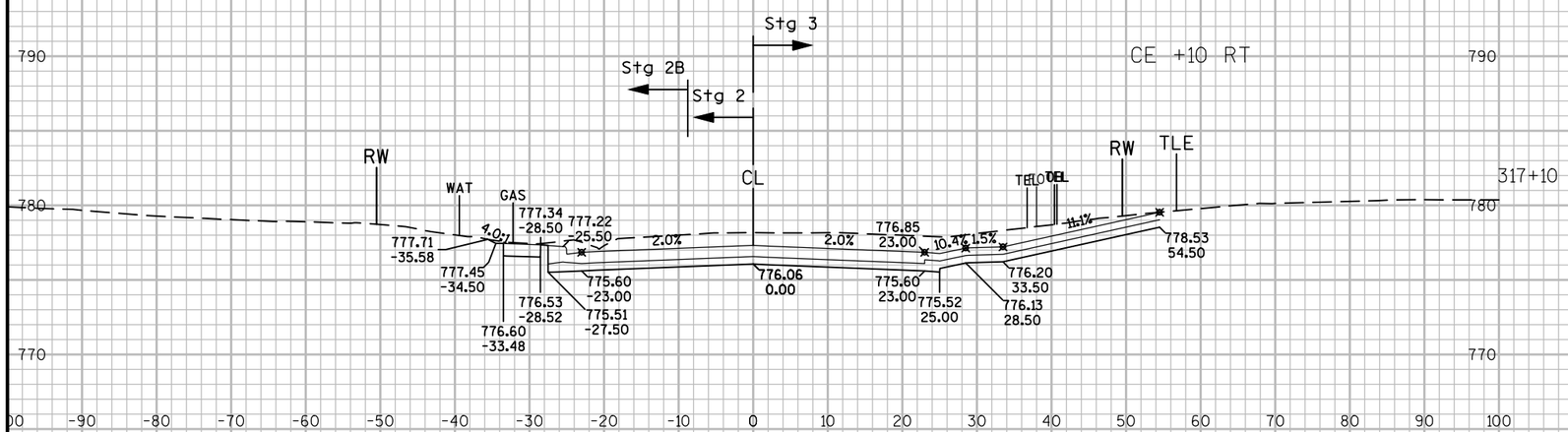

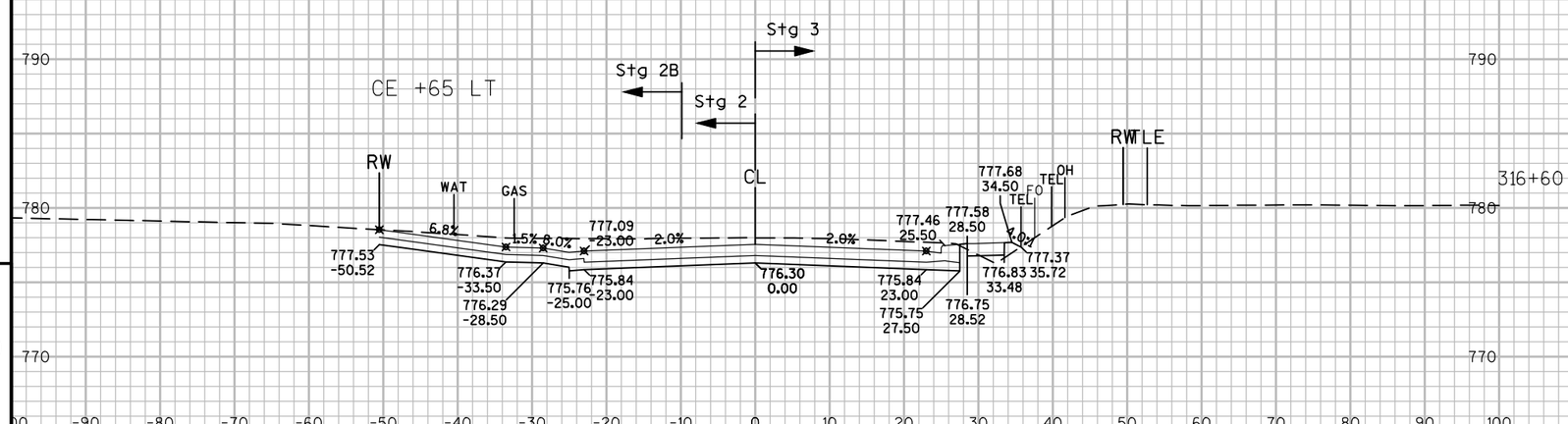

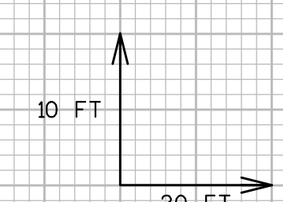

9

9

PROJECT NO:5144-01-75	HWY:STH 27	COUNTY:MONROE	CROSS SECTIONS:CROSS SECTION STH 27	SHEET 457	E

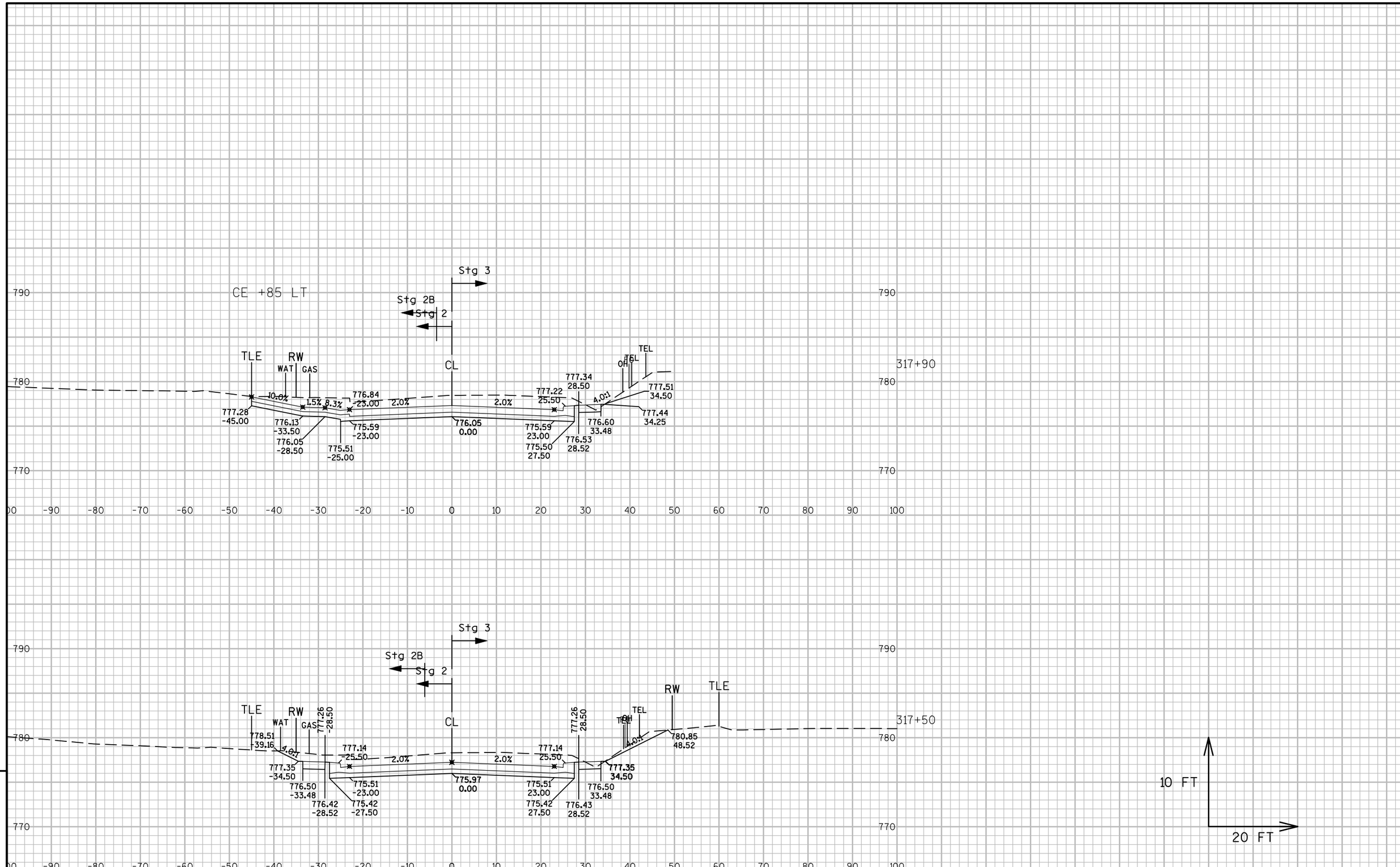

PROJECT NO:5144-01-75	HWY:STH 27	COUNTY:MONROE	CROSS SECTIONS:CROSS SECTION STH 27	SHEET 458	E

FILE NAME : N:\PDS\C3D\51440105\SHEETSPLAN\090100_XS.DWG
LAYOUT NAME - 09016_XS
PLOT DATE : 7/28/2017 10:22 AM PLOT BY : VALENTI, PAUL M PLOT NAME : PLOT SCALE : 1:20_XREF

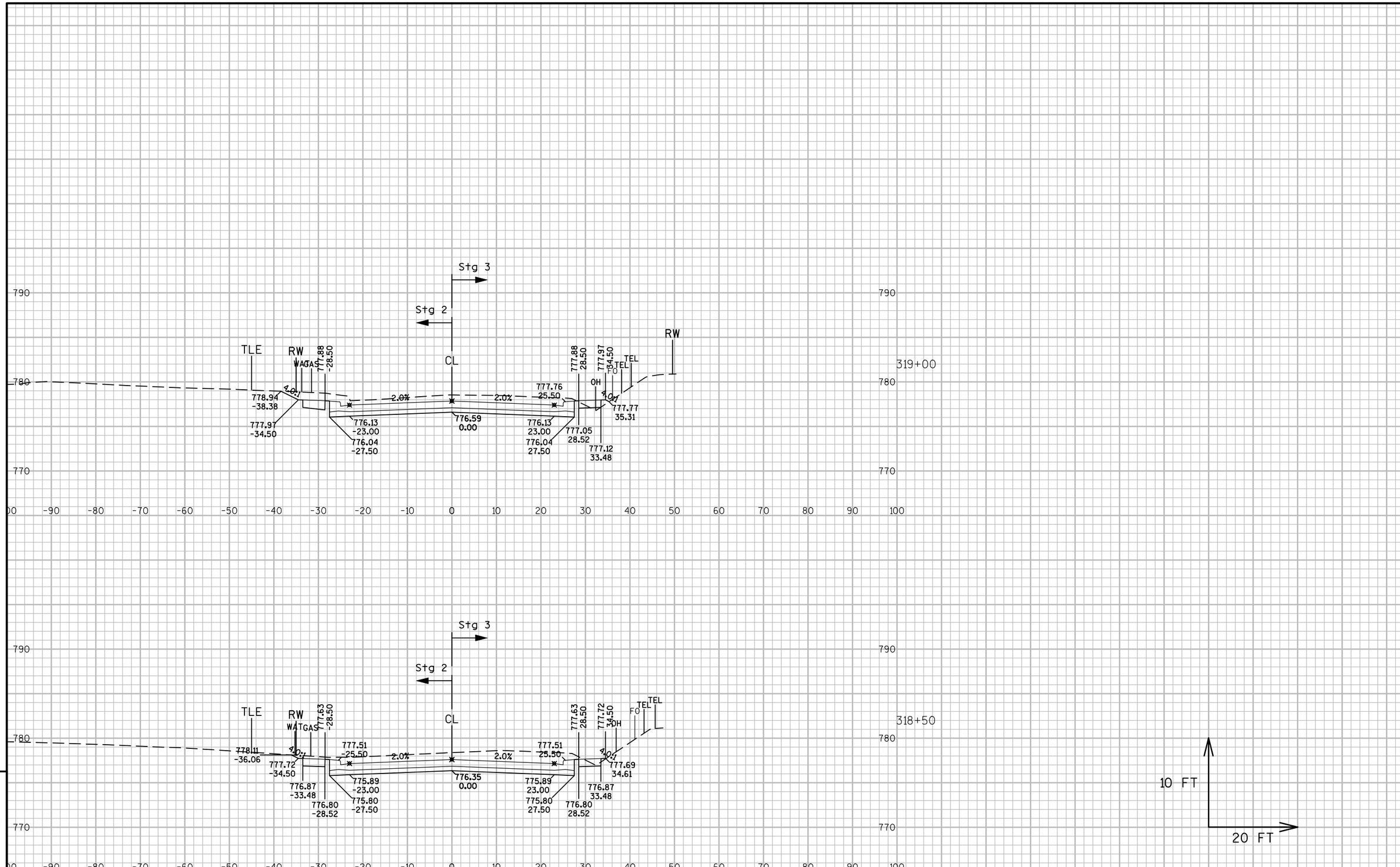

PROJECT NO:5144-01-75	HWY:STH 27	COUNTY:MONROE	CROSS SECTIONS:CROSS SECTION STH 27	SHEET 459	E

FILE NAME : N:\PDS\C3D\51440105\SHEETSPLAN\090100_XS.DWG
LAYOUT NAME - 09017_XS
PLOT DATE : 7/28/2017 10:24 AM PLOT BY : VALENTI, PAUL M PLOT NAME : PLOT SCALE : 1:20_XREF

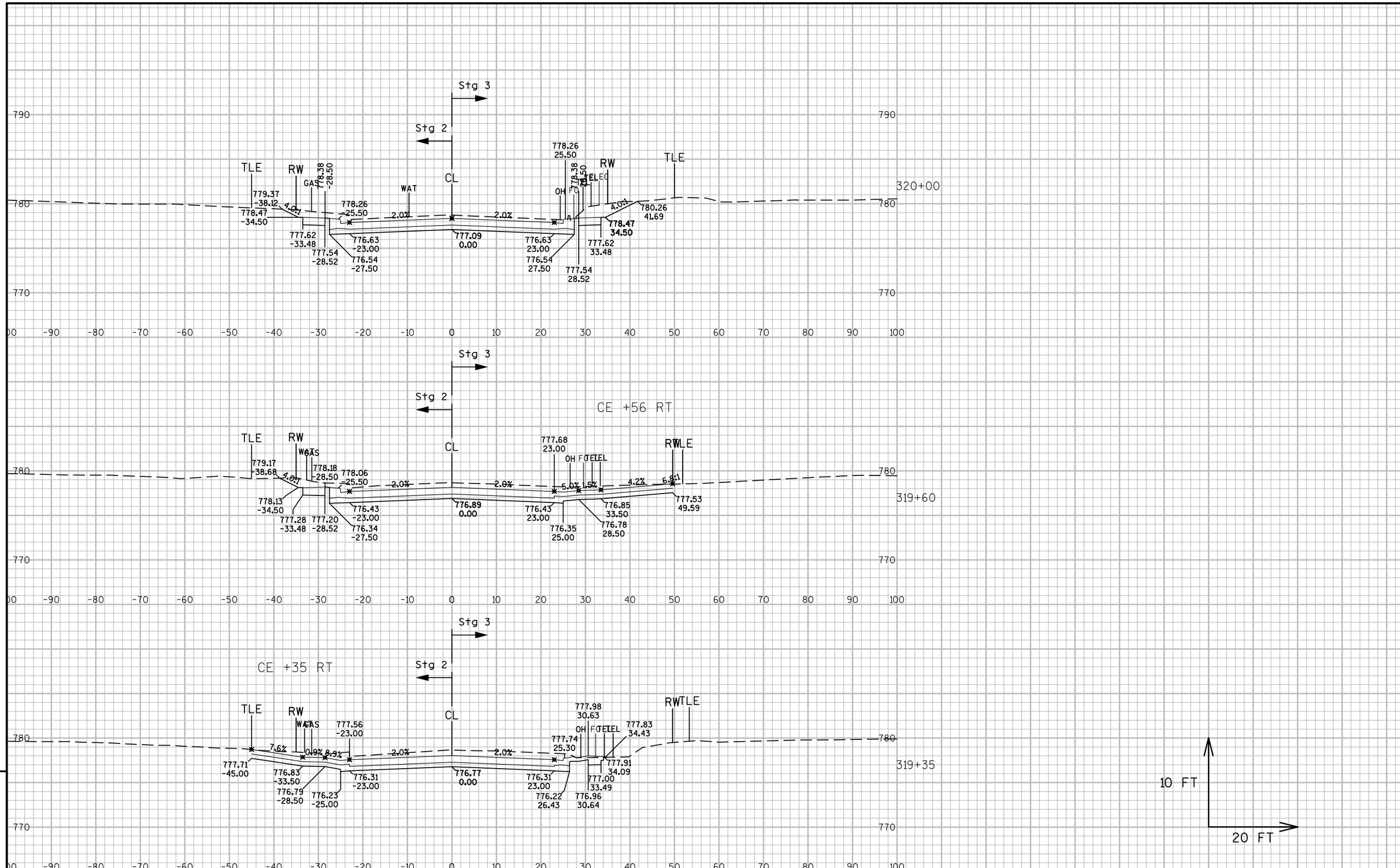

PROJECT NO:5144-01-75	HWY:STH 27	COUNTY:MONROE	CROSS SECTIONS:CROSS SECTION STH 27	SHEET 460	E

FILE NAME : N:\PDS\C3D\51440105\SHEETSPLAN\090100_XS.DWG
LAYOUT NAME - 09018_XS
PLOT DATE : 7/28/2017 10:23 AM PLOT BY : VALENTI, PAUL M PLOT NAME : PLOT SCALE : 1:20_XREF

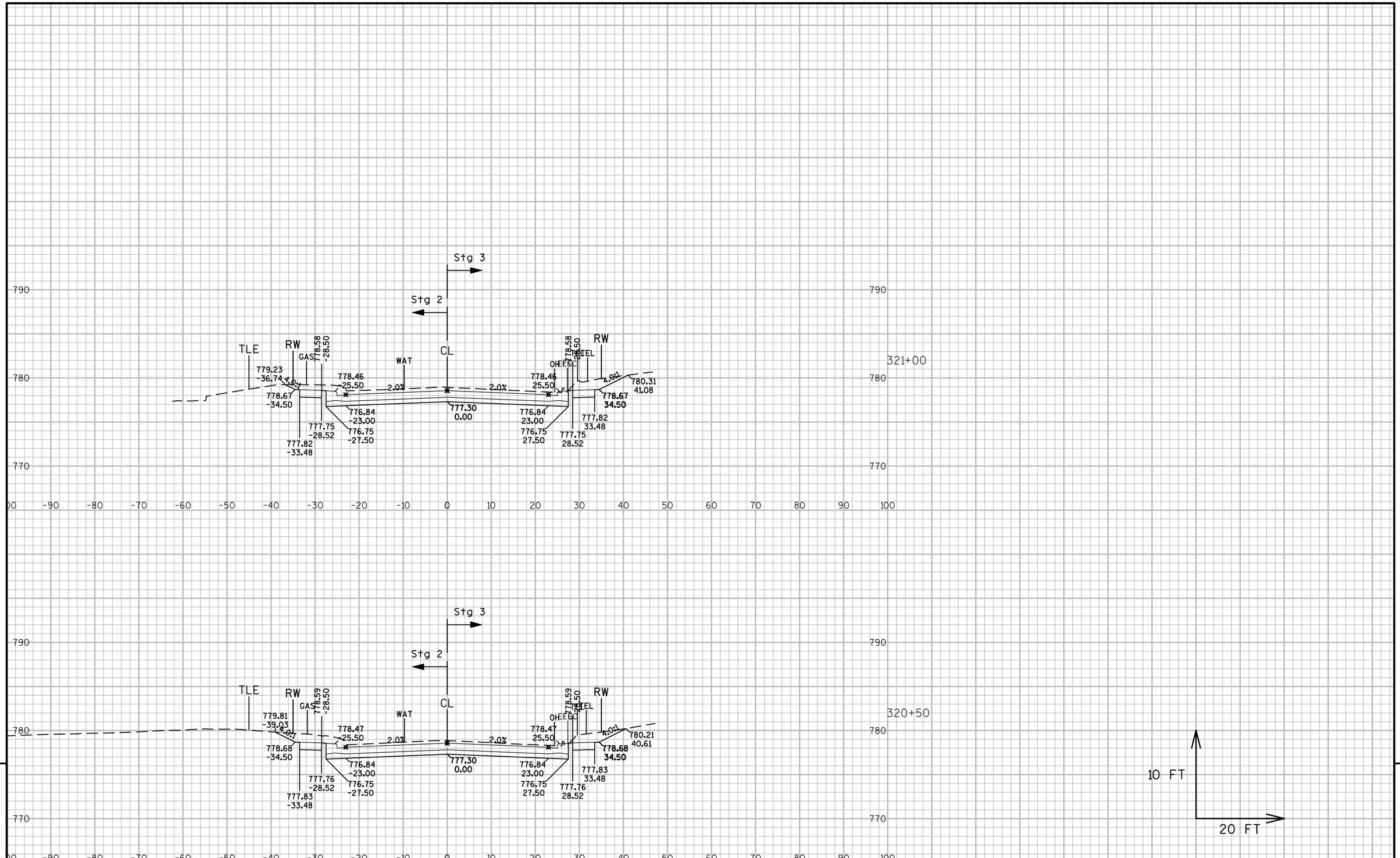

9

9

PROJECT NO:5144-01-75	HWY:STH 27	COUNTY:MONROE	CROSS SECTIONS:CROSS SECTION STH 27	SHEET 461	E

FILE NAME : N:\PDS\C3D\51440105\SHEETSPLAN\090100_XS.DWG
LAYOUT NAME - 09019_XS
PLOT DATE : 7/28/2017 10:24 AM PLOT BY : VALENTI, PAUL M PLOT NAME : PLOT SCALE : 1:20_XREF

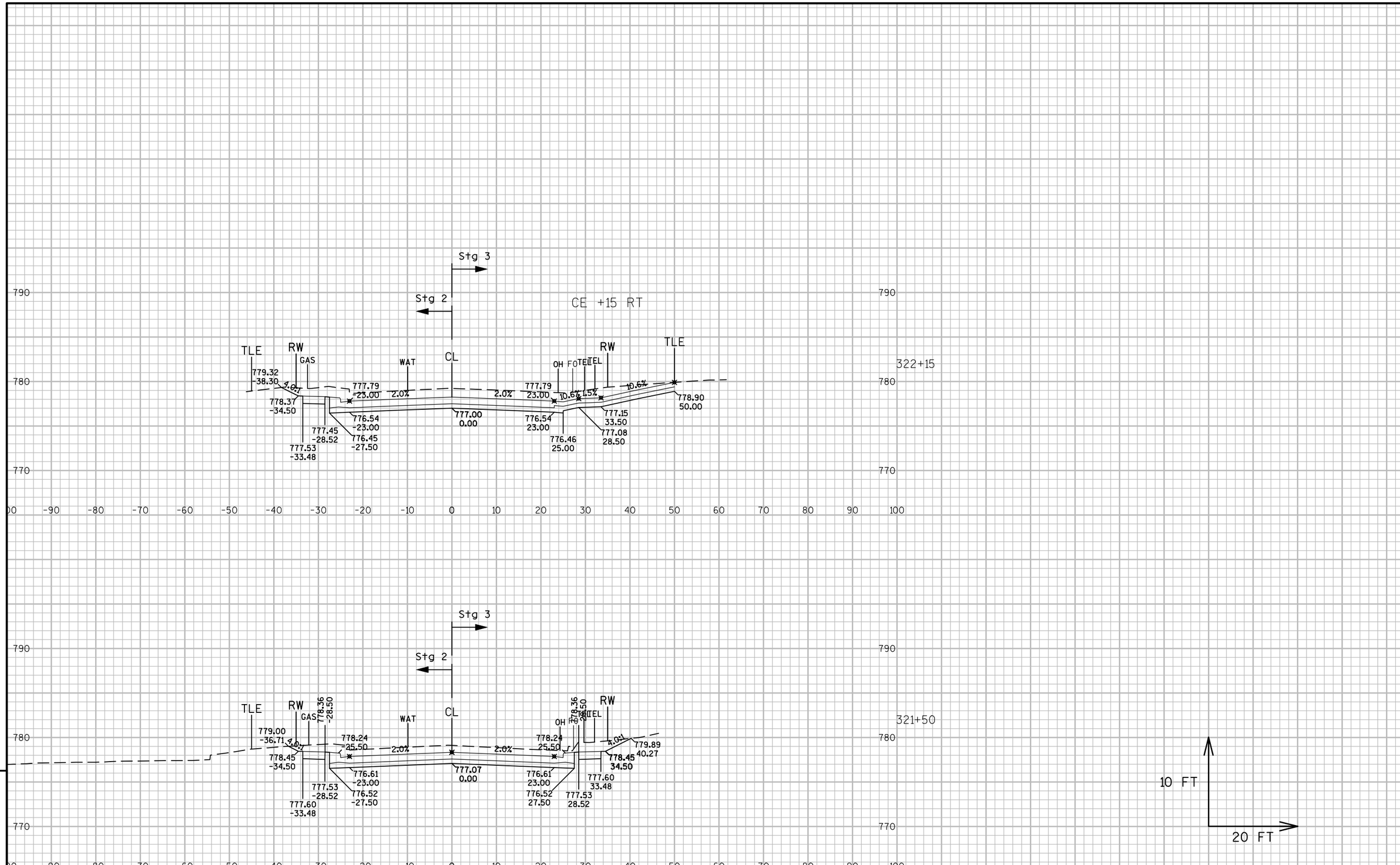

PROJECT NO: 5144-01-75	HWY: STH 27	COUNTY: MONROE	CROSS SECTIONS: CROSS SECTION STH 27	SHEET 462	E

FILE NAME : N:\PDS\C3D\51440105\SHEETSPLAN\090100_XS.DWG
LAYOUT NAME - 090110_XS
PLOT DATE : 7/28/2017 10:25 AM PLOT BY : VALENTI, PAUL M PLOT NAME : PLOT SCALE : 1:20_XREF

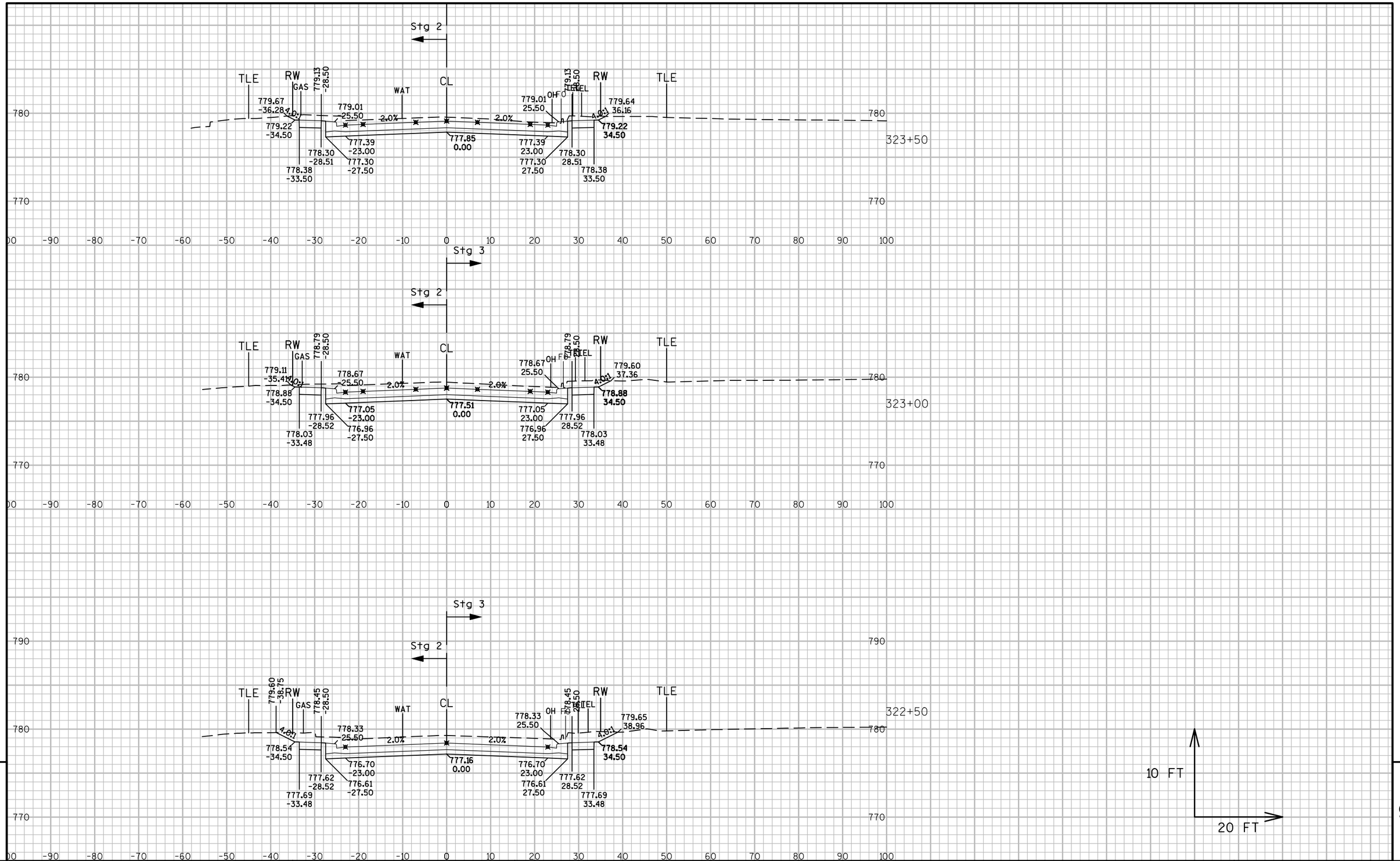

PROJECT NO:5144-01-75	HWY:STH 27	COUNTY:MONROE	CROSS SECTIONS:CROSS SECTION STH 27	SHEET 463	E

FILE NAME : N:\PDS\C3D\51440105\SHEETSPLAN\090100_XS.DWG
LAYOUT NAME - 090111_XS
PLOT DATE : 7/28/2017 10:26 AM PLOT BY : VALENTI, PAUL M PLOT NAME : PLOT SCALE : 1:20_XREF

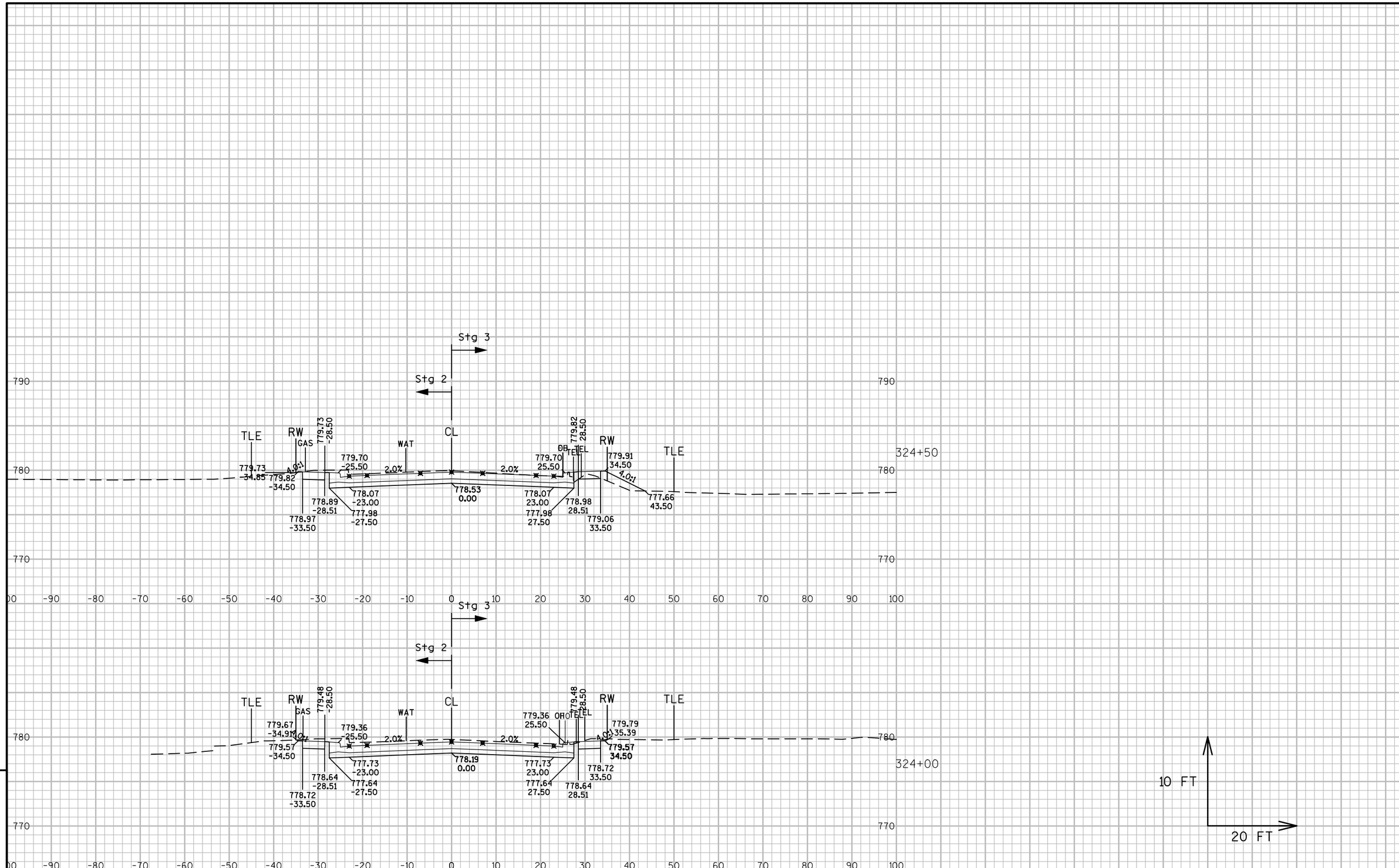

9

9

PROJECT NO:5144-01-75	HWY:STH 27	COUNTY:MONROE	CROSS SECTIONS:CROSS SECTION STH 27	SHEET 464	E

FILE NAME : N:\PDS\C3D\51440105\SHEETSPLAN\090100_XS.DWG
LAYOUT NAME - 090112_XS
PLOT DATE : 7/28/2017 10:26 AM PLOT BY : VALENTI, PAUL M PLOT NAME : PLOT SCALE : 1:20_XREF

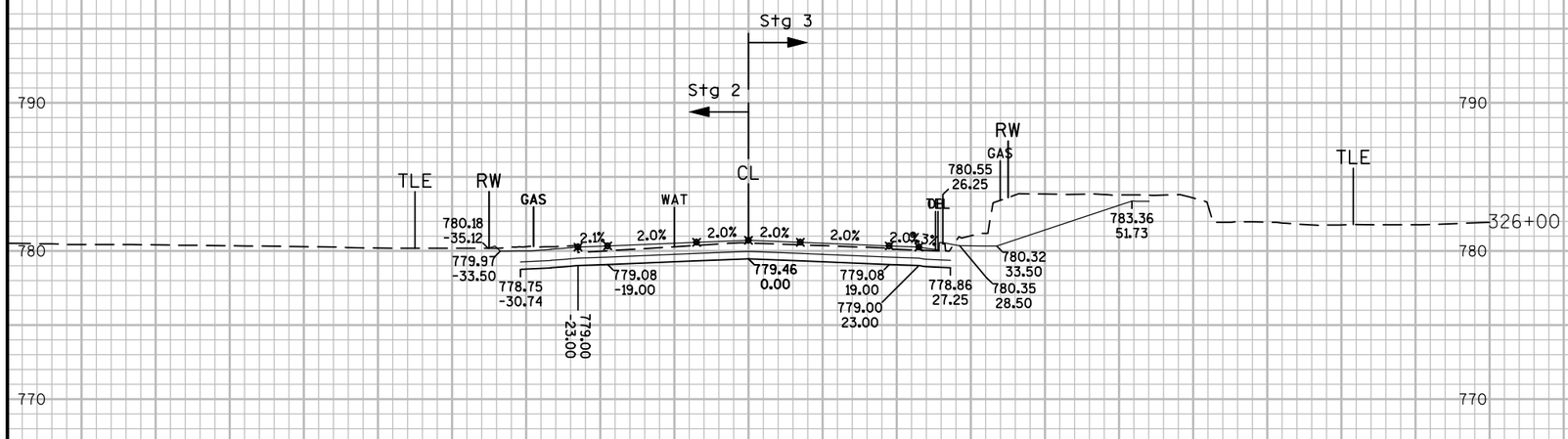

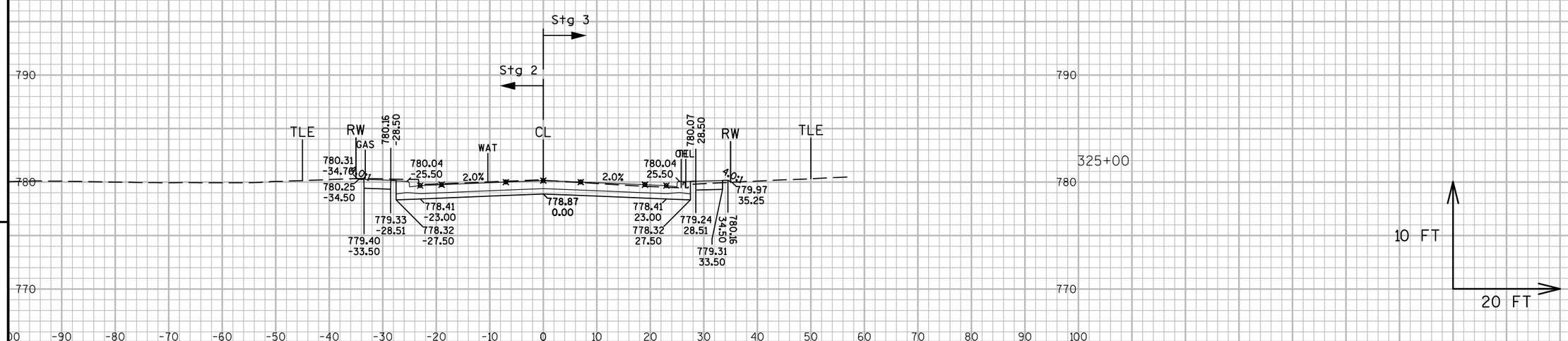

9

9

PROJECT NO:5144-01-75	HWY:STH 27	COUNTY:MONROE	CROSS SECTIONS:CROSS SECTION STH 27	SHEET 465	E

FILE NAME : N:\PDS\C3D\51440105\SHEETSPLAN\090100_XS.DWG
LAYOUT NAME - 090113_XS
PLOT DATE : 7/28/2017 10:27 AM PLOT BY : VALENTI, PAUL M PLOT NAME : PLOT SCALE : 1:20_XREF

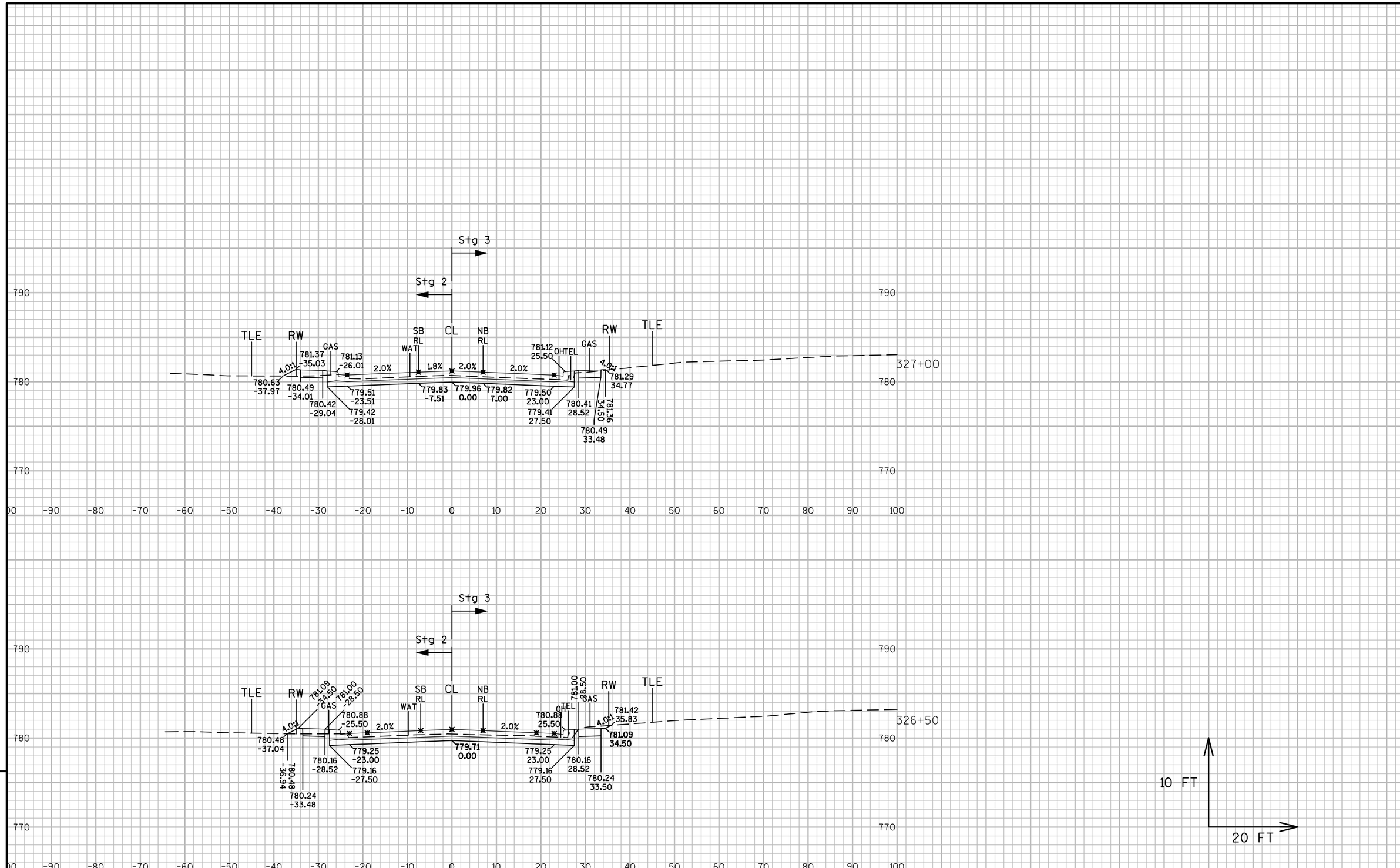

9

9

PROJECT NO: 5144-01-75	HWY: STH 27	COUNTY: MONROE	CROSS SECTIONS: CROSS SECTION STH 27	SHEET 466	E

FILE NAME : N:\PDS\C3D\51440105\SHEETSPLAN\090100_XS.DWG
LAYOUT NAME - 090114_XS

PLOT DATE : 7/28/2017 10:27 AM PLOT BY : VALENTI, PAUL M PLOT NAME : PLOT SCALE : 1:20_XREF

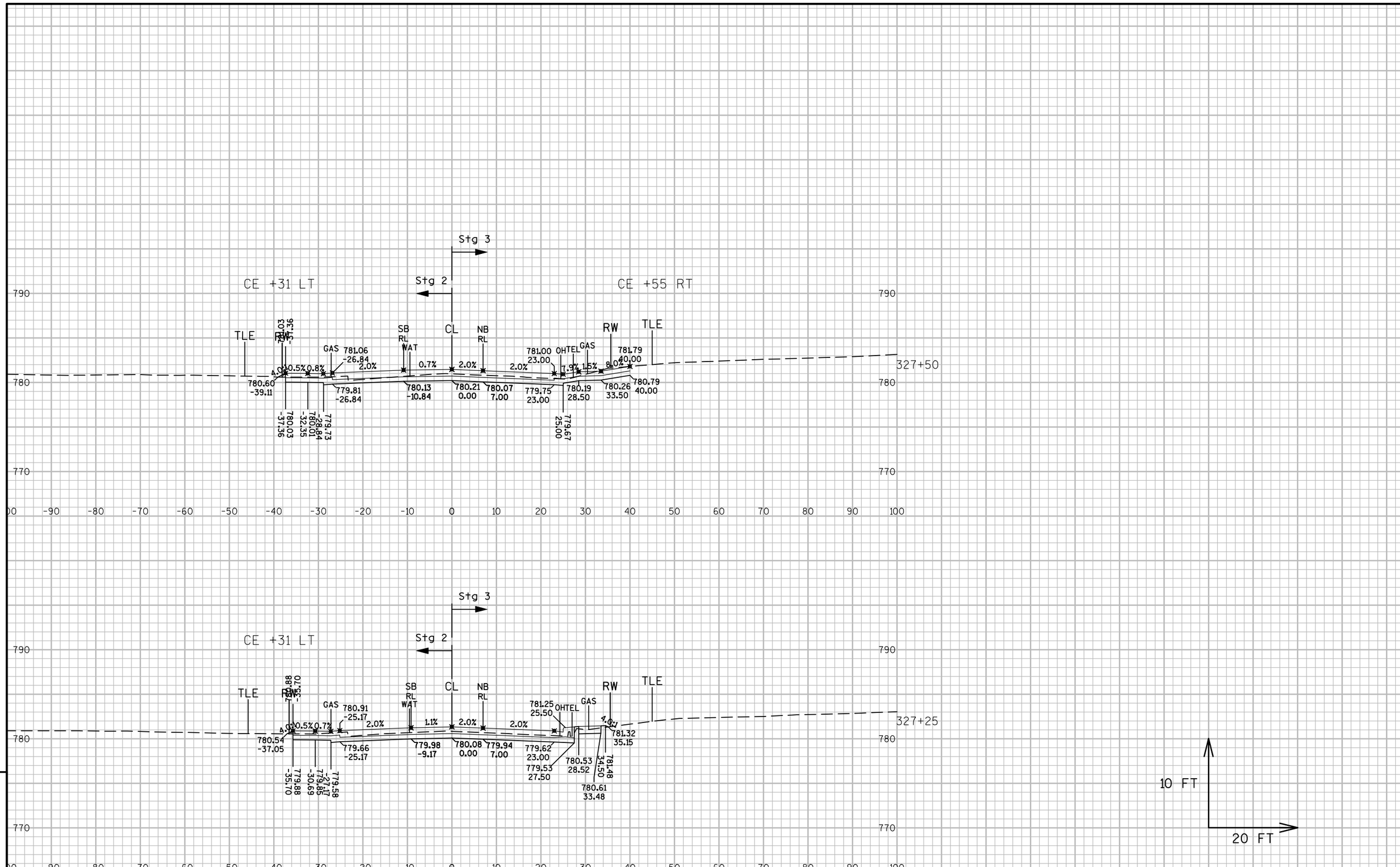

9

9

PROJECT NO: 5144-01-75	HWY: STH 27	COUNTY: MONROE	CROSS SECTIONS: CROSS SECTION STH 27	SHEET 467	E

FILE NAME : N:\PDS\C3D\51440105\SHEETSPLAN\090100_XS.DWG
LAYOUT NAME - 090115_XS

PLOT DATE : 7/28/2017 10:29 AM PLOT BY : VALENTI, PAUL M PLOT NAME : PLOT SCALE : 1:20_XREF

WISDOT/CADDS SHEET 49

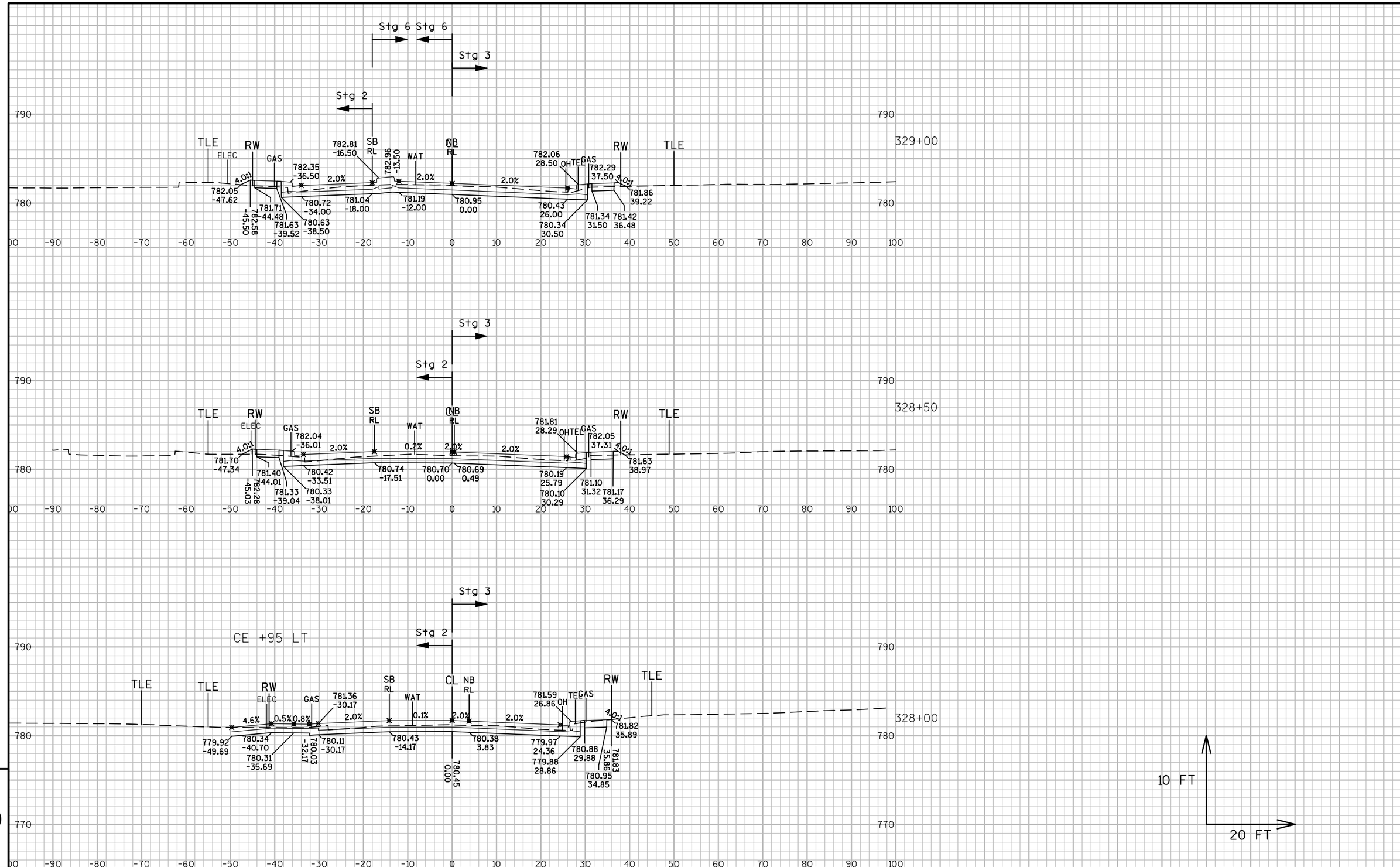

9

9

PROJECT NO:5144-01-75	HWY:STH 27	COUNTY:MONROE	CROSS SECTIONS:CROSS SECTION STH 27	SHEET 468	E

FILE NAME : N:\PDS\C3D\51440105\SHEETSPLAN\090100_XS.DWG
LAYOUT NAME - 090116_XS
PLOT DATE : 7/28/2017 10:30 AM PLOT BY : VALENTI, PAUL M PLOT NAME : PLOT SCALE : 1:20_XREF

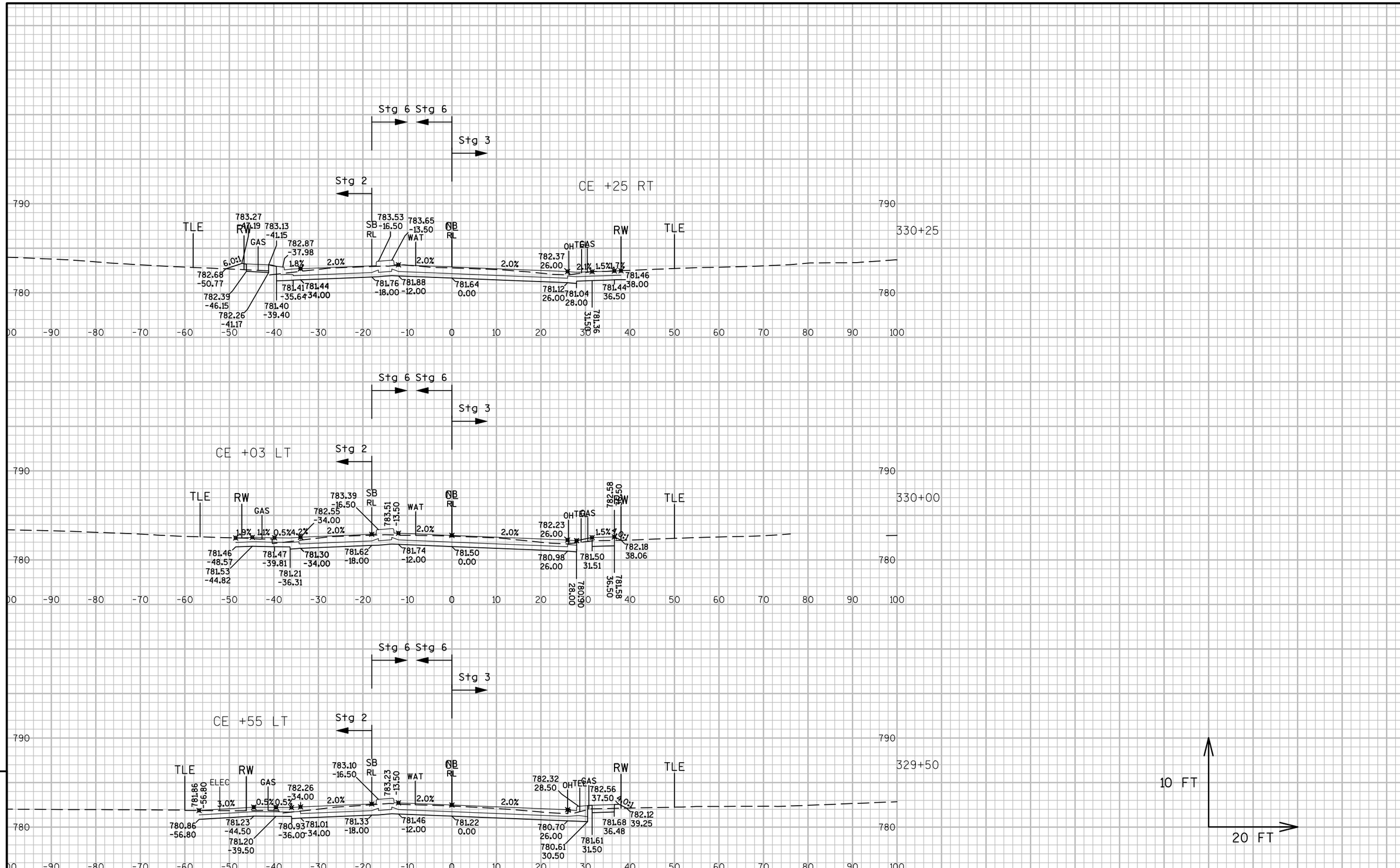

PROJECT NO:5144-01-75	HWY:STH 27	COUNTY:MONROE	CROSS SECTIONS:CROSS SECTION STH 27	SHEET 469	E

FILE NAME : N:\PDS\C3D\51440105\SHEETSPLAN\090100_XS.DWG
LAYOUT NAME - 090117_XS
PLOT DATE : 7/28/2017 10:31 AM PLOT BY : VALENTI, PAUL M PLOT NAME : PLOT SCALE : 1:20_XREF

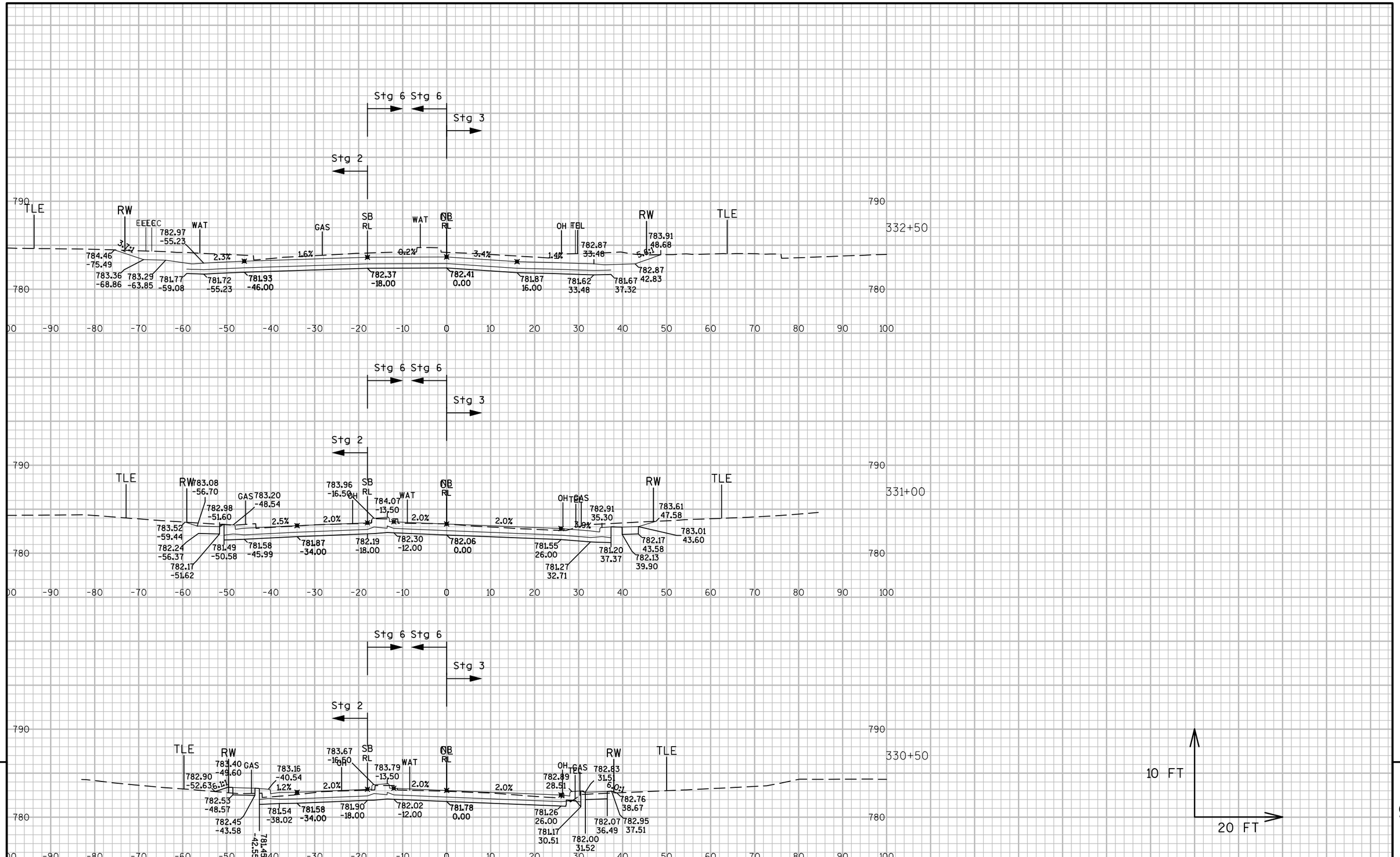

PROJECT NO: 5144-01-75	HWY: STH 27	COUNTY: MONROE	CROSS SECTIONS: CROSS SECTION STH 27	SHEET 470	E

FILE NAME : N:\PDS\C3D\51440105\SHEETSPLAN\090100_XS.DWG
LAYOUT NAME - 090118_XS
PLOT DATE : 7/28/2017 10:32 AM PLOT BY : VALENTI, PAUL M PLOT NAME : PLOT SCALE : 1:20_XREF

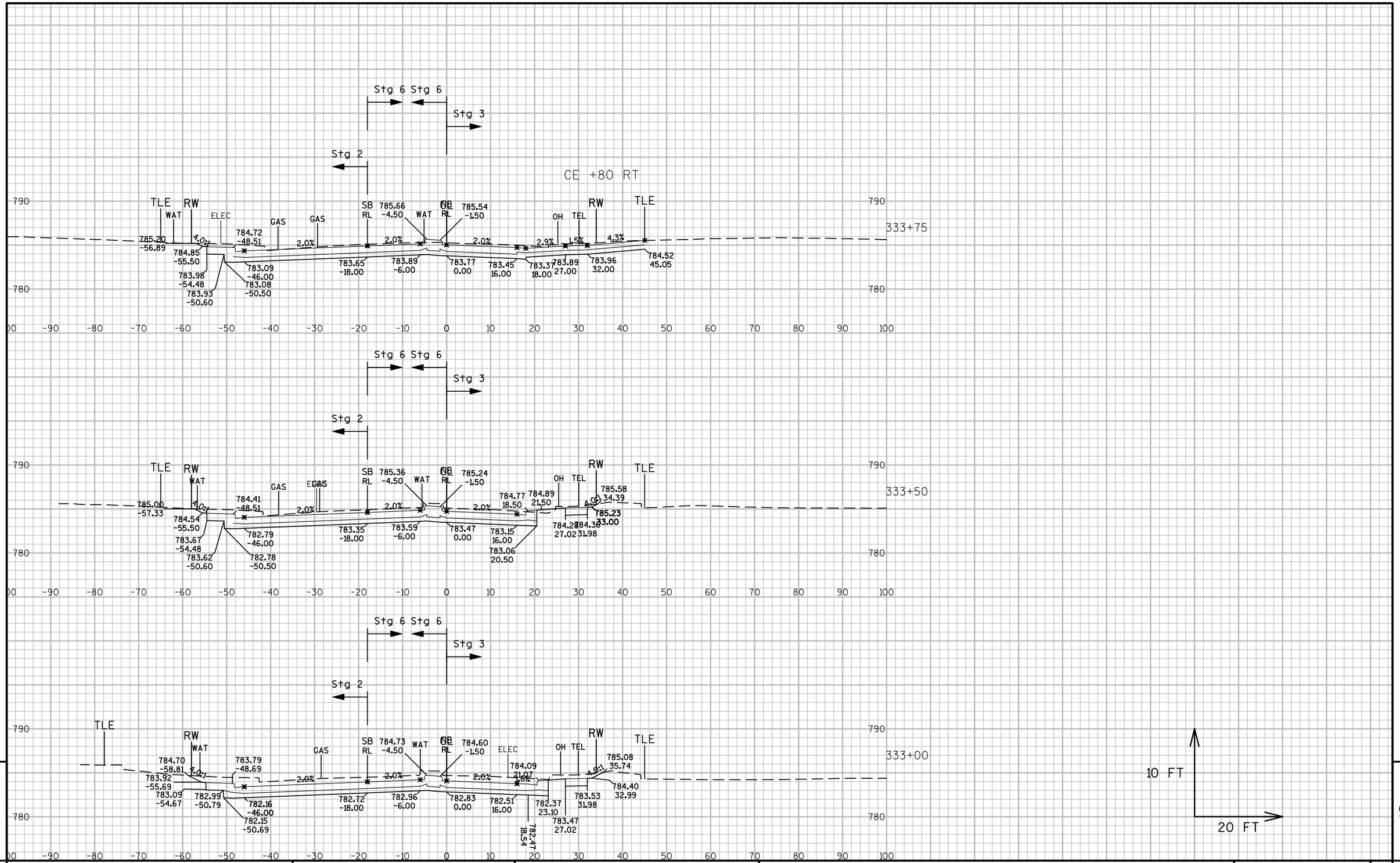

PROJECT NO: 5144-01-75	HWY: STH 27	COUNTY: MONROE	CROSS SECTIONS: CROSS SECTION STH 27	SHEET 471	E

FILE NAME : N:\PDS\C3D\51440105\SHEETSPLAN\090100_XS.DWG
LAYOUT NAME - 090119_XS
PLOT DATE : 7/28/2017 10:33 AM PLOT BY : VALENTI, PAUL M PLOT NAME : PLOT SCALE : 1:20_XREF

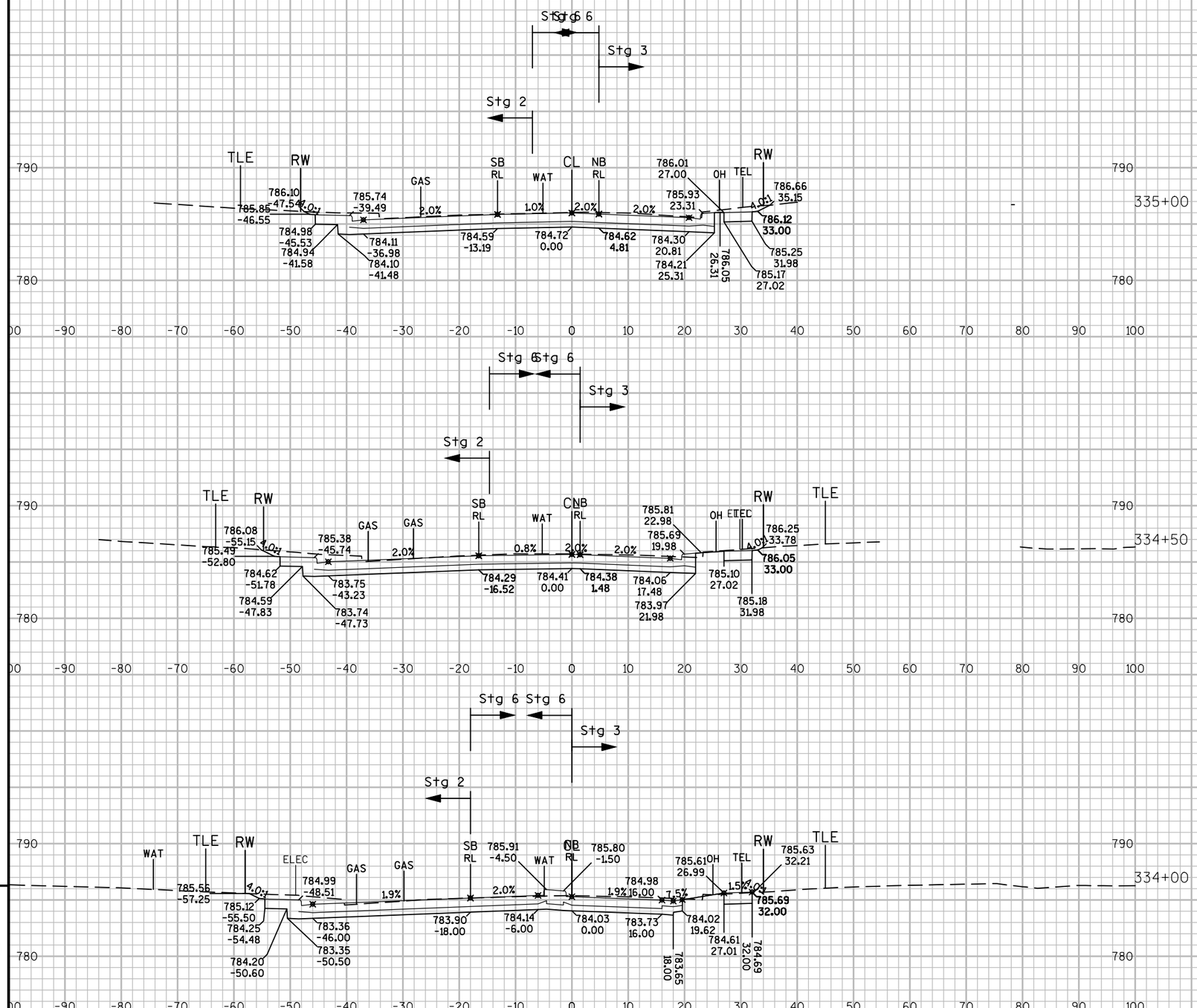

PROJECT NO: 5144-01-75	HWY: STH 27	COUNTY: MONROE	CROSS SECTIONS: CROSS SECTION STH 27	SHEET 472	E

FILE NAME : N:\PDS\C3D\51440105\SHEETSPLAN\090100_XS.DWG
LAYOUT NAME - 090120_XS
PLOT DATE : 7/28/2017 10:34 AM PLOT BY : VALENTI, PAUL M PLOT NAME : PLOT SCALE : 1:20_XREF

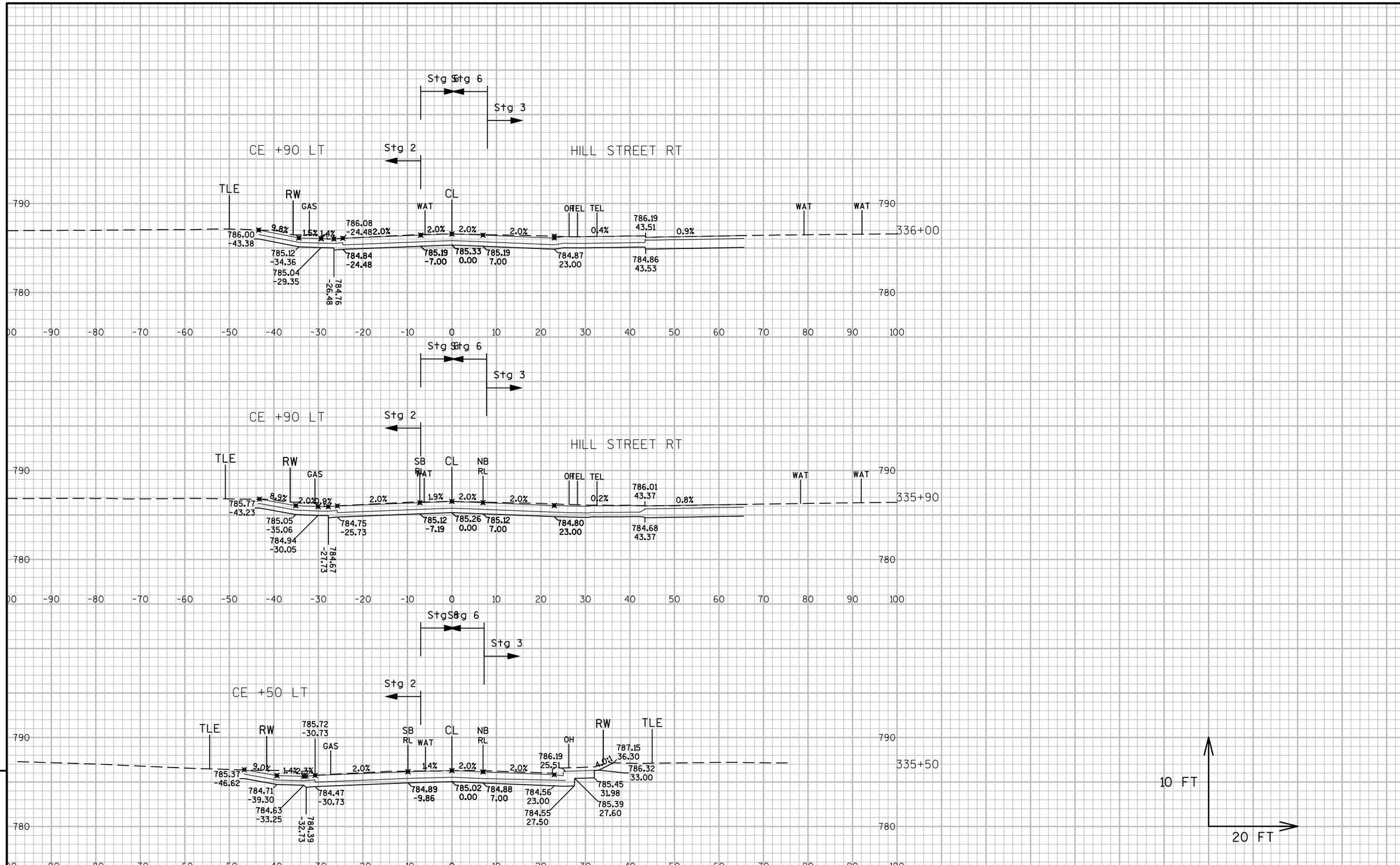

9

9

PROJECT NO:5144-01-75	HWY:STH 27	COUNTY:MONROE	CROSS SECTIONS:CROSS SECTION STH 27	SHEET 473	E

FILE NAME : N:\PDS\C3D\51440105\SHEETSPLAN\090100_XS.DWG
LAYOUT NAME - 090121_XS
PLOT DATE : 7/28/2017 10:35 AM PLOT BY : VALENTI, PAUL M PLOT NAME : PLOT SCALE : 1:20_XREF

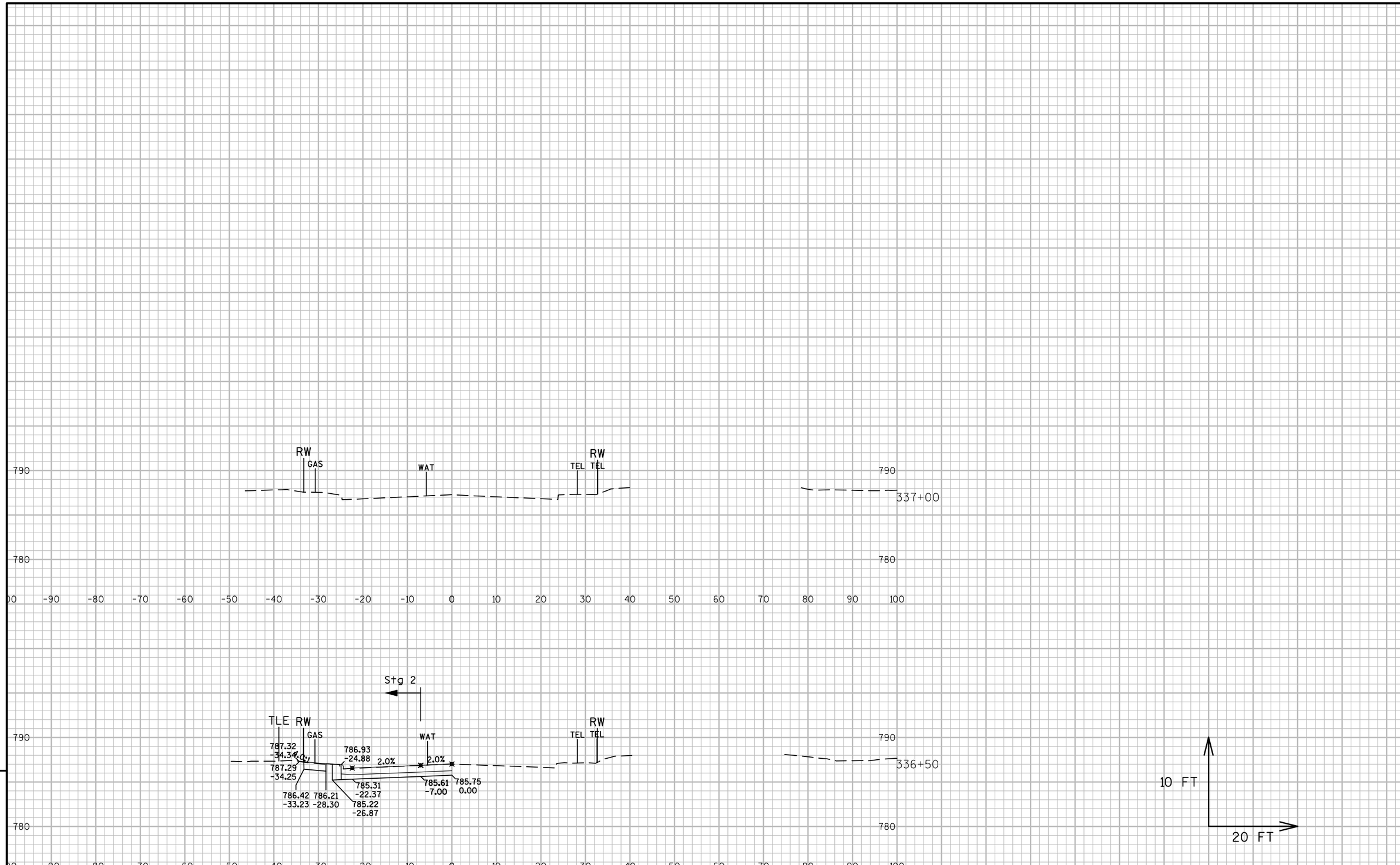

9

9

PROJECT NO:5144-01-75	HWY:STH 27	COUNTY:MONROE	CROSS SECTIONS:CROSS SECTION STH 27	SHEET 474	E

FILE NAME : N:\PDS\C3D\51440105\SHEETSPLAN\090100_XS.DWG
LAYOUT NAME - 090122_XS

PLOT DATE : 7/28/2017 10:36 AM PLOT BY : VALENTI, PAUL M PLOT NAME : PLOT SCALE : 1:20_XREF

WISDOT/CADDS SHEET 49

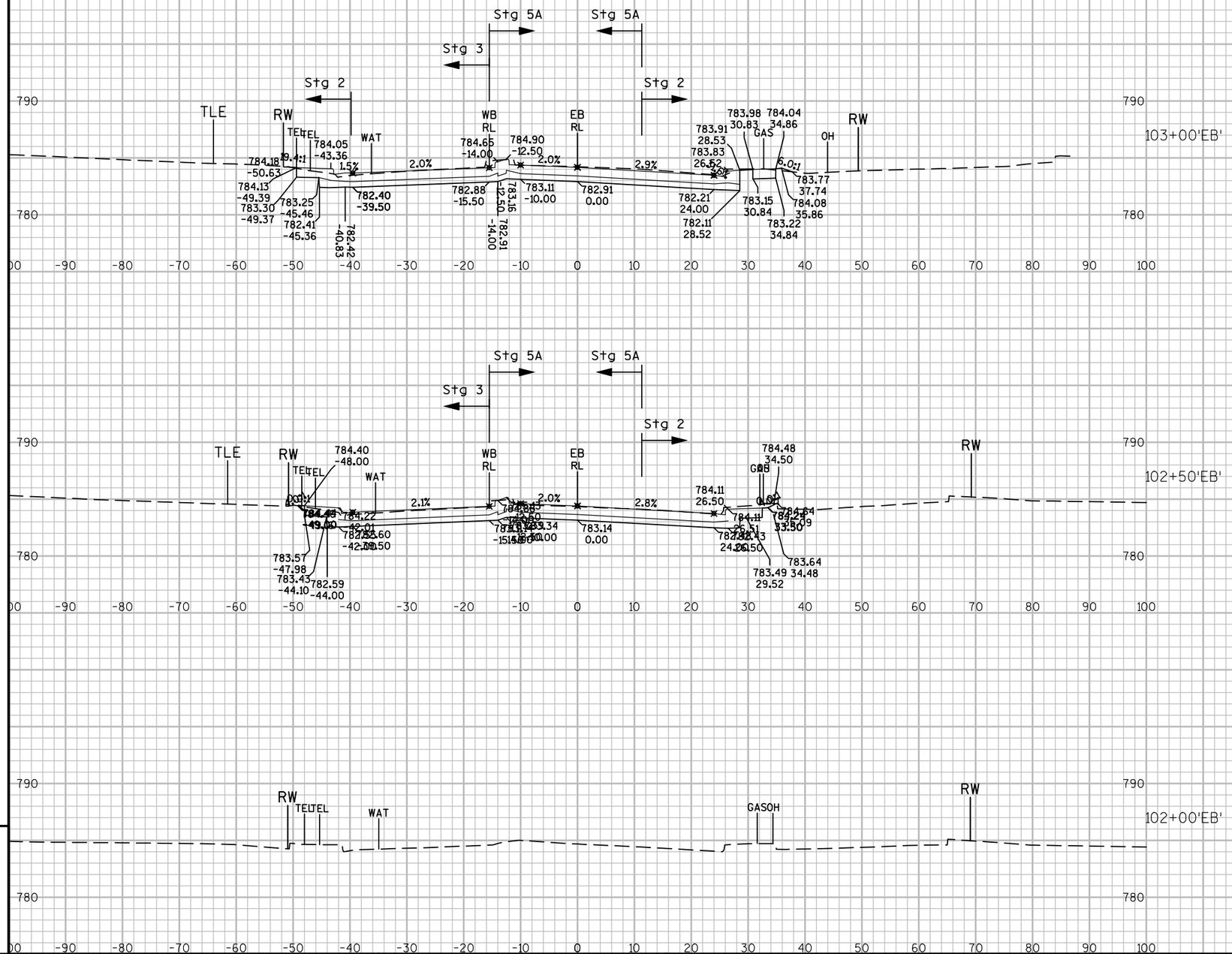

PROJECT NO:5144-01-75	HWY:STH 27	COUNTY:MONROE	CROSS SECTIONS:STH 16	SHEET 475	E

FILE NAME : N:\PDS\C3D\51440105\SHEETSPLAN\090200_XS.DWG
LAYOUT NAME - 090201
PLOT DATE : 7/28/2017 10:43 AM PLOT BY : VALENTI, PAUL M PLOT NAME : PLOT SCALE : 1" = 20'_XREF

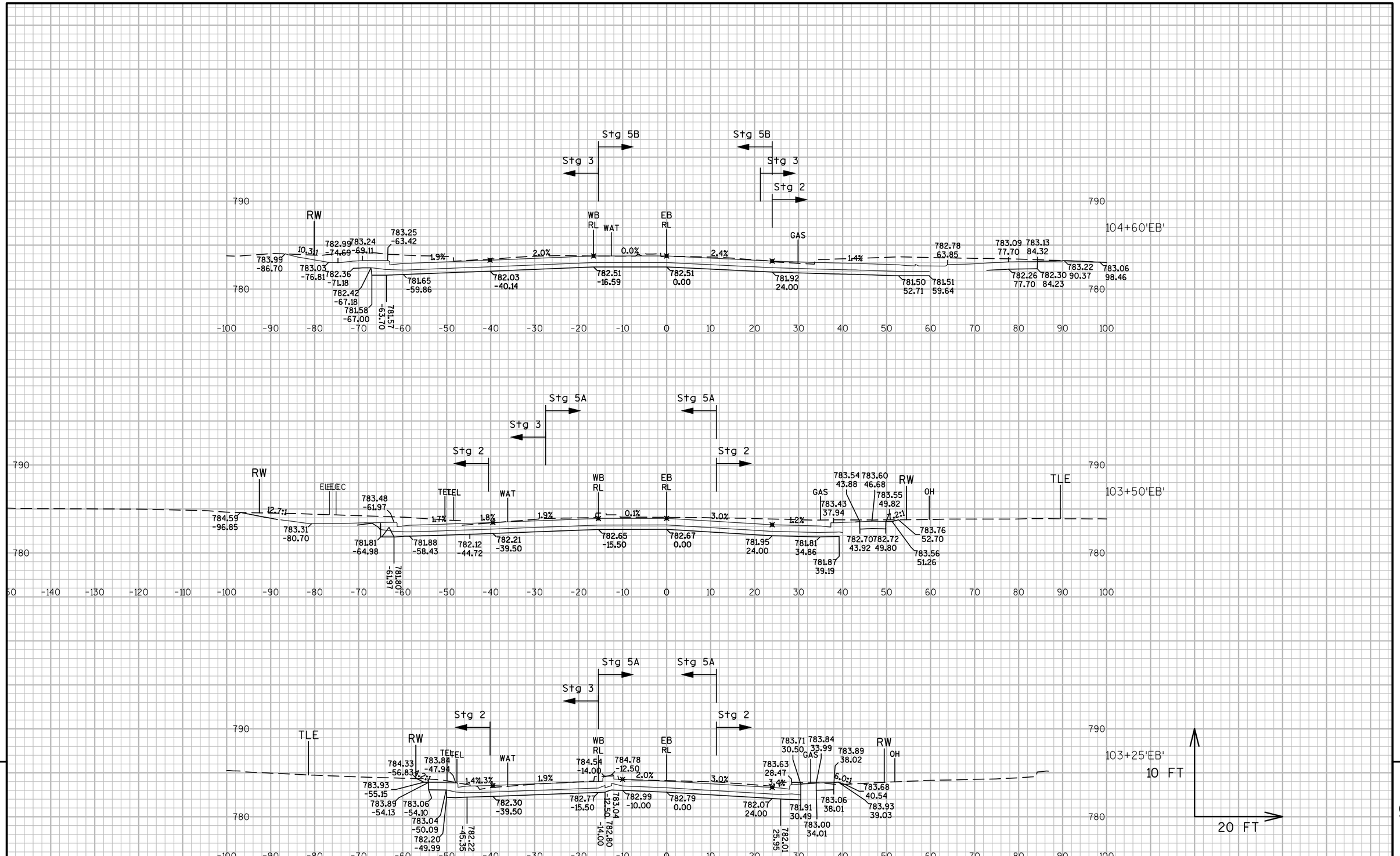

PROJECT NO: 5144-01-75	HWY: STH 27	COUNTY: MONROE	CROSS SECTIONS: STH 16	SHEET 476	E

FILE NAME : N:\PDS\C3D\51440105\SHEETSPLAN\090200_XS.DWG
LAYOUT NAME - 090202
PLOT DATE : 7/28/2017 10:45 AM PLOT BY : VALENTI, PAUL M PLOT NAME : PLOT SCALE : 1" = 20'_XREF

WISDOT/CADDS SHEET 49

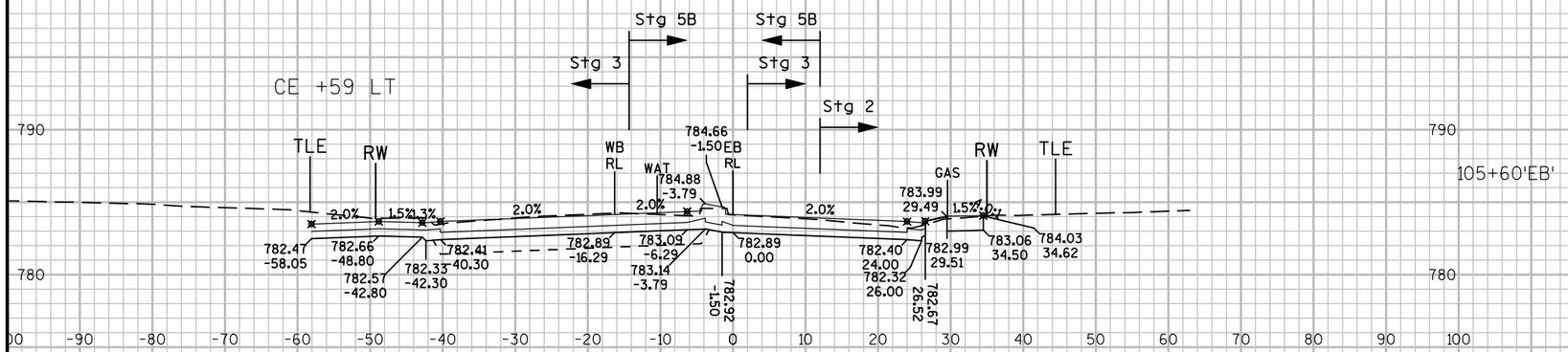

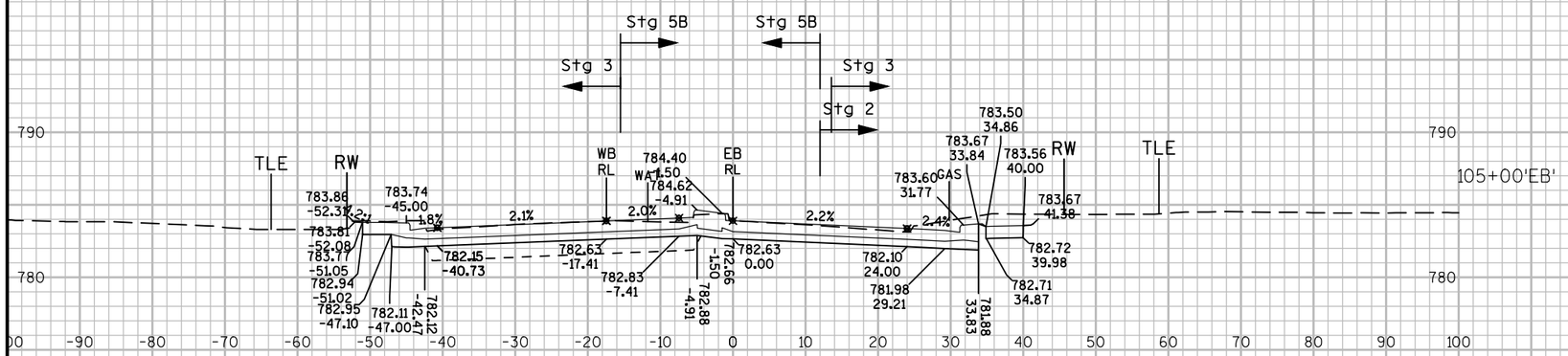

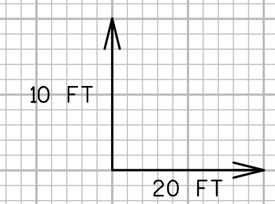

9

9

PROJECT NO:5144-01-75	HWY:STH 27	COUNTY:MONROE	CROSS SECTIONS:STH 16	SHEET 477	E

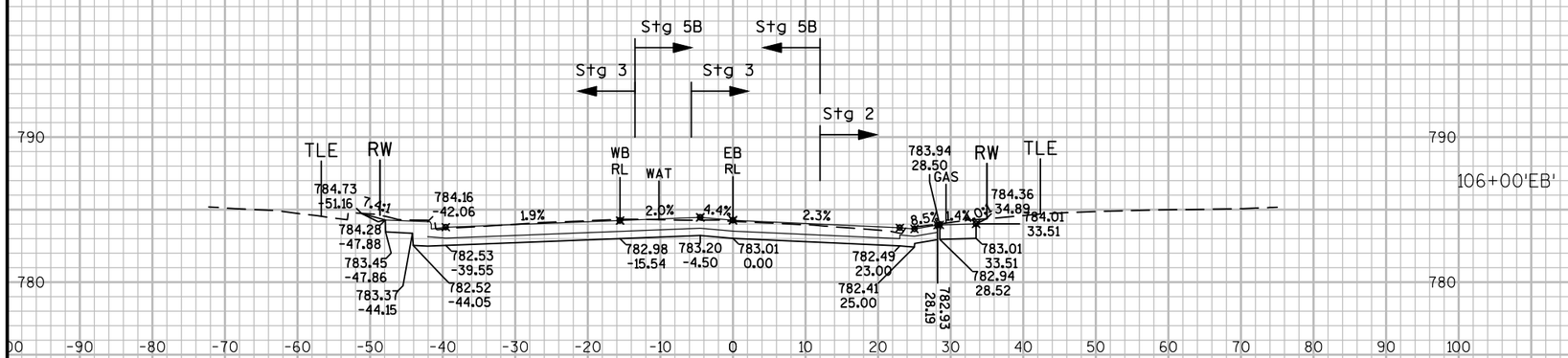

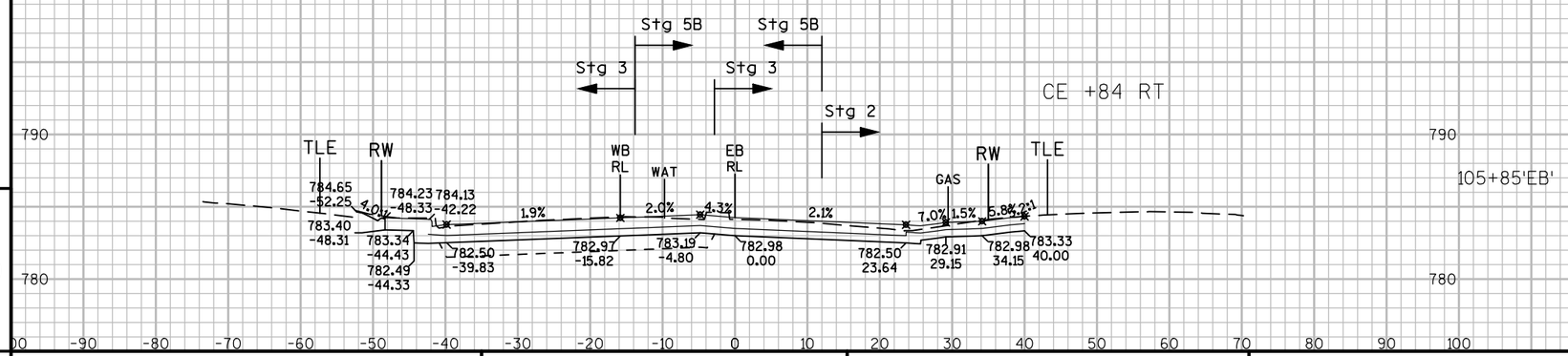

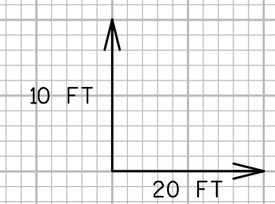

9

9

PROJECT NO:5144-01-75	HWY:STH 27	COUNTY:MONROE	CROSS SECTIONS:CROSS SECTION STH 16	SHEET 478	E

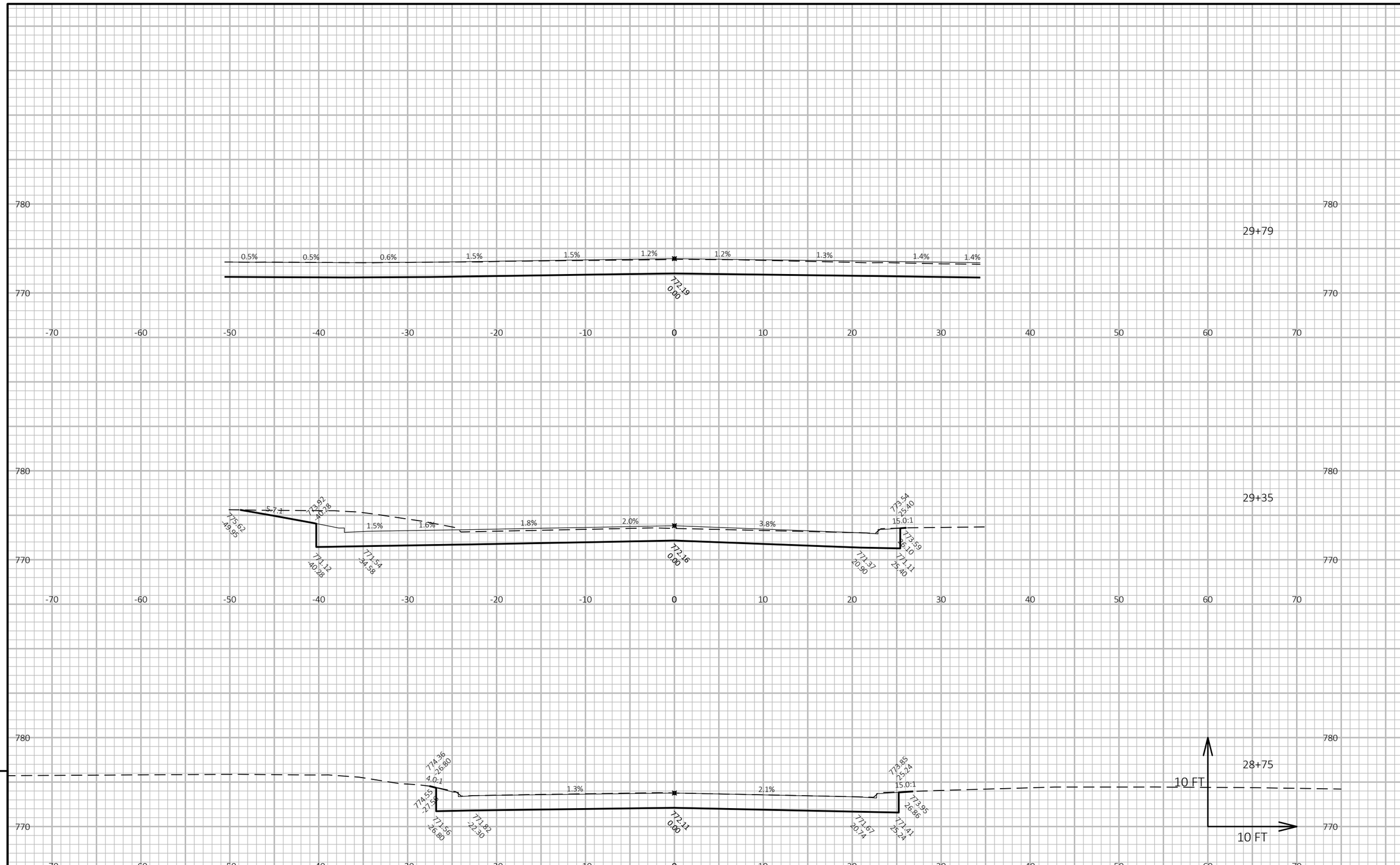

9

9

PROJECT NO: 5144-01-75 & 5144-01-76	HWY: ROBERTS RD	COUNTY: MONROE	CROSS SECTIONS: RIVER RD 'R'	SHEET 479	E

FILE NAME : P:\50S\51\00051029\CADD\C3D\DESIGN\CORRIDORS\CORRIDOR-STH27-ROBERTS.DWG
LAYOUT NAME - 090208_xs
PLOT DATE : 7/13/2017 8:25 AM
PLOT BY : BRAD LEE
PLOT NAME :
PLOT SCALE : 1 IN:10 FT HORZ. / 1 IN:10 FT VERT.

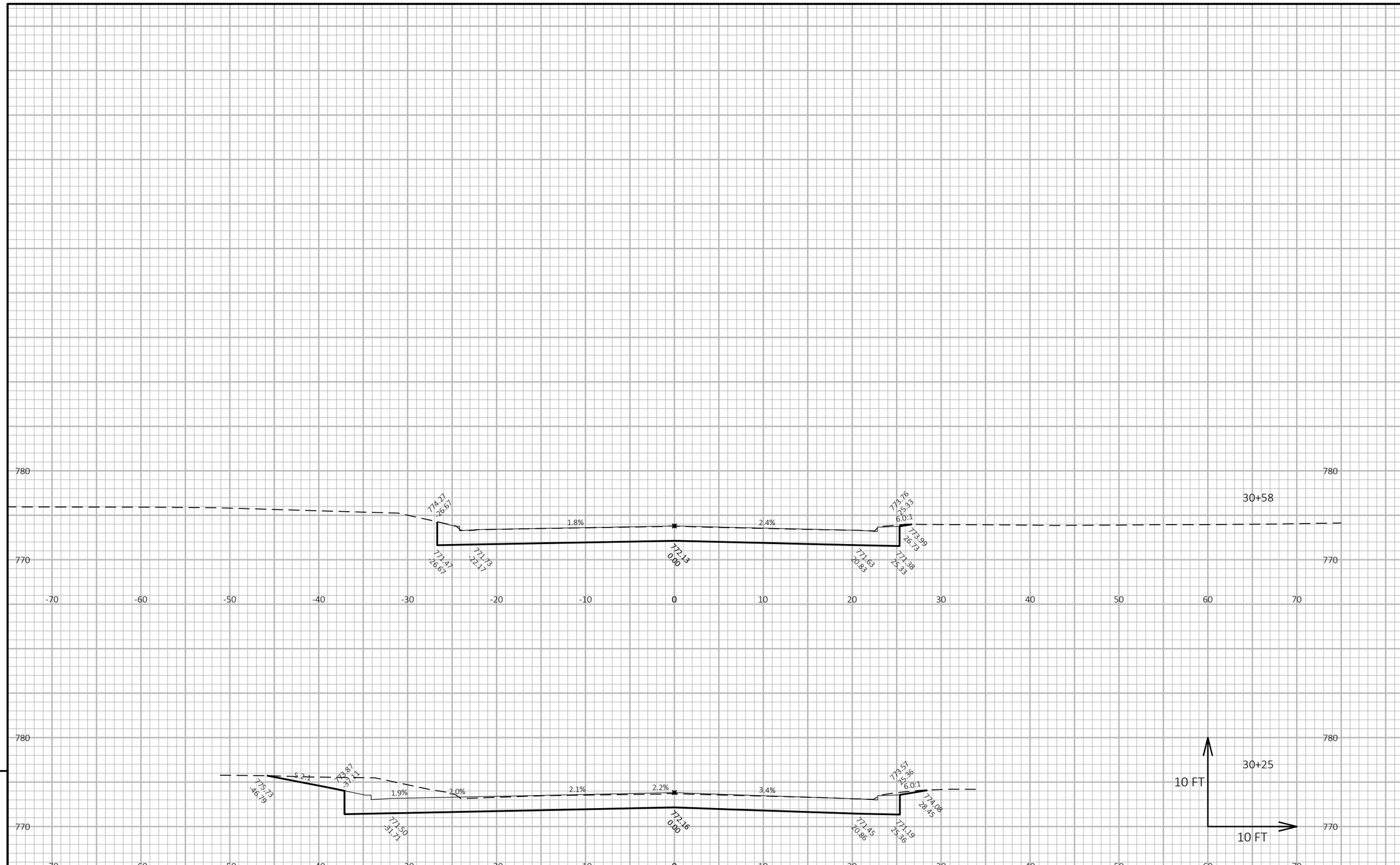

9

9

PROJECT NO: 5144-01-75 & 5144-01-76	HWY: ROBERTS RD	COUNTY: MONROE	CROSS SECTIONS: RIVER RD 'R'	SHEET 480	E

FILE NAME : P:\50S\51\00051029\CADD\C3D\DESIGN\CORRIDORS\CORRIDOR-STH27-ROBERTS.DWG
LAYOUT NAME - 090209_xs

PLOT DATE : 7/13/2017 8:25 AM PLOT BY : BRAD LEE PLOT NAME : PLOT SCALE : 1 IN:10 FT HORZ. / 1 IN:10 FT VERT.

WISDOT/CADDS SHEET 49

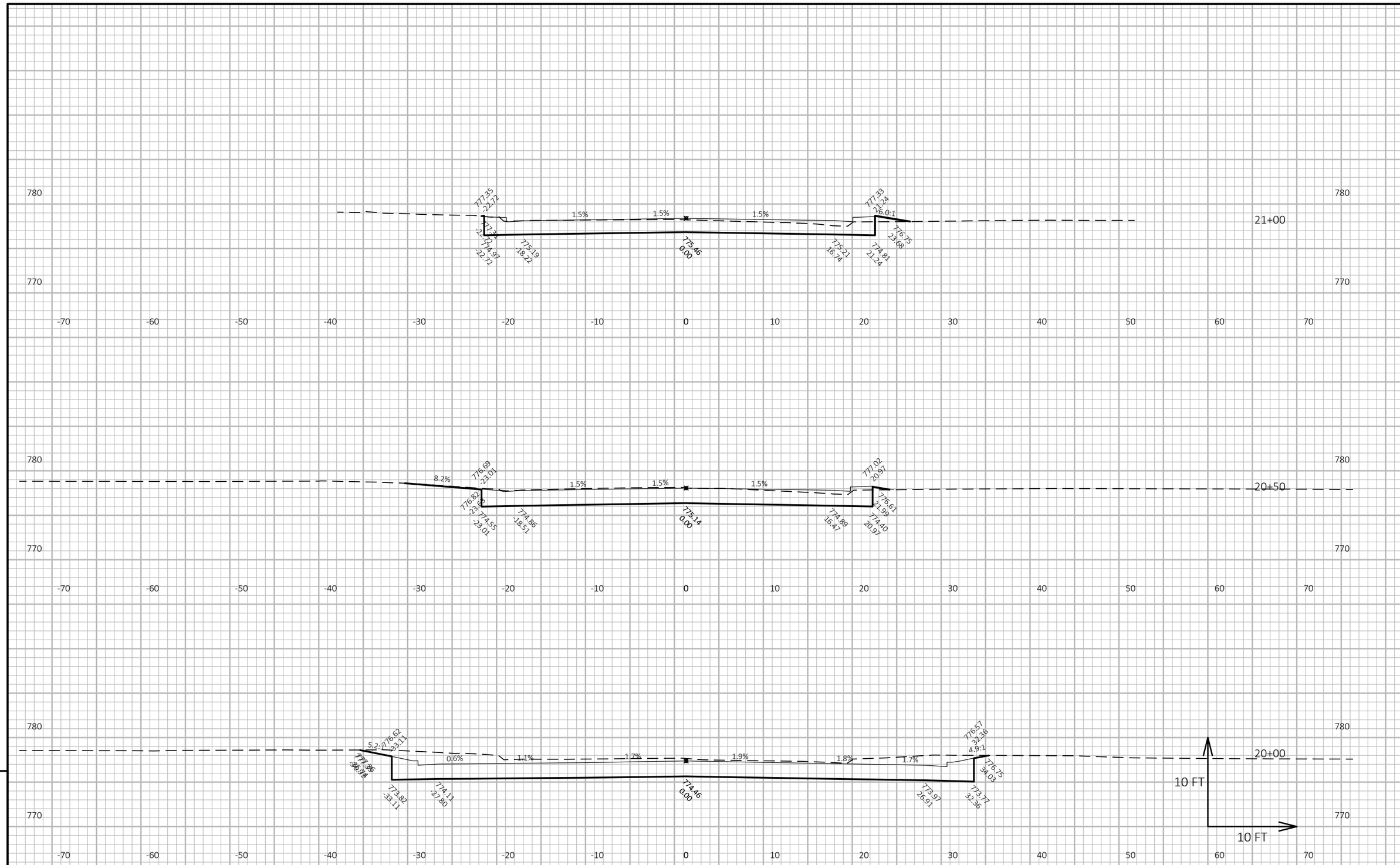

PROJECT NO: 5144-01-75 & 5144-01-76	HWY: ROBERTS RD	COUNTY: MONROE	CROSS SECTIONS: AVERILL ST 'AV'	SHEET 481	E

FILE NAME : P:\50S\51\00051029\CADD\C3D\DESIGN\CORRIDORS\CORRIDOR-STH27-ROBERTS.DWG
LAYOUT NAME - 090210_xs
PLOT DATE : 7/13/2017 8:25 AM
PLOT BY : BRAD LEE
PLOT NAME :
PLOT SCALE : 1 IN:10 FT HORZ. / 1 IN:10 FT VERT.

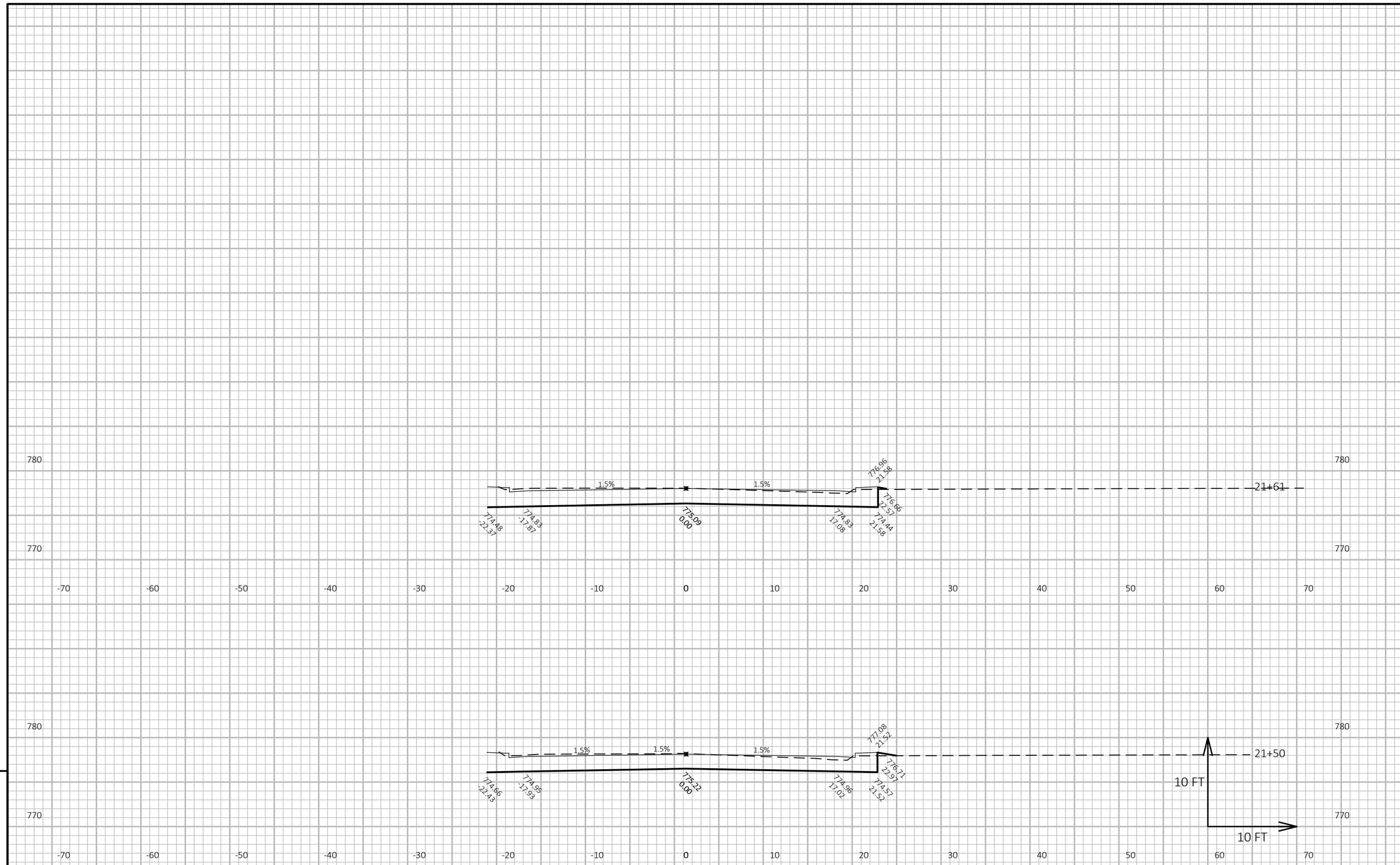

9

9

PROJECT NO: 5144-01-75 & 5144-01-76	HWY: ROBERTS RD	COUNTY: MONROE	CROSS SECTIONS: AVERILL ST 'AV'	SHEET 482	E

FILE NAME : P:\50S\51\00051029\CADD\C3D\DESIGN\CORRIDORS\CORRIDOR-STH27-ROBERTS.DWG
LAYOUT NAME - 090211_xs

PLOT DATE : 7/13/2017 8:25 AM PLOT BY : BRAD LEE PLOT NAME : PLOT SCALE : 1 IN:10 FT HORZ. / 1 IN:10 FT VERT.

WISDOT/CADDS SHEET 49

CE +15 LT

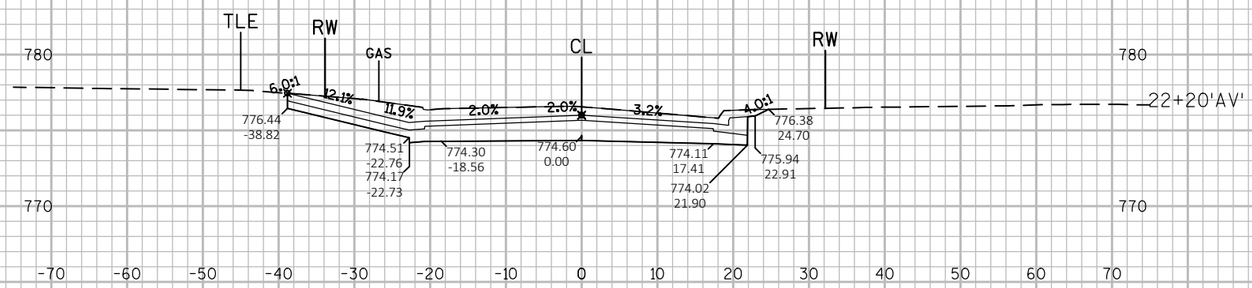

CE +15 LT

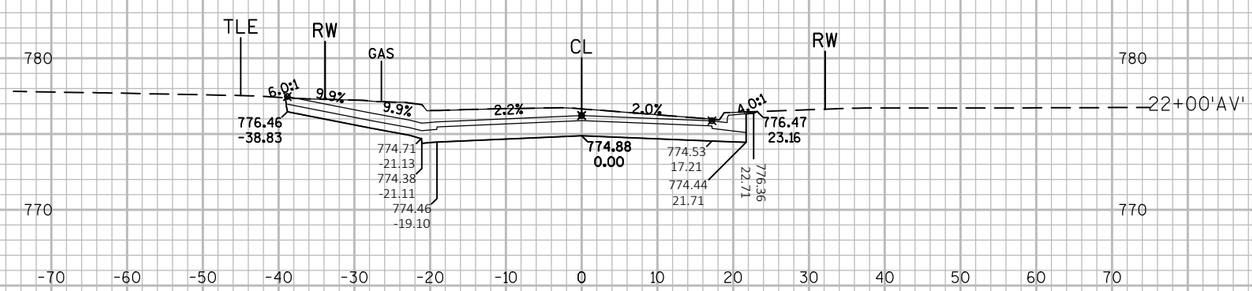

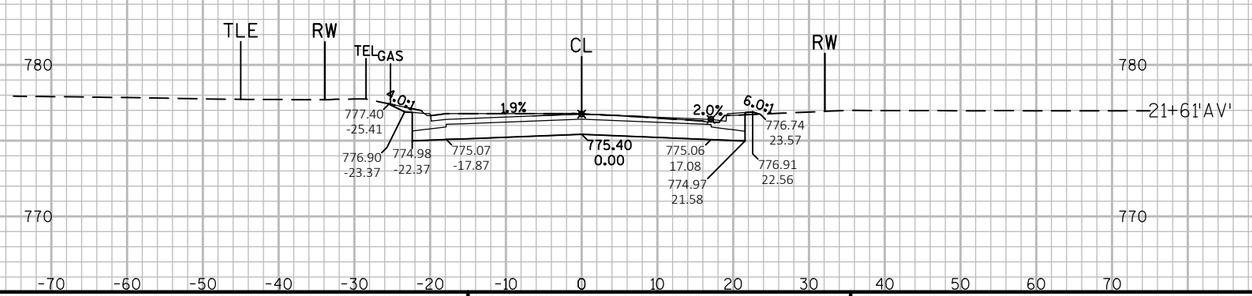

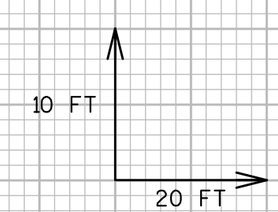

9

9

PROJECT NO:5144-01-75	HWY:STH 27	COUNTY:MONROE	CROSS SECTIONS: W AVERILL STREET	SHEET 483	E

FILE NAME : N:\PDS\C3D\51440105\SHEETSPLAN\090400_XS.DWG
LAYOUT NAME - 090401
PLOT DATE : 7/28/2017 10:54 AM PLOT BY : VALENTI, PAUL M PLOT NAME : PLOT SCALE : 1" = 20'_XREF

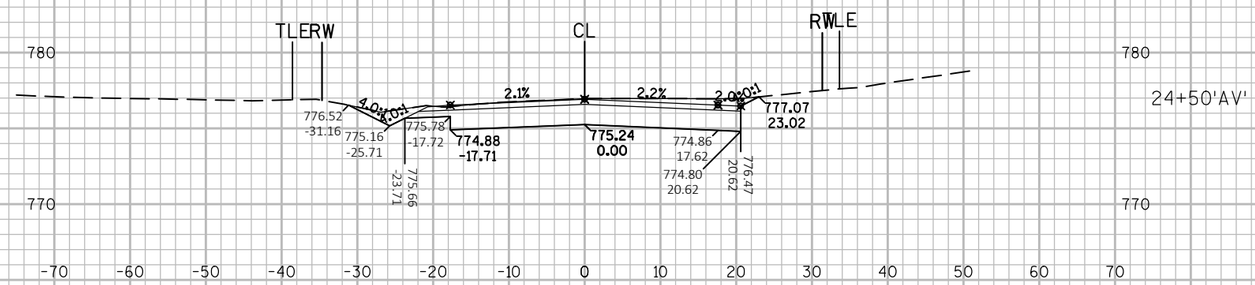

24+50'AV'

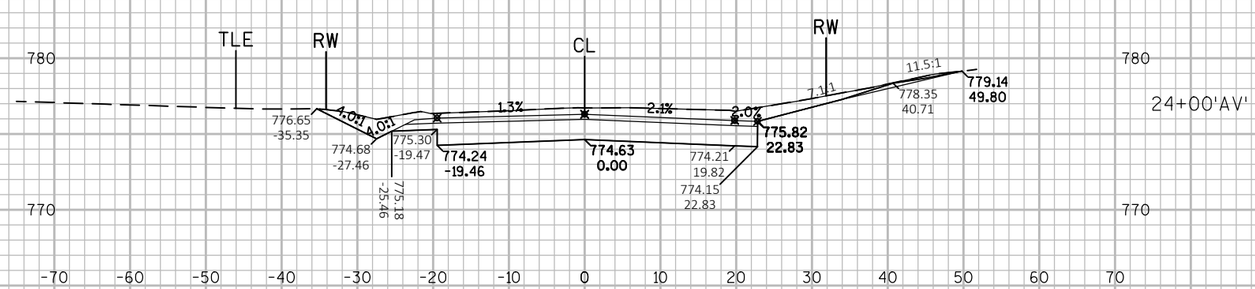

24+00'AV'

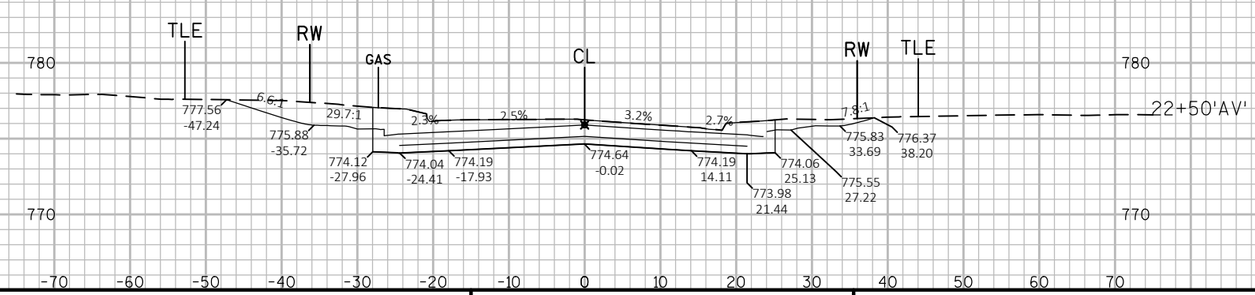

22+50'AV'

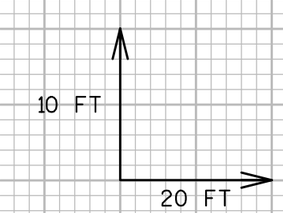

9

9

PROJECT NO:5144-01-75	HWY:STH 27	COUNTY:MONROE	CROSS SECTIONS: W AVERILL STREET	SHEET 484	E

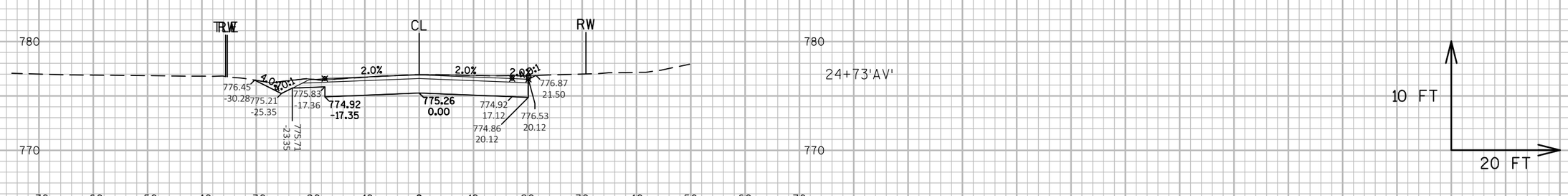

9

9

PROJECT NO:5144-01-75	HWY:STH 27	COUNTY:MONROE	CROSS SECTIONS: W AVERILL STREET	SHEET 485	E

FILE NAME : N:\PDS\C3D\51440105\SHEETSPLAN\090400_XS.DWG
LAYOUT NAME - 090403

PLOT DATE : 7/28/2017 10:56 AM PLOT BY : VALENTI, PAUL M PLOT NAME : PLOT SCALE : 1" = 20'_XREF

WISDOT/CADDS SHEET 49

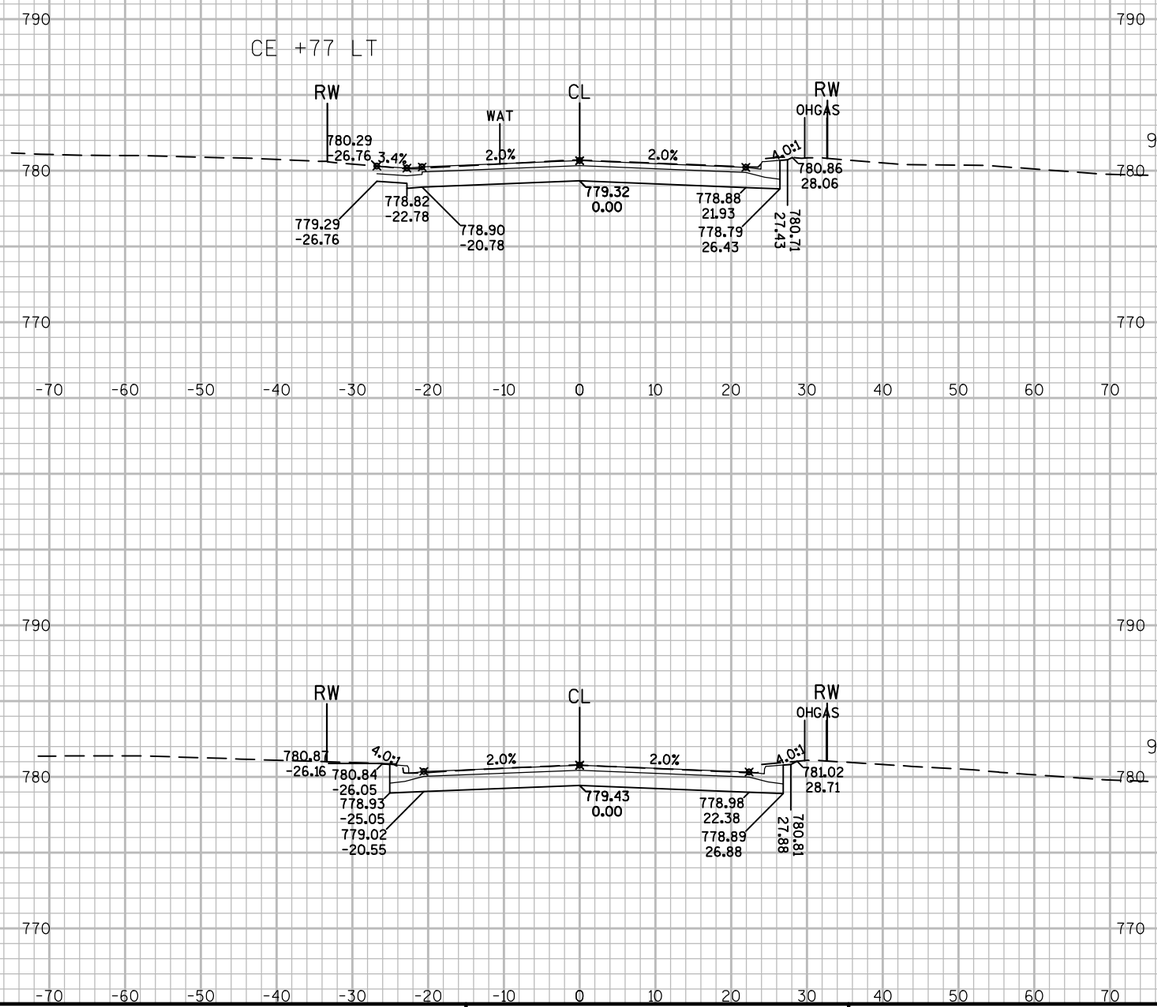

PROJECT NO:5144-01-75	HWY:STH 27	COUNTY:MONROE	CROSS SECTIONS:MAPLE AVENUE	SHEET 486	E

FILE NAME : N:\PDS\C3D\51440105\SHEETSPLAN\090500_XS.DWG
LAYOUT NAME - 090501
PLOT DATE : 7/28/2017 11:02 AM PLOT BY : VALENTI, PAUL M PLOT NAME : PLOT SCALE : 1" = 20'_XREF

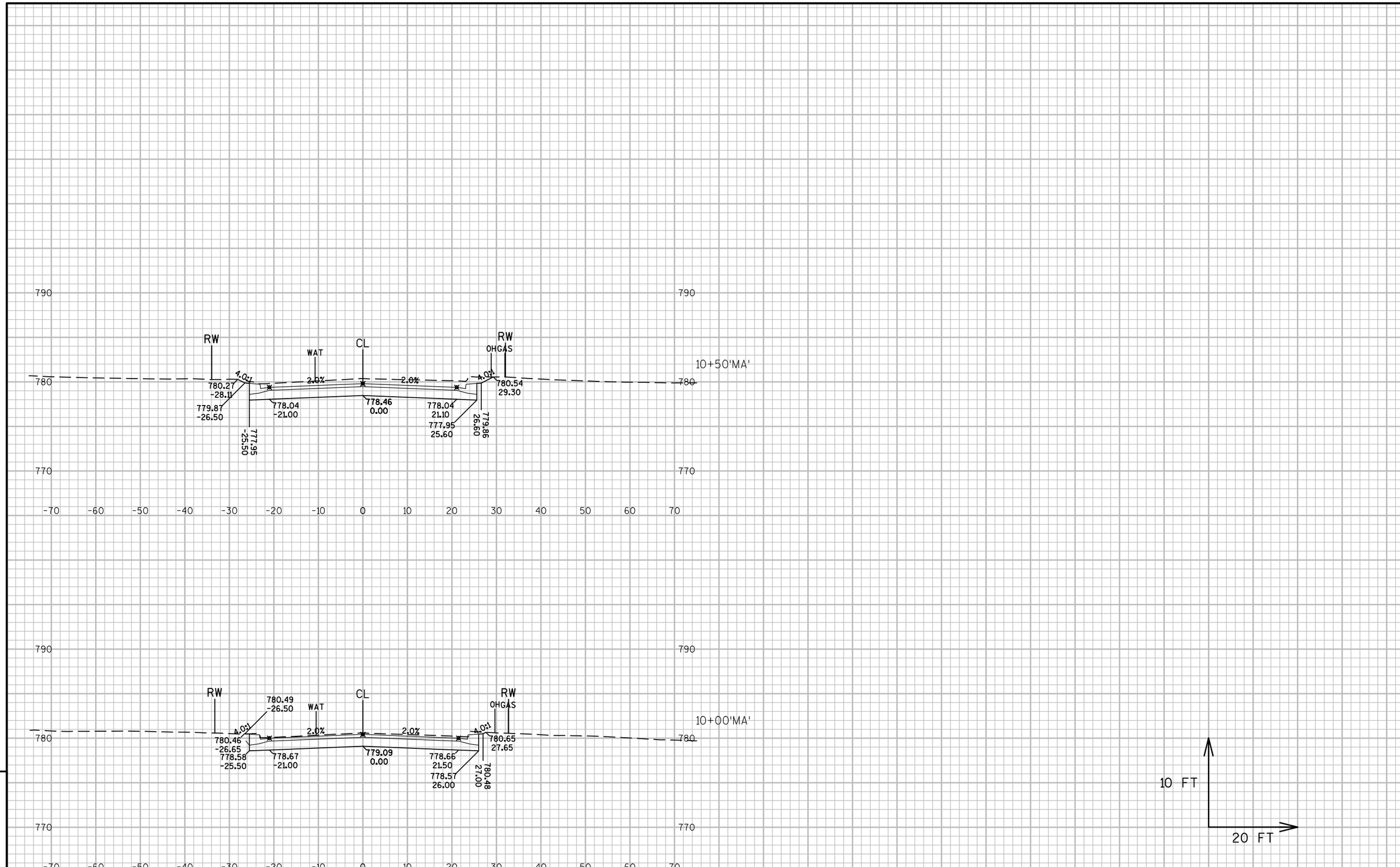

9

9

PROJECT NO:5144-01-75	HWY:STH 27	COUNTY:MONROE	CROSS SECTIONS:MAPLE AVENUE	SHEET 487	E

FILE NAME : N:\PDS\C3D\51440105\SHEETSPLAN\090500_XS.DWG
LAYOUT NAME - 090502
PLOT DATE : 7/28/2017 11:03 AM PLOT BY : VALENTI, PAUL M PLOT NAME : PLOT SCALE : 1" = 20'_XREF

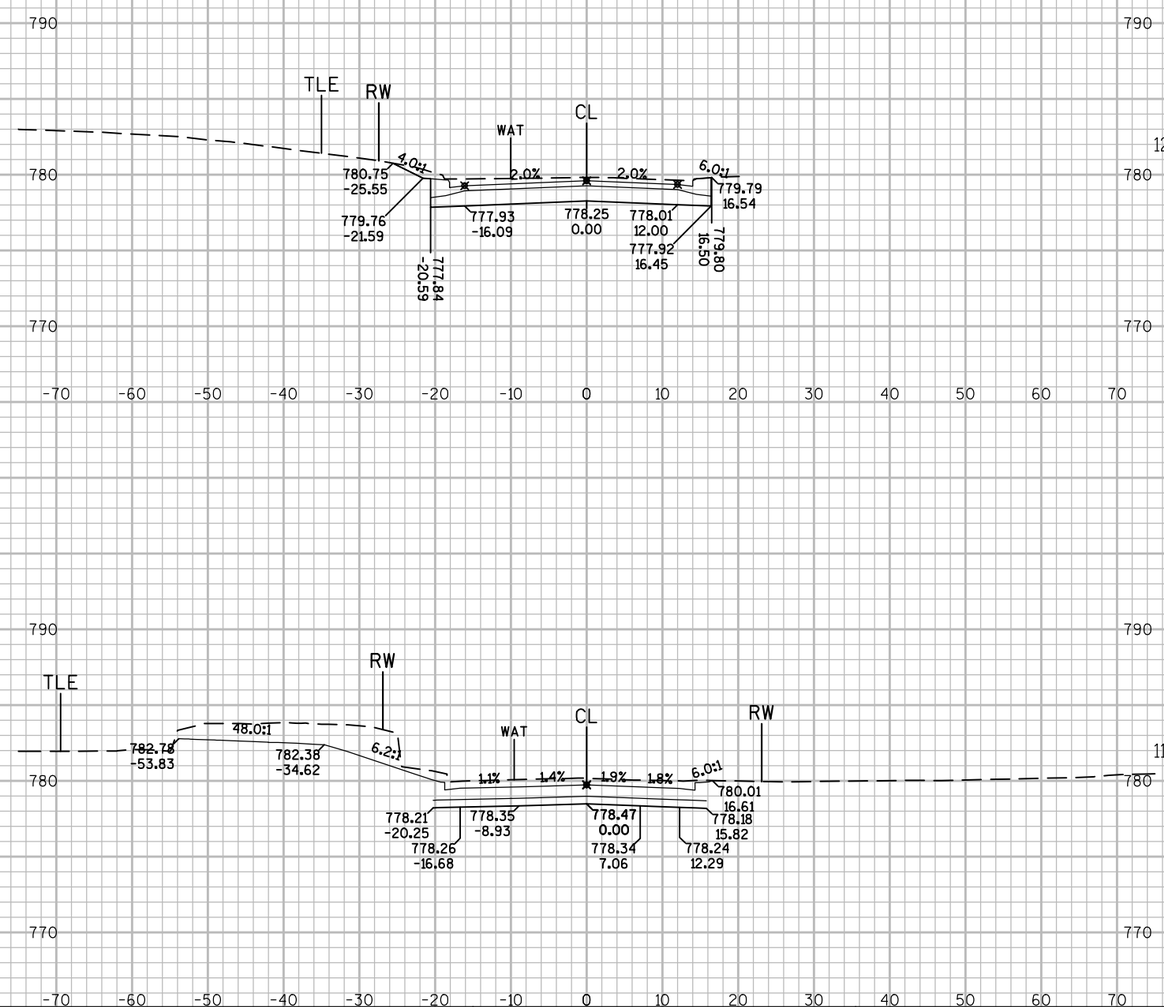

9

9

PROJECT NO:5144-01-75	HWY:STH 27	COUNTY:MONROE	CROSS SECTIONS:MAPLE AVENUE	SHEET 488	E

FILE NAME : N:\PDS\C3D\51440105\SHEETSPLAN\090500_XS.DWG
LAYOUT NAME - 090503
PLOT DATE : 7/28/2017 11:04 AM PLOT BY : VALENTI, PAUL M PLOT NAME : PLOT SCALE : 1" = 20'_XREF

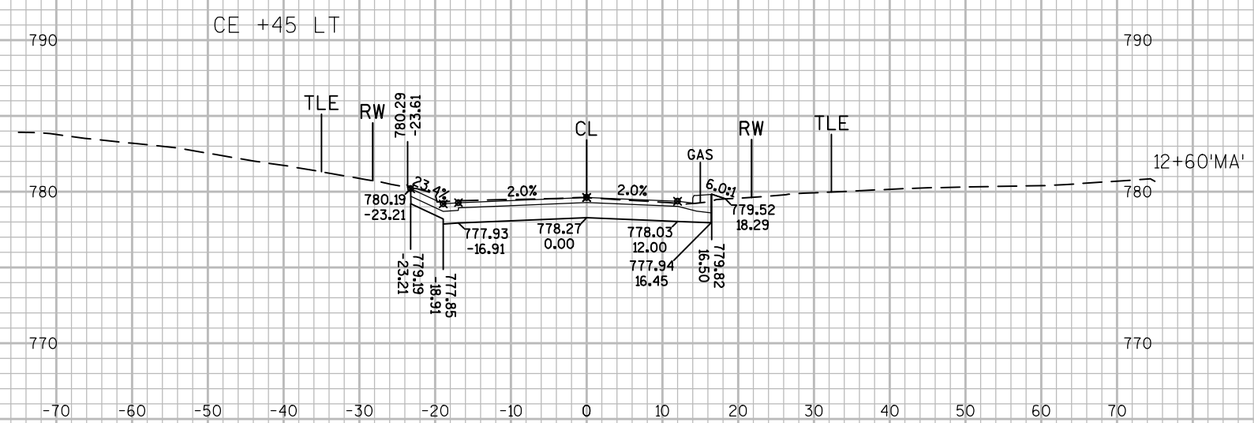

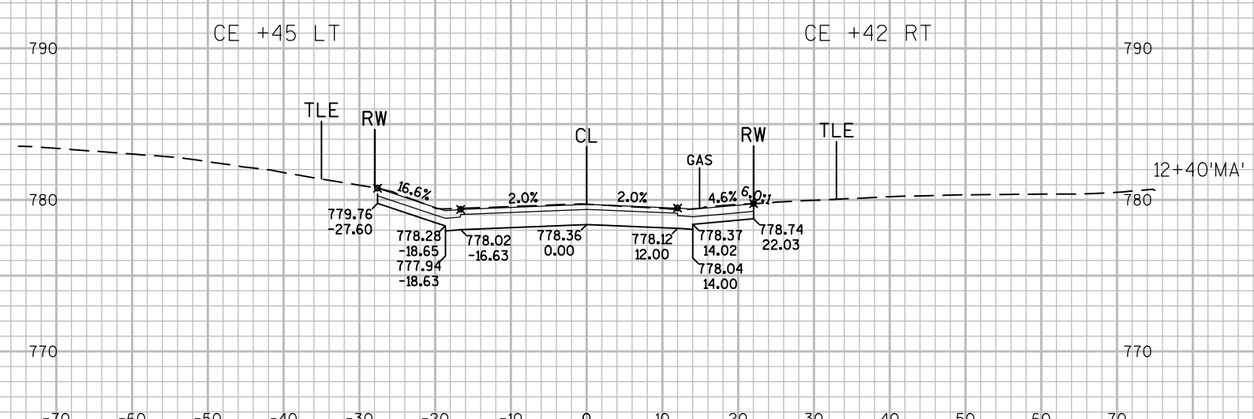

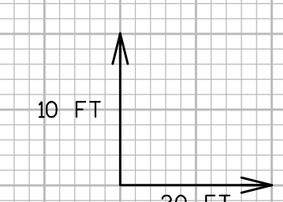

9

9

PROJECT NO:5144-01-75	HWY:STH 27	COUNTY:MONROE	CROSS SECTIONS:MAPLE AVENUE	SHEET 489	E

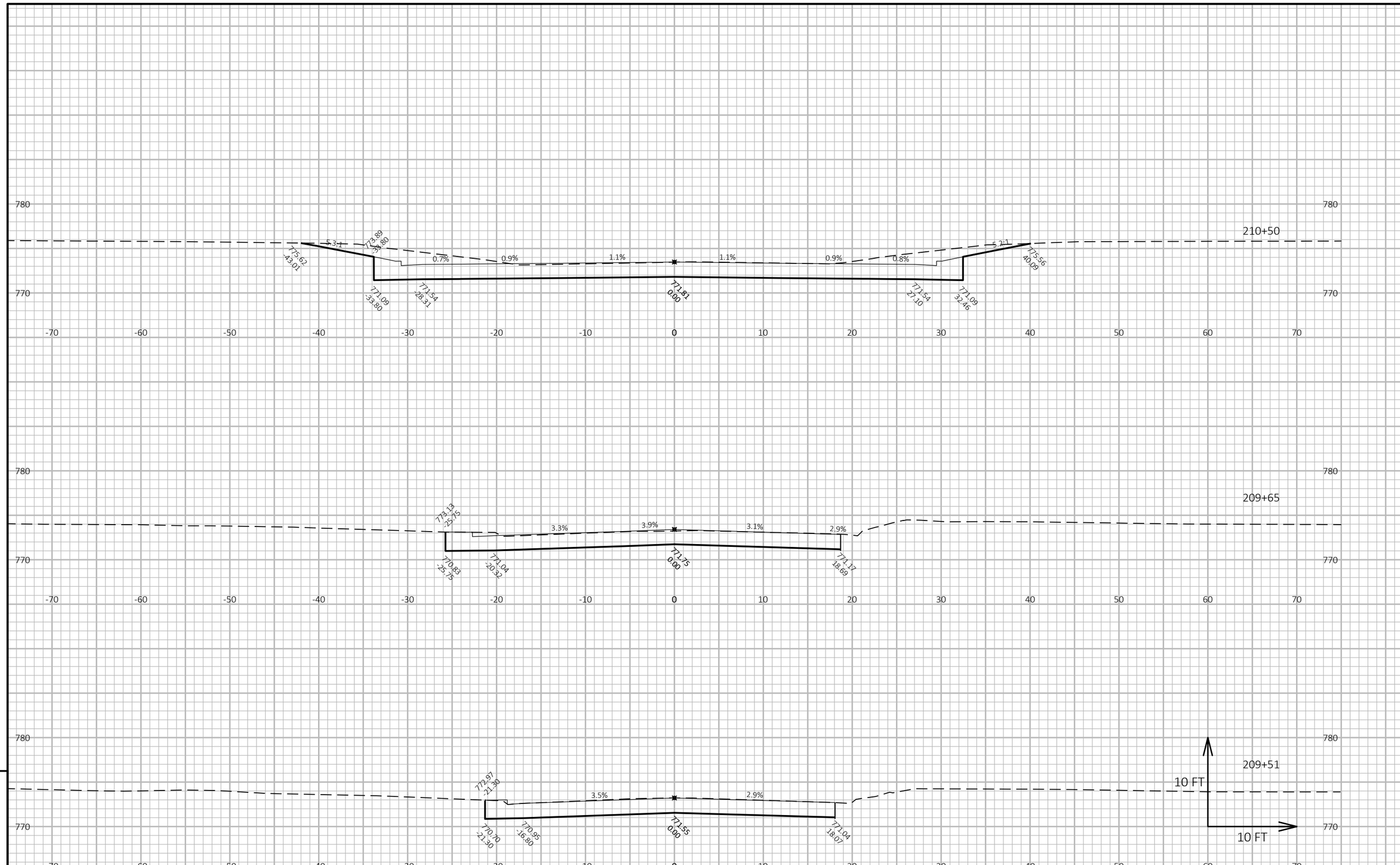

9

9

PROJECT NO: 5144-01-75 & 5144-01-76	HWY: ROBERTS RD	COUNTY: MONROE	CROSS SECTIONS: ROBERTS RD 'RO'	SHEET 490	E

FILE NAME : P:\50S\51\00051029\CADD\C3D\DESIGN\CORRIDORS\CORRIDOR-STH27-ROBERTS.DWG
LAYOUT NAME - 090201_xs

PLOT DATE : 7/13/2017 8:24 AM PLOT BY : BRAD LEE PLOT NAME : PLOT SCALE : 1 IN:10 FT HORZ. / 1 IN:10 FT VERT.

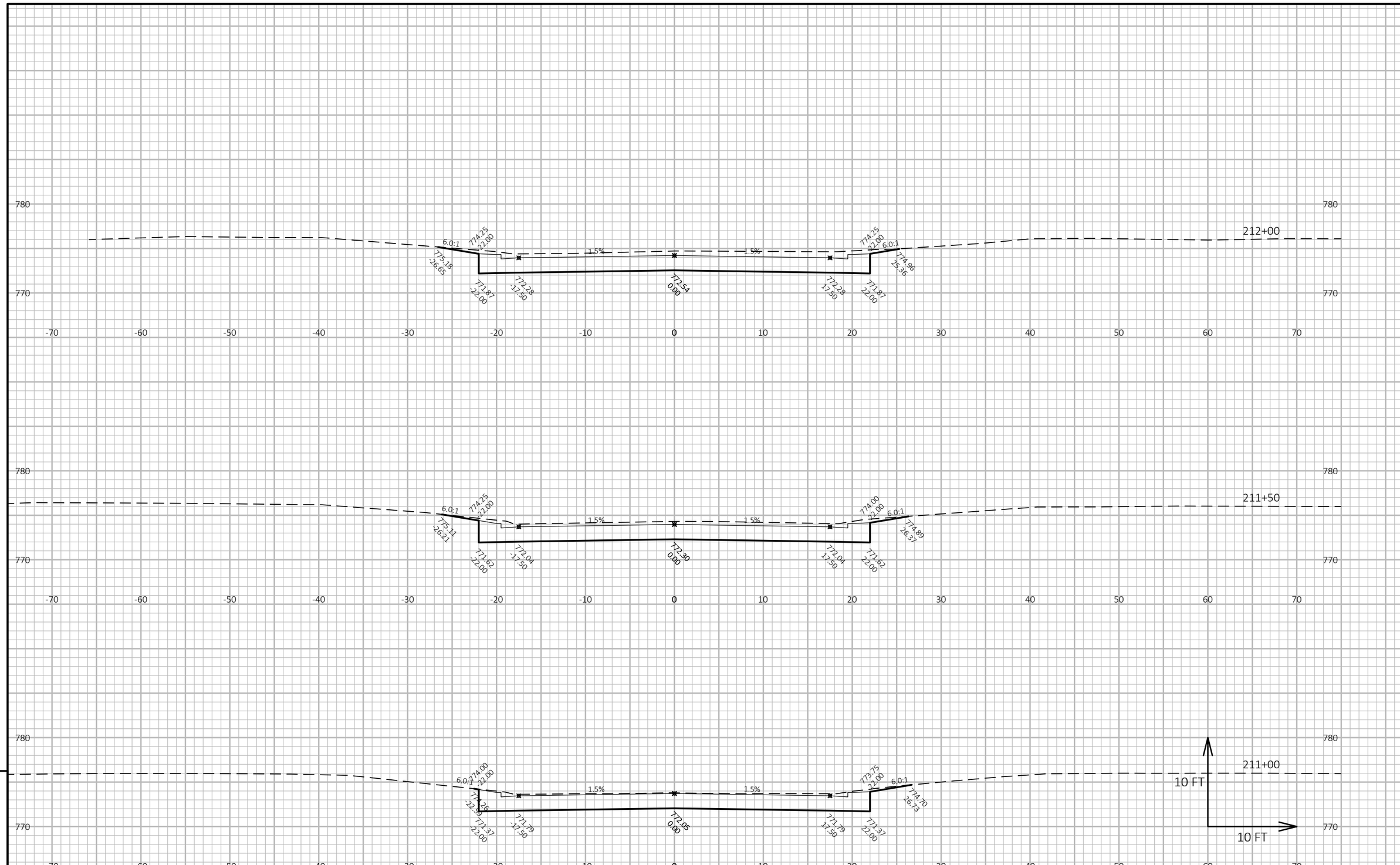

9

9

PROJECT NO: 5144-01-75 & 5144-01-76	HWY: ROBERTS RD	COUNTY: MONROE	CROSS SECTIONS: ROBERTS RD 'RO'	SHEET 491	E

FILE NAME : P:\50S\51\00051029\CADD\C3D\DESIGN\CORRIDORS\CORRIDOR-STH27-ROBERTS.DWG
LAYOUT NAME - 090202_xs

PLOT DATE : 7/13/2017 8:24 AM PLOT BY : BRAD LEE PLOT NAME : PLOT SCALE : 1 IN:10 FT HORZ. / 1 IN:10 FT VERT.

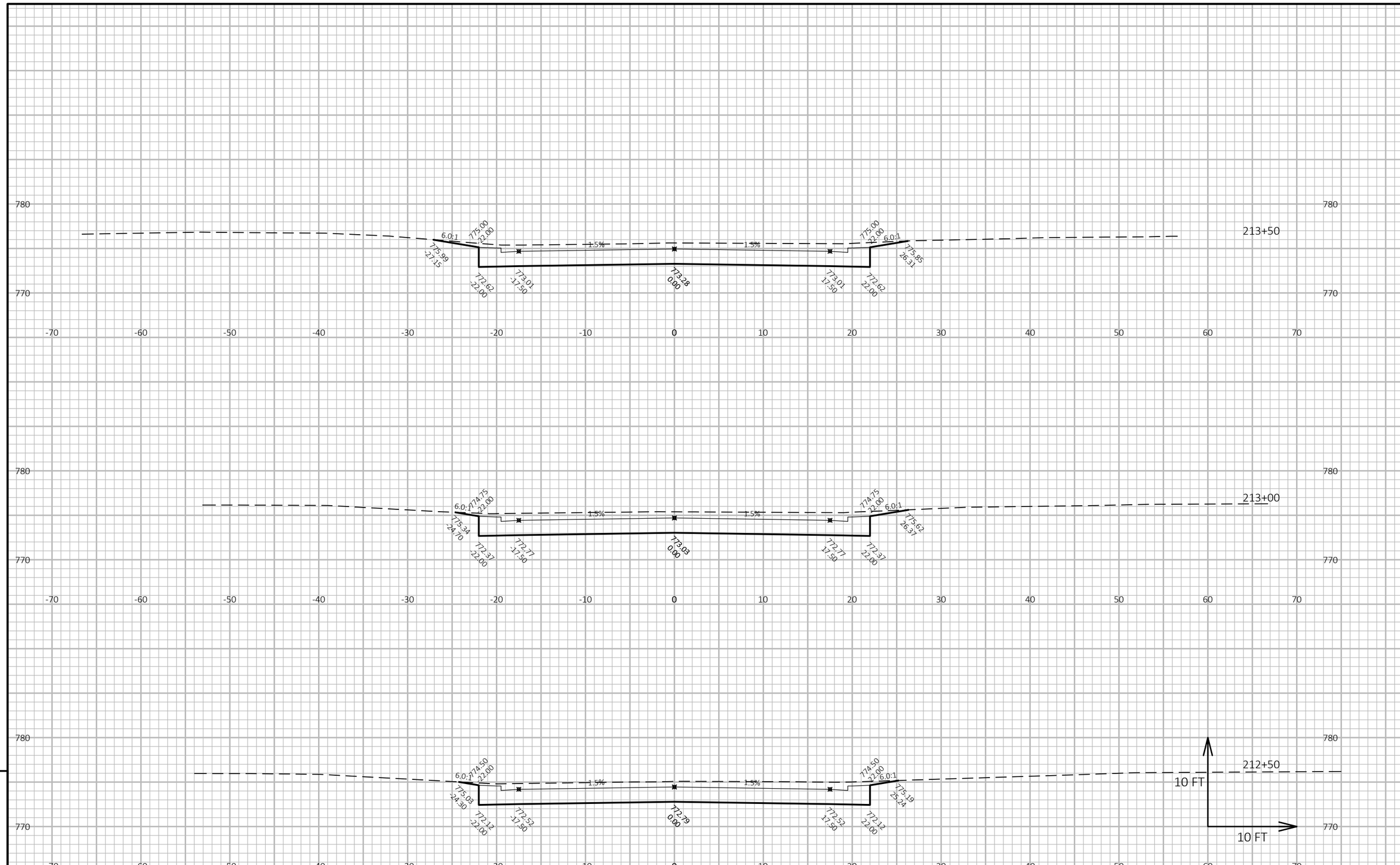

9

9

PROJECT NO: 5144-01-75 & 5144-01-76	HWY: ROBERTS RD	COUNTY: MONROE	CROSS SECTIONS: ROBERTS RD 'RO'	SHEET 492	E

FILE NAME : P:\50S\51\00051029\CADD\C3D\DESIGN\CORRIDORS\CORRIDOR-STH27-ROBERTS.DWG
LAYOUT NAME - 090203_xs

PLOT DATE : 7/13/2017 8:24 AM PLOT BY : BRAD LEE PLOT NAME : **PLOT SCALE :** 1 IN:10 FT HORZ. / 1 IN:10 FT VERT.

WISDOT/CADDS SHEET 49

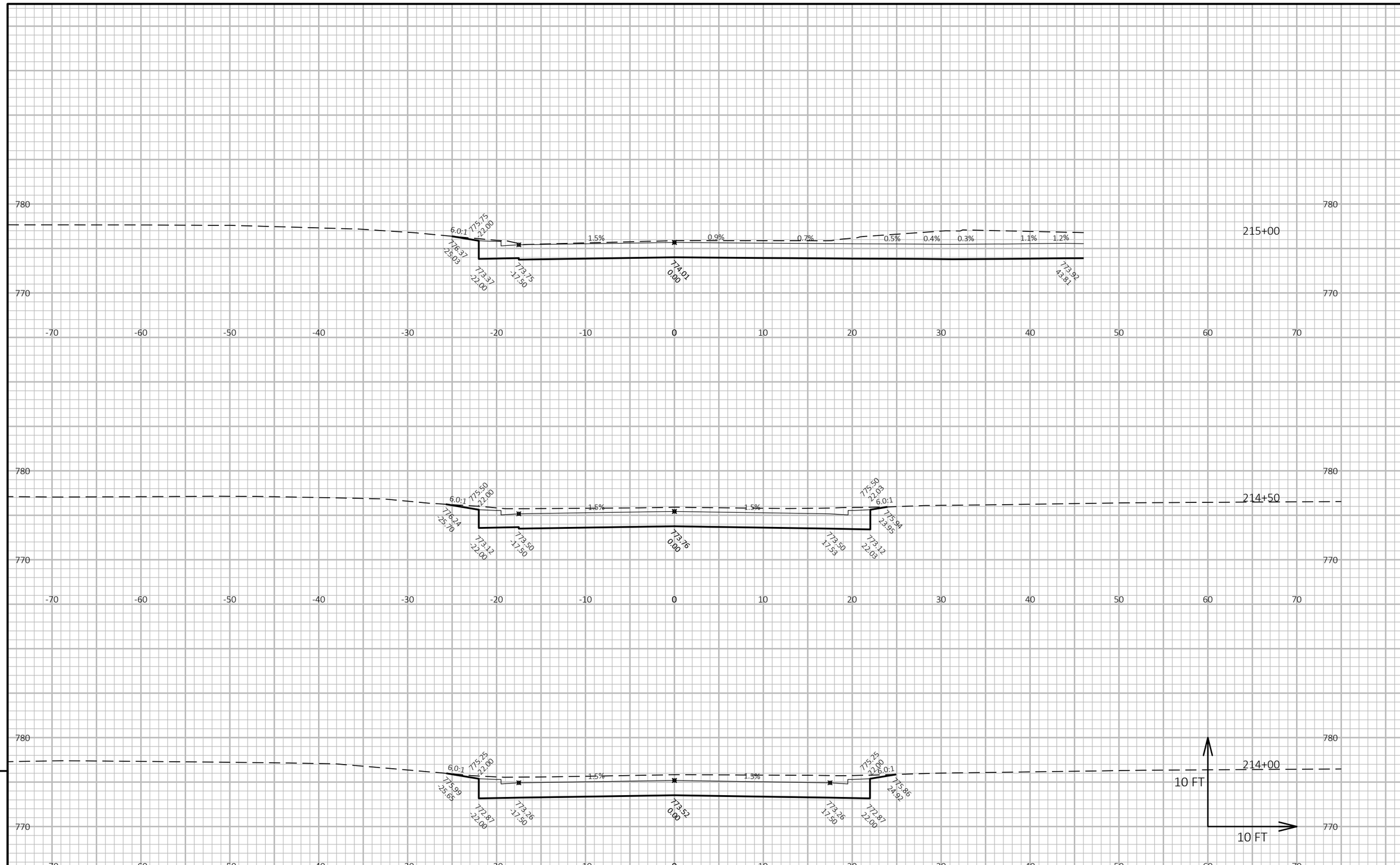

9

9

PROJECT NO: 5144-01-75 & 5144-01-76	HWY: ROBERTS RD	COUNTY: MONROE	CROSS SECTIONS: ROBERTS RD 'RO'	SHEET 493	E

FILE NAME : P:\50S\51\00051029\CADD\C3D\DESIGN\CORRIDORS\CORRIDOR-STH27-ROBERTS.DWG
LAYOUT NAME - 090204_xs

PLOT DATE : 7/13/2017 8:24 AM PLOT BY : BRAD LEE PLOT NAME : PLOT SCALE : 1 IN:10 FT HORZ. / 1 IN:10 FT VERT.

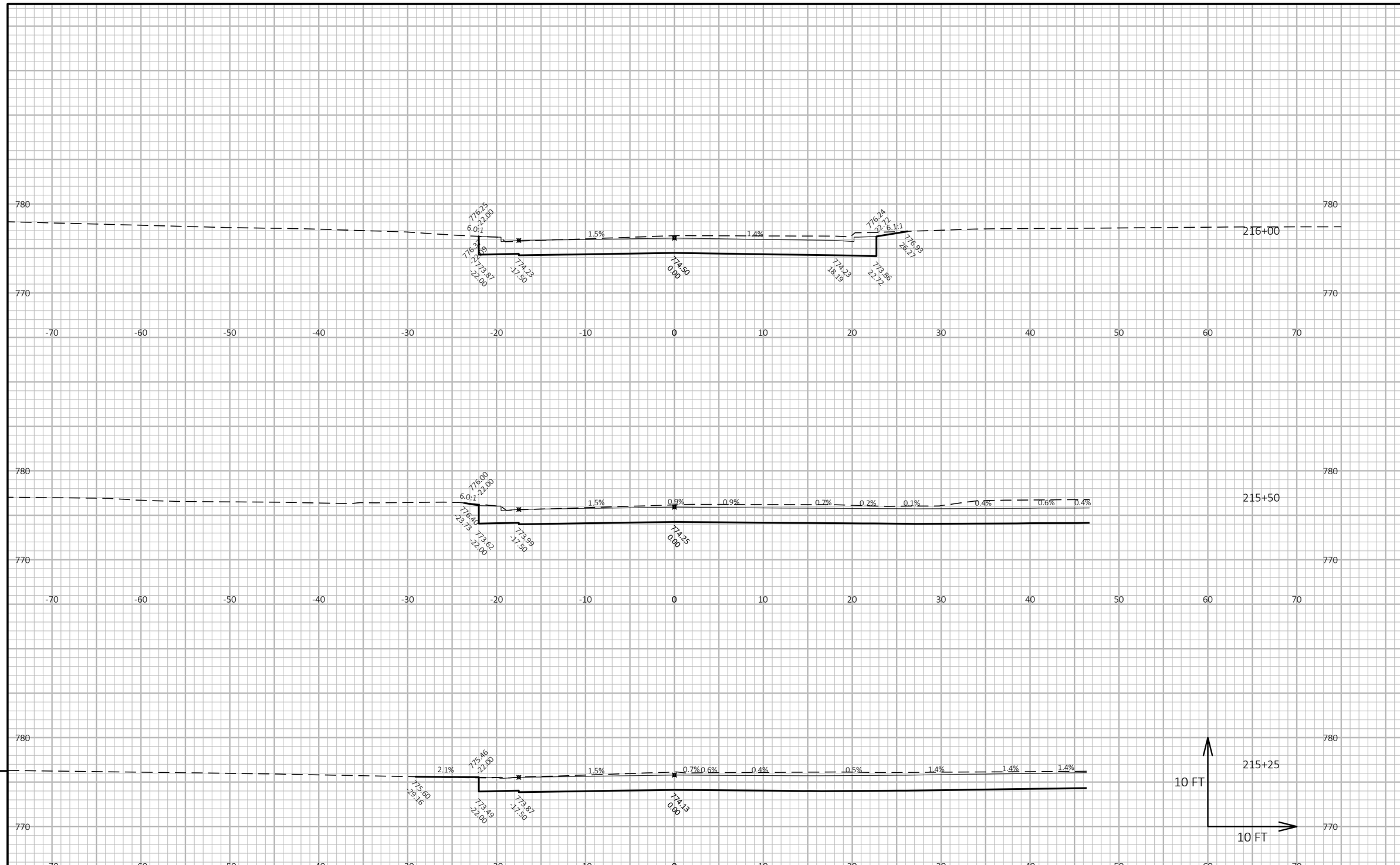

9

9

PROJECT NO: 5144-01-75 & 5144-01-76	HWY: ROBERTS RD	COUNTY: MONROE	CROSS SECTIONS: ROBERTS RD 'RO'	SHEET 494	E

FILE NAME : P:\50S\51\00051029\CADD\C3D\DESIGN\CORRIDORS\CORRIDOR-STH27-ROBERTS.DWG
LAYOUT NAME - 090205_xs

PLOT DATE : 7/13/2017 8:24 AM PLOT BY : BRAD LEE PLOT NAME : PLOT SCALE : 1 IN:10 FT HORZ. / 1 IN:10 FT VERT.

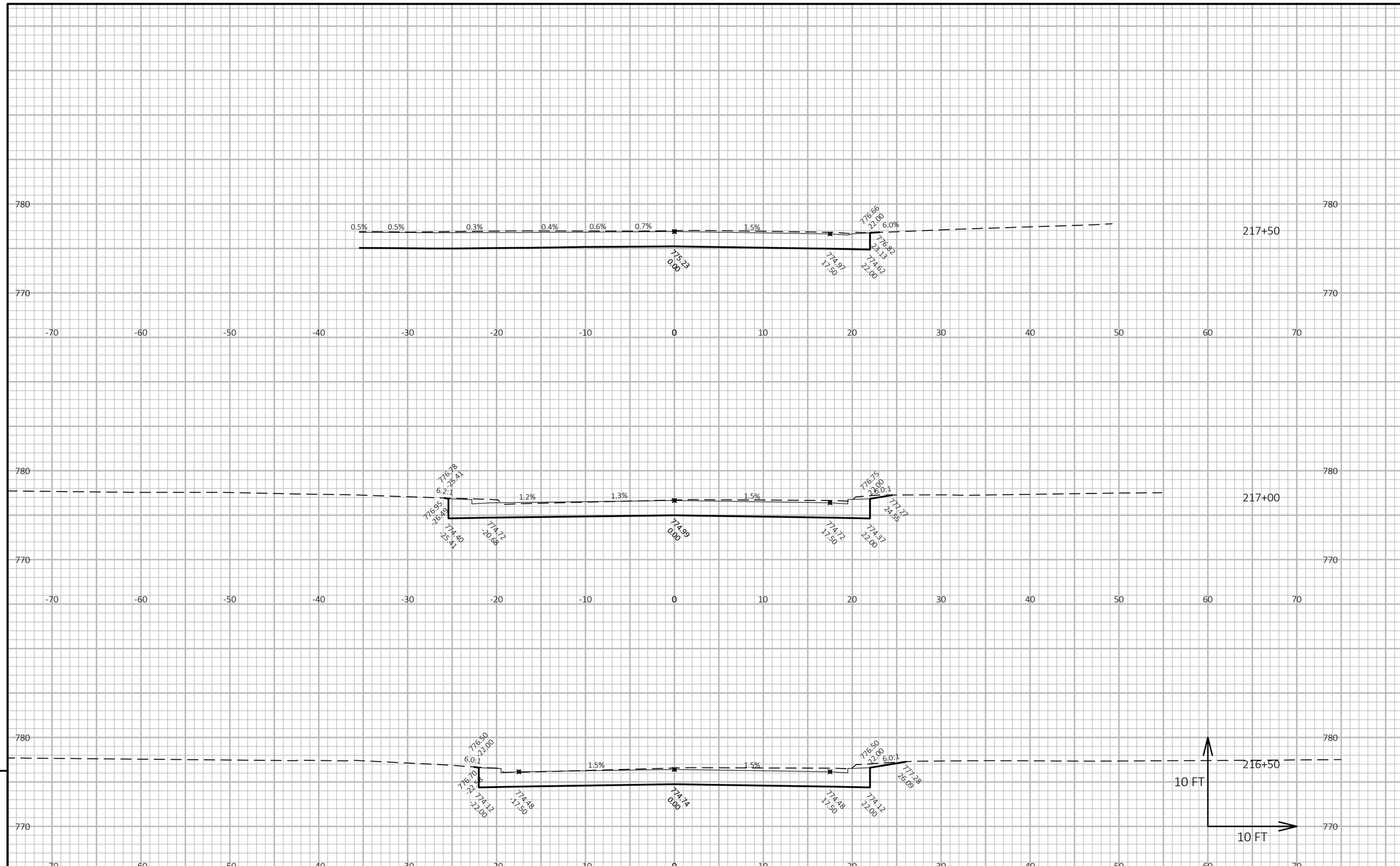

9

9

PROJECT NO: 5144-01-75 & 5144-01-76	HWY: ROBERTS RD	COUNTY: MONROE	CROSS SECTIONS: ROBERTS RD 'RO'	SHEET 495	E

FILE NAME : P:\50S\51\00051029\CADD\C3D\DESIGN\CORRIDORS\CORRIDOR-STH27-ROBERTS.DWG
LAYOUT NAME - 090206_xs

PLOT DATE : 7/13/2017 8:24 AM PLOT BY : BRAD LEE PLOT NAME : PLOT SCALE : 1 IN:10 FT HORZ. / 1 IN:10 FT VERT.

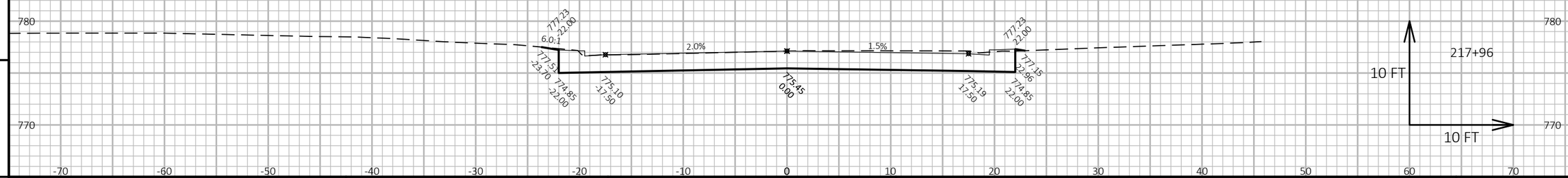

9

9

PROJECT NO: 5144-01-75 & 5144-01-76	HWY: ROBERTS RD	COUNTY: MONROE	CROSS SECTIONS: ROBERTS RD 'RO'	SHEET 496	E

FILE NAME : P:\50S\51\00051029\CADD\C3D\DESIGN\CORRIDORS\CORRIDOR-STH27-ROBERTS.DWG
LAYOUT NAME - 090207_xs

PLOT DATE : 7/13/2017 8:24 AM PLOT BY : BRAD LEE PLOT NAME : PLOT SCALE : 1 IN:10 FT HORZ. / 1 IN:10 FT VERT.

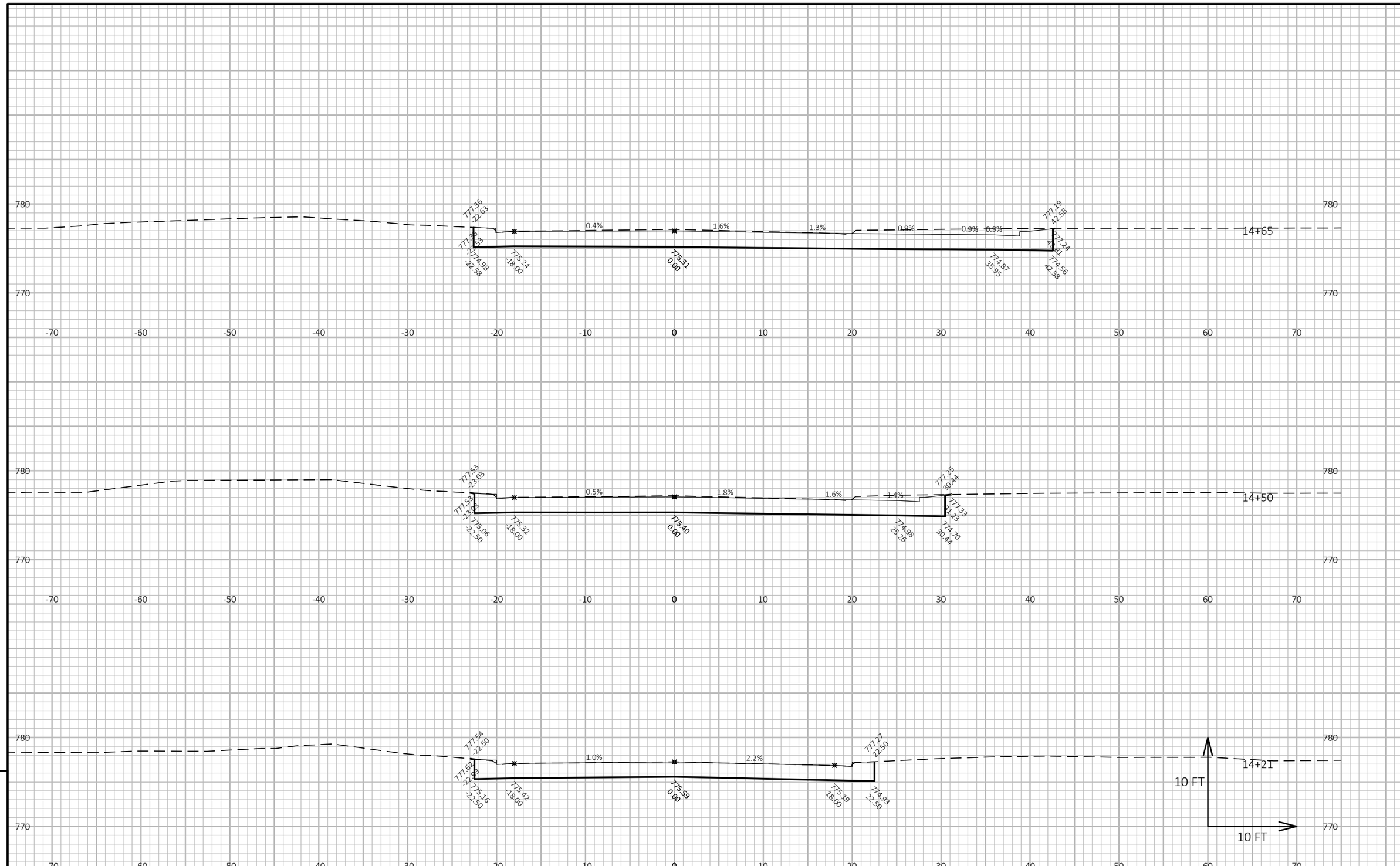

9

9

PROJECT NO: 5144-01-75 & 5144-01-76	HWY: ROBERTS RD	COUNTY: MONROE	CROSS SECTIONS: HOESCHLER DR 'HO'	SHEET 497	E

FILE NAME : P:\50S\51\00051029\CADD\C3D\DESIGN\CORRIDORS\CORRIDOR-STH27-ROBERTS.DWG
LAYOUT NAME - 090212_xs

PLOT DATE : 7/13/2017 8:25 AM PLOT BY : BRAD LEE PLOT NAME : PLOT SCALE : 1 IN:10 FT HORZ. / 1 IN:10 FT VERT.

Wisconsin Department of Transportation

Dedicated people creating transportation solutions through innovation and exceptional service.

http://www.dot.wisconsin.gov