GRE

MAY 2017

PROJECT ID: 4659-15-71

COUNTY: OUTAGAMIE

ORDER OF SHEETS

Section No. 1 Title
Section No. 2 Typical Sections and Details
Section No. 3 Estimate of Quantities
Section No. 3 Miscellaneous Quantities
~~Section No. 4 Right of Way Plat~~
~~Section No. 5 Plan and Profile~~
Section No. 6 Standard Detail Drawings
Section No. 7 Sign Plates
Section No. 8 Structure Plans
~~Section No. 9 Computer Earthwork Data~~
Section No. 9 Cross Sections

TOTAL SHEETS = 248

21

STATE OF WISCONSIN
DEPARTMENT OF TRANSPORTATION

PLAN OF PROPOSED IMPROVEMENT

STATE PROJECT	FEDERAL PROJECT	
	PROJECT	CONTRACT
4659-15-71	WISC 2017276	1

C APPLETON, COLLEGE AVENUE

IH 41 - N LINWOOD AVENUE

STH 125

OUTAGAMIE COUNTY

STATE PROJECT NUMBER
4659-15-71

BEGIN PROJECT
STA. 11+56 EB
Y=562219.64
X=812208.21

EXCEPTION TO NET CENTERLINE LENGTH
STR. B-44-0009
STA. 85+88 EB - STA. 88+20 EB

END PROJECT
STA. 93+10 EB

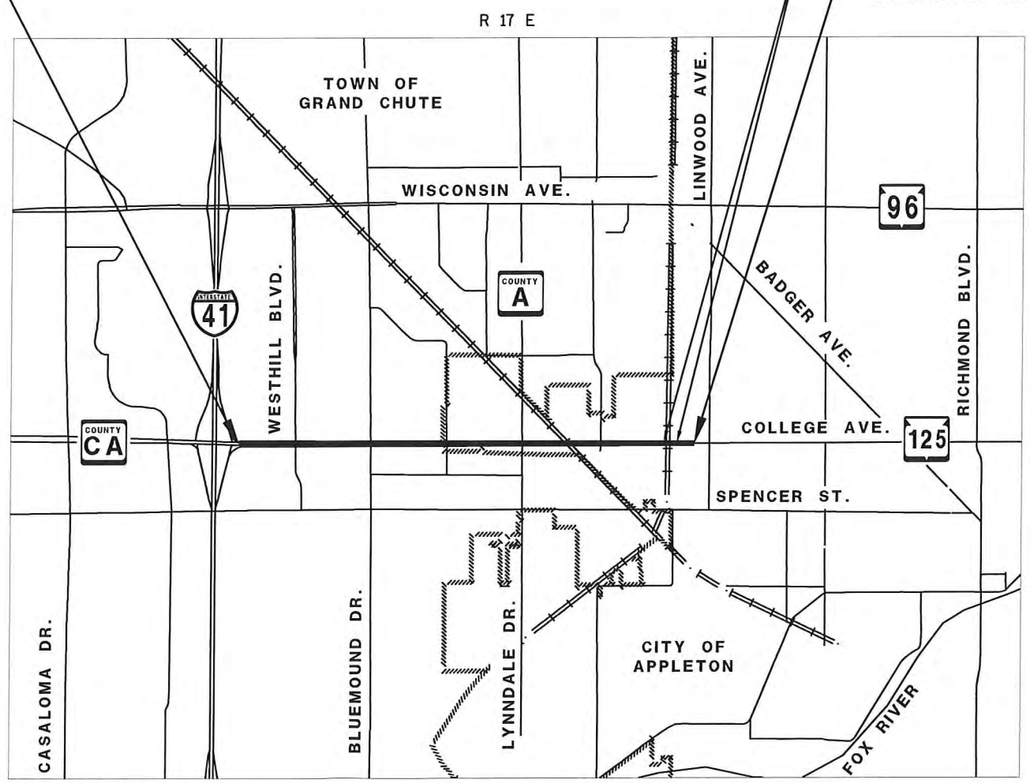

LAYOUT
SCALE 0 1/2 MILE

TOTAL NET LENGTH OF CENTERLINE = 1.492 MILES

HORIZONTAL POSITIONS SHOWN ON THIS PLAN ARE WISCONSIN COUNTY COORDINATES, OUTAGAMIE COUNTY, NAD83 (2011), IN U.S. SURVEY FEET. VALUES ARE GRID COORDINATES, GRID BEARINGS, AND GRID DISTANCES. GRID DISTANCES MAY BE USED AS GROUND DISTANCES.

DESIGN DESIGNATION

A.A.D.T.	(2015)	= 30,800
A.A.D.T.	(2035)	= 38,400
D.H.V.		= 1,417
D.D.		= 59/41
T.		= 5.3%
DESIGN SPEED		= 35mph
ESALS		= 6,724,395

CONVENTIONAL SYMBOLS

PLAN
- CORPORATE LIMITS
- PROPERTY LINE
- LOT LINE
- LIMITED HIGHWAY EASEMENT
- EXISTING RIGHT OF WAY
- PROPOSED OR NEW R/W LINE
- SLOPE INTERCEPT
- REFERENCE LINE
- EXISTING CULVERT
- PROPOSED CULVERT (Box or Pipe)
- COMBUSTIBLE FLUIDS (CAUTION)
- MARSH AREA
- WOODED OR SHRUB AREA

PROFILE
- GRADE LINE
- ORIGINAL GROUND
- MARSH OR ROCK PROFILE (To be noted as such) (ROCK)
- SPECIAL DITCH (LABEL)
- GRADE ELEVATION (95.36)
- CULVERT (Profile View)

UTILITIES
- ELECTRIC (E)
- FIBER OPTIC (FO)
- GAS (G)
- SANITARY SEWER (SAN)
- STORM SEWER (SS)
- TELEPHONE (T)
- WATER (W)
- UTILITY PEDESTAL
- POWER POLE
- TELEPHONE POLE

ORIGINAL PLANS PREPARED BY

GRAEF
1150 Springhurst Drive, Suite 201
Green Bay, WI 54304-5950
920 / 592 9440
920 / 592 9445 fax
www.graef-usa.com

WISCONSIN ANDREW K. SCHULTZ 41695 GREEN BAY, WI PROFESSIONAL ENGINEER

1-30-17 (Date) (Signature)

STATE OF WISCONSIN
DEPARTMENT OF TRANSPORTATION

PREPARED BY

Surveyor	WISDOT
Designer	GRAEF
Project Manager	TIM RANK
Regional Examiner	TIM RANK
Regional Supervisor	CHARLES KAROW

APPROVED FOR THE DEPARTMENT

DATE: 1/31/17 (Signature)

E

GENERAL NOTES

NO TREES OR SHRUBS ARE TO BE REMOVED UNLESS INDICATED FOR REMOVAL BY THE ENGINEER.

ALL HOLES OR OPENINGS BELOW SUBGRADE RESULTING FROM THE ABANDONMENT OR REMOVAL OF EXISTING STRUCTURES OR FROM GRUBBING OF TREES OR STUMPS SHALL BE BACKFILLED WITH GRANULAR BACKFILL. BACKFILL GRANULAR MATERIAL IS INCIDENTAL TO THE REMOVAL ITEM.

ALL RADIUS DIMENSIONS FOR CURB & GUTTER ARE GIVEN TO THE FLANGE. ALL ELEVATIONS ALONG CURB & GUTTER ARE GIVEN TO THE FLANGE. OFFSETS NOTED ARE TO THE FLANGE OR EDGE OF LANE IF NO CURB, UNLESS OTHERWISE NOTED.

THE LOCATION OF KNOWN EXISTING UTILITIES IN THE VICINITY OF THE PROJECT ON THE PLANS IS APPROXIMATE. THERE MAY BE OTHER UTILITIES IN THE AREA THAT ARE NOT SHOWN.

SILT FENCE SHALL BE INSTALLED IN THE LOCATIONS SHOWN ON THE PLANS, OR AS DIRECTED BY THE ENGINEER.

THE CONTRACTOR SHALL NOTIFY DIGGERS HOTLINE AND AFFECTED UTILITIES PRIOR TO THE START OF WORK. ANY LOCAL MUNICIPAL UTILITY WHICH IS NOT A MEMBER OF THE DIGGERS HOTLINE MUST BE CONTACTED SEPARATELY.

CONCRETE JOINTS SHALL MATCH ABUTTING PAVEMENT AND CURB AND GUTTER JOINTS UNLESS OTHERWISE DESIGNATED BY THE ENGINEER.

RE-TOPSOIL OF GRADED AREAS, AS DESIGNATED BY THE ENGINEER, IMMEDIATELY AFTER GRADING IS COMPLETED WITHIN THOSE AREAS. SEED, FERTILIZE, AND MULCH/EROSION MAT TOP-SOILED AREAS, AS DESIGNATED BY THE ENGINEER, WITHIN FIVE (5) CALENDAR DAYS AFTER PLACEMENT OF TOPSOIL.

STOCKPILE EXCESS MATERIAL OR SPOILS ON UPLAND AREAS AWAY FROM WETLANDS, FLOOD PLAINS AND WATERWAYS. STOCKPILED SOIL SHALL BE PROTECTED AGAINST EROSION.

STANDARD ABBREVIATIONS

AEW	APRON END WALL
AGG	AGGREGATE
BAD	BASE AGGREGATE DENSE
BM	BENCH MARK
C&G	CURB AND GUTTER
C/L	CENTER OR CONSTRUCTION LINE
CONC	CONCRETE
CP	CULVERT PIPE
CPCM	CULVERT PIPE CORRUGATED METAL
CPRC	CULVERT PIPE REINFORCED CONCRETE
CPRCHE	CULVERT PIPE REINFORCED CONCRETE HORIZONTAL ELLIPTICAL
CSCP	CORRUGATED STEEL CULVERT PIPE
CSPA	CORRUGATED STEEL PIPE ARCH
CSD	CONCRETE SURFACE DRAIN
CY	CUBIC-YARD
D	DEGREE OF CURVE/DELTA
DISCH	DISCHARGE
EB	EASTBOUND
FE	FIELD ENTRANCE
HERCP	HORIZONTAL ELLIPTICAL REINFORCED CONCRETE PIPE
HMA	HOT MIX ASPHALT
INV	INVERT
L	LENGTH OF CURVE
LHF	LEFT HAND FORWARD
LT	LEFT
MIN	MINIMUM
M/L	MATCHLINE
NB	NORTHBOUND
NC	NORMAL CROWN
NTS	NOT TO SCALE
PAVT	PAVEMENT
PB	PULL BOX
PC	POINT-OF-CURVE
PCC	POINT OF COMPOUND CURVE
PE	PRIVATE ENTRANCE
PI	POINT OF INTERSECTION
PLE	PERMANENT LIMITED EASEMENT
PT	POINT OF TANGENT
PVC	POINT OF VERTICAL CURVE
PVI	POINT OF VERTICAL INTERSECTION
PVT	POINT OF VERTICAL TANGENT
R	RADIUS OF CURVE
℄	REFERENCE LINE
R/W	RIGHT OF WAY
RAD	RADIUS
RC	REVERSE CROWN
RCAEW	APRON ENDWALL FOR CULVERT PIPE REINFORCED CONCRETE
RCHESS	REINFORCED CONCRETE HORIZONTAL ELLIPTICAL STORM SEWER
RCPSS	REINFORCED CONCRETE PIPE - STORM SEWER
REQD	REQUIRED
RHF	RIGHT HAND FORWARD
RO	RUN OFF LENGTH
RT	RIGHT
SALV	SALVAGED
SB	SIGNAL BASE
SDD	STANDARD DETAIL DRAWING
SE	SUPER ELEVATION
SF	SQUARE FOOT
STA	STATION
SY	SQUARE YARD
T	TANGENT LENGTH
TC	TOP OF CURB
TLE	TEMPORARY LIMITED EASEMENT
(TYP.)	TYPICAL
VAR.	VARIES
WB	WESTBOUND

DIGGERS HOTLINE

Dial 811 or (800) 242-8511

www.DiggersHotline.com

DEPT. OF NATURAL RESOURCES

WISCONSIN DEPT. OF NATURAL RESOURCES
MR. MATTHEW SCHAEVE
2984 SHAWANO AVENUE
GREEN BAY, WI 54313
PHONE: (920) 662-5472
EMAIL: matthew.schaeve@wisconsin.gov

WISDOT PROJECT MANAGER

WISCONSIN DEPT. OF TRANSPORTATION
MR. TIM RANK
944 VANDERPERREN WAY
GREEN BAY, WI 54304
PHONE: (920) 360-2579
EMAIL: tim.rank@dot.wi.gov

DESIGN CONTACT

GRAEF
MR. DAN HERZBERG
1150 SPRINGHURST DRIVE, SUITE 201
GREEN BAY, WI 54304
PHONE: (920) 405-3825
EMAIL: dan.herzberg@graef-usa.com

UTILITIES

MATTHEW HISCHKE
ANR PIPELINE COMPANY - GAS/PETROLEUM
N4956 OAKCREST DRIVE
BONDUAL, WI 54107
PHONE: (715) 758-3345
EMAIL: matthew-hischke@transcanada.com

JIM HAWBAKER
APPLETON SCHOOL DISTRICT - FIBER OPTIC
120 EAST HARRIS STREET
APPLETON, WI. 54912-2019
PHONE: (920) 993.7062
EMAIL: hawbakerjames@aasd.k12.wi.us

MIKE HARDY
CITY OF APPLETON
(ELECTRIC & SIGNAL)
2625 EAST GLENDALE AVE
APPLETON, WI 54911
PHONE: (920) 832-6478
EMAIL: Michael.hardy@appleton.org

PAULA VANDEHEY
CITY OF APPLETON DEPARTMENT OF PUBLIC WORKS
(SEWER, STORM, AND WATER)
100 NORTH APPLETON STREET
APPLETON, WI 54911
PHONE: (920) 832-6474
EMAIL: Paula.vandehey@appleton.org

JOSEPH KASSAB
AT&T WISCONSIN
COMMUNICATION LINE
205 S. JEFFERSON STREET
GREEN BAY, WI 54301
PHONE: (920) 433-4200
EMAIL: JK572@ATT.COM

KEVIN HUFF
CENTURYLINK - COMMUNICATION LINE
13057 S MONITOR AVE
PALOS HEIGHTS, IL 60463
PHONE: (708) 837-7927
EMAIL: Kevin.huff@centurylink.com

SURVEY CONTACT PERSON

NORTHEAST REGION SURVEY COORDINATOR
ATTN: CORMAC MCINNIS
944 VANDERPERREN WAY
GREEN BAY, WI. 54304
PHONE: 920-492-5638
EMAIL: cormac.mcinnis@dot.wi.gov

UTILITIES

STEVE JAKUBIEC
TDS METROCOM - COMMUNICATION LINE
10 COLLEGE AVENUE, SUITE 218A
APPLETON, WI 54911
PHONE: (920) 882-4166
EMAIL: steve.jakubiec@tdstelecom.com

VINCE ALBIN
TIME WARNER CABLE
COMMUNICATION LINE
3545 PLANK RD.
APPLETON, WI 54915
PHONE: (920) 831-9249
EMAIL: Vince.albin@twcable.com

THOMAS MARQUARDT
TOWN OF GRAND CHUTE SANITARY DISTRICT 3
STORM
1900 GRAND CHUTE BLVD
APPLETON, WI 54913
PHONE: (920) 832-1581
EMAIL: Thomas.marquardt@grandchute.net

TODD PRAHL
TOWN OF GRAND CHUTE SANITARY DISTRICTS 1 & 2
SEWER & WATER
1900 GRAND CHUTE BLVD
APPLETON, WI 54913
PHONE: (920) 832-1581
EMAIL: Todd.prahl@grandchute.net

JIM QUINN
WE ENERGIES - ELECTRICITY
800 S. LYNNDALE DR.
APPLETON, WI. 54912
PHONE: (618) 920-5772
EMAIL: james.quinn@we-energies.com

THOMAS BORCHART
WE ENERGIES - GAS/PETROLEUM
800 S. LYNNDALE DR.
APPLETON, WI. 54912
PHONE: (920) 380-3449
EMAIL: thomas.borchart@we-energies.com

DENNIS RUESS C/O AARON GRODI
WINDSTREAM, KDL, & MCLEOD
COMMUNICATION LINE
1858 WRIGHT STREET
MADISON, WI 53704
PHONE: (812) 456-1249
EMAIL: Dennis.ruess@windstream.com

ROBERT SCHUURMANS
WISDOT NE REGION (ELECTRICAL, SIGNAL)
WISCONSIN DEPARTMENT OF TRANSPORTATION
944 VANDERPERREN WAY
GREEN BAY, WI 54304-9879
PHONE: (920) 492.5710
EMAIL: Robert.schuurmans@dot.wi.gov

JOHN LOUIS
WISCONSIN INDEPENDENT NETWORK, LLC.
COMMUNICATION LINE
800 WISCONSIN ST.
EAU CLAIRE, WI. 54703
PHONE: (715) 838-4012
EMAIL: jlouis@wins.net

MARK DECHNAT
LEVEL 3
612 WEST MAIN ST.
MADISON, WI.
PHONE: (414) 426-1857
EMAIL: mark.dechant@level3.com

DON DIETSCH
TELEPORT (TCA)
7711 N. PORT WASHINGTON RD.
MILWAUKEE, WI.
PHONE: (414) 751-7209
EMAIL: ddietsch@kapurinc.com

2

2

N

SCALE, FEET 0 500 1000

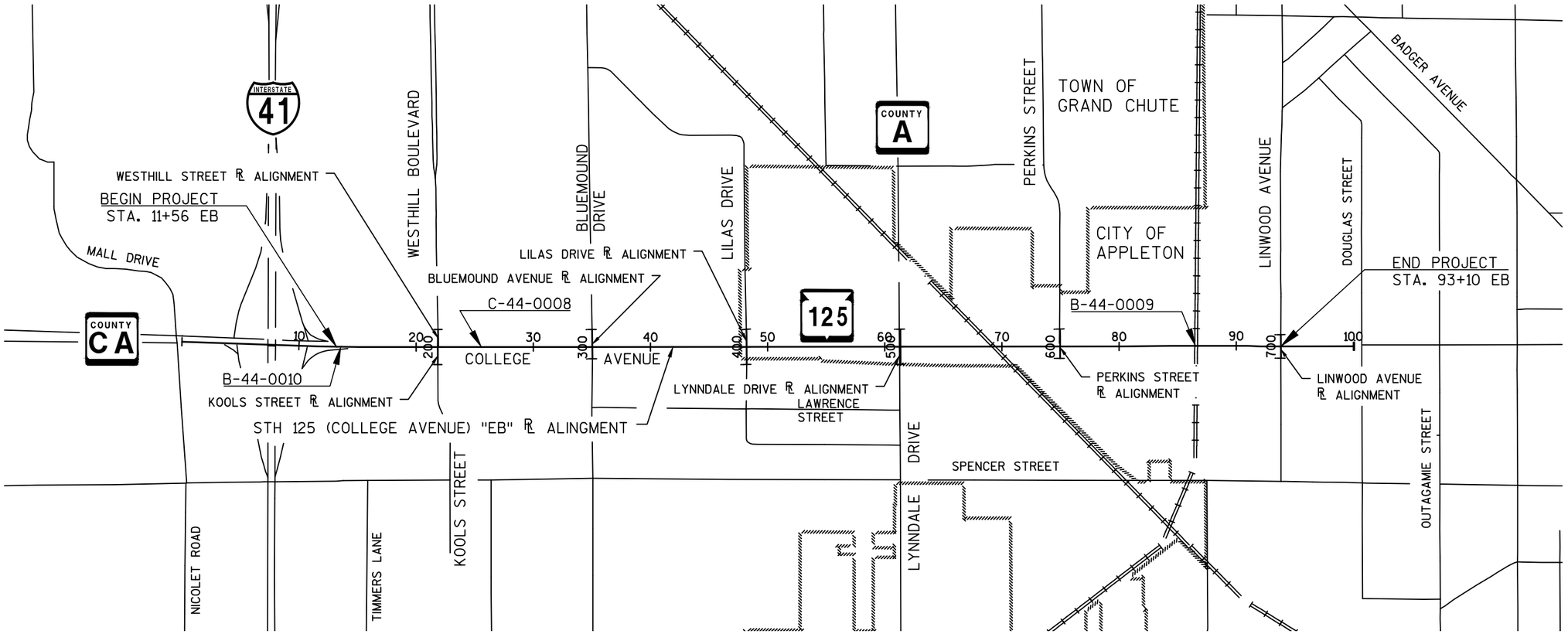

PROJECT NO: 4659-15-71	HWY: STH 125	COUNTY: OUTAGAMIE	PROJECT OVERVIEW	SHEET 3 E

FILE NAME : J:\JOBS2013\20132040\CAD\TRANSPORTATION\DWG\SHEETSPLAN\020201-PO.DWG
LAYOUT NAME - 020201-PO
PLOT DATE : 9/27/2016 7:10 PM PLOT BY : SCHULTZ, ANDREW K. PLOT NAME :
PLOT SCALE : 1 IN:1000 FT
WISDOT/CADDS SHEET 42

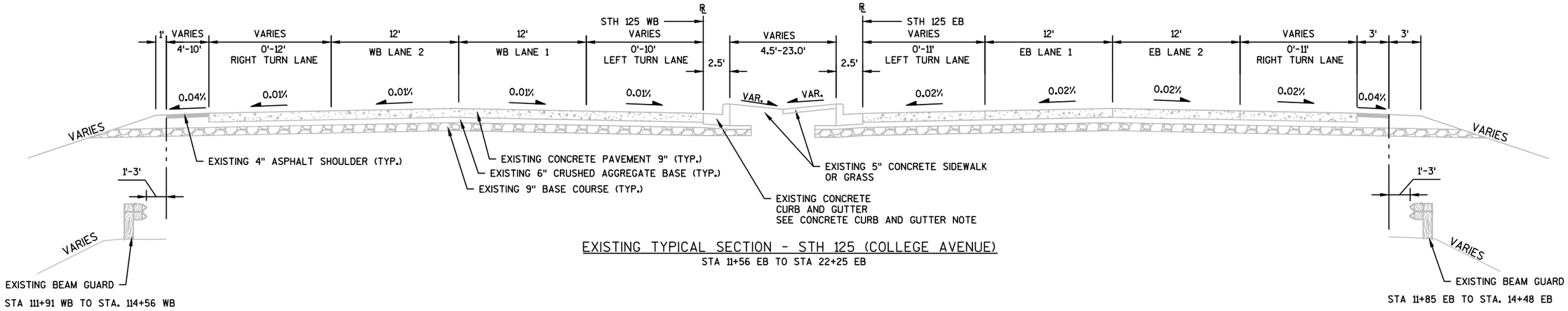

EXISTING TYPICAL SECTION - STH 125 (COLLEGE AVENUE)

STA 11+56 EB TO STA 22+25 EB

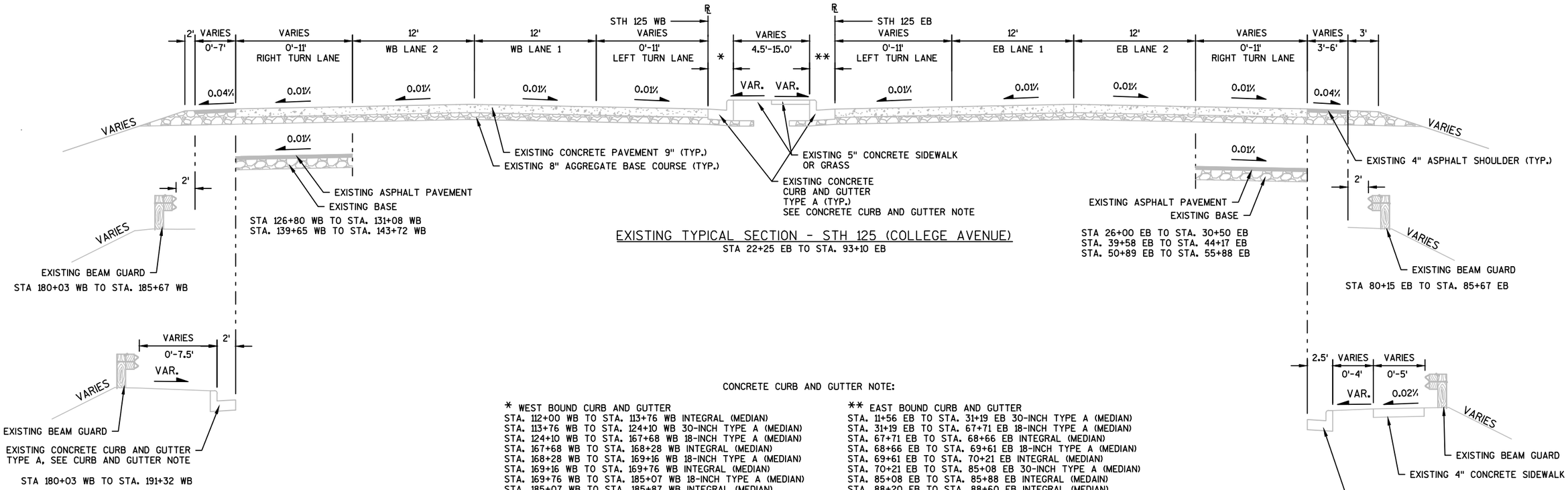

EXISTING TYPICAL SECTION - STH 125 (COLLEGE AVENUE)

STA 22+25 EB TO STA. 93+10 EB

CONCRETE CURB AND GUTTER NOTE:

* WEST BOUND CURB AND GUTTER
STA. 112+00 WB TO STA. 113+76 WB INTEGRAL (MEDIAN)
STA. 113+76 WB TO STA. 124+10 WB 30-INCH TYPE A (MEDIAN)
STA. 124+10 WB TO STA. 167+68 WB 18-INCH TYPE A (MEDIAN)
STA. 167+68 WB TO STA. 168+28 WB INTEGRAL (MEDIAN)
STA. 168+28 WB TO STA. 169+16 WB 18-INCH TYPE A (MEDIAN)
STA. 169+16 WB TO STA. 169+76 WB INTEGRAL (MEDIAN)
STA. 169+76 WB TO STA. 185+07 WB 18-INCH TYPE A (MEDIAN)
STA. 185+07 WB TO STA. 185+87 WB INTEGRAL (MEDIAN)
STA. 188+20 WB TO STA. 188+60 WB INTEGRAL (MEDIAN)
STA. 188+20 WB TO STA. 188+79 WB INTEGRAL (OUTSIDE)
STA. 188+60 WB TO STA. 190+60 WB 18-INCH TYPE A (MEDIAN)
STA. 188+79 WB TO STA. 190+80 WB 30-INCH TYPE A (OUTSIDE)
STA. 190+59 WB TO STA. 192+04 WB 30-INCH TYPE A (MEDIAN)
STA. 190+80 WB TO STA. 193+20 WB INTEGRAL (OUTSIDE)

** EAST BOUND CURB AND GUTTER
STA. 11+56 EB TO STA. 31+19 EB 30-INCH TYPE A (MEDIAN)
STA. 31+19 EB TO STA. 67+71 EB 18-INCH TYPE A (MEDIAN)
STA. 67+71 EB TO STA. 68+66 EB INTEGRAL (MEDIAN)
STA. 68+66 EB TO STA. 69+61 EB 18-INCH TYPE A (MEDIAN)
STA. 69+61 EB TO STA. 70+21 EB INTEGRAL (MEDIAN)
STA. 70+21 EB TO STA. 85+08 EB 30-INCH TYPE A (MEDIAN)
STA. 85+08 EB TO STA. 85+88 EB INTEGRAL (MEDAIN)
STA. 88+20 EB TO STA. 88+60 EB INTEGRAL (MEDIAN)
STA. 88+20 EB TO STA. 88+79 EB INTEGRAL (OUTSIDE)
STA. 88+60 EB TO STA. 90+60 EB 18-INCH TYPE A (MEDIAN)
STA. 88+79 EB TO STA. 90+80 EB 30-INCH TYPE A (OUTSIDE)
STA. 99+60 EB TO STA. 93+10 EB INTEGRAL (MEDIAN)
STA. 90+80 EB TO STA. 93+10 EB INTEGRAL (OUTSIDE)

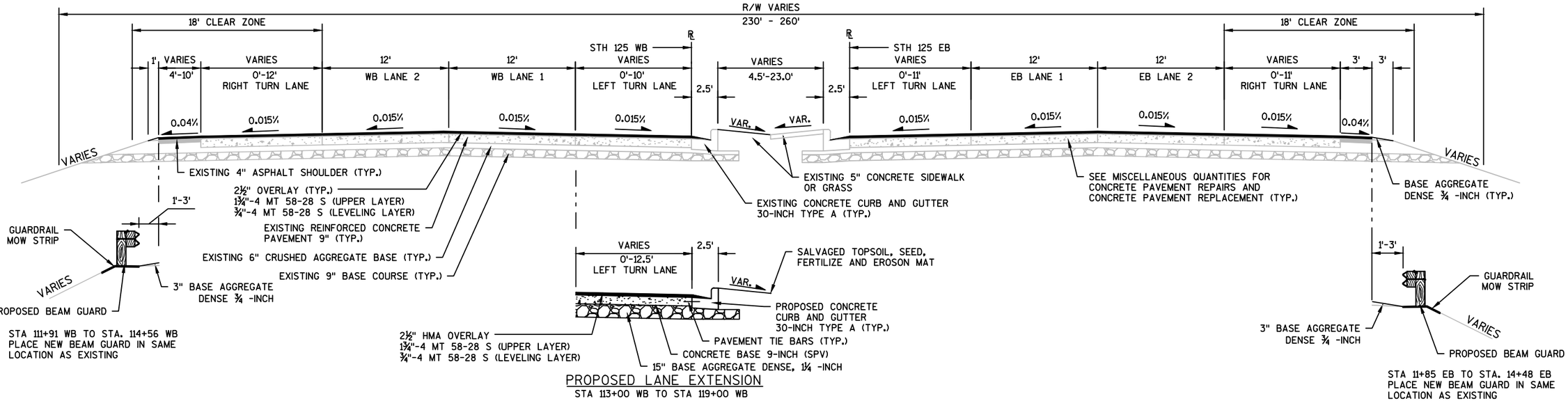

PROPOSED LANE EXTENSION
STA 113+00 WB TO STA 119+00 WB

FINISHED TYPICAL SECTION - STH 125 (COLLEGE AVENUE)
STA 11+56 EB TO STA 22+25 EB

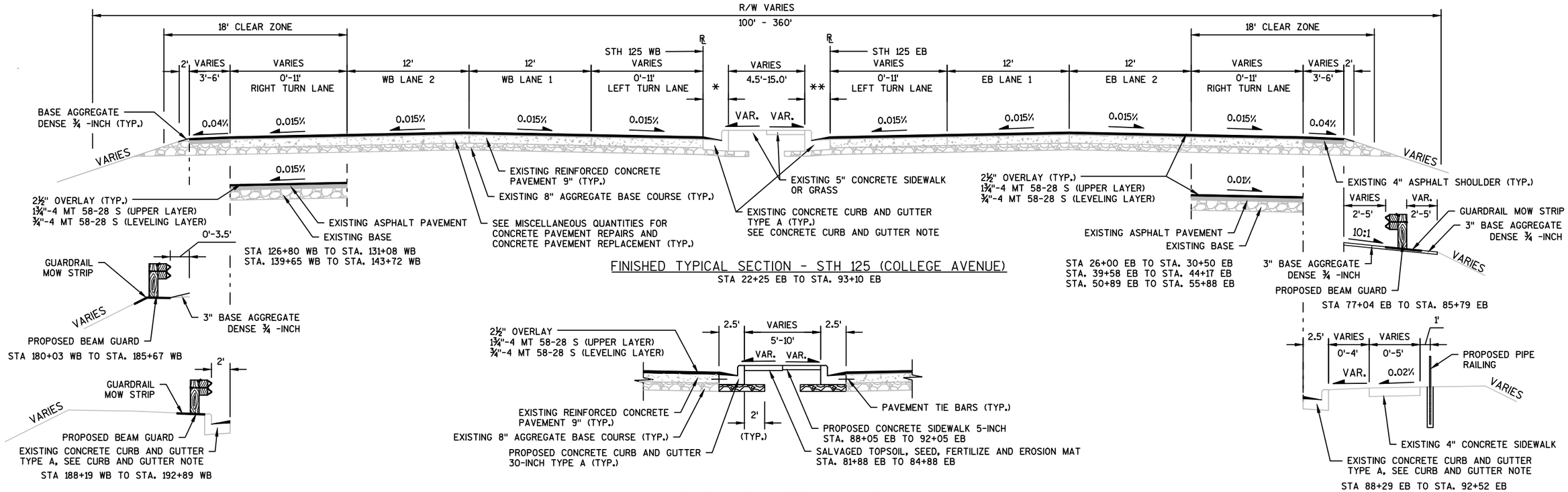

FINISHED TYPICAL SECTION - STH 125 (COLLEGE AVENUE)
STA 22+25 EB TO STA. 93+10 EB

PROPOSED MEDIAN REPLACEMENT
STA. 181+87 WB TO STA. 184+67 WB STA. 81+88 EB TO STA. 84+88 EB
STA. 188+84 WB TO STA. 192+04 WB STA. 88+85 EB TO STA. 92+05 EB

PROJECT NO: 4659-15-71	HWY: STH 125	COUNTY: OUTAGAMIE	TYPICAL SECTIONS	SHEET 5	E

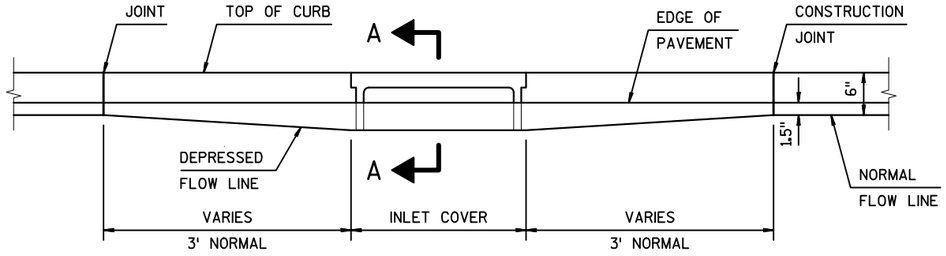

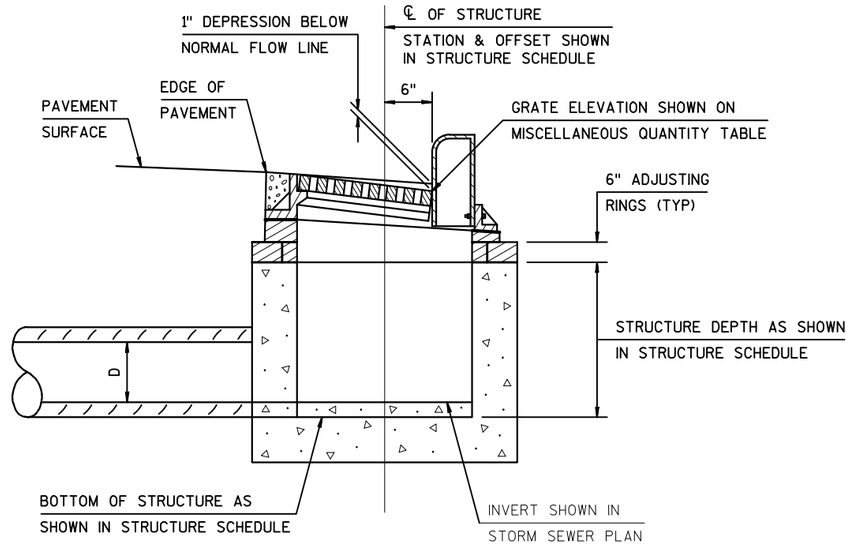

SECTION A-A

DETAIL OF CURB AND GUTTER AT INLETS

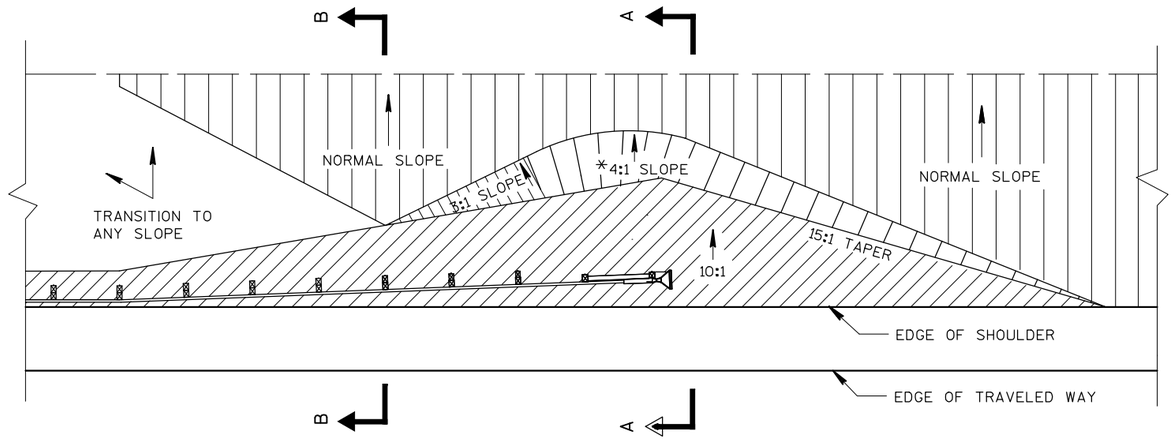

PLAN VIEW

*A 3:1 MAXIMUM SLOPE MAY BE USED FOR INSTALLATIONS ON EXISTING HIGHWAYS.

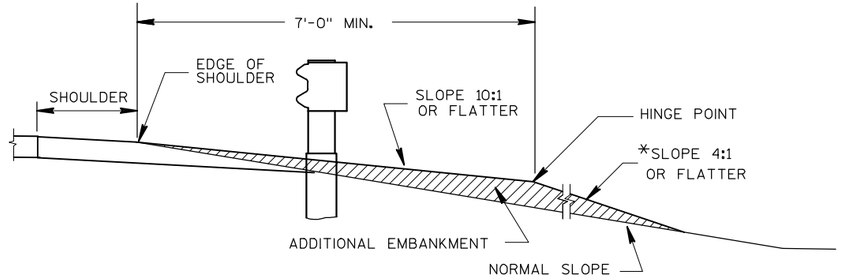

SECTION A-A

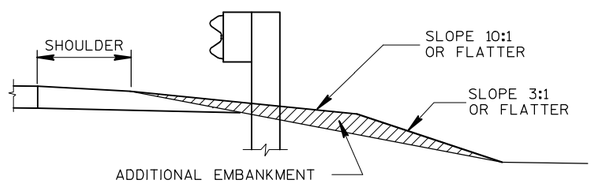

SECTION B-B

FILL AREA AT BEAM GUARD

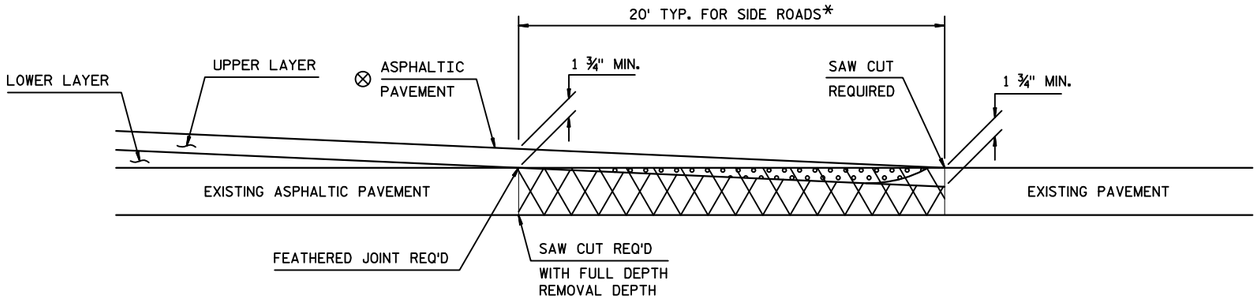

⊗ SEE TYPICAL CROSS SECTION FOR PAVEMENT TYPE AND THICKNESS OF INDIVIDUAL LAYERS

REMOVING ASPHALTIC SURFACE, BUTT JOINTS (FULL DEPTH REMOVAL OPTIONAL)

ASPHALTIC WEDGING (FULL DEPTH REMOVAL OPTION)

REMOVING ASPHALTIC SURFACE, BUTT JOINTS (MILLING OPTION)

BUTT JOINT DETAIL FOR NON-MILLED ASPHALTIC PAVEMENTS

*SEE PLAN DETAILS FOR EXACT LOCATION

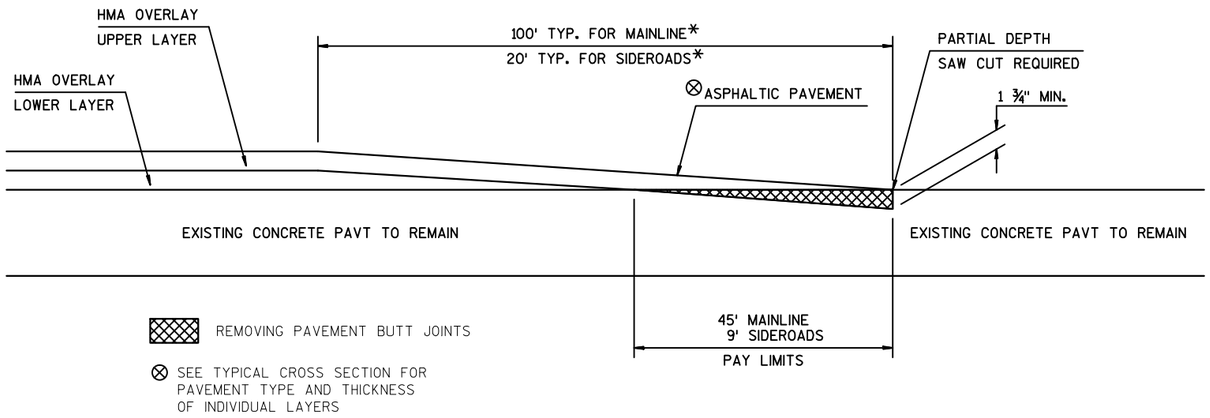

⊗ SEE TYPICAL CROSS SECTION FOR PAVEMENT TYPE AND THICKNESS OF INDIVIDUAL LAYERS

REMOVING PAVEMENT BUTT JOINT DETAIL

*SEE PLAN DETAILS FOR EXACT LOCATION

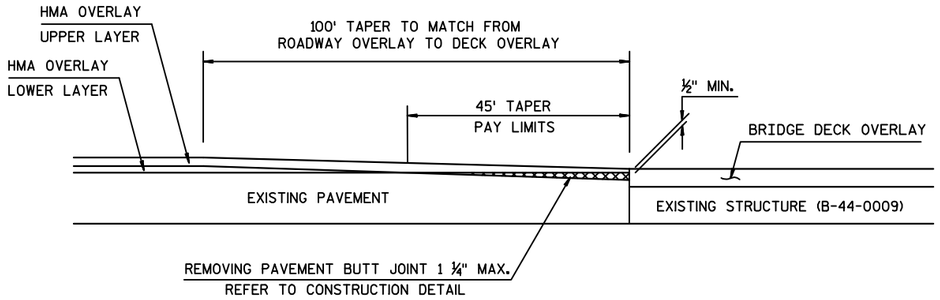

BRIDGE APPROACH PAVING DETAIL

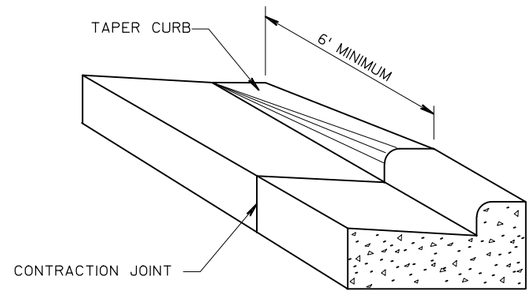

DETAIL OF CURB & GUTTER TERMINI

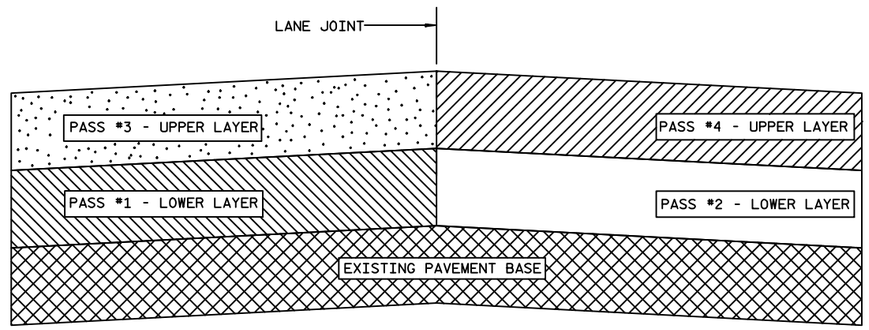

(LOWER AND UPPER LAYERS)

TYPICAL PAVEMENT CROSS SECTIONS OF ASPHALT PAVEMENT LAYERS

PROJECT NO: 4659-15-71	HWY: STH 125	COUNTY: OUTAGAMIE	CONSTRUCTION DETAILS	SHEET 7 E

2

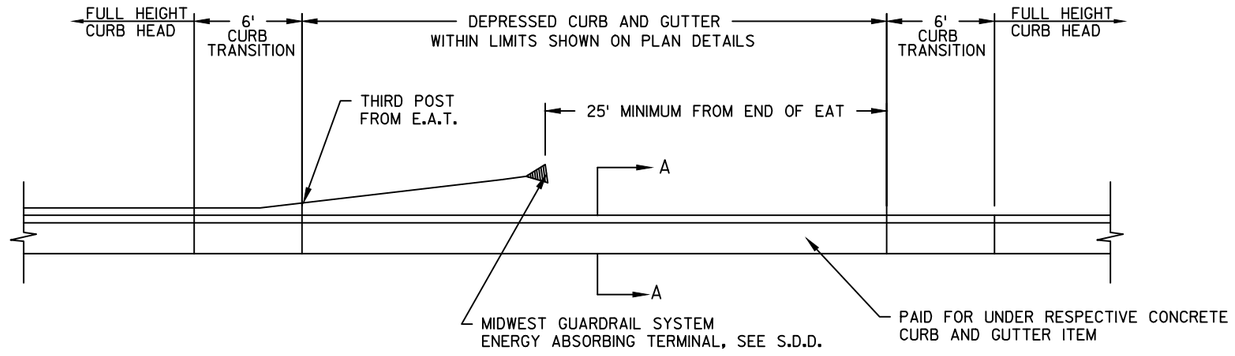

DEPRESSED CURB HEAD AT BEAM GUARD TERMINAL

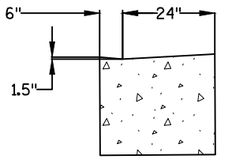

SECTION A-A
DEPRESSED CURB

2

NOTES:

PROVIDE 1/4-INCH WEEP HOLE IN EACH LEVEL HORIZONTAL RAIL SECTION OR AT LOW POINT OF EACH HORIZONTAL SECTION.

FIELD VERIFY DIMENSIONS

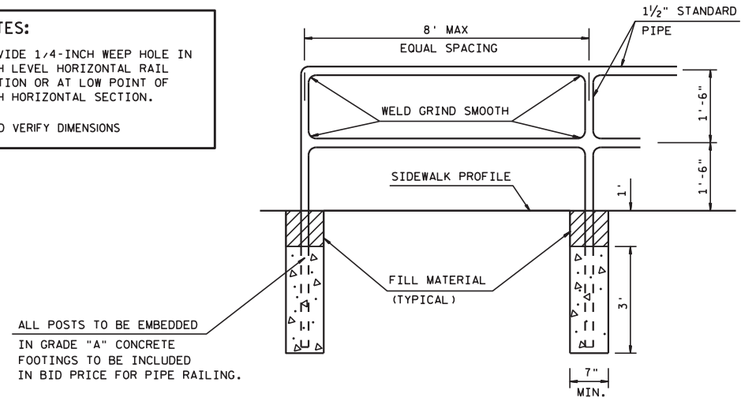

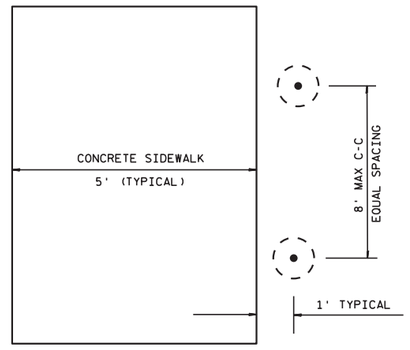

PIPE RAILING DETAIL

PROJECT NO: 4659-15-71	HWY: STH 125	COUNTY: OUTAGAMIE	CONSTRUCTION DETAILS	SHEET	E

TABLE OF NOMINAL DIMENSIONS AND WEIGHTS

DIMENSION IN INCHES		NON-CONDUCTIVE PULL BOX	
BOX DIAMETER ** (INSIDE)	A	24	24
BOX DIAMETER ** (OUTSIDE)	B	25	25
BOX LENGTH	C	36	42
COVER	D	25 1/2	25 1/2
FRAME	E	27	27
FRAME	F	25 3/4	25 3/4
FRAME	G	22 1/2	22 1/2
WEIGHT IN POUNDS *			
COVER		50	50

* THE ACTUAL WEIGHT OF THE COVER MAY VARY NOT TO EXCEED 100 LBS.

** DIAMETER VARIES FROM TOP TO BOTTOM WITH THE DIAMETER LARGER AT THE BOTTOM TO PREVENT FROST HEAVE

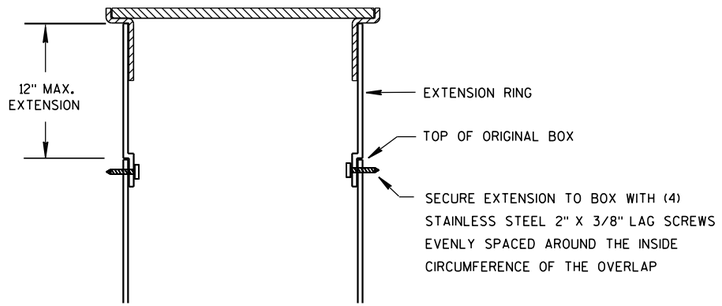

BOX EXTENSION

INSTALLED IN SOD OR CRUSHED AGGREGATE

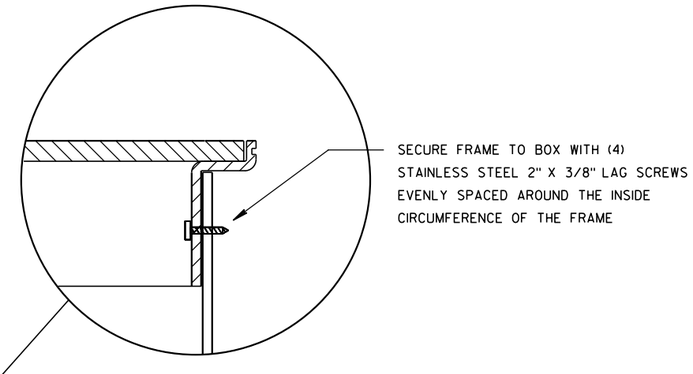

INSTALLED IN SIDEWALK

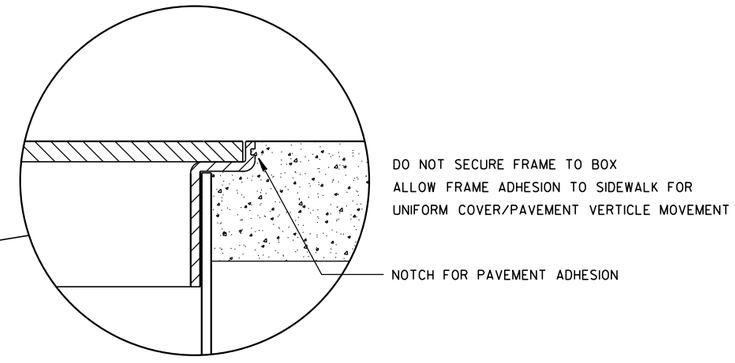

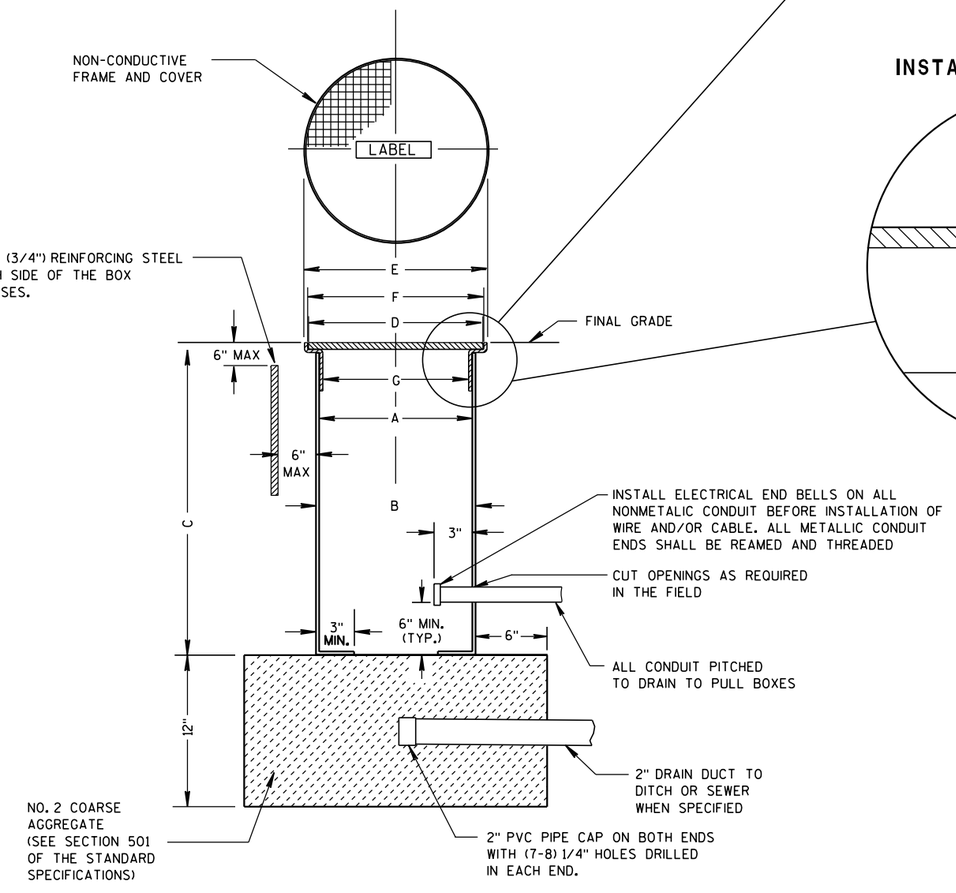

NON-CONDUCTIVE PULL BOX

GENERAL NOTES

DETAILS OF CONSTRUCTION, MATERIALS AND WORKMANSHIP NOT SHOWN ON THIS DRAWING SHALL CONFORM TO THE PERTINENT REQUIREMENTS OF THE CONTRACT.

ALL BOXES, FRAMES AND COVERS SHALL BE SUITABLE FOR TIER 15 LOADING AS SPECIFIED IN ANSI/SCTE 77.

PROVIDE AN OPENING FOR TOOL ASSISTED COVER REMOVAL NOT LARGE ENOUGH TO PERMIT PASSAGE OF A SPHERE MORE THAN 1/2" DIAMETER

ENSURE COVER SURFACE IS SKID RESISTANT WITH A COEFFICIENT OF FRICTION OF AT LEAST 0.5 AND VERTICAL SURFACE DICONTINUITIES LESS THAN 1/4".

BOXES AND EXTENSIONS ARE TRIMMABLE FOR CUSTOM LENGTHS. TRIMMED PIECES SHALL MAINTAIN A UNIFORM LENGTH.

ENTRANCE HOLES INTO PULL BOXES SHALL BE CUT WITH A CIRCULAR HOLE SAW OR HYDRAULIC CONDUIT PUNCH. HOLE SIZE SHALL BE THE OUTSIDE DIAMETER OF THE CONDUIT THAT IS TO FIT IN THE OPENING PLUS NO MORE THAN 1/4".

THE CONTRACTOR SHALL NOT INSTALL WIRE IN ANY PULL BOX UNTIL ITS INSTALLATION HAS BEEN INSPECTED AND ACCEPTED BY THE ENGINEER.

ALL METALLIC CONDUIT IN WHICH WIRE AND/OR CABLE IS TO BE INSTALLED, SHALL BE BUSHED BEFORE INSTALLATION OF THE WIRE AND/OR CABLE.

ENTIRE BOX MUST BE CONSTRUCTED OF NON-CONDUCTIVE MATERIALS WITH THE EXCEPTION OF STAINLESS STEEL FASTENERS.

WHEN A PULL BOX IS INSTALLED IN CRUSHED AGGREGATE SHOULDERS, PLACE IT 2-3 INCHES BELOW GRADE AND COVER IT WITH 2-3 INCHES OF CRUSHED AGGREGATE

LABEL ON COVER SHALL READ "ELECTRIC" FOR SIGNAL OR LIGHTING SYSTEMS. "WISDOT COMMUNICATIONS" FOR COMMUNICATIONS SYSTEMS.

2

LEGEND

- OVERLAY AND JOINT REPAIR
- BASE PATCHING CONCRETE SHES
- PROPOSED LEFT TURN LANE EXTENSION
- 18A / 18D — PROPOSED 18-INCH CURB AND GUTTER TYPE A OR D
- 30A / 30D — PROPOSED 30-INCH CURB AND GUTTER TYPE A OR D
- INLET PROTECTION TYPE C
- EROSION MAT CLASS I TYPE A
- XXXX — SAW CUT
- LOCATE ALL EX LOOP DETECTORS PRIOR TO PAV'T REPAIR CONSTRUCTION

N

IH-41 NORTHBOUND ENTRANCE RAMP

IH-41 NORTHBOUND EXIT RAMP

STA. 100+00.00 WB
Y: 562294.05
X: 811054.42

STA. 0+00.00 EB
Y: 562258.07
X: 811053.22

BEGIN CONSTRUCTION
STA. 11+56 EB
Y=562219.64
X=812208.21

SAW CUT REQ'D, SEE CONSTRUCTION DETAIL "REMOVING PAVEMENT BUTT JOINT"

SAW CUT REQ'D, SEE CONSTRUCTION DETAIL "REMOVING PAVEMENT BUTT JOINT"

STA. 112+00 WB
Y=562254.07
X=812253.72

STH 125 (COLLEGE AVENUE)

S88° 05' 39"E
1645.85'

S88° 05' 39"E
1181.99'

PC: 11+81.99

110+00WB | 111+00WB | 112+00WB | 113+00WB | 114+00WB

10+00EB | 11+00EB | 12+00EB | 13+00EB | 14+00EB

MGS TERMINAL TYPE 2
111+91.17 WB
-41.17 LT

MGS TERMINAL EAT
11+84.74 EB
50.65 RT

MGS TERMINAL TYPE 2
14+48.32 EB
43.02 RT

STR. B-44-0010
STA 12+52 EB-
STA 13+60 EB

CAUTION — WE ENERGIES ELECTRIC OVERHEAD

CAUTION — WISDOT ELECTRIC SIGNAL

CAUTION — ANR 16" GAS PIPELINE

CAUTION — ANR 8" GAS PIPELINE

CAUTION — ATT COMMUNICATIONS

CAUTION — TDS FIBER OPTIC

TOWN OF GRAND CHUTE WATERMAIN

CENTURYLINK FIBER OPTIC

TIME WARNER COMMUNICATIONS

WIN FIBER OPTIC

TOWN OF GRAND CHUTE STORM SEWER

TOWN OF GRAND CHUTE SANITARY SEWER

EXISTING R/W

PLACE NEW BEAM GUARD IN SAME LOCATION AS EXISTING

REMOVE EX. GUARDRAIL

GUARDRAIL MOW STRIP

REMOVE EX. INLET

ADJUST EX. MANHOLE

FULL DEPTH SAW CUT REQ'D FOR LEFT TURN LANE EXTENSION

12.50

REMOVE EX. CURB AND GUTTER

113+00.00 WB
14.50 RT

PROPOSED LEFT TURN LANE EXTENSION

CURVE 1

ADJUST EX. INLET

30A

MATCH LINE STA. 14+50 EB

MATCH LINE STA. 114+50 WB

CURVE 1
PI STA = 13+48.32
Y = 562213.231
X = 812400.802
DELTA = 1°54'21"
D = 0°34'23"
T = 166.33'
L = 332.64'
R = 10000.00'
PC STA = 11+81.99
PT STA = 15+14.63

PROJECT NO: 4659-15-71	HWY: STH 125	COUNTY: OUTAGAMIE	PLAN DETAILS	SHEET 11 E

FILE NAME : J:\JOBS2013\20132040\CAD\TRANSPORTATION\DWG\SHEETSPLAN\021201-PD.DWG
LAYOUT NAME - 021201-PD - 021201-PD
PLOT DATE : 1/31/2017 8:51 AM
PLOT BY : TURSKY, EVAN M.
PLOT NAME :
PLOT SCALE : 1:40_XREF
WISDOT/CADDS SHEET 42

2

LEGEND

- OVERLAY AND JOINT REPAIR
- BASE PATCHING CONCRETE SHES
- PROPOSED LEFT TURN LANE EXTENSION
- 18A / 18D — PROPOSED 18-INCH CURB AND GUTTER TYPE A OR D
- 30A / 30D — PROPOSED 30-INCH CURB AND GUTTER TYPE A OR D
- INLET PROTECTION TYPE C
- EROSION MAT CLASS I TYPE A
- XXXX — SAW CUT
- LOCATE ALL EX LOOP DETECTORS PRIOR TO PAV'T REPAIR CONSTRUCTION

BENCH MARK

NO.	DESCRIPTION	ELEVATION
1	NE. TAG BOLT ON HYD. IN SW. CORNER OF 3800 W. COLLEGE AVE	774.33'

N

MATCH LINE STA. 14+50 WB

MATCH LINE STA. 14+50 EB

MATCH LINE STA. 20+50 WB

MATCH LINE STA. 20+50 EB

GUARDRAIL MOW STRIP

MGS TERMINAL EAT
114+55.58 WB
-36.24 LT

CURVE 1

PROPOSED LEFT TURN LANE EXTENSION

CP #300 REBAR
N: 562233.930
E: 812573.732

PT: 15+14.63

PC: 116+45.85WB

CURVE 2

R=11014.50

12.50

REMOVE EX. INLET

REMOVE EX. CURB AND GUTTER

ADJUST EX. INLET

117+77.04 WB
14.50 RT

CP #301 REBAR
N: 562228.395
E: 812887.865

119+00.27 WB
1.91 RT

PT: 120+11.75WB

115+00WB

116+00WB

117+08WB

118+00WB

119+00WB

120+00WB

15+00EB

16+00EB

17+00EB

18+00EB

19+00EB

20+00EB

N90° 00' 00"E
1971.31'

N90° 00' 00"E
986.64'

30A

EXISTING R/W

STH 125 (COLLEGE AVENUE)

CENTURYLINK FIBER OPTIC — CAUTION

TOWN OF GRAND CHUTE STORM SEWER

TIME WARNER COMMUNICATIONS — CAUTION

WIN FIBER OPTIC — CAUTION

WE ENERGIES ELECTRIC OVERHEAD — CAUTION

TOWN OF GRAND CHUTE SANITARY SEWER

TOWN OF GRAND CHUTE WATERMAIN

WE ENERGIES GAS

WE ENERGIES ELECTRIC OVERHEAD — CAUTION

TDS FIBER OPTIC — CAUTION

ATT COMMUNICATIONS — CAUTION

WE ENERGIES ELECTRIC OVERHEAD — CAUTION

WISDOT ELECTRIC SIGNAL — CAUTION

TOWN OF GRAND CHUTE WATERMAIN

TOWN OF GRAND CHUTE SANITARY SEWER

TOWN OF GRAND CHUTE STORM SEWER

WE ENERGIES GAS

CURVE 1
PI STA = 13+48.32
Y = 562213.231
X = 812400.802
DELTA = 1°54'21"
D = 0°34'23"
T = 166.33'
L = 332.64'
R = 10000.00'
PC STA = 11+81.99
PT STA = 15+14.63

CURVE 2
PI STA = 118+28.82
Y = 562233.231
X = 812882.229
DELTA = 1°54'21"
D = 0°31'15"
T = 182.97'
L = 365.90'
R = 11000.00'
PC STA = 116+45.85
PT STA = 120+11.75

PROJECT NO: 4659-15-71	HWY: STH 125	COUNTY: OUTAGAMIE	PLAN DETAILS	SHEET 12 E

FILE NAME : J:\JOBS2013\20132040\CAD\TRANSPORTATION\DWG\SHEETSPLAN\021201-PD.DWG
LAYOUT NAME - 021201-PD - 021202-PD

PLOT DATE : 1/31/2017 8:52 AM PLOT BY : TURSKY, EVAN M. PLOT NAME : PLOT SCALE : 1:40_XREF

WISDOT/CADDS SHEET 42

2

LEGEND

- OVERLAY AND JOINT REPAIR
- BASE PATCHING CONCRETE SHES
- PROPOSED LEFT TURN LANE EXTENSION
- 18A / 18D — PROPOSED 18-INCH CURB AND GUTTER TYPE A OR D
- 30A / 30D — PROPOSED 30-INCH CURB AND GUTTER TYPE A OR D
- INLET PROTECTION TYPE C
- EROSION MAT CLASS I TYPE A
- XXXX — SAW CUT
- LOCATE ALL EX LOOP DETECTORS PRIOR TO PAV'T REPAIR CONSTRUCTION

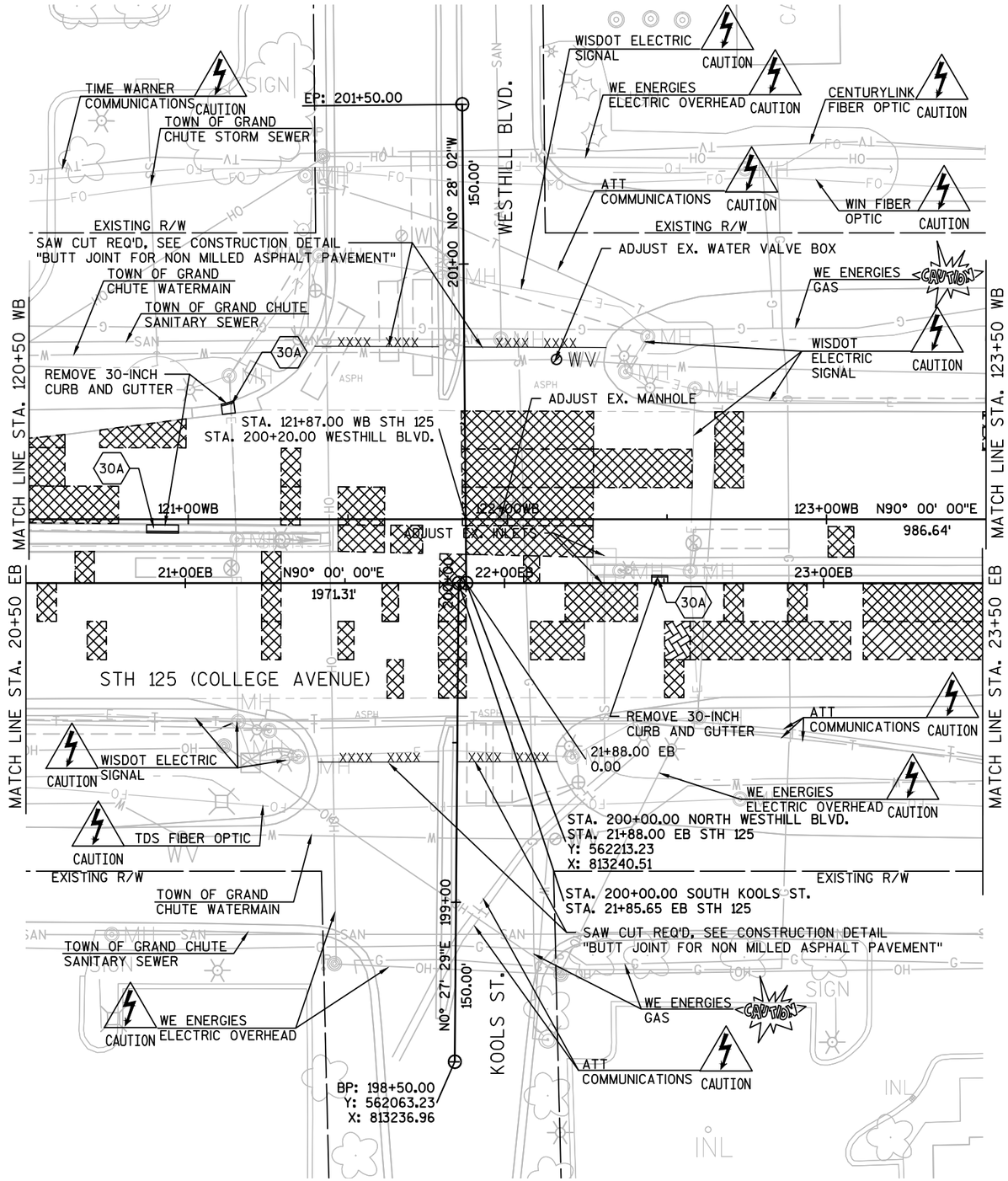

PROJECT NO: 4659-15-71	HWY: STH 125	COUNTY: OUTAGAMIE	PLAN DETAILS	SHEET 13 E

FILE NAME : J:\JOBS2013\20132040\CAD\TRANSPORTATION\DWG\SHEETSPLAN\021201-PD.DWG
LAYOUT NAME - 021201-PD - 021203-PD
PLOT DATE : 1/31/2017 8:52 AM PLOT BY : TURSKY, EVAN M. PLOT NAME : PLOT SCALE : *********
WISDOT/CADDS SHEET 42

LEGEND

- OVERLAY AND JOINT REPAIR
- BASE PATCHING CONCRETE SHES
- PROPOSED LEFT TURN LANE EXTENSION
- 18A / 18D — PROPOSED 18-INCH CURB AND GUTTER TYPE A OR D
- 30A / 30D — PROPOSED 30-INCH CURB AND GUTTER TYPE A OR D
- INLET PROTECTION TYPE C
- EROSION MAT CLASS I TYPE A
- XXXX — SAW CUT
- LOCATE ALL EX LOOP DETECTORS PRIOR TO PAV'T REPAIR CONSTRUCTION

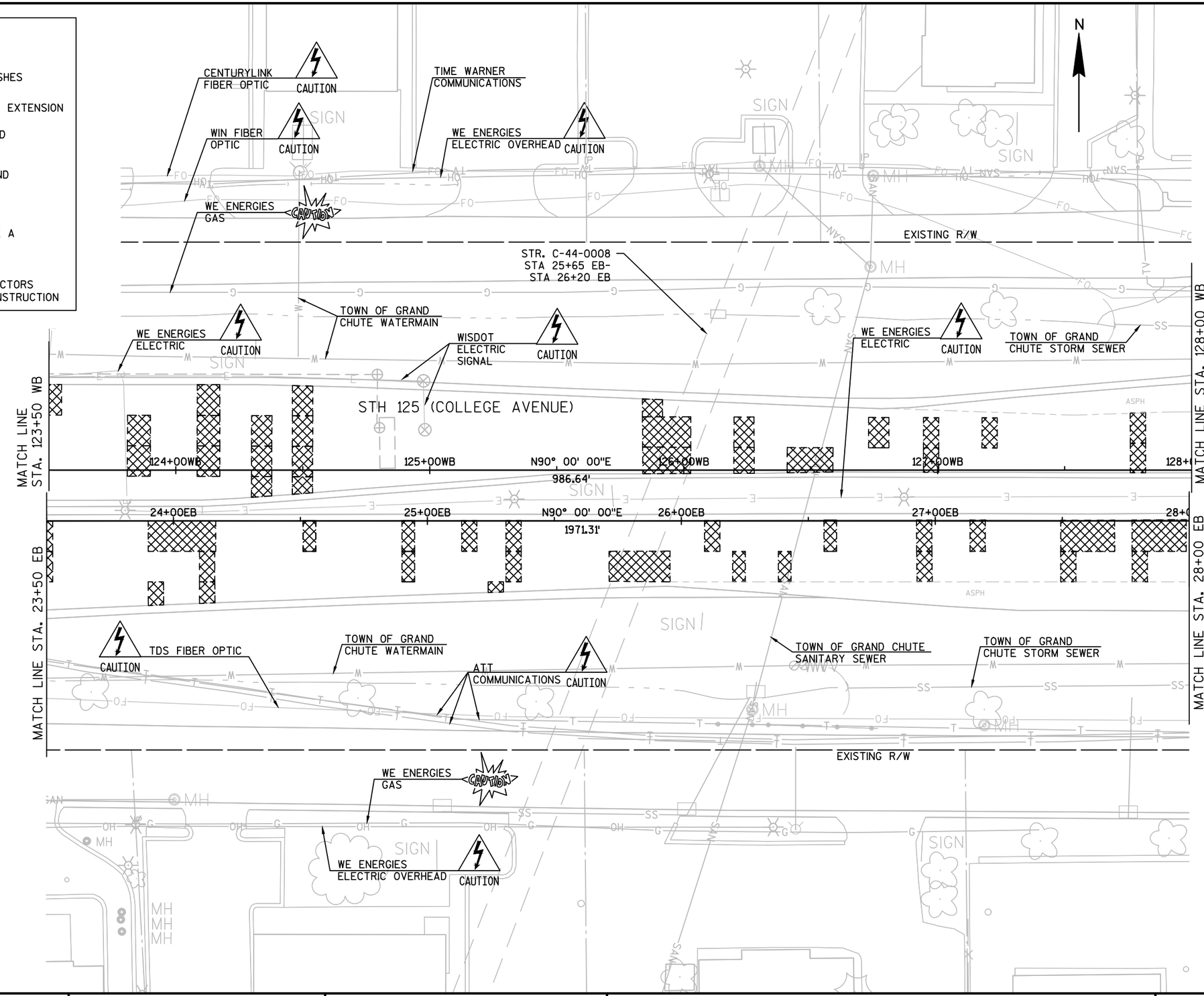

PROJECT NO: 4659-15-71	HWY: STH 125	COUNTY: OUTAGAMIE	PLAN DETAILS	SHEET 14 E

FILE NAME : J:\JOBS2013\20132040\CAD\TRANSPORTATION\DWG\SHEETSPLAN\021201-PD.DWG
LAYOUT NAME - 021201-PD - 021204-PD

PLOT DATE : 1/31/2017 8:52 AM PLOT BY : TURSKY, EVAN M. PLOT NAME : PLOT SCALE : 1:40_XREF

2

LEGEND

- OVERLAY AND JOINT REPAIR
- BASE PATCHING CONCRETE SHES
- PROPOSED LEFT TURN LANE EXTENSION
- 18A 18D — PROPOSED 18-INCH CURB AND GUTTER TYPE A OR D
- 30A 30D — PROPOSED 30-INCH CURB AND GUTTER TYPE A OR D
- INLET PROTECTION TYPE C
- ·###· EROSION MAT CLASS I TYPE A
- XXXX SAW CUT
- LOCATE ALL EX LOOP DETECTORS PRIOR TO PAV'T REPAIR CONSTRUCTION

N

MATCH LINE STA. 128+00 WB

MATCH LINE STA. 28+00 EB

MATCH LINE STA. 133+50 WB

MATCH LINE STA. 33+50 EB

STH 125 (COLLEGE AVENUE)

EXISTING R/W

CENTURYLINK FIBER OPTIC — CAUTION

WE ENERGIES GAS — CAUTION

TIME WARNER COMMUNICATIONS — CAUTION

WIN FIBER OPTIC — CAUTION

TOWN OF GRAND CHUTE WATERMAIN

WE ENERGIES ELECTRIC — CAUTION

PI: 129+98.39WB
Y: 562233.2315
X: 814051.8311

TOWN OF GRAND CHUTE STORM SEWER

ADJUST EX. WATER VALVE BOX

SAW CUT REQ'D, SEE CONSTRUCTION DETAIL "BUTT JOINT FOR NON MILLED ASPHALT PAVEMENT"

REMOVE EX. 18-INCH CURB AND GUTTER

18A

ADJUST EX. INLETS

ADJUST EX. INLETS

129+00WB — N90° 00' 00"E — 986.64' — 130+00WB — 131+00WB — N89° 56' 28"E — 5005.55' — 132+00WB — 133+00WB

29+00EB — 30+00EB — 31+00EB — 32+00EB — N90° 00' 00"E — 1971.31' — 33+00EB

TOWN OF GRAND CHUTE STORM SEWER

TOWN OF GRAND CHUTE SANITARY SEWER

SAW CUT REQ'D, SEE CONSTRUCTION DETAIL "BUTT JOINT FOR NON MILLED ASPHALT PAVEMENT"

TDS FIBER OPTIC — CAUTION

ATT COMMUNICATIONS — CAUTION

EXISTING R/W

TOWN OF GRAND CHUTE WATERMAIN

WISDOT ELECTRIC SIGNAL — CAUTION

WE ENERGIES GAS

TOWN OF GRAND CHUTE STORM SEWER

WE ENERGIES ELECTRIC OVERHEAD — CAUTION

SIGN

PROJECT NO: 4659-15-71	HWY: STH 125	COUNTY: OUTAGAMIE	PLAN DETAILS	SHEET 15 E

FILE NAME : J:\JOBS2013\20132040\CAD\TRANSPORTATION\DWG\SHEETSPLAN\021201-PD.DWG
LAYOUT NAME - 021201-PD - 021205-PD
PLOT DATE : 1/31/2017 8:53 AM PLOT BY : TURSKY, EVAN M. PLOT NAME : PLOT SCALE : 1:40_XREF
WISDOT/CADDS SHEET 42

2

LEGEND

- OVERLAY AND JOINT REPAIR
- BASE PATCHING CONCRETE SHES
- PROPOSED LEFT TURN LANE EXTENSION
- 18A / 18D — PROPOSED 18-INCH CURB AND GUTTER TYPE A OR D
- 30A / 30D — PROPOSED 30-INCH CURB AND GUTTER TYPE A OR D
- INLET PROTECTION TYPE C
- ### — EROSION MAT CLASS I TYPE A
- XXXX — SAW CUT
- LOCATE ALL EX LOOP DETECTORS PRIOR TO PAV'T REPAIR CONSTRUCTION

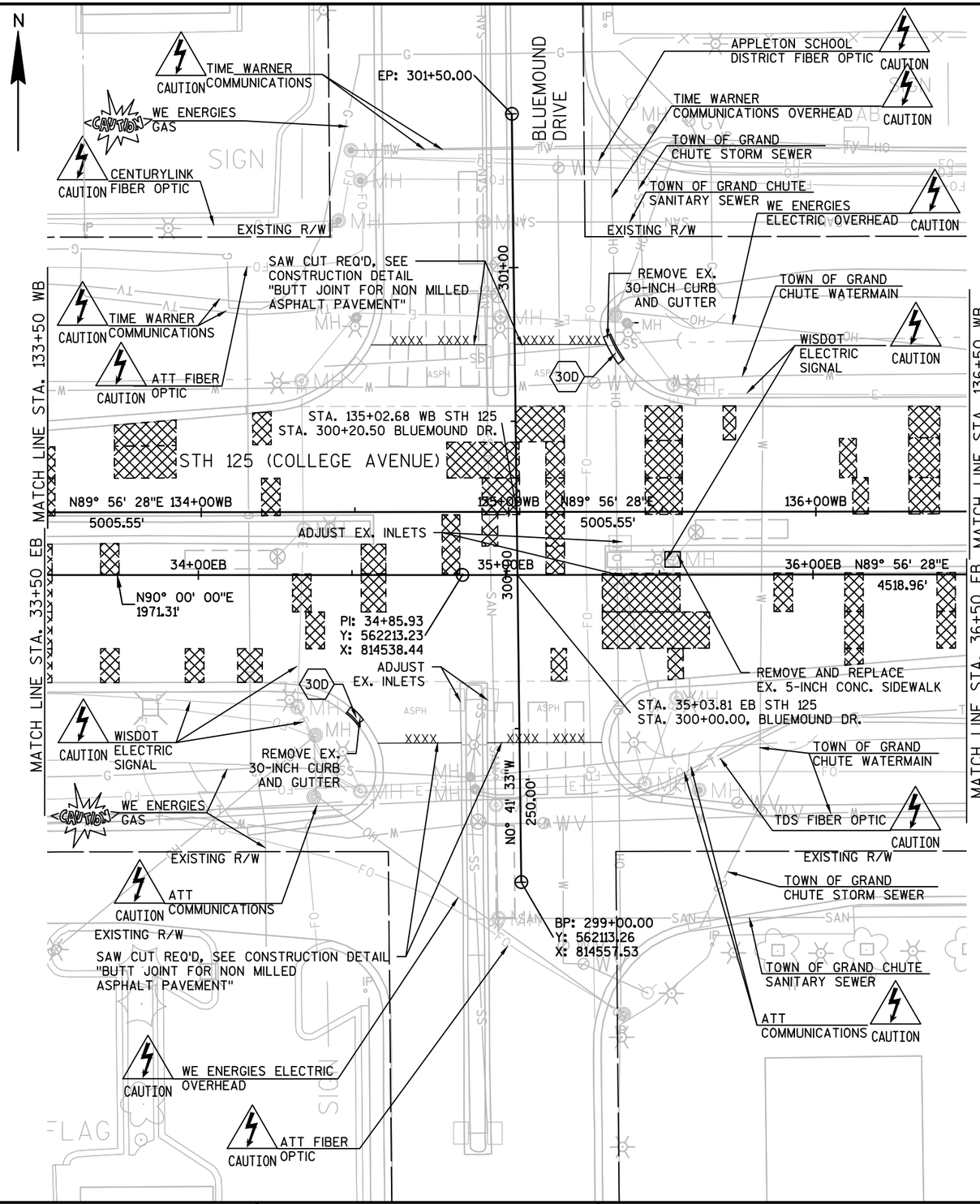

PROJECT NO: 4659-15-71	HWY: STH 125	COUNTY: OUTAGAMIE	PLAN DETAILS	SHEET 16 E

FILE NAME : J:\JOBS2013\20132040\CAD\TRANSPORTATION\DWG\SHEETSPLAN\021201-PD.DWG
LAYOUT NAME - 021201-PD - 021206-PD
PLOT DATE : 1/31/2017 8:53 AM PLOT BY : TURSKY, EVAN M. PLOT NAME : PLOT SCALE : 1:40_XREF
WISDOT/CADDS SHEET 42

2

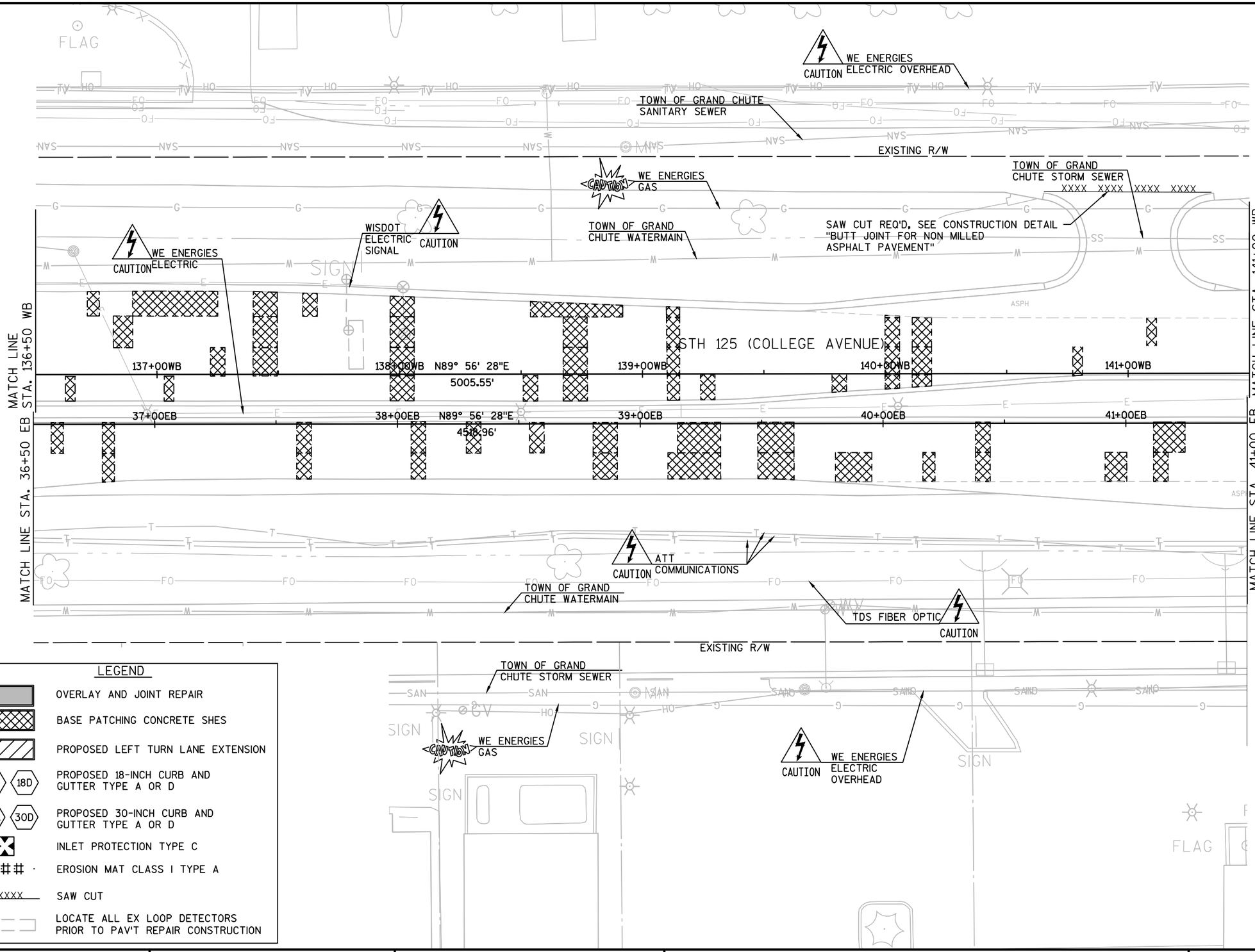

LEGEND

- OVERLAY AND JOINT REPAIR
- BASE PATCHING CONCRETE SHES
- PROPOSED LEFT TURN LANE EXTENSION
- 18A / 18D — PROPOSED 18-INCH CURB AND GUTTER TYPE A OR D
- 30A / 30D — PROPOSED 30-INCH CURB AND GUTTER TYPE A OR D
- INLET PROTECTION TYPE C
- EROSION MAT CLASS I TYPE A
- XXXX — SAW CUT
- LOCATE ALL EX LOOP DETECTORS PRIOR TO PAV'T REPAIR CONSTRUCTION

PROJECT NO: 4659-15-71	HWY: STH 125	COUNTY: OUTAGAMIE	PLAN DETAILS	SHEET 17 E

FILE NAME : J:\JOBS2013\20132040\CAD\TRANSPORTATION\DWG\SHEETSPLAN\021201-PD.DWG
LAYOUT NAME - 021201-PD - 021207-PD
PLOT DATE : 1/31/2017 8:53 AM PLOT BY : TURSKY, EVAN M. PLOT NAME : PLOT SCALE : 1:40_XREF
WISDOT/CADDS SHEET 42

2

N

LEGEND

- OVERLAY AND JOINT REPAIR
- BASE PATCHING CONCRETE SHES
- PROPOSED LEFT TURN LANE EXTENSION
- 18A 18D — PROPOSED 18-INCH CURB AND GUTTER TYPE A OR D
- 30A 30D — PROPOSED 30-INCH CURB AND GUTTER TYPE A OR D
- INLET PROTECTION TYPE C
- ·####· — EROSION MAT CLASS I TYPE A
- XXXX — SAW CUT
- LOCATE ALL EX LOOP DETECTORS PRIOR TO PAV'T REPAIR CONSTRUCTION

MATCH LINE STA. 141+00 WB

MATCH LINE STA. 41+00 EB

MATCH LINE STA. 147+00 WB

MATCH LINE STA. 47+00 EB

STH 125 (COLLEGE AVENUE)

142+00WB | 143+00WB | N89° 56' 28"E 5005.55' | 144+00WB | 145+00WB | 146+00WB | 147+

42+00EB | 43+00EB | N89° 56' 28"E 4518.96' | 44+00EB | 45+00EB | 46+00EB | 47+

EXISTING R/W

ADJUST EX. INLETS

18A

REMOVE EX. 18-INCH CURB AND GUTTER AROUND EX. INLET

TOWN OF GRAND CHUTE STORM SEWER

SAW CUT REQ'D, SEE CONSTRUCTION DETAIL "BUTT JOINT FOR NON MILLED ASPHALT PAVEMENT"

XXXX XXXX

CAUTION — ATT COMMUNICATIONS

CAUTION — TDS FIBER OPTIC

CAUTION — WE ENERGIES ELECTRIC OVERHEAD

CAUTION — WE ENERGIES ELECTRIC

CAUTION — WE ENERGIES GAS

TOWN OF GRAND CHUTE WATERMAIN

TOWN OF GRAND CHUTE SANITARY SEWER

WISDOT ELECTRIC SIGNAL

CAUTION

ADJUST EX. INLETS

TOWN OF GRAND CHUTE STORM SEWER

CAUTION — WE ENERGIES GAS

CAUTION — WE ENERGIES ELECTRIC OVERHEAD

PROJECT NO: 4659-15-71	HWY: STH 125	COUNTY: OUTAGAMIE	PLAN DETAILS	SHEET 18 E

FILE NAME : J:\JOBS2013\20132040\CAD\TRANSPORTATION\DWG\SHEETSPLAN\021201-PD.DWG
LAYOUT NAME - 021201-PD - 021208-PD

PLOT DATE : 1/31/2017 8:54 AM PLOT BY : TURSKY, EVAN M. PLOT NAME : PLOT SCALE : 1:40_XREF

WISDOT/CADDS SHEET 42

2

LEGEND

- OVERLAY AND JOINT REPAIR
- BASE PATCHING CONCRETE SHES
- PROPOSED LEFT TURN LANE EXTENSION
- 18A / 18D — PROPOSED 18-INCH CURB AND GUTTER TYPE A OR D
- 30A / 30D — PROPOSED 30-INCH CURB AND GUTTER TYPE A OR D
- INLET PROTECTION TYPE C
- ·####· — EROSION MAT CLASS I TYPE A
- XXXX — SAW CUT
- LOCATE ALL EX LOOP DETECTORS PRIOR TO PAV'T REPAIR CONSTRUCTION

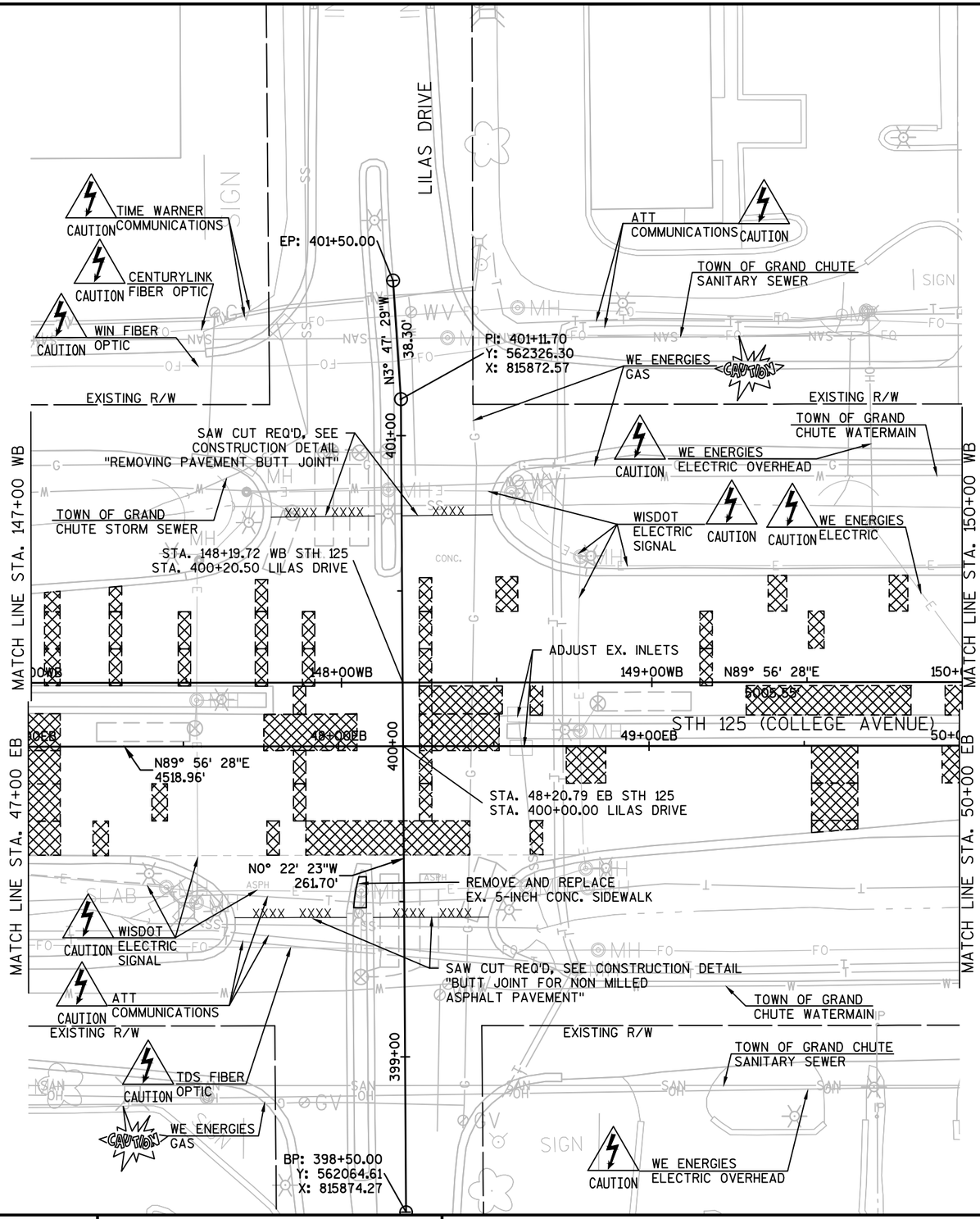

PROJECT NO: 4659-15-71	HWY: STH 125	COUNTY: OUTAGAMIE	PLAN DETAILS	SHEET 19 E

FILE NAME : J:\JOBS2013\20132040\CAD\TRANSPORTATION\DWG\SHEETSPLAN\021201-PD.DWG
LAYOUT NAME - 021201-PD - 021209-PD
PLOT DATE : 1/31/2017 8:54 AM PLOT BY : TURSKY, EVAN M. PLOT NAME : PLOT SCALE : **********
WISDOT/CADDS SHEET 42

2

LEGEND

- OVERLAY AND JOINT REPAIR
- BASE PATCHING CONCRETE SHES
- PROPOSED LEFT TURN LANE EXTENSION
- 18A 18D — PROPOSED 18-INCH CURB AND GUTTER TYPE A OR D
- 30A 30D — PROPOSED 30-INCH CURB AND GUTTER TYPE A OR D
- INLET PROTECTION TYPE C
- EROSION MAT CLASS I TYPE A
- XXXX — SAW CUT
- LOCATE ALL EX LOOP DETECTORS PRIOR TO PAV'T REPAIR CONSTRUCTION

N

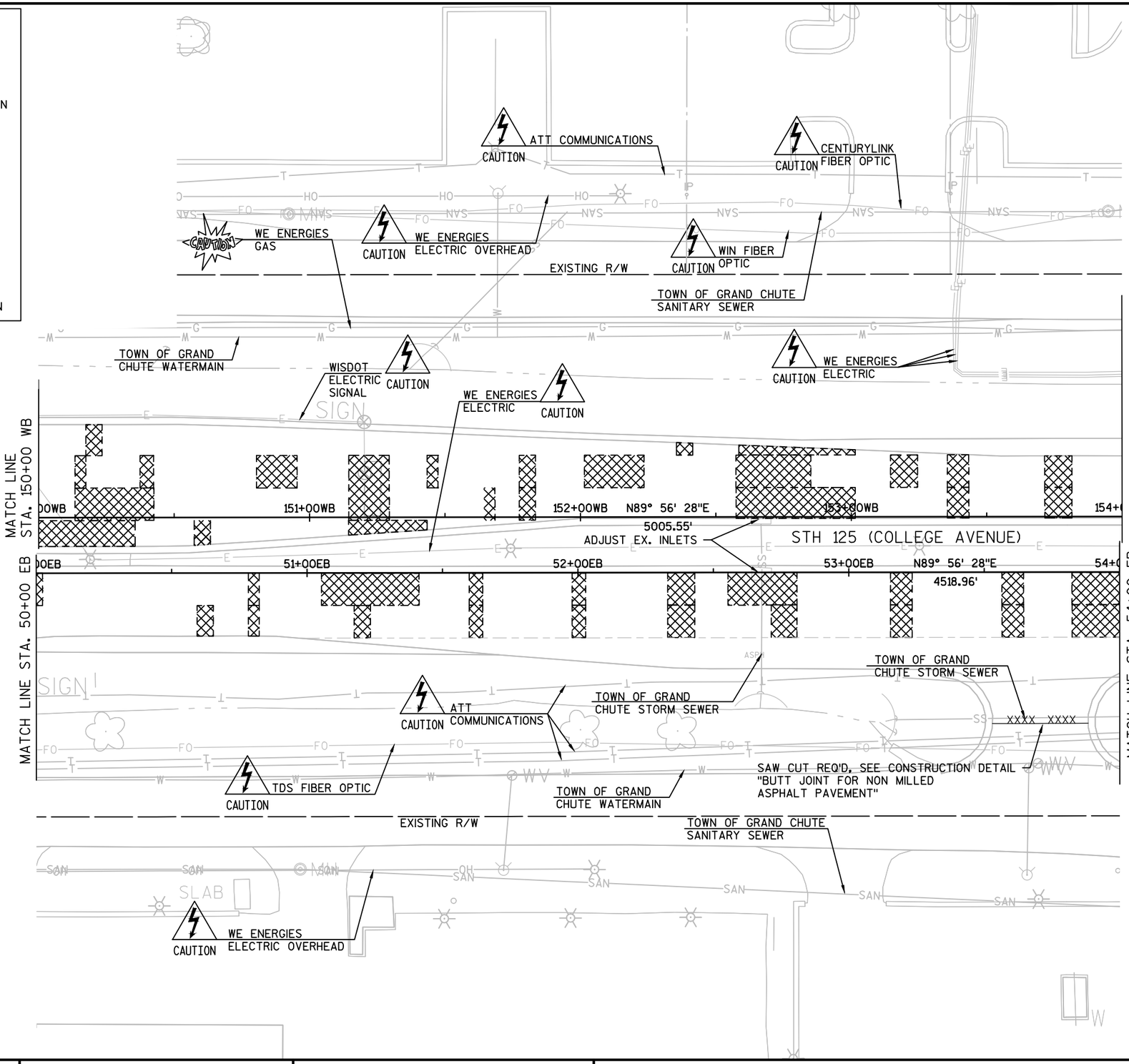

PROJECT NO: 4659-15-71	HWY: STH 125	COUNTY: OUTAGAMIE	PLAN DETAILS	SHEET 20 E

FILE NAME : J:\JOBS2013\20132040\CAD\TRANSPORTATION\DWG\SHEETSPLAN\021201-PD.DWG
LAYOUT NAME - 021201-PD - 021210-PD
PLOT DATE : 1/31/2017 8:54 AM PLOT BY : TURSKY, EVAN M. PLOT NAME : PLOT SCALE : 1:40_XREF
WISDOT/CADDS SHEET 42

2

N

LEGEND

- OVERLAY AND JOINT REPAIR
- BASE PATCHING CONCRETE SHES
- PROPOSED LEFT TURN LANE EXTENSION
- 18A / 18D — PROPOSED 18-INCH CURB AND GUTTER TYPE A OR D
- 30A / 30D — PROPOSED 30-INCH CURB AND GUTTER TYPE A OR D
- INLET PROTECTION TYPE C
- EROSION MAT CLASS I TYPE A
- XXXX — SAW CUT
- LOCATE ALL EX LOOP DETECTORS PRIOR TO PAV'T REPAIR CONSTRUCTION

CAUTION ATT COMMUNICATIONS

CAUTION WE ENERGIES ELECTRIC OVERHEAD

CAUTION CENTURYLINK FIBER OPTIC

CAUTION WIN FIBER OPTIC

TOWN OF GRAND CHUTE SANITARY SEWER

EXISTING R/W

TOWN OF GRAND CHUTE WATERMAIN

CAUTION WE ENERGIES GAS

CAUTION WE ENERGIES ELECTRIC

MATCH LINE STA. 154+00 WB

MATCH LINE STA. 159+00 WB

00WB 155+00WB N89° 56' 28"E 156+00WB 157+00WB 158+00WB 159+

5005.55'

ADJUST EX. INLETS

ADJUST EX. INLETS

00EB 55+00EB 56+00EB 57+00EB N89° 56' 28"E 58+00EB 59+

4518.96'

MATCH LINE STA. 54+00 EB

MATCH LINE STA. 59+00 EB

STH 125 (COLLEGE AVENUE)

TOWN OF GRAND CHUTE STORM SEWER

TOWN OF GRAND CHUTE STORM SEWER

CAUTION WISDOT ELECTRIC SIGNAL

CAUTION WE ENERGIES GAS

TOWN OF GRAND CHUTE WATERMAIN

CAUTION ATT COMMUNICATIONS

CAUTION TDS FIBER OPTIC

EXISTING R/W

CAUTION WE ENERGIES ELECTRIC OVERHEAD

TOWN OF GRAND CHUTE SANITARY SEWER

PROJECT NO: 4659-15-71	HWY: STH 125	COUNTY: OUTAGAMIE	PLAN DETAILS	SHEET 21 E

FILE NAME : J:\JOBS2013\20132040\CAD\TRANSPORTATION\DWG\SHEETSPLAN\021201-PD.DWG
LAYOUT NAME - 021201-PD - 021211-PD
PLOT DATE : 1/31/2017 8:55 AM PLOT BY : TURSKY, EVAN M. PLOT NAME : PLOT SCALE : 1:40_XREF
WISDOT/CADDS SHEET 42

2

2

LEGEND

- OVERLAY AND JOINT REPAIR
- BASE PATCHING CONCRETE SHES
- PROPOSED LEFT TURN LANE EXTENSION
- 18A / 18D — PROPOSED 18-INCH CURB AND GUTTER TYPE A OR D
- 30A / 30D — PROPOSED 30-INCH CURB AND GUTTER TYPE A OR D
- INLET PROTECTION TYPE C
- EROSION MAT CLASS I TYPE A
- XXXX — SAW CUT
- LOCATE ALL EX LOOP DETECTORS PRIOR TO PAV'T REPAIR CONSTRUCTION

N

MATCH LINE STA. 159+00 WB

MATCH LINE STA. 59+00 EB

MATCH LINE STA. 163+50 WB

MATCH LINE STA. 63+50 EB

STH 125 (COLLEGE AVENUE)

CTH A LYNNDALE DRIVE

EP: 501+50.00

CAUTION — CENTURYLINK FIBER OPTIC

EXISTING R/W

TOWN OF GRAND CHUTE STORM SEWER

WIN FIBER OPTIC — CAUTION

TOWN OF GRAND CHUTE SANITARY SEWER

EXISTING R/W

WE ENERGIES ELECTRIC OVERHEAD — CAUTION

SAW CUT REQ'D, SEE CONSTRUCTION DETAIL "BUTT JOINT FOR NON MILLED ASPHALT PAVEMENT"

CAUTION — WISDOT ELECTRIC SIGNAL

TOWN OF GRAND CHUTE WATERMAIN

CAUTION — WE ENERGIES GAS

TOWN OF GRAND CHUTE STORM SEWER

STA. 161+32.54 WB STH 125
STA. 500+20.50 CTH A/LYNNDALE DRIVE

WISDOT ELECTRIC SIGNAL — CAUTION

501+00

ADJUST EX. INLETS

160+00WB — 161+00WB — 162+00WB — N89° 56' 28"E 5005.55' — 163+00WB

60+00EB — 61+00EB — 62+00EB — N89° 56' 28"E 4518.96' — 63+00EB

500+00

CAUTION — ATT COMMUNICATIONS

CAUTION — TDS FIBER OPTIC

CAUTION — WISDOT ELECTRIC SIGNAL

CAUTION — WE ENERGIES ELECTRIC OVERHEAD

WE ENERGIES GAS — CAUTION

EXISTING R/W

BP: 498+50.00
Y: 562065.96
X: 817187.17

N0° 23' 49"W 300.00'

499+00

STA. 61+33.62 EB STH 125
STA. 500+00.00 CTH A/LYNNDALE DRIVE

TOWN OF GRAND CHUTE STORM SEWER

SAW CUT REQ'D, SEE CONSTRUCTION DETAIL "BUTT JOINT FOR NON MILLED ASPHALT PAVEMENT"

CAUTION — WE ENERGIES ELECTRIC OVERHEAD

WISDOT ELECTRIC SIGNAL — CAUTION

TOWN OF GRAND CHUTE WATERMAIN

TOWN OF GRAND CHUTE SANITARY SEWER

EXISTING R/W

WE ENERGIES GAS — CAUTION

PROJECT NO: 4659-15-71	HWY: STH 125	COUNTY: OUTAGAMIE	PLAN DETAILS	SHEET 22 E

2

LEGEND

- OVERLAY AND JOINT REPAIR
- BASE PATCHING CONCRETE SHES
- PROPOSED LEFT TURN LANE EXTENSION
- 18A / 18D — PROPOSED 18-INCH CURB AND GUTTER TYPE A OR D
- 30A / 30D — PROPOSED 30-INCH CURB AND GUTTER TYPE A OR D
- INLET PROTECTION TYPE C
- ·###· EROSION MAT CLASS I TYPE A
- XXXX SAW CUT
- LOCATE ALL EX LOOP DETECTORS PRIOR TO PAV'T REPAIR CONSTRUCTION

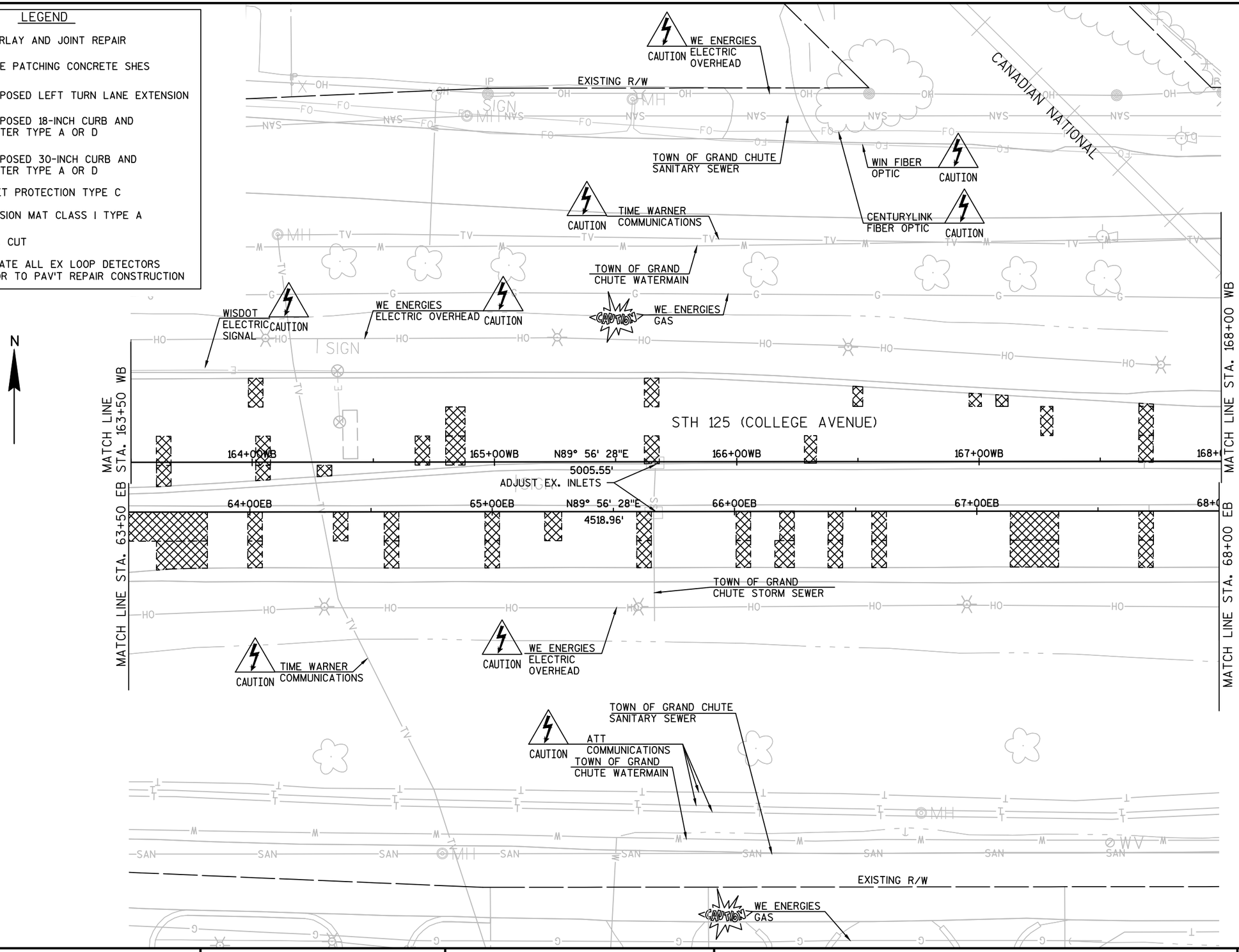

PROJECT NO: 4659-15-71	HWY: STH 125	COUNTY: OUTAGAMIE	PLAN DETAILS	SHEET 23 E

FILE NAME : J:\JOBS2013\20132040\CAD\TRANSPORTATION\DWG\SHEETSPLAN\021201-PD.DWG
LAYOUT NAME - 021201-PD - 021213-PD
PLOT DATE : 1/31/2017 8:55 AM PLOT BY : TURSKY, EVAN M. PLOT NAME : PLOT SCALE : 1:40_XREF
WISDOT/CADDS SHEET 42

2

LEGEND

- OVERLAY AND JOINT REPAIR
- BASE PATCHING CONCRETE SHES
- PROPOSED LEFT TURN LANE EXTENSION
- 18A / 18D — PROPOSED 18-INCH CURB AND GUTTER TYPE A OR D
- 30A / 30D — PROPOSED 30-INCH CURB AND GUTTER TYPE A OR D
- INLET PROTECTION TYPE C
- EROSION MAT CLASS I TYPE A
- XXXX — SAW CUT
- LOCATE ALL EX LOOP DETECTORS PRIOR TO PAV'T REPAIR CONSTRUCTION

N

EXISTING R/W

TOWN OF GRAND CHUTE SANITARY SEWER

CENTURYLINK FIBER OPTIC — CAUTION

TOWN OF GRAND CHUTE STORM SEWER

TOWN OF GRAND CHUTE WATERMAIN

WIN FIBER OPTIC — CAUTION

CAUTION — TIME WARNER COMMUNICATIONS

CAUTION — WE ENERGIES GAS

CAUTION — WE ENERGIES ELECTRIC OVERHEAD

TOWN OF GRAND CHUTE STORM SEWER

MATCH LINE STA. 168+00 WB

MATCH LINE STA. 172+50 WB

SAW CUT REQ'D. SEE CONSTRUCTION DETAIL "BUTT JOINT FOR NON MILLED ASPHALT PAVEMENT"

CONC. ASPH ASPH CONC.

168+28.21 WB

169+00WB

169+15.93 WB

STH 125
COLLEGE AVENUE

170+00WB N89° 56' 28"E 5005.55'

171+00WB

172+00WB

68+66.00 EB

69+61.06 EB

00EB N89° 56' 28"E 4518.96'

69+00EB

70+00EB

71+00EB

72+00EB

MATCH LINE STA. 68+00 EB

MATCH LINE STA. 72+50 EB

CONC. ASPH ASPH CONC.

SAW CUT REQ'D. SEE CONSTRUCTION DETAIL "BUTT JOINT FOR NON MILLED ASPHALT PAVEMENT"

WE ENERGIES ELECTRIC — CAUTION

CANADIAN NATIONAL

CAUTION — WE ENERGIES ELECTRIC OVERHEAD

CAUTION — WISDOT ELECTRIC SIGNAL

WINDSTREAM FIBER OPTIC — CAUTION

CAUTION — ATT COMMUNICATIONS

CAUTION — TIME WARNER COMMUNICATIONS OVERHEAD

TOWN OF GRAND CHUTE WATERMAIN

TOWN OF GRAND CHUTE SANITARY SEWER

CAUTION — WE ENERGIES ELECTRIC OVERHEAD

EXISTING R/W

EXISTING R/W

PROJECT NO: 4659-15-71	HWY: STH 125	COUNTY: OUTAGAMIE	PLAN DETAILS	SHEET 24 E

FILE NAME : J:\JOBS2013\20132040\CAD\TRANSPORTATION\DWG\SHEETSPLAN\021201-PD.DWG
LAYOUT NAME - 021201-PD - 021214-PD

PLOT DATE : 1/31/2017 8:56 AM PLOT BY : TURSKY, EVAN M. PLOT NAME : PLOT SCALE : 1:40_XREF

LEGEND

- OVERLAY AND JOINT REPAIR
- BASE PATCHING CONCRETE SHES
- PROPOSED LEFT TURN LANE EXTENSION
- 18A / 18D — PROPOSED 18-INCH CURB AND GUTTER TYPE A OR D
- 30A / 30D — PROPOSED 30-INCH CURB AND GUTTER TYPE A OR D
- INLET PROTECTION TYPE C
- ·####· EROSION MAT CLASS I TYPE A
- XXXX SAW CUT
- LOCATE ALL EX LOOP DETECTORS PRIOR TO PAV'T REPAIR CONSTRUCTION

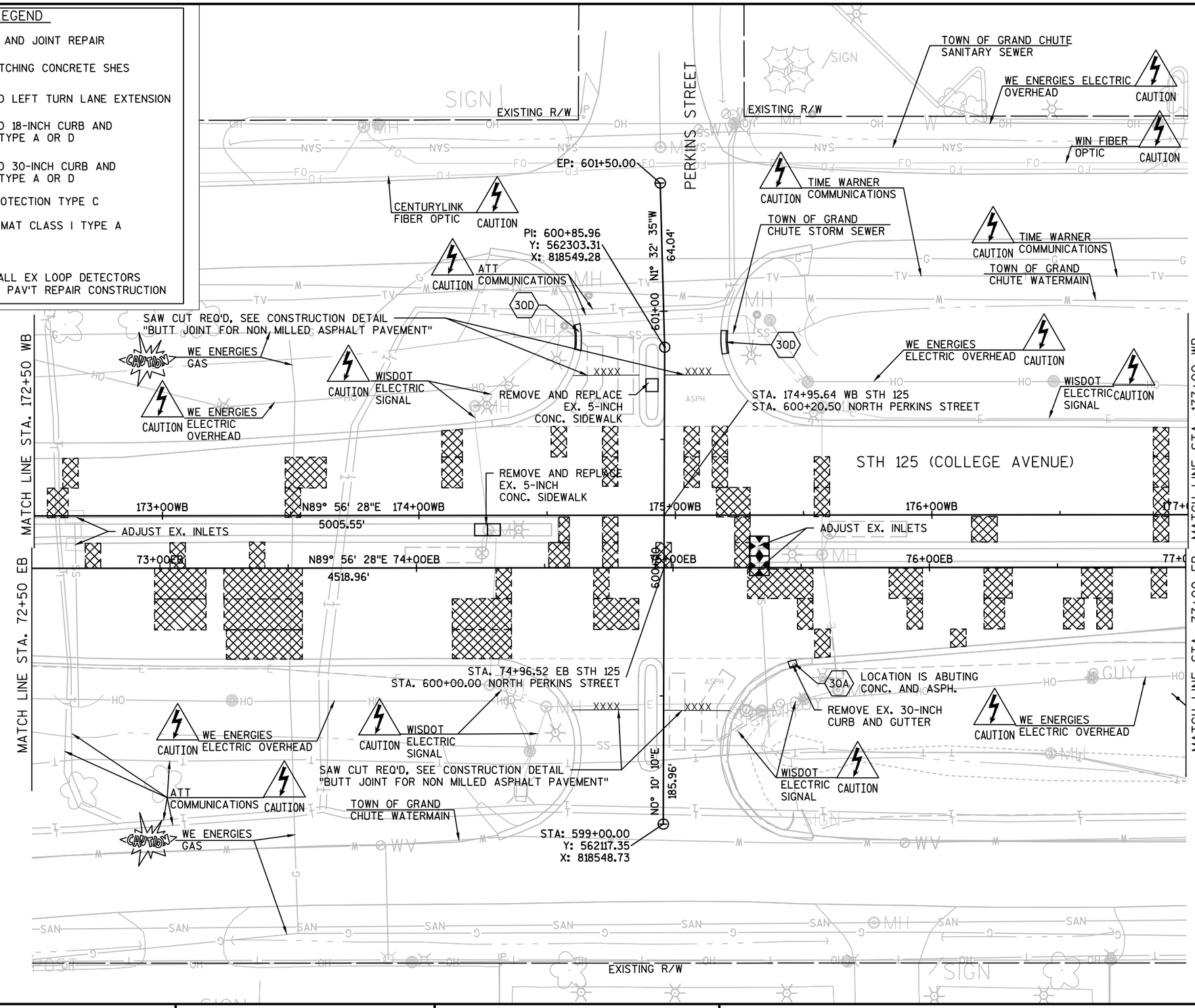

PROJECT NO: 4659-15-71	HWY: STH 125	COUNTY: OUTAGAMIE	PLAN DETAILS	SHEET 25 E

2

LEGEND

- OVERLAY AND JOINT REPAIR
- BASE PATCHING CONCRETE SHES
- PROPOSED LEFT TURN LANE EXTENSION
- 18A / 18D — PROPOSED 18-INCH CURB AND GUTTER TYPE A OR D
- 30A / 30D — PROPOSED 30-INCH CURB AND GUTTER TYPE A OR D
- INLET PROTECTION TYPE C
- ### — EROSION MAT CLASS I TYPE A
- XXXX — SAW CUT
- LOCATE ALL EX LOOP DETECTORS PRIOR TO PAV'T REPAIR CONSTRUCTION

BENCH MARK

NO.	DESCRIPTION	ELEVATION
2	SE. TAG BOLT ON HYD. IN NE. CORNER OF 2295 COLLEGE AVE.	798.39'

N

WOODS EDGE DR.

EXISTING R/W

EXISTING R/W

CENTURYLINK FIBER OPTIC — CAUTION

WIN FIBER OPTIC — CAUTION

WE ENERGIES GAS — CAUTION

TOWN OF GRAND CHUTE WATERMAIN

MATCH LINE STA. 177+00 WB

WISDOT ELECTRIC SIGNAL — CAUTION

MGS TERMINAL TYPE 2
180+02.78 WB
-32.03 LT

PI: 180+03.94 WB
Y: 562238.37
X: 819057.38

WE ENERGIES ELECTRIC OVERHEAD — CAUTION

181+86.96 WB
2.0' RT.

30A

GUARDRAIL MOW STRIP

REMOVE EX. 30-INCH CURB AND GUTTER FOR TEMPORARY CROSSOVER

MATCH LINE STA. 183+00 WB

S89° 21' 53"E
412.64'

178+00WB — N89° 56' 28"E 5005.55' — 179+00WB — 180+00WB — 181+00WB — 182+00WB — 183+

ADJUST EX. INLETS
77+54.62 EB
32.35 RT

STH 125 (COLLEGE AVENUE)

PI: 80+04.89 EB
Y: 562217.87
X: 819057.40

78+00EB — N89° 56' 28"E 4518.96' — 79+00EB — 80+00EB — 81+00EB — N89° 17' 27"E 440.50' — 82+00EB — 83+

ADJUST EX. INLETS

MGS TERMINAL EAT
77+04.66 EB
34.38 RT

81+87.85 EB
-2.0' LT.

GUARDRAIL MOW STRIP

MATCH LINE STA. 77+00 EB

SLOPE INTERCEPT

TOWN OF GRAND CHUTE STORM SEWER

SILT FENCE

TOWN OF GRAND CHUTE STORM SEWER

WE ENERGIES ELECTRIC OVERHEAD — CAUTION

ATT COMMUNICATIONS

TOWN OF GRAND CHUTE WATERMAIN

REMOVE EX. GUARDRAIL

CP 302 REBAR
N: 562126.938
E: 818774.874

WE ENERGIES GAS — CAUTION

BM#2

EXISTING R/W

PROJECT NO: 4659-15-71	HWY: STH 125	COUNTY: OUTAGAMIE	PLAN DETAILS	SHEET 26 E

FILE NAME : J:\JOBS2013\20132040\CAD\TRANSPORTATION\DWG\SHEETSPLAN\021201-PD.DWG
LAYOUT NAME - 021201-PD - 021216-PD
PLOT DATE : 1/31/2017 8:56 AM PLOT BY : TURSKY, EVAN M. PLOT NAME : PLOT SCALE : 1:40_XREF
WISDOT/CADDS SHEET 42

2

LEGEND

- OVERLAY AND JOINT REPAIR
- BASE PATCHING CONCRETE SHES
- PROPOSED LEFT TURN LANE EXTENSION
- 18A 18D — PROPOSED 18-INCH CURB AND GUTTER TYPE A OR D
- 30A 30D — PROPOSED 30-INCH CURB AND GUTTER TYPE A OR D
- INLET PROTECTION TYPE C
- EROSION MAT CLASS I TYPE A
- XXXX — SAW CUT
- LOCATE ALL EX LOOP DETECTORS PRIOR TO PAV'T REPAIR CONSTRUCTION

N

EXISTING R/W

WE ENERGIES ELECTRIC OVERHEAD — CAUTION

WE ENERGIES GAS — CAUTION

WE ENERGIES ELECTRIC OVERHEAD — CAUTION

TOWN OF GRAND CHUTE WATERMAIN

CENTURYLINK FIBER OPTIC — CAUTION

WIN FIBER OPTIC — CAUTION

TOWN OF GRAND CHUTE WATERMAIN

MATCH LINE STA. 83+00 EB

MATCH LINE STA. 183+00 WB

REMOVE EX. 30-INCH CURB AND GUTTER FOR TEMPORARY CROSSOVER

GUARDRAIL MOW STRIP

183+87.59 WB
-31.97 LT

PI: 184+16.57 WB
Y: 562233.80
X: 819469.99

S89° 21' 53"E
412.64'

REMOVE EX. ASPHALT SHOULDER AND REPLACE WITH BASE AGGREGATE DENSE 3/4-INCH

184+86.93 WB
2.0' RT.

185+28.22 WB
-24.95 LT

ADJUST EX. INLET

STR. B-44-0009
STA 85+88 EB-
STA 88+20 EB
SEE STRUCTURE PLANS

WIS. CENTRAL LTD

GUARDRAIL MOW STRIP

188+50.25 WB
-24.00 LT

REMOVE EX. GUARDRAIL

CONCRETE CURB AND GUTTER 4-INCH SLOPED 30-INCH TYPE TBTT

WE ENERGIES ELECTRIC OVERHEAD — CAUTION

188+18.75 WB
-24.01 LT

MATCH LINE STA. 188+65 WB

REMOVE EX. INTEGRAL CURB AND GUTTER

188+56.25 WB
-24.00 LT

18A

N89° 56' 28"E
680.50'

184+00WB

185+00WB

186+00WB

187+00WB

188+00WB

85+00EB

86+00EB

87+00EB

88+00EB

N89° 56' 28"E
652.64'

84+87.88 EB
-2.0' LT.

ADJUST EX. INLET

STH 125 (COLLEGE AVENUE)

SAW CUT REQ'D, SEE CONSTRUCTION DETAIL "BRIDGE APPROACH HMA PAVING DETAIL"

REMOVE AND REPLACE EX. 5-INCH CONC. SIDEWALK

REMOVE EX. ASPHALT PAVEMENT AND REPLACE WITH 5-INCH CONC. SIDEWALK

REMOVE AND REPLACE EX. 5-INCH CONC. SIDEWALK

PI: 84+45.39 EB
Y: 562223.33
X: 819497.87

N89° 17' 27"E
440.50'

85+29.24 EB
29.37 RT

30A

WE ENERGIES ELECTRIC OVERHEAD — CAUTION

88+29.36 EB
29.32 RT

84+68.06 EB
32.48 RT

GUARDRAIL MOW STRIP

REMOVE EX. GUARDRAIL

WE ENERGIES ELECTRIC OVERHEAD — CAUTION

PIPE RAILING
SEE PIPE RAILING DETAIL

REMOVE EX. GUARDRAIL

ATT COMMUNICATIONS — CAUTION

TOWN OF GRAND CHUTE WATERMAIN

WE ENERGIES GAS — CAUTION

EXISTING R/W

INDIAN NATIONAL

SLAB

PROJECT NO: 4659-15-71	HWY: STH 125	COUNTY: OUTAGAMIE	PLAN DETAILS	SHEET 27 E

FILE NAME : J:\JOBS2013\20132040\CAD\TRANSPORTATION\DWG\SHEETSPLAN\021201-PD.DWG
LAYOUT NAME - 021201-PD - 021217-PD
PLOT DATE : 1/31/2017 8:57 AM PLOT BY : TURSKY, EVAN M. PLOT NAME : PLOT SCALE : 1:40_XREF
WISDOT/CADDS SHEET 42

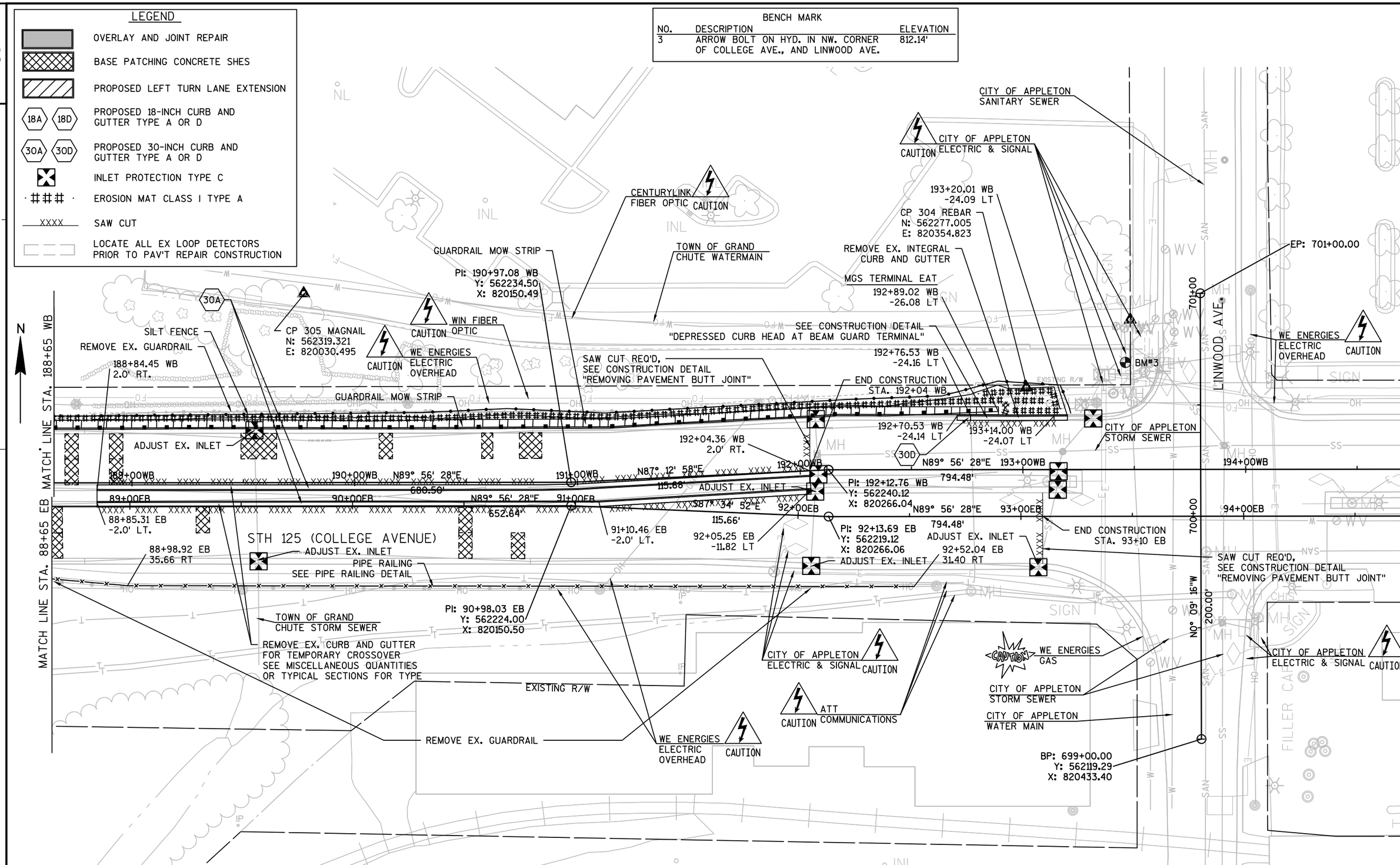

PROJECT NO: 4659-15-71	HWY: STH 125	COUNTY: OUTAGAMIE	PLAN DETAILS	SHEET 28	E

FILE NAME : J:\JOBS2013\20132040\CAD\TRANSPORTATION\DWG\SHEETSPLAN\021201-PD.DWG
LAYOUT NAME - 021201-PD - 021218-PD
PLOT DATE : 1/31/2017 8:57 AM PLOT BY : TURSKY, EVAN M. PLOT NAME : PLOT SCALE : 1:40_XREF
WISDOT/CADDS SHEET 42

2

2

N

EXISTING R/W

INL. 1.1, STA. 114+18 WB, 14.0' LT
INLET 2'X3' TYPE H
FL. ELEV.=771.66
N 12" RCP ELEV.=768.93'

AVENUE)

113+00WB

114+00WB

115+00WB

116+00WB

117+00WB

118+00WB

CONNECTION PAID FOR
AS CONCRETE COLLAR

17' CPRC @ 5.50%

13+00EB

14+00EB

15+00EB

16+00EB

17+00EB

18+00EB

INL. 2.1, STA. 117+68 WB, 14.0' RT
INLET 2'X3', TYPE H
FL. ELEV.=773.53
S 12" RCP ELEV.=770.78'

9' CPRC @ 5.20%
CONNECTION PAID FOR
AS CONCRETE COLLAR

STH 125 (COLLEGE AVENUE)

EX. INL. 2.2, STA. 17+68 EB, 0' LT
FL. ELEV.=773.61
N 12" RCP ELEV.=770.31'
S EX. RCP ELEV.=770.31'

EX. INL. 1.2, STA. 14+18 EB, 0' LT
FL. ELEV.=771.50
N 12" RCP ELEV.=767.98
S EX. 12" RCP ELEV=76800'

EXISTING R/W

PROJECT NO: 4659-15-71	HWY: STH 125	COUNTY: OUTAGAMIE	STORM SEWER	SHEET 29 E

FILE NAME : J:\JOBS2013\20132040\CAD\TRANSPORTATION\DWG\SHEETSPLAN\022501-SS.DWG
LAYOUT NAME - 021201-PD - 021201-PD

PLOT DATE : 2/14/2017 9:04 AM PLOT BY : WORECK, CHRIS PLOT NAME : PLOT SCALE : 1" = 40'_XREF

WISDOT/CADDS SHEET 42

2

SIGNING NOTES

WHEN AN EXISTING STOP SIGN AND SUPPORT IS TO BE REMOVED AND A NEW STOP SIGN AND SUPPORT ERECTED THE WORK SHALL BE DONE CONCURRENTLY. FOR OTHER SIGNS AND SUPPORTS THAT ARE TO BE REMOVED AND NEW SIGNS AND SUPPORTS ERECTED, THE REMOVAL OF THE EXISTING SIGN/SUPPORT AND ERECTION OF THE NEW SIGN/SUPPORT SHOULD BE DONE AS CONCURRENTLY AS POSSIBLE. IN NO CASE SHALL A NEW SIGN/SUPPORT BE DOWN FOR MORE THAN 24 HOURS AND THERE SHALL NOT BE MORE THAN ONE SIGN OF THE SAME LEGEND MISSING IN A ROW.

WOOD POSTS SIZES, FOR TYPE II SIGNING, ARE ESTIMATED LENGTHS AND THE ACTUAL LENGTH WILL BE DETERMINED IN THE FIELD.

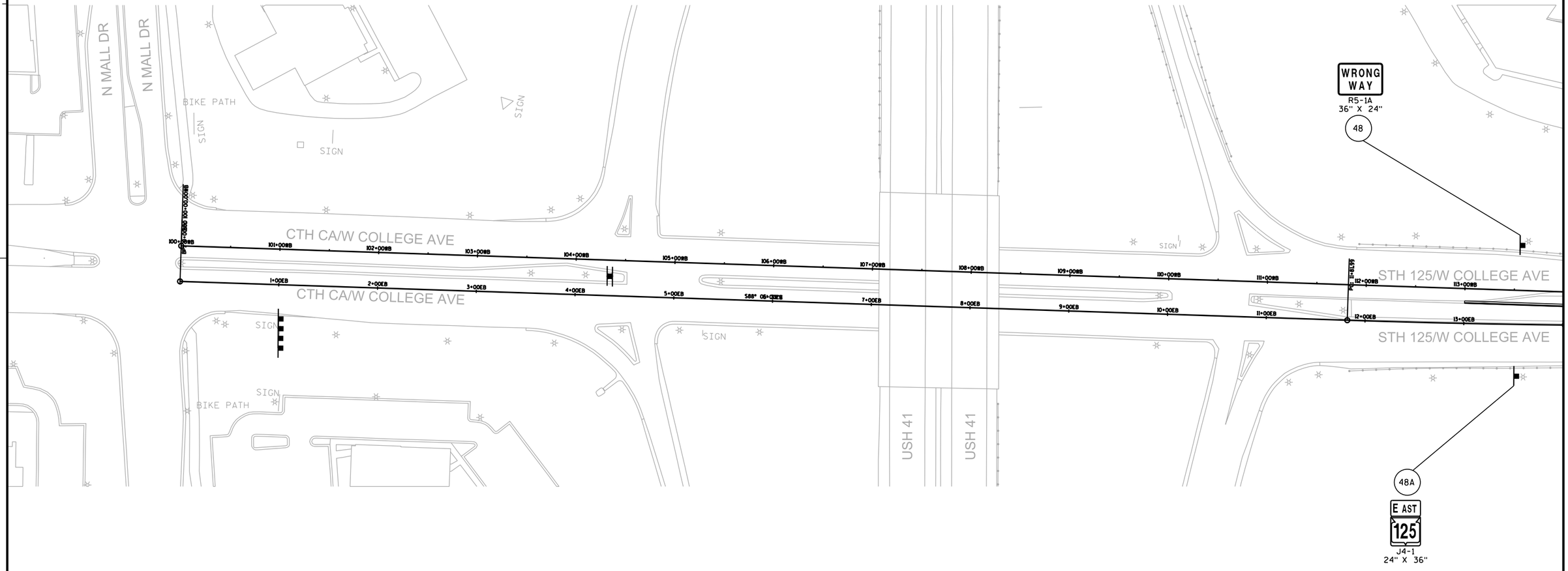

SIGN-REMOVE EXISTING

SIGN-REMOVE AND REPLACE

SIGN-PLACE NEW

PROJECT NO: 4659-15-71	HWY: STH 125	COUNTY: OUTAGAMIE	PERMANENT SIGNING	SHEET 30	E

SIGNING NOTES

WHEN AN EXISTING STOP SIGN AND SUPPORT IS TO BE REMOVED AND A NEW STOP SIGN AND SUPPORT ERECTED THE WORK SHALL BE DONE CONCURRENTLY. FOR OTHER SIGNS AND SUPPORTS THAT ARE TO BE REMOVED AND NEW SIGNS AND SUPPORTS ERECTED, THE REMOVAL OF THE EXISTING SIGN/SUPPORT AND ERECTION OF THE NEW SIGN/SUPPORT SHOULD BE DONE AS CONCURRENTLY AS POSSIBLE. IN NO CASE SHALL A NEW SIGN/SUPPORT BE DOWN FOR MORE THAN 24 HOURS AND THERE SHALL NOT BE MORE THAN ONE SIGN OF THE SAME LEGEND MISSING IN A ROW.

WOOD POSTS SIZES, FOR TYPE II SIGNING, ARE ESTIMATED LENGTHS AND THE ACTUAL LENGTH WILL BE DETERMINED IN THE FIELD.

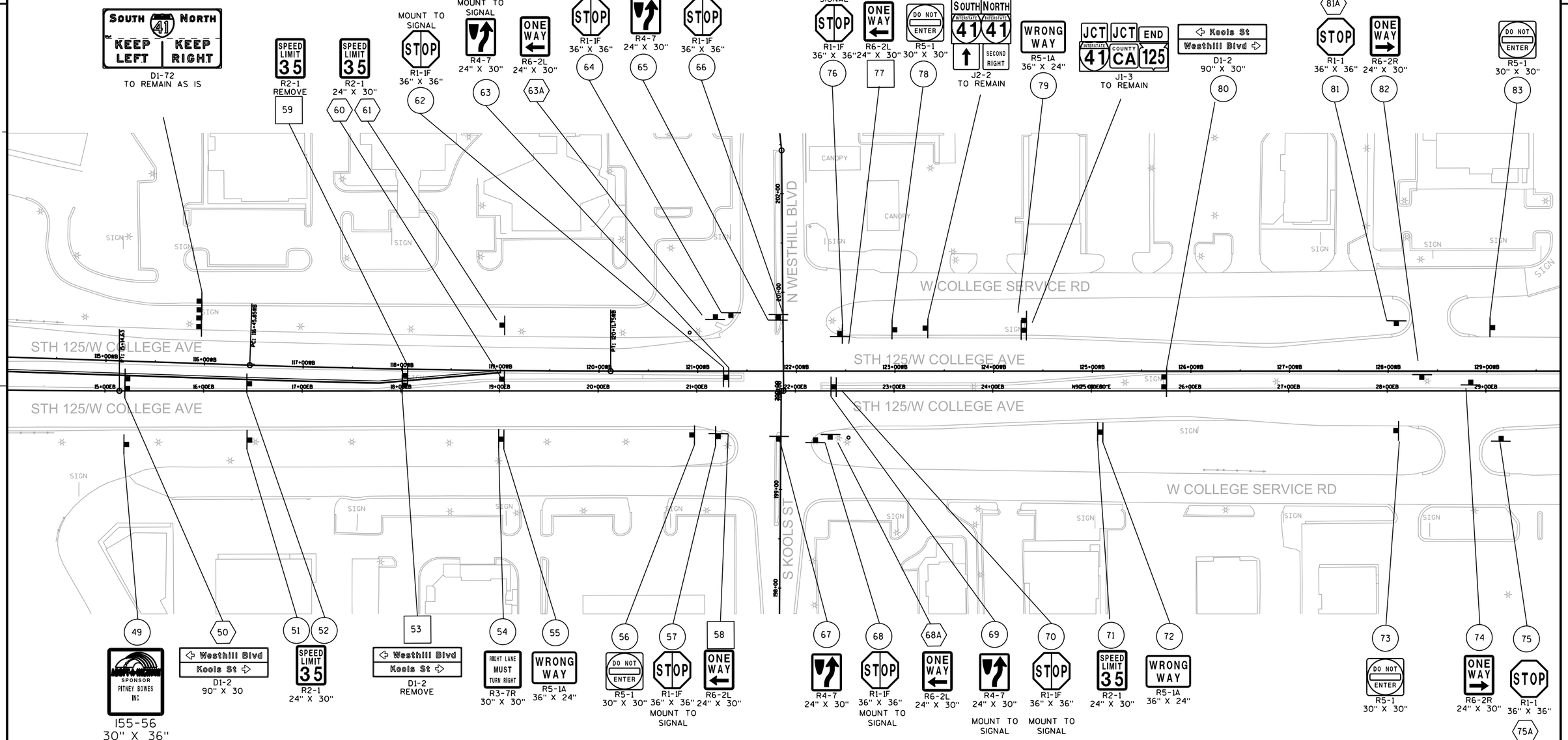

SIGN-REMOVE EXISTING

SIGN-REMOVE AND REPLACE

SIGN-PLACE NEW

PROJECT NO: 4659-15-71	HWY: STH 125	COUNTY: OUTAGAMIE	PERMANENT SIGNING	SHEET 31	E

SIGNING NOTES

WHEN AN EXISTING STOP SIGN AND SUPPORT IS TO BE REMOVED AND A NEW STOP SIGN AND SUPPORT ERECTED THE WORK SHALL BE DONE CONCURRENTLY. FOR OTHER SIGNS AND SUPPORTS THAT ARE TO BE REMOVED AND NEW SIGNS AND SUPPORTS ERECTED, THE REMOVAL OF THE EXISTING SIGN/SUPPORT AND ERECTION OF THE NEW SIGN/SUPPORT SHOULD BE DONE AS CONCURRENTLY AS POSSIBLE. IN NO CASE SHALL A NEW SIGN/SUPPORT BE DOWN FOR MORE THAN 24 HOURS AND THERE SHALL NOT BE MORE THAN ONE SIGN OF THE SAME LEGEND MISSING IN A ROW.

WOOD POSTS SIZES, FOR TYPE II SIGNING, ARE ESTIMATED LENGTHS AND THE ACTUAL LENGTH WILL BE DETERMINED IN THE FIELD.

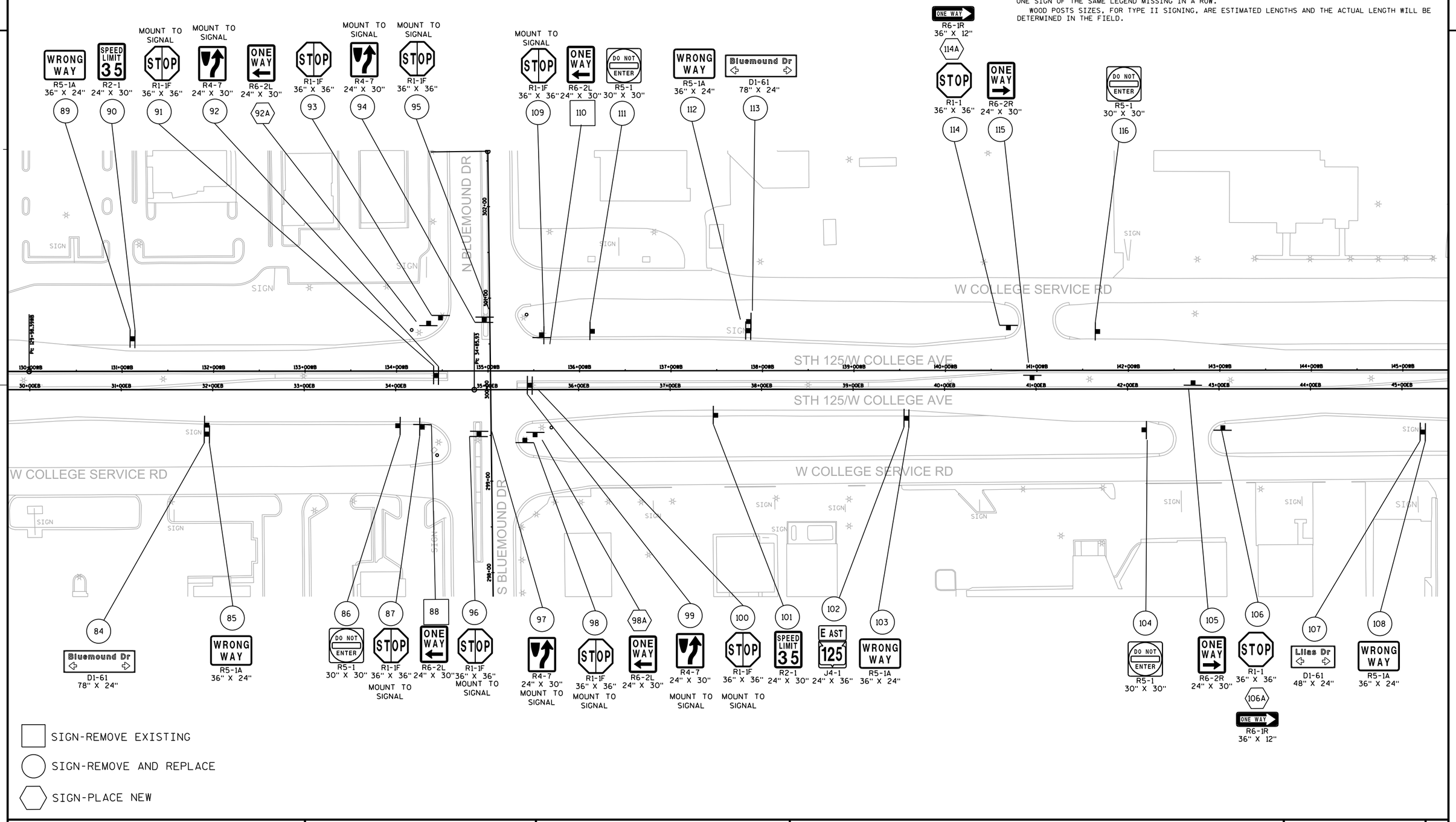

PROJECT NO: 4659-15-71	HWY: STH 125	COUNTY: OUTAGAMIE	PERMANENT SIGNING	SHEET 32	E

SIGNING NOTES

WHEN AN EXISTING STOP SIGN AND SUPPORT IS TO BE REMOVED AND A NEW STOP SIGN AND SUPPORT ERECTED THE WORK SHALL BE DONE CONCURRENTLY. FOR OTHER SIGNS AND SUPPORTS THAT ARE TO BE REMOVED AND NEW SIGNS AND SUPPORTS ERECTED, THE REMOVAL OF THE EXISTING SIGN/SUPPORT AND ERECTION OF THE NEW SIGN/SUPPORT SHOULD BE DONE AS CONCURRENTLY AS POSSIBLE. IN NO CASE SHALL A NEW SIGN/SUPPORT BE DOWN FOR MORE THAN 24 HOURS AND THERE SHALL NOT BE MORE THAN ONE SIGN OF THE SAME LEGEND MISSING IN A ROW.

WOOD POSTS SIZES, FOR TYPE II SIGNING, ARE ESTIMATED LENGTHS AND THE ACTUAL LENGTH WILL BE DETERMINED IN THE FIELD.

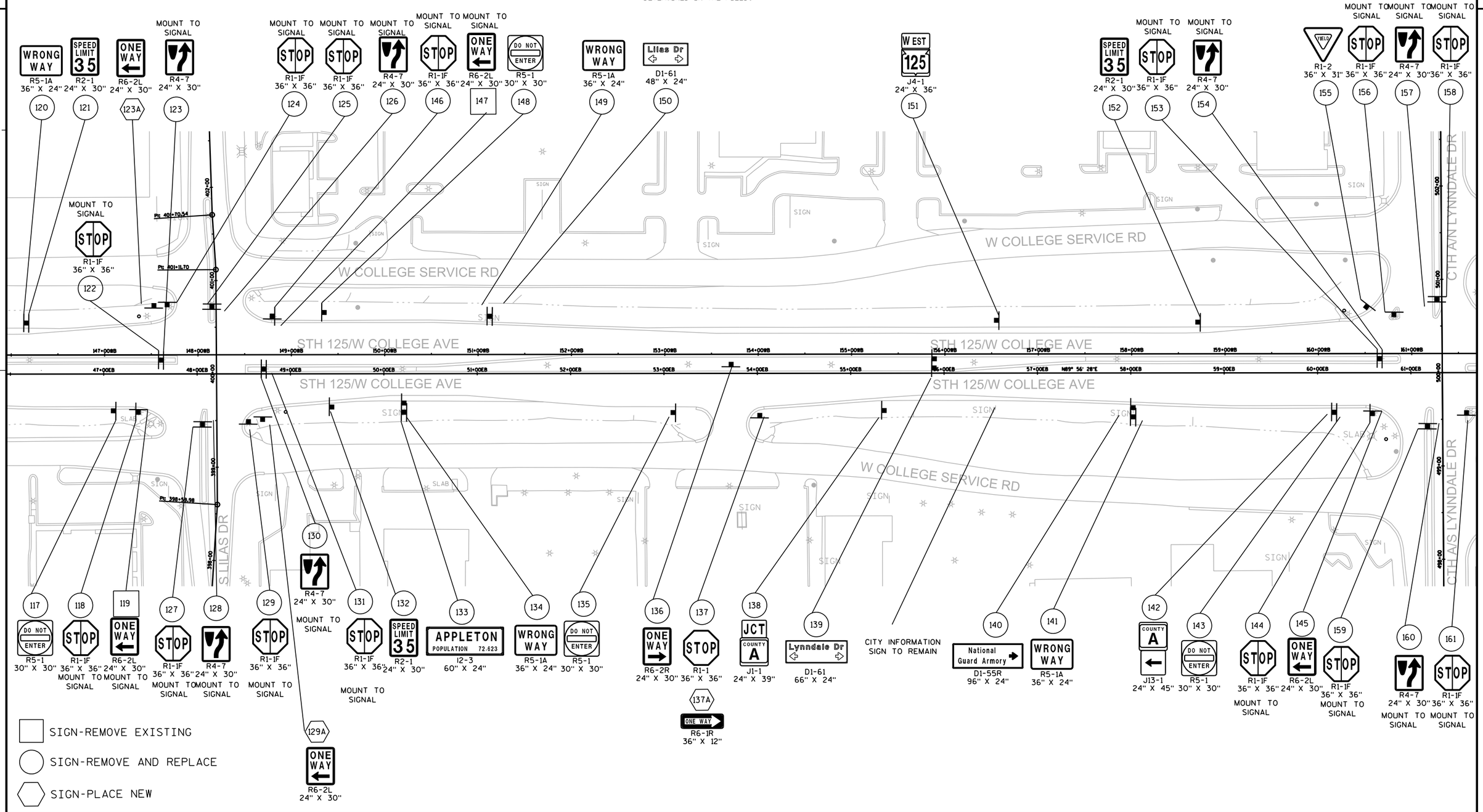

PROJECT NO: 4659-15-71	HWY: STH 125	COUNTY: OUTAGAMIE	PERMANENT SIGNING	SHEET 33	E

SIGNING NOTES

WHEN AN EXISTING STOP SIGN AND SUPPORT IS TO BE REMOVED AND A NEW STOP SIGN AND SUPPORT ERECTED THE WORK SHALL BE DONE CONCURRENTLY. FOR OTHER SIGNS AND SUPPORTS THAT ARE TO BE REMOVED AND NEW SIGNS AND SUPPORTS ERECTED, THE REMOVAL OF THE EXISTING SIGN/SUPPORT AND ERECTION OF THE NEW SIGN/SUPPORT SHOULD BE DONE AS CONCURRENTLY AS POSSIBLE. IN NO CASE SHALL A NEW SIGN/SUPPORT BE DOWN FOR MORE THAN 24 HOURS AND THERE SHALL NOT BE MORE THAN ONE SIGN OF THE SAME LEGEND MISSING IN A ROW.

WOOD POSTS SIZES, FOR TYPE II SIGNING, ARE ESTIMATED LENGTHS AND THE ACTUAL LENGTH WILL BE DETERMINED IN THE FIELD.

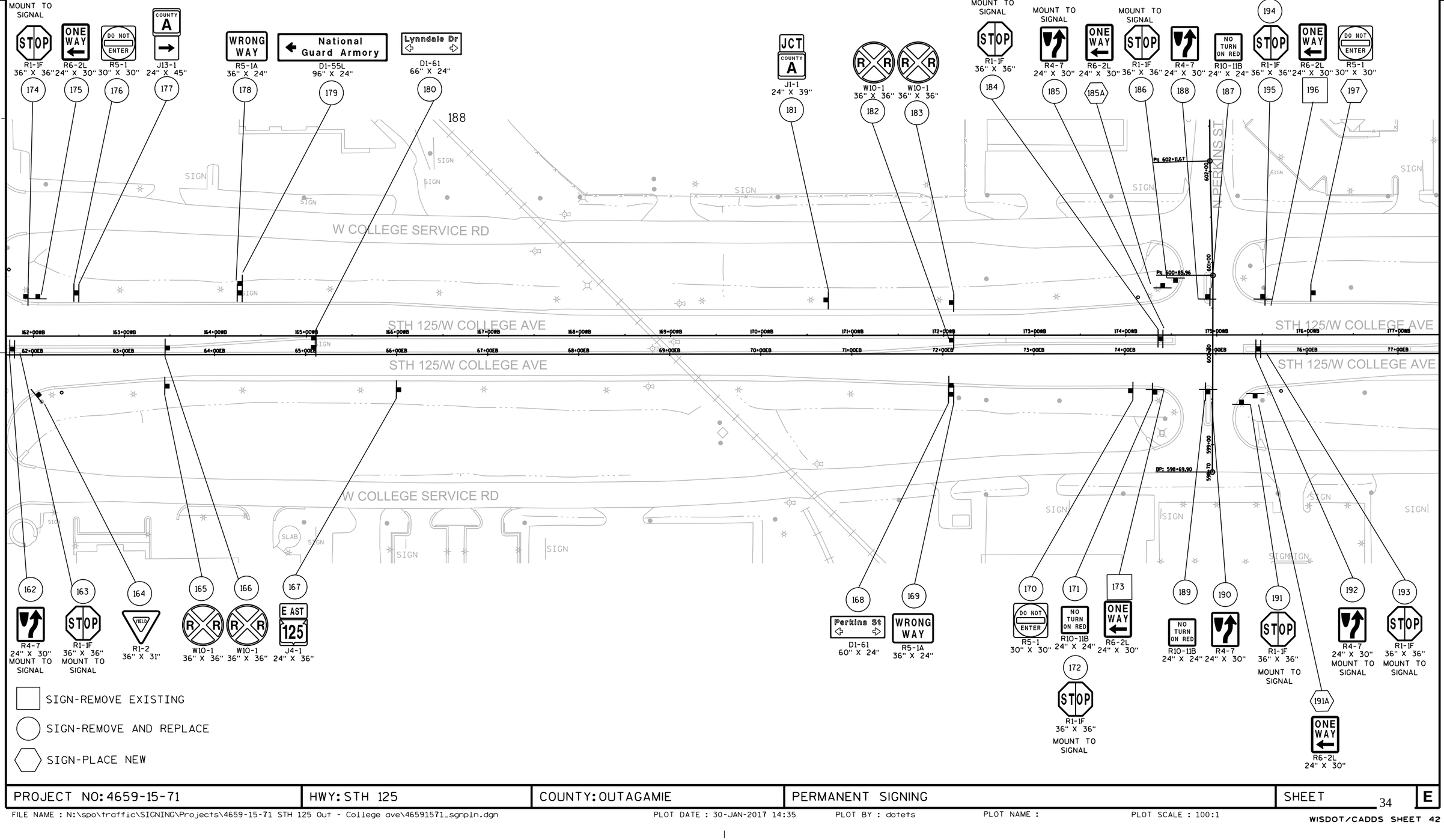

PROJECT NO: 4659-15-71	HWY: STH 125	COUNTY: OUTAGAMIE	PERMANENT SIGNING	SHEET 34	E

SIGNING NOTES

WHEN AN EXISTING STOP SIGN AND SUPPORT IS TO BE REMOVED AND A NEW STOP SIGN AND SUPPORT ERECTED THE WORK SHALL BE DONE CONCURRENTLY. FOR OTHER SIGNS AND SUPPORTS THAT ARE TO BE REMOVED AND NEW SIGNS AND SUPPORTS ERECTED, THE REMOVAL OF THE EXISTING SIGN/SUPPORT AND ERECTION OF THE NEW SIGN/SUPPORT SHOULD BE DONE AS CONCURRENTLY AS POSSIBLE. IN NO CASE SHALL A NEW SIGN/SUPPORT BE DOWN FOR MORE THAN 24 HOURS AND THERE SHALL NOT BE MORE THAN ONE SIGN OF THE SAME LEGEND MISSING IN A ROW.

WOOD POSTS SIZES, FOR TYPE II SIGNING, ARE ESTIMATED LENGTHS AND THE ACTUAL LENGTH WILL BE DETERMINED IN THE FIELD.

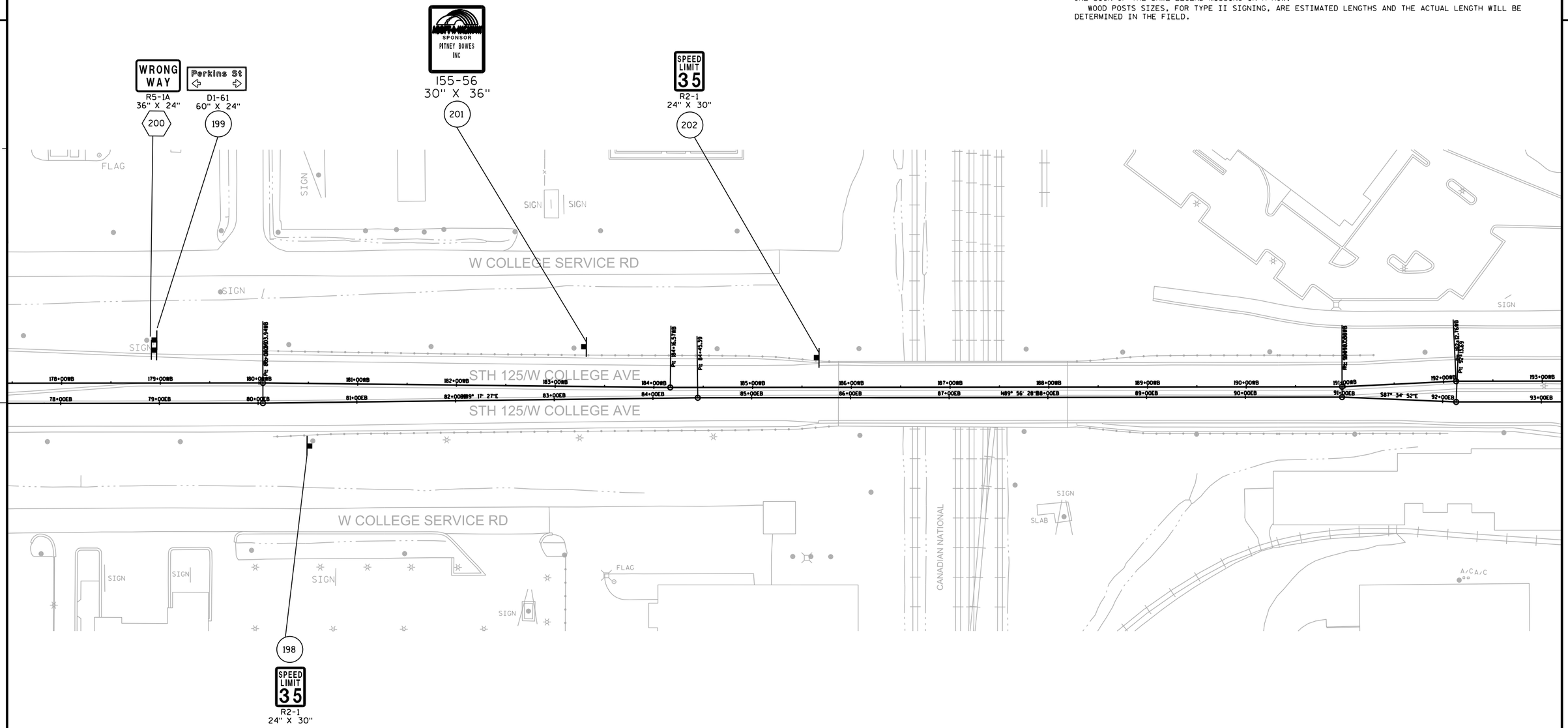

SIGN-REMOVE EXISTING

SIGN-REMOVE AND REPLACE

SIGN-PLACE NEW

PROJECT NO: 4659-15-71	HWY: STH 125	COUNTY: OUTAGAMIE	PERMANENT SIGNING	SHEET 35	E

CONFIGURATION WITH HEAD NUMBERS				
3-VR	3-V	3-VA	5-VL	EVP DETECTOR
R Y G — 28, 29	R Y G — 17, 18, 19, 22, 23, 24, 26, 27, 30, 31	R Y G — 21, 25	R Y G Y G — 16, 20	1 2 4

MONOTUBE STRUCTURE NUMBERS	
SB12	S-44-0047
SB18	S-44-0048

LEGEND

- PULL BOX, 24" x 42"
- PULL BOX, 24" x 36"
- PULL BOX, 12" x 24"
- SIGNAL HEAD NUMBER / MOUNTING CONFIGURATION
- YIELD SIGN
- LUMINAIRE UNDER PERMIT
- OVERHEAD LINES
- EVP DETECTOR
- CONTROL CABINET
- 2" CONDUIT (unless otherwise noted)
- SIGNAL STANDARD, PEDESTAL BASE
- LUMINAIRE
- 35' SIGNAL POLE, MONOTUBE ARM
- LOOP DETECTOR (In 1" Conduit)
- RAMP GATE
- RAMP GATE SOLAR PANEL

IH 41 NB On Ramp

IH 41 NB LANES

STH 125 (College Ave)

35 MPH Posted Speed Limit

WB

9+00EB 10+00EB 111+00WB 112+00WB 113+00WB 114+00WB

12+00EB 13+00EB 14+00EB

SB12 SB13 SB14 SB15 SB16 SB17 SB18 SB19 SB20 SB21 SB22

PB1 PB2

G44-01 G44-03

GATE

Asphalt Grass

Overlap "B" Overlap "D" Overlap "E" Overlap "F"

2-3" TYP 3" TYP 2" TYP 1" TYP

275' TO NEAR RIGHT SIGNAL

2" COMMUNICATIONS CONDUIT TO S44-0331

COMMUNICATIONS PULL BOX APPROX HALFWAY TO S44-0331

NOTE

WISCONSIN DOT NE REGION ELECTRICAL UNIT SHALL APPROVE FINAL LOCATIONS FOR ALL CONCRETE BASES AND LOOP DETECTORS IN THE FIELD PRIOR TO CONSTRUCTION.
THEY MAY BE REACHED AT (920) 492-5654 OR 492-5710.

GENERAL NOTES

THE LOCATION OF EXISTING AND PROPOSED UTILITY INSTALLATIONS AS SHOWN ON THE PLANS ARE APPROXIMATE. THERE MAY BE OTHER UTILITY INSTALLATIONS WITHIN THE PROJECT AREA THAT ARE NOT SHOWN. THE CONTRACTOR SHALL VERIFY THE LOCATIONS OF ALL UTILITIES PRIOR TO CONSTRUCTION.

TRAFFIC CONTROL SIGNAL

IH 41 & STH 125
TOWN OF GRAND CHUTE
OUTAGAMIE COUNTY

SIGNAL NO. 44-0329 SCALE 0 20

DISTRICT CONTACT: RJS
DESIGNED BY: RJS

PAGE 1 OF 1

PROJECT NO: 4659-15-71	HWY: IH 41	COUNTY: OUTAGAMIE	CONSTRUCTION DETAIL - TRAFFIC SIGNAL REVISION	SHEET 36	E

FILE NAME : F:\d3_traffi\S-329,east,lr,const.dgn PLOT DATE : 17-AUG-2016 11:20 PLOT BY : dotc5s PLOT NAME : s-329,east,lr,constPLOT SCALE : 40:1

WISDOT/CADDS SHEET 42

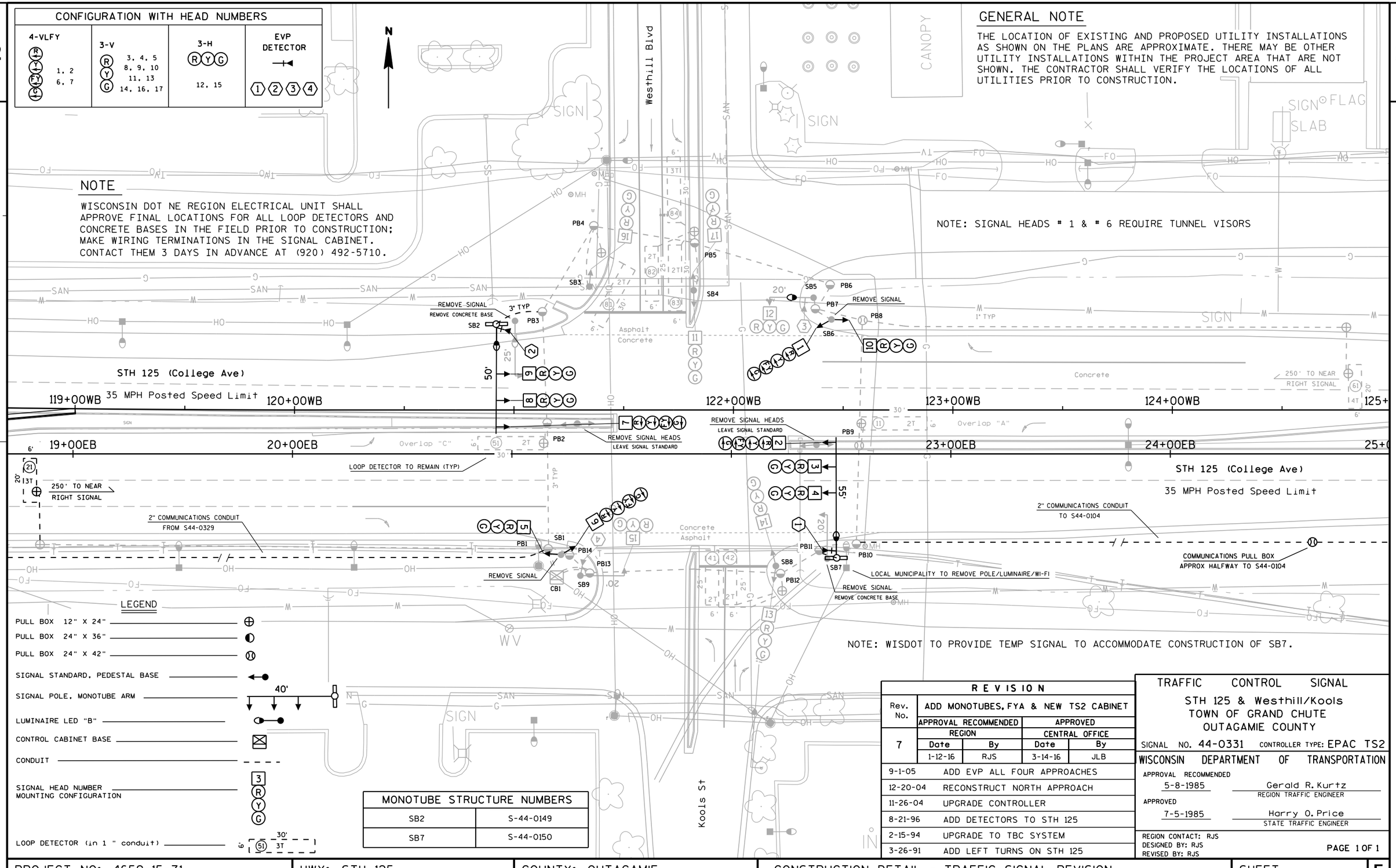

GENERAL NOTE

THE LOCATION OF EXISTING AND PROPOSED UTILITY INSTALLATIONS AS SHOWN ON THE PLANS ARE APPROXIMATE. THERE MAY BE OTHER UTILITY INSTALLATIONS WITHIN THE PROJECT AREA THAT ARE NOT SHOWN. THE CONTRACTOR SHALL VERIFY THE LOCATIONS OF ALL UTILITIES PRIOR TO CONSTRUCTION.

MONOTUBE STRUCTURE NUMBERS	
SB2	S-44-0149
SB7	S-44-0150

REVISION				
Rev. No.	ADD MONOTUBES, FYA & NEW TS2 CABINET			
	APPROVAL RECOMMENDED		APPROVED	
	REGION		CENTRAL OFFICE	
7	Date	By	Date	By
	1-12-16	RJS	3-14-16	JLB
9-1-05	ADD EVP ALL FOUR APPROACHES			
12-20-04	RECONSTRUCT NORTH APPROACH			
11-26-04	UPGRADE CONTROLLER			
8-21-96	ADD DETECTORS TO STH 125			
2-15-94	UPGRADE TO TBC SYSTEM			
3-26-91	ADD LEFT TURNS ON STH 125			

TRAFFIC CONTROL SIGNAL
STH 125 & Westhill/Kools
TOWN OF GRAND CHUTE
OUTAGAMIE COUNTY

SIGNAL NO. 44-0331 CONTROLLER TYPE: EPAC TS2

WISCONSIN DEPARTMENT OF TRANSPORTATION

APPROVAL RECOMMENDED 5-8-1985 Gerald R. Kurtz, REGION TRAFFIC ENGINEER

APPROVED 7-5-1985 Harry O. Price, STATE TRAFFIC ENGINEER

REGION CONTACT: RJS
DESIGNED BY: RJS
REVISED BY: RJS

PAGE 1 OF 1

PROJECT NO: 4659-15-71	HWY: STH 125	COUNTY: OUTAGAMIE	CONSTRUCTION DETAIL - TRAFFIC SIGNAL REVISION	SHEET 37	E

2

GENERAL NOTE

THE LOCATION OF EXISTING AND PROPOSED UTILITY INSTALLATIONS AS SHOWN ON THE PLANS ARE APPROXIMATE. THERE MAY BE OTHER UTILITY INSTALLATIONS WITHIN THE PROJECT AREA THAT ARE NOT SHOWN. THE CONTRACTOR SHALL VERIFY THE LOCATIONS OF ALL UTILITIES PRIOR TO CONSTRUCTION.

CONFIGURATION WITH HEAD NUMBERS

4-VLFY	3-V	EVP DETECTOR
R 1, 2	R 3, 4, 5	1 2 3 4
Y 6, 7	Y 8, 9, 10	
FY 11, 12	G 13, 14, 15	
G 16, 17	18, 19, 20	

MONOTUBE STRUCTURE NUMBERS

SB2	S-44-0151
SB4	S-44-0152
SB6	S-44-0153
SB8	S-44-0154

NOTE

WISCONSIN DOT NE REGION ELECTRICAL UNIT SHALL APPROVE FINAL LOCATIONS FOR ALL LOOP DETECTORS AND CONCRETE BASES IN THE FIELD PRIOR TO CONSTRUCTION; MAKE WIRING TERMINATIONS IN THE SIGNAL CABINET. CONTACT THEM 3 DAYS IN ADVANCE AT (920) 492-5710.

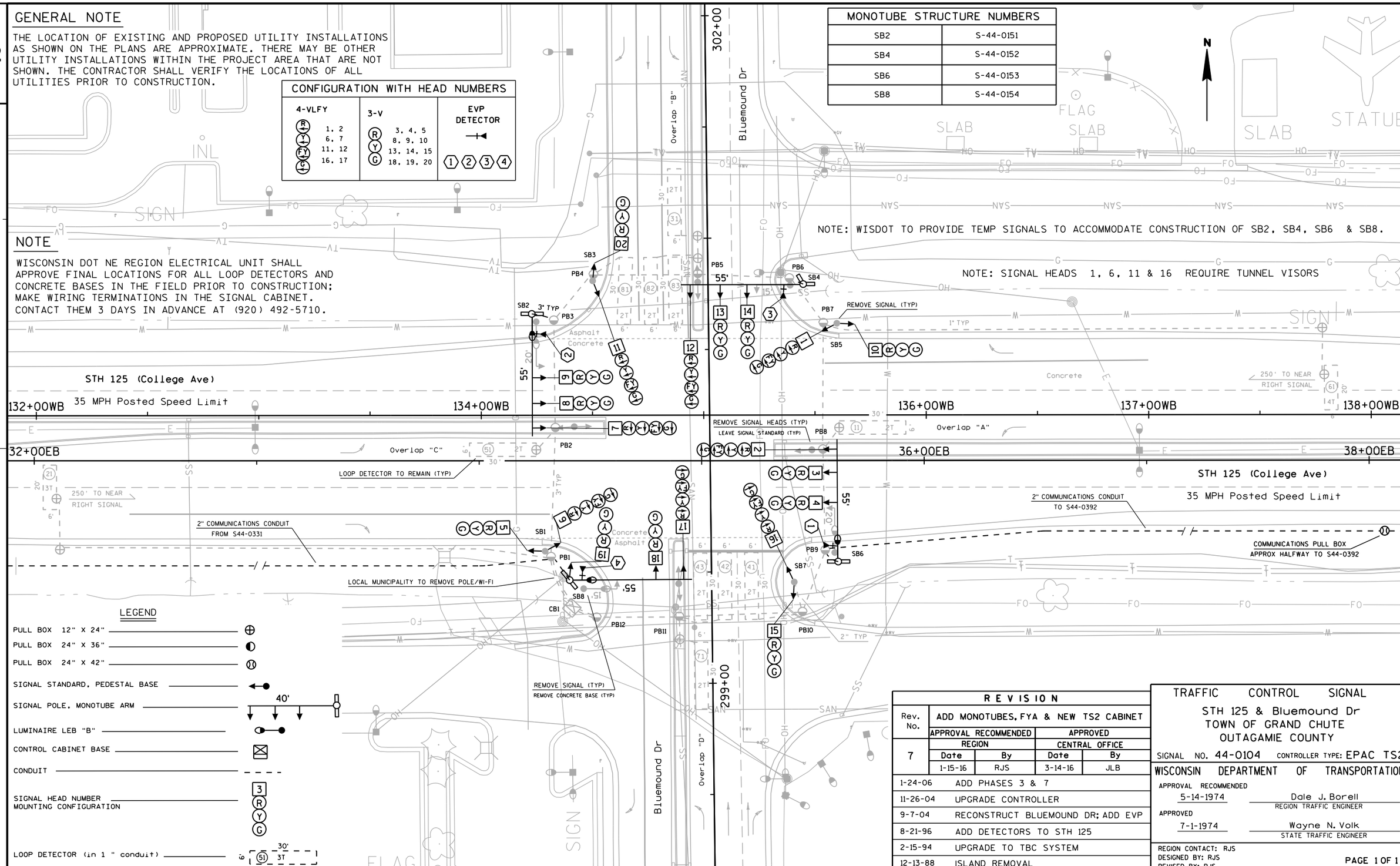

NOTE: WISDOT TO PROVIDE TEMP SIGNALS TO ACCOMMODATE CONSTRUCTION OF SB2, SB4, SB6 & SB8.

NOTE: SIGNAL HEADS 1, 6, 11 & 16 REQUIRE TUNNEL VISORS

LEGEND

- PULL BOX 12" X 24"
- PULL BOX 24" X 36"
- PULL BOX 24" X 42"
- SIGNAL STANDARD, PEDESTAL BASE
- SIGNAL POLE, MONOTUBE ARM (40')
- LUMINAIRE LEB "B"
- CONTROL CABINET BASE
- CONDUIT
- SIGNAL HEAD NUMBER MOUNTING CONFIGURATION (3, R, Y, G)
- LOOP DETECTOR (in 1 " conduit) (51, 3T, 30')

REVISION

Rev. No.	ADD MONOTUBES, FYA & NEW TS2 CABINET			
	APPROVAL RECOMMENDED		APPROVED	
	REGION		CENTRAL OFFICE	
7	Date	By	Date	By
	1-15-16	RJS	3-14-16	JLB
1-24-06	ADD PHASES 3 & 7			
11-26-04	UPGRADE CONTROLLER			
9-7-04	RECONSTRUCT BLUEMOUND DR; ADD EVP			
8-21-96	ADD DETECTORS TO STH 125			
2-15-94	UPGRADE TO TBC SYSTEM			
12-13-88	ISLAND REMOVAL			

TRAFFIC CONTROL SIGNAL
STH 125 & Bluemound Dr
TOWN OF GRAND CHUTE
OUTAGAMIE COUNTY

SIGNAL NO. 44-0104 CONTROLLER TYPE: EPAC TS2

WISCONSIN DEPARTMENT OF TRANSPORTATION

APPROVAL RECOMMENDED 5-14-1974 — Dale J. Borell, REGION TRAFFIC ENGINEER

APPROVED 7-1-1974 — Wayne N. Volk, STATE TRAFFIC ENGINEER

REGION CONTACT: RJS
DESIGNED BY: RJS
REVISED BY: RJS

PAGE 1 OF 1

PROJECT NO: 4659-15-71	HWY: STH 125	COUNTY: OUTAGAMIE	CONSTRUCTION DETAIL - TRAFFIC SIGNAL REVISION	SHEET 38	E

FILE NAME : F:\d3_traffi\S-104,rev7,const.dgn PLOT DATE : 19-AUG-2016 09:50 PLOT BY : dotc5s PLOT NAME : S-104,rev7,const PLOT SCALE : 40:1

WISDOT/CADDS SHEET 42

CONFIGURATION WITH HEAD NUMBERS			
4-VLFY	3-V	3-H	EVP DETECTOR
1, 2 6, 7	3, 4, 5 8, 9, 10 11, 13, 14 15, 17, 18	12, 16	① ② ③ ④

MONOTUBE STRUCTURE NUMBERS	
SB2	S-44-0155
SB7	S-44-0156

NOTE

WISCONSIN DOT NE REGION ELECTRICAL UNIT SHALL APPROVE FINAL LOCATIONS FOR ALL LOOP DETECTORS AND CONCRETE BASES IN THE FIELD PRIOR TO CONSTRUCTION; MAKE WIRING TERMINATIONS IN THE SIGNAL CABINET. CONTACT THEM 3 DAYS IN ADVANCE AT (920) 492-5710.

GENERAL NOTE

THE LOCATION OF EXISTING AND PROPOSED UTILITY INSTALLATIONS AS SHOWN ON THE PLANS ARE APPROXIMATE. THERE MAY BE OTHER UTILITY INSTALLATIONS WITHIN THE PROJECT AREA THAT ARE NOT SHOWN. THE CONTRACTOR SHALL VERIFY THE LOCATIONS OF ALL UTILITIES PRIOR TO CONSTRUCTION.

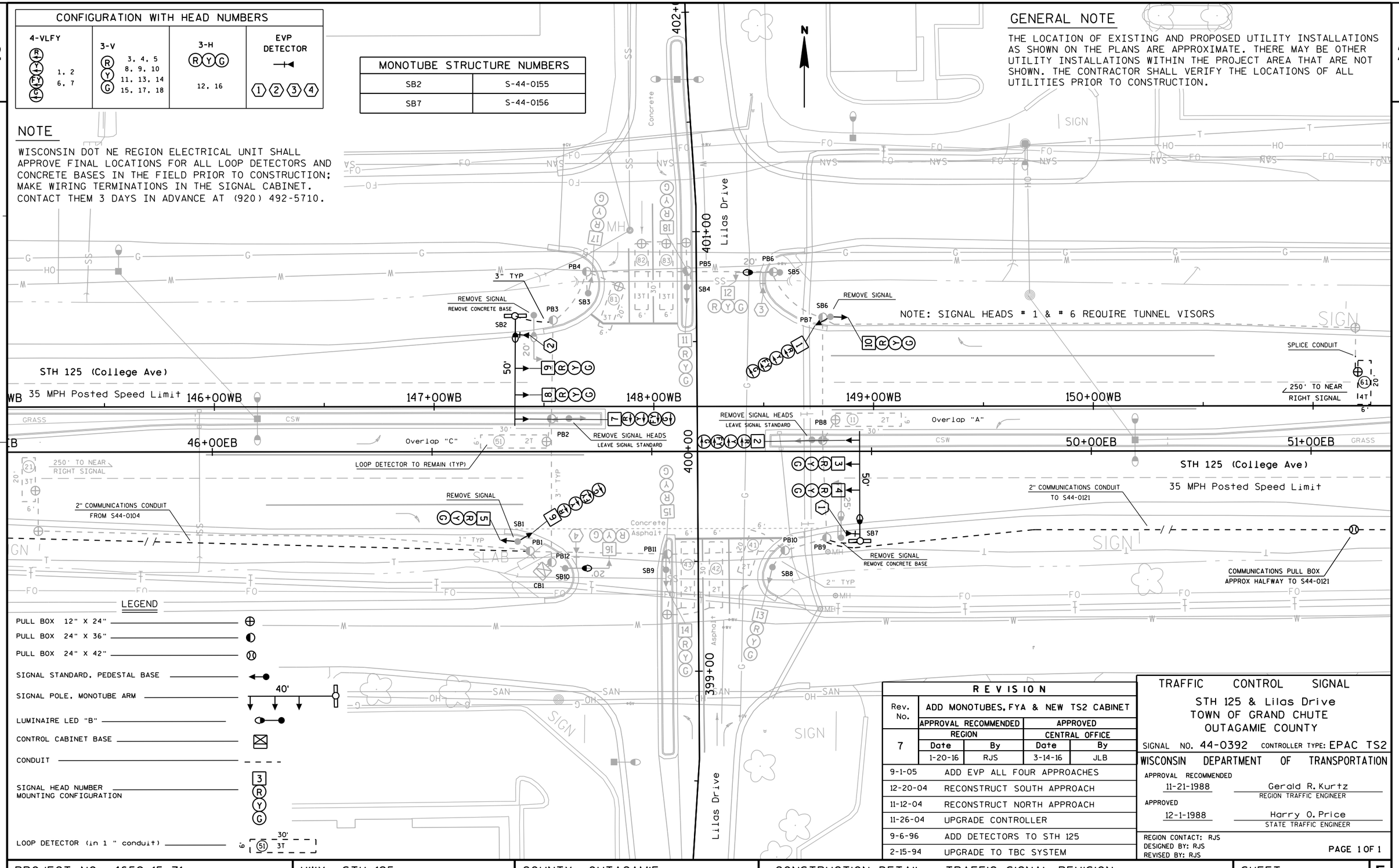

LEGEND

- PULL BOX 12" X 24"
- PULL BOX 24" X 36"
- PULL BOX 24" X 42"
- SIGNAL STANDARD, PEDESTAL BASE
- SIGNAL POLE, MONOTUBE ARM — 40'
- LUMINAIRE LED "B"
- CONTROL CABINET BASE
- CONDUIT
- SIGNAL HEAD NUMBER MOUNTING CONFIGURATION — 3 R Y G
- LOOP DETECTOR (in 1 " conduit) — 6' 30' 3T

REVISION				
Rev. No.	ADD MONOTUBES, FYA & NEW TS2 CABINET			
	APPROVAL RECOMMENDED		APPROVED	
	REGION		CENTRAL OFFICE	
7	Date	By	Date	By
	1-20-16	RJS	3-14-16	JLB
9-1-05	ADD EVP ALL FOUR APPROACHES			
12-20-04	RECONSTRUCT SOUTH APPROACH			
11-12-04	RECONSTRUCT NORTH APPROACH			
11-26-04	UPGRADE CONTROLLER			
9-6-96	ADD DETECTORS TO STH 125			
2-15-94	UPGRADE TO TBC SYSTEM			

TRAFFIC CONTROL SIGNAL

STH 125 & Lilas Drive
TOWN OF GRAND CHUTE
OUTAGAMIE COUNTY

SIGNAL NO. 44-0392 CONTROLLER TYPE: EPAC TS2

WISCONSIN DEPARTMENT OF TRANSPORTATION

APPROVAL RECOMMENDED
11-21-1988 — Gerald R. Kurtz, REGION TRAFFIC ENGINEER

APPROVED
12-1-1988 — Harry O. Price, STATE TRAFFIC ENGINEER

REGION CONTACT: RJS
DESIGNED BY: RJS
REVISED BY: RJS

PAGE 1 OF 1

PROJECT NO: 4659-15-71	HWY: STH 125	COUNTY: OUTAGAMIE	CONSTRUCTION DETAIL - TRAFFIC SIGNAL REVISION	SHEET 39 E

FILE NAME : F:\d3_traffi\S-392,rev7,const.dgn PLOT DATE : 09-SEP-2016 12:48 PLOT BY : dotc5s PLOT NAME : S-392,rev7,const PLOT SCALE : 40:1

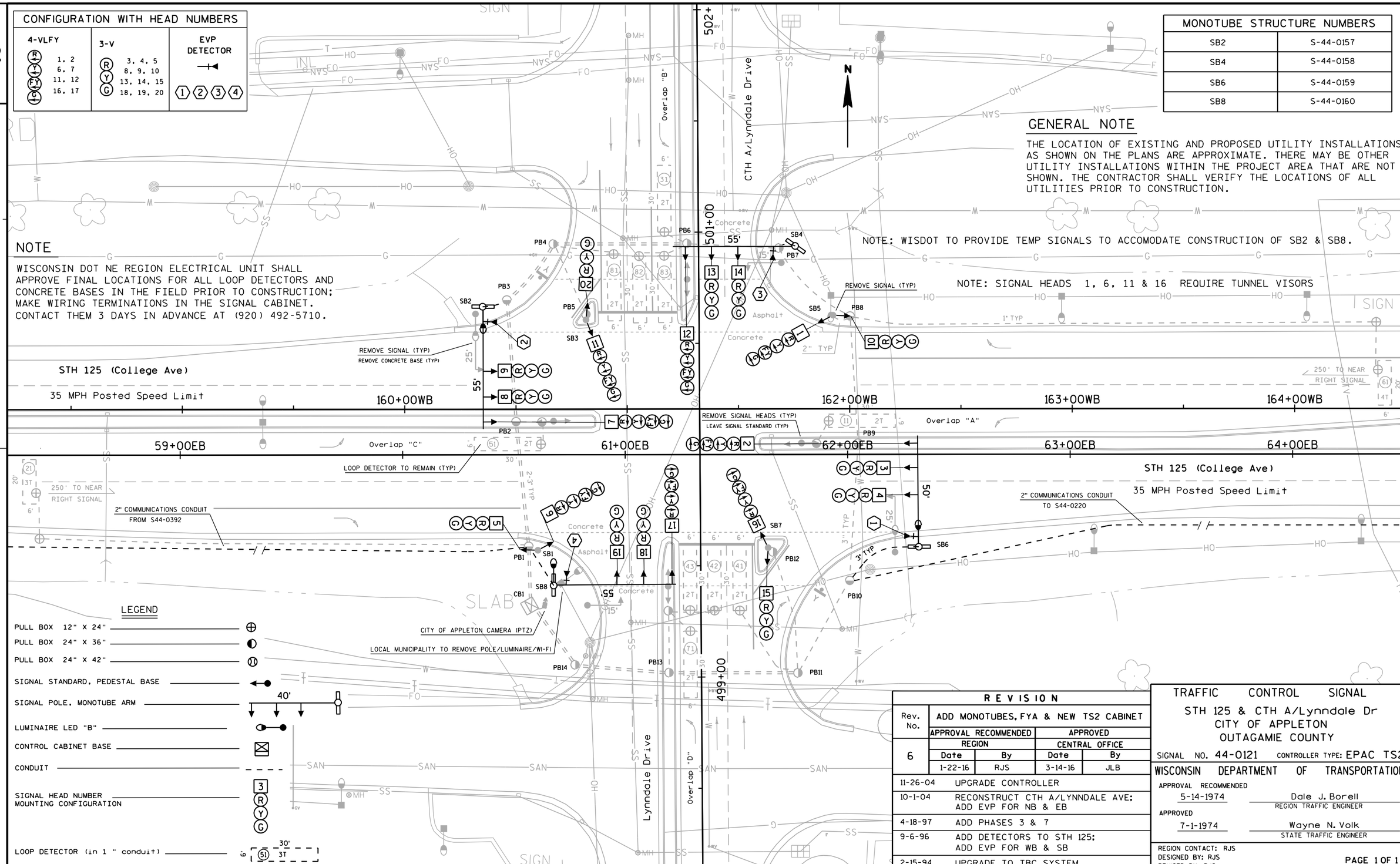

REVISION				
Rev. No.	ADD MONOTUBES, FYA & NEW TS2 CABINET			
	APPROVAL RECOMMENDED		APPROVED	
	REGION		CENTRAL OFFICE	
6	Date	By	Date	By
	1-22-16	RJS	3-14-16	JLB
11-26-04	UPGRADE CONTROLLER			
10-1-04	RECONSTRUCT CTH A/LYNNDALE AVE; ADD EVP FOR NB & EB			
4-18-97	ADD PHASES 3 & 7			
9-6-96	ADD DETECTORS TO STH 125; ADD EVP FOR WB & SB			
2-15-94	UPGRADE TO TBC SYSTEM			

TRAFFIC CONTROL SIGNAL
STH 125 & CTH A/Lynndale Dr
CITY OF APPLETON
OUTAGAMIE COUNTY

SIGNAL NO. 44-0121 CONTROLLER TYPE: EPAC TS2

WISCONSIN DEPARTMENT OF TRANSPORTATION

APPROVAL RECOMMENDED 5-14-1974 Dale J. Borell, REGION TRAFFIC ENGINEER

APPROVED 7-1-1974 Wayne N. Volk, STATE TRAFFIC ENGINEER

REGION CONTACT: RJS
DESIGNED BY: RJS
REVISED BY: RJS

PAGE 1 OF 1

PROJECT NO: 4659-15-71	HWY: STH 125	COUNTY: OUTAGAMIE	CONSTRUCTION DETAIL - TRAFFIC SIGNAL REVISION	SHEET 40	E

FILE NAME : F:\d3_traffi\S-121,rev6,const.dgn PLOT DATE : 19-SEP-2016 11:20 PLOT BY : dotc5s PLOT NAME : S-121,rev6,const PLOT SCALE : 40:1

WISDOT/CADDS SHEET 42

GENERAL NOTE

THE LOCATION OF EXISTING AND PROPOSED UTILITY INSTALLATIONS AS SHOWN ON THE PLANS ARE APPROXIMATE. THERE MAY BE OTHER UTILITY INSTALLATIONS WITHIN THE PROJECT AREA THAT ARE NOT SHOWN. THE CONTRACTOR SHALL VERIFY THE LOCATIONS OF ALL UTILITIES PRIOR TO CONSTRUCTION.

2

2

N

SIGN

College Ave North Frontage Rd

STH 125 (College Ave)
to Lynndale Drive

167+00WB | 168+00WB | 169+00WB | 170+00WB | 171+00WB | 172+00WB

67+00EB | 68+00EB | 69+00EB | 70+00EB | 71+00EB | 72+00EB

STH 125 (College Ave)
to Perkins Street

2" COMMUNICATIONS CONDUIT

WE-ENERGIES STREET LIGHT (TYP)

RR SIGNAL

RAILROAD R/W

COMMUNICATIONS PULL BOX

15' MIN

2" SPECIAL

2" CONDUIT SHALL BE A MINIMUM OF 6' BELOW RR R/W

15' MIN

2" CONDUIT SHALL BE 8' BELOW TRACKS

COMMUNICATIONS PULL BOX

2" COMMUNICATIONS CONDUIT

250' TO NEAR RIGHT SIGNAL

RAILROAD R/W

RR BUNGALOW

1_195_4
791.17

College Ave South Frontage Rd

PROJECT NO: 4659-15-71	HWY: STH 125	COUNTY: OUTAGAMIE	CONSTRUCTION DETAIL - COMMUNICATIONS CONDUIT AT RR CROSSING	SHEET 41	E

FILE NAME : F:\d3_traffi\S-121,rev6,RR.dgn PLOT DATE : 21-OCT-2016 06:57 PLOT BY : dotc5s PLOT NAME : S-121,rev6,RR PLOT SCALE : 40:1

WISDOT/CADDS SHEET 42

2

CONFIGURATION WITH HEAD NUMBERS		
4-VLFY	3-V	3-H
R Y FY G: 1, 2, 6, 7	R Y G: 3, 4, 5, 8, 9, 10, 11, 13, 14, 16	R Y G: 12, 15

NOTE

WISCONSIN DOT NE REGION ELECTRICAL UNIT SHALL APPROVE FINAL LOCATIONS FOR ALL LOOP DETECTORS AND CONCRETE BASES IN THE FIELD PRIOR TO CONSTRUCTION; MAKE WIRING TERMINATIONS IN THE SIGNAL CABINET. CONTACT THEM 3 DAYS IN ADVANCE AT (920) 492-5710.

GENERAL NOTE

THE LOCATION OF EXISTING AND PROPOSED UTILITY INSTALLATIONS AS SHOWN ON THE PLANS ARE APPROXIMATE. THERE MAY BE OTHER UTILITY INSTALLATIONS WITHIN THE PROJECT AREA THAT ARE NOT SHOWN. THE CONTRACTOR SHALL VERIFY THE LOCATIONS OF ALL UTILITIES PRIOR TO CONSTRUCTION.

MONOTUBE STRUCTURE NUMBERS	
SB2	S-44-0161
SB6	S-44-0162

2

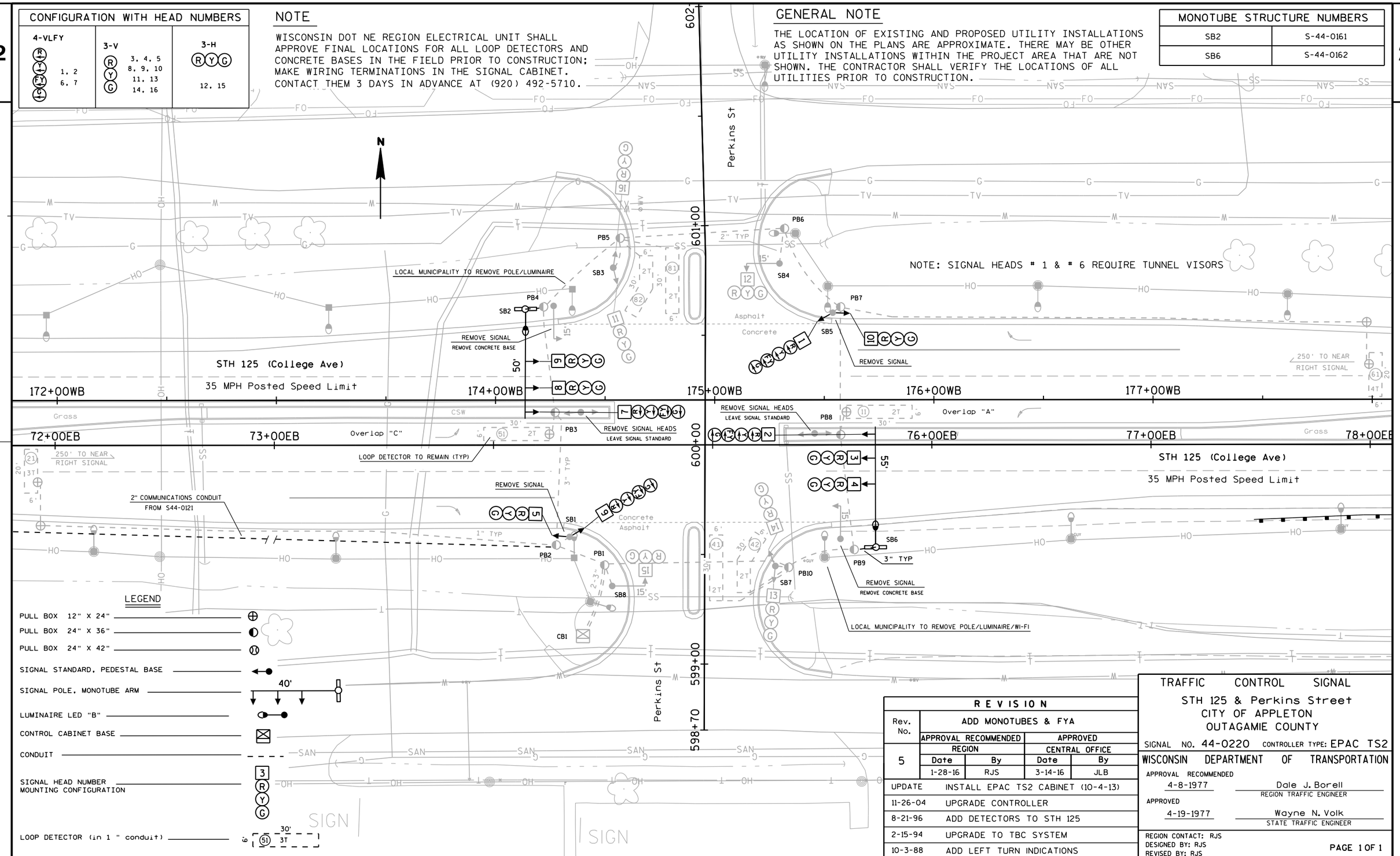

LEGEND

- PULL BOX 12" X 24"
- PULL BOX 24" X 36"
- PULL BOX 24" X 42"
- SIGNAL STANDARD, PEDESTAL BASE
- SIGNAL POLE, MONOTUBE ARM (40')
- LUMINAIRE LED "B"
- CONTROL CABINET BASE
- CONDUIT
- SIGNAL HEAD NUMBER MOUNTING CONFIGURATION (3 R Y G)
- LOOP DETECTOR (in 1 " conduit) (51) 3T 30' 6'

REVISION				
Rev. No.	ADD MONOTUBES & FYA			
	APPROVAL RECOMMENDED		APPROVED	
	REGION		CENTRAL OFFICE	
5	Date	By	Date	By
	1-28-16	RJS	3-14-16	JLB
UPDATE	INSTALL EPAC TS2 CABINET (10-4-13)			
11-26-04	UPGRADE CONTROLLER			
8-21-96	ADD DETECTORS TO STH 125			
2-15-94	UPGRADE TO TBC SYSTEM			
10-3-88	ADD LEFT TURN INDICATIONS			

TRAFFIC CONTROL SIGNAL
STH 125 & Perkins Street
CITY OF APPLETON
OUTAGAMIE COUNTY

SIGNAL NO. 44-0220 CONTROLLER TYPE: EPAC TS2

WISCONSIN DEPARTMENT OF TRANSPORTATION

APPROVAL RECOMMENDED 4-8-1977 — Dale J. Borell, REGION TRAFFIC ENGINEER

APPROVED 4-19-1977 — Wayne N. Volk, STATE TRAFFIC ENGINEER

REGION CONTACT: RJS
DESIGNED BY: RJS
REVISED BY: RJS

PAGE 1 OF 1

PROJECT NO: 4659-15-71	HWY: STH 125	COUNTY: OUTAGAMIE	CONSTRUCTION DETAIL - TRAFFIC SIGNAL REVISION	SHEET 42	E

FILE NAME : F:\d3_traffi\S-220,rev5,const.dgn PLOT DATE : 24-AUG-2016 09:52 PLOT BY : dotc5s PLOT NAME : S-220,rev5,const PLOT SCALE : 40:1

WISDOT/CADDS SHEET 42

2

2

N

EPOXY 8-INCH (WHITE) "CHANNELIZING LINE"

EPOXY 4-INCH (WHITE) "LANE LINE" (12.5 LINE, 37.5' GAP)

EPOXY 4-INCH (WHITE) "EDGE LINE"

EPOXY 8-INCH (WHITE) "CHANNELIZING LINE"

111+00 WB 112+00 WB 113+00 WB 114+00 WB 115+00 WB 116+00 WB 117+00 WB 118+00 WB

11+00 EB 12+00 EB 13+00 EB 14+00 EB 15+00 EB 16+00 EB 17+00 EB 18+00 EB

STH 125 COLLEGE AVENUE

EPOXY 4-INCH (YELLOW) "EDGE LINE"

EPOXY 4-INCH (WHITE) "EDGE LINE"

EPOXY 4-INCH (WHITE) "LANE LINE" (12.5 LINE, 37.5' GAP)

EPOXY 8-INCH (WHITE) "DROP LANE LINE" (3' LINE, 9' GAP)

EPOXY 8-INCH (WHITE) "LANE LINE EXTENSION" (2' LINE, 6' GAP)

ARROWS EPOXY TYPE 2 (WHITE)

WORDS EPOXY "ONLY" (WHITE)

ARROWS EPOXY TYPE 2 (WHITE)

INL

MH

W

FLAG

MH

T114
773.200

MH

MH

MUD CREEK

1_201_4
773.34

PROJECT NO: 4659-15-71	HWY: STH 125	COUNTY: OUTAGAMIE	PAVEMENT MARKING	SHEET 43 E

FILE NAME : J:\JOBS2013\20132040\CAD\TRANSPORTATION\DWG\SHEETSPLAN\024501-PM.DWG
LAYOUT NAME - 024501

PLOT DATE : 9/2/2016 9:40 AM PLOT BY : WORECK, CHRIS PLOT NAME : PLOT SCALE : 1 IN:50 FT

WISDOT/CADDS SHEET 42

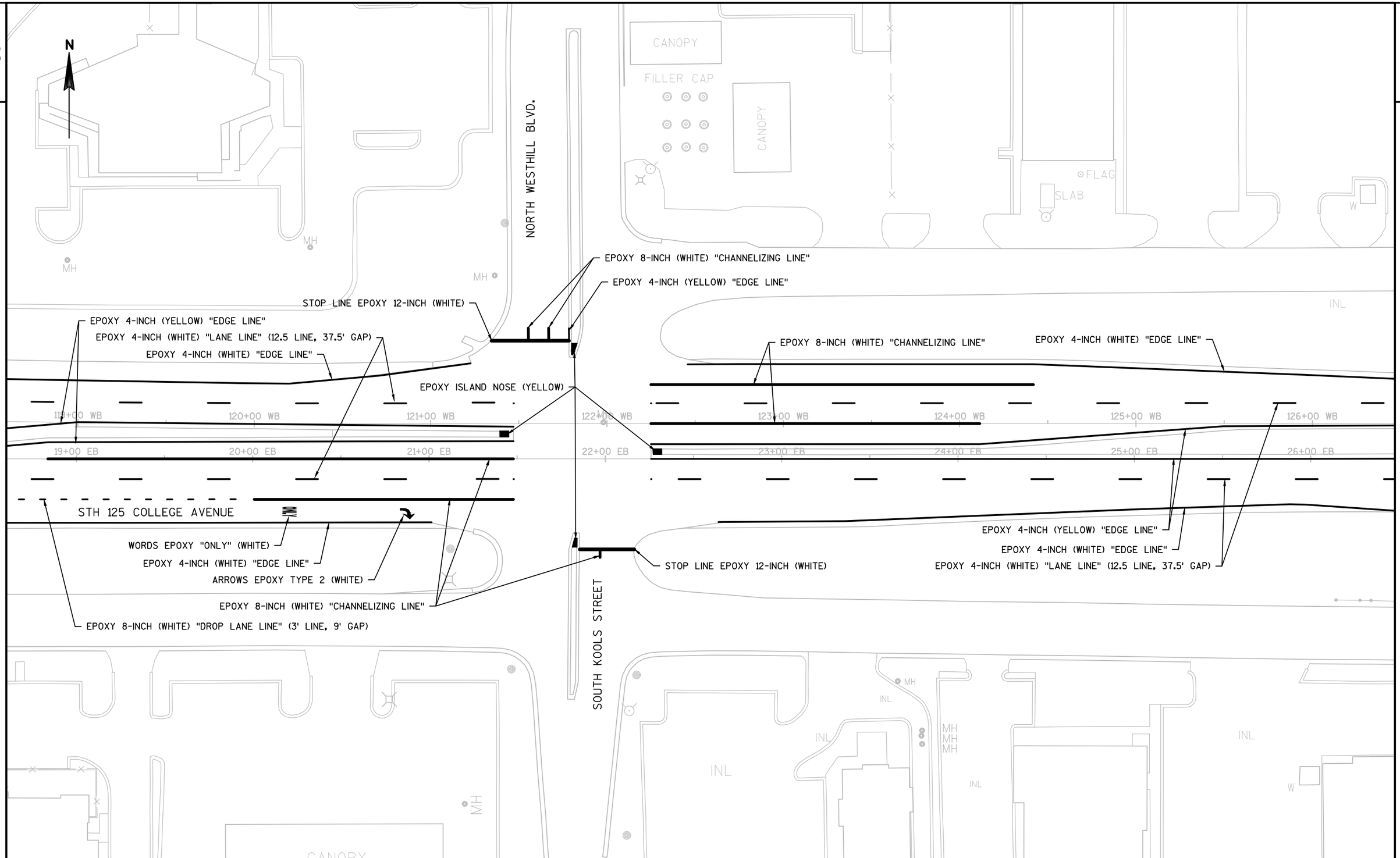

PROJECT NO:4659-15-71	HWY:STH 125	COUNTY:OUTAGAMIE	PAVEMENT MARKING	SHEET 44	E

2

N

INL

EPOXY 4-INCH (YELLOW) "DOUBLE YELLOW"
STOP LINE EPOXY 12-INCH (WHITE)
EPOXY 4-INCH (YELLOW) "EDGE LINE"
EPOXY 4-INCH (WHITE) "EDGE LINE"
EPOXY 8-INCH (WHITE) "CHANNELIZING LINE"
EPOXY 4-INCH (WHITE) "EDGE LINE"
EPOXY 4-INCH (WHITE) "LANE LINE" (12.5 LINE, 37.5' GAP)

127+00 WB 128+00 WB 129+00 WB 130+00 WB 131+00 WB 132+00 WB 133+00 WB 134+00 WB

STH 125 COLLEGE AVENUE

27+00 EB 28+00 EB 29+00 EB 30+00 EB 31+00 EB 32+00 EB 33+00 EB 34+00 EB

EPOXY 8-INCH (WHITE) "CHANNELIZING LINE"
EPOXY 4-INCH (WHITE) "EDGE LINE"
EPOXY 4-INCH (WHITE) "EDGE LINE"
STOP LINE EPOXY 12-INCH (WHITE)
EPOXY 4-INCH (YELLOW) "DOUBLE YELLOW"
EPOXY 8-INCH (WHITE) "CHANNELIZING LINE"
EPOXY 8-INCH (WHITE) "CHANNELIZING LINE"

INL FLAG

PROJECT NO: 4659-15-71	HWY: STH 125	COUNTY: OUTAGAMIE	PAVEMENT MARKING	SHEET 45 E

FILE NAME : J:\JOBS2013\20132040\CAD\TRANSPORTATION\DWG\SHEETSPLAN\024501-PM.DWG
LAYOUT NAME - 024503

PLOT DATE : 9/2/2016 9:40 AM PLOT BY : WORECK, CHRIS PLOT NAME : PLOT SCALE : 1 IN:50 FT

2

N

NORTH BLUEMOUND DRIVE

MH

SLAB

FLAG

SLAB

INL

BLEACHERS

MH

INL

W

STATUE

SLAB

MH

MH

EPOXY 4-INCH (WHITE) "EDGE LINE"

EPOXY 4-INCH (YELLOW) "EDGE LINE"

EPOXY 4-INCH (WHITE) "LANE LINE" (12.5 LINE, 37.5' GAP)

STOP LINE EPOXY 12-INCH (WHITE)

EPOXY 8-INCH (WHITE) "CHANNELIZING LINE"

EPOXY 4-INCH (YELLOW) "EDGE LINE"

SERVICE ROAD

EPOXY 4-INCH (WHITE) "EDGE LINE"

EPOXY 4-INCH (WHITE) "LANE LINE" (12.5 LINE, 37.5' GAP)

EPOXY 8-INCH (WHITE) "CHANNELIZING LINE"

EPOXY 4-INCH (WHITE) "EDGE LINE"

EPOXY 4-INCH (YELLOW) "DOUBLE YELLOW"

EPOXY ISLAND NOSE (YELLOW)

STH 125 COLLEGE AVENUE

STOP LINE EPOXY 12-INCH (WHITE)

WB 135+00 WB 136+00 WB 137+00 WB 138+00 WB 139+00 WB 140+00 WB 141+00 WB 142

EB 35+00 EB 36+00 EB 37+00 EB 38+00 EB 39+00 EB 40+00 EB 41+00 EB 42

STOP LINE EPOXY 12-INCH (WHITE)

EPOXY 8-INCH (WHITE) "CHANNELIZING LINE"

EPOXY 4-INCH (YELLOW) "EDGE LINE"

EPOXY 4-INCH (WHITE) "LANE LINE" (12.5 LINE, 37.5' GAP)

EPOXY 8-INCH (WHITE) "CHANNELIZING LINE"

EPOXY 4-INCH (WHITE) "EDGE LINE"

EPOXY 4-INCH (WHITE) "LANE LINE" (12.5 LINE, 37.5' GAP)

EPOXY 4-INCH (WHITE) "EDGE LINE"

EPOXY 4-INCH (YELLOW) "EDGE LINE"

EPOXY 8-INCH (WHITE) "CHANNELIZING LINE"

SERVICE ROAD

SOUTH BLUEMOUND DRIVE

W

A/C

FLAG

FLAG

FLAG

2

PROJECT NO: 4659-15-71	HWY: STH 125	COUNTY: OUTAGAMIE	PAVEMENT MARKING	SHEET 46 E

FILE NAME : J:\JOBS2013\20132040\CAD\TRANSPORTATION\DWG\SHEETSPLAN\024501-PM.DWG
LAYOUT NAME - 024504

PLOT DATE : 11/21/2016 2:45 PM PLOT BY : WORECK, CHRIS PLOT NAME : PLOT SCALE : 1 IN:50 FT

WISDOT/CADDS SHEET 42

2

N

777.87

W W W

SIGN

SIGN

NORTH LILAS DRIVE INL

INL

SERVICE ROAD

EPOXY 4-INCH (WHITE) "EDGE LINE"

EPOXY 8-INCH (WHITE) "CHANNELIZING LINE"

ARROWS EPOXY TYPE 2 (WHITE)

EPOXY 8-INCH (WHITE) "CHANNELIZING LINE"

ARROWS EPOXY TYPE 2 (WHITE)

MH

MH

EPOXY 8-INCH (WHITE) "CHANNELIZING LINE"

EPOXY 4-INCH (WHITE) "EDGE LINE"

STOP LINE EPOXY 12-INCH (WHITE)

EPOXY ISLAND NOSE (YELLOW)

142+00 WB 143+00 WB 144+00 WB 145+00 WB 146+00 WB 147+00 WB 148+00 WB 149+00 WB

42+00 EB 43+00 EB 44+00 EB 45+00 EB 46+00 EB 47+00 EB 48+00 EB 49+00 EB

MH

STH 125 COLLEGE AVENUE

EPOXY ISLAND NOSE (YELLOW)

EPOXY 4-INCH (WHITE) "EDGE LINE"

EPOXY 4-INCH (YELLOW) "EDGE LINE"

EPOXY 4-INCH (WHITE) "LANE LINE" (12.5 LINE, 37.5' GAP)

EPOXY 8-INCH (WHITE) "CHANNELIZING LINE"

SLAB

STOP LINE EPOXY 12-INCH (WHITE)

EPOXY 4-INCH (YELLOW) "DOUBLE YELLOW"

T117
774.870

SERVICE ROAD

EPOXY 4-INCH (YELLOW) "EDGE LINE"

EPOXY 8-INCH (WHITE) "CHANNELIZING LINE"

EPOXY 4-INCH (WHITE) "LANE LINE" (12.5 LINE, 37.5' GAP)

EPOXY 4-INCH (YELLOW) "EDGE LINE"

EPOXY 4-INCH (WHITE) "EDGE LINE"

SIGN

FLAG

FLAG

SIGN

1_198_4
776.00

FLAG

SIGN

AG

INL

INL

SOUTH LILAS DRIVE INL

2

PROJECT NO: 4659-15-71	HWY: STH 125	COUNTY: OUTAGAMIE	PAVEMENT MARKING	SHEET 47 E

FILE NAME : J:\JOBS2013\20132040\CAD\TRANSPORTATION\DWG\SHEETSPLAN\024501-PM.DWG
LAYOUT NAME - 024505

PLOT DATE : 11/21/2016 2:47 PM PLOT BY : WORECK, CHRIS PLOT NAME : PLOT SCALE : 1 IN:50 FT

WISDOT/CADDS SHEET 42

2

N

SIGN

SIGN

SIGN

SIGN

INL

INL

INL

SERVICE ROAD

T132
781.750

EPOXY 8-INCH (WHITE) "CHANNELIZING LINE"

EPOXY 4-INCH (WHITE) "LANE LINE" (12.5 LINE, 37.5' GAP)

EPOXY 4-INCH (WHITE) "EDGE LINE"

150+00 WB | 151+00 WB | 152+00 WB | 153+00 WB | 154+00 WB | 155+00 WB | 156+00 WB | 157+00 WB

50+00 EB | 51+00 EB | 52+00 EB | 53+00 EB | 54+00 EB | 55+00 EB | 56+00 EB | 57+00 EB

EPOXY 4-INCH (WHITE) "EDGE LINE"

EPOXY 8-INCH (WHITE) "CHANNELIZING LINE"

EPOXY 4-INCH (WHITE) "LANE LINE" (12.5 LINE, 37.5' GAP)

STH 125 COLLEGE AVENUE

EPOXY 4-INCH (WHITE) "EDGE LINE"

EPOXY 4-INCH (YELLOW) "EDGE LINE"

STOP LINE EPOXY 12-INCH (WHITE)

EPOXY 4-INCH (YELLOW) "DOUBLE YELLOW"

SERVICE ROAD

SLAB

INL

SIGN

INL

INL

1_197_4
781.39

SIGN

SIGN

W

SIGN

SIGN

2

PROJECT NO: 4659-15-71	HWY: STH 125	COUNTY: OUTAGAMIE	PAVEMENT MARKING	SHEET 48 E

2

2

N

INL

SIGN

SIGN

INL

MH

MH

NORTH LYNNDALE DRIVE

2_172_16
787.38

SIGN

SIGN

IN

SERVICE ROAD

SERVICE ROAD

EPOXY 4-INCH (YELLOW) "EDGE LINE"

EPOXY 8-INCH (WHITE) "CHANNELIZING LINE"

EPOXY 4-INCH (WHITE) "EDGE LINE"

MH

EPOXY 4-INCH (WHITE) "EDGE LINE"

EPOXY 4-INCH (WHITE) "LANE LINE" (12.5 LINE, 37.5' GAP)

EPOXY 4-INCH (YELLOW) "EDGE LINE"

STOP LINE EPOXY 12-INCH (WHITE)

158+00 WB 159+00 WB 160+00 WB 161+00 WB 162+00 WB 163+00 WB 164+00 WB 165+00 WB

58+00 EB 59+00 EB 60+00 EB 61+00 EB 62+00 EB 63+00 EB 64+00 EB 65+00 EB

EPOXY ISLAND NOSE (YELLOW)

STH 125 COLLEGE AVENUE

EPOXY 4-INCH (WHITE) "EDGE LINE"

EPOXY 8-INCH (WHITE) "CHANNELIZING LINE"

EPOXY 4-INCH (WHITE) "LANE LINE" (12.5 LINE, 37.5' GAP)

EPOXY 8-INCH (WHITE) "CHANNELIZING LINE"

STOP LINE EPOXY 12-INCH (WHITE)

EPOXY 4-INCH (YELLOW) "EDGE LINE"

EPOXY 4-INCH (WHITE) "LANE LINE" (12.5 LINE, 37.5' GAP)

EPOXY 4-INCH (WHITE) "EDGE LINE"

SLAB

MH

1_196_4
784.35

SERVICE ROAD

SERVICE ROAD

SIGN

MH

SIGN

SIGN

SOUTH LYNNDALE DRIVE

SIGN

INL

SLAB

SLAB

SIGN

PROJECT NO: 4659-15-71	HWY: STH 125	COUNTY: OUTAGAMIE	PAVEMENT MARKING	SHEET 49 E

2

N

SIGN

SIGN

CANADIAN NATIONAL

SERVICE ROAD

T120
791.600

EPOXY 8-INCH (WHITE) "CHANNELIZING LINE"

EPOXY 4-INCH (WHITE) "EDGE LINE"

STH 125 COLLEGE AVENUE

166+00 WB | 167+00 WB | 168+00 WB | 169+00 WB | 170+00 WB | 171+00 WB | 172+00 WB | 173+00

RAILROAD CROSSING EPOXY (WHITE)

EPOXY 4-INCH (WHITE) "EDGE LINE"

RAILROAD CROSSING EPOXY (WHITE)

66+00 EB | 67+00 EB | 68+00 EB | 69+00 EB | 70+00 EB | 71+00 EB | 72+00 EB | 73+00

RAILROAD CROSSING EPOXY (WHITE)

EPOXY 4-INCH (YELLOW) "EDGE LINE"

EPOXY 4-INCH (WHITE) "LANE LINE" (12.5 LINE, 37.5' GAP)

EPOXY 4-INCH (WHITE) "EDGE LINE"

EPOXY 8-INCH (WHITE) "CHANNELIZING LINE"

1_195_4
791.17

SERVICE ROAD

INL

INL

SIGN

2

PROJECT NO: 4659-15-71	HWY: STH 125	COUNTY: OUTAGAMIE	PAVEMENT MARKING	SHEET 50 E

FILE NAME : J:\JOBS2013\20132040\CAD\TRANSPORTATION\DWG\SHEETSPLAN\024501-PM.DWG
LAYOUT NAME - 024508

PLOT DATE : 9/2/2016 9:42 AM PLOT BY : WORECK, CHRIS PLOT NAME : PLOT SCALE : 1 IN:50 FT

WISDOT/CADDS SHEET 42

2

N

NORTH PERKINS STREET

SERVICE ROAD

EPOXY 4-INCH (YELLOW) "EDGE LINE"
EPOXY 4-INCH (WHITE) "EDGE LINE"
EPOXY 4-INCH (WHITE) "LANE LINE" (12.5 LINE, 37.5' GAP)
EPOXY 8-INCH (WHITE) "CHANNELIZING LINE"
EPOXY 8-INCH (WHITE) "CHANNELIZING LINE"
EPOXY 4-INCH (YELLOW) "EDGE LINE"
CURB EPOXY YELLOW)
EPOXY 8-INCH (WHITE) "CHANNELIZING LINE"
EPOXY 4-INCH (WHITE) "EDGE LINE"
EPOXY ISLAND NOSE (YELLOW)
EPOXY ISLAND NOSE (YELLOW)
STH 125 COLLEGE AVENUE
STOP LINE EPOXY 12-INCH (WHITE)
CURB EPOXY YELLOW)
EPOXY 4-INCH (YELLOW) "EDGE LINE"
EPOXY 4-INCH (WHITE) "LANE LINE" (12.5 LINE, 37.5' GAP)
EPOXY 4-INCH (WHITE) "EDGE LINE"
EPOXY 8-INCH (WHITE) "CHANNELIZING LINE"
EPOXY 4-INCH (YELLOW) "EDGE LINE"
EPOXY 4-INCH (WHITE) "LANE LINE" (12.5 LINE, 37.5' GAP)
EPOXY 4-INCH (WHITE) "EDGE LINE"
EPOXY 8-INCH (WHITE) "CHANNELIZING LINE"
ARROWS EPOXY TYPE 2 (WHITE)
SERVICE ROAD

173+00 WB 174+00 WB 175+00 WB 176+00 WB 177+00 WB 178+00 WB 179+00 WB 180+00 WB
73+00 EB 74+00 EB 75+00 EB 76+00 EB 77+00 EB 78+00 EB 79+00 EB 80+00 EB

MH INL W FLAG SIGN

PROJECT NO: 4659-15-71	HWY: STH 125	COUNTY: OUTAGAMIE	PAVEMENT MARKING	SHEET 51 E

FILE NAME : J:\JOBS2013\20132040\CAD\TRANSPORTATION\DWG\SHEETSPLAN\024501-PM.DWG
LAYOUT NAME - 024509
PLOT DATE : 11/21/2016 3:02 PM PLOT BY : WORECK, CHRIS PLOT NAME : PLOT SCALE : 1 IN:50 FT

2

2

N

W

SIGN

SIGN

EPOXY 4-INCH (WHITE) "EDGE LINE"

STH 125 COLLEGE AVENUE

181+00 WB

182+00 WB

183+00 WB

184+00 WB

185+00 WB

186+00 WB

187+00 WB

188+00 WB

81+00 EB

82+00 EB

83+00 EB

84+00 EB

85+00 EB

86+00 EB

87+00 EB

88+00 EB

EPOXY 4-INCH (YELLOW) "EDGE LINE"

EPOXY 4-INCH (WHITE) "LANE LINE" (12.5 LINE, 37.5' GAP)

EPOXY 4-INCH (WHITE) "EDGE LINE"

194+4
8.76

INL

MH

N

SIGN

FLAG

W

CANADIAN NATIONAL

SIGN

SLAB

PROJECT NO: 4659-15-71	HWY: STH 125	COUNTY: OUTAGAMIE	PAVEMENT MARKING	SHEET 52 E

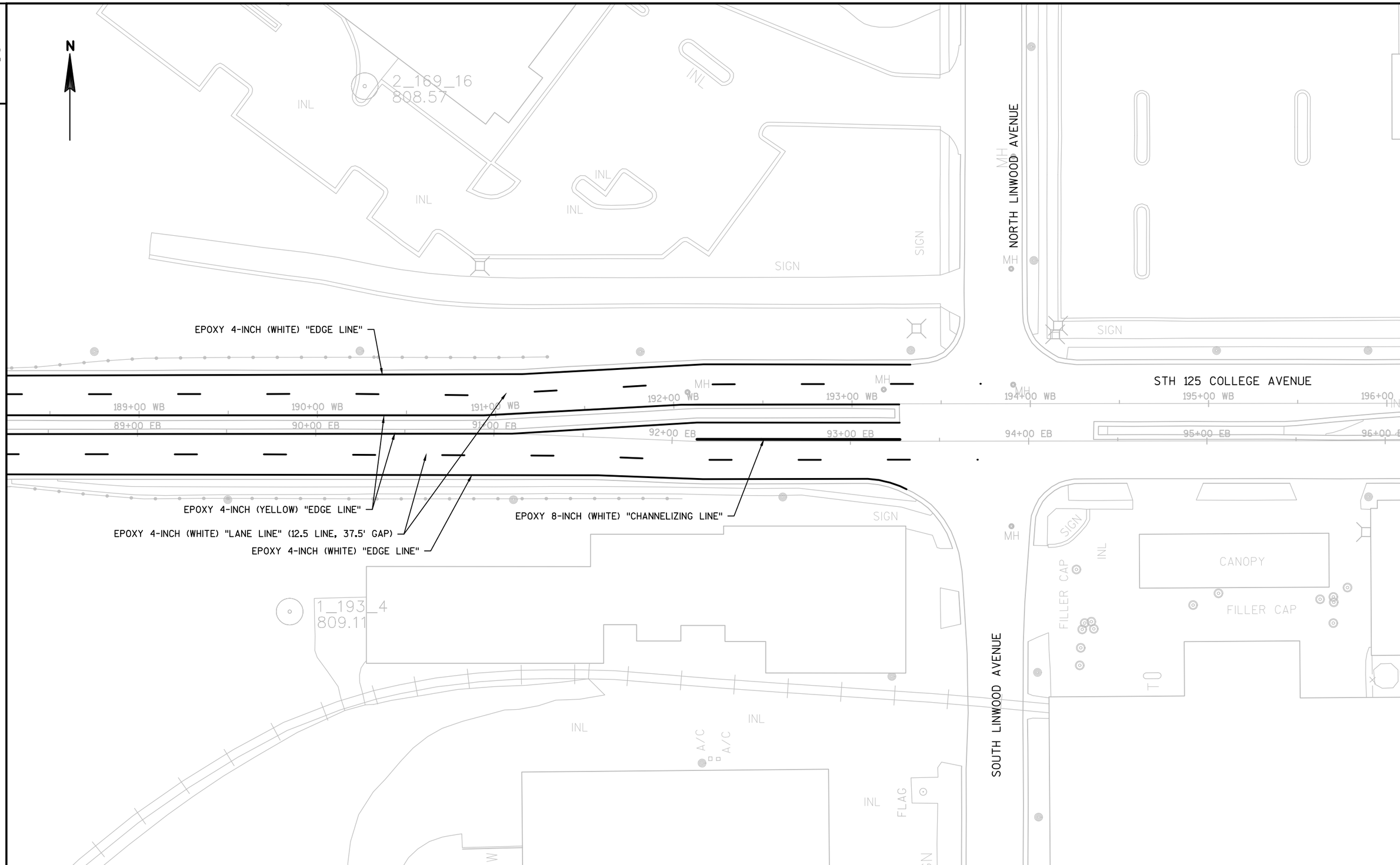

PROJECT NO:4659-15-71	HWY:STH 125	COUNTY:OUTAGAMIE	PAVEMENT MARKING	SHEET 53	E

FILE NAME : J:\JOBS2013\20132040\CAD\TRANSPORTATION\DWG\SHEETSPLAN\024501-PM.DWG
LAYOUT NAME - 024511
PLOT DATE : 1/31/2017 9:18 AM PLOT BY : TURSKY, EVAN M. PLOT NAME : PLOT SCALE : 1 IN:50 FT
WISDOT/CADDS SHEET 42

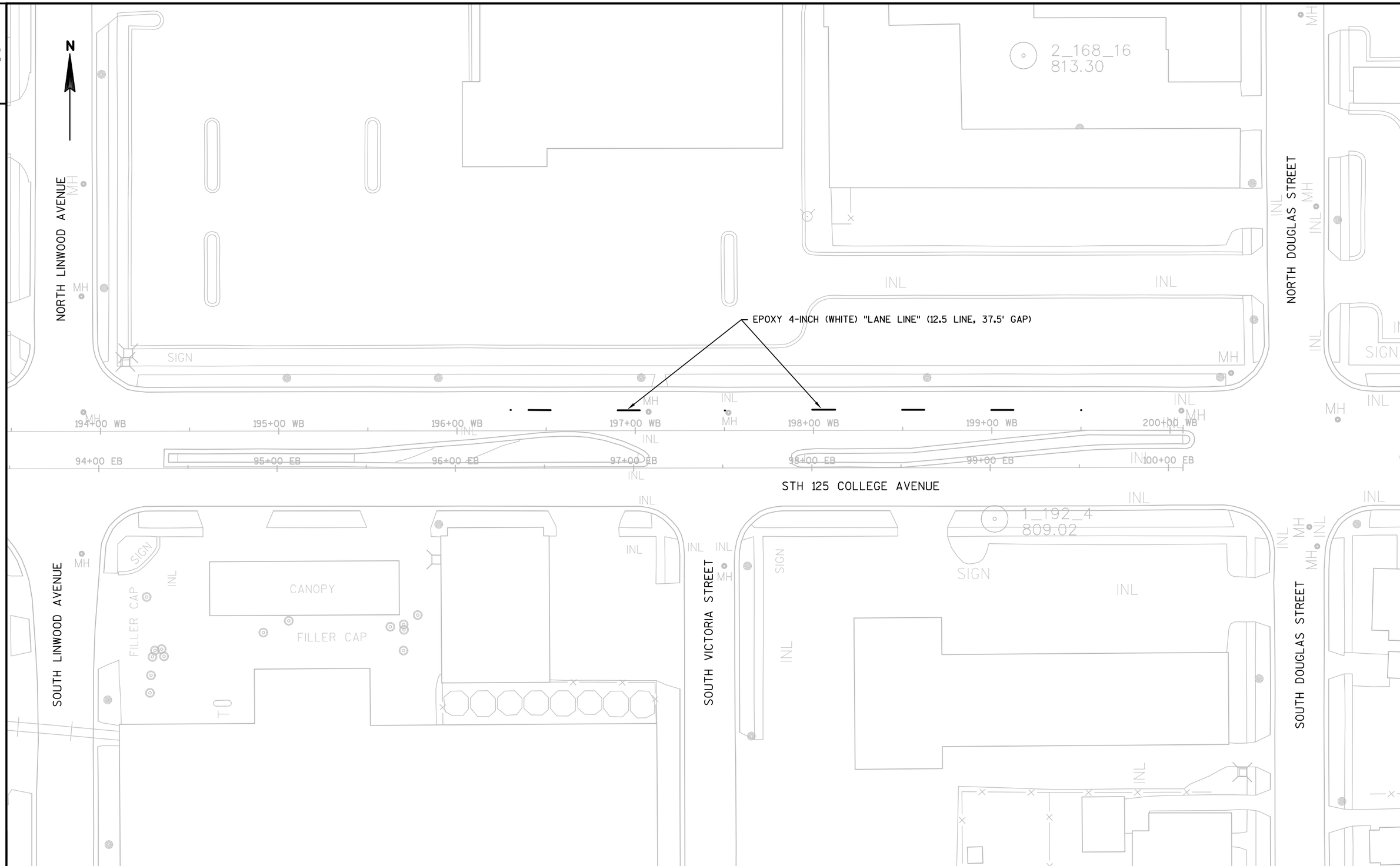

PROJECT NO:4659-15-71	HWY:STH 125	COUNTY:OUTAGAMIE	PAVEMENT MARKING	SHEET 54	E

FILE NAME : J:\JOBS2013\20132040\CAD\TRANSPORTATION\DWG\SHEETSPLAN\024501-PM.DWG
LAYOUT NAME - 024511
PLOT DATE : 9/2/2016 9:44 AM PLOT BY : WORECK, CHRIS PLOT NAME : PLOT SCALE : 1 IN:50 FT
WISDOT/CADDS SHEET 42

NOTE: DURING OVERLAY CONSTRUCTION ADD W8-11 "UNEVEN LANES" SIGN, SHOWN BELOW. PLACE THESE SIGNS AT THE START AND END OF THE PROJCECT AND AFTER EVERY INTERSECTION FACING TRAFFIC.

W8-11
36"X36"

LEGEND

SIGN ON PERMANENT SUPPORT

MB PORTABLE CHANGEABLE MESSAGE BOARD

N

SEE SDD "TRAFFIC CONTROL INTERSECTION WITHIN SINGLE LANE CLOSURE".
WHEN WORKING INSIDE INTERSECTIONS SEE SDD "TRAFFIC CONTROL BARRICADES AND SIGNS FOR SIDEROAD CLOSURES".

W20-1-A

SEE SDD TRAFFIC CONTROL, "SINGLE LANE CLOSURE"
AND TRAFFIC CONTROL DETAIL SHEETS,
DETAILS 1 & 2

SEE TRAFFIC CONTROL DETAIL SHEET,
DETAIL 3

1000'

MALL DRIVE

CASALOMA DRIVE

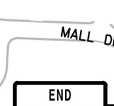

G20-2A
48"X24"

W20-1-A

NICOLET ROAD

LAWRENCE STREET

500'

1750'

MB

WESTHILL BOULEVARD

KOOLS STREET

BLUEMOUND DRIVE

LILAS DRIVE

STH 125 (COLLEGE AVENUE)

LAWRENCE STREET

SEE TRAFFIC CONTROL DETAIL SHEET,
DETAIL 4

SEE TRAFFIC CONTROL DETAIL SHEETS,
DETAIL 1 & 2

PROJECT NO: 4659-15-71	HWY: STH 125	COUNTY: OUTAGAMIE	TRAFFIC CONTROL OVERVIEW	SHEET 55 E

FILE NAME : J:\JOBS2013\20132040\CAD\TRANSPORTATION\DWG\SHEETSPLAN\025001-TC.DWG
LAYOUT NAME - 025001

PLOT DATE : 9/27/2016 7:44 PM PLOT BY : SCHULTZ, ANDREW K. PLOT NAME : PLOT SCALE : 1:500_XREF

WISDOT/CADDS SHEET 42

NOTE: DURING OVERLAY CONSTRUCTION ADD W8-11 "UNEVEN LANES" SIGN, SHOWN BELOW. PLACE THESE SIGNS AT THE START AND END OF THE PROJCECT AND AFTER EVERY INTERSECTION FACING TRAFFIC.

W8-11
36"X36"

LEGEND

SIGN ON PERMANENT SUPPORT

MB PORTABLE CHANGEABLE MESSAGE BOARD

N

STRUCTURE B-44-0009 DECK REPAIR WORK

SEE TRAFFIC CONTROL DETAIL SHEETS FOR TEMPORARY CROSSOVER STAGE 1 & 2

SEE TRAFFIC CONTROL DETAIL SHEET, DETAIL 4

SEE TRAFFIC CONTROL DETAIL SHEET, DETAIL 5 & 6

LILAS DRIVE

LYNNDALE DRIVE

CANADIAN NATIONAL RAILROAD

PERKINS STREET

WOODS EDGE DRIVE

NATIONAL RAILROAD

OUTAGAMIE STREET

MASON STREET

WASHINGTON STREET

125

STH 125 (COLLEGE AVENUE)

MB

B-44-09

CANADIAN NATIONAL RAILROAD

LINWOOD AVENUE

VICTORIA STREET

DOUGLAS STREET

SPRUCE STREET

LAWRENCE STREET

COUNTY A

SEE SDD "TRAFFIC CONTROL INTERSECTION WITHIN SINGLE LANE CLOSURE".

WHEN WORKING INSIDE INTERSECTIONS SEE SDD "TRAFFIC CONTROL BARRICADES AND SIGNS FOR SIDEROAD CLOSURES".

PROJECT NO: 4659-15-71	HWY: STH 125	COUNTY: OUTAGAMIE	TRAFFIC CONTROL OVERVIEW	SHEET 56 E

2

DETAIL 1

TYPICAL IH 41 NB EXIT RAMP
CLOSURE OF THE OUTSIDE
RIGHT-TURN LANE DURING EB
STH 125 COLLEGE AVENUE OUTSIDE
LANE CLOSURES.

N

LEGEND

- TYPE III BARRICADE WTH ATTACHED SIGN
- TRAFFIC CONTROL DRUM
- TRAFFIC CONTROL DRUM WITH TYPE C STEADY BURN LIGHT
- SIGN ON TEMPORARY SUPPORT
- (A) TYPE A WARNING LIGHT (FLASHING)
- DIRECTION OF TRAFFIC

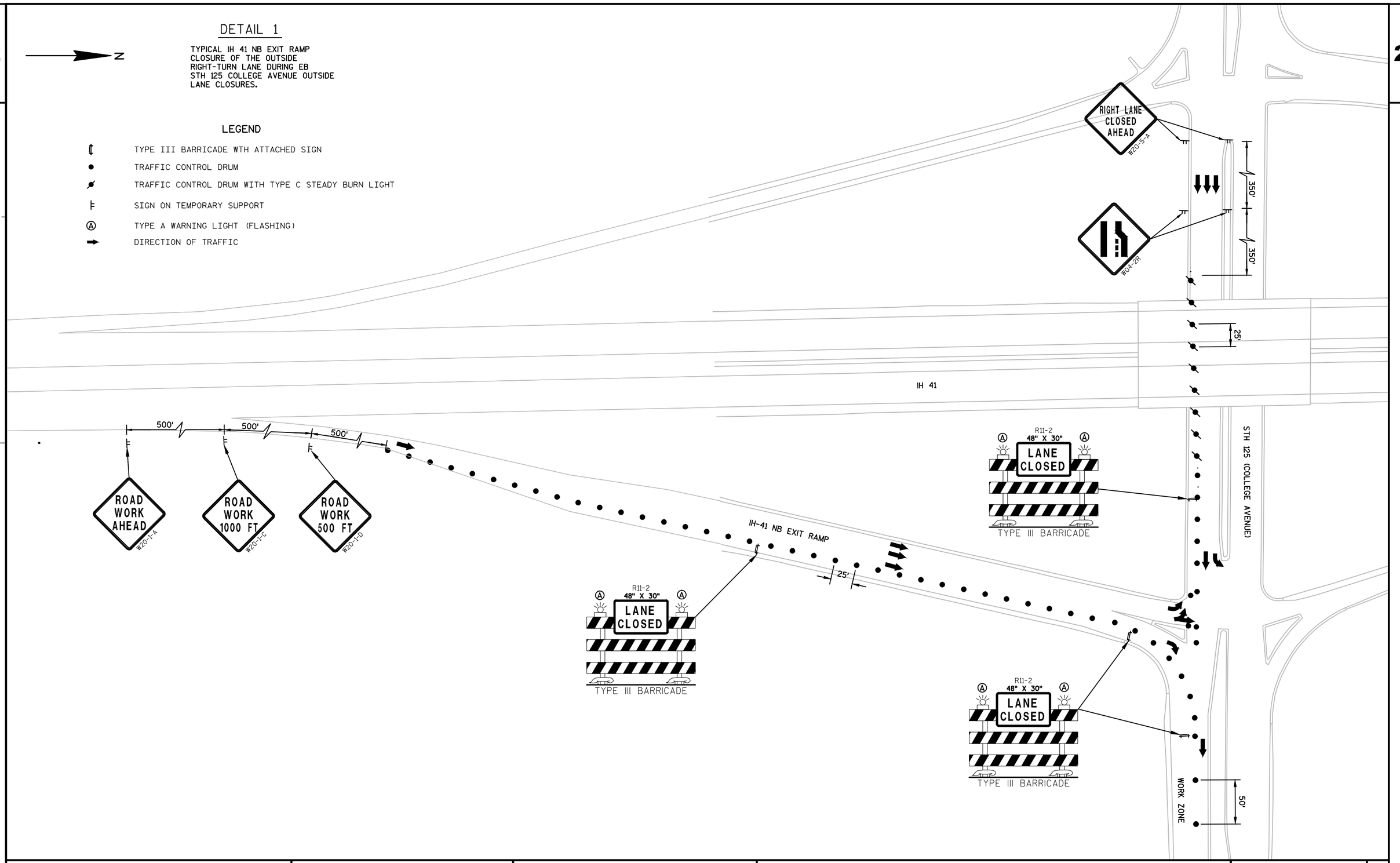

2

PROJECT NO: 4659-15-71	HWY: STH 125	COUNTY: OUTAGAMIE	TRAFFIC CONTROL DETAILS	SHEET 57 E

DETAIL 2

TYPICAL IH 41 NB EXIT RAMP CLOSURE OF THE INSIDE RIGHT-TURN LANE WITH A TAPER SHIFT AND CLOSURE OF THE LEFT RIGHT-TURN LANE DURING EB STH 125 COLLEGE AVENUE INSIDE LANE CLOSURE.

N

LEGEND

- TYPE III BARRICADE WTH ATTACHED SIGN
- TRAFFIC CONTROL DRUM
- TRAFFIC CONTROL DRUM WITH TYPE C STEADY BURN LIGHT
- SIGN ON TEMPORARY SUPPORT
- (A) TYPE A WARNING LIGHT (FLASHING)
- DIRECTION OF TRAFFIC

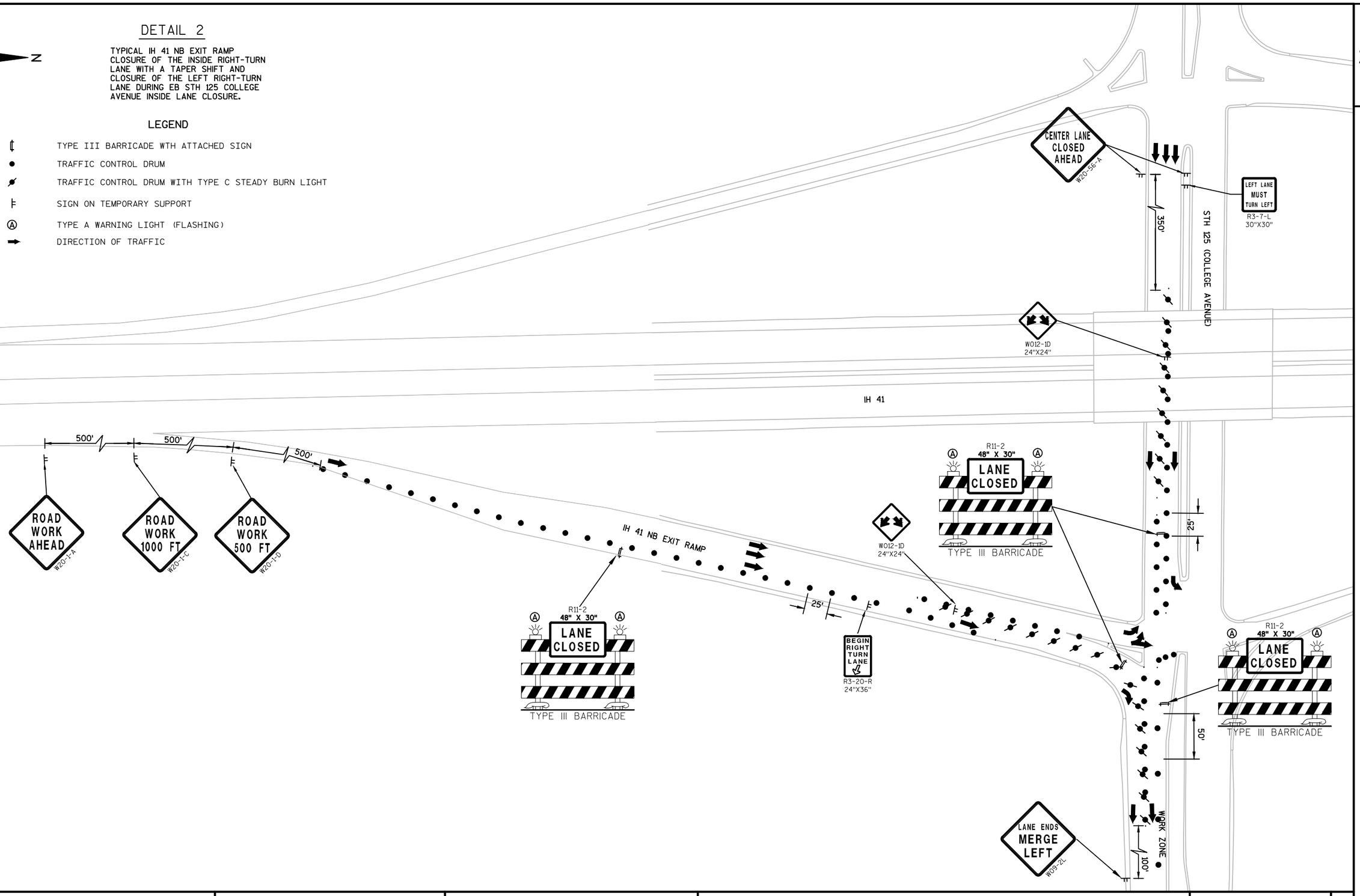

PROJECT NO: 4659-15-71	HWY: STH 125	COUNTY: OUTAGAMIE	TRAFFIC CONTROL DETAILS	SHEET 58 E

FILE NAME : J:\JOBS2013\20132040\CAD\TRANSPORTATION\DWG\SHEETSPLAN\025001-TC.DWG
LAYOUT NAME - 025004
PLOT DATE : 1/30/2017 11:45 AM PLOT BY : TURSKY, EVAN M. PLOT NAME : PLOT SCALE : VARIOUS
WISDOT/CADDS SHEET 42

2

N

LEGEND

- TYPE III BARRICADE WTH ATTACHED SIGN
- TRAFFIC CONTROL DRUM
- TRAFFIC CONTROL DRUM WITH TYPE C STEADY BURN LIGHT
- (A) TYPE A WARNING LIGHT (FLASHING)
- DIRECTION OF TRAFFIC
- SIGN ON TEMPORARY SUPPORT

DETAIL 7

TEMPORARY PAVEMENT MARKING PLACED DURING ASPHALT PAVING

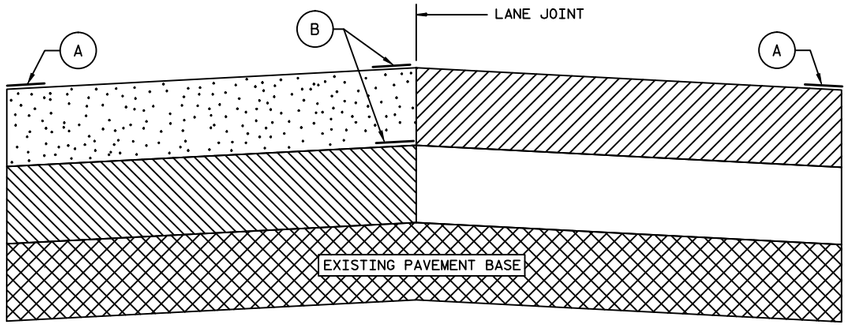

(LOWER AND UPPER LAYERS)

TEMPORARY PAVEMENT MARKING DETAIL

(A) TEMPORARY PAVEMENT MARKING, PAINT 4-INCH (WHITE OR YELLOW) "EDGE LINE"

(B) TEMPORARY PAVEMENT MARKING, EPOXY 4-INCH (WHITE) "LANE LINE" (4' LINE, 46' GAP) PAID FOR AS PAVEMENT MARKING SAME DAY EPOXY 4-INCH

DETAIL 3

MID-ACCESS INTERSECTION MAY BE CLOSED WHEN ACTIVELY WORKING IN THE RIGHT LANE OF WB STH 125 COLLEGE AVENUE WITHIN 200' OF EITHER SIDE OF THE MID-ACCESS INTERSECTION.

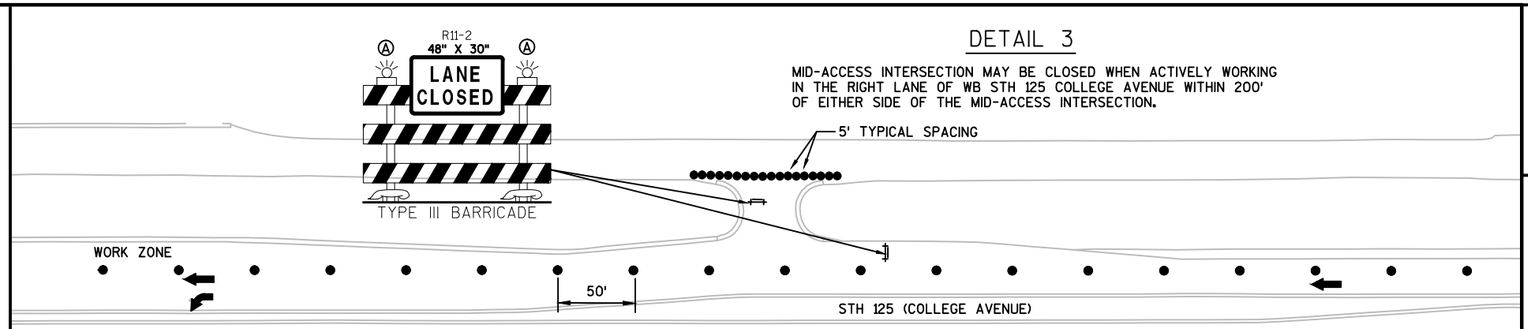

DETAIL 4

MID-ACCESS INTERSECTION MAY BE CLOSED WHEN ACTIVELY WORKING IN THE RIGHT LANE OF EB STH 125 COLLEGE AVENUE WITHIN 200' OF EITHER SIDE OF THE MID-ACCESS INTERSECTION.

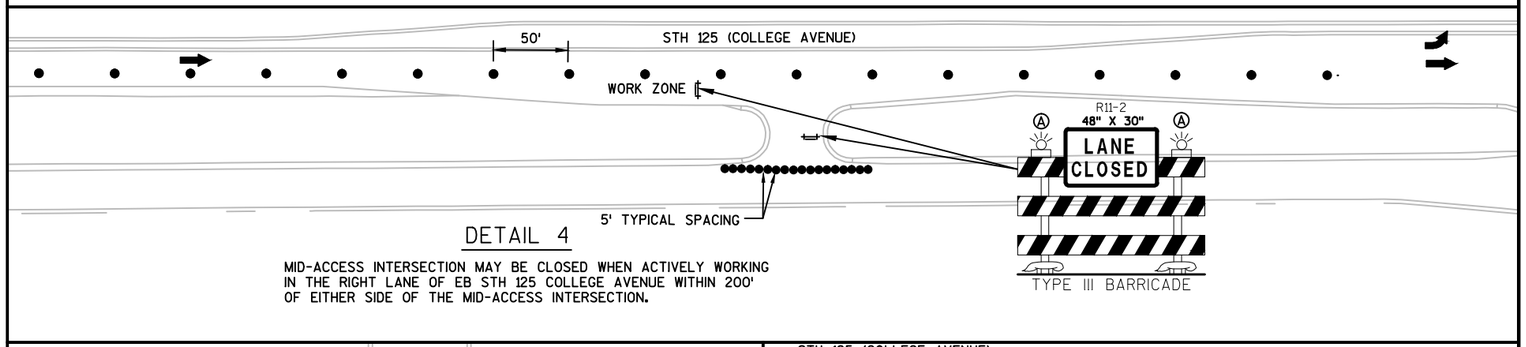

DETAIL 5

RIGHT-TURN LANE ON SB LYNNDALE DRIVE MAY BE CLOSED WHEN ACTIVELY WORKING IN THE RIGHT LANE OF WB STH 125 COLLEGE AVENUE WITHIN 200' WEST OF THE INTERSECTION.

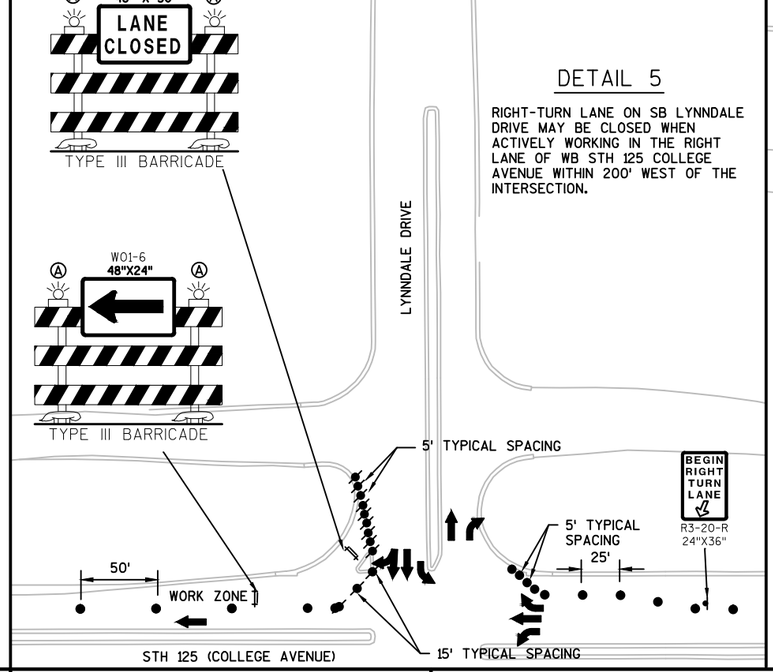

DETAIL 6

RIGHT-TURN LANE ON NB LYNNDALE DRIVE MAY BE CLOSED WHEN ACTIVELY WORKING IN THE RIGHT LANE OF EB STH 125 COLLEGE AVENUE WITHIN 200' EAST OF THE INTERSECTION.

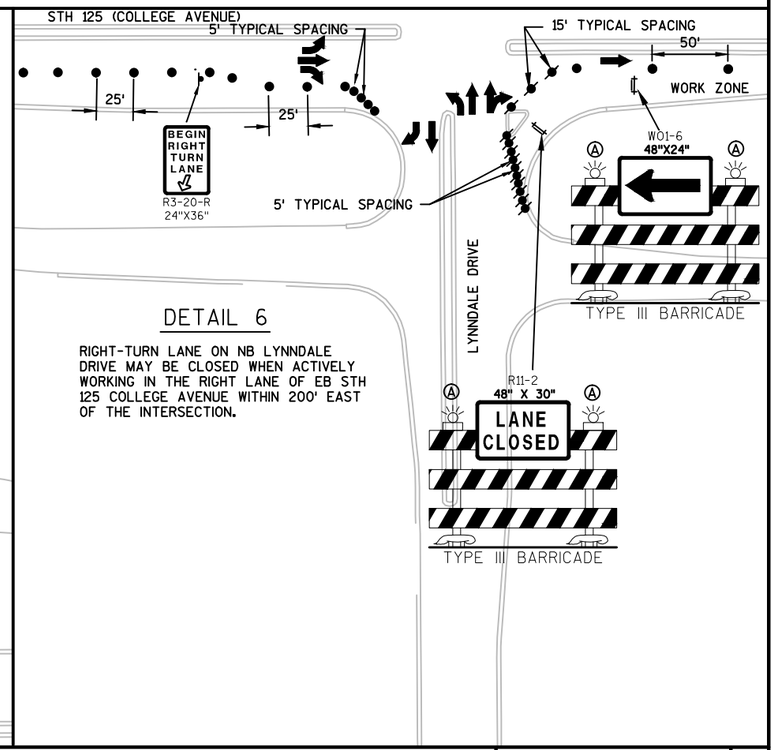

PROJECT NO: 4659-15-71	HWY: STH 125	COUNTY: OUTAGAMIE	TRAFFIC CONTROL DETAILS	SHEET 59 E

FILE NAME : J:\JOBS2013\20132040\CAD\TRANSPORTATION\DWG\SHEETSPLAN\025001-TC.DWG
LAYOUT NAME - 025005
PLOT DATE : 3/3/2017 10:21 AM PLOT BY : WORECK, CHRIS PLOT NAME : PLOT SCALE : VARIOUS
WISDOT/CADDS SHEET 42

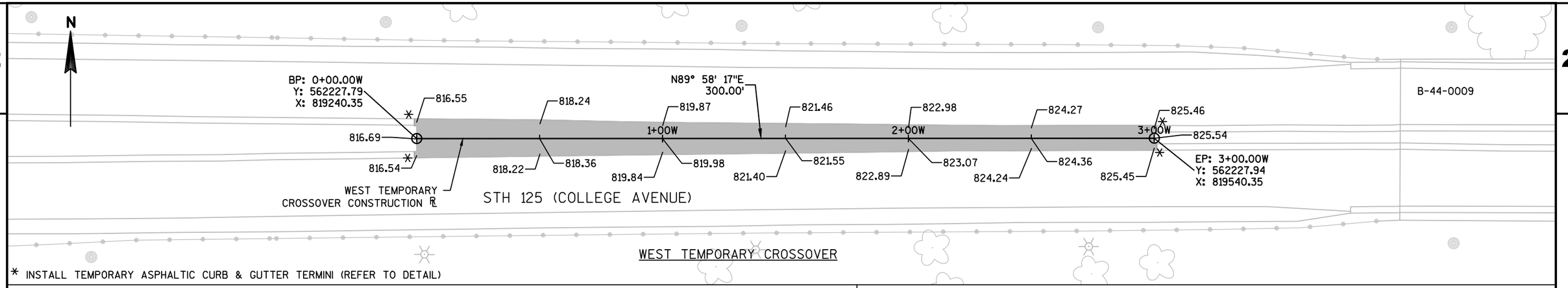

WEST TEMPORARY CROSSOVER

* INSTALL TEMPORARY ASPHALTIC CURB & GUTTER TERMINI (REFER TO DETAIL)

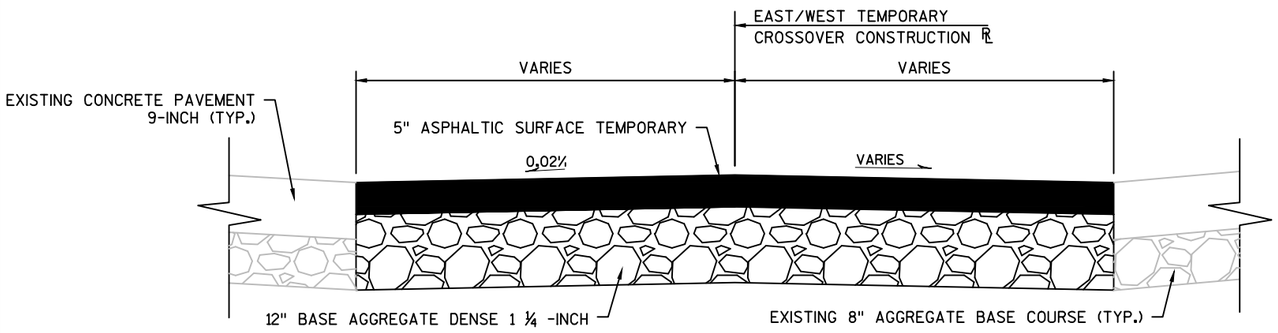

TEMPORARY CROSSOVER TYPICAL SECTION
EAST AND WEST TEMPORARY CROSSOVERS

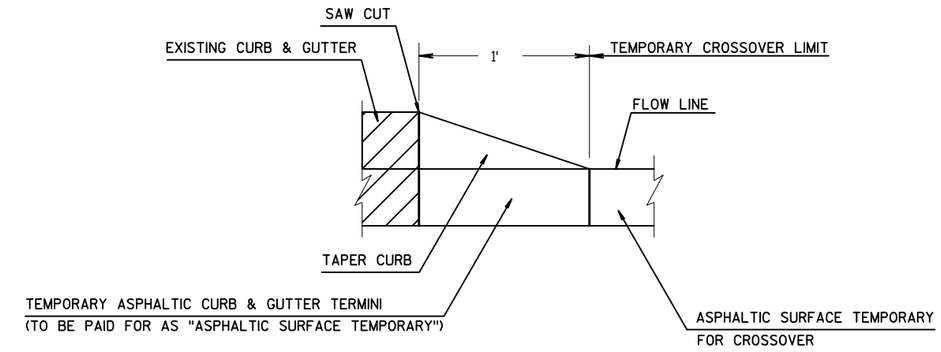

DETAIL OF TEMPORARY ASPHALTIC CURB & GUTTER TERMINI
TO BE INSTALLED AT EACH CORNER OF THE EAST AND WEST TEMPORARY CROSSOVERS

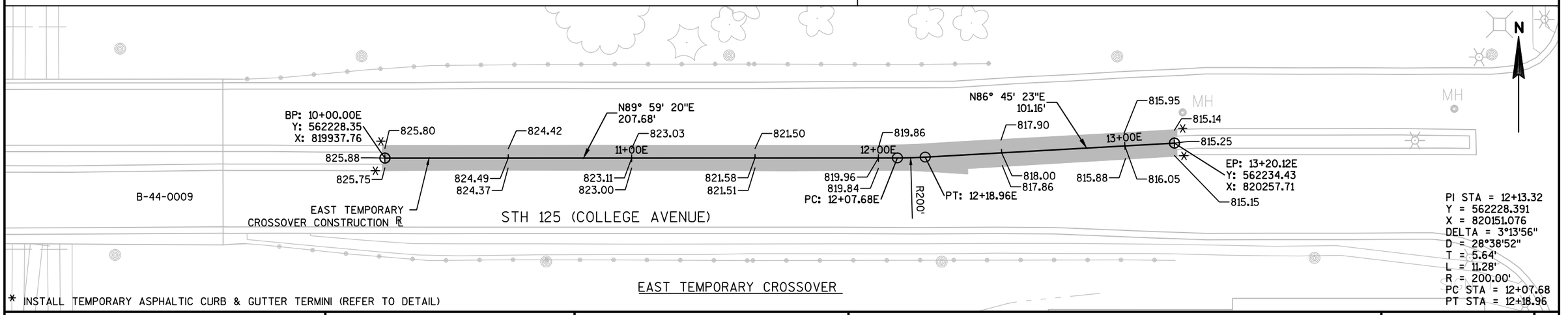

EAST TEMPORARY CROSSOVER

* INSTALL TEMPORARY ASPHALTIC CURB & GUTTER TERMINI (REFER TO DETAIL)

PROJECT NO: 4659-16-71	HWY: STH 125	COUNTY: OUTAGAMIE	TRAFFIC CONTROL DETAIL FOR TEMPORARY CROSSOVERS	SHEET 60 E

2

LEGEND

- TYPE III BARRICADE
- TYPE III BARRICADE WTH ATTACHED SIGN
- TRAFFIC CONTROL DRUM
- TRAFFIC CONTROL DRUM WITH TYPE C STEADY BURN LIGHT
- SIGN ON PERMANENT SUPPORT
- SIGN ON TEMPORARY SUPPORT
- DELINEATOR FLEXIBLE/TUBULAR MARKER
- (A) TYPE A WARNING LIGHT (FLASHING)
- WORK AREA
- DIRECTION OF TRAFFIC

N

2

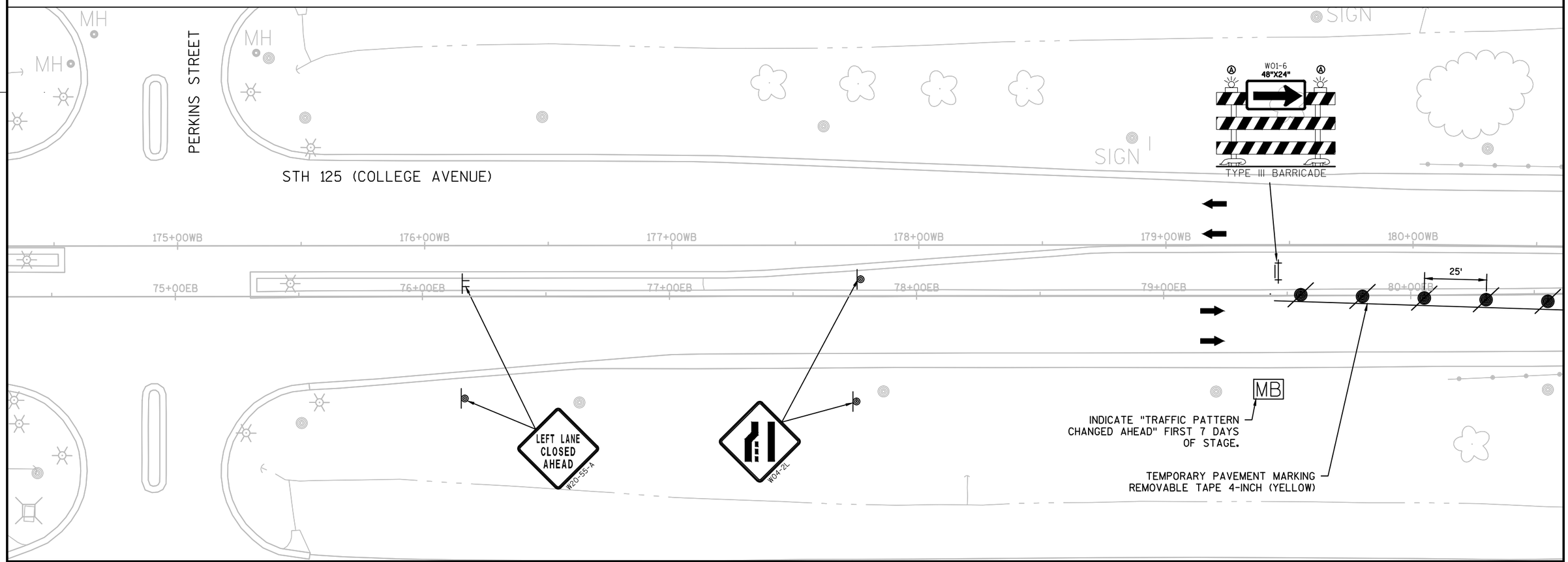

PROJECT NO: 4659-15-71	HWY: STH 125	COUNTY: OUTAGAMIE	TRAFFIC CONTROL, STAGE 1	SHEET 61 E

FILE NAME : J:\JOBS2013\20132040\CAD\TRANSPORTATION\DWG\SHEETSPLAN\025007-TC.DWG
LAYOUT NAME - 025007
PLOT DATE : 10/31/2016 1:12 PM PLOT BY : WORECK, CHRIS PLOT NAME : PLOT SCALE : 1" = 40'_XREF
WISDOT/CADDS SHEET 42

2

2

LEGEND

- TYPE III BARRICADE
- TYPE III BARRICADE WTH ATTACHED SIGN
- TRAFFIC CONTROL DRUM
- TRAFFIC CONTROL DRUM WITH TYPE C STEADY BURN LIGHT
- SIGN ON PERMANENT SUPPORT
- SIGN ON TEMPORARY SUPPORT
- DELINEATOR FLEXIBLE/TUBULAR MARKER
- (A) TYPE A WARNING LIGHT (FLASHING)
- WORK AREA
- DIRECTION OF TRAFFIC

N

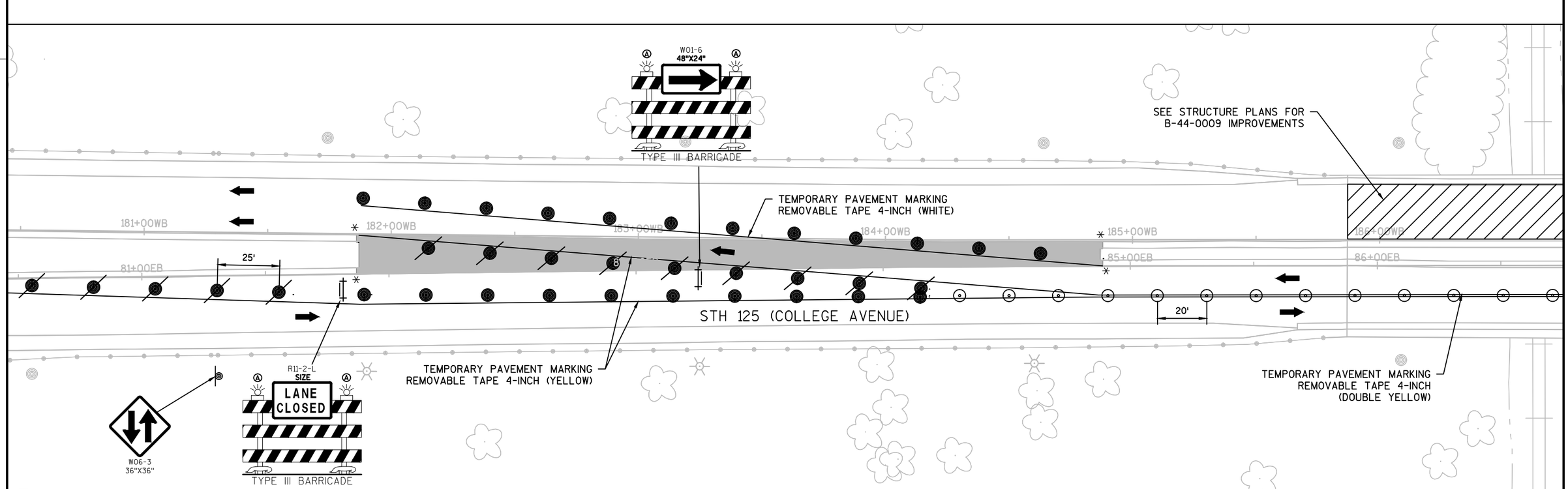

* INSTALL TEMPORARY ASPHALTIC CURB & GUTTER TERMINI (REFER TO DETAIL)

PROJECT NO: 4659-15-71	HWY: STH 125	COUNTY: OUTAGAMIE	TRAFFIC CONTROL, STAGE 1	SHEET 62 E

2

2

LEGEND

- TYPE III BARRICADE
- TYPE III BARRICADE WTH ATTACHED SIGN
- TRAFFIC CONTROL DRUM
- TRAFFIC CONTROL DRUM WITH TYPE C STEADY BURN LIGHT
- SIGN ON PERMANENT SUPPORT
- SIGN ON TEMPORARY SUPPORT
- DELINEATOR FLEXIBLE/TUBULAR MARKER
- (A) TYPE A WARNING LIGHT (FLASHING)
- WORK AREA
- DIRECTION OF TRAFFIC

N

WIS. CENTRAL LTD

SEE STRUCTURE PLANS FOR B-44-0009 IMPROVEMENTS

W01-4R

R11-2 48" X 30" ROAD CLOSED

TYPE III BARRICADE

W01-6 48" X 24"

TYPE III BARRICADE

W06-3 36"X36"

TEMPORARY PAVEMENT MARKING REMOVABLE TAPE 4-INCH (WHITE)

187+00WB 188+00WB 189+00WB 190+00WB 191+00WB 192+00WB

87+00EB 88+00EB 92+00EB

MH

20'

STH 125 (COLLEGE AVENUE)

TEMPORARY PAVEMENT MARKING REMOVABLE TAPE 4-INCH (DOUBLE YELLOW)

TEMPORARY PAVEMENT MARKING REMOVABLE TAPE 4-INCH (YELLOW)

* INSTALL TEMPORARY ASPHALTIC CURB & GUTTER TERMINI (REFER TO DETAIL)

SIGN

1_193_4 809.11

PROJECT NO: 4659-15-71	HWY: STH 125	COUNTY: OUTAGAMIE	TRAFFIC CONTROL, STAGE 1	SHEET 63 E

2

LEGEND

- TYPE III BARRICADE
- TYPE III BARRICADE WTH ATTACHED SIGN
- TRAFFIC CONTROL DRUM
- TRAFFIC CONTROL DRUM WITH TYPE C STEADY BURN LIGHT
- SIGN ON PERMANENT SUPPORT
- SIGN ON TEMPORARY SUPPORT
- DELINEATOR FLEXIBLE/TUBULAR MARKER
- (A) TYPE A WARNING LIGHT (FLASHING)
- WORK AREA
- DIRECTION OF TRAFFIC
- MB PORTABLE CHANGEABLE MESSAGE BOARD

N

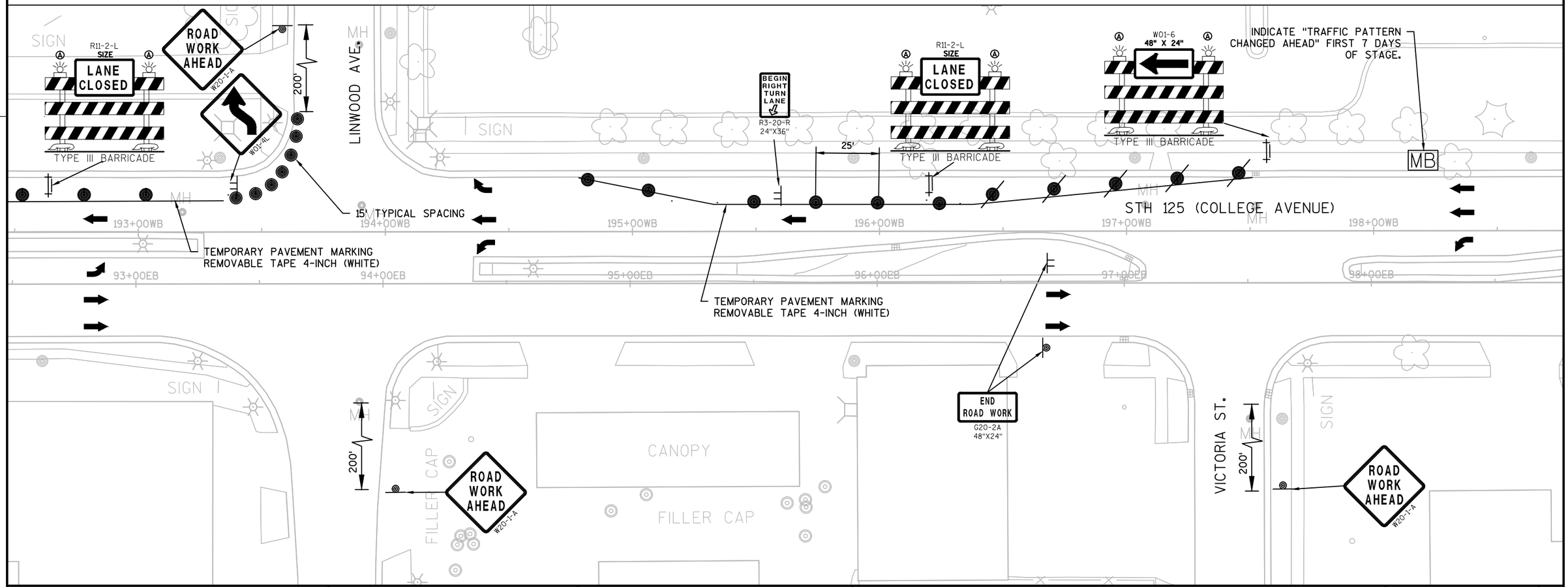

PROJECT NO: 4659-15-71	HWY: STH 125	COUNTY: OUTAGAMIE	TRAFFIC CONTROL, STAGE 1	SHEET 64 E

FILE NAME : J:\JOBS2013\20132040\CAD\TRANSPORTATION\DWG\SHEETSPLAN\025007-TC.DWG
LAYOUT NAME - 025010
PLOT DATE : 1/31/2017 10:34 AM PLOT BY : TURSKY, EVAN M. PLOT NAME : PLOT SCALE : 1" = 40'_XREF
WISDOT/CADDS SHEET 42

2

2

LEGEND

- TYPE III BARRICADE
- TYPE III BARRICADE WTH ATTACHED SIGN
- TRAFFIC CONTROL DRUM
- TRAFFIC CONTROL DRUM WITH TYPE C STEADY BURN LIGHT
- SIGN ON PERMANENT SUPPORT
- SIGN ON TEMPORARY SUPPORT
- DELINEATOR FLEXIBLE/TUBULAR MARKER
- TYPE A WARNING LIGHT (FLASHING)
- WORK AREA
- DIRECTION OF TRAFFIC

N

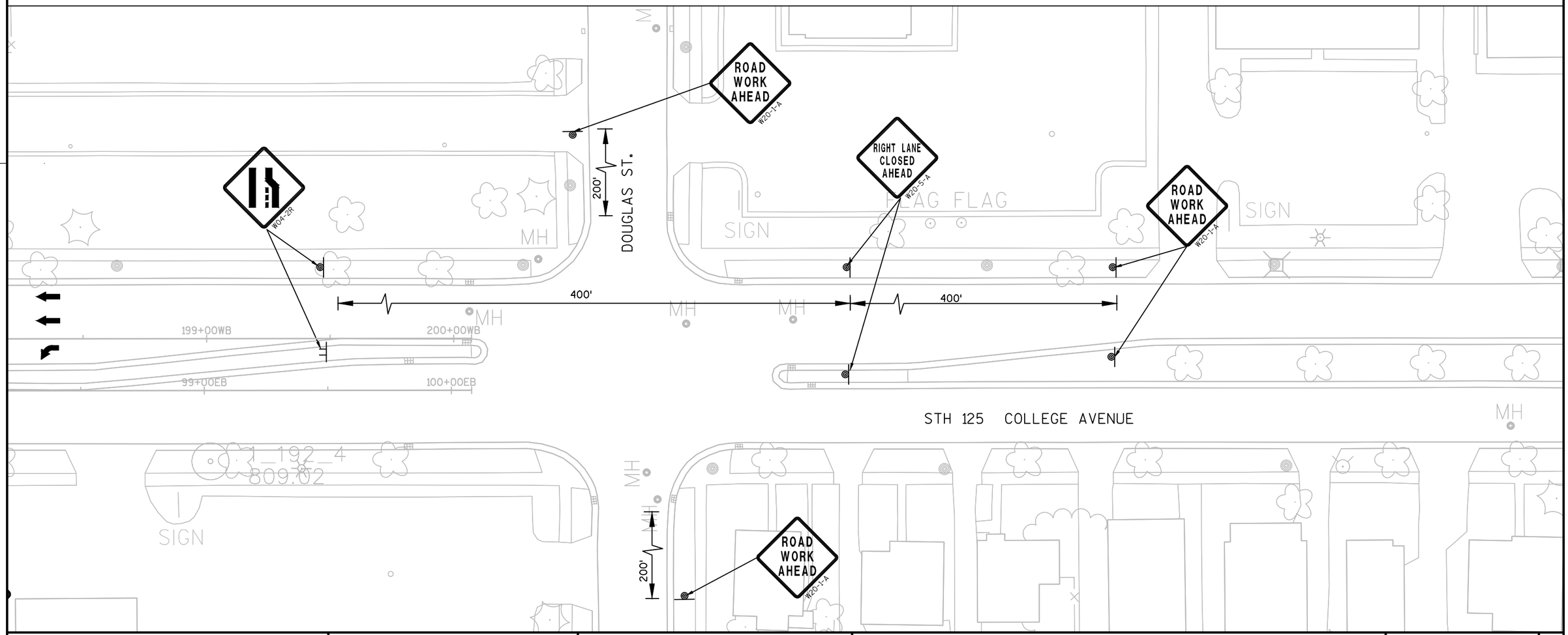

PROJECT NO: 4659-15-71	HWY: STH 125	COUNTY: OUTAGAMIE	TRAFFIC CONTROL, STAGE 1	SHEET 65 E

FILE NAME : J:\JOBS2013\20132040\CAD\TRANSPORTATION\DWG\SHEETSPLAN\025007-TC.DWG
LAYOUT NAME - 025011

PLOT DATE : 9/2/2016 9:53 AM PLOT BY : WORECK, CHRIS PLOT NAME : PLOT SCALE : 1:40_XREF

WISDOT/CADDS SHEET 42

2

2

LEGEND

- TYPE III BARRICADE
- TYPE III BARRICADE WTH ATTACHED SIGN
- TRAFFIC CONTROL DRUM
- TRAFFIC CONTROL DRUM WITH TYPE C STEADY BURN LIGHT
- SIGN ON PERMANENT SUPPORT
- SIGN ON TEMPORARY SUPPORT
- DELINEATOR FLEXIBLE/TUBULAR MARKER
- (A) TYPE A WARNING LIGHT (FLASHING)
- WORK AREA
- DIRECTION OF TRAFFIC
- MB PORTABLE CHANGEABLE MESSAGE BOARD

N

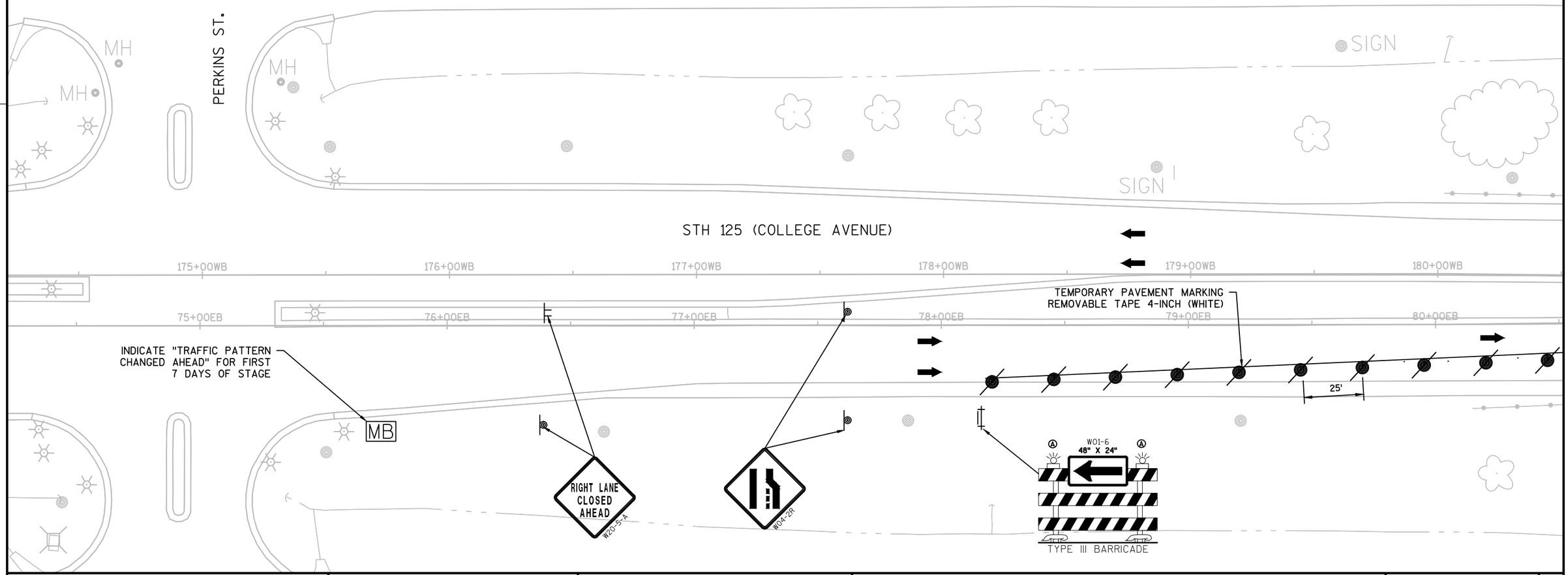

PROJECT NO: 4659-15-71	HWY: STH 125	COUNTY: OUTAGAMIE	TRAFFIC CONTROL, STAGE 2	SHEET 66 E

FILE NAME : J:\JOBS2013\20132040\CAD\TRANSPORTATION\DWG\SHEETSPLAN\025012-TC.DWG
LAYOUT NAME - 025012
PLOT DATE : 9/27/2016 8:13 PM PLOT BY : SCHULTZ, ANDREW K. PLOT NAME : PLOT SCALE : 1" = 40'_XREF
WISDOT/CADDS SHEET 42

2

2

N

LEGEND

- TYPE III BARRICADE
- TYPE III BARRICADE WTH ATTACHED SIGN
- TRAFFIC CONTROL DRUM
- TRAFFIC CONTROL DRUM WITH TYPE C STEADY BURN LIGHT
- SIGN ON PERMANENT SUPPORT
- SIGN ON TEMPORARY SUPPORT
- DELINEATOR FLEXIBLE/TUBULAR MARKER
- TYPE A WARNING LIGHT (FLASHING)
- WORK AREA
- DIRECTION OF TRAFFIC

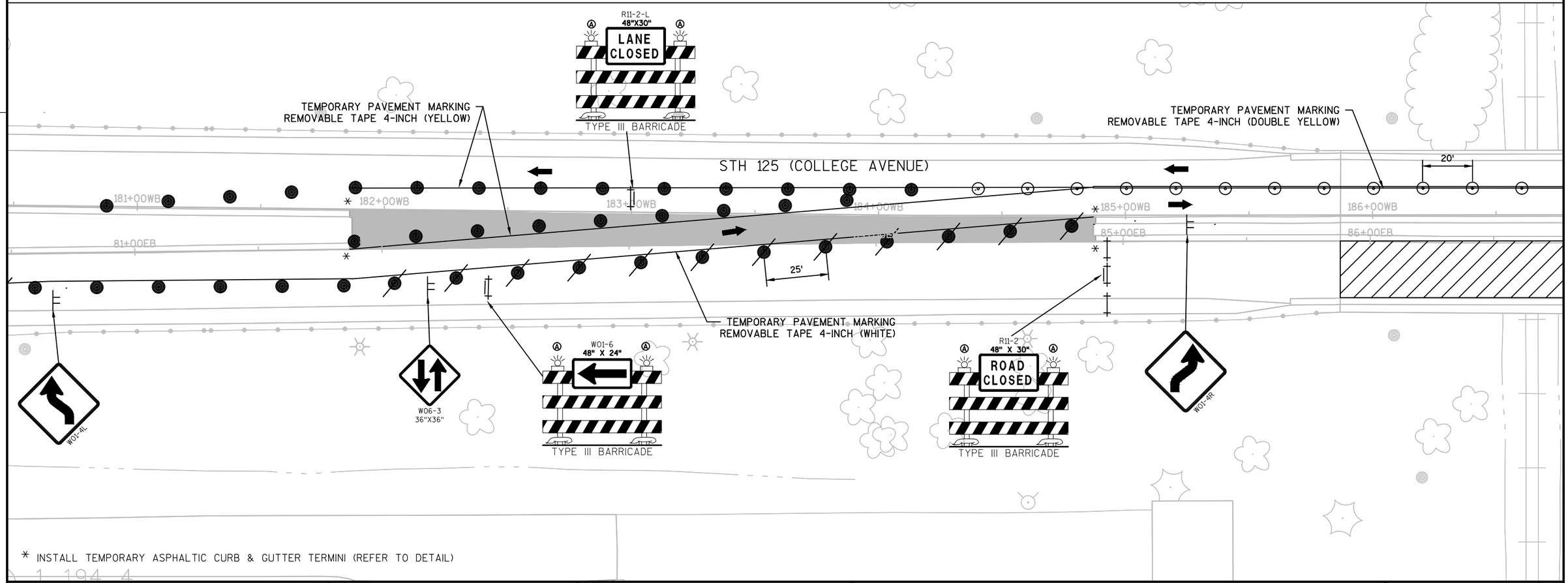

* INSTALL TEMPORARY ASPHALTIC CURB & GUTTER TERMINI (REFER TO DETAIL)

PROJECT NO: 4659-15-71	HWY: STH 125	COUNTY: OUTAGAMIE	TRAFFIC CONTROL, STAGE 2	SHEET 67 E

FILE NAME : J:\JOBS2013\20132040\CAD\TRANSPORTATION\DWG\SHEETSPLAN\025012-TC.DWG
LAYOUT NAME - 025013

PLOT DATE : 1/31/2017 10:45 AM PLOT BY : TURSKY, EVAN M. PLOT NAME : PLOT SCALE : 1" = 40'_XREF

WISDOT/CADDS SHEET 42

2

2

LEGEND

- TYPE III BARRICADE
- TYPE III BARRICADE WTH ATTACHED SIGN
- TRAFFIC CONTROL DRUM
- TRAFFIC CONTROL DRUM WITH TYPE C STEADY BURN LIGHT
- SIGN ON PERMANENT SUPPORT
- SIGN ON TEMPORARY SUPPORT
- DELINEATOR FLEXIBLE/TUBULAR MARKER
- (A) TYPE A WARNING LIGHT (FLASHING)
- WORK AREA
- DIRECTION OF TRAFFIC

N

WIS. CENTRAL LTD

TEMPORARY PAVEMENT MARKING
REMOVABLE TAPE 4-INCH (DOUBLE YELLOW)

20'

187+00WB
188+00WB
189+00WB
190+00WB
191+00WB
192+00WB
87+00EB
88+00EB
92+00EB

STH 125 (COLLEGE AVENUE)

W06-3
36"X36"

TEMPORARY PAVEMENT MARKING
REMOVABLE TAPE 4-INCH (YELLOW)

R11-2-L
48"X30"
LANE
CLOSED

TYPE III BARRICADE

W01-6
48" X 24"

TYPE III BARRICADE

25'

TEMPORARY PAVEMENT MARKING
REMOVABLE TAPE 4-INCH (WHITE)

* INSTALL TEMPORARY ASPHALTIC CURB & GUTTER TERMINI (REFER TO DETAIL)

PROJECT NO: 4659-15-71	HWY: STH 125	COUNTY: OUTAGAMIE	TRAFFIC CONTROL, STAGE 2	SHEET 68 E

FILE NAME : J:\JOBS2013\20132040\CAD\TRANSPORTATION\DWG\SHEETSPLAN\025012-TC.DWG
LAYOUT NAME - 025014

PLOT DATE : 1/31/2017 10:50 AM PLOT BY : TURSKY, EVAN M. PLOT NAME : PLOT SCALE : 1" = 40'_XREF

WISDOT/CADDS SHEET 42

2

LEGEND

- TYPE III BARRICADE
- TYPE III BARRICADE WTH ATTACHED SIGN
- TRAFFIC CONTROL DRUM
- TRAFFIC CONTROL DRUM WITH TYPE C STEADY BURN LIGHT
- SIGN ON PERMANENT SUPPORT
- SIGN ON TEMPORARY SUPPORT
- DELINEATOR FLEXIBLE/TUBULAR MARKER
- (A) TYPE A WARNING LIGHT (FLASHING)
- WORK AREA
- DIRECTION OF TRAFFIC

N

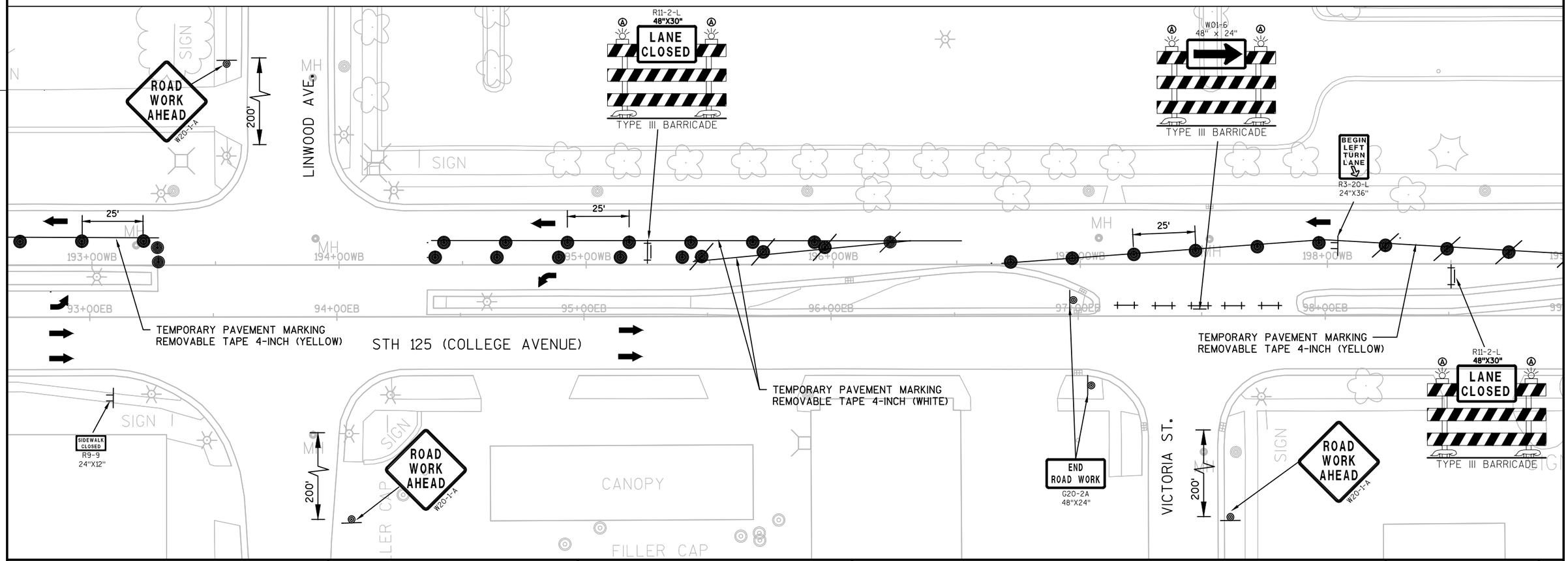

PROJECT NO: 4659-15-71	HWY: STH 125	COUNTY: OUTAGAMIE	TRAFFIC CONTROL, STAGE 2	SHEET 69 E

FILE NAME : J:\JOBS2013\20132040\CAD\TRANSPORTATION\DWG\SHEETSPLAN\025012-TC.DWG
LAYOUT NAME - 025015

PLOT DATE : 1/31/2017 11:02 AM PLOT BY : TURSKY, EVAN M. PLOT NAME : PLOT SCALE : 1" = 40'_XREF

WISDOT/CADDS SHEET 42

2

2

LEGEND

- TYPE III BARRICADE
- TYPE III BARRICADE WTH ATTACHED SIGN
- TRAFFIC CONTROL DRUM
- TRAFFIC CONTROL DRUM WITH TYPE C STEADY BURN LIGHT
- SIGN ON PERMANENT SUPPORT
- SIGN ON TEMPORARY SUPPORT
- DELINEATOR FLEXIBLE/TUBULAR MARKER
- TYPE A WARNING LIGHT (FLASHING)
- WORK AREA
- DIRECTION OF TRAFFIC

N

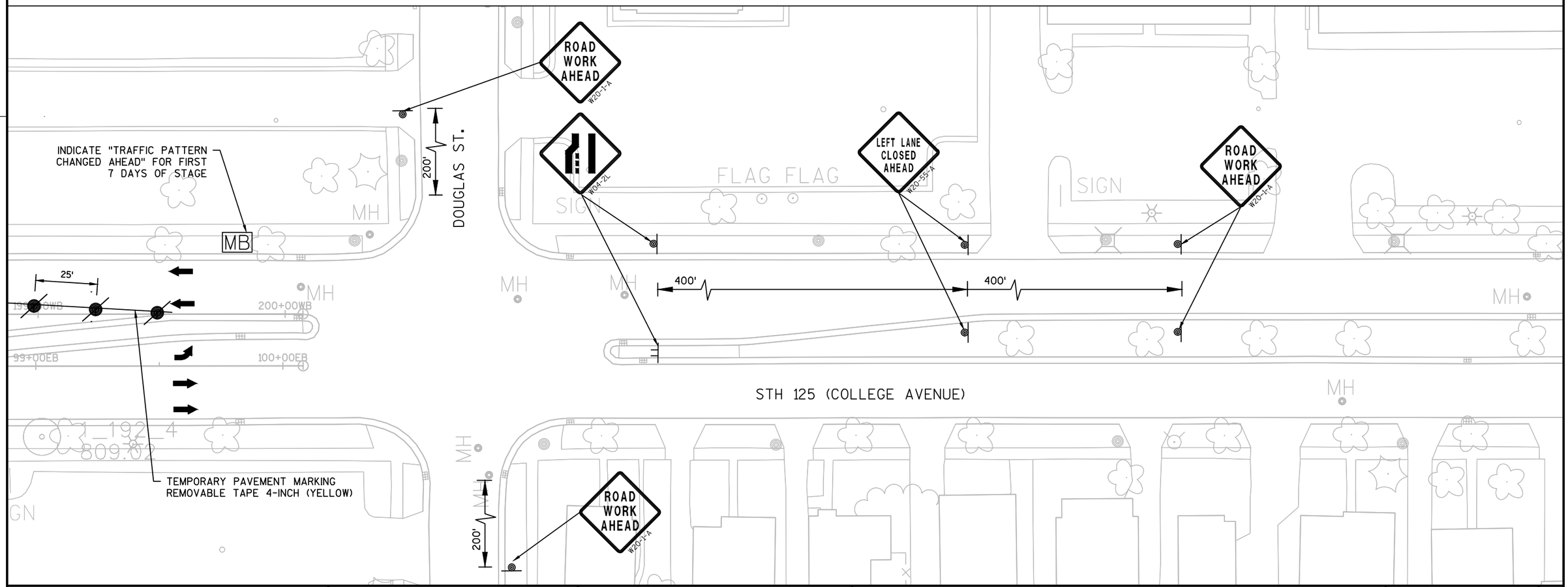

PROJECT NO: 4659-15-71	HWY: STH 125	COUNTY: OUTAGAMIE	TRAFFIC CONTROL, STAGE 2	SHEET 70 E

FILE NAME : J:\JOBS2013\20132040\CAD\TRANSPORTATION\DWG\SHEETSPLAN\025012-TC.DWG
LAYOUT NAME - 025016
PLOT DATE : 10/31/2016 1:17 PM PLOT BY : WORECK, CHRIS PLOT NAME : PLOT SCALE : 1" = 40'_XREF
WISDOT/CADDS SHEET 42

4659-15-71

Line	Item	Item Description	Unit	Total	Qty
0010	203.0225.S	Debris Containment (structure) 01. B-44-0009	LS	1.000	1.000
0020	204.0100	Removing Pavement	SY	89.000	89.000
0030	204.0105	Removing Pavement Butt Joints	SY	1,273.000	1,273.000
0040	204.0110	Removing Asphaltic Surface	SY	797.000	797.000
0050	204.0115	Removing Asphaltic Surface Butt Joints	SY	2,743.000	2,743.000
0060	204.0150	Removing Curb & Gutter	LF	1,900.000	1,900.000
0070	204.0155	Removing Concrete Sidewalk	SY	206.000	206.000
0080	204.0195	Removing Concrete Bases	EACH	14.000	14.000
0090	204.0220	Removing Inlets	EACH	2.000	2.000
0100	204.0245	Removing Storm Sewer (size) 01. 10-Inch	LF	22.000	22.000
0110	205.0100	Excavation Common	CY	1,365.000	1,365.000
0120	211.0100	Prepare Foundation for Asphaltic Paving (project) 01. 4659-15-71	LS	1.000	1.000
0130	213.0100	Finishing Roadway (project) 01. 4659-15-71	EACH	1.000	1.000
0140	305.0110	Base Aggregate Dense 3/4-Inch	TON	404.000	404.000
0150	305.0120	Base Aggregate Dense 1 1/4-Inch	TON	1,117.000	1,117.000
0160	390.0403	Base Patching Concrete Shes	SY	12,310.000	12,310.000
0170	416.0610	Drilled Tie Bars	EACH	4,342.000	4,342.000
0180	416.0620	Drilled Dowel Bars	EACH	13,428.000	13,428.000
0190	440.4410	Incentive IRI Ride	DOL	12,326.500	12,326.500
0200	455.0605	Tack Coat	GAL	8,077.000	8,077.000
0210	460.2000	Incentive Density HMA Pavement	DOL	6,240.000	6,240.000
0220	460.2010	Incentive Air Voids HMA Pavement	DOL	9,750.000	9,750.000
0230	460.6224	HMA Pavement 4 MT 58-28 S	TON	9,746.000	9,746.000
0240	465.0125	Asphaltic Surface Temporary	TON	224.000	224.000
0250	502.3100	Expansion Device (structure) 01. B-44-0009	LS	1.000	1.000
0260	502.3200	Protective Surface Treatment	SY	1,704.000	1,704.000
0270	502.3210	Pigmented Surface Sealer	SY	193.000	193.000
0280	502.4205	Adhesive Anchors No. 5 Bar	EACH	68.000	68.000
0290	505.0600	Bar Steel Reinforcement HS Coated Structures	LB	5,107.000	5,107.000
0300	505.0904	Bar Couplers No. 4	EACH	15.000	15.000
0310	505.0905	Bar Couplers No. 5	EACH	46.000	46.000
0320	509.0301	Preparation Decks Type 1	SY	142.000	142.000
0330	509.0302	Preparation Decks Type 2	SY	93.000	93.000
0340	509.0500	Cleaning Decks	SY	1,356.000	1,356.000
0350	509.1000	Joint Repair	SY	52.000	52.000
0360	509.1500	Concrete Surface Repair	SF	240.000	240.000
0370	509.2000	Full-Depth Deck Repair	SY	1.000	1.000
0380	509.2500	Concrete Masonry Overlay Decks	CY	121.000	121.000
0390	513.2050.S	Railing Pipe	LF	425.000	425.000

4659-15-71

Line	Item	Item Description	Unit	Total	Qty
0400	513.9005.S	Removing and Resetting Tubular Railing (structure) 01. B-44-0009	LS	1.000	1.000
0410	520.8700	Cleaning Culvert Pipes	EACH	18.000	18.000
0420	601.0405	Concrete Curb & Gutter 18-Inch Type A	LF	19.000	19.000
0430	601.0409	Concrete Curb & Gutter 30-Inch Type A	LF	1,920.000	1,920.000
0440	601.0411	Concrete Curb & Gutter 30-Inch Type D	LF	38.000	38.000
0450	601.0586	Concrete Curb & Gutter 4-Inch Sloped 30-Inch Type TBTT	LF	37.000	37.000
0460	602.0410	Concrete Sidewalk 5-Inch	SF	1,875.000	1,875.000
0470	608.0312	Storm Sewer Pipe Reinforced Concrete Class III 12-Inch	LF	26.000	26.000
0480	611.0624	Inlet Covers Type H	EACH	2.000	2.000
0490	611.3230	Inlets 2x3-FT	EACH	2.000	2.000
0500	611.8110	Adjusting Manhole Covers	EACH	1.000	1.000
0510	611.8115	Adjusting Inlet Covers	EACH	43.000	43.000
0520	614.0397	Guardrail Mow Strip Emulsified Asphalt	SY	920.000	920.000
0530	614.0920	Salvaged Rail	LF	2,192.000	2,192.000
0540	614.0925	Salvaged Guardrail End Treatments	EACH	8.000	8.000
0550	614.2300	MGS Guardrail 3	LF	2,131.000	2,131.000
0560	614.2500	MGS Thrie Beam Transition	LF	117.000	117.000
0570	614.2610	MGS Guardrail Terminal EAT	EACH	4.000	4.000
0580	614.2620	MGS Guardrail Terminal Type 2	EACH	3.000	3.000
0590	618.0100	Maintenance And Repair of Haul Roads (project) 01. 4659-15-71	EACH	1.000	1.000
0600	619.1000	Mobilization	EACH	1.000	1.000
0610	624.0100	Water	MGAL	15.000	15.000
0620	625.0100	Topsoil	SY	1,875.000	1,875.000
0630	628.1504	Silt Fence	LF	1,095.000	1,095.000
0640	628.1520	Silt Fence Maintenance	LF	1,095.000	1,095.000
0650	628.1905	Mobilizations Erosion Control	EACH	5.000	5.000
0660	628.1910	Mobilizations Emergency Erosion Control	EACH	3.000	3.000
0670	628.2002	Erosion Mat Class I Type A	SY	1,845.000	1,845.000
0680	628.7015	Inlet Protection Type C	EACH	28.000	28.000
0690	629.0210	Fertilizer Type B	CWT	1.180	1.180
0700	630.0130	Seeding Mixture No. 30	LB	33.800	33.800
0710	634.0614	Posts Wood 4x6-Inch X 14-FT	EACH	67.000	67.000
0720	634.0616	Posts Wood 4x6-Inch X 16-FT	EACH	23.000	23.000
0730	634.0620	Posts Wood 4x6-Inch X 20-FT	EACH	4.000	4.000
0740	637.2210	Signs Type II Reflective H	SF	786.550	786.550
0750	637.2215	Signs Type II Reflective H Folding	SF	276.020	276.020
0760	637.2230	Signs Type II Reflective F	SF	28.280	28.280

4659-15-71

Line	Item	Item Description	Unit	Total	Qty
0770	638.2602	Removing Signs Type II	EACH	105.000	105.000
0780	638.3000	Removing Small Sign Supports	EACH	83.000	83.000
0790	643.0100	Traffic Control (project) 01. 4659-15-71	EACH	1.000	1.000
0800	643.0300	Traffic Control Drums	DAY	51,866.000	51,866.000
0810	643.0420	Traffic Control Barricades Type III	DAY	3,172.000	3,172.000
0820	643.0500	Traffic Control Flexible Tubular Marker Posts	EACH	60.000	60.000
0830	643.0600	Traffic Control Flexible Tubular Marker Bases	EACH	52.000	52.000
0840	643.0705	Traffic Control Warning Lights Type A	DAY	5,498.000	5,498.000
0850	643.0715	Traffic Control Warning Lights Type C	DAY	11,002.000	11,002.000
0860	643.0900	Traffic Control Signs	DAY	7,904.000	7,904.000
0870	643.1050	Traffic Control Signs PCMS	DAY	42.000	42.000
0880	646.0106	Pavement Marking Epoxy 4-Inch	LF	34,349.000	34,349.000
0890	646.0126	Pavement Marking Epoxy 8-Inch	LF	6,115.000	6,115.000
0900	646.0600	Removing Pavement Markings	LF	162.500	162.500
0910	647.0110	Pavement Marking Railroad Crossings Epoxy	EACH	2.000	2.000
0920	647.0166	Pavement Marking Arrows Epoxy Type 2	EACH	5.000	5.000
0930	647.0356	Pavement Marking Words Epoxy	EACH	2.000	2.000
0940	647.0456	Pavement Marking Curb Epoxy	LF	40.000	40.000
0950	647.0556	Pavement Marking Stop Line Epoxy 12-Inch	LF	485.000	485.000
0960	647.0606	Pavement Marking Island Nose Epoxy	EACH	17.000	17.000
0970	649.0400	Temporary Pavement Marking Removable Tape 4-Inch	LF	6,873.000	6,873.000
0980	649.0402	Temporary Pavement Marking Paint 4-Inch	LF	30,688.000	30,688.000
0990	649.0802	Temporary Pavement Marking Paint 8-Inch	LF	6,115.000	6,115.000
1000	650.4000	Construction Staking Storm Sewer	EACH	2.000	2.000
1010	650.5000	Construction Staking Base	LF	620.000	620.000
1020	650.7000	Construction Staking Concrete Pavement	LF	600.000	600.000
1030	650.8000	Construction Staking Resurfacing Reference	LF	16,148.000	16,148.000
1040	650.8500	Construction Staking Electrical Installations (project) 01. 4659-15-71	LS	1.000	1.000
1050	650.9910	Construction Staking Supplemental Control (project) 01. 4659-15-71	LS	1.000	1.000
1060	650.9920	Construction Staking Slope Stakes	LF	1,346.000	1,346.000
1070	652.0210	Conduit Rigid Nonmetallic Schedule 40 1-Inch	LF	225.000	225.000
1080	652.0225	Conduit Rigid Nonmetallic Schedule 40 2-Inch	LF	5,260.000	5,260.000
1090	652.0235	Conduit Rigid Nonmetallic Schedule 40 3-Inch	LF	210.000	210.000
1100	652.0605	Conduit Special 2-Inch	LF	510.000	510.000
1110	652.0800	Conduit Loop Detector	LF	230.000	230.000
1120	653.0105	Pull Boxes Steel 12x24-Inch	EACH	4.000	4.000
1130	654.0113	Concrete Bases Type 13	EACH	14.000	14.000
1140	655.0230	Cable Traffic Signal 5-14 AWG	LF	4,020.000	4,020.000

4659-15-71

Line	Item	Item Description	Unit	Total	Qty
1150	655.0240	Cable Traffic Signal 7-14 AWG	LF	1,400.000	1,400.000
1160	655.0260	Cable Traffic Signal 12-14 AWG	LF	7,470.000	7,470.000
1170	655.0305	Cable Type UF 2-12 AWG Grounded	LF	3,080.000	3,080.000
1180	655.0515	Electrical Wire Traffic Signals 10 AWG	LF	9,990.000	9,990.000
1190	655.0610	Electrical Wire Lighting 12 AWG	LF	1,810.000	1,810.000
1200	655.0700	Loop Detector Lead In Cable	LF	1,580.000	1,580.000
1210	655.0800	Loop Detector Wire	LF	760.000	760.000
1220	655.0900	Traffic Signal EVP Detector Cable	LF	3,870.000	3,870.000
1230	657.0100	Pedestal Bases	EACH	14.000	14.000
1240	657.0425	Traffic Signal Standards Aluminum 15-FT	EACH	14.000	14.000
1250	657.1355	Install Poles Type 12	EACH	2.000	2.000
1260	657.1360	Install Poles Type 13	EACH	12.000	12.000
1270	657.1550	Install Monotube Arms 50-FT	EACH	5.000	5.000
1280	657.1555	Install Monotube Arms 55-FT	EACH	9.000	9.000
1290	657.1812	Install Luminaire Arms Steel 12-FT	EACH	11.000	11.000
1300	657.1815	Install Luminaire Arms Steel 15-FT	EACH	1.000	1.000
1310	658.0110	Traffic Signal Face 3-12 Inch Vertical	EACH	42.000	42.000
1320	658.0115	Traffic Signal Face 4-12 Inch Vertical	EACH	28.000	28.000
1330	658.0215	Backplates Signal Face 3 Section 12-Inch	EACH	42.000	42.000
1340	658.0220	Backplates Signal Face 4 Section 12-Inch	EACH	28.000	28.000
1350	658.0600	Led Modules 12-Inch Red Ball	EACH	42.000	42.000
1360	658.0605	Led Modules 12-Inch Yellow Ball	EACH	42.000	42.000
1370	658.0610	Led Modules 12-Inch Green Ball	EACH	42.000	42.000
1380	658.0615	Led Modules 12-Inch Red Arrow	EACH	28.000	28.000
1390	658.0620	Led Modules 12-Inch Yellow Arrow	EACH	56.000	56.000
1400	658.0625	Led Modules 12-Inch Green Arrow	EACH	28.000	28.000
1410	658.5069	Signal Mounting Hardware (location) 01. STH 125 & Westhill/Kools	LS	1.000	1.000
1420	658.5069	Signal Mounting Hardware (location) 02. STH 125 & Bluemound	LS	1.000	1.000
1430	658.5069	Signal Mounting Hardware (location) 03. STH 125 & Lilas	LS	1.000	1.000
1440	658.5069	Signal Mounting Hardware (location) 04. STH 125 & Lynndale	LS	1.000	1.000
1450	658.5069	Signal Mounting Hardware (location) 05. STH 125 & Perkins	LS	1.000	1.000
1460	659.1120	Luminaires Utility LED B	EACH	15.000	15.000
1470	690.0150	Sawing Asphalt	LF	3,144.000	3,144.000
1480	690.0250	Sawing Concrete	LF	33,644.000	33,644.000
1490	715.0502	Incentive Strength Concrete Structures	DOL	726.000	726.000
1500	801.0117	Railroad Flagging Reimbursment	DOL	12,000.000	12,000.000

4659-15-71

Line	Item	Item Description	Unit	Total	Qty
1510	ASP.1T0A	On-the-Job Training Apprentice at $5.00/HR	HRS	2,400.000	2,400.000
1520	ASP.1T0G	On-the-Job Training Graduate at $5.00/HR	HRS	2,100.000	2,100.000
1530	SPV.0060	Special 01. Pull Boxes Non-Cunductive 24x42-Inch	EACH	6.000	6.000
1540	SPV.0060	Special 02. Adjusting Water Valve Box	EACH	2.000	2.000
1550	SPV.0105	Special 02. Remove Traffic Signal (STH 125 & Westhill/Kools)	LS	1.000	1.000
1560	SPV.0105	Special 03. Remove Traffic Signal (STH 125 & Bluemound)	LS	1.000	1.000
1570	SPV.0105	Special 04. Remove Traffic Signal (STH 125 & Lilas)	LS	1.000	1.000
1580	SPV.0105	Special 05. Remove Traffic Signal (STH 125 & Lynndale)	LS	1.000	1.000
1590	SPV.0105	Special 06. Remove Traffic Signal (STH 125 & Perkins)	LS	1.000	1.000
1600	SPV.0120	Special 01. Water For Seeded Areas	MGAL	42.100	42.100
1610	SPV.0180	Special 01. Concrete Base 9-Inch	SY	725.000	725.000

NOTE: ALL ITEMS ON THIS SHEET ARE CATEGORY 0010 UNLESS OTHERWISE NOTED.

3

REMOVING PAVEMENT

STATION - STATION	LOCATION	204.0100 (SY)
113+00 WB - 113+76 WB	LEFT-TURN LANE	89
	PROJECT TOTAL	89

REMOVING ASPHALT SURFACE

STATION - STATION	LOCATION	204.0110 (SY)
81+88 EB - 84+88 EB	WEST TEMPORARY CROSSOVER	411
85+67 EB - 85+78 EB	RIGHT	4
88+85 EB - 92+02 EB	EAST TEMPORARY CROSSOVER	360
184+51 WB - 185+66 WB	SHOULDER	22
	PROJECT TOTAL	797

REMOVING CURB AND GUTTER

STATION - STATION	LOCATION	204.0150 (LF)
14+23 EB - 14+27 EB	MEDIAN	4
22+46 EB - 22+52 EB	MEDIAN	6
42+31 EB - 42+41 EB	MEDIAN	8
75+46 EB	RIGHT	3
81+87 EB - 84+87 EB	MEDIAN	300
88+85 EB - 92+05 EB	MEDIAN	320
113+80 WB - 119+00 WB	MEDIAN	507
120+87 WB - 120+97 WB	MEDIAN	10
121+10 WB - 121+16 WB	SHOULDER	6
133+28 WB - 133+34 WB	MEDIAN	6
181+87 WB - 184+87 WB	MEDIAN	300
188+18 WB - 188+23 WB	MEDIAN	5
188+19 WB - 188+57 WB	LEFT	39
188+84 WB - 192+04 WB	MEDIAN	320
192+70 WB - 193+20 WB	LEFT	50
SOUTH BLUEMOUND DR.	SB LANE	6
NORTH BLUEMOUND DR.	NB LANE	10
	PROJECT TOTAL	1,900

REMOVING PAVEMENT BUTT JOINTS

STATION	LOCATION	204.0105 (SY)
11+56 EB	EB LANE	235
85+88 EB	BRIDGE ABUTMENT	115
88+20 EB	BRIDGE ABUTMENT	115
93+10 EB	EB LANE	160
112+00 WB	WB LANE	245
185+87 WB	BRIDGE ABUTMENT	115
188+19 WB	BRIDGE ABUTMENT	115
192+04 WB	WB LANE	110
NORTH LILAS DRIVE	SB LANE	34
NORTH LILAS DRIVE	NB LANE	29
	PROJECT TOTAL	1,273

REMOVING ASPHALTIC SURFACE BUTT JOINTS

STATION	LOCATION	204.0115 (SY)
28+75 EB	MIDBLOCK ENTRANCE	109.5
42+75 EB	MIDBLOCK ENTRANCE	83.0
53+72 EB	MIDBLOCK ENTRANCE	97.5
68+95 EB	EB LANE	115.0
69+09 EB	EB LANE	115.0
128+50 WB	MIDBLOCK ENTRANCE	100.0
141+00 WB	MIDBLOCK ENTRANCE	97.0
168+73 WB	WB LANE	115.0
168+89 WB	WB LANE	115.0
WESTHILL BLVD.	SB LANE	107.0
WESTHILL BLVD.	NB LANE	117.5
KOOLS ST.	SB LANE	111.0
KOOLS ST.	NB LANE	94.0
NORTH BLUEMOUND DR.	SB LANE	105.0
NORTH BLUEMOUND DR.	NB LANE	85.5
SOUTH BLUEMOUND DR.	SB LANE	80.5
SOUTH BLUEMOUND DR.	NB LANE	92.5
SOUTH LILAS DR.	SB LANE	103.0
SOUTH LILAS DR.	NB LANE	101.0
NORTH LYNNDALE DR.	SB LANE	81.0
NORTH LYNNDALE DR.	NB LANE	98.0
NORTH LYNNDALE DR.	RIGHT-TURN LANE	65.5
SOUTH LYNNDALE DR.	SB LANE	89.5
SOUTH LYNNDALE DR.	NB LANE	78.0
SOUTH LYNNDALE DR.	RIGHT-TURN LANE	69.5
NORTH PERKINS ST.	SB LANE	80.0
NORTH PERKINS ST.	NB LANE	78.0
SOUTH PERKINS ST.	SB LANE	78.5
SOUTH PERKINS ST.	NB LANE	81.0
	PROJECT TOTAL	2,743.0

NOTE: ALL ITEMS ON THIS SHEET ARE CATEGORY 0010 UNLESS OTHERWISE NOTED.

3

REMOVING CONCRETE SIDEWALK

STATION - STATION	LOCATION	204.0155 (SY)
35+52 EB - 35+57 EB	MEDIAN	3
74+23 EB - 74+33 EB	MEDIAN	6
85+78 EB - 85+83 EB	RIGHT	2
88+19 EB - 88+29 EB	MEDIAN	6
88+19 EB - 88+24 EB	RIGHT	2
88+85 EB - 92+05 EB	MEDIAN	180
SOUTH LILAS DR.	MEDIAN	4
NORTH PERKINS ST.	MEDIAN	3
	PROJECT TOTAL	206

REMOVING CONCRETE BASES

LOCATION	204.0195 EACH
STH 125 & WESTHILL/KOOLS (S44-0331)	2
STH 125 & BLUEMOUND (S44-0104)	4
STH 125 & LILAS (S44-0392)	2
STH 125 & LYNNDALE (S44-0121)	4
STH 125 & PERKINS (S44-0220)	2
PROJECT TOTALS	14

REMOVING INLETS

STATION	LOCATION	204.0220 (EACH)
114+38 WB	MEDIAN	1
117+69 WB	MEDIAN	1
	PROJECT TOTAL	2

REMOVING STORM SEWER

STATION	LOCATION	204.0245 10-INCH (LF)
114+38 WB	MEDIAN	13
117+69 WB	MEDIAN	9
	PROJECT TOTAL	22

3

EARTHWORK

STATION TO STATION	LOCATION	COMMON EXCAVATION Cut (1) (item # 205.0100)	SALVAGED/UNUSABLE MATERIAL (2)	AVAILABLE MATERIAL (3)	UNEXPANDED FILL	EXPANDED FILL (4) FACTOR 1.25	MASS ORDINATE +/- (5) (6)	WASTE	BORROW (item #208.0100)	COMMENT:
113+00 WB - 119+00 WB	LEFT-TURN LANE EXTENSION	800	65	735	4	5	730	730	0	
LEFT-TURN LANE EXTENSION SUBTOTAL		800	65	735	4	5	730	730	0	
CURB AND GUTTER	ENTIRE PROJECT	15	11	4	5	7	-2	0	0	
CURB AND GUTTER SUBTOTAL		15	11	4	5	7	-2	0	0	
77+04 EB - 85+79 EB	GUARDRAIL	155	0	155	20	24	131	131	0	
GUARDRAIL SUBTOTAL		155	0	155	20	24	131	131	0	
GRADING AND SHAPING FOR GUARDRAIL		25	0	25	8	10	15	15		
GRADING AND SHAPING FOR GUARDRAIL SUBTOTAL		25	0	25	8	10	15	15	0	
81+87 EB - 84+87 EB	TEMPORARY WEST CROSSOVER	204	47	157	75	94	63	63	0	
TEMPORARY WEST CROSSOVER SUBTOTALS		204	47	157	75	94	63	63	0	
88+85 EB - 92+05 EB	TEMPORARY EAST CROSSOVER	166	76	90	0	0	90	90	0	
TEMPORARY EAST CROSSOVER		166	76	90	0	0	90	90	0	
Grand Total		1365	199	1166	112	140	1026	1029	0	
Total Common Exc		1365								

1) Salvaged/Unsuable Pavement Material is included in Cut.
2) Salvaged/Unusable Pavement Material
3) Available Material = Cut - Salvaged/Unusuable Pavement Material
4) Expanded Fill. Factor = 1.25
5) The Mass Ordinate + or - Qty calculated for the Division. Plus quantity indicates an excess of material within the Division. Minus indicates a shortage of material within the Division.
6) Excavation for Structures is not included on this table.

NOTE: ALL ITEMS ON THIS SHEET ARE CATEGORY 0010 UNLESS OTHERWISE NOTED.

BASE AGGREGATE DENSE AND WATER

STATION - STATION	LOCATION	305.0110 BASE AGGREGATE DENSE 3/4-INCH (TON)	305.0120 BASE AGGREGATE DENSE 1 1/4-INCH (TON)	624.0100 WATER (MGAL)
11+56 EB - 77+04 EB	SHOULDER	90	---	0.9
11+85 EB - 14+48 EB	GUARDRAIL	25	---	0.25
77+04 EB - 85+79 EB	GUARDRAIL	70	---	0.7
112+00 WB - 185+67 WB	SHOULDER	102	---	1
111+90 WB - 114+60 WB	GUARDRAIL	25	---	0.25
180+00 WB - 185+81 WB	GUARDRAIL	55	---	0.6
113+00 WB - 119+00 WB	LEFT TURN LANE	---	671	7
81+88 EB - 84+88 EB	WEST TEMPORARY CROSSOVER	---	164	2
88+85 EB - 92+02 EB	EAST TEMPOARAY CROSSOVER	---	120	1
88+85 EB - 92+02 EB	RESTORE MEDIAN	---	60	1
	UNDISTRIBUTED	37	102	1
	PROJECT TOTALS	404	1,117	15

PAVEMENT REPAIR SUMMARY

STATION	TO	STATION	LOCATION	390.0403 BASE PATCHING CONCRETE SHES (SY)	416.0610* DRILLED TIE BARS (EACH)	416.0620* DRILLED DOWEL BARS (EACH)	690.0150* SAWING ASPHALT (LF)	690.0250* SAWING CONCRETE (LF)
EB	-	EB	EB MAINLINE LANE 1	2,693	1,063	2,664	36	8,022
EB	-	EB	EB MAINLINE LANE 2	2,288	502	2,336	615	5,086
WB	-	WB	WB MAINLINE LANE 1	1,851	586	1,952	0	5,468
WB	-	WB	WB MAINLINE LANE 2	2,207	522	2,312	780	4,966
EB	-	EB	S KOOLS STREET INTERSECTION	180	50	304	148	533
WB	-	WB	N WESTHILL BLVD INTERSECTION	224	49	216	121	121
EB	-	EB	S BLUEMOUND DR INTERSECTION	215	71	400	134	620
WB	-	WB	N BLUEMOUND DR INTERSECTION	291	106	416	212	720
EB	-	EB	S LILAS DR INTERSECTION	293	111	248	126	588
WB	-	WB	N LILAS DR INTERSECTION	256	127	272	79	653
EB	-	EB	S LYNNDALE DR INTERSECTION	227	99	416	90	706
WB	-	WB	N LYNNDALE DR INTERSECTION	107	27	176	99	266
EB		EB	S PERKINS ST	167	52	248	99	401
WB		WB	N PERKINS ST	129	49	240	68	443
WB		WB	USH 41 NB ON RAMP	62	14	0	116	119
			UNDISTRIBUTED	1,120	340	1,220	270	2,870
			PROJECT TOTALS	12,310	3,768	13,420	2,993	31,582

* ADDITIONAL QUANTITIES LISTED ELSWHERE IN PLAN

DRILLED TIE BARS

STATION - STATION	LOCATION	416.0610* (EACH)
22+46 EB - 22+52 EB	MEDIAN	3
75+46 EB	OUTSIDE LANE	2
81+87 EB - 84+87 EB	MEDIAN	68
88+85 EB - 92+05 EB	MEDIAN	104
113+00 WB - 119+00 WB	LEFT TURN LANE	146
120+87 WB - 120+97 WB	MEDIAN	2
121+10 WB - 121+16 WB	SHOULDER	3
181+87 WB - 184+87 WB	MEDIAN	102
188+18 WB - 188+23 WB	MEDIAN	2
188+18 WB - 188+56 WB	OUTSIDE LANE	15
188+84 WB - 192+04 WB	MEDIAN	107
192+70 WB - 193+20 WB	OUTSIDE LANE	20
	PROJECT TOTAL	574

* ADDITIONAL QUANTITIES LISTED ELSWHERE IN PLAN

DRILLED DOWEL BARS

STATION	LOCATION	416.0620* (EACH)
113+00 WB	LEFT TURN LANE	8
	PROJECT TOTAL	8

* ADDITIONAL QUANTITIES LISTED ELSWHERE IN PLAN

NOTE: ALL ITEMS ON THIS SHEET ARE CATEGORY 0010 UNLESS OTHERWISE NOTED.

3

3

STH 125 EASTBOUND CONCRETE BASE PATCHING - LANE 1

STATION		TO	STATION		LOCATION	REPAIR SIZE LENGTH X WIDTH (FT x FT)	390.0403 BASE PATCHING CONCRETE SHES (SY)	416.0610 DRILLED TIE BARS (EACH)	416.0620 DRILLED DOWEL BARS (EACH)	690.0150 SAWING ASPHALT (LF)	690.0250 SAWING CONCRETE (LF)
12+09	EB	-	12+86	EB	STH 125 EB LANE 1	77 x 12	102.7	92	16	---	178
14+12	EB	-	14+35	EB	STH 125 EB LANE 1	23 x 12	30.7	18	16	---	66
14+84	EB	-	14+90	EB	STH 125 EB LANE 1	6 x 12	8.0	3	16	---	36
15+07	EB	-	15+13	EB	STH 125 EB LANE 1	6 x 12	8.0	3	16	---	36
15+52	EB	-	15+58	EB	STH 125 EB LANE 1	6 x 12	8.0	6	16	---	36
15+81	EB	-	15+89	EB	STH 125 EB LANE 1	8 x 12	10.7	6	16	---	40
18+11	EB	-	18+17	EB	STH 125 EB LANE 1	6 x 12	8.0	3	16	8	28
18+82	EB	-	19+10	EB	STH 125 EB LANE 1	28 x 12	37.3	---	8	28	52
19+61	EB	-	19+67	EB	STH 125 EB LANE 1	6 x 12	8.0	3	16	---	36
20+54	EB	-	20+60	EB	STH 125 EB LANE 1	6 x 12	8.0	6	16	---	36
21+24	EB	-	21+30	EB	STH 125 EB LANE 1	6 x 12	8.0	---	16	---	36
21+62	EB	-	21+67	EB	STH 125 EB LANE 1	6 x 12	8.0	6	16	---	36
21+80	EB	-	21+88	EB	STH 125 EB LANE 1	8 x 12	10.7	---	16	---	40
22+19	EB	-	22+42	EB	STH 125 EB LANE 1	23 x 12	30.7	16	16	---	70
22+69	EB	-	22+75	EB	STH 125 EB LANE 1	6 x 12	8.0	3	16	---	36
22+89	EB	-	22+95	EB	STH 125 EB LANE 1	6 x 12	8.0	3	16	---	36
23+12	EB	-	23+52	EB	STH 125 EB LANE 1	40 x 12	53.3	15	16	---	104
23+90	EB	-	24+17	EB	STH 125 EB LANE 1	27 x 12	36.0	17	16	---	78
24+51	EB	-	24+57	EB	STH 125 EB LANE 1	6 x 12	8.0	6	16	---	36
24+90	EB	-	24+96	EB	STH 125 EB LANE 1	6 x 12	8.0	3	16	---	36
25+13	EB	-	25+19	EB	STH 125 EB LANE 1	6 x 12	8.0	6	16	---	36
25+31	EB	-	25+37	EB	STH 125 EB LANE 1	6 x 12	8.0	3	16	---	36
26+09	EB	-	26+16	EB	STH 125 EB LANE 1	7 x 12	9.3	6	16	---	38
26+56	EB	-	26+61	EB	STH 125 EB LANE 1	6 x 12	8.0	6	16	---	36
26+93	EB	-	26+99	EB	STH 125 EB LANE 1	6 x 12	8.0	3	16	---	36
27+14	EB	-	27+20	EB	STH 125 EB LANE 1	6 x 12	8.0	6	16	---	36
27+49	EB	-	27+70	EB	STH 125 EB LANE 1	20 x 12	26.7	14	16	---	64
27+77	EB	-	27+99	EB	STH 125 EB LANE 1	22 x 12	29.3	14	16	---	68
28+52	EB	-	28+90	EB	STH 125 EB LANE 1	38 x 12	50.7	20	16	---	100
29+33	EB	-	29+38	EB	STH 125 EB LANE 1	6 x 12	8.0	3	16	---	36
29+61	EB	-	29+67	EB	STH 125 EB LANE 1	6 x 12	8.0	3	16	---	36
29+74	EB	-	29+80	EB	STH 125 EB LANE 1	6 x 12	8.0	3	16	---	36
30+02	EB	-	30+36	EB	STH 125 EB LANE 1	34 x 12	45.3	12	16	---	92
30+56	EB	-	30+62	EB	STH 125 EB LANE 1	6 x 12	8.0	3	16	---	36
30+80	EB	-	31+14	EB	STH 125 EB LANE 1	34 x 12	45.3	22	16	---	92
31+41	EB	-	31+62	EB	STH 125 EB LANE 1	21 x 12	28.0	---	16	---	66
32+19	EB	-	32+25	EB	STH 125 EB LANE 1	6 x 12	8.0	---	16	---	36
32+36	EB	-	32+43	EB	STH 125 EB LANE 1	6 x 12	8.0	3	16	---	36
33+07	EB	-	33+13	EB	STH 125 EB LANE 1	6 x 12	8.0	---	16	---	36
33+44	EB	-	33+52	EB	STH 125 EB LANE 1	8 x 12	10.7	---	16	---	40
					STH 125 EB LANE 1 SUBTOTALS =		749.3	336	632	36	2,044

STH 125 EASTBOUND CONCRETE BASE PATCHING - LANE 1 CONTIMUES ON FOLLOWING SHEET

NOTE: ALL ITEMS ON THIS SHEET ARE CATEGORY 0010 UNLESS OTHERWISE NOTED.

3

STH 125 EASTBOUND CONCRETE BASE PATCHING - LANE 1

STATION		TO	STATION		LOCATION	REPAIR SIZE LENGTH X WIDTH (FT x FT)	390.0403 BASE PATCHING CONCRETE SHES (SY)	416.0610 DRILLED TIE BARS (EACH)	416.0620 DRILLED DOWEL BARS (EACH)	690.0150 SAWING ASPHALT (LF)	690.0250 SAWING CONCRETE (LF)
34+31	EB	-	34+37	EB	STH 125 EB LANE 1	6 x 12	8.0	6	16	---	36
34+53	EB	-	34+61	EB	STH 125 EB LANE 1	8 x 12	10.7	3	16	---	40
35+31	EB	-	35+57	EB	STH 125 EB LANE 1	26 x 12	34.7	10	8	---	76
35+87	EB	-	35+93	EB	STH 125 EB LANE 1	6 x 12	8.0	6	8	---	36
36+10	EB	-	36+16	EB	STH 125 EB LANE 1	6 x 12	8.0	3	16	---	36
36+40	EB	-	36+46	EB	STH 125 EB LANE 1	6 x 12	8.0	3	16	---	36
36+57	EB	-	36+63	EB	STH 125 EB LANE 1	6 x 12	8.0	6	16	---	36
36+78	EB	-	36+84	EB	STH 125 EB LANE 1	6 x 12	8.0	3	16	---	36
37+59	EB	-	37+65	EB	STH 125 EB LANE 1	6 x 12	8.0	3	16	---	36
38+06	EB	-	38+12	EB	STH 125 EB LANE 1	6 x 12	8.0	3	16	---	36
38+28	EB	-	38+34	EB	STH 125 EB LANE 1	6 x 12	8.0	6	16	---	36
38+54	EB	-	38+60	EB	STH 125 EB LANE 1	6 x 12	8.0	6	16	---	36
38+81	EB	-	38+92	EB	STH 125 EB LANE 1	11 x 12	14.7	4	16	---	46
39+15	EB	-	39+33	EB	STH 125 EB LANE 1	18 x 12	24.0	10	16	---	60
39+48	EB	-	39+63	EB	STH 125 EB LANE 1	15 x 12	20.0	6	16	---	54
40+38	EB	-	40+44	EB	STH 125 EB LANE 1	6 x 12	8.0	3	16	---	36
41+11	EB	-	41+24	EB	STH 125 EB LANE 1	15 x 12	20.0	9	16	---	54
41+88	EB	-	41+94	EB	STH 125 EB LANE 1	6 x 12	8.0	3	16	---	36
42+22	EB	-	42+42	EB	STH 125 EB LANE 1	20 x 12	26.7	11	16	---	54
42+65	EB	-	42+71	EB	STH 125 EB LANE 1	6 x 12	8.0	3	16	---	36
43+08	EB	-	43+15	EB	STH 125 EB LANE 1	6 x 12	8.0	3	16	---	36
43+30	EB	-	43+36	EB	STH 125 EB LANE 1	6 x 12	8.0	6	16	---	36
43+87	EB	-	43+93	EB	STH 125 EB LANE 1	6 x 12	8.0	6	16	---	36
44+48	EB	-	44+64	EB	STH 125 EB LANE 1	16 x 12	21.3	12	16	---	56
45+20	EB	-	45+26	EB	STH 125 EB LANE 1	6 x 12	8.0	---	16	---	36
45+38	EB	-	45+44	EB	STH 125 EB LANE 1	6 x 12	8.0	6	16	---	36
45+63	EB	-	45+69	EB	STH 125 EB LANE 1	6 x 12	8.0	6	16	---	36
45+77	EB	-	454+91	EB	STH 125 EB LANE 1	14 x 12	18.7	5	16	---	52
46+16	EB	-	46+22	EB	STH 125 EB LANE 1	6 x 12	8.0	---	16	---	36
46+29	EB	-	46+37	EB	STH 125 EB LANE 1	8 x 12	10.7	6	16	---	40
46+47	EB	-	46+53	EB	STH 125 EB LANE 1	6 x 12	8.0	3	16	---	36
46+88	EB	-	47+10	EB	STH 125 EB LANE 1	22 x 12	29.3	---	16	---	68
47+85	EB	-	47+91	EB	STH 125 EB LANE 1	6 x 12	8.0	---	16	---	36
48+26	EB	-	48+30	EB	STH 125 EB LANE 1	6 x 12	8.0	---	16	---	36
48+73	EB	-	48+86	EB	STH 125 EB LANE 1	14 x 12	18.7	10	16	---	52
49+52	EB	-	49+67	EB	STH 125 EB LANE 1	15 x 12	20.0	6	16	---	54
49+94	EB	-	50+02	EB	STH 125 EB LANE 1	8 x 12	10.7	6	16	---	40
50+77	EB	-	50+83	EB	STH 125 EB LANE 1	6 x 12	8.0	3	16	---	36
51+05	EB	-	51+41	EB	STH 125 EB LANE 1	36 x 12	48.0	27	16	---	96
51+60	EB	-	51+66	EB	STH 125 EB LANE 1	6 x 12	8.0	3	16	---	36
					STH 125 EB LANE 1 SUBTOTALS =		528.0	215	624	0	1,742

STH 125 EASTBOUND CONCRETE BASE PATCHING - LANE 1 CONTIMUES ON FOLLOWING SHEET

NOTE: ALL ITEMS ON THIS SHEET ARE CATEGORY 0010 UNLESS OTHERWISE NOTED.

3

3

STH 125 EASTBOUND CONCRETE BASE PATCHING - LANE 1

STATION		TO	STATION		LOCATION	REPAIR SIZE LENGTH X WIDTH (FT x FT)	390.0403 BASE PATCHING CONCRETE SHES (SY)	416.0610 DRILLED TIE BARS (EACH)	416.0620 DRILLED DOWEL BARS (EACH)	690.0150 SAWING ASPHALT (LF)	690.0250 SAWING CONCRETE (LF)
51+98	EB	-	52+04	EB	STH 125 EB LANE 1	6 x 12	8.0	3	16	---	36
52+33	EB	-	52+43	EB	STH 125 EB LANE 1	10 x 12	13.3	4	16	---	44
52+55	EB	-	52+82	EB	STH 125 EB LANE 1	27 x 12	36.0	17	16	---	78
53+15	EB	-	53+23	EB	STH 125 EB LANE 1	8 x 12	10.7	3	16	---	40
53+57	EB	-	53+65	EB	STH 125 EB LANE 1	8 x 12	10.7	3	16	---	40
53+84	EB	-	54+20	EB	STH 125 EB LANE 1	38 x 12	50.7	15	16	---	100
54+37	EB	-	54+43	EB	STH 125 EB LANE 1	6 x 12	8.0	3	16	---	36
54+95	EB	-	55+01	EB	STH 125 EB LANE 1	6 x 12	8.0	6	16	---	36
55+24	EB	-	55+60	EB	STH 125 EB LANE 1	36 x 12	48.0	30	16	---	96
55+80	EB	-	55+99	EB	STH 125 EB LANE 1	19 x 12	25.3	14	16	---	62
56+42	EB	-	56+48	EB	STH 125 EB LANE 1	6 x 12	8.0	6	16	---	36
57+03	EB	-	57+09	EB	STH 125 EB LANE 1	6 x 12	8.0	---	16	---	36
57+45	EB	-	57+51	EB	STH 125 EB LANE 1	6 x 12	8.0	3	16	---	36
58+51	EB	-	58+63	EB	STH 125 EB LANE 1	12 x 12	16.0	10	16	---	48
58+86	EB	-	58+96	EB	STH 125 EB LANE 1	10 x 12	13.3	---	16	---	44
59+40	EB	-	59+63	EB	STH 125 EB LANE 1	23 x 12	30.7	12	16	---	70
59+74	EB	-	60+20	EB	STH 125 EB LANE 1	46 x 12	61.3	16	16	---	116
60+37	EB	-	60+43	EB	STH 125 EB LANE 1	6 x 12	8.0	3	16	---	36
60+54	EB	-	60+60	EB	STH 125 EB LANE 1	6 x 12	8.0	3	16	---	36
60+73	EB	-	60+79	EB	STH 125 EB LANE 1	6 x 12	8.0	---	16	---	36
61+08	EB	-	61+14	EB	STH 125 EB LANE 1	6 x 12	8.0	3	16	---	36
61+66	EB	-	61+72	EB	STH 125 EB LANE 1	6 x 12	8.0	3	16	---	36
61+21	EB	-	61+27	EB	STH 125 EB LANE 1	6 x 12	8.0	3	16	---	36
61+67	EB	-	61+73	EB	STH 125 EB LANE 1	6 x 12	8.0	6	16	---	36
61+82	EB	-	61+89	EB	STH 125 EB LANE 1	6 x 12	8.0	3	16	---	36
61+93	EB	-	61+99	EB	STH 125 EB LANE 1	6 x 12	8.0	6	16	---	36
62+06	EB	-	62+12	EB	STH 125 EB LANE 1	6 x 12	8.0	6	16	---	36
62+54	EB	-	62+80	EB	STH 125 EB LANE 1	26 x 12	34.7	10	16	---	76
63+35	EB	-	63+41	EB	STH 125 EB LANE 1	6 x 12	8.0	3	16	---	36
63+49	EB	-	63+83	EB	STH 125 EB LANE 1	32 x 12	42.7	18	16	---	88
63+99	EB	-	64+05	EB	STH 125 EB LANE 1	6 x 12	8.0	3	16	---	36
64+34	EB	-	64+40	EB	STH 125 EB LANE 1	6 x 12	8.0	6	16	---	36
64+55	EB	-	64+61	EB	STH 125 EB LANE 1	6 x 12	8.0	3	16	---	36
64+97	EB	-	65+03	EB	STH 125 EB LANE 1	6 x 12	8.0	3	16	---	36
65+22	EB	-	65+29	EB	STH 125 EB LANE 1	7 x 12	9.3	6	16	---	38
65+60	EB	-	65+66	EB	STH 125 EB LANE 1	6 x 12	8.0	3	16	---	36
66+00	EB	-	66+06	EB	STH 125 EB LANE 1	6 x 12	8.0	3	16	---	36
66+19	EB	-	66+25	EB	STH 125 EB LANE 1	6 x 12	8.0	3	16	---	36
66+39	EB	-	66+42	EB	STH 125 EB LANE 1	6 x 12	8.0	3	16	---	36
					STH 125 EB LANE 1 SUBTOTALS =		602.7	245	624	0	1,840

STH 125 EASTBOUND CONCRETE BASE PATCHING - LANE 1 CONTIMUES ON FOLLOWING SHEET

NOTE: ALL ITEMS ON THIS SHEET ARE CATEGORY 0010 UNLESS OTHERWISE NOTED.

3

STH 125 EASTBOUND CONCRETE BASE PATCHING - LANE 1

STATION		TO	STATION		LOCATION	REPAIR SIZE LENGTH X WIDTH (FT x FT)	390.0403 BASE PATCHING CONCRETE SHES (SY)	416.0610 DRILLED TIE BARS (EACH)	416.0620 DRILLED DOWEL BARS (EACH)	690.0150 SAWING ASPHALT (LF)	690.0250 SAWING CONCRETE (LF)
66+57	EB	-	66+63	EB	STH 125 EB LANE 1	6 x 12	8.0	3	16	---	36
67+14	EB	-	67+34	EB	STH 125 EB LANE 1	20 x 12	26.7	8	16	---	64
67+67	EB	-	67+73	EB	STH 125 EB LANE 1	6 x 12	8.0	3	16	---	36
70+15	EB	-	70+21	EB	STH 125 EB LANE 1	6 x 12	8.0	3	16	---	36
70+52	EB	-	70+95	EB	STH 125 EB LANE 1	43 x 12	57.3	27	16	---	110
71+10	EB	-	71+74	EB	STH 125 EB LANE 1	64 x 12	85.3	23	16	---	152
71+91	EB	-	72+22	EB	STH 125 EB LANE 1	31 x 12	41.3	6	16	---	86
72+98	EB	-	73+18	EB	STH 125 EB LANE 1	20 x 12	26.7	5	16	---	64
73+25	EB	-	73+57	EB	STH 125 EB LANE 1	32 x 12	42.7	10	16	---	88
74+31	EB	-	74+37	EB	STH 125 EB LANE 1	6 x 12	8.0	3	16	---	36
74+69	EB	-	74+75	EB	STH 125 EB LANE 1	6 x 12	8.0	3	16	---	36
75+29	EB	-	75+56	EB	STH 125 EB LANE 1	27 x 12	36.0	17	16	---	78
75+84	EB	-	75+97	EB	STH 125 EB LANE 1	13 x 12	17.3	7	16	---	50
76+21	EB	-	76+32	EB	STH 125 EB LANE 1	11 x 12	14.7	5	16	---	46
76+59	EB	-	76+71	EB	STH 125 EB LANE 1	12 x 12	16.0	6	16	---	48
76+85	EB	-	76+93	EB	STH 125 EB LANE 1	8 x 12	10.7	6	16	---	40
77+00	EB	-	77+11	EB	STH 125 EB LANE 1	11 x 12	14.7	4	16	---	46
77+44	EB	-	77+50	EB	STH 125 EB LANE 1	6 x 12	8.0	3	16	---	36
77+66	EB	-	77+72	EB	STH 125 EB LANE 1	6 x 12	8.0	3	16	---	36
77+76	EB	-	77+82	EB	STH 125 EB LANE 1	6 x 12	8.0	3	16	---	36
78+04	EB	-	78+10	EB	STH 125 EB LANE 1	8 x 12	10.7	3	16	---	40
78+14	EB	-	78+20	EB	STH 125 EB LANE 1	6 x 12	8.0	3	16	---	36
78+42	EB	-	78+48	EB	STH 125 EB LANE 1	6 x 12	8.0	6	16	---	36
78+81	EB	-	78+87	EB	STH 125 EB LANE 1	6 x 12	8.0	6	16	---	36
78+99	EB	-	78+05	EB	STH 125 EB LANE 1	6 x 12	8.0	3	16	---	36
79+37	EB	-	79+45	EB	STH 125 EB LANE 1	8 x 12	10.7	3	16	---	40
79+78	EB	-	79+84	EB	STH 125 EB LANE 1	6 x 12	8.0	3	16	---	36
79+99	EB	-	80+05	EB	STH 125 EB LANE 1	6 x 12	8.0	6	16	---	36
80+33	EB	-	80+39	EB	STH 125 EB LANE 1	6 x 12	8.0	6	16	---	36
80+64	EB	-	80+70	EB	STH 125 EB LANE 1	6 x 12	8.0	6	16	---	36
80+81	EB	-	80+87	EB	STH 125 EB LANE 1	6 x 12	8.0	6	16	---	36
81+06	EB	-	81+12	EB	STH 125 EB LANE 1	6 x 12	8.0	3	16	---	36
81+40	EB	-	81+46	EB	STH 125 EB LANE 1	6 x 12	8.0	3	16	---	36
81+59	EB	-	81+73	EB	STH 125 EB LANE 1	14 x 12	18.7	10	16	---	52
82+03	EB	-	82+09	EB	STH 125 EB LANE 1	6 x 12	8.0	3	16	---	36
82+21	EB	-	82+27	EB	STH 125 EB LANE 1	6 x 12	8.0	3	16	---	36
82+39	EB	-	82+45	EB	STH 125 EB LANE 1	6 x 12	8.0	---	16	---	36
82+61	EB	-	82+83	EB	STH 125 EB LANE 1	22 x 12	29.3	5	16	---	68
82+97	EB	-	83+28	EB	STH 125 EB LANE 1	31 x 12	41.3	9	16	---	86
83+38	EB	-	83+46	EB	STH 125 EB LANE 1	8 x 12	10.7	---	16	---	40
					STH 125 EB LANE 1 SUBTOTALS =		686.7	235	640	0	1,990

STH 125 EASTBOUND CONCRETE BASE PATCHING - LANE 1 CONTIMUES ON FOLLOWING SHEET

NOTE: ALL ITEMS ON THIS SHEET ARE CATEGORY 0010 UNLESS OTHERWISE NOTED.

3

STH 125 EASTBOUND CONCRETE BASE PATCHING - LANE 1

STATION		TO	STATION		LOCATION	REPAIR SIZE LENGTH X WIDTH (FT x FT)	390.0403 BASE PATCHING CONCRETE SHES (SY)	416.0610 DRILLED TIE BARS (EACH)	416.0620 DRILLED DOWEL BARS (EACH)	690.0150 SAWING ASPHALT (LF)	690.0250 SAWING CONCRETE (LF)
83+61	EB	-	83+67	EB	STH 125 EB LANE 1	6 x 12	8.0	---	16	---	36
83+80	EB	-	83+86	EB	STH 125 EB LANE 1	6 x 12	8.0	---	16	---	36
83+99	EB	-	84+05	EB	STH 125 EB LANE 1	6 x 12	8.0	3	16	---	36
84+19	EB	-	84+39	EB	STH 125 EB LANE 1	20 x 12	26.7	5	16	---	64
84+43	EB	-	84+50	EB	STH 125 EB LANE 1	7 x 12	9.3	---	16	---	38
84+96	EB	-	85+02	EB	STH 125 EB LANE 1	6 x 12	8.0	3	16	---	36
88+38	EB	-	88+70	EB	STH 125 EB LANE 1	32 x 12	42.7	15	16	---	88
89+30	EB	-	89+36	EB	STH 125 EB LANE 1	6 x 12	8.0	3	16	---	36
90+48	EB	-	90+54	EB	STH 125 EB LANE 1	6 x 12	8.0	3	16	---	36
STH 125 EB LANE 1 SUBTOTALS =							126.7	32	144	0	406
STH 125 EB LANE 1 TOTALS =							2,693.3	1,063	2,664	36	8,022

NOTE: ALL ITEMS ON THIS SHEET ARE CATEGORY 0010 UNLESS OTHERWISE NOTED.

3

3

STH 125 EASTBOUND CONCRETE BASE PATCHING - LANE 2

STATION		TO	STATION		LOCATION	REPAIR SIZE LENGTH X WIDTH (FT x FT)	390.0403 BASE PATCHING CONCRETE SHES (SY)	416.0610 DRILLED TIE BARS (EACH)	416.0620 DRILLED DOWEL BARS (EACH)	690.0150 SAWING ASPHALT (LF)	690.0250 SAWING CONCRETE (LF)
12+37	EB	-	12+55	EB	STH 125 EB LANE 2	18 x 12	24.0	8	16	---	42
13+49	EB	-	13+69	EB	STH 125 EB LANE 2	20 x 12	26.7	16	16	---	64
14+82	EB	-	15+22	EB	STH 125 EB LANE 2	40 x 12	53.3	23	16	---	92
15+81	EB	-	15+89	EB	STH 125 EB LANE 2	8 x 12	10.7	---	16	---	24
16+70	EB	-	16+76	EB	STH 125 EB LANE 2	6 x 12	8.0	6	16	---	36
17+37	EB	-	17+65	EB	STH 125 EB LANE 2	28 x 12	37.3	17	16	---	80
18+35	EB	-	18+55	EB	STH 125 EB LANE 2	20 x 12	26.7	16	16	---	64
18+82	EB	-	19+10	EB	STH 125 EB LANE 2	28 x 12	37.3	2	16	---	52
19+45	EB	-	19+90	EB	STH 125 EB LANE 2	45 x 12	60.0	33	16	---	108
20+22	EB	-	20+34	EB	STH 125 EB LANE 2	12 x 12	16.0	10	16	---	48
20+69	EB	-	20+75	EB	STH 125 EB LANE 2	6 x 12	8.0	6	16	---	36
21+24	EB	-	21+30	EB	STH 125 EB LANE 2	6 x 12	8.0	3	16	---	30
21+47	EB	-	21+53	EB	STH 125 EB LANE 2	6 x 12	8.0	6	16	---	36
21+79	EB	-	21+88	EB	STH 125 EB LANE 2	9 x 12	12.0	---	16	---	33
22+08	EB	-	22+25	EB	STH 125 EB LANE 2	17 x 12	22.7	9	16	---	52
22+50	EB	-	23+07	EB	STH 125 EB LANE 2	57 x 12	76.0	31	16	---	126
23+12	EB	-	23+53	EB	STH 125 EB LANE 2	41 x 12	54.7	15	16	---	65
24+10	EB	-	24+16	EB	STH 125 EB LANE 2	6 x 12	8.0	---	16	---	30
24+90	EB	-	24+96	EB	STH 125 EB LANE 2	6 x 12	8.0	3	16	---	30
25+31	EB	-	25+37	EB	STH 125 EB LANE 2	6 x 12	8.0	3	16	---	30
25+72	EB	-	25+96	EB	STH 125 EB LANE 2	24 x 12	32.0	20	16	---	72
26+20	EB	-	26+26	EB	STH 125 EB LANE 2	6 x 12	8.0	3	16	6	30
26+38	EB	-	26+44	EB	STH 125 EB LANE 2	6 x 12	8.0	3	16	6	30
26+93	EB	-	26+99	EB	STH 125 EB LANE 2	6 x 12	8.0	---	16	6	24
27+49	EB	-	27+55	EB	STH 125 EB LANE 2	6 x 12	8.0	---	16	6	24
27+78	EB	-	27+84	EB	STH 125 EB LANE 2	6 x 12	8.0	---	16	6	24
28+02	EB	-	28+37	EB	STH 125 EB LANE 2	29 x 12	38.7	10	8	29	53
28+69	EB	-	28+89	EB	STH 125 EB LANE 2	20 x 12	26.7	---	16	20	24
29+32	EB	-	29+38	EB	STH 125 EB LANE 2	6 x 12	8.0	3	16	---	30
29+61	EB	-	29+67	EB	STH 125 EB LANE 2	6 x 12	8.0	3	16	---	30
29+74	EB	-	29+80	EB	STH 125 EB LANE 2	6 x 12	8.0	---	16	---	30
30+02	EB	-	30+36	EB	STH 125 EB LANE 2	34 x 12	45.3	12	16	---	58
30+56	EB	-	30+62	EB	STH 125 EB LANE 2	6 x 12	8.0	---	16	---	30
30+80	EB	-	31+08	EB	STH 125 EB LANE 2	28 x 12	37.3	---	8	---	52
31+41	EB	-	31+62	EB	STH 125 EB LANE 2	21 x 12	28.0	---	16	---	45
32+19	EB	-	32+25	EB	STH 125 EB LANE 2	6 x 12	8.0	3	16	---	30
33+07	EB	-	33+13	EB	STH 125 EB LANE 2	6 x 12	8.0	---	16	---	30
33+44	EB	-	33+52	EB	STH 125 EB LANE 2	8 x 12	10.7	---	16	---	32
34+35	EB	-	34+41	EB	STH 125 EB LANE 2	6 x 12	8.0	6	16	---	36
					STH 125 EB LANE 2 SUBTOTALS =		828.0	270	608	79	1,762

STH 125 EASTBOUND CONCRETE BASE PATCHING - LANE 2 CONTIMUES ON FOLLOWING SHEET

NOTE: ALL ITEMS ON THIS SHEET ARE CATEGORY 0010 UNLESS OTHERWISE NOTED.

3

STH 125 EASTBOUND CONCRETE BASE PATCHING - LANE 2

STATION		TO	STATION		LOCATION	REPAIR SIZE LENGTH X WIDTH (FT x FT)	390.0403 BASE PATCHING CONCRETE SHES (SY)	416.0610 DRILLED TIE BARS (EACH)	416.0620 DRILLED DOWEL BARS (EACH)	690.0150 SAWING ASPHALT (LF)	690.0250 SAWING CONCRETE (LF)
35+31	EB	-	35+66	EB	STH 125 EB LANE 2	35 x 12	46.7	13	16	---	31
36+10	EB	-	36+16	EB	STH 125 EB LANE 2	6 x 12	8.0	---	16	---	30
36+40	EB	-	36+46	EB	STH 125 EB LANE 2	6 x 12	8.0	3	16	---	30
36+78	EB	-	36+84	EB	STH 125 EB LANE 2	6 x 12	8.0	---	16	6	24
37+59	EB	-	37+65	EB	STH 125 EB LANE 2	6 x 12	8.0	---	16	6	24
38+06	EB	-	38+12	EB	STH 125 EB LANE 2	6 x 12	8.0	---	16	6	24
38+81	EB	-	38+92	EB	STH 125 EB LANE 2	11 x 12	14.7	---	16	11	24
39+11	EB	-	39+33	EB	STH 125 EB LANE 2	22 x 12	29.3	3	16	22	30
39+48	EB	-	39+63	EB	STH 125 EB LANE 2	15 x 12	20.0	---	16	15	24
39+80	EB	-	39+95	EB	STH 125 EB LANE 2	15 x 12	20.0	6	16	15	39
40+16	EB	-	40+22	EB	STH 125 EB LANE 2	6 x 12	8.0	3	16	6	30
40+38	EB	-	40+44	EB	STH 125 EB LANE 2	6 x 12	8.0	---	16	6	24
40+91	EB	-	41+00	EB	STH 125 EB LANE 2	9 x 12	12.0	4	16	9	33
41+11	EB	-	41+17	EB	STH 125 EB LANE 2	6 x 12	8.0	---	16	6	24
41+88	EB	-	41+94	EB	STH 125 EB LANE 2	6 x 12	8.0	---	16	6	24
42+22	EB	-	42+32	EB	STH 125 EB LANE 2	10 x 12	13.3	---	16	10	24
42+50	EB	-	42+56	EB	STH 125 EB LANE 2	6 x 12	8.0	3	16	6	30
42+66	EB	-	42+72	EB	STH 125 EB LANE 2	6 x 12	8.0	---	16	6	24
43+09	EB	-	43+15	EB	STH 125 EB LANE 2	6 x 12	8.0	---	16	6	24
43+87	EB	-	43+93	EB	STH 125 EB LANE 2	6 x 12	8.0	3	16	---	30
44+74	EB	-	44+80	EB	STH 125 EB LANE 2	6 x 12	8.0	6	16	---	36
45+20	EB	-	45+26	EB	STH 125 EB LANE 2	6 x 12	8.0	3	16	---	30
45+77	EB	-	45+91	EB	STH 125 EB LANE 2	14 x 12	18.7	3	16	---	38
46+16	EB	-	46+22	EB	STH 125 EB LANE 2	6 x 12	8.0	3	16	---	30
46+47	EB	-	46+53	EB	STH 125 EB LANE 2	6 x 12	8.0	3	16	---	30
46+88	EB	-	47+10	EB	STH 125 EB LANE 2	22 x 12	29.3	---	16	---	46
47+40	EB	-	47+46	EB	STH 125 EB LANE 2	6 x 12	8.0	6	16	---	36
47+85	EB	-	47+91	EB	STH 125 EB LANE 2	6 x 12	8.0	3	16	---	30
48+25	EB	-	48+31	EB	STH 125 EB LANE 2	6 x 12	8.0	---	16	---	30
49+52	EB	-	49+67	EB	STH 125 EB LANE 2	15 x 12	20.0	---	16	---	39
50+59	EB	-	50+65	EB	STH 125 EB LANE 2	6 x 12	8.0	3	16	6	30
50+77	EB	-	50+83	EB	STH 125 EB LANE 2	6 x 12	8.0	---	16	6	24
51+17	EB	-	51+23	EB	STH 125 EB LANE 2	6 x 12	8.0	---	16	6	24
51+60	EB	-	51+66	EB	STH 125 EB LANE 2	6 x 12	8.0	---	16	6	24
51+97	EB	-	52+03	EB	STH 125 EB LANE 2	6 x 12	8.0	---	16	6	24
52+33	EB	-	52+43	EB	STH 125 EB LANE 2	10 x 12	13.3	---	16	10	24
52+71	EB	-	52+81	EB	STH 125 EB LANE 2	10 x 12	13.3	---	16	10	24
53+15	EB	-	53+23	EB	STH 125 EB LANE 2	8 x 12	10.7	---	16	8	24
53+57	EB	-	53+65	EB	STH 125 EB LANE 2	8 x 12	10.7	---	16	8	24
53+82	EB	-	54+20	EB	STH 125 EB LANE 2	38 x 12	50.7	---	16	38	24
					STH 125 EB LANE 2 SUBTOTALS =		522.7	68	640	246	1,138

STH 125 EASTBOUND CONCRETE BASE PATCHING - LANE 2 CONTIMUES ON FOLLOWING SHEET

NOTE: ALL ITEMS ON THIS SHEET ARE CATEGORY 0010 UNLESS OTHERWISE NOTED.

3

STH 125 EASTBOUND CONCRETE BASE PATCHING - LANE 2

STATION		TO	STATION		LOCATION	REPAIR SIZE LENGTH X WIDTH (FT x FT)	390.0403 BASE PATCHING CONCRETE SHES (SY)	416.0610 DRILLED TIE BARS (EACH)	416.0620 DRILLED DOWEL BARS (EACH)	690.0150 SAWING ASPHALT (LF)	690.0250 SAWING CONCRETE (LF)
54+37	EB	-	54+43	EB	STH 125 EB LANE 2	6 x 12	8.0	---	16	6	24
55+72	EB	-	55+82	EB	STH 125 EB LANE 2	10 x 12	13.3	3	16	10	31
55+94	EB	-	56+00	EB	STH 125 EB LANE 2	6 x 12	8.0	---	16	6	24
57+03	EB	-	57+09	EB	STH 125 EB LANE 2	6 x 12	8.0	---	16	---	30
57+45	EB	-	57+51	EB	STH 125 EB LANE 2	6 x 12	8.0	3	16	---	30
57+64	EB	-	57+71	EB	STH 125 EB LANE 2	7 x 12	9.3	6	16	---	38
57+86	EB	-	57+98	EB	STH 125 EB LANE 2	12 x 12	16.0	8	16	---	47
58+64	EB	-	58+70	EB	STH 125 EB LANE 2	6 x 12	8.0	6	16	---	36
58+86	EB	-	58+96	EB	STH 125 EB LANE 2	10 x 12	13.3	4	16	---	34
59+40	EB	-	59+52	EB	STH 125 EB LANE 2	12 x 12	16.0	---	16	---	36
59+74	EB	-	59+86	EB	STH 125 EB LANE 2	12 x 12	16.0	---	16	---	36
60+37	EB	-	60+43	EB	STH 125 EB LANE 2	6 x 12	8.0	3	16	---	30
60+54	EB	-	60+60	EB	STH 125 EB LANE 2	6 x 12	8.0	3	16	---	30
61+08	EB	-	61+14	EB	STH 125 EB LANE 2	6 x 12	8.0	3	16	---	30
61+21	EB	-	61+27	EB	STH 125 EB LANE 2	6 x 12	8.0	3	16	---	30
61+70	EB	-	61+76	EB	STH 125 EB LANE 2	6 x 12	8.0	4	16	---	32
61+83	EB	-	61+89	EB	STH 125 EB LANE 2	6 x 12	8.0	3	16	---	30
62+55	EB	-	62+80	EB	STH 125 EB LANE 2	25 x 12	8.0	7	16	---	49
63+35	EB	-	63+41	EB	STH 125 EB LANE 2	6 x 12	33.3	3	16	---	30
63+61	EB	-	63+80	EB	STH 125 EB LANE 2	19 x 12	8.0	---	16	19	24
63+99	EB	-	63+05	EB	STH 125 EB LANE 2	6 x 12	25.3	---	16	6	24
64+55	EB	-	64+61	EB	STH 125 EB LANE 2	6 x 12	8.0	---	16	6	24
64+97	EB	-	65+03	EB	STH 125 EB LANE 2	6 x 12	8.0	---	16	6	24
65+60	EB	-	65+66	EB	STH 125 EB LANE 2	6 x 12	8.0	---	16	6	24
66+01	EB	-	66+07	EB	STH 125 EB LANE 2	6 x 12	8.0	---	16	6	24
66+17	EB	-	66+25	EB	STH 125 EB LANE 2	8 x 12	8.0	1	16	8	26
66+39	EB	-	66+45	EB	STH 125 EB LANE 2	6 x 12	10.7	---	16	6	24
66+57	EB	-	66+63	EB	STH 125 EB LANE 2	6 x 12	8.0	---	16	6	24
67+14	EB	-	67+34	EB	STH 125 EB LANE 2	20 x 12	8.0	---	16	20	24
67+67	EB	-	67+73	EB	STH 125 EB LANE 2	6 x 12	26.7	---	16	6	24
70+02	EB	-	70+21	EB	STH 125 EB LANE 2	19 x 12	8.0	5	16	9	47
70+52	EB	-	70+58	EB	STH 125 EB LANE 2	6 x 12	25.3	6	16	---	30
71+10	EB	-	71+74	EB	STH 125 EB LANE 2	64 x 12	8.0	16	16	---	88
71+91	EB	-	72+22	EB	STH 125 EB LANE 2	31 x 12	85.3	5	16	---	55
72+98	EB	-	73+18	EB	STH 125 EB LANE 2	20 x 12	41.3	8	16	---	44
73+25	EB	-	73+57	EB	STH 125 EB LANE 2	32 x 12	26.7	---	16	---	56
74+14	EB	-	74+37	EB	STH 125 EB LANE 2	23 x 12	42.7	7	16	---	64
74+69	EB	-	74+87	EB	STH 125 EB LANE 2	18 x 12	30.7	13	16	---	54
75+49	EB	-	75+55	EB	STH 125 EB LANE 2	6 x 12	24.0	3	16	---	30
75+91	EB	-	75+97	EB	STH 125 EB LANE 2	6 x 12	8.0	3	16	---	30
					STH 125 EB LANE 2 SUBTOTALS =		640.0	126	640	126	1,391

STH 125 EASTBOUND CONCRETE BASE PATCHING - LANE 2 CONTIMUES ON FOLLOWING SHEET

NOTE: ALL ITEMS ON THIS SHEET ARE CATEGORY 0010 UNLESS OTHERWISE NOTED.

3

STH 125 EASTBOUND CONCRETE BASE PATCHING - LANE 2

STATION		TO	STATION		LOCATION	REPAIR SIZE LENGTH X WIDTH (FT x FT)	390.0403 BASE PATCHING CONCRETE SHES (SY)	416.0610 DRILLED TIE BARS (EACH)	416.0620 DRILLED DOWEL BARS (EACH)	690.0150 SAWING ASPHALT (LF)	690.0250 SAWING CONCRETE (LF)
76+21	EB	-	76+29	EB	STH 125 EB LANE 2	8 x 12	8.0	3	16	---	32
76+52	EB	-	76+60	EB	STH 125 EB LANE 2	8 x 12	10.7	6	16	---	40
76+65	EB	-	76+71	EB	STH 125 EB LANE 2	6 x 12	10.7	3	16	---	30
77+01	EB	-	77+11	EB	STH 125 EB LANE 2	10 x 12	8.0	---	16	10	24
77+42	EB	-	77+48	EB	STH 125 EB LANE 2	6 x 12	13.3	1	16	6	26
77+66	EB	-	77+72	EB	STH 125 EB LANE 2	6 x 12	8.0	---	16	6	24
77+75	EB	-	77+81	EB	STH 125 EB LANE 2	6 x 12	8.0	---	16	6	24
78+05	EB	-	78+11	EB	STH 125 EB LANE 2	6 x 12	8.0	---	16	6	24
78+68	EB	-	78+74	EB	STH 125 EB LANE 2	6 x 12	8.0	3	16	6	30
78+99	EB	-	78+05	EB	STH 125 EB LANE 2	6 x 12	8.0	---	16	6	24
79+37	EB	-	79+45	EB	STH 125 EB LANE 2	8 x 12	8.0	---	16	8	24
80+38	EB	-	80+46	EB	STH 125 EB LANE 2	8 x 12	10.7	---	16	8	32
80+70	EB	-	80+76	EB	STH 125 EB LANE 2	6 x 12	8.0	3	16	6	30
81+06	EB	-	81+12	EB	STH 125 EB LANE 2	6 x 12	10.7	---	16	6	24
81+40	EB	-	81+46	EB	STH 125 EB LANE 2	6 x 12	8.0	---	16	6	24
82+39	EB	-	82+45	EB	STH 125 EB LANE 2	6 x 12	8.0	---	16	6	24
82+76	EB	-	82+82	EB	STH 125 EB LANE 2	6 x 12	8.0	---	16	6	24
83+22	EB	-	83+28	EB	STH 125 EB LANE 2	6 x 12	8.0	---	16	6	24
83+38	EB	-	83+46	EB	STH 125 EB LANE 2	8 x 12	8.0	---	16	8	24
83+61	EB	-	83+67	EB	STH 125 EB LANE 2	6 x 12	8.0	---	16	6	24
83+80	EB	-	83+86	EB	STH 125 EB LANE 2	6 x 12	10.7	---	16	6	24
84+19	EB	-	84+25	EB	STH 125 EB LANE 2	6 x 12	8.0	---	16	6	24
84+43	EB	-	84+71	EB	STH 125 EB LANE 2	28 x 12	8.0	7	16	28	46
84+96	EB	-	85+02	EB	STH 125 EB LANE 2	6 x 12	8.0	---	16	6	24
85+53	EB	-	85+59	EB	STH 125 EB LANE 2	6 x 12	37.3	3	16	6	30
88+45	EB	-	88+70	EB	STH 125 EB LANE 2	25 x 12	8.0	---	16	---	49
90+48	EB	-	90+54	EB	STH 125 EB LANE 2	6 x 12	8.0	3	16	---	30
90+68	EB	-	90+74	EB	STH 125 EB LANE 2	6 x 12	33.3	6	16	---	36
					STH 125 EB LANE 2 SUBTOTALS =		297.3	38	448	164	795
					STH 125 EB LANE 2 TOTALS =		2,288.0	502	2,336	615	5,086

NOTE: ALL ITEMS ON THIS SHEET ARE CATEGORY 0010 UNLESS OTHERWISE NOTED.

3

STH 125 WESTBOUND CONCRETE BASE PATCHING - LANE 1

STATION		TO	STATION		LOCATION	REPAIR SIZE LENGTH X WIDTH (FT x FT)	390.0403 BASE PATCHING CONCRETE SHES (SY)	416.0610 DRILLED TIE BARS (EACH)	416.0620 DRILLED DOWEL BARS (EACH)	690.0150 SAWING ASPHALT (LF)	690.0250 SAWING CONCRETE (LF)
113+25	WB	-	113+54	WB	STH 125 WB LANE 1	29 x 12	38.7	---	16	---	53
114+08	WB	-	114+26	WB	STH 125 WB LANE 1	18 x 12	24.0	8	16	---	42
114+40	WB	-	114+84	WB	STH 125 WB LANE 1	44 x 12	58.7	12	16	---	68
115+37	WB	-	115+56	WB	STH 125 WB LANE 1	18 x 12	24.0	---	16	---	42
115+69	WB	-	115+81	WB	STH 125 WB LANE 1	12 x 12	16.0	5	16	---	36
116+62	WB	-	116+68	WB	STH 125 WB LANE 1	6 x 12	8.0	3	16	---	30
117+02	WB	-	117+08	WB	STH 125 WB LANE 1	6 x 12	8.0	3	16	---	30
117+37	WB	-	117+72	WB	STH 125 WB LANE 1	35 x 12	46.7	---	16	---	59
117+81	WB	-	117+98	WB	STH 125 WB LANE 1	17 x 12	22.7	4	16	---	41
118+33	WB	-	118+80	WB	STH 125 WB LANE 1	47 x 12	62.7	12	16	---	71
119+17	WB	-	119+32	WB	STH 125 WB LANE 1	15 x 12	20.0	12	16	---	54
119+96	WB	-	120+35	WB	STH 125 WB LANE 1	39 x 12	52.0	25	16	---	102
120+44	WB	-	120+77	WB	STH 125 WB LANE 1	33 x 12	44.0	19	16	---	90
121+29	WB	-	121+35	WB	STH 125 WB LANE 1	6 x 12	8.0	3	16	---	36
121+49	WB	-	121+62	WB	STH 125 WB LANE 1	13 x 12	17.3	5	16	---	50
121+85	WB	-	122+27	WB	STH 125 WB LANE 1	41 x 12	54.7	---	16	---	106
123+81	WB	-	123+90	WB	STH 125 WB LANE 1	9 x 12	12.0	4	16	---	42
124+08	WB	-	124+17	WB	STH 125 WB LANE 1	9 x 12	12.0	4	16	---	42
124+30	WB	-	124+38	WB	STH 125 WB LANE 1	8 x 12	10.7	---	16	---	40
124+46	WB	-	124+54	WB	STH 125 WB LANE 1	8 x 12	10.7	---	16	---	40
125+84	WB	-	126+03	WB	STH 125 WB LANE 1	19 x 12	25.3	8	16	---	62
126+20	WB	-	126+28	WB	STH 125 WB LANE 1	8 x 12	10.7	3	16	---	40
126+41	WB	-	126+59	WB	STH 125 WB LANE 1	18 x 12	24.0	16	16	---	60
126+94	WB	-	127+00	WB	STH 125 WB LANE 1	6 x 12	8.0	3	16	---	36
127+76	WB	-	127+82	WB	STH 125 WB LANE 1	6 x 12	8.0	3	16	---	36
128+12	WB	-	128+18	WB	STH 125 WB LANE 1	6 x 12	8.0	6	16	---	36
128+33	WB	-	128+98	WB	STH 125 WB LANE 1	65 x 12	86.7	25	16	---	154
129+31	WB	-	129+36	WB	STH 125 WB LANE 1	6 x 12	8.0	3	16	---	36
129+77	WB	-	129+83	WB	STH 125 WB LANE 1	6 x 12	8.0	6	16	---	36
130+11	WB	-	130+17	WB	STH 125 WB LANE 1	6 x 12	8.0	3	16	---	36
130+45	WB	-	130+51	WB	STH 125 WB LANE 1	6 x 12	8.0	3	16	---	36
130+60	WB	-	130+87	WB	STH 125 WB LANE 1	27 x 12	36.0	12	16	---	78
131+76	WB	-	131+82	WB	STH 125 WB LANE 1	6 x 12	8.0	3	16	---	36
132+47	WB	-	132+65	WB	STH 125 WB LANE 1	18 x 12	24.0	13	16	---	60
133+09	WB	-	133+35	WB	STH 125 WB LANE 1	26 x 12	34.7	10	16	---	76
133+46	WB	-	133+52	WB	STH 125 WB LANE 1	6 x 12	8.0	3	16	---	36
134+17	WB	-	134+23	WB	STH 125 WB LANE 1	6 x 12	8.0	6	16	---	36
134+91	WB	-	135+04	WB	STH 125 WB LANE 1	13 x 12	17.3	4	16	---	50
135+12	WB	-	135+18	WB	STH 125 WB LANE 1	6 x 12	8.0	---	16	---	36
135+44	WB	-	135+57	WB	STH 125 WB LANE 1	12 x 12	16.0	5	16	---	48
					STH 125 WB LANE 1 SUBTOTALS =		913.3	254	640	0	2,098

STH 125 WESTBOUND CONCRETE BASE PATCHING - LANE 1 CONTIMUES ON FOLLOWING SHEET

NOTE: ALL ITEMS ON THIS SHEET ARE CATEGORY 0010 UNLESS OTHERWISE NOTED.

3

STH 125 WESTBOUND CONCRETE BASE PATCHING - LANE 1

STATION		TO	STATION		LOCATION	REPAIR SIZE LENGTH X WIDTH (FT x FT)	390.0403 BASE PATCHING CONCRETE SHES (SY)	416.0610 DRILLED TIE BARS (EACH)	416.0620 DRILLED DOWEL BARS (EACH)	690.0150 SAWING ASPHALT (LF)	690.0250 SAWING CONCRETE (LF)
136+12	WB	-	136+18	WB	STH 125 WB LANE 1	6 x 12	8.0	6	16	---	36
136+30	WB	-	136+40	WB	STH 125 WB LANE 1	10 x 12	13.3	4	16	---	44
137+22	WB	-	137+28	WB	STH 125 WB LANE 1	6 x 12	8.0	6	16	---	36
137+40	WB	-	137+50	WB	STH 125 WB LANE 1	10 x 12	13.3	4	16	---	44
137+96	WB	-	138+06	WB	STH 125 WB LANE 1	10 x 12	13.3	---	16	---	44
138+67	WB	-	138+77	WB	STH 125 WB LANE 1	10 x 12	13.3	---	16	---	44
139+10	WB	-	139+16	WB	STH 125 WB LANE 1	6 x 12	8.0	---	16	---	36
140+00	WB	-	140+06	WB	STH 125 WB LANE 1	6 x 12	8.0	---	16	---	36
140+11	WB	-	140+19	WB	STH 125 WB LANE 1	8 x 12	10.7	---	16	---	40
140+77	WB	-	140+83	WB	STH 125 WB LANE 1	6 x 12	8.0	6	16	---	36
142+57	WB	-	142+77	WB	STH 125 WB LANE 1	20 x 12	26.7	16	16	---	64
143+55	WB	-	144+61	WB	STH 125 WB LANE 1	6 x 12	8.0	6	16	---	36
143+98	WB	-	144+04	WB	STH 125 WB LANE 1	6 x 12	8.0	3	16	---	36
145+77	WB	-	145+85	WB	STH 125 WB LANE 1	8 x 12	10.7	3	16	---	40
145+99	WB	-	146+15	WB	STH 125 WB LANE 1	16 x 12	21.3	6	16	---	56
146+54	WB	-	146+70	WB	STH 125 WB LANE 1	16 x 12	21.3	6	16	---	56
147+04	WB	-	147+10	WB	STH 125 WB LANE 1	6 x 12	8.0	3	16	---	36
147+24	WB	-	147+30	WB	STH 125 WB LANE 1	6 x 12	8.0	3	16	---	36
147+47	WB	-	147+53	WB	STH 125 WB LANE 1	6 x 12	8.0	3	16	---	36
147+72	WB	-	147+78	WB	STH 125 WB LANE 1	6 x 12	8.0	3	16	---	36
147+87	WB	-	147+93	WB	STH 125 WB LANE 1	6 x 12	8.0	3	16	---	36
148+25	WB	-	148+31	WB	STH 125 WB LANE 1	6 x 12	8.0	---	16	---	36
149+15	WB	-	149+21	WB	STH 125 WB LANE 1	6 x 12	8.0	3	16	---	36
150+13	WB	-	150+43	WB	STH 125 WB LANE 1	30 x 12	40.0	6	16	---	84
151+64	WB	-	151+70	WB	STH 125 WB LANE 1	6 x 12	8.0	6	16	---	36
151+77	WB	-	151+83	WB	STH 125 WB LANE 1	6 x 12	8.0	3	16	---	36
152+57	WB	-	153+01	WB	STH 125 WB LANE 1	44 x 12	58.7	27	16	---	112
153+35	WB	-	153+43	WB	STH 125 WB LANE 1	8 x 12	10.7	3	16	---	40
153+71	WB	-	153+81	WB	STH 125 WB LANE 1	10 x 12	13.3	4	16	---	44
154+10	WB	-	154+20	WB	STH 125 WB LANE 1	10 x 12	13.3	4	16	---	44
154+53	WB	-	154+59	WB	STH 125 WB LANE 1	6 x 12	8.0	3	16	---	36
154+92	WB	-	154+98	WB	STH 125 WB LANE 1	6 x 12	8.0	3	16	---	36
155+32	WB	-	155+38	WB	STH 125 WB LANE 1	6 x 12	8.0	6	16	---	36
156+07	WB	-	156+13	WB	STH 125 WB LANE 1	6 x 12	8.0	3	16	---	36
156+32	WB	-	156+85	WB	STH 125 WB LANE 1	54 x 12	72.0	20	16	---	132
157+20	WB	-	157+26	WB	STH 125 WB LANE 1	6 x 12	8.0	3	16	---	36
157+36	WB	-	157+48	WB	STH 125 WB LANE 1	12 x 12	16.0	5	16	---	48
158+47	WB	-	158+53	WB	STH 125 WB LANE 1	6 x 12	8.0	6	16	---	36
158+65	WB	-	158+71	WB	STH 125 WB LANE 1	6 x 12	8.0	6	16	---	36
159+19	WB	-	159+35	WB	STH 125 WB LANE 1	16 x 12	21.3	6	16	---	56
					STH 125 WB LANE 1 SUBTOTALS =		573.3	198	640	0	1,820

STH 125 WESTBOUND CONCRETE BASE PATCHING - LANE 1 CONTIMUES ON FOLLOWING SHEET

NOTE: ALL ITEMS ON THIS SHEET ARE CATEGORY 0010 UNLESS OTHERWISE NOTED.

STH 125 WESTBOUND CONCRETE BASE PATCHING - LANE 1

STATION		TO	STATION		LOCATION	REPAIR SIZE LENGTH X WIDTH (FT x FT)	390.0403 BASE PATCHING CONCRETE SHES (SY)	416.0610 DRILLED TIE BARS (EACH)	416.0620 DRILLED DOWEL BARS (EACH)	690.0150 SAWING ASPHALT (LF)	690.0250 SAWING CONCRETE (LF)
159+96	WB	-	160+02	WB	STH 125 WB LANE 1	6 x 12	8.0	3	16	---	36
160+71	WB	-	160+77	WB	STH 125 WB LANE 1	6 x 12	8.0	3	16	---	36
162+00	WB	-	162+06	WB	STH 125 WB LANE 1	6 x 12	8.0	6	16	---	36
162+43	WB	-	162+49	WB	STH 125 WB LANE 1	6 x 12	8.0	3	16	---	36
163+23	WB	-	163+28	WB	STH 125 WB LANE 1	6 x 12	8.0	---	16	---	36
163+60	WB	-	163+66	WB	STH 125 WB LANE 1	6 x 12	8.0	3	16	---	36
164+00	WB	-	164+06	WB	STH 125 WB LANE 1	6 x 13	8.7	3	16	---	38
164+67	WB	-	164+73	WB	STH 125 WB LANE 1	6 x 12	8.0	6	16	---	36
164+80	WB	-	164+88	WB	STH 125 WB LANE 1	8 x 12	10.7	3	16	---	40
165+62	WB	-	165+68	WB	STH 125 WB LANE 1	6 x 12	8.0	6	16	---	36
166+28	WB	-	166+34	WB	STH 125 WB LANE 1	6 x 12	8.0	6	16	---	36
167+66	WB	-	167+72	WB	STH 125 WB LANE 1	6 x 12	8.0	3	16	---	36
169+79	WB	-	169+85	WB	STH 125 WB LANE 1	6 x 12	8.0	3	16	---	36
170+53	WB	-	170+59	WB	STH 125 WB LANE 1	6 x 12	8.0	3	16	---	36
170+92	WB	-	170+98	WB	STH 125 WB LANE 1	6 x 12	8.0	3	16	---	36
171+29	WB	-	171+35	WB	STH 125 WB LANE 1	6 x 12	8.0	3	16	---	36
171+64	WB	-	171+80	WB	STH 125 WB LANE 1	16 x 12	21.3	6	16	---	56
172+55	WB	-	172+64	WB	STH 125 WB LANE 1	8 x 12	10.7	6	16	---	40
173+48	WB	-	173+54	WB	STH 125 WB LANE 1	6 x 12	8.0	3	16	---	36
175+16	WB	-	175+29	WB	STH 125 WB LANE 1	13 x 12	17.3	5	16	---	50
175+54	WB	-	175+60	WB	STH 125 WB LANE 1	6 x 12	8.0	3	16	---	36
176+86	WB	-	176+92	WB	STH 125 WB LANE 1	6 x 12	8.0	---	16	---	36
177+31	WB	-	177+37	WB	STH 125 WB LANE 1	6 x 12	8.0	3	16	---	36
178+64	WB	-	178+70	WB	STH 125 WB LANE 1	6 x 12	8.0	6	16	---	36
178+83	WB	-	178+89	WB	STH 125 WB LANE 1	6 x 12	8.0	3	16	---	36
179+08	WB	-	179+14	WB	STH 125 WB LANE 1	6 x 12	8.0	3	16	---	36
179+47	WB	-	179+53	WB	STH 125 WB LANE 1	6 x 12	8.0	3	16	---	36
179+66	WB	-	179+72	WB	STH 125 WB LANE 1	6 x 12	8.0	6	16	---	36
180+46	WB	-	180+52	WB	STH 125 WB LANE 1	6 x 12	8.0	6	16	---	36
180+65	WB	-	180+71	WB	STH 125 WB LANE 1	6 x 12	8.0	3	16	---	36
180+97	WB	-	181+03	WB	STH 125 WB LANE 1	6 x 12	8.0	6	16	---	36
181+25	WB	-	181+31	WB	STH 125 WB LANE 1	6 x 12	8.0	3	16	---	36
181+90	WB	-	181+96	WB	STH 125 WB LANE 1	6 x 12	8.0	---	16	---	36
182+05	WB	-	182+11	WB	STH 125 WB LANE 1	6 x 12	8.0	---	16	---	36
182+44	WB	-	182+50	WB	STH 125 WB LANE 1	6 x 12	8.0	---	16	---	36
183+26	WB	-	183+32	WB	STH 125 WB LANE 1	6 x 12	8.0	---	16	---	36
184+03	WB	-	184+09	WB	STH 125 WB LANE 1	6 x 12	8.0	---	16	---	36
184+44	WB	-	184+50	WB	STH 125 WB LANE 1	6 x 12	8.0	---	16	---	36
185+07	WB	-	185+13	WB	STH 125 WB LANE 1	6 x 12	8.0	3	16	---	36
185+56	WB	-	185+62	WB	STH 125 WB LANE 1	6 x 12	8.0	6	16	---	36
188+70	WB	-	188+76	WB	STH 125 WB LANE 1	6 x 12	8.0	3	16	---	36
188+90	WB	-	188+96	WB	STH 125 WB LANE 1	6 x 12	8.0	---	16	---	30
					STH 125 WB LANE 1 SUBTOTALS =		364.7	134	672	0	1,550
					STH 125 WB LANE 1 TOTALS =		1,851.3	586	1,952	0	5,468

NOTE: ALL ITEMS ON THIS SHEET ARE CATEGORY 0010 UNLESS OTHERWISE NOTED.

3

STH 125 WESTBOUND CONCRETE BASE PATCHING - LANE 2

STATION	TO STATION	LOCATION	REPAIR SIZE LENGTH X WIDTH (FT x FT)	390.0403 BASE PATCHING CONCRETE SHES (SY)	416.0610 DRILLED TIE BARS (EACH)	416.0620 DRILLED DOWEL BARS (EACH)	690.0150 SAWING ASPHALT (LF)	690.0250 SAWING CONCRETE (LF)
113+25 WB	113+54 WB	STH 125 WB LANE 2	29 x 12	38.7	6	16	---	30
114+41 WB	114+52 WB	STH 125 WB LANE 2	11 x 12	14.7	---	16	---	35
114+79 WB	114+86 WB	STH 125 WB LANE 2	7 x 12	9.3	---	16	---	31
114+88 WB	115+71 WB	STH 125 WB LANE 2	83 x 12	110.7	22	16	39	133
116+06 WB	116+12 WB	STH 125 WB LANE 2	6 x 12	8.0	3	16	6	30
116+75 WB	116+81 WB	STH 125 WB LANE 2	6 x 12	8.0	3	16	6	30
117+11 WB	117+33 WB	STH 125 WB LANE 2	22 x 12	29.3	8	16	22	46
117+37 WB	117+72 WB	STH 125 WB LANE 2	35 x 12	46.7	---	16	35	24
117+92 WB	118+00 WB	STH 125 WB LANE 2	8 x 12	10.7	---	16	8	25
118+24 WB	118+31 WB	STH 125 WB LANE 2	7 x 12	9.3	3	16	7	31
118+50 WB	118+56 WB	STH 125 WB LANE 2	6 x 12	8.0	---	16	6	24
118+67 WB	118+82 WB	STH 125 WB LANE 2	15 x 12	20.0	---	16	15	24
119+47 WB	119+76 WB	STH 125 WB LANE 2	29 x 12	38.7	12	16	29	53
120+23 WB	120+42 WB	STH 125 WB LANE 2	19 x 12	25.3	3	16	19	30
120+48 WB	120+61 WB	STH 125 WB LANE 2	13 x 12	17.3	---	16	---	37
121+29 WB	121+35 WB	STH 125 WB LANE 2	6 x 12	8.0	3	16	---	30
121+86 WB	122+58 WB	STH 125 WB LANE 2	72 x 12	96.0	25	16	---	86
122+65 WB	122+74 WB	STH 125 WB LANE 2	9 x 12	12.0	4	16	---	33
123+81 WB	123+90 WB	STH 125 WB LANE 2	9 x 12	12.0	4	16	---	33
124+08 WB	124+17 WB	STH 125 WB LANE 2	9 x 12	12.0	---	16	---	33
124+30 WB	124+38 WB	STH 125 WB LANE 2	8 x 12	10.7	---	16	---	32
124+46 WB	124+54 WB	STH 125 WB LANE 2	8 x 12	10.7	---	16	---	32
125+84 WB	126+03 WB	STH 125 WB LANE 2	19 x 12	25.3	5	16	---	43
126+21 WB	126+27 WB	STH 125 WB LANE 2	8 x 12	10.7	---	16	---	32
126+73 WB	126+81 WB	STH 125 WB LANE 2	8 x 12	10.7	6	16	---	40
126+94 WB	127+00 WB	STH 125 WB LANE 2	6 x 12	8.0	3	16	---	30
127+17 WB	127+23 WB	STH 125 WB LANE 2	8 x 12	10.7	6	16	---	40
127+76 WB	127+82 WB	STH 125 WB LANE 2	6 x 12	8.0	---	16	6	24
128+04 WB	128+10 WB	STH 125 WB LANE 2	6 x 12	8.0	3	16	6	30
128+33 WB	128+98 WB	STH 125 WB LANE 2	65 x 12	86.7	---	16	65	24
129+30 WB	129+36 WB	STH 125 WB LANE 2	6 x 12	8.0	---	16	6	24
129+47 WB	129+53 WB	STH 125 WB LANE 2	6 x 12	8.0	3	16	6	30
130+11 WB	130+17 WB	STH 125 WB LANE 2	6 x 12	8.0	---	16	6	24
130+27 WB	130+33 WB	STH 125 WB LANE 2	6 x 12	8.0	3	16	6	30
130+45 WB	130+51 WB	STH 125 WB LANE 2	6 x 12	8.0	---	16	6	24
130+60 WB	130+87 WB	STH 125 WB LANE 2	27 x 12	36.0	---	16	27	24
131+66 WB	131+82 WB	STH 125 WB LANE 2	16 x 12	21.3	3	16	16	34
132+47 WB	132+53 WB	STH 125 WB LANE 2	6 x 12	8.0	---	16	6	24
133+23 WB	123+29 WB	STH 125 WB LANE 2	6 x 12	8.0	---	16	---	30
		STH 125 WB LANE 2 SUBTOTALS =		837.3	128	624	348	1,369

STH 125 WESTBOUND CONCRETE BASE PATCHING - LANE 2 CONTIMUES ON FOLLOWING SHEET

NOTE: ALL ITEMS ON THIS SHEET ARE CATEGORY 0010 UNLESS OTHERWISE NOTED.

3

3

STH 125 WESTBOUND CONCRETE BASE PATCHING - LANE 2

STATION		TO	STATION		LOCATION	REPAIR SIZE LENGTH X WIDTH (FT x FT)	390.0403 BASE PATCHING CONCRETE SHES (SY)	416.0610 DRILLED TIE BARS (EACH)	416.0620 DRILLED DOWEL BARS (EACH)	690.0150 SAWING ASPHALT (LF)	690.0250 SAWING CONCRETE (LF)
133+46	WB	-	133+52	WB	STH 125 WB LANE 2	6 x 12	8.0	3	16	---	30
133+72	WB	-	133+92	WB	STH 125 WB LANE 2	20 x 12	26.7	8	16	---	64
134+80	WB	-	135+01	WB	STH 125 WB LANE 2	21 x 12	28.0	11	16	---	54
135+12	WB	-	135+18	WB	STH 125 WB LANE 2	6 x 12	8.0	---	16	---	30
135+44	WB	-	135+57	WB	STH 125 WB LANE 2	13 x 12	17.3	---	16	---	37
136+07	WB	-	136+13	WB	STH 125 WB LANE 2	6 x 12	8.0	6	16	---	36
136+30	WB	-	136+40	WB	STH 125 WB LANE 2	10 x 12	13.3	---	16	---	34
136+82	WB	-	136+90	WB	STH 125 WB LANE 2	8 x 12	10.7	6	16	---	40
137+40	WB	-	137+50	WB	STH 125 WB LANE 2	10 x 12	13.3	---	16	---	34
137+96	WB	-	138+06	WB	STH 125 WB LANE 2	10 x 12	13.3	---	16	---	34
138+67	WB	-	138+77	WB	STH 125 WB LANE 2	10 x 12	13.3	---	16	---	34
139+10	WB	-	139+16	WB	STH 125 WB LANE 2	6 x 12	8.0	---	16	---	30
140+00	WB	-	140+06	WB	STH 125 WB LANE 2	6 x 12	8.0	---	16	6	24
140+11	WB	-	140+19	WB	STH 125 WB LANE 2	8 x 12	10.7	---	16	8	24
141+07	WB	-	141+13	WB	STH 125 WB LANE 2	6 x 12	8.0	3	16	6	24
142+00	WB	-	142+15	WB	STH 125 WB LANE 2	15 x 12	20.0	6	16	15	39
143+50	WB	-	143+56	WB	STH 125 WB LANE 2	6 x 12	8.0	3	8	6	30
143+97	WB	-	144+03	WB	STH 125 WB LANE 2	6 x 12	8.0	---	16	6	24
144+79	WB	-	144+85	WB	STH 125 WB LANE 2	6 x 12	8.0	3	16	6	30
145+24	WB	-	145+36	WB	STH 125 WB LANE 2	12 x 12	16.0	5	16	12	36
145+77	WB	-	145+85	WB	STH 125 WB LANE 2	8 x 12	10.7	---	16	8	24
145+99	WB	-	146+14	WB	STH 125 WB LANE 2	15 x 12	20.0	---	16	15	24
146+51	WB	-	146+82	WB	STH 125 WB LANE 2	31 x 12	41.3	18	16	---	70
147+03	WB	-	147+09	WB	STH 125 WB LANE 2	6 x 12	8.0	---	16	---	30
147+25	WB	-	147+31	WB	STH 125 WB LANE 2	6 x 12	8.0	---	16	---	30
147+47	WB	-	147+53	WB	STH 125 WB LANE 2	6 x 12	8.0	3	16	---	30
147+71	WB	-	147+77	WB	STH 125 WB LANE 2	6 x 12	8.0	---	16	---	30
147+86	WB	-	147+92	WB	STH 125 WB LANE 2	6 x 12	8.0	3	16	---	30
148+25	WB	-	148+31	WB	STH 125 WB LANE 2	6 x 12	8.0	---	16	---	30
149+15	WB	-	149+21	WB	STH 125 WB LANE 2	6 x 12	8.0	3	16	---	30
149+50	WB	-	149+56	WB	STH 125 WB LANE 2	6 x 12	8.0	6	16	---	36
150+13	WB	-	150+19	WB	STH 125 WB LANE 2	6 x 12	8.0	3	16	---	30
150+37	WB	-	150+43	WB	STH 125 WB LANE 2	6 x 12	8.0	3	16	---	30
150+80	WB	-	150+95	WB	STH 125 WB LANE 2	15 x 12	20.0	12	16	---	54
151+14	WB	-	151+30	WB	STH 125 WB LANE 2	15 x 12	20.0	3	16	---	54
151+43	WB	-	151+49	WB	STH 125 WB LANE 2	6 x 12	8.0	6	16	---	36
151+77	WB	-	151+83	WB	STH 125 WB LANE 2	6 x 12	8.0	6	16	---	30
152+01	WB	-	152+24	WB	STH 125 WB LANE 2	23 x 12	30.7	20	16	---	70
152+57	WB	-	152+85	WB	STH 125 WB LANE 2	28 x 12	37.3	20	16	---	52
153+14	WB	-	153+24	WB	STH 125 WB LANE 2	10 x 12	13.3	8	16	---	44
					STH 125 WB LANE 2 SUBTOTALS =		544.0	168	632	88	1,452

STH 125 WESTBOUND CONCRETE BASE PATCHING - LANE 2 CONTIMUES ON FOLLOWING SHEET

NOTE: ALL ITEMS ON THIS SHEET ARE CATEGORY 0010 UNLESS OTHERWISE NOTED.

3

3

STH 125 WESTBOUND CONCRETE BASE PATCHING - LANE 2

STATION		TO	STATION		LOCATION	REPAIR SIZE LENGTH X WIDTH (FT x FT)	390.0403 BASE PATCHING CONCRETE SHES (SY)	416.0610 DRILLED TIE BARS (EACH)	416.0620 DRILLED DOWEL BARS (EACH)	690.0150 SAWING ASPHALT (LF)	690.0250 SAWING CONCRETE (LF)
153+35	WB	-	153+43	WB	STH 125 WB LANE 2	8 x 12	10.7	---	16	8	24
153+71	WB	-	153+81	WB	STH 125 WB LANE 2	10 x 12	13.3	---	16	10	24
154+10	WB	-	154+20	WB	STH 125 WB LANE 2	10 x 12	13.3	---	16	10	24
154+53	WB	-	154+59	WB	STH 125 WB LANE 2	6 x 12	8.0	---	16	6	24
154+92	WB	-	154+98	WB	STH 125 WB LANE 2	6 x 12	8.0	---	16	6	24
155+09	WB	-	155+15	WB	STH 125 WB LANE 2	6 x 12	8.0	3	16	6	30
155+38	WB	-	155+73	WB	STH 125 WB LANE 2	35 x 12	46.7	15	16	35	59
156+06	WB	-	156+12	WB	STH 125 WB LANE 2	6 x 12	8.0	---	16	6	24
156+32	WB	-	156+89	WB	STH 125 WB LANE 2	57 x 12	76.0	2	16	57	26
157+20	WB	-	157+26	WB	STH 125 WB LANE 2	6 x 12	8.0	---	16	6	24
157+35	WB	-	157+48	WB	STH 125 WB LANE 2	13 x 12	17.3	---	16	13	24
158+37	WB	-	158+43	WB	STH 125 WB LANE 2	6 x 12	8.0	3	16	6	30
159+19	WB	-	159+35	WB	STH 125 WB LANE 2	16 x 12	21.3	6	16	---	40
159+53	WB	-	159+59	WB	STH 125 WB LANE 2	6 x 12	8.0	6	16	---	36
159+77	WB	-	160+10	WB	STH 125 WB LANE 2	33 x 12	44.0	21	16	---	84
160+40	WB	-	160+54	WB	STH 125 WB LANE 2	14 x 12	18.7	10	16	---	52
160+70	WB	-	160+81	WB	STH 125 WB LANE 2	11 x 12	14.7	2	16	---	40
160+99	WB	-	161+12	WB	STH 125 WB LANE 2	13 x 12	17.3	7	16	---	50
161+39	WB	-	161+48	WB	STH 125 WB LANE 2	9 x 12	12.0	8	16	---	42
161+55	WB	-	161+62	WB	STH 125 WB LANE 2	7 x 12	9.3	6	16	---	38
162+43	WB	-	162+49	WB	STH 125 WB LANE 2	6 x 12	8.0	3	16	---	30
163+23	WB	-	163+29	WB	STH 125 WB LANE 2	6 x 12	8.0	3	16	---	30
164+80	WB	-	164+88	WB	STH 125 WB LANE 2	8 x 12	10.7	3	16	---	32
167+28	WB	-	167+34	WB	STH 125 WB LANE 2	6 x 12	8.0	6	16	---	36
167+66	WB	-	167+72	WB	STH 125 WB LANE 2	6 x 12	8.0	3	16	---	30
169+79	WB	-	169+85	WB	STH 125 WB LANE 2	6 x 12	8.0	---	16	6	24
170+53	WB	-	170+59	WB	STH 125 WB LANE 2	6 x 12	8.0	---	16	6	24
170+92	WB	-	170+98	WB	STH 125 WB LANE 2	6 x 12	8.0	---	16	6	24
171+29	WB	-	171+35	WB	STH 125 WB LANE 2	6 x 12	8.0	---	16	6	24
171+64	WB	-	171+80	WB	STH 125 WB LANE 2	16 x 12	21.3	---	16	16	24
172+61	WB	-	172+67	WB	STH 125 WB LANE 2	6 x 12	8.0	3	16	6	24
173+48	WB	-	173+64	WB	STH 125 WB LANE 2	14 x 12	18.7	7	16	---	46
174+09	WB	-	174+17	WB	STH 125 WB LANE 2	8 x 12	10.7	3	16	---	40
174+72	WB	-	174+78	WB	STH 125 WB LANE 2	6 x 12	8.0	3	16	---	36
175+03	WB	-	175+09	WB	STH 125 WB LANE 2	6 x 12	8.0	3	16	---	36
175+14	WB	-	175+20	WB	STH 125 WB LANE 2	6 x 12	8.0	1	16	---	31
175+54	WB	-	175+60	WB	STH 125 WB LANE 2	6 x 12	8.0	3	16	---	30
176+86	WB	-	176+92	WB	STH 125 WB LANE 2	6 x 12	8.0	---	16	---	30
177+31	WB	-	177+37	WB	STH 125 WB LANE 2	6 x 12	8.0	3	16	---	30
					STH 125 WB LANE 2 SUBTOTALS =		552.0	133	624	215	1,300

STH 125 WESTBOUND CONCRETE BASE PATCHING - LANE 2 CONTIMUES ON FOLLOWING SHEET

NOTE: ALL ITEMS ON THIS SHEET ARE CATEGORY 0010 UNLESS OTHERWISE NOTED.

3

STH 125 WESTBOUND CONCRETE BASE PATCHING - LANE 2

STATION		TO	STATION		LOCATION	REPAIR SIZE LENGTH X WIDTH (FT x FT)	390.0403 BASE PATCHING CONCRETE SHES (SY)	416.0610 DRILLED TIE BARS (EACH)	416.0620 DRILLED DOWEL BARS (EACH)	690.0150 SAWING ASPHALT (LF)	690.0250 SAWING CONCRETE (LF)
178+58	WB	-	177+66	WB	STH 125 WB LANE 2	8 x 12	10.7	6	16	---	40
178+83	WB	-	178+89	WB	STH 125 WB LANE 2	6 x 12	8.0	3	16	---	30
179+08	WB	-	179+14	WB	STH 125 WB LANE 2	6 x 12	8.0	3	16	---	30
179+47	WB	-	179+53	WB	STH 125 WB LANE 2	6 x 12	8.0	3	16	---	30
179+89	WB	-	179+95	WB	STH 125 WB LANE 2	6 x 12	8.0	3	16	6	30
180+04	WB	-	180+10	WB	STH 125 WB LANE 2	6 x 12	8.0	3	16	6	30
180+65	WB	-	180+71	WB	STH 125 WB LANE 2	6 x 12	8.0	---	16	6	24
181+24	WB	-	181+30	WB	STH 125 WB LANE 2	6 x 12	8.0	---	16	6	24
181+70	WB	-	181+76	WB	STH 125 WB LANE 2	6 x 12	8.0	3	16	6	30
181+90	WB	-	181+96	WB	STH 125 WB LANE 2	6 x 12	8.0	---	16	6	24
182+05	WB	-	182+11	WB	STH 125 WB LANE 2	6 x 12	8.0	---	16	6	24
182+44	WB	-	182+50	WB	STH 125 WB LANE 2	6 x 12	8.0	---	16	6	24
182+84	WB	-	182+90	WB	STH 125 WB LANE 2	6 x 12	8.0	3	16	6	30
183+04	WB	-	183+10	WB	STH 125 WB LANE 2	6 x 12	8.0	3	16	6	30
183+26	WB	-	183+49	WB	STH 125 WB LANE 2	23 x 12	30.7	7	16	23	41
183+63	WB	-	183+69	WB	STH 125 WB LANE 2	6 x 12	8.0	3	16	6	30
183+93	WB	-	184+09	WB	STH 125 WB LANE 2	16 x 12	21.3	5	16	16	34
184+45	WB	-	184+51	WB	STH 125 WB LANE 2	6 x 12	8.0	---	16	6	24
185+07	WB	-	185+13	WB	STH 125 WB LANE 2	6 x 12	8.0	---	16	6	24
185+20	WB	-	185+26	WB	STH 125 WB LANE 2	6 x 12	8.0	3	16	6	30
185+38	WB	-	185+44	WB	STH 125 WB LANE 2	6 x 12	8.0	3	16	6	30
188+70	WB	-	188+76	WB	STH 125 WB LANE 2	6 x 12	8.0	3	16	---	30
188+90	WB	-	188+96	WB	STH 125 WB LANE 2	6 x 12	8.0	3	16	---	30
189+49	WB	-	186+70	WB	STH 125 WB LANE 2	16 x 12	21.3	16	16	---	56
190+11	WB	-	190+17	WB	STH 125 WB LANE 2	6 x 12	8.0	6	16	---	36
190+57	WB	-	190+63	WB	STH 125 WB LANE 2	6 x 12	8.0	6	16	---	36
190+74	WB	-	190+84	WB	STH 125 WB LANE 2	10 x 12	13.3	8	16	---	44
					STH 125 WB LANE 2 SUBTOTALS =		273.3	93	432	129	845
					STH 125 WB LANE 2 TOTALS =		2,206.7	522	2,312	780	4,966

NOTE: ALL ITEMS ON THIS SHEET ARE CATEGORY 0010 UNLESS OTHERWISE NOTED.

3

S KOOLS ST INTERSECTION CONCRETE PAVEMENT BASE PATCHING

STATION		TO	STATION		LOCATION	REPAIR SIZE LENGTH X WIDTH (FT x FT)	390.0403 BASE PATCHING CONCRETE SHES (SY)	416.0610 DRILLED TIE BARS (EACH)	416.0620 DRILLED DOWEL BARS (EACH)	690.0150 SAWING ASPHALT (LF)	690.0250 SAWING CONCRETE (LF)
15+01	EB	-	15+09	EB	S KOOLS STREET INTERSECTION RIGHT-TURN LANE	8 x 11	9.8	---	16	8	24
15+81	EB	-	15+89	EB	S KOOLS STREET INTERSECTION RIGHT-TURN LANE	8 x 11	9.8	---	16	8	24
16+13	EB	-	16+28	EB	S KOOLS STREET INTERSECTION RIGHT-TURN LANE	15 x 11	18.3	6	16	15	37
16+83	EB	-	16+89	EB	S KOOLS STREET INTERSECTION RIGHT-TURN LANE	6 x 11	7.3	3	16	6	28
17+37	EB	-	17+44	EB	S KOOLS STREET INTERSECTION RIGHT-TURN LANE	7 x 11	8.6	---	16	7	24
18+84	EB	-	19+05	EB	S KOOLS STREET INTERSECTION RIGHT-TURN LANE	19 x 11	23.2	---	16	19	24
21+63	EB	-	21+69	EB	S KOOLS STREET INTERSECTION RIGHT-TURN LANE	6 x 11	7.3	3	16	6	28
21+79	EB	-	21+88	EB	S KOOLS STREET INTERSECTION RIGHT-TURN LANE	9 x 11	11.0	---	16	9	24
22+50	EB	-	22+56	EB	S KOOLS STREET INTERSECTION RIGHT-TURN LANE	6 x 11	7.3	---	16	6	24
23+90	EB	-	23+96	EB	S KOOLS STREET INTERSECTION RIGHT-TURN LANE	6 x 9	6.2	3	16	6	25
24+10	EB	-	24+16	EB	S KOOLS STREET INTERSECTION RIGHT-TURN LANE	6 x 8	5.6	---	16	6	17
25+24	EB	-	25+30	EB	S KOOLS STREET INTERSECTION RIGHT-TURN LANE	6 x 4	2.8	3	16	6	14
19+22	EB	-	19+62	EB	S KOOLS STREET INTERSECTION LEFT-TURN LANE	40 x 3	14.4	5	16	40	47
19+83	EB	-	19+89	EB	S KOOLS STREET INTERSECTION LEFT-TURN LANE	6 x 8	5.1	3	16	6	21
20+07	EB	-	20+14	EB	S KOOLS STREET INTERSECTION LEFT-TURN LANE	7 x 11	8.6	6	16	---	36
20+64	EB	-	20+72	EB	S KOOLS STREET INTERSECTION LEFT-TURN LANE	8 x 11	9.8	6	16	---	38
21+24	EB	-	21+30	EB	S KOOLS STREET INTERSECTION LEFT-TURN LANE	6 x 11	7.3	6	16	---	34
21+80	EB	-	21+88	EB	S KOOLS STREET INTERSECTION LEFT-TURN LANE	8 x 11	9.8	3	16	---	30
22+06	EB	-	22+12	EB	S KOOLS STREET INTERSECTION LEFT-TURN LANE	6 x 11	7.3	3	16	---	34
					S KOOLS ST INTERSECTION TOTALS =		179.5	50	304	148	533

N WESTHILL BLVD INTERSECTION CONCRETE PAVEMENT BASE PATCHING

STATION		TO	STATION		LOCATION	REPAIR SIZE LENGTH X WIDTH (FT x FT)	390.0403 BASE PATCHING CONCRETE SHES (SY)	416.0610 DRILLED TIE BARS (EACH)	416.0620 DRILLED DOWEL BARS (EACH)	690.0150 SAWING ASPHALT (LF)	690.0250 SAWING CONCRETE (LF)
120+49	WB	-	120+61	WB	N WESTHILL INTERSECTION RIGHT-TURN LANE	12 x 3	4.5	---	16	12	12
120+72	WB	-	121+00	WB	N WESTHILL INTERSECTION RIGHT-TURN LANE	32 x 7	26.0	---	16	32	32
121+86	WB	-	122+27	WB	N WESTHILL INTERSECTION RIGHT-TURN LANE	41 x 11	50.1	---	16	41	41
122+64	WB	-	122+74	WB	N WESTHILL INTERSECTION RIGHT-TURN LANE	9 x 11	11.0	---	16	9	9
123+49	WB	-	123+55	EB	N WESTHILL INTERSECTION RIGHT-TURN LANE	6 x 11	7.3	3	16	6	6
124+08	WB	-	124+17	WB	N WESTHILL INTERSECTION RIGHT-TURN LANE	9 x 11	11.0	4	16	9	9
124+46	WB	-	124+54	WB	N WESTHILL INTERSECTION RIGHT-TURN LANE	6 x 11	7.3	3	16	6	6
125+84	WB	-	125+92	WB	N WESTHILL INTERSECTION RIGHT-TURN LANE	6 x 7	4.5	---	16	6	6
121+47	WB	-	121+61	WB	N WESTHILL INTERSECTION LEFT-TURN LANE	14 x 11	17.1	8	8	---	---
121+63	WB	-	121+73	WB	N WESTHILL INTERSECTION LEFT-TURN LANE	10 x 11	12.2	8	16	---	---
121+87	WB	-	122+27	WB	N WESTHILL INTERSECTION LEFT-TURN LANE	40 x 11	48.9	9	16	---	---
123+00	WB	-	123+09	WB	N WESTHILL INTERSECTION LEFT-TURN LANE	9 x 11	11.0	8	16	---	---
124+30	WB	-	124+38	WB	N WESTHILL INTERSECTION LEFT-TURN LANE	8 x 10	8.9	3	16	---	---
125+84	WB	-	125+92	WB	N WESTHILL INTERSECTION LEFT-TURN LANE	6 x 7	4.6	3	16	---	---
					WESTHILL BLVD INTERSECTION TOTALS =		224.4	49	216	121	121

NOTE: ALL ITEMS ON THIS SHEET ARE CATEGORY 0010 UNLESS OTHERWISE NOTED.

3

3

N BLUEMOUND BLVD INTERSECTION CONCRETE PAVEMENT BASE PATCHING

STATION		TO	STATION		LOCATION	REPAIR SIZE LENGTH X WIDTH (FT x FT)	390.0403 BASE PATCHING CONCRETE SHES (SY)	416.0610 DRILLED TIE BARS (EACH)	416.0620 DRILLED DOWEL BARS (EACH)	690.0150 SAWING ASPHALT (LF)	690.0250 SAWING CONCRETE (LF)
132+98	WB	-	133+34	WB	N BLUEMOUND RIGHT-TURN LANE	36 x 3	12.8	12	16	36	26
133+72	WB	-	133+92	WB	N BLUEMOUND RIGHT-TURN LANE	20 x 8	16.9	---	16	20	15
134+17	WB	-	134+23	WB	N BLUEMOUND RIGHT-TURN LANE	6 x 11	7.0	6	16	---	33
135+02	WB	-	135+18	WB	N BLUEMOUND RIGHT-TURN LANE	16 x 11	19.6	3	16	16	22
135+44	WB	-	135+57	WB	N BLUEMOUND RIGHT-TURN LANE	13 x 11	15.9	---	16	13	22
135+69	WB	-	135+75	WB	N BLUEMOUND RIGHT-TURN LANE	6 x 11	7.3	3	16	6	28
136+30	WB	-	136+40	WB	N BLUEMOUND RIGHT-TURN LANE	10 x 11	12.2	---	16	10	22
136+71	WB	-	136+77	WB	N BLUEMOUND RIGHT-TURN LANE	6 x 11	7.3	3	16	6	28
136+90	WB	-	137+25	WB	N BLUEMOUND RIGHT-TURN LANE	35 x 11	42.8	15	16	35	57
137+40	WB	-	137+50	WB	N BLUEMOUND RIGHT-TURN LANE	10 x 11	12.2	---	16	10	22
137+60	WB	-	137+66	WB	N BLUEMOUND RIGHT-TURN LANE	6 x 11	7.3	3	16	6	28
137+96	WB	-	138+06	WB	N BLUEMOUND RIGHT-TURN LANE	10 x 11	12.2	---	16	10	22
138+54	WB	-	138+92	WB	N BLUEMOUND RIGHT-TURN LANE	38 x 5	22.8	11	16	38	39
139+10	WB	-	139+16	WB	N BLUEMOUND RIGHT-TURN LANE	6 x 4	2.7	---	16	6	8
134+78	WB	-	134+84	WB	N BLUEMOUND LEFT-TURN LANE	6 x 11	7.3	3	16	---	34
134+93	WB	-	134+99	WB	N BLUEMOUND LEFT-TURN LANE	6 x 11	7.3	3	16	---	28
135+12	WB	-	135+18	WB	N BLUEMOUND LEFT-TURN LANE	6 x 11	7.3	---	16	---	22
136+61	WB	-	136+67	WB	N BLUEMOUND LEFT-TURN LANE	6 x 11	7.3	6	16	---	34
137+02	WB	-	137+08	WB	N BLUEMOUND LEFT-TURN LANE	6 x 11	7.3	6	16	---	34
137+96	WB	-	138+06	WB	N BLUEMOUND LEFT-TURN LANE	10 x 11	12.2	4	16	---	32
138+51	WB	-	138+57	WB	N BLUEMOUND LEFT-TURN LANE	6 x 11	7.3	6	16	---	34
138+67	WB	-	138+77	WB	N BLUEMOUND LEFT-TURN LANE	10 x 11	12.2	4	16	---	32
139+10	WB	-	139+16	WB	N BLUEMOUND LEFT-TURN LANE	6 x 11	7.3	3	16	---	28
139+24	WB	-	139+30	WB	N BLUEMOUND LEFT-TURN LANE	6 x 11	7.3	6	16	---	34
140+00	WB	-	140+06	WB	N BLUEMOUND LEFT-TURN LANE	6 x 6	4.3	6	16	---	19
140+11	WB	-	140+19	WB	N BLUEMOUND LEFT-TURN LANE	8 x 5	4.7	3	16	---	17
					N BLUEMOUND BLVD INTERSECTION TOTALS =		291.1	106	416	212	720

NOTE: ALL ITEMS ON THIS SHEET ARE CATEGORY 0010 UNLESS OTHERWISE NOTED.

3

3

S BLUEMOUND BLVD INTERSECTION CONCRETE PAVEMENT BASE PATCHING

STATION		TO	STATION		LOCATION	REPAIR SIZE LENGTH X WIDTH (FT x FT)	390.0403 BASE PATCHING CONCRETE SHES (SY)	416.0610 DRILLED TIE BARS (EACH)	416.0620 DRILLED DOWEL BARS (EACH)	690.0150 SAWING ASPHALT (LF)	690.0250 SAWING CONCRETE (LF)
29+12	EB	-	29+26	EB	S BLUEMOUND RIGHT-TURN LANE	14 x 3	4.4	5	16	14	20
29+74	EB	-	29+80	EB	S BLUEMOUND RIGHT-TURN LANE	6 x 4	2.7	---	16	6	8
30+36	EB	-	30+42	EB	S BLUEMOUND RIGHT-TURN LANE	6 x 5	3.5	3	16	6	10
30+56	EB	-	30+62	EB	S BLUEMOUND RIGHT-TURN LANE	6 x 6	3.9	---	16	6	18
30+93	EB	-	31+09	EB	S BLUEMOUND RIGHT-TURN LANE	16 x 7	12.8	---	16	16	14
31+41	EB	-	31+64	EB	S BLUEMOUND RIGHT-TURN LANE	23 x 10	24.5	1	16	23	14
32+15	EB	-	32+19	EB	S BLUEMOUND RIGHT-TURN LANE	6 x 11	7.3	3	16	6	28
32+74	EB	-	32+93	EB	S BLUEMOUND RIGHT-TURN LANE	19 x 11	23.2	8	16	19	41
33+07	EB	-	33+13	EB	S BLUEMOUND RIGHT-TURN LANE	6 x 11	7.3	---	16	6	22
33+28	EB	-	33+34	EB	S BLUEMOUND RIGHT-TURN LANE	6 x 11	7.3	3	16	6	28
33+44	EB	-	33+52	EB	S BLUEMOUND RIGHT-TURN LANE	8 x 11	9.8	---	16	8	22
33+68	EB	-	33+74	EB	S BLUEMOUND RIGHT-TURN LANE	6 x 11	7.3	3	16	6	28
33+96	EB	-	34+02	EB	S BLUEMOUND RIGHT-TURN LANE	6 x 11	7.3	3	16	6	22
34+13	EB	-	34+20	EB	S BLUEMOUND RIGHT-TURN LANE	8 x 11	9.8	3	16	8	30
35+14	EB	-	35+20	EB	S BLUEMOUND RIGHT-TURN LANE	6 x 11	7.3	3	16	6	28
35+53	EB	-	35+59	EB	S BLUEMOUND RIGHT-TURN LANE	6 x 11	7.3	---	16	6	22
36+10	EB	-	36+16	EB	S BLUEMOUND RIGHT-TURN LANE	6 x 5	3.5	---	16	6	11
31+41	EB	-	31+61	EB	S BLUEMOUND LEFT-TURN LANE	20 x 3	5.6	8	16	---	25
32+18	EB	-	32+24	EB	S BLUEMOUND LEFT-TURN LANE	6 x 8	5.0	3	16	---	21
32+37	EB	-	32+43	EB	S BLUEMOUND LEFT-TURN LANE	6 x 9	5.9	3	16	---	24
32+84	EB	-	32+90	EB	S BLUEMOUND LEFT-TURN LANE	6 x 11	7.3	6	16	---	34
33+07	EB	-	33+13	EB	S BLUEMOUND LEFT-TURN LANE	6 x 11	7.3	3	16	---	28
33+44	EB	-	33+52	EB	S BLUEMOUND LEFT-TURN LANE	8 x 11	9.8	3	16	---	30
33+68	EB	-	33+74	EB	S BLUEMOUND LEFT-TURN LANE	6 x 11	7.3	6	16	---	34
34+53	EB	-	34+61	EB	S BLUEMOUND LEFT-TURN LANE	8 x 11	9.8	3	16	---	30
34+79	EB	-	34+85	EB	S BLUEMOUND LEFT-TURN LANE	6 x 11	7.3	3	16	---	28
35+13	EB	-	35+19	EB	S BLUEMOUND LEFT-TURN LANE	6 x 11	7.3	3	16	---	28
					S BLUEMOUND BLVD INTERSECTION TOTALS =		215.0	71	400	134	620

NOTE: ALL ITEMS ON THIS SHEET ARE CATEGORY 0010 UNLESS OTHERWISE NOTED.

3

3

N LILAS DR INTERSECTION CONCRETE PAVEMENT BASE PATCHING

STATION		TO	STATION		LOCATION	REPAIR SIZE LENGTH X WIDTH (FT x FT)	390.0403 BASE PATCHING CONCRETE SHES (SY)	416.0610 DRILLED TIE BARS (EACH)	416.0620 DRILLED DOWEL BARS (EACH)	690.0150 SAWING ASPHALT (LF)	690.0250 SAWING CONCRETE (LF)
147+04	WB	-	147+10	WB	N LILAS DR RIGHT-TURN LANE	6 x 6	4.3	---	16	6	13
147+24	WB	-	147+30	WB	N LILAS DR RIGHT-TURN LANE	6 x 8	5.5	---	16	6	16
147+71	WB	-	147+77	WB	N LILAS DR RIGHT-TURN LANE	6 x 11	7.3	3	16	---	28
148+25	WB	-	148+31	WB	N LILAS DR RIGHT-TURN LANE	6 x 11	7.3	3	16	---	28
148+50	WB	-	148+57	WB	N LILAS DR RIGHT-TURN LANE	7 x 11	8.6	6	16	---	36
149+37	WB	-	149+43	WB	N LILAS DR RIGHT-TURN LANE	6 x 11	7.3	3	16	6	22
149+76	WB	-	149+82	WB	N LILAS DR RIGHT-TURN LANE	6 x 11	7.3	3	16	6	22
150+17	WB	-	150+23	WB	N LILAS DR RIGHT-TURN LANE	6 x 11	7.3	3	16	6	22
152+35	WB	-	152+41	WB	N LILAS DR RIGHT-TURN LANE	6 x 5	3.0	3	16	6	9
152+58	WB	-	153+01	WB	N LILAS DR RIGHT-TURN LANE	43 x 3	13.4	6	16	43	18
147+83	WB	-	147+89	WB	N LILAS DR LEFT-TURN LANE	6 x 11	7.3	3	16	---	34
148+25	WB	-	148+52	WB	N LILAS DR LEFT-TURN LANE	27 x 11	33.0	7	16	---	70
148+60	WB	-	148+66	WB	N LILAS DR LEFT-TURN LANE	6 x 11	7.3	6	16	---	34
149+30	WB	-	149+83	WB	N LILAS DR LEFT-TURN LANE	53 x 11	64.8	40	16	---	128
149+95	WB	-	150+36	WB	N LILAS DR LEFT-TURN LANE	41 x 11	50.1	20	16	---	82
150+57	WB	-	150+63	WB	N LILAS DR LEFT-TURN LANE	6 x 11	7.3	6	16	---	34
151+14	WB	-	151+43	WB	N LILAS DR LEFT-TURN LANE	23 x 6	14.5	15	16	---	57
					N LILAS DR INTERSECTION TOTALS =		255.7	127	272	79	653

S LILAS DR INTERSECTION CONCRETE PAVEMENT BASE PATCHING

STATION		TO	STATION		LOCATION	REPAIR SIZE LENGTH X WIDTH (FT x FT)	390.0403 BASE PATCHING CONCRETE SHES (SY)	416.0610 DRILLED TIE BARS (EACH)	416.0620 DRILLED DOWEL BARS (EACH)	690.0150 SAWING ASPHALT (LF)	690.0250 SAWING CONCRETE (LF)
44+63	EB	-	44+88	EB	S LILAS DR LEFT-TURN LANE	25 x 5	13.3	20	16	---	60
45+20	EB	-	45+26	EB	S LILAS DR LEFT-TURN LANE	6 x 11	7.3	3	16	---	28
45+71	EB	-	45+77	EB	S LILAS DR LEFT-TURN LANE	6 x 11	7.3	6	16	---	34
46+16	EB	-	46+22	EB	S LILAS DR LEFT-TURN LANE	6 x 11	7.3	3	16	---	28
46+67	EB	-	47+10	EB	S LILAS DR LEFT-TURN LANE	43 x 11	52.6	23	16	---	86
47+77	EB	-	48+06	EB	S LILAS DR LEFT-TURN LANE	29 x 11	35.4	14	16	---	68
48+26	EB	-	48+52	EB	S LILAS DR LEFT-TURN LANE	26 x 11	31.8	13	8	---	42
45+19	EB	-	45+26	EB	S LILAS DR RIGHT-TURN LANE	6 x 7	4.7	---	16	6	14
45+71	EB	-	45+77	EB	S LILAS DR RIGHT-TURN LANE	6 x 9	6.0	3	16	6	24
45+85	EB	-	45+91	EB	S LILAS DR RIGHT-TURN LANE	6 x 11	7.3	---	16	6	22
46+88	EB	-	47+10	EB	S LILAS DR RIGHT-TURN LANE	22 x 11	27.4	---	16	22	22
47+20	EB	-	47+26	EB	S LILAS DR RIGHT-TURN LANE	6 x 11	7.3	3	16	6	28
47+77	EB	-	47+83	EB	S LILAS DR RIGHT-TURN LANE	6 x 11	7.3	3	16	6	28
47+89	EB	-	48+42	EB	S LILAS DR RIGHT-TURN LANE	53 x 11	64.8	17	16	53	69
48+62	EB	-	48+68	EB	S LILAS DR RIGHT-TURN LANE	6 x 11	7.3	3	16	6	28
49+52	EB	-	49+67	EB	S LILAS DR RIGHT-TURN LANE	15 x 3	5.7	---	16	15	7
					S LILAS DR INTERSECTION TOTALS =		292.9	111	248	126	588

NOTE: ALL ITEMS ON THIS SHEET ARE CATEGORY 0010 UNLESS OTHERWISE NOTED.

3

3

N LYNNDALE DR INTERSECTION CONCRETE PAVEMENT BASE PATCHING

STATION		TO	STATION		LOCATION	REPAIR SIZE LENGTH X WIDTH (FT x FT)	390.0403 BASE PATCHING CONCRETE SHES (SY)	416.0610 DRILLED TIE BARS (EACH)	416.0620 DRILLED DOWEL BARS (EACH)	690.0150 SAWING ASPHALT (LF)	690.0250 SAWING CONCRETE (LF)
159+84	WB	-	160+14	WB	N LYNNDALE DR RIGHT-TURN LANE	30 x 10	32.3	3	16	30	25
160+70	WB	-	160+80	WB	N LYNNDALE DR RIGHT-TURN LANE	10 x 11	12.2	---	16	10	22
161+03	WB	-	161+11	WB	N LYNNDALE DR RIGHT-TURN LANE	9 x 11	11.0	---	16	9	22
161+23	WB	-	161+29	WB	N LYNNDALE DR RIGHT-TURN LANE	6 x 11	7.3	3	16	6	28
161+48	WB	-	161+56	WB	N LYNNDALE DR RIGHT-TURN LANE	8 x 11	9.8	3	16	8	30
162+80	WB	-	162+86	WB	N LYNNDALE DR RIGHT-TURN LANE	6 x 11	7.3	3	16	6	28
163+99	WB	-	164+05	WB	N LYNNDALE DR RIGHT-TURN LANE	6 x 11	7.3	3	16	6	28
165+62	WB	-	165+68	WB	N LYNNDALE DR RIGHT-TURN LANE	6 x 11	7.3	3	16	6	28
166+48	WB	-	166+52	WB	N LYNNDALE DR RIGHT-TURN LANE	6 x 8	5.5	3	16	6	23
166+96	WB	-	167+02	WB	N LYNNDALE DR RIGHT-TURN LANE	6 x 5	3.5	3	16	6	17
167+07	WB	-	167+13	WB	N LYNNDALE DR RIGHT-TURN LANE	6 x 5	3.0	3	16	6	15
161+80	WB	-	161+86	WB	S LYNNDALE DR LEFT-TURN LANE	6 x 11	7.3	8	16	---	34
163+23	WB	-	163+29	WB	S LYNNDALE DR LEFT-TURN LANE	6 x 11	7.3	3	16	---	28
163+61	WB	-	163+67	WB	S LYNNDALE DR LEFT-TURN LANE	6 x 10	6.5	3	16	---	26
164+02	WB	-	164+08	WB	S LYNNDALE DR LEFT-TURN LANE	6 x 8	5.0	3	16	---	27
164+27	WB	-	164+33	WB	S LYNNDALE DR LEFT-TURN LANE	6 x 6	3.9	6	16	---	24
N LYNNDALE DR INTERSECTION TOTALS =							106.7	27	176	99	266

NOTE: ALL ITEMS ON THIS SHEET ARE CATEGORY 0010 UNLESS OTHERWISE NOTED.

3

S LYNNDALE DR INTERSECTION CONCRETE PAVEMENT BASE PATCHING

STATION		TO	STATION		LOCATION	REPAIR SIZE LENGTH X WIDTH (FT x FT)	390.0403 BASE PATCHING CONCRETE SHES (SY)	416.0610 DRILLED TIE BARS (EACH)	416.0620 DRILLED DOWEL BARS (EACH)	690.0150 SAWING ASPHALT (LF)	690.0250 SAWING CONCRETE (LF)
57+03	EB	-	57+09	EB	S LYNNDALE DR RIGHT-TURN LANE	6 x 3	2.3	---	16	6	7
57+40	EB	-	57+46	EB	S LYNNDALE DR RIGHT-TURN LANE	6 x 5	3.3	3	16	6	16
59+40	EB	-	59+52	EB	S LYNNDALE DR RIGHT-TURN LANE	12 x 11	14.7	---	16	12	22
59+74	EB	-	59+86	EB	S LYNNDALE DR RIGHT-TURN LANE	12 x 11	14.7	---	16	12	22
60+32	EB	-	60+38	EB	S LYNNDALE DR RIGHT-TURN LANE	6 x 11	7.3	3	16	6	28
60+66	EB	-	60+72	EB	S LYNNDALE DR RIGHT-TURN LANE	6 x 11	7.3	3	16	6	28
60+97	EB	-	61+03	EB	S LYNNDALE DR RIGHT-TURN LANE	6 x 11	7.3	3	16	6	28
61+40	EB	-	61+46	EB	S LYNNDALE DR RIGHT-TURN LANE	6 x 11	7.3	3	16	6	28
61+74	EB	-	61+80	EB	S LYNNDALE DR RIGHT-TURN LANE	6 x 11	7.3	3	16	6	28
62+09	EB	-	62+15	EB	S LYNNDALE DR RIGHT-TURN LANE	6 x 11	7.3	3	16	6	28
62+57	EB	-	62+63	EB	S LYNNDALE DR RIGHT-TURN LANE	6 x 8	5.5	---	16	6	16
62+87	EB	-	62+93	EB	S LYNNDALE DR RIGHT-TURN LANE	6 x 6	3.8	3	16	6	17
63+00	EB	-	63+06	EB	S LYNNDALE DR RIGHT-TURN LANE	6 x 5	3.1	3	16	6	15
56+67	EB	-	56+73	EB	S LYNNDALE DR LEFT-TURN LANE	6 x 6	3.8	6	16	---	23
56+84	EB	-	56+90	EB	S LYNNDALE DR LEFT-TURN LANE	6 x 7	4.5	6	16	---	26
57+03	EB	-	57+09	EB	S LYNNDALE DR LEFT-TURN LANE	6 x 8	5.3	3	16	---	22
57+62	EB	-	57+68	EB	S LYNNDALE DR LEFT-TURN LANE	6 x 11	7.3	6	16	---	34
57+98	EB	-	58+09	EB	S LYNNDALE DR LEFT-TURN LANE	10 x 11	12.2	4	16	---	32
58+20	EB	-	58+26	EB	S LYNNDALE DR LEFT-TURN LANE	6 x 11	7.3	6	16	---	34
58+86	EB	-	58+96	EB	S LYNNDALE DR LEFT-TURN LANE	10 x 11	12.2	4	16	---	32
59+06	EB	-	59+12	EB	S LYNNDALE DR LEFT-TURN LANE	6 x 11	7.3	6	16	---	34
59+34	EB	-	59+46	EB	S LYNNDALE DR LEFT-TURN LANE	12 x 11	14.7	7	16	---	40
59+74	EB	-	59+86	EB	S LYNNDALE DR LEFT-TURN LANE	12 x 11	14.7	5	16	---	34
59+95	EB	-	60+19	EB	S LYNNDALE DR LEFT-TURN LANE	24 x 11	29.3	10	16	---	46
60+73	EB	-	60+79	EB	S LYNNDALE DR LEFT-TURN LANE	6 x 11	7.3	3	16	---	28
60+88	EB	-	60+94	EB	S LYNNDALE DR LEFT-TURN LANE	8 x 11	9.8	6	16	---	38
S LYNNDALE DR INTERSECTION TOTALS =							227.2	99	416	90	706

NOTE: ALL ITEMS ON THIS SHEET ARE CATEGORY 0010 UNLESS OTHERWISE NOTED.

3

N PERKINS ST INTERSECTION CONCRETE PAVEMENT BASE PATCHING

STATION		TO	STATION		LOCATION	REPAIR SIZE LENGTH X WIDTH (FT x FT)	390.0403 BASE PATCHING CONCRETE SHES (SY)	416.0610 DRILLED TIE BARS (EACH)	416.0620 DRILLED DOWEL BARS (EACH)	690.0150 SAWING ASPHALT (LF)	690.0250 SAWING CONCRETE (LF)
174+09	WB	-	174+17	WB	N PERKINS ST RIGHT-TURN LANE	8 x 11	9.4	---	16	8	21
174+52	WB	-	174+58	WB	N PERKINS ST RIGHT-TURN LANE	6 x 11	7.3	3	16	6	28
174+72	WB	-	174+78	WB	N PERKINS ST RIGHT-TURN LANE	6 x 11	7.3	---	16	6	22
175+03	WB	-	175+09	WB	N PERKINS ST RIGHT-TURN LANE	6 x 11	7.3	---	16	6	22
175+14	WB	-	175+20	WB	N PERKINS ST RIGHT-TURN LANE	6 x 11	7.3	---	16	6	22
176+86	WB	-	176+92	WB	N PERKINS ST RIGHT-TURN LANE	6 x 11	7.3	---	16	6	22
177+15	WB	-	177+22	WB	N PERKINS ST RIGHT-TURN LANE	6 x 11	7.3	3	16	6	28
177+84	WB	-	178+00	WB	N PERKINS ST RIGHT-TURN LANE	16 x 8	14.2	6	8	16	32
178+58	WB	-	178+66	WB	N PERKINS ST RIGHT-TURN LANE	8 x 5	4.6	---	16	8	10
174+54	WB	-	174+60	WB	N PERKINS ST LEFT-TURN LANE	6 x 11	7.3	7	8	---	34
174+72	WB	-	174+78	WB	N PERKINS ST LEFT-TURN LANE	6 x 11	7.3	3	16	---	34
175+23	WB	-	175+29	WB	N PERKINS ST LEFT-TURN LANE	6 x 11	7.3	---	16	---	28
176+15	WB	-	176+26	WB	N PERKINS ST LEFT-TURN LANE	11 x 11	13.4	8	16	---	44
176+86	WB	-	176+92	WB	N PERKINS ST LEFT-TURN LANE	6 x 11	7.3	3	16	---	28
177+25	WB	-	177+31	WB	N PERKINS ST LEFT-TURN LANE	6 x 11	7.3	6	16	---	34
178+08	WB	-	178+21	WB	N PERKINS ST LEFT-TURN LANE	12 x 5	6.5	10	16	---	34
N PERKINS ST INTERSECTION TOTALS =							128.9	49	240	68	443

S PERKINS ST INTERSECTION CONCRETE PAVEMENT BASE PATCHING

STATION		TO	STATION		LOCATION	REPAIR SIZE LENGTH X WIDTH (FT x FT)	390.0403 BASE PATCHING CONCRETE SHES (SY)	416.0610 DRILLED TIE BARS (EACH)	416.0620 DRILLED DOWEL BARS (EACH)	690.0150 SAWING ASPHALT (LF)	690.0250 SAWING CONCRETE (LF)
71+06	EB	-	71+35	EB	S PERKINS ST RIGHT-TURN LANE	29 x 5	16.1	2	16	29	14
71+91	EB	-	71+97	EB	S PERKINS ST RIGHT-TURN LANE	6 x 8	5.3	---	16	6	16
73+26	EB	-	73+56	EB	S PERKINS ST RIGHT-TURN LANE	30 x 11	36.7	---	16	30	22
74+15	EB	-	74+37	EB	S PERKINS ST RIGHT-TURN LANE	22 x 11	26.9	---	16	22	22
75+55	EB	-	75+61	EB	S PERKINS ST RIGHT-TURN LANE	6 x 11	7.3	3	16	6	28
76+08	EB	-	76+14	EB	S PERKINS ST RIGHT-TURN LANE	6 x 7	4.7	3	16	6	20
71+64	EB	-	71+70	EB	S PERKINS ST LEFT-TURN LANE	6 x 4	2.7	3	16	---	14
72+02	EB	-	72+22	EB	S PERKINS ST LEFT-TURN LANE	10 x 7	7.8	4	16	---	24
72+33	EB	-	72+39	EB	S PERKINS ST LEFT-TURN LANE	6 x 9	5.7	6	16	---	29
72+71	EB	-	72+77	EB	S PERKINS ST LEFT-TURN LANE	6 x 11	7.3	6	16	---	34
73+04	EB	-	73+10	EB	S PERKINS ST LEFT-TURN LANE	6 x 11	7.3	3	16	---	28
73+35	EB	-	73+41	EB	S PERKINS ST LEFT-TURN LANE	6 x 11	7.3	3	16	---	28
74+52	EB	-	74+60	EB	S PERKINS ST LEFT-TURN LANE	8 x 11	9.8	4	16	---	32
74+72	EB	-	74+79	EB	S PERKINS ST LEFT-TURN LANE	6 x 11	7.3	2	16	---	28
74+93	EB	-	74+99	EB	S PERKINS ST LEFT-TURN LANE	6 x 11	7.3	6	16	---	34
75+24	EB	-	75+30	EB	S PERKINS ST LEFT-TURN LANE	6 x 11	7.3	7	8	---	28
S PERKINS ST INTERSECTION TOTALS =							166.9	52	248	99	401

NOTE: ALL ITEMS ON THIS SHEET ARE CATEGORY 0010 UNLESS OTHERWISE NOTED.

3

IH 41 NB ON RAMP CONCRETE PAVEMENT BASE PATCHING

STATION		TO	STATION		LOCATION	REPAIR SIZE LENGTH X WIDTH (FT x FT)	390.0403 BASE PATCHING CONCRETE SHES (SY)	416.0610 DRILLED TIE BARS (EACH)	416.0620 DRILLED DOWEL BARS (EACH)	690.0150 SAWING ASPHALT (LF)	690.0250 SAWING CONCRETE (LF)
113+25	WB	-	113+31	WB	IH 41 NB ON RAMP	6 x 12	8.0	---	---	6	24
113+48	WB	-	113+54	WB	IH 41 NB ON RAMP	6 x 12	8.0	---	---	6	24
113+85	WB	-	114+00	WB	IH 41 NB ON RAMP	15 x 9	14.8	6	---	15	33
114+40	WB	-	114+85	WB	IH 41 NB ON RAMP	45 x 5	23.5	8	---	45	35
114+88	WB	-	115+32	WB	IH 41 NB ON RAMP	44 x 2	7.3	---	---	44	3
IH 41 NB ON RAMP INTERSECTION TOTALS =							61.7	14	0	116	119

3

NOTE: ALL ITEMS ON THIS SHEET ARE CATEGORY 0010 UNLESS OTHERWISE NOTED.

ASPHALT ITEMS

STATION - STATION	LOCATION	455.0605 TACK COAT OVER CONCRETE (GAL)	455.0605 TACK COAT OVER LOWER HMA PAVEMENT LAYER (GAL)	460.6224 HMA PAVEMENT 4 MT 58-28 S (TON)	465.0125 ASPHALTIC SURFACE TEMPORARY (TON)
11+56 EB - 21+85 EB	START EB - S. KOOLS ST INT.	380	272	785	---
21+85 EB - 34+89 EB	S. KOOLS ST - S. BLUEMOUND DR.	427	305	882	---
34+89 EB - 48+08 EB	S. BLUEMOUND DR. - S. LILAS DR.	402	287	837	---
48+08 EB - 61+19 EB	S. LILAS DR. - S. LYNNDALE DR.	408	292	850	---
61+19 EB - 68+65 EB	S. LYNNDALE DR. - RR CROSSING	195	139	405	---
69+61 EB - 74+91 EB	RR CROSSING - S. PERKINS ST.	180	128	371	---
74+91 EB - 85+88 EB	S. PERKINS ST. - (B-44-0009)	294	210	585	---
88+20 EB - 93+10 EB	(B-44-0009) - S. LINWOOD AVE.	113	81	222	---
112+00 WB - 121+79 WB	START WB - N. WESTHILL BLVD.	358	255	738	---
121+79 WB - 134+94 WB	N. WESTHILL BLVD. - N. BLUEMOUND DR.	404	288	839	---
134+94 WB - 148+15 WB	N. BLUEMOUND DR. - N. LILAS DR.	418	298	869	---
148+15 WB - 161+25 WB	N. LILAS DR. - N. LYNNDALE DR.	374	267	778	---
161+25 WB - 168+28 WB	N. LYNNDALE DR. - RR CROSSING	230	165	480	---
169+16 WB - 174+90 WB	RR CROSSING - N. PERKINS ST.	149	106	309	---
174+90 WB - 185+87 WB	N. PERKINS ST. - (B-44-0009)	306	219	640	---
188+19 WB - 192+04 WB	(B-44-0009) - N. LINWOOD AVE.	74	53	156	---
81+88 EB - 84+88 EB	WEST TEMPORARY CROSSOVER	---	---	---	118
88+85 EB - 92+02 EB	EAST TEMPORARY CROSSOVER	---	---	---	106
	SUBTOTALS	4,712	3,365	9,746	224
	PROJECT TOTALS	8,077		9,746	224

* THE FOLLOWING APPLICATION RATES WERE USED TO ESTIMATE TACK COAT QUANTITY: 0.07 GAL/SY OVER CONCRETE
0.05 GAL/SY OVER LOWER HMA PAVEMENT LAYER

RAILING PIPE

STATION - STATION	LOCATION	513.2050.S (LF)
88+29 EB - 92+52 EB	RIGHT	425
	PROJECT TOTAL	425

CLEANING CULVERT PIPES

STATION	LOCATION	520.8700 (EACH)
11+64 EB	RIGHT	1
14+18 EB	RIGHT	1
17+67 EB	RIGHT	1
22+31 EB	RIGHT	1
32+70 EB	RIGHT	1
46+94 EB	RIGHT	1
48+64 EB	RIGHT	1
52+68 EB	RIGHT	1
55+67 EB	RIGHT	1
58+66 EB	RIGHT	1
65+67 EB	RIGHT	1
69+74 EB	RIGHT	1
72+68 EB	RIGHT	1
75+38 EB	RIGHT	1
78+21 EB	RIGHT	1
81+67 EB	RIGHT	1
89+58 EB	RIGHT	1
110+94 WB	LEFT	1
	PROJECT TOTAL	18

NOTE: ALL ITEMS ON THIS SHEET ARE CATEGORY 0010 UNLESS OTHERWISE NOTED.

3

CONCRETE CURB AND GUTTER

STATION - STATION	LOCATION	601.0405 18-INCH TYPE A (LF)	601.0409 30-INCH TYPE A (LF)	601.0411 30-INCH TYPE D (LF)	601.0586 4-INCH SLOPED 30-INCH TYPE TBTT (LF)
14+23 EB - 14+27 EB	MEDIAN	---	4	---	---
22+46 EB - 22+52 EB	MEDIAN	---	6	---	---
42+31 EB - 42+41 EB	MEDIAN	8	---	---	---
75+46 EB	OUTSIDE LANE	---	3	---	---
81+87 EB - 84+87 EB	MEDIAN	---	300	---	---
88+85 EB - 92+05 EB	MEDIAN	---	320	---	---
113+00 WB - 119+00 WB	LEFT TURN LANE	---	601	---	---
120+87 WB - 120+97 WB	MEDIAN	---	10	---	---
121+10 WB - 121+16 WB	SHOULDER	---	6	---	---
133+28 WB - 133+34 WB	MEDIAN	6	---	---	---
181+87 WB - 184+87 WB	MEDIAN	---	300	---	---
188+18 WB - 188+23 WB	MEDIAN	5	---	---	---
188+19 WB - 188+56 WB	SHOULDER	---	---	---	37
188+84 WB - 192+04 WB	MEDIAN	---	320	---	---
192+70 WB - 193+20 WB	OUTSIDE LANE	---	50	---	---
SOUTH BLUEMOUND DR.	SB LANE	---	---	6	---
NORTH BLUEMOUND DR.	NB LANE	---	---	10	---
NORTH PERKINS ST.	SB LANE	---	---	11	---
NORTH PERKINS ST.	NB LANE	---	---	11	---
	PROJECT TOTALS	19	1,920	38	37

CONCRETE SIDEWALK 5-INCH

STATION - STATION	LOCATION	602.0410 (SF)
35+52 EB - 35+57 EB	MEDIAN	25
74+23 EB - 74+33 EB	MEDIAN	50
85+67 EB - 85+83 EB	RIGHT	54
88+19 EB - 88+29 EB	MEDIAN	50
88+19 EB - 88+24 EB	RIGHT	18
88+85 EB - 92+05 EB	MEDIAN	1,620
SOUTH LILAS DR.	MEDIAN	34
NORTH PERKINS ST.	MEDIAN	24
	PROJECT TOTAL	1,875

STORM SEWER

FROM STRUCTURE NO.	TO STRUCTURE NO.	INLET ELEV	OUTLET ELEV	SLOPE %	608.0312 STORM SEWER PIPE REINFORCED CONCRETE CLASS III 12-INCH (LF)
INL 1.1	EX. INL 1.2	768.93	767.98	5.50%	17
INL 2.1	EX. INL 2.2	770.78	588.60	5.20%	9
			PROJECT TOTAL		26

STORM SEWER STRUCTURE SCHEDULE

STRUCT. NO.	STATION	OFFSET	FINISHED TOP CASTING ELEV	FINISHED BOTTOM STRUCTURE ELEV	FINISHED STRUCTURE ELEV	FINISHED DEPTH	INLET COVERS 611.0624 TYPE H (EACH)	INLETS 611.3230 2x3-FT (EACH)
INL 1.1	114+18 WB	14.00' RT	771.66	770.83	768.93	1.90	1	1
INL 2.1	117+68 WB	14.0' RT	773.53	772.70	770.78	1.92	1	1
					PROJECT TOTALS		2	2

NOTE: TYPE H COVER = 4" DEPTH FROM FLOW LINE TO BOTTOM OF CASTING

3

NOTE: ALL ITEMS ON THIS SHEET ARE CATEGORY 0010 UNLESS OTHERWISE NOTED.

ADJUSTING INLET COVERS

STATION	LOCATION	611.8115 (EACH)
14+18 EB	EB MEDIAN	1
17+69 EB	EB MEDIAN	1
22+31 EB	EB/WB MEDIAN	2
29+18 EB	EB/WB MEDIAN	2
32+69 EB	EB/WB MEDIAN	2
34+85 EB	S BLUEMOUND MEDIAN	2
35+38 EB	EB/WB MEDIAN	2
42+36 EB	EB/WB MEDIAN	2
46+94 EB	EB/WB MEDIAN	2
48+59 EB	EB/WB MEDIAN	2
52+68 EB	EB/WB MEDIAN	2
55+67 EB	EB/WB MEDIAN	2
58+67 EB	EB/WB MEDIAN	2
61+66 EB	EB/WB MEDIAN	2
65+67 EB	EB/WB MEDIAN	2
72+67 EB	EB/WB MEDIAN	2
75+34 EB	EB/WB MEDIAN	2
78+17 EB	EB/WB MEDIAN	2
81+67 EB	EB/WB MEDIAN	2
85+75 EB	EB SHOULDER	1
89+58 EB	EB SHOULDER	1
92+07 EB	EB MEDIAN & OUTSIDE	2
93+08 EB	EB OUTSIDE	1
185+73 WB	WB OUTSIDE	1
189+56 WB	WB OUTSIDE	1
	PROJECT TOTALS	43

ADJUSTING MANHOLE COVERS

CATEGORY	STATION	LOCATION	611.8110 (EACH)
0030	113+60 WB	SHOULDER	1
		PROJECT TOTAL	1

3

GUARDRAIL

STATION TO STATION	LOCATION	614.0397 GUARDRAIL MOW STRIP EMULSIFIED ASPHALT (SY)	614.0920 SALVAGED RAIL (LF)	614.0925 SALVAGED GUARDRAIL END TREATMENTS (EACH)	614.2300 MGS GUARDRAIL 3 (LF)	614.2500 MGS THRIE BEAM TRANSITION (LF)	614.2610 MGS GUARDRAIL TERMINAL EAT (EACH)	614.2620 MGS GUARDRAIL TERMINAL TYPE 2 (EACH)
11+85 EB - 14+48 EB	RIGHT	111	212	2	210	---	1	1
77+04 EB - 85+79 EB	RIGHT	352	511	1	788	39	1	---
88+28 EB - 92+10 EB	RIGHT	---	369	1	---	---	---	---
111+90 WB - 114+60 WB	LEFT	111	212	2	212	---	1	1
180+00 WB - 185+81 WB	LEFT	227	576	1	539	39	---	1
188+18 WB - 192+89 WB	LEFT	119	312	1	382	39	1	---
	PROJECT TOTALS	920	2,192	8	2,131	117	4	3

LANDSCAPE SUMMARY

STATION TO STATION	LOCATION	625.0100 TOPSOIL (SY)	629.0210 FERTILIZER TYPE B (CWT)	630.0130 SEEDING MIXTURE NO.30 LB	SPV.0120.01 WATER FOR SEEDED AREAS MGAL
113+00 WB - 119+00 WB	MEDIAN	333	0.21	6.0	7.5
77+48 EB - 80+72 EB	SHOULDER	541	0.34	9.7	12.1
81+87 EB - 84+88 EB	MEDIAN	240	0.15	4.3	5.4
188+18 WB - 193+20 WB	SHOULDER	301	0.19	5.4	6.7
GRADING AND SHAPING	SHOULDER LOCATIONS	50	0.03	0.9	1.1
	SIGNAL BASE LOCATIONS	35	0.02	0.6	0.8
	SUBTOTALS	1,500	1	27	33.6
	UNDISTRIBUTED	375	0.24	6.8	8.4
	PROJECT TOTALS	1,875	1.18	33.8	42.1

THE FOLLOWING APPLICATION RATES WERE USED TO ESTIMATE SEEDING AND FERTILIZING QUANTITIES:

7 LBS/1000 SF (TYPE B FERTILIZER)

2 LBS/1000 SF (SEED MIXTURE NO. 30)

NOTE: ALL ITEMS ON THIS SHEET ARE CATEGORY 0010 UNLESS OTHERWISE NOTED.

3

3

EROSION CONTROL ITEMS

STATION TO STATION	LOCATION	628.1504 SILT FENCE (LF)	628.1520 SILT FENCE MAINTENANCE (LF)	628.1905 MOBILIZATION EROSION CONTROL (EACH)	628.1910 MOBILIZATION EMERGENCY EROSION CONTROL (EACH)	628.2002 EROSION MAT CLASS I TYPE A (SY)	628.7015 INLET PROTECTION TYPE C (EACH)
14+18 EB	EB/WB MEDIAN	---	---	---	---	---	2
17+69 EB	EB/WB MEDIAN	---	---	---	---	---	2
75+34 EB	EB/WB MEDIAN	---	---	---	---	---	2
78+17 EB	EB/WB MEDIAN	---	---	---	---	---	2
81+67 EB	EB/WB MEDIAN	---	---	---	---	---	2
85+75 EB	EB SHOULDER	---	---	---	---	---	1
185+73 WB	WB OUTSIDE	---	---	---	---	---	1
89+58 EB	EB SHOULDER	---	---	---	---	---	1
189+56 WB	WB SHOULDER	---	---	---	---	---	1
92+07 EB	EB MEDIAN & SHOULDER	---	---	---	---	---	2
192+08 WB	WB MEDIAN & SHOULDER	---	---	---	---	---	2
93+08 EB	EB SHOULDER	---	---	---	---	---	1
93+16 EB	EB/WB MEDIAN	---	---	---	---	---	2
193+33 WB	WB SHOULDER	---	---	---	---	---	1
113+00 WB - 119+00 WB	MEDIAN	---	---	---	---	335	---
77+38 EB - 80+85 EB	SHOULDER	360	360	---	---	545	---
81+87 EB - 84+88 EB	MEDIAN	---	---	---	---	240	---
188+18 WB - 193+20 WB	SHOULDER	515	515	---	---	305	---
11+56 EB - 93+50 EB	STH 125/COLLEGE AVE.	---	---	5	3	---	---
	SIGNAL BASE LOCATIONS	---	---	---	---	50.0	---
	SUBTOTALS	875	875	5	3	1,475	22
	UNDISTRIBUTED	220	220	---	---	370	6
	PROJECT TOTALS	1,095	1,095	5	3	1,845	28

3

ERECTION & REMOVAL OF TYPE II SIGNS AND SUPPORTS

SIGN NO.	LOCATION	SIGN CODE	W X H	637.2210 SIGNS TYPE II REFLECTIVE H S.F.	637.2215 SIGN TYPE II REF. H FOLD.	637.2230 SIGNS TYPE II REFLECTIVE F S.F.	634.0612 POSTS WOOD 4x6x12 EACH	634.0614 POSTS WOOD 4x6x14 EACH	634.0616 POSTS WOOD 4x6x16 EACH	634.0620 POSTS WOOD 4x6x20 EACH	638.2101 MOVING SIGNS TYPE II EACH	638.2602 REMOVING SIGNS TYPE II EACH	638.3000 REMOVING SMALL SIGN SUPPORTS EACH	REMARKS
1-47	VACANT	---	---	---	---	---	---	---	---	---	---	---	---	
48A	STH 125 E. OF I-41	J4-1	24" X 36"	6.00	---	---	---	---	1	---	---	1	1	EAST STH 125
48	"	R5-1A	36" X 24"	6.00	---	---	---	1	---	---	---	1	1	
49	"	I55-56	30" X 36"	7.50	---	---	---	1	---	---	---	1	1	PITNEY BOWES INC, SEE PLAN SHEET
50	"	D1-2	90" X 30"	18.75	---	---	---	2	---	---	---	---	---	SEE SIGN DETAIL SHEET
51	"	R2-1	24" X 30"	5.00	---	---	---	1	---	---	---	1	1	35 MPH
52	"	R2-1	24" X 30"	5.00	---	---	---	1	---	---	---	1	1	35 MPH
53	"	D1-2	---	---	---	---	---	---	---	---	---	1	2	
54	"	R3-7R	30" X 30"	6.25	---	---	---	1	---	---	---	1	1	
55	"	R5-1A	36" X 24"	6.00	---	---	---	---	---	---	---	---	---	MOUNT TO BACK OF SIGN 54, PART OF SIGN 54 REMOVAL
56	"	R5-1	30" X 30"	6.25	---	---	---	1	---	---	---	1	1	
57	"	R1-1F	36" X 36"	---	7.46	---	---	---	---	---	---	1	---	MOUNT TO SIGNAL
58	"	R6-2L	---	---	---	---	---	---	---	---	---	---	---	PART OF SIGN 57 REMOVAL
59A	"	D1-72	120" X 60"	50.00	---	---	---	---	---	4	---	1	4	SEE SIGN DETAIL SHEET
59	"	R2-1	---	---	---	---	---	---	---	---	---	---	---	PART OF SIGN 53 REMOVAL
60	"	R2-1	24" X 30"	5.00	---	---	---	1	---	---	---	---	---	35 MPH
	PAGE SUBTOTAL			121.75	7.46	0.00	0	9	1	4	0	10	13	

ERECTION & REMOVAL OF TYPE II SIGNS AND SUPPORTS

SIGN NO.	LOCATION	SIGN CODE	W X H	637.2210 SIGNS TYPE II REFLECTIVE H S.F.	637.2215 SIGN TYPE II REF. H FOLD.	637.2230 SIGNS TYPE II REFLECTIVE F S.F.	634.0612 POSTS WOOD 4x6x12 EACH	634.0614 POSTS WOOD 4x6x14 EACH	634.0616 POSTS WOOD 4x6x16 EACH	634.0620 POSTS WOOD 4x6x20 EACH	638.2101 MOVING SIGNS TYPE II EACH	638.2602 REMOVING SIGNS TYPE II EACH	638.3000 REMOVING SMALL SIGN SUPPORTS EACH	REMARKS
61	STH 125 E. OF I-41	R2-1	24" X 30"	5.00	---	---	---	1	---	---	---	---	---	35 MPH
62	"	R1-1F	36" X 36"	---	7.46	---	---	---	---	---	---	1	---	MOUNT TO SIGNAL
63	"	R4-7	24" X 30"	5.00	---	---	---	---	---	---	---	---	---	MOUNT TO SIGNAL, PART OF SIGN 62 REMOVAL
63A	"	R6-2L	24" X 30"	5.00	---	---	---	1	---	---	---	---	---	
64	"	R1-1F	36" X 36"	---	7.46	---	---	---	---	---	---	1	---	MOUNT TO SIGNAL
65	"	R4-7	24" X 30"	5.00	---	---	---	---	---	---	---	1	---	MOUNT TO SIGNAL
66	"	R1-1F	36" X 36"	---	7.46	---	---	---	---	---	---	---	---	MOUNT TO SIGNAL, PART OF SIGN 65 REMOVAL
67	STH 125 E. OF KOOLS ST	R4-7	24" X 30"	5.00	---	---	---	1	---	---	---	1	1	
68	"	R1-1F	36" X 36"	---	7.46	---	---	---	---	---	---	1	---	MOUNT TO SIGNAL
68A	"	R6-2L	24" X 30"	5.00	---	---	---	1	---	---	---	---	---	
69	"	R4-7	24" X 30"	5.00	---	---	---	---	---	---	---	1	---	MOUNT TO SIGNAL
70	"	R1-1F	36" X 36"	---	7.46	---	---	---	---	---	---	---	---	MOUNT TO SIGNAL, PART OF SIGN 69 REMOVAL
71	"	R2-1	24" X 30"	5.00	---	---	---	1	---	---	---	1	1	35 MPH
72	"	R5-1A	30" X 24"	5.00	---	---	---	---	---	---	---	---	---	MOUNT TO BACK OF SIGN 71, PART OF SIGN 71 REMOVAL
73	"	R5-1	30" X 30"	6.25	---	---	---	1	---	---	---	1	1	
74	"	R6-2R	24" X 30"	5.00	---	---	---	1	---	---	---	1	1	
75	"	R1-1	36" X 36"	7.46	---	---	---	---	1	---	---	1	1	
75A	"	R6-1R	36" X 12"	3.00	---	---	---	---	---	---	---	---	---	MOUNT ABOVE SIGN 75
76	"	R1-1F	36" X 36"	---	7.46	---	---	---	---	---	---	1	---	MOUNT TO SIGNAL
77	"	R6-2L	---	---	---	---	---	---	---	---	---	---	---	PART OF SIGN 76 REMOVAL
78	"	R5-1	30" X 30"	6.25	---	---	---	1	---	---	---	1	1	
79	"	R5-1A	36" X 24"	6.00	---	---	---	---	---	---	---	1	---	MOUNT TO BACK OF EXISTING J1-3, POST TO REMAIN
80	"	D1-2	90" X 30"	18.75	---	---	---	2	---	---	---	1	2	SEE SIGN DETAIL SHEET
81	"	R1-1	36" X 36"	7.46	---	---	---	---	1	---	---	1	1	
81A	"	R6-1R	36" X 12"	3.00	---	---	---	---	---	---	---	---	---	MOUNT ABOVE SIGN 81
82	"	R6-2R	24" X 30"	5.00	---	---	---	1	---	---	---	1	1	
83	"	R5-1	30" X 30"	6.25	---	---	---	1	---	---	---	1	1	
84	"	D1-61	78" X 24"	13.00	---	---	---	2	---	---	---	1	2	SEE SIGN DETAIL SHEET
85	"	R5-1A	36" X 24"	6.00	---	---	---	---	---	---	---	---	---	MOUNT TO BACK OF SIGN 84, PART OF SIGN 84 REMOVAL
86	"	R5-1	30" X 30"	6.25	---	---	---	1	---	---	---	1	1	
87	"	R1-1F	36" X 36"	---	7.46	---	---	---	---	---	---	1	---	MOUNT TO SIGNAL
88	"	R6-2L	---	---	---	---	---	---	---	---	---	---	---	PART OF SIGN 87 REMOVAL
89	"	R5-1A	36" X 24"	6.00	---	---	---	1	---	---	---	1	1	
90	"	R2-1	24" X 30"	5.00	---	---	---	---	---	---	---	---	---	MOUNT TO BACK OF SIGN 89, PART OF SIGN 89 REMOVAL
91	"	R1-1F	36" X 36"	---	7.46	---	---	---	---	---	---	1	---	MOUNT TO SIGNAL
92	"	R4-7	24" X 30"	5.00	---	---	---	---	---	---	---	---	---	MOUNT TO SIGNAL, PART OF SIGN 91 REMOVAL
92A	"	R6-2L	24" X 30"	5.00	---	---	---	1	---	---	---	---	---	
93	"	R1-1F	36" X 36"	---	7.46	---	---	---	---	---	---	1	---	MOUNT TO SIGNAL
94	"	R1-1F	36" X 36"	---	7.46	---	---	---	---	---	---	1	---	MOUNT TO SIGNAL
95	"	R4-7	24" X 30"	5.00	---	---	---	---	---	---	---	---	---	MOUNT TO SIGNAL, PART OF SIGN 94 REMOVAL
96	"	R1-1F	36" X 36"	---	7.46	---	---	---	---	---	---	1	---	MOUNT TO SIGNAL
97	"	R4-7	24" X 30"	5.00	---	---	---	---	---	---	---	---	---	MOUNT TO SIGNAL, PART OF SIGN 97 REMOVAL
98	STH 125 E. OF BLUEMOUND DR	R1-1F	36" X 36"	---	7.46	---	---	---	---	---	---	1	---	MOUNT TO SIGNAL
98A	"	R6-2L	24" X 30"	5.00	---	---	---	1	---	---	---	---	---	
99	"	R4-7	24" X 30"	5.00	---	---	---	---	---	---	---	1	---	MOUNT TO SIGNAL
100	"	R1-1F	36" X 36"	---	7.46	---	---	---	---	---	---	---	---	MOUNT TO SIGNAL, PART OF SIGN 99 REMOVAL
101	"	R2-1	24" X 30"	5.00	---	---	---	1	---	---	---	1	1	35 MPH
102	"	J4-1	24" X 36"	6.00	---	---	---	1	---	---	---	1	1	EAST STH 125
103	"	R5-1A	36" X 24"	6.00	---	---	---	---	---	---	---	---	---	MOUNT TO BACK OF SIGN 102, PART OF SIGN 102 REMOVAL
104	"	R5-1	30" X 30"	6.25	---	---	---	1	---	---	---	1	1	
105	"	R6-2R	24" X 30"	5.00	---	---	---	1	---	---	---	1	1	
106	"	R1-1	36" X 36"	7.46	---	---	---	---	1	---	---	1	1	
106A	"	R6-1R	36" X 12"	3.00	---	---	---	---	---	---	---	---	---	MOUNT ABOVE SIGN 106
107	"	D1-61	48" X 24"	8.00	---	---	---	1	---	---	---	1	2	SEE SIGN DETAIL SHEET
108	"	R5-1A	36" X 24"	6.00	---	---	---	---	---	---	---	---	---	MOUNT TO BACK OF SIGN 107, PART OF SIGN 107 REMOVAL
109	"	R1-1F	36" X 36"	---	7.46	---	---	---	---	---	---	1	---	MOUNT TO SIGNAL
110	"	R6-2L	---	---	---	---	---	---	---	---	---	---	---	PART OF SIGN 109 REMOVAL
111	"	R5-1	30" X 30"	6.25	---	---	---	1	---	---	---	1	1	
112	"	R5-1A	36" X 24"	6.00	---	---	---	2	---	---	---	1	2	
113	"	D1-61	78" X 24"	13.00	---	---	---	---	---	---	---	---	---	MOUNT TO BACK OF SIGN 112, PART OF SIGN 112 REMOVAL
114	"	R1-1	36" X 36"	7.46	---	---	---	---	1	---	---	1	1	
114A	"	R6-1R	36" X 12"	3.00	---	---	---	---	---	---	---	---	---	MOUNT ABOVE SIGN 114
115	"	R6-2R	24" X 30"	5.00	---	---	---	1	---	---	---	1	1	
116	"	R5-1	30" X 30"	6.25	---	---	---	1	---	---	---	1	1	
117	"	R5-1	30" X 30"	6.25	---	---	---	1	---	---	---	1	1	
118	"	R1-1F	36" X 36"	---	7.46	---	---	---	---	---	---	1	---	MOUNT TO SIGNAL
119	"	R6-2L	---	---	---	---	---	---	---	---	---	---	---	PART OF SIGN 118 REMOVAL
	PAGE SUBTOTAL			291.59	111.90	0.00	0	29	4	0	0	41	29	

ERECTION & REMOVAL OF TYPE II SIGNS AND SUPPORTS

SIGN NO.	LOCATION	SIGN CODE	W X H	637.2210 SIGNS TYPE II REFLECTIVE H S.F.	637.2215 SIGN TYPE II REF. H FOLD.	637.2230 SIGNS TYPE II REFLECTIVE F S.F.	634.0612 POSTS WOOD 4x6x12 EACH	634.0614 POSTS WOOD 4x6x14 EACH	634.0616 POSTS WOOD 4x6x16 EACH	634.0620 POSTS WOOD 4x6x20 EACH	638.2101 MOVING SIGNS TYPE II EACH	638.2602 REMOVING SIGNS TYPE II EACH	638.3000 REMOVING SMALL SIGN SUPPORTS EACH	REMARKS
120	STH 125 E. OF BLUEMOUND DR	R5-1A	36" X 24"	6.00	---	---	---	1	---	---	---	1	1	
121	"	R2-1	24" X 30"	5.00	---	---	---	---	---	---	---	---	---	35 MPH, MOUNT TO BACK OF SIGN 120, PART OF SIGN 120 REMOVAL
122	"	R1-1F	36" X 36"	---	7.46	---	---	---	---	---	---	1	---	MOUNT TO SIGNAL
123	"	R4-7	24" X 30"	5.00	---	---	---	---	---	---	---	---	---	MOUNT TO SIGNAL, PART OF SIGN 122 REMOVAL
123A	"	R6-2L	24" X 30"	5.00	---	---	---	1	---	---	---	---	---	
124	"	R1-1F	36" X 36"	---	7.46	---	---	---	---	---	---	1	---	MOUNT TO SIGNAL
125	"	R1-1F	36" X 36"	---	7.46	---	---	---	---	---	---	1	---	MOUNT TO SIGNAL
126	"	R4-7	24" X 30"	5.00	---	---	---	---	---	---	---	---	---	MOUNT TO SIGNAL, PART OF SIGN 125 REMOVAL
127	"	R1-1F	36" X 36"	---	7.46	---	---	---	---	---	---	1	---	MOUNT TO SIGNAL
128	"	R4-7	24" X 30"	5.00	---	---	---	---	---	---	---	---	---	MOUNT TO SIGNAL, PART OF SIGN 127 REMOVAL
129	STH 125 E. OF LILAS DR	R1-1F	36" X 36"	---	7.46	---	---	---	---	---	---	1	---	MOUNT TO SIGNAL
129A	"	R6-2L	24" X 30"	5.00	---	---	---	1	---	---	---	---	---	
130	"	R4-7	24" X 30"	5.00	---	---	---	---	---	---	---	1	---	MOUNT TO SIGNAL
131	"	R1-1F	36" X 36"	---	7.46	---	---	---	---	---	---	---	---	MOUNT TO SIGNAL, PART OF SIGN 130 REMOVAL
132	"	R2-1	24" X 30"	5.00	---	---	---	1	---	---	---	1	1	35 MPH
133	"	I2-3	60" X 24"	10.00	---	---	---	2	---	---	---	1	2	APPLETON POPULATION, SEE SIGN DETAIL
134	"	R5-1A	36" X 24"	6.00	---	---	---	---	---	---	---	---	---	MOUNT TO BACK OF SIGN, 133, PART OF SIGN 133 REMOVAL
135	"	R5-1	30" X 30"	6.25	---	---	---	1	---	---	---	1	1	
136	"	R6-2R	24" X 30"	5.00	---	---	---	1	---	---	---	1	1	
137	"	R1-1	36" X 36"	7.46	---	---	---	---	1	---	---	1	1	
137A	"	R6-1R	36" X 12"	3.00	---	---	---	---	---	---	---	---	---	MOUNT ABOVE SIGN 137
138	"	J1-1	24" X 39"	6.50	---	---	---	---	1	---	---	1	1	JCT CTH A
139	"	D1-61	66" X 24"	11.00	---	---	---	2	---	---	---	1	2	SEE DETAIL SHEET
140	"	D1-55R	96" X 24"	16.00	---	---	---	2	---	---	---	1	2	
141	"	R5-1A	36" X 24"	6.00	---	---	---	---	---	---	---	---	---	MOUNT TO BACK OF SIGN 140, PART OF SIGN 140 REMOVAL
142	"	J13-1	24" X 45"	7.50	---	---	---	---	1	---	---	1	1	CTH A LEFT
143	"	R5-1	30" X 30"	6.25	---	---	---	---	---	---	---	---	---	MOUNT TO BACK OF SIGN 142, PART OF SIGN 142 REMOVAL
144	"	R1-1F	36" X 36"	---	7.46	---	---	---	---	---	---	1	---	MOUNT TO SIGNAL
145	"	R6-2L	24" X 30"	5.00	---	---	---	---	1	---	---	---	---	PART OF SIGN 144 REMOVAL
146	"	R1-1F	36" X 36"	---	7.46	---	---	---	---	---	---	1	---	MOUNT TO SIGNAL
147	"	R6-2L	---	---	---	---	---	---	---	---	---	---	---	PART OF SIGN 146 REMOVAL
148	"	R5-1	30" X 30"	6.25	---	---	---	1	---	---	---	1	1	
149	"	R5-1A	36" X 24"	6.00	---	---	---	1	---	---	---	1	2	
150	"	D1-61	48" X 24"	8.00	---	---	---	---	---	---	---	---	---	MOUNT TO BACK OF SIGN 149, PART OF SIGN 149 REMOVAL
151	"	J4-1	24" X 36"	6.00	---	---	---	---	1	---	---	1	1	WEST STH 125
152	"	R2-1	24" X 30"	5.00	---	---	---	1	---	---	---	1	1	35 MPH
153	"	R1-1F	36" X 36"	---	7.46	---	---	---	---	---	---	1	---	MOUNT TO SIGNAL
154	"	R4-7	24" X 30"	5.00	---	---	---	---	---	---	---	---	---	MOUNT TO SIGNAL, PART OF SIGN 153 REMOVAL
155	"	R1-2	36" X 31"	3.88	---	---	---	---	1	---	---	1	1	
156	"	R1-1F	36" X 36"	---	7.46	---	---	---	---	---	---	1	---	MOUNT TO SIGNAL
157	"	R4-7	24" X 30"	5.00	---	---	---	---	---	---	---	1	---	MOUNT TO SIGNAL
158	"	R1-1F	36" X 36"	---	7.46	---	---	---	---	---	---	---	---	MOUNT TO SIGNAL, PART OF SIGN 157 REMOVAL
159	"	R1-1F	36" X 36"	---	7.46	---	---	---	---	---	---	1	---	MOUNT TO SIGNAL
160	"	R4-7	24" X 30"	5.00	---	---	---	---	---	---	---	---	---	MOUNT TO SIGNAL, PART OF SIGN 160 REMOVAL
161	STH 125, E. OF CTH A	R1-1F	36" X 36"	---	7.46	---	---	---	---	---	---	1	---	MOUNT TO SIGNAL
162	"	R4-7	24" X 30"	5.00	---	---	---	---	---	---	---	1	---	MOUNT TO SIGNAL
163	"	R1-1F	36" X 36"	---	7.46	---	---	---	---	---	---	---	---	MOUNT TO SIGNAL, PART OF SIGN 162 REMOVAL
164	"	R1-2	36" X 31"	3.88	---	---	---	---	1	---	---	1	1	
165	"	W10-1	36" X 36"	---	---	7.07	---	---	1	---	---	1	1	
166	"	W10-1	94" X 106"	---	---	7.07	---	---	1	---	---	1	1	
167	"	J4-1	24" X 36"	6.00	---	---	---	---	1	---	---	1	1	EAST STH 125
168	"	D1-61	60" X 24"	10.00	---	---	---	---	2	---	---	1	2	SEE DETAIL SHEET
169	"	R5-1A	36" X 24"	6.00	---	---	---	---	---	---	---	---	---	MOUNT TO BACK OF SIGN 168, PART OF SIGN 168 REMOVAL
170	"	R5-1	30" X 30"	6.25	---	---	---	1	---	---	---	1	1	
171	"	R10-11B	24" X 24"	4.00	---	---	---	---	---	---	---	1	---	MOUNT TO SIGNAL
172	"	R1-1F	36" X 36"	---	7.46	---	---	---	---	---	---	---	---	MOUNT TO SIGNAL BELOW SIGN 171, PART OF SIGN 171 REMOVAL
173	"	R6-2L	---	---	---	---	---	---	---	---	---	---	---	PART OF SIGN 171 REMOVAL
174	"	R1-1F	36" X 36"	---	7.46	---	---	---	---	---	---	1	---	MOUNT TO SIGNAL
175	"	R6-2L	24" X 30"	5.00	---	---	---	---	1	---	---	---	---	PART OF SIGN 174 REMOVAL
176	"	R5-1	30" X 30"	6.25	---	---	---	---	1	---	---	1	1	
177	"	J13-1	24" X 45"	7.50	---	---	---	---	---	---	---	---	---	CTH A RIGHT, MOUNT TO BACK OF SIGN 176, PART OF SIGN 176 REMOVAL
178	"	R5-1A	36" X 24"	6.00	---	---	---	2	---	---	---	1	2	
179	"	D1-55L	96" X 24"	16.00	---	---	---	---	---	---	---	---	---	MOUNT TO BACK OF SIGN 178, PART OF SIGN 178 REMOVAL
PAGE SUBTOTAL				273.96	119.36	14.14	0	18	14	0	0	39	29	

3

ERECTION & REMOVAL OF TYPE II SIGNS AND SUPPORTS

SIGN NO.	LOCATION	SIGN CODE	W X H	637.2210 SIGNS TYPE II REFLECTIVE H S.F.	637.2215 SIGN TYPE II REF. H FOLD.	637.2230 SIGNS TYPE II REFLECTIVE F S.F.	634.0612 POSTS WOOD 4x6x12 EACH	634.0614 POSTS WOOD 4x6x14 EACH	634.0616 POSTS WOOD 4x6x16 EACH	634.0620 POSTS WOOD 4x6x20 EACH	638.2101 MOVING SIGNS TYPE II EACH	638.2602 REMOVING SIGNS TYPE II EACH	638.3000 REMOVING SMALL SIGN SUPPORTS EACH	REMARKS
180	STH 125, E. OF CTH A	D1-61	66" X 24"	11.00	---	---	---	2	---	---	---	1	2	SEE DETAIL SHEET
181	"	J1-1	24" X 39"	6.50	---	---	---	---	1	---	---	1	1	JCT CTH A
182	"	W10-1	36" X 36"	---	---	7.07	---	---	1	---	---	1	1	
183	"	W10-1	94" X 106"	---	---	7.07	---	---	1	---	---	1	1	
184	"	R4-7	24" X 30"	5.00	---	---	---	---	---	---	---	1	---	MOUNT TO SIGNAL
185	"	R1-1F	36" X 36"	---	7.46	---	---	---	---	---	---	---	---	MOUNT TO SIGNAL, PART OF SIGN 184 REMOVAL
185A	"	R6-2L	24" X 30"	5.00	---	---	---	1	---	---	---	---	---	
186	"	R1-1F	36" X 36"	---	7.46	---	---	---	---	---	---	1	---	MOUNT TO SIGNAL
187	"	R10-11B	24" X 24"	4.00	---	---	---	1	---	---	---	1	1	
188	"	R4-7	24" X 30"	5.00	---	---	---	---	---	---	---	---	---	PART OF SIGN 187 REMOVAL
189	"	R10-11B	24" X 24"	4.00	---	---	---	1	---	---	---	1	1	
190	"	R4-7	24" X 30"	5.00	---	---	---	---	---	---	---	---	---	PART OF SIGN 189 REMOVAL
191	STH 125, E. OF PERKINS ST	R1-1F	36" X 36"	---	7.46	---	---	---	---	---	---	1	---	MOUNT TO SIGNAL
191A	"	R6-2L	24" X 30"	5.00	---	---	---	1	---	---	---	---	---	
192	"	R4-7	24" X 30"	5.00	---	---	---	---	---	---	---	1	---	MOUNT TO SIGNAL
193	"	R1-1F	36" X 36"	---	7.46	---	---	---	---	---	---	---	---	MOUNT TO SIGNAL, PART OF SIGN 192 REMOVAL
194	"	R10-11B	24" X 24"	4.00	---	---	---	---	---	---	---	1	---	MOUNT TO SIGNAL
195	"	R1-1F	36" X 36"	---	7.46	---	---	---	---	---	---	---	---	MOUNT TO SIGNAL BELOW SIGN 194, PART OF SIGN 194 REMOVAL
196	"	R6-2L	---	---	---	---	---	---	---	---	---	---	---	PART OF SIGN 194 REMOVAL
197	"	R5-1	30" X 30"	6.25	---	---	---	1	---	---	---	---	---	
198	"	R2-1	24" X 30"	5.00	---	---	---	1	---	---	---	1	1	35 MPH
199	"	D1-61	60" X 24"	10.00	---	---	---	2	---	---	---	1	2	SEE DETAIL SHEET
200	"	R5-1A	36" X 24"	6.00	---	---	---	---	---	---	---	---	---	MOUNT TO BACK OF SIGN 199
201	"	I55-56	30" X 36"	7.50	---	---	---	---	1	---	---	1	1	PITNEY BOWES INC, SEE PLAN SHEET
202	"	R2-1	24" X 30"	5.00	---	---	---	1	---	---	---	1	1	35 MPH
	PAGE SUBTOTAL			99.25	37.30	14.14	0	11	4	0	0	15	12	
	PROJECT TOTALS			**786.55**	**276.02**	**28.28**	**0**	**67**	**23**	**4**	**0**	**105**	**83**	

NOTE: ALL ITEMS ON THIS SHEET ARE CATEGORY 0010 UNLESS OTHERWISE NOTED.

3

3

TRAFFIC CONTROL DEVICES

	LOCATION	DAYS IN PHASE	643.0300 DRUMS (DAYS)	643.0420 BARRICADES TYPE III (DAYS)	643.0500 FLEXIBLE TUBULAR MARKER POSTS (EACH)	643.0600 FLEXIBLE TUBULAR MARKER BASES (EACH)	643.0705 WARNING LIGHTS TYPE A (DAYS)	643.0715 WARNING LIGHTS TYPE C (DAYS)	643.0900 TRAFFIC CONTROL SIGNS (DAYS)	643.1050 TRAFFIC CONTROL SIGNS PCMS (DAYS)
STAGE 1 TEMPORARY CROSSOVER	EASTBOUND LANE	44	1,408	88	29	25	176	440	528	7
	WESTBOUND LANE	44	3,212	352	--	--	616	1,320	748	7
	STAGE 1 TOTALS		4,620	440	29	25	792	1,760	1,276	14
STAGE 2 TEMPORARY CROSSOVER	EASTBOUND LANE	44	2,640	572	--	--	616	1,364	748	7
	WESTBOUND LANE	44	2,684	220	31	27	440	396	660	7
	STAGE 2 TOTALS		5,324	792	31	27	1,056	1,760	1,408	14
ADVANCE WARNING	EASTBOUND LANES	7	21	--	--	--	--	21	--	7
	WESTBOUND LANES	7	21	--	--	--	--	21	--	7
	ADVANCE WARNING TOTALS		42	--	--	--	--	42	--	14
STH 125/COLLEGE AVE. EB LEFT LANE NIGHT WORK	ADVANCE TO IH-41 NB EXIT RAMP	30	870	30	--	--	60	300	240	--
	IH-41 NB EXIT RAMP	30	1,920	60	--	--	120	510	210	--
	STA. 10+90 EB - STA. 21+50 EB	30	1,470	60	--	--	120	150	210	--
	STA. 22+25 EB - STA. 34+55 EB	30	1,500	60	--	--	120	210	180	--
	STA. 35+25 EB - STA. 47+25 EB	30	1,530	60	--	--	120	210	180	--
	STA. 48+50 EB - STA. 60+90 EB	30	1,800	60	--	--	120	210	180	--
	STA. 61+60 EB - STA. 74+60 EB	30	1,560	60	--	--	120	210	180	--
	STA. 75+25 EB - STA. 81+50 EB	30	660	30	--	--	60	90	90	--
STH 125/COLLEGE AVE. EB LEFT INSIDE NIGHT WORK TOTALS			11,310	420	--	--	840	1,890	1,470	--
STH 125/COLLEGE AVE. WB LEFT LANE NIGHT WORK	STA. 112+00 WB - STA. 121+50 WB	30	720	60	--	--	120	90	150	--
	STA. 122+25 WB - STA. 134+55 WB	30	1,350	60	--	--	120	240	180	--
	STA. 135+40 WB - STA. 147+75 WB	30	1,830	60	--	--	120	240	180	--
	STA. 148+50 WB - STA. 160+98 WB	30	1,470	60	--	--	120	270	180	--
	STA. 161+50 WB - STA. 174+60 WB	30	1,530	60	--	--	120	270	120	--
	STA. 175+25 WB - STA. 181+90 WB	30	1,200	30	--	--	60	300	120	--
STH 125/COLLEGE AVE. WB INSIDE LANE NIGHT WORK TOTALS			8,100	330	--	--	660	1,410	930	--
STH 125/COLLEGE AVE. EB OUTSIDE LANES NIGHT WORK	ADVANCE TO IH-41 NB EXIT RAMP	30	540	30	--	--	60	300	240	--
	IH-41 NB EXIT RAMP	30	1,320	60	--	--	120	--	150	--
	STA. 12+00 EB - STA. 21+50 EB	30	1,560	30	--	--	60	180	150	--
	STA. 22+25 EB - STA. 34+55 EB	30	2,100	90	--	--	180	330	210	--
	STA. 35+25 EB - STA. 47+25 EB	30	2,010	90	--	--	180	330	210	--
	STA. 48+50 EB - STA. 60+90 EB	30	2,250	90	--	--	180	330	210	--
	STA. 61+60 EB - STA. 74+60 EB	30	2,070	90	--	--	180	630	180	--
	STA. 75+25 EB - STA. 81+50 EB	30	750	60	--	--	120	210	150	--
STH 125/COLLEGE AVE. EB OUTSIDE LANE NIGHT WORK TOTALS			12,600	540	--	--	1,080	2,310	1,500	--
	SUBTOTALS		41,996	2,522	60	52	4,428	9,172	6,584	42

TRAFFIC CONTROL DEVICES CONTINUE ON FOLLOWING SHEET

NOTE: ALL ITEMS ON THIS SHEET ARE CATEGORY 0010 UNLESS OTHERWISE NOTED.

3

3

TRAFFIC CONTROL DEVICES

	LOCATION	DAYS IN PHASE	643.0300 DRUMS (DAYS)	643.0420 BARRICADES TYPE III (DAYS)	643.0500 FLEXIBLE TUBULAR MARKER POSTS (EACH)	643.0600 FLEXIBLE TUBULAR MARKER BASES (EACH)	643.0705 WARNING LIGHTS TYPE A (DAYS)	643.0715 WARNING LIGHTS TYPE C (DAYS)	643.0900 TRAFFIC CONTROL SIGNS (DAYS)	643.1050 TRAFFIC CONTROL SIGNS PCMS (DAYS)
STH 125/COLLEGE AVE. WB LEFT LANE NIGHT WORK	STA. 112+00 WB - STA. 121+50 WB	30	750	60	--	--	120	210	150	--
	STA. 122+25 WB - STA. 134+55 WB	30	2,100	120	--	--	240	330	240	--
	STA. 135+40 WB - STA. 147+75 WB	30	1,590	120	--	--	240	330	240	--
	STA. 148+50 WB - STA. 160+98 WB	30	1,920	90	--	--	180	510	210	--
	STA. 161+50 WB - STA. 174+60 WB	30	2,310	60	--	--	120	330	180	--
	STA. 175+25 WB - STA. 181+75 WB	30	1,200	0	--	--	0	120	90	--
STH 125/COLLEGE AVE. WB INSIDE LANE NIGHT WORK TOTALS			9,870	450	--		900	1,830	1,110	--
INTERSECTION NIGHT WORK CLOSURES	S. KOOLS STREET	5	--	25	--	--	20	--	25	--
	N. WESTHILL BLVD.	5	--	20	--	--	10	--	15	--
	N. BLUEMOUND DR. INTERSECTION	5	--	20	--	--	20	--	20	--
	S. BLUEMOUND DR. INTERSECTION	5	--	25	--	--	20	--	25	--
	S. LILAS DR. INTERSECTION	5	--	20	--	--	20	--	20	--
	N. LILAS DR. INTERSECTION	5	--	20	--	--	20	--	25	--
	N. LYNNDALE INTERSECTION	5	--	25	--	--	20	--	25	--
	S. LYNNDALE INTERSECTION	5	--	25	--	--	20	--	25	--
	S.PERKINS ST. INTERSECTION	5	--	10	--	--	10	--	10	--
	N. PERKINS ST. INTERSECTION	5	--	10	--	--	10	--	20	--
STH 125/COLLEGE AVE. INTERSECTION NIGHT WORK TOTALS			--	200	--	--	170	--	210	--
SUBTOTALS			9,870	650	0	0	1,070	1,830	1,320	0
PROJECT TOTALS			51,866	3,172	60	52	5,498	11,002	7,904	42

NOTE: ALL ITEMS ON THIS SHEET ARE CATEGORY 0010 UNLESS OTHERWISE NOTED.

3

3

PAVEMENT MARKING

STATION TO STATION	LOCATION	646.0106 EPOXY 4-INCH WHITE DASHED (LF)	646.0106 EPOXY 4-INCH WHITE SOLID (LF)	646.0106 EPOXY 4-INCH YELLOW SOLID (LF)	646.0126 EPOXY 8-INCH WHITE DASHED (LF)	646.0126 EPOXY 8-INCH WHITE SOLID (LF)	647.0166 ARROWS EPOXY TYPE 2 (EACH)	647.0356 WORDS EPOXY "ONLY" (EACH)	647.0556 STOP LINE EPOXY 12-INCH (LF)	647.0110 RAILROAD CROSSING EPOXY (EACH)	647.0456 CURB EPOXY (LF)	647.0606 ISLAND NOSE EPOXY (EACH)	649.0402 TEMPORARY PAVEMENT MARKING PAINT 4-INCH WHITE DASHED (LF)	649.0402 TEMPORARY PAVEMENT MARKING PAINT 4-INCH WHITE SOLID (LF)	649.0402 TEMPORARY PAVEMENT MARKING PAINT 4-INCH YELLOW SOLID (LF)	649.0802 TEMPORARY PAVEMENT MARKING PAINT 8-INCH WHITE DASHED (LF)	649.0802 TEMPORARY PAVEMENT MARKING PAINT 8-INCH WHITE SOLID (LF)
11+56 EB - 21+50 EB	STH 125/COLLEGE AVE.	238	947	993	203	409	3	2	---	---	---	1	76	947	993	203	409
112+00 WB TO 121+50 WB	STH 125/COLLEGE AVE.	238	923	948	---	709	---	---	---	---	---	---	76	923	948	---	709
WESTHILL BLVD.	INTERSECTION	---	---	7	---	14	---	---	44	---	---	1	---	---	7	---	14
KOOLS ST.	INTERSECTION	---	---	---	---	5	---	---	31	---	---	1	---	---	---	---	5
21+50 EB - 35+00 EB	STH 125/COLLEGE AVE.	313	1081	1256	---	504	---	---	26	---	---	2	100	1081	1256	---	504
121+50 WB - 135+00 WB	STH 125/COLLEGE AVE.	313	1094	1248	---	506	---	---	20	---	---	---	100	1094	1248	---	506
NORTH BLUEMOUND DR.	NORTH BLUEMOUND DR.	---	---	24	---	22	---	---	47	---	---	1	---	---	24	---	22
SOUTH BLUEMOUND DR.	SOUTH BLUEMOUND DR.	---	---	15	---	30	---	---	45	---	---	1	---	---	15	---	30
35+00 EB - 48+00 EB	STH 125/COLLEGE AVE.	313	1113	1283	---	449	---	---	19	---	---	2	100	1113	1283	---	449
135+00 WB - 148+00 WB	STH 125/COLLEGE AVE.	313	1121	1287	---	705	---	---	20	---	---	---	100	1121	1287	---	705
NORTH LILAS DR.	INTERSECTION	---	---	---	---	26	2	---	37	---	---	1	---	---	---	---	26
SOUTH LILAS DR.	INTERSECTION	---	---	10	---	20	---	---	41	---	---	1	---	---	10	---	20
48+00 WB - 61+00 EB	STH 125/COLLEGE AVE.	313	1113	1257	---	599	---	---	21	---	---	2	100	1113	1257	---	599
148+00 WB - 161+00 WB	STH 125/COLLEGE AVE.	313	1145	1234	---	396	---	---	---	---	---	---	100	1145	1234	---	396
NORTH LYNNDALE DR.	INTERSECTION	---	18	11	---	22	---	---	35	---	---	1	---	18	11	---	22
SOUTH LYNNDALE DR.	INTERSECTION	---	18	9	---	18	---	---	34	---	---	1	---	18	9	---	18
61+00 EB - 75+00 EB	STH 125/COLLEGE AVE.	313	1209	1295	---	348	---	---	---	1	---	1	100	1209	1295	---	348
161+00 WB - 175+00 WB	STH 125/COLLEGE AVE.	313	1242	1294	---	601	---	---	---	1	---	---	100	1242	1294	---	601
NORTH PERKINS ST.	INTERSECTION	---	---	16	---	16	---	---	32	---	19	---	---	---	16	---	16
SOUTH PERKINS ST.	INTERSECTION	---	---	16	---	16	---	---	33	---	21	---	---	---	16	---	16
75+00 EB - 93+28 EB	STH 125/COLLEGE AVE.	463	1779	1797	---	114	---	---	---	---	---	1	144	1524	1565	---	114
175+00 WB - 192+27 WB	STH 125/COLLEGE AVE.	463	1780	1797	---	383	---	---	---	---	---	---	144	1546	1566	---	383
196+39 WB - 197+50 WB	STH 125/COLLEGE AVE.	25	---	---	---	---	---	---	---	---	---	---	8	---	---	---	---
198+00 WB - 199+50 WB	STH 125/COLLEGE AVE.	38	---	---	---	---	---	---	---	---	---	---	12	---	---	---	---
	SUBTOTALS	3,969	14,583	15,797	203	5,912	5	2	485	2	40	17	1,260	14,094	15,334	203	5,912
	PROJECT TOTALS		34,349			6,115	5	2	485	2	40	17		30,688			6,115

NOTE: ALL ITEMS ON THIS SHEET ARE CATEGORY 0010 UNLESS OTHERWISE NOTED.

3

TEMPORARY PAVEMENT MARKING

STAGE	LOCATION	646.0600 REMOVING PAVEMENT MARKING (LF)	649.0400 REMOVABLE TAPE 4-INCH WHITE (LF)	649.0400 REMOVABLE TAPE 4-INCH YELLOW (LF)
STAGE 1 TEMPORARY CROSSOVER	EASTBOUND LANE	62.5	0	1,169
	WESTBOUND LANE	25.0	1,027	1,028
	STAGE 1 TOTALS	87.5	1,027	2,197
STAGE 2 TEMPORARY CROSSOVER	EASTBOUND LANE	37.5	979	951
	WESTBOUND LANE	37.5	291	1,428
	STAGE 2 TOTALS	75.0	1,270	2,379
	PROJECT TOTALS	162.5	6,873	

3

CONSTRUCTION STAKING SUMMARY

STATION TO STATION	LOCATION	650.4000 STORM SEWER (EACH)	650.5000 BASE (LF)	650.7000 CONCRETE PAVEMENT (LF)	650.8000 RESUFACING REFERENCE (LF)	650.8500 ELECTRICAL INSTALLATIONS (4659-15-71) (LS)	650.9910 SUPPLEMENTAL CONTROL (4659-15-71) (LS)	650.9920 SLOPE STAKES (LF)
114+18 WB	RIGHT	1	---	---	---	---	---	---
117+68 WB	RIGHT	1	---	---	---	---	---	---
81+88 EB - 84+88 EB	WEST TEMPORARY CROSS-OVER	---	320	---	---	---	---	---
88+85 EB - 92+02 EB	EAST TEMPORARY CROSS-OVER	---	300	---	---	---	---	---
113+00 WB - 119+00 WB	LEFT TURN LANE	---	---	600	---	---	---	---
11+56 EB - 93+10 EB	EB LANES	---	---	---	8144	---	---	---
112+00 WB - 192+04 WB	WB LANES	---	---	---	8004	---	---	---
77+04 EB - 85+79 EB	RT	---	---	---	---	---	---	875
188+18 WB - 192+89 WB	LT	---	---	---	---	---	---	471
	PROJECT WIDE	---	---	---	---	1	1	---
	PROJECT TOTALS	2	620	600	16,148	1	1	1,346

NOTE: ALL ITEMS ON THIS SHEET ARE CATEGORY 0010 UNLESS OTHERWISE NOTED.

3

CONDUIT RIGID NONMETALLIC SCHEDULE 40

LOCATION	FROM	TO	652.0210 1-INCH LF	652.0225 2-INCH LF	652.0235 3-INCH LF	652.0605 SPECIAL 2-INCH LF
STH 125 & IH 41 NB (S44-0329)	PB1	PB2	225	---	---	---
	S44-0329	S44-0331	---	970	---	---
STH 125 & WESTHILL/KOOLS (S44-0331)	PB3	SB2	---	---	20	---
	PB11	SB7	---	---	10	---
	S44-0331	S44-0104	---	1110	---	80
STH 125 & BLUEMOUND (S44-0104)	PB1	SB8	---	---	10	---
	PB3	SB2	---	---	10	---
	PB6	SB4	---	---	10	---
	PB9	SB6	---	---	10	---
	S44-0104	S44-0392	---	1110	---	80
STH 125 & LILAS (S44-0392)	PB3	SB2	---	---	20	---
	PB9	SB7	---	---	20	---
	S44-0392	S44-0121	---	1110	---	80
STH 125 & LYNNDALE (S44-0121)	PB1	SB8	---	---	20	---
	PB3	SB2	---	---	10	---
	PB6	SB4	---	---	10	---
	PB9	SB6	---	---	40	---
	S44-0121	S44-0220	---	960	---	270
STH 125 & PERKINS (S44-0220)	PB4	SB2	---	---	10	---
	PB9	SB6	---	---	10	---
PROJECT TOTALS			225	5,260	210	510

LOOP DETECTORS

LOCATION	LOOP NO.	# OF TURNS	652.0800 CONDUIT LF	655.0700 LEAD IN CABLE LF	655.0800 WIRE LF
STH 125 & IH 41 NB (S44-0329)	82	4	90	770	330
STH 125 & WESTHILL/KOOLS (S44-0331)	21	3	80	280	220
STH 125 & LILAS (S44-0392)	61	4	60	530	210
PROJECT TOTALS			230	1,580	760

3

PULL BOXES

LOCATION	653.0105 STEEL 12x24-INCH EACH	SPV.0060.01 NON-CONDUCTIVE 24x42-INCH EACH
STH 125 & IH 41 NB (S44-0329)	2	1
STH 125 & WESTHILL/KOOLS (S44-0331)	1	1
STH 125 & BLUEMOUND (S44-0104)	---	1
STH 125 & LILAS (S44-0392)	1	1
STH 125 & LYNNDALE (S44-0121)	---	2
PROJECT TOTALS	4	6

CONCRETE BASES TYPE 13

LOCATION	654.0113 EACH
STH 125 & WESTHILL/KOOLS (S44-0331)	2
STH 125 & BLUEMOUND (S44-0104)	4
STH 125 & LILAS (S44-0392)	2
STH 125 & LYNNDALE (S44-0121)	4
STH 125 & PERKINS (S44-0220)	2
PROJECT TOTALS	14

TRAFFIC SIGNAL CABLE SUMMARY

LOCATION	655.0230 5-14 AWG LF	655.0240 7-14 AWG LF	655.0260 12-14 AWG LF	655.0230 BASE TO HEAD 5-14 AWG LF	655.0240 BASE TO HEAD 7-14 AWG LF	655.0900 EVP DETECTOR CABLE LF	658.0215 BACKPLATES SIGNAL FACE 3 SECTION 12-INCH EACH	658.0220 BACKPLATES SIGNAL FACE 4 SECTION 12-INCH EACH
STH 125 & WESTHILL/KOOLS (S44-0331)	690	0	1,290	300	200	940	6	4
STH 125 & BLUEMOUND (S44-0104)	0	0	1,630	570	400	950	12	8
STH 125 & LILAS (S44-0392)	810	0	1,240	300	200	940	6	4
STH 125 & LYNNDALE (S44-0121)	0	0	1,910	570	400	1,040	12	8
STH 125 & PERKINS (S44-0220)	480	0	1,400	300	200	0	6	4
PROJECT TOTAL	4,020	1,400	7,470			3,870	42	28

NOTE: ALL ITEMS ON THIS SHEET ARE CATEGORY 0010 UNLESS OTHERWISE NOTED.

3

TRAFFIC SIGNAL CABLE
STH 125 & WESTHILL/KOOLS (S44-0331)

LOCATION	655.0230 5-14 AWG LF	655.0240 7-14 AWG LF	655.0260 12-14 AWG LF	HEAD NO.	655.0230 BASE TO HEAD 5-14 AWG LF	655.0240 BASE TO HEAD 7-14 AWG LF	655.0900 EVP DETECTOR CABLE LF	658.0215 BACKPLATES SIGNAL FACE 3 SECTION 12-INCH EACH	658.0220 BACKPLATES SIGNAL FACE 4 SECTION 12-INCH EACH
FROM CB1 TO									
SB1	---	---	50	5	20	---	---	1	---
	---	---	---	6	---	20	---	---	1
SB2	---	---	190	7	---	80	---	---	1
	---	---	---	8	70	---	---	1	---
	---	---	---	9	60	---	---	1	---
	---	---	---	EVP #2	---	---	220	---	---
SB3	260	---	---	16	---	---	---	---	---
SB4	---	---	310	11	---	---	---	---	---
	---	---	---	17	---	---	---	---	---
SB5	370	---	---	12	---	---	---	---	---
	---	---	---	EVP #3	---	---	400	---	---
SB6	---	---	380	1	---	20	---	---	1
	---	---	---	10	20	---	---	1	---
SB7	---	---	200	2	---	80	---	---	1
	---	---	---	3	70	---	---	1	---
	---	---	---	4	60	---	---	1	---
	---	---	---	EVP #1	---	---	230	---	---
SB8	---	---	160	13	---	---	---	---	---
	---	---	---	14	---	---	---	---	---
SB9	60	---	---	15	---	---	---	---	---
	---	---	---	EVP #4	---	---	90	---	---
SUBTOTAL	690	0	1,290		300	200	940	6	4

SIGNAL INDICATION		CONDUCTOR COLOR
RED	=	RED
YELLOW	=	ORANGE
GREEN	=	GREEN
RED ARROW	=	RED w/BLACK TRACER
YELLOW ARROW	=	BLACK w/WHITE
YELLOW FLASHING ARROW	=	WHITE w/BLACK
GREEN ARROW	=	BLUE w/BLACK

NOTES:
IF THERE IS A BACK TO BACK 3 SECTION OR 5 SECTION, THEN USE SOLID COLORED CONDUCTORS FOR NB & EB, AND TRACER CONDUCTORS FOR SB & WB.

NOTE: ALL ITEMS ON THIS SHEET ARE CATEGORY 0010 UNLESS OTHERWISE NOTED.

3

TRAFFIC SIGNAL CABLE
STH 125 & BLUEMOUND (S44-0104)

LOCATION	655.0230 5-14 AWG LF	655.0240 7-14 AWG LF	655.0260 12-14 AWG LF	HEAD NO.	655.0230 BASE TO HEAD 5-14 AWG LF	655.0240 BASE TO HEAD 7-14 AWG LF	655.0900 EVP DETECTOR CABLE LF	658.0215 BACKPLATES SIGNAL FACE 3 SECTION 12-INCH EACH	658.0220 BACKPLATES SIGNAL FACE 4 SECTION 12-INCH EACH
FROM CB1 TO									
SB1	---	---	60	5	20	---	---	1	---
	---	---	---	6		20	---	---	1
SB2	---	---	200	7	---	80	---	---	1
	---	---	---	8	70	---	---	1	---
	---	---	---	9	60	---	---	1	---
	---	---	---	EVP #2	---	---	230	---	---
SB3	---	---	230	11	---	20	---	---	1
	---	---	---	20	20	---	---	1	
SB4	---	---	350	12	---	80	---	---	1
	---	---	---	13	70	---	---	1	---
	---	---	---	14	60	---	---	1	---
	---	---	---	EVP #3	---	---	380	---	---
SB5	---	---	340	1	---	20	---	---	1
	---	---	---	10	20	---	---	1	---
SB6	---	---	210	2	---	80	---	---	1
	---	---	---	3	70	---	---	1	---
	---	---	---	4	60	---	---	1	---
	---	---	---	EVP #1	---	---	240	---	---
SB7	---	---	170	15	20	---	---	1	---
	---	---	---	16	---	20	---	---	1
SB8	---	---	70	17	---	80	---	---	1
	---	---	---	18	70	---	---	1	---
	---	---	---	19	30	---	---	1	---
	---	---	---	EVP #4	---	---	100	---	---
SUBTOTAL	0	0	1,630		570	400	950	12	8

SIGNAL INDICATION		CONDUCTOR COLOR
RED	=	RED
YELLOW	=	ORANGE
GREEN	=	GREEN
RED ARROW	=	RED w/BLACK TRACER
YELLOW ARROW	=	BLACK w/WHITE
YELLOW FLASHING ARROW	=	WHITE w/BLACK
GREEN ARROW	=	BLUE w/BLACK

NOTES:
IF THERE IS A BACK TO BACK 3 SECTION OR 5 SECTION, THEN USE SOLID COLORED CONDUCTORS FOR NB & EB, AND TRACER CONDUCTORS FOR SB & WB.

NOTE: ALL ITEMS ON THIS SHEET ARE CATEGORY 0010 UNLESS OTHERWISE NOTED.

3

TRAFFIC SIGNAL CABLE
STH 125 & LILAS (S44-0392)

LOCATION	655.0230 5-14 AWG LF	655.0240 7-14 AWG LF	655.0260 12-14 AWG LF	HEAD NO.	655.0230 BASE TO HEAD 5-14 AWG LF	655.0240 BASE TO HEAD 7-14 AWG LF	655.0900 EVP DETECTOR CABLE LF	658.0215 BACKPLATES SIGNAL FACE 3 SECTION 12-INCH EACH	658.0220 BACKPLATES SIGNAL FACE 4 SECTION 12-INCH EACH
FROM CB1 TO									
SB1	---	---	50	5	20	---	---	1	---
	---	---	---	6		20	---	---	1
SB2	---	---	200	7	---	80	---	---	1
	---	---	---	8	70	---	---	1	---
	---	---	---	9	60	---	---	1	---
	---	---	---	EVP #2	---	---	230	---	---
SB3	230	---	---	17	---	---	---	---	---
SB4	---	---	290	11	---	---	---	---	---
	---	---	---	18	---	---	---	---	---
SB5	340	---	---	12	---	---	---	---	---
	---	---	---	EVP #3	---	---	370	---	---
SB6	---	---	350	1	---	20	---	---	1
	---	---	---	10	20	---	---	1	---
SB7	---	---	230	2	---	80	---	---	1
	---	---	---	3	70	---	---	1	---
	---	---	---	4	60	---	---	1	---
	---	---	---	EVP #1	---	---	260	---	---
SB8	190	---	---	13	---	---	---	---	---
SB9	---	---	120	14	---	---	---	---	---
	---	---	---	15	---	---	---	---	---
SB10	50	---	---	16	---	---	---	---	---
	---	---	---	EVP #4	---	---	80	---	---
SUBTOTAL	810	0	1,240		300	200	940	6	4

SIGNAL INDICATION		CONDUCTOR COLOR
RED	=	RED
YELLOW	=	ORANGE
GREEN	=	GREEN
RED ARROW	=	RED w/BLACK TRACER
YELLOW ARROW	=	BLACK w/WHITE
YELLOW FLASHING ARROW	=	WHITE w/BLACK
GREEN ARROW	=	BLUE w/BLACK

NOTES:
IF THERE IS A BACK TO BACK 3 SECTION OR 5 SECTION, THEN USE SOLID COLORED CONDUCTORS FOR NB & EB, AND TRACER CONDUCTORS FOR SB & WB.

NOTE: ALL ITEMS ON THIS SHEET ARE CATEGORY 0010 UNLESS OTHERWISE NOTED.

3

3

TRAFFIC SIGNAL CABLE
STH 125 & LYNNDALE (S44-0121)

LOCATION	655.0230 5-14 AWG LF	655.0240 7-14 AWG LF	655.0260 12-14 AWG LF	HEAD NO.	655.0230 BASE TO HEAD 5-14 AWG LF	655.0240 BASE TO HEAD 7-14 AWG LF	655.0900 EVP DETECTOR CABLE LF	658.0215 BACKPLATES SIGNAL FACE 3 SECTION 12-INCH EACH	658.0220 BACKPLATES SIGNAL FACE 4 SECTION 12-INCH EACH
FROM CB1 TO									
SB1	---	---	70	5	20	---	---	1	---
	---	---	---	6		20	---	---	1
SB2	---	---	200	7	---	80	---	---	1
	---	---	---	8	70	---	---	1	---
	---	---	---	9	60	---	---	1	---
	---	---	---	EVP #2	---	---	230	---	---
SB3	---	---	270	11	---	20	---	---	1
	---	---	---	20	20	---	---	1	
SB4	---	---	360	12	---	80	---	---	1
	---	---	---	13	70	---	---	1	---
	---	---	---	14	60	---	---	1	---
	---	---	---	EVP #3	---	---	390	---	---
SB5	---	---	390	1	---	20	---	---	1
	---	---	---	10	20	---	---	1	---
SB6	---	---	280	2	---	80	---	---	1
	---	---	---	3	70	---	---	1	---
	---	---	---	4	60	---	---	1	---
	---	---	---	EVP #1	---	---	310	---	---
SB7	---	---	260	15	20	---	---	1	---
	---	---	---	16	---	20	---	---	1
SB8	---	---	80	17	---	80	---	---	1
	---	---	---	18	70	---	---	1	---
	---	---	---	19	30	---	---	1	---
	---	---	---	EVP #4	---	---	110	---	---
SUBTOTAL	0	0	1,910		570	400	1,040	12	8

SIGNAL INDICATION		CONDUCTOR COLOR
RED	=	RED
YELLOW	=	ORANGE
GREEN	=	GREEN
RED ARROW	=	RED w/BLACK TRACER
YELLOW ARROW	=	BLACK w/WHITE
YELLOW FLASHING ARROW	=	WHITE w/BLACK
GREEN ARROW	=	BLUE w/BLACK

NOTES:
IF THERE IS A BACK TO BACK 3 SECTION OR 5 SECTION, THEN USE SOLID COLORED CONDUCTORS FOR NB & EB, AND TRACER CONDUCTORS FOR SB & WB.

NOTE: ALL ITEMS ON THIS SHEET ARE CATEGORY 0010 UNLESS OTHERWISE NOTED.

3

3

TRAFFIC SIGNAL CABLE
STH 125 & PERKINS (S44-0220)

LOCATION	655.0230 5-14 AWG LF	655.0240 7-14 AWG LF	655.0260 12-14 AWG LF	HEAD NO.	655.0230 BASE TO HEAD 5-14 AWG LF	655.0240 BASE TO HEAD 7-14 AWG LF	655.0900 EVP DETECTOR CABLE LF	658.0215 BACKPLATES SIGNAL FACE 3 SECTION 12-INCH EACH	658.0220 BACKPLATES SIGNAL FACE 4 SECTION 12-INCH EACH
FROM CB1 TO									
SB1	---	---	110	5	20	---	---	1	---
	---	---	---	6	---	20	---	---	1
SB2	---	---	240	7	---	80	---	---	1
	---	---	---	8	70	---	---	1	---
	---	---	---	9	60	---	---	1	---
SB3	---	---	300	11	---	---	---	---	---
	---	---	---	16	---	---	---	---	---
SB4	400	---	---	12	---	---	---	---	---
SB5	---	---	350	1	---	20	---	---	1
	---	---	---	10	20	---	---	1	---
SB6	---	---	220	2	---	80	---	---	1
	---	---	---	3	70	---	---	1	---
	---	---	---	4	60	---	---	1	---
SB7	---	---	180	13	---	---	---	---	---
	---	---	---	14	---	---	---	---	---
SB8	80	---	---	15	---	---	---	---	---
SUBTOTAL	480	0	1,400		300	200	0	6	4

SIGNAL INDICATION		CONDUCTOR COLOR
RED	=	RED
YELLOW	=	ORANGE
GREEN	=	GREEN
RED ARROW	=	RED w/BLACK TRACER
YELLOW ARROW	=	BLACK w/WHITE
YELLOW FLASHING ARROW	=	WHITE w/BLACK
GREEN ARROW	=	BLUE w/BLACK

NOTES:
IF THERE IS A BACK TO BACK 3 SECTION OR 5 SECTION, THEN USE SOLID COLORED CONDUCTORS FOR NB & EB, AND TRACER CONDUCTORS FOR SB & WB.

NOTE: ALL ITEMS ON THIS SHEET ARE CATEGORY 0010 UNLESS OTHERWISE NOTED.

3

ELECTRICAL WIRE TRAFFIC SIGNALS 10 AWG

LOCATION	FROM	TO	655.0515 EQUIPMENT GROUNDING CONDUCTOR (GREEN) LF
STH 125 & WESTHILL/KOOLS (S44-0331)	CB1	PB1	40
	CB1	SB1	50
	SB1	PB14	30
	SB1	SB2	210
	SB2	PB2	110
	SB2	PB3	50
	SB2	SB3	140
	SB3	PB4	60
	SB3	SB4	140
	SB4	PB5	50
	SB4	SB5	160
	SB5	PB6	60
	SB5	PB7	40
	SB5	SB6	50
	SB6	PB8	70
	SB6	SB7	240
	SB7	PB9	130
	SB7	PB10	70
	SB7	PB11	40
	SB7	SB8	80
	SB8	PB12	40
	SB8	SB9	150
	SB9	PB13	40
	SB9	CB1	60
STH 125 & WESTHILL/KOOLS (S44-0331) SUBTOTAL			2,110

ELECTRICAL WIRE TRAFFIC SIGNALS 10 AWG (CON'T)

LOCATION	FROM	TO	655.0515 EQUIPMENT GROUNDING CONDUCTOR (GREEN) LF
STH 125 & BLUEMOUND (S44-0104)	CB1	SB8	70
	SB8	PB1	40
	SB8	SB1	50
	SB1	SB2	180
	SB2	PB2	110
	SB2	PB3	40
	SB2	SB3	90
	SB3	PB4	40
	SB3	SB4	160
	SB4	PB5	90
	SB4	PB6	40
	SB4	SB5	90
	SB5	PB7	40
	SB5	SB6	180
	SB6	PB8	100
	SB6	PB9	40
	SB6	SB7	90
	SB7	PB10	40
	SB7	CB1	170
	CB1	PB11	90
	CB1	PB12	40
STH 125 & BLUEMOUND (S44-0104) SUBTOTAL			1,790

ELECTRICAL WIRE TRAFFIC SIGNALS 10 AWG CONTINUES ON FOLLOWING SHEET

NOTE: ALL ITEMS ON THIS SHEET ARE CATEGORY 0010 UNLESS OTHERWISE NOTED.

3

ELECTRICAL WIRE TRAFFIC SIGNALS 10 AWG (CON'T)

LOCATION	FROM	TO	655.0515 EQUIPMENT GROUNDING CONDUCTOR (GREEN) LF
STH 125 & LILAS (S44-0392)	CB1	SB1	50
	SB1	PB1	40
	SB1	SB9	120
	SB9	PB11	40
	SB9	SB8	120
	SB8	PB10	40
	SB8	SB7	90
	SB7	PB8	110
	SB7	PB9	50
	SB7	SB6	190
	SB6	PB7	40
	SB6	SB5	100
	SB5	PB6	40
	SB5	SB4	100
	SB4	PB5	40
	SB4	SB3	110
	SB3	PB4	40
	SB3	SB2	100
	SB2	PB2	110
	SB2	PB3	50
	SB2	SB10	200
	SB10	PB12	40
	SB10	CB1	50
STH 125 & LILAS (S44-0392) SUBTOTAL			1,870

ELECTRICAL WIRE TRAFFIC SIGNALS 10 AWG (CON'T)

LOCATION	FROM	TO	655.0515 EQUIPMENT GROUNDING CONDUCTOR (GREEN) LF
STH 125 & LYNNDALE (S44-0121)	CB1	SB8	80
	SB8	PB1	50
	SB8	SB1	60
	SB1	SB2	180
	SB2	PB2	100
	SB2	PB3	40
	SB2	SB3	140
	SB3	PB4	90
	SB3	PB5	40
	SB3	SB4	220
	SB4	PB6	90
	SB4	PB7	40
	SB4	SB5	120
	SB5	PB8	40
	SB5	SB6	220
	SB6	PB9	140
	SB6	PB10	70
	SB6	SB7	210
	SB7	PB11	120
	SB7	PB12	40
	SB7	CB1	260
	CB1	PB13	110
	CB1	PB14	60
STH 125 & LYNNDALE (S44-0121) SUBTOTAL			2,520

ELECTRICAL WIRE TRAFFIC SIGNALS 10 AWG CONTINUES ON FOLLOWING SHEET

NOTE: ALL ITEMS ON THIS SHEET ARE CATEGORY 0010 UNLESS OTHERWISE NOTED.

3

ELECTRICAL WIRE TRAFFIC SIGNALS 10 AWG (CON'T)

LOCATION	FROM	TO	655.0515 EQUIPMENT GROUNDING CONDUCTOR (GREEN) LF
STH 125 & PERKINS (S44-0220)	CB1	SB1	110
	SB1	PB2	40
	SB1	SB2	180
	SB2	PB3	100
	SB2	PB4	40
	SB2	SB3	110
	SB3	PB5	40
	SB3	SB4	150
	SB4	PB6	50
	SB4	SB5	120
	SB5	PB7	40
	SB5	SB6	180
	SB6	PB8	100
	SB6	PB9	40
	SB6	SB7	90
	SB7	PB10	40
	SB7	SB8	150
	SB8	PB1	40
	SB8	CB1	80
STH 125 & PERKINS (S44-0220) SUBTOTAL			1,700
		PROJECT TOTAL	9,990

LIGHTING WIRE

LOCATION	FROM	TO	655.0305 TYPE UF 2-12 AWG GROUNDED LF	655.0610 ELECTRICAL WIRE LIGHTING 12 AWG LF
STH 125 & WESTHILL/KOOLS (S44-0331)	CB1	SB2	190	---
	CB1	SB5	370	---
	CB1	SB7	200	---
	SB2	LUMINAIRE	---	150
	SB7	LUMINAIRE	---	150
STH 125 & BLUEMOUND (S44-0104)	CB1	SB2	200	---
	CB1	SB6	210	---
	CB1	SB8	70	---
	SB2	LUMINAIRE	---	150
	SB6	LUMINAIRE	---	150
	SB8	LUMINAIRE	---	150
STH 125 & LILAS (S44-0392)	CB1	SB2	200	---
	CB1	SB5	340	---
	CB1	SB7	230	---
	CB1	SB10	50	---
	SB2	LUMINAIRE	---	150
	SB7	LUMINAIRE	---	150
STH 125 & LYNNDALE (S44-0121)	CB1	SB2	200	---
	CB1	SB6	280	---
	CB1	SB8	80	---
	SB2	LUMINAIRE	---	150
	SB6	LUMINAIRE	---	150
	SB8	LUMINAIRE	---	160
STH 125 & PERKINS (S44-0220)	CB1	SB2	240	---
	CB1	SB6	220	---
	SB2	LUMINAIRE	---	150
	SB6	LUMINAIRE	---	150
		PROJECT TOTALS	3080	1810

TRAFFIC SIGNAL POLES

LOCATION	657.0100 PEDESTAL BASES EACH	657.0425 TRAFFIC SIGNAL STANDARD ALUMINUM 15-FT EACH	657.1355 INSTALL POLES TYPE 12 EACH	657.1360 INSTALL POLES TYPE 13 EACH	657.1550 INSTALL MONOTUBE ARMS 50-FT EACH	657.1555 INSTALL MONOTUBE ARMS 55-FT EACH
STH 125 & WESTHILL/KOOLS (S44-0331)	2	2	---	2	1	1
STH 125 & BLUEMOUND (S44-0104)	4	4	1	3	---	4
STH 125 & LILAS (S44-0392)	2	2	---	2	2	---
STH 125 & LYNNDALE (S44-0121)	4	4	1	3	1	3
STH 125 & PERKINS (S44-0220)	2	2	---	2	1	1
PROJECT TOTALS	14	14	2	12	5	9

LUMINAIRES

LOCATION	657.1812 INSTALL LUMINAIRE ARMS STEEL 12-FOOT EACH	657.1815 INSTALL LUMINAIRE ARMS STEEL 15-FOOT EACH	659.1120 LUMINAIRES UTILITY LED-B EACH
STH 125 & WESTHILL/KOOLS (S44-0331)	2	---	3
STH 125 & BLUEMOUND (S44-0104)	3	---	3
STH 125 & LILAS (S44-0392)	2	---	4
STH 125 & LYNNDALE (S44-0121)	2	1	3
STH 125 & PERKINS (S44-0220)	2	---	2
PROJECT TOTALS	11	1	15

NOTE: ALL ITEMS ON THIS SHEET ARE CATEGORY 0010 UNLESS OTHERWISE NOTED.

3

TRAFFIC SIGNAL HEADS

LOCATION	658.0110 TRAFFIC SIGNAL FACE 3-12 INCH VERTICAL EACH	658.0115 TRAFFIC SIGNAL FACE 4-12 INCH VERTICAL EACH	658.0600 LED MODULES 12-INCH RED BALL EACH	658.0605 LED MODULES 12-INCH YELLOW BALL EACH	658.0610 LED MODULES 12-INCH GREEN BALL EACH	658.0615 LED MODULES 12-INCH RED ARROW EACH	658.0620 LED MODULES 12-INCH YELLOW ARROW EACH	658.0625 LED MODULES 12-INCH GREEN ARROW EACH
STH 125 & WESTHILL/KOOLS (S44-0331)	6	4	6	6	6	4	8	4
STH 125 & BLUEMOUND (S44-0104)	12	8	12	12	12	8	16	8
STH 125 & LILAS (S44-0392)	6	4	6	6	6	4	8	4
STH 125 & LYNNDALE (S44-0121)	12	8	12	12	12	8	16	8
STH 125 & PERKINS (S44-0220)	6	4	6	6	6	4	8	4
PROJECT TOTALS	42	28	42	42	42	28	56	28

UTILITY ADJUSTMENT

CATEGORY	STATION	LOCATION	SPV.0060.02 ADJUSTING WATER VALVE BOX (EACH)
0030	122+10 WB	NB LANE OF WESTHILL BLVD.	1
0030	135+20 WB	NB LANE OF N. BLUEMOUND DR.	1
		PROJECT TOTAL	2

CONCRETE BASE 9-INCH

STATION - STATION	LOCATION	SPV.0180.01 (SY)
113+00 WB - 119+00 WB	LEFT-TURN LANE	725
	PROJECT TOTAL	725

SAWING ASPHALT

STATION - STATION	LOCATION	690.0150* (LF)
85+67 EB - 85+78 EB	RIGHT	4
NORTH PERKINS ST	SB LANE	16
NORTH PERKINS ST	NB LANE	16
184+52 WB - 185+66 WB	LEFT	115
	PROJECT TOTAL	151

* ADDITIONAL QUANTITIES LISTED ELSWHERE IN PLAN

SAWING CONCRETE

STATION - STATION	LOCATION	690.0250* (LF)
14+23 EB - 14+27 EB	MEDIAN	5
22+46 EB - 22+52 EB	MEDIAN	11
35+52 EB - 35+57 EB	MEDIAN	10
42+31 EB - 42+41 EB	MEDIAN	15
74+23 EB - 74+33 EB	MEDIAN	10
75+46 EB	RIGHT	8
81+87 EB - 84+87 EB	MEDIAN	182
85+78 EB - 85+83 EB	RIGHT	3
88+19 EB - 88+29 EB	MEDIAN	5
88+19 EB - 88+24 EB	RIGHT	8
88+85 EB - 92+05 EB	MEDIAN	323
113+00 WB - 119+00 WB	MEDIAN	615
120+87 WB - 120+97 WB	MEDIAN	15
121+10 WB - 121+16 WB	SHOULDER	12
133+28 WB - 133+34 WB	MEDIAN	3
181+87 WB - 184+87 WB	MEDIAN	277
184+52 WB - 185+66 WB	SHOULDER	115
188+19 WB - 188+57 WB	LEFT	44
188+18 WB - 188+23 WB	MEDIAN	8
188+84 WB - 192+04 WB	MEDIAN	319
192+70 WB - 193+20 WB	LEFT	50
SOUTH BLUEMOUND DR.	SB LANE	5
NORTH BLUEMOUND DR.	NB LANE	5
SOUTH LILAS DR.	MEDIAN	4
NORTH PERKINS ST.	MEDIAN	10
	PROJECT TOTAL	2,062

* ADDITIONAL QUANTITIES LISTED ELSWHERE IN PLAN

Standard Detail Drawing List

08A05-19A	INLET COVERS TYPE A, H, A-S, H-S & Z
08C07-01	INLETS 2X2-FT, 2X2.5-FT, 2X3-FT AND 2.5X3-FT
08D01-19	CONCRETE CURB, CONCRETE CURB AND GUTTER AND TIES
08E09-06	SILT FENCE
08E10-02	INLET PROTECTION TYPE A, B, C AND D
08F04-07	JOINT TIES FOR CONCRETE PIPE AND CONCRETE COLLAR DETAIL
09B02-09	CONDUIT
09B04-11	PULL BOX
09C03-04	TRANSFORMER/PEDESTAL BASES
09C12-08A	CONCRETE BASE TYPE 13
09C13-02	CONCRETE BASE TYPE 10 & TYPE 13 EXTENSION
09E01-14G	HARDWARE DETAILS FOR POLE MOUNTINGS
09E03-05	NON-FREEWAY LIGHTING UNIT POLE WIRING
09E06-05	TRAFFIC SIGNAL STANDARD POLY BRACKET MOUNTINGS (TYPICAL) 13 FT. OR 15 FT.
09E08-08C	TYPE 12 POLE 35'-55' MONOTUBE ARM
09E08-08D	TYPE 13 POLE 35'-55' MONOTBE ARM
09E08-08E	GENERAL NOTES AND HARDWARE DETAILS FOR TYPE 9, 10, 12 & 13 POLES WITH MONOTUBE ARMS
09F09-04	LOOP DETECTOR PLACED IN CRUSHED AGGREGATE BASE (NEW CONCRETE PAVEMENT)
13B01-10	PAVEMENT DETAILS FOR RAILROAD APPROACH
13C01-18	CONCRETE PAVEMENT LONGITUDINAL JOINTS AND TIES
13C14-06A	BASE PATCHING CONCRETE
13C14-06B	BASE PATCHING CONCRETE
13C14-06C	BASE PATCHING CONCRETE
13C15-06A	CONCRETE BASE
13C15-06B	CONCRETE BASE
13C18-03A	CONCRETE PAVEMENT JOINTING
13C18-03B	CONCRETE PAVEMENT STEEL REINFORCEMENT
13C18-03C	CONCRETE PAVEMENT JOINT TIES
13C18-03D	CONCRETE PAVEMENT JOINTING AT UTILITY FIXTURES
14B28-03	GUARDRAIL MOW STRIP
14B42-04A	MIDWEST GUARDRAIL SYSTEM (MGS) GUARDRAIL
14B42-04B	MIDWEST GUARDRAIL SYSTEM (MGS) GUARDRAIL
14B42-04C	MIDWEST GUARDRAIL SYSTEM (MGS) GUARDRAIL
14B44-02A	MIDWEST GUARDRAIL SYSTEM ENERGY ABSORBING TERMINAL (MGS)
14B44-02B	MIDWEST GUARDRAIL SYSTEM ENERGY ABSORBING TERMINAL (MGS)
14B44-02C	MIDWEST GUARDRAIL SYSTEM ENERGY ABSORBING TERMINAL (MGS)
14B45-04A	MIDWEST GUARDRAIL SYSTEM THRIE BEAM TRANSITION (MGS)
14B45-04B	MIDWEST GUARDRAIL SYSTEM THRIE BEAM TRANSITION (MGS)
14B45-04C	MIDWEST GUARDRAIL SYSTEM THRIE BEAM TRANSITION (MGS)
14B45-04D	MIDWEST GUARDRAIL SYSTEM THRIE BEAM TRANSITION (MGS)
14B45-04E	MIDWEST GUARDRAIL SYSTEM THRIE BEAM TRANSITION (MGS)
14B45-04F	MIDWEST GUARDRAIL SYSTEM THRIE BEAM TRANSITION (MGS)
14B45-04G	MIDWEST GUARDRAIL SYSTEM THRIE BEAM TRANSITION (MGS)
14B45-04H	MIDWEST GUARDRAIL SYSTEM THRIE BEAM TRANSITION (MGS)
14B45-04I	MIDWEST GUARDRAIL SYSTEM THRIE BEAM TRANSITION (MGS)
14B45-04J	MIDWEST GUARDRAIL SYSTEM THRIE BEAM TRANSITION (MGS)
14B45-04K	MIDWEST GUARDRAIL SYSTEM THRIE BEAM TRANSITION (MGS)
14B45-04L	MIDWEST GUARDRAIL SYSTEM THRIE BEAM TRANSITION (MGS)
15C02-06A	BARRICADES AND SIGNS FOR MAINLINE CLOSURES
15C02-06B	BARRICADES AND SIGNS FOR MAINLINE CLOSURES
15C03-03	BARRICADES AND SIGNS FOR SIDEROAD CLOSURES
15C05-03	TRAFFIC CONTROL, ADVANCE WARNING SIGNS 40 M.P.H. OR LESS
15C07-13B	PAVEMENT MARKING WORDS
15C07-13C	PAVEMENT MARKING ARROWS
15C08-16A	PAVEMENT MARKING (MAINLINE)
15C08-16E	PAVEMENT MARKING (LEFT TURN LANE)
15C09-10A	SIGNING AND PAVEMENT MARKING DETAILS FOR RAILROAD-HIGHWAY GRADE CROSSINGS
15C11-06	FLEXIBLE TUBULAR MARKER POST
15C27-01	DOUBLE ARROW WARNING SIGN PLACEMENT
15C33-02	STOP LINE AND CROSSWALK PAVEMENT MARKING
15D20-04	TRAFFIC CONTROL, SINGLE LANE CLOSURE, NON-FREEWAY/EXPRESSWAY
15D21-04	TRAFFIC CONTROL, INTERSECTION WITHIN SINGLE LANE CLOSURE
15D30-03A	TRAFFIC CONTROL, PEDESTRIAN ACCOMMODATION
15D30-03B	TRAFFIC CONTROL, TEMPORARY ADA COMPLIANT PEDESTRIAN ACCOMMODATION
15D30-03C	TRAFFIC CONTROL, PEDESTRIAN ACCOMMODATION

6

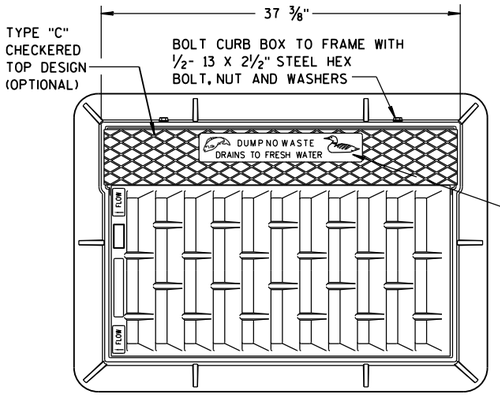

NOTE:
GRATE IS REVERSIBLE.

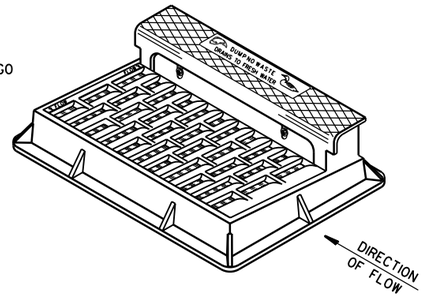

NOTE: CURB BOX HEIGHT ADJUSTABLE 6" TO 9"

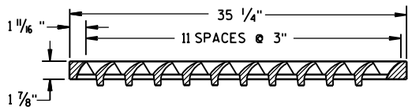

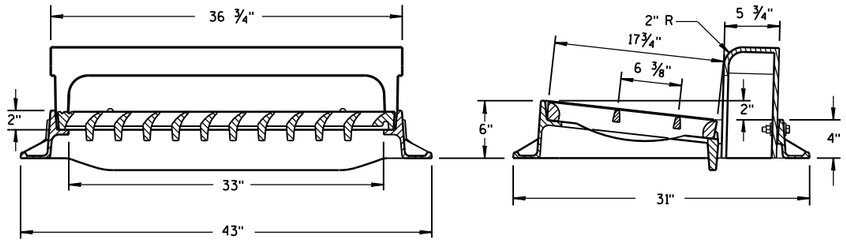

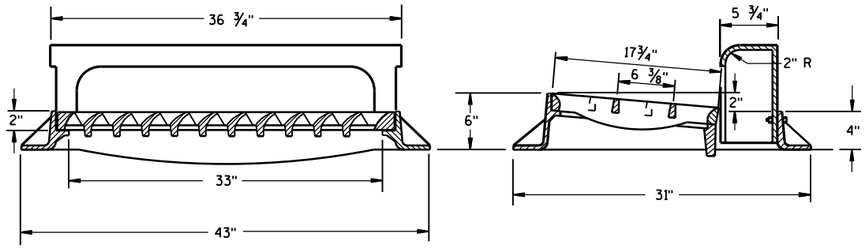

TYPE "H"

NOTE: EITHER CASTING IS ACCEPTABLE

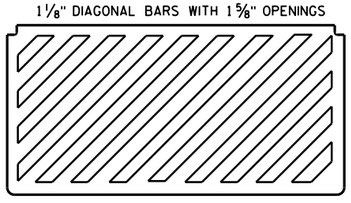

SPECIAL GRATE FOR TYPE "H" COVER

(MEASURES 35 1/4" X 17 3/4" X 2")

(NOTED AS TYPE H-S ON DRAINAGE TABLE)

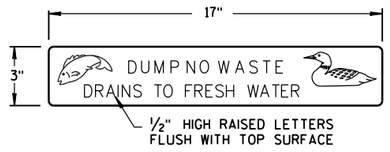

LOGO DETAIL

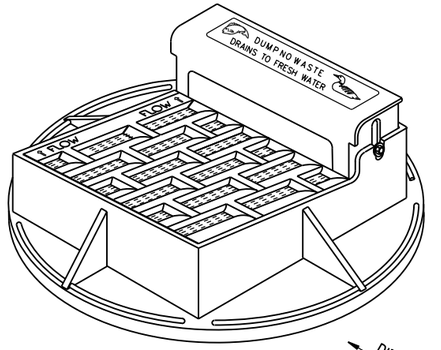

NOTE: CURB BOX ADJUSTABLE 4" TO 9"

NOTE:
GRATE IS REVERSIBLE.

GENERAL NOTES

DETAILS OF CONSTRUCTION, MATERIALS AND WORKMANSHIP NOT SHOWN ON THIS DRAWING SHALL CONFORM TO THE PERTINENT REQUIREMENTS OF THE STANDARD SPECIFICATIONS AND THE APPLICABLE SPECIAL PROVISIONS.

DETAIL DRAWINGS FOR PROPOSED ALTERNATE DESIGNS FOR CATCH BASIN, MANHOLE AND INLET COVERS SHALL BE SUBMITTED TO THE ENGINEER FOR APPROVAL PROVIDING THAT SUCH ALTERNATE DESIGNS MAKE PROVISION FOR EQUIVALENT CAPACITY AND STRENGTH.

ROUND FRAMES AND COVERS SHALL HAVE CONTINUOUSLY MACHINED BEARING SURFACES TO PREVENT ROCKING AND RATTLING.

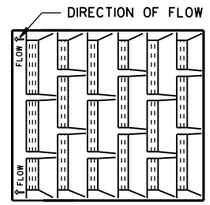

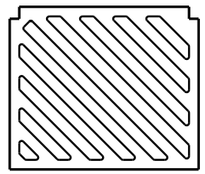

SPECIAL GRATE FOR TYPE "A" COVER

(MEASURES 19 3/4" X 17" X 1 7/8")

(NOTED AS TYPE A-S ON DRAINAGE TABLE)

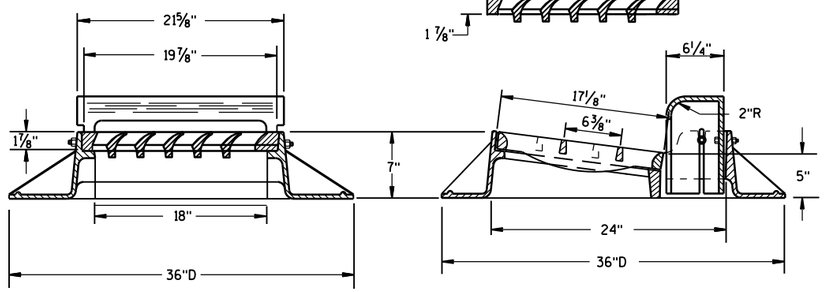

TYPE "A"

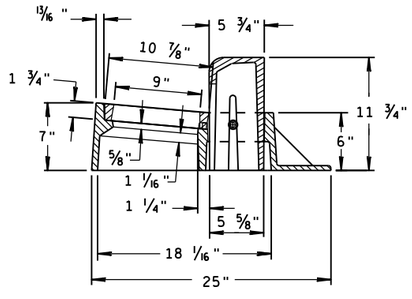

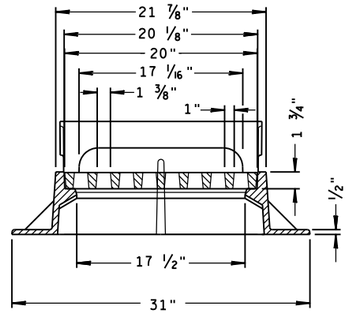

TYPE "Z"

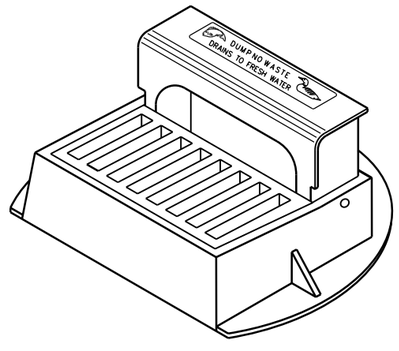

INLET COVERS
TYPE A, H, A-S, H-S & Z

STATE OF WISCONSIN
DEPARTMENT OF TRANSPORTATION

APPROVED
11-27-13 — DATE
/S/ Jerry H. Zogg — ROADWAY STANDARDS ENGINEER
FHWA

6

S.D.D. 8 A 5-19a

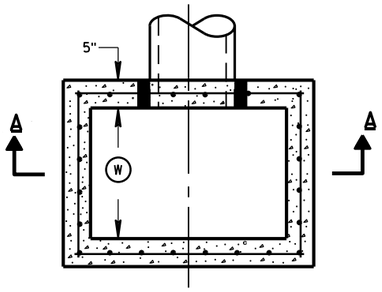

PLAN VIEW

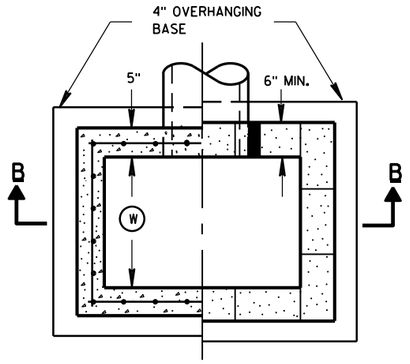

PLAN VIEW

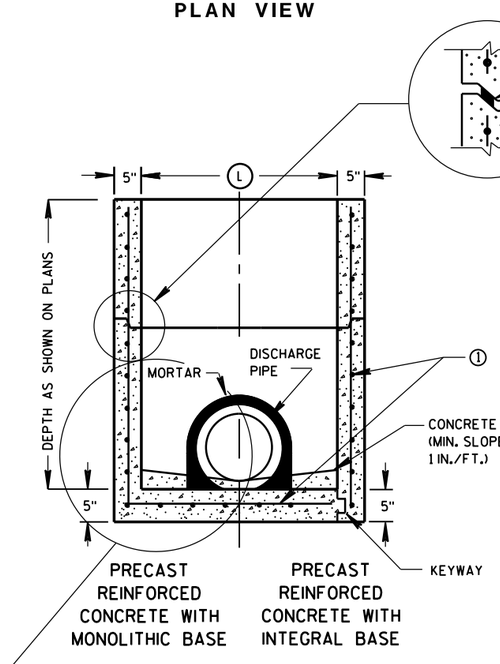

SECTION A-A

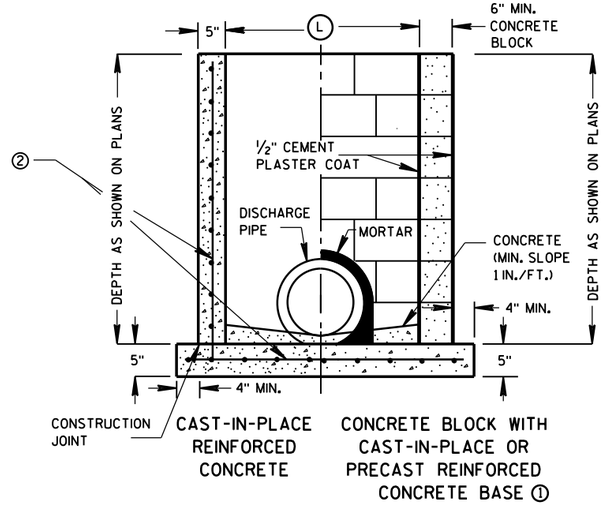

SECTION B-B

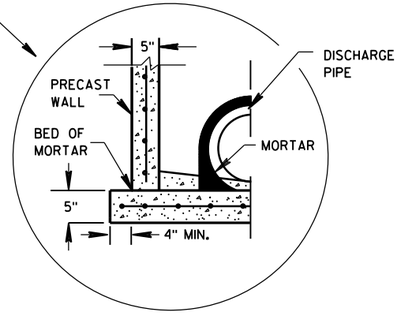

SEPARATE PRECAST REINFORCED CONCRETE BASE OPTION

GENERAL NOTES

DETAILS OF CONSTRUCTION, MATERIALS AND WORKMANSHIP NOT SHOWN ON THIS DRAWING SHALL CONFORM TO THE PERTINENT REQUIREMENTS OF THE STANDARD SPECIFICATIONS AND THE APPLICABLE SPECIAL PROVISIONS.

UNLESS OTHERWISE AUTHORIZED IN WRITING BY THE ENGINEER, THE CONTRACTOR SHALL NOT ORDER AND DELIVER PRECAST INLET UNITS REQUIRED FOR THE PROJECT UNTIL A LIST OF SIZES IS FURNISHED BY THE ENGINEER.

DETAILED DRAWINGS FOR PROPOSED ALTERNATE DESIGNS FOR UNDERGROUND DRAINAGE STRUCTURES SHALL BE SUBMITTED TO THE ENGINEER FOR APPROVAL PROVIDING THAT SUCH ALTERNATE DESIGNS MAKE PROVISION FOR EQUIVALENT CAPACITY AND STRENGTH.

ALL PRECAST INLET UNITS SHALL CONFORM TO THE PERTINENT REQUIREMENTS OF ASTM C 913.

ALL DRAINAGE STRUCTURES ARE DESIGNATED ON THE PLANS AS "MANHOLES 3X3-L", "CATCH BASINS 4-B", "INLETS 2X3-H", ETC. THE FIRST NUMBERS DESIGNATES THE SIZE OF THE STRUCTURE, AND THE FOLLOWING LETTER DESIGNATES THE TYPE OF COVER TO BE USED TO COMPRISE THE COMPLETE UNIT.

BASES SHALL BE PLACED ON A BED OF MATERIAL AT LEAST 6 INCHES IN DEPTH, WHICH MEETS THE REQUIREMENTS OF GRANULAR BACKFILL. THIS BEDDING SHALL BE COMPACTED AND PROVIDE UNIFORM SUPPORT FOR THE ENTIRE AREA OF THE BASE.

ALL BAR STEEL REINFORCEMENT SHALL BE EMBEDDED 2 INCHES CLEAR UNLESS OTHERWISE SHOWN OR NOTED.

PRECAST REINFORCED RISERS SHALL HAVE A TONGUE AND GROOVE JOINT WITH TONGUE UP OR DOWN.

4" OVERHANGING BASES ARE REQUIRED FOR CAST-IN-PLACE REINFORCED CONCRETE AND CONCRETE BLOCK INSTALLATIONS.
4" OVERHANG IS REQUIRED WHEN SEPARATE PRECAST BASE IS PROVIDED.
OVERHANG IS NOT REQUIRED ON PRECAST STRUCTURES WITH AN INTEGRAL OR MONOLITHIC BASE.

MAXIMUM INSIDE PIPE DIAMETER DETERMINED BY 3 INCH CLEARANCE ON EACH SIDE OF THE OUTSIDE WALL OF THE PIPE. SEE DETAIL "A". ASSUMES PIPE ENTERS PERPENDICULAR TO THE STRUCTURE.

① FOR PRECAST INLETS PROVIDE REINFORCING STEEL IN ACCORDANCE TO ASTM C 913.

② CONTRACTOR TO PROVIDE DRAWING(S) STAMPED BY A PROFESSIONAL ENGINEER FOR STEEL REINFORCING DESIGN FOR CAST-IN-PLACE STRUCTURES.

INLET COVER MATRIX

INLET SIZE		INLET COVER TYPE	ALL A'S	ALL B'S	BW	F	ALL H'S	S	T	V	WM
	WIDTH (W) (FT)	LENGTH (L) (FT)									
2X2-FT	2	2	X	X				X		X	
2X2.5-FT	2	2.5			X			X	X	X	X
2X3-FT	2	3					X				
2.5X3-FT	2.5	3				X					

PIPE MATRIX

INLET SIZE	MAXIMUM INSIDE PIPE DIAMETER	
	WIDTH (IN)	LENGTH (IN)
2X2-FT	12	12
2X2.5-FT	12	18
2X3-FT	12	24
2.5X3-FT	18	24

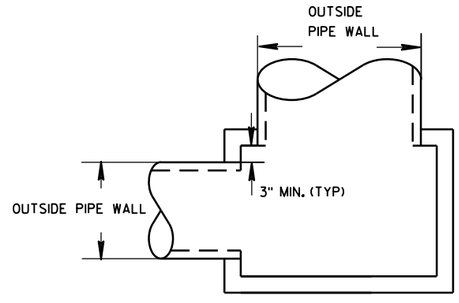

DETAIL "A"

INLETS 2X2-FT, 2X2.5-FT, 2X3-FT AND 2.5X3-FT

STATE OF WISCONSIN
DEPARTMENT OF TRANSPORTATION

APPROVED
6/5/2012
DATE
/S/ Jerry H. Zogg
ROADWAY STANDARDS DE ENGINEER
FHWA

6

S.D.D. 8 C 7-1

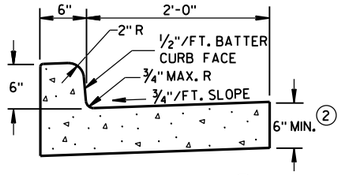

TYPES A & D ①

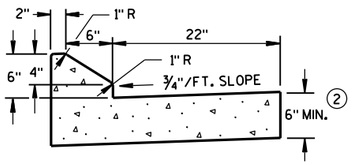

6" SLOPED CURB TYPES G & J ①

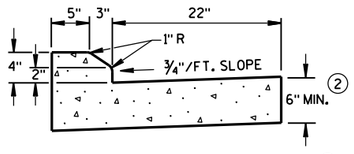

4" SLOPED CURB TYPES G & J ①

CONCRETE CURB & GUTTER 30"

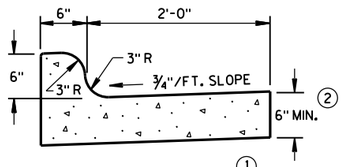

TYPES K & L ①

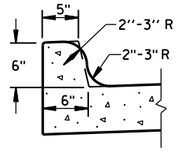

OPTIONAL CURB SHAPE FOR TYPES K & L ①

CONCRETE CURB & GUTTER 30"

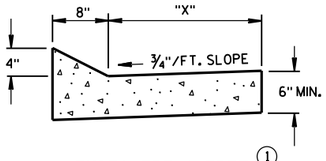

TYPES TBT & TBTT ①

CONCRETE CURB & GUTTER

TBT & TBTT	"X"
30"	22"
36"	28"

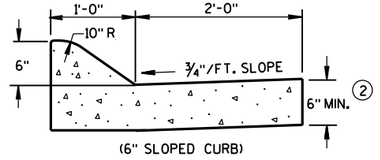

(6" SLOPED CURB)

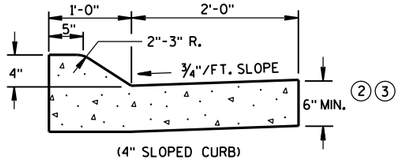

(4" SLOPED CURB)

TYPES A & D ①

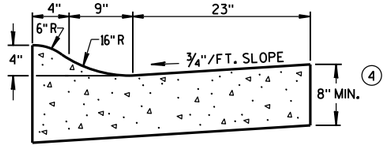

4" SLOPED CURB TYPES R & T ①⑤

CONCRETE CURB & GUTTER 36"

GENERAL NOTES

DETAILS OF CONSTRUCTION, MATERIALS AND WORKMANSHIP NOT SHOWN ON THIS DRAWING SHALL CONFORM TO THE PERTINENT REQUIREMENTS OF THE CONTRACT.

PAVEMENT TIES AND TIE BARS SHALL BE EPOXY COATED IN CONFORMANCE WITH SUBSECTION 505.2.6.2 OF THE STANDARD SPECIFICATIONS.

INTEGRAL CURB & GUTTER SHALL CONFORM TO THE DETAILS SHOWN FOR CONCRETE CURB & GUTTER INCLUDING THE TRANSVERSE GUTTER SLOPE. A LONGITUDINAL CONSTRUCTION JOINT IS NOT REQUIRED WITH INTEGRAL CURB AND GUTTER.

WHERE THE TRANSVERSE JOINTS IN THE PAVEMENT ARE REQUIRED TO BE SEALED, THE JOINTS IN THE INTEGRAL CURB AND GUTTER SHALL BE SEALED TO THE FACE OF CURB WITH THE SAME TYPE OF SEALANT. THE COST OF FURNISHING AND INSTALLING THIS SEALANT SHALL BE INCIDENTAL TO THE ITEM CONCRETE CURB AND GUTTER.

UNLESS OTHERWISE SHOWN ON THE TYPICAL CROSS SECTIONS, THE BASE AGGREGATE AND COMMON EXCAVATION LIMITS ARE 2'-0" BEHIND THE BACK OF CURBS.

① TIE BARS ARE REQUIRED FOR CURB AND GUTTER TYPES A, G, K, R AND TBTT.

② THE BOTTOM OF CURB AND GUTTER MAY BE CONSTRUCTED EITHER LEVEL OR PARALLEL TO THE SLOPE OF THE SUBGRADE OR BASE AGGREGATE PROVIDED A 6" MINIMUM GUTTER THICKNESS IS MAINTAINED.

③ USE 8" MINIMUM GUTTER THICKNESS WHEN USED WITH AN ADJACENT CONCRETE TRUCK APRON PLACED BEHIND BACK OF CURB.

④ THE BOTTOM OF CURB AND GUTTER MAY BE CONSTRUCTED EITHER LEVEL OR PARALLEL TO THE SLOPE OF THE SUBGRADE OR BASE AGGREGATE PROVIDED A 8" MINIMUM GUTTER THICKNESS IS MAINTAINED.

⑤ THE FACE OF CURB IS 6" FROM THE BACK OF CURB.

⑥ WHEN REVERSE SLOPE GUTTER IS REQUIRED, THE LOCATION(S) WILL BE SHOWN ELSEWHERE IN THE PLAN.

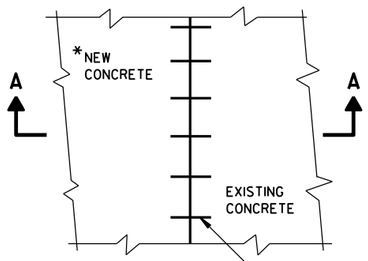

PLAN VIEW

*NEW CURB & GUTTER, SURFACE DRAINS, CONCRETE PAVEMENT OR OTHER NEW CONCRETE.

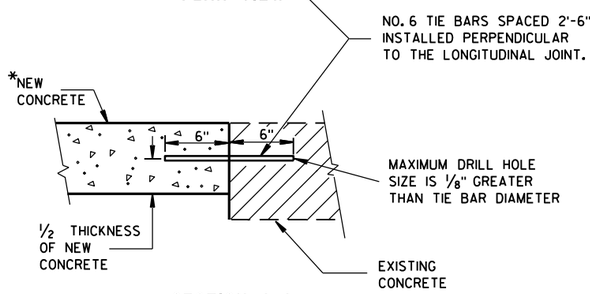

SECTION A-A

TIE BARS DRILLED INTO EXISTING PAVEMENT

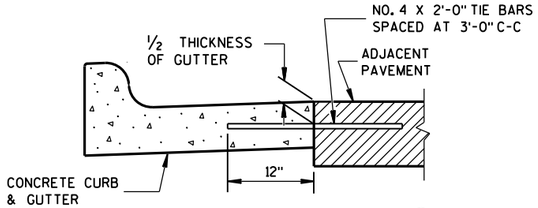

TYPICAL TIE BAR LOCATION ①

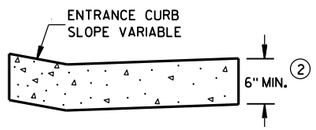

DRIVEWAY ENTRANCE CURB

(WHEN DIRECTED BY THE ENGINEER)

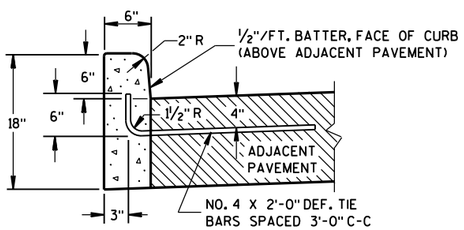

① TYPES A & D

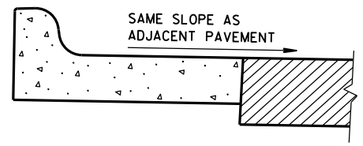

⑥ REVERSE SLOPE GUTTER

(TYPICAL FOR ALL CURB & GUTTER TYPES)

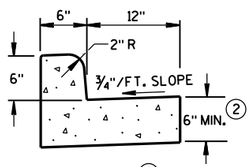

① TYPES A & D

CONCRETE CURB & GUTTER 18"

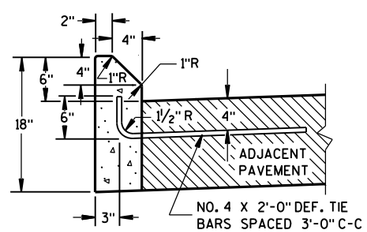

① TYPES G & J

CONCRETE CURB

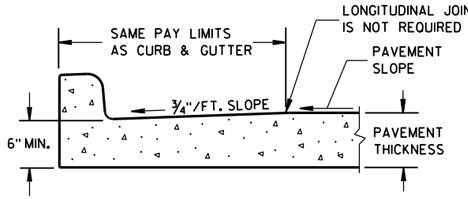

PARTIAL SECTION OF PAVEMENT WITH INTEGRAL CURB & GUTTER

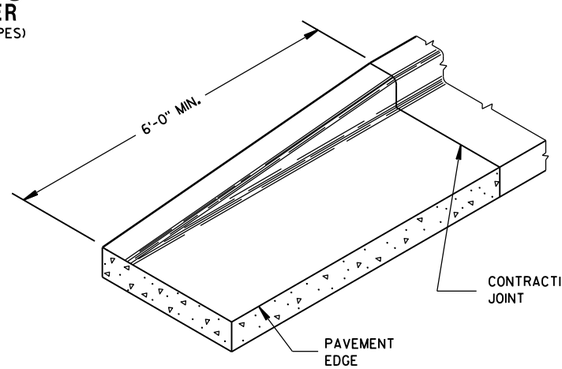

END SECTION CURB & GUTTER

CONCRETE CURB, CONCRETE CURB & GUTTER AND TIES

STATE OF WISCONSIN
DEPARTMENT OF TRANSPORTATION

APPROVED

June, 2016 — DATE

/S/ Jerry H. Zogg — ROADWAY STANDARDS DEVELOPMENT ENGINEER

FHWA

6

S.D.D. 8 D 1-19

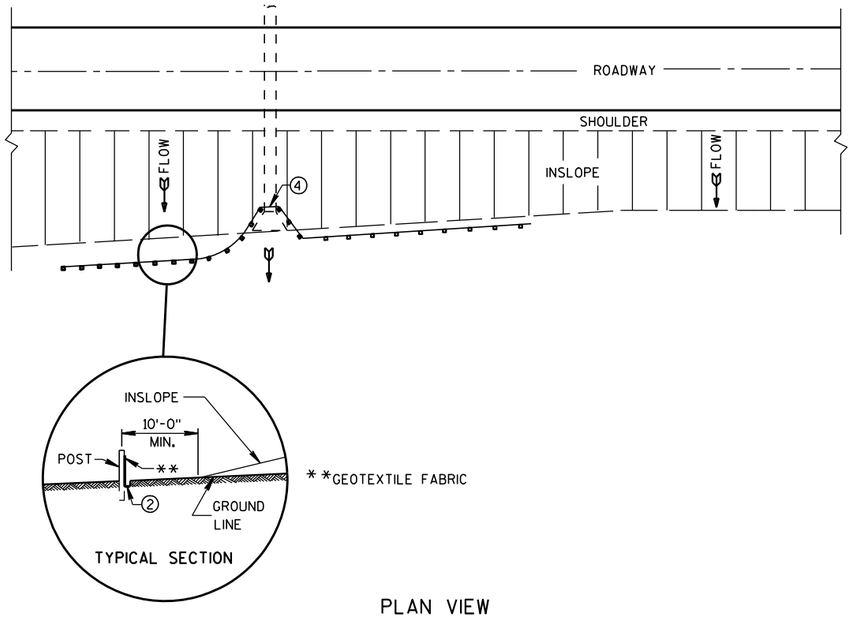

PLAN VIEW

TYPICAL APPLICATION OF SILT FENCE

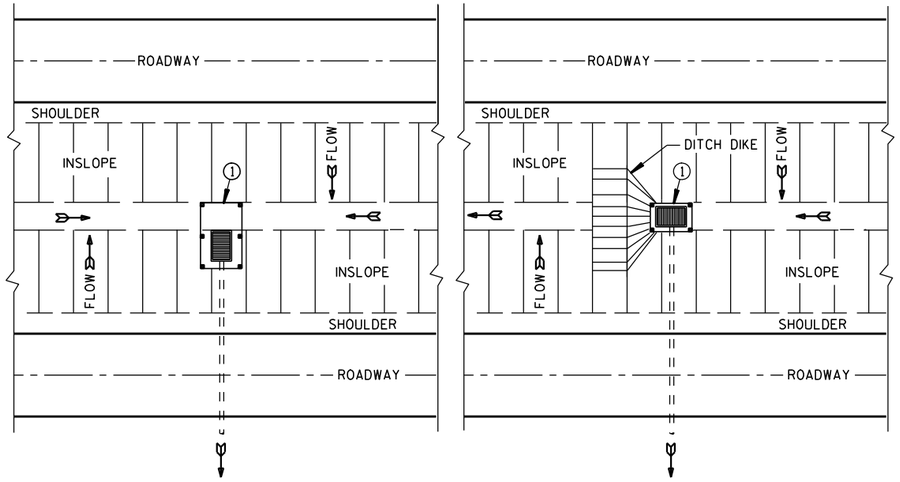

PLAN VIEW

SILT FENCE AT MEDIAN SURFACE DRAINS

GENERAL NOTES

DETAILS OF CONSTRUCTION NOT SHOWN ON THIS DRAWING SHALL CONFORM TO THE PERTINENT REQUIREMENTS OF THE STANDARD SPECIFICATIONS AND APPLICABLE SPECIAL PROVISIONS.

① HORIZONTAL BRACE REQUIRED WITH 2" X 4" WOODEN FRAME OR EQUIVALENT AT TOP OF POSTS.

② FOR MANUAL INSTALLATIONS THE TRENCH SHALL BE A MINIMUM OF 4" WIDE & 6" DEEP TO BURY AND ANCHOR THE GEOTEXTILE FABRIC. FOLD MATERIAL TO FIT TRENCH AND BACKFILL & COMPACT TRENCH WITH EXCAVATED SOIL.

③ WOOD POSTS SHALL BE A MINIMUM SIZE OF 1⅛" X 1⅛" OF OAK OR HICKORY.

④ SILT FENCE TO EXTEND ACROSS THE TOP OF THE PIPE.

⑤ CONSTRUCT SILT FENCE FROM A CONTINUOUS ROLL IF POSSIBLE BY CUTTING LENGTHS TO AVOID JOINTS. IF A JOINT IS NECESSARY USE ONE OF THE FOLLOWING TWO METHODS; A) OVERLAP THE END POSTS AND TWIST, OR ROTATE, AT LEAST 180 DEGREES, B) HOOK THE END OF EACH SILT FENCE LENGTH.

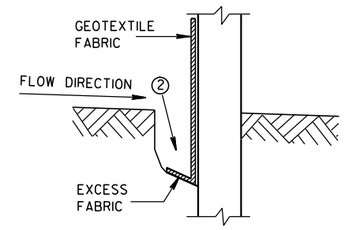

TRENCH DETAIL

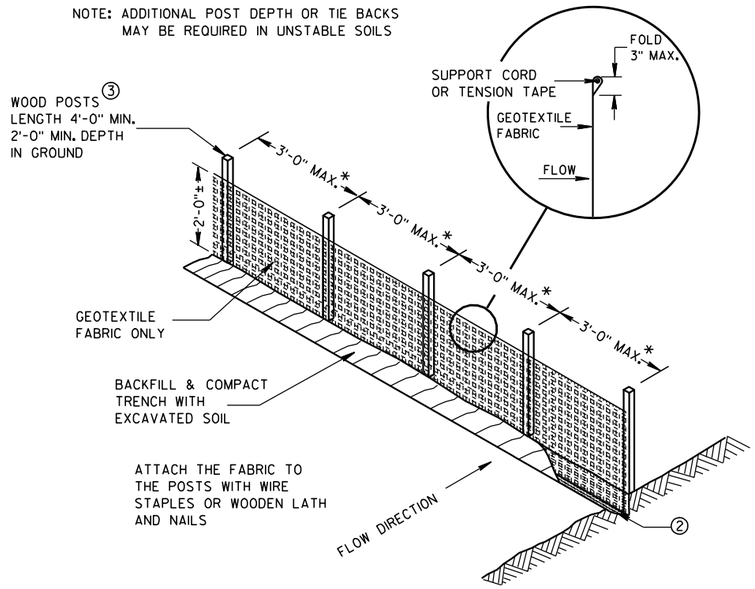

SILT FENCE

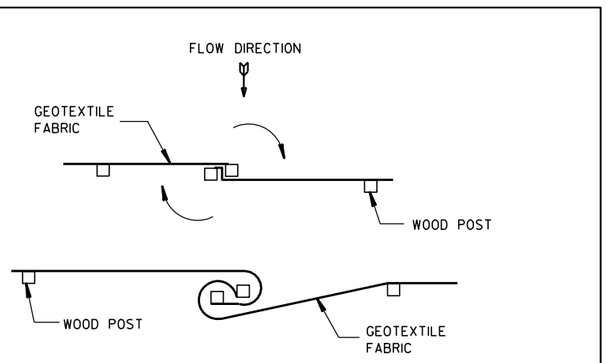

TWIST METHOD

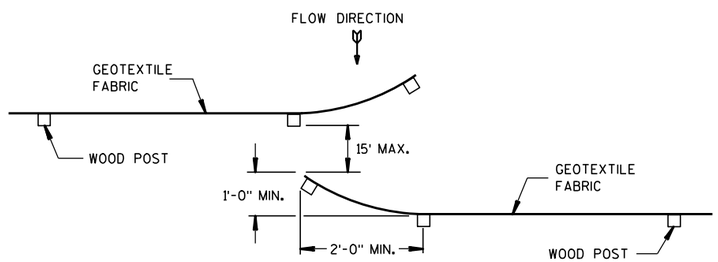

HOOK METHOD

JOINING TWO LENGTHS OF SILT FENCE ⑤

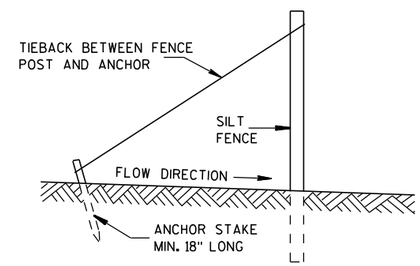

SILT FENCE TIE BACK

(WHEN REQUIRED BY THE ENGINEER)

SILT FENCE

STATE OF WISCONSIN
DEPARTMENT OF TRANSPORTATION

APPROVED
4-29-05 DATE
/S/ Beth Cannestra
CHIEF ROADWAY DEVELOPMENT ENGINEER
FHWA

6

S.D.D. 8 E 9-6

6

S.D.D. 8 E 9-6

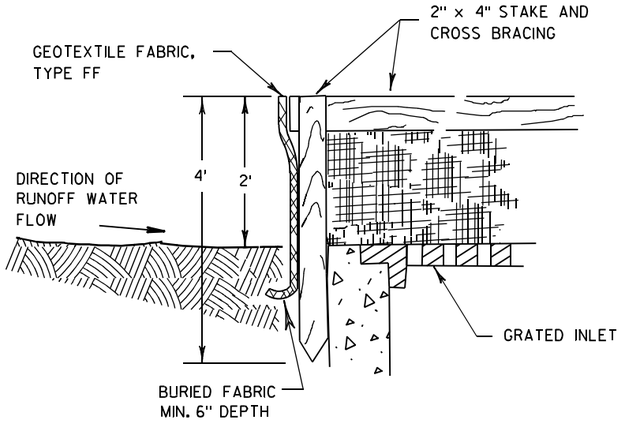

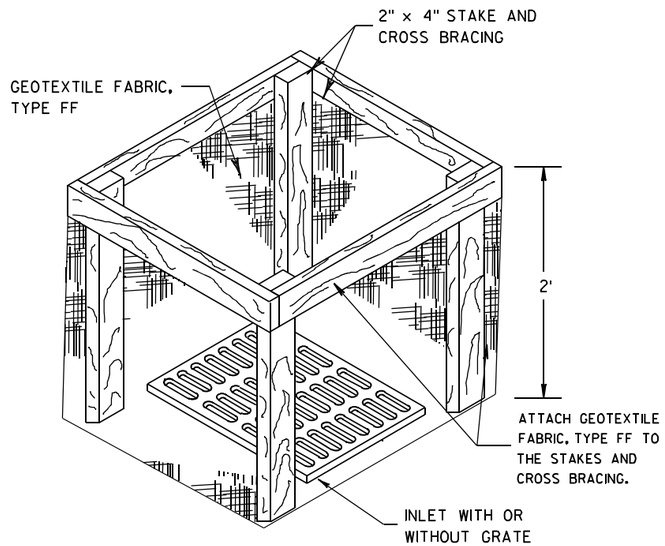

INLET PROTECTION, TYPE A

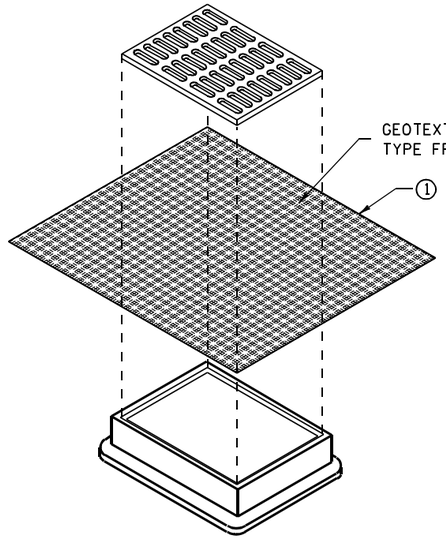

INLET PROTECTION, TYPE B
(WITHOUT CURB BOX)

(CAN BE INSTALLED IN ANY INLET WITHOUT A CURB BOX)

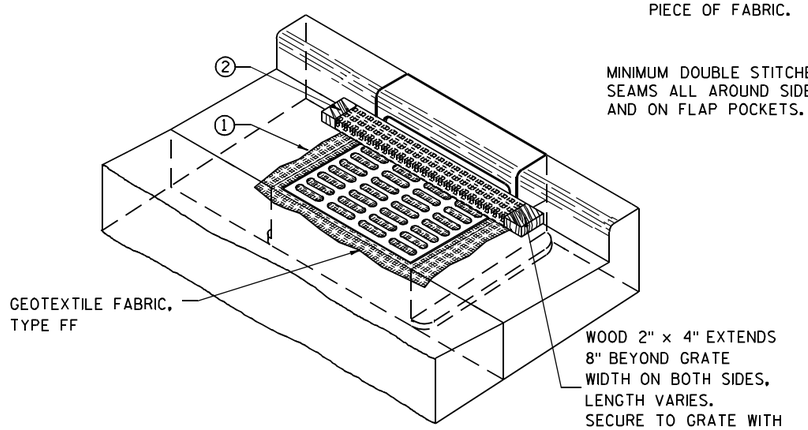

INLET PROTECTION, TYPE C (WITH CURB BOX)

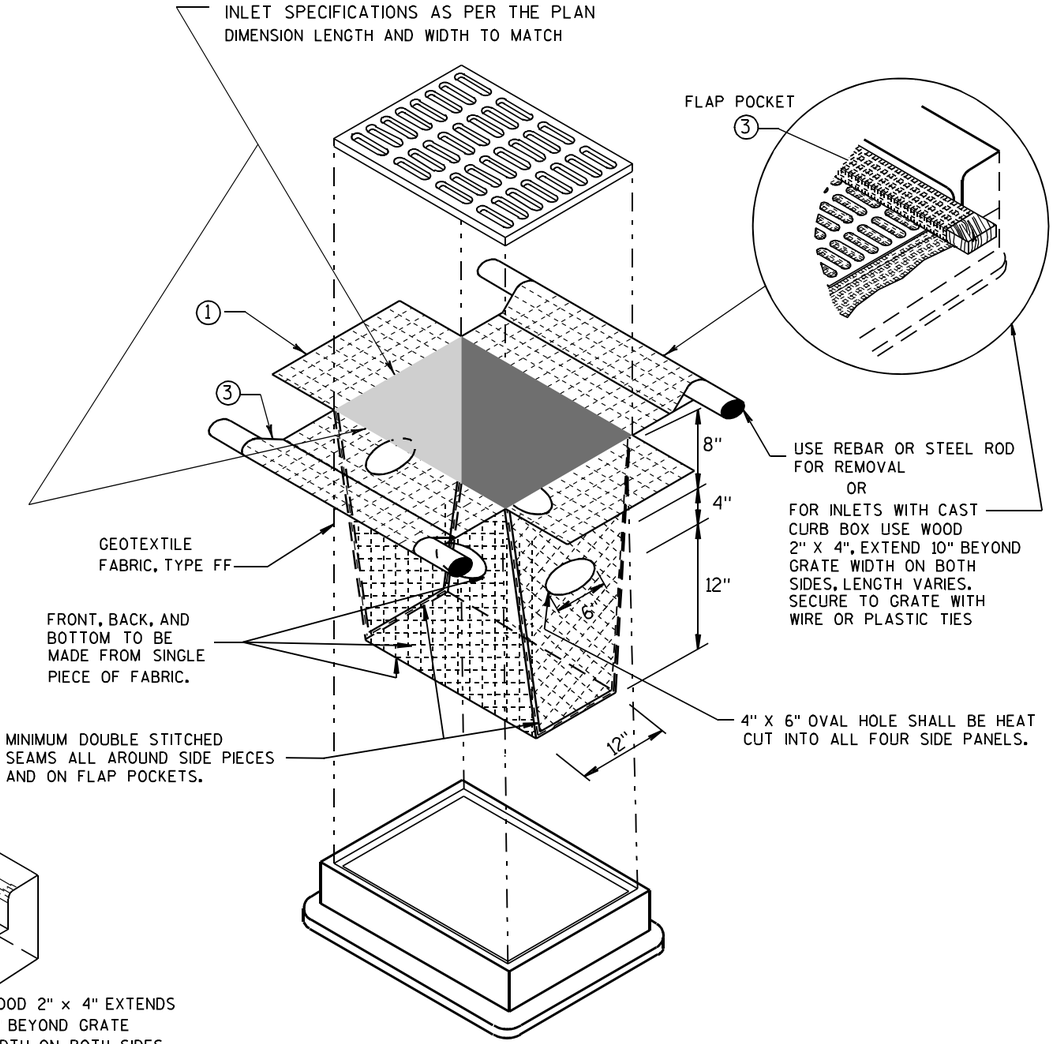

INLET PROTECTION, TYPE D

(CAN BE INSTALLED IN ANY INLET TYPE WITH
OR WITHOUT A CURB BOX AS PER NOTE ②)

GENERAL NOTES

INLET PROTECTION DEVICES SHALL BE MAINTAINED OR REPLACED AT THE DIRECTION OF THE ENGINEER.

MANUFACTURED ALTERNATIVES APPROVED AND LISTED ON THE DEPARTMENT'S EROSION CONTROL PRODUCT ACCEPTABILITY LIST MAY BE SUBSTITUTED.

WHEN REMOVING OR MAINTAINING INLET PROTECTION, CARE SHALL BE TAKEN SO THAT THE SEDIMENT TRAPPED ON THE GEOTEXTILE FABRIC DOES NOT FALL INTO THE INLET. ANY MATERIAL FALLING INTO THE INLET SHALL BE REMOVED IMMEDIATELY.

① FINISHED SIZE, INCLUDING FLAP POCKETS WHERE REQUIRED, SHALL EXTEND A MINIMUM OF 10" AROUND THE PERIMETER TO FACILITATE MAINTENANCE OR REMOVAL.

② FOR INLET PROTECTION, TYPE C (WITH CURB BOX), AN ADDITIONAL 18" OF FABRIC IS WRAPPED AROUND THE WOOD AND SECURED WITH STAPLES. THE WOOD SHALL NOT BLOCK THE ENTIRE HEIGHT OF THE CURB BOX OPENING.

③ FLAP POCKETS SHALL BE LARGE ENOUGH TO ACCEPT WOOD 2X4.

INSTALLATION NOTES

TYPE B & C

TRIM EXCESS FABRIC IN THE FLOW LINE TO WITHIN 3" OF THE GRATE.

THE CONTRACTOR SHALL DEMONSTRATE A METHOD OF MAINTENANCE, USING A SEWN FLAP, HAND HOLDS OR OTHER METHOD TO PREVENT ACCUMULATED SEDIMENT FROM ENTERING THE INLET.

TYPE D

DO NOT INSTALL INLET PROTECTION TYPE D IN INLETS SHALLOWER THAN 30", MEASURED FROM THE BOTTOM OF THE INLET TO THE TOP OF THE GRATE.

TRIM EXCESS FABRIC IN THE FLOW LINE TO WITHIN 3" OF THE GRATE.

THE INSTALLED BAG SHALL HAVE A MINIMUM SIDE CLEARANCE, BETWEEN THE INLET WALLS AND THE BAG, MEASURED AT THE BOTTOM OF THE OVERFLOW HOLES, OF 3". WHERE NECESSARY THE CONTRACTOR SHALL CINCH THE BAG, USING PLASTIC ZIP TIES, TO ACHIEVE THE 3" CLEARANCE. THE TIES SHALL BE PLACED AT A MAXIMUM OF 4" FROM THE BOTTOM OF THE BAG.

INLET PROTECTION
TYPE A, B, C, AND D

STATE OF WISCONSIN
DEPARTMENT OF TRANSPORTATION

APPROVED

10/16/02
DATE

/S/ Beth Cannestra
CHIEF ROADWAY DEVELOPMENT ENGINEER

FHWA

6
S.D.D. 8 E 10-2

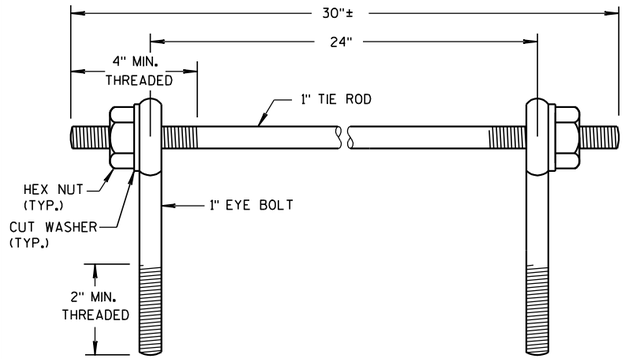

EYE BOLTS AND TIE ROD

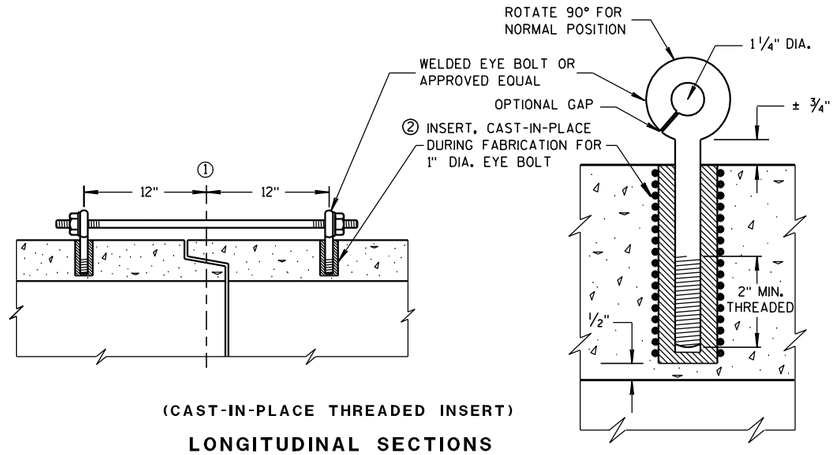

(CAST-IN-PLACE THREADED INSERT)

LONGITUDINAL SECTIONS

EYE BOLT AND TIE ROD ASSEMBLY (ALTERNATE NO. 1)

GENERAL NOTES

DETAILS OF CONSTRUCTION, MATERIALS, AND WORKMANSHIP NOT SHOWN ON THIS DRAWING SHALL CONFORM TO THE PERTINENT REQUIREMENTS OF THE STANDARD SPECIFICATIONS AND APPLICABLE SPECIAL PROVISIONS.

CONCRETE CULVERT AND STORM SEWER PIPE SHALL BE TIED TOGETHER IN THE MANNER ILLUSTRATED BY THIS DETAIL AT LOCATIONS DESIGNATED IN THE STANDARD SPECIFICATIONS AND THE PLAN. THE CONTRACTOR MAY USE EITHER ALTERNATE 1, 2 OR 3 FOR DRAINAGE STRUCTURES. ONLY ALTERNATE 1 AND 3 MAY BE USED FOR CATTLE PASSES, UNLESS OTHERWISE STATED IN THE CONTRACT. THE MATERIALS, FABRICATION AND WORK NECESSARY TO TIE THE PIPE BY THIS DETAIL WILL BE CONSIDERED INCIDENTAL TO THE PIPE AND APRON ENDWALLS IF REQUIRED.

DETAILED DRAWINGS FOR PROPOSED ALTERNATE DESIGNS FOR JOINT TIES SHALL BE SUBMITTED TO THE ENGINEER FOR APPROVAL.

JOINT TIES TO BE HOT-DIP GALVANIZED PER ASTM A 153.

① ℄ OF TONGUE AND GROOVE OR BELL AND SPIGOT JOINTS.

② THE INSIDE OF THE THREADED INSERTS SHALL BE CLEAN TO ALLOW THE INSERTION OF THREADED EYE BOLTS.

③ HOLES SHALL BE CAST-IN-PLACE OR DRILLED 12 INCHES FROM ℄ OF TONGUE AND GROOVE.

④ BOLT PROJECTION INSIDE OF PIPE SHALL NOT EXCEED 2 INCHES.

⑤ OPENING TO BE ROD DIAMETER PLUS 1 INCH.

⑥ LENGTH ADEQUATE TO EXTEND TO WITHIN 1/2 INCH OF THE INNER SURFACE OF THE PIPE.

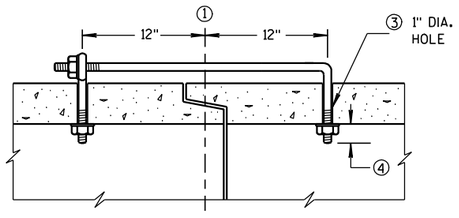

(TONGUE & GROOVE PIPE)

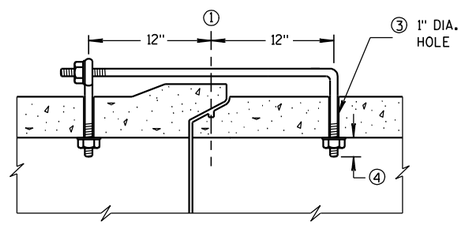

(MODIFIED BELL PIPE)

LONGITUDINAL SECTION

EYE BOLT DIMENSION TABLE

PIPE SIZE	L = LENGTH	
	TONGUE & GROOVE PIPE	MODIFIED BELL PIPE
18" TO 24"	4 1/2"	6 1/4"
30"	5"	7"
36"	5 1/2"	7"
42"	6"	
48"	6 1/2"	
60"	7 1/2"	
66"	8"	

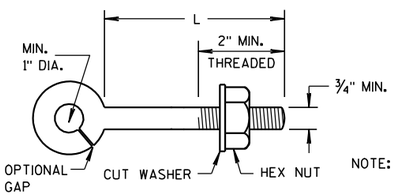

NOTE:

EYE BOLT

NOTE: TWO EYE BOLTS MAY BE USED WITH A 30" LONG THREADED ROD IN LIEU OF THE 90° BENT TIE ROD.

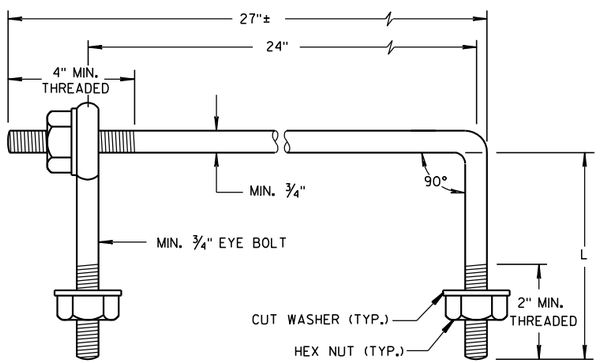

EYE BOLT AND TIE ROD

(JOINT TIES FOR 18" TO 66" DIA. CONCRETE PIPE)

EYE BOLT AND TIE ROD ASSEMBLY (ALTERNATE NO. 2)

ADJUSTABLE TIE ROD TABLE

PIPE DIAMETER	TIE ROD DIAMETER	D	L_1	N
12-60	5/8	5/8	5	1/2
66-84	3/4	3/4	5	1/2
90-108	1	1	7	1 1/16

DIMENSIONS SHOWN ARE IN INCHES

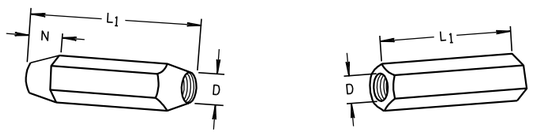

TAPERED PLAIN

RIGHT AND LEFT THREADS

SLEEVE NUTS

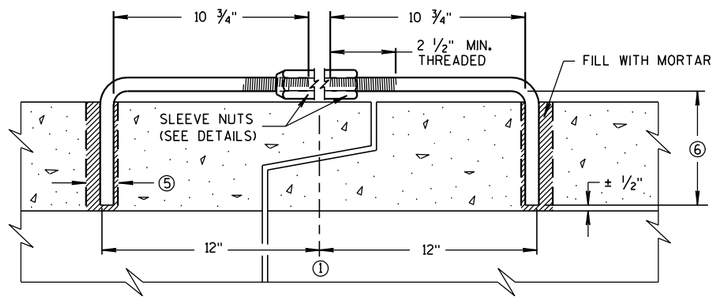

LONGITUDINAL SECTION

(JOINT TIES FOR 12" TO 108" DIA. CONCRETE PIPE)

ADJUSTABLE TIE ROD (ALTERNATE NO. 3)

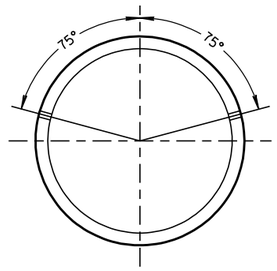

PLACEMENT OF (2) CAST-IN-PLACE INSERTS OR HOLES DURING FABRICATION FOR PIPE SECTIONS REQUIRING TIE RODS

TRANSVERSE SECTION

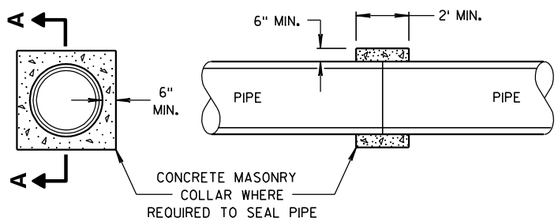

SECTION A-A

CONCRETE COLLAR DETAIL

JOINT TIES FOR CONCRETE PIPE AND CONCRETE COLLAR DETAIL

STATE OF WISCONSIN
DEPARTMENT OF TRANSPORTATION

APPROVED
6/5/2012 — DATE
/S/ Jerry H. Zogg — ROADWAY STANDARDS ENGINEER
FHWA

6

S.D.D. 8 F 4-7

6

S.D.D. 8 F 4-7

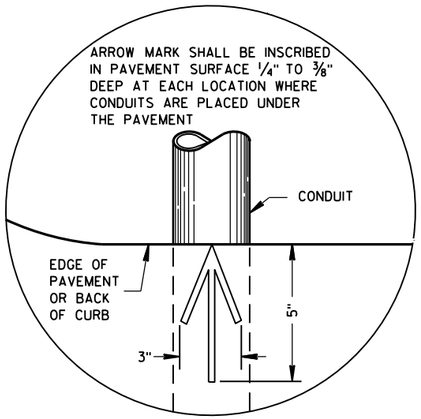

PLAN VIEW

ARROW MARK

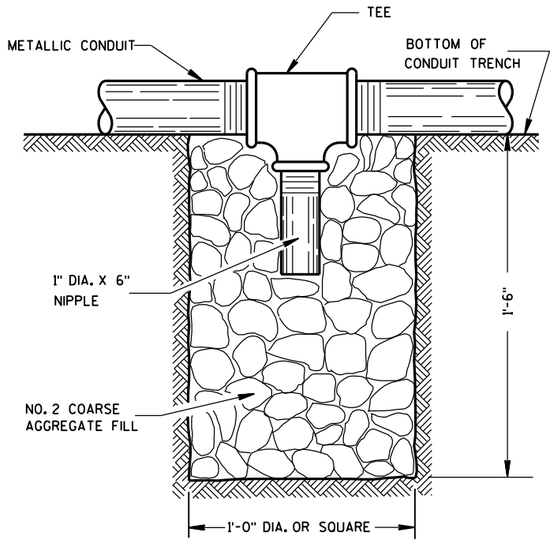

NOTE: INSTALL AT LOCATIONS WHERE METALLIC CONDUITS CANNOT BE PITCHED TO DRAIN INTO A PULL BOX.

DRAIN SUMP FOR METALLIC CONDUIT

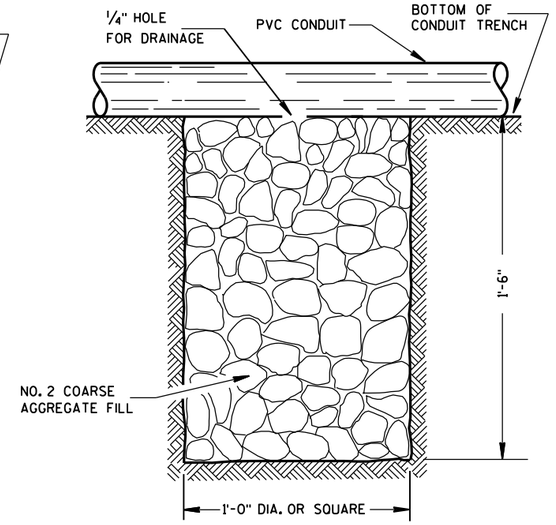

NOTE: INSTALL AT LOCATIONS WHERE PVC CONDUITS CANNOT BE PITCHED TO DRAIN INTO A PULL BOX.

DRAIN SUMP FOR PVC CONDUIT

GENERAL NOTES

DETAILS OF CONSTRUCTION, MATERIALS AND WORKMANSHIP NOT SHOWN ON THIS DRAWING SHALL CONFORM TO THE PERTINENT REQUIREMENTS OF THE CONTRACT.

METALLIC (STANDARD SPECIFICATION 652.2.2) OR NONMETALLIC (STANDARD SPECIFICATION 652.2.3) CONDUIT SHALL BE FURNISHED AND PLACED AS SHOWN.

DEPTH OF CONDUIT INSTALLED BELOW THE TRAVELED WAY SHALL BE 24 INCHES MINIMUM AND 36 INCHES MAXIMUM.

DEPTH OF CONDUIT INSTALLED THAT IS NOT BELOW THE TRAVELED WAY SHALL BE 18 INCHES MINIMUM AND 36 INCHES MAXIMUM.

ANY EXCEPTION TO THE MAXIMUM DEPTH SHALL BE ONLY WITH THE WRITTEN APPROVAL OF THE ENGINEER.

THE TRENCH SHALL NOT BE BACKFILLED PRIOR TO INSPECTION OF THE CONDUIT.

ALL METALLIC CONDUIT RACEWAY ENDS SHALL BE REAMED AND THREADED.

ALL METALLIC CONDUIT IN WHICH WIRE OR CABLE IS TO BE INSTALLED SHALL BE BUSHED WITH APPROVED THREADED BUSHINGS BEFORE INSTALLATION OF THE WIRE OR CABLE.

ALL METALLIC CONDUITS IN WHICH WIRE OR CABLE IS NOT TO BE INSTALLED SHALL BE CAPPED WITH THREADED PROTECTIVE CAPS, AS APPROVED BY THE ENGINEER.

ALL NONMETALLIC CONDUIT SHALL BE CAPPED OR PLUGGED IMMEDIATELY AFTER INSTALLATION AND SHALL REMAIN CAPPED OR PLUGGED UNTIL WIRE/CABLES ARE INSTALLED.

NONMETALLIC CONDUITS IN WHICH WIRE OR CABLE IS NOT BEING INSTALLED SHALL REMAIN CAPPED OR PLUGGED.

BENDING OF PVC ELECTRICAL CONDUIT SHALL BE ACCOMPLISHED BY USING A BLANKET OR EMERSION TYPE TANK DESIGNED FOR THE PURPOSE OF BENDING PVC ELECTRICAL CONDUIT.

ALL CUT ENDS SHALL BE TRIMMED INSIDE AND OUTSIDE TO REMOVE ALL ROUGH EDGES ON NONMETALLIC CONDUIT. (SEE NEC 347.5)

WHEN REQUIRED TO CONNECT NONMETALLIC CONDUIT TO METALLIC CONDUIT, ONLY U.L. LISTED ADAPTER FITTINGS SHALL BE USED.

PRIOR TO CONDUIT ACCEPTANCE, CONDUIT CAPS OR PLUGS SHALL BE REMOVED, AND THE CAPS, PLUGS AND CONDUIT ENDS SHALL BE THOROUGHLY CLEANED AND THEN THE CAPS OR PLUGS REINSTALLED TO ENSURE THAT THE CAPS OR PLUGS CAN BE EASILY REMOVED IN THE FUTURE.

ALL CONDUIT BEING FURNISHED AND INSTALLED SHALL HAVE THE U.L. LABEL FIRMLY ATTACHED.

CONDUIT RUNS SHALL BE THE SAME SIZE OF CONDUIT FROM ONE END TO THE OTHER (FROM PULL BOX TO PULL BOX-OR-JUNCTION BOX TO JUNCTION BOX-OR-BASE TO BASE, ETC.).

TRACER WIRE SHALL BE INSTALLED AS STATED IN THE STANDARD SPECIFICATION, ITEM 652.3.1.1.

ALL CONDUIT RUNS SHALL BE STRAIGHT (WITHOUT BENDS) FROM PULL BOX TO PULL BOX, PULL BOX TO BASE AND BASE TO BASE AS SHOWN ON THE PLANS.

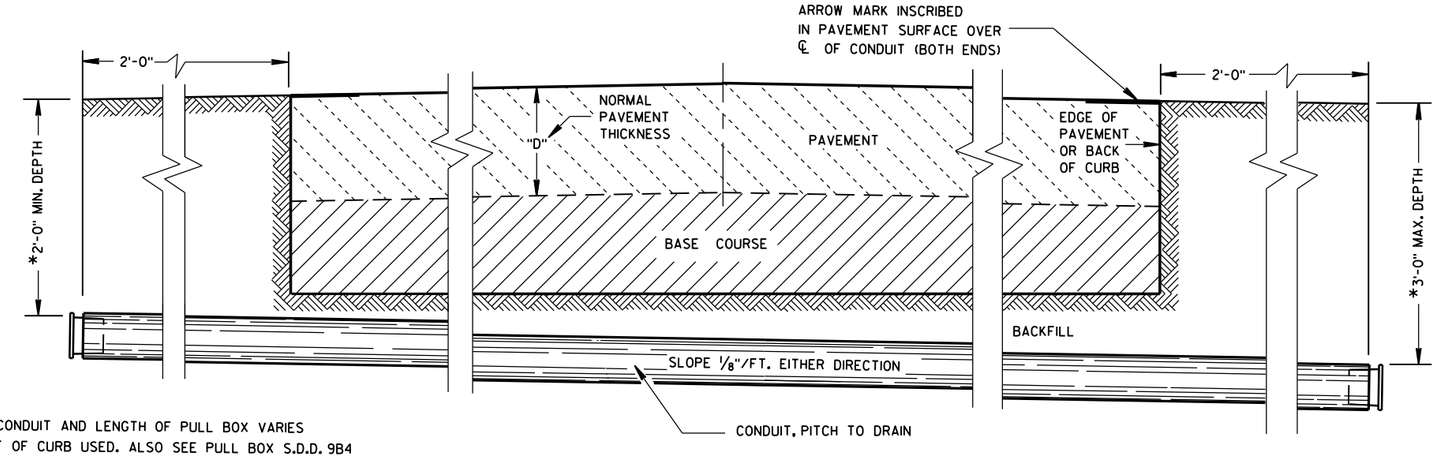

*DEPTH OF CONDUIT AND LENGTH OF PULL BOX VARIES WITH HEIGHT OF CURB USED. ALSO SEE PULL BOX S.D.D. 9B4

SIDE ELEVATION

DETAIL FOR CONDUIT UNDER PAVED HIGHWAYS

CONDUIT

STATE OF WISCONSIN
DEPARTMENT OF TRANSPORTATION

APPROVED
June, 2015 — DATE
/S/ Ahmet Demirbilek — STATE ELECTRICAL
FHWA

6

S.D.D. 9 B 2-9

TABLE OF NOMINAL DIMENSIONS AND WEIGHTS

DIMENSION IN INCHES		CORRUGATED STEEL PIPE								
PIPE DIAMETER (INSIDE)	A	12	12	12	18	18	18	24	24	24
PIPE LENGTH **	B	24	30	36	24	30	36	36	42	48
WALL THICKNESS	C	0.064	0.064	0.064	0.064	0.064	0.064	0.064	0.064	0.064
COVER	D	10 1/4	10 1/4	10 1/4	16 1/4	16 1/4	16 1/4	22 1/4	22 1/4	22 1/4
FRAME	E	14 1/2	14 1/2	14 1/2	20 1/2	20 1/2	20 1/2	26 1/2	26 1/2	26 1/2
FRAME	F	8 1/2	8 1/2	8 1/2	14 1/2	14 1/2	14 1/2	20 1/2	20 1/2	20 1/2
FRAME	G	11 1/2	11 1/2	11 1/2	17 1/2	17 1/2	17 1/2	23 1/2	23 1/2	23 1/2
WEIGHT IN POUNDS *										
FRAME AND COVER		60	60	60	110	110	110	155	155	155

* THE ACTUAL WEIGHT OF THE MANHOLE FRAME AND COVER MAY VARY WITHIN 5 PERCENT PLUS OR MINUS OF THE WEIGHTS SHOWN.

** NORMALLY USED LENGTHS. THE PROJECT ENGINEER SHALL DETERMINE IF PIPE LENGTHS, OTHER THAN THOSE SPECIFIED, SHALL BE USED, TO A MAXIMUM OF 48" (CONTINUOUS LENGTH, NON-SPLICED). THE ADDITIONAL LENGTH SHALL BE INCIDENTAL TO THE PULL BOX BID PRICE.

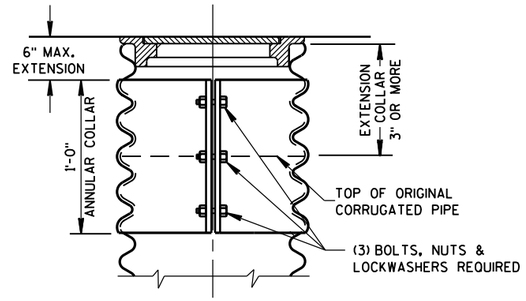

CORRUGATED PIPE EXTENDER

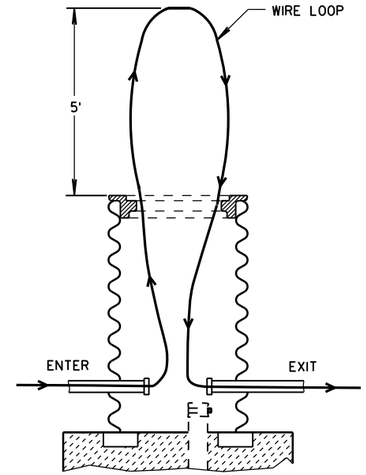

MEASUREMENT DETAIL FOR WIRE/CABLE IN THE PULL BOX

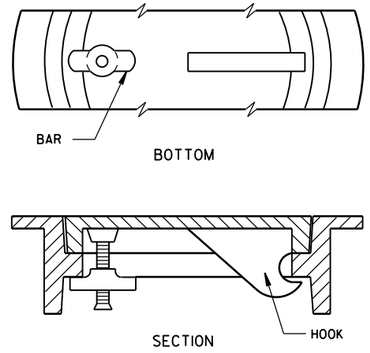

ALTERNATE COVER (LOCKING)

TIGHTENING BAR TYPE

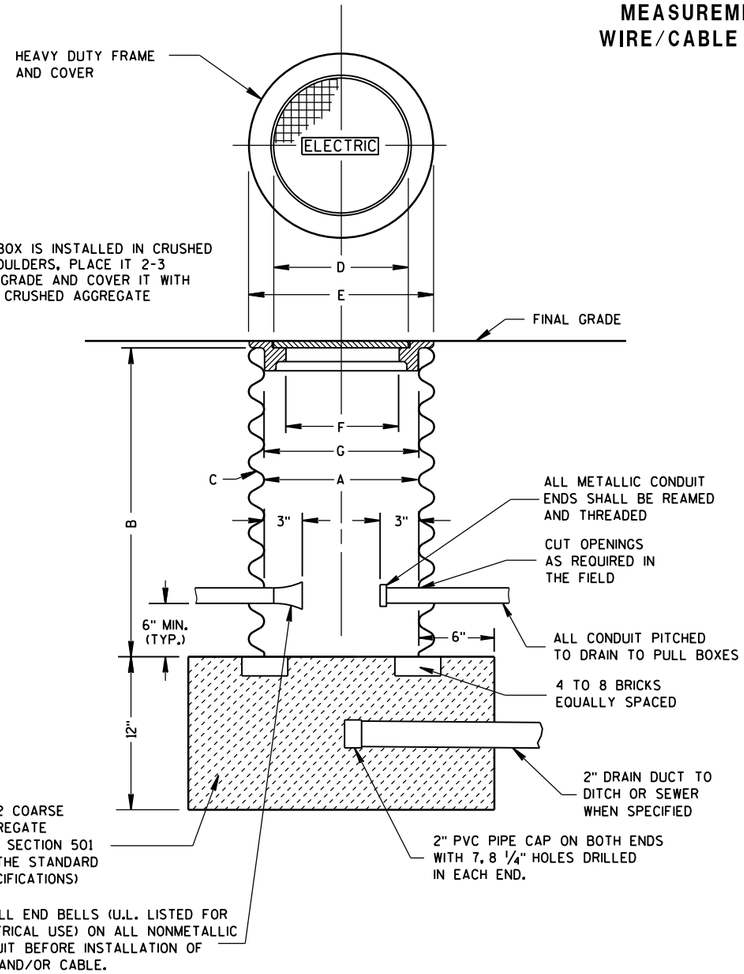

PULL BOX

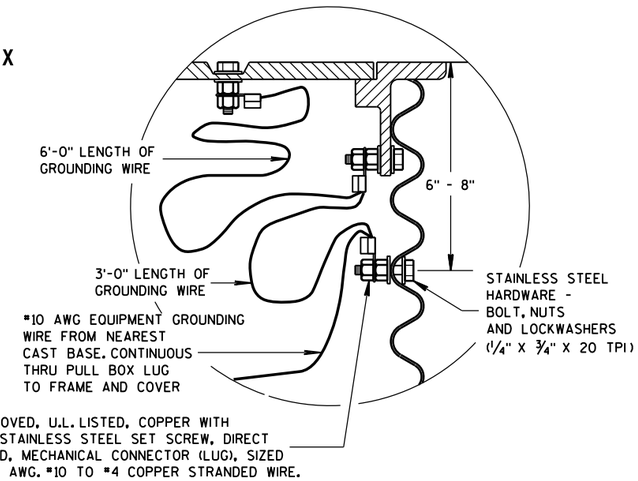

EQUIPMENT GROUNDING LUG AND LOCATION IN STEEL PULL BOXES

GENERAL NOTES

DETAILS OF CONSTRUCTION, MATERIALS AND WORKMANSHIP NOT SHOWN ON THIS DRAWING SHALL CONFORM TO THE PERTINENT REQUIREMENTS OF THE CONTRACT.

ALL FRAMES AND COVERS SHALL BE HEAVY DUTY TYPE, SUITABLE FOR VEHICULAR TRAFFIC LOADS.

PULL BOXES LOCATED IN THE ROADWAYS SHALL HAVE LOCKING COVERS.

ENTRANCE HOLES INTO PULL BOXES SHALL BE CUT WITH A CIRCULAR HOLE SAW OR HYDRAULIC CONDUIT PUNCH. HOLE SIZE SHALL BE THE OUTSIDE DIAMETER OF THE CONDUIT THAT IS TO FIT IN THE OPENING PLUS NO MORE THAN 1/4".

THE CONTRACTOR SHALL NOT INSTALL WIRE IN ANY PULL BOX UNTIL ITS INSTALLATION HAS BEEN INSPECTED AND ACCEPTED BY THE ENGINEER.

GROUNDING LUGS (MECHANICAL CONNECTORS) SHALL BE U.L. LISTED AND APPROVED FOR USE WITH COPPER WIRE.

ALL METALLIC CONDUIT IN WHICH WIRE AND/OR CABLE IS TO BE INSTALLED, SHALL BE BUSHED BEFORE INSTALLATION OF THE WIRE AND/OR CABLE.

WHEN PULL BOXES ARE INSTALLED FOR FUTURE USE, DO NOT INSTALL THE EQUIPMENT GROUNDING LUG. THE EQUIPMENT GROUNDING LUG, THE EQUIPMENT GROUNDING ELECTRODE AND THE EQUIPMENT GROUNDING CONDUCTOR SHALL BE REQUIRED AND INSTALLED UNDER A FUTURE WIRING CONTRACT.

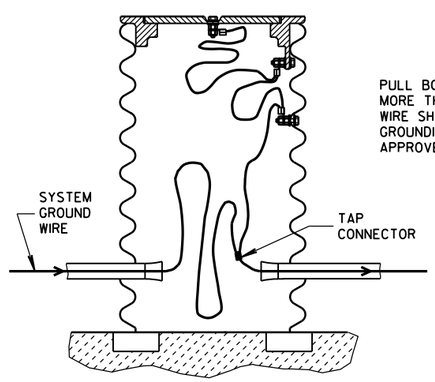

PULL BOX TO NEAREST BASE DISTANCE MORE THAN 20 FEET. PULL BOX GROUND WIRE SHALL CONNECT AT SYSTEM GROUNDING WIRE. USE DEPARTMENT APPROVED TAP CONNECTOR.

EQUIPMENT GROUNDING LUG AND LOCATION IN STEEL PULL BOXES

PULL BOX

STATE OF WISCONSIN
DEPARTMENT OF TRANSPORTATION

APPROVED
Sept. 2014 — DATE
/S/ Ahmet Demirbilek — STATE ELECTRICAL
FHWA

6

S.D.D. 9 B 4-11

GENERAL NOTES

DETAILS OF CONSTRUCTION, MATERIALS AND WORKMANSHIP NOT SHOWN ON THIS DRAWING SHALL CONFORM TO THE PERTINENT REQUIREMENTS OF THE CONTRACT.

FOUR (4) BOLTS SHALL BE FURNISHED WITH EACH TRANSFORMER BASE. BOLTS SHALL BE 1" DIAMETER, 4" IN LENGTH, WITH WASHERS, LOCK WASHERS AND NUTS. BOLTS, NUTS AND WASHERS SHALL BE MANUFACTURED IN ACCORDANCE WITH SECTION 641.2.2 OF THE STANDARD SPECIFICATIONS.

LEVELING SHIMS, IF NEEDED, SHALL BE DESIGNED FOR THE PURPOSE AND USED UNDER CAST BASES WHEN PLUMBING POLES OR STANDARDS DURING INSTALLATION. THE USE OF WASHERS IN LIEU OF PROPER LEVELING SHIMS IS NOT ACCEPTABLE.

SHIM LENGTH SHALL BE LONG ENOUGH TO COMPLETELY COVER THE AREA UNDER THE LENGTH AND WIDTH OF THE BASE MOUNTING FLANGE.

DOUBLE NUTTING IS NOT ACCEPTABLE FOR LEVELING OR MOUNTING PURPOSES.

A NEMA APPROVED, U.L. LISTED, COPPER WITH BRASS OR STAINLESS STEEL SET SCREW, DIRECT BURY RATED, MECHANICAL CONNECTOR (LUG), SIZED TO ACCEPT AWG. #10 TO #4 COPPER STRANDED WIRE SHALL BE FURNISHED AND INSTALLED IN THE PEDESTAL AND TRANSFORMER BASES.

THE MECHANICAL CONNECTOR SHALL BE INSTALLED USING A 1/4" - 20 (TPI) STAINLESS STEEL HEX HEAD BOLT OF SUFFICIENT LENGTH TO FIRMLY ATTACH THE LUG TO THE BASE.

SHOULD THE MANNER OF ATTACHMENT OF THE LUG REQUIRE WASHERS, HEX NUTS, LOCK WASHER - THEY SHALL BE STAINLESS STEEL AS IS THE BOLT. THE MANNER OF ATTACHMENT SHALL NOT BLOCK ACCESSIBILITY TO WIRE PLACEMENT IN THE CONNECTOR.

PEDESTAL BASE COLLAR THREADING SHALL BE TAPERED AND IN ACCORDANCE WITH NATIONAL PIPE THREADING DIMENSIONS.

BASE COLLAR THREADING SHALL EXTEND INTO THE BASE COLLAR WITH SUFFICIENT DEPTH TO ACCEPT THE INSTALLATION OF TRAFFIC SIGNAL STANDARDS TO A DEPTH OF 1 1/2", THEN TIGHTENING TO A POINT OF BEING IMMOVABLE.

THE ACCESS DOOR SHALL BE OF THE SAME MATERIAL AS THE BASE.

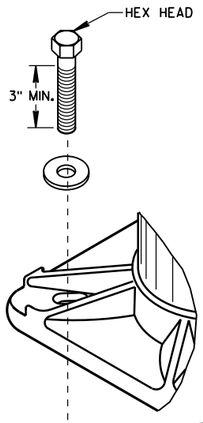

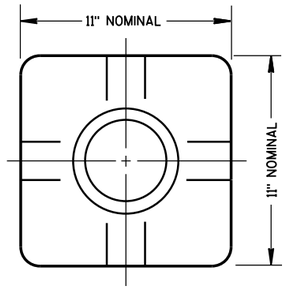

TOP VIEW
(PEDESTAL BASE)

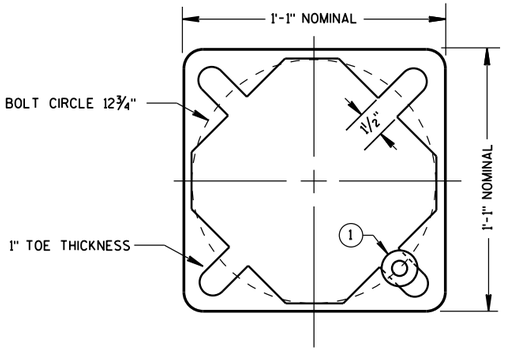

BOTTOM VIEW
(PEDESTAL BASE)

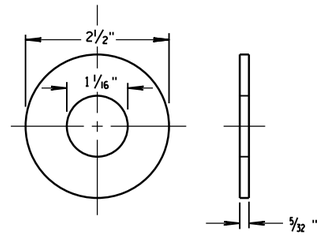

ZINC COATED STEEL WASHER
TO BE PROVIDED BY THE CONTRACTOR

PEDESTAL BASE WASHER (1)

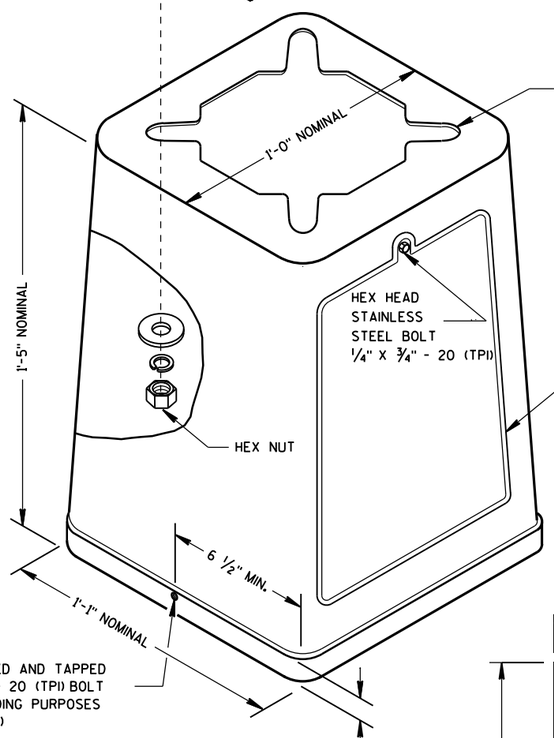

ISOMETRIC VIEW

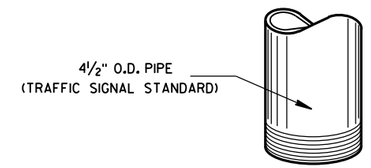

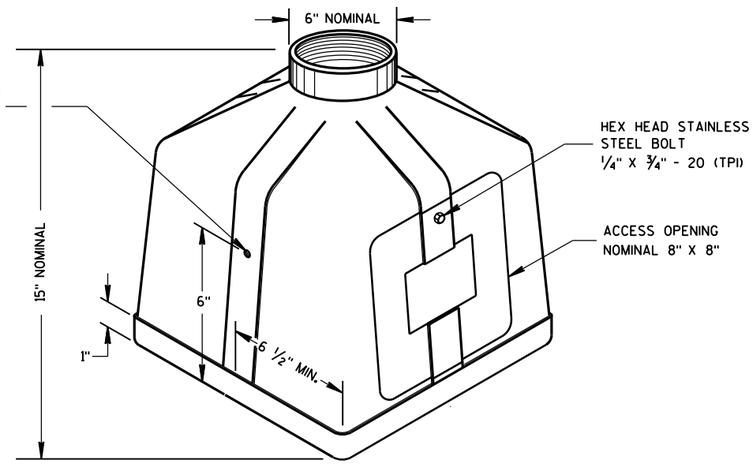

ISOMETRIC VIEW

PEDESTAL BASE

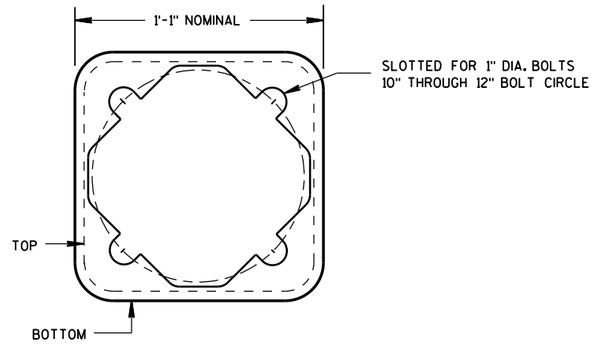

BOTTOM VIEW
(TRANSFORMER BASE)

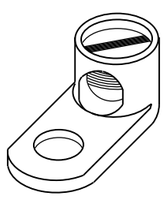

TYPICAL MECHANICAL CONNECTOR LUG

TO BE FURNISHED WITH EACH BASE

TRANSFORMER BASE

INTENDED FOR USE WITH TYPE 2, 3, 4, 5 & 6 POLES

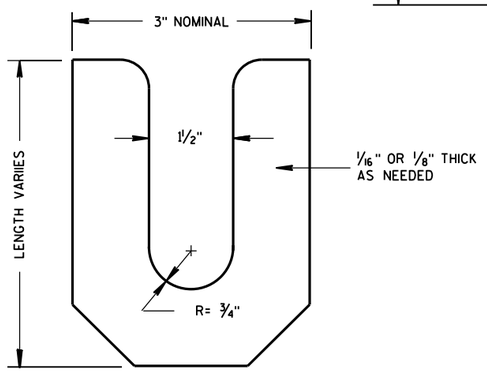

LEVELING SHIM

TRANSFORMER/PEDESTAL BASES

STATE OF WISCONSIN
DEPARTMENT OF TRANSPORTATION

APPROVED
Sept. 2014 — DATE
/S/ Ahmet Demirbilek — STATE ELECTRICAL
FHWA

6
S.D.D. 9 C 3-4

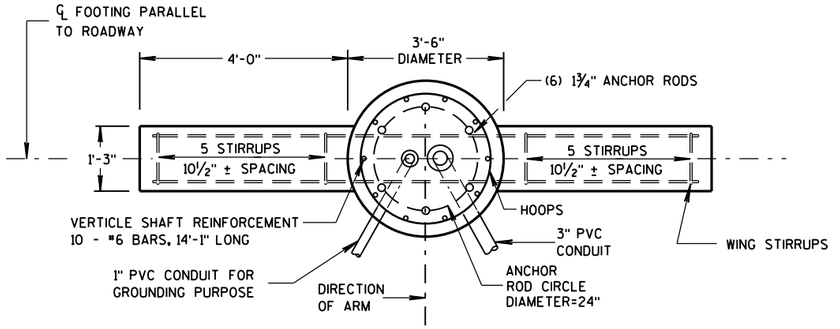

PLAN VIEW

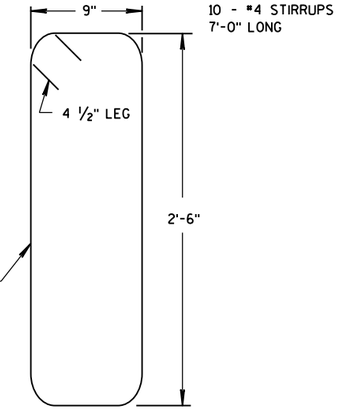

WING STIRRUP

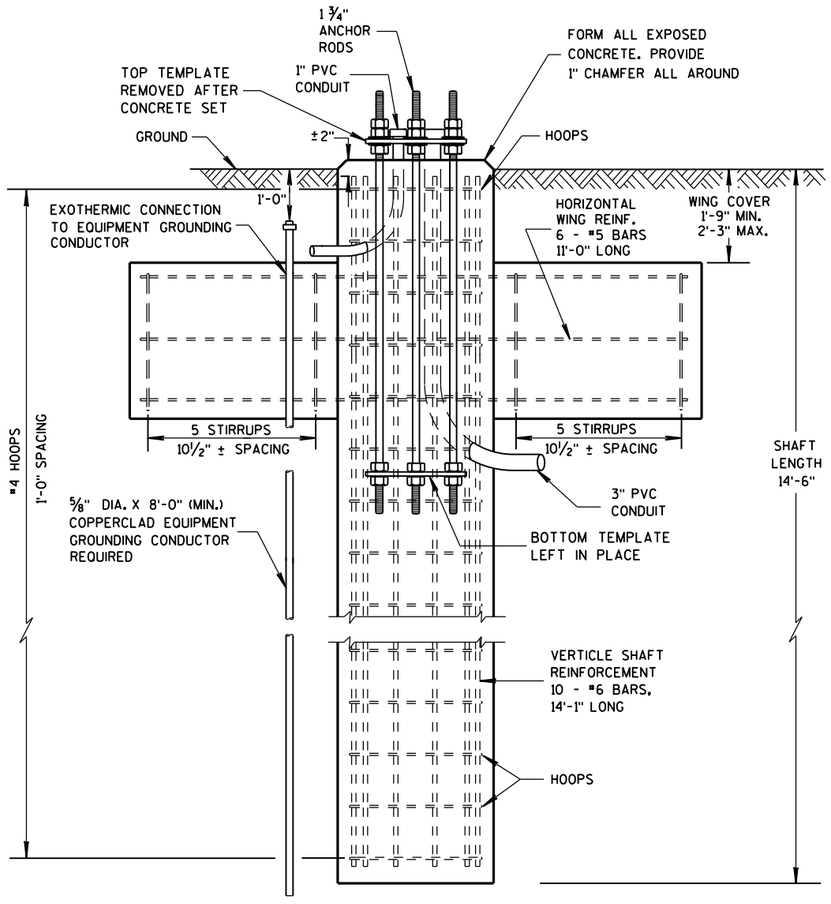

ELEVATION VIEW

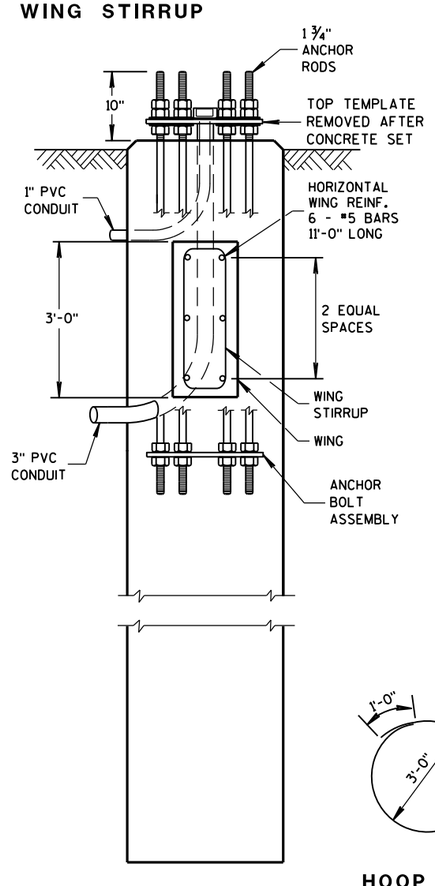

SIDE VIEW

DOES NOT SHOW HOOPS OR VERTICAL SHAFT REINFORCEMENT

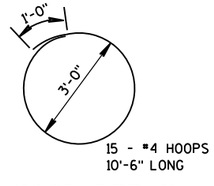

15 - #4 HOOPS 10'-6" LONG

HOOP DETAIL

GENERAL NOTES

DETAILS OF CONSTRUCTION, MATERIALS AND WORKMANSHIP NOT SHOWN ON THIS DRAWING SHALL CONFORM TO THE PERTINENT REQUIREMENTS OF THE CONTRACT.

ORIENT ANCHOR RODS IN FOOTING AND PROVIDE ANCHOR ROD PROJECTION ABOVE TOP OF CONCRETE FOOTING BASE PER THIS SHEET.

BENDING DIMENSIONS FOR REINFORCING BARS ARE OUT TO OUT.

USE 3" CLEAR FOR ALL REINFORCEMENT UNLESS NOTED OTHERWISE.

THE CONTRACTOR IS RESPONSIBLE FOR MAKING HIS OWN DETERMINATION AS TO THE TYPE AND LOCATION OF THE UNDERGROUND UTILITIES AS MAY BE NECESSARY TO AVOID DAMAGE THERETO.

WELDING OF ANCHOR RODS TO THE CAGE IS UNACCEPTABLE. TEMPLATES SHALL BE USED.

BASES (SHAFT), BELOW THE WING, SHALL BE EXCAVATED BY THE USE OF A CIRCULAR AUGER. IF A BASE REQUIRES A DEEP FORM BECAUSE OF LOOSE SOIL, THE FORM SHALL BE REMOVED BEFORE BACKFILLING AROUNG THE BASE. BACKFILL SHALL BE TAMPED TIGHT AGAINST THE BARE CONCRETE BASE IN LAYERS OF 1 FOOT OR LESS.

TOP SURFACE OF THE CONCRETE BASE SHALL BE TROWEL FINISHED AND LEVEL.

CONDUIT SIZE AND LOCATIONS SHALL BE AS SHOWN ON THE PLANS.

MINIMUM BENDING RADIUS OF CONDUIT IS EQUAL TO 6 X THE DIAMETER.

CONDUIT HEIGHT ABOVE CONCRETE BASE SHALL BE 4½" INCHES. ALL METALLIC CONDUIT ENDS SHALL BE REAMED AND THREADED. NONMETALLIC CONDUIT SHALL HAVE BELL ENDS INSTALLED. ALL CONDUIT SHALL SLOPE TO PULL BOX.

ALL CONDUIT ENDS AT THE TOP OF THE BASES SHALL BE CAPPED IF METALLIC OR PLUGGED IF NONMETALLIC IMMEDIATELY AFTER PLACEMENT AND BEFORE CONCRETE IS POURED. CONDUITS IN WHICH WIRE OR CABLE IS NOT INSTALLED SHALL REMAIN CAPPED OR PLUGGED.

BELL ENDS SHALL BE INSTALLED ON ALL PVC CONDUIT EXPOSED AT THE TOP OF CONCRETE BASES BEFORE INSTALLATION OF CABLE OR WIRE.

WHEN REQUIRED TO CONNECT NONMETALLIC CONDUIT TO METALLIC CONDUIT, ONLY ADAPTOR FITTINGS, UL LISTED FOR ELECTRICAL USE, SHALL BE USED.

A NO. 4 AWG, STRANDED COPPER EQUIPMENT GROUNDING CONDUCTOR SHALL BE EXOTHERMICALLY WELDED TO THE EQUIPMENT GROUNDING ELECTRODE (GROUND ROD).

THE EQUIPMENT GROUNDING CONDUCTOR SHALL BE FURNISHED AND INSTALLED TO ENTER THE BASE THROUGH A 1-INCH CONDUIT INSTALLED FOR GROUNDING PURPOSES, LEAVING A 4-FOOT COIL OF WIRE ABOVE THE CONCRETE BASE, THE EQUIPMENT GROUNDING CONDUCTOR SHALL BE NEATLY COILED AND THE COILS TIED TOGETHER.

BAR STEEL REINFORCEMENT SHALL BE COATED WITH POWDERED EPOXY RESIN IN ACCORDANCE WITH SECTION 505 OF THE STANDARD SPECIFICATIONS.

THE MINIMUM DEPTH OF CONDUIT EXITING THE CONCRETE BASE AND INSTALLED BELOW THE TRAVEL WAY SHALL BE 24-INCHES. THE MINIMUM DEPTH OF CONDUIT EXITING THE CONCRETE BASE THAT IS NOT INSTALLED BELOW THE TRAVELED WAY SHALL BE 18-INCHES. THE MAXIMUM DEPTH OF ALL CONDUIT SHALL BE 36-INCHES, (GREATER THAN 36-INCHES IF INSTALLED IN BREAKER-RUN), EXCEPT WITH THE WRITTEN APPROVAL OF THE ENGINEER.

ANCHOR RODS SHALL BE INSTALLED WITH MISALIGNMENTS OF LESS THAN 1:40 FROM VERTICAL.

CONCRETE MASONRY	fc=3,500 p.s.i.
HIGH STRENGTH BAR STEEL REINFORCEMENT, GRADE 60	fy=60,000 p.s.i.
ANCHOR RODS, ASTM F1554 GRADE 55 (IN ACCORDANCE WITH SECTION 641.2.2.3 OF THE STANDARD SPECIFICATIONS	fy=55,000 p.s.i.
TEMPLATES, ASTM A709 GRADE 36	fy=36,000 p.s.i.

(FOR TYPE 12 & 13 POLES)

CONCRETE = 6.3 C.Y.
H.S. REINFORCEMENT = 433 LBS.

TO BE USED WHEN GROUND ELEVATION AT BASE EQUALS OR IS GREATER THAN HIGH POINT OF ROADWAY ELEVATION.
SEE S.D.D. 9C13-2 WHEN GROUND ELEVATION AT BASE IS LOWER THAN HIGH POINT OF ROADWAY ELEVATION.

CONCRETE BASE TYPE 13

STATE OF WISCONSIN
DEPARTMENT OF TRANSPOI

6

S.D.D. 9 C 12-8a
S.D.D. 9 C 12-8a

REINFORCEMENT AND CONCRETE QUANTITIES
ADJUSTED FOR EXTENDED TYPE 10 CONCRETE BASE

HEIGHT INCREASE REQUIRED	* HEIGHT ABOVE GROUND SURFACE ON LOW SIDE (MAXIMUM)	SHAFT LENGTH	LENGTH OF #6 VERTICAL REINF.	NO. OF #4 HOOPS	C.Y. OF CONCRETE	LBS. OF HOOP BAR STEEL	LBS. OF VERTICAL BAR STEEL
>0" TO 6"	10"	14'-6"	14'-1"	16	2.6	78	127
>6" TO 1'-0"	1'-4"	15'-0"	14'-7"	16	2.7	78	131
>1'-0" TO 1'-6"	1'-10"	15'-6"	15'-1"	17	2.8	83	136
>1'-6" TO 2'-0"	2'-4"	16'-0"	15'-7"	17	2.9	83	141

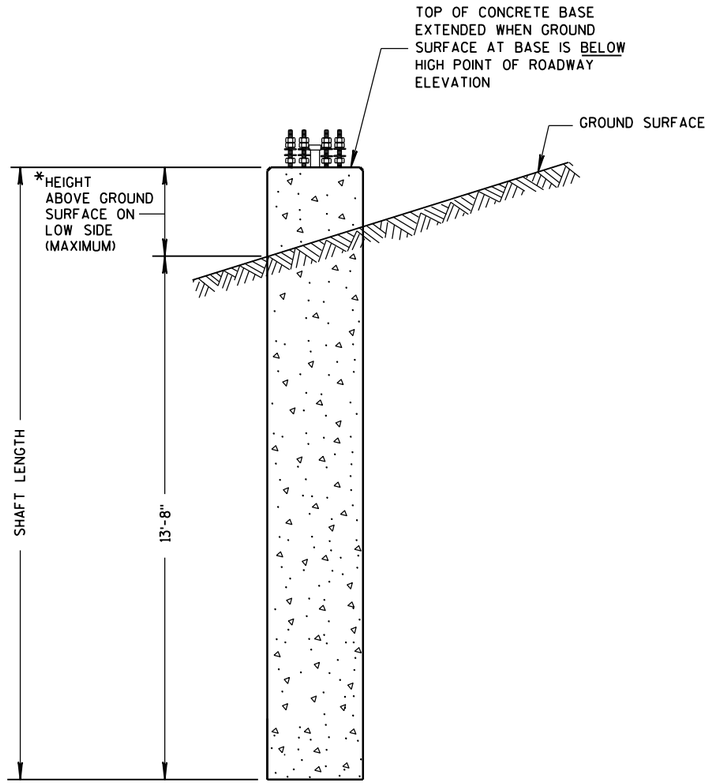

CONCRETE BASE TYPE 10 (EXTENDED)

REINFORCEMENT AND CONCRETE QUANTITIES
ADJUSTED FOR EXTENDED TYPE 13 CONCRETE BASE

HEIGHT INCREASE REQUIRED	* HEIGHT ABOVE GROUND SURFACE ON LOW SIDE (MAXIMUM)	SHAFT LENGTH	LENGTH OF #6 VERTICAL REINF.	NO. OF #4 HOOPS	C.Y. OF CONCRETE	LBS. OF H.S. BAR STEEL
>0" TO 6"	10"	15'-0"	14'-7"	16	6.5	447
>6" TO 1'-0"	1'-4"	15'-6"	15'-1"	16	6.6	454
>1'-0" TO 1'-6"	1'-10"	16'-0"	15'-7"	17	6.8	469
>1'-6" TO 2'-0"	2'-4"	16'-6"	16'-1"	17	7.0	476

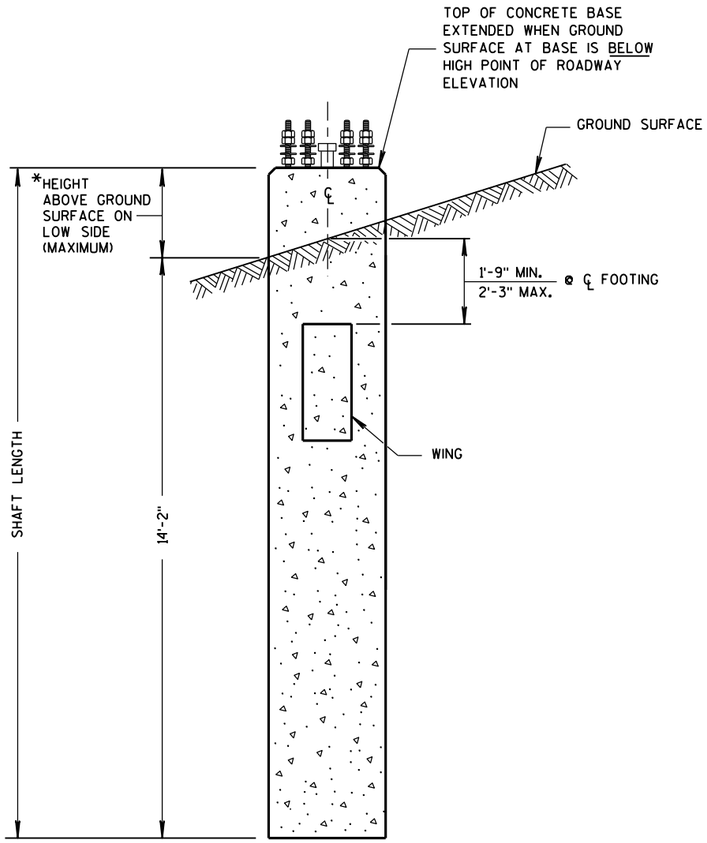

CONCRETE BASE TYPE 13 (EXTENDED)

CONCRETE BASE
TYPE 10 & TYPE 13 EXTENSION

STATE OF WISCONSIN
DEPARTMENT OF TRANSPORTATION

APPROVED
11-26-2013 DATE
/S/ Ahmet Demirbilek STATE ELECTRICAL
FHWA

6

S.D.D. 9 C 13-2

6

S.D.D. 9 C 13-2

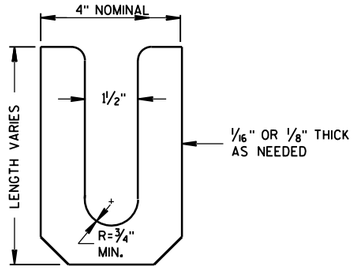

LEVELING SHIM (13)

SHALL BE ALUMINUM

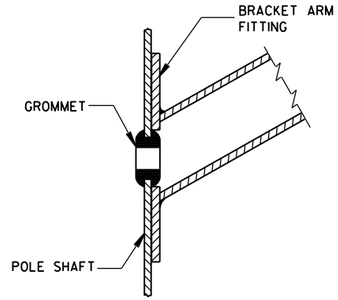

TYPICAL APPLICATION OF GROMMET IN POLE SHAFT

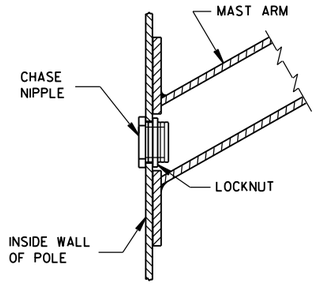

TYPICAL APPLICATION OF CHASE NIPPLE IN POLE SHAFT

GENERAL NOTES

CLAMP BOLT-NUT TIGHTENING TORQUE SHALL BE INDICATED BY INDENT STAMPING (1/2 INCH NUMERALS AND LETTERS) OR WEATHERPROOF PRINTING ON THE INSIDE OF THE CLAMP THAT IS WELDED TO THE ARM MEMBER.

(10) 4.5" I.D. FOR LUMINAIRE MAST ARM CLAMP.
6.625" I.D. FOR TROMBONE MAST ARM CLAMP.

(11) INDIVIDUAL BASE PLATE ANCHOR ROD COVERS. (4 REQUIRED)

(12) BASE PLATE SLOTTED TO ACCEPT 11" THROUGH 12" BOLT CIRCLE USING 1" DIAMETER ANCHOR RODS.

(13) LEVELING SHIMS, DESIGNED FOR THE PURPOSE, SHALL BE USED WHEN PLUMBING POLES. THE USE OF WASHERS IN LIEU OF PROPER LEVELING SHIMS IS NOT ACCEPTABLE. LEVELING SHIMS SHALL BE USED ONLY BETWEEN THE TOP OF THE CONCRETE BASE AND A METALLIC BASE PLATE.

SHIMS SHALL BE LONG ENOUGH AND WIDE ENOUGH TO COMPLETELY COVER THE AREA UNDER THE LENGTH AND WIDTH OF THE BASE MOUNTING FLANGE.

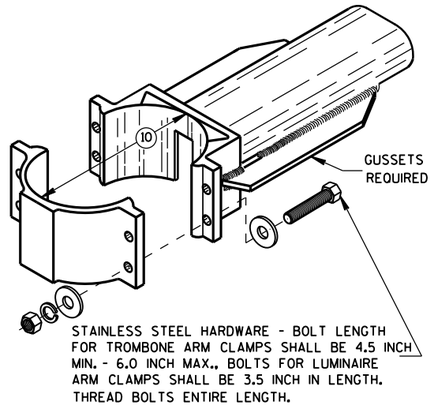

TYPICAL TROMBONE MAST ARM AND SINGLE LUMINAIRE MAST ARM MOUNTING CLAMP

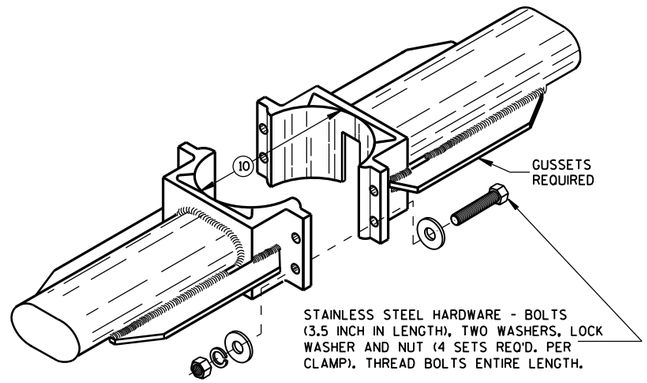

TYPICAL LUMINAIRE MAST ARM (DOUBLE) MOUNTING BRACKETS

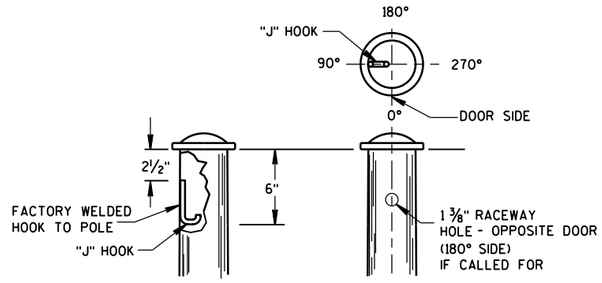

TYPICAL "J" HOOK LOCATION

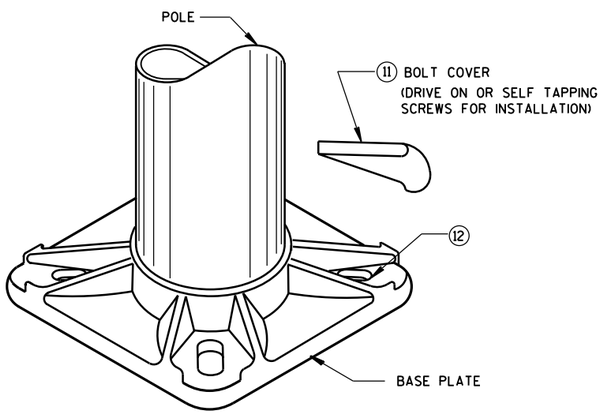

BASE PLATE

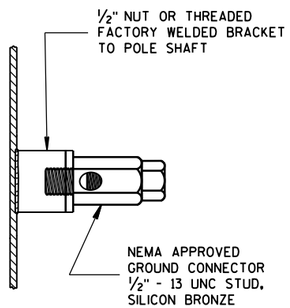

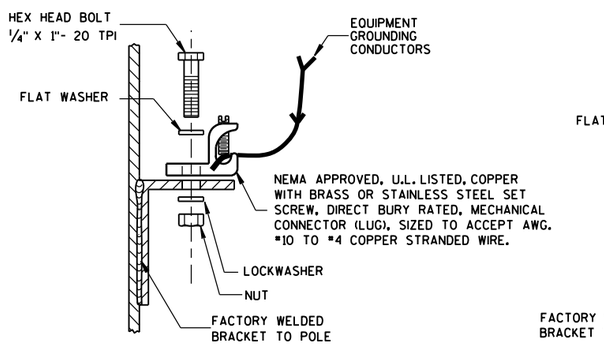

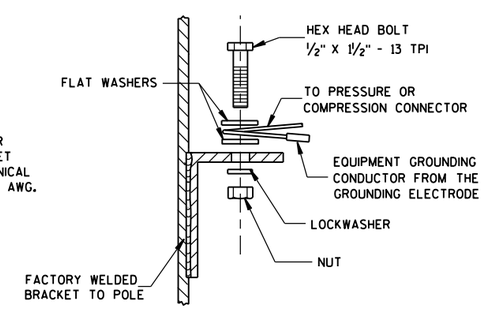

TYPICAL GROUNDING CONNECTIONS

NUT, BOLT AND WASHERS SHALL BE STAINLESS STEEL

HARDWARE DETAILS FOR POLE MOUNTINGS

STATE OF WISCONSIN
DEPARTMENT OF TRANSPORTATION

APPROVED
Feb. 2015 — DATE
/S/ Ahmet Demirbilek — STATE ELECTRICAL
FHWA

6
S.D.D. 9 E 1-14g

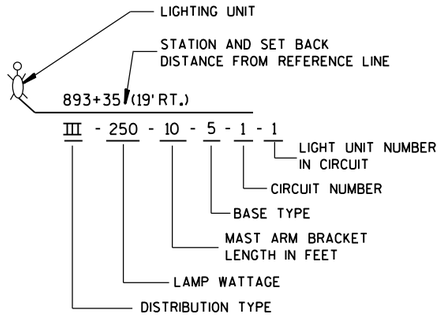

LIGHTING UNIT CODE
(TYPICAL)

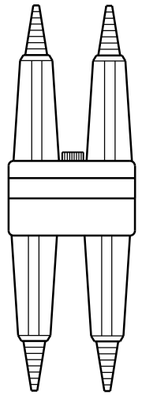

DETAIL "A"
BREAKAWY DOUBLE POLE WITH WATERPROOF INSULATING BOOT

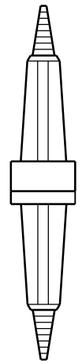

DETAIL "B"
BREAKAWY SINGLE POLE WITH WATERPROOF INSULATING BOOT

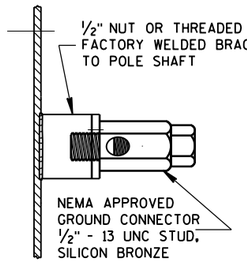

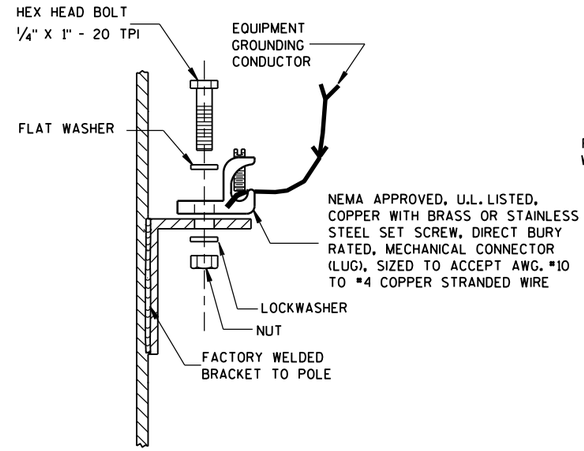

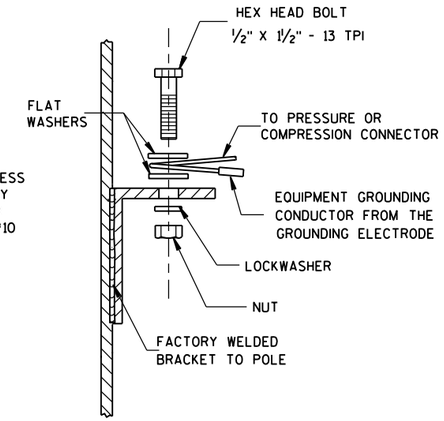

TYPICAL GROUNDING CONNECTIONS
NUT, BOLT, WASHERS AND LOCKWASHERS SHALL BE STAINLESS STEEL

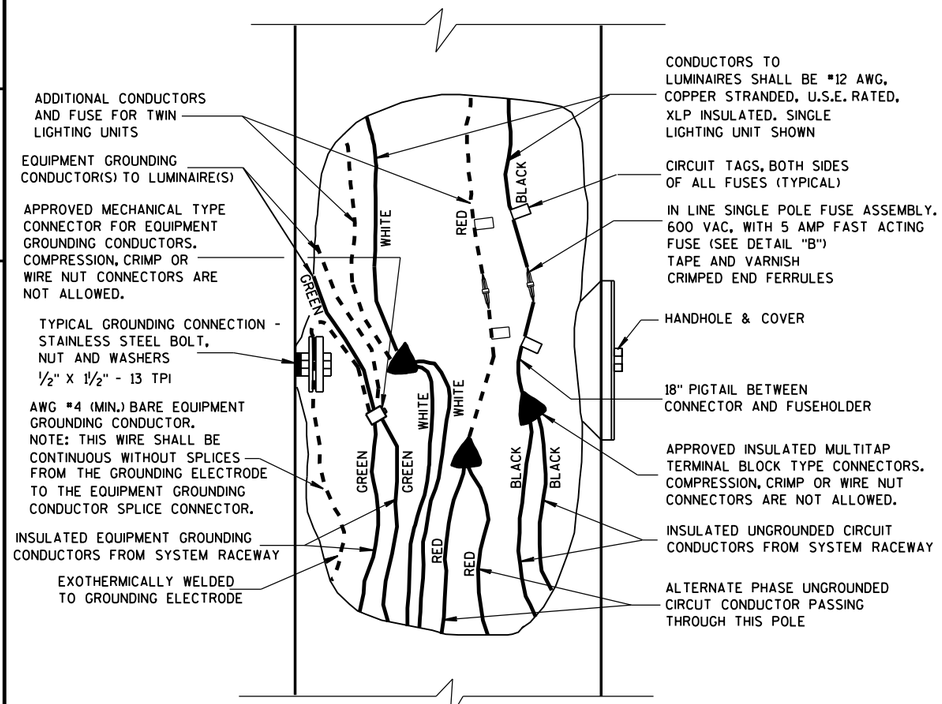

3 WIRE - 120, 240 OR 480 VAC (UNGROUNDED CONDUCTOR) WITH GROUNDED CONDUCTOR AND WITH EQUIPMENT GROUNDING CONDUCTOR

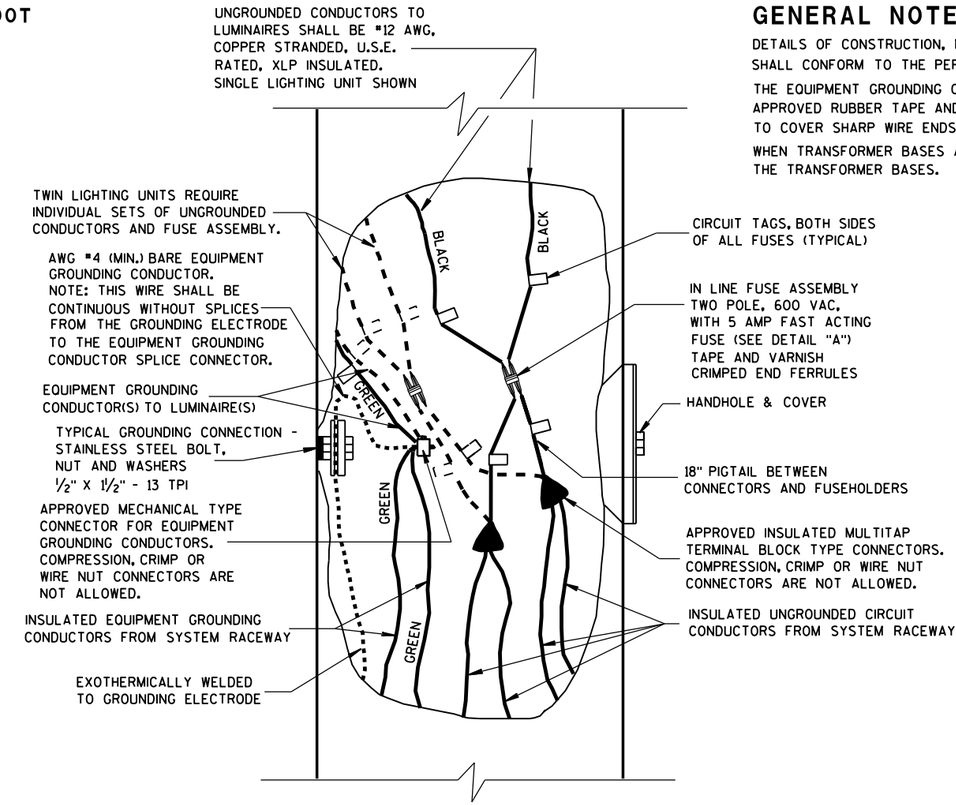

2 WIRE - 240 OR 480 VAC (UNGROUNDED CONDUCTORS) WITH EQUIPMENT GROUNDING CONDUCTOR

GENERAL NOTES

DETAILS OF CONSTRUCTION, MATERIALS AND WORKMANSHIP NOT SHOWN ON THIS DRAWING SHALL CONFORM TO THE PERTINENT REQUIREMENTS OF THE CONTRACT.

THE EQUIPMENT GROUNDING CONNECTOR SHALL BE TAPED WITH 3 WRAPS (MINIMUM) OF APPROVED RUBBER TAPE AND THEN 3 WRAPS (MINIMUM) OF APPROVED VINYL TAPE TO COVER SHARP WIRE ENDS AFTER THE CONNECTION IS COMPLETED.

WHEN TRANSFORMER BASES ARE USED, ALL WIRING CONNECTIONS SHALL OCCUR WITHIN THE TRANSFORMER BASES.

NON-FREEWAY LIGHTING UNIT POLE WIRING

STATE OF WISCONSIN
DEPARTMENT OF TRANSPORTATION

APPROVED
Sept. 2014 — DATE
/S/ Ahmet Demirbilek — STATE ELECTRICAL
FHWA

6
S.D.D. 9 E 3-5

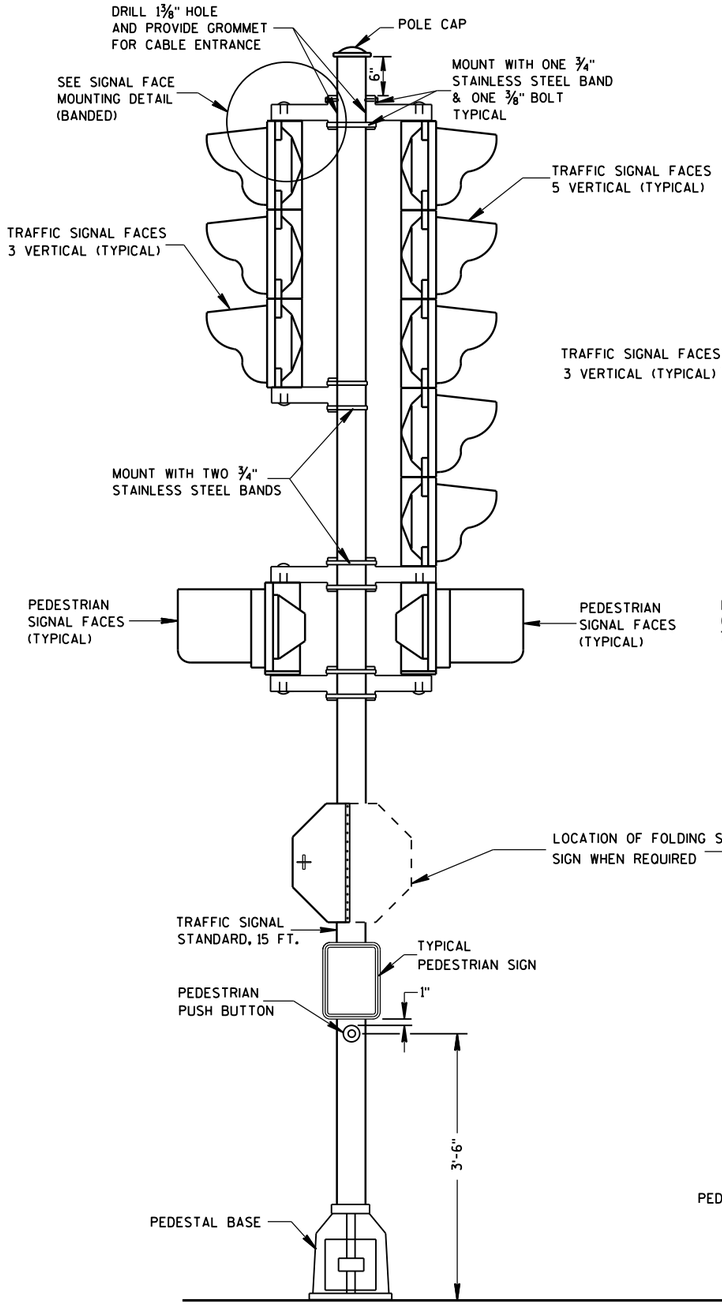

TRAFFIC SIGNAL STANDARD-15 FT.

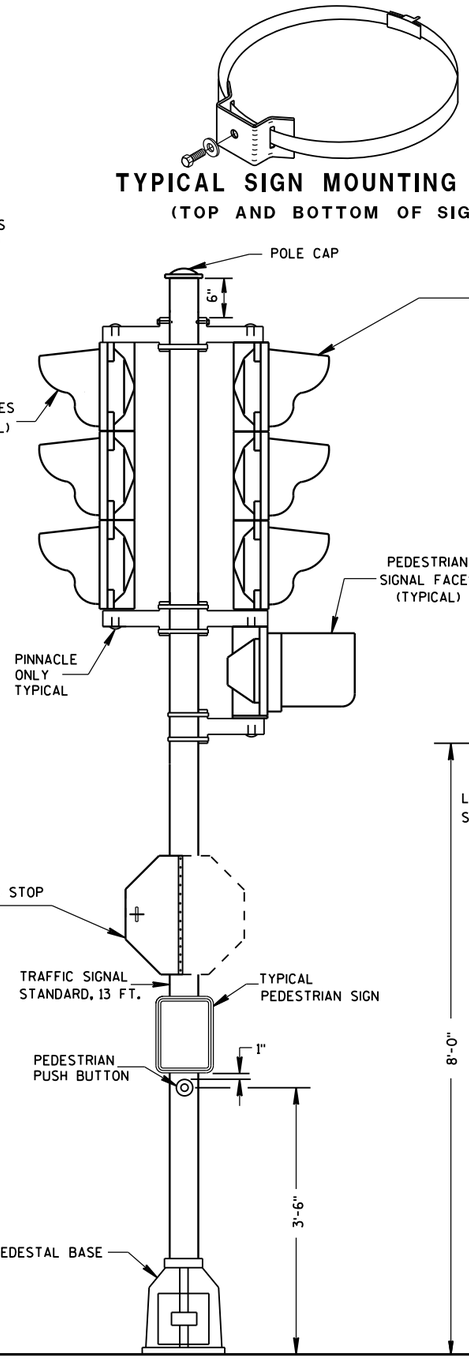

TRAFFIC SIGNAL STANDARD-13 FT.

TYPICAL SIGN MOUNTING BAND
(TOP AND BOTTOM OF SIGN)

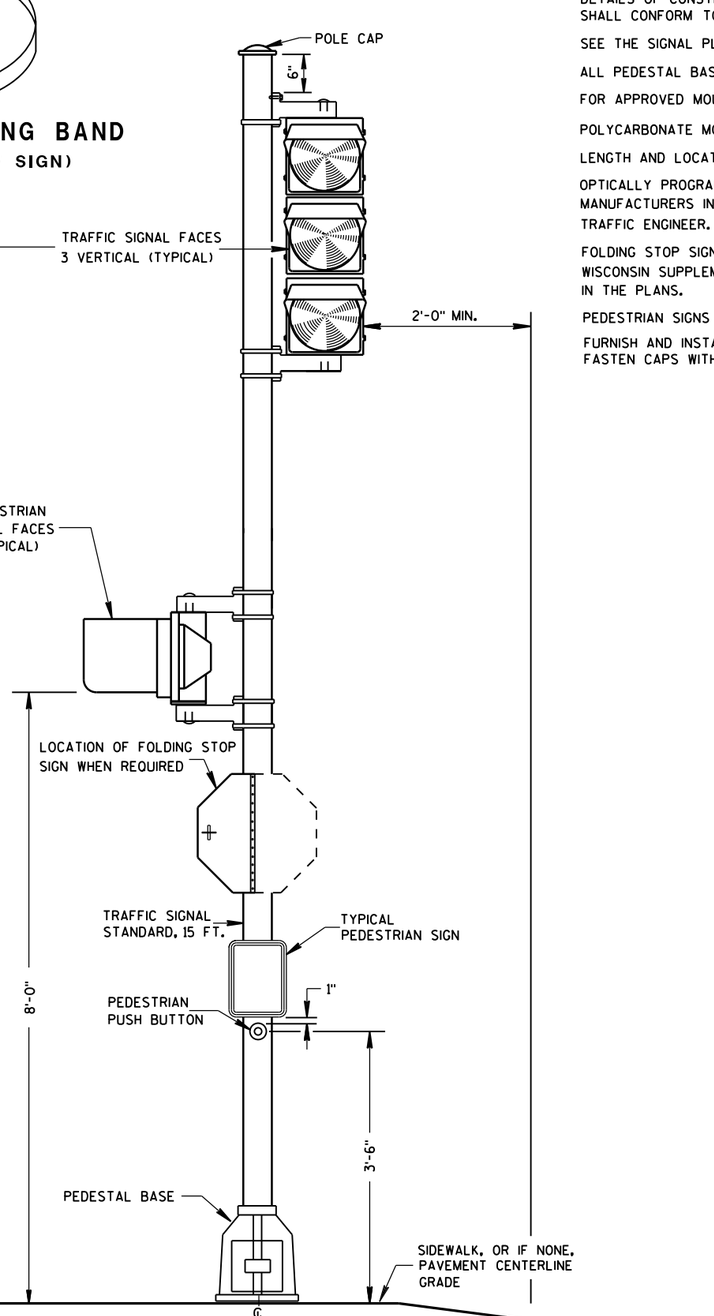

TRAFFIC SIGNAL STANDARD-15 FT.
3M MOUNTING (TYPICAL)

GENERAL NOTES

DETAILS OF CONSTRUCTION, MATERIALS AND WORKMANSHIP NOT SHOWN ON THIS DRAWING SHALL CONFORM TO THE PERTINENT REQUIREMENTS OF THE CONTRACT.

SEE THE SIGNAL PLAN FOR REQUIRED SIGNAL FACE SIZES.

ALL PEDESTAL BASES SHALL BE MOUNTED ON CONCRETE BASE - TYPE 1.

FOR APPROVED MOUNTING HARDWARE, SEE THE CONTRACT SPECIAL PROVISIONS.

POLYCARBONATE MOUNTING BRACKETS SHALL BE USED.

LENGTH AND LOCATION OF TRAFFIC SIGNAL STANDARDS SHALL BE AS SHOWN ON THE PLANS.

OPTICALLY PROGRAMMED SIGNAL FACES SHALL BE MASKED IN ACCORDANCE WITH MANUFACTURERS INSTRUCTIONS, AND UNDER THE DIRECTIONS OF THE REGION TRAFFIC ENGINEER.

FOLDING STOP SIGNS SHALL BE IN ACCORDANCE WITH THE MUTCD AND/OR THE LATEST WISCONSIN SUPPLEMENT. THE SIGNS SHALL BE SIZED AND LOCATED AS CALLED FOR IN IN THE PLANS.

PEDESTRIAN SIGNS SHALL BE AS DESIGNATED IN THE PLANS.

FURNISH AND INSTALL VENTILATED, CAST, METALLIC (ALUMINUM ALLOY) CAPS. FASTEN CAPS WITH ONE (1) ¼" X ¾" - 20 TPI STAINLESS STEEL, HEX HEAD BOLT.

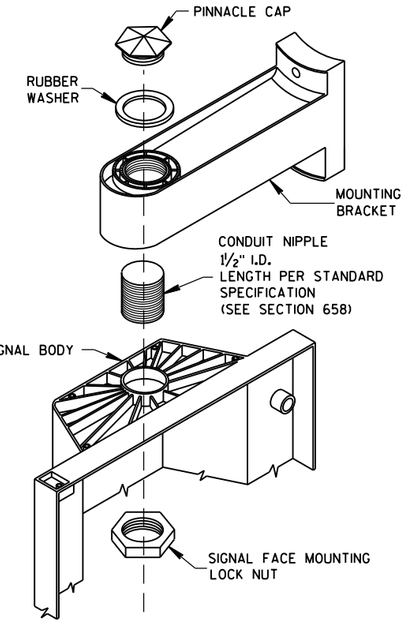

SIGNAL FACE MOUNTING DETAIL
(BANDED)

TRAFFIC SIGNAL STANDARD
POLY BRACKET MOUNTINGS
(TYPICAL) 13 FT. OR 15 FT.

STATE OF WISCONSIN
DEPARTMENT OF TRANSPORTATION

APPROVED
2/28/2013 — DATE
/S/ Ahmet Demirbilek — STATE ELECTRICAL
FHWA

6

S.D.D. 9 E 6-5

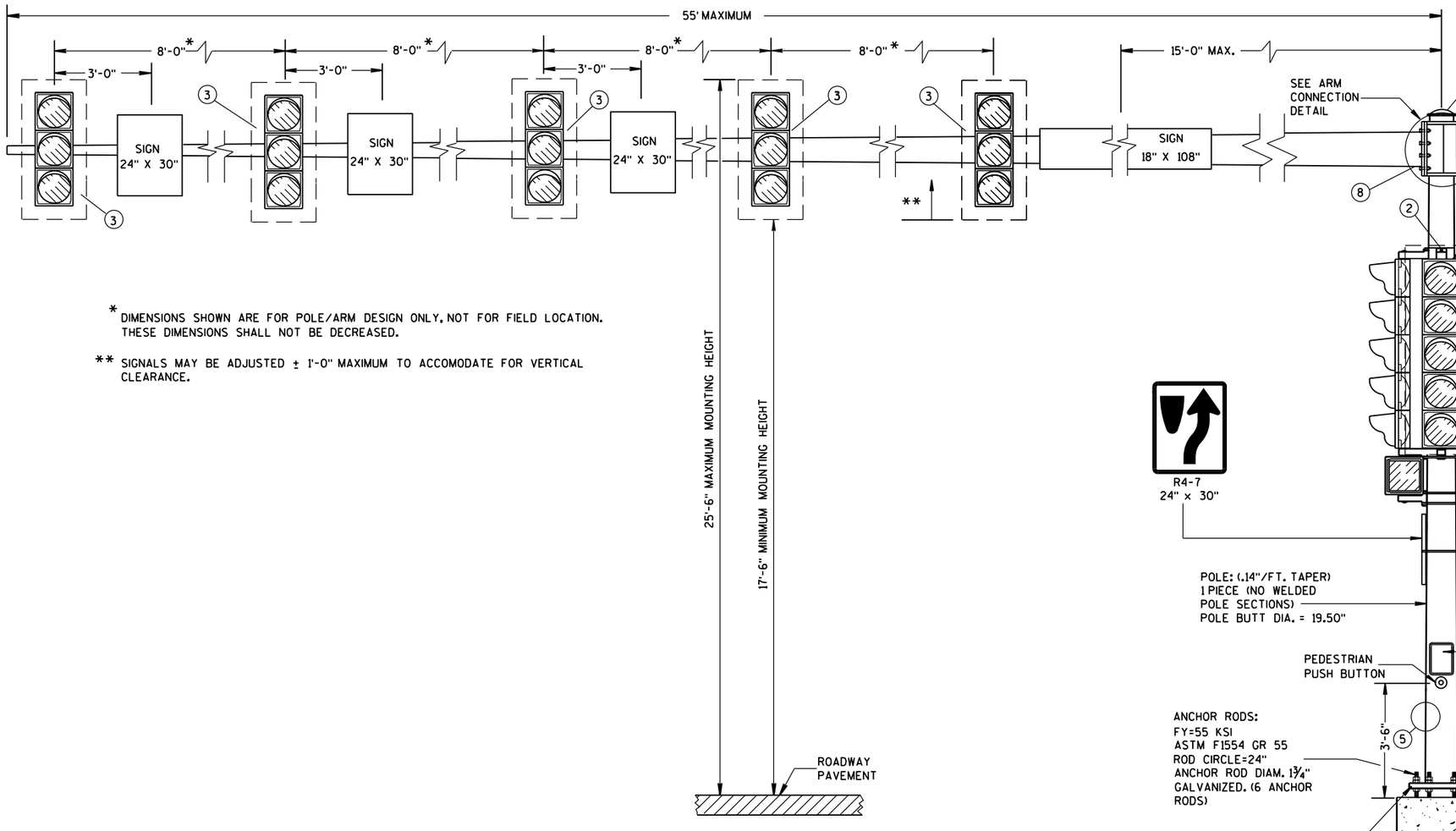

* DIMENSIONS SHOWN ARE FOR POLE/ARM DESIGN ONLY, NOT FOR FIELD LOCATION. THESE DIMENSIONS SHALL NOT BE DECREASED.

** SIGNALS MAY BE ADJUSTED ± 1'-0" MAXIMUM TO ACCOMODATE FOR VERTICAL CLEARANCE.

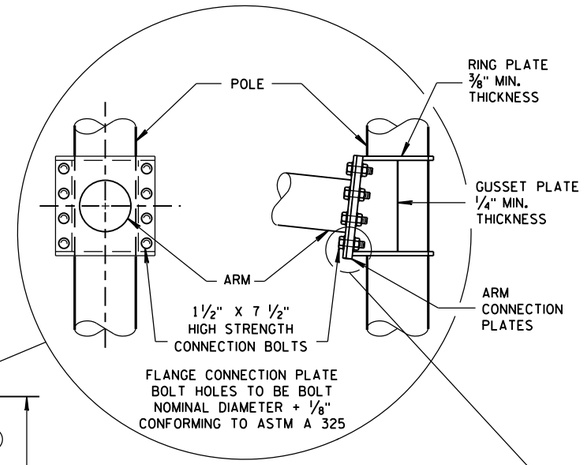

8 BOLT ARM CONNECTION DETAIL

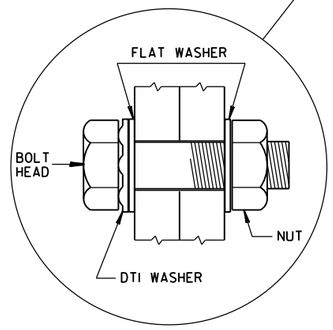

RECOMMENDED BOLT ASSEMBLY DETAIL

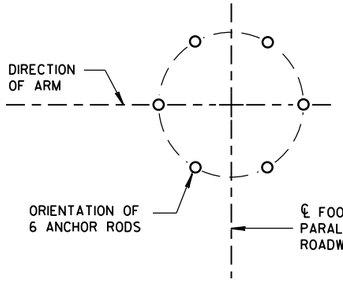

ANCHOR ROD LOCATION

(MAXIMUM LOAD)

TYPE 12 POLE 35'- 55' MONOTUBE ARM

TYPE 12 POLE
35' - 55' MONOTUBE ARM

STATE OF WISCONSIN
DEPARTMENT OF TRANSPORTATION

APPROVED
May, 2015 — DATE
/S/ Ahmet Demirbilek — STATE ELECTRICAL
FHWA

6

S.D.D. 9 E 8-8c

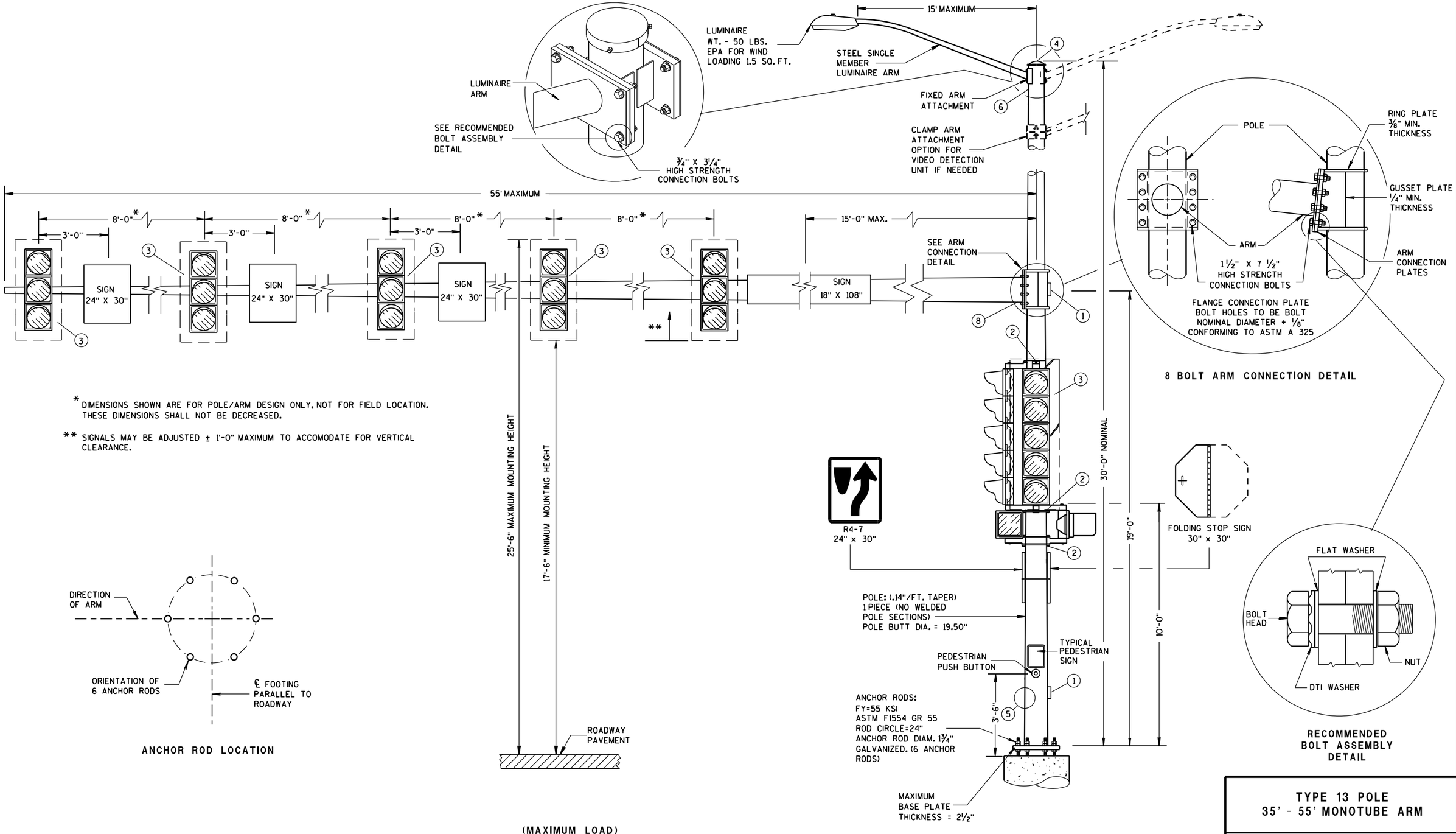

* DIMENSIONS SHOWN ARE FOR POLE/ARM DESIGN ONLY, NOT FOR FIELD LOCATION. THESE DIMENSIONS SHALL NOT BE DECREASED.

** SIGNALS MAY BE ADJUSTED ± 1'-0" MAXIMUM TO ACCOMODATE FOR VERTICAL CLEARANCE.

8 BOLT ARM CONNECTION DETAIL

RECOMMENDED BOLT ASSEMBLY DETAIL

ANCHOR ROD LOCATION

(MAXIMUM LOAD)

TYPE 13 POLE 35'- 55' MONOTUBE ARM

TYPE 13 POLE
35' - 55' MONOTUBE ARM

STATE OF WISCONSIN
DEPARTMENT OF TRANSPORTATION

APPROVED
May 2016 — DATE
/S/ Ahmet Demirbilek — STATE ELECTRICAL
FHWA

S.D.D. 9 E 8-8d

6

GENERAL NOTES

DETAILS OF CONSTRUCTION, MATERIALS AND WORKMANSHIP NOT SHOWN ON THIS DRAWING SHALL CONFORM TO THE PERTINENT REQUIREMENTS OF THE CONTRACT.

POLE TYPES 9 AND 10 ARE FOR ARM LENGTHS 15-FOOT TO 30-FOOT.

POLE TYPES 12 AND 13 ARE FOR ARM LENGTHS 35-FOOT TO 55-FOOT.

MONOTUBE POLE AND ARM SHALL BE GALVANIZED STEEL.

RING-STIFFENED BUILT-UP BOX TYPE OF ATTACHMENT FOR TRAFFIC SIGNAL ARM.

ONE (1) PIECE POLE CONSTRUCTION (NO WELDED POLE SECTIONS).

STANDARD STRAIGHT ARM DESIGN (3 % ± RISE).

SECTION 657, POLES OF THE STANDARD SPECIFICATIONS SHALL APPLY TO THIS DRAWING.

PROVIDE WIREWAY THRU POLE WALL AND ARM CONNECTION PLATES. PROVIDE ROUND, SMOOTH INSIDE SURFACE.

MANUFACTURER'S SUBMITTED POLE DESIGNS AND DRAWINGS SHALL BE SIGNED AND STAMPED BY A REGISTERED PROFESSIONAL ENGINEER AND CERTIFIED AS BEING IN COMPLIANCE WITH THE AASHTO 2013 6TH EDITION AND ALL PERTINENT WISDOT SPECIFICATIONS AND DRAWINGS FOR TRAFFIC AND LIGHTING STRUCTURES AND AS FOLLOWS:

- CATEGORY III FATIGUE LOADS OF GALLOPING, TRUCK GUSTS (AT 45 MPH VEHICLE VELOCITY) AND NATURAL WIND GUSTS FOR DESIGN OF TYPE 9 AND TYPE 10 STRUCTURES.
- CATEGORY II FATIGUE LOADS OF GALLOPING, TRUCK GUSTS (AT 45 MPH VEHICLE VELOCITY) AND NATURAL WIND GUSTS FOR DESIGN OF TYPE 12 AND TYPE 13 STRUCTURES.
- 90 MPH (3-SECOND GUST) WIND SPEED AND A 50 YEAR DESIGN LIFE.

SECURE THE OPENING BELOW THE BASE PLATE WITH STAINLESS STEEL OR GALVANIZED STEEL MESH AND SECURE THE MESH WITH ¾" S.S. BANDING AROUND THE LEVELING NUTS.

INDENT PRINT (NOMINAL ½" HIGH) THE POLE LENGTH AND FIRST TWO LETTERS OF THE MANUFACTURERS NAME ON TWO SIDES OF THE BASE PLATE 180 DEGREES APART, BEFORE GALVANIZING. THE ARM SHALL BE IDENTIFIED WITH THE SAME INFORMATION BY INDENT PRINT.

SIGNAL FACE SHALL BE MOUNTED 6 INCHES (NOMINAL) FROM THE END OF THE MONOTUBE ARM OR AS SHOWN ON THE PLAN CONSTRUCTION DETAIL OR AS DIRECTED BY THE PROJECT ENGINEER/ELECTRICAL OPERATIONS PERSONNEL. MOUNT ALL LIKE HEADS AT SAME ELEVATION.

SIGN MOUNTING BRACKETS SHALL BE FURNISHED IN ACCORDANCE WITH SECTION 637 OF THE STANDARD SPECIFICATIONS FOR HIGHWAY AND STRUCTURE CONSTRUCTION.

(1) DESIGN FOR MAXIMUM ALLOWABLE HANDHOLE WITH COVER ASSEMBLY WITH TWO ¼" X ¾" - 20 TPI STAINLESS STEEL HEX HEAD BOLTS.

(2) SIGNAL MOUNTING BRACKETS FOR POLE MOUNTING, MOUNT WITH CAP SCREW AND BANDING, (SEE SPECIFICATIONS SEC. 658).

(3) SECURELY MOUNT BACKPLATES, PROJECTING 5" BEYOND ALL SIDES OF THE SIGNAL FACE HOUSING, PER MANUFACTURERS RECOMMENDATIONS.

(4) THE TOP OF THE POLE SHAFT AND THE END OF THE MONOTUBE ARM SHALL BE EQUIPPED WITH A REMOVABLE, VENTILATED CAP HELD SECURELY IN PLACE WITH SET SCREWS.

(5) FACTORY-WELDED BRACKET FOR GROUNDING LUG, OPPOSITE HANDHOLE, (LUG AND HARDWARE PAID UNDER SEPARATE ITEM). PROVIDE HOLE IN BRACKET FOR ¼" X ¾" - 20 TPI STAINLESS STEEL HEX HEAD BOLT.

(6) FACTORY-WELDED "J" HOOK FOR STRAIN RELIEF FOR POLE LUMINAIRE WIRE.

(7) INSTALL STRUCTURAL IDENTIFICATION PLAQUES.

STRUCTURAL IDENTIFICATION PLAQUES SHALL BE PLACED ON THE POLES IN THE SAME DIRECTION AS THE ARM.

MOUNTING HEIGHT SHALL BE 6'-0" ABOVE THE CURB OR SHOULDER. ADJUST IF IT IS KNOWN THAT REQUIRED TRAFFIC SIGNS WILL BE OBSTRUCTED.

(8) FACTORY DRILLED ½" DRAIN HOLE 2" FROM FLANGE CONNECTION PLATE.

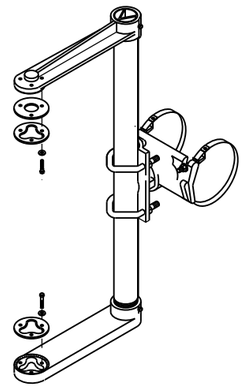

SIGNAL FACE MOUNTING BRACKET
DETAIL FOR MONOTUBE ARM

(MOUNT PER MANUFACTURER'S RECOMMENDATION)

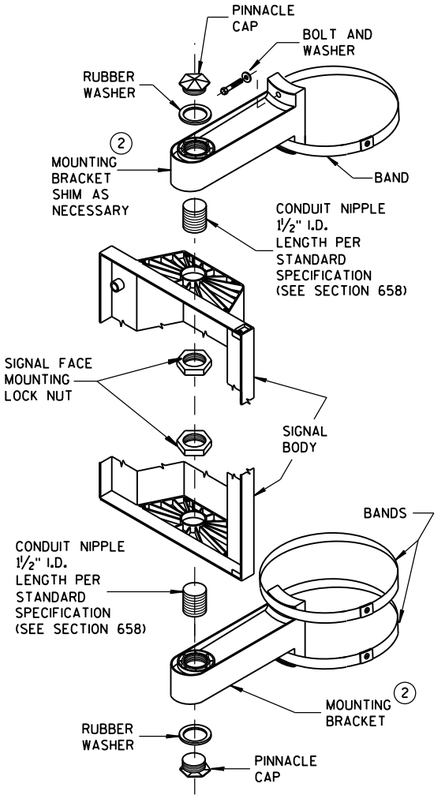

SIGNAL FACE
VERTICAL MOUNTING DETAIL

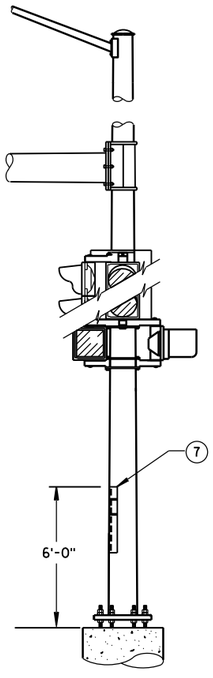

STRUCTURAL IDENTIFICATION
PLAQUE PLACEMENT

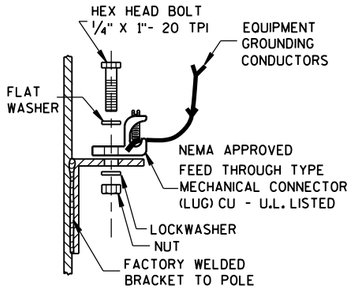

TYPICAL GROUNDING CONNECTIONS (5)

NUT, BOLT AND WASHERS SHALL
BE STAINLESS STEEL

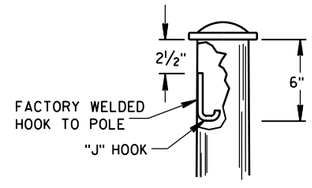

"J" HOOK WIRE SUPPORT (6)

GENERAL NOTES AND HARDWARE DETAILS FOR TYPE 9, 10, 12 & 13 POLES WITH MONOTUBE ARMS

STATE OF WISCONSIN
DEPARTMENT OF TRANSPORTATION

APPROVED
May 2016
DATE

/S/ Ahmet Demirbilek
STATE ELECTRICAL

FHWA

6

S.D.D. 9 E 8-8e

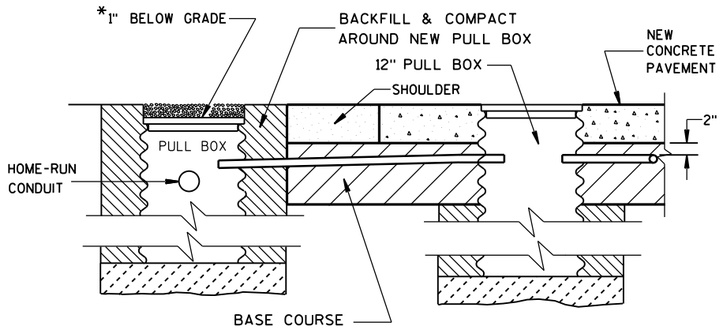

SECTION A-A

NO CURB & GUTTER

LOOP DETECTOR INSTALLATION DETAILS

*RECESS PULL BOX SO THAT THE COVER IS 3" BELOW GRADE IN SHOULDER AREAS OF CRUSHED AGGREGATE. BACKFILL OVER COVER WITH THE CRUSHED AGGREGATE TO BRING THE AREA TO GRADE LEVEL.

GENERAL NOTES

DETAILS OF CONSTRUCTION, MATERIALS AND WORKMANSHIP NOT SHOWN ON THIS DRAWING SHALL CONFORM TO THE PERTINENT REQUIREMENTS OF THE CONTRACT.

LOOP SIZE, LOCATION, NUMBER OF TURNS OF WIRE AND ASSOCIATED SIGNAL PHASE SHALL BE AS SHOWN ON THE PLANS.

PITCH LEAD OUT CONDUIT TO DRAIN TO ROADSIDE PULL BOX.

SPLICES SHALL BE INSTALLED BY USING CAST IN PLACE SPLICE KITS LISTED ON THE DEPARTMENTS APPROVED PRODUCTS LIST OR AN ENGINEER APPROVED EQUAL. NON-INSULATED BUTT SPLICES TO FIT #12 AWG STRANDED WIRE SHALL BE USED. SPLICES SHALL BE SOLDERED AND INSULATED FROM EACH OTHER AS PER INSTRUCTIONS INCLUDED IN THE SPLICE KIT.

MEASURE GROUND RESISTANCE USING A MEGGER. REPLACE LOOP WIRE NOT ATTAINING A READING OF INFINITY TO GROUND.

AFTER SPLICING THE LOOP WIRE TO THE LOOP LEAD-IN CABLE, THE CONTRACTOR SHALL MEASURE INDUCTANCE, GROUND RESISTANCE AND WIRE RESISTANCE AT THE CABINET END OF THE LEAD-IN CABLE AND FURNISH A COPY OF THE READINGS TO THE PROJECT ENGINEER FOR EVALUATION.

LOOP DETECTOR LEADS SHALL BE IDENTIFIED WITH THEIR ASSOCIATED LOOP BY USE OF WATERPROOF TAGS AT BOTH ENDS OF THE CABLE. A LISTING OF THE CABLE IDENTIFICATION PER INDIVIDUAL LOOP LEAD-IN SHALL BE PLACED IN THE CABINET.

THE #12 AWG LOOP WIRE FROM THE LOOP TO THE ROADSIDE PULL BOX, SHALL BE HAND TWISTED AT LEAST 3 TWISTS PER FOOT BEFORE INSTALLATION.

SPLICES OF LOOP WIRE TO LEAD-IN CABLE SHALL BE MADE ONLY IN PULL BOXES AT THE SIDE OF THE ROAD.

THE #12 AWG LOOP WIRE SHALL BE INSTALLED FROM THE ROADSIDE PULL BOX, THROUGH THE LOOP DUCT, BACK TO THE ROADSIDE PULL BOX, AND BE INSTALLED IN ONE, NON-SPLICED, CONTINUOUS LENGTH.

PROTECTION OF THE CONDUIT, CONDULET AND PULL BOX SHALL BE REQUIRED AFTER INSTALLATION AND BEFORE THE NEW CONCRETE PAVEMENT IS PLACED.

12" PULL BOXES IN PAVEMENT SHALL BE CORRUGATED STEEL ONLY.

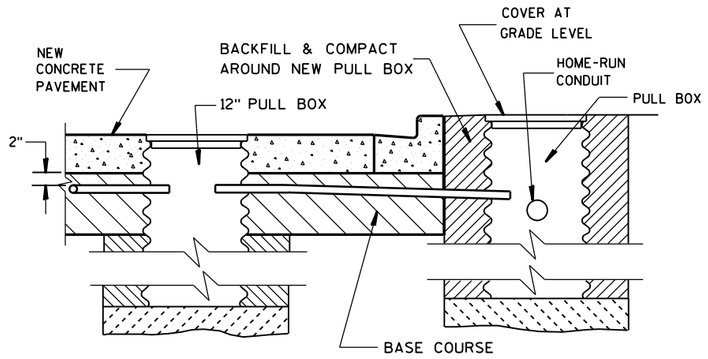

SECTION B-B

CURB & GUTTER

LOOP DETECTOR INSTALLATION DETAILS

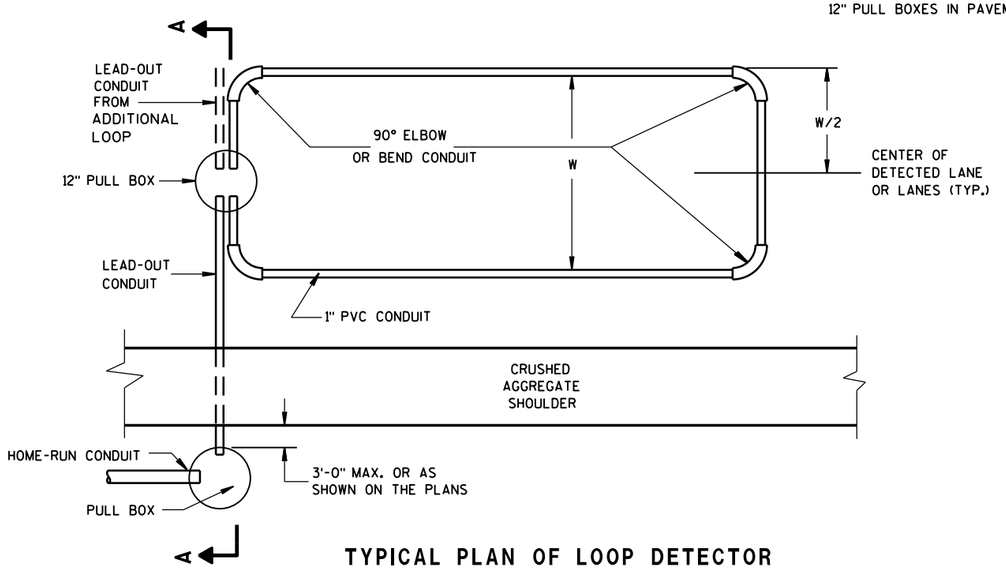

TYPICAL PLAN OF LOOP DETECTOR WITH 12" PULLBOX

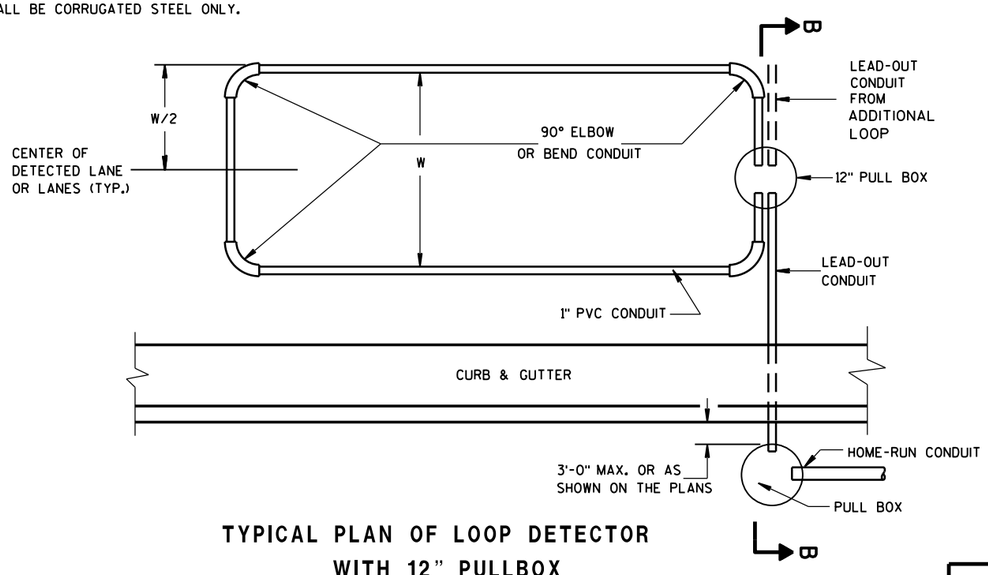

TYPICAL PLAN OF LOOP DETECTOR WITH 12" PULLBOX

LOOP DETECTOR PLACED IN CRUSHED AGGREGATE BASE (NEW CONCRETE PAVEMENT)

STATE OF WISCONSIN
DEPARTMENT OF TRANSPORTATION

APPROVED

Sept. 2014 — DATE

/S/ Ahmet Demirbilek — STATE ELECTRICAL

FHWA

6

S.D.D. 9 F 9-4

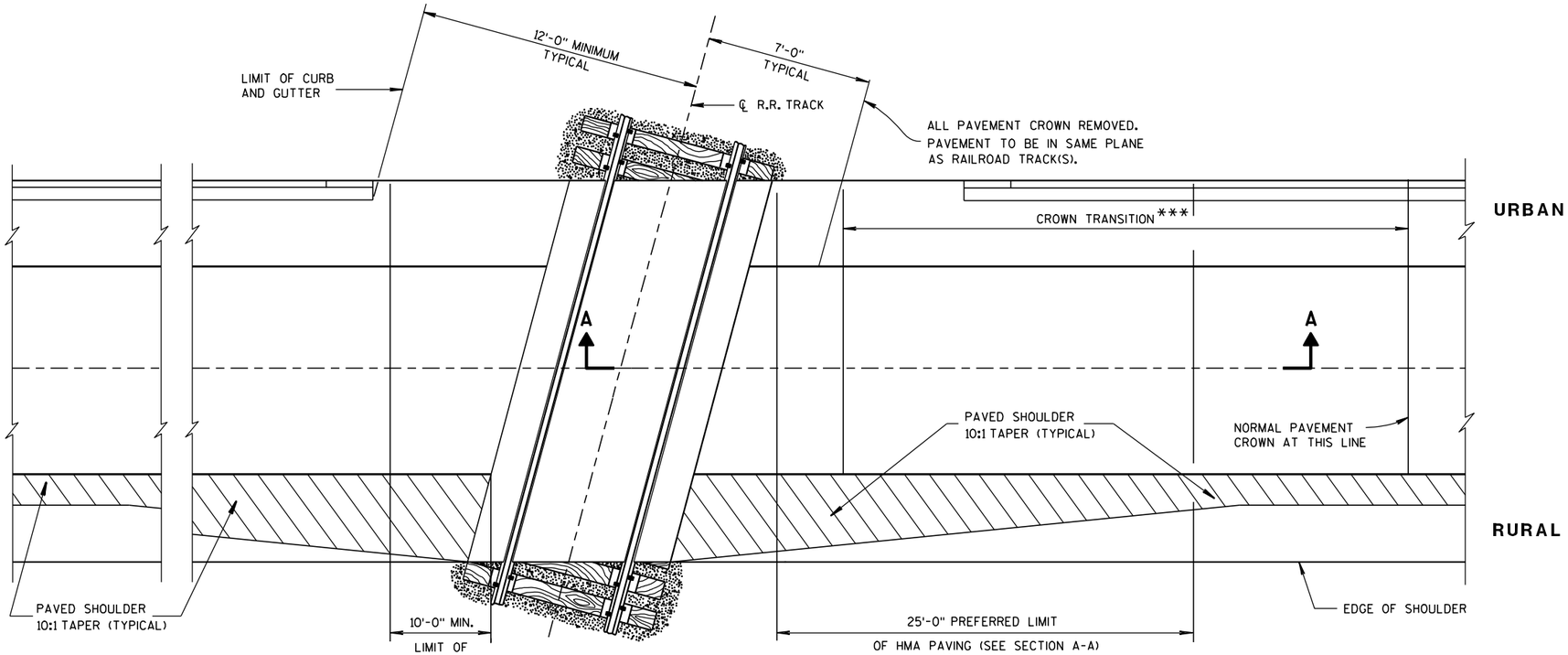

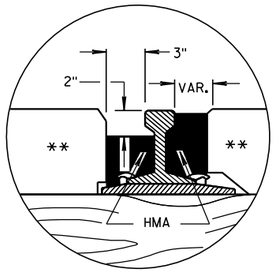

DETAIL B

HMA FLANGEWAY AND FIELD FILLERS

GENERAL NOTES

DETAILS OF CONSTRUCTION, MATERIALS AND WORKMANSHIP NOT SHOWN ON THIS DRAWING SHALL CONFORM TO THE PERTINENT REQUIREMENTS OF THE STANDARD SPECIFICATIONS AND THE APPLICABLE SPECIAL PROVISIONS.

TIMBER, CONCRETE OR RUBBER CROSSING SURFACE MATERIAL, RAILS, TIES, BALLAST, GEOTEXTILE FABRIC AND CROSSING DRAINAGE SYSTEM BY OTHERS UNLESS OTHERWISE PROVIDED.

HMA PAVEMENT APPROACHES AND HMA PAVEMET CROSSING SURFACES TO BE PLACED BY CONTRACTOR UNLESS OTHERWISE PROVIDED.

HMA FLANGEWAY AND FIELD FILLERS TO BE PLACED AND THOROUGHLY HAND COMPACTED BY THE CONTRACTOR WHEN NOT PROVIDED BY OTHERS. SEE DETAIL B. HMA FILLERS NOT REQUIRED WHEN RUBBER FILLERS ARE PROVIDED.

HMA PAVEMENT SHALL BE ROLLED PARALLEL TO THE TRACK.

** CROSSING SURFACE MAY BE TIMBER, RUBBER, CONCRETE, HMA PAVEMENT OR A COMBINATION OF SUCH MATERIALS.

*** CROWN TRANSITION LENGTH SHOWN ELSEWHERE IN THE PLAN.

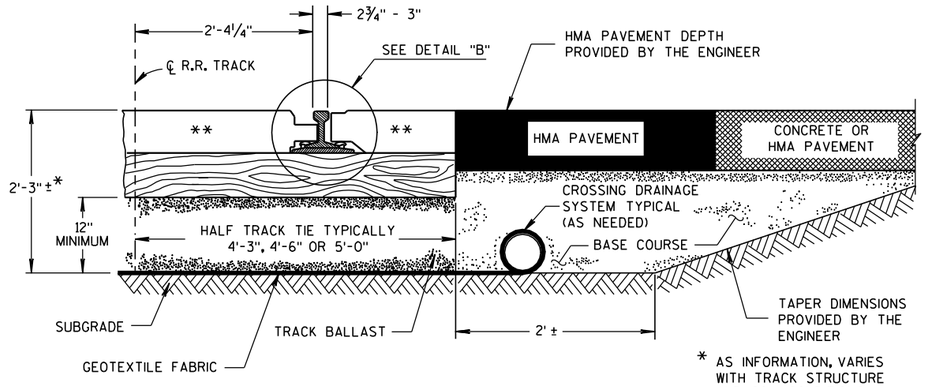

TYPICAL HALF SECTION

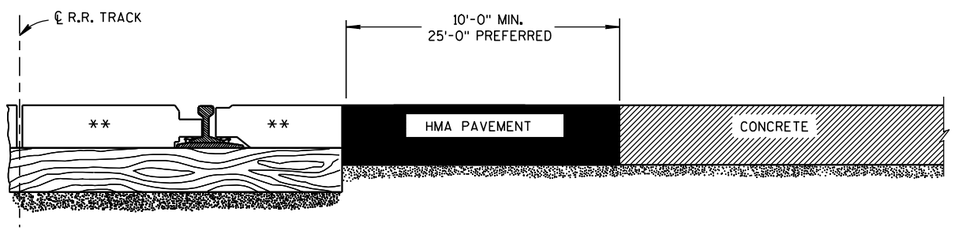

SECTION A-A

CONCRETE PAVEMENT APPROACH

SECTION A-A

HMA PAVEMENT APPROACH

EXAMPLES OF PAVEMENT APPROACHES

PAVEMENT DETAILS FOR RAILROAD APPROACH

STATE OF WISCONSIN
DEPARTMENT OF TRANSPORTATION

APPROVED
8-28-09 DATE
/S/ Ronald E. Adams
CHIEF, RAILROADS & HAI CTION
FHWA

6

S.D.D. 13 B 1-10

6

S.D.D. 13 B 1-10

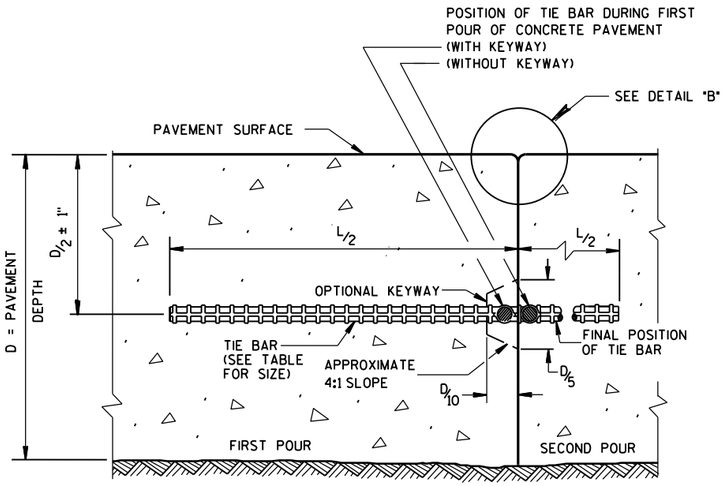

CONSTRUCTION JOINT

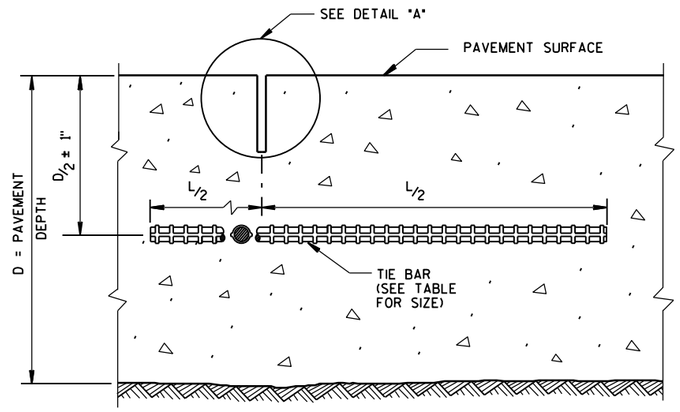

SAWED JOINT

GENERAL NOTES

DO NOT SEAL OR FILL LONGITUDINAL JOINTS.

CREATE A LONGITUDINAL JOINT FOR PAVEMENT WIDTHS GREATER THAN 15 FEET.

CORRELATE LONGITUDINAL JOINTS WITH LANE LINES WHEN POSSIBLE.

(1) ANCHOR TIE BARS INTO DRILLED HOLES WITH AN EPOXY.

(2) PAVEMENT THAT WAS IN PLACE PRIOR TO THE CONTRACT.

PLAN VIEW

SECTION A-A

LONGITUDINAL CONSTRUCTION JOINT TIE BARS ANCHORED INTO EXISTING PAVEMENT

DETAIL "A"

DETAIL "B"

DETAIL "C"

TIE BAR TABLE

PAVEMENT DEPTH (D)	TIE BAR SIZE	TIE BAR LENGTH (L)	MAX. TIE BAR SPACING
< 10 1/2"	NO. 4	30"	36"
≥ 10 1/2"	NO. 5	36"	36"
	NO. 4 *	30"	24"**

* SUBSTITUTE BENT BARS AT LONGITUDINAL JOINTS WHEN EQUIPMENT LIMITATIONS DURING CONSTRUCTION WARRANT (e.g. AUXILIARY LANES OR TURN LANES)

** CONFORM TO 15" MINUMUM SPACING FROM TRANSVERSE JOINTS; SPACING BETWEEN TIE BARS WILL BE 30" AT TRANSVERSE JOINTS.

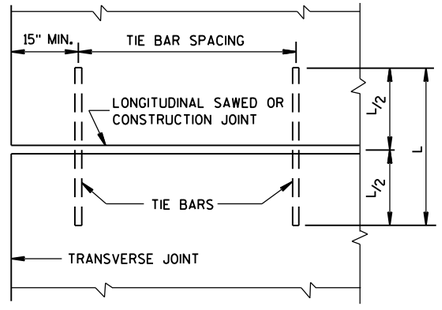

PLAN VIEW
SHOWING LOCATION OF TIE BARS

CONCRETE PAVEMENT LONGITUDINAL JOINTS AND TIES

STATE OF WISCONSIN
DEPARTMENT OF TRANSPORTATION

APPROVED
June, 2015 — DATE
/S/ Peter Kemp, P.E. — PAVEMENT SUPER
FHWA

6
S.D.D. 13 C 1-18

GENERAL NOTES

SAW CUT, DRILL, AND LIFT OUT EXISTING CONCRETE PAVEMENT WITHIN THE BOUNDARIES OF CONCRETE REPAIR AREAS. THE CONTRACTOR MAY MAKE ADDITIONAL SAW CUTS INSIDE THE REPAIR LIMITS TO REDUCE WEIGHT AND SIZE OF CONCRETE PIECES.

PROVIDE 6-FOOT MINIMUM DISTANCE FROM BOUNDARIES OF CONCRETE REPAIR AREAS TO ADJACENT TRANSVERSE JOINT OR CRACK.

THE LENGTH OF THE REPAIRS MAY VARY FROM THE DIMENSIONS SHOWN IF THE EXISTING CONCRETE PAVEMENT IS NONDOWELED AND THE PAVEMENT IS TO BE OVERLAID AFTER REPAIRING.

(1) DOWEL BARS MIGHT NOT EXIST.

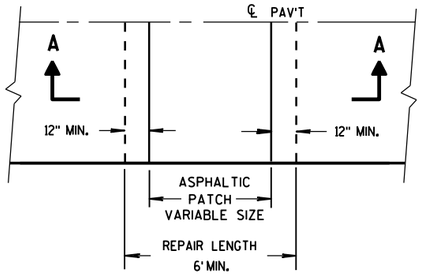

PLAN VIEW

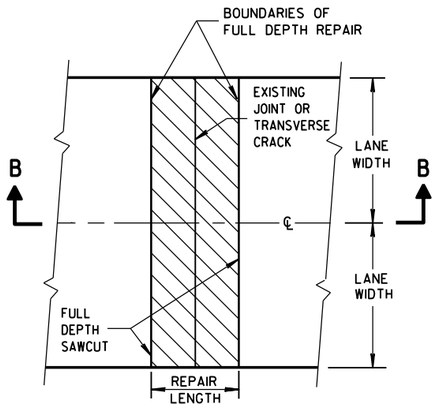

PLAN VIEW
(DOUBLE LANE REPAIR)

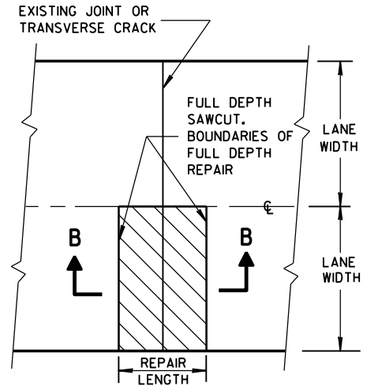

PLAN VIEW
(SINGLE LANE REPAIR)

FULL DEPTH CONCRETE PAVEMENT REMOVAL

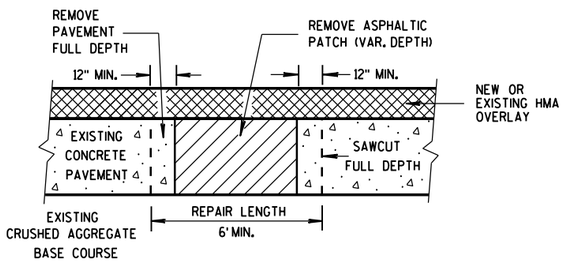

SECTION A-A

HMA PATCH REMOVAL

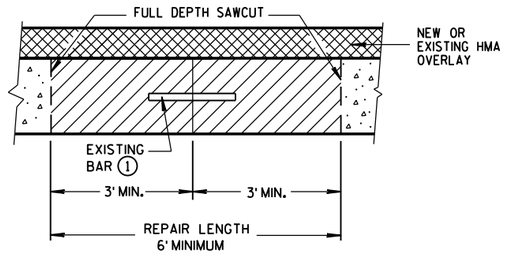

SECTION B-B

CONCRETE REMOVAL

BASE PATCHING CONCRETE

STATE OF WISCONSIN
DEPARTMENT OF TRANSPOI

S.D.D. 13 C 14-6a

S.D.D. 13 C 14-6a

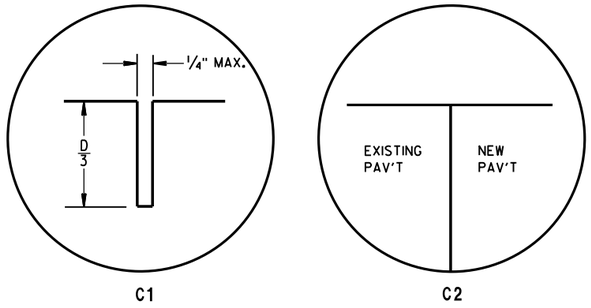

TRANSVERSE JOINTS

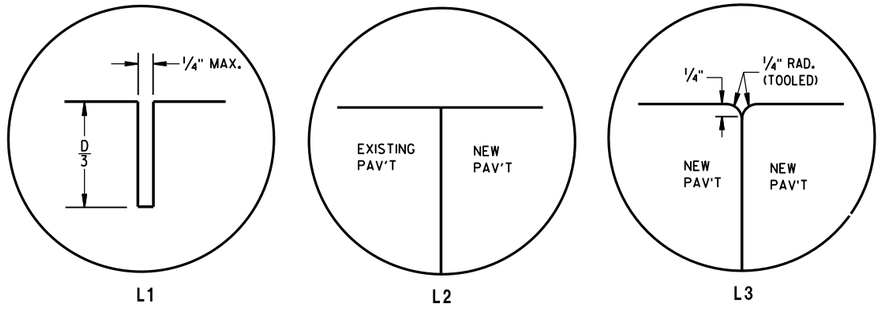

LONGITUDINAL JOINTS

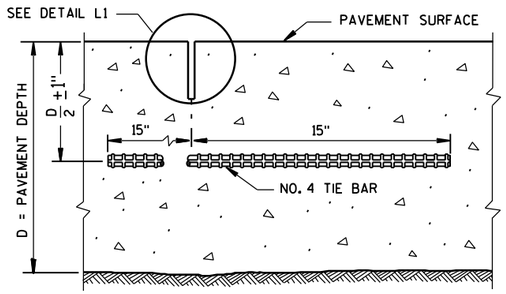

SECTION C-C

SAWED LONGITUDINAL JOINT

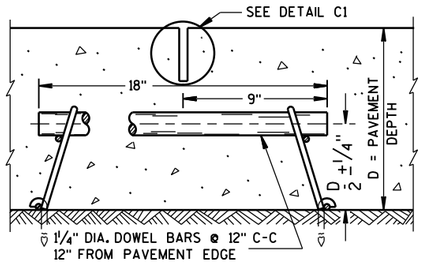

SECTION F-F

CONTRACTION JOINT

GENERAL NOTES

INSTALL DOWEL BARS PARALLEL TO THE PAVEMENT CENTERLINE AND PAVEMENT SURFACE.

CONCRETE BASE PATCHES OF EXISTING NONDOWELED CONCRETE PAVEMENTS DO NOT NEED TO BE DOWELED.

DO NOT SEAL OR FILL JOINTS.

ANCHOR DOWEL BARS AND TIE BARS INTO DRILLED HOLES WITH AN EPOXY.

PROVIDE A MINIMUM DISTANCE OF 15 INCHES FROM AN EXISTING TRANSVERSE JOINT OR THE EDGE OF REPLACEMENT TO THE CENTER OF THE TIE BAR NEAREST THAT JOINT OR EDGE.

(1) APPLY A THIN UNIFORM COATING OF SURFACE TREATMENT TO THE FREE END OF DOWEL BARS TO PREVENT BONDING.

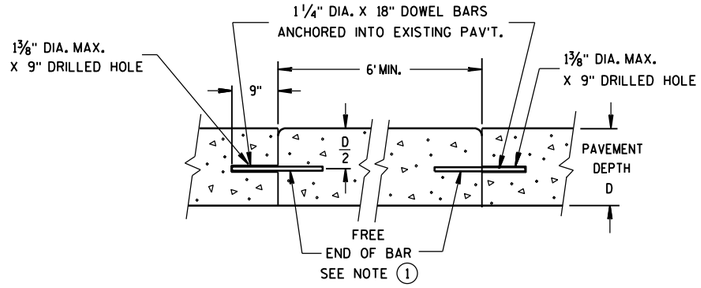

SECTION D-D

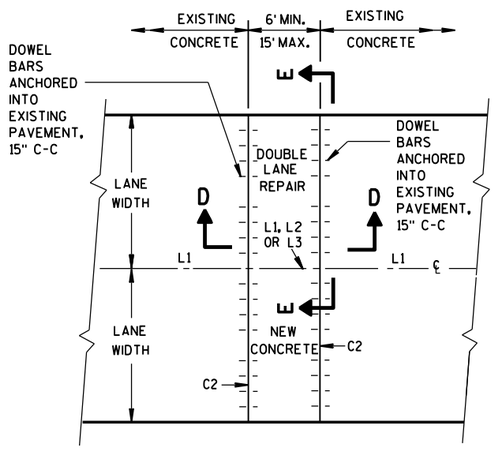

PLAN VIEW

MULTI-LANE CONCRETE BASE PATCH 15' MAXIMUM LENGTH

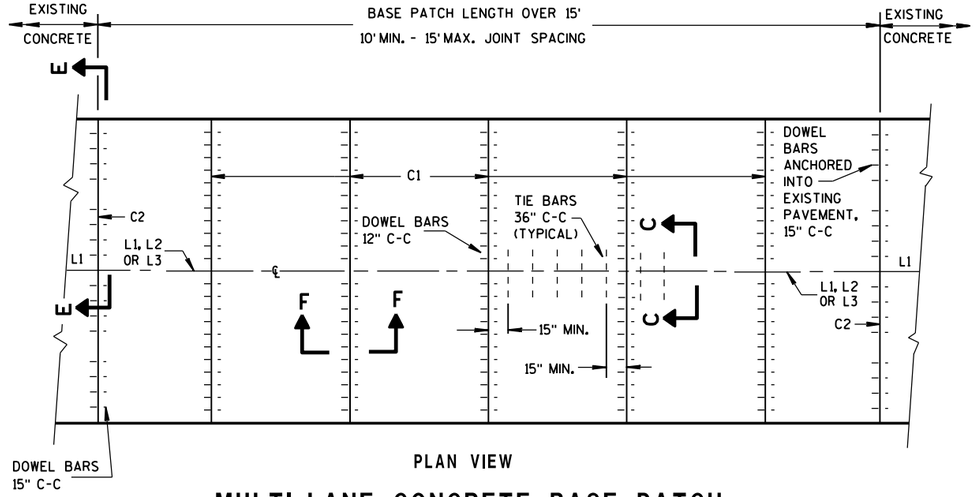

PLAN VIEW

MULTI-LANE CONCRETE BASE PATCH GREATER THAN 15' IN LENGTH

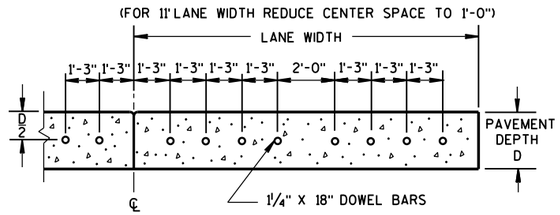

SECTION E-E

SPACING OF DOWEL BARS ANCHORED INTO EXISTING PAVEMENT

BASE PATCHING CONCRETE

STATE OF WISCONSIN
DEPARTMENT OF TRANSPOI

6
S.D.D. 13 C 14-6b

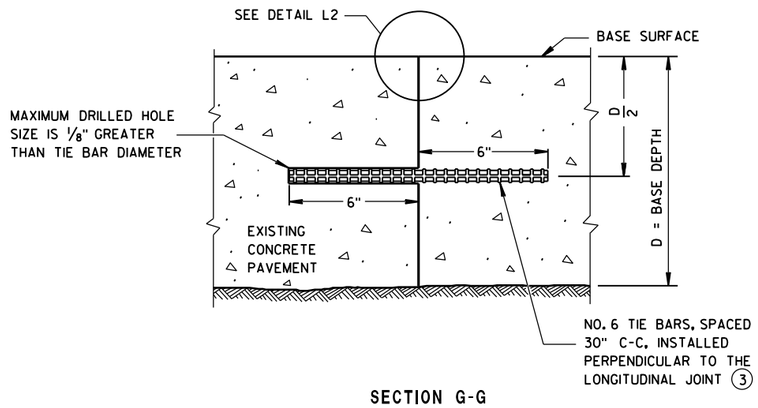

SECTION G-G

TIE BARS ANCHORED INTO EXISTING PAVEMENT

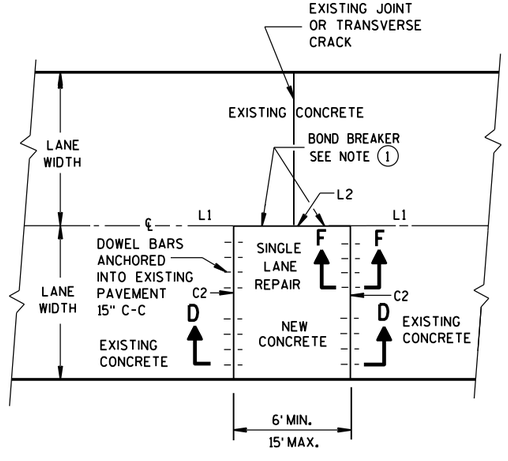

PLAN VIEW

SINGLE LANE CONCRETE BASE PATCH 15' MAXIMUM LENGTH

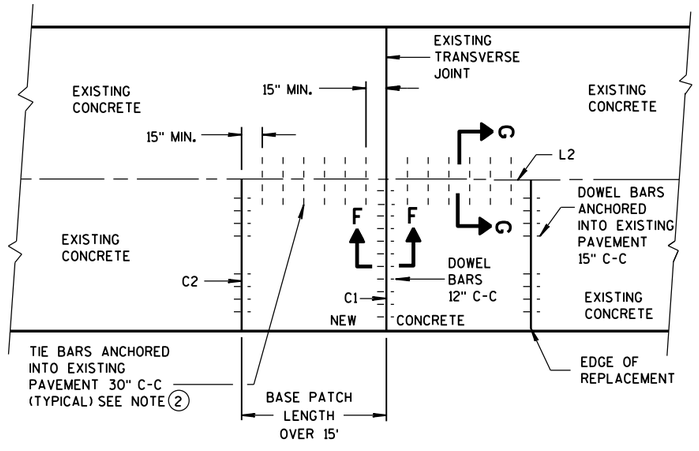

PLAN VIEW

SINGLE LANE CONCRETE BASE PATCH GREATER THAN 15' IN LENGTH

GENERAL NOTES

(1) USE AN ENGINEER-APPROVED BOND BREAKER (E.G. RELEASE AGENT, CURING COMPOUND) FOR SINGLE LANE BASE PATCHES UP TO 15 FEET IN LENGTH.

(2) WITH THE APPROVAL OF THE ENGINEER, FOR SINGLE LANE PAVEMENT REPLACEMENTS LESS THAN 30 FEET IN LENGTH, DRILLED TIE BARS MAY BE INSTALLED ON 6:1 SKEW HORIZONTALLY, DIRECTION OF SKEW ALTERNATING WITH EACH SUCCESSIVE BAR. DRIVE SKEWED TIE BARS TO A DEPTH OF 6 INCHES IN A HOLE OF SUCH A DIAMETER AS TO PROVIDE A TIGHT DRIVEN FIT.

(3) ANCHOR TIE BARS INTO DRILLED HOLES WITH AN EPOXY.

BASE PATCHING CONCRETE

STATE OF WISCONSIN
DEPARTMENT OF TRANSPORTATION

APPROVED
Sept., 2015 — DATE
/S/ Peter Kemp, P.E. — PAVEMENT SUPER
FHWA

6

S.D.D. 13 C 14-6c

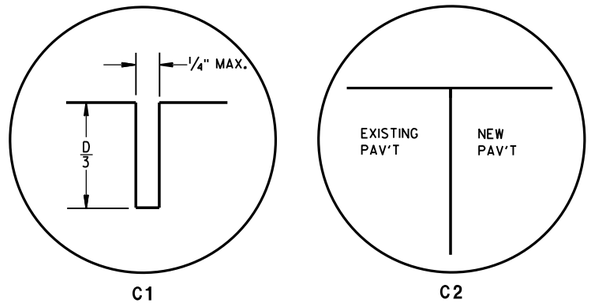

TRANSVERSE JOINTS

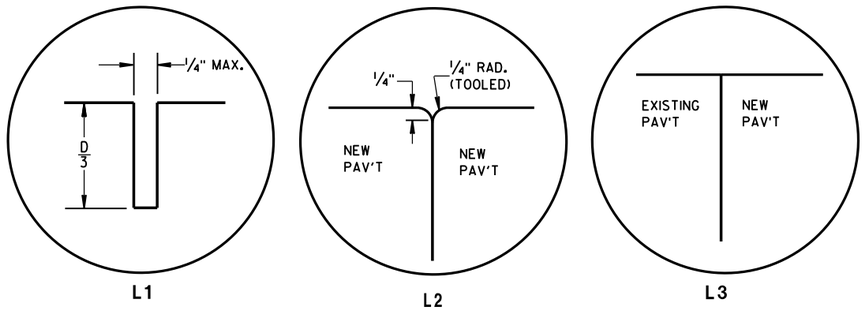

LONGITUDINAL JOINTS

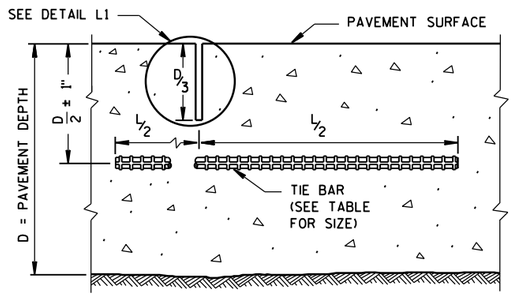

SECTION C-C

SAWED JOINT

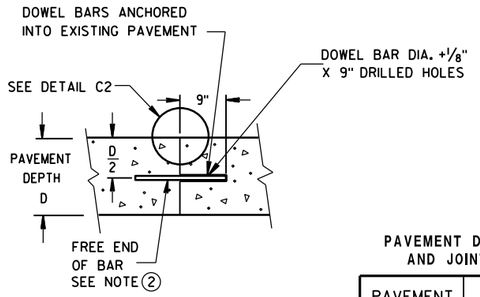

SECTION D-D

GENERAL NOTES

ANCHOR TIE BARS AND DOWEL BARS INTO DRILLED HOLES WITH AN EPOXY.

PROVIDE A MINIMUM DISTANCE OF 15 INCHES FROM AN EXISTING TRANSVERSE JOINT OR THE EDGE OF REPLACEMENT TO THE CENTER OF THE TIE BAR NEAREST THAT JOINT OR EDGE.

(1) INSTALL DOWEL BARS PARALLEL TO THE PAVEMENT CENTERLINE AND PAVEMENT SURFACE.

(2) APPLY A THIN UNIFORM COATING OF SURFACE TREATMENT TO THE FREE END OF DOWEL BARS TO PREVENT BONDING.

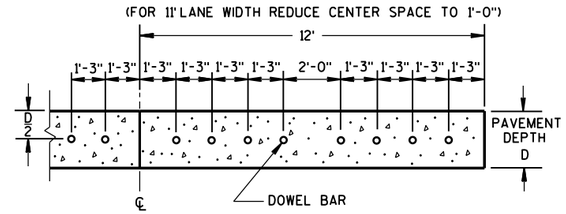

SECTION E-E

SPACING OF DOWEL BARS ANCHORED INTO EXISTING PAVEMENT

PAVEMENT DEPTH, DOWEL BAR SIZE AND JOINT SPACING TABLE

PAVEMENT DEPTH (D)	DOWEL BAR DIAMETER	CONTRACTION JOINT SPACING
5½", 6, 6 ½"	NONE	12'
7, 7 ½"	1"	14'
8, 8 ½"	1 ¼"	15'
9, 9 ½"	1 ¼"	15'
10" & ABOVE	1 ½"	15'

TIE BAR TABLE

PAVEMENT DEPTH (D)	TIE BAR SIZE	TIE BAR LENGTH (L)	MAX. TIE BAR SPACING
< 10 ½"	NO. 4	30"	36"
≥ 10 ½"	NO. 5	36"	36"
	NO. 4 *	30"	24" **

* SUBSTITUTE BENT BARS AT LONGITUDINAL JOINTS WHEN EQUIPMENT LIMITATIONS DURING CONSTRUCTION WARRANT (e.g. AUXILIARY LANES OR TURN LANES)

** CONFORM TO 15" MINUMUM SPACING FROM TRANSVERSE JOINTS; SPACING BETWEEN TIE BARS WILL BE 30" AT TRANSVERSE JOINTS.

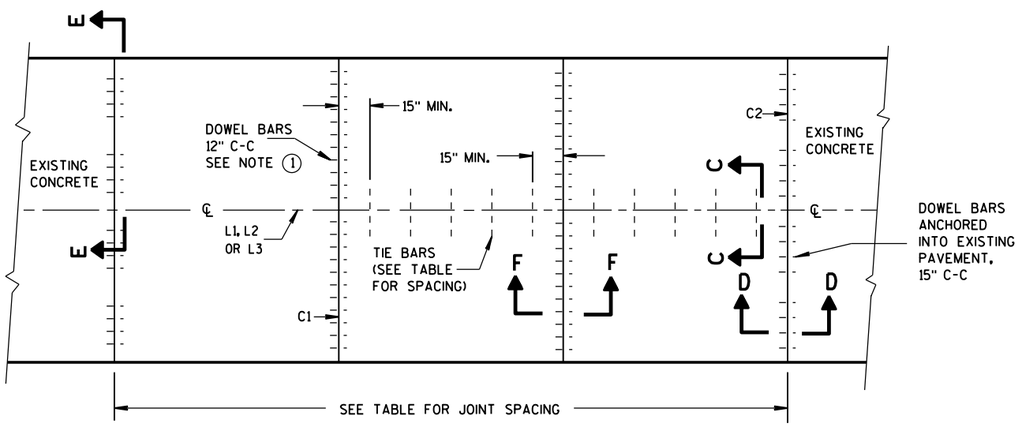

PLAN VIEW

CONCRETE BASE CONTRACTION JOINT LOCATIONS

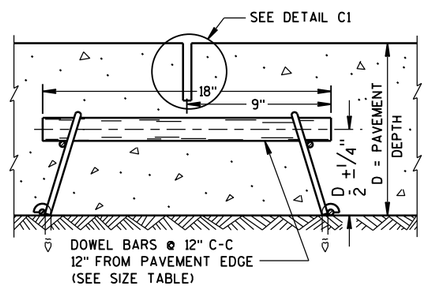

SECTION F-F

CONTRACTION JOINT

CONCRETE BASE

STATE OF WISCONSIN
DEPARTMENT OF TRANSPOI

6
S.D.D. 13 C 15-6a

GENERAL NOTES

(1) USE AN ENGINEER-APPROVED BOND BREAKER (E.G. RELEASE AGENT, CURING COMPOUND) AT THE LONGITUDINAL JOINT IN LIEU OF TIE BARS FOR SINGLE LANE CONCRETE BASE REPAIRS UP TO 15 FEET IN LENGTH.

(2) ANCHOR TIE BARS INTO DRILLED HOLES WITH AN EPOXY.

(3) PAVEMENT THAT WAS IN PLACE PRIOR TO THE CONTRACT.

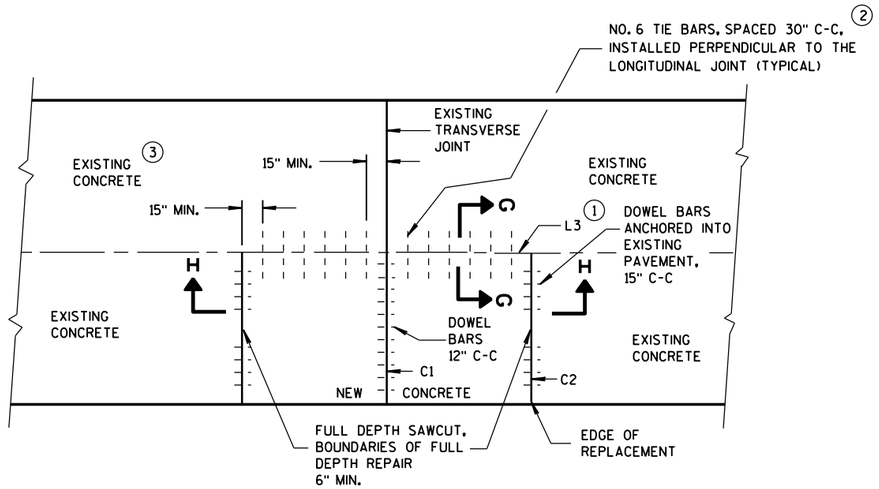

PLAN VIEW

SINGLE LANE CONCRETE BASE REPAIR

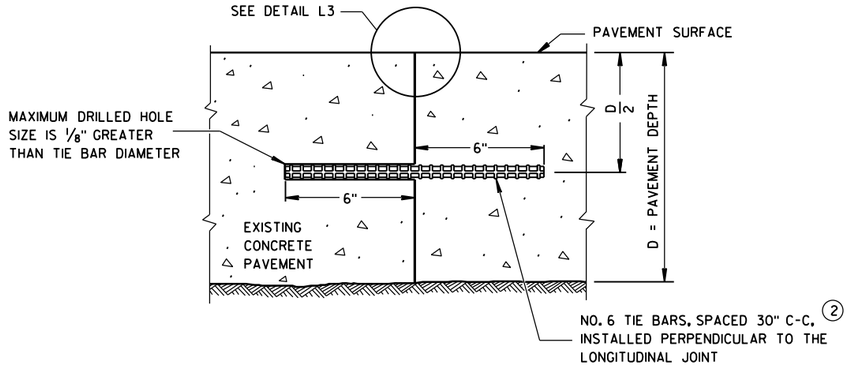

SECTION G-G

TIE BARS ANCHORED INTO EXISTING PAVEMENT

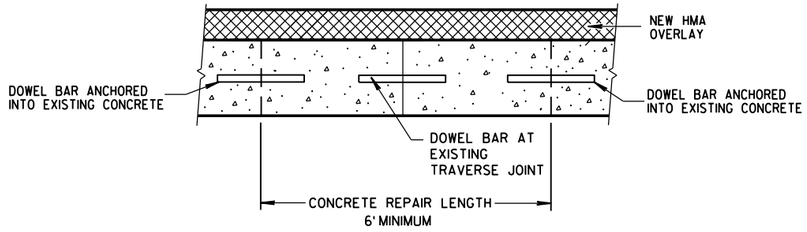

SECTION H-H

CONCRETE BASE

STATE OF WISCONSIN
DEPARTMENT OF TRANSPORTATION

APPROVED
June, 2015 — DATE
/S/ Peter Kemp, P.E. — PAVEMENT SUPEI
FHWA

6

S.D.D. 13 C 15-6b

6

S.D.D. 13 C 15-6b

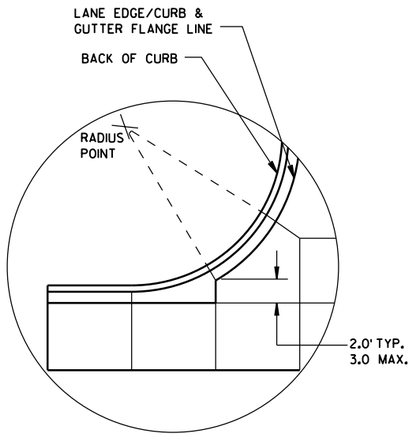

DETAIL "A"

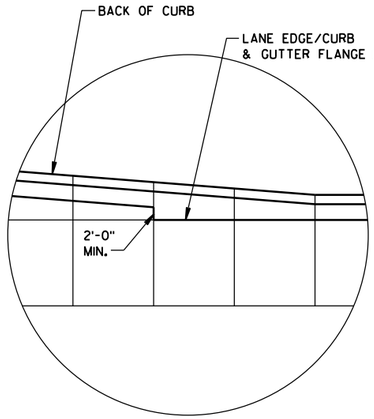

DETAIL "B"

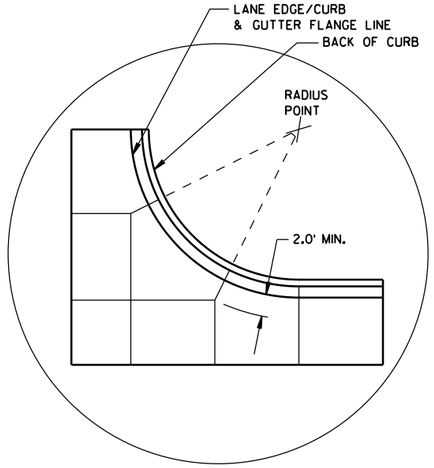

DETAIL "C"

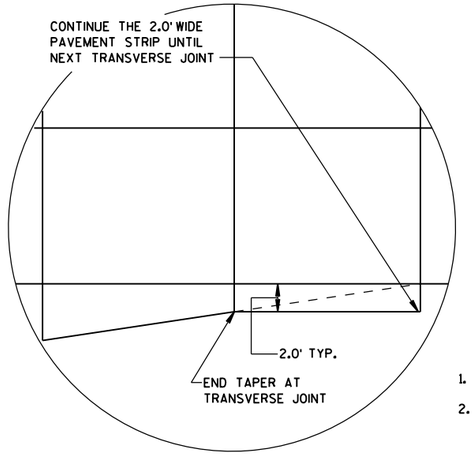

DETAIL "D"

GENERAL NOTES

THE PRIMARY ROADWAY CONTROLS THE TRANSVERSE JOINT PATTERN.

ALIGN NEW JOINTS WITH EXISTING JOINTS OR CRACKS.

CONSTRUCT TRANSVERSE JOINTS PERPENDICULAR TO THE ROADWAY.

ADJUST TRANSVERSE JOINTS TO ALIGN WITH UTILITY FIXTURES (E.G. MANHOLES AND INLETS) IN THE PAVEMENT STRUCTURE WHEN POSSIBLE. WATER VALVES DO NOT REQUIRE JOINT ADJUSTMENT.

AVOID SLABS LESS THAN 2 FEET WIDE OR GREATER THAN 15 FEET WIDE.

SEE TABLE FOR TRANSVERSE JOINT SPACING. JOINT SPACING SPECIFIED IS MAXIMUM AND ACTUAL SPACING CAN BE ADJUSTED TO ACCOMMODATE INTERSECTIONS.

AVOID ANGLES LESS THAN 60° BY DOGLEGGING JOINTS THROUGH CURVE RADIUS POINTS. USE 90° ANGLES WHEN POSSIBLE.

CORRELATE LONGITUDINAL JOINTS WITH LANE LINES WHEN POSSIBLE.

1. PROVIDE TRANSVERSE JOINTS AT ALL PAVEMENT WIDTH CHANGES.
2. CONSTRUCT DOWELED EXPANSION JOINT ON THE SIDE ROAD OF AN INTERSECTION IF THE SIDE ROAD IS CONCRETE PAVEMENT AND GREATER THAN 300 FEET IN LENGTH. ALIGN EXPANSION JOINT WITH EDGE OF RADIUS.
3. THE ENGINEER MAY APPROVE SLIGHT VARIATIONS FROM THESE JOINTING DETAILS.

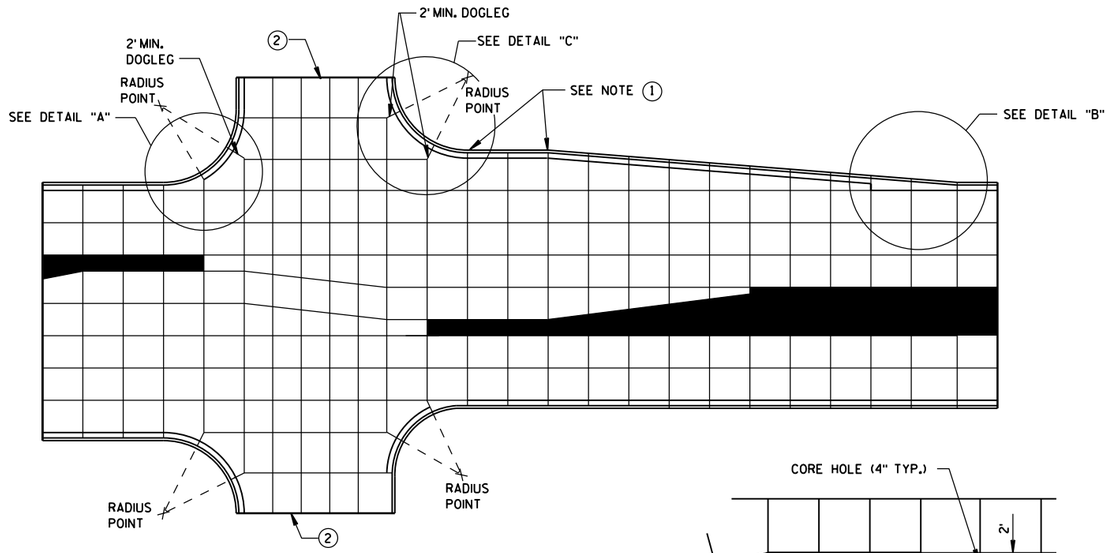

STANDARD INTERSECTION

PAVEMENT DEPTH AND JOINT SPACING TABLE

PAVEMENT DEPTH (D)	CONTRACTION JOINT SPACING
6", 6½"	12'
7", 7½"	14'
8" & ABOVE	15'

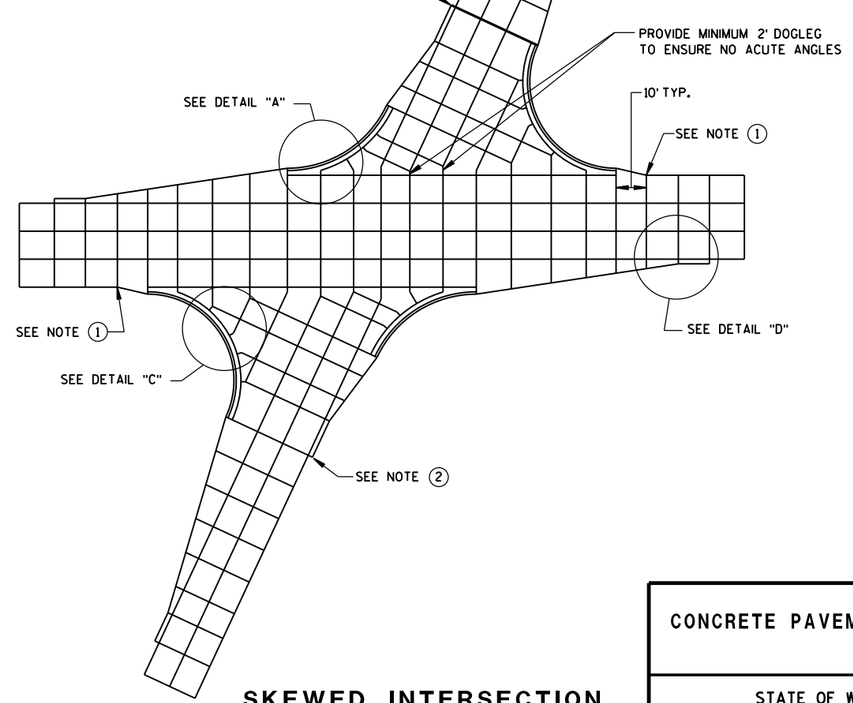

SKEWED INTERSECTION

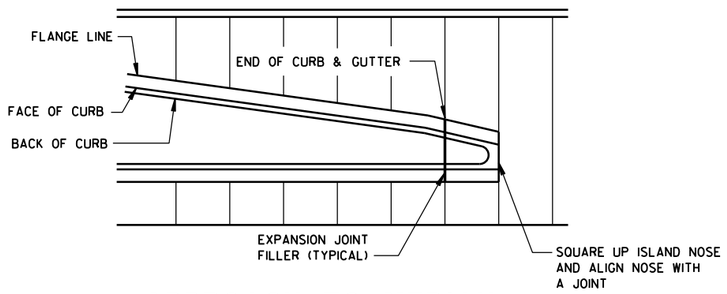

APPROACH TO MEDIAN

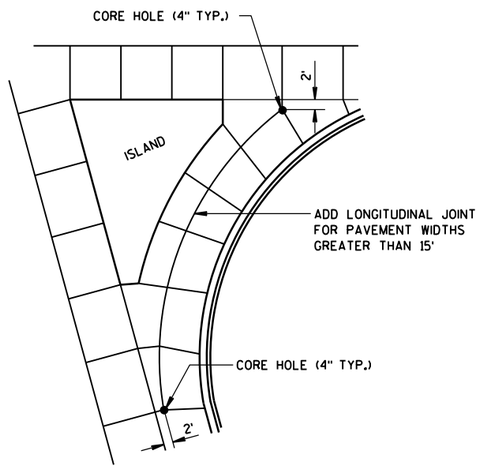

LARGE RIGHT TURN

CONCRETE PAVEMENT JOINTING

STATE OF WISCONSIN
DEPARTMENT OF TRANSPOR

6
S.D.D. 13 C 18-3a

LEGEND

POTENTIAL DOWELED EXPANSION JOINT

DOWELED JOINT

TIED JOINT

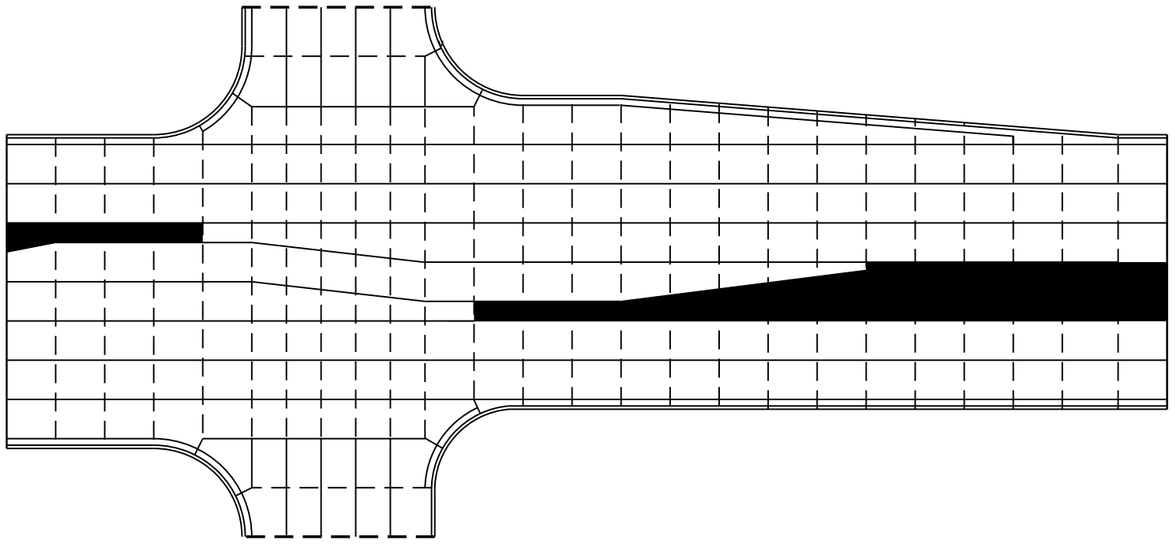

STANDARD INTERSECTION

GENERAL NOTES

USE AN EXPANSION JOINT FILLER MEETING THE REQUIREMENTS OF STANDARD SPECIFICATION 415.

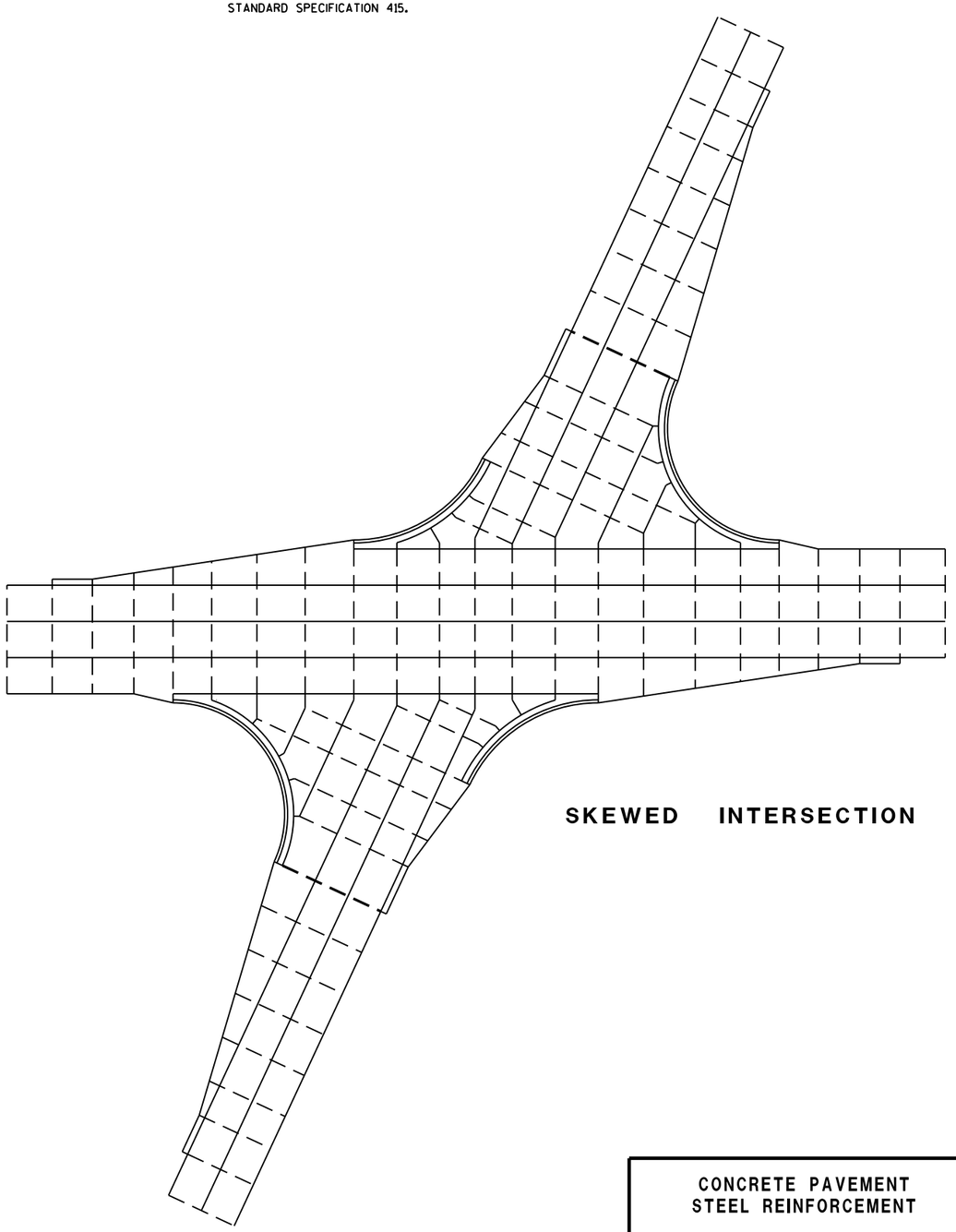

SKEWED INTERSECTION

CONCRETE PAVEMENT
STEEL REINFORCEMENT

STATE OF WISCONSIN
DEPARTMENT OF TRANSPOI

6

S.D.D. 13 C 18-3b

6

S.D.D. 13 C 18-3b

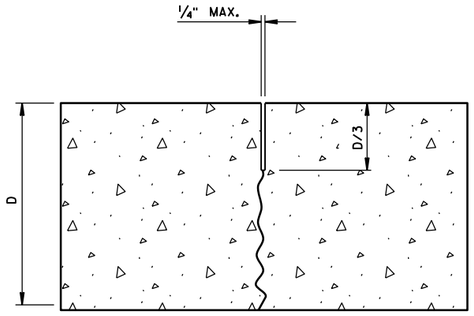

UNDOWELED-TRANSVERSE

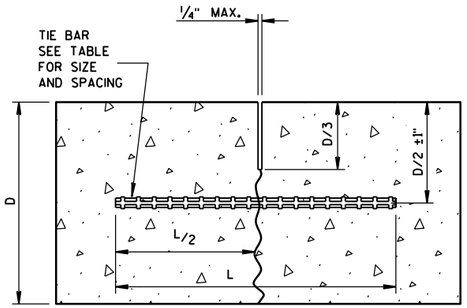

TIED LONGITUDINAL

TIE BAR TABLE

PAVEMENT DEPTH (D)	TIE BAR SIZE	TIE BAR LENGTH (L)	MAX. TIE BAR SPACING
< 10 1/2"	NO. 4	30"	36"
≥ 10 1/2"	NO. 5	36"	36"
	NO. 4*	30"	24"**

* SUBSTITUTE BENT BARS AT LONGITUDINAL JOINTS WHEN EQUIPMENT LIMITATIONS DURING CONSTRUCTION WARRANT (e.g. AUXILIARY LANES OR TURN LANES)

** CONFORM TO 15" MINUMUM SPACING FROM TRANSVERSE JOINTS; SPACING BETWEEN TIE BARS WILL BE 30" AT TRANSVERSE JOINTS.

GENERAL NOTES

1. USE DOWELED EXPANSION JOINTS ON SIDE ROADS AT INTERSECTIONS (TO ISOLATE THE SIDE ROAD FROM THE THROUGH STREET) IF THE SIDE ROAD IS CONCRETE PAVEMENT AND GREATER THAN 300 FEET IN LENGTH.
2. SPACE CONTRACTION JOINTS IN ACCORDANCE WITH 13C4, 13C11 OR 13C13.
3. LOCATE CONSTRUCTION JOINTS A MINIMUM OF 6 FEET FROM THE NEAREST CONTRACTION JOINT AND ALIGN PARALLEL TO CONTRACTION JOINTS.
4. CONSTRUCTION JOINTS CAN BE FORMED OR SAWED.
5. IF JOINT IS FORMED, PROVIDE A 1/4-INCH RADIUS.
6. ANCHOR TIE BARS INTO DRILLED HOLES WITH AN EPOXY.

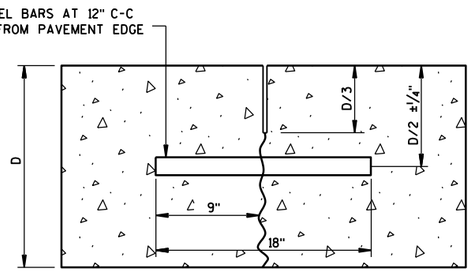

DOWELED-TRANSVERSE

CONTRACTION JOINTS

SEE NOTE (2)

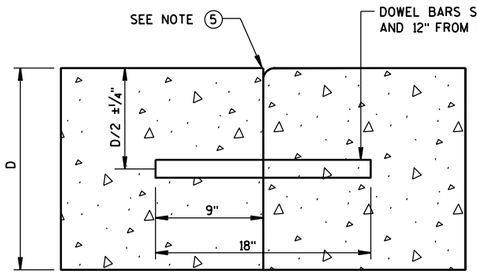

DOWELED TRANSVERSE (3)

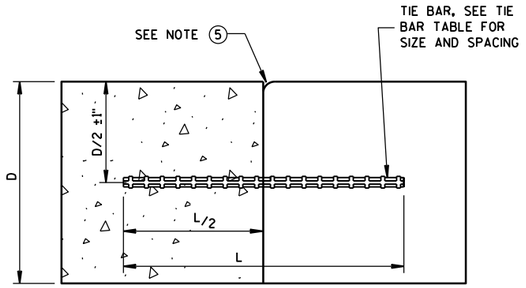

TIED LONGITUDINAL

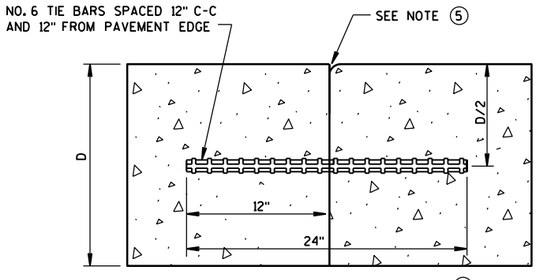

TIED TRANSVERSE (3)

(FOR USE ON NON-DOWELED PAVEMENTS ONLY)

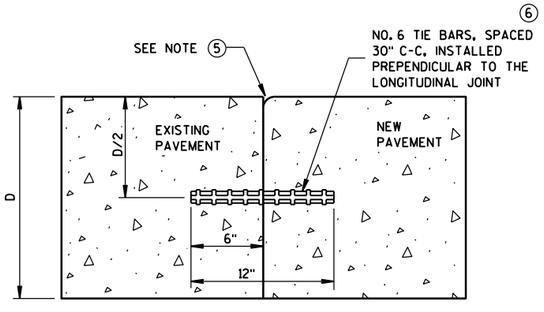

TIED LONGITUDINAL TO EXISTING

CONSTRUCTION JOINTS

SEE NOTE (4)

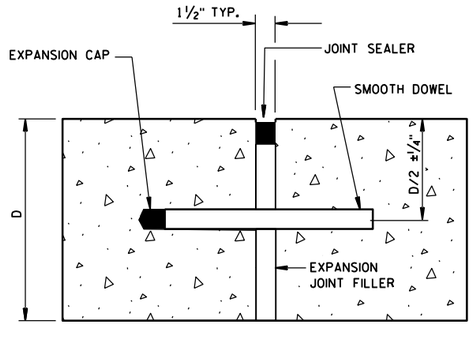

DOWELED-TRANSVERSE

SEE NOTE (1)

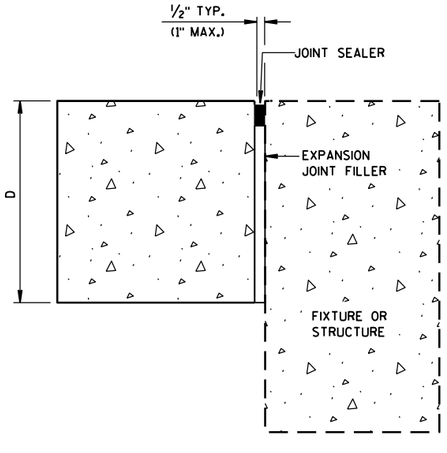

UNTIED-LONGITUDINAL

EXPANSION JOINTS

CONCRETE PAVEMENT
JOINT TYPES

STATE OF WISCONSIN
DEPARTMENT OF TRANSPOI

6

S.D.D. 13 C 18-3c

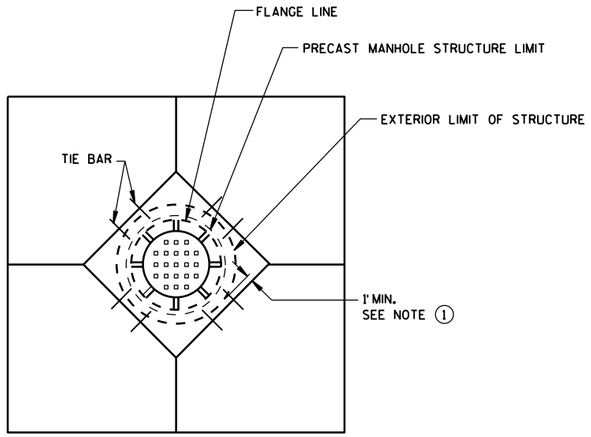

DIAGONAL MANHOLE BOXOUT FOR CONSTRUCTION JOINTS

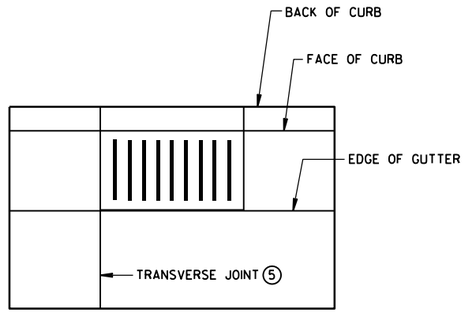

INLET WITH TRANSVERSE JOINT

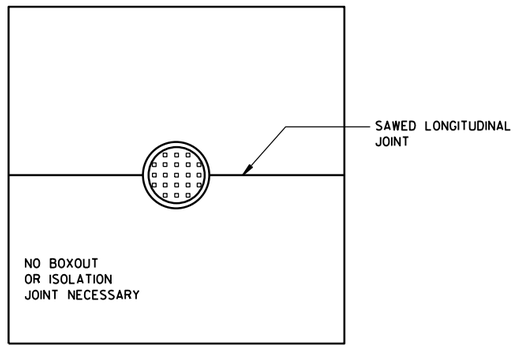

MANHOLE WITH LONGITUDINAL JOINT

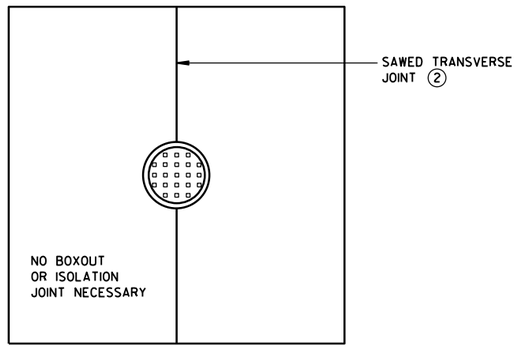

MANHOLE WITH TRANSVERSE JOINT

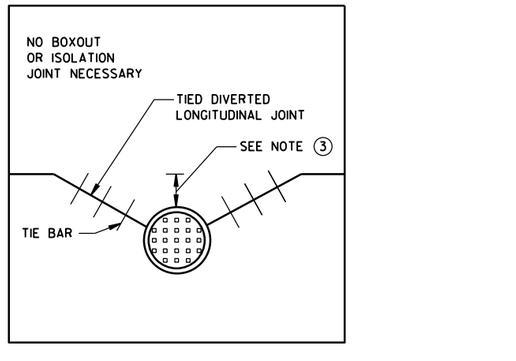

MANHOLE WITH DIVERTED LONGITUDINAL CONTRACTION JOINT

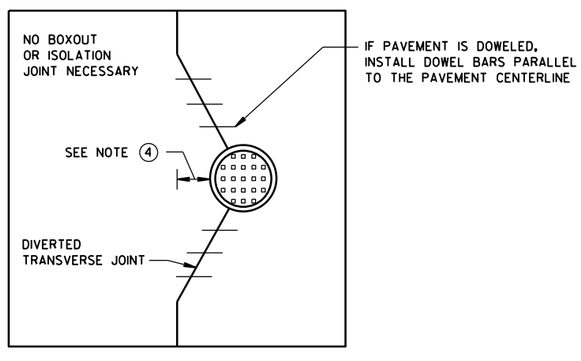

MANHOLE WITH DIVERTED TRANSVERSE CONTRACTION JOINT

GENERAL NOTES

(1) USE BOXOUTS WHEN UTILITY STRUCTURE IS IN THE PATH OF CONSTRUCTION JOINTS. PROVIDE A 1-FOOT MINIMUM CLEARANCE BETWEEN THE EXTERIOR LIMIT OF THE STRUCTURE TO THE DIAMOND BOXOUT.

(2) ADJUST TRANSVERSE JOINT TO INTERSECT MANHOLE IF POSSIBLE.

(3) IF DISTANCE BETWEEN THE LONGITUDINAL JOINT AND THE EDGE OF MANHOLE IS 2 FEET OR LESS, DIVERT THE LONGITUDIAL JOINT AT A 2:1 TAPER RATE TO THE CENTER OF THE MANHOLE. IF THE DISTANCE IS GREATER THAN 2 FEET, DO NOT DIVERT THE JOINT AND SAW AS NORMAL. PLACE REBAR REINFORCEMENT AROUND THE MANHOLE.

(4) IF DISTANCE FROM THE EDGE OF THE MANHOLE TO THE NEAREST TRANSVERSE JOINT IS 4 FEET OR LESS, REDIRECT JOINT TO INTERSECT THE CENTER OF THE MANHOLE. IF DISTANCE IS GREATER THAN 4 FEET, DO NOT DIVERT THE JOINT AND SAW AS NORMAL. PLACE REBAR REINFORCEMENT AROUND THE MANHOLE.

(5) ALIGN TRANSVERSE JOINT WITH ONE EDGE OF INLET WHEN PRACTICAL.

CONCRETE PAVEMENT JOINTING AT UTILITY FIXTURES

STATE OF WISCONSIN
DEPARTMENT OF TRANSPORTATION

APPROVED
June, 2015 — DATE
/S/ Peter Kemp, P.E. — PAVEMENT SUPER
FHWA

6

S.D.D. 13 C 18-3d

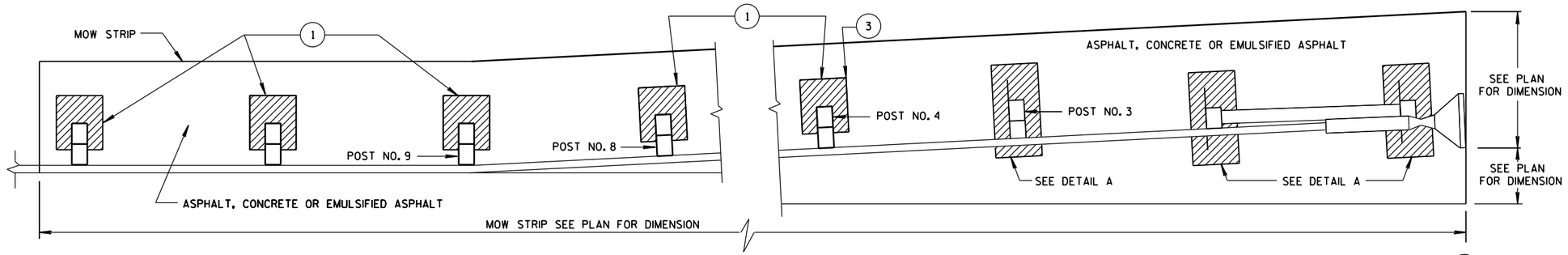

PLAN VIEW

MOW STRIP LAYOUT FOR ENERGY ABORBING TERMINAL

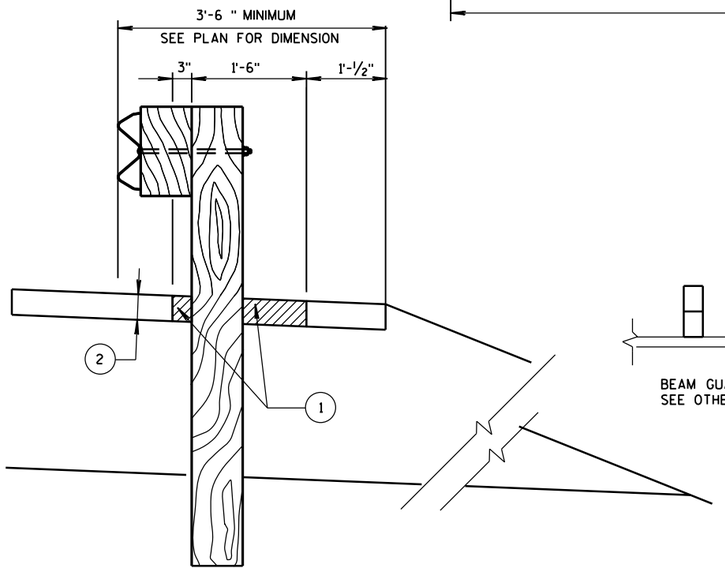

SECTION A-A

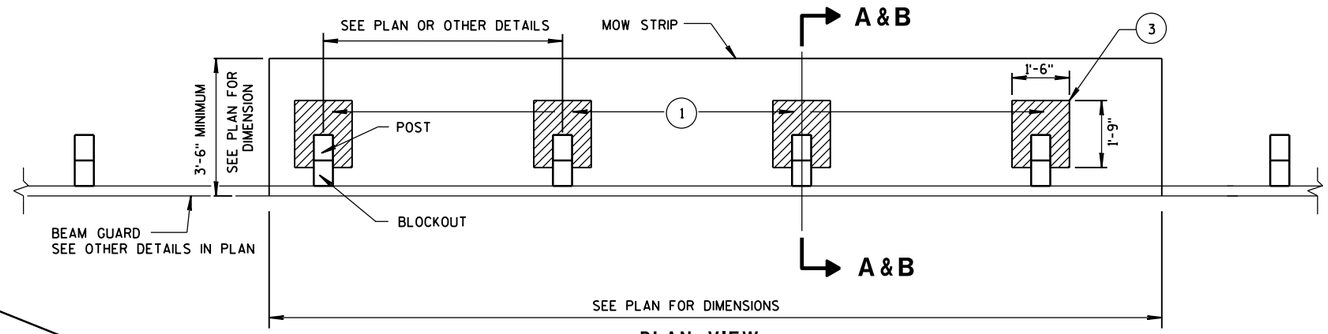

PLAN VIEW

MOW STRIP FOR TYPICAL BLOCKOUT LAYOUT

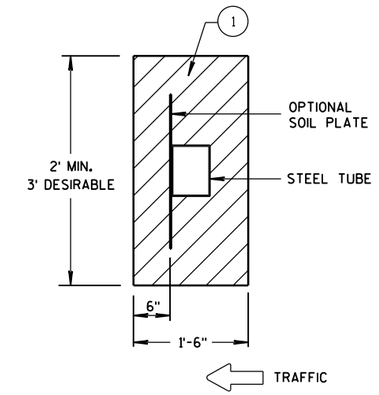

DETAIL A

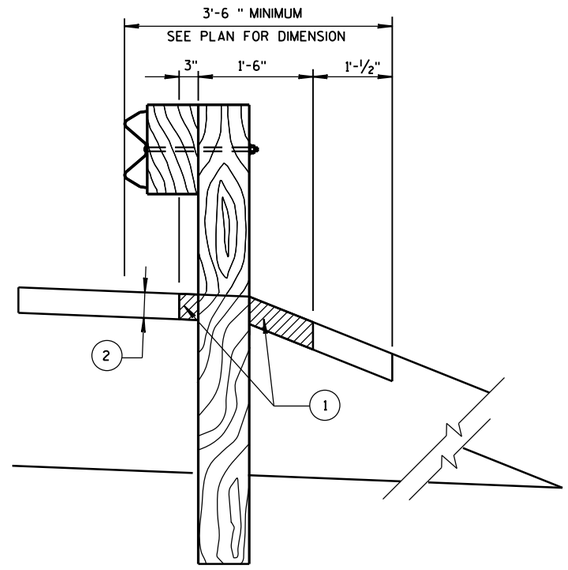

SECTION B-B

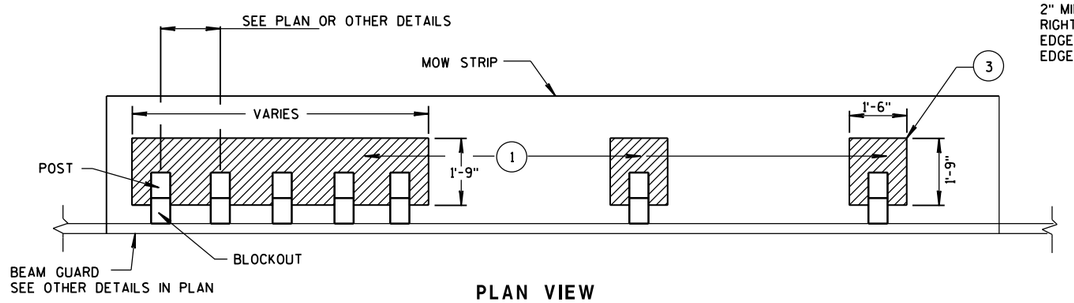

PLAN VIEW

MOW STRIP FOR TIGHT SPACING LAYOUT

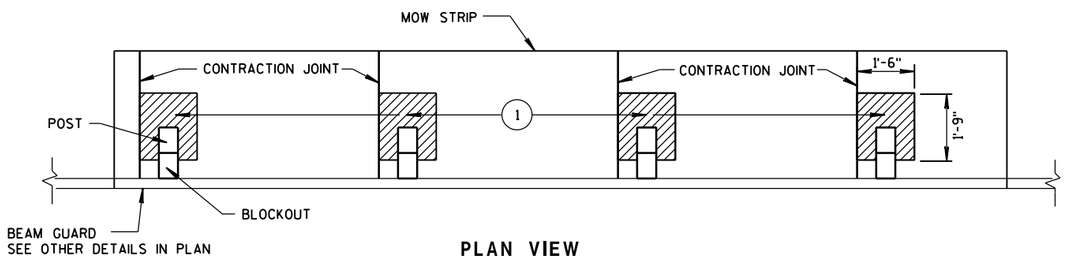

PLAN VIEW

JOINT PLACEMENT FOR CONCRETE MOW STRIP

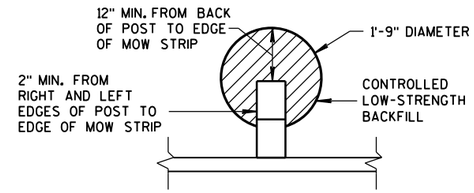

ALTERNATIVE HMA
MOW STRIP DESIGN

(1) CONTROLLED LOW-STRENGTH BACKFILL OR EMULSIFIED ASPHALT.

(2) DEPTH OF MOW STRIP:
ASPHALT - 4"
CONCRETE - 4"
EMULSIFIED ASPHALT - 1" OR LESS

(3) FOR EMULSIFIED ASPHALT MOW STRIP LEAVE OUTS NOT REQUIRED. (TYPICAL FOR ALL POSTS.)

GUARDRAIL MOW STRIP

STATE OF WISCONSIN
DEPARTMENT OF TRANSPORTATION

APPROVED
June 2014
DATE
/S/ Jerry H. Zogg
ROADWAY STANDARDS DEVELOPMENT ENGINEER
FHWA

NT

6

S.D.D. 14 B 28-3

6

S.D.D. 14 B 28-3

① WOOD OR STEEL POSTS (w6X9 OR w6X8.5) MAY BE USED. DO NOT INTERMIX WOOD AND STEEL POSTS. INSTALL STEEL POSTS WITH HOLES ON APPROACHING TRAFFIC SIDE.

② USE WOOD OR APPROVED PLASTIC BLOCKOUTS. WOOD BLOCKOUTS MAY BE CONSTRUCTED OUT OF TWO OR MORE WOOD BLOCKOUTS. SEE ALTERNATE WOOD BLOCKOUT DETAIL. DIMENSIONS OF APPROVED PLASTIC BLOCKOUTS MAY VARY.

③ IF ROCK IS ENCOUNTERED DURING EXCAVATION, PROVIDE A HOLE 12 INCHES IN DIAMETER EXTENDING 20 INCHES DEEP INTO THE ROCK. PLACE APPROXIMATELY 2½ INCHES OF GRANULAR MATERIAL IN THE BOTTOM OF THE HOLE. CUT THE POSTS THE TO LENGTH AMD INSTALL. BACKFILL WITH EXCAVATED MATERIAL AND COMPACT. BACKFILL IS TO BE FREE OF LARGE ROCKS.

④ WHEN THE DISTANCE FROM BACK OF POST TO SHOULDER HINGE POINT IS LESS THAN 2 FEET INSTALL LONGER POST AT HALF POST SPACING (K).

⑤ FOR NEW MGS INSTALLATION TOP OF W-BEAM RAIL TOLERANCE IS ± 1". FOR EXISTING MGS INSTALLATION TOP OF W-BEAM IS BETWEEN 27¾" TO 32".

⑥ WHEN USING STEEL POST AND WOOD BLOCKOUTS INSTALL FOUR 16D GALVANIZED NAILS. INSTALL NAILS AT THE BACK CORNERS OF THE BLOCK AND BEND THE NAILS OVER THE FLANGE OF THE STEEL POST.

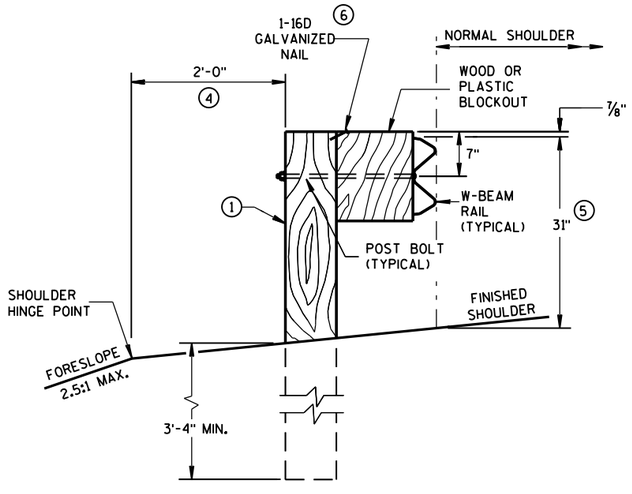

END VIEW

LOCATED ALONG A ROADWAY SHOULDER
STANDARD INSTALLATION

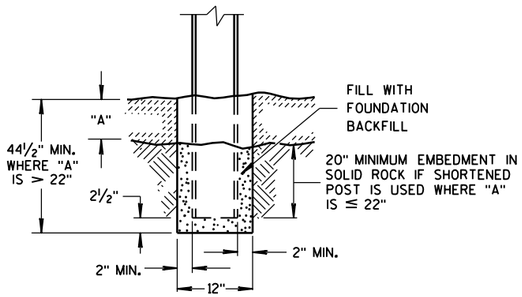

END VIEW

SETTING STEEL OR WOOD POST IN ROCK ③

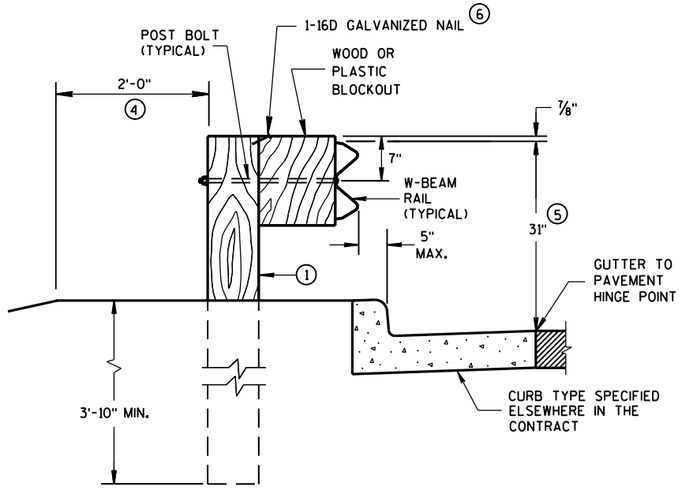

END VIEW

LOCATED ALONG A CURBED ROADWAY

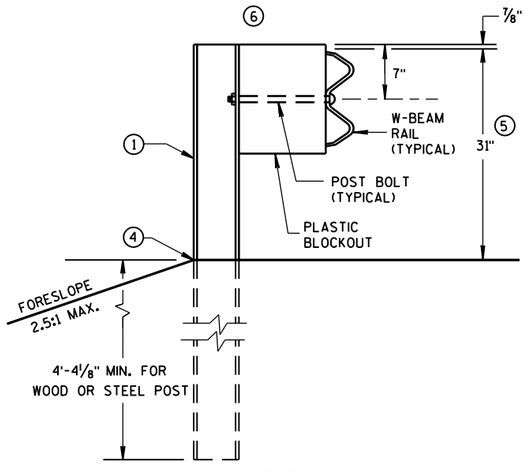

END VIEW

MGS LONGER POST AT HALFPOST SPACING W BEAM (K)

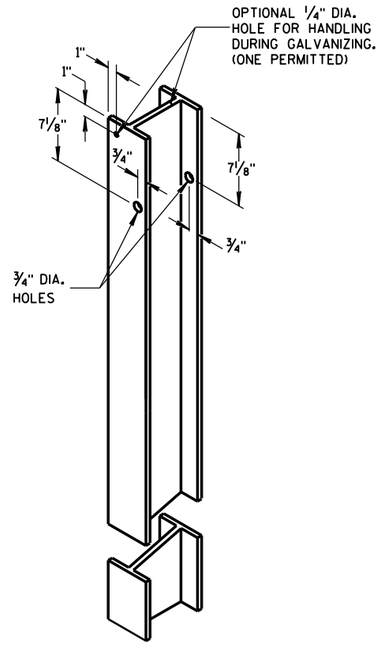

STEEL POST &
HOLE PUNCHING DETAIL
(w6X9) ①

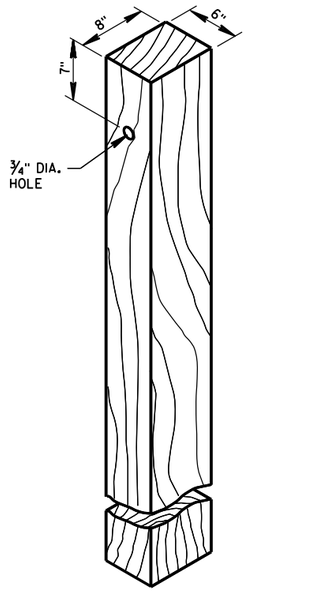

WOOD POST
(6" X 8") NOMINAL ①

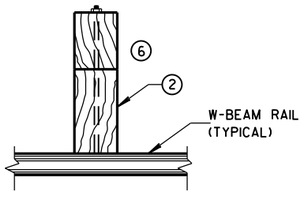

PLAN VIEW
WOOD POST,
BLOCKOUT & BEAM

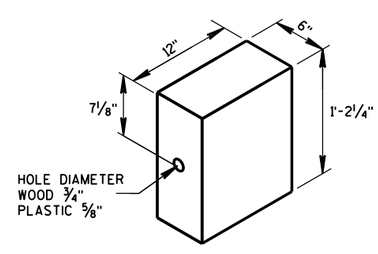

WOOD OR
PLASTIC BLOCKOUT ②

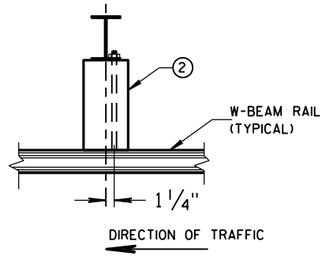

PLAN VIEW
STEEL POST,
PLASTIC BLOCKOUT & BEAM

MIDWEST GUARDRAIL SYSTEM
(MGS) GUARDRAIL

STATE OF WISCONSIN
DEPARTMENT OF TRANSPOI

6

S.D.D. 14 B 42-4a

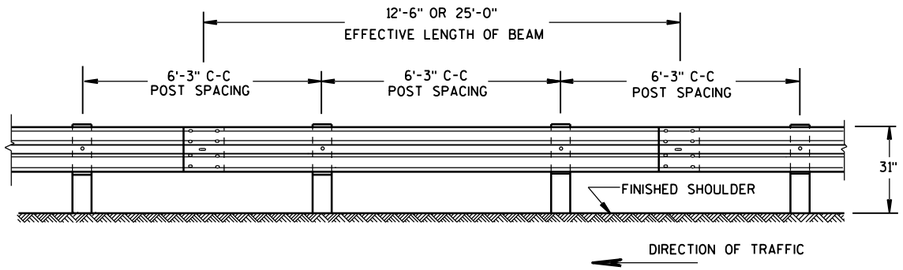

FRONT VIEW

POST SPACING STANDARD INSTALLATION

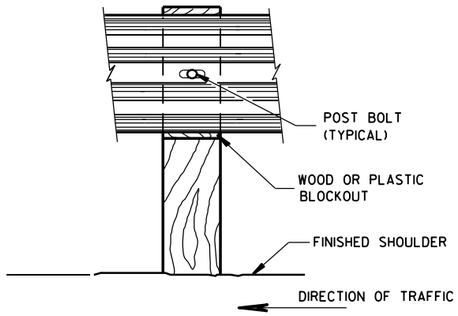

FRONT VIEW AT WOOD POST

7. PROVIDE SILVER REFLECTIVE SHEETING ON ALL REFLECTORS EXCEPT THOSE LOCATED ALONG THE LEFT EDGE OF ONE-WAY ROADWAYS, WHICH SHALL BE PROVIDED WITH YELLOW REFLECTIVE SHEETING. SHEETING IS TYPE H. SEE STANDARD SPECIFICATION 637.

8. DO NOT INSTALL REFLECTORS ON THE FIRST 50 FEET OF THE APPROACH END OF THE ENERGY ABSORBING TERMINAL. RAIL SPLICE LOCATIONS ARE THE ONLY ACCEPTABLE LOCATIONS FOR REFLECTORS.

9. REVERSE EVERY OTHER REFLECTOR FOR 2-WAY VISIBILITY. THE CONTRACTOR MAY FURNISH TWO-SIDED REFLECTORS IN LIEU OF ONE-SIDED REFLECTORS.

10. PROVIDE AN ANGLE OF BEND OF 90° ± 1° FOR TWO-SIDED REFLECTORS.

11. 25 FEET OF HALF POST SPACING IS REQUIRED ON APPROACH AND DEPARTURE ENDS OF QUARTER POST SPACING.

POST BOLTS ARE A 5/8" DIAMETER ASTM A307 GUARDRAIL BOLT. A POST BOLT REQUIRES 5/8" DIAMETER A563A DOUBLE RECESSED (DR) HEAVY HEX NUT AND 5/8" DIAMETER F844 FLAT WASHER. POST BOLTS MAY BE LONGER IF MULTIPLE BLOCKOUTS ARE BEING USED.

GUARD RAIL SPLICE BOLTS ARE A 5/8" DIAMETER ASTM A307 GUARDRAIL HEAD BOLT. A GUARDRAIL SPLICE BOLT REQUIRES 5/8" DIAMETER A563A DOUBLE RECESSED (DR) HEAVY HEX NUT.

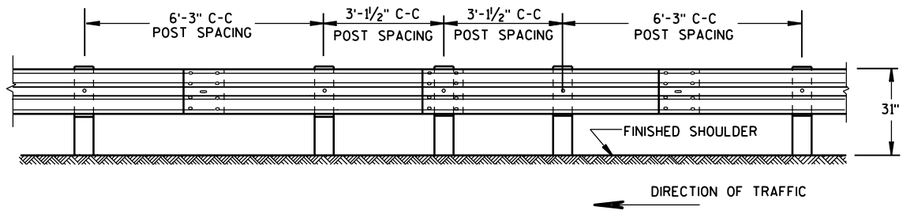

FRONT VIEW

HALF POST SPACING (HS) AND HALF POST SPACING WITH LONGER POSTS (K)

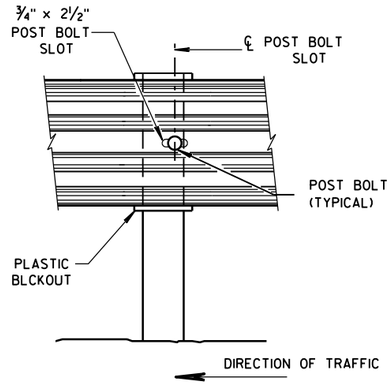

FRONT VIEW AT STEEL POST

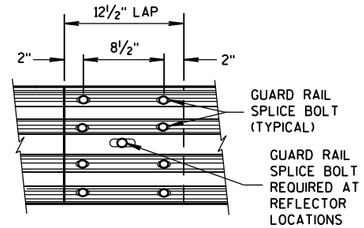

FRONT VIEW
MID-SPAN BEAM SPLICE

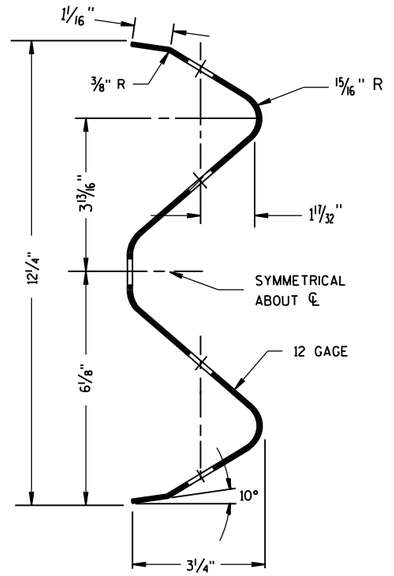

SECTION THRU W-BEAM RAIL

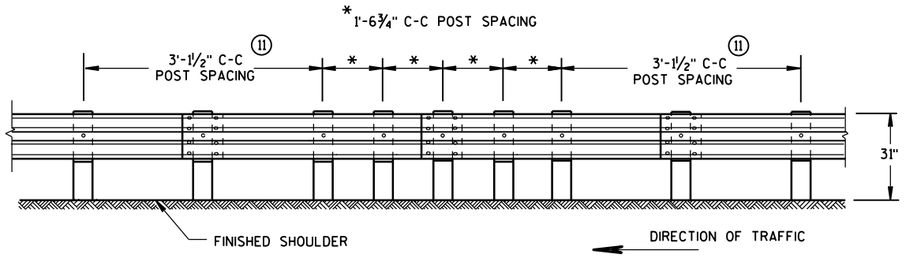

FRONT VIEW

QUARTER POST SPACING (QS)

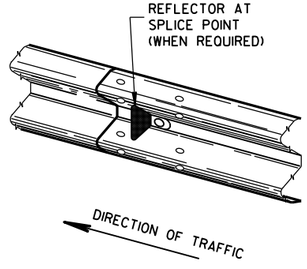

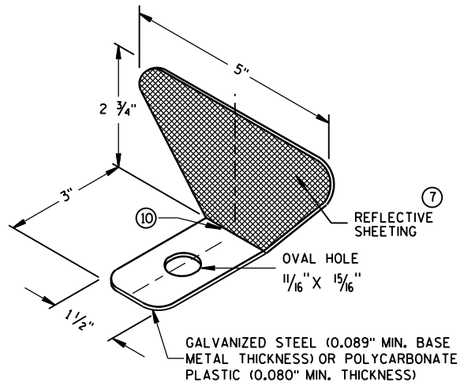

ONE SIDED REFLECTOR DETAIL AND TYPICAL INSTALLATION 7

REFLECTOR SPACING 8

	BEAM GUARD LENGTH	REFLECTOR SPACING	NO. SURFACES REFLECTORIZED	MIN. NO. REFLECTORS
ONE WAY TRAFFIC	< 200'	50' C-C	1	3
	> 200'	100' C-C	1	
TWO WAY TRAFFIC	< 200'	25' C-C	1 9	6
	> 200'	50' C-C	1	
TWO WAY TRAFFIC	< 200'	50' C-C	2	3
	> 200'	100' C-C	2 10	

MIDWEST GUARDRAIL SYSTEM
(MGS) GUARDRAIL

STATE OF WISCONSIN
DEPARTMENT OF TRANSPO

6

S.D.D. 14 B 42-4b

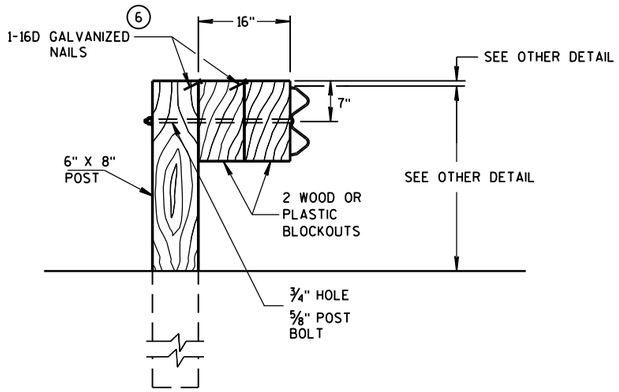

DETAIL FOR 16" BLOCKOUT DEPTH

IT IS ACCEPTABLE TO USE BLOCKOUTS UP TO 16" DEEP TO INCREASE THE POST OFFSET TO AVOID UNDERGROUND OBSTACLES. THERE IS NO LIMIT TO THE NUMBER OF POSTS THAT CAN HAVE ADDITIONAL BLOCKOUTS UP TO 16" DEEP.

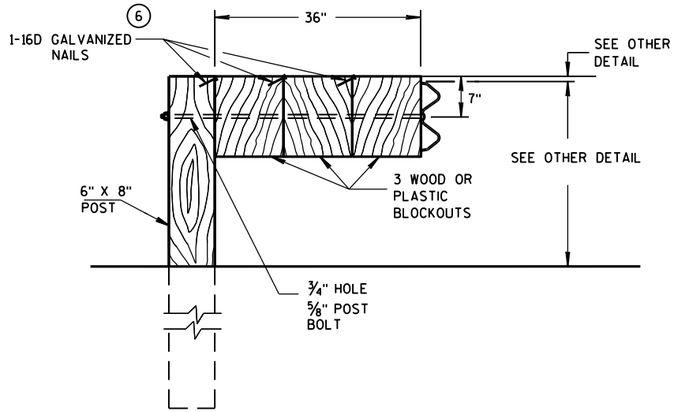

DETAIL FOR 36" BLOCKOUT DEPTH

NOTES: UNDER SPECIAL CIRCUMSTANCES, SUCH AS AVOIDING OBSTACLES THAT ARE NOT RELOCATED, IT IS ACCEPTABLE TO INSTALL ADDITIONAL BLOCKOUTS TO OBTAIN UP TO 36" DEPTH FOR ONE OR TWO POSTS IN A SECTION OF GUARDRAIL.

DO NOT USE 16" OR 36" BLOCKOUTS IF IT CAUSES THE POST TO BE DRIVEN BEYOND SHOULDER HINGE POINT OR CAUSES A FIXED OBJECT TO BE WITHIN THE DEFLECTION DISTANCE OF THE BARRIER.

NOTE: 1. ALL FILLETS SHALL HAVE A MINIMUM RADIUS OF 1/16".
2. IF THE BOLT EXTENDS MORE THAN 1/4" FROM THE NUT THE BOLT SHOULD BE TRIMMED BACK.

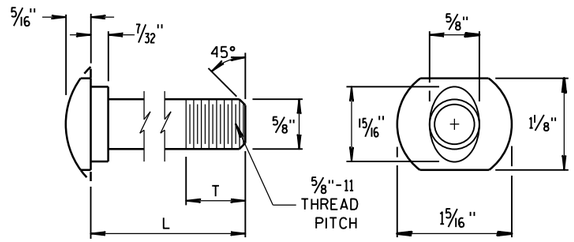

POST BOLT TABLE

L	T (MIN.)
1¼"	1⅛"
2"	1¾"
10"	4"
14"	4 1/16"
18"	4"
21"	4 1/16"
25"	4"

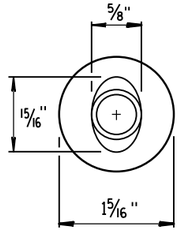

ALTERNATE BOLT HEAD

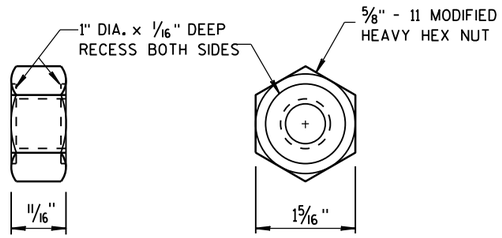

POST BOLT, SPLICE BOLT AND RECESS NUT

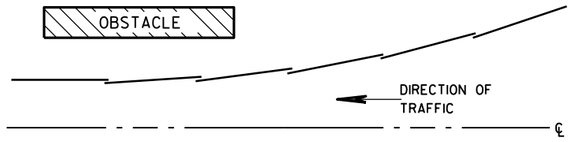

PLAN VIEW

BEAM LAPPING DETAIL

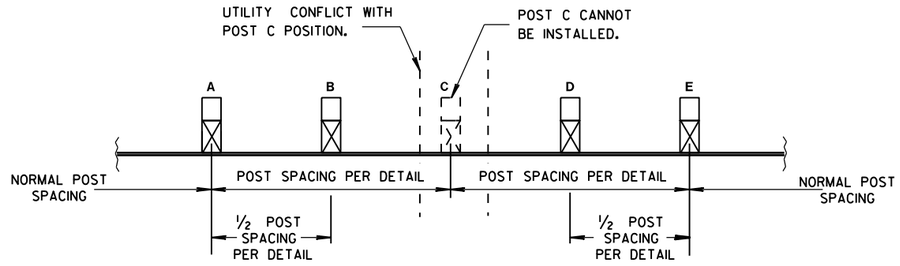

POST DRIVING FOR CONTINUOUS UNDERGROUND OBSTRUCTION

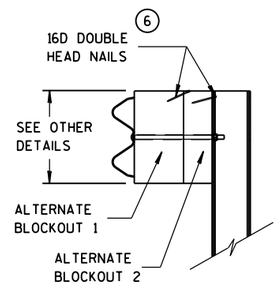

SIDE VIEW

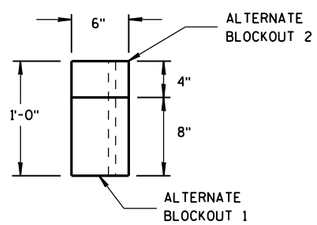

TOP VIEW

ALTERNATE WOOD BLOCKOUT DETAIL

MIDWEST GUARDRAIL SYSTEM (MGS) GUARDRAIL

STATE OF WISCONSIN
DEPARTMENT OF TRANSPORTATION

APPROVED
June 2016 — DATE
/S/ Jerry H. Zogg — ROADWAY STANDARDS DEVELOPMENT ENGINEER
FHWA

6
S.D.D. 14 B 42-4c

GENERAL NOTES

(A) THE SLOPE IN THE AREA BOUNDED BY THE GRADELINE, THE HINGE POINT LINE (HPL), AND THE CLEAR ZONE LIMITS (CZL) SHALL BE 4:1 OR FLATTER.

(B) AFTER FINAL ASSEMBLY, RECHECK CABLE TO BE SURE IT IS TAUT AND HAS NOT RELAXED.

(C) DIFFERENT MANUFACTURES REQUIRE DIFFERENT PERFORATED W-BEAM RAIL END PANELS. SEE MANUFACTURES INFORMATION.

(D) THE TOP OF THE STEEL TUBE ON POST 1 AND POST 2 SHALL NOT BE MORE THAN 3" ABOVE THE FINISH GROUND ELEVATION.

(F) ATTACH ALUMINUM SHEET TO E.A.T. HEAD USING 4 STAINLESS STEEL SELF-TAPPING SCREWS. ONE SCREW PER CORNER.

(G) ½" DIAMETER X 3" LONG LAG BOLT AND WASHER.

(H) HARDWARE VARIES BETWEEN DIFFERENT MANUFACTURES. SEE MANUFACTURE'S DRAWING FOR INFORMATION.

(I) DIMENSIONS MAY VARY. SEE MANUFACTURE'S INFORMATION.

SEE SDD 14B42 FOR MORE INFORMATION.

* DO NOT ATTACH BLOCKOUTS TO POSTS 1 AND 2.

DO NOT INSTALL REFLECTORS ON THE FIRST 50 FEET OF THE APPROACH END OF THE ENERGY ABSORBING TERMINAL.

W-BEAM RAIL SPLICES ARE LOCATED AT POST NUMBER 3, AND BETWEEN POST 5 AND 6, BETWEEN POSTS 7 AND 8, AND MIDDLE OF THE SPAN AFTER POST 9.

THE CENTER OF THE UPPER 3½" DIAMETER HOLE ON POST NUMBER 3 THROUGH POST 9 IS TO BE FLUSH WITH THE GROUND LINE UP TO A MAXIMUM OF 2" ABOVE GROUND LINE.

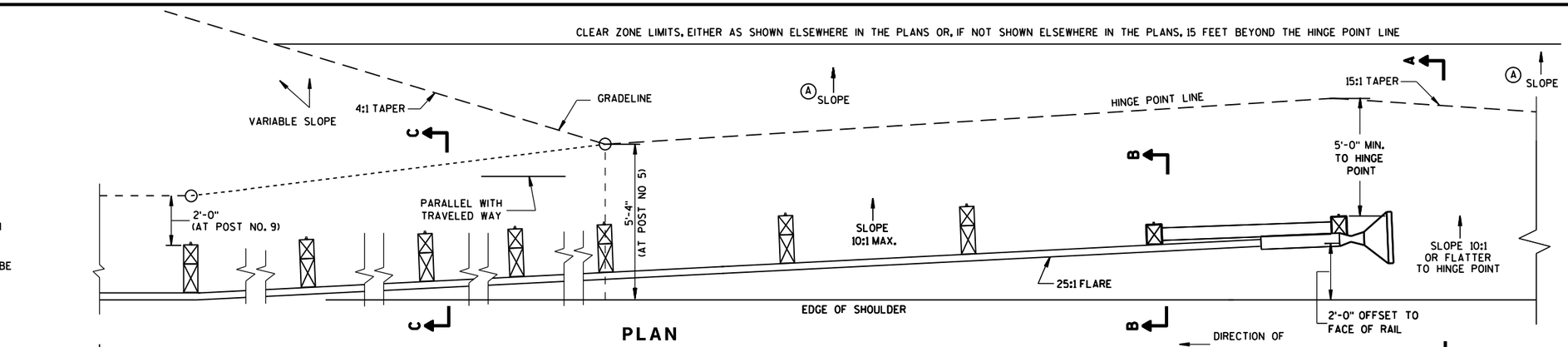

ELEVATION

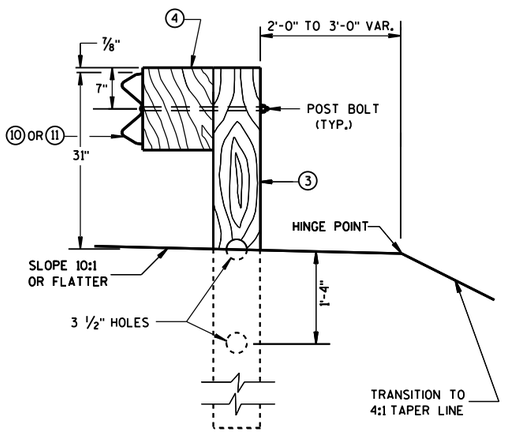

SECTION C-C
TYPICAL AT POST NOS. 3-9

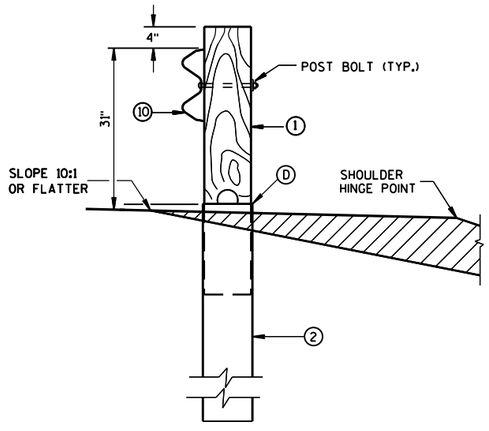

SECTION B-B
TYPICAL AT POST NO. 2*

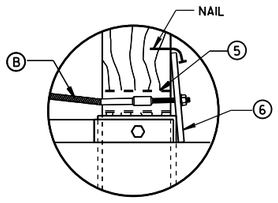

DETAIL "A"

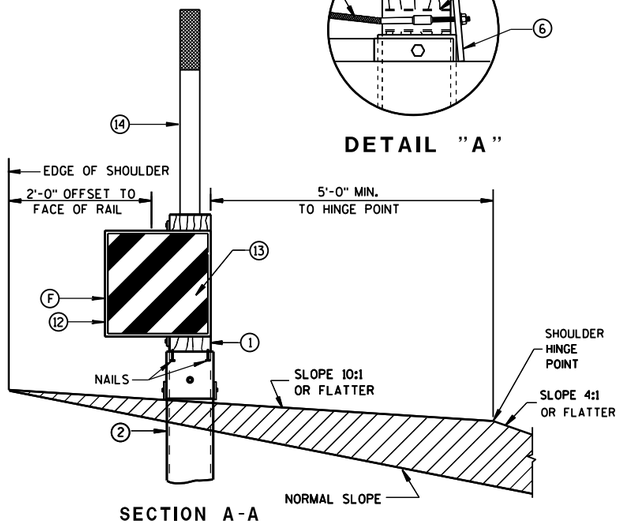

SECTION A-A
TYPICAL AT POST NO. 1*

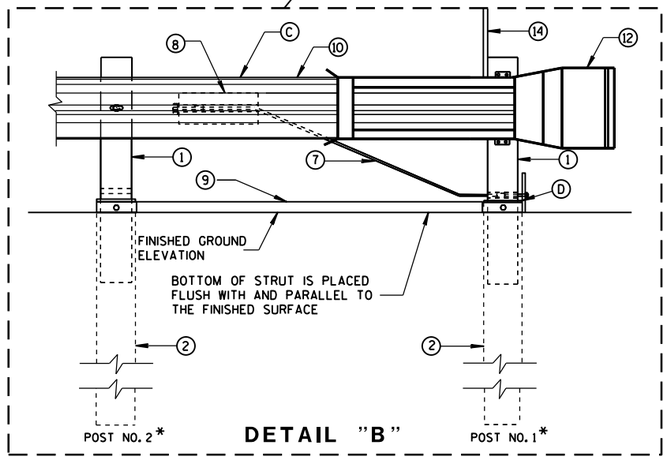

DETAIL "B"

MIDWEST GUARDRAIL SYSTEM
ENERGY ABSORBING TERMINAL
(MGS)

STATE OF WISCONSIN
DEPARTMENT OF TRANSPOI

S.D.D. 14 B 44-2a

S.D.D. 14 B 44-2a

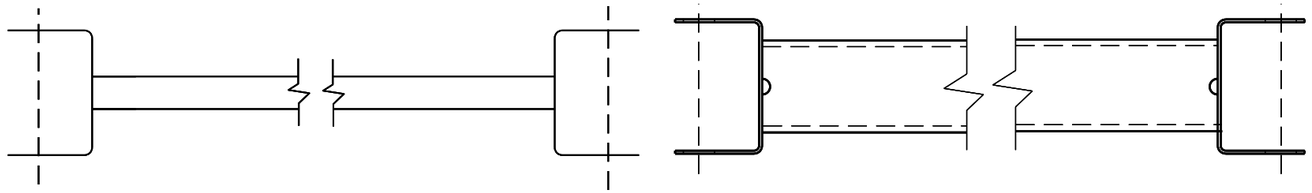

GENERIC GROUND STRUT (9) (H)

BILL OF MATERIALS

PART NO.	DESCRIPTION MATERIALS PROVIDED BY MGS EAT MANUFACTURER. SEE MANUFACTURER'S DETAILS FOR MORE INFORMATION.
(1)	WOOD BREAKAWAY POST
(2)	6" X 8" X 0.188", 6'-0" LONG FOUNDATION TUBE AT POSTS 1 AND 2
(3)	WOOD CRT
(4)	WOOD BLOCKOUT
(5)	PIPE SLEEVE
(6)	BEARING PLATE
(7)	BCT CABLE ASSEMBLY
(8)	ANCHOR CABLE BOX
(9)	GROUND STRUT
(10)	PERFORATED W-BEAM RAIL END PANEL, 12'-6" LONG.
(11)	STANDARD W-BEAM RAIL. MULTIPLE SECTIONS REQUIRED. SECTIONS VARY IN LENGTH.
(12)	END SECTION EAT
(13)	0.040" ALUMINUM SHEET WITH REFLECTIVE SHEETING TYPE F PER SECTION 637 OF THE STANDARD SPECIFICATIONS
(14)	EAT MARKER POST - YELLOW (SEE APPROVED PRODUCTS LIST)

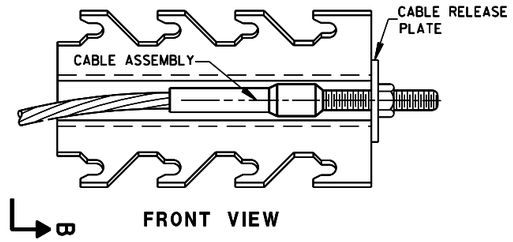

FRONT VIEW

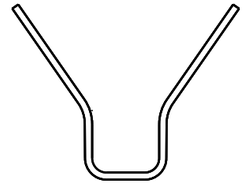

SECTION B-B

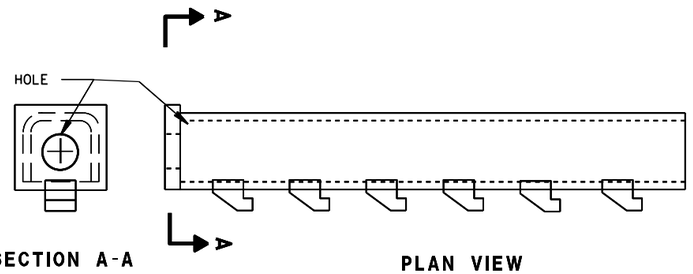

SECTION A-A

PLAN VIEW

GENERIC ANCHOR CABLE BOX (8) (H)

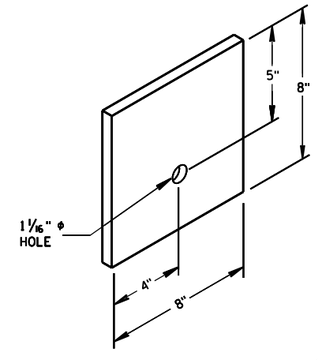

BEARING PLATE (6)

MIDWEST GUARDRAIL SYSTEM
ENERGY ABSORBING TERMINAL
(MGS)

STATE OF WISCONSIN
DEPARTMENT OF TRANSPOI

6

S.D.D. 14 B 44-2b

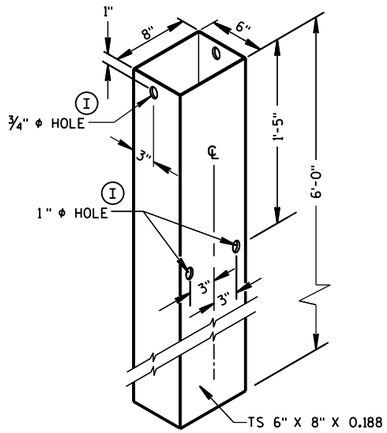

FOUNDATION TUBE (2)

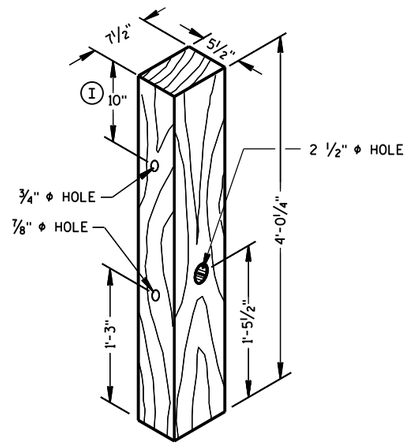

POSTS NUMBER 1 AND 2

WOOD BREAKAWAY POST (1)

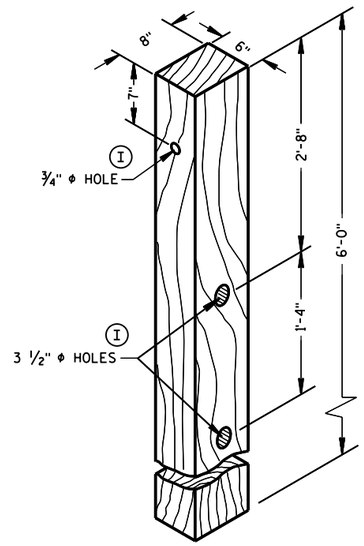

POSTS NUMBER 3-9

WOOD CRT POST (3)

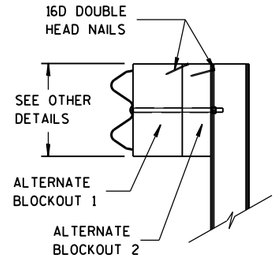

SIDE VIEW

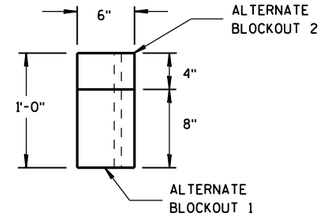

TOP VIEW

ALTERNATE WOOD BLOCKOUT DETAIL

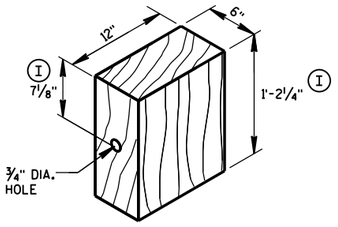

WOOD BLOCKOUT (4)

REQ'D. AT ALL POSTS EXCEPT POST NO'S 1 & 2

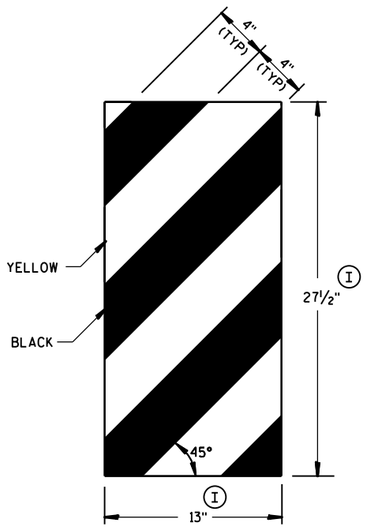

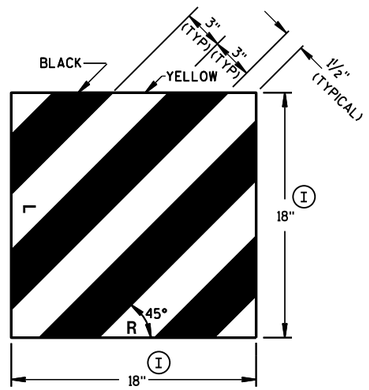

GENERIC REFLECTIVE SHEETING (13) (H)

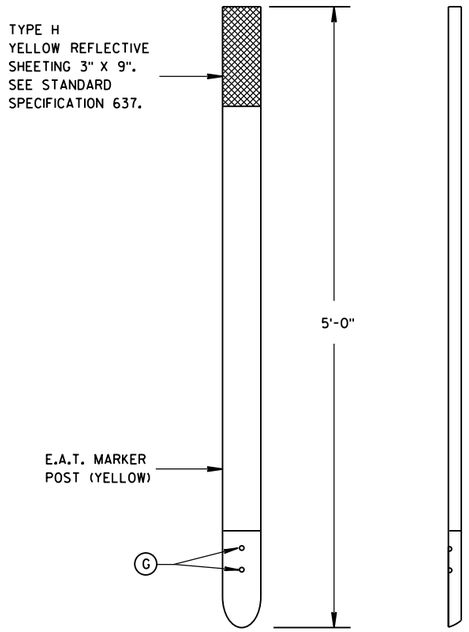

FRONT VIEW

SIDE VIEW

E.A.T. MARKER POST (14)

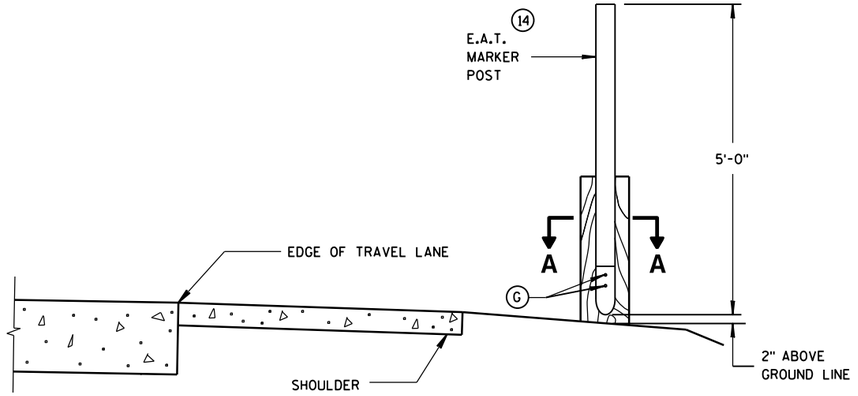

TYPICAL INSTALLATION OF E.A.T. MARKER POST BACKSIDE OF POST NO. 1

(E.A.T. AND RAIL REMOVED FOR CLARITY)

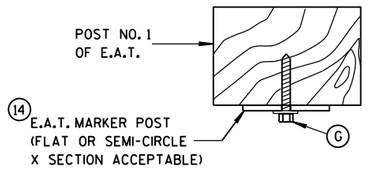

SECTION A-A

MIDWEST GUARDRAIL SYSTEM ENERGY ABSORBING TERMINAL (MGS)

STATE OF WISCONSIN
DEPARTMENT OF TRANSPORTATION

APPROVED
June 2014 — DATE
/S/ Jerry H. Zogg — ROADWAY STANDARDS ENGINEER
FHWA

6

S.D.D. 14 B 44-2c

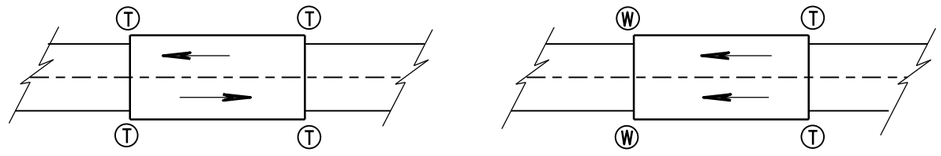

TWO WAY TRAFFIC

ONE WAY TRAFFIC

Ⓣ THRIE BEAM CONNECTION

Ⓦ W-BEAM CONNECTION WHEN REQUIRED

TYPICAL LOCATIONS OF THRIE BEAM AND W-BEAM CONNECTIONS TO BRIDGE

GENERAL NOTES

IF ROCK IS ENCOUNTERED, REMOVE ROCK TO FULL DEPTH OF POST PLUS 2½", AND 12" DIAMETER AROUND POST. SEE 14B42 FOR MORE DETAILS.

TRANSITION USES STEEL POSTS ONLY.

SEE STANDARD DETAIL DRAWING 14 B 42 FOR MORE INFORMATION.

① BRIDGE RAILING TYPE "W" DOES NOT REQUIRE A TERMINAL CONNECTOR.

② OPTIONAL CURB AND GUTTER OR DRAINAGE FEATURE SEE PLAN FOR INFORMATION.

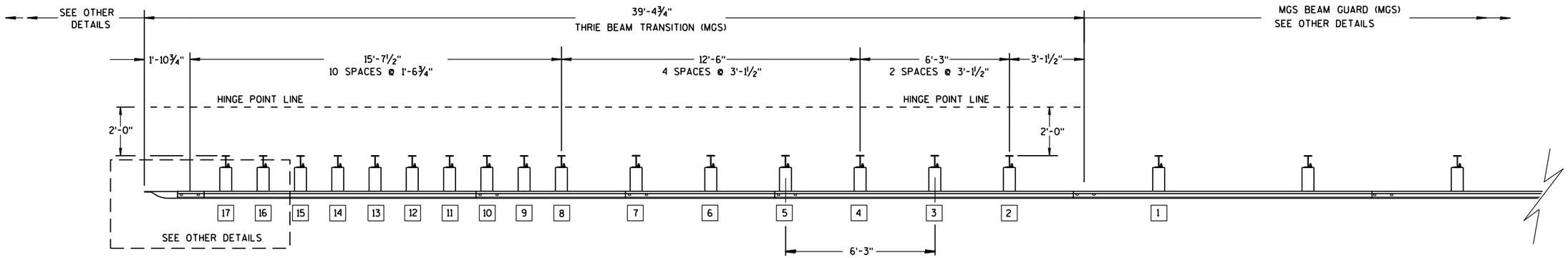

PLAN VIEW

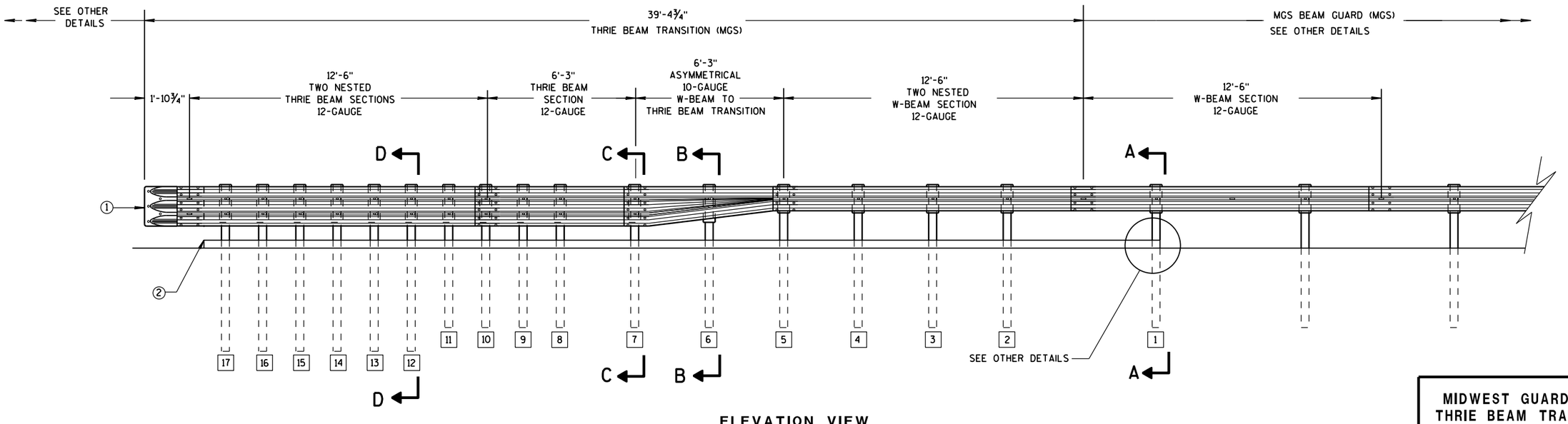

ELEVATION VIEW

MIDWEST GUARDRAIL SYSTEM THRIE BEAM TRANSITION

MIDWEST GUARDRAIL SYSTEM
THRIE BEAM TRANSITION (MGS)

STATE OF WISCONSIN
DEPARTMENT OF TRANSPOR

6

S.D.D. 14 B 45-4a

GENERAL NOTES

(2) OPTIONAL CURB AND GUTTER OR DRAINAGE_FEATURE SEE PLAN FOR INFORMATION.

(3) WHEN USING STEEL POSTS AND WOOD BLOCKOUTS INSTALL FOUR 10D GALVANIZED NAILS. INSTALL NAILS AT THE BACK CORNERS OF THE BLOCK AND BEND THE NAILS OVER THE FLANGE OF THE STEEL POST.

(4) TOLERANCE FOR TOP OF W-BEAM RAIL IS ± 1".

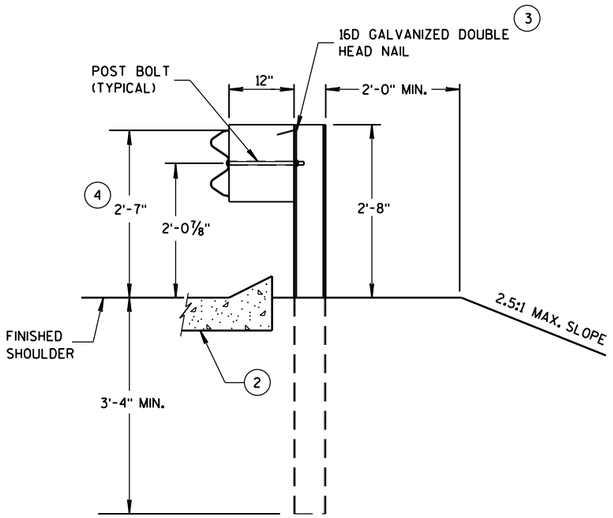

SECTION A-A

POSTS 1-5

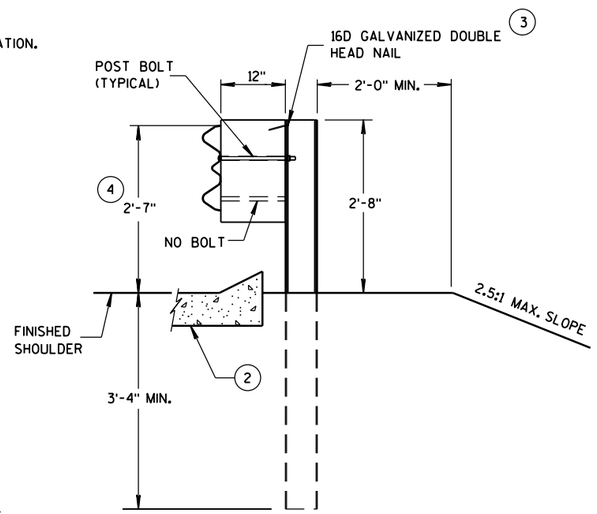

SECTION B-B

POST 6

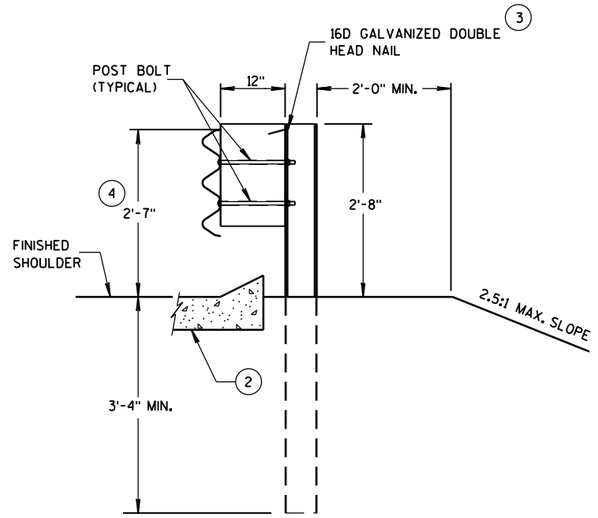

SECTION C-C

POSTS 7-11

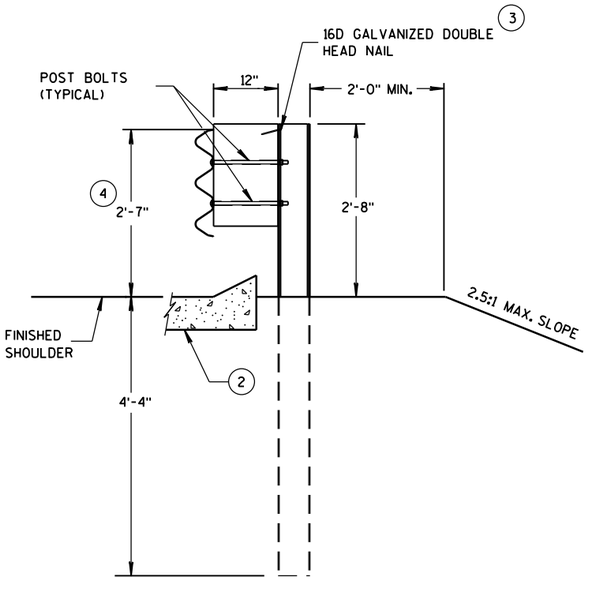

SECTION D-D

POSTS 12-17

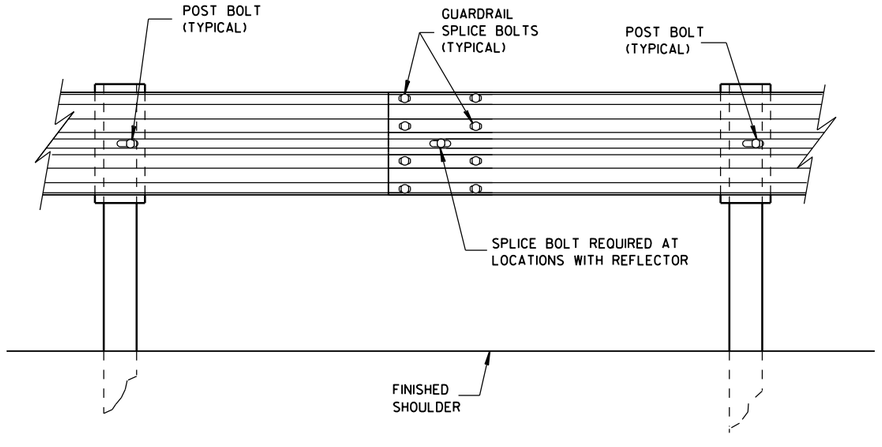

SPLICE DETAIL

PLATE WASHER DETAIL

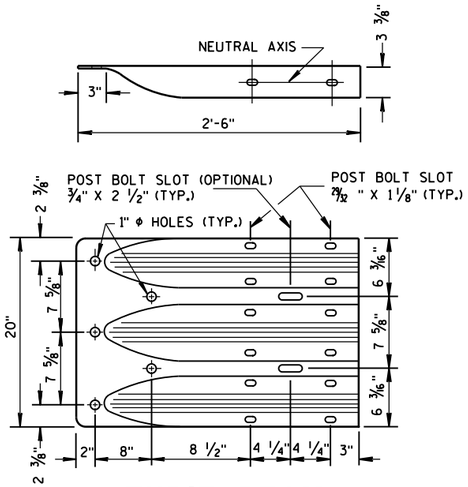

THRIE BEAM TERMINAL CONNECTOR

SECTION THRU THRIE BEAM RAIL ELEMENT

MIDWEST GUARDRAIL SYSTEM
THRIE BEAM TRANSITION (MGS)

STATE OF WISCONSIN
DEPARTMENT OF TRANSPO

6

S.D.D. 14 B 45-4b

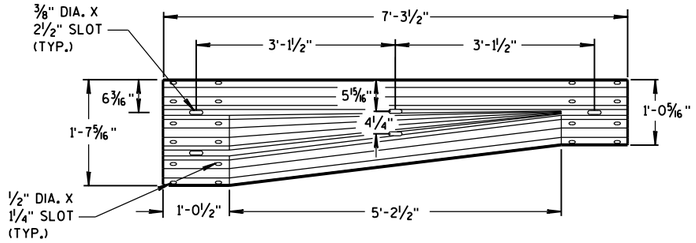

W-BEAM TO THRIE BEAM TRANSITION SECTION

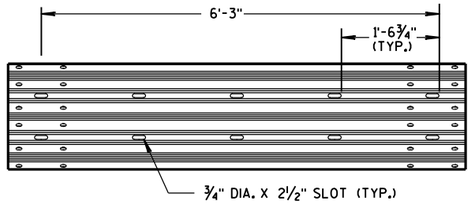

6'-3" THRIE BEAM SECTION

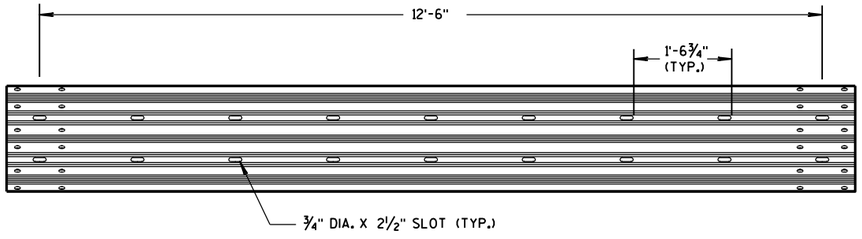

12'-6" THRIE BEAM SECTION

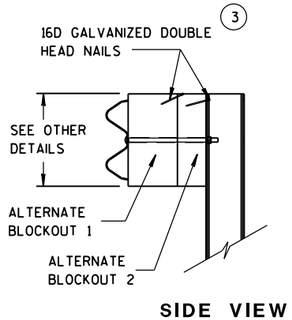

SIDE VIEW

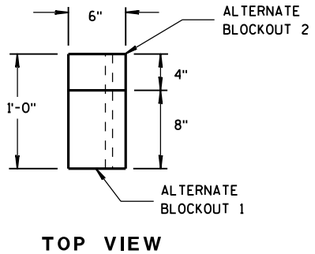

TOP VIEW

ALTERNATE WOOD BLOCKOUT DETAIL

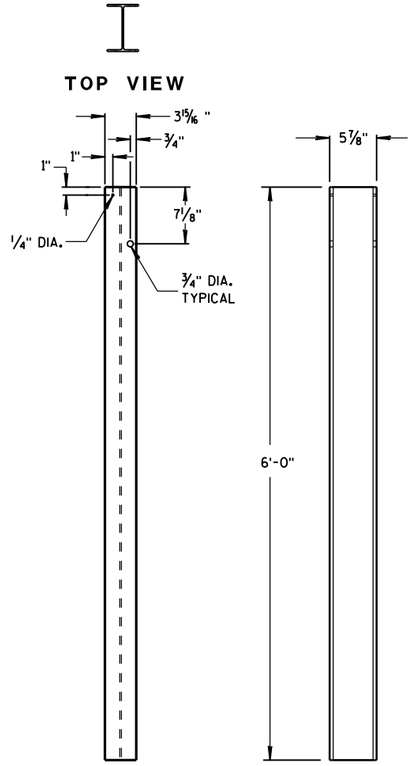

STEEL POSTS 1-5

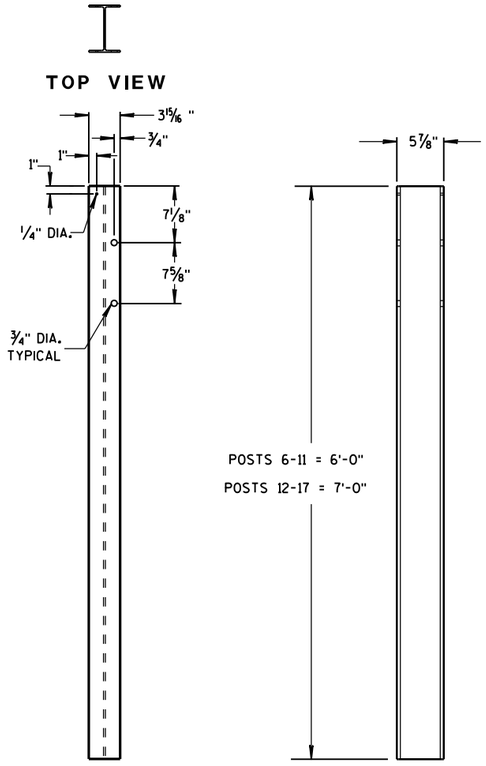

STEEL POSTS 6-17

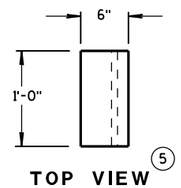

TOP VIEW

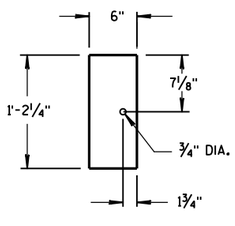

FRONT VIEW

BLOCKOUT POSTS 1-5

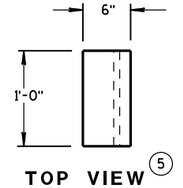

TOP VIEW

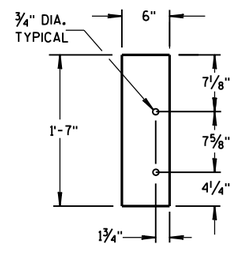

FRONT VIEW

BLOCKOUT POSTS 6-17

GENERAL NOTES

STEEL POSTS ARE W6X9 OR W6X8.5.

BOLT HOLES FOR POST ARE ON FRONT AND OF SIDE OF POST.

(3) WHEN USING STEEL POSTS AND WOOD BLOCKOUTS INSTALL FOUR 16D GALVANIZED NAILS. INSTALL NAILS AT THE BACK CORNERS OF THE BLOCK AND BEND THE NAILS OVER THE FLANGE OF THE STEEL POST.

(5) WOOD BLOCKS MAY BE CONSTRUCTED OUT OF 2 WOOD BLOCKS. SEE ALTERNATE WOOD BLOCK DETAIL.

MIDWEST GUARDRAIL SYSTEM
THRIE BEAM TRANSITION (MGS)

STATE OF WISCONSIN
DEPARTMENT OF TRANSPOI

6

S.D.D. 14 B 45-4c
S.D.D. 14 B 45-4c

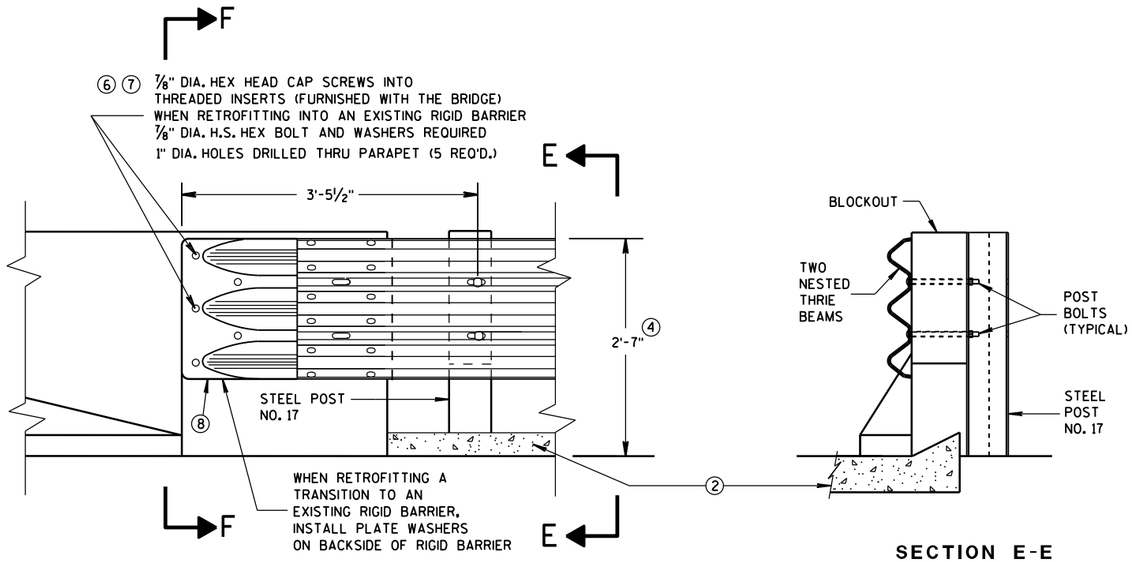

FRONT VIEW

SECTION E-E

THRIE BEAM CONNECTION TO BRIDGE PARAPET WITH SQUARE ENDS

GENERAL NOTES

THESE ARE TYPICAL CONNECTION DETAILS. ADJUST THE POSTION OF CONNECTIONS TO EXISTING BRIDGES TO FIT THE ACTUAL BRIDGE AND SITE DIMENSIONS.

② OPTIONAL CURB AND GUTTER OR DRAINAGE FEATURE SEE PLAN FOR INFORMATION.

④ TOLERANCE FOR TOP OF BEAM IS ± 1".

⑥ DRILLING BOLT HOLES THROUGH THE PARAPET, BOLTS, NUTS, WASHERS AND REPAIRING DAMAGED CONCRETE ARE INCIDENTAL TO THE CONTRACT.

⑦ BOLTS MAY BE A325 BOLTS OR A449 BOLTS. BOLT LENGTH AND THREADING LENGTH ARE TO ALLOW FOR A TIGHT CONNECTION BETWEEN RIGID BARRIER AND THRIE BEAM CONNECTION PLATE. CONTRACTOR IS TO FIELD VERIFY BOLT LENGTH AND THREAD LENGTH. ONE ROUND WASHER REQUIRED BETWEEN BOLT HEAD AND THRIE BEAM CONNECTOR PLATE. BOLTS THAT EXTEND THROUGH THE PARAPET AND OUT THE BACK FACE REQUIRE A HARDENED ROUND STEEL WASHER THAT IS 2" O.D. X 5/8" THICK AND ONE PLATE WASHER. REPAIR ANY DAMAGED CONCRETE FROM BOLT INSTALLATION.

⑧ THE RECESS FOR A W-BEAM CONNECTION, WHICH EXISTS ON SOME PARAPETS OF THIS TYPE, SHALL BE FILLED WITH A TREATED TIMBER BLOCKOUT. BLOCKOUT SIZE IS 1'-6" X 2'-0" X 3 1/2".

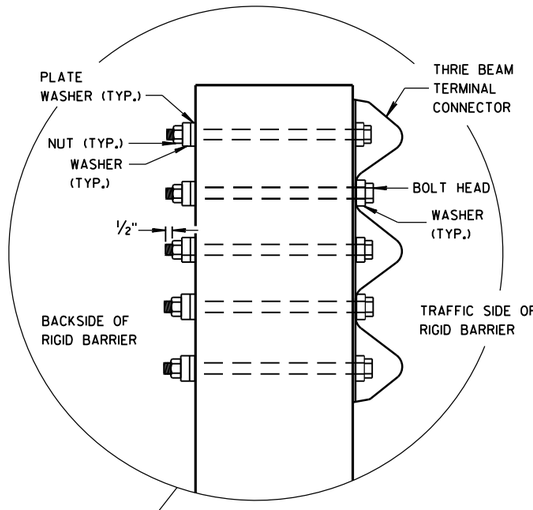

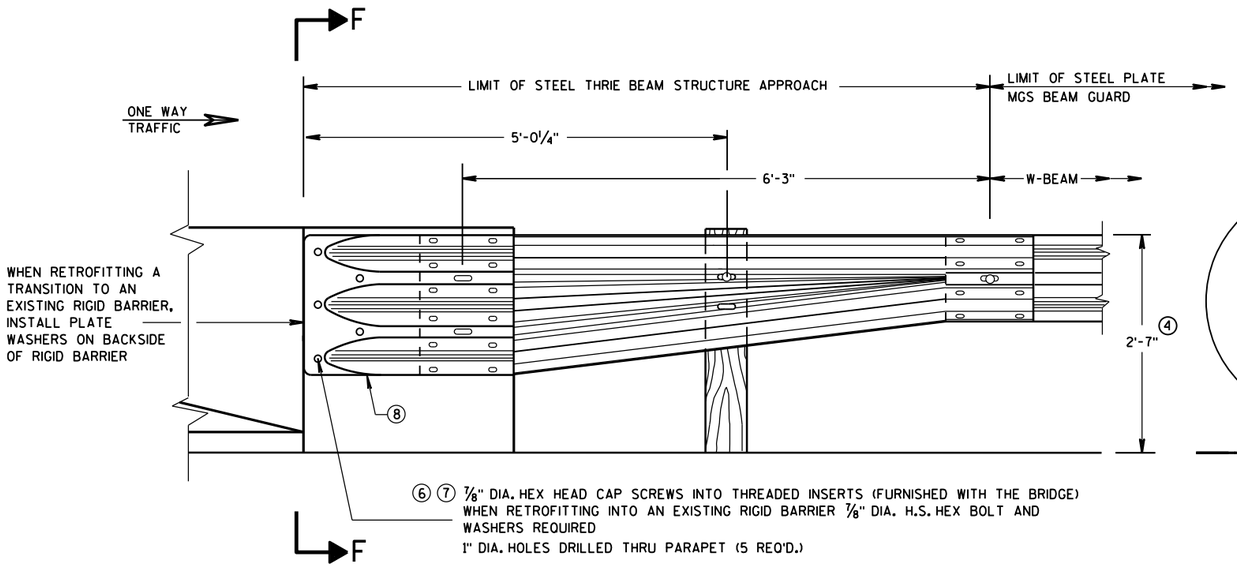

FRONT VIEW

SECTION F-F

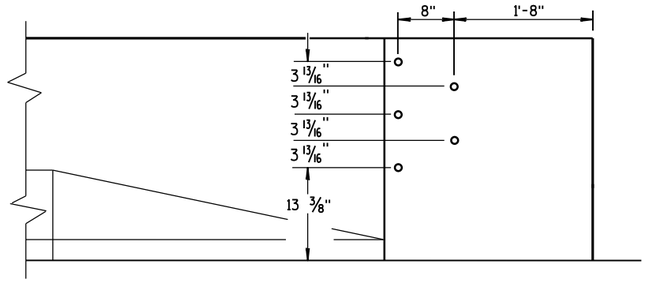

DRILL HOLE LOCATION

W BEAM TRANSITION AND CONNECTION TO BRIDGE PARAPETS WITH SQUARE ENDS

(USE ONLY ON THE TRAFFIC EXIT END OF ONE WAY BRIDGES)

MIDWEST GUARDRAIL SYSTEM THRIE BEAM TRANSITION (MGS)
STATE OF WISCONSIN DEPARTMENT OF TRANSPORTATION
APPROVED June, 2015 — DATE /S/ Jerry H. Zogg — ROADWAY STANDARDS DEVELOPMENT ENGINEER FHWA NT

6

S.D.D. 14 B 45-4d

6

S.D.D. 14 B 45-4d

GENERAL NOTES

THESE ARE TYPICAL CONNECTION DETAILS. ADJUST THE POSTION OF CONNECTIONS TO EXISTING BRIDGES TO FIT THE ACTUAL BRIDGE AND SITE DIMENSIONS.

(2) OPTIONAL CURB AND GUTTER OR DRAINAGE FEATURE SEE PLAN FOR INFORMATION.

(4) TOLERANCE FOR TOP OF BEAM IS ± 1".

(6) DRILLING BOLT HOLES THROUGH THE PARAPET, BOLTS, NUTS, WASHERS AND REPAIRING DAMAGED CONCRETE ARE INCIDENTAL TO THE CONTRACT.

(7) BOLTS MAY BE A325 BOLTS OR A449 BOLTS. BOLT LENGTH AND THREADING LENGTH ARE TO ALLOW FOR A TIGHT CONNECTION BETWEEN RIGID BARRIER AND THRIE BEAM CONNECTION PLATE. CONTRACTOR IS TO FIELD VERIFY BOLT LENGTH AND THREAD LENGTH. ONE ROUND WASHER REQUIRED BETWEEN BOLT HEAD AND THRIE BEAM CONNECTOR PLATE. BOLTS THAT EXTEND THROUGH THE PARAPET AND OUT THE BACK FACE REQUIRE A HARDENED ROUND STEEL WASHER THAT IS 2" O.D. X 5/8" THICK AND ONE PLATE WASHER. REPAIR ANY DAMAGED CONCRETE FROM BOLT INSTALLATION.

(8) THE RECESS FOR A W-BEAM CONNECTION, WHICH EXISTS ON SOME PARAPETS OF THIS TYPE, SHALL BE FILLED WITH A TREATED TIMBER BLOCKOUT. BLOCKOUT SIZE IS 1'-6" X 2'-0" X 3 1/2".

(9) BOLT, NUT AND WASHERS NOT REQUIRED FOR THIS LOCATION WHEN RETROFITTING AN EXISTING PAPAPET AND THE HOLE IS EITHER ABOVE PARAPET OR WITHIN 4 INCHES OF THE EDGE OF PARAPET.

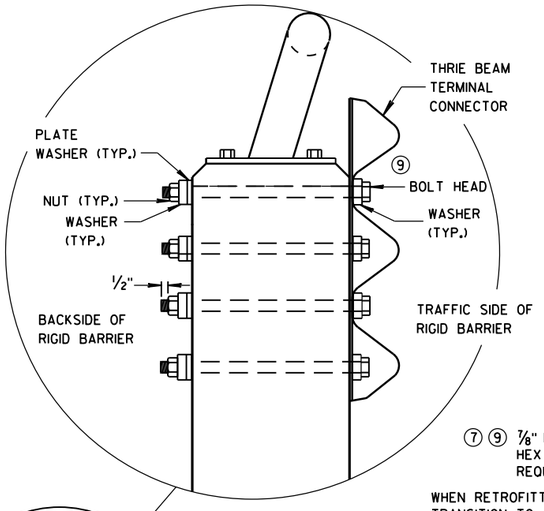

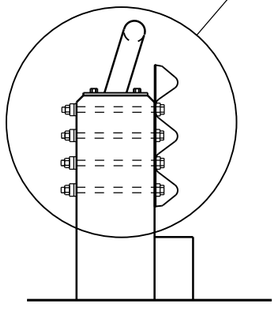

SECTION G-G

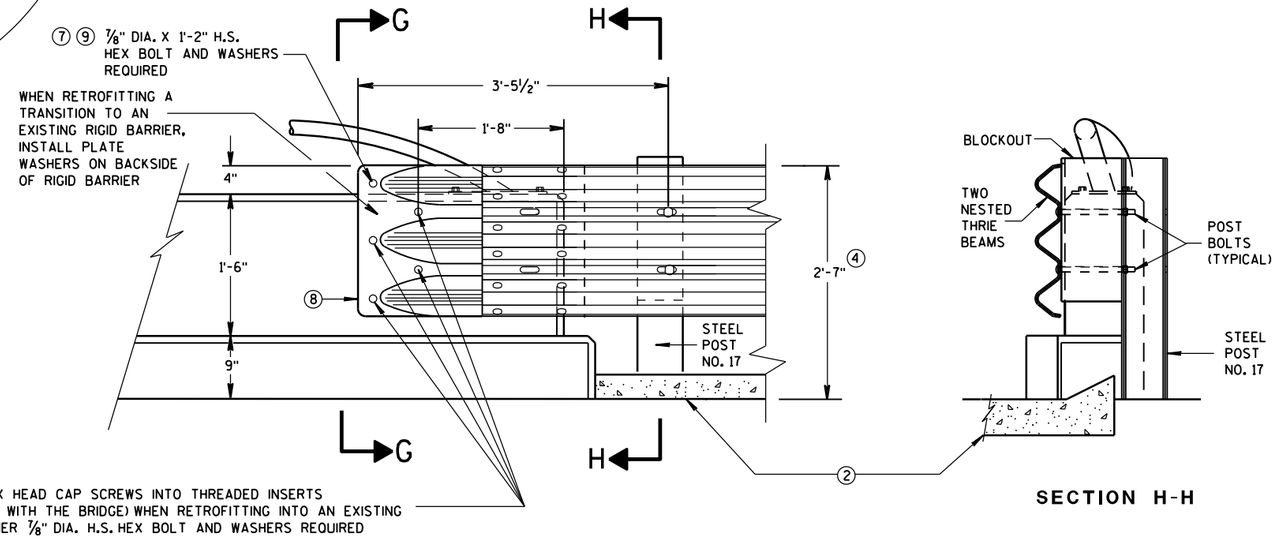

FRONT VIEW

SECTION H-H

THRIE BEAM CONNECTION TO VERTICAL FACED PARAPETS

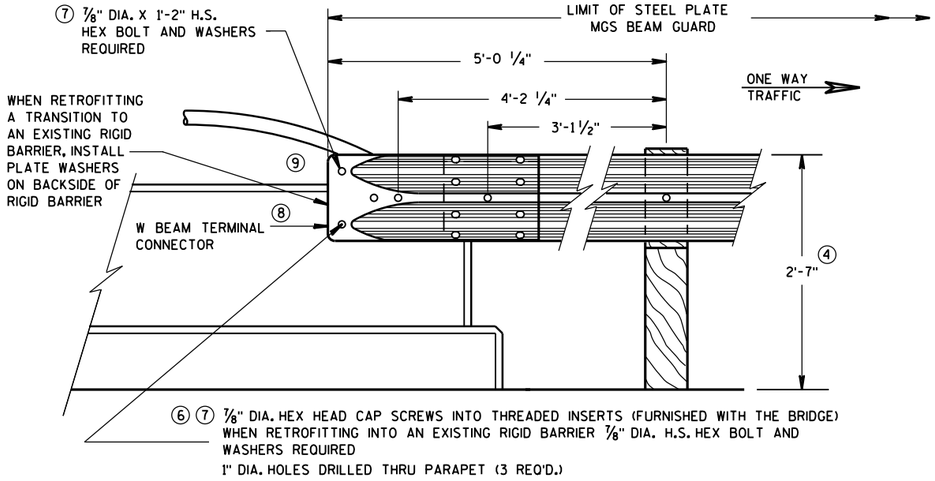

FRONT VIEW

W BEAM CONNECTION TO VERTICAL FACE PARAPET

(USE ONLY ON THE TRAFFIC EXIT END OF ONE WAY BRIDGES)

MIDWEST GUARDRAIL SYSTEM
THRIE BEAM TRANSITION (MGS)

STATE OF WISCONSIN
DEPARTMENT OF TRANSPORTATION

APPROVED
June, 2015 — DATE
/S/ Jerry H. Zogg — ROADWAY STANDARDS DEVELOPMENT ENGINEER
FHWA

6

S.D.D. 14 B 45-4e

6

S.D.D. 14 B 45-4e

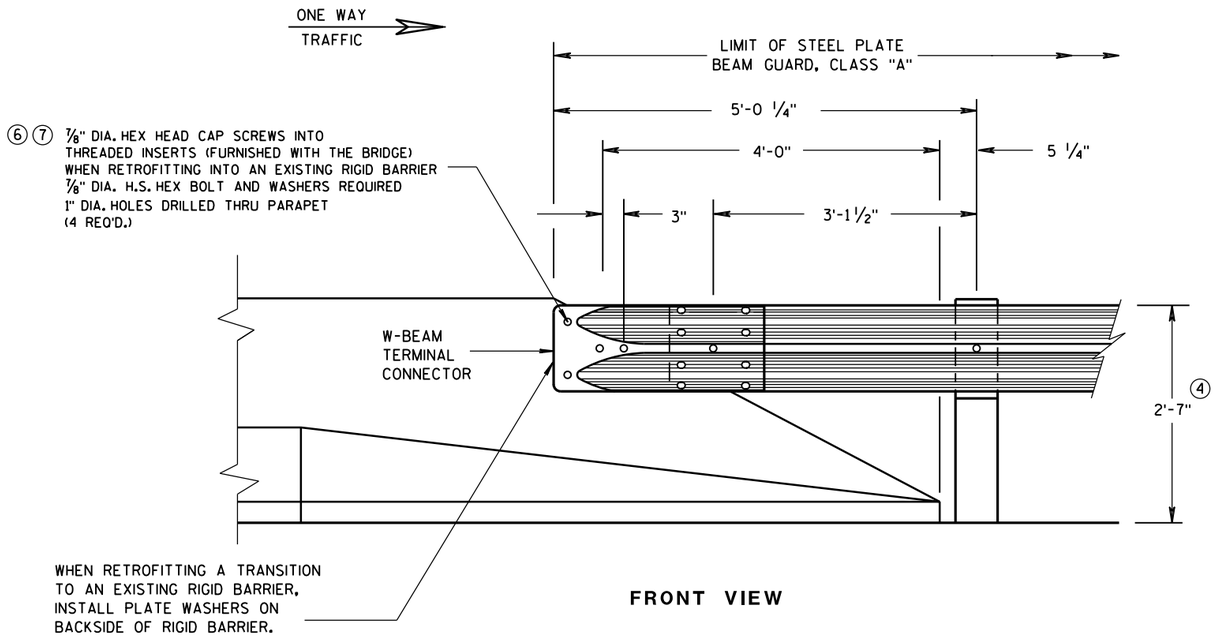

FRONT VIEW

W BEAM CONNECTION TO PARAPETS WITH SLOPED ENDS

(USE ONLY AT TRAFFIC EXIT END OF ONE WAY BRIDGE)

GENERAL NOTES

② OPTIONAL CURB AND GUTTER OR DRAINAGE FEATURE SEE PLAN FOR INFORMATION.

④ TOLERANCE FOR TOP OF BEAM IS ± 1".

⑥ DRILLING BOLT HOLES THROUGH THE PARAPET, BOLTS, NUTS, WASHERS AND REPAIRING DAMAGED CONCRETE ARE INCIDENTAL TO THE CONTRACT.

⑦ BOLTS MAY BE A325 BOLTS OR A449 BOLTS. BOLT LENGTH AND THREADING LENGTH ARE TO ALLOW FOR A TIGHT CONNECTION BETWEEN RIGID BARRIER AND THRIE BEAM CONNECTION PLATE. CONTRACTOR IS TO FIELD VERIFY BOLT LENGTH AND THREAD LENGTH. ONE ROUND WASHER REQUIRED BETWEEN BOLT HEAD AND THRIE BEAM CONNECTOR PLATE. BOLTS THAT EXTEND THROUGH THE PARAPET AND OUT THE BACK FACE REQUIRE A HARDENED ROUND STEEL WASHER THAT IS 2" O.D. X 5/8" THICK AND ONE PLATE WASHER. REPAIR ANY DAMAGED CONCRETE FROM BOLT INSTALLATION.

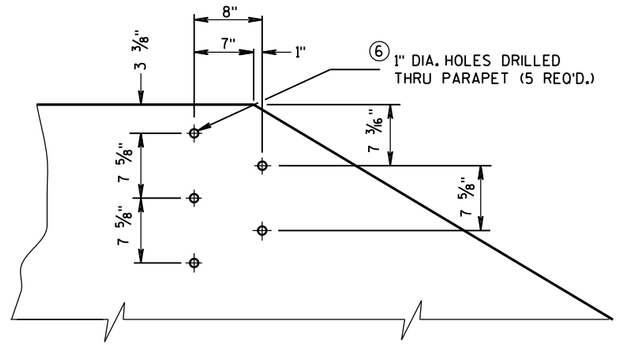

DRILL HOLE LOCATION AND PATTERN
FOR THRIE BEAM CONNECTION

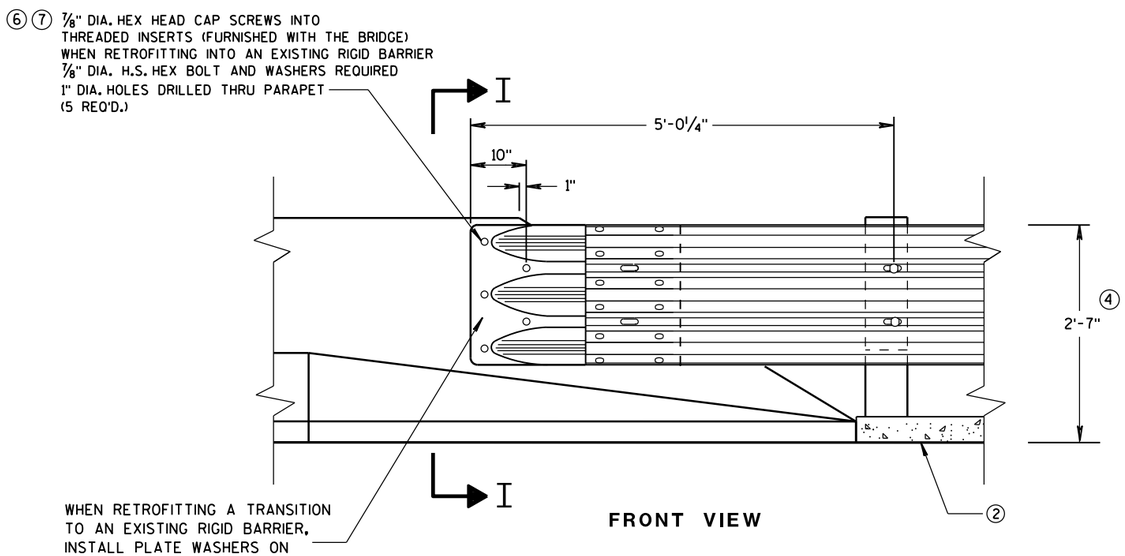

FRONT VIEW

SECTION I-I

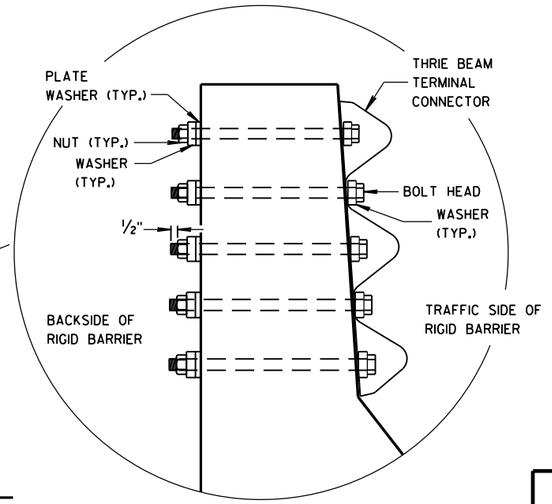

THRIE BEAM CONNECTION TO BRIDGE PARAPETS WITH SLOPED ENDS

MIDWEST GUARDRAIL SYSTEM
THRIE BEAM TRANSITION (MGS)

STATE OF WISCONSIN
DEPARTMENT OF TRANSPORTATION

APPROVED
June, 2015 — DATE
/S/ Jerry H. Zogg — ROADWAY STANDARDS DEVELOPMENT ENGINEER
FHWA

6

S.D.D. 14 B 45-4f

6

S.D.D. 14 B 45-4f

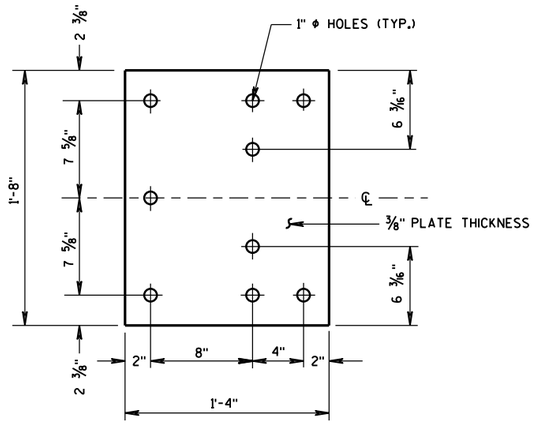

BACK-UP PLATE DETAIL

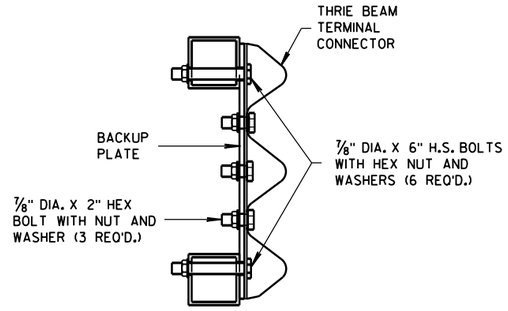

SECTION J-J

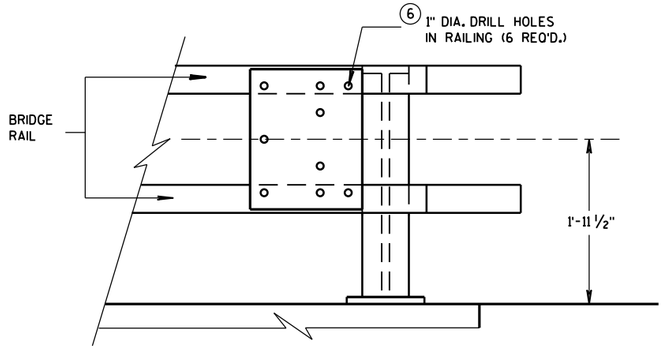

BACK-UP PLATE MOUNTING ONTO BRIDGE RAILING

GENERAL NOTES

4 TOLERANCE FOR TOP OF BEAM IS ± 1".

6 DRILLING HOLES THROUGH THE PAPRPET, BOLTS, NUTS, WASHERS AND REPAIRING DAMAGED CONCRETE ARE INCIDENTAL TO THE CONTRACT.

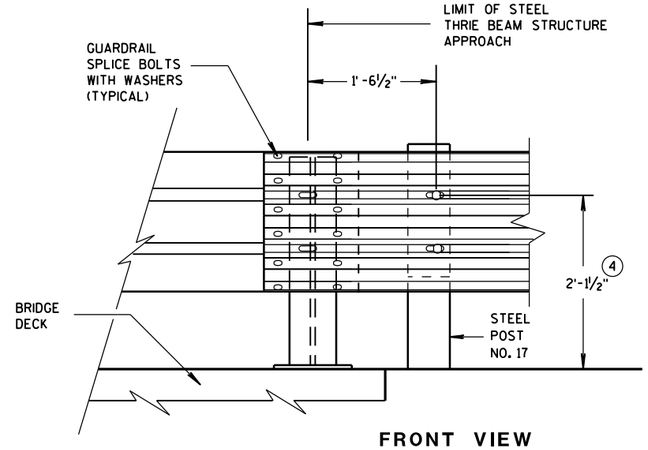

FRONT VIEW

THRIE BEAM CONNECTION TO STEEL RAILING TYPE "W"

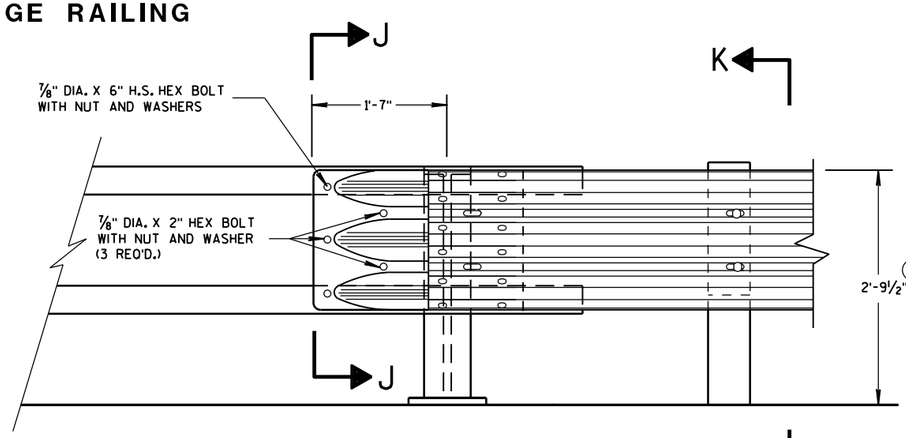

FRONT VIEW

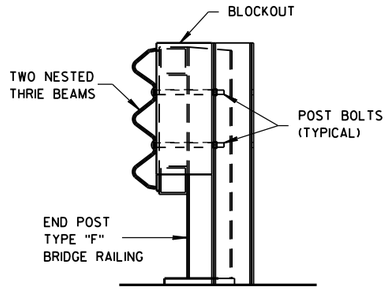

SECTION K-K

THRIE BEAM CONNECTION TO TUBULAR RAILING TYPE "F"

MIDWEST GUARDRAIL SYSTEM
THRIE BEAM TRANSITION (MGS)

STATE OF WISCONSIN
DEPARTMENT OF TRANSPORTATION

APPROVED
June, 2015 — DATE
/S/ Jerry H. Zogg — ROADWAY STANDARDS DEVELOPMENT ENGINEER
FHWA

6

S.D.D. 14 B 45-4g

6

S.D.D. 14 B 45-4g

GENERAL NOTES

(4) TOLERANCE FOR TOP OF W-BEAM RAIL IS ± 1".

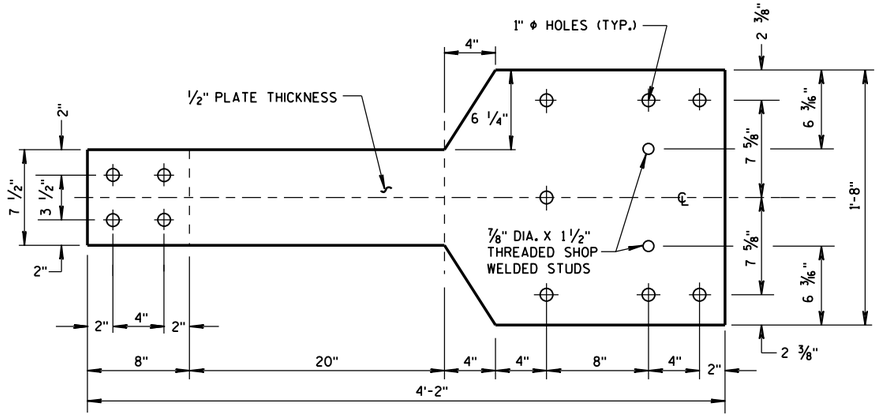

FRONT VIEW

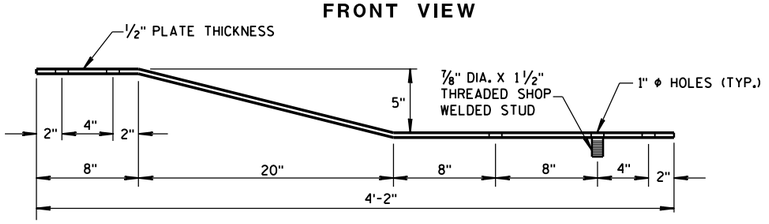

PLAN VIEW

BACK-UP PLATE DETAIL, TYPE "M"

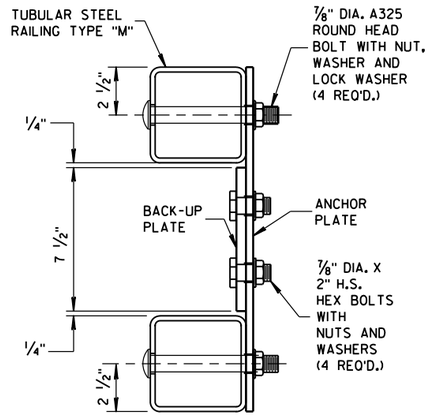

SECTION L-L

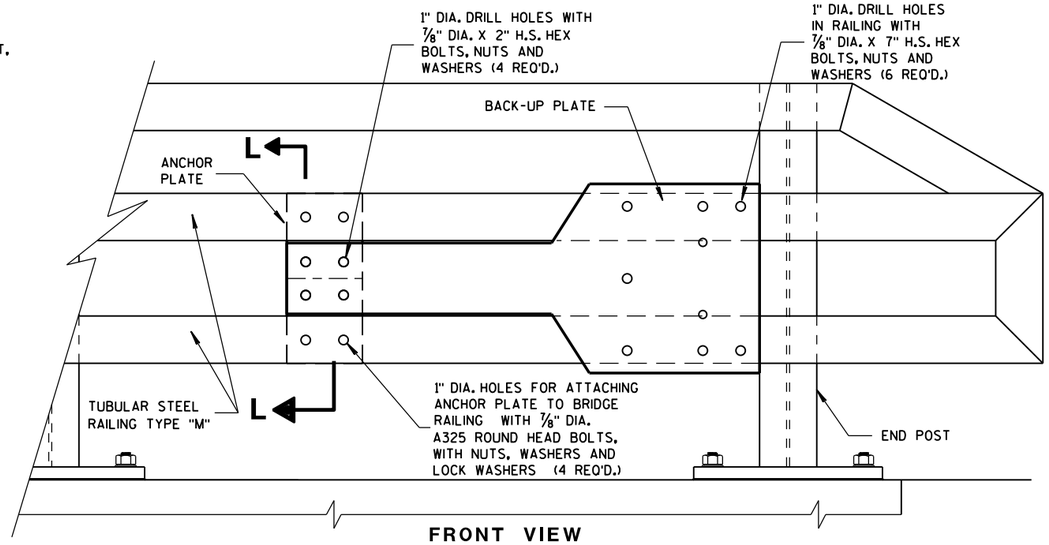

FRONT VIEW

ANCHOR AND BACK-UP PLATE MOUNTING TO BRIDGE RAILING, TYPE "M"

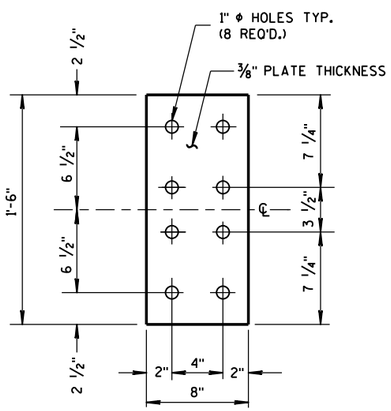

FRONT VIEW

ANCHOR PLATE DETAIL, TYPE "M"

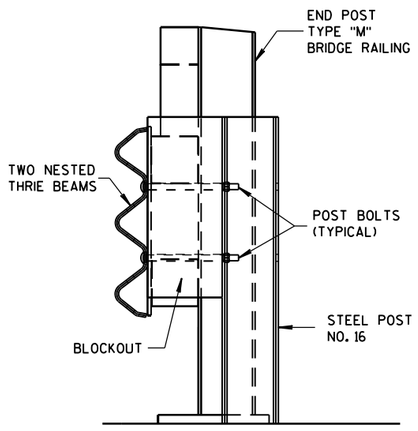

SECTION M-M

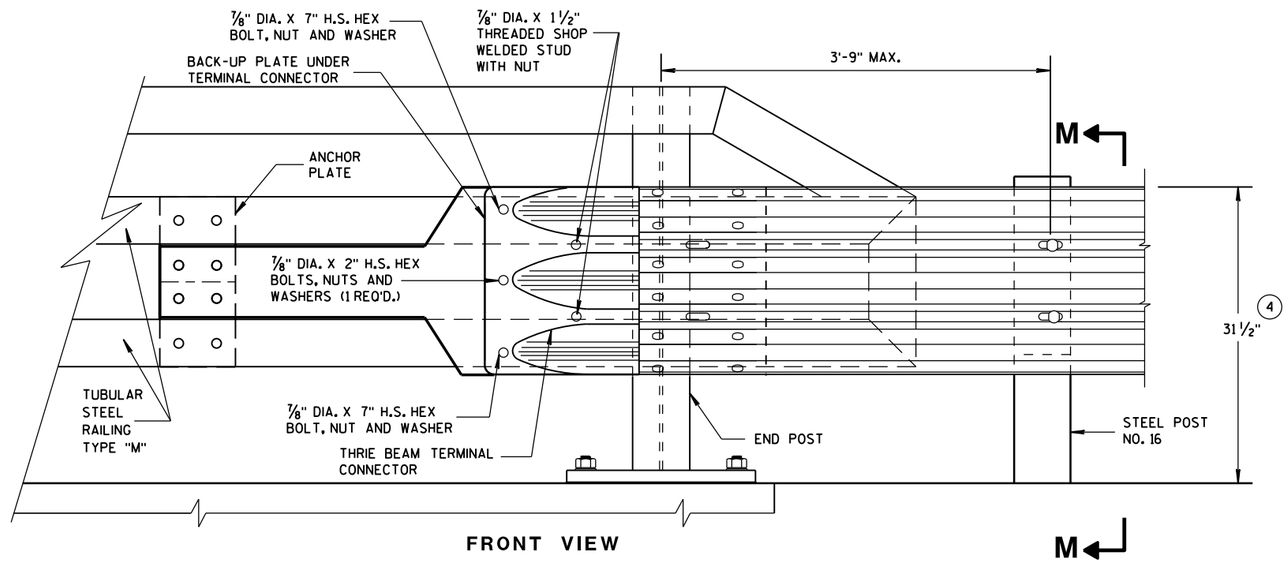

FRONT VIEW

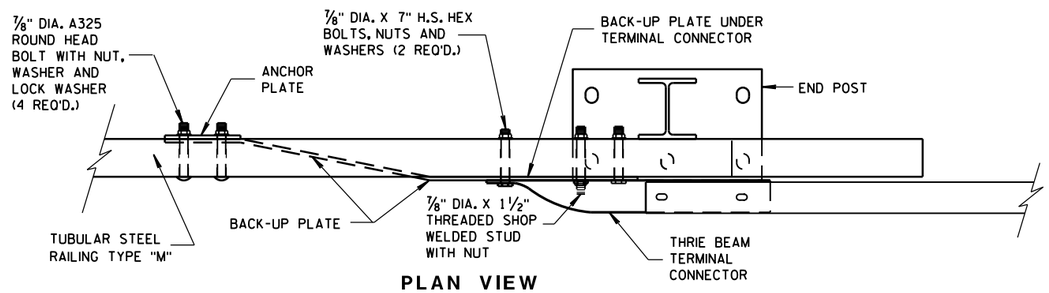

PLAN VIEW

THRIE BEAM CONNECTION TO TUBULAR RAILING, TYPE "M"

MIDWEST GUARDRAIL SYSTEM
THRIE BEAM TRANSITION (MGS)

STATE OF WISCONSIN
DEPARTMENT OF TRANSPORTATION

APPROVED
June, 2015 — DATE
/S/ Jerry H. Zogg — ROADWAY STANDARDS DEVELOPMENT ENGINEER
FHWA

6

S.D.D. 14 B 45-4h

6

S.D.D. 14 B 45-4h

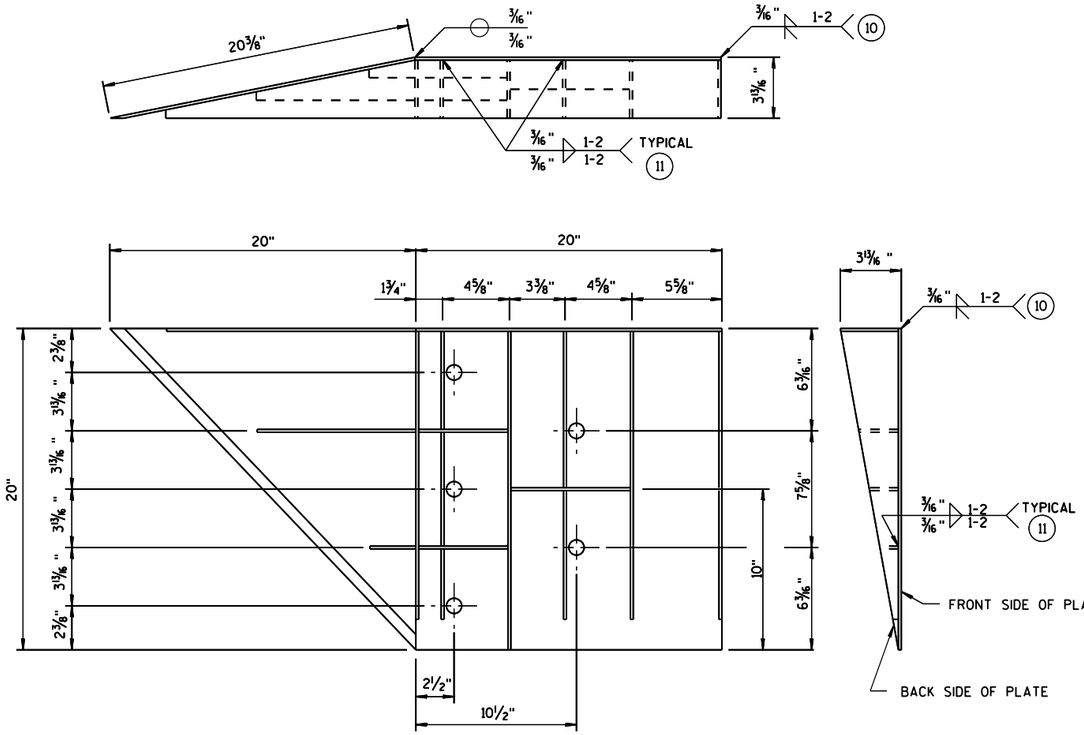

WELDING INSTRUCTION

(VIEWED FROM BACK SIDE OF PLATE)

GENERAL NOTES

COVER PLATE PANELS ARE 3/16" THICK.

ALL STIFFENERS ARE 1/4" THICK.

CONNECTOR PLATE SHALL BE FABRICATED FROM ASTM GRADE A36 STEEL AND GALVANIZED.

FOR GALVANIZED REQUIREMENTS, SEE SECTION 614 OF THE STANDARD SPECIFICATIONS.

ALL HOLE DIAMETERS SHALL BE 1".

FOR OPPOSITE SIDE INSTALLATION MIRROR DRAWINGS.

(10) STIFFENERS LOCATED AT THE OUTSIDE EDGES OF THE COVER PLATES SHALL BE WELDED AS FOLLOWS:
SINGLE BEVEL GROOVE WELD ON EXTERNAL SIDES AND 3/16" FILLET WELD BY 1" LONG SPACED AT 2" ON INTERNAL SIDES.

(11) STIFFENERS LOCATED ON THE INSIDE OF THE COVER PLATE SHALL BE WELDED AS FOLLOWS:
3/16" FILLET WELD BY 1" LONG SPACED AT 2".

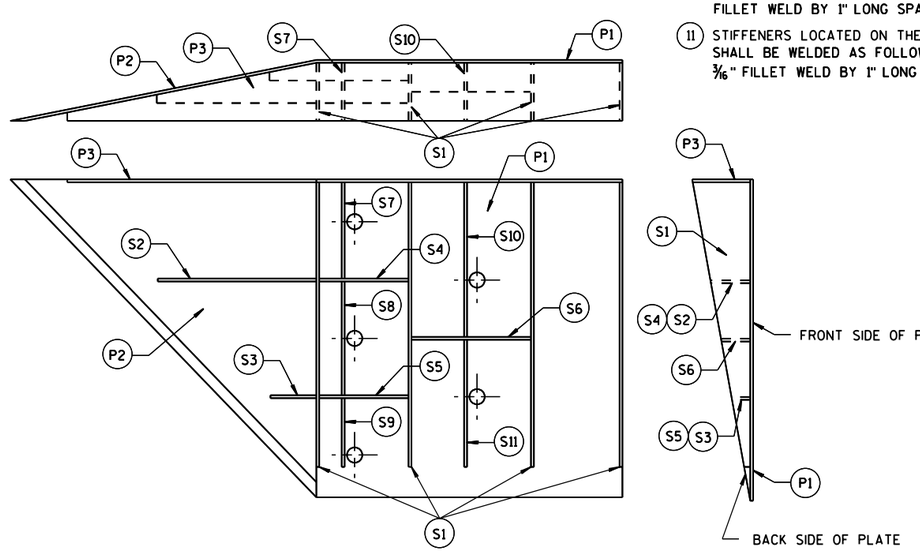

PLATE AND STIFFENER IDENTIFICATION

(VIEWED FROM BACK SIDE OF PLATE)

CONNECTOR PLATE DIMENSION (PER ASSEMBLY)

PLATE	QUANTITY	SHAPE	SIZE (A x B x C x D)	THICKNESS
P1	1		20" x 20"	3/16"
P2	1		20" x 20" x 28 9/16"	3/16"
P3	1		39" x 3 5/8" x 20" x 19 5/16"	3/16"
S1	4		18 7/16" x 3 3/8" x 18 3/4"	1/4"
S2	1		10 1/4" x 2 7/16" x 10 3/8" x 1/2"	1/4"
S3	1		3" x 1 1/16" x 3 1/8" x 1/2"	1/4"
S4	1		6 1/8" x 2 7/16"	1/4"
S5	1		6 1/8" x 1 1/16"	1/4"
S6	1		7 3/4" x 1 3/4"	1/4"
S7	1		2 9/16" x 6" x 3 5/8" x 5 7/8"	1/4"
S8	1		1 5/32" x 7 1/2" x 2 1/2" x 7 3/8"	1/4"
S9	1		6 1/16" x 6 3/16" x 1 1/32"	1/4"
S10	1		1 7/8" x 9 7/8" x 3 5/8" x 9 11/16"	1/4"
S11	1		8 1/2" x 8 3/4" x 1 13/16"	1/4"

SINGLE SLOPE CONNECTION PLATE

MIDWEST GUARDRAIL SYSTEM
THRIE BEAM TRANSITION (MGS)

STATE OF WISCONSIN
DEPARTMENT OF TRANSPORTATION

APPROVED
June, 2015 — DATE
/S/ Jerry H. Zogg — ROADWAY STANDARDS ENGINEER
FHWA

6

S.D.D. 14 B 45-4i

6

S.D.D. 14 B 45-4i

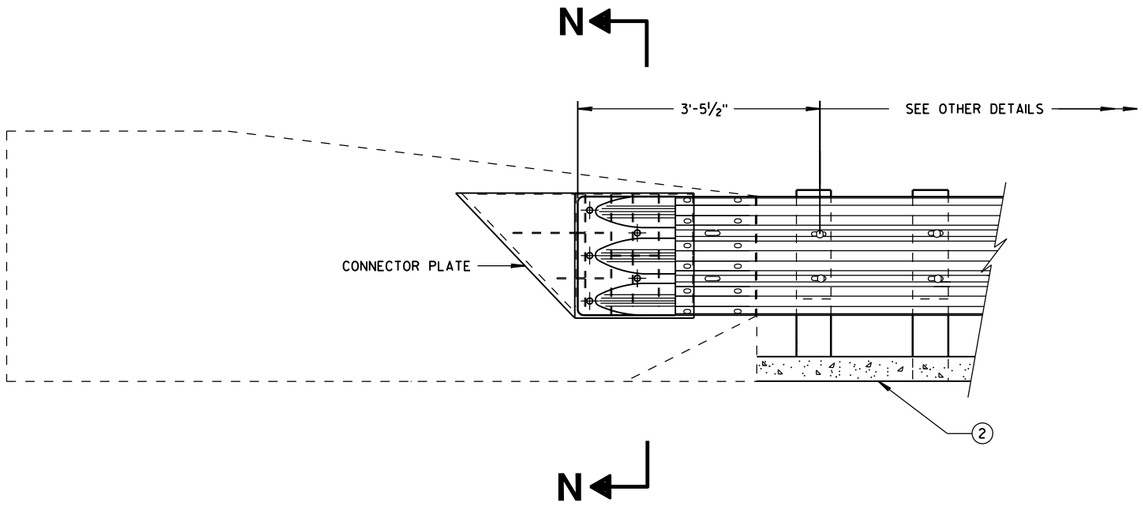

THRIE BEAM CONNECTION TO SINGLE SLOPE BARRIER

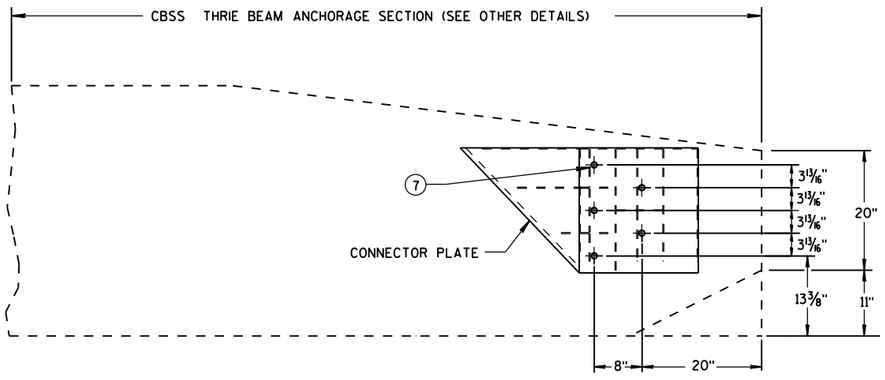

SINGLE SLOPE CONNECTION PLATE PLACEMENT

GENERAL NOTES

CONNECTOR PLATE, DRILLING BOLT HOLES THROUGH THE PARAPET, BOLTS, NUTS, WASHERS AND REPAIRING DAMAGED CONCRETE ARE INCIDENTAL TO THE CONTRACT.

(2) OPTIONAL CURB AND GUTTER OR DRAINAGE FEATURE SEE PLAN FOR INFORMATION.

(7) BOLTS MAY BE A325 BOLTS OR A449 BOLTS. BOLT LENGTH AND THREADING LENGTH ARE TO ALLOW FOR A TIGHT CONNECTION BETWEEN RIGID BARRIER AND THRIE BEAM CONNECTION PLATE. CONTRACTOR IS TO FIELD VERIFY BOLT LENGTH AND THREAD LENGTH. ONE ROUND WASHER REQUIRED BETWEEN BOLT HEAD AND THRIE BEAM CONNECTOR PLATE. BOLTS THAT EXTEND THROUGH THE PARAPET AND OUT THE BACK FACE REQUIRE A HARDENED ROUND STEEL WASHER THAT IS 2" O.D. X 5/8" THICK AND ONE PLATE WASHER. REPAIR ANY DAMAGED CONCRETE FROM BOLT INSTALLATION.

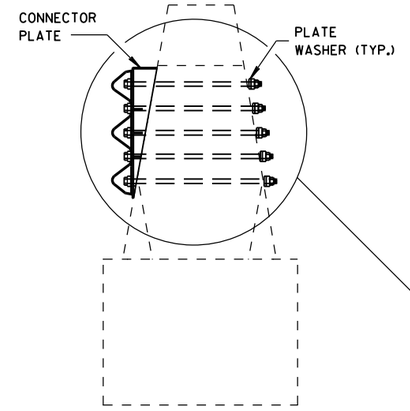

SECTION N-N

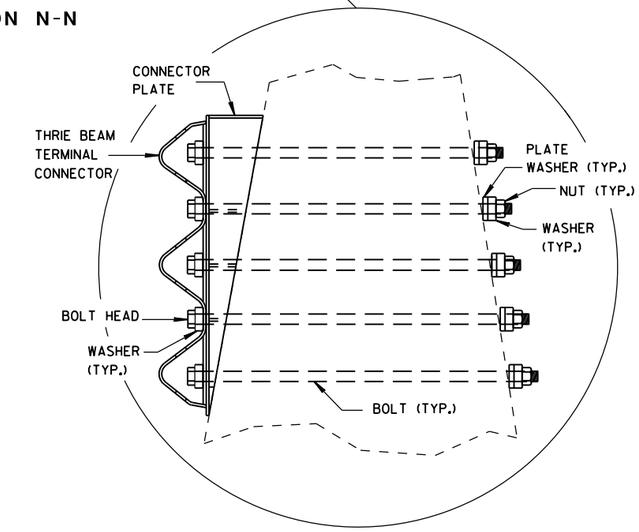

MIDWEST GUARDRAIL SYSTEM
THRIE BEAM TRANSITION (MGS)

STATE OF WISCONSIN
DEPARTMENT OF TRANSPORTATION

APPROVED
June, 2015 — DATE
/S/ Jerry H. Zoga — ROADWAY STANDARDS DEVELOPMENT ENGINEER
NT
FHWA

6

S.D.D. 14 B 45-4j

6

S.D.D. 14 B 45-4j

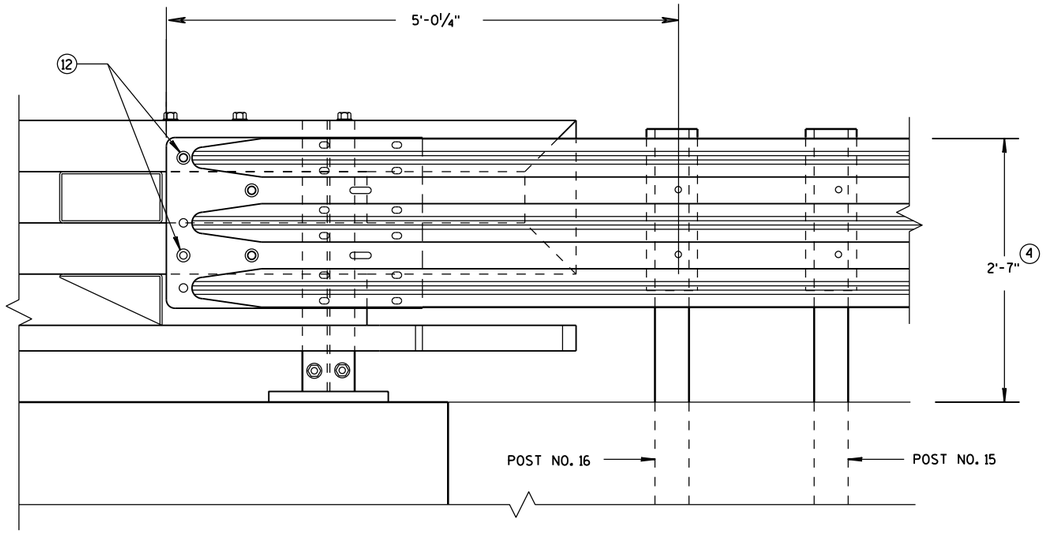

ELEVATION OF DETAIL AT NY3 END POST

THRIE BEAM RAIL ATTACHMENT

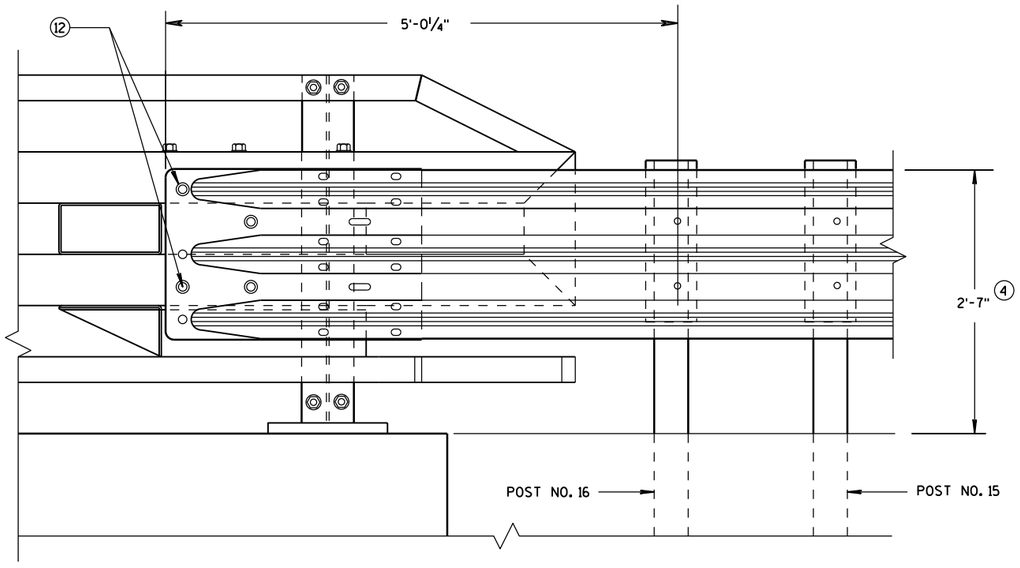

ELEVATION OF DETAIL AT NY4 END POST

THRIE BEAM RAIL ATTACHMENT

GENERAL NOTES

(4) TOLERANCE FOR TOP OF BEAM IS ± 1".

(12) BOLTS MAY BE A325 BOLTS OR A449 BOLTS. BOLT LENGTH AND THREADING LENGTH ARE TO ALLOW FOR A TIGHT CONNECTION BETWEEN RIGID BARRIER AND THRIE BEAM CONNECTION PLATE. CONTRACTOR IS TO FIELD VERIFY BOLT LENGTH AND THREAD LENGTH. ONE ROUND WASHER REQUIRED BETWEEN BOLT HEAD AND THRIE BEAM CONNECTOR PLATE. ON BACKSIDE OF PARAPET ONE ROUND WASHER, AND NUT REQUIRED. BOLT THREAD IS TO EXTEND ½-INCH BEYOND NUT.

MIDWEST GUARDRAIL SYSTEM
THRIE BEAM TRANSITION (MGS)

STATE OF WISCONSIN
DEPARTMENT OF TRANSPORTATION

APPROVED
June, 2015
DATE

/S/ Jerry H. Zogg
ROADWAY STANDARDS D ENGINEER

FHWA

NT

6

S.D.D. 14 B 45-4k

6

S.D.D. 14 B 45-4k

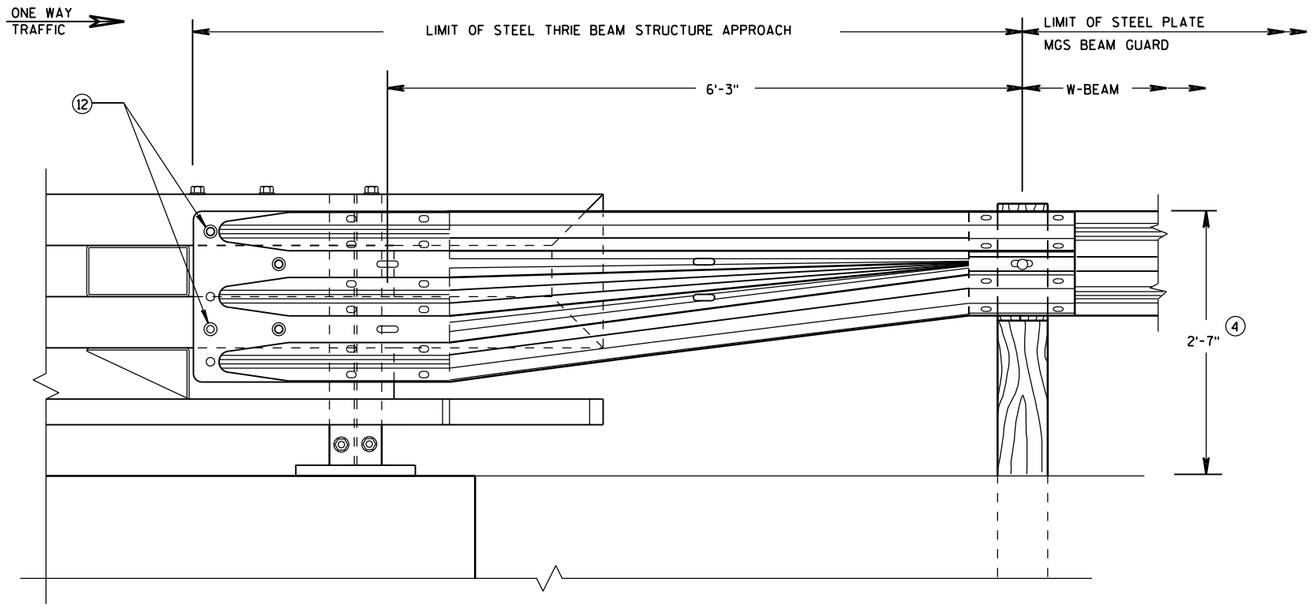

FRONT VIEW

W BEAM TRANSITION AND CONNECTION TO BRIDGE RAILING TYPE "NY3"

(USE ONLY ON THE TRAFFIC EXIT END OF ONE WAY BRIDGES)

GENERAL NOTES

(4) TOLERANCE FOR TOP OF BEAM IS ± 1".

(12) BOLTS MAY BE A325 BOLTS OR A449 BOLTS. BOLT LENGTH AND THREADING LENGTH ARE TO ALLOW FOR A TIGHT CONNECTION BETWEEN RIGID BARRIER AND THRIE BEAM CONNECTION PLATE. CONTRACTOR IS TO FIELD VERIFY BOLT LENGTH AND THREAD LENGTH. ONE ROUND WASHER REQUIRED BETWEEN BOLT HEAD AND THRIE BEAM CONNECTOR PLATE. ON BACKSIDE OF PARAPET ONE ROUND WASHER, AND NUT REQUIRED. BOLT THREAD IS TO EXTEND ½-INCH BEYOND NUT.

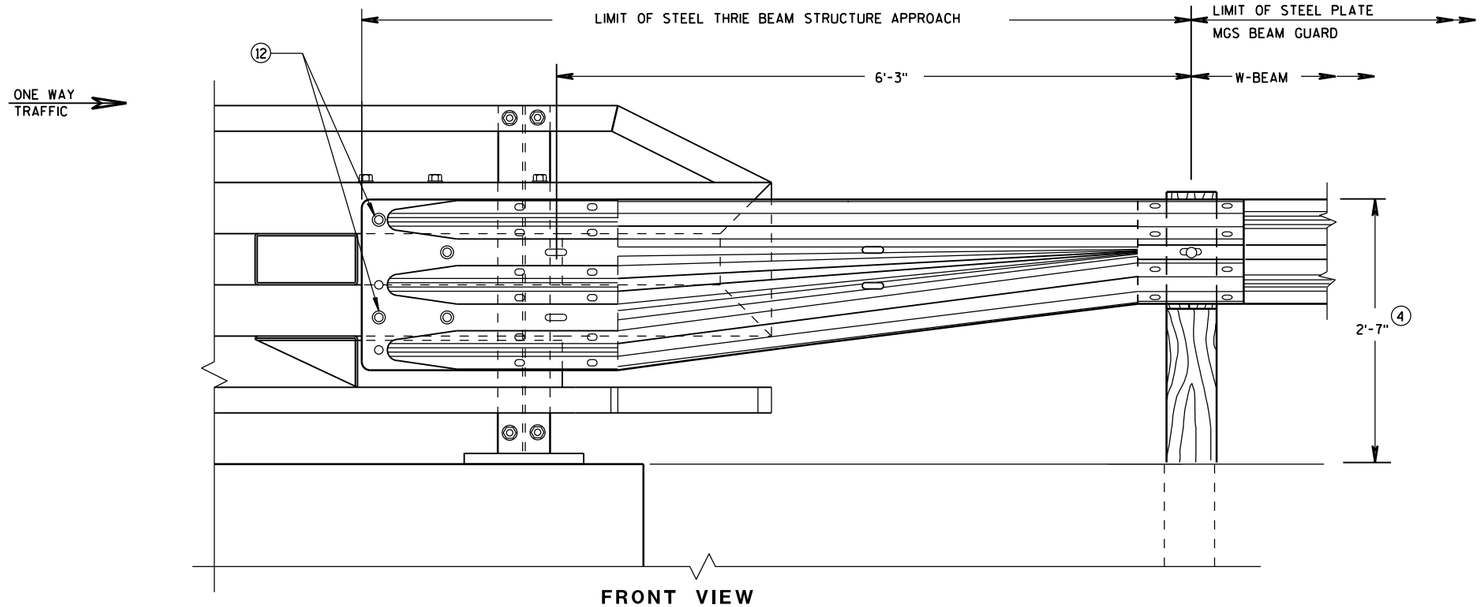

FRONT VIEW

W BEAM TRANSITION AND CONNECTION TO BRIDGE RAILING TYPE "NY4"

(USE ONLY ON THE TRAFFIC EXIT END OF ONE WAY BRIDGES)

MIDWEST GUARDRAIL SYSTEM
THRIE BEAM TRANSITION (MGS)

STATE OF WISCONSIN
DEPARTMENT OF TRANSPORTATION

APPROVED
June, 2015
DATE
/S/ Jerry H. Zogg
ROADWAY STANDARDS DEVELOPMENT ENGINEER
FHWA

6

S.D.D. 14 B 45-4L

6

S.D.D. 14 B 45-4L

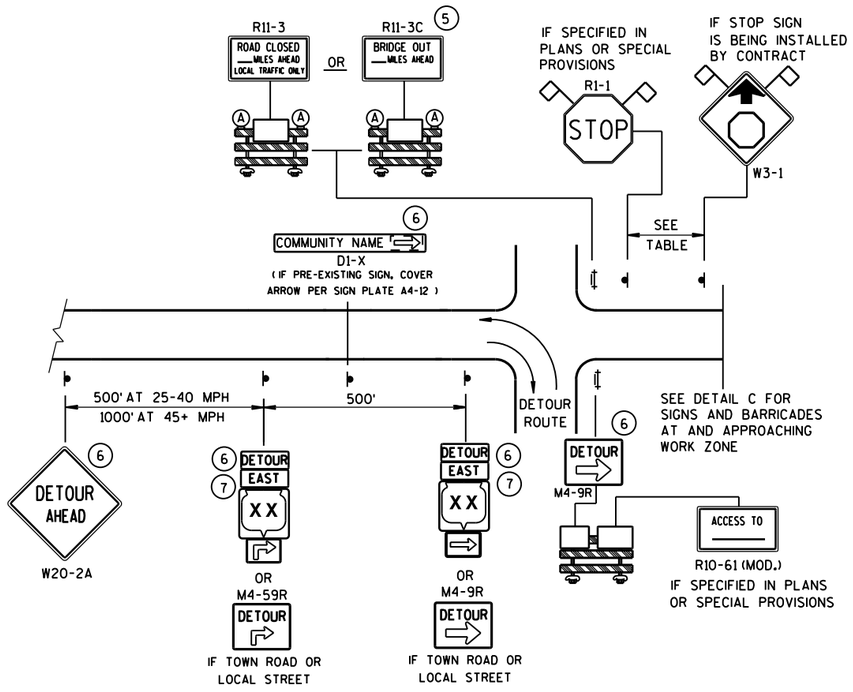

DETAIL A
MAINLINE CLOSURE WITH POSTED DETOUR

WORK ZONE GREATER THAN ½ MILE FROM DETOUR ROUTE (1000 FEET IF URBAN)

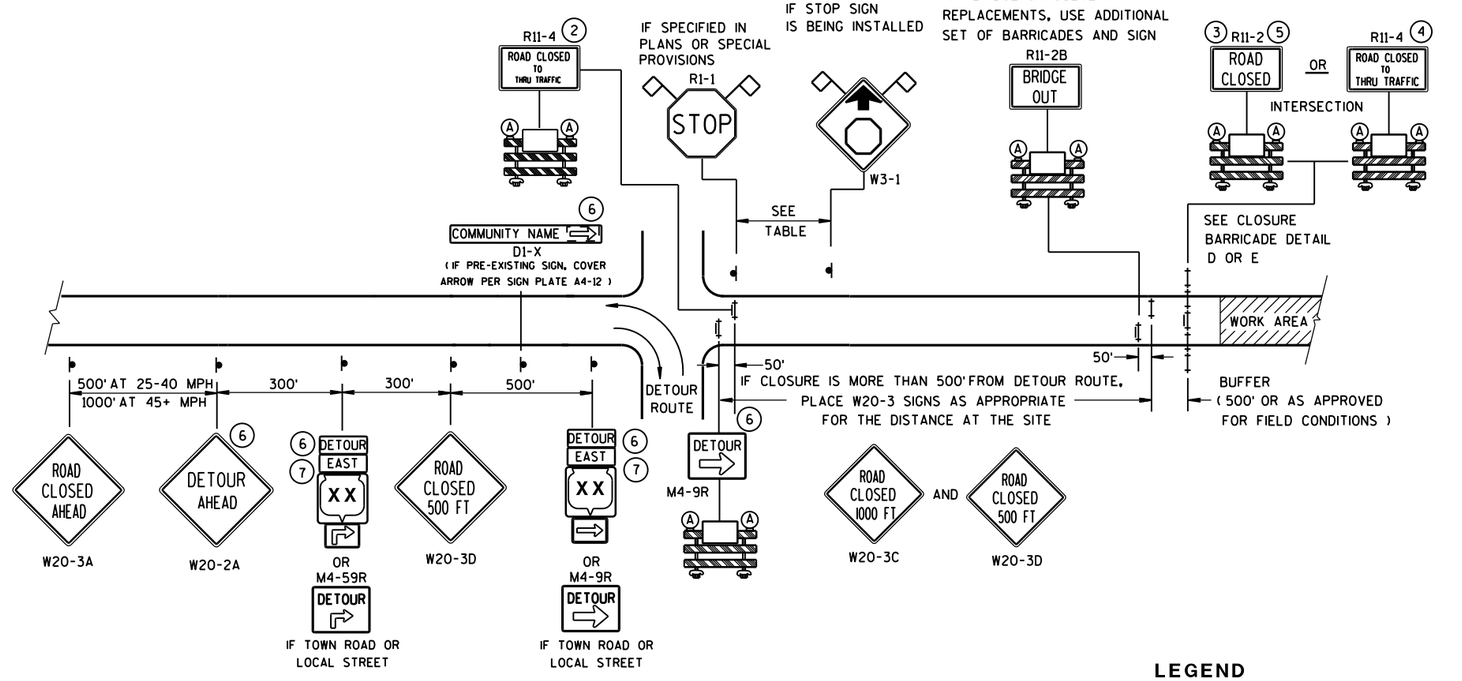

DETAIL B
MAINLINE CLOSURE WITH POSTED DETOUR

WORK ZONE LESS THAN ½ MILE FROM DETOUR ROUTE (1000 FEET IF URBAN)

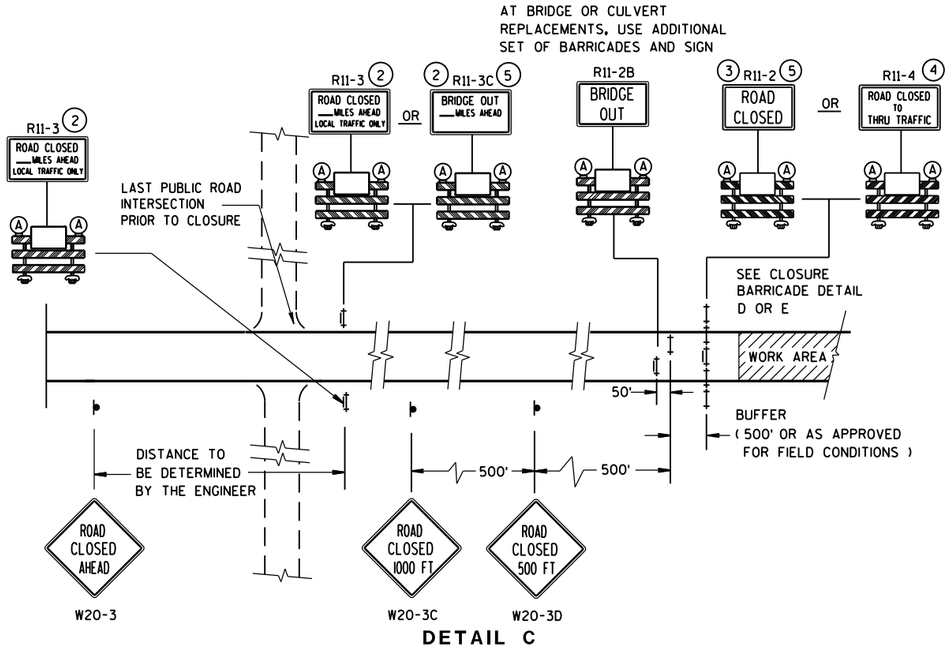

DETAIL C
MAINLINE CLOSURE, NO POSTED DETOUR

SPEED LIMIT (MPH)	"STOP AHEAD" ADVANCE WARNING DISTANCE (FT)
25	200
30	200
35	350
40	350
45	500
50	550
55	750

LEGEND

- SIGN ON PERMANENT SUPPORT
- TYPE III BARRICADE
- TYPE III BARRICADE WITH ATTACHED SIGN
- (A) TYPE "A" WARNING LIGHT (FLASHING)
- WORK AREA
- DETOUR / EAST — M4-8 / M3-X
- XX — M1-4; COUNTY XX — M1-5A; XX — M1-6
- M05-1 OR M06-1
- FLAGS, 16" X 16" MIN., (ORANGE)

SEE SDD 15C2-SHEET "**b**" FOR GENERAL NOTES AND FOOTNOTES (1) THROUGH (7)

BARRICADES AND SIGNS FOR MAINLINE CLOSURES

STATE OF WISCONSIN
DEPARTMENT OF TRANSPORTATION

Sept. 2015 — DATE
/S/ Peter Amakobe Atepe
STATEWIDE WORK ZONE TRAFFIC SAFETY ENGINEER
FHWA

S.D.D. 15 C 2-6a

6

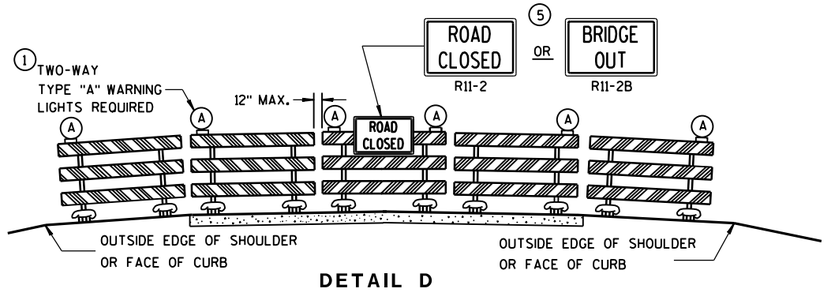

DETAIL D

ROAD CLOSURE BARRICADE DETAIL

APPROACH VIEW

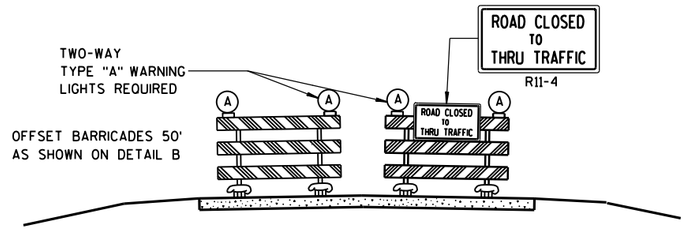

DETAIL E

LANE CLOSURE BARRICADE DETAIL

APPROACH VIEW

SEE SDD 15C2-SHEET "**a**" FOR LEGEND

GENERAL NOTES

THE EXACT NUMBER, LOCATION, AND SPACING OF ALL SIGNS AND BARRICADES SHALL BE ADJUSTED TO FIT FIELD CONDITIONS AS APPROVED BY THE ENGINEER.

ANY SIGNS TEMPORARY OR EXISTING, WHICH CONFLICT WITH TRAFFIC CONTROL "IN USE" SHALL BE REMOVED OR COVERED AS NEEDED AND AS APPROVED BY THE ENGINEER.

THE SPACING BETWEEN TRAFFIC CONTROL SIGNS SHOULD BE ADJUSTED TO NOT CONFLICT WITH AND SHOULD PROVIDE A DESIRABLE MINIMUM OF 200 FEET CLEARANCE TO EXISTING SIGNS THAT WILL REMAIN IN PLACE.

BARRICADES THAT MUST BE MOVED FOR A WORK OPERATION SHALL BE IMMEDIATELY RE-ESTABLISHED UPON COMPLETION OF THE OPERATION OR, FOR CONTINUING OPERATIONS, AT THE END OF EACH WORKING DAY.

SIGNS THAT WILL BE IN PLACE LESS THAN 7 CONTINUOUS DAYS AND NIGHTS MAY BE MOUNTED ON PORTABLE SUPPORTS.

ALL TYPE III BARRICADES SHALL HAVE RAILS REFLECTORIZED ON BOTH FACES. STRIPES SHALL BE PROPERLY SLOPED DOWN TOWARD THE TRAFFIC SIDE OR AS SHOWN IN THE ROAD CLOSURE BARRICADE DETAIL D FOR FULL ROAD CLOSURES.

TYPE "A" LOW-INTENSITY FLASHING WARNING LIGHTS SHALL BE VISIBLE ON BOTH SIDES OF THE BARRICADE.

THE R11-2, R11-3, M4-9, R11-4 AND R10-61 SIGNS PLACED ON BARRICADES SHALL COVER NO MORE THAN THE TOP RAIL. THE SIGNS SHALL NOT COVER ANY PORTION OF THE MIDDLE OR BOTTOM RAILS.

"WO AND "MO" SIGNS ARE THE SAME AS "W" AND "M" SIGNS EXCEPT THE BACKGROUND IS ORANGE.

ALL SIGNS SHALL BE 48" X 48" UNLESS OTHERWISE NOTED BELOW:
- R11-2 SHALL BE 48" X 30".
- R11-3, R11-4 AND R10-61 SHALL BE 60" X 30".
- M4-9 SHALL BE 30" X 24".
- M3-X SHALL BE 24" X 12". (36" X 18" IF NEEDED TO MATCH EXISTING SIGNS.)
- M4-8 SHALL BE 24" X 12". (30" X 15" IF NEEDED TO MATCH EXISTING SIGNS.)
- M1-4, M1-5A, AND M1-6 SHALL BE 24" X 24". (36" X 36" IF NEEDED TO MATCH EXISTING SIGNS.)
- M05-1 AND M06-1 SHALL BE 21" X 21". (30" X 30" IF NEEDED TO MATCH EXISTING SIGNS.)
- D1-X SHALL BE AS SHOWN ON SPECIFIC PROJECT SIGNING DETAIL SHEETS.
- R1-1 SHALL BE 36" X 36".

(1) TWO WARNING LIGHTS SHALL BE PROVIDED ON THE CENTER BARRICADE AND A MINIMUM OF ONE WARNING LIGHT SHALL BE PROVIDED ON EACH OF THE OTHER BARRICADES WITHIN THE ROADWAY LIMITS. SPACING OF THE WARNING LIGHTS SHALL BE UNIFORM TO THE EDGE OF ROADWAY AS SHOWN (APPROX. 8-FOOT LIGHT SPACING).

(2) THESE SIGNS AND BARRICADES ARE NOT REQUIRED IF ROAD CLOSURE BEGINS AT INTERSECTION.

(3) FOR ROAD CLOSURE WITHOUT LOCAL ACCESS TO PROJECT, SEE ROAD CLOSURE BARRICADE DETAIL D.

(4) FOR ROAD CLOSURE WITH LOCAL ACCESS TO PROJECT, SEE LANE CLOSURE BARRICADE DETAIL E.

(5) FOR BRIDGE OR CULVERT REPLACEMENTS, SUBSTITUTE "BRIDGE OUT" INSTEAD OF "ROAD CLOSED" ON R11-2 AND R11-3 SIGNS.

(6) INSTALL DETOUR AND COMMUNITY GUIDE SIGNS AND ARROWS ONLY IF SPECIFIED IN THE CONTRACT. IF THERE ARE EXISTING ROUTE MARKER ASSEMBLIES THAT WILL REMAIN IN PLACE, ADJUST THE LOCATION OF THE DETOUR ROUTE SIGNS TO CORRESPOND WITH THE EXISTING ASSEMBLIES. MODIFY EXISTING SIGNS WHERE POSSIBLE. SEE SPECIFIC PROJECT DETOUR SIGNING DETAIL SHEETS. IF DETOUR SIGNS ARE BEING INSTALLED BY OTHERS, PLACE THE CONTRACTED TRAFFIC CONTROL SIGNS TO ALLOW FOR PLACEMENT OF ALL WARNING, DETOUR AND GUIDE SIGNS AS SHOWN.

(7) "EAST" CARDINAL DIRECTION MARKERS AND RIGHT TURN ARROWS ARE SHOWN. USE OTHER CARDINAL DIRECTIONS AND ARROWS AS APPROPRIATE.

BARRICADES AND SIGNS FOR MAINLINE CLOSURES

STATE OF WISCONSIN
DEPARTMENT OF TRANSPORTATION

Sept. 2015 — DATE

/S/ Peter Amakobe Atepe
STATEWIDE WORK ZO... SAFETY ENGI... — FHWA

6

S.D.D. 15 C 2-6b

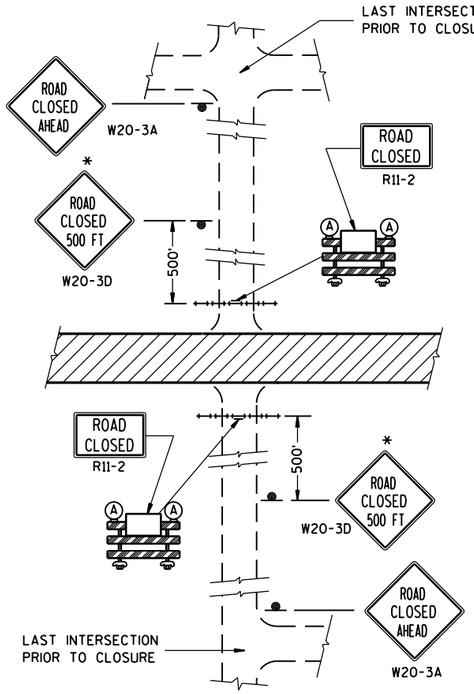

DETAIL 1

(NO ACCESS TO PROJECT)

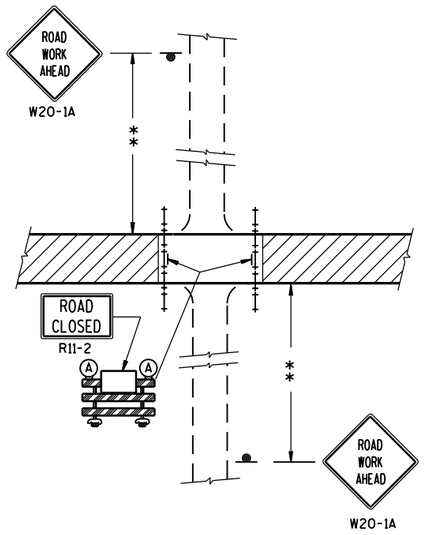

DETAIL 2

(PUBLIC CROSS-TRAFFIC MAINTAINED.
NO ACCESS TO PROJECT).

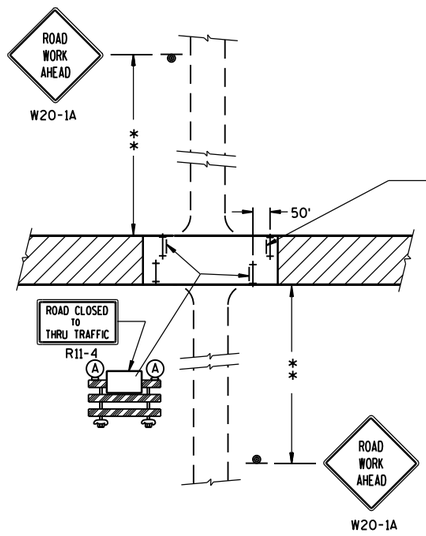

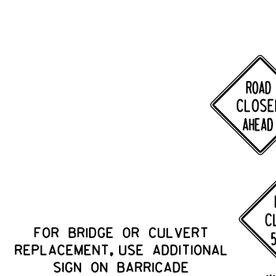

DETAIL 3

(PUBLIC CROSS-TRAFFIC MAINTAINED. CONTRACTOR, LOCAL BUSINESS AND RESIDENT ACCESS).

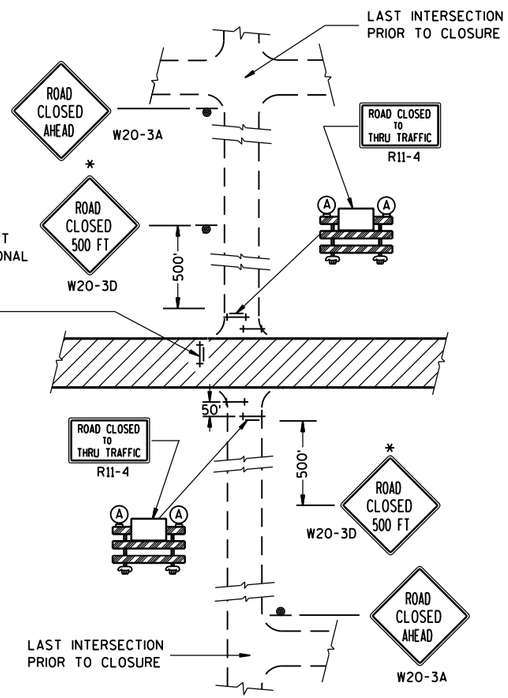

DETAIL 4

(CONTRACTOR, LOCAL BUSINESS AND
RESIDENT ACCESS TO PROJECT)

GENERAL NOTES

THE EXACT NUMBER, LOCATION, AND SPACING OF ALL SIGNS AND BARRICADES SHALL BE ADJUSTED TO FIT FIELD CONDITIONS AS APPROVED BY THE ENGINEER.

ANY SIGNS TEMPORARY OR EXISTING, WHICH CONFLICT WITH TRAFFIC CONTROL "IN USE" SHALL BE REMOVED OR COVERED AS NEEDED AND AS APPROVED BY THE ENGINEER.

THE SPACING BETWEEN TRAFFIC CONTROL SIGNS SHOULD BE ADJUSTED TO NOT CONFLICT WITH AND SHOULD PROVIDE A DESIRABLE MINIMUM OF 200 FEET CLEARANCE TO EXISTING SIGNS THAT WILL REMAIN IN PLACE.

IF A "STOP" SIGN MUST BE REMOVED FOR A WORK OPERATION, A TEMPORARY "STOP" SIGN SHALL BE PLACED PRIOR TO THE SIGN REMOVAL, OR A FLAGGER SHALL BE PROVIDED UNTIL THE SIGN IS RE-ESTABLISHED.

BARRICADES THAT MUST BE MOVED FOR A WORK OPERATION SHALL BE IMMEDIATELY RE-ESTABLISHED UPON COMPLETION OF THE OPERATION OR, FOR CONTINUING OPERATIONS, AT THE END OF EACH WORKING DAY.

SIGNS THAT WILL BE IN PLACE LESS THAN 7 CONTINUOUS DAYS AND NIGHTS MAY BE MOUNTED ON PORTABLE SUPPORTS.

ALL TYPE III BARRICADES SHALL HAVE RAILS REFLECTORIZED ON BOTH FACES. STRIPES SHALL BE PROPERLY SLOPED DOWN TOWARD THE TRAFFIC SIDE OR AS SHOWN IN THE ROAD CLOSURE BARRICADE DETAIL D FOR FULL ROAD CLOSURES.

TYPE "A" LOW-INTENSITY FLASHING WARNING LIGHTS SHALL BE VISIBLE ON BOTH SIDES OF THE BARRICADE.

THE R11-2, R11-3 AND R11-4 SIGNS PLACED ON BARRICADES SHALL COVER NO MORE THAN THE TOP RAIL. THE SIGNS SHALL NOT COVER ANY PORTION OF THE MIDDLE OR BOTTOM RAILS.

ALL SIGNS SHALL BE 48" X 48" UNLESS OTHERWISE NOTED BELOW:
R11-2 SHALL BE 48" X 30".
R11-4 AND R11-3 SHALL BE 60" X 30".

*OMIT THE "ROAD CLOSED 500 FT." SIGN IF THE LAST INTERSECTION IS 500 FT. OR LESS FROM THE WORK ZONE.

**500' MAX. OR AT LAST INTERSECTION WHICHEVER IS CLOSER.

LEGEND

- SIGN ON PERMANENT SUPPORT
- TYPE III BARRICADE
- TYPE III BARRICADE WITH ATTACHED SIGN
- (A) TYPE "A" WARNING LIGHT (FLASHING)
- WORK AREA

BARRICADES AND SIGNS FOR SIDEROAD CLOSURES

STATE OF WISCONSIN
DEPARTMENT OF TRANSPORTATION

APPROVED
Sept. 2015 — DATE
/S/ Peter Amakobe Atepe
STATEWIDE WORK ZO[illegible]FIC SAFETY ENGI[illegible]
FHWA

6

S.D.D. 15 C 3-3

6

S.D.D. 15 C 3-3

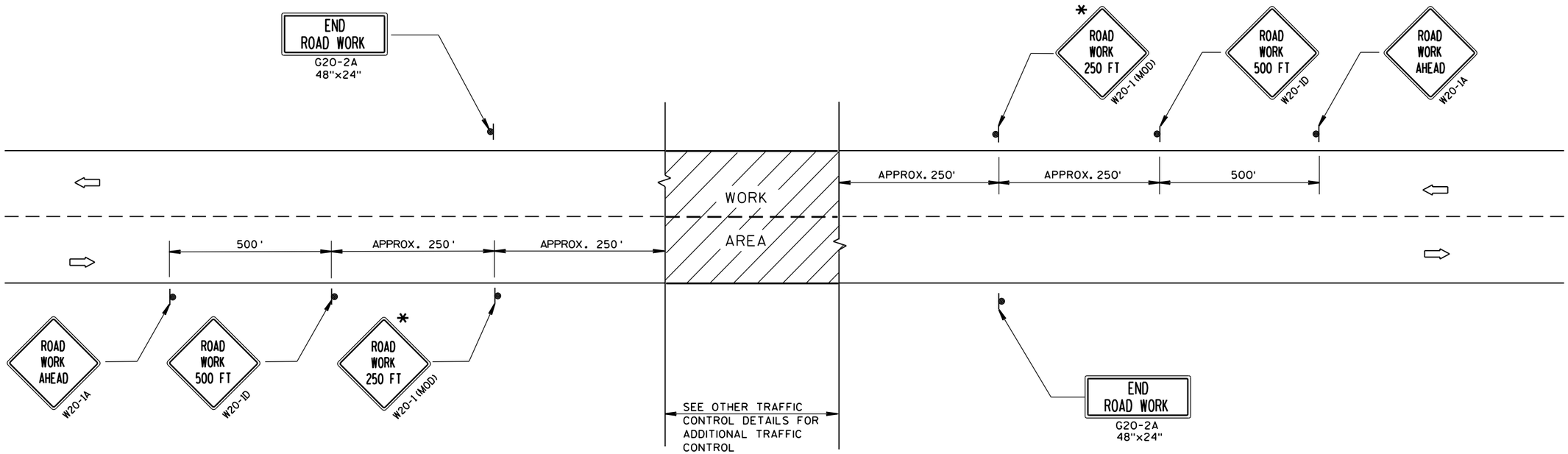

TYPICAL SIDEROAD APPROACH WARNING SIGN DETAIL

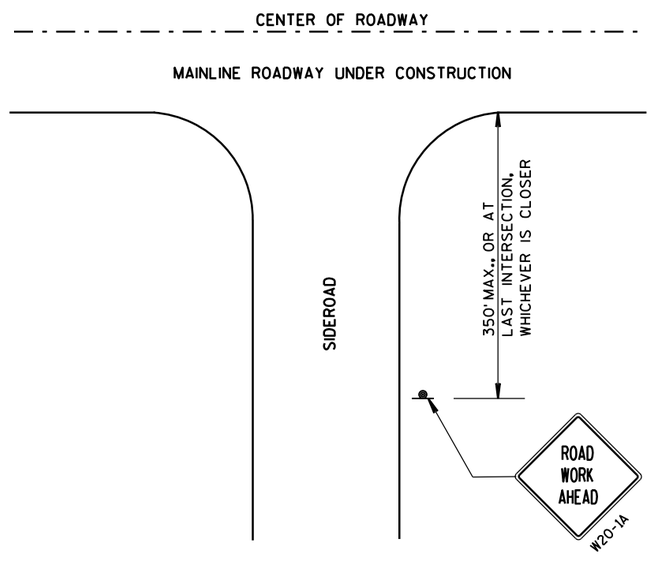

GENERAL NOTES

THE EXACT NUMBER, LOCATION, AND SPACING OF ALL SIGNS AND DEVICES SHALL BE ADJUSTED TO FIT FIELD CONDITIONS.

THE SPACING BETWEEN TRAFFIC CONTROL SIGNS SHOULD BE ADJUSTED TO NOT CONFLICT WITH AND SHOULD PROVIDE A DESIRABLE MINIMUM OF 200 FEET CLEARANCE TO EXISTING SIGNS THAT WILL REMAIN IN PLACE.

ALL SIGNS ARE 48"x48" UNLESS OTHERWISE NOTED. IF NECESSARY DUE TO SPACE CONSTRAINTS, 36"x36" SIGNS MAY BE USED INSTEAD OF 48"x48" SIGNS.

SIGNS THAT WILL BE IN PLACE LESS THAN 7 CONTINUOUS DAYS AND NIGHTS MAY BE MOUNTED ON PORTABLE SUPPORTS.

IF A "STOP" SIGN MUST BE REMOVED FOR A WORK OPERATION, A TEMPORARY "STOP" SIGN SHALL BE PLACED PRIOR TO THE SIGN REMOVAL, OR A FLAGGER SHALL BE PROVIDED UNTIL THE SIGN IS RE-ESTABLISHED.

* THE THIRD W20-1 SIGN IS REQUIRED ONLY IF THERE IS AN INTERSECTION BETWEEN THE "ROAD WORK 500 FT" SIGN AND THE WORK ZONE. ADJUST THE PLACEMENT OF THIS SIGN BASED ON INTERSECTION LOCATION AND OTHER FIELD CONDITIONS.

LEGEND

- SIGN ON PERMANENT SUPPORT
- DIRECTION OF TRAFFIC
- WORK AREA

TRAFFIC CONTROL, ADVANCE WARNING SIGNS 40 M.P.H. OR LESS TWO-WAY UNDIVIDED ROAD OPEN TO TRAFFIC

STATE OF WISCONSIN
DEPARTMENT OF TRANSPORTATION

APPROVED
Sept. 2015 — DATE
/S/ Peter Amakobe Atepe
STATEWIDE WORK ZOI SAFETY ENGIN IC
FHWA

6

S.D.D. 15 C 5-3
S.D.D. 15 C 5-3

GENERAL NOTES

DETAILS OF INSTALLATION, MATERIALS AND WORKMANSHIP NOT SHOWN ON THIS DRAWING SHALL CONFORM TO THE PERTINENT REQUIREMENTS OF THE STANDARD SPECIFICATIONS AND APPLICABLE SPECIAL PROVISIONS.

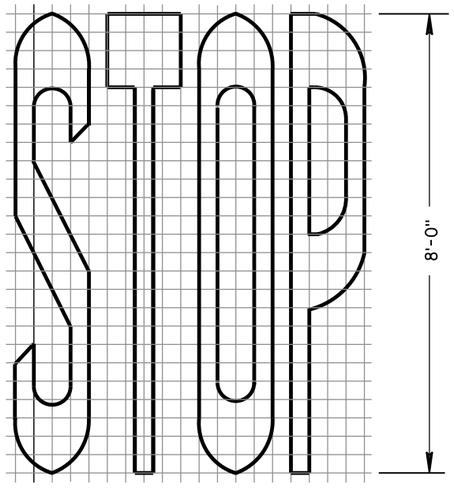

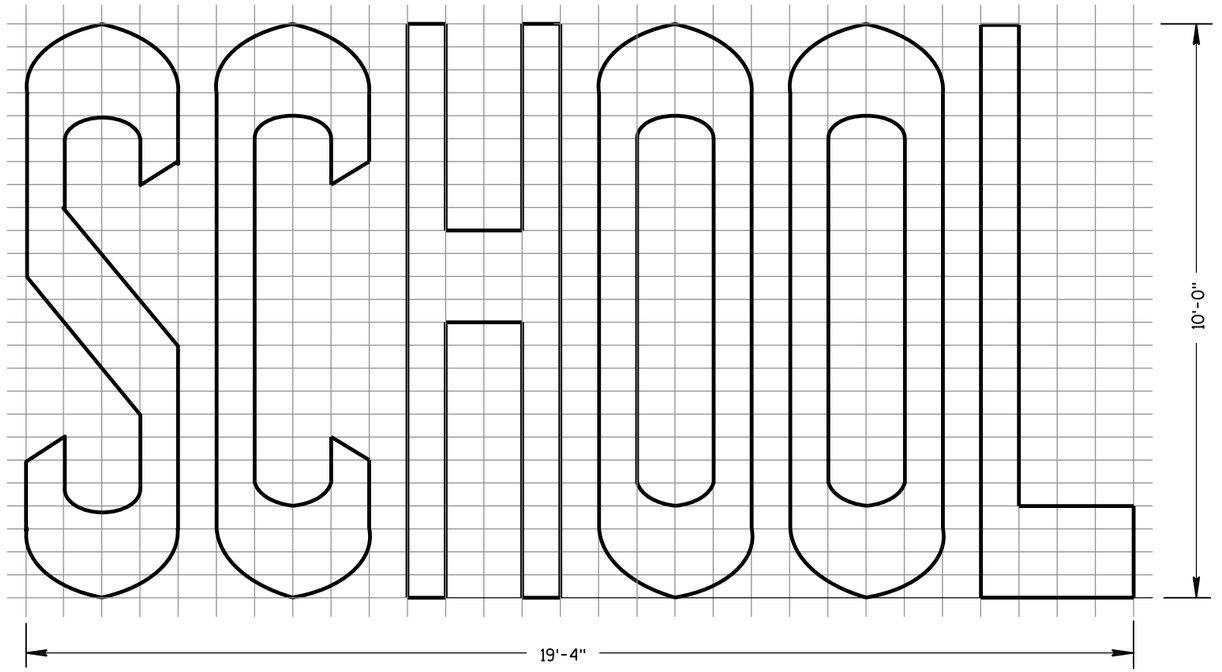

TWO-LANE

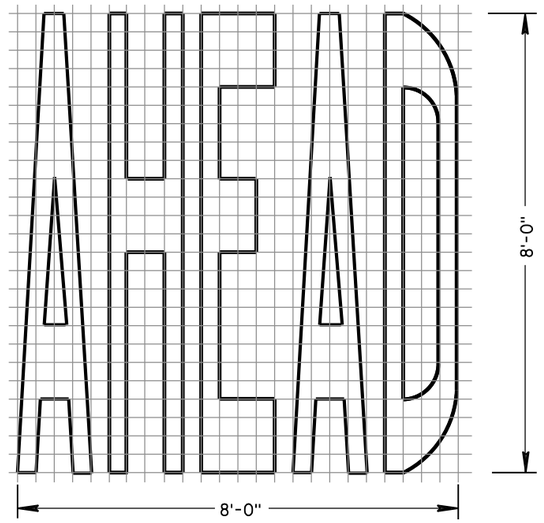

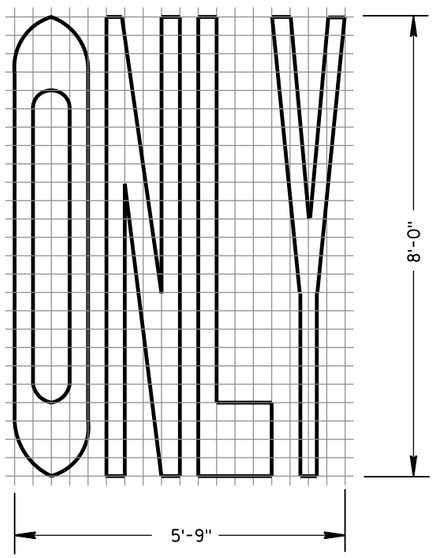

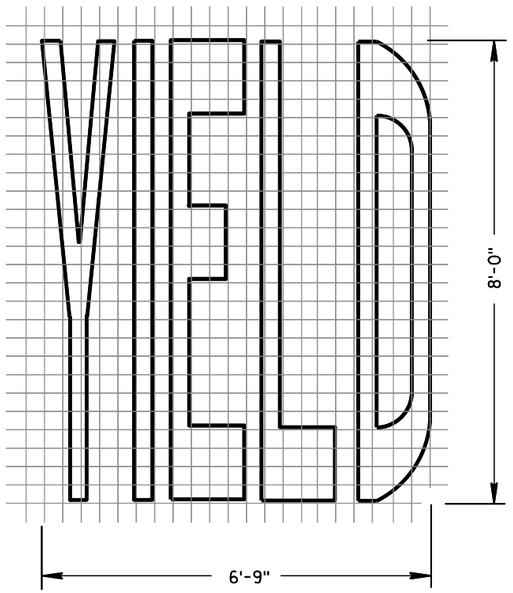

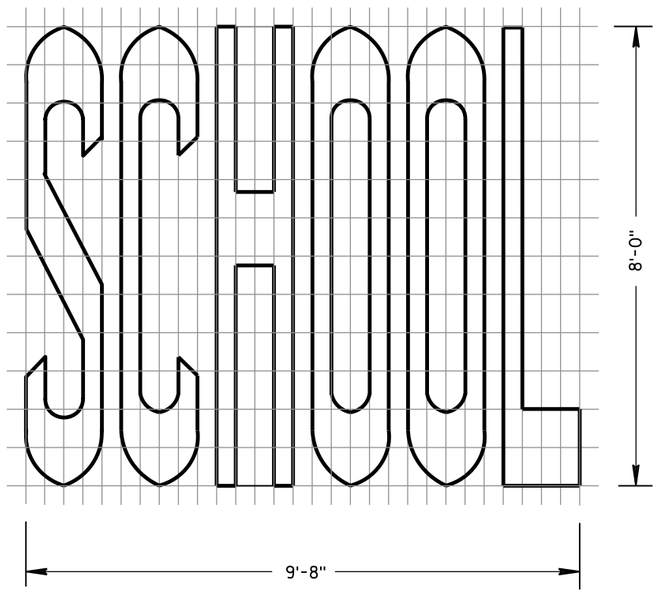

SINGLE-LANE

PAVEMENT MARKING WORDS

STATE OF WISCONSIN
DEPARTMENT OF TRANSPORTATION

APPROVED

4-18-16	/S/ Matthew R. Rauch	
DATE	STATE SIGNING AND MARK	EER

FHWA

6

S.D.D. 15 C 7-13b

6

S.D.D. 15 C 7-13b

GENERAL NOTES

DETAILS OF INSTALLATION, MATERIALS AND WORKMANSHIP NOT SHOWN ON THIS DRAWING SHALL CONFORM TO THE PERTINENT REQUIREMENTS OF THE STANDARD SPECIFICATIONS AND APPLICABLE SPECIAL PROVISIONS.

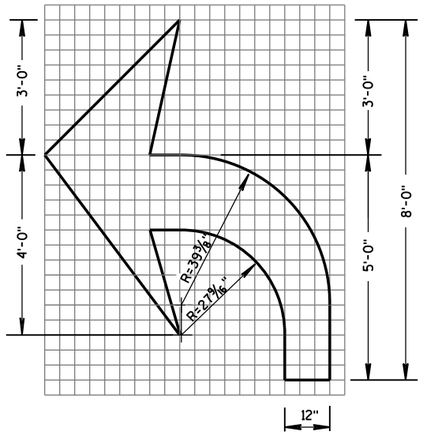

TYPE 2

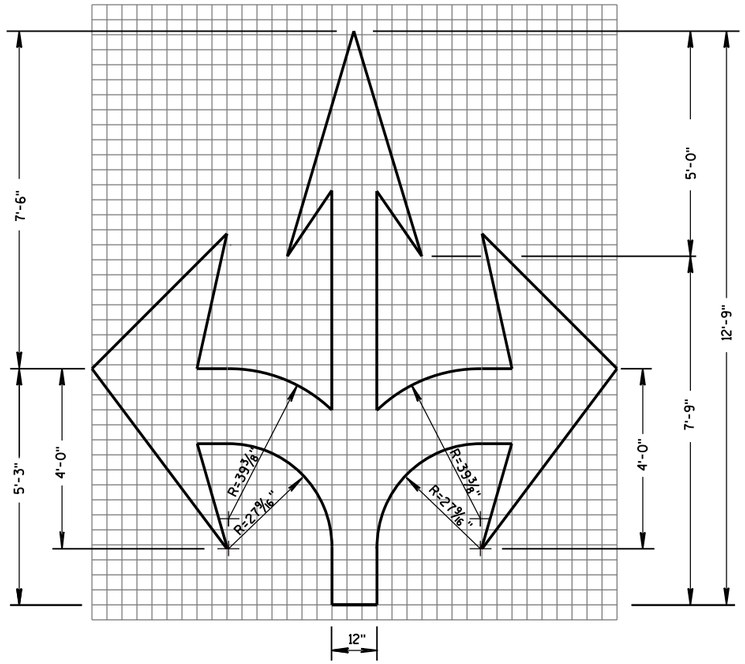

TYPE 6

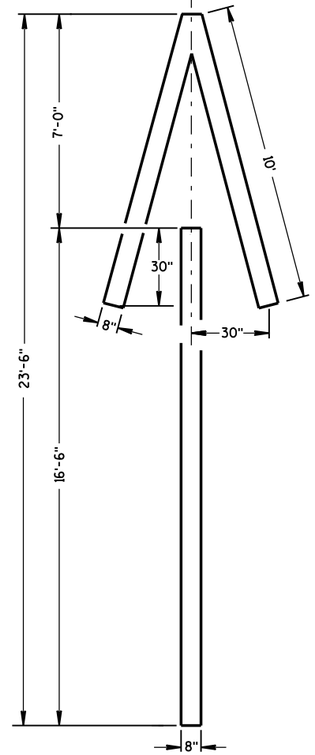

TYPE 4

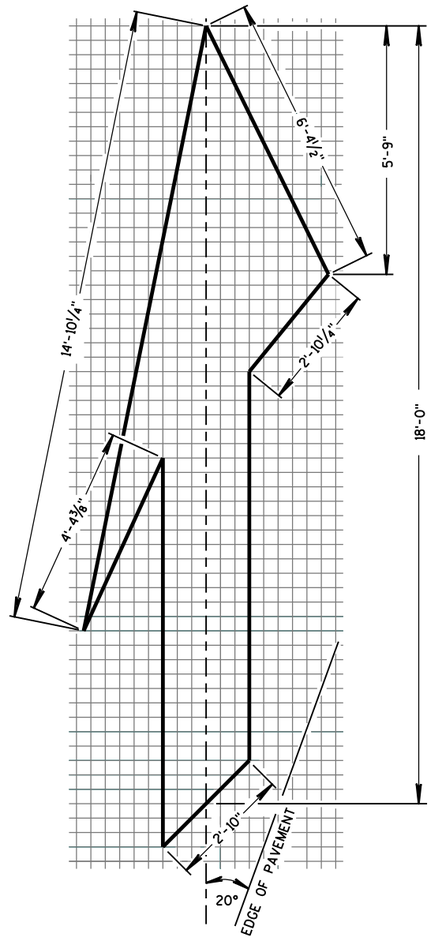

TYPE 5 LANE DROP ARROW

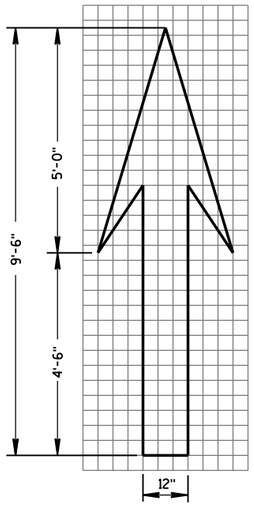

TYPE 1

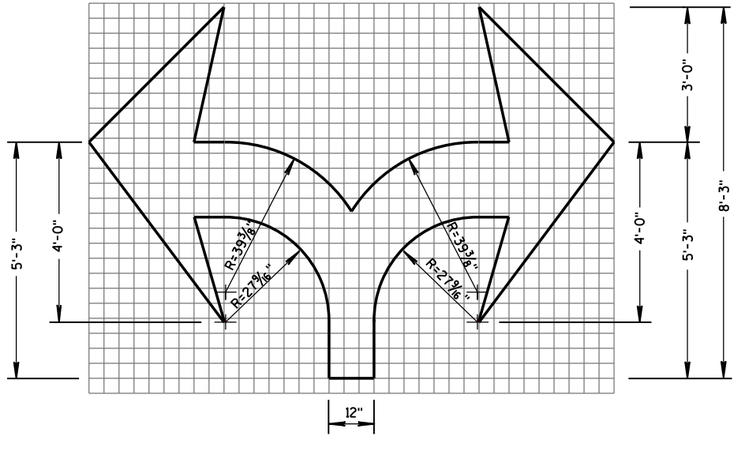

TYPE 7

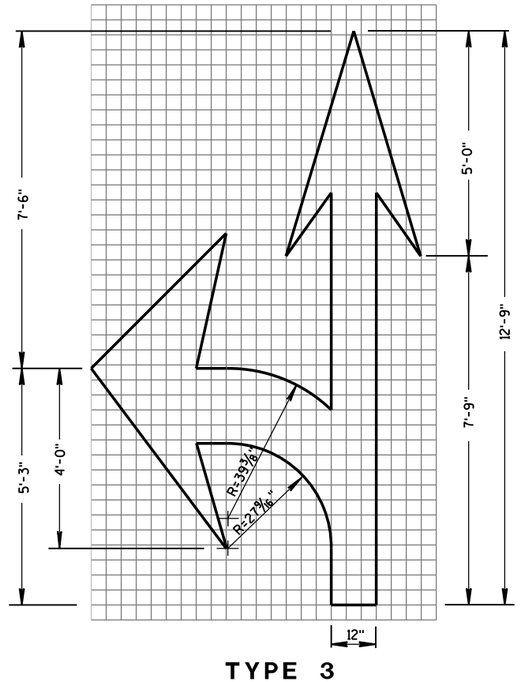

TYPE 3

PAVEMENT MARKING ARROWS

STATE OF WISCONSIN
DEPARTMENT OF TRANSPORTATION

APPROVED
4-18-16
DATE
/S/ Matthew R. Rauch
STATE SIGNING AND MAR
ENGINEER
FHWA

6

S.D.D. 15 C 7-13c

6

S.D.D. 15 C 7-13c

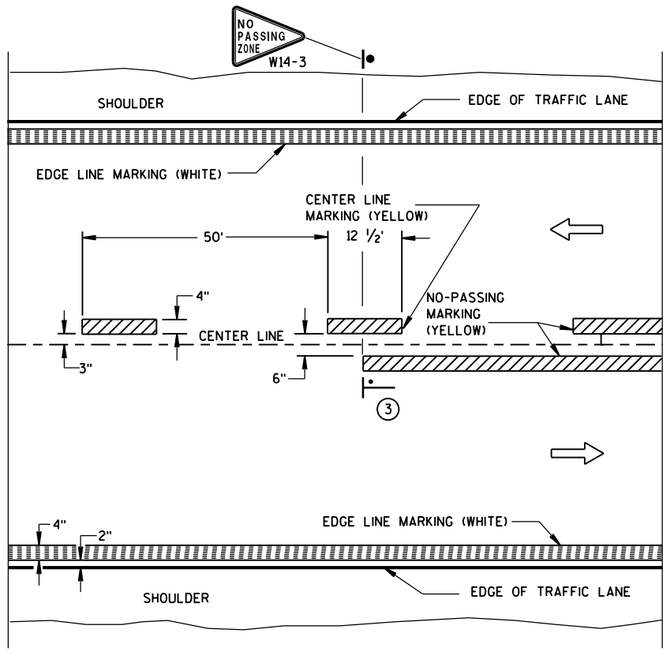

TWO WAY TRAFFIC

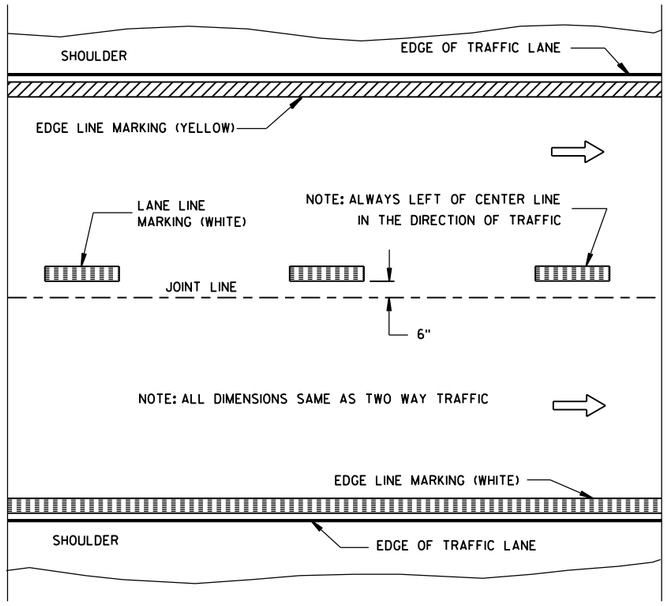

ONE WAY TRAFFIC

PERMANENT PAVEMENT MARKING

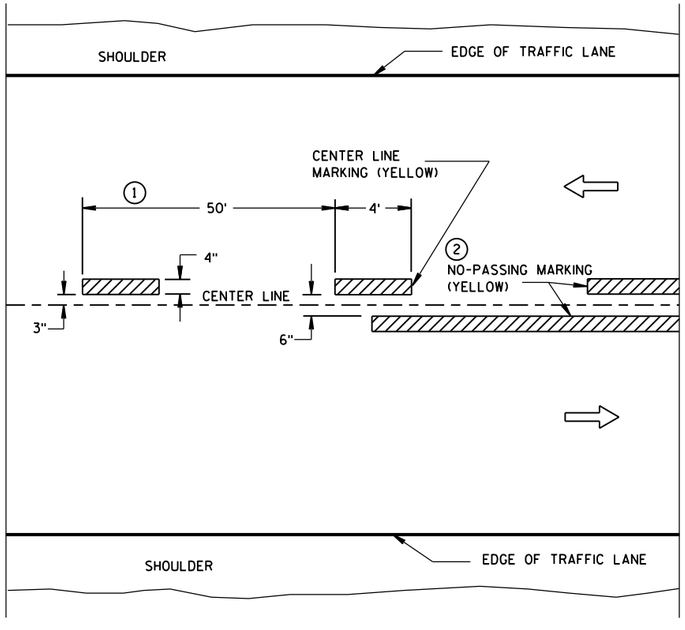

TWO WAY TRAFFIC

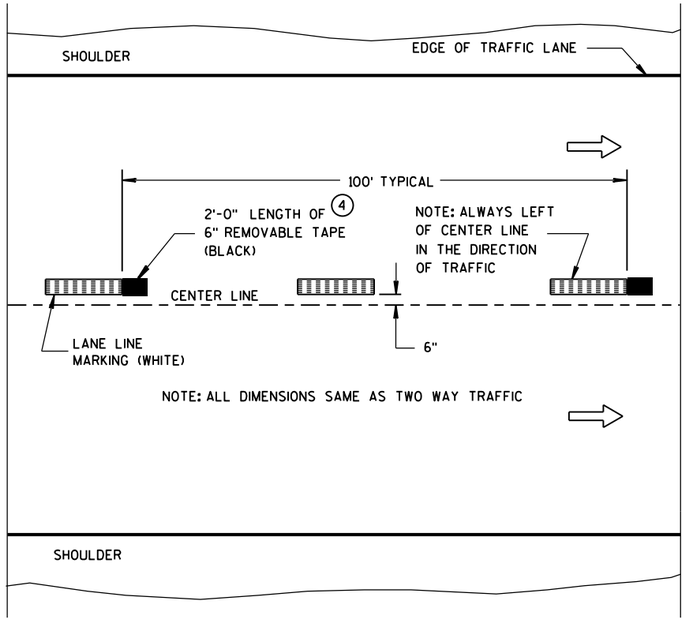

ONE WAY TRAFFIC

TEMPORARY (INTERMEDIATE) PAVEMENT MARKING

(SHOWS CYCLE FOR TEMPORARY CENTER LINE OR TEMPORARY LANE LINE MARKING)

GENERAL NOTES

DETAILS OF CONSTRUCTION NOT SHOWN ON THIS DRAWING SHALL CONFORM TO STANDARD SPECIFICATIONS AND SPECIAL PROVISIONS.

1. HALF CYCLE LENGTHS (25'±) WITH 2' MINIMUM STRIPE LENGTHS SHALL BE PROVIDED ON ROADWAYS (INCLUDING TEMPORARY TRAVELED WAYS) WITH REVERSE CURVATURE, CURVATURE OF OVER 5 DEGREES OR WHEN DIRECTED BY THE ENGINEER TO MARK UNUSUAL ALIGNMENT OF THE TRAVELED WAY.
2. NO PASSING ZONE TEMPORARY PAVEMENT MARKING IS REQUIRED TO BE PLACED, WHERE APPROPRIATE, ALONG WITH CENTERLINE TEMPORARY PAVEMENT MARKING WHEN A SAME DAY PERMANENT PAVEMENT MARKING ITEM IS INCLUDED IN THE CONTRACT.
3. NO PASSING ZONE MARKINGS ARE PLACED ACCORDING TO "T" MARKINGS. IF EXISTING NO PASSING ZONE W14-3 SIGNS ARE BEYOND 50 FEET IN EITHER DIRECTION, THE SIGNS SHALL BE MOVED TO THE "T" MARKINGS.
4. CONCRETE ONLY.

NOTE

ARROW SYMBOL (⇨) SHOWS DIRECTION OF TRAVEL

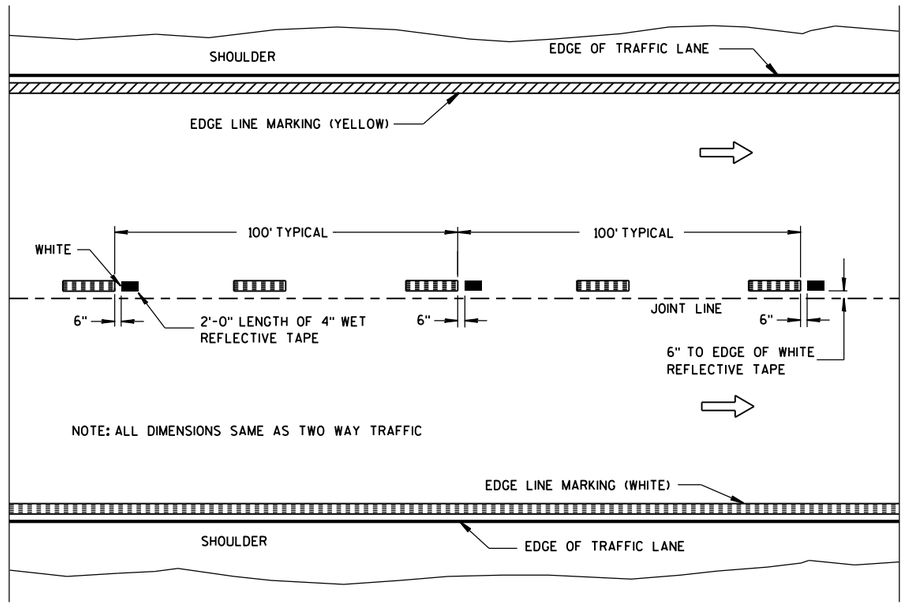

WET REFLECTIVE TAPE SUPPLEMENT TO
SPRAYED OR NON WET REFLECTIVE TAPE LANE LINE

LEGEND

"T" MARKING

POST MOUNTED SIGN

PAVEMENT MARKING (MAINLINE)

STATE OF WISCONSIN
DEPARTMENT OF TRANSPORTATION

APPROVED

5-13-2013 DATE

/S/ Travis Feltes STATE TRAFFIC E

FHWA

6

S.D.D. 15 C 8-16a

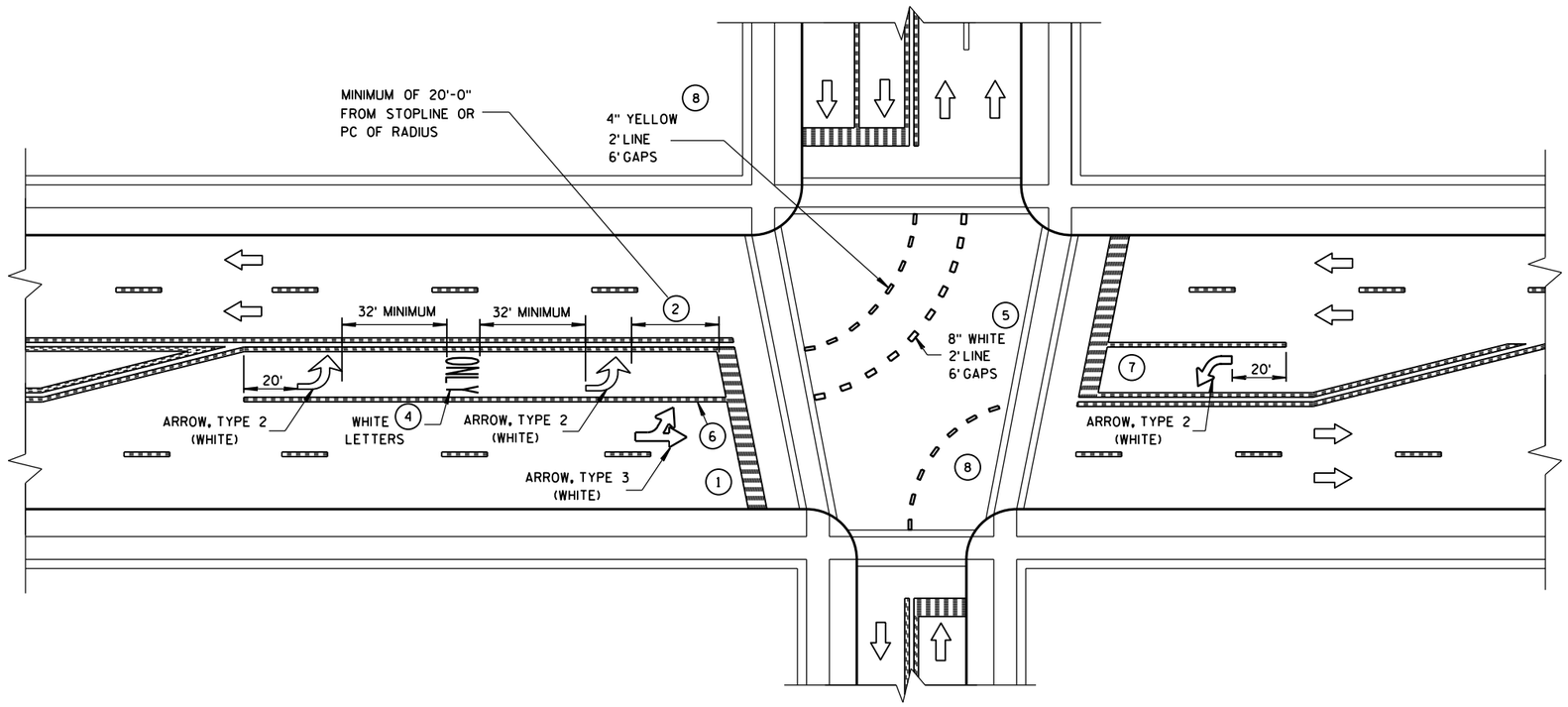

GENERAL NOTES

1. STOP BAR IS REQUIRED ONLY WHEN SPECIFIED IN THE CONTRACT.
2. DISTANCE MAY BE ADJUSTED TO ACCOMODATE SHORT LEFT TURN LANES. AS APPROVED BY THE ENGINEER.
3. A SET OF ARROWS IS REQUIRED EVERY 400 FEET OR NEAR INTERSECTIONS OR DRIVEWAYS WITH TURNING TRAFFIC.
4. ADD EXTRA SETS OF ONE ARROW AND ONE ONLY PER 160 FEET OR WHEN ON A CURVE.
5. 8" WHITE WITH 2' LINE 6' GAPS FOR DUAL TURN LANE.
6. 8" WHITE
7. ADD SECOND ARROW WHEN TURN BAY IS GREATER THAN OR EQUAL TO 108 FEET.
8. REQUIRED ONLY WHEN SPECIFIED IN THE CONTRACT.

NOTE:
ARROW SYMBOL (⇨)
SHOWS DIRECTION OF TRAVEL

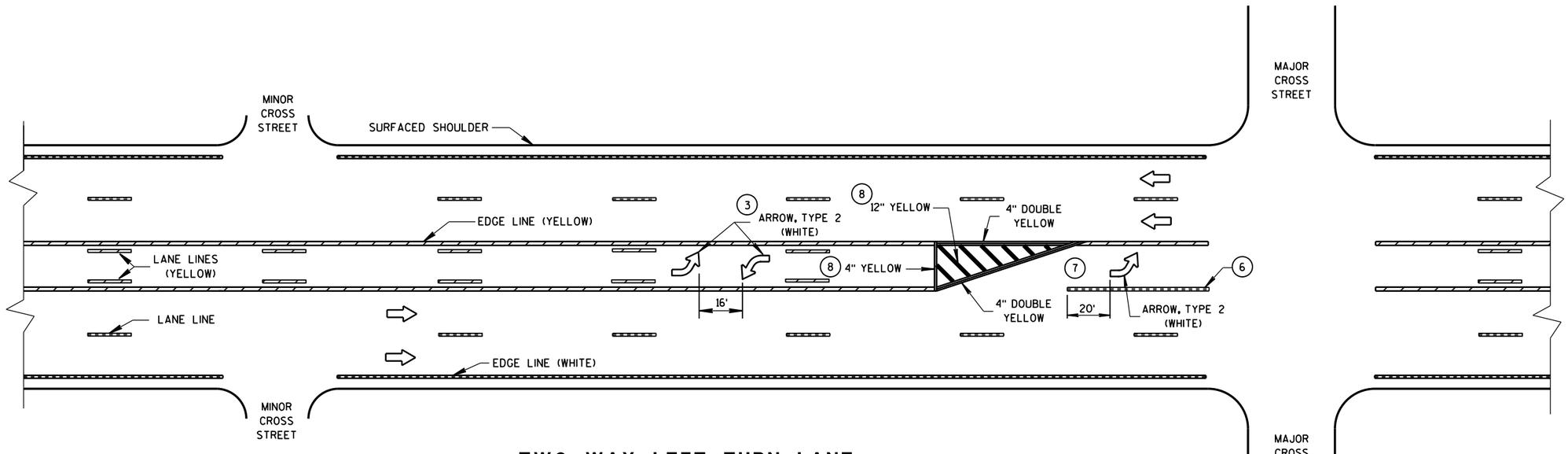

TWO WAY LEFT TURN LANE

PAVEMENT MARKING (LEFT TURN LANE)

STATE OF WISCONSIN
DEPARTMENT OF TRANSPORTATION

6

S.D.D. 15 C 8-16e

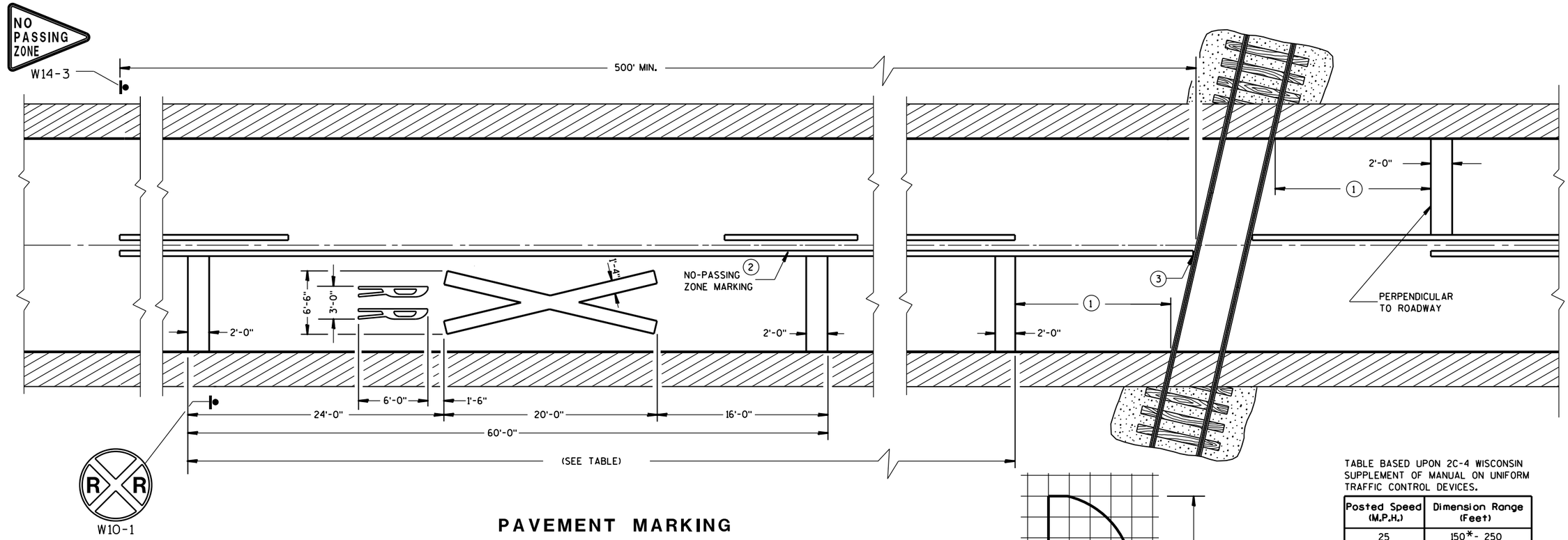

PAVEMENT MARKING

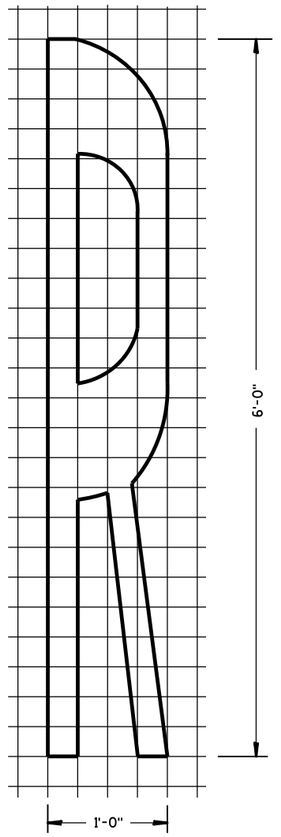

TABLE BASED UPON 2C-4 WISCONSIN SUPPLEMENT OF MANUAL ON UNIFORM TRAFFIC CONTROL DEVICES.

Posted Speed (M.P.H.)	Dimension Range (Feet)
25	150*- 250
30	200*- 300
35	250*- 450
40	300*- 500
45	400*- 650
50	550*- 800
55	750*- 1000
60	1000*- 1250
65	1000*- 1250

* THE MINIMUM DISTANCES IN THE TABLE ARE DESIRABLE AND SHOULD BE USED. THE DISTANCES MAY BE INCREASED UP TO THE MAXIMUM TO ALLOW FOR FIELD CONDITIONS SUCH AS THE CLOSE PROXIMITY OF DRIVEWAYS, BRIDGES, SIDEROADS OR OTHER FEATURES THAT WOULD PROHIBIT THE MINIMUM DISTANCES FROM BEING USED.

GENERAL NOTES

DETAILS OF CONSTRUCTION, MATERIALS, AND WORKMANSHIP NOT SHOWN ON THIS DRAWING SHALL CONFORM TO THE PERTINENT REQUIREMENTS OF THE STANDARD SPECIFICATIONS AND THE APPLICABLE SPECIAL PROVISIONS.

ON MULTI-LANE ROADS THE TRANSVERSE BANDS SHOULD EXTEND ACROSS ALL APPROACH LANES, AND INDIVIDUAL R X R SYMBOLS SHOULD BE USED IN EACH APPROACH LANE.

CENTER OR LANE LINES AND NO-PASSING ZONE MARKINGS SHOWN ON THIS DRAWING ARE REQUIRED AND PAID FOR UNDER OTHER ITEMS IN THE CONTRACT.

RETRACE EXISTING SYMBOL WHERE EXISTING SYMBOLS ARE PLACED.

(1) MINIMUM 8' FROM ANY RAILROAD WARNING DEVICES (SIGNALS, GATES, ETC.) OR 25' FROM THE NEAREST RAIL, WHICHEVER DISTANCE IS GREATER.

(2) 500' MINIMUM. MARKING LIMITS MAY BE EXTENDED AS DIRECTED BY THE ENGINEER TO MEET ADJACENT NO-PASSING ZONE MARKINGS.

(3) FOR MULTIPLE TRACK CROSSINGS, THE BARRIER LINE SHALL EXTEND TO THE NEAR RAIL OF THE FURTHEST TRACK IN THE DIRECTION OF HIGHWAY TRAVEL.

SIGNING AND PAVEMENT MARKING DETAILS FOR RAILROAD-HIGHWAY GRADE CROSSINGS

STATE OF WISCONSIN
DEPARTMENT OF TRANSPORTATION

APPROVED
4-18-2016 — DATE
/S/ Matthew R. Rauch — STATE SIGNING AND MAI[illegible]GINEER
FHWA

6

S.D.D. 15 C 9-10a

6

S.D.D. 15 C 9-10a

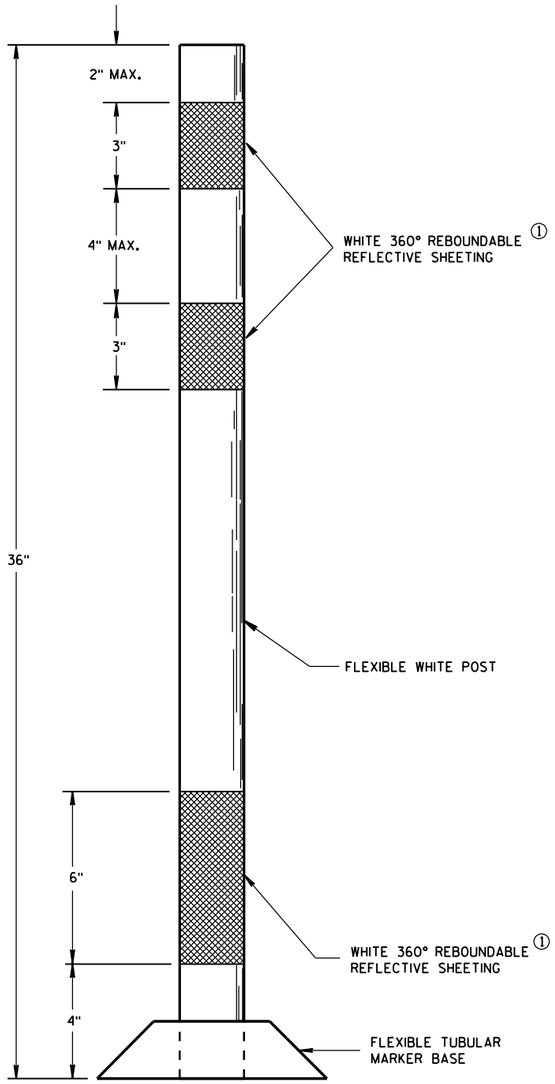

FLEXIBLE
TUBULAR MARKER POST
PERMANENT CROSSOVER

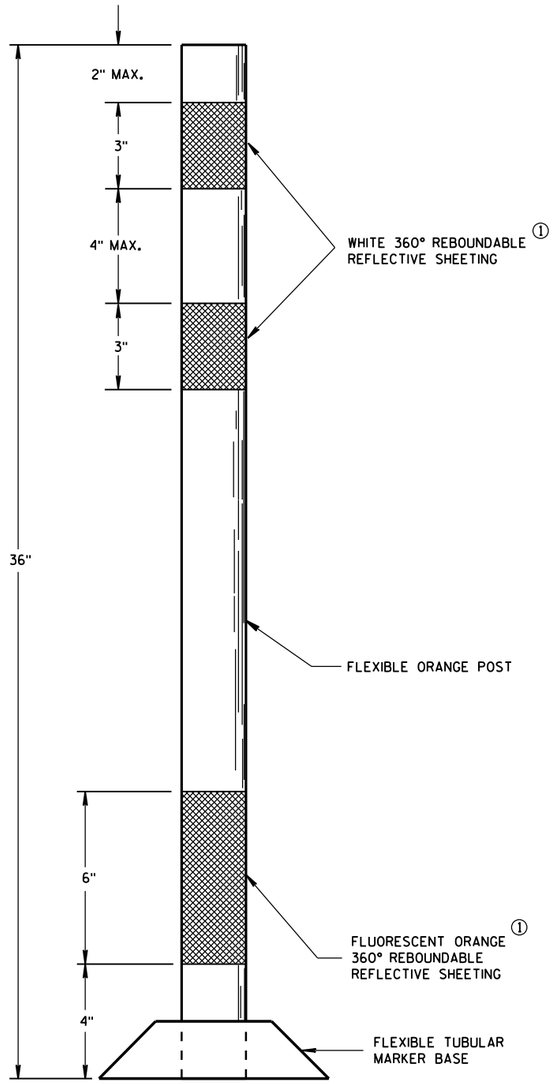

FLEXIBLE
TUBULAR MARKER POST
WORK ZONE

GENERAL NOTES

DETAILS OF CONSTRUCTION NOT SHOWN ON THIS DRAWING SHALL CONFORM TO THE PERTINENT REQUIREMENTS OF THE STANDARD SPECIFICATIONS AND APPLICABLE SPECIAL PROVISIONS.

SURFACE MOUNTED BASES SHALL BE FURNISHED IN ACCORDANCE WITH MANUFACTURERS RECOMMENDATIONS TO BE COMPATIBLE WITH FLEXIBLE TUBULAR MARKER POSTS TO A SIZE AND SHAPE THAT WILL PROVIDE A STABLE POST FOUNDATION WHEN SECURED TO THE PAVEMENT.

THE ASPHALTIC ADHESIVE OR BUTYL PAD FURNISHED SHALL BE IN ACCORDANCE WITH MANUFACTURERS RECOMMENDATIONS.

① REFLECTIVE SHEETING SHALL FOLLOW THE REQUIREMENTS IN THE APPROVED PRODUCTS LISTING FOR SIGN SHEETING.

FLEXIBLE TUBULAR MARKER POST

STATE OF WISCONSIN
DEPARTMENT OF TRANSPORTATION

APPROVED
10-16-2015
DATE
FHWA

/S/ Peter Amakobe Atepe
STATEWIDE WORK ZON
SAFETY ENGINE

6

S.D.D. 15 C 11-6

GENERAL NOTE

APPLIES TO ISLANDS AT LEFT TURNS AT ONE WAY ROADWAYS AS WELL.

SEE MISCELLANEOUS QUANTITIES FOR SIGN SIZE.

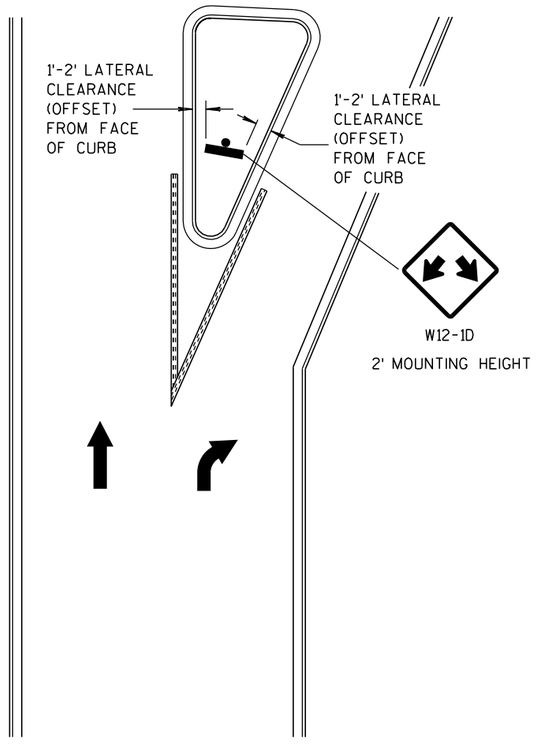

LARGE RIGHT TURN ISLAND

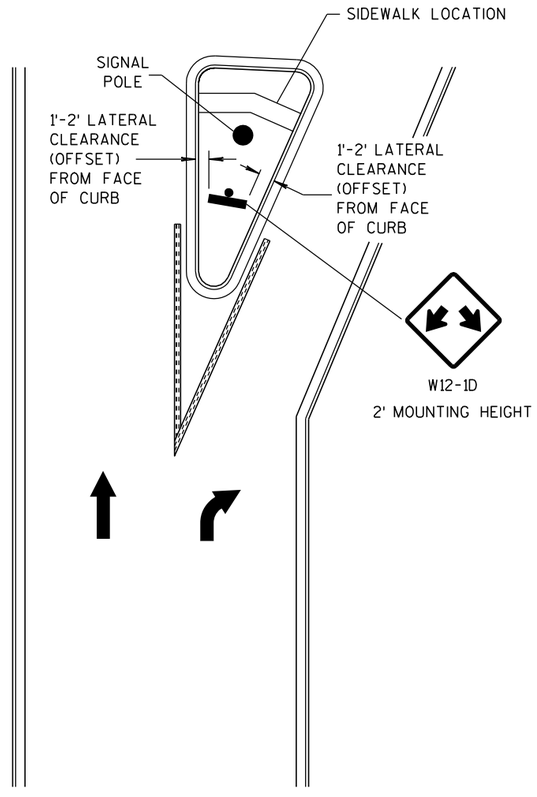

LARGE RIGHT TURN ISLAND
WITH SIGNAL POLE

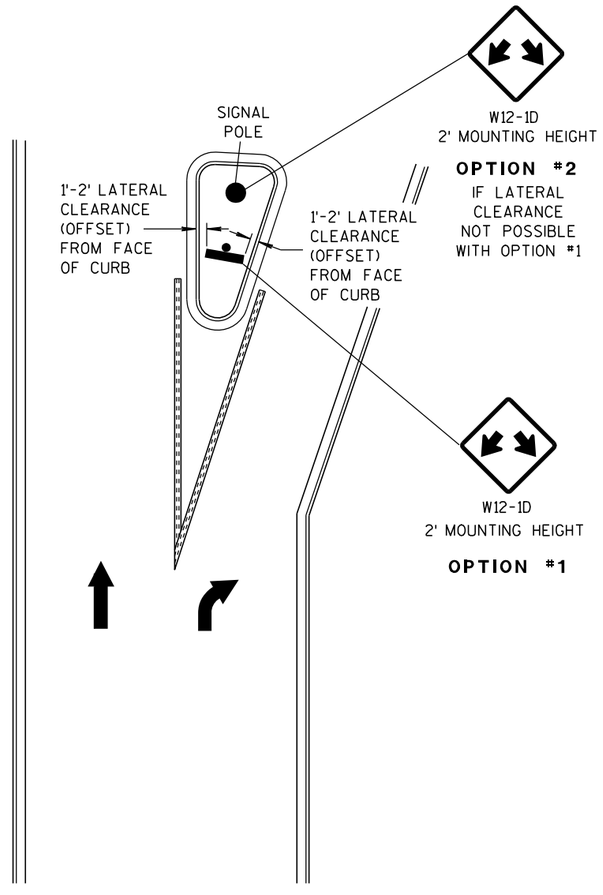

SMALL RIGHT TURN ISLAND

DOUBLE ARROW WARNING SIGN PLACEMENT

DOUBLE ARROW WARNING SIGN PLACEMENT	
STATE OF WISCONSIN DEPARTMENT OF TRANSPORTATION	
APPROVED	
10-22-08 DATE	/S/ Thomas N. Nothdurft STATE TRAFFIC ENGINEER
FHWA	184 IGN

6

S.D.D. 15 C 27-1

6

S.D.D. 15 C 27-1

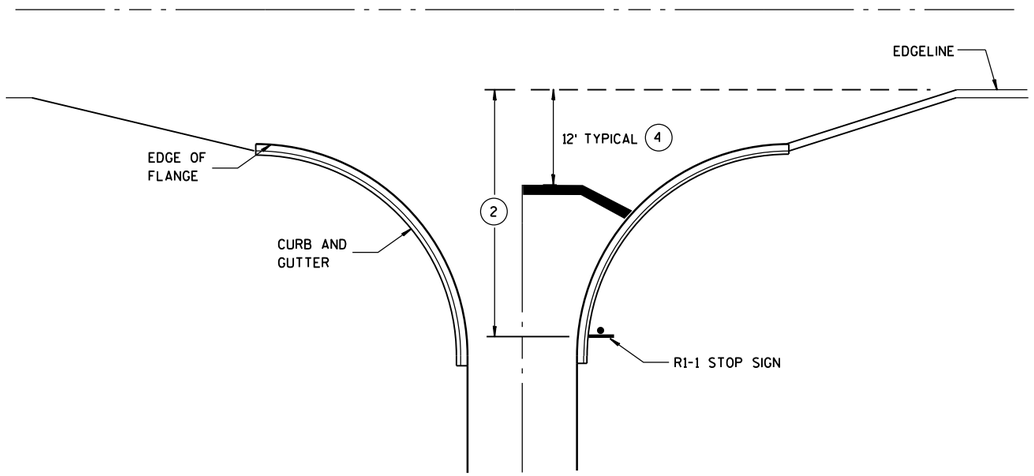

TYPICAL STOP LINE PAVEMENT MARKING WITH CURB AND GUTTER

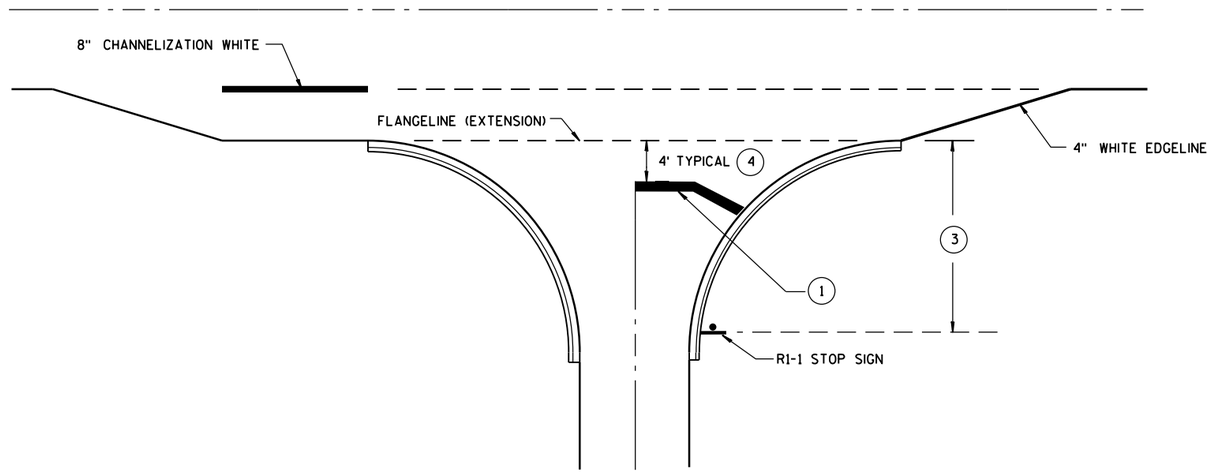

TYPICAL STOP LINE PAVEMENT MARKING FOR SIDEROADS WITH RIGHT TURN LANE

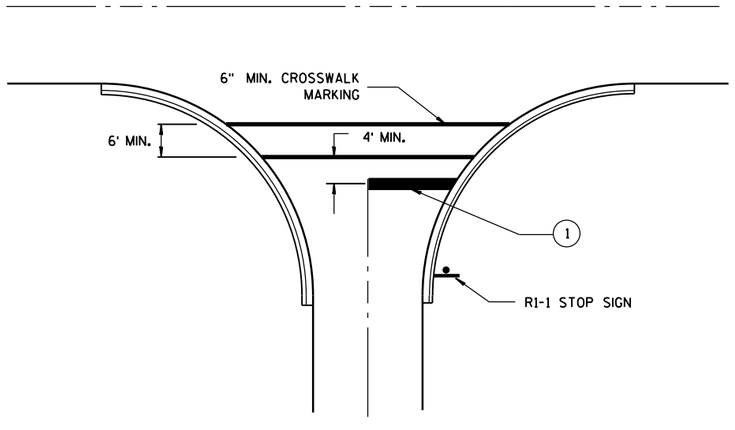

TYPICAL STOP LINE PAVEMENT MARKING FOR SIDEROADS WITH CROSSWALK MARKING

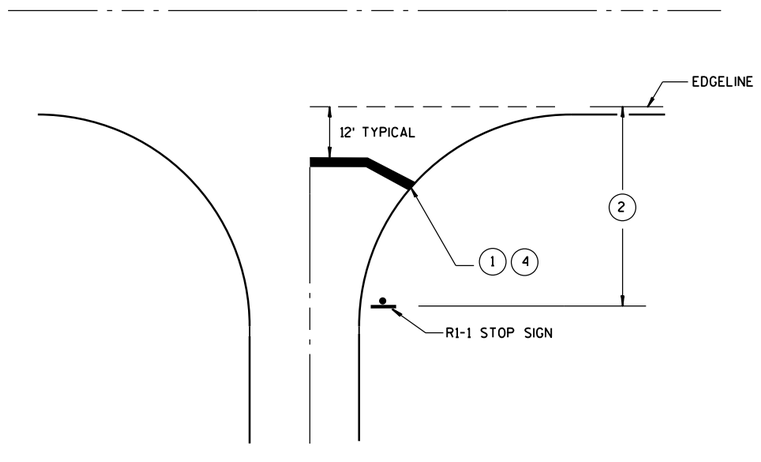

TYPICAL STOP LINE PAVEMENT MARKING WITHOUT CURB AND GUTTER

GENERAL NOTES

1. 18-INCH STOP LINES MAY BE DELETED OR ADDED BY THE PROJECT ENGINEER BASED ON VISIBILITY AND SIGHT LINES.
2. IF STOP SIGN IS LESS THAN OR EQUAL TO 40 FEET FROM THE EDGELINE THAN NO STOP LINE IS REQUIRED.
3. IF STOP SIGN IS LESS THAN OR EQUAL TO 30 FEET FROM THE FLANGELINE EXTENSION THAN NO STOP LINE IS REQUIRED.
4. MOVE CLOSER TO EDGE OF TRAVEL LANE AS NEEDED FOR VISIBILITY AND SIGHT LINES. (NO CLOSER THAN 4 FEET).

STOP LINE AND CROSSWALK PAVEMENT MARKING

STATE OF WISCONSIN
DEPARTMENT OF TRANSPORTATION

APPROVED

4-18-2016
DATE

/S/ Matthew R. Rauch
STATE SIGNING AND MAR 185 NEER

FHWA

6

S.D.D. 15 C 33-2

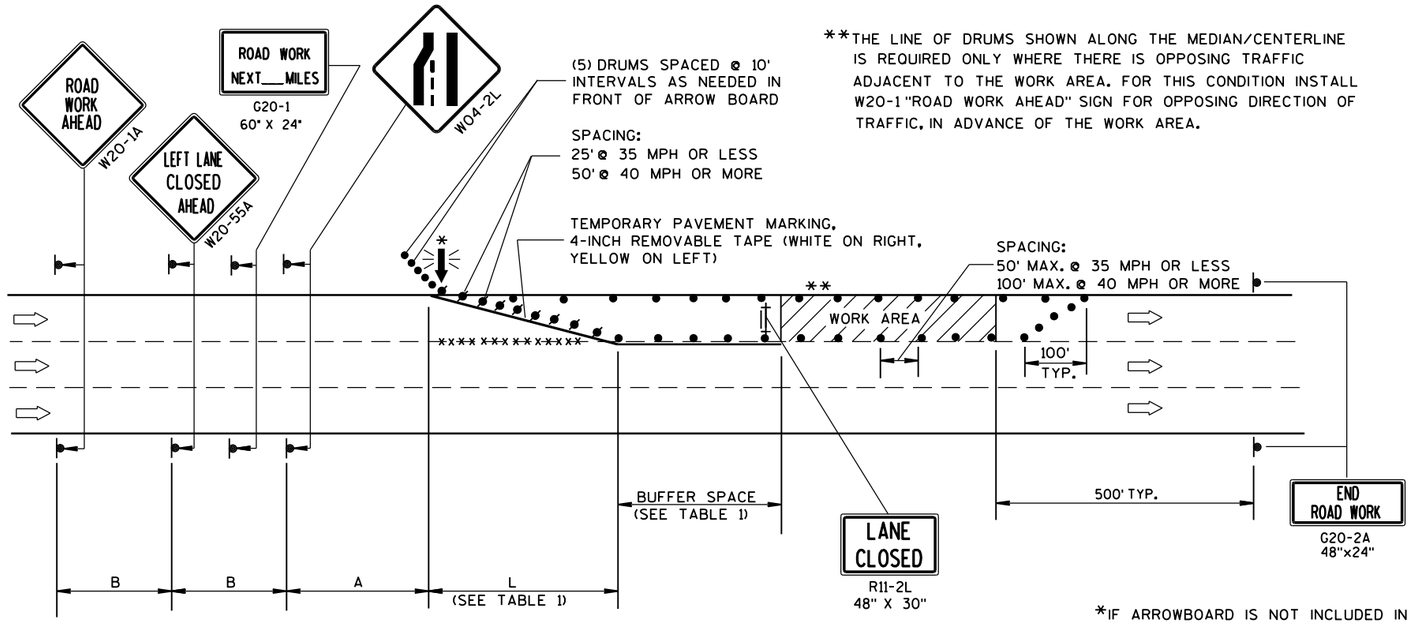

**THE LINE OF DRUMS SHOWN ALONG THE MEDIAN/CENTERLINE IS REQUIRED ONLY WHERE THERE IS OPPOSING TRAFFIC ADJACENT TO THE WORK AREA. FOR THIS CONDITION INSTALL W20-1 "ROAD WORK AHEAD" SIGN FOR OPPOSING DIRECTION OF TRAFFIC, IN ADVANCE OF THE WORK AREA.

B=400' AT 25-30 MPH
700' AT 35-40 MPH
1000' AT 45-55 MPH

A=200' AT 25-30 MPH
350' AT 35-40 MPH
500' AT 45-55 MPH

(PLACE BARRICADE AND SIGN APPROX. EVERY 1000' ACROSS THE CLOSED LANE)

*IF ARROWBOARD IS NOT INCLUDED IN MISCELLANEOUS QUANTITIES, SUBSTITUTE A TYPE III BARRICADE WITH W01-6 SIGN IN THE LANE CLOSURE TAPER.

W01-6
48"x24"

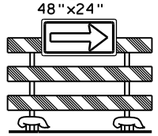

TABLE 1
TAPER AND BUFFER SPACE FOR 12' LANE WIDTH

S	L	BUFFER SPACE
25	125'	55'
30	180'	85'
35	245'	120'
40	320'	170'
45	540'	220'
50	600'	280'
55	660'	335'

FOR LANE WIDTH OTHER THAN 12':

L = WS AT 45 MPH OR GREATER

$L = \frac{WS^2}{60}$ AT 40 MPH OR LESS

L = TAPER LENGTH IN FEET

S = NON-CONSTRUCTION SPEED LIMIT (MPH)

W = WIDTH OF LANE CLOSURE

LEGEND

- TYPE III BARRICADE WITH ATTACHED SIGN
- SIGN ON PERMANENT SUPPORT
- TRAFFIC CONTROL DRUM WITH TYPE "C" STEADY BURN LIGHT
- TRAFFIC CONTROL DRUM
- FLASHING ARROW BOARD
- DIRECTION OF TRAFFIC
- REMOVING PAVEMENT MARKING (SEE GENERAL NOTES)
- WORK AREA

GENERAL NOTES

THIS LANE CLOSURE DETAIL IS TYPICAL FOR CLOSING THE LEFT LANE. FOR A RIGHT LANE CLOSURE, REVERSE THE TRAFFIC CONTROL.

THIS DETAIL MAY BE USED FOR ROADWAYS WITH EITHER TWO OR THREE LANES IN EACH DIRECTION.

THE EXACT NUMBER, LOCATION, AND SPACING OF ALL SIGNS AND DEVICES SHALL BE ADJUSTED TO FIT FIELD CONDITIONS AS APPROVED BY THE ENGINEER.

THE SPACING BETWEEN TRAFFIC CONTROL SIGNS SHOULD BE ADJUSTED TO NOT CONFLICT WITH AND SHOULD PROVIDE A DESIRABLE MINIMUM OF 200 FEET CLEARANCE TO EXISTING SIGNS THAT WILL REMAIN IN PLACE.

ALL SIGNS ARE 48"x48" UNLESS OTHERWISE NOTED. IF NECESSARY DUE TO SPACE CONSTRAINTS IN URBAN AREAS, 36" X 36" SIGNS MAY BE USED IF APPROVED BY DISTRICT TRAFFIC UNIT.

"WO" SIGNS ARE THE SAME AS "W" SIGNS EXCEPT THE BACKGROUND IS ORANGE.

SIGNS THAT WILL BE IN PLACE LESS THAN 7 CONTINUOUS DAYS AND NIGHTS, OR THAT WILL BE PLACED IN A CLOSED LANE, MAY BE MOUNTED ON PORTABLE SUPPORTS.

ANY SIGNS TEMPORARY OR EXISTING, WHICH CONFLICT WITH TRAFFIC CONTROL "IN USE" SHALL BE REMOVED OR COVERED AS NEEDED AND AS APPROVED BY THE ENGINEER.

REMOVE PAVEMENT MARKINGS AND PLACE TEMPORARY PAVEMENT MARKING, REMOVABLE TAPE IF LANE CLOSURE IS TO BE IN PLACE FOR 4 OR MORE CONTINUOUS DAYS AND NIGHTS.

ON UNDIVIDED ROADWAYS, OMIT THE SIGNS SHOWN ON LEFT SIDE OF ROAD.

W20-1A, G20-1 AND G20-2A SIGNS ARE NOT REQUIRED IF THE LANE CLOSURE IS WITHIN A LARGER WORK ZONE WHERE THESE SIGNS ARE ALREADY PRESENT.

OMIT G20-1 SIGNS IF LENGTH OF WORK AREA IS 2 MILES OR LESS.

CONSIDER GEOMETRICS WHEN LOCATING SIGNS AND ARROWBOARDS SO THE APPROACHING DRIVER HAS A CLEAR VIEW OF THE ARROWBOARDS AND LANE CLOSURE DRUMS.

PLACE THE ARROWBOARD AS CLOSE AS POSSIBLE TO THE BEGINNING OF THE LANE CLOSURE TAPER, PREFERABLY ON THE SHOULDER OR TERRACE.

CHANNELIZING DEVICES PLACED ADJACENT TO WORK AREA SHALL BE PULLED BACK FROM THE TRAVEL LANE WHEN WORK IS NOT IN PROGRESS.

BARRICADES IN A CLOSED LANE THAT MUST BE MOVED FOR A WORK OPERATION SHALL BE IMMEDIATELY RE-ESTABLISHED UPON COMPLETION OF THE OPERATION OR, FOR CONTINUING OPERATIONS, AT THE END OF EACH WORKING DAY.

WARNING LIGHTS ARE NOT REQUIRED IF THE LANE CLOSURE IS A DAYTIME ONLY OPERATION.

TRAFFIC CONTROL, SINGLE LANE CLOSURE, NON-FREEWAY/EXPRESSWAY

STATE OF WISCONSIN
DEPARTMENT OF TRANSPORTATION

APPROVED
June 2016 — DATE
/S/ Peter Amakobe Atepe — STATEWIDE WORK ZONE SAFETY ENGINEER
FHWA

6

S.D.D. 15 D 20-4

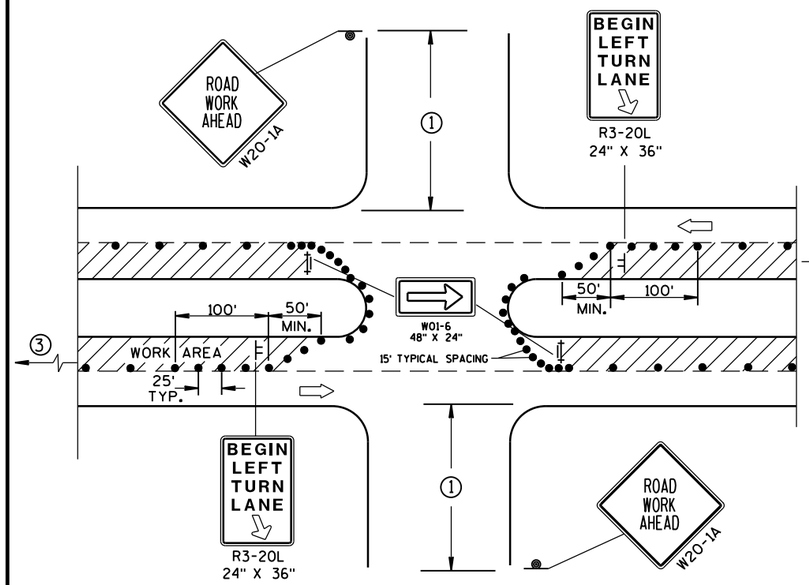

DETAIL A

FOR LEFT LANE CLOSURE AT INTERSECTION OR MEDIAN OPENING

PROVIDE TURN LANES AT INTERSECTIONS WHENEVER STAGING OF WORK ALLOWS. TAPER AND TURN LANE LENGTHS BASED ON FIELD CONDITIONS AS APPROVED BY THE ENGINEER.

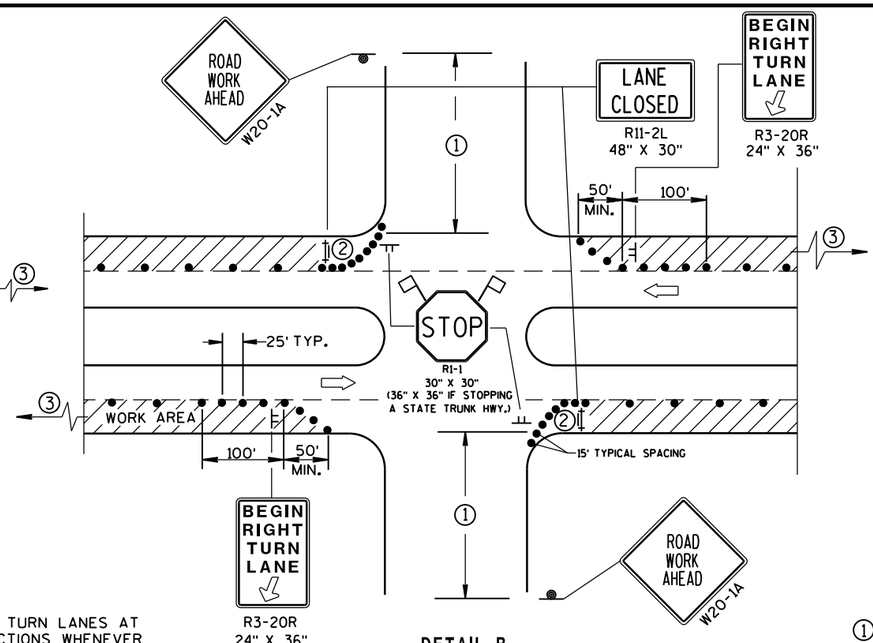

DETAIL B

FOR RIGHT LANE CLOSURE AT INTERSECTION

GENERAL NOTES

THE EXACT NUMBER, LOCATION, AND SPACING OF ALL SIGNS AND DEVICES SHALL BE ADJUSTED TO FIT FIELD CONDITIONS AS APPROVED BY THE ENGINEER.

THE SPACING BETWEEN SIGNS SHOULD BE ADJUSTED TO NOT CONFLICT WITH AND SHOULD PROVIDE A DESIRABLE MINIMUM OF 200 FEET CLEARANCE TO EXISTING SIGNS THAT WILL REMAIN IN PLACE.

ALL SIGNS ARE 48"x48" UNLESS OTHERWISE NOTED. IF NECESSARY DUE TO SPACE CONSTRAINTS IN URBAN AREAS, 36" X 36" SIGNS MAY BE USED IF APPROVED BY DISTRICT TRAFFIC UNIT.

"WO" SIGNS ARE THE SAME AS "W" SIGNS EXCEPT THE BACKGROUND IS ORANGE.

SIGN LAYOUTS SHALL BE IN ACCORDANCE WITH THE FHWA'S MANUAL OF STANDARD HIGHWAY SIGNS OR THE WISCONSIN STANDARD SIGN PLATES.

SIGNS THAT WILL BE IN PLACE LESS THAN 7 CONTINUOUS DAYS AND NIGHTS, OR THAT WILL BE PLACED IN A CLOSED LANE, MAY BE MOUNTED ON PORTABLE SUPPORTS.

ANY SIGNS TEMPORARY OR EXISTING, WHICH CONFLICT WITH TRAFFIC CONTROL "IN USE" SHALL BE REMOVED OR COVERED AS NEEDED AND AS APPROVED BY THE ENGINEER.

CHANNELIZING DEVICES PLACED ADJACENT TO WORK AREA SHALL BE PULLED BACK FROM THE TRAVEL LANE WHEN WORK IS NOT IN PROGRESS.

BARRICADES IN A CLOSED LANE THAT MUST BE MOVED FOR A WORK OPERATION SHALL BE IMMEDIATELY RE-ESTABLISHED UPON COMPLETION OF THE OPERATION OR, FOR CONTINUING OPERATIONS, AT THE END OF EACH WORKING DAY.

① 500' TYPICAL OR AT LAST INTERSECTION, WHICHEVER IS CLOSER.
350' IF 35-40 MPH.
200' IF 25-30 MPH.

② ALSO USE BARRICADE AND 15-FOOT TYPICAL DRUM SPACING AT COMMERCIAL DRIVEWAYS.

③ SEE SEPARATE LANE CLOSURE DETAIL FOR ADDITIONAL TRAFFIC CONTROL.

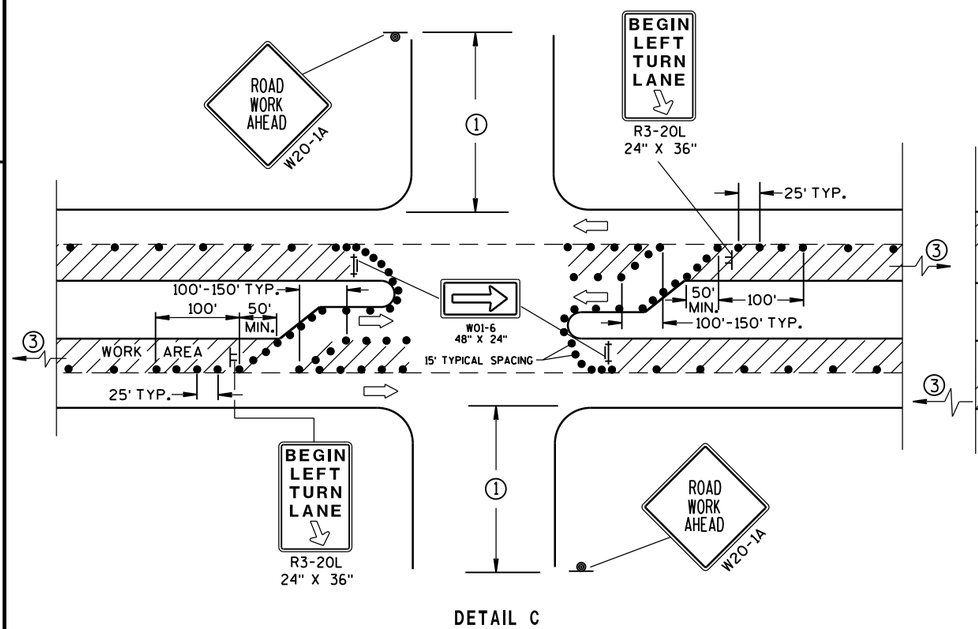

DETAIL C

FOR LEFT LANE CLOSURE AT INTERSECTION OR MEDIAN OPENING (WITH LEFT TURN BAY OPEN)

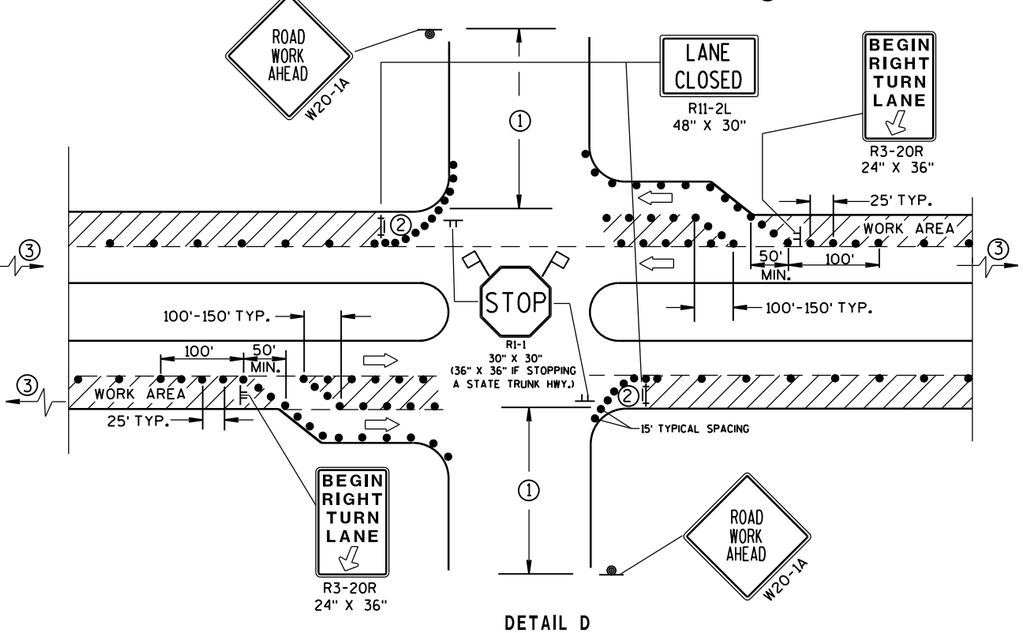

DETAIL D

FOR RIGHT LANE CLOSURE AT INTERSECTION (WITH RIGHT TURN BAY OPEN)

LEGEND

- TRAFFIC CONTROL DRUM
- SIGN ON PERMANENT SUPPORT
- SIGN ON TEMPORARY SUPPORT (5' MIN. MOUNTING HEIGHT)
- TYPE III BARRICADE WITH ATTACHED SIGN AND TYPE "A" WARNING LIGHT (FLASHING)
- DIRECTION OF TRAFFIC
- FLAGS, 16" X 16" MIN., (ORANGE)
- WORK AREA

TRAFFIC CONTROL, INTERSECTION WITHIN SINGLE LANE CLOSURE

STATE OF WISCONSIN
DEPARTMENT OF TRANSPORTATION

APPROVED
June 2016 — DATE
/S/ Peter Anakobe Atepe
STATEWIDE WORK ZONE TRAFFIC SAFETY ENGINEER
FHWA

6

S.D.D. 15 D 21-4

6

S.D.D. 15 D 21-4

NOTE: MAY BE USED ON ROADWAY WITH POSTED SPEED OF LESS THAN 40 MPH.

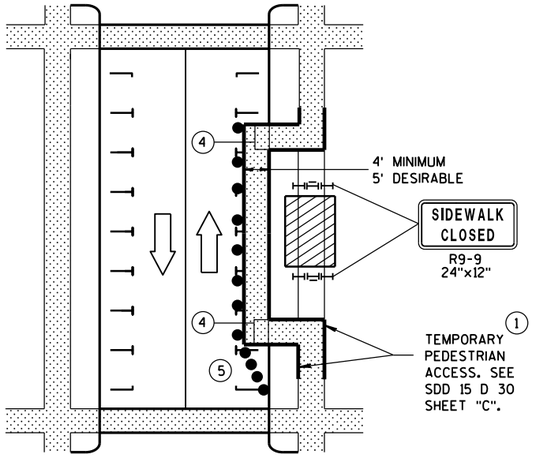

MID-BLOCK SIDEWALK CLOSURE IN PARKING LANE

NOTE: LAYOUT SAME AS ABOVE.

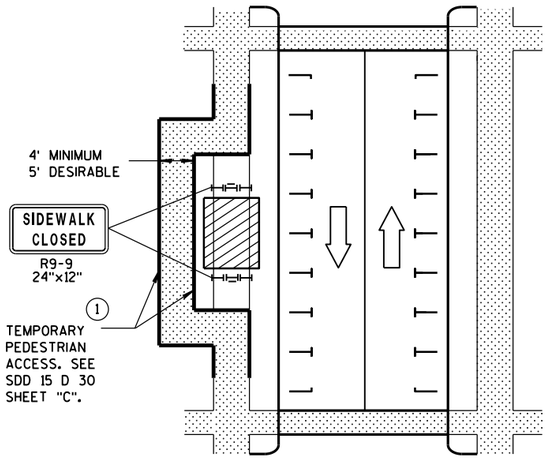

SIDEWALK DIVERSION

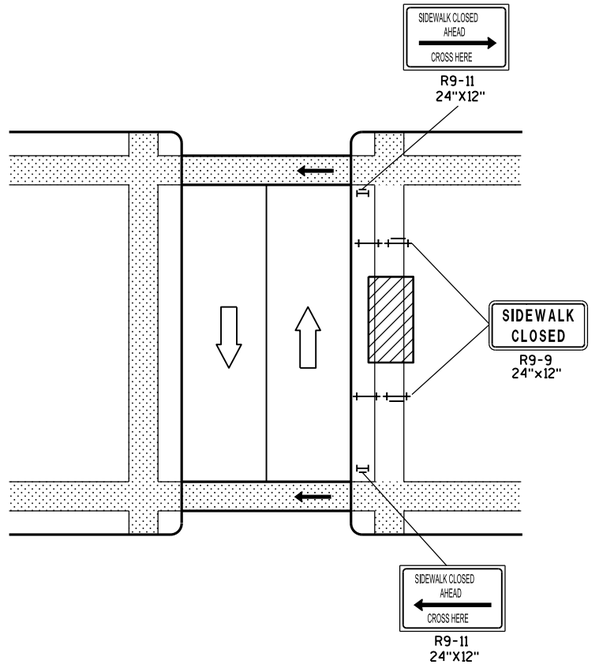

MID-BLOCK SIDEWALK CLOSURE

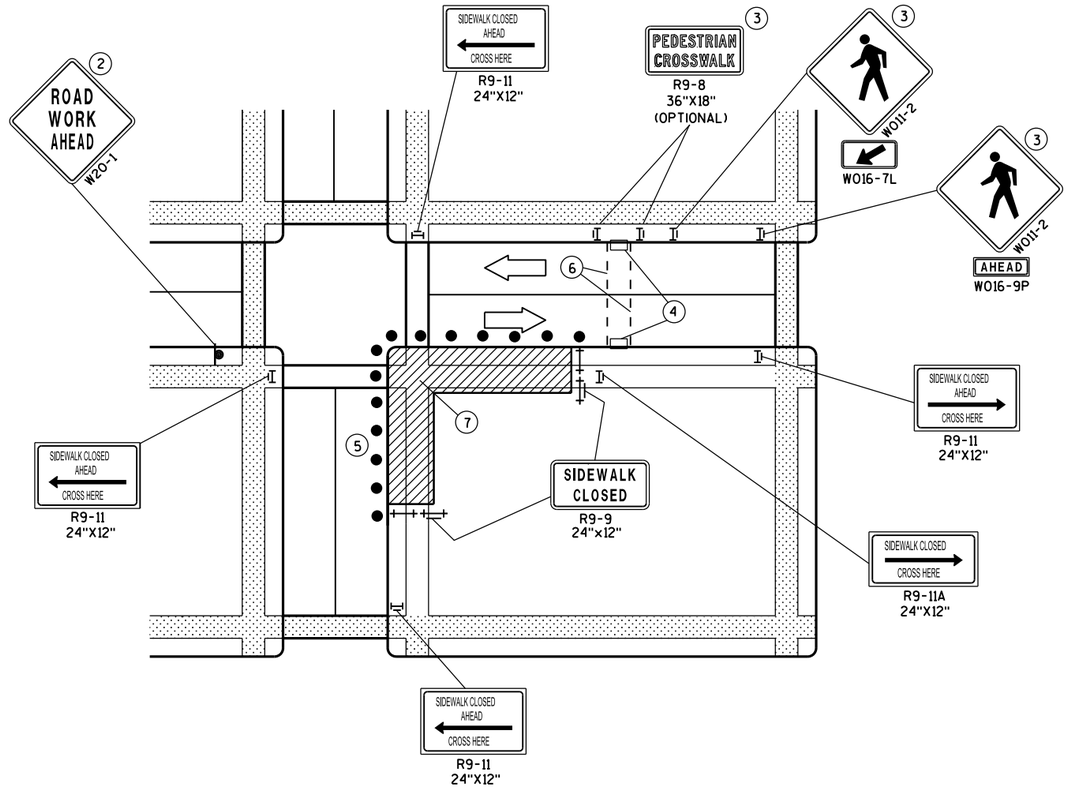

CORNER SIDEWALK CLOSURE WITH TEMPORARY CROSSWALK

GENERAL NOTES

WHEN CLOSING OR RELOCATING CROSSWALKS OR SIDEWALKS, PROVIDE DETECABLE TEMPORARY FACILITIES AND INCLUDE ACCESSIBILITY FEATURES CONSISTENT WITH EXISTING PEDESTRIAN FACILITIES.

TEMPORARY TRAFFIC CONTROL DEVICES FOR PEDESTRIANS ARE SHOWN. OTHER DEVICES MAY BE NECESSARY TO CONTROL VEHICULAR TRAFFIC. STAGE WORK, AS NECESSARY, TO PROVIDE A TEMPORARY PEDESTRIAN ACCESS ROUTE AT ALL TIMES. FOR ROADWAYS WITH NO AVAILABLE DETOURS, MAINTAIN ONE OPEN SIDEWALK AT ALL TIMES.

"WO" SIGN IS THE SAME AS "W" SIGN EXCEPT THE BACKGROUND IS ORANGE.

FOR NIGHTTIME CLOSURE USE TYPE "A" FLASHING WARNING LIGHTS ON BARRICADES, SUPPORTING SIGNS AND CLOSING SIDEWALK. USE TYPE "C" STEADY BURN LIGHTS ON CHANNELIZING DEVICES SEPARATING THE WORK AREA FROM VEHICULAR TRAFFIC.

PEDESTRIAN TRAFFIC SIGNAL DISPLAY CONTROLLING CLOSED CROSSWALK SHALL BE COVERED OR DEACTIVATED.

POST MOUNTED SIGNS LOCATED ADJACENT TO A SIDEWALK SHALL HAVE A 7 FOOT MINIMUM CLEARANCE FROM THE BOTTOM OF THE SIGN TO THE SIDEWALK SURFACE.

ALTERNATE SIDEWALK WORK BETWEEN LEFT AND RIGHT SIDE OF ROADWAY TO MAINTAIN PEDESTRIAN ACCESS.

(1) IF SIDEWALK CLOSURE AFFECTS AN ACCESSIBLE AND DETECTABLE FACILITY, MAINTAIN ACCESSIBILITY AND DETECTABILITY ALONG THE ALTERNATE PEDESTRIAN ROUTE.

(2) "ROAD WORK AHEAD" SIGNS ARE NOT REQUIRED IF THE SIDEWALK CLOSURE OCCURS WITHIN A LARGER WORK ZONE WHERE ADVANCE WARNING SIGNS ARE ALREADY PRESENT, OR IF THE WORK AREA AND EQUIPMENT ARE MORE THAN 2 FEET BEHIND THE CURB.

(3) IF TEMPORARY PEDESTRIAN CROSSWALK IS NOT PROVIDED, OMIT R9-8 AND W011-2 SIGN ASSEMBLIES. IF PROVIDED INCLUDE ON BOTH SIDES OF THE CROSSWALK.

(4) TEMPORARY CURB RAMPS. SEE SDD 15 D 30 SHEET "B".

(5) DRUMS OR BARRICADES AT 25 FOOT SPACING. STREET PARKING SHALL BE PROHIBITED FOR AT LEAST 50 FEET IN ADVANCE OF THE MID-BLOCK CROSSWALK.

(6) TEMPORARY PAVEMENT MARKING FOR CROSSWALK LINES.

(7) LIMIT WORK TO ONE QUADRANT AT A TIME TO MINIMIZE PEDESTRIAN DISRUPTION.

LEGEND

- SIGN ON PERMANENT SUPPORT
- UNDER PEDESTRIAN TRAFFIC
- WORK AREA
- PEDESTRIAN CHANNELIZATION DEVICE
- TYPE II BARRICADE WITH/WITHOUT SIGN (ALL WITH ONE WARNING LIGHT, TYPE A, LOW-INTENSITY FLASHING)
- TYPE III BARRICADE WITH/WITHOUT SIGN (ALL WITH ONE WARNING LIGHT, TYPE A, LOW-INTENSITY FLASHING)
- DIRECTION OF TRAFFIC
- TRAFFIC CONTOL DRUM

TRAFFIC CONTROL, PEDESTRIAN ACCOMMODATION

STATE OF WISCONSIN
DEPARTMENT OF TRANSPOR

6

S.D.D. 15 D 30-3a

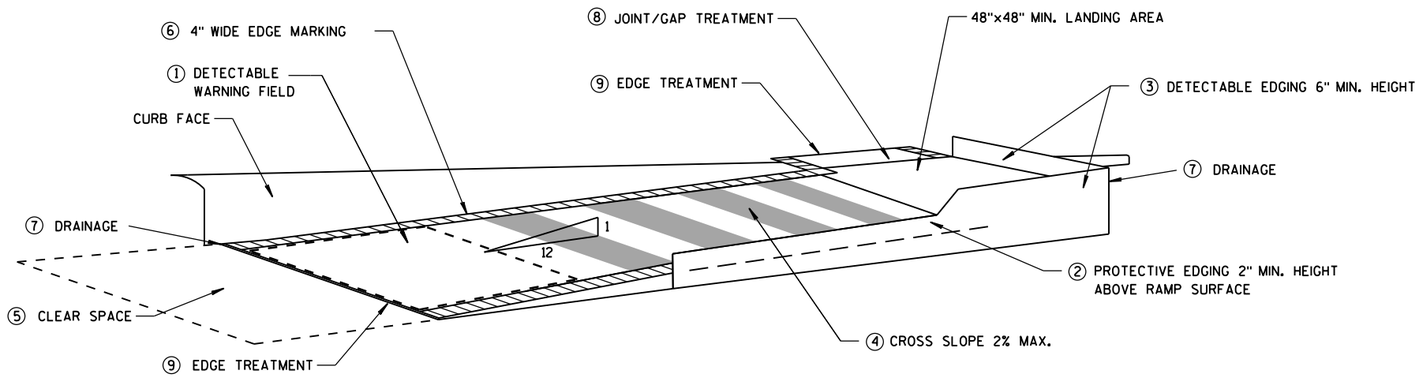

TEMPORARY CURB RAMP PARALLEL TO CURB

GENERAL NOTES

NOTIFY THE BUS COMPANY 7 DAYS IN ADVANCE OF THE BUS STOP RELOCATION.

ALTERNATE SIDEWALK WORK BETWEEN LEFT AND RIGHT SIDE OF ROADWAY TO MAINTAIN PEDESTRIAN ACCESS.

① CURB RAMPS SHALL BE 48" MIN. WIDTH WITH A FIRM, STABLE AND SLIP RESISTANT SURFACE. INSTALL CONTRASTING DETECTABLE WARNING FIELD AT PEDESTRIAN STREET CROSSINGS. REFER TO SDD 8D5 SHEET "E".

② PROTECTIVE EDGING WITH A 2" MIN. HEIGHT SHALL BE INSTALLED WHEN A CURB RAMP OR LANDING PLATFORM HAS A VERTICAL DROP OF 6" OR GREATER OR HAS A SIDE APRON SLOPE STEEPER THAN 1:3 (33%). PROTECTIVE EDGING SHOULD BE CONSIDERED WHEN CURB RAMPS OR LANDING PLATFORMS HAVE A VERTICAL DROP OF 3" OR MORE.

③ DETECTABLE EDGING WITH 6" MIN. HEIGHT AND CONTRASTING COLOR SHALL BE INSTALLED ON ALL CURB RAMP LANDINGS WHERE THE WALKWAY CHANGES DIRECTION (TURNS).

④ CURB RAMPS AND LANDINGS SHALL HAVE A 1:50 (2%) MAX. CROSS-SLOPE.

⑤ CLEAR SPACE OF 48"X48" MIN. SHALL BE PROVIDED ABOVE AND BELOW THE CURB RAMP.

⑥ THE CURB RAMP WALKWAY EDGE SHALL BE MARKED WITH A YELLOW COLOR, 4" WIDE MARKING, UNLESS A CONTRASTING DETECTABLE WARNING FIELD IS PROVIDED.

⑦ DO NOT RESTRICT WATER FLOW IN THE GUTTER SYSTEM.

⑧ LATERAL JOINTS OR GAPS BETWEEN SURFACES SHALL BE LESS THAN 1/2" WIDTH.

⑨ CHANGES BETWEEN SURFACE HEIGHTS SHALL NOT EXCEED 1/2". LATERAL EDGES SHALL BE VERTICAL UP TO 1/4" HIGH, AND BEVELED AT 1:2 BETWEEN 1/4" AND 1/2".

⑩ 5' WIDE MIN. WITH PEDSETRIAN SAFETY FENCE, 10' WIDE MIN. WITHOUT PEDESTRIAN SAFETY FENCE.

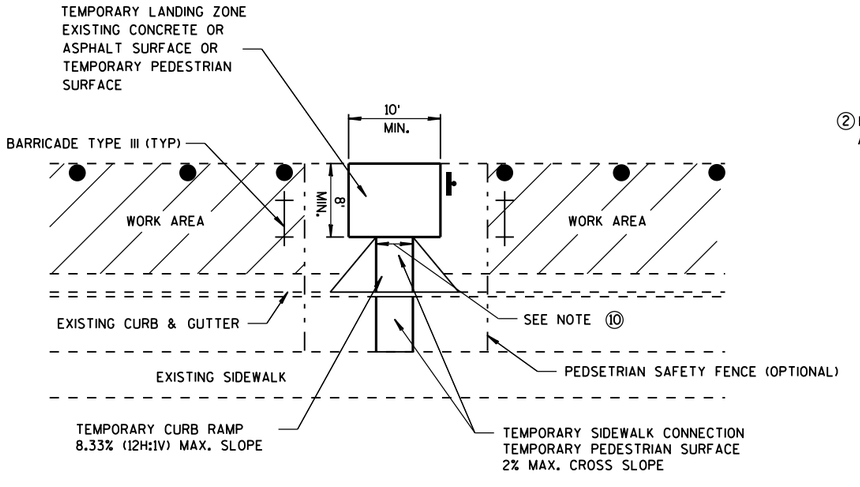

TEMPORARY BUS STOP PAD

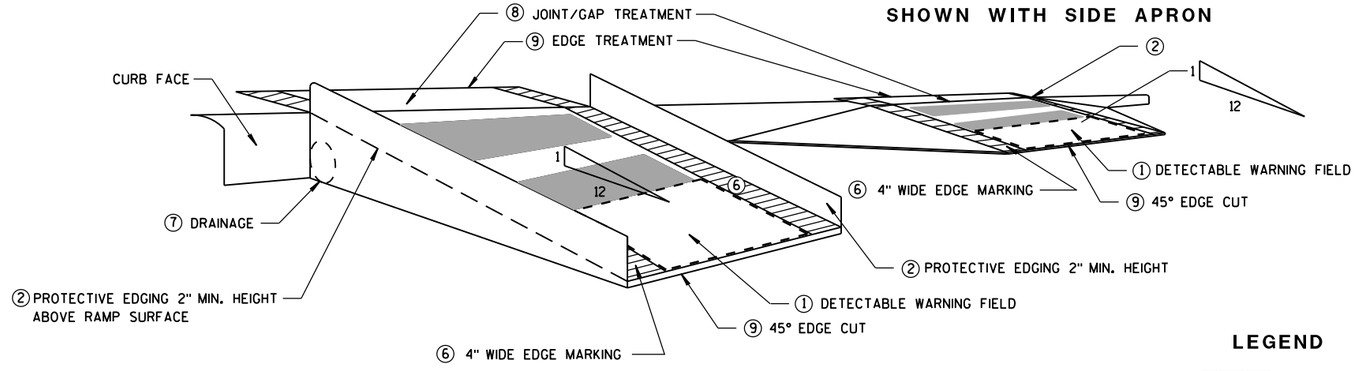

SHOWN WITH PROTECTIVE EDGE

TEMPORARY CURB RAMP PERPENDICULAR TO CURB

LEGEND

WORK AREA

TYPE III BARRICADE

TRAFFIC CONTOL DRUM

TRAFFIC CONTROL, TEMPORARY ADA COMPLIANT PEDESTRIAN ACCOMMODATION

STATE OF WISCONSIN
DEPARTMENT OF TRANSPORTATION

APPROVED

June 2016 — DATE

/S/ Peter Amakobe Atepe — STATEWIDE WORK ZO SAFETY ENGI IC

FHWA

6

S.D.D. 15 D 30-3b

6

S.D.D. 15 D 30-3b

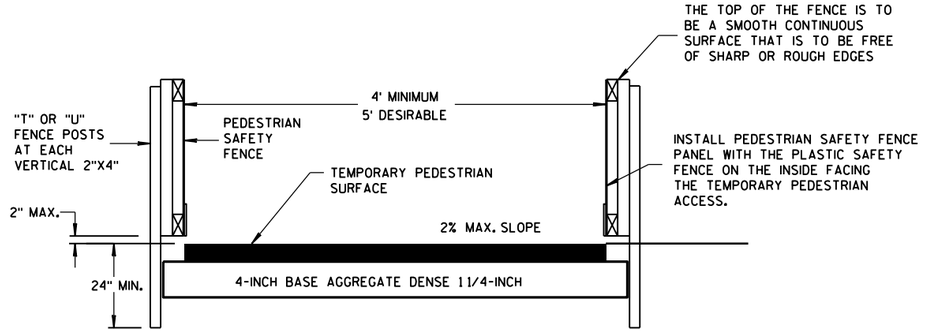

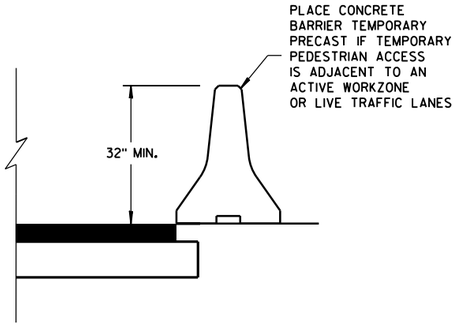

TEMPORARY PEDESTRIAN ACCESS

GENERAL NOTES

(1) INTERCHANGEABLE WITH THE PEDESTRIAN SAFETY FENCE.

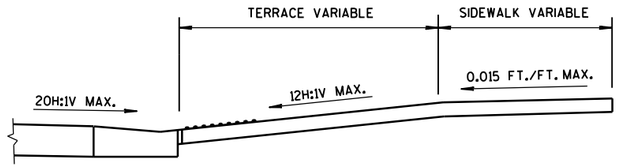

SECTION A-A

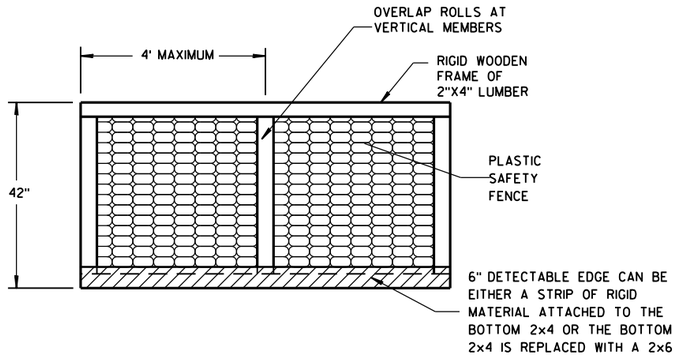

PEDESTRIAN SAFETY FENCE

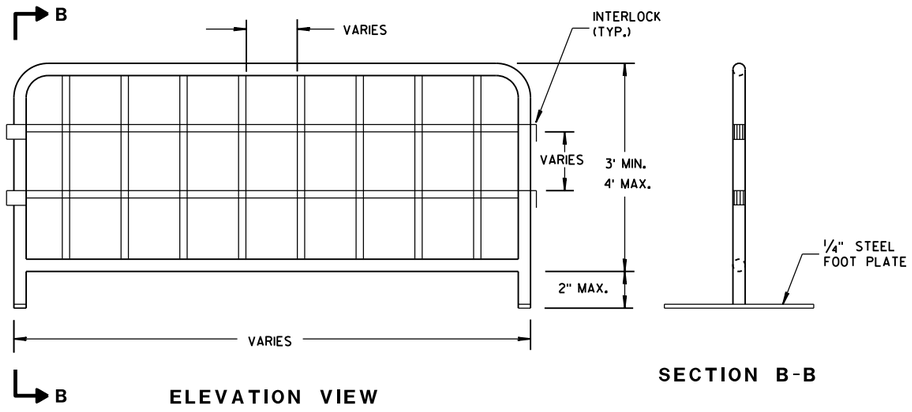

ELEVATION VIEW

SECTION B-B

TEMPORARY PEDESTRIAN STEEL BARRICADE (1)

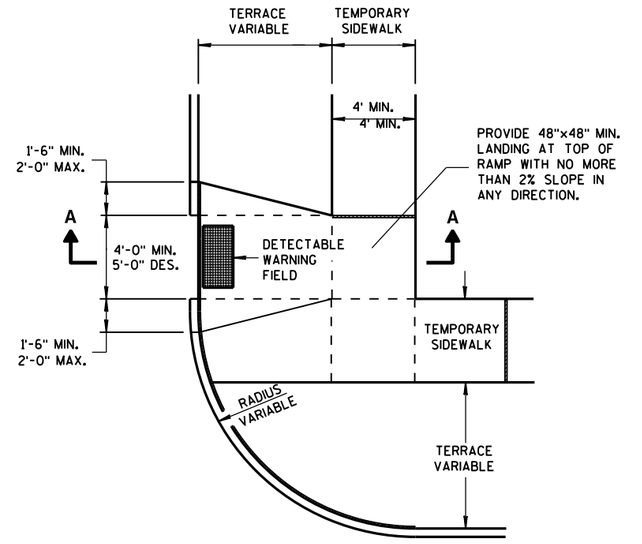

PLAN VIEW

TEMPORARY TYPE 3 RAMP

(OUTSIDE OF CROSSWALK AREA)

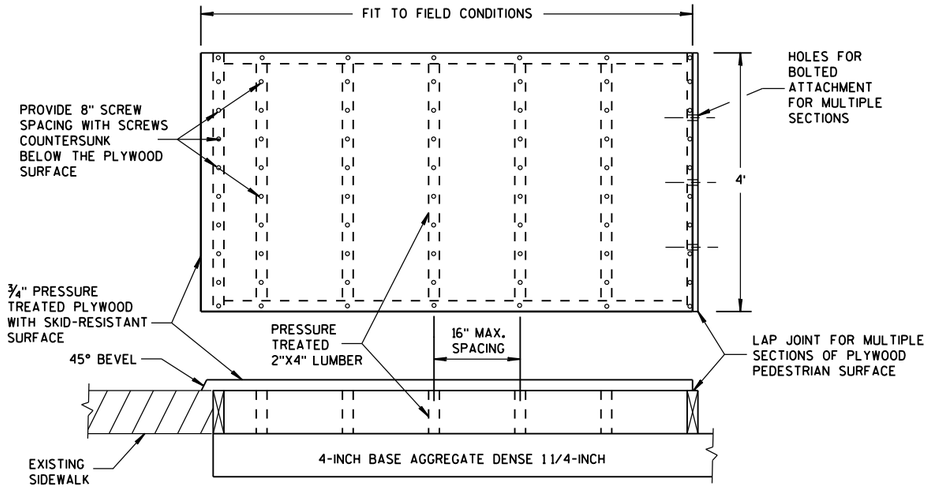

TEMPORARY PEDESTRIAN SURFACE PLYWOOD

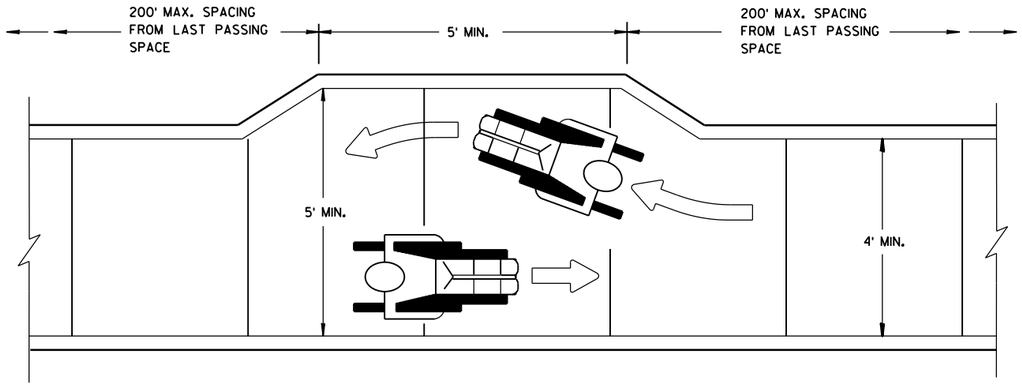

NARROW SIDEWALK PASSING DETAIL

TRAFFIC CONTROL, PEDESTRIAN ACCOMMODATION

STATE OF WISCONSIN
DEPARTMENT OF TRANSPORTATION

APPROVED
June 2016
DATE
/S/ Peter Amakobe Atepe
STATEWIDE WORK ZON IC
SAFETY ENGIN
FHWA

6

S.D.D. 15 D 30-3c

6

S.D.D. 15 D 30-3c

50

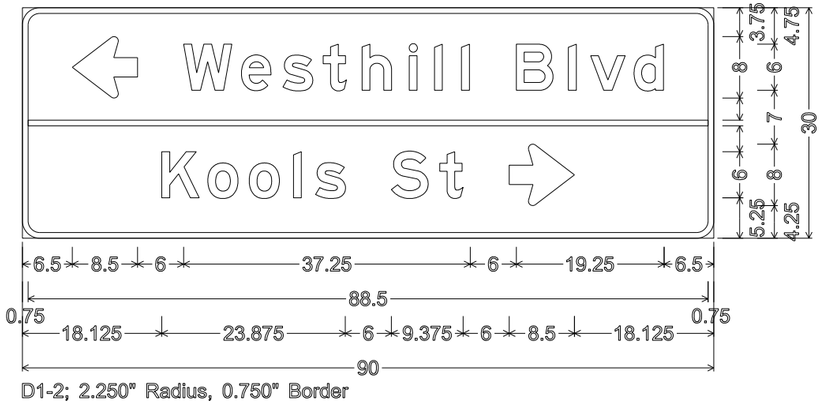

D1-2; 2.250" Radius, 0.750" Border

80

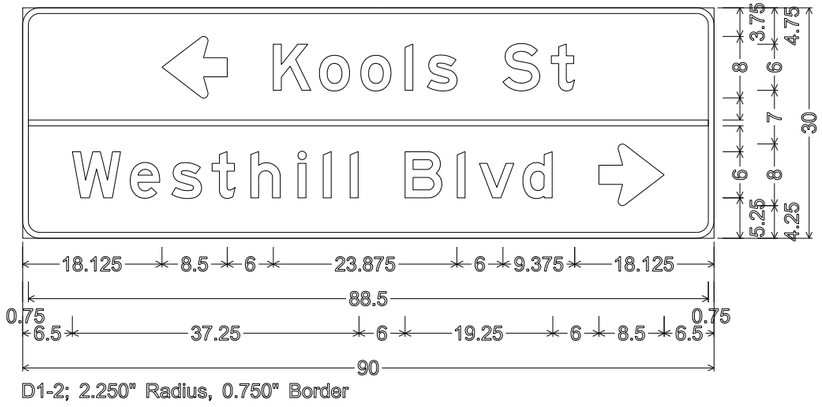

D1-2; 2.250" Radius, 0.750" Border

NOTES

1. Signs are Type II- Type H Reflective
2. Color:
   Background - Green
   Message - White
3. Message Series - E except as noted

180 139

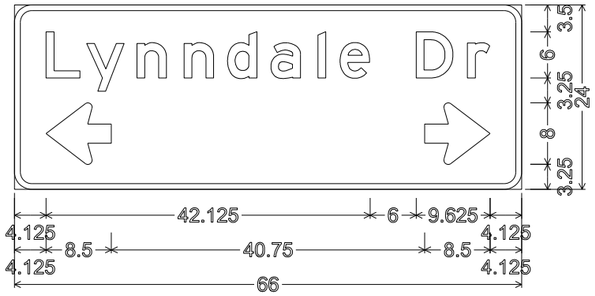

D1-61;
2.250" Radius, 0.750" Border

84 113

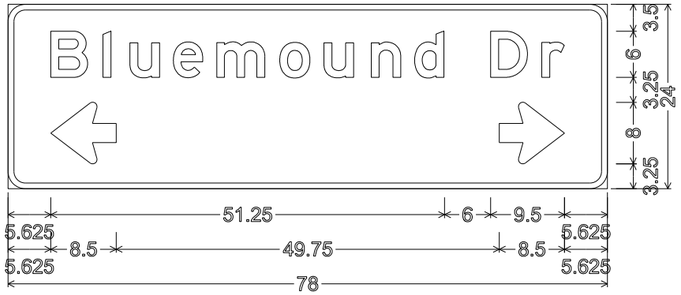

D1-61; 2.250" Radius, 0.750" Border

133

I2-3;
3.000" Radius, 1.000" Border,
"Appleton" D; "POPULATION" C; "72,623" C

168 199

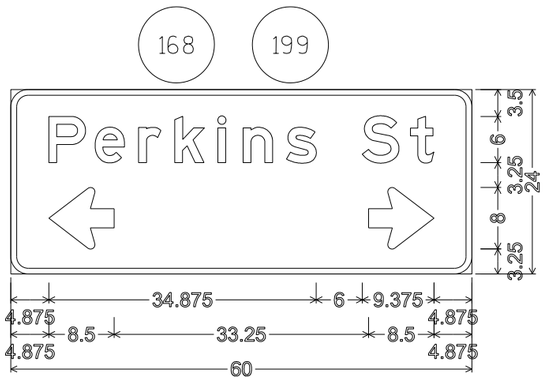

D1-61;
2.250" Radius, 0.750" Border

107 150

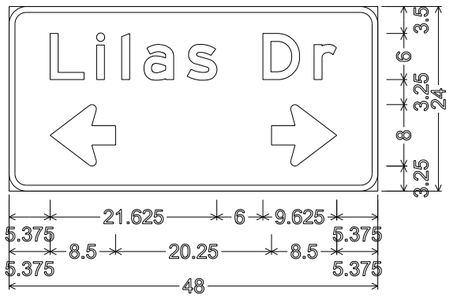

D1-61;
2.250" Radius, 0.750" Border

7

7

PROJECT NO: 4659-15-71	HWY: STH 125	COUNTY: OUTAGAMIE	PERMANENT SIGNING	SHEET NO: 191	E

TYPICAL ASSEMBLIES

J1-1

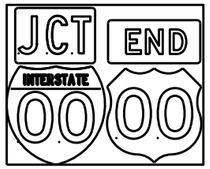

J1-2

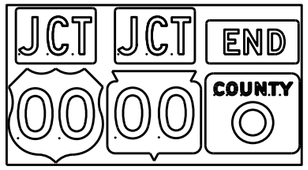

J1-3

J2-1

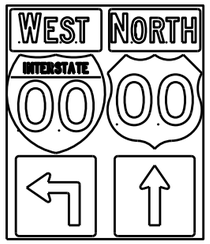

J2-2

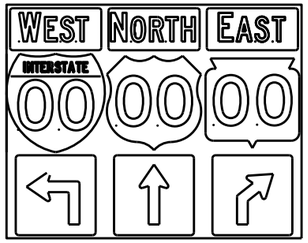

J2-3

JV

(Typical Vertical J-Assembly
See Note 10 and 11)

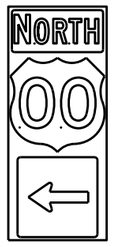

J3-1

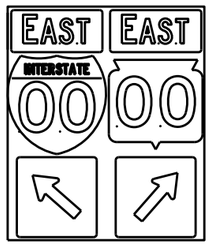

J3-2

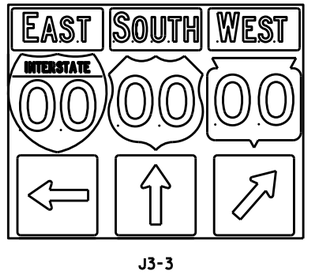

J3-3

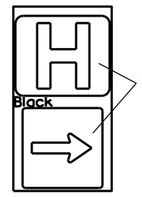

JH-1

J4-1

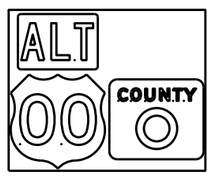

J4-2

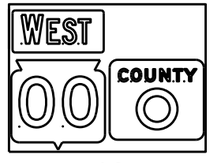

J4-2

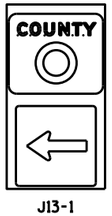

J13-1

J12-1

J32-1

J33-1

J23-1

J22-1

[blue background with interstate]

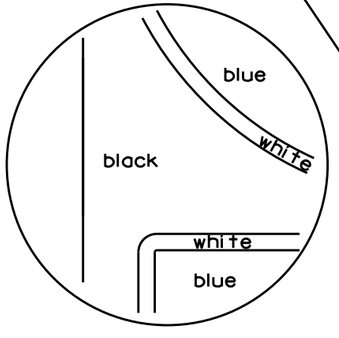

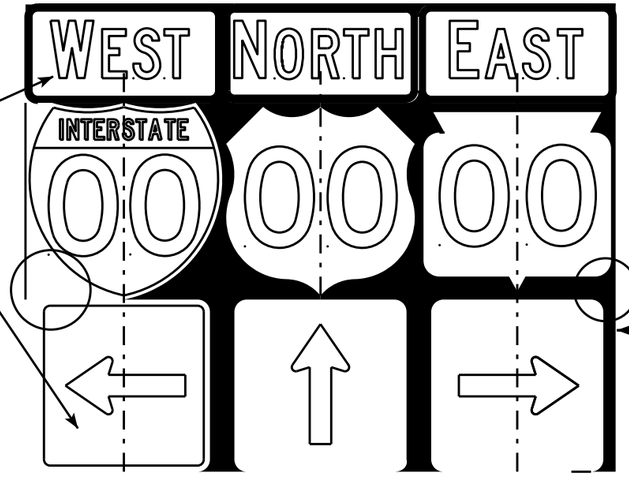

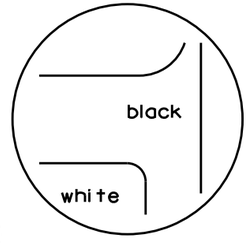

[black background]

NOTES

1. Signs are Type II - Type H Reflective - reference WIS DOT Standard Specification for HIGHWAY and STRUCTURE CONSTRUCTION latest edition.
2. Color:
   Background - Black Non-reflective
   Message - see Note 5
3. Message Series - See Note 5
4. Corners shall be square or rounded if base material is plywood. If base material is metal the corners shall be rounded.
5. The colors and message spacing on each marker shall be according to the applicable route marker panel specifications.
6. Certain marker heads require the component pieces to be the same color. As an example, all the components used with an M1-1 Interstate marker shall be blue.
7. Single panel j-assemblies shall only be used with route marker shields that are same size. If the route marker shields are different size use multiple piece component.
8. Route assemblies that have 24 inch route shields and have dimensions greater than 48 inches (both vertical and horizontal) shall have one horizontal splice between the arrows and route shields. Vertical splices shall not be used on route assemblies with a horizontal dimension of 144 inches or less. The contractor shall not use more than one vertical joint per sign and the joint shall be between route shields.
9. Route assemblies that have 36 inch shields and have dimensions greater than 48 inchs (both vertical and horizontal) shall have two horizontal splices. One horizontal splice shall be between the cardinal direction and route shields and the other horizontal splice shall be between the arrows and route shields. Vertical splices shall not be used on route assemblies with a horizontal dimension of 144 or less. The contractor shall not use more than one vertical joint per sign and the joint shall be between route shields.
10. All Vertical J Assemblies are given a Sign Code of JV
11. For JV Assemblies that have a mixture of Interstate and non Interstate shields, arrows and cardinals shall be white on blue.

ROUTE MARKERS & COMPONENTS
IN TYPICAL ASSEMBLIES

WISCONSIN DEPT OF TRANSPORTATION

APPROVED Matthew R Rauch
for State Traffic Engineer

DATE 2/06/14 PL A2-1S.8

PROJECT NO: SHEET NO: E

FILE NAME : C:\CAEFiles\Projects\tr_stdplate\A21S.DGN PLOT DATE : 06-FEB-2014 14:10 PLOT BY : mscsja PLOT NAME :
WISDOT/CADDS SHEET 42

URBAN AREA

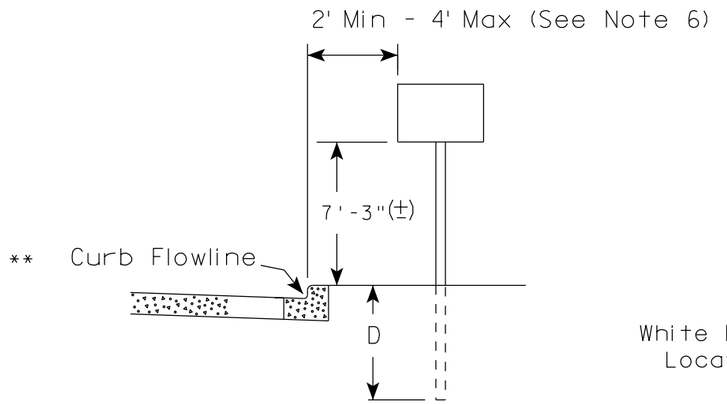

RURAL AREA (See Note 2)

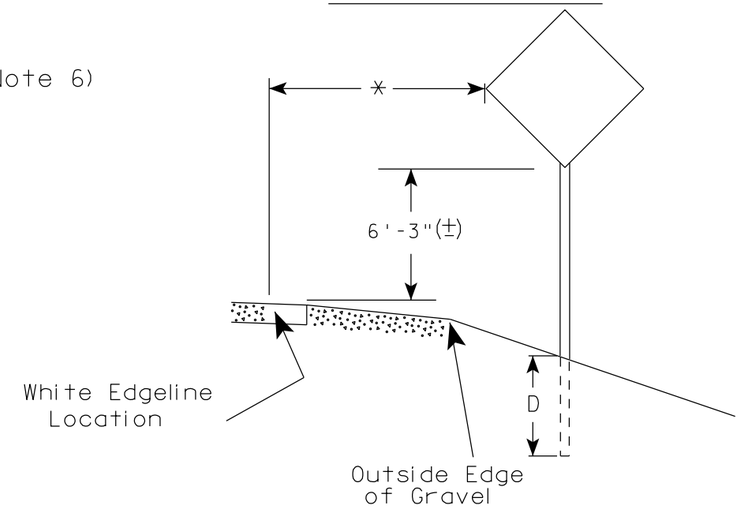

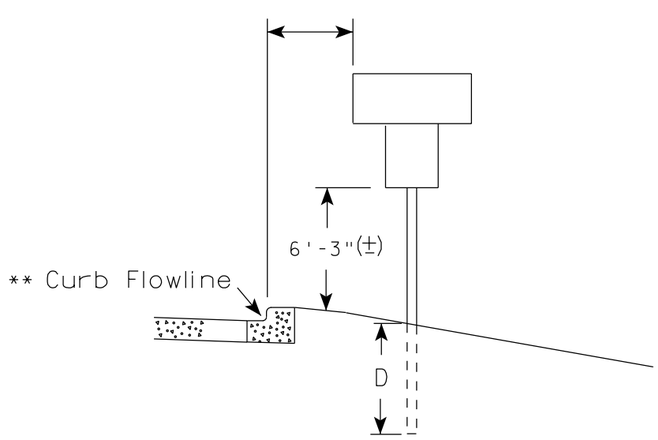

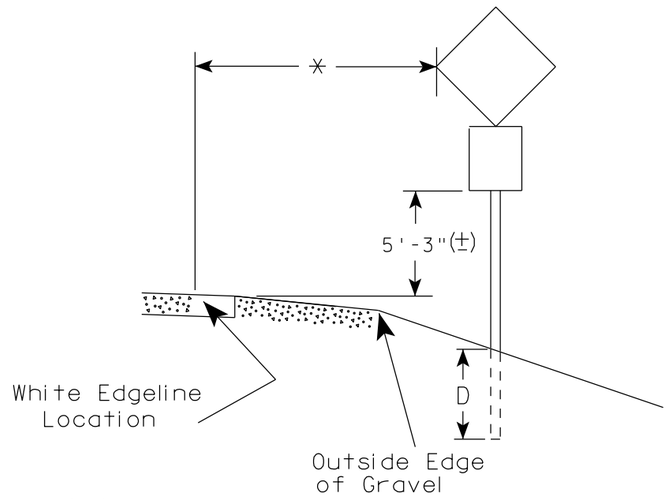

** The existence of curb and gutter does not in itself mandate the vertical clearance illustrated. That height is typically measured where there is sidewalk adjacent to the roadway or parking is permitted. In the absence of sidewalk vertical clearance is measured from the top of the curb. Offset of signs is measured from the flow line.

* 6 feet from edge of a paved shoulder or 12 feet from the edge of pavement (edge line location) or 2 feet from outside edge of gravel, whichever is greater unless directed by project engineer.

GENERAL NOTES

1. Signs wider than 4 feet or 20 sq.ft or larger, shall be mounted on multiple posts. Refer to plate A4-4.
2. If signs are mounted on barrier wall, see A4-10 sign plate.
3. For expressways and freeways, mounting height is 7'- 3" (±) or 6'-3" (±) depending upon existence of a sub-sign.
4. Minimum mounting height for J assemblies (A2-1S) is 7'-3" (±) or 6'-3" (±) per urban or rural detail respectively.
5. Minimum mounting height for signs mounted on traffic signal poles is 5'- 3" (±).
6. Offset distance shall be consistent with existing signs or consistent throughout length of project.
7. The (±) tolerance for mounting height is 3 inches.
8. Folding signs shall be mounted at a height of 5'-3" (±) or as directd by the Engineer.
9. The Double Arrow sign (W12-1) shall be mounted at a height of 2'-3" (±). The Chevron sign (W1-8), Roundabout Chevron panel (R6-4B), Enhanced Reference Markers, Clearance Markers (W5-52), Mile Markers (D10 series), In Road Object Markers (W5-54) & End of Road Markers (W5-56) shall be mounted at a height of 4'-3" (±).

POST EMBEDMENT DEPTH

Area of Sign Installation (Sq. Ft.)	D (Min)
20 or Less	4'
Greater than 20	5'

TYPICAL INSTALLATION OF PERMANENT TYPE II SIGNS ON SINGLE POSTS

WISCONSIN DEPT OF TRANSPORTATION

APPROVED Matthew R Rauch
for State Traffic Engineer

DATE 7/23/15 PLATE NO. A4-3.20

PROJECT NO:	HWY:	COUNTY:		SHEET NO:	E

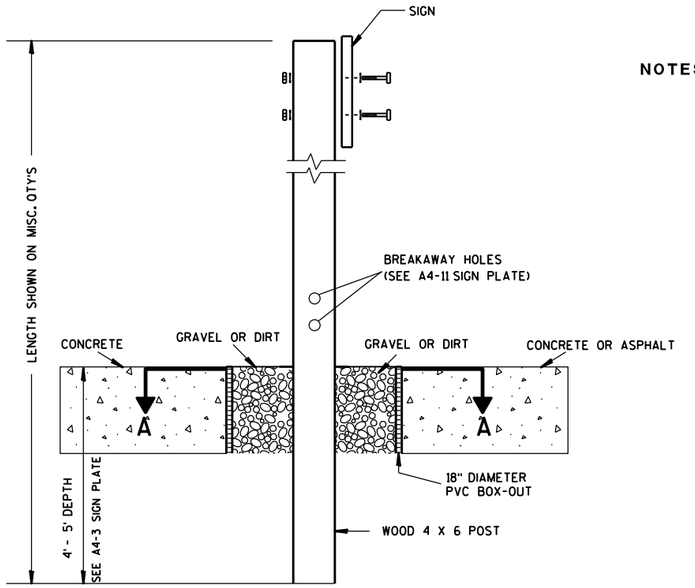

ELEVATION VIEW

DETAIL OF WOOD 4 X 6 SIGN POST IN BOX-OUT

NOTES:
1. ALL MATERIAL TO BE APPROVED BY ENGINEER PRIOR TO INSTALLATION
2. SEE SIGN PLATE A4-8 FOR SIGN HARDWARE REQUIREMENTS
3. 18 INCH X 18 INCH SQUARE BOX-OUTS MAY BE USED FOR INSTALLATIONS IN EXISTING CONCRETE OR ASPHALT LOCATIONS.

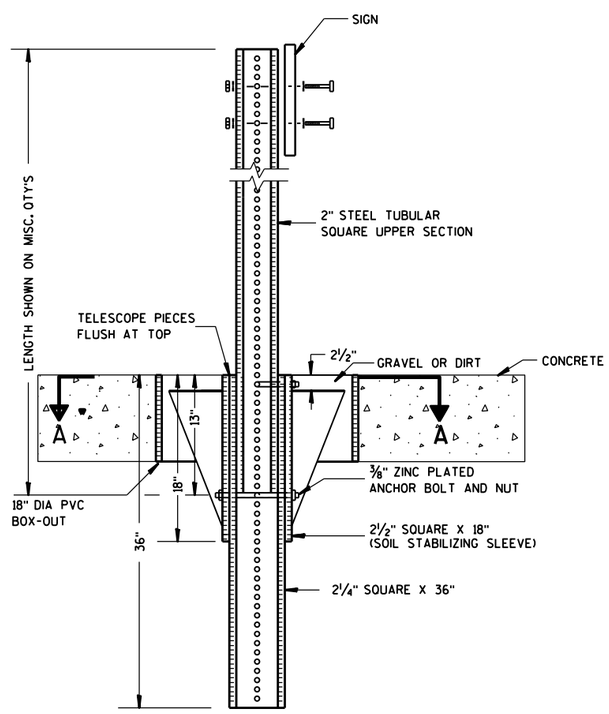

ELEVATION VIEW

DETAIL OF STEEL 2 X 2 SIGN POST IN BOX-OUT

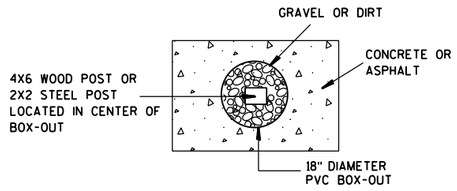

PLAN VIEW

FOR NEW CONCRETE/ASPHALT INSTALLATIONS

SIGN POST BOX-OUTS A4-3B

WISCONSIN DEPT OF TRANSPORTATION

APPROVED Matthew R Rauch
for State Traffic Engineer

DATE 1/27/14 PLATE NO. A4-3B.1

PROJECT NO:	HWY:	COUNTY:		SHEET NO:	E

FILE NAME : C:\CAEFiles\Projects\tr_stdplate\A43B.DGN PLOT DATE : 27-JAN-2014 09:48 PLOT BY : mscsja PLOT NAME : PLOT SCALE : 13.659812:1.000000 WISDOT/CADDS SHEET 42

URBAN AREA

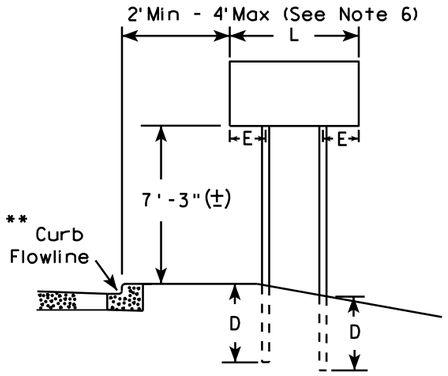

RURAL AREA (See Note 3)

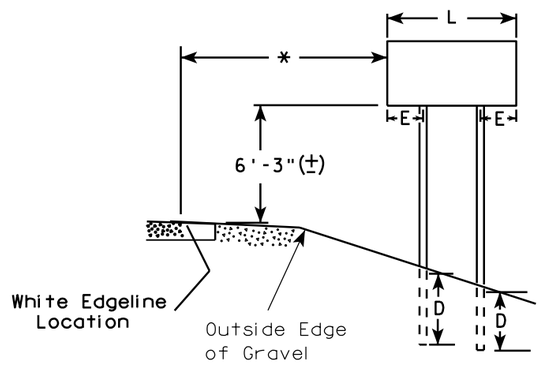

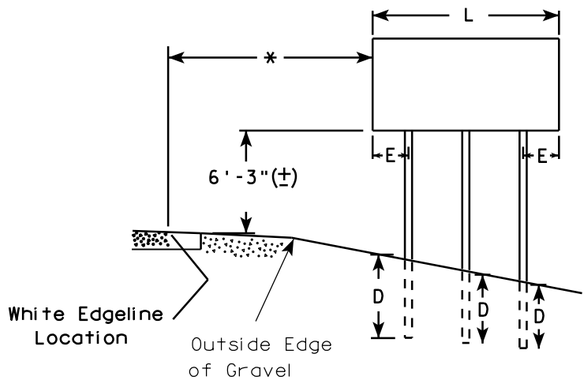

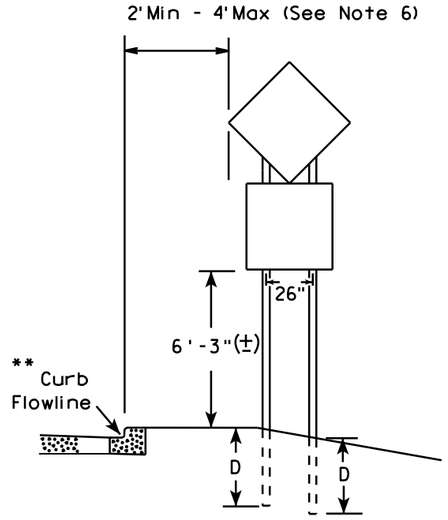

48" DIAMOND WARNING SIGN

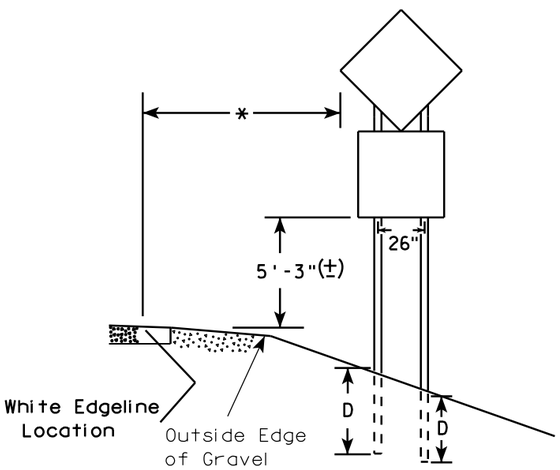

48" DIAMOND WARNING SIGN

GENERAL NOTES

1. For 3 or 4 post installations, individual post spacing shall be greater than 3'-6".
2. See tables below for required number of posts.
3. For expressways and freeways, mounting height is 7'-3" (±) or 6'-3" (±) depending upon existence of sub-sign.
4. The (±) tolerance for mounting height is 3 inches.
5. Minimum mounting height for J assemblies (A2-1S) is 7'-3" (±) or 6'-3" (±) per urban or rural detail respectively.
6. Offset distance shall be consistent with existing signs or consistent throughout length of project.
7. Folding signs shall be mounted at a height of 5'-3" (±) or as directed by the engineer.
8. The Double Arrow sign (W12-1) shall be mounted at a height of 2'-3" (±). The Chevron sign (W1-8), Roundabout Chevron panel (R6-4B), Clearance Markers (W5-52), Mile Markers (D10 series), In Road Object Markers (W5-54) & End of Road Markers (W5-56) shall be mounted at a height of 4"-3" (±).

* 6 feet from edge of a paved shoulder or 12 feet from the edge of pavement (edge line location) or 2 feet from outside edge of gravel, whichever is greater unless directed by project engineer.

** The existence of curb and gutter does not in itself mandate the vertical clearance illustrated. That height is typically measured where there is sidewalk adjacent to the roadway or parking is permitted. In the absence of sidewalk vertical clearance is measured from the top of the curb. Offset of signs is measured from the flow line.

*** See A4-3 sign plate for signs 4' or less in width and less than 20 S.F. in area.

SIGN SHAPE OTHER THAN DIAMOND (TWO POSTS REQUIRED)	
L	E
Greater than 48" Less than 60"	12"
60" to 120"	L/5

***

SIGN SHAPE OTHER THAN DIAMOND (THREE POSTS REQUIRED)	
L	E
Greater than 120" less than 168"	12"

SIGN SHAPE OTHER THAN DIAMOND (FOUR POSTS REQUIRED)	
L	E
168" and greater	12"

POST EMBEDMENT DEPTH

Area of Sign Installation (Sq. Ft.)	D (Min)
20 or Less	4'
Greater than 20	5'

TYPICAL INSTALLATION OF TYPE II SIGNS ON MULTIPLE POSTS

WISCONSIN DEPT OF TRANSPORTATION

APPROVED Matthew R Rauch
for State Traffic Engineer

DATE 7/23/15 PLATE NO. A4-4 14
195

PROJECT NO:	HWY:	COUNTY:		SHEET NO:	E

FILE NAME : C:\CAEfiles\Projects\tr_stdplate\A44.DGN PLOT DATE : 23-JUL-2015 15:23 PLOT BY : mscj9h PLOT NAME : PLOT SCALE : 107.021305:1.000000

WISDOT/CADDS SHEET 42

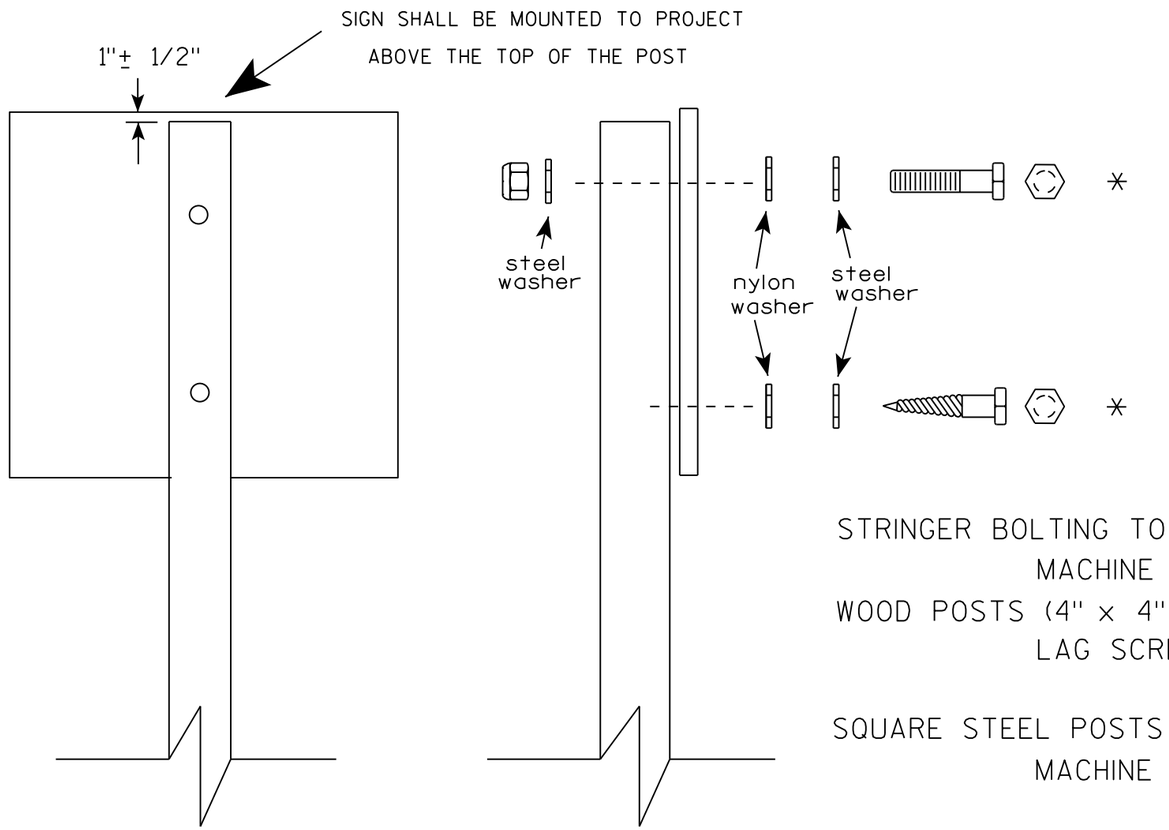

Nuts, bolts and lags used for mounting signs shall have hexagonal heads and shall be either :

a. Hot dip galvanized in accordance with ASTM Designation: A 153, Class D, or SC 3
b. Electro-galvanized in accordance with ASTM Designation : B 633, TYPE III, SC 3.

Threads on bolts and nuts shall be manufactured with sufficient allowance for the cadmium plate or galvanized coating to permit the nuts to run freely on the bolts.

STRINGER BOLTING TO ALUMINUM SIGNS (SEE SIGN PLATE A4-18)

MACHINE BOLTS - 5/16" X 1-3/4" Length w/ lock nuts

WOOD POSTS (4" x 4" or 4" x 6")

LAG SCREWS - 3/8" X 3" (NO STRINGERS ON BACK OF SIGN)
3/8" X 4" (STRINGERS ON BACK OF SIGN)

SQUARE STEEL POSTS (2" x 2")

MACHINE BOLTS - 3/8" X 3-1/4" Length w/ nuts (NO STRINGER ON BACK OF SIGN)
3/8" X 5" Length w/ nuts (STRINGERS ON BACK OF SIGN)

RIVETS - 9/32 " (6605-9-6) BULB-TITE, TRI-FOLD, ALUMINUM BODY/MANDREL
O.D. FLANGE .720-.765 INCH, GRIP RANGE .042-.375 INCH

WASHERS (ALL POSTS) -

1-1/4" O.D. X 3/8" I.D. X 1/16" STEEL
1-1/4" O.D. X 3/8" I.D. X .080 NYLON

* Two different fastening systems are shown for illustration purposes. On any individual sign, either one or the other system shall be used. Actual number of fasteners per sign varies with the sign area, but normally there are two. For a single post installation, all signs greater than 9 sq. ft. require the use of 3 fasteners.

ATTACHMENT OF SIGNS TO POSTS

WISCONSIN DEPT OF TRANSPORTATION

APPROVED Matthew R Rauch
For State Traffic Engineer

DATE 8/11/16 PLATE NO. A4-8.8

PROJECT NO: SHEET NO: E

FILE NAME : C:\CAEfiles\Projects\tr_stdplate\A48.DGN PLOT DATE : 11-AUG-2016 11:35 PLOT BY : $$ plotuser $$

TELESCOPIC TUBING ANCHORS
TWO PIECE SYSTEM

2 1/4 " SQUARE
12 GAUGE
PERFORATED
GALVANIZED FINISH

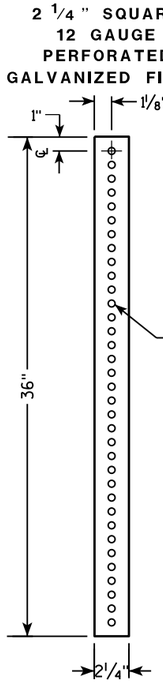

2 1/2 " SQUARE
12 GAUGE
OMNI-DIRECTIONAL
PERFORATED
SOIL STABILIZING SLEEVE
GALVANIZED FINISH

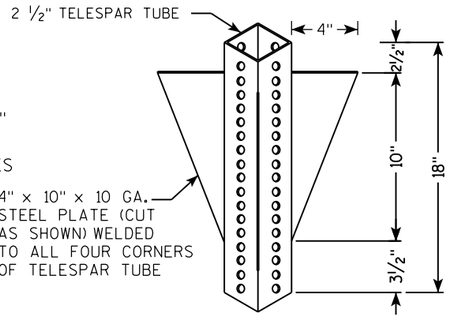

DETAIL OF TUBULAR STEEL SIGN POST
(IN POURED CONCRETE OR ASPHALT)

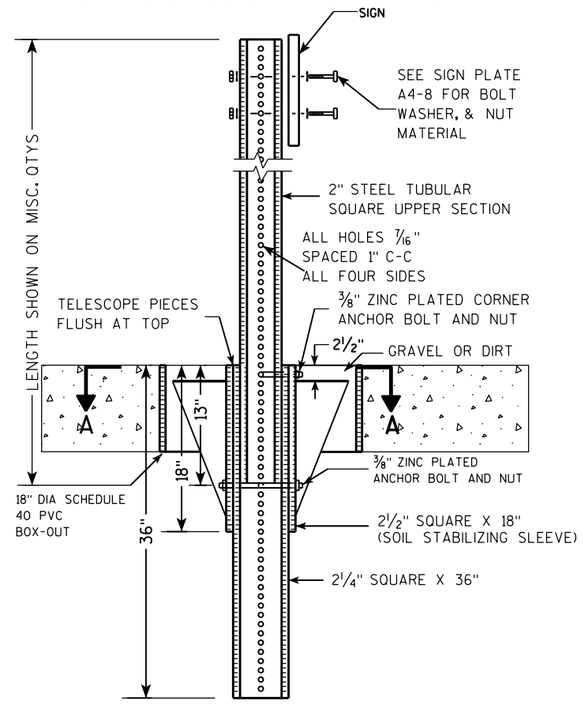

DETAIL OF TUBULAR STEEL SIGN POST
(IN LOCATIONS OTHER THAN POURED CONCRETE OR ASPHALT)

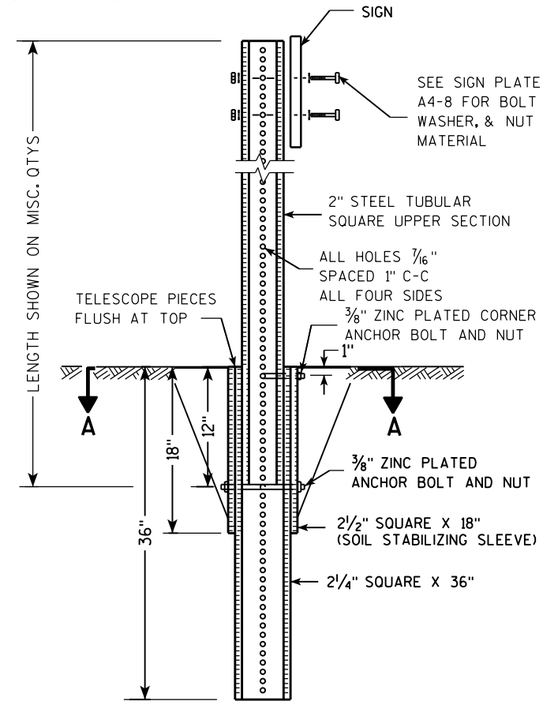

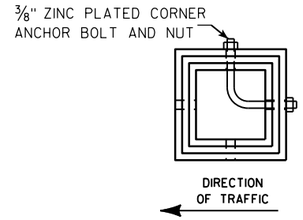

SECTION A-A

Area of Sign Installation (Sq. Ft.)	Number of Required Posts
9 or less	1
Greater than 9 less than or equal to 18	2
Greater than 18 less than or equal to 27	3

Signs wider than 3 feet or larger than 9 sq. ft shall be mounted on multiple posts (see above table).

TUBULAR STEEL
SIGN POST
A4-9

WISCONSIN DEPT OF TRANSPORTATION

APPROVED Matthew R Rauch
for State Traffic Engineer

DATE 2/05/15 PLATE A4-9.9

PROJECT NO:	HWY:	COUNTY:		SHEET NO:	E

FILE NAME : C:\CAEFiles\Projects\tr_stdplate\A49.DGN PLOT DATE : 05-FEB-2015 17:09 PLOT BY : mscsja PLOT NAME : PLOT SCALE : 13.659812:1.000000
WISDOT/CADDS SHEET 42

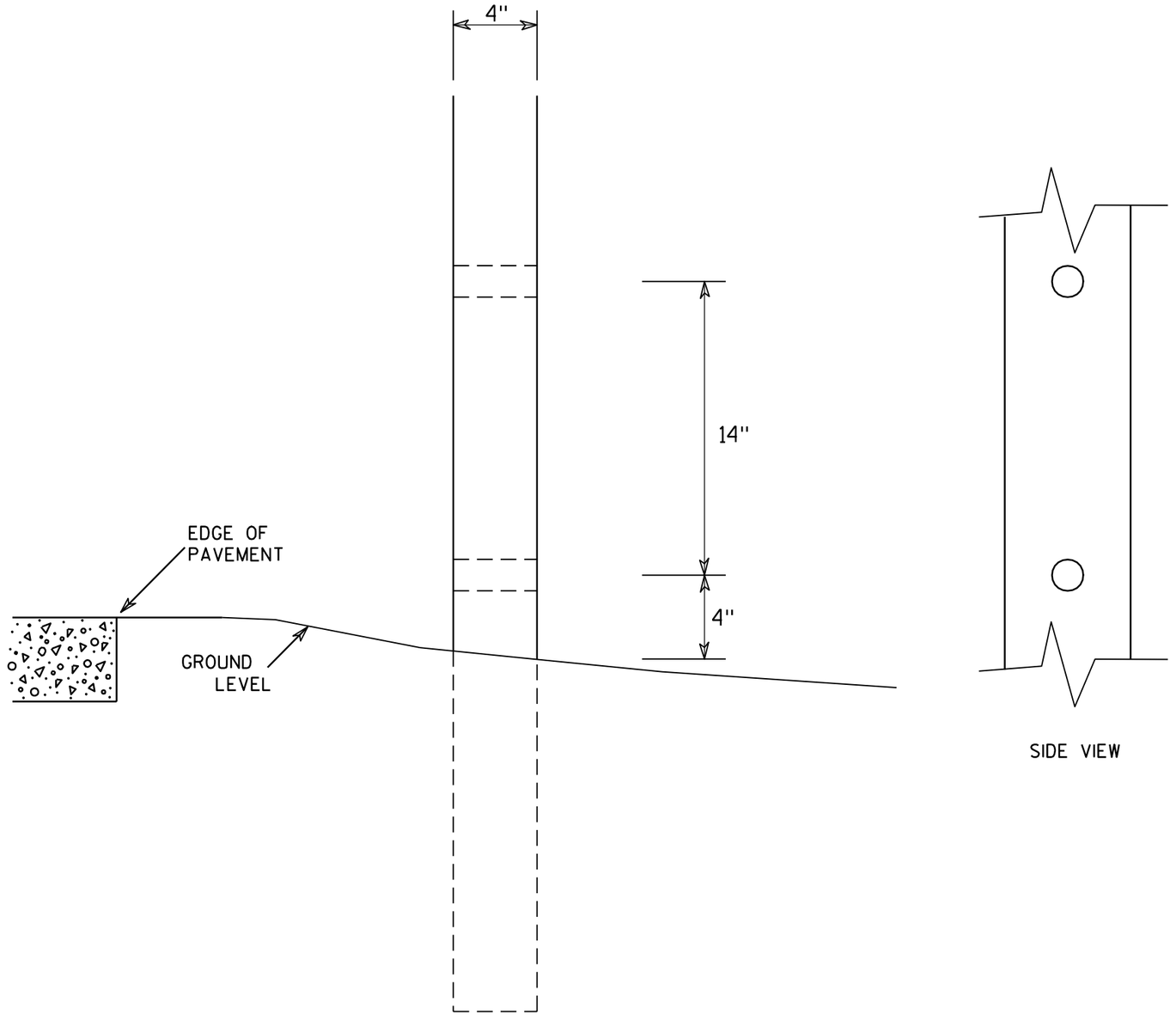

SIDE VIEW

GENERAL NOTES

1. All 4 x 6 Wood Posts shall be modified by having two 1½" diameter holes drilled perpendicular to the roadway centerline.

7

7

4 X 6 WOOD POST MODIFICATIONS

WISCONSIN DEPT OF TRANSPORTATION

APPROVED Chester J Spang for State Traffic Engineer

DATE 3/27/97 PLATE NO. A4-11.2

PROJECT NO:	HWY:	COUNTY:		SHEET NO: 198	E

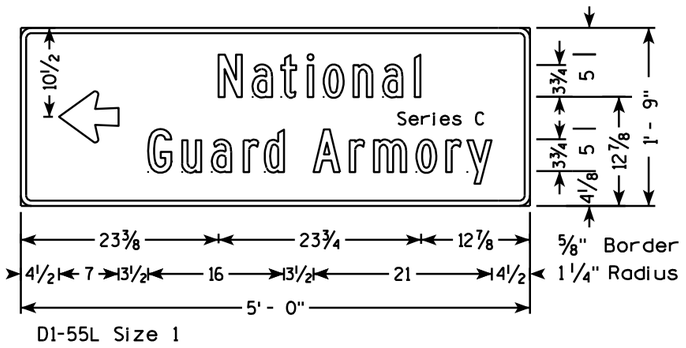

D1-55L Size 1

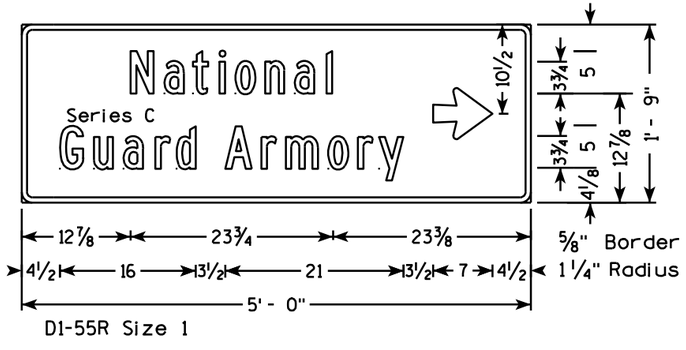

D1-55R Size 1

NOTES

1. Sign is Type II - Type H Reflective - reference WIS DOT Standard Specification for HIGHWAY and STRUCTURE CONSTRUCTION latest edition.
2. Color:
   Background - Green
   Message - White
3. Message Series - E except as noted
4. Corners may be square or rounded when base material is plywood but borders shall be rounded as shown. When base material is metal, the corners and borders shall be rounded.

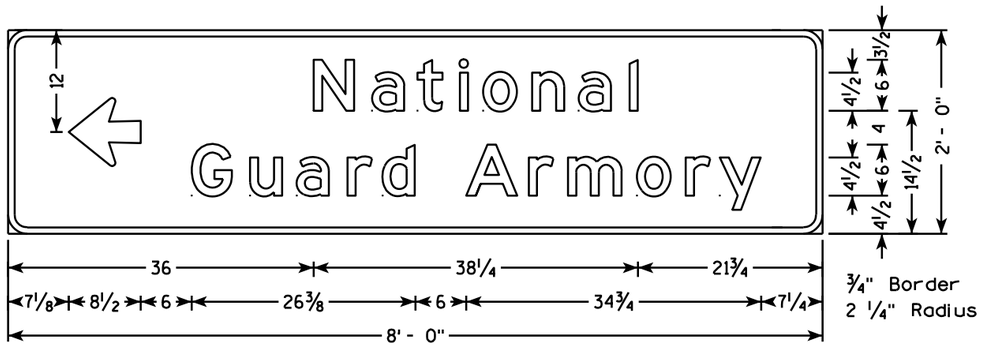

D1-55L Size 2

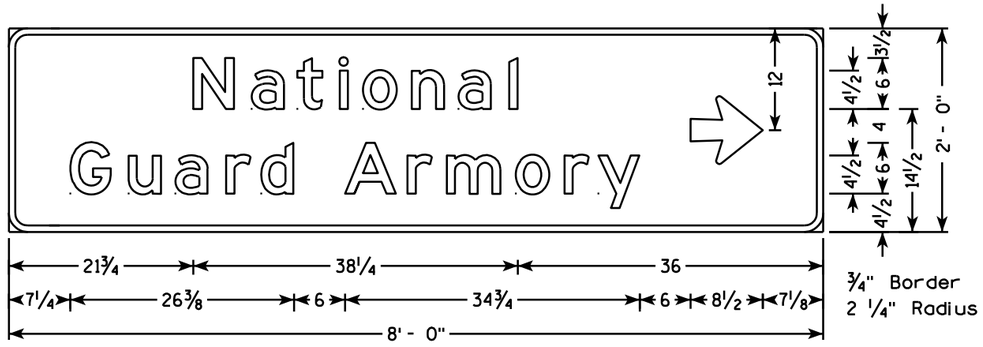

D1-55R Size 2

TYPICAL STANDARD
D1-55L & R

WISCONSIN DEPT OF TRANSPORTATION

APPROVED Matthew R Rauch
for State Traffic Engineer

DATE 03/21/13 PLATE NO. D1-55L.2

PROJECT NO:	HWY:	COUNTY:		SHEET NO: 199	E

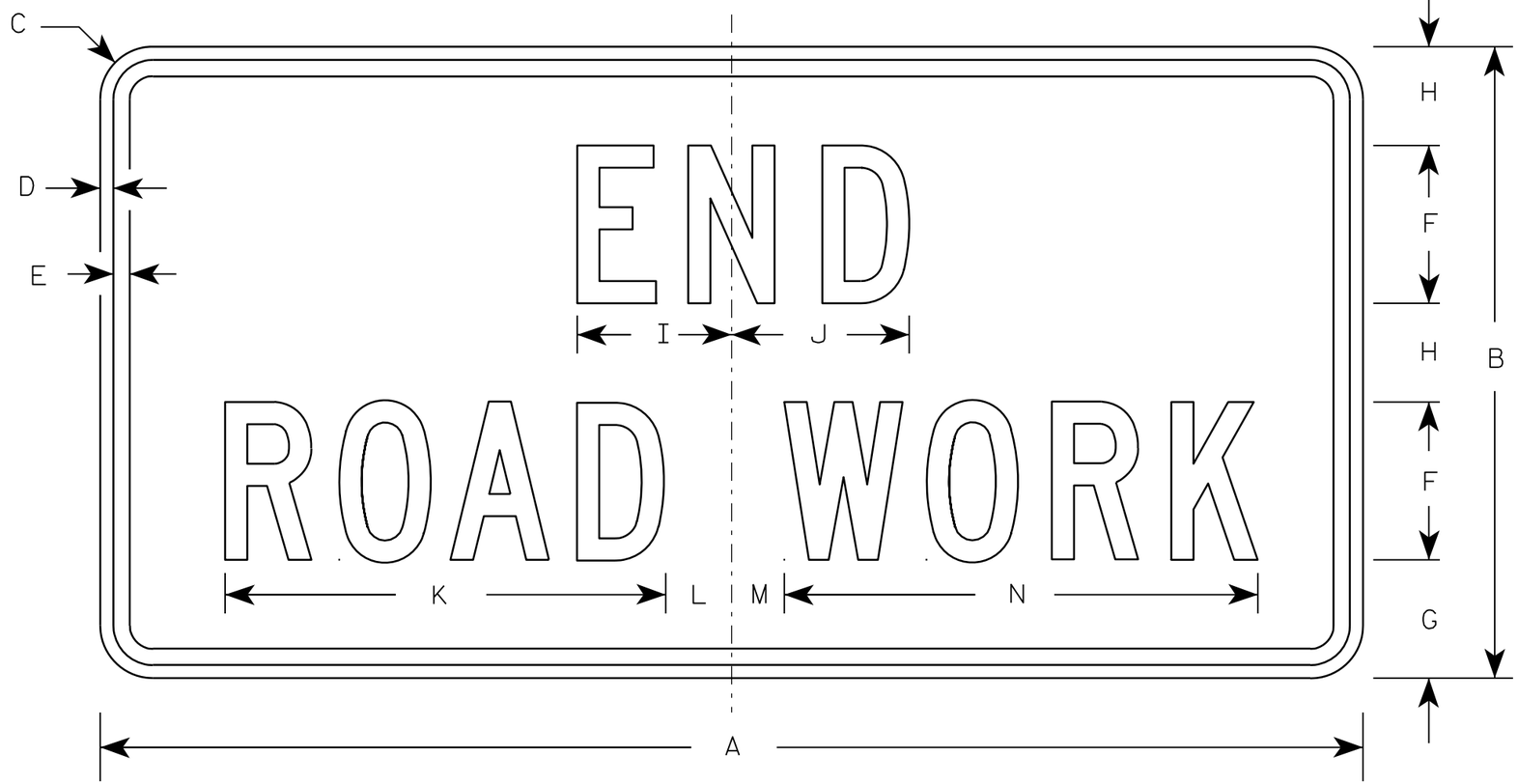

G20-2A

NOTES

1. Sign is Type II - Type F Reflective - reference WIS DOT Standard Specification for HIGHWAY and STRUCTURE CONSTRUCTION latest edition.
2. Color:
   Background - Orange
   Message - Black
3. Message Series - C
4. Corners may be square or rounded when base material is plywood but borders shall be rounded as shown. When base material is metal, the corners and borders shall be rounded.

Metric equivalent for this sign is:

SIZE	
1	900 mm X 450 mm
2	1200 mm X 600 mm
3	1200 mm X 600 mm
4	1200 mm X 600 mm
5	1200 mm X 600 mm

SIZE	A	B	C	D	E	F	G	H	I	J	K	L	M	N	O	P	Q	R	S	T	U	V	W	X	Y	Z	Area sq. ft.	Area m2
1	36	18	1 1/8	3/8	1/2	4	3 3/4	2 1/2	4 1/8	4 1/8	11 1/8	2	1	12 1/8													4.5	0.41
2	48	24	1 1/2	1/2	5/8	6	4 1/2	3 3/4	5 7/8	6 3/4	16 3/4	2 1/2	1 3/4	18 1/2													8.0	0.72
3	48	24	1 1/2	1/2	5/8	6	4 1/2	3 3/4	5 7/8	6 3/4	16 3/4	2 1/2	1 3/4	18 1/2													8.0	0.72
4	48	24	1 1/2	1/2	5/8	6	4 1/2	3 3/4	5 7/8	6 3/4	16 3/4	2 1/2	1 3/4	18 1/2													8.0	0.72
5	48	24	1 1/2	1/2	5/8	6	4 1/2	3 3/4	5 7/8	6 3/4	16 3/4	2 1/2	1 3/4	18 1/2													8.0	0.72

STANDARD SIGN
G20-2A

WISCONSIN DEPT OF TRANSPORTATION

APPROVED Matthew R Rauch
for State Traffic Engineer

DATE 9/30/09 PLATE NO. G20-2A.8

PROJECT NO:	HWY:	COUNTY:		SHEET NO: 200	E

NOTES

1. Sign is Type II - Type H Reflective - reference WIS DOT Standard Specification for HIGHWAY and STRUCTURE CONSTRUCTION latest edition.
2. Color:
   Background - White
   Message - (See Note 5)
3. Message Series - (See Note 6)
4. Corners may be square or rounded when base material is plywood but borders shall be rounded as shown. When base material is metal, the corners and borders shall be rounded.
5. Border - Blue
   Line 1 - Red
   Line 2 - Black
   Line 3-5 - Blue
6. Line 1 - Dutch 8011L
   Line 2 - Series E
   Line 3-5 - Series C
7. Contractor shall provide and install a new post bracket in accordance with the I55-56B sign detail.

Background Colors of Symbol*

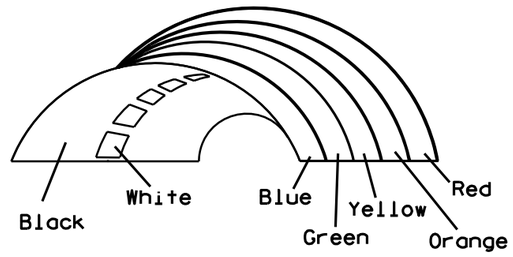

*1/4" Black Border between each color of rainbow and border of rainbow

SIZE	A	B	C	D	E	F	G	H	I	J	K	L	M	N	O	P	Q	R	S	T	U	V	W	X	Y	Z	Area sq. ft.
1																											
2	30	36	1 1/2	1/2	5/8	3	2	3 1/2	2 7/8	1	8	2 1/8	11 1/4	11 1/8	9 3/8	1 1/4		3/4	12 5/8	7 1/2							7.5
3																											
4																											
5																											

STANDARD SIGN
I55-56

WISCONSIN DEPT OF TRANSPORTATION

APPROVED Matthew R Rauch
for State Traffic Engineer

DATE 4/27/11 PLATE NO. 155-56.3

PROJECT NO:	HWY:	COUNTY:		SHEET NO: 201

NOTES

1. Must be capable of permanent attachment to a wood or steel channel sign post utilizing the fastening hardware specified on the A4-8 sign plate.
2. Shall be entirely primed and painted with two coats of a black powder coated enamel paint.
3. Shall be made with 12 gauge steel, and incorporate no welds, no hinged components, no threaded lock-type components, and no parts which are loose or can be separated from the main body.
4. Shall have rounded edges with at least 1/8" radii.
5. Shall not have unrounded and uncoated metal edges which can contact the back surface of the roll-up sign.
6. Top of bracket shall be mounted 2' below the bottom of the I55-56 sign.
7. Cost of bracket and fastening hardware shall be incidental to the I55-56 sign.

ISOMETRIC VIEW

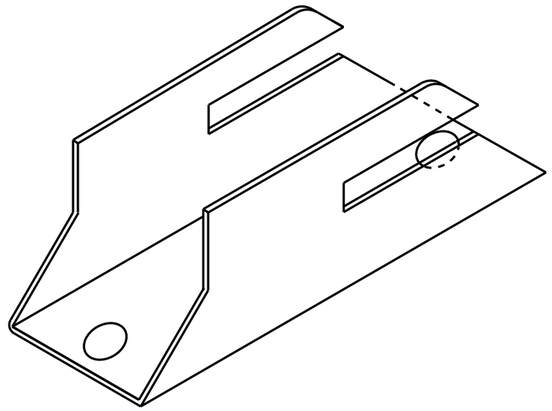

TOP VIEW

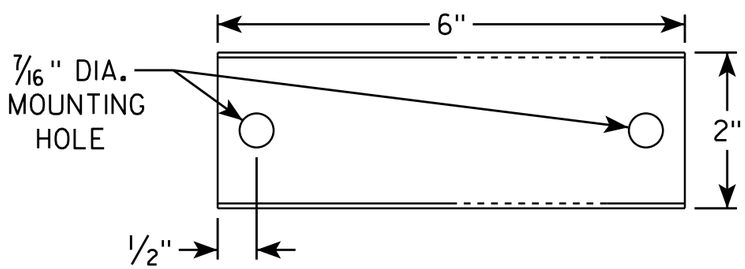

SIDE VIEW

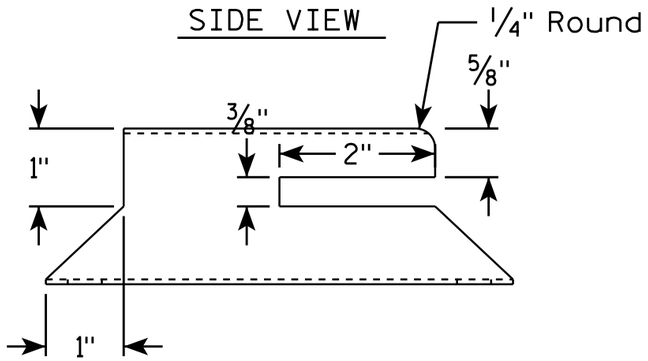

END VIEW

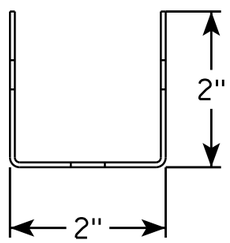

SIDE VIEW

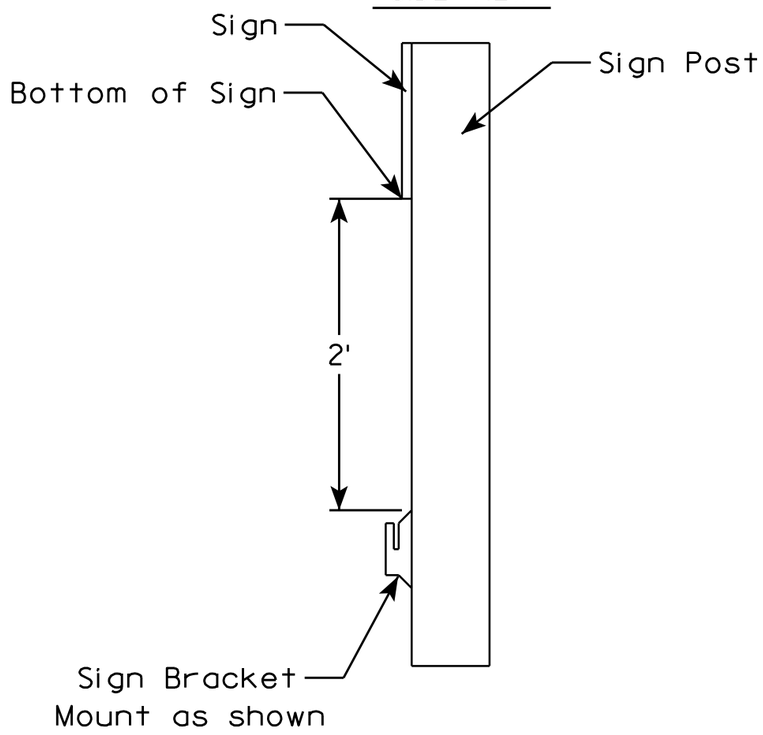

ROLLUP SIGN BRACKET
I55-56B

WISCONSIN DEPT OF TRANSPORTATION

APPROVED Matthew R Rauch
for State Traffic Engineer

DATE 4/26/16 PLATE I55-56B.2

PROJECT NO:	HWY:	COUNTY:		SHEET NO:	E

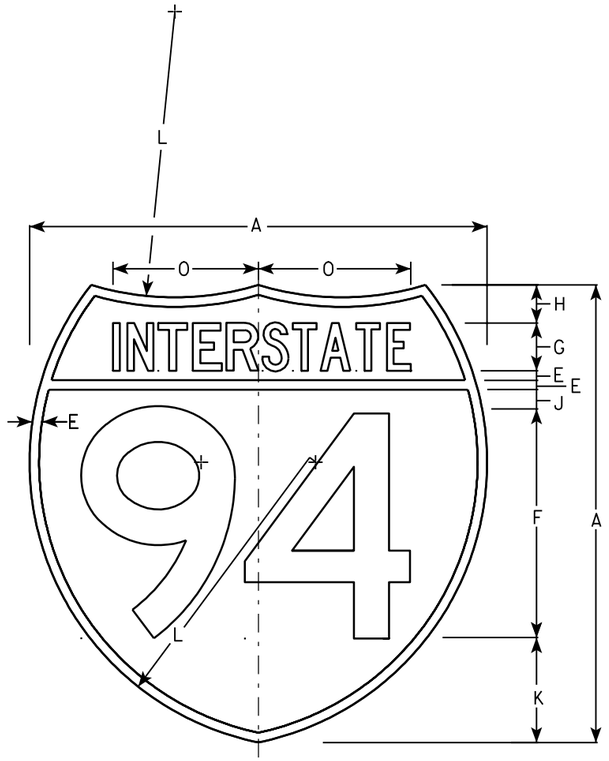

M1-1

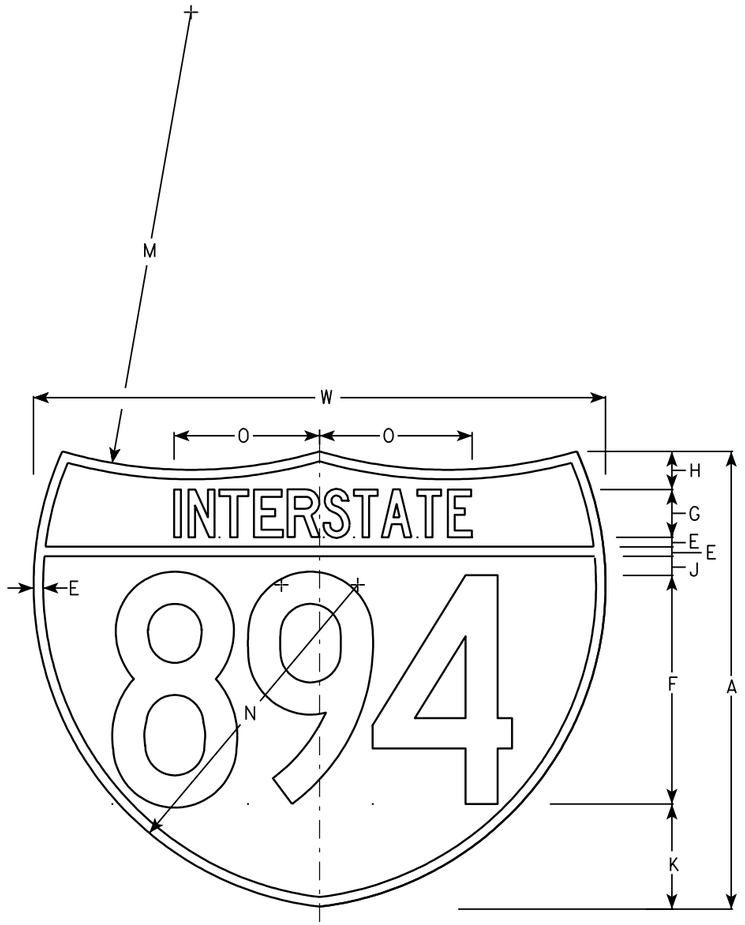

M1-1A

NOTES

1. Sign is Type II - See Note 6 - reference WIS DOT Standard Specification for HIGHWAY and STRUCTURE CONSTRUCTION latest edition.
2. Color:
   Background - Top Red - Bottom Blue (See Note 6)
   Message - White - See Note 6
3. Message Series - See note 5
4. Substitute appropriate numerals & ajust spacing as per plate A10-1.
5. M1-1 - Numerals - D
   Interstate - C
   M1-1A - All copy - C
6. Permanent Signs
   Message - Type H Reflective
   Detour or other temporary signs
   Background - Reflective
   Message - Reflective

7

7

Metric equivalent for these signs are:

SIZE	M1-1	SIZE	M1-1A
1			
2	600 mm X 600 mm	2	600 mm X 750 mm
3	900 mm X 900 mm	3	900 mm X 1125 mm
4	900 mm X 900 mm	4	900 mm X 1125 mm
5	900 mm X 900 mm	5	900 mm X 1125 mm

SIZE	A	B	C	D	E	F	G	H	I	J	K	L	M	N	O	P	Q	R	S	T	U	V	W	X	Y	M1-1 Area sq. ft.	M1-1A Area sq. ft.	M1-1 Area m2	M1-1A Area m2
1																													
2	24				1/2	12	2 1/2	2		1	5 1/2	15	24	17	7 7/8								30			3.13	3.91	.36	.46
3	36				3/4	18	3 3/4	3		1 1/2	8 1/4	22 1/2	36	25 1/2	11 3/4								45			7.03	8.79	.81	1.05
4	36				3/4	18	3 3/4	3		1 1/2	8 1/4	22 1/2	36	25 1/2	11 3/4								45			7.03	8.79	.81	1.05
5	36				3/4	18	3 3/4	3		1 1/2	8 1/4	22 1/2	36	25 1/2	11 3/4								45			7.03	8.79	.81	1.05

INTERSTATE ROUTE MARKER
M1-1 FOR ASSEMBLIES

WISCONSIN DEPT OF TRANSPORTATION

APPROVED Matthew R Rauch
for State Traffic Engineer

DATE 08/23/05 PLATE NO. M1-1.8

PROJECT NO:	HWY:	COUNTY:		SHEET NO: 203	E

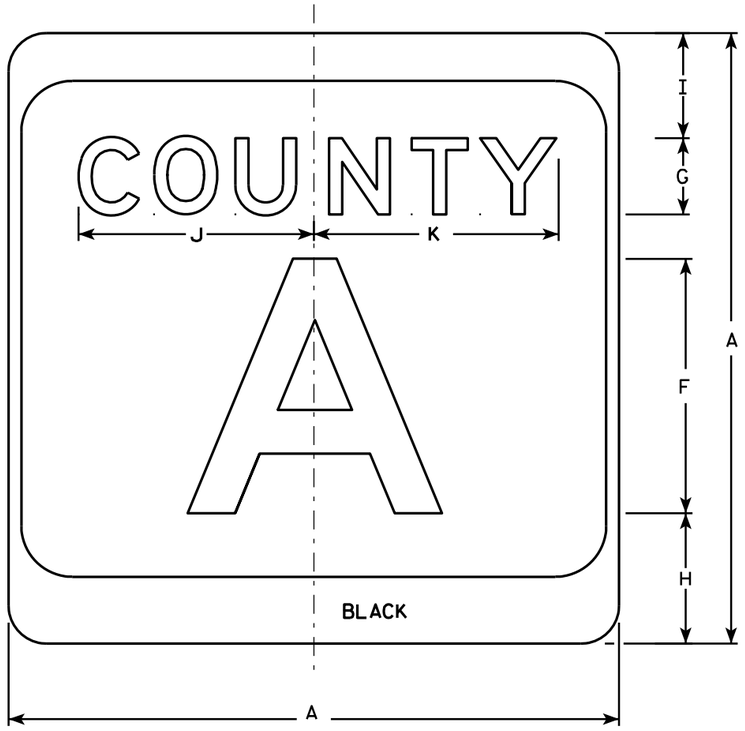

M1-5A

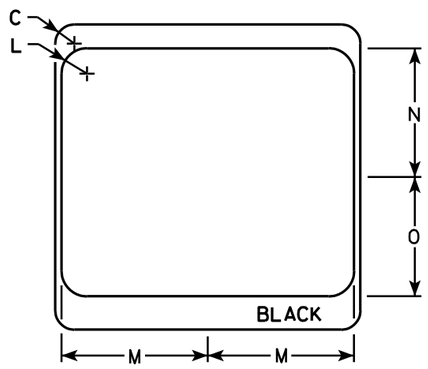

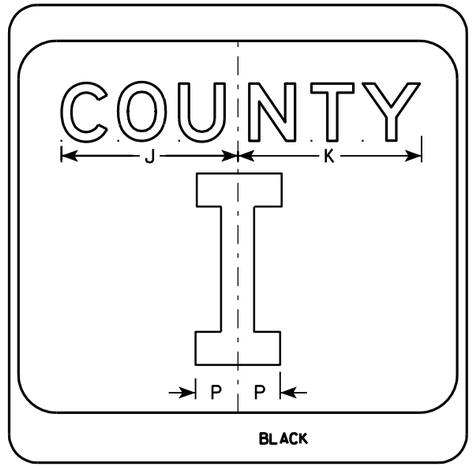

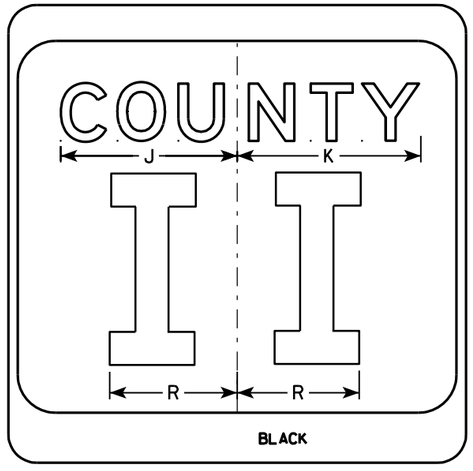

NOTES

1. Sign is Type II - see Note 7 - reference WIS DOT Standard Specification for HIGHWAY and STRUCTURE CONSTRUCTION latest edition.
2. Color:
   Background - White & Black - See Note 7
   Message - Black
3. Message Series - see Note 5
4. Corners may be square or rounded when base material is plywood but borders shall be rounded as shown. When base material is metal, the corners and borders shall be rounded.
5. Message Series E for 1 letter.
   Message Series D for 2 letters unless message is too big then Series C.
   Message Series C for 3 letters unless message is too big then Series B.
6. Substitute appropriate letters & optically center to achieve proper balance.
7. Permanent Signs
   Background - Type H Reflective
   Detour or temporary Signs
   Background - Reflective

SIZE	A	B	C	D	E	F	G	H	I	J	K	L	M	N	O	P	Q	R	S	T	U	V	W	X	Y	Z	Area sq. ft.
1																											
2	24		1 1/2			10	3	5 1/8	4 1/8	9 1/4	9 5/8	2	11 1/2	10 1/8	9 3/8	2 1/4		6 5/8									4.0
3	36		2 1/4			16	4	7 5/8	5 5/8	12 1/4	12 7/8	3	17 1/8	15 1/4	14	3 3/8		10									9.0
4	36		2 1/4			16	4	7 5/8	5 5/8	12 1/4	12 7/8	3	17 1/8	15 1/4	14	3 3/8		10									9.0
5	36		2 1/4			16	4	7 5/8	5 5/8	12 1/4	12 7/8	3	17 1/8	15 1/4	14	3 3/8		10									9.0

CTH MARKER
M1-5A FOR ASSEMBLIES

WISCONSIN DEPT OF TRANSPORTATION

APPROVED Matthew R Rauch
for State Traffic Engineer

DATE 9/27/11 PLATE NO. M1-5A.8

PROJECT NO: | HWY: | COUNTY: | SHEET NO: 204 | E

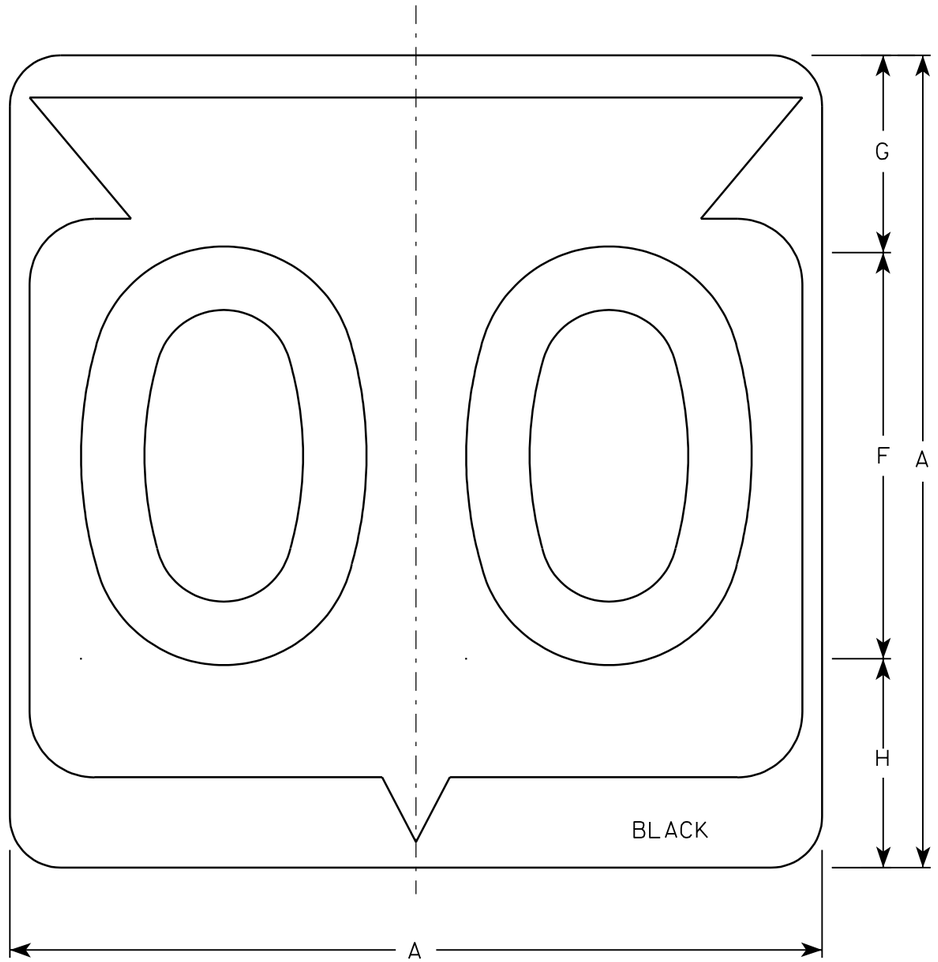

M1-6

NOTES

1. Sign is Type II - See Note 6 - reference WIS DOT Standard Specification for HIGHWAY and STRUCTURE CONSTRUCTION latest edition.
2. Color:
   Background - White & Black - See Note 6
   Message - Black
3. Message Series - See note 5
4. Corners may be square or rounded when base material is plywood but borders shall be rounded as shown. When base material is metal, the corners and borders shall be rounded.
5. Substitute appropriate Series numerals and adjust spacing as per plate A10-1.
6. Permanent Signs
   Background - Type H Reflective
   Detour or temporary Signs
   Background - Reflective

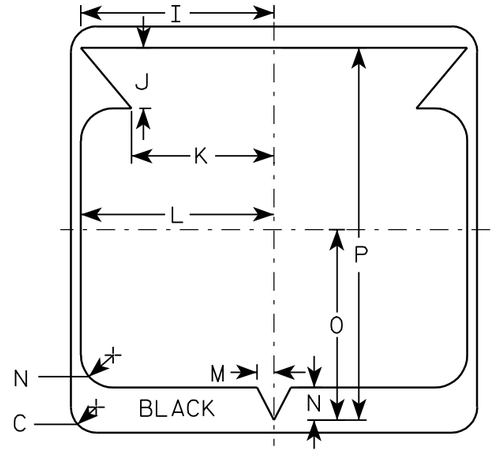

Metric equivalent for this sign is:

SIZE	
1	
2	600 mm X 600 mm
3	900 mm X 900 mm
4	900 mm X 900 mm
5	900 mm X 900 mm

SIZE	A	B	C	D	E	F	G	H	I	J	K	L	M	N	O	P	Q	R	S	T	U	V	W	X	Y	Z	Area sq. ft.	Area m2
1																												
2	24		1 1/2			12	5 1/2	6 1/2	10 1/4	2 1/2	8 7/8	11 1/2	1	1 7/8	11 1/4	21 7/8											4.0	.36
3	36		2 1/4			18	8 3/4	9 1/4	15 3/8	5 3/8	12 5/8	17 1/8	1 1/2	2 7/8	16 7/8	33											9.0	.81
4	36		2 1/4			18	8 3/4	9 1/4	15 3/8	5 3/8	12 5/8	17 1/8	1 1/2	2 7/8	16 7/8	33											9.0	.81
5	36		2 1/4			18	8 3/4	9 1/4	15 3/8	5 3/8	12 5/8	17 1/8	1 1/2	2 7/8	16 7/8	33											9.0	.81

STATE ROUTE MARKER M1-6 FOR ASSEMBLIES

WISCONSIN DEPT OF TRANSPORTATION

APPROVED Chester J Spang for State Traffic Engineer

DATE 3/20/02 PLATE NO. M1-6.9

PROJECT NO:	HWY:	COUNTY:		SHEET NO: 205	E

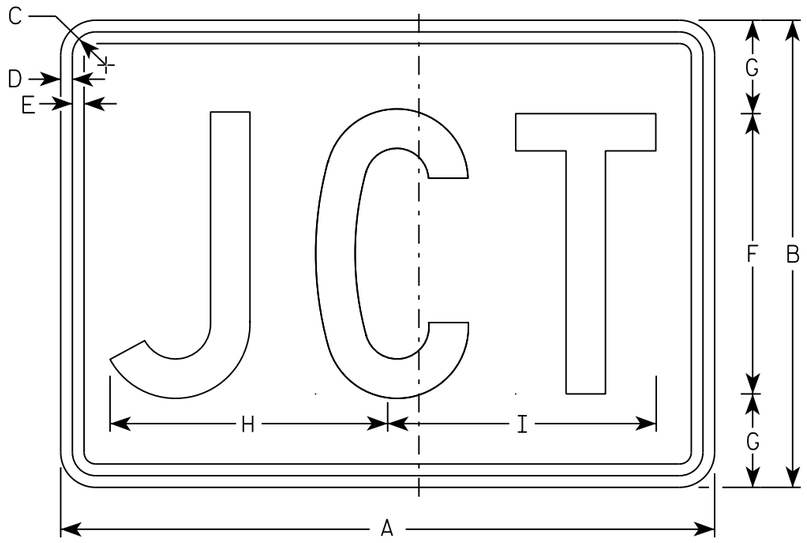

M2-1
MM2-1
MP2-1

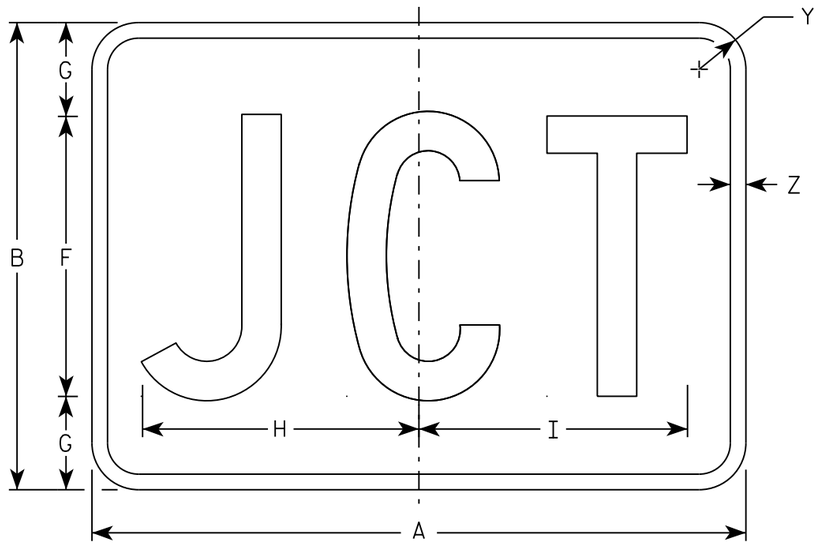

MB2-1
MK2-1
MN2-1
MR2-1

NOTES

1. Sign is Type II - Type H
2. Color:
   Background - See note 5
   Message - See note 5
3. Message Series - C
4. Corners may be square or rounded when base material is plywood but borders shall be rounded as shown. When base material is metal, the corners and borders shall be rounded.
5. M2-1 Background - White
   Message - Black
   MB2-1 Background - Blue
   Message - White
   MK2-1 Background - Green
   Message - White
   MM2-1 Background - White
   Message - Green
   MN2-1 Background - Brown
   Message - White
   MP2-1 Background - White
   Message - Blue
   MR2-1 Background - Brown
   Message - Yellow

SIZE	A	B	C	D	E	F	G	H	I	J	K	L	M	N	O	P	Q	R	S	T	U	V	W	X	Y	Z	Area sq. ft.
1																											
2	21	15	1 1/8	3/8	3/8	9	3	8 7/8	8 5/8																1 1/2	1/2	2.20
3	30	21	1 1/8	3/8	3/8	13	4	12 7/8	12 3/8																1 1/2	1/2	4.40
4	30	21	1 1/8	3/8	3/8	13	4	12 7/8	12 3/8																1 1/2	1/2	4.40
5	30	21	1 1/8	3/8	3/8	13	4	12 7/8	12 3/8																1 1/2	1/2	4.40

STANDARD SIGN
M2-1

WISCONSIN DEPT OF TRANSPORTATION

APPROVED Matthew R Rauch
for State Traffic Engineer

DATE 10/15/15 PLATE 206 12-1.12

PROJECT NO:	HWY:	COUNTY:		SHEET NO:	E

FILE NAME : C:\CAEfiles\Projects\tr_stdplate\M21.DGN PLOT DATE : 01-DEC-2015 17:54 PLOT BY : $$ plotuser $$ PLOT NAME : PLOT SCALE : 4.864603:1.000000

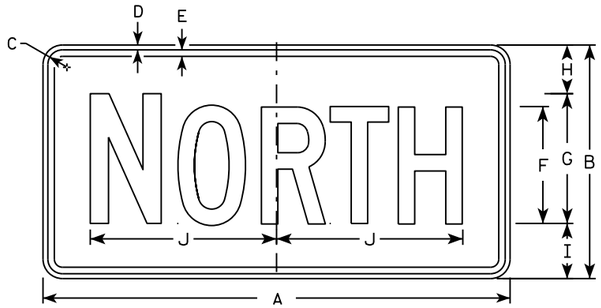

M3-1
MM3-1
MP3-1

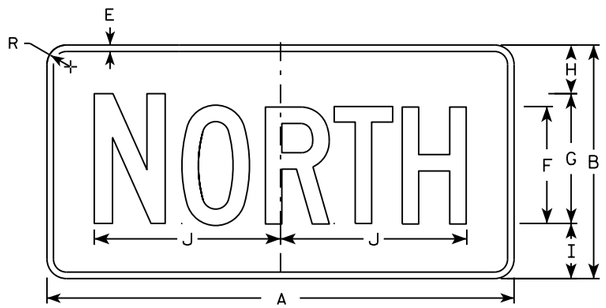

MB3-1
MK3-1
MN3-1

M3-2
MM3-2
MP3-2

MB3-2
MK3-2
MN3-2

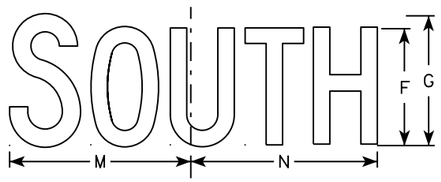

M3-3
MM3-3
MP3-3

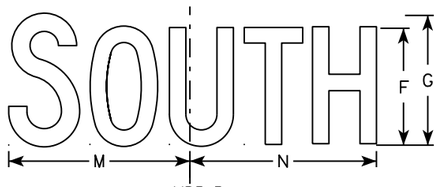

MB3-3
MK3-3
MN3-3

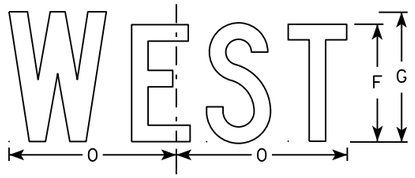

M3-4
MM3-4
MP3-4

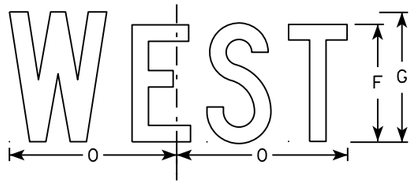

MB3-4
MK3-4
MN3-4

NOTES

1. All Signs Type II - Type H
2. Color:
   Background - See note 5
   Message - See note 5
3. Message Series - C
4. Corners may be square or rounded when base material is plywood but borders shall be rounded as shown. When base material is metal, the corners and borders shall be rounded.
5. M3-1 thru M3-4 Background - White
   Message - Black
   MB3-1 thru MB3-4 Background - Blue
   Message - White
   MK3-1 thru MK3-4 Background - Green
   Message - White
   MM3-1 thru MM3-4 Background - White
   Message - Green
   MN3-1 thru MN3-4 Background - Brown
   Message - White
   MP3-1 thru MP3-4 Background - White
   Message - Blue
6. Note the first letter of each direction is larger than the remainder of the message.

SIZE	A	B	C	D	E	F	G	H	I	J	K	L	M	N	O	P	Q	R	S	T	U	V	W	X	Y	Z	Area sq. ft.
1																											
2	24	12	1 1/8	3/8	3/8	6	7	2 1/4	2 3/4	10 1/4	7 7/8	8 3/8	10 1/4	9 3/4	8 3/4			1 1/2									2.00
3	36	18	1 1/8	3/8	1/2	9	10	3 3/4	4 1/4	14 3/8	12	12 1/8	14	14 1/8	13			1 1/2									4.5
4	36	18	1 1/8	3/8	1/2	9	10	3 3/4	4 1/4	14 3/8	12	12 1/8	14	14 1/8	13			1 1/2									4.5
5	36	18	1 1/8	3/8	1/2	9	10	3 3/4	4 1/4	14 3/8	12	12 1/8	14	14 1/8	13			1 1/2									4.5

STANDARD SIGNS
M3-1 thur M3-4
SERIES

WISCONSIN DEPT OF TRANSPORTATION

APPROVED Matthew P Rauch for State Traffic Engineer

DATE 10/15/15 PLATE NO M3-1.14

PROJECT NO: | HWY: | COUNTY: | SHEET NO: E

FILE NAME : C:\CAEfiles\Projects\tr_stdplate\M31.DGN PLOT DATE : 01-DEC-2015 17:54 PLOT BY : $$ plotuser $$ PLOT NAME : PLOT SCALE : 11.675051:1.000000

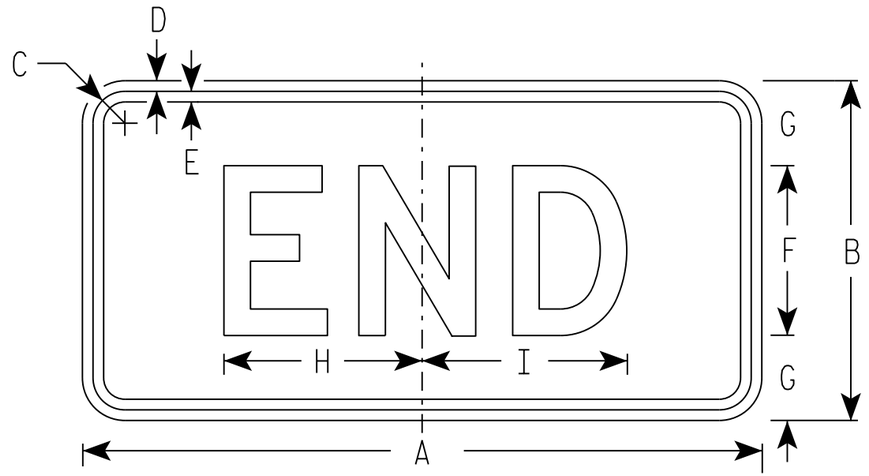

M4-6
MM4-6
MP4-6

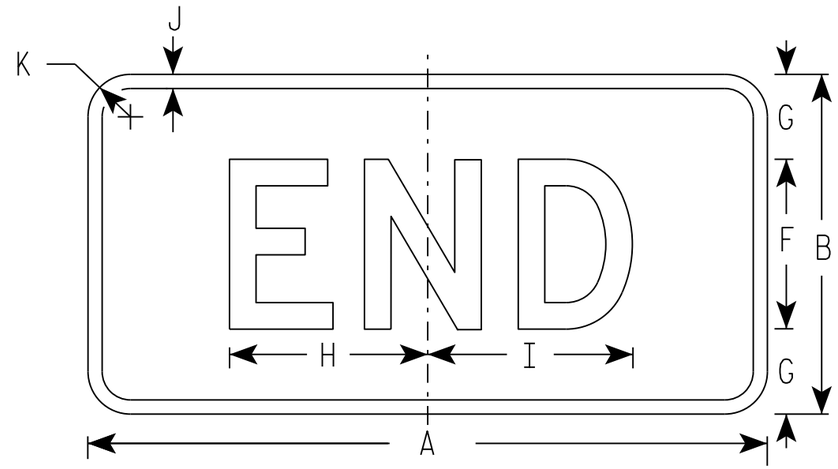

MB4-6
MK4-6
MN4-6
MR4-6

NOTES

1. Sign is Type II - Type H
2. Color:
   Background - See note 5
   Message - See note 5
3. Message Series - D
4. Corners may be square or rounded when base material is plywood but borders shall be rounded as shown. When base material is metal, the corners and borders shall be rounded.
5. M4-6 Background - White
   Message - Black

   MB4-6 Background - Blue
   Message - White

   MK4-6 Background - Green
   Message - White

   MM4-6 Background - White
   Message - Green

   MN4-6 Background - Brown
   Message - White

   MP4-6 Background - White
   Message - Blue

   MR4-6 Background - Brown
   Message - Yellow

SIZE	A	B	C	D	E	F	G	H	I	J	K	L	M	N	O	P	Q	R	S	T	U	V	W	X	Y	Z	Area sq. ft.
1																											
2	24	12	1 1/8	3/8	3/8	6	3	7	7 1/4	1/2	1 1/2																2.00
3	36	18	1 1/8	3/8	1/2	9	4 1/2	12	11 7/8	1/2	1 1/2																4.5
4	36	18	1 1/8	3/8	1/2	9	4 1/2	12	11 7/8	1/2	1 1/2																4.5
5	36	18	1 1/8	3/8	1/2	9	4 1/2	12	11 7/8	1/2	1 1/2																4.5

STANDARD SIGN
M4-6

WISCONSIN DEPT OF TRANSPORTATION

APPROVED Matthew R Rauch
for State Traffic Engineer

DATE 10/15/15 PLATE 208 '14-7.9

PROJECT NO: | HWY: | COUNTY: | SHEET NO: E

FILE NAME : C:\CAEfiles\Projects\tr_stdplate\M46.DGN PLOT DATE : 01-DEC-2015 17:55 PLOT BY : $$ plotuser $$ PLOT NAME : PLOT SCALE : 5.351066:1.000000

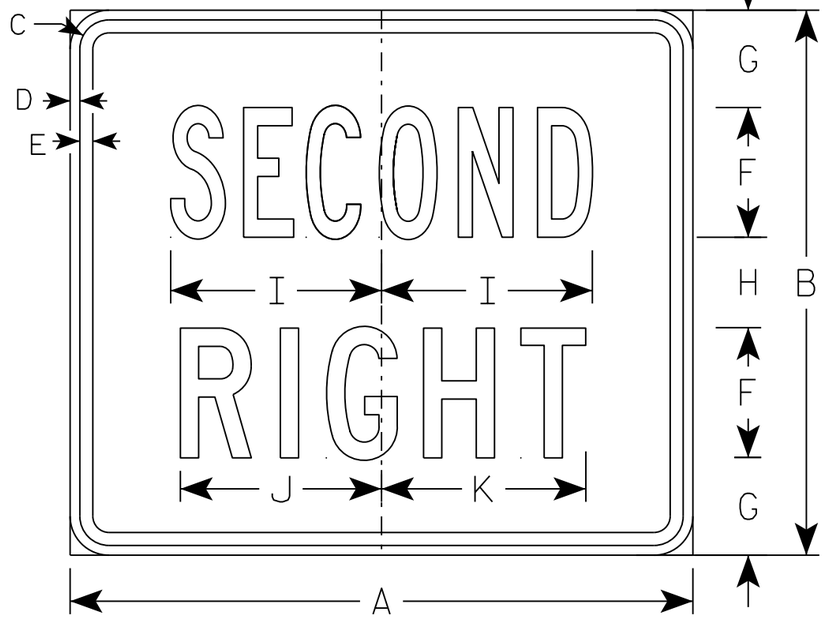

M4-22R
MM4-22R
M04-22R
MP4-22R

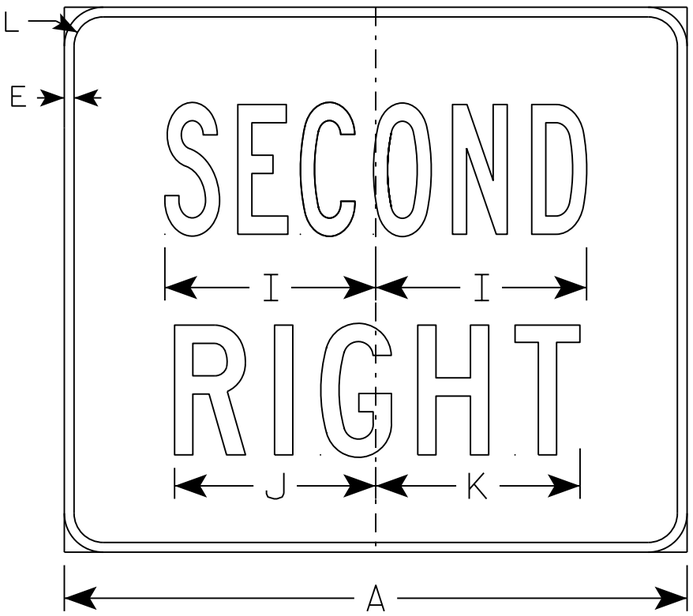

MB4-22R
MK4-22R
MN4-22R
MR4-22R

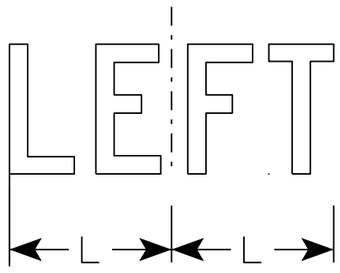

M4-22L
MB4-22L
MK4-22L
MM4-22L
MN4-22L
M04-22L
MP4-22L
MR4-22L

NOTES

1. Sign is Type II - Type H except as Shown
2. Color:
   Background - See note 5
   Message - See note 5
3. Message Series - C
4. Corners may be square or rounded when base material is plywood but borders shall be rounded as shown. When base material is metal, the corners and borders shall be rounded.
5. M4-22 Background - White
   Message - Black
   MB4-22 Background - Blue
   Message - White
   MK4-22 Background - Green
   Message - White
   MM4-22 Background - White
   Message - Green
   MN4-22 Background - Brown
   Message - White
   M04-22 Background - Orange - Type F Reflective
   Message - Black
   MP4-22 Background - White
   Message - Blue
   MR4-22 Background - Brown
   Message - Yellow

SIZE	A	B	C	D	E	F	G	H	I	J	K	L	M	N	O	P	Q	R	S	T	U	V	W	X	Y	Z	Area sq. ft.
1																											
2	24	21	1 1/8	3/8	1/2	5	3 3/4	3 1/2	8 1/8	7 3/4	7 7/8	1 1/2															3.5
3	36	30	1 5/8	5/8	3/4	8	4 3/4	4 1/2	13 1/8	12 5/8	12 1/2	1 7/8															7.5
4																											
5																											

STANDARD SIGN
M4-22

WISCONSIN DEPT OF TRANSPORTATION

APPROVED Matthew R Rauch
for State Traffic Engineer

DATE 10/15/15 PLATE NO. M4-22.4

PROJECT NO:	HWY:	COUNTY:		SHEET NO:	E

FILE NAME : C:\CAEfiles\Projects\tr_stdplate\M422.DGN PLOT DATE : 01-DEC-2015 18:04 PLOT BY : $$ plotuser $$ PLOT NAME : PLOT SCALE : 5.837526:1.000000

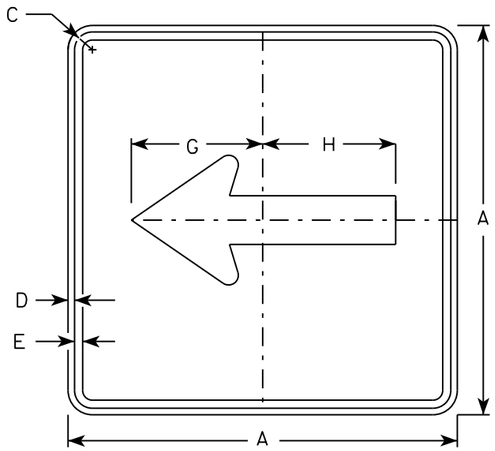

M6-1
MM6-1
MO6-1
MP6-1

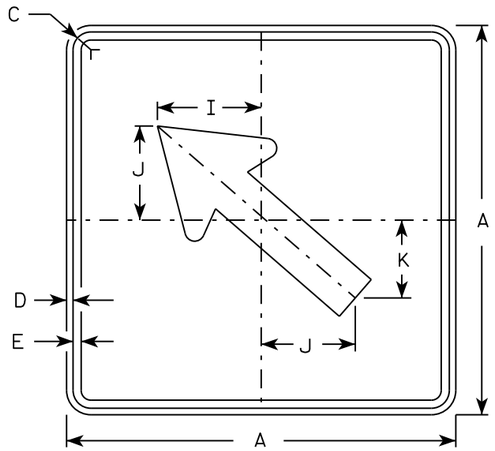

M6-2
MM6-2
MO6-2
MP6-2

NOTES

1. Signs are Type II - Type H except as Shown
2. Color:
   Background - See note 4
   Message - See note 4
3. Corners may be square or rounded when base material is plywood but borders shall be rounded as shown. When base material is metal, the corners and borders shall be rounded.
4. M6-1 and M6-2 Background - White
   Message - Black
   MB6-1 and MB6-2 Background - Blue
   Message - White
   MK6-1 and MK6-2 Background - Green
   Message - White
   MM6-1 and MM6-2 Background - White
   Message - Green
   MN6-1 and MN6-2 Background - Brown
   Message - White
   MO6-1 and MO6-2 Background - Orange - Type F Reflective
   Message - Black
   MP6-1 and MP6-2 Background - White
   Message - Blue
   MR6-1 and MR6-2 Background - Brown
   Message - Yellow

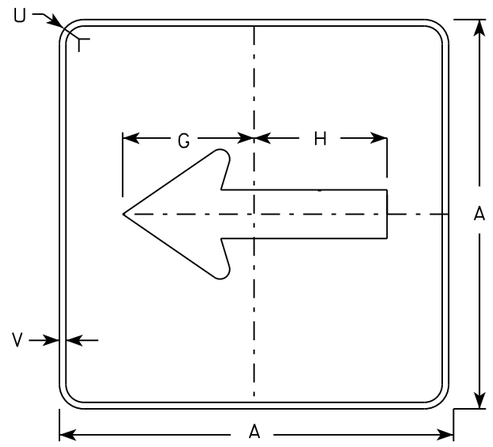

MB6-1
MK6-1
MN6-1
MR6-1

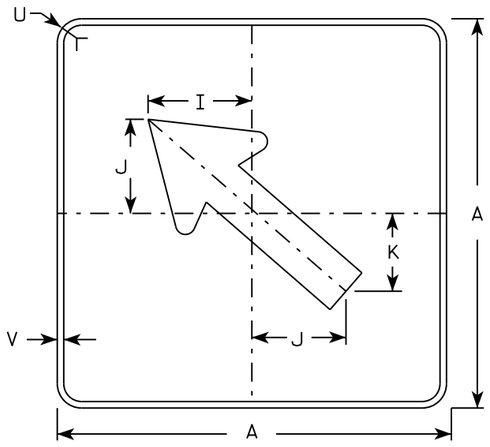

MB6-2
MK6-2
MN6-2
MR6-2

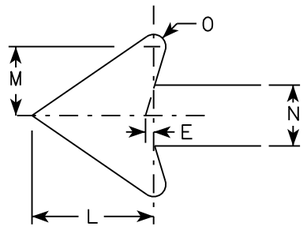

SIZE	A	B	C	D	E	F	G	H	I	J	K	L	M	N	O	P	Q	R	S	T	U	V	W	X	Y	Z	Area sq. ft.
1																											
2	21		1 1/8	3/8	3/8		7 1/2	7 1/8	5 5/8	5	4 1/4	5 1/4	3	2 5/8	1/2						1 1/2	1/2						3.06
3	30		1 3/8	1/2	5/8		10 3/4	10 1/4	8	7 1/4	6	7 1/2	4 1/4	3 3/4	3/4						1 7/8	1/2						6.25
4	30		1 3/8	1/2	5/8		10 3/4	10 1/4	8	7 1/4	6	7 1/2	4 1/4	3 3/4	3/4						1 7/8	1/2						6.25
5	30		1 3/8	1/2	5/8		10 3/4	10 1/4	8	7 1/4	6	7 1/2	4 1/4	3 3/4	3/4						1 7/8	1/2						6.25

STANDARD SIGN
M6-1 & M6-2
SERIES

WISCONSIN DEPT OF TRANSPORTATION

APPROVED Matthew R Rauch
for State Traffic Engineer

DATE 10/15/15 PLATE 210 M6-1.15

PROJECT NO:	HWY:	COUNTY:		SHEET NO:	E

FILE NAME : C:\CAEfiles\Projects\tr_stdplate\M61.DGN PLOT DATE : 01-DEC-2015 17:57 PLOT BY : $$ plotuser $$ PLOT NAME : PLOT SCALE : 11.675051:1.000000

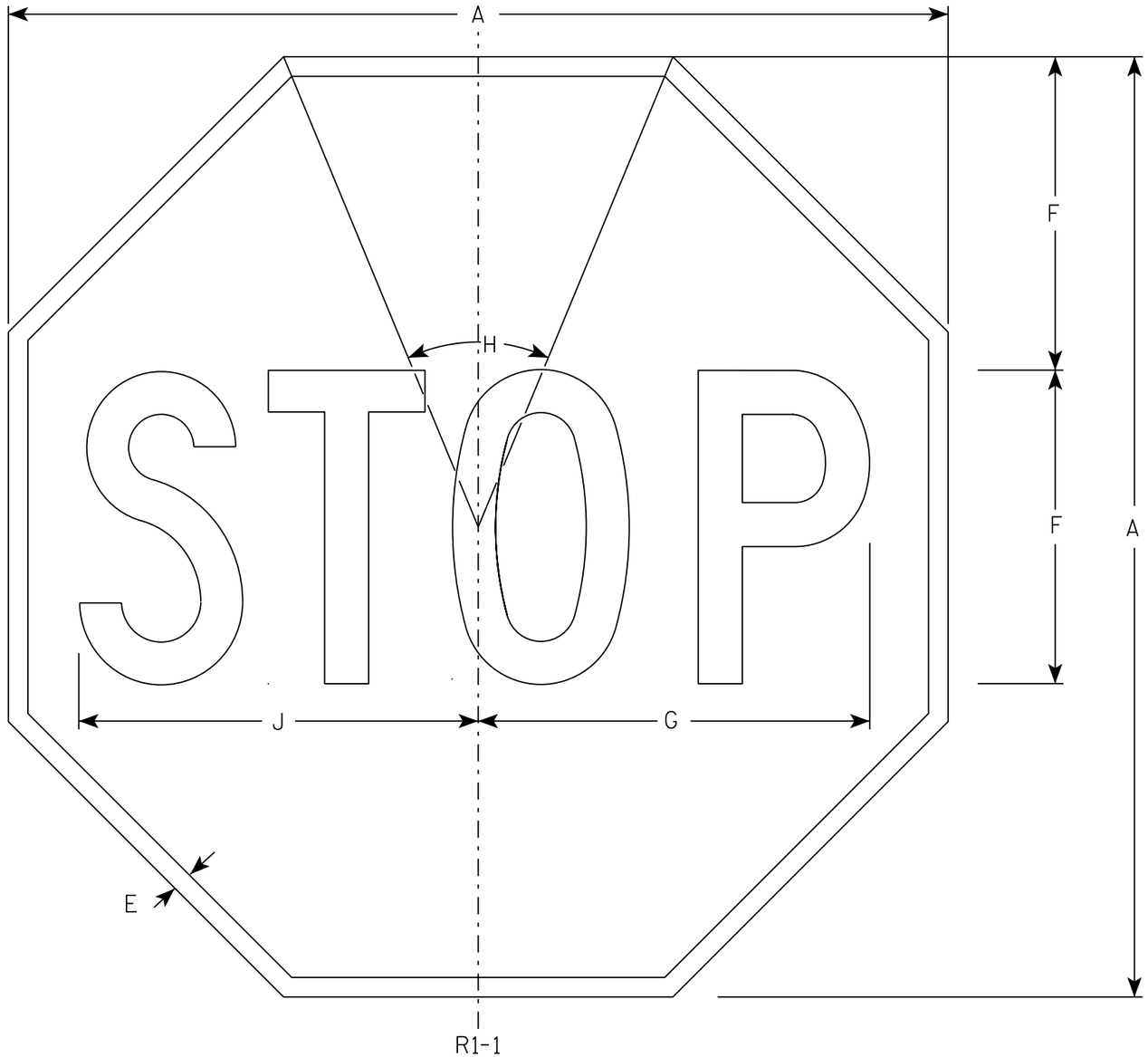

R1-1

NOTES

1. Sign is Type II - Type H Reflective - reference WIS DOT Standard Specification for HIGHWAY and STRUCTURE CONSTRUCTION latest edition.
2. Color:
   Background - Red
   Message - White
3. Message Series - C

SIZE	A	B	C	D	E	F	G	H	I	J	K	L	M	N	O	P	Q	R	S	T	U	V	W	X	Y	Z	Area sq. ft.
1	30				5/8	10	12 1/2	45°		12 3/4																	5.18
2S	30				5/8	10	12 1/2	45°		12 3/4																	5.18
2M	36				3/4	12	15	45°		15 3/8																	7.46
3	36				3/4	12	15	45°		15 3/8																	7.46
4	48				1	16	20	45°		20 1/2																	13.25
5	48				1	16	20	45°		20 1/2																	13.25
6	18				3/8	6	7 3/4	45°		7 3/4																	1.86
7	12				1/4	4	5	45°		5 1/8																	0.78

STANDARD SIGN
R1-1

WISCONSIN DEPT OF TRANSPORTATION

APPROVED Matthew R Rauch
for State Traffic Engineer

DATE 11/12/15 PLATE 211 R1-1.13

PROJECT NO:	HWY:	COUNTY:		SHEET NO:	E

FILE NAME : C:\CAEfiles\Projects\tr_stdplate\R11.DGN PLOT DATE : 01-DEC-2015 18:07 PLOT BY : $$ plotuser $$ PLOT NAME : PLOT SCALE : 4.378143:1.000000

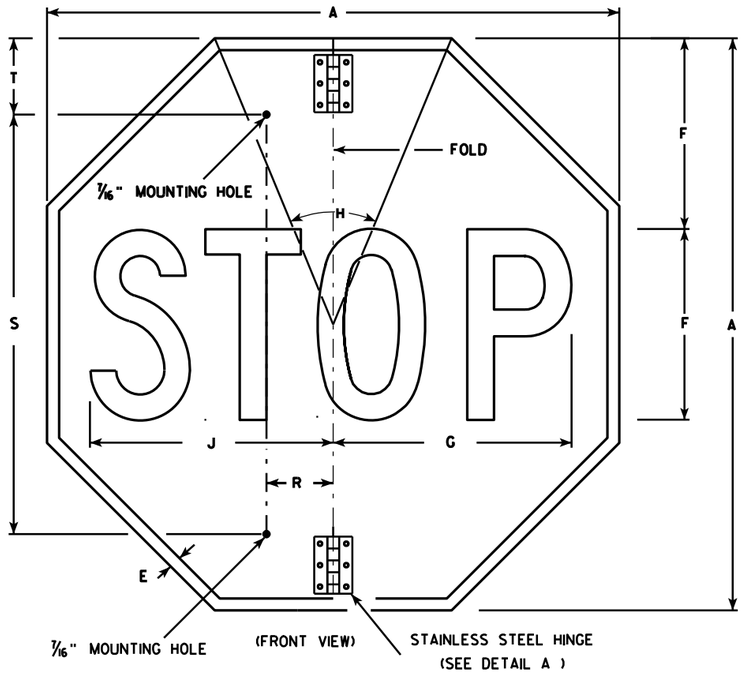

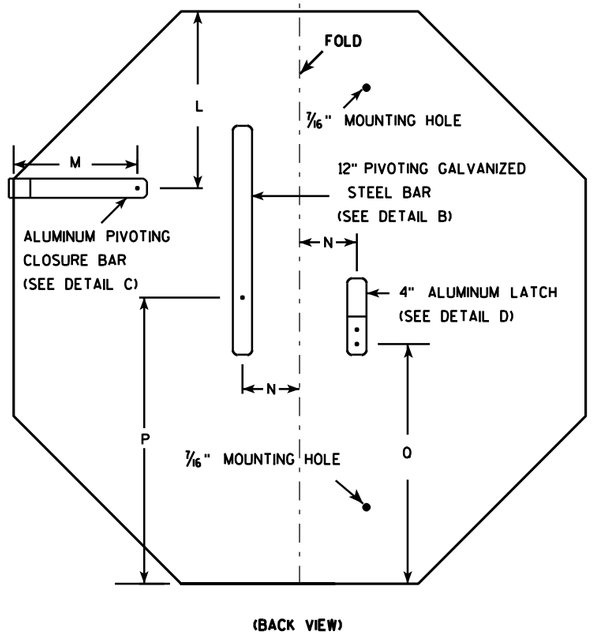

NOTES

1. Sign is Type II - Type H Reflective - reference WIS DOT Standard Specification for HIGHWAY and STRUCTURE CONSTRUCTION latest edition.
2. Color:
   Background - Red
   Message - White
3. Message Series - C
4. All hardware used on the folding STOP sign installation shall conform to 637.2.4 of the WIS DOT Standard Specification.

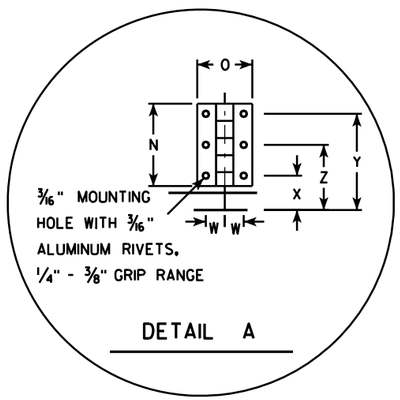

DETAIL A

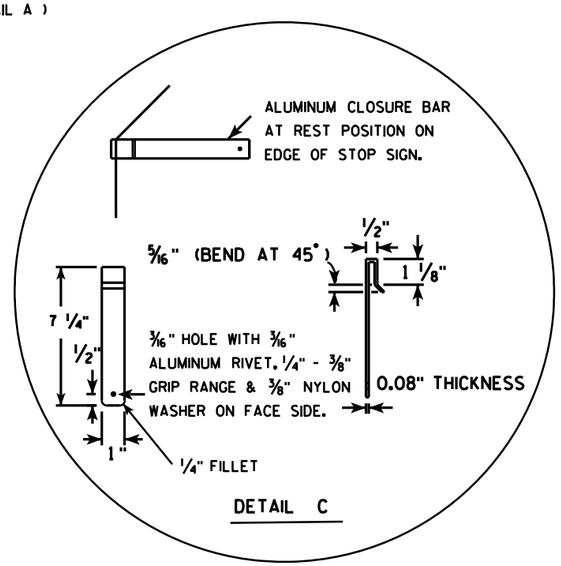

DETAIL C

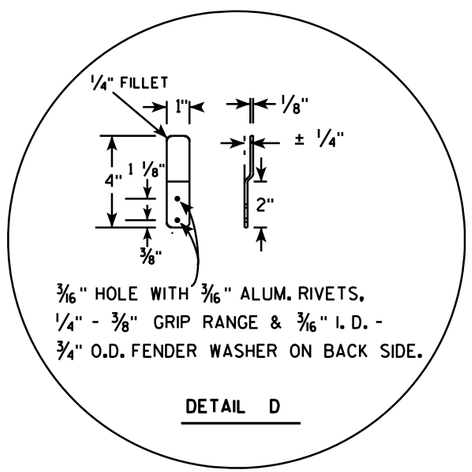

DETAIL D

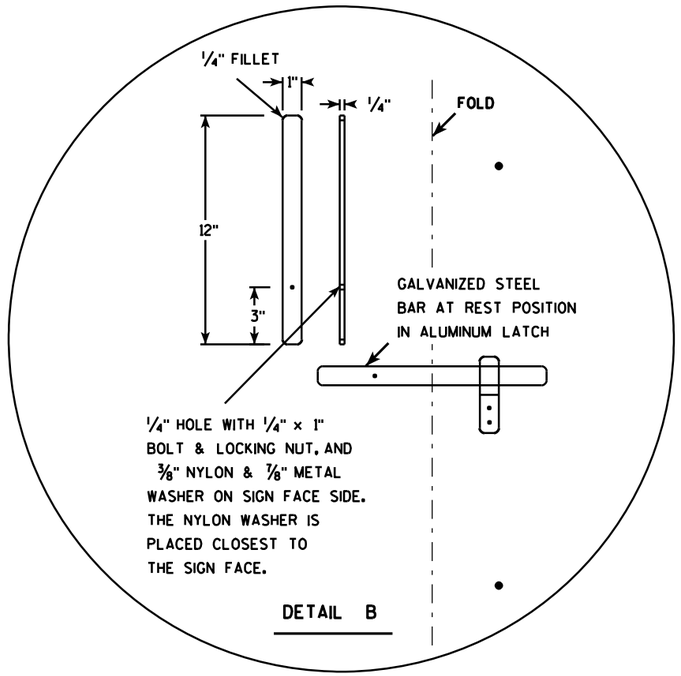

DETAIL B

SIZE	A	B	C	D	E	F	G	H	I	J	K	L	M	N	O	P	O	R	S	T	U	V	W	X	Y	Z	Area sq. ft.
1																											
2S	30				5/8	10	12 1/2	45		12 3/4		9 1/4	6 1/2	3	2	15	12 3/8	2 1/2	22	5			11/16	1 1/4	3 1/2	2 3/8	5.18
2M	36				3/4	12	15	45		15 3/8		11	6 1/2	3	2	18	15 3/8	2 1/2	26	5			11/16	1 1/4	3 1/2	2 3/8	7.46
3	36				3/4	12	15	45		15 3/8		11	6 1/2	3	2	18	15 3/8	2 1/2	26	5			11/16	1 1/4	3 1/2	2 3/8	7.46
4																											
5																											

STANDARD SIGN
R1-1F

WISCONSIN DEPT OF TRANSPORTATION

APPROVED Matthew R Rauch
for State Traffic Engineer

DATE 12/03/10 PLATE NO. R1-1F.3

PROJECT NO: | HWY: | COUNTY: | SHEET NO: 212 | E

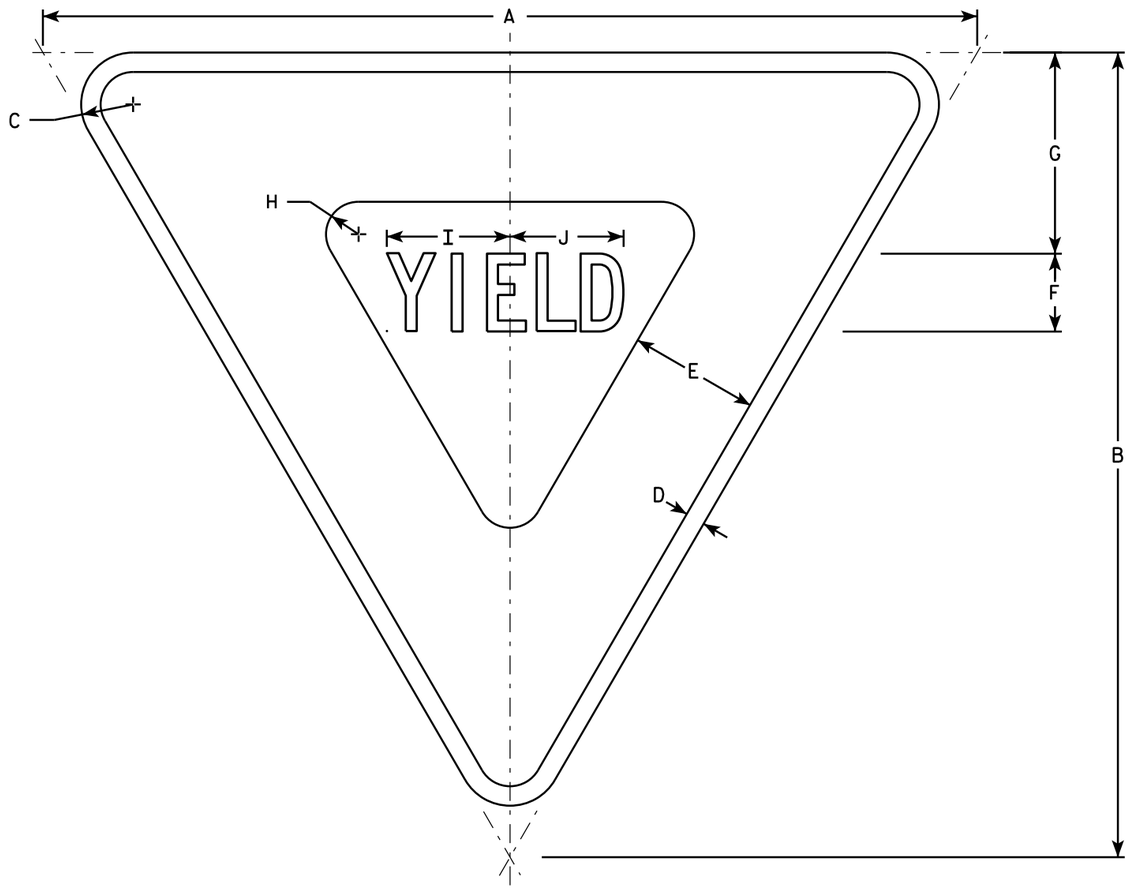

R1-2

NOTES

1. Sign is Type II - Type H Reflective - reference WIS DOT Standard Specification for HIGHWAY and STRUCTURE CONSTRUCTION latest edition.
2. Color:
   Background - White
   Message - See note 5
3. Message Series - C
4. Corners may be square or rounded when base material is plywood but borders shall be rounded as shown. When base material is metal, the corners and borders shall be rounded.
5. The border strip and word message are reflectorized red.

SIZE	A	B	C	D	E	F	G	H	I	J	K	L	M	N	O	P	Q	R	S	T	U	V	W	X	Y	Z	Area sq. ft.
1	30	26	1 1/2	5/8	4	2 1/2	6 3/8	7/8	4	3 5/8																	2.71
2S	36	31	2	3/4	5	3	7 3/4	1 1/4	4 3/4	4 3/8																	3.88
2M	48	42	3	1	6	4	9 3/4	2	6 1/4	5 7/8																	7.00
3	48	42	3	1	6	4	9 3/4	2	6 1/4	5 7/8																	7.00
4	48	42	3	1	6	4	9 3/4	2	6 1/4	5 7/8																	7.00
5	60	52	3	1 1/2	8	5	13	2 1/2	7 7/8	7 1/4																	10.83
6																											
7	18	15 1/2	1	3/8	2 1/2	1 1/2	3 7/8	5/8	2 3/8	2 1/4																	0.97

STANDARD SIGN
R1-2

WISCONSIN DEPT OF TRANSPORTATION

APPROVED Matthew R Rauch
for State Traffic Engineer

DATE 10/13/14 PLATE R1-2.12

PROJECT NO:	HWY:	COUNTY:		SHEET NO:	E

FILE NAME : C:\CAEFiles\Projects\tr_stdplate\R12.DGN PLOT DATE : 13-OCT-2014 15:12 PLOT BY : mscsja PLOT NAME : PLOT SCALE : 5.837526:1.000000
WISDOT/CADDS SHEET 42

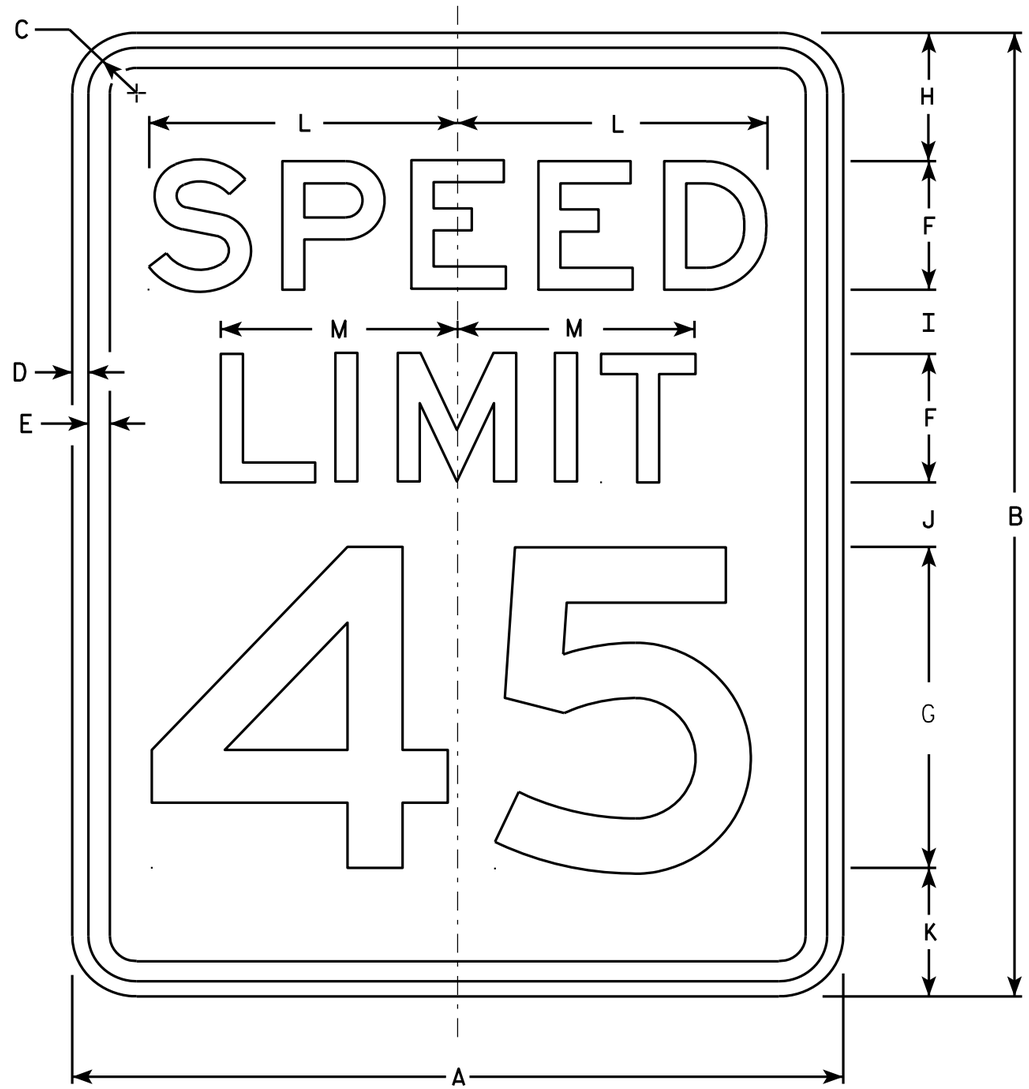

R2-1

NOTES

1. Sign is Type II - Type H Reflective - reference WIS DOT Standard Specification for HIGHWAY and STRUCTURE CONSTRUCTION latest edition.
2. Color:
   Background - White
   Message - Black
3. Message Series - E
4. Corners may be square or rounded when base material is plywood but borders shall be rounded as shown. When base material is metal, the corners and borders shall be rounded.
5. Substitute appropriate numerals and optically adjust spacing to achieve proper balance.

SIZE	A	B	C	D	E	F	G	H	I	J	K	L	M	N	O	P	Q	R	S	T	U	V	W	X	Y	Z	Area sq. ft.
1	18	24	1 1/8	3/8	1/2	3	8	3	2	2	3	7 1/4	5 1/2														3.0
2S	24	30	1 1/8	3/8	1/2	4	10	3	2 1/4	3 3/8	3 3/8	9 5/8	7 3/8														5.0
2M	30	36	1 3/8	1/2	5/8	5	12	5	2 1/2	2 1/2	4	12	9 1/4														7.5
3	36	48	1 3/8	1/2	5/8	6	14	6	5	5	6	14 3/8	11														12.0
4	36	48	1 3/8	1/2	5/8	6	14	6	5	5	6	14 3/8	11														12.0
5	48	60	2 1/4	3/4	1	8	20	6	4 1/2	6 3/4	6 3/4	19 1/4	14 5/8														20.0

STANDARD SIGN
R2-1

WISCONSIN DEPT OF TRANSPORTATION

APPROVED Matthew R Rauch
for State Traffic Engineer

DATE 5/26/10 PLATE NO. R2-1.13

PROJECT NO: | HWY: | COUNTY: | SHEET NO: 214 | E

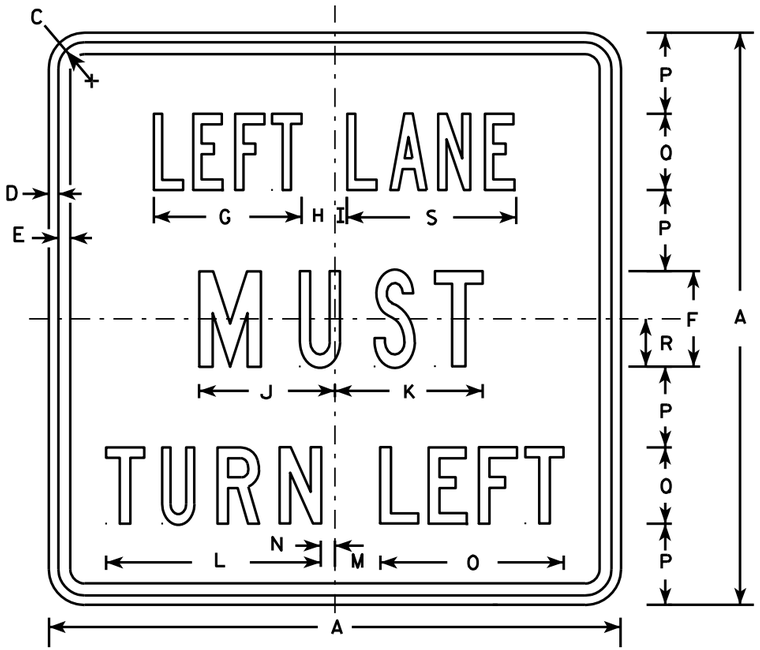

R3-7L

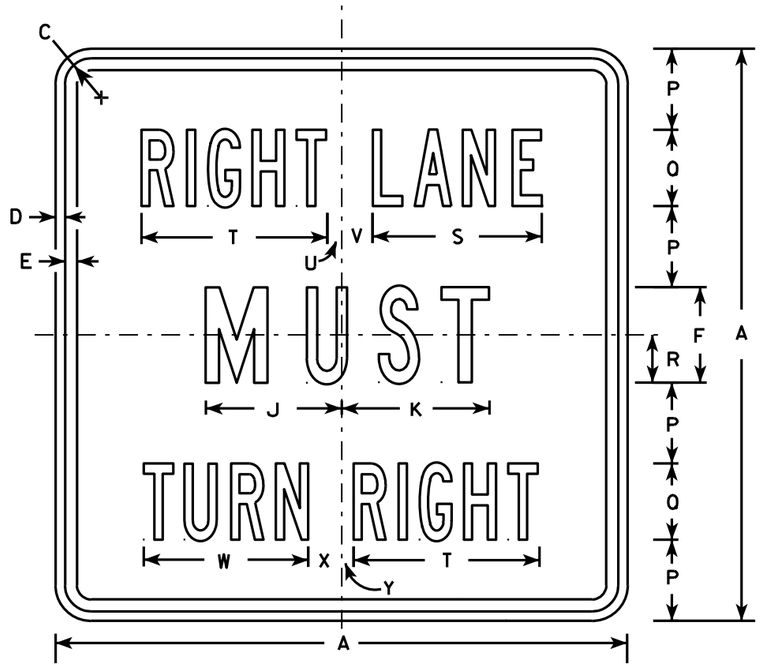

R3-7R

NOTES

1. Sign is Type II - Type H Reflective - reference WIS DOT Standard Specification for HIGHWAY and STRUCTURE CONSTRUCTION latest edition.
2. Color:
   Background - White
   Message - Black
3. Message Series - Line 1 is Series B.
   Line 2 is Series C.
   Line 3 on plate R3-7R is Series B and Series C on plate R3-7L.
4. Corners may be square or rounded when base material is plywood but borders shall be rounded as shown. When base material is metal, the corners and borders shall be rounded.

SIZE	A	B	C	D	E	F	G	H	I	J	K	L	M	N	O	P	Q	R	S	T	U	V	W	X	Y	Z	Area sq. ft.
1	30		1 3/8	1/2	5/8	5	7 3/4	1 3/4	5/8	7 1/8	7 3/4	11 1/4	2 3/8	3/4	9 5/8	4 1/4	4	2 1/2	8 7/8	9 3/4	3/4	1 5/8	8 5/8	1 5/8	5/8		6.25
2S	30		1 3/8	1/2	5/8	5	7 3/4	1 3/4	5/8	7 1/8	7 3/4	11 1/4	2 3/8	3/4	9 5/8	4 1/4	4	2 1/2	8 7/8	9 3/4	3/4	1 5/8	8 5/8	1 5/8	5/8		6.25
2M	30		1 3/8	1/2	5/8	5	7 3/4	1 3/4	5/8	7 1/8	7 3/4	11 1/4	2 3/8	3/4	9 5/8	4 1/4	4	2 1/2	8 7/8	9 3/4	3/4	1 5/8	8 5/8	1 5/8	5/8		6.25
3	36		1 5/8	5/8	3/4	6	9 5/8	2	1 1/8	8 3/4	9	13 1/2	3 7/8	1 1/2	12 1/2	5	5	3	10 5/8	12	7/8	2 1/4	10 5/8	2 1/8	1		9.00
4	48		2 1/4	3/4	1	8	13 1/2	2 3/8	1 1/2	11 1/2	11 7/8	17 3/4	3 5/8	2 1/2	16 3/8	6 1/2	7	4	14 3/8	16 7/8	5/8	3 1/4	15 1/8	2 3/4	1 1/8		16.00
5																											

STANDARD SIGN
R3-7L & R3-7R

WISCONSIN DEPT OF TRANSPORTATION

APPROVED Matthew R Rauch
for State Traffic Engineer

DATE 3/18/2011 PLATE NO. R3-7.3

PROJECT NO: | HWY: | COUNTY: | SHEET NO: 215 | E

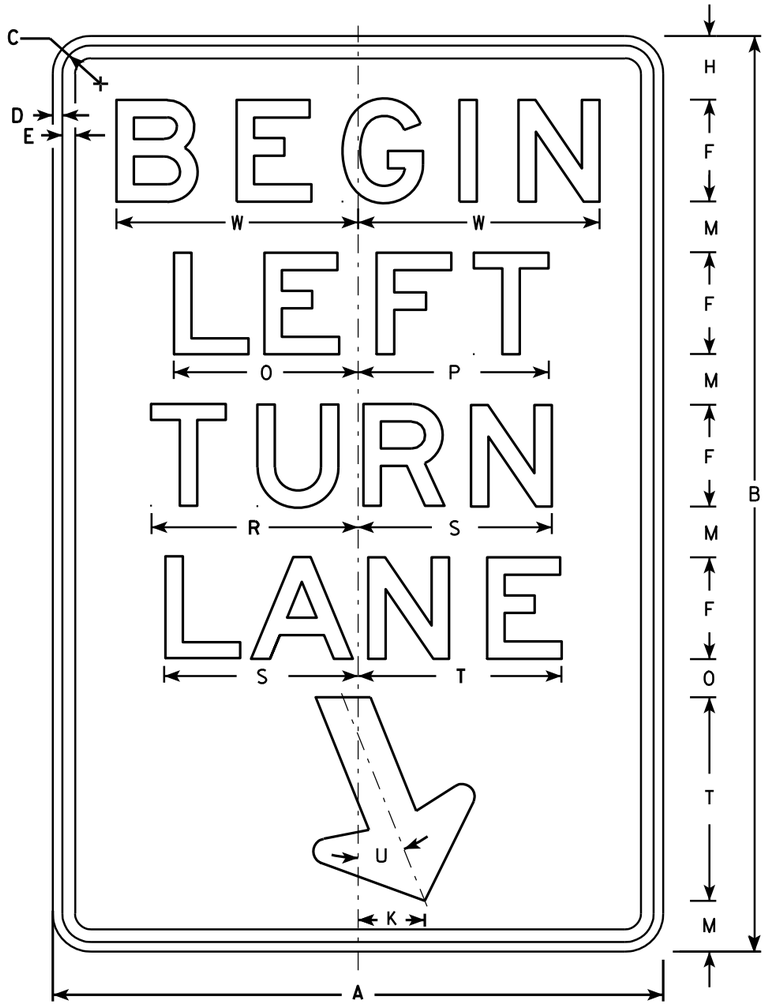

R3-20L

NOTES

1. Sign is Type II - Type H Reflective - reference WIS DOT Standard Specification for HIGHWAY and STRUCTURE CONSTRUCTION latest edition.
2. Color:
   Background - White
   Message - Black
3. Message Series - E
4. Corners may be square or rounded when base material is plywood but borders shall be rounded as shown. When base material is metal, the corners and borders shall be rounded.

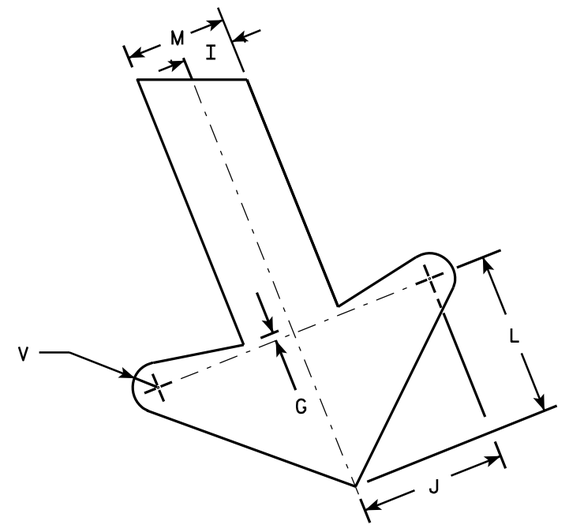

ARROW DETAIL

SIZE	A	B	C	D	E	F	G	H	I	J	K	L	M	N	O	P	Q	R	S	T	U	V	W	X	Y	Z	Area sq. ft.
1																											
2S	24	36	1 1/8	3/8	1/2	4	1/4	2 1/2	1	2 7/8	2 5/8	3 1/4	2	1 1/2	7 1/4	7 1/2		8 1/8	7 5/8	8	22°	1/2	9 1/2				6.0
2M	24	36	1 1/8	3/8	1/2	4	1/4	2 1/2	1	2 7/8	2 5/8	3 1/4	2	1 1/2	7 1/4	7 1/2		8 1/8	7 5/8	8	22°	1/2	9 1/2				6.0
3	36	54	1 3/4	1/2	5/8	6	3/8	3 3/4	1 1/2	4 1/4	4	4 7/8	3	2 1/4	10 7/8	11 1/4		12 1/4	11 1/2	12	22°	3/4	13 1/4				13.5
4																											
5																											

STANDARD SIGN
R3-20L

WISCONSIN DEPT OF TRANSPORTATION

APPROVED Matthew R Rauch
for State Traffic Engineer

DATE 10/18/10 PLATE NO. R3-20L.7

PROJECT NO: | HWY: | COUNTY: | SHEET NO: 216 | E

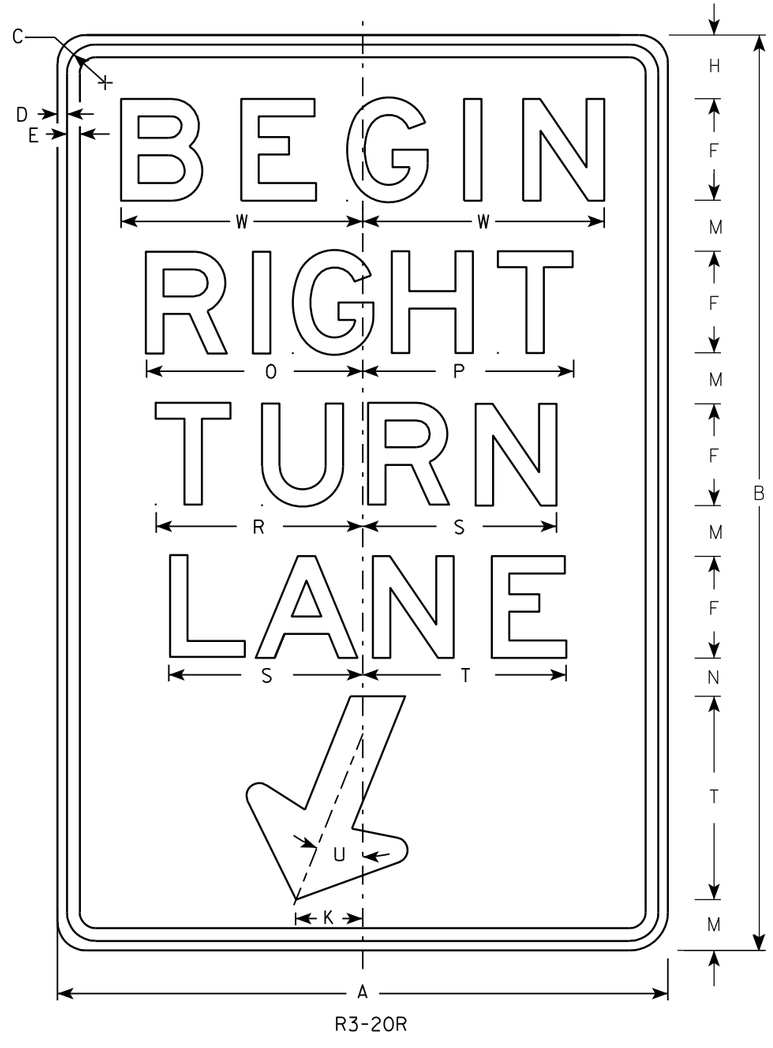

R3-20R

NOTES

1. Sign is Type II - Type H Reflective - reference WIS DOT Standard Specification for HIGHWAY and STRUCTURE CONSTRUCTION latest edition.
2. Color:
   Background - White
   Message - Black
3. Message Series - E
4. Corners may be square or rounded when base material is plywood but borders shall be rounded as shown. When base material is metal, the corners and borders shall be rounded.

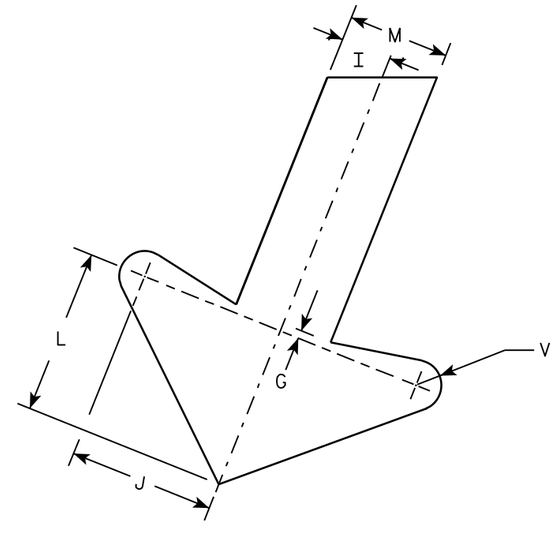

ARROW DETAIL

SIZE	A	B	C	D	E	F	G	H	I	J	K	L	M	N	O	P	Q	R	S	T	U	V	W	X	Y	Z	Area sq. ft.
1																											
2S	24	36	1 1/8	3/8	1/2	4	1/4	2 1/2	1	2 7/8	2 5/8	3 1/4	2	1 1/2	8 1/2	8 1/4		8 1/8	7 5/8	8	22°	1/2	9 1/2				6.0
2M	24	36	1 1/8	3/8	1/2	4	1/4	2 1/2	1	2 7/8	2 5/8	3 1/4	2	1 1/2	8 1/2	8 1/4		8 1/8	7 5/8	8	22°	1/2	9 1/2				6.0
3	36	54	1 3/4	1/2	5/8	6	3/8	3 3/4	1 1/2	4 1/4	4	4 7/8	3	2 1/4	12 3/4	12 1/2		12 1/4	11 1/2	12	22°	3/4	13 1/4				13.5
4																											
5																											

STANDARD SIGN
R3-20R

WISCONSIN DEPT OF TRANSPORTATION

APPROVED Matthew R Rauch
for State Traffic Engineer

DATE 10/18/10 PLATE NO. R3-20R.6

PROJECT NO: | HWY: | COUNTY: | SHEET NO: 217 | E

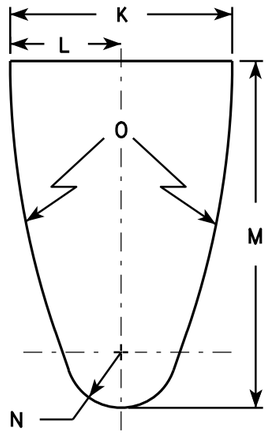

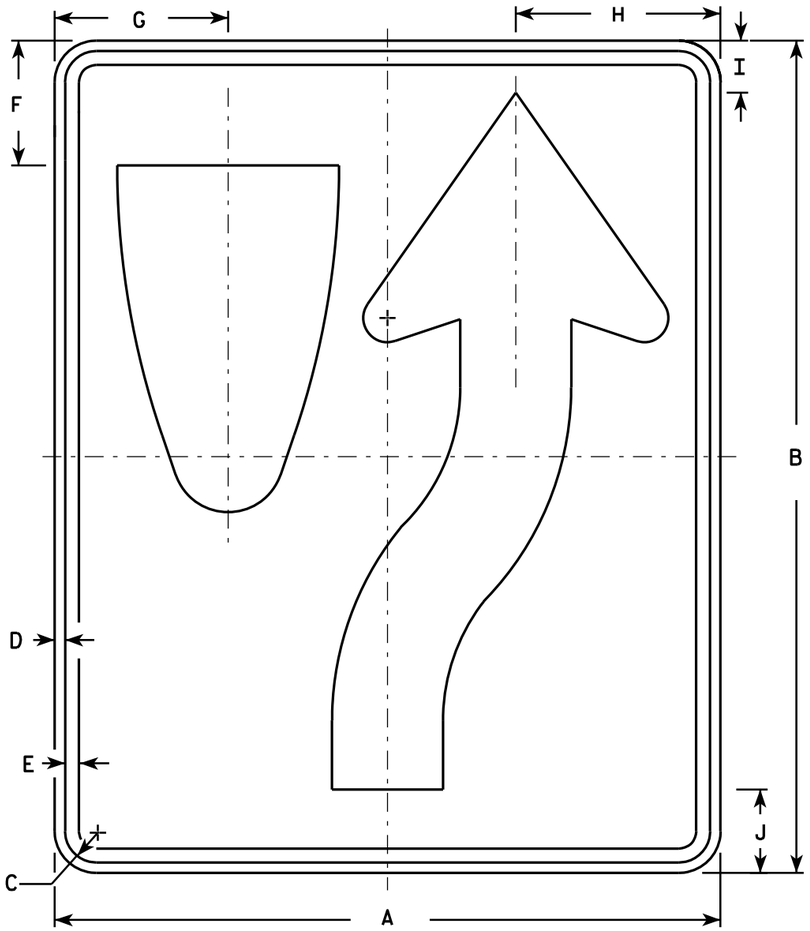

R4-7

NOTES

1. Sign is Type II - Type H Reflective - reference WIS DOT Standard Specification for HIGHWAY and STRUCTURE CONSTRUCTION latest edition. material is plywood but borders shall be rounded
2. Color:
   Background - White
   Message - Black
3. Corners may be square or rounded when base as shown. When base material is metal, the corners and borders shall be rounded.
4. R4-8 is the same as R4-7 except Legend is reversed.

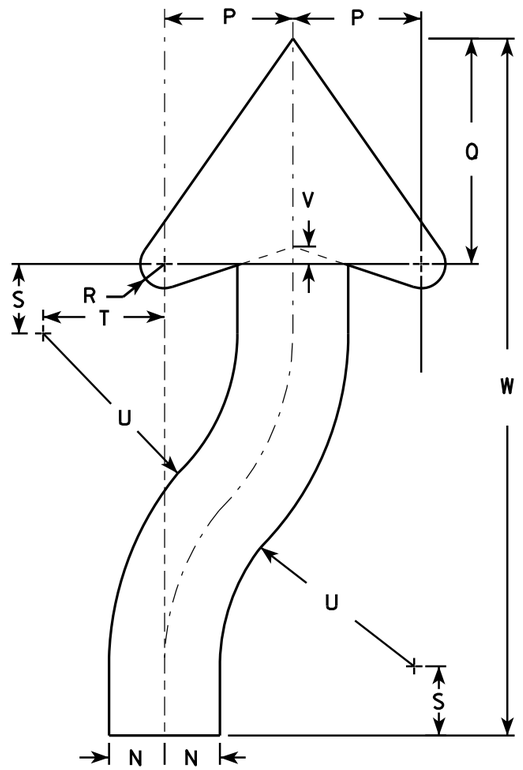

ARROW DETAIL

SIZE	A	B	C	D	E	F	G	H	I	J	K	L	M	N	O	P	Q	R	S	T	U	V	W	X	Y	Z	Area sq. ft.
1	18	24	1 1/8	3/8	1/2	3 3/8	4 3/4	5 1/2	1 3/8	2 1/4	6	3	9 3/8	1 1/2	22 1/2	3 1/2	6 1/8	5/8	1 7/8	3 1/4	6 3/4	1/2	20 3/8				3.0
2S	24	30	1 1/8	3/8	1/2	4 1/2	6 1/4	7 3/8	1 7/8	3	8	4	12 1/2	2	30	4 5/8	8 1/8	7/8	2 1/2	4 3/8	9	5/8	25 1/8				5.0
2M	24	30	1 1/8	3/8	1/2	4 1/2	6 1/4	7 3/8	1 7/8	3	8	4	12 1/2	2	30	4 5/8	8 1/8	7/8	2 1/2	4 3/8	9	5/8	25 1/8				5.0
3	36	48	1 3/4	1/2	5/8	6 3/4	9 3/8	11 1/8	2 7/8	4 1/2	12	6	18 3/4	3	45	6 7/8	12 1/4	1 1/4	3 3/4	6 5/8	13 1/2	1	40 3/4				12.0
4	36	48	1 3/4	1/2	5/8	6 3/4	9 3/8	11 1/8	2 7/8	4 1/2	12	6	18 3/4	3	45	6 7/8	12 1/4	1 1/4	3 3/4	6 5/8	13 1/2	1	40 3/4				12.0
5	48	60	2 1/4	3/4	1	9	12 1/2	14 3/4	3 3/4	6	16	8	25	4	60	9 1/4	16 1/4	1 5/8	5	8 3/4	18	1 1/4	50 1/4				20.0

STANDARD SIGN
R4-7 & R4-8

WISCONSIN DEPT OF TRANSPORTATION

APPROVED Matthew R Rauch for State Traffic Engineer

DATE 3/25/2011 PLATE NO. R4-7.8

PROJECT NO:	HWY:	COUNTY:		SHEET NO: 218	E

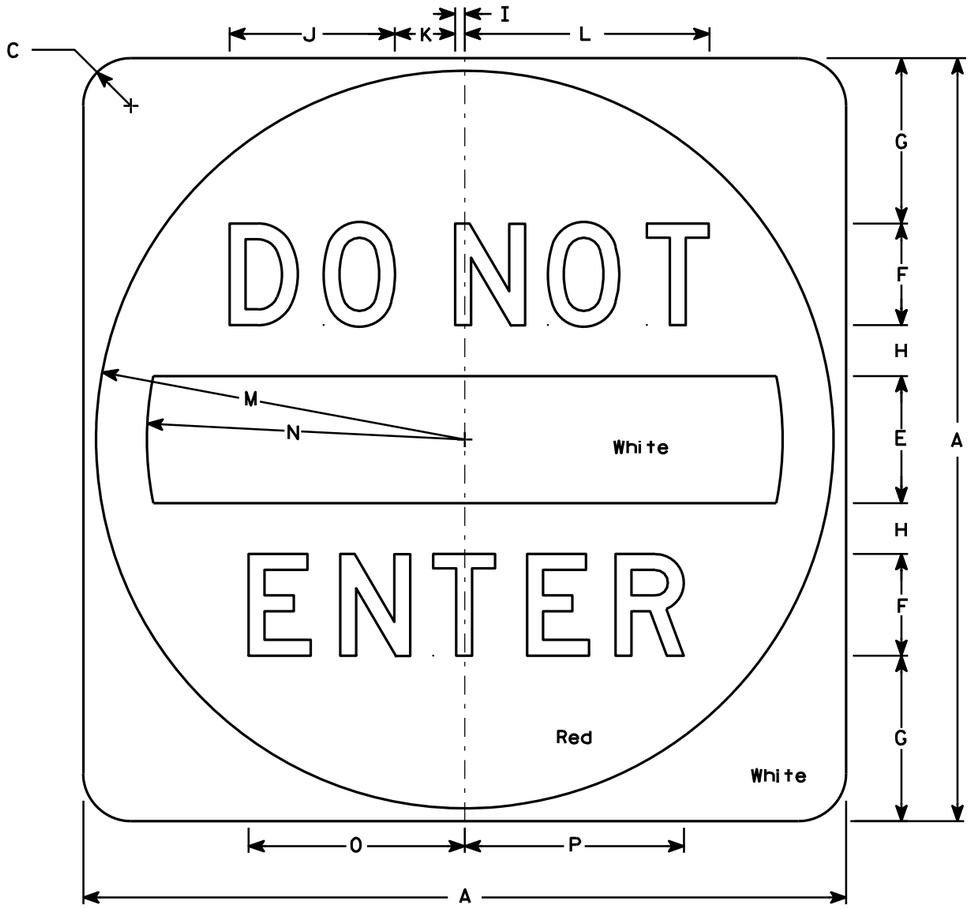

R5-1

NOTES

1. Sign is Type II - Type H Reflective - reference WIS DOT Standard Specification for HIGHWAY and STRUCTURE CONSTRUCTION latest edition.
2. Color:
   Background - See detail
   Message - White - Type H Reflective
3. Message Series - D
4. Corners may be square or rounded when base material is plywood but when base material is metal, the cornors shall be rounded.

SIZE	A	B	C	D	E	F	G	H	I	J	K	L	M	N	O	P	Q	R	S	T	U	V	W	X	Y	Z	Area sq. ft.
1																											
2S	30		1 7/8		5	4	6 1/2	2	3/8	6 1/2	2 3/8	9 5/8	14 1/2	12 1/2	8 1/2	8 5/8											6.26
2M	36		2 1/4		6	5	7 1/2	2 1/2	1/2	8 1/8	3	12 1/8	17 1/2	15	10 5/8	10 3/4											9.0
3	36		2 1/4		6	5	7 1/2	2 1/2	1/2	8 1/8	3	12 1/8	17 1/2	15	10 5/8	10 3/4											9.0
4	36		2 1/4		6	5	7 1/2	2 1/2	1/2	8 1/8	3	12 1/8	17 1/2	15	10 5/8	10 3/4											9.0
5	48		3		8	6	11	3	5/8	9 3/4	3 5/8	14 1/2	23 1/2	20	12 3/4	12 7/8											16.0

STANDARD SIGN
R5-1

WISCONSIN DEPT OF TRANSPORTATION

APPROVED Matthew R Rauch
for State Traffic Engineer

DATE 12/17/10 PLATE NO. R5-1.15

PROJECT NO: | HWY: | COUNTY: | SHEET NO: 219 | E

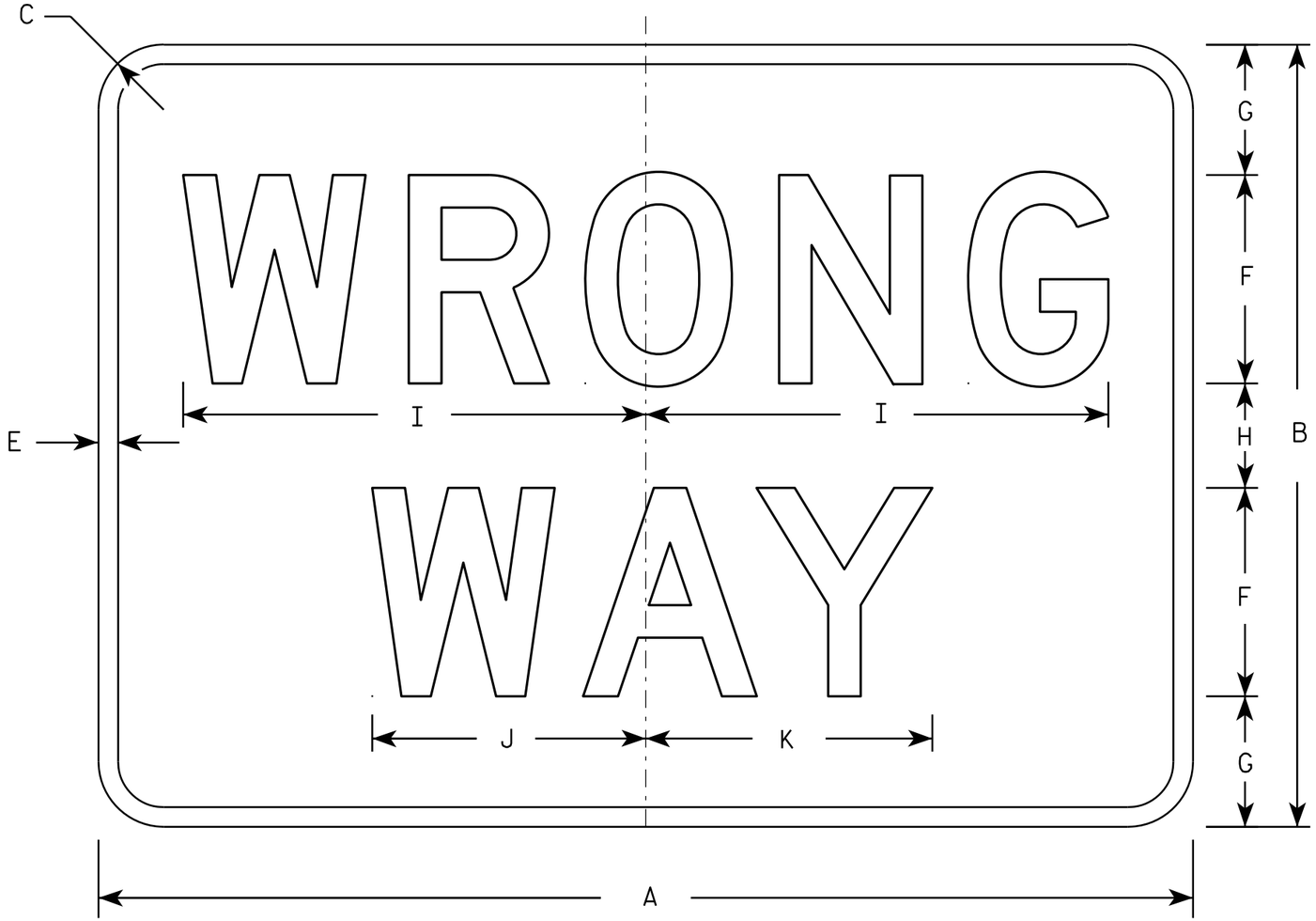

R5-1A

NOTES

1. Sign is Type II - Type H Reflective - reference WIS DOT Standard Specification for HIGHWAY and STRUCTURE CONSTRUCTION latest edition.
2. Color:
   Background - Red
   Message - White
3. Message Series - D
4. Corners may be square or rounded when base material is plywood but borders shall be rounded as shown. When base material is metal, the corners and borders shall be rounded.

SIZE	A	B	C	D	E	F	G	H	I	J	K	L	M	N	O	P	Q	R	S	T	U	V	W	X	Y	Z	Area sq. ft.
1	30	18	1 1/2		1/2	5	3	2	11	6 1/2	6 7/8																3.75
2S	36	24	2		5/8	6	4 1/2	3	13 1/4	7 7/8	8 1/4																6.00
2M	42	30	2 1/2		3/4	8	5	4	17 3/4	10 1/2	11																8.75
3	42	30	2 1/2		3/4	8	5	4	17 3/4	10 1/2	11																8.75
4	42	30	2 1/2		3/4	8	5	4	17 3/4	10 1/2	11																8.75
5	42	30	2 1/2		3/4	8	5	4	17 3/4	10 1/2	11																8.75

STANDARD SIGN
R5-1A

WISCONSIN DEPT OF TRANSPORTATION

APPROVED Matthew R Rauch
for State Traffic Engineer

DATE 12/17/10 PLATE NO. R5-1A.2

PROJECT NO:	HWY:	COUNTY:		SHEET NO: 220	E

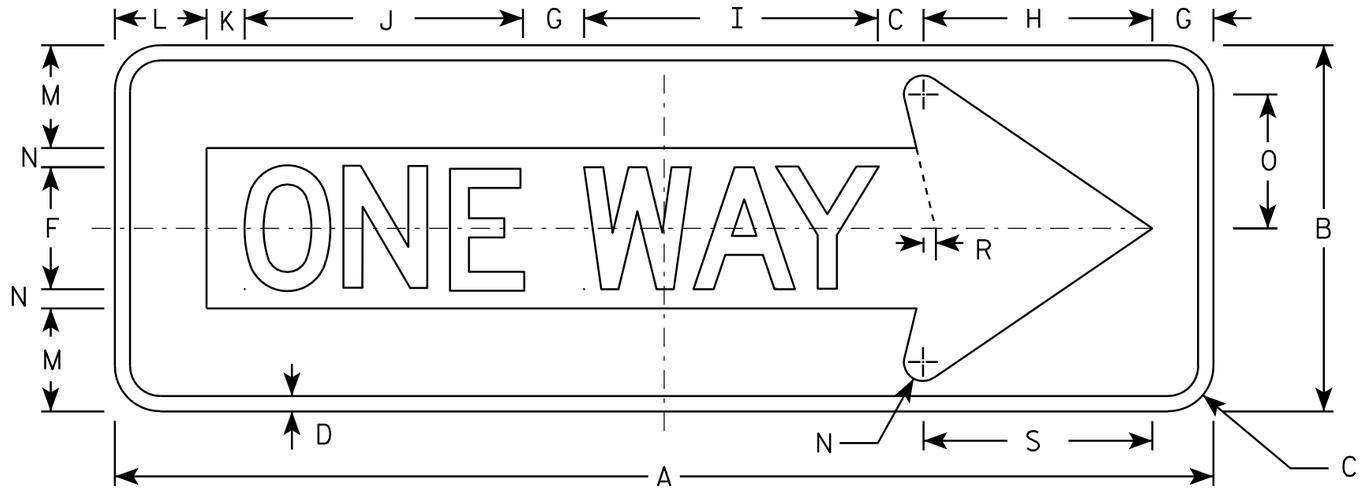

R6-1R

NOTES

1. Sign is Type II - Type H Reflective - reference WIS DOT Standard Specification for HIGHWAY and STRUCTURE CONSTRUCTION latest edition.
2. Color:
   Background - BLACK
   Message - BLACK LEGEND & WHITE ARROW & BORDER
3. Message Series - D
4. Corners may be square or rounded when base material is plywood but borders shall be rounded as shown. When base material is metal, the corners and borders shall be rounded.

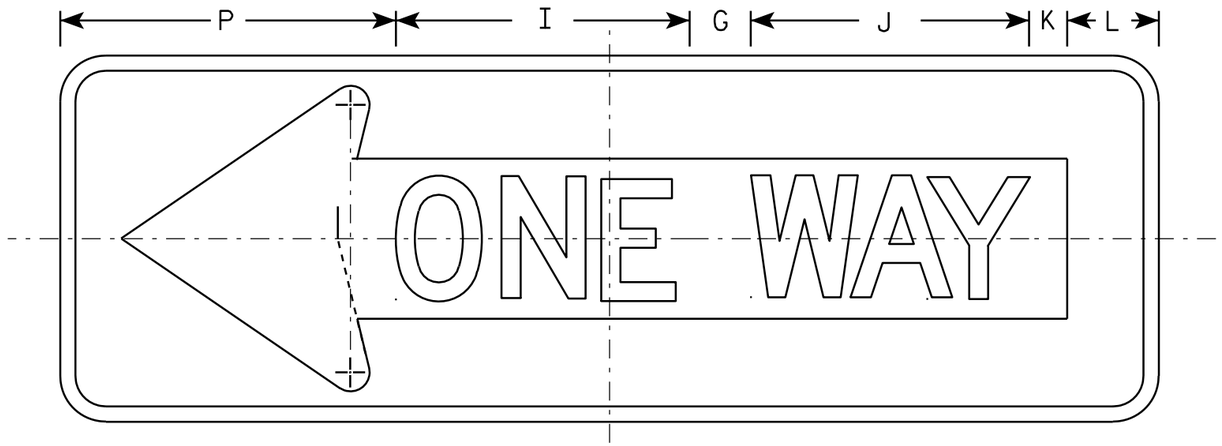

R6-1L

SIZE	A	B	C	D	E	F	G	H	I	J	K	L	M	N	O	P	Q	R	S	T	U	V	W	X	Y	Z	Area sq. ft.
1																											
2S	36	12	1 ½	½		4	2	7 ½	9 ⅝	9 ⅛	1 ¼	3	3 ⅜	⅝	4 ⅜	11		⅜	7 ½								3.0
2M	54	18	2 ¼	¾		6	3	11 ¼	14 ½	13 ⅝	1 ⅞	4 ½	5	1	6 ½	16 ½		⅝	11 ¼								6.75
3	54	18	2 ¼	¾		6	3	11 ¼	14 ½	13 ⅝	1 ⅞	4 ½	5	1	6 ½	16 ½		⅝	11 ¼								6.75
4	54	18	2 ¼	¾		6	3	11 ¼	14 ½	13 ⅝	1 ⅞	4 ½	5	1	6 ½	16 ½		⅝	11 ¼								6.75
5																											

STANDARD SIGN
R6-1 L & R

WISCONSIN DEPT OF TRANSPORTATION

APPROVED Matthew R Rauch
for State Traffic Engineer

DATE 12/17/10 PLATE NO. R6-1.2

PROJECT NO:

SHEET NO: 221 E

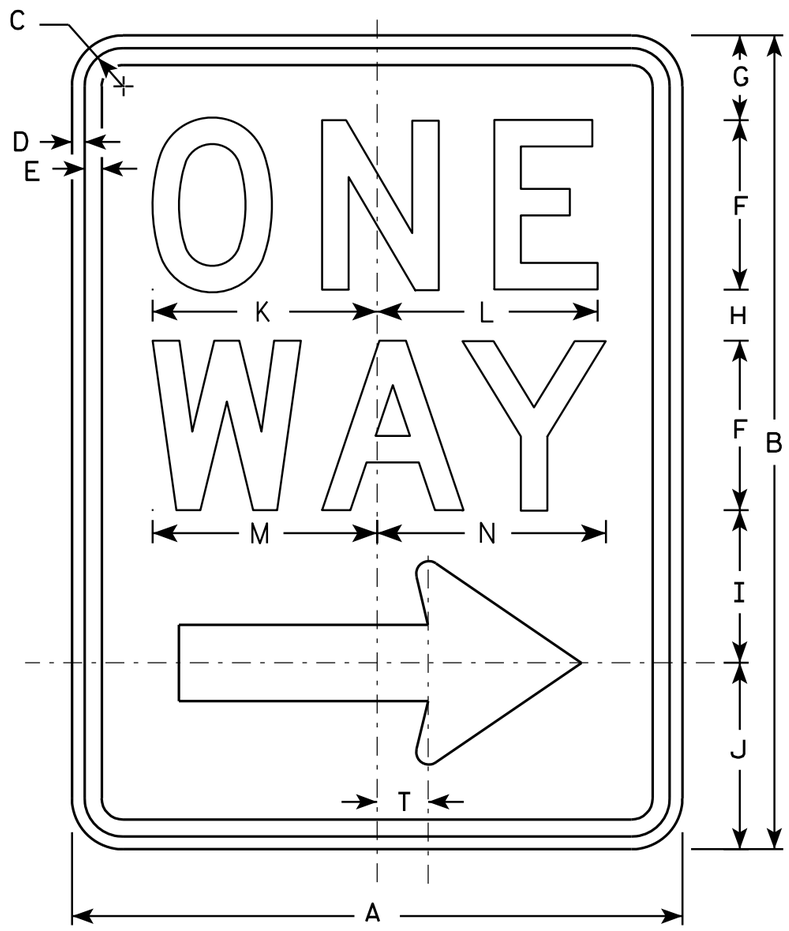

R6-2R

NOTES

1. Sign is Type II - Type H Reflective - reference WIS DOT Standard Specification for HIGHWAY and STRUCTURE CONSTRUCTION latest edition.
2. Color:
   Background - White
   Message - Black
3. Message Series - D
4. Corners may be square or rounded when base material is plywood but borders shall be rounded as shown. When base material is metal, the corners and borders shall be rounded.
5. R6-2L same as R6-2R except arrow points to the left.

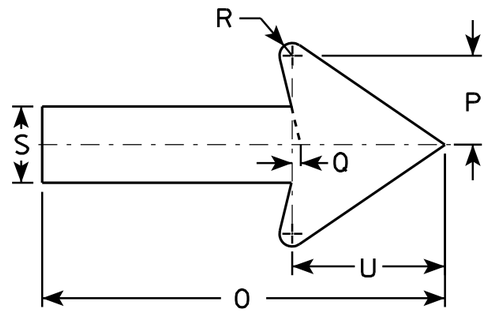

SIZE	A	B	C	D	E	F	G	H	I	J	K	L	M	N	O	P	O	R	S	T	U	V	W	X	Y	Z
1	18	24	1 1/8	3/8	1/2	5	2 1/2	1 1/2	4 1/2	5 1/2	6 5/8	6 1/2	6 5/8	6 3/4	11 7/8	2 5/8	1/4	3/8	2 1/4	1 1/2	4 1/2					
2S	24	30	1 1/8	3/8	1/2	6	3	2 1/2	5 1/2	7	8 1/8	8 1/8	8 1/2	8 5/8	16	3 1/2	3/8	1/2	3	2	6					
2M	30	36	1 3/8	1/2	5/8	8	2 1/2	2 5/8	6 7/8	8	10 1/2	10 1/2	11 1/4	11 1/4	20	4 3/8	1/2	5/8	3 3/4	2 1/2	7 1/2					
3	36	48	1 7/8	1/2	5/8	10	5 1/4	3 1/4	9	10 1/2	12 3/4	12 3/4	13 1/4	13 1/2	24	5 5/8	1/2	3/4	4 3/4	3	9					
4	36	48	1 7/8	1/2	5/8	10	5 1/4	3 1/4	9	10 1/2	12 3/4	12 3/4	13 1/4	13 1/2	24	5 5/8	1/2	3/4	4 3/4	3	9					
5																										

STANDARD SIGN
R6-2 R&L

WISCONSIN DEPT OF TRANSPORTATION

APPROVED Matthew R Rauch
for State Traffic Engineer

DATE 11/2/10 PLATE NO. R6-2.8

PROJECT NO:	HWY:	COUNTY:		SHEET NO: 222	E

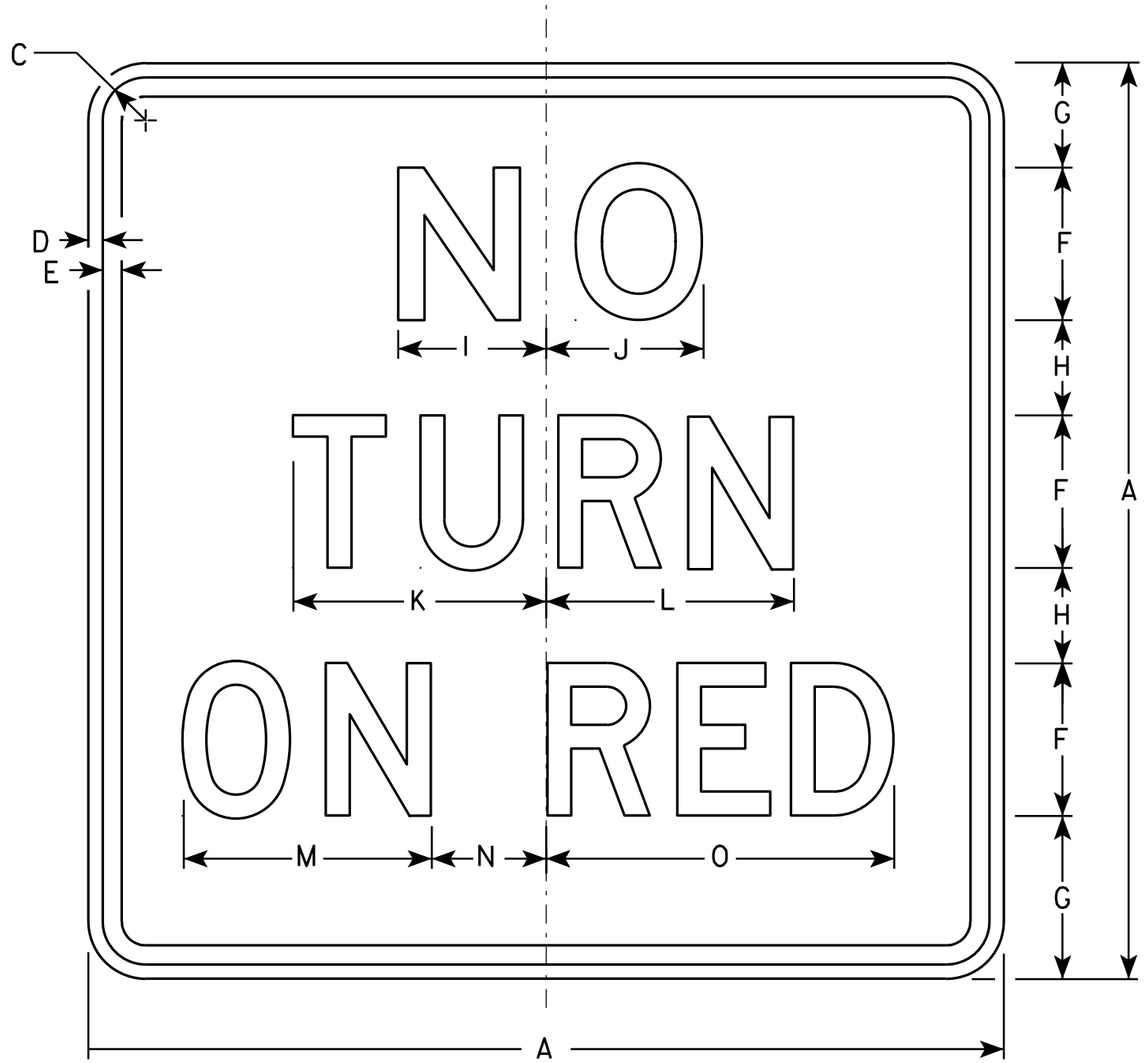

R10-11B

NOTES

1. Sign is Type II - Type H Reflective - reference WIS DOT Standard Specification for HIGHWAY and STRUCTURE CONSTRUCTION latest edition.
2. Color:
   Background - White
   Message - Black
3. Message Series - See Note 5.
4. Corners may be square or rounded when base material is plywood but borders shall be rounded as shown. When base material is metal, the corners and borders shall be rounded.
5. Line 1 is Series E.
   Lines 2 and 3 are Series D.

SIZE	A	B	C	D	E	F	G	H	I	J	K	L	M	N	O	P	Q	R	S	T	U	V	W	X	Y	Z	Area sq. ft.
1	18		1 1/8	3/8	3/8	3	2 3/4	1 3/4	3	3 1/8	5	4 7/8	5 1/4	1 7/8	7 1/8												2.25
2S	24		1 1/8	3/8	1/2	4	3 1/2	2 1/2	3 7/8	4 1/8	6 5/8	6 1/2	6 1/2	3	9 1/8												4.0
2M	24		1 1/8	3/8	1/2	4	3 1/2	2 1/2	3 7/8	4 1/8	6 5/8	6 1/2	6 1/2	3	9 1/8												4.0
3	30		1 3/8	1/2	5/8	5	4 1/2	3	4 7/8	5 1/4	8 1/4	8 1/8	7 3/4	4 1/8	11 7/8												6.25
4																											
5																											

STANDARD SIGN
R10-11B

WISCONSIN DEPT OF TRANSPORTATION

APPROVED Matthew R Rauch
for State Traffic Engineer

DATE 4/5/11 PLATE NO. R10-11B.4

PROJECT NO: | HWY: | COUNTY: | SHEET NO: 223 | E

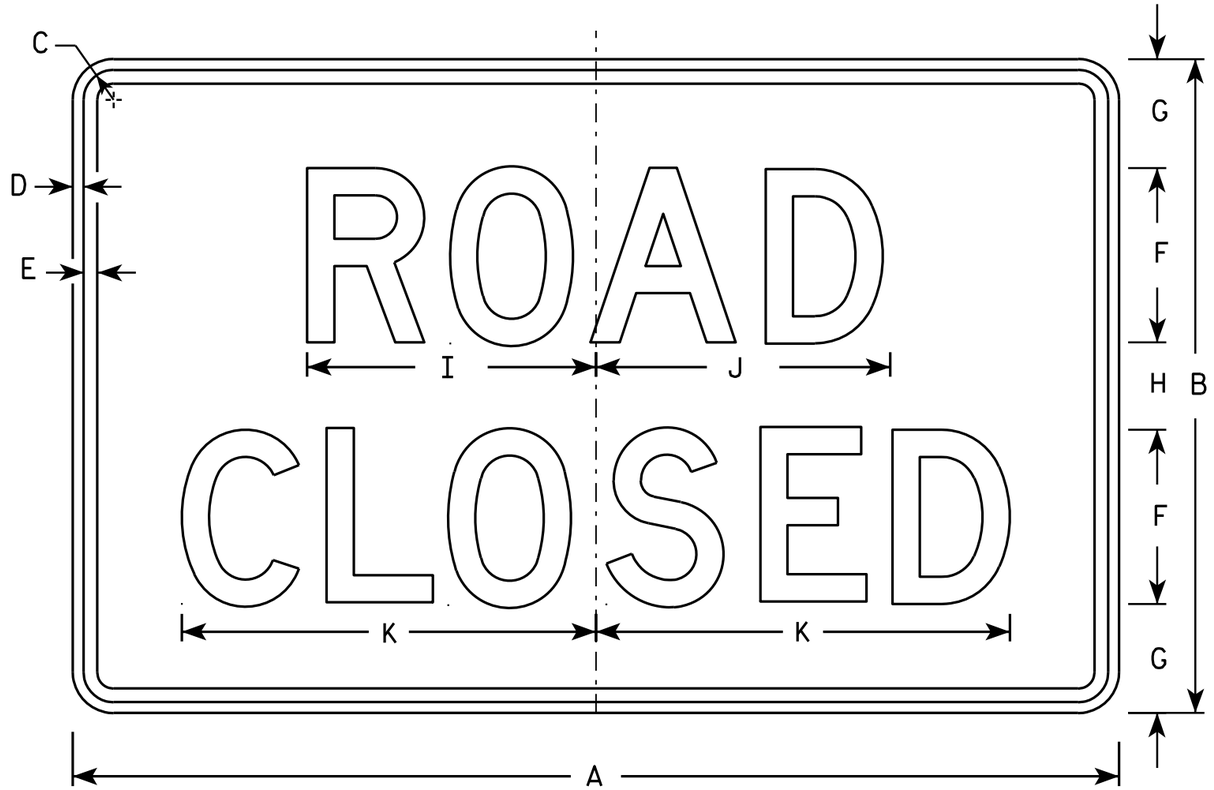

R11-2

NOTES

1. Sign is Type II - Type H Reflective - reference WIS DOT Standard Specification for HIGHWAY and STRUCTURE CONSTRUCTION latest edition.
2. Color:
   Background - White
   Message - Black
3. Message Series - D
4. Corners may be square or rounded when base material is plywood but borders shall be rounded as shown. When base material is metal, the corners and borders shall be rounded.
5. Modify the message as required.

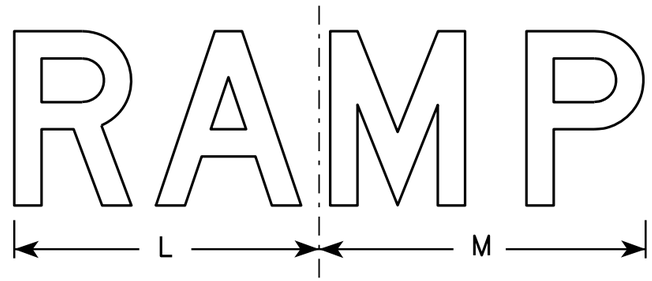

R11-2R

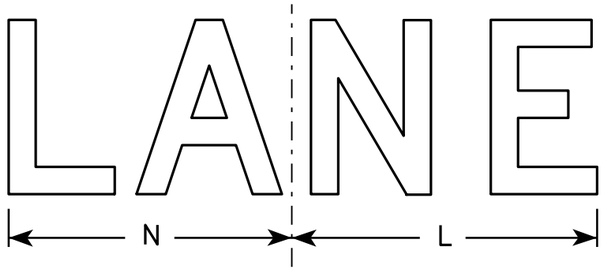

R11-2L

SIZE	A	B	C	D	E	F	G	H	I	J	K	L	M	N	O	P	Q	R	S	T	U	V	W	X	Y	Z	Area sq. ft.
1																											
2S	48	30	1 3/8	1/2	5/8	8	5	4	13 1/4	13 1/2	19	14	15	13													10.0
2M	48	30	1 3/8	1/2	5/8	8	5	4	13 1/4	13 1/2	19	14	15	13													10.0
3	48	30	1 3/8	1/2	5/8	8	5	4	13 1/4	13 1/2	19	14	15	13													10.0
4	48	30	1 3/8	1/2	5/8	8	5	4	13 1/4	13 1/2	19	14	15	13													10.0
5	48	30	1 3/8	1/2	5/8	8	5	4	13 1/4	13 1/2	19	14	15	13													10.0

STANDARD SIGN
R11-2

WISCONSIN DEPT OF TRANSPORTATION

APPROVED Matthew R Rauch
for State Traffic Engineer

DATE 4/1/11 PLATE NO. R11-2.10

PROJECT NO:	HWY:	COUNTY:		SHEET NO: 224	E

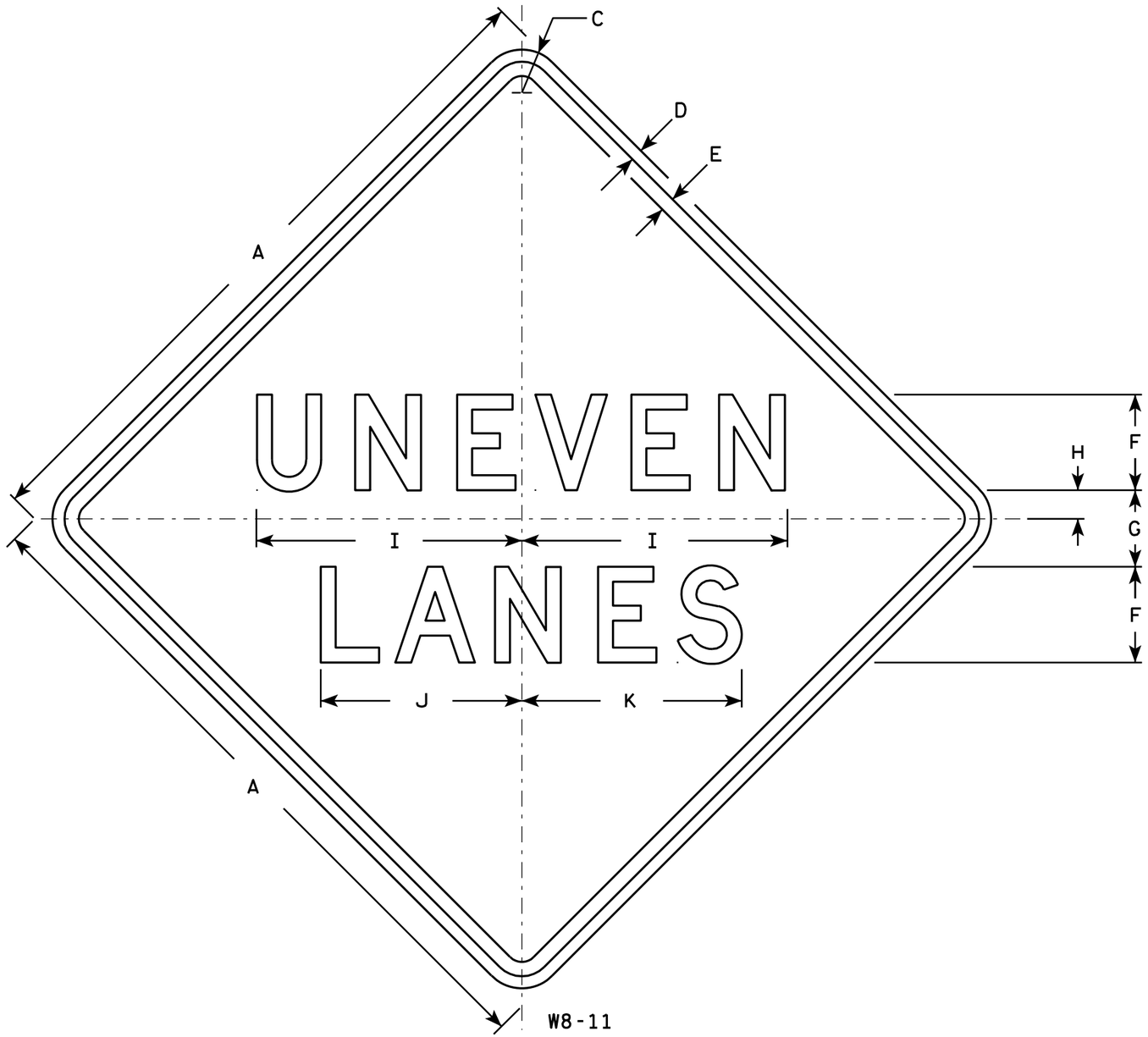

NOTES

1. Sign is Type II - Type F Reflective - reference WIS DOT Standard Specification for HIGHWAY and STRUCTURE CONSTRUCTION latest edition.
2. Color:
   Background - Orange
   Message - Black
3. Message Series - D
4. Corners may be square or rounded when base material is plywood but borders shall be rounded as shown. When base material is metal, the corners and borders shall be rounded.

SIZE	A	B	C	D	E	F	G	H	I	J	K	L	M	N	O	P	Q	R	S	T	U	V	W	X	Y	Z	Area sq. ft.
1																											
2S	36		1 5/8	5/8	3/4	5	4	1 1/2	13 7/8	10 1/2	11 1/2																9.0
2M	36		1 5/8	5/8	3/4	5	4	1 1/2	13 7/8	10 1/2	11 1/2																9.0
3																											
4	36		1 5/8	5/8	3/4	5	4	1 1/2	13 7/8	10 1/2	11 1/2																9.0
5	48		2 1/4	3/4	1	7	5	2	18 1/2	14	15 3/8																16.0

STANDARD SIGN
W8-11

WISCONSIN DEPT OF TRANSPORTATION

APPROVED Matthew R Rauch
for State Traffic Engineer

DATE 3/22/11 PLATE NO. W8-11.4

PROJECT NO: | HWY: | COUNTY: | SHEET NO: 225 | E

FILE NAME : C:\Users\PROJECTS\tr_stdplate\W811.DGN PLOT DATE : 22-MAR-2011 14:12 PLOT BY : mscj9h PLOT NAME : PLOT SCALE : 6.703924:1.000000
WISDOT/CADDS SHEET 42

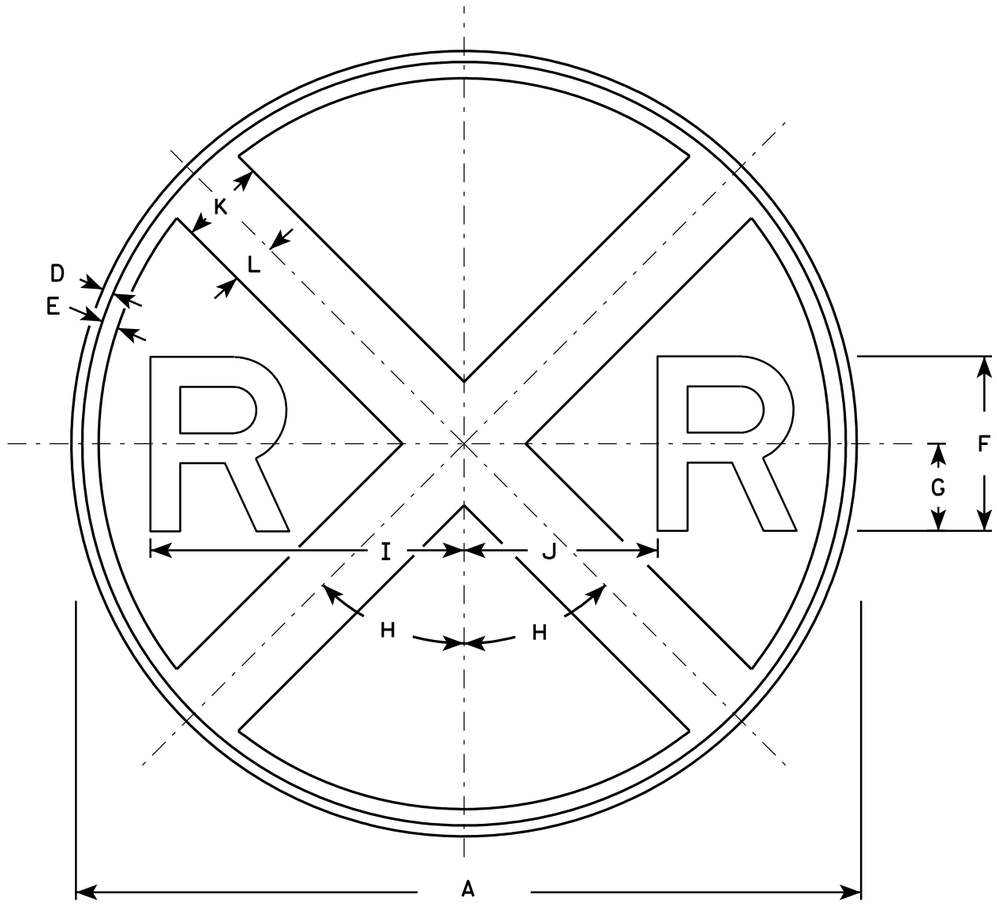

W10-1

NOTES

1. Sign is Type II - Type F Reflective - reference WIS DOT Standard Specification for HIGHWAY and STRUCTURE CONSTRUCTION latest edition.
2. Color:
   Background - Yellow
   Message - Black
3. Message Series - E

SIZE	A	B	C	D	E	F	G	H	I	J	K	L	M	N	O	P	Q	R	S	T	U	V	W	X	Y	Z	Area sq. ft.
1	30			3/8	5/8	7	3 1/2	45°	12 3/8	7 1/8	3	1 1/2															4.91
2S	36			5/8	3/4	8	4	45°	14 3/8	8 5/8	4	2															7.07
2M	36			5/8	3/4	8	4	45°	14 3/8	8 5/8	4	2															7.07
3																											
4	48			3/4	1 1/4	10	5	45°	18 3/8	11 5/8	5	2 1/2															12.57
5																											

STANDARD SIGN
W10-1

WISCONSIN DEPT OF TRANSPORTATION

APPROVED Matthew R Rauch for State Traffic Engineer

DATE 3/13/13 PLATE NO. W10-1.8

PROJECT NO:	HWY:	COUNTY:		SHEET NO: 226	E

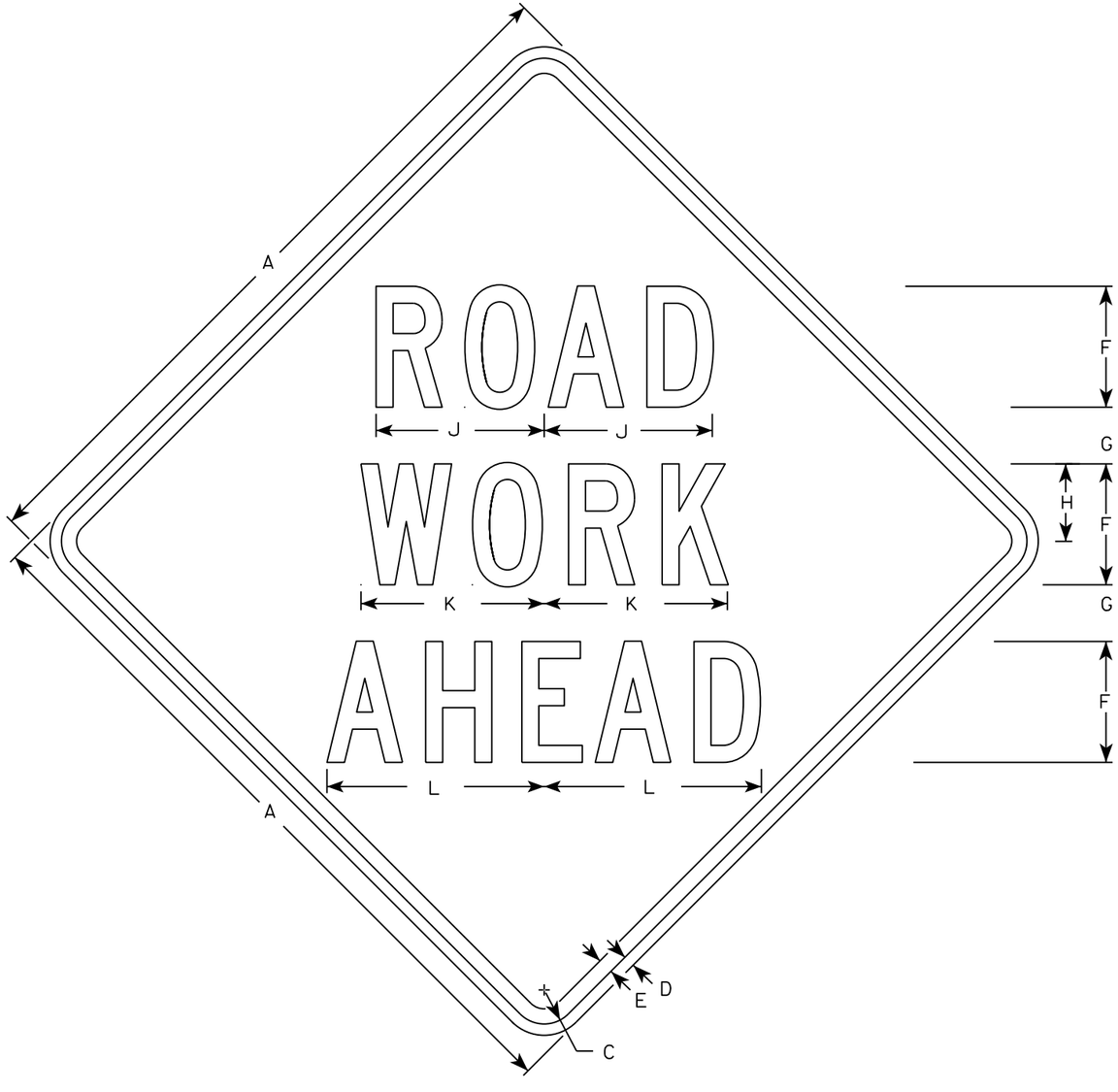

W20-1A

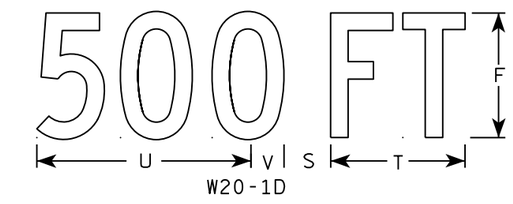

W20-1D

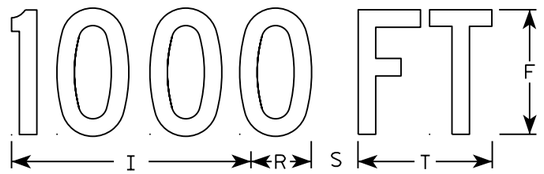

W20-1C

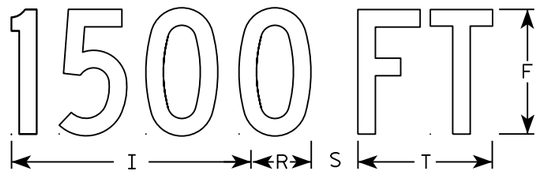

W20-1B

W20-1G

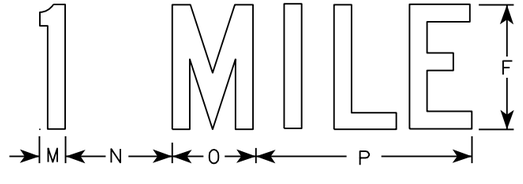

W20-1F

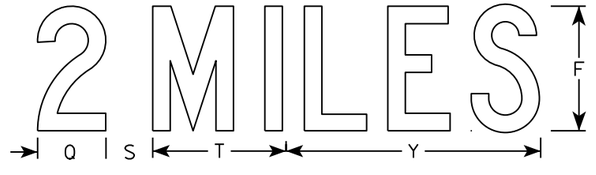

W20-1E

NOTES

1. Sign is Type II - Type F Reflective
2. Color:
   Background - Orange
   Message - Black
3. Message Series - C
4. Corners may be square or rounded when base material is plywood but borders shall be rounded as shown. When base material is metal, the corners and borders shall be rounded.

SIZE	A	B	C	D	E	F	G	H	I	J	K	L	M	N	O	P	Q	R	S	T	U	V	W	X	Y	Z	Area sq. ft.
1	36		1 3/8	1/2	5/8	5	2 5/8	3 1/4	10 1/8	7	7 5/8	8 7/8	1 1/8	4 1/2	3 1/2	9		2 1/2	2 1/4	5 5/8	9	1 3/8	8	1 3/4	10 3/4	6	9.0
2S	48		2 1/4	3/4	1	8	3 3/4	5 1/8	15 3/8	11 1/8	12 1/8	14 3/8	1 5/8	6 7/8	5 3/8	13 7/8	4 3/8	3 7/8	3	8 5/8	13 3/4	2 1/8	11 7/8	2 3/4	16 3/8	9	16.0
2M	48		2 1/4	3/4	1	8	3 3/4	5 1/8	15 3/8	11 1/8	12 1/8	14 3/8	1 5/8	6 7/8	5 3/8	13 7/8	4 3/8	3 7/8	3	8 5/8	13 3/4	2 1/8	11 7/8	2 3/4	16 3/8	9	16.0
3	48		2 1/4	3/4	1	8	3 3/4	5 1/8	15 3/8	11 1/8	12 1/8	14 3/8	1 5/8	6 7/8	5 3/8	13 7/8	4 3/8	3 7/8	3	8 5/8	13 3/4	2 1/8	11 7/8	2 3/4	16 3/8	9	16.0
4	48		2 1/4	3/4	1	8	3 3/4	5 1/8	15 3/8	11 1/8	12 1/8	14 3/8	1 5/8	6 7/8	5 3/8	13 7/8	4 3/8	3 7/8	3	8 5/8	13 3/4	2 1/8	11 7/8	2 3/4	16 3/8	9	16.0
5	48		2 1/4	3/4	1	8	3 3/4	5 1/8	15 3/8	11 1/8	12 1/8	14 3/8	1 5/8	6 7/8	5 3/8	13 7/8	4 3/8	3 7/8	3	8 5/8	13 3/4	2 1/8	11 7/8	2 3/4	16 3/8	9	16.0

STANDARD SIGN
W20-1A, B, C, D, F & G

WISCONSIN DEPT OF TRANSPORTATION

APPROVED Matthew R Rauch
for State Traffic Engineer

DATE 5/07/15 PLATE NO. W20-1.10

PROJECT NO:

SHEET NO: E

FILE NAME : C:\CAEfiles\Projects\tr_stdplate\W201.DGN PLOT DATE : 01-DEC-2015 18:24 PLOT BY : $$ plotuser $$

W20-56A

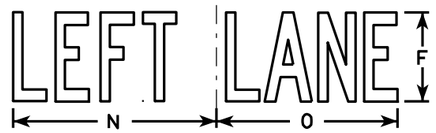

W20-55A

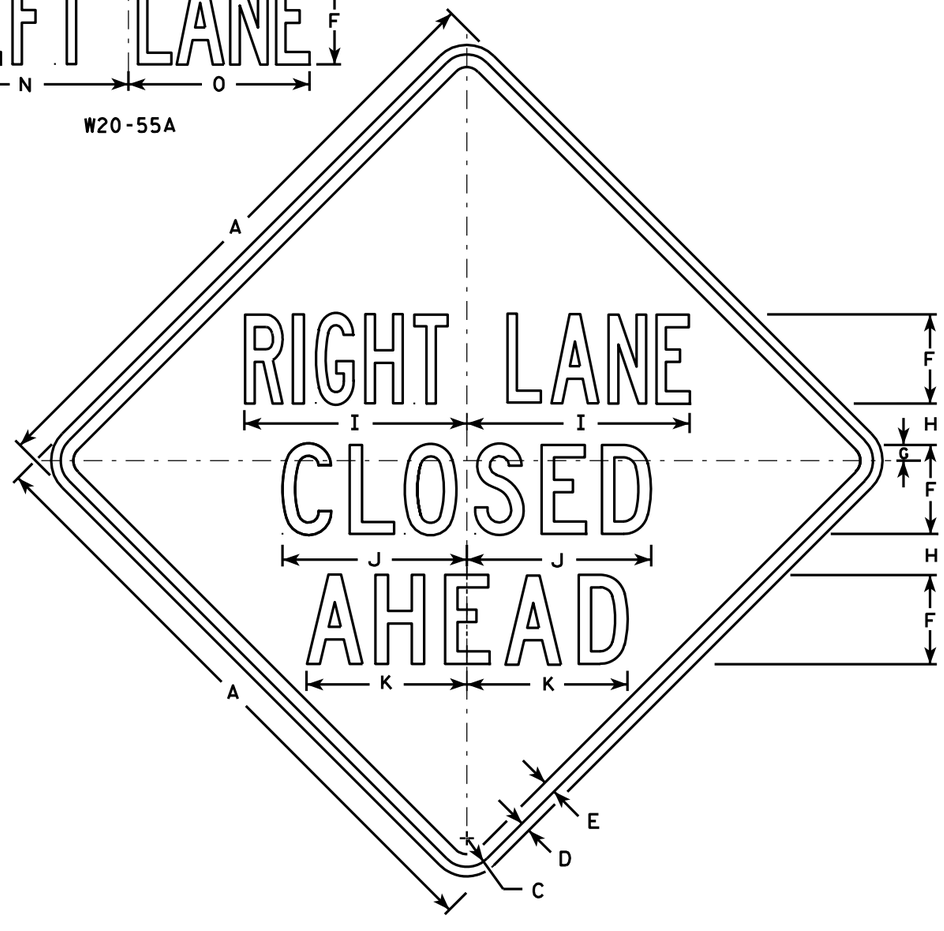

W20-5A

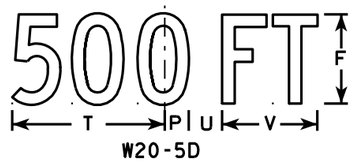

W20-5D

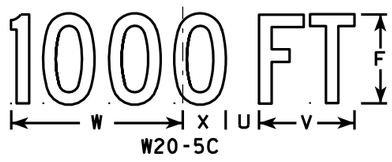

W20-5C

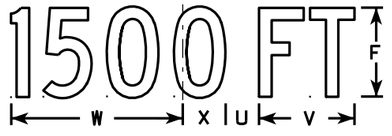

W20-5B

W20-5G

W20-5F

NOTES

1. Sign is Type II - Type F Reflective - reference WIS DOT Standard Specification for HIGHWAY and STRUCTURE CONSTRUCTION latest edition.
2. Color:
   Background - Orange
   Message - Black
3. Message Series - See Note 5
4. Corners may be square or rounded when base material is plywood but borders shall be rounded as shown. When base material is metal, the corners and borders shall be rounded.
5. " _____ LANE" is Series B.
   All other copy is Series C.

SIZE	A	B	C	D	E	F	G	H	I	J	K	L	M	N	O	P	Q	R	S	T	U	V	W	X	Y	Z	Area sq. ft.
1	36	6	1 5/8	5/8	3/4	5	1/8	2 1/2	13 1/8	10 3/4	9 1/2	14 1/4	13 5/8	12	12	1 3/8	1 1/8	4 1/2	3 1/2	9	1 1/8	5 5/8	10 1/8	2 1/2	1 3/4	8	9.0
2S	48	8	2 1/4	3/4	1	7	1 1/4	3 1/4	17 1/2	14 3/8	12 5/8	19	18 3/8	16	14 1/4	1 7/8	1 1/2	6	4 5/8	12	2 5/8	7 1/2	13 1/2	3 3/8	2 3/8	10 5/8	16.0
2M	48	8	2 1/4	3/4	1	7	1 1/4	3 1/4	17 1/2	14 3/8	12 5/8	19	18 3/8	16	14 1/4	1 7/8	1 1/2	6	4 5/8	12	2 5/8	7 1/2	13 1/2	3 3/8	2 3/8	10 5/8	16.0
3	48	8	2 1/4	3/4	1	7	1 1/4	3 1/4	17 1/2	14 3/8	12 5/8	19	18 3/8	16	14 1/4	1 7/8	1 1/2	6	4 5/8	12	2 5/8	7 1/2	13 1/2	3 3/8	2 3/8	10 5/8	16.0
4	48	8	2 1/4	3/4	1	7	1 1/4	3 1/4	17 1/2	14 3/8	12 5/8	19	18 3/8	16	14 1/4	1 7/8	1 1/2	6	4 5/8	12	2 5/8	7 1/2	13 1/2	3 3/8	2 3/8	10 5/8	16.0
5	48	8	2 1/4	3/4	1	7	1 1/4	3 1/4	17 1/2	14 3/8	12 5/8	19	18 3/8	16	14 1/4	1 7/8	1 1/2	6	4 5/8	12	2 5/8	7 1/2	13 1/2	3 3/8	2 3/8	10 5/8	16.0

STANDARD SIGN
W20-5A, B, C, D, F & G

WISCONSIN DEPT OF TRANSPORTATION

APPROVED Matthew R Rauch
for State Traffic Engineer

DATE 3/18/11 PLATE NO. W20-5.11

PROJECT NO: | HWY: | COUNTY: | SHEET NO: 228 | E

7

FILE NAME : C:\Users\PROJECTS\tr_stdplate\W205.DGN PLOT DATE : 18-MAR-2011 12:15 PLOT BY : mscj9h PLOT NAME : PLOT SCALE : 11.918087:1.000000
WISDOT/CADDS SHEET 42

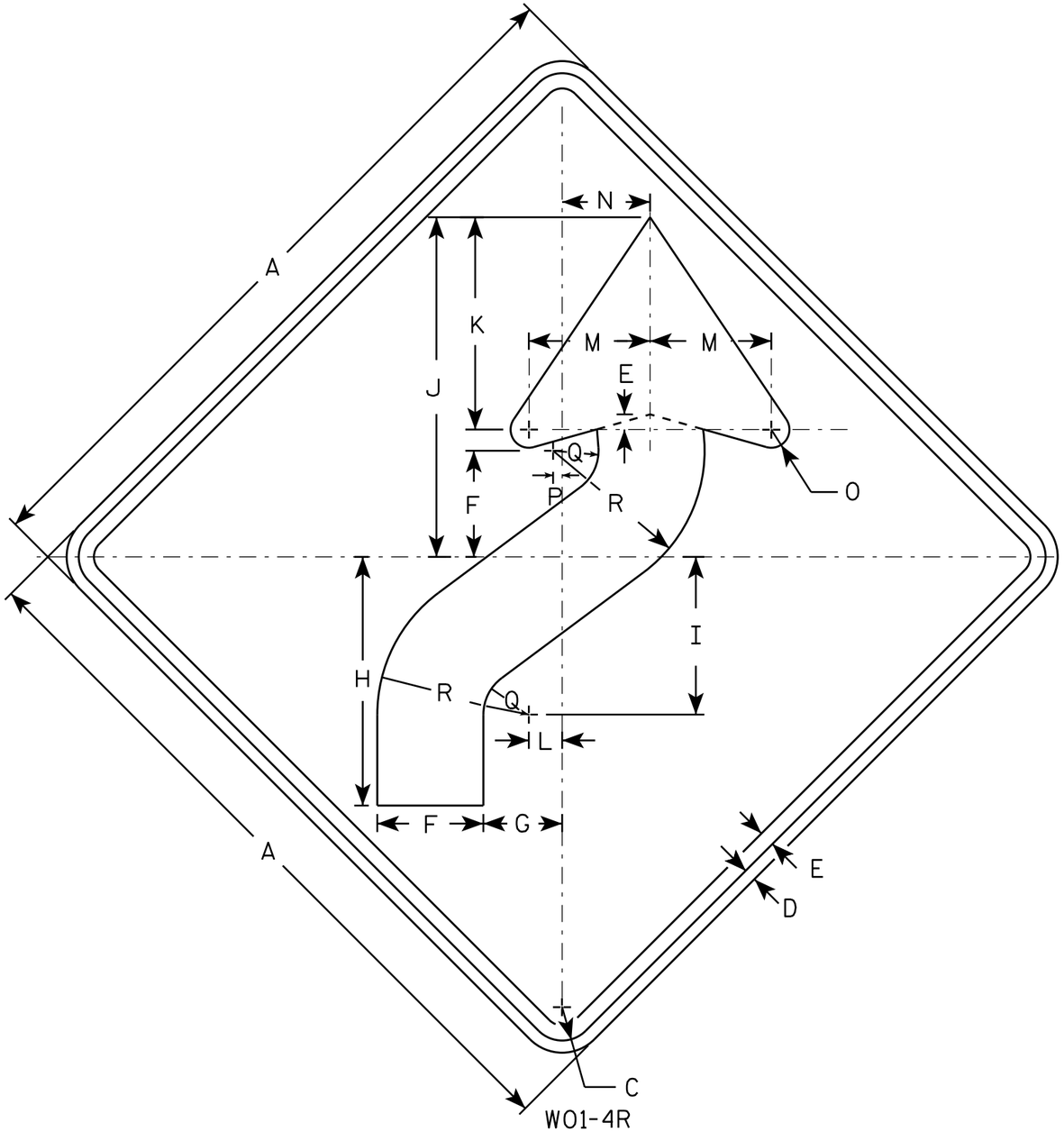

W01-4R

NOTES

1. Sign is Type II - Type F Reflective - reference WIS DOT Standard Specification for HIGHWAY and STRUCTURE CONSTRUCTION latest edition.
2. Color:
   Background - Orange
   Message - Black
3. Corners may be square or rounded when base material is plywood but borders shall be rounded as shown. When base material is metal, the corners and borders shall be rounded.
4. W01-4L is the same as W01-4R except the arrow is reversed along the vertical centerline.

SIZE	A	B	C	D	E	F	G	H	I	J	K	L	M	N	O	P	Q	R	S	T	U	V	W	X	Y	Z	Area sq. ft.
1	36		1 5/8	5/8	3/4	5 1/4	4	12 3/8	7 7/8	16 7/8	10 1/2	1 5/8	6	4 1/2	1	1/2	2 1/4	7 1/2									9.0
2S	48		2 1/4	3/4	1	7	5 1/4	16 1/2	10 1/2	22 1/2	14	2 1/4	8	6	1 1/4	5/8	3	10									16.0
2M	48		2 1/4	3/4	1	7	5 1/4	16 1/2	10 1/2	22 1/2	14	2 1/4	8	6	1 1/4	5/8	3	10									16.0
3	48		2 1/4	3/4	1	7	5 1/4	16 1/2	10 1/2	22 1/2	14	2 1/4	8	6	1 1/4	5/8	3	10									16.0
4	48		2 1/4	3/4	1	7	5 1/4	16 1/2	10 1/2	22 1/2	14	2 1/4	8	6	1 1/4	5/8	3	10									16.0
5	48		2 1/4	3/4	1	7	5 1/4	16 1/2	10 1/2	22 1/2	14	2 1/4	8	6	1 1/4	5/8	3	10									16.0

STANDARD SIGN
W01-4

WISCONSIN DEPT OF TRANSPORTATION

APPROVED Matthew R Rauch
for State Traffic Engineer

DATE 11/18/13 PLATE NO W01-4.1

PROJECT NO: | HWY: | COUNTY: | SHEET NO: E

FILE NAME : C:\CAEfiles\Projects\tr_stdplate\W014.DGN PLOT DATE : 28-FEB-2014 11:35 PLOT BY : mscj9h PLOT NAME : PLOT SCALE : 6.755110:1.000000
WISDOT/CADDS SHEET 42

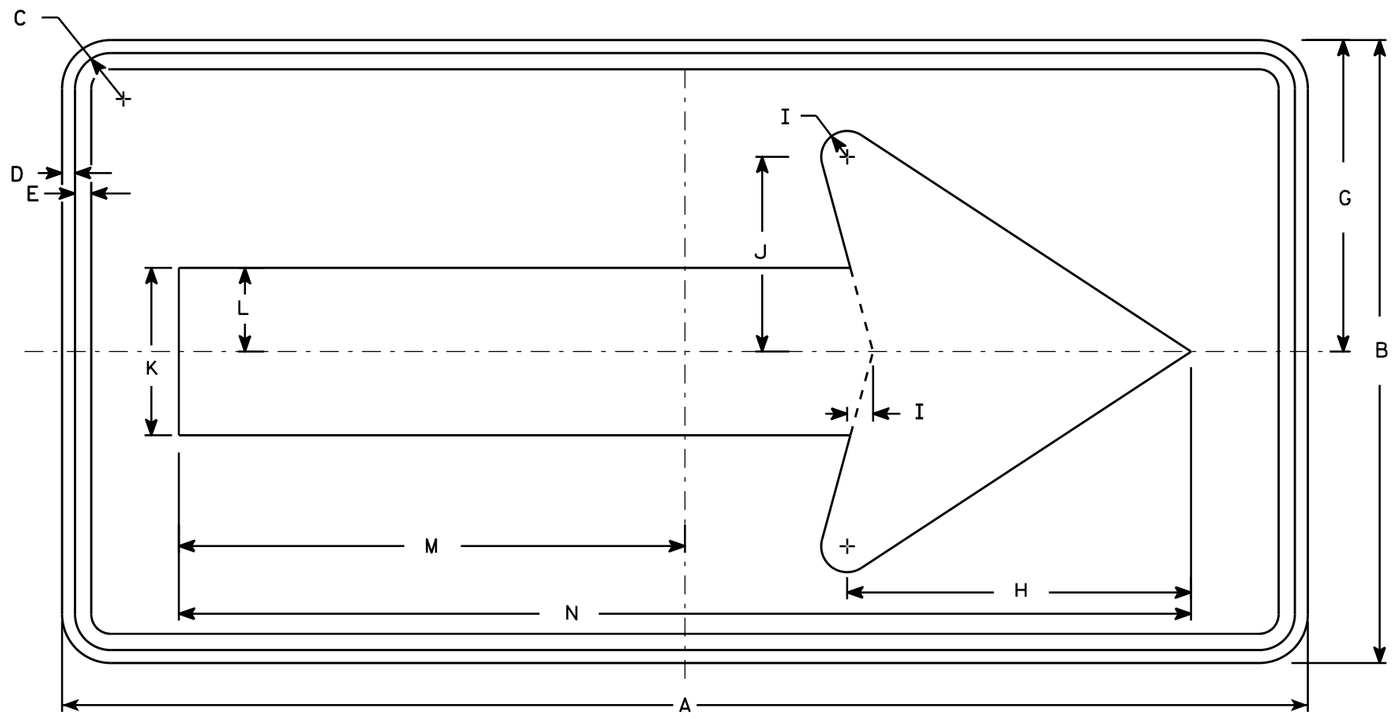

W01-6

NOTES

1. Sign is Type II - Type F Reflective - reference WIS DOT Standard Specification for HIGHWAY and STRUCTURE CONSTRUCTION latest edition.
2. Color:
   Background - Orange
   Message - Black
3. Corners may be square or rounded when base material is plywood but borders shall be rounded as shown. When base material is metal, the corners and borders shall be rounded.

SIZE	A	B	C	D	E	F	G	H	I	J	K	L	M	N	O	P	Q	R	S	T	U	V	W	X	Y	Z	Area sq. ft.
1																											
2S	48	24	1 3/8	1/2	5/8		12	13 1/4	1	7 1/2	6 1/2	3 1/4	19 1/2	39													8.0
2M	48	24	1 3/8	1/2	5/8		12	13 1/4	1	7 1/2	6 1/2	3 1/4	19 1/2	39													8.0
3	60	30	1 3/8	1/2	5/8		15	16 1/4	1 1/4	9 1/4	8	4	24 3/8	48 3/4													12.5
4	60	30	1 3/8	1/2	5/8		15	16 1/4	1 1/4	9 1/4	8	4	24 3/8	48 3/4													12.5
5	60	30	1 3/8	1/2	5/8		15	16 1/4	1 1/4	9 1/4	8	4	24 3/8	48 3/4													12.5

STANDARD SIGN
W01-6

WISCONSIN DEPT OF TRANSPORTATION

APPROVED Matthew R Rauch
for State Traffic Engineer

DATE 11/18/13 PLATE W01-6.1

PROJECT NO: | HWY: | COUNTY: | SHEET NO: E

FILE NAME : C:\CAEfiles\Projects\tr_stdplate\W016.DGN PLOT DATE : 28-FEB-2014 11:37 PLOT BY : mscj9h PLOT NAME : PLOT SCALE : 5.837526:1.000000 WISDOT/CADDS SHEET 42

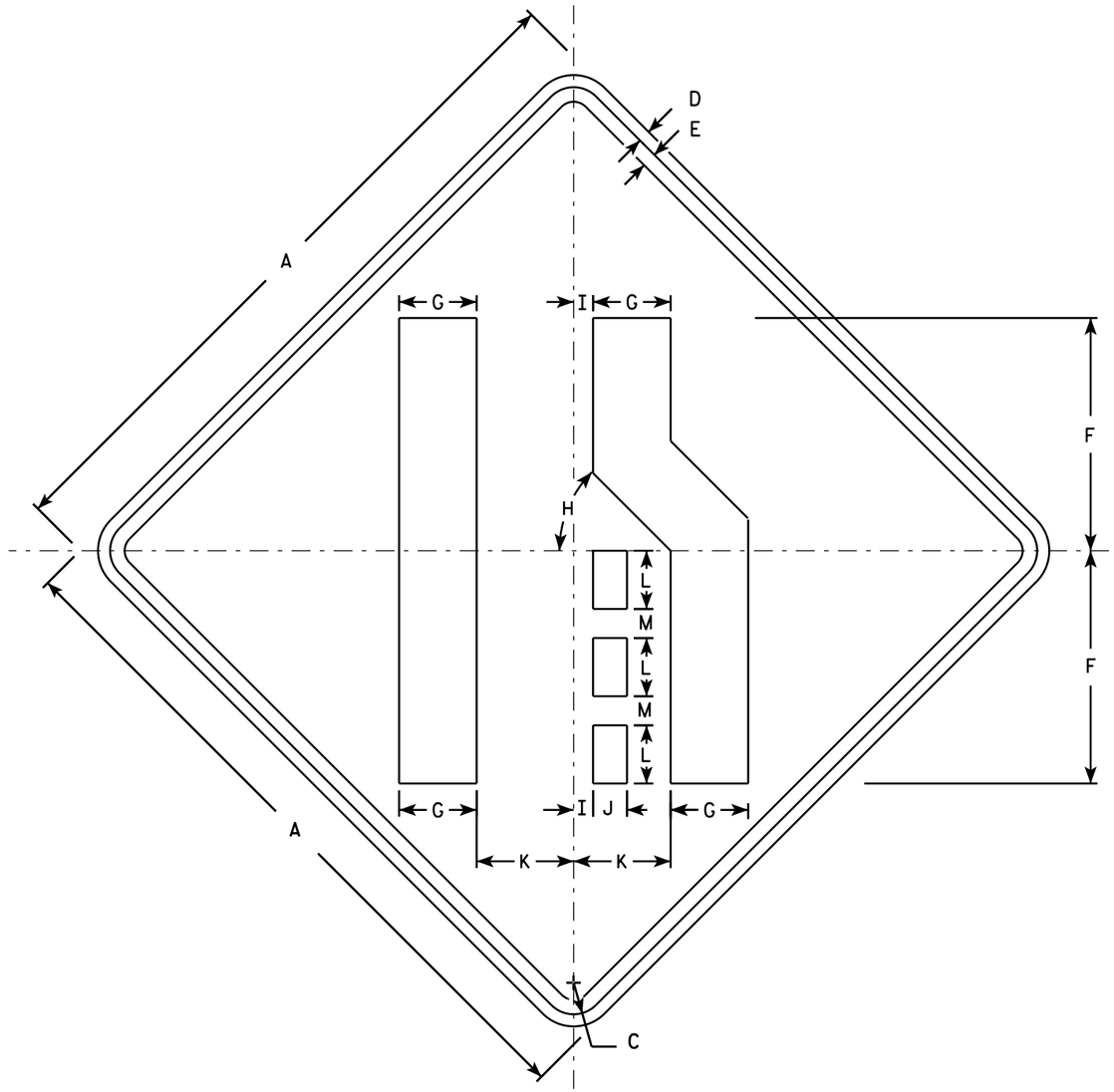

W04-2R

NOTES

1. Sign is Type II - Type F Reflective - reference WIS DOT Standard Specification for HIGHWAY and STRUCTURE CONSTRUCTION latest edition.
2. Color:
   Background - Orange
   Message - Black
3. Corners may be square or rounded when base material is plywood but borders shall be rounded as shown. When base material is metal, the corners and borders shall be rounded.
4. W04-2L is the same as W04-2R except the symbol is reversed along the vertical centerline.

SIZE	A	B	C	D	E	F	G	H	I	J	K	L	M	N	O	P	Q	R	S	T	U	V	W	X	Y	Z	Area sq. ft.
1	36		1 5/8	5/8	3/4	12	4	45°	1	1 3/4	5	3	1 1/2														9.0
2S	48		2 1/4	3/4	1	16	5 3/8	45°	1 1/4	2 3/8	6 3/4	4	2														16.0
2M	48		2 1/4	3/4	1	16	5 3/8	45°	1 1/4	2 3/8	6 3/4	4	2														16.0
3	48		2 1/4	3/4	1	16	5 3/8	45°	1 1/4	2 3/8	6 3/4	4	2														16.0
4	48		2 1/4	3/4	1	16	5 3/8	45°	1 1/4	2 3/8	6 3/4	4	2														16.0
5	48		2 1/4	3/4	1	16	5 3/8	45°	1 1/4	2 3/8	6 3/4	4	2														16.0

STANDARD SIGN
W04-2

WISCONSIN DEPT OF TRANSPORTATION

APPROVED Matthew R Rauch
for State Traffic Engineer

DATE 11/20/13 PLATE 231 W04-2.1

PROJECT NO: | SHEET NO: E

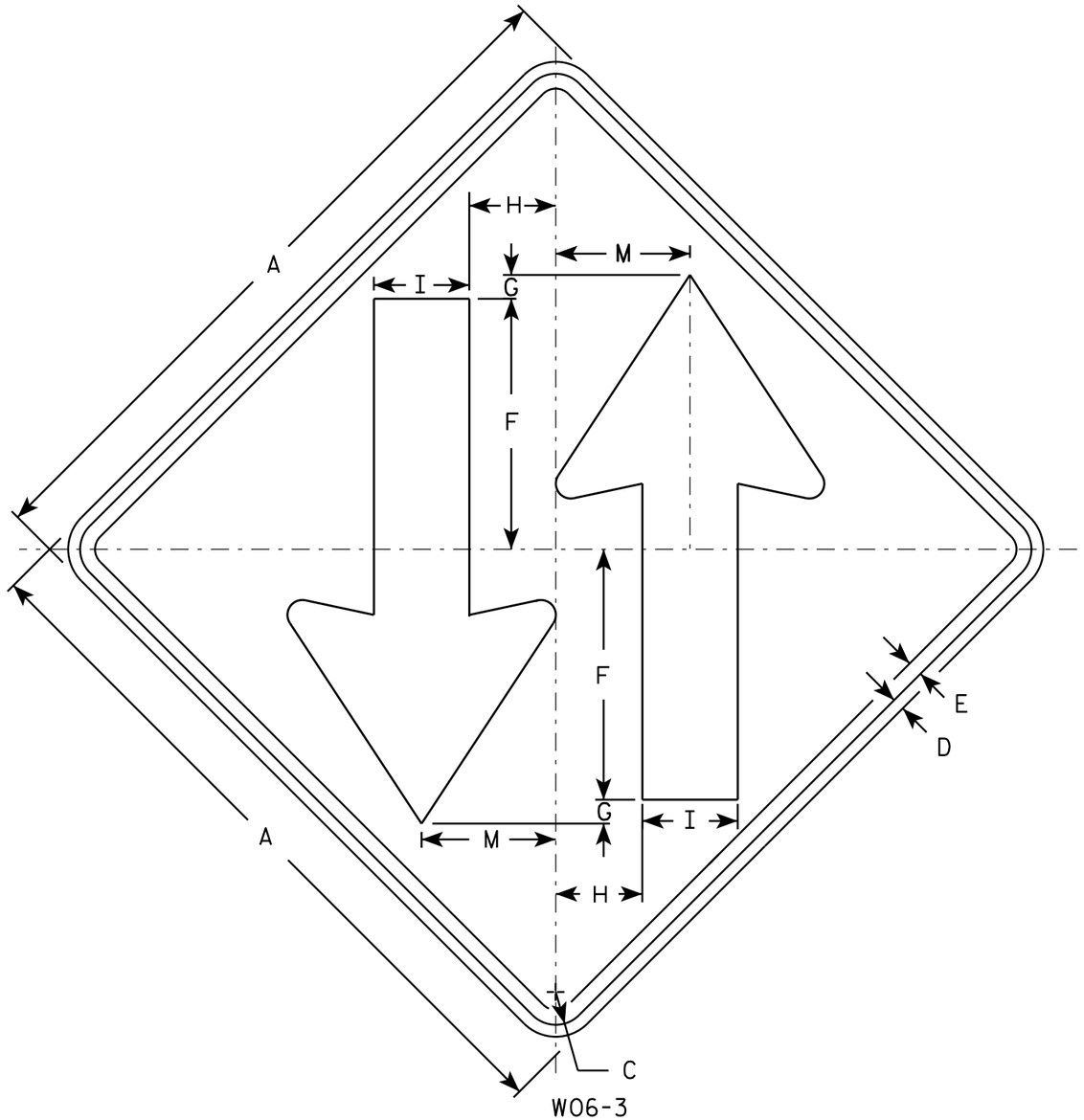

NOTES

1. Sign is Type II - Type F Reflective - reference WIS DOT Standard Specification for HIGHWAY and STRUCTURE CONSTRUCTION latest edition.
2. Color:
   Background - Orange
   Message - Black
3. Corners may be square or rounded when base material is plywood but borders shall be rounded as shown. When base material is metal, the corners and borders shall be rounded.

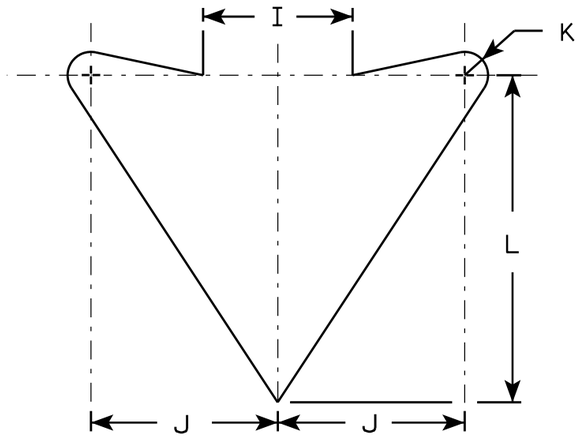

ARROW DETAIL

SIZE	A	B	C	D	E	F	G	H	I	J	K	L	M	N	O	P	Q	R	S	T	U	V	W	X	Y	Z	Area sq. ft.
1	36		1 5/8	5/8	3/4	12	1	4 1/4	5	6	3/4	10 1/2	6 3/4														9.0
2S	48		2 1/4	3/4	1	15 1/2	1	6	6	8	1	14	9														16.0
2M	48		2 1/4	3/4	1	15 1/2	1	6	6	8	1	14	9														16.0
3	48		2 1/4	3/4	1	15 1/2	1	6	6	8	1	14	9														16.0
4	48		2 1/4	3/4	1	15 1/2	1	6	6	8	1	14	9														16.0
5	48		2 1/4	3/4	1	15 1/2	1	6	6	8	1	14	9														16.0

STANDARD SIGN
W06-3

WISCONSIN DEPT OF TRANSPORTATION

APPROVED Matthew R Rauch
for State Traffic Engineer

DATE 11/20/13 PLATE 232 W06-3.1

PROJECT NO: | HWY: | COUNTY: | SHEET NO: E

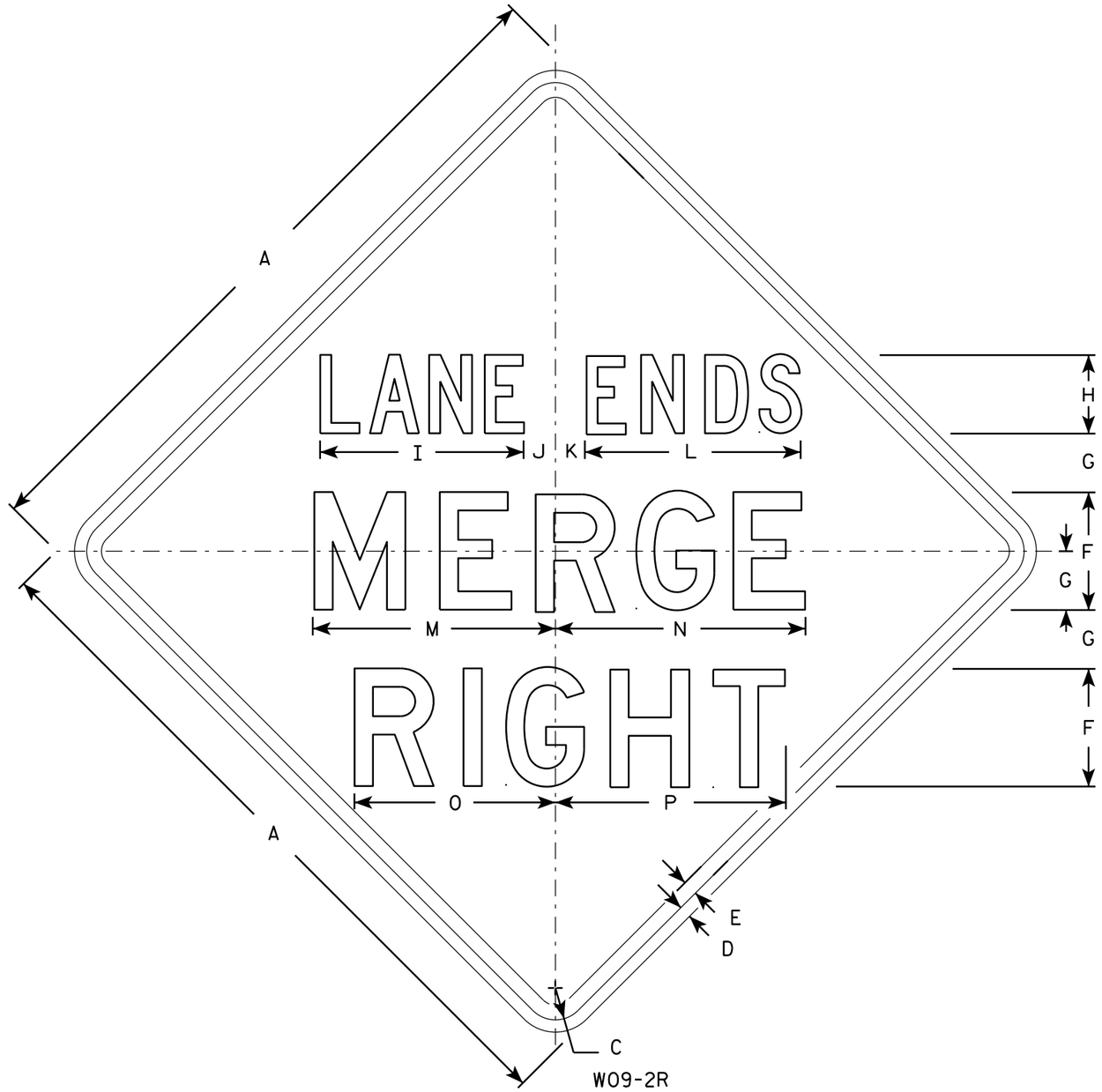

W09-2R

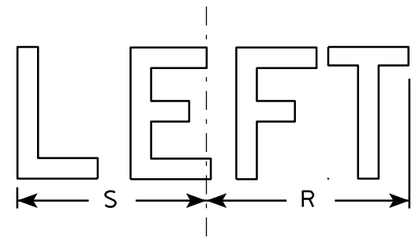

W09-2L

NOTES

1. Sign is Type II - Type F Reflective - reference WIS DOT Standard Specification for HIGHWAY and STRUCTURE CONSTRUCTION latest edition.
2. Color:
   Background - Orange
   Message - Black
3. Message Series - See note 5
4. Corners may be square or rounded when base material is plywood but borders shall be rounded as shown. When base material is metal, the corners and borders shall be rounded.
5. Line 1 is Series C, lines 2 & 3 are Series D.
6. W09-2L is the same as W09-2R except the word LEFT replaces RIGHT.

SIZE	A	B	C	D	E	F	G	H	I	J	K	L	M	N	O	P	Q	R	S	T	U	V	W	X	Y	Z	Area sq. ft.
1	36		1 5/8	5/8	3/4	6	3	4	10 3/8	1 5/8	1 1/2	11	12 3/8	12 3/4	10 1/4	11 3/4		9 1/8	8 1/2								9.0
2S	48		2 1/4	3/4	1	8	4	6	14 1/2	2	3 1/4	13 3/4	16 3/8	17 1/8	13 3/4	15 3/4		12 1/4	11 1/4								16.0
2M	48		2 1/4	3/4	1	8	4	6	14 1/2	2	3 1/4	13 3/4	16 3/8	17 1/8	13 3/4	15 3/4		12 1/4	11 1/4								16.0
3	48		2 1/4	3/4	1	8	4	6	14 1/2	2	3 1/4	13 3/4	16 3/8	17 1/8	13 3/4	15 3/4		12 1/4	11 1/4								16.0
4	48		2 1/4	3/4	1	8	4	6	14 1/2	2	3 1/4	13 3/4	16 3/8	17 1/8	13 3/4	15 3/4		12 1/4	11 1/4								16.0
5	48		2 1/4	3/4	1	8	4	6	14 1/2	2	3 1/4	13 3/4	16 3/8	17 1/8	13 3/4	15 3/4		12 1/4	11 1/4								16.0

STANDARD SIGN
W09-2

WISCONSIN DEPT OF TRANSPORTATION

APPROVED Matthew R Rauch
for State Traffic Engineer

DATE 12/02/13 PLATE NO W09-2.1

PROJECT NO: SHEET NO: E

FILE NAME : C:\CAEFiles\Projects\tr_stdplate\W092.DGN PLOT DATE : 02-DEC-2013 15:18 PLOT BY : mscsja

STATE PROJECT NUMBER
4659-15-71

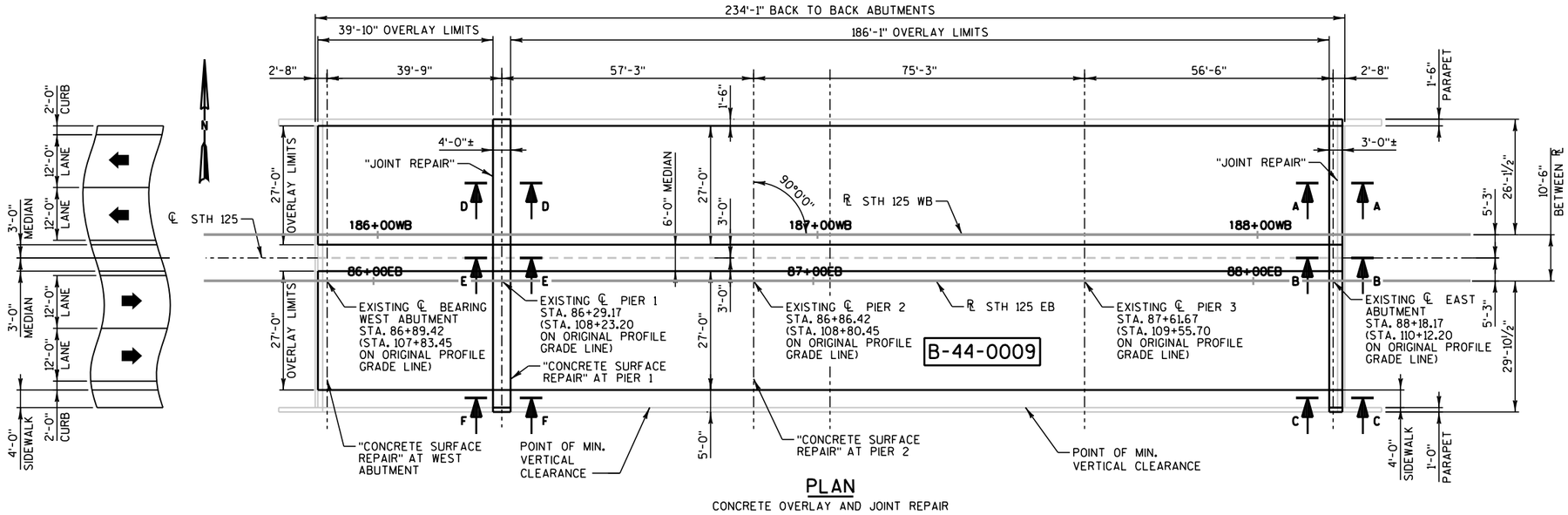

PLAN
CONCRETE OVERLAY AND JOINT REPAIR

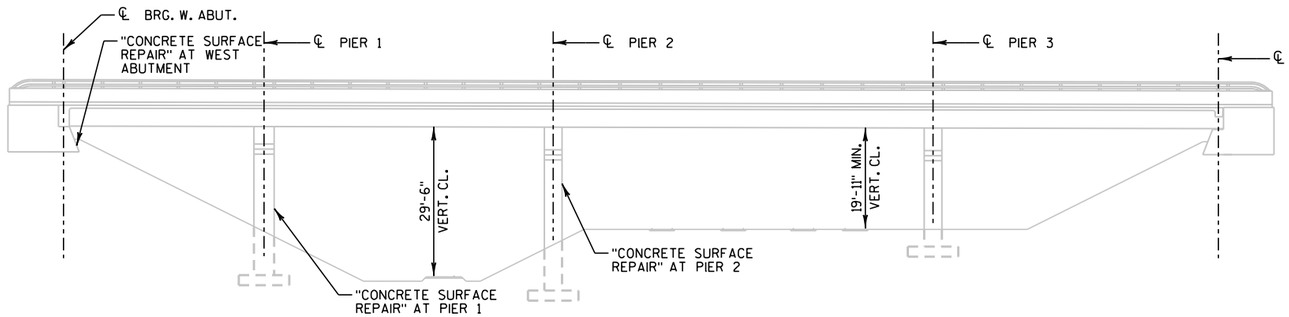

ELEVATION
(NORMAL TO STRUCTURE)

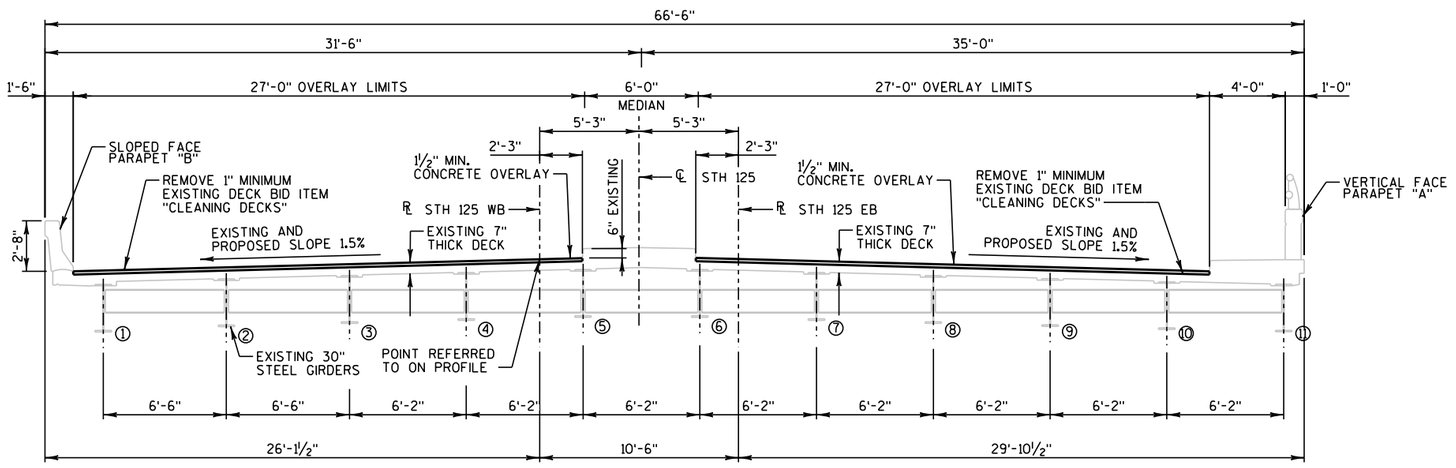

CROSS SECTION THRU B-44-0009
(LOOKING EAST)
2" AVERAGE OVERLAY THICKNESS

BENCH MARKS

NO.	DESCRIPTION	ELEV.
3	ARROW BOLT ON HYDRANT IN NW CORNER OF COLLEGE AVE., AND LINWOOD AVE.	812.14

NOTES:

FOR SECTIONS A-A, B-B, AND C-C, SEE SHEET 3.

FOR SECTIONS D-D, E-E, AND F-F-, SEE SHEET 4.

TRAFFIC DATA

STH 125
A.D.T. 30,800 (2015)
A.D.T. 38,400 (2035)
R.D.S. 35 MPH

DESIGN DATA

LIVE LOAD:
DESIGN LOADING: HS20
INVENTORY RATING: HS24
OPERATIONAL RATING: HS41
WISCONSIN STANDARD PERMIT VEHICLE (WIS-SPV) = 220 KIPS

MATERIAL PROPERTIES:
CONCRETE MASONRY
SUPERSTRUCTURE.....f'c = 4,000 PSI

BAR STEEL REINFORCEMENT
HIGH STRENGTH GRADE 60....60,000 PSI

LIST OF DRAWINGS

1. CONCRETE OVERLAY
2. QUANTITES AND GENERAL NOTES
3. EAST ABUTMENT STRIP SEAL EXPANSION JOINT
4. PIER 1 STRIP SEAL EXPANSION JOINT
5. BILL OF BARS
6. STRIP SEAL EXPANSION JOINT
7. STRIP SEAL COVER PLATE
8. DECK REPAIR
9. MISCELLANEOUS DETAILS

WISCONSIN
JEFFREY S. ROSNER
34316-006
DE PERE, WI
PROFESSIONAL ENGINEER
3-02-17

STRUCTURE DESIGN CONTACTS
BUREAU OF STRUCTURES:
WILLIAM DREHER, P.E. (608) 266-8489
CONSULTANT:
JEFFREY S. ROSNER, P.E. (920) 592-9440

NO.	DATE	REVISION	BY

PLANS PREPARED BY: GRAEF
1150 Springhurst Drive
Suite 201
Green Bay, WI 54304
920 / 592-9440
920 / 592-9445 fax
www.graef-usa.com

STATE OF WISCONSIN
DEPARTMENT OF TRANSPORTATION

ACCEPTED William C. Dreher SDR 03/03/17
CHIEF STRUCTURES DESIGN ENGINEER DATE

STRUCTURE B-44-0009

STH 125 OVER CN RAILROAD SOO LINE

COUNTY	~~TOWN/CITY/VILLAGE~~
OUTAGAMIE	APPLETON

DESIGN SPEC. REHABILITATION N/A

DESIGNED BY	DESIGN CK'D.	DRAWN BY	PLANS CK'D.
JSR	KW	AMZ	JSR

CONCRETE OVERLAY

SHEET 1 OF 9
234

I.D. DATE:

J:±JOBS2015±20152050±CAD±STRUCTURAL±01_B-44-009_CONC OVERLAY.DGN 3/2/2017 2:48:25 PM

STATE PROJECT NUMBER

4659-15-71

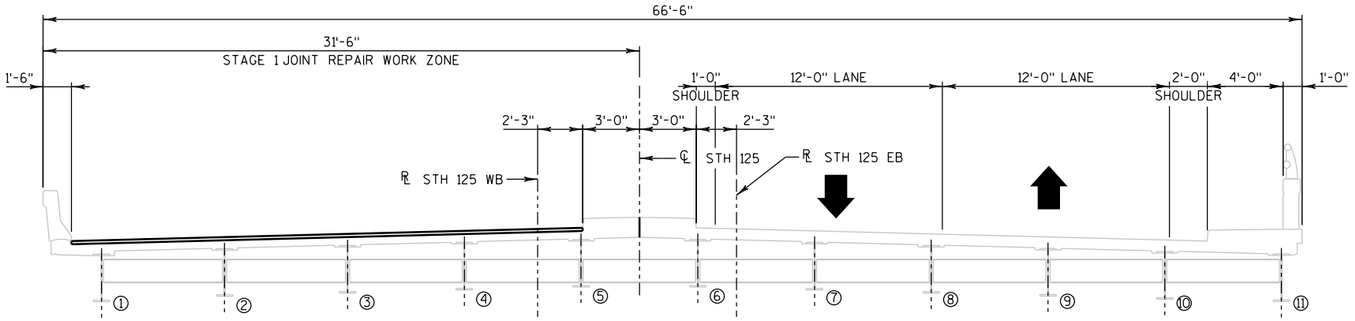

STAGE 1 JOINT REPAIR SECTION

(LOOKING EAST)

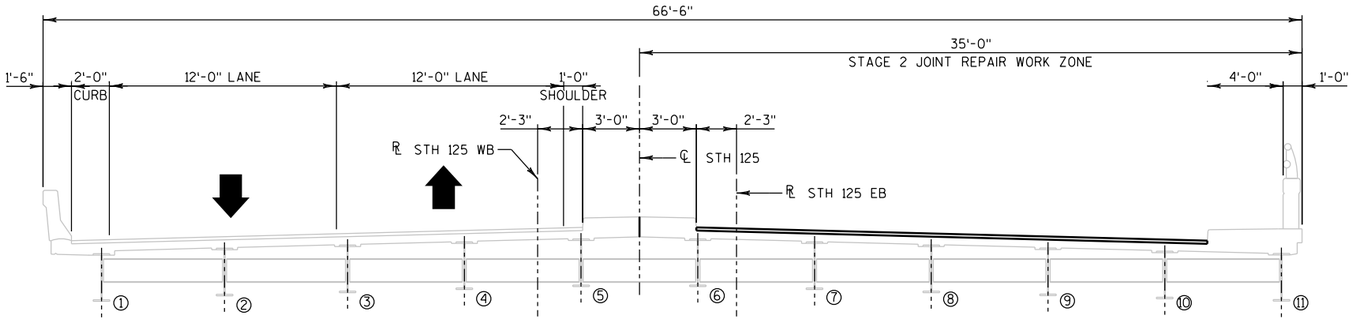

STAGE 2 JOINT REPAIR SECTION

(LOOKING EAST)

TOTAL ESTIMATED QUANTITIES

	ITEM NO.	BID ITEMS	UNIT	TOTALS
	203.0225.S	DEBRIS CONTAINMENT STRUCTURE B-44-0009	LS	1
	502.3100	EXPANSION DEVICE B-44-0009	LS	1
	502.3200	PROTECTIVE SURFACE TREATMENT	SY	1704
	502.3210	PIGMENTED SURFACE SEALER	SY	193
	502.4205	ADHESIVE ANCHORS NO. 5 BAR	EA	68
	505.0904	BAR COUPLERS NO. 4	EA	15
	505.0905	BAR COUPLERS NO. 5	EA	46
	505.0600	BAR STEEL REINFORCEMENT HS COATED STRUCTURES	LB	5107
●	509.0301	PREPARATION DECKS TYPE 1	SY	142
●	509.0302	PREPARATION DECKS TYPE 2	SY	93
	509.0500	CLEANING DECKS	SY	1356
	509.1000	JOINT REPAIR	SY	52
⚠	509.1500	CONCRETE SURFACE REPAIR	SF	240
	509.2000	FULL-DEPTH DECK REPAIR	SY	1
	509.2500	CONCRETE MASONRY OVERLAY DECKS	CY	121
	513.9005.S	REMOVING AND RESETTING TUBULAR RAILING B-44-0009	LS	1

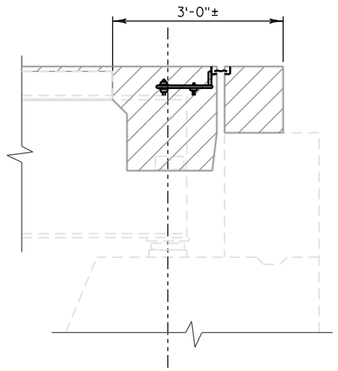

REMOVAL SECTION AT ABUTMENT

WORK WITH SHEET 3

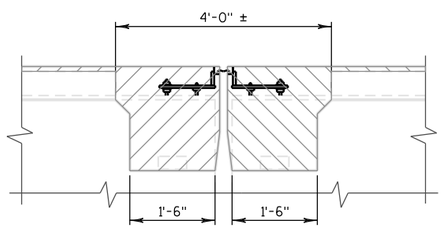

REMOVAL SECTION THRU PIER JOINT

WORK WITH SHEET 4

GENERAL NOTES

DRAWINGS NOT TO BE SCALED.

DIMENSIONS SHOWN ARE BASED ON THE ORIGINAL STRUCTURE PLANS.

BAR STEEL REINFORCEMENT SHALL BE EMBEDDED 2 INCHES CLEAR UNLESS OTHERWISE SHOWN OR NOTED.

THE FIRST OR FIRST TWO DIGITS OF A BAR MARK SIGNIFIES THE BAR SIZE.

A MINIMUM OF 1 INCH OF CONCRETE SHALL BE REMOVED FROM THE ENTIRE BRIDGE DECK UNDER THE BID ITEM "CLEANING DECKS".

ANY EXCAVATION REQUIRED TO COMPLETE THE OVERLAY OR THE PAVING BLOCK AT ABUTMENTS IS INCIDENTAL TO THE BID ITEM, "CONCRETE MASONRY OVERLAY DECKS".

THE EXISTING STRUCTURE, B-44-0009, IS A FOUR SPAN STEEL DECK GIRDER STRUCTURE WITH AN OVERALL WIDTH OF 66.5 FEET AND AN OVERALL LENGTH OF 234.08 FEET. THE ENTIRE DECK SURFACE TO BE REPAIRED FOR A NEW CONCRETE OVERLAY.

ALL CONCRETE REMOVAL NOT COVERED WITH A CONCRETE OVERLAY SHALL BE DEFINED BY A 1 INCH DEEP SAWCUT.

PREPARATION DECKS TYPE 1, PREPARATION DECKS TYPE 2, AND FULL-DEPTH DECK REPAIR AREAS ARE BASED ON THE PLANS AND AS DETERMINED BY THE ENGINEER. DECK PREPARATION AND FULL-DEPTH DECK REPAIRS SHALL BE FILLED WITH "CONCRETE MASONRY OVERLAY DECKS".

USE EXISTING BAR STEEL REINFORCEMENT WHERE SHOWN AND EXTEND 24 BAR DIAMETERS INTO NEW WORK.

PROFILE GRADE LINE SHALL BE DETERMINED IN THE FIELD BASED ON A MINIMUM OVERLAY THICKNESS OF 1½" PLACED ABOVE THE DECK SURFACE AFTER SURFACE PREPARATION. EXPECTED AVERAGE OVERLAY THICKNESS IS 2". IF EXPECTED AVERAGE OVERLAY THICKNESS IS EXCEEDED BY MORE THAN ½", CONTACT THE STRUCTURES DESIGN SECTION.

THE BID ITEM "CONCRETE MASONRY OVERLAY DECKS" INCLUDES CONCRETE FOR THE PREPARATION DECKS TYPE 1, PREPARATION DECKS TYPE 2, FULL DEPTH DECK REPAIR AND CONCRETE OVERLAY PLACED OVER THE JOINT REPAIR.

PROTECTIVE SURFACE TREATMENT SHALL BE APPLIED TO THE ENTIRE TOP SURFACE OF THE NEW CONCRETE OVERLAY AND SIDEWALK AND MEDIAN CONCRETE FULL LENGTH OF BRIDGE.

PIGMENTED SURFACE SEALER SHALL BE APPLIED TO THE TOP AND INSIDE FACE OF THE PARAPETS THE FULL LENGTH OF BRIDGE EACH SIDE INCLUDING THE WINGWALL PARAPETS.

⚠ CONCRETE SURFACE REPAIRS AT THE WEST ABUTMENT, PIER 1, AND PIER 2 AS DIRECTED BY THE ENGINEER.

EXPANSION JOINT ASSEMBLY INCLUDING ANCHOR STUDS AND HARDWARE SHALL BE PAID FOR IN THE LUMP SUM BID PRICES AS "EXPANSION DEVICE B-44-0009".

● QUANTITIES SHOWN INCLUDE A 10% INCREASE TO ACCOUNT FOR ADDITIONAL DETERIORATION BETWEEN THE TIME OF INSPECTION AND THE TIME OF CONSTRUCTION.

NO.	DATE	REVISION	BY

STATE OF WISCONSIN
DEPARTMENT OF TRANSPORTATION

STRUCTURE B-44-0009

DRAWN BY AMZ | PLANS CK'D. JSR

QUANTITIES AND GENERAL NOTES

SHEET 2 OF 9

235

FILE=
SCALE =

8

8

STATE PROJECT NUMBER

4659-15-71

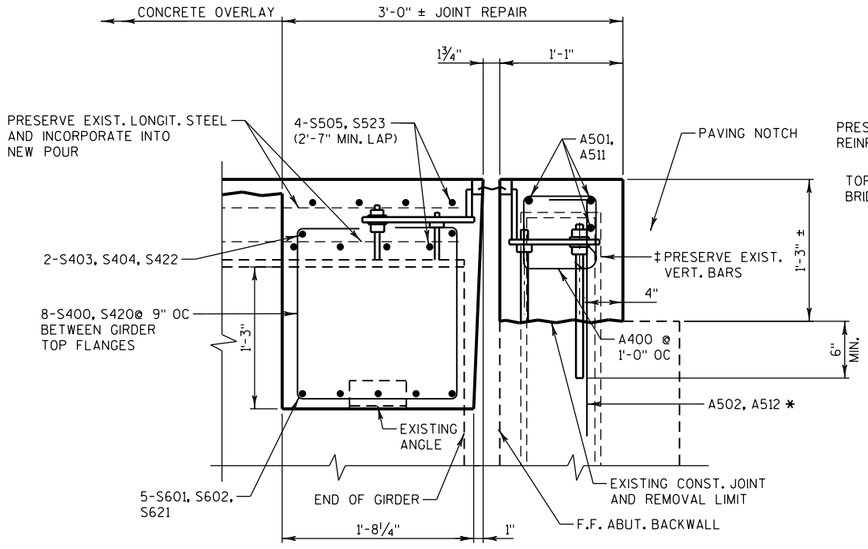

SECTION A-A THRU PROPOSED JOINT STEEL GIRDER WITH END DIAPHRAGM

NORMAL TO ℄ SUBSTRUCTURE

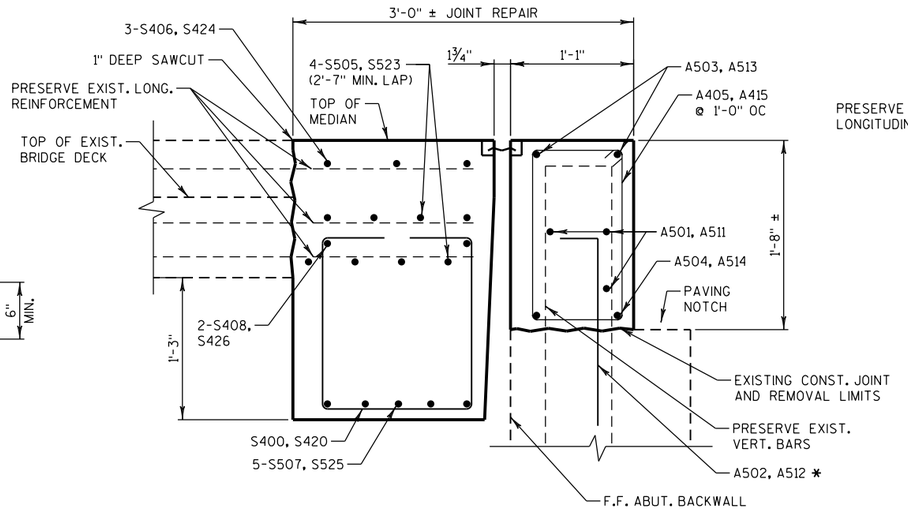

SECTION B-B THRU PROPOSED JOINT AT MEDIAN

COVER PLATES NOT SHOWN
NORMAL TO ℄ SUBSTRUCTURE

SECTION AT PIER 1 SIMILAR

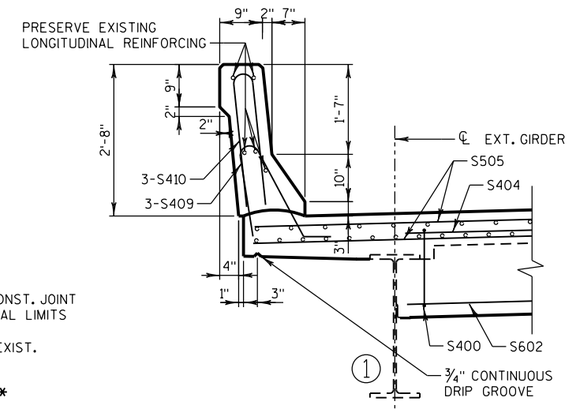

SECTION AT NORTH PARAPET

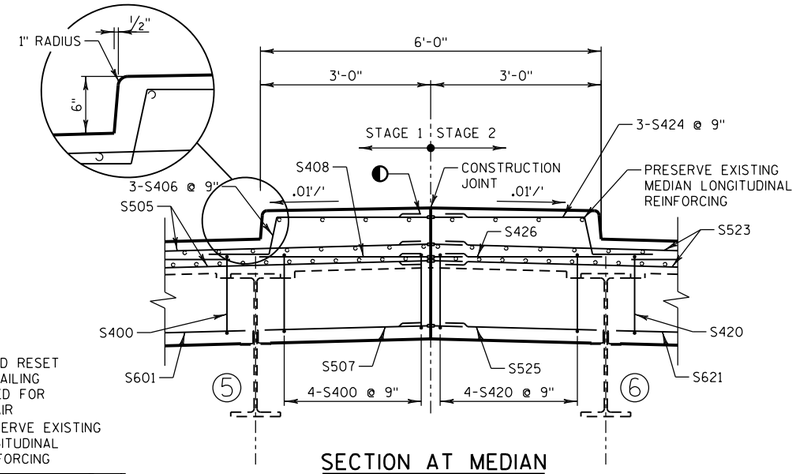

SECTION AT MEDIAN

(LOOKING EAST)

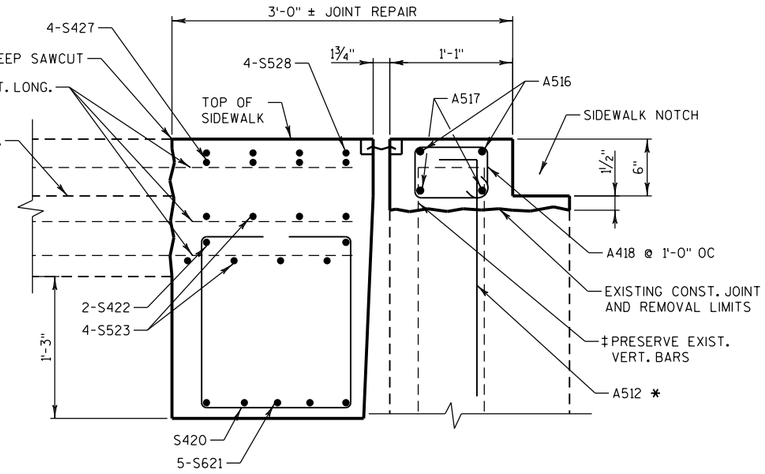

SECTION C-C THRU PROPOSED JOINT AT SIDEWALK

COVER PLATES NOT SHOWN
NORMAL TO ℄ SUBSTRUCTURE

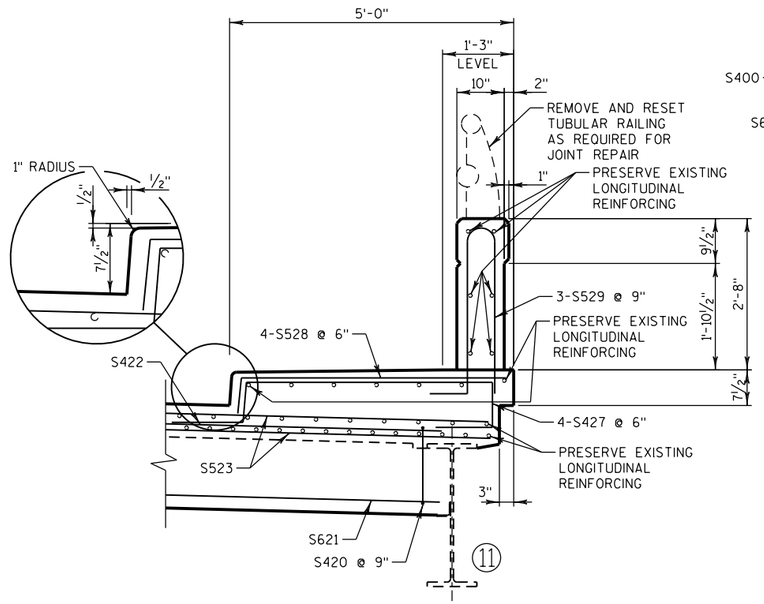

SECTION AT SOUTH PARAPET AND SIDEWALK

LEGEND

‡ EXISTING BARS ARE LIKELY TO BE CORRODED AND/OR DAMAGED DURING CONCRETE REMOVAL. PRESERVE AND INCORPORATE AS MUCH REBAR AS PRACTICAL. SUPPLEMENT WITH THE BARS INDICATED BY *.

* ADHESIVE ANCHORS NO. 5 BAR, EMBED 1'-6" IN CONCRETE. SPACE AT 1'-0" OC. TURN 10" LEG AS NECESSARY TO FIT.

◐ BAR COUPLERS FOR A501, A503, A504, A511, A513, A514, S505, S406, S507, S408, S523, S424, S525 AND S426. SEE "MISCELLANEOUS DETAILS" SHEET 9 OF 9.

NO.	DATE	REVISION	BY

STATE OF WISCONSIN
DEPARTMENT OF TRANSPORTATION

STRUCTURE B-44-0009

DRAWN BY AMZ | PLANS CK'D. JSR

EAST ABUTMENT STRIP SEAL EXPANSION JOINT

SHEET 3 OF 9
236

FILE=
SCALE =

8

8

STATE PROJECT NUMBER

4659-15-71

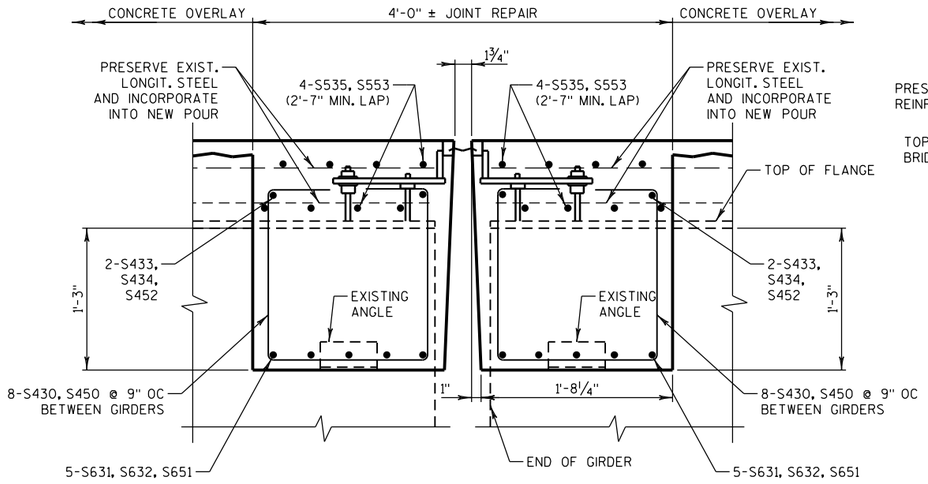

SECTION D-D THRU PROPOSED JOINT AT PIER 1

NORMAL TO ℄ SUBSTRUCTURE

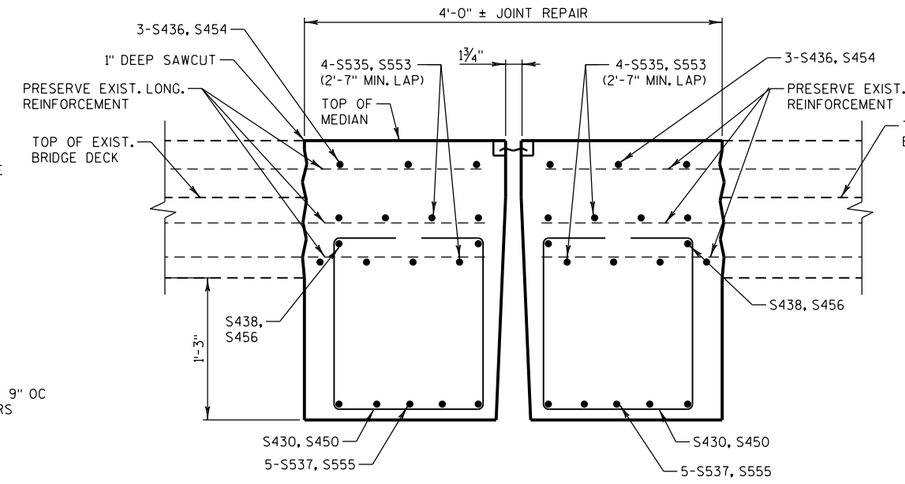

SECTION E-E THRU PROPOSED JOINT AT MEDIAN

COVER PLATES NOT SHOWN
NORMAL TO ℄ SUBSTRUCTURE

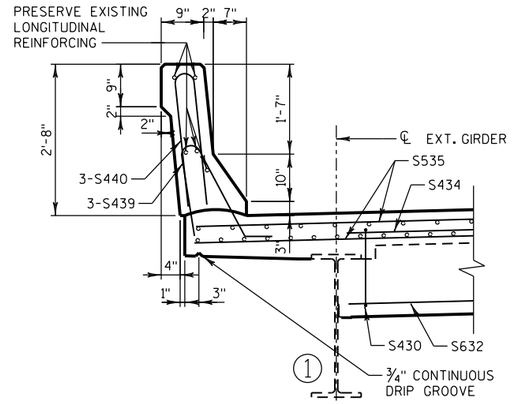

SECTION AT NORTH PARAPET

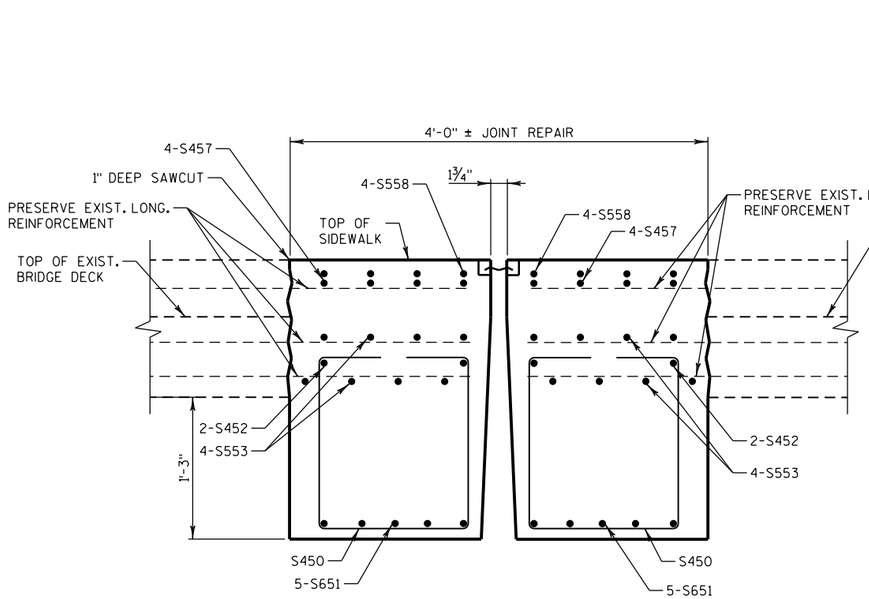

SECTION F-F THRU PROPOSED JOINT AT SIDEWALK

COVER PLATES NOT SHOWN
NORMAL TO ℄ SUBSTRUCTURE

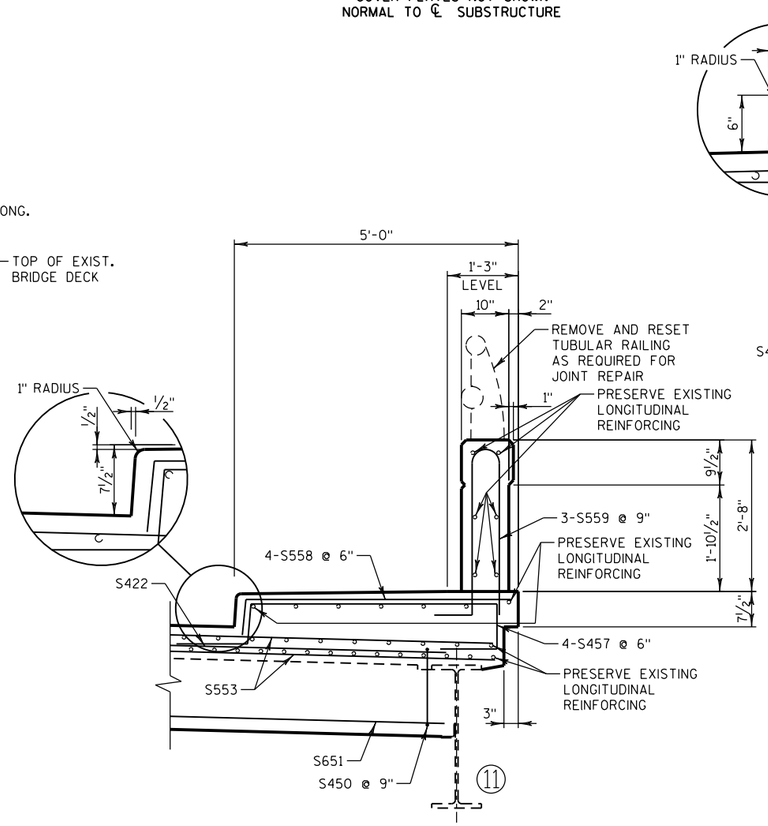

SECTION AT SOUTH PARAPET AND SIDEWALK

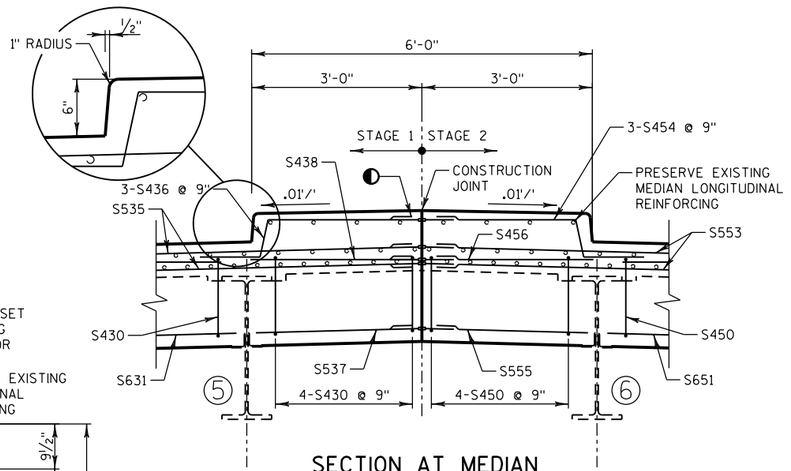

SECTION AT MEDIAN

(LOOKING EAST)

LEGEND

◐ BAR COUPLERS FOR S535, S436, S537, S438, S553, S454, S555 AND S456. SEE "MISCELLANEOUS DETAILS" SHEET 9 OF 9.

NO.	DATE	REVISION	BY

STATE OF WISCONSIN
DEPARTMENT OF TRANSPORTATION

STRUCTURE B-44-0009

DRAWN BY AMZ | PLANS CK'D. JSR

PIER 1
STRIP SEAL
EXPANSION JOINT

SHEET 4 OF 9
237

FILE=
SCALE =

8

8

STATE PROJECT NUMBER

4659-15-71

NOTE:
THE FIRST OR FIRST TWO DIGITS OF THE BAR MARK SIGNIFIES THE BAR SIZE.

BILL OF BARS

MARK	COATED	NO. REQ'D	LENGTH	BAR SERIES	BENT	LOCATION
A400	X	29	3'-10"		X	PAVING NOTCH STIRRUP STAGE 1, E ABUT
A501	X	15	8'-0"			PAVING NOTCH TRANS STAGE 1, E ABUT
A502	X	32	3'-3"		X	PAVING NOTCH DOWEL STAGE 1, E ABUT
A503	X	2	4'-7"		X	PAVING NOTCH MEDIAN TOP STAGE 1, E ABUT
A504	X	2	3'-6"			PAVING NOTCH MEDIAN BOTT STAGE 1, E ABUT
A405	X	4	4'-8"		X	PAVING NOTCH MEDIAN STIRRUP STAGE 1, E ABUT
A410	X	29	3'-10"		X	PAVING NOTCH STIRRUP STAGE 2, E ABUT
A511	X	15	8'-0"			PAVING NOTCH TRANS STAGE 2, E ABUT
A512	X	36	3'-3"		X	PAVING NOTCH DOWEL STAGE 2, E ABUT
A513	X	2	4'-7"		X	PAVING NOTCH MEDIAN TOP STAGE 2, E ABUT
A514	X	2	3'-6"			PAVING NOTCH MEDIAN BOTT STAGE 2, E ABUT
A415	X	4	4'-8"		X	PAVING NOTCH MEDIAN STIRRUP STAGE 2, E ABUT
A516	X	2	6'-3"		X	PAVING NOTCH SIDEWALK TRANS TOP STAGE 2, N ABUT.
A517	X	2	6'-0"			PAVING NOTCH SIDEWALK TRANS BOTT STAGE 2, N ABUT.
A418	X	6	2'-8"		X	PAVING NOTCH SIDEWALK STIRRUP STAGE 2, N ABUT.
S400	X	36	4'-4"		X	DIAPH STIRRUP STAGE 1, E ABUT
S601	X	10	5'-9"			DIAPH TRANS BOTT BTW GIRDERS 3-4 & 4-5 STAGE 1, E ABUT
S602	X	10	6'-1"			DIAPH. TRANS. BOTT. BTW GIRDERS 1-2 & 2-3 STAGE 1, E ABUT
S403	X	4	5'-9"			DIAPH TRANS TOP BTW GIRDERS 3-4 & 4-5 STAGE 1, E ABUT
S404	X	4	6'-1"			DIAPH TRANS TOP BTW GIRDERS 1-2 & 2-3 STAGE 1, E ABUT
S505	X	16	16'-8"			DECK TRANS TOP AND BOTT STAGE 1, E ABUT
S406	X	3	4'-2"		X	MEDIAN TRANS TOP STAGE 1, E ABUT
S507	X	5	2'-9"			DIAPH TRANS BOTT AT CJ STAGE 1, E ABUT
S408	X	2	2'-9"			DIAPH TRANS TOP AT CJ STAGE 1, E ABUT
S409	X	3	4'-3"		X	PARAPET DOWEL STAGE 1, E ABUT
S410	X	3	4'-10"		X	PARAPET VERT, STAGE 1, E ABUT
S411	X	8	6'-0"			DECK TRANS EXP DEVICE ADDL BTW GIRDERS, STAGE 1
S419	X	8	6'-0"			DECK TRANS EXP DEVICE ADDL BTW GIRDERS, STAGE 2
S420	X	44	4'-4"		X	DIAPH STIRRUP STAGE 2, E ABUT
S621	X	25	5'-9"			DIAPH TRANS BOTT BTW GIRDERS STAGE 2, E ABUT
S422	X	10	5'-9"			DIAPH TRANS TOP BTW GIRDERS STAGE 2, E ABUT
S523	X	16	18'-6"			DECK TRANS TOP AND BOTT STAGE 2, E ABUT
S424	X	3	4'-2"		X	MEDIAN TRANS TOP STAGE 2, E ABUT
S525	X	5	2'-9"			DIAPH TRANS BOTT AT CJ STAGE 2, E ABUT
S426	X	2	2'-9"			DIAPH TRANS TOP AT CJ STAGE 2, E ABUT
S427	X	4	8'-0"		X	SIDEWALK DOWEL STAGE 2, E ABUT
S528	X	4	4'-10"		X	SIDEWALK TRANSVERSE STAGE 2, E ABUT
S529	X	3	7'-3"		X	PARAPET VERT STAGE 2, E ABUT
S430	X	72	4'-4"		X	DIAPH STIRRUP STAGE 1, PIER 1
S631	X	20	5'-9"			DIAPH TRANS BOTT BTW GIRDERS 3-4 & 4-5 STAGE 1, PIER 1
S632	X	20	6'-1"			DIAPH. TRANS. BOTT. BTW GIRDERS 1-2 & 2-3 STAGE 1, PIER 1
S433	X	8	5'-9"			DIAPH TRANS TOP BTW GIRDERS 3-4 & 4-5 STAGE 1, PIER 1
S434	X	8	6'-1"			DIAPH TRANS TOP BTW GIRDERS 1-2 & 2-3 STAGE 1, PIER 1
S535	X	32	16'-8"			DECK TRANS TOP AND BOTT STAGE 1, PIER 1
S436	X	6	4'-2"		X	MEDIAN TRANS TOP STAGE 1, PIER 1
S537	X	10	2'-9"			DIAPH TRANS BOTT AT CJ STAGE 1, PIER 1
S438	X	4	2'-9"			DIAPH TRANS TOP AT CJ STAGE 1, PIER 1
S439	X	6	4'-3"		X	PARAPET DOWEL STAGE 1, PIER 1
S440	X	6	4'-10"		X	PARAPET VERT, STAGE 1, PIER 1
S441	X	16	6'-0"			DECK TRANS EXP DEVICE ADDL BTW GIRDERS, STAGE 1
S450	X	88	4'-4"		X	DIAPH STIRRUP STAGE 2, PIER 1
S651	X	50	5'-9"			DIAPH TRANS BOTT BTW GIRDERS STAGE 2, PIER 1
S452	X	20	5'-9"			DIAPH TRANS TOP BTW GIRDERS STAGE 2, PIER 1
S553	X	32	18'-6"			DECK TRANS TOP AND BOTT STAGE 2, PIER 1
S454	X	6	4'-2"		X	MEDIAN TRANS TOP STAGE 2, PIER 1
S555	X	10	2'-9"			DIAPH TRANS BOTT AT CJ STAGE 2, PIER 1
S456	X	4	2'-9"			DIAPH TRANS TOP AT CJ STAGE 2, PIER 1

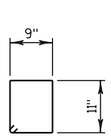

A400, A410

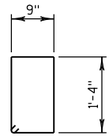

A405, A415

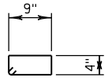

A418

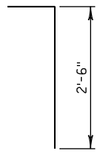

A502, A512

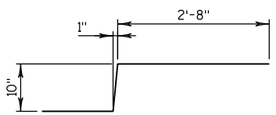

A503, A513

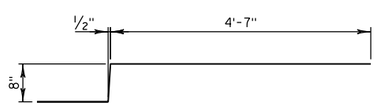

A516

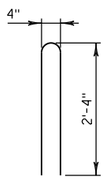

S410, S440

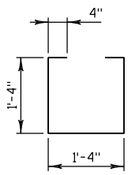

S400, S420, S430, S450

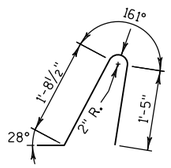

S409, S439

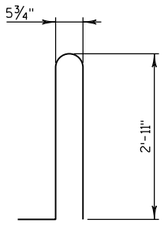

S529, S559

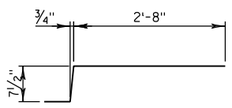

S406, S424, S436, S454

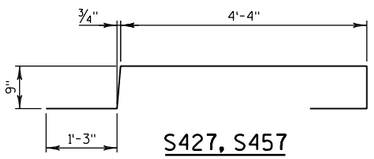

S427, S457

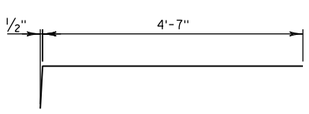

S528, S558

NO.	DATE	REVISION	BY

STATE OF WISCONSIN
DEPARTMENT OF TRANSPORTATION

STRUCTURE B-44-0009

DRAWN BY AMZ | PLANS CK'D. JSR

BILL OF BARS

SHEET 5 OF 9
238

FILE=
SCALE =

8

8

STATE PROJECT NUMBER

4659-15-71

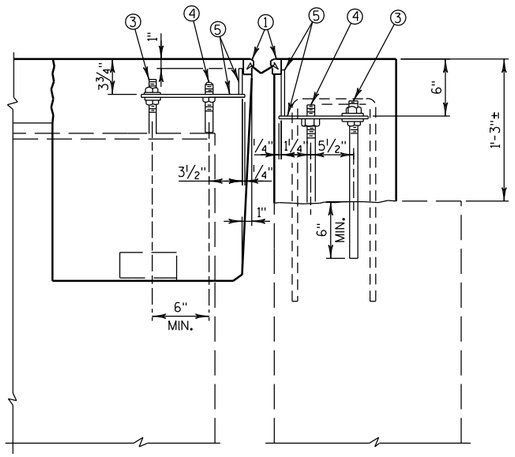

TYPICAL SECTION THRU JOINT AT EAST ABUTMENT

NORMAL TO ℄ EAST ABUTMENT

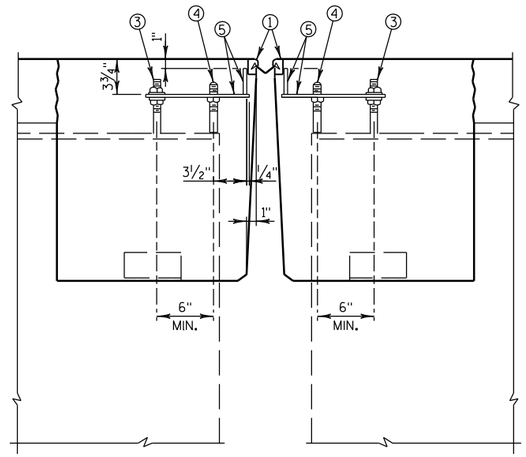

TYPICAL SECTION THRU JOINT AT PIER 1

NORMAL TO ℄ PIER 1

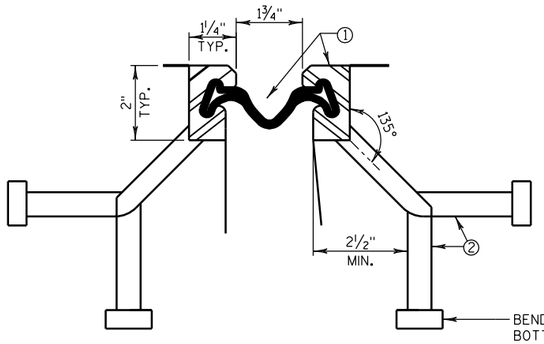

SECTION THRU JOINT

EXTERIOR GIRDER TO EDGE OF SLAB
AND AT PARAPETS, MEDIANS & SIDEWALKS

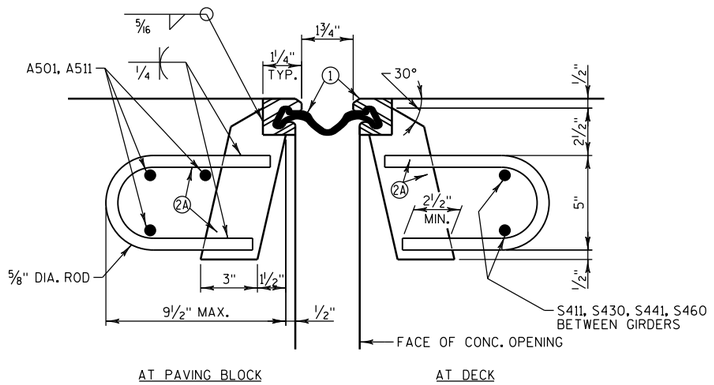

SECTION THRU JOINT

ROADWAY TRAFFIC AREA BETWEEN EXTERIOR GIRDERS
SYM. ABOUT ℄ JOINT UNLESS OTHERWISE SHOWN OR NOTED.
EAST ABUTMENT SHOWN. PIER 1 SIMILAR.

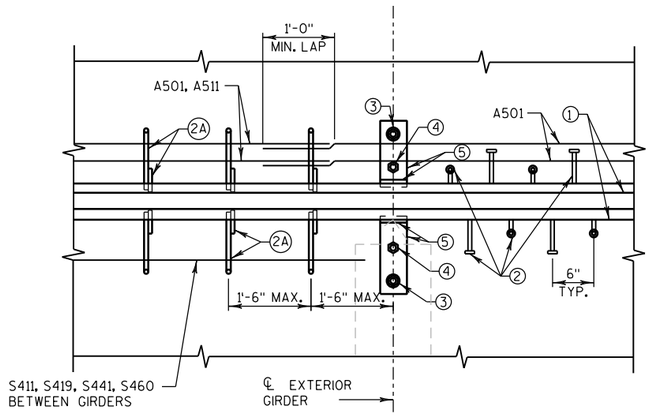

PART PLAN

EAST ABUTMENT SHOWN. PIER 1 SIMILAR.

LEGEND

1. NEOPRENE STRIP SEAL (4-INCH) & STEEL EXTRUSIONS. SET JOINT OPENING AT 1¾".
2. STUDS ⅝" ϕ × 6⅜" LONG AT 6" ALTERNATE CENTERS. WELD TO EXTRUSIONS & BEND AS SHOWN AFTER WELDING.

2A. ½" THICK ANCHOR PLATE WITH ⅝" ϕ ROD (OR ALTERNATE STRIP SEAL ANCHOR). WELD ROD TO ANCHOR PLATE, WELD ANCHOR PL. TO NO. 1 AT 1'-6" CTRS. BETWEEN GIRDERS.

3. ¾" ϕ THREADED ROD WITH 2 NUTS AND 2 PLATE WASHERS. WELD THREADED ROD TO TOP FLANGE OR ATTACH BY BOLTING THRU FLANGE. ON ABUTMENT SIDE, GROUT THREADED ROD INTO FIELD DRILLED HOLES IN ABUTMENT BACKWALL AS SHOWN.
4. ¾" ϕ THREADED ROD WITH NUT. TACK WELD NUT TO NO. 5.
5. FABRICATE SUPPORT FROM 3" × ½" BAR AS SHOWN OR EQUIVALENT. ONE PER GIRDER PER SIDE. SHOP OR FIELD WELD TO NO. 1. IF FIELD WELDED, COVER WELDED AREAS WITH EPOXY-COATING MATERIAL. PROVIDE 1½" ϕ HOLE FOR NO. 3 & 1" ϕ HOLE FOR NO. 4.
6. GALVANIZED PLATE ⅜" × 10½" × 2'-2" WITH HOLES FOR NO. 7. BEND AS SHOWN.
7. ¾" ϕ × 1½" STAINLESS STEEL SOCKET FLAT HEAD SCREWS WITH ANTI-SEIZE LUBRICANT. PLACE IN COUNTERSUNK HOLE. RECESS 1/16" BELOW PLATE SURFACE.
8. ¾" ϕ × 4" GALVANIZED HEX HEAD BOLT. BEND 45°.
9. ¾" ϕ × 2¼" GALVANIZED THREADED COUPLING.
10. GALVANIZED PLATE ⅜" × 2'-0" × LIMITS SHOWN. BEND DOWN FACE OF SIDEWALK AND MEDIAN WITH HOLES FOR NO. 7. GALVANIZE PLATE AFTER SLIP RESISTANT SURFACE IS APPLIED.
11. 1" × 5" SLOTTED COUNTERSUNK HOLE FOR NO. 7. PLACE SLOT PARALLEL TO DIRECTION OF MOVEMENT.

SEE SHEET 7

NOTES

ONE FIELD SPLICE IS PERMITTED IN STEEL EXTRUSIONS, UNLESS MORE ARE REQUIRED FOR STAGED CONSTRUCTION, HANDLING OR GALVANIZING REQUIREMENTS. IF USED, DETAILS SHALL BE SUBMITTED FOR APPROVAL. NO SPLICING PERMITTED IN NEOPRENE STRIP SEAL.

AFTER FABRICATION, BUT BEFORE SHIPMENT, STRAIGHTEN STEEL EXTRUSIONS SUCH THAT THEY SHALL BE FREE FROM WARP, TWIST & SWEEP.

FABRICATOR SHALL PROVIDE MEANS OF KEEPING GALVANIZED EXTRUSIONS CLEAN & SMOOTH DURING SHIPMENT AND PRIOR TO APPLYING LUBRICANT ADHESIVE FOR NEOPRENE GLAND INSTALLATION.

SANDBLAST PLATES & EXTRUSIONS AFTER FABRICATION IN ACCORDANCE WITH SSPC SP. #6 "COMMERCIAL BLAST CLEANING". AFTER BLAST CLEANING, THE PLATES, SUPPORTS AND EXTRUSIONS SHALL BE HOT DIPPED GALVANIZED. SLIP-RESISTANT SURFACE IS APPLIED TO THE SIDEWALK AND MEDIAN COVER PLATES BY THE MANUFACTURER AND THEN HOT DIPPED GALVANIZED TO THEIR RECOMMENDATIONS TO MAINTAIN THE INTEGRITY OF THIS SURFACE.

ANCHOR SYSTEM NO. 8 & NO. 9 SHALL CONFORM TO ASTM A307 & SHALL BE GALVANIZED IN ACCORDANCE WITH ASTM A153 CLASS C & D.

STRIP SEAL EXPANSION JOINT ASSEMBLY, INCLUDING ANCHOR STUDS & HARDWARE WILL BE PAID FOR AT THE LUMP SUM PRICE BID FOR "EXPANSION DEVICE B-44-0009".

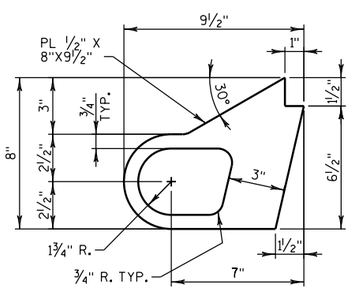

ALTERNATE STRIP SEAL ANCHOR

NO.	DATE	REVISION	BY

STATE OF WISCONSIN
DEPARTMENT OF TRANSPORTATION

STRUCTURE B-44-0009

DRAWN BY AMZ | PLANS CK'D. JSR

STRIP SEAL EXPANSION JOINT

SHEET 6 OF 9
239

FILE=
SCALE =

8

8

STATE PROJECT NUMBER

4659-15-71

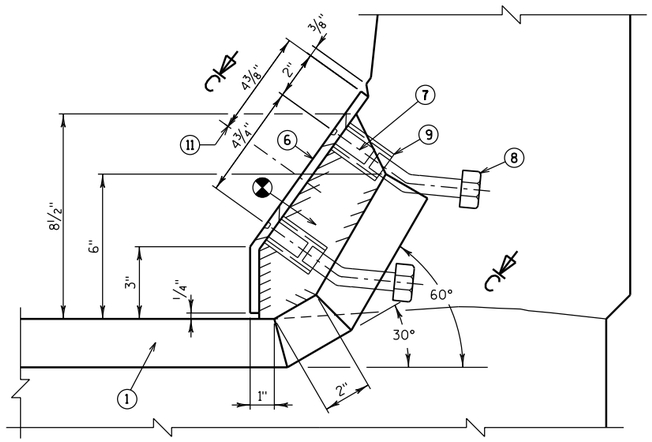

SECTION A-A

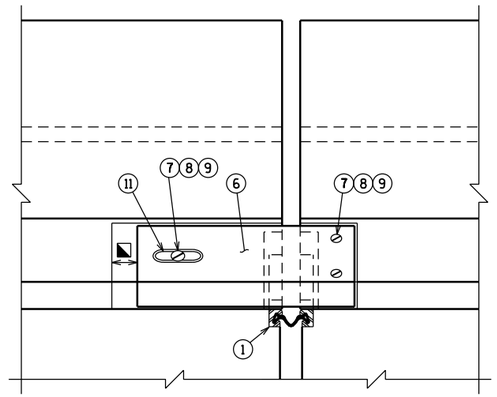

VIEW OF PARAPET PLATE FROM ROADWAY

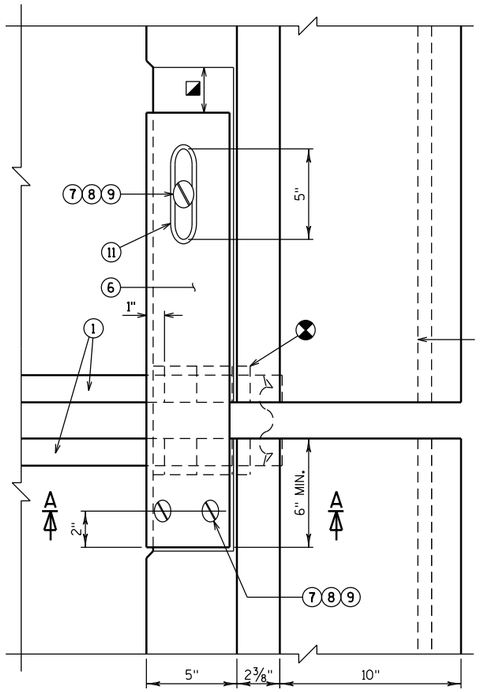

PLAN

LEGEND

- BLOCK OUT CONCRETE 2" EACH SIDE FOR JOINT OPENING
- JOINT OPENING DIM. ALONG SKEW PLUS 1/2"
- (X) SEE SHEET 6 FOR LEGEND

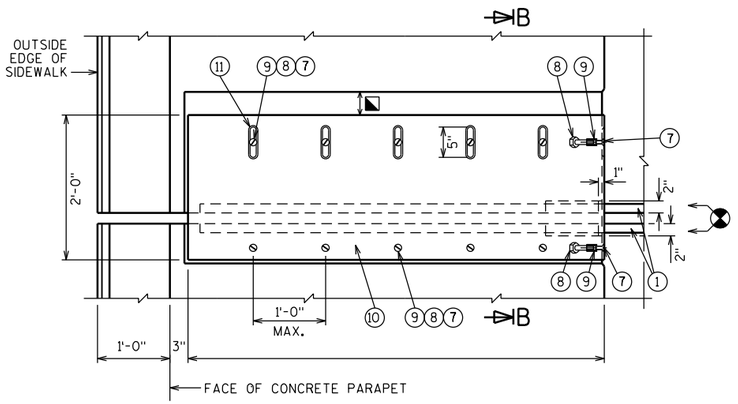

PLAN AT SIDEWALK

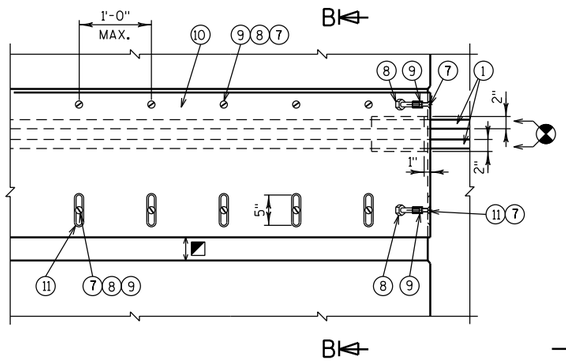

PLAN AT MEDIAN

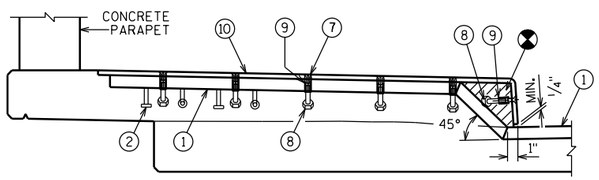

SECTION AT SIDEWALK

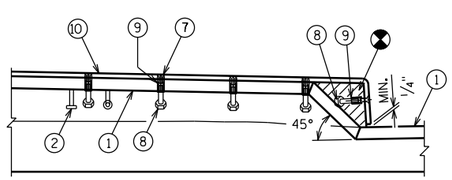

SECTION AT MEDIAN

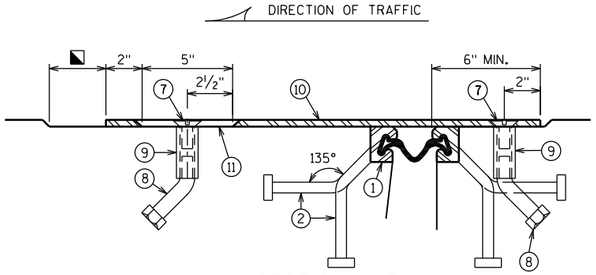

SECTION B-B

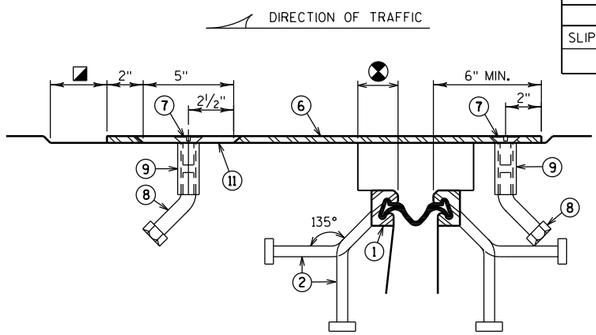

SECTION C-C

PLAN OF SIDEWALK COVER PLATE WITH SLIP-RESISTANT SURFACE

PLACE SLIP-RESISTANT SURFACE ON TOP WALKING SURFACE IN SHADED AREA ONLY (NOT ON CURB FACE).

APPROVED SLIP-RESISTANT APPLIED SURFACES FOR STEEL PLATES		
PRODUCT	MANUFACTURER	CONTACT AT
SLIPNOT GRADE 2, STEEL	W. S. MOLNAR COMPANY	1-800-SLIPNOT
ALGRIP, STEEL	ROSS TECHNOLOGY CORP.	1-800-345-8170

8

8

NO.	DATE	REVISION	BY

STATE OF WISCONSIN
DEPARTMENT OF TRANSPORTATION

STRUCTURE B-44-0009

DRAWN BY AMZ | PLANS CK'D. JSR

STRIP SEAL COVER PLATE

SHEET 7 OF 9

240

FILE=
SCALE =

STATE PROJECT NUMBER

4659-15-71

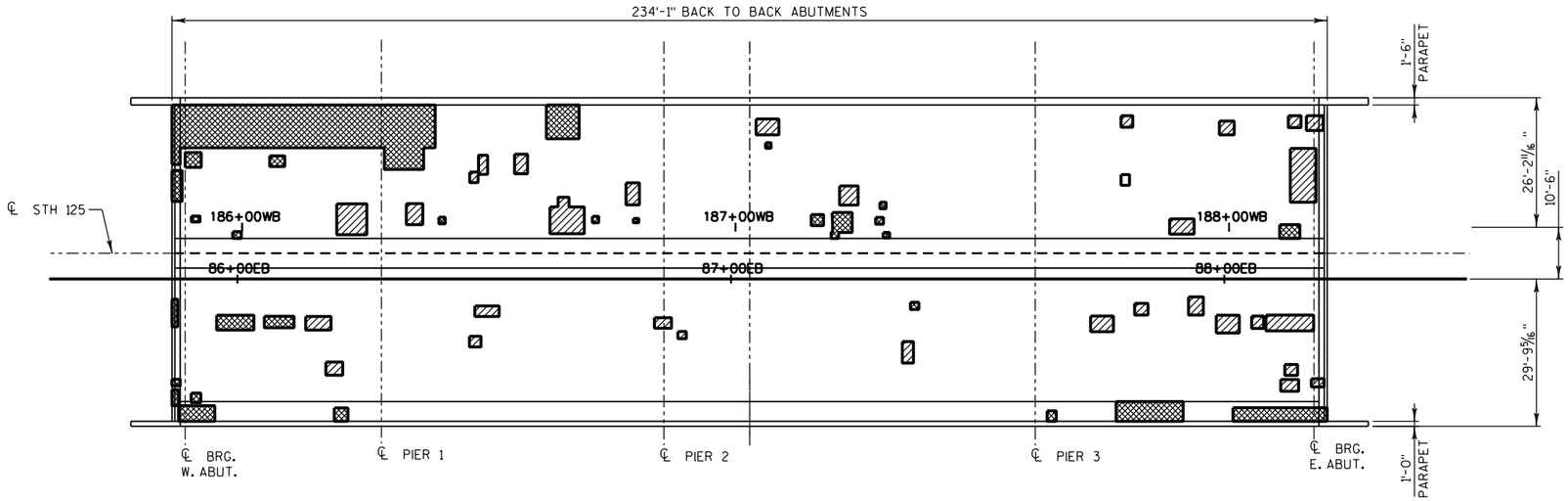

N

PLAN

DECK REPAIR
TOP OF DECK SHOWN

DECK REPAIR

DECK REPAIR AREAS		S.N. B-44-0009	
ITEM	UNIT	QUANT.	%
TOTAL AREA	ft²	12,637.4	
SHADE/DEBRIS	ft²	0	
PREPARATION, DECKS, TYPE 1	ft²	1160.5	8.5
PREPARATION, DECKS, TYPE 2	ft²	762.0	5.6
FULL DEPTH DECK REPAIR	ft²	0.0	1.0

LEGEND

DECK PREPARATION AREA, TYPE 1
DECK PREPARATION AREA, TYPE 2
SHADE/DEBRIS
DELAMINATION
SPALL
DEBOND
ASPHALT PATCH
CONCRETE PATCH

SURFACE TYPE: CONCRETE - NO OVERLAY
SURVEY TYPE: INFRARED THERMOGRAPHY INSPECTION DATE: 9/14/16
INFRARED THERMOGRAPHY SURVEY TAKEN BY INFRASENSE

- FOR INFORMATION ONLY. FIELD ENGINEER TO VERIFY EXACT LOCATION AND QUANTITY OF REPAIRS.

8

8

NO.	DATE	REVISION	BY

STATE OF WISCONSIN
DEPARTMENT OF TRANSPORTATION

STRUCTURE B-44-0009

DRAWN BY AMZ | PLANS CK'D. JSR

DECK REPAIR

SHEET 8 OF 9

241

FILE=
SCALE =

STATE PROJECT NUMBER

4659-15-71

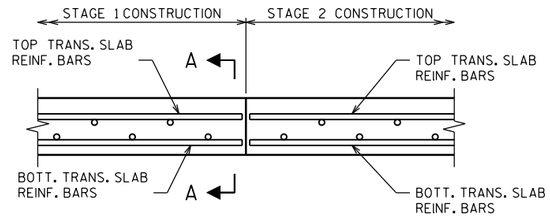

SECTION THRU SLAB

(LOOKING EAST)

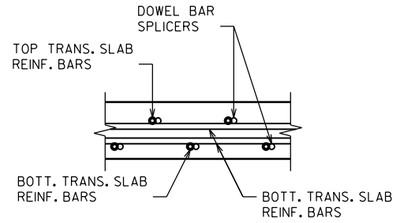

SECTION A-A

DOWEL BAR SPLICER LAP LENGTHS

BAR SIZE	4	5
f'c = 4000	1'-8"	2'-8"

NOTES

STEEL SPLICE (COUPLER) ASSEMBLY SHALL BE AN APPROVED TYPE AND SHALL DEVELOP IN TENSION AT LEAST 125% OF THE YIELD STRENGTH OF THE SPLICED REINFORCEMENT BARS.

DOWEL BAR SPLICERS SHALL BE OF MINIMUM 60 ksi YIELD STRENGTH, AND HAVE TENSILE STRENGTH AREA EQUAL OR GREATER THAN THAT OF THE LAPPED REINFORCEMENT BARS.

DOWEL BAR SPLICERS SHALL MEET THE DEFORMATION REQUIREMENTS FOR STANDARD ASTM DEFORMED REINFORCING BARS.

FOR DOWEL BAR SPLICERS, ALL REINFORCEMENT SHALL BE LAPPED AND TIED TO THE SPLICER BARS.

SPLICER (COUPLER) ASSEMBLY IN THE SLAB SHALL BE EPOXY COATED IN ACCORDANCE WITH THE REQUIREMENTS FOR REINFORCEMENT BARS.

OTHER SYSTEMS OF SIMILAR DESIGN MAY BE SUBMITTED TO THE ENGINEER FOR APPROVAL. APPROVAL SHALL BE BASED ON CERTIFIED TEST RESULTS FROM AN APPROVED TESTING LABORATORY THAT THE PROPOSED SPLICER (COUPLER) ASSEMBLY SATISFIES THE FOLLOWING REQUIREMENT:

(1) MINIMUM CAPACITY = 1.25 X fy X AREA OF SPLICED REINFORCEMENT BAR.

WHERE fy = YIELD STRENGTH OF SPLICED REINFORCEMENT BARS

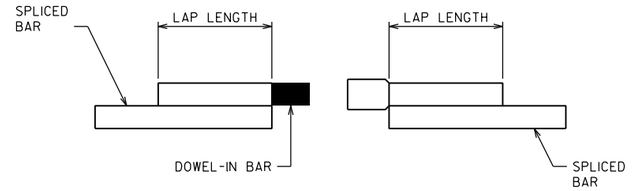

DOWEL BAR SPLICER

ONE PIECE THREADED SPLICER

SPLICER ALTERNATIVES

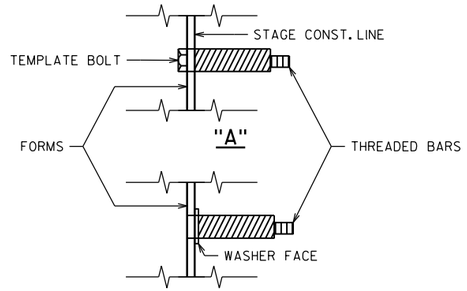

"B"

INSTALLATION AND SETTING METHODS

"A" SET SPLICER BY MEANS OF A TEMPLATE BOLT
"B" SET SPLICER BY NAILING TO WOOD FORMS OR CEMENTING TO STEEL FORMS

NO.	DATE	REVISION	BY

STATE OF WISCONSIN
DEPARTMENT OF TRANSPORTATION

STRUCTURE B-44-0009

DRAWN BY AMZ | PLANS CK'D. JSR

MISCELLANEOUS DETAILS

SHEET 9 OF 9

242

FILE=
SCALE =

8

8

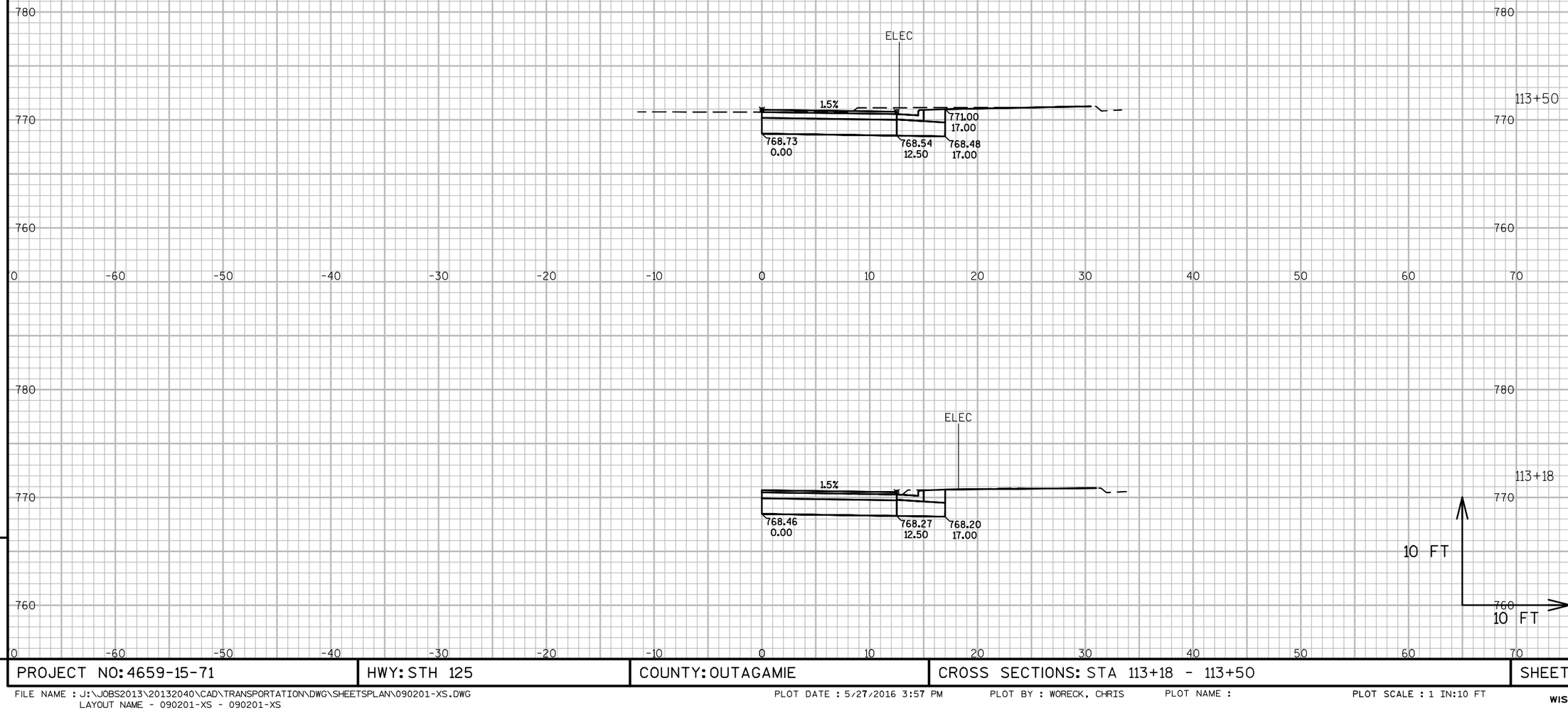

9

9

PROJECT NO: 4659-15-71	HWY: STH 125	COUNTY: OUTAGAMIE	CROSS SECTIONS: STA 113+18 - 113+50	SHEET 243 E

FILE NAME : J:\JOBS2013\20132040\CAD\TRANSPORTATION\DWG\SHEETSPLAN\090201-XS.DWG
LAYOUT NAME - 090201-XS - 090201-XS
PLOT DATE : 5/27/2016 3:57 PM PLOT BY : WORECK, CHRIS PLOT NAME : PLOT SCALE : 1 IN:10 FT
WISDOT/CADDS SHEET 49

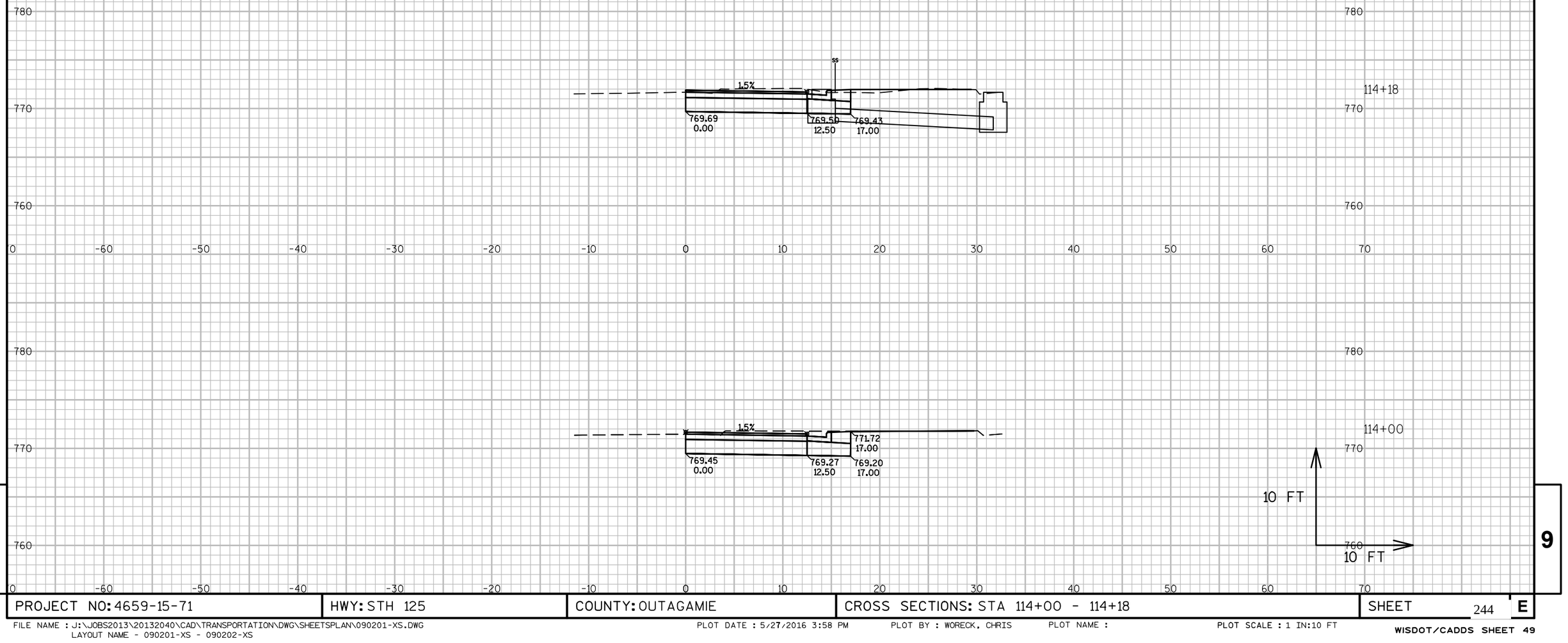

PROJECT NO: 4659-15-71	HWY: STH 125	COUNTY: OUTAGAMIE	CROSS SECTIONS: STA 114+00 - 114+18	SHEET 244 E

FILE NAME : J:\JOBS2013\20132040\CAD\TRANSPORTATION\DWG\SHEETSPLAN\090201-XS.DWG
LAYOUT NAME - 090201-XS - 090202-XS

PLOT DATE : 5/27/2016 3:58 PM PLOT BY : WORECK, CHRIS PLOT NAME : PLOT SCALE : 1 IN:10 FT

WISDOT/CADDS SHEET 49

9

9

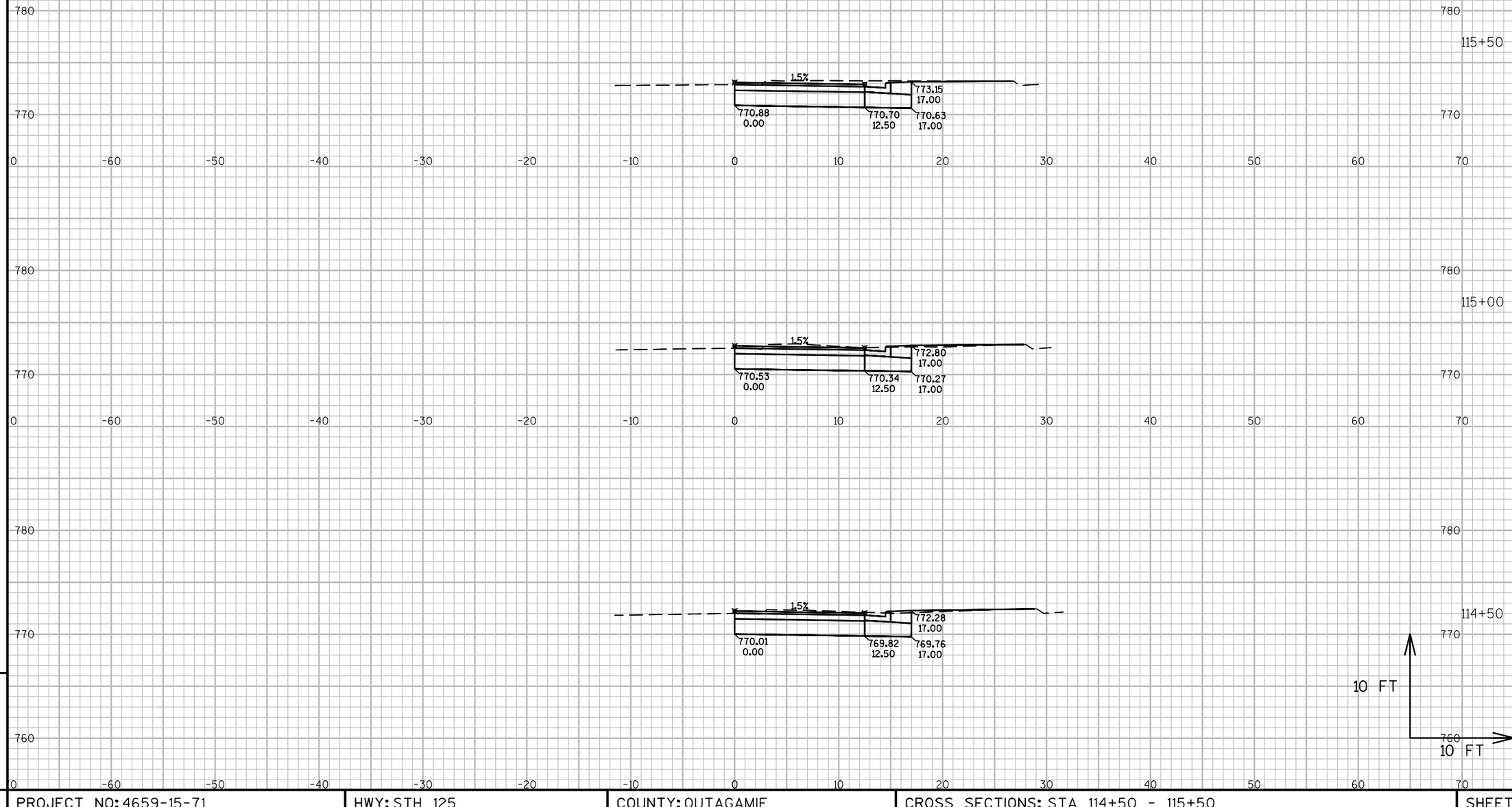

9

9

PROJECT NO: 4659-15-71	HWY: STH 125	COUNTY: OUTAGAMIE	CROSS SECTIONS: STA 114+50 - 115+50	SHEET 245 E

FILE NAME : J:\JOBS2013\20132040\CAD\TRANSPORTATION\DWG\SHEETSPLAN\090201-XS.DWG
LAYOUT NAME - 090201-XS - 090203-XS
PLOT DATE : 5/27/2016 3:58 PM PLOT BY : WORECK, CHRIS PLOT NAME : PLOT SCALE : 1 IN:10 FT
WISDOT/CADDS SHEET 49

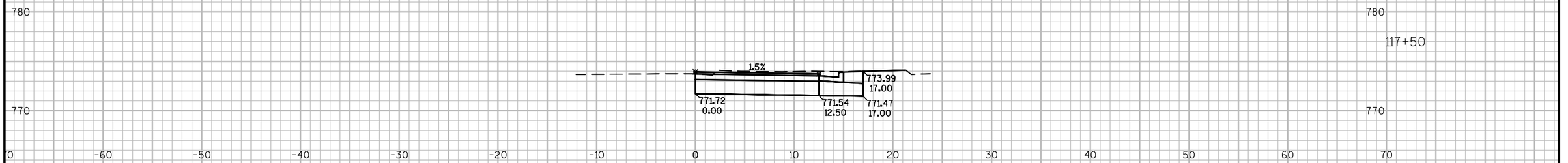

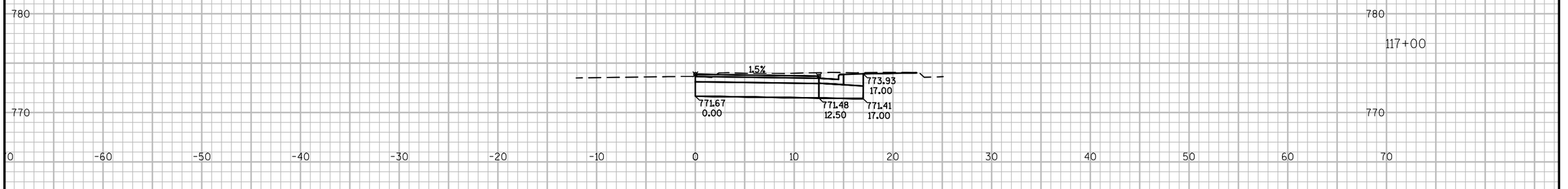

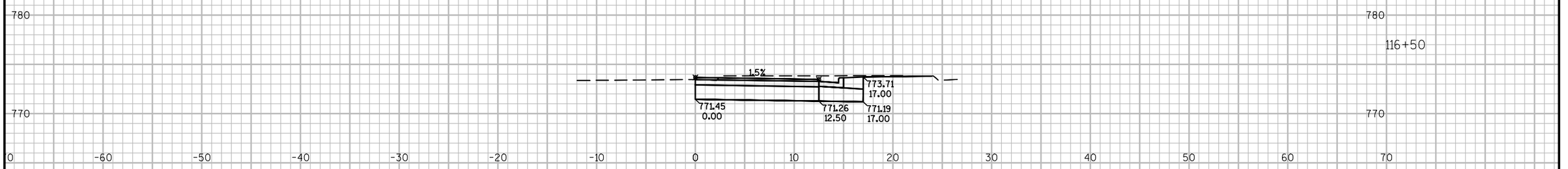

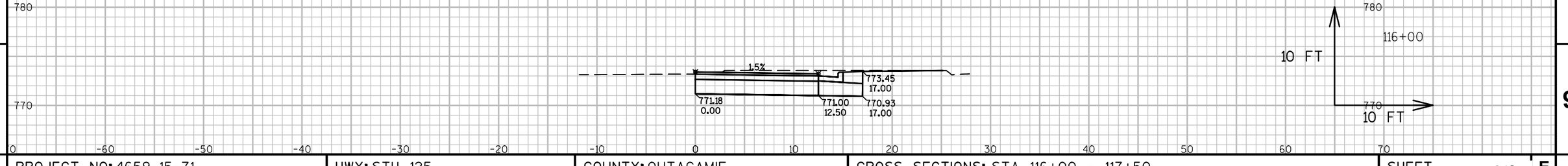

9

9

PROJECT NO: 4659-15-71	HWY: STH 125	COUNTY: OUTAGAMIE	CROSS SECTIONS: STA 116+00 - 117+50	SHEET 246 E

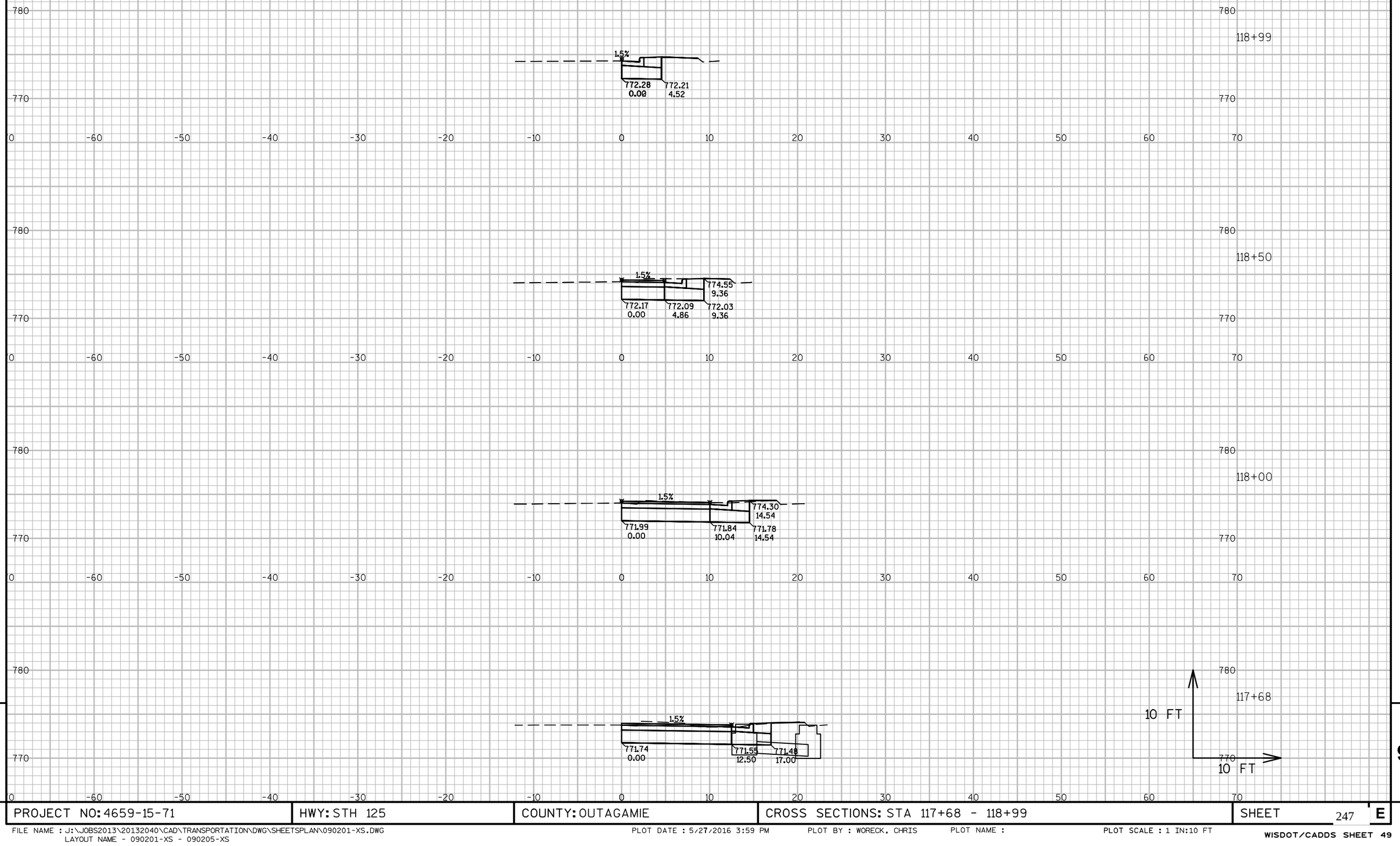

9

9

PROJECT NO: 4659-15-71	HWY: STH 125	COUNTY: OUTAGAMIE	CROSS SECTIONS: STA 117+68 - 118+99	SHEET 247 E

FILE NAME : J:\JOBS2013\20132040\CAD\TRANSPORTATION\DWG\SHEETSPLAN\090201-XS.DWG
LAYOUT NAME - 090201-XS - 090205-XS

PLOT DATE : 5/27/2016 3:59 PM PLOT BY : WORECK, CHRIS PLOT NAME : PLOT SCALE : 1 IN:10 FT

Wisconsin Department of Transportation

Dedicated people creating transportation solutions
through innovation and exceptional service.

http://www.dot.wisconsin.gov