SEL

MAY 2017

PROJECT ID: 4880-01-71

WITH: N/A

COUNTY: OZAUKEE

ORDER OF SHEETS

Section No.	1	Title
Section No.	2	Typical Sections and Details (Includes Erosion Control)
Section No.	3	Estimate of Quantities
Section No.	3	Miscellaneous Quantities
Section No.	4	Right of Way Plat
Section No.	5	Plan and Profile
Section No.	6	Standard Detail Drawings
Section No.	7	Sign Plates
~~Section No.~~	~~8~~	~~Structure Plans~~
Section No.	9	Computer Earthwork Data
Section No.	9	Cross Sections

TOTAL SHEETS = 274

12

STATE OF WISCONSIN
DEPARTMENT OF TRANSPORTATION

PLAN OF PROPOSED IMPROVEMENT

CTH D (MAIN STREET)

BEECH STREET - CTH LL

CTH D

OZAUKEE COUNTY

STATE PROJECT NUMBER
4880-01-71

STATE PROJECT	FEDERAL PROJECT	
	PROJECT	CONTRACT
4880-01-71	WISC 2017269	1

DESIGN DESIGNATION

A.A.D.T. (2017)	=	2,600 VPD
A.A.D.T. (2037)	=	2,900 VPD
D.H.V.	=	307 VPD
D.D.	=	60/40
T.	=	12.7%
DESIGN SPEED	=	30 MPH
ESALS	=	532,900 (HMA)

CONVENTIONAL SYMBOLS

PLAN
- CORPORATE LIMITS
- PROPERTY LINE
- LOT LINE
- LIMITED HIGHWAY EASEMENT
- EXISTING RIGHT OF WAY
- PROPOSED OR NEW R/W LINE
- SLOPE INTERCEPT
- REFERENCE LINE (300'EB')
- EXISTING CULVERT
- PROPOSED CULVERT (Box or Pipe)
- COMBUSTIBLE FLUIDS (CAUTION)
- MARSH AREA
- WOODED OR SHRUB AREA

PROFILE
- GRADE LINE
- ORIGINAL GROUND
- MARSH OR ROCK PROFILE (To be noted as such) (ROCK)
- SPECIAL DITCH (LABEL)
- GRADE ELEVATION (95.36)
- CULVERT (Profile View)

UTILITIES
- ELECTRIC (E)
- FIBER OPTIC (FO)
- GAS (G)
- SANITARY SEWER (SAN)
- STORM SEWER (SS)
- TELEPHONE (T)
- WATER (W)
- UTILITY PEDESTAL
- POWER POLE
- TELEPHONE POLE

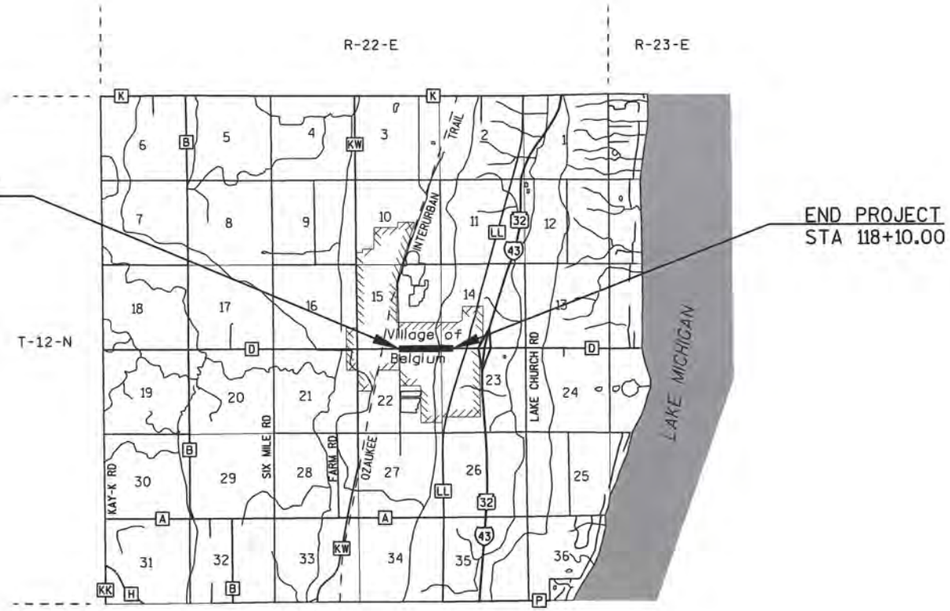

LAYOUT

SCALE 0 2 MILES

TOTAL NET LENGTH OF CENTERLINE = 0.774 MI

HORIZONTAL POSITIONS SHOWN ON THIS PLAN ARE WISCONSIN STATE PLANE COORDINATE SYSTEM (WSPCS), 'SOUTH ZONE', IN U.S. SURVEY FEET. COORDINATES SHOWN ON THIS PLAN ARE GROUND VALUES AND THE COMBINATION FACTOR USED IS 0.99989982.

ACCEPTED FOR
VILLAGE OF BELGIUM

12/8/16 (Date)

VICKIE BOEHNLEIN
VILLAGE PRESIDENT

ACCEPTED FOR
OZAUKEE COUNTY

12/9/16 (Date)

JON EDGREN
DIRECTOR OF PUBLIC WORKS

ORIGINAL PLANS PREPARED BY

GREMMER & ASSOCIATES, INC.
CONSULTING ENGINEERS
Stevens Point • Fond du Lac
93 South Pioneer Road, Suite 300 • Fond du Lac, WI 54935
(920) 924-5720 • fax (920) 924-5725

WISCONSIN JEFFREY A. CHVOSTA E-39047 SLINGER, WI PROFESSIONAL ENGINEER

12/9/16 (Date)

JEFFREY A. CHVOSTA, PE

STATE OF WISCONSIN
DEPARTMENT OF TRANSPORTATION

PREPARED BY

Surveyor	GREMMER & ASSOCIATES, INC.
Designer	GREMMER & ASSOCIATES, INC.
Management Consultant	DAAR ENGINEERING, INC.
C.O. Examiner	

APPROVED FOR THE DEPARTMENT

DATE: 1/20/2017 (Management Consultant Signature)

E

GENERAL NOTES

ELEVATIONS SHOWN ON THE PLAN ARE REFERENCED TO THE NATIONAL GEODETIC VERTICAL DATUM OF 1929 (NGVD 29).

THE LOCATIONS OF EXISTING AND PROPOSED UTILITY INSTALLATIONS AS SHOWN ON THE PLANS ARE APPROXIMATE. THERE MAY BE OTHER UTILITY INSTALLATIONS WITHIN THE PROJECT AREA THAT ARE NOT SHOWN.

THE CONTRACTOR SHALL NOTIFY DIGGERS HOTLINE AND AFFECTED UTILITIES PRIOR TO THE START OF WORK. ANY UTILITY WHICH IS NOT A MEMBER OF THE DIGGERS HOTLINE MUST BE CONTACTED SEPARATELY.

A VERTICAL SAW CUT SHALL BE MADE THROUGH EXISTING DRIVEWAYS, SIDEWALKS AND PAVEMENTS AT THE REMOVAL LIMITS.

SAWCUT LOCATIONS SHOWN ON THE PLANS ARE SUBJECT TO ADJUSTMENT BY THE ENGINEER IN THE FIELD.

WHEN THE QUANTITY OF THE ITEMS OF BASE AGGREGATE DENSE, HMA PAVEMENT OR ASPHALTIC SURFACE IS MEASURED FOR PAYMENT BY THE TON, THE DEPTH OR THICKNESS OF THE MATERIAL SHOWN ON THE PLAN IS APPROXIMATE, AND THE ACTUAL THICKNESS WILL DEPEND ON THE DISTRIBUTION OF THE MATERIAL AS DIRECTED BY THE ENGINEER.

THE EXACT LOCATION AND LAYOUT OF PRIVATE ENTRANCES IS TO BE DETERMINED IN THE FIELD BY THE ENGINEER.

NO TREES OR SHRUBS ARE TO BE REMOVED WITHOUT THE APPROVAL OF THE ENGINEER.

TOPSOIL, FERTILIZER, SEED AND EROSION MAT AS SHOWN IN PLANS OR AS DIRECTED BY THE ENGINEER SHALL BE PLACED ON ALL DISTURBED AREAS, EXCLUSIVE OF THE AREA OCCUPIED BY THE NEW PAVEMENTS, SIDEWALKS, ENTRANCES, AND RELATED STRUCTURES.

SECTIONS AS SHOWN ON THE CROSS-SECTIONS INCLUDE THE THICKNESS OF TOPSOIL WHERE REQUIRED.

CURB AND GUTTER RADII ARE SHOWN TO THE FLOW LINE OF CURB.

CONTRACTOR SHALL VERIFY EXISTING PIPE SIZES, MATERIALS AND INVERT ELEVATIONS WHEN CONNECTING NEW STORM SEWER INTO EXISTING PIPES PRIOR TO MANUFACTURING INLETS AND MANHOLES.

ROTATE MANHOLE COVERS TO MATCH LANE LINES OR CENTER OF LANE AS DIRECTED BY THE ENGINEER IN THE FIELD.

ALL CURB RAMPS SHALL BE 6-INCH THICK AND PAID FOR AS CONCRETE SIDEWALK 6-INCH.

EROSION CONTROL ITEMS SHOWN ARE APPROXIMATE, THE EXACT LOCATION SHALL BE DETERMINED BY THE ENGINEER IN THE FIELD.

REMOVAL OF ASPHALTIC PAVEMENT SHALL BE MEASURED AND PAID FOR AS EXCAVATION COMMON.

ANY IMPACTS TO HISTORIC PROPERTIES OUTSIDE OF THE LIMITS SHOWN ON THE PLANS SHALL BE COORDINATED WITH THE STATE HISTORIC PRESERVATION OFFICE (SHPO).

STREET LIGHTING CONDUIT SHALL BE INSTALLED PRIOR TO PLACEMENT OF CONCRETE CURB & GUTTER AND CONCRETE SIDEWALK.

THE VILLAGE OF BELGIUM HAS AGREED TO BURY ALL OVERHEAD UTILITIES ALONG THE PROJECT CORRIDOR. UTILITY RELOCATIONS ARE ANTICIPATED TO BE COMPLETED PRIOR TO CONSTRUCTION WITH THE EXCEPTION OF FINAL CONNECTIONS AND POLE REMOVALS. CONTRACTOR SHALL CONTACT ALL UTILITY COMPANIES PRIOR TO CONSTRUCTION AND SHALL COORDINATE ALL RELOCATION ACTIVITIES THAT MAY OCCUR CONCURRENT WITH THE PROJECT.

ABBREVIATIONS

AEW	APRON ENDWALL
AGG	AGGREGATE
AH	AHEAD
ASP	ASPHALT
BK	BACK
BAD	BASE AGGREGATE DENSE
BM	BENCH MARK
CC	CENTER OF CURVATURE
CE	COMMERCIAL ENTRANCE
C&G	CURB AND GUTTER
C/L	CENTER OR CONSTRUCTION LINE
CONC	CONCRETE
CP	CULVERT PIPE
CPCM	CULVERT PIPE CORRUGATED METAL
CPCS	CULVERT PIPE CORRUGATED STEEL
CPRC	CULVERT PIPE REINFORCED CONCRETE
CS	CURVE SPIRAL, THE POINT OF CHANGE IN ALIGNMENT FROM CURVE TO SPIRAL
CSD	CONCRETE SURFACE DRAIN
CY	CUBIC YARD
D	DEGREE OF CURVE
Δ	DELTA
DISCH	DISCHARGE
E	EXTERNAL DISTANCE FROM MIDPOINT OF CIRCULAR CURVE FROM ANGLE INTERSECTION
EB	EASTBOUND
ELEV	ELEVATION
FE	FIELD ENTRANCE
HMA	HOT MIX ASPHALT
HP	HIGH POINT
HT	HEIGHT
INV	INVERT
L	LENGTH OF CURVE
LHF	LEFT HAND FORWARD
LP	LOW POINT
Ls	LENGTH OF SPIRAL
LT	LEFT
MAX	MAXIMUM
MIN	MINIMUM
M/L	MATCHLINE
NB	NORTHBOUND
NC	NORMAL CROWN
NOM	NOMINAL
NORM	NORMAL
PAVT	PAVEMENT
PC	POINT OF CURVE
PCC	POINT OF COMPOUND CURVE
PE	PRIVATE ENTRANCE
PI	POINT OF INTERSECTION
PLE	PERMANENT LIMITED EASEMENT
PT	POINT OF TANGENT
R	RADIUS OF CURVE
R/L	REFERENCE LINE
R/W	RIGHT OF WAY
RC	REVERSE CROWN
RCAEW	APRON ENDWALL FOR CULVERT PIPE REINFORCED CONCRETE
RCP	REINFORCED CONCRETE PIPE
REQ'D	REQUIRED
RHF	RIGHT HAND FORWARD
RO	RUN OFF LENGTH
RT	RIGHT
SALV	SALVAGED
SB	SOUTHBOUND
SC	SPIRAL CURVE, THE POINT OF CHANGE IN ALIGNMENT FROM SPIRAL TO CURVE
SDD	STANDARD DETAIL DRAWING
SE	SUPER ELEVATION
SEG	SEGMENT
SF	SQUARE FOOT
SS	STORM SEWER
ST	SPIRAL TANGENT, THE POINT OF CHANGE IN ALIGNMENT FROM SPIRAL TO TANGENT
STA	STATION
SY	SQUARE YARD
T	TANGENT LENGTH
TLE	TEMPORARY LIMITED EASEMENT
TS	TANGENT SPIRAL, THE POINT OF CHANGE IN ALIGNMENT FROM TANGENT TO SPIRAL
TYP	TYPICAL
V	VELOCITY OR DESIGN SPEED
VC	VERTICAL CURVE
VCL	VERTICAL CURVE LENGTH
VPC	POINT OF VERTICAL CURVE
VPI	POINT OF VERTICAL INTERSECTION
VPRC	POINT OF VERTICAL REVERSE CURVE
VPT	POINT OF VERTICAL TANGENT
WB	WESTBOUND
WCL	WISCONSIN CENTRAL LTD.

ORDER OF SECTION 2 SHEETS

GENERAL NOTES
PROJECT OVERVIEW
TYPICAL SECTIONS
CONSTRUCTION DETAILS
REMOVAL PLAN
CURB RAMP DETAILS
PLAN DETAILS
EROSION CONTROL PLAN
STORM SEWER LAYOUT
SIGNING PLAN
LIGHTING PLAN
PAVEMENT MARKING PLAN
TRAFFIC CONTROL
DETOUR PLAN
ALIGNMENT DIAGRAM

UTILITIES

COMMUNICATIONS

* FRONTIER COMMUNICATIONS
118 DIVISION STREET
PLYMOUTH, WI 53073
PHONE: (920) 893-7455
MOBILE: (920) 246-3530
ATTN: MR. RYAN OSNESS
EMAIL: ryan.d.osness@ftr.com

COMMUNICATIONS

* CHARTER COMMUNICATIONS
(FORMERLY DBA TIME WARNER COMMUNICATIONS)
1320 N. DR. MARTIN LUTHER KING JR. DRIVE
MILWAUKEE, WI 53212
PHONE: (414) 908-4822
MOBILE: (414) 430-5812
ATTN: MR. CHARLES BRASILE
EMAIL: charles.brasile@charter.com

SANITARY SEWER & WATER MAIN

* VILLAGE OF BELGIUM
104 PETER THEIN AVENUE
BELGIUM, WI 53004-9446
PHONE: (262) 285-7931
MOBILE: (414) 416-7085
ATTN: MR. DANIEL BIRENBAUM
EMAIL: dbirenbaum@village.belgium.wi.gov

* DENOTES MEMBER OF DIGGERS HOTLINE

ELECTRIC & GAS

* WE ENERGIES - CORPORATE
333 W. EVERETT STREET
MILWAUKEE, WI 53203
PHONE: (414) 221-5617
MOBILE: (414) 975-9053
ATTN: MR. LATROY BRUMFIELD
EMAIL: LaTroy.Brumfield@we-energies.com

ELECTRIC

* WE ENERGIES - LOCAL
315 S 6TH STREET
CEDAR GROVE, WI 53013
PHONE: (618) 210-6153
ATTN: MR. DALE MEEUSEN
EMAIL: Dale.Meeusen@we-energies.com

GAS

WE ENERGIES - LOCAL
5400 N. GREEN BAY AVENUE
MILWAUKEE, WI 53209
PHONE: (414) 944-5623
MOBILE: (414) 840-9927
ATTN: MR. GEORGE SPARANGIS
EMAIL: George.Sparangis@we-energies.com

DIGGERS HOTLINE
Dial 811 or (800)242-8511
www.DiggersHotline.com

DESIGN CONTACT

GREMMER & ASSOCIATES, INC.
93 S. PIONEER ROAD, SUITE 300
FOND DU LAC, WI 54935
PHONE: (920) 924-5720
ATTN: MR. JEFFREY CHVOSTA
EMAIL: j.chvosta@gremmerassociates.com

DNR AREA LIAISON

WISCONSIN DEPT. OF NATURAL RESOURCES
2300 N. DR. MARTIN LUTHER KING JR. DR.
MILWAUKEE, WI 53212
PHONE: (414) 263-8517
ATTN: MS. KRISTINA BETZOLD
EMAIL: kristina.betzold@wisconsin.gov

OZAUKEE COUNTY CONTACT

MR. JON EDGREN
DIRECTOR OF PUBLIC WORKS
OZAUKEE COUNTY HIGHWAY DEPARTMENT
410 SOUTH SPRING STREET
PORT WASHINGTON, WI 53074
PHONE: (262) 284-8331
EMAIL: jedgren@co.ozaukee.wi.us

VILLAGE OF BELGIUM CONTACT

MS. VICKIE BOEHNLEIN
VILLAGE PRESIDENT
104 PETER THEIN AVENUE
BELGIUM, WI 53004
PHONE: (262) 285-7931
EMAIL: vboehnlein@village.belgium.wi.us

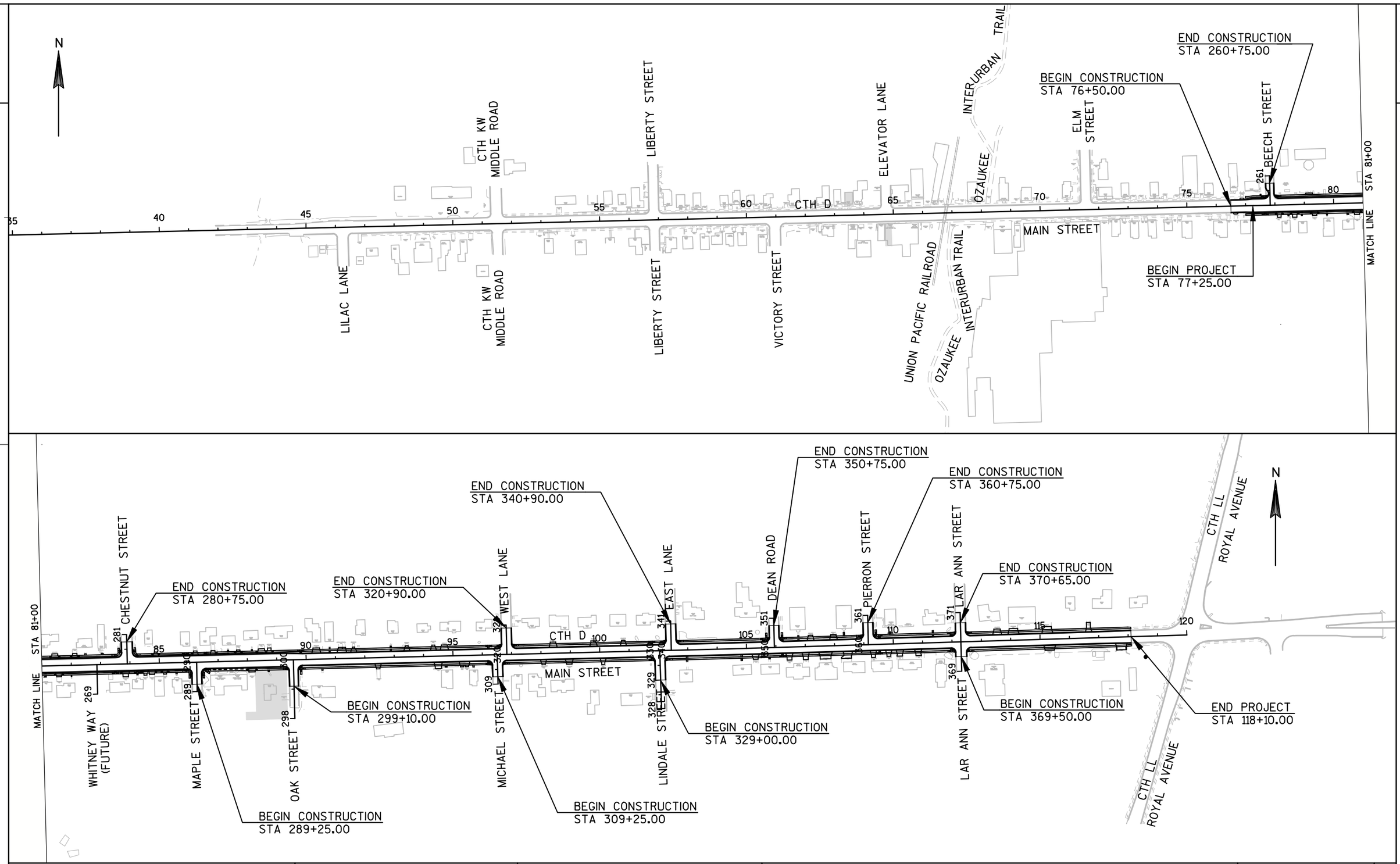

PROJECT NO:4880-01-71	HWY:CTH D	COUNTY:OZAUKEE	PROJECT OVERVIEW: CTH D	SHEET 3	E

FILE NAME : S:\CURRPROJ\OZAUKEECO\CTH D\CIVIL3D\48800100\SHEETSPLAN\48800100-020201-PO.DWG PLOT DATE : 2/1/2017 7:51 AM PLOT BY : AARON SARAUER PLOT NAME : PLOT SCALE : 1:300_XREF

WISDOT/CADDS SHEET 42

SIDE ROADS													
STREET	LEFT SIDE						RIGHT SIDE						F-F
	ROW (R)	SIDEWALK (S)	TERRACE (T)	OVERALL WIDTH (W)	LANE WIDTH (L)	LATERAL CLEARANCE (C)	LATERAL CLEARANCE (C)	LANE WIDTH (L)	OVERALL WIDTH (W)	TERRACE (T)	SIDEWALK (S)	ROW (R)	
BEECH ST	20.2'	N/A	N/A	12'	0	16'	4.5'	12'	12.5'	N/A	N/A	N/A	28.5'
CHESTNUT ST	30.5'	5'	5.5'-5.75'	17.5	12'	9.5'	9'-9.5'	12'	17'-17.5'	5.5'	5'	29.5'	38.5'-39'
MAPLE ST	26.5'	4.5'	4.5'	15.5'	12'	7.5'	7'-7.5'	12'	15'-15.5'	4.5'	4.5'	26.5'	34.5'-35'
OAK ST	25'	N/A	N/A	14'	12'	6'	6'	12'	14'	6.75'	5'	25'	32'
MICHAEL ST	32'	N/A	N/A	16'	12'	8'	8'	12'	16'	N/A	N/A	28'	36'
WEST LN	30'	N/A	N/A	16'	12'	8'	7.5'-8'	12'	15.5'-16'	N/A	N/A	30'	35.5'-36'
LINDALE ST	31.4'	N/A	N/A	16'	12'	8'	8'	12'	16'	N/A	N/A	31'	36'
EAST LN	30'	N/A	N/A	16'	12'	8'	7.5'	12'	15.5'	N/A	N/A	30'	35.5'
DEAN RD	30'	5'	6.5'	15.25'	12'	7.25'	7'	12'	15'	6.5'	5'	30'	34.25'
PIERRON ST	30'	N/A	N/A	15.5'	12'	7.5'	7.25'	12'	15.25'	6.5'	5'	30'	34.75'
S LAR ANN ST	30'	N/A	N/A	15.5'	12'	7.5'	8'	12'	16'	N/A	N/A	30'	35.5'
N LAR ANN ST	30'	N/A	N/A	17.25'	12'	9.25'	9.25'	12'	17.25'	N/A	N/A	30'	38.5'

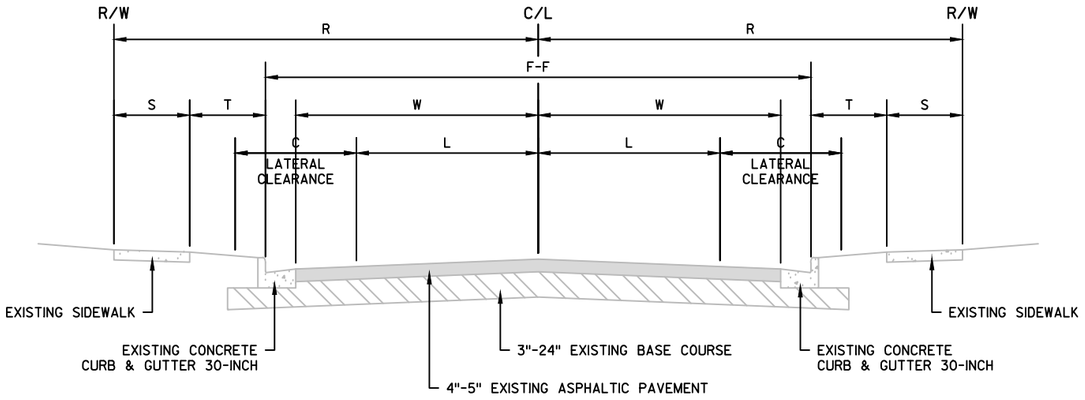

EXISTING TYPICAL SECTION
SIDE ROADS

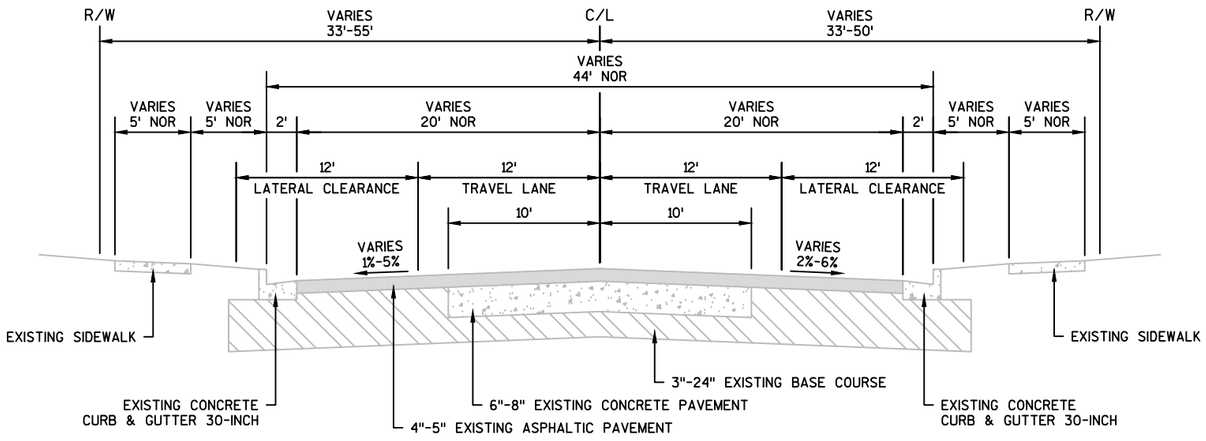

EXISTING TYPICAL SECTION
CTH D
STA 76+50 - STA 118+10

PROJECT NO: 4880-01-71	HWY: CTH D	COUNTY: OZAUKEE	TYPICAL SECTIONS	SHEET 4	E

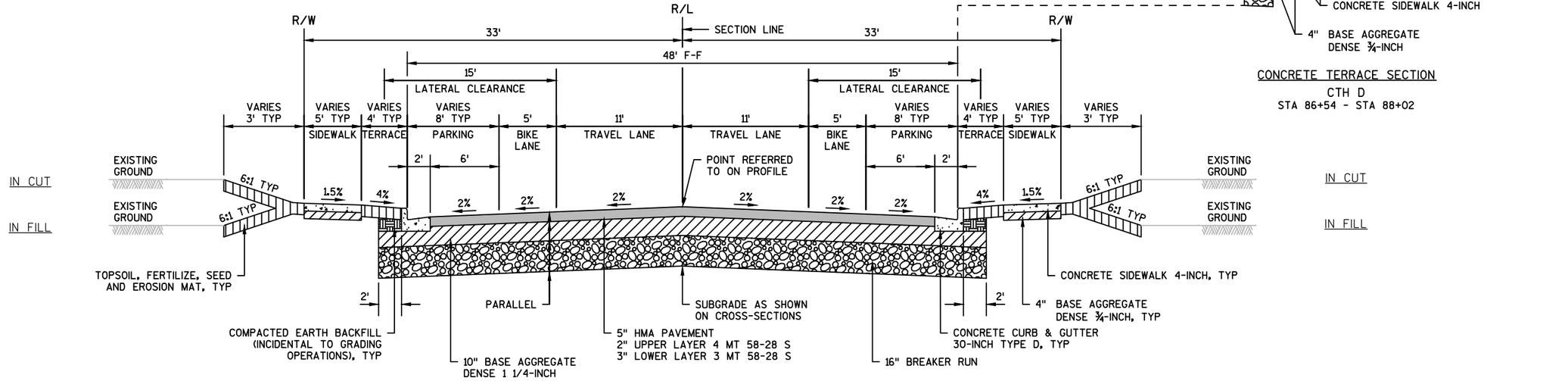

FINISHED TYPICAL SECTION

CTH D
STA 77+25 - STA 91+00

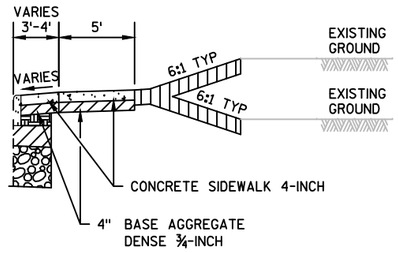

CONCRETE TERRACE SECTION

CTH D
STA 86+54 - STA 88+02

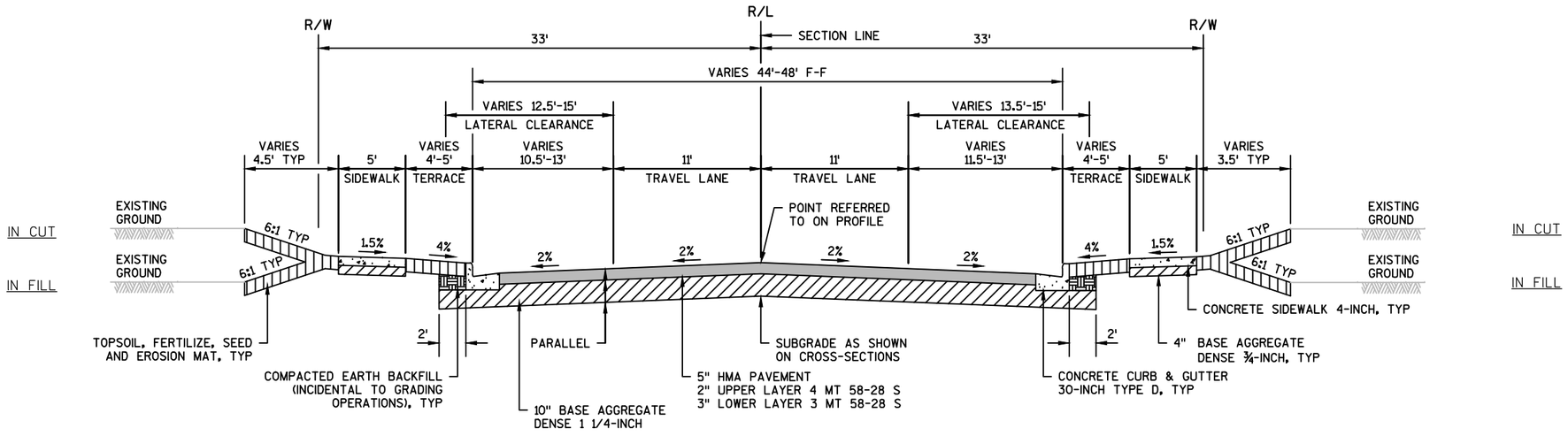

FINISHED TYPICAL SECTION

CTH D
STA 76+50 - STA 77+25

PROJECT NO: 4880-01-71	HWY: CTH D	COUNTY: OZAUKEE	TYPICAL SECTIONS	SHEET 5	E

SIDE ROADS

STREET	LEFT SIDE							RIGHT SIDE							F-F
	ROW (R)	(X)	SIDEWALK (S)	TERRACE (T)	OVERALL WIDTH (W)	LANE WIDTH (L)	LATERAL CLEARANCE (C)	LATERAL CLEARANCE (C)	LANE WIDTH (L)	OVERALL WIDTH (W)	TERRACE (T)	SIDEWALK (S)	(X)	ROW (R)	
BEECH ST	20.2'	5'	N/A	N/A	3.5'-12.5'	0	7.5'-16.5'	4.5'	12'	12.5'	N/A	N/A	5'	N/A	20'-29'
CHESTNUT ST	30.5'	3'	5'	6'	17.5'	12'	9.5'	9.5'	12'	17.5'	5'	5'	3'	29.5'	39'
MAPLE ST	26.5'	3'	5'	4'	15.5'	12'	7.5'	7.5'	12'	15.5'	3.5'	5'	3'	26.5'	35'
OAK ST	25'	5'	N/A	N/A	14'	12'	6'	6'	12'	14'	7'	5'	3'	30'	32'
MICHAEL ST	32'	7.5'	N/A	N/A	16'	12'	8'	8'	12'	16'	N/A	N/A	5'	28'	36'
WEST LN	30'	5'	N/A	N/A	16'	12'	8'	8'	12'	16'	N/A	N/A	5'	30'	36'
LINDALE ST	31.4'	5'	N/A	N/A	16'	12'	8'	8'	12'	16'	N/A	N/A	5'	31'	36'
EAST LN	30'	5'	N/A	N/A	16'	12'	8'	8'	12'	16'	N/A	N/A	5'	30'	36'
DEAN RD	30'	3'	5'	6.75'	15.25'	12'	7.25'	7.25'	12'	15.25'	6.75'	5'	3'	30'	34.5'
PIERRON ST	30'	5'	N/A	N/A	15.5'	12'	7.5'	7.5'	12'	15.5'	6'	5'	3'	30'	35'
S LAR ANN ST	30'	5'	N/A	N/A	17.5'	12'	9.5'	9.5'	12'	17.5'	N/A	N/A	5'	30'	39'
N LAR ANN ST	30'	5'	N/A	N/A	16'	12'	8'	8'	12'	16'	N/A	N/A	5'	30'	36'

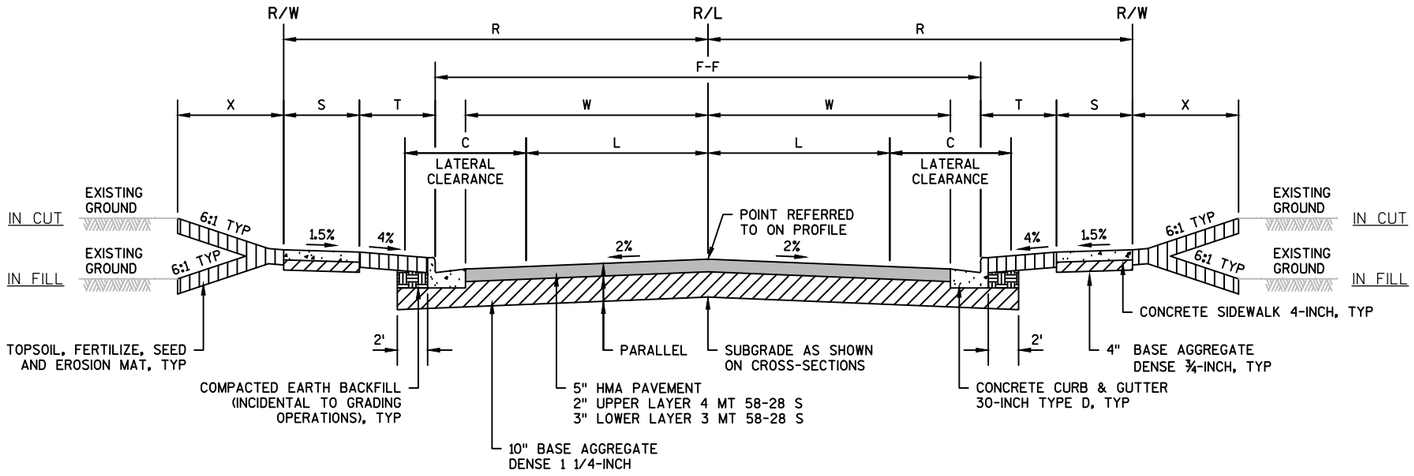

FINISHED TYPICAL SECTION
SIDE ROADS

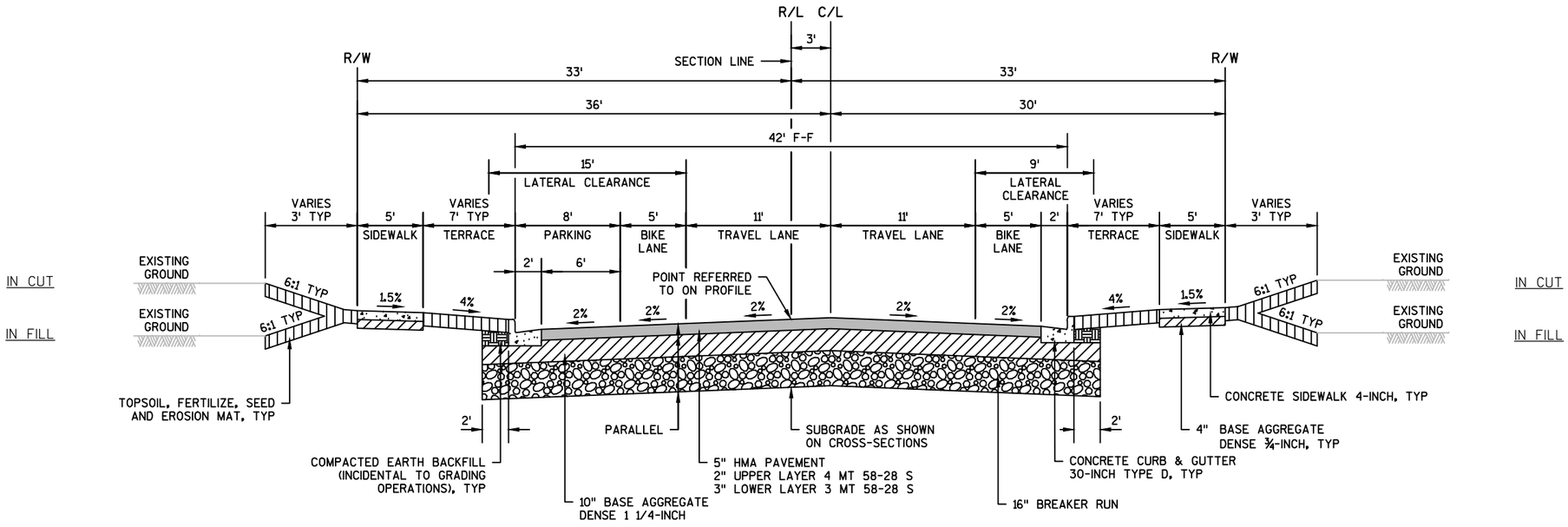

FINISHED TYPICAL SECTION
CTH D
STA 91+00 - STA 118+10

PROJECT NO: 4880-01-71	HWY: CTH D	COUNTY: OZAUKEE	TYPICAL SECTIONS	SHEET 6	E

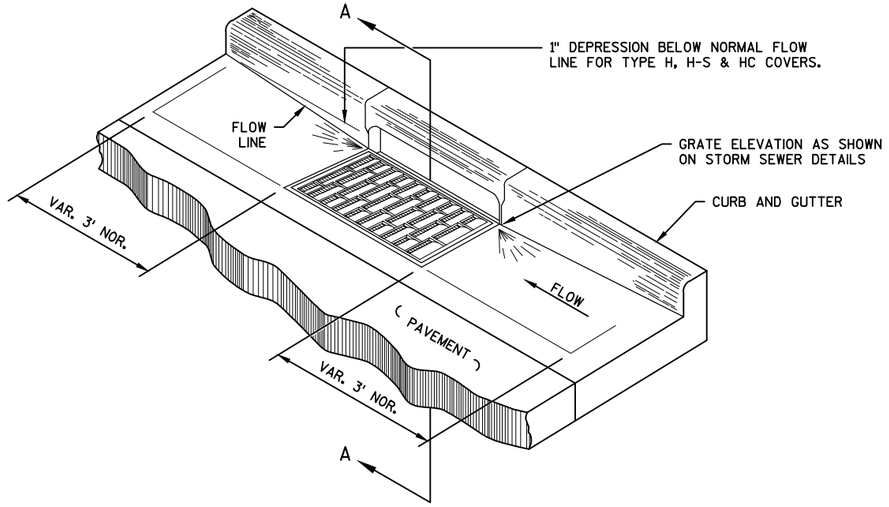

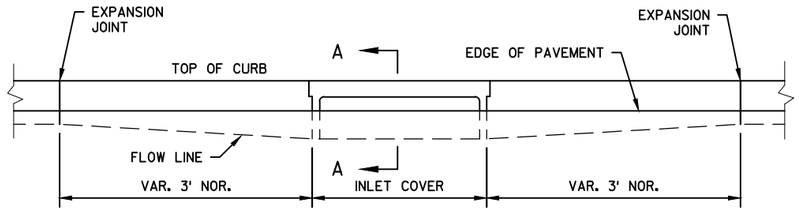

ELEVATION

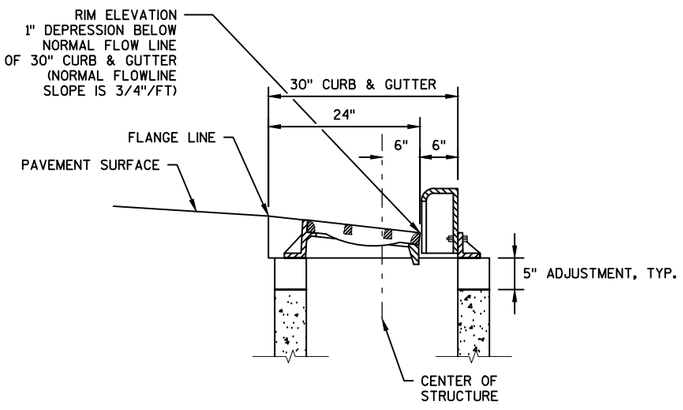

(CATCH BASINS/ INLETS 2'X3'-H & 2'X3'-HS)

SECTION A-A

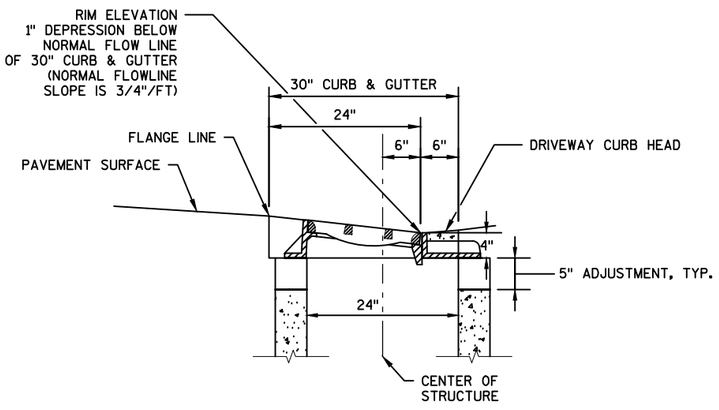

(CATCH BASINS/ INLETS 2'X3'-HC)

SECTION A-A

CURB AND GUTTER DETAIL AT INLETS

PROJECT NO: 4880-01-71	HWY: CTH D	COUNTY: OZAUKEE	CONSTRUCTION DETAILS	SHEET 7	E

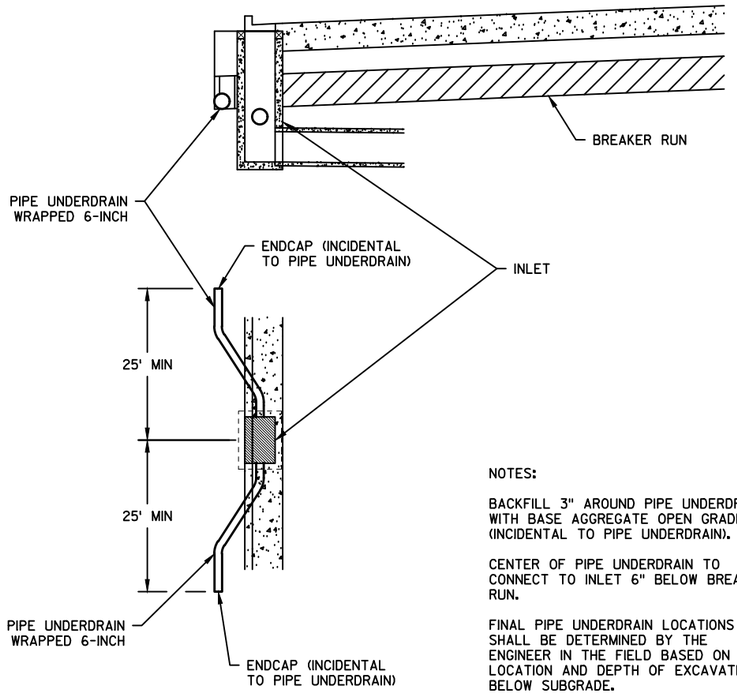

NOTES:

BACKFILL 3" AROUND PIPE UNDERDRAIN WITH BASE AGGREGATE OPEN GRADED (INCIDENTAL TO PIPE UNDERDRAIN).

CENTER OF PIPE UNDERDRAIN TO CONNECT TO INLET 6" BELOW BREAKER RUN.

FINAL PIPE UNDERDRAIN LOCATIONS SHALL BE DETERMINED BY THE ENGINEER IN THE FIELD BASED ON LOCATION AND DEPTH OF EXCAVATION BELOW SUBGRADE.

DETAIL FOR PIPE UNDERDRAIN AT CURB & GUTTER INLETS

NOTES:

STORM SEWER LATERALS SHALL BE INSTALLED WITH 4-FEET OF DESIRABLE COVER AND 3-FEET OF MINIMUM COVER.

STORM SEWER LATERALS WHEN CONNECTED DIRECTLY TO THE STORM SEWER PIPE SHALL BE AT AN ELEVATION NO LOWER THAN THE SPRING LINE.

STORM SEWER LATERAL DEPTHS SHALL BE ADJUSTED TO AVOID UTILITY CONFLICTS.

STORM SEWER LATERALS SHALL BE CAPPED AT A POINT BEYOND THE RIGHT-OF-WAY LINE OR SHALL BE CONNECTED TO AN EXISTING PIPE.

STORM SEWER LATERAL LOCATIONS SHALL BE COORDINATED WITH THE VILLAGE OF BELGIUM AND SHALL BE VERIFIED BY THE ENGINEER IN THE FIELD.

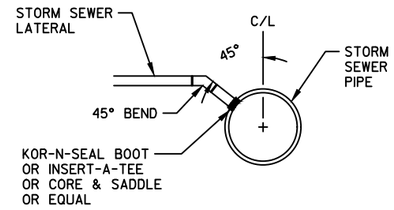

STORM SEWER PIPE CONNECTION

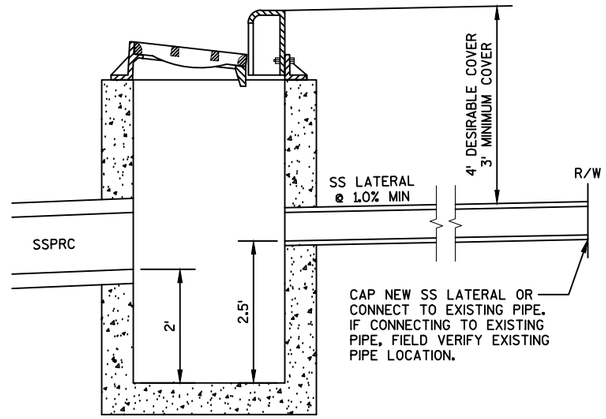

CATCH BASIN CONNECTION

STORM SEWER LATERAL CONNECTION

(INCIDENTAL TO STORM LATERAL BID ITEM)

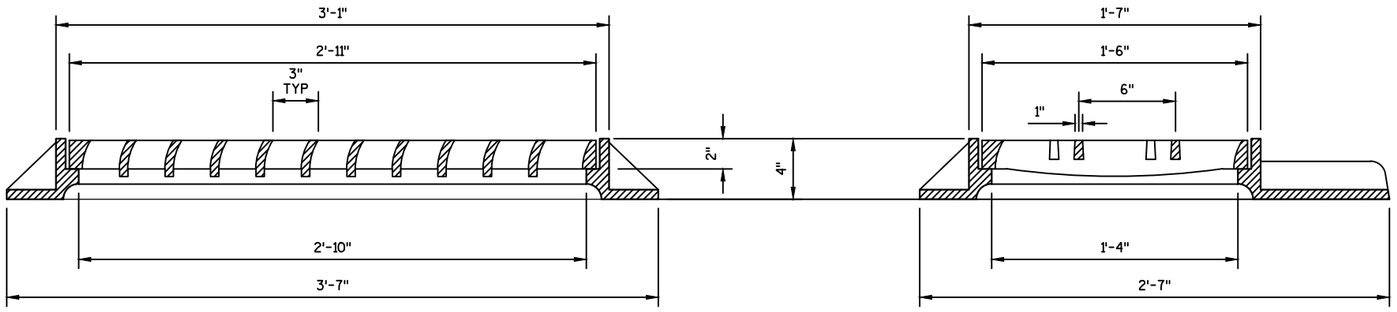

FRONT VIEW

SIDE VIEW

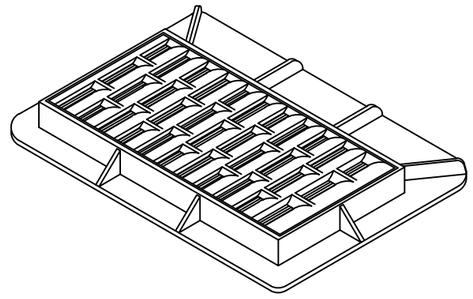

ISOMETRIC VIEW

INLET COVER TYPE HC

PROJECT NO: 4880-01-71	HWY: CTH D	COUNTY: OZAUKEE	CONSTRUCTION DETAILS	SHEET 8	E

NOTES:

ALL RISERS SHALL BE SAME HEIGHT. RISER HEIGHT SHALL BE 4" MINIMUM AND 8" MAXIMUM.

ALL TREADS SHALL BE SAME DEPTH. TREAD DEPTH SHALL BE 11" MINIMUM AND 12" MAXIMUM.

ACTUAL HEIGHT AND NUMBER OF STEPS MAY VARY DUE TO FIELD CONDITIONS.

STEEL REINFORCEMENT AND PIPE RAILING NOT REQUIRED ON STEPS WITH 2 RISERS OR LESS. ALL STEEL TO 2" CLEAR.

MINIMUM WIDTH OF STEP SHALL BE 4 FEET.

NUMBER OF STEPS LISTED IN PLANS EQUALS NUMBER OF RISERS.

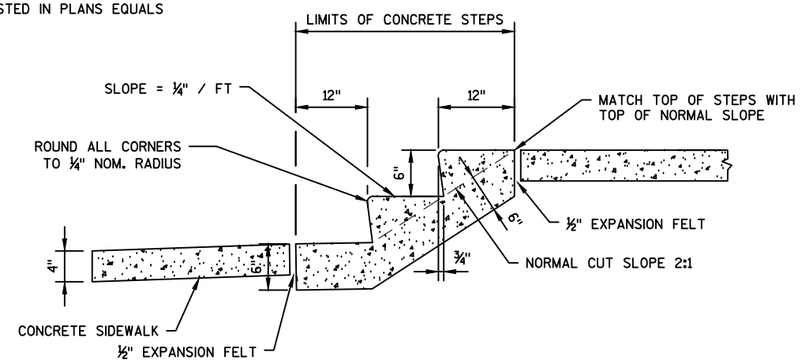

CONCRETE STEPS DETAIL

SEE PLAN SHEETS FOR LOCATIONS

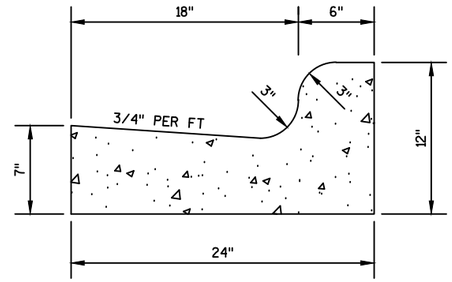

24" CURB & GUTTER DETAIL

SEE PLAN SHEETS FOR LOCATIONS

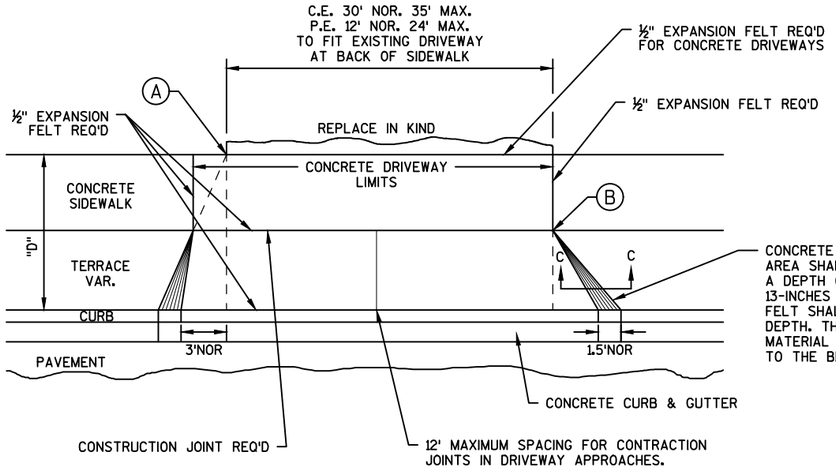

PLAN VIEW

Ⓐ WHEN "D" IS 13' OR LESS, ALIGN TAPER WITH BACK OF SIDEWALK

Ⓑ WHEN "D" IS GREATER THAN 13', ALIGN TAPER WITH FRONT OF SIDEWALK

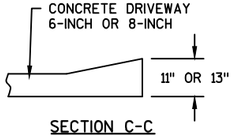

SECTION C-C

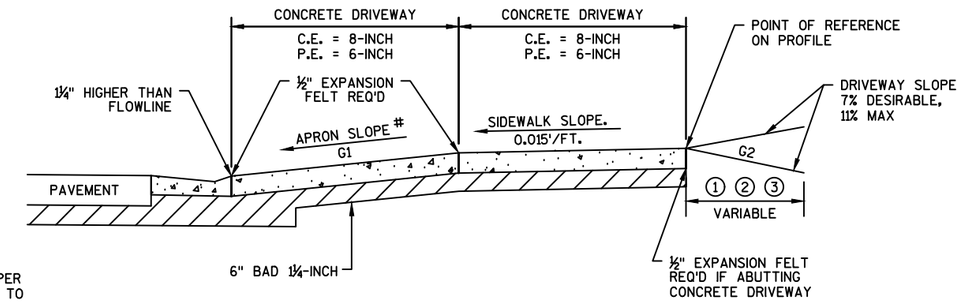

TYPICAL SIDEWALK SECTION

① — C.E. 8" CONC DWY OVER 6" BAD 1¼-INCH
P.E. 6" CONC DWY OVER 6" BAD 1¼-INCH

② — 6" BASE AGG. DENSE ¾-INCH

③ — C.E. 4" ASPH SURFACE OVER 6" BAD 1¼-INCH
P.E. 3" ASPH SURFACE OVER 6" BAD 1¼-INCH

\#

TERRACE WIDTH	APRON SLOPE (G1)		
	MIN %	DESIRABLE %	MAX %
3 FT	7.0	8.5	11.0
4 FT	5.0	7.0	11.0
5 FT	4.0	7.0	11.0
6 FT	4.0	7.0	11.0
7 FT	3.5	7.0	11.0
8 FT	3.0	7.0	11.0

NOTE: ALGEBRAIC DIFFERENCE BETWEEN TANGENT GRADES G1 & G2 TO NOT EXCEED 15%

DEPRESS SIDEWALK PROFILE IF DRIVEWAY APRON EXCEEDS MAX SLOPE

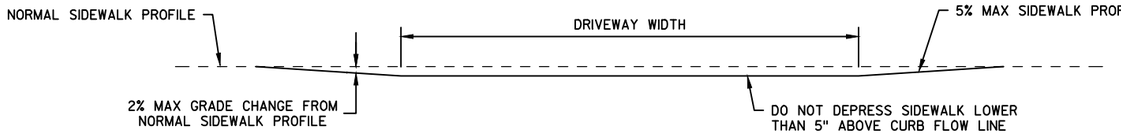

DEPRESSED SIDEWALK PROFILE DETAIL

URBAN ENTRANCE DETAIL WITH SIDEWALK, CURB & GUTTER

PROJECT NO: 4880-01-71	HWY: CTH D	COUNTY: OZAUKEE	CONSTRUCTION DETAILS	SHEET 9	E

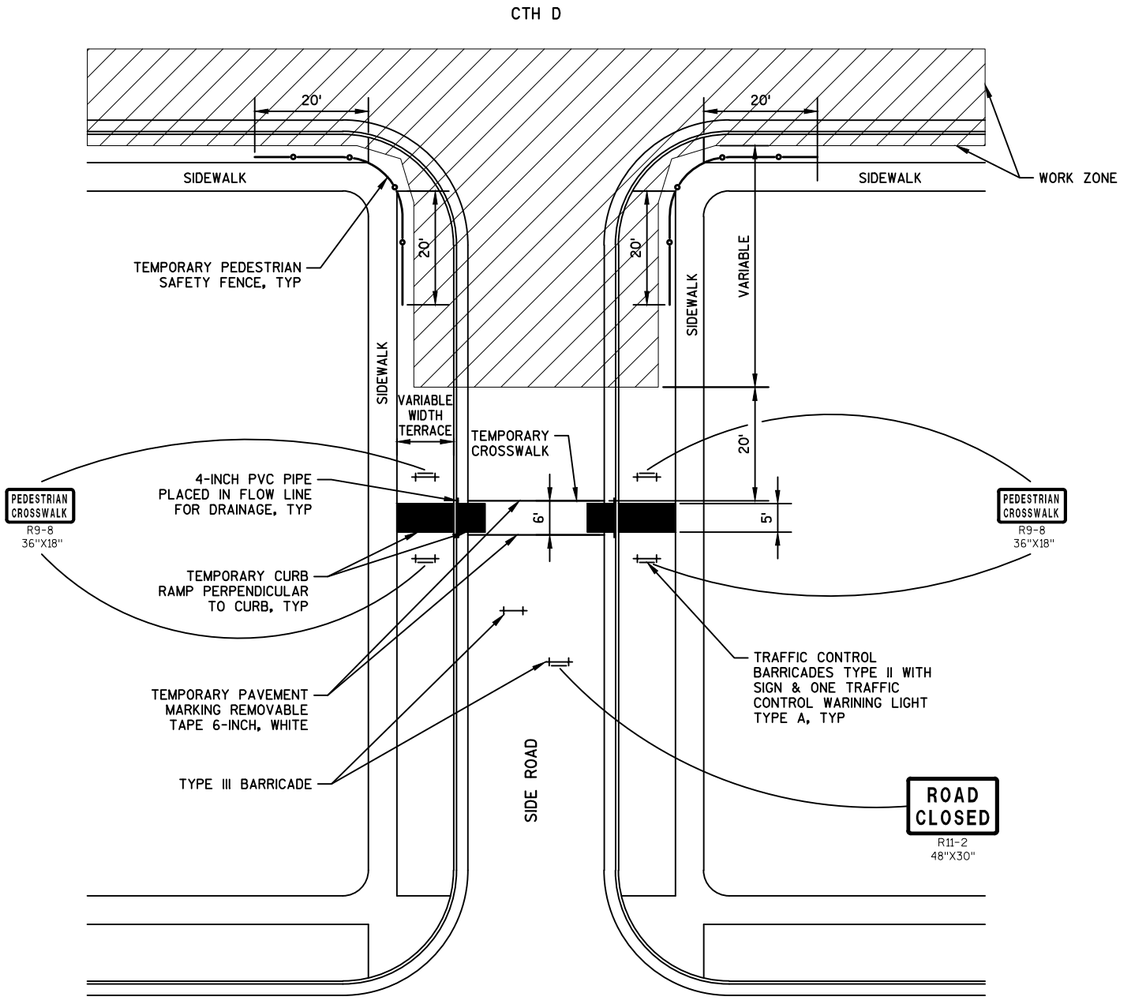

LOCATION OF TEMPORARY CROSSWALK
TO BE DETERMINED BY THE ENGINEER.
DO NOT LOCATE IN EXISTING DRIVEWAY.

TEMPORARY CROSSWALK DETAIL - SIDE ROAD OUTSIDE CONSTRUCTION LIMITS

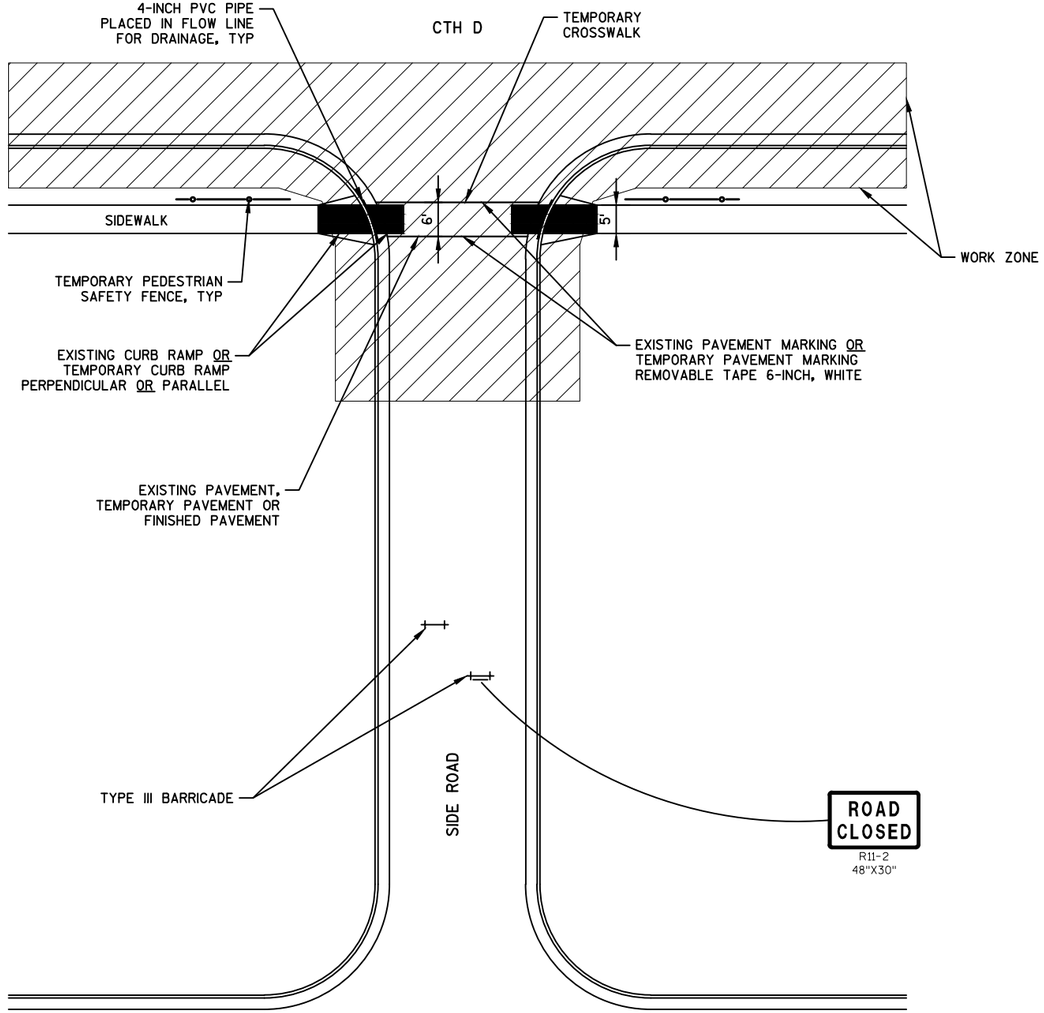

LOCATION OF TEMPORARY CROSSWALK
TO BE DETERMINED BY THE ENGINEER.

TEMPORARY CROSSWALK DETAIL - SIDE ROAD INSIDE CONSTRUCTION LIMITS

NOTES:

ACTUAL DIMENSIONS AND REINFORCEMENT MAY VARY DUE TO FIELD CONDITIONS.

STEEL REINFORCEMENT SHALL BE INCIDENTAL TO BID ITEM.

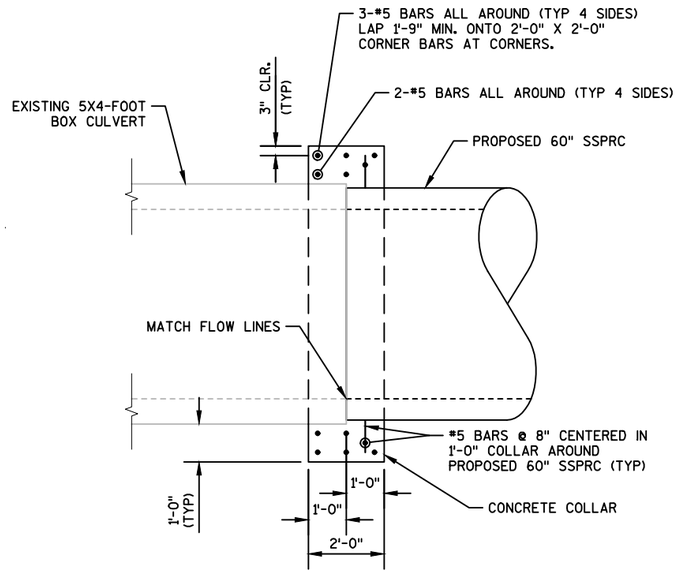

SECTION A-A

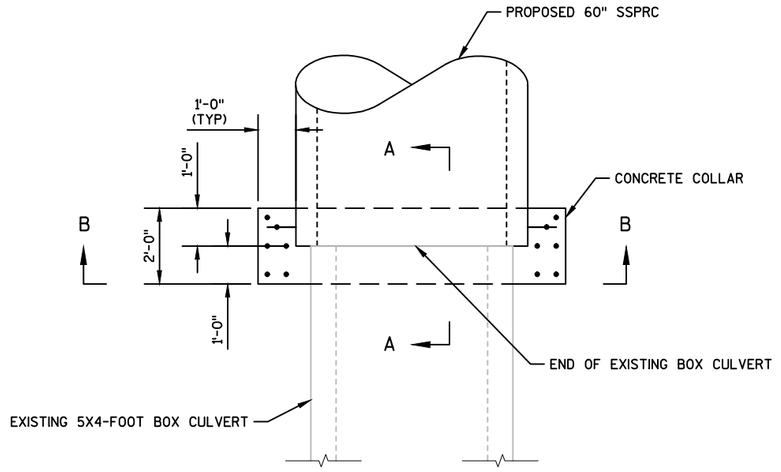

PLAN

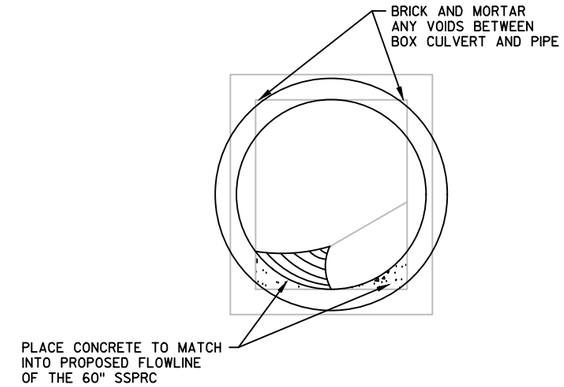

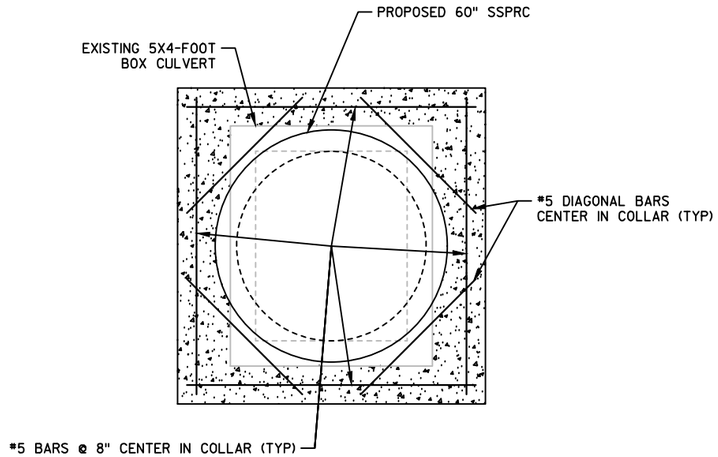

SECTION B-B

CONNECTION TO EXISTING BOX CULVERT CONCRETE COLLAR DETAIL

PROJECT NO: 4880-01-71	HWY: CTH D	COUNTY: OZAUKEE	CONSTRUCTION DETAILS	SHEET 11	E

	HYDROLOGIC SOIL GROUP											
	A			B			C			D		
	SLOPE RANGE (PERCENT)			SLOPE RANGE (PERCENT)			SLOPE RANGE (PERCENT)			SLOPE RANGE (PERCENT)		
LAND USE:	0-2	2-6	6 & OVER	0-2	2-6	6 & OVER	0-2	2-6	6 & OVER	0-2	2-6	6 & OVER
ROW CROPS	.08 .22	.16 .30	.22 .38	.12 .26	.20 .34	.27 .44	.15 .30	.24 .37	.33 .50	.19 .34	.28 .41	.38 .56
MEDIAN STRIP-TURF	.19 .24	.20 .26	.24 .30	.19 .25	.22 .28	.26 .33	.20 .26	.23 .30	.30 .37	.20 .27	.25 .32	.30 .40
SIDE SLOPE-TURF			.25 .32			.27 .34			.28 .36			.25 .38
PAVEMENT:												
ASPHALT	.70 - .95											
CONCRETE	.80 - .95											
BRICK	.70 - .80											
DRIVES, WALKS	.75 - .85											
ROOFS	.75 - .95											
GRAVEL ROADS, SHOULDERS	.40 - .60											

TOTAL PROJECT AREA = 8.451 ACRES
TOTAL AREA EXPECTED TO BE DISTURBED BY CONSTRUCTION ACTIVITIES = 7.578 ACRES

RUNOFF COEFFICIENT TABLE

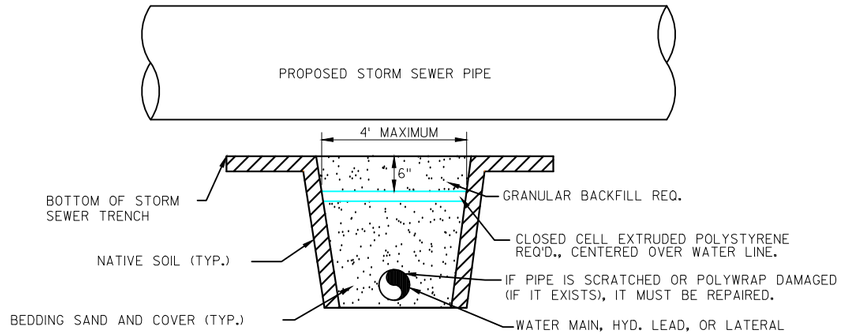

GRANULAR BACKFILL SHALL BE LEVELED OUT SO INSULATION IS UNIFORMLY SUPPORTED, ESPECIALLY IF ANY SHEETS ARE OVERLAPPED

EXTRUDED POLYSTYRENE TO BE MIN. 2-INCH THICK.
SEE PLAN SHEETS FOR DETAILS.

INSULATION BOARD POLYSTYRENE, 2-INCH

NOTES:

TOTAL LENGTH OF PIPE BEND TO EQUAL
L1 + L2 = 8'-0".

BEND SHALL BE REINFORCED CONCRETE IN ACCORDANCE WITH STANDARD SPECIFICATION 608.2.1.

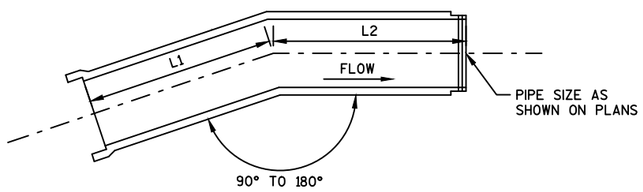

STORM SEWER BEND DETAIL

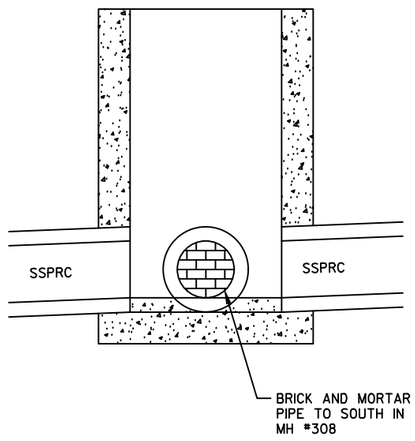

STORM SEWER BULKHEAD DETAIL

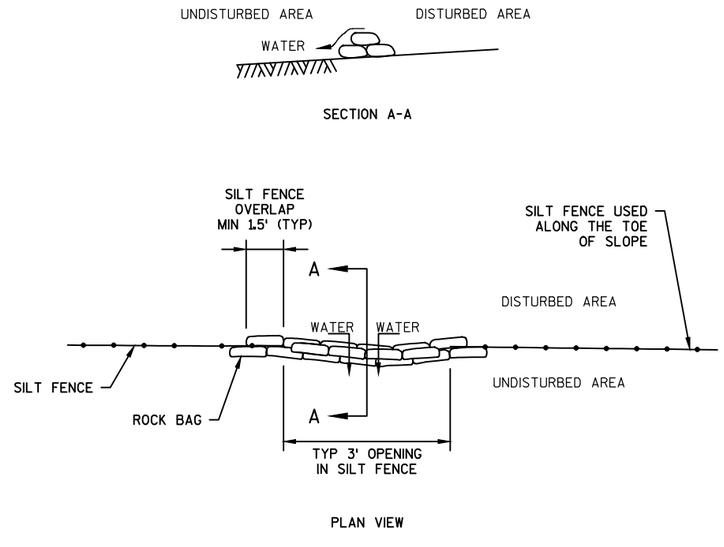

ROCK BAGS USED FOR SILT FENCE RELIEF POINT

ROCK BAGS DETAIL

PROJECT NO: 4880-01-71	HWY: CTH D	COUNTY: OZAUKEE	CONSTRUCTION DETAILS	SHEET 12	E

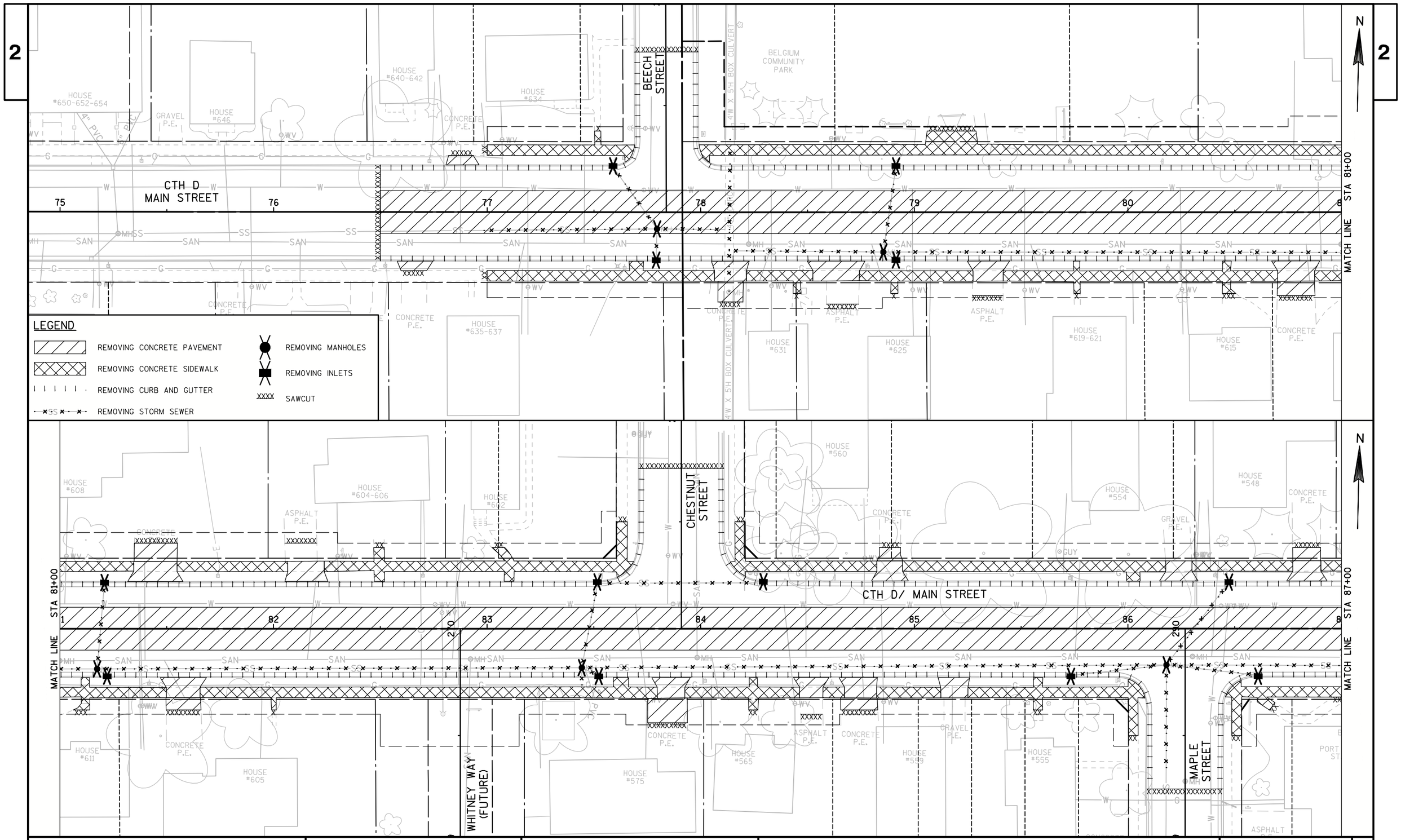

PROJECT NO: 4880-01-71	HWY: CTH D	COUNTY: OZAUKEE	REMOVAL PLAN: CTH D	SHEET 13 E

FILE NAME : S:\CURRPROJ\OZAUKEECO\CTH D\CIVIL3D\48800100\SHEETSPLAN\48800100-021101-RM.DWG PLOT DATE : 1/24/2017 9:02 AM PLOT BY : AARON SARAUER PLOT NAME : PLOT SCALE : 1:40_XREF

WISDOT/CADDS SHEET 42

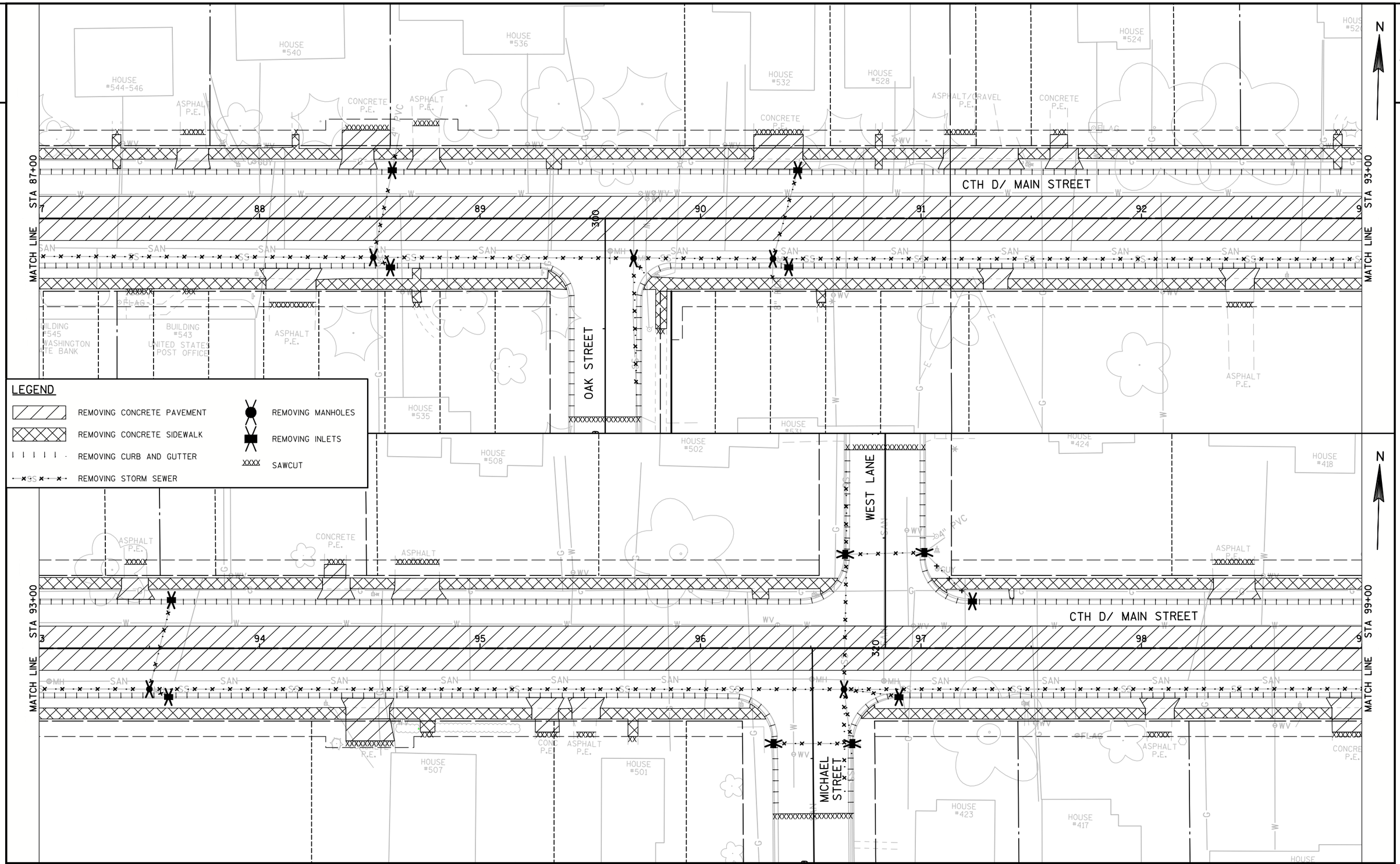

PROJECT NO: 4880-01-71	HWY: CTH D	COUNTY: OZAUKEE	REMOVAL PLAN: CTH D	SHEET 14	E

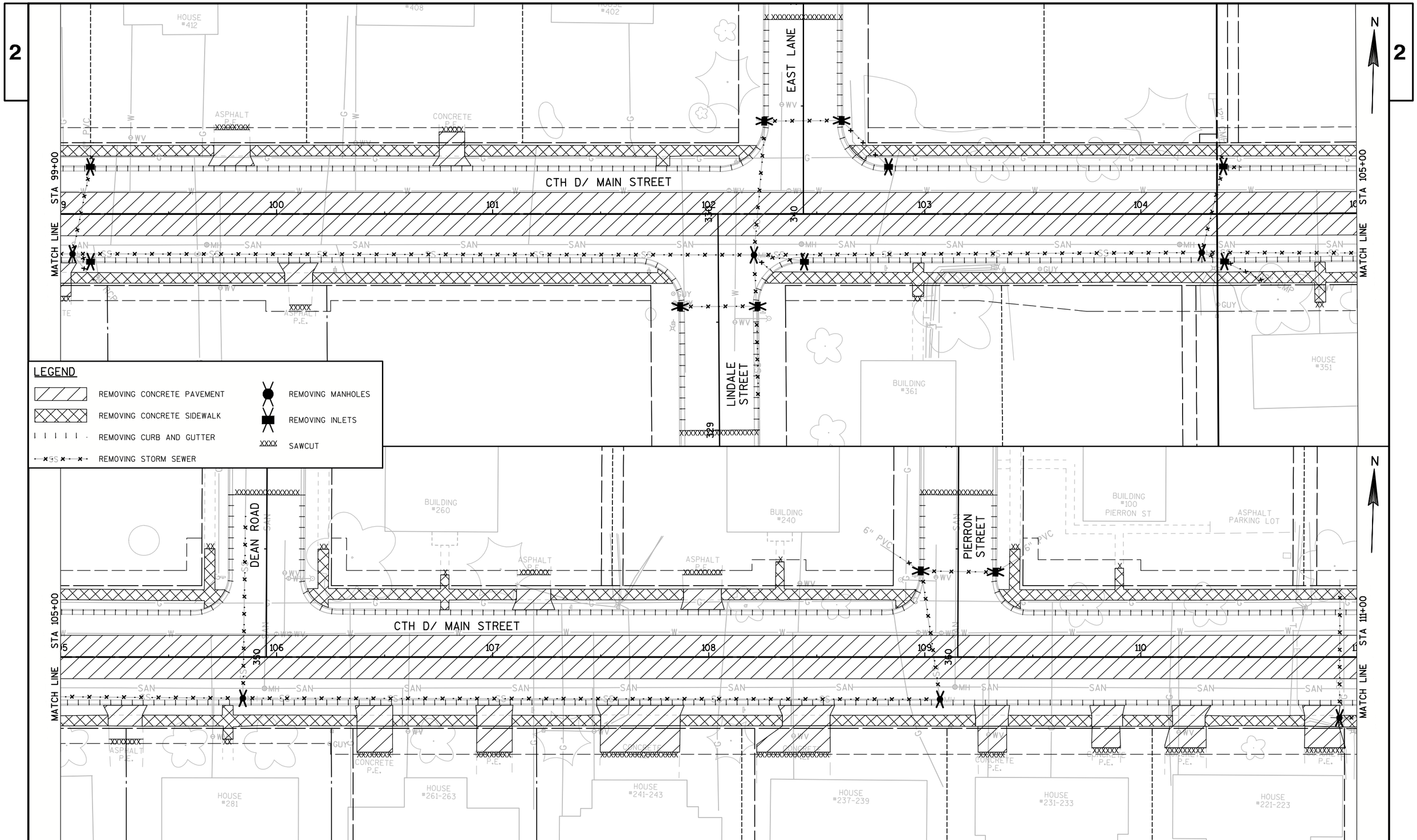

PROJECT NO:4880-01-71	HWY:CTH D	COUNTY:OZAUKEE	REMOVAL PLAN: CTH D	SHEET 15	E

FILE NAME : S:\CURRPROJ\OZAUKEECO\CTH D\CIVIL3D\48800100\SHEETSPLAN\48800100-021101-RM.DWG PLOT DATE : 1/24/2017 9:02 AM PLOT BY : AARON SARAUER PLOT NAME : PLOT SCALE : 1:40_XREF

WISDOT/CADDS SHEET 42

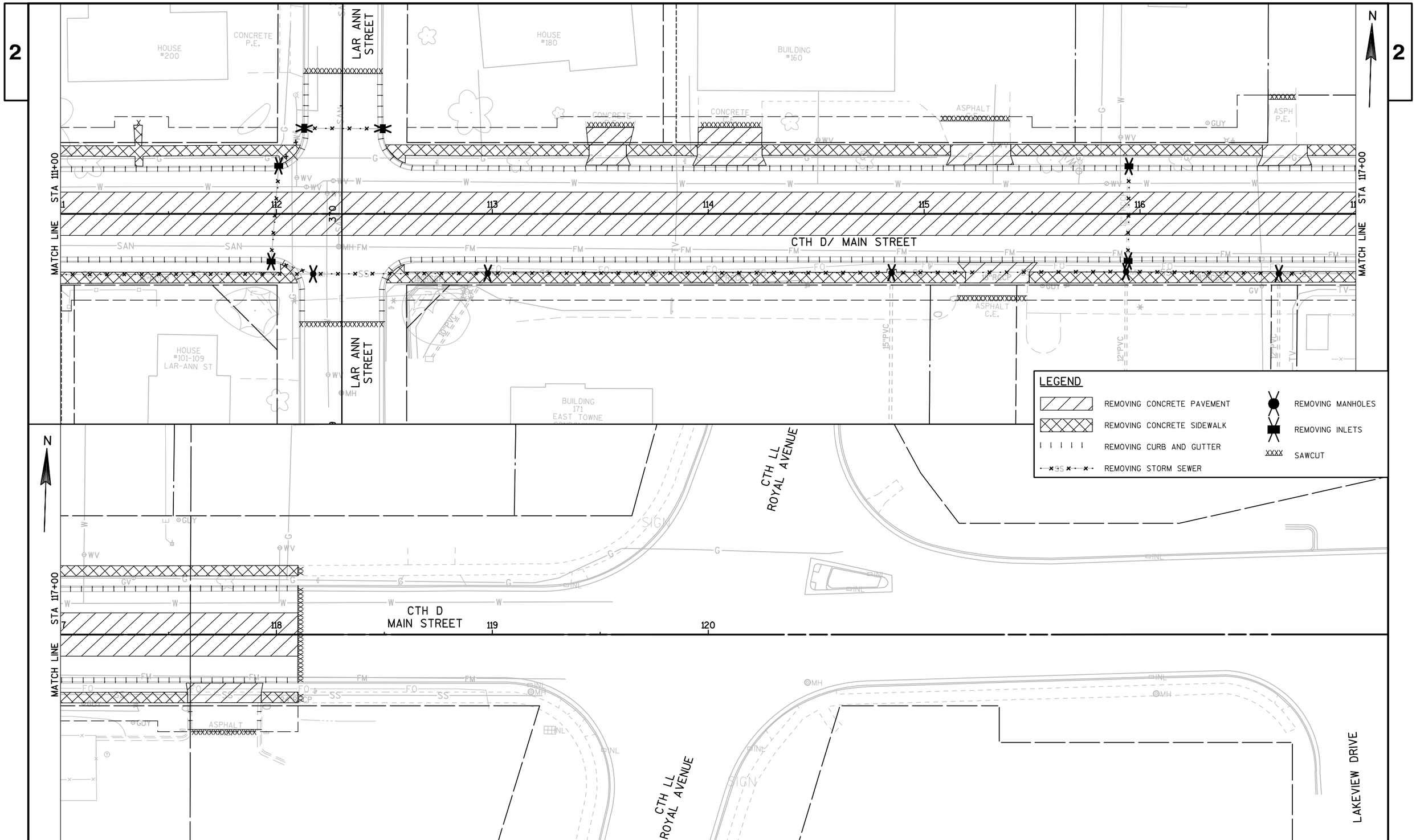

PROJECT NO:4880-01-71	HWY:CTH D	COUNTY:OZAUKEE	REMOVAL PLAN: CTH D	SHEET 16	E

FILE NAME : S:\CURRPROJ\OZAUKEECO\CTH D\CIVIL3D\48800100\SHEETSPLAN\48800100-021101-RM.DWG PLOT DATE : 1/24/2017 9:03 AM PLOT BY : AARON SARAUER PLOT NAME : PLOT SCALE : 1:40_XREF

WISDOT/CADDS SHEET 42

LEGEND

- 2M CONCRETE CURB RAMP TYPE 2 MODIFIED
- 3M CONCRETE CURB RAMP TYPE 3 MODIFIED
- 4B1M CONCRETE CURB RAMP TYPE 4B1 MODIFIED
- 7BM CONCRETE CURB RAMP TYPE 7B MODIFIED
- 8 CONCRETE CURB RAMP TYPE 8

NOTES:

REFER TO SDD " CURB RAMPS" FOR JOINT LOCATIONS AND ADDITIONAL DETAILS.

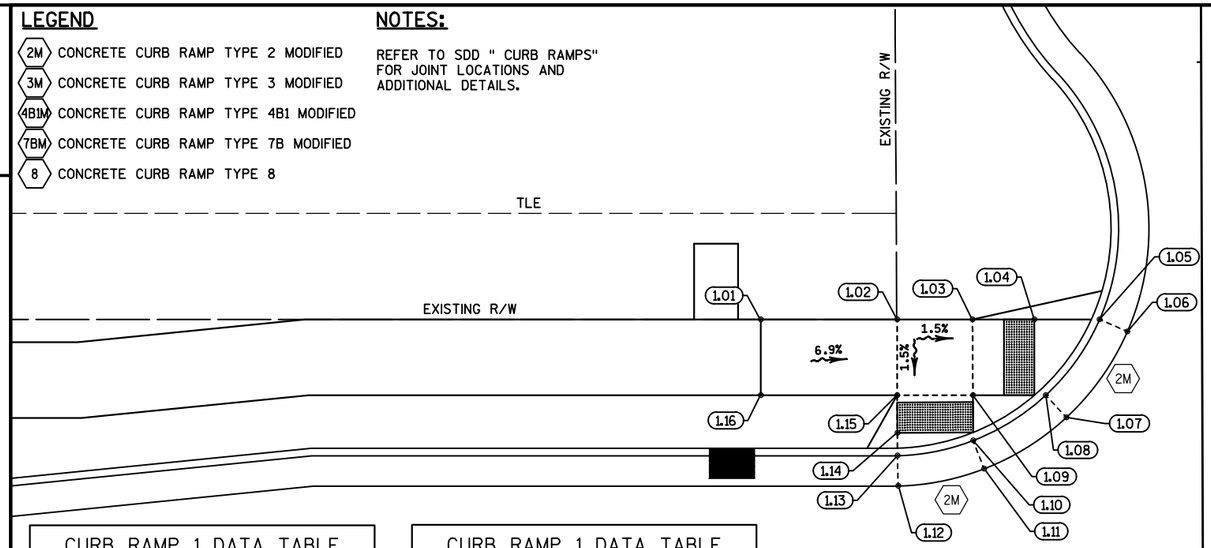

CURB RAMP 1 DATA TABLE			
NUMBER	STATION	OFFSET	ELEVATION
1.01	77+54.66	-33.00	733.42
1.02	77+63.66	-33.00	732.79
1.03	77+68.64	-33.00	732.72
1.04	77+72.72	-33.00	732.53
1.05	77+77.02	-33.00	732.47
1.06	77+78.85	-32.20	732.60

CURB RAMP 1 DATA TABLE			
NUMBER	STATION	OFFSET	ELEVATION
1.07	77+74.83	-26.53	732.67
1.08	77+73.47	-28.00	732.54
1.09	77+68.66	-28.00	732.64
1.10	77+68.68	-25.01	732.61
1.11	77+69.40	-23.14	732.73
1.12	77+63.74	-22.01	732.79

CURB RAMP 1 DATA TABLE			
NUMBER	STATION	OFFSET	ELEVATION
1.13	77+63.68	-24.01	732.67
1.14	77+63.68	-25.52	732.69
1.15	77+63.66	-28.00	732.72
1.16	77+54.66	-28.00	733.34

BEECH STREET

CONSTRUCTION PERMIT

CONSTRUCTION PERMIT

CURB RAMP TYPE 4B1 MODIFIED		
RADIUS (AT CURB FACE)	W = 4'-0"	
	X	Y
15 FEET	3'-9"	3'-5½"

N

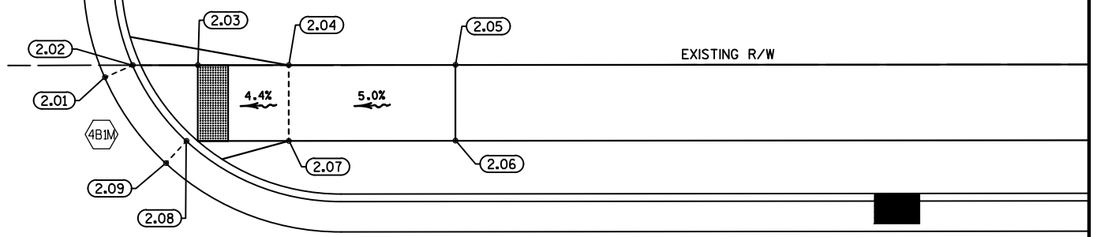

CURB RAMP 2 DATA TABLE			
NUMBER	STATION	OFFSET	ELEVATION
2.01	77+97.73	-32.20	732.39
2.02	77+99.56	-33.00	732.26
2.03	78+03.86	-33.00	732.32
2.04	78+09.86	-33.00	732.63
2.05	78+20.86	-33.00	733.20
2.06	78+20.86	-28.00	733.12

CURB RAMP 2 DATA TABLE			
NUMBER	STATION	OFFSET	ELEVATION
2.07	78+09.86	-28.00	732.64
2.08	78+03.11	-28.00	732.34
2.09	78+01.75	-26.53	732.47

78

CTH D
MAIN STREET

CURB RAMP 3 DATA TABLE			
NUMBER	STATION	OFFSET	ELEVATION
3.01	77+68.68	22.00	732.78
3.02	77+68.68	24.00	732.65
3.03	77+68.68	28.00	732.81
3.04	77+76.68	28.00	733.26
3.05	77+76.68	33.00	733.34
3.06	77+68.68	33.00	732.89
3.07	77+63.68	33.00	732.90

CURB RAMP 3 DATA TABLE			
NUMBER	STATION	OFFSET	ELEVATION
3.08	77+55.68	33.00	733.41
3.09	77+55.68	28.00	733.33
3.10	77+63.68	28.00	732.83
3.11	77+63.68	24.00	732.67
3.12	77+63.68	22.00	732.79
3.13	77+76.68	24.50	733.12
3.14	77+55.68	24.50	733.19

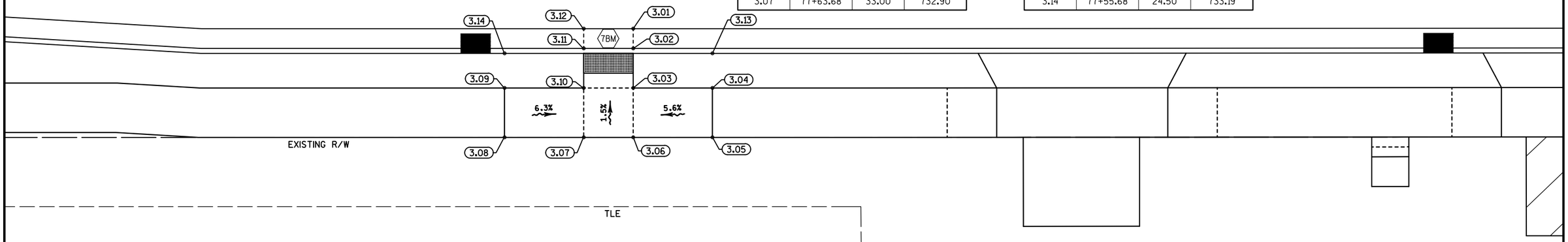

PROJECT NO: 4880-01-71	HWY: CTH D	COUNTY: OZAUKEE	CURB RAMP DETAILS: BEECH STREET	SHEET 17	E

2

CURB RAMP 4 DATA TABLE			
NUMBER	STATION	OFFSET	ELEVATION
4.01	83+39.46	-33.00	734.48
4.02	83+47.46	-33.00	733.98
4.03	83+52.46	-33.00	733.97
4.04	83+60.46	-41.00	733.79
4.05	83+60.46	-46.00	733.75
4.06	83+60.46	-54.00	733.98
4.07	83+65.46	-54.00	733.89

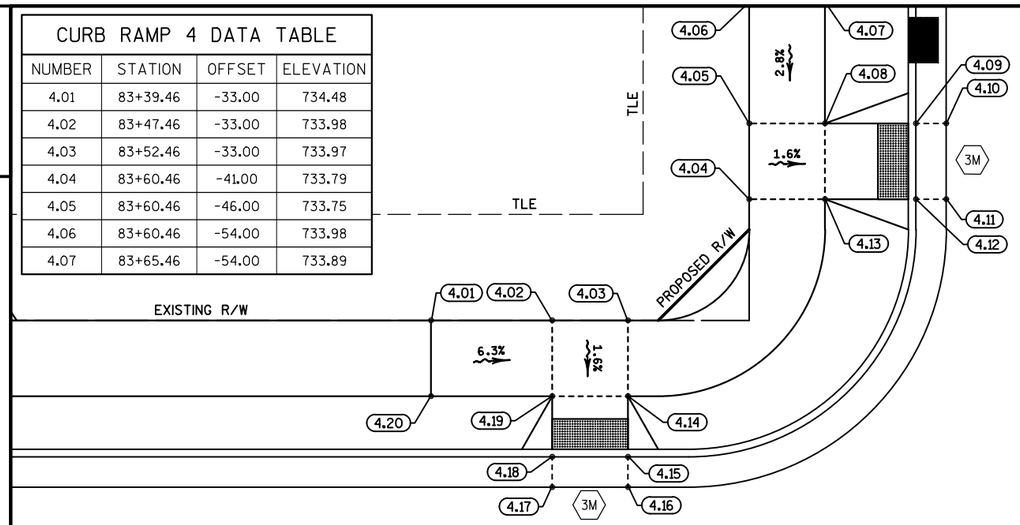

CURB RAMP 4 DATA TABLE			
NUMBER	STATION	OFFSET	ELEVATION
4.08	83+65.46	-46.00	733.67
4.09	83+71.46	-46.00	733.43
4.10	83+73.46	-46.00	733.55
4.11	83+73.46	-41.00	733.59
4.12	83+71.46	-41.00	733.47
4.13	83+65.46	-41.00	733.71
4.14	83+52.46	-28.00	733.89

CURB RAMP 4 DATA TABLE			
NUMBER	STATION	OFFSET	ELEVATION
4.15	83+52.46	-24.00	733.73
4.16	83+52.46	-22.00	733.85
4.17	83+47.46	-22.00	733.87
4.18	83+47.46	-24.00	733.74
4.19	83+47.46	-28.00	733.90
4.20	83+39.46	-28.00	734.40

CHESTNUT STREET

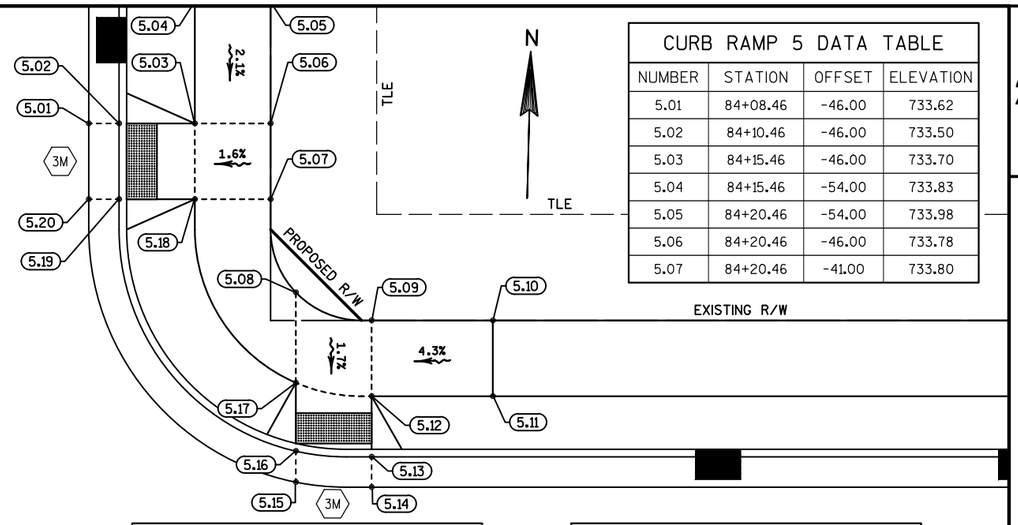

CURB RAMP 5 DATA TABLE			
NUMBER	STATION	OFFSET	ELEVATION
5.01	84+08.46	-46.00	733.62
5.02	84+10.46	-46.00	733.50
5.03	84+15.46	-46.00	733.70
5.04	84+15.46	-54.00	733.83
5.05	84+20.46	-54.00	733.98
5.06	84+20.46	-46.00	733.78
5.07	84+20.46	-41.00	733.80

CURB RAMP 5 DATA TABLE			
NUMBER	STATION	OFFSET	ELEVATION
5.08	84+22.14	-34.84	733.77
5.09	84+27.14	-33.00	733.75
5.10	84+35.14	-33.00	734.09
5.11	84+35.14	-28.00	734.01
5.12	84+27.14	-28.00	733.67
5.13	84+27.14	-24.00	733.51
5.14	84+27.14	-22.00	733.63

CURB RAMP 5 DATA TABLE			
NUMBER	STATION	OFFSET	ELEVATION
5.15	84+22.14	-22.33	733.64
5.16	84+22.14	-24.37	733.50
5.17	84+22.14	-28.88	733.68
5.18	84+15.46	-41.00	733.72
5.19	84+10.46	-41.00	733.52
5.20	84+08.46	-41.00	733.64

84

CURB RAMP 7 DATA TABLE			
NUMBER	STATION	OFFSET	ELEVATION
7.01	83+52.46	22.00	733.85
7.02	83+52.46	24.00	733.73
7.03	83+52.46	28.00	733.89
7.04	83+60.46	28.00	734.34
7.05	83+60.46	33.00	734.42
7.06	83+52.46	33.00	733.96
7.07	83+47.46	33.00	733.97

CURB RAMP 7 DATA TABLE			
NUMBER	STATION	OFFSET	ELEVATION
7.08	83+39.46	33.00	734.48
7.09	83+39.46	28.00	734.40
7.10	83+47.46	28.00	733.90
7.11	83+47.46	24.00	733.74
7.12	83+47.46	22.00	733.87
7.13	83+60.46	24.50	734.20
7.14	83+39.46	24.50	734.26

CTH D
MAIN STREET

CURB RAMP 6 DATA TABLE			
NUMBER	STATION	OFFSET	ELEVATION
6.01	84+27.14	22.00	733.63
6.02	84+27.14	24.00	733.50
6.03	84+27.14	28.00	733.66
6.04	84+35.14	28.00	733.90
6.05	84+35.14	33.00	733.97
6.06	84+27.14	33.00	733.73
6.07	84+22.14	33.00	733.75

CURB RAMP 6 DATA TABLE			
NUMBER	STATION	OFFSET	ELEVATION
6.08	84+14.14	33.00	734.26
6.09	84+14.14	28.00	734.18
6.10	84+22.14	28.00	733.67
6.11	84+22.14	24.00	733.52
6.12	84+22.14	22.00	733.64
6.13	84+35.14	24.50	733.98
6.14	84+14.14	24.50	734.04

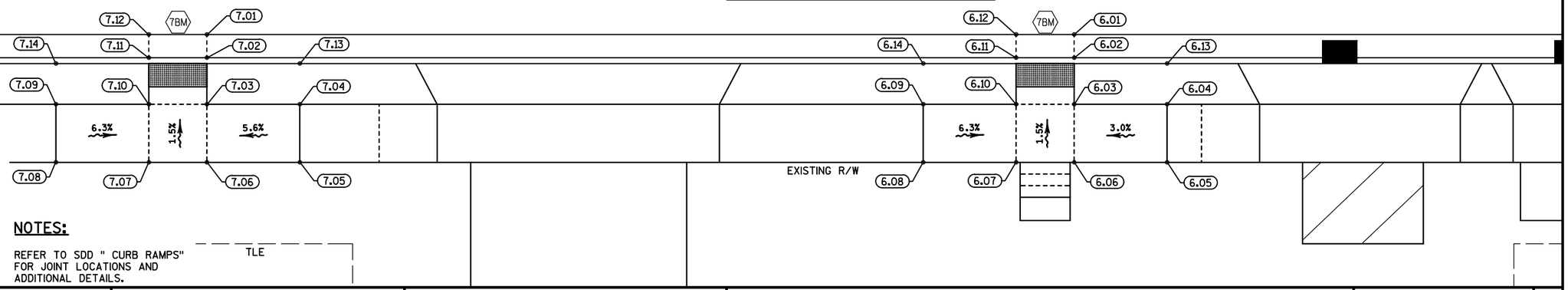

LEGEND

- 2M CONCRETE CURB RAMP TYPE 2 MODIFIED
- 3M CONCRETE CURB RAMP TYPE 3 MODIFIED
- 4B1M CONCRETE CURB RAMP TYPE 4B1 MODIFIED
- 7BM CONCRETE CURB RAMP TYPE 7B MODIFIED
- 8 CONCRETE CURB RAMP TYPE 8

NOTES:

REFER TO SDD " CURB RAMPS" FOR JOINT LOCATIONS AND ADDITIONAL DETAILS.

PROJECT NO: 4880-01-71	HWY: CTH D	COUNTY: OZAUKEE	CURB RAMP DETAILS: CHESTNUT STREET	SHEET 18	E

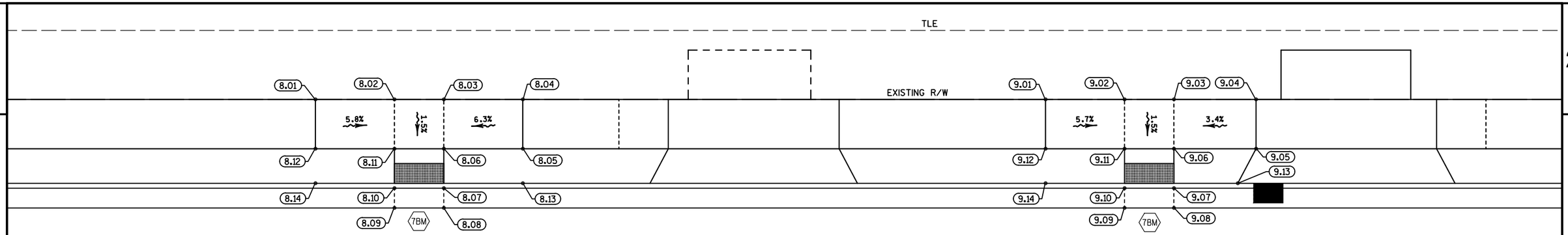

CURB RAMP 8 DATA TABLE			
NUMBER	STATION	OFFSET	ELEVATION
8.01	85+79.33	-33.00	734.54
8.02	85+87.33	-33.00	734.08
8.03	85+92.33	-33.00	734.09
8.04	86+00.33	-33.00	734.60
8.05	86+00.33	-28.00	734.52
8.06	85+92.33	-28.00	734.02
8.07	85+92.33	-24.00	733.86

CURB RAMP 8 DATA TABLE			
NUMBER	STATION	OFFSET	ELEVATION
8.08	85+92.33	-22.00	733.98
8.09	85+87.33	-22.00	733.97
8.10	85+87.33	-24.00	733.84
8.11	85+87.33	-28.00	734.00
8.12	85+79.33	-28.00	734.46
8.13	86+00.33	-24.50	734.38
8.14	85+79.33	-24.50	734.32

CTH D
MAIN STREET

CURB RAMP 9 DATA TABLE			
NUMBER	STATION	OFFSET	ELEVATION
9.01	86+53.26	-33.00	734.76
9.02	86+61.26	-33.00	734.31
9.03	86+66.26	-33.00	734.32
9.04	86+74.58	-33.00	734.60
9.05	86+74.58	-28.00	734.53
9.06	86+66.26	-28.00	734.24
9.07	86+66.26	-24.00	734.08

CURB RAMP 9 DATA TABLE			
NUMBER	STATION	OFFSET	ELEVATION
9.08	86+66.26	-22.00	734.21
9.09	86+61.26	-22.00	734.19
9.10	86+61.26	-24.00	734.07
9.11	86+61.26	-28.00	734.23
9.12	86+53.26	-28.00	734.68
9.13	86+72.72	-24.50	734.60
9.14	86+53.26	-24.50	734.54

86

290

87

CURB RAMP 11 DATA TABLE			
NUMBER	STATION	OFFSET	ELEVATION
11.01	85+79.33	28.00	734.46
11.02	85+87.33	28.00	734.00
11.03	85+87.33	24.00	733.84
11.04	85+87.33	22.00	733.97
11.05	85+92.33	22.00	733.98
11.06	85+92.33	24.00	733.86
11.07	85+92.33	28.00	734.02
11.08	85+98.28	28.74	734.27

CURB RAMP 11 DATA TABLE			
NUMBER	STATION	OFFSET	ELEVATION
11.09	86+04.59	35.05	734.32
11.10	86+05.32	41.00	734.14
11.11	86+09.32	41.00	733.98
11.12	86+11.32	41.00	734.10
11.13	86+11.32	46.00	734.07
11.14	86+09.32	46.00	733.95
11.15	86+05.32	46.00	734.11
11.16	86+05.32	53.99	734.52

CURB RAMP 11 DATA TABLE			
NUMBER	STATION	OFFSET	ELEVATION
11.17	86+00.32	53.99	734.60
11.18	86+00.32	46.00	734.19
11.19	86+00.32	41.00	734.22
11.20	85+99.92	36.84	734.35
11.21	85+96.48	33.40	734.35
11.22	85+92.33	33.00	734.10
11.23	85+87.33	33.00	734.08
11.24	85+79.33	33.00	734.54

CURB RAMP 10 DATA TABLE			
NUMBER	STATION	OFFSET	ELEVATION
10.01	86+66.26	22.00	734.21
10.02	86+66.26	24.00	734.08
10.03	86+66.26	27.00	734.20
10.04	86+74.26	27.00	734.63
10.05	86+74.26	32.00	734.71
10.06	86+66.26	32.00	734.28
10.07	86+66.26	32.79	734.34
10.08	86+71.50	36.45	734.87

CURB RAMP 10 DATA TABLE			
NUMBER	STATION	OFFSET	ELEVATION
10.09	86+69.11	40.00	734.97
10.10	86+61.26	34.70	734.43
10.11	86+61.26	32.00	734.27
10.12	86+57.14	32.41	734.52
10.13	86+53.55	36.38	734.34
10.14	86+53.32	41.02	734.18
10.15	86+53.32	46.02	734.16
10.16	86+53.32	54.01	734.50

CURB RAMP 10 DATA TABLE			
NUMBER	STATION	OFFSET	ELEVATION
10.17	86+48.32	54.01	734.42
10.18	86+48.32	46.02	734.08
10.19	86+44.32	46.02	733.92
10.20	86+42.32	46.02	734.04
10.21	86+42.32	41.02	734.06
10.22	86+44.32	41.02	733.94
10.23	86+48.32	41.02	734.10
10.24	86+48.73	35.03	734.26

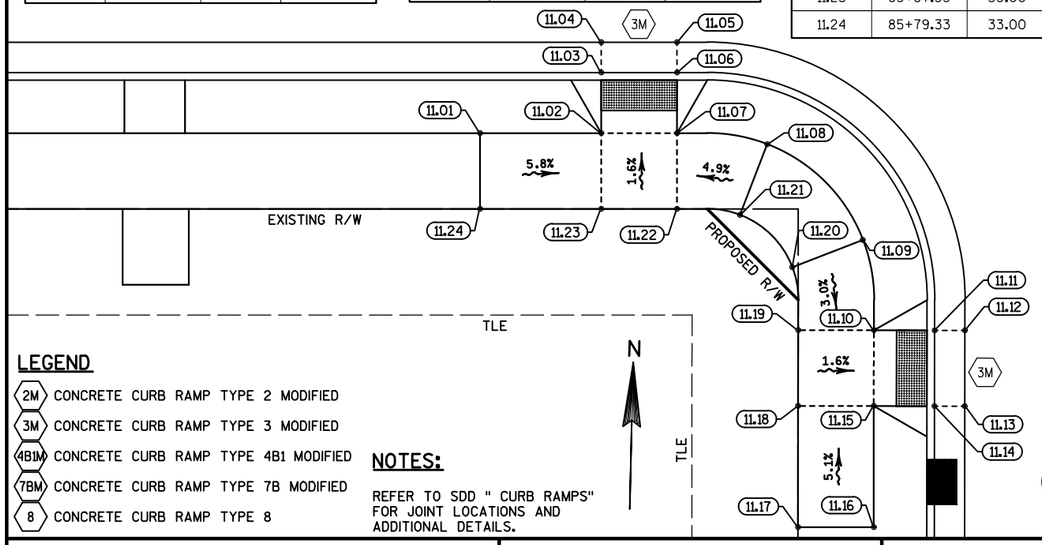

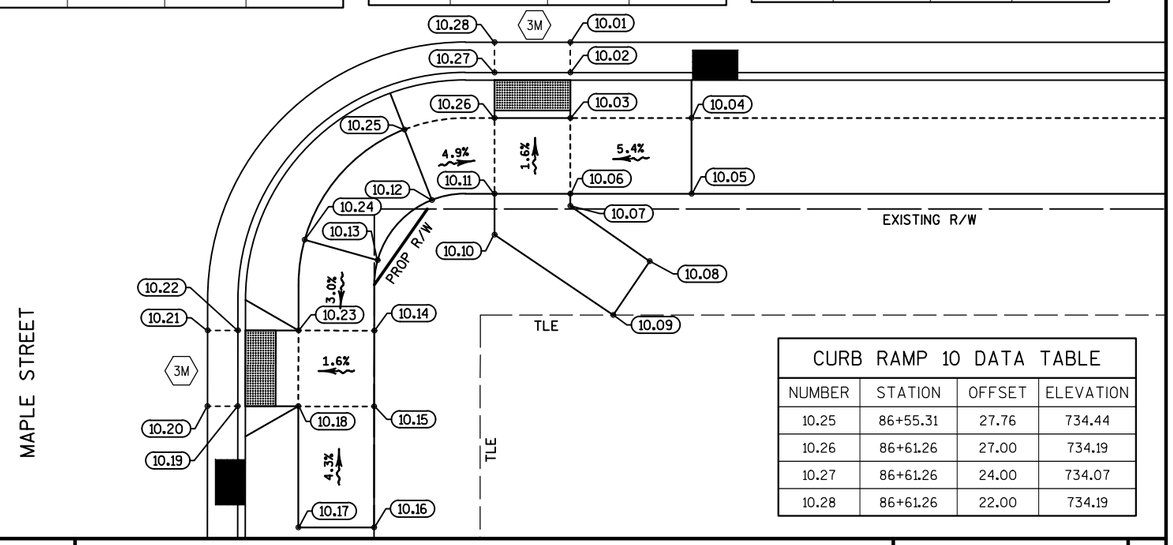

CURB RAMP 10 DATA TABLE			
NUMBER	STATION	OFFSET	ELEVATION
10.25	86+55.31	27.76	734.44
10.26	86+61.26	27.00	734.19
10.27	86+61.26	24.00	734.07
10.28	86+61.26	22.00	734.19

LEGEND

- 2M CONCRETE CURB RAMP TYPE 2 MODIFIED
- 3M CONCRETE CURB RAMP TYPE 3 MODIFIED
- 4B1M CONCRETE CURB RAMP TYPE 4B1 MODIFIED
- 7BM CONCRETE CURB RAMP TYPE 7B MODIFIED
- 8 CONCRETE CURB RAMP TYPE 8

NOTES:

REFER TO SDD " CURB RAMPS" FOR JOINT LOCATIONS AND ADDITIONAL DETAILS.

PROJECT NO: 4880-01-71	HWY: CTH D	COUNTY: OZAUKEE	CURB RAMP DETAILS: MAPLE STREET	SHEET 19	E

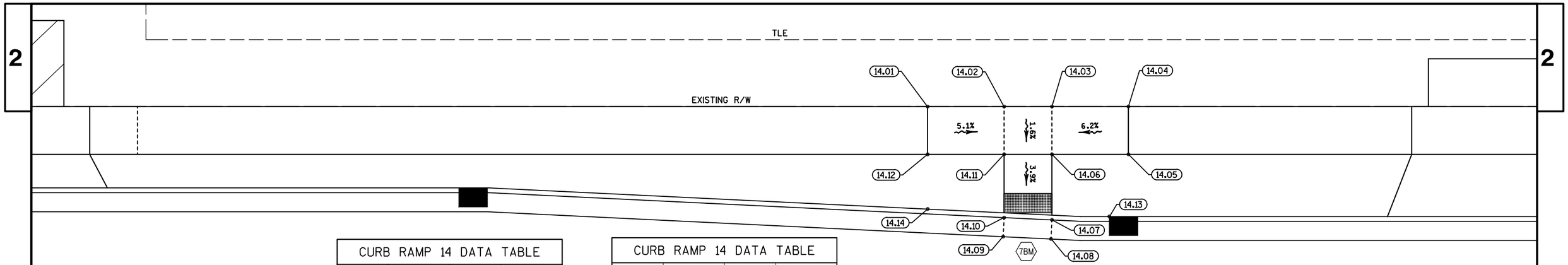

CTH D
MAIN STREET

CURB RAMP 14 DATA TABLE			
NUMBER	STATION	OFFSET	ELEVATION
14.01	89+71.76	-33.00	734.65
14.02	89+79.76	-33.00	734.24
14.03	89+84.76	-33.00	734.26
14.04	89+92.76	-33.00	734.76
14.05	89+92.76	-28.00	734.68
14.06	89+84.76	-28.00	734.18
14.07	89+84.76	-21.14	733.92

CURB RAMP 14 DATA TABLE			
NUMBER	STATION	OFFSET	ELEVATION
14.08	89+84.66	-19.15	734.02
14.09	89+79.66	-19.39	734.00
14.10	89+79.76	-21.39	733.90
14.11	89+79.76	-28.00	734.16
14.12	89+71.76	-28.00	734.57
14.13	89+90.75	-21.50	734.41
14.14	89+71.76	-22.27	734.34

89

300

90

CURB RAMP 12 DATA TABLE			
NUMBER	STATION	OFFSET	ELEVATION
12.01	89+21.75	28.00	734.31
12.02	89+31.75	28.00	733.98
12.03	89+35.95	28.00	733.78
12.04	89+37.31	26.53	733.90
12.05	89+41.33	32.20	733.87
12.06	89+39.50	33.00	733.75
12.07	89+35.20	33.00	733.81
12.08	89+31.75	33.00	733.95
12.09	89+21.75	33.00	734.39

CURB RAMP 13 DATA TABLE			
NUMBER	STATION	OFFSET	ELEVATION
13.01	89+73.37	26.93	734.12
13.02	89+75.06	28.00	734.00
13.03	89+79.76	28.00	734.05
13.04	89+79.76	23.31	733.96
13.05	89+78.69	21.62	734.08
13.06	89+84.36	19.34	734.05

CURB RAMP 13 DATA TABLE			
NUMBER	STATION	OFFSET	ELEVATION
13.07	89+84.76	21.30	733.93
13.08	89+84.76	23.90	733.97
13.09	89+84.76	28.00	734.13
13.10	89+95.76	28.00	734.69
13.11	89+95.75	33.00	734.77
13.12	89+84.75	33.00	734.21

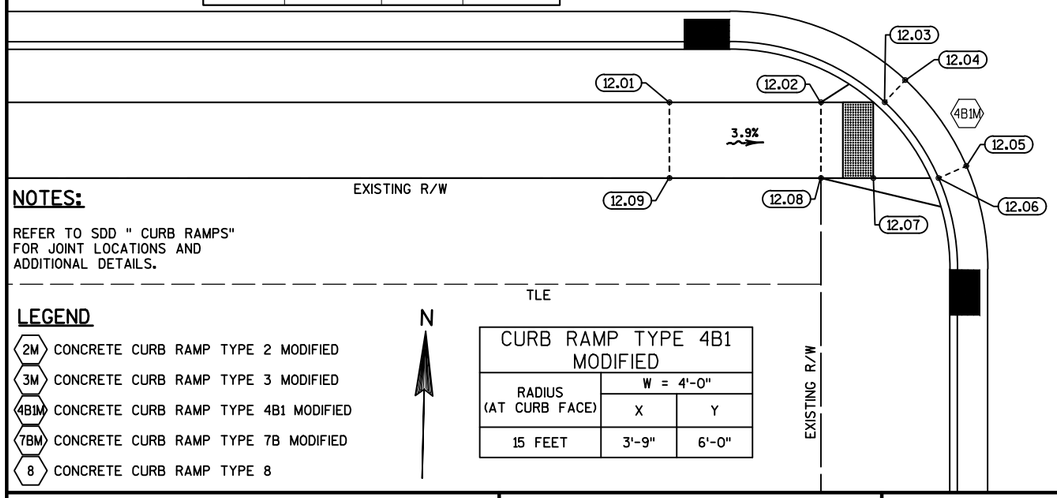

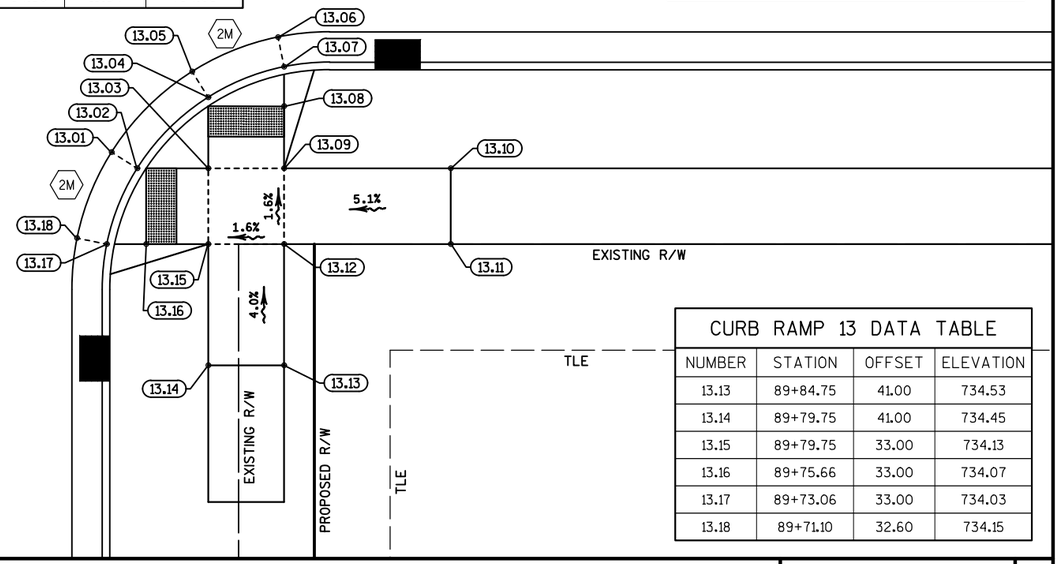

CURB RAMP 13 DATA TABLE			
NUMBER	STATION	OFFSET	ELEVATION
13.13	89+84.75	41.00	734.53
13.14	89+79.75	41.00	734.45
13.15	89+79.75	33.00	734.13
13.16	89+75.66	33.00	734.07
13.17	89+73.06	33.00	734.03
13.18	89+71.10	32.60	734.15

NOTES:

REFER TO SDD " CURB RAMPS" FOR JOINT LOCATIONS AND ADDITIONAL DETAILS.

LEGEND

- 2M CONCRETE CURB RAMP TYPE 2 MODIFIED
- 3M CONCRETE CURB RAMP TYPE 3 MODIFIED
- 4B1M CONCRETE CURB RAMP TYPE 4B1 MODIFIED
- 7BM CONCRETE CURB RAMP TYPE 7B MODIFIED
- 8 CONCRETE CURB RAMP TYPE 8

N

CURB RAMP TYPE 4B1 MODIFIED		
RADIUS (AT CURB FACE)	W = 4'-0"	
	X	Y
15 FEET	3'-9"	6'-0"

PROJECT NO: 4880-01-71	HWY: CTH D	COUNTY: OZAUKEE	CURB RAMP DETAILS: OAK STREET	SHEET 20	E

FILE NAME : S:\CURRPROJ\OZAUKEECO\CTH D\CIVIL3D\48800100\SHEETSPLAN\48800100-021121-CR.DWG
LAYOUT NAME - 48800100-021121-CR - SHEET-04
PLOT DATE : 1/24/2017 9:04 AM PLOT BY : AARON SARAUER PLOT NAME : PLOT SCALE : 1:10_XREF
WISDOT/CADDS SHEET 42

LEGEND

- 2M CONCRETE CURB RAMP TYPE 2 MODIFIED
- 3M CONCRETE CURB RAMP TYPE 3 MODIFIED
- 4B1M CONCRETE CURB RAMP TYPE 4B1 MODIFIED
- 7BM CONCRETE CURB RAMP TYPE 7B MODIFIED
- 8 CONCRETE CURB RAMP TYPE 8

NOTES:

REFER TO SDD " CURB RAMPS" FOR JOINT LOCATIONS AND ADDITIONAL DETAILS.

CURB RAMP TYPE 4B1 MODIFIED		
RADIUS (AT CURB FACE)	W = 7'-0"	
	X	Y
15 FEET	2'-0¼"'	6'-0¼"

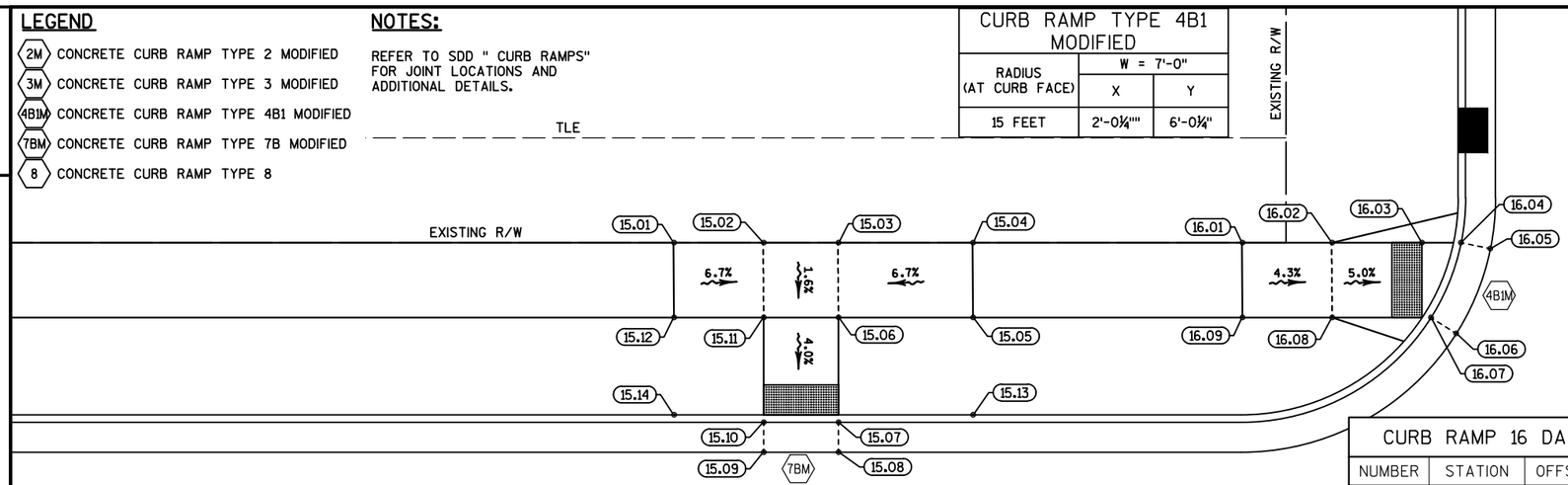

CURB RAMP 15 DATA TABLE			
NUMBER	STATION	OFFSET	ELEVATION
15.01	96+12.90	-33.00	739.36
15.02	96+18.90	-33.00	738.96
15.03	96+23.90	-33.00	739.04
15.04	96+32.90	-33.00	739.64
15.05	96+32.90	-28.00	739.56

CURB RAMP 15 DATA TABLE			
NUMBER	STATION	OFFSET	ELEVATION
15.06	96+23.90	-28.00	738.96
15.07	96+23.90	-21.00	738.68
15.08	96+23.90	-19.00	738.80
15.09	96+18.90	-19.00	738.73
15.10	96+18.90	-21.00	738.60

CURB RAMP 15 DATA TABLE			
NUMBER	STATION	OFFSET	ELEVATION
15.11	96+18.90	-28.00	738.88
15.12	96+12.90	-28.00	739.28
15.13	96+32.90	-21.50	739.31
15.14	96+12.90	-21.50	738.99

CURB RAMP 16 DATA TABLE			
NUMBER	STATION	OFFSET	ELEVATION
16.01	96+50.93	-33.00	739.89
16.02	96+56.93	-33.00	739.63
16.03	96+62.93	-33.00	739.33
16.04	96+65.53	-33.00	739.29
16.05	96+67.49	-32.60	739.41
16.06	96+65.21	-26.93	739.35
16.07	96+63.52	-28.00	739.23
16.08	96+56.93	-28.00	739.55
16.09	96+50.93	-28.00	739.81

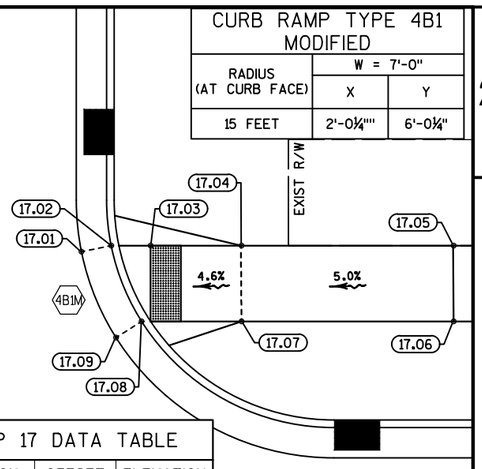

CURB RAMP 17 DATA TABLE			
NUMBER	STATION	OFFSET	ELEVATION
17.01	97+00.18	-32.60	740.03
17.02	97+02.14	-33.00	739.91
17.03	97+04.74	-33.00	739.95
17.04	97+10.74	-33.00	740.25
17.05	97+24.74	-33.00	740.95
17.06	97+24.74	-28.00	740.87
17.07	97+10.74	-28.00	740.17
17.08	97+04.14	-28.00	739.94
17.09	97+02.45	-26.93	740.06

96

320

CURB RAMP 19 DATA TABLE			
NUMBER	STATION	OFFSET	ELEVATION
19.01	96+11.94	28.00	739.38
19.02	96+18.95	28.00	738.99
19.03	96+18.90	22.79	738.75
19.04	96+18.89	21.03	738.72
19.05	96+19.01	19.03	738.85
19.06	96+24.69	20.37	738.92

CURB RAMP 19 DATA TABLE			
NUMBER	STATION	OFFSET	ELEVATION
19.07	96+23.90	22.21	738.79
19.08	96+23.95	28.00	738.92
19.09	96+30.70	28.00	738.85
19.10	96+32.39	26.93	738.97
19.11	96+34.66	32.60	738.99
19.12	96+32.70	33.00	738.87

CURB RAMP 19 DATA TABLE			
NUMBER	STATION	OFFSET	ELEVATION
19.13	96+30.10	33.00	738.90
19.14	96+23.98	33.00	738.99
19.15	96+18.98	33.00	739.07
19.16	96+11.98	33.00	739.46

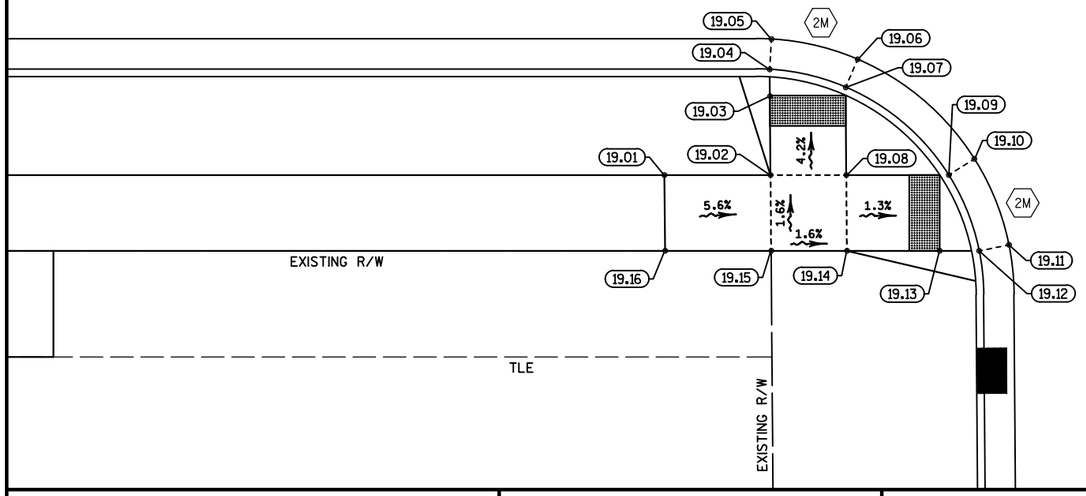

CTH D
MAIN STREET

CURB RAMP 18 DATA TABLE			
NUMBER	STATION	OFFSET	ELEVATION
18.01	96+69.63	26.93	739.84
18.02	96+71.32	28.00	739.71
18.03	96+77.92	28.00	739.88
18.04	96+90.92	28.00	740.53
18.05	96+90.92	33.00	740.61

CURB RAMP 18 DATA TABLE			
NUMBER	STATION	OFFSET	ELEVATION
18.06	96+77.92	33.00	739.96
18.07	96+71.92	33.00	739.72
18.08	96+69.31	33.00	739.68
18.09	96+67.35	32.60	739.81

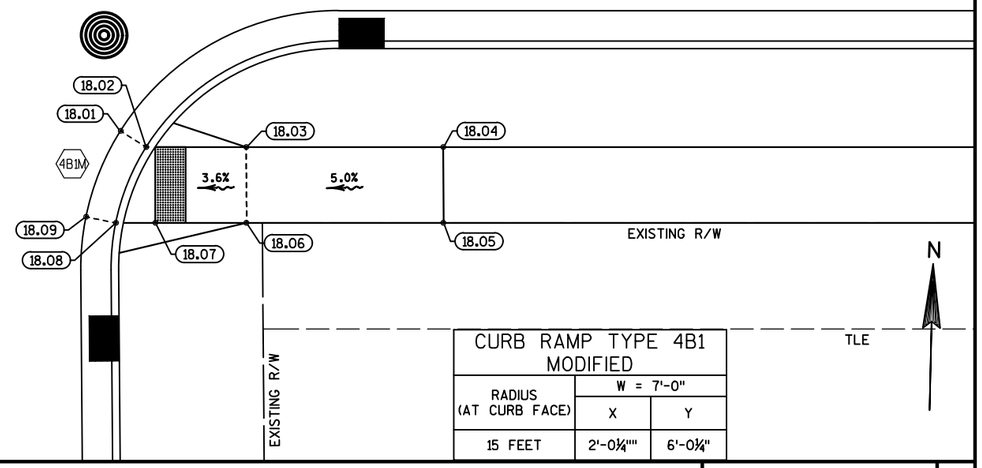

CURB RAMP TYPE 4B1 MODIFIED		
RADIUS (AT CURB FACE)	W = 7'-0"	
	X	Y
15 FEET	2'-0¼"'	6'-0¼"

PROJECT NO: 4880-01-71	HWY: CTH D	COUNTY: OZAUKEE	CURB RAMP DETAILS: MICHAEL STREET/ WEST LANE	SHEET	E

FILE NAME : S:\CURRPROJ\OZAUKEECO\CTH D\CIVIL3D\48800100\SHEETSPLAN\48800100-021121-CR.DWG
LAYOUT NAME - 48800100-021121-CR - SHEET-05
PLOT DATE : 1/24/2017 9:04 AM PLOT BY : AARON SARAUER PLOT NAME : PLOT SCALE : 1:10_XREF
WISDOT/CADDS SHEET 42

LEGEND

- 2M CONCRETE CURB RAMP TYPE 2 MODIFIED
- 3M CONCRETE CURB RAMP TYPE 3 MODIFIED
- 4B1M CONCRETE CURB RAMP TYPE 4B1 MODIFIED
- 7BM CONCRETE CURB RAMP TYPE 7B MODIFIED
- 8 CONCRETE CURB RAMP TYPE 8

NOTES:

REFER TO SDD " CURB RAMPS" FOR JOINT LOCATIONS AND ADDITIONAL DETAILS.

CURB RAMP TYPE 4B1 MODIFIED		
RADIUS (AT CURB FACE)	W = 7'-0"	
	X	Y
15 FEET	2'-0¼""	6'-0¼"

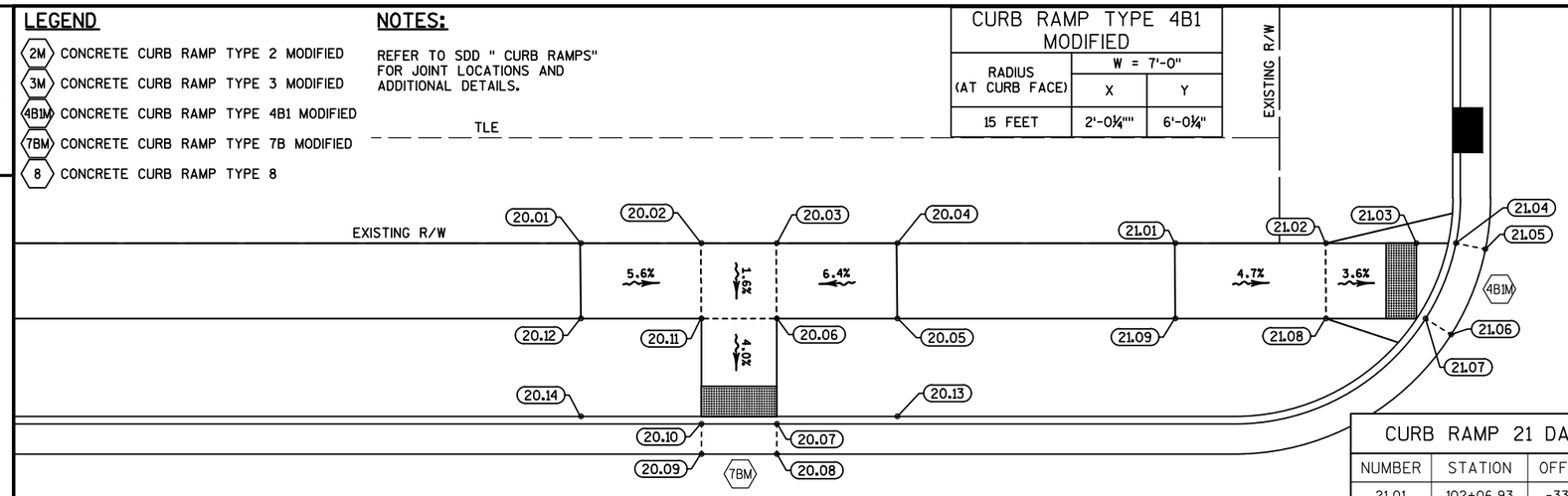

CURB RAMP 20 DATA TABLE			
NUMBER	STATION	OFFSET	ELEVATION
20.01	101+67.46	-33.00	744.48
20.02	101+75.46	-33.00	744.03
20.03	101+80.46	-33.00	744.05
20.04	101+88.46	-33.00	744.56
20.05	101+88.46	-28.00	744.48

CURB RAMP 20 DATA TABLE			
NUMBER	STATION	OFFSET	ELEVATION
20.06	101+80.46	-28.00	743.97
20.07	101+80.46	-21.00	743.69
20.08	101+80.46	-19.00	743.81
20.09	101+75.46	-19.00	743.80
20.10	101+75.46	-21.00	743.67

CURB RAMP 20 DATA TABLE			
NUMBER	STATION	OFFSET	ELEVATION
20.11	101+75.46	-28.00	743.95
20.12	101+67.46	-28.00	744.40
20.13	101+88.46	-21.50	744.22
20.14	101+67.46	-21.50	744.14

CURB RAMP 21 DATA TABLE			
NUMBER	STATION	OFFSET	ELEVATION
21.01	102+06.93	-33.00	744.62
21.02	102+16.93	-33.00	744.15
21.03	102+22.93	-33.00	743.91
21.04	102+25.53	-33.00	743.87
21.05	102+27.49	-32.60	744.00
21.06	102+25.21	-26.93	744.03
21.07	102+23.52	-28.00	743.90
21.08	102+16.93	-28.00	744.07
21.09	102+06.93	-28.00	744.54

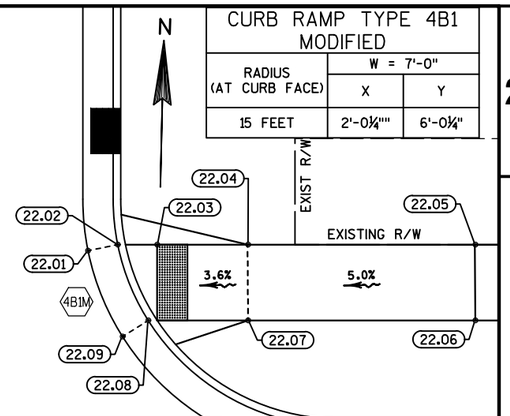

CURB RAMP 22 DATA TABLE			
NUMBER	STATION	OFFSET	ELEVATION
22.01	102+60.18	-32.60	744.01
22.02	102+62.14	-33.00	743.88
22.03	102+64.74	-33.00	743.92
22.04	102+70.74	-33.00	744.16
22.05	102+85.74	-33.00	744.91
22.06	102+85.74	-28.00	744.83
22.07	102+70.74	-28.00	744.08
22.08	102+64.14	-28.00	743.92
22.09	102+62.45	-26.93	744.05

CTH D
MAIN STREET

102

330

340

CURB RAMP 24 DATA TABLE			
NUMBER	STATION	OFFSET	ELEVATION
24.01	101+67.48	28.00	744.52
24.02	101+75.48	28.00	743.99
24.03	101+75.46	24.60	743.84
24.04	101+75.44	21.52	743.81
24.05	101+75.96	19.58	743.93
24.06	101+81.64	22.33	743.98

CURB RAMP 24 DATA TABLE			
NUMBER	STATION	OFFSET	ELEVATION
24.07	101+80.46	23.94	743.86
24.08	101+80.48	28.00	743.91
24.09	101+84.23	28.00	743.86
24.10	101+85.92	26.93	743.98
24.11	101+88.20	32.60	743.95
24.12	101+86.24	33.00	743.83

CURB RAMP 24 DATA TABLE			
NUMBER	STATION	OFFSET	ELEVATION
24.13	101+83.63	33.00	743.87
24.14	101+80.52	33.00	743.99
24.15	101+75.52	33.00	744.07
24.16	101+67.52	33.00	744.60

CURB RAMP 23 DATA TABLE			
NUMBER	STATION	OFFSET	ELEVATION
23.01	102+23.16	26.93	744.01
23.02	102+24.85	28.00	743.87
23.03	102+31.45	28.00	744.02
23.04	102+47.45	28.00	744.81
23.05	102+47.45	33.00	744.89

CURB RAMP 23 DATA TABLE			
NUMBER	STATION	OFFSET	ELEVATION
23.06	102+31.45	33.00	744.10
23.07	102+25.45	33.00	743.86
23.08	102+22.85	33.00	743.82
23.09	102+20.89	32.60	743.97

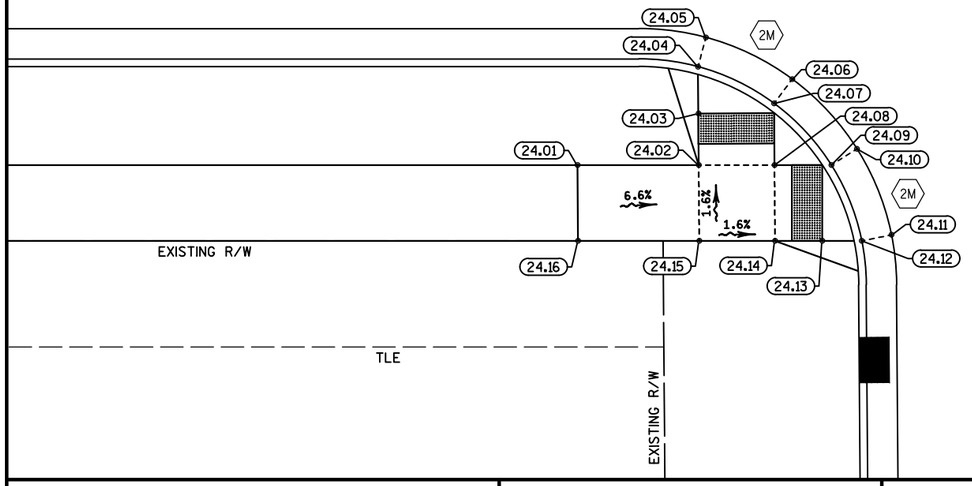

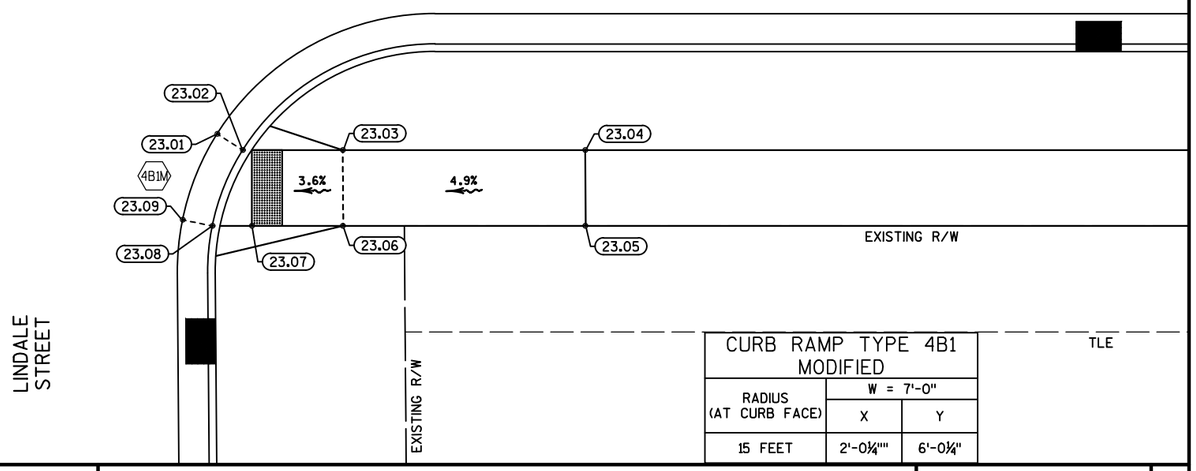

CURB RAMP TYPE 4B1 MODIFIED		
RADIUS (AT CURB FACE)	W = 7'-0"	
	X	Y
15 FEET	2'-0¼""	6'-0¼"

PROJECT NO: 4880-01-71	HWY: CTH D	COUNTY: OZAUKEE	CURB RAMP DETAILS: LINDALE STREET/ EAST LANE	SHEET 22	E

LEGEND

- 2M CONCRETE CURB RAMP TYPE 2 MODIFIED
- 3M CONCRETE CURB RAMP TYPE 3 MODIFIED
- 4B1M CONCRETE CURB RAMP TYPE 4B1 MODIFIED
- 7BM CONCRETE CURB RAMP TYPE 7B MODIFIED
- 8 CONCRETE CURB RAMP TYPE 8

NOTES:

REFER TO SDD " CURB RAMPS" FOR JOINT LOCATIONS AND ADDITIONAL DETAILS.

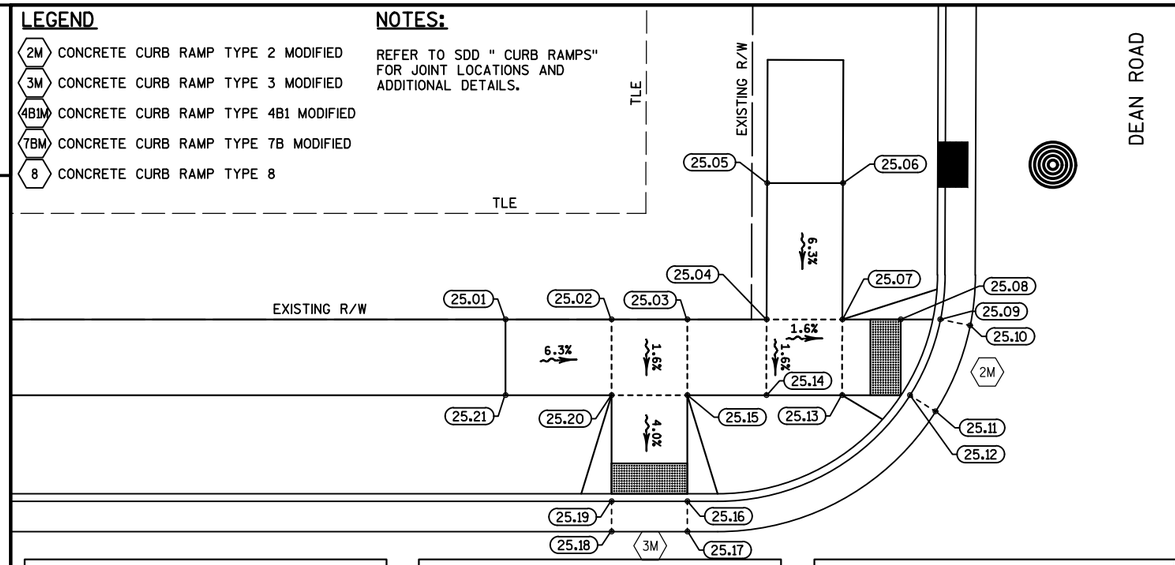

CURB RAMP 25 DATA TABLE			
NUMBER	STATION	OFFSET	ELEVATION
25.01	105+49.04	-33.00	745.85
25.02	105+56.04	-33.00	745.41
25.03	105+61.04	-33.00	745.42
25.04	105+66.28	-33.00	745.23
25.05	105+66.32	-42.00	745.72
25.06	105+71.32	-42.00	745.72
25.07	105+71.28	-33.00	745.15

CURB RAMP 25 DATA TABLE			
NUMBER	STATION	OFFSET	ELEVATION
25.08	105+75.14	-33.00	745.00
25.09	105+77.74	-33.00	744.96
25.10	105+79.70	-32.60	745.07
25.11	105+77.43	-26.93	745.10
25.12	105+75.73	-28.00	744.99
25.13	105+71.26	-28.00	745.07
25.14	105+66.26	-28.00	745.15

CURB RAMP 25 DATA TABLE			
NUMBER	STATION	OFFSET	ELEVATION
25.15	105+61.04	-28.00	745.34
25.16	105+61.04	-21.00	745.06
25.17	105+61.04	-19.00	745.18
25.18	105+56.04	-19.00	745.16
25.19	105+56.04	-21.00	745.04
25.20	105+56.04	-28.00	745.32
25.21	105+49.04	-28.00	745.77

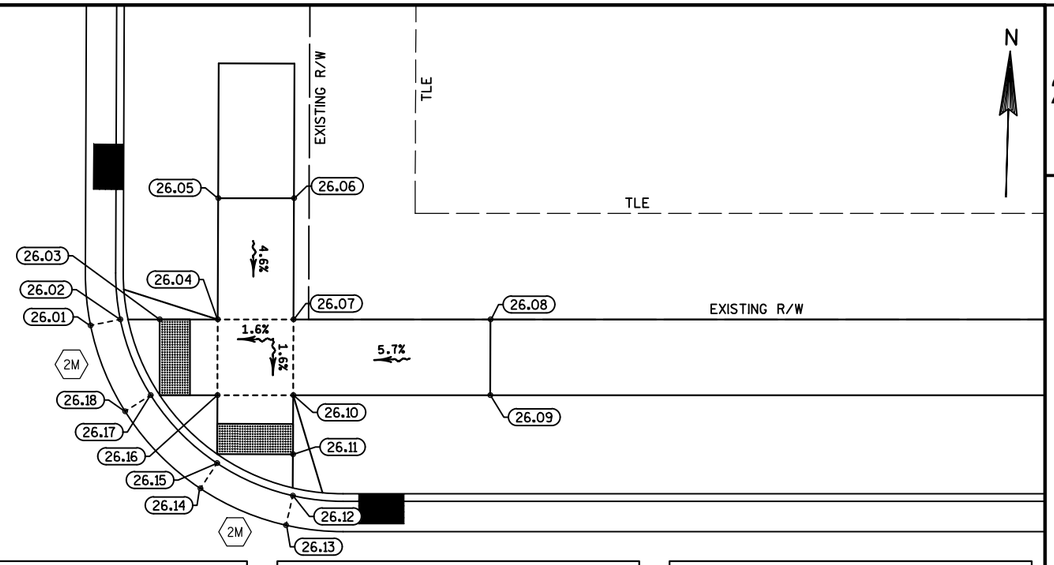

CURB RAMP 26 DATA TABLE			
NUMBER	STATION	OFFSET	ELEVATION
26.01	106+10.89	-32.60	745.26
26.02	106+12.85	-33.00	745.14
26.03	106+15.45	-33.00	745.18
26.04	106+19.28	-33.00	745.35
26.05	106+19.32	-41.00	745.72
26.06	106+24.32	-41.00	745.80

CURB RAMP 26 DATA TABLE			
NUMBER	STATION	OFFSET	ELEVATION
26.07	106+24.28	-33.00	745.43
26.08	106+37.28	-33.00	746.17
26.09	106+37.26	-28.00	746.09
26.10	106+24.26	-28.00	745.35
26.11	106+24.25	-24.09	745.30
26.12	106+24.23	-21.37	745.27

CURB RAMP 26 DATA TABLE			
NUMBER	STATION	OFFSET	ELEVATION
26.13	106+23.79	-19.42	745.40
26.14	106+18.14	-21.84	745.35
26.15	106+19.24	-23.51	745.23
26.16	106+19.26	-28.00	745.28
26.17	106+14.86	-28.00	745.18
26.18	106+13.17	-26.93	745.30

350

106

CURB RAMP 28 DATA TABLE			
NUMBER	STATION	OFFSET	ELEVATION
28.01	105+61.04	19.00	745.30
28.02	105+61.04	21.00	745.18
28.03	105+61.04	28.00	745.46
28.04	105+69.04	28.00	745.97
28.05	105+69.04	33.00	746.05

CURB RAMP 28 DATA TABLE			
NUMBER	STATION	OFFSET	ELEVATION
28.06	105+61.04	33.00	745.54
28.07	105+56.04	33.00	745.52
28.08	105+49.04	33.00	745.97
28.09	105+49.04	28.00	745.89
28.10	105+56.04	28.00	745.44

CTH D
MAIN STREET

CURB RAMP 27 DATA TABLE			
NUMBER	STATION	OFFSET	ELEVATION
27.01	106+24.25	19.00	745.53
27.02	106+24.25	21.00	745.40
27.03	106+24.25	28.00	745.68
27.04	106+32.25	28.00	746.20
27.05	106+32.25	33.00	746.28

CURB RAMP 27 DATA TABLE			
NUMBER	STATION	OFFSET	ELEVATION
27.06	106+24.25	33.00	745.76
27.07	106+19.25	33.00	745.75
27.08	106+12.25	33.00	746.20
27.09	106+12.25	28.00	746.12
27.10	106+19.25	28.00	745.67

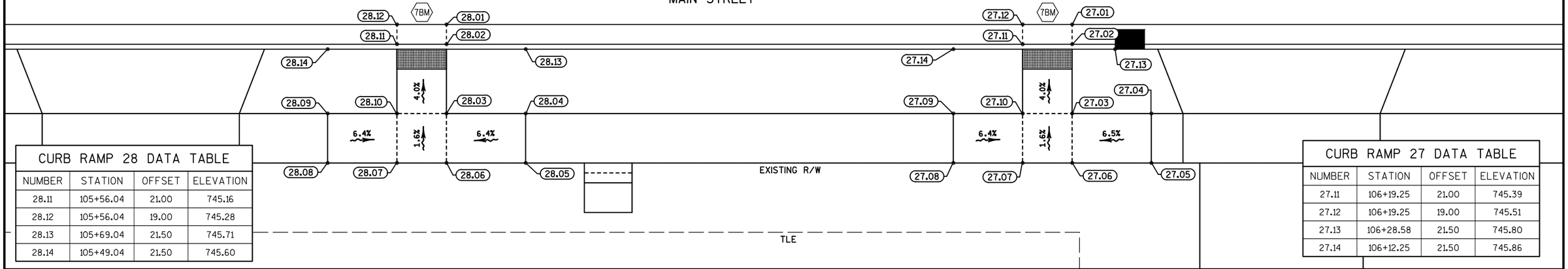

CURB RAMP 28 DATA TABLE			
NUMBER	STATION	OFFSET	ELEVATION
28.11	105+56.04	21.00	745.16
28.12	105+56.04	19.00	745.28
28.13	105+69.04	21.50	745.71
28.14	105+49.04	21.50	745.60

CURB RAMP 27 DATA TABLE			
NUMBER	STATION	OFFSET	ELEVATION
27.11	106+19.25	21.00	745.39
27.12	106+19.25	19.00	745.51
27.13	106+28.58	21.50	745.80
27.14	106+12.25	21.50	745.86

PROJECT NO: 4880-01-71	HWY: CTH D	COUNTY: OZAUKEE	CURB RAMP DETAILS: DEAN ROAD	SHEET 23	E

LEGEND

- 2M CONCRETE CURB RAMP TYPE 2 MODIFIED
- 3M CONCRETE CURB RAMP TYPE 3 MODIFIED
- 4B1M CONCRETE CURB RAMP TYPE 4B1 MODIFIED
- 7BM CONCRETE CURB RAMP TYPE 7B MODIFIED
- 8 CONCRETE CURB RAMP TYPE 8

CURB RAMP TYPE 4B1 MODIFIED		
RADIUS (AT CURB FACE)	W = 7'-0"	
	X	Y
15 FEET	2'-0¼""	6'-0¼"

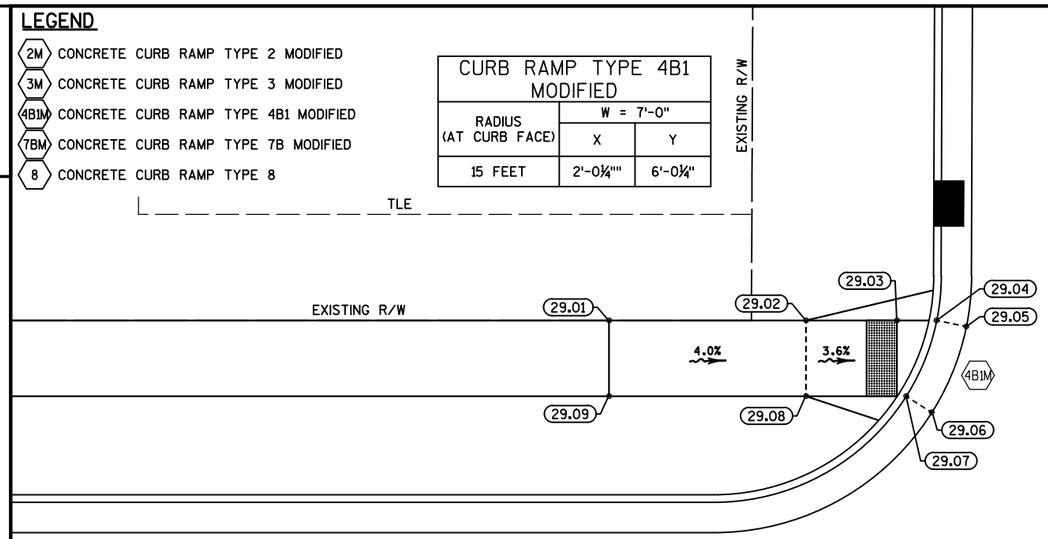

CURB RAMP 29 DATA TABLE			
NUMBER	STATION	OFFSET	ELEVATION
29.01	108+76.06	-33.00	747.02
29.02	108+89.06	-33.00	746.50
29.03	108+95.06	-33.00	746.26
29.04	108+97.66	-33.00	746.22
29.05	108+99.62	-32.60	746.34

CURB RAMP 29 DATA TABLE			
NUMBER	STATION	OFFSET	ELEVATION
29.06	108+97.35	-26.93	746.38
29.07	108+95.65	-28.00	746.26
29.08	108+89.06	-28.00	746.42
29.09	108+76.06	-28.00	746.94

109

360

PIERRON STREET

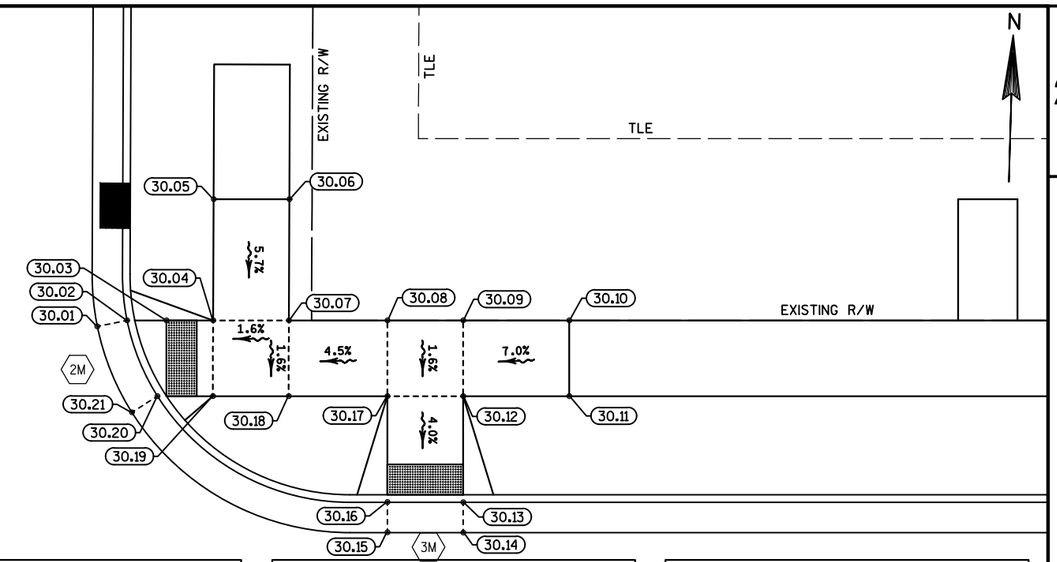

CURB RAMP 30 DATA TABLE			
NUMBER	STATION	OFFSET	ELEVATION
30.01	109+31.31	-32.60	746.36
30.02	109+33.27	-33.00	746.24
30.03	109+35.87	-33.00	746.28
30.04	109+38.95	-33.00	746.42
30.05	109+38.99	-41.00	746.88
30.06	109+43.99	-41.00	746.96
30.07	109+43.95	-33.00	746.50

CURB RAMP 30 DATA TABLE			
NUMBER	STATION	OFFSET	ELEVATION
30.08	109+50.45	-33.00	746.79
30.09	109+55.45	-33.00	746.80
30.10	109+62.45	-33.00	747.29
30.11	109+62.45	-28.00	747.21
30.12	109+55.45	-28.00	746.72
30.13	109+55.45	-21.00	746.44
30.14	109+55.45	-19.00	746.57

CURB RAMP 30 DATA TABLE			
NUMBER	STATION	OFFSET	ELEVATION
30.15	109+50.45	-19.02	746.56
30.16	109+50.45	-21.02	746.43
30.17	109+50.45	-28.00	746.71
30.18	109+43.93	-28.00	746.42
30.19	109+38.93	-28.00	746.35
30.20	109+35.28	-28.00	746.29
30.21	109+33.59	-26.93	746.41

CTH D
MAIN STREET

CURB RAMP 31 DATA TABLE			
NUMBER	STATION	OFFSET	ELEVATION
31.01	109+55.45	19.00	746.69
31.02	109+55.45	21.00	746.56
31.03	109+55.45	28.00	746.84
31.04	109+62.45	28.00	747.33
31.05	109+62.45	33.00	747.41

CURB RAMP 31 DATA TABLE			
NUMBER	STATION	OFFSET	ELEVATION
31.06	109+55.45	33.00	746.92
31.07	109+50.45	33.00	746.92
31.08	109+43.45	33.00	747.38
31.09	109+43.45	28.00	747.30
31.10	109+50.45	28.00	746.84

CURB RAMP 31 DATA TABLE			
NUMBER	STATION	OFFSET	ELEVATION
31.11	109+50.45	21.00	746.56
31.12	109+50.45	19.00	746.68
31.13	109+62.45	21.50	747.07
31.14	109+43.45	21.50	746.82

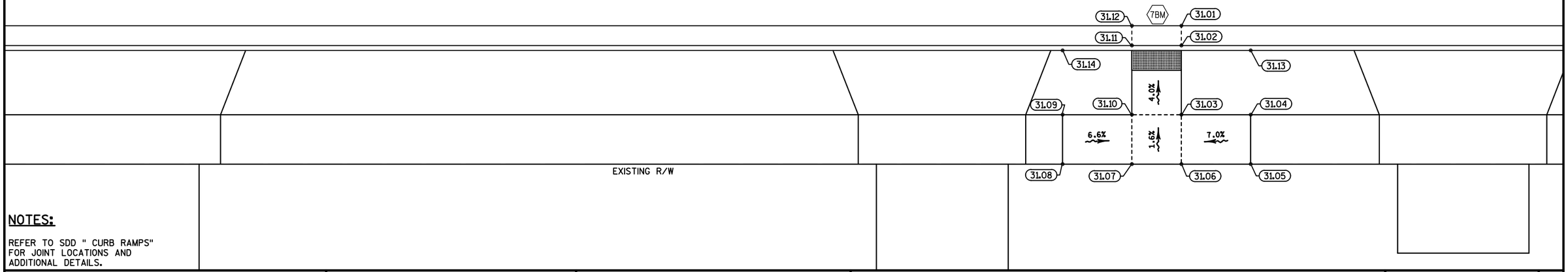

NOTES:

REFER TO SDD " CURB RAMPS" FOR JOINT LOCATIONS AND ADDITIONAL DETAILS.

PROJECT NO: 4880-01-71	HWY: CTH D	COUNTY: OZAUKEE	CURB RAMP DETAILS: PIERRON STREET	SHEET 24	E

FILE NAME : S:\CURRPROJ\OZAUKEECO\CTH D\CIVIL3D\48800100\SHEETSPLAN\48800100-021121-CR.DWG
LAYOUT NAME - 48800100-021121-CR - SHEET-08
PLOT DATE : 1/24/2017 9:05 AM PLOT BY : AARON SARAUER PLOT NAME : PLOT SCALE : 1:10_XREF
WISDOT/CADDS SHEET 42

LEGEND

- 2M CONCRETE CURB RAMP TYPE 2 MODIFIED
- 3M CONCRETE CURB RAMP TYPE 3 MODIFIED
- 4B1M CONCRETE CURB RAMP TYPE 4B1 MODIFIED
- 7BM CONCRETE CURB RAMP TYPE 7B MODIFIED
- 8 CONCRETE CURB RAMP TYPE 8

NOTES:

REFER TO SDD " CURB RAMPS" FOR JOINT LOCATIONS AND ADDITIONAL DETAILS.

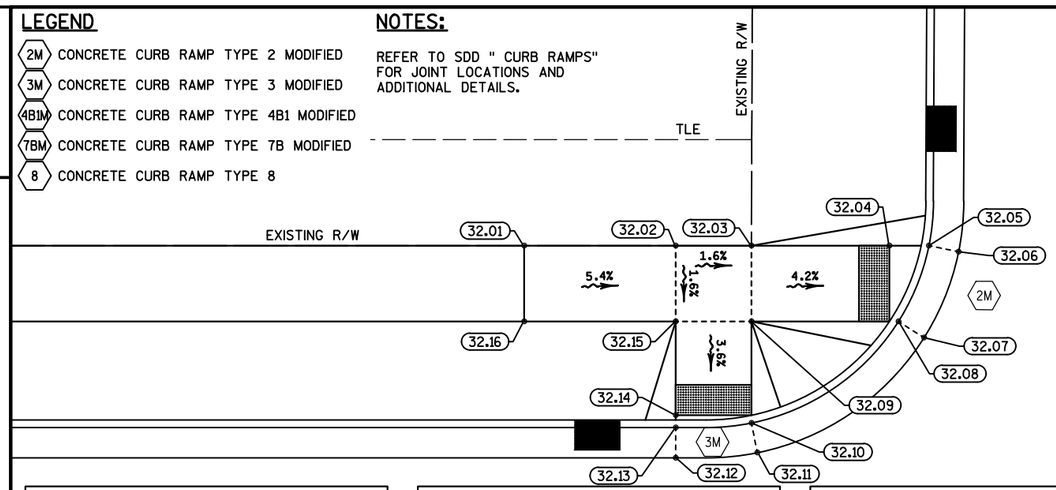

CURB RAMP 32 DATA TABLE			
NUMBER	STATION	OFFSET	ELEVATION
32.01	111+85.45	-33.00	746.75
32.02	111+95.45	-33.00	746.21
32.03	112+00.45	-33.00	746.13
32.04	112+09.56	-33.00	745.70
32.05	112+12.16	-33.00	745.66
32.06	112+14.12	-32.60	745.78

CURB RAMP 32 DATA TABLE			
NUMBER	STATION	OFFSET	ELEVATION
32.07	112+11.85	-26.93	745.84
32.08	112+10.16	-28.00	745.72
32.09	112+00.45	-28.00	746.05
32.10	112+00.45	-21.30	745.85
32.11	112+00.85	-19.34	745.97
32.12	111+95.45	-19.00	746.01

CURB RAMP 32 DATA TABLE			
NUMBER	STATION	OFFSET	ELEVATION
32.13	111+95.45	-21.00	745.88
32.14	111+95.45	-21.81	745.89
32.15	111+95.45	-28.00	746.13
32.16	111+85.45	-28.00	746.68

112

LAR ANN STREET

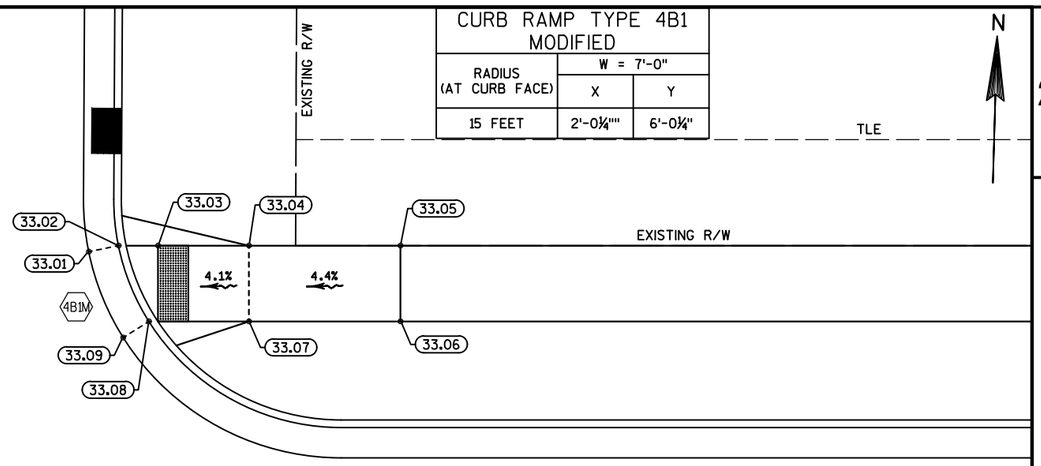

CURB RAMP TYPE 4B1 MODIFIED		
RADIUS (AT CURB FACE)	W = 7'-0"	
	X	Y
15 FEET	2'-0¼""	6'-0¼"

N

CURB RAMP 33 DATA TABLE			
NUMBER	STATION	OFFSET	ELEVATION
33.01	112+46.81	-32.60	745.74
33.02	112+48.77	-33.00	745.62
33.03	112+51.37	-33.00	745.66
33.04	112+57.37	-33.00	745.93
33.05	112+67.37	-33.00	746.37

CURB RAMP 33 DATA TABLE			
NUMBER	STATION	OFFSET	ELEVATION
33.06	112+67.37	-28.00	746.29
33.07	112+57.37	-28.00	745.85
33.08	112+50.78	-28.00	745.65
33.09	112+49.09	-26.93	745.77

CTH D
MAIN STREET

113

370

CURB RAMP 35 DATA TABLE			
NUMBER	STATION	OFFSET	ELEVATION
35.01	111+85.32	28.00	746.79
35.02	111+95.32	28.00	746.14
35.03	111+95.32	22.22	746.02
35.04	111+95.32	21.01	746.00
35.05	111+95.32	19.00	746.13
35.06	112+00.92	19.78	746.11

CURB RAMP 35 DATA TABLE			
NUMBER	STATION	OFFSET	ELEVATION
35.07	112+00.32	21.69	745.99
35.08	112+00.32	28.00	746.06
35.09	112+08.51	28.00	745.85
35.10	112+10.20	26.93	745.97
35.11	112+12.48	32.60	745.86
35.12	112+10.52	33.00	745.74

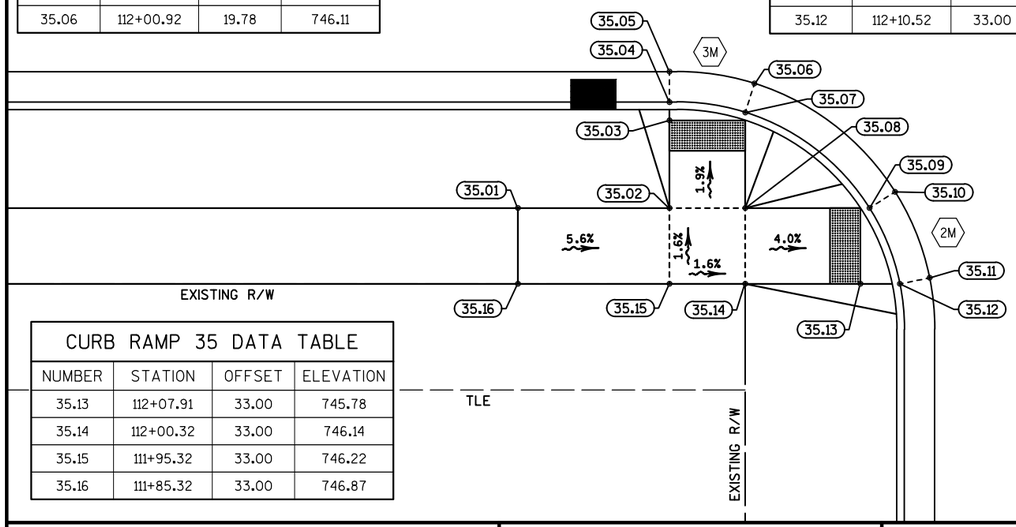

CURB RAMP 35 DATA TABLE			
NUMBER	STATION	OFFSET	ELEVATION
35.13	112+07.91	33.00	745.78
35.14	112+00.32	33.00	746.14
35.15	111+95.32	33.00	746.22
35.16	111+85.32	33.00	746.87

CURB RAMP 34 DATA TABLE			
NUMBER	STATION	OFFSET	ELEVATION
34.01	112+50.44	26.93	745.68
34.02	112+52.13	28.00	745.56
34.03	112+58.73	28.00	745.75
34.04	112+73.73	28.00	746.37
34.05	112+73.73	33.00	746.45
34.06	112+58.73	33.00	745.83
34.07	112+52.73	33.00	745.56
34.08	112+50.12	33.00	745.52
34.09	112+48.16	32.60	745.64

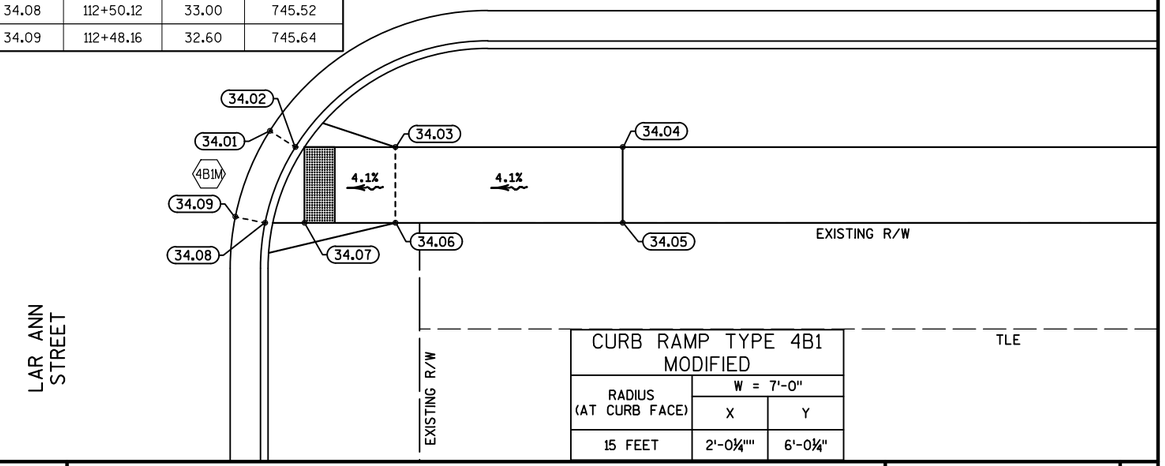

LAR ANN STREET

CURB RAMP TYPE 4B1 MODIFIED		
RADIUS (AT CURB FACE)	W = 7'-0"	
	X	Y
15 FEET	2'-0¼""	6'-0¼"

PROJECT NO: 4880-01-71	HWY: CTH D	COUNTY: OZAUKEE	CURB RAMP DETAILS: LAR ANN STREET	SHEET 25 E

* SEE CURB RAMP DETAIL SHEETS FOR ADDITIONAL CURB RAMP INFORMATION

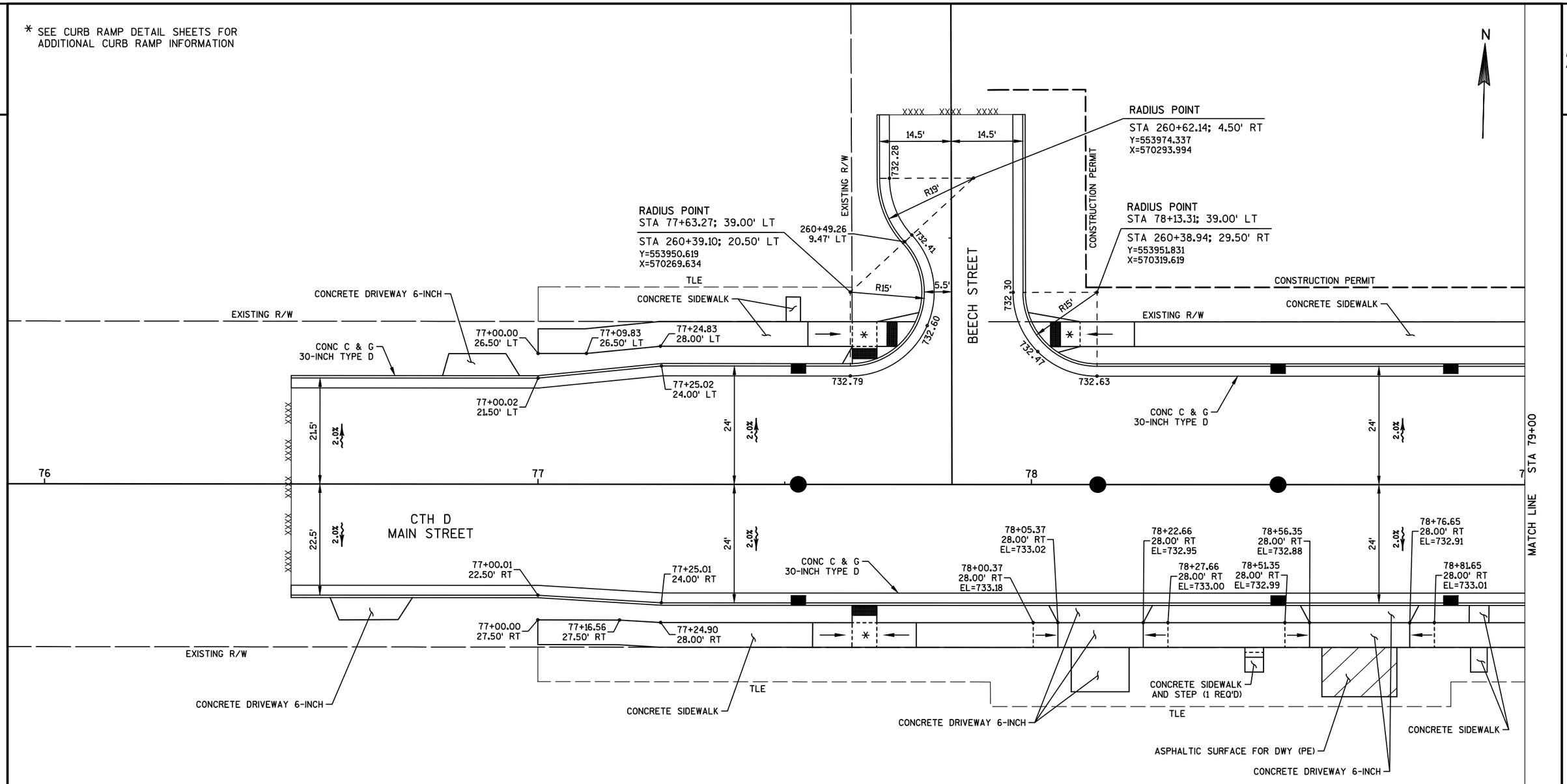

PROJECT NO: 4880-01-71	HWY: CTH D	COUNTY: OZAUKEE	PLAN DETAILS: CTH D	SHEET 26 E

FILE NAME : S:\CURRPROJ\OZAUKEECO\CTH D\CIVIL3D\48800100\SHEETSPLAN\48800100-021201-PD.DWG
LAYOUT NAME - 48800100-021201-PD - SHEET-01
PLOT DATE : 1/24/2017 9:06 AM PLOT BY : AARON SARAUER PLOT NAME : PLOT SCALE : 1 IN:20 FT
WISDOT/CADDS SHEET 42

* SEE CURB RAMP DETAIL SHEETS FOR ADDITIONAL CURB RAMP INFORMATION

N

MATCH LINE STA 79+00

MATCH LINE STA 82+00

CONCRETE SIDEWALK

CONSTRUCTION PERMIT

TLE

EXISTING R/W

CONCRETE DRIVEWAY 6-INCH

CONC C & G
30-INCH TYPE D

CTH D
MAIN STREET

24'

2.0%

79

80

81

82

81+27.14
28.00' LT
EL=733.81

81+32.14
28.00' LT
EL=733.71

81+57.44
28.00' LT
EL=733.80

81+62.44
28.00' LT
EL=733.96

81+97.80
28.00' LT
EL=733.99

79+24.75
28.00' RT
EL=733.03

79+19.75
28.00' RT
EL=733.10

79+44.05
28.00' RT
EL=733.15

79+49.05
28.00' RT
EL=733.29

80+67.57
28.01' RT
EL=733.52

80+62.57
28.00' RT
EL=733.66

80+89.87
28.01' RT
EL=733.56

80+94.87
28.00' RT
EL=733.67

81+47.06
28.00' RT
EL=733.74

81+42.06
28.00' RT
EL=733.82

81+68.36
28.00' RT
EL=733.81

81+73.36
28.00' RT
EL=733.95

ASPHALTIC SURFACE FOR DWY (PE)

CONCRETE DRIVEWAY 6-INCH

CONCRETE SIDEWALK

CONCRETE SIDEWALK
AND STEP (1 REQ'D)

CONCRETE DRIVEWAY 6-INCH

CONCRETE SIDEWALK

CONCRETE SIDEWALK
AND STEP (1 REQ'D)

CONCRETE DRIVEWAY 6-INCH

PROJECT NO: 4880-01-71	HWY: CTH D	COUNTY: OZAUKEE	PLAN DETAILS: CTH D	SHEET 27	E

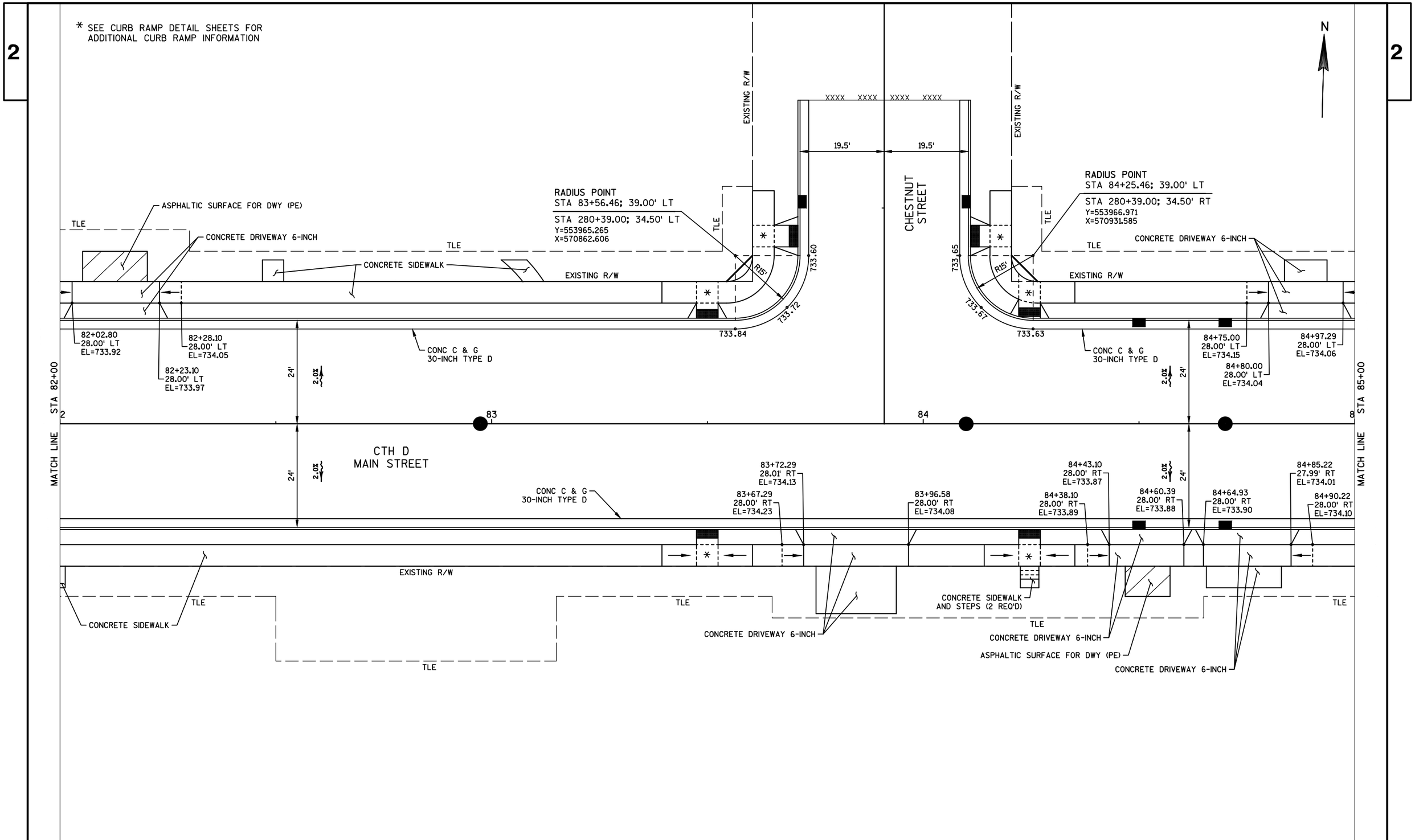

PROJECT NO:4880-01-71	HWY:CTH D	COUNTY:OZAUKEE	PLAN DETAILS: CTH D	SHEET 28	E

FILE NAME : S:\CURRPROJ\OZAUKEECO\CTH D\CIVIL3D\48800100\SHEETSPLAN\48800100-021201-PD.DWG
LAYOUT NAME - 48800100-021201-PD - SHEET-03
PLOT DATE : 1/24/2017 9:06 AM PLOT BY : AARON SARAUER PLOT NAME : PLOT SCALE : 1 IN:20 FT
WISDOT/CADDS SHEET 42

2

* SEE CURB RAMP DETAIL SHEETS FOR ADDITIONAL CURB RAMP INFORMATION

N

CONCRETE DRIVEWAY 6-INCH

CONCRETE DRIVEWAY 6-INCH

BASE AGGREGATE DENSE ¾-INCH

ASPHALTIC SURFACE FOR DWY (PE)

CONCRETE SIDEWALK

CONCRETE DRIVEWAY 6-INCH

TLE

EXISTING R/W

85+02.29
28.00' LT
EL=734.15

CONC C & G
30-INCH TYPE D

86+10.07
28.00' LT
EL=734.47

86+15.07
28.00' LT
EL=734.40

86+32.36
28.00' LT
EL=734.48

86+74.58
28.00' LT
EL=734.53

86+92.87
28.00' LT
EL=734.64

86+97.87
28.00' LT
EL=734.77

87+56.14
28.00' LT
EL=734.84

87+61.14
28.00' LT
EL=734.73

87+78.43
28.00' LT
EL=734.70

87+83.43
28.00' LT
EL=734.77

24'

2.0%

CTH D
MAIN STREET

STA 85+00

STA 88+00

5

86

290

87

8

MATCH LINE

MATCH LINE

85+05.20
28.00' RT
EL=734.15

85+27.50
27.99' RT
EL=734.13

85+10.20
28.01' RT
EL=734.07

85+32.50
28.00' RT
EL=734.23

CONC C & G
30-INCH TYPE D

733.99

734.06

734.11

R15'

734.19

734.13

734.07

R15'

CONC C & G
30-INCH TYPE D

87+71.85
27.00' RT

87+96.85
28.00' RT
EL=734.79

EXISTING R/W

TLE

CONCRETE DRIVEWAY 6-INCH

CONCRETE SIDEWALK

BASE AGGREGATE DENSE ¾-INCH

CONCRETE SIDEWALK

RADIUS POINT
STA 85+94.32; 39.00' RT

STA 289+60.99; 32.50' LT
Y=553893.172
X=571102.327

RADIUS POINT
STA 86+59.32; 39.00' RT

STA 289+61.01; 32.50' RT
Y=553894.779
X=571167.308

MAPLE STREET

17.5'

17.5'

XXXX XXXX XXXX XXXX

EXISTING R/W

EXISTING R/W

PROJECT NO: 4880-01-71	HWY: CTH D	COUNTY: OZAUKEE	PLAN DETAILS: CTH D	SHEET 29	E

2

* SEE CURB RAMP DETAIL SHEETS FOR ADDITIONAL CURB RAMP INFORMATION

N

CONCRETE DRIVEWAY 6-INCH

ASPHALTIC SURFACE FOR DWY (PE)

CONCRETE SIDEWALK

TLE

CONCRETE DRIVEWAY 6-INCH

TLE

CONCRETE DRIVEWAY 6-INCH

CONCRETE SIDEWALK

EXISTING R/W

88+29.65
28.00' LT
EL=734.58

88+34.65
28.00' LT
EL=734.48

88+61.95
28.00' LT
EL=734.32

88+66.83
28.00' LT
EL=734.30

88+84.12
28.00' LT
EL=734.30

88+89.12
28.00' LT
EL=734.37

89+25.75
24.00' LT

89+87.75
21.00' LT

CONC C & G
30-INCH TYPE D

STA 88+00

MATCH LINE

8

89

300

90

9

STA 91+00

MATCH LINE

24'

2.0%

21'

2.0%

R/L
(SECTION LINE)

90+00.00
0.00'

C/L

1.72°

91+00.00
3.00' RT

CTH D
MAIN STREET

88+28.14
27.99' RT
EL=734.50

88+01.85
28.00' RT
EL=734.60

88+33.14
28.00' RT
EL=734.57

CONC C & G
30-INCH TYPE D

733.78

733.90

733.84

734.03

734.10

734.16

R15'

R15'

EXISTING R/W

EXISTING R/W

TLE

TLE

ASPHALTIC SURFACE FOR DWY (PE)

CONCRETE DRIVEWAY 6-INCH

CONCRETE SIDEWALK

CONC C & G
30-INCH TYPE D

CONCRETE SIDEWALK

RADIUS POINT
STA 89+25.75; 39.00' RT

STA 299+60.99; 31.00' LT
Y=553901.369
X=571433.653

RADIUS POINT
STA 89+87.75; 36.00' RT

STA 299+64.01; 31.00' RT
Y=553905.901
X=571495.561

OAK STREET

EXISTING R/W

16'

16'

XXXX XXXX XXXX

EXISTING R/W

PROPOSED R/W

TLE

PROJECT NO: 4880-01-71	HWY: CTH D	COUNTY: OZAUKEE	PLAN DETAILS: CTH D	SHEET 30	E

FILE NAME : S:\CURRPROJ\OZAUKEECO\CTH D\CIVIL3D\48800100\SHEETSPLAN\48800100-021201-PD.DWG
LAYOUT NAME - 48800100-021201-PD - SHEET-05

PLOT DATE : 1/24/2017 9:06 AM PLOT BY : AARON SARAUER PLOT NAME : PLOT SCALE : 1 IN:20 FT

WISDOT/CADDS SHEET 42

2

* SEE CURB RAMP DETAIL SHEETS FOR ADDITIONAL CURB RAMP INFORMATION

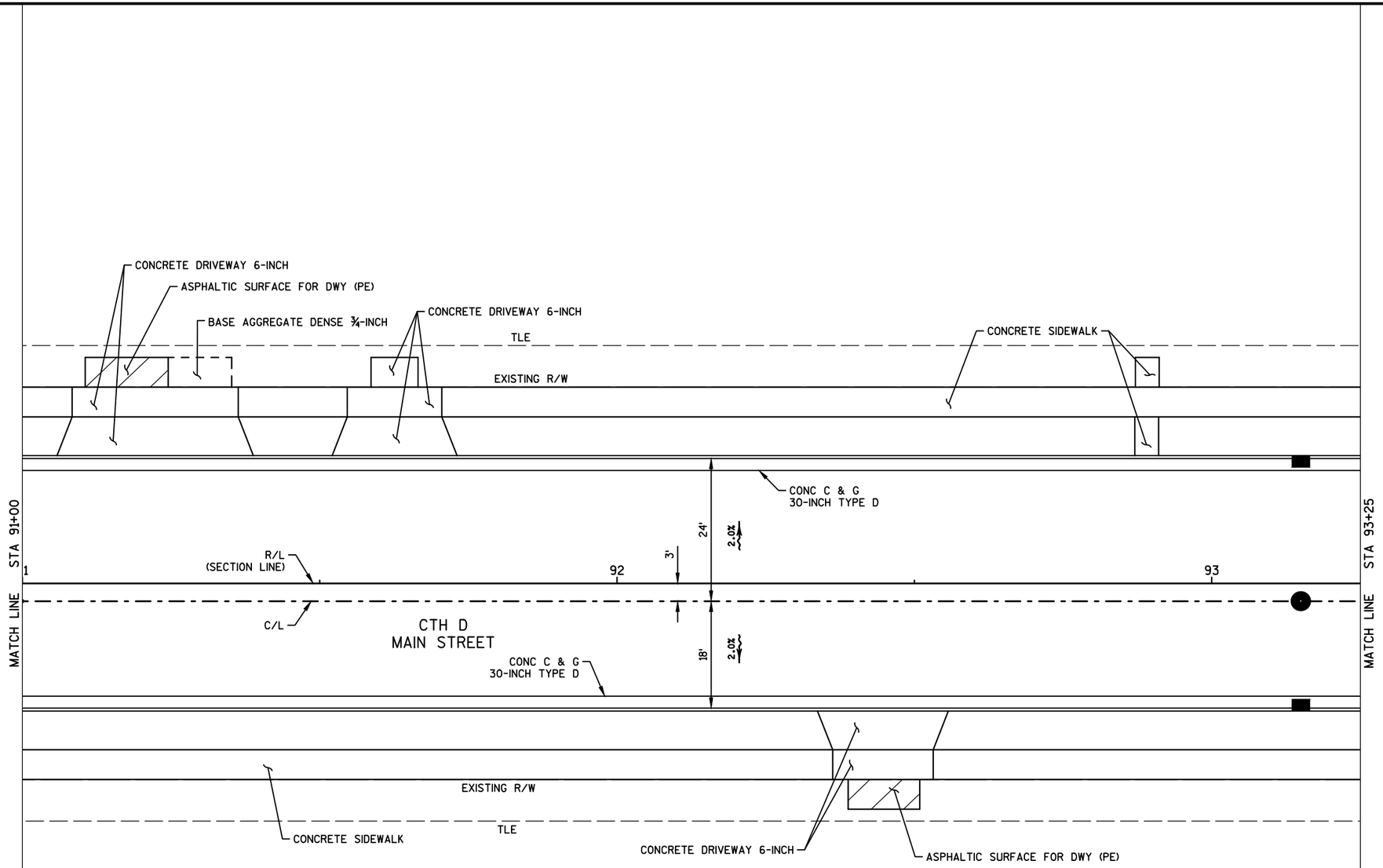

2

PROJECT NO: 4880-01-71	HWY: CTH D	COUNTY: OZAUKEE	PLAN DETAILS: CTH D	SHEET 31	E

FILE NAME : S:\CURRPROJ\OZAUKEECO\CTH D\CIVIL3D\48800100\SHEETSPLAN\48800100-021201-PD.DWG
LAYOUT NAME - 48800100-021201-PD - SHEET-06
PLOT DATE : 1/24/2017 9:06 AM PLOT BY : AARON SARAUER PLOT NAME : PLOT SCALE : 1 IN:20 FT
WISDOT/CADDS SHEET 42

2

* SEE CURB RAMP DETAIL SHEETS FOR ADDITIONAL CURB RAMP INFORMATION

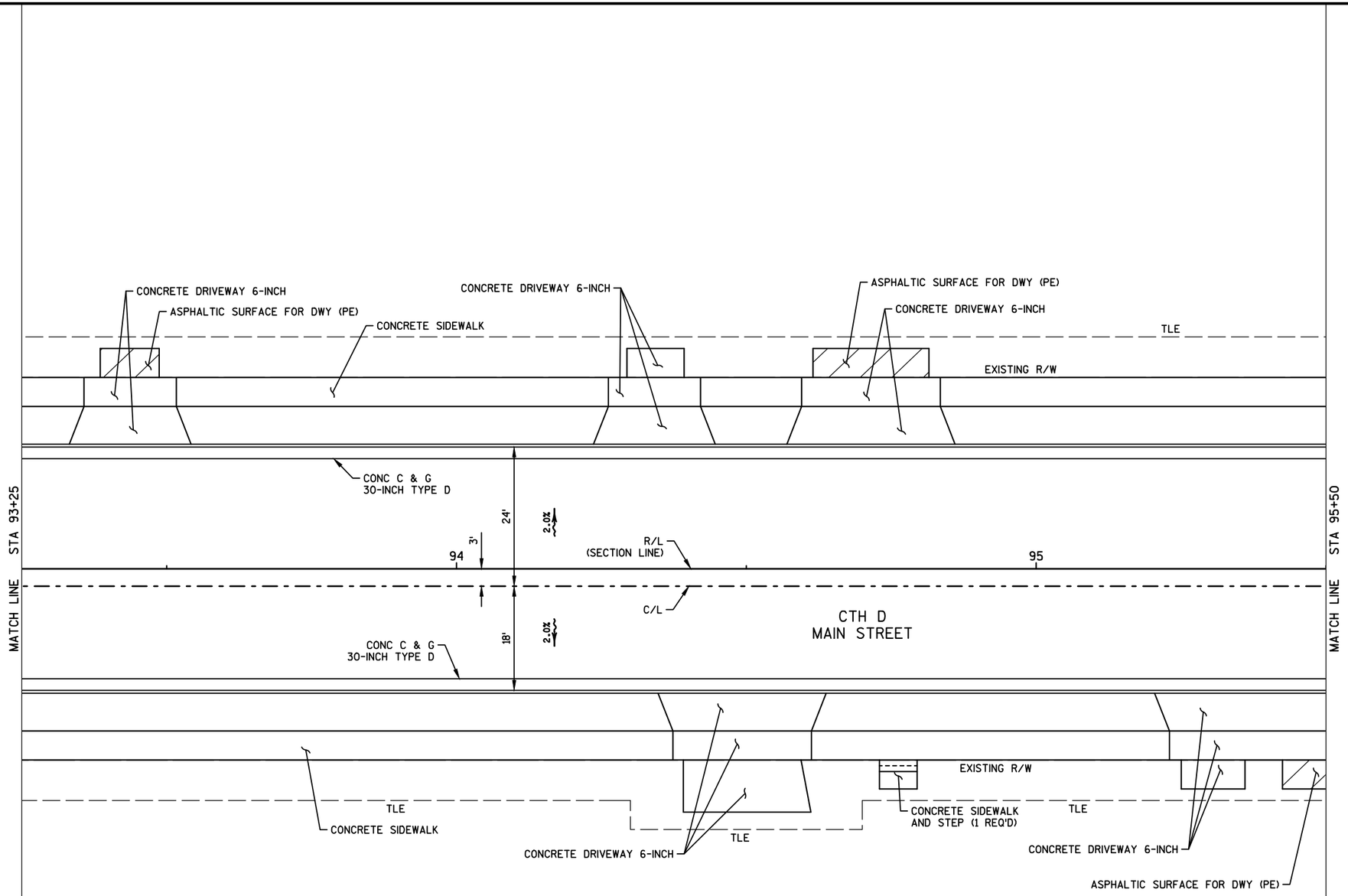

2

PROJECT NO: 4880-01-71	HWY: CTH D	COUNTY: OZAUKEE	PLAN DETAILS: CTH D	SHEET 32	E

* SEE CURB RAMP DETAIL SHEETS FOR ADDITIONAL CURB RAMP INFORMATION

N

XXXX XXXX XXXX XXXX

18' 18'

EXISTING R/W

EXISTING R/W

RADIUS POINT
STA 96+50.83; 36.00' LT

STA 320+36.00; 33.00' LT
Y=553994.279
X=572156.657

RADIUS POINT
STA 97+16.83; 36.00' LT

STA 320+36.00; 33.00' RT
Y=553995.912
X=572222.637

CONCRETE SIDEWALK

TLE

EXISTING R/W

739.44

739.31

739.19

R15'

740.02

740.08

740.15

R15'

CONCRETE SIDEWALK

TLE

EXISTING R/W

ASPHALTIC SURFACE FOR DWY (PE)

CONCRETE DRIVEWAY 6-INCH

CONC C & G
30-INCH TYPE D

CONC C & G
30-INCH TYPE D

WEST LANE

STA 95+50

24'

2.0%

96

320

97

R/L
(SECTION LINE)

C/L

3'

24'

2.0%

98

STA 98+50

MATCH LINE

18'

2.0%

CONC C & G
30-INCH TYPE D

738.84

738.95

739.00

R15'

CONCRETE SIDEWALK

EXISTING R/W

TLE

RADIUS POINT
STA 96+18.01; 36.00' RT

STA 309+64.24; 33.00' LT
Y=553921.489
X=572125.623

MICHAEL
STREET

18' 18'

EXISTING R/W

XXXX XXXX XXXX XXXX

739.79

739.86

739.79

R15'

RADIUS POINT
STA 96+84.01; 36.00' RT

STA 309+63.72; 33.00' RT
Y=553923.122
X=572191.605

EXISTING R/W

CONCRETE SIDEWALK

TLE

CONCRETE DRIVEWAY 6-INCH

ASPHALTIC SURFACE FOR DWY (PE)

18'

2.0%

CONC C & G
30-INCH TYPE D

CTH D
MAIN STREET

MATCH LINE

PROJECT NO: 4880-01-71	HWY: CTH D	COUNTY: OZAUKEE	PLAN DETAILS: CTH D	SHEET 33	E

2

2

N

* SEE CURB RAMP DETAIL SHEETS FOR
ADDITIONAL CURB RAMP INFORMATION

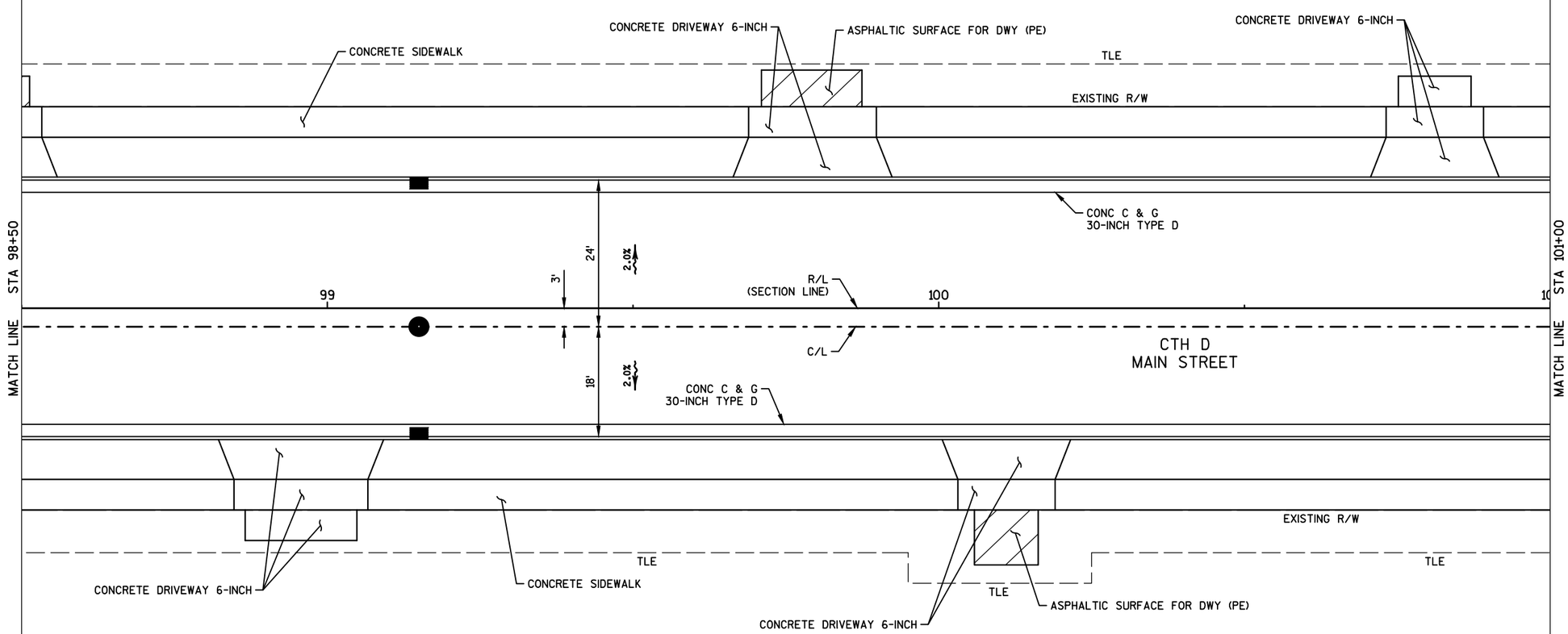

PROJECT NO: 4880-01-71	HWY: CTH D	COUNTY: OZAUKEE	PLAN DETAILS: CTH D	SHEET 34	E

2

2

* SEE CURB RAMP DETAIL SHEETS FOR ADDITIONAL CURB RAMP INFORMATION

N

EXISTING R/W

18'

18'

EXISTING R/W

RADIUS POINT
STA 102+10.83; 36.00' LT
STA 340+36.00; 33.00' LT
Y=554008.130
X=572716.486

RADIUS POINT
STA 102+76.83; 36.00' LT
STA 340+36.00; 33.00' RT
Y=554009.762
X=572782.465

CONCRETE SIDEWALK

TLE

EXISTING R/W

743.98

743.99

R15'

R15'

744.05

744.07

743.92

744.16

EAST LANE

CONCRETE SIDEWALK

TLE

EXISTING R/W

CONC C & G
30-INCH TYPE D

CONC C & G
30-INCH TYPE D

STA 101+00

STA 104+00

3'

24'

2.0%

24'

2.0%

R/L
(SECTION LINE)

101

102

330

340

103

104

C/L

MATCH LINE

18'

2.0%

18'

2.0%

CTH D
MAIN STREET

MATCH LINE

CONC C & G
30-INCH TYPE D

CONC C & G
30-INCH TYPE D

743.90

744.00

744.14

744.04

R15'

R15'

743.93

743.94

EXISTING R/W

EXISTING R/W

TLE

TLE

CONCRETE SIDEWALK

CONCRETE SIDEWALK

LINDALE
STREET

RADIUS POINT
STA 101+71.54; 36.00' RT
STA 329+64.24; 33.00' LT
Y=553935.180
X=572678.987

RADIUS POINT
STA 102+37.54; 36.00' RT
STA 329+63.77; 33.00' RT
Y=553936.812
X=572744.969

EXISTING R/W

EXISTING R/W

18'

18'

329

XXXX XXXX XXXX XXXX

PROJECT NO: 4880-01-71	HWY: CTH D	COUNTY: OZAUKEE	PLAN DETAILS: CTH D	SHEET 35	E

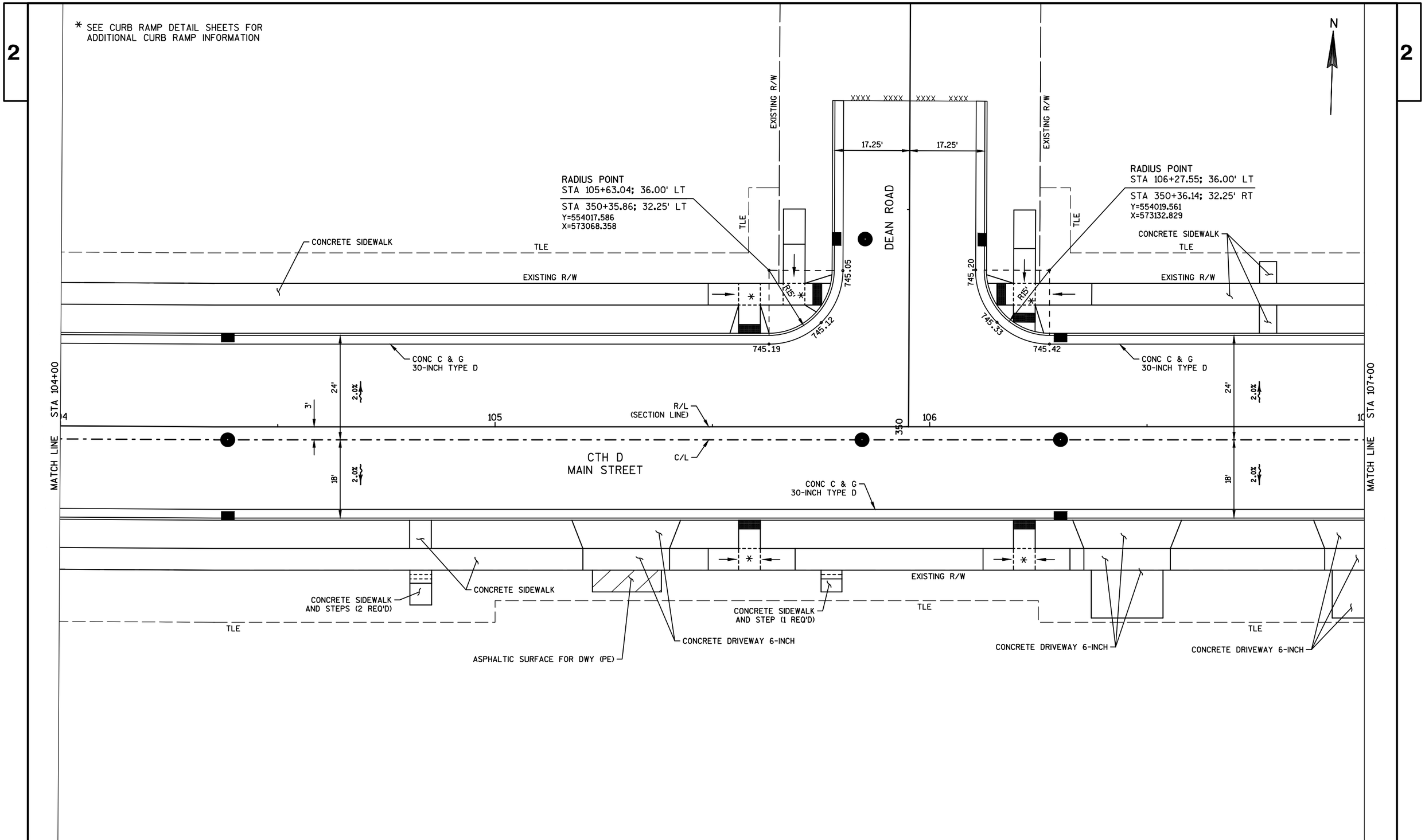

PROJECT NO:4880-01-71	HWY:CTH D	COUNTY:OZAUKEE	PLAN DETAILS: CTH D	SHEET 36	E

FILE NAME : S:\CURRPROJ\OZAUKEECO\CTH D\CIVIL3D\48800100\SHEETSPLAN\48800100-021201-PD.DWG
LAYOUT NAME - 48800100-021201-PD - SHEET-11
PLOT DATE : 1/24/2017 9:07 AM PLOT BY : AARON SARAUER PLOT NAME : PLOT SCALE : 1 IN:20 FT
WISDOT/CADDS SHEET 42

2

2

* SEE CURB RAMP DETAIL SHEETS FOR ADDITIONAL CURB RAMP INFORMATION

N

EXISTING R/W

17.5'

17.5'

EXISTING R/W

PIERRON STREET

RADIUS POINT
STA 108+82.97; 36.00' LT

STA 360+35.86; 32.50' LT
Y=554027.380
X=573388.129

RADIUS POINT
STA 109+47.97; 36.00' LT

STA 360+36.14; 32.50' RT
Y=554029.370
X=573453.100

CONCRETE DRIVEWAY 6-INCH

ASPHALTIC SURFACE FOR DWY (PE)

TLE

CONCRETE DRIVEWAY 6-INCH

ASPHALTIC SURFACE FOR DWY (PE)

TLE

TLE

CONCRETE SIDEWALK

TLE

CONCRETE SIDEWALK

EXISTING R/W

R15

R15

746.32

746.33

746.41

746.44

746.34

746.56

CONC C & G
30-INCH TYPE D

CONC C & G
30-INCH TYPE D

STA 107+00

STA 110+00

MATCH LINE

MATCH LINE

3'

24'

2.0%

24'

2.0%

R/L
(SECTION LINE)

107

108

109

360

110

C/L

CTH D
MAIN STREET

18'

2.0%

18'

2.0%

CONC C & G
30-INCH TYPE D

EXISTING R/W

TLE

CONCRETE SIDEWALK

CONCRETE DRIVEWAY 6-INCH

CONCRETE DRIVEWAY 6-INCH

CONCRETE DRIVEWAY 6-INCH

CONCRETE DRIVEWAY 6-INCH

PROJECT NO: 4880-01-71	HWY: CTH D	COUNTY: OZAUKEE	PLAN DETAILS: CTH D	SHEET 37	E

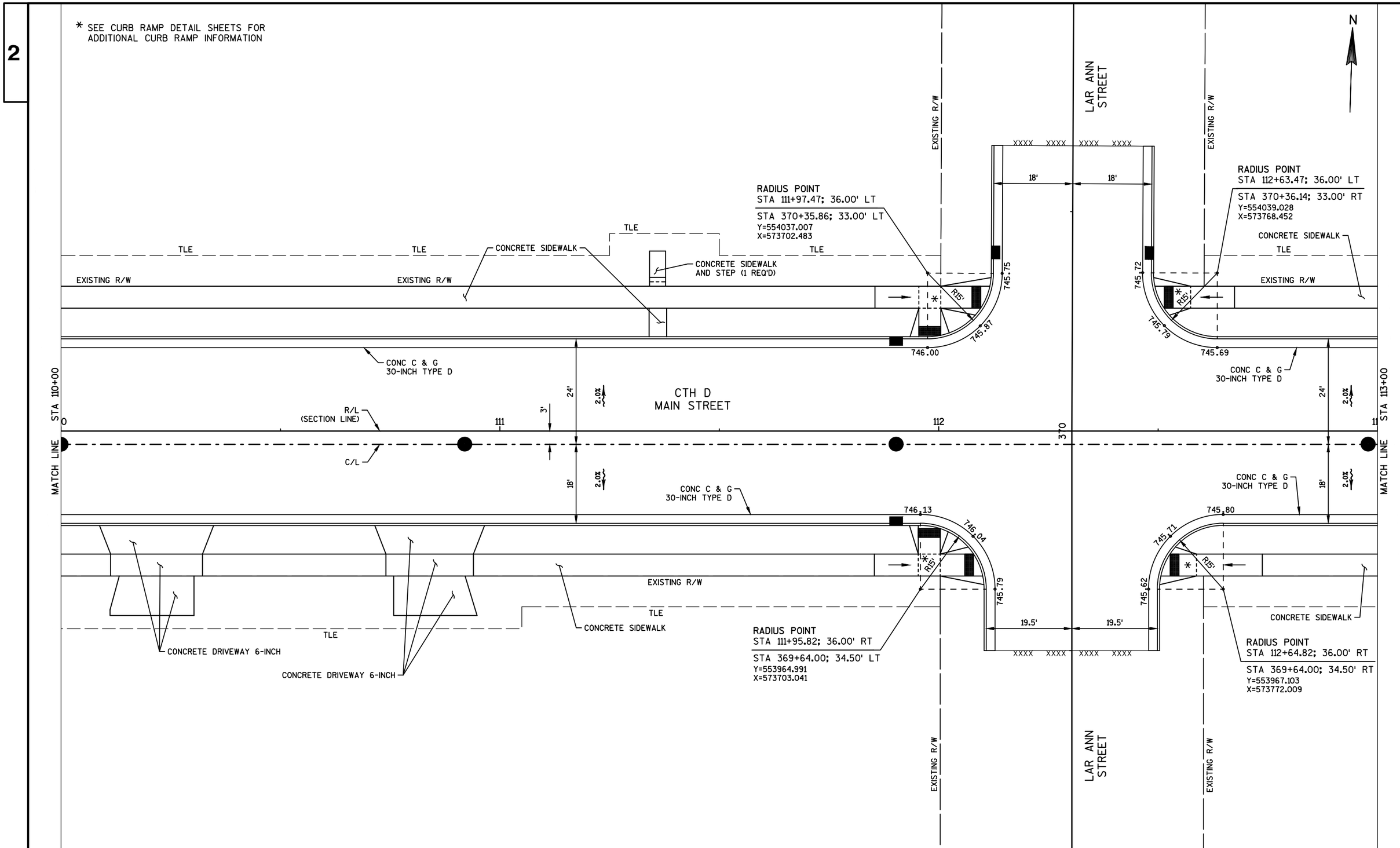

PROJECT NO:4880-01-71	HWY:CTH D	COUNTY:OZAUKEE	PLAN DETAILS: CTH D	SHEET 38	E

FILE NAME : S:\CURRPROJ\OZAUKEECO\CTH D\CIVIL3D\48800100\SHEETSPLAN\48800100-021201-PD.DWG
LAYOUT NAME - 48800100-021201-PD - SHEET-13
PLOT DATE : 1/24/2017 9:07 AM PLOT BY : AARON SARAUER PLOT NAME : PLOT SCALE : 1 IN:20 FT

* SEE CURB RAMP DETAIL SHEETS FOR ADDITIONAL CURB RAMP INFORMATION

N

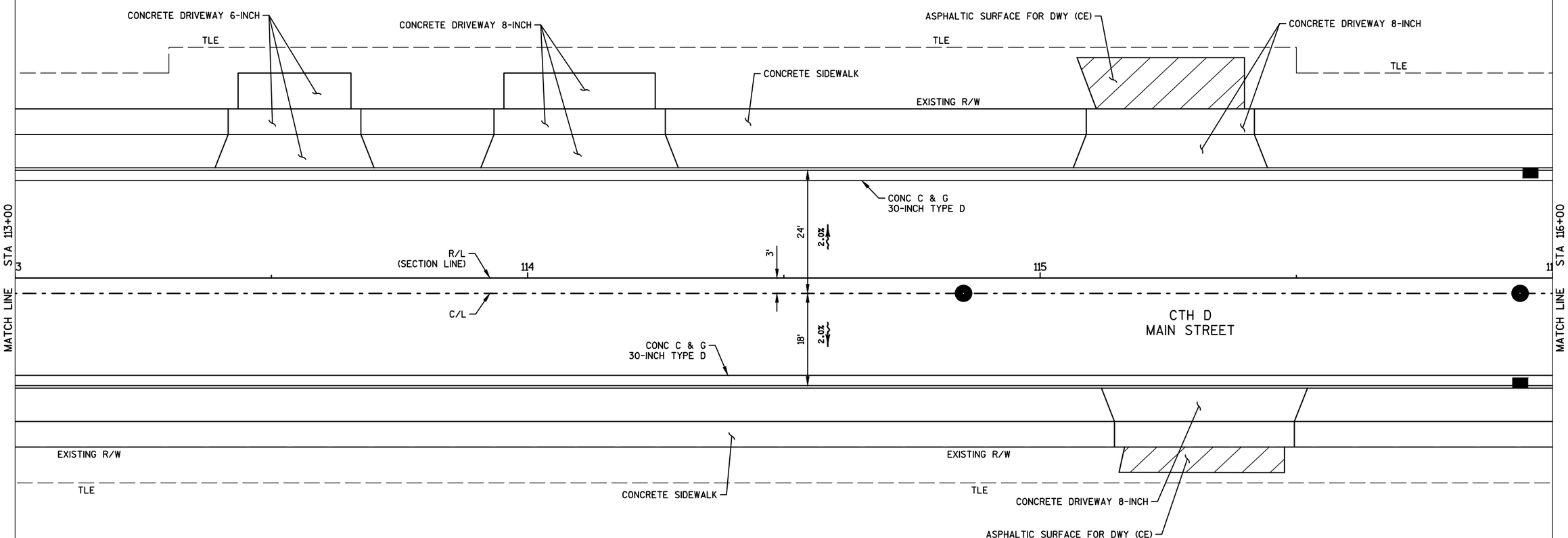

* SEE CURB RAMP DETAIL SHEETS FOR ADDITIONAL CURB RAMP INFORMATION

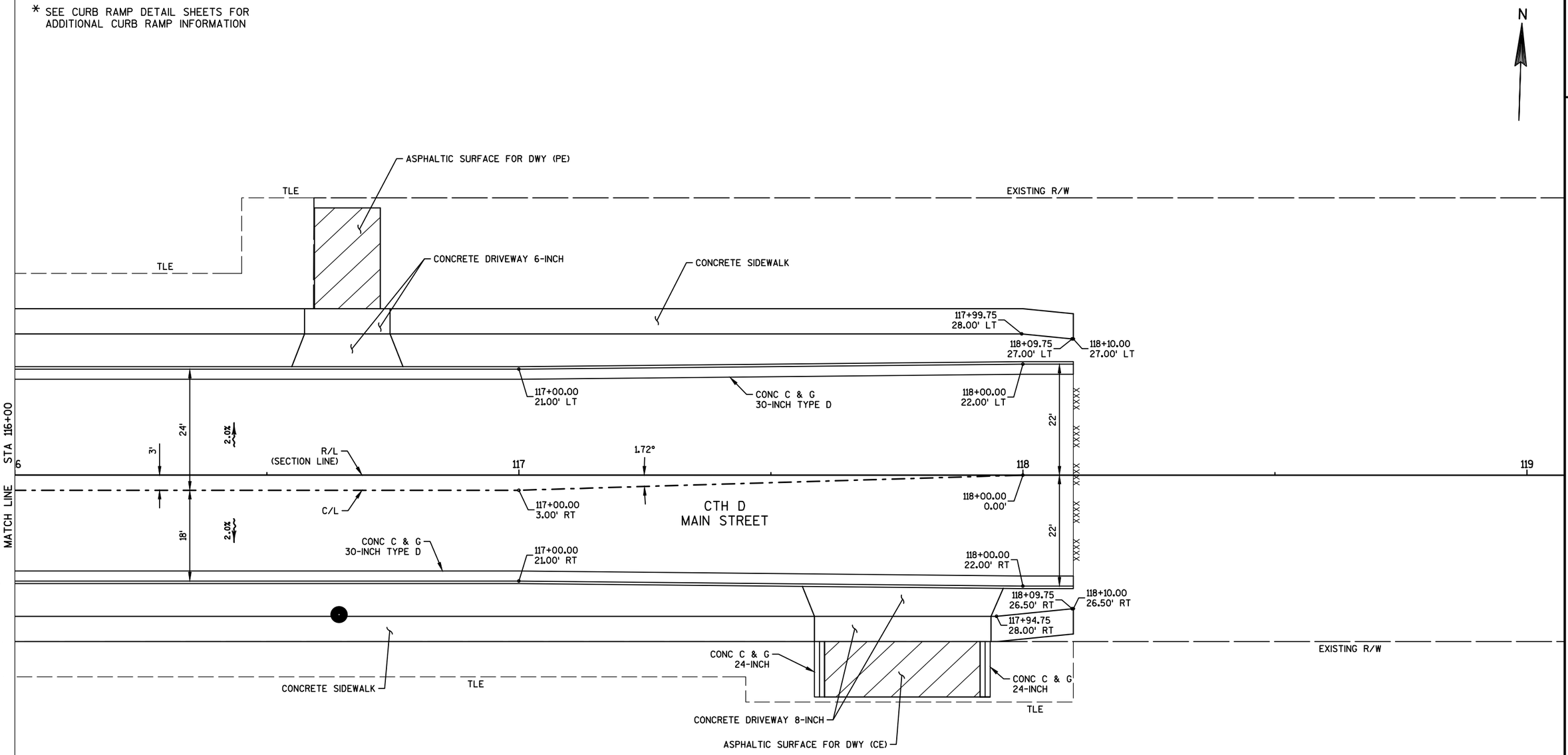

PROJECT NO: 4880-01-71	HWY: CTH D	COUNTY: OZAUKEE	PLAN DETAILS: CTH D	SHEET 40	E

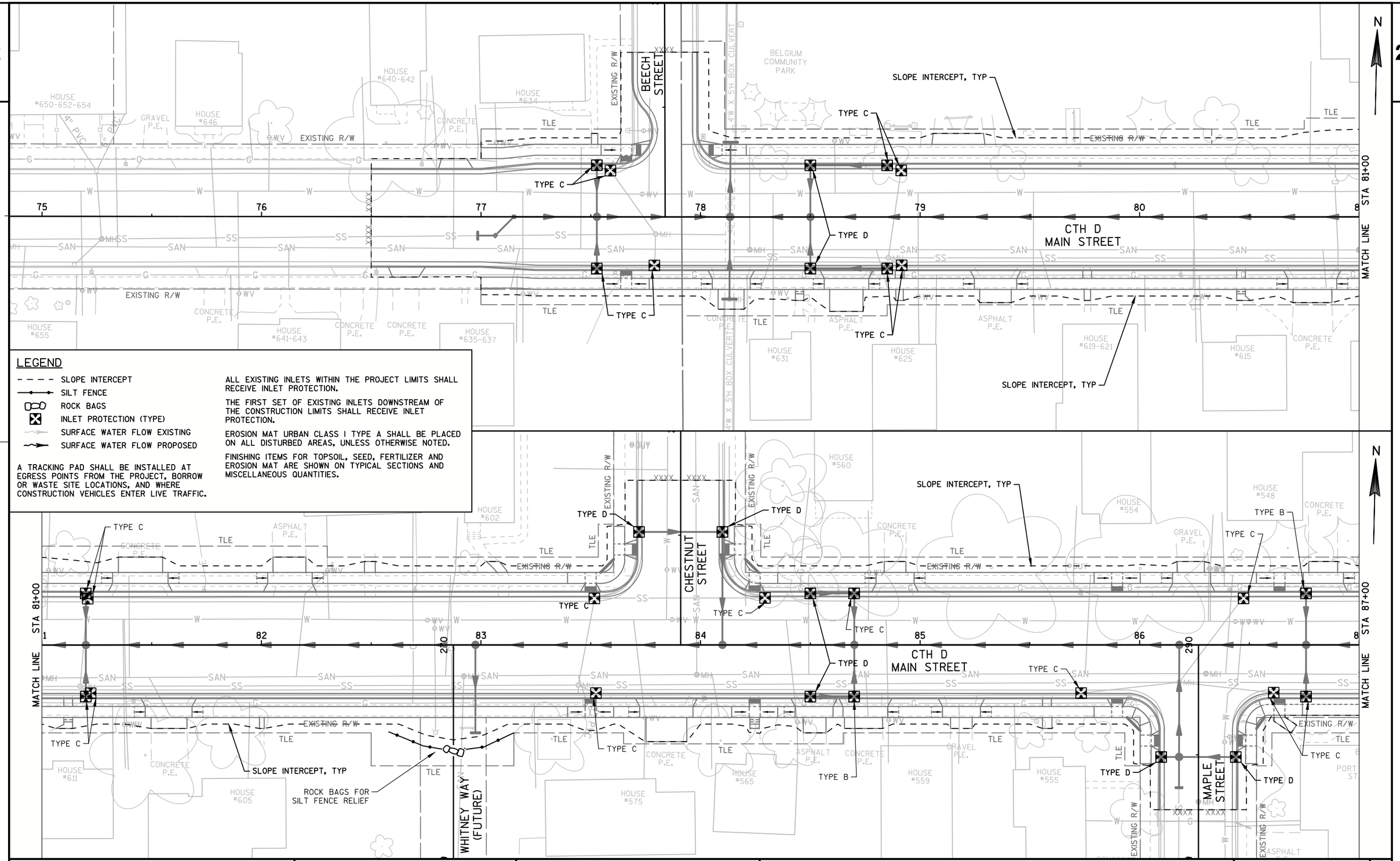

PROJECT NO: 4880-01-71	HWY: CTH D	COUNTY: OZAUKEE	EROSION CONTROL PLAN: CTH D	SHEET 41 E

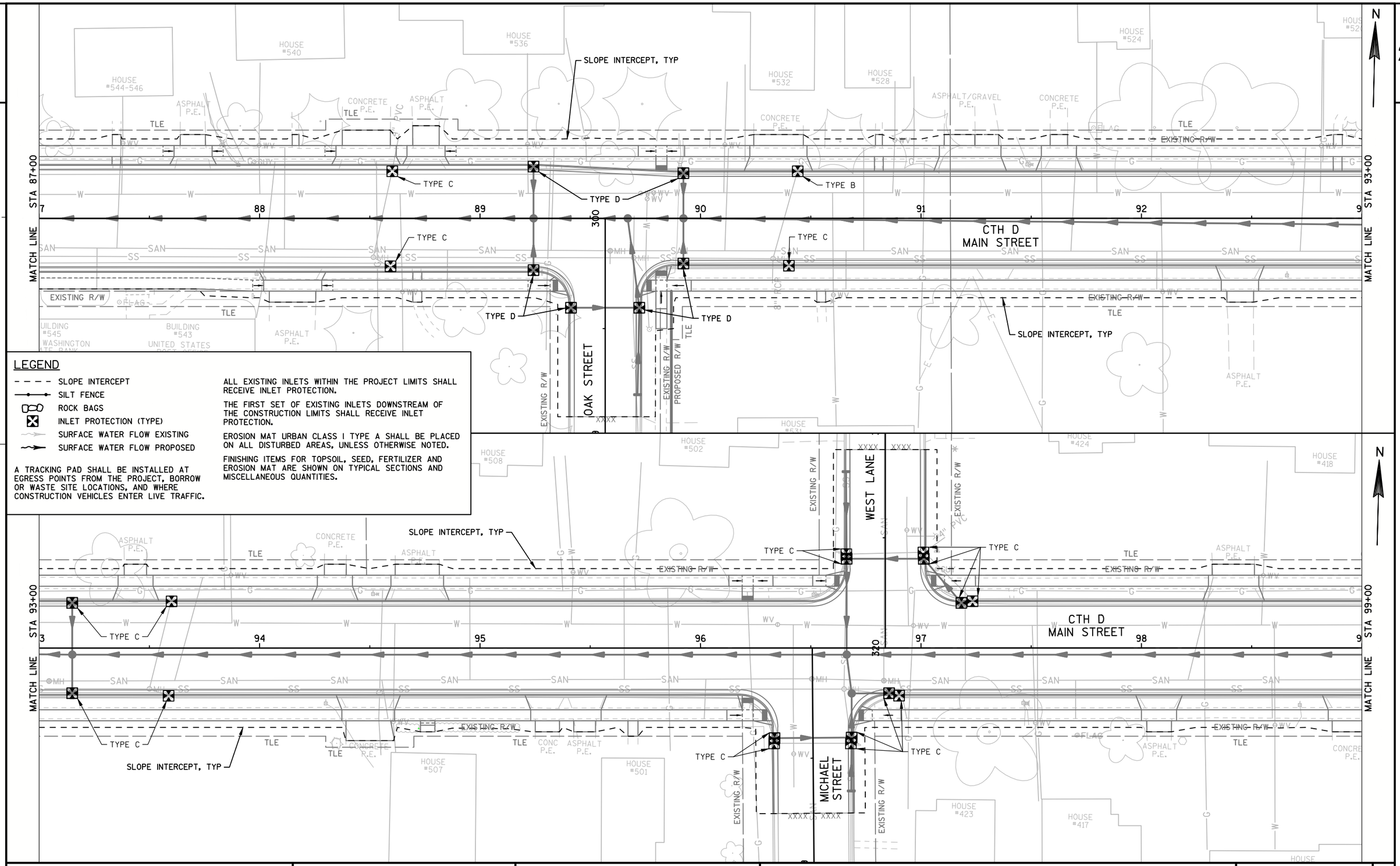

LEGEND

- SLOPE INTERCEPT
- SILT FENCE
- ROCK BAGS
- INLET PROTECTION (TYPE)
- SURFACE WATER FLOW EXISTING
- SURFACE WATER FLOW PROPOSED

A TRACKING PAD SHALL BE INSTALLED AT EGRESS POINTS FROM THE PROJECT, BORROW OR WASTE SITE LOCATIONS, AND WHERE CONSTRUCTION VEHICLES ENTER LIVE TRAFFIC.

ALL EXISTING INLETS WITHIN THE PROJECT LIMITS SHALL RECEIVE INLET PROTECTION.

THE FIRST SET OF EXISTING INLETS DOWNSTREAM OF THE CONSTRUCTION LIMITS SHALL RECEIVE INLET PROTECTION.

EROSION MAT URBAN CLASS I TYPE A SHALL BE PLACED ON ALL DISTURBED AREAS, UNLESS OTHERWISE NOTED.

FINISHING ITEMS FOR TOPSOIL, SEED, FERTILIZER AND EROSION MAT ARE SHOWN ON TYPICAL SECTIONS AND MISCELLANEOUS QUANTITIES.

PROJECT NO: 4880-01-71	HWY: CTH D	COUNTY: OZAUKEE	EROSION CONTROL PLAN: CTH D	SHEET 42	E

LEGEND

- SLOPE INTERCEPT
- SILT FENCE
- ROCK BAGS
- INLET PROTECTION (TYPE)
- SURFACE WATER FLOW EXISTING
- SURFACE WATER FLOW PROPOSED

A TRACKING PAD SHALL BE INSTALLED AT EGRESS POINTS FROM THE PROJECT, BORROW OR WASTE SITE LOCATIONS, AND WHERE CONSTRUCTION VEHICLES ENTER LIVE TRAFFIC.

ALL EXISTING INLETS WITHIN THE PROJECT LIMITS SHALL RECEIVE INLET PROTECTION.

THE FIRST SET OF EXISTING INLETS DOWNSTREAM OF THE CONSTRUCTION LIMITS SHALL RECEIVE INLET PROTECTION.

EROSION MAT URBAN CLASS I TYPE A SHALL BE PLACED ON ALL DISTURBED AREAS, UNLESS OTHERWISE NOTED.

FINISHING ITEMS FOR TOPSOIL, SEED, FERTILIZER AND EROSION MAT ARE SHOWN ON TYPICAL SECTIONS AND MISCELLANEOUS QUANTITIES.

PROJECT NO: 4880-01-71	HWY: CTH D	COUNTY: OZAUKEE	EROSION CONTROL PLAN: CTH D	SHEET 43	E

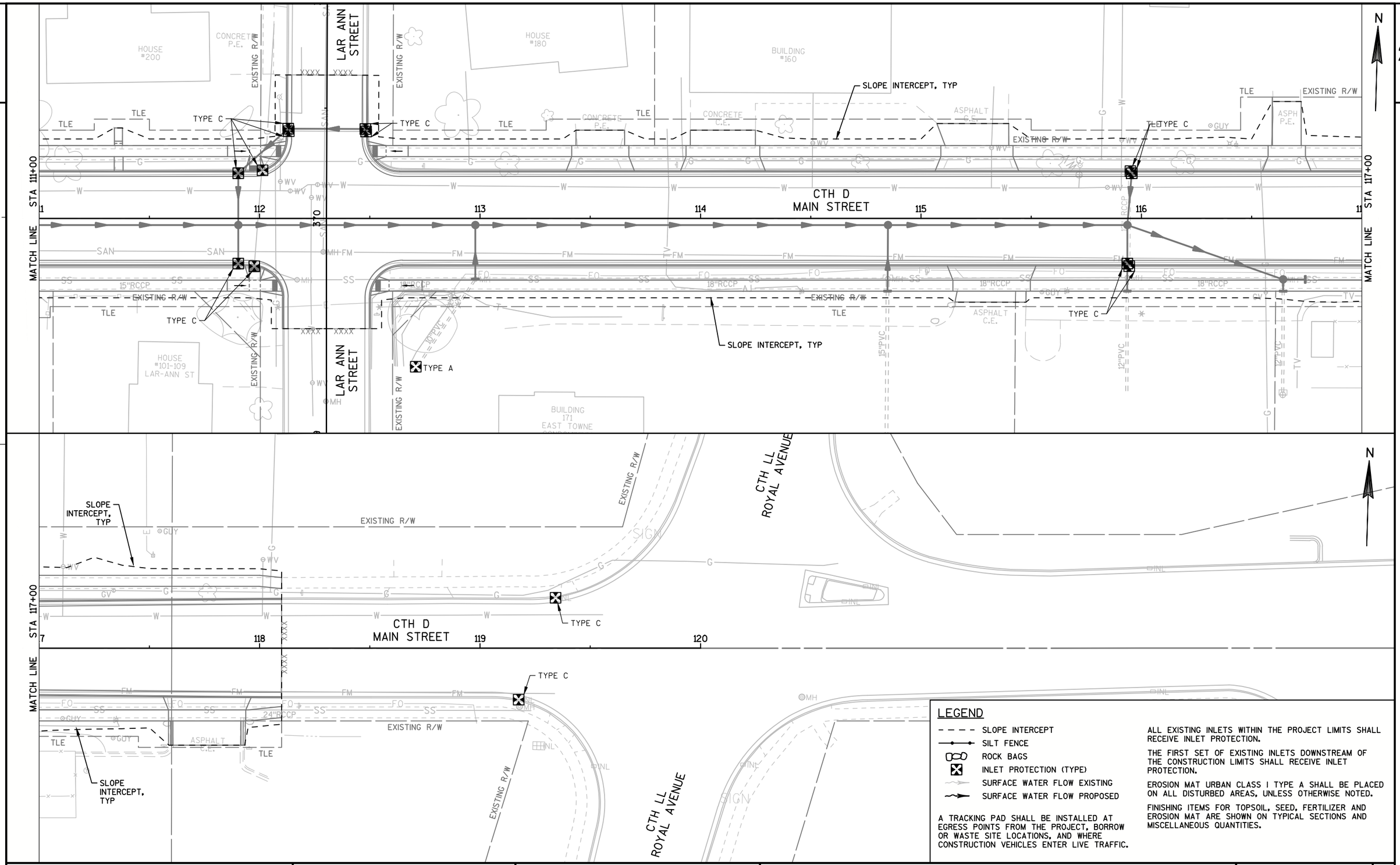

LEGEND

- SLOPE INTERCEPT
- SILT FENCE
- ROCK BAGS
- INLET PROTECTION (TYPE)
- SURFACE WATER FLOW EXISTING
- SURFACE WATER FLOW PROPOSED

A TRACKING PAD SHALL BE INSTALLED AT EGRESS POINTS FROM THE PROJECT, BORROW OR WASTE SITE LOCATIONS, AND WHERE CONSTRUCTION VEHICLES ENTER LIVE TRAFFIC.

ALL EXISTING INLETS WITHIN THE PROJECT LIMITS SHALL RECEIVE INLET PROTECTION.

THE FIRST SET OF EXISTING INLETS DOWNSTREAM OF THE CONSTRUCTION LIMITS SHALL RECEIVE INLET PROTECTION.

EROSION MAT URBAN CLASS I TYPE A SHALL BE PLACED ON ALL DISTURBED AREAS, UNLESS OTHERWISE NOTED.

FINISHING ITEMS FOR TOPSOIL, SEED, FERTILIZER AND EROSION MAT ARE SHOWN ON TYPICAL SECTIONS AND MISCELLANEOUS QUANTITIES.

PROJECT NO: 4880-01-71	HWY: CTH D	COUNTY: OZAUKEE	EROSION CONTROL PLAN: CTH D	SHEET 44 E

LEGEND

- (4) STORM SEWER LATERAL 4-INCH
- (6) STORM SEWER LATERAL 6-INCH
- (8) STORM SEWER LATERAL 8-INCH
- (S) SANITARY SEWER LATERAL 4-INCH
- (W1) WATER SERVICE 1-INCH WITH 4'X8' INSULATION BOARD
- (W2) WATER SERVICE 1¼-INCH WITH 4'X8' INSULATION BOARD
- (I) 4'X8' INSULATION BOARD

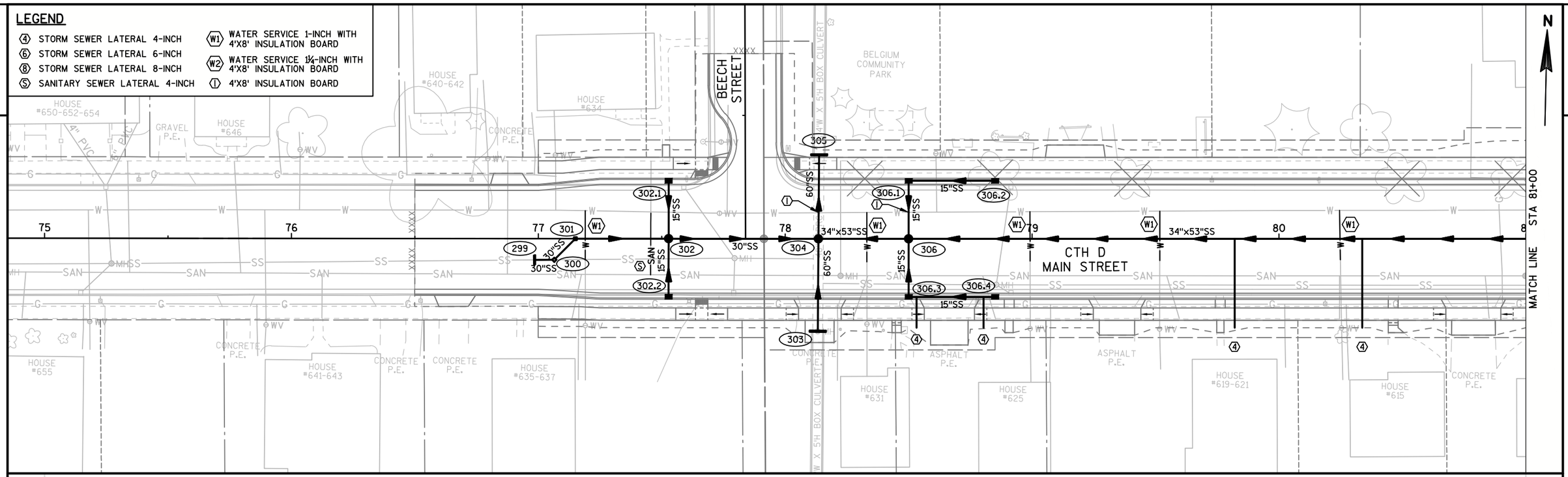

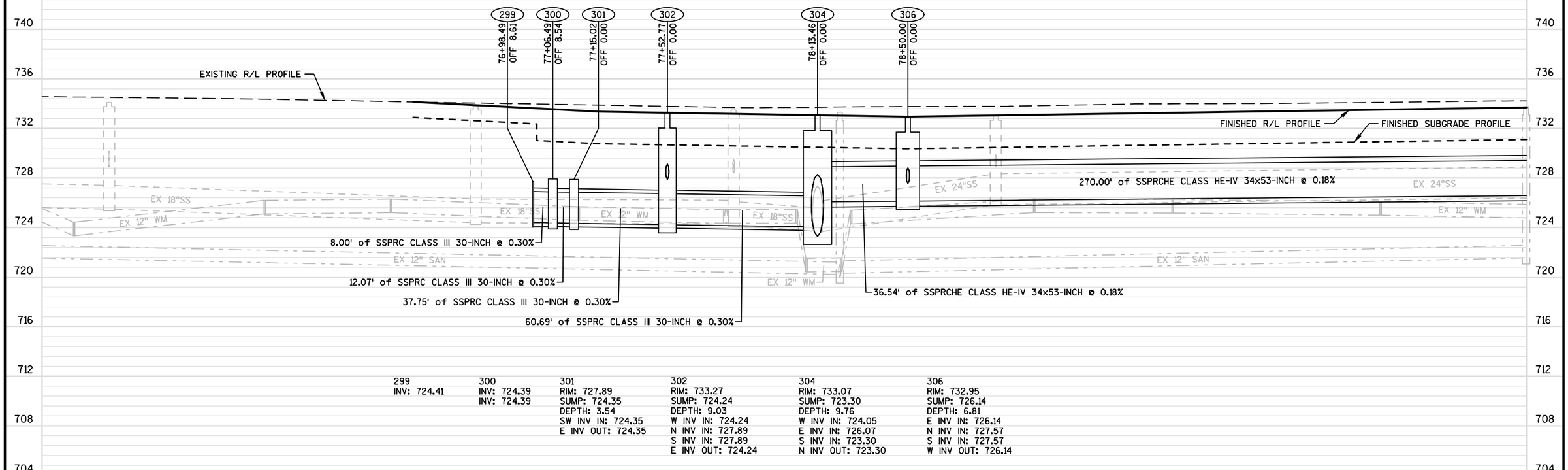

299	300	301	302	304	306
INV: 724.41	INV: 724.39	RIM: 727.89	RIM: 733.27	RIM: 733.07	RIM: 732.95
	INV: 724.39	SUMP: 724.35	SUMP: 724.24	SUMP: 723.30	SUMP: 726.14
		DEPTH: 3.54	DEPTH: 9.03	DEPTH: 9.76	DEPTH: 6.81
		SW INV IN: 724.35	W INV IN: 724.24	W INV IN: 724.05	E INV IN: 726.14
		E INV OUT: 724.35	N INV IN: 727.89	E INV IN: 726.07	N INV IN: 727.57
			S INV IN: 727.89	S INV IN: 723.30	S INV IN: 727.57
			E INV OUT: 724.24	N INV OUT: 723.30	W INV OUT: 726.14

PROJECT NO: 4880-01-71	HWY: CTH D	COUNTY: OZAUKEE	STORM SEWER: CTH D	SHEET 45	E

FILE NAME : S:\CURRPROJ\OZAUKEECO\CTH D\CIVIL3D\48800100\SHEETSPLAN\48800100-022501-SS.DWG
LAYOUT NAME - 48800100-022501-SS - SHEET-01-A
PLOT DATE : 1/24/2017 9:13 AM PLOT BY : AARON SARAUER PLOT NAME : PLOT SCALE : 1 IN:40 FT
WISDOT/CADDS SHEET 41

LEGEND

- (4) STORM SEWER LATERAL 4-INCH
- (6) STORM SEWER LATERAL 6-INCH
- (8) STORM SEWER LATERAL 8-INCH
- (S) SANITARY SEWER LATERAL 4-INCH
- (W1) WATER SERVICE 1-INCH WITH 4'X8' INSULATION BOARD
- (W2) WATER SERVICE 1¼-INCH WITH 4'X8' INSULATION BOARD
- (I) 4'X8' INSULATION BOARD

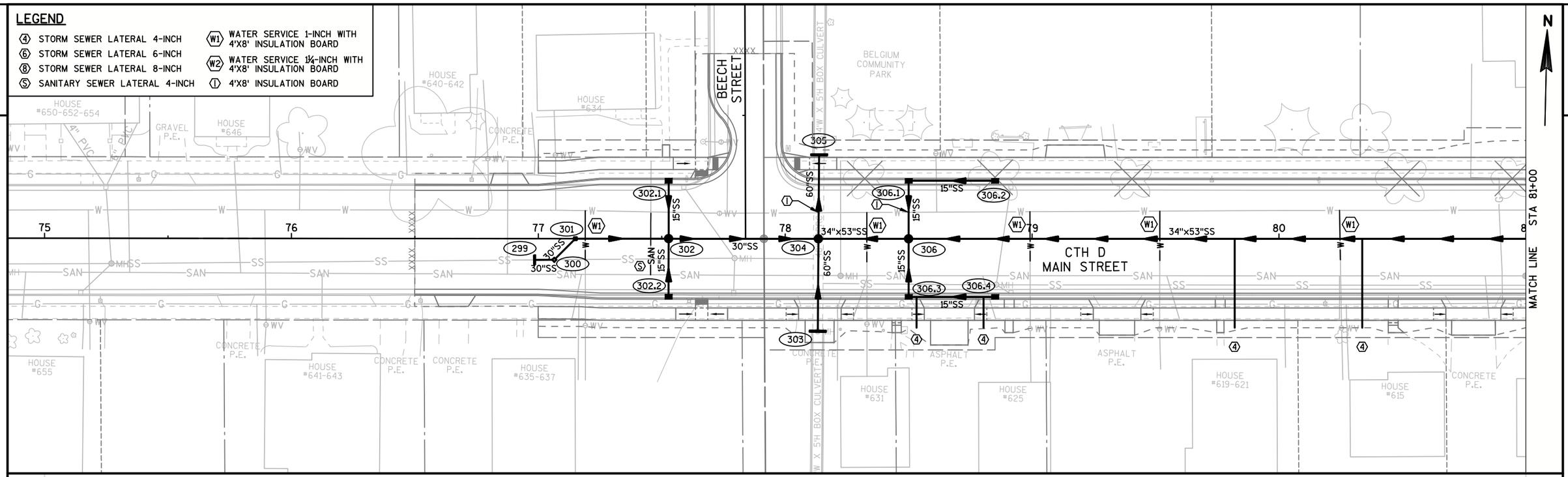

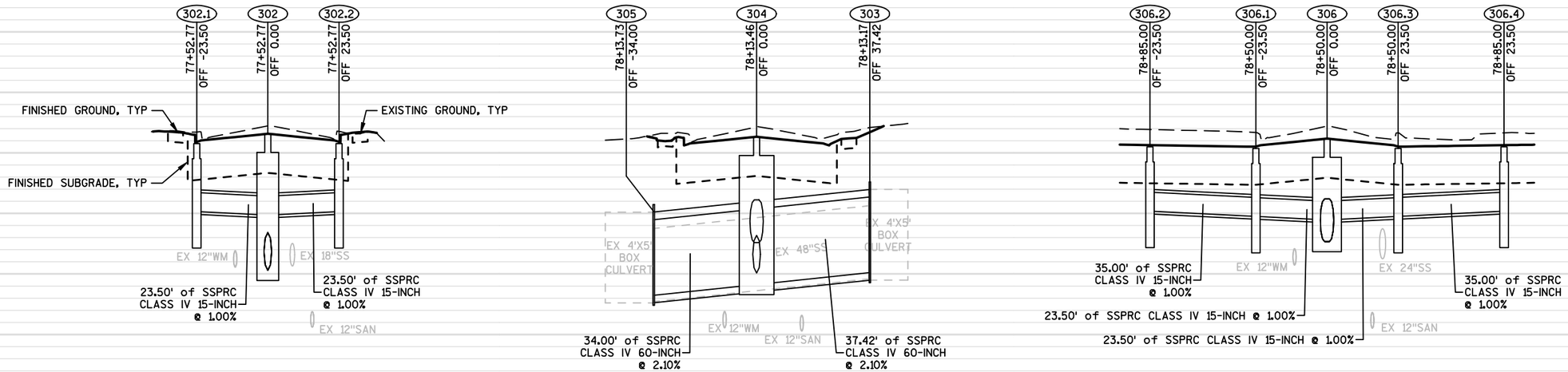

302.1
RIM: 732.62
SUMP: 726.12
DEPTH: 6.50
S INV OUT: 728.12

302
RIM: 733.27
SUMP: 724.24
DEPTH: 9.03
W INV IN: 724.24
N INV IN: 727.89
S INV IN: 727.89
E INV OUT: 724.24

302.2
RIM: 732.62
SUMP: 726.12
DEPTH: 6.50
N INV OUT: 728.12

305
INV: 722.59

304
RIM: 733.07
SUMP: 723.30
DEPTH: 9.76
W INV IN: 724.05
E INV IN: 726.07
S INV IN: 723.30
N INV OUT: 723.30

303
INV: 724.09

306.2
RIM: 732.41
SUMP: 726.15
DEPTH: 6.25
W INV OUT: 728.15

306.1
RIM: 732.30
SUMP: 725.80
DEPTH: 6.50
E INV IN: 727.80
S INV OUT: 727.80

306
RIM: 732.95
SUMP: 726.14
DEPTH: 6.81
E INV IN: 726.14
N INV IN: 727.57
S INV IN: 727.57
W INV OUT: 726.14

306.3
RIM: 732.30
SUMP: 725.80
DEPTH: 6.50
E INV IN: 727.80
N INV OUT: 727.80

306.4
RIM: 732.41
SUMP: 726.15
DEPTH: 6.25
W INV OUT: 728.15

PROJECT NO: 4880-01-71	HWY: CTH D	COUNTY: OZAUKEE	STORM SEWER: CTH D	SHEET 46	E

FILE NAME : S:\CURRPROJ\OZAUKEECO\CTH D\CIVIL3D\48800100\SHEETSPLAN\48800100-022501-SS.DWG
LAYOUT NAME - 48800100-022501-SS - SHEET-01-B
PLOT DATE : 1/24/2017 9:13 AM PLOT BY : AARON SARAUER PLOT NAME : PLOT SCALE : 1 IN:40 FT
WISDOT/CADDS SHEET 41

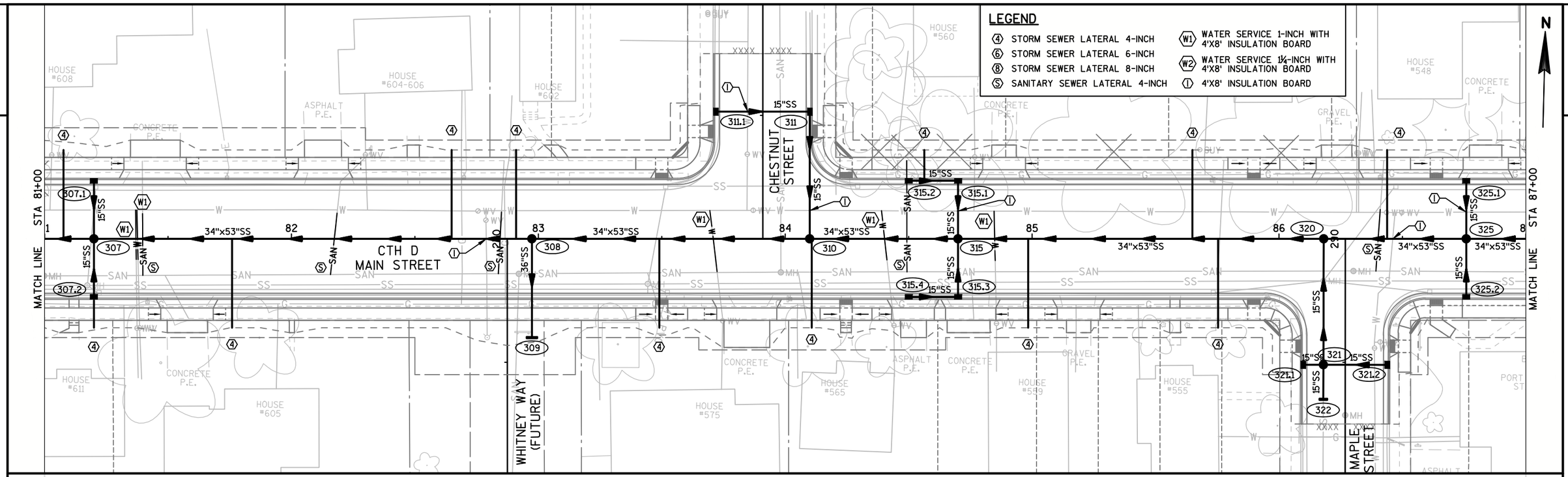

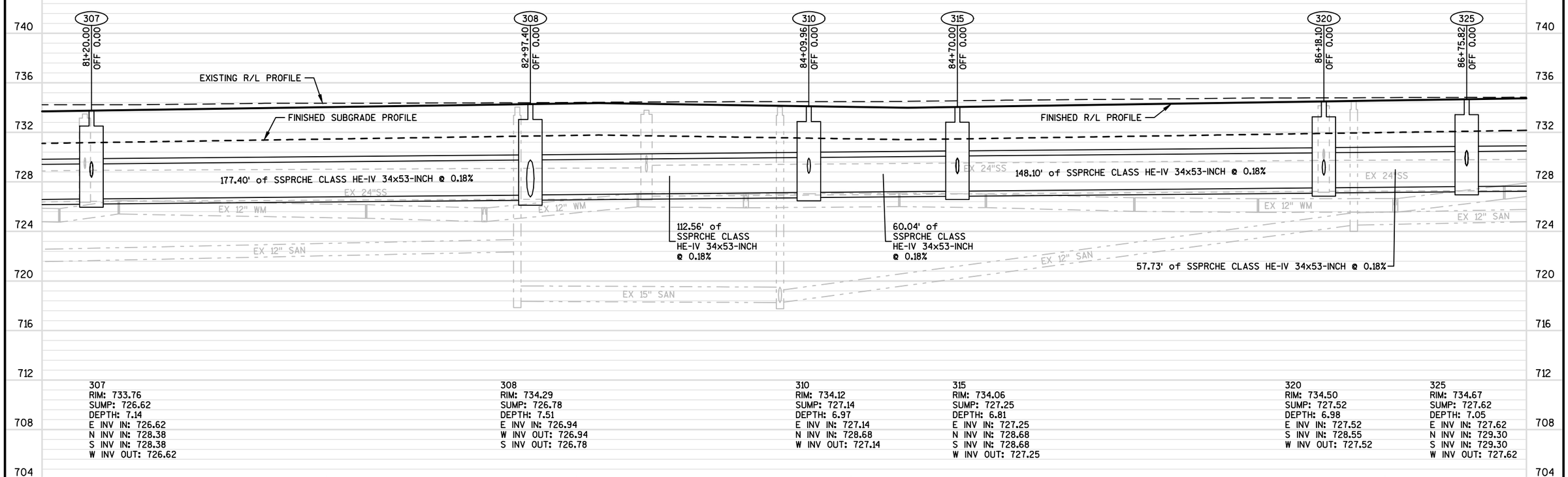

307
RIM: 733.76
SUMP: 726.62
DEPTH: 7.14
E INV IN: 726.62
N INV IN: 728.38
S INV IN: 728.38
W INV OUT: 726.62

308
RIM: 734.29
SUMP: 726.78
DEPTH: 7.51
E INV IN: 726.94
W INV OUT: 726.94
S INV OUT: 726.78

310
RIM: 734.12
SUMP: 727.14
DEPTH: 6.97
E INV IN: 727.14
N INV IN: 728.68
W INV OUT: 727.14

315
RIM: 734.06
SUMP: 727.25
DEPTH: 6.81
E INV IN: 727.25
N INV IN: 728.68
S INV IN: 728.68
W INV OUT: 727.25

320
RIM: 734.50
SUMP: 727.52
DEPTH: 6.98
E INV IN: 727.52
S INV IN: 728.55
W INV OUT: 727.52

325
RIM: 734.67
SUMP: 727.62
DEPTH: 7.05
E INV IN: 727.62
N INV IN: 729.30
S INV IN: 729.30
W INV OUT: 727.62

PROJECT NO: 4880-01-71	HWY: CTH D	COUNTY: OZAUKEE	STORM SEWER: CTH D	SHEET 47	E

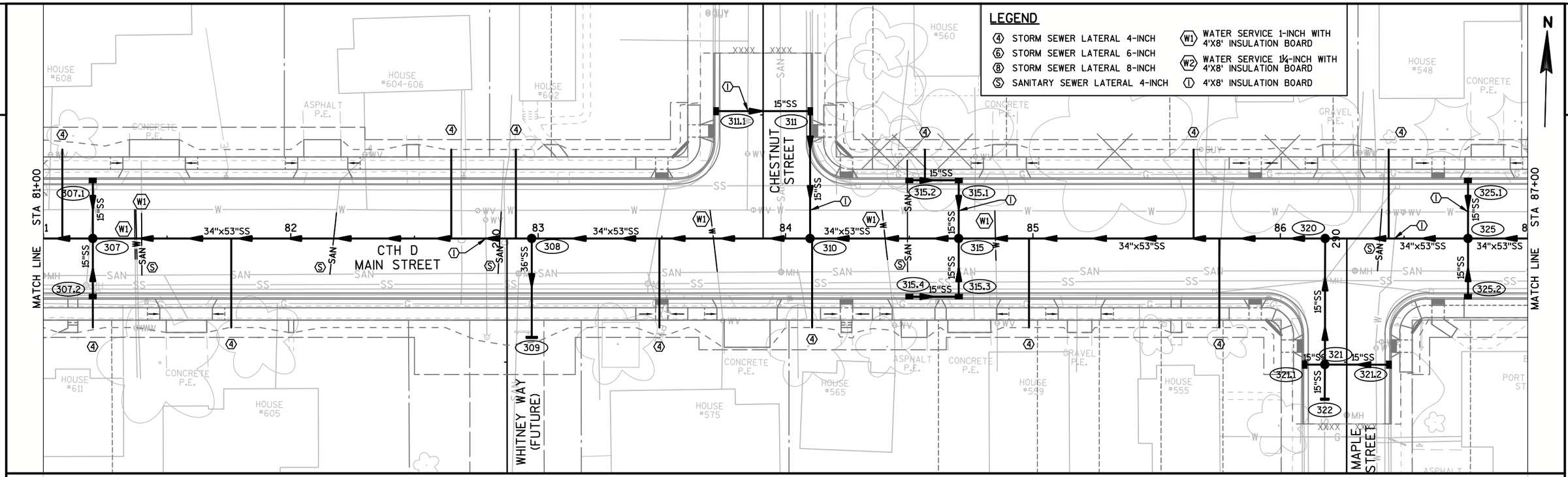

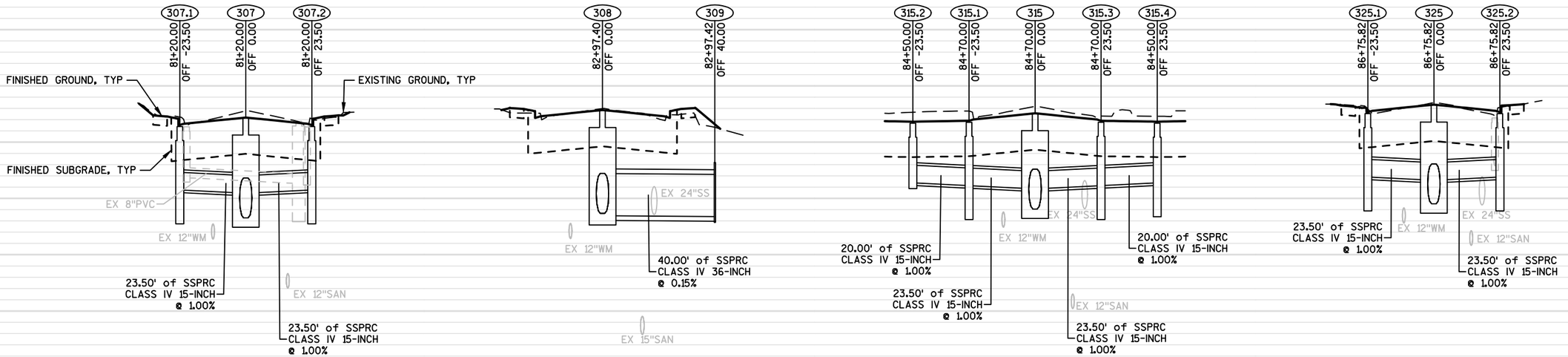

307.1
RIM: 733.11
SUMP: 726.61
DEPTH: 6.50
S INV OUT: 728.61

307
RIM: 733.76
SUMP: 726.62
DEPTH: 7.14
E INV IN: 726.62
N INV IN: 728.38
S INV IN: 728.38
W INV OUT: 726.62

307.2
RIM: 733.11
SUMP: 726.61
DEPTH: 6.50
N INV OUT: 728.61

308
RIM: 734.29
SUMP: 726.78
DEPTH: 7.51
E INV IN: 726.94
W INV OUT: 726.94
S INV OUT: 726.78

309
INV: 726.72

315.2
RIM: 733.35
SUMP: 729.11
DEPTH: 4.24
E INV OUT: 729.11

315.1
RIM: 733.41
SUMP: 726.91
DEPTH: 6.50
W INV IN: 728.91
S INV OUT: 728.91

315
RIM: 734.06
SUMP: 727.25
DEPTH: 6.81
E INV IN: 727.25
N INV IN: 728.68
S INV IN: 728.68
W INV OUT: 727.25

315.3
RIM: 733.41
SUMP: 726.91
DEPTH: 6.50
W INV IN: 728.91
N INV OUT: 728.91

315.4
RIM: 733.35
SUMP: 727.11
DEPTH: 6.24
E INV OUT: 729.11

325.1
RIM: 734.03
SUMP: 727.53
DEPTH: 6.50
S INV OUT: 729.53

325
RIM: 734.67
SUMP: 727.62
DEPTH: 7.05
E INV IN: 727.62
N INV IN: 729.30
S INV IN: 729.30
W INV OUT: 727.62

325.2
RIM: 734.03
SUMP: 727.53
DEPTH: 6.50
N INV OUT: 729.53

PROJECT NO: 4880-01-71	HWY: CTH D	COUNTY: OZAUKEE	STORM SEWER: CTH D	SHEET 48	E

2

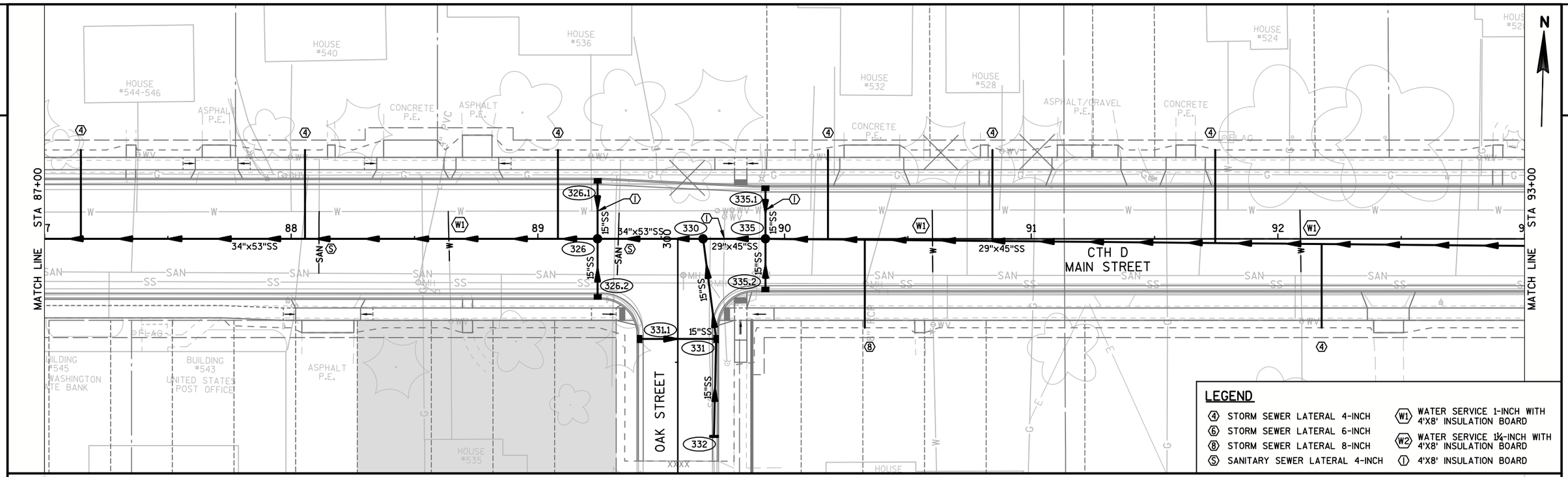

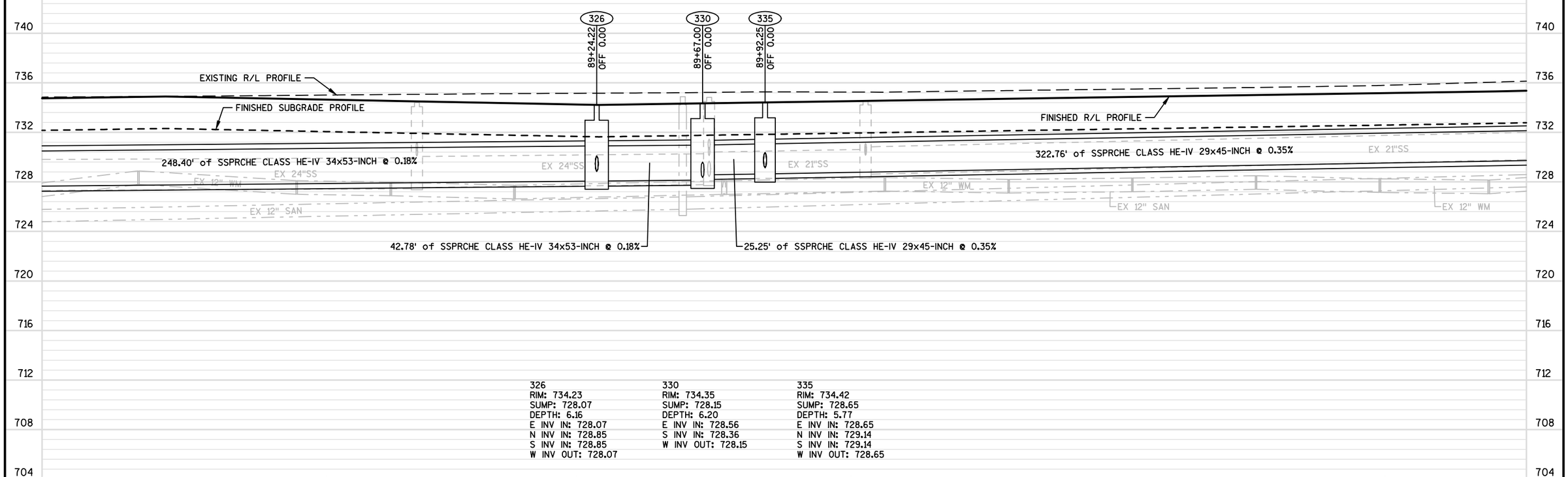

326
RIM: 734.23
SUMP: 728.07
DEPTH: 6.16
E INV IN: 728.07
N INV IN: 728.85
S INV IN: 728.85
W INV OUT: 728.07

330
RIM: 734.35
SUMP: 728.15
DEPTH: 6.20
E INV IN: 728.56
S INV IN: 728.36
W INV OUT: 728.15

335
RIM: 734.42
SUMP: 728.65
DEPTH: 5.77
E INV IN: 728.65
N INV IN: 729.14
S INV IN: 729.14
W INV OUT: 728.65

PROJECT NO: 4880-01-71	HWY: CTH D	COUNTY: OZAUKEE	STORM SEWER: CTH D	SHEET 49	E

FILE NAME : S:\CURRPROJ\OZAUKEECO\CTH D\CIVIL3D\48800100\SHEETSPLAN\48800100-022501-SS.DWG
LAYOUT NAME - 48800100-022501-SS - SHEET-03-A
PLOT DATE : 1/24/2017 9:14 AM PLOT BY : AARON SARAUER PLOT NAME : PLOT SCALE : 1 IN:40 FT
WISDOT/CADDS SHEET 41

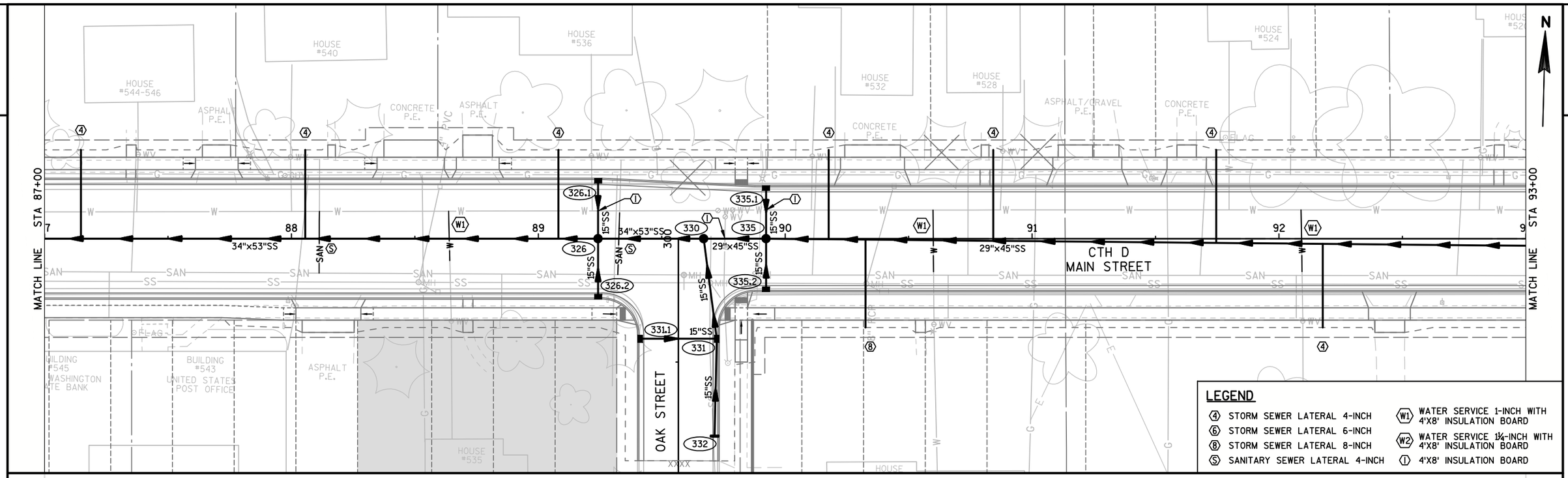

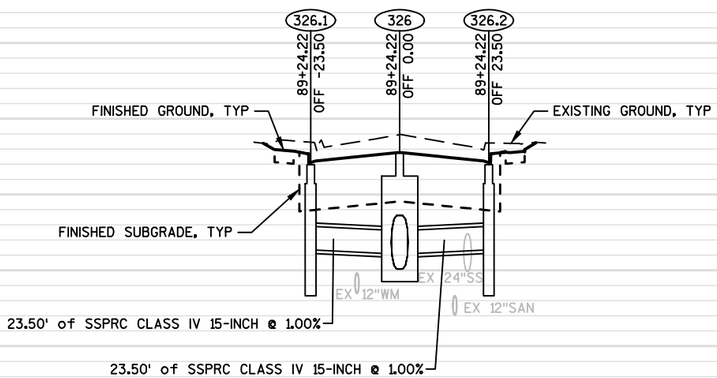

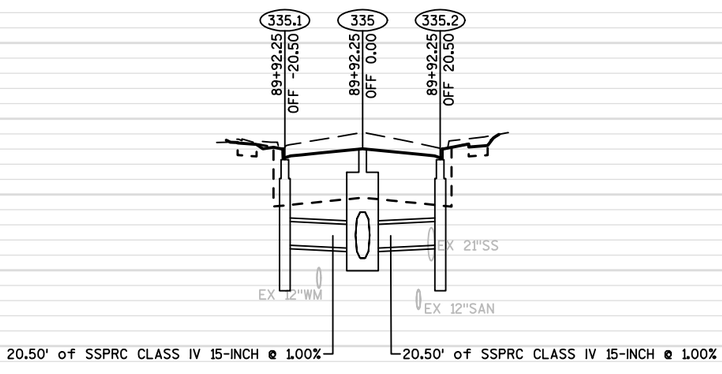

326.1
RIM: 733.58
SUMP: 727.08
DEPTH: 6.50
S INV OUT: 729.08

326
RIM: 734.23
SUMP: 728.07
DEPTH: 6.16
E INV IN: 728.07
N INV IN: 728.85
S INV IN: 728.85
W INV OUT: 728.07

326.2
RIM: 733.58
SUMP: 727.08
DEPTH: 6.50
N INV OUT: 729.08

335.1
RIM: 733.84
SUMP: 727.34
DEPTH: 6.50
S INV OUT: 729.34

335
RIM: 734.42
SUMP: 728.65
DEPTH: 5.77
E INV IN: 728.65
N INV IN: 729.14
S INV IN: 729.14
W INV OUT: 728.65

335.2
RIM: 733.84
SUMP: 727.34
DEPTH: 6.50
N INV OUT: 729.34

PROJECT NO: 4880-01-71	HWY: CTH D	COUNTY: OZAUKEE	STORM SEWER: CTH D	SHEET 50 E

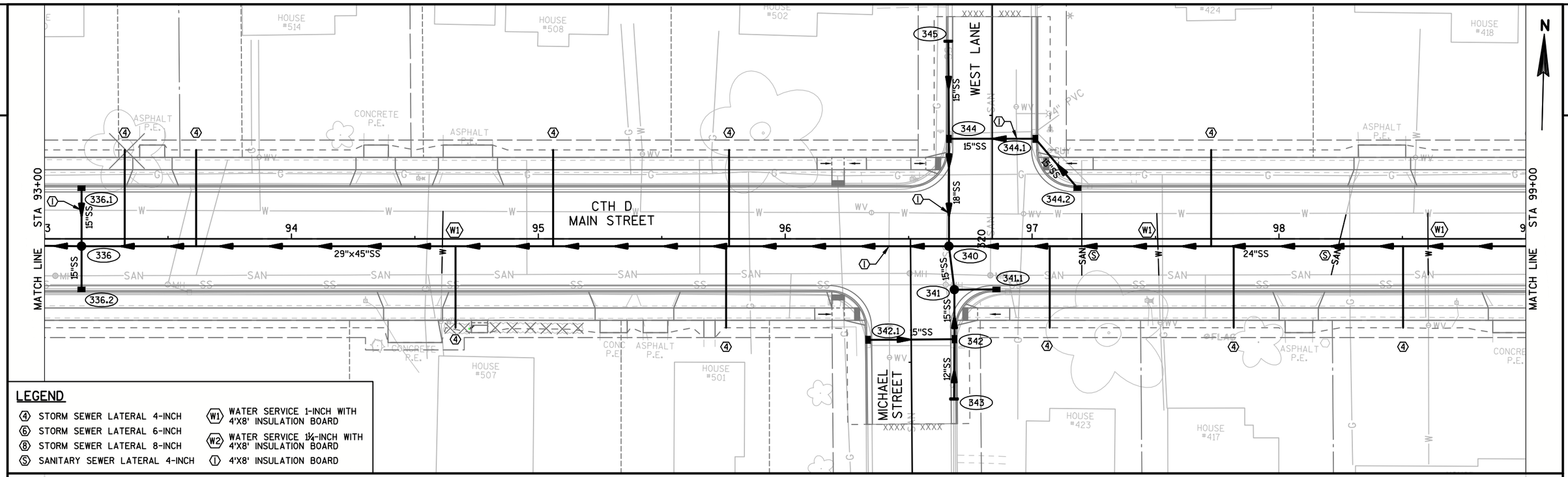

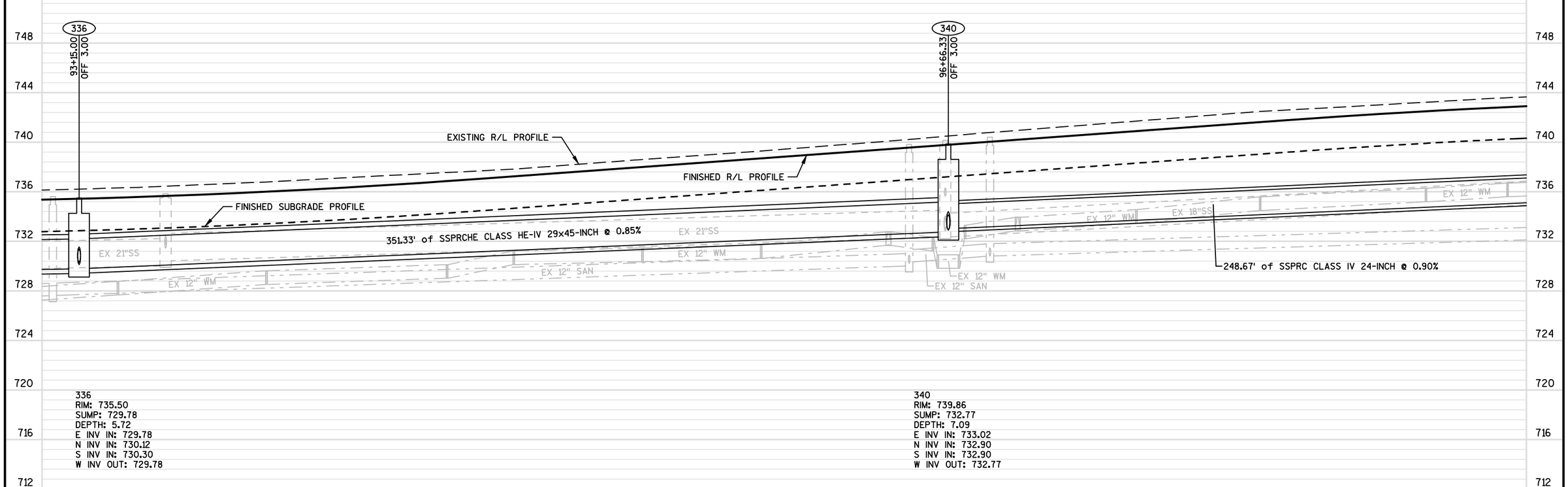

336
RIM: 735.50
SUMP: 729.78
DEPTH: 5.72
E INV IN: 729.78
N INV IN: 730.12
S INV IN: 730.30
W INV OUT: 729.78

340
RIM: 739.86
SUMP: 732.77
DEPTH: 7.09
E INV IN: 733.02
N INV IN: 732.90
S INV IN: 732.90
W INV OUT: 732.77

PROJECT NO: 4880-01-71	HWY: CTH D	COUNTY: OZAUKEE	STORM SEWER: CTH D	SHEET 51	E

FILE NAME : S:\CURRPROJ\OZAUKEECO\CTH D\CIVIL3D\48800100\SHEETSPLAN\48800100-022501-SS.DWG
LAYOUT NAME - 48800100-022501-SS - SHEET-04-A
PLOT DATE : 1/24/2017 9:14 AM PLOT BY : AARON SARAUER PLOT NAME : PLOT SCALE : 1 IN:40 FT
WISDOT/CADDS SHEET 41

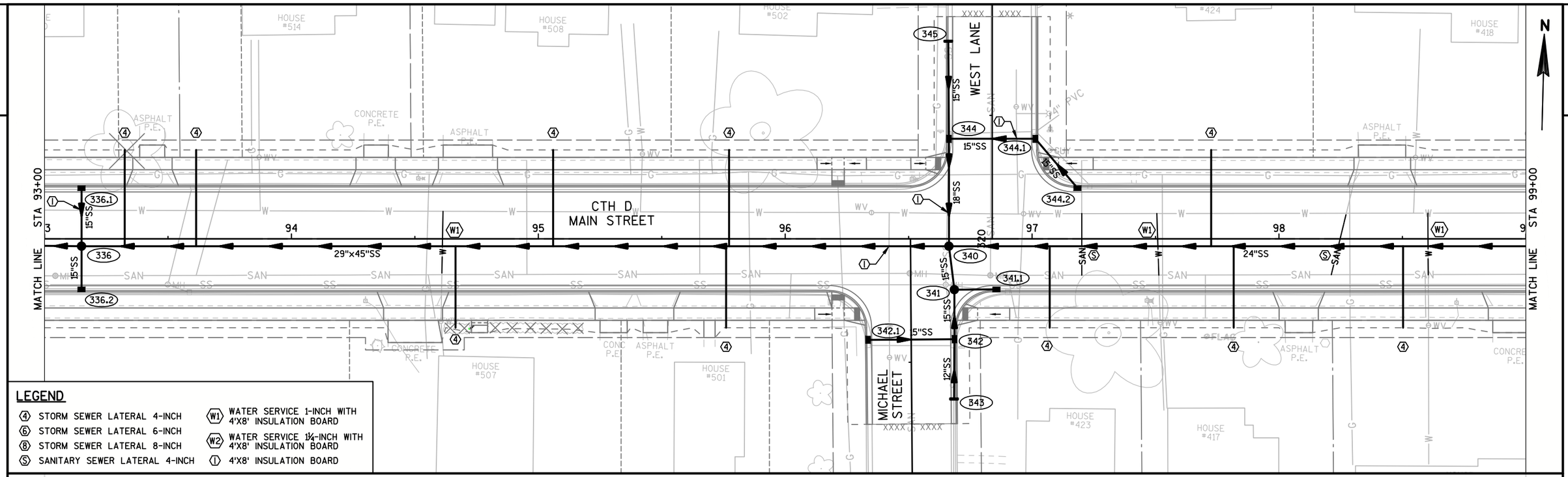

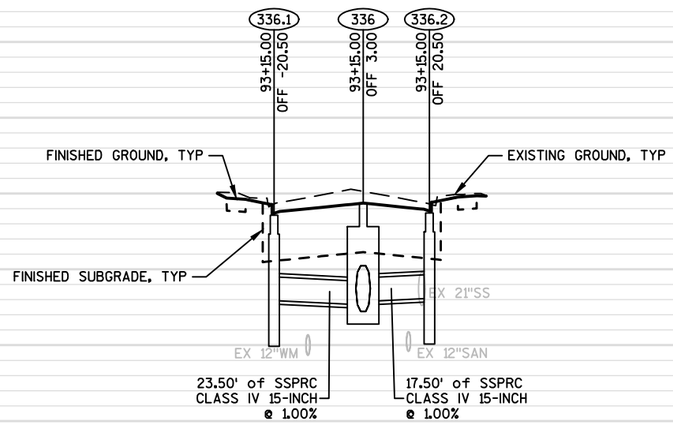

336.1	336	336.2
RIM: 734.86	RIM: 735.50	RIM: 734.98
SUMP: 728.35	SUMP: 729.78	SUMP: 728.48
DEPTH: 6.50	DEPTH: 5.72	DEPTH: 6.50
S INV OUT: 730.36	E INV IN: 729.78	N INV OUT: 730.48
	N INV IN: 730.12	
	S INV IN: 730.30	
	W INV OUT: 729.78	

PROJECT NO: 4880-01-71	HWY: CTH D	COUNTY: OZAUKEE	STORM SEWER: CTH D	SHEET 52	E

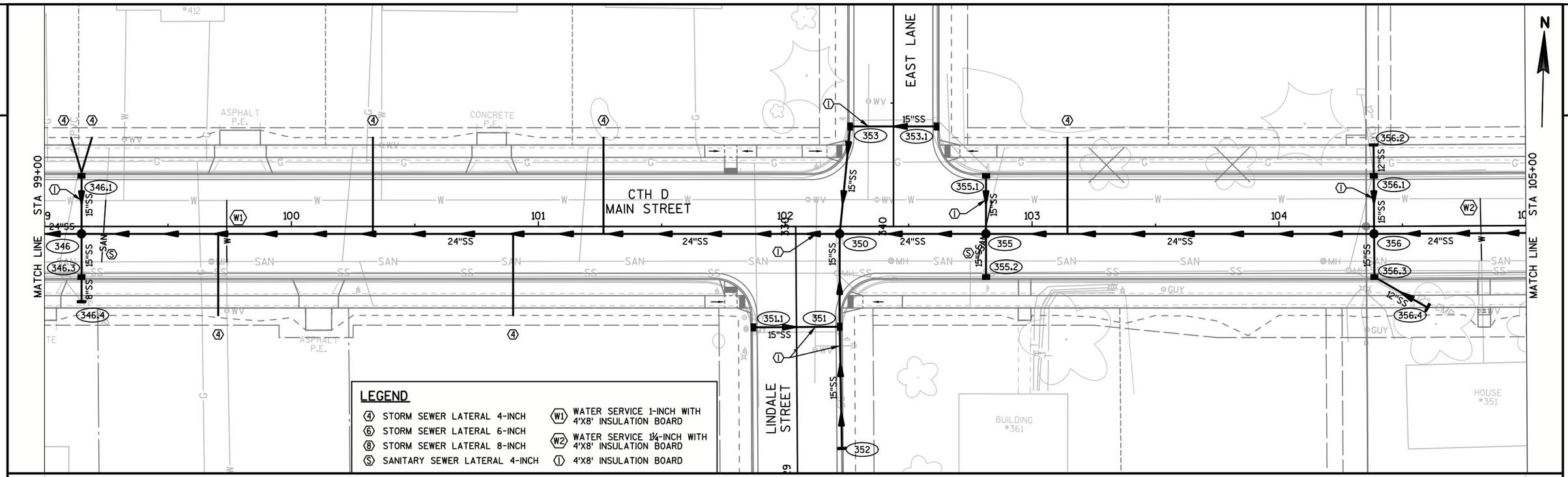

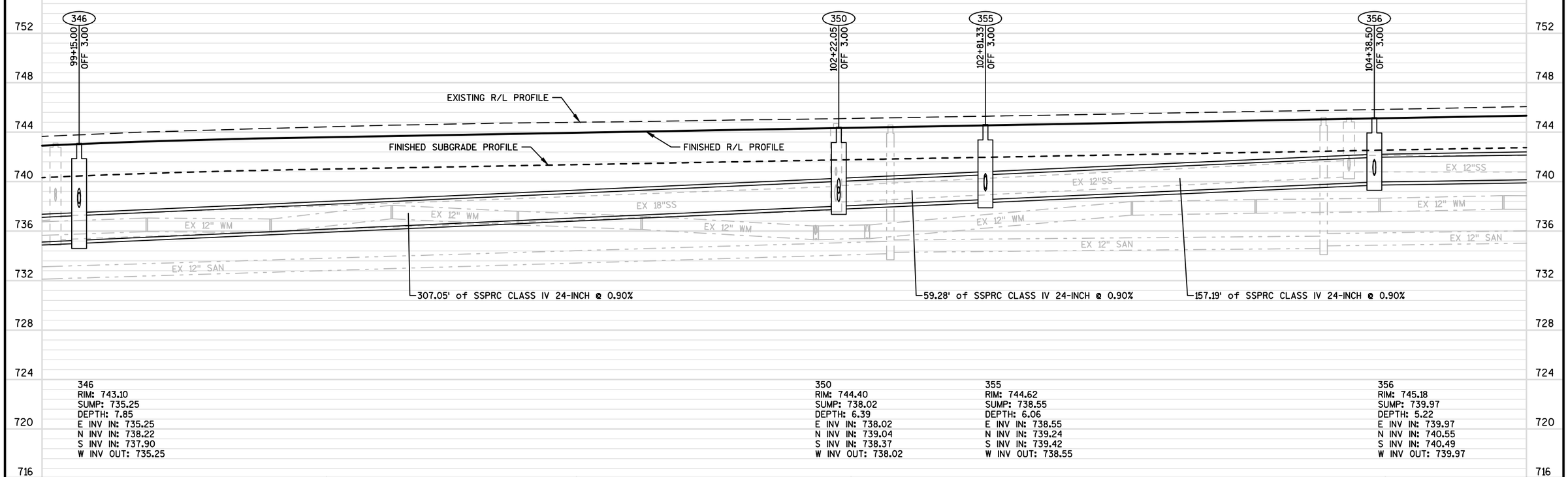

346
RIM: 743.10
SUMP: 735.25
DEPTH: 7.85
E INV IN: 735.25
N INV IN: 738.22
S INV IN: 737.90
W INV OUT: 735.25

350
RIM: 744.40
SUMP: 738.02
DEPTH: 6.39
E INV IN: 738.02
N INV IN: 739.04
S INV IN: 738.37
W INV OUT: 738.02

355
RIM: 744.62
SUMP: 738.55
DEPTH: 6.06
E INV IN: 738.55
N INV IN: 739.24
S INV IN: 739.42
W INV OUT: 738.55

356
RIM: 745.18
SUMP: 739.97
DEPTH: 5.22
E INV IN: 739.97
N INV IN: 740.55
S INV IN: 740.49
W INV OUT: 739.97

PROJECT NO: 4880-01-71	HWY: CTH D	COUNTY: OZAUKEE	STORM SEWER: CTH D	SHEET 53	E

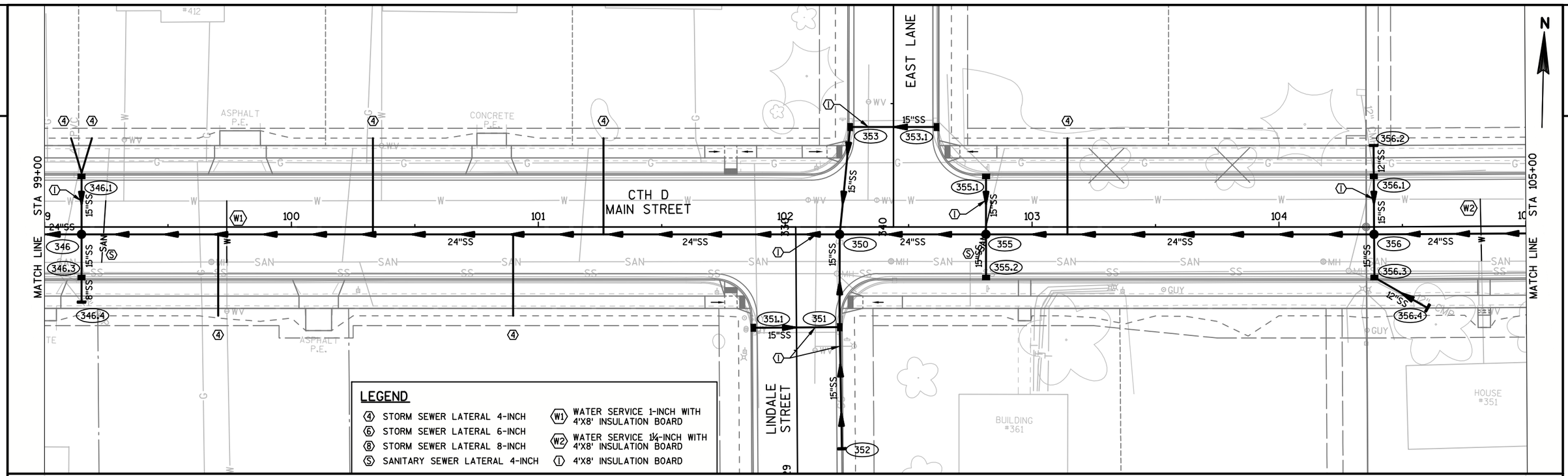

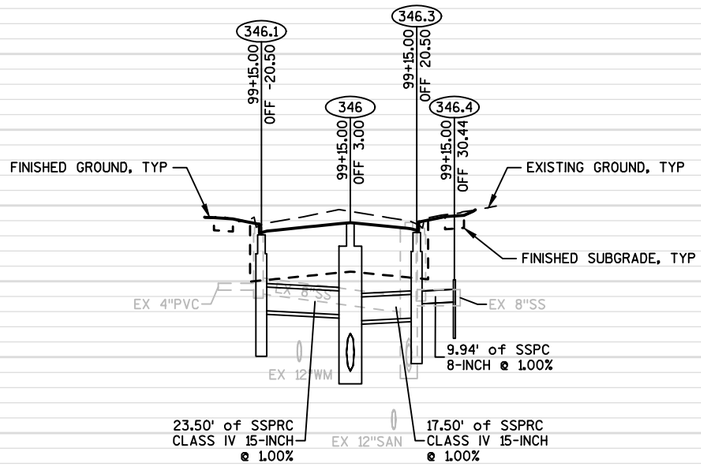

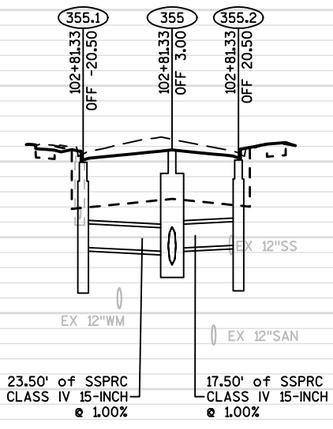

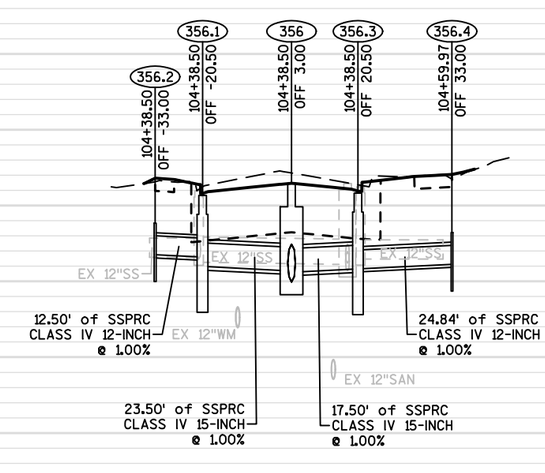

752 748 744 740 736 732 728 724 720 716

346.1
RIM: 742.46
SUMP: 736.46
DEPTH: 6.00
S INV OUT: 738.46

346
RIM: 743.10
SUMP: 735.25
DEPTH: 7.85
E INV IN: 735.25
N INV IN: 738.22
S INV IN: 737.90
W INV OUT: 735.25

346.3
RIM: 742.58
SUMP: 736.08
DEPTH: 6.50
S INV IN: 738.81
N INV OUT: 738.08

346.4
INV: 738.91

355.1
RIM: 743.97
SUMP: 737.47
DEPTH: 6.50
S INV OUT: 739.47

355
RIM: 744.62
SUMP: 738.55
DEPTH: 6.06
E INV IN: 738.55
N INV IN: 739.24
S INV IN: 739.42
W INV OUT: 738.55

355.2
RIM: 744.09
SUMP: 737.59
DEPTH: 6.50
N INV OUT: 739.59

356.2
INV: 741.41

356.1
RIM: 744.54
SUMP: 738.79
DEPTH: 5.75
N INV IN: 741.28
S INV OUT: 740.79

356
RIM: 745.18
SUMP: 739.97
DEPTH: 5.22
E INV IN: 739.97
N INV IN: 740.55
S INV IN: 740.49
W INV OUT: 739.97

356.3
RIM: 744.66
SUMP: 738.66
DEPTH: 6.00
SE INV IN: 740.66
N INV OUT: 740.66

356.4
INV: 740.91

PROJECT NO: 4880-01-71	HWY: CTH D	COUNTY: OZAUKEE	STORM SEWER: CTH D	SHEET 54	E

FILE NAME : S:\CURRPROJ\OZAUKEECO\CTH D\CIVIL3D\48800100\SHEETSPLAN\48800100-022501-SS.DWG
LAYOUT NAME - 48800100-022501-SS - SHEET-05-B
PLOT DATE : 1/24/2017 9:14 AM PLOT BY : AARON SARAUER PLOT NAME : PLOT SCALE : 1 IN:40 FT
WISDOT/CADDS SHEET 41

LEGEND

- ④ STORM SEWER LATERAL 4-INCH
- ⑥ STORM SEWER LATERAL 6-INCH
- ⑧ STORM SEWER LATERAL 8-INCH
- Ⓢ SANITARY SEWER LATERAL 4-INCH
- Ⓦ1 WATER SERVICE 1-INCH WITH 4'X8' INSULATION BOARD
- Ⓦ2 WATER SERVICE 1¼-INCH WITH 4'X8' INSULATION BOARD
- ① 4'X8' INSULATION BOARD

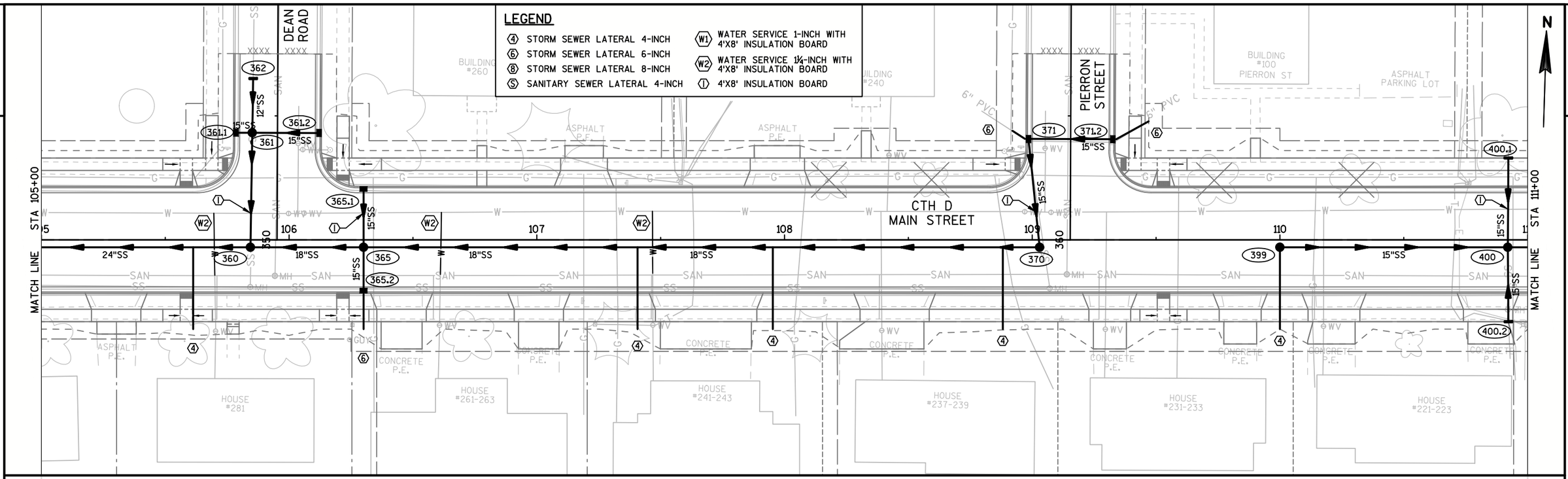

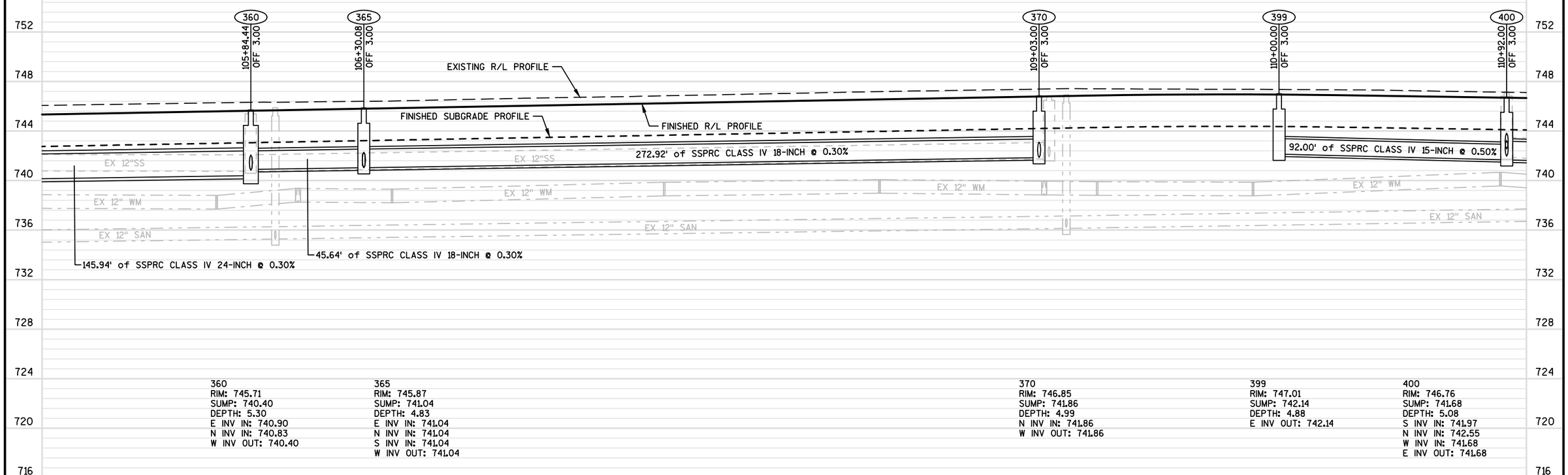

360
RIM: 745.71
SUMP: 740.40
DEPTH: 5.30
E INV IN: 740.90
N INV IN: 740.83
W INV OUT: 740.40

365
RIM: 745.87
SUMP: 741.04
DEPTH: 4.83
E INV IN: 741.04
N INV IN: 741.04
S INV IN: 741.04
W INV OUT: 741.04

370
RIM: 746.85
SUMP: 741.86
DEPTH: 4.99
N INV IN: 741.86
W INV OUT: 741.86

399
RIM: 747.01
SUMP: 742.14
DEPTH: 4.88
E INV OUT: 742.14

400
RIM: 746.76
SUMP: 741.68
DEPTH: 5.08
S INV IN: 741.97
N INV IN: 742.55
W INV IN: 741.68
E INV OUT: 741.68

PROJECT NO: 4880-01-71	HWY: CTH D	COUNTY: OZAUKEE	STORM SEWER: CTH D	SHEET 55	E

LEGEND

- ④ STORM SEWER LATERAL 4-INCH
- ⑥ STORM SEWER LATERAL 6-INCH
- ⑧ STORM SEWER LATERAL 8-INCH
- Ⓢ SANITARY SEWER LATERAL 4-INCH
- Ⓦ1 WATER SERVICE 1-INCH WITH 4'X8' INSULATION BOARD
- Ⓦ2 WATER SERVICE 1¼-INCH WITH 4'X8' INSULATION BOARD
- ① 4'X8' INSULATION BOARD

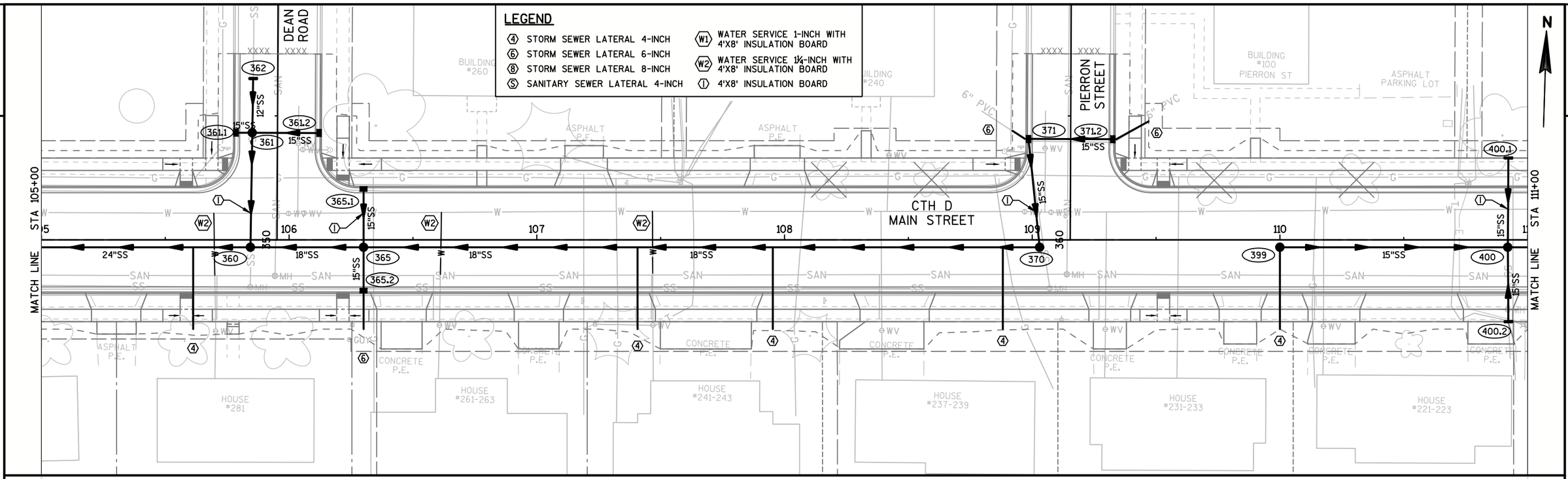

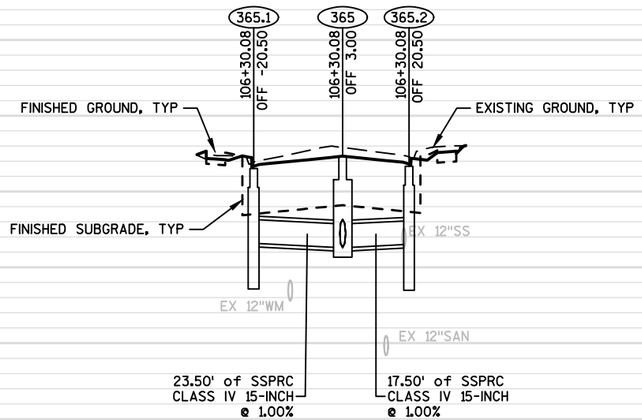

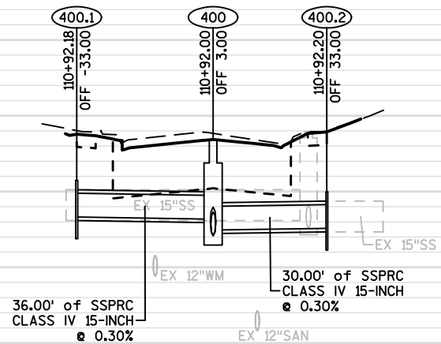

752 748 744 740 736 732 728 724 720 716

365.1
RIM: 745.23
SUMP: 739.28
DEPTH: 5.95
S INV OUT: 741.28

365
RIM: 745.87
SUMP: 741.04
DEPTH: 4.83
E INV IN: 741.04
N INV IN: 741.04
S INV IN: 741.04
W INV OUT: 741.04

365.2
RIM: 745.35
SUMP: 739.22
DEPTH: 6.13
N INV OUT: 741.22

400.1
INV: 742.66

400
RIM: 746.76
SUMP: 741.68
DEPTH: 5.08
S INV IN: 741.97
N INV IN: 742.55
W INV IN: 741.68
E INV OUT: 741.68

400.2
INV: 742.06

PROJECT NO: 4880-01-71	HWY: CTH D	COUNTY: OZAUKEE	STORM SEWER: CTH D	SHEET 56	E

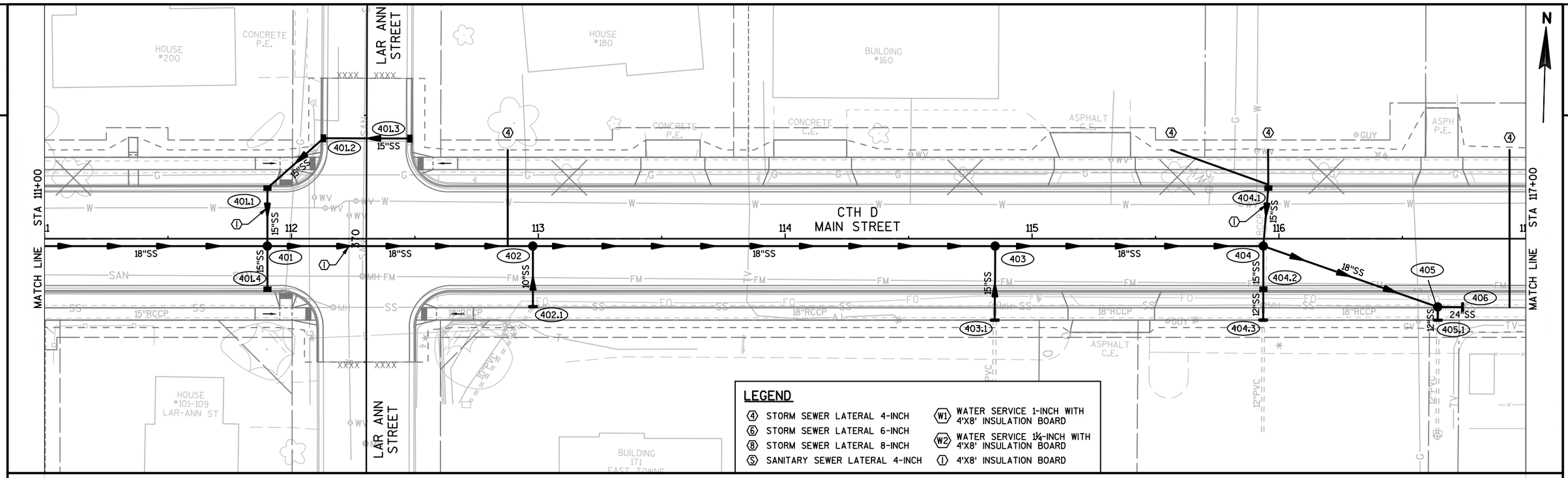

LEGEND

- (4) STORM SEWER LATERAL 4-INCH
- (6) STORM SEWER LATERAL 6-INCH
- (8) STORM SEWER LATERAL 8-INCH
- (S) SANITARY SEWER LATERAL 4-INCH
- (W1) WATER SERVICE 1-INCH WITH 4'X8' INSULATION BOARD
- (W2) WATER SERVICE 1¼-INCH WITH 4'X8' INSULATION BOARD
- (I) 4'X8' INSULATION BOARD

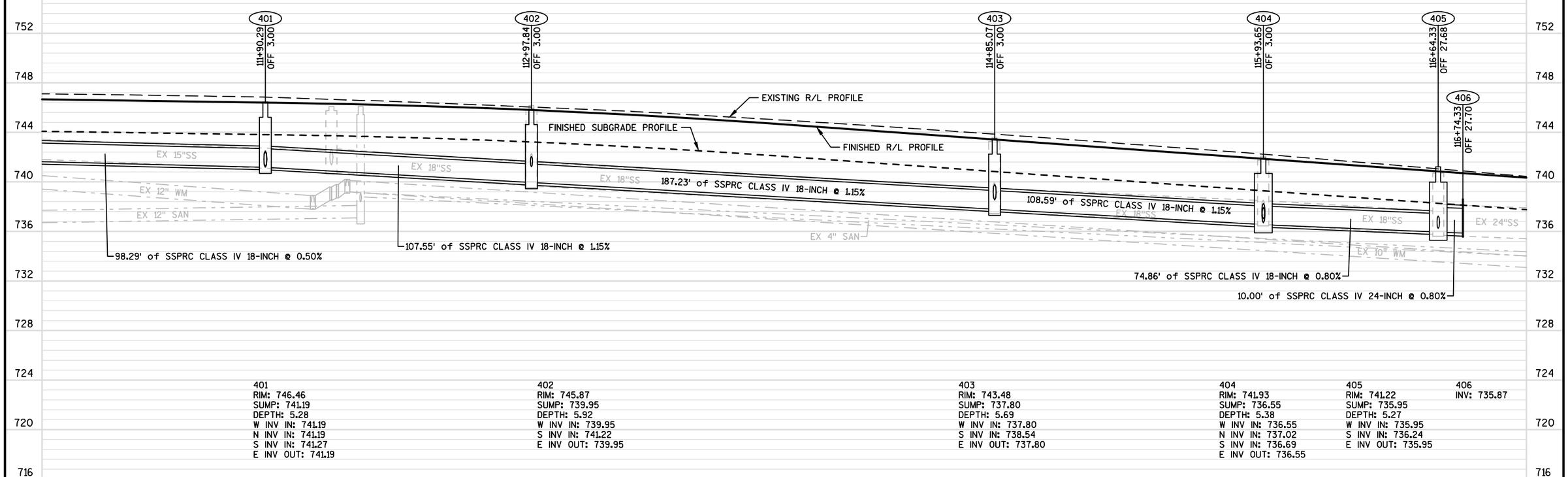

401	402	403	404	405	406
RIM: 746.46	RIM: 745.87	RIM: 743.48	RIM: 741.93	RIM: 741.22	INV: 735.87
SUMP: 741.19	SUMP: 739.95	SUMP: 737.80	SUMP: 736.55	SUMP: 735.95	
DEPTH: 5.28	DEPTH: 5.92	DEPTH: 5.69	DEPTH: 5.38	DEPTH: 5.27	
W INV IN: 741.19	W INV IN: 739.95	W INV IN: 737.80	W INV IN: 736.55	W INV IN: 735.95	
N INV IN: 741.19	S INV IN: 741.22	S INV IN: 738.54	N INV IN: 737.02	S INV IN: 736.24	
S INV IN: 741.27	E INV OUT: 739.95	E INV OUT: 737.80	S INV IN: 736.69	E INV OUT: 735.95	
E INV OUT: 741.19			E INV OUT: 736.55		

PROJECT NO: 4880-01-71	HWY: CTH D	COUNTY: OZAUKEE	STORM SEWER: CTH D	SHEET 57	E

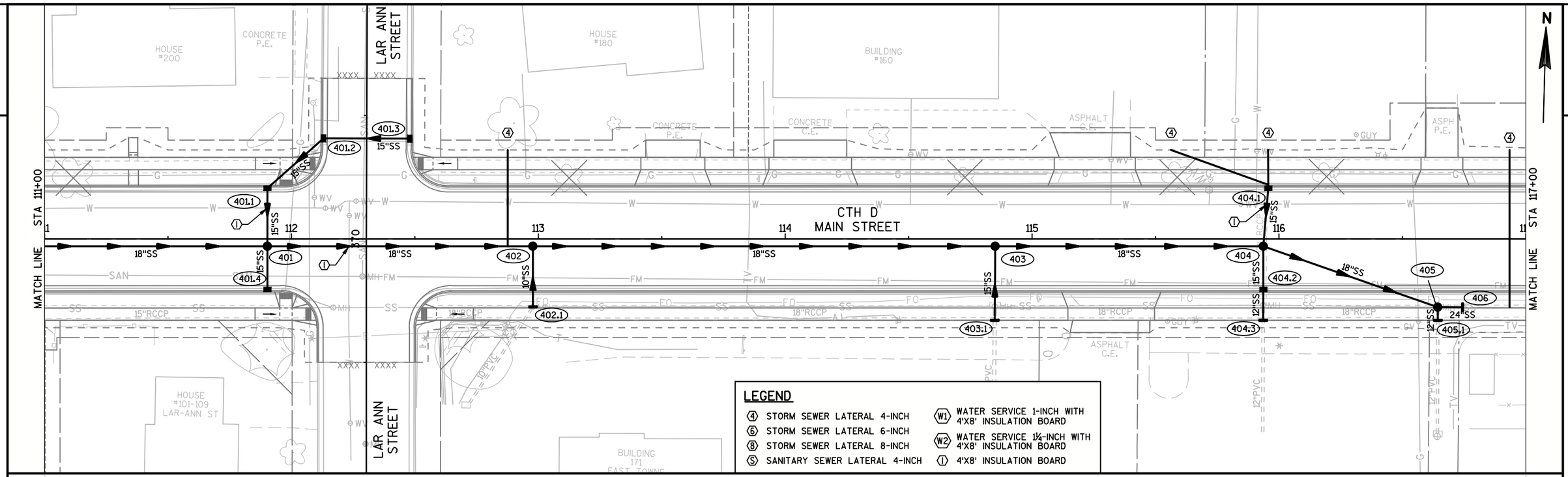

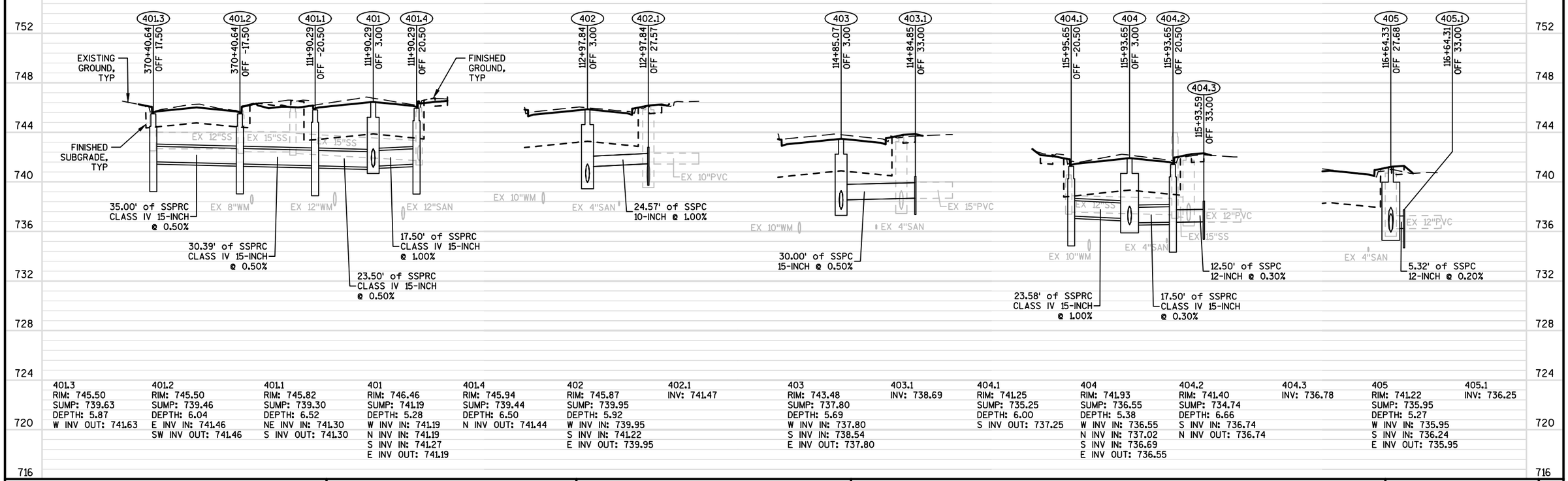

401.3	401.2	401.1	401	401.4	402	402.1	403	403.1	404.1	404	404.2	404.3	405	405.1
RIM: 745.50	RIM: 745.50	RIM: 745.82	RIM: 746.46	RIM: 745.94	RIM: 745.87	INV: 741.47	RIM: 743.48	INV: 738.69	RIM: 741.25	RIM: 741.93	RIM: 741.40	INV: 736.78	RIM: 741.22	INV: 736.25
SUMP: 739.63	SUMP: 739.46	SUMP: 739.30	SUMP: 741.19	SUMP: 739.44	SUMP: 739.95		SUMP: 737.80		SUMP: 735.25	SUMP: 736.55	SUMP: 734.74		SUMP: 735.95	
DEPTH: 5.87	DEPTH: 6.04	DEPTH: 6.52	DEPTH: 5.28	DEPTH: 6.50	DEPTH: 5.92		DEPTH: 5.69		DEPTH: 6.00	DEPTH: 5.38	DEPTH: 6.66		DEPTH: 5.27	
W INV OUT: 741.63	E INV IN: 741.46	NE INV IN: 741.30	W INV IN: 741.19	N INV OUT: 741.44	W INV IN: 739.95		W INV IN: 737.80		S INV OUT: 737.25	W INV IN: 736.55	S INV IN: 736.74		W INV IN: 735.95	
	SW INV OUT: 741.46	S INV OUT: 741.30	N INV IN: 741.19		S INV IN: 741.22		S INV IN: 738.54			N INV IN: 737.02	N INV OUT: 736.74		S INV IN: 736.24	
			S INV IN: 741.27		E INV OUT: 739.95		E INV OUT: 737.80			S INV IN: 736.69			E INV OUT: 735.95	
			E INV OUT: 741.19							E INV OUT: 736.55				

PROJECT NO: 4880-01-71	HWY: CTH D	COUNTY: OZAUKEE	STORM SEWER: CTH D	SHEET 58	E

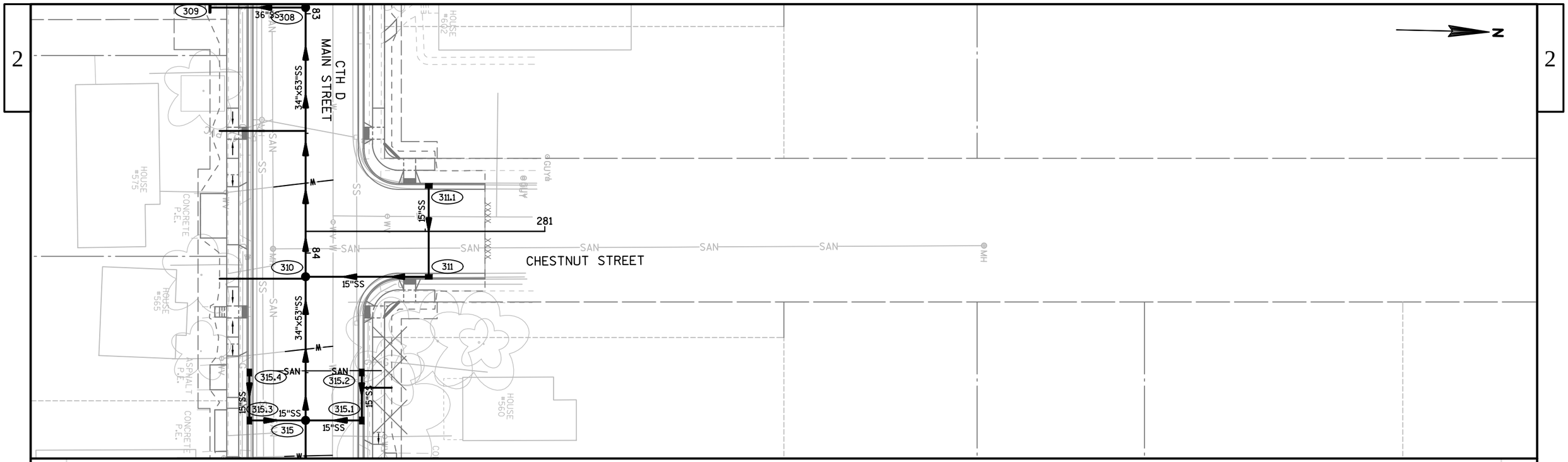

310
RIM: 734.12
SUMP: 727.14
DEPTH: 6.97
E INV IN: 727.14
N INV IN: 728.68
W INV OUT: 727.14

311
RIM: 733.39
SUMP: 726.94
DEPTH: 6.45
W INV IN: 728.94
S INV OUT: 728.94

311.1
RIM: 733.32
SUMP: 727.32
DEPTH: 6.00
E INV OUT: 729.32

PROJECT NO: 4880-01-71	HWY: CTH D	COUNTY: OZAUKEE	STORM SEWER: CHESTNUT STREET	SHEET 59	E

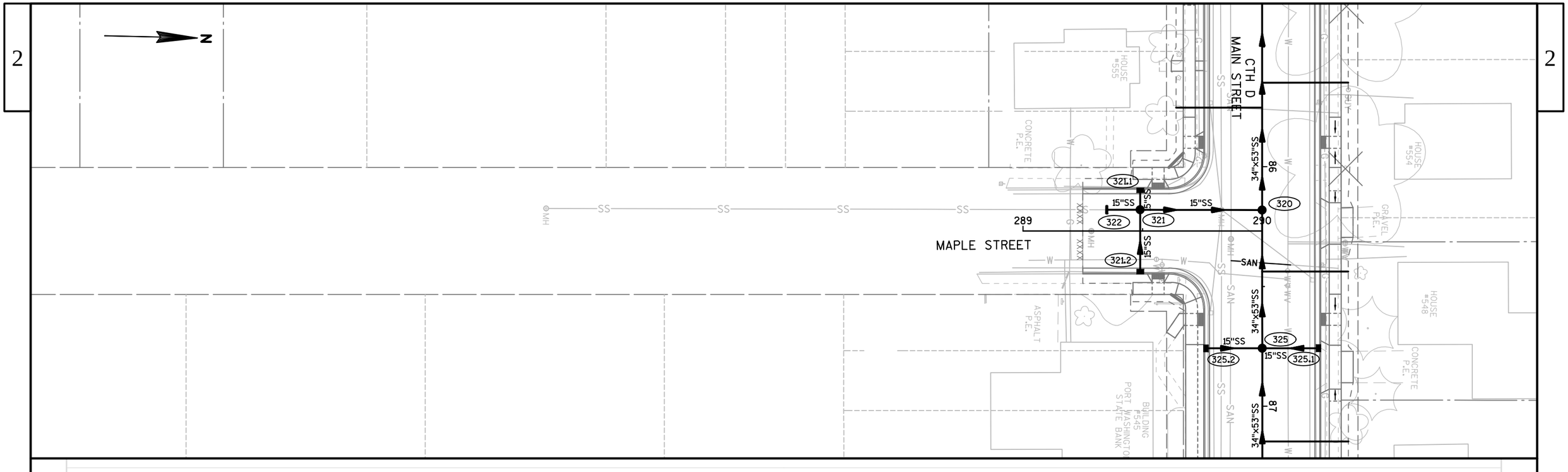

321.1
RIM: 733.84
SUMP: 727.34
DEPTH: 6.50
E INV OUT: 729.34

321.2
RIM: 733.82
SUMP: 727.82
DEPTH: 6.00
W INV OUT: 729.82

322
INV: 728.74

321
RIM: 734.11
SUMP: 728.70
DEPTH: 5.41
S INV IN: 728.70
W INV IN: 729.26
E INV IN: 729.56
N INV OUT: 728.70

320
RIM: 734.50
SUMP: 727.52
DEPTH: 6.98
E INV IN: 727.52
S INV IN: 728.55
W INV OUT: 727.52

PROJECT NO: 4880-01-71	HWY: CTH D	COUNTY: OZAUKEE	STORM SEWER: MAPLE STREET	SHEET 60	E

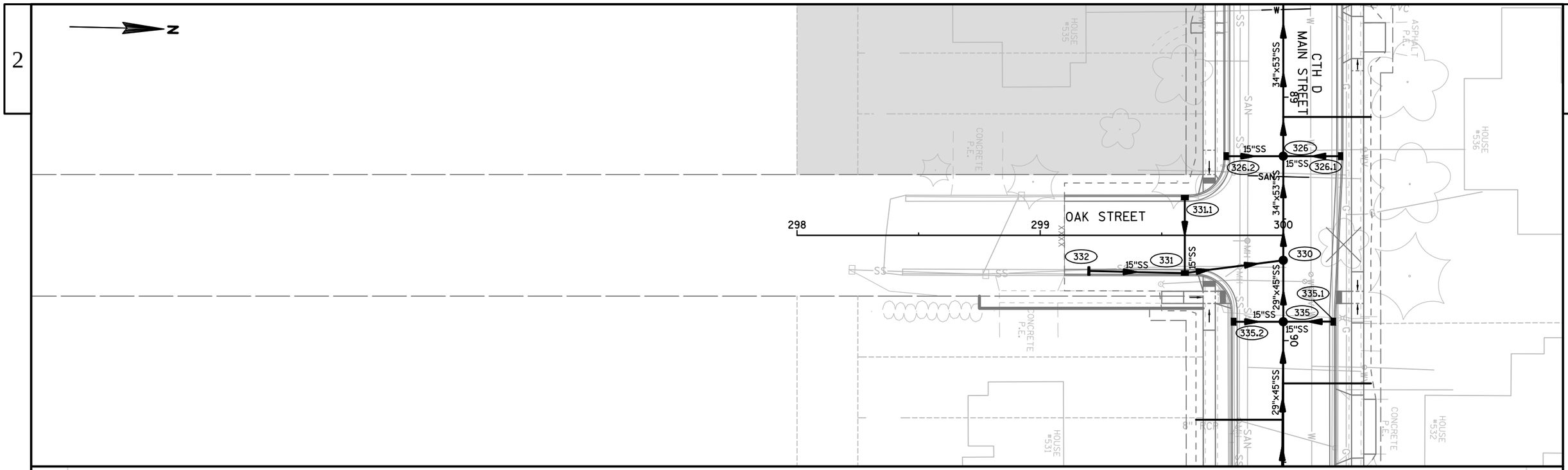

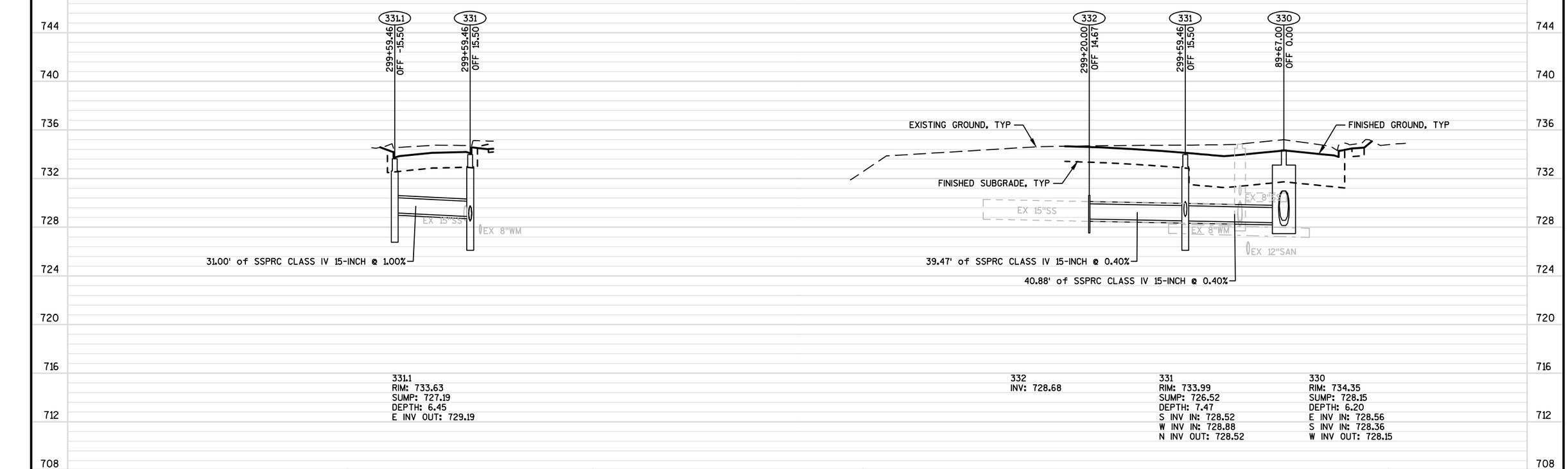

331.1
RIM: 733.63
SUMP: 727.19
DEPTH: 6.45
E INV OUT: 729.19

332
INV: 728.68

331
RIM: 733.99
SUMP: 726.52
DEPTH: 7.47
S INV IN: 728.52
W INV IN: 728.88
N INV OUT: 728.52

330
RIM: 734.35
SUMP: 728.15
DEPTH: 6.20
E INV IN: 728.56
S INV IN: 728.36
W INV OUT: 728.15

PROJECT NO: 4880-01-71	HWY: CTH D	COUNTY: OZAUKEE	STORM SEWER: OAK STREET	SHEET 61 E

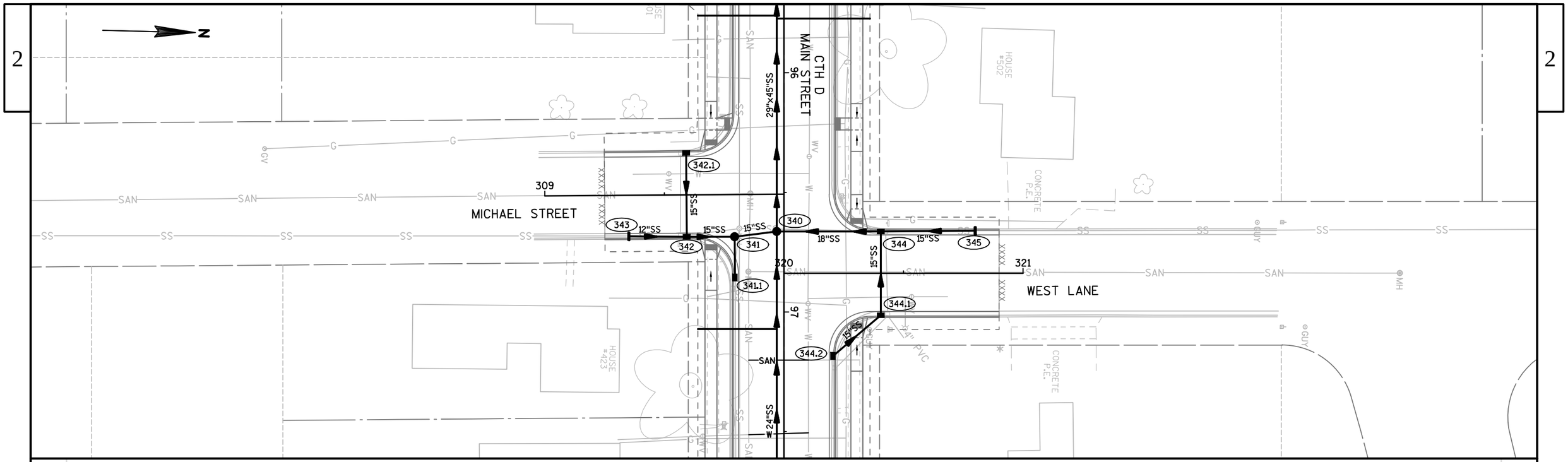

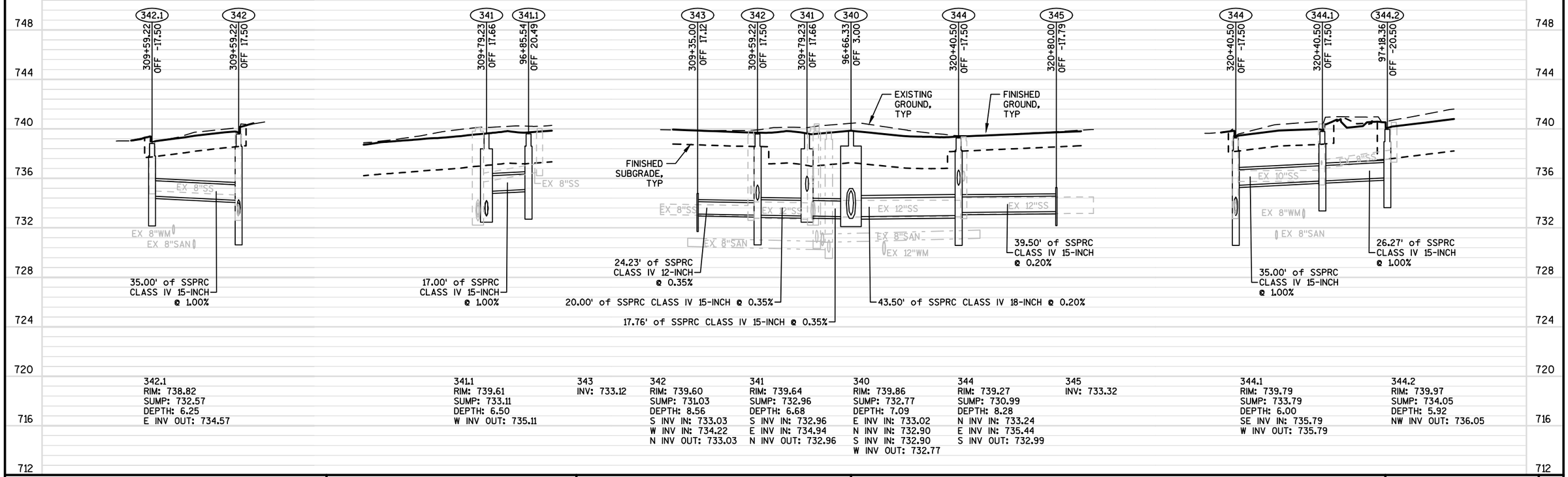

342.1
RIM: 738.82
SUMP: 732.57
DEPTH: 6.25
E INV OUT: 734.57

341.1
RIM: 739.61
SUMP: 733.11
DEPTH: 6.50
W INV OUT: 735.11

343
INV: 733.12

342
RIM: 739.60
SUMP: 731.03
DEPTH: 8.56
S INV IN: 733.03
W INV IN: 734.22
N INV OUT: 733.03

341
RIM: 739.64
SUMP: 732.96
DEPTH: 6.68
S INV IN: 732.96
E INV IN: 734.94
N INV OUT: 732.96

340
RIM: 739.86
SUMP: 732.77
DEPTH: 7.09
E INV IN: 733.02
N INV IN: 732.90
S INV IN: 732.90
W INV OUT: 732.77

344
RIM: 739.27
SUMP: 730.99
DEPTH: 8.28
N INV IN: 733.24
E INV IN: 735.44
S INV OUT: 732.99

345
INV: 733.32

344.1
RIM: 739.79
SUMP: 733.79
DEPTH: 6.00
SE INV IN: 735.79
W INV OUT: 735.79

344.2
RIM: 739.97
SUMP: 734.05
DEPTH: 5.92
NW INV OUT: 736.05

PROJECT NO: 4880-01-71	HWY: CTH D	COUNTY: OZAUKEE	STORM SEWER: MICHAEL STREET/ WEST LANE	SHEET 62	E

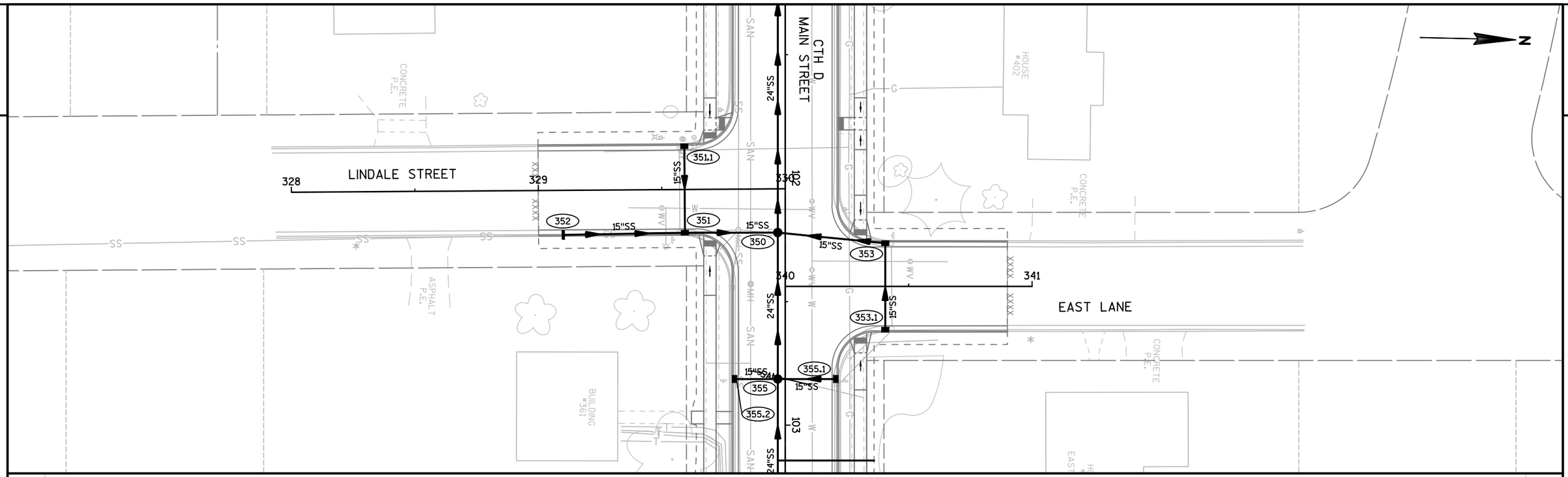

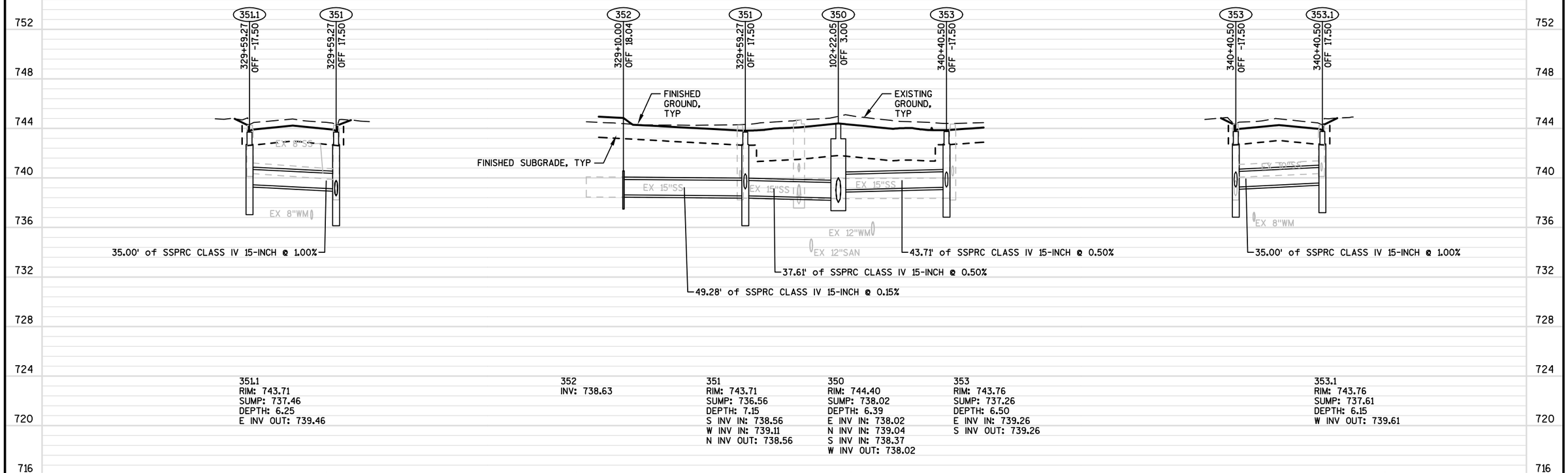

351.1
RIM: 743.71
SUMP: 737.46
DEPTH: 6.25
E INV OUT: 739.46

352
INV: 738.63

351
RIM: 743.71
SUMP: 736.56
DEPTH: 7.15
S INV IN: 738.56
W INV IN: 739.11
N INV OUT: 738.56

350
RIM: 744.40
SUMP: 738.02
DEPTH: 6.39
E INV IN: 738.02
N INV IN: 739.04
S INV IN: 738.37
W INV OUT: 738.02

353
RIM: 743.76
SUMP: 737.26
DEPTH: 6.50
E INV IN: 739.26
S INV OUT: 739.26

353.1
RIM: 743.76
SUMP: 737.61
DEPTH: 6.15
W INV OUT: 739.61

PROJECT NO: 4880-01-71	HWY: CTH D	COUNTY: OZAUKEE	STORM SEWER: LINDALE STREET/ EAST LANE	SHEET 63	E

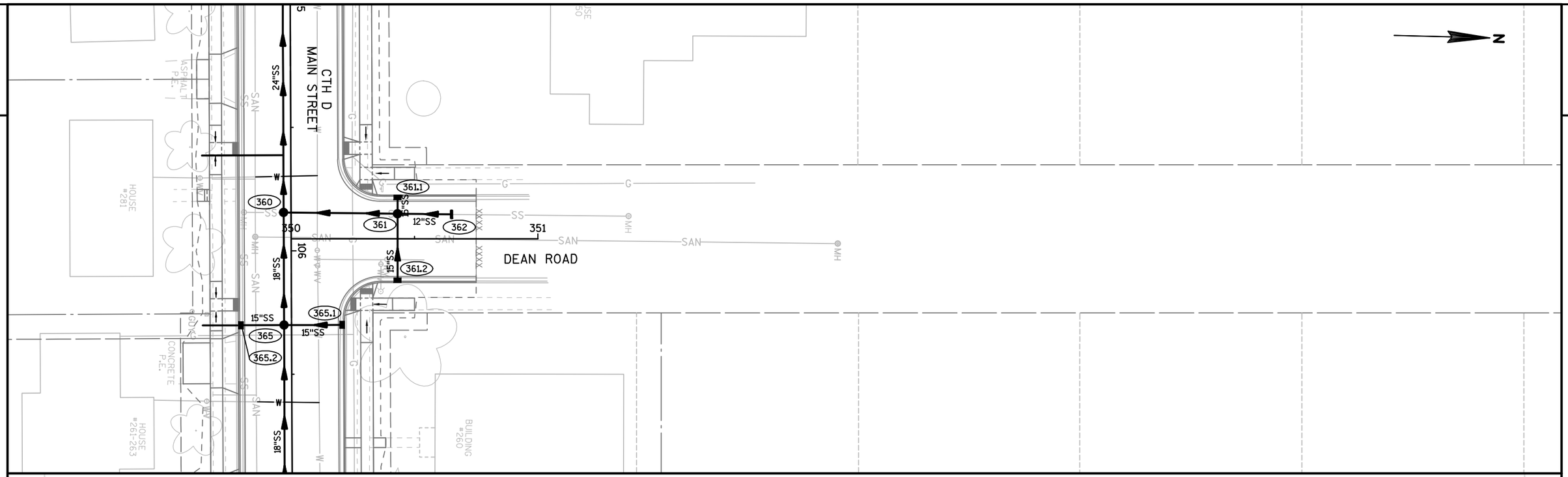

360
RIM: 745.71
SUMP: 740.40
DEPTH: 5.30
E INV IN: 740.90
N INV IN: 740.83
W INV OUT: 740.40

361
RIM: 745.12
SUMP: 741.06
DEPTH: 4.06
N INV IN: 741.31
W INV IN: 741.06
E INV IN: 741.06
S INV OUT: 741.06

362
INV: 741.44

361.1
RIM: 744.81
SUMP: 739.09
DEPTH: 5.72
E INV OUT: 741.09

361.2
RIM: 744.88
SUMP: 739.19
DEPTH: 5.69
W INV OUT: 741.19

PROJECT NO: 4880-01-71	HWY: CTH D	COUNTY: OZAUKEE	STORM SEWER: DEAN ROAD	SHEET 64	E

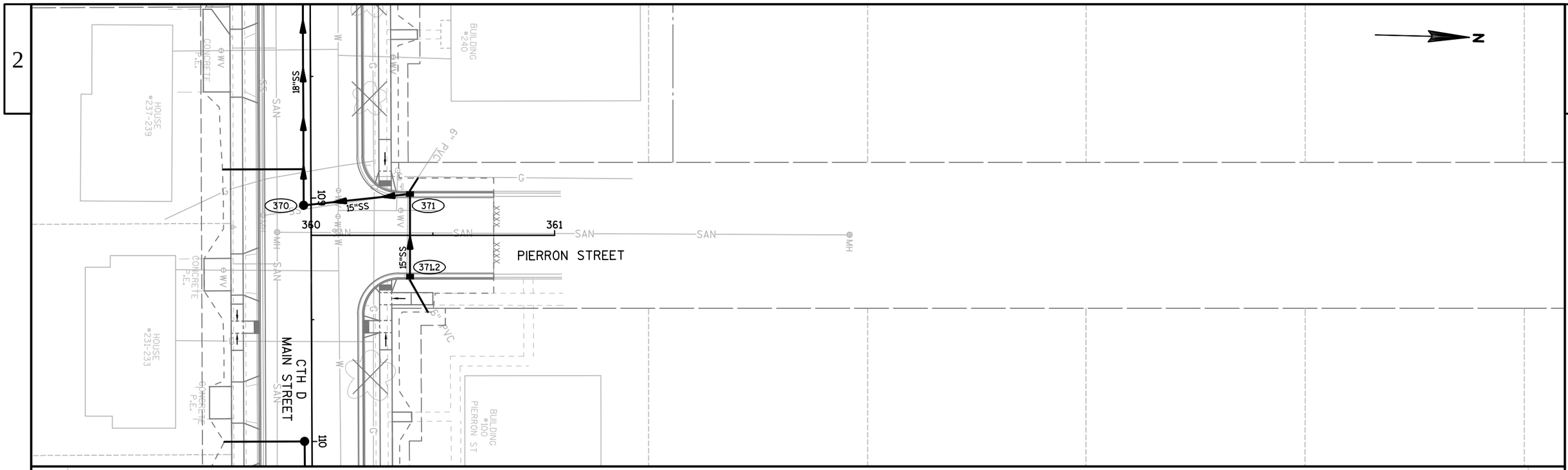

370	371	371.2
RIM: 746.85	RIM: 746.09	RIM: 746.09
SUMP: 741.86	SUMP: 740.08	SUMP: 740.25
DEPTH: 4.99	DEPTH: 6.01	DEPTH: 5.84
N INV IN: 741.86	E INV IN: 742.08	W INV OUT: 742.25
W INV OUT: 741.86	S INV OUT: 742.08	

PROJECT NO: 4880-01-71	HWY: CTH D	COUNTY: OZAUKEE	STORM SEWER: PIERRON STREET	SHEET 65	E

FILE NAME : S:\CURRPROJ\OZAUKEECO\CTH D\CIVIL3D\48800100\SHEETSPLAN\48800100-022502-SS.DWG
LAYOUT NAME - 48800100-022502-SS - SHEET-07-A [PIERRON]

PLOT DATE : 1/24/2017 9:18 AM PLOT BY : AARON SARAUER PLOT NAME : PLOT SCALE : 1 IN:40 FT

WISDOT/CADDS SHEET 41

STORM SEWER STRUCTURE DATA

STRUCTURE NUMBER	ALIGNMENT	STATION	OFFSET	LOCATION	TYPE	RIM/GRATE ELEVATION	STRUCTURE INV ELEV	TOTAL DEPTH	SUMP DEPTH	CONNECTING PIPES	PIPE DIRECTION	PIPE SIZE & TYPE	PIPE INVERT	PIPE ROUTE	PIPE LENGTH	PIPE SLOPE	REMARKS
299	CTHD	76+98.49	8.61	RT	CONCRETE COLLAR					299-300 OUT	E	SSPRC CLASS III 30-INCH	724.41	TO STR: 300	8.00'	0.30%	
300	CTHD	77+06.49	8.54	RT	45 DEGREE BEND					299-300 IN 300-301 OUT	W NE	SSPRC CLASS III 30-INCH SSPRC CLASS III 30-INCH	724.39 724.39	FROM STR: 299 TO STR: 301	-- 12.07'	-- 0.30%	
301	CTHD	77+15.02	0.00		45 DEGREE BEND					300-301 IN 301-302 OUT	SW E	SSPRC CLASS III 30-INCH SSPRC CLASS III 30-INCH	724.35 724.35	FROM STR: 300 TO STR: 302	-- 37.75'	-- 0.30%	
302	CTHD	77+52.77	0.00		MANHOLES 6-J	733.27	724.24	9.03'	0.00'	301-302 IN 302-302.1 IN 302-302.2 IN 302-304 OUT	W N S E	SSPRC CLASS III 30-INCH SSPRC CLASS IV 15-INCH SSPRC CLASS IV 15-INCH SSPRC CLASS III 30-INCH	724.24 727.89 727.89 724.24	FROM STR: 301 FROM STR: 302.1 FROM STR: 302.2 TO STR: 304	-- -- -- 60.69'	-- -- -- 0.30%	
302.1	CTHD	77+52.77	-23.50	LT	CATCH BASINS 2X3-H	732.62	726.12	6.50'	2.00'	302-302.1 OUT	S	SSPRC CLASS IV 15-INCH	728.12	TO STR: 302	23.50'	1.00%	
302.2	CTHD	77+52.77	23.50	RT	CATCH BASINS 2X3-H	732.62	726.12	6.50'	2.00'	302-302.2 OUT	N	SSPRC CLASS IV 15-INCH	728.12	TO STR: 302	23.50'	1.00%	
303	CTHD	78+13.17	37.42	RT	CONNECT TO EXISTING BOX CULVERT					303-304 OUT	N	SSPRC CLASS IV 60-INCH	724.09	TO STR: 304	37.42'	2.10%	CONNECT TO BOX CULV (SEE DETAIL)
304	CTHD	78+13.46	0.00		MANHOLES 10-J	733.07	723.30	9.76'	0.00'	302-304 IN 304-306 IN 303-304 IN 304-305 OUT	W E S N	SSPRC CLASS III 30-INCH SSPRCHE CLASS HE-IV 34X53-INCH SSPRC CLASS IV 60-INCH SSPRC CLASS IV 60-INCH	724.05 726.07 723.30 723.30	FROM STR: 302 FROM STR: 306 FROM STR: 303 TO STR: 305	-- -- -- 34.00'	-- -- -- 2.10%	
305	CTHD	78+13.73	-34.00	LT	CONNECT TO EXISTING BOX CULVERT					304-305 IN	S	SSPRC CLASS IV 60-INCH	722.59	FROM STR: 304	--	--	CONNECT TO BOX CULV (SEE DETAIL)
306	CTHD	78+50.00	0.00		MANHOLES 8-J	732.95	726.14	6.81'	0.00'	306-307 IN 306-306.1 IN 306-306.3 IN 304-306 OUT	E N S W	SSPRCHE CLASS HE-IV 34X53-INCH SSPRC CLASS IV 15-INCH SSPRC CLASS IV 15-INCH SSPRCHE CLASS HE-IV 34X53-INCH	726.14 727.57 727.57 726.14	FROM STR: 307 FROM STR: 306.1 FROM STR: 306.3 TO STR: 304	-- -- -- 36.54'	-- -- -- 0.18%	
306.1	CTHD	78+50.00	-23.50	LT	CATCH BASINS 2X3-H-S	732.30	725.80	6.50'	2.00'	306.1-306.2 IN 306-306.1 OUT	E S	SSPRC CLASS IV 15-INCH SSPRC CLASS IV 15-INCH	727.80 727.80	FROM STR: 306.2 TO STR: 306	-- 23.50'	-- 1.00%	CONNECT TO PU 6-INCH
306.2	CTHD	78+85.00	-23.50	LT	CATCH BASINS 2X3-H	732.41	726.15	6.25'	2.00'	306.1-306.2 OUT	W	SSPRC CLASS IV 15-INCH	728.15	TO STR: 306.1	35.00'	1.00%	
306.3	CTHD	78+50.00	23.50	RT	CATCH BASINS 2X3-H-S	732.30	725.80	6.50'	2.00'	306.3-306.4 IN 306-306.3 OUT	E N	SSPRC CLASS IV 15-INCH SSPRC CLASS IV 15-INCH	727.80 727.80	FROM STR: 306.4 TO STR: 306	-- 23.50'	-- 1.00%	CONNECT TO PU 6-INCH
306.4	CTHD	78+85.00	23.50	RT	CATCH BASINS 2X3-H	732.41	726.15	6.25'	2.00'	306.3-306.4 OUT	W	SSPRC CLASS IV 15-INCH	728.15	TO STR: 306.3	35.00'	1.00%	
307	CTHD	81+20.00	0.00		MANHOLES 8-J	733.76	726.62	7.14'	0.00'	307-308 IN 307-307.1 IN 307-307.2 IN 306-307 OUT	E N S W	SSPRCHE CLASS HE-IV 34X53-INCH SSPRC CLASS IV 15-INCH SSPRC CLASS IV 15-INCH SSPRCHE CLASS HE-IV 34X53-INCH	726.62 728.38 728.38 726.62	FROM STR: 308 FROM STR: 307.1 FROM STR: 307.2 TO STR: 306	-- -- -- 270.00'	-- -- -- 0.18%	
307.1	CTHD	81+20.00	-23.50	LT	CATCH BASINS 2X3-H	733.11	726.61	6.50'	2.00'	307-307.1 OUT	S	SSPRC CLASS IV 15-INCH	728.61	TO STR: 307	23.50'	1.00%	
307.2	CTHD	81+20.00	23.50	RT	CATCH BASINS 2X3-H	733.11	726.61	6.50'	2.00'	307-307.2 OUT	N	SSPRC CLASS IV 15-INCH	728.61	TO STR: 307	23.50'	1.00%	CONNECT TO SS LATERAL
308	CTHD	82+97.40	0.00	LT	MANHOLES 8-J	734.29	726.78	7.51'	0.00'	308-310 IN 307-308 OUT 308-309 OUT	E W S	SSPRCHE CLASS HE-IV 34X53-INCH SSPRCHE CLASS HE-IV 34X53-INCH SSPRC CLASS IV 36-INCH	726.94 726.94 726.78	FROM STR: 310 TO STR: 307 TO STR: 309	-- 177.40' 40.00'	-- 0.18% 0.15%	BULKHEAD PIPE TO SOUTH (SEE DETAIL)
309	CTHD	82+97.42	40.00	RT	36" CAP					308-309 IN	N	SSPRC CLASS IV 36-INCH	726.72	FROM STR: 308	--	--	
310	CTHD	84+09.96	0.00		MANHOLES 8-J	734.12	727.14	6.97'	0.00'	310-315 IN 310-311 IN 308-310 OUT	E N W	SSPRCHE CLASS HE-IV 34X53-INCH SSPRC CLASS IV 15-INCH SSPRCHE CLASS HE-IV 34X53-INCH	727.14 728.68 727.14	FROM STR: 315 FROM STR: 311 TO STR: 308	-- -- 112.56'	-- -- 0.18%	CONNECT TO SS LATERAL
311	CHESTNUT CL	280+51.50	19.00	RT	CATCH BASINS 2X3-H-S	733.39	726.94	6.45'	2.00'	311-311.1 IN 310-311 OUT	W S	SSPRC CLASS IV 15-INCH SSPRC CLASS IV 15-INCH	728.94 728.94	FROM STR: 311.1 TO STR: 310	-- 51.50'	-- 0.50%	CONNECT TO PU 6-INCH
311.1	CHESTNUT CL	280+51.50	-19.01	LT	CATCH BASINS 2X3-H-S	733.32	727.32	6.00'	2.00'	311-311.1 OUT	E	SSPRC CLASS IV 15-INCH	729.32	TO STR: 311	38.01'	1.00%	CONNECT TO PU 6-INCH
315	CTHD	84+70.00	0.00		MANHOLES 8-J	734.06	727.25	6.81'	0.00'	315-320 IN 315-315.1 IN 315-315.3 IN 310-315 OUT	E N S W	SSPRCHE CLASS HE-IV 34X53-INCH SSPRC CLASS IV 15-INCH SSPRC CLASS IV 15-INCH SSPRCHE CLASS HE-IV 34X53-INCH	727.25 728.68 728.68 727.25	FROM STR: 320 FROM STR: 315.1 FROM STR: 315.3 TO STR: 310	-- -- -- 60.04'	-- -- -- 0.18%	
315.1	CTHD	84+70.00	-23.50	LT	CATCH BASINS 2X3-H	733.41	726.91	6.50'	2.00'	315.1-315.2 IN 315-315.1 OUT	W S	SSPRC CLASS IV 15-INCH SSPRC CLASS IV 15-INCH	728.91 728.91	FROM STR: 315.2 TO STR: 315	-- 23.50'	-- 1.00%	
315.2	CTHD	84+50.00	-23.50	LT	INLETS 2X3-H-S	733.35	729.11	4.24'	0.00'	315.1-315.2 OUT	E	SSPRC CLASS IV 15-INCH	729.11	TO STR: 315.1	20.00'	1.00%	CONNECT TO PU 6-INCH
315.3	CTHD	84+70.00	23.50	RT	CATCH BASINS 2X3-HC	733.41	726.91	6.50'	2.00'	315.3-315.4 IN 315-315.3 OUT	W N	SSPRC CLASS IV 15-INCH SSPRC CLASS IV 15-INCH	728.91 728.91	FROM STR: 315.4 TO STR: 315	-- 23.50'	-- 1.00%	
315.4	CTHD	84+50.00	23.50	RT	CATCH BASINS 2X3-HC	733.35	727.11	6.24'	2.00'	315.3-315.4 OUT	E	SSPRC CLASS IV 15-INCH	729.11	TO STR: 315.3	20.00'	1.00%	CONNECT TO PU 6-INCH

STORM SEWER STRUCTURE DATA

STRUCTURE NUMBER	ALIGNMENT	STATION	OFFSET	LOCATION	TYPE	RIM/GRATE ELEVATION	STRUCTURE INV ELEV	TOTAL DEPTH	SUMP DEPTH	CONNECTING PIPES	PIPE DIRECTION	PIPE SIZE & TYPE	PIPE INVERT	PIPE ROUTE	PIPE LENGTH	PIPE SLOPE	REMARKS
320	CTHD	86+18.10	0.00		MANHOLES 8-J	734.50	727.52	6.98'	0.00'	320-325 IN 320-321 IN 315-320 OUT	E S W	SSPRCHE CLASS HE-IV 34X53-INCH SSPRC CLASS IV 15-INCH SSPRCHE CLASS HE-IV 34X53-INCH	727.52 728.55 727.52	FROM STR: 325 FROM STR: 321 TO STR: 315	-- -- 148.10'	-- -- 0.18%	
321	MAPLE	289+48.99	-8.85	LT	MANHOLES 4-J	734.11	728.70	5.41'	0.00'	321-322 IN 321-321.1 IN 321-321.2 IN 320-321 OUT	S W E N	SSPRC CLASS IV 15-INCH SSPRC CLASS IV 15-INCH SSPRC CLASS IV 15-INCH SSPRC CLASS IV 15-INCH	728.70 729.26 729.56 728.70	FROM STR: 322 FROM STR: 321.1 FROM STR: 321.2 TO STR: 320	-- -- -- 51.01'	-- -- -- 0.30%	
321.1	MAPLE	289+48.99	-17.00	LT	CATCH BASINS 2X3-H-S	733.84	727.34	6.50'	2.00'	321-321.1 OUT	E	SSPRC CLASS IV 15-INCH	729.34	TO STR: 321	8.16'	1.00%	CONNECT TO PU 6-INCH
321.2	MAPLE	289+48.99	17.01	RT	CATCH BASINS 2X3-H-S	733.82	727.82	6.00'	2.00'	321-321.2 OUT	W	SSPRC CLASS IV 15-INCH	729.82	TO STR: 321	25.85'	1.00%	CONNECT TO PU 6-INCH
322	MAPLE	289+35.00	-8.88	LT	CONCRETE COLLAR					321-322 OUT	N	SSPRC CLASS IV 15-INCH	728.74	TO STR: 321	13.99'	0.30%	
325	CTHD	86+75.82	0.00	RT	MANHOLES 8-J	734.67	727.62	7.05'	0.00'	325-326 IN 325-325.1 IN 325-325.2 IN 320-325 OUT	E N S W	SSPRCHE CLASS HE-IV 34X53-INCH SSPRC CLASS IV 15-INCH SSPRC CLASS IV 15-INCH SSPRCHE CLASS HE-IV 34X53-INCH	727.62 729.30 729.30 727.62	FROM STR: 326 FROM STR: 325.1 FROM STR: 325.2 TO STR: 320	-- -- -- 57.73'	-- -- -- 0.18%	
325.1	CTHD	86+75.82	-23.50	LT	CATCH BASINS 2X3-HC	734.03	727.53	6.50'	2.00'	325-325.1 OUT	S	SSPRC CLASS IV 15-INCH	729.53	TO STR: 325	23.50'	1.00%	
325.2	CTHD	86+75.82	23.50	RT	CATCH BASINS 2X3-H	734.03	727.53	6.50'	2.00'	325-325.2 OUT	N	SSPRC CLASS IV 15-INCH	729.53	TO STR: 325	23.50'	1.00%	
326	CTHD	89+24.22	0.00	RT	MANHOLES 8-J	734.23	728.07	6.16'	0.00'	326-330 IN 326-326.1 IN 326-326.2 IN 325-326 OUT	E N S W	SSPRCHE CLASS HE-IV 34X53-INCH SSPRC CLASS IV 15-INCH SSPRC CLASS IV 15-INCH SSPRCHE CLASS HE-IV 34X53-INCH	728.07 728.85 728.85 728.07	FROM STR: 330 FROM STR: 326.1 FROM STR: 326.2 TO STR: 325	-- -- -- 248.40'	-- -- -- 0.18%	
326.1	CTHD	89+24.22	-23.50	LT	CATCH BASINS 2X3-H-S	733.58	727.08	6.50'	2.00'	326-326.1 OUT	S	SSPRC CLASS IV 15-INCH	729.08	TO STR: 326	23.50'	1.00%	CONNECT TO PU 6-INCH
326.2	CTHD	89+24.22	23.50	RT	CATCH BASINS 2X3-H-S	733.58	727.08	6.50'	2.00'	326-326.2 OUT	N	SSPRC CLASS IV 15-INCH	729.08	TO STR: 326	23.50'	1.00%	CONNECT TO PU 6-INCH
330	CTHD	89+67.00	0.00		MANHOLES 8-J	734.35	728.15	6.20'	0.00'	330-335 IN 330-331 IN 326-330 OUT	E S W	SSPRCHE CLASS HE-IV 29X45-INCH SSPRC CLASS IV 15-INCH SSPRCHE CLASS HE-IV 34X53-INCH	728.56 728.36 728.15	FROM STR: 335 FROM STR: 331 TO STR: 326	-- -- 42.78'	-- -- 0.18%	
331	OAK	299+59.46	15.50	RT	CATCH BASINS 2X3-H-S	733.99	726.52	7.47'	2.00'	331-332 IN 331-331.1 IN 330-331 OUT	S W N	SSPRC CLASS IV 15-INCH SSPRC CLASS IV 15-INCH SSPRC CLASS IV 15-INCH	728.52 728.88 728.52	FROM STR: 332 FROM STR: 331.1 TO STR: 330	-- -- 40.88'	-- -- 0.40%	CONNECT TO PU 6-INCH
331.1	OAK	299+59.46	-15.50	LT	CATCH BASINS 2X3-H-S	733.63	727.19	6.45'	2.00'	331-331.1 OUT	E	SSPRC CLASS IV 15-INCH	729.19	TO STR: 331	31.00'	1.00%	CONNECT TO PU 6-INCH
332	OAK	299+20.00	14.67	RT	CONCRETE COLLAR					331-332 OUT	N	SSPRC CLASS IV 15-INCH	728.68	TO STR: 331	39.47'	0.40%	
335	CTHD	89+92.25	0.00		MANHOLES 7-J	734.42	728.65	5.77'	0.00'	335-336 IN 335-335.1 IN 335-335.2 IN 330-335 OUT	E N S W	SSPRCHE CLASS HE-IV 29X45-INCH SSPRC CLASS IV 15-INCH SSPRC CLASS IV 15-INCH SSPRCHE CLASS HE-IV 29X45-INCH	728.65 729.14 729.14 728.65	FROM STR: 336 FROM STR: 335.1 FROM STR: 335.2 TO STR: 330	-- -- -- 25.25'	-- -- -- 0.35%	
335.1	CTHD	89+92.25	-20.50	LT	CATCH BASINS 2X3-H	733.84	727.34	6.50'	2.00'	335-335.1 OUT	S	SSPRC CLASS IV 15-INCH	729.34	TO STR: 335	20.50'	1.00%	
335.2	CTHD	89+92.25	20.50	RT	CATCH BASINS 2X3-H	733.84	727.34	6.50'	2.00'	335-335.2 OUT	N	SSPRC CLASS IV 15-INCH	729.34	TO STR: 335	20.50'	1.00%	
336	CTHD	93+15.00	3.00	RT	MANHOLES 7-J	735.50	729.78	5.72'	0.00'	336-340 IN 336-336.1 IN 336-336.2 IN 335-336 OUT	E N S W	SSPRCHE CLASS HE-IV 29X45-INCH SSPRC CLASS IV 15-INCH SSPRC CLASS IV 15-INCH SSPRCHE CLASS HE-IV 29X45-INCH	729.78 730.12 730.30 729.78	FROM STR: 340 FROM STR: 336.1 FROM STR: 336.2 TO STR: 335	-- -- -- 322.76'	-- -- -- 0.35%	
336.1	CTHD	93+15.00	-20.50	LT	CATCH BASINS 2X3-H	734.86	728.35	6.50'	2.00'	336-336.1 OUT	S	SSPRC CLASS IV 15-INCH	730.36	TO STR: 336	23.50'	1.00%	
336.2	CTHD	93+15.00	20.50	RT	CATCH BASINS 2X3-H	734.98	728.48	6.50'	2.00'	336-336.2 OUT	N	SSPRC CLASS IV 15-INCH	730.48	TO STR: 336	17.50'	1.00%	
340	CTHD	96+66.33	3.00	RT	MANHOLES 7-J	739.86	732.77	7.09'	0.00'	340-346 IN 340-344 IN 340-341 IN 336-340 OUT	E N S W	SSPRC CLASS IV 24-INCH SSPRC CLASS IV 18-INCH SSPRC CLASS IV 15-INCH SSPRCHE CLASS HE-IV 29X45-INCH	733.02 732.90 732.90 732.77	FROM STR: 346 FROM STR: 344 FROM STR: 341 TO STR: 336	-- -- -- 351.33'	-- -- -- 0.85%	
341	MICHAEL CL	309+79.23	17.66	RT	MANHOLES 4-J	739.64	732.96	6.68'	0.00'	341-342 IN 341-341.1 IN 340-341 OUT	S E N	SSPRC CLASS IV 15-INCH SSPRC CLASS IV 15-INCH SSPRC CLASS IV 15-INCH	732.96 734.94 732.96	FROM STR: 342 FROM STR: 341.1 TO STR: 340	-- -- 17.76'	-- -- 0.35%	
341.1	CTHD	96+85.54	20.49	RT	CATCH BASINS 2X3-H-S	739.61	733.11	6.50'	2.00'	341-341.1 OUT	W	SSPRC CLASS IV 15-INCH	735.11	TO STR: 341	17.00'	1.00%	CONNECT TO PU 6-INCH
342	MICHAEL CL	309+59.22	17.50	RT	CATCH BASINS 2X3-H-S	739.60	731.03	8.56'	2.00'	342-343 IN 342-342.1 IN 341-342 OUT	S W N	SSPRC CLASS IV 12-INCH SSPRC CLASS IV 15-INCH SSPRC CLASS IV 15-INCH	733.03 734.22 733.03	FROM STR: 343 FROM STR: 342.1 TO STR: 341	-- -- 20.00'	-- -- 0.35%	CONNECT TO PU 6-INCH
342.1	MICHAEL CL	309+59.22	-17.50	LT	CATCH BASINS 2X3-H	738.82	732.57	6.25'	2.00'	342-342.1 OUT	E	SSPRC CLASS IV 15-INCH	734.57	TO STR: 342	35.00'	1.00%	
343	MICHAEL CL	309+35.00	17.12	RT	CONCRETE COLLAR					342-343 OUT	N	SSPRC CLASS IV 12-INCH	733.12	TO STR: 342	24.23'	0.35%	

STORM SEWER STRUCTURE DATA

STRUCTURE NUMBER	ALIGNMENT	STATION	OFFSET	LOCATION	TYPE	RIM/GRATE ELEVATION	STRUCTURE INV ELEV	TOTAL DEPTH	SUMP DEPTH	CONNECTING PIPES	PIPE DIRECTION	PIPE SIZE & TYPE	PIPE INVERT	PIPE ROUTE	PIPE LENGTH	PIPE SLOPE	REMARKS
344	WEST	320+40.50	-17.50	LT	CATCH BASINS 2X3-H	739.27	730.99	8.28'	2.00'	344-345 IN 344-344.1 IN 340-344 OUT	N E S	SSPRC CLASS IV 15-INCH SSPRC CLASS IV 15-INCH SSPRC CLASS IV 18-INCH	733.24 735.44 732.99	FROM STR: 345 FROM STR: 344.1 TO STR: 340	-- -- 43.50'	-- -- 0.20%	
344.1	WEST	320+40.50	17.50	RT	CATCH BASINS 2X3-H-S	739.79	733.79	6.00'	2.00'	344.1-344.2 IN 344-344.1 OUT	SE W	SSPRC CLASS IV 15-INCH SSPRC CLASS IV 15-INCH	735.79 735.79	FROM STR: 344.2 TO STR: 344	-- 35.00'	-- 1.00%	CONNECT TO PU 6-INCH
344.2	CTHD	97+18.36	-20.50	LT	CATCH BASINS 2X3-H-S	739.97	734.05	5.92'	2.00'	344.1-344.2 OUT	NW	SSPRC CLASS IV 15-INCH	736.05	TO STR: 344.1	26.27'	1.00%	CONNECT TO PU 6-INCH
345	WEST	320+80.00	-17.79	LT	CONCRETE COLLAR					344-345 OUT	S	SSPRC CLASS IV 15-INCH	733.32	TO STR: 344	39.50'	0.20%	
346	CTHD	99+15.00	3.00	RT	MANHOLES 5-J	743.10	735.25	7.85'	0.00'	346-350 IN 346-346.1 IN 346-346.3 IN 340-346 OUT	E N S W	SSPRC CLASS IV 24-INCH SSPRC CLASS IV 15-INCH SSPRC CLASS IV 15-INCH SSPRC CLASS IV 24-INCH	735.25 738.22 737.90 735.25	FROM STR: 350 FROM STR: 346.1 FROM STR: 346.3 TO STR: 340	-- -- -- 248.67'	-- -- -- 0.90%	
346.1	CTHD	99+15.00	-20.50	LT	CATCH BASINS 2X3-H	742.46	736.46	6.00'	2.00'	346-346.1 OUT	S	SSPRC CLASS IV 15-INCH	738.46	TO STR: 346	23.50'	1.00%	CONNECT TO SS LATERAL
346.3	CTHD	99+15.00	20.50	RT	CATCH BASINS 2X3-H	742.58	736.08	6.50'	2.00'	346.3-346.4 IN 346-346.3 OUT	S N	SSPC 8-INCH SSPRC CLASS IV 15-INCH	738.81 738.08	FROM STR: 346.4 TO STR: 346	-- 17.50'	-- 1.00%	
346.4	CTHD	99+15.00	30.44	RT	CONCRETE COLLAR					346.3-346.4 OUT	N	SSPC 8-INCH	738.91	TO STR: 346.3	9.94'	1.00%	
350	CTHD	102+22.05	3.00	RT	MANHOLES 5-J	744.40	738.02	6.39'	0.00'	350-355 IN 350-353 IN 350-351 IN 346-350 OUT	E N S W	SSPRC CLASS IV 24-INCH SSPRC CLASS IV 15-INCH SSPRC CLASS IV 15-INCH SSPRC CLASS IV 24-INCH	738.02 739.04 738.37 738.02	FROM STR: 355 FROM STR: 353 FROM STR: 351 TO STR: 346	-- -- -- 307.05'	-- -- -- 0.90%	
351	LINDALE CL	329+59.27	17.50	RT	CATCH BASINS 2X3-H-S	743.71	736.56	7.15'	2.00'	351-352 IN 351-351.1 IN 350-351 OUT	S W N	SSPRC CLASS IV 15-INCH SSPRC CLASS IV 15-INCH SSPRC CLASS IV 15-INCH	738.56 739.11 738.56	FROM STR: 352 FROM STR: 351.1 TO STR: 350	-- -- 37.61'	-- -- 0.50%	CONNECT TO PU 6-INCH
351.1	LINDALE CL	329+59.27	-17.50	LT	CATCH BASINS 2X3-H-S	743.71	737.46	6.25'	2.00'	351-351.1 OUT	E	SSPRC CLASS IV 15-INCH	739.46	TO STR: 351	35.00'	1.00%	CONNECT TO PU 6-INCH
352	LINDALE CL	329+10.00	18.04	RT	CONCRETE COLLAR					351-352 OUT	N	SSPRC CLASS IV 15-INCH	738.63	TO STR: 351	49.28'	0.15%	
353	EAST	340+40.50	-17.50	LT	CATCH BASINS 2X3-H-S	743.76	737.26	6.50'	2.00'	353-353.1 IN 350-353 OUT	E S	SSPRC CLASS IV 15-INCH SSPRC CLASS IV 15-INCH	739.26 739.26	FROM STR: 353.1 TO STR: 350	-- 43.71'	-- 0.50%	CONNECT TO PU 6-INCH
353.1	EAST	340+40.50	17.50	RT	CATCH BASINS 2X3-H-S	743.76	737.61	6.15'	2.00'	353-353.1 OUT	W	SSPRC CLASS IV 15-INCH	739.61	TO STR: 353	35.00'	1.00%	CONNECT TO PU 6-INCH
355	CTHD	102+81.33	3.00	RT	MANHOLES 5-J	744.62	738.55	6.06'	0.00'	355-356 IN 355-355.1 IN 355-355.2 IN 350-355 OUT	E N S W	SSPRC CLASS IV 24-INCH SSPRC CLASS IV 15-INCH SSPRC CLASS IV 15-INCH SSPRC CLASS IV 24-INCH	738.55 739.24 739.42 738.55	FROM STR: 356 FROM STR: 355.1 FROM STR: 355.2 TO STR: 350	-- -- -- 59.28'	-- -- -- 0.90%	
355.1	CTHD	102+81.33	-20.50	LT	CATCH BASINS 2X3-H	743.97	737.47	6.50'	2.00'	355-355.1 OUT	S	SSPRC CLASS IV 15-INCH	739.47	TO STR: 355	23.50'	1.00%	
355.2	CTHD	102+81.33	20.50	RT	CATCH BASINS 2X3-H	744.09	737.59	6.50'	2.00'	355-355.2 OUT	N	SSPRC CLASS IV 15-INCH	739.59	TO STR: 355	17.50'	1.00%	
356	CTHD	104+38.50	3.00	RT	MANHOLES 5-J	745.18	739.97	5.22'	0.00'	356-360 IN 356-356.1 IN 356-356.3 IN 355-356 OUT	E N S W	SSPRC CLASS IV 24-INCH SSPRC CLASS IV 15-INCH SSPRC CLASS IV 15-INCH SSPRC CLASS IV 24-INCH	739.97 740.55 740.49 739.97	FROM STR: 360 FROM STR: 356.1 FROM STR: 356.3 TO STR: 355	-- -- -- 157.19'	-- -- -- 0.90%	
356.1	CTHD	104+38.50	-20.50	LT	CATCH BASINS 2X3-H	744.54	738.79	5.75'	2.00'	356.1-356.2 IN 356-356.1 OUT	N S	SSPRC CLASS IV 12-INCH SSPRC CLASS IV 15-INCH	741.28 740.79	FROM STR: 356.2 TO STR: 356	-- 23.50'	-- 1.00%	
356.2	CTHD	104+38.50	-33.00	LT	CONCRETE COLLAR					356.1-356.2 OUT	S	SSPRC CLASS IV 12-INCH	741.41	TO STR: 356.1	12.50'	1.00%	
356.3	CTHD	104+38.50	20.50	RT	CATCH BASINS 2X3-H	744.66	738.66	6.00'	2.00'	356.3-356.4 IN 356-356.3 OUT	SE N	SSPRC CLASS IV 12-INCH SSPRC CLASS IV 15-INCH	740.66 740.66	FROM STR: 356.4 TO STR: 356	-- 17.50'	-- 1.00%	
356.4	CTHD	104+59.97	33.00	RT	CONCRETE COLLAR					356.3-356.4 OUT	NW	SSPRC CLASS IV 12-INCH	740.91	TO STR: 356.3	24.84'	1.00%	
360	CTHD	105+84.44	3.00	RT	MANHOLES 5-J	745.71	740.40	5.30'	0.00'	360-365 IN 360-361 IN 356-360 OUT	E N W	SSPRC CLASS IV 18-INCH SSPRC CLASS IV 15-INCH SSPRC CLASS IV 24-INCH	740.90 740.83 740.40	FROM STR: 365 FROM STR: 361 TO STR: 356	-- -- 145.94'	-- -- 0.30%	
361	DEAN	350+43.15	-10.15	LT	MANHOLES 4-J	745.12	741.06	4.06'	0.00'	361-362 IN 361-361.1 IN 361-361.2 IN 360-361 OUT	N W E S	SSPRC CLASS IV 12-INCH SSPRC CLASS IV 15-INCH SSPRC CLASS IV 15-INCH SSPRC CLASS IV 15-INCH	741.31 741.06 741.06 741.06	FROM STR: 362 FROM STR: 361.1 FROM STR: 361.2 TO STR: 360	-- -- -- 46.19'	-- -- -- 0.50%	
361.1	DEAN	350+43.14	-16.75	LT	CATCH BASINS 2X3-H-S	744.81	739.09	5.72'	2.00'	361-361.1 OUT	E	SSPRC CLASS IV 15-INCH	741.09	TO STR: 361	6.60'	0.50%	CONNECT TO PU 6-INCH
361.2	DEAN	350+43.14	16.75	RT	CATCH BASINS 2X3-H-S	744.88	739.19	5.69'	2.00'	361-361.2 OUT	W	SSPRC CLASS IV 15-INCH	741.19	TO STR: 361	26.90'	0.50%	CONNECT TO PU 6-INCH
362	DEAN	350+65.00	-9.90	LT	CONCRETE COLLAR					361-362 OUT	S	SSPRC CLASS IV 12-INCH	741.44	TO STR: 361	21.86'	0.60%	

STORM SEWER STRUCTURE DATA

STRUCTURE NUMBER	ALIGNMENT	STATION	OFFSET	LOCATION	TYPE	RIM/GRATE ELEVATION	STRUCTURE INV ELEV	TOTAL DEPTH	SUMP DEPTH	CONNECTING PIPES	PIPE DIRECTION	PIPE SIZE & TYPE	PIPE INVERT	PIPE ROUTE	PIPE LENGTH	PIPE SLOPE	REMARKS
365	CTHD	106+30.08	3.00	RT	MANHOLES 4-J	745.87	741.04	4.83'	0.00'	365-370 IN 365-365.1 IN 365-365.2 IN 360-365 OUT	E N S W	SSPRC CLASS IV 18-INCH SSPRC CLASS IV 15-INCH SSPRC CLASS IV 15-INCH SSPRC CLASS IV 18-INCH	741.04 741.04 741.04 741.04	FROM STR: 370 FROM STR: 365.1 FROM STR: 365.2 TO STR: 360	-- -- -- 45.64'	-- -- -- 0.30%	
365.1	CTHD	106+30.08	-20.50	LT	CATCH BASINS 2X3-H	745.23	739.28	5.95'	2.00'	365-365.1 OUT	S	SSPRC CLASS IV 15-INCH	741.28	TO STR: 365	23.50'	1.00%	
365.2	CTHD	106+30.08	20.50	RT	CATCH BASINS 2X3-H	745.35	739.22	6.13'	2.00'	365-365.2 OUT	N	SSPRC CLASS IV 15-INCH	741.22	TO STR: 365	17.50'	1.00%	CONNECT TO SS LATERAL
370	CTHD	109+03.00	3.00	RT	MANHOLES 4-J	746.85	741.86	4.99'	0.00'	370-371 IN 365-370 OUT	N W	SSPRC CLASS IV 15-INCH SSPRC CLASS IV 18-INCH	741.86 741.86	FROM STR: 371 TO STR: 365	-- 272.92'	-- 0.30%	
371	PIERRON	360+40.64	-17.00	LT	CATCH BASINS 2X3-H-S	746.09	740.08	6.01'	2.00'	371-371.2 IN 370-371 OUT	E S	SSPRC CLASS IV 15-INCH SSPRC CLASS IV 15-INCH	742.08 742.08	FROM STR: 371.2 TO STR: 370	-- 43.94'	-- 0.50%	CONNECT TO PU 6-INCH CONNECT TO SS LATERAL
371.2	PIERRON	360+40.64	17.00	RT	CATCH BASINS 2X3-H-S	746.09	740.25	5.84'	2.00'	371-371.2 OUT	W	SSPRC CLASS IV 15-INCH	742.25	TO STR: 371	34.00'	0.50%	CONNECT TO PU 6-INCH CONNECT TO SS LATERAL
399	CTHD	110+00.00	3.00	RT	MANHOLES 4-J	747.01	742.14	4.88'	0.00'	339-400 OUT	E	SSPRC CLASS IV 15-INCH	742.14	TO STR: 400	92.00'	0.50%	CONNECT TO SS LATERAL
400	CTHD	110+92.00	3.00	RT	MANHOLES 4-J	746.76	741.68	5.08'	0.00'	400-400.2 IN 400-400.1 IN 339-400 IN 400-401 OUT	S N W E	SSPRC CLASS IV 15-INCH SSPRC CLASS IV 15-INCH SSPRC CLASS IV 15-INCH SSPRC CLASS IV 18-INCH	741.97 742.55 741.68 741.68	FROM STR: 400.2 FROM STR: 400.1 FROM STR: 399 TO STR: 401	-- -- -- 98.29'	-- -- -- 0.50%	
400.1	CTHD	110+92.18	-33.00	LT	CONCRETE COLLAR					400-400.1 OUT	S	SSPRC CLASS IV 15-INCH	742.66	TO STR: 400	36.00'	0.30%	
400.2	CTHD	110+92.20	33.00	RT	CONCRETE COLLAR					400-400.2 OUT	N	SSPRC CLASS IV 15-INCH	742.06	TO STR: 400	30.00'	0.30%	
401	CTHD	111+90.29	3.00	RT	MANHOLES 4-J	746.46	741.19	5.28'	0.00'	400-401 IN 401-401.1 IN 401-401.4 IN 401-402 OUT	W N S E	SSPRC CLASS IV 18-INCH SSPRC CLASS IV 15-INCH SSPRC CLASS IV 15-INCH SSPRC CLASS IV 18-INCH	741.19 741.19 741.27 741.19	FROM STR: 400 FROM STR: 401.1 FROM STR: 401.4 TO STR: 402	-- -- -- 107.55'	-- -- -- 1.15%	
401.1	CTHD	111+90.29	-20.50	LT	CATCH BASINS 2X3-H	745.82	739.30	6.52'	2.00'	401.1-401.2 IN 401-401.1 OUT	NE S	SSPRC CLASS IV 15-INCH SSPRC CLASS IV 15-INCH	741.30 741.30	FROM STR: 401.2 TO STR: 401	-- 23.50'	-- 0.50%	
401.2	LARANN	370+40.64	-17.50	LT	CATCH BASINS 2X3-H-S	745.50	739.46	6.04'	2.00'	401.2-401.3 IN 401.1-401.2 OUT	E SW	SSPRC CLASS IV 15-INCH SSPRC CLASS IV 15-INCH	741.46 741.46	FROM STR: 401.3 TO STR: 401.1	-- 30.39'	-- 0.50%	CONNECT TO PU 6-INCH
401.3	LARANN	370+40.64	17.50	RT	CATCH BASINS 2X3-H-S	745.50	739.63	5.87'	2.00'	401.2-401.3 OUT	W	SSPRC CLASS IV 15-INCH	741.63	TO STR: 401.2	35.00'	0.50%	CONNECT TO PU 6-INCH
401.4	CTHD	111+90.29	20.50	RT	CATCH BASINS 2X3-H	745.94	739.44	6.50'	2.00'	401-401.4 OUT	N	SSPRC CLASS IV 15-INCH	741.44	TO STR: 401	17.50'	1.00%	
402	CTHD	112+97.84	3.00	RT	MANHOLES 4-J	745.87	739.95	5.92'	0.00'	401-402 IN 402-402.1 IN 402-403 OUT	W S E	SSPRC CLASS IV 18-INCH SSPC 10-INCH SSPRC CLASS IV 18-INCH	739.95 741.22 739.95	FROM STR: 401 FROM STR: 402.1 TO STR: 403	-- -- 187.23'	-- -- 1.15%	
402.1	CTHD	112+97.84	27.57	RT	CONNECT TO EXISTING					402-402.1 OUT	N	SSPC 10-INCH	741.47	TO STR: 402	24.57'	1.00%	
403	CTHD	114+85.07	3.00	RT	MANHOLES 4-J	743.48	737.80	5.69'	0.00'	402-403 IN 403-403.1 IN 403-404 OUT	W S E	SSPRC CLASS IV 18-INCH SSPC 15-INCH SSPRC CLASS IV 18-INCH	737.80 738.54 737.80	FROM STR: 402 FROM STR: 403.1 TO STR: 404	-- -- 108.59'	-- -- 1.15%	
403.1	CTHD	114+84.85	33.00	RT	CONNECT TO EXISTING					403-403.1 OUT	N	SSPC 15-INCH	738.69	TO STR: 403	30.00'	0.50%	
404	CTHD	115+93.65	3.00	RT	MANHOLES 6-J	741.93	736.55	5.38'	0.00'	403-404 IN 404-404.1 IN 404-404.2 IN 404-405 OUT	W N S E	SSPRC CLASS IV 18-INCH SSPRC CLASS IV 15-INCH SSPRC CLASS IV 15-INCH SSPRC CLASS IV 18-INCH	736.55 737.02 736.69 736.55	FROM STR: 403 FROM STR: 404.1 FROM STR: 404.2 TO STR: 405	-- -- -- 74.86'	-- -- -- 0.80%	
404.1	CTHD	115+95.65	-20.50	LT	CATCH BASINS 2X3-H	741.25	735.25	6.00'	2.00'	404-404.1 OUT	S	SSPRC CLASS IV 15-INCH	737.25	TO STR: 404	23.58'	1.00%	CONNECT TO SS LATERAL
404.2	CTHD	115+93.65	20.50	RT	CATCH BASINS 2X3-H	741.40	734.74	6.66'	2.00'	404.2-404.3 IN 404-404.2 OUT	S N	SSPC 12-INCH SSPRC CLASS IV 15-INCH	736.74 736.74	FROM STR: 404.3 TO STR: 404	-- 17.50'	-- 0.30%	
404.3	CTHD	115+93.59	33.00	RT	CONNECT TO EXISTING					404.2-404.3 OUT	N	SSPC 12-INCH	736.78	TO STR: 404.2	12.50'	0.30%	
405	CTHD	116+64.33	27.68	RT	MANHOLES 6-J	741.22	735.95	5.27'	0.00'	404-405 IN 405-405.1 IN 405-406 OUT	W S E	SSPRC CLASS IV 18-INCH SSPC 12-INCH SSPRC CLASS IV 24-INCH	735.95 736.24 735.95	FROM STR: 404 FROM STR: 405.1 TO STR: 406	-- -- 10.00'	-- -- 0.80%	
405.1	CTHD	116+64.31	33.00	RT	CONNECT TO EXISTING					405-405.1 OUT	N	SSPC 12-INCH	736.25	TO STR: 405	5.32'	0.20%	
406	CTHD	116+74.33	27.70	RT	CONCRETE COLLAR					405-406 IN	W	SSPRC CLASS IV 24-INCH	735.87	FROM STR: 405	--	--	

LEGEND

- XXX — SIGN - REMOVE EXISTING
- XXX — SIGN - MOVE EXISTING
- XXX — SIGN - PLACE NEW
- EXISTING SIGN
- PROPOSED SIGN MOUNTED ON POST(S)

302A R5-2 24"X24" + 302B R6-2-R 24"X30" — ONE WAY

101 — ONE WAY REMOVE; ONE WAY REMOVE

303A R5-2 24"X24" + 303B R6-2-L 24"X30" — ONE WAY

304A R3-17 30"X24" + 304B R3-17-B 30"X12" — BIKE LANE ENDS

PRIVATE SIGN TO REMAIN

306 SPEED LIMIT 25 R2-1 24"X30"

103 SPEED LIMIT 25 REMOVE

BEECH STREET

CONCRETE P.E.

75 76 77 78 79 80 STA 81+00

CTH D
MAIN STREET

MATCH LINE

301A R3-17 30"X24" + 301B R3-17-A 30"X12" — BIKE LANE AHEAD

CONCRETE P.E. CONCRETE P.E. CONCRETE P.E. CONCRETE P.E. ASPHALT P.E. ASPHALT P.E. CONCRETE P.E.

102 SPEED LIMIT 25 REMOVE

305 SPEED LIMIT 25 R2-1 24"X30"

310 STOP R1-1 30"X30" + 105 STOP REMOVE

PRIVATE SIGN TO REMAIN

104 Belgian COMMUNITY CENTER REMOVE; Belgian COMMUNITY CENTER REMOVE

ASPHALT P.E. CONCRETE P.E.

CHESTNUT STREET

107 WATCH CHILDREN REMOVE

108 SPEED LIMIT 25 REMOVE

313 SPEED LIMIT 25 R2-1 24"X30"

202 MOVE

CONCRETE P.E. GRAVEL P.E. CONCRETE P.E.

STA 81+00 1 82 270 83 84 85 86 290 STA 87+00

MATCH LINE

CTH D
MAIN STREET

CONCRETE P.E.

WHITNEY WAY (FUTURE)

106 SPEED LIMIT 25 REMOVE

CONCRETE P.E. ASPHALT P.E. CONCRETE P.E. GRAVEL P.E.

311 SPEED LIMIT 25 R2-1 24"X30"

201 MOVE

109 STOP REMOVE

PRIVATE SIGN TO REMAIN

MAPLE STREET

314 STOP R1-1 30"X30"

315 BIKE LANE R3-17 30"X24"

ASPHALT

MATCH LINE

PROJECT NO: 4880-01-71	HWY: CTH D	COUNTY: OZAUKEE	SIGNING PLAN: CTH D	SHEET 70	E

FILE NAME : S:\CURRPROJ\OZAUKEECO\CTH D\CIVIL3D\48800100\SHEETSPLAN\48800100-023201-PS.DWG
LAYOUT NAME - 48800100-023201-PS - SHEET-01

PLOT DATE : 3/17/2017 8:11 AM PLOT BY : AARON SARAUER PLOT NAME : PLOT SCALE : 1:40_XREF

WISDOT/CADDS SHEET 42

2

316 BIKE LANE R3-17 30"X24"

319 SPEED LIMIT 25 R2-1 24"X30"

111 SPEED LIMIT 25 REMOVE

ASPHALT P.E. CONCRETE P.E. ASPHALT P.E. CONCRETE P.E. ASPHALT/GRAVEL P.E. CONCRETE P.E. FLAG

STA 87+00 7 88 89 90 91 92 9 STA 93+00

MATCH LINE MATCH LINE

CTH D
MAIN STREET

300

OAK STREET

FLAG ASPHALT P.E.

PRIVATE SIGN TO REMAIN

317 STOP R1-1 30"X30"

110 SPEED LIMIT 25 REMOVE

318A SPEED LIMIT 25 R2-1 24"X30"

318B NO PARKING R7-53-L 18"X24"

XXXX

ASPHALT P.E.

N

LEGEND

- XXX — SIGN - REMOVE EXISTING
- XXX — SIGN - MOVE EXISTING
- XXX — SIGN - PLACE NEW
- EXISTING SIGN
- PROPOSED SIGN MOUNTED ON POST(S)

321 SPEED LIMIT 25 R2-1 24"X30"

113 SPEED LIMIT 25 REMOVE

323 STOP R1-1 30"X30"

114 STOP REMOVE

XXXX XXXX

WEST LANE

116 WATCH CHILDREN REMOVE

327 BIKE LANE R3-17 30"X24"

ASPHALT P.E. CONCRETE P.E. ASPHALT P.E. ASPHALT P.E.

STA 93+00 3 94 95 96 320 97 98 9 STA 99+00

MATCH LINE MATCH LINE

CTH D
MAIN STREET

320 NO PARKING R7-53-D 18"X24"

CONCRETE P.E. CONC P.E. ASPHALT P.E.

322A SPEED LIMIT 25 R2-1 24"X30"

322B NO PARKING R7-53-R 18"X24"

112 SPEED LIMIT 25 REMOVE

XXXX XXXX

MICHAEL STREET

324 STOP R1-1 30"X30"

115 STOP REMOVE

325A BIKE LANE R3-17 30"X24"

325B NO PARKING R7-53-L 18"X24"

FLAG ASPHALT P.E. CONCRE P.E.

PROJECT NO: 4880-01-71	HWY: CTH D	COUNTY: OZAUKEE	SIGNING PLAN: CTH D	SHEET 71	E

FILE NAME : S:\CURRPROJ\OZAUKEECO\CTH D\CIVIL3D\48800100\SHEETSPLAN\48800100-023201-PS.DWG
LAYOUT NAME - 48800100-023201-PS - SHEET-02

PLOT DATE : 3/17/2017 8:11 AM PLOT BY : AARON SARAUER PLOT NAME : PLOT SCALE : **********

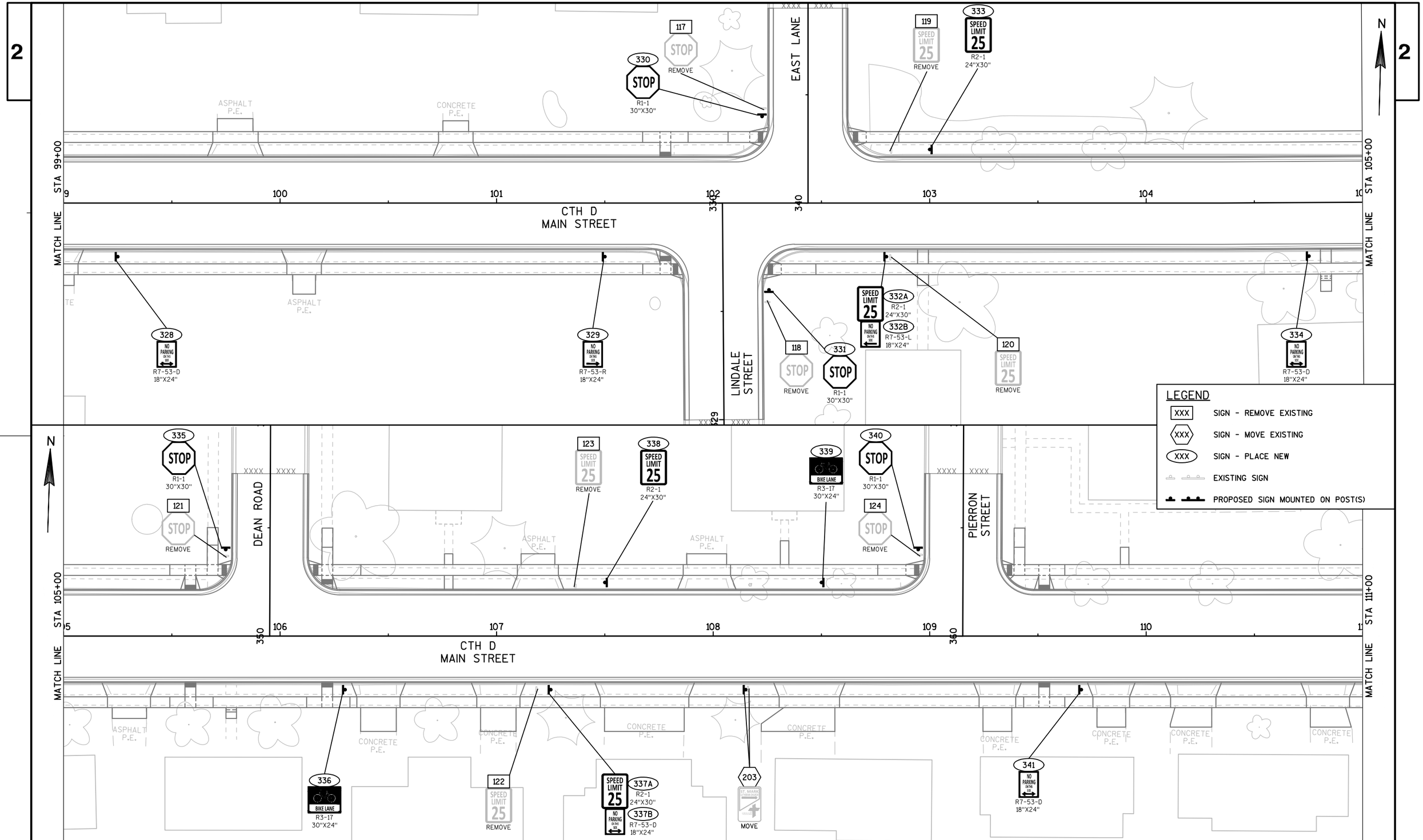

PROJECT NO:4880-01-71	HWY:CTH D	COUNTY:OZAUKEE	SIGNING PLAN: CTH D	SHEET 72	E

FILE NAME : S:\CURRPROJ\OZAUKEECO\CTH D\CIVIL3D\48800100\SHEETSPLAN\48800100-023201-PS.DWG
LAYOUT NAME - 48800100-023201-PS - SHEET-03
PLOT DATE : 1/24/2017 9:20 AM PLOT BY : AARON SARAUER PLOT NAME : PLOT SCALE : ##########

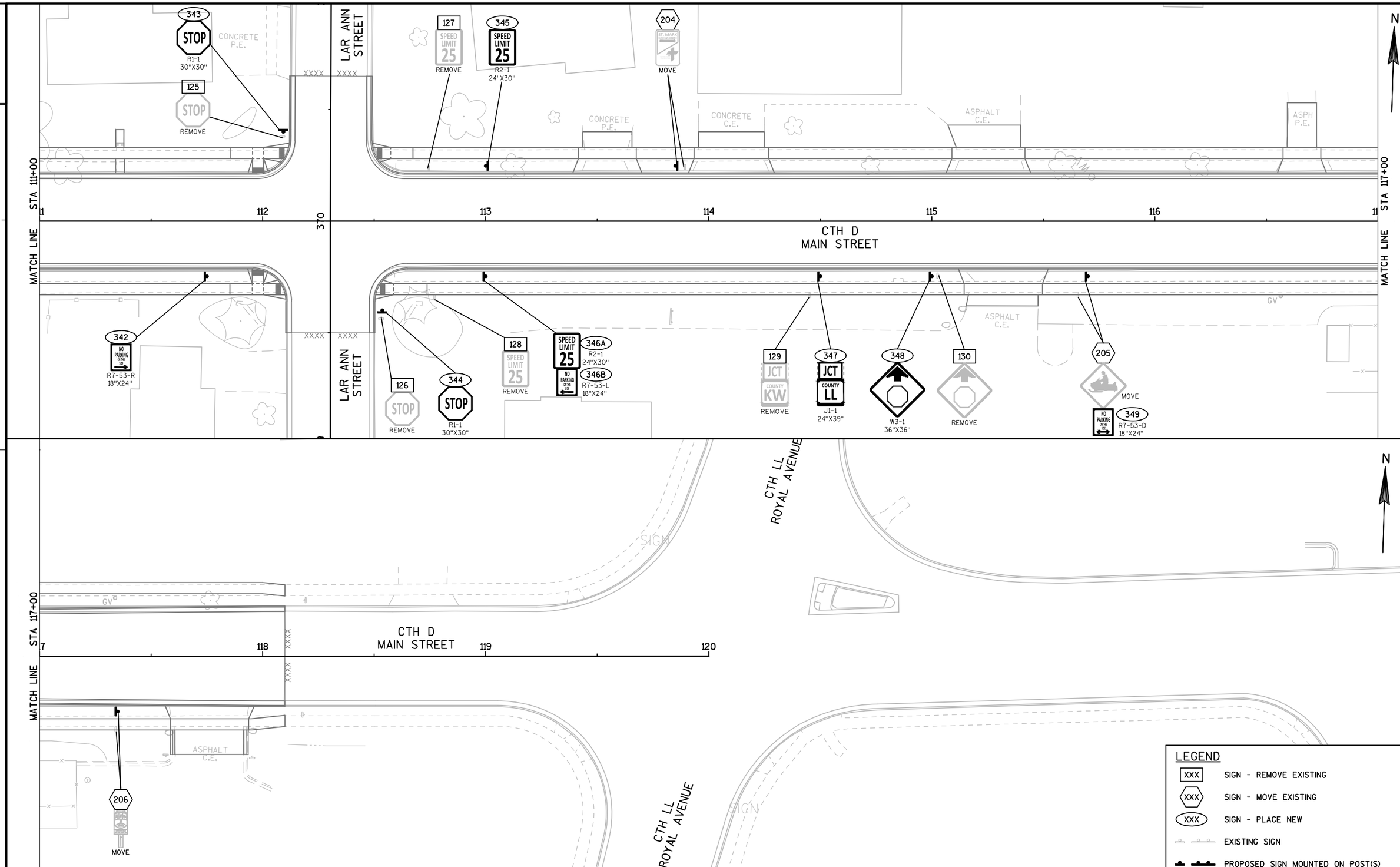

PROJECT NO:4880-01-71	HWY:CTH D	COUNTY:OZAUKEE	SIGNING PLAN: CTH D	SHEET 73	E

FILE NAME : S:\CURRPROJ\OZAUKEECO\CTH D\CIVIL3D\48800100\SHEETSPLAN\48800100-023201-PS.DWG
LAYOUT NAME - 48800100-023201-PS - SHEET-04
PLOT DATE : 1/24/2017 9:20 AM PLOT BY : AARON SARAUER PLOT NAME : PLOT SCALE : **********

2

STREET LIGHTING PLANS PREPARED BY:

WISCONSIN
MIKE D. SCARMON
E-37613
EVANSVILLE, WI
PROFESSIONAL ENGINEER

12/22/2016
(DATE) (SIGNATURE)

LIGHTING PLAN LEGEND:

- DECORATIVE LIGHTING UNIT
- EXISTING UTILITY LIGHT TO BE REMOVED BY OTHERS
- CONCRETE CONTROL CABINET BASE/ELECTRICAL SERVICE
- PULL BOX NON-CONDUCTIVE (24"X42")
- LIGHTING CONDUIT (2" SCHEDULE 40 PVC UNLESS NOTED)

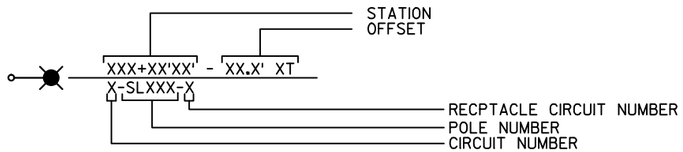

CONDUIT/CONDUCTOR LEGEND

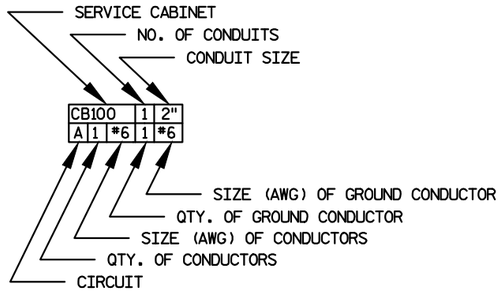

PWO = PULL WIRE ONLY
NEU = NEUTRAL

CONDUCTOR COLOR LEGEND

CB100

LIGHTING CONDUCTORS
A - BLACK
B - RED
C - BLACK
D - RED
E - BLACK
F - RED
G - BLACK
H - RED
240V PHASE TO PHASE
RECEPTACLE CONDUCTORS
I - BLUE & NEUTRAL
J - BROWN & NEUTRAL
K - BLUE & NEUTRAL
L - BROWN & NEUTRAL
M - BLUE & NEUTRAL
N - BROWN & NEUTRAL
O - BLUE & NEUTRAL
P - BROWN & NEUTRAL
120V PHASE TO GROUND

GENERAL STREET LIGHTING NOTES:

1) THE ENGINEER SHALL APPROVE THE FINAL LOCATION FOR ALL CONCRETE BASES IN THE FIELD PRIOR TO CONSTRUCTION.

2) THE LOCATION OF EXISTING AND PROPOSED UTILITIES AS SHOWN ON THE PLANS ARE APPROXIMATE. IN ADDITION, THERE MAY BE OTHER UTILITIES WITHIN THE PROJECT AREA WHICH ARE NOT SHOWN. THE CONTRACTOR SHALL VERIFY THE LOCATIONS OF ALL UTILITIES PRIOR TO CONSTRUCTION.

3) NO SPLICES ALLOWED IN PULL BOXES.

2

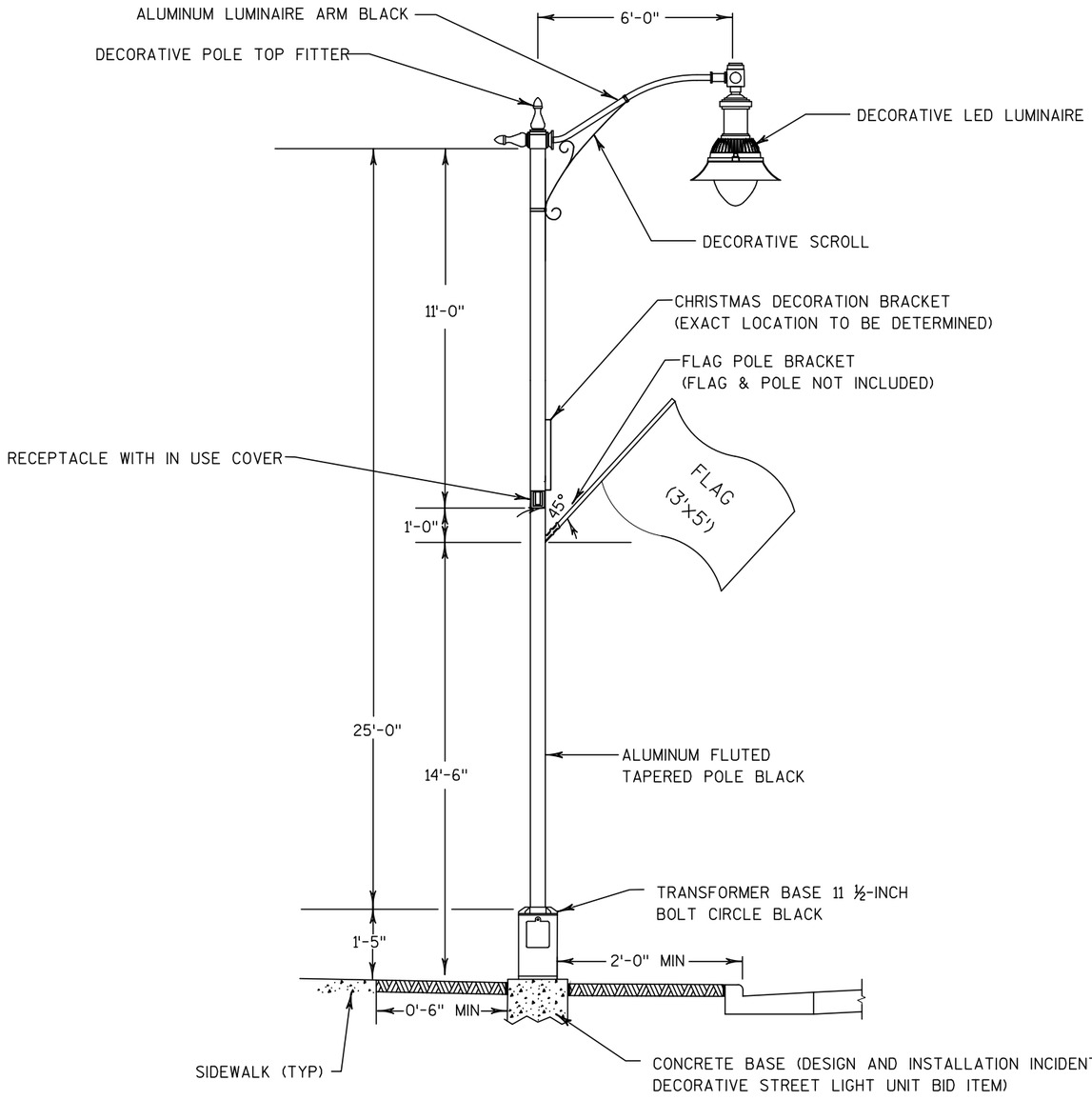

DECORATIVE LIGHTING UNIT DETAIL

NO SCALE

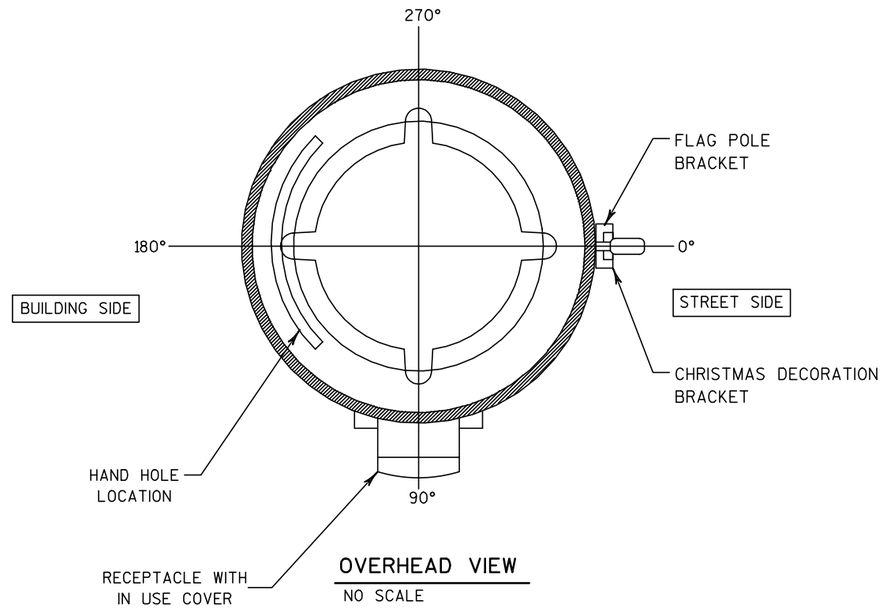

OVERHEAD VIEW

NO SCALE

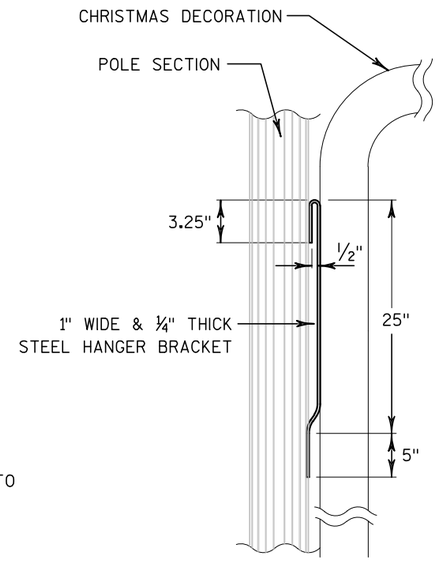

CHRISTMAS DECORATION BRACKET

NO SCALE

NOTES:

BRACKET SHOWN IN THE DETAIL DEPICTS THE DIMENSIONS OF THE VILLAGE OF BELGIUM'S CURRENT CHRISTMAS DECORATION HANGERS.

POLES IN THIS CONTRACT (AS SPECIFIED) SHALL FEATURE A BRACKET DESIGNED TO ACCEPT A HANGER WITH THE DIMENSIONS SHOWN.

MOUNTING BRACKETS SHALL ACCEPT ALL HANGER TYPES.

TABLE OF NOMINAL DIMENSIONS AND WEIGHTS

NON-CONDUCTIVE PULL BOX DIMENSION (INCHES)			
BOX DIAMETER ** (INSIDE)	A	24	24
BOX DIAMETER ** (OUTSIDE)	B	25	25
BOX LENGTH	C	36	42
COVER	D	25 1/2	25 1/2
FRAME	E	27	27
FRAME	F	25 3/4	25 3/4
FRAME	G	22 1/2	22 1/2
WEIGHT (POUNDS) *			
COVER		50	50

* THE ACTUAL WEIGHT OF THE COVER MAY VARY NOT TO EXCEED 100 LBS.

** DIAMETER VARIES FROM TOP TO BOTTOM WITH THE DIAMETER LARGER AT THE BOTTOM TO PREVENT FROST HEAVE

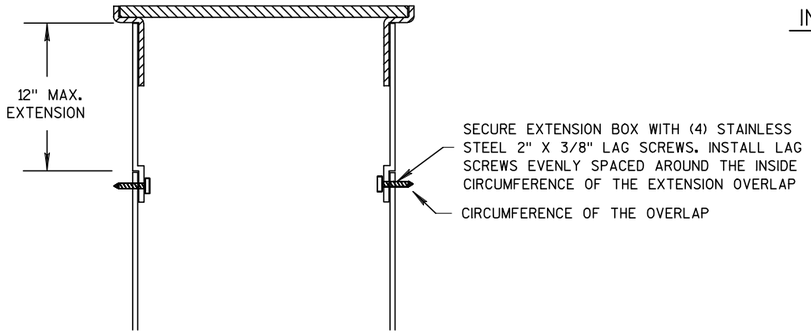

BOX EXTENSION

INSTALLED IN SOD OR CRUSHED AGGREGATE

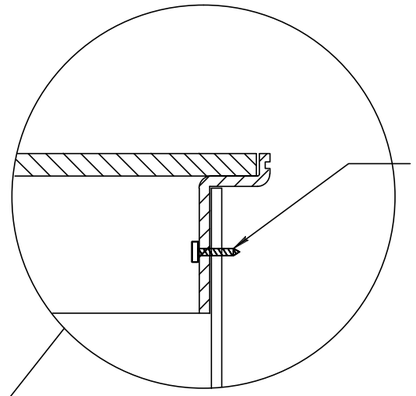

INSTALLED IN SIDEWALK

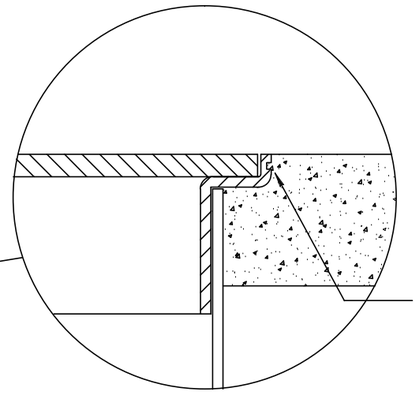

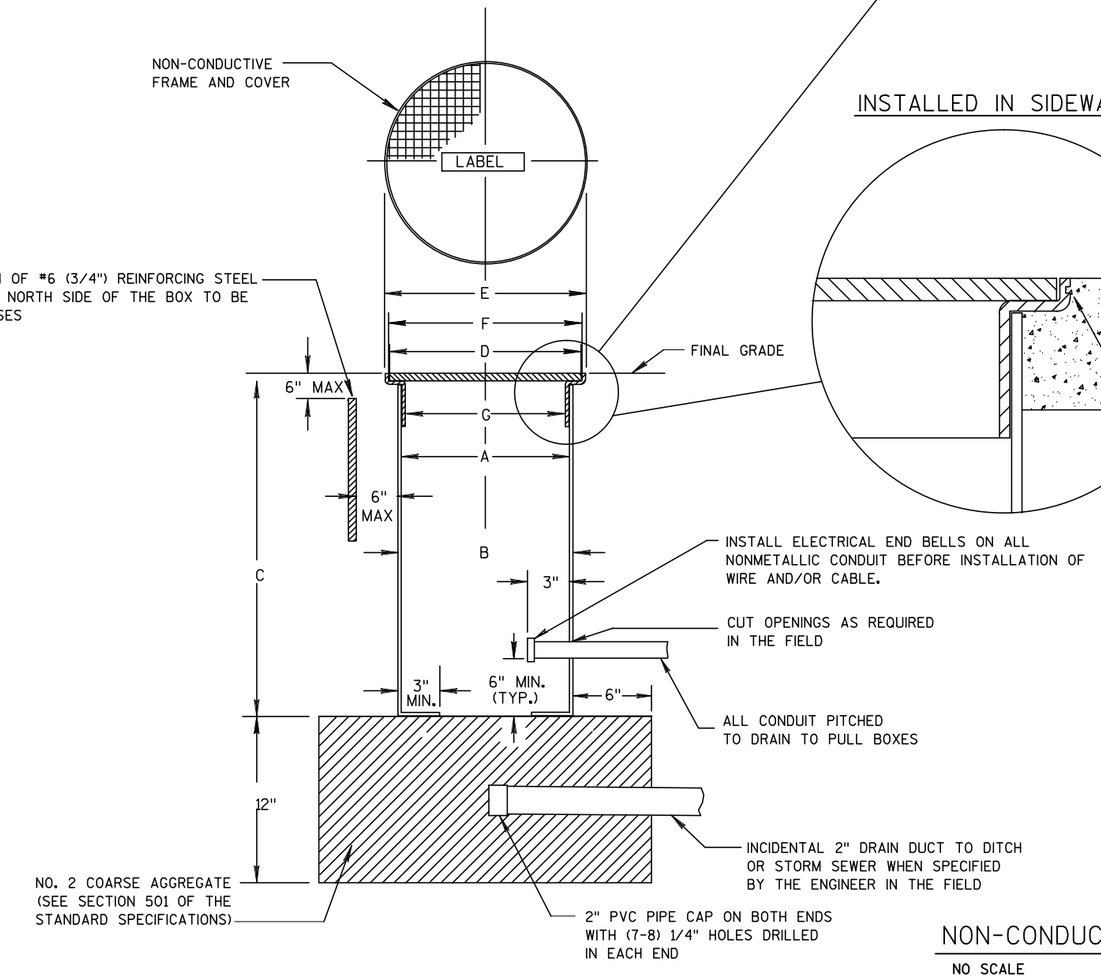

NON-CONDUCTIVE PULL BOX

NO SCALE

GENERAL NOTES

DETAILS OF CONSTRUCTION, MATERIALS AND WORKMANSHIP NOT SHOWN ON THIS DRAWING SHALL CONFORM TO THE PERTINENT REQUIREMENTS OF THE CONTRACT.

ALL BOXES, FRAMES AND COVERS SHALL BE SUITABLE FOR TIER 15 LOADING AS SPECIFIED IN ANSI/SCTE 77.

PROVIDE AN OPENING FOR TOOL ASSISTED COVER REMOVAL NOT LARGE ENOUGH TO PERMIT PASSAGE OF A SPHERE MORE THAN 1/2" DIAMETER

ENSURE COVER SURFACE IS SKID RESISTANT WITH A COEFFICIENT OF FRICTION OF AT LEAST 0.5 AND VERTICAL SURFACE DISCONTINUITIES LESS THAN 1/4".

BOXES AND EXTENSIONS ARE TRIMMABLE FOR CUSTOM LENGTHS. TRIMMED PIECES SHALL MAINTAIN A UNIFORM LENGTH.

ENTRANCE HOLES INTO PULL BOXES SHALL BE CUT WITH A CIRCULAR HOLE SAW OR HYDRAULIC CONDUIT PUNCH. HOLE SIZE SHALL BE THE OUTSIDE DIAMETER OF THE CONDUIT THAT IS TO FIT IN THE OPENING PLUS NO MORE THAN 1/4".

THE CONTRACTOR SHALL NOT INSTALL WIRE IN ANY PULL BOX UNTIL ITS INSTALLATION HAS BEEN INSPECTED AND ACCEPTED BY THE ENGINEER.

ENTIRE BOX MUST BE CONSTRUCTED OF NON-CONDUCTIVE MATERIALS WITH THE EXCEPTION OF STAINLESS STEEL FASTENERS.

WHEN A PULL BOX IS INSTALLED IN CRUSHED AGGREGATE SHOULDERS, PLACE IT 2-3 INCHES BELOW GRADE AND COVER IT WITH 2-3 INCHES OF CRUSHED AGGREGATE.

LABEL ON COVER SHALL READ "ELECTRIC" FOR SIGNAL OR LIGHTING SYSTEMS. "WISDOT COMMUNICATIONS" FOR COMMUNICATIONS SYSTEMS.

2

2

N

BEECH STREET

77+58'D' - 26.5' LT
PB102

79+34'D' - 26.8' LT
F-SL107-N

78+28'D' - 26.5' LT
PB103

LIGHTING IN PROJECT
ID 4880-01-70

STUB AND CAP CONDUIT

R/W (TYP.)

75+00'D' 76+00'D' 77+00'D' 78+00'D' 79+00'D' 80+00'D' 81+0

CTH D

MATCH LINE STA 81+00 'D'

LIGHTING IN PROJECT
ID 4880-01-71

80+53'D' - 26.8' RT
G-SL108-0

77+96'D' - 26.8' RT
H-SL106-P

SHEET 4 OF 19

PROJECT NO: 4880-01-71	HWY: CTH D	COUNTY: OZAUKEE	LIGHTING PLANS	SHEET 77	E

2

2

C =

CB100			1	2"
E	2	#6	1	#6
F	2	#6	--	--
M	1	#10	--	--
N	1	#10	--	--
NEU	1	#10	--	--

D =

CB100			1	2"
G	2	#6	1	#6
H	2	#6	--	--
O	1	#10	--	--
P	1	#10	--	--
NEU	1	#10	--	--

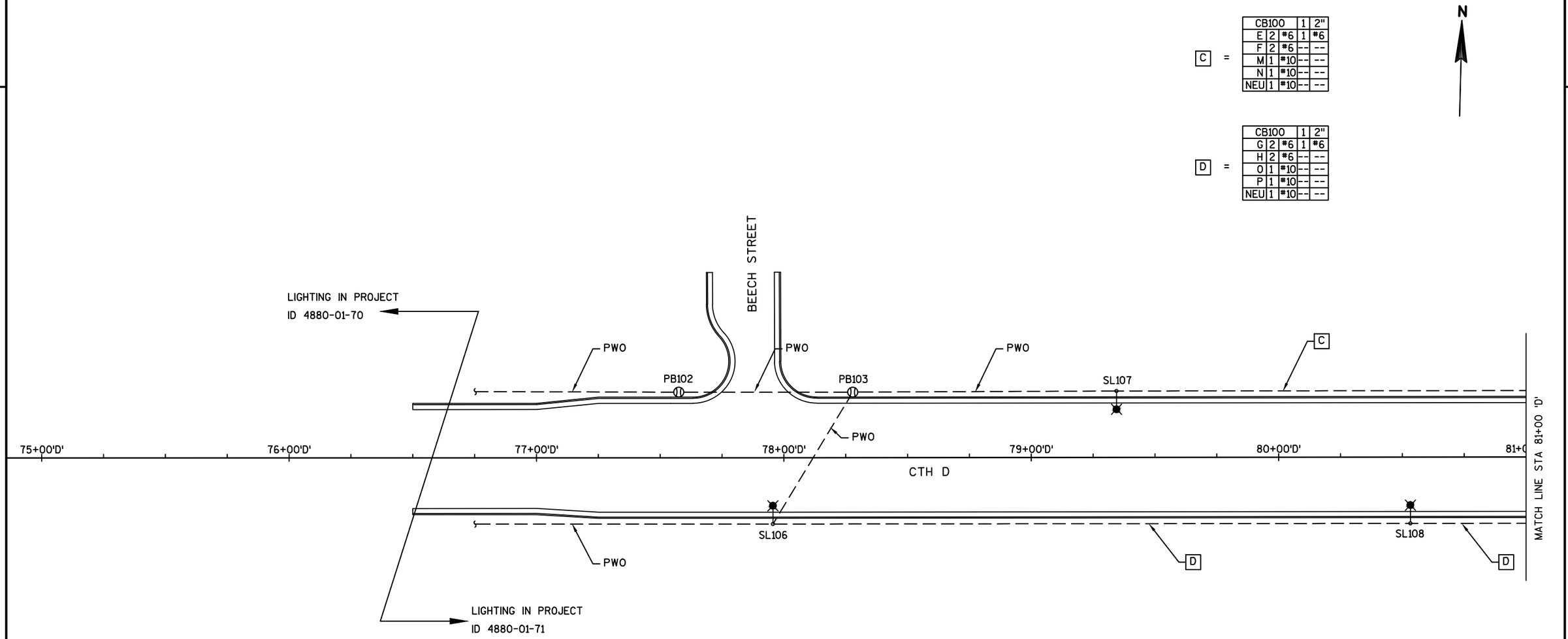

SHEET 5 OF 19

PROJECT NO: 4880-01-71	HWY: CTH D	COUNTY: OZAUKEE	LIGHTING PLANS	SHEET 78	E

2

N

83+20'D' - 26.5' LT
PB104

81+83'D' - 26.9' LT
E-SL109-M

CHESTNUT STREET

84+40'D' - 26.9' LT
F-SL111-N

R/W (TYP.)

MATCH LINE STA 81+00 'D'

82+00'D'

83+00'D'

84+00'D'

85+00'D'

86+00'D'

CTH D

MATCH LINE STA 87+00 'D'

83+20'D' - 26.8' RT
H-SL110-P

85+81'D' - 26.8' RT
G-SL112-0

MAPLE STREET

86+74'D' - 26.5' RT
PB105

SHEET 6 OF 19

PROJECT NO: 4880-01-71	HWY: CTH D	COUNTY: OZAUKEE	LIGHTING PLANS	SHEET 79	E

2

2

C =

CB100			1	2"
E	2	#6	1	#6
F	2	#6	--	--
M	1	#10	--	--
N	1	#10	--	--
NEU	1	#10	--	--

D =

CB100			1	2"
G	2	#6	1	#6
H	2	#6	--	--
O	1	#10	--	--
P	1	#10	--	--
NEU	1	#10	--	--

N

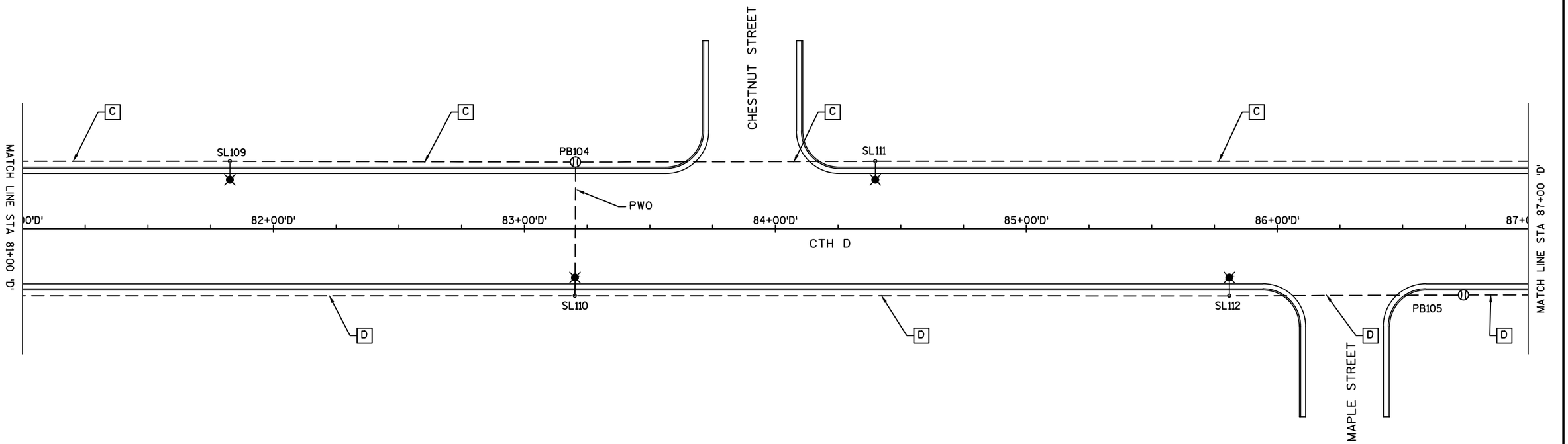

SHEET 7 OF 19

PROJECT NO: 4880-01-71	HWY: CTH D	COUNTY: OZAUKEE	LIGHTING PLANS	SHEET 80	E

FILE NAME : G:\GREMMER\15015-00 - CTH D - BELGIUM\LIGHTING\CIVIL 3D\PLAN SHEETS\023601-LP_71_A.DWG PLOT DATE : 1/2/2017 11:56 AM PLOT BY : KL ENGINEERING PLOT NAME : PLOT SCALE : 1 IN:40 FT

WISDOT/CADDS SHEET 42

2

N

87+55'D' - 26.9' LT
E-SL113-M

89+13'D' - 26.5' LT
PB106

89+18'D' - 26.5' LT
PB108

91+02'D' - 24.9' LT
A-SL115-I

R/W (TYP.)

MATCH LINE STA 87+00 'D'

88+00'D'

89+00'D'

90+00'D'

91+00'D'

92+00'D'

93+

MATCH LINE STA 93+00 'D'

CTH D

OAK STREET

R/W (TYP.)

89+13'D' - 26.5' RT
PB107

89+18'D' - 26.5' RT
PB109

89+26'D' - 26.8' RT
C-SL114-K

89+34'D' - 45.0' RT
CB100

89+91'D' - 24.5' RT
PB110

92+78'D' - 24.8' RT
D-SL116-L

SHEET 8 OF 19

PROJECT NO: 4880-01-71	HWY: CTH D	COUNTY: OZAUKEE	LIGHTING PLANS	SHEET 81	E

2

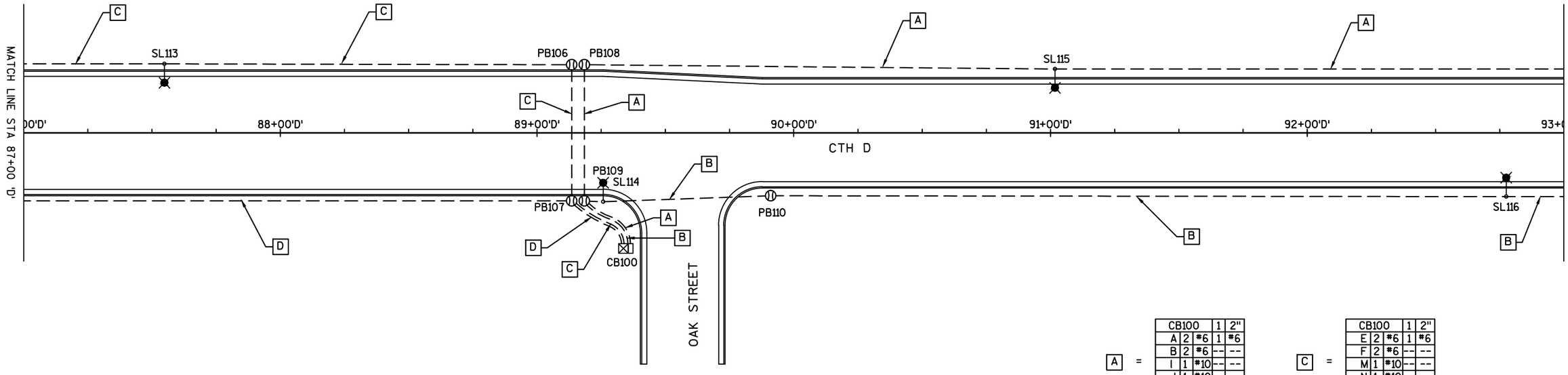

A =

CB100		1	2"
A	2	#6	1	#6
B	2	#6	--	--
I	1	#10	--	--
J	1	#10	--	--
NEU	1	#10	--	--

C =

CB100		1	2"
E	2	#6	1	#6
F	2	#6	--	--
M	1	#10	--	--
N	1	#10	--	--
NEU	1	#10	--	--

B =

CB100		1	2"
C	2	#6	1	#6
D	2	#6	--	--
K	1	#10	--	--
L	1	#10	--	--
NEU	1	#10	--	--

D =

CB100		1	2"
G	2	#6	1	#6
H	2	#6	--	--
O	1	#10	--	--
P	1	#10	--	--
NEU	1	#10	--	--

SHEET 9 OF 19

PROJECT NO: 4880-01-71	HWY: CTH D	COUNTY: OZAUKEE	LIGHTING PLANS	SHEET 82	E

2

N

WEST LANE

94+49'D' - 24.9' LT
B-SL117-J

96+49'D' - 25.0' LT
PB111

97+53'D' - 24.9' LT
A-SL119-I

R/W (TYP.)

MATCH LINE STA 93+00 'D'

94+00'D'

95+00'D'

96+00'D'

97+00'D'

98+00'D'

CTH D

R/W (TYP.)

96+13'D' - 24.8' RT
C-SL118-K

97+53'D' - 25.0' RT
PB112

MICHAEL STREET

MATCH LINE STA 99+00 'D'

SHEET 10 OF 19

PROJECT NO: 4880-01-71	HWY: CTH D	COUNTY: OZAUKEE	LIGHTING PLANS	SHEET 83	E

FILE NAME : G:\GREMMER\15015-00 - CTH D - BELGIUM\LIGHTING\CIVIL 3D\PLAN SHEETS\023601-LP_71.DWG PLOT DATE : 1/2/2017 11:55 AM PLOT BY : KL ENGINEERING PLOT NAME : PLOT SCALE : 1 IN:40 FT

WISDOT/CADDS SHEET 42

2

A =

CB100		1	2"
A	2	*6	1	*6
B	2	*6	--	--
I	1	*10	--	--
J	1	*10	--	--
NEU	1	*10	--	--

B =

CB100		1	2"
C	2	*6	1	*6
D	2	*6	--	--
K	1	*10	--	--
L	1	*10	--	--
NEU	1	*10	--	--

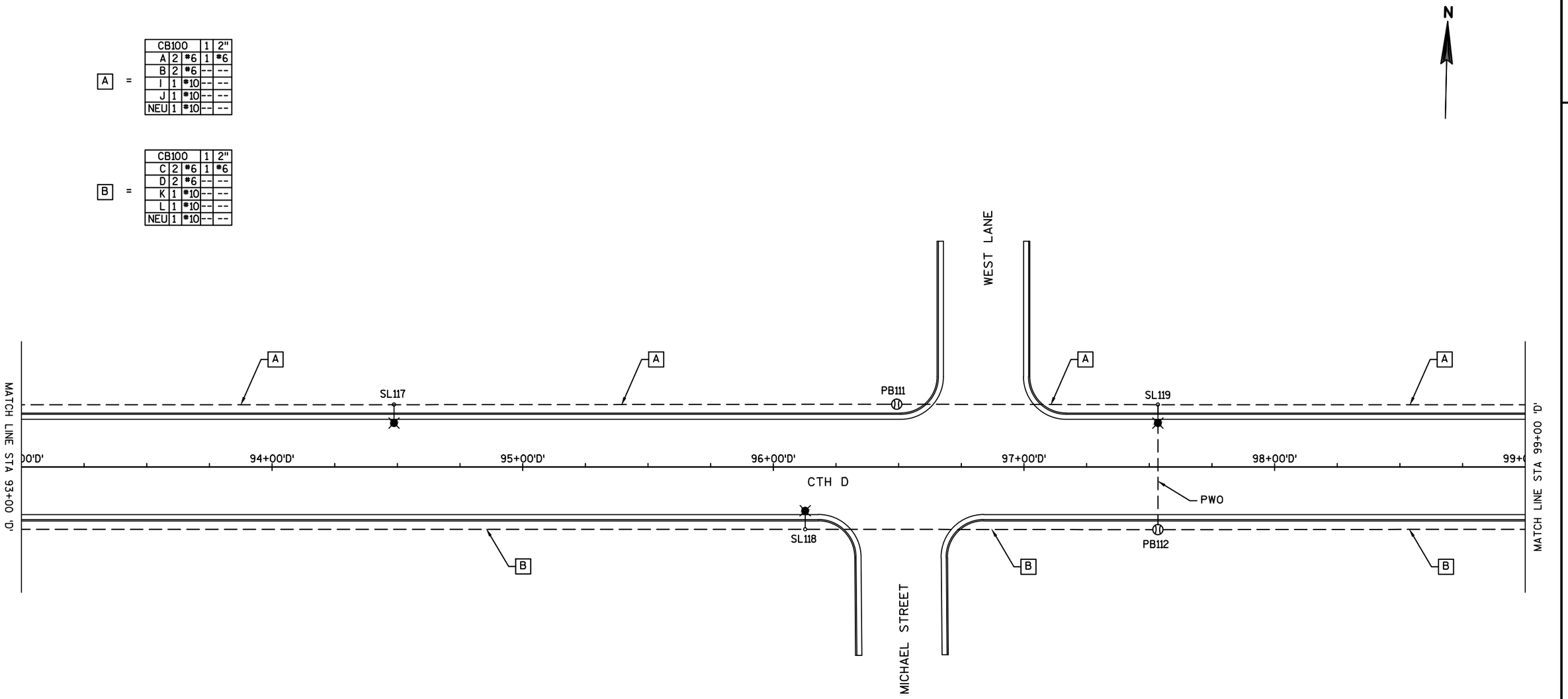

SHEET 11 OF 19

PROJECT NO: 4880-01-71	HWY: CTH D	COUNTY: OZAUKEE	LIGHTING PLANS	SHEET 84	E

2

2

N

EAST LANE

100+67'D' - 24.9' LT
B-SL121-J

102+11'D' - 25.0' LT
PB114

102+78'D' - 24.9' LT
PB115

104+08'D' - 24.9' LT
A-SL123-I

R/W (TYP.)

MATCH LINE STA 99+00 'D'

100+00'D'

101+00'D'

102+00'D'

103+00'D'

104+00'D'

105+

MATCH LINE STA 105+00 'D'

CTH D

R/W (TYP.)

101+67'D' - 25.0' RT
PB113

99+13'D' - 24.8' RT
D-SL120-L

102+39'D' - 24.8' RT
C-SL122-K

LINDALE STREET

SHEET 12 OF 19

PROJECT NO: 4880-01-71	HWY: CTH D	COUNTY: OZAUKEE	LIGHTING PLANS	SHEET 85	E

FILE NAME : G:\GREMMER\15015-00 - CTH D - BELGIUM\LIGHTING\CIVIL 3D\PLAN SHEETS\023601-LP_71.DWG PLOT DATE : 1/2/2017 11:55 AM PLOT BY : KL ENGINEERING PLOT NAME : PLOT SCALE : 1 IN:40 FT

WISDOT/CADDS SHEET 42

2

A =

CB100		1	2"
A	2	#6	1	#6
B	2	#6	--	--
I	1	#10	--	--
J	1	#10	--	--
NEU	1	#10	--	--

B =

CB100		1	2"
C	2	#6	1	#6
D	2	#6	--	--
K	1	#10	--	--
L	1	#10	--	--
NEU	1	#10	--	--

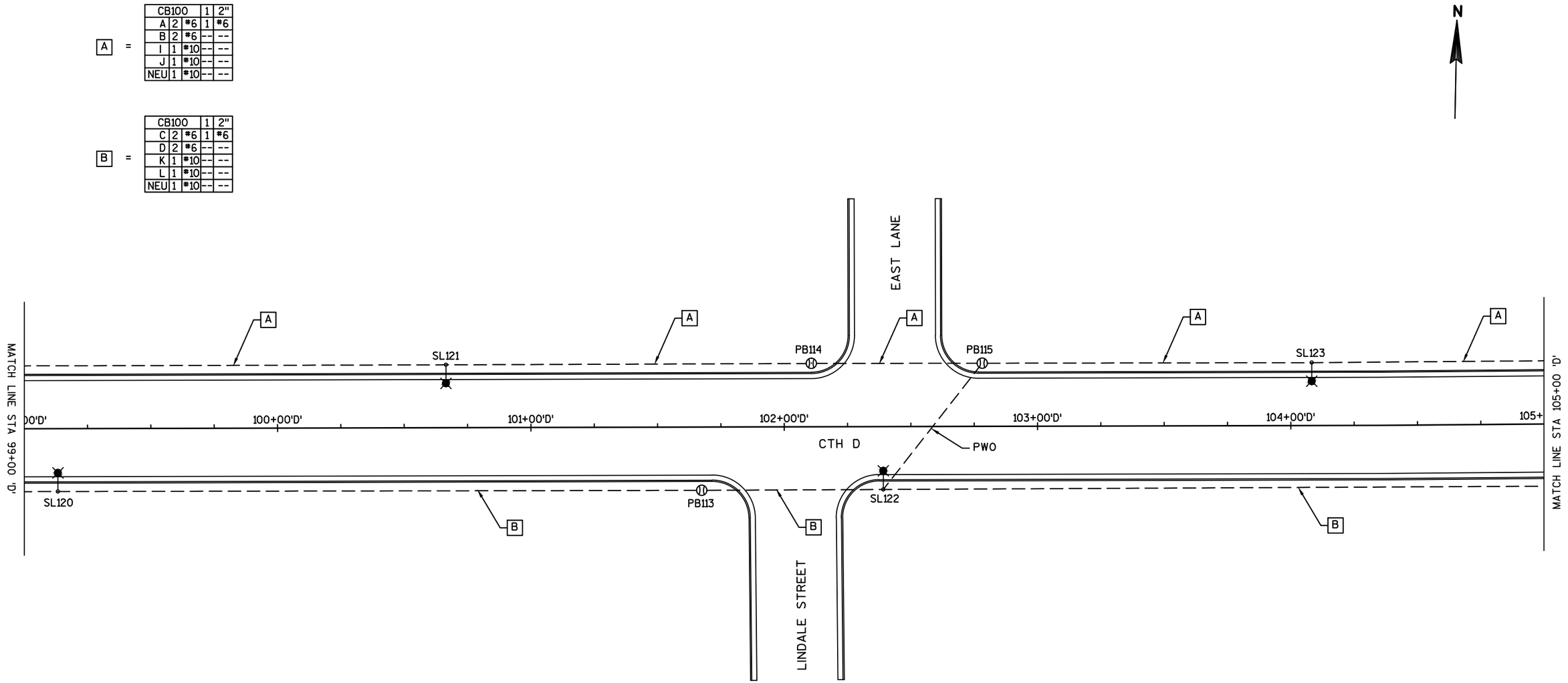

SHEET 13 OF 19

PROJECT NO: 4880-01-71	HWY: CTH D	COUNTY: OZAUKEE	LIGHTING PLANS	SHEET 86	E

2

2

N

DEAN ROAD

PIERRON ROAD

105+50'D' - 25.0' LT
PB116

106+30'D' - 25.0' LT
PB117

107+35'D' - 24.8' LT
B-SL125-J

108+82'D' - 25.0' LT
PB118

109+44'D' - 25.6' LT
PB119

110+45'D' - 24.9' LT
A-SL127-I

R/W (TYP.)

6" PVC

MATCH LINE STA 105+00 'D'

106+00'D'

107+00'D'

108+00'D'

109+00'D'

110+00'D'

CTH D

MATCH LINE STA 111+00 'D'

R/W (TYP.)

105+76'D' - 24.8' RT
D-SL124-L

108+95'D' - 24.8' RT
C-SL126-K

SHEET 14 OF 19

PROJECT NO: 4880-01-71	HWY: CTH D	COUNTY: OZAUKEE	LIGHTING PLANS	SHEET 87	E

FILE NAME : G:\GREMMER\15015-00 - CTH D - BELGIUM\LIGHTING\CIVIL 3D\PLAN SHEETS\023601-LP_71.DWG PLOT DATE : 1/2/2017 11:55 AM PLOT BY : KL ENGINEERING PLOT NAME : PLOT SCALE : 1 IN:40 FT

WISDOT/CADDS SHEET 42

2

A =

CB100			1	2"
A	2	#6	1	#6
B	2	#6	--	--
I	1	#10	--	--
J	1	#10	--	--
NEU	1	#10	--	--

B =

CB100			1	2"
C	2	#6	1	#6
D	2	#6	--	--
K	1	#10	--	--
L	1	#10	--	--
NEU	1	#10	--	--

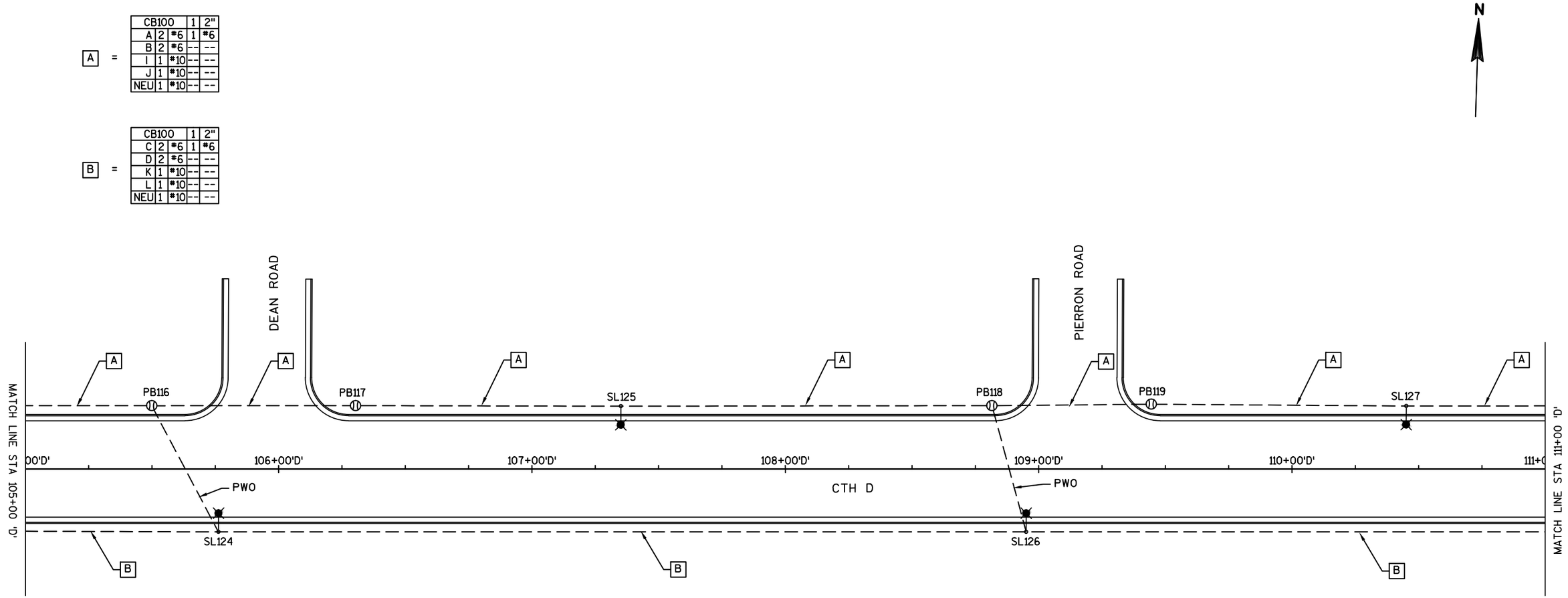

SHEET 15 OF 19

PROJECT NO: 4880-01-71	HWY: CTH D	COUNTY: OZAUKEE	LIGHTING PLANS	SHEET 88	E

2

N

LAR ANN ROAD

111+84'D' - 25.0' LT
PB120

112+64'D' - 25.0' LT
PB121

113+35'D' - 24.9' LT
B-SL129-J

MATCH LINE STA 111+00 'D'

MATCH LINE STA 116+25 'D'

112+00'D'

113+00'D'

114+00'D'

115+00'D'

116+00'D'

CTH D

R/W (TYP.)

111+89'D' - 24.8' RT
D-SL128-L

112+65'D' - 25.0' RT
PB122

114+94'D' - 25.0' RT
C-SL130-K

SHEET 16 OF 19

PROJECT NO: 4880-01-71	HWY: CTH D	COUNTY: OZAUKEE	LIGHTING PLANS	SHEET 89	E

FILE NAME : G:\GREMMER\15015-00 - CTH D - BELGIUM\LIGHTING\CIVIL 3D\PLAN SHEETS\023601-LP_71.DWG PLOT DATE : 1/2/2017 11:55 AM PLOT BY : KL ENGINEERING PLOT NAME : PLOT SCALE : 1 IN:40 FT

2

A =

CB100		1	2"
A	2	#6	1	#6
B	2	#6	--	--
I	1	#10	--	--
J	1	#10	--	--
NEU	1	#10	--	--

B =

CB100		1	2"
C	2	#6	1	#6
D	2	#6	--	--
K	1	#10	--	--
L	1	#10	--	--
NEU	1	#10	--	--

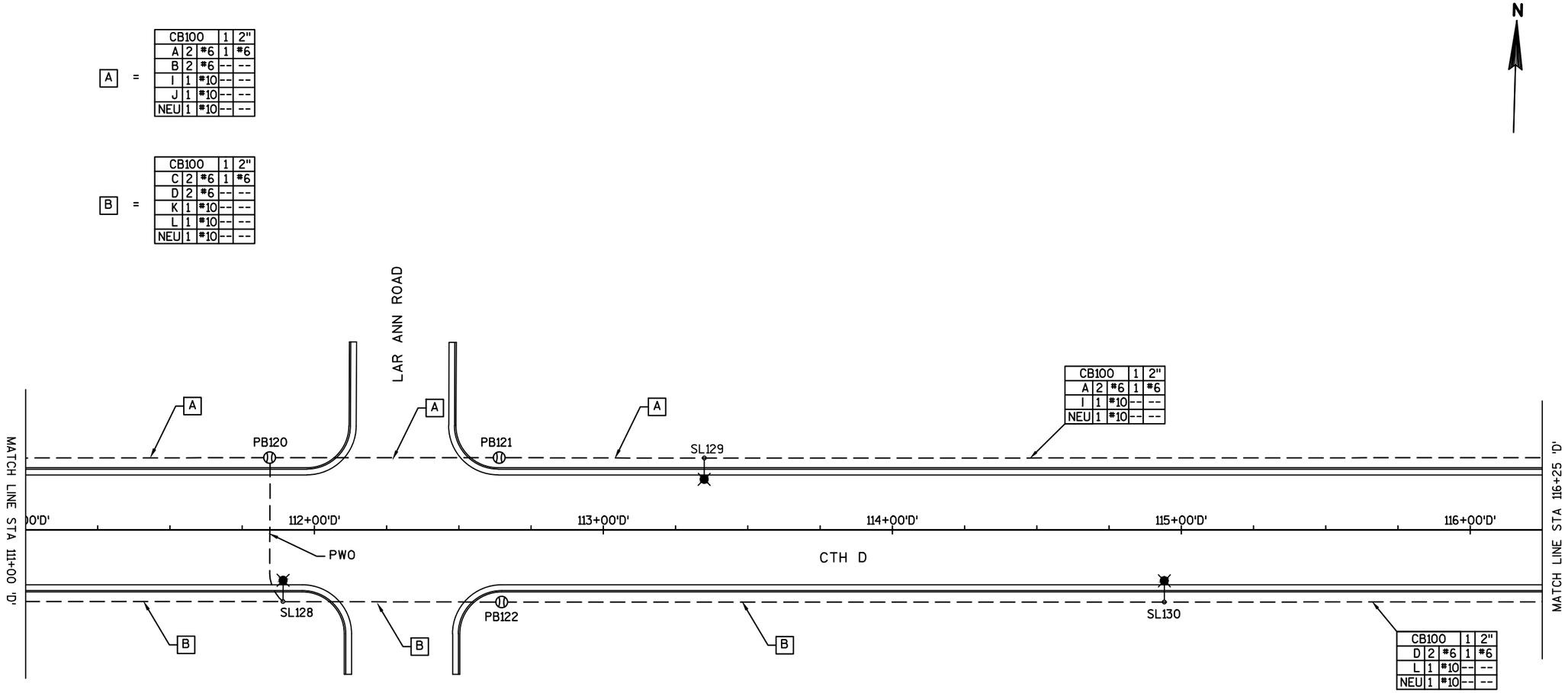

SHEET 17 OF 19

PROJECT NO: 4880-01-71	HWY: CTH D	COUNTY: OZAUKEE	LIGHTING PLANS	SHEET 90	E

2

N

N ROYAL AVE / CTH LL

116+51'D' - 25.1' LT
A-SL131-L

STUB AND CAP CONDUIT

R/W (TYP.)

MATCH LINE STA 116+25 'D'

117+00'D'

118+00'D'

119+00'D'

CTH D

118+01'D' - 24.8' RT
D-SL132-L

S ROYAL AVE / CTH LL

SHEET 18 OF 19

PROJECT NO: 4880-01-71	HWY: CTH D	COUNTY: OZAUKEE	LIGHTING PLANS	SHEET 91	E

FILE NAME : G:\GREMMER\15015-00 - CTH D - BELGIUM\LIGHTING\CIVIL 3D\PLAN SHEETS\023601-LP_71.DWG PLOT DATE : 1/2/2017 11:55 AM PLOT BY : KL ENGINEERING PLOT NAME : PLOT SCALE : 1 IN:40 FT

2

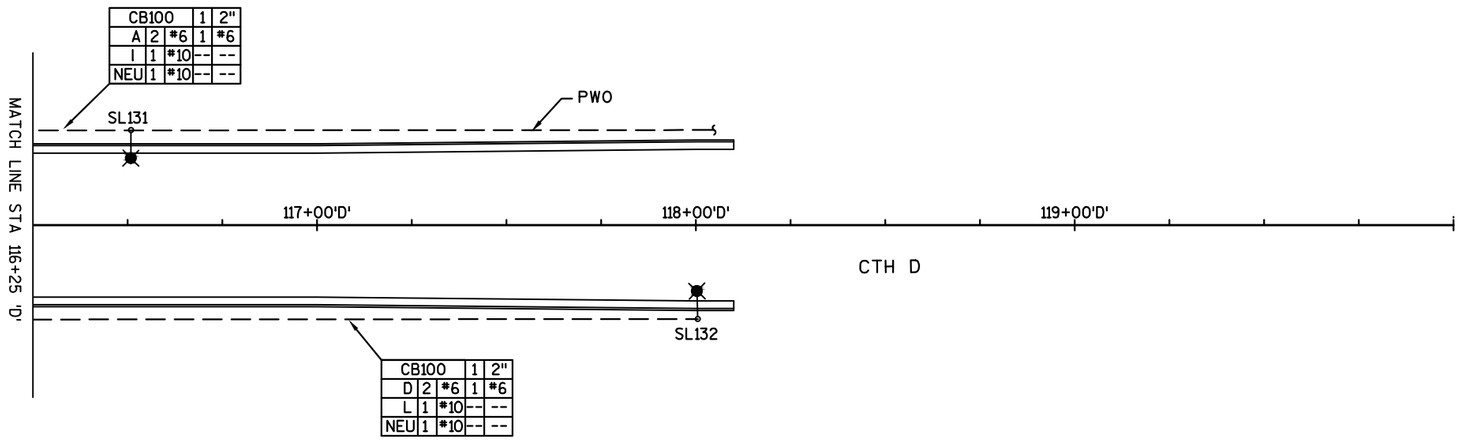

SHEET 19 OF 19

PROJECT NO: 4880-01-71	HWY: CTH D	COUNTY: OZAUKEE	LIGHTING PLANS	SHEET 92	E

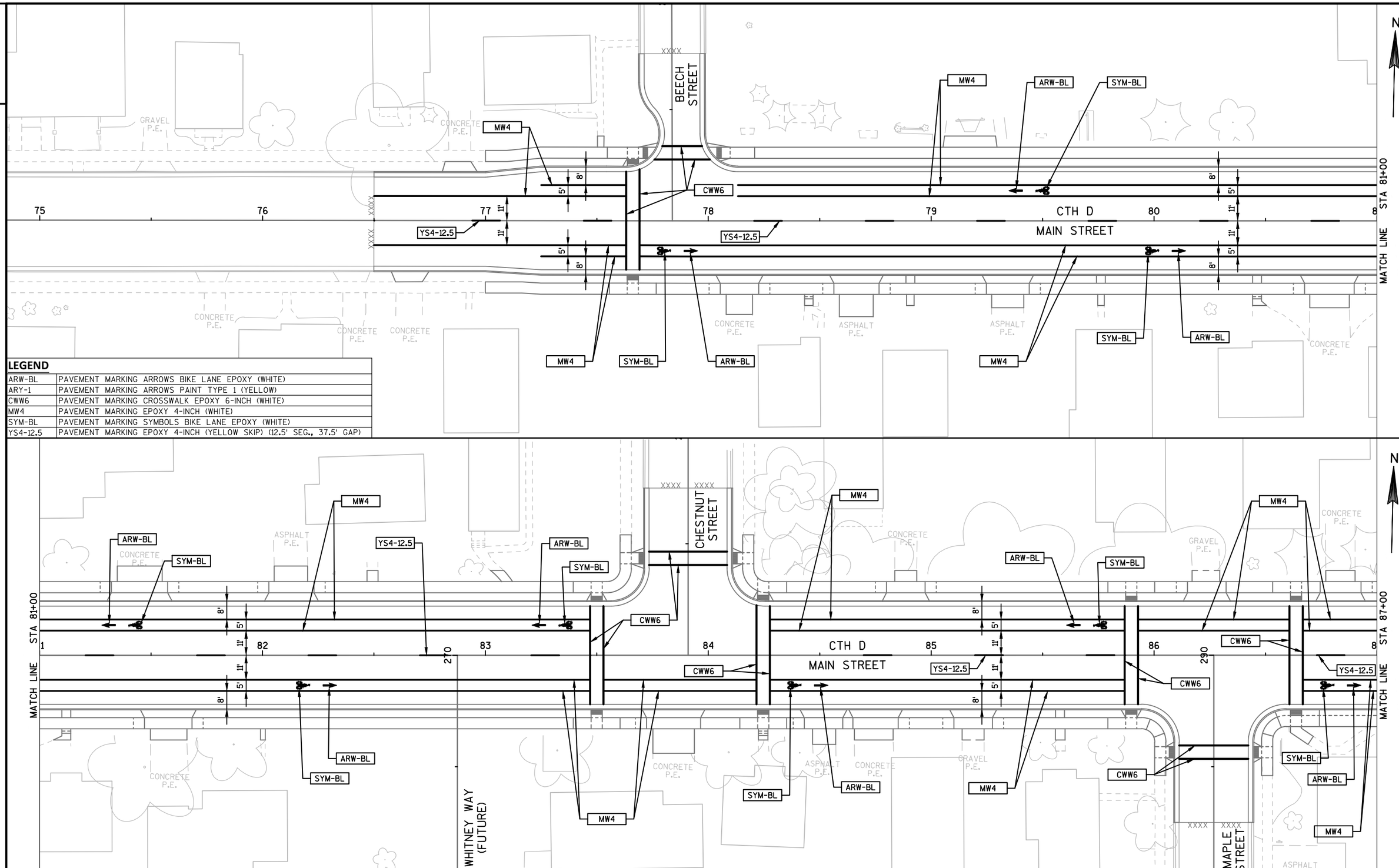

LEGEND

ARW-BL	PAVEMENT MARKING ARROWS BIKE LANE EPOXY (WHITE)
ARY-1	PAVEMENT MARKING ARROWS PAINT TYPE 1 (YELLOW)
CWW6	PAVEMENT MARKING CROSSWALK EPOXY 6-INCH (WHITE)
MW4	PAVEMENT MARKING EPOXY 4-INCH (WHITE)
SYM-BL	PAVEMENT MARKING SYMBOLS BIKE LANE EPOXY (WHITE)
YS4-12.5	PAVEMENT MARKING EPOXY 4-INCH (YELLOW SKIP) (12.5' SEG., 37.5' GAP)

PROJECT NO:4880-01-71	HWY:CTH D	COUNTY:OZAUKEE	PAVEMENT MARKING PLAN: CTH D	SHEET 93	E

FILE NAME : S:\CURRPROJ\OZAUKEECO\CTH D\CIVIL3D\48800100\SHEETSPLAN\48800100-024501-PM.DWG
LAYOUT NAME - 48800100-024501-PM - SHEET-01
PLOT DATE : 1/24/2017 9:21 AM PLOT BY : AARON SARAUER PLOT NAME : PLOT SCALE : 1:40_XREF

WISDOT/CADDS SHEET 42

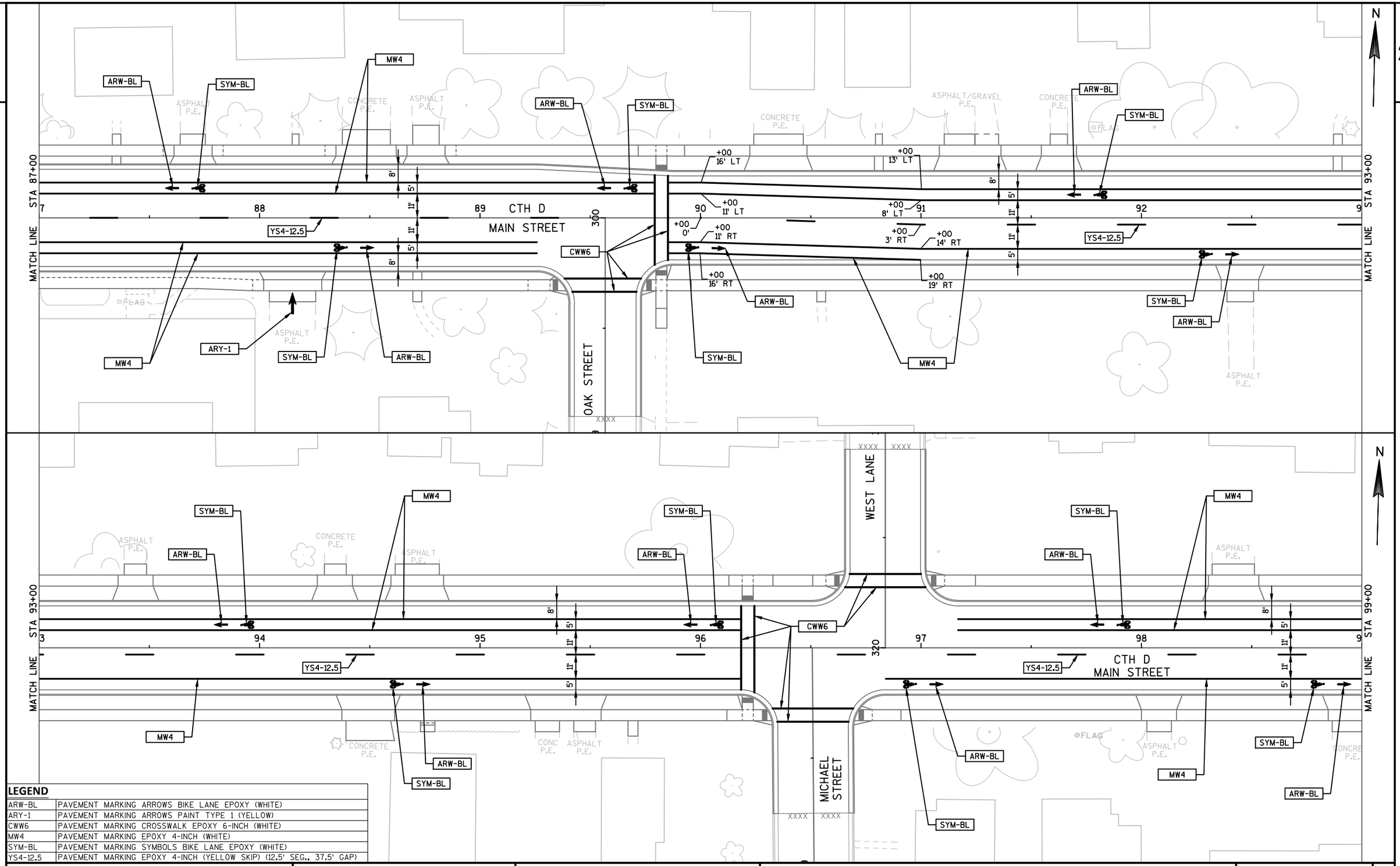

LEGEND	
ARW-BL	PAVEMENT MARKING ARROWS BIKE LANE EPOXY (WHITE)
ARY-1	PAVEMENT MARKING ARROWS PAINT TYPE 1 (YELLOW)
CWW6	PAVEMENT MARKING CROSSWALK EPOXY 6-INCH (WHITE)
MW4	PAVEMENT MARKING EPOXY 4-INCH (WHITE)
SYM-BL	PAVEMENT MARKING SYMBOLS BIKE LANE EPOXY (WHITE)
YS4-12.5	PAVEMENT MARKING EPOXY 4-INCH (YELLOW SKIP) (12.5' SEG., 37.5' GAP)

PROJECT NO: 4880-01-71	HWY: CTH D	COUNTY: OZAUKEE	PAVEMENT MARKING PLAN: CTH D	SHEET 94	E

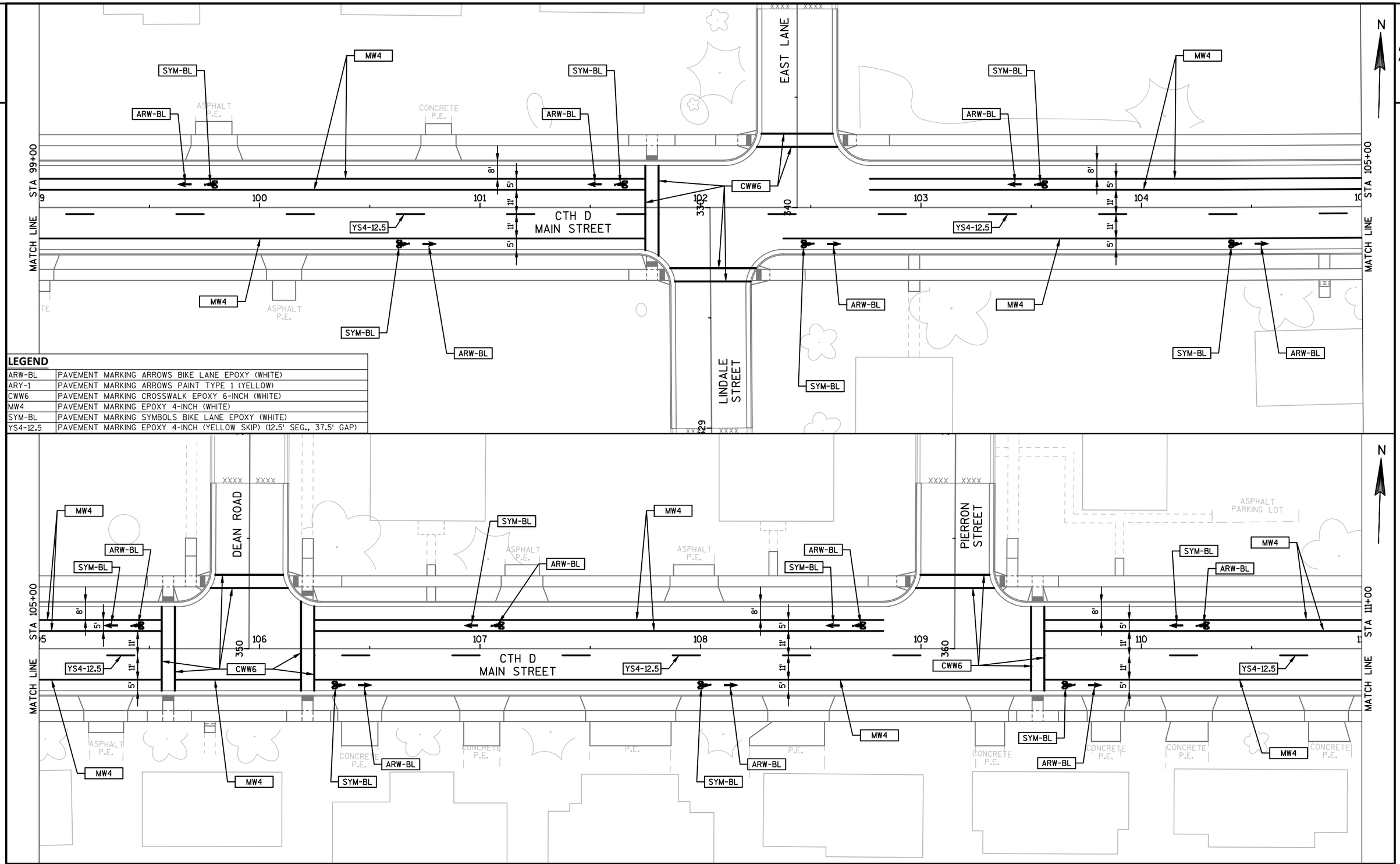

LEGEND

ARW-BL	PAVEMENT MARKING ARROWS BIKE LANE EPOXY (WHITE)
ARY-1	PAVEMENT MARKING ARROWS PAINT TYPE 1 (YELLOW)
CWW6	PAVEMENT MARKING CROSSWALK EPOXY 6-INCH (WHITE)
MW4	PAVEMENT MARKING EPOXY 4-INCH (WHITE)
SYM-BL	PAVEMENT MARKING SYMBOLS BIKE LANE EPOXY (WHITE)
YS4-12.5	PAVEMENT MARKING EPOXY 4-INCH (YELLOW SKIP) (12.5' SEG., 37.5' GAP)

PROJECT NO: 4880-01-71	HWY: CTH D	COUNTY: OZAUKEE	PAVEMENT MARKING PLAN: CTH D	SHEET 95 E

FILE NAME : S:\CURRPROJ\OZAUKEECO\CTH D\CIVIL3D\48800100\SHEETSPLAN\48800100-024501-PM.DWG
LAYOUT NAME - 48800100-024501-PM - SHEET-03

PLOT DATE : 1/24/2017 9:22 AM PLOT BY : AARON SARAUER PLOT NAME : PLOT SCALE : **********

WISDOT/CADDS SHEET 42

2

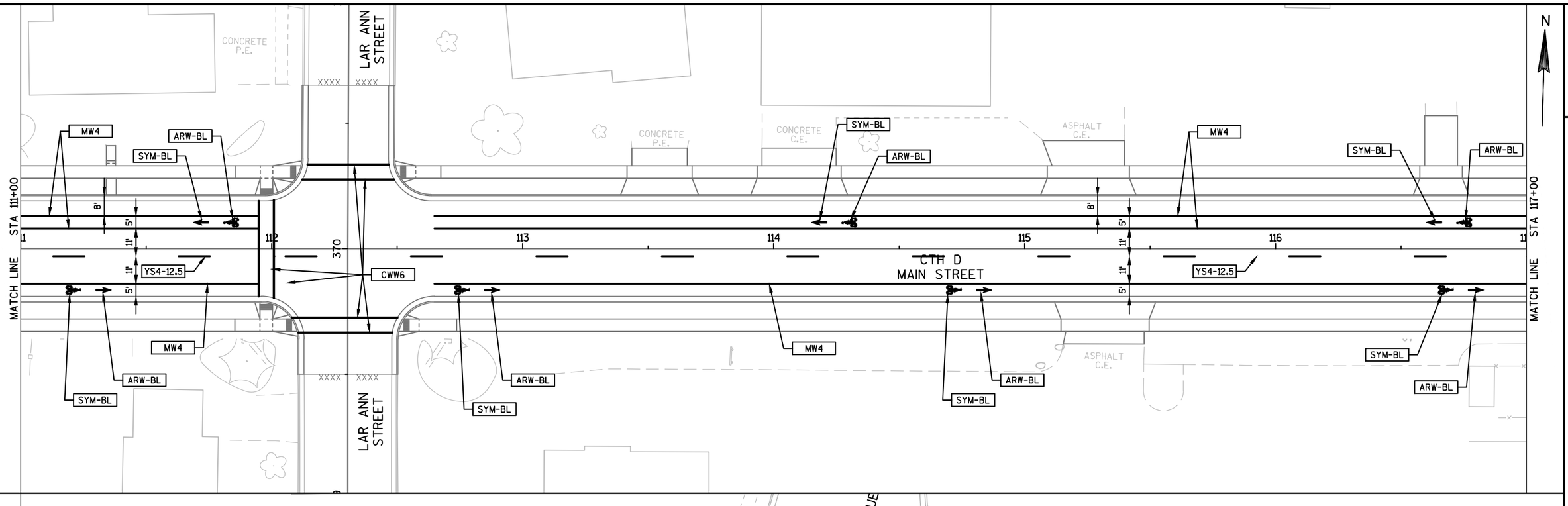

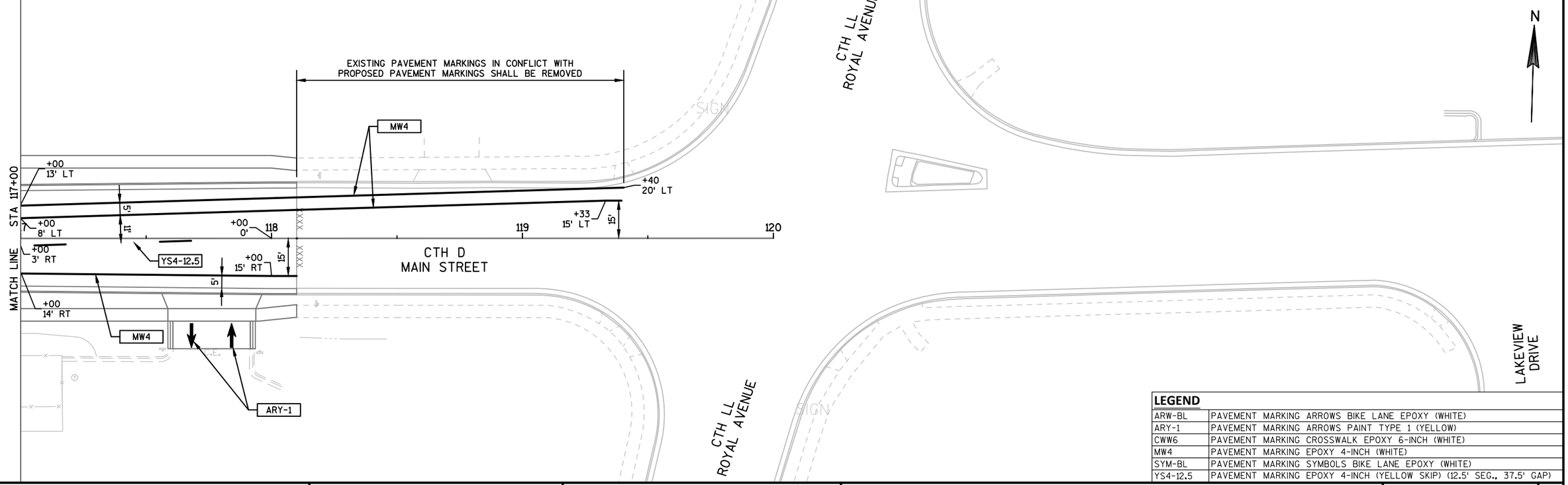

LEGEND	
ARW-BL	PAVEMENT MARKING ARROWS BIKE LANE EPOXY (WHITE)
ARY-1	PAVEMENT MARKING ARROWS PAINT TYPE 1 (YELLOW)
CWW6	PAVEMENT MARKING CROSSWALK EPOXY 6-INCH (WHITE)
MW4	PAVEMENT MARKING EPOXY 4-INCH (WHITE)
SYM-BL	PAVEMENT MARKING SYMBOLS BIKE LANE EPOXY (WHITE)
YS4-12.5	PAVEMENT MARKING EPOXY 4-INCH (YELLOW SKIP) (12.5' SEG., 37.5' GAP)

PROJECT NO: 4880-01-71	HWY: CTH D	COUNTY: OZAUKEE	PAVEMENT MARKING PLAN: CTH D	SHEET 96	E

2

NOTES:

1. REFER TO SDD "BARRICADES AND SIGNS FOR MAINLINE CLOSURES" FOR DETAILS:
   - (A) = DETAIL A (MAINLINE CLOSURE WITH POSTED DETOUR)
   - (B) = DETAIL B (MAINLINE CLOSURE WITH POSTED DETOUR)
   - (C) = DETAIL C (MAINLINE CLOSURE NO DETOUR
   - (D) = DETAIL D (ROAD CLOSURE BARRICADE DETAIL)
   - (E) = DETAIL E (ROAD CLOSURE BARRICADE DETAIL)
2. REFER TO SDD "BARRICADES AND SIGNS FOR SIDE ROAD CLOSURES" FOR DETAILS:
   - (1) = DETAIL 1 (NO ACCESS TO PROJECT)
   - (2) = DETAIL 2 (PUBLIC CROSS-TRAFFIC MAINTAINED. NO ACCESS TO PROJECT)
   - (3) =DETAIL 3 (PUBLIC CROSS-TRAFFIC MAINTAINED. CONTRACTOR LOCAL BUSINESS AND RESIDENT ACCESS)
   - (4) =DETAIL 4 (CONTRACTOR, LOCAL BUSINESS AND RESIDENT ACCESS TO PROJECT)

LEGEND

WORK AREA

N

0 300 600

1" = 600'

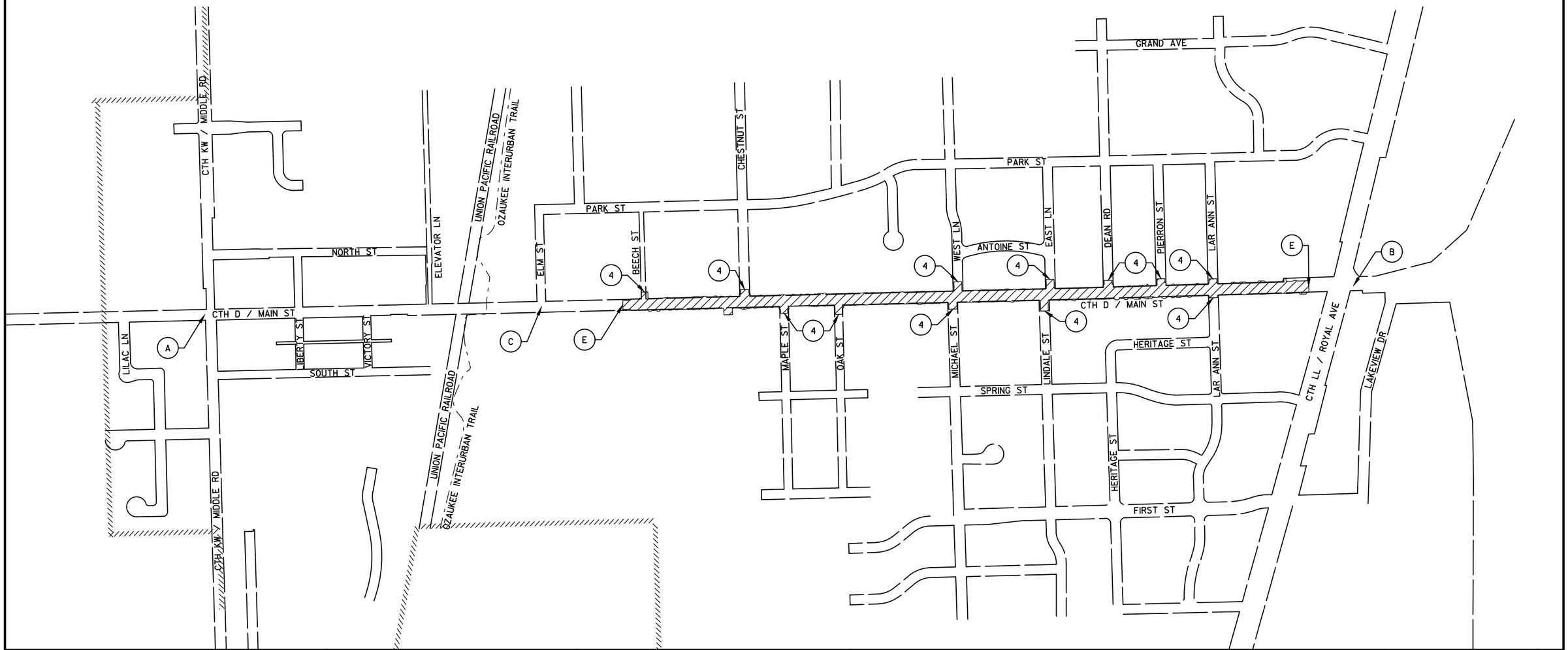

PROJECT NO: 4880-01-71	HWY: CTH D	COUNTY: OZAUKEE	TRAFFIC CONTROL OVERVIEW: ADVANCE WARNING SIGNS	SHEET 97	E

NOTES:

1. ALTERNATE ROUTE SIGNING TO BE PAID FOR AS TRAFFIC CONTROL SIGNS FIXED MESSAGE.
2. POST MOUNTED SIGNS LOCATED NEAR OR ADJACENT TO THE SIDEWALK SHALL HAVE A 7-FT MINIMUM CLEARANCE FROM THE BOTTOM OF THE SIGN TO THE EXISTING OR NEW SIDEWALK.

LEGEND

WORK AREA

ALTERNATE ROUTE

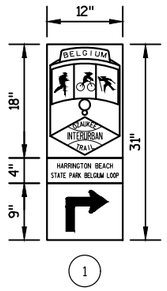

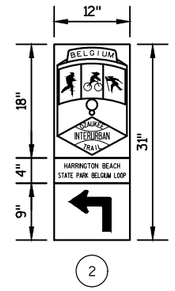

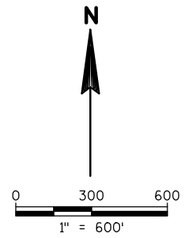

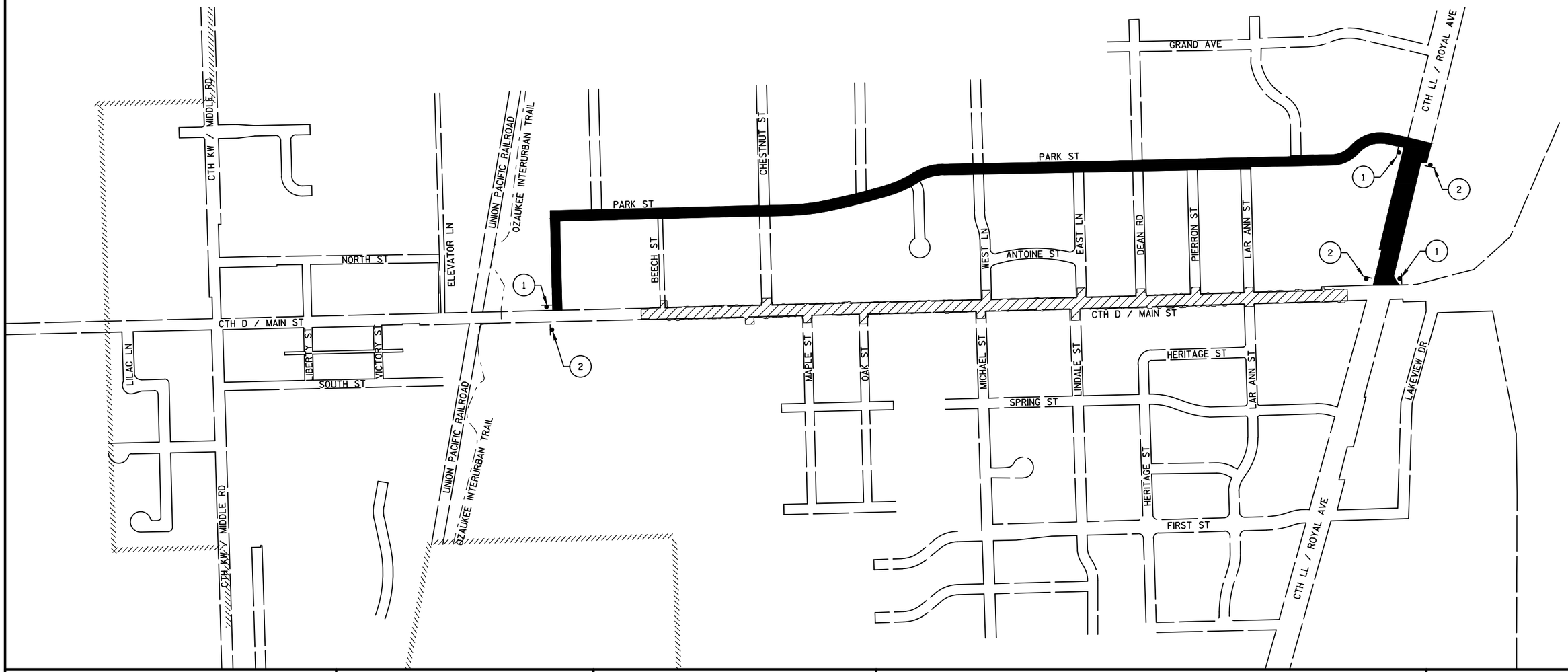

PROJECT NO: 4880-01-71	HWY: CTH D	COUNTY: OZAUKEE	TRAFFIC CONTROL OVERVIEW: BICYCLE ROUTE SIGNS	SHEET 98	E

NOTES:

1. REFER TO SDD "TRAFFIC CONTROL, PEDESTRIAN ACCOMMODATION" FOR DETAILS.
2. TEMPORARY CROSSWALKS SHALL BE MOVED AS NEEDED TO PROVIDE CONTINUOUS PEDESTRIAN ACCESS THROUGHOUT THE RECONSTRUCTION PROJECT. TEMPORARY CROSSWALKS SHALL BE PROVIDED AT ALL TIMES FOR A MINIMUM OF ONE NORTH-SOUTH LEG OF THE INDICATED INTERSECTIONS AS DIRECTED BY THE FIELD ENGINEER.
3. POST MOUNTED SIGNS LOCATED NEAR OR ADJACENT TO THE SIDEWALK SHALL HAVE A 7-FT MINIMUM CLEARANCE FROM THE BOTTOM OF THE SIGN TO THE EXISTING OR NEW SIDEWALK.
4. SIDEWALK TO BE MAINTAINED ON ALL SIDEROADS AND ALONG CTH D DURING STORM SEWER, COMMON EXCAVATION AND PAVING OPERATIONS.
5. FURNISH AND INSTALL TEMPORARY CURB RAMPS WHEN EXISTING OR FINISHED CURB RAMPS ARE NOT IN PLACE.
6. MAXIMUM SIDEWALK CLOSURE SHALL BE 72 CONTINUOUS HOURS.

LEGEND

WORK AREA

(A) = TEMPORARY CROSSWAK ACROSS CTH D

(B) = TEMPORARY CROSSWALK SIDEROAD OUTSIDE CONSTRUCTION LIMITS (SEE DETAIL)

(C) = TEMPORARY CROSSWALK SIDEROAD INSIDE CONSTRUCTION LIMITS (SEE DETAIL)

(D) = MAINTAIN EXISTING CROSSING

N

0 300 600

1" = 600'

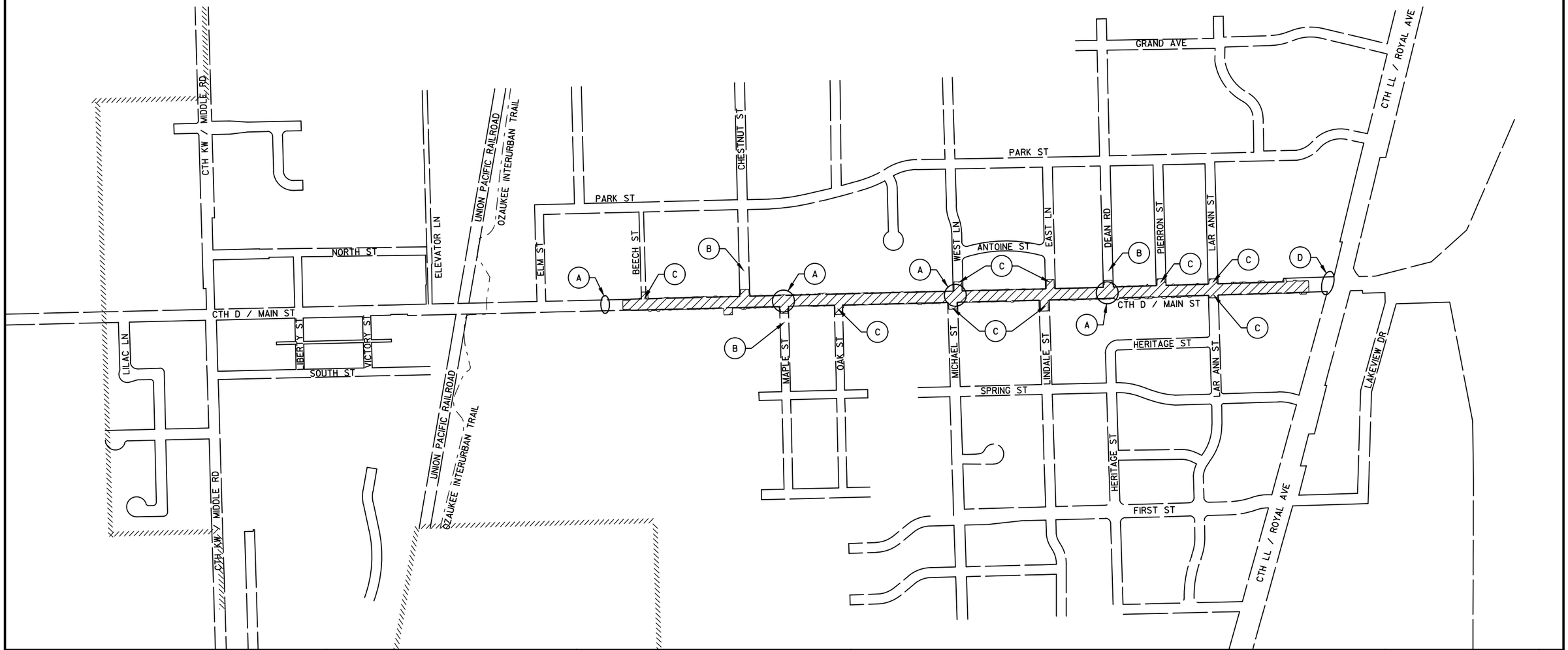

PROJECT NO: 4880-01-71	HWY: CTH D	COUNTY: OZAUKEE	TRAFFIC CONTROL OVERVIEW: PEDESTRIAN ACCESS - ROADWAY CONSTRUCTION	SHEET 99	E

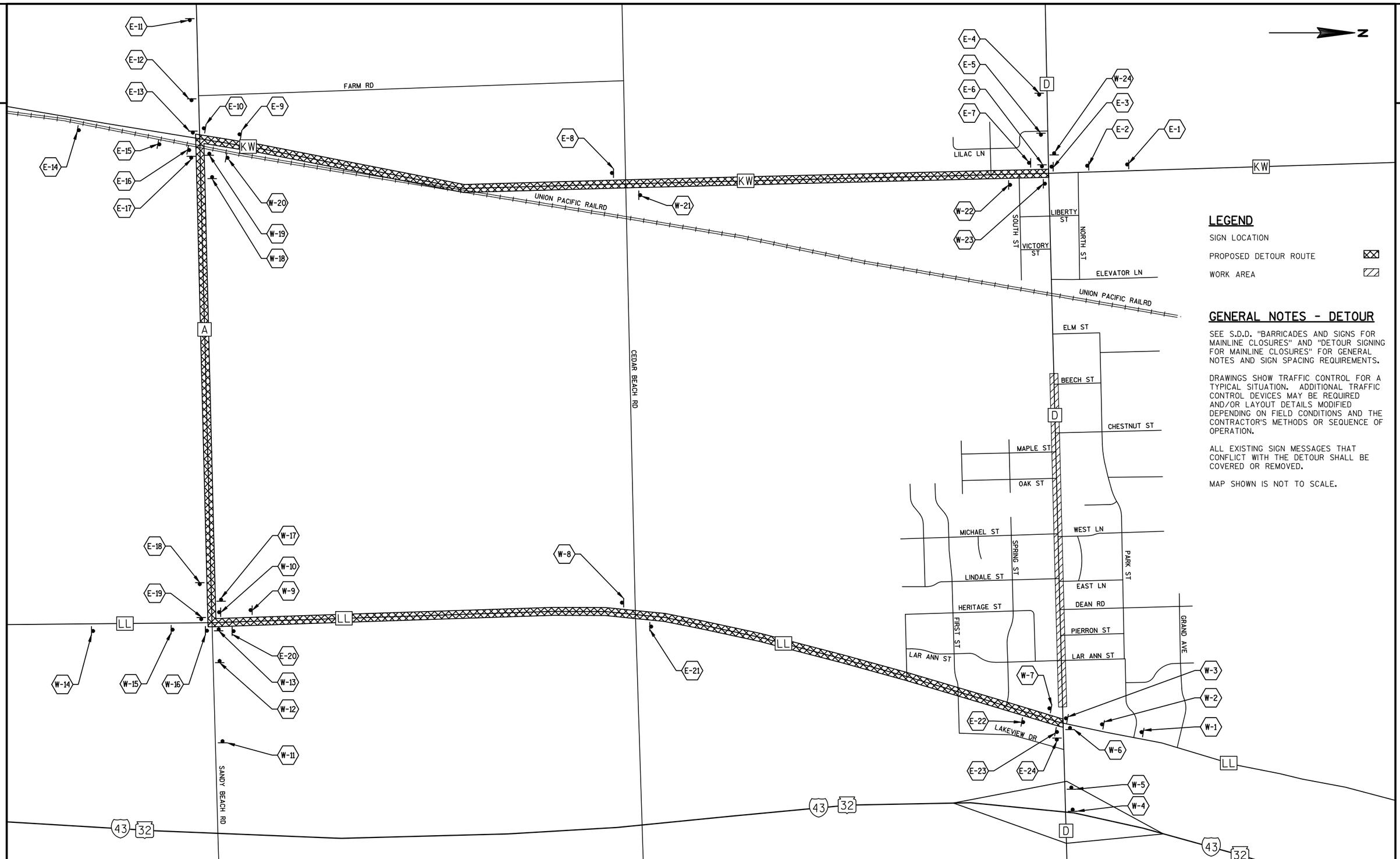

LEGEND

SIGN LOCATION

PROPOSED DETOUR ROUTE

WORK AREA

GENERAL NOTES - DETOUR

SEE S.D.D. "BARRICADES AND SIGNS FOR MAINLINE CLOSURES" AND "DETOUR SIGNING FOR MAINLINE CLOSURES" FOR GENERAL NOTES AND SIGN SPACING REQUIREMENTS.

DRAWINGS SHOW TRAFFIC CONTROL FOR A TYPICAL SITUATION. ADDITIONAL TRAFFIC CONTROL DEVICES MAY BE REQUIRED AND/OR LAYOUT DETAILS MODIFIED DEPENDING ON FIELD CONDITIONS AND THE CONTRACTOR'S METHODS OR SEQUENCE OF OPERATION.

ALL EXISTING SIGN MESSAGES THAT CONFLICT WITH THE DETOUR SHALL BE COVERED OR REMOVED.

MAP SHOWN IS NOT TO SCALE.

PROJECT NO: 4880-01-71	HWY: CTH D	COUNTY: OZAUKEE	DETOUR PLAN	SHEET 100	E

FILE NAME : S:\CURRPROJ\OZAUKEECO\CTH D\CIVIL3D\48800100\SHEETSPLAN\48800100-027001-DT.DWG
LAYOUT NAME - 48800100-027001-DT - SHEET-01

PLOT DATE : 1/24/2017 9:23 AM PLOT BY : AARON SARAUER PLOT NAME : PLOT SCALE : 1 IN:1100 FT

WISDOT/CADDS SHEET 42

E-1

E-2

MODIFY EXISTING SIGN

FROM TO

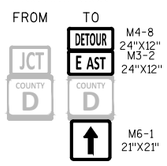

E-3

MODIFY EXISTING SIGN

FROM TO

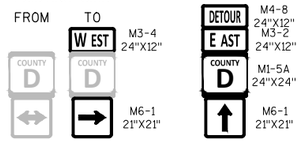

E-4

E-5

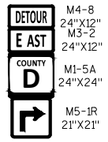

E-6

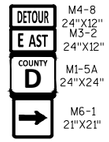

E-7

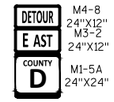

E-8

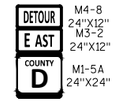

E-9

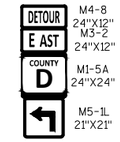

E-10

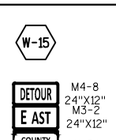

E-11

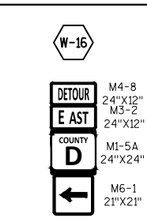

E-12

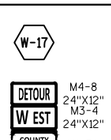

E-13

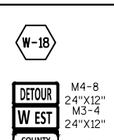

E-14

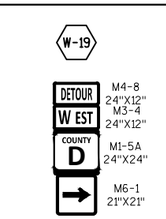

E-15

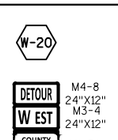

E-16

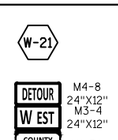

E-17

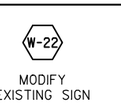

E-18

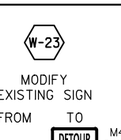

E-19

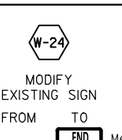

E-20

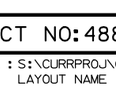

E-21

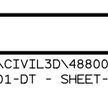

E-22

MODIFY EXISTING SIGN

FROM TO

E-23

MODIFY EXISTING SIGN

FROM TO

E-24

MODIFY EXISTING SIGN

FROM TO

W-1

W-2

MODIFY EXISTING SIGN

FROM TO

W-3

MODIFY EXISTING SIGN

FROM TO

W-4

W-5

W-6

W-7

W-8

W-9

W-10

W-11

W-12

W-13

W-14

W-15

W-16

W-17

W-18

W-19

W-20

W-21

W-22

MODIFY EXISTING SIGN

FROM TO

W-23

MODIFY EXISTING SIGN

FROM TO

W-24

MODIFY EXISTING SIGN

FROM TO

2

PROJECT NO: 4880-01-71	HWY: CTH D	COUNTY: OZAUKEE	DETOUR PLAN	SHEET 101	E

CONTROL POINT TABLE		
Point #	Northing	Easting
30	553843.9300	566900.7520
31	553873.6800	567624.7620
32	553836.7420	568164.5450
33	553886.7560	568620.4860
34	553895.0720	568948.2010
35	553858.5750	569362.8030
36	553928.9490	569694.4170
37	553877.3880	570306.5190
38	553943.4350	570854.6320
39	553915.5760	571164.4310
40	553976.1430	572229.0010
41	553955.7980	572775.5700
42	553973.3940	573385.1820
43	554034.3430	573751.6280

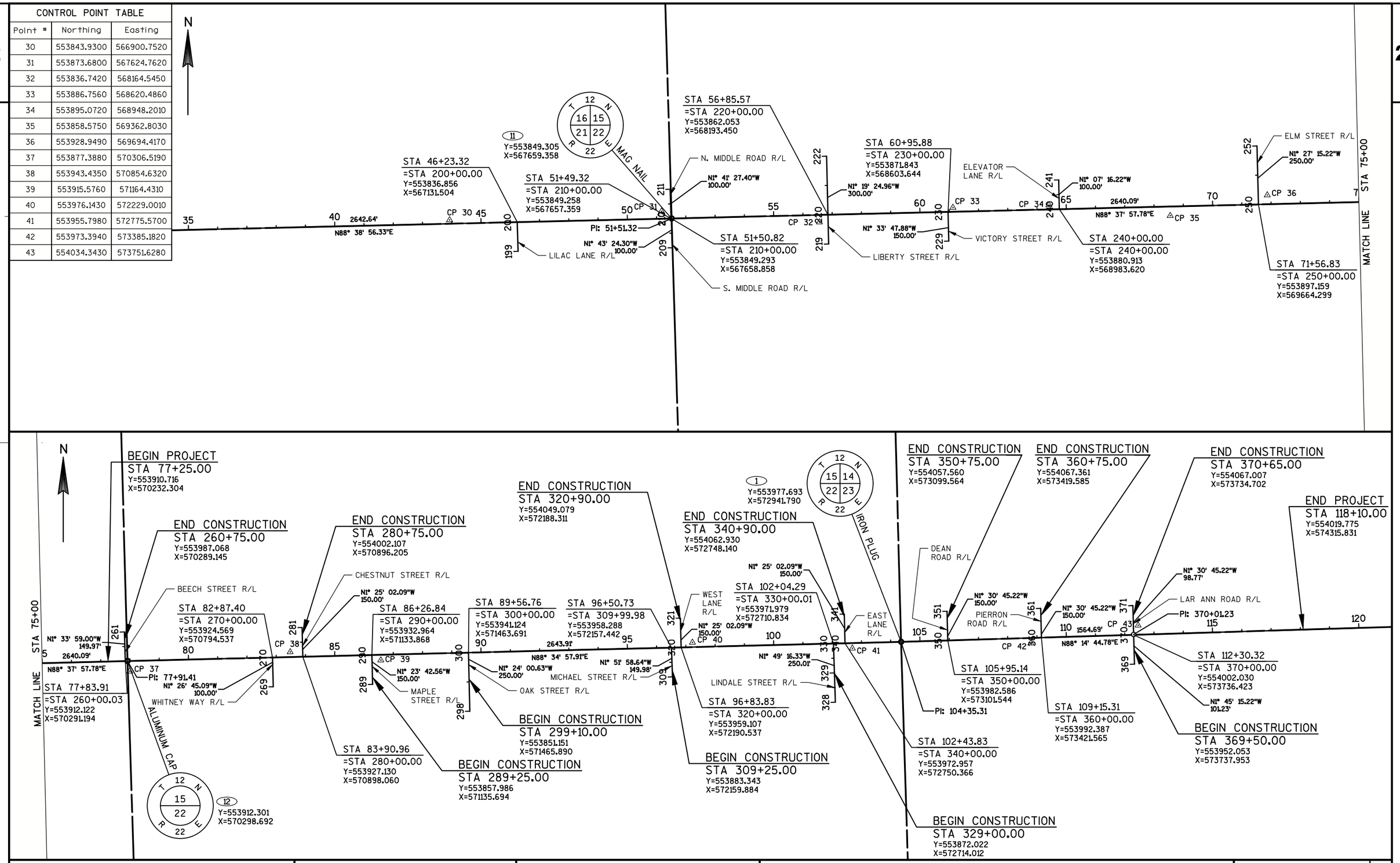

PROJECT NO: 4880-01-71	HWY: CTH D	COUNTY: OZAUKEE	ALIGNMENT DIAGRAM: CTH D	SHEET 102 E

4880-01-71

Line	Item	Item Description	Unit	Total	Qty
0010	201.0105	Clearing	STA	13.000	13.000
0020	201.0120	Clearing	ID	37.000	37.000
0030	201.0205	Grubbing	STA	13.000	13.000
0040	201.0220	Grubbing	ID	37.000	37.000
0050	204.0100	Removing Pavement	SY	10,800.000	10,800.000
0060	204.0150	Removing Curb & Gutter	LF	9,100.000	9,100.000
0070	204.0155	Removing Concrete Sidewalk	SY	4,000.000	4,000.000
0080	204.0210	Removing Manholes	EACH	21.000	21.000
0090	204.0220	Removing Inlets	EACH	42.000	42.000
0100	204.0245	Removing Storm Sewer (size) 001. 8-Inch	LF	830.000	830.000
0110	204.0245	Removing Storm Sewer (size) 002. 10-Inch	LF	180.000	180.000
0120	204.0245	Removing Storm Sewer (size) 003. 12-Inch	LF	1,100.000	1,100.000
0130	204.0245	Removing Storm Sewer (size) 004. 15-Inch	LF	580.000	580.000
0140	204.0245	Removing Storm Sewer (size) 005. 18-Inch	LF	1,150.000	1,150.000
0150	204.0245	Removing Storm Sewer (size) 006. 21-Inch	LF	700.000	700.000
0160	204.0245	Removing Storm Sewer (size) 007. 24-Inch	LF	1,200.000	1,200.000
0170	204.0245	Removing Storm Sewer (size) 008. 48-Inch	LF	75.000	75.000
0180	205.0100	Excavation Common	CY	25,146.000	25,146.000
0190	213.0100	Finishing Roadway (project) 001. 4880-01-71	EACH	1.000	1.000
0200	305.0110	Base Aggregate Dense 3/4-Inch	TON	1,200.000	1,200.000
0210	305.0120	Base Aggregate Dense 1 1/4-Inch	TON	15,400.000	15,400.000
0220	311.0110	Breaker Run	TON	19,300.000	19,300.000
0230	416.0160	Concrete Driveway 6-Inch	SY	1,580.000	1,580.000
0240	416.0180	Concrete Driveway 8-Inch	SY	205.000	205.000
0250	416.0610	Drilled Tie Bars	EACH	90.000	90.000
0260	440.4410	Incentive IRI Ride	DOL	3,096.000	3,096.000
0270	450.4000	HMA Cold Weather Paving	TON	2,420.000	2,420.000
0280	455.0605	Tack Coat	GAL	1,100.000	1,100.000
0290	460.2000	Incentive Density HMA Pavement	DOL	3,880.000	3,880.000
0300	460.6223	HMA Pavement 3 MT 58-28 S	TON	3,630.000	3,630.000
0310	460.6224	HMA Pavement 4 MT 58-28 S	TON	2,420.000	2,420.000
0320	465.0120	Asphaltic Surface Driveways and Field Entrances	TON	57.000	57.000
0330	520.8000	Concrete Collars for Pipe	EACH	13.000	13.000
0340	601.0411	Concrete Curb & Gutter 30-Inch Type D	LF	9,100.000	9,100.000
0350	602.0405	Concrete Sidewalk 4-Inch	SF	39,300.000	39,300.000
0360	602.0415	Concrete Sidewalk 6-Inch	SF	1,850.000	1,850.000
0370	602.0505	Curb Ramp Detectable Warning Field Yellow	SF	480.000	480.000
0380	602.1500	Concrete Steps	SF	85.000	85.000
0390	608.0330	Storm Sewer Pipe Reinforced Concrete Class III 30-Inch	LF	119.000	119.000

4880-01-71

Line	Item	Item Description	Unit	Total	Qty
0400	608.0412	Storm Sewer Pipe Reinforced Concrete Class IV 12-Inch	LF	84.000	84.000
0410	608.0415	Storm Sewer Pipe Reinforced Concrete Class IV 15-Inch	LF	1,781.000	1,781.000
0420	608.0418	Storm Sewer Pipe Reinforced Concrete Class IV 18-Inch	LF	939.000	939.000
0430	608.0424	Storm Sewer Pipe Reinforced Concrete Class IV 24-Inch	LF	928.000	928.000
0440	608.0436	Storm Sewer Pipe Reinforced Concrete Class IV 36-Inch	LF	40.000	40.000
0450	608.0460	Storm Sewer Pipe Reinforced Concrete Class IV 60-Inch	LF	71.000	71.000
0460	608.6008	Storm Sewer Pipe Composite 8-Inch	LF	10.000	10.000
0470	608.6010	Storm Sewer Pipe Composite 10-Inch	LF	25.000	25.000
0480	608.6012	Storm Sewer Pipe Composite 12-Inch	LF	18.000	18.000
0490	608.6015	Storm Sewer Pipe Composite 15-Inch	LF	30.000	30.000
0500	610.0429	Storm Sewer Pipe Reinforced Concrete Horizontal Elliptical Class HE-IV 29x45-Inch	LF	699.000	699.000
0510	610.0434	Storm Sewer Pipe Reinforced Concrete Horizontal Elliptical Class HE-IV 34x53-Inch	LF	1,154.000	1,154.000
0520	611.0530	Manhole Covers Type J	EACH	31.000	31.000
0530	611.0624	Inlet Covers Type H	EACH	26.000	26.000
0540	611.0639	Inlet Covers Type H-S	EACH	25.000	25.000
0550	611.1230	Catch Basins 2x3-FT	EACH	53.000	53.000
0560	611.2004	Manholes 4-FT Diameter	EACH	10.000	10.000
0570	611.2005	Manholes 5-FT Diameter	EACH	5.000	5.000
0580	611.2006	Manholes 6-FT Diameter	EACH	3.000	3.000
0590	611.2007	Manholes 7-FT Diameter	EACH	3.000	3.000
0600	611.2008	Manholes 8-FT Diameter	EACH	9.000	9.000
0610	611.3230	Inlets 2x3-FT	EACH	1.000	1.000
0620	611.8110	Adjusting Manhole Covers	EACH	1.000	1.000
0630	612.0406	Pipe Underdrain Wrapped 6-Inch	LF	1,300.000	1,300.000
0640	612.0902.S	Insulation Board Polystyrene (inch) 001. 2-Inch	SY	200.000	200.000
0650	619.1000	Mobilization	EACH	1.000	1.000
0660	621.0100	Landmark Reference Monuments	EACH	8.000	8.000
0670	624.0100	Water	MGAL	500.000	500.000
0680	625.0100	Topsoil	SY	10,585.000	10,585.000
0690	628.1504	Silt Fence	LF	75.000	75.000
0700	628.1520	Silt Fence Maintenance	LF	75.000	75.000
0710	628.1905	Mobilizations Erosion Control	EACH	10.000	10.000
0720	628.1910	Mobilizations Emergency Erosion Control	EACH	5.000	5.000

4880-01-71

Line	Item	Item Description	Unit	Total	Qty
0730	628.2006	Erosion Mat Urban Class I Type A	SY	10,585.000	10,585.000
0740	628.7005	Inlet Protection Type A	EACH	4.000	4.000
0750	628.7010	Inlet Protection Type B	EACH	4.000	4.000
0760	628.7015	Inlet Protection Type C	EACH	115.000	115.000
0770	628.7020	Inlet Protection Type D	EACH	20.000	20.000
0780	628.7560	Tracking Pads	EACH	2.000	2.000
0790	628.7570	Rock Bags	EACH	15.000	15.000
0800	629.0210	Fertilizer Type B	CWT	7.000	7.000
0810	630.0140	Seeding Mixture No. 40	LB	195.000	195.000
0820	634.0614	Posts Wood 4x6-Inch X 14-FT	EACH	35.000	35.000
0830	634.0616	Posts Wood 4x6-Inch X 16-FT	EACH	10.000	10.000
0840	637.2210	Signs Type II Reflective H	SF	235.480	235.480
0850	637.2230	Signs Type II Reflective F	SF	9.000	9.000
0860	638.2102	Moving Signs Type II	EACH	6.000	6.000
0870	638.2602	Removing Signs Type II	EACH	30.000	30.000
0880	638.3000	Removing Small Sign Supports	EACH	22.000	22.000
0890	642.5201	Field Office Type C	EACH	1.000	1.000
0900	643.0100	Traffic Control (project) 001. 4880-01-71	EACH	1.000	1.000
0910	643.0410	Traffic Control Barricades Type II	DAY	1,812.000	1,812.000
0920	643.0420	Traffic Control Barricades Type III	DAY	5,738.000	5,738.000
0930	643.0705	Traffic Control Warning Lights Type A	DAY	13,288.000	13,288.000
0940	643.0900	Traffic Control Signs	DAY	7,852.000	7,852.000
0950	643.1000	Traffic Control Signs Fixed Message	SF	30.990	30.990
0960	643.2000	Traffic Control Detour (project) 001. 4880-01-71	EACH	1.000	1.000
0970	643.3000	Traffic Control Detour Signs	DAY	25,066.000	25,066.000
0980	644.1430.S	Temporary Pedestrian Surface Plate	SF	2,875.000	2,875.000
0990	644.1601.S	Temporary Curb Ramp	EACH	32.000	32.000
1000	644.1616.S	Temporary Pedestrian Safety Fence	LF	1,210.000	1,210.000
1010	646.0106	Pavement Marking Epoxy 4-Inch	LF	13,450.000	13,450.000
1020	647.0153	Pavement Marking Arrows Paint Type 1	EACH	3.000	3.000
1030	647.0206	Pavement Marking Arrows Bike Lane Epoxy	EACH	41.000	41.000
1040	647.0306	Pavement Marking Symbols Bike Lane Epoxy	EACH	41.000	41.000
1050	647.0766	Pavement Marking Crosswalk Epoxy 6-Inch	LF	1,790.000	1,790.000
1060	649.0600	Temporary Pavement Marking Removable Tape 6-Inch	LF	1,195.000	1,195.000
1070	650.4000	Construction Staking Storm Sewer	EACH	87.000	87.000
1080	650.4500	Construction Staking Subgrade	LF	5,095.000	5,095.000
1090	650.5000	Construction Staking Base	LF	5,095.000	5,095.000
1100	650.5500	Construction Staking Curb Gutter and Curb & Gutter	LF	9,100.000	9,100.000
1110	650.8500	Construction Staking Electrical Installations (project) 001. 4880-01-71	LS	1.000	1.000

4880-01-71

Line	Item	Item Description	Unit	Total	Qty
1120	650.9910	Construction Staking Supplemental Control (project) 001. 4880-01-71	LS	1.000	1.000
1130	650.9920	Construction Staking Slope Stakes	LF	5,095.000	5,095.000
1140	652.0225	Conduit Rigid Nonmetallic Schedule 40 2-Inch	LF	8,995.000	8,995.000
1150	654.0230	Concrete Control Cabinet Bases Type L30	EACH	1.000	1.000
1160	655.0610	Electrical Wire Lighting 12 AWG	LF	3,969.000	3,969.000
1170	655.0615	Electrical Wire Lighting 10 AWG	LF	25,469.000	25,469.000
1180	655.0625	Electrical Wire Lighting 6 AWG	LF	42,181.000	42,181.000
1190	656.0200	Electrical Service Meter Breaker Pedestal (location) 001. CB 100	LS	1.000	1.000
1200	659.2130	Lighting Control Cabinets 120/240 30-Inch	EACH	1.000	1.000
1210	690.0150	Sawing Asphalt	LF	780.000	780.000
1220	690.0250	Sawing Concrete	LF	850.000	850.000
1230	ASP.1T0A	On-the-Job Training Apprentice at $5.00/HR	HRS	1,500.000	1,500.000
1240	ASP.1T0G	On-the-Job Training Graduate at $5.00/HR	HRS	1,500.000	1,500.000
1250	SPV.0060	Special 001. Section Survey Monuments	EACH	2.000	2.000
1260	SPV.0060	Special 101. Manholes 10-FT Diameter	EACH	1.000	1.000
1270	SPV.0060	Special 102. Storm Sewer 45 Degree Bend 30-Inch	EACH	2.000	2.000
1280	SPV.0060	Special 103. Storm Sewer Cap 36-Inch	EACH	1.000	1.000
1290	SPV.0060	Special 104. Inlet Covers Type HC	EACH	3.000	3.000
1300	SPV.0060	Special 105. Connect to Existing Storm Sewer Pipe	EACH	4.000	4.000
1310	SPV.0060	Special 106. Connect to Existing Box Culvert	EACH	2.000	2.000
1320	SPV.0060	Special 201. Pull Box Non-Conductive 24x42-Inch	EACH	21.000	21.000
1330	SPV.0060	Special 202. Decorative Street Light Unit	EACH	27.000	27.000
1340	SPV.0060	Special 401. Adjust Sanitary Sewer Manhole	EACH	14.000	14.000
1350	SPV.0060	Special 501. Adjust Water Valve Box	EACH	34.000	34.000
1360	SPV.0060	Special 502. Adjust Water Curb Box	EACH	43.000	43.000
1370	SPV.0075	Special 001. Street Sweeping	HRS	43.000	43.000
1380	SPV.0090	Special 001. Temporary PVC Pipe 4-Inch	LF	256.000	256.000
1390	SPV.0090	Special 002. Concrete Curb & Gutter 24-Inch	LF	22.000	22.000
1400	SPV.0090	Special 101. Storm Sewer Lateral 4-Inch	LF	1,633.000	1,633.000
1410	SPV.0090	Special 102. Storm Sewer Lateral 6-Inch	LF	37.000	37.000
1420	SPV.0090	Special 103. Storm Sewer Lateral 8-Inch	LF	36.000	36.000
1430	SPV.0090	Special 401. Sanitary Lateral 4-Inch	LF	320.000	320.000
1440	SPV.0090	Special 501. Water Service 1-Inch	LF	370.000	370.000
1450	SPV.0090	Special 502. Water Service 1 1/4-Inch	LF	100.000	100.000
1460	SPV.0105	Special 001. Construction Staking Sidewalk and Curb Ramps	LS	1.000	1.000
1470	SPV.0105	Special 002. Temporary Mailbox Accommodations	LS	1.000	1.000
1480	SPV.0120	Special 001. Water for Seeded Areas	MGAL	185.000	185.000

					4880-01-71
1490	SPV.0180	Special 001. Preparing Topsoil for Lawn Type Turf	SY	10,585.000	10,585.000

3

CLEARING AND GRUBBING ITEMS

STATION - STATION	LOCATION	201.0105 CLEARING STA	201.0120 CLEARING ID	201.0205 GRUBBING STA	201.0220 GRUBBING ID
CATEGORY CODE 0010					
78+00 - 81+00	LT	3	--	3	--
84+00 - 86+00	LT	2	--	2	--
89+00 - 91+00	LT	2	--	2	--
93+00 - 94+00	LT	1	--	1	--
103+00 - 104+00	LT	1	--	1	--
108+00 - 112+00	LT	4	--	4	--
113+13	LT	--	8	--	8
114+73	LT	--	6	--	6
115+59	LT	--	9	--	9
116+19	LT	--	8	--	8
117+77	LT	--	6	--	6
	TOTALS	**13**	**37**	**13**	**37**

REMOVING PAVEMENT

STATION - STATION	LOCATION	204.0100 SY	COMMENTS
CATEGORY CODE 0010			
76+50 - 118+10	LT & RT	9,310	20' WIDE CONCRETE PAVEMENT UNDER ASPHALT
76+50 - 118+10	LT & RT	1,490	CONCRETE DRIVEWAYS
	TOTAL	**10,800**	

REMOVING CURB & GUTTER

STATION - STATION	LOCATION	204.0150 LF
CATEGORY CODE 0010		
76+50 - 77+70	LT	169
76+50 - 86+09	RT	1,006
77+98 - 83+71	LT	667
84+10 - 96+66	LT	1,360
86+44 - 89+41	RT	405
89+73 - 96+33	RT	766
96+69 - 101+87	RT	631
97+02 - 102+26	LT	644
102+23 - 112+11	RT	1,080
102+62 - 105+78	LT	423
106+12 - 108+98	LT	379
109+33 - 112+13	LT	364
112+49 - 118+10	LT	597
112+50 - 118+10	RT	583
117+60	RT	13
117+92	RT	13
	TOTAL	**9,100**

3

REMOVING CONCRETE SIDEWALK

STATION - STATION	LOCATION	204.0155 SY
CATEGORY CODE 0010		
77+00 - 77+69	LT	41
77+00 - 86+08	RT	473
77+99 - 83+69	LT	329
84+14 - 96+62	LT	617
86+46 - 89+39	RT	165
89+74 - 96+30	RT	343
96+73 - 101+83	RT	250
97+05 - 102+22	LT	263
102+26 - 112+10	RT	472
102+65 - 105+76	LT	181
106+14 - 108+96	LT	159
109+34 - 112+11	LT	173
112+50 - 118+10	LT	257
112+51 - 118+10	RT	277
	TOTAL	**4,000**

REMOVING STORM SEWER ITEMS

STATION - STATION	LOCATION	204.0210 REMOVING MANHOLES EACH	204.0220 REMOVING INLETS EACH	204.0245.001 REMOVING STORM SEWER 8-INCH LF	204.0245.002 REMOVING STORM SEWER 10-INCH LF	204.0245.003 REMOVING STORM SEWER 12-INCH LF	204.0245.004 REMOVING STORM SEWER 15-INCH LF	204.0245.005 REMOVING STORM SEWER 18-INCH LF	204.0245.006 REMOVING STORM SEWER 21-INCH LF	204.0245.007 REMOVING STORM SEWER 24-INCH LF	204.0245.008 REMOVING STORM SEWER 48-INCH LF
CATEGORY CODE 0010											
77+06 - 109+07	LT & RT	15	36	830	180	1,009	291	690	700	1,190	75
110+92 - 116+74	LT & RT	6	6	--	--	91	289	460	--	10	--
	TOTALS	**21**	**42**	**830**	**180**	**1,100**	**580**	**1,150**	**700**	**1,200**	**75**

EARTHWORK SUMMARY

Division	From/To Station	Location	205.0100 Excavation Common (1)		Salvaged/Unusable Pavement Material (4)	Available Material (5)	Unexpanded Fill	Expanded Fill (6)	Mass Ordinate +/- (7)	Waste	Comment:
Division 1			Cut (2)	EBS Excavation (3)				Factor 1.11			
	76+50/118+10	CTH D	22978	0	4,135	18,843	58	64	18,779	18,779	
	260+00/260+75	Beech Street	117	0	36	81	1	1	80	80	
	280+00/280+75	Chestnut Street	158	0	53	105	3	3	102	102	
	289+25/290+00	Maple Street	157	0	45	112	1	1	111	111	
	299+10/300+00	Oak Street	217	0	52	165	0	0	165	165	
	309+25/310+00	Michael Street	163	0	48	115	0	0	115	115	
	320+00/320+90	West Lane	211	0	60	151	0	0	150	150	
	329+00/330+00	Lindale Street	242	0	69	173	0	0	173	173	
	340+00/340+90	East Street	219	0	61	158	0	0	158	158	
	350+00/350+75	Dean Street	172	0	47	125	0	0	124	124	
	360+00/360+75	Pierron Street	167	0	47	120	0	0	120	120	
	369+50/370+65	LarAnn Street	345	0	67	278	0	0	278	278	
Division 1 Subtotal			25,146	0	4,720	20,426	64	71	20,355	20,355	
Grand Total			25,146	0	4,720	20,426	64	71	20,355	20,355	
Total Common Exc			**25,146**								

Notes:
(1) Common Excavation is the sum of the Cut and EBS Excavation columns. Item number 205.0100
(2) Salvaged/Unsuable Pavement Material is included in Cut.
(3) EBS Excavation to be backfilled with Breaker Run.
(4) Salvaged/Unusable Pavement Material = Length * Typical Width * Typical Depth
5) Available Material = Cut - Salvaged/Unusuable Pavement Material
(6) Expanded Fill Factor = 1.11. Expanded Fill = Unexpanded Fill * Fill Factor
(7) The Mass Ordinate + or - Qty calculated for the Division. Plus quantity indicates an excess of material within the Division. Minus indicates a shortage of material within the Division.

BASE AGGREGATE DENSE, BREAKER RUN, AND WATER ITEMS

STATION - STATION	LOCATION	305.0110 BASE AGGREGATE DENSE 3/4-INCH TON	305.0120 BASE AGGREGATE DENSE 1 1/4-INCH TON	311.0110 BREAKER RUN TON	624.0100 WATER MGAL
CATEGORY CODE 0010					
76+50 - 118+10	LT & RT	1,200	15,400	19,300	500
	TOTALS	**1,200**	**15,400**	**19,300**	**500**

BASE AGGREGATE DENSE 3/4-INCH WEIGHT CALCULATIONS BASED ON 2.1 TONS/CY.
BASE AGGREGATE DENSE 1 1/4-INCH WEIGHT CALCULATIONS BASED ON 2.0 TONS/CY.
BREAKER RUN WEIGHT CALCULATIONS BASED ON 1.8 TONS/CY.

DRILLED TIE BARS

STATION - STATION	LOCATION	416.0610 EACH	COMMENTS
CATEGORY CODE 0010			
76+50	LT & RT	6	PROJECT LIMITS
260+75	LT & RT	6	BEECH ST LIMITS
280+75	LT & RT	6	CHESTNUT ST LIMITS
289+25	LT & RT	6	MAPLE ST LIMITS
299+10	LT & RT	6	OAK ST LIMITS
309+25	LT & RT	6	MICHAEL ST LIMITS
320+90	LT & RT	6	WEST LN LIMITS
329+00	LT & RT	6	LINDALE ST LIMITS
340+90	LT & RT	6	EAST LN LIMITS
350+75	LT & RT	6	DEAN RD LIMITS
360+75	LT & RT	6	PIERRON ST LIMITS
369+50	LT & RT	6	LAR ANN ST LIMITS
370+65	LT & RT	6	LAR ANN ST LIMITS
117+76	RT	6	DRIVEWAY LIMITS
118+10	LT & RT	6	PROJECT LIMITS
	TOTAL	**90**	

*3 TIE BARS REQ'D AT CONNECTION BETWEEN EXISTING AND PROPOSED CURB & GUTTER

ASPHALTIC ITEMS

STATION - STATION	LOCATION	450.4000 HMA COLD WEATHER PAVING TON	455.0605 TACK COAT GAL	460.6223 HMA PAVEMENT 3 MT 58-28 S TON	460.6224 HMA PAVEMENT 4 MT 58-28 S TON
CATEGORY CODE 0010					
76+50 - 118+10	LT & RT	2,420	1,100	3,630	2,420
	TOTALS	**2,420**	**1,100**	**3,630**	**2,420**

HMA PAVEMENT WEIGHT CALCULATIONS BASED ON 110 LB/SY/IN.
TACK COAT CALCULATIONS BASED ON 0.050 GAL/SY.

3

CONCRETE DRIVEWAY ITEMS

STATION	LOCATION	416.0160 CONCRETE DRIVEWAY 6-INCH SY	416.0180 CONCRETE DRIVEWAY 8-INCH SY
CATEGORY CODE 0010			
76+66	RT	8	--
76+88	LT	8	--
78+14	RT	28	--
78+67	RT	20	--
79+34	RT	20	--
80+79	RT	32	--
81+45	LT	40	--
81+58	RT	32	--
82+13	LT	20	--
83+84	RT	48	--
84+52	RT	16	--
84+74	RT	28	--
84+89	LT	24	--
85+19	RT	16	--
86+24	LT	16	--
86+84	LT	24	--
87+70	LT	16	--
88+15	RT	24	--
88+48	LT	44	--
88+75	LT	16	--
90+35	LT	48	--
91+22	LT	36	--
91+63	LT	28	--
92+45	RT	24	--
93+44	LT	24	--
94+34	LT	28	--
94+49	RT	52	--
94+71	LT	32	--
95+31	RT	48	--
98+08	RT	24	--
98+42	LT	32	--
98+96	RT	40	--
98+79	LT	28	--
100+11	RT	24	--
100+81	LT	28	--
105+30	RT	28	--
106+45	RT	48	--
107+01	RT	48	--
107+19	LT	28	--
107+68	RT	100	--
107+97	LT	32	--
108+44	RT	76	--
109+31	RT	40	--
109+84	RT	36	--
110+22	RT	48	--
110+84	RT	44	--
113+54	LT	52	--
114+10	LT	--	69
115+25	LT	--	44
115+32	RT	--	48
116+66	LT	24	--
117+76	RT	--	44
TOTALS		**1,580**	**205**

ASPHALTIC SURFACE DRIVEWAYS AND FIELD ENTRANCES

STATION	LOCATION	465.0120 TON
CATEGORY CODE 0010		
78+67	RT	3
79+34	RT	2
82+13	LT	2
84+52	RT	1
87+70	LT	1
88+15	RT	2
88+75	LT	2
91+18	LT	1
92+45	RT	1
93+44	LT	1
94+71	LT	2
95+47	RT	1
98+08	RT	1
98+42	LT	2
99+79	LT	2
100+11	RT	2
105+30	RT	2
107+19	LT	1
107+97	LT	2
115+25	LT	8
115+32	RT	4
	TOTAL	**57**

ASPHALTIC SURFACE WEIGHT CALCULATIONS
BASED ON 110 LB/SY/IN.

CONCRETE SIDEWALK & DETECTABLE WARNING FIELD

STATION - STATION	602.0405 CONCRETE SIDEWALK 4-INCH SF	602.0415 CONCRETE SIDEWALK 6-INCH SF	602.0505 CURB RAMP DETECTABLE WARNING FIELD YELLOW SF	602.1500 CONCRETE STEPS SF
CATEGORY CODE 0010				
76+50 LT - 260+75 RT	359	65	20	--
76+50 RT - 289+25 LT	3,905	105	50	37
260+75 RT - 280+75 LT	2,811	120	30	--
280+75 RT - 320+90 LT	5,239	210	70	--
289+25 RT - 299+10 LT	1,792	115	30	--
299+10 RT - 309+25 LT	3,019	180	40	14
309+25 RT - 329+00 LT	2,248	115	30	--
320+90 RT - 340+90 LT	2,236	135	30	--
329+00 RT - 369+50 LT	8,675	255	60	26
340+90 RT - 350+75 LT	1,590	130	30	--
350+75 RT - 360+75 LT	1,320	125	30	--
360+75 RT - 370+65 LT	1,474	195	40	8
369+50 RT - 118+10 RT	2,410	50	10	--
370+65 RT - 118+10 LT	2,222	50	10	--
TOTALS	**39,300**	**1,850**	**480**	**85**

*CURB RAMPS TO BE PAID FOR AS CONCRETE SIDEWALK 6-INCH

CONCRETE CURB AND GUTTER ITEMS

STATION - STATION	601.0411 CONCRETE CURB & GUTTER 30-INCH TYPE D LF	650.5500 CONSTRUCTION STAKING CURB, GUTTER AND CURB & GUTTER LF	SPV.0090.002 CONCRETE CURB & GUTTER 24-INCH LF
CATEGORY CODE 0010			
76+50 LT - 260+75 RT	175	175	--
76+50 RT - 289+25 LT	1,001	1,001	--
260+75 RT - 280+75 LT	665	665	--
280+75 RT - 320+90 LT	1,365	1,365	--
289+25 RT - 299+10 LT	399	399	--
299+10 RT - 309+25 LT	770	770	--
309+25 RT - 329+00 LT	637	637	--
320+90 RT - 340+90 LT	651	651	--
329+00 RT - 369+50 LT	1,085	1,085	--
340+90 RT - 350+75 LT	427	427	--
350+75 RT - 360+75 LT	378	378	--
360+75 RT - 370+65 LT	364	364	--
369+50 RT - 118+10 RT	581	581	22
370+65 RT - 118+10 LT	602	602	--
TOTALS	**9,100**	**9,100**	**22**

ADJUSTING MANHOLE COVERS

STATION	LOCATION	EXISTING ELEVATION	FINISHED ELEVATION	611.8110 EACH	COMMENTS
CATEGORY CODE 0010					
78+13	RT	733.69	733.38	1	0.31' ADJUSTMENT DOWN
			TOTALS	**1**	

STORM SEWER PIPES

FROM	TO	LOCATION	608.0330 Storm Sewer Pipe Reinforced Concrete Class III 30-Inch LF	608.0412 Storm Sewer Pipe Reinforced Concrete Class IV 12-Inch LF	608.0415 Storm Sewer Pipe Reinforced Concrete Class IV 15-Inch LF	608.0418 Storm Sewer Pipe Reinforced Concrete Class IV 18-Inch LF	608.0424 Storm Sewer Pipe Reinforced Concrete Class IV 24-Inch LF	608.0436 Storm Sewer Pipe Reinforced Concrete Class IV 36-Inch LF	608.0460 Storm Sewer Pipe Reinforced Concrete Class IV 60-Inch LF	608.6008 Storm Sewer Pipe Composite 8-Inch LF	608.6010 Storm Sewer Pipe Composite 10-Inch LF	608.6012 Storm Sewer Pipe Composite 12-Inch LF	608.6015 Storm Sewer Pipe Composite 15-Inch LF	610.0429 Storm Sewer Pipe Reinforced Concrete Horizontal Elliptical Class HE-IV 29x45-Inch LF	610.0434 Storm Sewer Pipe Reinforced Concrete Horizontal Elliptical Class HE-IV 34x53-Inch LF	JOINT TIES* EACH
299	300		8													
300	301	CTHD	12													
301	302	CTHD	38													
302	304	CTHD	61													
302.1	302	CTHD			23											
302.2	302	CTHD			23											
303	304	CTHD							37							
304	305	CTHD							34							
306	304	CTHD													37	
306.1	306	CTHD			23											
306.2	306.1	CTHD			35											
306.3	306	CTHD			23											
306.4	306.3	CTHD			35											
307	306	CTHD													270	
307.1	307	CTHD			23											
307.2	307	CTHD			23											
308	307	CTHD													177	
308	309	CTHD						40								
310	308	CTHD													113	
311	310	CHESTNUT CL			51											
311.1	311	CHESTNUT CL			38											
315	310	CTHD													60	
315.1	315	CTHD			23											
315.2	315.1	CTHD			20											
315.3	315	CTHD			23											
315.4	315.3	CTHD			20											
320	315	CTHD													148	
321	320	MAPLE			51											
321.1	321	MAPLE			8											
321.2	321	MAPLE			26											
322	321	MAPLE			14											
325	320	CTHD													58	
325.1	325	CTHD			23											
325.2	325	CTHD			23											
326	325	CTHD													248	
326.1	326	CTHD			23											
326.2	326	CTHD			23											
330	326	CTHD													43	
331	330	OAK			41											
331.1	331	OAK			31											
332	331	OAK			39											
335	330	CTHD												25		
335.1	335	CTHD			20											
335.2	335	CTHD			20											
336	335	CTHD												323		
336.1	336	CTHD			23											
336.2	336	CTHD			17											
340	336	CTHD												351		
341	340	MICHAEL CL			18											
341.1	341	CTHD			17											
342	341	MICHAEL CL			20											
342.1	342	MICHAEL CL			35											
343	342	MICHAEL CL		24												
344	340	WEST				43										
344.1	344	WEST			35											

STORM SEWER PIPES

FROM	TO	LOCATION	608.0330 Storm Sewer Pipe Reinforced Concrete Class III 30-Inch LF	608.0412 Storm Sewer Pipe Reinforced Concrete Class IV 12-Inch LF	608.0415 Storm Sewer Pipe Reinforced Concrete Class IV 15-Inch LF	608.0418 Storm Sewer Pipe Reinforced Concrete Class IV 18-Inch LF	608.0424 Storm Sewer Pipe Reinforced Concrete Class IV 24-Inch LF	608.0436 Storm Sewer Pipe Reinforced Concrete Class IV 36-Inch LF	608.0460 Storm Sewer Pipe Reinforced Concrete Class IV 60-Inch LF	608.6008 Storm Sewer Pipe Composite 8-Inch LF	608.6010 Storm Sewer Pipe Composite 10-Inch LF	608.6012 Storm Sewer Pipe Composite 12-Inch LF	608.6015 Storm Sewer Pipe Composite 15-Inch LF	610.0429 Storm Sewer Pipe Reinforced Concrete Horizontal Elliptical Class HE-IV 29x45-Inch LF	610.0434 Storm Sewer Pipe Reinforced Concrete Horizontal Elliptical Class HE-IV 34x53-Inch LF	JOINT TIES* EACH
344.2	344.1	WEST			26											
345	344	WEST			40											
346	340	CTHD					249									
346.1	346	CTHD			23											
346.3	346	CTHD			17											
346.4	346.3	CTHD								10						
350	346	CTHD					307									
351	350	LINDALE CL			38											
351.1	351	LINDALE CL			35											
352	351	LINDALE CL			49											
353	350	EAST			44											
353.1	353	EAST			35											
355	350	CTHD					59									
355.1	355	CTHD			23											
355.2	355	CTHD			17											
356	355	CTHD					157									
356.1	356	CTHD			23											
356.2	356.1	CTHD		13												
356.3	356	CTHD			17											
356.4	356.3	CTHD		25												
360	356	CTHD					146									
361	360	DEAN			46											
361.1	361	DEAN			7											
361.2	361	DEAN			27											
362	361	DEAN		22												
365	360	CTHD				46										
365.1	365	CTHD			23											
365.2	365	CTHD			17											
370	365	CTHD				273										
371	370	PIERRON			44											
371.2	371	PIERRON			34											
399	400	CTHD			92											
400	401	CTHD				98										
400.1	400	CTHD			36											
400.2	400	CTHD			30											
401	402	CTHD				108										
401.1	401	CTHD			23											
401.2	401.1	LARANN			30											
401.3	401.2	LARANN			35											
401.4	401	CTHD			18											
402	403	CTHD				187										
402.1	402	CTHD									25					
403	404	CTHD				109										
403.1	403	CTHD											30			
404	405	CTHD				75										
404.1	404	CTHD			24											
404.2	404	CTHD			18											
404.3	404.2	CTHD										13				
405	406	CTHD					10									
405.1	405	CTHD										5				
		TOTALS	119	84	1781	939	928	40	71	10	25	18	30	699	1154	

* NON-BID ITEM: FOR INFORMATION ONLY

PROJECT NO: 4880-01-71	HWY: CTH D	COUNTY: OZAUKEE	MISCELLANEOUS QUANTITIES	SHEET 112	E

STORM SEWER STRUCTURES

STRUCTURE	STATION	OFFSET*	LOCATION	520.8000 Concrete Collars for Pipe EACH	611.0530 Manhole Covers Type J EACH	611.0624 Inlet Covers Type H EACH	611.0639 Inlet Covers Type H-S EACH	611.1230 Catch Basins 2x3-FT EACH	611.2004 Manholes 4-FT Diameter EACH	611.2005 Manholes 5-FT Diameter EACH	611.2006 Manholes 6-FT Diameter EACH	611.2007 Manholes 7-FT Diameter EACH	611.2008 Manholes 8-FT Diameter EACH	611.3230 Inlets 2x3-FT EACH	650.4000 Construction Staking Storm Sewer EACH	SPV.0060.101 Manholes 10-FT Diameter EACH	SPV.0060.102 Storm Sewer 45 Degree Bend 30-Inch EACH	SPV.0060.103 Storm Sewer Cap 36-Inch EACH	SPV.0060.104 Inlet Covers Type HC EACH	SPV.0060.105 Connect to Existing Storm Sewer Pipe EACH	SPV.0060.106 Connect to Existing Box Culvert EACH
299	76+98	8.6' RT	CTHD	1																	
300	77+06	8.5' RT	CTHD												1		1				
301	77+15	0' RT	CTHD												1		1				
302	77+53	0' RT	CTHD		1						1				1						
302.1	77+53	23.5' RT	CTHD			1		1							1						
302.2	77+53	23.5' RT	CTHD			1		1							1						
303	78+13	37.4' RT	CTHD																		1
304	78+13	0' RT	CTHD		1										1	1					
305	78+14	34' RT	CTHD																		1
306	78+50	0' RT	CTHD		1								1		1						
306.1	78+50	23.5' RT	CTHD				1	1							1						
306.2	78+85	23.5' RT	CTHD			1		1							1						
306.3	78+50	23.5' RT	CTHD				1	1							1						
306.4	78+85	23.5' RT	CTHD			1		1							1						
307	81+20	0' RT	CTHD		1								1		1						
307.1	81+20	23.5' RT	CTHD			1		1							1						
307.2	81+20	23.5' RT	CTHD			1		1							1						
308	82+97	0' RT	CTHD		1								1		1						
309	82+97	40' RT	CTHD															1			
310	84+10	0' RT	CTHD		1								1		1						
311	280+51	19' RT	CHESTNUT CL				1	1							1						
311.1	280+51	19' RT	CHESTNUT CL				1	1							1						
315	84+70	0' RT	CTHD		1								1		1						
315.1	84+70	23.5' RT	CTHD			1		1							1						
315.2	84+50	23.5' RT	CTHD				1							1	1						
315.3	84+70	23.5' RT	CTHD					1							1				1		
315.4	84+50	23.5' RT	CTHD					1							1				1		
320	86+18	0' RT	CTHD		1								1		1						
321	289+49	8.8' RT	MAPLE		1				1						1						
321.1	289+49	17' RT	MAPLE				1	1							1						
321.2	289+49	17' RT	MAPLE				1	1							1						
322	289+35	8.9' RT	MAPLE	1																	
325	86+76	0' RT	CTHD		1								1		1						
325.1	86+76	23.5' RT	CTHD					1							1				1		
325.2	86+76	23.5' RT	CTHD			1		1							1						
326	89+24	0' RT	CTHD		1								1		1						
326.1	89+24	23.5' RT	CTHD				1	1							1						
326.2	89+24	23.5' RT	CTHD				1	1							1						
330	89+67	0' RT	CTHD		1								1		1						
331	299+59	15.5' RT	OAK				1	1							1						
331.1	299+59	15.5' RT	OAK				1	1							1						
332	299+20	14.7' RT	OAK	1																	
335	89+92	0' RT	CTHD		1							1			1						
335.1	89+92	20.5' RT	CTHD			1		1							1						
335.2	89+92	20.5' RT	CTHD			1		1							1						
336	93+15	3' RT	CTHD		1							1			1						
336.1	93+15	20.5' RT	CTHD			1		1							1						
336.2	93+15	20.5' RT	CTHD			1		1							1						
340	96+66	3' RT	CTHD		1							1			1						
341	309+79	17.7' RT	MICHAEL CL		1				1						1						
341.1	96+86	20.5' RT	CTHD				1	1							1						
342	309+59	17.5' RT	MICHAEL CL				1	1							1						
342.1	309+59	17.5' RT	MICHAEL CL			1		1							1						
343	309+35	17.1' RT	MICHAEL CL	1																	
344	320+40	17.5' RT	WEST			1		1							1						

REMARKS
* STATIONS AND OFFSETS ARE TO CENTER OF STRUCTURE

STORM SEWER STRUCTURES

STRUCTURE	STATION	OFFSET*	LOCATION	520.8000 Concrete Collars for Pipe EACH	611.0530 Manhole Covers Type J EACH	611.0624 Inlet Covers Type H EACH	611.0639 Inlet Covers Type H-S EACH	611.1230 Catch Basins 2x3-FT EACH	611.2004 Manholes 4-FT Diameter EACH	611.2005 Manholes 5-FT Diameter EACH	611.2006 Manholes 6-FT Diameter EACH	611.2007 Manholes 7-FT Diameter EACH	611.2008 Manholes 8-FT Diameter EACH	611.3230 Inlets 2x3-FT EACH	650.4000 Construction Staking Storm Sewer EACH	SPV.0060.101 Manholes 10-FT Diameter EACH	SPV.0060.102 Storm Sewer 45 Degree Bend 30-Inch EACH	SPV.0060.103 Storm Sewer Cap 36-Inch EACH	SPV.0060.104 Inlet Covers Type HC EACH	SPV.0060.105 Connect to Existing Storm Sewer Pipe EACH	SPV.0060.106 Connect to Existing Box Culvert EACH
344.1	320+40	17.5' RT	WEST				1	1							1						
344.2	97+18	20.5' RT	CTHD				1	1							1						
345	320+80	17.8' RT	WEST	1																	
346	99+15	3' RT	CTHD		1					1					1						
346.1	99+15	20.5' RT	CTHD			1		1							1						
346.3	99+15	20.5' RT	CTHD			1		1							1						
346.4	99+15	30.4' RT	CTHD	1																	
350	102+22	3' RT	CTHD		1					1					1						
351	329+59	17.5' RT	LINDALE CL				1	1							1						
351.1	329+59	17.5' RT	LINDALE CL				1	1							1						
352	329+10	18' RT	LINDALE CL	1																	
353	340+40	17.5' RT	EAST				1	1							1						
353.1	340+40	17.5' RT	EAST				1	1							1						
355	102+81	3' RT	CTHD		1					1					1						
355.1	102+81	20.5' RT	CTHD			1		1							1						
355.2	102+81	20.5' RT	CTHD			1		1							1						
356	104+38	3' RT	CTHD		1					1					1						
356.1	104+38	20.5' RT	CTHD			1		1							1						
356.2	104+38	33' RT	CTHD	1																	
356.3	104+38	20.5' RT	CTHD			1		1							1						
356.4	104+60	33' RT	CTHD	1																	
360	105+84	3' RT	CTHD		1					1					1						
361	350+43	10.2' RT	DEAN		1				1						1						
361.1	350+43	16.7' RT	DEAN				1	1							1						
361.2	350+43	16.7' RT	DEAN				1	1							1						
362	350+65	9.9' RT	DEAN	1																	
365	106+30	3' RT	CTHD		1				1						1						
365.1	106+30	20.5' RT	CTHD			1		1							1						
365.2	106+30	20.5' RT	CTHD			1		1							1						
370	109+03	3' RT	CTHD		1				1						1						
371	360+41	17' RT	PIERRON				1	1							1						
371.2	360+41	17' RT	PIERRON				1	1							1						
399	110+00	3' RT	CTHD		1				1						1						
400	110+92	3' RT	CTHD		1				1						1						
400.1	110+92	33' RT	CTHD	1																	
400.2	110+92	33' RT	CTHD	1																	
401	111+90	3' RT	CTHD		1				1						1						
401.1	111+90	20.5' RT	CTHD			1		1							1						
401.2	370+41	17.5' RT	LARANN				1	1							1						
401.3	370+41	17.5' RT	LARANN				1	1							1						
401.4	111+90	20.5' RT	CTHD			1		1							1						
402	112+98	3' RT	CTHD		1				1						1						
402.1	112+98	27.6' RT	CTHD																	1	
403	114+85	3' RT	CTHD		1				1						1						
403.1	114+85	33' RT	CTHD																	1	
404	115+94	3' RT	CTHD		1						1				1						
404.1	115+96	20.5' RT	CTHD			1		1							1						
404.2	115+94	20.5' RT	CTHD			1		1							1						
404.3	115+94	33' RT	CTHD																	1	
405	116+64	27.7' RT	CTHD		1						1				1						
405.1	116+64	33' RT	CTHD																	1	
406	116+74	27.7' RT	CTHD	1																	
			TOTALS	13	31	26	25	53	10	5	3	3	9	1	87	1	2	1	3	4	2

REMARKS
* STATIONS AND OFFSETS ARE TO CENTER OF STRUCTURE

3

PIPE UNDERDRAIN WRAPPED 6-INCH

STATION	LOCATION	612.0406 LF
CATEGORY CODE 0010		
78+50	LT & RT	100
84+50	LT & RT	100
89+24	LT & RT	100
96+86	RT	50
97+18	LT	50
280+52	LT & RT	100
289+49	LT & RT	100
299+59	LT & RT	100
309+59	RT	50
320+41	RT	50
329+59	LT & RT	100
340+41	LT & RT	100
350+43	LT & RT	100
360+41	LT & RT	100
370+41	LT & RT	100
TOTAL		**1,300**

LANDMARK REFERENCE MONUMENTS

LOCATION	621.0100 LANDMARK REFERENCE MONUMENTS EACH	SPV.0060.001 SECTION SURVEY MONUMENTS EACH
CATEGORY CODE 0010		
77+91.41	4	1
104+35.31	4	1
TOTALS	**8**	**2**

RESTORATION ITEMS

STATION - STATION	625.0100 TOPSOIL SY	628.2006 EROSION MAT URBAN CLASS I TYPE A SY	629.0210 FERTILIZER TYPE B CWT	630.0140 SEEDING MIXTURE NO. 40 LB	SPV.0120.001 WATER FOR SEEDED AREAS MGAL	SPV.0180.001 PREPARING TOPSOIL FOR LAWN TYPE TURF SY
CATEGORY CODE 0010						
76+50 LT - 260+75 RT	108	108	0.1	2	2	108
76+50 RT - 289+25 LT	664	664	0.5	12	11	664
260+75 RT - 280+75 LT	465	465	0.3	8	8	465
280+75 RT - 320+90 LT	1,033	1,033	0.7	19	18	1,033
289+25 RT - 299+10 LT	152	152	0.1	3	3	152
299+10 RT - 309+25 LT	716	716	0.4	13	12	716
309+25 RT - 329+00 LT	571	571	0.4	10	10	571
320+90 RT - 340+90 LT	568	568	0.4	10	10	568
329+00 RT - 369+50 LT	972	972	0.6	18	16	972
340+90 RT - 350+75 LT	396	396	0.3	7	7	396
350+75 RT - 360+75 LT	312	312	0.2	6	5	312
360+75 RT - 370+65 LT	339	339	0.2	6	6	339
369+50 RT - 118+10 RT	554	554	0.4	10	9	554
370+65 RT - 118+10 LT	549	549	0.3	10	9	549
UNDISTRIBUTED	1,851	1,851	1.1	36	34	1,851
CATEGORY CODE 0010 SUBTOTALS	9,250	9,250	6.0	170	160	9,250
CATEGORY CODE 0020						
UNDISTRIBUTED	1,335	1,335	1.0	25	25	1,335
CATEGORY CODE 0020 SUBTOTALS	1,335	1,335	1.0	25	25	1,335
TOTALS	**10,585**	**10,585**	**7.0**	**195**	**185**	**10,585**

SILT FENCE ITEMS

STATION - STATION	LOCATION	628.1504 SILT FENCE LF	628.1520 SILT FENCE MAINTENANE LF
CATEGORY CODE 0010			
82+58 - 83+15	RT	60	60
UNDISTRIBUTED		15	15
TOTALS		**75**	**75**

EROSION CONTROL MOBILIZATIONS ITEMS

LOCATION	628.1905 MOBILIZATION EROSION CONTROL EACH	628.1910 MOBILIZATION EMERGENCY EROSION CONTROL EACH
CATEGORY CODE 0010		
PROJECT 4880-01-71	10	5
TOTALS	**10**	**5**

INLET PROTECTION ITEMS

LOCATION	628.7005 INLET PROTECTION TYPE A EACH	628.7010 INLET PROTECTION TYPE B EACH	628.7015 INLET PROTECTION TYPE C EACH	628.7020 INLET PROTECTION TYPE D EACH
CATEGORY CODE 0010				
EXISTING STRUCTURES	3	1	55	--
PROPOSED STRUCTURES	--	2	36	16
UNDISTRIBUTED	1	1	24	4
TOTALS	**4**	**4**	**115**	**20**

TRACKING PADS

LOCATION	628.7560 EACH
CATEGORY CODE 0010	
PROJECT 4880-01-71	2
TOTAL	**2**

ROCK BAGS

STATION	LOCATION	628.7570 EACH
CATEGORY CODE 0010		
82+87	RT	12
UNDISTRIBUTED		3
TOTAL		**15**

3

SIGNING ITEMS

SIGN NUMBER	STATION	LOCATION	SIGN CODE	SIZE	634.0614* POSTS WOOD 4X6-INCH X 14-FT EACH	634.0616* POSTS WOOD 4X6-INCH X 16-FT EACH	637.2210 SIGNS TYPE II REFLECTIVE H SF	637.2230 SIGNS TYPE II REFLECTIVE F SF	COMMENTS
CATEGORY CODE 0010									
301A	75+00	RT	R3-17	30X24	1	--	5.00	--	--
301B	"	"	R3-17A	30X12	--	--	2.50	--	--
302A	260+39	RT	R5-2	24X24	--	1	4.00	--	--
302B	"	"	R6-2R	24X30	--	--	5.00	--	--
303A	"	"	R5-2	24X24	--	--	4.00	--	MOUNT TO BACKSIDE OF SIGN #302A
303B	"	"	R6-2R	24X30	--	--	5.00	--	MOUNT TO BACKSIDE OF SIGN #302B
304A	78+50	LT	R3-17	30X24	1	--	5.00	--	--
304B	"	"	R3-17B	30X12	--	--	2.50	--	--
305	79+00	RT	R2-1	24X30	1	--	5.00	--	--
306	80+00	LT	R2-1	24X30	1	--	5.00	--	--
310	280+40	LT	R1-1	30X30	1	--	5.18	--	--
311	84+30	RT	R2-1	24X30	1	--	5.00	--	--
313	85+75	LT	R2-1	24X30	1	--	5.00	--	--
314	289+59	RT	R1-1	30X30	1	--	5.18	--	--
315	86+95	RT	R3-17	30X24	--	1	5.00	--	--
316	89+00	LT	R3-17	30X24	--	--	5.00	--	--
317	299+60	RT	R1-1	30X30	1	--	5.18	--	--
318A	90+25	RT	R2-1	24X30	1	--	5.00	--	--
318B	"	"	R7-53L	18X24	1	--	3.00	--	--
319	91+45	LT	R2-1	24X30	--	1	5.00	--	--
320	93+05	RT	R7-53D	18X24	--	--	3.00	--	--
321	96+00	LT	R2-1	24X30	1	--	5.00	--	--
322A	96+00	RT	R2-1	24X30	1	--	5.00	--	--
322B	"	"	R7-53R	18X24	1	--	3.00	--	--
323	320+40	LT	R1-1	30X30	--	--	5.18	--	--
324	309+60	RT	R1-1	30X30	--	1	5.18	--	--
325A	97+00	RT	R3-17	30X24	1	--	5.00	--	--
325B	"	"	R7-53L	18X24	1	--	3.00	--	--
327	98+95	LT	R3-17	30X24	1	--	5.00	--	--
328	99+25	RT	R7-53D	18X24	1	--	3.00	--	--
329	101+50	RT	R7-53R	18X24	--	1	3.00	--	--
330	340+40	LT	R1-1	30X30	--	--	5.18	--	--
331	329+60	RT	R1-1	30X30	1	--	5.18	--	--
332A	102+80	RT	R2-1	24X30	1	--	5.00	--	--
332B	"	"	R7-53L	18X24	1	--	3.00	--	--
333	103+00	LT	R2-1	24X30	1	--	5.00	--	--
334	104+75	RT	R7-53D	18X24	--	1	3.00	--	--
335	350+40	LT	R1-1	30X30	--	--	5.18	--	--
336	106+30	RT	R3-17	30X24	1	--	5.00	--	--
337A	107+25	RT	R2-1	24X30	1	--	5.00	--	--
337B	"	"	R7-53D	18X24	1	--	3.00	--	--
338	107+50	LT	R2-1	24X30	1	--	5.00	--	--
339	108+50	LT	R3-17	30X24	1	--	5.00	--	--
340	360+40	LT	R1-1	30X30	1	--	5.18	--	--
341	109+70	RT	R7-53D	18X24	1	--	3.00	--	--
342	111+75	RT	R7-53R	18X24	1	--	3.00	--	--
343	370+40	LT	R1-1	30X30	--	1	5.18	--	--
344	369+60	RT	R1-1	30X30	--	--	5.18	--	--
345	113+00	LT	R2-1	24X30	--	1	5.00	--	JCT; CTH LL
346A	113+00	RT	R2-1	24X30	--	1	5.00	--	--
346B	"	"	R7-53L	18X24	--	--	3.00	--	--
347	114+50	RT	J1-1	24X39	--	--	6.50	--	--
348	115+00	RT	W3-1	36X36	--	--	--	9.00	--
349	115+70	RT	R7-53D	18X24	--	--	3.00	--	MOUNT BELOW SIGN #205
			TOTALS		**30**	**9**	**235.48**	**9.00**	

EXISTING SIGNING ITEMS

SIGN NUMBER	EXISTING SIGN STATION	LOCATION	EXISTING ROADWAY	634.0614* POSTS WOOD 4X6-INCH X 14-FT EACH	634.0616* POSTS WOOD 4X6-INCH X 16-FT EACH	638.2102 MOVING SIGNS TYPE II EACH	638.2602 REMOVING SIGNS TYPE II EACH	638.3000 REMOVING SMALL SIGN SUPPORTS EACH	COMMENTS
CATEGORY CODE 0010									
101	260+37	RT	BEECH STREET	--	--	--	1	1	--
102	78+78	RT	CTH D	--	--	--	1	--	--
103	80+16	LT	CTH D	--	--	--	1	1	--
104	83+53	LT	CTH D	--	--	--	1	1	--
105	280+40	LT	CHESTNUT STREET	--	--	--	1	1	--
106	84+01	RT	CTH D	--	--	--	1	--	--
107	84+63	LT	CTH D	--	--	--	1	1	--
108	85+73	LT	CTH D	--	--	--	1	--	--
109	286+66	RT	MAPLE STREET	--	--	--	1	1	--
110	89+80	RT	CTH D	--	--	--	1	--	--
111	91+49	LT	CTH D	--	--	--	1	--	--
112	96+18	RT	CTH D	--	--	--	1	--	--
113	96+52	LT	CTH D	--	--	--	1	--	--
114	320+43	LT	WEST LANE	--	--	--	1	1	--
115	309+56	RT	MICHAEL STREET	--	--	--	1	1	--
116	320+44	RT	WEST LANE	--	--	--	1	--	--
117	340+43	LT	EAST LANE	--	--	--	1	1	--
118	329+55	RT	LINDALE STREET	--	--	--	1	1	--
119	102+82	LT	CTH D	--	--	--	1	1	--
120	102+82	RT	CTH D	--	--	--	1	1	--
121	350+36	LT	DEAN ROAD	--	--	--	1	1	--
122	107+19	RT	CTH D	--	--	--	1	1	--
123	107+36	LT	CTH D	--	--	--	1	1	--
124	360+37	LT	PIERRON STREET	--	--	--	1	1	--
125	370+37	LT	LAR ANN STREET	--	--	--	1	1	--
126	369+57	RT	LAR ANN STREET	--	--	--	1	1	--
127	112+74	LT	CTH D	--	--	--	1	1	--
128	112+77	RT	CTH D	--	--	--	1	--	--
129	114+46	RT	CTH D	--	--	--	1	--	--
130	115+03	RT	CTH D	--	--	--	1	1	--
201	85+95	RT	CTH D	1	--	1	--	--	SEE PLANS FOR NEW LOCATION
202	86+42	LT	CTH D	1	--	1	--	--	SEE PLANS FOR NEW LOCATION
203	108+17	RT	CTH D	1	--	1	--	1	SEE PLANS FOR NEW LOCATION
204	113+89	LT	CTH D	1	--	1	--	1	SEE PLANS FOR NEW LOCATION
205	115+66	RT	CTH D	--	1	1	--	--	MOUNT ABOVE SIGN #349
206	117+34	RT	CTH D	1	--	1	--	--	SEE PLANS FOR NEW LOCATION
			TOTALS	**5**	**1**	**6**	**30**	**22**	

*ADDITIONAL QUANTITIES SHOWN ELSEWHERE.

TRAFFIC CONTROL ITEMS

LOCATION	NUMBER OF DAYS IN SERVICE	643.0410 TRAFFIC CONTROL BARRICADES TYPE II NO. REQ'D	643.0410 TRAFFIC CONTROL BARRICADES TYPE II TOTAL DAY	643.0420 TRAFFIC CONTROL BARRICADES TYPE III NO. REQ'D	643.0420 TRAFFIC CONTROL BARRICADES TYPE III TOTAL DAY	643.0705 TRAFFIC CONTROL WARNING LIGHTS TYPE A NO. REQ'D	643.0705 TRAFFIC CONTROL WARNING LIGHTS TYPE A TOTAL DAY	643.0900 TRAFFIC CONTROL SIGNS NO. REQ'D	643.0900 TRAFFIC CONTROL SIGNS TOTAL DAY	643.1000 TRAFFIC CONTROL SIGNS FIXED MESSAGE SF	643.3000 TRAFFIC CONTROL DETOUR SIGNS NO. REQ'D	643.3000 TRAFFIC CONTROL DETOUR SIGNS TOTAL DAY
CATEGORY CODE 0010												
CTH D/ CTH KW	151	--	--	2	302	4	604	1	151	--	1	151
CTH D/ ELM STREET	151	--	--	2	302	4	604	5	755	10.33	--	--
CTH D AT WEST PROJECT LIMITS	151	--	--	4	604	8	1,208	1	151	--	--	--
CTH D/ BEECH STREET	151	--	--	2	302	4	604	2	302	--	--	--
CTH D/ CHESTNUT STREET	151	4	604	2	302	8	1,208	6	906	--	--	--
CTH D/ MAPLE STREET	151	4	604	2	302	8	1,208	6	906	--	--	--
CTH D/ OAK STREET	151	--	--	2	302	4	604	2	302	--	--	--
CTH D/ MICHAEL STREET	151	--	--	2	302	4	604	2	302	--	--	--
CTH D/ WEST LANE	151	--	--	2	302	4	604	2	302	--	--	--
CTH D/ LINDALE STREET	151	--	--	2	302	4	604	2	302	--	--	--
CTH D/ EAST LANE	151	--	--	2	302	4	604	2	302	--	--	--
CTH D/ DEAN ROAD	151	4	604	2	302	8	1,208	7	1,057	--	--	--
CTH D/ PEIRRON STREET	151	--	--	2	302	4	604	3	453	--	--	--
CTH D/ S LAR ANN STREET	151	--	--	2	302	4	604	3	453	--	--	--
CTH D/ N LAR ANN STREET	151	--	--	2	302	4	604	3	453	--	--	--
CTH D AT EAST PROJECT LIMITS	151	--	--	4	604	8	1,208	1	151	--	--	--
CTH D/ CTH LL	151	--	--	2	302	4	604	4	604	10.33	1	151
CTH LL/ PARK STREET	151	--	--	--	--	--	--	--	--	10.33	--	--
EB CTH D DETOUR ROUTE	151	--	--	--	--	--	--	--	--	--	82	12,382
WB CTH D DETOUR ROUTE	151	--	--	--	--	--	--	--	--	--	82	12,382
TOTALS		12	**1,812**	38	**5,738**	88	**13,288**	52	**7,852**	**30.99**	166	**25,066**

TEMPORARY PEDESTRIAN ACCOMMODATION ITEMS

LOCATION	644.1430.S TEMPORARY PEDESTRIAN SURFACE PLATE SF	644.1601.S TEMPORARY CURB RAMP EACH	644.1616.S TEMPORARY PEDESTRIAN SAFETY FENCE LF	649.0600 TEMPORARY PAVEMENT MARKING REMOVABLE TAPE 6-INCH LF	SPV.0090.001 TEMPORARY PVC PIPE 4-INCH LF
CATEGORY CODE 0010					
CTH D WEST OF PROJECT LIMITS	245.0	2.0	32.0	80.0	16.0
BEECH STREET	130.0	2.0	80.0	48.0	16.0
CHESTNUT STREET	50.0	2.0	126.0	70.0	16.0
MAPLE STREET	40.0	2.0	114.0	62.0	16.0
CTH D AT MAPLE STREET	265.0	2.0	35.0	88.0	16.0
OAK STREET	160.0	2.0	80.0	67.0	16.0
CTH D AT MICHAEL STREET	270.0	2.0	35.0	81.0	16.0
MICHAEL STREET	200.0	2.0	70.0	82.0	16.0
WEST LANE	200.0	2.0	80.0	81.0	16.0
LINDALE STREET	200.0	2.0	80.0	84.0	16.0
EAST LANE	200.0	2.0	80.0	82.0	16.0
CTH D AT DEAN RD	200.0	2.0	38.0	79.0	16.0
DEAN ROAD	160.0	2.0	120.0	64.0	16.0
PIERRON STREET	180.0	2.0	80.0	74.0	16.0
S. LAR ANN STREET	185.0	2.0	80.0	76.0	16.0
N. LAR ANN STREET	190.0	2.0	80.0	77.0	16.0
TOTALS	**2,875.0**	**32.0**	**1,210.0**	**1,195.0**	**256.0**

PAVEMENT MARKING ITEMS

STATION - STATION	LOCATION	646.0106 PAVEMENT MARKING EPOXY 4-INCH WHITE LF	646.0106 PAVEMENT MARKING EPOXY 4-INCH YELLOW LF	647.0153 PAVEMENT MARKING ARROWS PAINT TYPE 1 YELLOW EACH	647.0206 PAVEMENT MARKING ARROWS BIKE LANE EPOXY WHITE EACH	647.0306 PAVEMENT MARKING SYMBOLS BIKE LANE EPOXY WHITE EACH	647.0766 PAVEMENT MARKING CROSSWALK EPOXY 6-INCH WHITE LF
CATEGORY CODE 0010							
76+50 - 118+10	LT & RT	12,400	1,050	3	41	41	1,790
		12,400	1,050				
TOTALS		**13,450**		**3**	**41**	**41**	**1,790**

CONSTRUCTION STAKING ITEMS

LOCATION	LOCATION	650.4500 CONSTRUCTION STAKING SUBGRADE LF	650.5000 CONSTRUCTION STAKING BASE LF	650.9910 CONSTRUCTION STAKING SUPPLEMENTAL CONTROL LS	650.9920 CONSTRUCTION STAKING SLOPE STAKES LF	SPV.0105.001 CONSTRUCTION STAKING SIDEWALK AND CURB RAMPS LS
CATEGORY CODE 0010						
CTH D		4,160	4,160	1	4,160	1
BEECH STREET		75	75	--	75	--
CHESTNUT STREET		75	75	--	75	--
MAPLE STREET		75	75	--	75	--
OAK STREET		90	90	--	90	--
MICHAEL STREET		75	75	--	75	--
WEST LANE		90	90	--	90	--
LINDALE STREET		100	100	--	100	--
EAST LANE		90	90	--	90	--
DEAN ROAD		75	75	--	75	--
PIERRON STREET		75	75	--	75	--
LAR ANN STREET		115	115	--	115	--
TOTALS		**5,095**	**5,095**	**1**	**5,095**	**1**

STAKING ITEMS FOR STORM SEWER, CURB & GUTTER, AND ELECTRICAL INSTALLATIONS SHOWN ELSEWHERE

STREET SWEEPING

LOCATION	SPV.0075.001 HRS
CATEGORY CODE 0010	
PROJECT 4881-01-71	43
TOTAL	**43**

SAWING PAVEMENT ITEMS

STATION	LOCATION	690.0150 SAWING ASPHALT LF	690.0250 SAWING CONCRETE LF	COMMENTS
CATEGORY CODE 0010				
76+50	LT & RT	20	25	PROJECT LIMITS
76+66	RT	--	12	DRIVEWAY
76+88	LT	--	12	DRIVEWAY
77+00	LT & RT	--	10	SIDEWALK
77+52	LT	--	3	SIDEWALK
78+14	RT	--	12	DRIVEWAY
78+45	RT	--	4	SIDEWALK
78+67	RT	16	--	DRIVEWAY
78+91	RT	--	3	SIDEWALK
79+17	LT	--	23	SIDEWALK
79+34	RT	14	--	DRIVEWAY
79+76	RT	--	3	SIDEWALK
80+47	RT	--	6	SIDEWALK
80+79	RT	--	18	DRIVEWAY
81+10	RT	--	8	SIDEWALK
81+45	LT	--	20	DRIVEWAY
81+58	RT	--	16	DRIVEWAY
82+00	RT	--	2	SIDEWALK
82+13	LT	16	--	DRIVEWAY
82+49	LT	--	5	SIDEWALK
83+05	LT	--	6	SIDEWALK
83+84	RT	--	19	DRIVEWAY
84+25	RT	--	4	SIDEWALK
84+52	RT	10	--	DRIVEWAY
84+74	RT	--	17	DRIVEWAY
84+89	LT	--	10	DRIVEWAY
85+58	RT	--	4	SIDEWALK
86+70	RT	--	4	SIDEWALK
86+84	LT	--	13	DRIVEWAY
86+98	RT	--	5	SIDEWALK
87+35	LT	--	4	SIDEWALK
87+46	RT	--	13	SIDEWALK
87+68	RT	--	8	SIDEWALK
87+70	LT	12	--	DRIVEWAY
88+15	RT	22	--	DRIVEWAY
88+16	LT	--	3	SIDEWALK
88+48	LT	--	22	DRIVEWAY
88+72	RT	--	4	SIDEWALK
88+75	LT	12	--	DRIVEWAY
90+35	LT	--	22	DRIVEWAY
90+55	RT	--	4	SIDEWALK
90+81	LT	--	3	SIDEWALK
91+18	LT	14	--	DRIVEWAY
91+63	LT	--	8	DRIVEWAY
92+45	RT	12	--	DRIVEWAY
92+89	LT	--	4	SIDEWALK
93+44	LT	10	--	DRIVEWAY
94+34	LT	--	10	DRIVEWAY
94+50	RT	--	22	DRIVEWAY
94+71	LT	20	--	DRIVEWAY
94+76	RT	--	7	SIDEWALK
95+31	RT	--	11	DRIVEWAY
95+48	RT	8	--	DRIVEWAY
95+69	RT	--	5	SIDEWALK
98+08	RT	12	--	DRIVEWAY
98+42	LT	20	--	DRIVEWAY
98+96	RT	--	18	DRIVEWAY

SAWING PAVEMENT ITEMS

STATION	LOCATION	690.0150 SAWING ASPHALT LF	690.0250 SAWING CONCRETE LF	COMMENTS
CATEGORY CODE 0010				
99+79	LT	16	--	DRIVEWAY
100+11	RT	10	--	DRIVEWAY
100+81	LT	--	12	DRIVEWAY
102+97	RT	--	5	SIDEWALK
104+83	RT	--	5	SIDEWALK
105+30	RT	16	--	DRIVEWAY
105+77	RT	--	5	SIDEWALK
106+45	RT	--	17	DRIVEWAY
106+78	LT	--	4	SIDEWALK
107+01	RT	--	16	DRIVEWAY
107+19	LT	16	--	DRIVEWAY
107+68	RT	--	37	DRIVEWAY
107+97	LT	18	--	DRIVEWAY
108+33	LT	--	4	SIDEWALK
108+39	RT	--	34	DRIVEWAY
109+31	RT	--	13	DRIVEWAY
109+84	RT	--	13	DRIVEWAY
109+90	LT	--	4	SIDEWALK
110+21	RT	--	19	DRIVEWAY
110+85	RT	--	19	DRIVEWAY
111+36	LT	--	4	SIDEWALK
113+55	LT	--	22	DRIVEWAY
114+10	LT	--	29	DRIVEWAY
115+23	LT	32	--	DRIVEWAY
115+32	RT	32	--	DRIVEWAY
116+66	LT	12	--	DRIVEWAY
117+76	RT	30	4	DRIVEWAY
118+10	LT & RT	--	55	PROJECT LIMITS
260+75	LT & RT	26	5	BEECH ST LIMITS
280+54	LT & RT	--	10	SIDEWALK
280+75	LT & RT	36	5	CHESTNUT ST LIMITS
289+28	LT & RT	32	5	MAPLE ST LIMITS
289+46	LT & RT	--	9	SIDEWALK
299+10	LT & RT	28	5	OAK ST LIMITS
299+50	RT	--	5	SIDEWALK
309+25	LT & RT	32	5	MICHAEL ST LIMITS
320+90	LT & RT	32	5	WEST LN LIMITS
329+00	LT & RT	32	5	LINDALE ST LIMITS
340+90	LT & RT	32	5	EAST LN LIMITS
350+50	LT & RT	--	10	SIDEWALK
350+75	LT & RT	32	4	DEAN RD LIMITS
360+50	RT	--	5	SIDEWALK
360+75	LT & RT	32	4	PIERRON ST LIMITS
369+50	LT & RT	34	5	LAR ANN ST LIMITS
370+65	LT & RT	32	5	LAR ANN ST LIMITS
	TOTALS	**780**	**850**	

STORM SEWER LATERALS

STATION	LOCATION	HOUSE NUMBER	SPV.0090.101 STORM SEWER LATERAL 4-INCH LF	SPV.0090.102 STORM SEWER LATERAL 6-INCH LF	SPV.0090.103 STORM SEWER LATERAL 8-INCH LF	COMMENTS
CATEGORY CODE 0020						
78+53	RT	631	13	--	--	CONNECT TO 15" SS
78+80	RT	625	13	--	--	CONNECT TO 15" SS
79+82	RT	619-621	36	--	--	CONNECT TO 34"X53" SS
80+34	RT	615	36	--	--	CONNECT TO 34"X53" SS
81+08	LT	608	36	--	--	CONNECT TO 34"X53" SS
81+20	RT	611	12	--	--	CONNECT TO STRUCTURE 307.2
81+76	RT	605	36	--	--	CONNECT TO 34"X53" SS
82+65	LT	604-606	36	--	--	CONNECT TO 34"X53" SS
82+91	LT	602	36	--	--	CONNECT TO 34"X53" SS
83+49	RT	575	36	--	--	CONNECT TO 34"X53" SS
84+11	RT	565	36	--	--	CONNECT TO STRUCTURE 310
84+56	LT	560	13	--	--	CONNECT TO 15" SS
84+98	RT	559	36	--	--	CONNECT TO 34"X53" SS
85+65	LT	554	36	--	--	CONNECT TO 34"X53" SS
85+75	RT	555	36	--	--	CONNECT TO 34"X53" SS
86+44	LT	548	36	--	--	CONNECT TO 34"X53" SS
87+15	LT	544-546	36	--	--	CONNECT TO 34"X53" SS
88+06	LT	540	36	--	--	CONNECT TO 34"X53" SS
89+08	LT	536	36	--	--	CONNECT TO 34"X53" SS
90+18	LT	532	37	--	--	CONNECT TO 29"X45" SS
90+33	RT	531	--	--	36	CONNECT TO 29"X45" SS
90+84	LT	528	37	--	--	CONNECT TO 29"X45" SS
91+75	LT	524	38	--	--	CONNECT TO 29"X45" SS
92+18	RT	525	34	--	--	CONNECT TO 29"X45" SS
93+33	LT	520	39	--	--	CONNECT TO 29"X45" SS
93+61	LT	514	39	--	--	CONNECT TO 29"X45" SS
94+66	RT	507	33	--	--	CONNECT TO 29"X45" SS
95+06	LT	508	39	--	--	CONNECT TO 29"X45" SS
95+76	RT	501	33	--	--	CONNECT TO 29"X45" SS
95+77	LT	502	39	--	--	CONNECT TO 29"X45" SS
97+72	LT	424	39	--	--	CONNECT TO 24" SS
97+07	RT	423	33	--	--	CONNECT TO 24" SS
97+82	RT	417	33	--	--	CONNECT TO 24" SS
98+50	RT	413	33	--	--	CONNECT TO 24" SS
99+15	LT	418	15	--	--	CONNECT TO STRUCTURE 346.1
99+15	LT	412	15	--	--	CONNECT TO STRUCTURE 346.1
99+70	RT	407	33	--	--	CONNECT TO 24" SS
100+33	LT	408	39	--	--	CONNECT TO 24" SS
100+90	RT	401	33	--	--	CONNECT TO 24" SS
101+26	LT	402	39	--	--	CONNECT TO 24" SS
103+14	LT	102	39	--	--	CONNECT TO 24" SS
105+61	RT	281	33	--	--	CONNECT TO 24" SS
106+30	RT	261-263	--	15	--	CONNECT TO STRUCTURE 365.2
107+41	RT	243	33	--	--	CONNECT TO 18" SS
107+95	RT	241	33	--	--	CONNECT TO 18" SS
108+88	RT	237-239	33	--	--	CONNECT TO 18" SS
110+00	RT	231-233	33	--	--	CONNECT TO STRUCTURE 399
112+88	RT	180	39	--	--	CONNECT TO 18" SS
115+94	LT	160	40	--	--	CONNECT TO STRUCTURE 404.1
115+94	LT	120	15	--	--	CONNECT TO STRUCTURE 404.1
116+93	LT	110	64	--	--	CONNECT TO 24" SS
360+41	LT	240	--	7	--	CONNECT TO STRUCTURE 371
360+41	RT	100	--	15	--	CONNECT TO STRUCTURE 371.2
		TOTALS	**1,633**	**37**	**36**	

ADJUSTING SANITARY SEWER AND WATER MAIN ITEMS

STATION	LOCATION	EXISTING ELEVATION	FINISHED ELEVATION	SPV.0060.401 ADJUST SANITARY SEWER MANHOLE EACH	SPV.0060.501 ADJUST WATER VALVE BOX EACH	SPV.0060.502 ADJUST WATER CURB BOX EACH	COMMENTS
CATEGORY CODE 0020							
77+07	34' LT	733.63	733.59	--	--	1	0.04' ADJUSTMENT DOWN
77+19	35' RT	733.22	733.25	--	--	1	0.03' ADJUSTMENT UP
77+73	10' LT	733.46	732.99	--	1	--	0.47' ADJUSTMENT DOWN
78+22	15' RT	733.31	732.74	1	--	--	0.57' ADJUSTMENT DOWN
78+33	35' RT	733.63	733.36	--	--	1	0.27' ADJUSTMENT DOWN
78+61	35' RT	732.93	733.04	--	--	1	0.12' ADJUSTMENT UP
81+00	15' RT	733.76	733.40	1	--	--	0.36' ADJUSTMENT DOWN
81+03	34' LT	734.12	734.01	--	--	1	0.11' ADJUSTMENT DOWN
81+38	36' RT	733.66	733.67	--	--	1	0.01' ADJUSTMENT UP
81+39	36' RT	733.68	733.68	--	--	1	0' ADJUSTMENT DOWN
82+30	34' LT	733.99	734.18	--	--	1	0.19' ADJUSTMENT UP
82+76	11' LT	734.07	734.00	--	1	--	0.07' ADJUSTMENT DOWN
82+79	7' LT	732.25	734.08	--	1	--	1.84' ADJUSTMENT UP
82+92	14' RT	734.05	733.99	1	--	--	0.06' ADJUSTMENT DOWN
83+75	33' RT	734.06	734.17	--	--	1	0.11' ADJUSTMENT UP
83+87	12' LT	734.10	733.96	--	1	--	0.14' ADJUSTMENT DOWN
83+98	14' RT	734.05	733.88	1	--	--	0.17' ADJUSTMENT DOWN
84+44	35' RT	734.50	734.29	--	--	1	0.21' ADJUSTMENT DOWN
84+77	33' LT	734.20	734.20	--	--	1	0' ADJUSTMENT UP
84+86	34' RT	734.62	734.30	--	--	1	0.32' ADJUSTMENT DOWN
86+30	13' RT	734.51	734.28	1	--	--	0.23' ADJUSTMENT DOWN
86+31	35' LT	734.13	734.47	--	--	1	0.34' ADJUSTMENT UP
86+32	35' LT	734.18	734.46	--	--	1	0.28' ADJUSTMENT UP
86+44	11' LT	734.33	734.37	--	1	--	0.04' ADJUSTMENT UP
86+50	11' LT	734.37	734.38	--	1	--	0.01' ADJUSTMENT UP
87+38	34' LT	734.73	734.92	--	--	1	0.19' ADJUSTMENT UP
88+00	33' LT	734.74	734.85	--	--	1	0.11' ADJUSTMENT UP
88+65	33' RT	734.68	734.61	--	--	1	0.07' ADJUSTMENT DOWN
89+22	34' LT	734.67	734.45	--	--	1	0.22' ADJUSTMENT DOWN
89+59	15' RT	734.89	734.03	1	--	--	0.86' ADJUSTMENT DOWN
89+73	11' LT	734.90	734.14	--	1	--	0.76' ADJUSTMENT DOWN
89+76	9' LT	735.02	734.20	--	1	--	0.82' ADJUSTMENT DOWN
89+79	12' LT	734.86	734.15	--	1	--	0.71' ADJUSTMENT DOWN
90+11	33' LT	735.08	734.84	--	--	1	0.24' ADJUSTMENT DOWN
90+60	35' RT	735.07	735.06	--	--	1	0.01' ADJUSTMENT DOWN
90+88	35' LT	735.00	735.02	--	--	1	0.02' ADJUSTMENT UP
92+10	33' RT	735.44	735.52	--	--	1	0.08' ADJUSTMENT UP
92+82	33' LT	735.68	735.62	--	--	1	0.06' ADJUSTMENT DOWN
93+04	15' RT	735.20	735.21	1	--	--	0.01' ADJUSTMENT UP
93+87	33' LT	736.43	736.30	--	--	1	0.13' ADJUSTMENT DOWN
94+61	33' RT	737.36	737.31	--	--	1	0.05' ADJUSTMENT DOWN
95+42	34' LT	737.90	738.25	--	--	1	0.35' ADJUSTMENT UP
96+35	10' LT	739.65	739.13	--	1	--	0.52' ADJUSTMENT DOWN
96+50	14' RT	739.82	739.41	1	--	--	0.41' ADJUSTMENT DOWN
96+83	15' RT	740.41	739.86	1	--	--	0.55' ADJUSTMENT DOWN
96+97	10' LT	740.85	740.03	--	1	--	0.82' ADJUSTMENT DOWN
97+52	34' RT	741.62	741.51	--	--	1	0.11' ADJUSTMENT DOWN
98+55	33' LT	742.74	742.78	--	--	1	0.04' ADJUSTMENT UP
98+61	35' RT	743.51	743.30	--	--	1	0.21' ADJUSTMENT DOWN
99+32	35' LT	743.73	743.66	--	--	1	0.07' ADJUSTMENT DOWN
99+74	34' RT	744.34	744.07	--	--	1	0.27' ADJUSTMENT DOWN
100+37	33' LT	744.21	744.01	--	--	1	0.2' ADJUSTMENT DOWN
102+09	11' LT	744.76	744.08	--	1	--	0.68' ADJUSTMENT DOWN
102+37	11' LT	744.78	744.18	--	1	--	0.6' ADJUSTMENT DOWN

ADJUSTING SANITARY SEWER AND WATER MAIN ITEMS

STATION	LOCATION	EXISTING ELEVATION	FINISHED ELEVATION	SPV.0060.401 ADJUST SANITARY SEWER MANHOLE EACH	SPV.0060.501 ADJUST WATER VALVE BOX EACH	SPV.0060.502 ADJUST WATER CURB BOX EACH	COMMENTS
CATEGORY CODE 0020							
102+43	14' RT	744.58	744.26	1	--	--	0.32' ADJUSTMENT DOWN
104+18	14' RT	745.20	744.89	1	--	--	0.31' ADJUSTMENT DOWN
104+82	34' RT	745.82	745.90	--	--	1	0.08' ADJUSTMENT UP
105+70	37' RT	746.25	746.36	--	--	1	0.11' ADJUSTMENT UP
105+94	15' RT	745.88	745.51	1	--	--	0.37' ADJUSTMENT DOWN
106+00	11' LT	746.04	745.49	--	1	--	0.55' ADJUSTMENT DOWN
106+06	11' LT	746.01	745.51	--	1	--	0.5' ADJUSTMENT DOWN
106+61	34' RT	746.75	746.59	--	--	1	0.16' ADJUSTMENT DOWN
107+47	34' RT	747.04	746.88	--	--	1	0.16' ADJUSTMENT DOWN
108+39	37' RT	747.70	747.35	--	--	1	0.35' ADJUSTMENT DOWN
108+42	34' LT	747.14	747.00	--	--	1	0.14' ADJUSTMENT DOWN
108+97	11' LT	747.04	746.54	--	1	--	0.5' ADJUSTMENT DOWN
109+08	11' LT	747.04	746.59	--	1	--	0.45' ADJUSTMENT DOWN
109+14	14' RT	746.94	746.67	1	--	--	0.27' ADJUSTMENT DOWN
109+30	36' RT	747.75	747.58	--	--	1	0.17' ADJUSTMENT DOWN
110+18	35' RT	747.45	747.51	--	--	1	0.06' ADJUSTMENT UP
112+09	17' LT	746.16	746.01	--	1	--	0.15' ADJUSTMENT DOWN
112+14	12' LT	746.33	746.08	--	1	--	0.25' ADJUSTMENT DOWN
112+23	9' LT	746.44	746.10	--	1	--	0.34' ADJUSTMENT DOWN
112+26	15' LT	746.31	745.97	--	1	--	0.34' ADJUSTMENT DOWN
112+29	15' RT	746.10	746.08	1	--	--	0.02' ADJUSTMENT DOWN
114+51	34' LT	744.51	744.42	--	--	1	0.09' ADJUSTMENT DOWN
115+32	32' LT	743.29	743.07	--	--	1	0.22' ADJUSTMENT DOWN
115+72	20' LT	742.07	741.75	--	1	--	0.32' ADJUSTMENT DOWN
115+85	14' LT	741.86	741.72	--	1	--	0.14' ADJUSTMENT DOWN
115+91	35' LT	742.59	742.63	--	--	1	0.04' ADJUSTMENT UP
260+39	10' LT	732.76	733.02	--	1	--	0.26' ADJUSTMENT UP
280+34	6' LT	733.88	733.70	--	1	--	0.18' ADJUSTMENT DOWN
289+56	12' RT	734.16	734.07	--	1	--	0.09' ADJUSTMENT DOWN
289+56	14' RT	734.14	734.07	--	1	--	0.07' ADJUSTMENT DOWN
309+52	9' LT	739.20	739.26	--	1	--	0.06' ADJUSTMENT UP
320+53	10' RT	740.43	740.12	--	1	--	0.31' ADJUSTMENT DOWN
329+50	6' RT	744.58	744.20	--	1	--	0.38' ADJUSTMENT DOWN
340+51	10' LT	744.56	744.22	--	1	--	0.34' ADJUSTMENT DOWN
350+36	10' RT	745.33	745.23	--	1	--	0.1' ADJUSTMENT DOWN
350+39	8' RT	745.36	745.22	--	1	--	0.14' ADJUSTMENT DOWN
360+37	10' LT	746.51	746.39	--	1	--	0.12' ADJUSTMENT DOWN
			TOTALS	**14**	**34**	**43**	

3

SANITARY SEWER LATERAL 4-INCH

STATION	LOCATION	NUMBER	SPV.0090.401 LF
CATEGORY CODE 0020			
77+45	LT & RT	634	25
81+40	LT & RT	608	25
82+16	LT & RT	604-606	25
82+84	LT & RT	602	25
84+49	LT & RT	560	45
86+39	LT & RT	548	25
88+11	LT & RT	540	25
89+32	LT & RT	536	25
97+20	LT & RT	424	25
98+21	LT & RT	418	25
99+23	LT & RT	412	25
102+78	LT & RT	102 (EAST LN)	25
		TOTAL	**320**

WATER ITEMS

STATION	LOCATION	HOUSE NUMBER	612.0802.S.001 INSULATION BOARD POLYSTYRENE 2-INCH SY	SPV.0090.501 WATER SERVICE 1-INCH LF	SPV.0090.502 WATER SERVICE 1 1/4-INCH LF
CATEGORY CODE 0020					
77+19	LT & RT	631-635	4	20	--
78+14	LT	--	4	--	--
78+33	LT & RT	631	4	20	--
78+50	LT	--	4	--	--
78+99	LT & RT	625	4	20	--
79+52	LT & RT	619-621	4	20	--
80+25	LT & RT	615	4	20	--
81+37	LT & RT	611	4	20	--
81+38	LT & RT	605	4	20	--
82+79	LT	--	4	--	--
83+70	LT & RT	575	4	20	--
84+10	LT	--	4	--	--
84+39	LT & RT	565	4	20	--
84+70	LT	--	4	--	--
84+85	LT & RT	559	4	20	--
86+46	LT	--	4	--	--
86+76	LT	--	4	--	--
88+64	LT & RT	535	4	20	--
89+24	LT	--	4	--	--
89+76	LT	--	4	--	--
89+92	LT	--	4	--	--
90+60	LT & RT	531	4	25	--
92+09	LT & RT	525	4	25	--
93+15	LT	--	4	--	--
94+61	LT & RT	507	4	25	--
96+42	RT	--	4	--	--
96+66	LT	--	4	--	--
97+51	LT & RT	417	4	25	--
98+60	LT & RT	413	4	25	--
99+15	LT	--	4	--	--
99+74	LT & RT	407	4	25	--
102+13	RT	--	4	--	--
102+81	LT	--	4	--	--
104+39	LT	--	4	--	--
104+82	LT & RT	351	4	--	25
105+70	LT & RT	281	4	--	25
105+85	LT	--	4	--	--
106+30	LT	--	4	--	--
106+62	LT & RT	261-263	4	--	25
107+47	LT & RT	241-243	4	--	25
109+02	LT	--	4	--	--
110+92	LT	--	4	--	--
111+90	LT	--	4	--	--
112+23	RT	--	4	--	--
115+95	LT	--	4	--	--
280+51	LT	--	4	--	--
320+40	RT	--	4	--	--
329+52	RT	--	4	--	--
329+59	RT	--	4	--	--
340+40	LT	--	4	--	--
		TOTALS	**200**	**370**	**100**

*INSULATION BOARD SHALL BE PLACED ON ALL CROSSINGS WHERE STORM SEWER IS WITHIN 24-INCHES OF THE WATER MAIN OR WATER SERVICE.

3

LIGHTING CONDUIT AND WIRE

FROM	-	TO	652.0225 CONDUIT RIGID NONMETALLIC SCHEDULE 40 2-INCH LF	655.0615 ELECTRICAL WIRE LIGHTING 10 AWG LF	655.0625 ELECTRICAL WIRE LIGHTING 6 AWG LF	REMARKS
ALL ITEMS ARE CATEGORY 0010						
CAP	-	PB 102	85	--	--	PULL WIRE ONLY
PB 102		PB 103	60	76	76	PULL WIRE ONLY
PB 103	-	SL 106	60	--	--	PULL WIRE ONLY
PB 103	-	SL 107	125	--	--	PULL WIRE ONLY
SL 107	-	SL 109	250	780	1,300	--
SL 109	-	PB 104	140	459	765	--
PB 104	-	SL 110	55	--	--	PULL WIRE ONLY
PB 104	-	SL 111	120	399	665	--
SL 111	-	SL 113	320	990	1,650	--
SL 113	-	PB 106	165	534	890	--
PB 106	-	PB 107	55	213	355	--
PB 107	-	CB 100	30	144	240	--
CAP	-	SL 106	120	--	--	PULL WIRE ONLY
SL 106	-	SL 108	260	810	1,350	--
SL 108	-	SL 110	270	840	1,400	--
SL 110	-	SL 112	260	810	1,350	--
SL 112	-	PB 105	95	324	540	--
PB 105	-	PB 107	240	768	1,280	--
PB 107	-	CB 100	30	144	240	--
CB 100	-	PB 109	30	144	240	--
PB 109	-	PB 108	55	213	355	--
PB 108	-	SL 115	185	594	990	--
SL 115	-	SL 117	350	1,080	1,800	--
SL 117	-	PB 111	200	639	1,065	--
PB 111	-	SL 119	105	354	590	--
SL 119	-	SL 121	320	990	1,650	--
SL 121	-	PB 114	150	489	815	--
PB 114	-	PB 115	70	258	430	--
PB 115	-	SL 123	130	429	715	--
SL 123	-	PB 116	150	489	815	--
PB 116	-	SL 124	60	--	--	PULL WIRE ONLY
PB 116	-	PB 117	85	303	505	--
PB 117	-	SL 125	105	354	590	--
SL 125	-	PB 118	150	489	815	--
PB 118	-	SL 126	55	--	--	PULL WIRE ONLY
PB 118	-	PB 119	65	243	405	--
PB 119		SL 127	100	339	565	--
SL 127	-	PB 120	150	489	815	--
PB 120	-	SL 128	50	--	--	PULL WIRE ONLY
PB 120	-	PB 121	75	273	455	--
PB 121	-	SL 129	70	249	415	--
SL 129	-	SL 131	320	660	990	--
SL 131	-	CAP	155	--	--	PULL WIRE ONLY
CB 100	-	PB 109	30	144	240	--
PB 109	-	SL 114	10	69	115	--
SL 114	-	PB 110	70	249	415	--
PB 110	-	SL 116	290	909	1,515	--
SL 116	-	SL 118	340	1,050	1,750	--
SL 118	-	PB 112	140	459	765	--
PB 112	-	SL 119	50	--	--	PULL WIRE ONLY
PB 112	-	SL 120	160	519	865	--
SL 120	-	PB 113	260	819	1,365	--
PB 113	-	SL 122	75	264	440	--
SL 122	-	PB 115	65	--	--	PULL WIRE ONLY
SL 122	-	SL 124	340	1,050	1,750	--
SL 124	-	SL 126	320	990	1,650	--
SL 126	-	SL 128	300	930	1,550	--
SL 128	-	PB 122	80	279	465	--
PB 122	-	SL 130	230	729	1,215	--
SL 130	-	SL 132	310	640	960	--
PROJECT TOTALS			8,995	25,469	42,181	

LIGHTING PULLBOXES

PULLBOX NUMBER	STATION	OFFSET	R/L	SPV.0060.201 PULL BOX NON-CONDUCTIVE 24X42-INCH EACH
ALL ITEMS ARE CATEGORY 0010				
PB 102	77+58'D'	26.5'	LT	1
PB 103	78+28'D'	26.5'	LT	1
PB 104	83+20'D'	26.5'	LT	1
PB 105	86+74'D'	26.5'	RT	1
PB 106	89+13'D'	26.5'	LT	1
PB 107	89+13'D'	26.5'	RT	1
PB 108	89+18'D'	26.5'	LT	1
PB 109	89+18'D'	26.5'	RT	1
PB 110	89+91'D'	24.5'	RT	1
PB 111	96+49'D'	25.0'	LT	1
PB 112	97+53'D'	25.0'	RT	1
PB 113	101+67'D'	25.0'	RT	1
PB 114	102+11'D'	25.0'	LT	1
PB 115	102+78'D'	24.9	LT	1
PB 116	105+50'D'	25.0'	LT	1
PB 117	106+30'D'	25.0'	LT	1
PB 118	108+82'D'	25.0'	LT	1
PB 119	109+44'D'	25.6'	LT	1
PB 120	111+84'D'	25.0'	LT	1
PB 121	112+64'D'	25.0'	LT	1
PB 122	112+65'D'	25.0'	RT	1
PROJECT TOTALS				21

3

LIGHTING BASES

LIGHT NUMBER	STATION	OFFSET	R/L	SPV.0060.202 DECORATIVE STREET LIGHT UNIT EACH	655.0610 ELECTRICAL WIRE LIGHTING 12 AWG LF
ALL ITEMS ARE CATEGORY 0010					
SL 106	77+96'D'	26.8'	RT	1	147
SL 107	79+34'D'	26.8'	LT	1	147
SL 108	80+53'D'	26.8'	RT	1	147
SL 109	81+83'D'	26.9'	LT	1	147
SL 110	83+20'D'	26.8'	RT	1	147
SL 111	84+40'D'	26.9'	LT	1	147
SL 112	85+81'D'	26.8'	RT	1	147
SL 113	87+55'D'	26.9'	LT	1	147
SL 114	89+26'D'	26.8'	RT	1	147
SL 115	91+02'D'	24.9'	LT	1	147
SL 116	92+78'D'	24.8'	RT	1	147
SL 117	94+49'D'	24.9'	LT	1	147
SL 118	96+13'D'	24.8'	RT	1	147
SL 119	97+53'D'	24.9'	LT	1	147
SL 120	99+13'D'	24.8'	RT	1	147
SL 121	100+67'D'	24.9'	LT	1	147
SL 122	102+39'D'	24.8'	RT	1	147
SL 123	104+08'D'	24.9'	LT	1	147
SL 124	105+76'D'	24.8'	RT	1	147
SL 125	107+35'D'	24.8'	LT	1	147
SL 126	108+95'D'	24.8'	RT	1	147
SL 127	110+45'D'	24.9'	LT	1	147
SL 128	111+89'D'	24.8'	RT	1	147
SL 129	113+35'D'	24.9'	LT	1	147
SL 130	114+94'D'	25.0'	RT	1	147
SL 131	116+51'D'	25.1'	LT	1	147
SL 132	118+01'D'	24.8'	RT	1	147
PROJECT TOTALS				27	3969

LIGHTING CONTROL

CABINET NUMBER	STATION	OFFSET	R/L	650.8500.001 CONSTRUCTION STAKING ELECTRICAL INSTALLATIONS 4880-01-71 LS	654.0230 CONCRETE CONTROL CABINET BASES TYPE L30 EACH	656.0200.001 ELECTRICAL SERVICE METER BREAKER PEDESTAL (CB100) LS	659.2130 LIGHTING CONTROL CABINETS 120/240 30-INCH EACH
ALL ITEMS ARE CATEGORY 0010							
CB100	89.34'D'	45.0'	RT	1	1	1	1
PROJECT TOTALS				1	1	1	1

CONVENTIONAL SIGNS AND ABBREVIATIONS

SECTION LINE	
QUARTER LINE	
SIXTEENTH LINE	
NEW REFERENCE LINE	
NEW R/W LINE	
EXISTING R/W LINE	
PROPERTY LINE	
CORPORATE LIMITS	
LOT AND TIE LINES	
SLOPE INTERCEPT	
UNDERGROUND FACILITY	T (TYPE)
FENCE	X X
LIMITED EASEMENT	
BUILDING	
IRON PIN	
R/W MONUMENT	
MANHOLE	
BUSHES	
TREES (DECIDUOUS)	
TREES (CONIFEROUS)	
POWER POLE (COMPENSABLE)	
SIGN	
POWER POLE	
UTILITY PEDESTAL	
GUY ANCHOR	
CATCH BASIN	
VALVE	
HYDRANT	
LIGHT POLE	
POINT NUMBER	
RECORDED AS	SLANTED
SAME OWNERSHIP	N
NO ACCESS (BY ACQUISITION)	
NO ACCESS (PREVIOUS)	
TEMPORARY LIMITED EASEMENT	
SECTION CORNER	T 12 N R 22 E

AC.	ACRES
A.P.	ACCESS POINT
BLDG.	BUILDING
C/L	CENTERLINE
CONC.	CONCRETE
CSM	CERTIFIED SURVEY MAP
D	DEGREE OF CURVE
DOC#	DOCUMENT NUMBER
E	EAST
E	ELECTRIC CABLE
ETAL	AND OTHERS
FM	FORCE MAIN
FO	FIBER OPTIC CABLE
FT.	FEET
GAR.	GARAGE
G	GAS MAIN
H.	HOUSE
I.P.	IRON PIPE
L	LENGTH OF CURVE
LC	LAND CONTRACT
LC	LONG CHORD
LCB	LONG CHORD BEARING
LT.	LEFT
MI.	MILE
MON.	MONUMENT
N	NORTH
OL	OUTLOT
P.C.	POINT OF CURVE
PERM.	PERMANENT
P.I.	POINT OF INTERSECTION
P.L.	PROPERTY LINE
P.L.E.	PERMANENT LIMITED EASEMENT
P.T.	POINT OF TANGENT
R	RADIUS
R	RANGE
R/L	REFERENCE LINE
REM.	REMAINING
RT.	RIGHT
R/W	RIGHT OF WAY
S	SOUTH
SAN	SANITARY SEWER
SQ.FT.	SQUARE FEET
SS	STORM SEWER
STA.	STATION
T	TELEPHONE
T	TANGENT
T	TOWNSHIP
TEMP.	TEMPORARY
TLE	TEMPORARY LIMITED EASEMENT
V/P	VOLUME/PAGE OF RECORDS
VAR.	VARIES
W	WATER MAIN
W	WEST
X	EAST COORDINATE
Y	NORTH COORDINATE

NOTES

POSITIONS SHOWN ON THIS PLAT ARE WISCONSIN STATE PLANE COORDINATES, SOUTH ZONE, 1927 ADJUSTMENT. VALUES SHOWN ARE GROUND COORDINATES, GROUND BEARINGS AND GROUND DISTANCES. GROUND DISTANCES MAY BE CONVERTED TO GRID DISTANCES BY MULTIPLYING BY A GRID FACTOR OF 0.99989982.

RIGHT-OF-WAY BOUNDARIES ARE DEFINED WITH COURSES OF THE PERIMETER OF THE HIGHWAY LANDS REFERENCED TO THE U.S. PUBLIC LAND SURVEY SYSTEM OR OTHER SURVEYS OF PUBLIC RECORD.

RIGHT-OF-WAY MONUMENTS ARE TYPE 2 MONUMENTS (TYPICALLY 1" x 24" IRON PIPE), AND WILL BE PLACED PRIOR TO THE COMPLETION OF THE PROJECT.

DIMENSIONING FOR THE NEW RIGHT-OF-WAY IS MEASURED ALONG AND PERPENDICULAR TO NEW REFERENCE LINES.

PROPERTY LINES SHOWN ON THIS PLAT ARE DRAWN FROM DATA DERIVED FROM MAPS AND DOCUMENTS OF PUBLIC RECORD AND/OR EXISTING OCCUPATIONAL LINES. THIS PLAT MAY NOT BE A TRUE REPRESENTATION OF EXISTING PROPERTY LINES, EXCLUDING RIGHT-OF-WAY, AND SHOULD NOT BE USED AS A SUBSTITUTE FOR AN ACCURATE FIELD SURVEY.

A TEMPORARY LIMITED EASEMENT (TLE) IS A RIGHT FOR CONSTRUCTION PURPOSES, AS DEFINED HEREIN, INCLUDING THE RIGHT TO OPERATE NECESSARY EQUIPMENT THEREON, THE RIGHT OF INGRESS AND EGRESS, AS LONG AS REQUIRED FOR SUCH PUBLIC PURPOSE, INCLUDING THE RIGHT TO PRESERVE, PROTECT, REMOVE, OR PLANT THEREON ANY VEGETATION THAT THE HIGHWAY AUTHORITIES MAY DEEM DESIRABLE. ALL (TLEs) ON THIS PLAT EXPIRE AT THE COMPLETION OF THE CONSTRUCTION PROJECT FOR WHICH THIS INSTRUMENT IS GIVEN.

FOR THE LATEST ACCESS/DRIVEWAY INFORMATION, CONTACT THE VILLAGE OF BELGIUM.

REVISED: 6/29/16

BEGIN RELOCATION ORDER
STA. 77+00.00
2.18' SOUTH AND 91.38' WEST OF THE
SOUTH QUARTER CORNER OF SECTION 15, T12N, R22E
Y 553910.12
X 570207.31

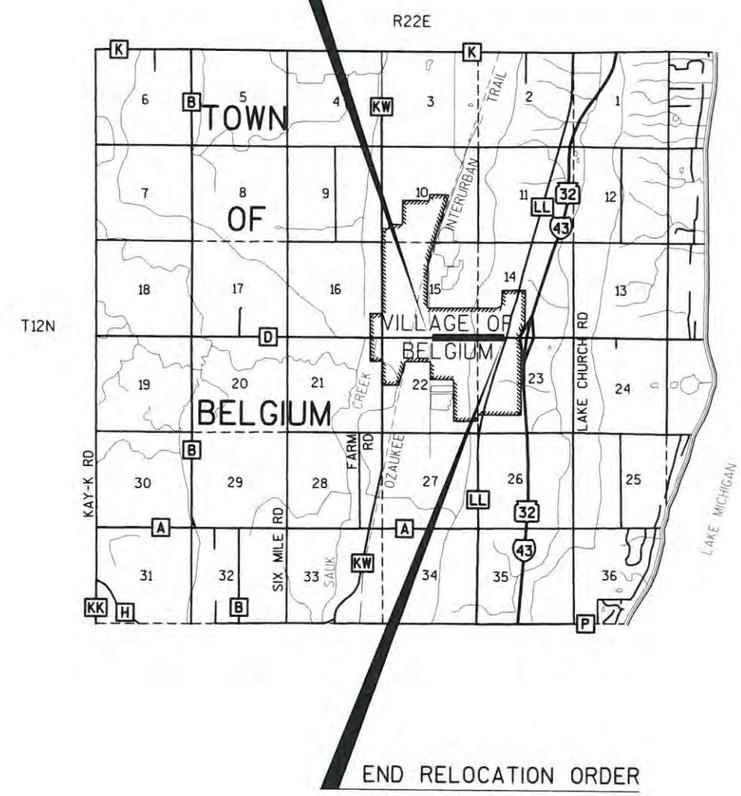

END RELOCATION ORDER
STA. 118+10.00
39.03' SOUTH AND 1274.24' WEST OF THE
SOUTH QUARTER CORNER OF SECTION 14, T12N, R22E
Y 554019.78
X 574315.83

LAYOUT

0 1 2 MILES
SCALE

TOTAL NET LENGTH OF CENTERLINE = 0.778 MILES

R/W PROJECT NUMBER	SHEET NUMBER	TOTAL SHEETS
4880-01-00		
FEDERAL PROJECT NUMBER	4.01	14

PLAT OF RIGHT OF WAY REQUIRED FOR
CTH D (MAIN STREET)
BEECH STREET - CTH LL

CTH D — OZAUKEE COUNTY

CONSTRUCTION PROJECT NUMBER
4880-01-71

REVISION	DATE

ACCEPTED FOR
VILLAGE OF BELGIUM
7/11/16 — DATE
VICKIE BOEHNLEIN
VILLAGE PRESIDENT

ACCEPTED FOR
OZAUKEE COUNTY
7/6/16 — DATE
JON EDGREN
PUBLIC WORKS DIRECTOR

ORIGINAL PLANS PREPARED BY
GREMMER & ASSOCIATES, INC.
CONSULTING ENGINEERS
Stevens Point • Fond du Lac
83 South Pioneer Road, Suite 300 • Fond du Lac, WI 54935
(920) 924-5720 • fax (920) 924-5725

WISCONSIN
JAY W. PANETTI
S-2747
WAUPUN,
WI
LAND SURVEYOR

6/29/16 — DATE
JAY W. PANETTI, 123

4

SCHEDULE OF LANDS & INTERESTS REQUIRED

AREAS SHOWN ON THE TOTAL ACRES COLUMN MAY BE APPROXIMATE AND ARE DERIVED FROM TAX ROLLS OR OTHER AVAILABLE SOURCES AND MAY NOT INCLUDE LANDS OF THE OWNER WHICH ARE NOT CONTIGUOUS TO THE AREA TO BE ACQUIRED. OWNER'S NAMES ARE SHOWN FOR REFERENCE PURPOSES ONLY AND ARE SUBJECT TO CHANGE PRIOR TO THE TRANSFER OF LAND INTERESTS TO THE DEPARTMENT.

PARCEL NUMBER	SHEET NUMBER	OWNER(S)	INTEREST REQUIRED	TOTAL ACRES (EXISTING)	R/W ACRES REQUIRED NEW	EXISTING	TOTAL	TOTAL ACRES REMAINING	T.L.E. ACRES TEMP.	TAX KEY NUMBER
1	4.06	DENIS A. MUELLER & LILA M. MUELLER	TLE	0.386	0	0	0	0.386	0.010	18-050-02-23.004
2	4.06	JODI SCHUBERT & JODY SCHUBERT	TLE	0.592	0	0	0	0.592	0.013	18-050-05-25.000
4	4.06	MARY BETH PETERSON	TLE	0.249	0	0	0	0.249	0.016	18-050-04-01.001
6	4.06	KEVIN M.C. JOHNSON & MARGARET M. JOHNSON	TLE	0.245	0	0	0	0.245	0.014	18-050-04-01.002
7	4.06	DANIEL G. DERLER	TLE	0.410	0	0	0	0.410	0.016	18-050-04-01.000
8	4.06	MICHAEL MUELLER & SHEILA MUELLER	TLE	0.241	0	0	0	0.241	0.010	18-050-04-02.000
9	4.06	JAMES R. FILLION & ANN M. FILLION	TLE	0.758	0	0	0	0.758	0.040	18-050-03-01.001
11	4.06	ADAM T. ARN & KATHLEEN M. ARN	TLE	0.241	0	0	0	0.241	0.010	18-050-04-03.000
12	4.06, 4.07	JULIE TOMKIEWICZ	TLE	0.482	0	0	0	0.482	0.012	18-050-04-04.002
13	4.06, 4.07	F SHO PROPERTIES LLC	TLE	0.344	0	0	0	0.344	0.017	18-050-03-01.003
14	4.07	LYMAN REAL ESTATE LIQUIDATING TRUST	TLE	17.000	0	0	0	17.000	0.034	18-050-04-04.000
16	4.07	JORDYN WRIGHT	FEE, TLE	0.367	0.001	0	0.001	0.366	0.015	18-050-03-01.005
17	4.07	KEVIN P. KOWALKOWSKI & GAIL R. KOWALKOWSKI	TLE	0.337	0	0	0	0.337	0.018	18-050-04-04.003
18	4.07	JAMES M. GOTTSACKER & JILL M. GOTTSACKER	TLE	0.241	0	0	0	0.241	0.017	18-050-04-04.001
19	4.07	THE KLINGBAIL FAMILY TRUST	FEE, TLE	0.119	0.001	0	0.001	0.118	0.004	18-050-03-07.009
21	4.07	RITA M. SALAMUN	TLE	0.551	0	0	0	0.551	0.019	18-050-03-04.000
22	4.07	PETER M. ANZIA & MARY BETH ANZIA	TLE	0.287	0	0	0	0.287	0.011	18-057-01-01.001
23	4.07	HENRY C. EGERER III & JULIE A. EGERER	FEE, TLE	0.141	0.001	0	0.001	0.140	0.014	18-057-01-03.001
24	4.07	PATRICK S. PARKER	TLE	0.303	0	0	0	0.303	0.012	18-050-03-06.000
26	4.07	PATRICIA G. BLEY	TLE	0.985	0	0	0	0.985	0.011	18-050-03-07.000
27	4.07	PORT WASHINGTON STATE BANK	FEE, TLE	0.158	0.001	0	0.001	0.157	0.010	18-057-02-01.000
	4.07		TLE	0.109	0	0	0	0.109	0.005	18-057-02-03.000
			TOTALS:	0.267	0.001	0	0.001	0.266	0.015	
28	4.07, 4.08	COPPERCREEK PROPERTIES, LLC	TLE	0.550	0	0	0	0.550	0.013	18-050-03-07.008
29	4.07, 4.08	PORT WASHINGTON STATE BANK & CAROLE H. PRISKE REVOCABLE TRUST DATED JULY 15, 1994	TLE	0.298	0	0	0	0.298	0.015	18-057-02-04.001
31	4.08	RONALD V. WOLLNER & PATRICIA M. WOLLNER	TLE	0.499	0	0	0	0	0.017	18-050-03-07.010
32	4.08	RONALD J. WEYKER & LOIS M. WEYKER	TLE	0.342	0	0	0	0	0.017	18-057-02-08.001
33	4.08	WILLIAM J. PEIFFER & TAMMY S. PEIFFER	TLE	1.861	0	0	0	0	0.025	18-050-03-07.016
34	4.08	DENNIS E. PERKINS & SUZANNE J. PERKINS	FEE, TLE	0.562	0.011	0	0.011	0.551	0.023	18-057-03-01.000

NOTE: THE PURPOSE FOR TLE'S IS FOR DRIVEWAYS AND SLOPES UNLESS OTHERWISE NOTED.

4

4

REVISED: 7/11/2016

REVISION DATE

DATE 7/11/2016

GRID FACTOR N/A

SCALE, FEET 0 --- ---

HWY: CTH D

COUNTY: OZAUKEE

STATE R/W PROJECT NUMBER 4880-01-00

CONSTRUCTION PROJECT NUMBER 4880-01-71

PLAT SHEET 4.02

PS&E SHEET 124 E

FILE NAME : 48800100-040102-RP.DWG PLOT DATE : 1/4/2017 1:29 PM PLOT BY : JAY PANETTI PLOT NAME : PLOT SCALE : **********

WISDOT/CADDS SHEET 75

SCHEDULE OF LANDS & INTERESTS REQUIRED

AREAS SHOWN ON THE TOTAL ACRES COLUMN MAY BE APPROXIMATE AND ARE DERIVED FROM TAX ROLLS OR OTHER AVAILABLE SOURCES AND MAY NOT INCLUDE LANDS OF THE OWNER WHICH ARE NOT CONTIGUOUS TO THE AREA TO BE ACQUIRED. OWNER'S NAMES ARE SHOWN FOR REFERENCE PURPOSES ONLY AND ARE SUBJECT TO CHANGE PRIOR TO THE TRANSFER OF LAND INTERESTS TO THE DEPARTMENT.

PARCEL NUMBER	SHEET NUMBER	OWNER(S)	INTEREST REQUIRED	TOTAL ACRES (EXISTING)	R/W ACRES REQUIRED NEW	EXISTING	TOTAL	TOTAL ACRES REMAINING	T.L.E. ACRES TEMP.	TAX KEY NUMBER
36	4.08	DEBRA WALTERS	TLE	0.350	0	0	0	0.350	0.011	18-050-03-08.003
37	4.08	KRAIG BENSON & MICHELE A. BENSON	TLE	0.630	0	0	0	0.630	0.015	18-050-03-09.004
38	4.08, 4.09	RICHARD E. CISESKE	TLE	2.860	0	0	0	2.860	0.049	18-050-04-07.005
39	4.08	BRENDA LEE STALLBAUM	TLE	0.441	0	0	0	0.441	0.015	18-050-03-11.000
41	4.08, 4.09	JEFFREY G. ANZIA & BARBARA C. ANZIA	TLE	0.500	0	0	0	0.500	0.018	18-050-03-12.002
42	4.09	GLANNIS R. BOWMAN & VERNA M. BOWMAN	TLE	0.459	0	0	0	0.459	0.016	18-050-03-13.002
43	4.09	KEVIN SCHULLER	TLE	0.530	0	0	0	0.530	0.022	18-050-04-05.000
44	4.09	JILL M. VERHUNCE & WILLIAM S. MARTENS	TLE	0.406	0	0	0	0.406	0.016	18-051-01-01.000
46	4.09	PATRICK A. RADTKE & SUSAN R. TAYLOR	TLE	0.313	0	0	0	0.313	0.014	18-050-04-06.000
47	4.09	DENNIS P. KLEIN & JEAN M. KLEIN	TLE	0.402	0	0	0	0.402	0.016	18-051-01-02.000
48	4.09	FAY L. WAGNER	TLE	0.313	0	0	0	0.313	0.010	18-050-04-07.000
49	4.09	SANDRA LE PAK	TLE	0.402	0	0	0	0.402	0.016	18-051-02-01.000
51	4.09	WILLIAM S. MARTENS & SERENA J. MARTENS	TLE	0.362	0	0	0	0.362	0.012	18-050-04-07.006
52	4.09, 4.10	THEODORE JOHN BARANEK, SR.	TLE	0.402	0	0	0	0.402	0.016	18-051-02-02.000
53	4.09, 4.10	J & L RISCH, LLC	TLE	0.482	0	0	0	0.482	0.016	18-050-04-07.025
54	4.10	AGUSTIN SALAZAR & CLAUDIA P. SALAZAR	TLE	0.145	0	0	0	0.145	0.016	18-051-02-03.000
56	4.10	BENJAMIN JUS-TUS JOHNSON & REBECCA JOHNSON	TLE	1.089	0	0	0	1.089	0.020	18-050-04-07.003
57	4.10	GERALD G. HUBING & ARLENE HUBING	TLE	0.402	0	0	0	0.402	0.016	18-051-02-04.000
58	4.10	VIRGIL C. MCCASLIN & MARY J. MCCASLIN, AS TRUSTEES OF THE VIRGIL C. MCCASLIN & MARY J. MCCASLIN LIVING TRUST DATED JULY 1, 2003	TLE	0.723	0	0	0	0.723	0.024	18-050-04-07.028
59	4.10	CAROL STATLER	TLE	0.402	0	0	0	0.402	0.016	18-051-02-05.000
61	4.10	GENERAL TELEPHONE COMPANY OF WISCONSIN	TLE	0.406	0	0	0	0.406	0.016	18-058-01-02.000
	4.10		TLE	0.406	0	0	0	0.406	0.026	18-058-01-01.000
			TOTALS:	0.812	0	0	0	0.812	0.042	
62	4.10	DONALD C. GIBSON & KANDY B. GIBSON	TLE	0.647	0	0	0	0.647	0.026	18-051-03-01.000
63	4.11	CAROL M. MCGILVARY	TLE	0.588	0	0	0	0.588	0.023	18-061-0001.00
64	4.11	BREW CITY PROPERTIES LLC	TLE	0.280	0	0	0	0.280	0.023	18-023-06-005.00
	4.11		TLE	0.280	0	0	0	0.280	0.015	18-023-06-002.00
			TOTALS:	0.560	0	0	0	0.560	0.038	

NOTE: THE PURPOSE FOR TLE'S IS FOR DRIVEWAYS AND SLOPES UNLESS OTHERWISE NOTED.

REVISED: 7/11/2016

SCHEDULE OF LANDS & INTERESTS REQUIRED

AREAS SHOWN ON THE TOTAL ACRES COLUMN MAY BE APPROXIMATE AND ARE DERIVED FROM TAX ROLLS OR OTHER AVAILABLE SOURCES AND MAY NOT INCLUDE LANDS OF THE OWNER WHICH ARE NOT CONTIGUOUS TO THE AREA TO BE ACQUIRED. OWNER'S NAMES ARE SHOWN FOR REFERENCE PURPOSES ONLY AND ARE SUBJECT TO CHANGE PRIOR TO THE TRANSFER OF LAND INTERESTS TO THE DEPARTMENT.

PARCEL NUMBER	SHEET NUMBER	OWNER(S)	INTEREST REQUIRED	TOTAL ACRES (EXISTING)	R/W ACRES REQUIRED NEW	EXISTING	TOTAL	TOTAL ACRES REMAINING	T.L.E. ACRES TEMP.	TAX KEY NUMBER
66	4.11	ANDY'S RENTALS LLC	TLE	0.346	0	0	0	0.346	0.023	18-061-0005.00
67	4.11	LOUIS A. MENCHACA, JR. & LORENE A. MENCHACA	TLE	0.280	0	0	0	0.280	0.026	18-023-06-003.00
68	4.11	BARBARA J. CROMELL (UNIT A)	TLE	0.280	0	0	0	0.280	0.026	18-073-0001.000
		WILLIAM KLEIN (UNIT B)								18-073-0002.000
69	4.11	BARBARA A. SWIETLIK METZ REVOCABLE TRUST	TLE	0.331	0	0	0	0.331	0.024	18-061-0010.00
		DATED APRIL 5, 2011, BARBARA A. SWIETLIK METZ, TRUSTEE (LC VENDOR)								
		DAVID N. WINNEMULLER & MYRA A. WINNEMULLER (LC VENDEE)								
71	4.11	RONALD R. SCHMITZ	TLE	0.284	0	0	0	0.284	0.026	18-065-01-01.000
72	4.11, 4.12	OPERATION HOMEFRONT, INC. (UNIT 1)	TLE	0.284	0	0	0	0.284	0.026	18-104-0001.000
		MATT J. SCHWANZ & STACIE L. PUERZER (UNIT 2)								18-104-0002.000
73	4.11, 4.12	JAMES M. KLOS	TLE	0.313	0	0	0	0.313	0.029	18-061-0015.00
74	4.12	ADRIANNE ANSAY & STANLEY SOBILO	TLE	0.284	0	0	0	0.284	0.026	18-065-01-03.000
		D/B/A SOBILO ENTERPRISES								
76	4.12	WALTER F. LAZORE	TLE	0.300	0	0	0	0.300	0.023	18-014-11-006.00
77	4.12	MICHAEL J. RAETHER & REBECCA R. RAETHER (UNIT A)	TLE	0.298	0	0	0	0.298	0.017	18-074-0001.000
		RALPH O. BLAUBACH & MARGARET E. BLAUBACH (UNIT B)								18-074-0002.000
78	4.12	ANSO A. ANSAY & LUELLA M. ANSAY	TLE	0.298	0	0	0	0.298	0.026	18-063-0020.000
79	4.12, 4.13	TOWN OF BELGIUM (UNIT 100)	TLE	1.261	0	0	0	1.261	0.039	18-123-0100.000
		JERRY-VALI INVESTMENTS, LLC (UNIT 200)								18-123-0200.000
81	4.12, 4.13	JOHN A. JENTGES & NANCY L. JENTGES, AS TRUSTEES OF THE JOHN A. JENTGES & NANCY L. JENTGES LIVING TRUST DATED NOVEMBER 4, 2002	TLE	6.060	0	0	0	6.060	0.049	18-014-11-027.00
82	4.13	SUKHDEV SINGH GILL	TLE	0.850	0	0	0	0.850	0.027	18-023-06-017.00
83	4.13	KIM DALE FALK & KAY MARIE FALK	TLE	0.390	0	0	0	0.390	0.019	18-014-11-026.00
84	4.13	TALWINDER S. GILL	TLE	1.235	0	0	0	1.235	0.029	18-023-06-022.00
91	4.09, 4.10, 4.11, 4.12, 4.13	FRONTIER COMMUNICATIONS	RELEASE OF RIGHTS							
92	4.11, 4.12, 4.13	WE ENERGIES	RELEASE OF RIGHTS							
93	4.07, 4.08, 4.09, 4.10, 4.11, 4.12, 4.13	FRONTIER COMMUNICATIONS	RELEASE OF RIGHTS							
94	4.11, 4.12, 4.13	TIME WARNER CABLE	RELEASE OF RIGHTS							

NOTE: THE PURPOSE FOR TLE'S IS FOR DRIVEWAYS AND SLOPES UNLESS OTHERWISE NOTED.

4

4

REVISED: 1/4/2017

REVISION DATE

DATE 7/11/2016

GRID FACTOR N/A

SCALE, FEET 0

HWY: CTH D

COUNTY: OZAUKEE

STATE R/W PROJECT NUMBER 4880-01-00

CONSTRUCTION PROJECT NUMBER 4880-01-71

PLAT SHEET 4.04

PS&E SHEET 126 E

FILE NAME : 48800100-040102-RP.DWG PLOT DATE : 1/4/2017 1:30 PM PLOT BY : JAY PANETTI PLOT NAME : PLOT SCALE : ********** WISDOT/CADDS SHEET 75

4 4

REVISED: 7/11/2016

REVISION DATE	DATE 7/11/2016	SCALE, FEET 0 200 400	HWY: CTH D	STATE R/W PROJECT NUMBER 4880-01-00	PLAT SHEET 4.05	
	GRID FACTOR N/A		COUNTY: OZAUKEE	CONSTRUCTION PROJECT NUMBER 4880-01-71	PS&E SHEET	E

FILE NAME : 48800100-040102-RP.DWG PLOT DATE : 1/4/2017 1:30 PM PLOT BY : JAY PANETTI PLOT NAME : PLOT SCALE : 1 IN:400 FT

WISDOT/CADDS SHEET 75

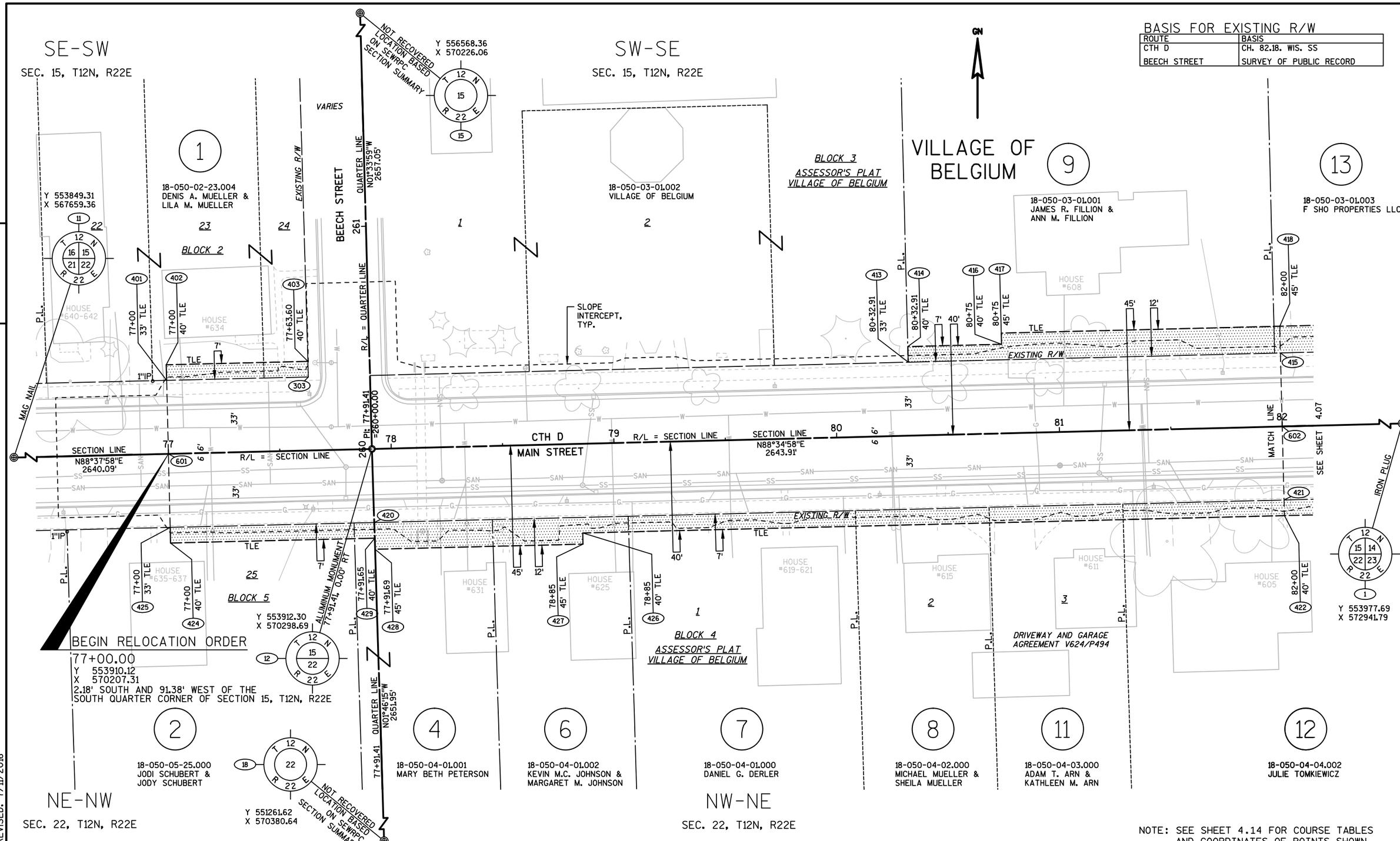

BASIS FOR EXISTING R/W

ROUTE	BASIS
CTH D	CH. 82.18. WIS. SS
BEECH STREET	SURVEY OF PUBLIC RECORD

NOTE: SEE SHEET 4.14 FOR COURSE TABLES AND COORDINATES OF POINTS SHOWN.

REVISED: 7/11/2016

REVISION DATE	DATE 7/11/2016	SCALE, FEET 0 20 40	HWY: CTH D	STATE R/W PROJECT NUMBER 4880-01-00	PLAT SHEET 4.06	
	GRID FACTOR 0.99989982		COUNTY: OZAUKEE	CONSTRUCTION PROJECT NUMBER 4880-01-71	PS&E SHEET	E

FILE NAME : 48800100-040102-RP.DWG PLOT DATE : 1/4/2017 1:49 PM PLOT BY : JAY PANETTI PLOT NAME : PLOT SCALE : ********** WISDOT/CADDS SHEET 75

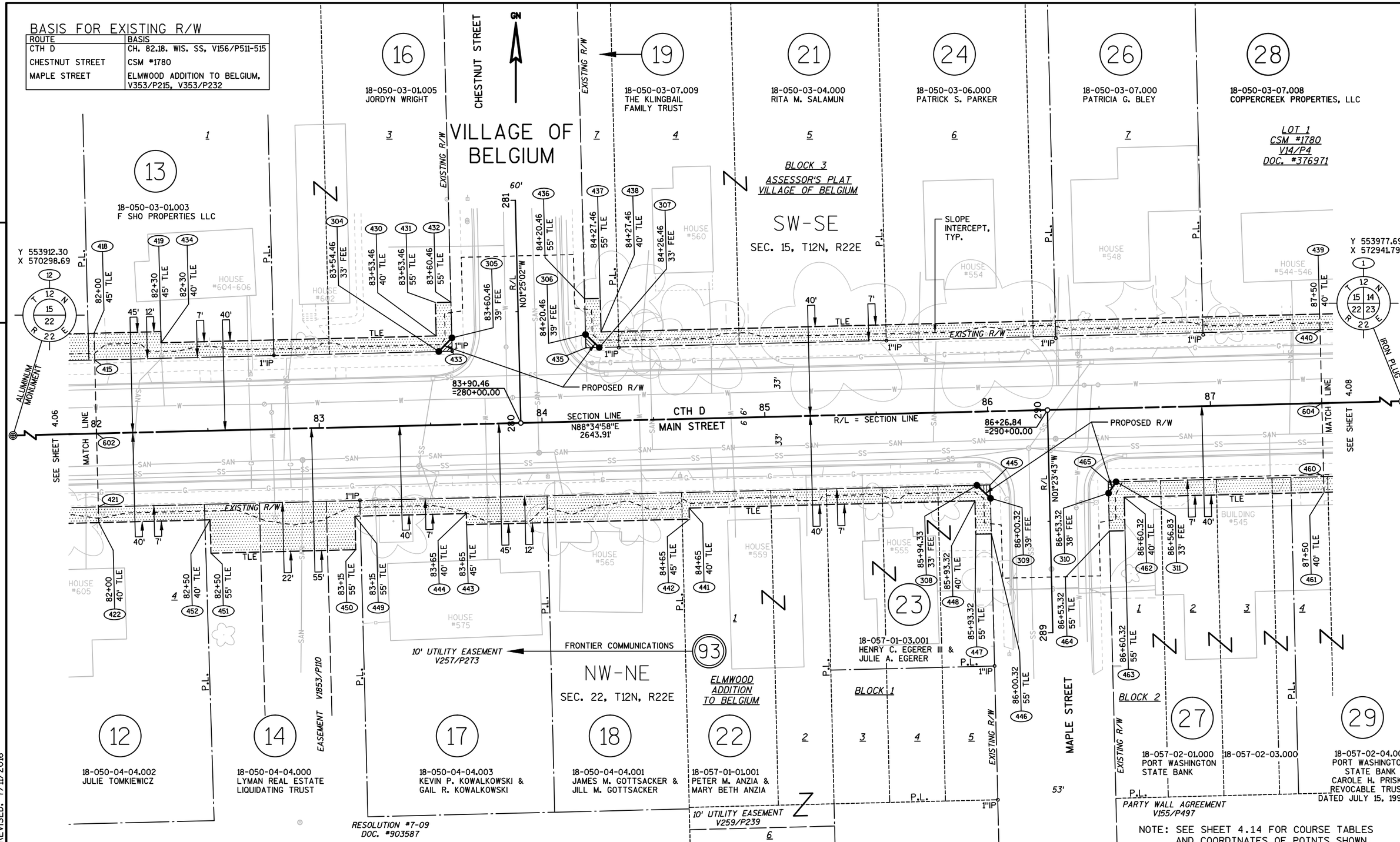

BASIS FOR EXISTING R/W

ROUTE	BASIS
CTH D	CH. 82.18. WIS. SS, V156/P511-515
CHESTNUT STREET	CSM #1780
MAPLE STREET	ELMWOOD ADDITION TO BELGIUM, V353/P215, V353/P232

NOTE: SEE SHEET 4.14 FOR COURSE TABLES AND COORDINATES OF POINTS SHOWN.

REVISED: 7/11/2016

REVISION DATE	DATE 7/11/2016	SCALE, FEET 0 20 40	HWY: CTH D	STATE R/W PROJECT NUMBER 4880-01-00	PLAT SHEET 4.07	
	GRID FACTOR 0.99989982		COUNTY: OZAUKEE	CONSTRUCTION PROJECT NUMBER 4880-01-71	PS&E SHEET	E

FILE NAME : 48800100-040102-RP.DWG PLOT DATE : 1/4/2017 1:50 PM PLOT BY : JAY PANETTI PLOT NAME : PLOT SCALE : ********** WISDOT/CADDS SHEET 75

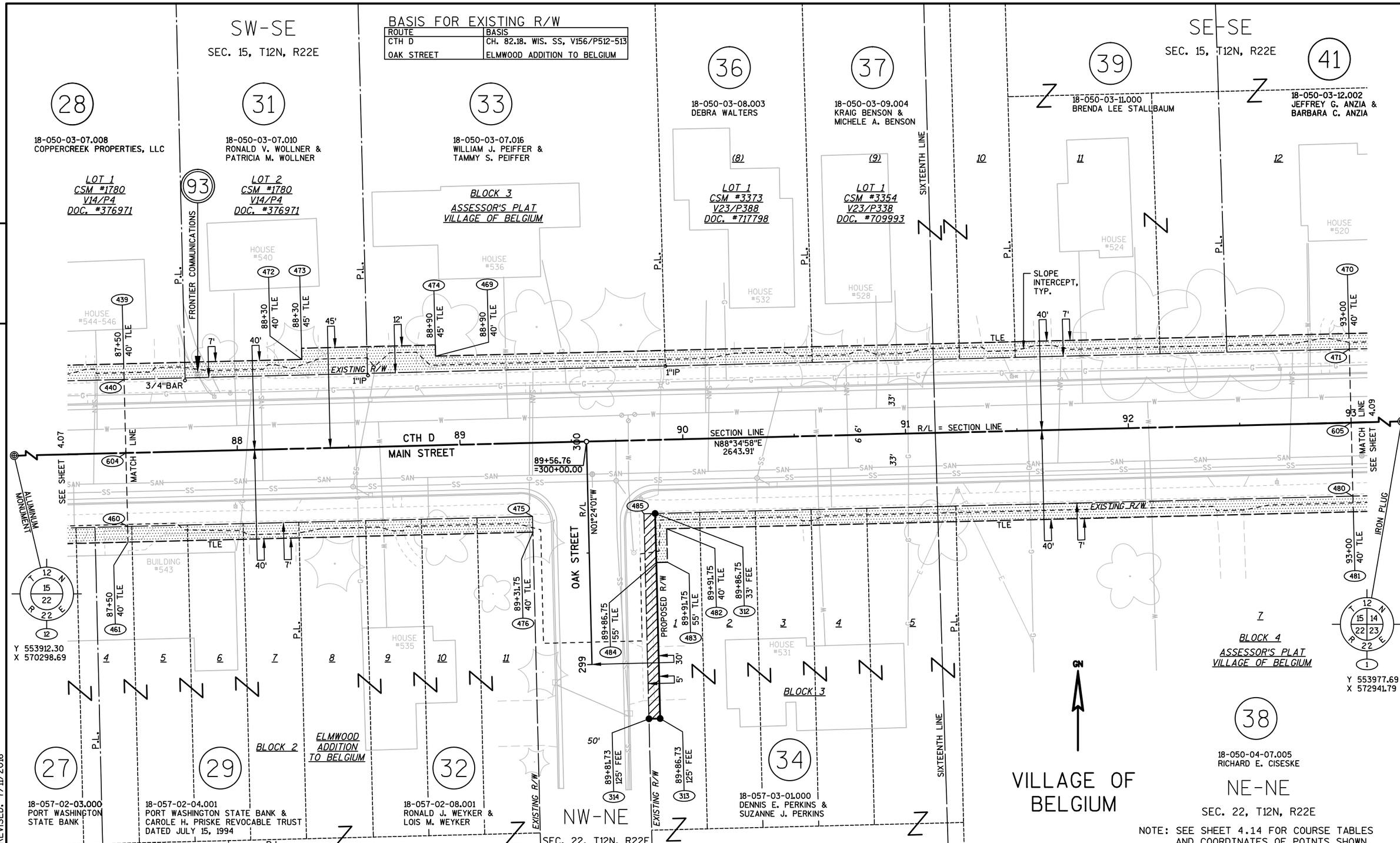

BASIS FOR EXISTING R/W

ROUTE	BASIS
CTH D	CH. 82.18. WIS. SS, V156/P512-513
OAK STREET	ELMWOOD ADDITION TO BELGIUM

NOTE: SEE SHEET 4.14 FOR COURSE TABLES AND COORDINATES OF POINTS SHOWN.

REVISED: 7/11/2016

REVISION DATE	DATE 7/11/2016	SCALE, FEET 0 20 40	HWY: CTH D	STATE R/W PROJECT NUMBER 4880-01-00	PLAT SHEET 4.08	
	GRID FACTOR 0.99989982		COUNTY: OZAUKEE	CONSTRUCTION PROJECT NUMBER 4880-01-71	PS&E SHEET 130	E

FILE NAME : 48800100-040102-RP.DWG PLOT DATE : 1/4/2017 1:51 PM PLOT BY : JAY PANETTI PLOT NAME : PLOT SCALE : ********** WISDOT/CADDS SHEET 75

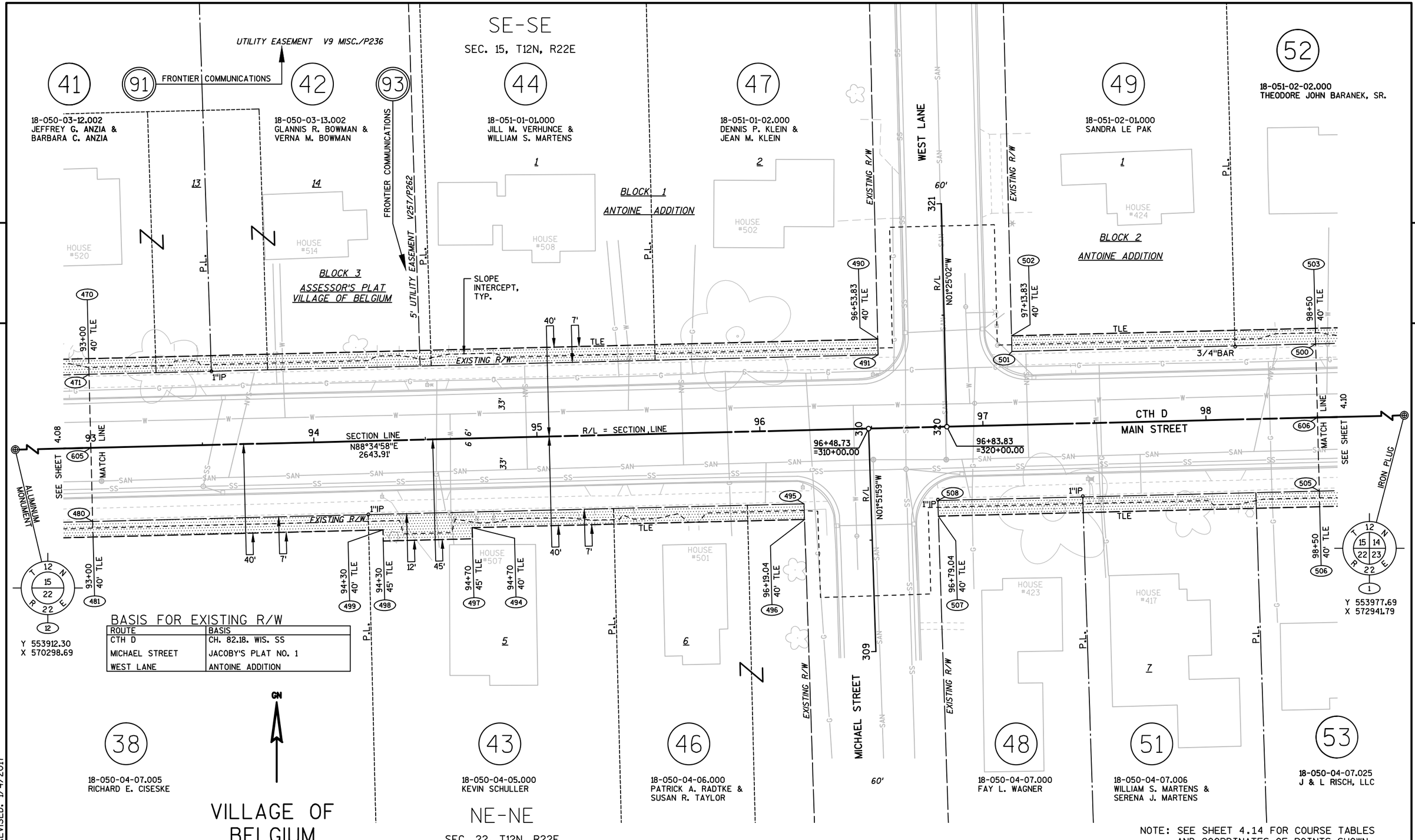

BASIS FOR EXISTING R/W

ROUTE	BASIS
CTH D	CH. 82.18. WIS. SS
MICHAEL STREET	JACOBY'S PLAT NO. 1
WEST LANE	ANTOINE ADDITION

NOTE: SEE SHEET 4.14 FOR COURSE TABLES AND COORDINATES OF POINTS SHOWN.

REVISED: 1/4/2017

REVISION DATE	DATE 7/11/2016	SCALE, FEET 0 20 40	HWY: CTH D	STATE R/W PROJECT NUMBER 4880-01-00	PLAT SHEET 4.09	
	GRID FACTOR 0.99989982		COUNTY: OZAUKEE	CONSTRUCTION PROJECT NUMBER 4880-01-71	PS&E SHEET 131	E

FILE NAME : 48800100-040102-RP.DWG PLOT DATE : 1/4/2017 1:54 PM PLOT BY : JAY PANETTI PLOT NAME : PLOT SCALE : ********** WISDOT/CADDS SHEET 75

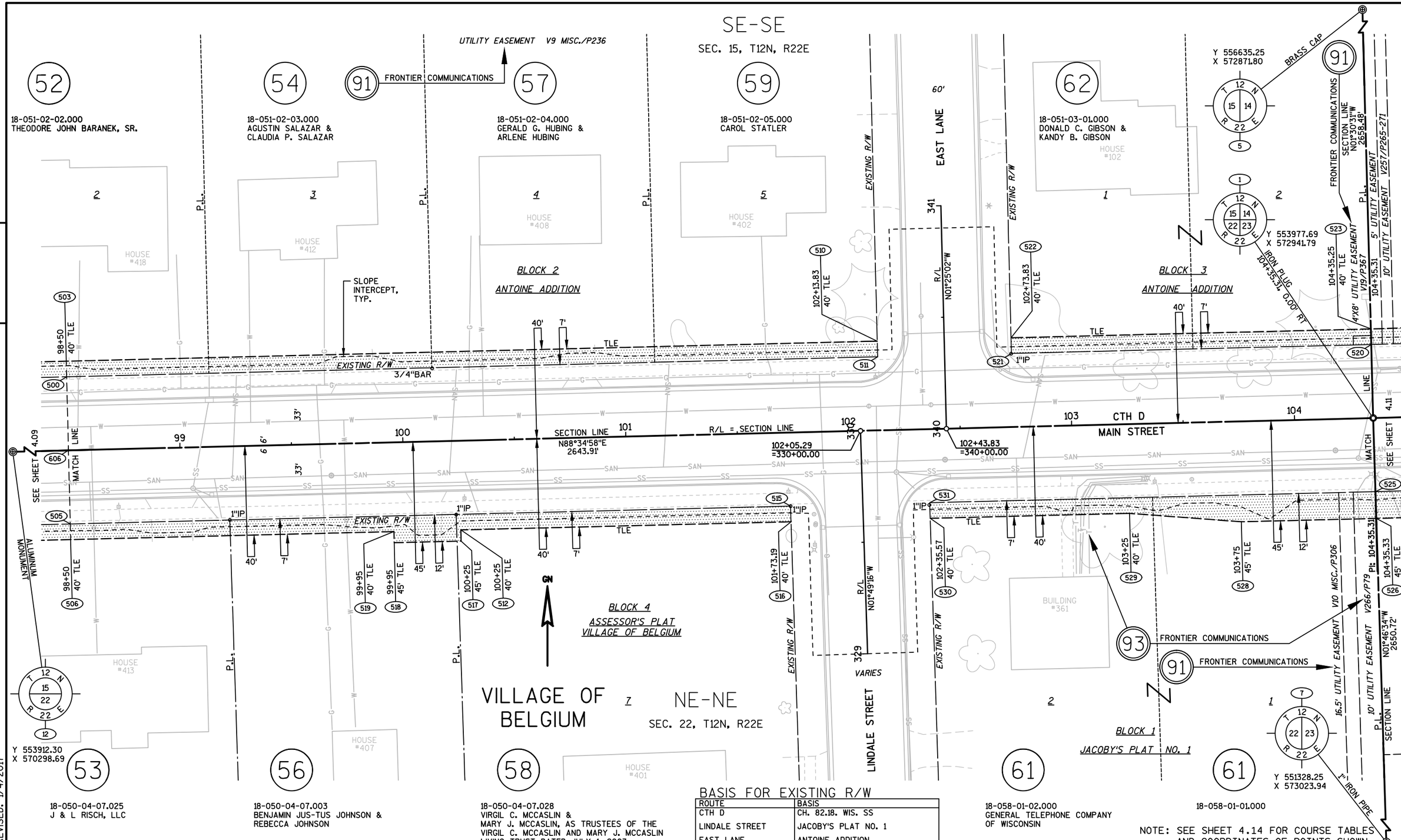

BASIS FOR EXISTING R/W

ROUTE	BASIS
CTH D	CH. 82.18. WIS. SS
LINDALE STREET	JACOBY'S PLAT NO. 1
EAST LANE	ANTOINE ADDITION

NOTE: SEE SHEET 4.14 FOR COURSE TABLES AND COORDINATES OF POINTS SHOWN.

REVISED: 1/4/2017

REVISION DATE	DATE 7/11/2016	SCALE, FEET 0 20 40	HWY: CTH D	STATE R/W PROJECT NUMBER 4880-01-00	PLAT SHEET 4.10	
	GRID FACTOR 0.99989982		COUNTY: OZAUKEE	CONSTRUCTION PROJECT NUMBER 4880-01-71	PS&E SHEET	E

FILE NAME : 48800100-040102-RP.DWG PLOT DATE : 1/4/2017 1:54 PM PLOT BY : JAY PANETTI PLOT NAME : PLOT SCALE : ********** WISDOT/CADDS SHEET 75

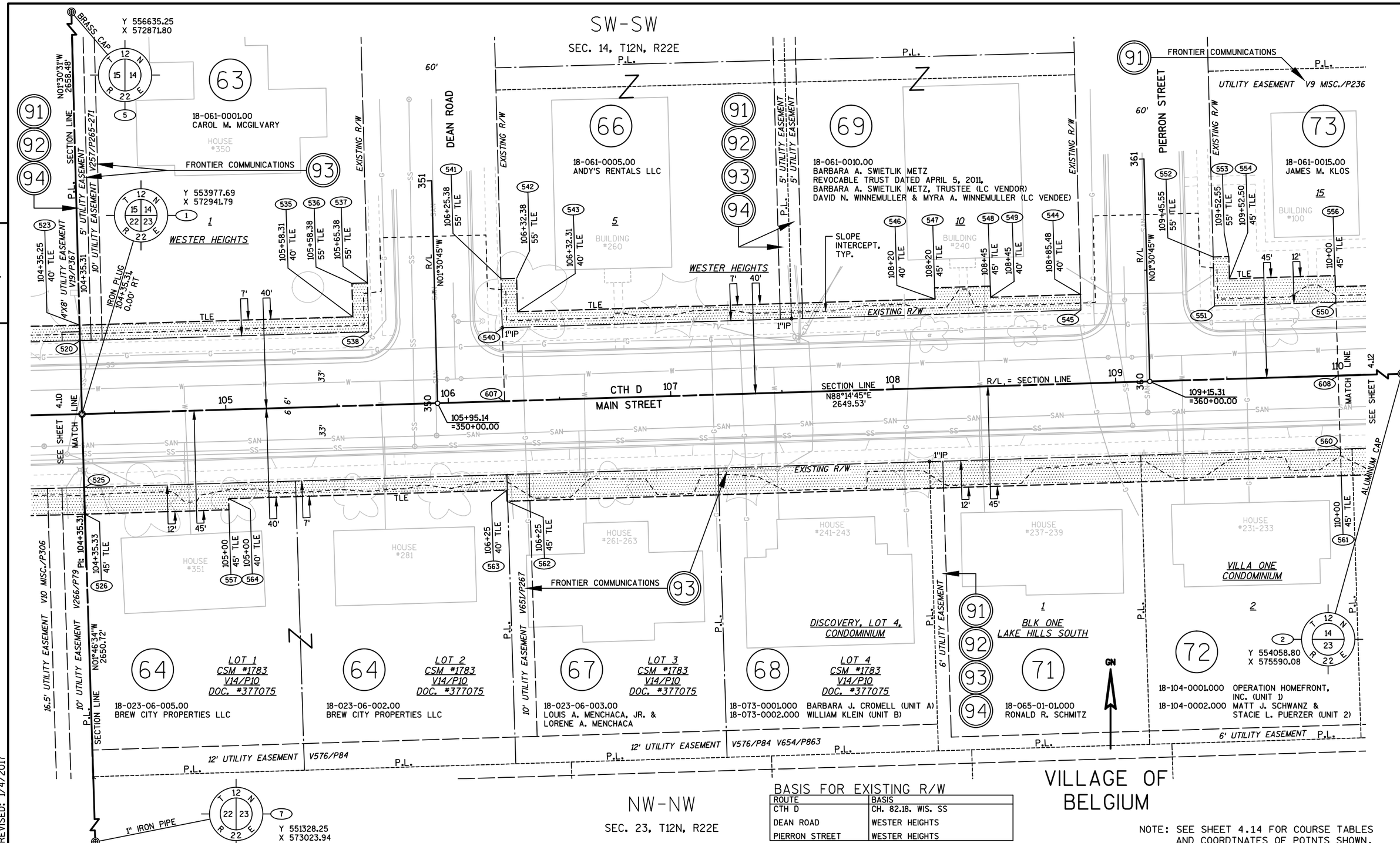

BASIS FOR EXISTING R/W

ROUTE	BASIS
CTH D	CH. 82.18. WIS. SS
DEAN ROAD	WESTER HEIGHTS
PIERRON STREET	WESTER HEIGHTS

NOTE: SEE SHEET 4.14 FOR COURSE TABLES AND COORDINATES OF POINTS SHOWN.

REVISED: 1/4/2017

REVISION DATE	DATE 7/11/2016	SCALE, FEET 0 20 40	HWY: CTH D	STATE R/W PROJECT NUMBER 4880-01-00	PLAT SHEET 4.11	
	GRID FACTOR 0.99989982		COUNTY: OZAUKEE	CONSTRUCTION PROJECT NUMBER 4880-01-71	PS&E SHEET	E

FILE NAME : 48800100-040102-RP.DWG PLOT DATE : 1/4/2017 1:55 PM PLOT BY : JAY PANETTI PLOT NAME : PLOT SCALE : ********** WISDOT/CADDS SHEET 75

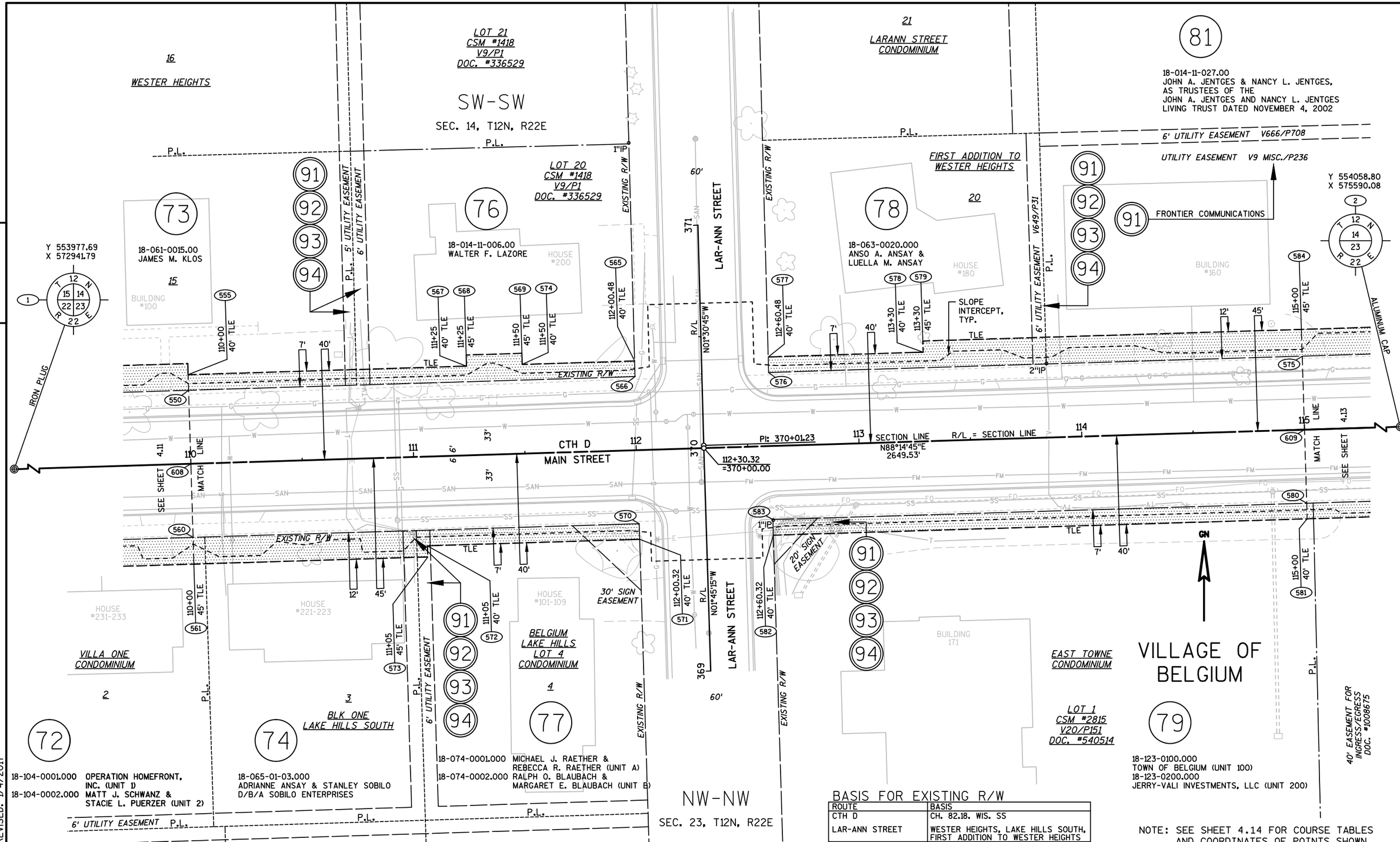

BASIS FOR EXISTING R/W

ROUTE	BASIS
CTH D	CH. 82.18. WIS. SS
LAR-ANN STREET	WESTER HEIGHTS, LAKE HILLS SOUTH, FIRST ADDITION TO WESTER HEIGHTS

NOTE: SEE SHEET 4.14 FOR COURSE TABLES AND COORDINATES OF POINTS SHOWN.

REVISED: 1/4/2017

REVISION DATE	DATE 7/11/2016	SCALE, FEET 0 20 40	HWY: CTH D	STATE R/W PROJECT NUMBER 4880-01-00	PLAT SHEET 4.12	
	GRID FACTOR 0.99989982		COUNTY: OZAUKEE	CONSTRUCTION PROJECT NUMBER 4880-01-71	PS&E SHEET 134	E

FILE NAME : 48800100-040102-RP.DWG PLOT DATE : 1/4/2017 1:35 PM PLOT BY : JAY PANETTI PLOT NAME : PLOT SCALE : ********** WISDOT/CADDS SHEET 75

SW-SW
SEC. 14, T12N, R22E

81

18-014-11-027.00
JOHN A. JENTGES & NANCY L. JENTGES,
AS TRUSTEES OF THE
JOHN A. JENTGES AND NANCY L. JENTGES
LIVING TRUST DATED NOVEMBER 4, 2002

6' UTILITY EASEMENT V666/P708

UTILITY EASEMENT V9 MISC./P236

91 FRONTIER COMMUNICATIONS

BUILDING #160

P.L.

83

18-014-11-026.00
KIM DALE FALK &
KAY MARIE FALK

HOUSE #120

94 TIME WARNER CABLE

92 WE ENERGIES

HOUSE #110

584 115+00 45' TLE
585 115+50 45' TLE
586 115+50 40' TLE
587 116+45 40' TLE
588 116+45 55' TLE
589 116+59.35 55' TLE

12' 45' 7' 40' TLE

575 599

2"IP

SE-SW
SEC. 14, T12N, R22E

UTILITY EASEMENT V9 MISC./P235

18-014-12-008.00
FRANCIS A. ROLLINGER &
GRACE M. ROLLINGER, TRUSTEES,
UTD APRIL 16, 1990

HOUSE #100

P.L.

SIXTEENTH LINE

PARCEL "A"
CSM #810
V4/P18
DOC. #282434

SLOPE INTERCEPT, TYP.

2"IP

EXISTING R/W

ROYAL AVENUE
CTH LL

CTH D
MAIN STREET

117 R/L = SECTION LINE 118 119 120

SECTION LINE
N88°14'45"E
2649.53'

Y 554058.80
X 575590.08
ALUMINUM CAP

T 12 N
R 22 E
14 23 2

VILLAGE OF BELGIUM UTILITY EASEMENT V221/P248

EXISTING R/W

610 590 591

END RELOCATION ORDER
118+10.00
Y 554019.78
X 574315.83
39.03' SOUTH AND 1274.24' WEST OF THE
SOUTH QUARTER CORNER OF SECTION 14, T12N, R22E

117+45 40' 593
117+45 45' TLE 592
118+10 45' TLE 591

SIXTEENTH LINE

BUILDING

GN

VILLAGE OF BELGIUM

SEE SHEET 4.12 MATCH LINE

609 580 581

115+00 40' TLE

IRON PLUG

T 12 N
R 22 E
15 14 22 23 1

Y 553977.69
X 572941.79

P.L.

40' EASEMENT FOR INGRESS/EGRESS DOC. #1008675

LOT 2
CSM #2815
V20/P151
DOC. #540514

RESTRICTIVE COVENANT V1232/P456

DECLARATION OF RESTRICTIONS DOC. #1025629

82

18-023-06-017.00
SUKHDEV SINGH GILL

12' DISTRIBUTION EASEMENT V1813/P206

92 93 94

84

18-023-06-022.00
TALWINDER S. GILL

MEMORANDUM V1474/P533

BUILDING

79

18-123-0100.000
TOWN OF BELGIUM (UNIT 100)
18-123-0200.000
JERRY-VALI INVESTMENTS, LLC (UNIT 200)

NW-NW
SEC. 23, T12N, R22E

NE-NW
SEC. 23, T12N, R22E

BASIS FOR EXISTING R/W

ROUTE	BASIS
CTH D	CH. 82.18. WIS. SS, V117/P361, V118/P65

NOTE: SEE SHEET 4.14 FOR COURSE TABLES AND COORDINATES OF POINTS SHOWN.

REVISED: 1/4/2017

REVISION DATE			

DATE 7/11/2016
GRID FACTOR 0.99989982

SCALE, FEET
0 20 40

HWY: CTH D
COUNTY: OZAUKEE

STATE R/W PROJECT NUMBER 4880-01-00
CONSTRUCTION PROJECT NUMBER 4880-01-71

PLAT SHEET 4.13
PS&E SHEET 135 E

FILE NAME : 48800100-040102-RP.DWG
PLOT DATE : 1/4/2017 1:36 PM
PLOT BY : JAY PANETTI
PLOT NAME :
PLOT SCALE : **********

WISDOT/CADDS SHEET 75

COURSE TABLE - SHEET 4.06

FROM POINT	TO POINT	BEARING	DISTANCE
12	601	S88°37'58"W	91.41'
601	401	N01°22'02"W	33.00'
401	402	N01°22'02"W	7.00'
402	403	N88°37'58"E	63.60'
403	303	S01°39'47"E	7.00'
303	401	S88°37'58"W	63.64'
12	602	N88°34'58"E	408.59'
602	415	N01°25'02"W	33.00'
415	413	S88°34'58"W	167.09'
413	414	N01°25'02"W	7.00'
414	416	N88°34'58"E	42.09'
416	417	N01°25'02"W	5.00'
417	418	N88°34'58"E	125.00'
418	415	S01°25'02"E	12.00'
12	420	S01°46'15"E	33.00'
420	421	N88°34'58"E	408.39'
421	422	S01°25'02"E	7.00'
422	426	S88°34'58"W	315.00'
426	427	S01°25'02"E	5.00'
427	428	S88°34'58"W	93.31'
428	429	N01°46'15"W	5.00'
429	424	S88°37'58"W	91.69'
424	425	N01°22'02"W	7.00'
425	420	N88°37'58"E	91.64'

COURSE TABLE - SHEET 4.07

FROM POINT	TO POINT	BEARING	DISTANCE
12	602	N88°34'58"E	408.59'
602	415	N01°25'02"W	33.00'
415	304	N88°34'58"E	154.46'
304	305	N43°34'58"E	8.49'
305	433	S01°25'02"E	6.00'
433	304	S88°34'58"W	6.00'
415	418	N01°25'02"W	12.00'
418	419	N88°34'58"E	30.00'
419	434	S01°25'02"E	5.00'
434	430	N88°34'58"E	123.46'
430	431	N01°25'02"W	15.00'
431	432	N88°34'58"E	7.00'
432	305	S01°25'02"E	16.00'
305	304	S43°34'58"W	8.49'
304	415	S88°34'58"W	154.46'
602	421	S01°25'02"E	33.00'
421	308	N88°34'58"E	394.33'
308	445	N88°34'58"E	6.00'
445	309	S01°23'43"E	6.00'
309	308	N46°24'22"W	8.48'
421	308	N88°34'58"E	394.33'
308	309	S46°24'22"E	8.48'
309	446	S01°23'43"E	16.00'
446	447	S88°36'17"W	7.00'
447	448	N01°23'43"W	15.00'
448	441	S88°34'58"W	128.32'
441	442	S01°25'02"E	5.00'
442	443	S88°34'58"W	100.00'
443	444	N01°25'02"W	5.00'
444	449	S88°34'58"W	50.00'
449	450	S01°25'02"E	15.00'
450	451	S88°34'58"W	65.00'
451	452	N01°25'02"W	15.00'
452	422	S88°34'58"W	50.00'
422	421	N01°25'02"W	7.00'
1	604	S88°34'58"W	1685.31'
604	440	N01°25'02"W	33.00'
440	307	S88°34'58"W	323.54'
307	435	S88°34'58"W	6.00'
435	306	N01°25'02"W	6.00'
306	307	S46°25'02"E	8.49'
440	307	S88°34'58"W	323.54'
307	306	N46°25'02"W	8.49'
306	436	N01°25'02"W	16.00'
436	437	N88°34'58"E	7.00'
437	438	S01°25'02"E	15.00'
438	439	N88°34'58"E	322.54'
439	440	S01°25'02"E	7.00'

SHEET 4.07 (CONTINUED)

FROM POINT	TO POINT	BEARING	DISTANCE
604	460	S01°25'02"E	33.00'
460	311	S88°34'58"W	93.17'
311	310	S33°35'23"W	6.10'
310	465	N01°23'43"W	5.00'
465	311	N88°34'58"E	3.50'
460	461	S01°25'02"E	7.00'
461	462	S88°34'52"W	89.68'
462	463	S01°23'43"E	15.00'
463	464	S88°36'17"W	7.00'
464	310	N01°23'43"W	17.00'
310	311	N33°35'23"E	6.10'
311	460	N88°34'58"E	93.17'

COURSE TABLE - SHEET 4.08

FROM POINT	TO POINT	BEARING	DISTANCE
12	604	N88°34'58"E	958.59'
604	440	N01°25'02"W	33.00'
440	439	N01°25'02"W	7.00'
439	472	N88°34'58"E	80.00'
472	473	N01°25'02"W	5.00'
473	474	N88°34'58"E	60.00'
474	469	S01°25'02"E	5.00'
469	470	N88°34'58"E	410.00'
470	471	S01°25'02"E	7.00'
471	440	S88°34'58"W	550.00'
604	460	S01°25'02"E	33.00'
460	475	N88°34'58"E	181.75'
475	476	S01°24'01"E	7.00'
476	461	S88°34'58"W	181.75'
461	460	N01°25'02"W	7.00'
1	605	S88°34'58"W	1135.31'
605	480	S01°25'02"E	33.00'
480	312	S88°34'58"W	313.25'
312	313	S01°24'01"E	92.00'
313	314	S88°35'59"W	5.00'
314	485	N01°24'01"W	92.00'
485	312	N88°34'58"E	5.00'
480	481	S01°25'02"E	7.00'
481	482	S88°34'58"W	308.25'
482	483	S01°24'01"E	15.00'
483	484	S88°34'58"W	5.00'
484	312	N01°24'01"W	22.00'
312	480	N88°34'58"E	313.25'

COURSE TABLE - SHEET 4.09

FROM POINT	TO POINT	BEARING	DISTANCE
12	605	N88°34'58"E	1508.59'
605	471	N01°25'02"W	33.00'
471	470	N01°25'02"W	7.00'
470	490	N88°34'58"E	353.83'
490	491	S01°25'02"E	7.00'
491	471	S88°34'58"W	353.83'
605	480	S01°25'02"E	33.00'
480	495	N88°34'58"E	318.98'
495	496	S01°51'59"E	7.00'
496	494	S88°34'58"W	149.04'
494	497	S01°25'02"E	5.00'
497	498	S88°34'58"W	40.00'
498	499	N01°25'02"W	5.00'
499	481	S88°34'58"W	130.00'
481	480	N01°25'02"W	7.00'
1	606	S88°34'58"W	585.31'
606	500	N01°25'02"W	33.00'
500	501	S88°34'58"W	136.17'
501	502	N01°25'02"W	7.00'
502	503	N88°34'58"E	136.17'
503	500	S01°25'02"E	7.00'
606	505	S01°25'02"E	33.00'
505	506	S01°25'02"E	7.00'
506	507	S88°34'58"W	170.96'
507	508	N01°51'59"W	7.00'
508	505	N88°34'58"E	171.01'

COURSE TABLE - SHEET 4.10

FROM POINT	TO POINT	BEARING	DISTANCE
12	606	N88°34'58"E	2058.59'
606	500	N01°25'02"W	33.00'
500	503	N01°25'02"W	7.00'
503	510	N88°34'58"E	363.83'
510	511	S01°25'02"E	7.00'
511	500	S88°34'58"W	363.83'
606	505	S01°25'02"E	33.00'
505	515	N88°34'58"E	323.14'
515	516	S01°49'16"E	7.00'
516	512	S88°34'58"W	148.19'
512	517	S01°25'02"E	5.00'
517	518	S88°34'58"W	30.00'
518	519	N01°25'02"W	5.00'
519	506	S88°34'58"W	145.00'
506	505	N01°25'02"W	7.00'
1	520	N01°30'31"W	33.00'
520	521	S88°34'58"W	161.43'
521	522	N01°25'02"W	7.00'
522	523	N88°34'58"E	161.42'
523	520	S01°30'31"E	7.00'
1	525	S01°46'34"E	33.00'
525	526	S01°46'34"E	12.00'
526	528	S88°34'58"W	60.60'
528	529	N85°42'24"W	50.25'
529	530	S88°34'58"W	89.43'
530	531	N01°49'16"W	7.00'
531	525	N88°34'58"E	200.00'

COURSE TABLE - SHEET 4.11

FROM POINT	TO POINT	BEARING	DISTANCE
1	520	N01°30'31"W	33.00'
520	523	N01°30'31"W	7.00'
523	535	N88°14'45"E	122.83'
535	536	N01°30'45"W	15.00'
536	537	N88°14'45"E	7.00'
537	538	S01°30'45"E	22.00'
538	520	S88°14'45"W	129.83'
1	607	N88°14'45"E	189.97'
607	540	N01°45'15"W	33.00'
540	541	N01°30'45"W	22.00'
541	542	N88°14'45"E	7.00'
542	543	S01°30'45"E	15.00'
543	546	N88°14'45"E	187.69'
546	547	N01°45'15"W	5.00'
547	548	N88°14'45"E	25.00'
548	549	S01°45'15"E	5.00'
549	544	N88°14'45"E	40.48'
544	545	S01°30'45"E	7.00'
545	540	S88°14'45"W	260.17'
2	608	S88°14'45"W	2084.84'
608	550	N01°45'15"W	33.00'
550	551	S88°14'45"W	54.55'
551	552	N01°30'45"W	22.00'
552	553	N88°14'45"E	7.00'
553	554	S01°30'45"E	10.00'
554	556	N88°14'45"E	47.50'
556	550	S01°45'15"E	12.00'
1	525	S01°46'34"E	33.00'
525	560	N88°14'45"E	564.67'
560	561	S01°45'15"E	12.00'
561	562	S88°14'45"W	375.00'
562	563	N01°45'15"W	5.00'
563	564	S88°14'45"W	125.00'
564	557	S01°45'15"E	5.00'
557	526	S88°14'42"W	64.67'
526	525	N01°46'34"W	12.00'

COURSE TABLE - SHEET 4.12

FROM POINT	TO POINT	BEARING	DISTANCE
1	608	N88°14'45"E	564.69'
608	550	N01°45'15"W	33.00'
550	555	N01°45'15"W	7.00'
555	567	N88°14'45"E	125.00'
567	568	N01°45'15"W	5.00'
568	569	N88°14'45"E	25.00'
569	574	S01°45'15"E	5.00'
574	565	N88°14'45"E	50.48'
565	566	S01°30'45"E	7.00'
566	550	S88°14'45"W	200.45'
608	560	S01°45'15"E	33.00'
560	570	N88°14'45"E	200.32'
570	571	S01°45'15"E	7.00'
571	572	S88°14'45"W	95.32'
572	573	S01°45'15"E	5.00'
573	561	S88°14'45"W	105.00'
561	560	N01°45'15"W	12.00'
2	609	S88°14'45"W	1584.84'
609	575	N01°45'15"W	33.00'
575	576	S88°14'45"W	239.55'
576	577	N01°30'45"W	7.00'
577	578	N88°14'45"E	69.52'
578	579	N01°45'15"W	5.00'
579	584	N88°14'45"E	170.00'
584	575	S01°45'15"E	12.00'
609	580	S01°45'15"E	33.00'
580	581	S01°45'15"E	7.00'
581	582	S88°14'45"W	239.68'
582	583	N01°45'15"W	7.00'
583	580	N88°14'45"E	239.68'

COURSE TABLE - SHEET 4.13

FROM POINT	TO POINT	BEARING	DISTANCE
1	609	N88°14'45"E	1064.69'
609	575	N01°45'15"W	33.00'
575	584	N01°45'15"W	12.00'
584	585	N88°14'45"E	50.00'
585	586	S01°45'15"E	5.00'
586	587	N88°14'45"E	95.00'
587	588	N01°45'15"W	15.00'
588	589	N88°14'45"E	14.35'
589	599	S01°31'39"E	22.00'
599	575	S88°14'45"W	159.26'
609	580	S01°45'15"E	33.00'
580	590	N88°14'45"E	310.00'
590	591	S01°45'15"E	12.00'
591	592	S88°14'45"W	65.00'
592	593	N01°45'15"W	5.00'
593	581	S88°14'45"W	245.00'
581	580	N01°45'15"W	7.00'

COORDINATE TABLE

POINT	Y	X
303	553944.6290	570270.1421
304	553959.2169	570860.7553
305	553965.3635	570866.6051
306	553966.8475	570926.5867
307	553960.9977	570932.7333
308	553899.1698	571102.1814
309	553893.3199	571108.3256
310	553895.6305	571161.2851
311	553900.7156	571164.6623
312	553908.8757	571494.4881
313	553816.8942	571496.7364
314	553816.7721	571491.7379
401	553943.1105	570206.5226
402	553950.1085	570206.3556
403	553951.6261	570269.9389
413	553951.2639	570539.3019
414	553958.2618	570539.1288
415	553955.3967	570706.3428
416	553959.3029	570581.2079
417	553964.3013	570581.0843
418	553967.3930	570706.0460
419	553968.1350	570736.0369

COORDINATE TABLE

POINT	Y	X
420	553879.3159	570299.7118
421	553889.4168	570707.9752
422	553882.4190	570708.1483
424	553870.1313	570208.2645
425	553877.1293	570208.0975
426	553874.6281	570393.2447
427	553869.6296	570393.3684
428	553867.3217	570300.0826
429	553872.3191	570299.9281
430	553966.1900	570859.5825
431	553981.1855	570859.2115
432	553981.3586	570866.2093
433	553959.3653	570866.7535
434	553963.1365	570736.1605
435	553960.8493	570926.7351
436	553982.8426	570926.1910
437	553983.0157	570933.1888
438	553968.0203	570933.5598
439	553975.9977	571256.0014
440	553968.9999	571256.1746
441	553888.9733	570973.0673
442	553883.9748	570973.1909
443	553881.5015	570873.2215
444	553886.5000	570873.0979
445	553899.3182	571108.1795
446	553877.3349	571108.7149
447	553877.1645	571101.7170
448	553892.1471	571101.3521
449	553885.2633	570823.1132
450	553870.2679	570823.4842
451	553868.6602	570758.5040
452	553883.6556	570758.1331
460	553903.0200	571257.8070
461	553896.0222	571257.9801
462	553893.8015	571168.3317
463	553878.7958	571168.6972
464	553878.6253	571161.6992
465	553900.6290	571161.1633
469	553979.4603	571395.9586
470	553989.6009	571805.8332
471	553982.6031	571806.0063
472	553977.9764	571335.9770
473	553982.9748	571335.8533
474	553984.4588	571395.8350
475	553907.5154	571439.5049
476	553900.5175	571439.6760
480	553916.6232	571807.6387
481	553909.6254	571807.8118
482	553902.0015	571499.6576
483	553887.0059	571500.0241
484	553886.8823	571495.0257
485	553908.7520	571489.4896
490	553998.3523	572159.5571
491	553991.3544	572159.7303
494	553913.8300	571977.7598
495	553924.5127	572126.5255
496	553917.5162	572126.7534
497	553908.8315	571977.8835
498	553907.8422	571937.8957
499	553912.8407	571937.7721
500	553996.2063	572355.8381
501	553992.8384	572219.7119
502	553999.8363	572219.5388
503	554003.2041	572355.6649
505	553930.2264	572357.4705
506	553923.2286	572357.6436
507	553919.0003	572186.7369
508	553925.9967	572186.5089
510	554012.2028	572719.3858
511	554005.2050	572719.5590
512	553927.5569	572532.5901
515	553938.2186	572680.5079
516	553931.2220	572680.7304
517	553922.5584	572532.7137
518	553921.8164	572502.7229
519	553926.8149	572502.5992

COORDINATE TABLE

POINT	Y	X
520	554010.6816	572940.9212
521	554006.6889	572779.5406
522	554013.6868	572779.3675
523	554017.6792	572940.7369
525	553944.7082	572942.8128
526	553932.7137	572943.1847
528	553931.2150	572882.6067
529	553934.9768	572832.4983
530	553932.7649	572743.0963
531	553939.7616	572742.8739
535	554021.4395	573063.5048
536	554036.4344	573063.1089
537	554036.6487	573070.1057
538	554014.6561	573070.6864
540	554016.4929	573130.6588
541	554038.4854	573130.0781
542	554038.6997	573137.0749
543	554023.7048	573137.4708
544	554031.4549	573390.5227
545	554024.4573	573390.7075
546	554029.4503	573325.0704
547	554034.4481	573324.9174
548	554035.2133	573349.9057
549	554030.2156	573350.0587
550	554027.9638	573505.2004
551	554026.2940	573450.6799
552	554048.2866	573450.0992
553	554048.5009	573457.0960
554	554038.5043	573457.3599
555	554034.9605	573504.9861
556	554039.9582	573504.8330
557	553934.6943	573007.8225
560	553961.9948	573507.2208
561	553950.0004	573507.5881
562	553938.5208	573132.7639
563	553943.5184	573132.6108
564	553939.6919	573007.6694
565	554041.0978	573705.3756
566	554034.1002	573705.5603
567	554038.7871	573629.9275
568	554043.7847	573629.7744
569	554044.5500	573654.7627
570	553968.1270	573707.4471
571	553961.1303	573707.6614
572	553958.2123	573612.3859
573	553953.2147	573612.5389
574	554039.5524	573654.9158
575	554043.2700	574004.9660
576	554035.9369	573765.5328
577	554042.9345	573765.3480
578	554045.0626	573834.8314
579	554050.0602	573834.6784
580	553977.3009	574006.9864
581	553970.3042	574007.2007
582	553962.9670	573767.6333
583	553969.9637	573767.4190
584	554055.2643	574004.5987
585	554056.7949	574054.5753
586	554051.7973	574054.7283
587	554054.7055	574149.6838
588	554069.6984	574149.2246
589	554070.1376	574163.5652
590	553986.7907	574316.8412
591	553974.7963	574317.2085
592	553972.8065	574252.2390
593	553977.8042	574252.0859
599	554048.1453	574164.1517
601	553910.1199	570207.3100
602	553922.4067	570707.1590
604	553936.0099	571256.9908
605	553949.6132	571806.8225
606	553963.2164	572356.6543
607	553983.5084	573131.6690
608	553994.9793	573506.2106
609	554010.2854	574005.9762
610	554019.7752	574315.8310

REVISED: 7/11/2016

REVISION DATE			

DATE 7/11/2016

GRID FACTOR 0.99989982

SCALE. FEET 0 --- ---

HWY: CTH D

COUNTY: OZAUKEE

STATE R/W PROJECT NUMBER 4880-01-00

CONSTRUCTION PROJECT NUMBER 4880-01-71

PLAT SHEET 4.14

PS&E SHEET 136

E

FILE NAME : 48800100-040102-RP.DWG PLOT DATE : 1/4/2017 1:37 PM PLOT BY : JAY PANETTI PLOT NAME : PLOT SCALE : **********

WISDOT/CADDS SHEET 75

BENCH MARKS

BM	DESCRIPTION	ELEVATION
D-8	NE BOLT ON FLANGE OF HYD. NW CORNER OF CTH D AND BEECH ST.	735.26

**VERTICAL DATUM REFERENCED TO NGVD 29

CONSTRUCTION LIMITS
STA 260+75.00
MATCH EXISTING
SAWCUT REQUIRED

BEGIN CONSTRUCTION
STA 76+50.00
MATCH EXISTING
SAWCUT REQUIRED

BEGIN PROJECT
STA 77+25.00

MATCH LINE STA 81+00

CTH D
MAIN STREET

BEECH STREET

BELGIUM COMMUNITY PARK

4'W X 5'H BOX CULVERT

48" PRC

EXISTING R/W

BM D-8

TLE

5' CONCRETE SIDEWALK

CONSTRUCTION PERMIT

SLOPE INTERCEPT, TYP

PLANTER AND SIGN TO REMAIN

TREE TO BE REMOVED, TYP

VILLAGE OF BELGIUM

R/L=C/L

WE ENERGIES

4" PVC

GRAVEL P.E.

CONCRETE P.E.

ASPHALT P.E.

1"IP

+14
12' PE

1 STEP REQ'D

+67
15' PE

+34
14' PE

+79
17' PE

HOUSE #650-652-654
HOUSE #640-642
HOUSE #634
HOUSE #646
HOUSE #655
HOUSE #641-643
HOUSE #635-637
HOUSE #631
HOUSE #625
HOUSE #619-621
HOUSE #615

VPI STA 76+50.00
VPI EL 734.15

VPI STA 77+25.00
VPI EL 733.36

VPI STA 78+50.00
VPI EL 732.95

-1.05%

-0.33%

0.30%

EXISTING R/L PROFILE

FINISHED R/L PROFILE

EXISTING R/L PROFILE ELEVATIONS

FINISHED R/L PROFILE ELEVATIONS

734.57	734.52	734.47	734.41	734.33
734.24	734.15	733.89	733.62	733.36
733.28	733.20	733.11	733.03	732.95
733.02	733.10	733.17	733.25	733.32
733.40	733.47	733.55	733.62	733.70

PROJECT NO: 4880-01-71	HWY: CTH D	COUNTY: OZAUKEE	PLAN AND PROFILE: CTH D	SHEET 137 E

FILE NAME : S:\CURRPROJ\OZAUKEECO\CTH D\CIVIL3D\48800100\SHEETSPLAN\48800100-050101-PP.DWG
LAYOUT NAME - 48800100-050101-PP - SHEET-01

PLOT DATE : 1/24/2017 9:25 AM PLOT BY : AARON SARAUER PLOT NAME : PLOT SCALE : 1 IN:40 FT

WISDOT/CADDS SHEET 44

BENCH MARKS

BM	DESCRIPTION	ELEVATION
D-9	NE BOLT ON FLANGE OF HYD, S. SIDE OF CTH D, 100' W. OF CHESTNUT ST.	734.73
D-10	NE BOLT ON FLANGE OF HYD, SE CORNER OF CTH D AND MAPLE ST.	736.35

**VERTICAL DATUM REFERENCED TO NGVD 29

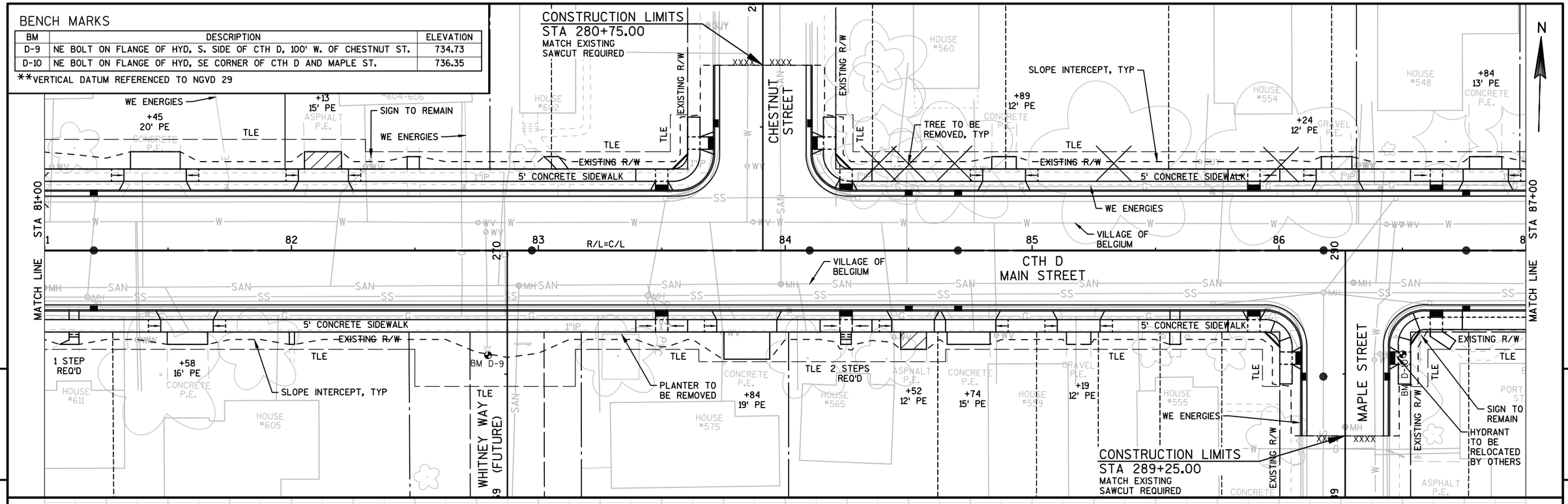

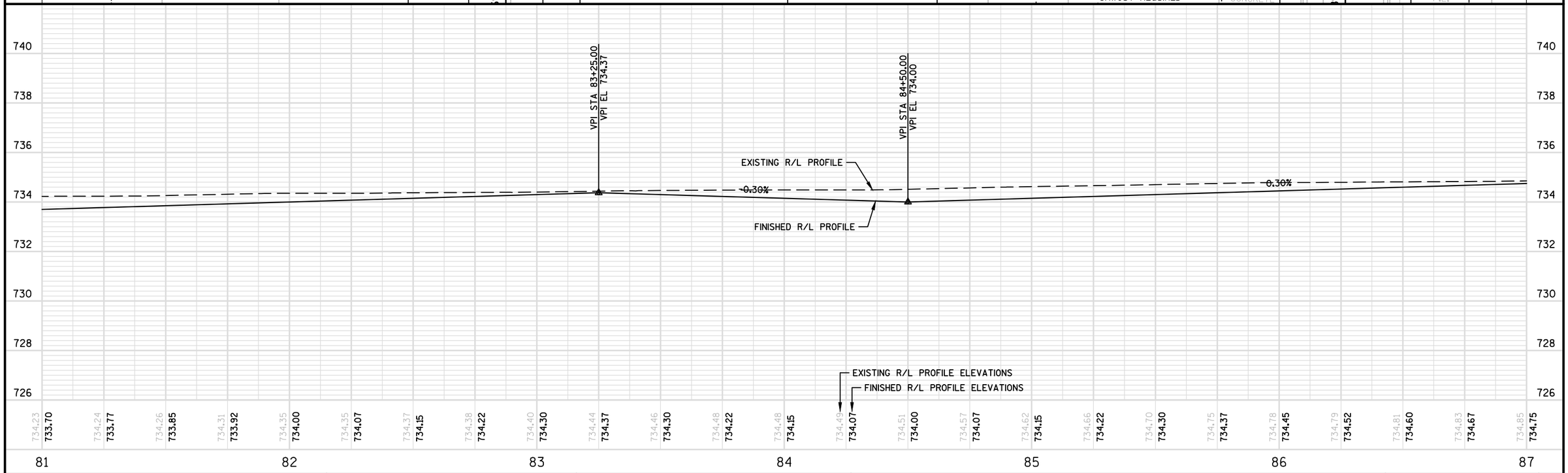

PROJECT NO: 4880-01-71	HWY: CTH D	COUNTY: OZAUKEE	PLAN AND PROFILE: CTH D	SHEET 138	E

FILE NAME : S:\CURRPROJ\OZAUKEECO\CTH D\CIVIL3D\48800100\SHEETSPLAN\48800100-050101-PP.DWG
LAYOUT NAME - 48800100-050101-PP - SHEET-02
PLOT DATE : 1/24/2017 9:25 AM PLOT BY : AARON SARAUER PLOT NAME : PLOT SCALE : 1 IN:40 FT
WISDOT/CADDS SHEET 44

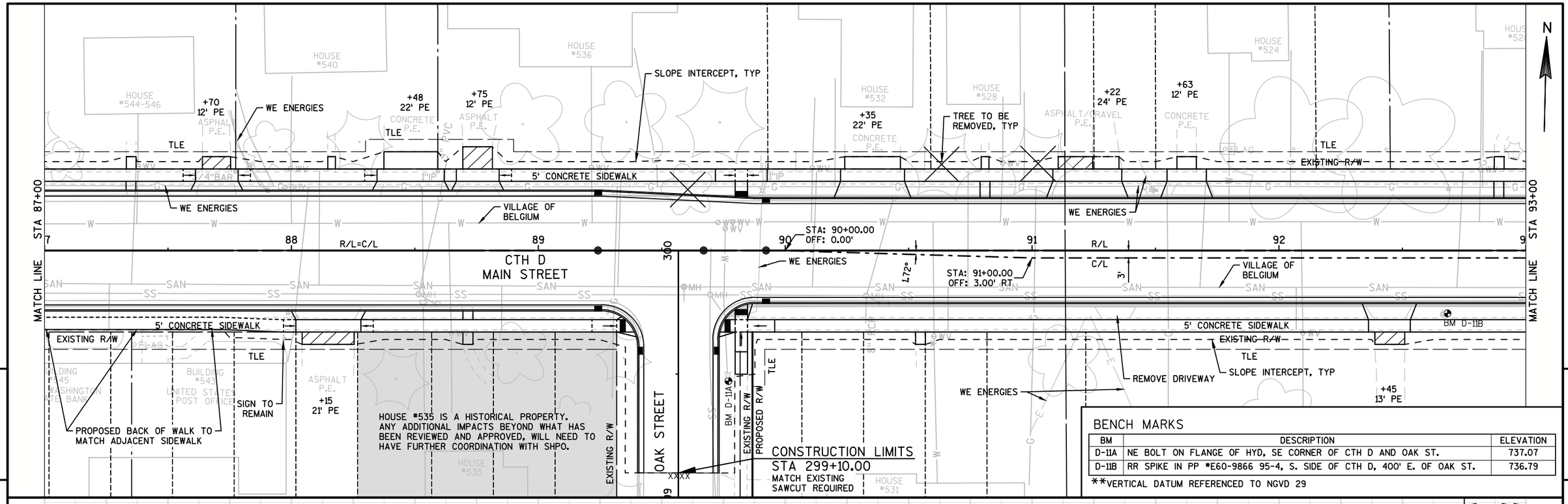

BENCH MARKS

BM	DESCRIPTION	ELEVATION
D-11A	NE BOLT ON FLANGE OF HYD, SE CORNER OF CTH D AND OAK ST.	737.07
D-11B	RR SPIKE IN PP *E60-9866 95-4, S. SIDE OF CTH D, 400' E. OF OAK ST.	736.79

**VERTICAL DATUM REFERENCED TO NGVD 29

PROJECT NO: 4880-01-71	HWY: CTH D	COUNTY: OZAUKEE	PLAN AND PROFILE: CTH D	SHEET 139 E

FILE NAME : S:\CURRPROJ\OZAUKEECO\CTH D\CIVIL3D\48800100\SHEETSPLAN\48800100-050101-PP.DWG
LAYOUT NAME - 48800100-050101-PP - SHEET-03
PLOT DATE : 1/24/2017 9:25 AM PLOT BY : AARON SARAUER PLOT NAME : PLOT SCALE : 1 IN:40 FT
WISDOT/CADDS SHEET 44

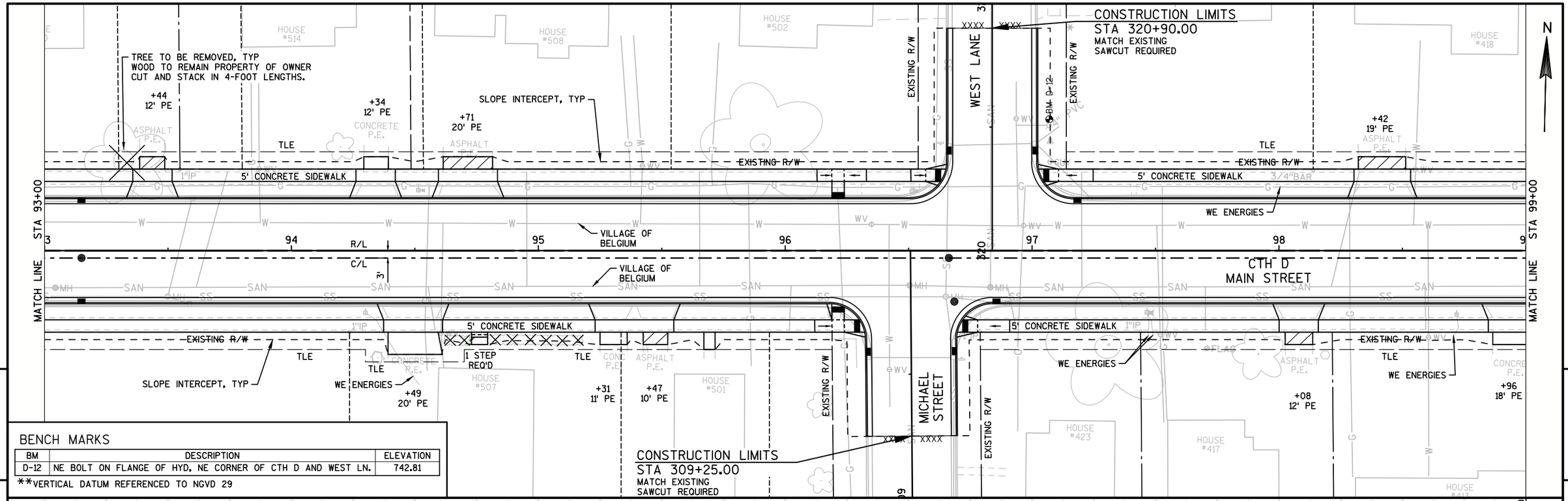

BENCH MARKS

BM	DESCRIPTION	ELEVATION
D-12	NE BOLT ON FLANGE OF HYD. NE CORNER OF CTH D AND WEST LN.	742.81

**VERTICAL DATUM REFERENCED TO NGVD 29

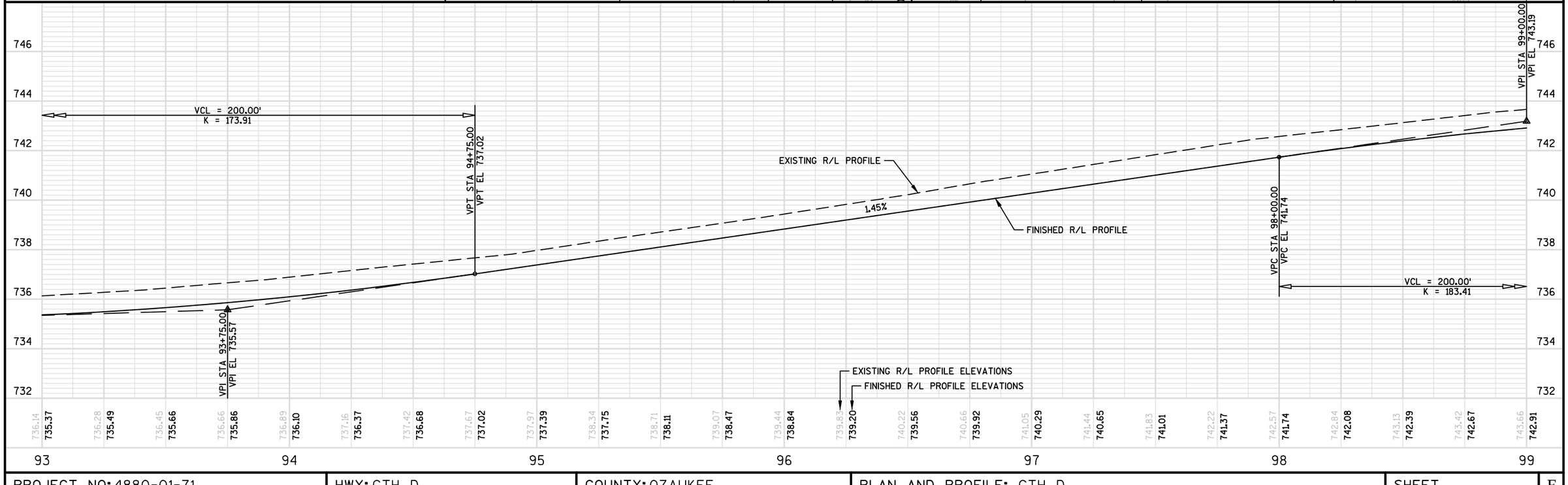

PROJECT NO: 4880-01-71	HWY: CTH D	COUNTY: OZAUKEE	PLAN AND PROFILE: CTH D	SHEET 140	E

BENCH MARKS

BM	DESCRIPTION	ELEVATION
D-13	NE BOLT ON FLANGE OF HYD. SE CORNER OF CTH D AND LINDALE ST.	746.34

**VERTICAL DATUM REFERENCED TO NGVD 29

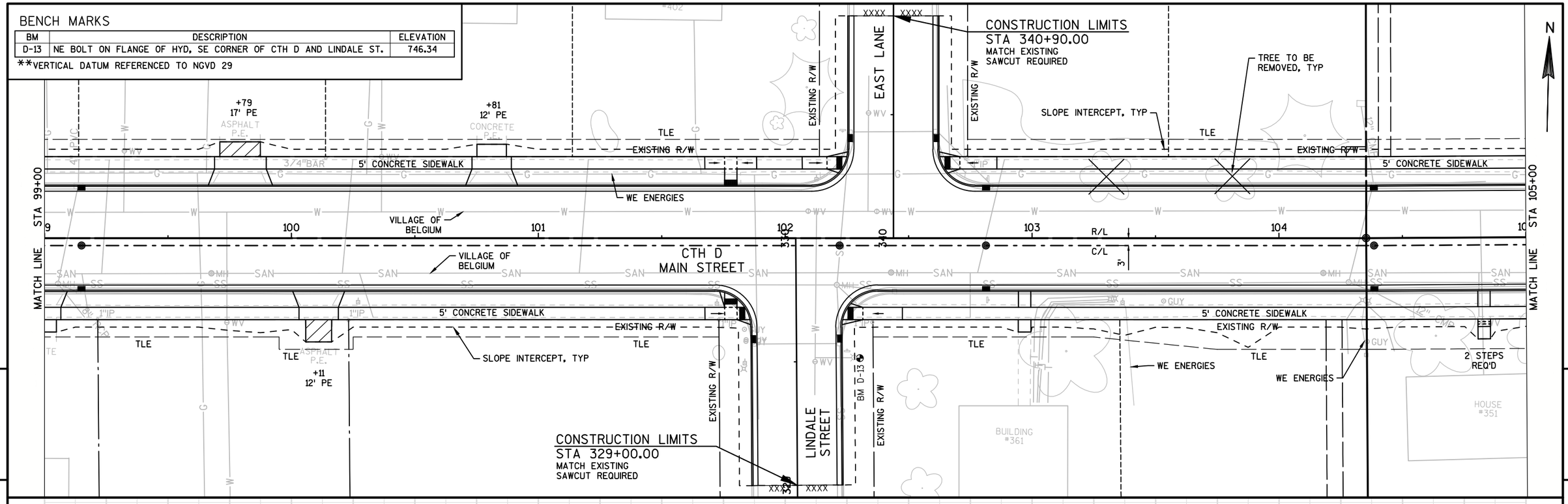

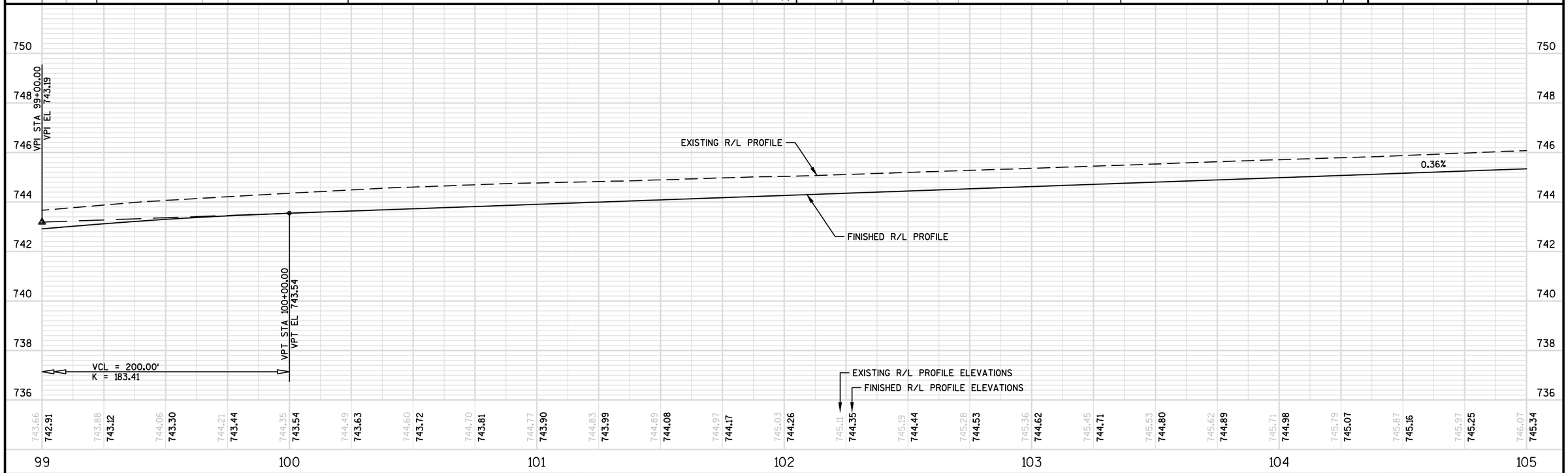

PROJECT NO: 4880-01-71	HWY: CTH D	COUNTY: OZAUKEE	PLAN AND PROFILE: CTH D	SHEET 141	E

FILE NAME : S:\CURRPROJ\OZAUKEECO\CTH D\CIVIL3D\48800100\SHEETSPLAN\48800100-050101-PP.DWG
LAYOUT NAME - 48800100-050101-PP - SHEET-05
PLOT DATE : 1/24/2017 9:25 AM PLOT BY : AARON SARAUER PLOT NAME : PLOT SCALE : 1 IN:40 FT
WISDOT/CADDS SHEET 44

CONSTRUCTION LIMITS
STA 350+75.00
MATCH EXISTING
SAWCUT REQUIRED

CONSTRUCTION LIMITS
STA 360+75.00
MATCH EXISTING
SAWCUT REQUIRED

DEAN ROAD

PIERRON STREET

CTH D
MAIN STREET

STA 105+00

STA 111+00

MATCH LINE

MATCH LINE

EXISTING R/W

TLE

5' CONCRETE SIDEWALK

BM D-14

BM D-15

TREE TO BE REMOVED, TYP

WE ENERGIES

FRONTIER

TWC

VILLAGE OF BELGIUM

AT&T

R/L

C/L

SLOPE INTERCEPT, TYP

BUILDING #260

BUILDING #240

BUILDING #100 PIERRON ST

ASPHALT PARKING LOT

HOUSE #281

HOUSE #261-263

HOUSE #241-243

HOUSE #237-239

1 STEP REQ'D

+30 16' PE

+45 16' PE

+01 16' PE

+19 15' PE

+68 37' PE

+97 18' PE

+44 24' PE

+31 13' PE

+84 13' PE

+22 17' PE

+84 16' PE

N

BENCH MARKS

BM	DESCRIPTION	ELEVATION
D-14	NE BOLT ON FLANGE OF HYD. NE CORNER OF CTH D AND DEAN RD.	747.48
D-15	NE BOLT ON FLANGE OF HYD. NW CORNER OF CTH D AND PIERRON ST.	748.87

**VERTICAL DATUM REFERENCED TO NGVD 29

EXISTING R/L PROFILE

FINISHED R/L PROFILE

VPI STA 109+75.00
VPI EL 747.05

HP STA 109+79.51
HP EL 746.97

VPC STA 109+25.00
VPC EL 746.87

VPT STA 110+25.00
VPT EL 746.90

VCL = 100.00'
K = 151.62

EXISTING R/L PROFILE ELEVATIONS
FINISHED R/L PROFILE ELEVATIONS

| | | |

CONSTRUCTION LIMITS
STA 370+65.00
MATCH EXISTING
SAWCUT REQUIRED

CONSTRUCTION LIMITS
STA 369+50.00
MATCH EXISTING
SAWCUT REQUIRED

LAR ANN STREET

CTH D
MAIN STREET

MATCH LINE STA 111+00

MATCH LINE STA 117+00

1 STEP REQ'D

5' CONCRETE SIDEWALK

TREE TO BE REMOVED, TYP

+54
20' PE

+10
30' CE

+25
29' CE

+66
14' PE

SLOPE INTERCEPT, TYP

WE ENERGIES

VILLAGE OF BELGIUM

TWC

FRONTIER

FENCE TO REMAIN

SIGN TO REMAIN

+32
31' CE

HOUSE #200

HOUSE #180

BUILDING #160

HOUSE #101-109 LAR-ANN ST

BUILDING 171 EAST TOWNE CONDOMINIUM

BENCH MARKS

BM	DESCRIPTION	ELEVATION
D-16	NE BOLT ON FLANGE OF HYD. NW CORNER OF CTH D AND N. LAR-ANN ST.	748.30

**VERTICAL DATUM REFERENCED TO NGVD 29

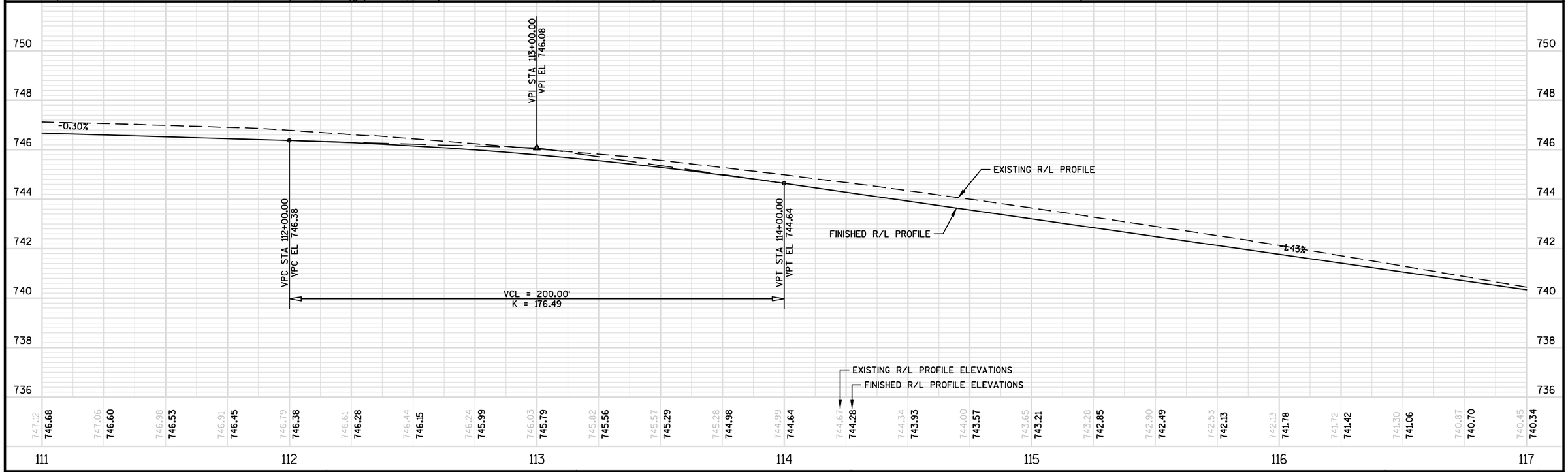

PROJECT NO: 4880-01-71	HWY: CTH D	COUNTY: OZAUKEE	PLAN AND PROFILE: CTH D	SHEET 143	E

FILE NAME : S:\CURRPROJ\OZAUKEECO\CTH D\CIVIL3D\48800100\SHEETSPLAN\48800100-050101-PP.DWG
LAYOUT NAME - 48800100-050101-PP - SHEET-07
PLOT DATE : 1/24/2017 9:25 AM PLOT BY : AARON SARAUER PLOT NAME : PLOT SCALE : 1 IN:40 FT
WISDOT/CADDS SHEET 44

BENCH MARKS

BM	DESCRIPTION	ELEVATION
C	NE BOLT ON SIGN BASE FOR MOBIL, SW CORNER OF CTH D AND CTH LL	738.35

**VERTICAL DATUM REFERENCED TO NGVD 29

WE ENERGIES
SLOPE INTERCEPT, TYP
TREE TO BE REMOVED, TYP
EXISTING R/W
5' CONCRETE SIDEWALK
STA 117+00
VILLAGE OF BELGIUM
STA: 118+00.00 OFF: 0.00'
CTH D MAIN STREET
R/L=C/L
MATCH LINE
STA: 117+00.00 OFF: 3.00' RT
-1.72°
VILLAGE OF BELGIUM
5' CONCRETE SIDEWALK
24"RCCP
TLE
TWC
+76 30.5' CE
SLOPE INTERCEPT, TYP
RELOCATE LARGE ROCKS (INCIDENTAL TO GRADING OPERATIONS)
BM C
END PROJECT STA 118+10.00
MATCH EXISTING SAWCUT REQUIRED
CTH LL ROYAL AVENUE
LAKEVIEW DRIVE
N

VPI STA 118+10.00
VPI EL 738.77
EXISTING R/L PROFILE
FINISHED R/L PROFILE
EXISTING R/L PROFILE ELEVATIONS
FINISHED R/L PROFILE ELEVATIONS

740.45	740.34	740.04	739.98	739.65	739.63	739.28
739.27	738.91	738.91	738.60	738.34		

746 744 742 740 738 736 734 732

117 118 119 120 121 122 123

PROJECT NO: 4880-01-71	HWY: CTH D	COUNTY: OZAUKEE	PLAN AND PROFILE: CTH D	SHEET 144	E

BENCH MARKS

BM	DESCRIPTION	ELEVATION
D-8	NE BOLT ON FLANGE OF HYD, NW CORNER OF CTH D AND BEECH ST.	735.26

**VERTICAL DATUM REFERENCED TO NGVD 29

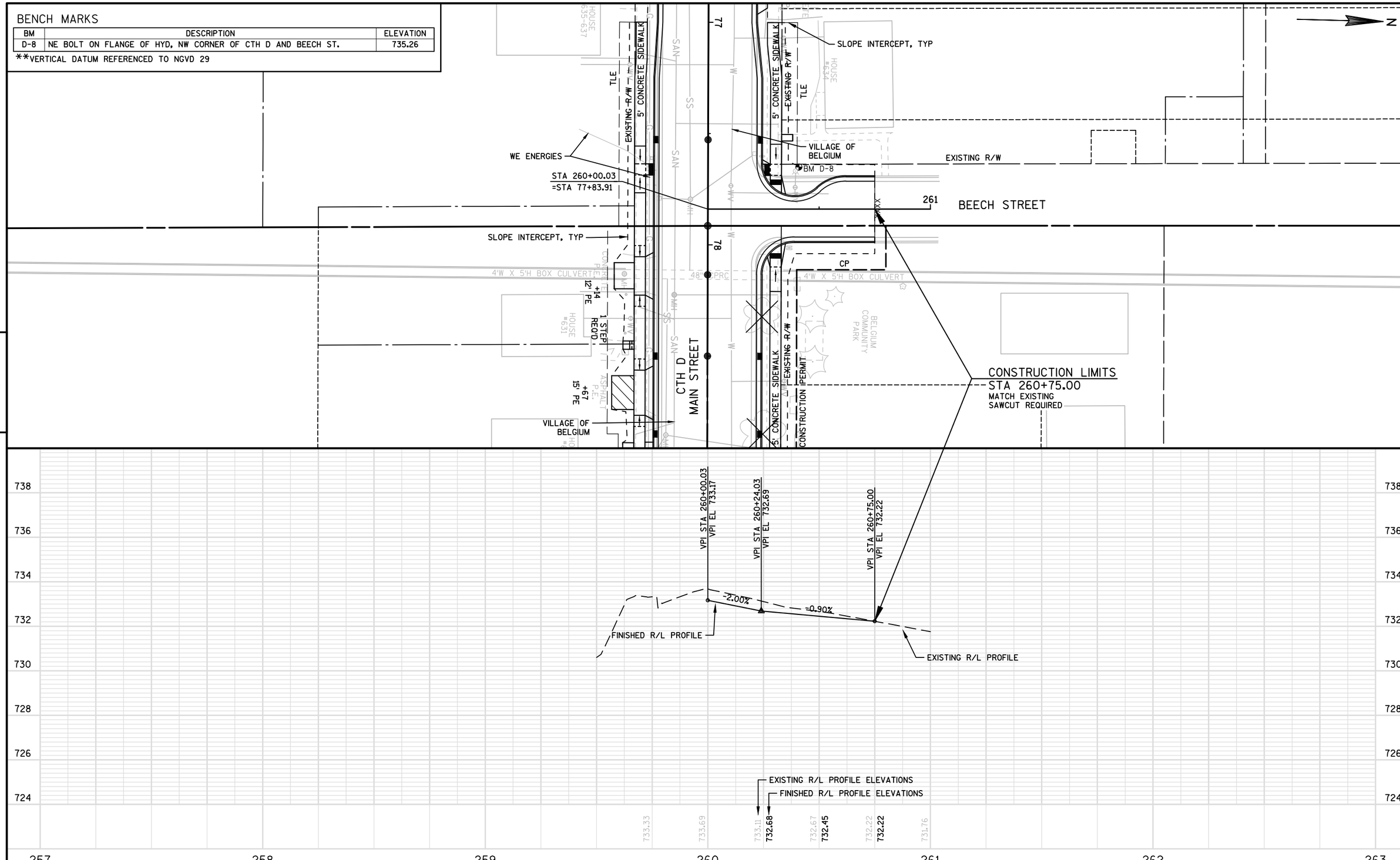

5

5

PROJECT NO:4880-01-71	HWY:CTH D	COUNTY:OZAUKEE	PLAN AND PROFILE: BEECH STREET	SHEET 145	E

FILE NAME : S:\CURRPROJ\OZAUKEECO\CTH D\CIVIL3D\48800100\SHEETSPLAN\48800100-050102-PP.DWG
LAYOUT NAME - 48800100-050102-PP - SHEET-01
PLOT DATE : 1/24/2017 9:27 AM PLOT BY : AARON SARAUER PLOT NAME : PLOT SCALE : 1 IN:40 FT

WISDOT/CADDS SHEET 44

BENCH MARKS

BM	DESCRIPTION	ELEVATION
D-9	NE BOLT ON FLANGE OF HYD. S. SIDE OF CTH D, 100' W. OF CHESTNUT ST.	734.73

**VERTICAL DATUM REFERENCED TO NGVD 29

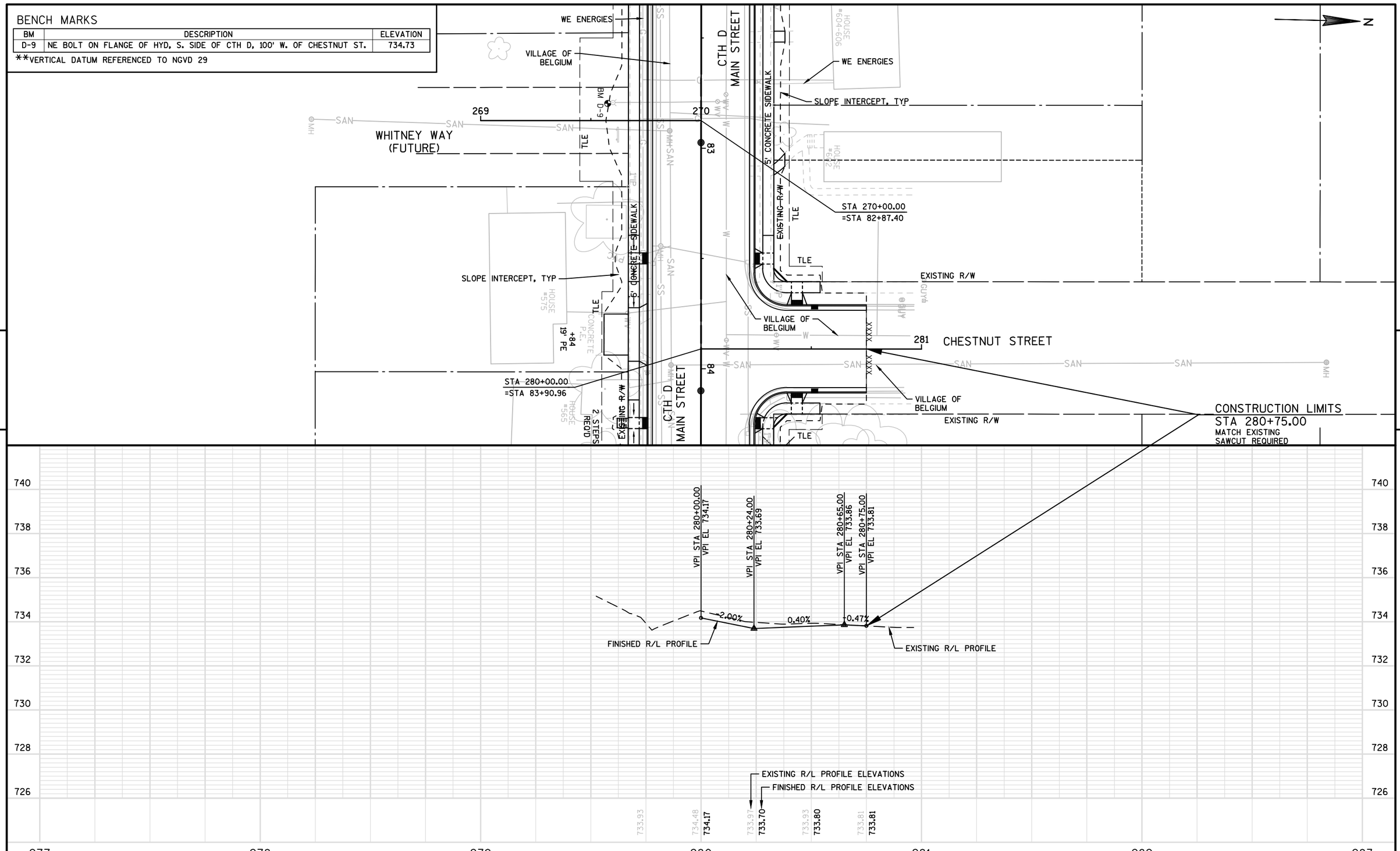

PROJECT NO: 4880-01-71	HWY: CTH D	COUNTY: OZAUKEE	PLAN AND PROFILE: CHESTNUT STREET	SHEET 146	E

SLOPE INTERCEPT, TYP

HOUSE #555

TLE

5' CONCRETE SIDEWALK

EXISTING R/W

CTH D
MAIN STREET

5' CONCRETE SIDEWALK

EXISTING R/W

TLE

HOUSE #554

WE ENERGIES

TLE

EXISTING R/W

98

+24
12" PE

289

290

MAPLE STREET

STA 290+00.00
=STA 86+26.84

BM D-10

EXISTING R/W

TLE

HOUSE #548

SLOPE INTERCEPT, TYP

CONSTRUCTION LIMITS
STA 289+25.00
MATCH EXISTING
SAWCUT REQUIRED

VILLAGE OF BELGIUM

+84
13" PE

97

EXISTING R/W

5' CONCRETE SIDEWALK

BUILDING
545
PORT WASHINGTON STATE BANK

VILLAGE OF BELGIUM

N

BENCH MARKS

BM	DESCRIPTION	ELEVATION
D-10	NE BOLT ON FLANGE OF HYD, SE CORNER OF CTH D AND MAPLE ST.	736.35

**VERTICAL DATUM REFERENCED TO NGVD 29

VPI STA 289+25.00
VPI EL 734.35

VPI STA 289+76.00
VPI EL 734.05

VPI STA 290+00.00
VPI EL 734.53

-0.59%

2.00%

EXISTING R/L PROFILE

FINISHED R/L PROFILE

EXISTING R/L PROFILE ELEVATIONS

FINISHED R/L PROFILE ELEVATIONS

734.23 734.35 734.48 734.57 734.79 734.30

734.35 734.20 734.05 734.53

740 738 736 734 732 730 728 726

287 288 289 290 291 292 293

PROJECT NO: 4880-01-71	HWY: CTH D	COUNTY: OZAUKEE	PLAN AND PROFILE: MAPLE STREET	SHEET 147	E

N

BENCH MARKS

BM	DESCRIPTION	ELEVATION
D-11A	NE BOLT ON FLANGE OF HYD, SE CORNER OF CTH D AND OAK ST.	737.07

**VERTICAL DATUM REFERENCED TO NGVD 29

SLOPE INTERCEPT, TYP
VILLAGE OF BELGIUM
EXISTING R/W
5' CONCRETE SIDEWALK
TLE
CTH D MAIN STREET
OAK STREET
298
299
300
BM D-11A
PROPOSED R/W
+75 12" PE
+35 22" PE
STA 300+00.00 =STA 89+56.76
WE ENERGIES
CONSTRUCTION LIMITS
STA 299+10.00
MATCH EXISTING
SAWCUT REQUIRED

VPI STA 299+10.00 VPI EL 734.67
VPI STA 299+35.00 VPI EL 734.54
VPI STA 299+76.00 VPI EL 733.84
VPI STA 300+00.00 VPI EL 734.32
0.50%
-1.71%
2.00%
EXISTING R/L PROFILE
FINISHED R/L PROFILE
VPC STA 299+10.00 VPC EL 734.67
VPT STA 299+60.00 VPT EL 734.11
VCL = 50.00'
K = 41.20
EXISTING R/L PROFILE ELEVATIONS
FINISHED R/L PROFILE ELEVATIONS

732.31	734.03	734.34	734.64	734.71	**734.56**	734.75	**734.27**	734.79	**733.85**	735.20	**734.32**	734.92	734.90

740 738 736 734 732 730 728 726

297 298 299 300 301 302 303

PROJECT NO: 4880-01-71	HWY: CTH D	COUNTY: OZAUKEE	PLAN AND PROFILE: OAK STREET	SHEET 148	E

BENCH MARKS

BM	DESCRIPTION	ELEVATION
D-12	NE BOLT ON FLANGE OF HYD, NE CORNER OF CTH D AND WEST LN.	742.81

**VERTICAL DATUM REFERENCED TO NGVD 29

N

SLOPE INTERCEPT, TYP

WE ENERGIES

EXISTING R/W

VILLAGE OF BELGIUM

TLE

5' CONCRETE SIDEWALK

EXISTING R/W

CTH D
MAIN STREET

96

97

309

MICHAEL STREET

STA 309+99.98
=STA 96+50.73

320

321

WEST LANE

STA 320+00.00
=STA 96+83.83

BM D-12

CONCRETE P.E.

3/4"BAR

HOUSE #501

HOUSE #502

HOUSE #423

CONSTRUCTION LIMITS
STA 309+25.00
MATCH EXISTING
SAWCUT REQUIRED

CONSTRUCTION LIMITS
STA 320+90.00
MATCH EXISTING
SAWCUT REQUIRED

5

5

VPI STA 309+25.00
VPI EL 739.77

VPI STA 309+78.98
VPI EL 739.27

VPI STA 309+99.98
VPI EL 739.57

VPI STA 309+96.98
VPI EL 739.63

VPI STA 320+00.00
VPI EL 740.05

VPI STA 320+21.00
VPI EL 739.63

VPI STA 320+90.00
VPI EL 740.48

-0.93%
2.00%
2.00%
-2.00%
1.23%

EXISTING R/L PROFILE
FINISHED R/L PROFILE
FINISHED R/L PROFILE
EXISTING R/L PROFILE

EXISTING R/L PROFILE ELEVATIONS
FINISHED R/L PROFILE ELEVATIONS
EXISTING R/L PROFILE ELEVATIONS
FINISHED R/L PROFILE ELEVATIONS

739.89 739.77 **739.77** 739.72 **739.54** 739.77 **739.31** 740.23 739.74 740.80 740.60 740.80 **740.05** 740.40 **739.68** 740.35 **739.99** 740.42 **740.29** 740.52

746 744 742 740 738 736 734 732

308 309 310 320 321 322

PROJECT NO: 4880-01-71	HWY: CTH D	COUNTY: OZAUKEE	PLAN AND PROFILE: MICHAEL STREET & WEST LANE	SHEET 149	E

BENCH MARKS

BM	DESCRIPTION	ELEVATION
D-13	NE BOLT ON FLANGE OF HYD, SE CORNER OF CTH D AND LINDALE ST.	746.34

**VERTICAL DATUM REFERENCED TO NGVD 29

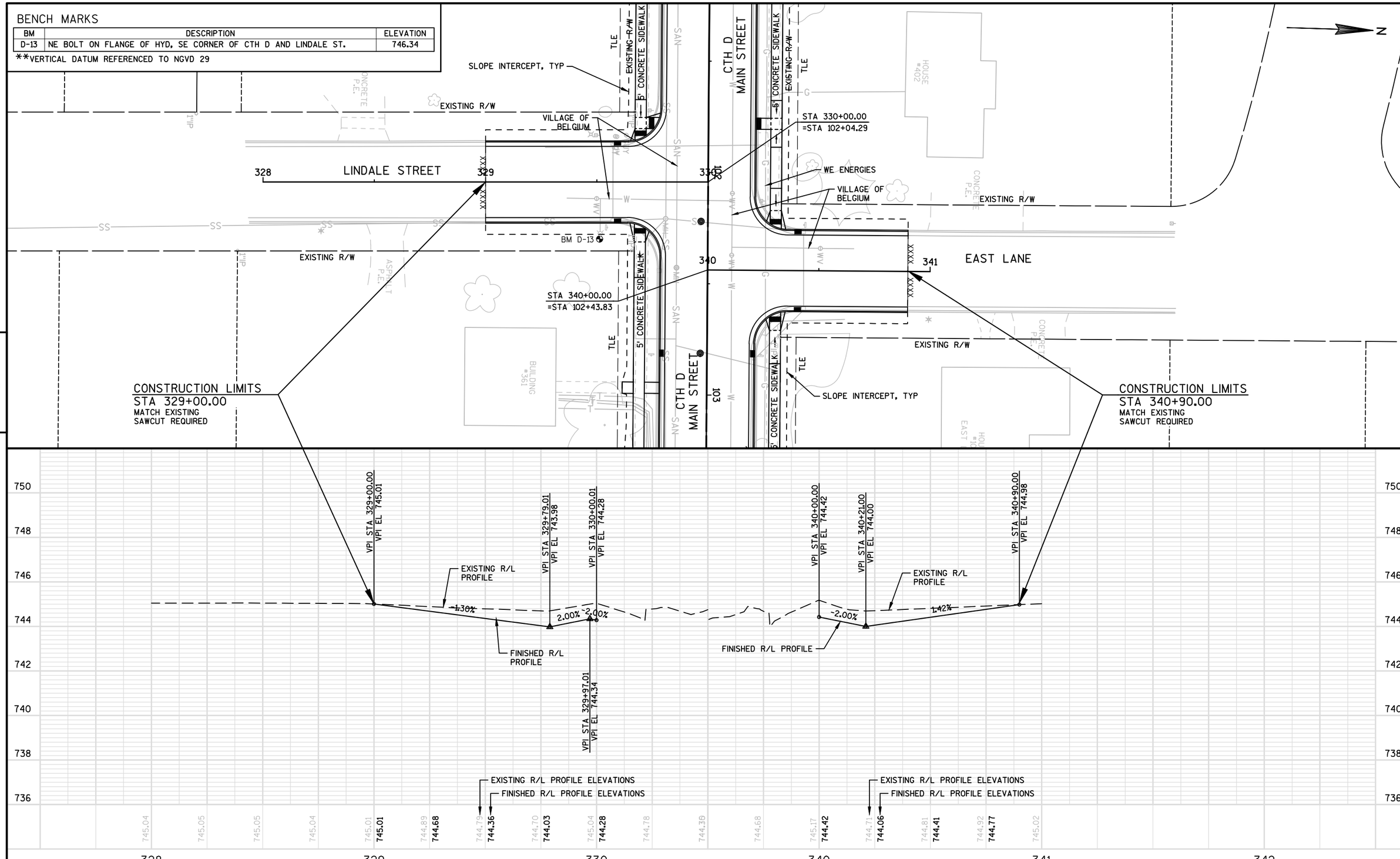

PROJECT NO:4880-01-71	HWY:CTH D	COUNTY:OZAUKEE	PLAN AND PROFILE: LINDALE STREET & EAST LANE	SHEET 150	E

FILE NAME : S:\CURRPROJ\OZAUKEECO\CTH D\CIVIL3D\48800100\SHEETSPLAN\48800100-050102-PP.DWG
LAYOUT NAME - 48800100-050102-PP - SHEET-06
PLOT DATE : 1/24/2017 9:27 AM PLOT BY : AARON SARAUER PLOT NAME : PLOT SCALE : 1 IN:40 FT

BENCH MARKS

BM	DESCRIPTION	ELEVATION
D-14	NE BOLT ON FLANGE OF HYD. NE CORNER OF CTH D AND DEAN RD.	747.48

**VERTICAL DATUM REFERENCED TO NGVD 29

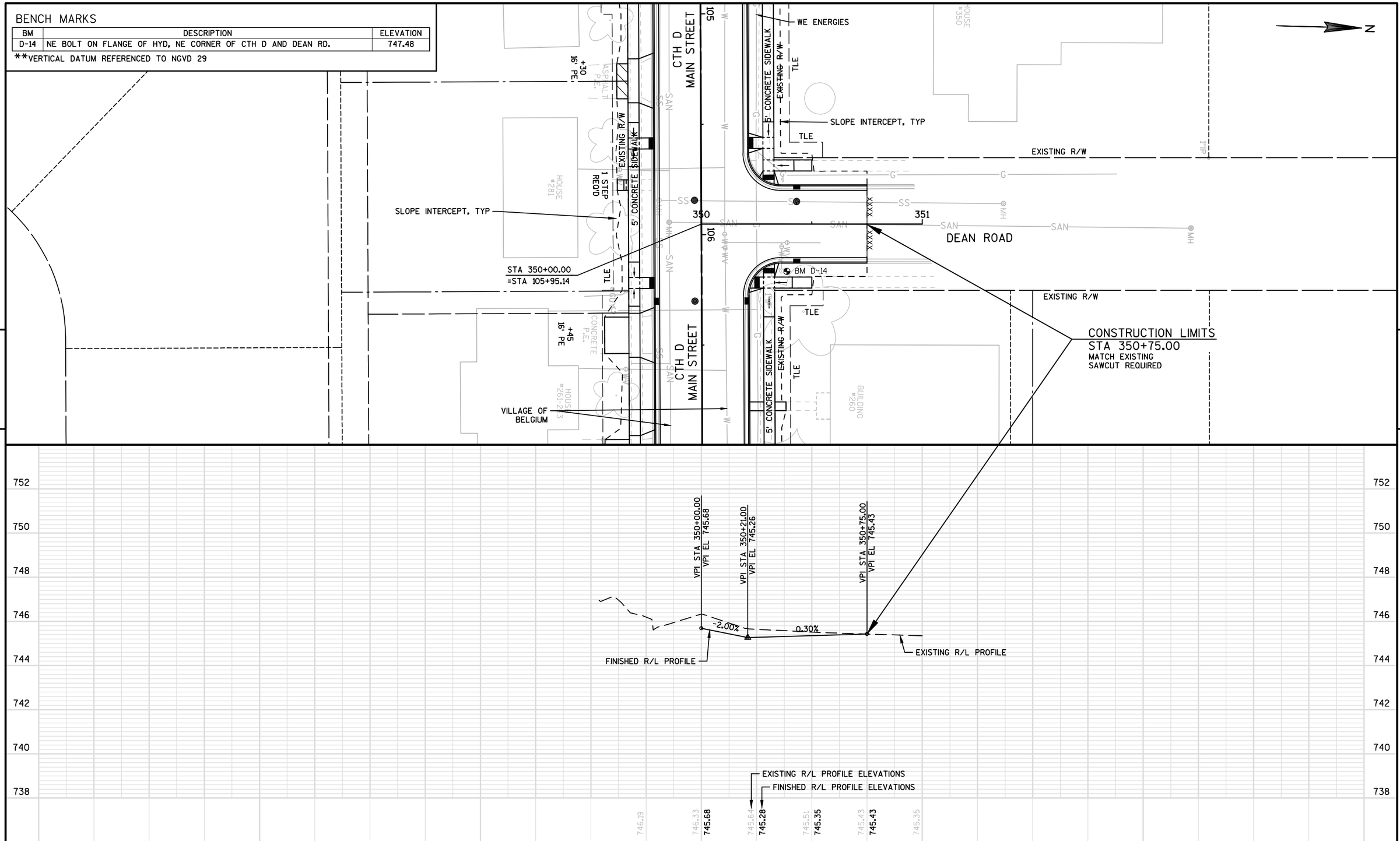

PROJECT NO: 4880-01-71	HWY: CTH D	COUNTY: OZAUKEE	PLAN AND PROFILE: DEAN ROAD	SHEET 151	E

BENCH MARKS

BM	DESCRIPTION	ELEVATION
D-15	NE BOLT ON FLANGE OF HYD, NW CORNER OF CTH D AND PIERRON ST.	748.87

**VERTICAL DATUM REFERENCED TO NGVD 29

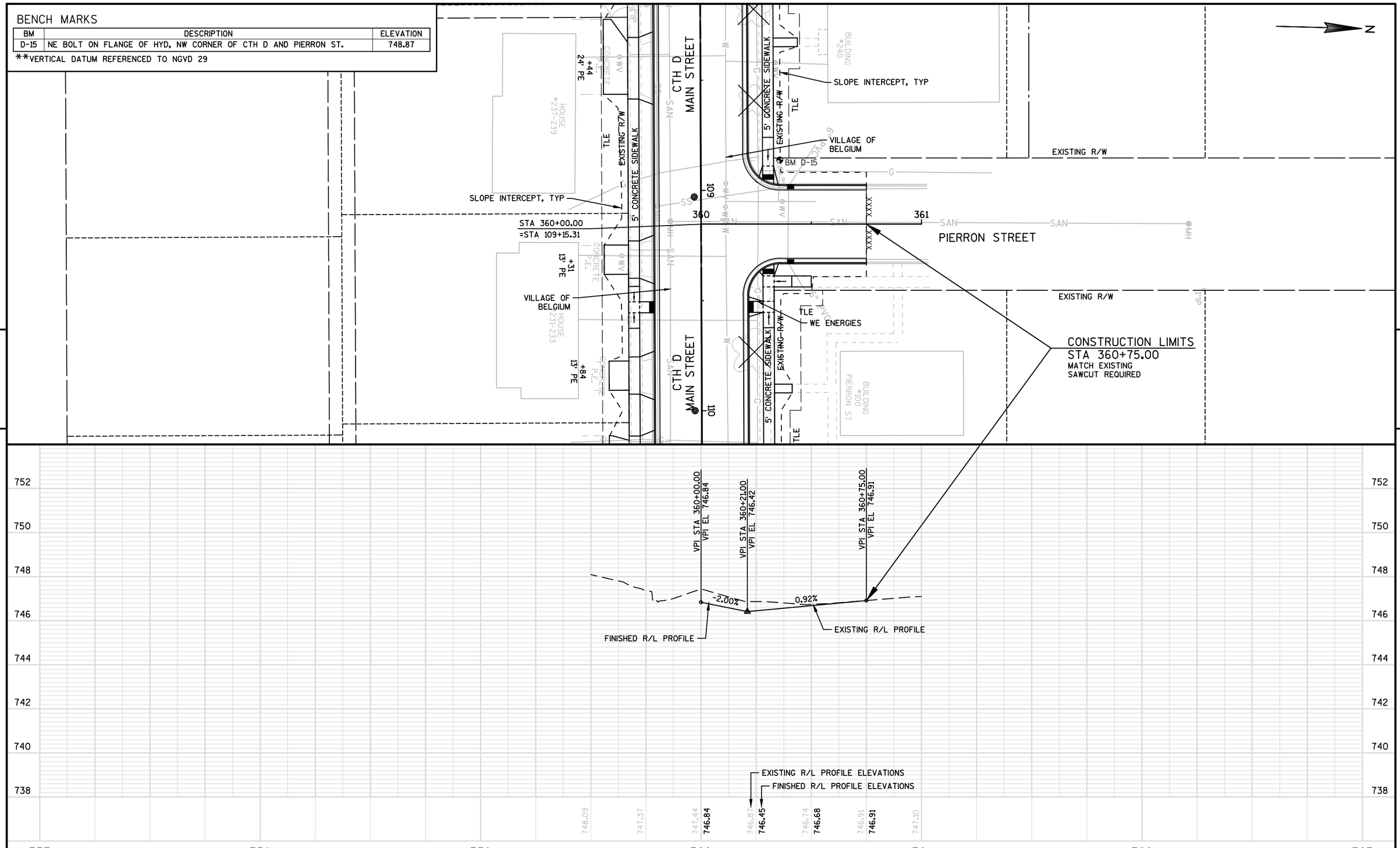

PROJECT NO: 4880-01-71	HWY: CTH D	COUNTY: OZAUKEE	PLAN AND PROFILE: PIERRON STREET	SHEET 152	E

FILE NAME : S:\CURRPROJ\OZAUKEECO\CTH D\CIVIL3D\48800100\SHEETSPLAN\48800100-050102-PP.DWG
LAYOUT NAME - 48800100-050102-PP - SHEET-08

PLOT DATE : 1/24/2017 9:27 AM PLOT BY : AARON SARAUER PLOT NAME : PLOT SCALE : 1 IN:40 FT

WISDOT/CADDS SHEET 44

BENCH MARKS

BM	DESCRIPTION	ELEVATION
D-16	NE BOLT ON FLANGE OF HYD, NW CORNER OF CTH D AND N. LAR-ANN ST.	748.30

**VERTICAL DATUM REFERENCED TO NGVD 29

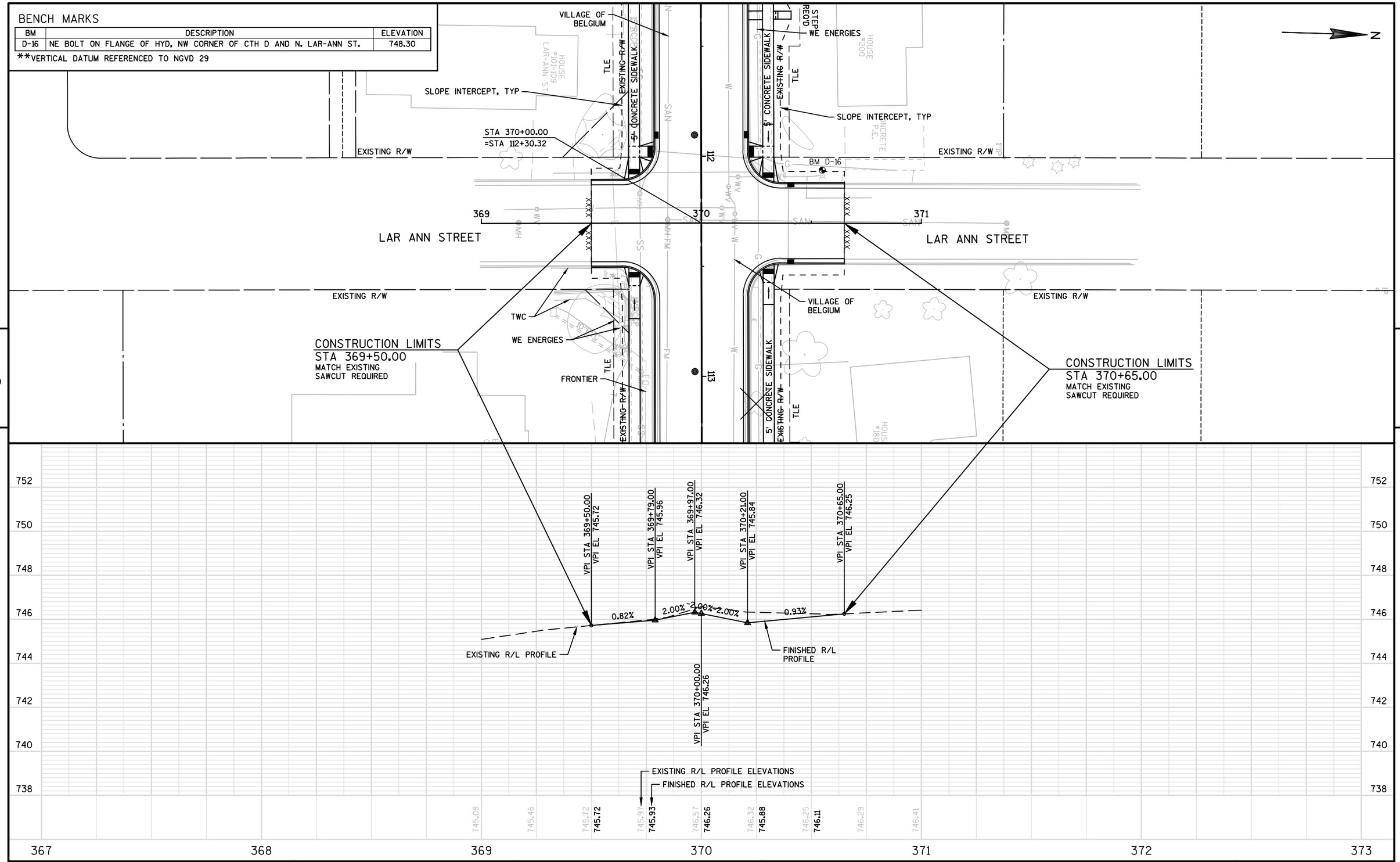

PROJECT NO: 4880-01-71	HWY: CTH D	COUNTY: OZAUKEE	PLAN AND PROFILE: LAR ANN STREET	SHEET 153	E

Standard Detail Drawing List

08A05-19A	INLET COVERS TYPE A, H, A-S, H-S & Z
08A05-19D	INLET COVER TYPE BW, MANHOLE COVERS, TYPE K, J, J-S, L & M
08A09-02	CATCH BASINS 2X3-FT AND 2.5X3-FT
08B09-02	MANHOLES 3-FT, 4-FT, 5-FT, 6-FT, 7-FT AND 8-FT DIAMETER
08D01-19	CONCRETE CURB, CONCRETE CURB AND GUTTER AND TIES
08D05-18A	CURB RAMPS TYPES 1 AND 1-A
08D05-18B	CURB RAMPS TYPES 2 AND 3
08D05-18C	CURB RAMPS TYPES 4A AND 4A1
08D05-18D	CURB RAMPS TYPE 4B AND 4B1
08D05-18E	CURB RAMPS TYPES 5, 6, 7A, 7B & 8
08E09-06	SILT FENCE
08E10-02	INLET PROTECTION TYPE A, B, C AND D
08E14-01	TRACKING PAD
09B02-09	CONDUIT
09B04-11	PULL BOX
09C03-04	TRANSFORMER/PEDESTAL BASES
09C14-02	CONCRETE CONTROL CABINET BASE, TYPE L
09D01-05	CABINET SERVICE INSTALLATION (METER BREAKER PEDESTAL)
09D04-02	LIGHTING CONTROL CABINET 120/240 VOLT
09E03-05	NON-FREEWAY LIGHTING UNIT POLE WIRING
15C02-06A	BARRICADES AND SIGNS FOR MAINLINE CLOSURES
15C02-06B	BARRICADES AND SIGNS FOR MAINLINE CLOSURES
15C02-06C	DETOUR SIGNING FOR MAINLINE CLOSURES
15C03-03	BARRICADES AND SIGNS FOR SIDEROAD CLOSURES
15C07-12C	PAVEMENT MARKING ARROWS
15C07-13E	PAVEMENT MARKING FOR BIKE LANES
15C08-17A	LONGITUDINAL MARKING (MAINLINE)
15C29-04A	BICYCLE LANE MARKING
15C33-02	STOP LINE AND CROSSWALK PAVEMENT MARKING
15D30-03A	TRAFFIC CONTROL, PEDESTRIAN ACCOMMODATION
15D30-03B	TRAFFIC CONTROL, TEMPORARY ADA COMPLIANT PEDESTRIAN ACCOMMODATION
15D30-03C	TRAFFIC CONTROL, PEDESTRIAN ACCOMMODATION
15D38-01A	TEMPORARY TRAFFIC CONTROL FIXED MESSAGE SIGNS
15D38-01B	ATTACHMENT OF SIGNS TO POSTS
16A01-06	LANDMARK REFERENCE MONUMENTS AND COVERS

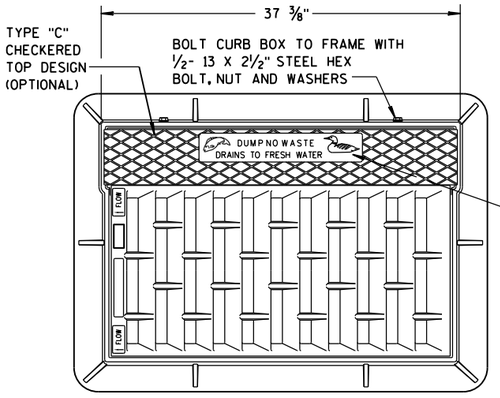

NOTE:
GRATE IS REVERSIBLE.

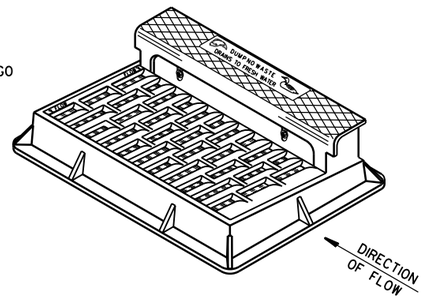

NOTE: CURB BOX HEIGHT ADJUSTABLE 6" TO 9"

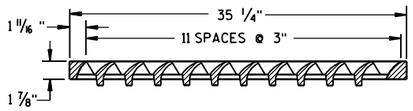

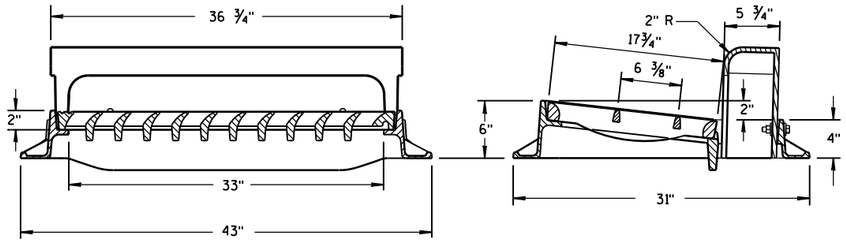

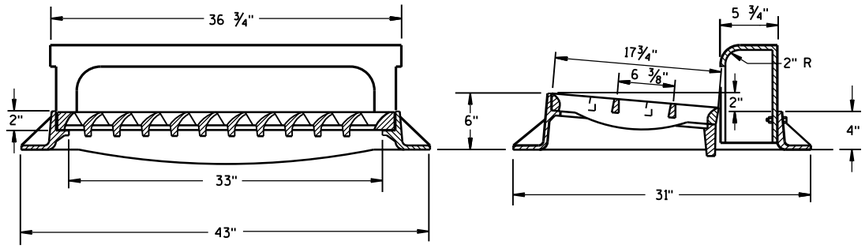

TYPE "H"

NOTE: EITHER CASTING IS ACCEPTABLE

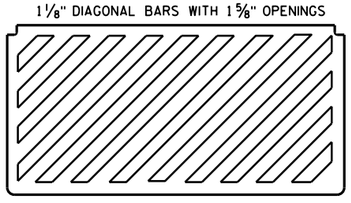

SPECIAL GRATE FOR TYPE "H" COVER

(MEASURES 35 1/4" X 17 3/4" X 2")

(NOTED AS TYPE H-S ON DRAINAGE TABLE)

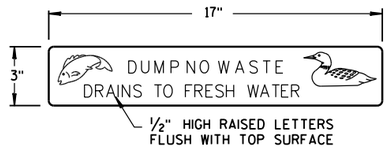

LOGO DETAIL

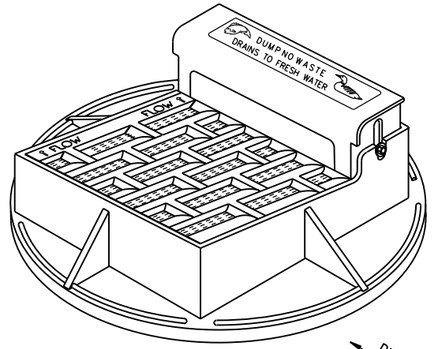

NOTE: CURB BOX ADJUSTABLE 4" TO 9"

NOTE:
GRATE IS REVERSIBLE.

GENERAL NOTES

DETAILS OF CONSTRUCTION, MATERIALS AND WORKMANSHIP NOT SHOWN ON THIS DRAWING SHALL CONFORM TO THE PERTINENT REQUIREMENTS OF THE STANDARD SPECIFICATIONS AND THE APPLICABLE SPECIAL PROVISIONS.

DETAIL DRAWINGS FOR PROPOSED ALTERNATE DESIGNS FOR CATCH BASIN, MANHOLE AND INLET COVERS SHALL BE SUBMITTED TO THE ENGINEER FOR APPROVAL PROVIDING THAT SUCH ALTERNATE DESIGNS MAKE PROVISION FOR EQUIVALENT CAPACITY AND STRENGTH.

ROUND FRAMES AND COVERS SHALL HAVE CONTINUOUSLY MACHINED BEARING SURFACES TO PREVENT ROCKING AND RATTLING.

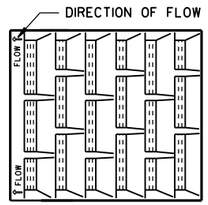

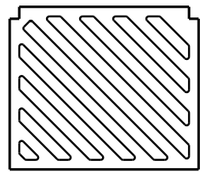

SPECIAL GRATE FOR TYPE "A" COVER

(MEASURES 19 3/4" X 17" X 1 7/8")

(NOTED AS TYPE A-S ON DRAINAGE TABLE)

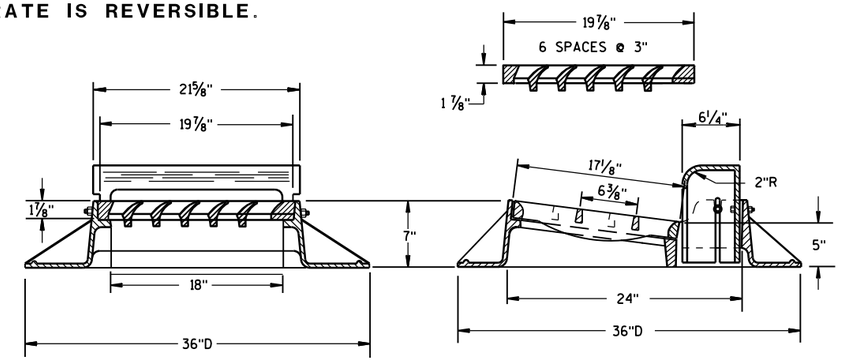

TYPE "A"

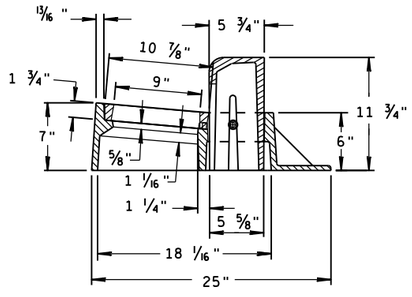

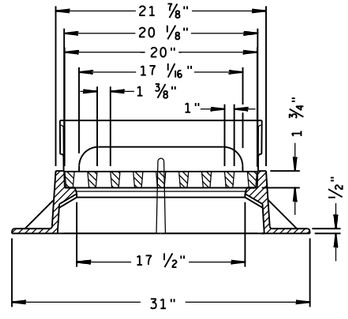

TYPE "Z"

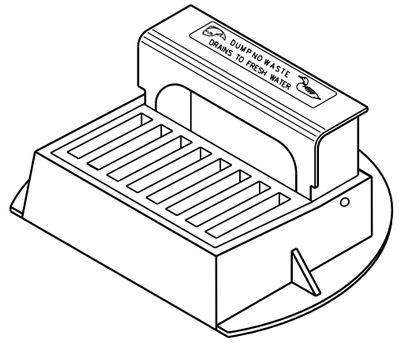

INLET COVERS
TYPE A, H, A-S, H-S & Z

STATE OF WISCONSIN
DEPARTMENT OF TRANSPORTATION

APPROVED
11-27-13 — DATE
/S/ Jerry H. Zogg — ROADWAY STANDARDS ENGINEER
FHWA

6

S.D.D. 8 A 5-19a

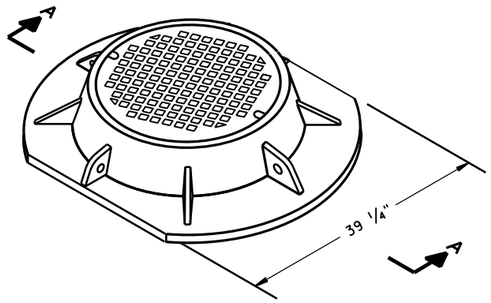

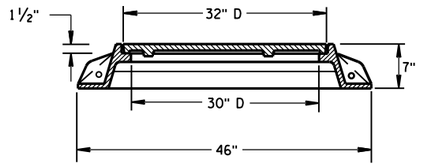

SECTION A-A
TYPE "K"

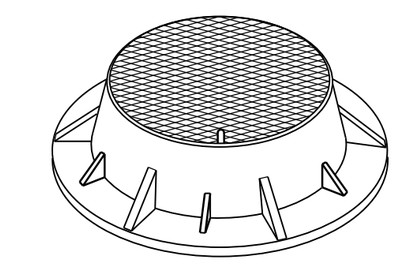

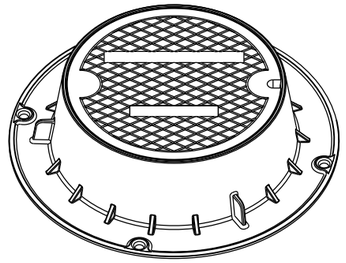

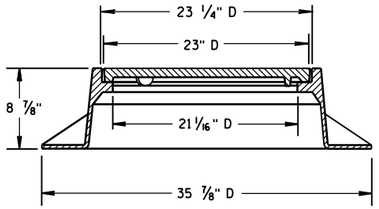

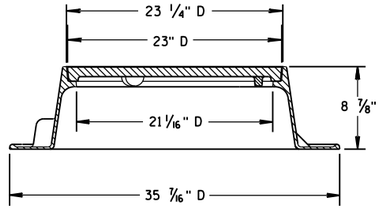

TYPE "J"
NOTE: EITHER CASTING IS ACCEPTABLE

GENERAL NOTES

DETAILS OF CONSTRUCTION, MATERIALS AND WORKMANSHIP NOT SHOWN ON THIS DRAWING SHALL CONFORM TO THE PERTINENT REQUIREMENTS OF THE STANDARD SPECIFICATIONS AND THE APPLICABLE SPECIAL PROVISIONS.

DETAIL DRAWINGS FOR PROPOSED ALTERNATE DESIGNS FOR MANHOLE COVERS SHALL BE SUBMITTED TO THE ENGINEER FOR APPROVAL PROVIDING THAT SUCH ALTERNATE DESIGNS MAKE PROVISION FOR EQUIVALENT CAPACITY AND STRENGTH.

ROUND FRAMES AND COVERS SHALL HAVE CONTINUOUSLY MACHINED BEARING SURFACES TO PREVENT ROCKING AND RATTLING.

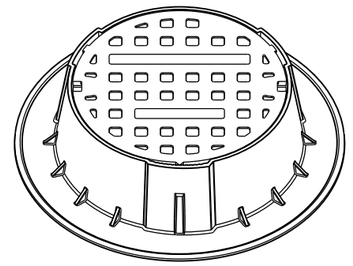

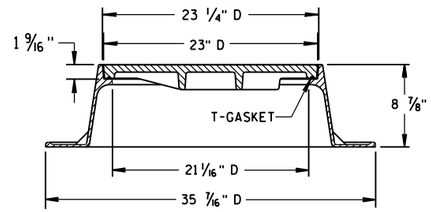

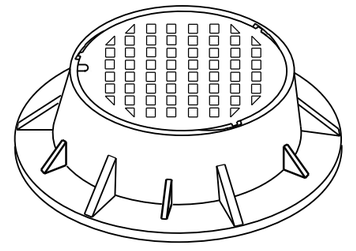

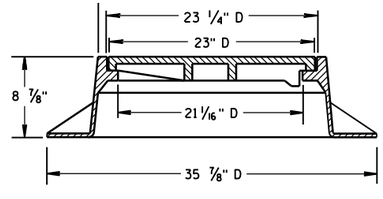

TYPE "J" SPECIAL
TYPE "B" NON-ROCKING SELF-SEAL LID
(NOTED AS TYPE J-S ON THE DRAINAGE TABLE)
NOTE: EITHER CASTING IS ACCEPTABLE

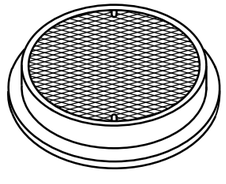

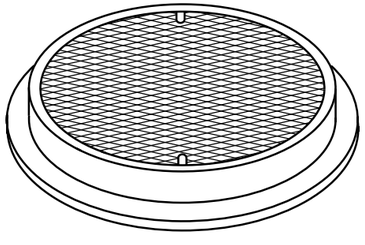

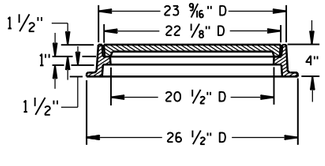

TYPE "L"

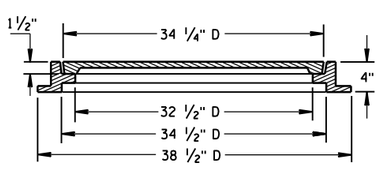

TYPE "M"

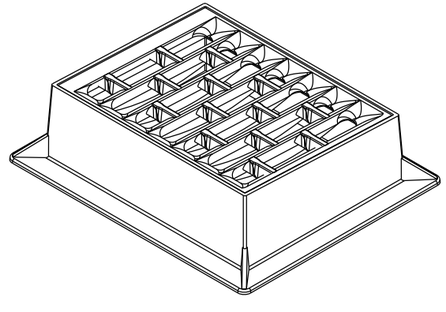

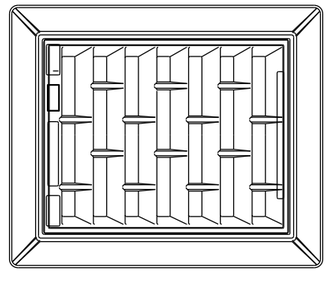

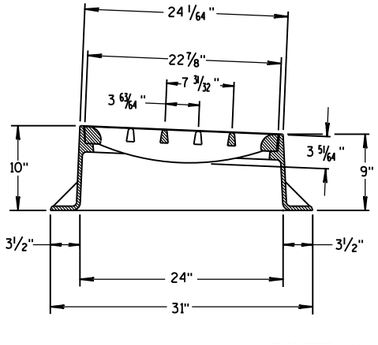

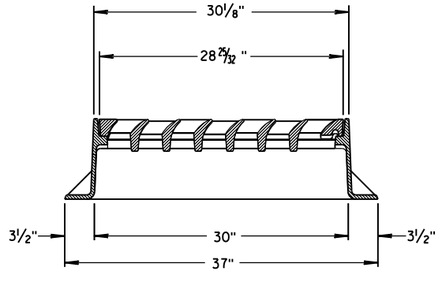

INLET COVER TYPE "BW"

INLET COVER TYPE BW
MANHOLE COVERS, TYPE K, J, J-S, L & M

STATE OF WISCONSIN
DEPARTMENT OF TRANSPORTATION

APPROVED
11/27/2013
DATE
FHWA

/S/ Jerry H. Zogg
ROADWAY STANDARDS DEVELOPMENT ENGINEER

6

S.D.D. 8 A 5-19d

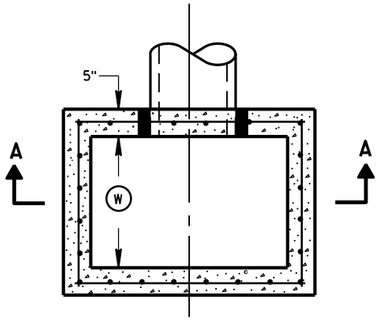

PLAN VIEW

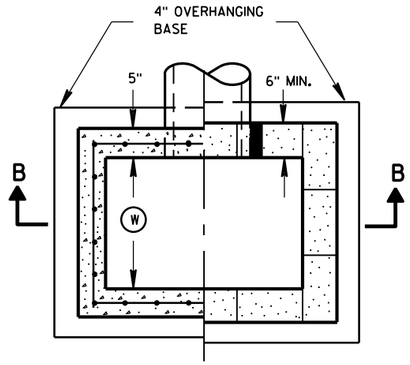

PLAN VIEW

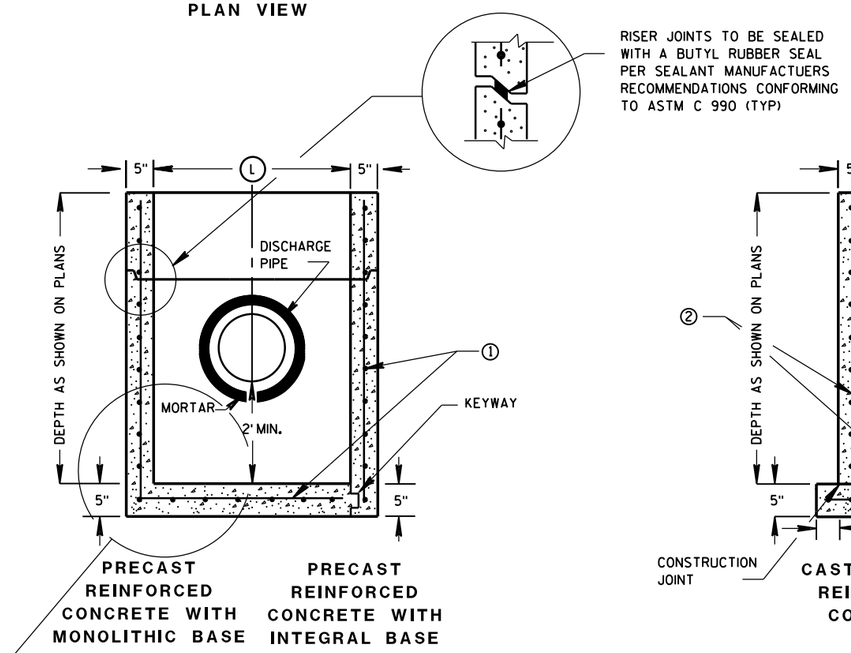

SECTION A-A

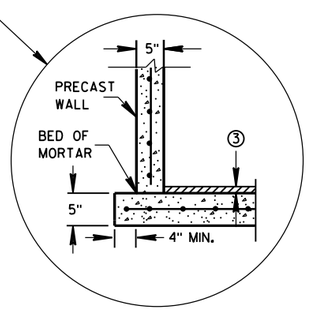

SEPARATE PRECAST REINFORCED CONCRETE BASE OPTION

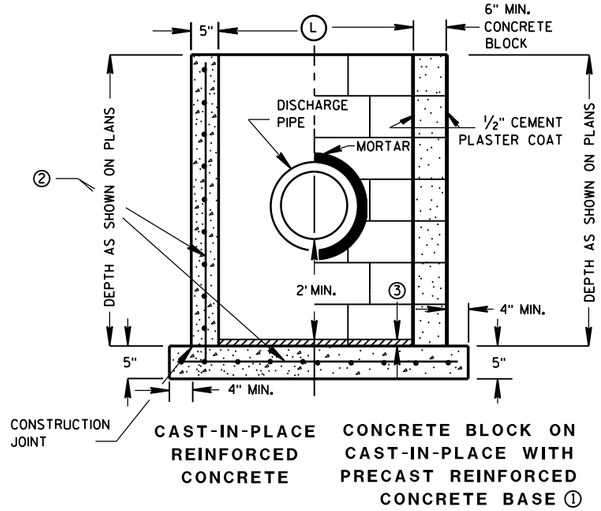

SECTION B-B

GENERAL NOTES

DETAILS OF CONSTRUCTION, MATERIALS AND WORKMANSHIP NOT SHOWN ON THIS DRAWING SHALL CONFORM TO THE PERTINENT REQUIREMENTS OF THE STANDARD SPECIFICATIONS AND THE APPLICABLE SPECIAL PROVISIONS.

UNLESS OTHERWISE AUTHORIZED IN WRITING BY THE ENGINEER, THE CONTRACTOR SHALL NOT ORDER AND DELIVER PRECAST CATCH BASIN UNITS REQUIRED FOR THE PROJECT UNTIL A LIST OF SIZES IS FURNISHED BY THE ENGINEER.

DETAILED DRAWINGS FOR PROPOSED ALTERNATE DESIGNS FOR UNDERGROUND DRAINAGE STRUCTURES SHALL BE SUBMITTED TO THE ENGINEER FOR APPROVAL PROVIDING THAT SUCH ALTERNATE DESIGNS MAKE PROVISION FOR EQUIVALENT CAPACITY AND STRENGTH.

ALL PRECAST CATCH BASIN UNITS SHALL CONFORM TO THE PERTINENT REQUIREMENTS OF ASTM C 913.

ALL DRAINAGE STRUCTURES ARE DESIGNATED ON THE PLANS AS "MANHOLES 3X3-L", "CATCH BASINS 4-B", "INLETS 2X3-H", ETC. THE FIRST NUMBERS DESIGNATES THE SIZE OF THE STRUCTURE, AND THE FOLLOWING LETTER DESIGNATES THE TYPE OF COVER TO BE USED TO COMPRISE THE COMPLETE UNIT.

BASES SHALL BE PLACED ON A BED OF MATERIAL AT LEAST 6 INCHES IN DEPTH, WHICH MEETS THE REQUIREMENTS OF FOUNDATION BACKFILL. THIS BEDDING SHALL BE COMPACTED AND PROVIDE UNIFORM SUPPORT FOR THE ENTIRE AREA OF THE BASE.

ALL BAR STEEL REINFORCEMENT SHALL BE EMBEDDED 2 INCHES CLEAR UNLESS OTHERWISE SHOWN OR NOTED.

PRECAST REINFORCED RISERS SHALL HAVE A TONGUE AND GROOVE JOINT WITH TONGUE UP OR DOWN.

4" OVERHANGING BASES ARE REQUIRED FOR CAST-IN-PLACE REINFORCED CONCRETE AND CONCRETE BLOCK INSTALLATIONS.
4" OVERHANG IS REQUIRED WHEN SEPARATE PRECAST BASE IS PROVIDED.
OVERHANG IS NOT REQUIRED ON PRECAST STRUCTURES WITH AN INTEGRAL OR MONOLITHIC BASE.

MAXIMUM INSIDE PIPE DIAMETER DETERMINED BY 3" CLEARANCE ON EACH SIDE OF THE OUTSIDE WALL OF THE PIPE. SEE DETAIL "A". ASSUMES PIPE ENTERS PERPENDICULAR TO THE STRUCTURE.

① FOR PRECAST CATCH BASINS PROVIDE REINFORCING STEEL IN ACCORDANCE TO ASTM C 913.

② CONTRACTOR TO PROVIDE DRAWING(S) STAMPED BY A PROFESSIONAL ENGINEER FOR STEEL REINFORCING DESIGN FOR CAST-IN-PLACE STRUCTURES.

③ 1" CONCRETE KEY POURED AFTER INSTALLATION. 2' SUMP MEASURED FROM TOP OF KEY.

CATCH BASIN COVER MATRIX

CATCH BASIN SIZE		INLET COVER TYPE	F	ALL H'S
	WIDTH (W) (FT)	LENGTH (L) (FT)		
2X3-FT	2	3		X
2.5X3-FT	2.5	3	X	

PIPE MATRIX

CATCH BASIN SIZE	MAXIMUM INSIDE PIPE DIAMETER FOR TWO PIPES	
	WIDTH (IN)	LENGTH (IN)
2X3-FT	12	24
2.5X3-FT	18	24

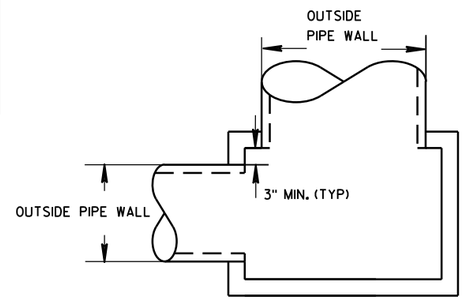

DETAIL "A"

CATCH BASINS 2X3-FT AND 2.5X3-FT

CATCH BASINS 2X3-FT AND 2.5X3-FT

STATE OF WISCONSIN
DEPARTMENT OF TRANSPORTATION

APPROVED
Sept., 2016 — DATE
FHWA

/S/ Rodney Taylor
ROADWAY STANDARDS UNIT SUPERVISOR

6

S.D.D. 8 A 9-2

6

S.D.D. 8 A 9-2

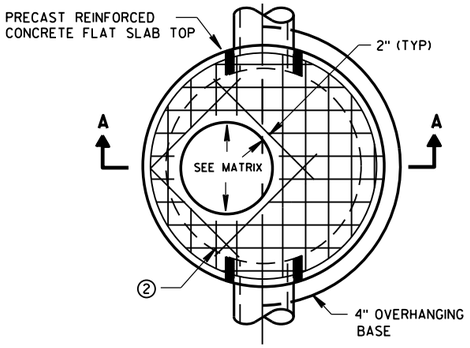

PLAN VIEW CIRCULAR OPENING

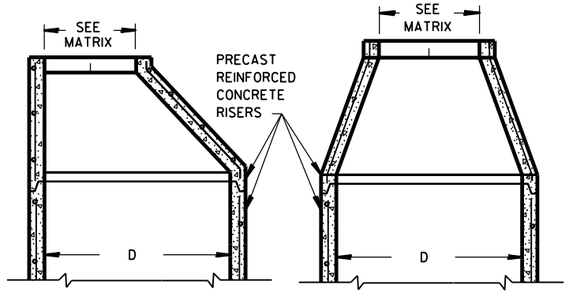

OPTIONAL PRECAST REINFORCED CONCRETE ECCENTRIC TOP

OPTIONAL PRECAST REINFORCED CONCRETE CONCENTRIC TOP

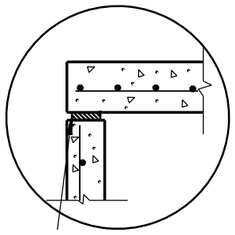

TOP WITH PLAIN END JOINT

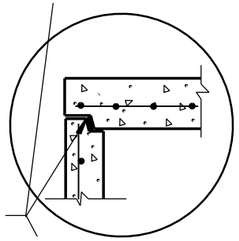

JOINTS TO BE SEALED WITH A BUTYL RUBBER SEAL PER SEALANT MANUFACTURERS RECOMMENDATIONS CONFORMING TO ASTM C990 (TYP)

TOP WITH TONGUE AND GROOVE JOINT

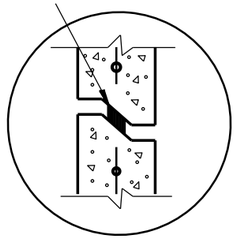

RISER WITH TONGUE AND GROOVE JOINT

DETAIL "B"

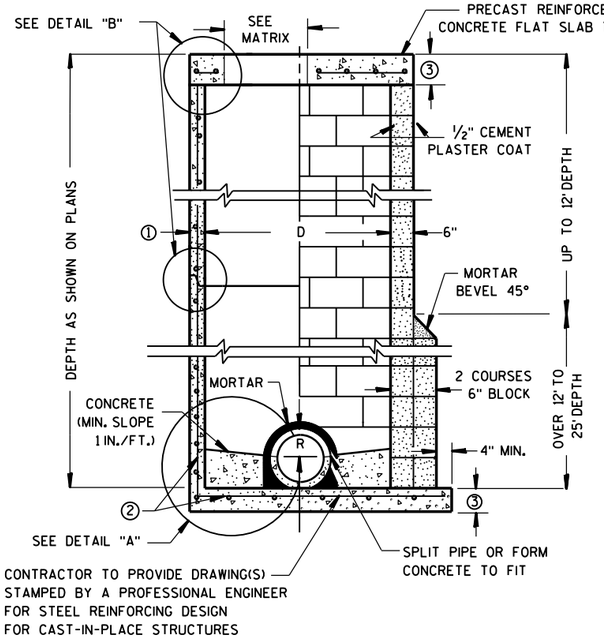

PRECAST REINFORCED CONCRETE WITH MONOLITHIC BASE

CONCRETE BLOCK WITH CAST-IN-PLACE OR PRECAST REINFORCED CONCRETE BASE ②

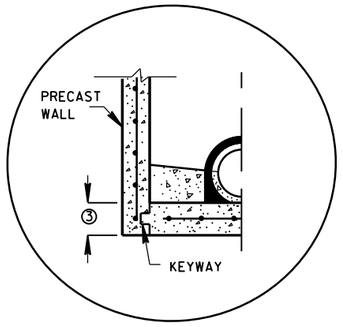

PRECAST REINFORCED CONCRETE WITH INTEGRAL BASE OPTION

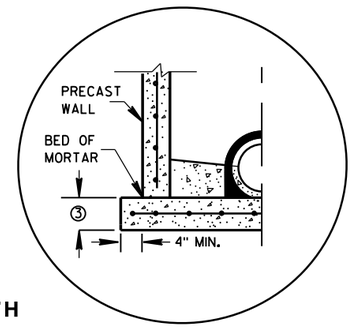

SEPARATE PRECAST REINFORCED CONCRETE BASE OPTION

DETAIL "A"

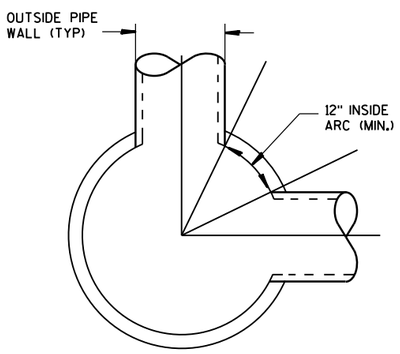

DETAIL "C"

GENERAL NOTES

DETAILS OF CONSTRUCTION, MATERIALS AND WORKMANSHIP NOT SHOWN ON THIS DRAWING SHALL CONFORM TO THE PERTINENT REQUIREMENTS OF THE STANDARD SPECIFICATIONS AND THE APPLICABLE SPECIAL PROVISIONS.

UNLESS OTHERWISE AUTHORIZED IN WRITING BY THE ENGINEER, THE CONTRACTOR SHALL NOT ORDER AND DELIVER PRECAST MANHOLE UNITS REQUIRED FOR THE PROJECT UNTIL A LIST OF SIZES IS FURNISHED BY THE ENGINEER.

DETAILED DRAWINGS FOR PROPOSED ALTERNATE DESIGNS FOR UNDERGROUND DRAINAGE STRUCTURES SHALL BE SUBMITTED TO THE ENGINEER FOR APPROVAL PROVIDING THAT SUCH ALTERNATE DESIGNS MAKE PROVISION FOR EQUIVALENT CAPACITY AND STRENGTH.

ALL DRAINAGE STRUCTURES ARE DESIGNATED ON THE PLANS AS "MANHOLES 3X3-L", "CATCH BASINS 4-B", "INLETS 2X3-H", ETC. THE FIRST NUMBERS DESIGNATE THE SIZE OF THE STRUCTURE, AND THE FOLLOWING LETTER DESIGNATES THE TYPE OF COVER TO BE USED TO COMPRISE THE COMPLETE UNIT.

BASES SHALL BE PLACED ON A BED OF MATERIAL AT LEAST 6 INCHES IN DEPTH, WHICH MEETS THE REQUIREMENTS OF FOUNDATION BACKFILL. THIS BEDDING SHALL BE COMPACTED AND PROVIDE UNIFORM SUPPORT FOR THE ENTIRE AREA OF THE BASE.

PRECAST REINFORCED CONE TOPS (ECCENTRIC OR CONCENTRIC) OR PRECAST REINFORCED FLAT SLAB TOPS MAY BE USED ON CONCRETE BLOCK STRUCTURES.

ECCENTRIC CONE TOPS MAY BE USED ON ALL STRUCTURES, AND CONCENTRIC CONE TOPS SHALL BE USED ONLY ON STRUCTURES 5 FEET OR LESS IN DEPTH, UNLESS OTHERWISE DIRECTED BY THE ENGINEER.

STEPS MEETING AASHTO M199 AND THE FOLLOWING REQUIREMENTS SHALL BE INSTALLED IN ALL STRUCTURES OVER 5 FEET IN DEPTH: 16 INCH C-C MAXIMUM SPACING; PROJECT A MINIMUM CLEAR DISTANCE OF 4 INCHES FROM THE WALL AT THE POINT OF EMBEDMENT; MINIMUM LENGTH OF 10 INCHES; MINIMUM WALL EMBEDMENT OF 3 INCHES. FERROUS METAL STEPS NOT PAINTED OR TREATED TO RESIST CORROSION SHALL HAVE A MINIMUM CROSS SECTIONAL DIMENSION OF 1 INCH.

STEPS OF APPROVED POLYPROPYLENE PLASTIC COATED REINFORCEMENT BAR ARE ACCEPTABLE. REINFORCING BAR MUST BE A MINIMUM OF ½" AND MEET THE REQUIREMENTS OF ASTM A615.

CERTIFICATION SHALL BE PROVIDED THAT INSTALLED STEPS WHEN TESTED IN ACCORDANCE WITH SECTION 10 OF AASHTO T280 CAN WITHSTAND A VERTICAL LOAD OF 800 LBS. AND A HORIZONTAL LOAD OF 400 LBS.

ALL BAR STEEL REINFORCEMENT SHALL BE EMBEDDED 2 INCHES CLEAR UNLESS OTHERWISE SHOWN OR NOTED.

CONCRETE BLOCK WILL NOT BE PERMITED FOR STRUCTURES GREATER THAN 4 FEET IN DIAMETER.

PRECAST REINFORCED RISERS SHALL HAVE A TONGUE AND GROOVE JOINT WITH TONGUE UP OR DOWN.

ALL PRECAST MANHOLE UNITS SHALL CONFORM TO THE PERTINENT REQUIREMENTS OF AASHTO DESIGNATION M 199.

4" OVERHANGING BASES ARE REQUIRED FOR ALL CONCRETE BLOCK INSTALLATIONS. 4" OVERHANG IS REQUIRED WHEN SEPARATE PRECAST BASE IS PROVIDED. OVERHANG IS NOT REQUIRED ON PRECAST STRUCTURES WITH AN INTEGRAL OR MONOLITHIC BASE.

FOR ADDITIONAL CONFIGURATIONS, MAINTAIN A MINIMUM OF 12 INCHES AS MEASURED FROM THE INSIDE OF THE STRUCTURE WALL BETWEEN THE OUTSIDE PIPE WALLS OF ADJACENT PIPES. SEE DETAIL "C".

① MINIMUM WALL THICKNESS SHALL BE 4 INCHES FOR 3-FT, 5 INCHES FOR 4-FT, 6 INCHES FOR 5-FT, 7 INCHES FOR 6-FT, 8 INCHES FOR 7-FT AND 9 INCHES FOR 8-FT DIAMETER PRECAST MANHOLES.

② FOR PRECAST MANHOLES PROVIDE REINFORCING STEEL IN ACCORDANCE TO AASHTO M199.

③ PRECAST FLAT SLAB TOPS AND BASES WITH A DIAMETER OF 48" AND LESS SHALL HAVE A MINIMUM THICKNESS OF 6". PRECAST FLAT SLAB TOPS AND BASES WITH A DIAMETER LARGER THAN 48" SHALL HAVE A MINIMUM THICKNESS OF 8".

MANHOLE COVER OPENING MATRIX

MANHOLE COVER TYPE	C	ALL J'S	K	L	M
OPENING SIZE (FT)					
2 DIA.	X	X		X	
3 DIA.			X		X

PIPE MATRIX

MANHOLE SIZE	MAXIMUM INSIDE PIPE DIAMETER FOR TWO PIPES	
	180° SEPARATION (IN)	90° SEPARATION (IN)
3-FT	15	12
4-FT	24	18
5-FT	36	24
6-FT	42	36
7-FT	48	36
8-FT	60	42

MANHOLES 3-FT, 4-FT, 5-FT, 6-FT, 7-FT AND 8-FT DIAMETER

STATE OF WISCONSIN
DEPARTMENT OF TRANSPORTATION

APPROVED

Sept., 2016
DATE

/S/ Rodney Taylor
ROADWAY STANDARDS DEVELOPMENT UNIT SUPERV

FHWA

6
S.D.D. 8 B 9-2

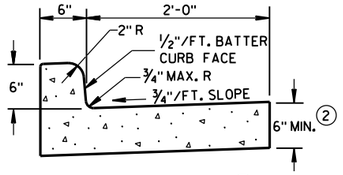

TYPES A & D ①

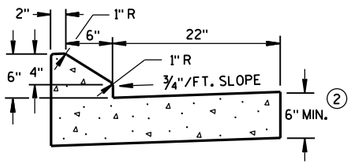

6" SLOPED CURB TYPES G & J ①

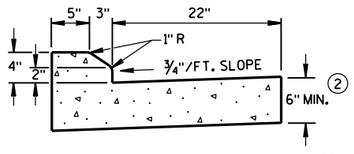

4" SLOPED CURB TYPES G & J ①

CONCRETE CURB & GUTTER 30"

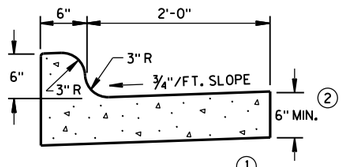

TYPES K & L ①

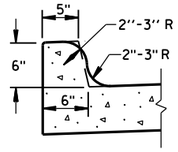

OPTIONAL CURB SHAPE FOR TYPES K & L ①

CONCRETE CURB & GUTTER 30"

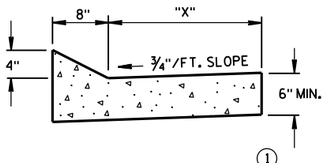

TYPES TBT & TBTT ①

CONCRETE CURB & GUTTER

TBT & TBTT	"X"
30"	22"
36"	28"

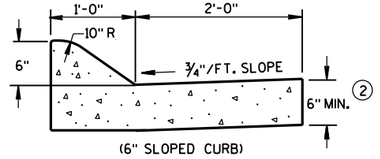

(6" SLOPED CURB)

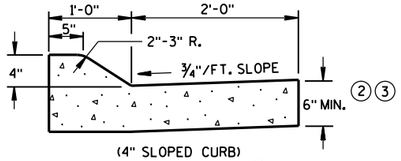

(4" SLOPED CURB)

TYPES A & D ①

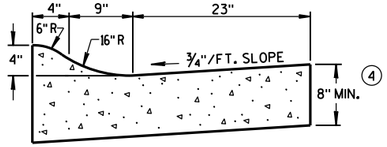

4" SLOPED CURB TYPES R & T ①⑤

CONCRETE CURB & GUTTER 36"

GENERAL NOTES

DETAILS OF CONSTRUCTION, MATERIALS AND WORKMANSHIP NOT SHOWN ON THIS DRAWING SHALL CONFORM TO THE PERTINENT REQUIREMENTS OF THE CONTRACT.

PAVEMENT TIES AND TIE BARS SHALL BE EPOXY COATED IN CONFORMANCE WITH SUBSECTION 505.2.6.2 OF THE STANDARD SPECIFICATIONS.

INTEGRAL CURB & GUTTER SHALL CONFORM TO THE DETAILS SHOWN FOR CONCRETE CURB & GUTTER INCLUDING THE TRANSVERSE GUTTER SLOPE. A LONGITUDINAL CONSTRUCTION JOINT IS NOT REQUIRED WITH INTEGRAL CURB AND GUTTER.

WHERE THE TRANSVERSE JOINTS IN THE PAVEMENT ARE REQUIRED TO BE SEALED, THE JOINTS IN THE INTEGRAL CURB AND GUTTER SHALL BE SEALED TO THE FACE OF CURB WITH THE SAME TYPE OF SEALANT. THE COST OF FURNISHING AND INSTALLING THIS SEALANT SHALL BE INCIDENTAL TO THE ITEM CONCRETE CURB AND GUTTER.

UNLESS OTHERWISE SHOWN ON THE TYPICAL CROSS SECTIONS, THE BASE AGGREGATE AND COMMON EXCAVATION LIMITS ARE 2'-0" BEHIND THE BACK OF CURBS.

① TIE BARS ARE REQUIRED FOR CURB AND GUTTER TYPES A, G, K, R AND TBTT.

② THE BOTTOM OF CURB AND GUTTER MAY BE CONSTRUCTED EITHER LEVEL OR PARALLEL TO THE SLOPE OF THE SUBGRADE OR BASE AGGREGATE PROVIDED A 6" MINIMUM GUTTER THICKNESS IS MAINTAINED.

③ USE 8" MINIMUM GUTTER THICKNESS WHEN USED WITH AN ADJACENT CONCRETE TRUCK APRON PLACED BEHIND BACK OF CURB.

④ THE BOTTOM OF CURB AND GUTTER MAY BE CONSTRUCTED EITHER LEVEL OR PARALLEL TO THE SLOPE OF THE SUBGRADE OR BASE AGGREGATE PROVIDED A 8" MINIMUM GUTTER THICKNESS IS MAINTAINED.

⑤ THE FACE OF CURB IS 6" FROM THE BACK OF CURB.

⑥ WHEN REVERSE SLOPE GUTTER IS REQUIRED, THE LOCATION(S) WILL BE SHOWN ELSEWHERE IN THE PLAN.

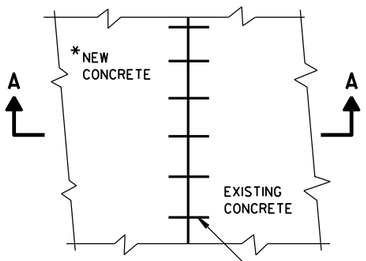

PLAN VIEW

*NEW CURB & GUTTER, SURFACE DRAINS, CONCRETE PAVEMENT OR OTHER NEW CONCRETE.

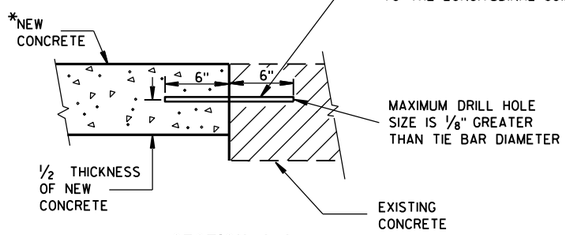

SECTION A-A

TIE BARS DRILLED INTO EXISTING PAVEMENT

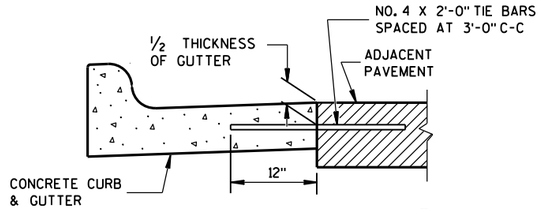

TYPICAL TIE BAR LOCATION ①

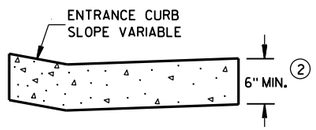

DRIVEWAY ENTRANCE CURB

(WHEN DIRECTED BY THE ENGINEER)

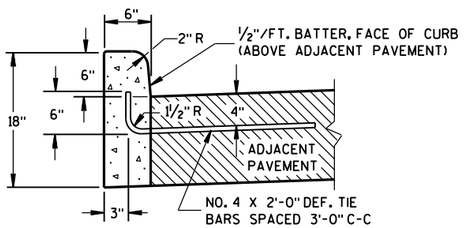

① TYPES A & D

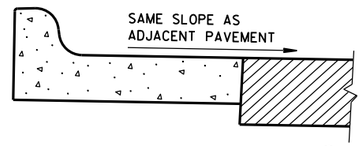

⑥ REVERSE SLOPE GUTTER

(TYPICAL FOR ALL CURB & GUTTER TYPES)

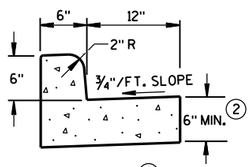

① TYPES A & D

CONCRETE CURB & GUTTER 18"

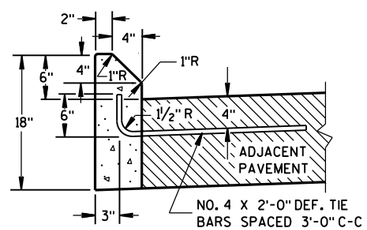

① TYPES G & J

CONCRETE CURB

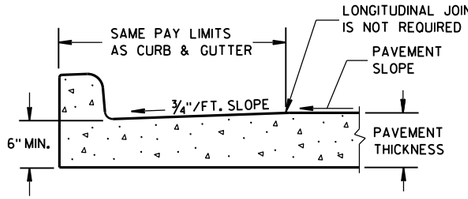

PARTIAL SECTION OF PAVEMENT WITH INTEGRAL CURB & GUTTER

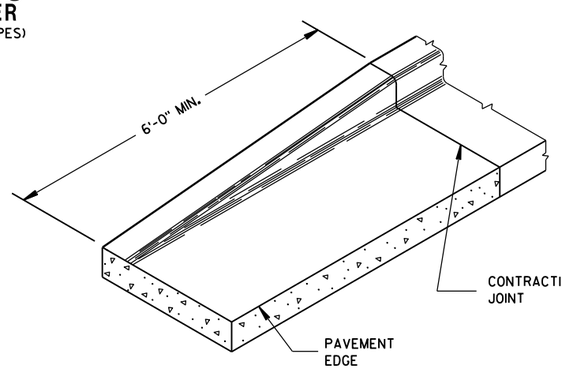

END SECTION CURB & GUTTER

CONCRETE CURB, CONCRETE CURB & GUTTER AND TIES

STATE OF WISCONSIN
DEPARTMENT OF TRANSPORTATION

APPROVED
June, 2016 — DATE
/S/ Jerry H. Zogg — ROADWAY STANDARDS DEVELOPMENT ENGINEER
FHWA

6

S.D.D. 8 D 1-19

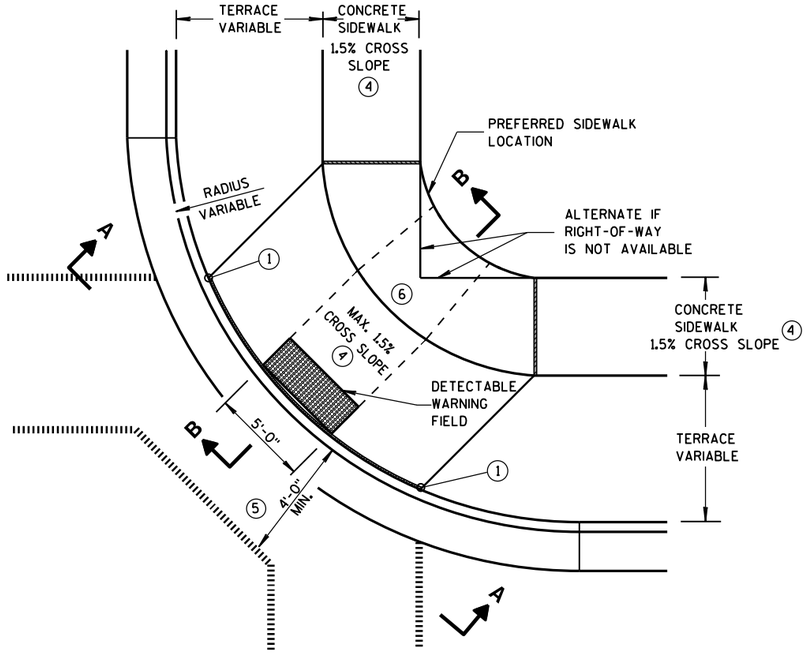

PLAN VIEW

TYPE 1 RAMP

(CENTER OF CORNER RADIUS)

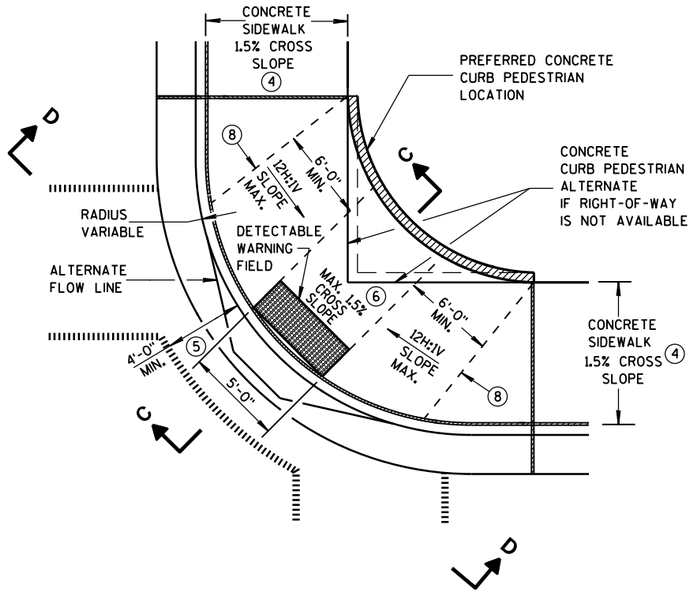

PLAN VIEW

TYPE 1-A RAMP

(NO TERRACE)

GENERAL NOTES

DETAILS OF CONSTRUCTION, MATERIALS AND WORKMANSHIP NOT SHOWN ON THIS DRAWING SHALL CONFORM TO THE PERTINENT REQUIREMENTS OF THE STANDARD SPECIFICATIONS AND THE APPLICABLE SPECIAL PROVISIONS.

WHEN NECESSARY, THE SIDEWALK ELEVATION MAY BE LOWERED TO MEET THE HIGH POINT ON THE RAMP.

TYPE 1 RAMPS SHALL HAVE A NORMAL SIDEWALK APRON AND CURB ON BOTH SIDES OF RAMP.

DETECTABLE WARNING FIELD SHALL BE MEASURED AND PAID BY THE SQUARE FOOT AS "CURB RAMP DETECTABLE WARNING FIELD". THE CONCRETE PEDESTRIAN CURB, IF NEEDED, SHALL BE MEASURED AND PAID BY THE LINEAL FOOT AS "CONCRETE CURB PEDESTRIAN". CONCRETE SIDEWALK IN THE CURB RAMP AREA SHALL BE MEASURED AND PAID BY THE SQUARE FOOT AS CONCRETE SIDEWALK, INCLUDING THE AREA UNDER THE DETECTABLE WARNING FIELD.

SELECT CURB RAMP DETECTABLE WARNING FIELD MATERIALS AND DEVICES FROM THE DEPARTMENT'S APPROVED MATERIALS LIST. THE COLOR OF THE DETECTABLE WARNING FIELD IS SPECIFIED ELSEWHERE AND IS INCIDENTAL TO THE BID ITEM OF "CURB RAMP DETECTABLE WARNING FIELD".

DETECTABLE WARNING FIELDS THAT ARE INSTALLED AS A GROUP OR SIDE BY SIDE, SHALL BE FROM THE SAME MANUFACTURER.

SURFACE TEXTURE OF THE RAMP SHALL BE OBTAINED BY COARSE BROOMING TRANSVERSE TO THE SLOPE OF THE RAMP.

(1) THIS POINT IS AN EXTENSION OF OUTSIDE EDGE OF APPROACHING SIDEWALK WHERE IT MEETS THE BACK OF CONCRETE CURB. POINT LOCATION MAY BE ADJUSTED TO ALIGN WITH BEGINNING OF FULL-HEIGHT CURB IF THIS DISTANCE IS SHORT.

(2) GRADE CHANGE BETWEEN GUTTER FLAG SLOPE AND THE CURB RAMP SLOPE SHALL NOT EXCEED 11%. MAXIMUM GUTTER FLAG SLOPE IS 4%. PROVIDE LONGITUDINAL DRAINAGE AROUND CURB AND AWAY FROM CURB RAMP. NO VERTICAL LIPS OR DISCONTINUITIES GREATER THAN 1/4-INCH ARE ALLOWED. SLOPE OF CURB HEAD OPENING SHALL NOT EXCEED 7%.

(3) ABSOLUTE MAXIMUM 12H:1V (8.33%) CURB RAMP SLOPE IS ALLOWABLE WITH FLATTENED GUTTER FLAG SLOPE AND NOT TO EXCEED 11% GRADE CHANGE.

(4) ±0.5% CONSTRUCTION TOLERANCE IN SIDEWALK CROSS SLOPE. THE SIDEWALK CROSS SLOPE SHALL NOT EXCEED 2% WITHOUT PRIOR APPROVAL FROM THE ENGINEER.

(5) PROVIDE A LEVEL LANDING IN THE STREET AND GUTTER AREA. (2% MAXIMUM SLOPE IN ANY DIRECTION). WHEN THE GUTTER SLOPE EXCEEDS 2%, CONSTRUCT THE LEVEL LANDING IN THE STREET AREA.

(6) PROVIDE A LEVEL LANDING (MAXIMUM 2% SLOPE) IN ANY DIRECTION OF PEDESTRIAN TRAVEL. STANDARD LANDING SIZE IS 5 FEET X 5 FEET.

(8) PROVIDE GRADE BREAK PERPENDICULAR TO DIRECTION OF WHEELCHAIR TRAVEL.

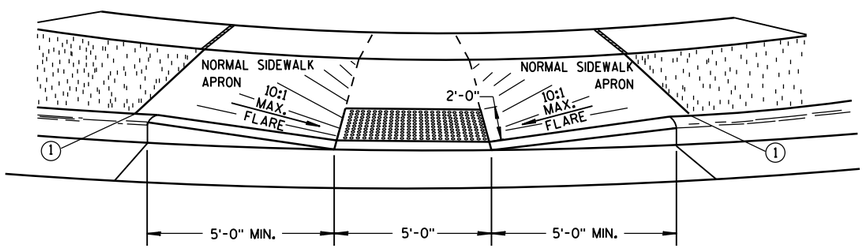

VIEW A-A

** WIDTH SHOWN ELSEWHERE IN THE PLANS

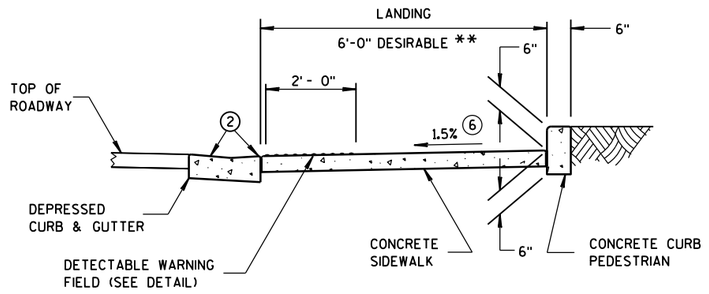

SECTION C-C

LEGEND

- ½" EXPANSION JOINT-SIDEWALK
- CONTRACTION JOINT FIELD LOCATED
- PAVEMENT MARKING CROSSWALK (WHITE)
- ALTERNATIVE LAYOUT

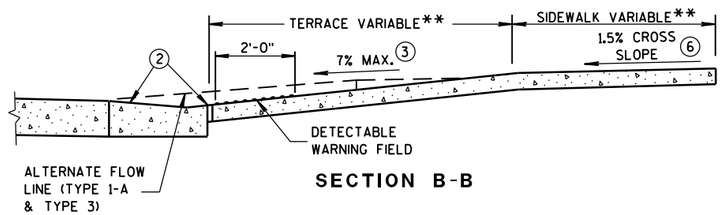

SECTION B-B

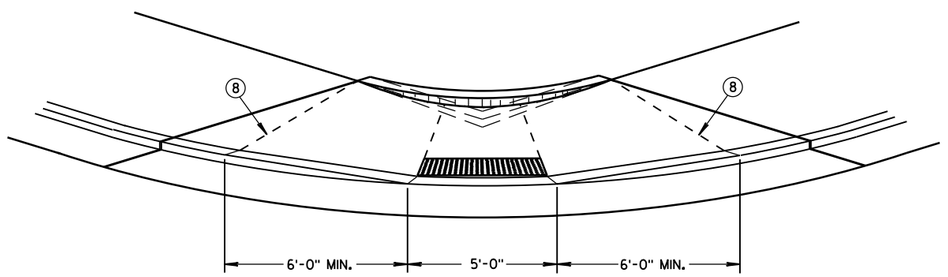

VIEW D-D

CURB RAMPS
TYPES 1 AND 1-A

STATE OF WISCONSIN
DEPARTMENT OF TRANSPOI

6

S.D.D. 8 D 5-18a

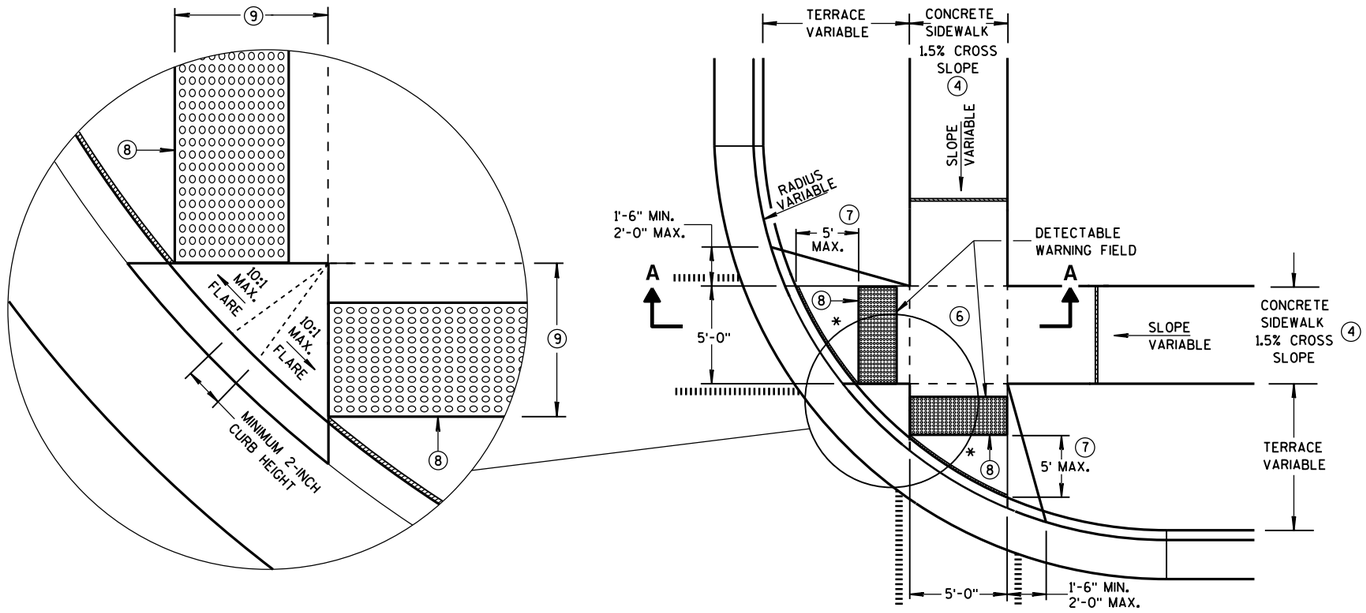

PLAN VIEW

TYPE 2 RAMP

(ON LINE WITH SIDEWALK)

* MAXIMUM 2.0% SLOPE IN ALL DIRECTIONS IN FRONT OF GRADE BREAK

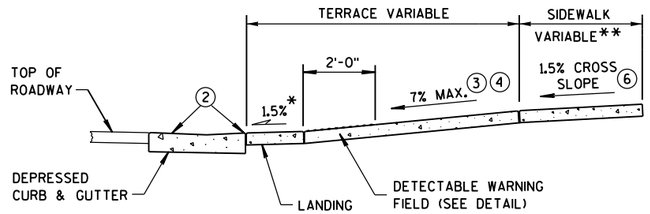

SECTION A-A

** WIDTH SHOWN ELSEWHERE IN THE PLANS

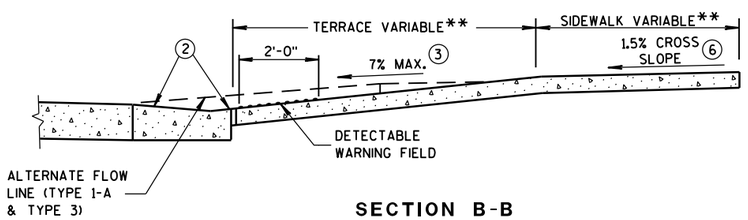

SECTION B-B

GENERAL NOTES

DETECTABLE WARNING FIELDS THAT ARE INSTALLED AS A GROUP OR SIDE BY SIDE, SHALL BE FROM THE SAME MANUFACTURER.

(2) GRADE CHANGE BETWEEN GUTTER FLAG SLOPE AND THE CURB RAMP SLOPE SHALL NOT EXCEED 11%. MAXIMUM GUTTER FLAG SLOPE IS 4%. PROVIDE LONGITUDINAL DRAINAGE AROUND CURB AND AWAY FROM CURB RAMP. NO VERTICAL LIPS OR DISCONTINUITIES GREATER THAN 1/4-INCH ARE ALLOWED. SLOPE OF CURB HEAD OPENING SHALL NOT EXCEED 7%.

(3) ABSOLUTE MAXIMUM 12H:1V (8.33%) CURB RAMP SLOPE IS ALLOWABLE WITH FLATTENED GUTTER FLAG SLOPE AND NOT TO EXCEED 11% GRADE CHANGE.

(4) ±0.5% CONSTRUCTION TOLERANCE IN SIDEWALK CROSS SLOPE. THE SIDEWALK CROSS SLOPE SHALL NOT EXCEED 2% WITHOUT PRIOR APPROVAL FROM THE ENGINEER.

(6) PROVIDE A LEVEL LANDING (MAXIMUM 2% SLOPE) IN ANY DIRECTION OF PEDESTRIAN TRAVEL. STANDARD LANDING SIZE IS 5 FEET X 5 FEET.

(7) WHEN THIS DISTANCE EXCEEDS 5 FEET, STAGGER ADDITIONAL DETECTABLE WARNING PANEL FORWARD TO REDUCE THIS DISTANCE. PROVIDE MINIMUM 12-INCH ROW OVERLAP TO AVOID SIDESTEP OF DOME DETECTION. USE EQUAL-SIZE PANELS TO DEVELOP OVERLAPPING, STAGGERED ROWS. ALIGN DOMES BETWEEN OVERLAPPING ROWS AND IN DIRECTION OF PEDESTRIAN TRAVEL.

(8) PROVIDE GRADE BREAK PERPENDICULAR TO DIRECTION OF WHEELCHAIR TRAVEL.

(9) WHEN THIS DISTANCE IS LESS THAN 6'-0", IT MAY BE DIFFICULT TO ACHIEVE A 7% SLOPE OR FLATTER ALONG THE RAMP. REDUCE CURB HEIGHT IN TRIANGLE AREA TO ACHIEVE 7% SLOPE OR FLATTER ON RAMP. CONSTRUCT 2-INCH MINIMUM CURB HEIGHT BETWEEN 10:1 FLARES.

LEGEND

- ½" EXPANSION JOINT-SIDEWALK
- CONTRACTION JOINT FIELD LOCATED
- PAVEMENT MARKING CROSSWALK (WHITE)
- ALTERNATIVE LAYOUT

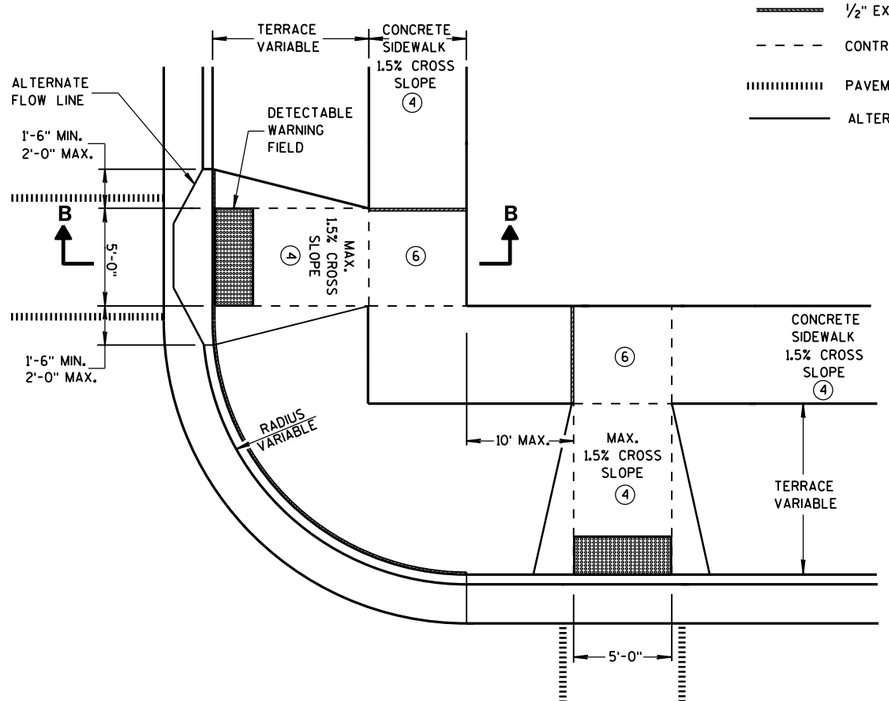

PLAN VIEW

TYPE 3 RAMP

(OUTSIDE OF CROSSWALK AREA)

CURB RAMPS TYPES 2 AND 3

STATE OF WISCONSIN
DEPARTMENT OF TRANSPO

6

S.D.D. 8 D 5-18b

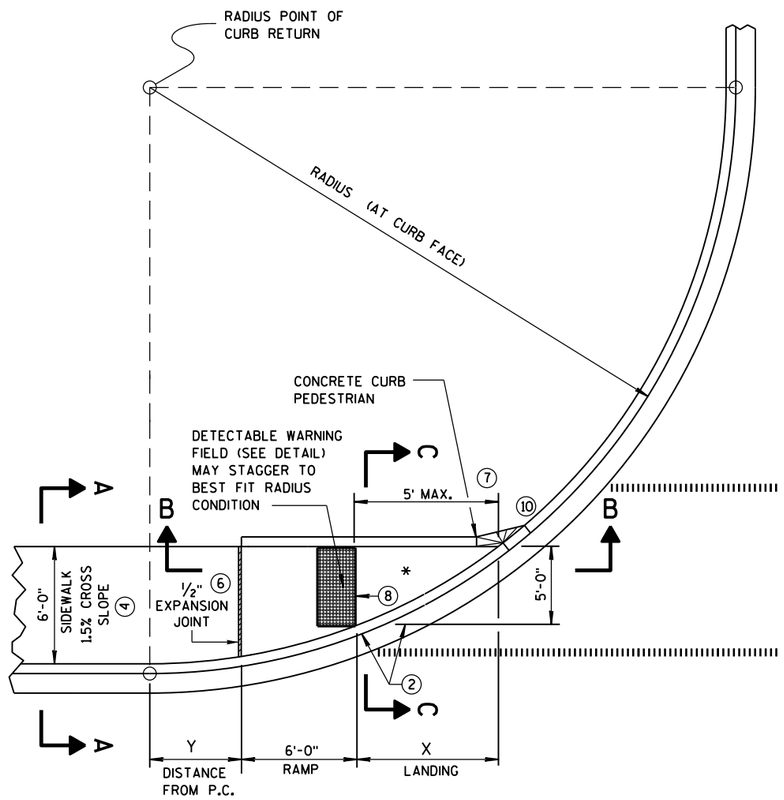

CURB RAMP TYPE 4A
PLAN VIEW

RADIUS (AT CURB FACE)	X	Y
20 FEET	7'-11"	0'-2"
30 FEET	10'-2¾"	1'-7½"
40 FEET	12'-1¼"	2'-10"
50 FEET	13'-8¾"	3'-10¾"
60 FEET	15'-2"	4'-10¼"

INTERMEDIATE RADII CAN BE INTERPOLATED

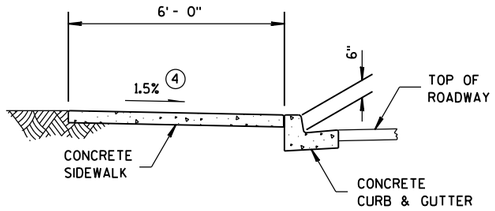

SECTION A-A FOR TYPE 4A

SECTION C-C FOR TYPE 4A

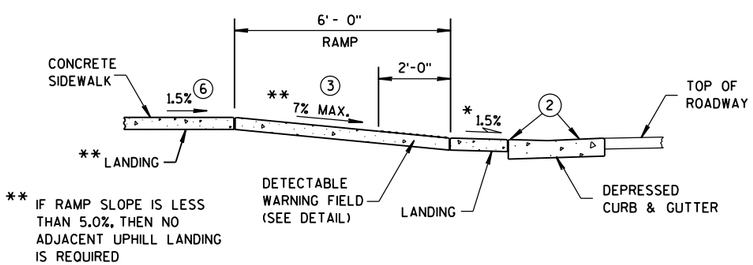

SECTION B-B FOR TYPE 4A

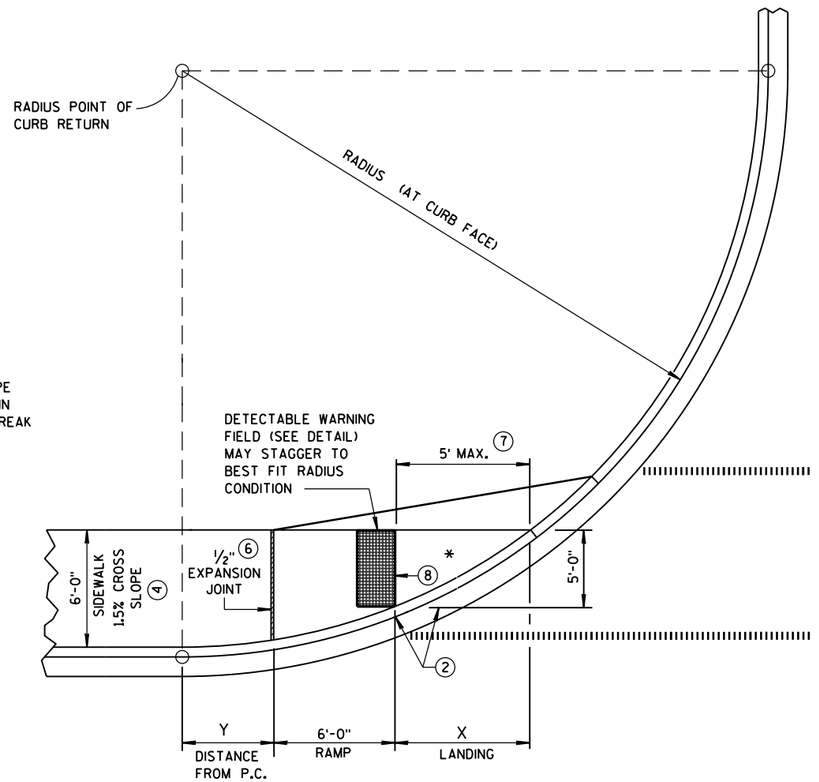

CURB RAMP TYPE 4A1
PLAN VIEW

GENERAL NOTES

AVOID PLACING DRAINAGE STRUCTURES, JUNCTION BOXES OR OTHER OBSTRUCTIONS IN FRONT OF RAMP ACCESS AREAS.

DETECTABLE WARNING FIELDS THAT ARE INSTALLED AS A GROUP OR SIDE BY SIDE, SHALL BE FROM THE SAME MANUFACTURER.

(2) GRADE CHANGE BETWEEN GUTTER FLAG SLOPE AND THE CURB RAMP SLOPE SHALL NOT EXCEED 11%. MAXIMUM GUTTER FLAG SLOPE IS 4%. PROVIDE LONGITUDINAL DRAINAGE AROUND CURB AND AWAY FROM CURB RAMP. NO VERTICAL LIPS OR DISCONTINUITIES GREATER THAN 1/4-INCH ARE ALLOWED. SLOPE OF CURB HEAD OPENING SHALL NOT EXCEED 7%.

(3) ABSOLUTE MAXIMUM 12H:1V (8.33%) CURB RAMP SLOPE IS ALLOWABLE WITH FLATTENED GUTTER FLAG SLOPE AND NOT TO EXCEED 11% GRADE CHANGE.

(4) ±0.5% CONSTRUCTION TOLERANCE IN SIDEWALK CROSS SLOPE. THE SIDEWALK CROSS SLOPE SHALL NOT EXCEED 2% WITHOUT PRIOR APPROVAL FROM THE ENGINEER.

(6) PROVIDE A LEVEL LANDING (MAXIMUM 2% SLOPE) IN ANY DIRECTION OF PEDESTRIAN TRAVEL. STANDARD LANDING SIZE IS 5 FEET X 5 FEET.

(7) WHEN THIS DISTANCE EXCEEDS 5 FEET, STAGGER ADDITIONAL DETECTABLE WARNING PANEL FORWARD TO REDUCE THIS DISTANCE. PROVIDE MINIMUM 12-INCH ROW OVERLAP TO AVOID SIDESTEP OF DOME DETECTION. USE EQUAL-SIZE PANELS TO DEVELOP OVERLAPPING, STAGGERED ROWS. ALIGN DOMES BETWEEN OVERLAPPING ROWS AND IN DIRECTION OF PEDESTRIAN TRAVEL.

(8) PROVIDE GRADE BREAK PERPENDICULAR TO DIRECTION OF WHEELCHAIR TRAVEL.

(10) INSTALL TRANSITION NOSE. (INCIDENTAL TO OTHER PAY ITEMS). DO NOT MARK TRANSITION NOSE.

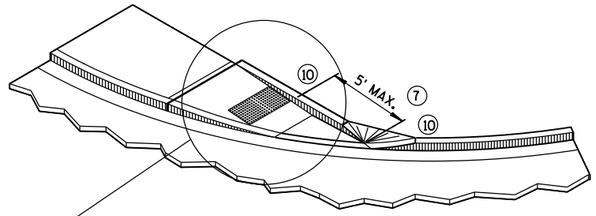

ISOMETRIC VIEW FOR TYPE 4A

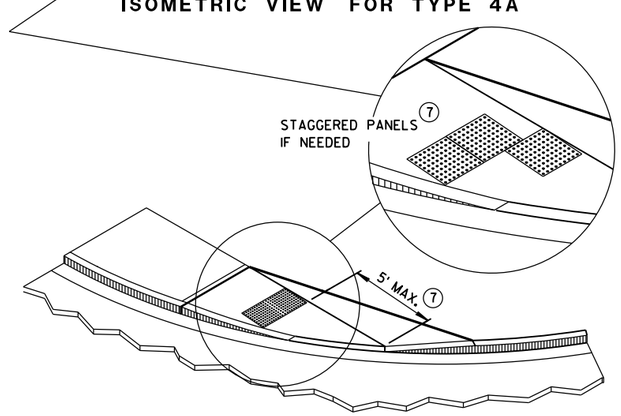

ISOMETRIC VIEW FOR TYPE 4A1

LEGEND

- ½" EXPANSION JOINT-SIDEWALK
- CONTRACTION JOINT FIELD LOCATED
- PAVEMENT MARKING CROSSWALK (WHITE)

CURB RAMPS TYPES 4A AND 4A1

STATE OF WISCONSIN
DEPARTMENT OF TRANSPOR

6

S.D.D. 8 D 5-18c

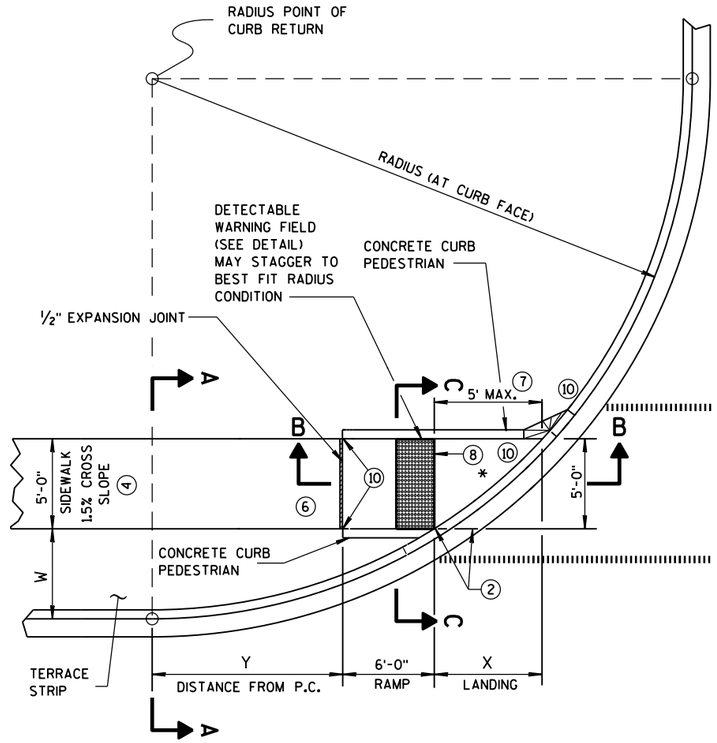

CURB RAMP TYPE 4B
PLAN VIEW

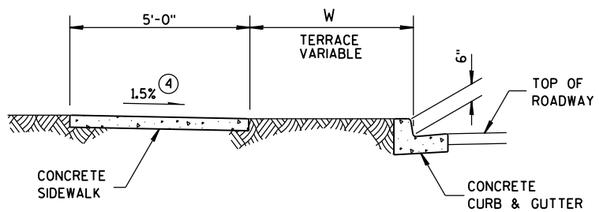

SECTION A-A FOR TYPE 4B

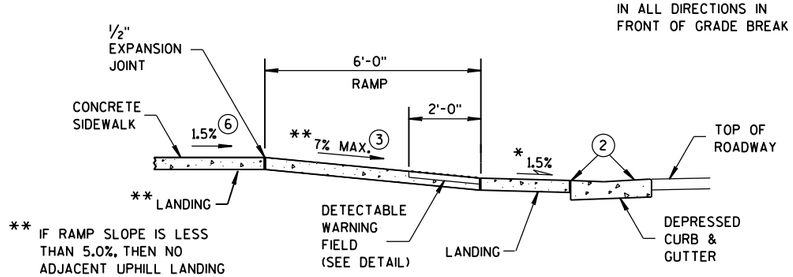

SECTION B-B FOR TYPE 4B

LEGEND

½" EXPANSION JOINT-SIDEWALK

CONTRACTION JOINT FIELD LOCATED

PAVEMENT MARKING CROSSWALK (WHITE)

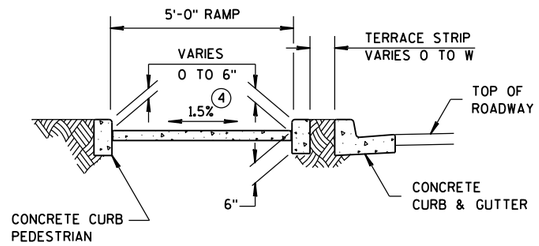

SECTION C-C FOR TYPE 4B

RADIUS (AT CURB FACE)	W = 3'-0"		W = 4'-0"		W = 5'-0"		W = 6'-0"		W = 7'-0"	
	X	Y	X	Y	X	Y	X	Y	X	Y
20 FEET	5'-9¾"	3'-6½"	4'-11½"	5'-1¾"	4'-3¼"	6'-5½"	3'-8¾"	7'-6¾"	3'-3"	8'-6¼"
30 FEET	7'-9¼"	5'-10½"	6'-9½"	7'-11¼"	6'-0¼"	9'-8"	5'-5"	11'-1¾"	4'-10¾"	12'-5¾"
40 FEET	9'-4"	7'-10"	8'-2¾"	10'-3"	7'-4¾"	12'-3¾"	6'-8½"	14'-1¼"	6'-1¾"	15'-8½"
50 FEET	10'-8"	9'-6½"	9'-5½"	12'-3¼"	8'-6½"	14'-7½"	7'-9¾"	16'-8¼"	7'-2½"	18'-6¼"
60 FEET	11'-10¼"	11'-0¾"	10'-6½"	14'-1¼"	9'-6½"	16'-8½"	8'-9¼"	18'-11¾"	8'-1½"	21'-0½"

INTERMEDIATE RADII CAN BE INTERPOLATED

GENERAL NOTES

AVOID PLACING DRAINAGE STRUCTURES, JUNCTION BOXES OR OTHER OBSTRUCTIONS IN FRONT OF RAMP ACCESS AREAS.

DETECTABLE WARNING FIELDS THAT ARE INSTALLED AS A GROUP OR SIDE BY SIDE, SHALL BE FROM THE SAME MANUFACTURER.

(2) GRADE CHANGE BETWEEN GUTTER FLAG SLOPE AND THE CURB RAMP SLOPE SHALL NOT EXCEED 11%. MAXIMUM GUTTER FLAG SLOPE IS 4%. PROVIDE LONGITUDINAL DRAINAGE AROUND CURB AND AWAY FROM CURB RAMP. NO VERTICAL LIPS OR DISCONTINUITIES GREATER THAN ¼-INCH ARE ALLOWED. SLOPE OF CURB HEAD OPENING SHALL NOT EXCEED 7%.

(3) ABSOLUTE MAXIMUM 12H:1V (8.33%) CURB RAMP SLOPE IS ALLOWABLE WITH FLATTENED GUTTER FLAG SLOPE AND NOT TO EXCEED 11% GRADE CHANGE.

(4) ±0.5% CONSTRUCTION TOLERANCE IN SIDEWALK CROSS SLOPE. THE SIDEWALK CROSS SLOPE SHALL NOT EXCEED 2% WITHOUT PRIOR APPROVAL FROM THE ENGINEER.

(6) PROVIDE A LEVEL LANDING (MAXIMUM 2% SLOPE) IN ANY DIRECTION OF PEDESTRIAN TRAVEL. STANDARD LANDING SIZE IS 5 FEET X 5 FEET.

(7) WHEN THIS DISTANCE EXCEEDS 5 FEET, STAGGER ADDITIONAL DETECTABLE WARNING PANEL FORWARD TO REDUCE THIS DISTANCE. PROVIDE MINIMUM 12-INCH ROW OVERLAP TO AVOID SIDESTEP OF DOME DETECTION. USE EQUAL-SIZE PANELS TO DEVELOP OVERLAPPING, STAGGERED ROWS. ALIGN DOMES BETWEEN OVERLAPPING ROWS AND IN DIRECTION OF PEDESTRIAN TRAVEL.

(8) PROVIDE GRADE BREAK PERPENDICULAR TO DIRECTION OF WHEELCHAIR TRAVEL.

(10) INSTALL TRANSITION NOSE. (INCIDENTAL TO OTHER PAY ITEMS). DO NOT MARK TRANSITION NOSE.

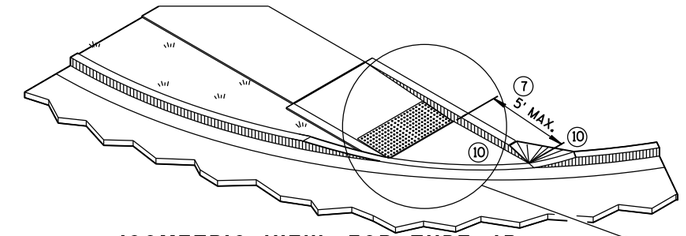

ISOMETRIC VIEW FOR TYPE 4B

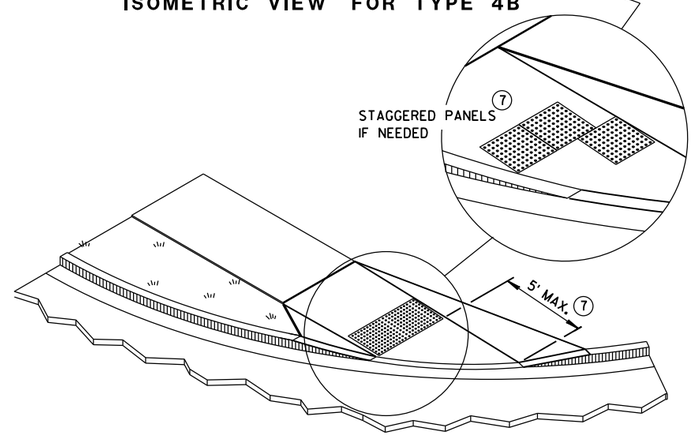

ISOMETRIC VIEW FOR TYPE 4B1

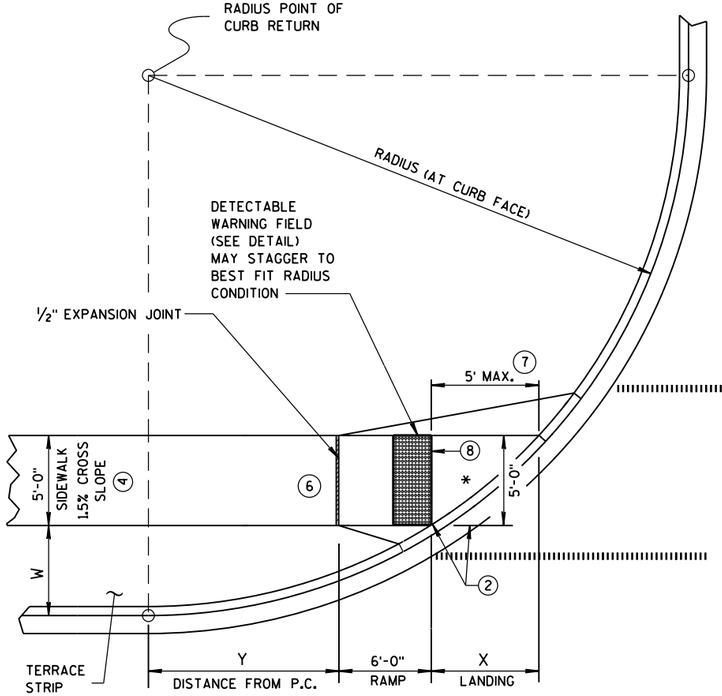

CURB RAMP TYPE 4B1
PLAN VIEW

CURB RAMPS
TYPE 4B AND 4B1

STATE OF WISCONSIN
DEPARTMENT OF TRANSPOI

6

S.D.D. 8 D 5-18d

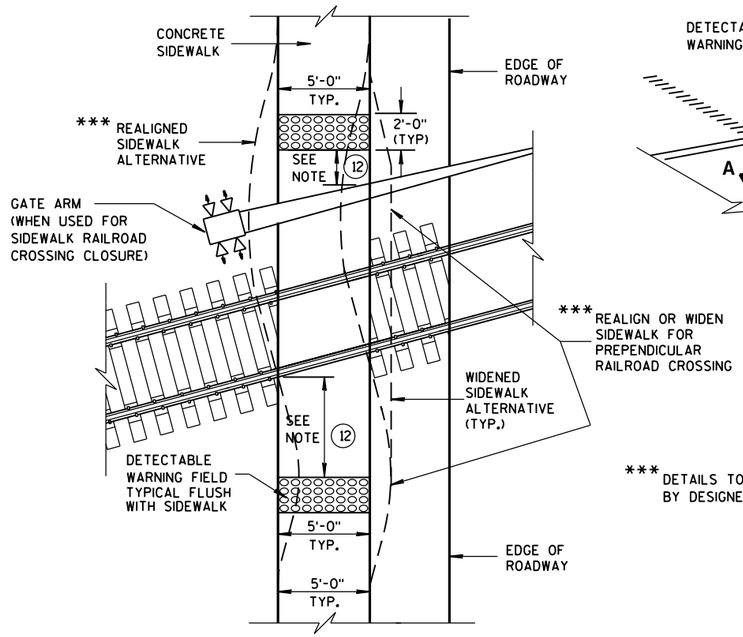

*** DETAILS TO BE DETERMINED BY DESIGNER

TYPE 8
DETECTABLE WARNINGS AT RAILROAD CROSSING

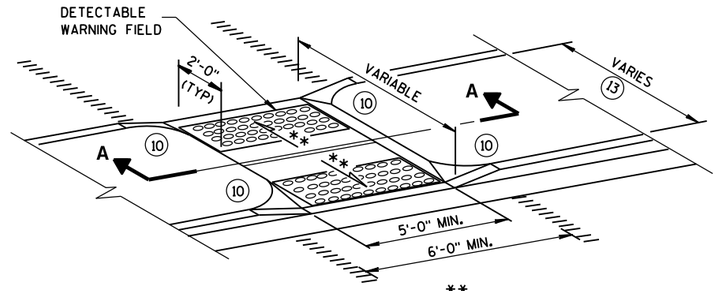

** 1% MIN. (PROVIDE DRAINAGE)

MEDIAN ISLAND NON-ELEVATED CROSSING
TYPE 5

GENERAL NOTES

SIDEWALK CROSS SLOPE SHALL NOT EXCEED 2%.

DETECTABLE WARNING FIELDS THAT ARE INSTALLED AS A GROUP OR SIDE BY SIDE, SHALL BE FROM THE SAME MANUFACTURER.

(2) GRADE CHANGE BETWEEN GUTTER FLAG SLOPE AND THE CURB RAMP SLOPE SHALL NOT EXCEED 11%. MAXIMUM GUTTER FLAG SLOPE IS 4%. PROVIDE LONGITUDINAL DRAINAGE AROUND CURB AND AWAY FROM CURB RAMP. NO VERTICAL LIPS OR DISCONTINUITIES GREATER THAN 1/4-INCH ARE ALLOWED. SLOPE OF CURB HEAD OPENING SHALL NOT EXCEED 7%.

(3) ABSOLUTE MAXIMUM 12H:1V (8.33%) CURB RAMP SLOPE IS ALLOWABLE WITH FLATTENED GUTTER FLAG SLOPE AND NOT TO EXCEED 11% GRADE CHANGE.

(4) ±0.5% CONSTRUCTION TOLERANCE IN SIDEWALK CROSS SLOPE. THE SIDEWALK CROSS SLOPE SHALL NOT EXCEED 2% WITHOUT PRIOR APPROVAL FROM THE ENGINEER.

(6) PROVIDE A LEVEL LANDING (MAXIMUM 2% SLOPE) IN ANY DIRECTION OF PEDESTRIAN TRAVEL. STANDARD LANDING SIZE IS 5 FEET X 5 FEET.

(10) INSTALL TRANSITION NOSE. (INCIDENTAL TO OTHER PAY ITEMS). DO NOT MARK TRANSITION NOSE.

(11) SLOPE SIDEWALK TOWARD LANDING AS SHOWN WHERE THERE IS NO TERRACE OR WHERE THE TERRACE WIDTH IS LESS THAN 6 FEET WIDE.

(12) THE EDGE OF THE DETECTABLE WARNING FIELD NEAREST TO A RAILROAD CROSSING SHALL BE 1.5 FEET ± 0.1' FROM THE FACE OF THE GATE ARM IF THE GATE ARM EXTENDS ACROSS THE SIDEWALK. WHERE THERE IS NO PEDESTRIAN GATE, THE EDGE OF THE DETECTABLE WARNING FIELD NEAREST TO THE RAILROAD CROSSING SHALL BE 15 FEET FROM THE NEAREST RAIL.

(13) DO NOT INSTALL DETECTABLE WARNING FIELDS IF MEDIAN WIDTH BETWEEN BACK OF CURBS IS LESS THAN 6 FEET.

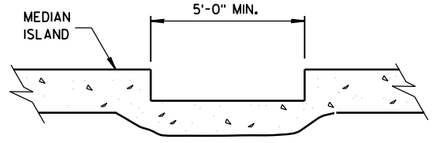

SECTION A-A

	MIN.	MAX.
A	1.6"	2.4"
B	0.65"	1.5"
C	*	*
D	0.9"	1.4"

* THE C DIMENSION IS 50% TO 65% OF THE D DIMENSION.

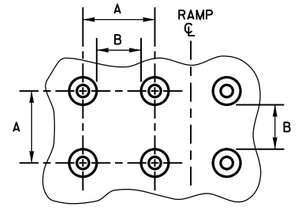

PLAN VIEW

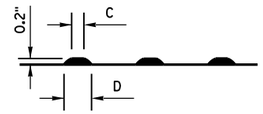

ELEVATION VIEW

TRUNCATED DOMES
DETECTABLE WARNING PATTERN DETAIL

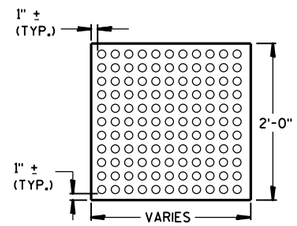

PLAN VIEW

DETECTABLE WARNING FIELD (TYPICAL)

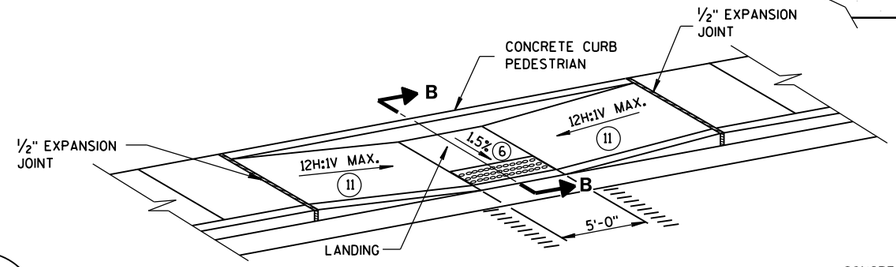

MID-BLOCK CROSSING
TYPE 7A

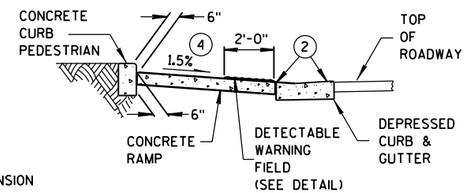

SECTION B-B

REFER TO GENERAL NOTES (2) AND (3) FOR ALL ISLAND CURB RAMPS

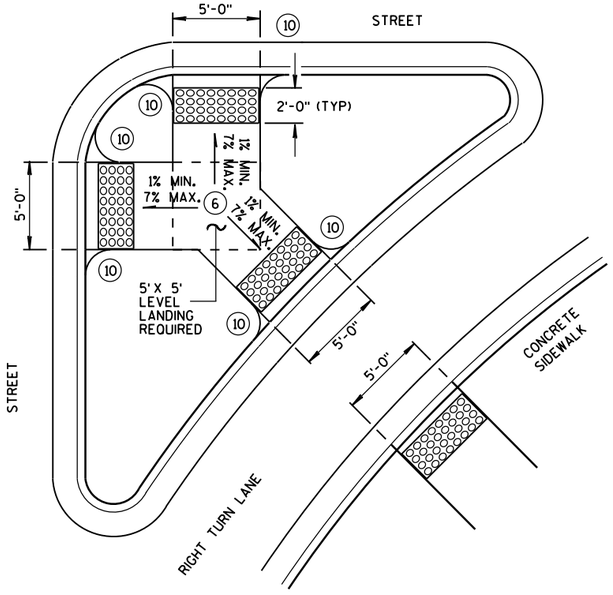

TYPE 6
DETECTABLE WARNING AT ISLANDS

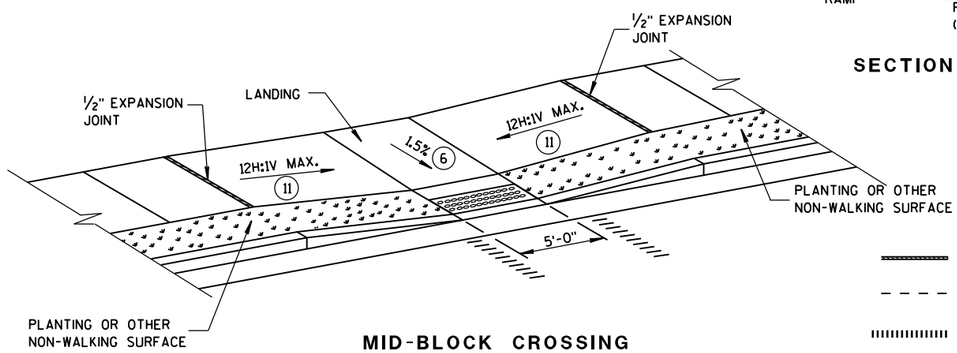

MID-BLOCK CROSSING
TYPE 7B

NOTE: THESE PARALLEL AND PARALLEL/PERPENDICULAR CURB RAMPS MAY BE USED AT INTERSECTIONS AND MID BLOCK LOCATIONS.

LEGEND

- 1/2" EXPANSION JOINT-SIDEWALK
- CONTRACTION JOINT FIELD LOCATED
- PAVEMENT MARKING CROSSWALK (WHITE)

CURB RAMPS
TYPES 5, 6, 7A, 7B & 8

STATE OF WISCONSIN
DEPARTMENT OF TRANSPORTATION

APPROVED
Sept., 2016
DATE
/S/ Rodney Taylor
ROADWAY STANDARDS UNIT SUPERV
ENT
FHWA

6

S.D.D. 8 D 5-18e

6

S.D.D. 8 D 5-18e

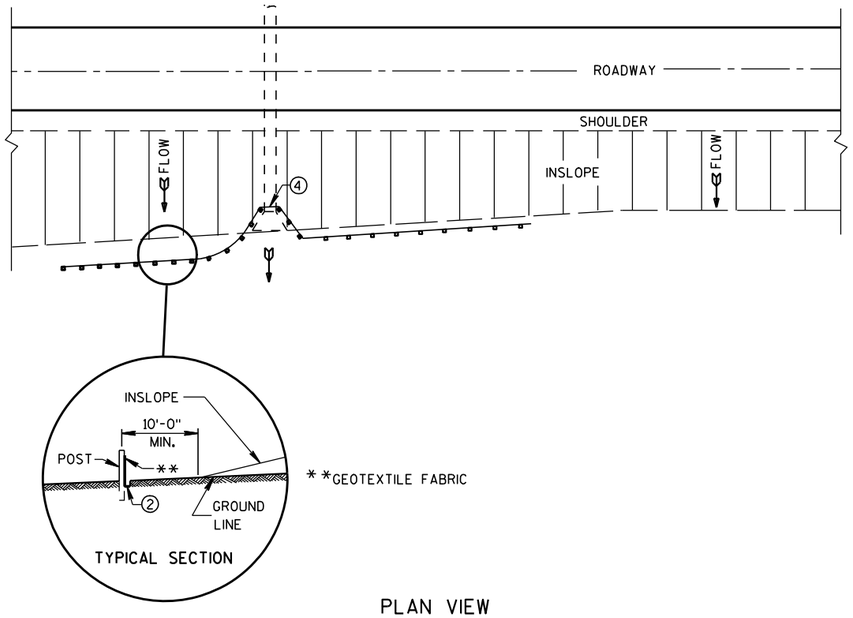

PLAN VIEW

TYPICAL APPLICATION OF SILT FENCE

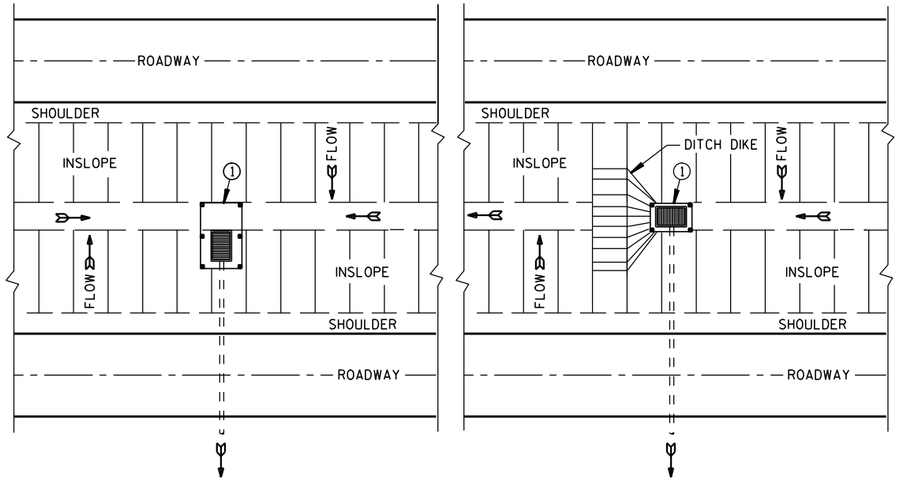

PLAN VIEW

SILT FENCE AT MEDIAN SURFACE DRAINS

GENERAL NOTES

DETAILS OF CONSTRUCTION NOT SHOWN ON THIS DRAWING SHALL CONFORM TO THE PERTINENT REQUIREMENTS OF THE STANDARD SPECIFICATIONS AND APPLICABLE SPECIAL PROVISIONS.

① HORIZONTAL BRACE REQUIRED WITH 2" X 4" WOODEN FRAME OR EQUIVALENT AT TOP OF POSTS.

② FOR MANUAL INSTALLATIONS THE TRENCH SHALL BE A MINIMUM OF 4" WIDE & 6" DEEP TO BURY AND ANCHOR THE GEOTEXTILE FABRIC. FOLD MATERIAL TO FIT TRENCH AND BACKFILL & COMPACT TRENCH WITH EXCAVATED SOIL.

③ WOOD POSTS SHALL BE A MINIMUM SIZE OF 1⅛" X 1⅛" OF OAK OR HICKORY.

④ SILT FENCE TO EXTEND ACROSS THE TOP OF THE PIPE.

⑤ CONSTRUCT SILT FENCE FROM A CONTINUOUS ROLL IF POSSIBLE BY CUTTING LENGTHS TO AVOID JOINTS. IF A JOINT IS NECESSARY USE ONE OF THE FOLLOWING TWO METHODS; A) OVERLAP THE END POSTS AND TWIST, OR ROTATE, AT LEAST 180 DEGREES, B) HOOK THE END OF EACH SILT FENCE LENGTH.

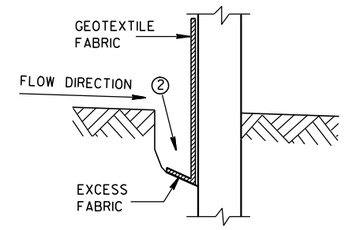

TRENCH DETAIL

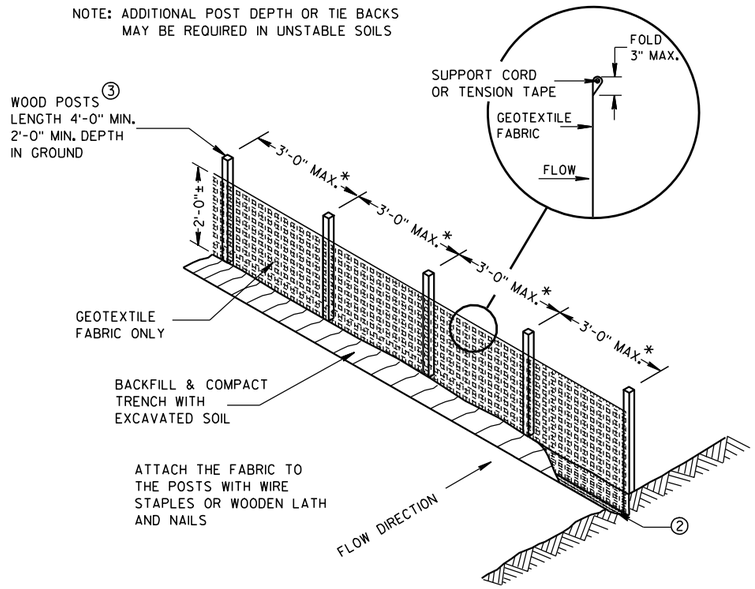

SILT FENCE

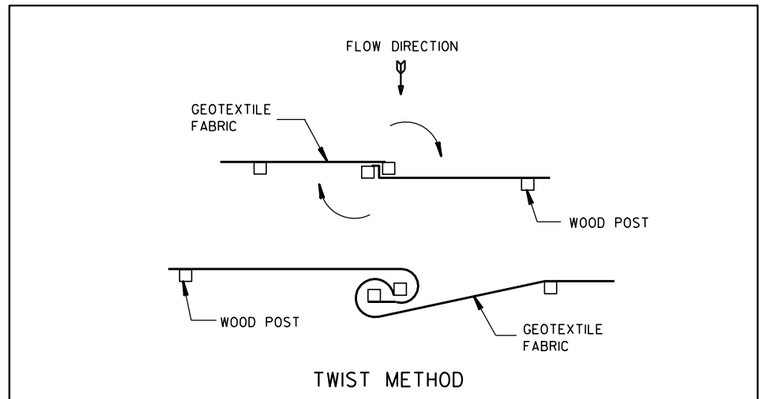

JOINING TWO LENGTHS OF SILT FENCE ⑤

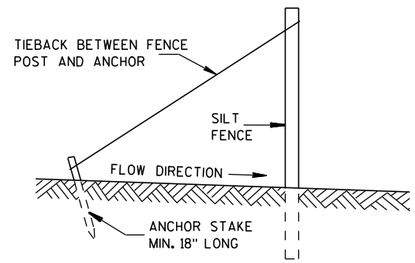

SILT FENCE TIE BACK

(WHEN REQUIRED BY THE ENGINEER)

SILT FENCE

STATE OF WISCONSIN
DEPARTMENT OF TRANSPORTATION

APPROVED
4-29-05 DATE
/S/ Beth Cannestra
CHIEF ROADWAY DEVELOPMENT ENGINEER
FHWA

6

S.D.D. 8 E 9-6

6

S.D.D. 8 E 9-6

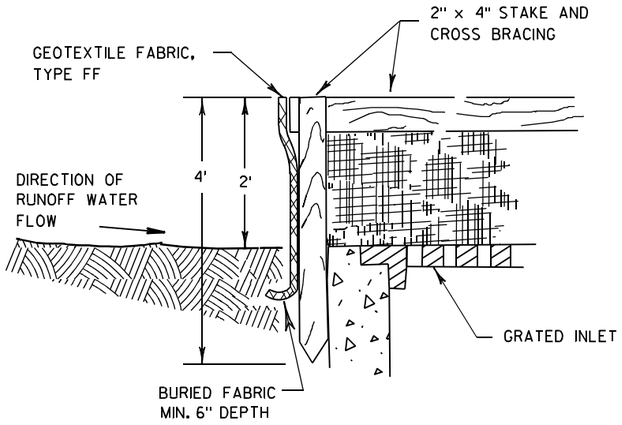

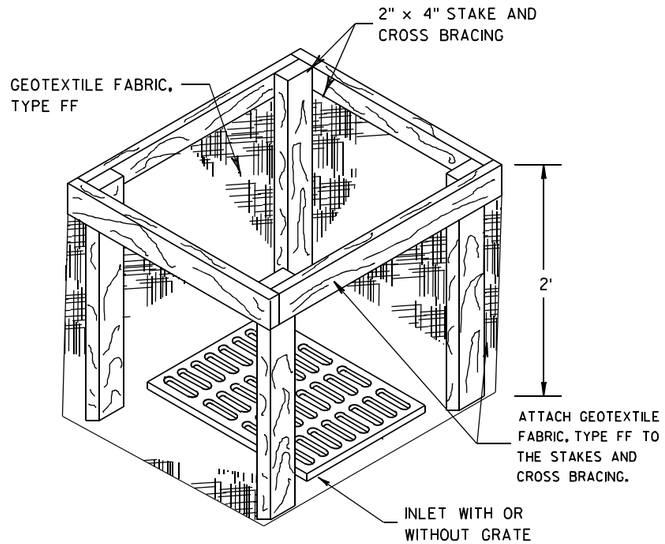

INLET PROTECTION, TYPE A

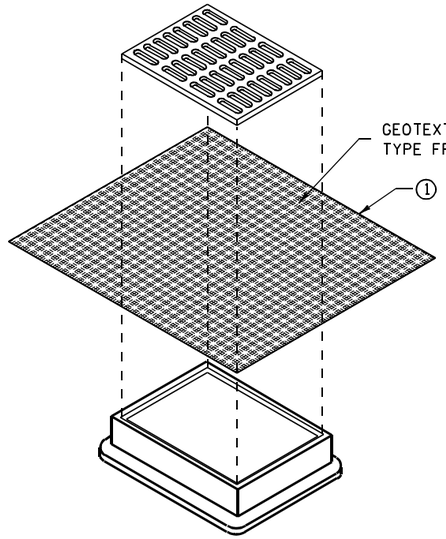

INLET PROTECTION, TYPE B
(WITHOUT CURB BOX)

(CAN BE INSTALLED IN ANY INLET WITHOUT A CURB BOX)

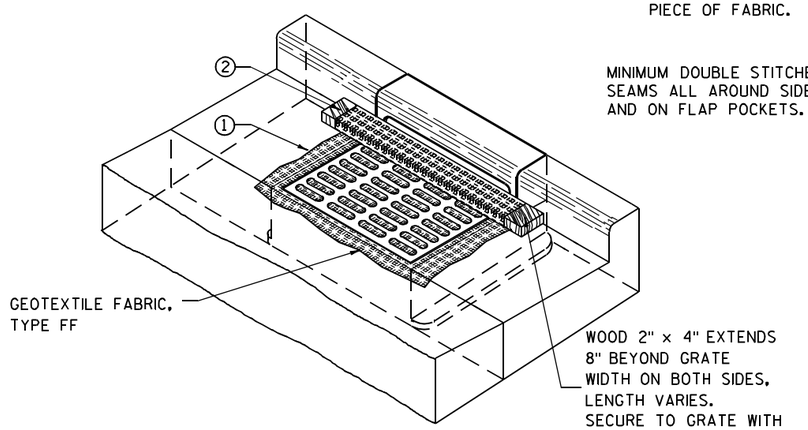

INLET PROTECTION, TYPE C (WITH CURB BOX)

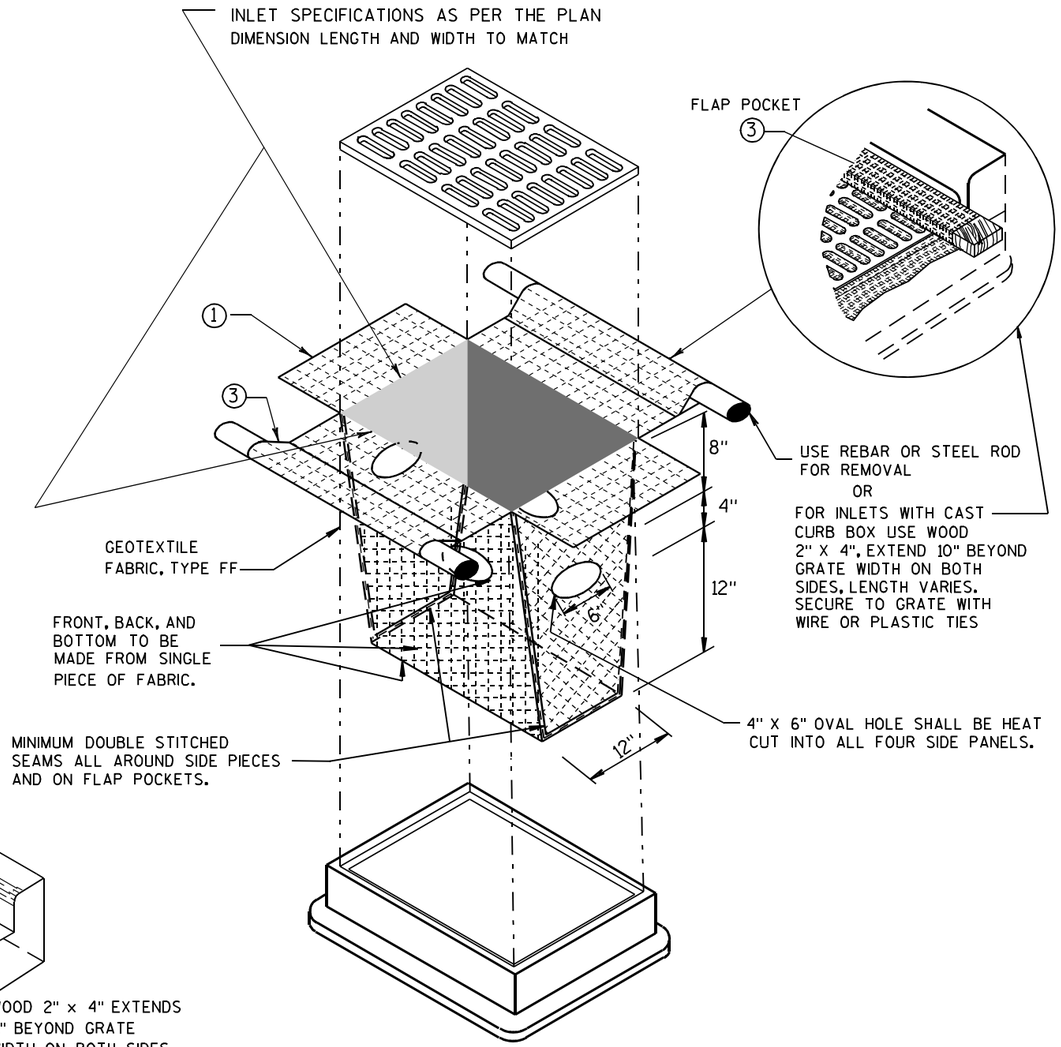

INLET PROTECTION, TYPE D

(CAN BE INSTALLED IN ANY INLET TYPE WITH
OR WITHOUT A CURB BOX AS PER NOTE ②)

GENERAL NOTES

INLET PROTECTION DEVICES SHALL BE MAINTAINED OR REPLACED AT THE DIRECTION OF THE ENGINEER.

MANUFACTURED ALTERNATIVES APPROVED AND LISTED ON THE DEPARTMENT'S EROSION CONTROL PRODUCT ACCEPTABILITY LIST MAY BE SUBSTITUTED.

WHEN REMOVING OR MAINTAINING INLET PROTECTION, CARE SHALL BE TAKEN SO THAT THE SEDIMENT TRAPPED ON THE GEOTEXTILE FABRIC DOES NOT FALL INTO THE INLET. ANY MATERIAL FALLING INTO THE INLET SHALL BE REMOVED IMMEDIATELY.

① FINISHED SIZE, INCLUDING FLAP POCKETS WHERE REQUIRED, SHALL EXTEND A MINIMUM OF 10" AROUND THE PERIMETER TO FACILITATE MAINTENANCE OR REMOVAL.

② FOR INLET PROTECTION, TYPE C (WITH CURB BOX), AN ADDITIONAL 18" OF FABRIC IS WRAPPED AROUND THE WOOD AND SECURED WITH STAPLES. THE WOOD SHALL NOT BLOCK THE ENTIRE HEIGHT OF THE CURB BOX OPENING.

③ FLAP POCKETS SHALL BE LARGE ENOUGH TO ACCEPT WOOD 2X4.

INSTALLATION NOTES

TYPE B & C

TRIM EXCESS FABRIC IN THE FLOW LINE TO WITHIN 3" OF THE GRATE.

THE CONTRACTOR SHALL DEMONSTRATE A METHOD OF MAINTENANCE, USING A SEWN FLAP, HAND HOLDS OR OTHER METHOD TO PREVENT ACCUMULATED SEDIMENT FROM ENTERING THE INLET.

TYPE D

DO NOT INSTALL INLET PROTECTION TYPE D IN INLETS SHALLOWER THAN 30", MEASURED FROM THE BOTTOM OF THE INLET TO THE TOP OF THE GRATE.

TRIM EXCESS FABRIC IN THE FLOW LINE TO WITHIN 3" OF THE GRATE.

THE INSTALLED BAG SHALL HAVE A MINIMUM SIDE CLEARANCE, BETWEEN THE INLET WALLS AND THE BAG, MEASURED AT THE BOTTOM OF THE OVERFLOW HOLES, OF 3". WHERE NECESSARY THE CONTRACTOR SHALL CINCH THE BAG, USING PLASTIC ZIP TIES, TO ACHIEVE THE 3" CLEARANCE. THE TIES SHALL BE PLACED AT A MAXIMUM OF 4" FROM THE BOTTOM OF THE BAG.

INLET PROTECTION
TYPE A, B, C, AND D

STATE OF WISCONSIN
DEPARTMENT OF TRANSPORTATION

APPROVED

10/16/02
DATE

/S/ Beth Cannestra
CHIEF ROADWAY DEVELOPMENT ENGINEER

FHWA

6

S.D.D. 8 E 10-2

GENERAL NOTES

DETAILS OF CONSTRUCTION, MATERIALS AND WORKMANSHIP NOT SHOWN ON THIS DRAWING SHALL CONFORM TO THE PERTINENT REQUIREMENTS OF THE STANDARD SPECIFICATIONS AND THE APPLICABLE SPECIAL PROVISIONS.

TRACKING PAD SHALL BE INSPECTED DAILY. DEFICIENT AREAS SHALL BE REPAIRED OR REPLACED IMMEDIATELY.

TRACKING PAD TO BE REMOVED AFTER CONSTRUCTION IS COMPLETED.

TRACKING PAD SHALL BE THE FULL WIDTH OF THE EGRESS POINT.

SURFACE WATER MUST BE PREVENTED FROM PASSING THROUGH THE TRACKING PAD. FLOWS SHALL BE DIVERTED AWAY, AROUND OR CONVEYED UNDER THE TRACKING PAD.

CULVERT PIPE OR OTHER BMP USED TO DIVERT WATER AWAY, AROUND OR UNDER THE TRACKING PAD SHALL BE DESIGNED TO CONVEY THE 2 YEAR - 24 HOUR EVENT.

THE COST OF ADDITIONAL BMP TO DIVERT WATER ARE INCIDENTAL TO THE TRACKING PAD BID ITEM.

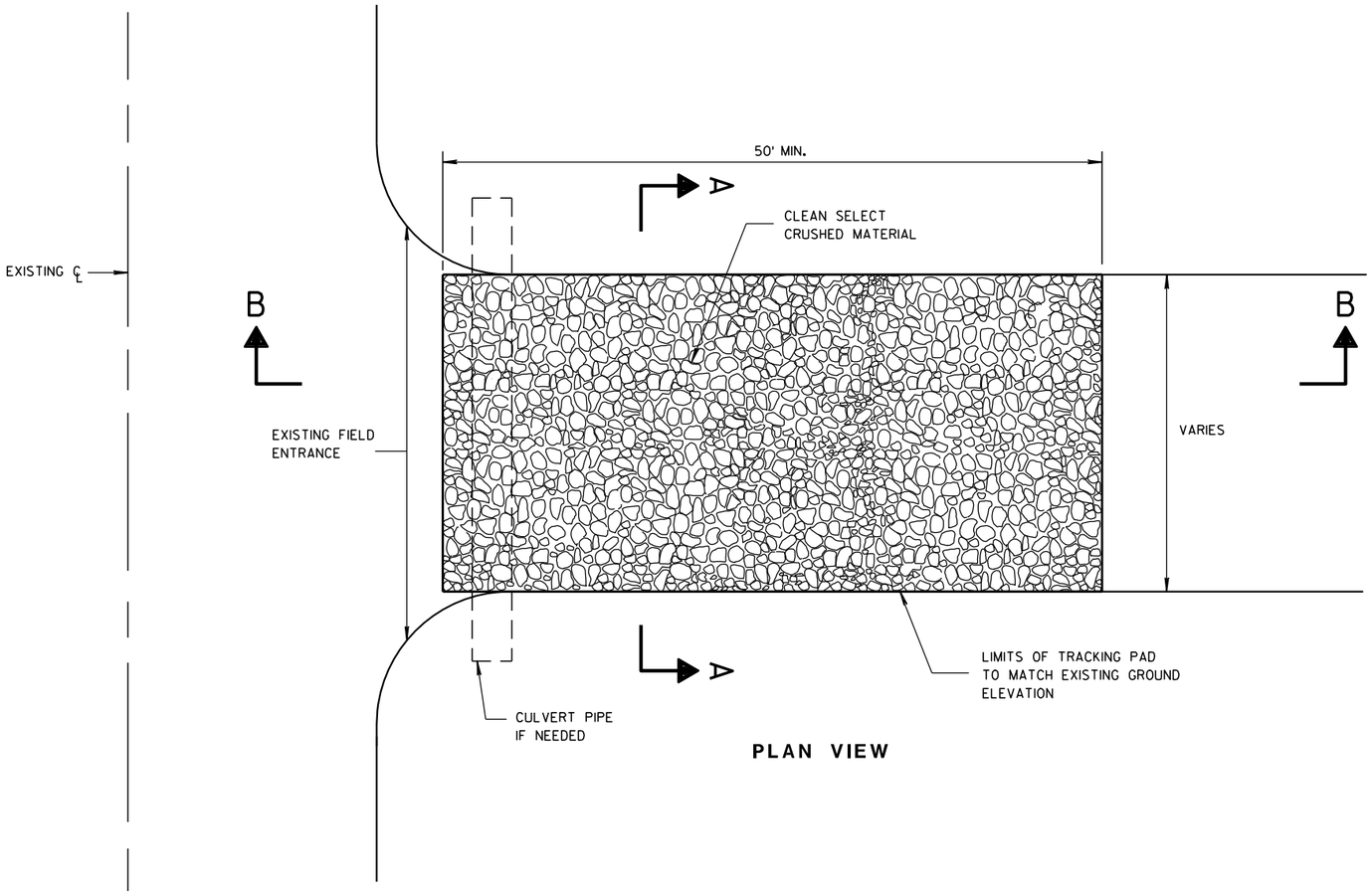

PLAN VIEW

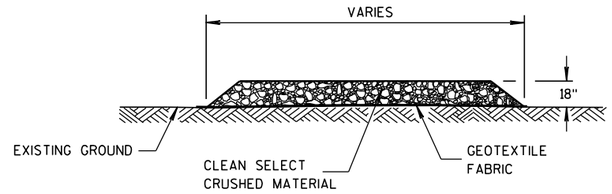

SECTION A-A

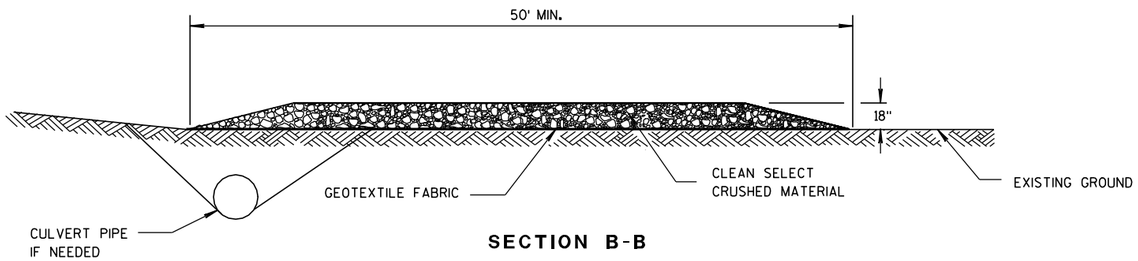

SECTION B-B

TRACKING PAD

TRACKING PAD

STATE OF WISCONSIN
DEPARTMENT OF TRANSPORTATION

APPROVED
3/24/2011 /S/ Jerry H. Zogg
DATE ROADWAY STANDARDS ENGINEER ENT
FHWA

6

6

S.D.D. 8 E 14-1

S.D.D. 8 E 14-1

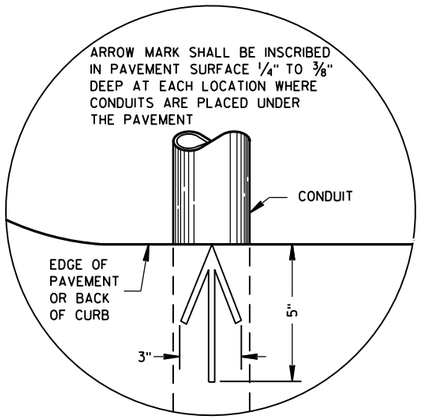

PLAN VIEW

ARROW MARK

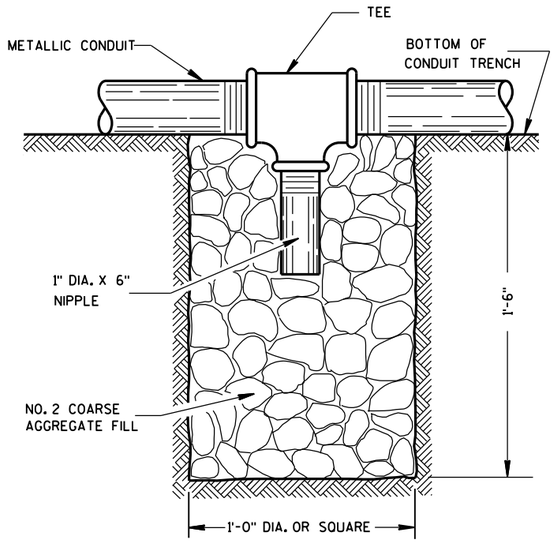

NOTE: INSTALL AT LOCATIONS WHERE METALLIC CONDUITS CANNOT BE PITCHED TO DRAIN INTO A PULL BOX.

DRAIN SUMP FOR METALLIC CONDUIT

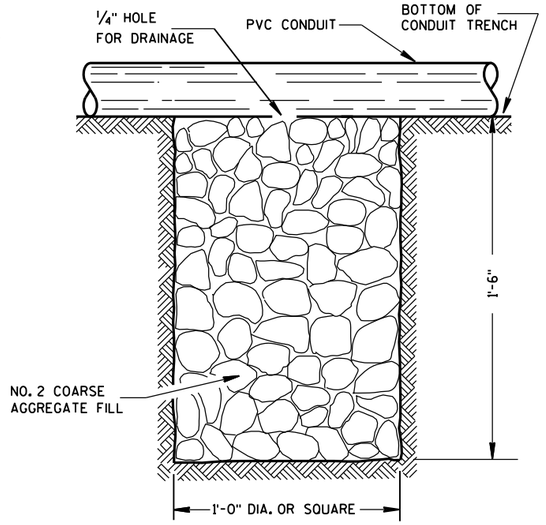

NOTE: INSTALL AT LOCATIONS WHERE PVC CONDUITS CANNOT BE PITCHED TO DRAIN INTO A PULL BOX.

DRAIN SUMP FOR PVC CONDUIT

GENERAL NOTES

DETAILS OF CONSTRUCTION, MATERIALS AND WORKMANSHIP NOT SHOWN ON THIS DRAWING SHALL CONFORM TO THE PERTINENT REQUIREMENTS OF THE CONTRACT.

METALLIC (STANDARD SPECIFICATION 652.2.2) OR NONMETALLIC (STANDARD SPECIFICATION 652.2.3) CONDUIT SHALL BE FURNISHED AND PLACED AS SHOWN.

DEPTH OF CONDUIT INSTALLED BELOW THE TRAVELED WAY SHALL BE 24 INCHES MINIMUM AND 36 INCHES MAXIMUM.

DEPTH OF CONDUIT INSTALLED THAT IS NOT BELOW THE TRAVELED WAY SHALL BE 18 INCHES MINIMUM AND 36 INCHES MAXIMUM.

ANY EXCEPTION TO THE MAXIMUM DEPTH SHALL BE ONLY WITH THE WRITTEN APPROVAL OF THE ENGINEER.

THE TRENCH SHALL NOT BE BACKFILLED PRIOR TO INSPECTION OF THE CONDUIT.

ALL METALLIC CONDUIT RACEWAY ENDS SHALL BE REAMED AND THREADED.

ALL METALLIC CONDUIT IN WHICH WIRE OR CABLE IS TO BE INSTALLED SHALL BE BUSHED WITH APPROVED THREADED BUSHINGS BEFORE INSTALLATION OF THE WIRE OR CABLE.

ALL METALLIC CONDUITS IN WHICH WIRE OR CABLE IS NOT TO BE INSTALLED SHALL BE CAPPED WITH THREADED PROTECTIVE CAPS, AS APPROVED BY THE ENGINEER.

ALL NONMETALLIC CONDUIT SHALL BE CAPPED OR PLUGGED IMMEDIATELY AFTER INSTALLATION AND SHALL REMAIN CAPPED OR PLUGGED UNTIL WIRE/CABLES ARE INSTALLED.

NONMETALLIC CONDUITS IN WHICH WIRE OR CABLE IS NOT BEING INSTALLED SHALL REMAIN CAPPED OR PLUGGED.

BENDING OF PVC ELECTRICAL CONDUIT SHALL BE ACCOMPLISHED BY USING A BLANKET OR EMERSION TYPE TANK DESIGNED FOR THE PURPOSE OF BENDING PVC ELECTRICAL CONDUIT.

ALL CUT ENDS SHALL BE TRIMMED INSIDE AND OUTSIDE TO REMOVE ALL ROUGH EDGES ON NONMETALLIC CONDUIT. (SEE NEC 347.5)

WHEN REQUIRED TO CONNECT NONMETALLIC CONDUIT TO METALLIC CONDUIT, ONLY U.L. LISTED ADAPTER FITTINGS SHALL BE USED.

PRIOR TO CONDUIT ACCEPTANCE, CONDUIT CAPS OR PLUGS SHALL BE REMOVED, AND THE CAPS, PLUGS AND CONDUIT ENDS SHALL BE THOROUGHLY CLEANED AND THEN THE CAPS OR PLUGS REINSTALLED TO ENSURE THAT THE CAPS OR PLUGS CAN BE EASILY REMOVED IN THE FUTURE.

ALL CONDUIT BEING FURNISHED AND INSTALLED SHALL HAVE THE U.L. LABEL FIRMLY ATTACHED.

CONDUIT RUNS SHALL BE THE SAME SIZE OF CONDUIT FROM ONE END TO THE OTHER (FROM PULL BOX TO PULL BOX-OR-JUNCTION BOX TO JUNCTION BOX-OR-BASE TO BASE, ETC.).

TRACER WIRE SHALL BE INSTALLED AS STATED IN THE STANDARD SPECIFICATION, ITEM 652.3.1.1.

ALL CONDUIT RUNS SHALL BE STRAIGHT (WITHOUT BENDS) FROM PULL BOX TO PULL BOX, PULL BOX TO BASE AND BASE TO BASE AS SHOWN ON THE PLANS.

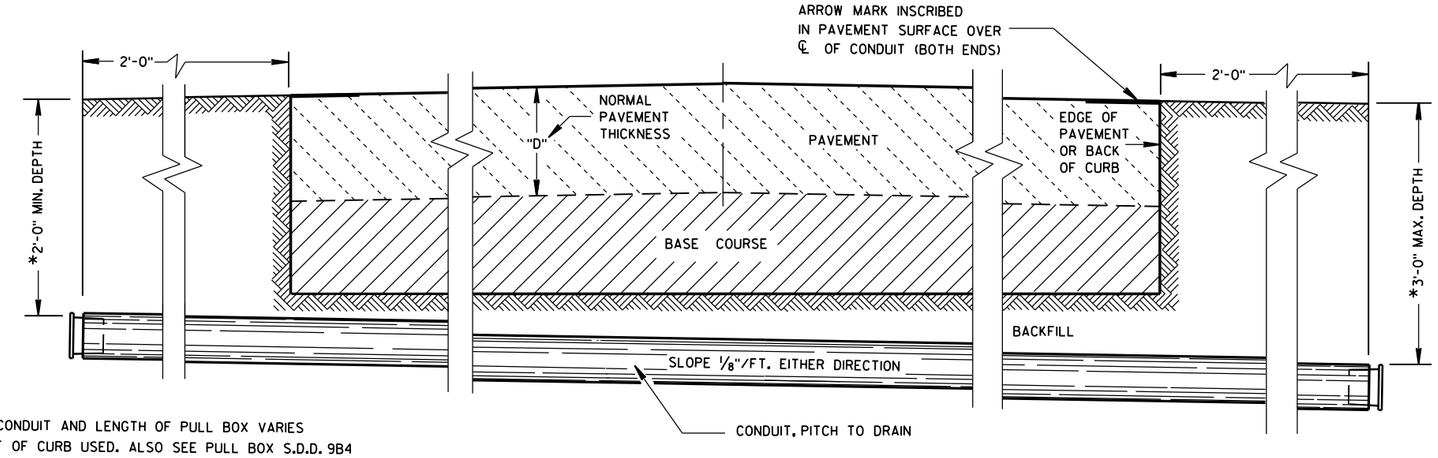

*DEPTH OF CONDUIT AND LENGTH OF PULL BOX VARIES WITH HEIGHT OF CURB USED. ALSO SEE PULL BOX S.D.D. 9B4

SIDE ELEVATION

DETAIL FOR CONDUIT UNDER PAVED HIGHWAYS

CONDUIT

STATE OF WISCONSIN
DEPARTMENT OF TRANSPORTATION

APPROVED
June, 2015 — DATE
/S/ Ahmet Demirbilek — STATE ELECTRICAL
FHWA

6

S.D.D. 9 B 2-9

TABLE OF NOMINAL DIMENSIONS AND WEIGHTS

DIMENSION IN INCHES		CORRUGATED STEEL PIPE								
PIPE DIAMETER (INSIDE)	A	12	12	12	18	18	18	24	24	24
PIPE LENGTH **	B	24	30	36	24	30	36	36	42	48
WALL THICKNESS	C	0.064	0.064	0.064	0.064	0.064	0.064	0.064	0.064	0.064
COVER	D	10 1/4	10 1/4	10 1/4	16 1/4	16 1/4	16 1/4	22 1/4	22 1/4	22 1/4
FRAME	E	14 1/2	14 1/2	14 1/2	20 1/2	20 1/2	20 1/2	26 1/2	26 1/2	26 1/2
FRAME	F	8 1/2	8 1/2	8 1/2	14 1/2	14 1/2	14 1/2	20 1/2	20 1/2	20 1/2
FRAME	G	11 1/2	11 1/2	11 1/2	17 1/2	17 1/2	17 1/2	23 1/2	23 1/2	23 1/2
WEIGHT IN POUNDS *										
FRAME AND COVER		60	60	60	110	110	110	155	155	155

* THE ACTUAL WEIGHT OF THE MANHOLE FRAME AND COVER MAY VARY WITHIN 5 PERCENT PLUS OR MINUS OF THE WEIGHTS SHOWN.

** NORMALLY USED LENGTHS. THE PROJECT ENGINEER SHALL DETERMINE IF PIPE LENGTHS, OTHER THAN THOSE SPECIFIED, SHALL BE USED, TO A MAXIMUM OF 48" (CONTINUOUS LENGTH, NON-SPLICED). THE ADDITIONAL LENGTH SHALL BE INCIDENTAL TO THE PULL BOX BID PRICE.

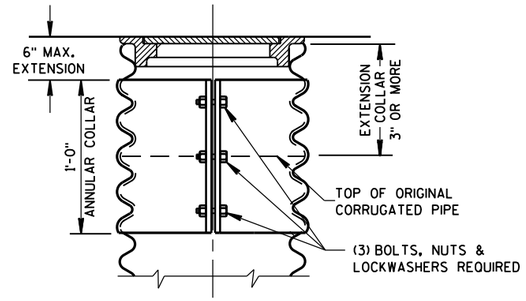

CORRUGATED PIPE EXTENDER

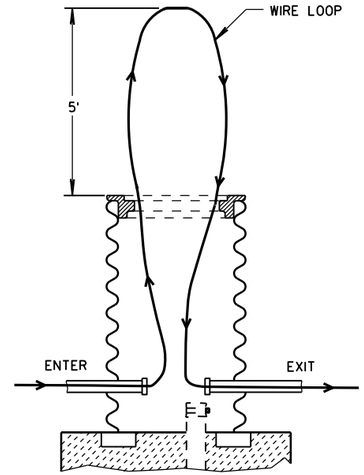

MEASUREMENT DETAIL FOR WIRE/CABLE IN THE PULL BOX

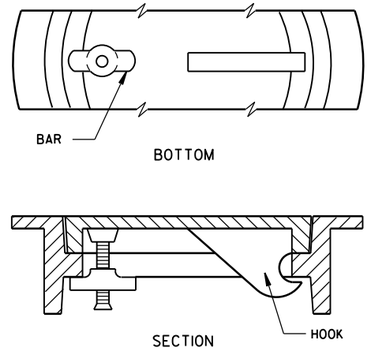

ALTERNATE COVER (LOCKING)

TIGHTENING BAR TYPE

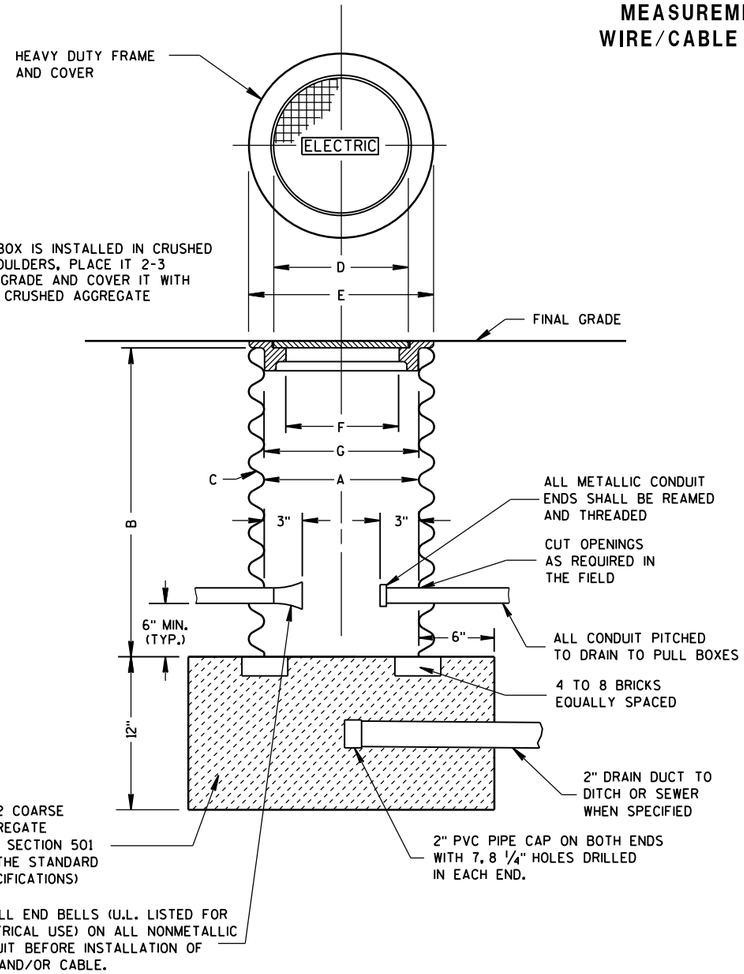

WHEN A PULL BOX IS INSTALLED IN CRUSHED AGGREGATE SHOULDERS, PLACE IT 2-3 INCHES BELOW GRADE AND COVER IT WITH 2-3 INCHES OF CRUSHED AGGREGATE

PULL BOX

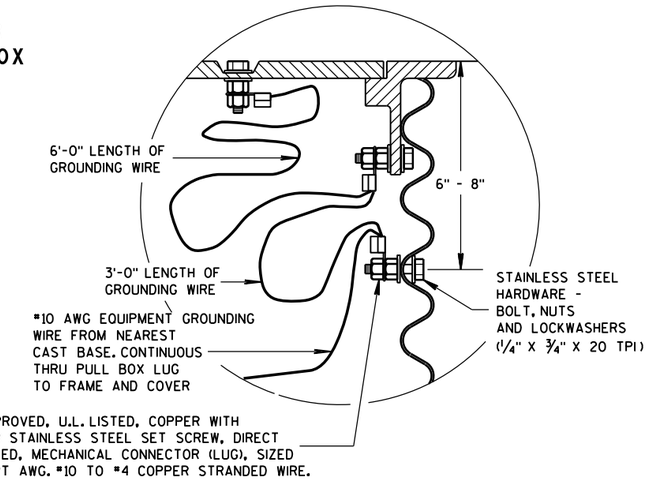

EQUIPMENT GROUNDING LUG AND LOCATION IN STEEL PULL BOXES

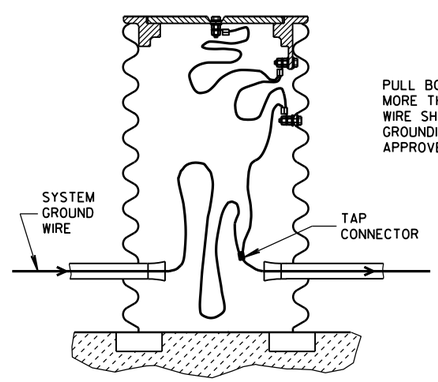

PULL BOX TO NEAREST BASE DISTANCE MORE THAN 20 FEET. PULL BOX GROUND WIRE SHALL CONNECT AT SYSTEM GROUNDING WIRE. USE DEPARTMENT APPROVED TAP CONNECTOR.

EQUIPMENT GROUNDING LUG AND LOCATION IN STEEL PULL BOXES

GENERAL NOTES

DETAILS OF CONSTRUCTION, MATERIALS AND WORKMANSHIP NOT SHOWN ON THIS DRAWING SHALL CONFORM TO THE PERTINENT REQUIREMENTS OF THE CONTRACT.

ALL FRAMES AND COVERS SHALL BE HEAVY DUTY TYPE, SUITABLE FOR VEHICULAR TRAFFIC LOADS.

PULL BOXES LOCATED IN THE ROADWAYS SHALL HAVE LOCKING COVERS.

ENTRANCE HOLES INTO PULL BOXES SHALL BE CUT WITH A CIRCULAR HOLE SAW OR HYDRAULIC CONDUIT PUNCH. HOLE SIZE SHALL BE THE OUTSIDE DIAMETER OF THE CONDUIT THAT IS TO FIT IN THE OPENING PLUS NO MORE THAN 1/4".

THE CONTRACTOR SHALL NOT INSTALL WIRE IN ANY PULL BOX UNTIL ITS INSTALLATION HAS BEEN INSPECTED AND ACCEPTED BY THE ENGINEER.

GROUNDING LUGS (MECHANICAL CONNECTORS) SHALL BE U.L. LISTED AND APPROVED FOR USE WITH COPPER WIRE.

ALL METALLIC CONDUIT IN WHICH WIRE AND/OR CABLE IS TO BE INSTALLED, SHALL BE BUSHED BEFORE INSTALLATION OF THE WIRE AND/OR CABLE.

WHEN PULL BOXES ARE INSTALLED FOR FUTURE USE, DO NOT INSTALL THE EQUIPMENT GROUNDING LUG. THE EQUIPMENT GROUNDING LUG, THE EQUIPMENT GROUNDING ELECTRODE AND THE EQUIPMENT GROUNDING CONDUCTOR SHALL BE REQUIRED AND INSTALLED UNDER A FUTURE WIRING CONTRACT.

PULL BOX

STATE OF WISCONSIN
DEPARTMENT OF TRANSPORTATION

APPROVED
Sept. 2014 — DATE
/S/ Ahmet Demirbilek — STATE ELECTRICAL
FHWA

6

S.D.D. 9 B 4-11

GENERAL NOTES

DETAILS OF CONSTRUCTION, MATERIALS AND WORKMANSHIP NOT SHOWN ON THIS DRAWING SHALL CONFORM TO THE PERTINENT REQUIREMENTS OF THE CONTRACT.

FOUR (4) BOLTS SHALL BE FURNISHED WITH EACH TRANSFORMER BASE. BOLTS SHALL BE 1" DIAMETER, 4" IN LENGTH, WITH WASHERS, LOCK WASHERS AND NUTS. BOLTS, NUTS AND WASHERS SHALL BE MANUFACTURED IN ACCORDANCE WITH SECTION 641.2.2 OF THE STANDARD SPECIFICATIONS.

LEVELING SHIMS, IF NEEDED, SHALL BE DESIGNED FOR THE PURPOSE AND USED UNDER CAST BASES WHEN PLUMBING POLES OR STANDARDS DURING INSTALLATION. THE USE OF WASHERS IN LIEU OF PROPER LEVELING SHIMS IS NOT ACCEPTABLE.

SHIM LENGTH SHALL BE LONG ENOUGH TO COMPLETELY COVER THE AREA UNDER THE LENGTH AND WIDTH OF THE BASE MOUNTING FLANGE.

DOUBLE NUTTING IS NOT ACCEPTABLE FOR LEVELING OR MOUNTING PURPOSES.

A NEMA APPROVED, U.L. LISTED, COPPER WITH BRASS OR STAINLESS STEEL SET SCREW, DIRECT BURY RATED, MECHANICAL CONNECTOR (LUG), SIZED TO ACCEPT AWG. #10 TO #4 COPPER STRANDED WIRE SHALL BE FURNISHED AND INSTALLED IN THE PEDESTAL AND TRANSFORMER BASES.

THE MECHANICAL CONNECTOR SHALL BE INSTALLED USING A 1/4" - 20 (TPI) STAINLESS STEEL HEX HEAD BOLT OF SUFFICIENT LENGTH TO FIRMLY ATTACH THE LUG TO THE BASE.

SHOULD THE MANNER OF ATTACHMENT OF THE LUG REQUIRE WASHERS, HEX NUTS, LOCK WASHER - THEY SHALL BE STAINLESS STEEL AS IS THE BOLT. THE MANNER OF ATTACHMENT SHALL NOT BLOCK ACCESSIBILITY TO WIRE PLACEMENT IN THE CONNECTOR.

PEDESTAL BASE COLLAR THREADING SHALL BE TAPERED AND IN ACCORDANCE WITH NATIONAL PIPE THREADING DIMENSIONS.

BASE COLLAR THREADING SHALL EXTEND INTO THE BASE COLLAR WITH SUFFICIENT DEPTH TO ACCEPT THE INSTALLATION OF TRAFFIC SIGNAL STANDARDS TO A DEPTH OF 1 1/2", THEN TIGHTENING TO A POINT OF BEING IMMOVABLE.

THE ACCESS DOOR SHALL BE OF THE SAME MATERIAL AS THE BASE.

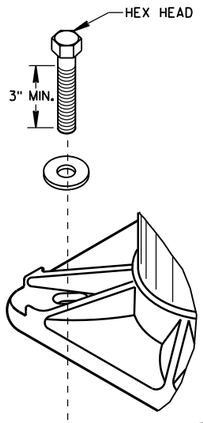

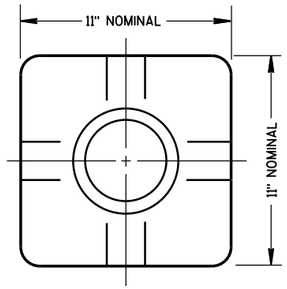

TOP VIEW
(PEDESTAL BASE)

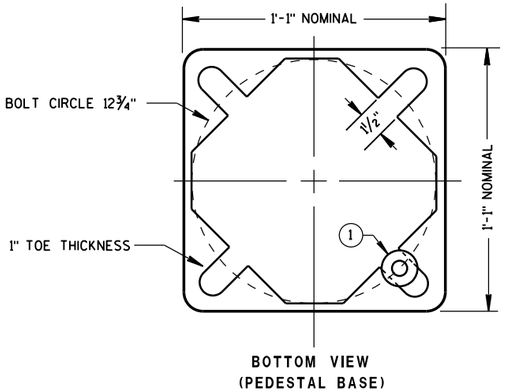

BOTTOM VIEW
(PEDESTAL BASE)

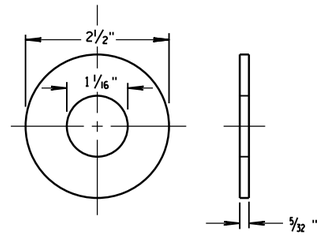

ZINC COATED STEEL WASHER
TO BE PROVIDED BY THE CONTRACTOR

PEDESTAL BASE WASHER (1)

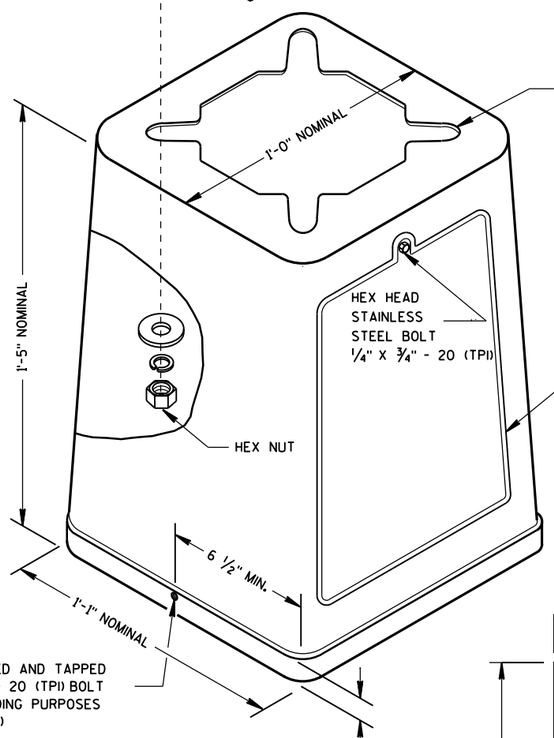

ISOMETRIC VIEW

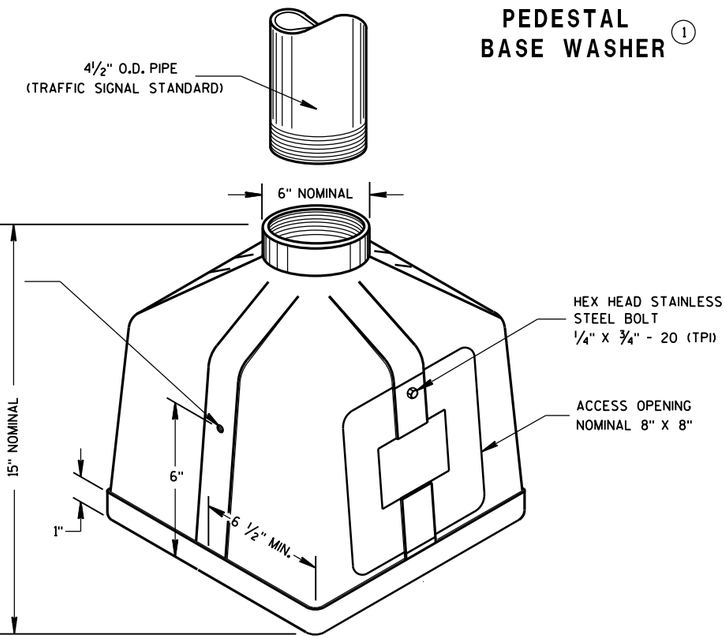

ISOMETRIC VIEW

PEDESTAL BASE

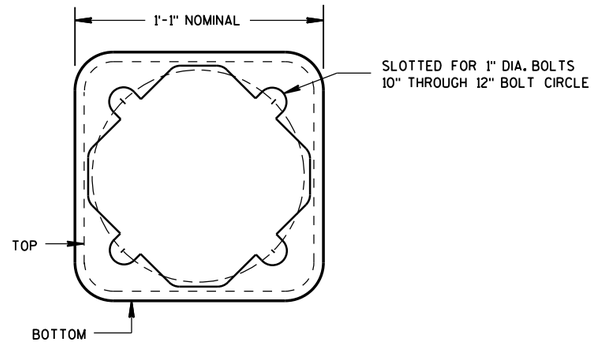

BOTTOM VIEW
(TRANSFORMER BASE)

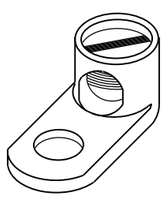

TYPICAL MECHANICAL CONNECTOR LUG

TO BE FURNISHED WITH EACH BASE

TRANSFORMER BASE

INTENDED FOR USE WITH TYPE 2, 3, 4, 5 & 6 POLES

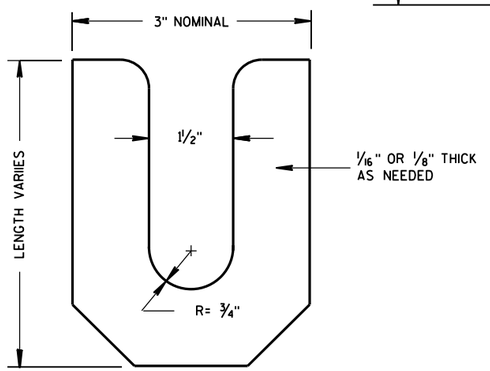

LEVELING SHIM

TRANSFORMER/PEDESTAL BASES

STATE OF WISCONSIN
DEPARTMENT OF TRANSPORTATION

APPROVED
Sept. 2014 — DATE
/S/ Ahmet Demirbilek — STATE ELECTRICAL
FHWA

6

S.D.D. 9 C 3-4

6

S.D.D. 9 C 3-4

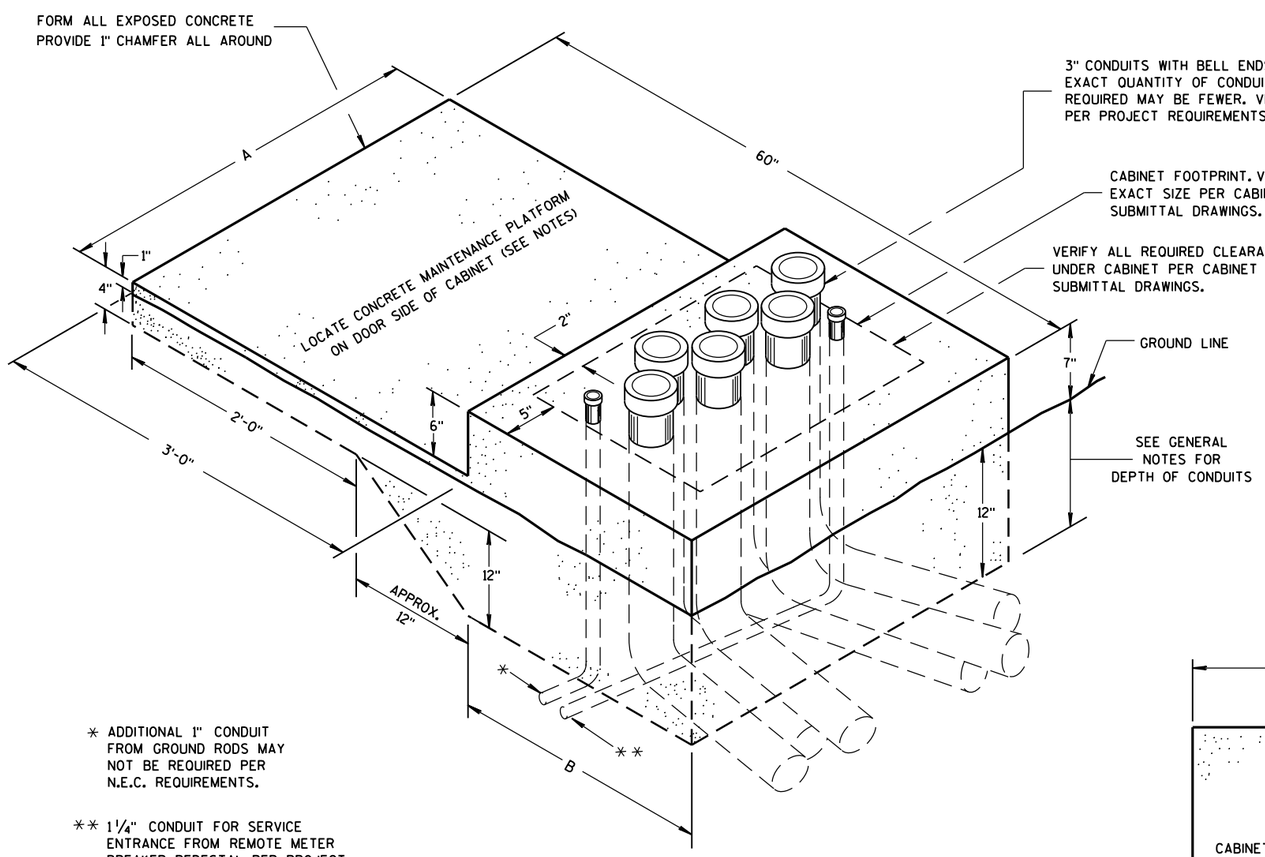

* ADDITIONAL 1" CONDUIT FROM GROUND RODS MAY NOT BE REQUIRED PER N.E.C. REQUIREMENTS.

** 1¼" CONDUIT FOR SERVICE ENTRANCE FROM REMOTE METER BREAKER PEDESTAL PER PROJECT REQUIREMENTS. VERIFY LOCATION OF CONDUIT DEPENDENT UPON LOCATION OF INCOMING FEEDER AND FOR EASE OF CONNECTION TO LOAD CENTER.

ISOMETRIC VIEW

CONCRETE CONTROL CABINET BASE, TYPE L

(C.Y. CONCRETE = APPROX. 0.4)

CONCRETE BASE TYPE	CABINET WIDTH	DIMENSIONS		MAXIMUM 3" CONDUITS
		A	B	
L24	24"	34"	24"	4
L30	30"	40"	24"	6

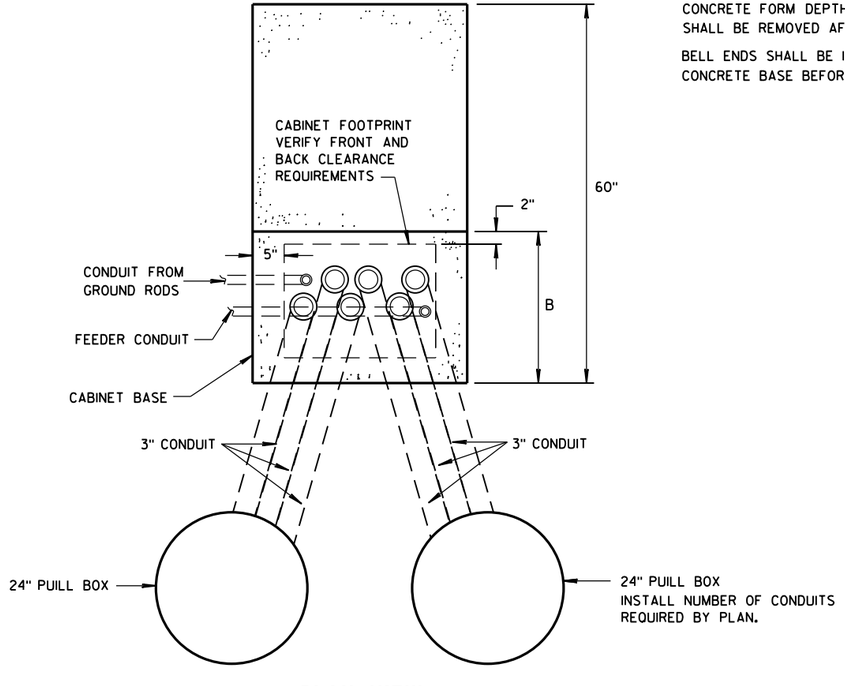

PLAN VIEW

CONCRETE CONTROL CABINET BASE, TYPE L

GENERAL NOTES

DETAILS OF CONSTRUCTION, MATERIALS AND WORKMANSHIP NOT SHOWN ON THIS DRAWING SHALL CONFORM TO THE PERTINENT REQUIREMENTS OF THE CONTRACT.

INSTALL FOUR STAINLESS STEEL APPROVED CONCRETE MASONRY ANCHORS TO ANCHOR THE CABINET BASES. THE ANCHORS SHALL BE LOCATED AS DIRECTED BY THE ENGINEER TO PROPERLY ANCHOR THE CONTROL CABINET TO THE BASE.

WHEN REQUIRED TO CONNECT NONMETALLIC CONDUIT TO METALLIC CONDUIT, ONLY ADAPTER FITTINGS, U.L. LISTED FOR ELECTRICAL USE, SHALL BE USED.

CONDUIT HEIGHT ABOVE THE CONCRETE BASE SHALL BE 1 INCH.

DEPTH OF CONDUIT INSTALLED BELOW THE TRAVELED WAY SHALL BE 24 INCHES MINIMUM AND 36 INCHES MAXIMUM.

DEPTH OF CONDUIT INSTALLED THAT IS NOT BELOW THE TRAVELED WAY SHALL BE 18 INCHES MINIMUM AND 36 INCHES MAXIMUM.

ANY EXCEPTION TO THE MAXIMUM DEPTH SHALL BE ONLY WITH THE WRITTEN APPROVAL OF THE ENGINEER.

CONTROL CABINET BASE TOP SURFACE SHALL BE TROWEL FINISHED SMOOTH AND LEVEL.

MAINTENANCE PLATFORM SHALL BE FLOAT OR BROOM FINISHED AND BE LEVEL.

MAINTENANCE PLATFORMS ARE NOT REQUIRED WHEN THE SURROUNDING AREA IS PAVED.

MINIMUM BENDING RADIUS OF CONDUIT = 6 X THE DIAMETER.

ALL METALLIC CONDUIT ENDS SHALL BE REAMED AND THREADED.

CAP ALL BELOW GRADE METALLIC CONDUIT ENDS IN WHICH WIRE OR CABLE IS NOT BEING INSTALLED.

PLUG ALL BELOW GRADE NONMETALLIC CONDUIT ENDS IN WHICH WIRE OR CABLE IS NOT BEING INSTALLED.

ALL CONDUIT ENDS AT THE TOP OF CONCRETE BASES SHALL BE CAPPED IF METALLIC OR PLUGGED IF NONMETALLIC IMMEDIATELY AFTER PLACEMENT AND BEFORE CONCRETE IS POURED. CONDUITS IN WHICH WIRE OR CABLE IS NOT BEING INSTALLED SHALL REMAIN CAPPED OR PLUGGED.

CONDUIT EXITING THE CONCRETE BASE SHALL TERMINATE IN PULL BOXES AS SHOWN ON THE PLANS.

CONCRETE FORM DEPTH BELOW FINISHED GRADE SHALL BE 6" MAXIMUM. CONCRETE FORMS SHALL BE REMOVED AFTER CONCRETE HAS SET.

BELL ENDS SHALL BE INSTALLED ON ALL PVC CONDUIT EXPOSED AT THE TOP OF THE CONCRETE BASE BEFORE INSTALLATION OF CABLE OR WIRE.

CONCRETE CONTROL CABINET BASE, TYPE L

STATE OF WISCONSIN
DEPARTMENT OF TRANSPORTATION

APPROVED
Nov. 2014 — DATE
/S/ Thomas Gonring — STATE LIGHTING ENGINE
FHWA
WYS

6

S.D.D. 9 C 14-2

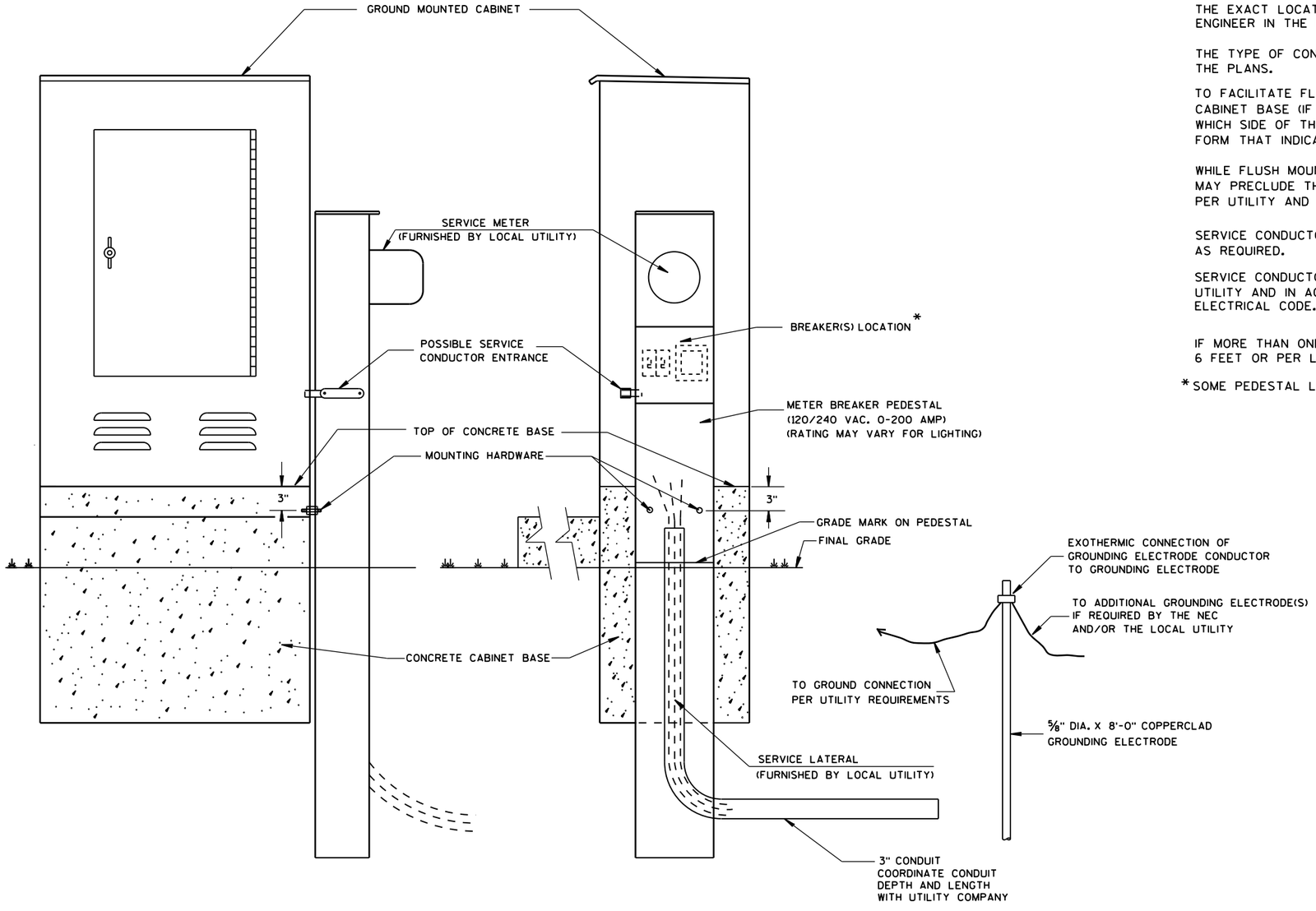

TYPICAL CABINET SERVICE INSTALLATION

GENERAL NOTES

DETAILS OF CONSTRUCTION, MATERIALS AND WORKMANSHIP NOT SHOWN ON THIS DRAWING SHALL CONFORM TO THE PERTINENT REQUIREMENTS OF THE CONTRACT.

THE EXACT LOCATION OF THE METER BREAKER PEDESTAL SHALL BE DETERMINED BY THE ENGINEER IN THE FIELD.

THE TYPE OF CONCRETE CABINET BASE TO BE INSTALLED SHALL BE AS CALLED FOR IN THE PLANS.

TO FACILITATE FLUSH MOUNTING OF THE METER BREAKER PEDESTAL AGAINST THE SIDE OF THE CABINET BASE (IF FLUSH MOUNTING POSSIBLE. CONFER WITH THE LOCAL UTILITY TO DETERMINE WHICH SIDE OF THE CONCRETE BASE THE ELECTRICAL SERVICE LATERAL WILL APPROACH. THEN FORM THAT INDICATED SIDE FOR FULL SIDE DEPTH.

WHILE FLUSH MOUNTING IS THE MOST DESIRABLE MOUNTING CONFIGURATION UTILITY REQUIREMENTS MAY PRECLUDE THIS OPTION. CONTRACTOR MUST PROVIDE UTILITY APPROVED PEDESTAL AND INSTALL PER UTILITY AND MANUFACTURERS REQUIREMENTS.

SERVICE CONDUCTOR ENTRANCES SHALL BE RIGID METALLIC CONDUIT, NIPPLES AND/OR CONDULETS AS REQUIRED.

SERVICE CONDUCTOR ENTRANCES SHALL BE SIZED AND LOCATED AS REQUIRED BY THE LOCAL UTILITY AND IN ACCORDANCE WITH APPROPRIATE ARTICLES OF THE LATEST ACCEPTED NATIONAL ELECTRICAL CODE.

IF MORE THAN ONE GROUNDING ELECTRODE IS REQUIRED, THE DISTANCE APART SHALL BE 6 FEET OR PER LOCAL UTILITY REGULATIONS.

* SOME PEDESTAL LIGHTING PLANS SHOW MAIN LUGS ONLY.

CABINET SERVICE INSTALLATION (METER BREAKER PEDESTAL)

STATE OF WISCONSIN
DEPARTMENT OF TRANSPORTATION

APPROVED
Sept. 2014 — DATE
/S/ Ahmet Demirbilek — STATE ELECTRICAL
FHWA

6
S.D.D. 9 D 1-5

GENERAL NOTES

DETAILS OF CONSTRUCTION, MATERIALS AND WORKMANSHIP NOT SHOWN ON THIS DRAWING SHALL CONFORM TO THE PERTINENT REQUIREMENTS OF THE STANDARD SPECIFICATIONS AND APPLICABLE SPECIAL PROVISIONS.

ALL INTERNAL ELECTRICAL COMPONENTS WILL BE PRE-WIRED BY THE CABINET FABRICATOR.

ALL CONDUIT ENTRIES SHALL BE SEALED WITH AN APPROPRIATE DUCT SEALING COMPOUND.

ORIENT PHOTOCELL AWAY FROM AMBIENT LIGHT SOURCES AND ONCOMING TRAFFIC HEADLIGHTS.

THE CONTRACTOR SHALL TOUCH UP ANY DAMAGE TO THE ANODIZED FINISH CAUSED BY THE INSTALLATION PROCESS. COLOR MATCH PAINT SHALL BE USED.

A COMPLETE LIGHTING OR ELECTRICAL PLAN SHALL BE SECURELY PLACED IN THE DOCUMENT HOLDER ATTACHED TO THE DOOR.

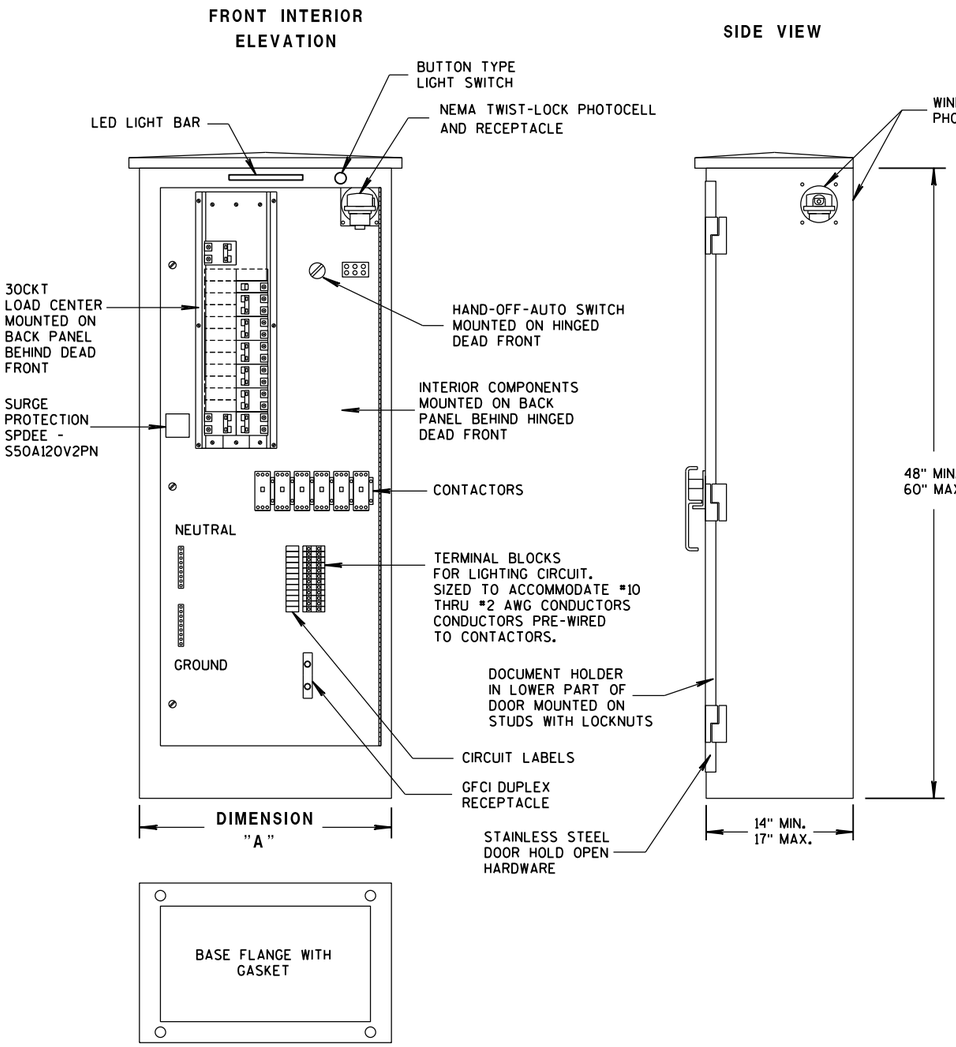

TABLE OF DIMENSIONS (INCHES)

CONCRETE BASE TYPE	CABINET WIDTH	DIMENSION "A"
L24	24"	24"
L30	30"	30"

LIGHTING CONTROL CABINET

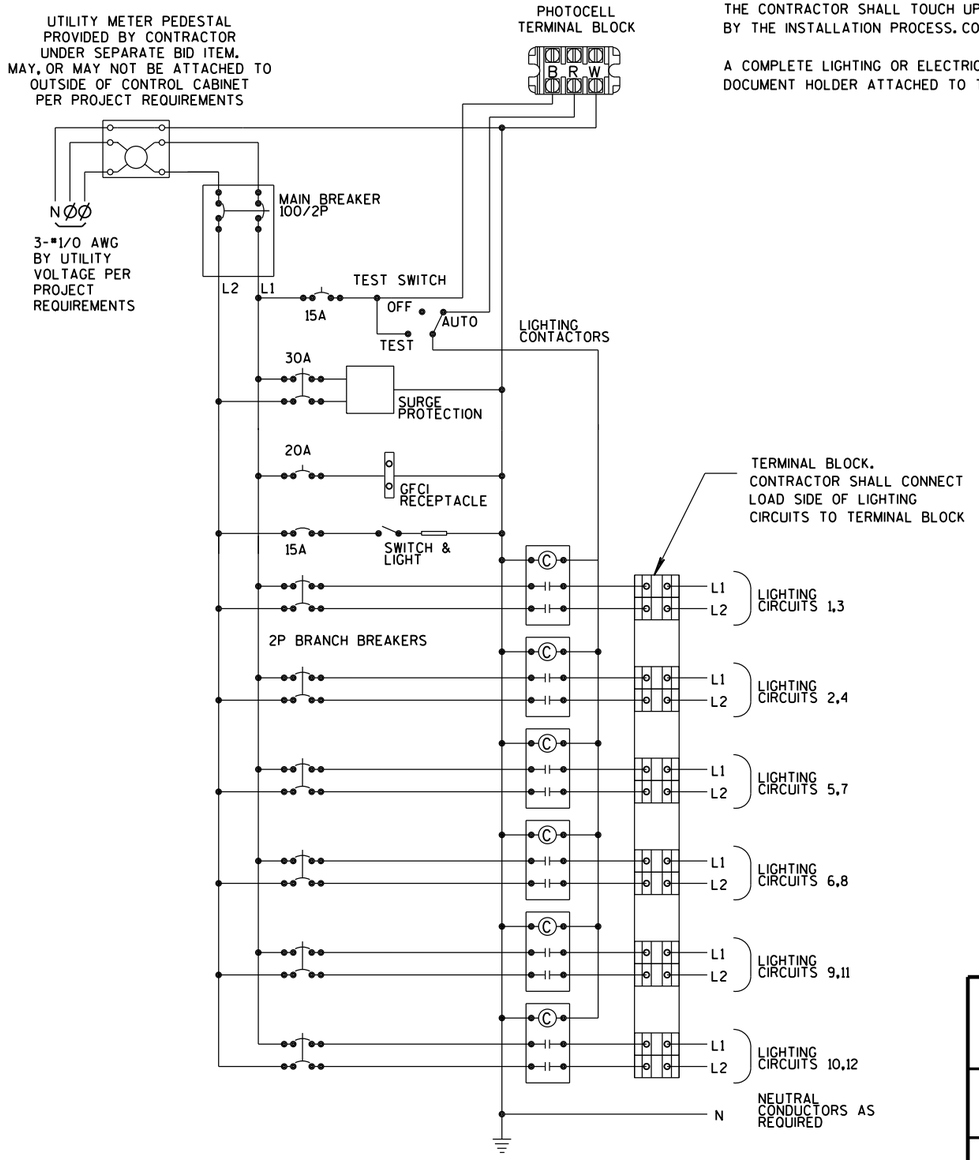

CONTROL CABINET SCHEMATIC

LIGHTING CONTROL CABINET 120/240 VOLT

STATE OF WISCONSIN
DEPARTMENT OF TRANSPORTATION

APPROVED
Sept. 2014 DATE
/S/ Thomas Gonring STATE LIGHTING ENGINEER
WYS.
FHWA

6
S.D.D. 9 D 4-2

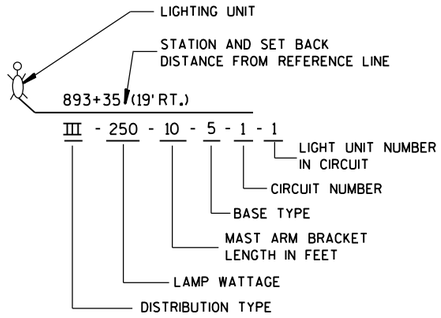

LIGHTING UNIT CODE
(TYPICAL)

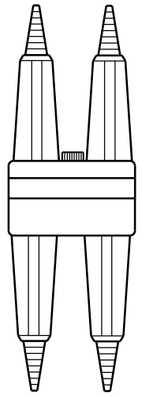

DETAIL "A"
BREAKAWY DOUBLE POLE WITH WATERPROOF INSULATING BOOT

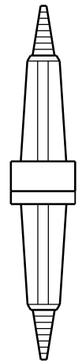

DETAIL "B"
BREAKAWY SINGLE POLE WITH WATERPROOF INSULATING BOOT

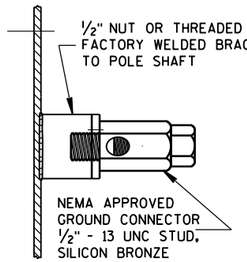

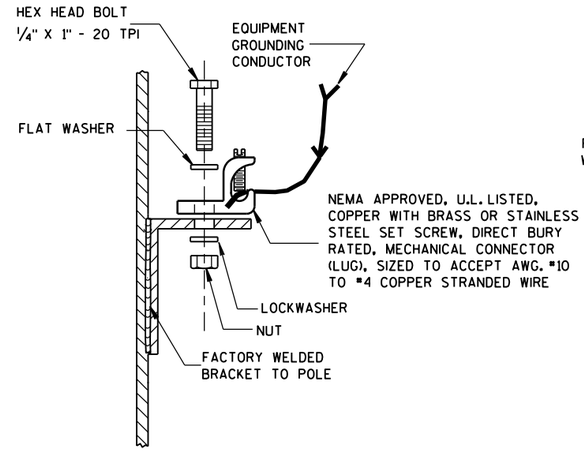

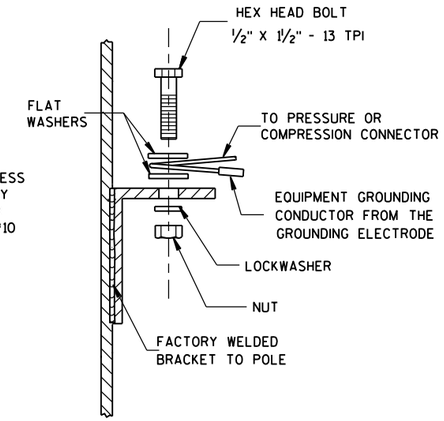

TYPICAL GROUNDING CONNECTIONS
NUT, BOLT, WASHERS AND LOCKWASHERS SHALL BE STAINLESS STEEL

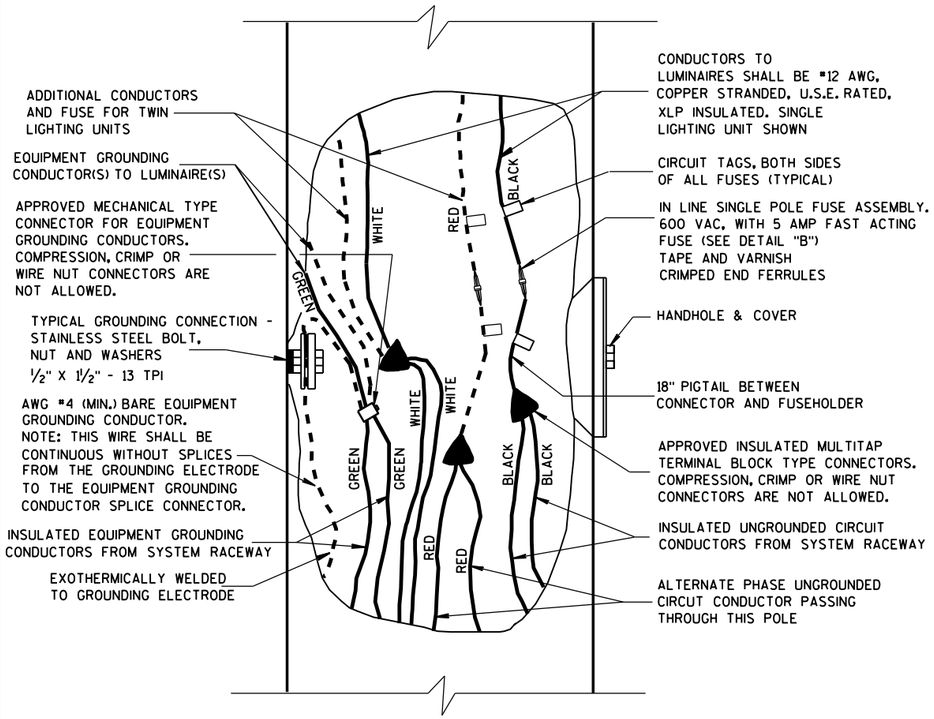

3 WIRE - 120, 240 OR 480 VAC (UNGROUNDED CONDUCTOR) WITH GROUNDED CONDUCTOR AND WITH EQUIPMENT GROUNDING CONDUCTOR

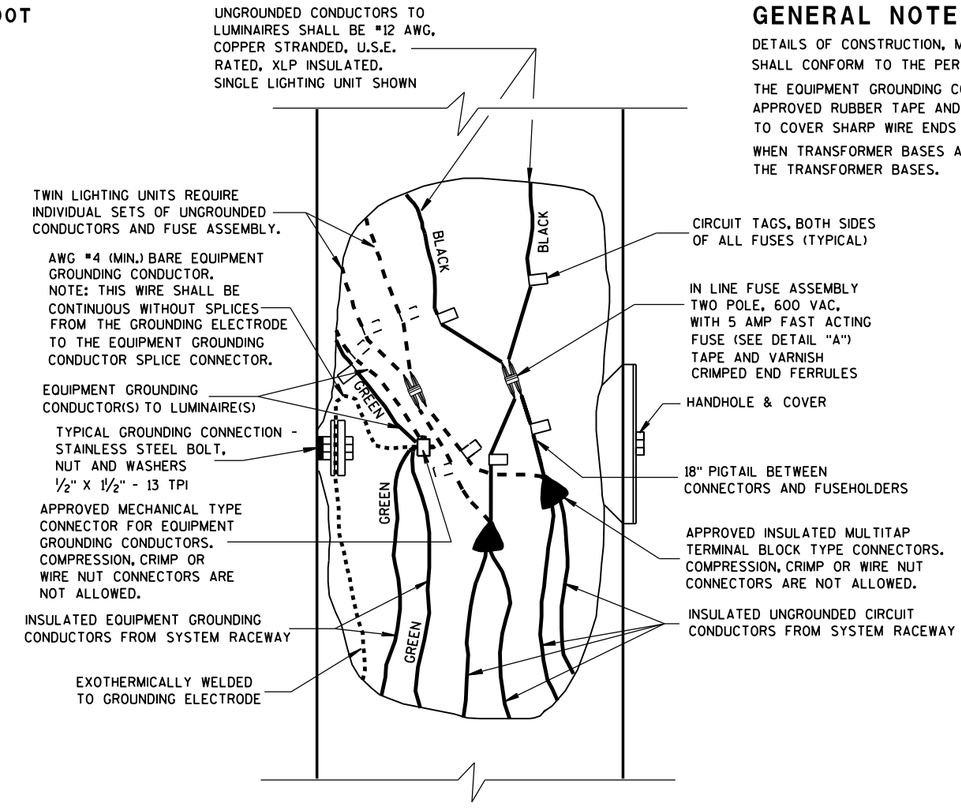

2 WIRE - 240 OR 480 VAC (UNGROUNDED CONDUCTORS) WITH EQUIPMENT GROUNDING CONDUCTOR

GENERAL NOTES

DETAILS OF CONSTRUCTION, MATERIALS AND WORKMANSHIP NOT SHOWN ON THIS DRAWING SHALL CONFORM TO THE PERTINENT REQUIREMENTS OF THE CONTRACT.

THE EQUIPMENT GROUNDING CONNECTOR SHALL BE TAPED WITH 3 WRAPS (MINIMUM) OF APPROVED RUBBER TAPE AND THEN 3 WRAPS (MINIMUM) OF APPROVED VINYL TAPE TO COVER SHARP WIRE ENDS AFTER THE CONNECTION IS COMPLETED.

WHEN TRANSFORMER BASES ARE USED, ALL WIRING CONNECTIONS SHALL OCCUR WITHIN THE TRANSFORMER BASES.

NON-FREEWAY LIGHTING UNIT POLE WIRING

STATE OF WISCONSIN
DEPARTMENT OF TRANSPORTATION

APPROVED
Sept. 2014 — DATE
/S/ Ahmet Demirbilek — STATE ELECTRICAL
FHWA

6
S.D.D. 9 E 3-5

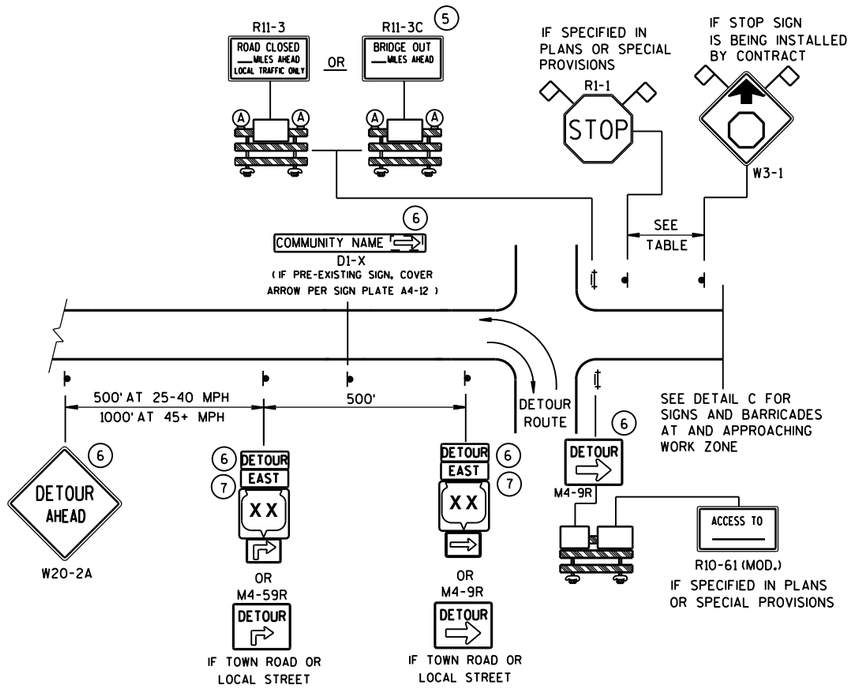

DETAIL A
MAINLINE CLOSURE WITH POSTED DETOUR

WORK ZONE GREATER THAN ½ MILE FROM DETOUR ROUTE (1000 FEET IF URBAN)

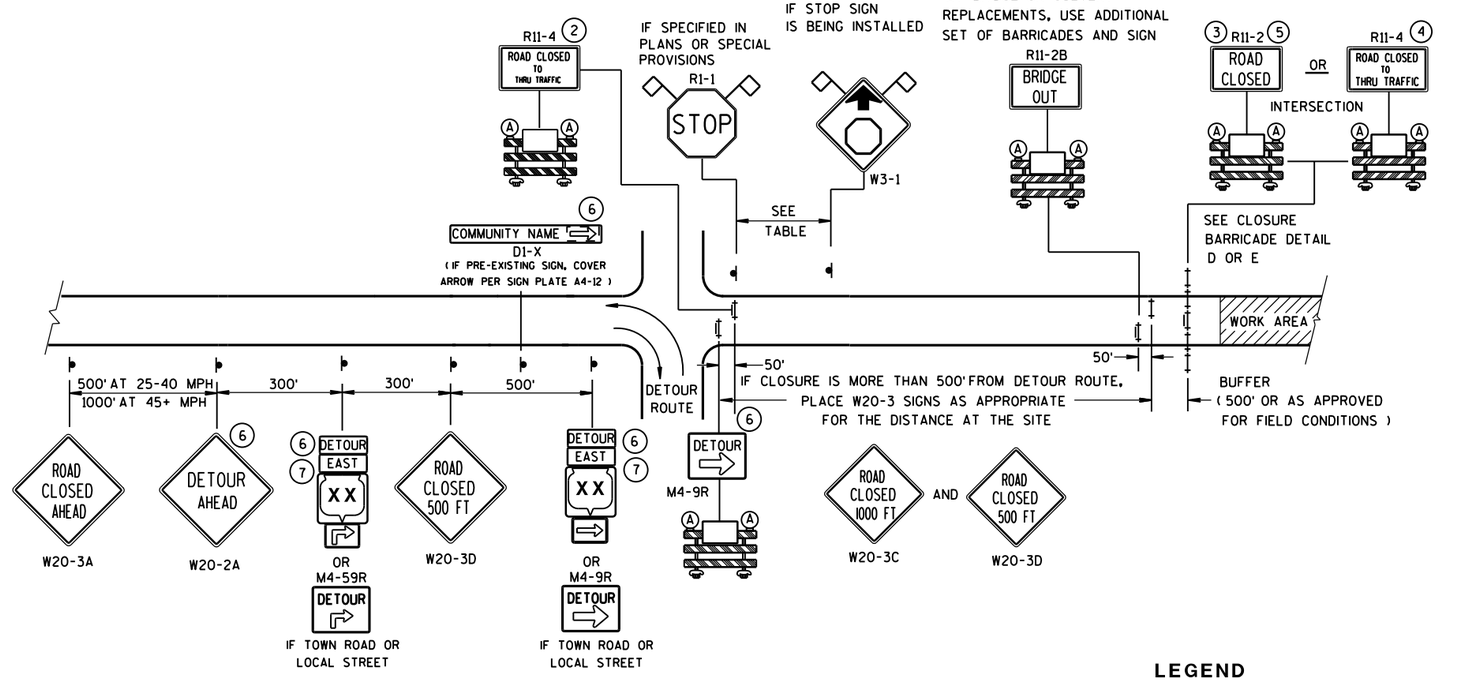

DETAIL B
MAINLINE CLOSURE WITH POSTED DETOUR

WORK ZONE LESS THAN ½ MILE FROM DETOUR ROUTE (1000 FEET IF URBAN)

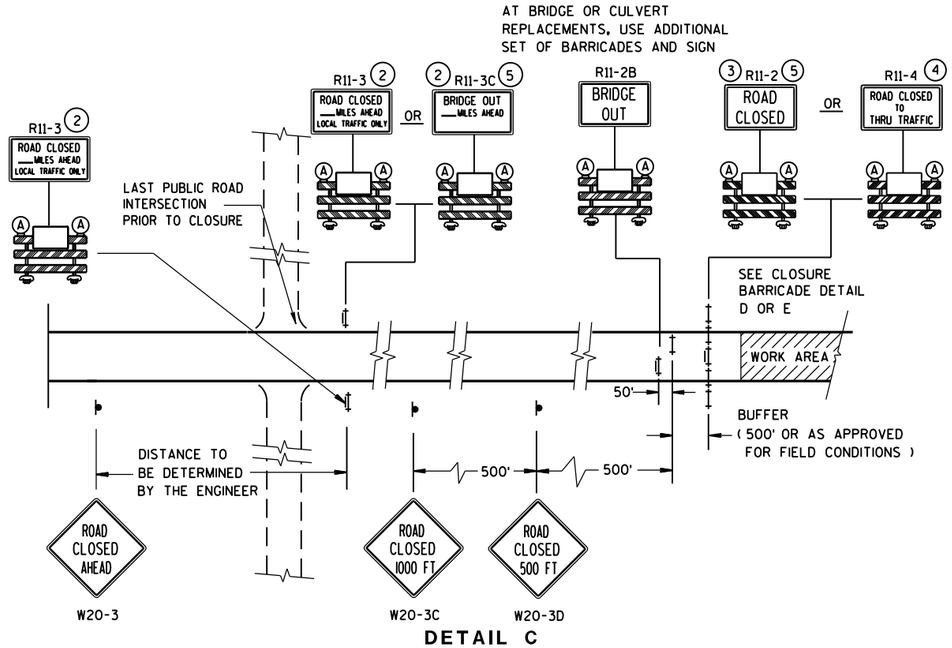

DETAIL C
MAINLINE CLOSURE, NO POSTED DETOUR

SPEED LIMIT (MPH)	"STOP AHEAD" ADVANCE WARNING DISTANCE (FT)
25	200
30	200
35	350
40	350
45	500
50	550
55	750

SEE SDD 15C2-SHEET "**b**" FOR GENERAL NOTES AND FOOTNOTES (1) THROUGH (7)

LEGEND

- SIGN ON PERMANENT SUPPORT
- TYPE III BARRICADE
- TYPE III BARRICADE WITH ATTACHED SIGN
- (A) TYPE "A" WARNING LIGHT (FLASHING)
- WORK AREA
- DETOUR / EAST — M4-8 / M3-X
- XX — M1-4; COUNTY XX — M1-5A; XX — M1-6
- M05-1 OR M06-1
- FLAGS, 16" X 16" MIN., (ORANGE)

BARRICADES AND SIGNS FOR MAINLINE CLOSURES

STATE OF WISCONSIN
DEPARTMENT OF TRANSPORTATION

Sept. 2015 — DATE
/S/ Peter Amakobe Atepe
STATEWIDE WORK ZONE TRAFFIC SAFETY ENGINEER
FHWA

S.D.D. 15 C 2-6a

6

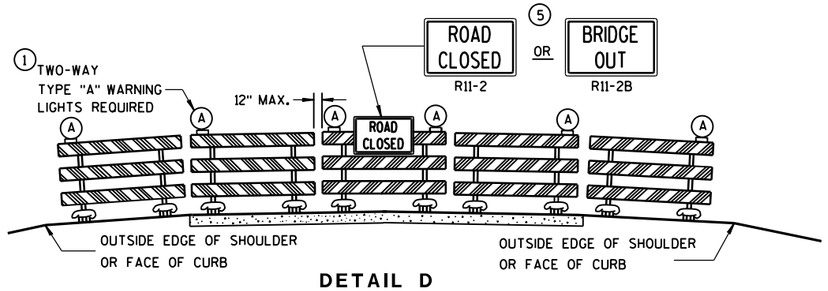

DETAIL D

ROAD CLOSURE BARRICADE DETAIL

APPROACH VIEW

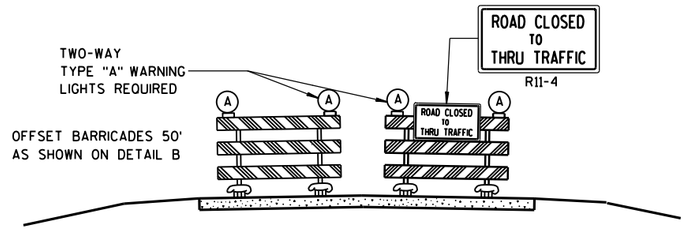

DETAIL E

LANE CLOSURE BARRICADE DETAIL

APPROACH VIEW

SEE SDD 15C2-SHEET "**a**" FOR LEGEND

GENERAL NOTES

THE EXACT NUMBER, LOCATION, AND SPACING OF ALL SIGNS AND BARRICADES SHALL BE ADJUSTED TO FIT FIELD CONDITIONS AS APPROVED BY THE ENGINEER.

ANY SIGNS TEMPORARY OR EXISTING, WHICH CONFLICT WITH TRAFFIC CONTROL "IN USE" SHALL BE REMOVED OR COVERED AS NEEDED AND AS APPROVED BY THE ENGINEER.

THE SPACING BETWEEN TRAFFIC CONTROL SIGNS SHOULD BE ADJUSTED TO NOT CONFLICT WITH AND SHOULD PROVIDE A DESIRABLE MINIMUM OF 200 FEET CLEARANCE TO EXISTING SIGNS THAT WILL REMAIN IN PLACE.

BARRICADES THAT MUST BE MOVED FOR A WORK OPERATION SHALL BE IMMEDIATELY RE-ESTABLISHED UPON COMPLETION OF THE OPERATION OR, FOR CONTINUING OPERATIONS, AT THE END OF EACH WORKING DAY.

SIGNS THAT WILL BE IN PLACE LESS THAN 7 CONTINUOUS DAYS AND NIGHTS MAY BE MOUNTED ON PORTABLE SUPPORTS.

ALL TYPE III BARRICADES SHALL HAVE RAILS REFLECTORIZED ON BOTH FACES. STRIPES SHALL BE PROPERLY SLOPED DOWN TOWARD THE TRAFFIC SIDE OR AS SHOWN IN THE ROAD CLOSURE BARRICADE DETAIL D FOR FULL ROAD CLOSURES.

TYPE "A" LOW-INTENSITY FLASHING WARNING LIGHTS SHALL BE VISIBLE ON BOTH SIDES OF THE BARRICADE.

THE R11-2, R11-3, M4-9, R11-4 AND R10-61 SIGNS PLACED ON BARRICADES SHALL COVER NO MORE THAN THE TOP RAIL. THE SIGNS SHALL NOT COVER ANY PORTION OF THE MIDDLE OR BOTTOM RAILS.

"WO AND "MO" SIGNS ARE THE SAME AS "W" AND "M" SIGNS EXCEPT THE BACKGROUND IS ORANGE.

ALL SIGNS SHALL BE 48" X 48" UNLESS OTHERWISE NOTED BELOW:
- R11-2 SHALL BE 48" X 30".
- R11-3, R11-4 AND R10-61 SHALL BE 60" X 30".
- M4-9 SHALL BE 30" X 24".
- M3-X SHALL BE 24" X 12". (36" X 18" IF NEEDED TO MATCH EXISTING SIGNS.)
- M4-8 SHALL BE 24" X 12". (30" X 15" IF NEEDED TO MATCH EXISTING SIGNS.)
- M1-4, M1-5A, AND M1-6 SHALL BE 24" X 24". (36" X 36" IF NEEDED TO MATCH EXISTING SIGNS.)
- M05-1 AND M06-1 SHALL BE 21" X 21". (30" X 30" IF NEEDED TO MATCH EXISTING SIGNS.)
- D1-X SHALL BE AS SHOWN ON SPECIFIC PROJECT SIGNING DETAIL SHEETS.
- R1-1 SHALL BE 36" X 36".

(1) TWO WARNING LIGHTS SHALL BE PROVIDED ON THE CENTER BARRICADE AND A MINIMUM OF ONE WARNING LIGHT SHALL BE PROVIDED ON EACH OF THE OTHER BARRICADES WITHIN THE ROADWAY LIMITS. SPACING OF THE WARNING LIGHTS SHALL BE UNIFORM TO THE EDGE OF ROADWAY AS SHOWN (APPROX. 8-FOOT LIGHT SPACING).

(2) THESE SIGNS AND BARRICADES ARE NOT REQUIRED IF ROAD CLOSURE BEGINS AT INTERSECTION.

(3) FOR ROAD CLOSURE WITHOUT LOCAL ACCESS TO PROJECT, SEE ROAD CLOSURE BARRICADE DETAIL D.

(4) FOR ROAD CLOSURE WITH LOCAL ACCESS TO PROJECT, SEE LANE CLOSURE BARRICADE DETAIL E.

(5) FOR BRIDGE OR CULVERT REPLACEMENTS, SUBSTITUTE "BRIDGE OUT" INSTEAD OF "ROAD CLOSED" ON R11-2 AND R11-3 SIGNS.

(6) INSTALL DETOUR AND COMMUNITY GUIDE SIGNS AND ARROWS ONLY IF SPECIFIED IN THE CONTRACT. IF THERE ARE EXISTING ROUTE MARKER ASSEMBLIES THAT WILL REMAIN IN PLACE, ADJUST THE LOCATION OF THE DETOUR ROUTE SIGNS TO CORRESPOND WITH THE EXISTING ASSEMBLIES. MODIFY EXISTING SIGNS WHERE POSSIBLE. SEE SPECIFIC PROJECT DETOUR SIGNING DETAIL SHEETS. IF DETOUR SIGNS ARE BEING INSTALLED BY OTHERS, PLACE THE CONTRACTED TRAFFIC CONTROL SIGNS TO ALLOW FOR PLACEMENT OF ALL WARNING, DETOUR AND GUIDE SIGNS AS SHOWN.

(7) "EAST" CARDINAL DIRECTION MARKERS AND RIGHT TURN ARROWS ARE SHOWN. USE OTHER CARDINAL DIRECTIONS AND ARROWS AS APPROPRIATE.

BARRICADES AND SIGNS FOR MAINLINE CLOSURES

STATE OF WISCONSIN
DEPARTMENT OF TRANSPORTATION

Sept. 2015 — DATE

/S/ Peter Amakobe Atepe
STATEWIDE WORK ZO[illegible] FIC
SAFETY ENGI[illegible]
FHWA

6

S.D.D. 15 C 2-6b

THIS DRAWING PROVIDES GENERAL GUIDANCE ON TYPICAL DETOUR SIGN LAYOUT AND SPACING. SEE PROJECT DETOUR SIGNING SHEETS FOR SPECIFIC DETAILS FOR EACH PROJECT.

GENERAL NOTES

THE EXACT NUMBER, LOCATION AND SPACING OF ALL SIGNS SHALL BE ADJUSTED TO FIT FIELD CONDITIONS AS APPROVED BY THE ENGINEER.

IF THERE ARE EXISTING ROUTE MARKER ASSEMBLIES THAT WILL REMAIN IN PLACE, ADJUST THE LOCATION OF THE DETOUR ROUTE SIGNS TO CORRESPOND WITH THE EXISTING ASSEMBLIES. SEE SPECIFIC PROJECT DETOUR SIGNING DETAIL SHEETS. MODIFY EXISTING SIGNS WHERE POSSIBLE.

THE SPACING BETWEEN TRAFFIC CONTROL AND DETOUR SIGNS SHOULD BE ADJUSTED TO NOT CONFLICT WITH AND TO PROVIDE A DESIRABLE MINIMUM OF 200 FEET CLEARANCE TO EXISTING SIGNS THAT WILL REMAIN IN PLACE.

ANY SIGNS TEMPORARY OR EXISTING, WHICH CONFLICT WITH TRAFFIC CONTROL "IN USE", SHALL BE REMOVED OR COVERED AS NEEDED AND AS APPROVED BY THE ENGINEER.

SIGNS THAT WILL BE IN PLACE LESS THAN 7 CONTINUOUS DAYS AND NIGHTS MAY BE MOUNTED ON PORTABLE SUPPORTS.

"MO" SIGNS ARE THE SAME AS "M" SIGNS EXCEPT THE BACKGROUND IS ORANGE.

SIGN SIZES SHALL BE AS FOLLOWS:

- M3-X SHALL BE 24" X 12". (36" X 18" IF NEEDED TO MATCH EXISTING SIGNS.)
- M4-8 SHALL BE 24" X 12". (30" X 15" IF NEEDED TO MATCH EXISTING SIGNS.)
- M1-4, M1-5A, AND M1-6 SHALL BE 24" X 24". (36" X 36" IF NEEDED TO MATCH EXISTING SIGNS.)
- M05-1 AND M06-1 SHALL BE 21" X 21". (30" X 30" IF NEEDED TO MATCH EXISTING SIGNS.)
- M4-9 SHALL BE 30" X 24".
- M4-8a SHALL BE 24" X 18".
- G20-51 SHALL BE 60" X 24".
- W20-2 SHALL BE 48" X 48".
- D1-X SHALL BE AS SHOWN ON SPECIFIC PROJECT SIGNING DETAIL SHEETS.

* OPTIONAL SIGNS. SEE SPECIFIC PROJECT DETOUR SIGNING DETAIL SHEETS.

** FOR A TOWN ROAD OR LOCAL STREET DETOURED ONTO A STATE TRUNK HIGHWAY, PLACE A ROAD NAME PLAQUE ABOVE THE M4-9 SIGN AS SPECIFIED IN THE CONTRACT.

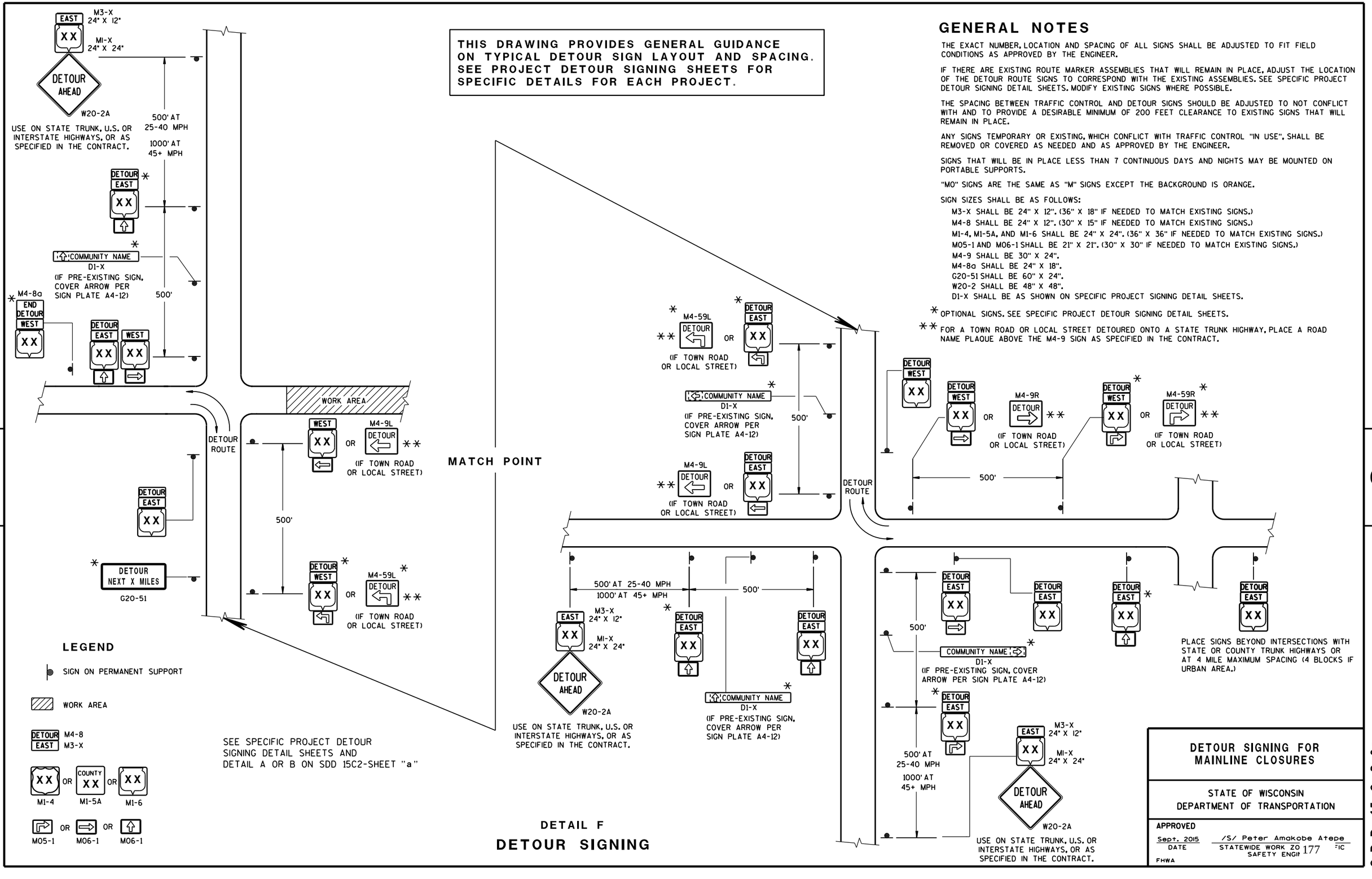

DETAIL F

DETOUR SIGNING

DETOUR SIGNING FOR MAINLINE CLOSURES

STATE OF WISCONSIN
DEPARTMENT OF TRANSPORTATION

APPROVED

Sept. 2015 — DATE

/S/ Peter Amakobe Atepe
STATEWIDE WORK ZO... SAFETY ENGI...

FHWA

6

S.D.D. 15 C 2-6c

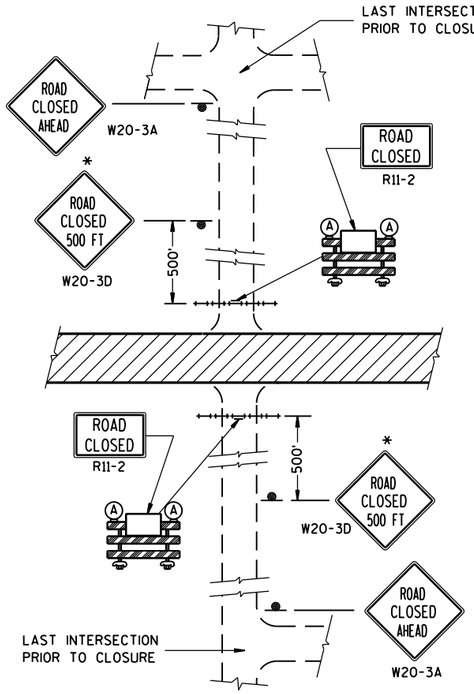

DETAIL 1

(NO ACCESS TO PROJECT)

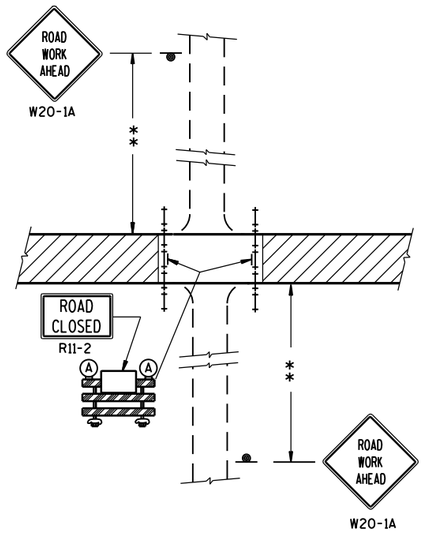

DETAIL 2

(PUBLIC CROSS-TRAFFIC MAINTAINED.
NO ACCESS TO PROJECT).

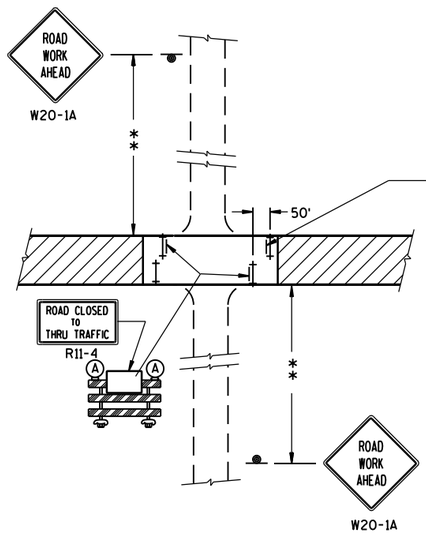

DETAIL 3

(PUBLIC CROSS-TRAFFIC MAINTAINED. CONTRACTOR,
LOCAL BUSINESS AND RESIDENT ACCESS).

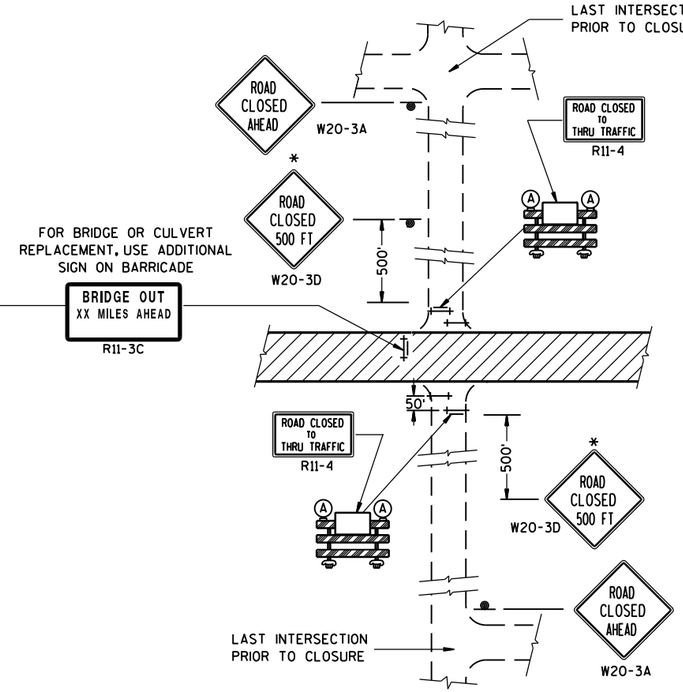

DETAIL 4

(CONTRACTOR, LOCAL BUSINESS AND
RESIDENT ACCESS TO PROJECT)

GENERAL NOTES

THE EXACT NUMBER, LOCATION, AND SPACING OF ALL SIGNS AND BARRICADES SHALL BE ADJUSTED TO FIT FIELD CONDITIONS AS APPROVED BY THE ENGINEER.

ANY SIGNS TEMPORARY OR EXISTING, WHICH CONFLICT WITH TRAFFIC CONTROL "IN USE" SHALL BE REMOVED OR COVERED AS NEEDED AND AS APPROVED BY THE ENGINEER.

THE SPACING BETWEEN TRAFFIC CONTROL SIGNS SHOULD BE ADJUSTED TO NOT CONFLICT WITH AND SHOULD PROVIDE A DESIRABLE MINIMUM OF 200 FEET CLEARANCE TO EXISTING SIGNS THAT WILL REMAIN IN PLACE.

IF A "STOP" SIGN MUST BE REMOVED FOR A WORK OPERATION, A TEMPORARY "STOP" SIGN SHALL BE PLACED PRIOR TO THE SIGN REMOVAL, OR A FLAGGER SHALL BE PROVIDED UNTIL THE SIGN IS RE-ESTABLISHED.

BARRICADES THAT MUST BE MOVED FOR A WORK OPERATION SHALL BE IMMEDIATELY RE-ESTABLISHED UPON COMPLETION OF THE OPERATION OR, FOR CONTINUING OPERATIONS, AT THE END OF EACH WORKING DAY.

SIGNS THAT WILL BE IN PLACE LESS THAN 7 CONTINUOUS DAYS AND NIGHTS MAY BE MOUNTED ON PORTABLE SUPPORTS.

ALL TYPE III BARRICADES SHALL HAVE RAILS REFLECTORIZED ON BOTH FACES. STRIPES SHALL BE PROPERLY SLOPED DOWN TOWARD THE TRAFFIC SIDE OR AS SHOWN IN THE ROAD CLOSURE BARRICADE DETAIL D FOR FULL ROAD CLOSURES.

TYPE "A" LOW-INTENSITY FLASHING WARNING LIGHTS SHALL BE VISIBLE ON BOTH SIDES OF THE BARRICADE.

THE R11-2, R11-3 AND R11-4 SIGNS PLACED ON BARRICADES SHALL COVER NO MORE THAN THE TOP RAIL. THE SIGNS SHALL NOT COVER ANY PORTION OF THE MIDDLE OR BOTTOM RAILS.

ALL SIGNS SHALL BE 48" X 48" UNLESS OTHERWISE NOTED BELOW:
R11-2 SHALL BE 48" X 30".
R11-4 AND R11-3 SHALL BE 60" X 30".

*OMIT THE "ROAD CLOSED 500 FT." SIGN IF THE LAST INTERSECTION IS 500 FT. OR LESS FROM THE WORK ZONE.

**500' MAX. OR AT LAST INTERSECTION WHICHEVER IS CLOSER.

LEGEND

- SIGN ON PERMANENT SUPPORT
- TYPE III BARRICADE
- TYPE III BARRICADE WITH ATTACHED SIGN
- (A) TYPE "A" WARNING LIGHT (FLASHING)
- WORK AREA

BARRICADES AND SIGNS FOR SIDEROAD CLOSURES

STATE OF WISCONSIN
DEPARTMENT OF TRANSPORTATION

APPROVED
Sept. 2015 — DATE
/S/ Peter Amakobe Atepe
STATEWIDE WORK ZO[illegible]FIC SAFETY ENGI[illegible]
FHWA

6

S.D.D. 15 C 3-3

6

S.D.D. 15 C 3-3

GENERAL NOTES

DETAILS OF INSTALLATION, MATERIALS AND WORKMANSHIP NOT SHOWN ON THIS DRAWING SHALL CONFORM TO THE PERTINENT REQUIREMENTS OF THE STANDARD SPECIFICATIONS AND APPLICABLE SPECIAL PROVISIONS.

ALL LETTERS, ARROWS AND SYMBOLS SHALL BE IN CONFORMANCE WITH REQUIREMENTS INCLUDED IN "STANDARD ALPHABETS FOR HIGHWAY SIGNS AND PAVEMENT MARKING" BOOK BY THE FEDERAL HIGHWAY ADMINISTRATION. ALL LETTERS, ARROWS AND SYMBOLS SHALL BE WHITE AND REFLECTORIZED. SMALL DIFFERENCES IN DIMENSIONS WITHIN THE TOLERANCES OF THAT BOOK ARE ACCEPTABLE.

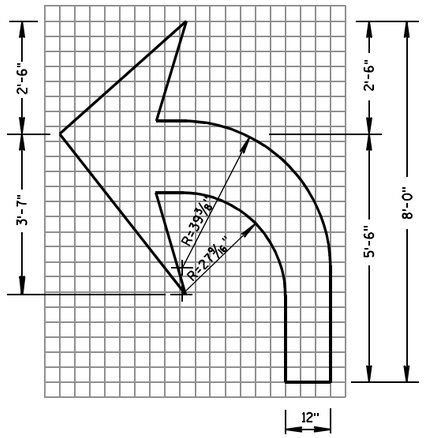

TYPE 2

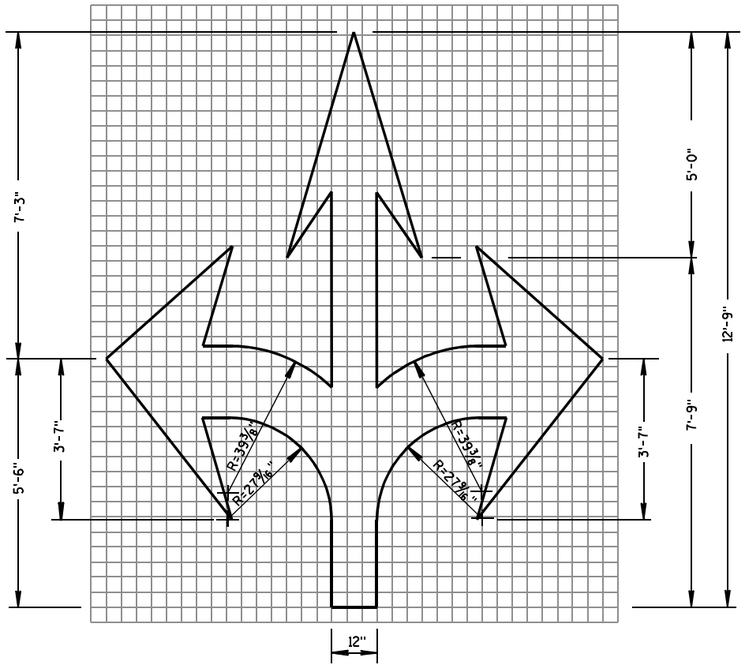

TYPE 6

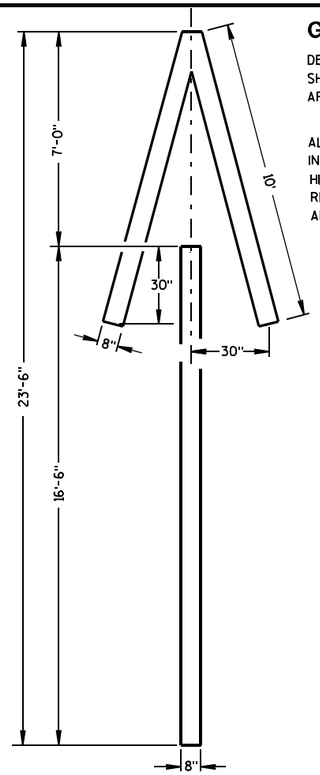

TYPE 4

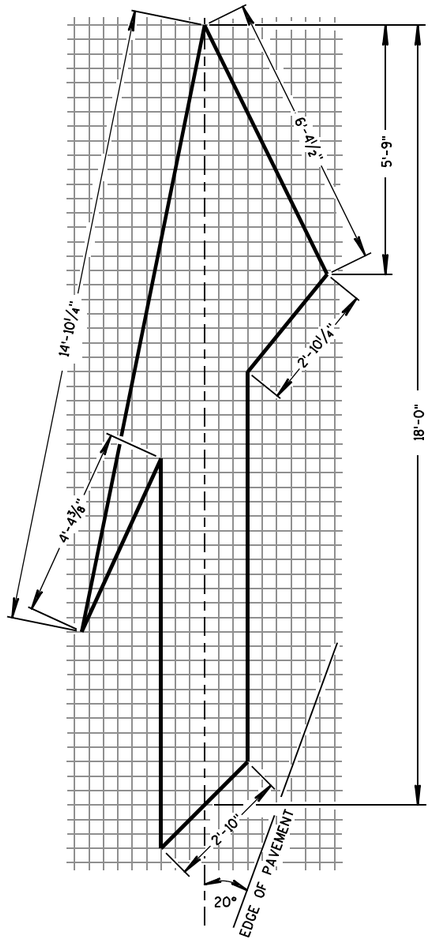

TYPE 5 LANE DROP ARROW

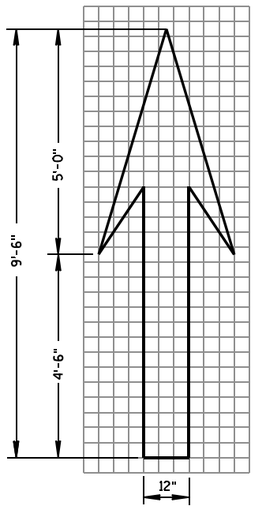

TYPE 1

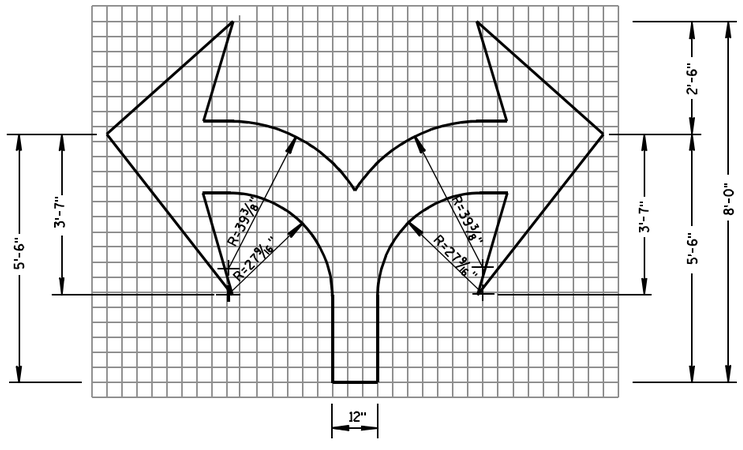

TYPE 7

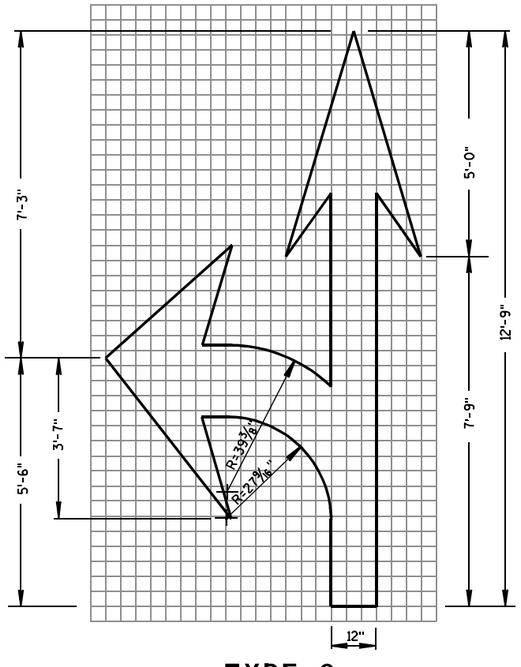

TYPE 3

PAVEMENT MARKING ARROWS

STATE OF WISCONSIN
DEPARTMENT OF TRANSPORTATION

APPROVED

7/1/11 — DATE

/S/ Thomas N. Nothohm — STATE TRAFFIC ENGINE[illegible] SIGN

FHWA

6

S.D.D. 15 C 7-12c

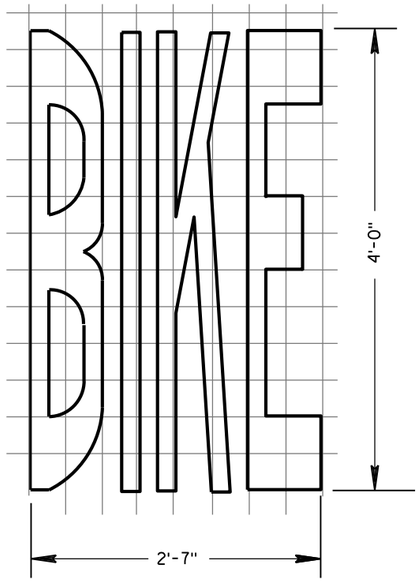

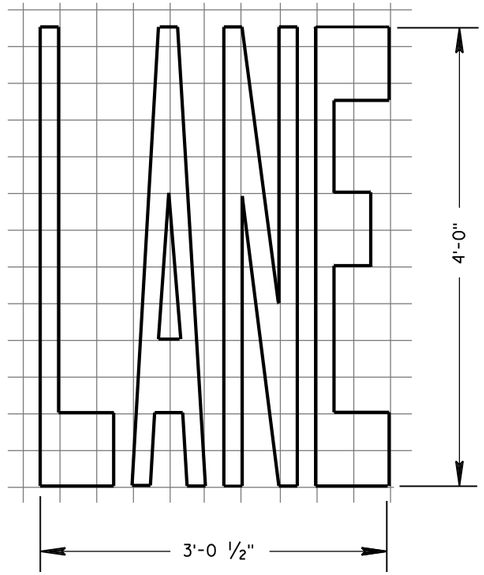

BIKE LANE WORDS

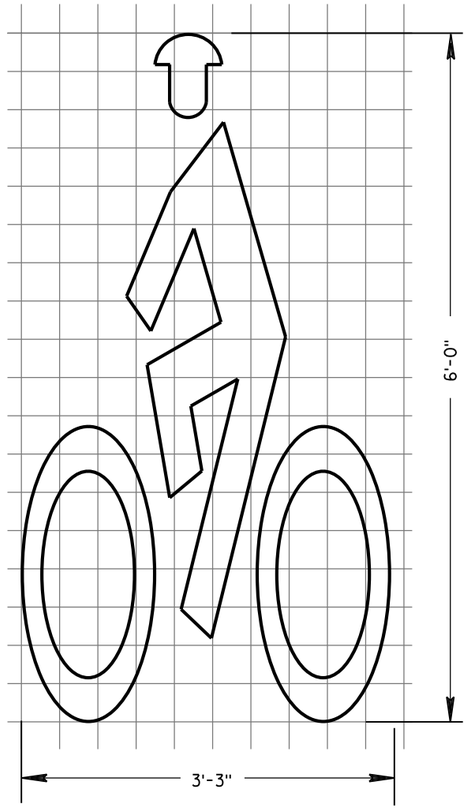

BIKE LANE SYMBOL

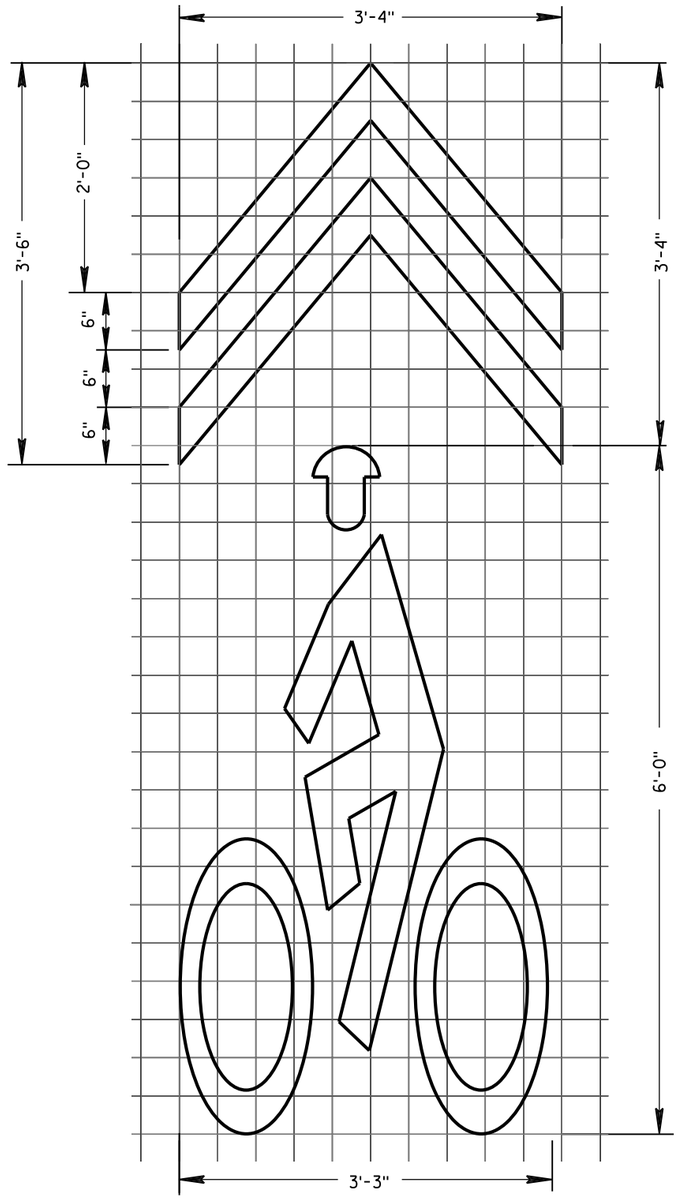

BIKE SYMBOL FOR SHARED LANE

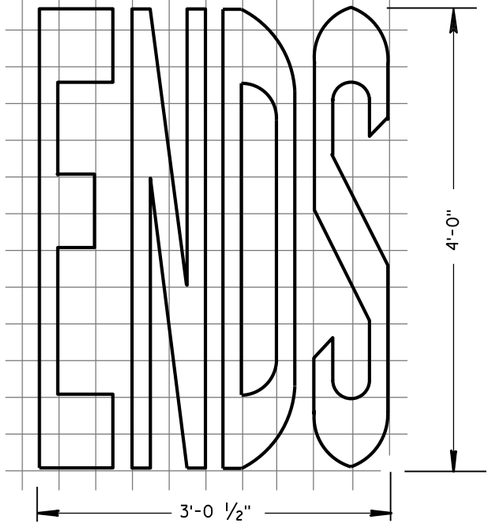

BIKE LANE WORDS

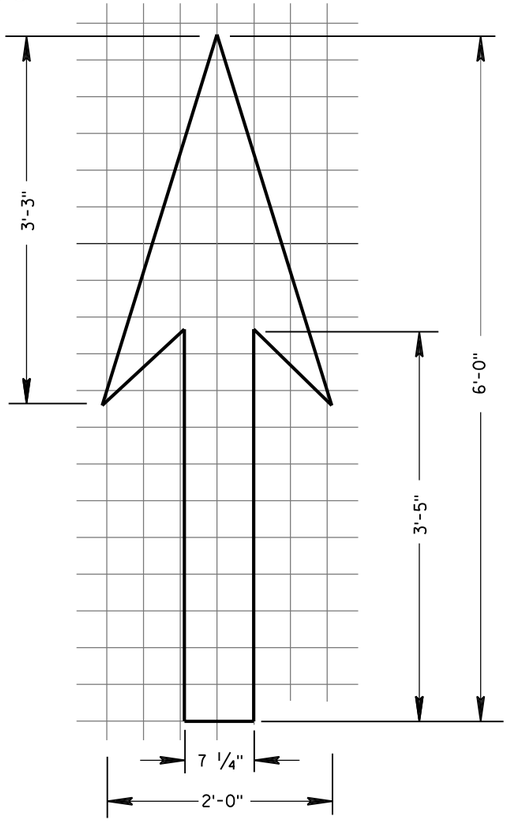

BIKE LANE ARROW

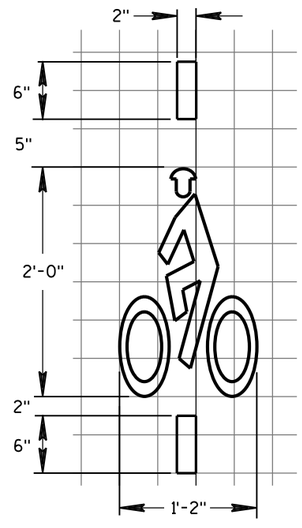

BICYCLE DETECTOR PAVEMENT MARKING

GENERAL NOTES

DETAILS OF INSTALLATION, MATERIALS AND WORKMANSHIP NOT SHOWN ON THIS DRAWING SHALL CONFORM TO THE PERTINENT REQUIREMENTS OF THE STANDARD SPECIFICATIONS AND APPLICABLE SPECIAL PROVISIONS.

PAVEMENT MARKING FOR BIKE LANES

STATE OF WISCONSIN
DEPARTMENT OF TRANSPORTATION

APPROVED

4-18-2016
DATE

/S/ Matthew R. Rauch
STATE SIGNING AND MARK ENGINEER

FHWA

6

S.D.D. 15 C 7-13e

6

S.D.D. 15 C 7-13e

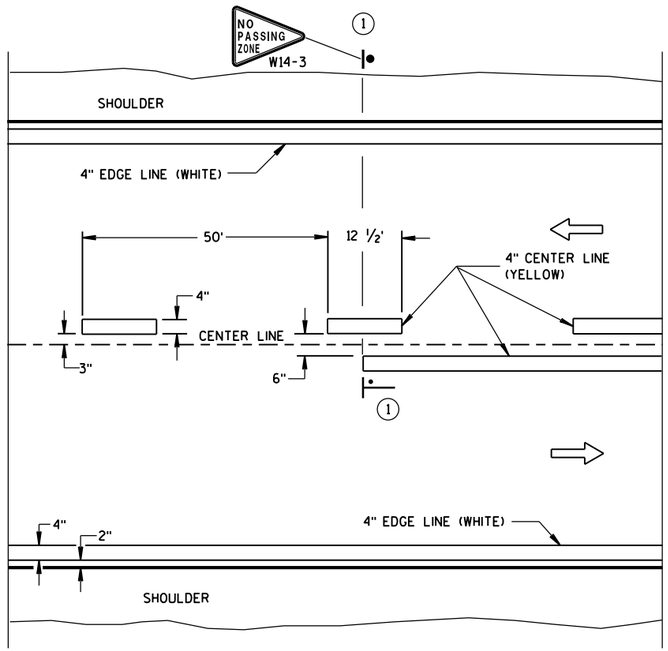

TWO WAY TRAFFIC

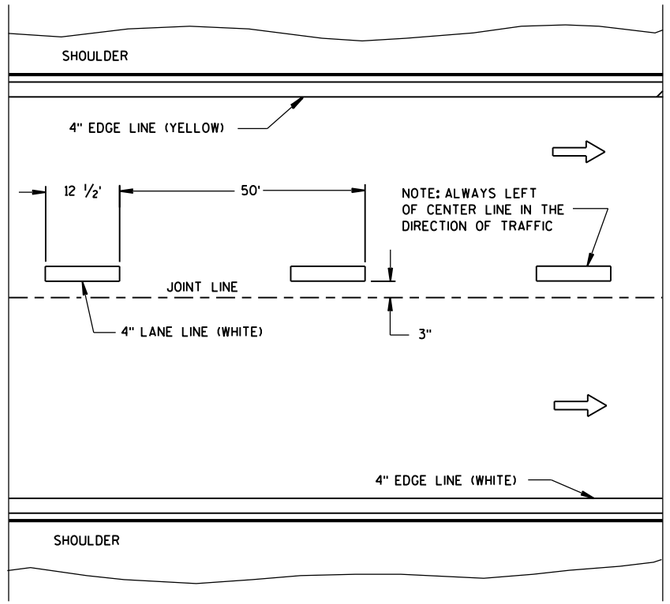

ONE WAY TRAFFIC

PERMANENT PAVEMENT MARKING

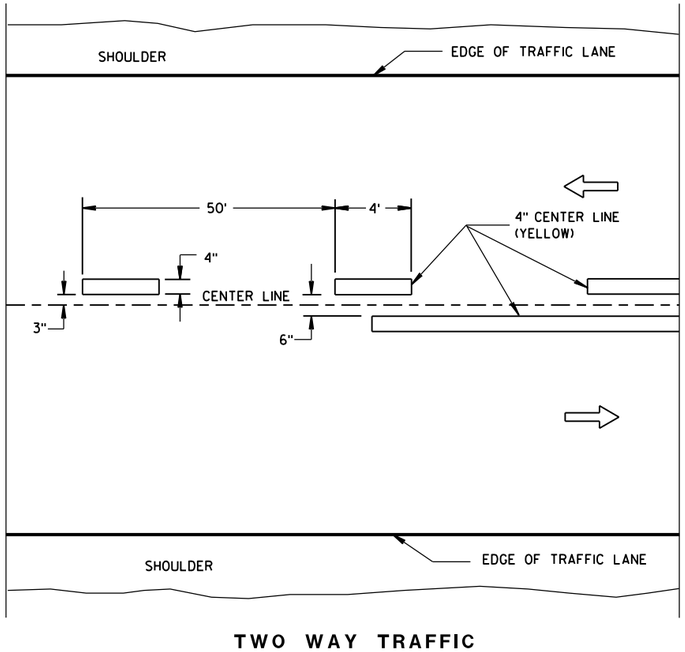

TWO WAY TRAFFIC

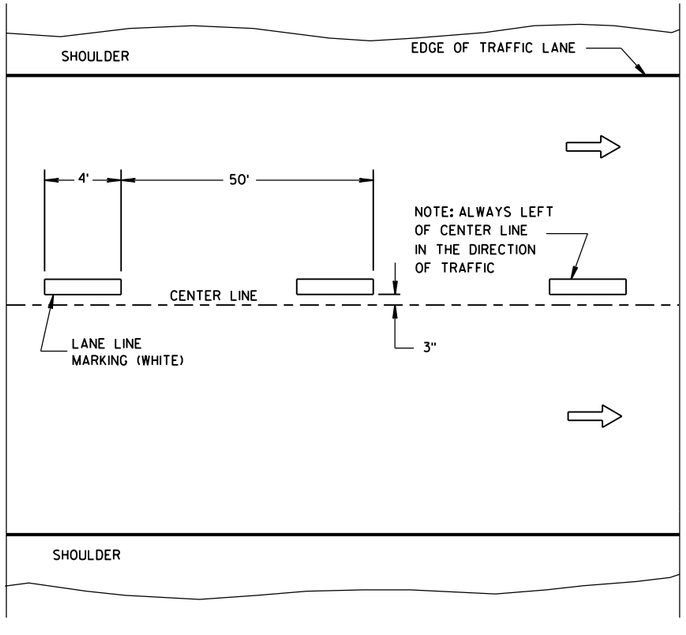

ONE WAY TRAFFIC

TEMPORARY PAVEMENT MARKING

GENERAL NOTES

DETAILS OF CONSTRUCTION NOT SHOWN ON THIS DRAWING SHALL CONFORM TO STANDARD SPECIFICATIONS AND SPECIAL PROVISIONS.

(1) NO PASSING ZONE W14-3 SIGN SHALL BE LOCATED WITHIN 50 FEET OF THE "T" MARKING.

NOTE

ARROW SYMBOL (⇨) SHOWS DIRECTION OF TRAVEL

LEGEND

"T" MARKING

POST MOUNTED SIGN

6

6

S.D.D. 15 C 8-17a

S.D.D. 15 C 8-17a

LONGITUDINAL MARKING (MAINLINE)

STATE OF WISCONSIN
DEPARTMENT OF TRANSPORTATION

APPROVED
Sept., 2016 /S/ Matthew R. Rauch
DATE STATE SIGNING AND MAR SINEER
FHWA

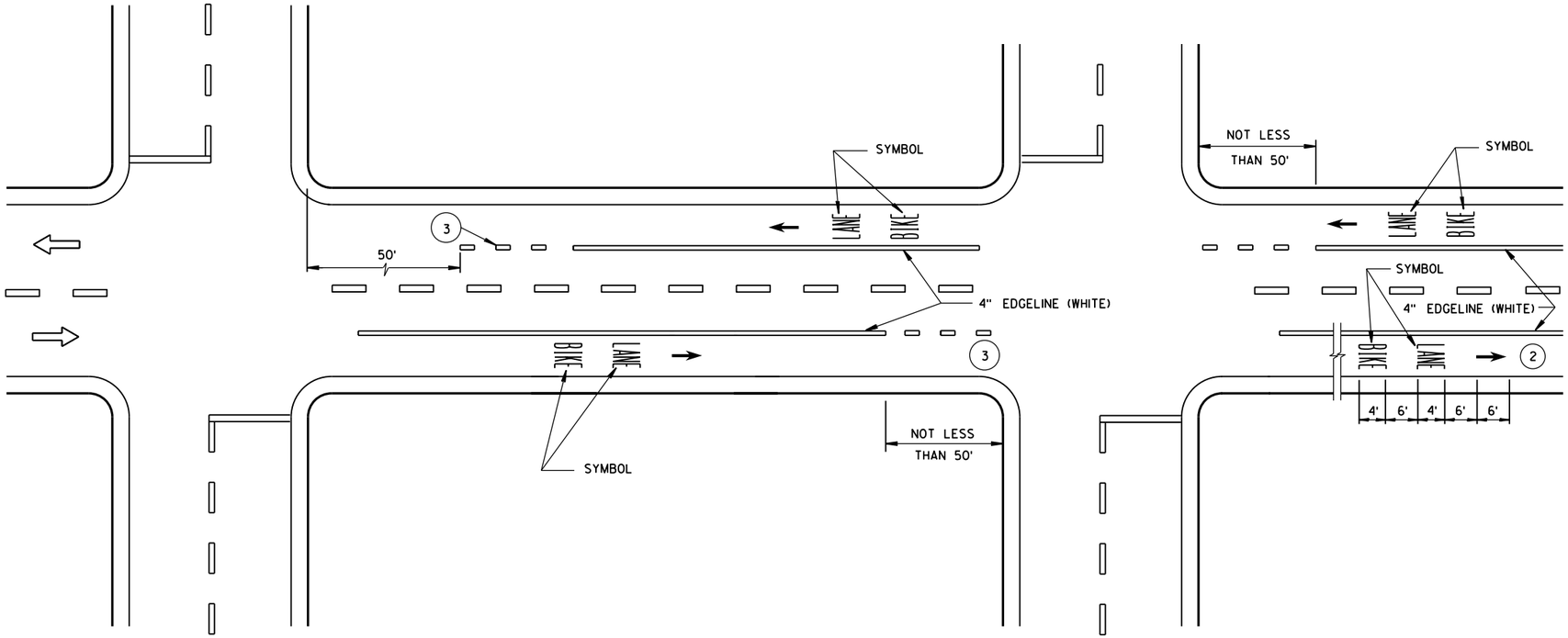

GENERAL NOTES

1. DETAILS OF CONSTRUCTION NOT SHOWN ON THIS DRAWING SHALL CONFORM TO STANDARD SPECIFICATIONS AND SPECIAL PROVISIONS.
2. MINIMUM OF ONE PER BLOCK. MAXIMUM OF 250 FEET.
3. DOTTED LINES (3'LINE, 9'GAP) SHOULD BE USED 50 FEET TO 200 FEET IN ADVANCE OF AN INTERSECTION WHERE THERE IS NO RIGHT TURN ONLY LANE AND THERE IS HEAVY RIGHT TURN TRAFFIC OR THERE IS A NEAR-SIDE BUS STOP. AT OTHER INTERSECTIONS WHERE RIGHT TURN TRAFFIC IS LIGHT TO MODERATE, A SOLID LINE CAN BE USED UP TO THE INTERSECTION.
4. IF SIGNED AND/OR MARKED AS A BICYCLE FACILITY INCLUDE SECOND LINE OF LINE-SPACE MARKING, OTHERWISE DO NOT.

DIRECTION OF TRAVEL

DESIGNATED BICYCLE LANE
NO PARKING

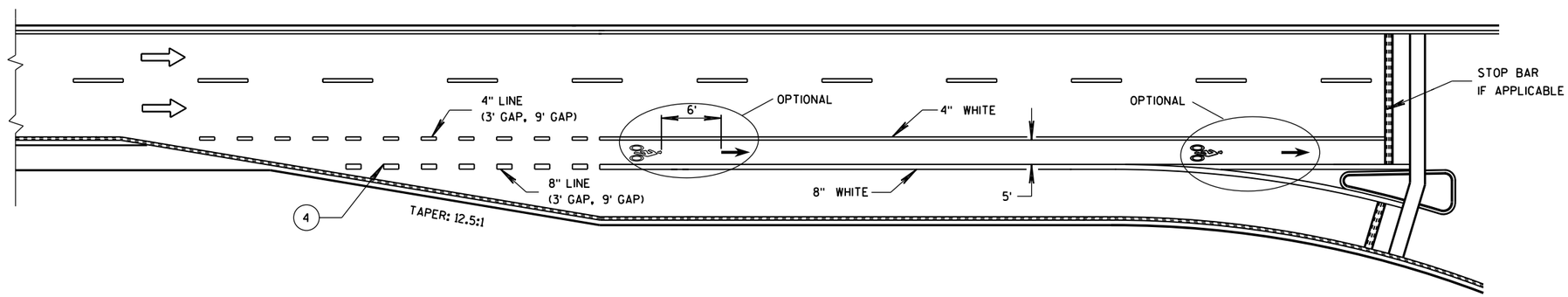

BIKE LANE - 4-LANE DIVIDED WITH RIGHT TURN LANE

BICYCLE LANE MARKING

STATE OF WISCONSIN
DEPARTMENT OF TRANSPORTATION

APPROVED
4-18-2016 DATE
/S/ Matthew R. Rauch
STATE SIGNING AND MAR NEER
FHWA

6

S.D.D. 15 C 29-4a

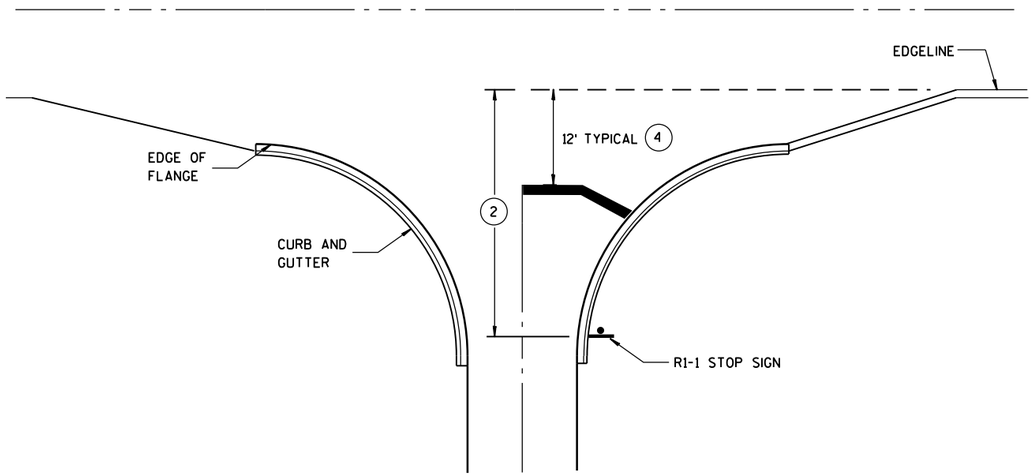

TYPICAL STOP LINE PAVEMENT MARKING WITH CURB AND GUTTER

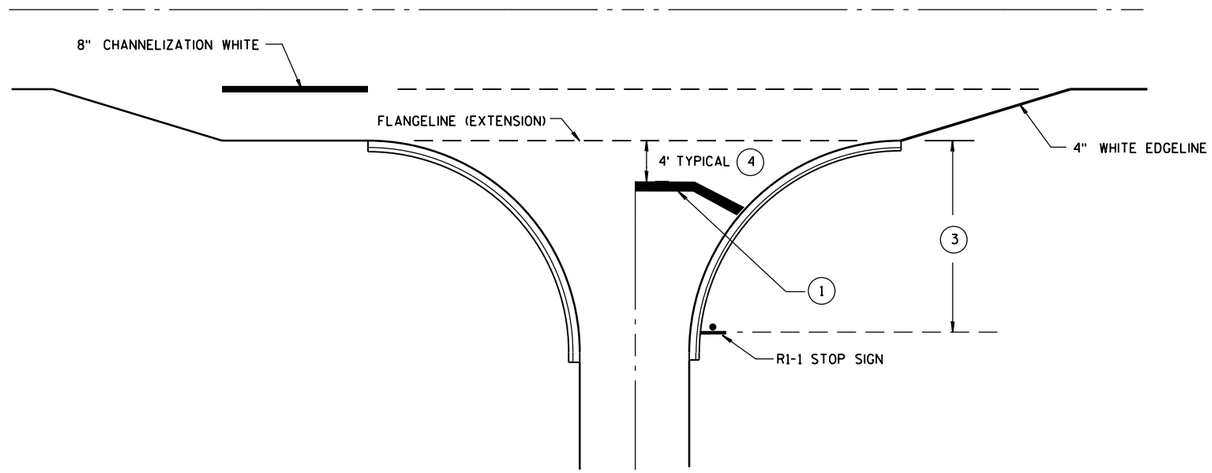

TYPICAL STOP LINE PAVEMENT MARKING FOR SIDEROADS WITH RIGHT TURN LANE

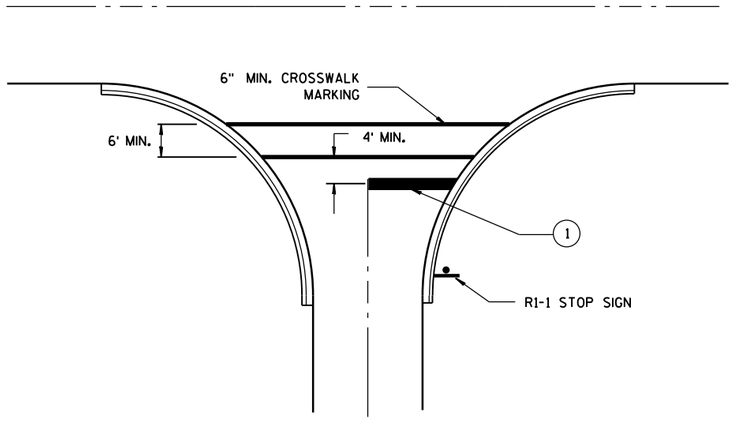

TYPICAL STOP LINE PAVEMENT MARKING FOR SIDEROADS WITH CROSSWALK MARKING

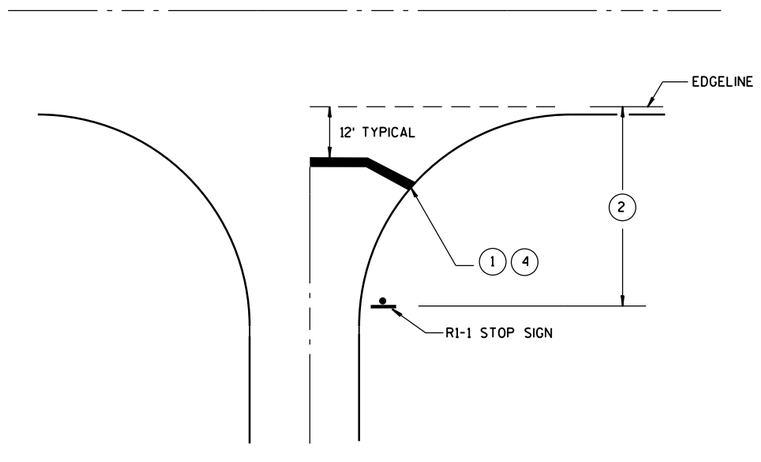

TYPICAL STOP LINE PAVEMENT MARKING WITHOUT CURB AND GUTTER

GENERAL NOTES

1. 18-INCH STOP LINES MAY BE DELETED OR ADDED BY THE PROJECT ENGINEER BASED ON VISIBILITY AND SIGHT LINES.
2. IF STOP SIGN IS LESS THAN OR EQUAL TO 40 FEET FROM THE EDGELINE THAN NO STOP LINE IS REQUIRED.
3. IF STOP SIGN IS LESS THAN OR EQUAL TO 30 FEET FROM THE FLANGELINE EXTENSION THAN NO STOP LINE IS REQUIRED.
4. MOVE CLOSER TO EDGE OF TRAVEL LANE AS NEEDED FOR VISIBILITY AND SIGHT LINES. (NO CLOSER THAN 4 FEET).

STOP LINE AND CROSSWALK PAVEMENT MARKING

STATE OF WISCONSIN
DEPARTMENT OF TRANSPORTATION

APPROVED

4-18-2016
DATE

/S/ Matthew R. Rauch
STATE SIGNING AND MAR 183 NEER

FHWA

6

S.D.D. 15 C 33-2

NOTE: MAY BE USED ON ROADWAY WITH POSTED SPEED OF LESS THAN 40 MPH.

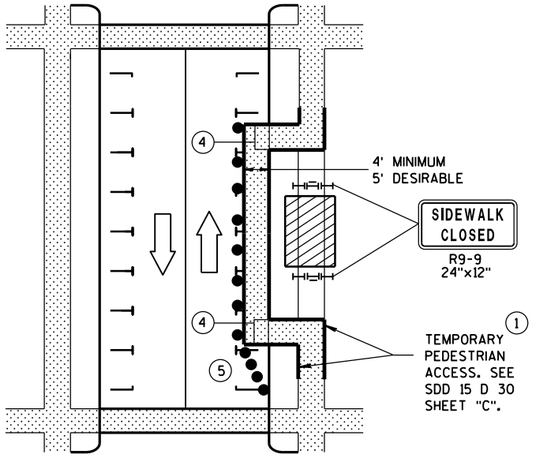

MID-BLOCK SIDEWALK CLOSURE IN PARKING LANE

NOTE: LAYOUT SAME AS ABOVE.

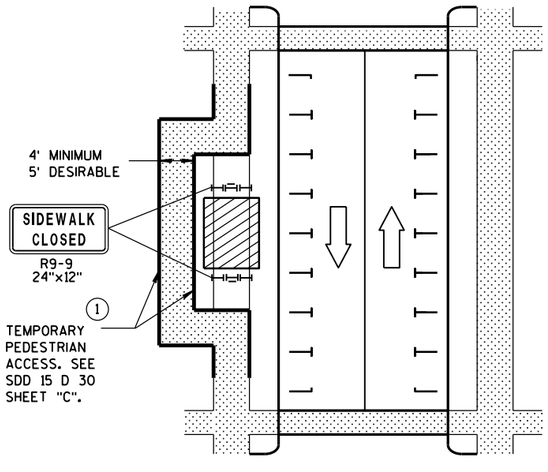

SIDEWALK DIVERSION

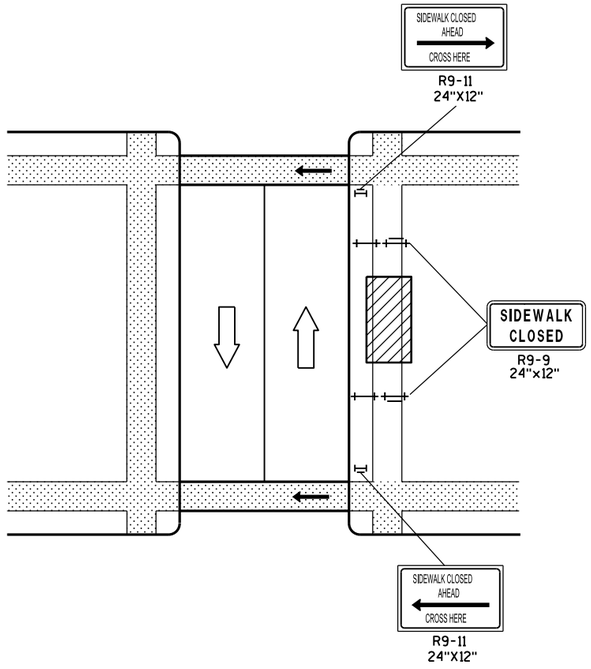

MID-BLOCK SIDEWALK CLOSURE

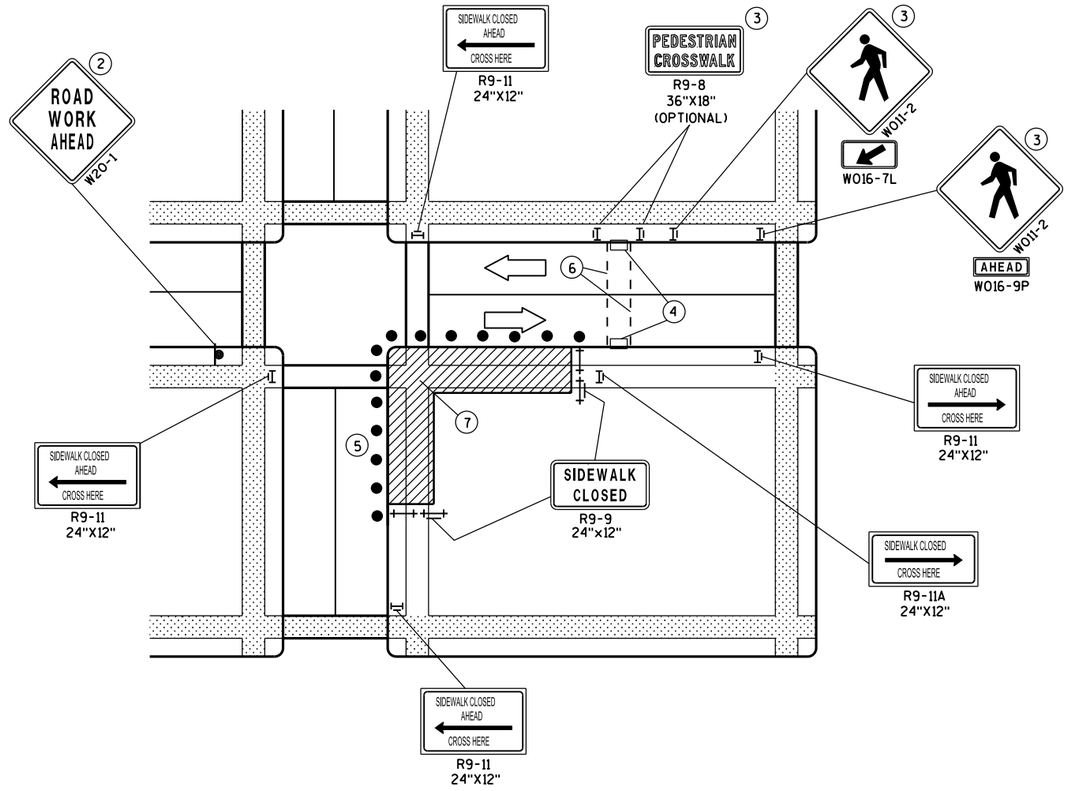

CORNER SIDEWALK CLOSURE WITH TEMPORARY CROSSWALK

GENERAL NOTES

WHEN CLOSING OR RELOCATING CROSSWALKS OR SIDEWALKS, PROVIDE DETECABLE TEMPORARY FACILITIES AND INCLUDE ACCESSIBILITY FEATURES CONSISTENT WITH EXISTING PEDESTRIAN FACILITIES.

TEMPORARY TRAFFIC CONTROL DEVICES FOR PEDESTRIANS ARE SHOWN. OTHER DEVICES MAY BE NECESSARY TO CONTROL VEHICULAR TRAFFIC. STAGE WORK, AS NECESSARY, TO PROVIDE A TEMPORARY PEDESTRIAN ACCESS ROUTE AT ALL TIMES. FOR ROADWAYS WITH NO AVAILABLE DETOURS, MAINTAIN ONE OPEN SIDEWALK AT ALL TIMES.

"WO" SIGN IS THE SAME AS "W" SIGN EXCEPT THE BACKGROUND IS ORANGE.

FOR NIGHTTIME CLOSURE USE TYPE "A" FLASHING WARNING LIGHTS ON BARRICADES, SUPPORTING SIGNS AND CLOSING SIDEWALK. USE TYPE "C" STEADY BURN LIGHTS ON CHANNELIZING DEVICES SEPARATING THE WORK AREA FROM VEHICULAR TRAFFIC.

PEDESTRIAN TRAFFIC SIGNAL DISPLAY CONTROLLING CLOSED CROSSWALK SHALL BE COVERED OR DEACTIVATED.

POST MOUNTED SIGNS LOCATED ADJACENT TO A SIDEWALK SHALL HAVE A 7 FOOT MINIMUM CLEARANCE FROM THE BOTTOM OF THE SIGN TO THE SIDEWALK SURFACE.

ALTERNATE SIDEWALK WORK BETWEEN LEFT AND RIGHT SIDE OF ROADWAY TO MAINTAIN PEDESTRIAN ACCESS.

(1) IF SIDEWALK CLOSURE AFFECTS AN ACCESSIBLE AND DETECTABLE FACILITY, MAINTAIN ACCESSIBILITY AND DETECTABILITY ALONG THE ALTERNATE PEDESTRIAN ROUTE.

(2) "ROAD WORK AHEAD" SIGNS ARE NOT REQUIRED IF THE SIDEWALK CLOSURE OCCURS WITHIN A LARGER WORK ZONE WHERE ADVANCE WARNING SIGNS ARE ALREADY PRESENT, OR IF THE WORK AREA AND EQUIPMENT ARE MORE THAN 2 FEET BEHIND THE CURB.

(3) IF TEMPORARY PEDESTRIAN CROSSWALK IS NOT PROVIDED, OMIT R9-8 AND W011-2 SIGN ASSEMBLIES. IF PROVIDED INCLUDE ON BOTH SIDES OF THE CROSSWALK.

(4) TEMPORARY CURB RAMPS. SEE SDD 15 D 30 SHEET "B".

(5) DRUMS OR BARRICADES AT 25 FOOT SPACING. STREET PARKING SHALL BE PROHIBITED FOR AT LEAST 50 FEET IN ADVANCE OF THE MID-BLOCK CROSSWALK.

(6) TEMPORARY PAVEMENT MARKING FOR CROSSWALK LINES.

(7) LIMIT WORK TO ONE QUADRANT AT A TIME TO MINIMIZE PEDESTRIAN DISRUPTION.

LEGEND

- SIGN ON PERMANENT SUPPORT
- UNDER PEDESTRIAN TRAFFIC
- WORK AREA
- PEDESTRIAN CHANNELIZATION DEVICE
- TYPE II BARRICADE WITH/WITHOUT SIGN (ALL WITH ONE WARNING LIGHT, TYPE A, LOW-INTENSITY FLASHING)
- TYPE III BARRICADE WITH/WITHOUT SIGN (ALL WITH ONE WARNING LIGHT, TYPE A, LOW-INTENSITY FLASHING)
- DIRECTION OF TRAFFIC
- TRAFFIC CONTOL DRUM

TRAFFIC CONTROL, PEDESTRIAN ACCOMMODATION

STATE OF WISCONSIN
DEPARTMENT OF TRANSPOR

6

S.D.D. 15 D 30-3a

6

S.D.D. 15 D 30-3a

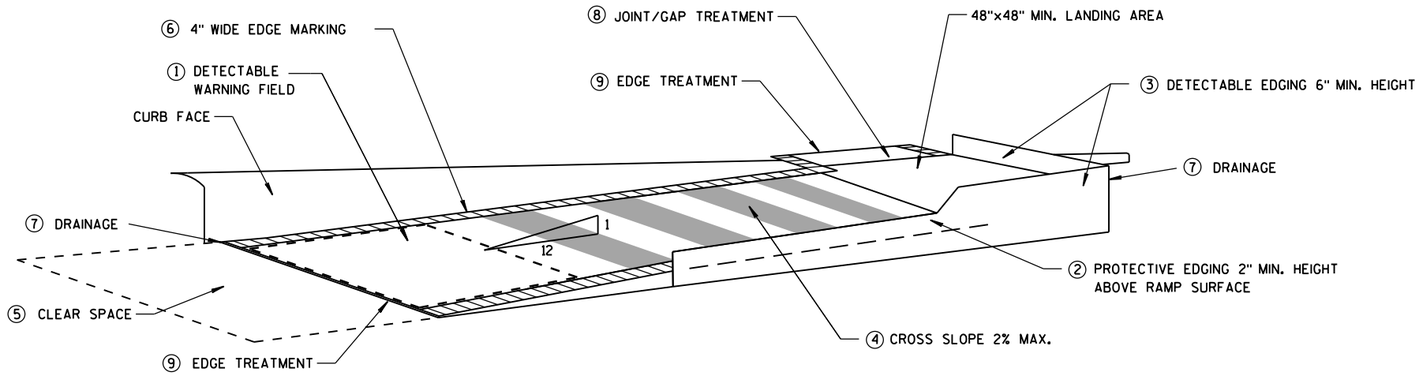

TEMPORARY CURB RAMP PARALLEL TO CURB

GENERAL NOTES

NOTIFY THE BUS COMPANY 7 DAYS IN ADVANCE OF THE BUS STOP RELOCATION.

ALTERNATE SIDEWALK WORK BETWEEN LEFT AND RIGHT SIDE OF ROADWAY TO MAINTAIN PEDESTRIAN ACCESS.

① CURB RAMPS SHALL BE 48" MIN. WIDTH WITH A FIRM, STABLE AND SLIP RESISTANT SURFACE. INSTALL CONTRASTING DETECTABLE WARNING FIELD AT PEDESTRIAN STREET CROSSINGS. REFER TO SDD 8D5 SHEET "E".

② PROTECTIVE EDGING WITH A 2" MIN. HEIGHT SHALL BE INSTALLED WHEN A CURB RAMP OR LANDING PLATFORM HAS A VERTICAL DROP OF 6" OR GREATER OR HAS A SIDE APRON SLOPE STEEPER THAN 1:3 (33%). PROTECTIVE EDGING SHOULD BE CONSIDERED WHEN CURB RAMPS OR LANDING PLATFORMS HAVE A VERTICAL DROP OF 3" OR MORE.

③ DETECTABLE EDGING WITH 6" MIN. HEIGHT AND CONTRASTING COLOR SHALL BE INSTALLED ON ALL CURB RAMP LANDINGS WHERE THE WALKWAY CHANGES DIRECTION (TURNS).

④ CURB RAMPS AND LANDINGS SHALL HAVE A 1:50 (2%) MAX. CROSS-SLOPE.

⑤ CLEAR SPACE OF 48"X48" MIN. SHALL BE PROVIDED ABOVE AND BELOW THE CURB RAMP.

⑥ THE CURB RAMP WALKWAY EDGE SHALL BE MARKED WITH A YELLOW COLOR, 4" WIDE MARKING, UNLESS A CONTRASTING DETECTABLE WARNING FIELD IS PROVIDED.

⑦ DO NOT RESTRICT WATER FLOW IN THE GUTTER SYSTEM.

⑧ LATERAL JOINTS OR GAPS BETWEEN SURFACES SHALL BE LESS THAN 1/2" WIDTH.

⑨ CHANGES BETWEEN SURFACE HEIGHTS SHALL NOT EXCEED 1/2". LATERAL EDGES SHALL BE VERTICAL UP TO 1/4" HIGH, AND BEVELED AT 1:2 BETWEEN 1/4" AND 1/2".

⑩ 5' WIDE MIN. WITH PEDSETRIAN SAFETY FENCE, 10' WIDE MIN. WITHOUT PEDESTRIAN SAFETY FENCE.

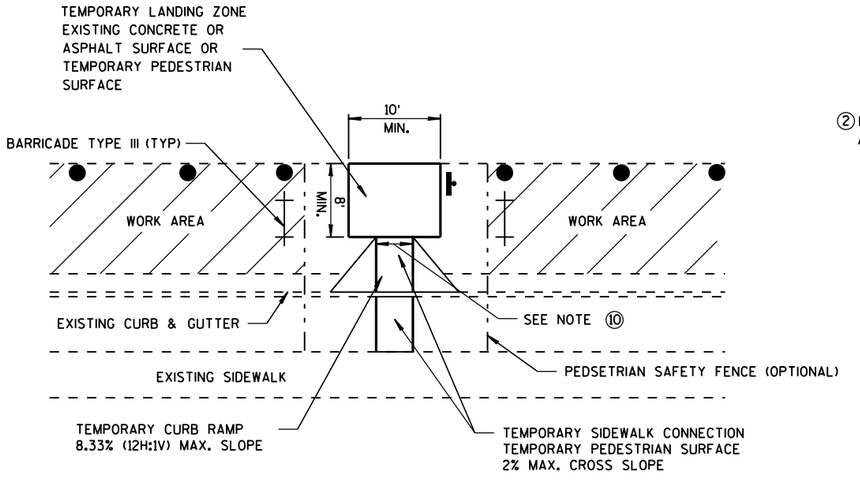

TEMPORARY BUS STOP PAD

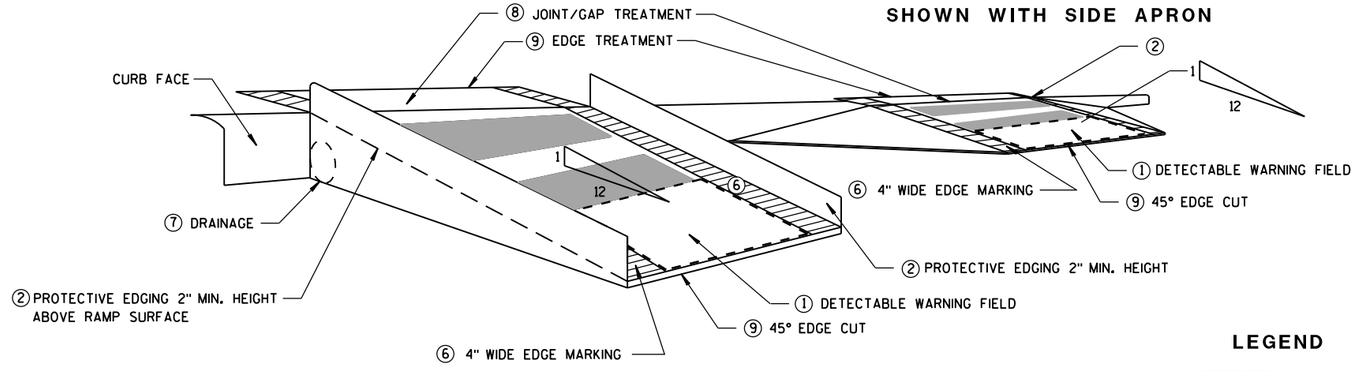

SHOWN WITH SIDE APRON

SHOWN WITH PROTECTIVE EDGE

TEMPORARY CURB RAMP PERPENDICULAR TO CURB

LEGEND

WORK AREA

TYPE III BARRICADE

TRAFFIC CONTOL DRUM

TRAFFIC CONTROL, TEMPORARY ADA COMPLIANT PEDESTRIAN ACCOMMODATION

STATE OF WISCONSIN
DEPARTMENT OF TRANSPORTATION

APPROVED

June 2016 — DATE

/S/ Peter Amakobe Atepe — STATEWIDE WORK ZO SAFETY ENGI IC

FHWA

6

S.D.D. 15 D 30-3b

6

S.D.D. 15 D 30-3b

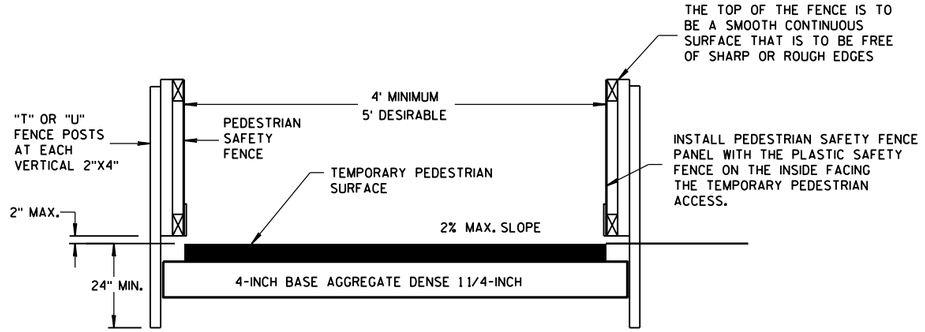

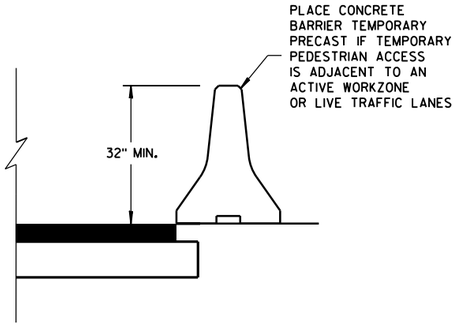

TEMPORARY PEDESTRIAN ACCESS

GENERAL NOTES

(1) INTERCHANGEABLE WITH THE PEDESTRIAN SAFETY FENCE.

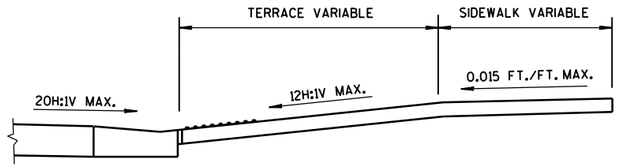

SECTION A-A

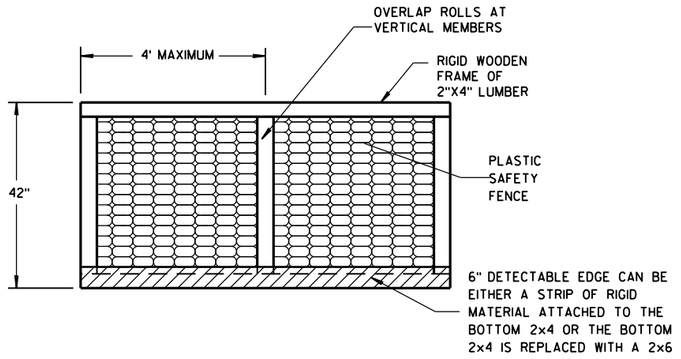

PEDESTRIAN SAFETY FENCE

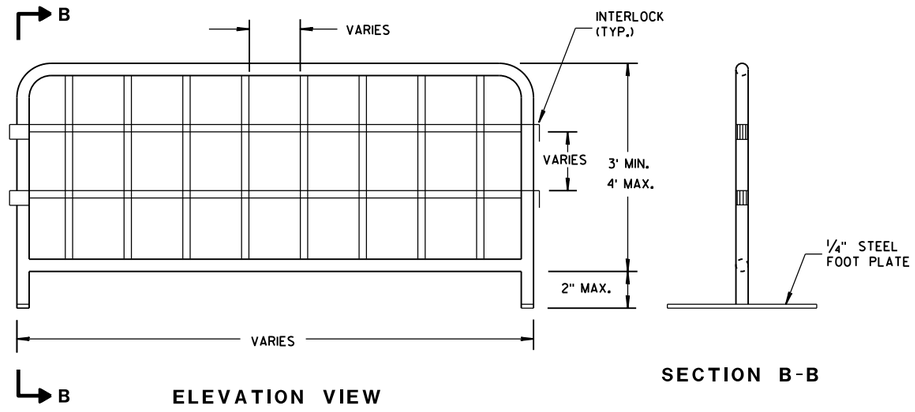

ELEVATION VIEW

SECTION B-B

TEMPORARY PEDESTRIAN STEEL BARRICADE (1)

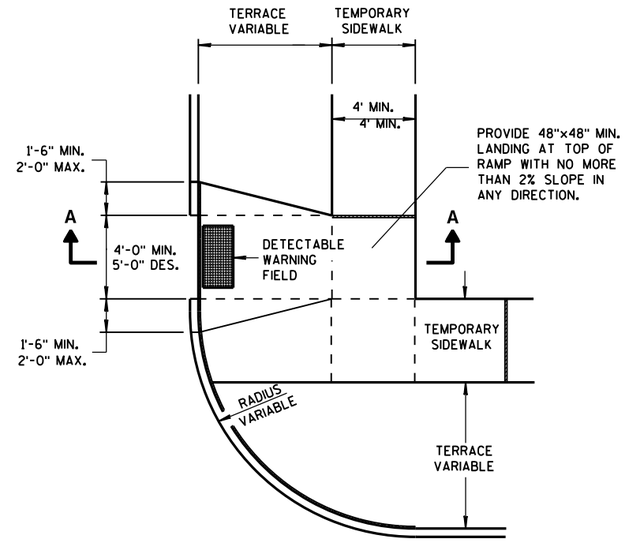

PLAN VIEW

TEMPORARY TYPE 3 RAMP

(OUTSIDE OF CROSSWALK AREA)

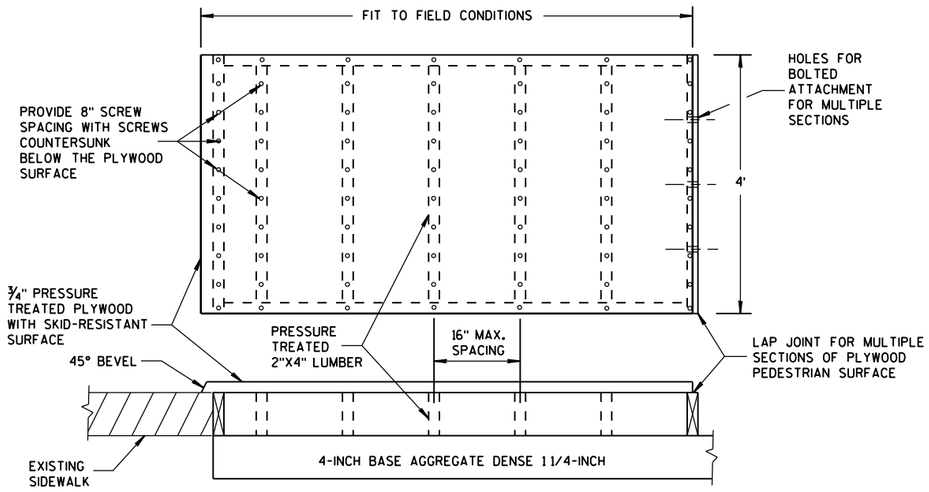

TEMPORARY PEDESTRIAN SURFACE PLYWOOD

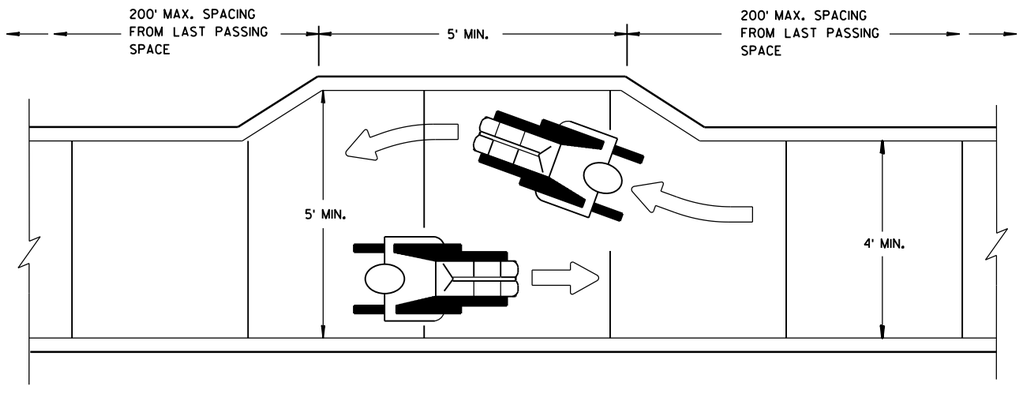

NARROW SIDEWALK PASSING DETAIL

TRAFFIC CONTROL, PEDESTRIAN ACCOMMODATION

STATE OF WISCONSIN
DEPARTMENT OF TRANSPORTATION

APPROVED
June 2016
DATE
/S/ Peter Amakobe Atepe
STATEWIDE WORK ZON IC
SAFETY ENGIN
FHWA

6

S.D.D. 15 D 30-3c

6

S.D.D. 15 D 30-3c

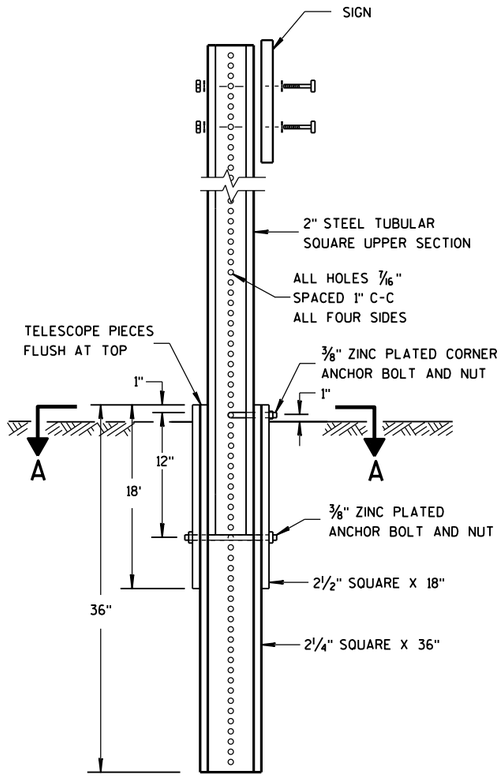

DETAIL OF TUBULAR STEEL SIGN POST

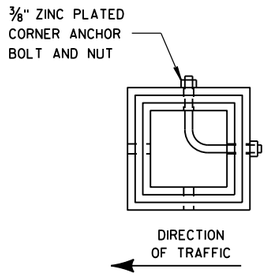

SECTION A-A

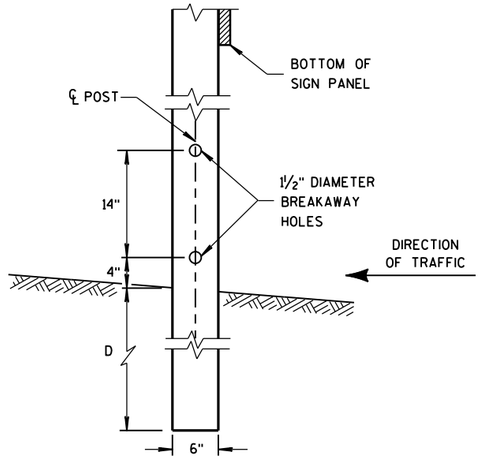

4"x6" WOOD POST MODIFICATION

GENERAL NOTES

(1) 6 FEET FROM THE EDGE OF PAVEMENT (EDGE LINE LOCATION) UNLESS OTHERWISE DIRECTED BY THE PROJECT ENGINEER. LATERAL OFFSET SHOULD BE ADJUSTED TO AVOID THE DITCH FLOWLINE.

(2) THE EXISTENCE OF CURB AND GUTTER DOES NOT IN ITSELF MANDATE THE VERTICAL CLEARANCE ILLUSTRATED. THAT HEIGHT IS TYPICALLY MEASURED WHERE THERE IS SIDEWALK ADJACENT TO THE ROADWAY OR PARKING IS PERMITTED. IN THE ABSENCE OF SIDEWALK, VERTICAL CLEARANCE IS MEASURED FROM THE TOP OF THE CURB. IF NO SIDEWALK AND NO PARKING, VERTICAL CLEARANCE MAY BE REDUCED TO 5 FOOT MINIMUM. OFFSET OF SIGNS IS MEASURED FROM THE CURB FLOWLINE.

(3) FOR SIGNS REQUIRING 4 POSTS, SPACE INTERMEDIATE POSTS EVENLY.

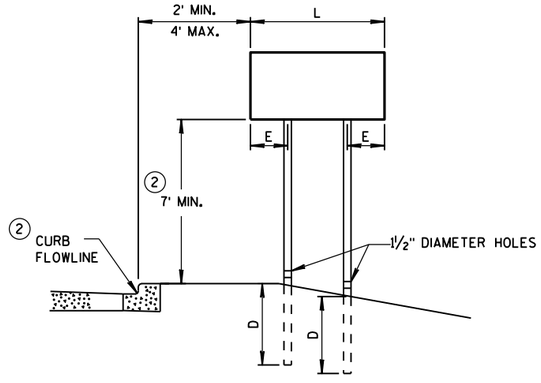

URBAN AREA

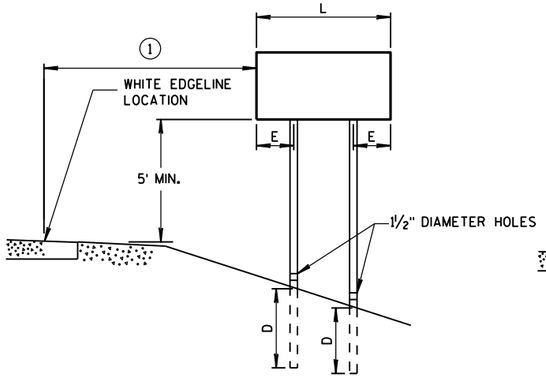

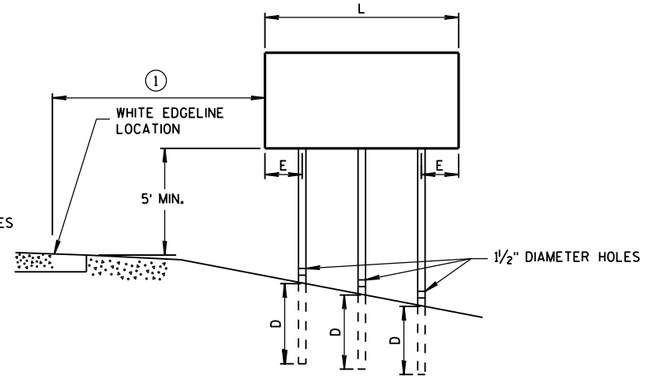

RURAL AREA

POST MOUNTING DETAIL FOR TEMPORARY TRAFFIC CONTROL FIXED MESSAGE SIGNS

TUBULAR STEEL POSTS

AREA OF SIGN INSTALLATION (SQ. FT.)	NUMBER OF REQUIRED TUBULAR STEEL POSTS
9 OR LESS	1
GREATER THAN 9 LESS THAN OR EQUAL TO 18	2
GREATER THAN 18 LESS THAN OR EQUAL TO 27	3

SIGNS WIDER THAN 3 FEET OR LARGER THAN 9 SQ. FT. SHALL BE MOUNTED ON MULTIPLE POSTS (SEE ABOVE TABLE).

SIGNS LARGER THAN 27 SQ. FT. SHALL NOT BE MOUNTED ON TUBULAR STEEL POSTS.

WOOD POST EMBEDMENT DEPTH

AREA OF SIGN INSTALLATION (SQ. FT.)	D (MIN)
20 OR LESS	4'
GREATER THAN 20	5'

4" X 6" WOOD POST

POST SPACING REQUIREMENTS		NUMBER OF WOOD POSTS REQUIRED
L	E	
48" OR LESS AND LESS THAN 20 SQ. FT.	-	1
LESS THAN 60"	12"	2
60" TO 120"	L/5	2
GREATER THAN 120" LESS THAN 168"	12"	3
168" AND GREATER	12"	4

SEE NOTE (3)

TEMPORARY TRAFFIC CONTROL FIXED MESSAGE SIGNS

STATE OF WISCONSIN DEPARTMENT OF TRANSPOR

6

S.D.D. 15 D 38-1a

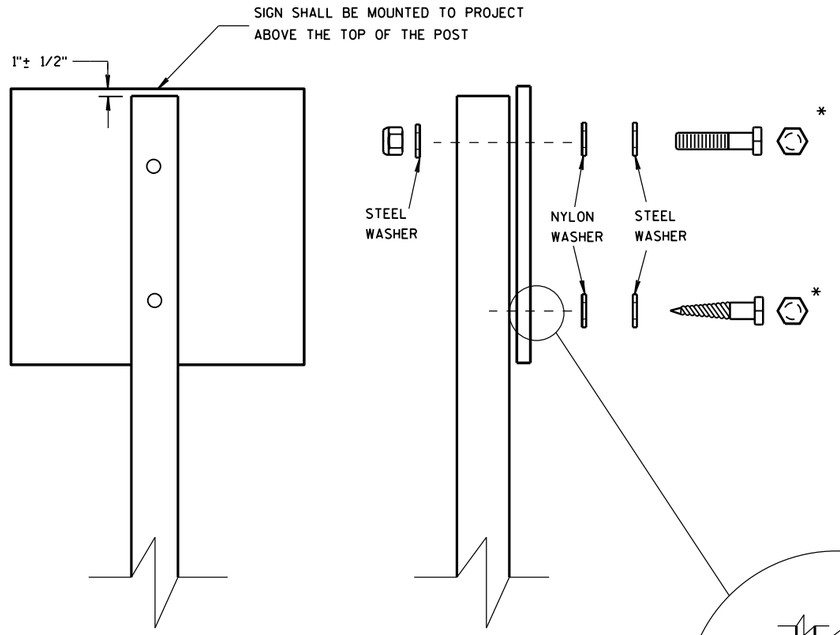

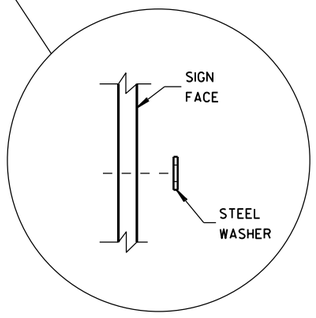

WASHER PLACEMENT WHEN SIGN HAS OTHER THAN TYPE H OR TYPE F FACE

NUTS, BOLTS AND LAGS USED FOR MOUNTING SIGNS SHALL HAVE HEXAGONAL HEADS AND SHALL BE EITHER:

A. HOT DIP GALVANIZED IN ACCORDANCE WITH ASTM DESIGNATION: A 153, CLASS D, OR SC 3

B. ELECTRO-GALVANIZED IN ACCORDANCE WITH ASTM DESIGNATION: B 633, TYPE III, SC 3

THREADS ON BOLTS AND NUTS SHALL BE MANUFACTURED WITH SUFFICIENT ALLOWANCE FOR THE CADMIUM PLATE OR GALVANIZED COATING TO PERMIT THE NUTS TO RUN FREELY ON THE BOLTS.

WOOD POSTS (4" x 4" or 4" x 6")

LAG SCREWS - 3/8" X 3"

MACHINE BOLTS - 5/16" X 6-1/2" OR 7" LENGTH W/ NUTS

SQUARE STEEL POSTS (2" x 2")

MACHINE BOLTS - 3/8" X 3-1/4" LENGTH W/ NUTS

RIVETS - 9/32" (6605-9-6) BULB-TITE, TRI-FOLD, ALUMINUM BODY/MANDREL O.D. FLANGE .720-.765 INCH, GRIP RANGE .042-.375 INCH

WASHERS (ALL POSTS) -

1-1/4" O.D. X 3/8" I.D. X 1/16" STEEL

1-1/4" O.D. X 3/8" I.D. X .080 NYLON FOR ALL TYPE H SIGNS

* TWO DIFFERENT FASTENING SYSTEMS ARE SHOWN FOR ILLUSTRATION PURPOSES. ON ANY INDIVIDUAL SIGN, EITHER ONE OR THE OTHER SYSTEM SHALL BE USED. ACTUAL NUMBER OF FASTENERS PER SIGN VARIES WITH THE SIGN AREA. FOR A SINGLE POST INSTALLATION, ALL SIGNS GREATER THAN 9 SQ. FT. REQUIRE THE USE OF 3 FASTENERS.

6

6

S.D.D. 15 D 38-1b

S.D.D. 15 D 38-1b

ATTACHMENT OF SIGNS TO POSTS

STATE OF WISCONSIN
DEPARTMENT OF TRANSPORTATION

APPROVED

Feb. 2015 — DATE

/S/ Travis Feltes — STATE TRAFFIC ENGINEER

FHWA

SIGN

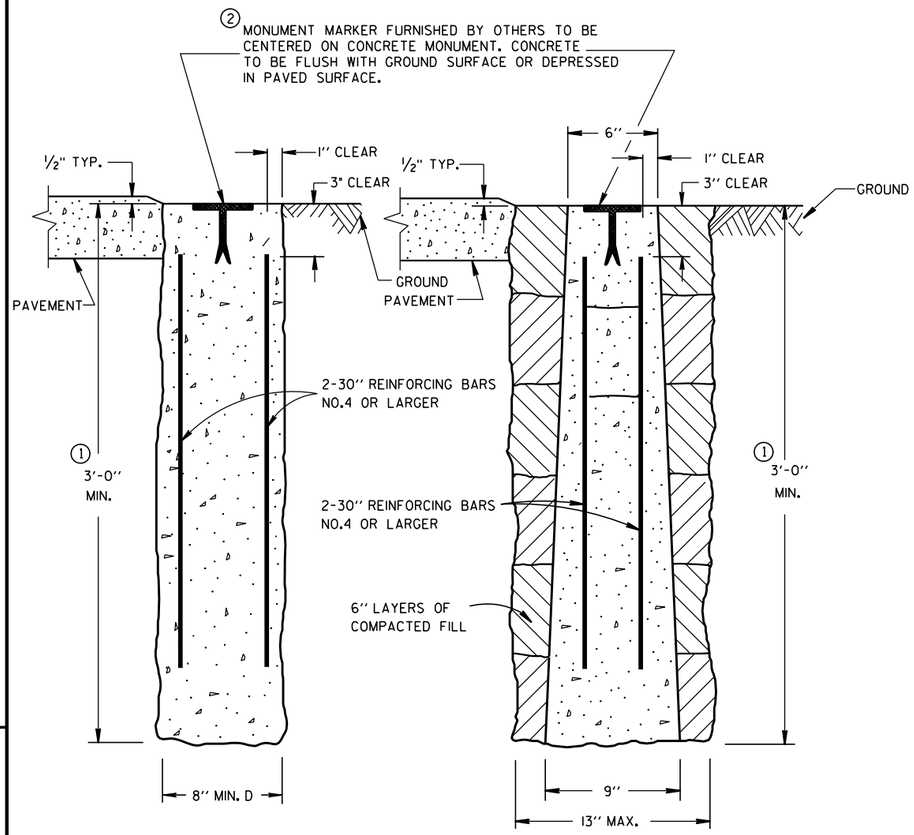

CAST-IN-PLACE PRECAST

CONCRETE MONUMENTS

TYPE A

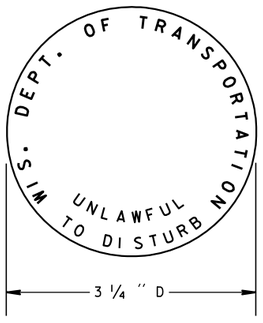

② WIS DOT MONUMENT MARKER LOGO FOR TYPES "A", "C" & "D"

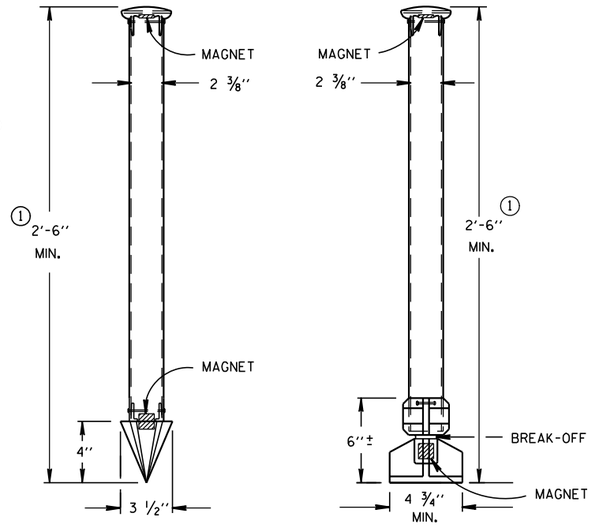

ALUMINUM MONUMENTS

(INCLUDES MARKER)

GENERAL NOTES

DETAILS OF CONSTRUCTION, MATERIALS AND WORKMANSHIP NOT SHOWN ON THIS DRAWING SHALL CONFORM TO THE PERTINENT REQUIREMENTS OF THE STANDARD SPECIFICATIONS AND THE APPLICABLE SPECIAL PROVISIONS.

DETAILED DRAWINGS OF PROPOSED ALTERNATE DESIGNS FOR METAL MONUMENTS OR MONUMENT COVERS SHALL BE SUBMITTED TO THE ENGINEER FOR APPROVAL.

INSTALLED METAL MONUMENTS MUST BE EASILY DETECTED WITH A DIP NEEDLE. INSERT PERMANENT MAGNETS SHALL BE ATTACHED NEAR THE TOP AND BOTTOM OF THOSE MONUMENTS CONSTRUCTED OF A METAL ALLOY WHICH IS NOT ATTRACTIVE TO A DIP NEEDLE.

THE CAST IRON MONUMENT COVER SHALL BE A "NON-ROCKING" TYPE. ADJUSTMENT OF THE COVER TO GRADE MAY BE ACCOMPLISHED BY THE USE OF MORTAR AND BRICK, OR BY EITHER PRECAST OR CAST-IN-PLACE REINFORCED CONCRETE GRADE RINGS.

MONUMENTS SHALL BE LOCATED AND PLACED AT THE DIRECTION OF THE ENGINEER.

ALUMINUM MONUMENTS AND MONUMENT COVERS SHALL BE MADE FROM AN ALUMINUM AND MAGNESIUM ALLOY AS DETERMINED BY THE MANUFACTURER.

THE MONUMENT COVERS DETAILED ON THIS DRAWING ARE NOT EQUAL ALTERNATES. MONUMENT COVERS SHALL BE CAST IRON UNLESS ALUMINUM IS SPECIFIED ELSEWHERE IN THE CONTRACT.

MONUMENT SHALL BE CAST-IN-PLACE CONCRETE UNLESS PRECAST CONCRETE OR ALUMINUM MONUMENTS ARE SPECIFIED IN THE CONTRACT OR PERMITTED BY THE ENGINEER.

① MINIMUM LENGTH SHALL BE 4'-0" FOR MONUMENTS INSTALLED IN PAVED AREAS.

② AN OFFICIAL COUNTY MONUMENT MARKER SUPPLIED BY A COUNTY MAY BE REQUIRED FOR SOME SECTION CORNERS AND WITNESS MONUMENTS INSTEAD OF THIS WIS DOT MARKER.

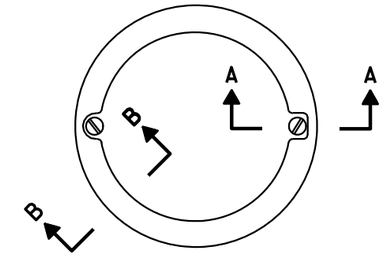

TOP VIEW

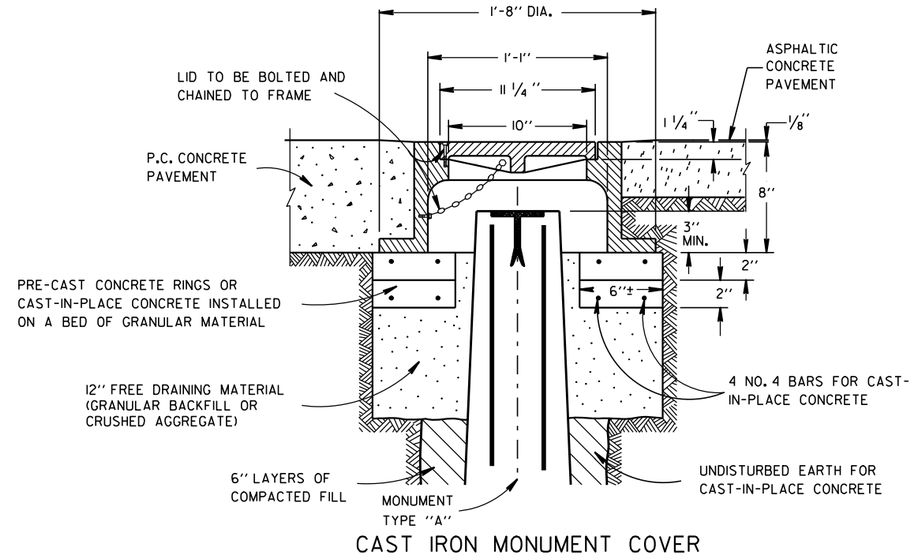

CAST IRON MONUMENT COVER

(APPROXIMATE WEIGHT - 95 LBS.)

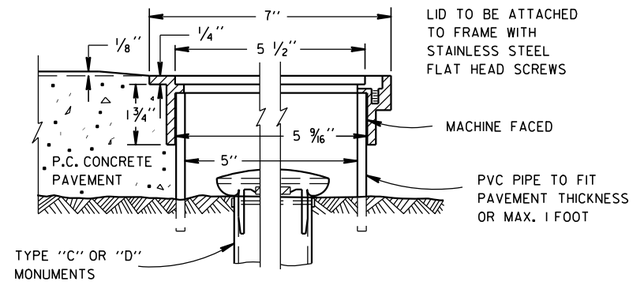

SECTION B-B SECTION A-A

ALUMINUM MONUMENT COVER

(APPROXIMATE WEIGHT 2 LBS)

(FOR CONCRETE PAVEMENT ONLY)

LANDMARK REFERENCE MOUNMENTS AND COVERS

STATE OF WISCONSIN
DEPARTMENT OF TRANSPORTATION

APPROVED
9/22/1999 DATE
/S/ Rory L. Rhinesmith
CHIEF ROADWAY DEVELOP NEER
FHWA

6

S.D.D. 16 A 1-6

NOTES

1. SIGN IS TYPE II - TYPE F REFLECTIVE - REFERENCE WIS DOT STANDARD SPECIFICATION FOR HIGHWAY AND STRUCTURE CONSTRUCTION LATEST EDITION.

2. COLOR:
   BACKGROUND - YELLOW
   MESSAGE - BLACK

3. MESSAGE SERIES - C

4. CORNERS MAY BE SQUARE OR ROUNDED WHEN BASE MATERIAL IS PLYWOOD BUT BORDERS SHALL BE ROUNDED AS SHOWN. WHEN BASE MATERIAL IS METAL, THE CORNERS AND BORDERS SHALL BE ROUNDED.

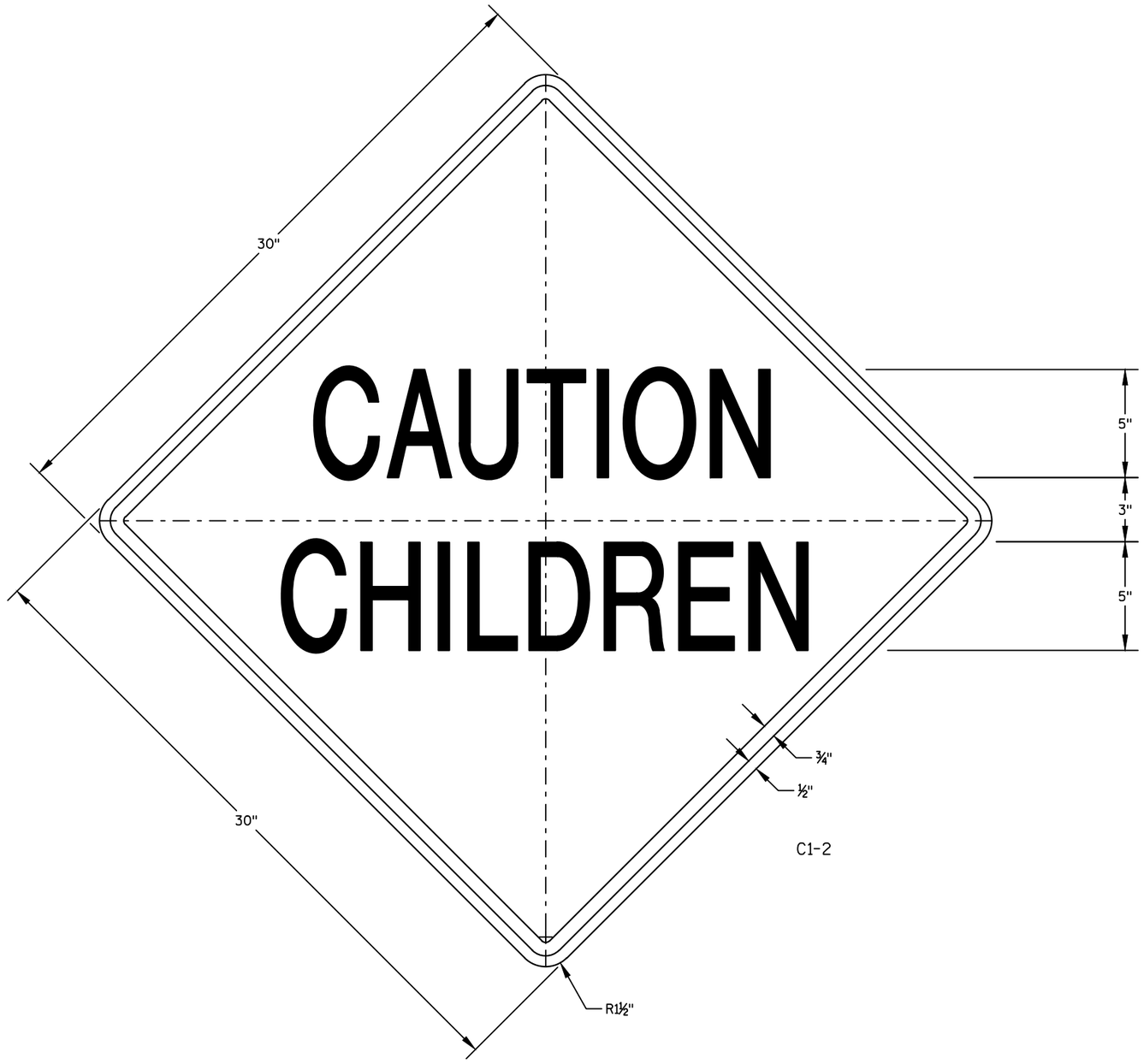

C1-2

7

7

PROJECT NO: 4880-01-71	HWY: CTH D	COUNTY: OZAUKEE	CTH D	SHEET 190	E

TYPICAL ASSEMBLIES

J1-1

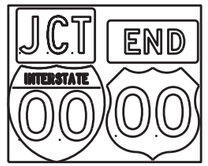

J1-2

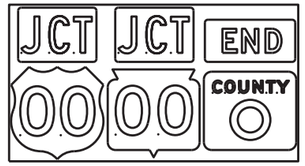

J1-3

J2-1

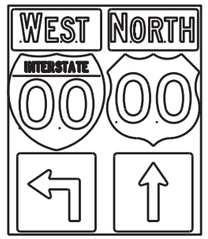

J2-2

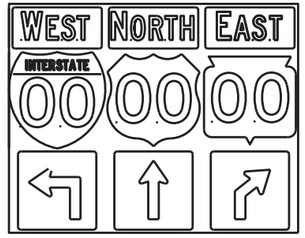

J2-3

JV

(Typical Vertical J-Assembly
See Note 10 and 11)

J3-1

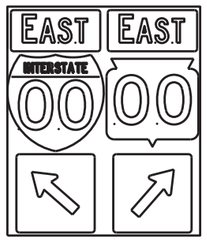

J3-2

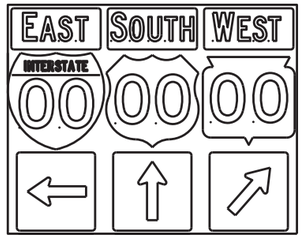

J3-3

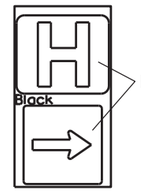

Blue Background

JH-1

J4-1

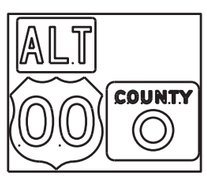

J4-2

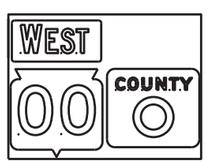

J4-2

J13-1

J12-1

J32-1

J33-1

J23-1

J22-1

[blue background with interstate]

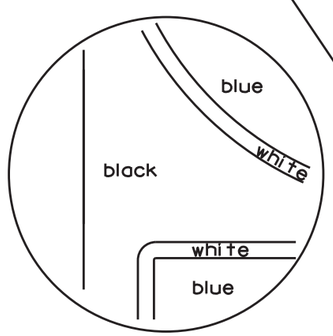

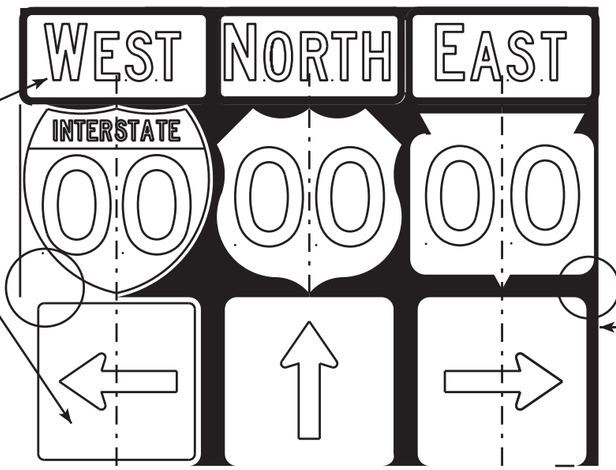

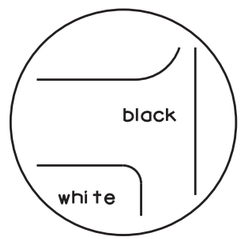

[black background]

NOTES

1. Signs are Type II - Type H Reflective - reference WIS DOT Standard Specification for HIGHWAY and STRUCTURE CONSTRUCTION latest edition.
2. Color:
   Background - Black Non-reflective
   Message - see Note 5
3. Message Series - See Note 5
4. Corners shall be square or rounded if base material is plywood. If base material is metal the corners shall be rounded.
5. The colors and message spacing on each marker shall be according to the applicable route marker panel specifications.
6. Certain marker heads require the component pieces to be the same color. As an example, all the components used with an M1-1 Interstate marker shall be blue.
7. Single panel j-assemblies shall only be used with route marker shields that are same size. If the route marker shields are different size use multiple piece component.
8. Route assemblies that have 24 inch route shields and have dimensions greater than 48 inches (both vertical and horizontal) shall have one horizontal splice between the arrows and route shields. Vertical splices shall not be used on route assemblies with a horizontal dimension of 144 inches or less. The contractor shall not use more than one vertical joint per sign and the joint shall be between route shields.
9. Route assemblies that have 36 inch shields and have dimensions greater than 48 inchs (both vertical and horizontal) shall have two horizontal splices. One horizontal splice shall be between the cardinal direction and route shields and the other horizontal splice shall be between the arrows and route shields. Vertical splices shall not be used on route assemblies with a horizontal dimension of 144 or less. The contractor shall not use more than one vertical joint per sign and the joint shall be between route shields.
10. All Vertical J Assemblies are given a Sign Code of JV
11. For JV Assemblies that have a mixture of Interstate and non Interstate shields, arrows and cardinals shall be white on blue.

ROUTE MARKERS & COMPONENTS IN TYPICAL ASSEMBLIES

WISCONSIN DEPT OF TRANSPORTATION

APPROVED Matthew R Rauch
for State Traffic Engineer

DATE 2/06/14 PLATE NO. A2-1S.8

PROJECT NO:

SHEET NO: 191 E

FILE NAME : C:\CAEFiles\Projects\tr_stdplate\A21S.DGN PLOT DATE : 06-FEB-2014 14:10 PLOT BY : mscsja PLOT NAME :

WISDOT/CADDS SHEET 42

URBAN AREA

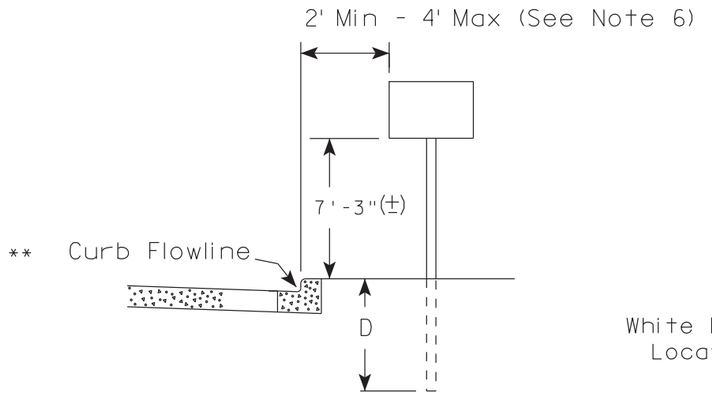

RURAL AREA (See Note 2)

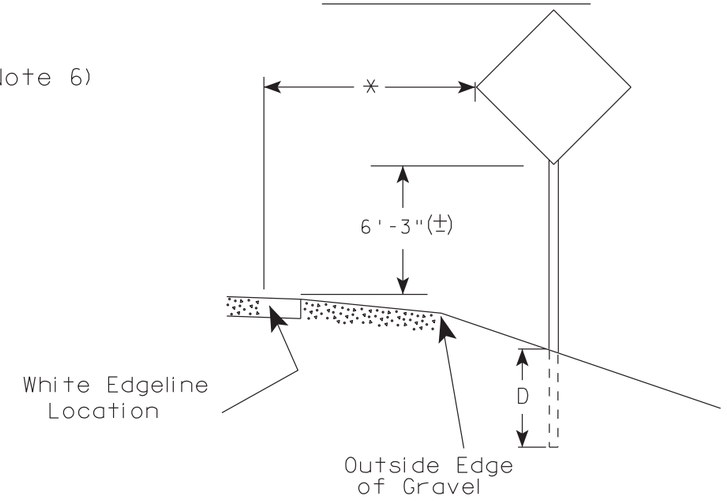

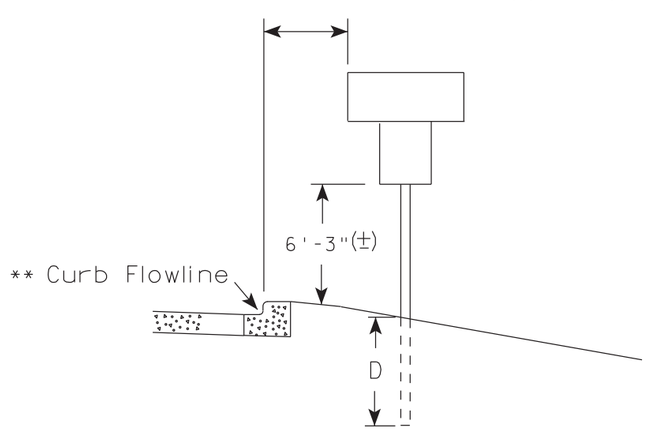

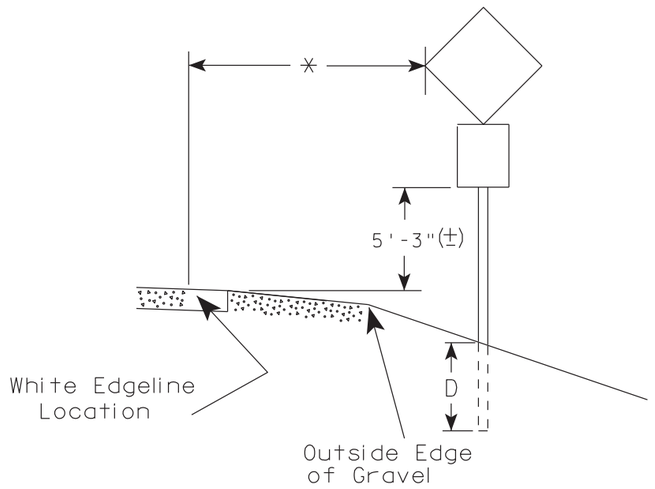

** The existence of curb and gutter does not in itself mandate the vertical clearance illustrated. That height is typically measured where there is sidewalk adjacent to the roadway or parking is permitted. In the absence of sidewalk vertical clearance is measured from the top of the curb. Offset of signs is measured from the flow line.

* 6 feet from edge of a paved shoulder or 12 feet from the edge of pavement (edge line location) or 2 feet from outside edge of gravel, whichever is greater unless directed by project engineer.

GENERAL NOTES

1. Signs wider than 4 feet or 20 sq.ft or larger, shall be mounted on multiple posts. Refer to plate A4-4.
2. If signs are mounted on barrier wall, see A4-10 sign plate.
3. For expressways and freeways, mounting height is 7'- 3" (±) or 6'-3" (±) depending upon existence of a sub-sign.
4. Minimum mounting height for J assemblies (A2-1S) is 7'-3" (±) or 6'-3" (±) per urban or rural detail respectively.
5. Minimum mounting height for signs mounted on traffic signal poles is 5'- 3" (±).
6. Offset distance shall be consistent with existing signs or consistent throughout length of project.
7. The (±) tolerance for mounting height is 3 inches.
8. Folding signs shall be mounted at a height of 5'-3" (±) or as directd by the Engineer.
9. The Double Arrow sign (W12-1) shall be mounted at a height of 2'-3" (±). The Chevron sign (W1-8), Roundabout Chevron panel (R6-4B), Enhanced Reference Markers, Clearance Markers (W5-52), Mile Markers (D10 series), In Road Object Markers (W5-54) & End of Road Markers (W5-56) shall be mounted at a height of 4'-3" (±).

POST EMBEDMENT DEPTH

Area of Sign Installation (Sq.Ft.)	D (Min)
20 or Less	4'
Greater than 20	5'

TYPICAL INSTALLATION OF PERMANENT TYPE II SIGNS ON SINGLE POSTS

WISCONSIN DEPT OF TRANSPORTATION

APPROVED Matthew R Rauch for State Traffic Engineer

DATE 7/23/15 PLATE NO. A4-3.20

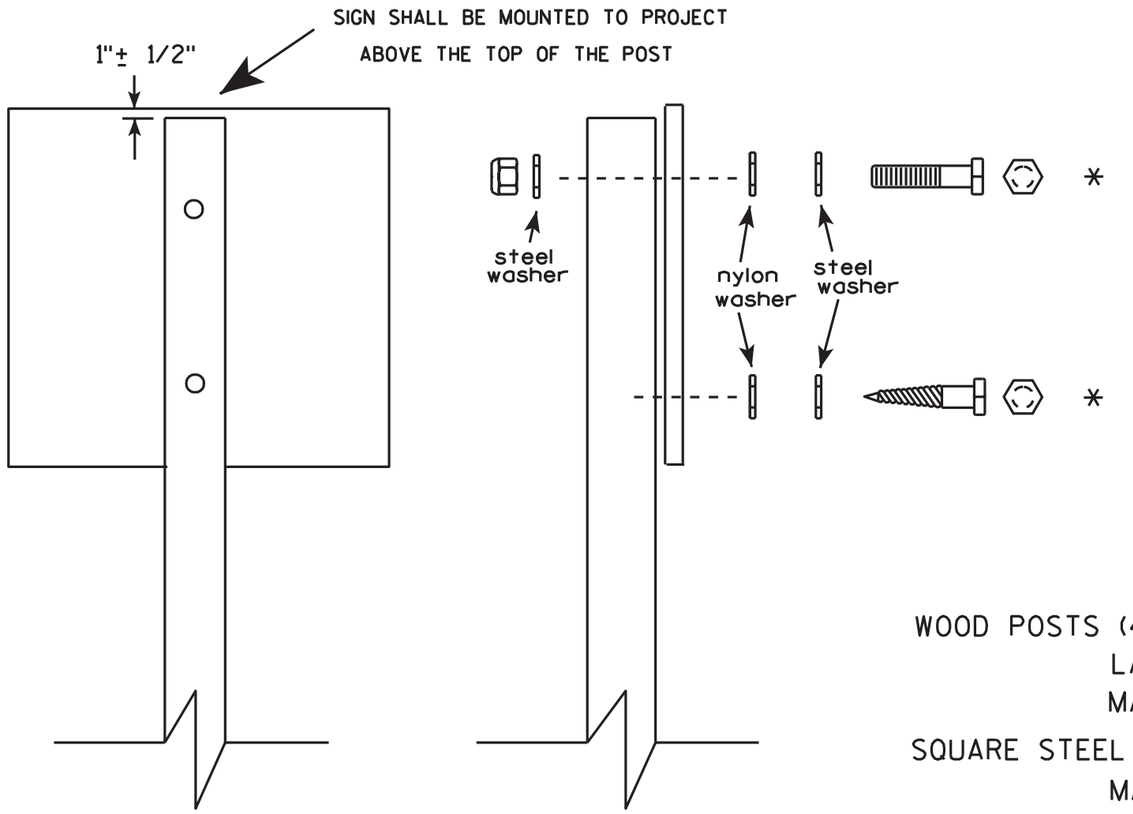

Nuts, bolts and lags used for mounting signs shall have hexagonal heads and shall be either :

a. Hot dip galvanized in accordance with ASTM Designation: A 153, Class D, or SC 3

b. Electro-galvanized in accordance with ASTM Designation : B 633, TYPE III, SC 3.

Threads on bolts and nuts shall be manufactured with sufficient allowance for the cadmium plate or galvanized coating to permit the nuts to run freely on the bolts.

WOOD POSTS (4" x 4" or 4" x 6")
LAG SCREWS - 3/8" X 3"
MACHINE BOLTS - 5/16" X 6-1/2" or 7" Length w/ nuts

SQUARE STEEL POSTS (2" x 2")
MACHINE BOLTS - 3/8" X 3-1/4" Length w/ nuts
RIVETS - 9/32 " (6605-9-6) BULB-TITE, TRI-FOLD, ALUMINUM BODY/MANDREL
O.D. FLANGE .720-.765 INCH, GRIP RANGE .042-.375 INCH

WASHERS (ALL POSTS) -
1-1/4" O.D. X 3/8" I.D. X 1/16" STEEL
1-1/4" O.D. X 3/8" I.D. X .080 NYLON for all Type H signs.

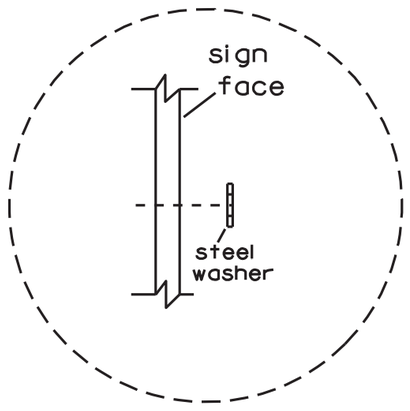

Washer Placement when Sign Has Other Than Type H or Type F Face

* Two different fastening systems are shown for illustration purposes. On any individual sign, either one or the other system shall be used. Actual number of fasteners per sign varies with the sign area, but normally there are two. For a single post installation, all signs greater than 9 sq. ft. require the use of 3 fasteners.

ATTACHMENT OF SIGNS TO POSTS

WISCONSIN DEPT OF TRANSPORTATION

APPROVED Matthew R Rauch
for State Traffic Engineer

DATE 3/23/10 PLATE NO. A4-8.7

7

7

PROJECT NO:

SHEET NO: 193 E

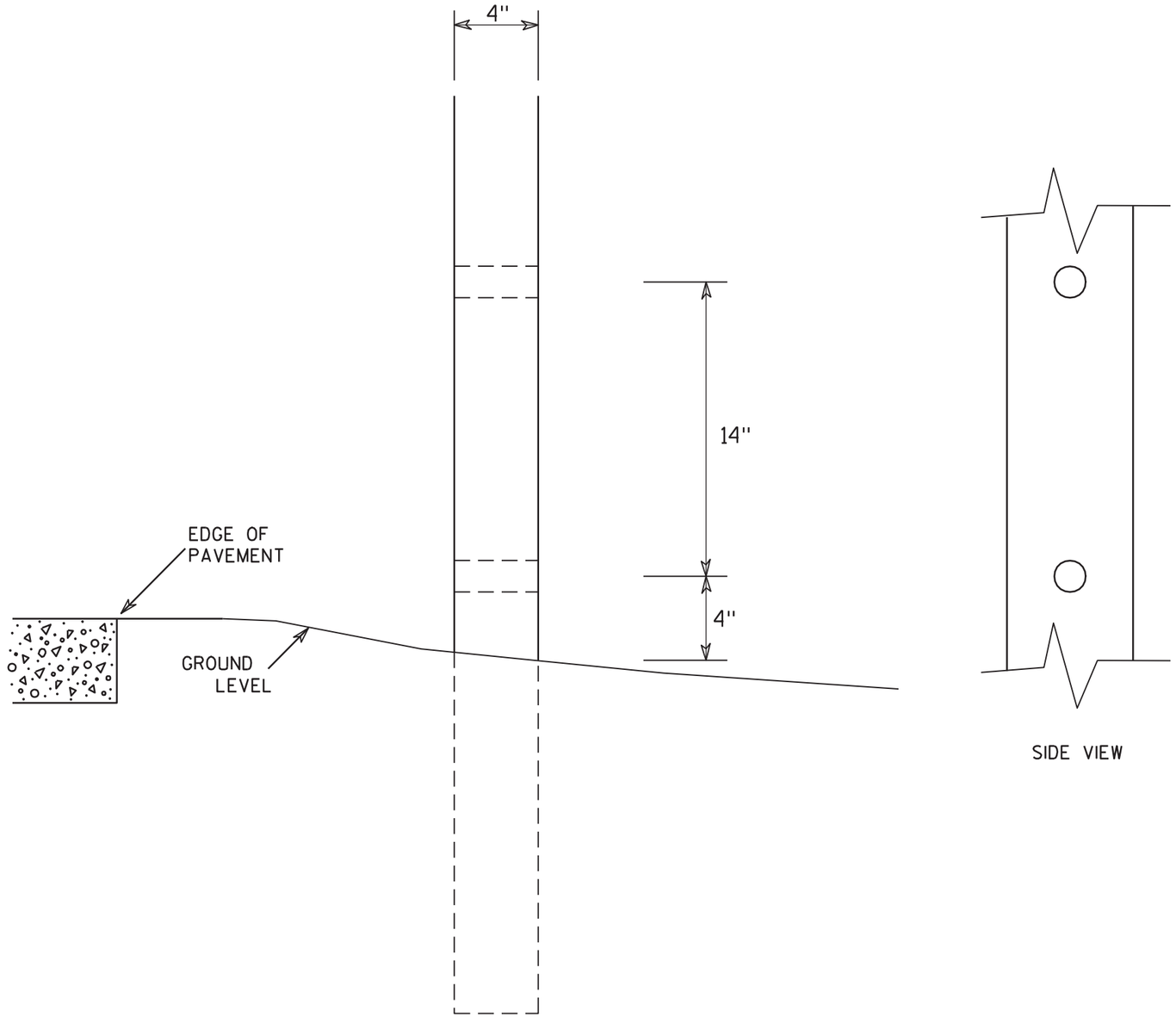

SIDE VIEW

GENERAL NOTES

1. All 4 x 6 Wood Posts shall be modified by having two 1½" diameter holes drilled perpendicular to the roadway centerline.

4 X 6 WOOD POST MODIFICATIONS

WISCONSIN DEPT OF TRANSPORTATION

APPROVED Chester J Spang
for State Traffic Engineer

DATE 3/27/97 PLATE NO. A4-11.2

PROJECT NO:	HWY:	COUNTY:		SHEET NO: 194	E

BANDING

SINGLE SIGN

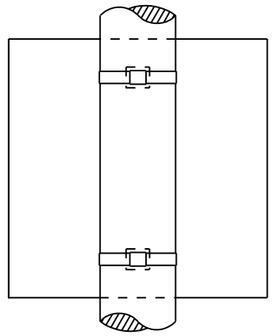

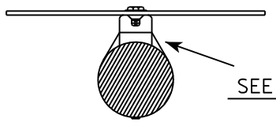

"J" ASSEMBLY

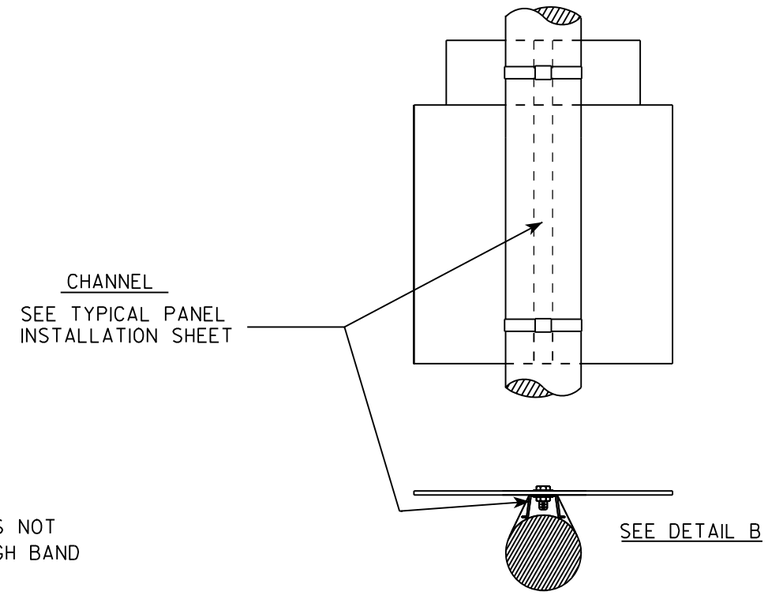

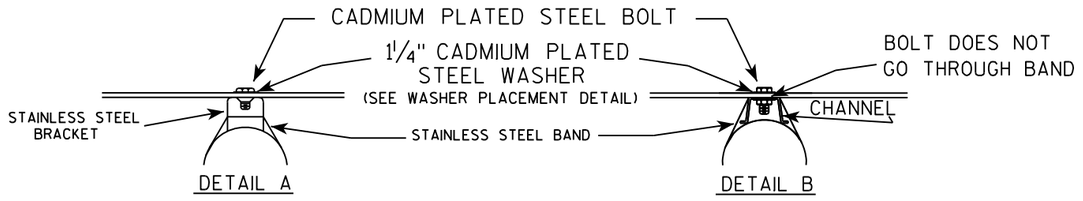

WASHER PLACEMENT

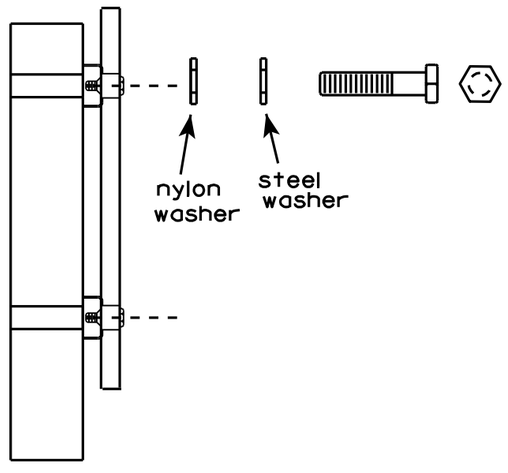

WASHERS (ALL POSTS) -
1-1/4" O.D. X 3/8" I.D. X 1/16" STEEL
1-1/4" O.D. X 3/8" I.D. X .080 NYLON
FOR ALL TYPE H SIGNS

GENERAL NOTES

1. Any sign over 3 feet in width shall use the V-Block banding method. See A5-10 standard plate.
2. Signs 3 feet or greater in height shall have three bracket bands installed. Signs less than 3 feet in height shall have two bracket bands installed.
3. Banding and assembly bracket shall be stainless steel. All bands shall be ¾" in width and 0.025" thickness.

STANDARD SIGN
SIGN BANDING DETAILS

WISCONSIN DEPT OF TRANSPORTATION

APPROVED Matthew R Rauch
for State Traffic Engineer

DATE 8/16/13 PLATE NO. A5-9.3

PROJECT NO:	HWY:	COUNTY:		SHEET NO: 195	E

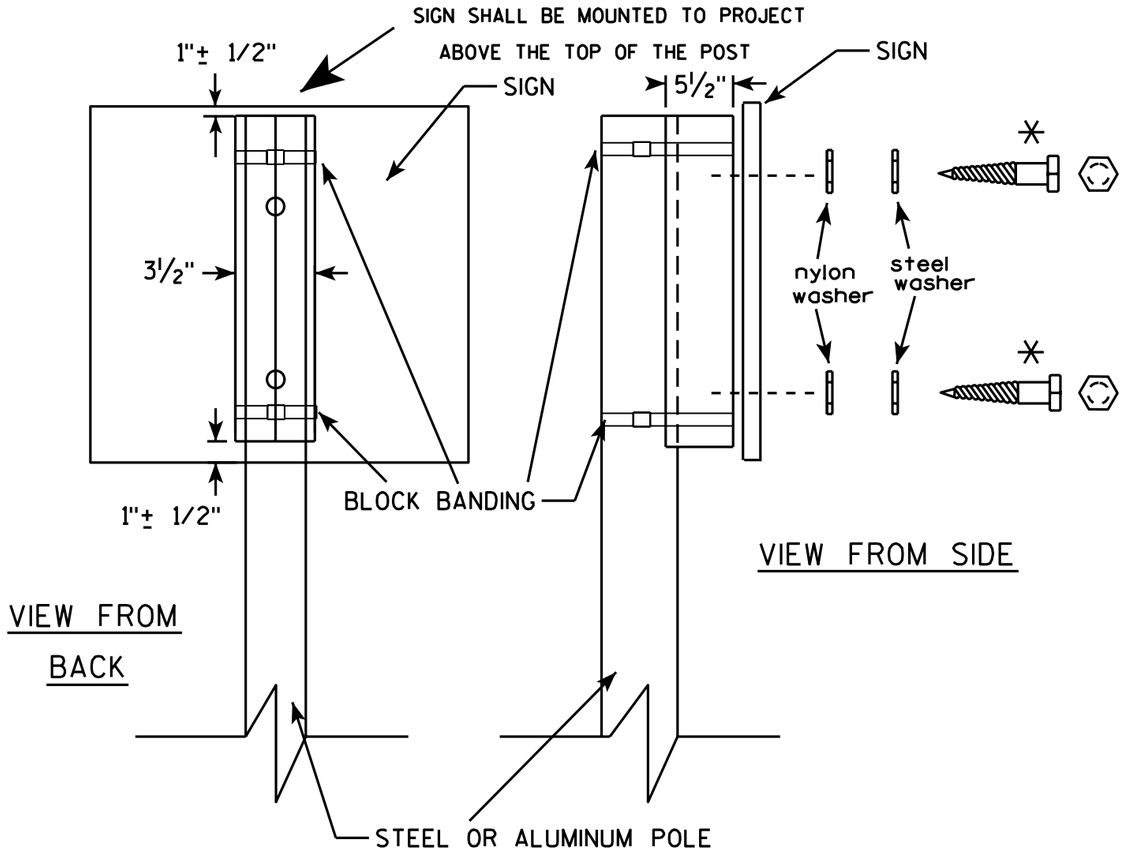

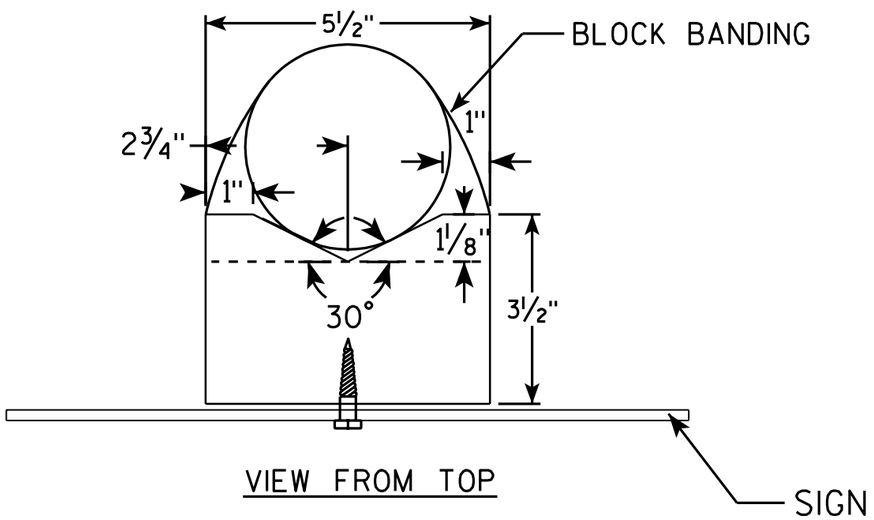

GENERAL NOTES

1. WOOD 4"X6" POST MATERIAL SHALL CONFORM TO 507.2.2 OF THE WisDOT STANDARD SPECIFICATIONS
2. BLOCK BANDING AND CLIPS SHALL BE STAINLESS STEEL, ¾" WIDTH AND 0.025" THICKNESS
3. SIGNS 3' OR GREATER IN HEIGHT SHALL UTILIZE 3 BLOCK BANDS. SIGNS UNDER 3' IN HEIGHT SHALL UTILIZE 2 BLOCK BANDS
4. ACTUAL NUMBER OF FASTENERS PER SIGN VARIES WITH THE SIGN AREA, BUT NORNALLY THERE ARE TWO. FOR SIGNS GREATER THAN 9 S.F. 3 FASTENERS SHALL BE USED.
5. ALL SIGN MOUNTING BOLTS AND WASHERS SHALL BE EITHER:
   a. Hot dip or mechanically galvanized in accordance with ASTM Designation: A 153, Class D, or
   b. Cadmium plated in accordance with ASTM Designation : B 766 TYPE 3, Class 12, or
   c. Electro-galvanized in accordance with ASTM Designation : B 633, TYPE III, SC 3.
6. ALL BOLTS SHALL HAVE HEXAGONAL HEADS.
7. STEEL WASHERS SHALL BE 1¼" O.D. X ⅜" I.D. X 1/16"
8. NYLON WASHERS SHALL BE 1¼" O.D. X ⅜" I.D. X .080 FOR TYPE H OR TYPE F FACE SIGN

✳ LAG BOLTS SHALL BE ⅜" X 2½"

BLOCK BANDING DETAIL (V-BLOCK OPTION)

WISCONSIN DEPT OF TRANSPORTATION

APPROVED Matthew R Rauch
for State Traffic Engineer

DATE 7/12/07 PLATE NO. A5-10.1

PROJECT NO:

SHEET NO: 196 E

FILE NAME : C:\Users\Projects\tr_stdplate\A510.dgn PLOT DATE : 06-AUG-2007 13:37 PLOT BY : ditjph

WISDOT/CADDS SHEET 42

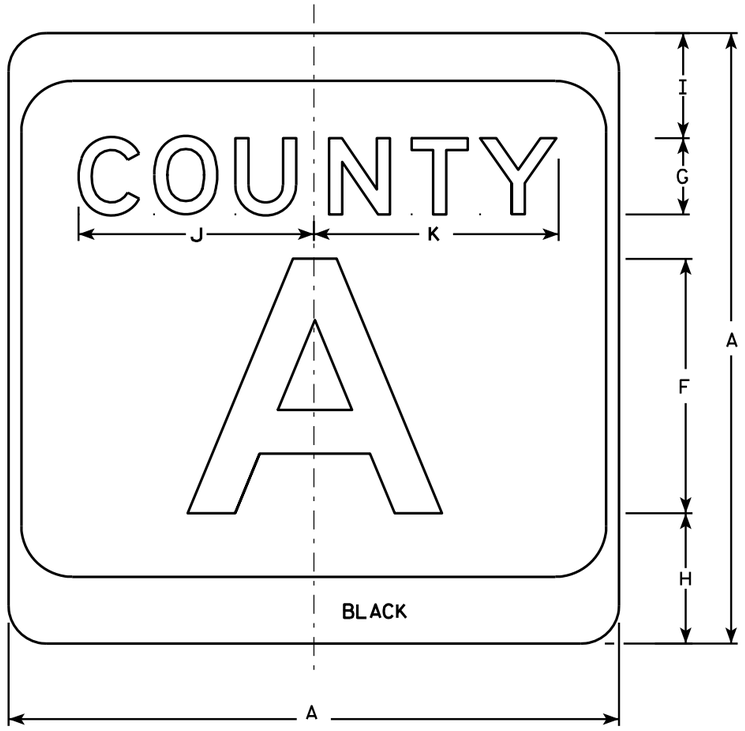

M1-5A

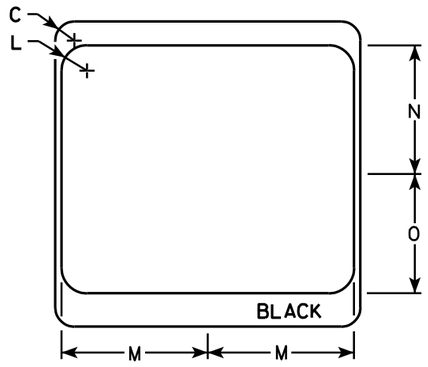

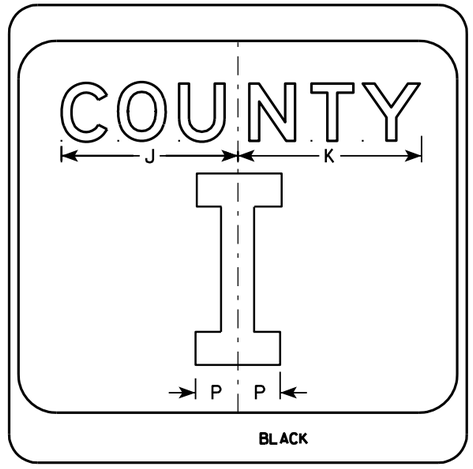

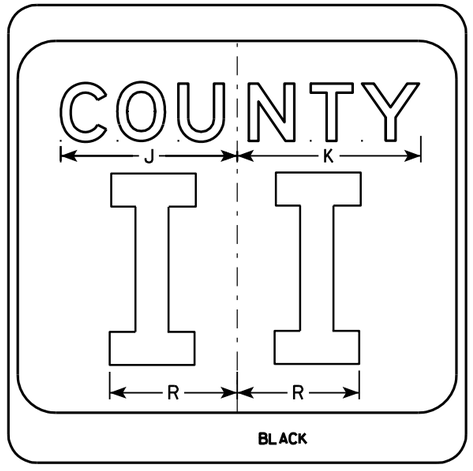

NOTES

1. Sign is Type II - see Note 7 - reference WIS DOT Standard Specification for HIGHWAY and STRUCTURE CONSTRUCTION latest edition.
2. Color:
   Background - White & Black - See Note 7
   Message - Black
3. Message Series - see Note 5
4. Corners may be square or rounded when base material is plywood but borders shall be rounded as shown. When base material is metal, the corners and borders shall be rounded.
5. Message Series E for 1 letter.
   Message Series D for 2 letters unless message is too big then Series C.
   Message Series C for 3 letters unless message is too big then Series B.
6. Substitute appropriate letters & optically center to achieve proper balance.
7. Permanent Signs
   Background - Type H Reflective
   Detour or temporary Signs
   Background - Reflective

SIZE	A	B	C	D	E	F	G	H	I	J	K	L	M	N	O	P	Q	R	S	T	U	V	W	X	Y	Z	Area sq. ft.
1																											
2	24		1 1/2			10	3	5 1/8	4 1/8	9 1/4	9 5/8	2	11 1/2	10 1/8	9 3/8	2 1/4		6 5/8									4.0
3	36		2 1/4			16	4	7 5/8	5 5/8	12 1/4	12 7/8	3	17 1/8	15 1/4	14	3 3/8		10									9.0
4	36		2 1/4			16	4	7 5/8	5 5/8	12 1/4	12 7/8	3	17 1/8	15 1/4	14	3 3/8		10									9.0
5	36		2 1/4			16	4	7 5/8	5 5/8	12 1/4	12 7/8	3	17 1/8	15 1/4	14	3 3/8		10									9.0

CTH MARKER
M1-5A FOR ASSEMBLIES

WISCONSIN DEPT OF TRANSPORTATION

APPROVED Matthew R Rauch
for State Traffic Engineer

DATE 9/27/11 PLATE NO. M1-5A.8

PROJECT NO:	HWY:	COUNTY:		SHEET NO: 197	E

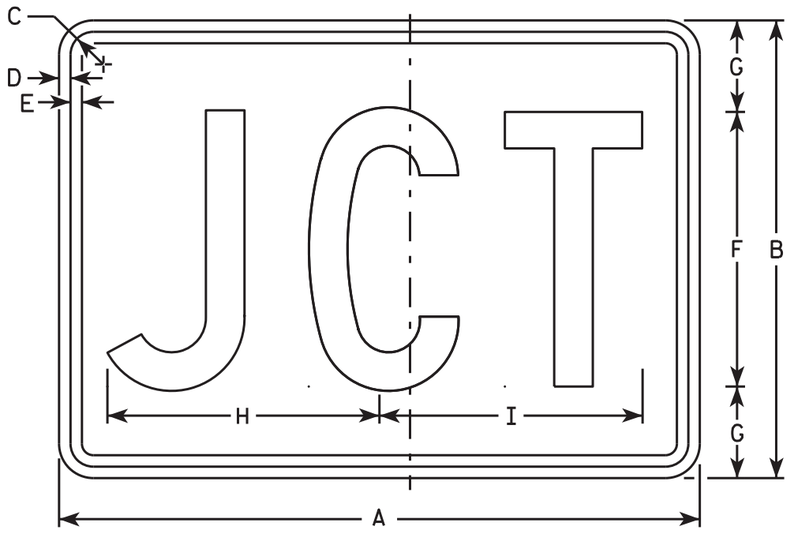

M2-1
MM2-1
MP2-1

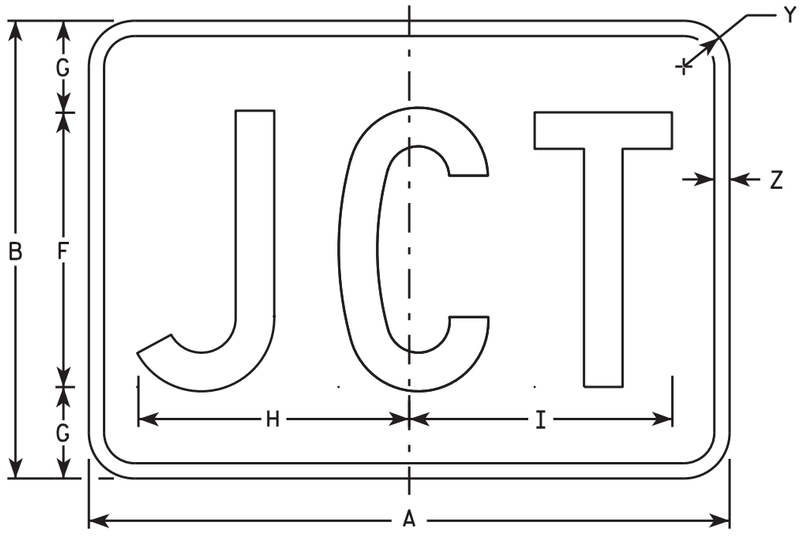

MB2-1
MK2-1
MN2-1
MR2-1

NOTES

1. Sign is Type II - Type H
2. Color:
   Background - See note 5
   Message - See note 5
3. Message Series - C
4. Corners may be square or rounded when base material is plywood but borders shall be rounded as shown. When base material is metal, the corners and borders shall be rounded.
5. M2-1 Background - White
   Message - Black
   MB2-1 Background - Blue
   Message - White
   MK2-1 Background - Green
   Message - White
   MM2-1 Background - White
   Message - Green
   MN2-1 Background - Brown
   Message - White
   MP2-1 Background - White
   Message - Blue
   MR2-1 Background - Brown
   Message - Yellow

SIZE	A	B	C	D	E	F	G	H	I	J	K	L	M	N	O	P	Q	R	S	T	U	V	W	X	Y	Z	Area sq. ft.
1																											
2	21	15	1 1/8	3/8	3/8	9	3	8 7/8	8 5/8																1 1/2	1/2	2.20
3	30	21	1 1/8	3/8	3/8	13	4	12 7/8	12 3/8																1 1/2	1/2	4.40
4	30	21	1 1/8	3/8	3/8	13	4	12 7/8	12 3/8																1 1/2	1/2	4.40
5	30	21	1 1/8	3/8	3/8	13	4	12 7/8	12 3/8																1 1/2	1/2	4.40

STANDARD SIGN
M2-1

WISCONSIN DEPT OF TRANSPORTATION

APPROVED Matthew R Rauch
for State Traffic Engineer

DATE 10/15/15 PLATE NO. M2-1.12

PROJECT NO: | HWY: | COUNTY: | SHEET NO: 198 | E

7

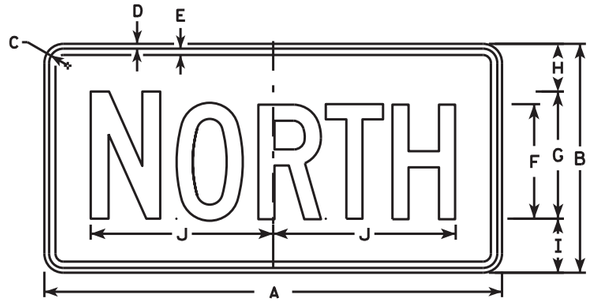

M3-1
MM3-1
MP3-1

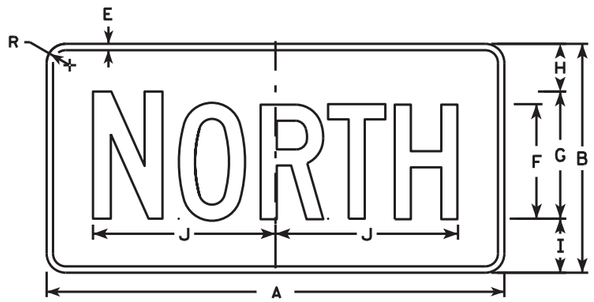

MB3-1
MK3-1
MN3-1

M3-2
MM3-2
MP3-2

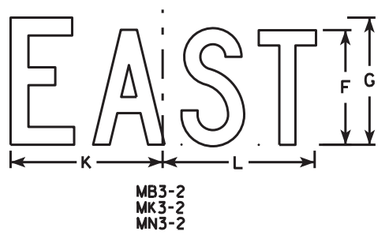

MB3-2
MK3-2
MN3-2

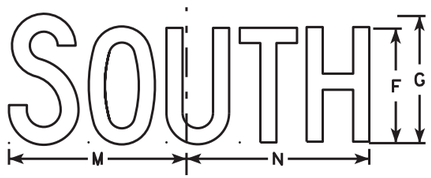

M3-3
MM3-3
MP3-3

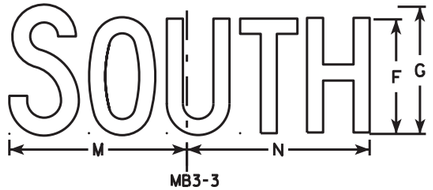

MB3-3
MK3-3
MN3-3

M3-4
MM3-4
MP3-4

MB3-4
MK3-4
MN3-4

NOTES

1. All Signs Type II - Type H
2. Color:
   Background - See note 5
   Message - See note 5
3. Message Series - C
4. Corners may be square or rounded when base material is plywood but borders shall be rounded as shown. When base material is metal, the corners and borders shall be rounded.
5. M3-1 thru M3-4 Background - White
   Message - Black
   MB3-1 thru MB3-4 Background - Blue
   Message - White
   MK3-1 thru MK3-4 Background - Green
   Message - White
   MM3-1 thru MM3-4 Background - White
   Message - Green
   MN3-1 thru MN3-4 Background - Brown
   Message - White
   MP3-1 thru MP3-4 Background - White
   Message - Blue
6. Note the first letter of each direction is larger than the remainder of the message.

SIZE	A	B	C	D	E	F	G	H	I	J	K	L	M	N	O	P	Q	R	S	T	U	V	W	X	Y	Z	Area sq. ft.
1																											
2	24	12	1 1/8	3/8	3/8	6	7	2 1/4	2 3/4	10 1/4	7 7/8	8 3/8	10 1/4	9 3/4	8 3/4			1 1/2									2.00
3	36	18	1 1/8	3/8	1/2	9	10	3 3/4	4 1/4	14 3/8	12	12 1/8	14	14 1/8	13			1 1/2									4.5
4	36	18	1 1/8	3/8	1/2	9	10	3 3/4	4 1/4	14 3/8	12	12 1/8	14	14 1/8	13			1 1/2									4.5
5	36	18	1 1/8	3/8	1/2	9	10	3 3/4	4 1/4	14 3/8	12	12 1/8	14	14 1/8	13			1 1/2									4.5

STANDARD SIGNS
M3-1 thur M3-4
SERIES

WISCONSIN DEPT OF TRANSPORTATION

APPROVED Matthew R Rauch for State Traffic Engineer

DATE 10/15/15 PLATE NO. M3-1.14

PROJECT NO: | HWY: | COUNTY: | SHEET NO: 199 | E

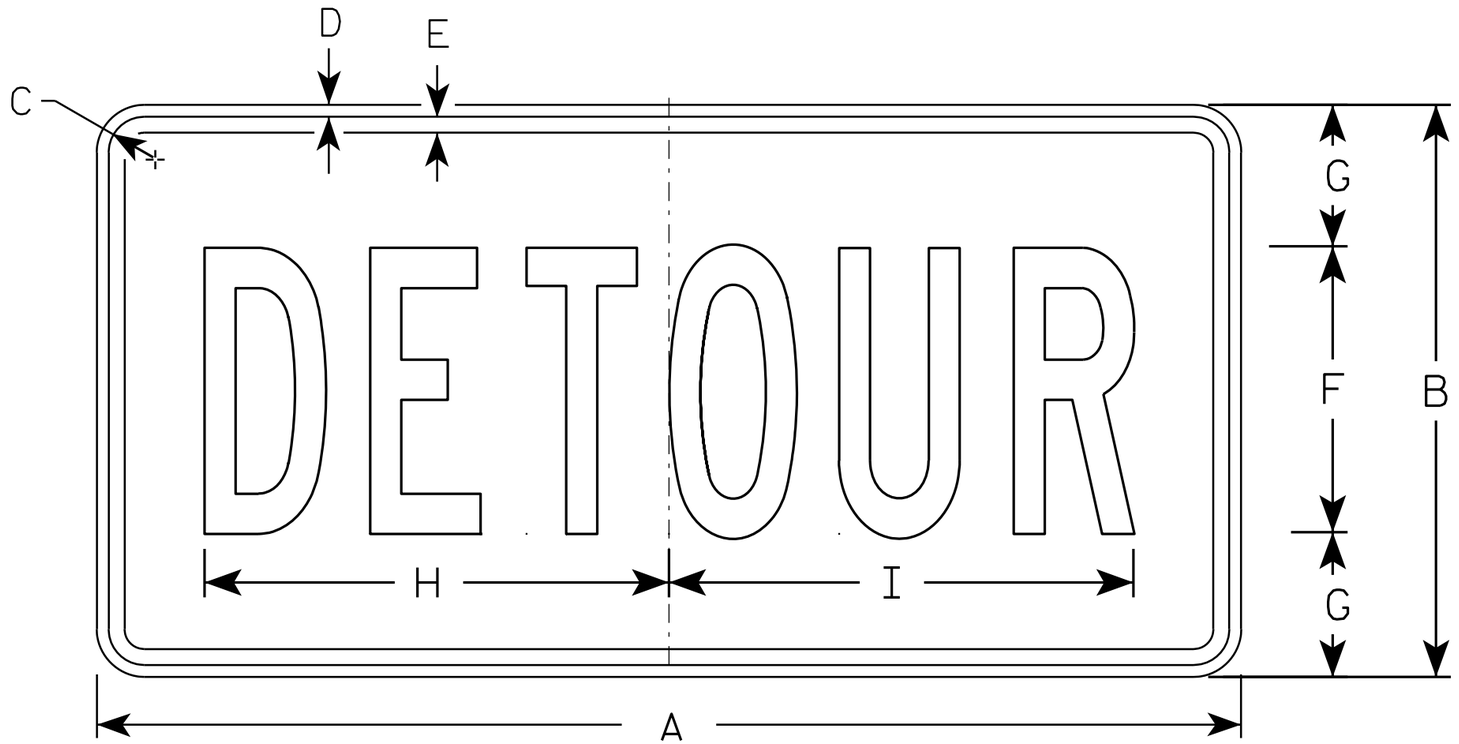

M4-8

NOTES

1. Sign is Type II - Type F Reflective - reference WIS DOT Standard Specification for HIGHWAY and STRUCTURE CONSTRUCTION latest edition.
2. Color:
   Background - Orange
   Message - Black
3. Message Series - B
4. Corners may be square or rounded when base material is plywood but borders shall be rounded as shown. When base material is metal, the corners and borders shall be rounded.

SIZE	A	B	C	D	E	F	G	H	I	J	K	L	M	N	O	P	Q	R	S	T	U	V	W	X	Y	Z	Area sq. ft.
1																											
2	24	12	1 1/8	3/8	3/8	6	3	10	10 1/4																		2.0
3	36	18	1 1/8	3/8	1/2	9	4 1/2	14 5/8	14 1/2																		4.5
4																											
5																											

STANDARD SIGN
M4-8

WISCONSIN DEPT OF TRANSPORTATION

APPROVED Matthew R Rauch
for State Traffic Engineer

DATE 11/10/10 PLATE NO. M4-8.2

PROJECT NO:	HWY:	COUNTY:		SHEET NO: 200	E

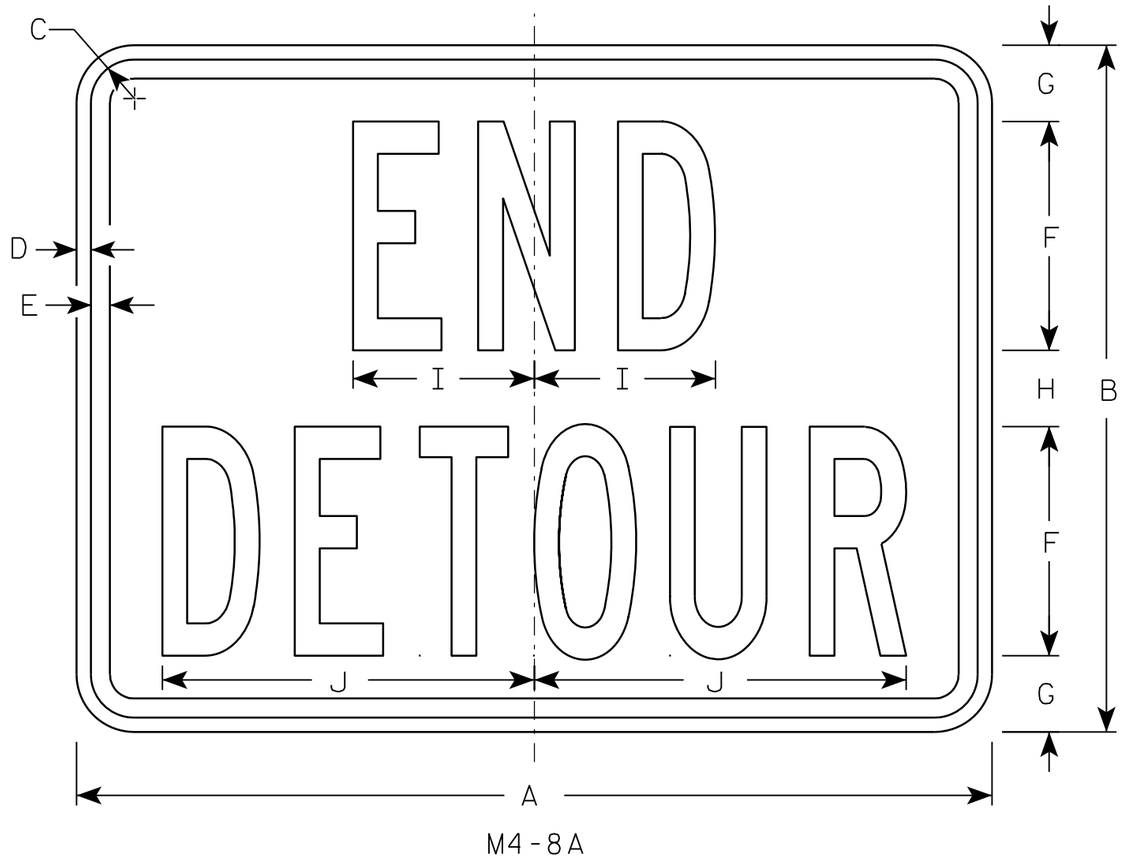

M4-8A

NOTES

1. Sign is Type II - Type F Reflective - reference WIS DOT Standard Specification for HIGHWAY and STRUCTURE CONSTRUCTION latest edition.
2. Color:
   Background - Orange
   Message - Black
3. Message Series - B
4. Corners may be square or rounded when base material is plywood but borders shall be rounded as shown. When base material is metal, the corners and borders shall be rounded.

SIZE	A	B	C	D	E	F	G	H	I	J	K	L	M	N	O	P	Q	R	S	T	U	V	W	X	Y	Z	Area sq. ft.
1																											
2	24	18	1 1/8	3/8	1/2	6	2	2	4 3/4	9 3/4																	3.0
3	30	24	1 1/8	3/8	1/2	8	2 1/2	3	6 3/4	13																	5.0
4																											
5																											

STANDARD SIGN
M4-8A

WISCONSIN DEPT OF TRANSPORTATION

APPROVED Matthew R Rauch
for State Traffic Engineer

DATE 3/9/11 PLATE NO. M4-8A.2

PROJECT NO:	HWY:	COUNTY:		SHEET NO: 201	E

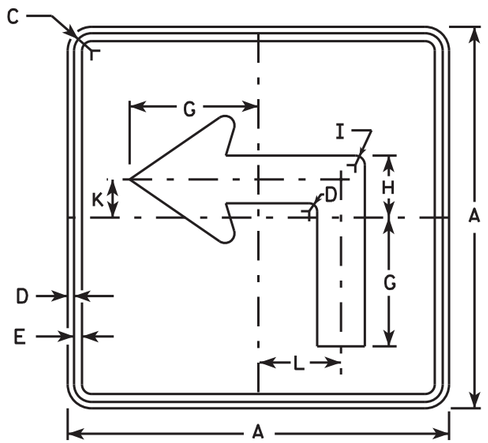

M5-1L
MM5-1L
MO5-1L
MP5-1L

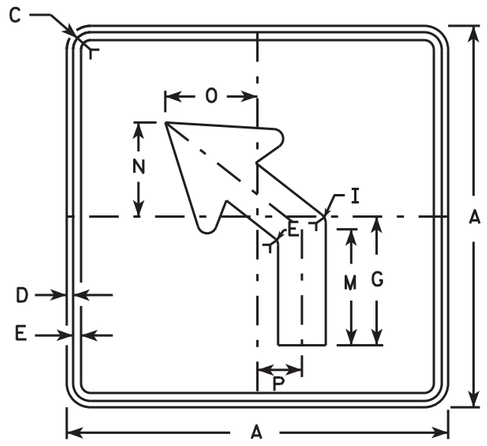

M5-2L
MM5-2L
MO5-2L
MP5-2L

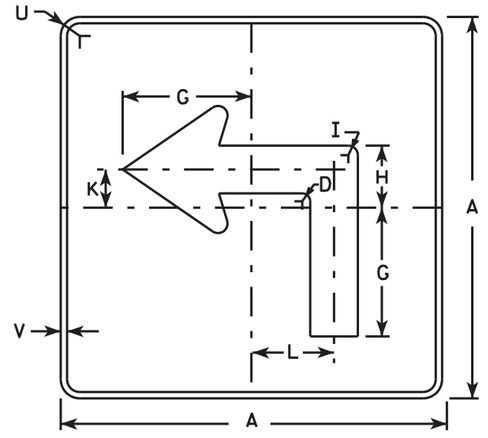

MB5-1L
MK5-1L
MN5-1L
MR5-1L

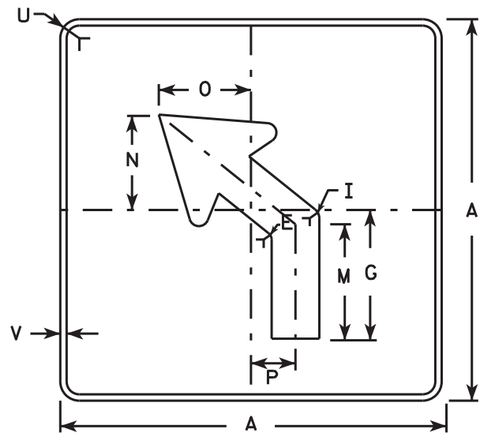

MB5-2L
MK5-2L
MN5-2L
MR5-2L

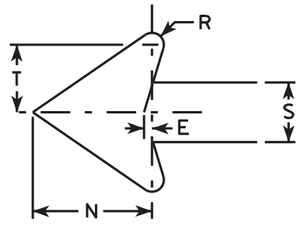

NOTES

1. Signs are Type II - Type H reflective except as shown
2. Color:
   Background - See note 4
   Message - See note 4
3. Corners may be square or rounded when base material is plywood but borders shall be rounded as shown. When base material is metal, the corners and borders shall be rounded.
4. M5-1 and M5-2 Background - White
   Message - Black
   MB5-1 and MB5-2 Background - Blue
   Message - White
   MK5-1 and MK5-2 Background - Green
   Message - White
   MM5-1 and MM5-2 Background - White
   Message - Green
   MN5-1 and MN5-2 Background - Brown
   Message - White
   MO5-1 and MO5-2 Background - Orange - Type F Reflective
   Message - Black
   MP5-1 and MP5-2 Background - White - Type H Reflective
   Message - Blue
   MR5-1 and MR5-2 Background - Brown
   Message - Yellow
5. M5-1R same as M5-1L except arrow points right.
6. M5-2R same as M5-2L except arrow tilts right.

SIZE	A	B	C	D	E	F	G	H	I	J	K	L	M	N	O	P	Q	R	S	T	U	V	W	X	Y	Z	Area sq. ft.
1																											
2	21		1 1/8	3/8	3/8		7	3 3/8	5/8		2 1/8	4 1/2	6 3/8	5 1/4	5	2 1/2		1/2	2 5/8	3	1 1/2	1/2					3.06
3	30		1 3/8	1/2	5/8		10 1/8	4 1/8	7/8		3	6 1/2	9 1/8	7 1/2	7 1/4	3 1/2		3/4	3 3/4	4 1/4	1 7/8	1/2					6.25
4	30		1 3/8	1/2	5/8		10 1/8	4 1/8	7/8		3	6 1/2	9 1/8	7 1/2	7 1/4	3 1/2		3/4	3 3/4	4 1/4	1 7/8	1/2					6.25
5	30		1 3/8	1/2	5/8		10 1/8	4 1/8	7/8		3	6 1/2	9 1/8	7 1/2	7 1/4	3 1/2		3/4	3 3/4	4 1/4	1 7/8	1/2					6.25

STANDARD SIGN
M5-1 & M5-2

WISCONSIN DEPT OF TRANSPORTATION

APPROVED Matthew R Rauch
for State Traffic Engineer

DATE 10/15/15 PLATE NO. M5-1.13

PROJECT NO: | HWY: | COUNTY: | SHEET NO: 202 E

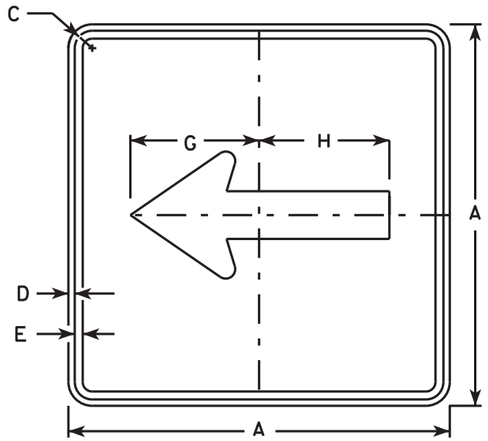

M6-1
MM6-1
MO6-1
MP6-1

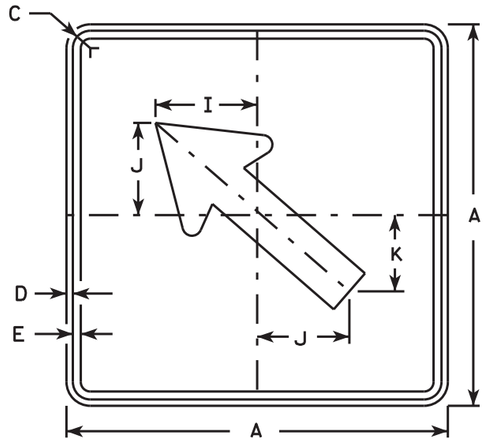

M6-2
MM6-2
MO6-2
MP6-2

NOTES

1. Signs are Type II - Type H except as Shown
2. Color:
   Background - See note 4
   Message - See note 4
3. Corners may be square or rounded when base material is plywood but borders shall be rounded as shown. When base material is metal, the corners and borders shall be rounded.
4. M6-1 and M6-2 Background - White
   Message - Black
   MB6-1 and MB6-2 Background - Blue
   Message - White
   MK6-1 and MK6-2 Background - Green
   Message - White
   MM6-1 and MM6-2 Background - White
   Message - Green
   MN6-1 and MN6-2 Background - Brown
   Message - White
   MO6-1 and MO6-2 Background - Orange - Type F Reflective
   Message - Black
   MP6-1 and MP6-2 Background - White
   Message - Blue
   MR6-1 and MR6-2 Background - Brown
   Message - Yellow

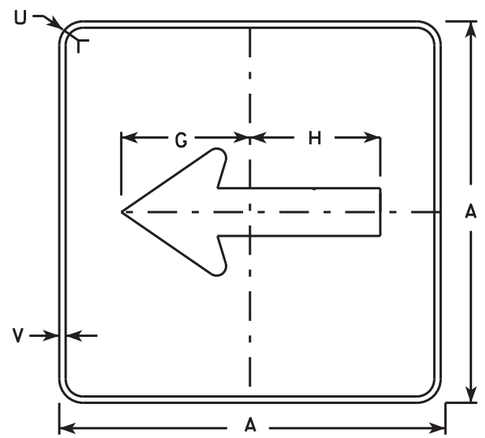

MB6-1
MK6-1
MN6-1
MR6-1

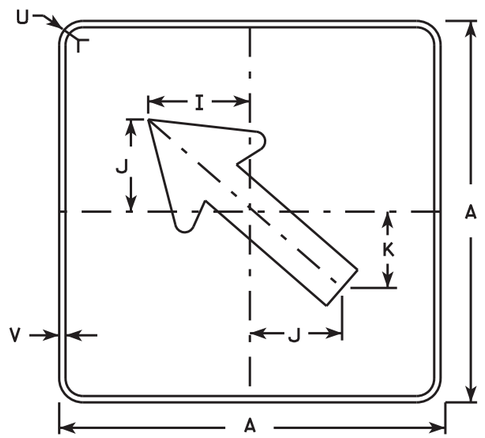

MB6-2
MK6-2
MN6-2
MR6-2

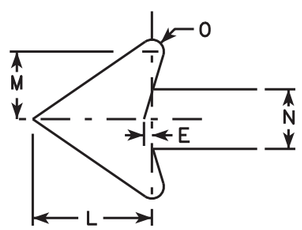

SIZE	A	B	C	D	E	F	G	H	I	J	K	L	M	N	O	P	Q	R	S	T	U	V	W	X	Y	Z	Area sq. ft.
1																											
2	21		1 1/8	3/8	3/8		7 1/2	7 1/8	5 5/8	5	4 1/4	5 1/4	3	2 5/8	1/2						1 1/2	1/2					3.06
3	30		1 3/8	1/2	5/8		10 3/4	10 1/4	8	7 1/4	6	7 1/2	4 1/4	3 3/4	3/4						1 7/8	1/2					6.25
4	30		1 3/8	1/2	5/8		10 3/4	10 1/4	8	7 1/4	6	7 1/2	4 1/4	3 3/4	3/4						1 7/8	1/2					6.25
5	30		1 3/8	1/2	5/8		10 3/4	10 1/4	8	7 1/4	6	7 1/2	4 1/4	3 3/4	3/4						1 7/8	1/2					6.25

STANDARD SIGN
M6-1 & M6-2
SERIES

WISCONSIN DEPT OF TRANSPORTATION

APPROVED Matthew R Rauch
for State Traffic Engineer

DATE 10/15/15 PLATE NO. M6-1.15

PROJECT NO: | HWY: | COUNTY: | SHEET NO: 203 | E

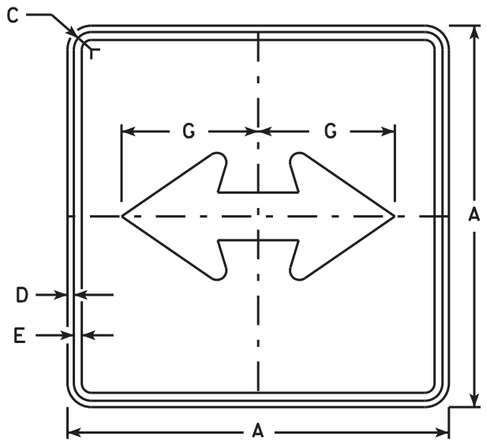

M6-4
MM6-4
MO6-4
MP6-4

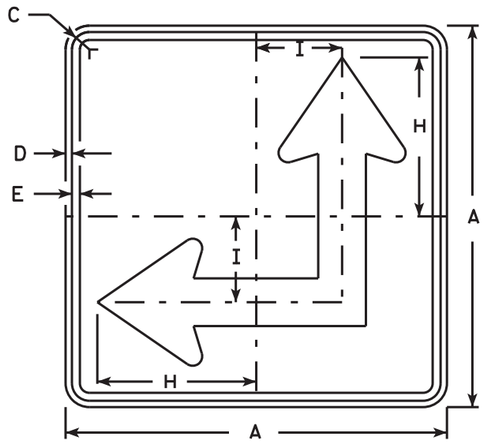

M6-6
MM6-6
MO6-6
MP6-6

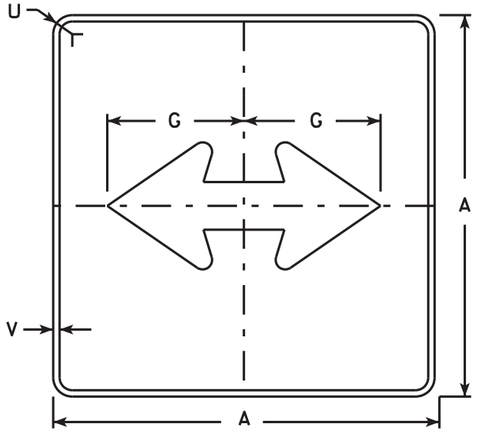

MB6-4
MK6-4
MN6-4
MR6-4

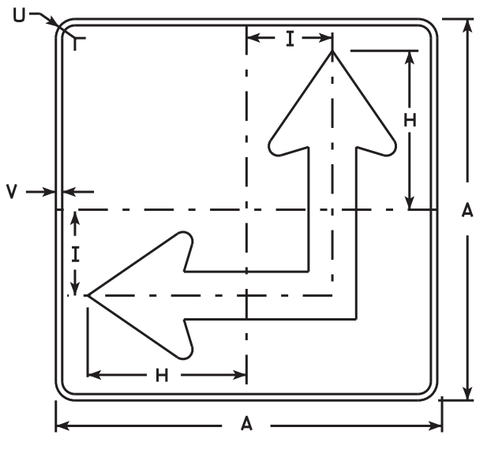

MB6-6
MK6-6
MN6-6
MR6-6

NOTES

1. Signs are Type II - Type H except as Shown
2. Color:
   Background - See Note 4
   Message - See Note 4
3. Corners may be square or rounded when base material is plywood but borders shall be rounded as shown. When base material is metal, the corners and borders shall be rounded.
4. M6-4 and M6-6 Background - White
   Message - Black
   MB6-4 and MB6-6 Background - Blue
   Message - White
   MK6-4 and MK6-6 Background - Green
   Message - White
   MM6-4 and MM6-6 Background - White
   Message - Green
   MN6-4 and MN6-6 Background - Brown
   Message - White
   MO6-4 and MO6-6 Background - Orange - Type F Reflective
   Message - Black
   MP6-4 and MP6-6 Background - White
   Message - Blue
   MR6-4 and MR6-6 Background - Brown
   Message - Yellow
5. M6-6R same as M6-6L except arrow points ahead and right.

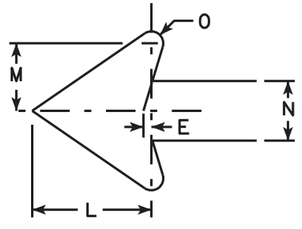

SIZE	A	B	C	D	E	F	G	H	I	J	K	L	M	N	O	P	Q	R	S	T	U	V	W	X	Y	Z	Area sq. ft.
1																											
2	21		1 1/8	3/8	3/8		7 1/2	8 3/4	4 1/4			5 1/4	3	2 5/8	1/2						1 1/2	1/2					3.06
3	30		1 3/8	1/2	5/8		10 3/4	12 1/2	6 3/4			7 1/2	4 1/4	3 3/4	3/4						1 7/8	1/2					6.25
4	30		1 3/8	1/2	5/8		10 3/4	12 1/2	6 3/4			7 1/2	4 1/4	3 3/4	3/4						1 7/8	1/2					6.25
5	30		1 3/8	1/2	5/8		10 3/4	12 1/2	6 3/4			7 1/2	4 1/4	3 3/4	3/4						1 7/8	1/2					6.25

STANDARD SIGN
M6-4 & M6-6
SERIES

WISCONSIN DEPT OF TRANSPORTATION

APPROVED Matthew R Rauch for State Traffic Engineer

DATE 10/15/15 PLATE NO. M6-4.10

PROJECT NO: | HWY: | COUNTY: | SHEET NO: 204 | E

FILE NAME : C:\CAEfiles\Projects\tr_stdplate\M64.DGN PLOT DATE : 15-OCT-2015 13:20 PLOT BY : ss...plotuser...ss PLOT NAME : PLOT SCALE : 18.607113:1.000000

WISDOT/CADDS SHEET 42

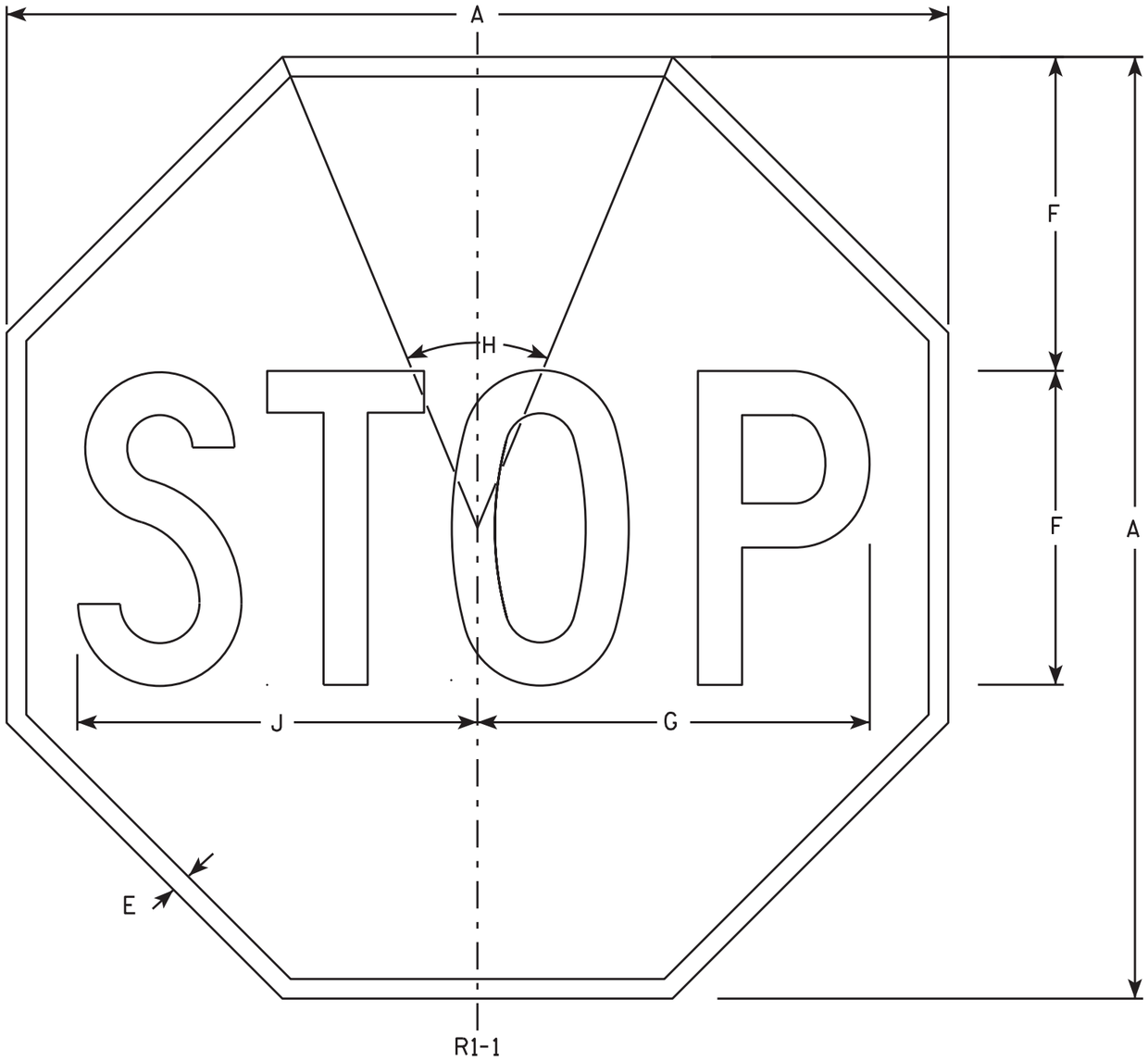

NOTES

1. Sign is Type II - Type H Reflective - reference WIS DOT Standard Specification for HIGHWAY and STRUCTURE CONSTRUCTION latest edition.
2. Color:
   Background - Red
   Message - White
3. Message Series - C

SIZE	A	B	C	D	E	F	G	H	I	J	K	L	M	N	O	P	Q	R	S	T	U	V	W	X	Y	Z	Area sq. ft.
1	30				5/8	10	12 1/2	45°		12 3/4																	5.18
2S	30				5/8	10	12 1/2	45°		12 3/4																	5.18
2M	36				3/4	12	15	45°		15 3/8																	7.46
3	36				3/4	12	15	45°		15 3/8																	7.46
4	48				1	16	20	45°		20 1/2																	13.25
5	48				1	16	20	45°		20 1/2																	13.25
6	18				3/8	6	7 3/4	45°		7 3/4																	1.86
7	12				1/4	4	5	45°		5 1/8																	0.78

STANDARD SIGN
R1-1

WISCONSIN DEPT OF TRANSPORTATION

APPROVED Matthew L Rauch
for State Traffic Engineer

DATE 11/12/15 PLATE NO. R1-1.12

PROJECT NO: | HWY: | COUNTY: | SHEET NO: 205 | E

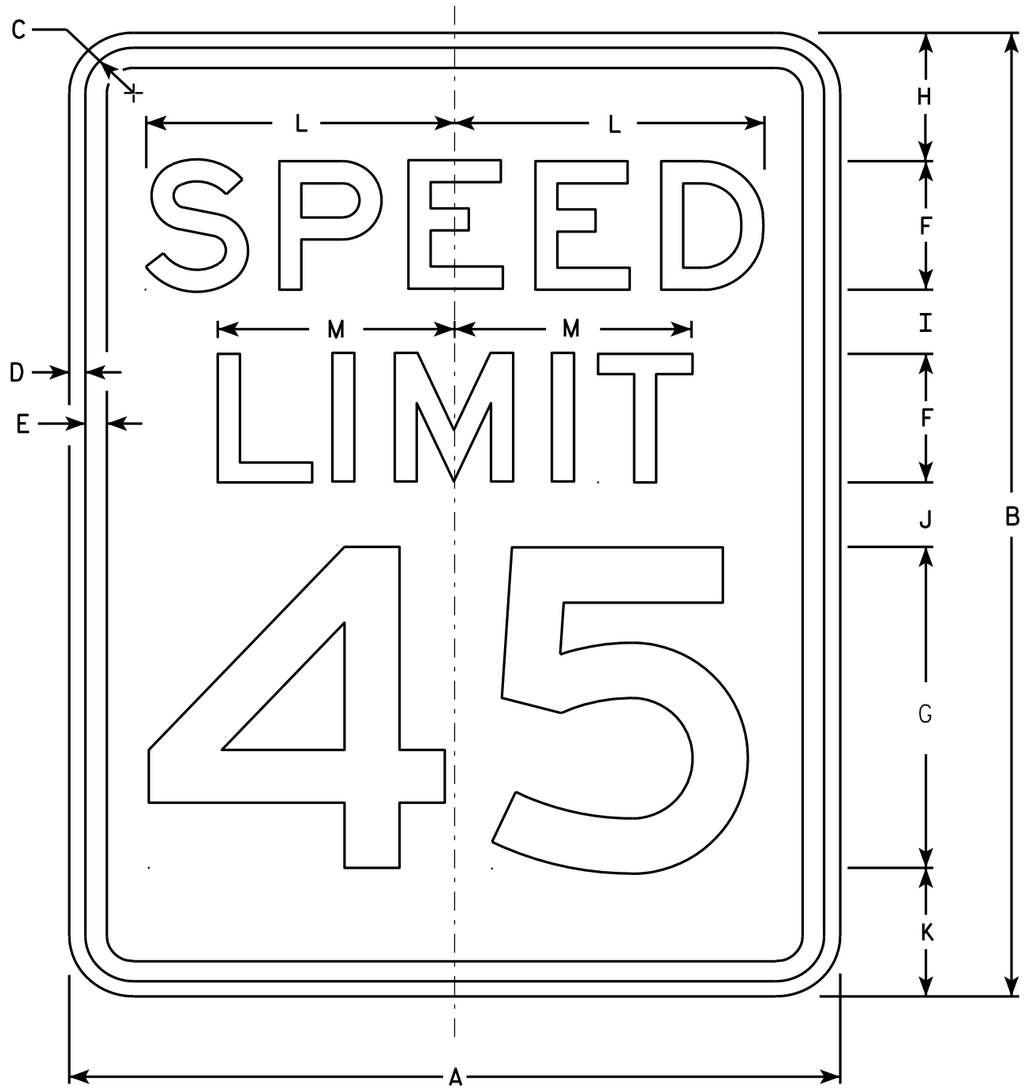

R2-1

NOTES

1. Sign is Type II - Type H Reflective - reference WIS DOT Standard Specification for HIGHWAY and STRUCTURE CONSTRUCTION latest edition.
2. Color:
   Background - White
   Message - Black
3. Message Series - E
4. Corners may be square or rounded when base material is plywood but borders shall be rounded as shown. When base material is metal, the corners and borders shall be rounded.
5. Substitute appropriate numerals and optically adjust spacing to achieve proper balance.

SIZE	A	B	C	D	E	F	G	H	I	J	K	L	M	N	O	P	Q	R	S	T	U	V	W	X	Y	Z	Area sq. ft.
1	18	24	1 1/8	3/8	1/2	3	8	3	2	2	3	7 1/4	5 1/2														3.0
2S	24	30	1 1/8	3/8	1/2	4	10	3	2 1/4	3 3/8	3 3/8	9 5/8	7 3/8														5.0
2M	30	36	1 3/8	1/2	5/8	5	12	5	2 1/2	2 1/2	4	12	9 1/4														7.5
3	36	48	1 3/8	1/2	5/8	6	14	6	5	5	6	14 3/8	11														12.0
4	36	48	1 3/8	1/2	5/8	6	14	6	5	5	6	14 3/8	11														12.0
5	48	60	2 1/4	3/4	1	8	20	6	4 1/2	6 3/4	6 3/4	19 1/4	14 5/8														20.0

STANDARD SIGN
R2-1

WISCONSIN DEPT OF TRANSPORTATION

APPROVED Matthew R Rauch
for State Traffic Engineer

DATE 5/26/10 PLATE NO. R2-1.13

PROJECT NO:	HWY:	COUNTY:		SHEET NO: 206	E

R3-17

NOTES

1. Sign is Type II - Type H Reflective - reference WIS DOT Standard Specification for HIGHWAY and STRUCTURE CONSTRUCTION latest edition.
2. Color:
   Background - AS SHOWN
   Message - BLACK
3. Message Series - C or as noted on the Signs.
4. Corners may be square or rounded when base material is plywood but borders shall be rounded as shown. When base material is metal, the corners and borders shall be rounded.

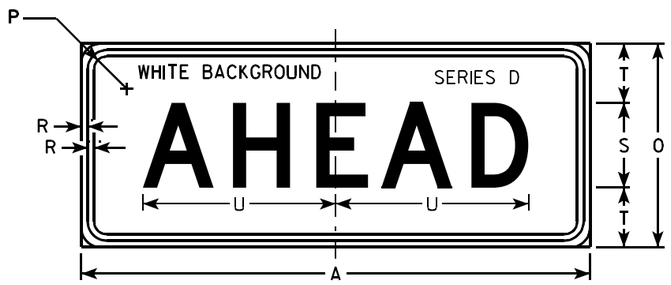

R3-17ap

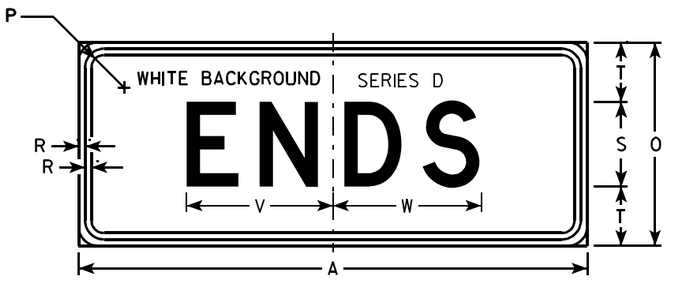

R3-17bp

SIZE	A	B	C	D	E	F	G	H	I	J	K	L	M	N	O	P	Q	R	S	T	U	V	W	X	Y	Z	R3-17 Area sq. ft.	R3-17ap Area sq. ft.	R3-17bp Area sq. ft.
1																													
2S	30	24	1 1/8	3/8	1/2	2	4	4 1/8	7 7/8	6 3/8	9 1/2	2 5/8	7/8	13	12	1 1/8	3 3/8	3/8	5	3 1/2	11 3/8	8 5/8	8 3/4	2 3/8	15 5/8	8	5.0	2.5	2.5
2M	30	24	1 1/8	3/8	1/2	2	4	4 1/8	7 7/8	6 3/8	9 1/2	2 5/8	7/8	13	12	1 1/8	3 3/8	3/8	5	3 1/2	11 3/8	8 5/8	8 3/4	2 3/8	15 5/8	8	5.0	2.5	2.5
3																													
4																													
5																													

STANDARD SIGN
R3-17 & R3-17a&bp

WISCONSIN DEPT OF TRANSPORTATION

APPROVED Matthew R Rauch
for State Traffic Engineer

DATE 4/12/2011 PLATE NO. R3-17.2

PROJECT NO:

SHEET NO: 207 E

FILE NAME : C:\CAEFiles\Projects\tr_stdplate\R317.DGN PLOT DATE : 02-APR-2013 14:09 PLOT BY : mscj9h

WISDOT/CADDS SHEET 42

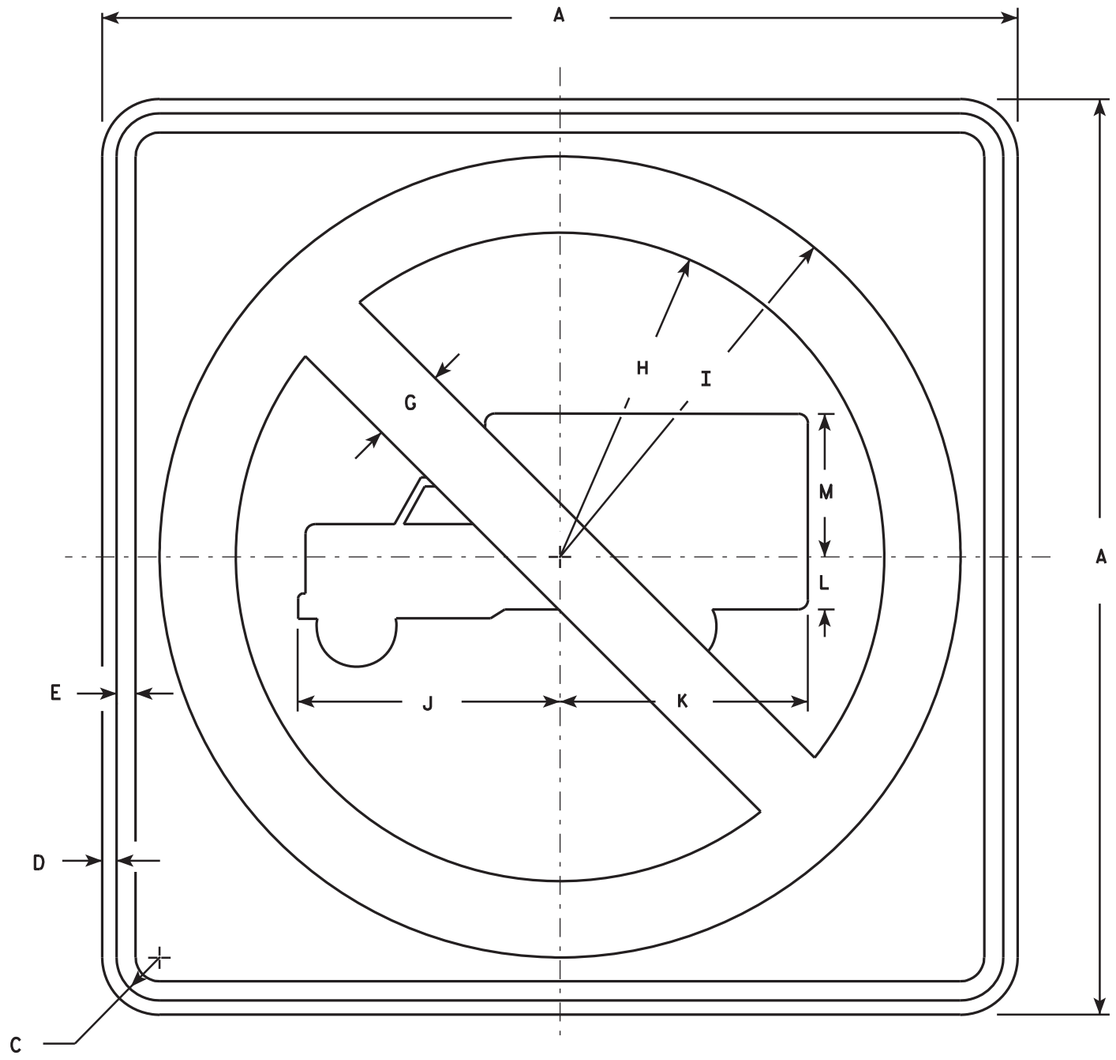

R5-2

NOTES

1. Sign is Type II - Type H Reflective - reference WIS DOT Standard Specification for HIGHWAY and STRUCTURE CONSTRUCTION latest edition.
2. Color:
   Background - White
   Message - See Note 4
3. Corners may be square or rounded when base material is plywood but borders shall be rounded as shown. When base material is metal, the corners and borders shall be rounded.
4. Circle & Diagonal - Reflective red.
   Truck Symbol & Border - Non-reflective black.

SIZE	A	B	C	D	E	F	G	H	I	J	K	L	M	N	O	P	Q	R	S	T	U	V	W	X	Y	Z	Area sq. ft.
1																											
2S	24		1 1/8	3/8	1/2		2	8 1/2	10 1/2	6 7/8	6 1/2	1 3/8	3 3/4														4.0
2M	24		1 1/8	3/8	1/2		2	8 1/2	10 1/2	6 7/8	6 1/2	1 3/8	3 3/4														4.0
3	30		1 3/8	1/2	5/8		2 1/2	10 5/8	13 1/8	8 1/2	8 1/8	1 5/8	4 3/4														6.25
4	36		1 5/8	5/8	3/4		3	12 3/4	15 3/4	10 1/4	9 3/4	2	5 3/4														9.0
5	48		2 1/4	3/4	1		4	17	21	13 5/8	13	2 5/8	7 5/8														16.0

STANDARD SIGN
R5-2

WISCONSIN DEPT OF TRANSPORTATION

APPROVED Matthew R Rauch
for State Traffic Engineer

DATE 3/29/2011 PLATE NO. R5-2.6

PROJECT NO: | HWY: | COUNTY: | SHEET NO: 208 | E

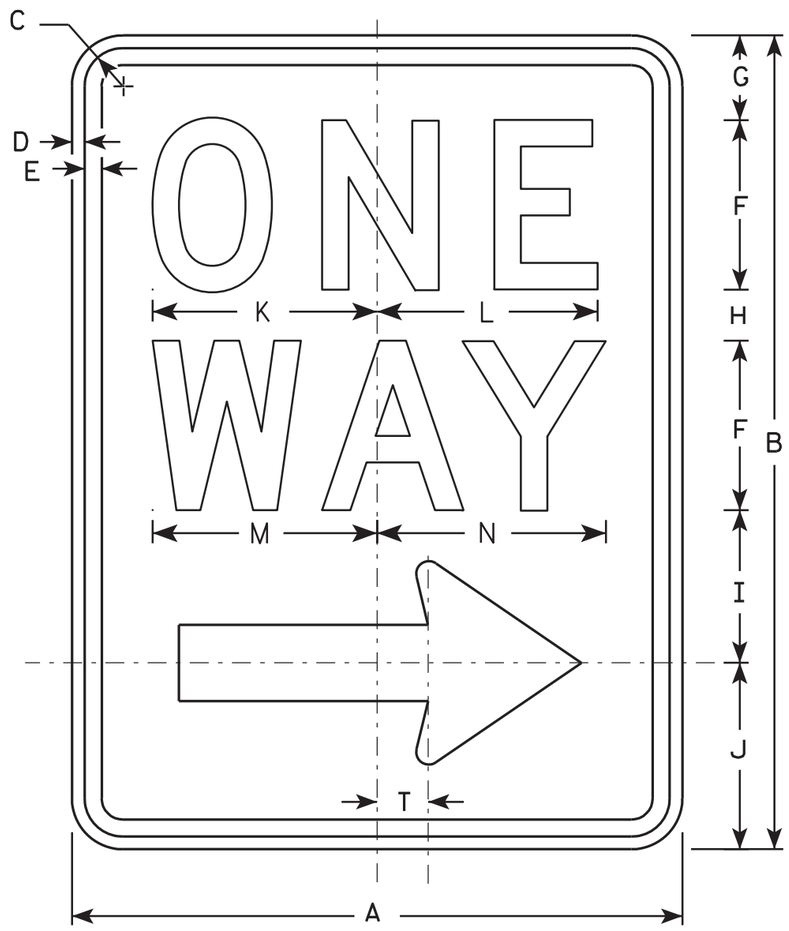

R6-2R

NOTES

1. Sign is Type II - Type H Reflective - reference WIS DOT Standard Specification for HIGHWAY and STRUCTURE CONSTRUCTION latest edition.
2. Color:
   Background - White
   Message - Black
3. Message Series - D
4. Corners may be square or rounded when base material is plywood but borders shall be rounded as shown. When base material is metal, the corners and borders shall be rounded.
5. R6-2L same as R6-2R except arrow points to the left.

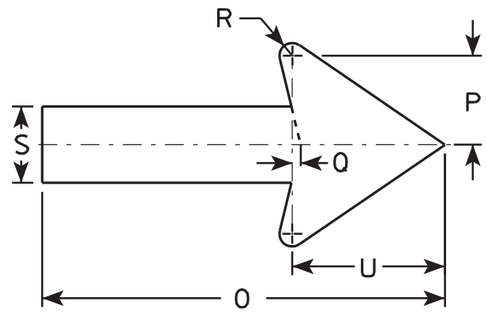

SIZE	A	B	C	D	E	F	G	H	I	J	K	L	M	N	O	P	O	R	S	T	U	V	W	X	Y	Z
1	18	24	1 1/8	3/8	1/2	5	2 1/2	1 1/2	4 1/2	5 1/2	6 5/8	6 1/2	6 5/8	6 3/4	11 7/8	2 5/8	1/4	3/8	2 1/4	1 1/2	4 1/2					
2S	24	30	1 1/8	3/8	1/2	6	3	2 1/2	5 1/2	7	8 1/8	8 1/8	8 1/2	8 5/8	16	3 1/2	3/8	1/2	3	2	6					
2M	30	36	1 3/8	1/2	5/8	8	2 1/2	2 5/8	6 7/8	8	10 1/2	10 1/2	11 1/4	11 1/4	20	4 3/8	1/2	5/8	3 3/4	2 1/2	7 1/2					
3	36	48	1 7/8	1/2	5/8	10	5 1/4	3 1/4	9	10 1/2	12 3/4	12 3/4	13 1/4	13 1/2	24	5 5/8	1/2	3/4	4 3/4	3	9					
4	36	48	1 7/8	1/2	5/8	10	5 1/4	3 1/4	9	10 1/2	12 3/4	12 3/4	13 1/4	13 1/2	24	5 5/8	1/2	3/4	4 3/4	3	9					
5																										

STANDARD SIGN
R6-2 R&L

WISCONSIN DEPT OF TRANSPORTATION

APPROVED Matthew R Rauch
for State Traffic Engineer

DATE 11/2/10 PLATE NO. R6-2.8

PROJECT NO:	HWY:	COUNTY:		SHEET NO: 209	E

R7-53

NOTES

1. Sign is Type II - Type H Reflective - reference WIS DOT Standard Specification for HIGHWAY and STRUCTURE CONSTRUCTION latest edition.
2. Color:
   Background - White
   Message - Red
3. Message Series - See Note 5
4. Corners may be square or rounded when base material is plywood but borders shall be rounded as shown. When base material is metal, the corners and borders shall be rounded.
5. Lines 1, 3 and 4 are series C, line 2 is series B.
6. R7-53D (double arrow)
   R7-53L (left arrow)
   R7-53R (right arrow)

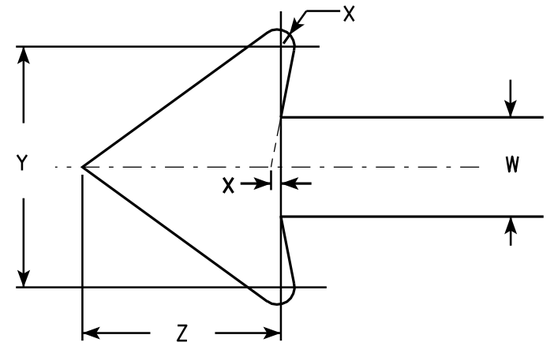

ARROW DETAIL

SIZE	A	B	C	D	E	F	G	H	I	J	K	L	M	N	O	P	Q	R	S	T	U	V	W	X	Y	Z	Area sq. ft.
1	12	18	1 1/8	3/8	3/8	3	1 7/8	2	7/8	5/8	1 1/2	2 1/2	2	2	4 7/8	4 7/8	2 5/8	1 3/4	1/4	4 1/2	2 3/8	3 7/8	3/4	1/8	1 3/4	1 1/2	1.5
2S	18	24	1 1/8	3/8	1/2	4	2 1/2	2 1/2	1 1/4	1	2	3 1/4	2 3/4	2 5/8	7 1/8	7	3 3/8	1 1/2	5/8	5 3/8	3	5 7/8	1 1/8	1/4	2 5/8	2 1/4	3.0
2M	24	30	1 1/8	3/8	1/2	5	3	3	2	1 1/4	2 1/2	4	3 1/4	3 3/8	9 1/4	9 1/4	4	2	5/8	6 5/8	3 5/8	7 3/4	1 1/2	1/4	3 1/2	3	5.0
3	24	30	1 1/8	3/8	1/2	5	3	3	2	1 1/4	2 1/2	4	3 1/4	3 3/8	9 1/4	9 1/4	4	2	5/8	6 5/8	3 5/8	7 3/4	1 1/2	1/4	3 1/2	3	5.0
4																											
5																											

STANDARD SIGN
R7-53

WISCONSIN DEPT OF TRANSPORTATION

APPROVED Matthew R Rauch
for State Traffic Engineer

DATE 3/31/2011 PLATE NO. R7-53.6

PROJECT NO:	HWY:	COUNTY:		SHEET NO: 210	E

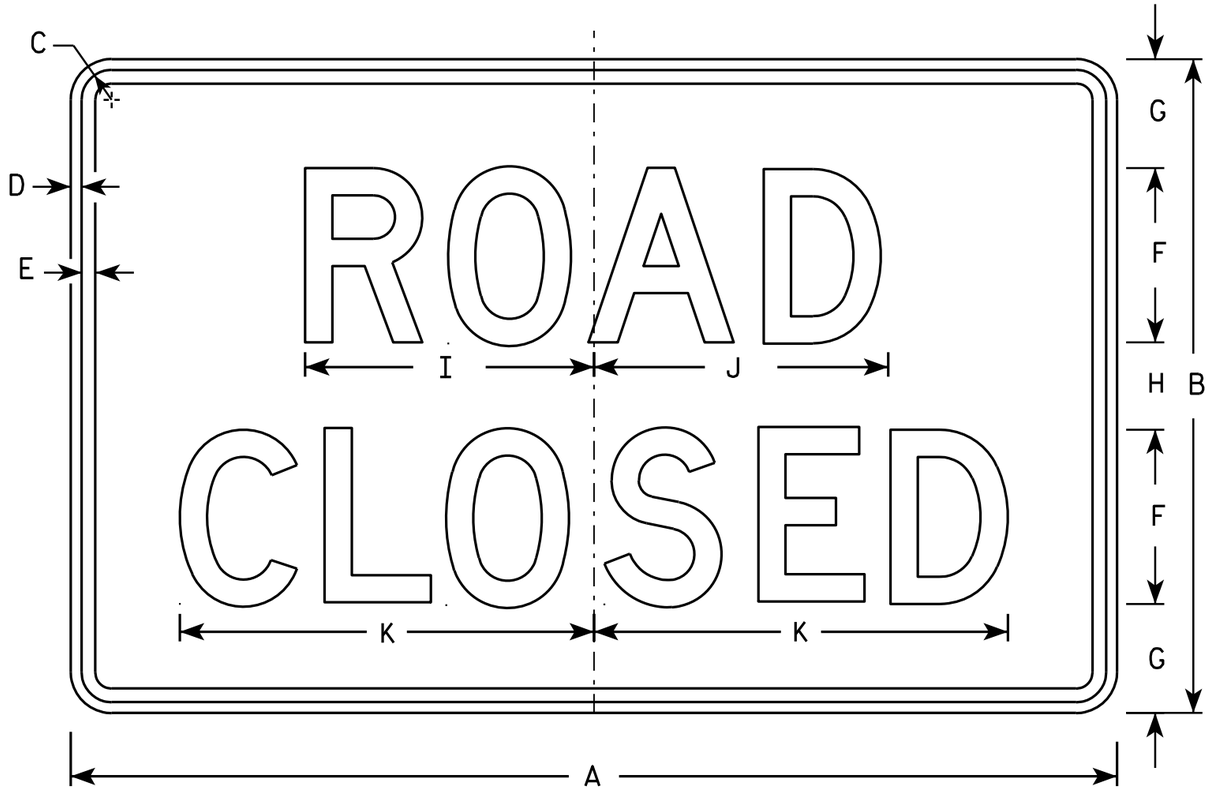

R11-2

NOTES

1. Sign is Type II - Type H Reflective - reference WIS DOT Standard Specification for HIGHWAY and STRUCTURE CONSTRUCTION latest edition.
2. Color:
   Background - White
   Message - Black
3. Message Series - D
4. Corners may be square or rounded when base material is plywood but borders shall be rounded as shown. When base material is metal, the corners and borders shall be rounded.
5. Modify the message as required.

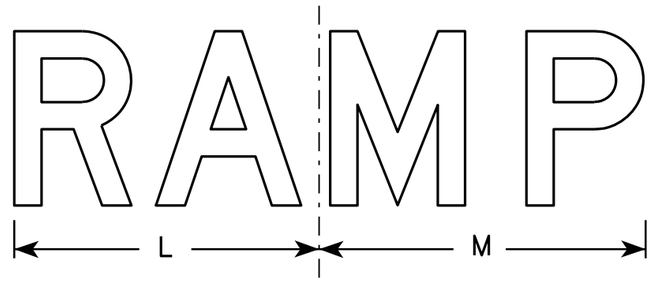

R11-2R

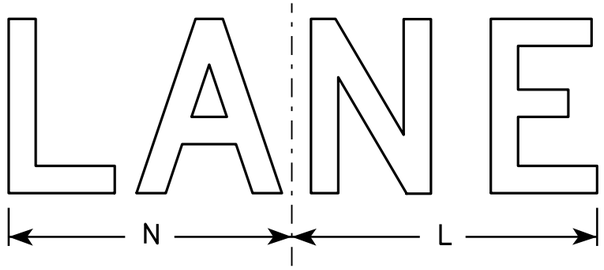

R11-2L

SIZE	A	B	C	D	E	F	G	H	I	J	K	L	M	N	O	P	Q	R	S	T	U	V	W	X	Y	Z	Area sq. ft.
1																											
2S	48	30	1 3/8	1/2	5/8	8	5	4	13 1/4	13 1/2	19	14	15	13													10.0
2M	48	30	1 3/8	1/2	5/8	8	5	4	13 1/4	13 1/2	19	14	15	13													10.0
3	48	30	1 3/8	1/2	5/8	8	5	4	13 1/4	13 1/2	19	14	15	13													10.0
4	48	30	1 3/8	1/2	5/8	8	5	4	13 1/4	13 1/2	19	14	15	13													10.0
5	48	30	1 3/8	1/2	5/8	8	5	4	13 1/4	13 1/2	19	14	15	13													10.0

STANDARD SIGN
R11-2

WISCONSIN DEPT OF TRANSPORTATION

APPROVED Matthew R Rauch
for State Traffic Engineer

DATE 4/1/11 PLATE NO. R11-2.10

PROJECT NO: | HWY: | COUNTY: | SHEET NO: 211 | E

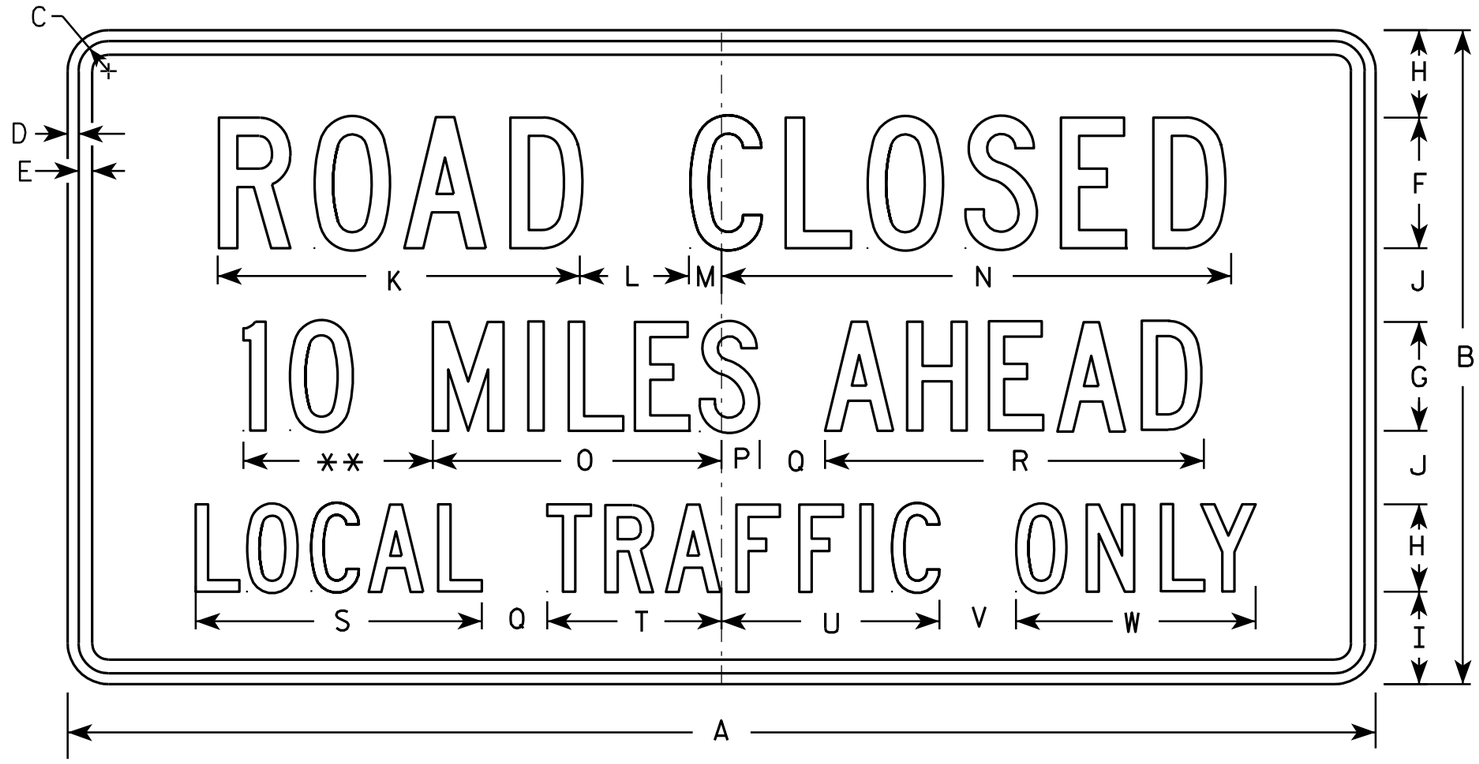

R11-3

NOTES

1. Sign is Type II - Type H Reflective - reference WIS DOT Standard Specification for HIGHWAY and STRUCTURE CONSTRUCTION latest edition.
2. Color:
   Background - White
   Message - Black
3. Message Series - C
4. Corners may be square or rounded when base material is plywood but borders shall be rounded as shown. When base material is metal, the corners and borders shall be rounded.
5. Substitute appropriate numerals and optically adjust spacing to achieve proper balance.

** See Note 5

SIZE	A	B	C	D	E	F	G	H	I	J	K	L	M	N	O	P	Q	R	S	T	U	V	W	X	Y	Z	Area sq. ft.
1	36	18	1 3/8	1/2	5/8	4	3	2 1/2	2	2	11 1/8	3	1 1/8	15 1/4	8	1 1/2	2	10 3/4	8 3/8	4 3/4	6 1/2	2	6 3/4				4.5
2S	60	30	1 3/8	1/2	5/8	6	5	4	4 1/4	3 3/8	16 5/8	5	1 1/2	23	13 1/4	1 3/4	3	17 3/8	13 1/8	8	10	3 1/2	11				12.5
2M	60	30	1 3/8	1/2	5/8	6	5	4	4 1/4	3 3/8	16 5/8	5	1 1/2	23	13 1/4	1 3/4	3	17 3/8	13 1/8	8	10	3 1/2	11				12.5
3																											
4																											
5																											

STANDARD SIGN
R11-3

WISCONSIN DEPT OF TRANSPORTATION

APPROVED Matthew R Rauch
for State Traffic Engineer

DATE 4/1/11 PLATE NO. R11-3.6

PROJECT NO: | HWY: | COUNTY: | SHEET NO: 212 | E

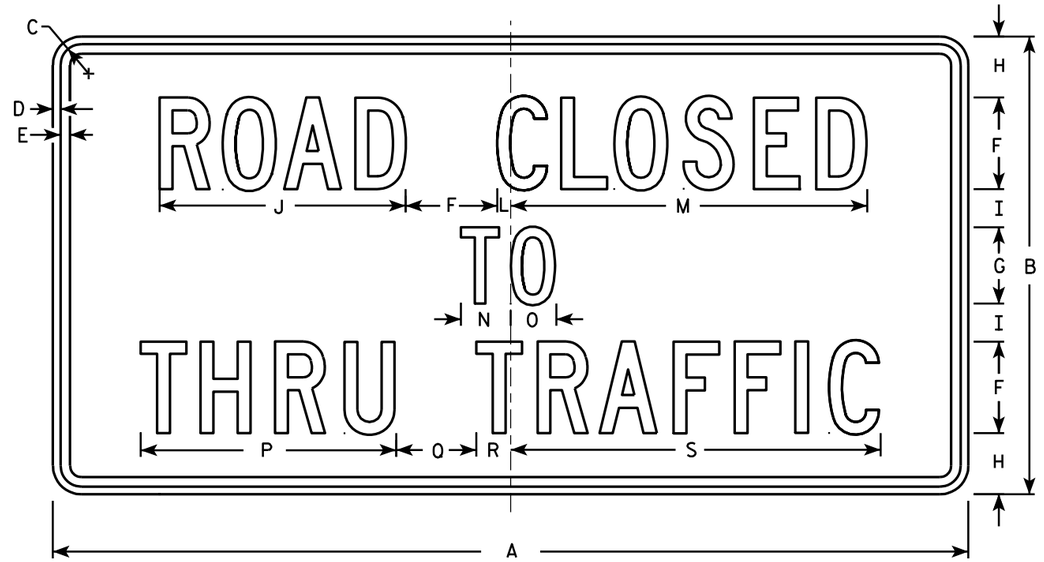

R11-4

NOTES

1. Sign is Type II - Type H Reflective - reference WIS DOT Standard Specification for HIGHWAY and STRUCTURE CONSTRUCTION latest edition.
2. Color:
   Background - White
   Message - Black
3. Message Series - C
4. Corners may be square or rounded when base material is plywood but borders shall be rounded as shown. When base material is metal, the corners and borders shall be rounded.

SIZE	A	B	C	D	E	F	G	H	I	J	K	L	M	N	O	P	Q	R	S	T	U	V	W	X	Y	Z	Area sq. ft.
1																											
2S	60	30	1 3/8	1/2	5/8	6	5	4	2 1/2	16 1/8		7/8	23 3/8	3 1/4	3	16 3/4	5 1/4	2 1/4	24 1/4								12.5
2M	60	30	1 3/8	1/2	5/8	6	5	4	2 1/2	16 1/8		7/8	23 3/8	3 1/4	3	16 3/4	5 1/4	2 1/4	24 1/4								12.5
3																											
4																											
5																											

STANDARD SIGN
R11 - 4

WISCONSIN DEPT OF TRANSPORTATION

APPROVED Matthew R Rauch for State Traffic Engineer

DATE 4/1/11 PLATE NO. R11-4.3

PROJECT NO: | HWY: | COUNTY: | SHEET NO: 213 | E

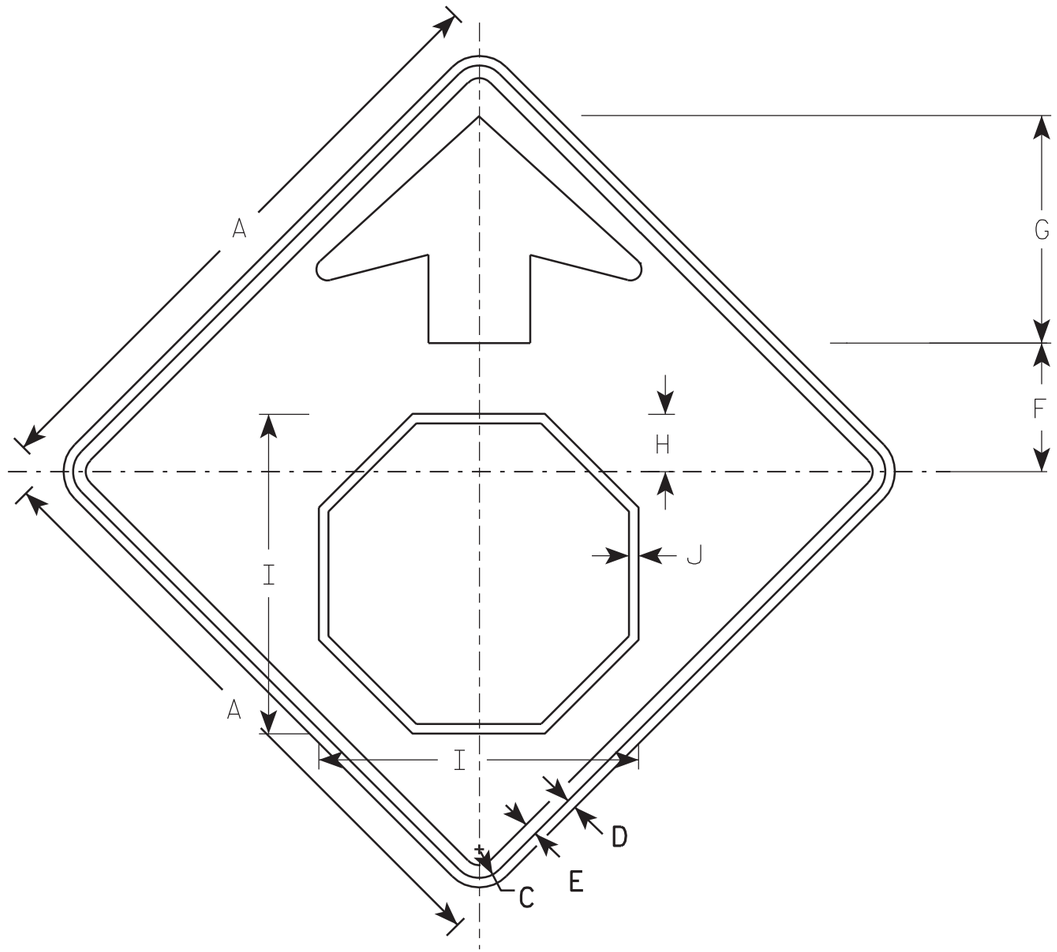

W3-1

NOTES

1. All Signs Type II - Type F Reflective - reference WIS DOT Standard Specification for HIGHWAY and STRUCTURE CONSTRUCTION latest edition.
2. Color:
   Background - YELLOW
   Arrow & Border - BLACK
   Stop Symbol - WHITE BORDER ON RED BACKGROUND

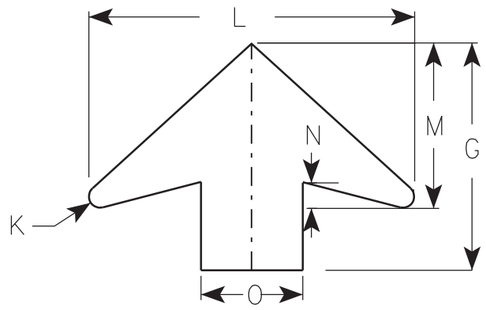

ARROW DETAIL

SIZE	A	B	C	D	E	F	G	H	I	J	K	L	M	N	O	P	Q	R	S	T	U	V	W	X	Y	Z	Area sq. ft.
1	30		1 3/8	1/2	5/8	6 1/4	11 1/4	2 7/8	15 3/4	1/2	1/2	16	8	1 1/4	5												6.25
2S	36		1 5/8	5/8	3/4	7 1/2	13 1/2	3 1/2	19	5/8	5/8	19 1/4	9 3/4	1 5/8	6												9.0
2M	36		1 5/8	5/8	3/4	7 1/2	13 1/2	3 1/2	19	5/8	5/8	19 1/4	9 3/4	1 5/8	6												9.0
3	36		1 5/8	5/8	3/4	7 1/2	13 1/2	3 1/2	19	5/8	5/8	19 1/4	9 3/4	1 5/8	6												9.0
4	48		2 1/4	3/4	1	10	17 7/8	4 1/2	25 1/8	3/4	7/8	25 5/8	13	2	8												16.0
5	48		2 1/4	3/4	1	10	17 7/8	4 1/2	25 1/8	3/4	7/8	25 5/8	13	2	8												16.0

STANDARD SIGN
W3-1

WISCONSIN DEPT OF TRANSPORTATION

APPROVED Matthew R Rauch
for State Traffic Engineer

DATE 6/7/10 PLATE NO. W3-1.12

PROJECT NO:

SHEET NO: 214 E

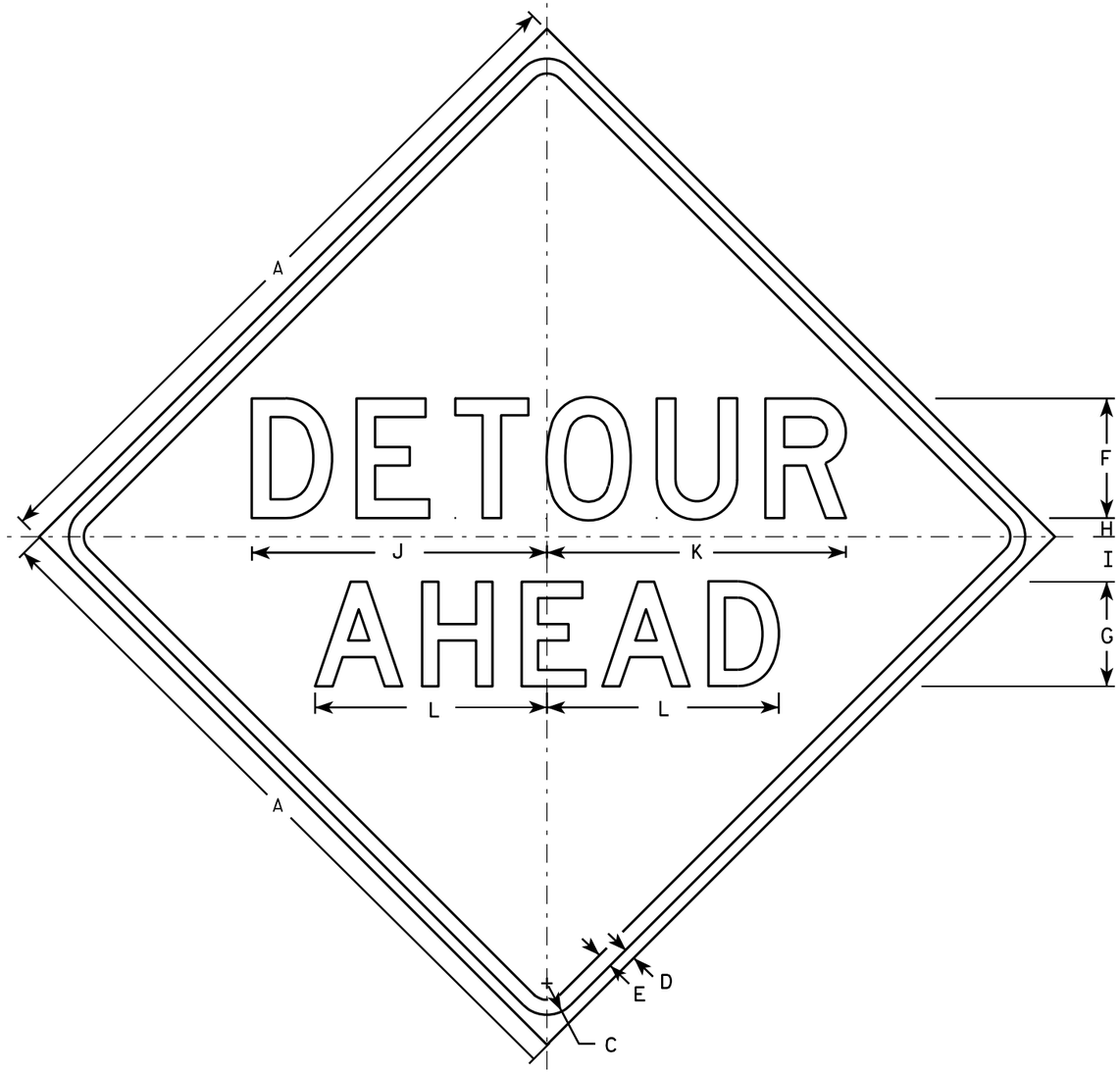

W20-2A

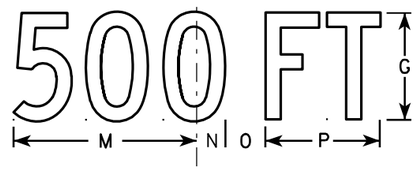

W20-2D

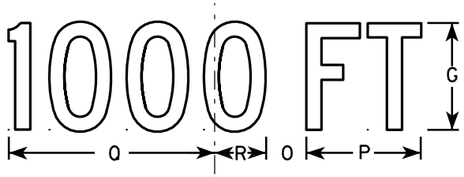

W20-2C

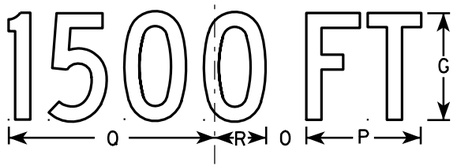

W20-2B

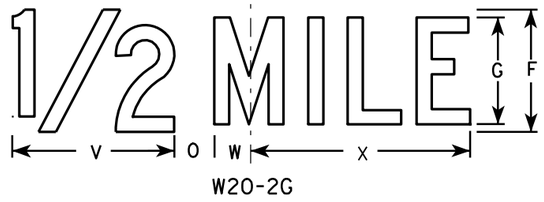

W20-2G

W20-2F

NOTES

1. Sign is Type II - Type F Reflective - reference WIS DOT Standard Specification for HIGHWAY and STRUCTURE CONSTRUCTION latest edition.
2. Color:
   Background - Orange
   Message - Black
3. Message Series - See note 5
4. Corners may be square or rounded when base material is plywood but borders shall be rounded as shown. When base material is metal, the corners and borders shall be rounded.
5. Line 1 is Series D.
   Line 2 is Series D for AHEAD and Series C for all other distances.

SIZE	A	B	C	D	E	F	G	H	I	J	K	L	M	N	O	P	O	R	S	T	U	V	W	X	Y	Z	Area sq. ft.
1	36		1 5/8	5/8	3/4	6	5	1	2 1/4	14 3/4	15	11 5/8	9	1 3/8	1 7/8	5 5/8	10 1/8	2 1/2	1 1/8	4 1/2	3 1/2	8	1 3/4	10 3/4			9.0
2S	48		2 1/4	3/4	1	8	7	1 1/4	3	19 3/4	20	15 1/2	12	1 7/8	2 5/8	7 1/2	13 1/2	3 3/8	1 1/2	6	4 5/8	10 5/8	2 3/8	14 3/8			16.0
2M	48		2 1/4	3/4	1	8	7	1 1/4	3	19 3/4	20	15 1/2	12	1 7/8	2 5/8	7 1/2	13 1/2	3 3/8	1 1/2	6	4 5/8	10 5/8	2 3/8	14 3/8			16.0
3	48		2 1/4	3/4	1	8	7	1 1/4	3	19 3/4	20	15 1/2	12	1 7/8	2 5/8	7 1/2	13 1/2	3 3/8	1 1/2	6	4 5/8	10 5/8	2 3/8	14 3/8			16.0
4	48		2 1/4	3/4	1	8	7	1 1/4	3	19 3/4	20	15 1/2	12	1 7/8	2 5/8	7 1/2	13 1/2	3 3/8	1 1/2	6	4 5/8	10 5/8	2 3/8	14 3/8			16.0
5	48		2 1/4	3/4	1	8	7	1 1/4	3	19 3/4	20	15 1/2	12	1 7/8	2 5/8	7 1/2	13 1/2	3 3/8	1 1/2	6	4 5/8	10 5/8	2 3/8	14 3/8			16.0

STANDARD SIGN
W20-2A,B,C,D,F & G

WISCONSIN DEPT OF TRANSPORTATION

APPROVED Matthew R Rauch
for State Traffic Engineer

DATE 3/18/11 PLATE NO. W20-2.6

PROJECT NO:	HWY:	COUNTY:		SHEET NO: 215	E

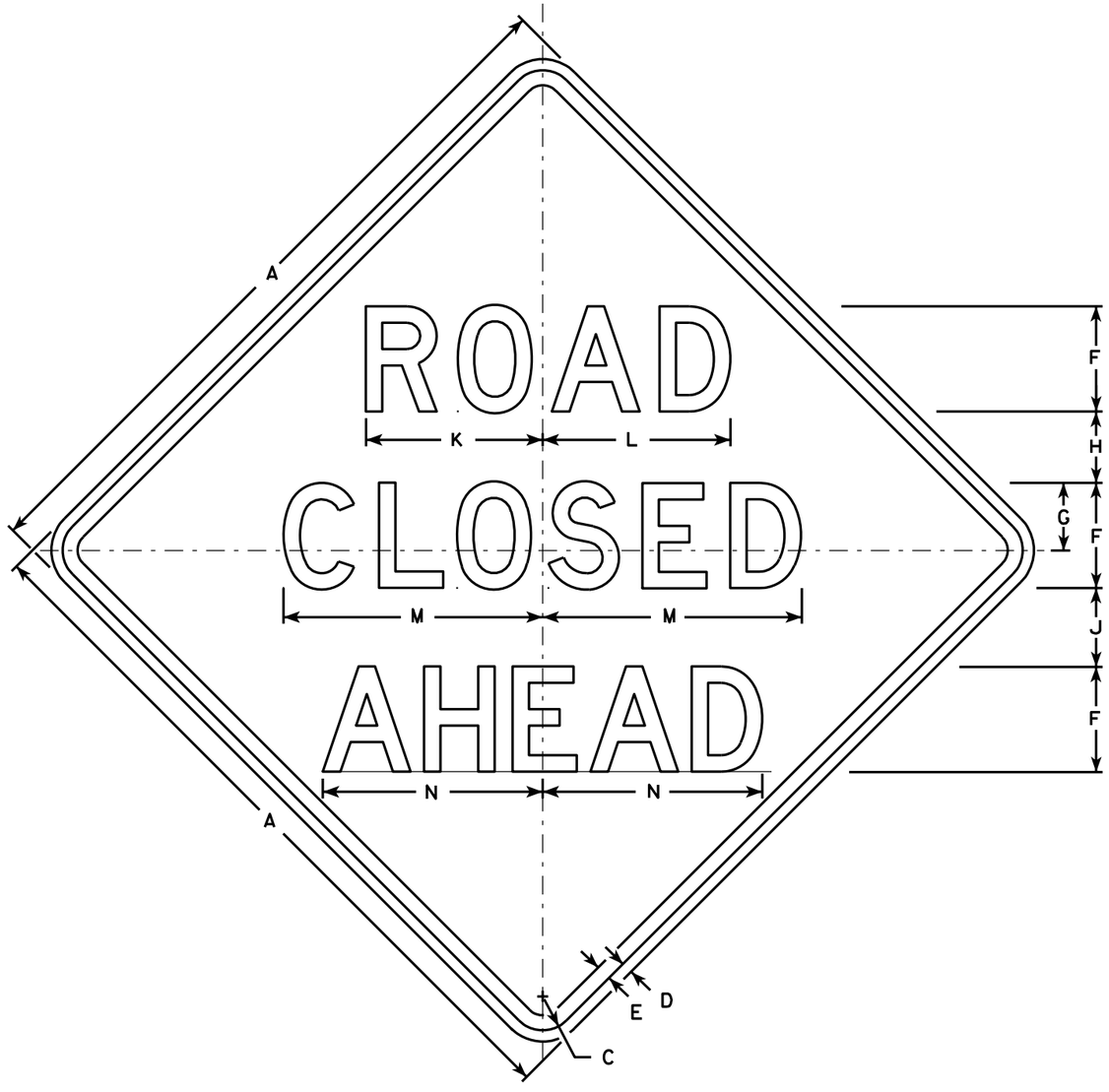

W20-3A

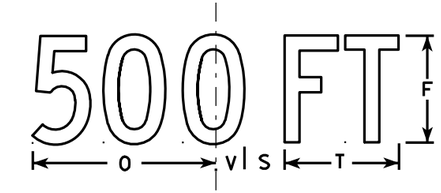

W20-3D

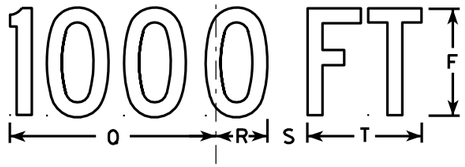

W20-3C

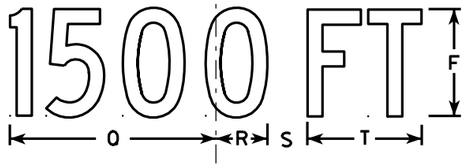

W20-3B

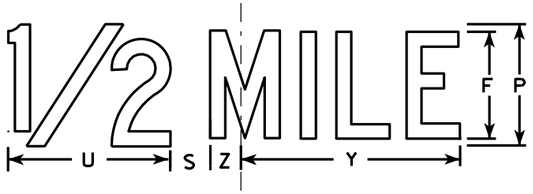

W20-3G

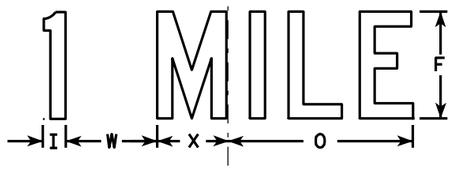

W20-3F

NOTES

1. Sign is Type II - Type F Reflective - reference WIS DOT Standard Specification for HIGHWAY and STRUCTURE CONSTRUCTION latest edition.
2. Color:
   Background - Orange
   Message - Black
3. Message Series - see note 5
4. Corners may be square or rounded when base material is plywood but borders shall be rounded as shown. When base material is metal, the corners and borders shall be rounded.
5. Lines 1 and 2 are Series D.
   Line 3 is Series D for AHEAD and Series C for all other distances.

SIZE	A	B	C	D	E	F	G	H	I	J	K	L	M	N	O	P	Q	R	S	T	U	V	W	X	Y	Z	Area sq. ft.
1	36		1 5/8	5/8	3/4	5	3 3/8	3 1/2	1 1/8	4	8 3/8	8 7/8	12 1/2	11	9	6	10 1/8	2 1/2	1 7/8	5 5/8	8	1 3/8	4 1/2	3 1/2	10 3/4	1 3/4	9.0
2S	48		2 1/4	3/4	1	7	4 1/2	4 3/4	1 1/2	5 1/4	11 3/4	12 1/2	17 1/4	14 5/8	12	8	13 1/2	3 3/8	2 5/8	7 1/2	10 5/8	1 7/8	6	4 5/8	14 3/8	2 3/8	16.0
2M	48		2 1/4	3/4	1	7	4 1/2	4 3/4	1 1/2	5 1/4	11 3/4	12 1/2	17 1/4	14 5/8	12	8	13 1/2	3 3/8	2 5/8	7 1/2	10 5/8	1 7/8	6	4 5/8	14 3/8	2 3/8	16.0
3	48		2 1/4	3/4	1	7	4 1/2	4 3/4	1 1/2	5 1/4	11 3/4	12 1/2	17 1/4	14 5/8	12	8	13 1/2	3 3/8	2 5/8	7 1/2	10 5/8	1 7/8	6	4 5/8	14 3/8	2 3/8	16.0
4	48		2 1/4	3/4	1	7	4 1/2	4 3/4	1 1/2	5 1/4	11 3/4	12 1/2	17 1/4	14 5/8	12	8	13 1/2	3 3/8	2 5/8	7 1/2	10 5/8	1 7/8	6	4 5/8	14 3/8	2 3/8	16.0
5	48		2 1/4	3/4	1	7	4 1/2	4 3/4	1 1/2	5 1/4	11 3/4	12 1/2	17 1/4	14 5/8	12	8	13 1/2	3 3/8	2 5/8	7 1/2	10 5/8	1 7/8	6	4 5/8	14 3/8	2 3/8	16.0

STANDARD SIGN
W20-3A, B, C, D, F & G

WISCONSIN DEPT OF TRANSPORTATION

APPROVED Matthew R Rauch
for State Traffic Engineer
DATE 3/18/11 PLATE NO. W20-3.7

PROJECT NO: | HWY: | COUNTY: | SHEET NO: 216 | E

7

FILE NAME : C:\Users\PROJECTS\tr_stdplate\W203.DGN PLOT DATE : 18-MAR-2011 12:08 PLOT BY : mscj9h PLOT NAME : PLOT SCALE : 9.931739:1.000000
WISDOT/CADDS SHEET 42

CTH D

Station	Real Station	Distance	Area (SF) Cut	Area (SF) Fill	Incremental Vol (CY) (Unadjusted) Cut Note 1	Incremental Vol (CY) (Unadjusted) Fill Note 2	Cumulative Vol (CY) Cut 1.00 Note 1	Cumulative Vol (CY) Expanded Fill 1.11	Mass Ordinate Note 3
76+50	7650	0	56	0	0	0	0	0	0
77+00	7700	50	71	0	118	1	118	1	117
77+50	7750	50	164	0	217	0	335	1	333
78+00	7800	50	150	0	291	0	625	1	624
78+50	7850	50	181	0	307	0	932	1	931
79+00	7900	50	170	0	325	0	1,258	2	1,256
79+50	7950	50	178	0	322	0	1,580	2	1,578
80+00	8000	50	172	0	323	0	1,903	2	1,901
80+50	8050	50	171	0	317	0	2,220	2	2,218
81+00	8100	50	162	0	309	0	2,529	2	2,527
81+50	8150	50	151	0	290	0	2,819	3	2,817
82+00	8200	50	153	0	281	1	3,101	3	3,097
82+50	8250	50	145	1	276	2	3,376	5	3,372
83+00	8300	50	141	6	265	7	3,642	12	3,630
83+50	8350	50	148	0	268	5	3,910	18	3,892
84+00	8400	50	142	0	269	0	4,179	18	4,161
84+50	8450	50	167	0	286	0	4,464	18	4,446
85+00	8500	50	166	0	308	0	4,772	18	4,754
85+50	8550	50	162	0	304	0	5,076	18	5,058
86+00	8600	50	144	0	283	0	5,360	18	5,342
86+50	8650	50	132	0	256	0	5,616	19	5,597
87+00	8700	50	142	1	254	1	5,869	20	5,850
87+50	8750	50	136	1	257	1	6,127	21	6,105
88+00	8800	50	157	0	271	1	6,398	22	6,375
88+50	8850	50	166	0	299	0	6,697	23	6,674
89+00	8900	50	185	0	326	0	7,023	23	7,000
89+50	8950	50	165	0	325	0	7,347	23	7,325
90+00	9000	50	164	0	304	0	7,652	23	7,629
90+50	9050	50	150	0	291	0	7,942	23	7,920
91+00	9100	50	147	0	275	0	8,217	23	8,194
91+50	9150	50	146	0	271	1	8,488	24	8,464
92+00	9200	50	148	0	272	0	8,760	24	8,736
92+50	9250	50	153	0	279	0	9,039	24	9,014
93+00	9300	50	158	0	288	0	9,327	24	9,302
93+50	9350	50	158	0	292	0	9,619	24	9,594
94+00	9400	50	158	0	293	0	9,911	24	9,887
94+50	9450	50	153	0	289	0	10,200	24	10,176
95+00	9500	50	146	0	277	0	10,477	24	10,453
95+50	9550	50	142	1	266	1	10,744	26	10,718
96+00	9600	50	140	2	260	3	11,004	29	10,975
96+50	9650	50	133	0	253	2	11,257	31	11,226
97+00	9700	50	141	0	254	0	11,511	31	11,479
97+50	9750	50	158	0	277	0	11,788	31	11,757
98+00	9800	50	157	0	292	0	12,080	31	12,049

NOTES	
1 - CUT	SALVAGED/UNUSABLE PAVEMENT MATERIAL IS INCLUDED IN CUT.
2 - FILL	DOES NOT INCLUDE PAVEMENT EXCAVATION VOLUME.
3 - MASS ORDINATE	[(CUT) - ((FILL) * FILL FACTOR)]

CTH D

Station	Real Station	Distance	Area (SF) Cut	Area (SF) Fill	Incremental Vol (CY) (Unadjusted) Cut Note 1	Incremental Vol (CY) (Unadjusted) Fill Note 2	Cumulative Vol (CY) Cut 1.00 Note 1	Cumulative Vol (CY) Expanded Fill 1.11	Mass Ordinate Note 3
98+50	9850	50	153	0	287	0	12,367	31	12,336
99+00	9900	50	154	0	284	0	12,650	31	12,619
99+50	9950	50	159	0	290	0	12,940	32	12,908
100+00	10000	50	161	0	296	0	13,236	32	13,204
100+50	10050	50	163	0	299	0	13,535	32	13,504
101+00	10100	50	161	0	300	0	13,835	32	13,803
101+50	10150	50	161	0	298	0	14,133	32	14,101
102+00	10200	50	144	0	283	0	14,415	32	14,384
102+50	10250	50	134	0	258	0	14,673	32	14,641
103+00	10300	50	151	0	264	1	14,937	33	14,904
103+50	10350	50	150	1	279	1	15,216	34	15,183
104+00	10400	50	151	0	279	1	15,495	34	15,461
104+50	10450	50	150	1	278	1	15,773	36	15,738
105+00	10500	50	154	0	281	1	16,054	37	16,018
105+50	10550	50	154	0	285	0	16,339	37	16,302
106+00	10600	50	137	0	269	0	16,608	37	16,572
106+50	10650	50	152	0	268	0	16,876	37	16,840
107+00	10700	50	159	0	288	0	17,164	37	17,127
107+50	10750	50	154	1	289	0	17,453	37	17,416
108+00	10800	50	158	0	289	0	17,742	38	17,704
108+50	10850	50	162	0	296	0	18,039	38	18,001
109+00	10900	50	136	0	276	0	18,315	38	18,277
109+50	10950	50	149	0	264	0	18,579	38	18,542
110+00	11000	50	148	0	275	0	18,855	38	18,817
110+50	11050	50	150	0	276	0	19,130	38	19,093
111+00	11100	50	149	0	277	0	19,407	38	19,369
111+50	11150	50	147	0	274	0	19,681	38	19,643
112+00	11200	50	107	0	235	0	19,916	38	19,878
112+50	11250	50	107	0	198	0	20,114	38	20,076
113+00	11300	50	139	0	228	0	20,342	39	20,303
113+50	11350	50	141	1	260	1	20,602	40	20,562
114+00	11400	50	144	0	264	1	20,865	41	20,825
114+50	11450	50	147	1	269	1	21,134	41	21,093
115+00	11500	50	149	0	274	1	21,408	42	21,365
115+50	11550	50	146	0	273	1	21,681	43	21,638
116+00	11600	50	139	1	264	1	21,945	44	21,901
116+50	11650	50	135	1	254	2	22,199	46	22,153
117+00	11700	50	128	4	243	5	22,443	51	22,391
117+50	11750	50	129	4	238	7	22,680	59	22,622
118+00	11800	50	137	1	247	4	22,927	64	22,863
118+10	11810	10	139	0	51	0	22,978	64	22,914
			Column Totals		22,978	58			

NOTES	
1 - CUT	SALVAGED/UNUSABLE PAVEMENT MATERIAL IS INCLUDED IN CUT.
2 - FILL	DOES NOT INCLUDE PAVEMENT EXCAVATION VOLUME.
3 - MASS ORDINATE	[(CUT) - ((FILL) * FILL FACTOR)]

Beech Street

Station	Real Station	Distance	Area (SF) Cut	Area (SF) Fill	Incremental Vol (CY) (Unadjusted) Cut Note 1	Incremental Vol (CY) (Unadjusted) Fill Note 2	Cumulative Vol (CY) Cut 1.00 Note 1	Cumulative Vol (CY) Expanded Fill 1.11	Mass Ordinate Note 3
260+22.03	26022	0	145	0	0	0	0	0	0
260+39.13	26039	17	39	1	58	0	58	1	58
260+50	26050	11	46	0	17	0	75	1	74
260+75	26075	25	45	0	42	0	117	1	116
				Column Totals	117	1			

Chestnut Street

Station	Real Station	Distance	Area (SF) Cut	Area (SF) Fill	Incremental Vol (CY) (Unadjusted) Cut Note 1	Incremental Vol (CY) (Unadjusted) Fill Note 2	Cumulative Vol (CY) Cut 1.00 Note 1	Cumulative Vol (CY) Expanded Fill 1.11	Mass Ordinate Note 3
280+22	28022	0	187	0	0	0	0	0	0
280+39	28039	17	62	3	78	1	78	1	77
280+50	28050	11	62	2	25	1	104	2	102
280+75	28075	25	56	1	54	1	158	3	155
				Column Totals	158	3			

Maple Street

Station	Real Station	Distance	Area (SF) Cut	Area (SF) Fill	Incremental Vol (CY) (Unadjusted) Cut Note 1	Incremental Vol (CY) (Unadjusted) Fill Note 2	Cumulative Vol (CY) Cut 1.00 Note 1	Cumulative Vol (CY) Expanded Fill 1.11	Mass Ordinate Note 3
289+25	28925	0	52	0	0	0	0	0	0
289+50	28950	25	62	1	53	0	53	0	53
289+60.99	28961	11	65	1	26	0	79	1	78
289+78	28978	17	182	0	78	0	157	1	156
				Column Totals	157	1			

NOTES	
1 - CUT	SALVAGED/UNUSABLE PAVEMENT MATERIAL IS INCLUDED IN CUT.
2 - FILL	DOES NOT INCLUDE PAVEMENT EXCAVATION VOLUME.
3 - MASS ORDINATE	[(CUT) - ((FILL) * FILL FACTOR)]

Oak Street

Station	Real Station	Distance	Area (SF) Cut	Area (SF) Fill	Incremental Vol (CY) (Unadjusted) Cut Note 1	Incremental Vol (CY) (Unadjusted) Fill Note 3	Cumulative Vol (CY) Cut 1.00 Note 1	Cumulative Vol (CY) Expanded Fill 1.11	Mass Ordinate Note 8
299+10	29910	0	48	0	0	0	0	0	0
299+25	29925	15	55	0	29	0	29	0	29
299+50	29950	25	73	0	59	0	88	0	88
299+60.99	29961	11	79	0	31	0	118	0	118
299+79.5	29980	19	207	0	98	0	217	0	217
			Column Totals		217	0			

Michael Street

Station	Real Station	Distance	Area (SF) Cut	Area (SF) Fill	Incremental Vol (CY) (Unadjusted) Cut Note 1	Incremental Vol (CY) (Unadjusted) Fill Note 2	Cumulative Vol (CY) Cut 1.00 Note 1	Cumulative Vol (CY) Expanded Fill 1.11	Mass Ordinate Note 3
309+25	30925	0	53	0	0	0	0	0	0
309+50	30950	25	57	0	51	0	51	0	51
309+63.72	30964	14	61	0	30	0	81	0	81
309+80.98	30981	17	197	0	82	0	163	0	163
			Column Totals		163	0			

West Lane

Station	Real Station	Distance	Area (SF) Cut	Area (SF) Fill	Incremental Vol (CY) (Unadjusted) Cut Note 1	Incremental Vol (CY) (Unadjusted) Fill Note 2	Cumulative Vol (CY) Cut 1.00 Note 1	Cumulative Vol (CY) Expanded Fill 1.11	Mass Ordinate Note 3
320+19	32019	0	211	0	0	0	0	0	0
320+36	32036	17	72	0	89	0	89	0	89
320+50	32050	14	65	0	35	0	124	0	124
320+75	32075	25	56	0	56	0	180	0	180
320+90	32090	15	52	0	30	0	211	0	210
			Column Totals		211	0			

NOTES	
1 - CUT	SALVAGED/UNUSABLE PAVEMENT MATERIAL IS INCLUDED IN CUT.
2 - FILL	DOES NOT INCLUDE PAVEMENT EXCAVATION VOLUME.
3 - MASS ORDINATE	[(CUT) - ((FILL) * FILL FACTOR)]

Lindale Street

Station	Real Station	Distance	Area (SF) Cut	Area (SF) Fill	Incremental Vol (CY) (Unadjusted) Cut Note 1	Incremental Vol (CY) (Unadjusted) Fill Note 2	Cumulative Vol (CY) Cut 1.00 Note 1	Cumulative Vol (CY) Expanded Fill 1.11	Mass Ordinate Note 3
329+00	32900	0	52	0	0	0	0	0	0
329+25	32925	25	62	0	53	0	53	0	53
329+50	32950	25	71	0	61	0	114	0	114
329+63.77	32964	14	75	0	37	0	152	0	151
329+81.01	32981	17	209	0	91	0	242	0	242
				Column Totals	242	0			

East Street

Station	Real Station	Distance	Area (SF) Cut	Area (SF) Fill	Incremental Vol (CY) (Unadjusted) Cut Note 1	Incremental Vol (CY) (Unadjusted) Fill Note 2	Cumulative Vol (CY) Cut 1.00 Note 1	Cumulative Vol (CY) Expanded Fill 1.11	Mass Ordinate Note 3
340+19	34019	0	210	0	0	0	0	0	0
340+36	34036	17	73	0	89	0	89	0	89
340+50	34050	14	70	0	37	0	127	0	126
340+75	34075	25	60	0	60	0	187	0	187
340+90	34090	15	54	0	32	0	219	0	219
				Column Totals	219	0			

Dean Street

Station	Real Station	Distance	Area (SF) Cut	Area (SF) Fill	Incremental Vol (CY) (Unadjusted) Cut Note 1	Incremental Vol (CY) (Unadjusted) Fill Note 2	Cumulative Vol (CY) Cut 1.00 Note 1	Cumulative Vol (CY) Expanded Fill 1.11	Mass Ordinate Note 3
350+19	35019	0	188	0	0	0	0	0	0
350+36.14	35036	17	69	1	82	0	82	0	81
350+50	35050	14	67	0	35	0	117	0	116
350+75	35075	25	51	0	55	0	172	0	171
				Column Totals	172	0			

NOTES	
1 - CUT	SALVAGED/UNUSABLE PAVEMENT MATERIAL IS INCLUDED IN CUT.
2 - FILL	DOES NOT INCLUDE PAVEMENT EXCAVATION VOLUME.
3 - MASS ORDINATE	[(CUT) - ((FILL) * FILL FACTOR)]

Pierron Street

Station	Real Station	Distance	Area (SF) Cut	Area (SF) Fill	Incremental Vol (CY) (Unadjusted) Cut Note 1	Incremental Vol (CY) (Unadjusted) Fill Note 2	Cumulative Vol (CY) Cut 1.00 Note 1	Cumulative Vol (CY) Expanded Fill 1.11	Mass Ordinate Note 3
360+19	36019	0	193	0	0	0	0	0	0
360+36.14	36036	17	63	0	81	0	81	0	81
360+50	36050	14	63	0	33	0	114	0	114
360+75	36075	25	52	0	54	0	167	0	167
				Column Totals	167	0			

Lar Ann Street

Station	Real Station	Distance	Area (SF) Cut	Area (SF) Fill	Incremental Vol (CY) (Unadjusted) Cut Note 1	Incremental Vol (CY) (Unadjusted) Fill Note 2	Cumulative Vol (CY) Cut 1.00 Note 1	Cumulative Vol (CY) Expanded Fill 1.11	Mass Ordinate Note 3
369+50	36950	0	58	0	0	0	0	0	0
369+63	36963	13	58	0	28	0	28	0	28
369+81	36981	18	184	0	81	0	109	0	108
369+81.1	36981	0	63	0	0	0	109	0	109
370+18.9	37019	38	72	0	95	0	204	0	203
370+19	37019	0	190	0	0	0	204	0	204
370+37.14	37037	18	60	0	84	0	288	0	288
370+50	37050	13	55	0	27	0	315	0	315
370+65	37065	15	51	0	30	0	345	0	345
				Column Totals	345	0			

NOTES	
1 - CUT	SALVAGED/UNUSABLE PAVEMENT MATERIAL IS INCLUDED IN CUT.
2 - FILL	DOES NOT INCLUDE PAVEMENT EXCAVATION VOLUME.
3 - MASS ORDINATE	[(CUT) - ((FILL) * FILL FACTOR)]

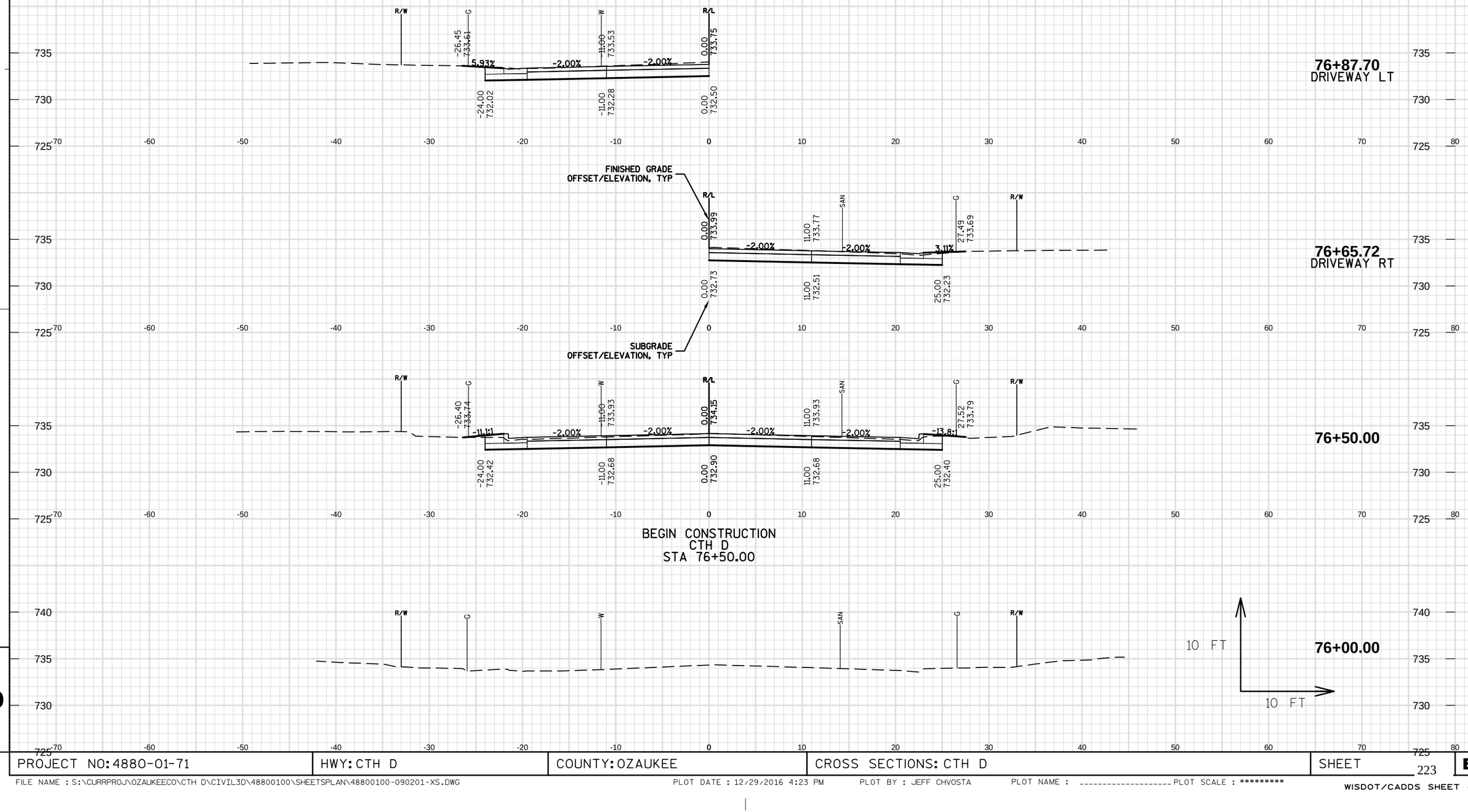

PROJECT NO: 4880-01-71	HWY: CTH D	COUNTY: OZAUKEE	CROSS SECTIONS: CTH D	SHEET 223 E

FILE NAME : S:\CURRPROJ\OZAUKEECO\CTH D\CIVIL3D\48800100\SHEETSPLAN\48800100-090201-XS.DWG PLOT DATE : 12/29/2016 4:23 PM PLOT BY : JEFF CHVOSTA PLOT NAME : _____ PLOT SCALE : **********

WISDOT/CADDS SHEET 49

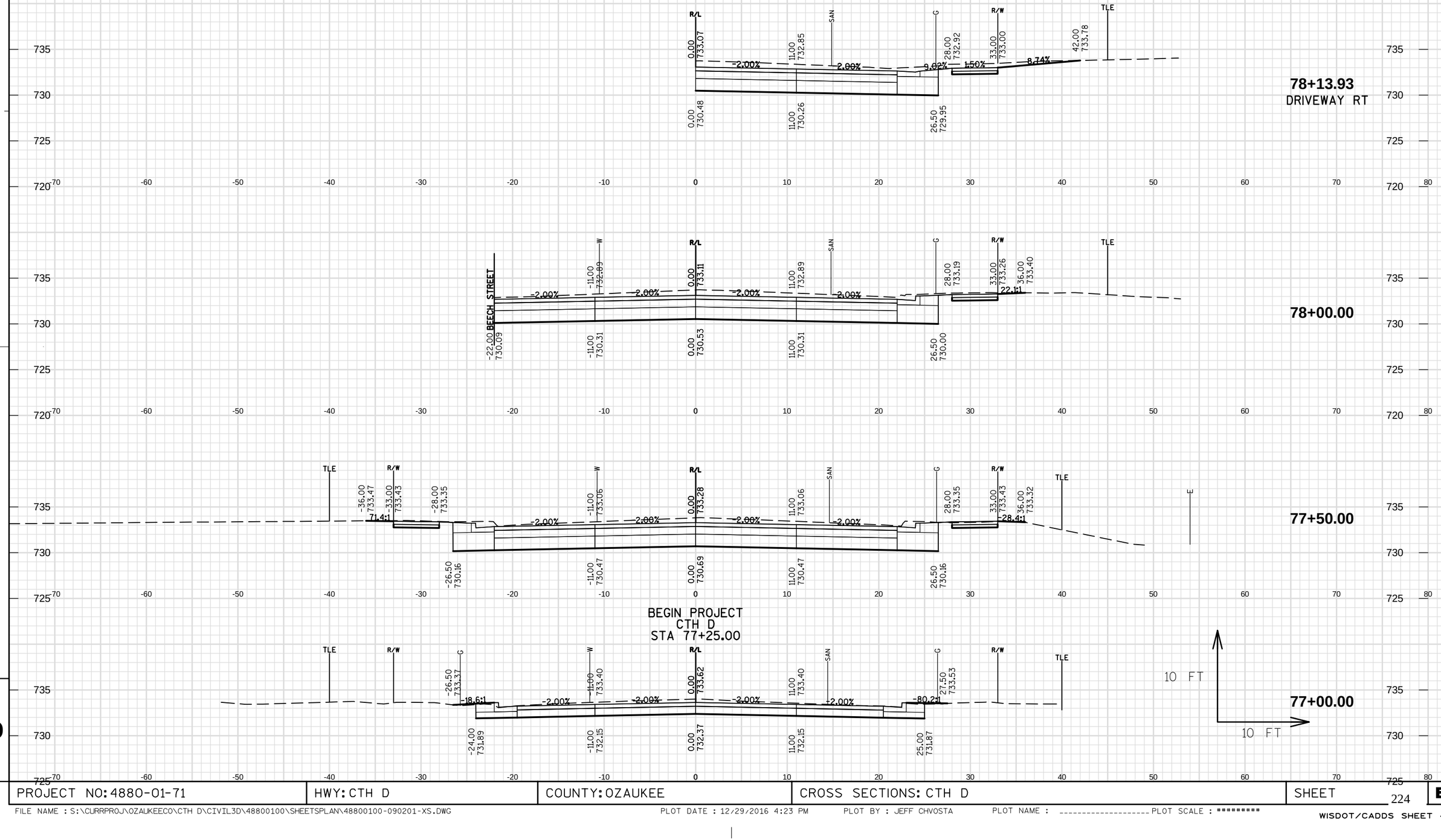

9

9

PROJECT NO: 4880-01-71	HWY: CTH D	COUNTY: OZAUKEE	CROSS SECTIONS: CTH D	SHEET 224	E

FILE NAME : S:\CURRPROJ\OZAUKEECO\CTH D\CIVIL3D\48800100\SHEETSPLAN\48800100-090201-XS.DWG PLOT DATE : 12/29/2016 4:23 PM PLOT BY : JEFF CHVOSTA PLOT NAME : _____ PLOT SCALE : *********

WISDOT/CADDS SHEET 49

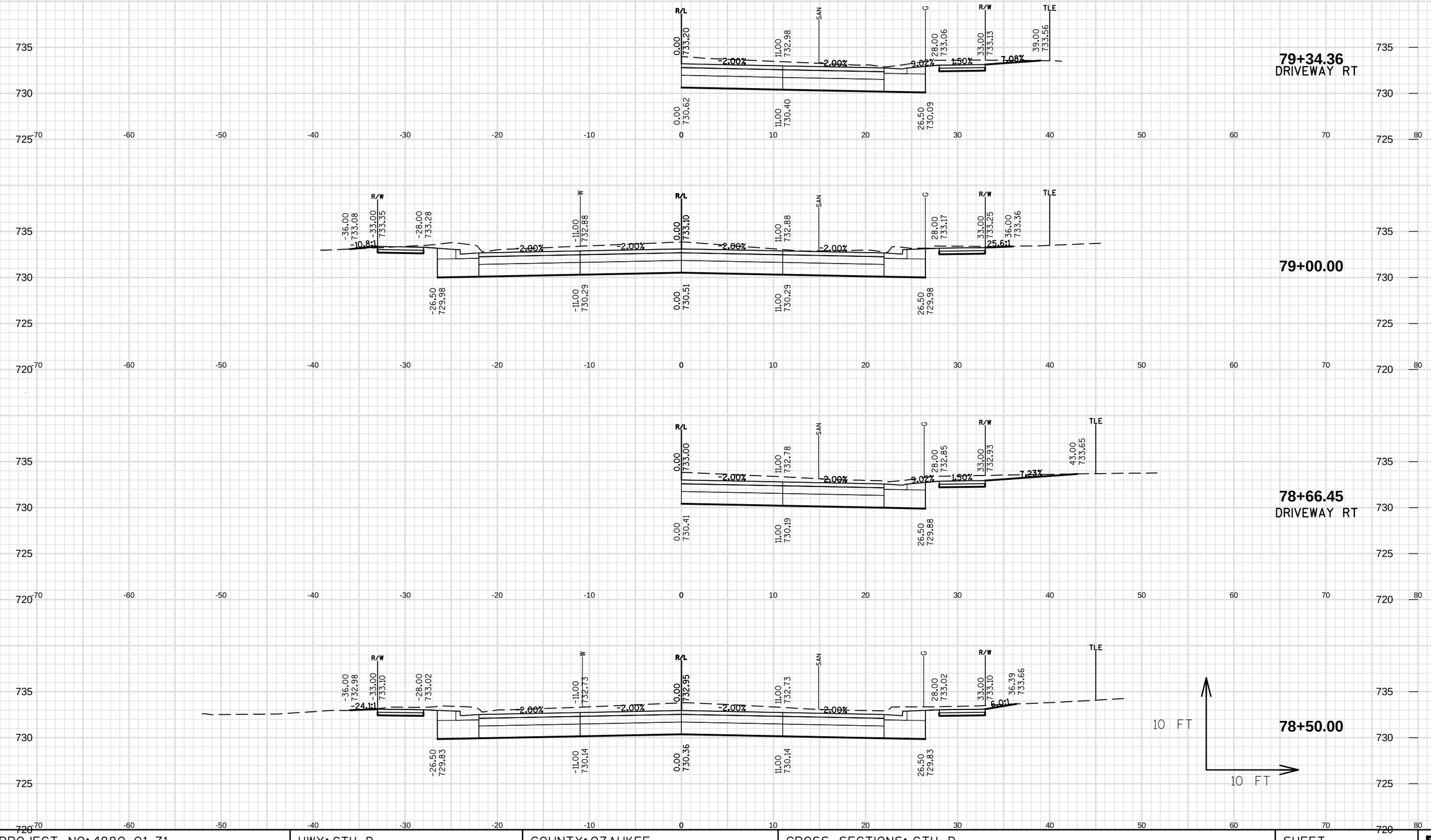

9

9

PROJECT NO: 4880-01-71	HWY: CTH D	COUNTY: OZAUKEE	CROSS SECTIONS: CTH D	SHEET 225	E

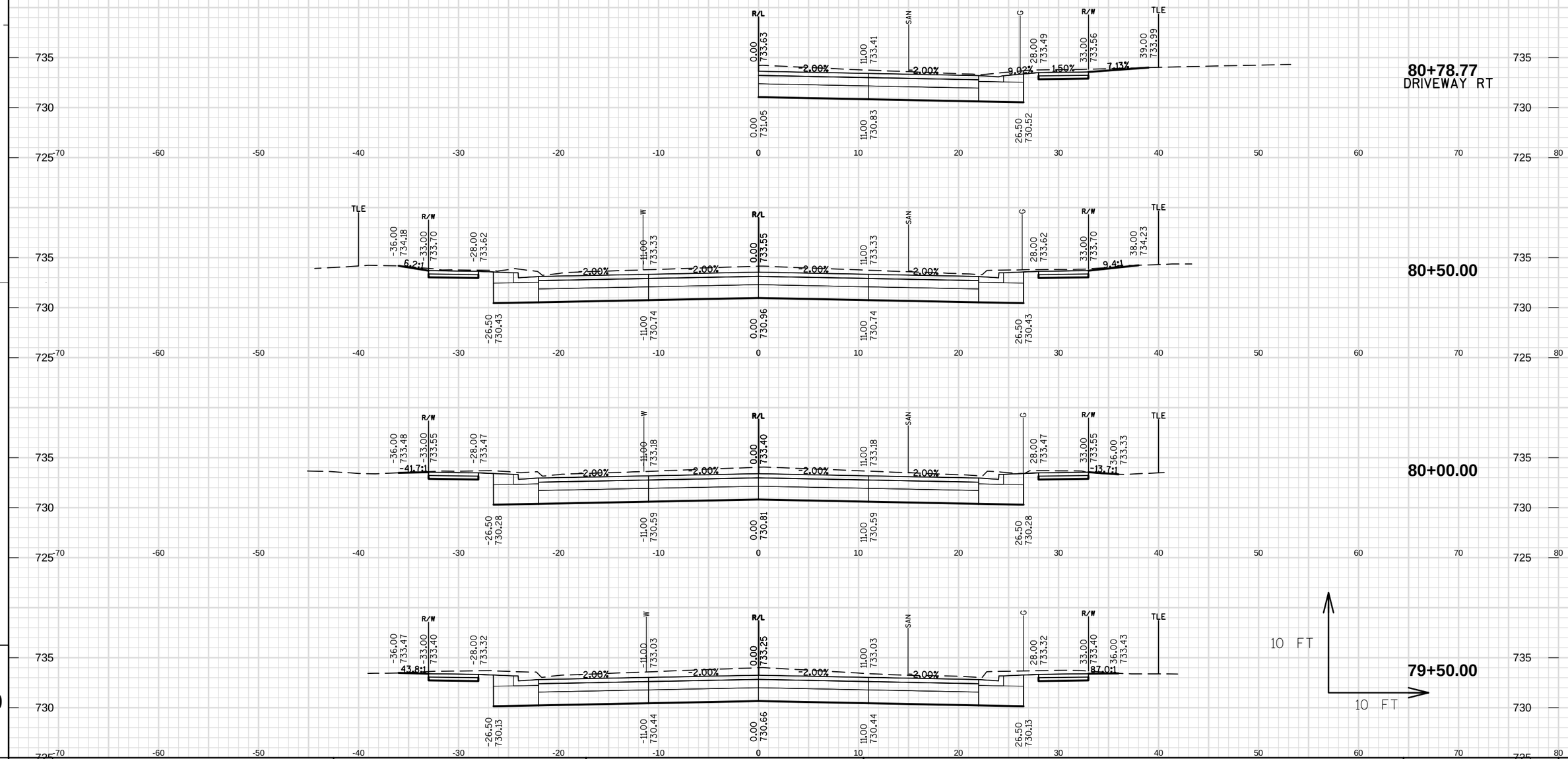

9

9

PROJECT NO: 4880-01-71	HWY: CTH D	COUNTY: OZAUKEE	CROSS SECTIONS: CTH D	SHEET 226	E

FILE NAME : S:\CURRPROJ\OZAUKEECO\CTH D\CIVIL3D\48800100\SHEETSPLAN\48800100-090201-XS.DWG PLOT DATE : 12/29/2016 4:23 PM PLOT BY : JEFF CHVOSTA PLOT NAME : _____ PLOT SCALE : ********* WISDOT/CADDS SHEET 49

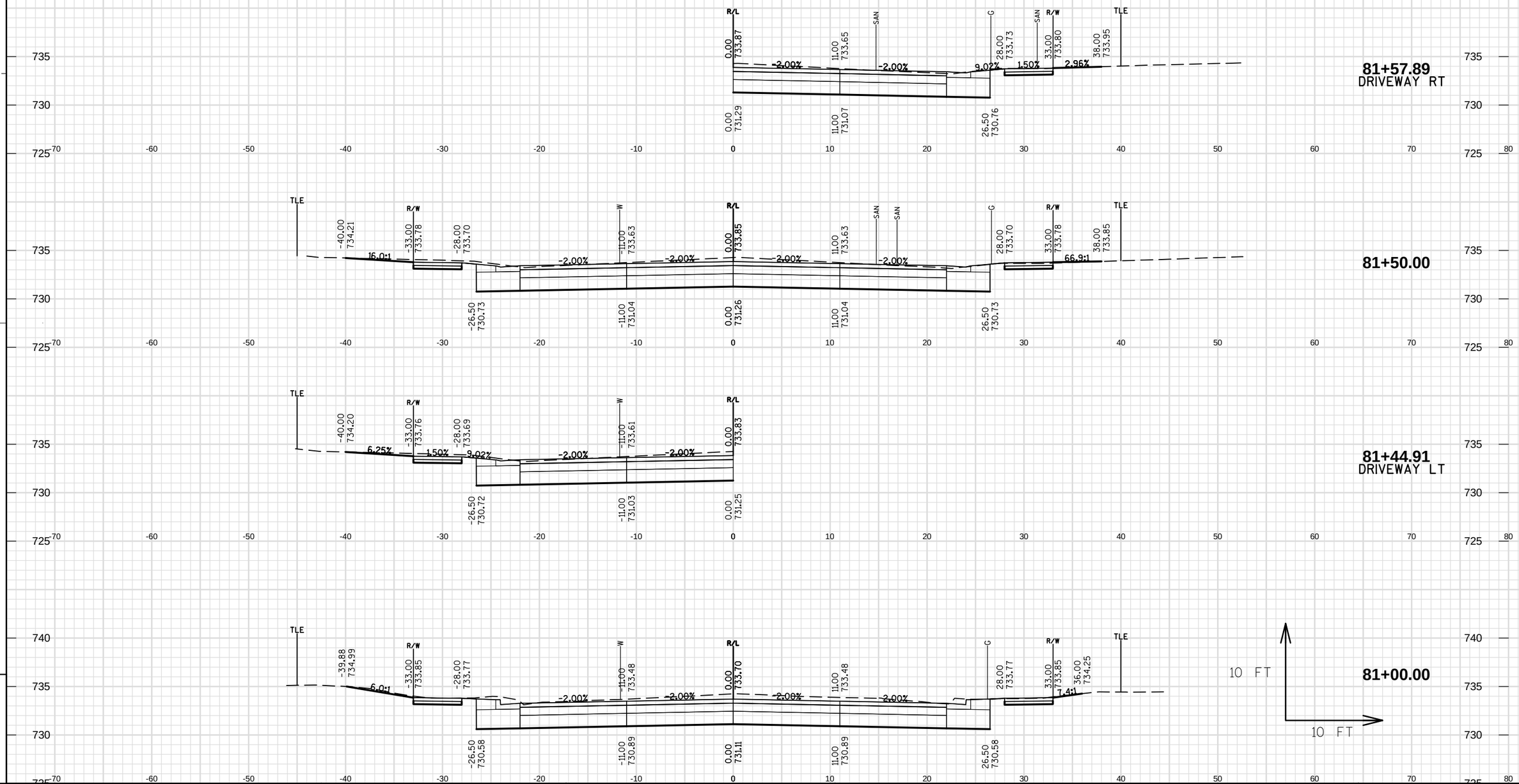

9

9

PROJECT NO: 4880-01-71	HWY: CTH D	COUNTY: OZAUKEE	CROSS SECTIONS: CTH D	SHEET 227	E

FILE NAME : S:\CURRPROJ\OZAUKEECO\CTH D\CIVIL3D\48800100\SHEETSPLAN\48800100-090201-XS.DWG PLOT DATE : 12/29/2016 4:24 PM PLOT BY : JEFF CHVOSTA PLOT NAME : ---------- PLOT SCALE : *********

WISDOT/CADDS SHEET 49

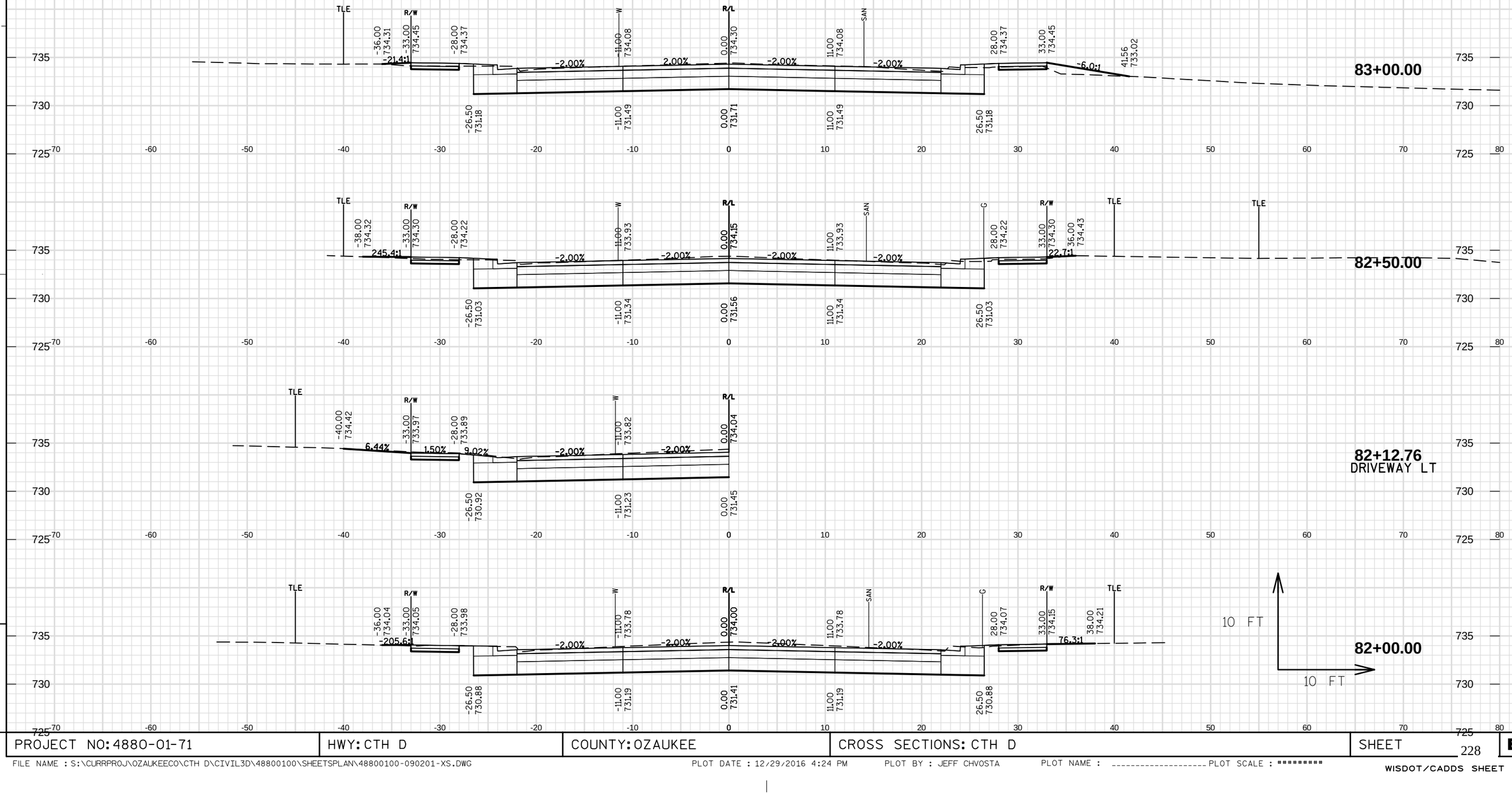

9

9

PROJECT NO: 4880-01-71	HWY: CTH D	COUNTY: OZAUKEE	CROSS SECTIONS: CTH D	SHEET 228	E

FILE NAME : S:\CURRPROJ\OZAUKEECO\CTH D\CIVIL3D\48800100\SHEETSPLAN\48800100-090201-XS.DWG PLOT DATE : 12/29/2016 4:24 PM PLOT BY : JEFF CHVOSTA PLOT NAME : ---------- PLOT SCALE : ********* WISDOT/CADDS SHEET 49

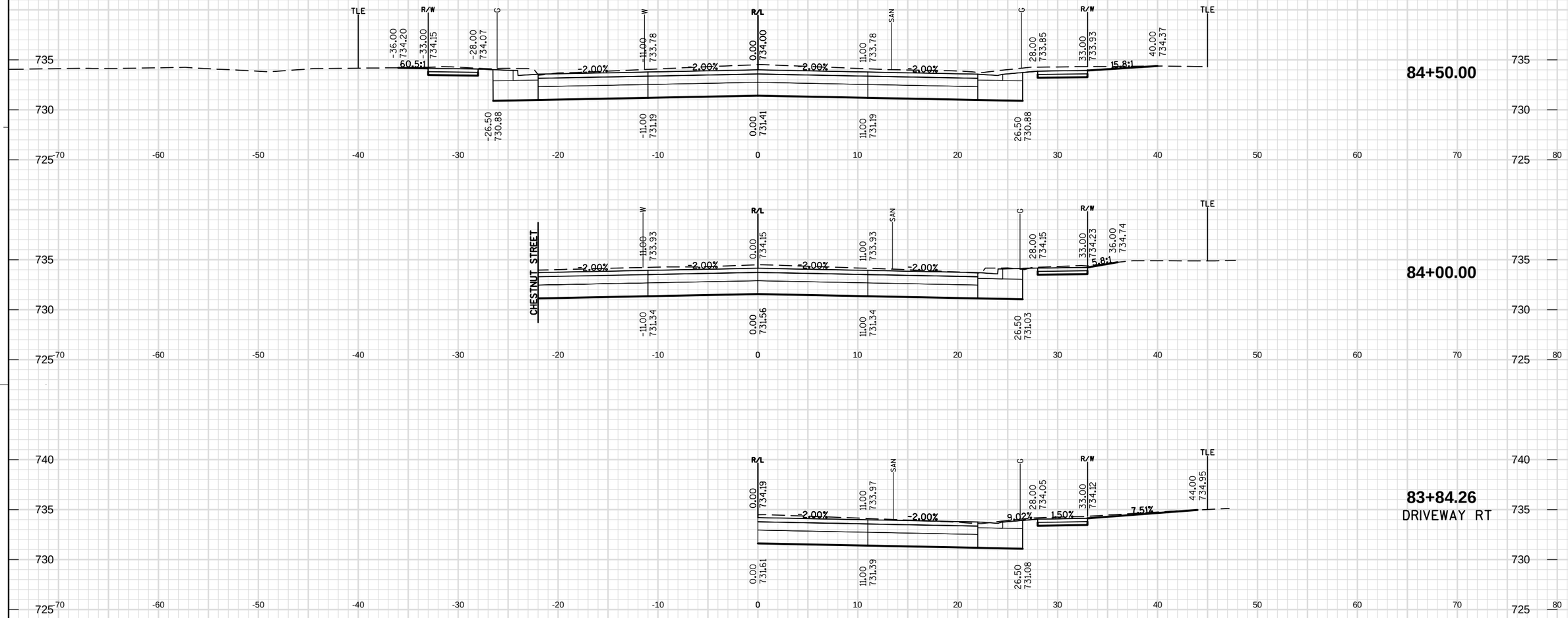

9

9

PROJECT NO: 4880-01-71	HWY: CTH D	COUNTY: OZAUKEE	CROSS SECTIONS: CTH D	SHEET 229	E

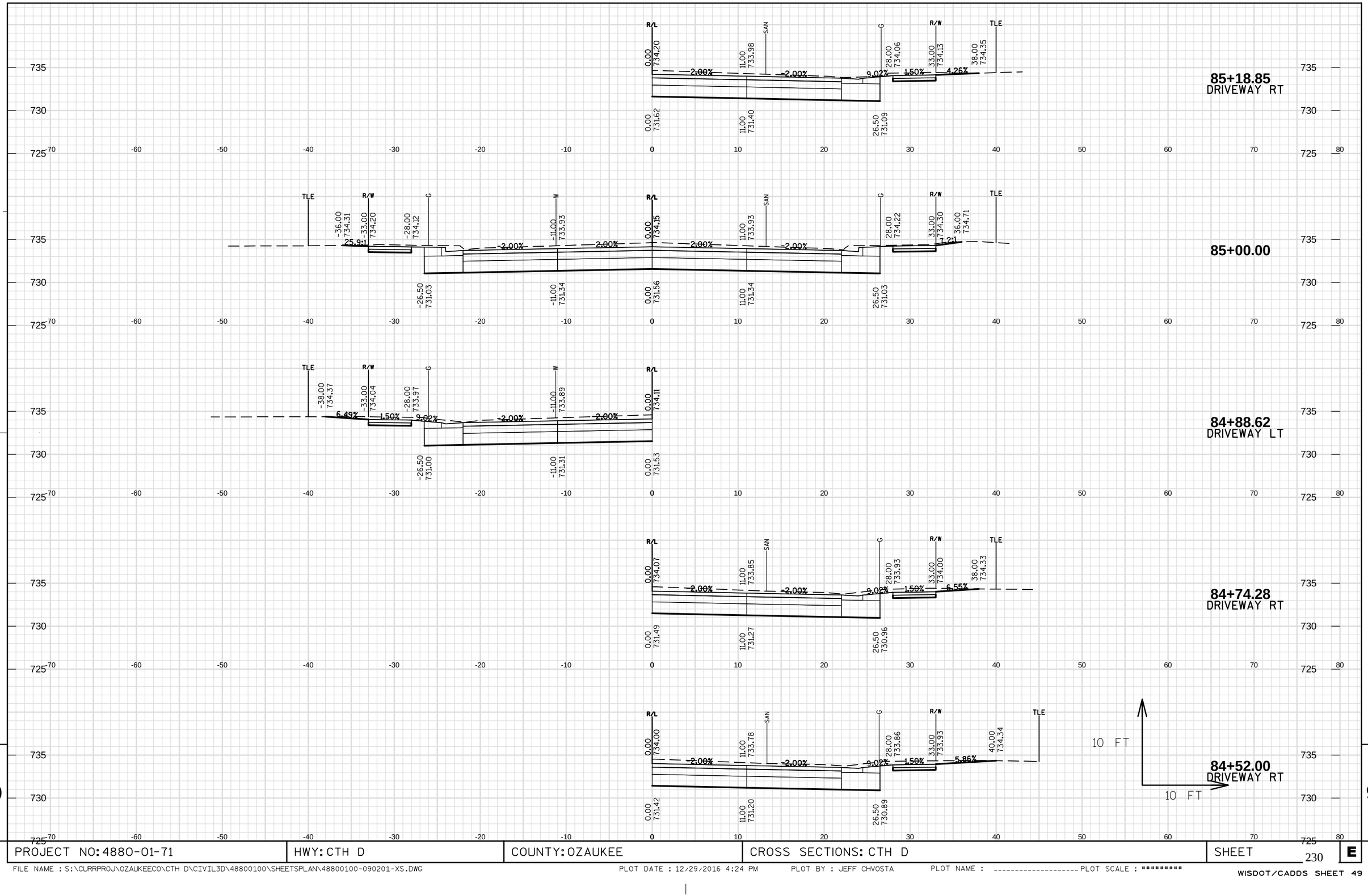

9

9

PROJECT NO: 4880-01-71	HWY: CTH D	COUNTY: OZAUKEE	CROSS SECTIONS: CTH D	SHEET 230	E

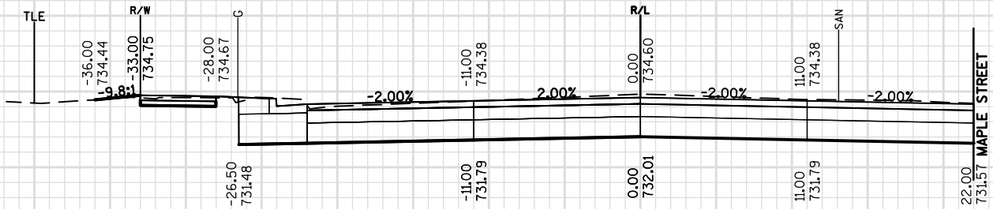

86+50.00

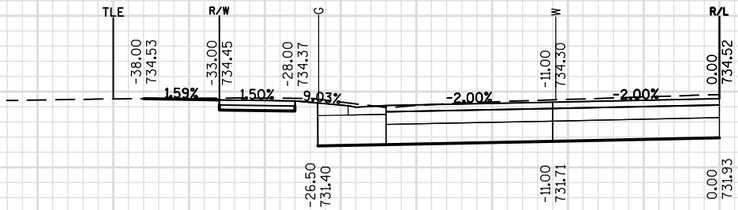

86+23.29
DRIVEWAY LT

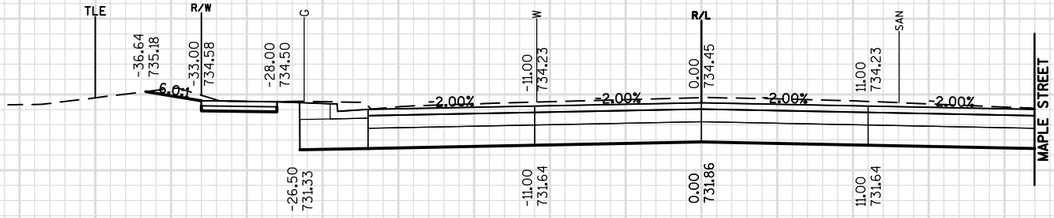

86+00.00

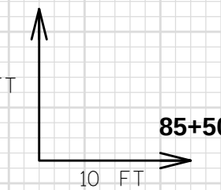

85+50.00

9

9

PROJECT NO: 4880-01-71	HWY: CTH D	COUNTY: OZAUKEE	CROSS SECTIONS: CTH D	SHEET 231 E

FILE NAME : S:\CURRPROJ\OZAUKEECO\CTH D\CIVIL3D\48800100\SHEETSPLAN\48800100-090201-XS.DWG PLOT DATE : 12/29/2016 4:24 PM PLOT BY : JEFF CHVOSTA PLOT NAME : _____ PLOT SCALE : *********

WISDOT/CADDS SHEET 49

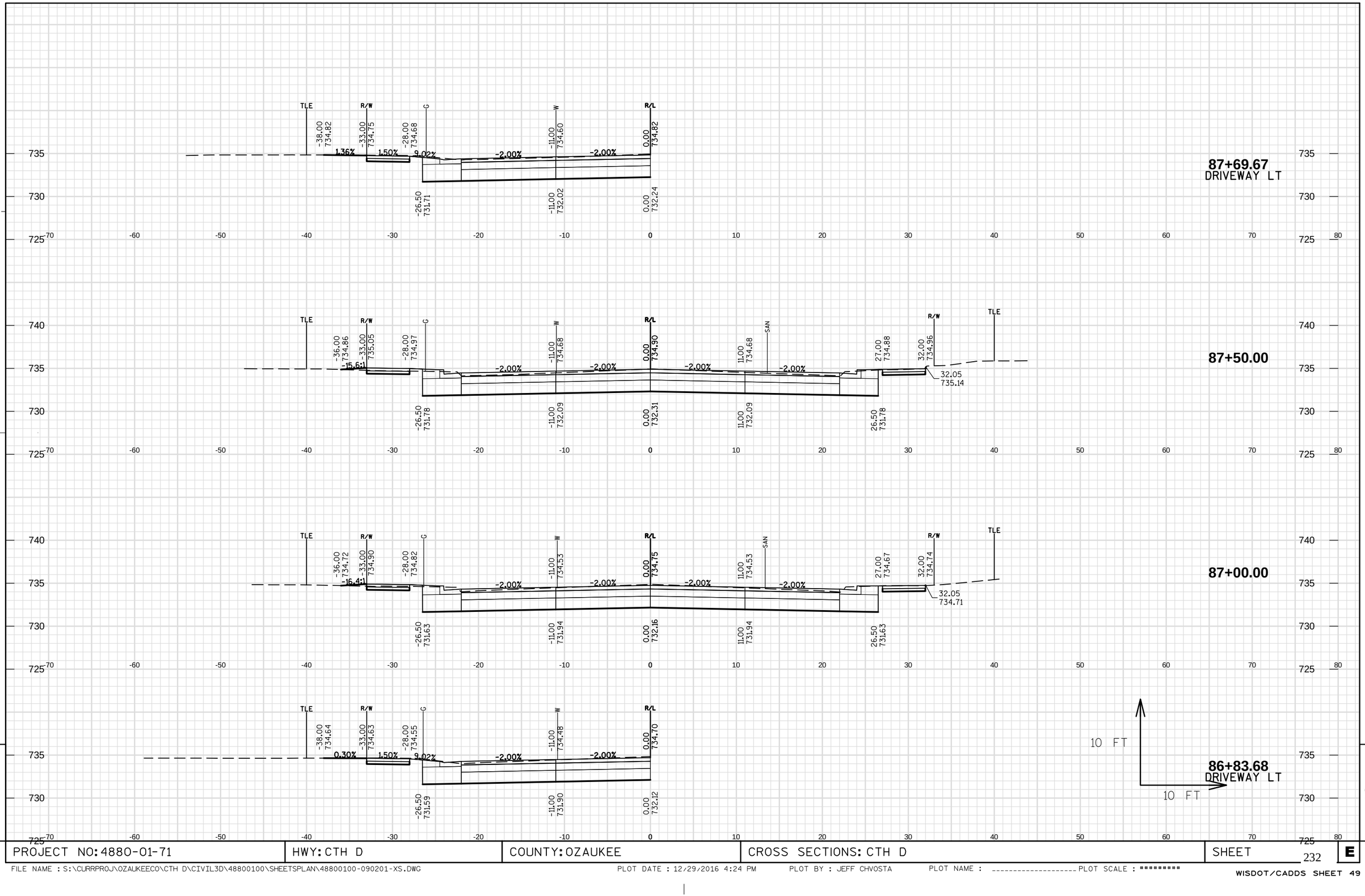

9

9

PROJECT NO: 4880-01-71	HWY: CTH D	COUNTY: OZAUKEE	CROSS SECTIONS: CTH D	SHEET 232	E

FILE NAME : S:\CURRPROJ\OZAUKEECO\CTH D\CIVIL3D\48800100\SHEETSPLAN\48800100-090201-XS.DWG PLOT DATE : 12/29/2016 4:24 PM PLOT BY : JEFF CHVOSTA PLOT NAME : _____ PLOT SCALE : *********

WISDOT/CADDS SHEET 49

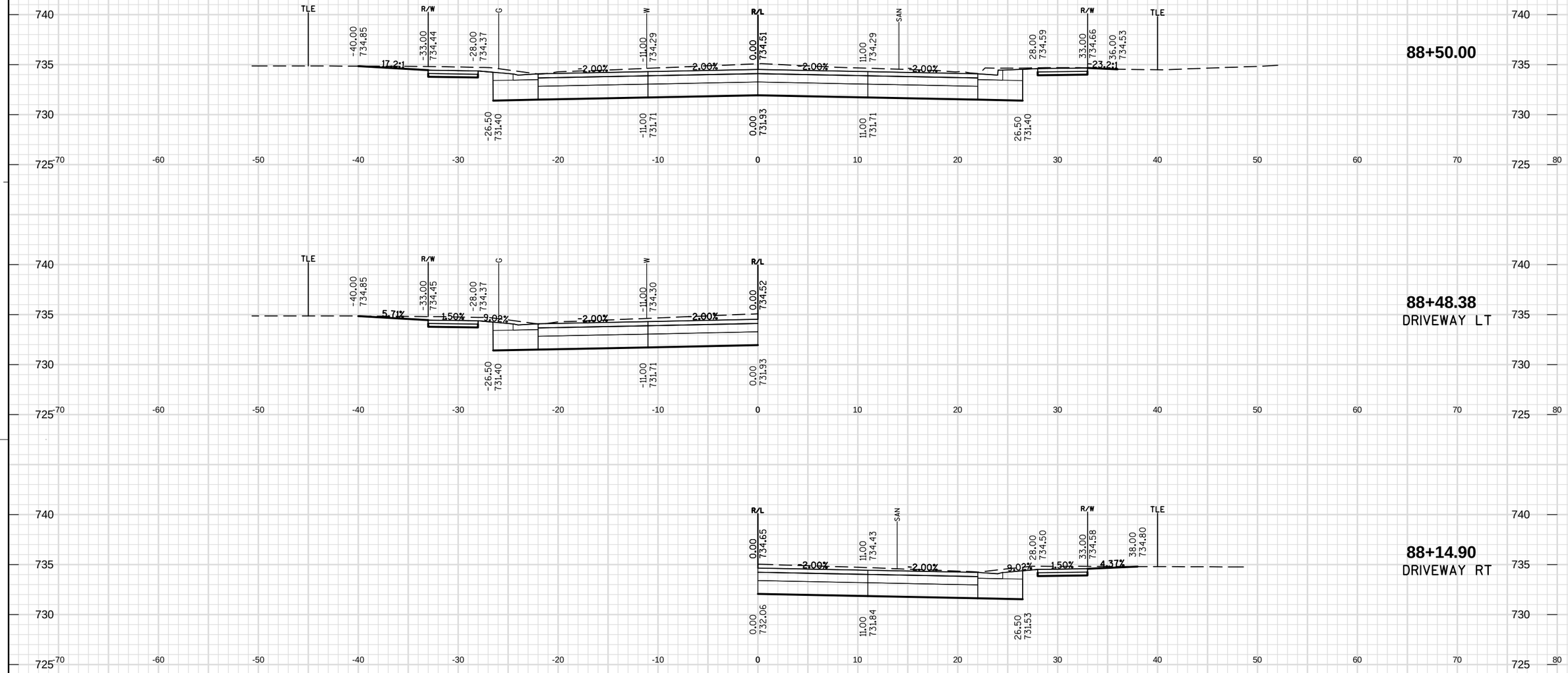

9

9

PROJECT NO: 4880-01-71	HWY: CTH D	COUNTY: OZAUKEE	CROSS SECTIONS: CTH D	SHEET 233	E

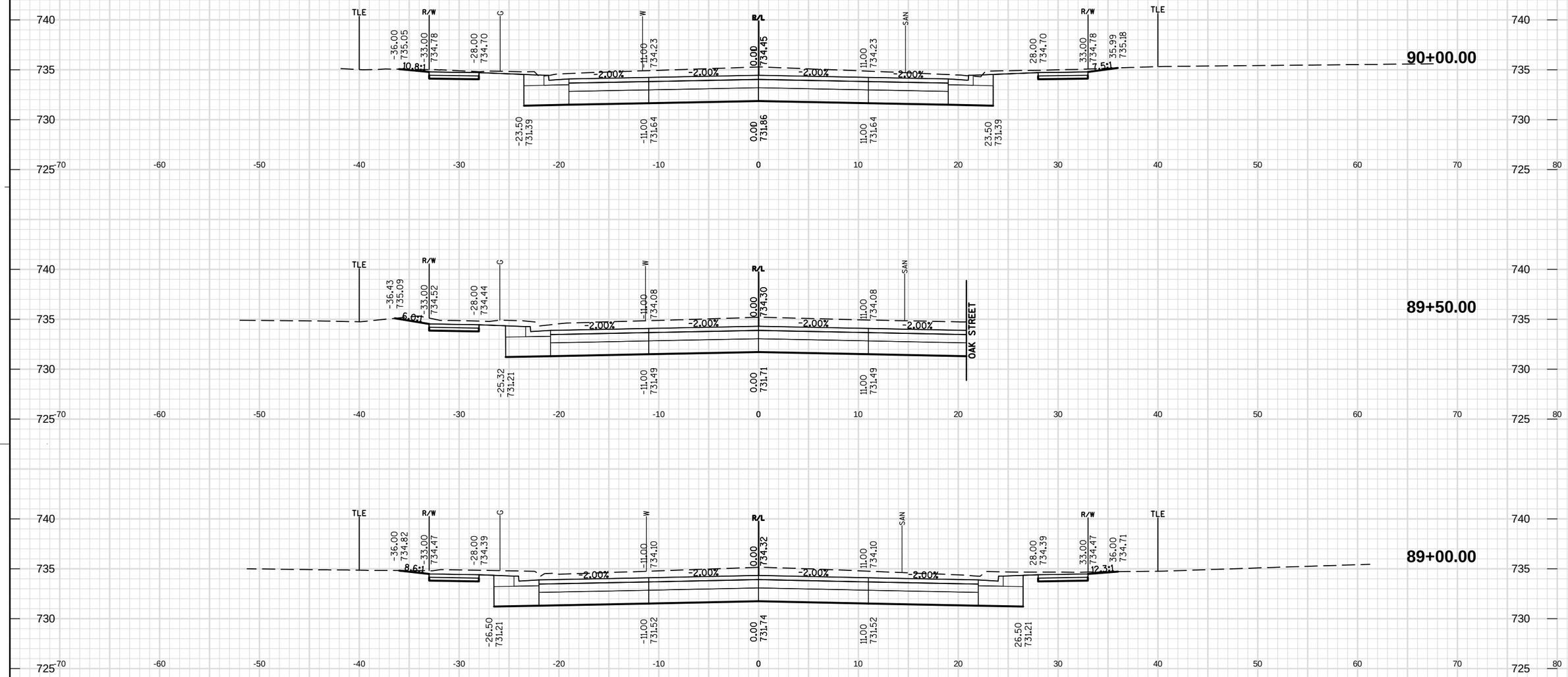

PROJECT NO: 4880-01-71	HWY: CTH D	COUNTY: OZAUKEE	CROSS SECTIONS: CTH D	SHEET 234 E

FILE NAME : S:\CURRPROJ\OZAUKEECO\CTH D\CIVIL3D\48800100\SHEETSPLAN\48800100-090201-XS.DWG PLOT DATE : 12/29/2016 4:24 PM PLOT BY : JEFF CHVOSTA PLOT NAME : _____ PLOT SCALE : *********

WISDOT/CADDS SHEET 49

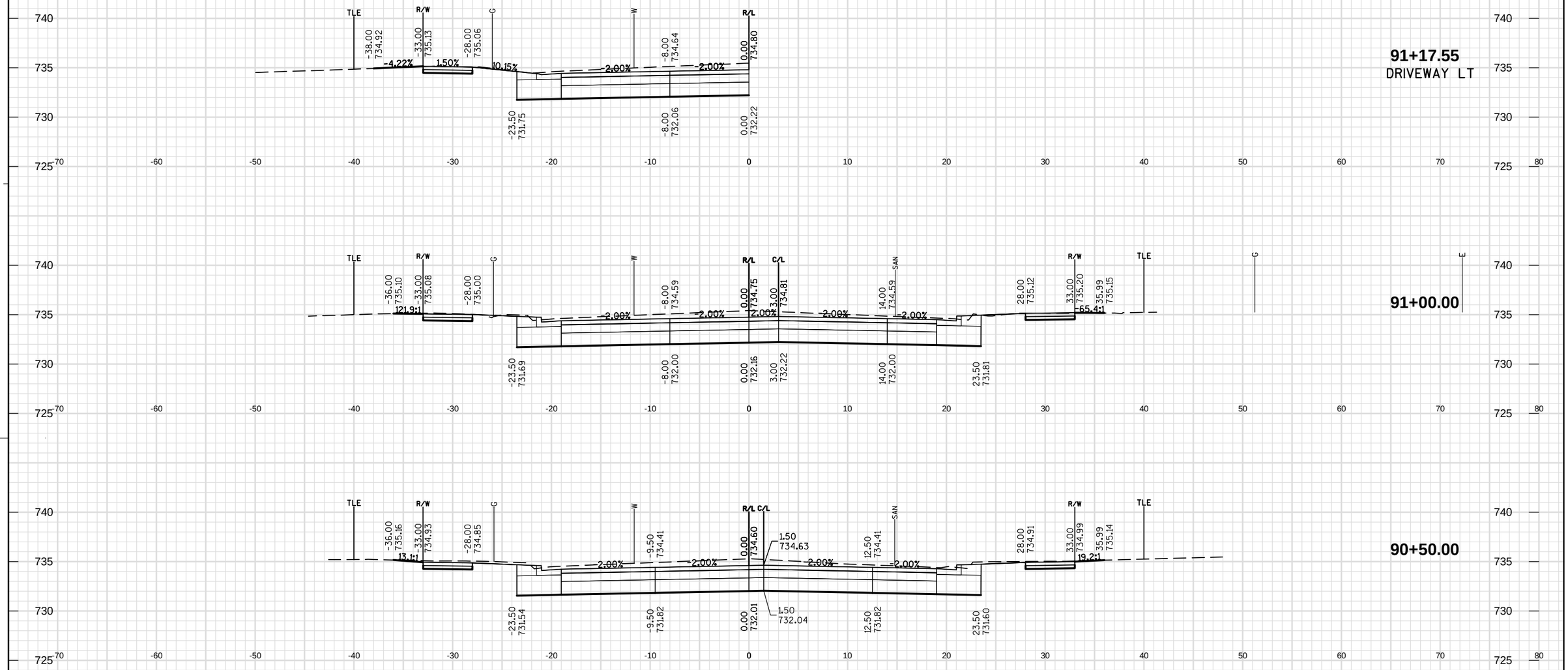

PROJECT NO: 4880-01-71	HWY: CTH D	COUNTY: OZAUKEE	CROSS SECTIONS: CTH D	SHEET 235 E

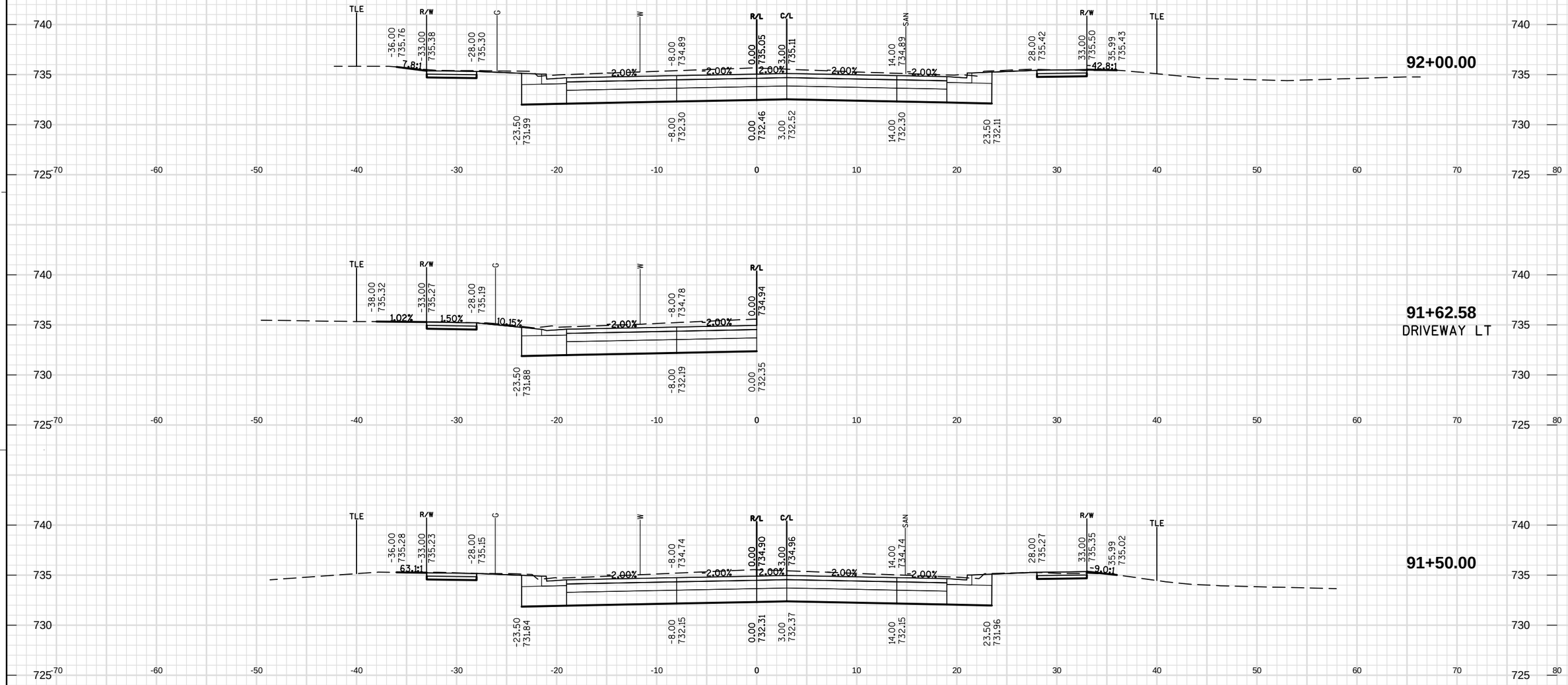

9

PROJECT NO: 4880-01-71	HWY: CTH D	COUNTY: OZAUKEE	CROSS SECTIONS: CTH D	SHEET 236	E

FILE NAME : S:\CURRPROJ\OZAUKEECO\CTH D\CIVIL3D\48800100\SHEETSPLAN\48800100-090201-XS.DWG PLOT DATE : 12/29/2016 4:24 PM PLOT BY : JEFF CHVOSTA PLOT NAME : ---------- PLOT SCALE : ********* WISDOT/CADDS SHEET 49

9

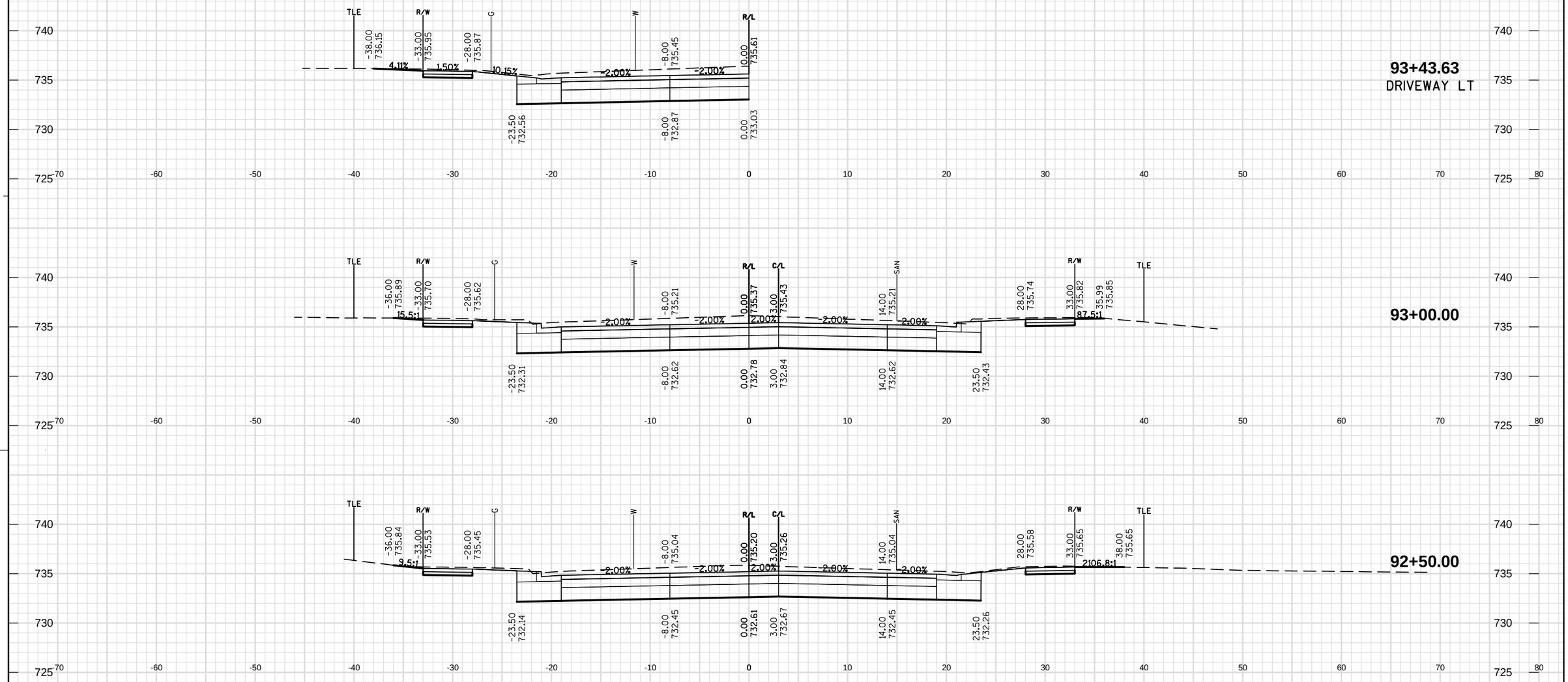

PROJECT NO: 4880-01-71	HWY: CTH D	COUNTY: OZAUKEE	CROSS SECTIONS: CTH D	SHEET 237 E

FILE NAME : S:\CURRPROJ\OZAUKEECO\CTH D\CIVIL3D\48800100\SHEETSPLAN\48800100-090201-XS.DWG PLOT DATE : 12/29/2016 4:24 PM PLOT BY : JEFF CHVOSTA PLOT NAME : ---------- PLOT SCALE : ********* WISDOT/CADDS SHEET 49

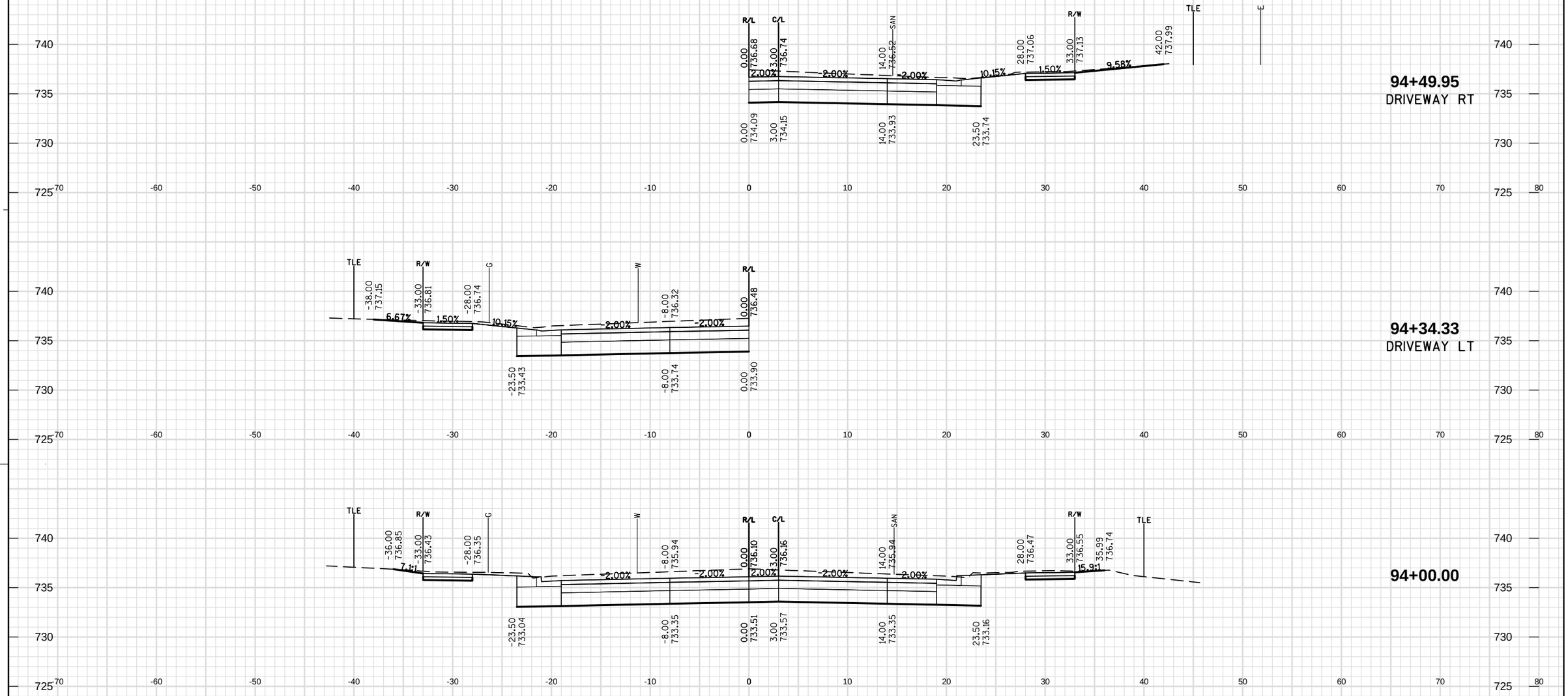

9

9

PROJECT NO: 4880-01-71	HWY: CTH D	COUNTY: OZAUKEE	CROSS SECTIONS: CTH D	SHEET 238	E

FILE NAME : S:\CURRPROJ\OZAUKEECO\CTH D\CIVIL3D\48800100\SHEETSPLAN\48800100-090201-XS.DWG PLOT DATE : 12/29/2016 4:24 PM PLOT BY : JEFF CHVOSTA PLOT NAME : ---------- PLOT SCALE : *********

WISDOT/CADDS SHEET 49

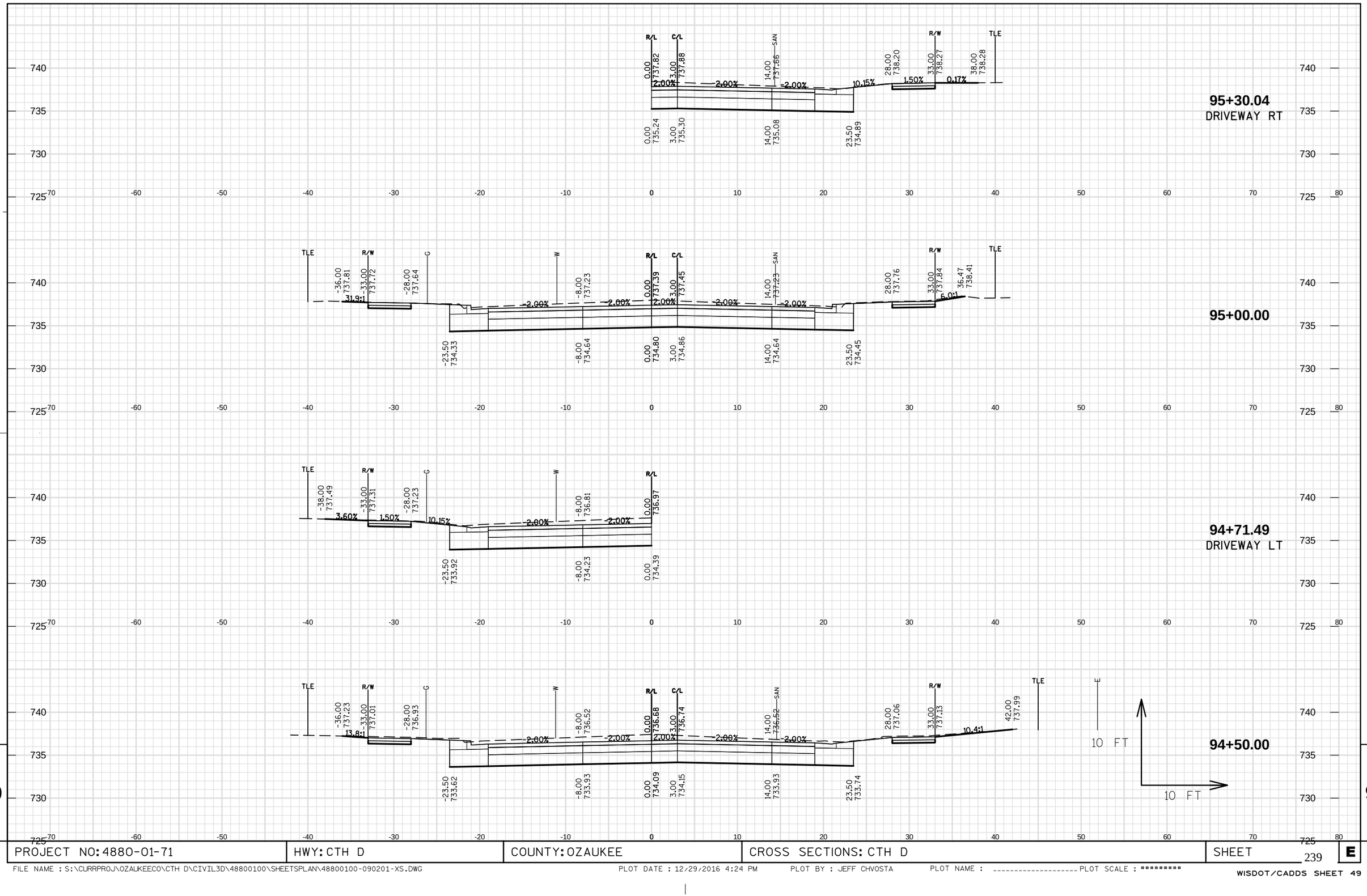

PROJECT NO: 4880-01-71	HWY: CTH D	COUNTY: OZAUKEE	CROSS SECTIONS: CTH D	SHEET 239	E

FILE NAME : S:\CURRPROJ\OZAUKEECO\CTH D\CIVIL3D\48800100\SHEETSPLAN\48800100-090201-XS.DWG PLOT DATE : 12/29/2016 4:24 PM PLOT BY : JEFF CHVOSTA PLOT NAME : ---------- PLOT SCALE : ********* WISDOT/CADDS SHEET 49

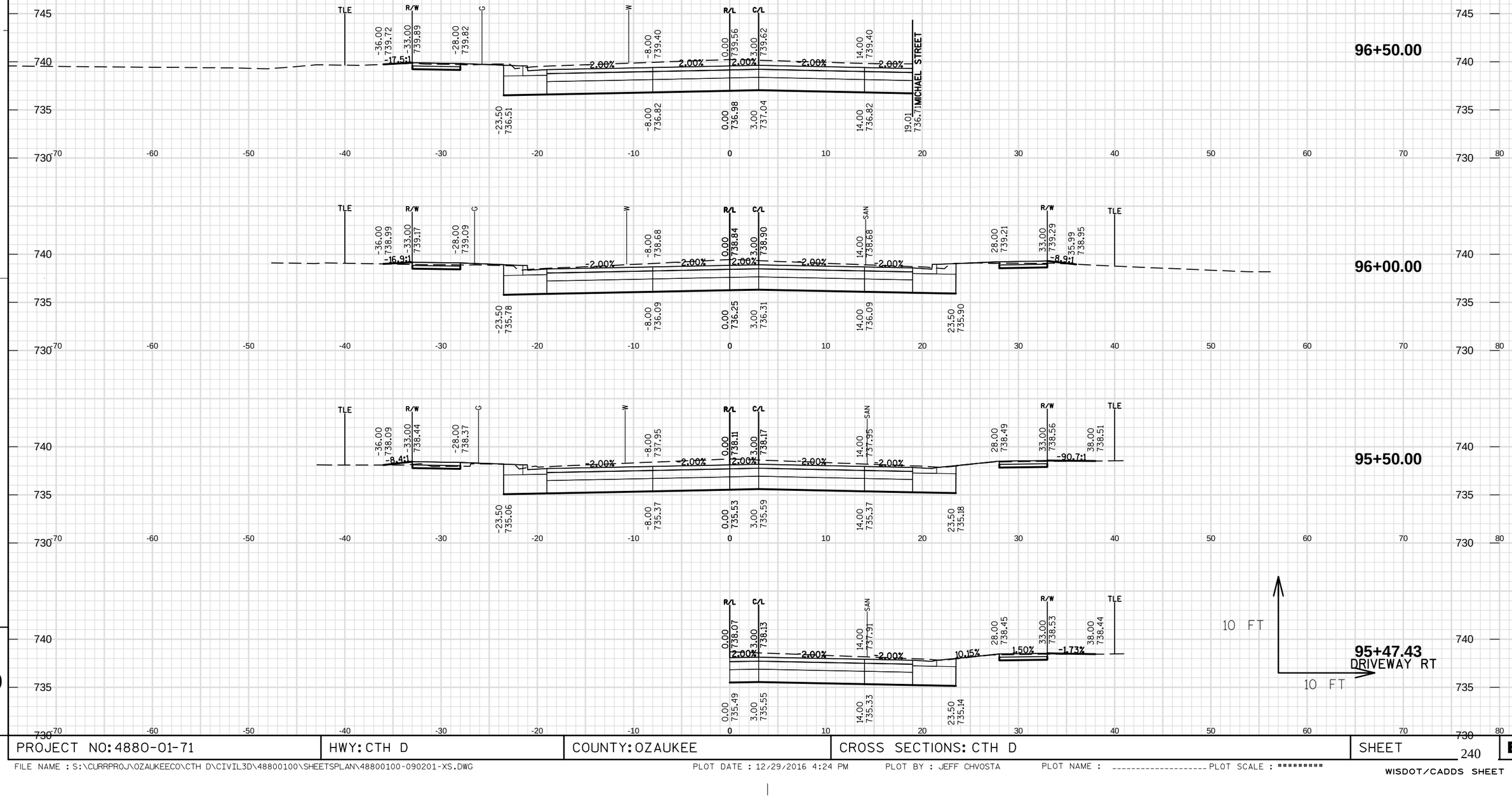

9

9

PROJECT NO: 4880-01-71	HWY: CTH D	COUNTY: OZAUKEE	CROSS SECTIONS: CTH D	SHEET 240 E

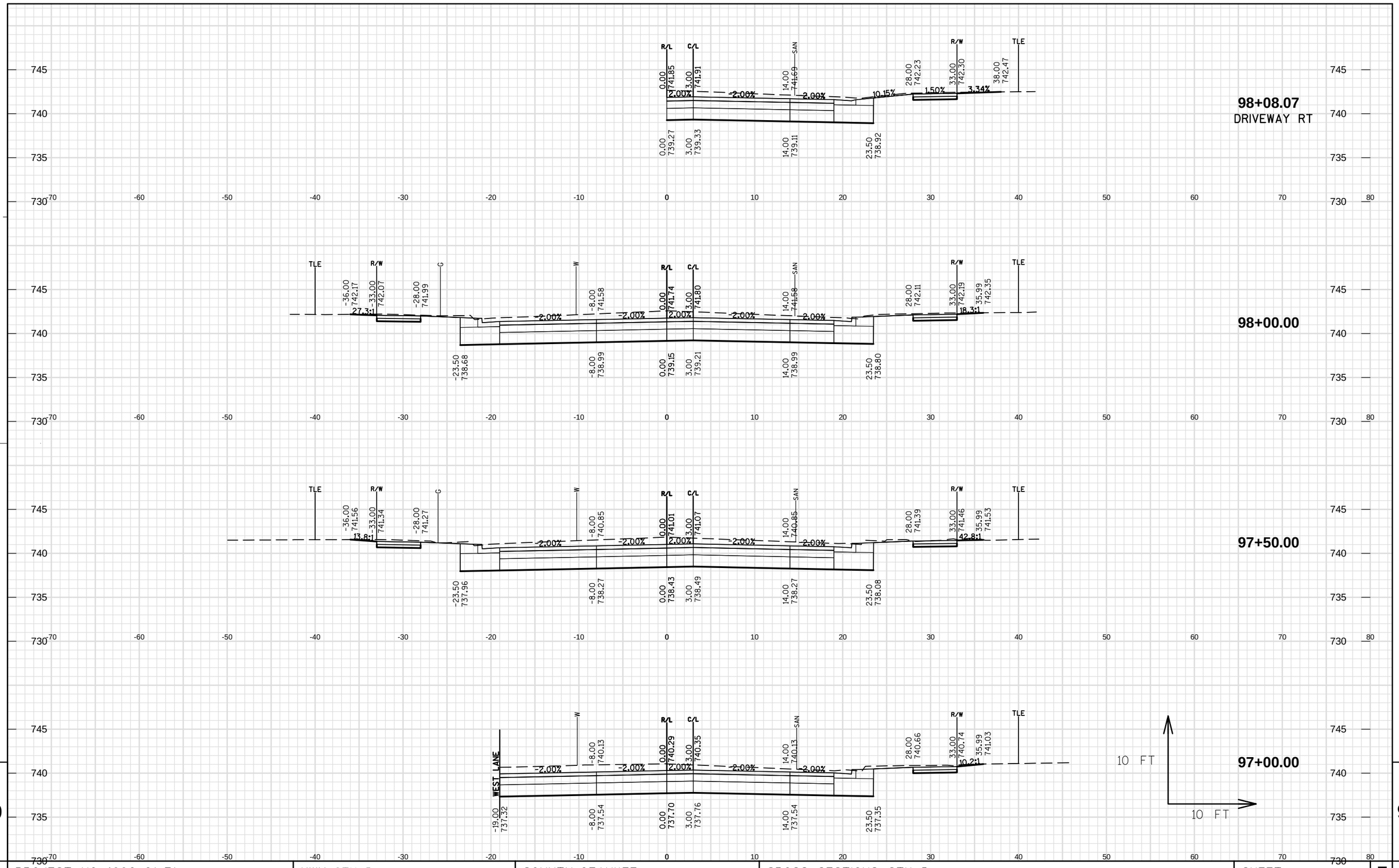

9

PROJECT NO: 4880-01-71	HWY: CTH D	COUNTY: OZAUKEE	CROSS SECTIONS: CTH D	SHEET 241	E

FILE NAME : S:\CURRPROJ\OZAUKEECO\CTH D\CIVIL3D\48800100\SHEETSPLAN\48800100-090201-XS.DWG PLOT DATE : 12/29/2016 4:24 PM PLOT BY : JEFF CHVOSTA PLOT NAME : ---------- PLOT SCALE : ********* WISDOT/CADDS SHEET 49

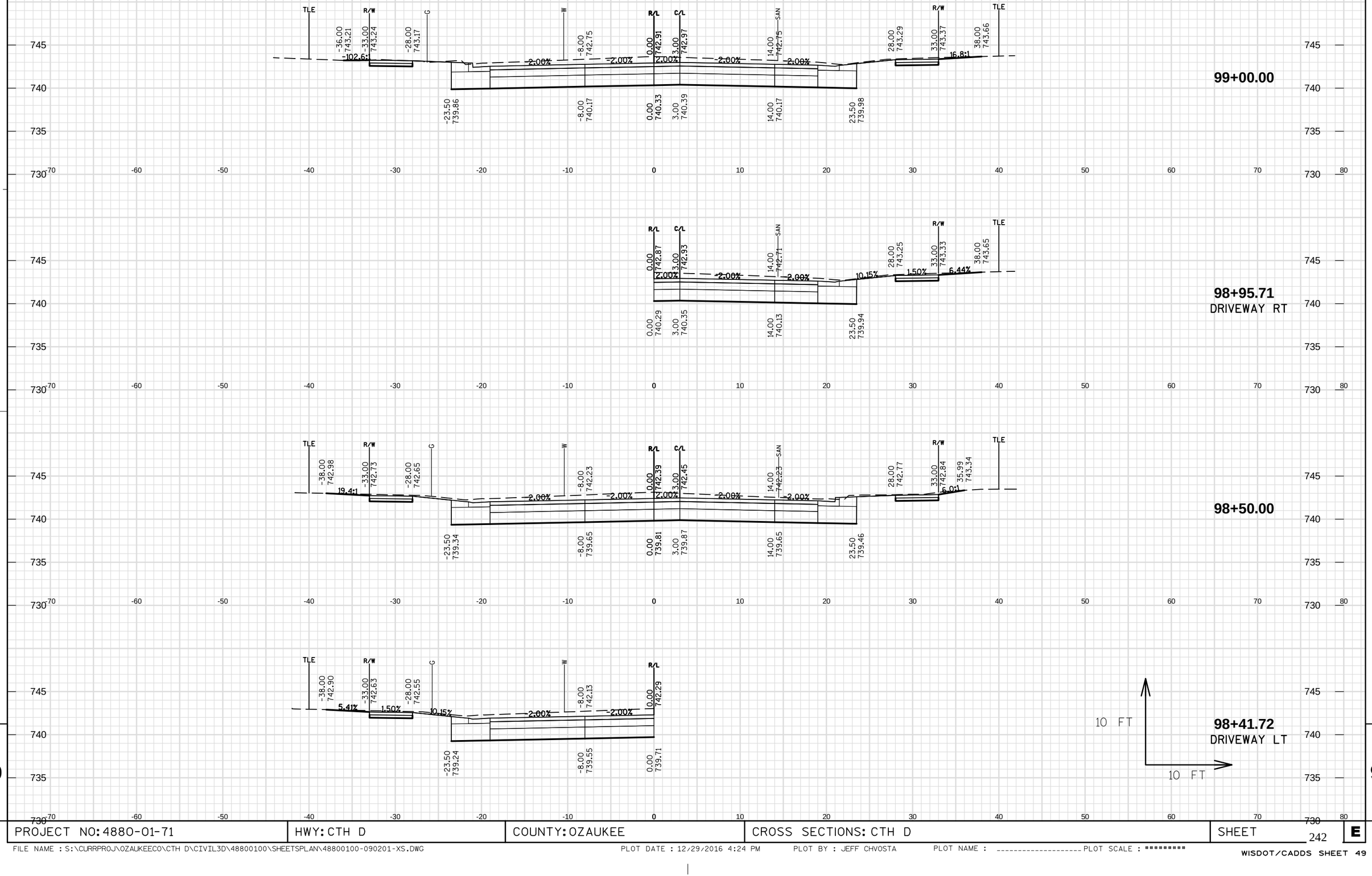

PROJECT NO: 4880-01-71	HWY: CTH D	COUNTY: OZAUKEE	CROSS SECTIONS: CTH D	SHEET 242 E

FILE NAME : S:\CURRPROJ\OZAUKEECO\CTH D\CIVIL3D\48800100\SHEETSPLAN\48800100-090201-XS.DWG PLOT DATE : 12/29/2016 4:24 PM PLOT BY : JEFF CHVOSTA PLOT NAME : ---------- PLOT SCALE : ********* WISDOT/CADDS SHEET 49

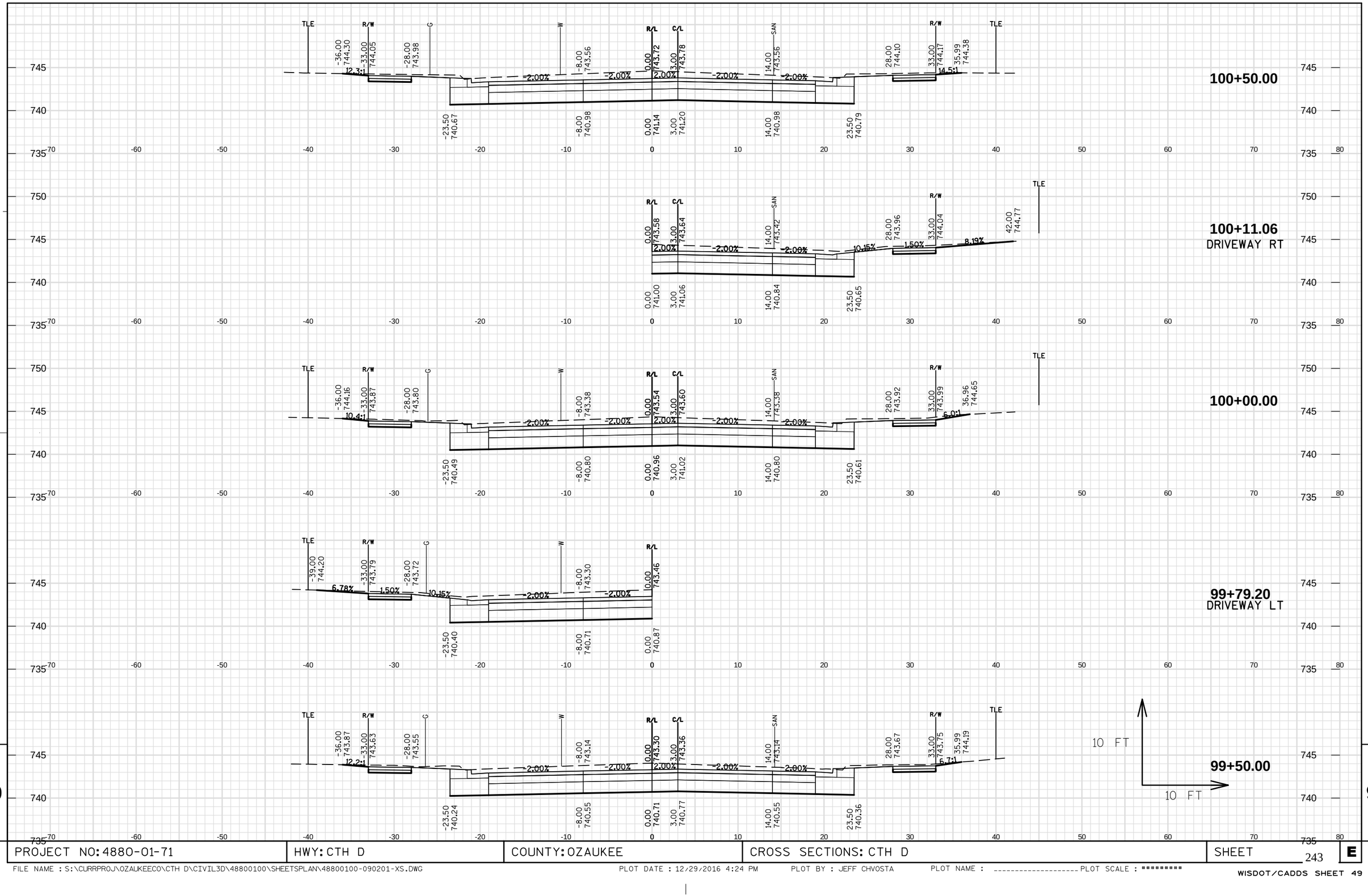

9

PROJECT NO: 4880-01-71	HWY: CTH D	COUNTY: OZAUKEE	CROSS SECTIONS: CTH D	SHEET 243	E

FILE NAME : S:\CURRPROJ\OZAUKEECO\CTH D\CIVIL3D\48800100\SHEETSPLAN\48800100-090201-XS.DWG PLOT DATE : 12/29/2016 4:24 PM PLOT BY : JEFF CHVOSTA PLOT NAME : ---------- PLOT SCALE : ********* WISDOT/CADDS SHEET 49

9

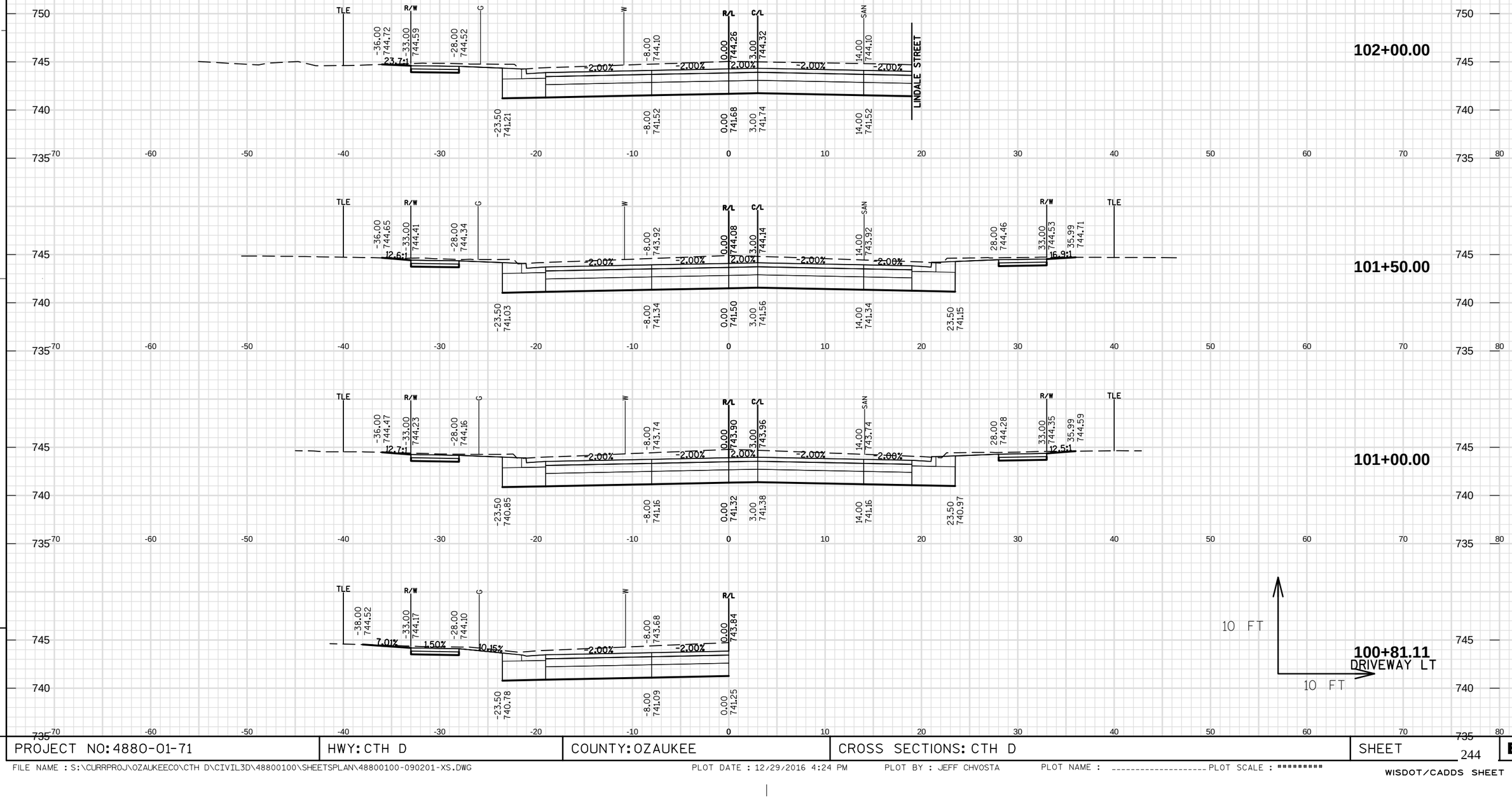

PROJECT NO: 4880-01-71	HWY: CTH D	COUNTY: OZAUKEE	CROSS SECTIONS: CTH D	SHEET 244 E

FILE NAME : S:\CURRPROJ\OZAUKEECO\CTH D\CIVIL3D\48800100\SHEETSPLAN\48800100-090201-XS.DWG PLOT DATE : 12/29/2016 4:24 PM PLOT BY : JEFF CHVOSTA PLOT NAME : ---------- PLOT SCALE : ********* WISDOT/CADDS SHEET 49

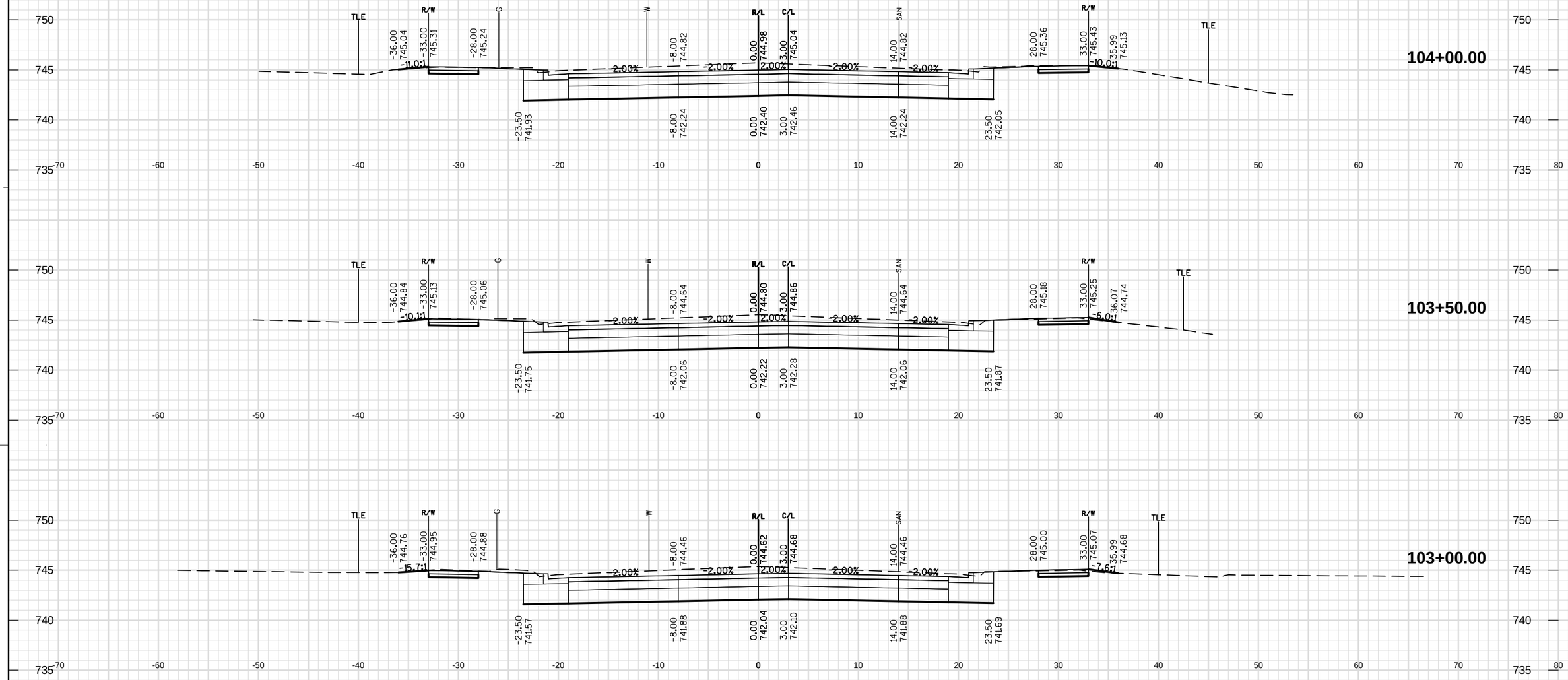

9

PROJECT NO: 4880-01-71	HWY: CTH D	COUNTY: OZAUKEE	CROSS SECTIONS: CTH D	SHEET 245	E

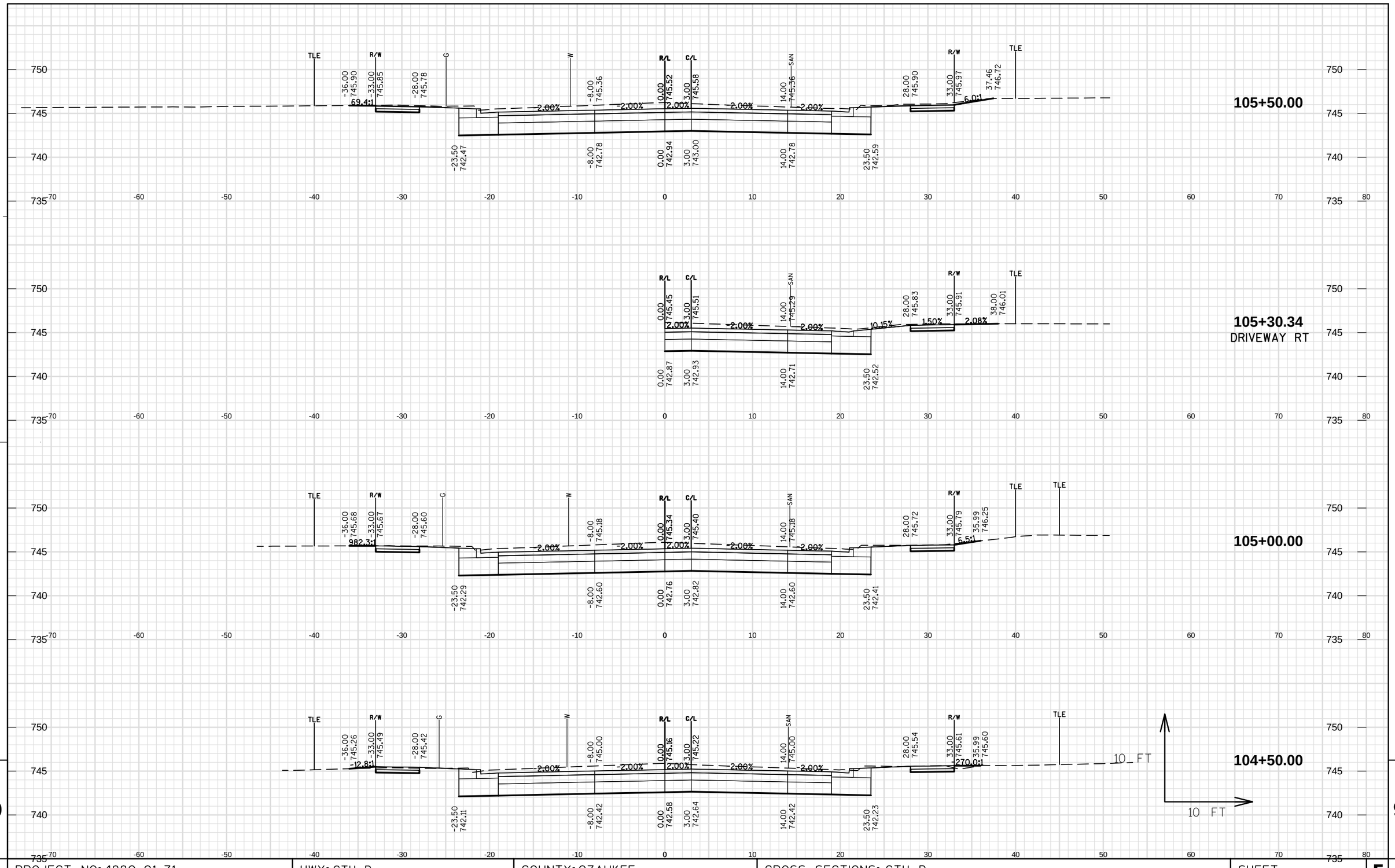

9

9

PROJECT NO: 4880-01-71	HWY: CTH D	COUNTY: OZAUKEE	CROSS SECTIONS: CTH D	SHEET 246	E

FILE NAME : S:\CURRPROJ\OZAUKEECO\CTH D\CIVIL3D\48800100\SHEETSPLAN\48800100-090201-XS.DWG PLOT DATE : 12/29/2016 4:24 PM PLOT BY : JEFF CHVOSTA PLOT NAME : ---------- PLOT SCALE : *********

WISDOT/CADDS SHEET 49

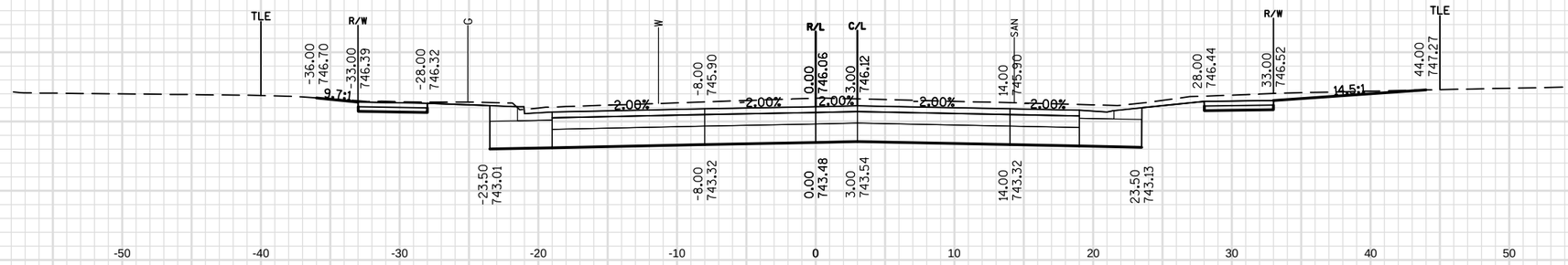

107+00.00

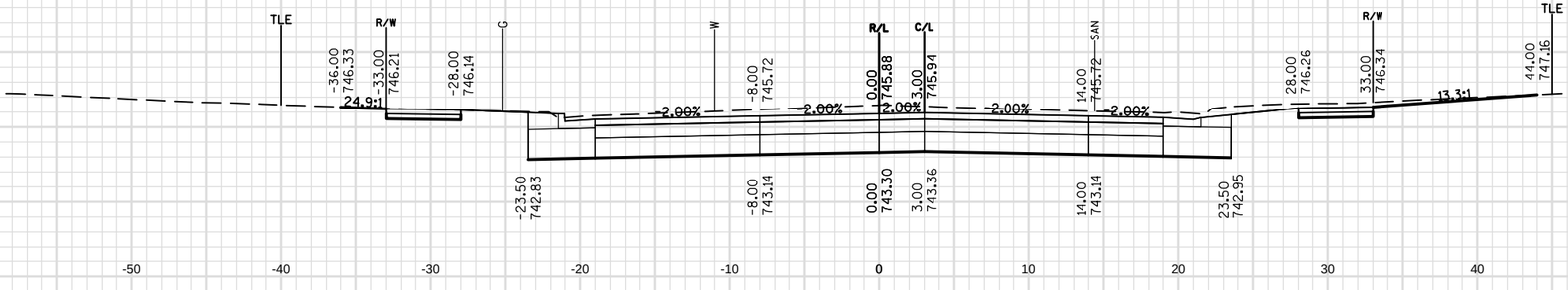

106+50.00

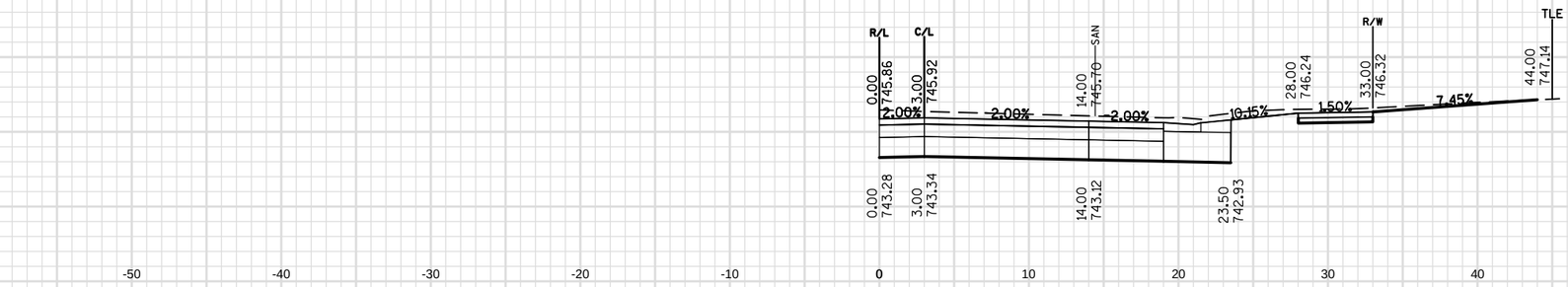

106+45.40
DRIVEWAY RT

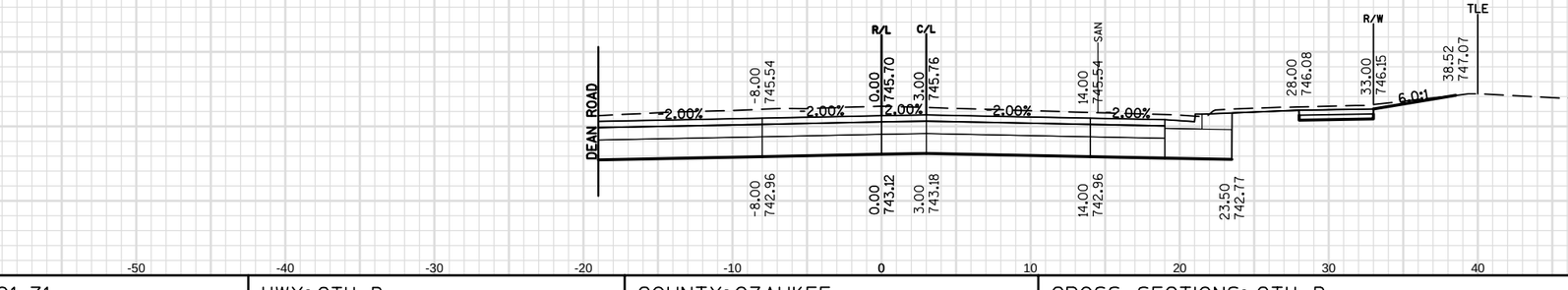

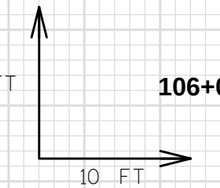

106+00.00

9

9

PROJECT NO: 4880-01-71	HWY: CTH D	COUNTY: OZAUKEE	CROSS SECTIONS: CTH D	SHEET 247	E

FILE NAME : S:\CURRPROJ\OZAUKEECO\CTH D\CIVIL3D\48800100\SHEETSPLAN\48800100-090201-XS.DWG PLOT DATE : 12/29/2016 4:24 PM PLOT BY : JEFF CHVOSTA PLOT NAME : ---------- PLOT SCALE : ********* WISDOT/CADDS SHEET 49

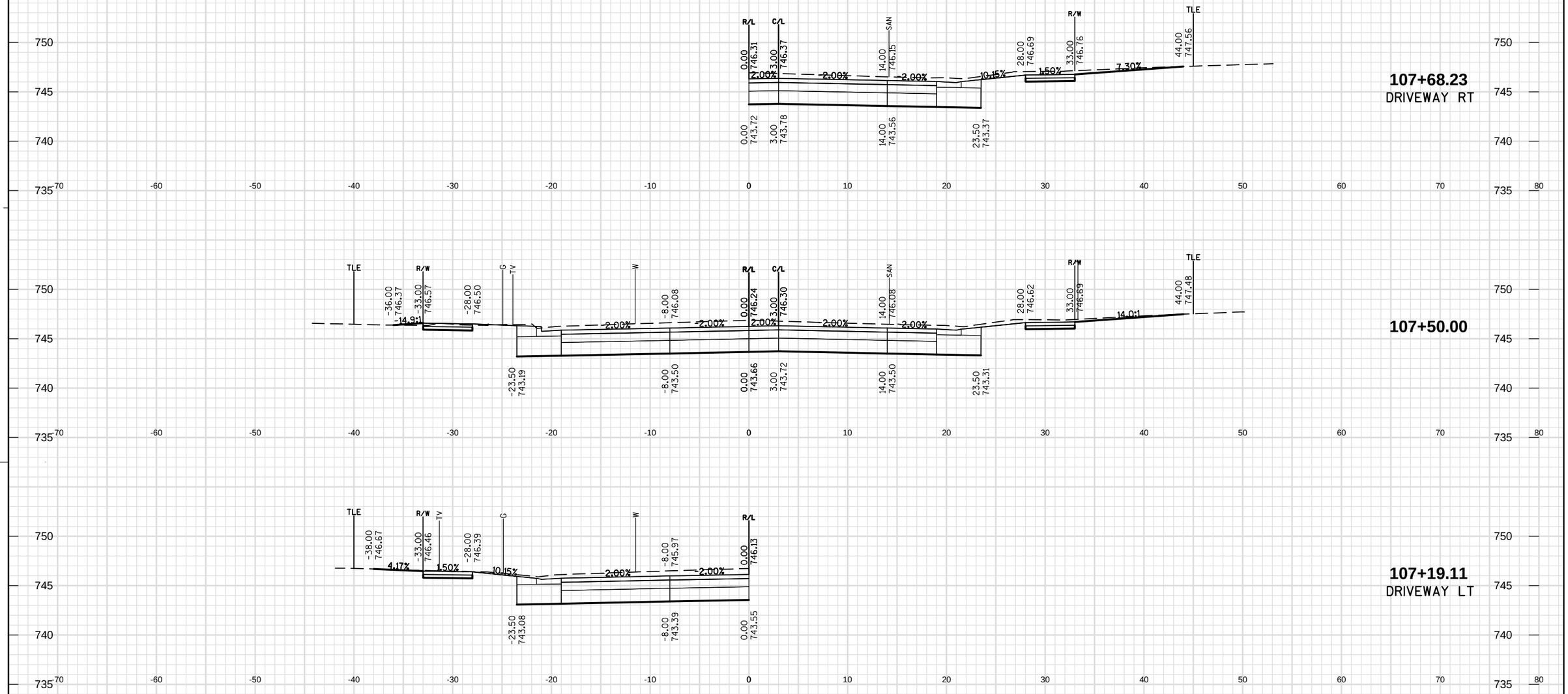

9

9

PROJECT NO: 4880-01-71	HWY: CTH D	COUNTY: OZAUKEE	CROSS SECTIONS: CTH D	SHEET 248 E

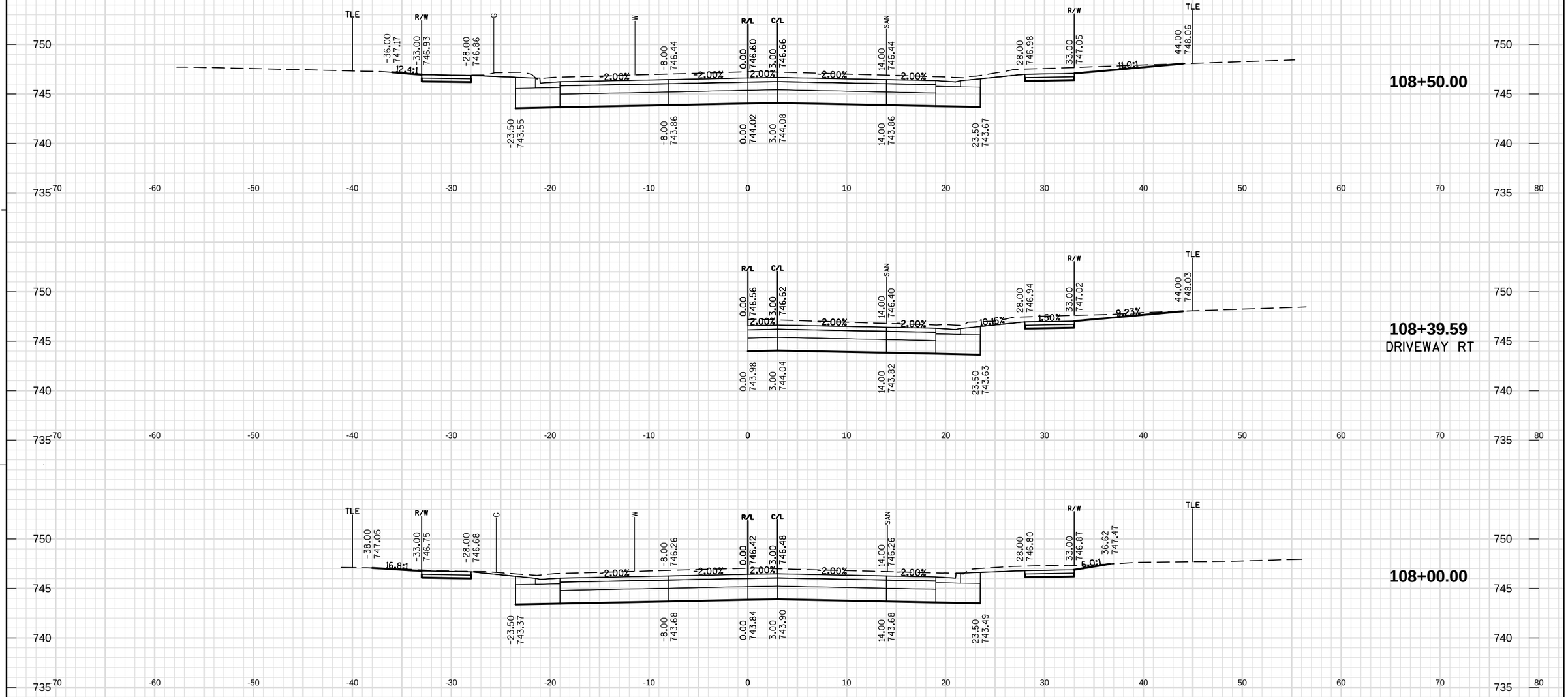

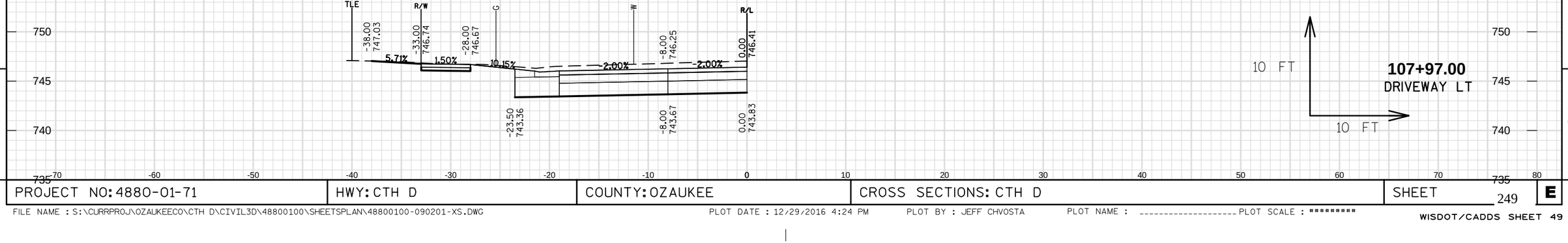

9

9

PROJECT NO: 4880-01-71	HWY: CTH D	COUNTY: OZAUKEE	CROSS SECTIONS: CTH D	SHEET 249	E

FILE NAME : S:\CURRPROJ\OZAUKEECO\CTH D\CIVIL3D\48800100\SHEETSPLAN\48800100-090201-XS.DWG PLOT DATE : 12/29/2016 4:24 PM PLOT BY : JEFF CHVOSTA PLOT NAME : ---------- PLOT SCALE : *********
WISDOT/CADDS SHEET 49

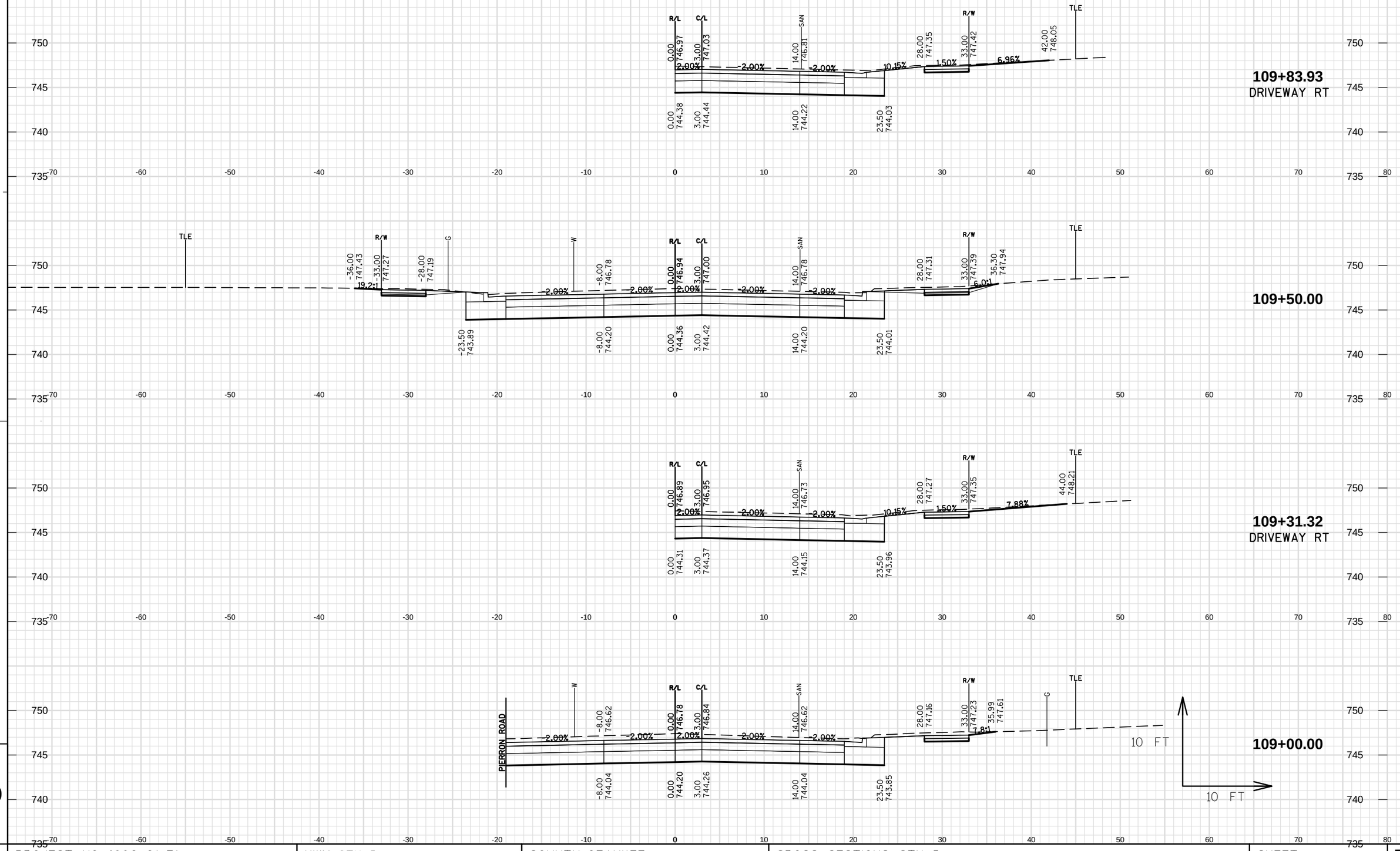

9

9

PROJECT NO: 4880-01-71	HWY: CTH D	COUNTY: OZAUKEE	CROSS SECTIONS: CTH D	SHEET 250	E

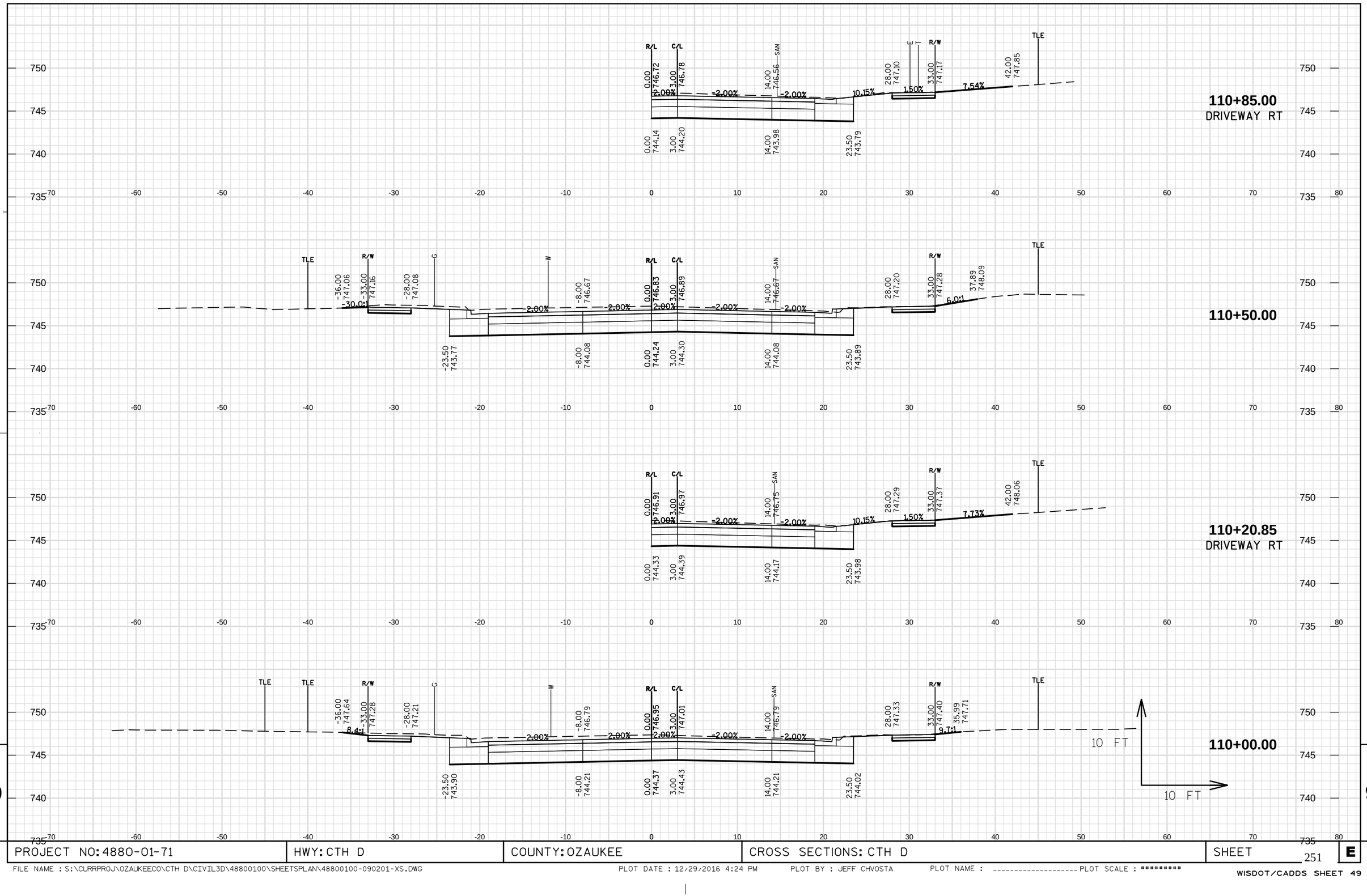

9

PROJECT NO: 4880-01-71	HWY: CTH D	COUNTY: OZAUKEE	CROSS SECTIONS: CTH D	SHEET 251	E

FILE NAME : S:\CURRPROJ\OZAUKEECO\CTH D\CIVIL3D\48800100\SHEETSPLAN\48800100-090201-XS.DWG PLOT DATE : 12/29/2016 4:24 PM PLOT BY : JEFF CHVOSTA PLOT NAME : ---------- PLOT SCALE : ********* WISDOT/CADDS SHEET 49

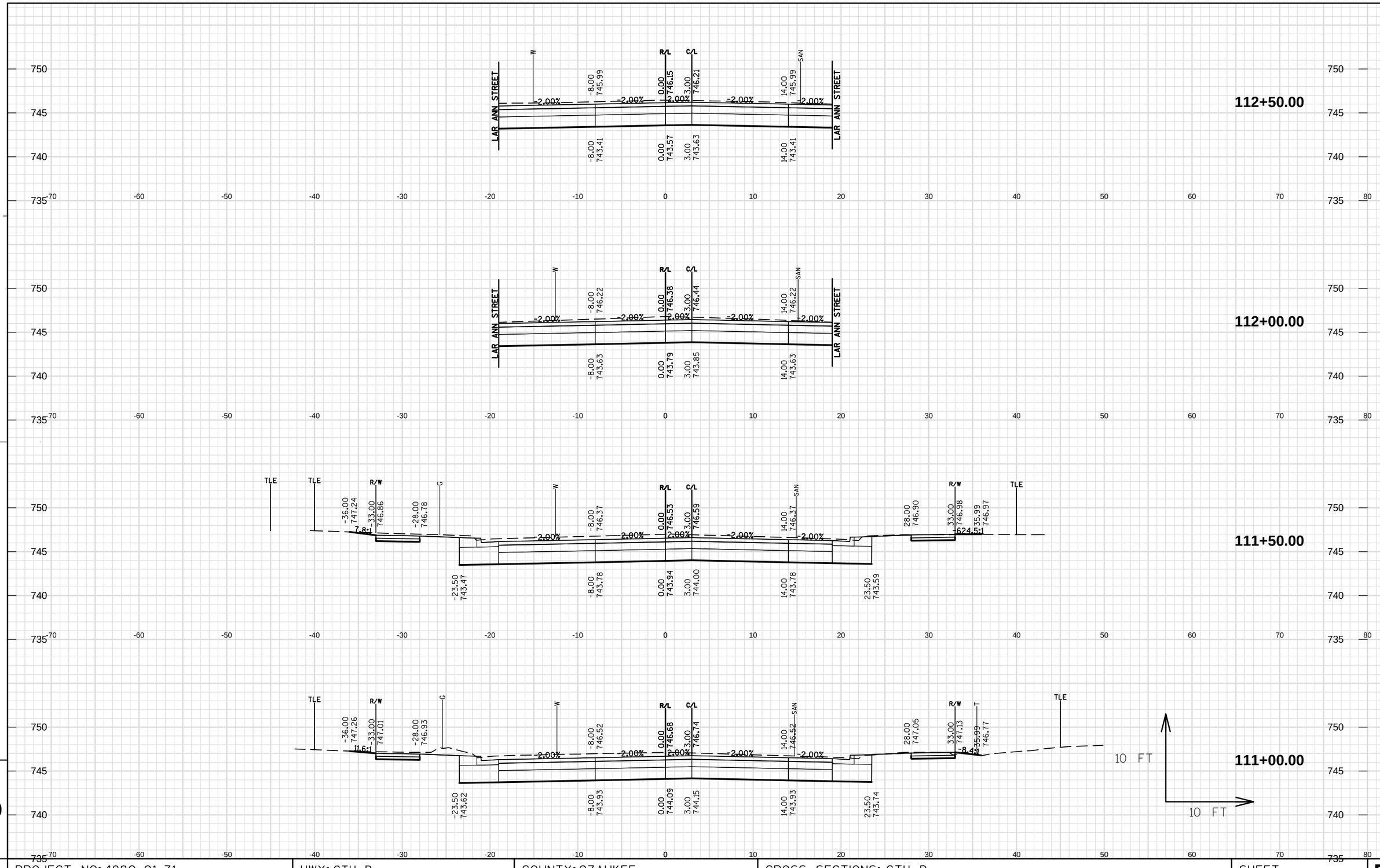

PROJECT NO: 4880-01-71	HWY: CTH D	COUNTY: OZAUKEE	CROSS SECTIONS: CTH D	SHEET 252 E

FILE NAME : S:\CURRPROJ\OZAUKEECO\CTH D\CIVIL3D\48800100\SHEETSPLAN\48800100-090201-XS.DWG PLOT DATE : 12/29/2016 4:24 PM PLOT BY : JEFF CHVOSTA PLOT NAME : ---------- PLOT SCALE : ********* WISDOT/CADDS SHEET 49

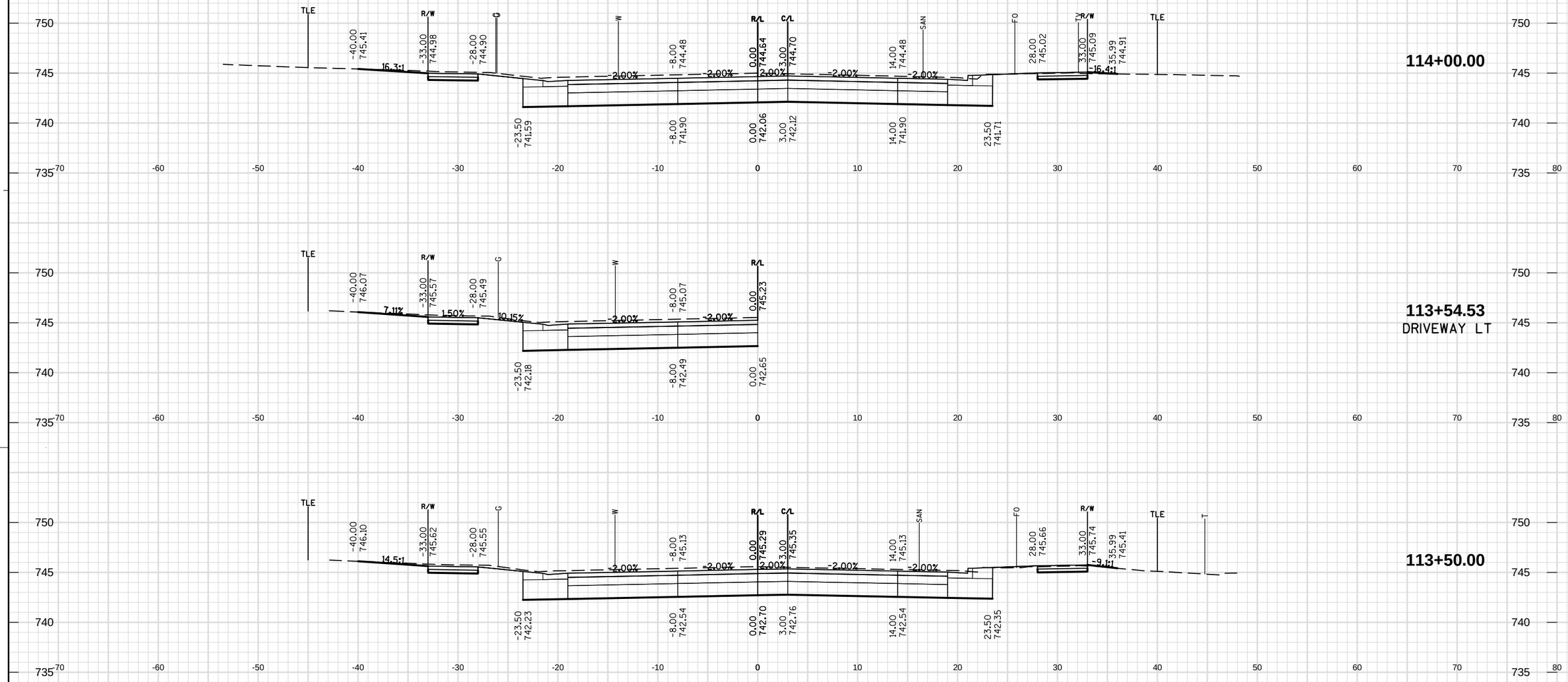

113+50.00

113+00.00

114+00.00

113+54.53
DRIVEWAY LT

PROJECT NO: 4880-01-71	HWY: CTH D	COUNTY: OZAUKEE	CROSS SECTIONS: CTH D	SHEET 253 E

FILE NAME : S:\CURRPROJ\OZAUKEECO\CTH D\CIVIL3D\48800100\SHEETSPLAN\48800100-090201-XS.DWG PLOT DATE : 12/29/2016 4:24 PM PLOT BY : JEFF CHVOSTA PLOT NAME : ---------- PLOT SCALE : *********

WISDOT/CADDS SHEET 49

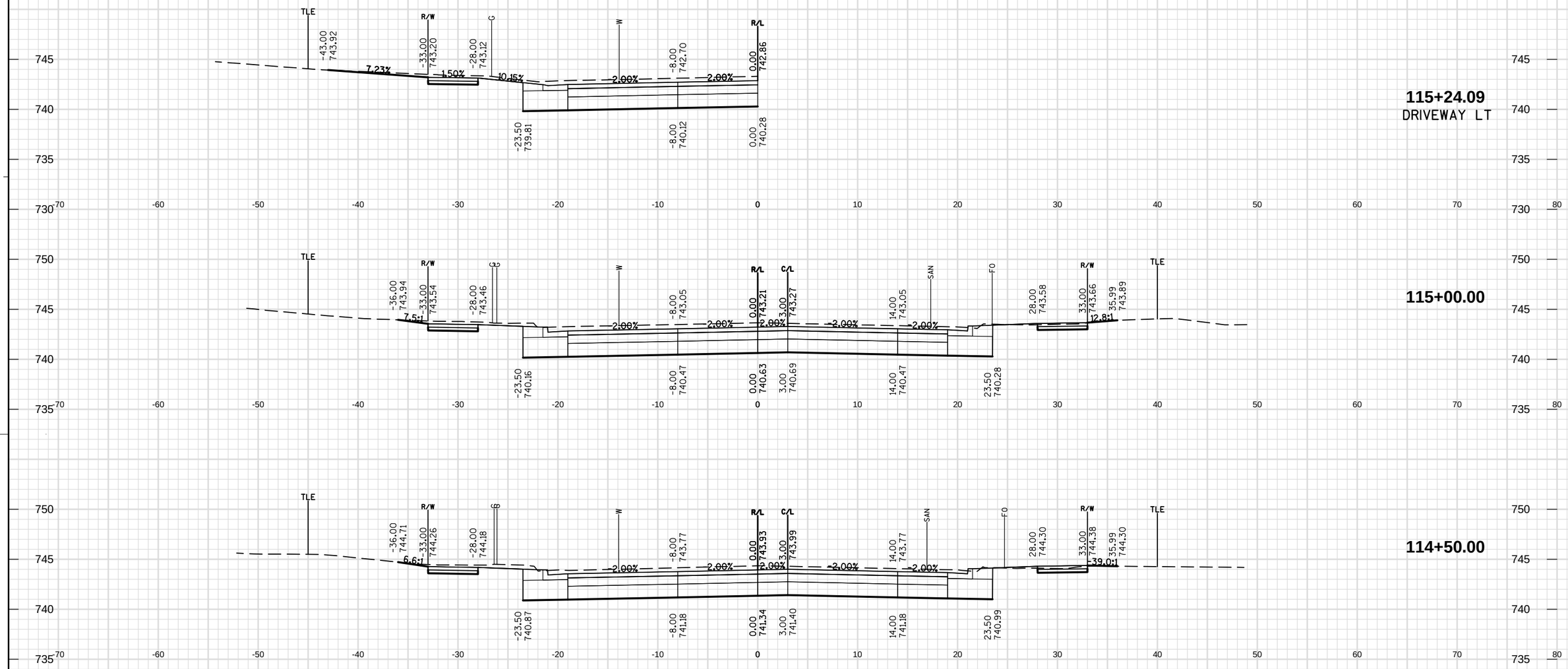

9

9

PROJECT NO: 4880-01-71	HWY: CTH D	COUNTY: OZAUKEE	CROSS SECTIONS: CTH D	SHEET 254	E

FILE NAME : S:\CURRPROJ\OZAUKEECO\CTH D\CIVIL3D\48800100\SHEETSPLAN\48800100-090201-XS.DWG PLOT DATE : 12/29/2016 4:24 PM PLOT BY : JEFF CHVOSTA PLOT NAME : ---------- PLOT SCALE : *********

WISDOT/CADDS SHEET 49

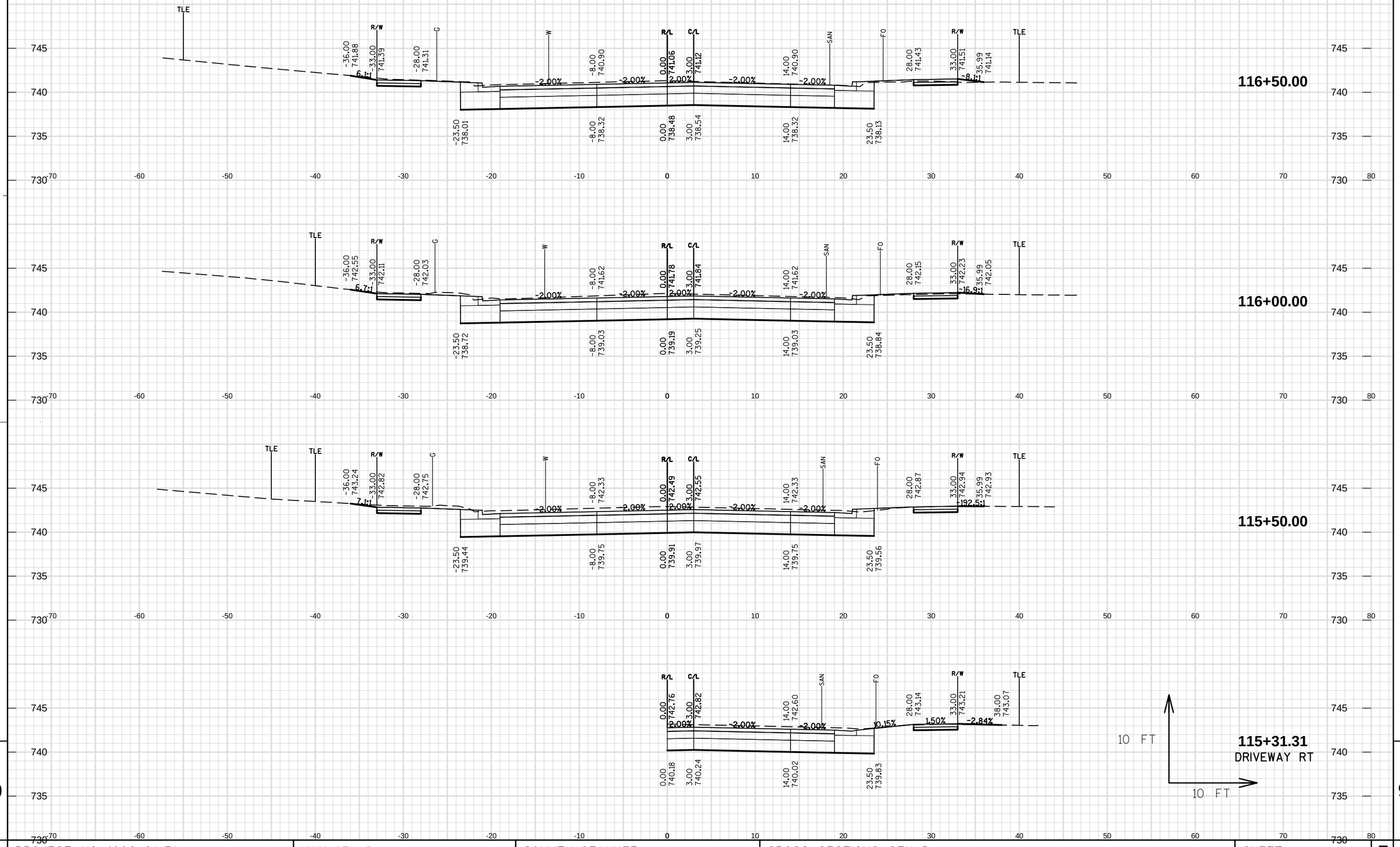

9

9

PROJECT NO: 4880-01-71	HWY: CTH D	COUNTY: OZAUKEE	CROSS SECTIONS: CTH D	SHEET 255	E

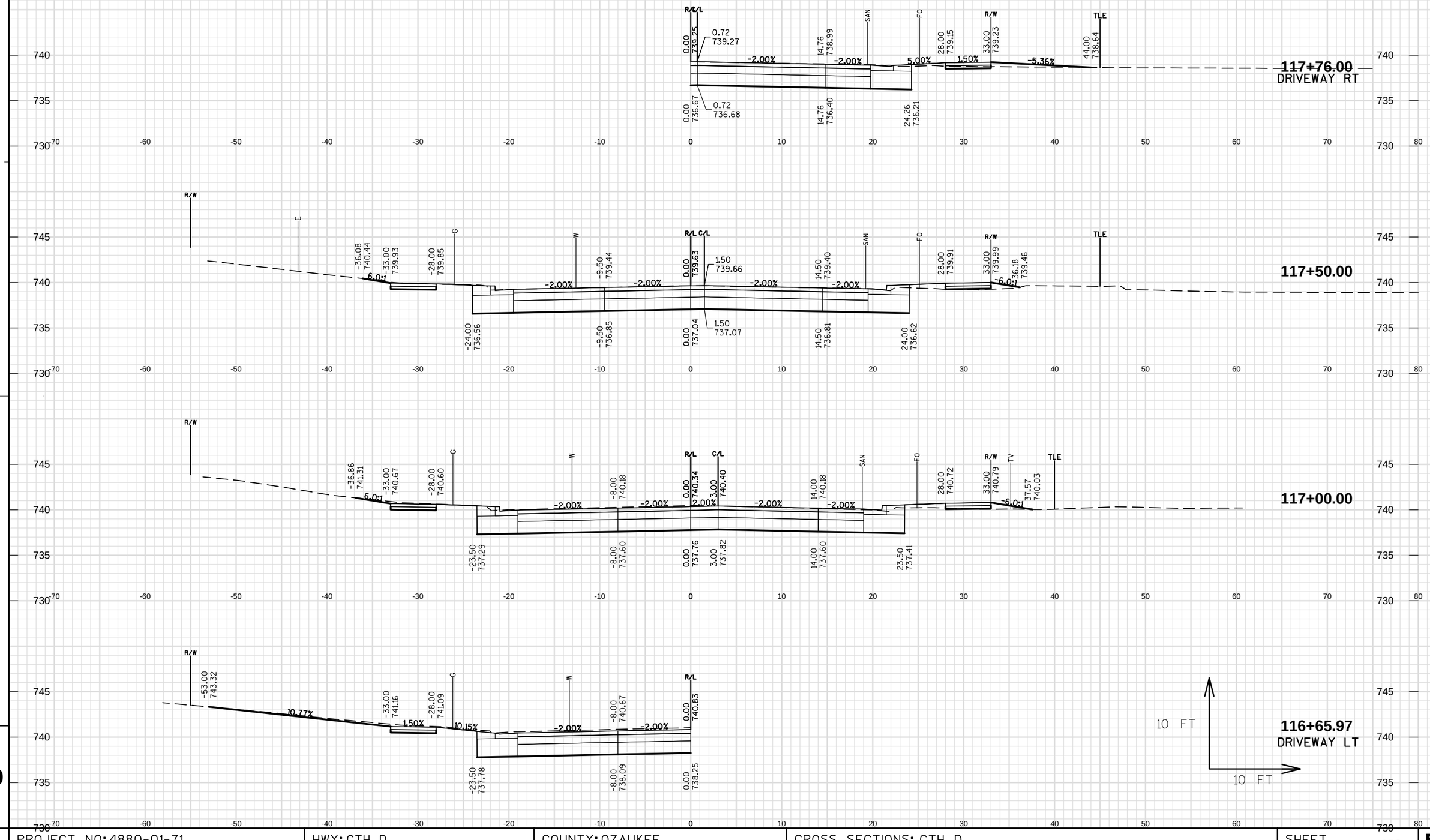

9

PROJECT NO: 4880-01-71	HWY: CTH D	COUNTY: OZAUKEE	CROSS SECTIONS: CTH D	SHEET 256	E

9

FILE NAME : S:\CURRPROJ\OZAUKEECO\CTH D\CIVIL3D\48800100\SHEETSPLAN\48800100-090201-XS.DWG PLOT DATE : 12/29/2016 4:24 PM PLOT BY : JEFF CHVOSTA PLOT NAME : ---------- PLOT SCALE : ********* WISDOT/CADDS SHEET 49

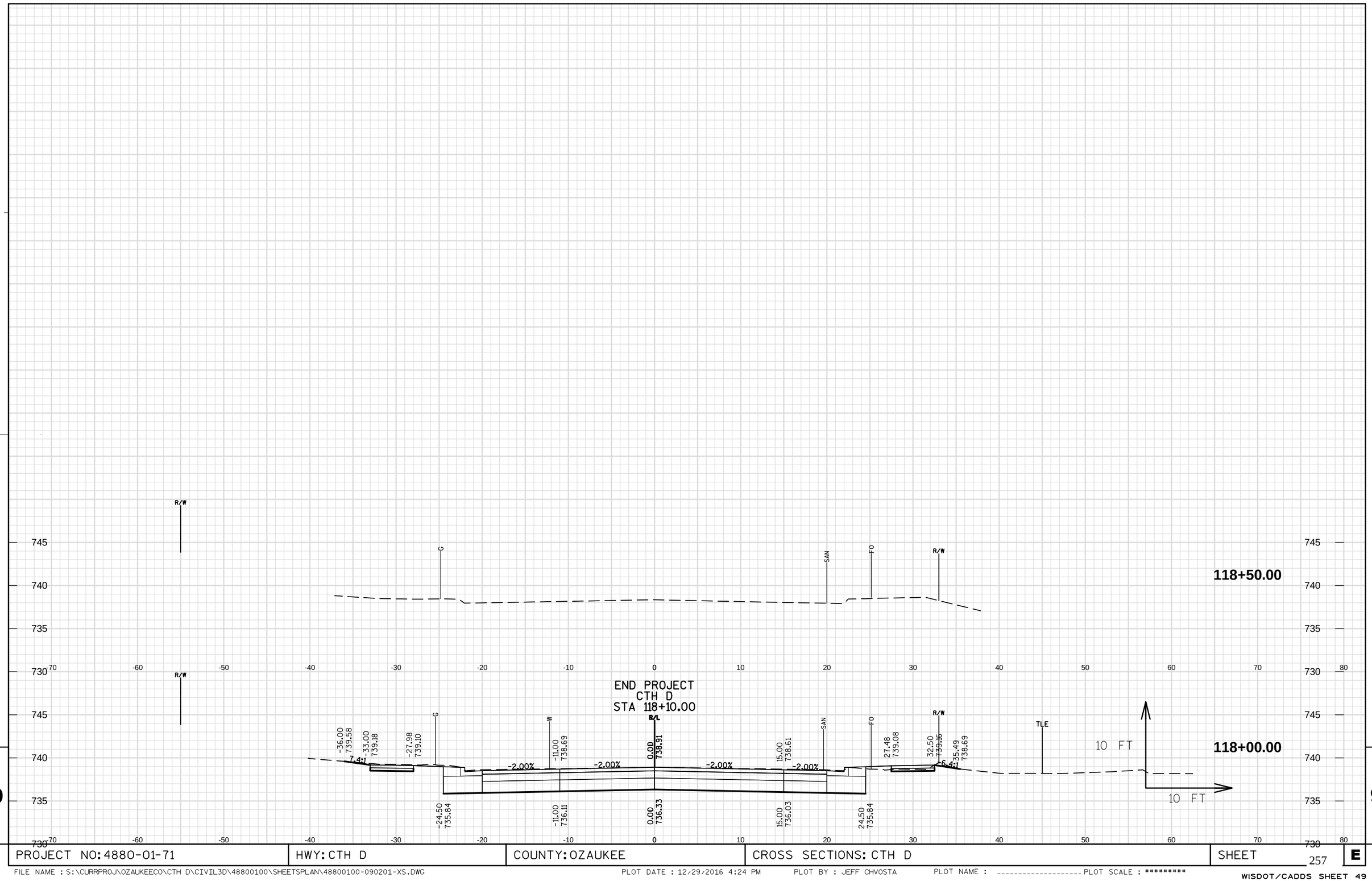

9

9

PROJECT NO: 4880-01-71	HWY: CTH D	COUNTY: OZAUKEE	CROSS SECTIONS: CTH D	SHEET 257	E

END CONSTRUCTION
BEECH STREET
STA 260+75.00

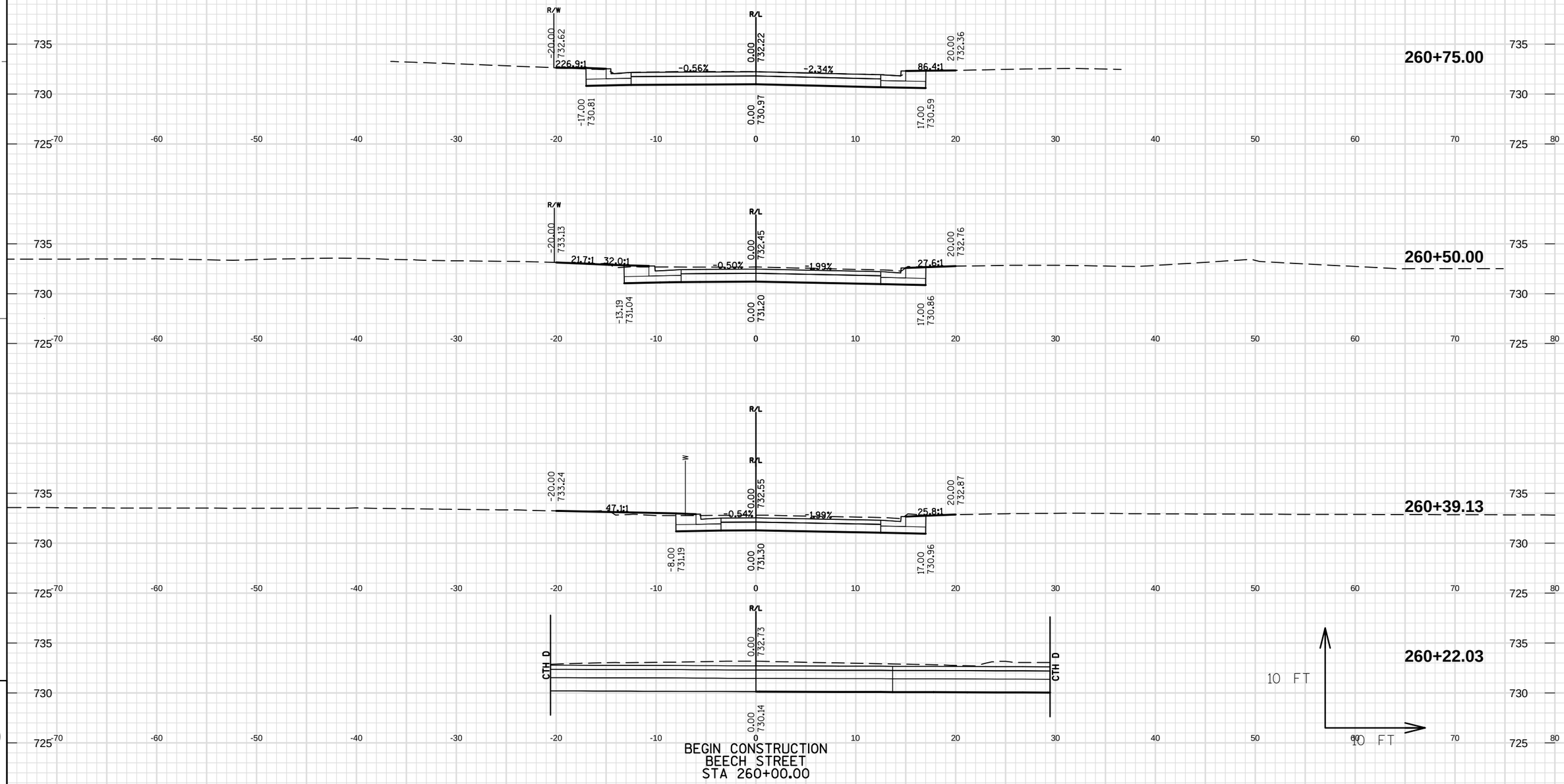

BEGIN CONSTRUCTION
BEECH STREET
STA 260+00.00

9

9

PROJECT NO: 4880-01-71	HWY: CTH D	COUNTY: OZAUKEE	CROSS SECTIONS: BEECH STREET	SHEET 258	E

END CONSTRUCTION
CHESTNUT STREET
STA 280+75.00

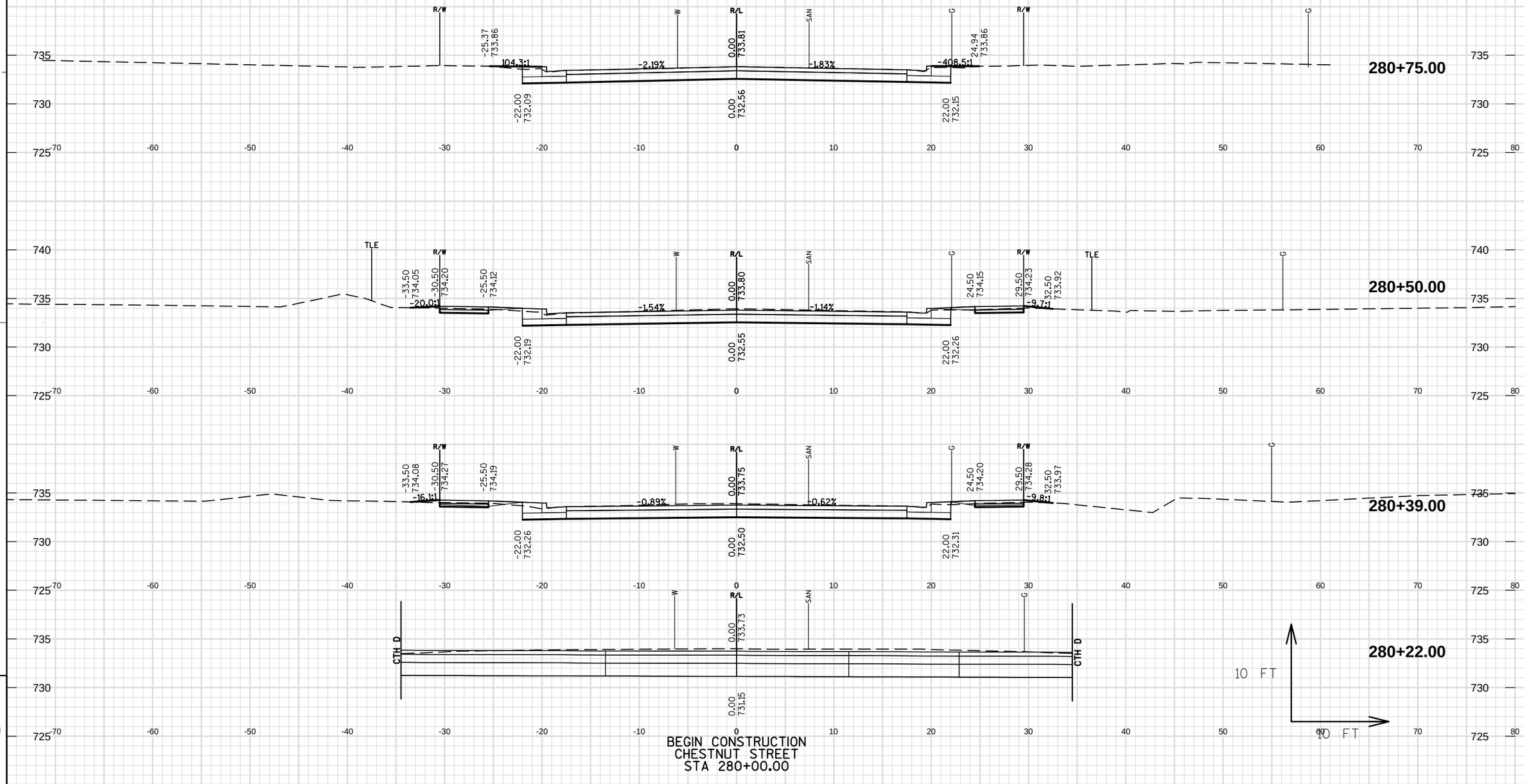

BEGIN CONSTRUCTION
CHESTNUT STREET
STA 280+00.00

9

9

PROJECT NO: 4880-01-71	HWY: CTH D	COUNTY: OZAUKEE	CROSS SECTIONS: CHESTNUT STREET	SHEET 259	E

FILE NAME : S:\CURRPROJ\OZAUKEECO\CTH D\CIVIL3D\48800100\SHEETSPLAN\48800100-090201-XS.DWG PLOT DATE : 12/29/2016 4:25 PM PLOT BY : JEFF CHVOSTA PLOT NAME : ---------- PLOT SCALE : ********* WISDOT/CADDS SHEET 49

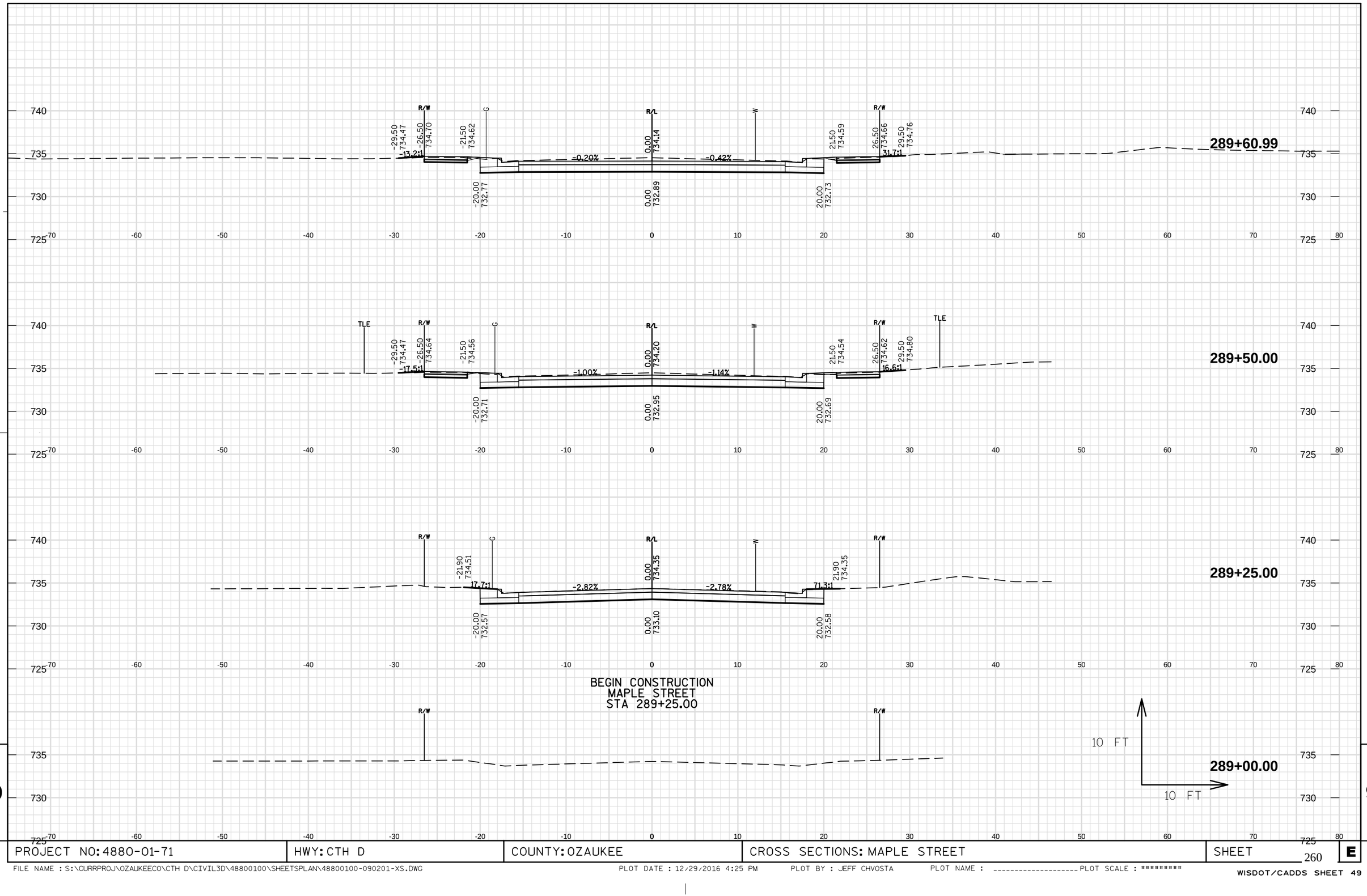

PROJECT NO: 4880-01-71	HWY: CTH D	COUNTY: OZAUKEE	CROSS SECTIONS: MAPLE STREET	SHEET 260	E

FILE NAME : S:\CURRPROJ\OZAUKEECO\CTH D\CIVIL3D\48800100\SHEETSPLAN\48800100-090201-XS.DWG PLOT DATE : 12/29/2016 4:25 PM PLOT BY : JEFF CHVOSTA PLOT NAME : ---------- PLOT SCALE : ********

WISDOT/CADDS SHEET 49

END CONSTRUCTION
MAPLE STREET
STA 290+00.00

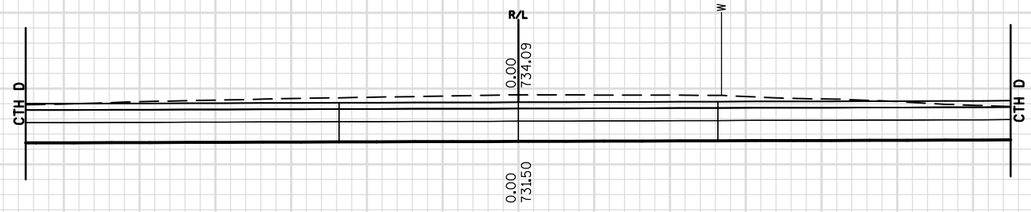

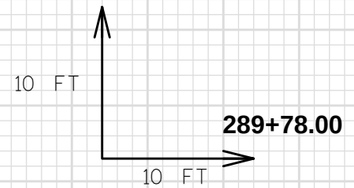

PROJECT NO: 4880-01-71	HWY: CTH D	COUNTY: OZAUKEE	CROSS SECTIONS: MAPLE STREET	SHEET 261	E

FILE NAME : S:\CURRPROJ\OZAUKEECO\CTH D\CIVIL3D\48800100\SHEETSPLAN\48800100-090201-XS.DWG PLOT DATE : 12/29/2016 4:25 PM PLOT BY : JEFF CHVOSTA PLOT NAME : ---------- PLOT SCALE : ********

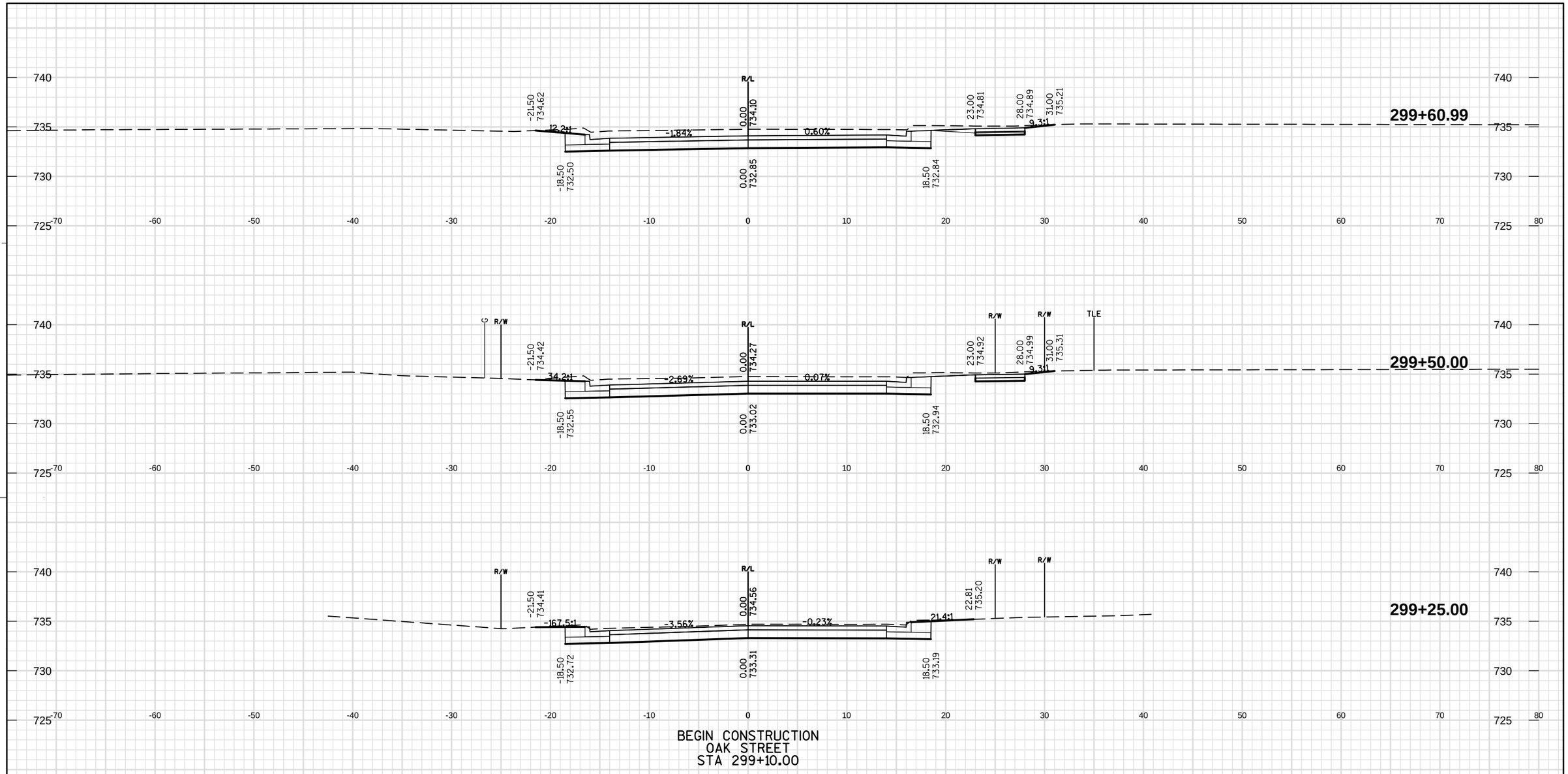

9

9

PROJECT NO: 4880-01-71	HWY: CTH D	COUNTY: OZAUKEE	CROSS SECTIONS: OAK STREET	SHEET 262	E

FILE NAME : S:\CURRPROJ\OZAUKEECO\CTH D\CIVIL3D\48800100\SHEETSPLAN\48800100-090201-XS.DWG PLOT DATE : 12/29/2016 4:25 PM PLOT BY : JEFF CHVOSTA PLOT NAME : ---------- PLOT SCALE : *********

WISDOT/CADDS SHEET 49

END CONSTRUCTION
OAK STREET
STA 300+00.00

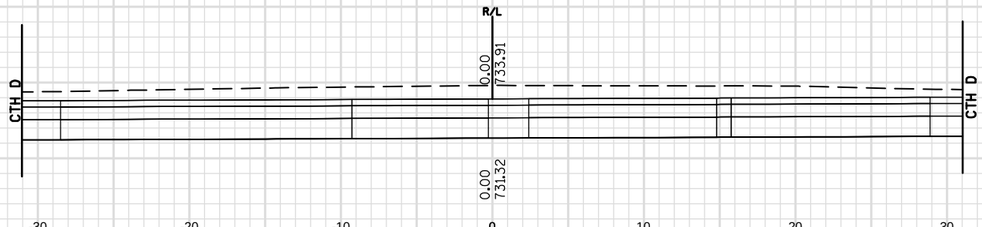

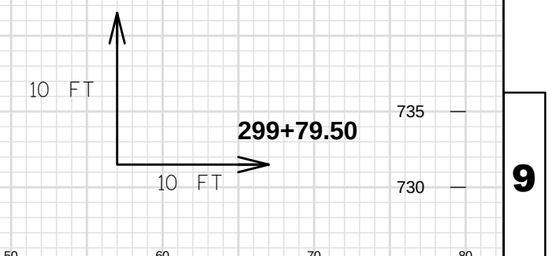

PROJECT NO: 4880-01-71	HWY: CTH D	COUNTY: OZAUKEE	CROSS SECTIONS: OAK STREET	SHEET 263	E

FILE NAME : S:\CURRPROJ\OZAUKEECO\CTH D\CIVIL3D\48800100\SHEETSPLAN\48800100-090201-XS.DWG PLOT DATE : 12/29/2016 4:25 PM PLOT BY : JEFF CHVOSTA PLOT NAME : ---------- PLOT SCALE : ********

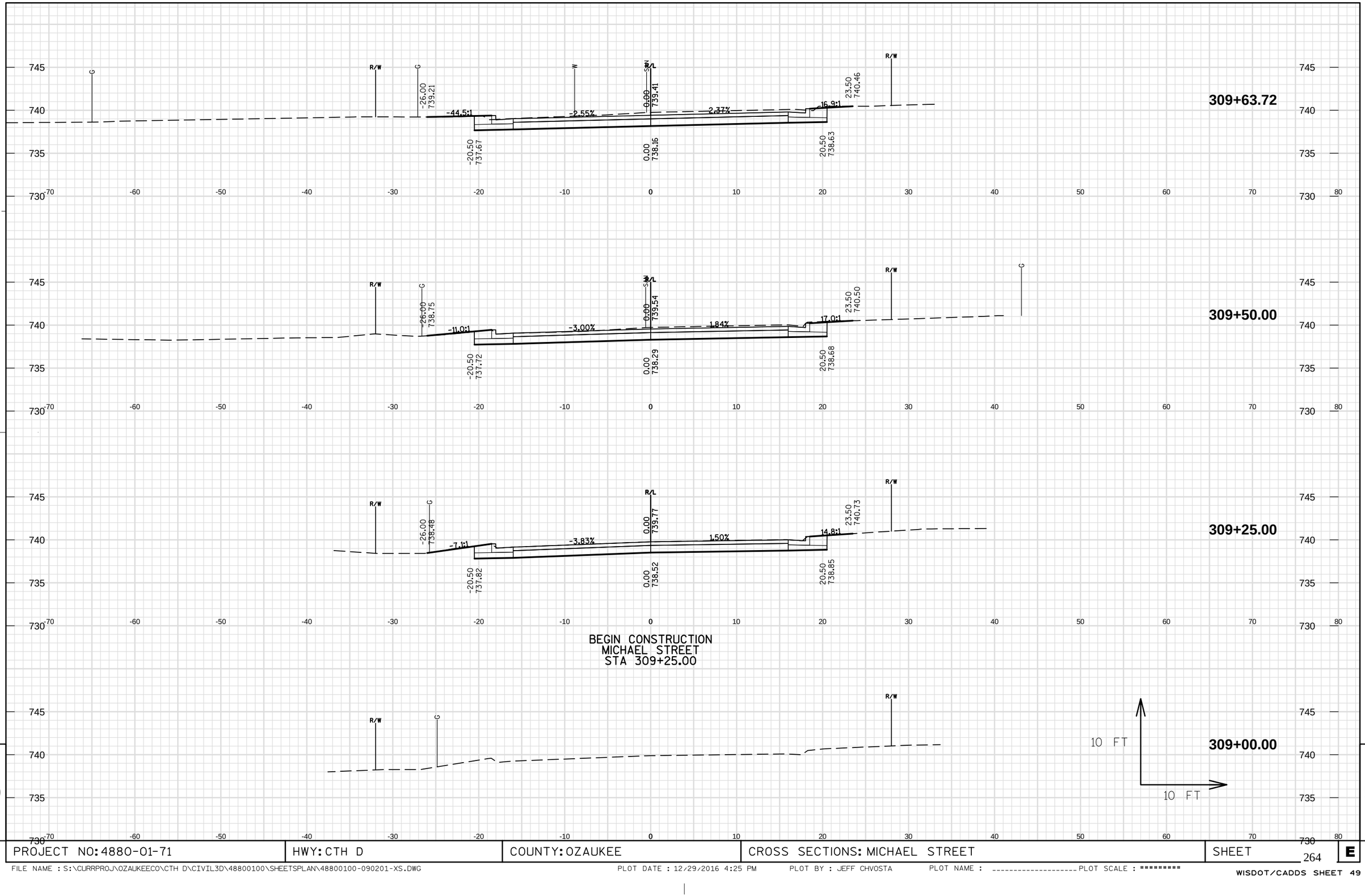

PROJECT NO: 4880-01-71	HWY: CTH D	COUNTY: OZAUKEE	CROSS SECTIONS: MICHAEL STREET	SHEET 264 E

END CONSTRUCTION
MICHAEL STREET
STA 310+00.00

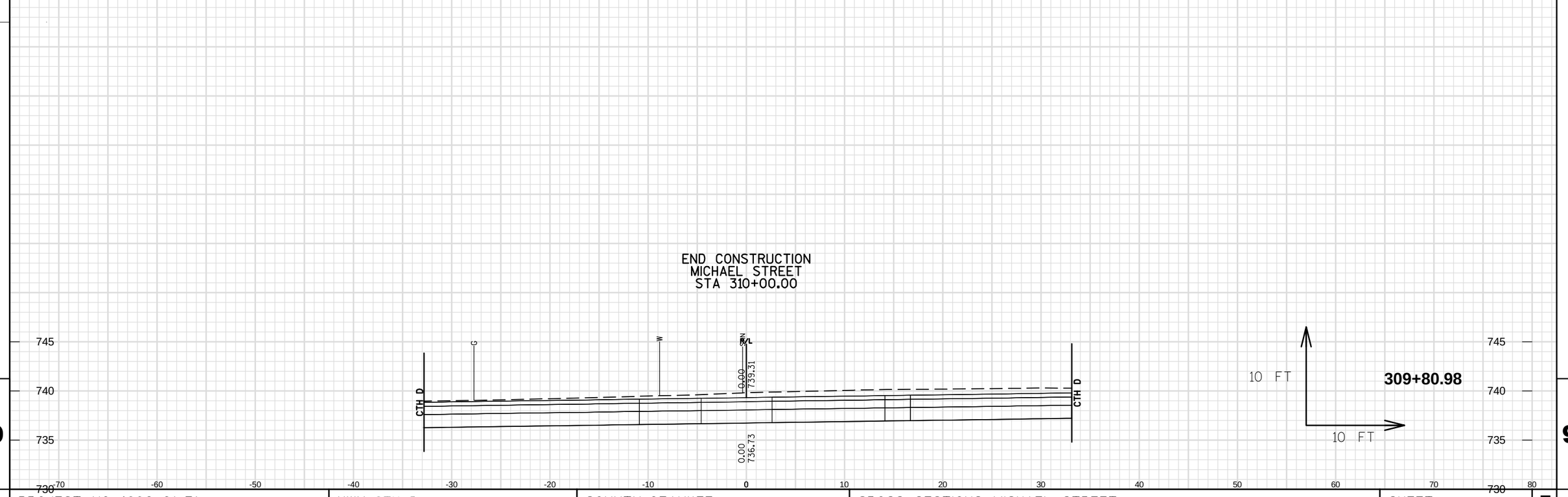

9

9

PROJECT NO: 4880-01-71	HWY: CTH D	COUNTY: OZAUKEE	CROSS SECTIONS: MICHAEL STREET	SHEET 265	E

FILE NAME : S:\CURRPROJ\OZAUKEECO\CTH D\CIVIL3D\48800100\SHEETSPLAN\48800100-090201-XS.DWG PLOT DATE : 12/29/2016 4:25 PM PLOT BY : JEFF CHVOSTA PLOT NAME : ---------- PLOT SCALE : ********

END CONSTRUCTION
WEST LANE
STA 320+90.00

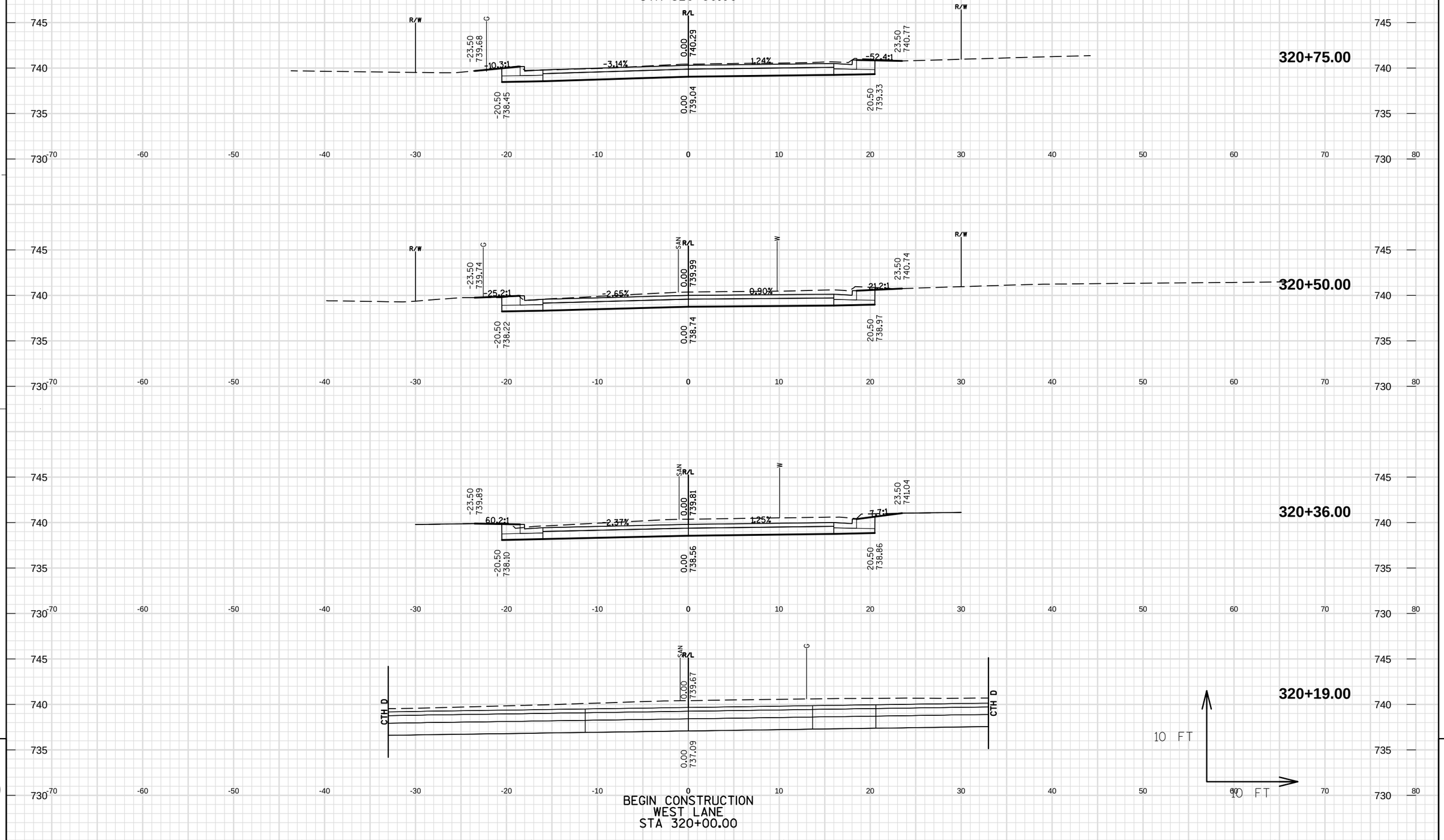

BEGIN CONSTRUCTION
WEST LANE
STA 320+00.00

9

9

PROJECT NO: 4880-01-71	HWY: CTH D	COUNTY: OZAUKEE	CROSS SECTIONS: WEST LANE	SHEET 266	E

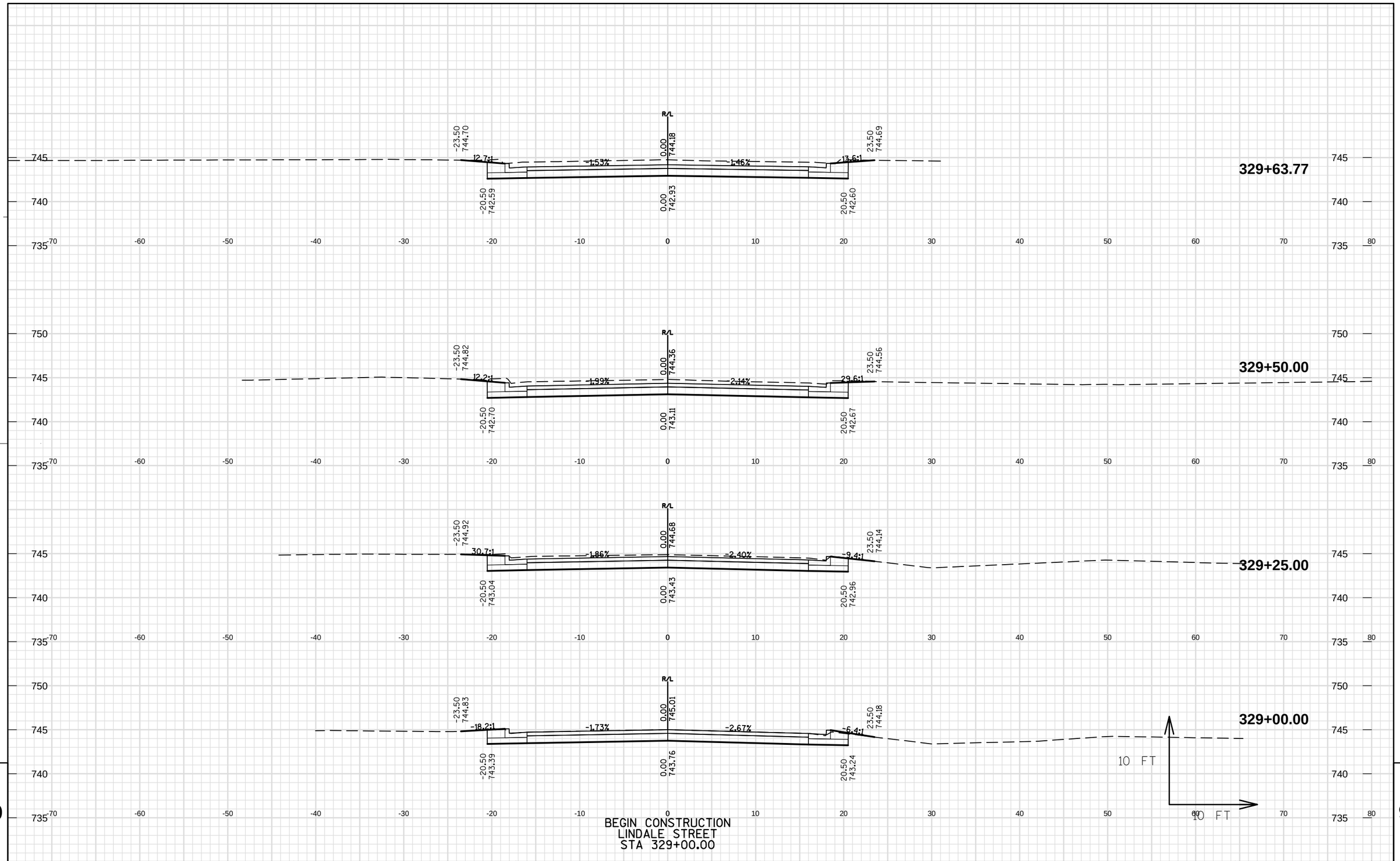

PROJECT NO: 4880-01-71	HWY: CTH D	COUNTY: OZAUKEE	CROSS SECTIONS: LINDALE STREET	SHEET 267	E

END CONSTRUCTION
LINDALE STREET
STA 330+00.00

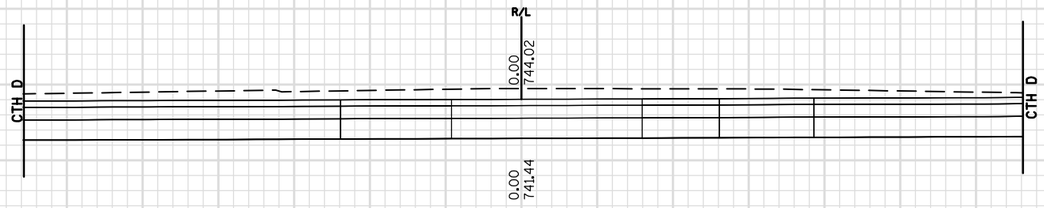

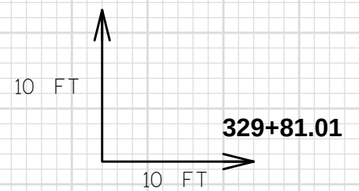

PROJECT NO: 4880-01-71	HWY: CTH D	COUNTY: OZAUKEE	CROSS SECTIONS: LINDALE STREET	SHEET 268	E

FILE NAME : S:\CURRPROJ\OZAUKEECO\CTH D\CIVIL3D\48800100\SHEETSPLAN\48800100-090201-XS.DWG PLOT DATE : 12/29/2016 4:26 PM PLOT BY : JEFF CHVOSTA PLOT NAME : ---------- PLOT SCALE : ********

WISDOT/CADDS SHEET 49

END CONSTRUCTION
EAST LANE
STA 340+90.00

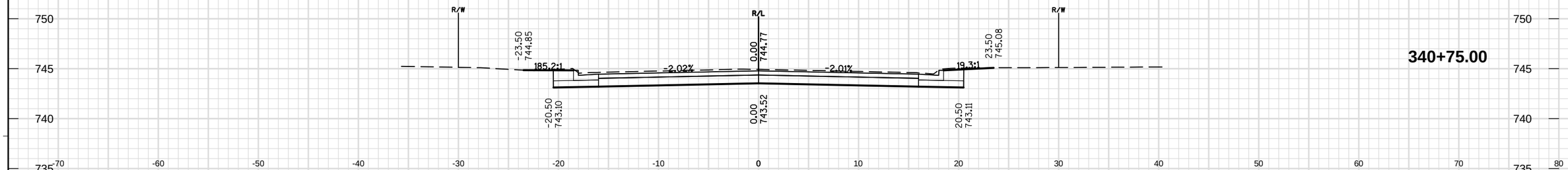

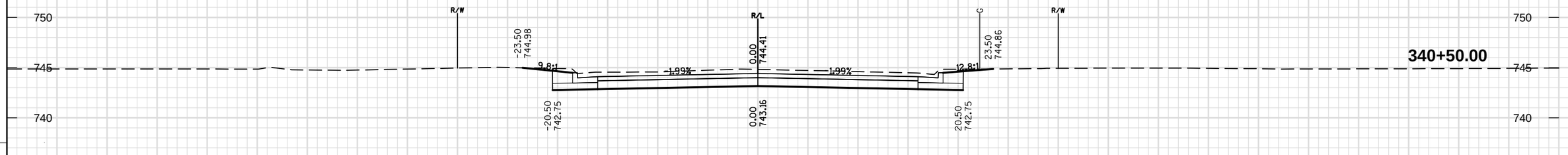

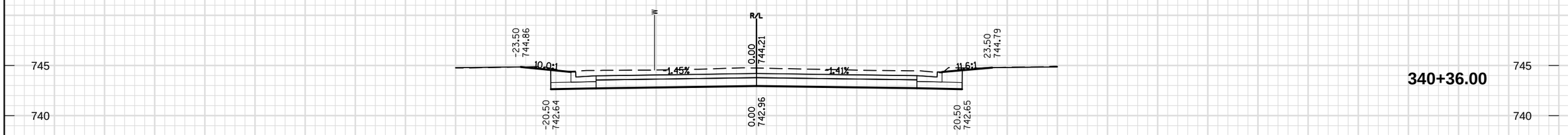

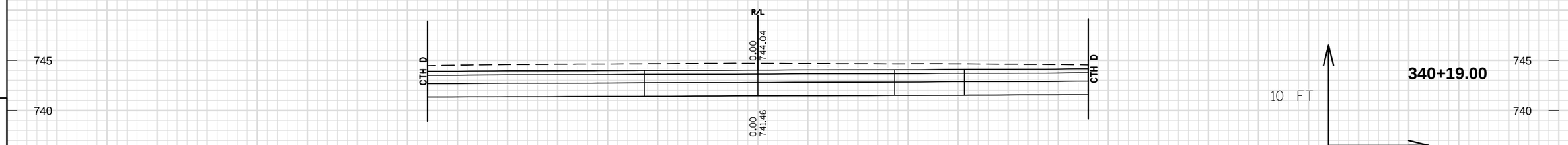

BEGIN CONSTRUCTION
EAST LANE
STA 340+00.00

9

9

PROJECT NO: 4880-01-71	HWY: CTH D	COUNTY: OZAUKEE	CROSS SECTIONS: EAST LANE	SHEET 269	E

END CONSTRUCTION
DEAN ROAD
STA 350+75.00

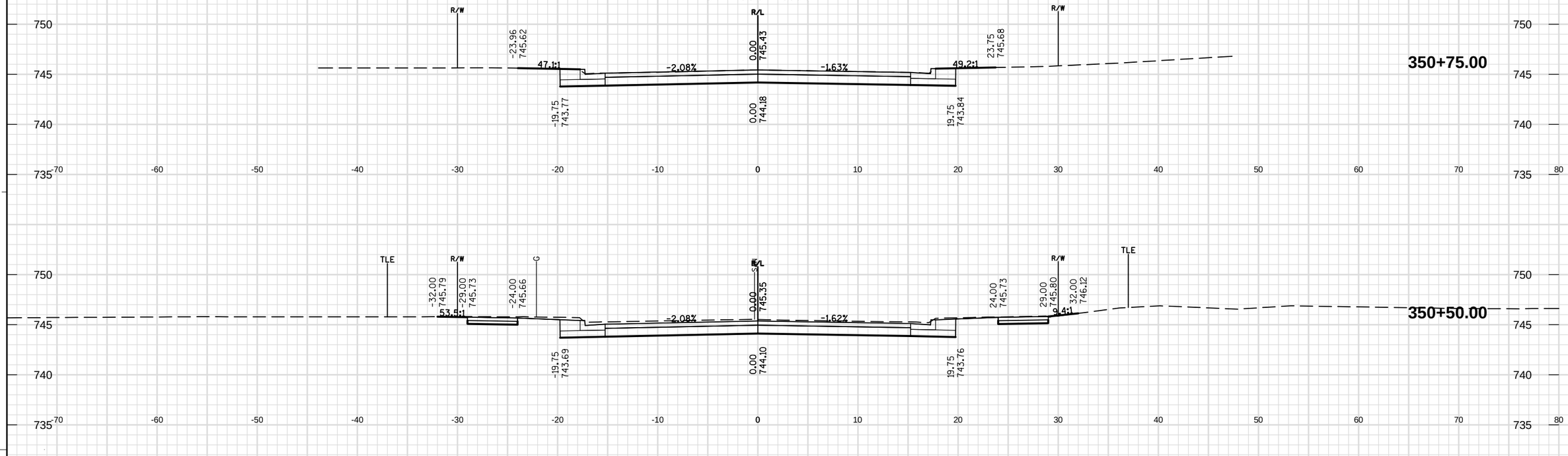

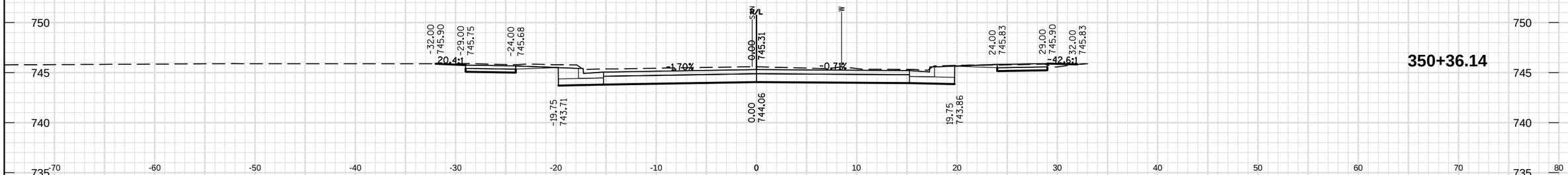

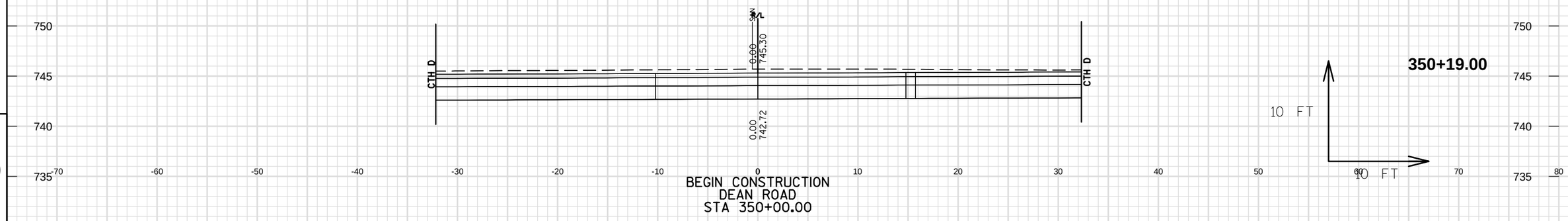

BEGIN CONSTRUCTION
DEAN ROAD
STA 350+00.00

PROJECT NO: 4880-01-71	HWY: CTH D	COUNTY: OZAUKEE	CROSS SECTIONS: DEAN ROAD	SHEET 270	E

FILE NAME : S:\CURRPROJ\OZAUKEECO\CTH D\CIVIL3D\48800100\SHEETSPLAN\48800100-090201-XS.DWG PLOT DATE : 12/29/2016 4:26 PM PLOT BY : JEFF CHVOSTA PLOT NAME : ---------- PLOT SCALE : ********* WISDOT/CADDS SHEET 49

END CONSTRUCTION
PIERRON STREET
STA 360+75.00

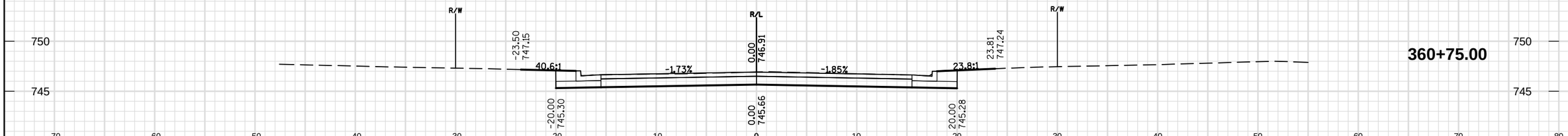

360+75.00

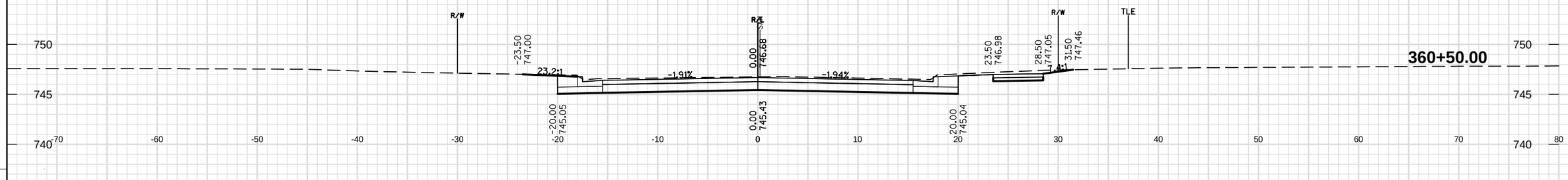

360+50.00

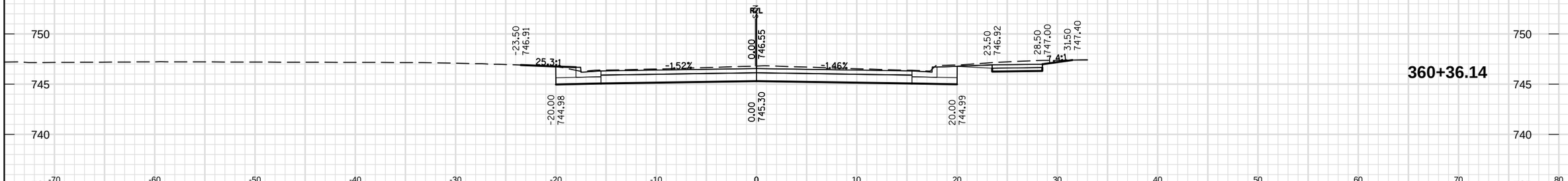

360+36.14

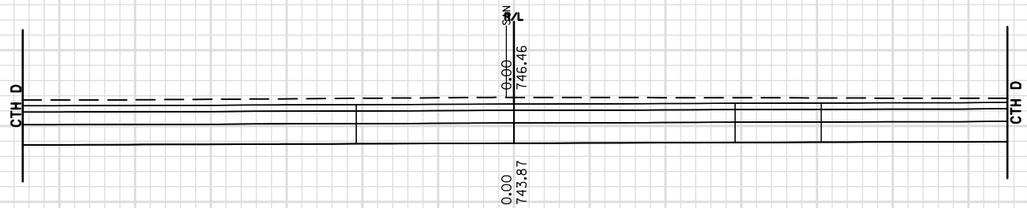

360+19.00

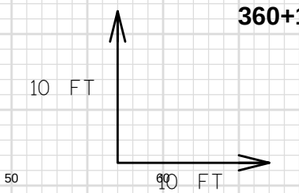

BEGIN CONSTRUCTION
PIERRON STREET
STA 360+00.00

9

9

PROJECT NO: 4880-01-71	HWY: CTH D	COUNTY: OZAUKEE	CROSS SECTIONS: PIERRON STREET	SHEET 271	E

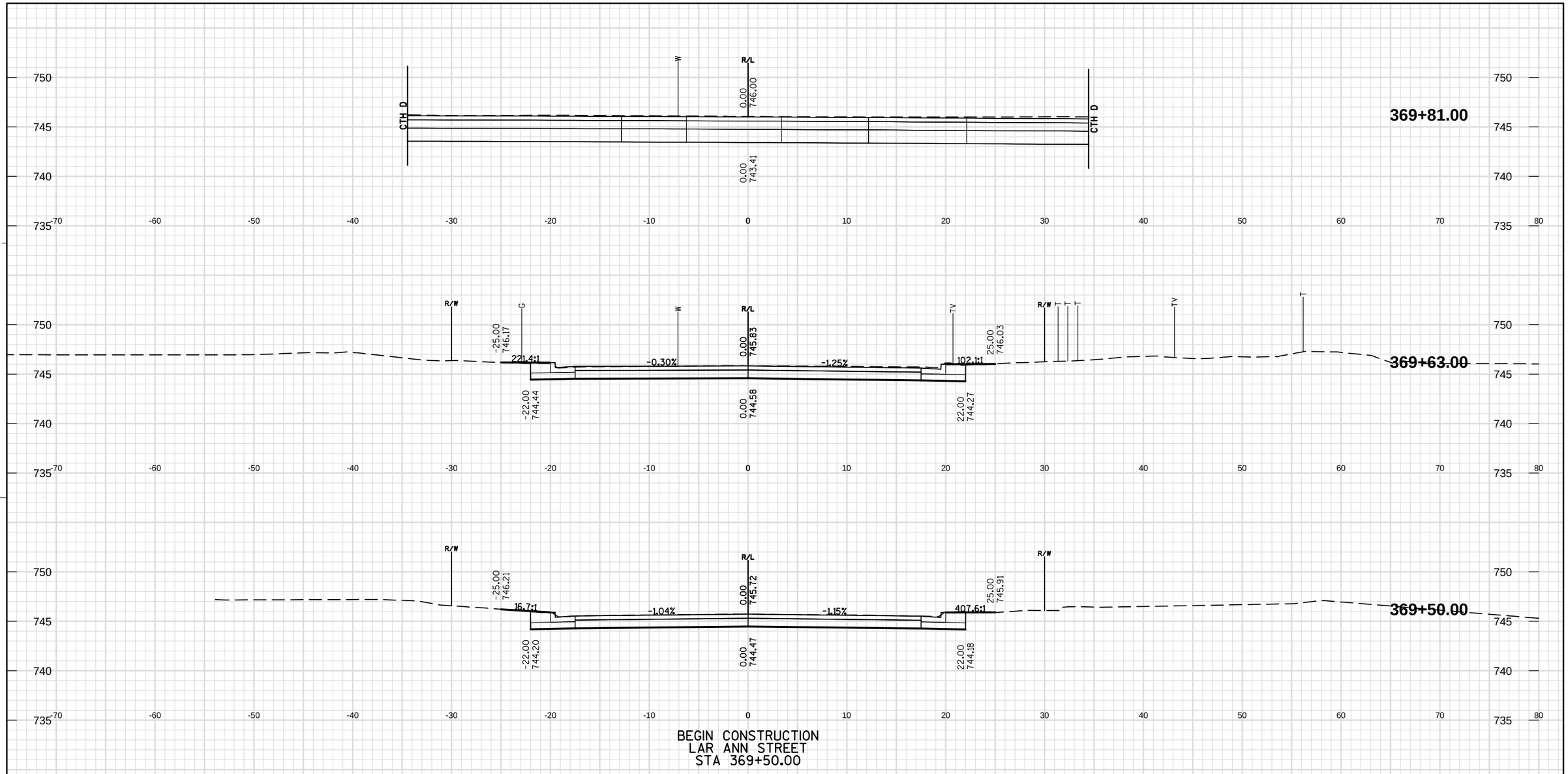

PROJECT NO: 4880-01-71	HWY: CTH D	COUNTY: OZAUKEE	CROSS SECTIONS: LAR ANN STREET	SHEET 272	E

FILE NAME : S:\CURRPROJ\OZAUKEECO\CTH D\CIVIL3D\48800100\SHEETSPLAN\48800100-090201-XS.DWG PLOT DATE : 12/29/2016 4:26 PM PLOT BY : JEFF CHVOSTA PLOT NAME : ---------- PLOT SCALE : ********* WISDOT/CADDS SHEET 49

END CONSTRUCTION
LAR ANN STREET
STA 370+65.00

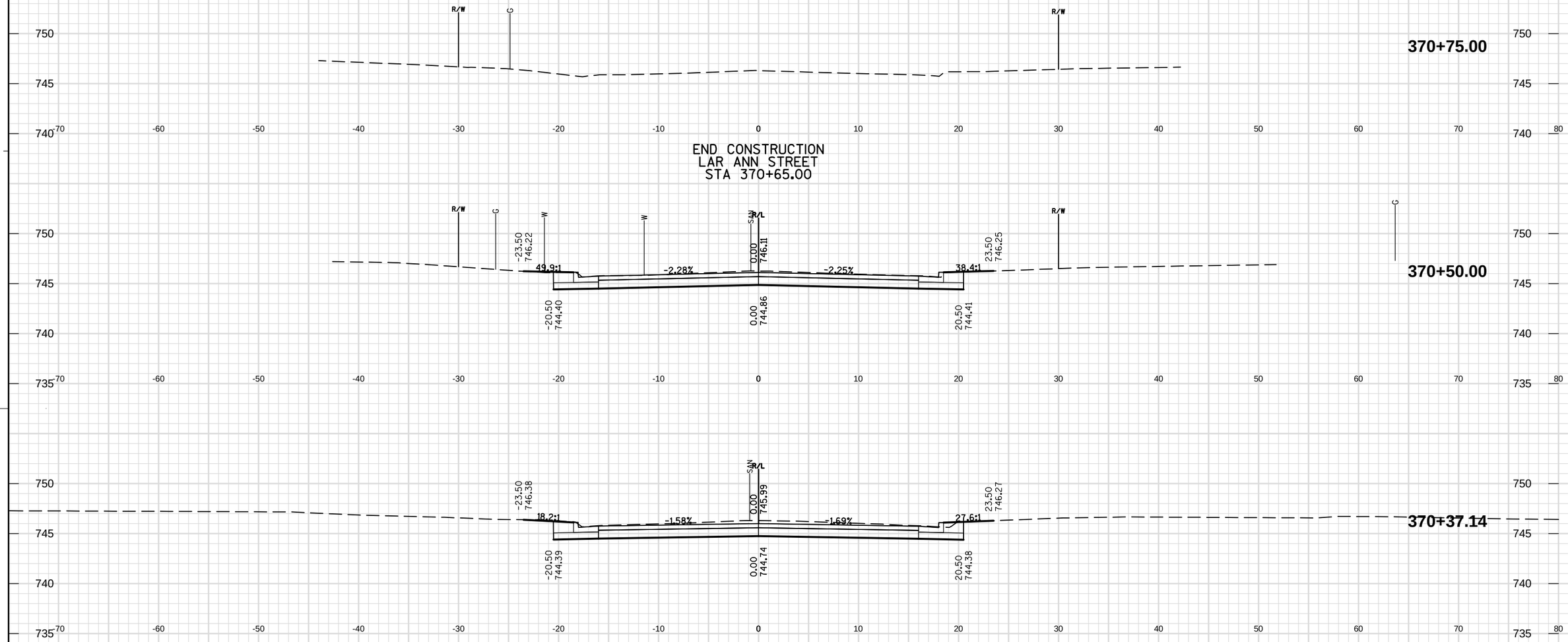

9

9

PROJECT NO: 4880-01-71	HWY: CTH D	COUNTY: OZAUKEE	CROSS SECTIONS: LAR ANN STREET	SHEET 273	E

FILE NAME : S:\CURRPROJ\OZAUKEECO\CTH D\CIVIL3D\48800100\SHEETSPLAN\48800100-090201-XS.DWG PLOT DATE : 12/29/2016 4:26 PM PLOT BY : JEFF CHVOSTA PLOT NAME : _____ PLOT SCALE : *********

WISDOT/CADDS SHEET 49

Wisconsin Department of Transportation

Dedicated people creating transportation solutions
through innovation and exceptional service.

http://www.dot.wisconsin.gov