SUP APR 2017

PROJECT ID: 8590-01-73
WITH: N/A

COUNTY: RUSK

ORDER OF SHEETS

Section No. 1 Title
Section No. 2 Typical Sections and Details (Inc Erosion Control)
Section No. 3 Estimate of Quantities
Section No. 3 Miscellaneous Quantities
~~Section No. 4 Right of Way Plat~~
Section No. 5 Plan and Profile
Section No. 6 Standard Detail Drawings
Section No. 7 Sign Plates
Section No. 8 Structure Plans
Section No. 9 Computer Earthwork Data
Section No. 9 Cross Sections

TOTAL SHEETS = 154

STATE OF WISCONSIN
DEPARTMENT OF TRANSPORTATION

PLAN OF PROPOSED IMPROVEMENT

BRUCE - RADISSON

B-54-0008/B-54-0021/B-54-0022

STH 40

RUSK COUNTY

STATE PROJECT	FEDERAL PROJECT	
	PROJECT	CONTRACT
8590-01-73	WISC 2017177	1

STATE PROJECT NUMBER
8590-01-73

36

N

DESIGN DESIGNATION		STH 40 ALDER CREEK BRIDGE	STH 40 BECKY CREEK BRIDGE	STH 40 CLEAR CREEK BRIDGE
A.A.D.T. (2017)	=	625	625	840
A.A.D.T. (2037)	=	725	725	1000
D.H.V.	=	110	110	140
D.D.	=	60/40	60/40	60/40
T.	=	23.0%	23.0%	23.0%
DESIGN SPEED	=	55 MPH	60 MPH	60 MPH
ESALS	=	N/A	N/A	N/A

CONVENTIONAL SYMBOLS

PLAN
- CORPORATE LIMITS
- PROPERTY LINE
- LOT LINE
- LIMITED HIGHWAY EASEMENT
- EXISTING RIGHT OF WAY
- PROPOSED OR NEW R/W LINE
- SLOPE INTERCEPT
- REFERENCE LINE
- EXISTING CULVERT
- PROPOSED CULVERT (Box or Pipe)
- COMBUSTIBLE FLUIDS — CAUTION
- MARSH AREA
- WOODED OR SHRUB AREA

PROFILE
- GRADE LINE
- ORIGINAL GROUND
- MARSH OR ROCK PROFILE (To be noted as such) — ROCK
- SPECIAL DITCH — LABEL
- GRADE ELEVATION — 95.36
- CULVERT (Profile View)

UTILITIES
- ELECTRIC — E
- FIBER OPTIC — FO
- GAS — G
- SANITARY SEWER — SAN
- STORM SEWER — SS
- TELEPHONE — T
- WATER — W
- UTILITY PEDESTAL
- POWER POLE
- TELEPHONE POLE

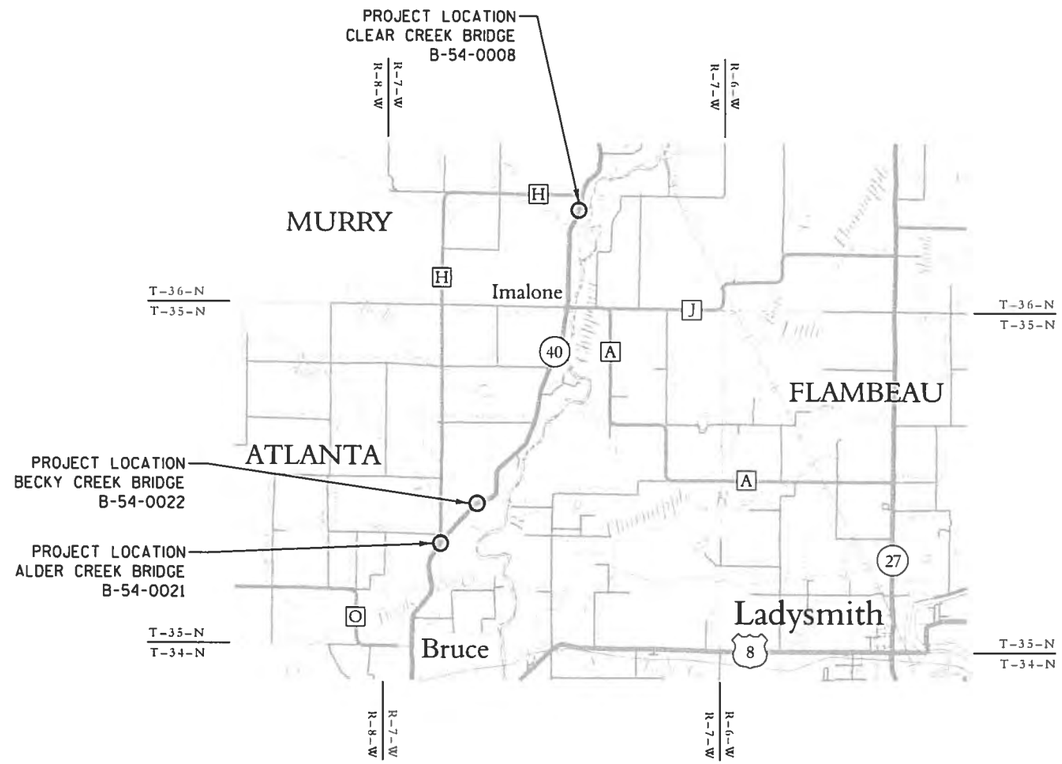

LAYOUT
SCALE 0 1.25 MI.

TOTAL NET LENGTH OF CENTERLINE = 0.000 MI.

COORDINATES ON THIS PLAN ARE REFERENCED TO THE WISCONSIN COUNTY COORDINATE SYSTEM (WCCS), RUSK COUNTY, HORIZONTAL DATUM NAD 83, (2011) ALL DISTANCES ARE GROUND, ELEVATIONS SHOWN ON THIS PLAN ARE REFERENCED TO NAVD 1988.

ORIGINAL PLANS PREPARED BY
emcs.inc
500 North 17th Avenue
Wausau, WI 54401
715.845.1081 Fax 715.845.1099

WISCONSIN PROFESSIONAL ENGINEER
STEPHANIE G. CHRISTENSEN
E35808
WAUSAU, WI

10/31/2016 (Date) (Signature)

STATE OF WISCONSIN
DEPARTMENT OF TRANSPORTATION

PREPARED BY

Surveyor	EMCS, INC.
Designer	EMCS, INC.
Project Manager	PHILIP KEPPERS
Regional Examiner	TOU YANG
Regional Supervisor	DAVID OSTROWSKI

APPROVED FOR THE DEPARTMENT
DATE: 10/16/2016 (Signature)

E

GENERAL NOTES

NO TREES OR SHRUBS SHALL BE REMOVED WITHOUT APPROVAL OF THE ENGINEER.

THE LOCATIONS OF EXISTING UTILITY INSTALLATIONS AS SHOWN ON THE PLANS ARE APPROXIMATE. THERE MAY BE OTHER UTILITY INSTALLATIONS WITHIN THE PROJECT AREA THAT ARE NOT SHOWN. EXISTING UTILITIES WERE ONLY SURVEYED IN THE AREAS NEAR STRUCTURES B-54-0021, B-54-0022, AND B-54-0008.

EXISTING RIGHT-OF-WAY SHOWN IS APPROXIMATE AND IS BASED ON AVAILABLE RIGHT-OF-WAY PLATS. NO WORK SHALL OCCUR OUTSIDE OF EXISTING RIGHT-OF-WAY.

AS-BUILTS USED FOR PLAN DEVELOPMENT

PROJECT NO: S 0164(3), CONSTRUCTION YEAR: 1957
PROJECT NO: 8590-02-71, CONSTRUCTION YEAR: 1977
PROJECT NO: 8590-02-72, CONSTRUCTION YEAR: 1978
PROJECT NO: 8590-07-71, CONSTRUCTION YEAR: 1990
PROJECT NO: 8590-21-71, CONSTRUCTION YEAR: 2005

ORDER OF SECTION 2 SHEETS

PROJECT OVERVIEW
TYPICAL SECTIONS
CONSTRUCTION DETAILS
EROSION CONTROL
PERMANENT SIGNING AND PAVEMENT MARKING
DETOUR

ALIGNMENT STATION RANGES

ALDER CREEK (B-54-0021): STA 53+00 - STA 64+00
BECKY CREEK (B-54-0022): STA 104+00 - STA 115+00
CLEAR CREEK (B-54-0008): STA 36+00 - STA 41+50

UTILITIES

BRUCE TELEPHONE COMPANY, INC.

(COMMUNICATIONS)
JOHN MANOSKY
620 NORTH ALVEY STREET
BRUCE, WI 54819
715-868-5111
manoskyj@brucetel.net

NORTH CENTRAL POWER CO. INC.

(ELECTRIC DISTRIBUTION)
MIKE HEATH
3661 NORTH CLARK STREET
P.O. BOX 68
RADISSON, WI 54867
715-945-2630
CELL 715-492-6407
ncpmike85@yahoo.com

XCEL ENERGY

(ELECTRIC DISTRIBUTION)
JASON MCROBERTS
310 HICKORY HILLS LANE
PHILLIPS, WI 54555
715-737-1198
CELL 715-577-1132
jason.l.mcroberts@xcelenergy.com

XCEL ENERGY

(ELECTRIC TRANSMISSION)
CHARLES DIENGER
8701 MONTICELLO LANE
MAPLE GROVE, MN 55369
651-955-1089
Charles.G.Dienger@XcelEnergy.com

DIGGERS HOTLINE
Dial 811 or (800) 242-8511
www.DiggersHotline.com

OTHER CONTACTS

DNR LIAISON

AMY CRONK
DNR NORTHERN REGION HEADQUARTERS
810 W. MAPLE STREET
SPOONER, WI 54801
(715) 635-4229
amy.cronk@wisconsin.gov

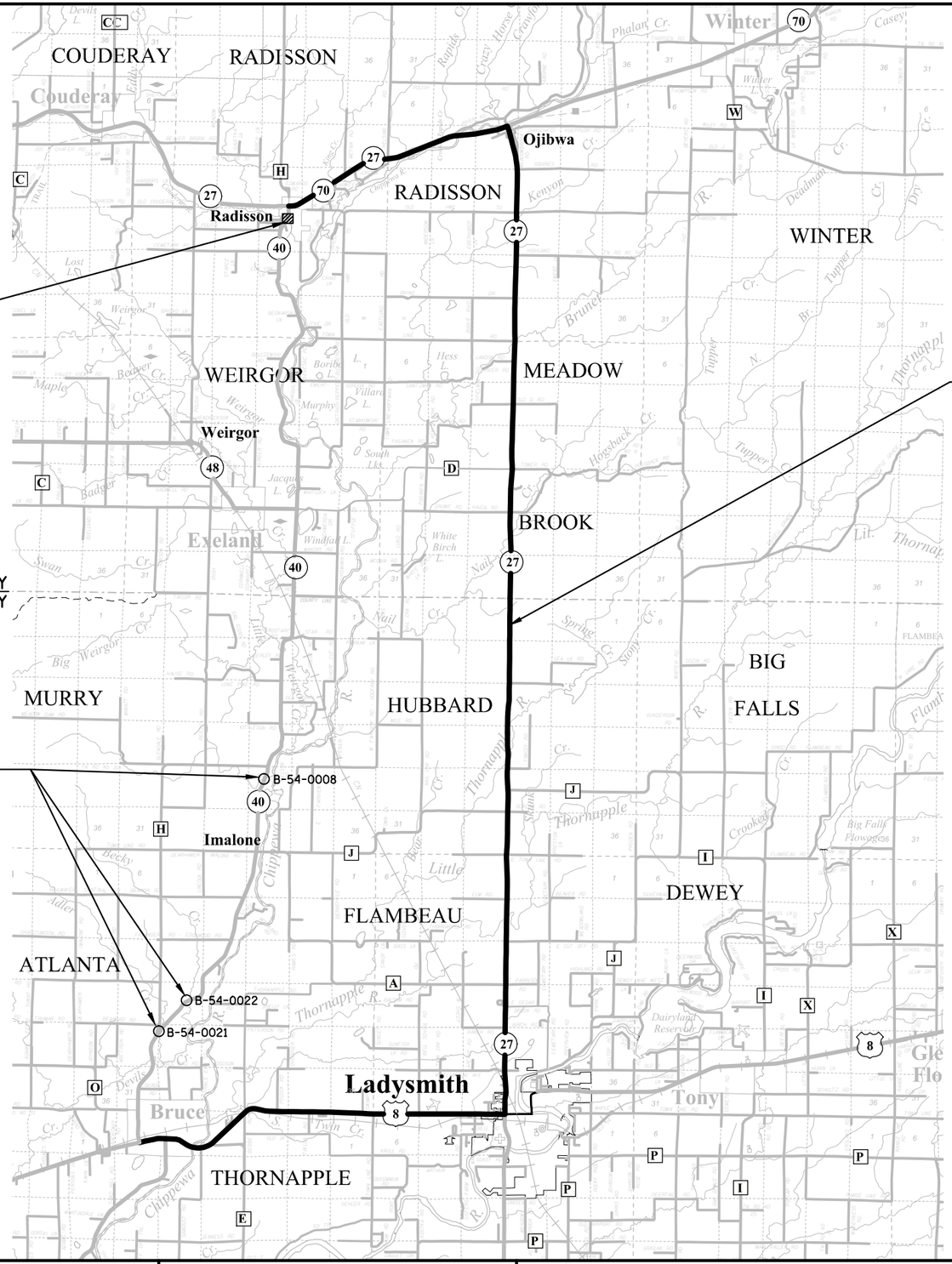

PROJECT 8590-01-76 LOCATION
COUDERAY RIVER BRIDGE REPLACEMENT
EXISTING BRIDGE: B-57-0072
PROPOSED BRIDGE: B-57-0089
PROPOSED RETAINING WALL: R-57-0001
(BY OTHERS)

DETOUR ROUTE
DETOUR ROUTE AND ALL TRAFFIC CONTROL DEVICES TO BE PAID UNDER THIS PROJECT, SEE DETOUR PLANS SHEETS

SAWYER COUNTY
RUSK COUNTY

PROJECT LOCATIONS
CLEAR CREEK BRIDGE REHABILITATION (B-54-0008):
ANCHOR NORTH WING WALLS AND CONCRETE SURFACE REPAIR

ALDER CREEK BRIDGE (B-54-0021):
CONCRETE DECK REPLACEMENT, SINGLE SLOPE 32SS CONCRETE PARAPET, CONCRETE SURFACE REPAIR, APPROACH PAVING AND REPLACE GUARDRAIL

BECKY CREEK BRIDGE (B-54-0022):
CONCRETE DECK REPLACEMENT WITH SINGLE SLOPE 32SS CONCRETE PARAPET, CONCRETE SURFACE REPAIR, APPROACH PAVING AND REPLACE GUARDRAIL

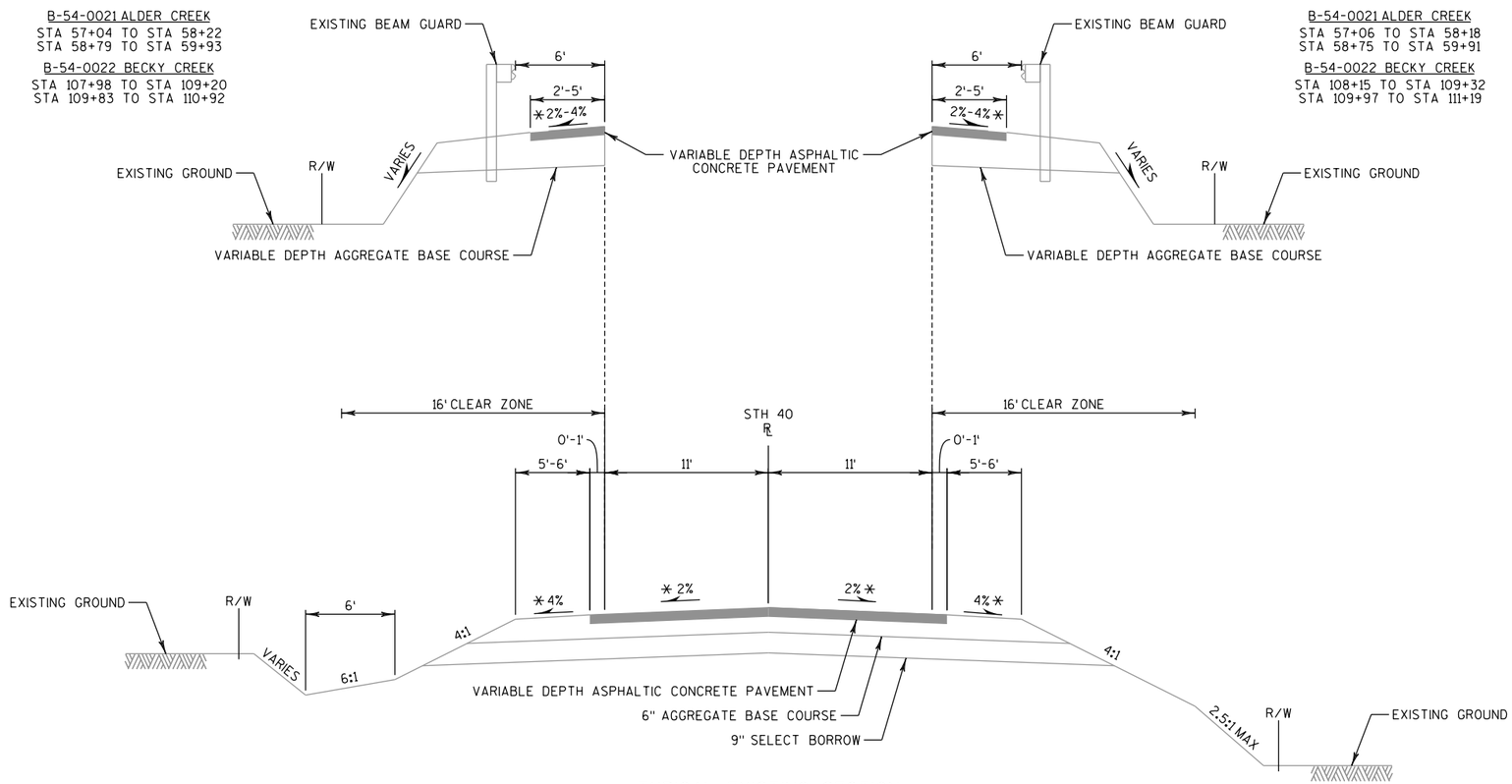

TYPICAL EXISTING SECTION
STH 40

ROADWAY APPROACHES TO B-54-0021, ALDER CREEK
ROADWAY APPROACHES TO B-54-0022, BECKY CREEK

NOTE

* CROSS SLOPE VARIES DUE TO SUPERELEVATION. SEE SECTION 5 PLAN SHEETS FOR ADDITIONAL INFORMATION.

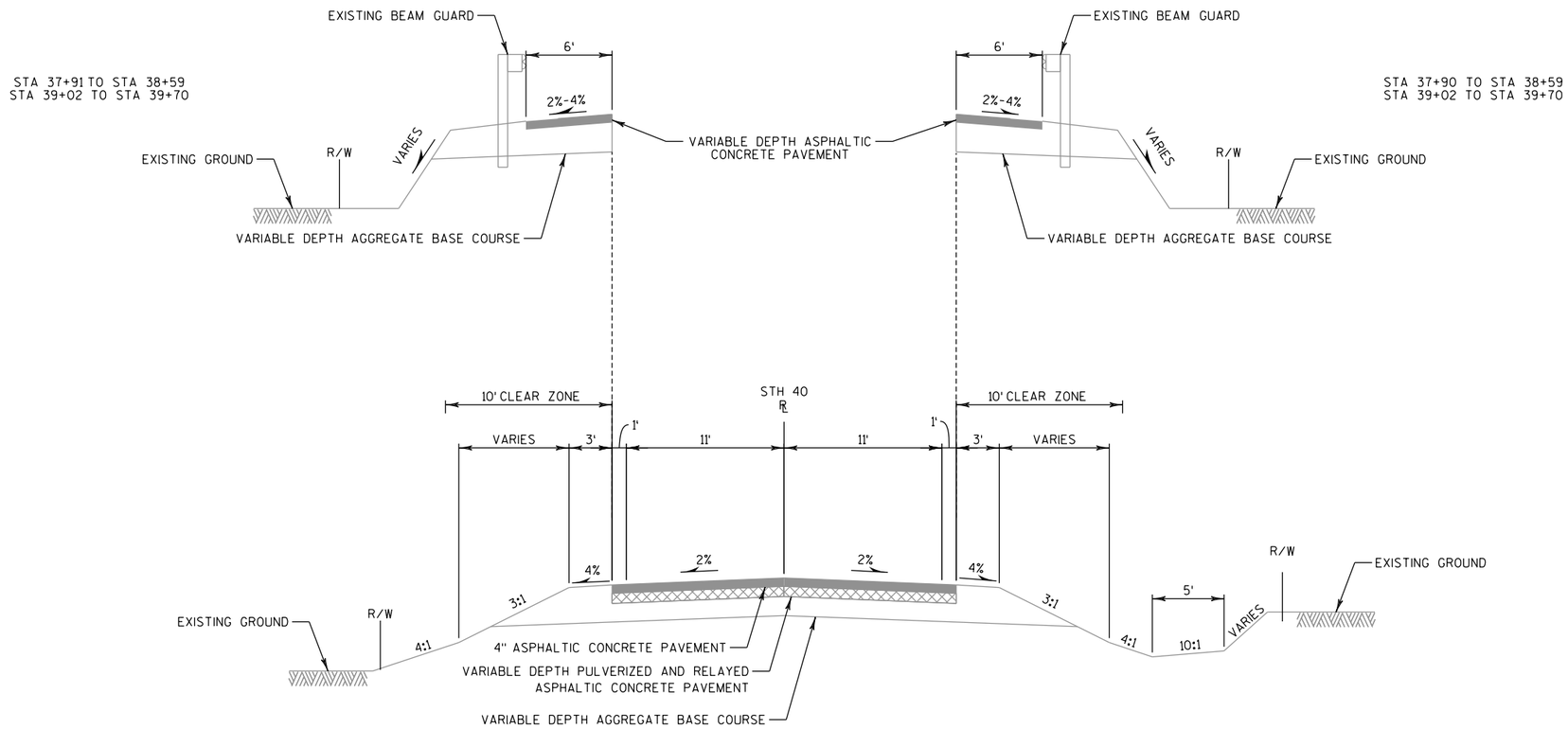

TYPICAL EXISTING SECTION
STH 40
ROADWAY APPROACHES TO B-54-0008, CLEAR CREEK

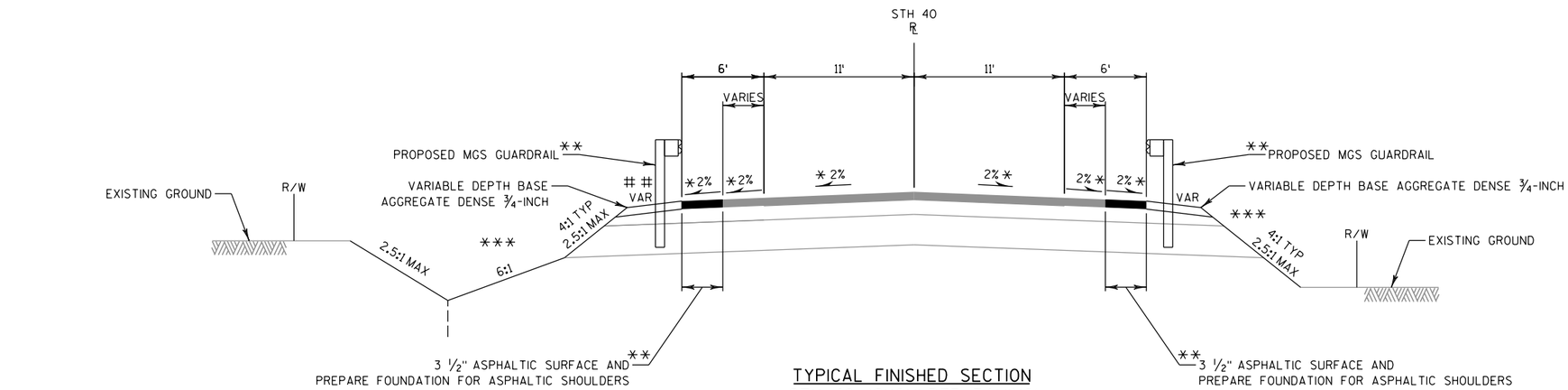

TYPICAL FINISHED SECTION

** STH 40 (SHOULDER PAVING)

ROADWAY APPROACHES TO B-54-0021, ALDER CREEK
ROADWAY APPROACHES TO B-54-0022, BECKY CREEK

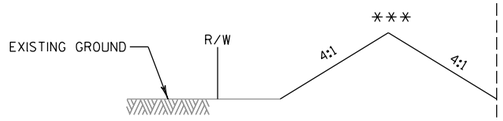

STA 110+76 - STA 112+00, LT
B-54-0022, BECKY CREEK

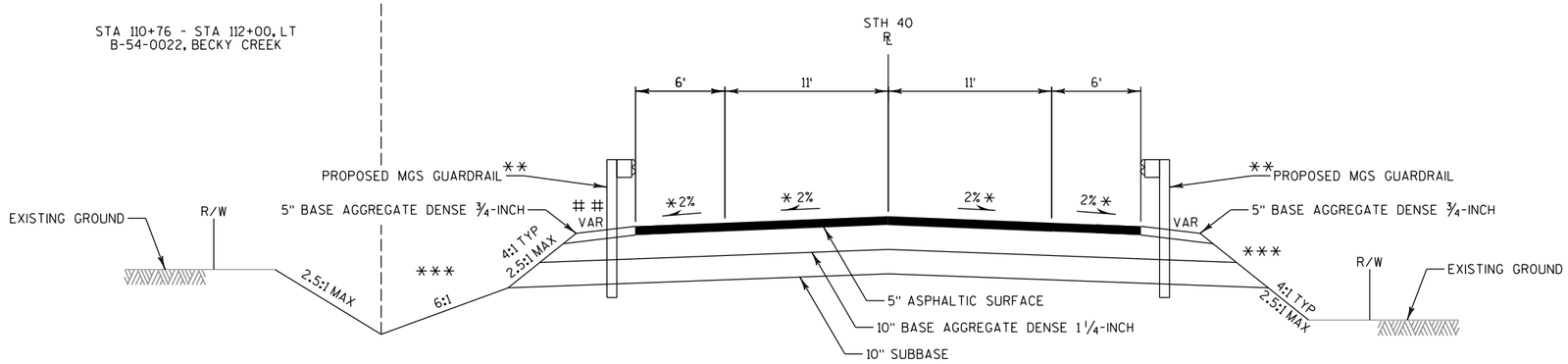

TYPICAL FINISHED SECTION

** STH 40 (RECONSTRUCTION)

ROADWAY APPROACHES TO B-54-0021, ALDER CREEK
ROADWAY APPROACHES TO B-54-0022, BECKY CREEK

NOTES

* CROSS SLOPE VARIES DUE TO SUPERELEVATION. SEE SECTION 5 PLAN SHEETS FOR ADDITIONAL INFORMATION. PAVED SHOULDERS CAN BE PAVED AT SAME CROSS SLOPE AS TRAVEL LANES.

** SEE SECTION 5 PLAN SHEETS FOR LIMITS OF GUARDRAIL, PAVEMENT RECONSTRUCTION, AND SHOULDER PAVING.

*** TOPSOIL, SEED, FERTILIZE AND EROSION MAT OR RIPRAP. SEE EROSION CONTROL SHEETS AND SECTION 5 PLAN SHEETS FOR RIPRAP LOCATIONS.

THE BASE AGGREGATE SHOULDER ON THE LEFT SIDE OF STH 40 AT BECKY CREEK IS PROPOSED AT 2% SLOPING DOWNWARD FROM THE SUPERELEVATED PAVEMENT.

2

NOTE

SEE SECTION 5 SHEETS AND SDD "MIDWEST GUARDRAIL SYSTEM (MGS) EAT" FOR ADDITIONAL INFORMATION

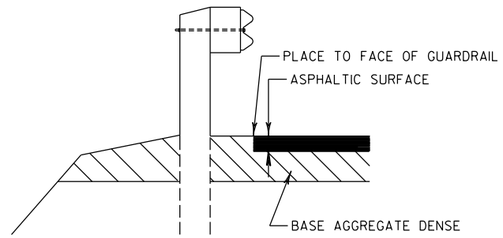

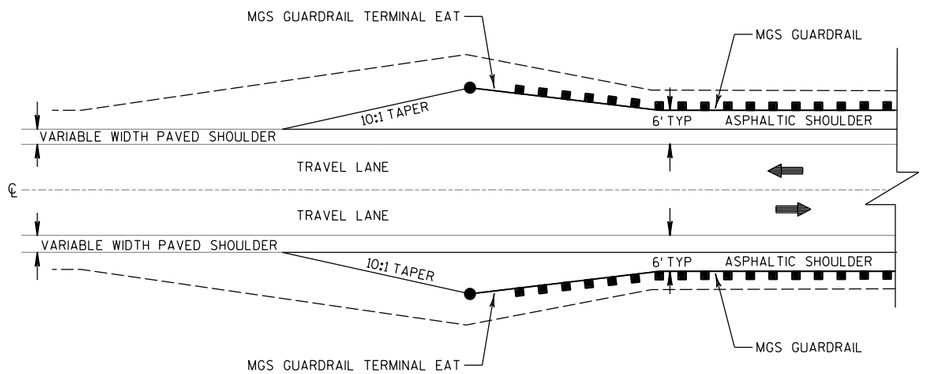

PAVED SHOULDER AT GUARDRAIL DETAIL

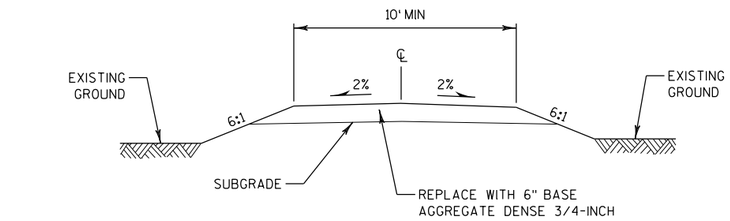

TYPICAL CROSS SECTION

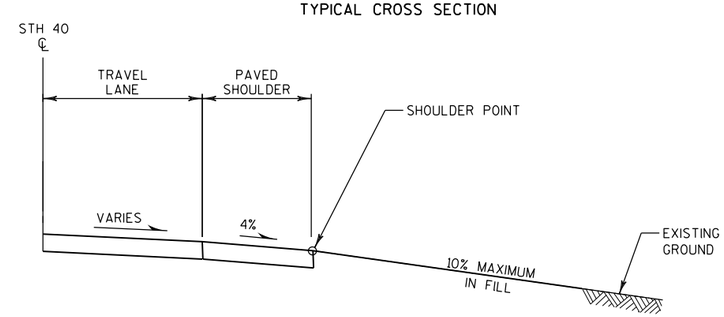

TYPICAL PROFILE

TYPICAL DRIVEWAY DETAIL IN GRADING

STA 111+75, RT

2

NOTES

BENCH FILL AS REQUIRED PER STANDARD SPECIFICATION 205.3.2(4)

** OFFSET AND ELEVATION PROVIDED FOR REFERENCE ONLY ON CROSS SECTIONS

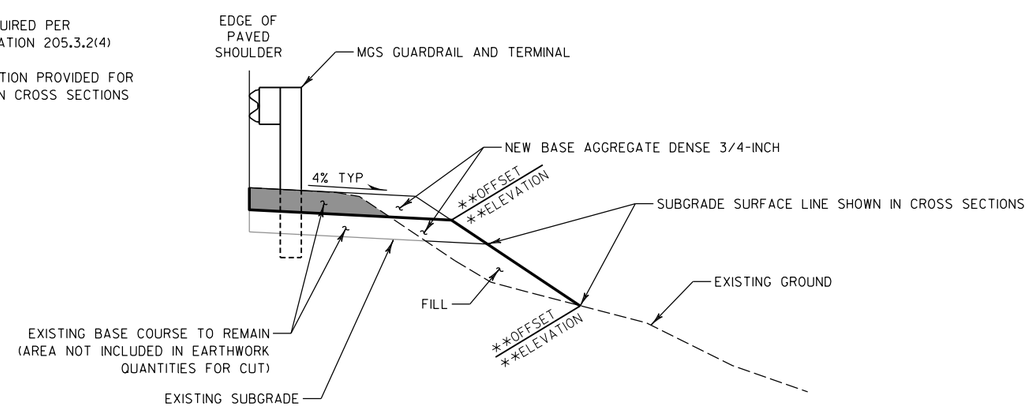

SHOULDER WIDENING EARTHWORK & BASE AGGREGATE FOR GUARDRAIL DETAIL

SEE CROSS SECTIONS FOR ADDITIONAL INFORMATION
(THIS DETAIL DOES NOT APPLY TO RECONSTRUCTION AREAS)

NOTES

TIE ASPHALTIC CURB INTO PROPOSED ASPHALTIC FLUME

SEE SECTION 5 SHEETS FOR ADDITIONAL INFORMATION

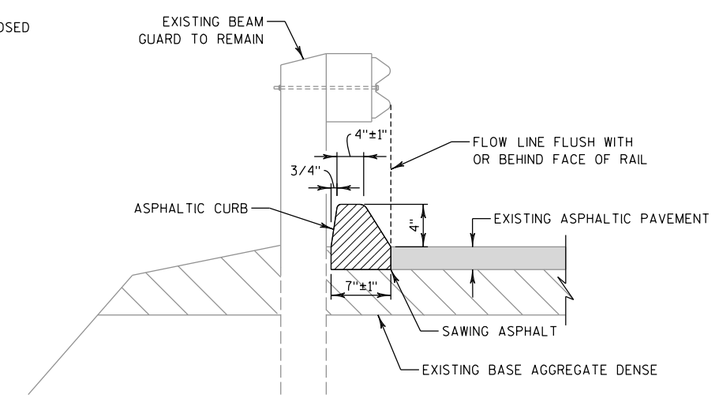

ASPHALTIC CURB DETAIL

CLEAR CREEK
STA 39+02 TO STA 39+24, LT & RT

PROJECT NO:8590-01-73	HWY:STH 40	COUNTY:RUSK	CONSTRUCTION DETAILS	SHEET 7	E

2

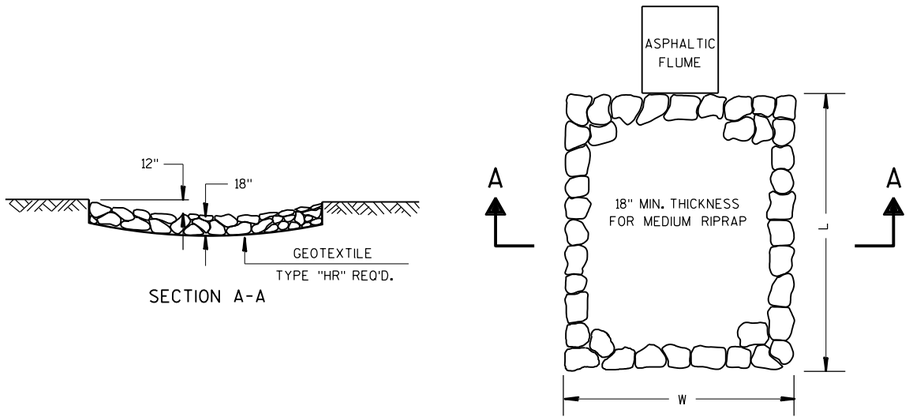

MEDIUM RIPRAP TREATMENT AT ASPHALTIC FLUMES

STA 58+83 RT
STA 58+87 LT
STA 110+05 RT
STA 39+26 LT
STA 39+26 RT

NOTES

VERIFY PROPOSED GUARDRAIL POST SPACING PRIOR TO CONSTRUCTING ASPHALTIC FLUMES AND PLACING RIPRAP

SEE EROSION CONTROL PLANS FOR ADDITIONAL INFORMATION AND FOR "L" AND "W" DIMENSIONS

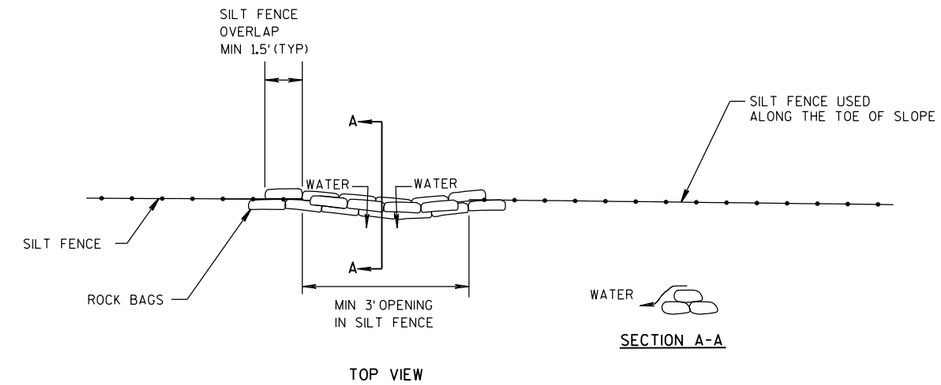

ROCK BAGS SILT FENCE RELIEF DETAIL

PAID AS ROCK BAGS

NOTE

SEE EROSION CONTROL PLANS FOR ADDITIONAL INFORMATION

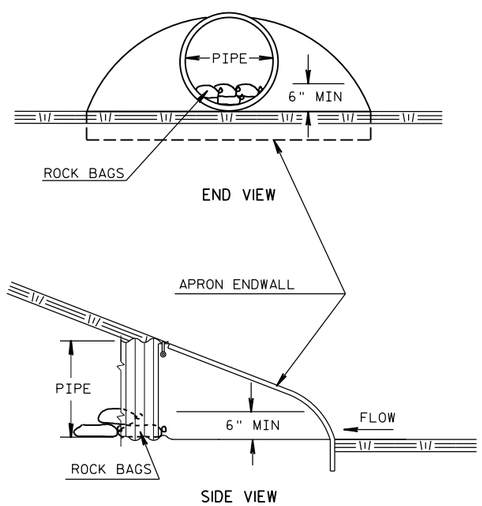

CULVERT PIPE CHECKS

INSTALL ON INLET END
EACH ROCK BAG PAID AS CULVERT PIPE CHECKS

NOTE

SEE EROSION CONTROL PLANS FOR ADDITIONAL INFORMATION

RUNOFF COEFFICIENT TABLE

	HYDROLOGIC SOIL GROUP											
	A			B			C			D		
	SLOPE RANGE (PERCENT)			SLOPE RANGE (PERCENT)			SLOPE RANGE (PERCENT)			SLOPE RANGE (PERCENT)		
LAND USE:	0-2	2-6	6 & OVER	0-2	2-6	6 & OVER	0-2	2-6	6 & OVER	0-2	2-6	6 & OVER
ROW CROPS	.08 .22	.16 .30	.22 .38	.12 .26	.20 .34	.27 .44	.15 .30	.24 .37	.33 .50	.19 .34	.28 .41	.38 .56
MEDIAN STRIP-TURF	.19 .24	.20 .26	.24 .30	.19 .25	.22 .28	.26 .33	.20 .26	.23 .30	.30 .37	.20 .27	.25 .32	.30 .40
SIDE SLOPE-TURF			.25 .32			.27 .34			.28 .36			.30 .38
PAVEMENT:												
ASPHALT	.70 - .95											
CONCRETE	.80 - .95											
BRICK	.70 - .80											
DRIVES, WALKS	.75 - .85											
ROOFS	.75 - .95											
GRAVEL ROADS, SHOULDERS	.40 - .60											

TOTAL PROJECT AREA = 4.83 ACRES
TOTAL AREA EXPECTED TO BE DISTURBED BY CONSTRUCTION ACTIVITIES = 1.94 ACRES

LEGEND

	EROSION MAT URBAN CLASS I TYPE B		TEMPORARY DITCH CHECKS
	EROSION MAT CLASS I TYPE B		SURFACE WATER FLOW
	SILT FENCE		DELINEATED WETLAND BOUNDARY
	RIPRAP HEAVY OR MEDIUM		SLOPE INTERCEPT
F	SILT FENCE RELIEF (ROCK BAGS)		CULVERT PIPE CHECKS

NOTE

DISTURBED AREAS WITHIN THE RIGHT-OF-WAY, EXCEPT THE AREAS WITHIN THE FINISHED SHOULDER POINTS, SHALL BE FERTILIZED, SEEDED, TOPSOILED AND COVERED WITH EROSION MAT.

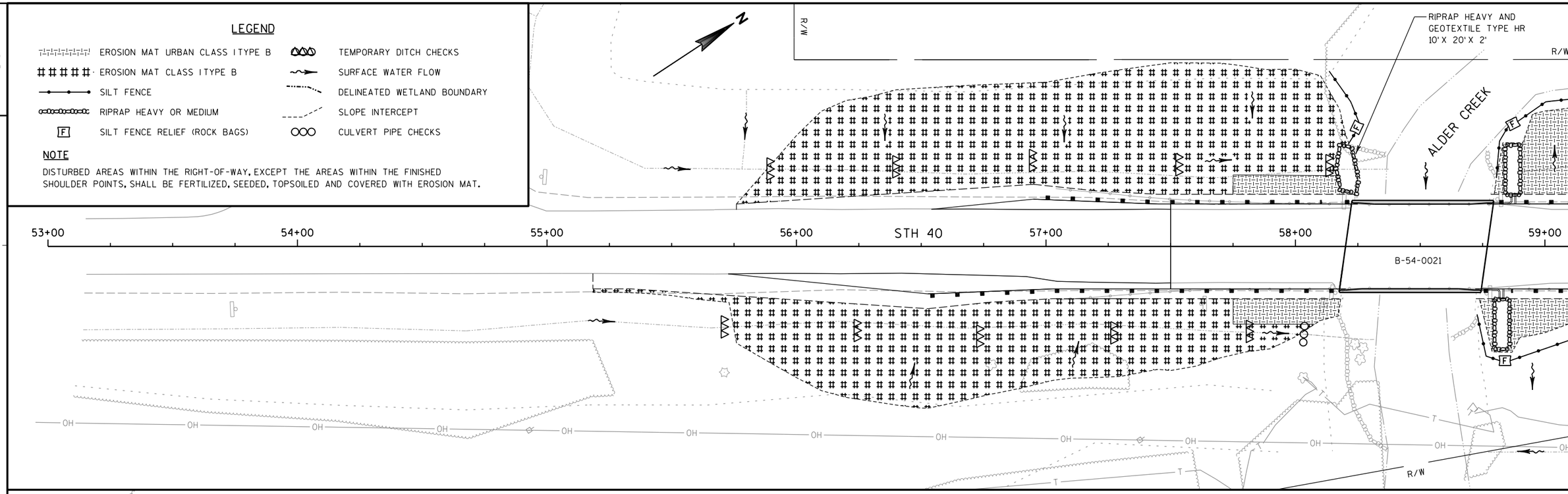

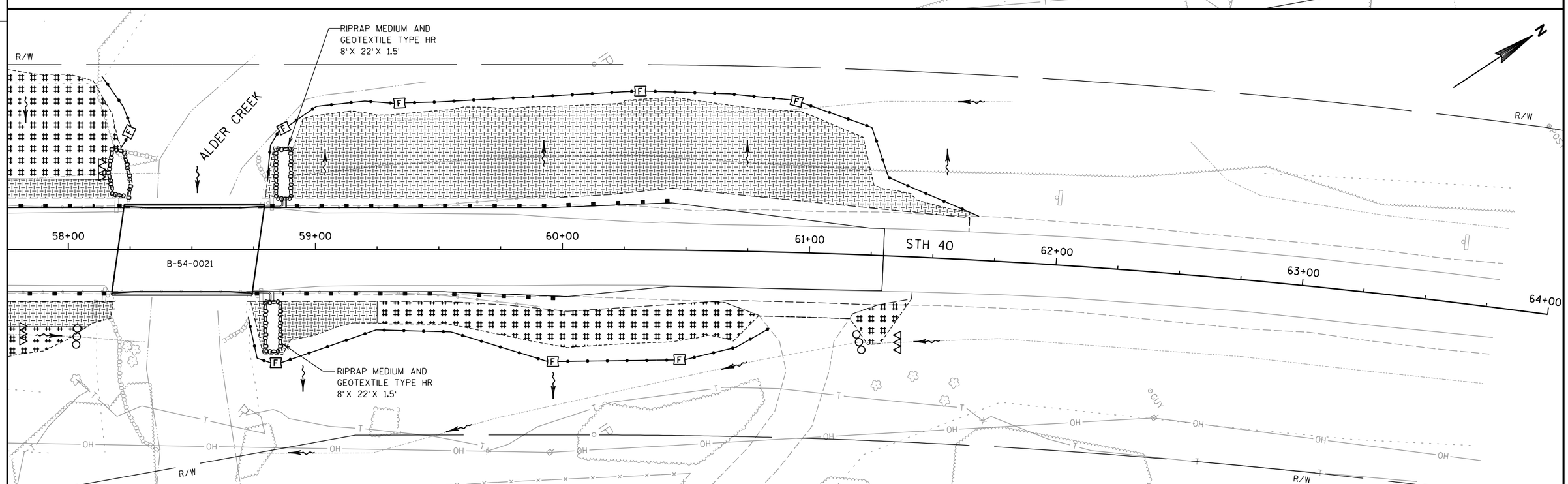

PROJECT NO:8590-01-73	HWY:STH 40	COUNTY:RUSK	EROSION CONTROL - ALDER CREEK	SHEET 9	E

FILE NAME : P:\48xx\4879.DP.14.STH40.RSK\CADDS\85900173\SheetsPlan\022001_ec.dgn PLOT DATE : 11/28/2016 PLOT BY : emo PLOT NAME : PLOT SCALE : 1:40

WISDOT/CADDS SHEET 42

LEGEND

	EROSION MAT URBAN CLASS I TYPE B		TEMPORARY DITCH CHECKS
	EROSION MAT CLASS I TYPE B		SURFACE WATER FLOW
	SILT FENCE		DELINEATED WETLAND BOUNDARY
	RIPRAP HEAVY OR MEDIUM		SLOPE INTERCEPT
F	SILT FENCE RELIEF (ROCK BAGS)		CULVERT PIPE CHECKS

NOTE

DISTURBED AREAS WITHIN THE RIGHT-OF-WAY, EXCEPT THE AREAS WITHIN THE FINISHED SHOULDER POINTS, SHALL BE FERTILIZED, SEEDED, TOPSOILED AND COVERED WITH EROSION MAT.

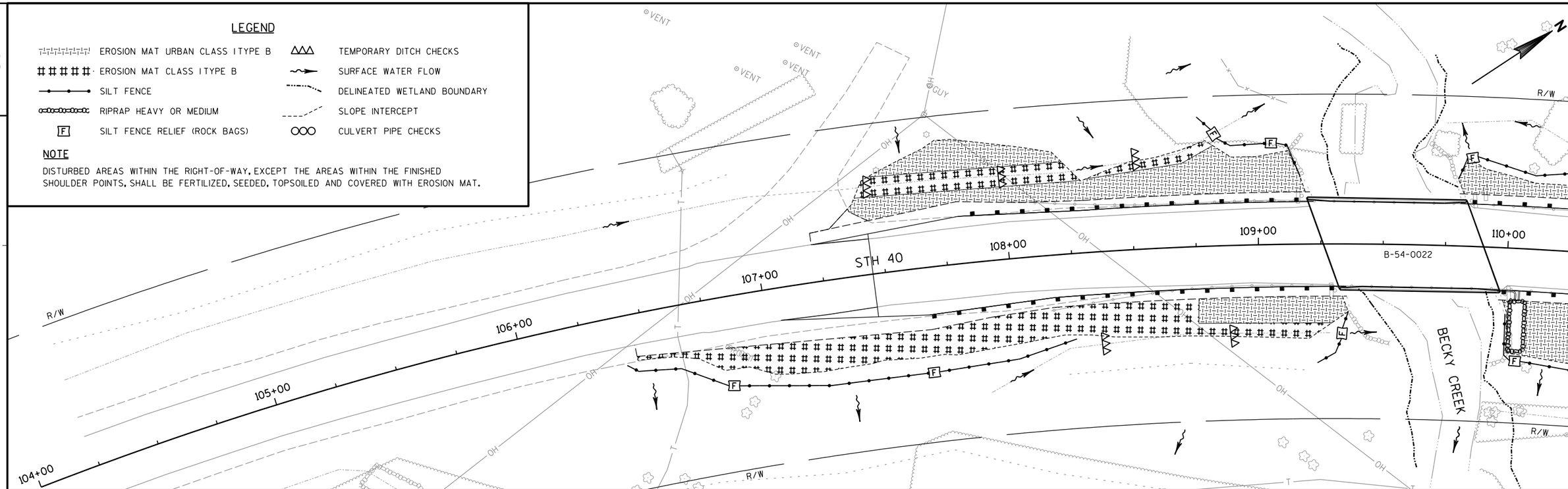

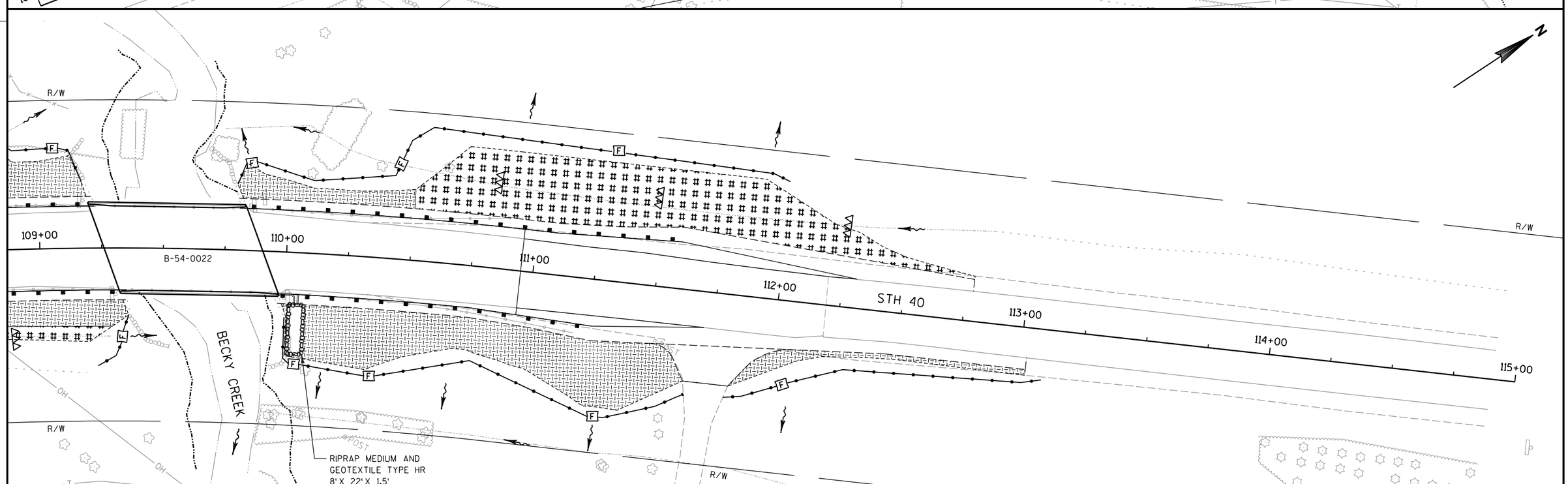

PROJECT NO:8590-01-73	HWY:STH 40	COUNTY:RUSK	EROSION CONTROL - BECKY CREEK	SHEET 10	E

FILE NAME : P:\48xx\4879.DP.14.STH40.RSK\CADDS\85900173\SheetsPlan\022002_ec.dgn PLOT DATE : 11/28/2016 PLOT BY : emo PLOT NAME : PLOT SCALE : 1:40

WISDOT/CADDS SHEET 42

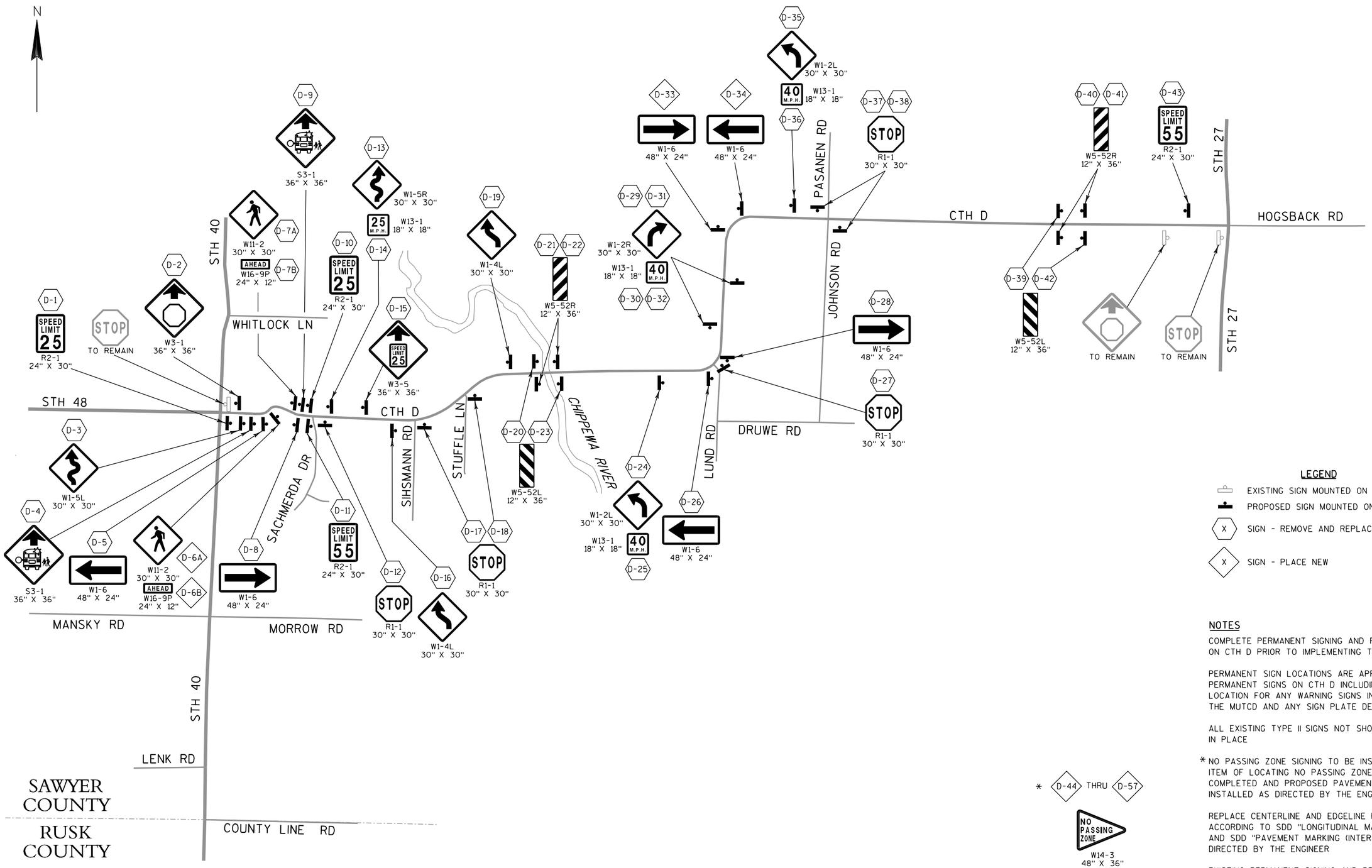

LEGEND

- EXISTING SIGN MOUNTED ON SINGLE POST
- PROPOSED SIGN MOUNTED ON SINGLE POST
- X — SIGN - REMOVE AND REPLACE
- X — SIGN - PLACE NEW

NOTES

COMPLETE PERMANENT SIGNING AND PAVEMENT MARKING ON CTH D PRIOR TO IMPLEMENTING THE STH 40 DETOUR

PERMANENT SIGN LOCATIONS ARE APPROXIMATE. PLACE PERMANENT SIGNS ON CTH D INCLUDING THE REQUIRED LOCATION FOR ANY WARNING SIGNS IN ACCORDANCE WITH THE MUTCD AND ANY SIGN PLATE DETAILS PROVIDED

ALL EXISTING TYPE II SIGNS NOT SHOWN ARE TO REMAIN IN PLACE

* NO PASSING ZONE SIGNING TO BE INSTALLED AFTER THE ITEM OF LOCATING NO PASSING ZONES HAS BEEN COMPLETED AND PROPOSED PAVEMENT MARKING INSTALLED AS DIRECTED BY THE ENGINEER

REPLACE CENTERLINE AND EDGELINE PAVEMENT MARKING ACCORDING TO SDD "LONGITUDINAL MARKING (MAINLINE)" AND SDD "PAVEMENT MARKING (INTERSECTIONS)" AS DIRECTED BY THE ENGINEER

EXISTING PERMANENT SIGNING AND PROPOSED SIGNING REMOVALS FOR CTH D PROVIDED BY WISDOT NWR TRAFFIC SECTION BASED ON OCT 2016 FIELD VISIT

PROJECT NO:8590-01-73	HWY:STH 40	COUNTY:RUSK	PERMANENT SIGNING AND PAVEMENT MARKING - CTH D	SHEET 11	E

2

GENERAL NOTES FOR TRAFFIC CONTROL AND DETOUR

1) ALL SIGNS ARE 48" X 48" UNLESS OTHERWISE NOTED.

2) "WO" SIGNS ARE THE SAME A "W" SIGNS EXCEPT THE BACKGROUND IS ORANGE.

3) ALL TYPE III BARRICADES SHALL BE 8' WIDE, UNLESS OTHERWISE NOTED. EQUIP WITH TYPE "A" (LOW INTENSITY FLASHING) LIGHTS PER SDDS.

4) CLEAR CREEK (B-54-0008) REHABILITATION WILL BE COMPLETED UNDER SINGLE LANE CLOSURES AND FLAGGING WITH A MINIMUM CLEAR ROADWAY WIDTH OF 16' AT ALL TIMES DURING WORKING HOURS. REOPEN STH 40 TO TWO LANES DURING NON-WORKING HOURS. SEE SDD "TRAFFIC CONTROL FOR LANE CLOSURE (SUITABLE FOR MOVING OPERATIONS)" AND SDD "TRAFFIC CONTROL, WORK ON SHOULDER OR PARKING LANE, UNDIVIDED ROADWAY" FOR TRAFFIC CONTROL DEVICES AND ADDITIONAL INFORMATION.

NOTES

ADJUST TRAFFIC CONTROL PCMS MESSAGE AS NEEDED BASED ON WORK ZONE AREAS AND CONSTRUCTION SCHEDULE AS APPROVED BY THE ENGINEER.

CONSIDER GEOMETRICS WHEN LOCATING MESSAGE BOARDS SO THE DRIVER HAS A CLEAR VIEW OF THE BOARD FOR A MINIMUM OF 1000 FEET IN FRONT OF THE MESSAGE BOARD.

PLACE TRAFFIC CONTROL SIGNS PCMS AND DISPLAY THE "PRIOR TO CONSTRUCTION" MESSAGE 7 DAYS PRIOR TO THE EXPECTED START OF THE PROPOSED WORK THAT WILL REQUIRE BRIDGE OR LANE CLOSURES. ADJUST THE MESSAGE DATE ACCORDINGLY.

* INSTALL TRAFFIC CONTROL DEVICES PER DETAIL C OF SDD "BARRICADES AND SIGNS FOR MAINLINE CLOSURES" IF THE CROSSING ROADWAY IS THE LAST CTH OR STH PRIOR TO THE BRIDGE OUT LOCATION. INSTALL TRAFFIC CONTROL DEVICES PER DETAIL B BELOW AT OTHER CTH OR STH INTERSECTIONS.

MAINTAIN ACCESS TO LOCAL TRAFFIC AT ALL TIMES. DO NOT CLOSE B-54-0021 (ALDER CREEK BRIDGE) AND B-54-0022 (BECKY CREEK BRIDGE) TO LOCAL TRAFFIC AT THE SAME TIME.

** INSTALL PROPOSED PERMANENT SIGNING AND PAVEMENT MARKING ALONG CTH D (DETOUR ROUTE FOR STH 48 CONNECTION TO STH 40) PRIOR TO IMPLEMENTING THE DETOUR. SEE PERMANENT SIGNING AND PAVEMENT MARKING SHEETS.

PLACE ALL PERMANENT SIGNS ON CTH D INCLUDING THE REQUIRED LOCATION FOR ANY WARNING SIGNS IN ACCORDANCE WITH THE MUTCD.

LEGEND

- MB — PORTABLE CHANGEABLE MESSAGE BOARD
- DETOUR ROUTE - STH 40
- ** DETOUR ROUTE - STH 48 CONNECTION TO STH 40
- A# — SEE SDD "BARRICADES AND SIGNS FOR MAINLINE CLOSURES" DETAIL A
- * C# — SEE SDD "BARRICADES AND SIGNS FOR MAINLINE CLOSURES" DETAIL C
- D — SEE SDD "BARRICADES AND SIGNS FOR MAINLINE CLOSURES" DETAIL D

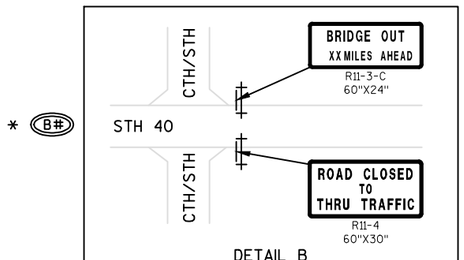

DETAIL B

TRAFFIC CONTROL SIGNS PCMS MESSAGES		
PCMS SIGN LOCATION	PRIOR TO CONSTRUCTION	
	PHASE 1 (2 SEC)	PHASE 2 (2 SEC)
STH 40 NB 0.1 MILES SOUTH OF CTH H (SOUTH)	WIS 40 ALDER/BECKY CREEK	BRIDGE CLOSED DATE
STH 40 SB 0.2 MILES NORTH BECKY CREEK	WIS 40 ALDER/BECKY CREEK	BRIDGE CLOSED DATE
STH 40 NB 0.3 MILES SOUTH OF THE COUDERAY RIVER	WIS 40 COUDERAY RIVER	BRIDGE CLOSED DATE
STH 40 SB 0.1 MILES NORTH OF THE COUDERAY RIVER	WIS 40 COUDERAY RIVER	BRIDGE CLOSED DATE
STH 48 EB 0.1 MILES WEST OF STH 40	WIS 40 DETOUR BEGINS	DATE

DISTANCES FOR BRIDGE OUT SIGNS				
LOCATION LABEL	CROSSING ROADWAY(S)	B-54-0021 ALDER CREEK	B-54-0022 BECKY CREEK	B-57-0089 COUDERAY RIVER
A1	USH 8	2¾ MILES	3¾ MILES	23½ MILES
B1	CTH O	2 MILES	3 MILES	22¾ MILES
B2/C1	CTH H	N/A	1 MILES	21 MILES
B3/C2	CTH A	5 MILES	4 MILES	15¾ MILES
B4	CTH H	7 MILES	6 MILES	13¾ MILES
B5/C3	STH 48 AND CTH D	13¼ MILES	21¼ MILES	7½ MILES
B6/C4	STH 27, STH 70, AND CTH H	21¼ MILES	20¼ MILES	¼ MILES

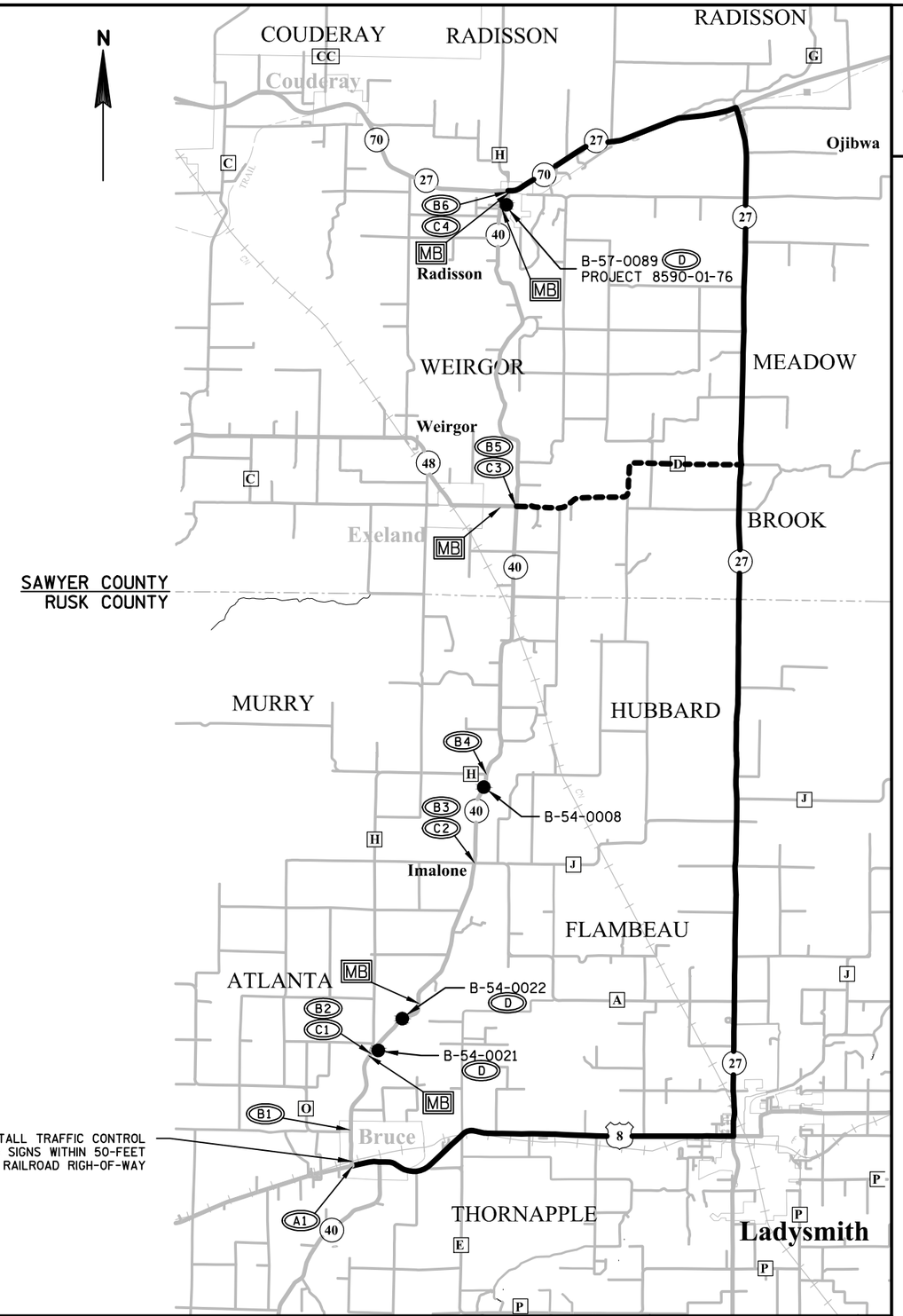

2

PROJECT NO:8590-01-73	HWY:STH 40	COUNTY:RUSK	DETOUR OVERVIEW	SHEET 12	E

NOTES

* PAID FOR AS TRAFFIC CONTROL DETOUR SIGN

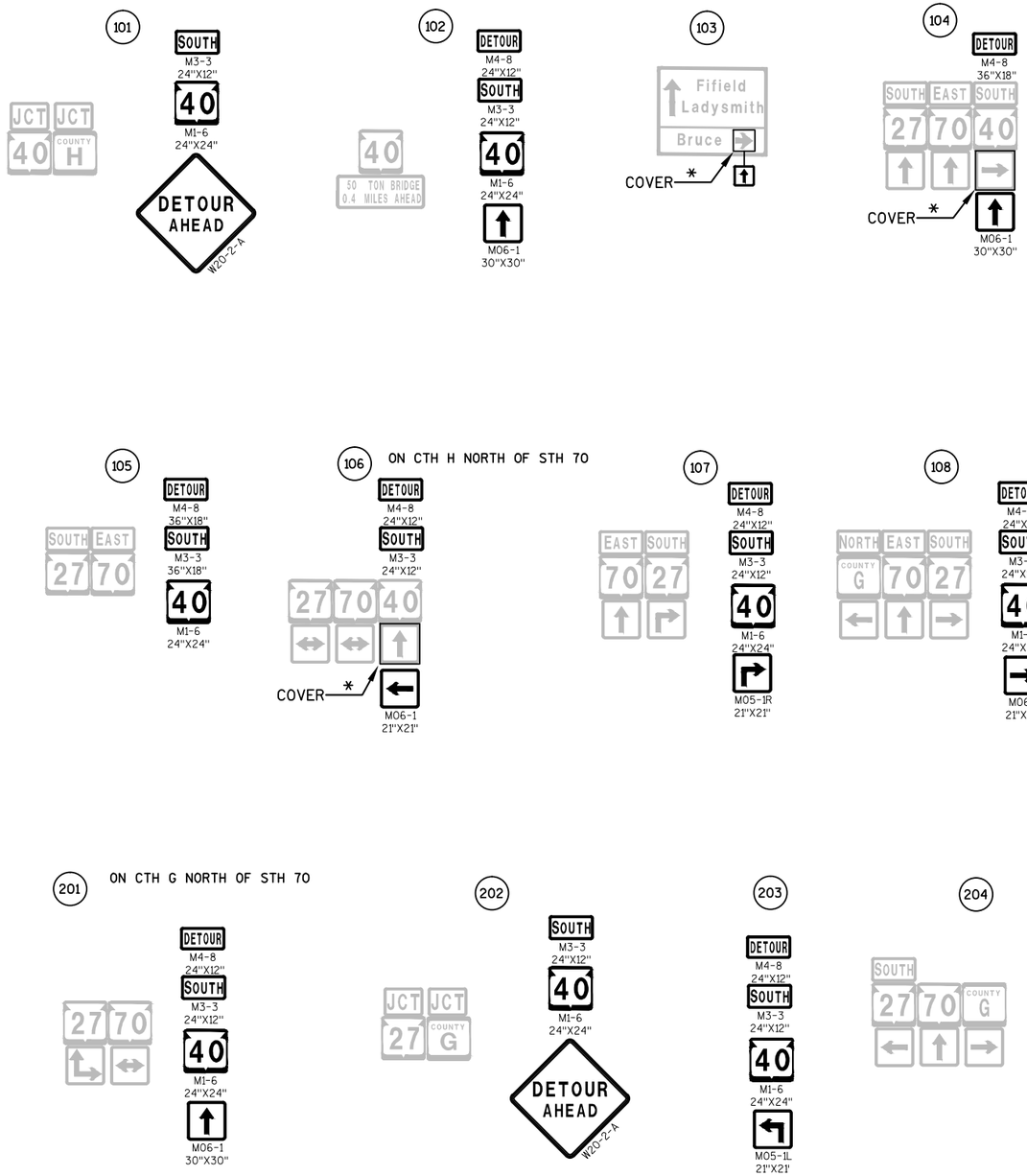

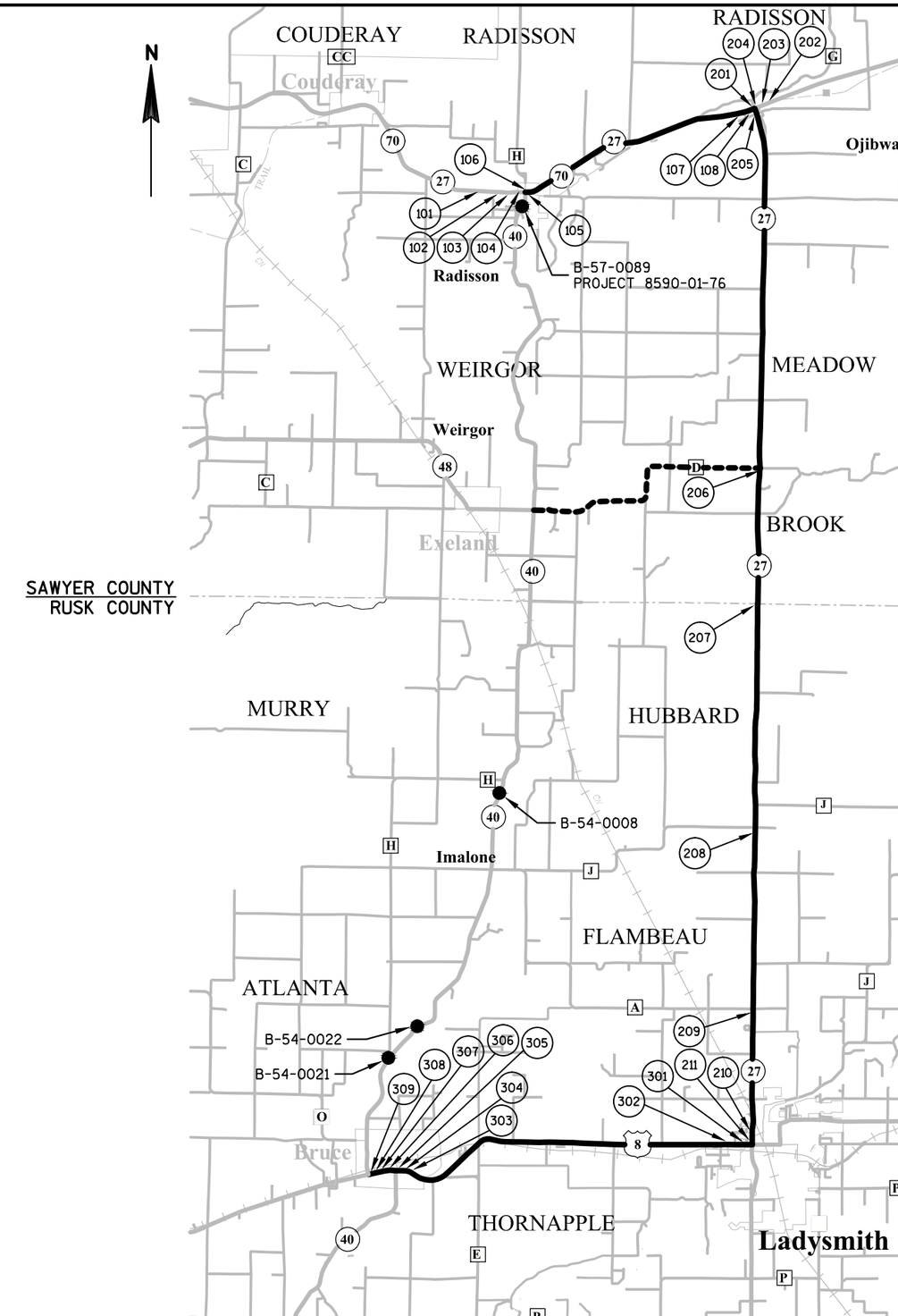

PROJECT NO:8590-01-73	HWY:STH 40	COUNTY:RUSK	DETOUR - STH 40 SOUTHBOUND	SHEET 13	E

205

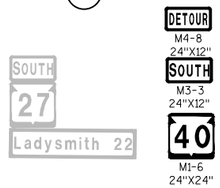

206 209

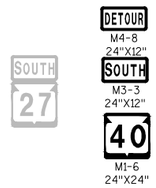

207

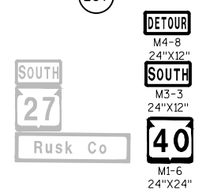

208

210

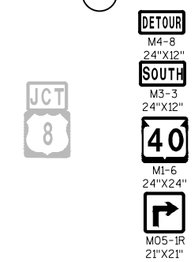

211

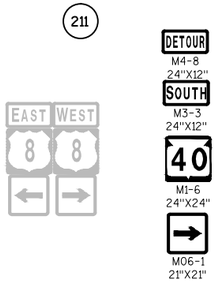

301 302

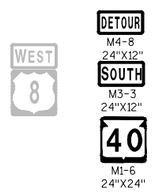

303

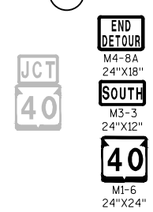

304

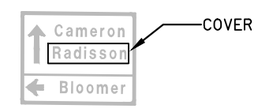

305

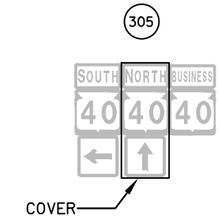

306

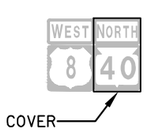

307

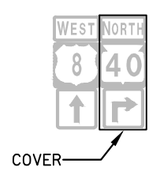

308

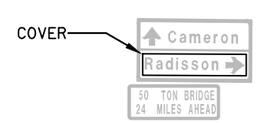

309

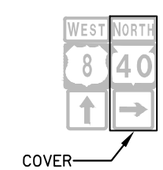

PROJECT NO:8590-01-73	HWY:STH 40	COUNTY:RUSK	DETOUR - STH 40 SOUTHBOUND	SHEET 14	E

2

NOTES

* PAID FOR AS TRAFFIC CONTROL DETOUR SIGN

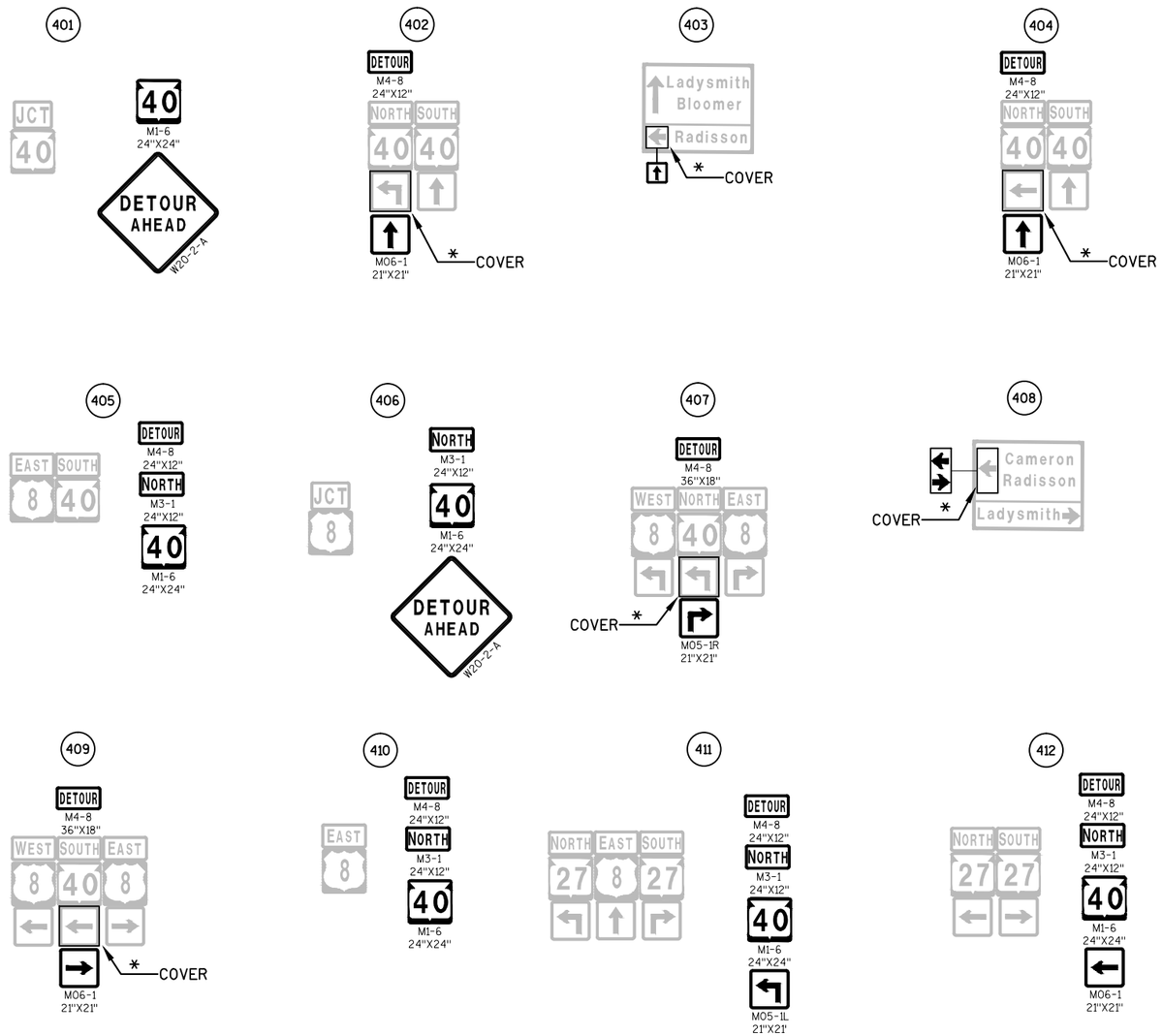

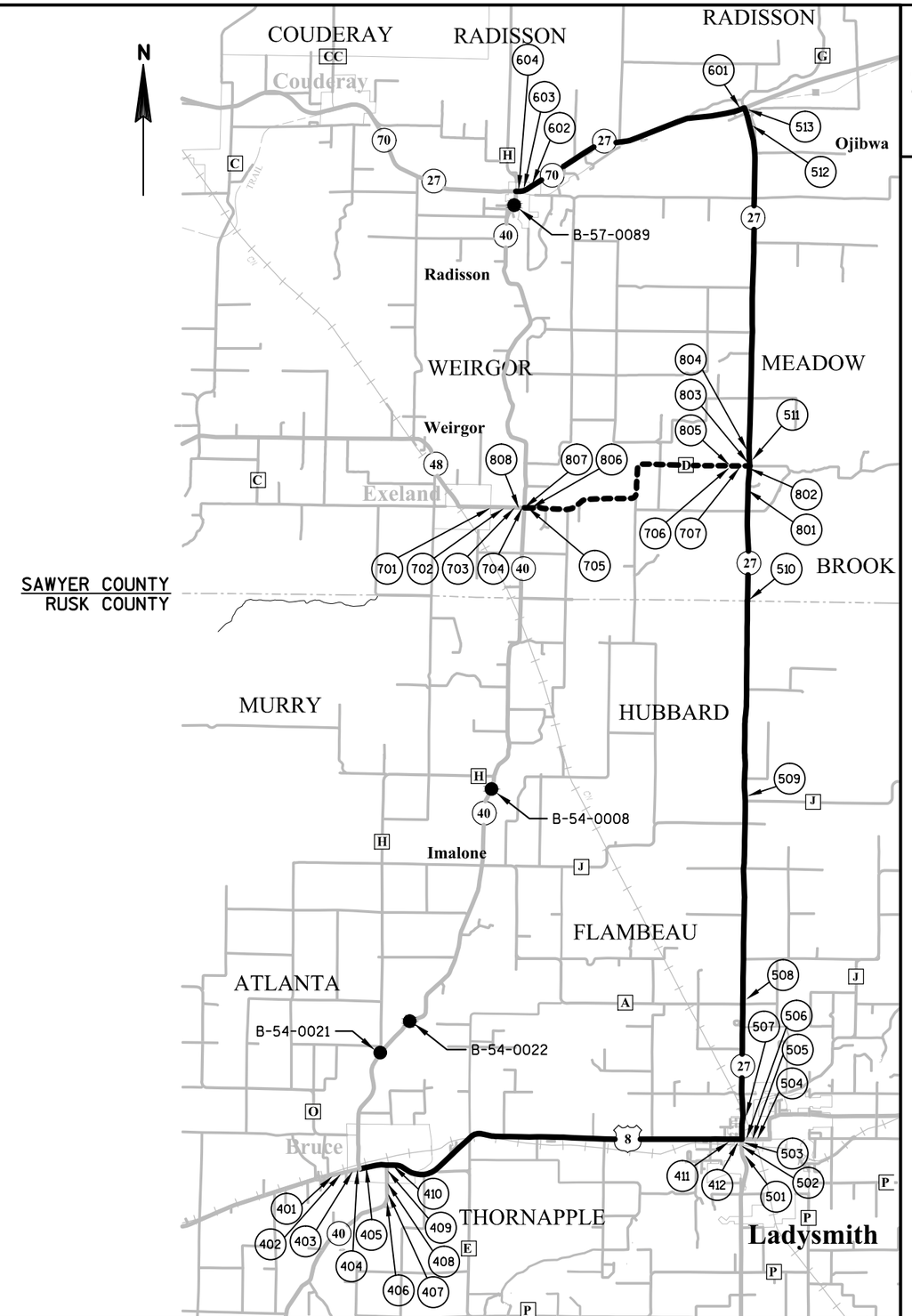

PROJECT NO:8590-01-73	HWY:STH 40	COUNTY:RUSK	DETOUR - STH 40 NORTHBOUND	SHEET 15	E

FILE NAME : P:\48XX\4879.DP.14.STH40.RSK\CADDS\85900173\SHEETSPLAN\027002_DT.DWG
LAYOUT NAME - ****
PLOT DATE : 11/28/2016 9:18 AM PLOT BY : MICHAEL HIGGINS PLOT NAME : PLOT SCALE : *******

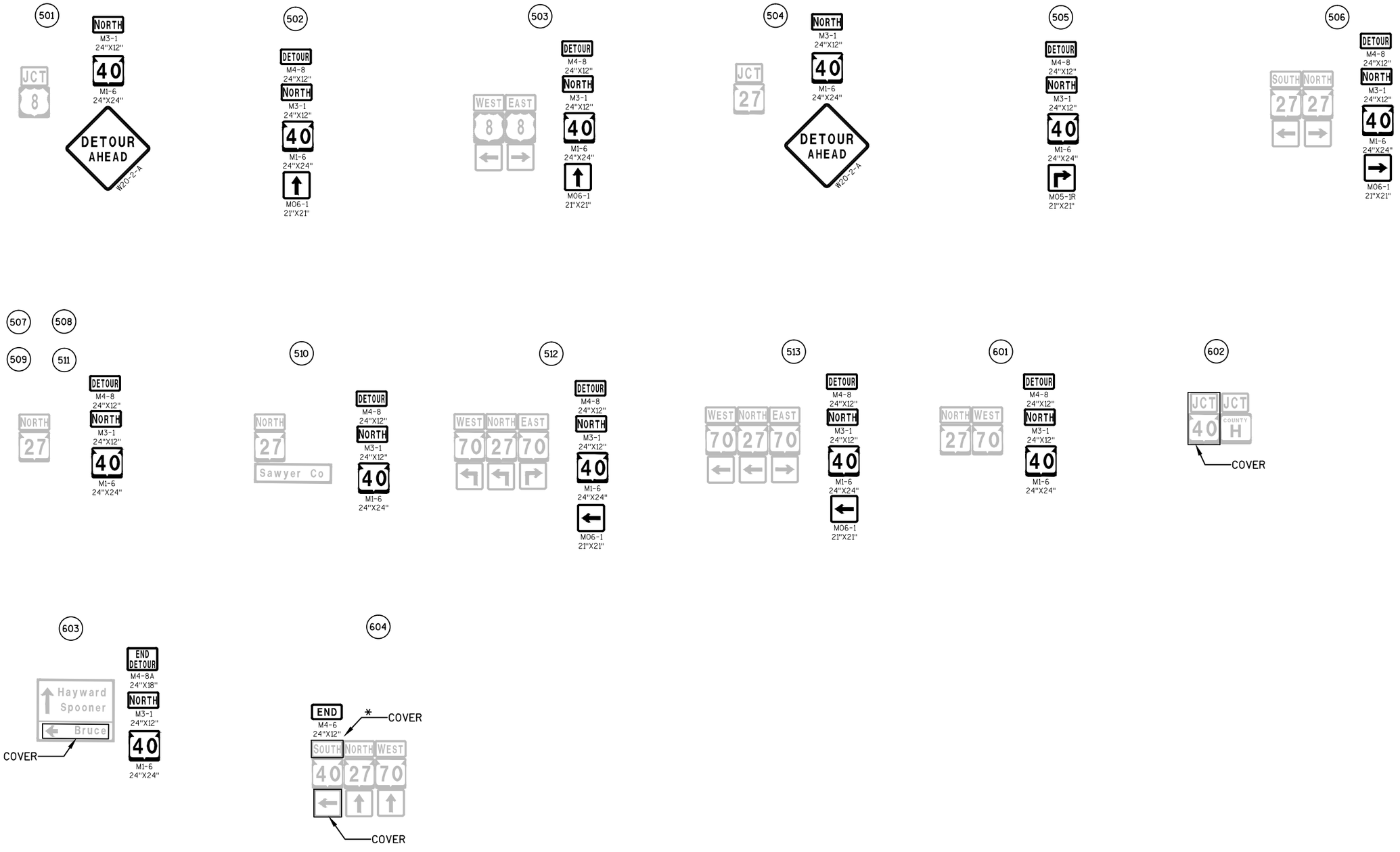

PROJECT NO:8590-01-73	HWY:STH 40	COUNTY:RUSK	DETOUR - STH 40 NORTHBOUND	SHEET 16	E

NOTES

* PAID FOR AS TRAFFIC CONTROL DETOUR SIGN

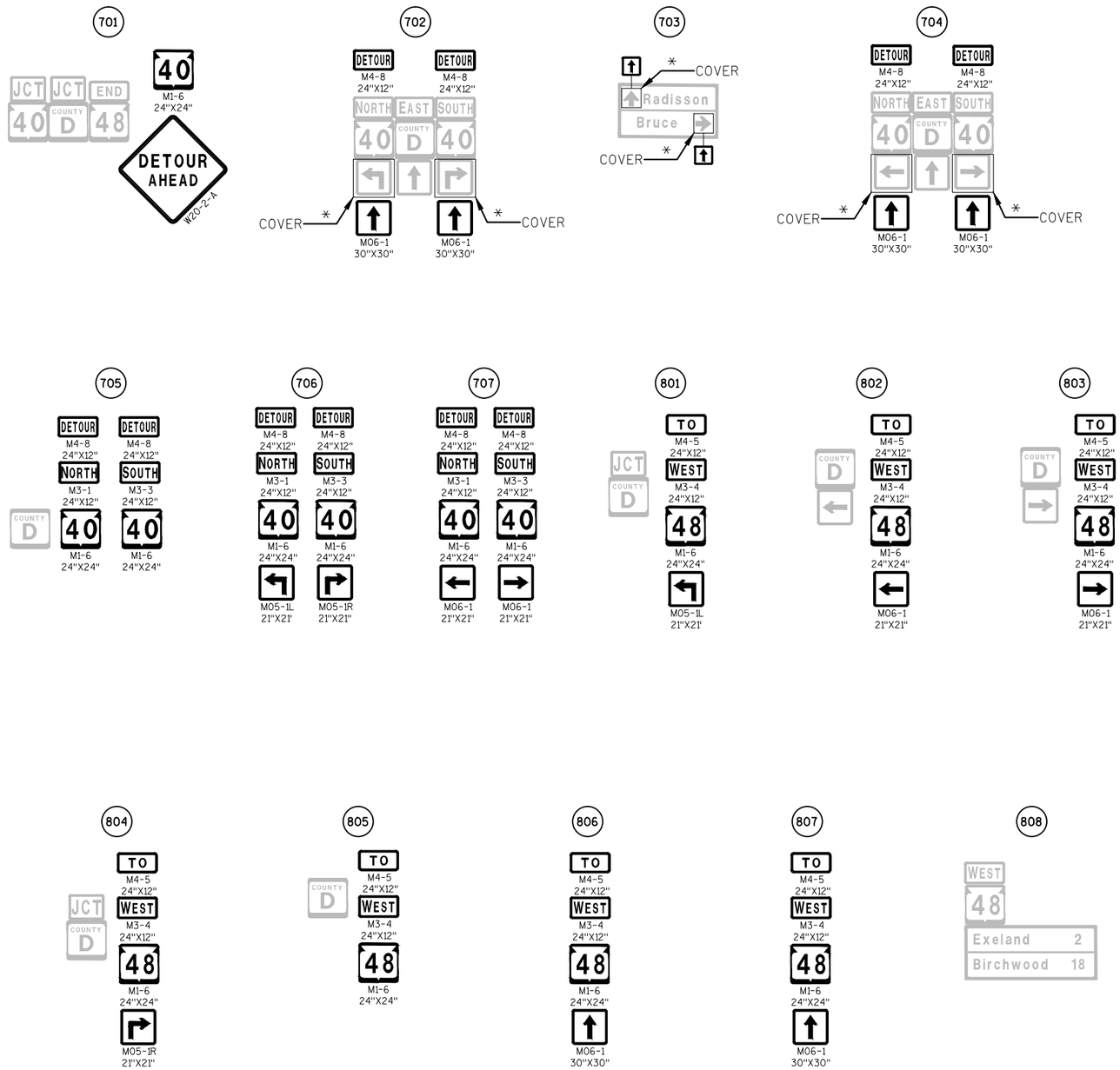

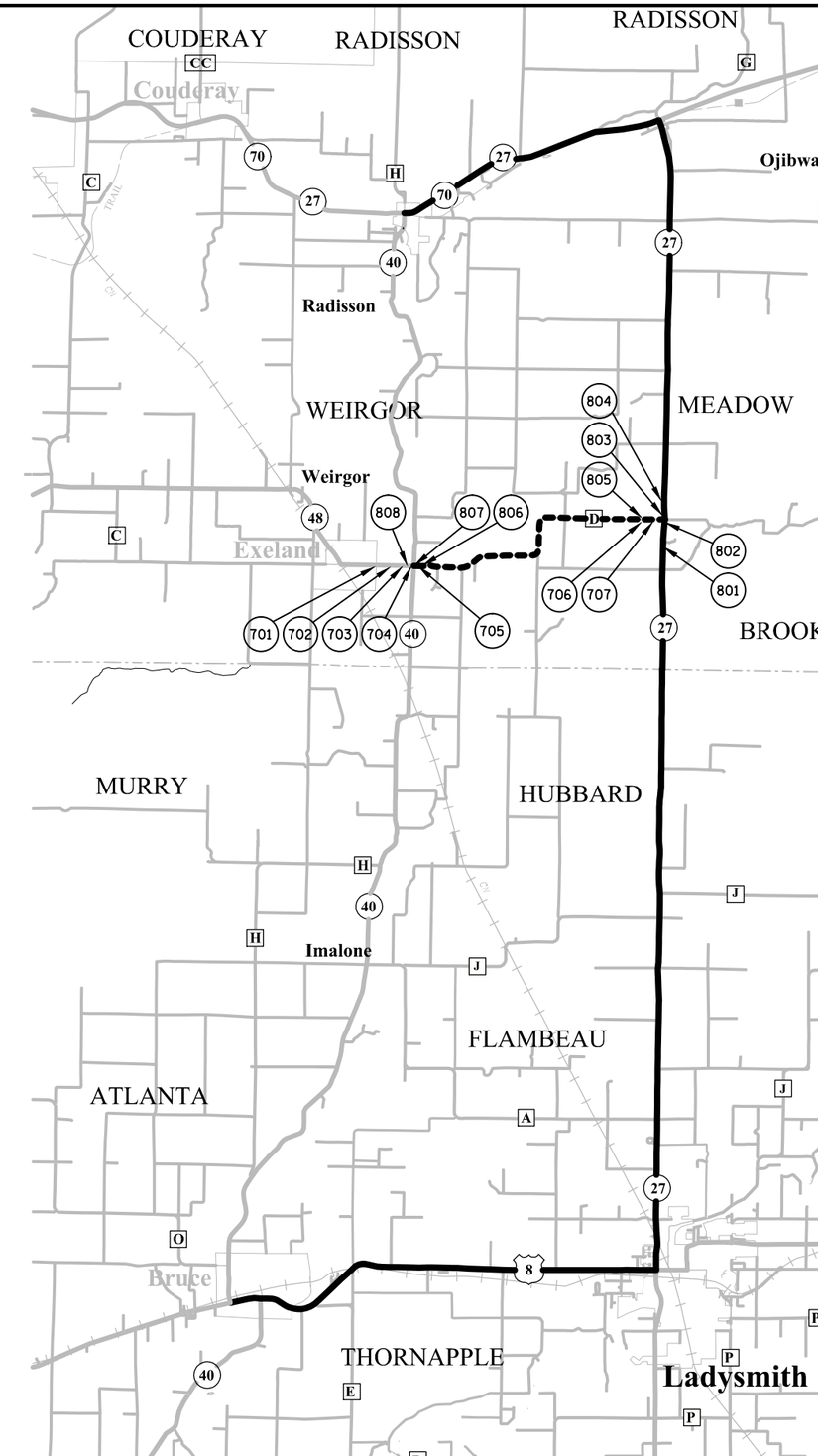

PROJECT NO:8590-01-73	HWY:STH 40	COUNTY:RUSK	DETOUR - STH 48 CONNECTION TO STH 40	SHEET 17	E

FILE NAME : P:\48XX\4879.DP.14.STH40.RSK\CADDS\85900173\SHEETSPLAN\027002_DT.DWG
LAYOUT NAME - ****
PLOT DATE : 11/28/2016 9:18 AM PLOT BY : MICHAEL HIGGINS PLOT NAME : PLOT SCALE : *******
WISDOT/CADDS SHEET 42

Estimate Of Quantities

8590-01-73

Line	Item	Item Description	Unit	Total	Qty
0010	201.0105	Clearing	STA	9.000	9.000
0020	201.0205	Grubbing	STA	9.000	9.000
0030	203.0210.S	Abatement of Asbestos Containing Material (structure) 01. B-54-21	LS	1.000	1.000
0040	203.0210.S	Abatement of Asbestos Containing Material (structure) 02. B-54-22	LS	1.000	1.000
0050	203.0700.S	Removing Old Structure Over Waterway With Debris Capture System (station) 01. 58+20	LS	1.000	1.000
0060	203.0700.S	Removing Old Structure Over Waterway With Debris Capture System (station) 02. 109+26	LS	1.000	1.000
0070	204.0110	Removing Asphaltic Surface	SY	8.000	8.000
0080	204.0165	Removing Guardrail	LF	970.000	970.000
0090	205.0100	Excavation Common	CY	2,756.000	2,756.000
0100	211.0400	Prepare Foundation for Asphaltic Shoulders	STA	12.000	12.000
0110	213.0100	Finishing Roadway (project) 01. 8590-01-73	EACH	1.000	1.000
0120	305.0110	Base Aggregate Dense 3/4-Inch	TON	730.000	730.000
0130	305.0120	Base Aggregate Dense 1 1/4-Inch	TON	1,990.000	1,990.000
0140	350.0102	Subbase	CY	1,135.000	1,135.000
0150	450.4000	HMA Cold Weather Paving	TON	325.000	325.000
0160	455.0605	Tack Coat	GAL	135.000	135.000
0170	465.0105	Asphaltic Surface	TON	675.000	675.000
0180	465.0310	Asphaltic Curb	LF	45.000	45.000
0190	465.0315	Asphaltic Flumes	SY	10.000	10.000
0200	502.0100	Concrete Masonry Bridges	CY	164.000	164.000
0210	502.3200	Protective Surface Treatment	SY	458.000	458.000
0220	502.3210	Pigmented Surface Sealer	SY	102.000	102.000
0230	502.4105	Adhesive Anchors 5/8-inch	EACH	32.000	32.000
0240	505.0600	Bar Steel Reinforcement HS Coated Structures	LB	33,700.000	33,700.000
0250	506.0105	Structural Steel Carbon	LB	3,059.000	3,059.000
0260	506.4000	Steel Diaphragms (structure) 01. B-54-21	EACH	3.000	3.000
0270	506.4000	Steel Diaphragms (structure) 02. B-54-22	EACH	3.000	3.000
0280	509.1500	Concrete Surface Repair	SF	29.000	29.000
0290	606.0200	Riprap Medium	CY	35.000	35.000
0300	606.0300	Riprap Heavy	CY	18.000	18.000
0310	614.0150	Anchor Assemblies for Steel Plate Beam Guard	EACH	8.000	8.000
0320	614.2300	MGS Guardrail 3	LF	475.000	475.000
0330	614.2500	MGS Thrie Beam Transition	LF	315.200	315.200
0340	614.2610	MGS Guardrail Terminal EAT	EACH	8.000	8.000
0350	618.0100	Maintenance And Repair of Haul Roads (project) 01. 8590-01-73	EACH	1.000	1.000
0360	619.1000	Mobilization	EACH	1.000	1.000

8590-01-73

Line	Item	Item Description	Unit	Total	Qty
0370	624.0100	Water	MGAL	50.000	50.000
0380	625.0500	Salvaged Topsoil	SY	6,300.000	6,300.000
0390	628.1504	Silt Fence	LF	1,920.000	1,920.000
0400	628.1520	Silt Fence Maintenance	LF	1,920.000	1,920.000
0410	628.1905	Mobilizations Erosion Control	EACH	6.000	6.000
0420	628.1910	Mobilizations Emergency Erosion Control	EACH	4.000	4.000
0430	628.2004	Erosion Mat Class I Type B	SY	3,700.000	3,700.000
0440	628.2008	Erosion Mat Urban Class I Type B	SY	2,600.000	2,600.000
0450	628.7504	Temporary Ditch Checks	LF	360.000	360.000
0460	628.7555	Culvert Pipe Checks	EACH	15.000	15.000
0470	628.7570	Rock Bags	EACH	450.000	450.000
0480	629.0210	Fertilizer Type B	CWT	4.500	4.500
0490	630.0120	Seeding Mixture No. 20	LB	77.500	77.500
0500	630.0130	Seeding Mixture No. 30	LB	53.000	53.000
0510	630.0140	Seeding Mixture No. 40	LB	8.000	8.000
0520	634.0612	Posts Wood 4x6-Inch X 12-FT	EACH	16.000	16.000
0530	634.0616	Posts Wood 4x6-Inch X 16-FT	EACH	21.000	21.000
0540	634.0618	Posts Wood 4x6-Inch X 18-FT	EACH	32.000	32.000
0550	637.2210	Signs Type II Reflective H	SF	79.830	79.830
0560	637.2230	Signs Type II Reflective F	SF	299.750	299.750
0570	638.2102	Moving Signs Type II	EACH	2.000	2.000
0580	638.2602	Removing Signs Type II	EACH	46.000	46.000
0590	638.3000	Removing Small Sign Supports	EACH	48.000	48.000
0600	638.4000	Moving Small Sign Supports	EACH	2.000	2.000
0610	642.5001	Field Office Type B	EACH	1.000	1.000
0620	643.0100	Traffic Control (project) 01. 8590-01-73	EACH	1.000	1.000
0630	643.0300	Traffic Control Drums	DAY	400.000	400.000
0640	643.0420	Traffic Control Barricades Type III	DAY	5,800.000	5,800.000
0650	643.0705	Traffic Control Warning Lights Type A	DAY	8,000.000	8,000.000
0660	643.0900	Traffic Control Signs	DAY	4,100.000	4,100.000
0670	643.0920	Traffic Control Covering Signs Type II	EACH	9.000	9.000
0680	643.1050	Traffic Control Signs PCMS	DAY	35.000	35.000
0690	643.2000	Traffic Control Detour (project) 01.8590-01-73	EACH	1.000	1.000
0700	643.3000	Traffic Control Detour Signs	DAY	21,200.000	21,200.000
0710	645.0120	Geotextile Type HR	SY	140.000	140.000
0720	646.0106	Pavement Marking Epoxy 4-Inch	LF	106,140.000	106,140.000
0730	646.0600	Removing Pavement Markings	LF	5,000.000	5,000.000
0740	648.0100	Locating No-Passing Zones	MI	5.700	5.700
0750	650.4500	Construction Staking Subgrade	LF	620.000	620.000
0760	650.5000	Construction Staking Base	LF	620.000	620.000

8590-01-73

Line	Item	Item Description	Unit	Total	Qty
0770	650.6500	Construction Staking Structure Layout (structure) 01. B-54-0008	LS	1.000	1.000
0780	650.6500	Construction Staking Structure Layout (structure) 02. B-54-0021	LS	1.000	1.000
0790	650.6500	Construction Staking Structure Layout (structure) 03. B-54-0022	LS	1.000	1.000
0800	650.9910	Construction Staking Supplemental Control (project) 01. 8590-01-73	LS	1.000	1.000
0810	650.9920	Construction Staking Slope Stakes	LF	1,175.000	1,175.000
0820	690.0150	Sawing Asphalt	LF	170.000	170.000
0830	715.0502	Incentive Strength Concrete Structures	DOL	984.000	984.000
0840	ASP.1T0A	On-the-Job Training Apprentice at $5.00/HR	HRS	1,200.000	1,200.000
0850	ASP.1T0G	On-the-Job Training Graduate at $5.00/HR	HRS	300.000	300.000
0860	SPV.0060	Special 01. Shaping and Finishing Wing Wall Rehabilitation	EACH	2.000	2.000
0870	SPV.0060	Special 02. Helical Tieback Anchors	EACH	8.000	8.000

3

CLEARING AND GRUBBING ITEMS

STATION - STATION	LOCATION	201.0105 CLEARING STA	201.0205 GRUBBING STA
CAT 0010			
56+00 - 62+00	LT & RT	6	6
106+00 - 107+00	RT	1	1
110+00 - 111+00	LT	1	1
39+00 - 40+00	LT & RT	1	1
TOTALS		9	9

REMOVING ASPHALTIC SURFACE ITEMS

STATION - STATION	LOCATION	204.0110 SY
CAT 0010		
39+02 - 39+30	LT & RT	8
TOTAL		8

3

EARTHWORK SUMMARY

DIVISION	LOCATION	EXCAVATION COMMON (NOTE 1) (ITEM #205.0100)	SALVAGED / UNUSEABLE PAVEMENT MATERIAL (NOTE 2)	AVAILABLE MATERIAL (NOTE 3)	UNEXPANDED FILL	EXPANDED FILL (NOTE 4)	MASS ORDINATE +/- (NOTE 5)	WASTE
						FACTOR 1.25		
ID 8010-02-75								
1	SOUTH OF ALDER CREEK: STA 55+18 - STA 58+22	981	33	948	57	71	877	877
1	NORTH OF ALDER CREEK: STA 58+75 - STA 61+64	813	108	705	400	500	205	205
2	SOUTH OF BECKY CREEK: STA 106+46 - STA 109+32	631	81	550	37	46	504	504
2	NORTH OF BECKY CREEK: STA 109+84 - STA 113+02	331	48	283	140	175	108	108
TOTALS		2,756	270	2,486	634	793	1,694	1,694

NOTES:
1) SALVAGED/UNSUABLE PAVEMENT MATERIAL IS INCLUDED IN CUT
2) SALVAGED/UNUSABLE PAVEMENT MATERIAL = (AREA OF PROJECT PAVEMENT REMOVAL) * (TYPICAL EXISTING PAVEMENT DEPTH)
3) AVAILABLE MATERIAL = CUT - SALVAGED/UNUSUABLE PAVEMENT MATERIAL
4) EXPANDED FILL FACTOR = (UNEXPANDED FILL) * (FILL FACTOR)
5) MASS ORDINATE = CUT - (EXPANDED FILL); PLUS INDICATES AN EXCESS OF MATERIAL

BASE AGGREGATE ITEMS

STATION - STATION	LOCATION	305.0110 BASE AGGREGATE DENSE 3/4-INCH TON	305.0120 BASE AGGREGATE DENSE 1 1/4-INCH TON	350.0102 SUBBASE CY	COMMENTS
CAT 0010					
55+18 - 57+50	RT	66	--	--	SHOULDER AND GUARDRAIL
55+76 - 57+50	LT	116	--	--	SHOULDER AND GUARDRAIL
57+50 - 58+22	LT & RT	22	220	125	APPROACH RECONSTRUCTION
58+75 - 61+30	LT & RT	72	805	454	APPROACH RECONSTRUCTION
61+30 - 61+42	RT	5	--	--	SHOULDER AND GUARDRAIL
61+30 - 61+64	LT	8	--	--	SHOULDER AND GUARDRAIL
106+46 - 107+45	RT	55	--	--	SHOULDER AND GUARDRAIL
107+22 - 107+45	LT	5	--	--	SHOULDER AND GUARDRAIL
107+45 - 109+32	LT & RT	56	625	361	APPROACH RECONSTRUCTION
109+84 - 110+95	LT & RT	30	340	195	APPROACH RECONSTRUCTION
109+84 - 112+78	LT	144	--	--	SHOULDER AND GUARDRAIL
109+96 - 113+02	RT	150	--	--	SHOULDER AND GUARDRAIL
39+02 - 39+55	LT & RT	1	--	--	SHOULDER RESTORATION
TOTALS		730	1,990	1,135	

3

ASPHALTIC ITEMS

STATION - STATION	LOCATION	211.0400 PREPARE FOUNDATION FOR ASPHALTIC SHOULDERS STA	450.4000 HMA COLD WEATHER PAVING TON	455.0605 TACK COAT GAL	465.0105 ASPHALTIC SURFACE TON	465.0310 ASPHALTIC CURB LF	465.0315 ASPHALTIC FLUMES SY	COMMENTS
CAT 0010								
55+73 - 57+50	RT	3	--	--	17	--	--	3.5-INCH PAVED SHOULDERS
56+54 - 57+50	LT	2	--	--	6	--	--	3.5-INCH PAVED SHOULDERS
57+50 - 58+22	LT & RT	--	--	20	73	--	--	5-INCH PAVED APPROACH RECONSTRUCTION
58+75 - 61+30	LT & RT	--	--	50	254	--	3	5-INCH PAVED APPROACH RECONSTRUCTION
107+06 - 107+45	RT	1	--	--	2	--	--	3.5-INCH PAVED SHOULDERS
107+22 - 107+45	LT	1	--	--	2	--	--	3.5-INCH PAVED SHOULDERS
107+45 - 109+32	LT & RT	--	--	40	193	--	--	5-INCH PAVED APPROACH RECONSTRUCTION
109+84 - 110+95	LT & RT	--	--	25	110	--	2	5-INCH PAVED APPROACH RECONSTRUCTION
110+95 - 112+31	LT	3	--	--	13	--	--	3.5-INCH PAVED SHOULDERS
110+95 - 111+71	RT	2	--	--	5	--	--	3.5-INCH PAVED SHOULDERS
39+02 - 39+30	LT&RT	--	--	--	--	45	5	ASPHALTIC CURB AND FLUMES
UNDISTRIBUTED	PROJECT	--	325	--	--	--	--	
TOTALS		12	325	135	675	45	10	

3

RIPRAP AND GEOTEXTILE ITEMS

STATION	LOCATION	606.0200 RIPRAP MEDIUM CY	606.0300 RIPRAP HEAVY CY	645.0120 GEOTEXTILE TYPE HR SY
CAT 0010				
58+20	LT	--	18	40
58+85	LT & RT	16	--	44
110+05	RT	8	--	22
39+24	LT & RT	11	--	34
TOTALS		35	18	140

GUARDRAIL ITEMS

STATION - STATION	LOCATION	204.0165 REMOVING GUARDRAIL LF	614.2300 MGS GUARDRAIL 3 LF	614.2500 MGS THRIE BEAM TRANSITION LF	614.2610 MGS GUARDRAIL TERMINAL EAT EACH
CAT 0010					
56+53 - 58+18	RT	115	75.0	39.4	1
56+95 - 58+22	LT	125	37.5	39.4	1
58+75 - 60+02	RT	120	37.5	39.4	1
58+79 - 60+44	LT	120	75.0	39.4	1
107+66 - 109+32	RT	120	75.0	39.4	1
107+81 - 109+20	LT	130	50.0	39.4	1
109+84 - 111+59	LT	115	87.5	39.4	1
109+97 - 111+26	RT	125	37.5	39.4	1
TOTALS		970	475.0	315.2	8

WATER

LOCATION	624.0100 MGAL
CAT 0010	
PROJECT	50
TOTAL	50

NOTE: WATER PROVIDED FOR COMPACTION OF BASE AGGREGATE

MOBILIZATIONS EROSION CONTROL

LOCATION	628.1905 EACH	628.1910 EMERGENCY EACH
CAT 0010		
PROJECT	6	4
TOTALS	6	4

3

TYPE II SIGNS AND SUPPORTS

SIGN NO.	SIGN CODE	W	X	H	637.2210 SIGNS TYPE II REFLECTIVE H SF	637.2230 SIGNS TYPE II REFLECTIVE F SF	634.0612 POSTS WOOD 4x6x12 EACH	634.0616 POSTS WOOD 4x6x16 EACH	634.0618 POSTS WOOD 4x6x18 EACH	638.2102 MOVING SIGNS TYPE II EACH	638.4000 MOVING SMALL SIGN SUPPORTS EACH	638.2602 REMOVING SIGNS TYPE II EACH	638.3000 REMOVING SMALL SIGN SUPPORTS EACH	COMMENTS
CAT 0010														
D-1	R2-1	24	X	30	5.00	--	--	1	--	--	--	1	1	
D-2	W3-1	36	X	36	--	9.00	--	--	1	--	--	1	1	
D-3	W1-5L	30	X	30	--	6.25	--	1	--	--	--	1	1	
D-4	S3-1	36	X	36	--	9.00	--	--	1	--	--	1	1	
D-5	W1-6	48	X	24	--	8.00	--	1	--	--	--	1	1	
D-6A	W11-2	30	X	30	--	6.25	--	1	--	--	--	--	--	
D-6B	W16-9P	24	X	12	--	2.00	--	--	--	--	--	--	--	MOUNT ON SAME POST AS D-6A
D-7A	W11-2	30	X	30	--	6.25	--	1	--	--	--	1	1	
D-7B	W16-9P	24	X	12	--	2.00	--	--	--	--	--	--	--	MOUNT ON SAME POST AS D-7A
D-8	W1-6	48	X	24	--	8.00	--	1	--	--	--	1	1	
D-9	S3-1	36	X	36	--	9.00	--	--	1	--	--	1	1	
D-10	R2-1	24	X	30	5.00	--	--	1	--	--	--	1	1	
D-11	R2-1	24	X	30	5.00	--	--	1	--	--	--	1	1	
D-12	R1-1	30	X	30	5.18	--	--	1	--	--	--	1	1	
D-13	W1-5R	30	X	30	--	6.25	--	--	1	--	--	1	1	
D-14	W13-1	18	X	18	--	2.25	--	--	--	--	--	--	--	MOUNT ON SAME POST AS D-13
D-15	W3-5	36	X	36	--	9.00	--	--	1	--	--	1	1	
D-16	W1-4L	30	X	30	--	6.25	--	1	--	--	--	1	1	
D-17	R1-1	30	X	30	5.18	--	--	1	--	--	--	1	1	
D-18	R1-1	30	X	30	5.18	--	--	1	--	--	--	1	1	
D-19	W1-4L	30	X	30	--	6.25	--	1	--	--	--	1	1	
D-20	W5-52L	12	X	36	--	3.00	1	--	--	--	--	1	1	
D-21	W5-52R	12	X	36	--	3.00	1	--	--	--	--	1	1	
D-22	W5-52R	12	X	36	--	3.00	1	--	--	--	--	1	1	
D-23	W5-52L	12	X	36	--	3.00	1	--	--	--	--	1	1	
D-24	W1-2L	30	X	30	--	6.25	--	--	1	--	--	1	1	
D-25	W13-1	18	X	18	--	2.25	--	--	--	--	--	--	--	MOUNT ON SAME POST AS D-24
D-26	W1-6	48	X	24	--	8.00	--	1	--	--	--	1	1	
D-27	R1-1	30	X	30	5.18	--	--	1	--	--	--	1	1	
D-28	W1-6	48	X	24	--	8.00	--	1	--	--	--	1	1	
D-29	W1-2R	30	X	30	--	6.25	--	--	1	--	--	1	1	
D-30	W13-1	18	X	18	--	2.25	--	--	--	--	--	--	--	MOUNT ON SAME POST AS D-29
D-31	W1-2R	30	X	30	--	6.25	--	--	1	--	--	1	1	
D-32	W13-1	18	X	18	--	2.25	--	--	--	--	--	--	--	MOUNT ON SAME POST AS D-31
D-33	W1-6	48	X	24	--	8.00	--	1	--	--	--	--	--	
D-34	W1-6	48	X	24	--	8.00	--	1	--	--	--	--	--	
D-35	W1-2L	30	X	30	--	6.25	--	--	1	--	--	1	1	
D-36	W13-1	18	X	18	--	2.25	--	--	--	--	--	--	--	MOUNT ON SAME POST AS D-35
D-37	R1-1	30	X	30	5.18	--	--	1	--	--	--	1	1	
D-38	R1-1	30	X	30	5.18	--	--	1	--	--	--	1	1	
D-39	W5-52L	12	X	36	--	3.00	1	--	--	--	--	1	1	
D-40	W5-52R	12	X	36	--	3.00	1	--	--	--	--	1	1	
D-41	W5-52R	12	X	36	--	3.00	1	--	--	--	--	1	1	
D-42	W5-52L	12	X	36	--	3.00	1	--	--	--	--	1	1	
D-43	R2-1	24	X	30	5.00	--	--	1	--	--	--	1	1	
D-44	W14-3	48	X	36	--	6.00	--	--	1	--	--	--	--	
D-45	W14-3	48	X	36	--	6.00	--	--	1	--	--	--	--	
D-46	W14-3	48	X	36	--	6.00	--	--	1	--	--	--	--	
D-47	W14-3	48	X	36	--	6.00	--	--	1	--	--	--	--	
D-48	W14-3	48	X	36	--	6.00	--	--	1	--	--	--	--	
D-49	W14-3	48	X	36	--	6.00	--	--	1	--	--	--	--	
D-50	W14-3	48	X	36	--	6.00	--	--	1	--	--	--	--	
SUBTOTALS					51.08	227.75	8	21	16	0	0	35	35	

3

TYPE II SIGNS AND SUPPORTS (CONTINUED)

SIGN NO.	SIGN CODE	W	X	H	637.2210 SIGNS TYPE II REFLECTIVE H SF	637.2230 SIGNS TYPE II REFLECTIVE F SF	634.0612 POSTS WOOD 4x6x12 EACH	634.0616 POSTS WOOD 4x6x16 EACH	634.0618 POSTS WOOD 4x6x18 EACH	638.2102 MOVING SIGNS TYPE II EACH	638.4000 MOVING SMALL SIGN SUPPORTS EACH	638.2602 REMOVING SIGNS TYPE II EACH	638.3000 REMOVING SMALL SIGN SUPPORTS EACH	COMMENTS
CAT 0010														
D-51	W14-3	48	X	36	--	6.00	--	--	1	--	--	--	--	
D-52	W14-3	48	X	36	--	6.00	--	--	1	--	--	--	--	
D-53	W14-3	48	X	36	--	6.00	--	--	1	--	--	--	--	
D-54	W14-3	48	X	36	--	6.00	--	--	1	--	--	--	--	
D-55	W14-3	48	X	36	--	6.00	--	--	1	--	--	--	--	
D-56	W14-3	48	X	36	--	6.00	--	--	1	--	--	--	--	
D-57	W14-3	48	X	36	--	6.00	--	--	1	--	--	--	--	
1-1	W14-3	48	X	36	--	6.00	--	--	1	--	--	1	1	
1-2	I3-1	66	X	15	6.88	--	--	--	2	--	--	1	2	ALDER CREEK
1-3	W5-52R	12	X	36	--	3.00	1	--	--	--	--	1	1	
1-4	W5-52L	12	X	36	--	3.00	1	--	--	--	--	1	1	
2-1	W5-52L	12	X	36	--	3.00	1	--	--	--	--	1	1	
2-2	W5-52R	12	X	36	--	3.00	1	--	--	--	--	1	1	
2-3	I3-1	66	X	15	6.88	--	--	--	2	--	--	--	--	ALDER CREEK
3-1	W5-52L	12	X	36	--	3.00	1	--	--	--	--	1	1	
3-2	I3-1	72	X	15	7.50	--	--	--	2	--	--	--	--	BECKY CREEK
3-3	W5-52R	12	X	36	--	3.00	1	--	--	--	--	1	1	
4-1	W5-52R	12	X	36	--	3.00	1	--	--	--	--	1	1	
4-2	I3-1	72	X	15	7.50	--	--	--	2	--	--	1	2	BECKY CREEK
4-3	W5-52L	12	X	36	--	3.00	1	--	--	--	--	1	1	
5-1	--	--	X	--	--	--	--	--	--	1	1	--	--	
5-2	--	--	X	--	--	--	--	--	--	1	1	--	--	
SUBTOTALS					28.75	72.00	8	0	16	2	2	11	13	
TOTALS					79.83	299.75	16	21	32	2	2	46	48	

NOTE: SIGNS POST LENGTHS ON CTH D WERE CALCULATED ASSUMING A 3:1 FILL SLOPE

3

EROSION CONTROL ITEMS

STATION - STATION	LOCATION	625.0500 SALVAGED TOPSOIL SY	628.1504 SILT FENCE LF	628.1520 SILT FENCE MAINTENANCE LF	628.2004 EROSION MAT CLASS I TYPE B SY	628.2008 EROSION MAT URBAN CLASS I TYPE B SY	628.7504 TEMPORARY DITCH CHECKS LF	628.7555 CULVERT PIPE CHECKS EACH	628.7570 ROCK BAGS EACH	629.0210 FERTILIZER TYPE B CWT	630.0120 SEEDING MIXTURE NO. 20 LB	630.0130 SEEDING MIXTURE NO. 30 LB	630.0140 SEEDING MIXTURE NO. 40 LB
CAT 0010													
55+18 - 58+18	RT	820	--	--	770	50	75	5	15	0.6	14.3	5.2	--
55+76 - 58+22	LT	1130	50	50	1090	40	75	--	15	0.8	22.7	5	--
58+75 - 61+42	RT	320	230	230	250	70	15	7	45	0.2	2.2	4.2	--
58+79 - 61+64	LT	950	325	325	--	950	--	--	60	0.6	17.5	5.4	--
106+46 - 109+32	RT	370	225	225	300	70	30	--	45	0.3	2.2	5.2	--
107+22 - 109+20	LT	370	60	60	100	270	45	--	30	0.3	--	3.7	3
109+84 - 112+78	LT	530	225	225	470	60	45	--	45	0.4	3	6.8	--
109+97 - 113+02	RT	390	325	325	--	390	--	--	60	0.3	--	3.7	3.3
39+01 - 39+60	LT	90	70	70	--	90	--	--	30	0.1	--	1.7	--
39+01 - 39+60	RT	90	70	70	--	90	--	--	30	0.1	--	1.7	--
UNDISTRIBUTED	--	1,240	340	340	720	520	75	3	75	0.8	15.6	10.4	1.7
TOTALS		6,300	1,920	1,920	3,700	2,600	360	15	450	4.5	77.5	53.0	8.0

NOTE: ROCK BAGS ARE FOR SILT FENCE RELIEF

3

TRAFFIC CONTROL ITEMS

LOCATION	DAYS	643.0300 DRUMS NO.	643.0300 DRUMS DAYS	643.0420 BARRICADES TYPE III NO.	643.0420 BARRICADES TYPE III DAYS	643.0705 WARNING LIGHTS TYPE A NO.	643.0705 WARNING LIGHTS TYPE A DAYS	643.0900 SIGNS NO.	643.0900 SIGNS DAYS	643.3000 DETOUR SIGNS NO.	643.3000 DETOUR SIGNS DAYS	COMMENTS
CAT 0010												
PROJECT	100	--	--	58	5,800	80	8,000	40	4,000	212	21,200	ROAD CLOSURE AND DETOUR
CLEAR CREEK	20	20	400	--	--	--	--	5	100	--	--	SHOULDER CLOSURES
TOTALS		20	400	58	5,800	80	8,000	45	4,100	212	21,200	

PAVEMENT MARKING ITEMS

STATION - STATION	LOCATION	646.0106 EPOXY 4-INCH (YELLOW) LF	646.0106 EPOXY 4-INCH (WHITE) LF	646.0600 REMOVING PAVEMENT MARKINGS LF	648.0100 LOCATING NO-PASSING ZONES MI
CAT 0010					
55+15 - 61+65	LT & RT	190	1,300	--	--
106+45 - 113+05	LT & RT	850	1,320	--	--
--	CTH D	42,280	60,200	5,000	5.7
TOTAL		43,320	62,820	5,000	5.7
		106,140			

NOTE: REMOVE EXISTING PAVEMENT MARKING ON CTH D IF REQUIRED BASED ON NEW PASSING ZONE OR INTERSECTION PAVEMENT MARKING AS DIRECTED BY THE ENGINEER

3

TRAFFIC CONTROL SIGNS PCMS

LOCATION	DAYS	643.1050 NO.	643.1050 DAYS	COMMENTS
CAT 0010				
STH 40 NB	7	1	7	0.1 MILES SOUTH OF CTH H (SOUTH)
STH 40 SB	7	1	7	0.2 MILES NORTH OF BECKY CREEK
STH 40 NB	7	1	7	0.3 MILES SOUTH OF COUDERAY RIVER
STH 40 SB	7	1	7	0.3 MILES NORTH OF COUDERAY RIVER
STH 48 EB	7	1	7	0.1 MILES WEST OF STH 40
TOTAL			35	

TRAFFIC CONTROL COVERING SIGNS TYPE II

DETOUR LABEL NUMBER	NUMBER OF CYCLES	643.0920 NO.	643.0920 EACH	COMMENTS
CAT 0010				
304	1	1	1	RADISSON
305	1	1	1	NORTH/STH 40/STRAIGHT ARROW
306	1	1	1	NORTH/STH 40
307	1	1	1	NORTH/STH 40/ADVANCED RIGHT ARROW
308	1	1	1	RADISSON/RIGHT ARROW
309	1	1	1	NORTH/STH 40/RIGHT ARROW
602	1	1	1	JUNCTION/STH 48
603	1	1	1	LEFT ARROW/BRUCE
604	1	1	1	LEFT ARROW
TOTAL			9	

3

CONSTRUCTION STAKING STRUCTURE LAYOUT

	STATION	LOCATION	650.6500.01 (B-54-0008) LS	650.6500.02 (B-54-0021) LS	650.6500.03 (B-54-0022) LS
CAT 0010					
	PROJECT	LT & RT	1	1	1
TOTALS			1	1	1

CONSTRUCTION STAKING ITEMS

	STATION - STATION	LOCATION	650.4500 SUBGRADE LF	650.5000 BASE LF	650.9910 (8590-01-73) LS	650.9920 SLOPE STAKES LF
CAT 0010						
	55+18 - 61+64	LT & RT	325	325	--	595
	106+46 - 112+78	LT & RT	295	295	--	580
	PROJECT	--	--	--	1	--
TOTALS			620	620	1	1,175

3

SAWING ASPHALT

	STATION - STATION	LOCATION	690.0150 LF
CAT 0010			
	57+50	LT & RT	30
	61+30	LT & RT	27
	107+45	LT & RT	28
	110+95	LT & RT	29
	39+02 - 39+30	LT & RT	56
TOTAL			170

SHAPING AND FINISHING WING WALL REHABILITATION

	STATION - STATION	LOCATION	SPV.0060.01 EACH	**TOPSOIL SY	**FERTILIZER TYPE B CWT	**SEEDING #30 LB
CAT 0010						
	39+01 - 39+60	LT	1	90	0.1	1.7
	39+01 - 39+60	RT	1	90	0.1	1.7
TOTALS			2	180	0.2	3.4

**NON-BID ITEM, ITEMS AND QUANTITIES LISTED FOR BID INFORMATION ONLY

LEGEND

- SLOPE INTERCEPT
- 5-INCH ASPHALTIC SURFACE
- 3.5-INCH ASPHALTIC SURFACE
- SAWING ASPHALT
- * ASPHALTIC FLUME
- CLEARING & GRUBBING
- RIPRAP HEAVY OR MEDIUM (SEE EROSION CONTROL SHEETS)
- PROPOSED SIGN MOUNTED ON SINGLE/DOUBLE SUPPORT
- X SIGN - REMOVE AND REPLACE NEW
- X SIGN - MOVE
- X SIGN - PLACE NEW

NOTES

PLACE EDGE LINE PAVEMENT MARKING AND CENTER LINE PAVEMENT MARKING TO MATCH EXISTING PER SDD "LONGITUDINAL MARKING (MAINLINE)"

* VERIFY PROPOSED GUARDRAIL POST LOCATIONS PRIOR TO CONSTRUCTING ASPHALTIC FLUME AND PLACING RIPRAP MEDIUM

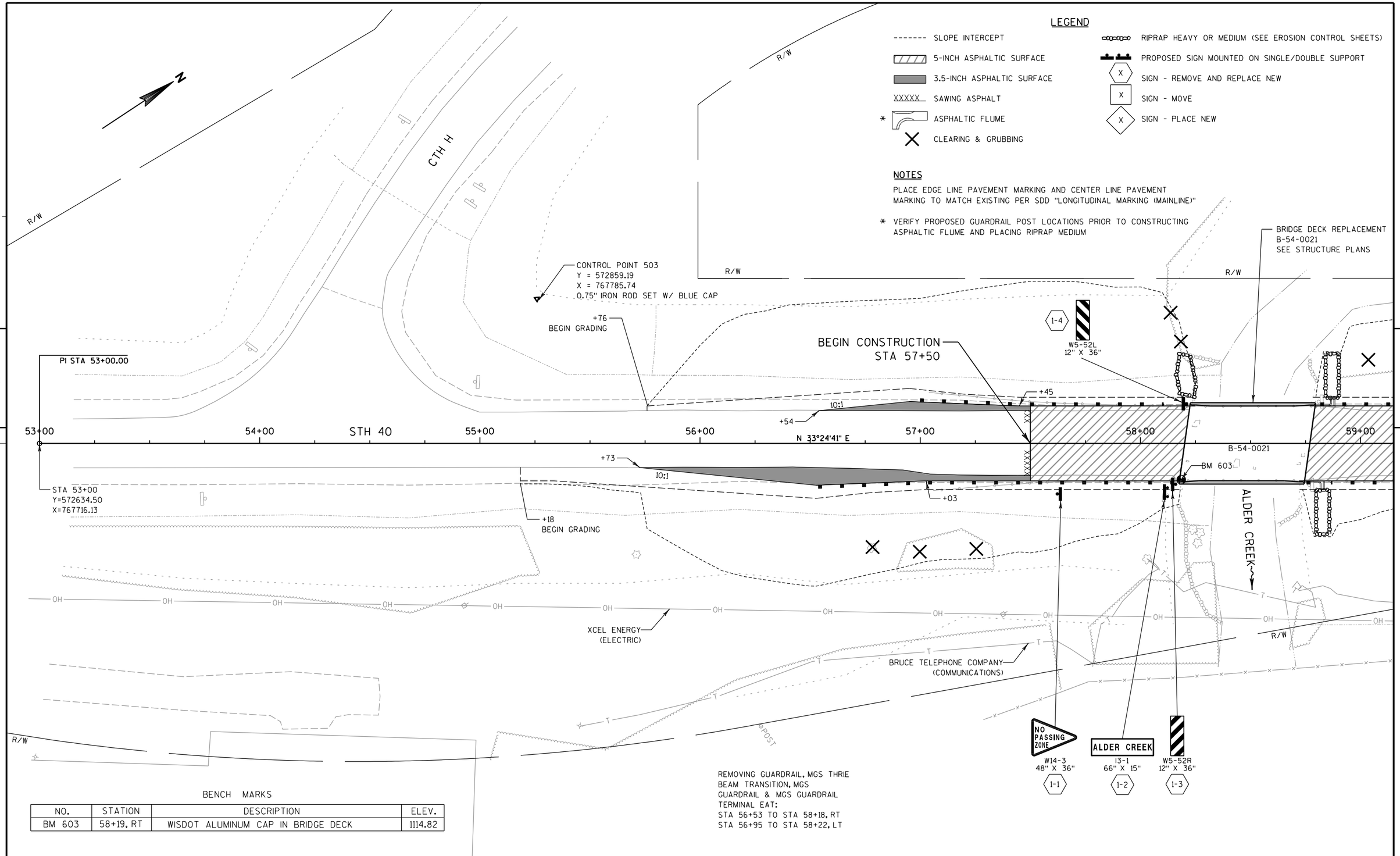

REMOVING GUARDRAIL, MGS THRIE BEAM TRANSITION, MGS GUARDRAIL & MGS GUARDRAIL TERMINAL EAT:
STA 56+53 TO STA 58+18, RT
STA 56+95 TO STA 58+22, LT

BENCH MARKS

NO.	STATION	DESCRIPTION	ELEV.
BM 603	58+19, RT	WISDOT ALUMINUM CAP IN BRIDGE DECK	1114.82

PROJECT NO:8590-01-73	HWY:STH 40	COUNTY:RUSK	PLAN - ALDER CREEK	SHEET 27	E

LEGEND

- SLOPE INTERCEPT
- 5-INCH ASPHALTIC SURFACE
- 3.5-INCH ASPHALTIC SURFACE
- XXXXX SAWING ASPHALT
- * ASPHALTIC FLUME
- CLEARING & GRUBBING
- RIPRAP HEAVY OR MEDIUM (SEE EROSION CONTROL SHEETS)
- PROPOSED SIGN MOUNTED ON SINGLE/DOUBLE SUPPORT
- X SIGN - REMOVE AND REPLACE NEW
- X SIGN - MOVE
- X SIGN - PLACE NEW

NOTES

PLACE EDGE LINE PAVEMENT MARKING AND CENTER LINE PAVEMENT MARKING TO MATCH EXISTING PER SDD "LONGITUDINAL MARKING (MAINLINE)"

* VERIFY PROPOSED GUARDRAIL POST LOCATIONS PRIOR TO CONSTRUCTING ASPHALTIC FLUME AND PLACING RIPRAP MEDIUM

** CURVE DATA SHOWN IS FOR NEW CONSTRUCTION, TRANSITION LANES TO MATCH EXISTING CROSS SLOPES AT STA 61+30 AS SHOWN IN THE CROSS SECTIONS

STH 40
** CURVE 1 DATA
PI = 62+00.59
Y = 573386.25
X = 768212.04
PC = 60+12.04
Y = 573228.86
X = 768108.21
PT = 63+88.59
Y = 573528.68
X = 768335.59
T = 188.55
L = 376.55
R = 2864.97
DELTA = 07°31'50" RT
D = 02°00'00"
SE = 4.4%
SE TRANSITION (T) = 173
RO (RUNOFF) = 120

REMOVING GUARDRAIL, MGS THRIE BEAM TRANSITION, MGS GUARDRAIL & MGS GUARDRAIL TERMINAL EAT:
STA 58+75 TO STA 60+02, RT
STA 58+79 TO STA 60+44, LT

BENCH MARKS

NO.	STATION	DESCRIPTION	ELEV.
BM 602	59+94, RT	RAILROAD SPIKE SET IN POWER POLE	1106.79

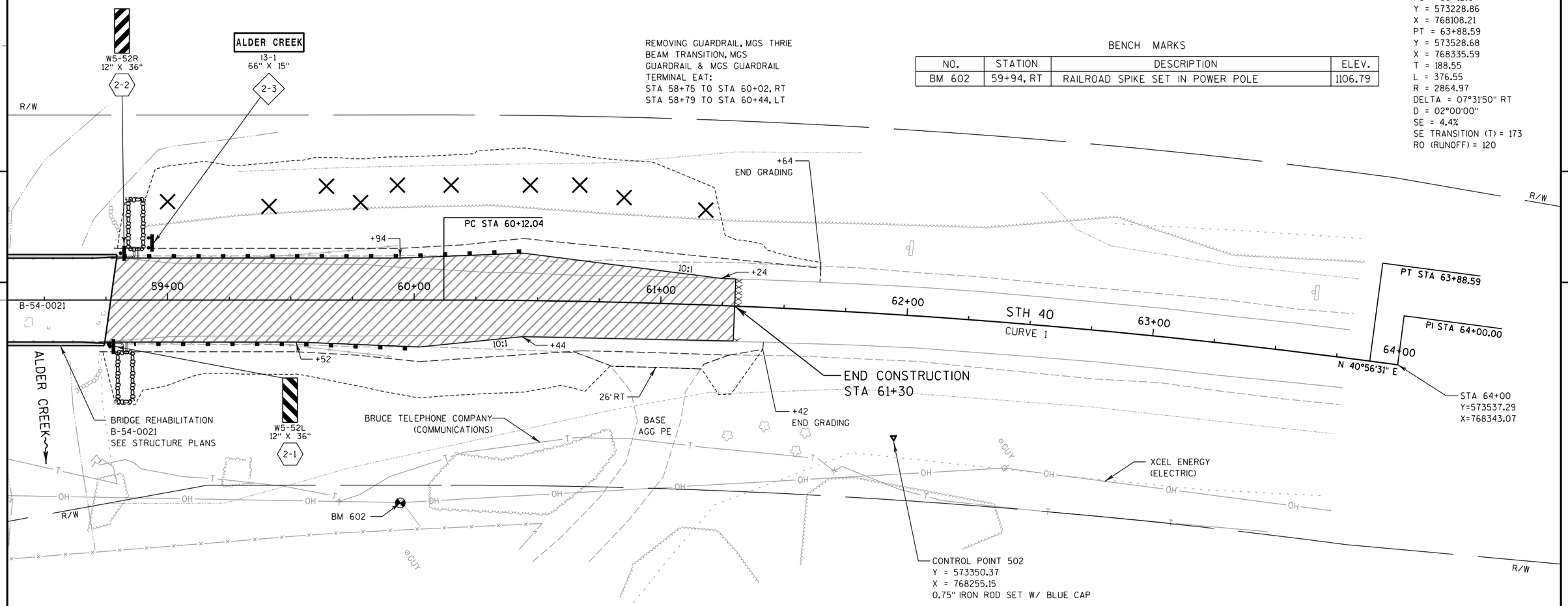

PROJECT NO:8590-01-73	HWY:STH 40	COUNTY:RUSK	PLAN - ALDER CREEK	SHEET 28	E

FILE NAME : P:\48xx\4879.DP.14.STH40.RSK\CADDS\85900173\SheetsPlan\050202_pn.dgn PLOT DATE : 1/23/2017 PLOT BY : emo PLOT NAME : PLOT SCALE : 1:40

WISDOT/CADDS SHEET 44

BENCH MARKS

NO.	STATION	DESCRIPTION	ELEV.
BM 600	109+33, RT	WISDOT ALUMINUM CAP IN BRIDGE DECK	1123.50
BM 601	105+02, RT	RAILROAD SPIKE SET IN 10" WHITE PINE	1127.95

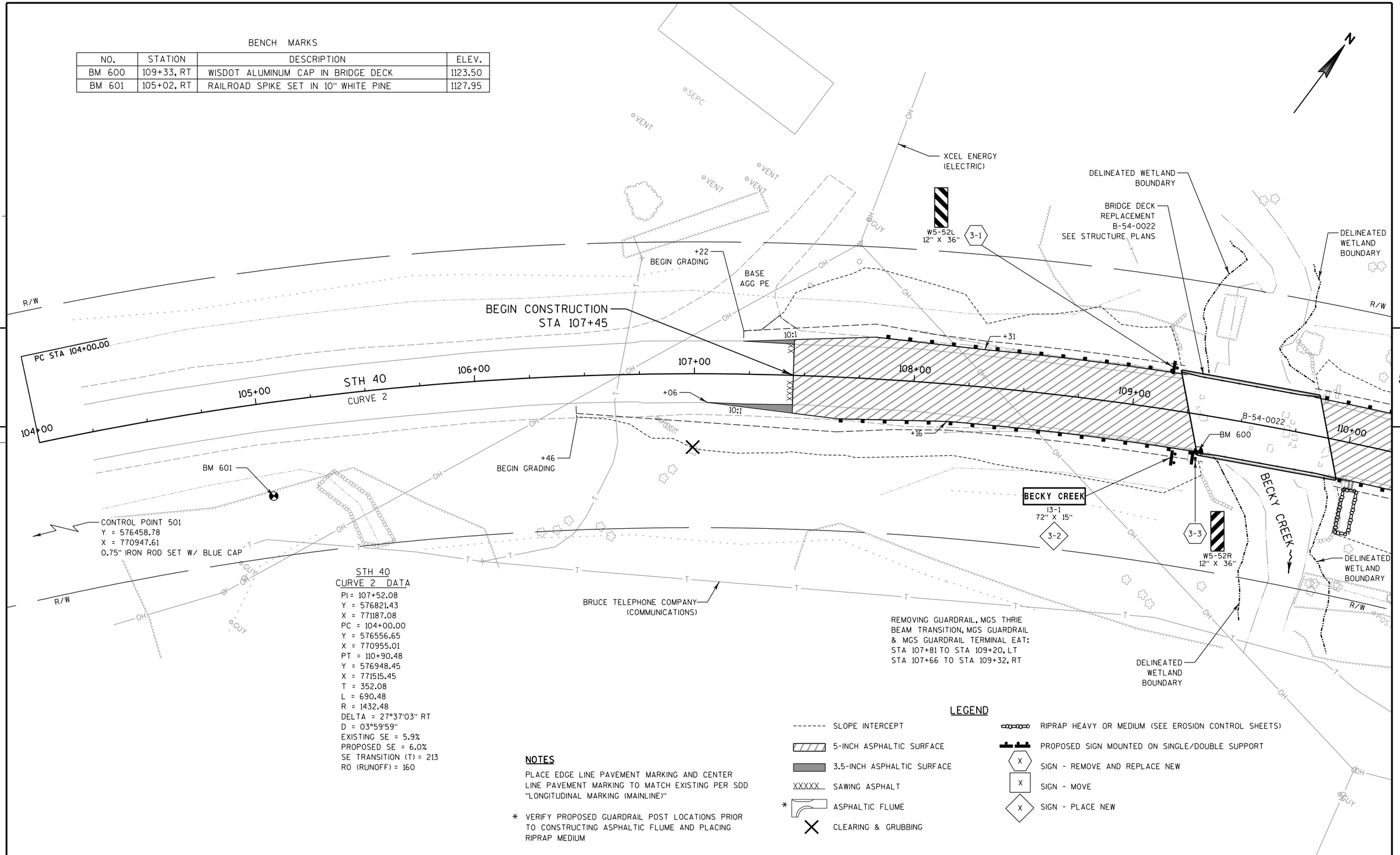

STH 40
CURVE 2 DATA

PI = 107+52.08
Y = 576821.43
X = 771187.08
PC = 104+00.00
Y = 576556.65
X = 770955.01
PT = 110+90.48
Y = 576948.45
X = 771515.45
T = 352.08
L = 690.48
R = 1432.48
DELTA = 27°37'03" RT
D = 03°59'59"
EXISTING SE = 5.9%
PROPOSED SE = 6.0%
SE TRANSITION (T) = 213
RO (RUNOFF) = 160

NOTES

PLACE EDGE LINE PAVEMENT MARKING AND CENTER LINE PAVEMENT MARKING TO MATCH EXISTING PER SDD "LONGITUDINAL MARKING (MAINLINE)"

* VERIFY PROPOSED GUARDRAIL POST LOCATIONS PRIOR TO CONSTRUCTING ASPHALTIC FLUME AND PLACING RIPRAP MEDIUM

LEGEND

- SLOPE INTERCEPT
- 5-INCH ASPHALTIC SURFACE
- 3.5-INCH ASPHALTIC SURFACE
- SAWING ASPHALT
- * ASPHALTIC FLUME
- CLEARING & GRUBBING
- RIPRAP HEAVY OR MEDIUM (SEE EROSION CONTROL SHEETS)
- PROPOSED SIGN MOUNTED ON SINGLE/DOUBLE SUPPORT
- X SIGN - REMOVE AND REPLACE NEW
- X SIGN - MOVE
- X SIGN - PLACE NEW

PROJECT NO:8590-01-73	HWY:STH 40	COUNTY:RUSK	PLAN - BECKY CREEK	SHEET 29	E

LEGEND

- SLOPE INTERCEPT
- 5-INCH ASPHALTIC SURFACE
- 3.5-INCH ASPHALTIC SURFACE
- SAWING ASPHALT
- * ASPHALTIC FLUME
- CLEARING & GRUBBING
- RIPRAP HEAVY OR MEDIUM (SEE EROSION CONTROL SHEETS)
- PROPOSED SIGN MOUNTED ON SINGLE/DOUBLE SUPPORT
- X SIGN - REMOVE AND REPLACE NEW
- X SIGN - MOVE
- X SIGN - PLACE NEW

NOTES

PLACE EDGE LINE PAVEMENT MARKING AND CENTER LINE PAVEMENT MARKING TO MATCH EXISTING PER SDD "LONGITUDINAL MARKING (MAINLINE)"

* VERIFY PROPOSED GUARDRAIL POST LOCATIONS PRIOR TO CONSTRUCTING ASPHALTIC FLUME AND PLACING RIPRAP MEDIUM

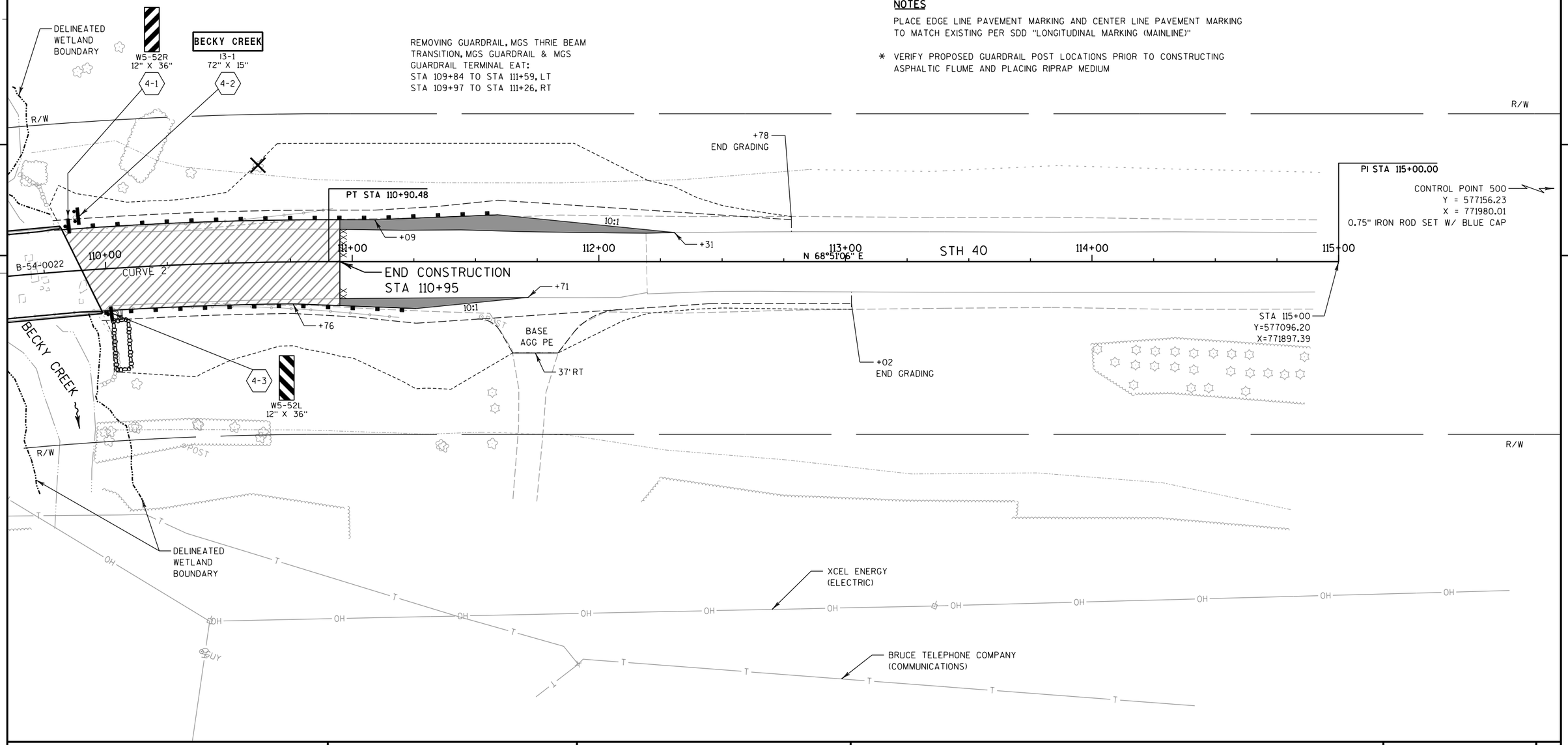

PROJECT NO:8590-01-73	HWY:STH 40	COUNTY:RUSK	PLAN - BECKY CREEK	SHEET 30	E

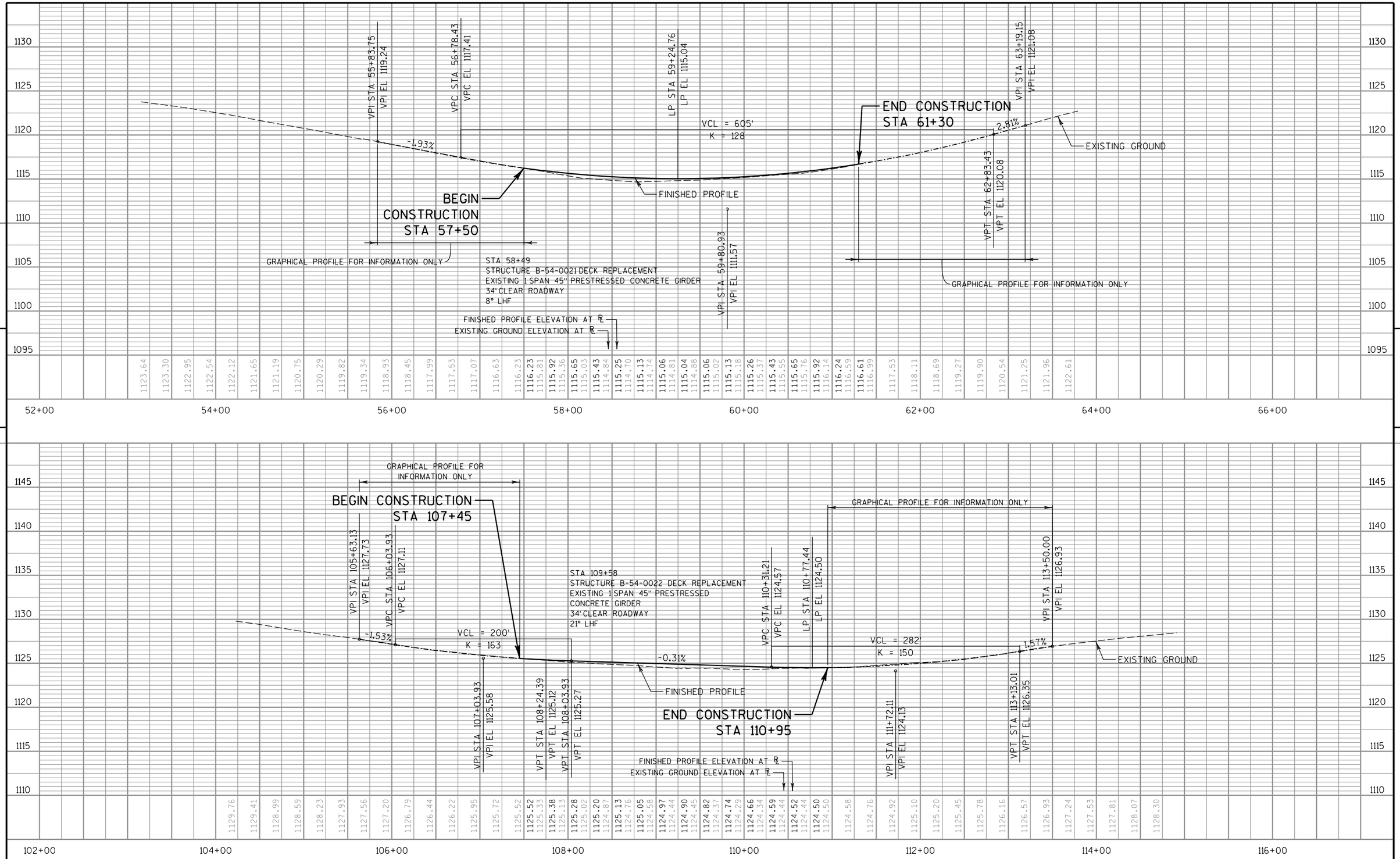

PROJECT NO: 8590-01-73	HWY: STH 40	COUNTY: RUSK	PROFILE - ALDER CREEK AND BECKY CREEK	SHEET 31	E

FILE NAME : P:\48xx\4879.DP.14.STH40.RSK\CADDS\85900173\SheetsPlan\050205_pr.dgn PLOT DATE : 11/27/2016 PLOT BY : sgc PLOT NAME : $FILE$ PLOT SCALE : 1:100

WISDOT/CADDS SHEET 46A

LEGEND

- ASPHALTIC FLUME
- RIPRAP MEDIUM (6'X15'X1.5')
- X — SIGN - MOVE
- SILT FENCE
- F — SILT FENCE RELIEF (ROCK BAGS)
- SURFACE WATER FLOW
- ANTICIPATED MAX AREA OF DISTURBANCE AND CLEARING AND GRUBBING AS REQUIRED

NOTES

DISTURBED AREAS WITHIN THE RIGHT-OF-WAY AT CLEAR CREEK, EXCEPT THE AREAS WITHIN THE FINISHED SHOULDER POINTS, SHALL BE FERTILIZED, SEEDED, TOP SOILED AND COVERED WITH EROSION MAT URBAN CLASS 1 TYPE B.

PLACE BASE AGGREGATE DENSE ¾-INCH AS DIRECTED BY THE ENGINEER FOR SHOULDER RESTORATION.

SEE STRUCTURE PLANS FOR ADDITIONAL INFORMATION NEAR WING WALLS.

BENCH MARKS

NO.	STATION	DESCRIPTION	ELEV.
BM 604	41+34, RT	RAILROAD SPIKE SET IN 20" WHITE PINE	1114.33
BM 605	38+60, RT	ALUMINUM DISK ON BRIDGE DECK	1118.15

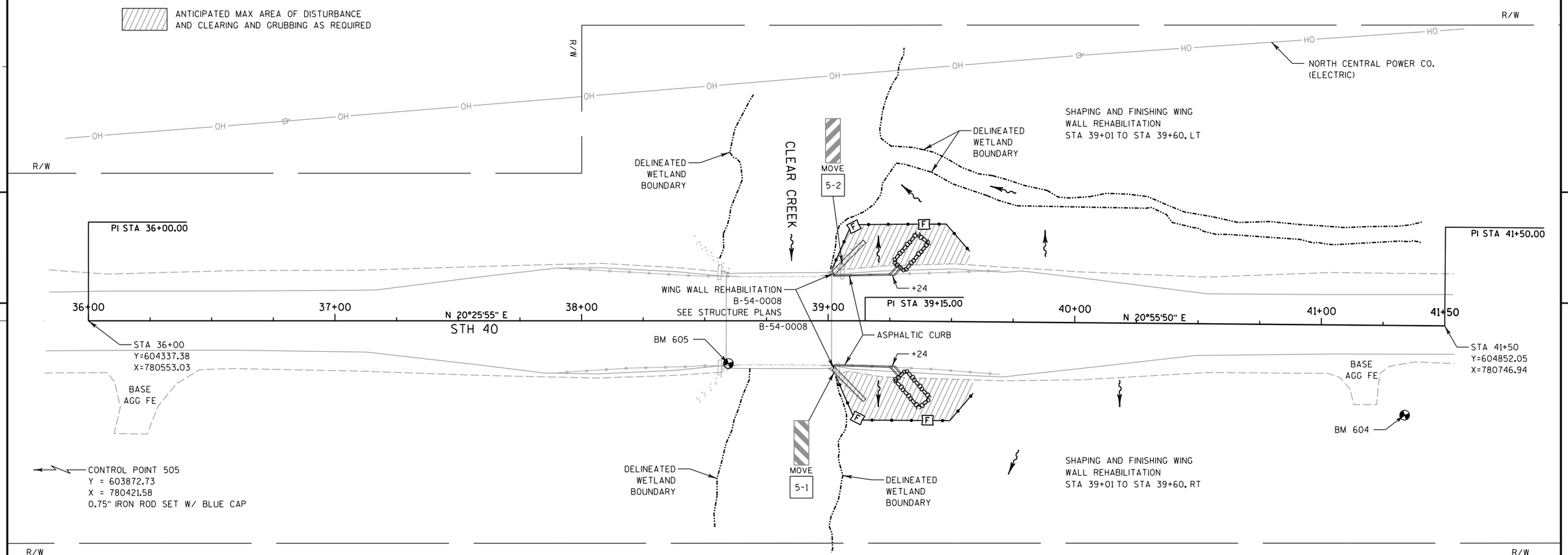

5

5

PROJECT NO:8590-01-73	HWY:STH 40	COUNTY:RUSK	PLAN - CLEAR CREEK	SHEET 32	E

Standard Detail Drawing List

08D04-05	CONCRETE SURFACE DRAINS & ASPHALTIC FLUMES
08E08-03	TYPICAL INSTALLATIONS OF EROSION BALES / TEMPORARY DITCH CHECKS
08E09-06	SILT FENCE
14B42-04A	MIDWEST GUARDRAIL SYSTEM (MGS) GUARDRAIL
14B42-04B	MIDWEST GUARDRAIL SYSTEM (MGS) GUARDRAIL
14B42-04C	MIDWEST GUARDRAIL SYSTEM (MGS) GUARDRAIL
14B44-02A	MIDWEST GUARDRAIL SYSTEM ENERGY ABSORBING TERMINAL (MGS)
14B44-02B	MIDWEST GUARDRAIL SYSTEM ENERGY ABSORBING TERMINAL (MGS)
14B44-02C	MIDWEST GUARDRAIL SYSTEM ENERGY ABSORBING TERMINAL (MGS)
14B45-04A	MIDWEST GUARDRAIL SYSTEM THRIE BEAM TRANSITION (MGS)
14B45-04B	MIDWEST GUARDRAIL SYSTEM THRIE BEAM TRANSITION (MGS)
14B45-04C	MIDWEST GUARDRAIL SYSTEM THRIE BEAM TRANSITION (MGS)
14B45-04D	MIDWEST GUARDRAIL SYSTEM THRIE BEAM TRANSITION (MGS)
14B45-04E	MIDWEST GUARDRAIL SYSTEM THRIE BEAM TRANSITION (MGS)
14B45-04F	MIDWEST GUARDRAIL SYSTEM THRIE BEAM TRANSITION (MGS)
14B45-04G	MIDWEST GUARDRAIL SYSTEM THRIE BEAM TRANSITION (MGS)
14B45-04H	MIDWEST GUARDRAIL SYSTEM THRIE BEAM TRANSITION (MGS)
14B45-04I	MIDWEST GUARDRAIL SYSTEM THRIE BEAM TRANSITION (MGS)
14B45-04J	MIDWEST GUARDRAIL SYSTEM THRIE BEAM TRANSITION (MGS)
14B45-04K	MIDWEST GUARDRAIL SYSTEM THRIE BEAM TRANSITION (MGS)
14B45-04L	MIDWEST GUARDRAIL SYSTEM THRIE BEAM TRANSITION (MGS)
15C02-06A	BARRICADES AND SIGNS FOR MAINLINE CLOSURES
15C02-06B	BARRICADES AND SIGNS FOR MAINLINE CLOSURES
15C02-06C	DETOUR SIGNING FOR MAINLINE CLOSURES
15C03-03	BARRICADES AND SIGNS FOR SIDEROAD CLOSURES
15C06-08	SIGNING & MARKING FOR TWO LANE BRIDGES
15C08-17A	LONGITUDINAL MARKING (MAINLINE)
15C12-04	TRAFFIC CONTROL FOR LANE CLOSURE (SUITABLE FOR MOVING OPERATIONS)
15C19-04A	MOVING PAVEMENT MARKING OPERATION TWO-LANE TWO-WAY ROADWAY
15C35-01A	PAVEMENT MARKING (INTERSECTIONS)
15D28-03	TRAFFIC CONTROL, WORK ON SHOULDER OR PARKING LANE, UNDIVIDED ROADWAY

6

6

GENERAL NOTES

DETAILS OF CONSTRUCTION, MATERIALS AND WORKMANSHIP NOT SHOWN ON THIS DRAWING SHALL CONFORM TO PERTINENT REQUIREMENTS OF THE STANDARD SPECIFICATIONS AND APPLICABLE SPECIAL PROVISIONS.

WELDED STEEL WIRE FABRIC SHALL BE IN ACCORDANCE WITH AASHTO SPECIFICATION M55.

① JOINTS SHALL BE 1/8 TO 1/4 INCH WIDE BY 1 1/2 INCHES DEEP AND SPACED AT UNIFORM INTERVALS OF APPROXIMATELY 4 FEET.

② GEOTEXTILE FABRIC TYPE "R" SHALL UNDERLAY THE FULL LENGTH AND WIDTH OF THE CONCRETE SURFACE DRAIN AND RIPRAP.

③ CONCRETE SURFACE DRAIN WITHOUT CURB AND GUTTER MAY BE USED ON BACKSLOPES WHEN SPECIFIED

ASPHALTIC FLUME

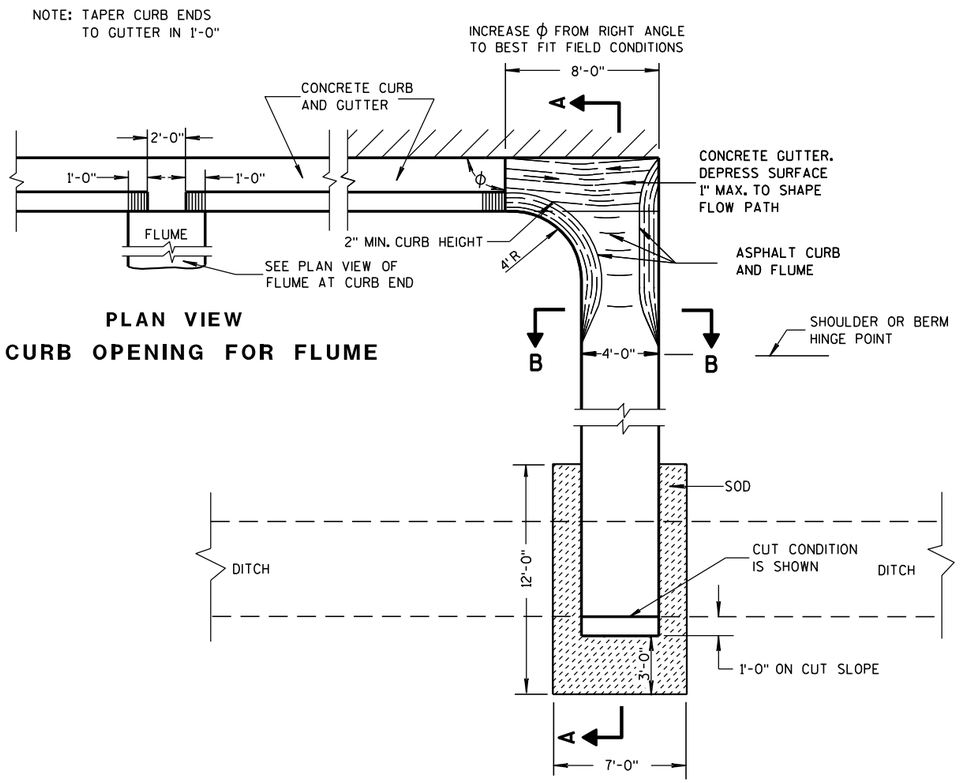

PLAN VIEW
CURB OPENING FOR FLUME

PLAN VIEW
FLUME AT CURB END

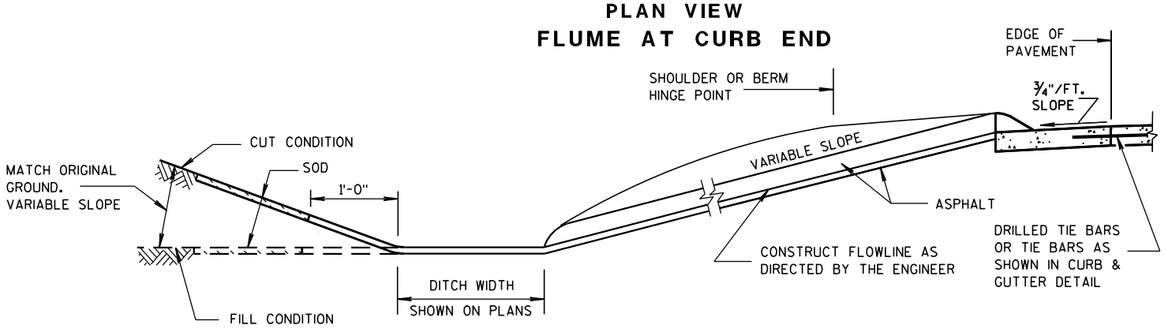

SECTION A-A

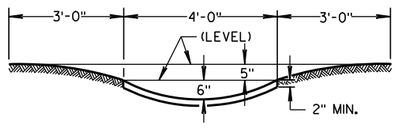

SECTION B-B

③ CONCRETE SURFACE DRAIN

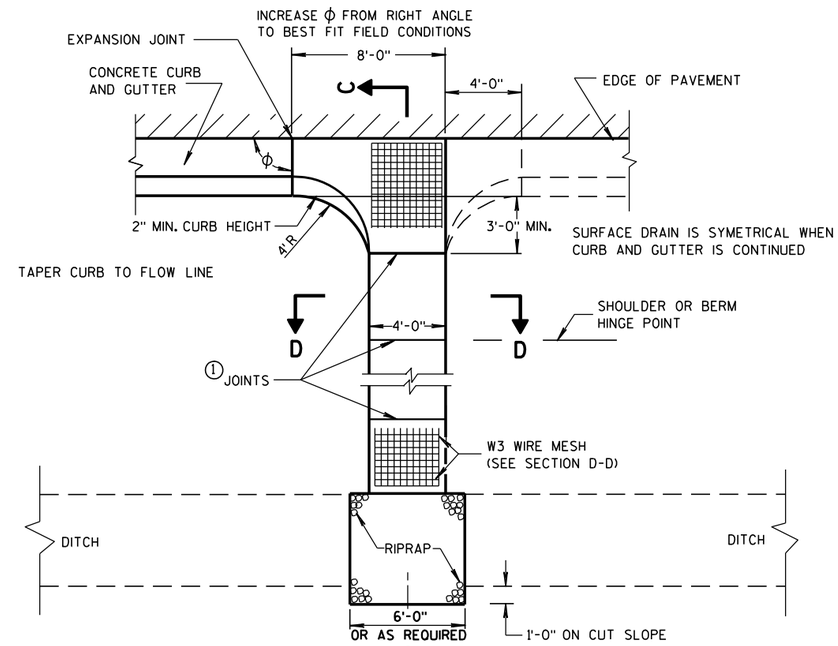

PLAN VIEW

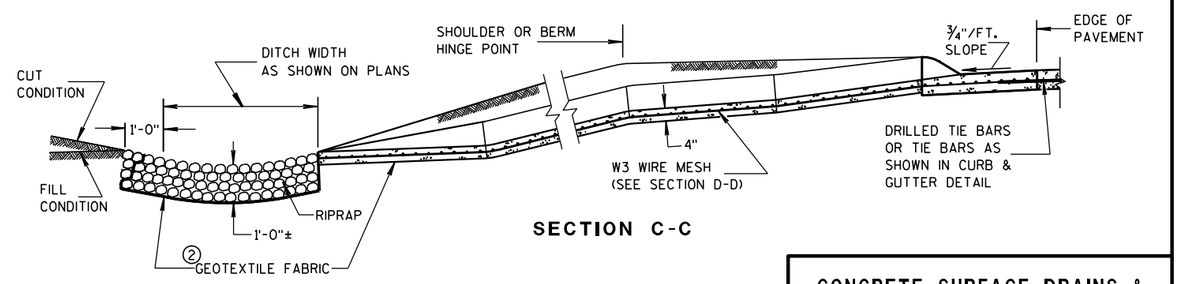

SECTION C-C

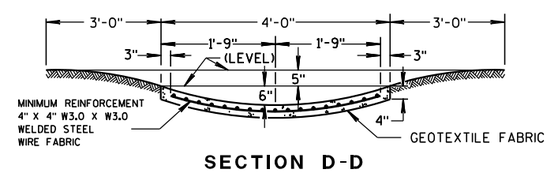

SECTION D-D

CONCRETE SURFACE DRAINS & ASPHALTIC FLUMES

STATE OF WISCONSIN
DEPARTMENT OF TRANSPORTATION

APPROVED
9-4-08 /S/ Jerry H. Zogg
DATE ROADWAY STANDARDS ENGINEER MENT
FHWA

6

S.D.D. 8 D 4-5

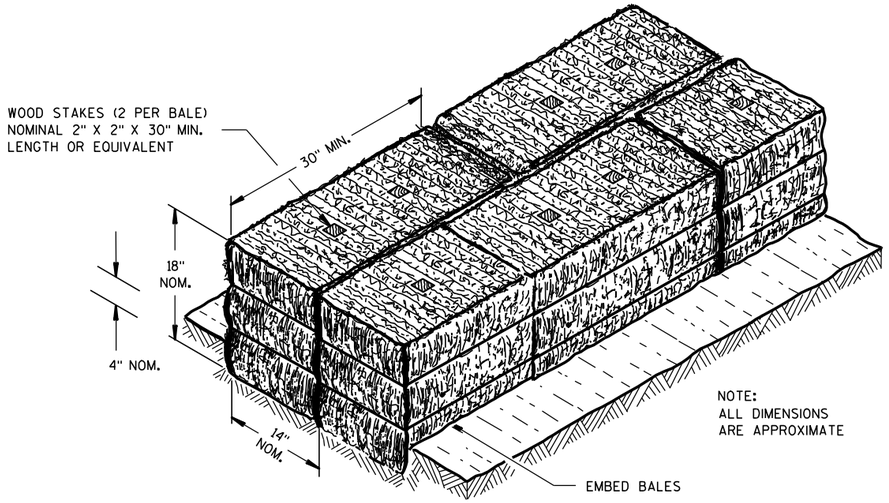

SECTION A-A

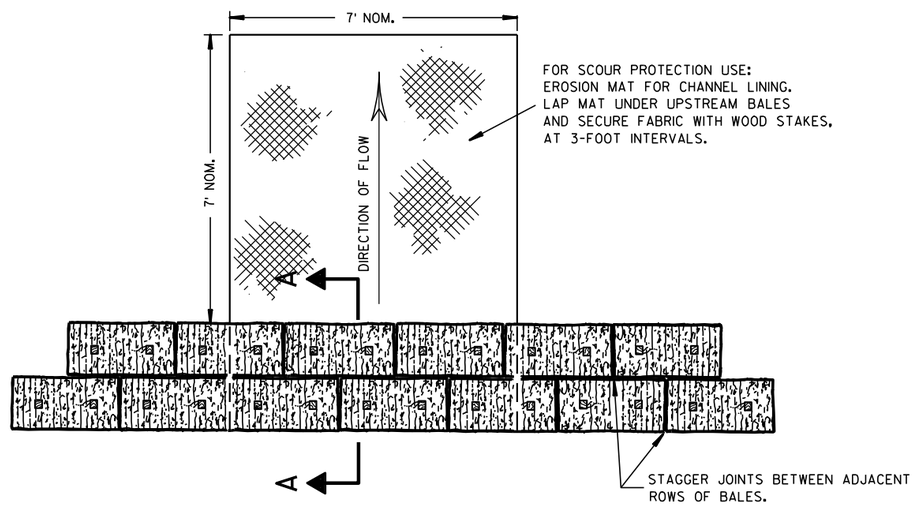

PLAN VIEW

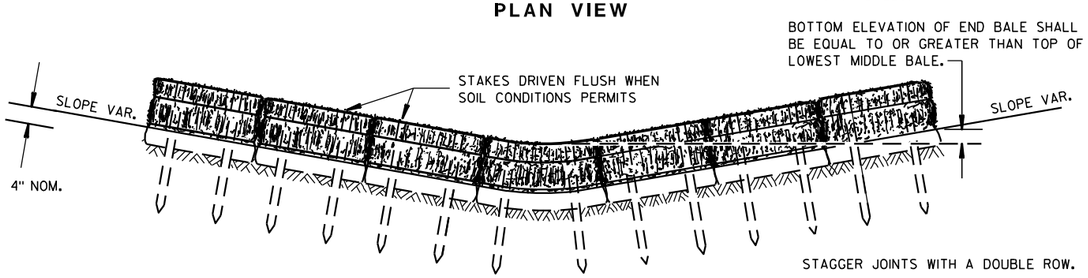

FRONT ELEVATION

TEMPORARY DITCH CHECK USING EROSION BALES ①

GENERAL NOTES

DETAILS OF CONSTRUCTION, MATERIALS AND WORKMANSHIP NOT SHOWN ON THIS DRAWING SHALL CONFORM TO THE PERTINENT REQUIREMENTS OF THE STANDARD SPECIFICATIONS AND THE APPLICABLE SPECIAL PROVISIONS.

① TEMPORARY DITCH CHECKS EITHER EROSION BALES OR MANUFACTURED SHALL BE PAID FOR UNDER THE BID ITEM OF TEMPORARY DITCH CHECK. THE DEPARTMENT WILL NOT PAY FOR TEMPORARY DITCH CHECKS CONSTRUCTED OF A SINGLE ROW OF EROSION BALES.

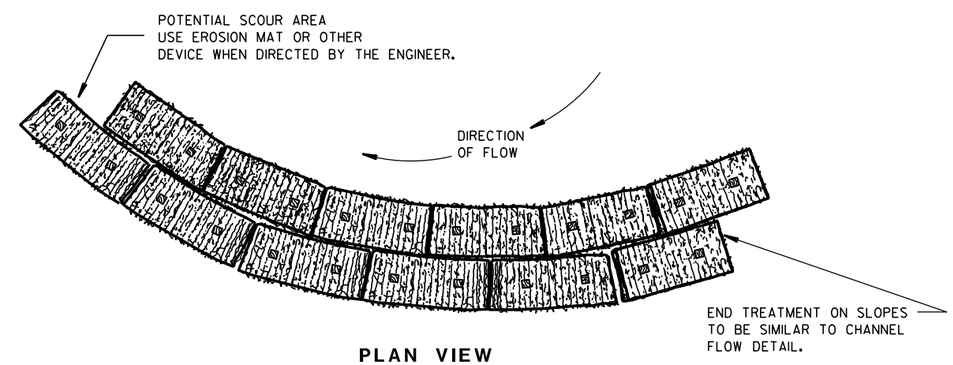

PLAN VIEW

WHEN ALTERING THE DIRECTION OF FLOW

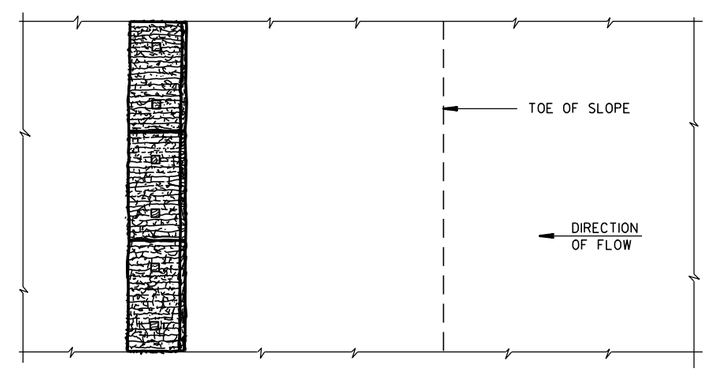

PLAN VIEW

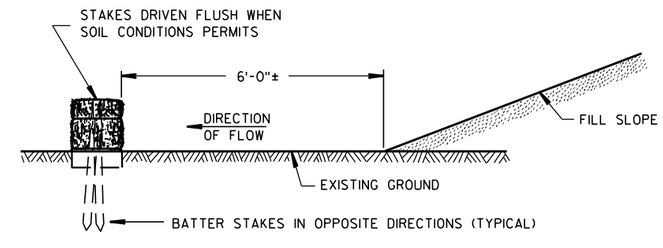

FRONT ELEVATION

WHEN EXISTING GROUND SLOPES AWAY FROM FILL SLOPE

EROSION BALES FOR SHEET FLOW

TYPICAL INSTALLATIONS OF EROSION BALES / TEMPORARY DITCH CHECKS

STATE OF WISCONSIN
DEPARTMENT OF TRANSPORTATION

APPROVED
6/04/02 — DATE
/S/ Beth Cann — CHIEF ROADWAY DEVELOPMENT ENGINEER
FHWA

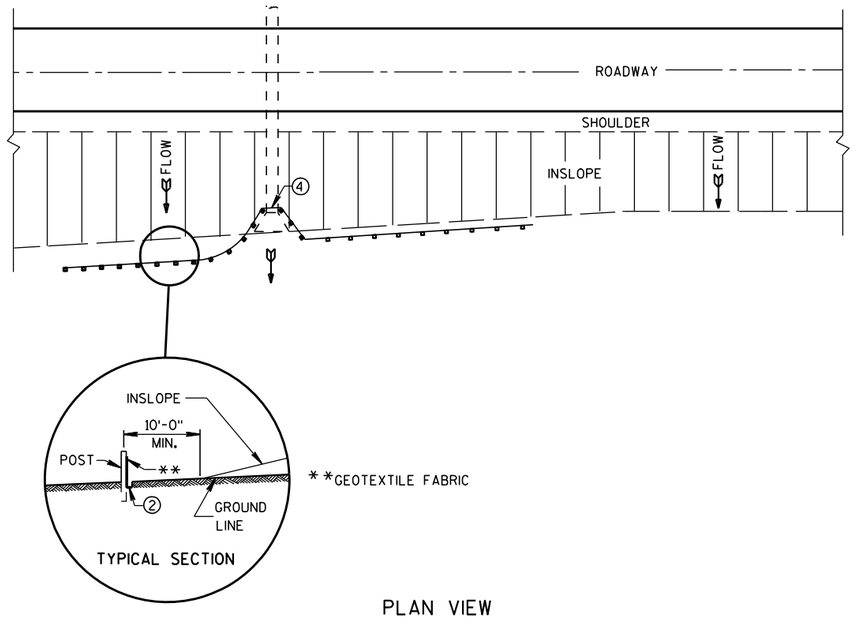

PLAN VIEW

TYPICAL APPLICATION OF SILT FENCE

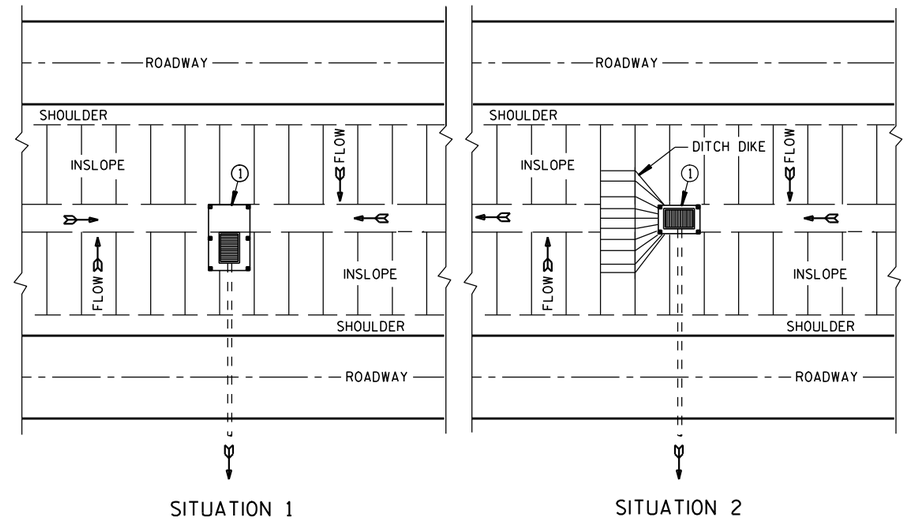

PLAN VIEW

SILT FENCE AT MEDIAN SURFACE DRAINS

GENERAL NOTES

DETAILS OF CONSTRUCTION NOT SHOWN ON THIS DRAWING SHALL CONFORM TO THE PERTINENT REQUIREMENTS OF THE STANDARD SPECIFICATIONS AND APPLICABLE SPECIAL PROVISIONS.

① HORIZONTAL BRACE REQUIRED WITH 2" X 4" WOODEN FRAME OR EQUIVALENT AT TOP OF POSTS.

② FOR MANUAL INSTALLATIONS THE TRENCH SHALL BE A MINIMUM OF 4" WIDE & 6" DEEP TO BURY AND ANCHOR THE GEOTEXTILE FABRIC. FOLD MATERIAL TO FIT TRENCH AND BACKFILL & COMPACT TRENCH WITH EXCAVATED SOIL.

③ WOOD POSTS SHALL BE A MINIMUM SIZE OF 1⅛" X 1⅛" OF OAK OR HICKORY.

④ SILT FENCE TO EXTEND ACROSS THE TOP OF THE PIPE.

⑤ CONSTRUCT SILT FENCE FROM A CONTINUOUS ROLL IF POSSIBLE BY CUTTING LENGTHS TO AVOID JOINTS. IF A JOINT IS NECESSARY USE ONE OF THE FOLLOWING TWO METHODS; A) OVERLAP THE END POSTS AND TWIST, OR ROTATE, AT LEAST 180 DEGREES. B) HOOK THE END OF EACH SILT FENCE LENGTH.

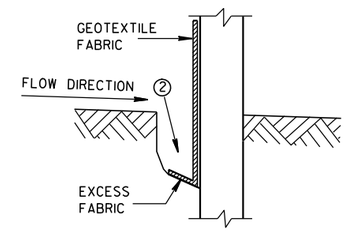

TRENCH DETAIL

NOTE: ADDITIONAL POST DEPTH OR TIE BACKS MAY BE REQUIRED IN UNSTABLE SOILS

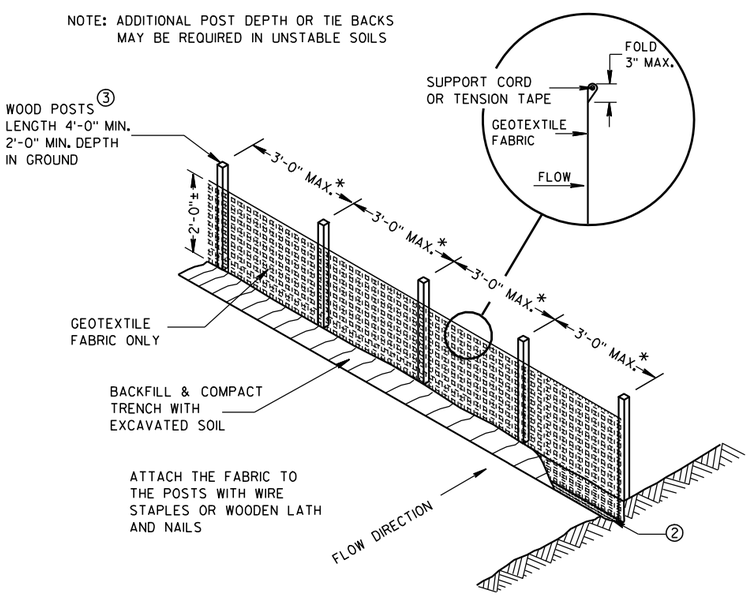

*NOTE: 8'-0" POST SPACING ALLOWED IF A WOVEN GEOTEXTILE FABRIC IS USED.

SILT FENCE

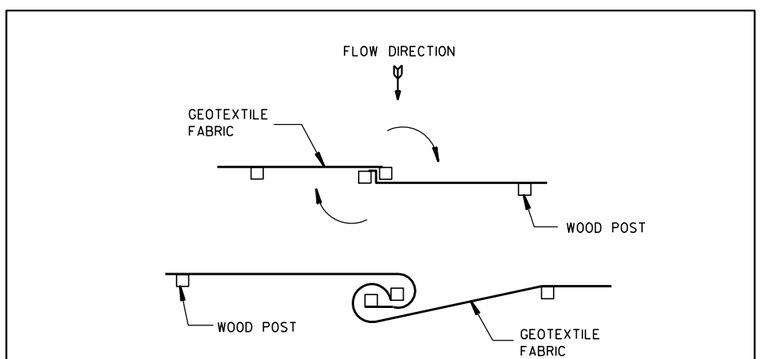

TWIST METHOD

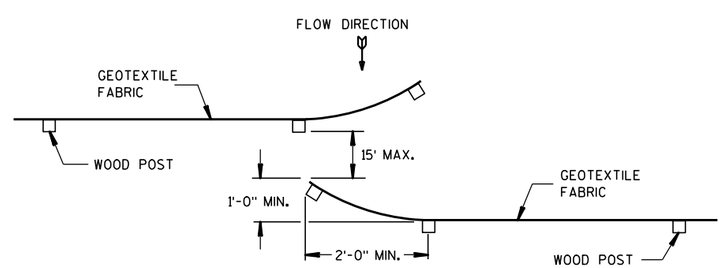

HOOK METHOD

JOINING TWO LENGTHS OF SILT FENCE ⑤

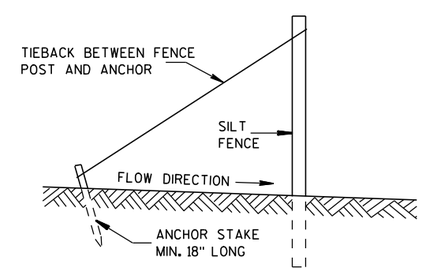

SILT FENCE TIE BACK

(WHEN REQUIRED BY THE ENGINEER)

SILT FENCE
STATE OF WISCONSIN DEPARTMENT OF TRANSPORTATION
APPROVED 4-29-05 /S/ Beth Cann----- DATE CHIEF ROADWAY DEVELOP ENGINEER FHWA

6

6

S.D.D. 8 E 9-6

S.D.D. 8 E 9-6

1. WOOD OR STEEL POSTS (w6X9 OR w6X8.5) MAY BE USED. DO NOT INTERMIX WOOD AND STEEL POSTS. INSTALL STEEL POSTS WITH HOLES ON APPROACHING TRAFFIC SIDE.

2. USE WOOD OR APPROVED PLASTIC BLOCKOUTS. WOOD BLOCKOUTS MAY BE CONSTRUCTED OUT OF TWO OR MORE WOOD BLOCKOUTS. SEE ALTERNATE WOOD BLOCKOUT DETAIL. DIMENSIONS OF APPROVED PLASTIC BLOCKOUTS MAY VARY.

3. IF ROCK IS ENCOUNTERED DURING EXCAVATION, PROVIDE A HOLE 12 INCHES IN DIAMETER EXTENDING 20 INCHES DEEP INTO THE ROCK. PLACE APPROXIMATELY 2½ INCHES OF GRANULAR MATERIAL IN THE BOTTOM OF THE HOLE. CUT THE POSTS THE TO LENGTH AMD INSTALL. BACKFILL WITH EXCAVATED MATERIAL AND COMPACT. BACKFILL IS TO BE FREE OF LARGE ROCKS.

4. WHEN THE DISTANCE FROM BACK OF POST TO SHOULDER HINGE POINT IS LESS THAN 2 FEET INSTALL LONGER POST AT HALF POST SPACING (K).

5. FOR NEW MGS INSTALLATION TOP OF W-BEAM RAIL TOLERANCE IS ± 1". FOR EXISTING MGS INSTALLATION TOP OF W-BEAM IS BETWEEN 27¾" TO 32".

6. WHEN USING STEEL POST AND WOOD BLOCKOUTS INSTALL FOUR 16D GALVANIZED NAILS. INSTALL NAILS AT THE BACK CORNERS OF THE BLOCK AND BEND THE NAILS OVER THE FLANGE OF THE STEEL POST.

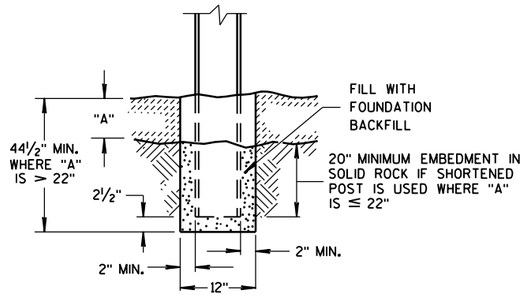

END VIEW
SETTING STEEL OR WOOD POST IN ROCK (3)

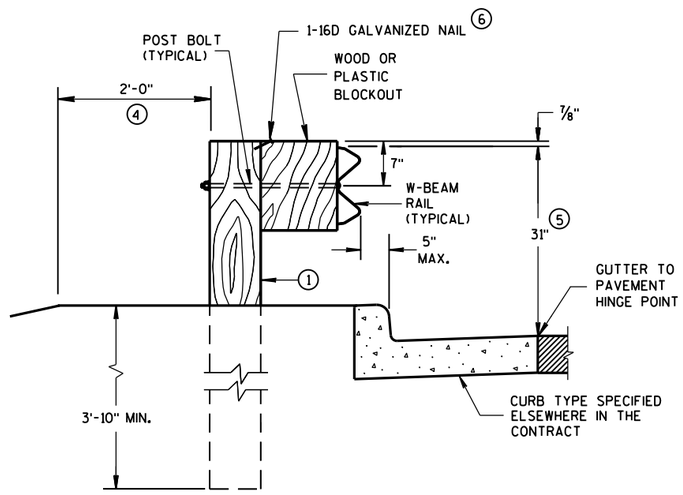

END VIEW
LOCATED ALONG A CURBED ROADWAY

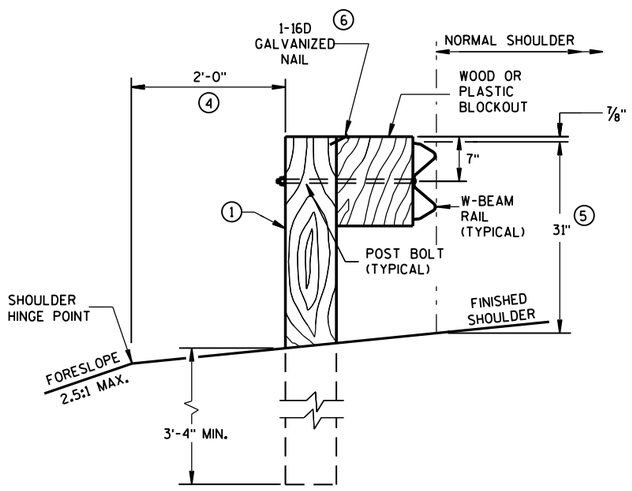

END VIEW
LOCATED ALONG A ROADWAY SHOULDER
STANDARD INSTALLATION

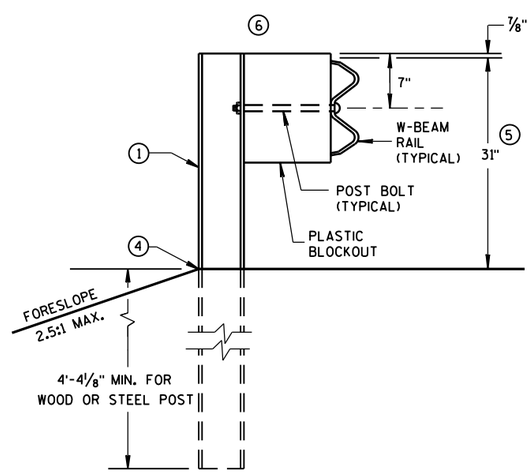

END VIEW
MGS LONGER POST AT HALFPOST SPACING W BEAM (K)

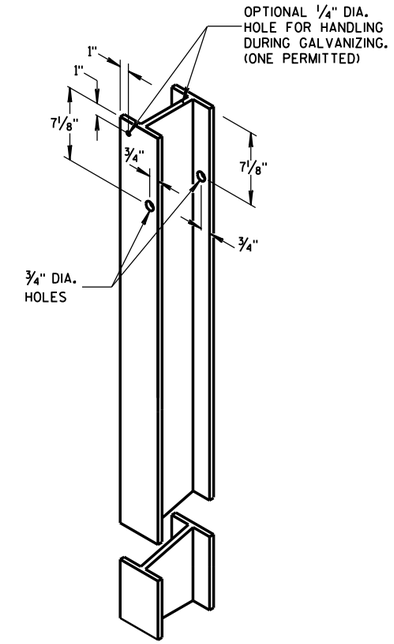

STEEL POST &
HOLE PUNCHING DETAIL
(w6X9) (1)

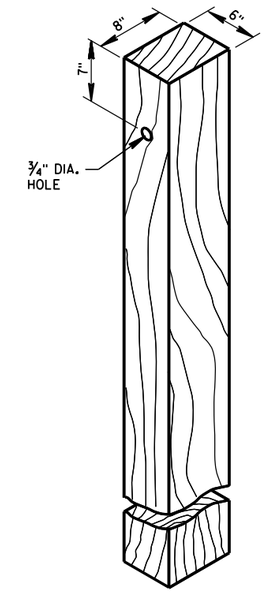

WOOD POST
(6" X 8") NOMINAL (1)

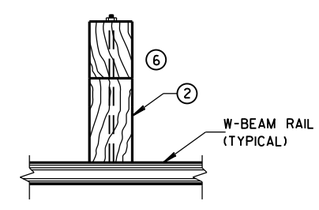

PLAN VIEW
WOOD POST,
BLOCKOUT & BEAM

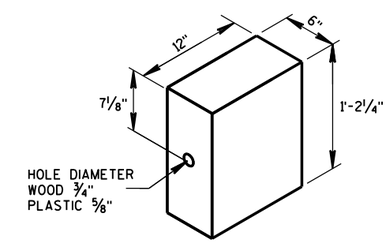

WOOD OR
PLASTIC BLOCKOUT (2)

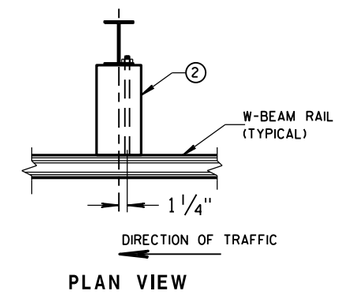

PLAN VIEW
STEEL POST,
PLASTIC BLOCKOUT & BEAM

MIDWEST GUARDRAIL SYSTEM
(MGS) GUARDRAIL

STATE OF WISCONSIN
DEPARTMENT OF TRANSPOI

6
S.D.D. 14 B 42-4a

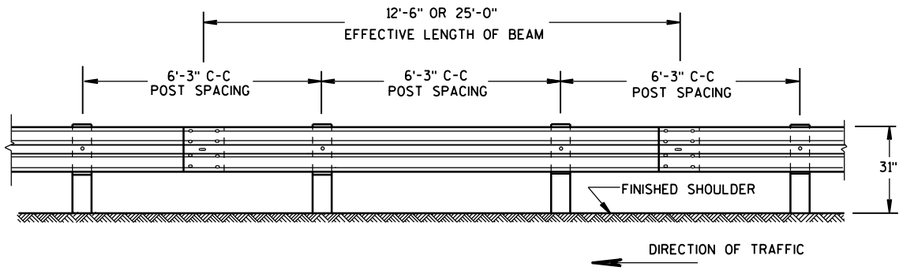

FRONT VIEW

POST SPACING STANDARD INSTALLATION

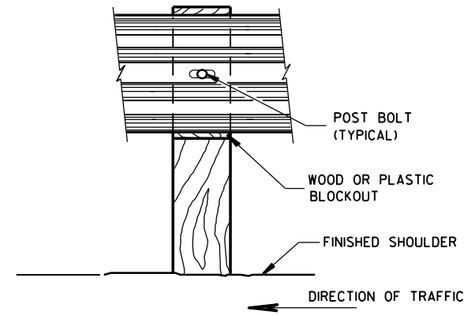

FRONT VIEW AT WOOD POST

7. PROVIDE SILVER REFLECTIVE SHEETING ON ALL REFLECTORS EXCEPT THOSE LOCATED ALONG THE LEFT EDGE OF ONE-WAY ROADWAYS, WHICH SHALL BE PROVIDED WITH YELLOW REFLECTIVE SHEETING. SHEETING IS TYPE H. SEE STANDARD SPECIFICATION 637.

8. DO NOT INSTALL REFLECTORS ON THE FIRST 50 FEET OF THE APPROACH END OF THE ENERGY ABSORBING TERMINAL. RAIL SPLICE LOCATIONS ARE THE ONLY ACCEPTABLE LOCATIONS FOR REFLECTORS.

9. REVERSE EVERY OTHER REFLECTOR FOR 2-WAY VISIBILITY. THE CONTRACTOR MAY FURNISH TWO-SIDED REFLECTORS IN LIEU OF ONE-SIDED REFLECTORS.

10. PROVIDE AN ANGLE OF BEND OF 90° ± 1° FOR TWO-SIDED REFLECTORS.

11. 25 FEET OF HALF POST SPACING IS REQUIRED ON APPROACH AND DEPARTURE ENDS OF QUARTER POST SPACING.

POST BOLTS ARE A 5/8" DIAMETER ASTM A307 GUARDRAIL BOLT. A POST BOLT REQUIRES 5/8" DIAMETER A563A DOUBLE RECESSED (DR) HEAVY HEX NUT AND 5/8" DIAMETER F844 FLAT WASHER. POST BOLTS MAY BE LONGER IF MULTIPLE BLOCKOUTS ARE BEING USED.

GUARD RAIL SPLICE BOLTS ARE A 5/8" DIAMETER ASTM A307 GUARDRAIL HEAD BOLT. A GUARDRAIL SPLICE BOLT REQUIRES 5/8" DIAMETER A563A DOUBLE RECESSED (DR) HEAVY HEX NUT.

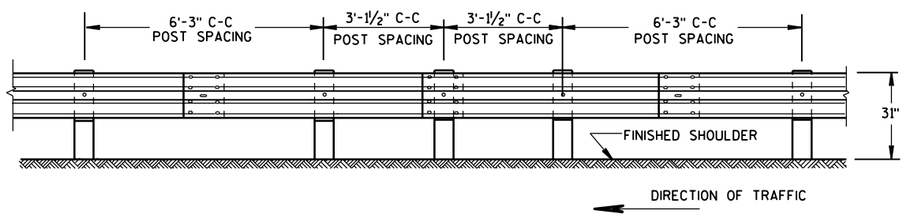

FRONT VIEW

HALF POST SPACING (HS) AND HALF POST SPACING WITH LONGER POSTS (K)

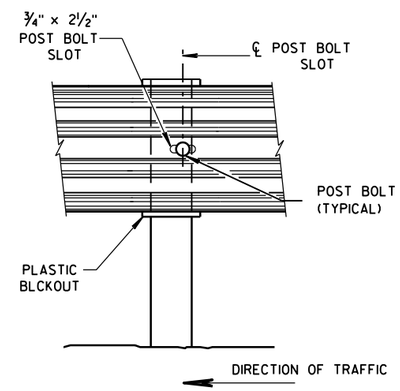

FRONT VIEW AT STEEL POST

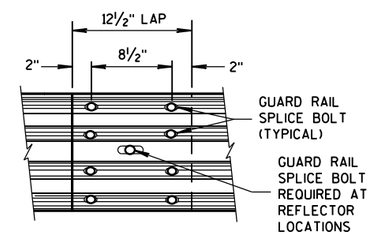

FRONT VIEW

MID-SPAN BEAM SPLICE

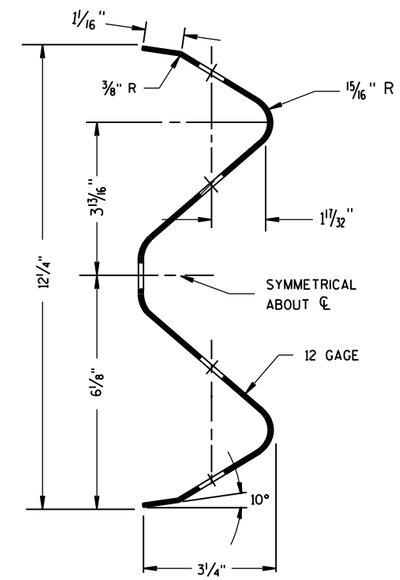

SECTION THRU W-BEAM RAIL

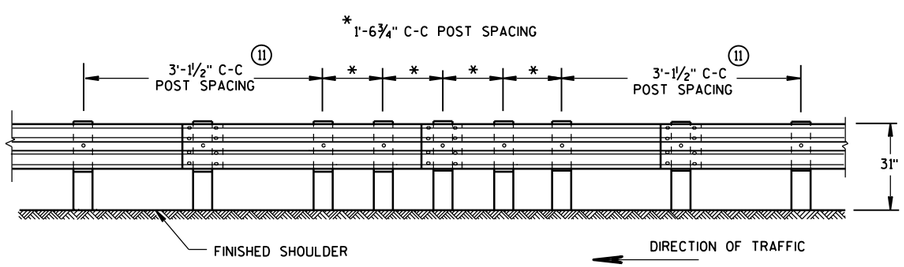

FRONT VIEW

QUARTER POST SPACING (QS)

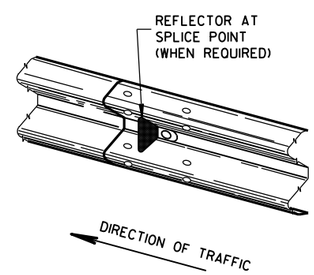

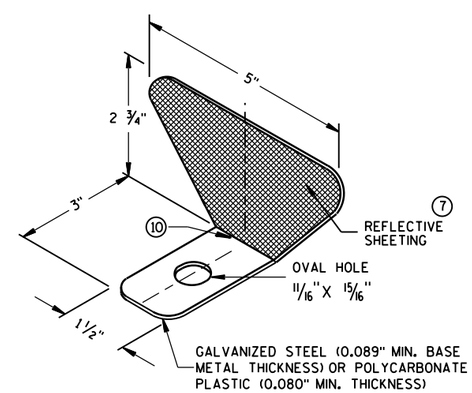

ONE SIDED REFLECTOR DETAIL AND TYPICAL INSTALLATION 7

REFLECTOR SPACING 8

	BEAM GUARD LENGTH	REFLECTOR SPACING	NO. SURFACES REFLECTORIZED	MIN. NO. REFLECTORS
ONE WAY TRAFFIC	< 200' > 200'	50' C-C 100' C-C	1 1	3
TWO WAY TRAFFIC	< 200' > 200'	25' C-C 50' C-C	1 9 1	6
TWO WAY TRAFFIC	< 200' > 200'	50' C-C 100' C-C	2 2 10	3

MIDWEST GUARDRAIL SYSTEM
(MGS) GUARDRAIL

STATE OF WISCONSIN
DEPARTMENT OF TRANSPOR

6

6

S.D.D. 14 B 42-4b

S.D.D. 14 B 42-4b

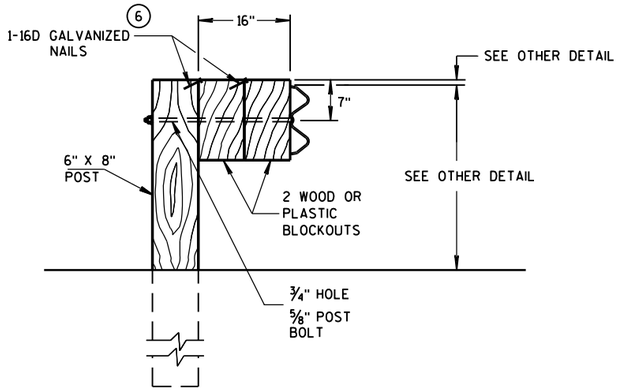

DETAIL FOR 16" BLOCKOUT DEPTH

IT IS ACCEPTABLE TO USE BLOCKOUTS UP TO 16" DEEP TO INCREASE THE POST OFFSET TO AVOID UNDERGROUND OBSTACLES. THERE IS NO LIMIT TO THE NUMBER OF POSTS THAT CAN HAVE ADDITIONAL BLOCKOUTS UP TO 16" DEEP.

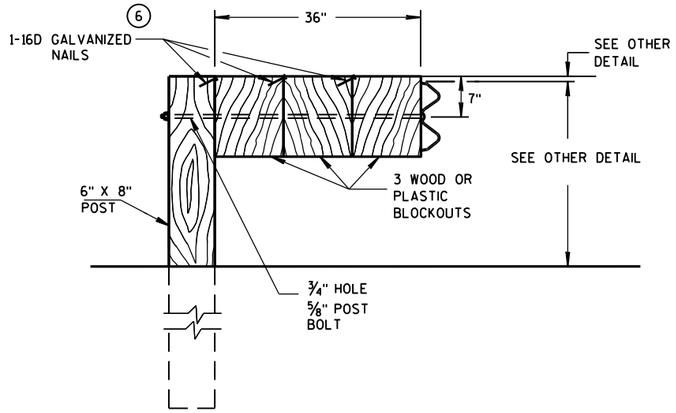

DETAIL FOR 36" BLOCKOUT DEPTH

NOTES: UNDER SPECIAL CIRCUMSTANCES, SUCH AS AVOIDING OBSTACLES THAT ARE NOT RELOCATED, IT IS ACCEPTABLE TO INSTALL ADDITIONAL BLOCKOUTS TO OBTAIN UP TO 36" DEPTH FOR ONE OR TWO POSTS IN A SECTION OF GUARDRAIL.

DO NOT USE 16" OR 36" BLOCKOUTS IF IT CAUSES THE POST TO BE DRIVEN BEYOND SHOULDER HINGE POINT OR CAUSES A FIXED OBJECT TO BE WITHIN THE DEFLECTION DISTANCE OF THE BARRIER.

NOTE: 1. ALL FILLETS SHALL HAVE A MINIMUM RADIUS OF 1/16".
2. IF THE BOLT EXTENDS MORE THAN 1/4" FROM THE NUT THE BOLT SHOULD BE TRIMMED BACK.

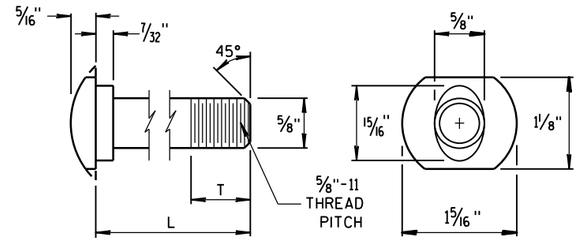

POST BOLT TABLE

L	T (MIN.)
1 1/4"	1 1/8"
2"	1 3/4"
10"	4"
14"	4 1/16"
18"	4"
21"	4 1/16"
25"	4"

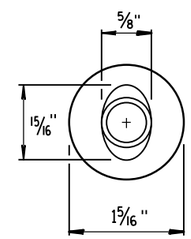

ALTERNATE BOLT HEAD

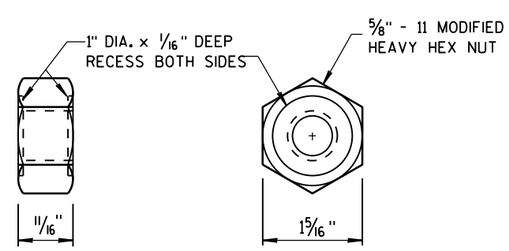

POST BOLT, SPLICE BOLT AND RECESS NUT

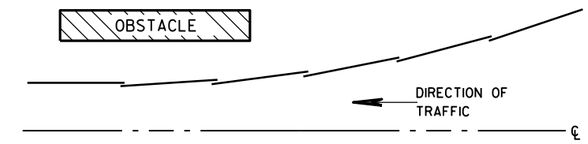

PLAN VIEW

BEAM LAPPING DETAIL

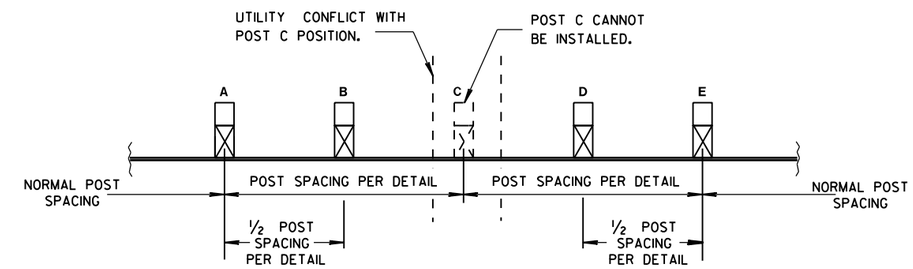

POST DRIVING FOR CONTINUOUS UNDERGROUND OBSTRUCTION

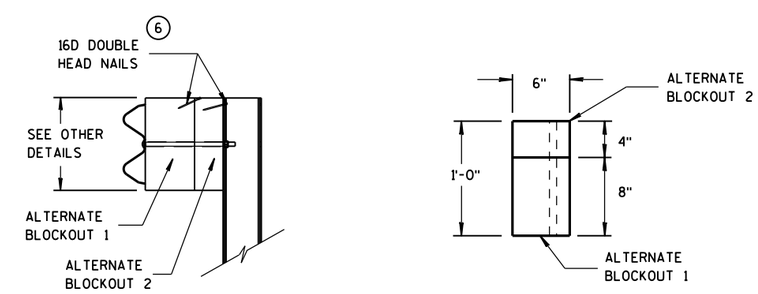

SIDE VIEW TOP VIEW

ALTERNATE WOOD BLOCKOUT DETAIL

MIDWEST GUARDRAIL SYSTEM (MGS) GUARDRAIL

STATE OF WISCONSIN
DEPARTMENT OF TRANSPORTATION

APPROVED
June 2016 — DATE
/S/ Jerry H. Zogg — ROADWAY STANDARDS DEVELOPMENT ENGINEER
FHWA

6

S.D.D. 14 B 42-4c

GENERAL NOTES

(A) THE SLOPE IN THE AREA BOUNDED BY THE GRADELINE, THE HINGE POINT LINE (HPL), AND THE CLEAR ZONE LIMITS (CZL) SHALL BE 4:1 OR FLATTER.

(B) AFTER FINAL ASSEMBLY, RECHECK CABLE TO BE SURE IT IS TAUT AND HAS NOT RELAXED.

(C) DIFFERENT MANUFACTURES REQUIRE DIFFERENT PERFORATED W-BEAM RAIL END PANELS. SEE MANUFACTURES INFORMATION.

(D) THE TOP OF THE STEEL TUBE ON POST 1 AND POST 2 SHALL NOT BE MORE THAN 3" ABOVE THE FINISH GROUND ELEVATION.

(F) ATTACH ALUMINUM SHEET TO E.A.T. HEAD USING 4 STAINLESS STEEL SELF-TAPPING SCREWS. ONE SCREW PER CORNER.

(G) 1/2" DIAMETER X 3" LONG LAG BOLT AND WASHER.

(H) HARDWARE VARIES BETWEEN DIFFERENT MANUFACTURES. SEE MANUFACTURE'S DRAWING FOR INFORMATION.

(I) DIMENSIONS MAY VARY. SEE MANUFACTURE'S INFORMATION.

SEE SDD 14B42 FOR MORE INFORMATION.

* DO NOT ATTACH BLOCKOUTS TO POSTS 1 AND 2.

DO NOT INSTALL REFLECTORS ON THE FIRST 50 FEET OF THE APPROACH END OF THE ENERGY ABSORBING TERMINAL.

W-BEAM RAIL SPLICES ARE LOCATED AT POST NUMBER 3, AND BETWEEN POST 5 AND 6, BETWEEN POSTS 7 AND 8, AND MIDDLE OF THE SPAN AFTER POST 9.

THE CENTER OF THE UPPER 3 1/2" DIAMETER HOLE ON POST NUMBER 3 THROUGH POST 9 IS TO BE FLUSH WITH THE GROUND LINE UP TO A MAXIMUM OF 2" ABOVE GROUND LINE.

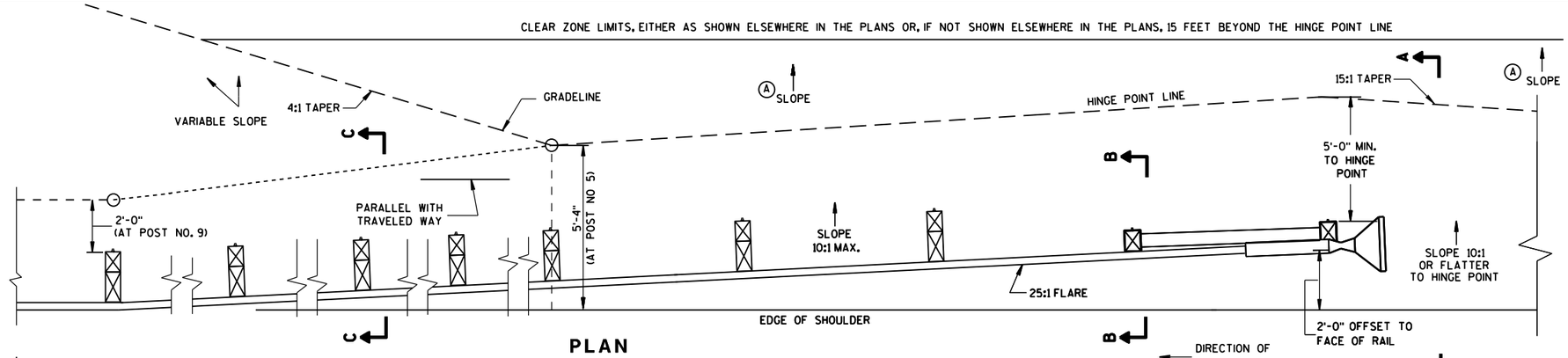

PLAN

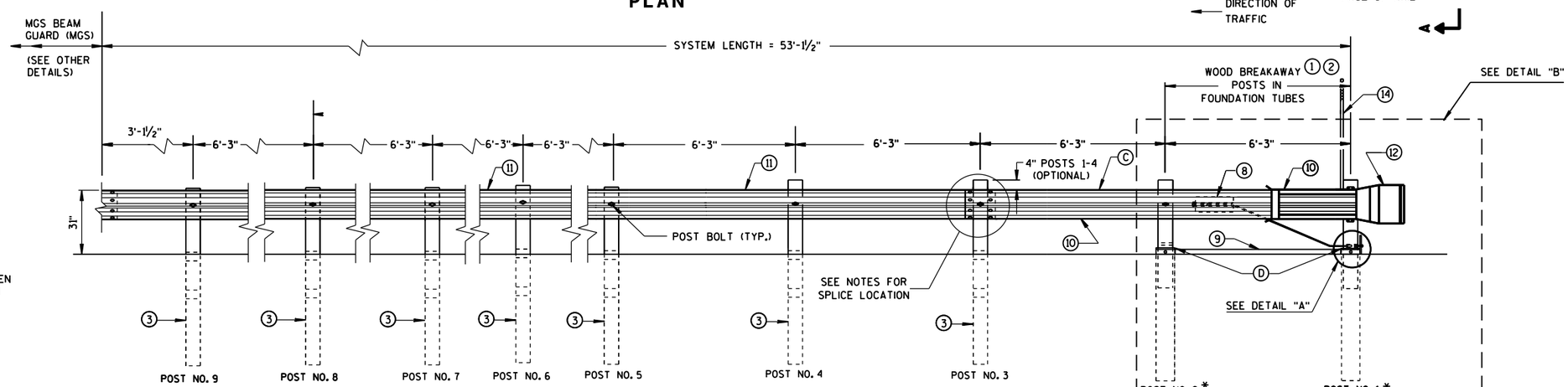

ELEVATION

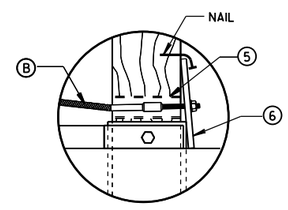

DETAIL "A"

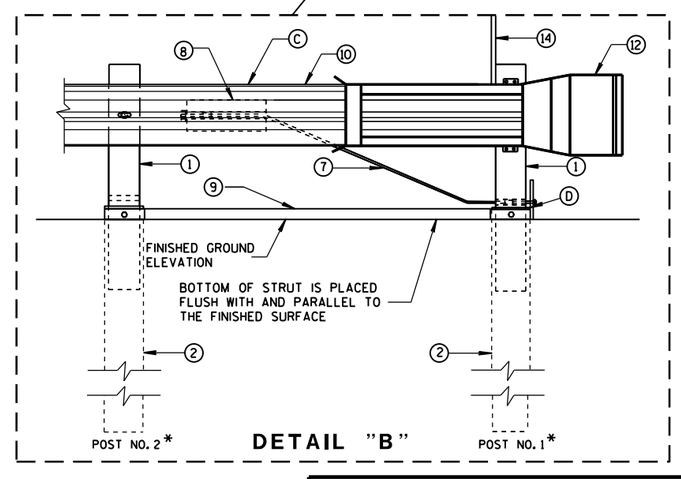

DETAIL "B"

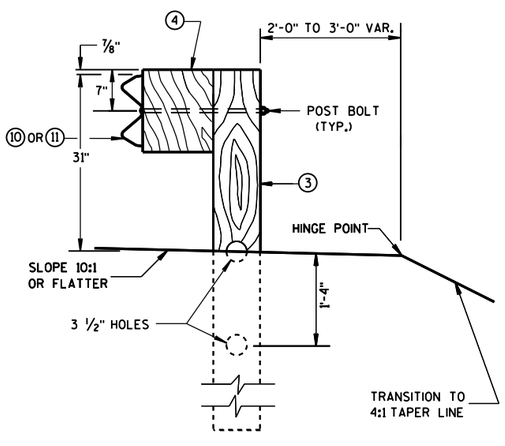

SECTION C-C
TYPICAL AT POST NOS. 3-9

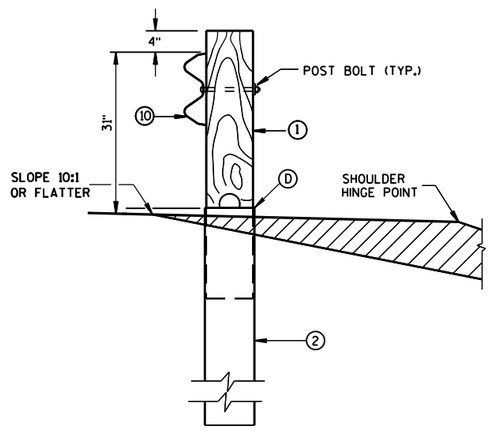

SECTION B-B
TYPICAL AT POST NO. 2*

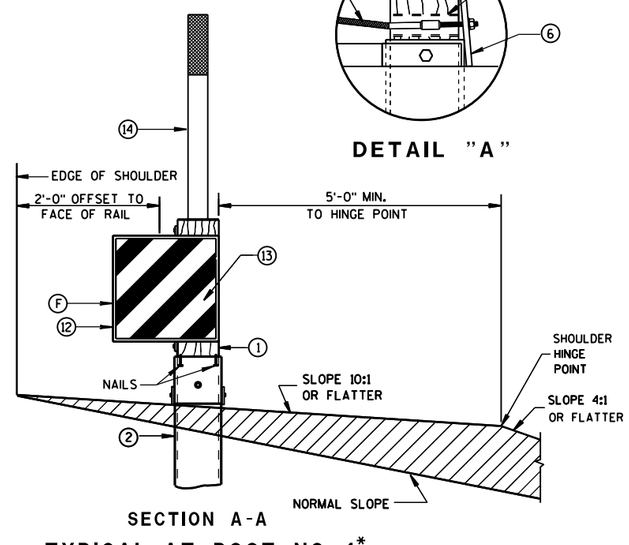

SECTION A-A
TYPICAL AT POST NO. 1*

MIDWEST GUARDRAIL SYSTEM ENERGY ABSORBING TERMINAL (MGS)

STATE OF WISCONSIN
DEPARTMENT OF TRANSPO

S.D.D. 14 B 44-2a

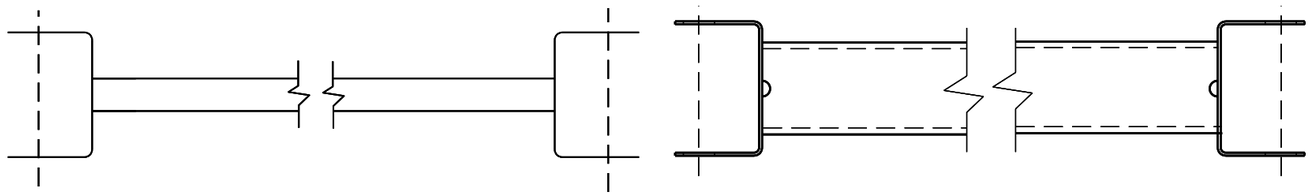

GENERIC GROUND STRUT (9) (H)

BILL OF MATERIALS

PART NO.	DESCRIPTION MATERIALS PROVIDED BY MGS EAT MANUFACTURER. SEE MANUFACTURER'S DETAILS FOR MORE INFORMATION.
1	WOOD BREAKAWAY POST
2	6" X 8" X 0.188", 6'-0" LONG FOUNDATION TUBE AT POSTS 1 AND 2
3	WOOD CRT
4	WOOD BLOCKOUT
5	PIPE SLEEVE
6	BEARING PLATE
7	BCT CABLE ASSEMBLY
8	ANCHOR CABLE BOX
9	GROUND STRUT
10	PERFORATED W-BEAM RAIL END PANEL, 12'-6" LONG.
11	STANDARD W-BEAM RAIL. MULTIPLE SECTIONS REQUIRED. SECTIONS VARY IN LENGTH.
12	END SECTION EAT
13	0.040" ALUMINUM SHEET WITH REFLECTIVE SHEETING TYPE F PER SECTION 637 OF THE STANDARD SPECIFICATIONS
14	EAT MARKER POST - YELLOW (SEE APPROVED PRODUCTS LIST)

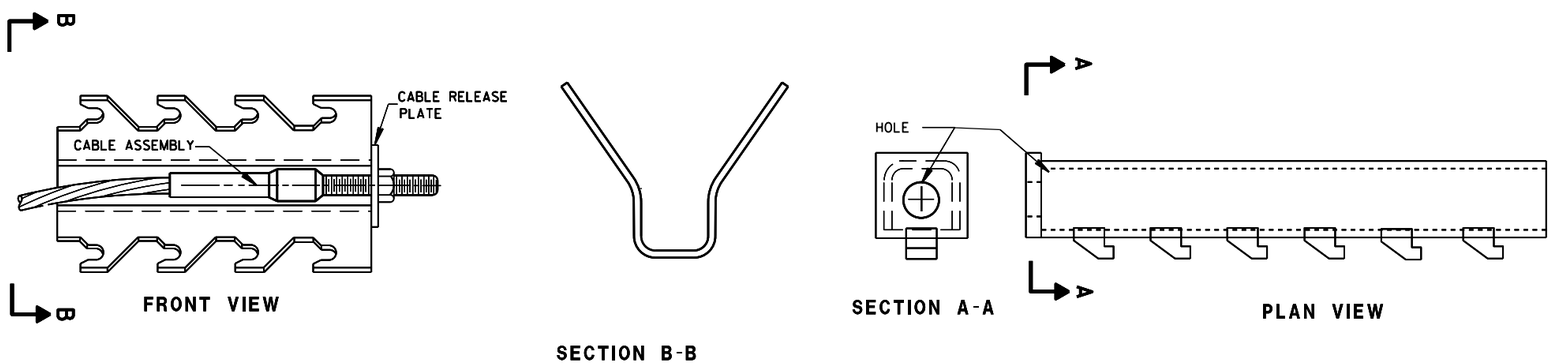

GENERIC ANCHOR CABLE BOX (8) (H)

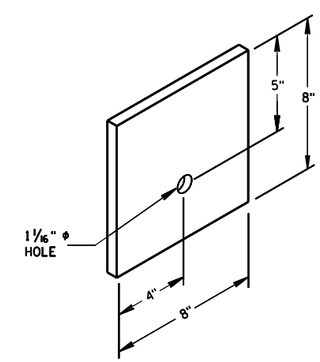

BEARING PLATE (6)

MIDWEST GUARDRAIL SYSTEM
ENERGY ABSORBING TERMINAL
(MGS)

STATE OF WISCONSIN
DEPARTMENT OF TRANSPOR

6
S.D.D. 14 B 44-2b

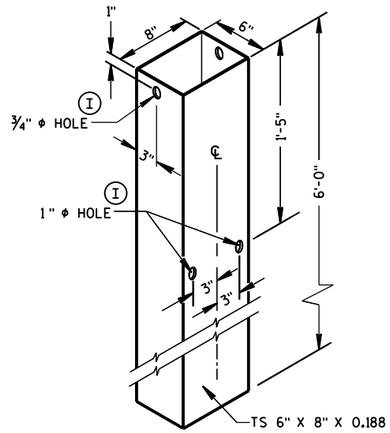

FOUNDATION TUBE (2)

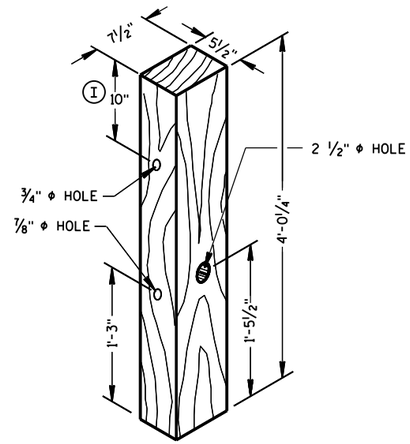

POSTS NUMBER 1 AND 2

WOOD BREAKAWAY POST (1)

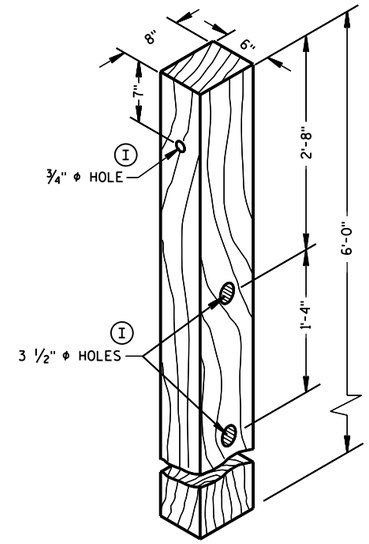

POSTS NUMBER 3-9

WOOD CRT POST (3)

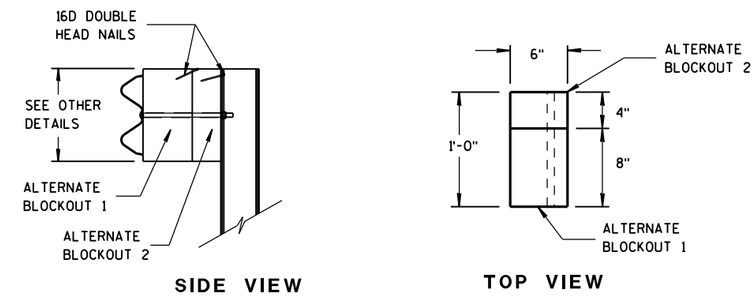

ALTERNATE WOOD BLOCKOUT DETAIL

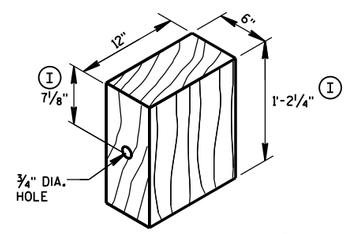

WOOD BLOCKOUT (4)

REQ'D. AT ALL POSTS EXCEPT POST NO'S 1 & 2

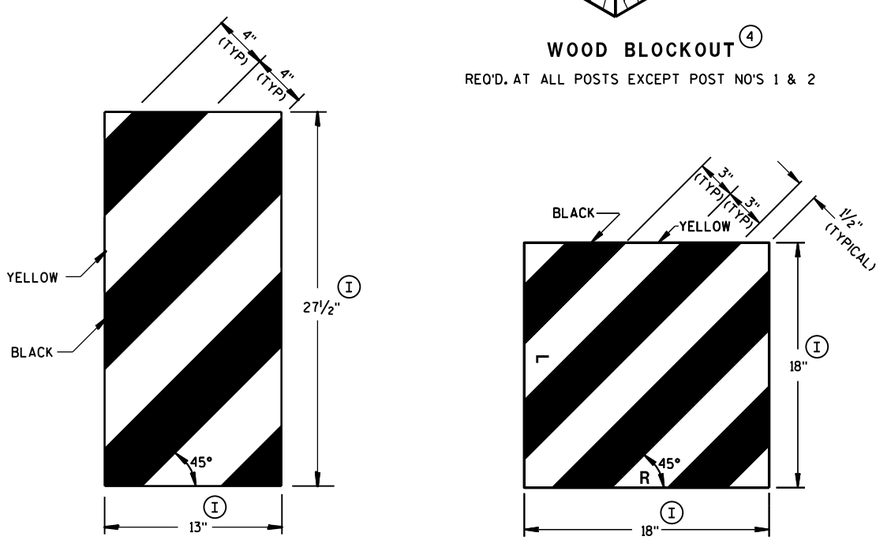

GENERIC REFLECTIVE SHEETING (13) (H)

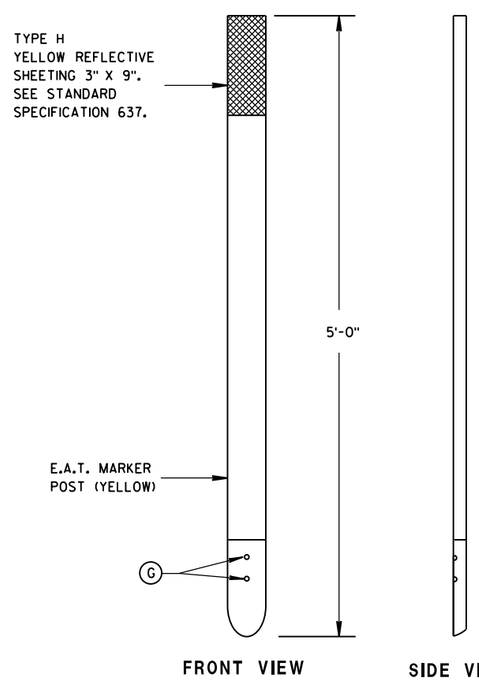

E.A.T. MARKER POST (14)

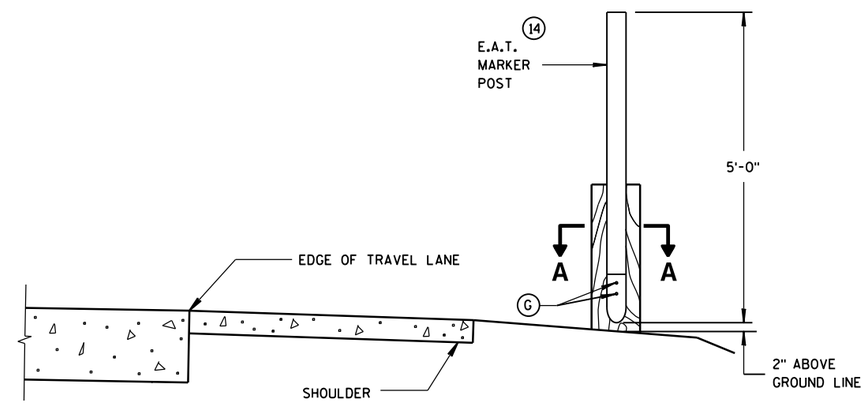

TYPICAL INSTALLATION OF E.A.T. MARKER POST BACKSIDE OF POST NO. 1

(E.A.T. AND RAIL REMOVED FOR CLARITY)

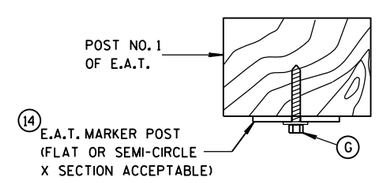

SECTION A-A

MIDWEST GUARDRAIL SYSTEM ENERGY ABSORBING TERMINAL (MGS)

STATE OF WISCONSIN
DEPARTMENT OF TRANSPORTATION

APPROVED
June 2014 — DATE
/S/ Jerry H. Zogg — ROADWAY STANDARDS DEVELOPMENT ENGINEER
FHWA

6

6

S.D.D. 14 B 44-2c

S.D.D. 14 B 44-2c

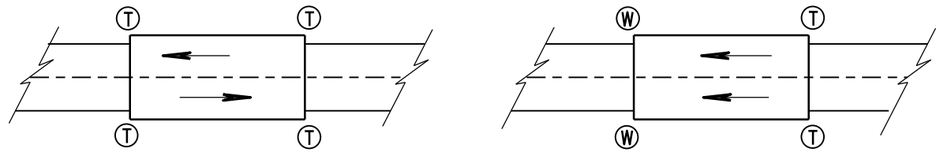

TWO WAY TRAFFIC

ONE WAY TRAFFIC

(T) THRIE BEAM CONNECTION

(W) W-BEAM CONNECTION WHEN REQUIRED

TYPICAL LOCATIONS OF THRIE BEAM AND W-BEAM CONNECTIONS TO BRIDGE

GENERAL NOTES

IF ROCK IS ENCOUNTERED, REMOVE ROCK TO FULL DEPTH OF POST PLUS 2½", AND 12" DIAMETER AROUND POST. SEE 14B42 FOR MORE DETAILS.

TRANSITION USES STEEL POSTS ONLY.

SEE STANDARD DETAIL DRAWING 14 B 42 FOR MORE INFORMATION.

(1) BRIDGE RAILING TYPE "W" DOES NOT REQUIRE A TERMINAL CONNECTOR.

(2) OPTIONAL CURB AND GUTTER OR DRAINAGE FEATURE SEE PLAN FOR INFORMATION.

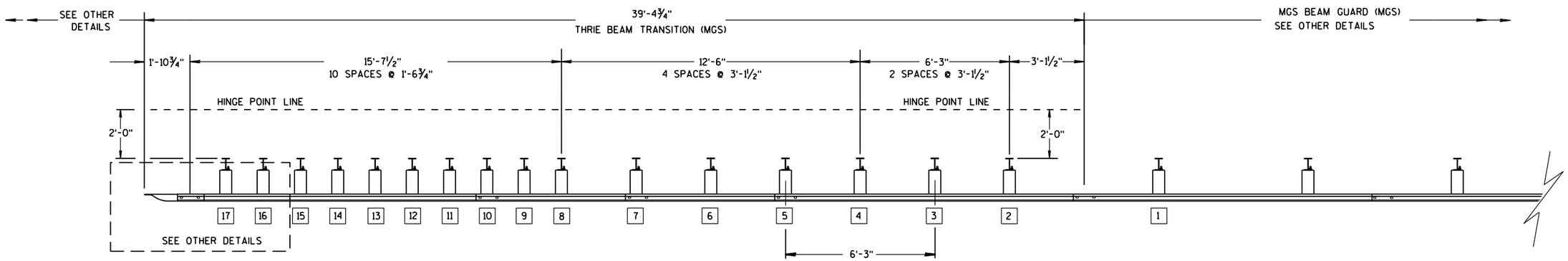

PLAN VIEW

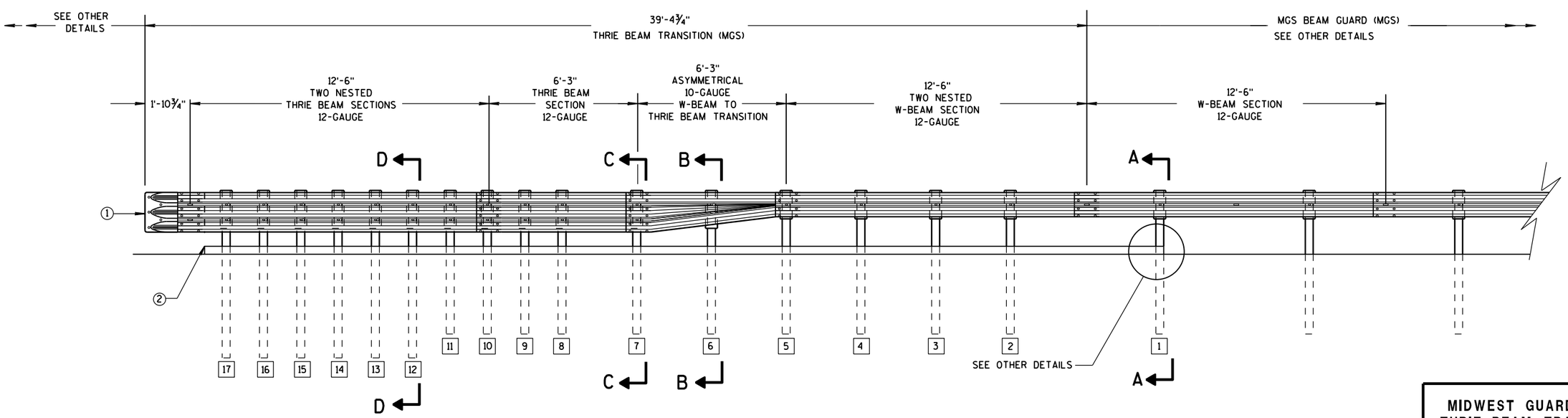

ELEVATION VIEW

MIDWEST GUARDRAIL SYSTEM THRIE BEAM TRANSITION

MIDWEST GUARDRAIL SYSTEM
THRIE BEAM TRANSITION (MGS)

STATE OF WISCONSIN
DEPARTMENT OF TRANSPOR

6

S.D.D. 14 B 45-4a

GENERAL NOTES

(2) OPTIONAL CURB AND GUTTER OR DRAINAGE_FEATURE SEE PLAN FOR INFORMATION.

(3) WHEN USING STEEL POSTS AND WOOD BLOCKOUTS INSTALL FOUR 10D GALVANIZED NAILS. INSTALL NAILS AT THE BACK CORNERS OF THE BLOCK AND BEND THE NAILS OVER THE FLANGE OF THE STEEL POST.

(4) TOLERANCE FOR TOP OF W-BEAM RAIL IS ± 1".

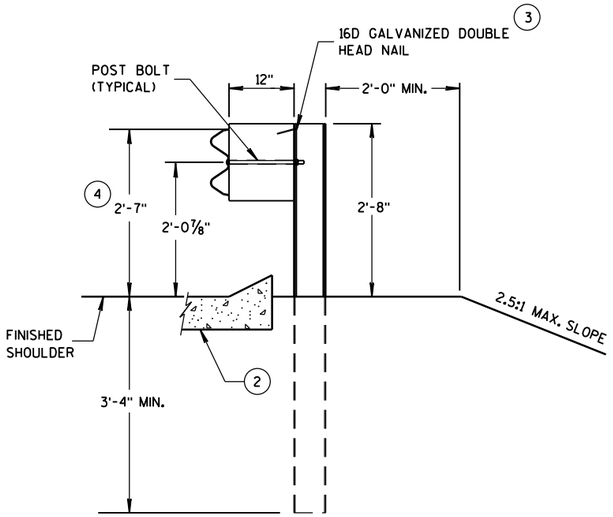

SECTION A-A
POSTS 1-5

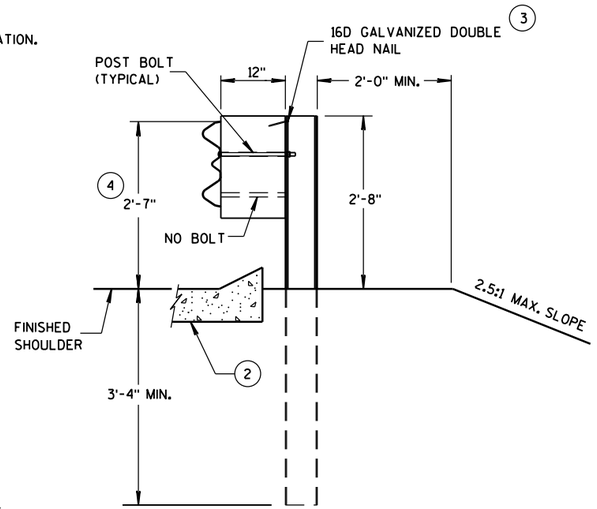

SECTION B-B
POST 6

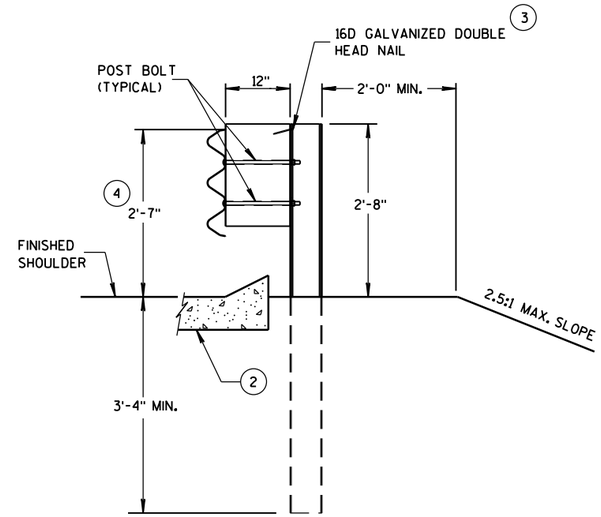

SECTION C-C
POSTS 7-11

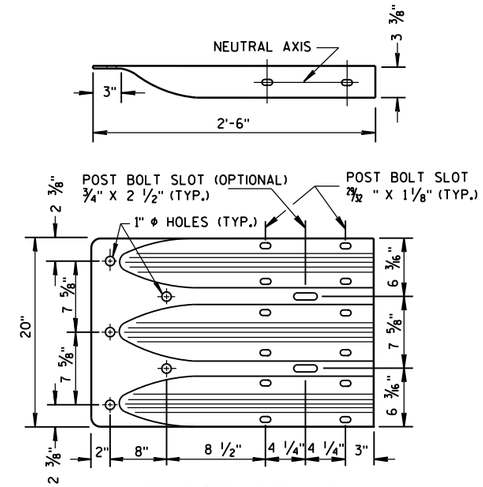

THRIE BEAM
TERMINAL CONNECTOR

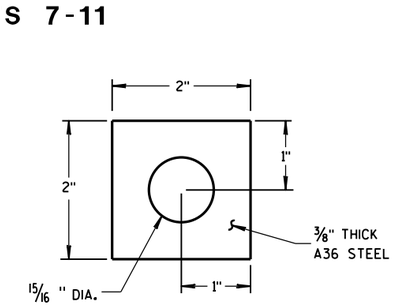

PLATE WASHER DETAIL

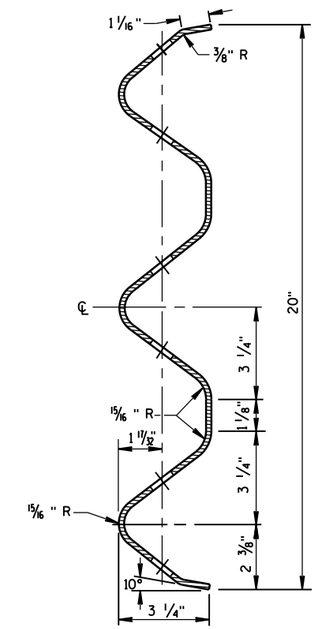

SECTION THRU THRIE
BEAM RAIL ELEMENT

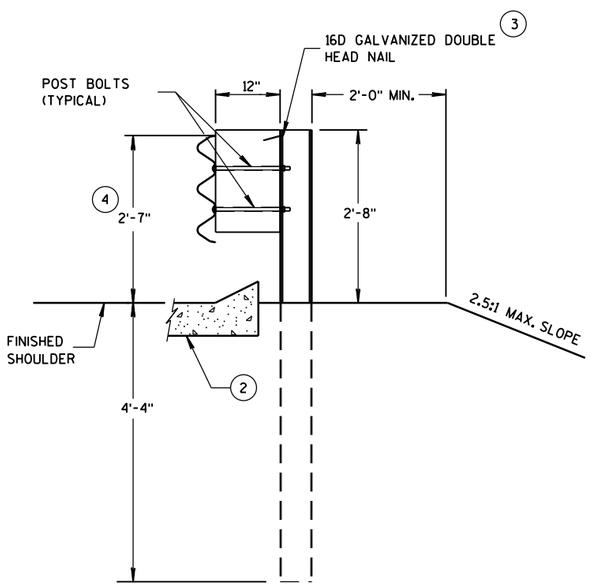

SECTION D-D
POSTS 12-17

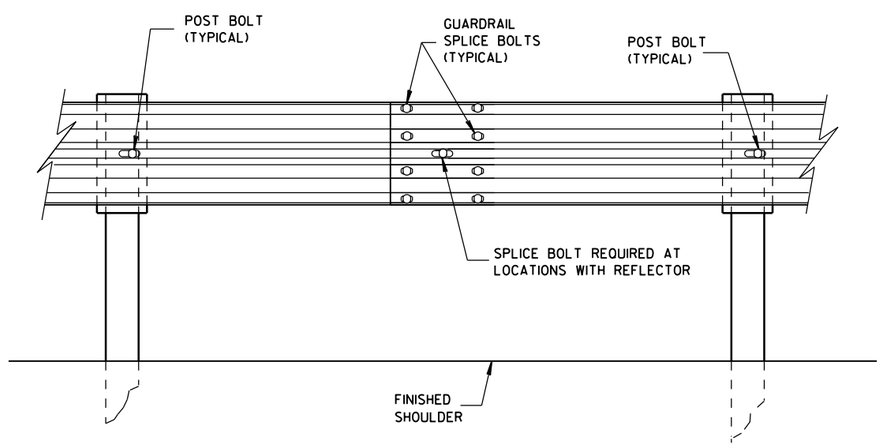

SPLICE DETAIL

MIDWEST GUARDRAIL SYSTEM
THRIE BEAM TRANSITION (MGS)

STATE OF WISCONSIN
DEPARTMENT OF TRANSPO

S.D.D. 14 B 45-4b

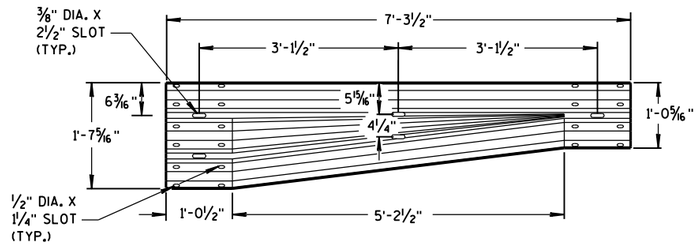

W-BEAM TO THRIE BEAM TRANSITION SECTION

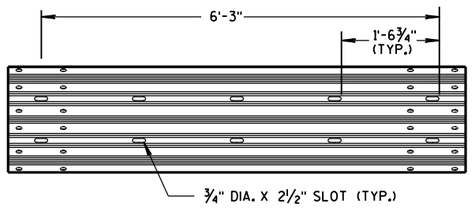

6'-3" THRIE BEAM SECTION

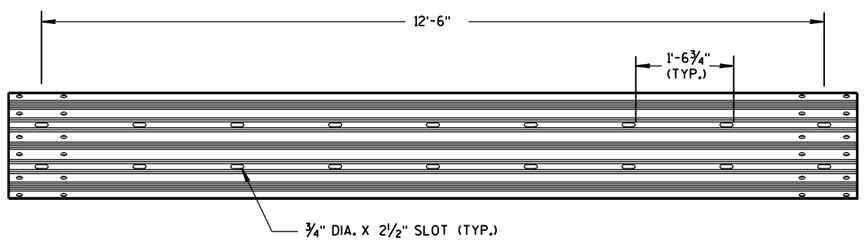

12'-6" THRIE BEAM SECTION

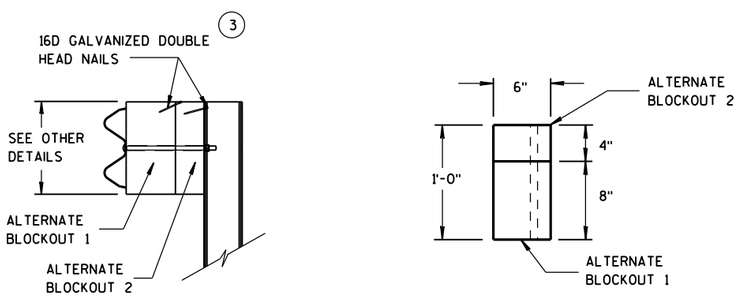

SIDE VIEW TOP VIEW

ALTERNATE WOOD BLOCKOUT DETAIL

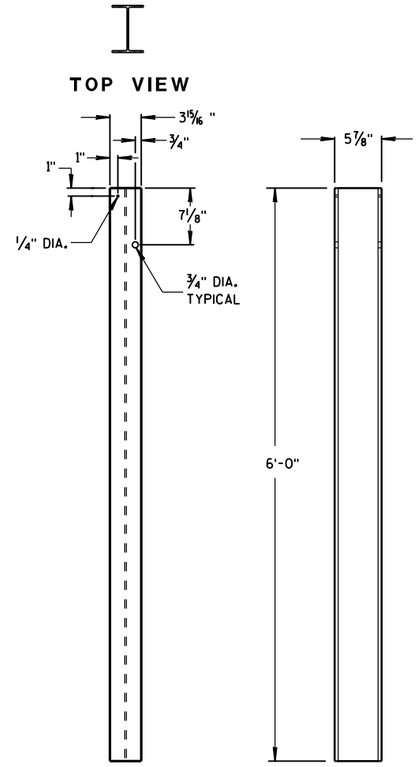

STEEL POSTS 1-5

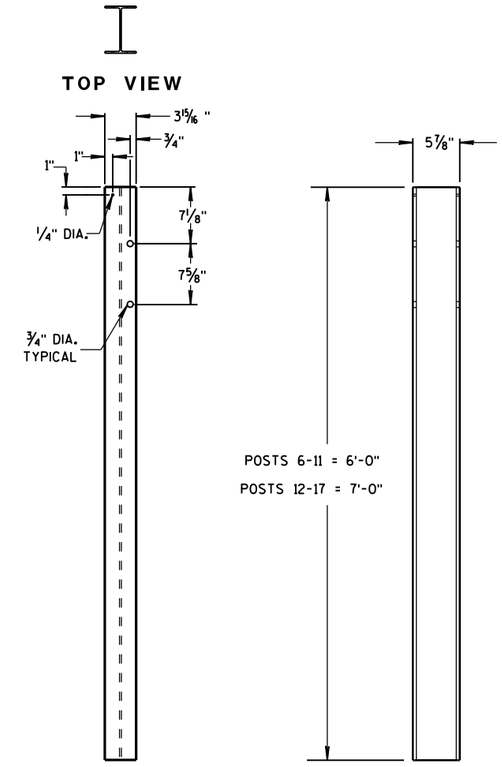

STEEL POSTS 6-17

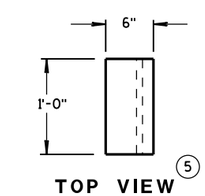

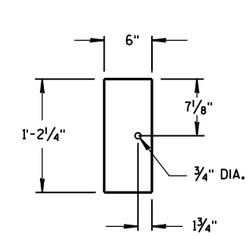

BLOCKOUT POSTS 1-5

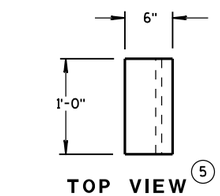

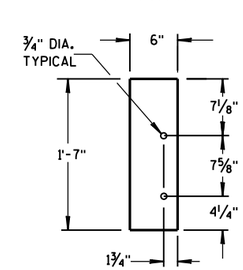

BLOCKOUT POSTS 6-17

GENERAL NOTES

STEEL POSTS ARE W6X9 OR W6X8.5.

BOLT HOLES FOR POST ARE ON FRONT AND OF SIDE OF POST.

(3) WHEN USING STEEL POSTS AND WOOD BLOCKOUTS INSTALL FOUR 16D GALVANIZED NAILS. INSTALL NAILS AT THE BACK CORNERS OF THE BLOCK AND BEND THE NAILS OVER THE FLANGE OF THE STEEL POST.

(5) WOOD BLOCKS MAY BE CONSTRUCTED OUT OF 2 WOOD BLOCKS. SEE ALTERNATE WOOD BLOCK DETAIL.

MIDWEST GUARDRAIL SYSTEM
THRIE BEAM TRANSITION (MGS)

STATE OF WISCONSIN
DEPARTMENT OF TRANSPORTATION

6

6

S.D.D. 14 B 45-4c

S.D.D. 14 B 45-4c

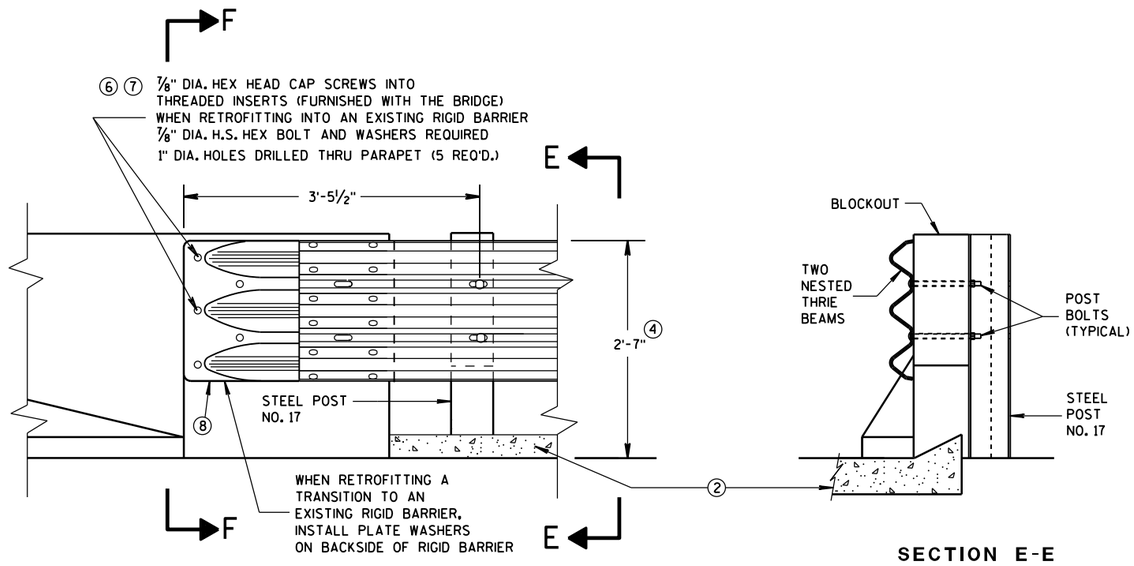

FRONT VIEW

SECTION E-E

THRIE BEAM CONNECTION TO BRIDGE PARAPET WITH SQUARE ENDS

GENERAL NOTES

THESE ARE TYPICAL CONNECTION DETAILS. ADJUST THE POSTION OF CONNECTIONS TO EXISTING BRIDGES TO FIT THE ACTUAL BRIDGE AND SITE DIMENSIONS.

② OPTIONAL CURB AND GUTTER OR DRAINAGE FEATURE SEE PLAN FOR INFORMATION.

④ TOLERANCE FOR TOP OF BEAM IS ± 1".

⑥ DRILLING BOLT HOLES THROUGH THE PARAPET, BOLTS, NUTS, WASHERS AND REPAIRING DAMAGED CONCRETE ARE INCIDENTAL TO THE CONTRACT.

⑦ BOLTS MAY BE A325 BOLTS OR A449 BOLTS. BOLT LENGTH AND THREADING LENGTH ARE TO ALLOW FOR A TIGHT CONNECTION BETWEEN RIGID BARRIER AND THRIE BEAM CONNECTION PLATE. CONTRACTOR IS TO FIELD VERIFY BOLT LENGTH AND THREAD LENGTH. ONE ROUND WASHER REQUIRED BETWEEN BOLT HEAD AND THRIE BEAM CONNECTOR PLATE. BOLTS THAT EXTEND THROUGH THE PARAPET AND OUT THE BACK FACE REQUIRE A HARDENED ROUND STEEL WASHER THAT IS 2" O.D. X 5/8" THICK AND ONE PLATE WASHER. REPAIR ANY DAMAGED CONCRETE FROM BOLT INSTALLATION.

⑧ THE RECESS FOR A W-BEAM CONNECTION, WHICH EXISTS ON SOME PARAPETS OF THIS TYPE, SHALL BE FILLED WITH A TREATED TIMBER BLOCKOUT. BLOCKOUT SIZE IS 1'-6" X 2'-0" X 3 1/2".

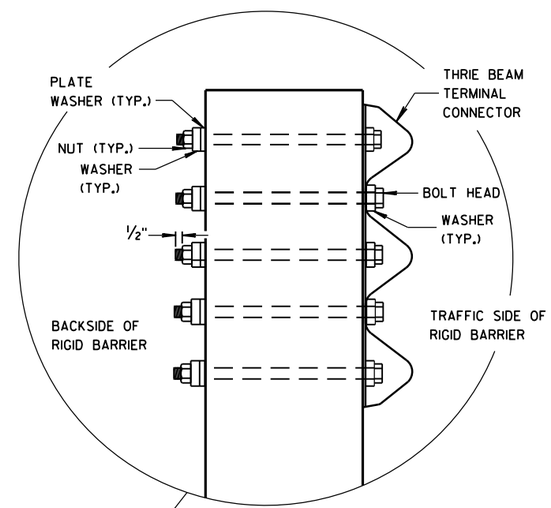

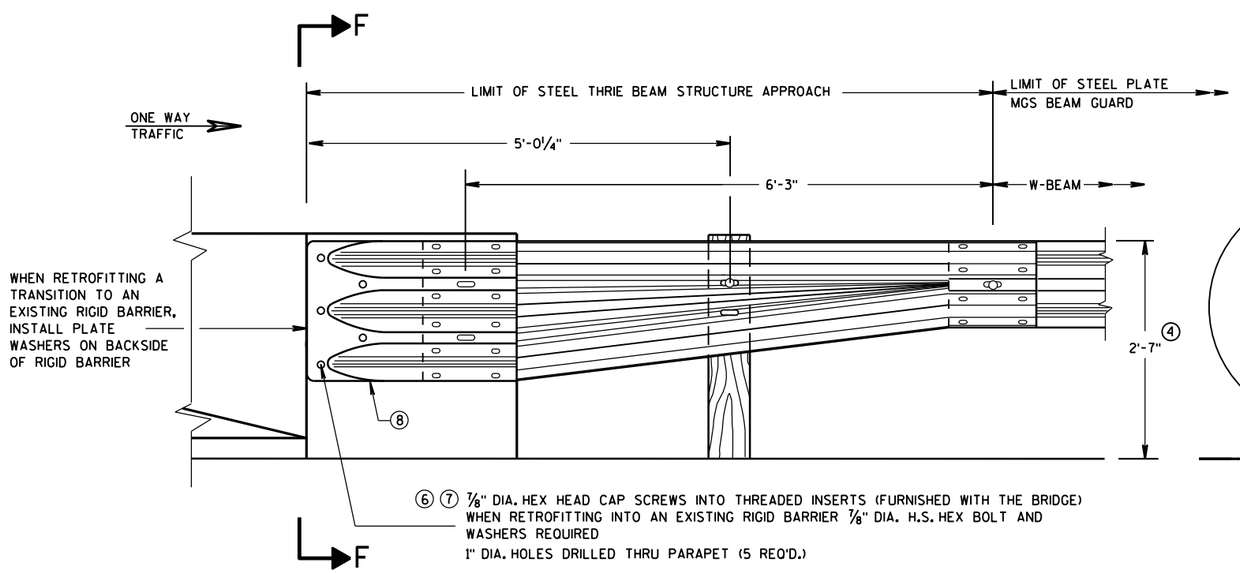

FRONT VIEW

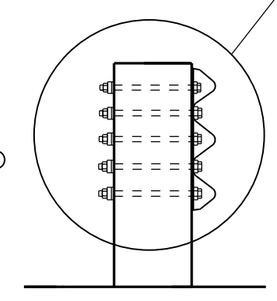

SECTION F-F

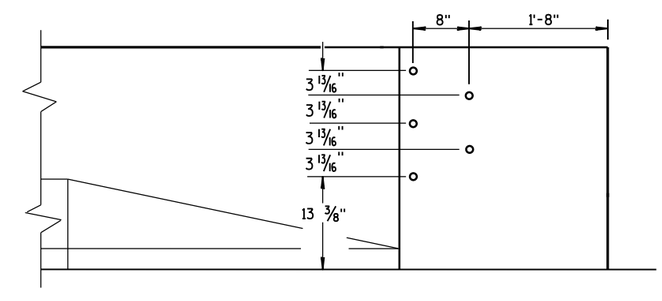

DRILL HOLE LOCATION

W BEAM TRANSITION AND CONNECTION TO BRIDGE PARAPETS WITH SQUARE ENDS

(USE ONLY ON THE TRAFFIC EXIT END OF ONE WAY BRIDGES)

MIDWEST GUARDRAIL SYSTEM
THRIE BEAM TRANSITION (MGS)

STATE OF WISCONSIN
DEPARTMENT OF TRANSPORTATION

APPROVED
June, 2015 — DATE
/S/ Jerry H. Zogg — ROADWAY STANDARDS DEVELOPMENT ENGINEER
NT
FHWA

6

S.D.D. 14 B 45-4d

GENERAL NOTES

THESE ARE TYPICAL CONNECTION DETAILS. ADJUST THE POSTION OF CONNECTIONS TO EXISTING BRIDGES TO FIT THE ACTUAL BRIDGE AND SITE DIMENSIONS.

(2) OPTIONAL CURB AND GUTTER OR DRAINAGE FEATURE SEE PLAN FOR INFORMATION.

(4) TOLERANCE FOR TOP OF BEAM IS ± 1".

(6) DRILLING BOLT HOLES THROUGH THE PARAPET, BOLTS, NUTS, WASHERS AND REPAIRING DAMAGED CONCRETE ARE INCIDENTAL TO THE CONTRACT.

(7) BOLTS MAY BE A325 BOLTS OR A449 BOLTS. BOLT LENGTH AND THREADING LENGTH ARE TO ALLOW FOR A TIGHT CONNECTION BETWEEN RIGID BARRIER AND THRIE BEAM CONNECTION PLATE. CONTRACTOR IS TO FIELD VERIFY BOLT LENGTH AND THREAD LENGTH. ONE ROUND WASHER REQUIRED BETWEEN BOLT HEAD AND THRIE BEAM CONNECTOR PLATE. BOLTS THAT EXTEND THROUGH THE PARAPET AND OUT THE BACK FACE REQUIRE A HARDENED ROUND STEEL WASHER THAT IS 2" O.D. X 5/8" THICK AND ONE PLATE WASHER. REPAIR ANY DAMAGED CONCRETE FROM BOLT INSTALLATION.

(8) THE RECESS FOR A W-BEAM CONNECTION, WHICH EXISTS ON SOME PARAPETS OF THIS TYPE, SHALL BE FILLED WITH A TREATED TIMBER BLOCKOUT. BLOCKOUT SIZE IS 1'-6" X 2'-0" X 3 1/2".

(9) BOLT, NUT AND WASHERS NOT REQUIRED FOR THIS LOCATION WHEN RETROFITTING AN EXISTING PAPAPET AND THE HOLE IS EITHER ABOVE PARAPET OR WITHIN 4 INCHES OF THE EDGE OF PARAPET.

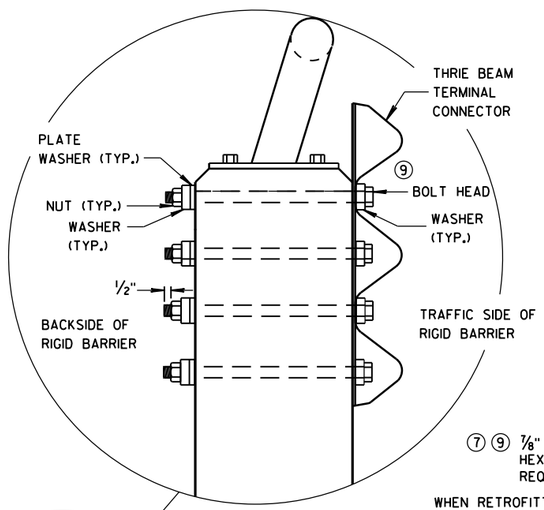

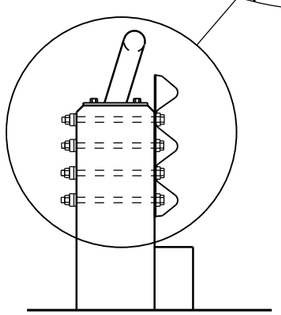

SECTION G-G

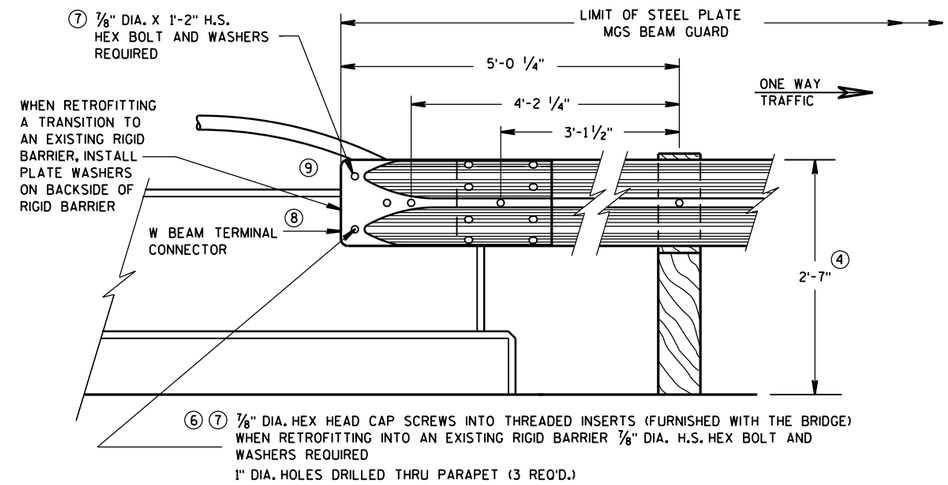

FRONT VIEW

W BEAM CONNECTION TO VERTICAL FACE PARAPET

(USE ONLY ON THE TRAFFIC EXIT END OF ONE WAY BRIDGES)

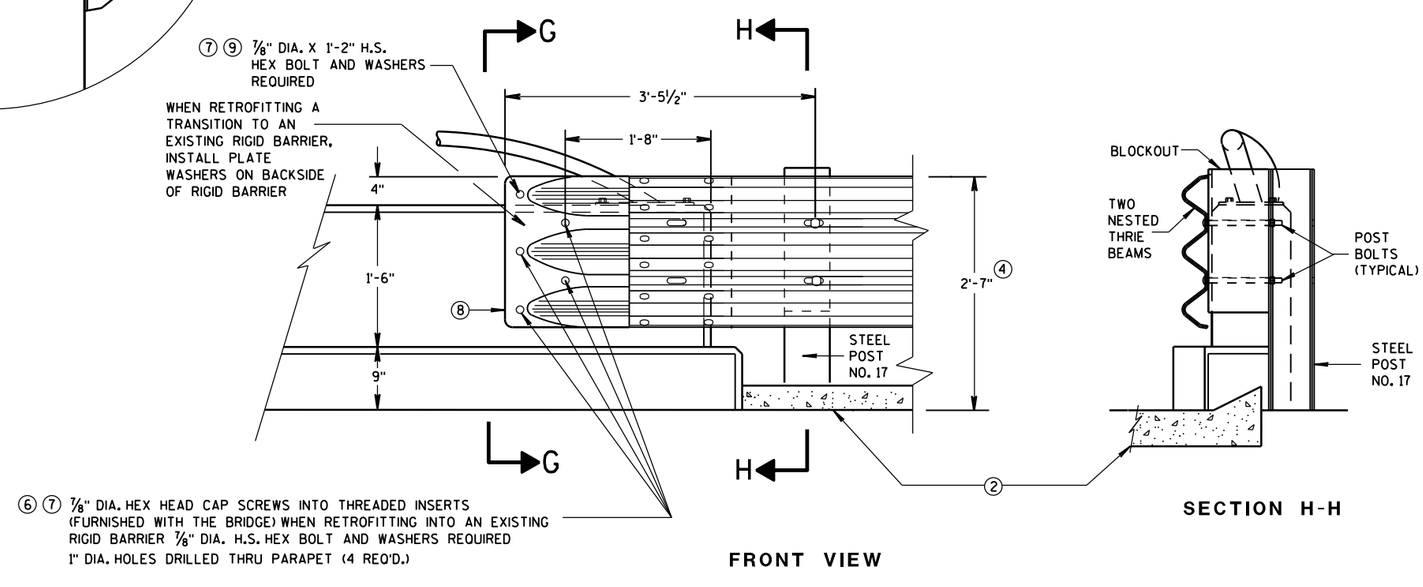

FRONT VIEW

SECTION H-H

THRIE BEAM CONNECTION TO VERTICAL FACED PARAPETS

MIDWEST GUARDRAIL SYSTEM
THRIE BEAM TRANSITION (MGS)

STATE OF WISCONSIN
DEPARTMENT OF TRANSPORTATION

APPROVED
June, 2015 — DATE
/S/ Jerry H. Zogg — ROADWAY STANDARDS DEVELOPMENT ENGINEER
FHWA
NT

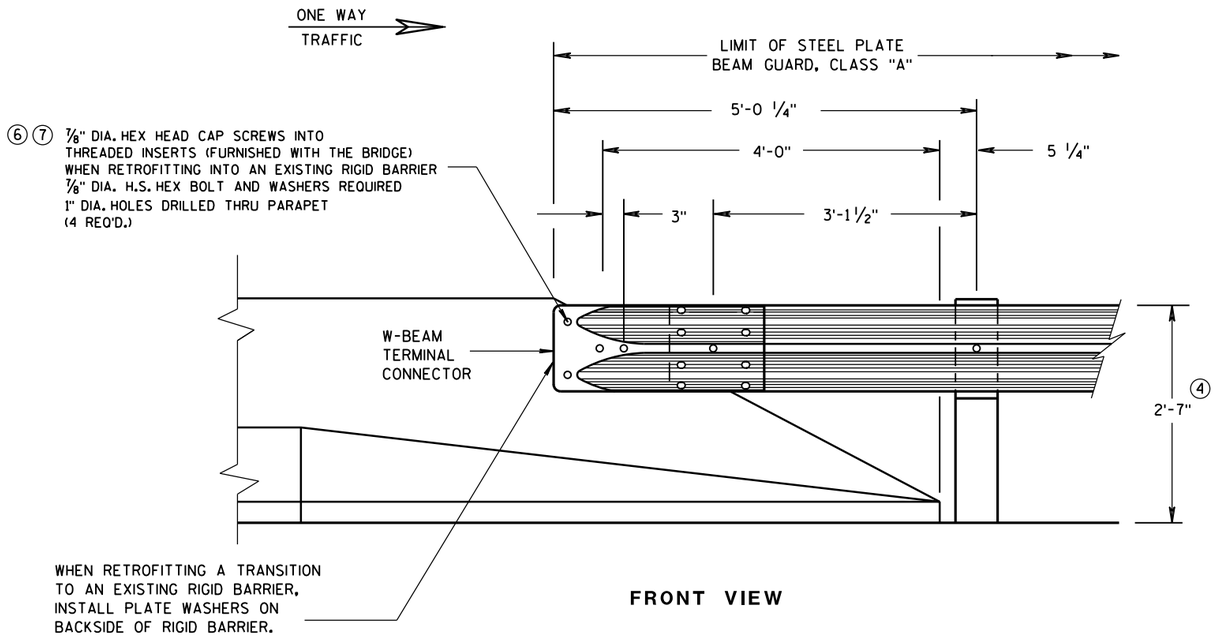

FRONT VIEW

W BEAM CONNECTION TO PARAPETS WITH SLOPED ENDS

(USE ONLY AT TRAFFIC EXIT END OF ONE WAY BRIDGE)

GENERAL NOTES

② OPTIONAL CURB AND GUTTER OR DRAINAGE FEATURE SEE PLAN FOR INFORMATION.

④ TOLERANCE FOR TOP OF BEAM IS ± 1".

⑥ DRILLING BOLT HOLES THROUGH THE PARAPET, BOLTS, NUTS, WASHERS AND REPAIRING DAMAGED CONCRETE ARE INCIDENTAL TO THE CONTRACT.

⑦ BOLTS MAY BE A325 BOLTS OR A449 BOLTS. BOLT LENGTH AND THREADING LENGTH ARE TO ALLOW FOR A TIGHT CONNECTION BETWEEN RIGID BARRIER AND THRIE BEAM CONNECTION PLATE. CONTRACTOR IS TO FIELD VERIFY BOLT LENGTH AND THREAD LENGTH. ONE ROUND WASHER REQUIRED BETWEEN BOLT HEAD AND THRIE BEAM CONNECTOR PLATE. BOLTS THAT EXTEND THROUGH THE PARAPET AND OUT THE BACK FACE REQUIRE A HARDENED ROUND STEEL WASHER THAT IS 2" O.D. X 5/8" THICK AND ONE PLATE WASHER. REPAIR ANY DAMAGED CONCRETE FROM BOLT INSTALLATION.

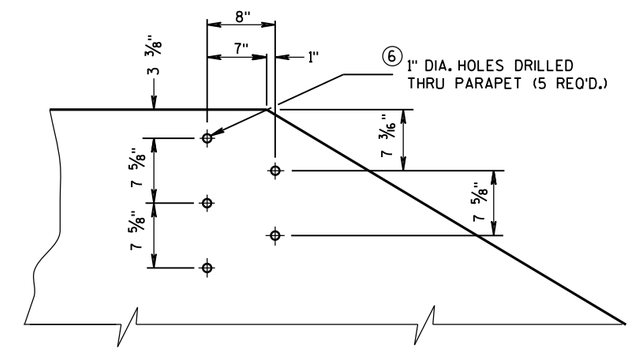

DRILL HOLE LOCATION AND PATTERN FOR THRIE BEAM CONNECTION

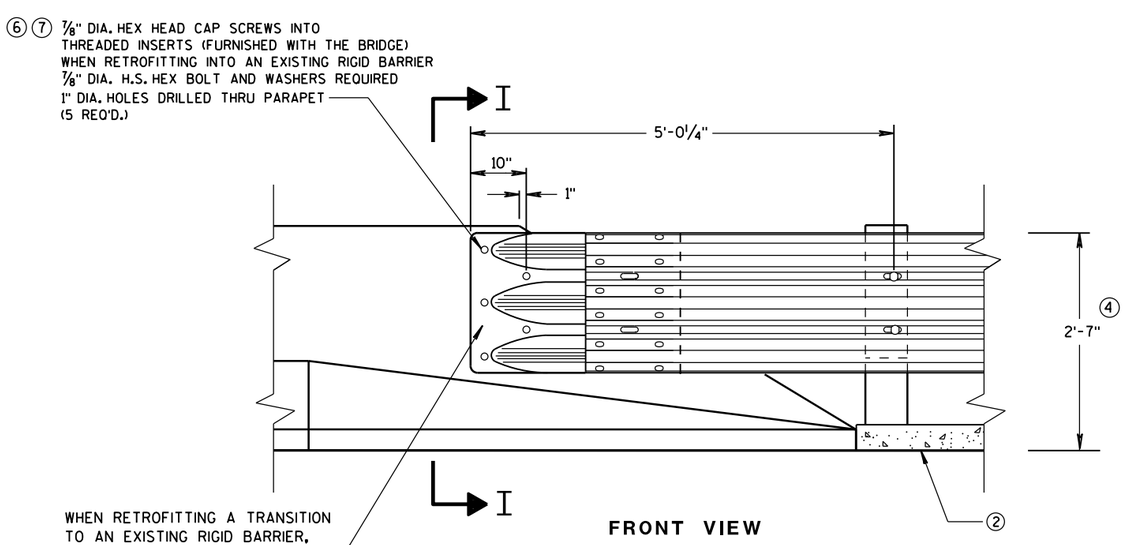

FRONT VIEW

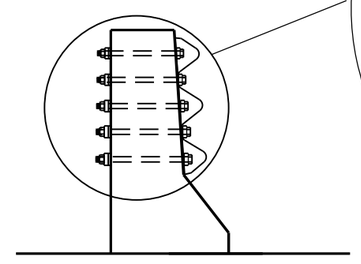

SECTION I-I

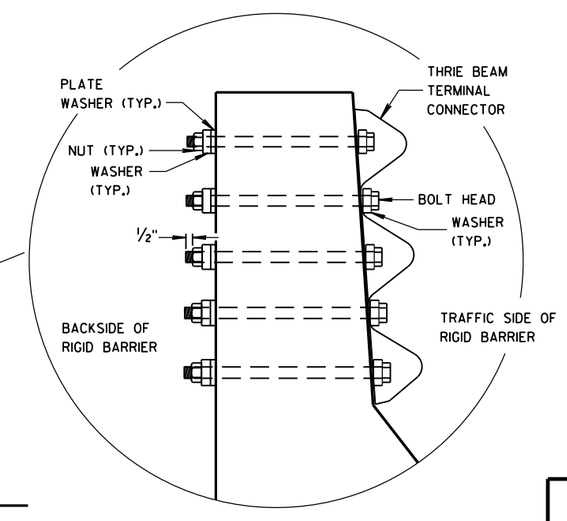

THRIE BEAM CONNECTION TO BRIDGE PARAPETS WITH SLOPED ENDS

MIDWEST GUARDRAIL SYSTEM
THRIE BEAM TRANSITION (MGS)

STATE OF WISCONSIN
DEPARTMENT OF TRANSPORTATION

APPROVED
June, 2015 — DATE
/S/ Jerry H. Zogg — ROADWAY STANDARDS DEVELOPMENT ENGINEER
FHWA

6

S.D.D. 14 B 45-4f

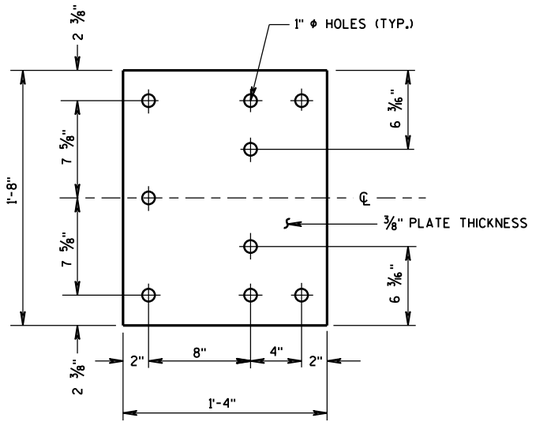

BACK-UP PLATE DETAIL

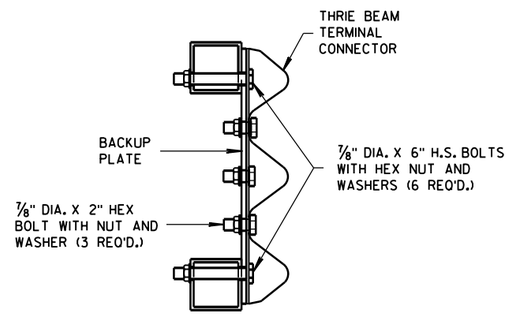

SECTION J-J

GENERAL NOTES

(4) TOLERANCE FOR TOP OF BEAM IS ± 1".

(6) DRILLING HOLES THROUGH THE PAPRPET, BOLTS, NUTS, WASHERS AND REPAIRING DAMAGED CONCRETE ARE INCIDENTAL TO THE CONTRACT.

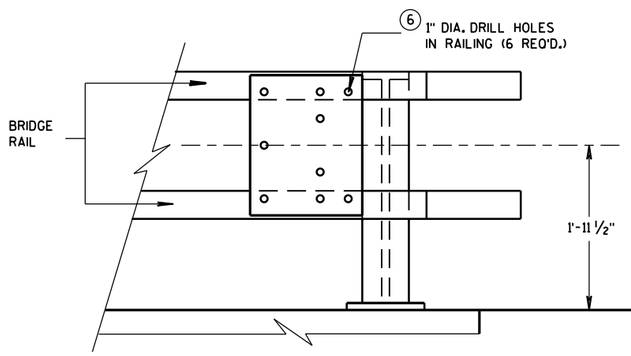

BACK-UP PLATE MOUNTING ONTO BRIDGE RAILING

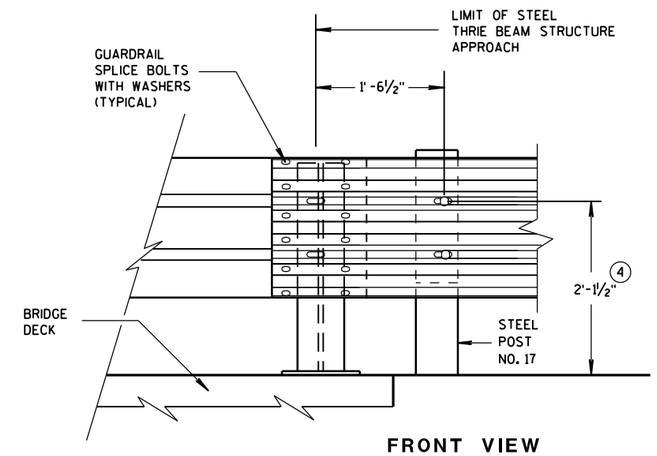

FRONT VIEW

THRIE BEAM CONNECTION TO STEEL RAILING TYPE "W"

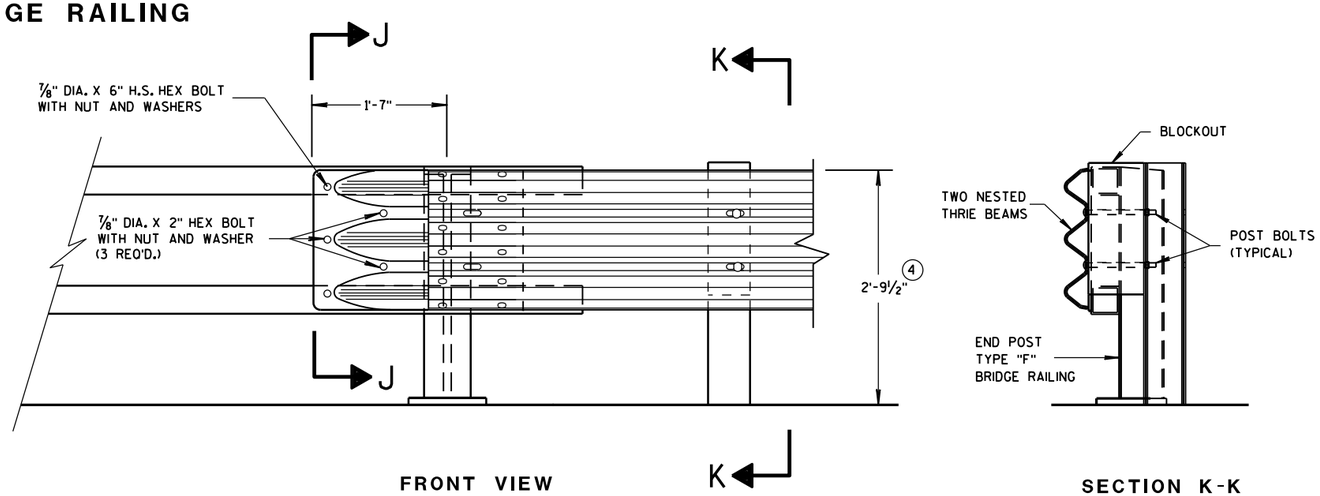

FRONT VIEW

SECTION K-K

THRIE BEAM CONNECTION TO TUBULAR RAILING TYPE "F"

MIDWEST GUARDRAIL SYSTEM
THRIE BEAM TRANSITION (MGS)

STATE OF WISCONSIN
DEPARTMENT OF TRANSPORTATION

APPROVED
June, 2015 — DATE
/S/ Jerry H. Zogg — ROADWAY STANDARDS DEVELOPMENT ENGINEER
FHWA

NT

6

6

S.D.D. 14 B 45-4g

S.D.D. 14 B 45-4g

GENERAL NOTES

(4) TOLERANCE FOR TOP OF W-BEAM RAIL IS ± 1".

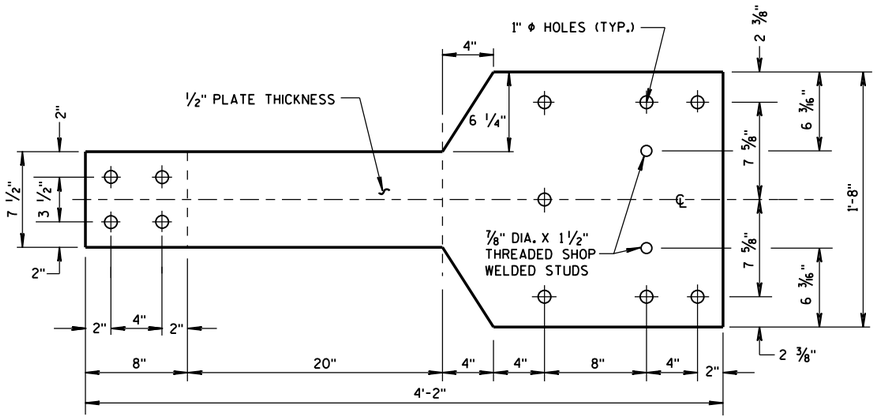

FRONT VIEW

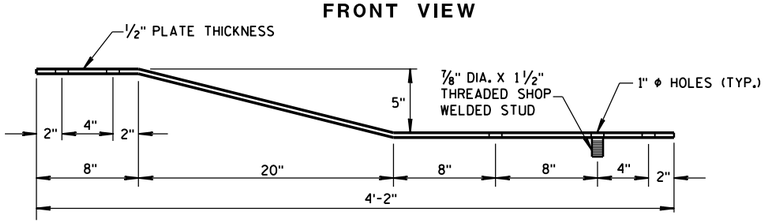

PLAN VIEW

BACK-UP PLATE DETAIL, TYPE "M"

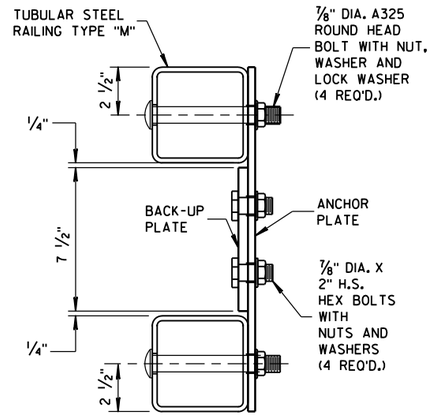

SECTION L-L

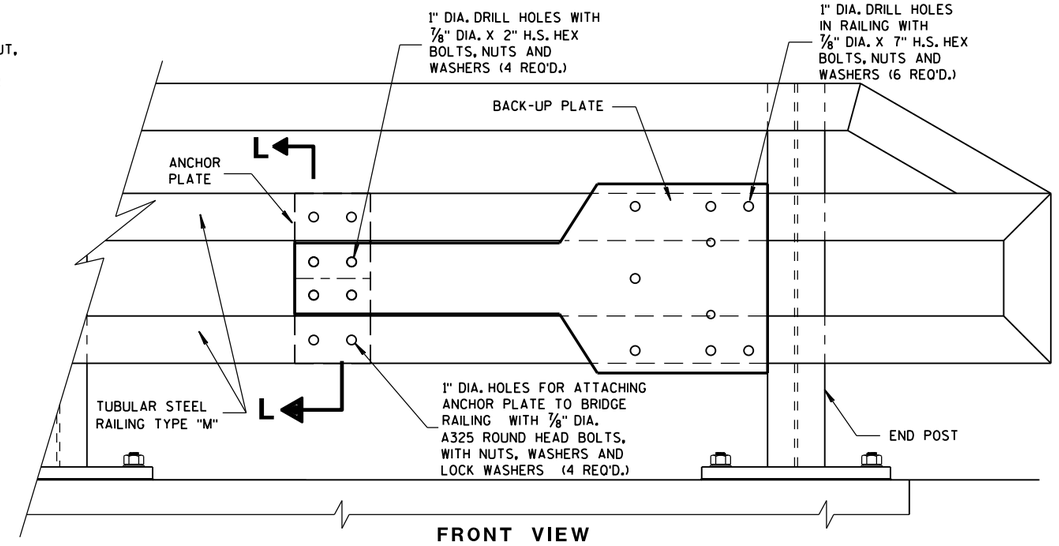

FRONT VIEW

ANCHOR AND BACK-UP PLATE MOUNTING TO BRIDGE RAILING, TYPE "M"

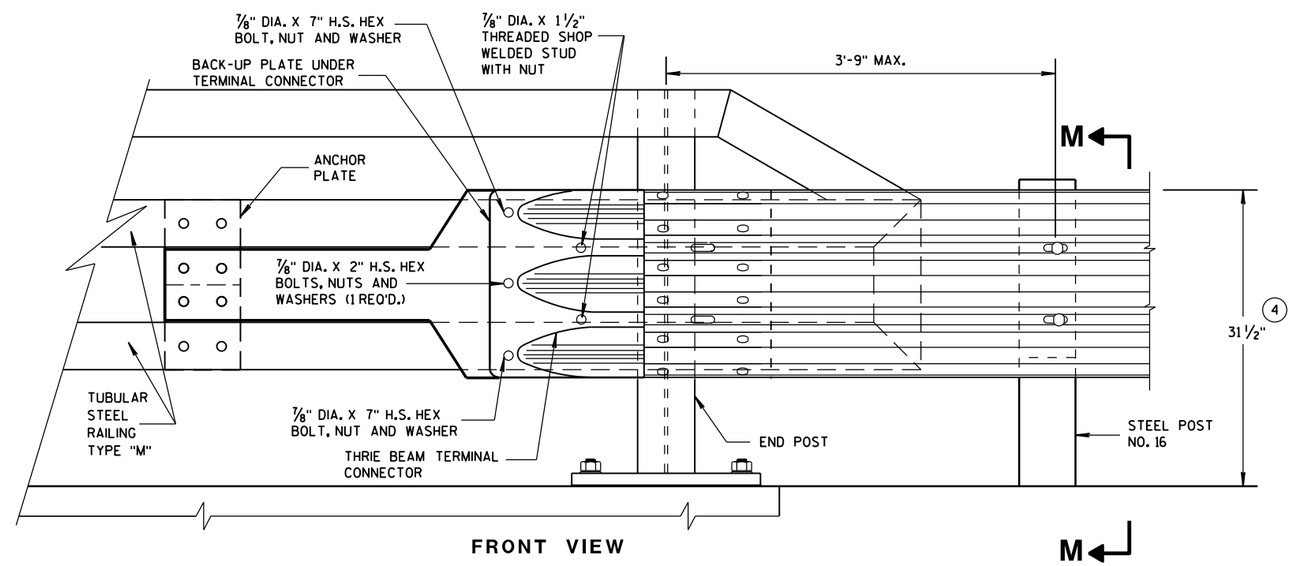

FRONT VIEW

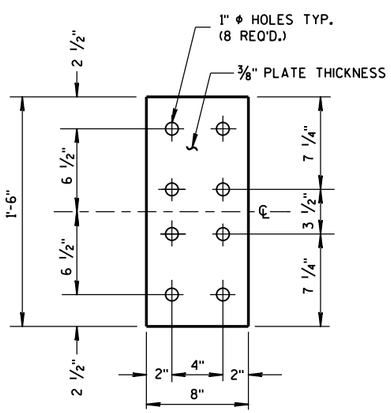

FRONT VIEW

ANCHOR PLATE DETAIL, TYPE "M"

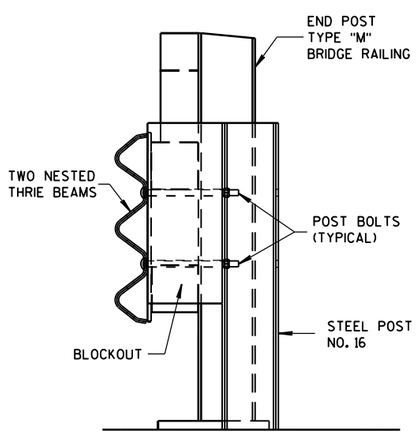

SECTION M-M

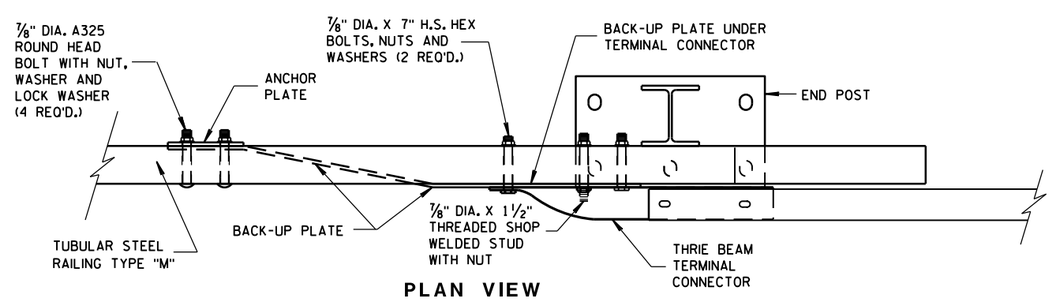

PLAN VIEW

THRIE BEAM CONNECTION TO TUBULAR RAILING, TYPE "M"

MIDWEST GUARDRAIL SYSTEM
THRIE BEAM TRANSITION (MGS)

STATE OF WISCONSIN
DEPARTMENT OF TRANSPORTATION

APPROVED
June, 2015 — DATE
/S/ Jerry H. Zogg — ROADWAY STANDARDS DEVELOPMENT ENGINEER
FHWA

6

6

S.D.D. 14 B 45-4h

S.D.D. 14 B 45-4h

GENERAL NOTES

COVER PLATE PANELS ARE 3/16" THICK.

ALL STIFFENERS ARE 1/4" THICK.

CONNECTOR PLATE SHALL BE FABRICATED FROM ASTM GRADE A36 STEEL AND GALVANIZED.

FOR GALVANIZED REQUIREMENTS, SEE SECTION 614 OF THE STANDARD SPECIFICATIONS.

ALL HOLE DIAMETERS SHALL BE 1".

FOR OPPOSITE SIDE INSTALLATION MIRROR DRAWINGS.

(10) STIFFENERS LOCATED AT THE OUTSIDE EDGES OF THE COVER PLATES SHALL BE WELDED AS FOLLOWS:
SINGLE BEVEL GROOVE WELD ON EXTERNAL SIDES AND 3/16" FILLET WELD BY 1" LONG SPACED AT 2" ON INTERNAL SIDES.

(11) STIFFENERS LOCATED ON THE INSIDE OF THE COVER PLATE SHALL BE WELDED AS FOLLOWS:
3/16" FILLET WELD BY 1" LONG SPACED AT 2".

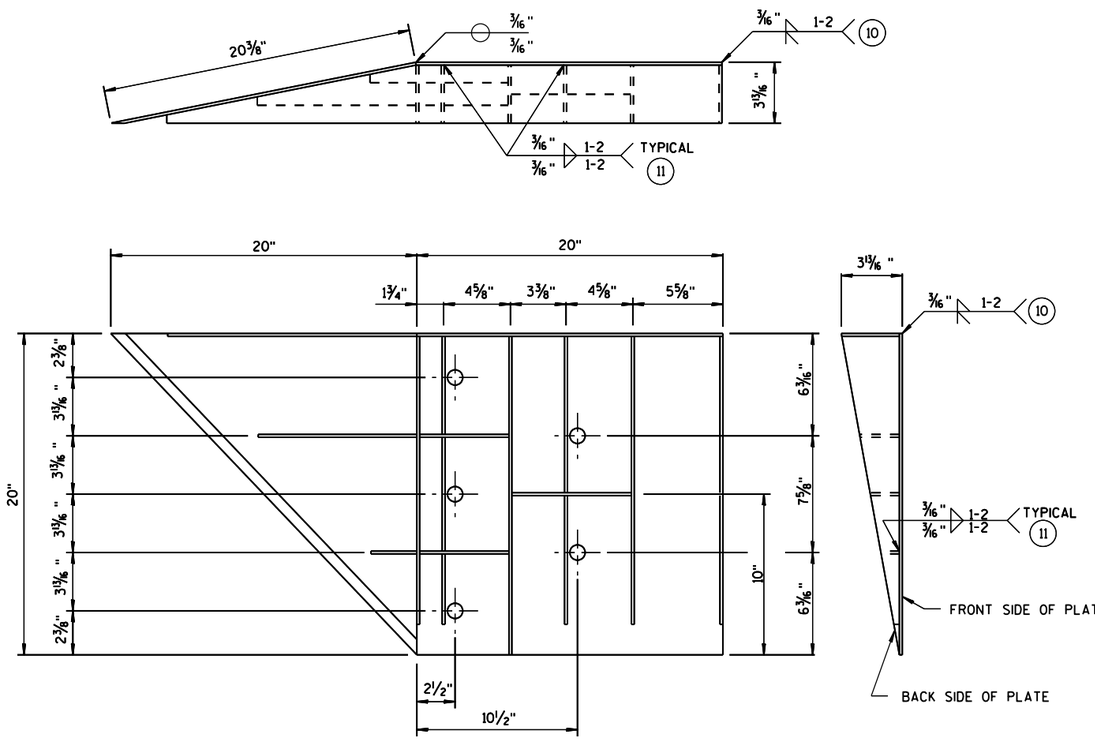

WELDING INSTRUCTION

(VIEWED FROM BACK SIDE OF PLATE)

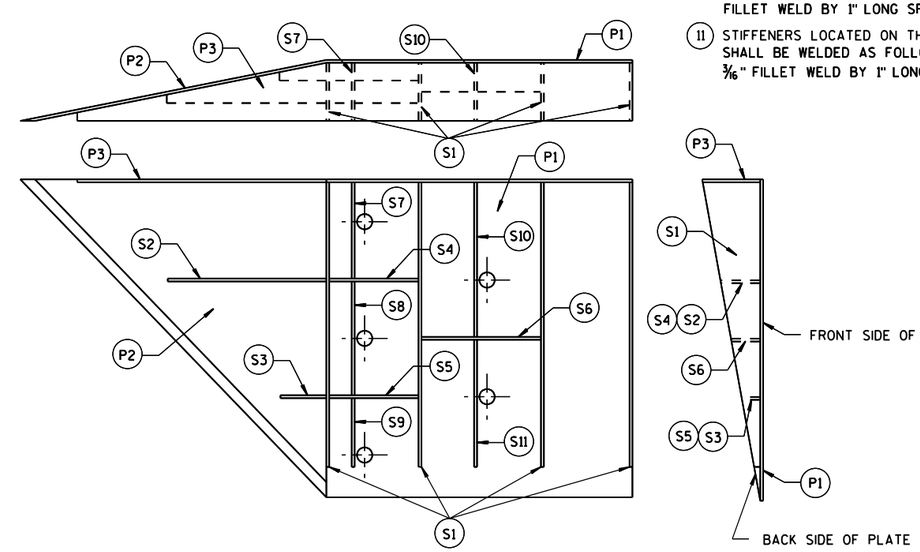

PLATE AND STIFFENER IDENTIFICATION

(VIEWED FROM BACK SIDE OF PLATE)

CONNECTOR PLATE DIMENSION (PER ASSEMBLY)

PLATE	QUANTITY	SHAPE	SIZE (A x B x C x D)	THICKNESS
P1	1		20" x 20"	3/16"
P2	1		20" x 20" x 28 9/16"	3/16"
P3	1		39" x 3 5/8" x 20" x 19 5/16"	3/16"
S1	4		18 7/16" x 3 5/8" x 18 3/4"	1/4"
S2	1		10 1/4" x 2 7/16" x 10 3/8" x 1/2"	1/4"
S3	1		3" x 1 1/16" x 3 1/8" x 1/2"	1/4"
S4	1		6 1/8" x 2 7/16"	1/4"
S5	1		6 1/8" x 1 1/16"	1/4"
S6	1		7 3/4" x 1 3/4"	1/4"
S7	1		2 9/16" x 6" x 3 5/8" x 5 7/8"	1/4"
S8	1		1 5/32" x 7 1/2" x 2 1/2" x 7 3/8"	1/4"
S9	1		6 1/16" x 6 3/16" x 1 3/32"	1/4"
S10	1		1 7/8" x 9 7/8" x 3 5/8" x 9 11/16"	1/4"
S11	1		8 1/2" x 8 3/4" x 1 13/16"	1/4"

SINGLE SLOPE CONNECTION PLATE

MIDWEST GUARDRAIL SYSTEM
THRIE BEAM TRANSITION (MGS)

STATE OF WISCONSIN
DEPARTMENT OF TRANSPORTATION

APPROVED
June, 2015 — DATE
/S/ Jerry H. Zogg — ROADWAY STANDARDS ENGINEER
FHWA

6

S.D.D. 14 B 45-4i

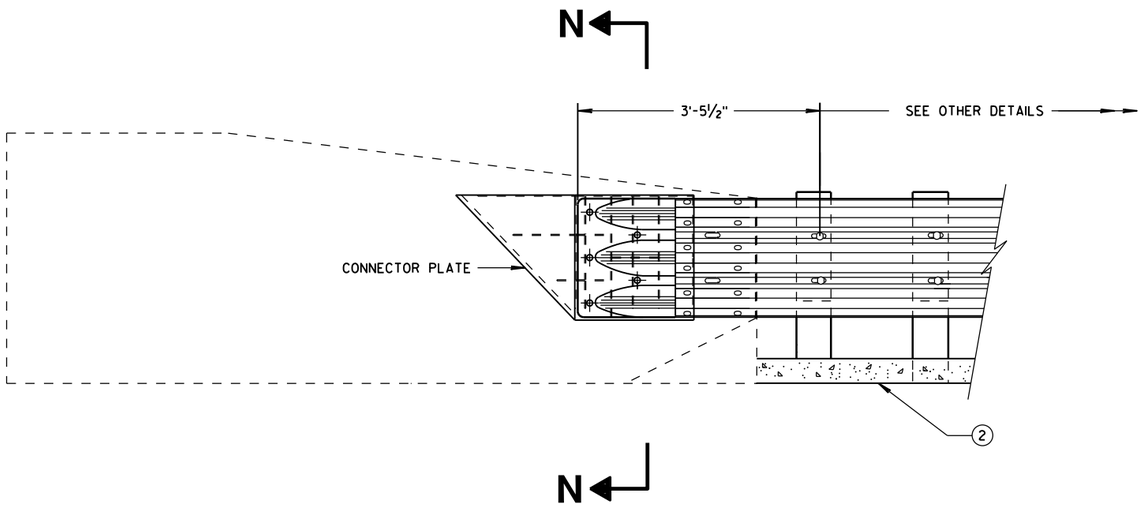

THRIE BEAM CONNECTION TO SINGLE SLOPE BARRIER

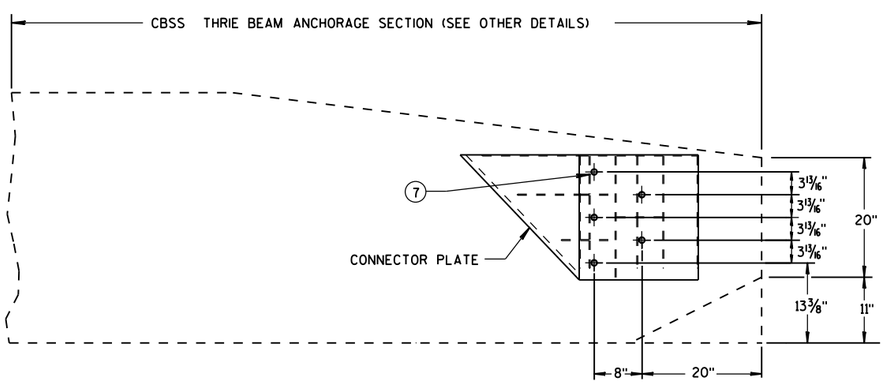

SINGLE SLOPE CONNECTION PLATE PLACEMENT

GENERAL NOTES

CONNECTOR PLATE, DRILLING BOLT HOLES THROUGH THE PARAPET, BOLTS, NUTS, WASHERS AND REPAIRING DAMAGED CONCRETE ARE INCIDENTAL TO THE CONTRACT.

(2) OPTIONAL CURB AND GUTTER OR DRAINAGE FEATURE SEE PLAN FOR INFORMATION.

(7) BOLTS MAY BE A325 BOLTS OR A449 BOLTS. BOLT LENGTH AND THREADING LENGTH ARE TO ALLOW FOR A TIGHT CONNECTION BETWEEN RIGID BARRIER AND THRIE BEAM CONNECTION PLATE. CONTRACTOR IS TO FIELD VERIFY BOLT LENGTH AND THREAD LENGTH. ONE ROUND WASHER REQUIRED BETWEEN BOLT HEAD AND THRIE BEAM CONNECTOR PLATE. BOLTS THAT EXTEND THROUGH THE PARAPET AND OUT THE BACK FACE REQUIRE A HARDENED ROUND STEEL WASHER THAT IS 2" O.D. X 5/8" THICK AND ONE PLATE WASHER. REPAIR ANY DAMAGED CONCRETE FROM BOLT INSTALLATION.

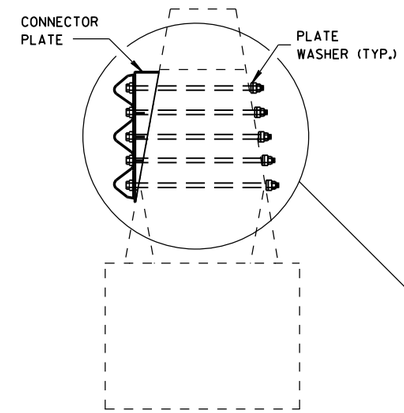

SECTION N-N

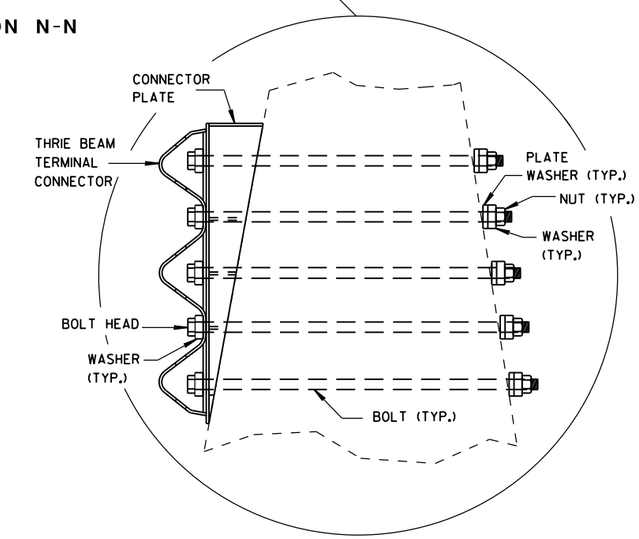

6

6

S.D.D. 14 B 45-4j

S.D.D. 14 B 45-4j

MIDWEST GUARDRAIL SYSTEM
THRIE BEAM TRANSITION (MGS)

STATE OF WISCONSIN
DEPARTMENT OF TRANSPORTATION

APPROVED
June, 2015 — DATE
/S/ Jerry H. Zogg — ROADWAY STANDARDS DEVELOPMENT ENGINEER
NT
FHWA

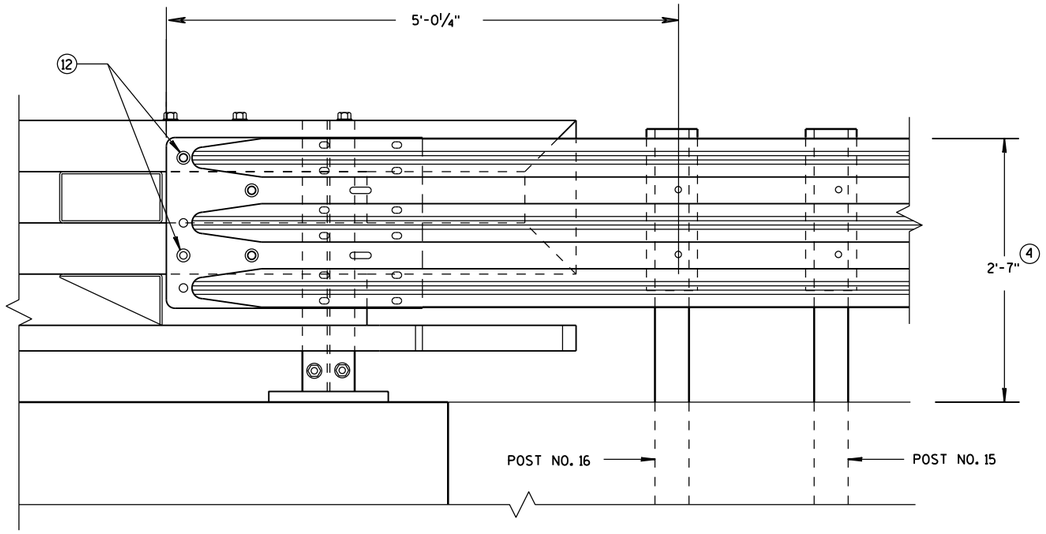

ELEVATION OF DETAIL AT NY3 END POST

THRIE BEAM RAIL ATTACHMENT

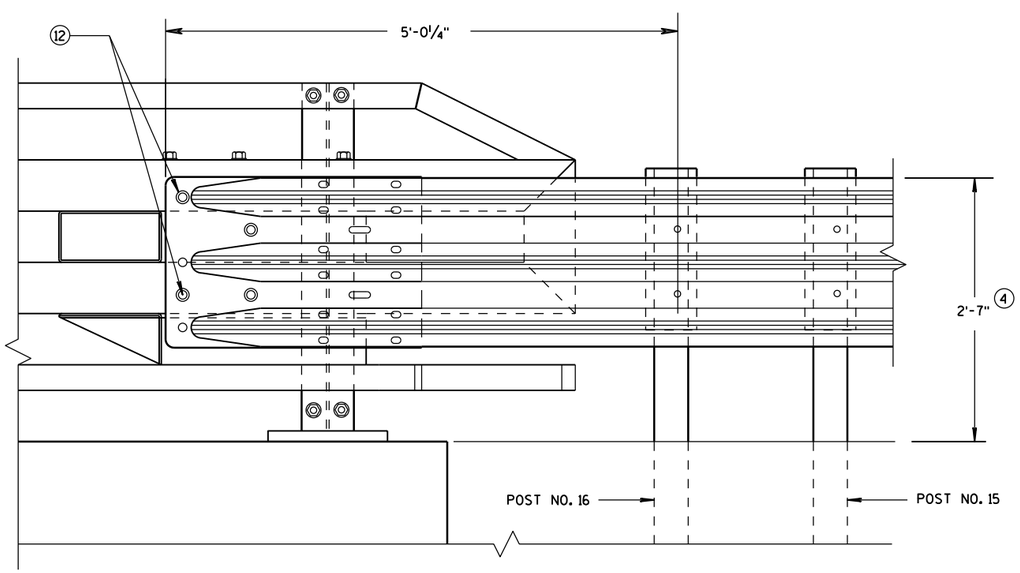

ELEVATION OF DETAIL AT NY4 END POST

THRIE BEAM RAIL ATTACHMENT

GENERAL NOTES

(4) TOLERANCE FOR TOP OF BEAM IS ± 1".

(12) BOLTS MAY BE A325 BOLTS OR A449 BOLTS. BOLT LENGTH AND THREADING LENGTH ARE TO ALLOW FOR A TIGHT CONNECTION BETWEEN RIGID BARRIER AND THRIE BEAM CONNECTION PLATE. CONTRACTOR IS TO FIELD VERIFY BOLT LENGTH AND THREAD LENGTH. ONE ROUND WASHER REQUIRED BETWEEN BOLT HEAD AND THRIE BEAM CONNECTOR PLATE. ON BACKSIDE OF PARAPET ONE ROUND WASHER, AND NUT REQUIRED. BOLT THREAD IS TO EXTEND ½-INCH BEYOND NUT.

MIDWEST GUARDRAIL SYSTEM
THRIE BEAM TRANSITION (MGS)

STATE OF WISCONSIN
DEPARTMENT OF TRANSPORTATION

APPROVED
June, 2015 — DATE
/S/ Jerry H. Zogg — ROADWAY STANDARDS DEVELOPMENT ENGINEER
FHWA

6

S.D.D. 14 B 45-4k

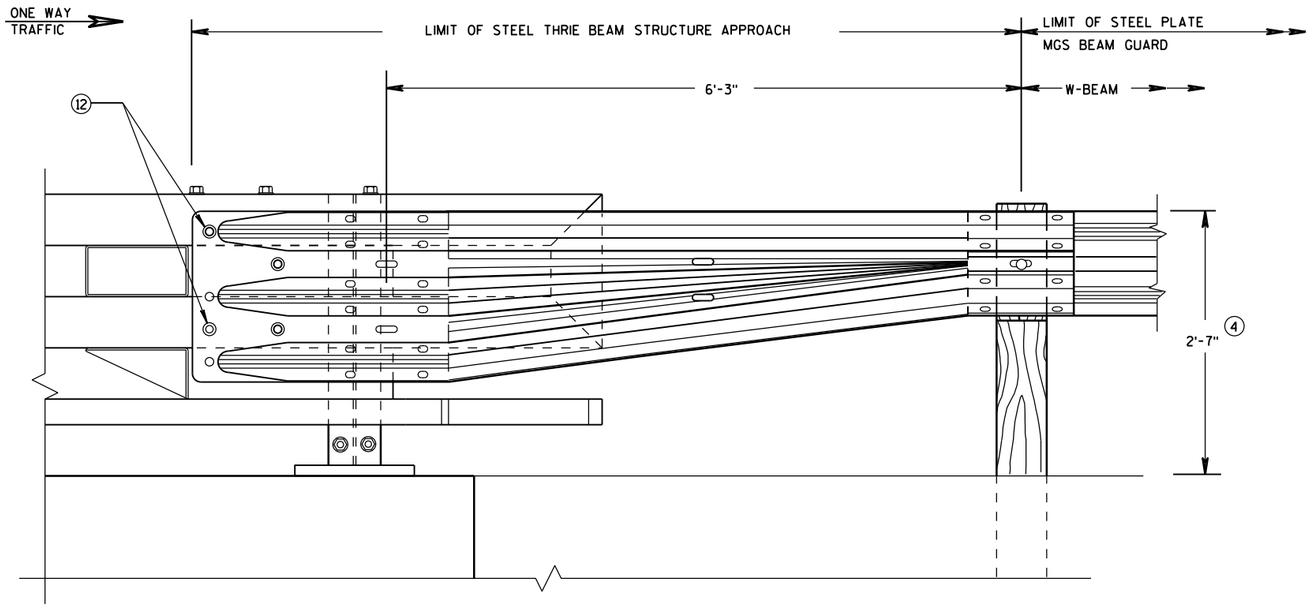

FRONT VIEW

W BEAM TRANSITION AND CONNECTION TO BRIDGE RAILING TYPE "NY3"

(USE ONLY ON THE TRAFFIC EXIT END OF ONE WAY BRIDGES)

GENERAL NOTES

(4) TOLERANCE FOR TOP OF BEAM IS ± 1".

(12) BOLTS MAY BE A325 BOLTS OR A449 BOLTS. BOLT LENGTH AND THREADING LENGTH ARE TO ALLOW FOR A TIGHT CONNECTION BETWEEN RIGID BARRIER AND THRIE BEAM CONNECTION PLATE. CONTRACTOR IS TO FIELD VERIFY BOLT LENGTH AND THREAD LENGTH. ONE ROUND WASHER REQUIRED BETWEEN BOLT HEAD AND THRIE BEAM CONNECTOR PLATE. ON BACKSIDE OF PARAPET ONE ROUND WASHER, AND NUT REQUIRED. BOLT THREAD IS TO EXTEND ½-INCH BEYOND NUT.

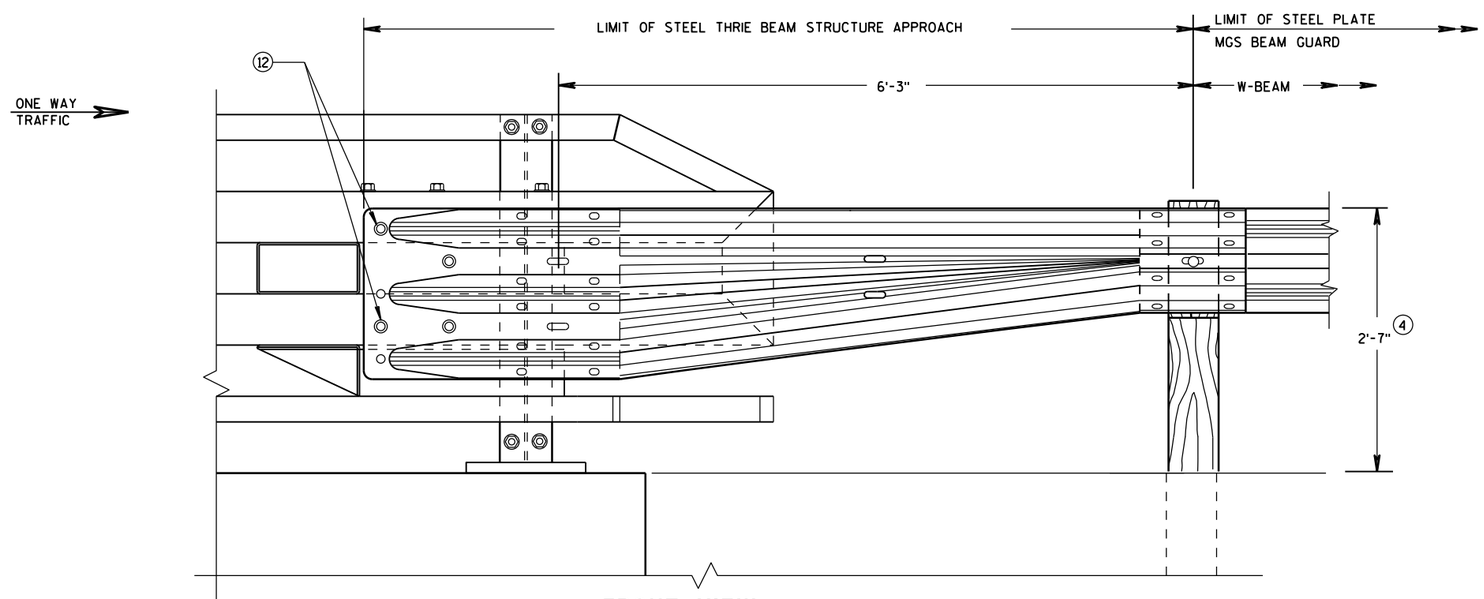

FRONT VIEW

W BEAM TRANSITION AND CONNECTION TO BRIDGE RAILING TYPE "NY4"

(USE ONLY ON THE TRAFFIC EXIT END OF ONE WAY BRIDGES)

MIDWEST GUARDRAIL SYSTEM
THRIE BEAM TRANSITION (MGS)

STATE OF WISCONSIN
DEPARTMENT OF TRANSPORTATION

APPROVED
June, 2015 — DATE
/S/ Jerry H. Zogg — ROADWAY STANDARDS DEVELOPMENT ENGINEER
NT
FHWA

6

S.D.D. 14 B 45-4L

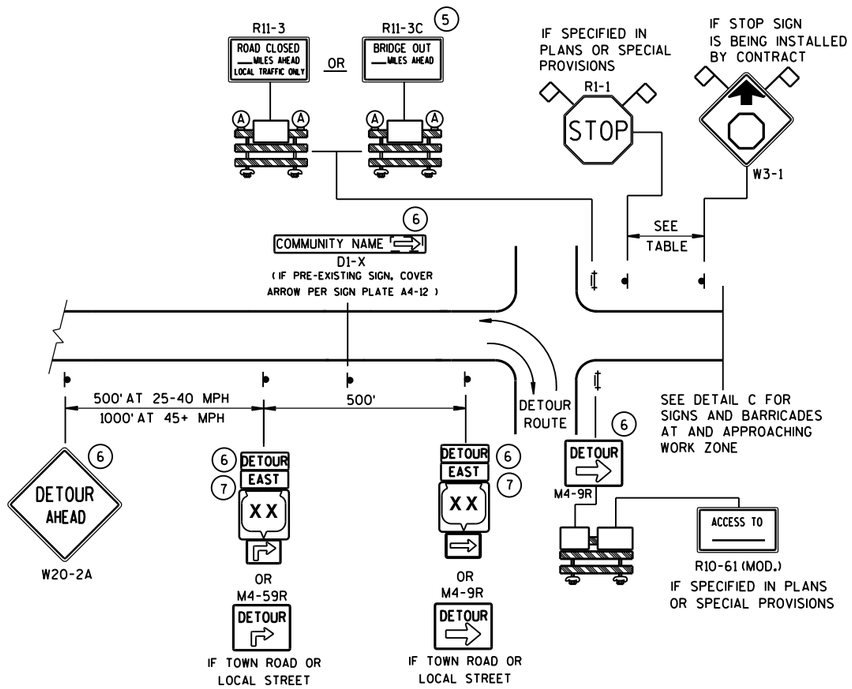

DETAIL A

MAINLINE CLOSURE WITH POSTED DETOUR

WORK ZONE GREATER THAN ½ MILE FROM DETOUR ROUTE (1000 FEET IF URBAN)

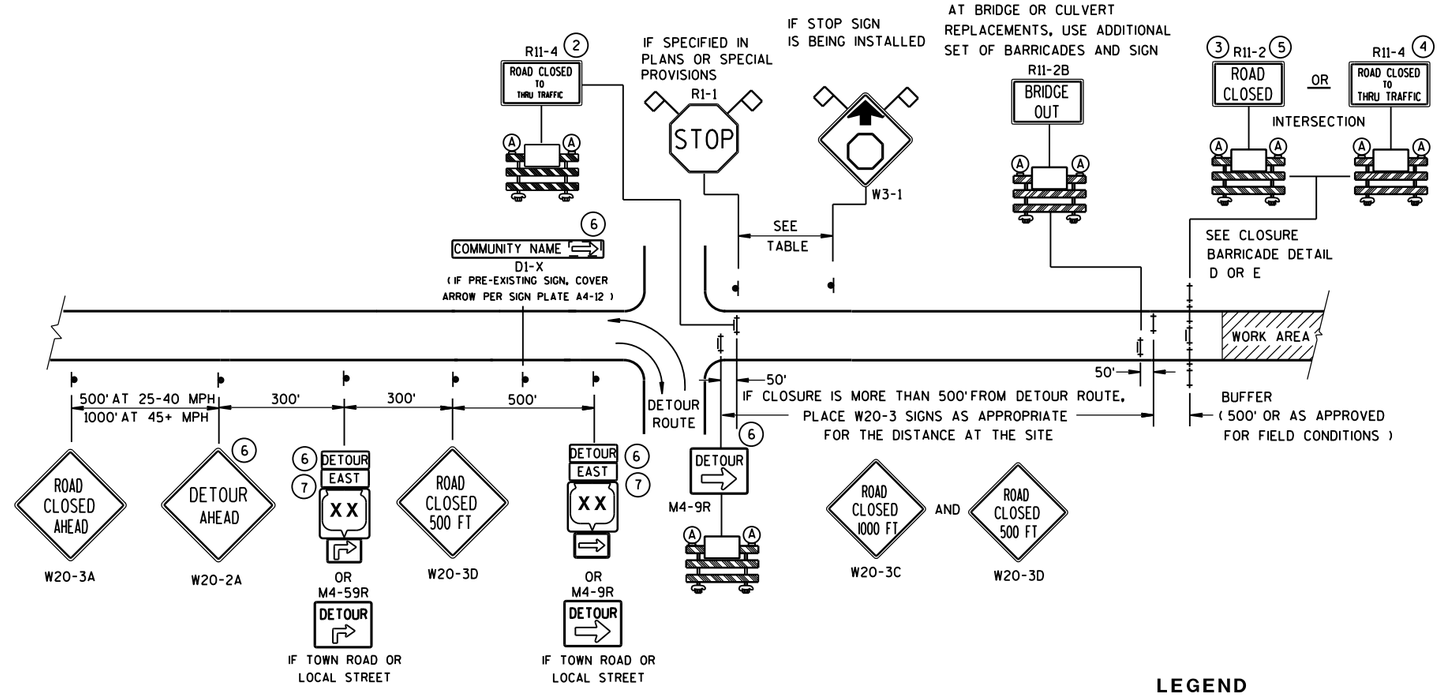

DETAIL B

MAINLINE CLOSURE WITH POSTED DETOUR

WORK ZONE LESS THAN ½ MILE FROM DETOUR ROUTE (1000 FEET IF URBAN)

LEGEND

- SIGN ON PERMANENT SUPPORT
- TYPE III BARRICADE
- TYPE III BARRICADE WITH ATTACHED SIGN
- (A) TYPE "A" WARNING LIGHT (FLASHING)
- WORK AREA
- DETOUR / EAST — M4-8 / M3-X
- XX — M1-4; XX COUNTY XX — M1-5A; XX — M1-6
- M05-1 OR M06-1
- FLAGS, 16" X 16" MIN., (ORANGE)

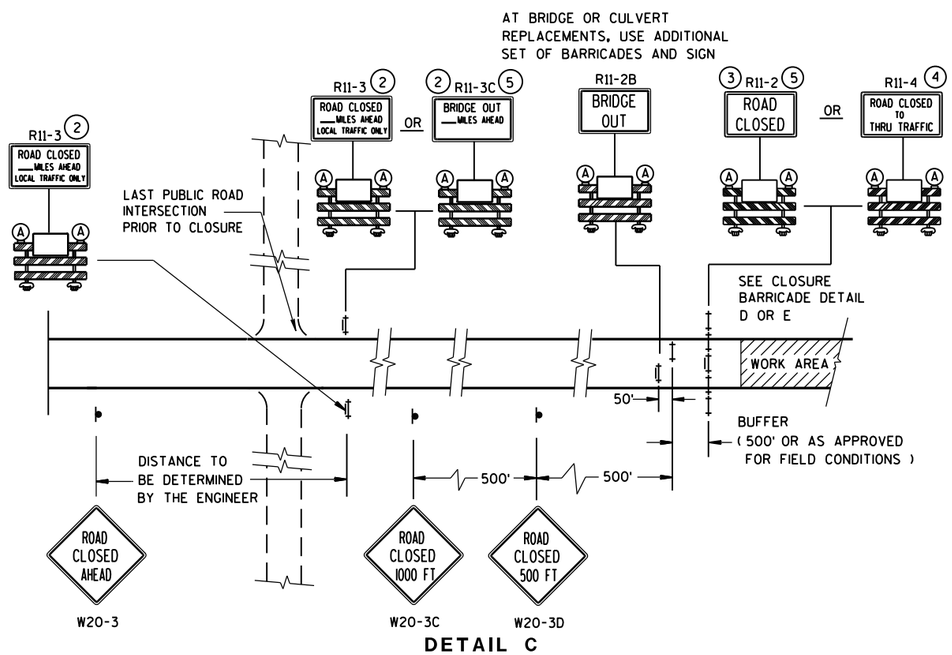

DETAIL C

MAINLINE CLOSURE, NO POSTED DETOUR

SPEED LIMIT (MPH)	"STOP AHEAD" ADVANCE WARNING DISTANCE (FT)
25	200
30	200
35	350
40	350
45	500
50	550
55	750

SEE SDD 15C2-SHEET "**b**" FOR GENERAL NOTES AND FOOTNOTES (1) THROUGH (7)

BARRICADES AND SIGNS FOR MAINLINE CLOSURES

STATE OF WISCONSIN
DEPARTMENT OF TRANSPORTATION

Sept. 2015 — DATE
/S/ Peter Amakobe Atepe — STATEWIDE WORK ZONE TRAFFIC SAFETY ENGINEER
FHWA

6

6

S.D.D. 15 C 2-6a

S.D.D. 15 C 2-6a

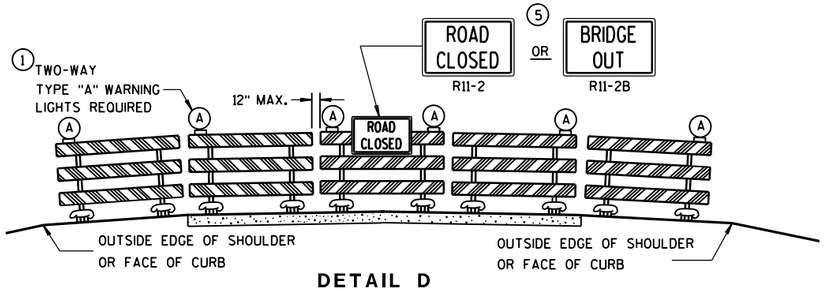

DETAIL D

ROAD CLOSURE BARRICADE DETAIL

APPROACH VIEW

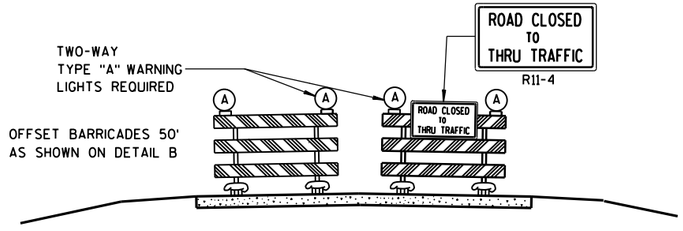

DETAIL E

LANE CLOSURE BARRICADE DETAIL

APPROACH VIEW

SEE SDD 15C2-SHEET "**a**" FOR LEGEND

GENERAL NOTES

THE EXACT NUMBER, LOCATION, AND SPACING OF ALL SIGNS AND BARRICADES SHALL BE ADJUSTED TO FIT FIELD CONDITIONS AS APPROVED BY THE ENGINEER.

ANY SIGNS TEMPORARY OR EXISTING, WHICH CONFLICT WITH TRAFFIC CONTROL "IN USE" SHALL BE REMOVED OR COVERED AS NEEDED AND AS APPROVED BY THE ENGINEER.

THE SPACING BETWEEN TRAFFIC CONTROL SIGNS SHOULD BE ADJUSTED TO NOT CONFLICT WITH AND SHOULD PROVIDE A DESIRABLE MINIMUM OF 200 FEET CLEARANCE TO EXISTING SIGNS THAT WILL REMAIN IN PLACE.

BARRICADES THAT MUST BE MOVED FOR A WORK OPERATION SHALL BE IMMEDIATELY RE-ESTABLISHED UPON COMPLETION OF THE OPERATION OR, FOR CONTINUING OPERATIONS, AT THE END OF EACH WORKING DAY.

SIGNS THAT WILL BE IN PLACE LESS THAN 7 CONTINUOUS DAYS AND NIGHTS MAY BE MOUNTED ON PORTABLE SUPPORTS.

ALL TYPE III BARRICADES SHALL HAVE RAILS REFLECTORIZED ON BOTH FACES. STRIPES SHALL BE PROPERLY SLOPED DOWN TOWARD THE TRAFFIC SIDE OR AS SHOWN IN THE ROAD CLOSURE BARRICADE DETAIL D FOR FULL ROAD CLOSURES.

TYPE "A" LOW-INTENSITY FLASHING WARNING LIGHTS SHALL BE VISIBLE ON BOTH SIDES OF THE BARRICADE.

THE R11-2, R11-3, M4-9, R11-4 AND R10-61 SIGNS PLACED ON BARRICADES SHALL COVER NO MORE THAN THE TOP RAIL. THE SIGNS SHALL NOT COVER ANY PORTION OF THE MIDDLE OR BOTTOM RAILS.

"WO AND "MO" SIGNS ARE THE SAME AS "W" AND "M" SIGNS EXCEPT THE BACKGROUND IS ORANGE.

ALL SIGNS SHALL BE 48" X 48" UNLESS OTHERWISE NOTED BELOW:

- R11-2 SHALL BE 48" X 30".
- R11-3, R11-4 AND R10-61 SHALL BE 60" X 30".
- M4-9 SHALL BE 30" X 24".
- M3-X SHALL BE 24" X 12". (36" X 18" IF NEEDED TO MATCH EXISTING SIGNS.)
- M4-8 SHALL BE 24" X 12". (30" X 15" IF NEEDED TO MATCH EXISTING SIGNS.)
- M1-4, M1-5A, AND M1-6 SHALL BE 24" X 24". (36" X 36" IF NEEDED TO MATCH EXISTING SIGNS.)
- M05-1 AND M06-1 SHALL BE 21" X 21". (30" X 30" IF NEEDED TO MATCH EXISTING SIGNS.)
- D1-X SHALL BE AS SHOWN ON SPECIFIC PROJECT SIGNING DETAIL SHEETS.
- R1-1 SHALL BE 36" X 36".

1. TWO WARNING LIGHTS SHALL BE PROVIDED ON THE CENTER BARRICADE AND A MINIMUM OF ONE WARNING LIGHT SHALL BE PROVIDED ON EACH OF THE OTHER BARRICADES WITHIN THE ROADWAY LIMITS. SPACING OF THE WARNING LIGHTS SHALL BE UNIFORM TO THE EDGE OF ROADWAY AS SHOWN (APPROX. 8-FOOT LIGHT SPACING).
2. THESE SIGNS AND BARRICADES ARE NOT REQUIRED IF ROAD CLOSURE BEGINS AT INTERSECTION.
3. FOR ROAD CLOSURE WITHOUT LOCAL ACCESS TO PROJECT, SEE ROAD CLOSURE BARRICADE DETAIL D.
4. FOR ROAD CLOSURE WITH LOCAL ACCESS TO PROJECT, SEE LANE CLOSURE BARRICADE DETAIL E.
5. FOR BRIDGE OR CULVERT REPLACEMENTS, SUBSTITUTE "BRIDGE OUT" INSTEAD OF "ROAD CLOSED" ON R11-2 AND R11-3 SIGNS.
6. INSTALL DETOUR AND COMMUNITY GUIDE SIGNS AND ARROWS ONLY IF SPECIFIED IN THE CONTRACT. IF THERE ARE EXISTING ROUTE MARKER ASSEMBLIES THAT WILL REMAIN IN PLACE, ADJUST THE LOCATION OF THE DETOUR ROUTE SIGNS TO CORRESPOND WITH THE EXISTING ASSEMBLIES. MODIFY EXISTING SIGNS WHERE POSSIBLE. SEE SPECIFIC PROJECT DETOUR SIGNING DETAIL SHEETS. IF DETOUR SIGNS ARE BEING INSTALLED BY OTHERS, PLACE THE CONTRACTED TRAFFIC CONTROL SIGNS TO ALLOW FOR PLACEMENT OF ALL WARNING, DETOUR AND GUIDE SIGNS AS SHOWN.
7. "EAST" CARDINAL DIRECTION MARKERS AND RIGHT TURN ARROWS ARE SHOWN. USE OTHER CARDINAL DIRECTIONS AND ARROWS AS APPROPRIATE.

BARRICADES AND SIGNS FOR MAINLINE CLOSURES

STATE OF WISCONSIN
DEPARTMENT OF TRANSPORTATION

Sept. 2015 — DATE
/S/ Peter Amakobe Atepe — STATEWIDE WORK ZONE TRAFFIC SAFETY ENGINEER
FHWA

6

S.D.D. 15 C 2-6b

THIS DRAWING PROVIDES GENERAL GUIDANCE ON TYPICAL DETOUR SIGN LAYOUT AND SPACING. SEE PROJECT DETOUR SIGNING SHEETS FOR SPECIFIC DETAILS FOR EACH PROJECT.

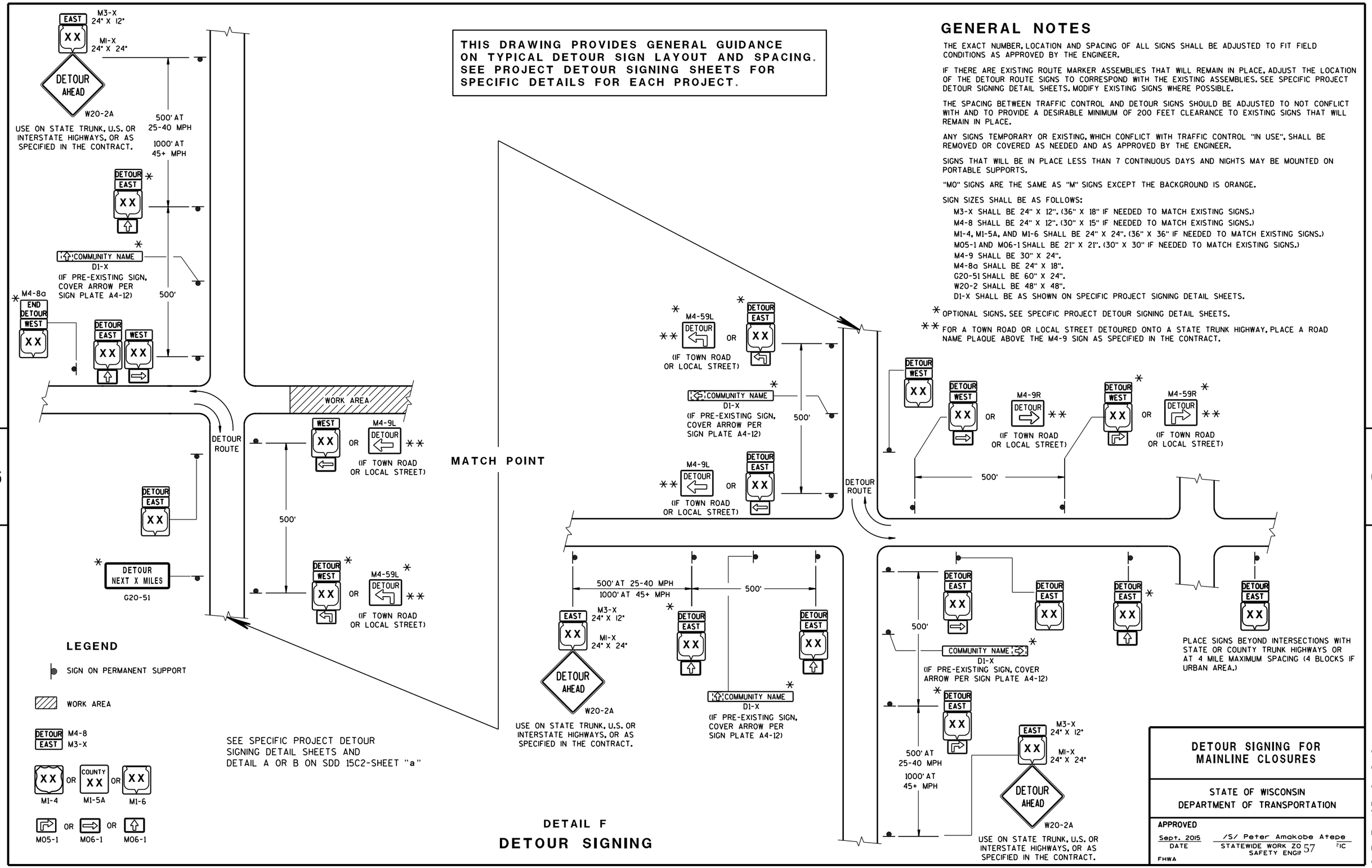

DETAIL F

DETOUR SIGNING

GENERAL NOTES

THE EXACT NUMBER, LOCATION AND SPACING OF ALL SIGNS SHALL BE ADJUSTED TO FIT FIELD CONDITIONS AS APPROVED BY THE ENGINEER.

IF THERE ARE EXISTING ROUTE MARKER ASSEMBLIES THAT WILL REMAIN IN PLACE, ADJUST THE LOCATION OF THE DETOUR ROUTE SIGNS TO CORRESPOND WITH THE EXISTING ASSEMBLIES. SEE SPECIFIC PROJECT DETOUR SIGNING DETAIL SHEETS. MODIFY EXISTING SIGNS WHERE POSSIBLE.

THE SPACING BETWEEN TRAFFIC CONTROL AND DETOUR SIGNS SHOULD BE ADJUSTED TO NOT CONFLICT WITH AND TO PROVIDE A DESIRABLE MINIMUM OF 200 FEET CLEARANCE TO EXISTING SIGNS THAT WILL REMAIN IN PLACE.

ANY SIGNS TEMPORARY OR EXISTING, WHICH CONFLICT WITH TRAFFIC CONTROL "IN USE", SHALL BE REMOVED OR COVERED AS NEEDED AND AS APPROVED BY THE ENGINEER.

SIGNS THAT WILL BE IN PLACE LESS THAN 7 CONTINUOUS DAYS AND NIGHTS MAY BE MOUNTED ON PORTABLE SUPPORTS.

"MO" SIGNS ARE THE SAME AS "M" SIGNS EXCEPT THE BACKGROUND IS ORANGE.

SIGN SIZES SHALL BE AS FOLLOWS:

- M3-X SHALL BE 24" X 12". (36" X 18" IF NEEDED TO MATCH EXISTING SIGNS.)
- M4-8 SHALL BE 24" X 12". (30" X 15" IF NEEDED TO MATCH EXISTING SIGNS.)
- M1-4, M1-5A, AND M1-6 SHALL BE 24" X 24". (36" X 36" IF NEEDED TO MATCH EXISTING SIGNS.)
- M05-1 AND M06-1 SHALL BE 21" X 21". (30" X 30" IF NEEDED TO MATCH EXISTING SIGNS.)
- M4-9 SHALL BE 30" X 24".
- M4-8a SHALL BE 24" X 18".
- G20-51 SHALL BE 60" X 24".
- W20-2 SHALL BE 48" X 48".
- D1-X SHALL BE AS SHOWN ON SPECIFIC PROJECT SIGNING DETAIL SHEETS.

* OPTIONAL SIGNS. SEE SPECIFIC PROJECT DETOUR SIGNING DETAIL SHEETS.

** FOR A TOWN ROAD OR LOCAL STREET DETOURED ONTO A STATE TRUNK HIGHWAY, PLACE A ROAD NAME PLAQUE ABOVE THE M4-9 SIGN AS SPECIFIED IN THE CONTRACT.

DETOUR SIGNING FOR MAINLINE CLOSURES	
STATE OF WISCONSIN DEPARTMENT OF TRANSPORTATION	
APPROVED	
Sept. 2015 DATE	/S/ Peter Amakobe Atepe STATEWIDE WORK ZONE TRAFFIC SAFETY ENGINEER
FHWA	

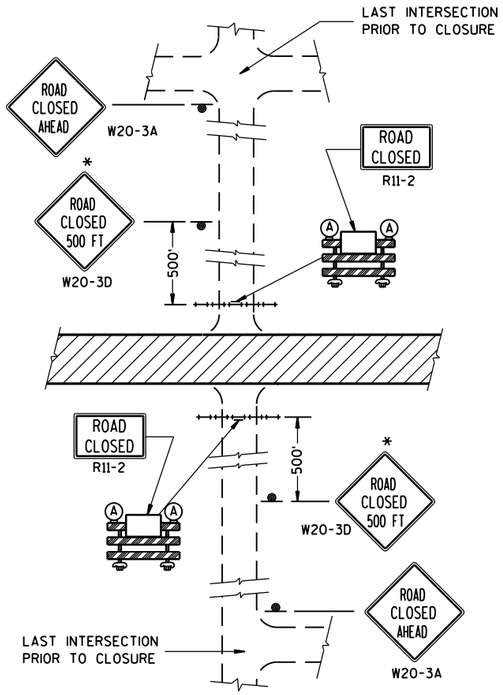

DETAIL 1

(NO ACCESS TO PROJECT)

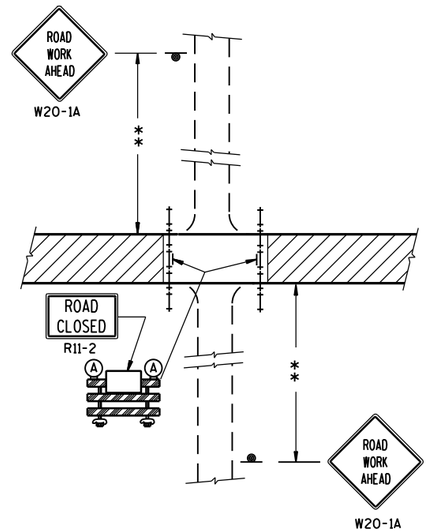

DETAIL 2

(PUBLIC CROSS-TRAFFIC MAINTAINED.
NO ACCESS TO PROJECT).

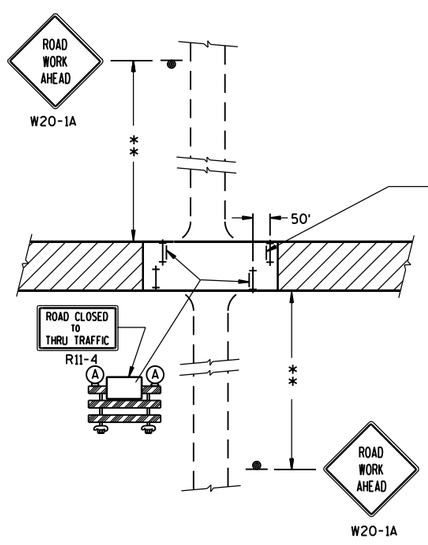

DETAIL 3

(PUBLIC CROSS-TRAFFIC MAINTAINED. CONTRACTOR,
LOCAL BUSINESS AND RESIDENT ACCESS).

FOR BRIDGE OR CULVERT
REPLACEMENT, USE ADDITIONAL
SIGN ON BARRICADE

BRIDGE OUT
XX MILES AHEAD
R11-3C

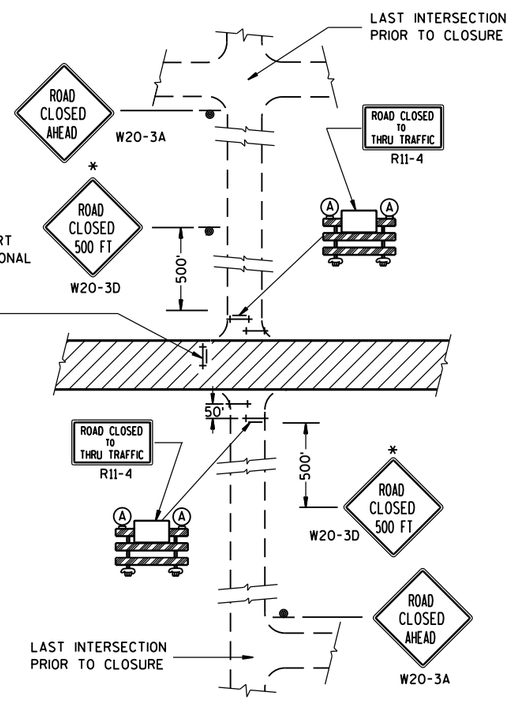

DETAIL 4

(CONTRACTOR, LOCAL BUSINESS AND
RESIDENT ACCESS TO PROJECT)

GENERAL NOTES

THE EXACT NUMBER, LOCATION, AND SPACING OF ALL SIGNS AND BARRICADES SHALL BE ADJUSTED TO FIT FIELD CONDITIONS AS APPROVED BY THE ENGINEER.

ANY SIGNS TEMPORARY OR EXISTING, WHICH CONFLICT WITH TRAFFIC CONTROL "IN USE" SHALL BE REMOVED OR COVERED AS NEEDED AND AS APPROVED BY THE ENGINEER.

THE SPACING BETWEEN TRAFFIC CONTROL SIGNS SHOULD BE ADJUSTED TO NOT CONFLICT WITH AND SHOULD PROVIDE A DESIRABLE MINIMUM OF 200 FEET CLEARANCE TO EXISTING SIGNS THAT WILL REMAIN IN PLACE.

IF A "STOP" SIGN MUST BE REMOVED FOR A WORK OPERATION, A TEMPORARY "STOP" SIGN SHALL BE PLACED PRIOR TO THE SIGN REMOVAL, OR A FLAGGER SHALL BE PROVIDED UNTIL THE SIGN IS RE-ESTABLISHED.

BARRICADES THAT MUST BE MOVED FOR A WORK OPERATION SHALL BE IMMEDIATELY RE-ESTABLISHED UPON COMPLETION OF THE OPERATION OR, FOR CONTINUING OPERATIONS, AT THE END OF EACH WORKING DAY.

SIGNS THAT WILL BE IN PLACE LESS THAN 7 CONTINUOUS DAYS AND NIGHTS MAY BE MOUNTED ON PORTABLE SUPPORTS.

ALL TYPE III BARRICADES SHALL HAVE RAILS REFLECTORIZED ON BOTH FACES. STRIPES SHALL BE PROPERLY SLOPED DOWN TOWARD THE TRAFFIC SIDE OR AS SHOWN IN THE ROAD CLOSURE BARRICADE DETAIL D FOR FULL ROAD CLOSURES.

TYPE "A" LOW-INTENSITY FLASHING WARNING LIGHTS SHALL BE VISIBLE ON BOTH SIDES OF THE BARRICADE.

THE R11-2, R11-3 AND R11-4 SIGNS PLACED ON BARRICADES SHALL COVER NO MORE THAN THE TOP RAIL. THE SIGNS SHALL NOT COVER ANY PORTION OF THE MIDDLE OR BOTTOM RAILS.

ALL SIGNS SHALL BE 48" X 48" UNLESS OTHERWISE NOTED BELOW:
R11-2 SHALL BE 48" X 30".
R11-4 AND R11-3 SHALL BE 60" X 30".

*OMIT THE "ROAD CLOSED 500 FT." SIGN IF THE LAST INTERSECTION IS 500 FT. OR LESS FROM THE WORK ZONE.

**500' MAX. OR AT LAST INTERSECTION WHICHEVER IS CLOSER.

LEGEND

- SIGN ON PERMANENT SUPPORT
- TYPE III BARRICADE
- TYPE III BARRICADE WITH ATTACHED SIGN
- (A) TYPE "A" WARNING LIGHT (FLASHING)
- WORK AREA

BARRICADES AND SIGNS FOR SIDEROAD CLOSURES

STATE OF WISCONSIN
DEPARTMENT OF TRANSPORTATION

APPROVED
Sept. 2015 — DATE
/S/ Peter Amakobe Atepe — STATEWIDE WORK ZONE TRAFFIC SAFETY ENGINEER
FHWA

6

S.D.D. 15 C 3-3

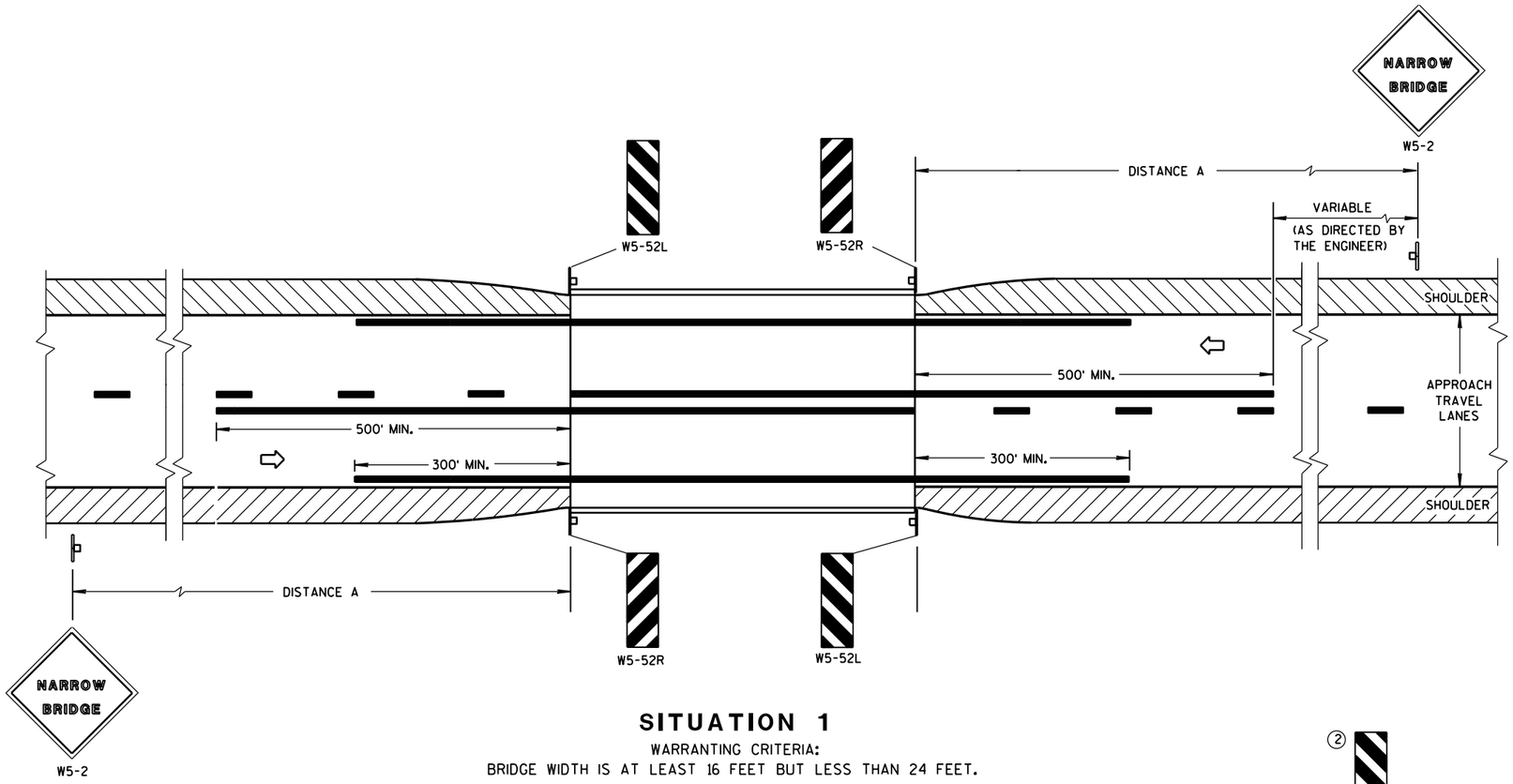

SITUATION 1

WARRANTING CRITERIA:
BRIDGE WIDTH IS AT LEAST 16 FEET BUT LESS THAN 24 FEET.

GENERAL NOTES

DETAILS OF TRAFFIC CONTROL DEVICES AND INSTALLATION NOT SHOWN ON THIS DRAWING SHALL CONFORM TO THE PERTINENT REQUIREMENTS OF THE STANDARD SPECIFICATIONS, THE SPECIAL PROVISIONS, AND THE MANUAL ON UNIFORM TRAFFIC CONTROL DEVICES.

1. LOCATE W5-52 SIGN POST(S) BEHIND GUARDRAIL WHEN PRESENT.
2. OMIT ON ONE-WAY TRAVELLED WAYS.
3. EDGE OF W5-52 SIGN SHALL BE PLACED IN LINE WITH FACE OF CURB OR PARAPET.

DISTANCE TABLE

POSTED OR 85th PERCENTILE SPEED	DISTANCE "A"
25	150'
30	200'
35	250'
40	300'
45	400'
50	550'
55	750'

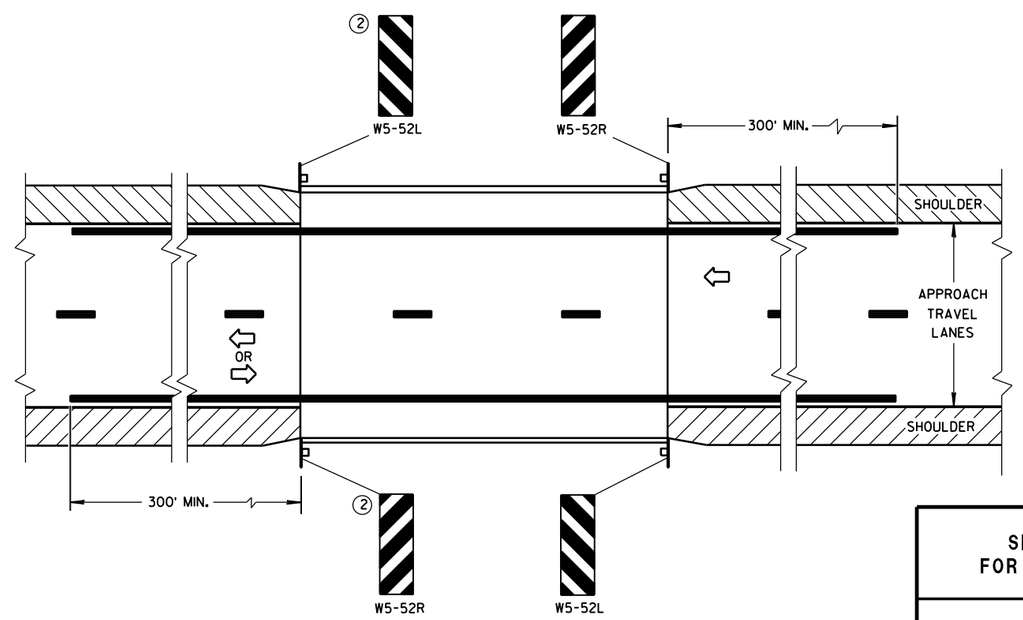

SITUATION 2

WARRANTING CRITERIA:

1. BRIDGE WIDTH IS AT LEAST 24 FEET AND
2. BRIDGE SHOULDER WIDTH IS LESS THAN 6 FEET.

SIGNING & MARKING FOR TWO LANE BRIDGES

STATE OF WISCONSIN
DEPARTMENT OF TRANSPORTATION

APPROVED
4-18-16 /S/ Matthew R. Rauch
DATE STATE SIGNING AND MAR ...NEER
FHWA

6

S.D.D. 15 C 6-8

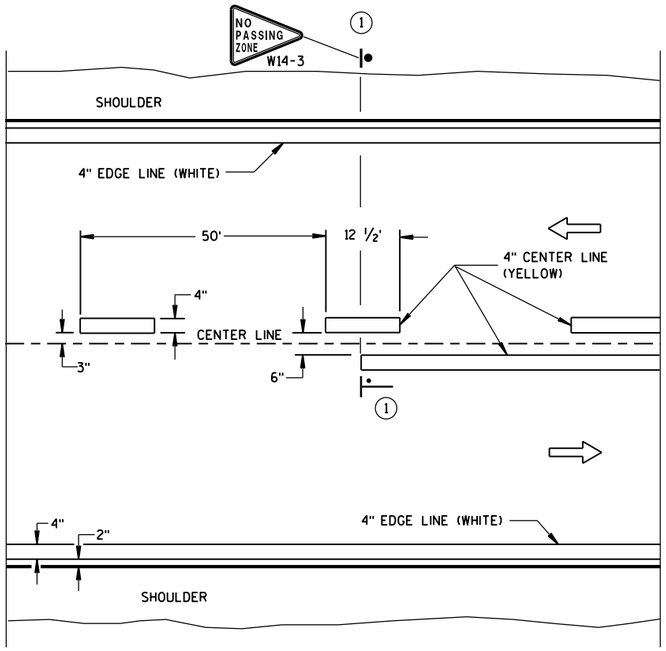

TWO WAY TRAFFIC

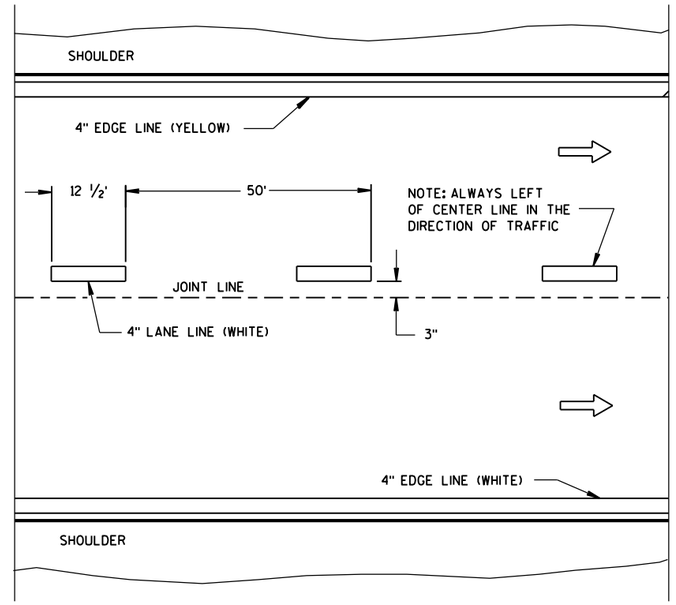

ONE WAY TRAFFIC

PERMANENT PAVEMENT MARKING

GENERAL NOTES

DETAILS OF CONSTRUCTION NOT SHOWN ON THIS DRAWING SHALL CONFORM TO STANDARD SPECIFICATIONS AND SPECIAL PROVISIONS.

(1) NO PASSING ZONE W14-3 SIGN SHALL BE LOCATED WITHIN 50 FEET OF THE "T" MARKING.

NOTE

ARROW SYMBOL (⇨) SHOWS DIRECTION OF TRAVEL

LEGEND

"T" MARKING

POST MOUNTED SIGN

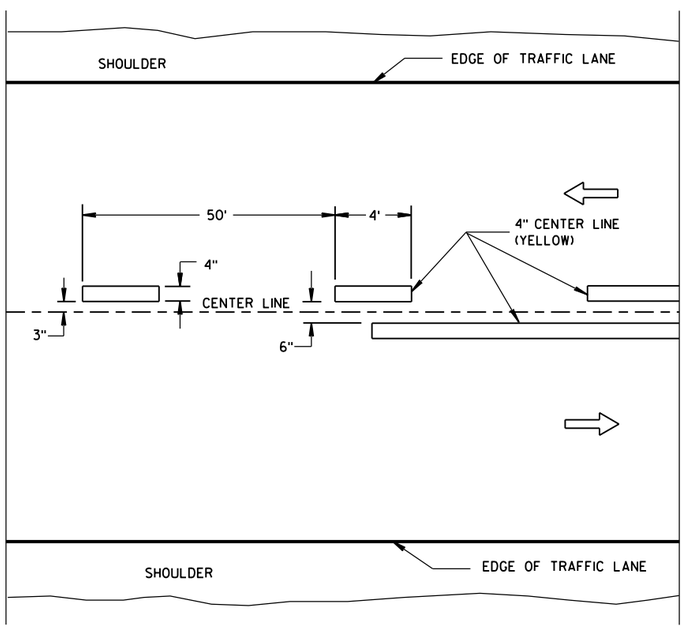

TWO WAY TRAFFIC

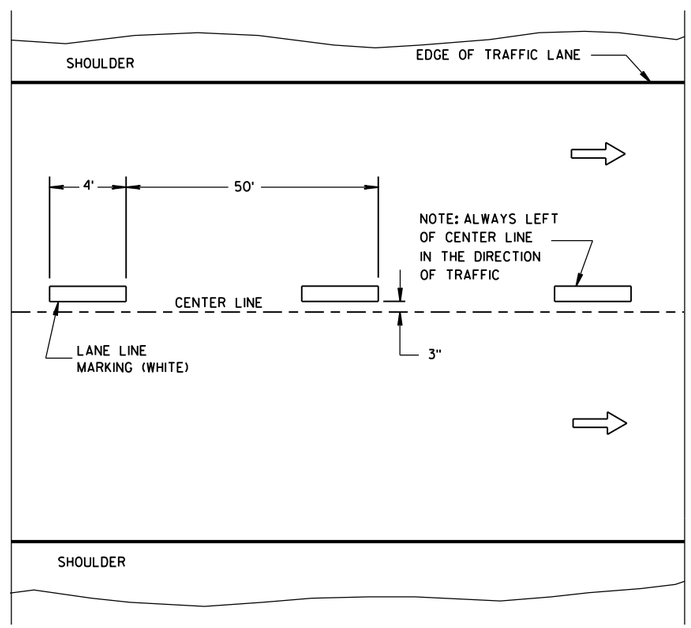

ONE WAY TRAFFIC

TEMPORARY PAVEMENT MARKING

6

6

S.D.D. 15 C 8-17a

S.D.D. 15 C 8-17a

LONGITUDINAL MARKING (MAINLINE)

STATE OF WISCONSIN
DEPARTMENT OF TRANSPORTATION

APPROVED

Sept., 2016	/S/ Matthew R. Rauch	
DATE	STATE SIGNING AND MAR	INEER

FHWA

LEGEND

SIGN ON PORTABLE OR PERMANENT SUPPORT

DIRECTION OF TRAFFIC

WORK AREA

FLAGGER, EQUIPPED WITH STOP/SLOW PADDLE FASTENED ON SUPPORT STAFF

SIGN SPACING TABLE

SPEED LIMIT	SIGN SPACING A,B,C
25-35 MPH	200'
35-40 MPH	350'
45-55 MPH	500'

USE OF THE "BE PREPARED TO STOP" SIGN IS OPTIONAL. WHEN USED, THIS SIGN SHALL BE LOCATED BETWEEN THE W20-7a AND W20-4 SIGNS. A 500' TYPICAL SPACING SHALL BE PROVIDED BETWEEN THE SIGNS.

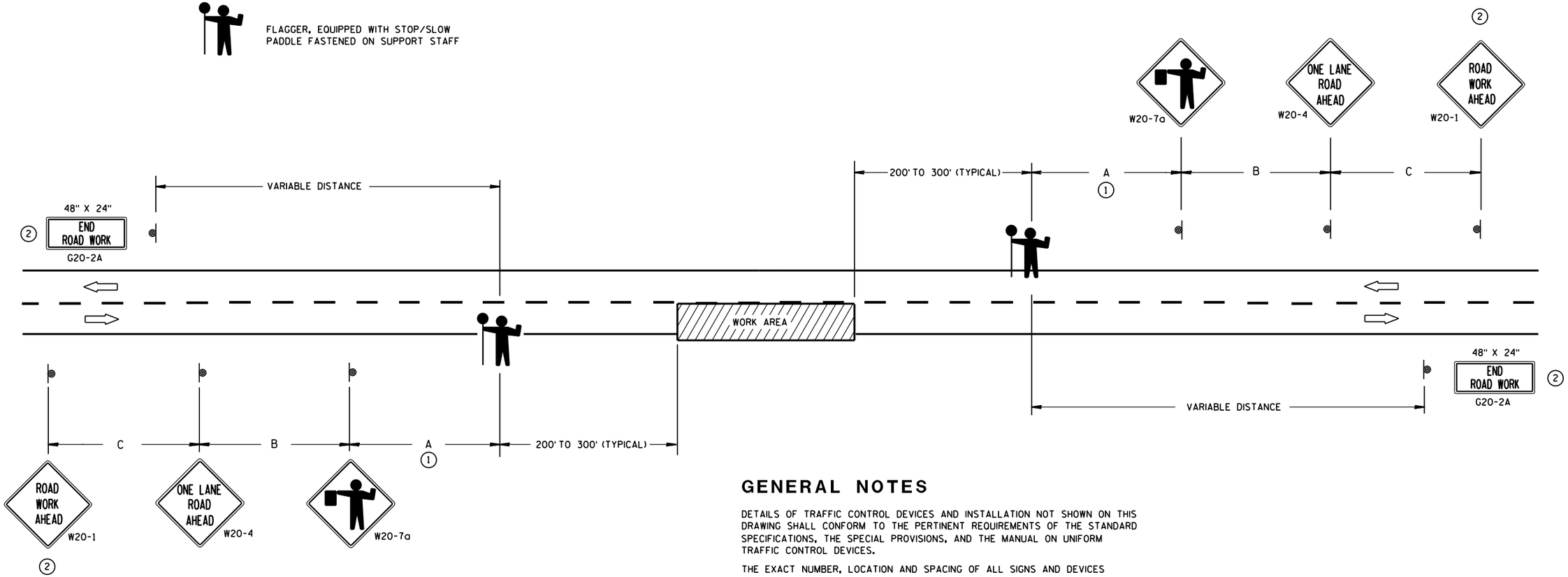

1. FOR A MOVING WORK OPERATION, SIGNING FOR BOTH DIRECTIONS SHALL BE REESTABLISHED (AS SIMULTANEOUSLY AS PRACTICAL) AT APPROXIMATELY 3500 FOOT INTERVALS IN THE MOVING WORK OPERATION OR AS APPROVED BY THE ENGINEER.

2. SIGN NOT REQUIRED IF FLAGGING OPERATION OCCURS WITHIN A SIGNED ROAD WORK ZONE AREA.

GENERAL NOTES

DETAILS OF TRAFFIC CONTROL DEVICES AND INSTALLATION NOT SHOWN ON THIS DRAWING SHALL CONFORM TO THE PERTINENT REQUIREMENTS OF THE STANDARD SPECIFICATIONS, THE SPECIAL PROVISIONS, AND THE MANUAL ON UNIFORM TRAFFIC CONTROL DEVICES.

THE EXACT NUMBER, LOCATION AND SPACING OF ALL SIGNS AND DEVICES (AND THE LOCATION OF ALL FLAGGERS) SHALL BE ADJUSTED TO FIT FIELD CONDITIONS AS APPROVED BY THE ENGINEER.

THE FIRST ADVANCE WARNING SIGN SHOULD TYPICALLY BE LOCATED IN ADVANCE OF THE ANTICIPATED TRAFFIC BACKUP OR QUEUE.

WHEN A SIDE ROAD OR RAMP INTERSECTS THE FACILITY ON WHICH THE WORK IS BEING PERFORMED, ADDITIONAL TRAFFIC CONTROLS SHALL BE PROVIDED AS SPECIFIED IN THE PLANS AND/OR THE SPECIAL PROVISIONS OR AS APPROVED BY THE ENGINEER.

FLAGGERS SHALL BE IN SIGHT OF EACH OTHER OR IN DIRECT COMMUNICATION AT ALL TIMES. THEY SHALL BE EQUIPPED WITH STOP/SLOW PADDLES FASTENED ON SUPPORT STAFFS. WHEN THE FLAGGING OPERATION IS NOT IN EFFECT, COVER OR REMOVE ALL TEMPORARY TRAFFIC CONTROL SIGNS.

ALL SIGNS ARE 48" X 48" UNLESS OTHERWISE NOTED.

TRAFFIC CONTROL FOR LANE CLOSURE (SUITABLE FOR MOVING OPERATIONS)

STATE OF WISCONSIN
DEPARTMENT OF TRANSPORTATION

APPROVED
8/2013 — DATE
/S/ Travis Feltes — STATE TRAFFIC ENGINEER
DESIGN
FHWA

6

S.D.D. 15 C 12-4

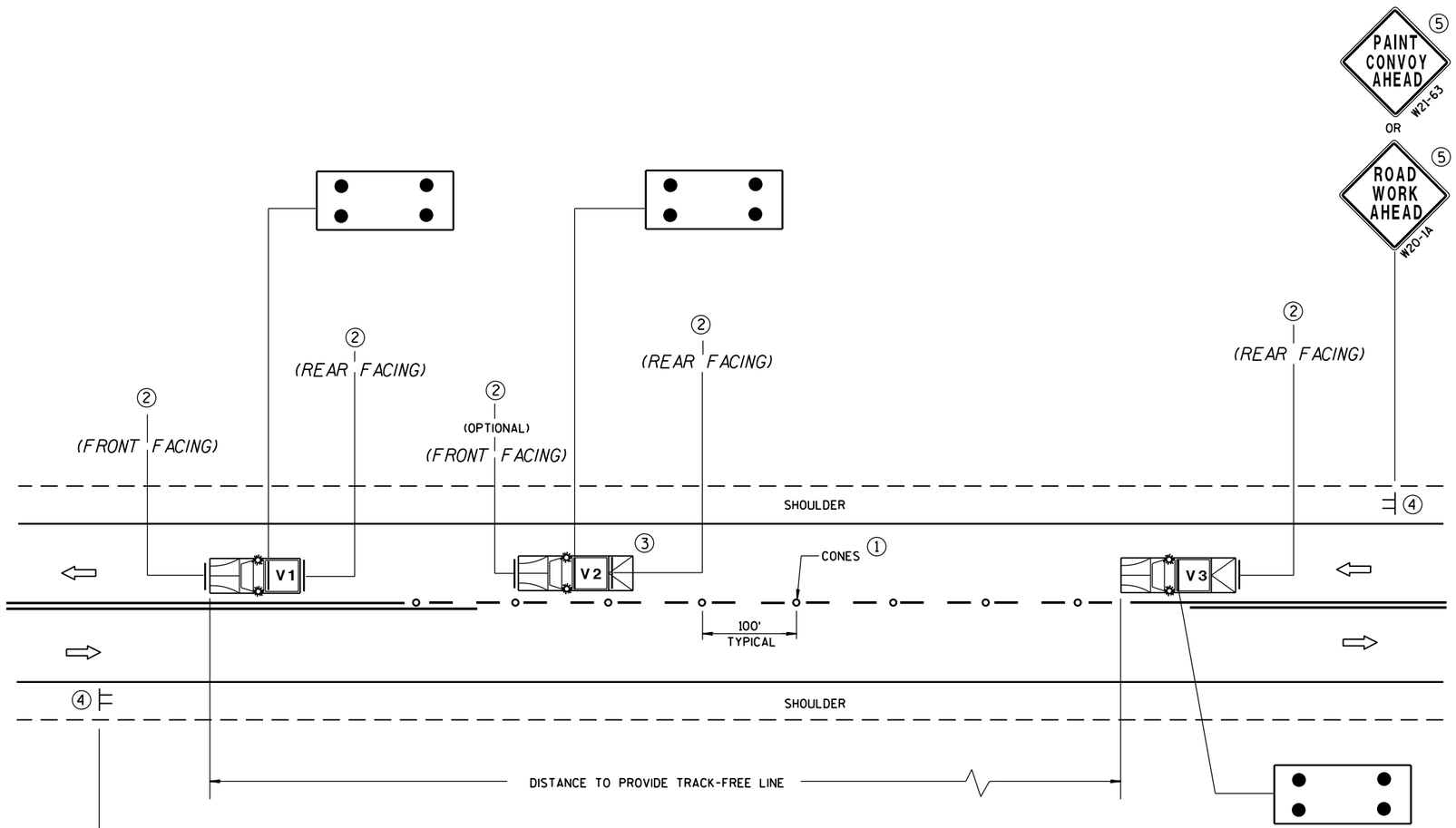

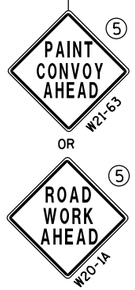

MOVING PAVEMENT MARKING OPERATIONS
TWO-LANE TWO-WAY ROADWAY

GENERAL NOTES

ALL VEHICLES SHALL BE EQUIPPED WITH TWO 360 DEGREE HIGH INTENSITY YELLOW FLASHING LIGHTS OR STROBE LIGHTS AND OPERATED WITH HEADLIGHTS TURNED ON.

VEHICLES SHALL BE EQUIPPED WITH REAR FACING TYPE B OR C FLASHING ARROW PANEL OPERATING IN CAUTION MODE. SIGNS PLACED ON VEHICLES MUST NOT OBSCURE THE ARROW PANEL.

ALL SIGNS ARE 48" X 48" UNLESS OTHERWISE SPECIFIED.

IF SPEED LIMIT IS 40 MPH OR LESS STATIONARY SIGNS MAY BE OMITTED IF CONES ARE USED.

ALTERNATE SIGN MESSAGES, SUCH AS "PAINT CREW AHEAD" OR "ROAD PAINTING AHEAD" MAY BE USED.

DISTANCE BETWEEN VEHICLES MAY VARY ACCORDING TO TERRAIN, SIGHT DISTANCE, PAINT DRYING TIME, AND OTHER FACTORS. WHENEVER ADEQUATE STOPPING SIGHT DISTANCE EXISTS TO THE REAR, SHADOW VEHICLES SHOULD MAINTAIN THE MINIMUM DISTANCE FROM THE WORK VEHICLE AND PROCEED AT THE SAME SPEED AS THE WORK VEHICLE. SHADOW VEHICLES SHOULD SLOW DOWN IN ADVANCE OF VERTICAL OR HORIZONTAL CURVES THAT RESTRICT SIGHT DISTANCE.

THE WORK AND SHADOW VEHICLES SHOULD PULL OVER PERIODICALLY TO ALLOW TRAFFIC TO PASS.

THIS DRAWING SHALL BE USED FOR CENTERLINE OR EDGELINE MARKING.

WHEN NO WORK ACTIVITY IS TAKING PLACE, REMOVE OR TURN THE STATIONARY WARNING SIGNS AWAY FROM TRAFFIC.

1. CONES MAY BE OMITTED ON PAINTED LINE IF APPROVED BY THE ENGINEER. CONSIDER PAVEMENT MARKING DRY OR CURE TIMES AND TRAFFIC VOLUME.
2. USE STANDARD SIGN W21-64 WITH APPROPRIATE ARROW.

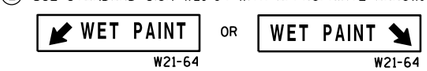

3. OPTIONAL TRUCK-MOUNTED ATTENUATOR.
4. SIGNS SHALL BE REPEATED APPROXIMATELY EVERY THREE MILES.
5. IF CONSTRUCTION WORK ZONE SIGNS ARE IN PLACE, W20-1 OR W21-63 ARE NOT REQUIRED.

LEGEND

V1	LEAD VEHICLE
V2	SHADOW VEHICLE
V3	TRAIL VEHICLE WITH TMA
TMA	TRUCK-MOUNTED ATTENUATOR
	SIGN ON TEMPORARY SUPPORT
	DIRECTION OF TRAFFIC
	CONES
	FLASHING ARROW PANEL (CAUTION)

MOVING PAVEMENT MARKING OPERATION
TWO-LANE TWO-WAY ROADWAY

STATE OF WISCONSIN
DEPARTMENT OF TRANSPORTATION

APPROVED
June 2016 — DATE
/S/ Peter Amakobe Atepe — STATEWIDE WORK ZONE SAFETY ENGINEER
FHWA

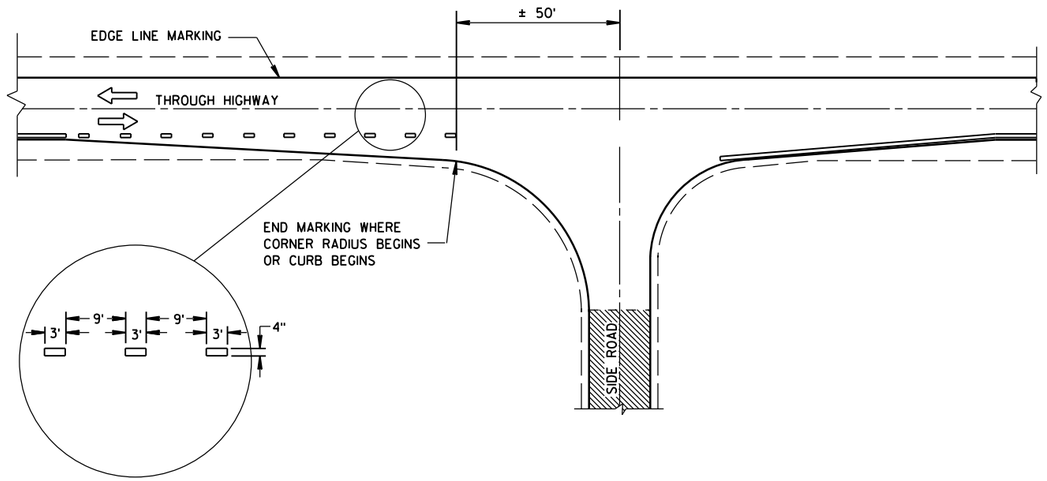

MINOR INTERSECTION WITHOUT CURBS

GENERAL NOTES

EDGE LINES SHALL BE OMITTED THROUGH INTERSECTIONS. EDGE LINES SHALL BE CONTINUED THROUGH DRIVEWAYS.

1. WHEN DISTANCE "A" IS LESS THAN 250 FEET, OMIT LANE LINE.
2. WHEN DISTANCE "B" IS LESS THAN 100 FEET, OMIT CHANNELIZING LANE LINE.
3. BARRIER LINE ENDS AT SIDE ROAD PAVEMENT/SURFACE EDGE EXTENSION.
4. BARRIER LINE STARTS 500 FEET PRIOR TO THE BYPASS TAPER.

ARROW SYMBOL (⇨) SHOWS DIRECTION OF TRAVEL

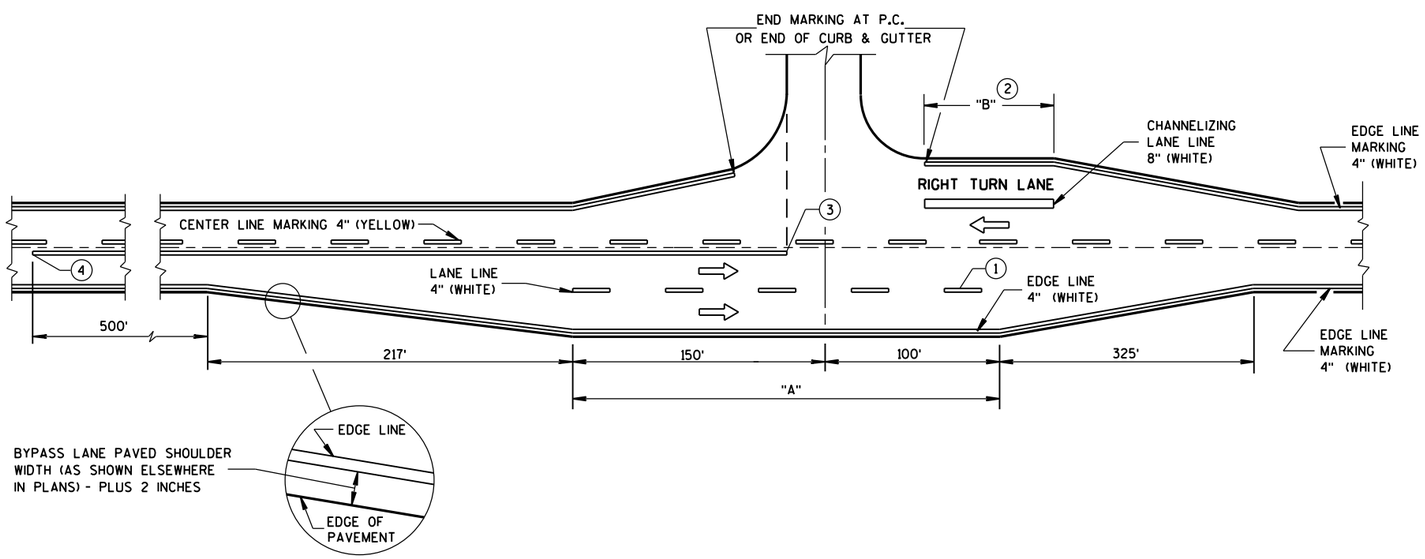

MAJOR INTERSECTIONS

(INTERSECTION WITH FULL RIGHT TURN LANE OR BYPASS LANES)

PAVEMENT MARKING
(INTERSECTIONS)

STATE OF WISCONSIN
DEPARTMENT OF TRANSPOR

6

S.D.D. 15 C 35-1a

GENERAL NOTES

THE EXACT NUMBER, LOCATION AND SPACING OF ALL SIGNS AND DEVICES SHALL BE ADJUSTED TO FIT FIELD CONDITIONS AS APPROVED BY THE ENGINEER.

ALL SIGNS ARE 48" X 48" UNLESS OTHERWISE NOTED. IF NECESSARY DUE TO SPACE CONSTRAINTS IN URBAN AREAS, 36" X 36" SIGNS MAY BE USED IF APPROVED BY DISTRICT TRAFFIC UNIT.

"WO" SIGNS ARE THE SAME AS "W" SIGNS EXCEPT THE BACKGROUND IS ORANGE.

SIGNS THAT WILL BE IN PLACE LESS THAN 7 CONTINUOUS DAYS AND NIGHTS MAY BE MOUNTED ON PORTABLE SUPPORTS.

ANY SIGNS TEMPORARY OR EXISTING, WHICH CONFLICT WITH TRAFFIC CONTROL "IN USE" SHALL BE REMOVED OR COVERED AS NEEDED AND AS APPROVED BY THE ENGINEER.

W20-1A AND G20-2A SIGNS ARE NOT REQUIRED IF THE WORK AREA IS WITHIN A LARGER WORK ZONE WHERE THESE SIGNS ARE ALREADY PRESENT. G20-2A SIGNS MAY ALSO BE OMITTED IF DURATION OF WORK IS LESS THAN 7 CONTINUOUS DAYS AND NIGHTS.

CHANNELIZING DEVICES PLACED ADJACENT TO THE WORK AREA SHALL BE PULLED BACK FROM THE TRAVEL LANE WHEN WORK IS NOT IN PROGRESS.

TABLE A

S \ W	SHOULDER TAPER LENGTH (FEET) 4	6	8	10	BUFFER SPACE (FEET)
30	20	30	40	50	200
35	30	45	55	70	250
40	40	55	75	90	305
45	60	90	120	150	360
50	70	100	135	170	425
55	75	110	150	185	495

SHOULDER TAPER LENGTH = $\frac{1}{3}L$

W = SHOULDER WIDTH (FEET)
S = NON-CONSTRUCTION SPEED LIMIT (MPH)

TAPER LENGTH

$L = WS$ AT 45 MPH OR GREATER

$L = \frac{WS^2}{60}$ AT 40 MPH OR LESS

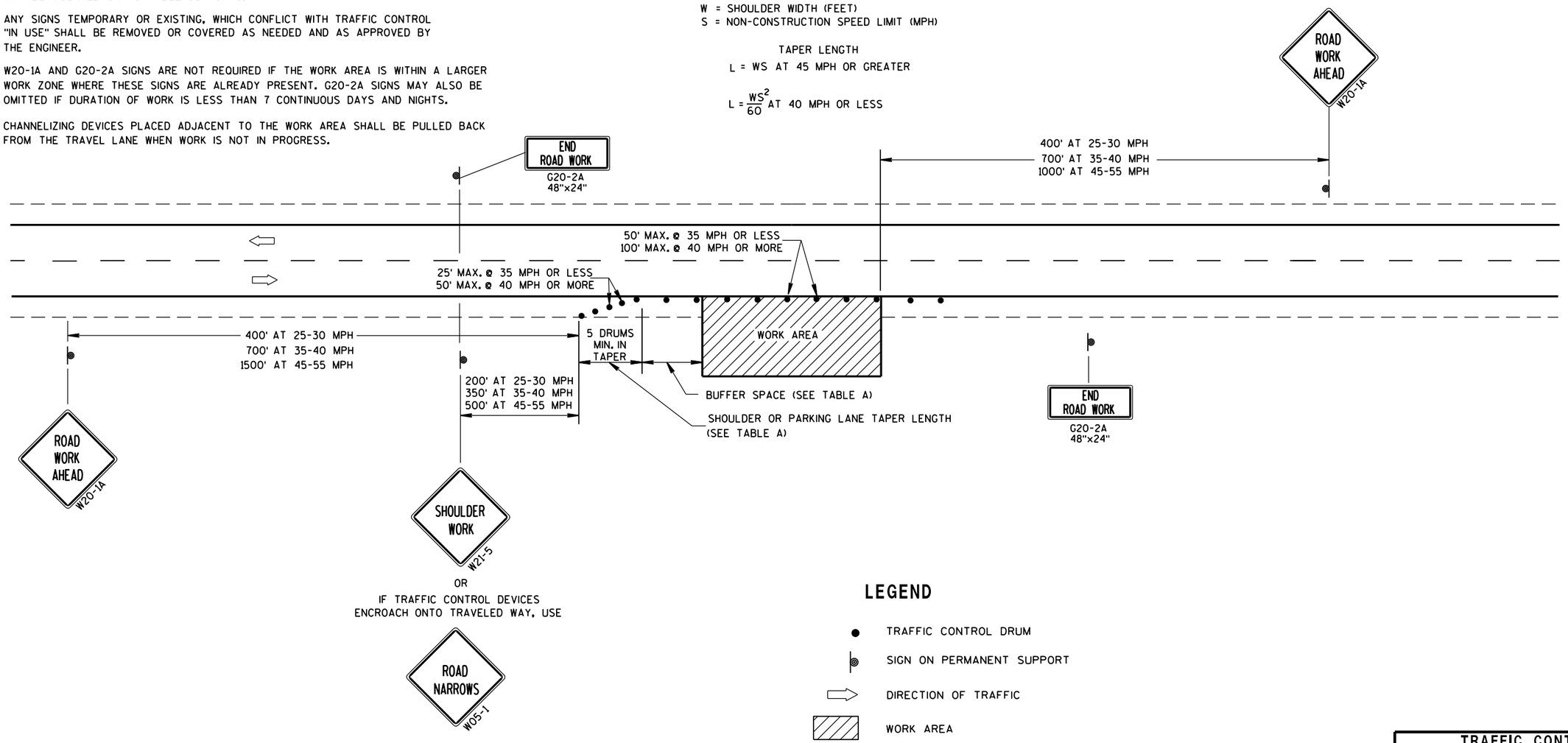

LEGEND

- TRAFFIC CONTROL DRUM
- SIGN ON PERMANENT SUPPORT
- DIRECTION OF TRAFFIC
- WORK AREA

TRAFFIC CONTROL, WORK ON SHOULDER OR PARKING LANE, UNDIVIDED ROADWAY

STATE OF WISCONSIN
DEPARTMENT OF TRANSPORTATION

APPROVED

July 14, 2015 — DATE

/S/ Peter Amakobe Atepe — STATEWIDE WORK ZONE TRAFFIC SAFETY ENGINEER

FHWA

6

S.D.D. 15 D 28-3

NOTES

1. Sign is Type II - Type H Reflective
2. Color:
   Background - Green
   Message - White
3. Message Series - E

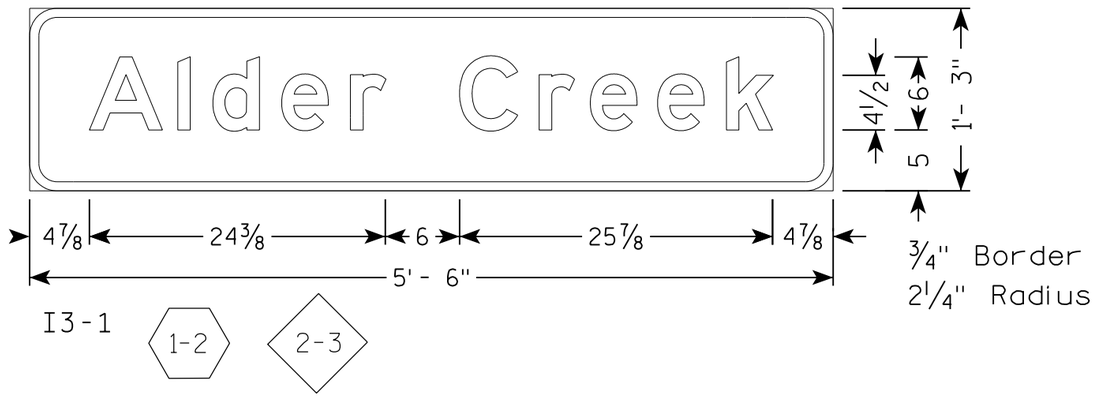

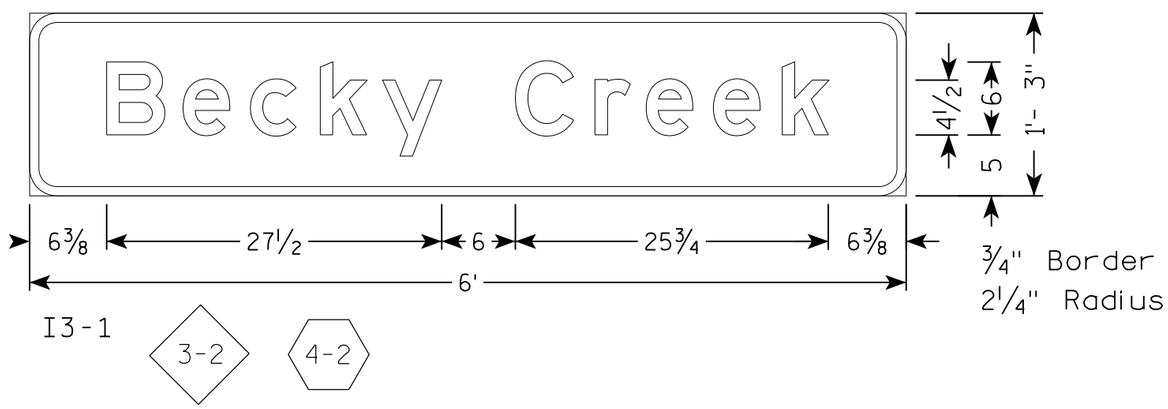

7

7

PROJECT NO: 8590-01-73	HWY: STH 40	COUNTY: RUSK	SIGN DETAIL		SHEET 65	E

URBAN AREA

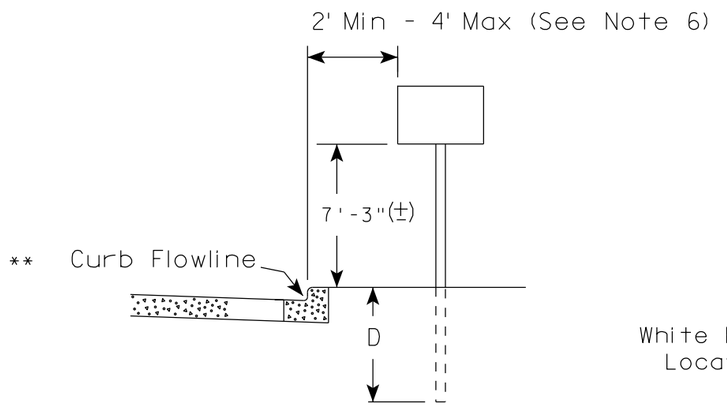

RURAL AREA (See Note 2)

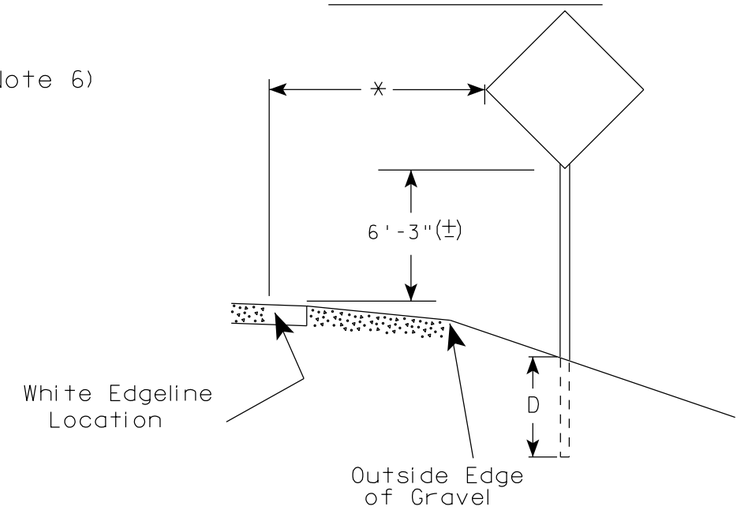

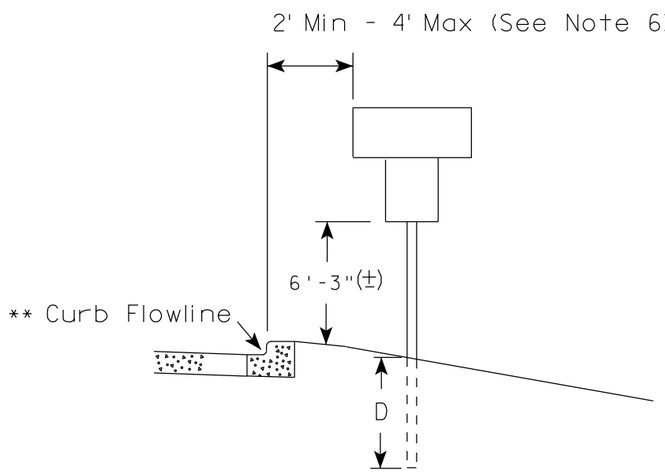

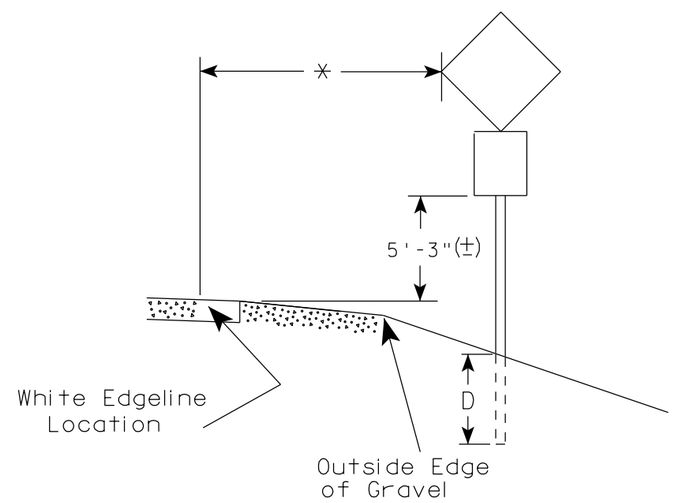

** The existence of curb and gutter does not in itself mandate the vertical clearance illustrated. That height is typically measured where there is sidewalk adjacent to the roadway or parking is permitted. In the absence of sidewalk vertical clearance is measured from the top of the curb. Offset of signs is measured from the flow line.

* 6 feet from edge of a paved shoulder or 12 feet from the edge of pavement (edge line location) or 2 feet from outside edge of gravel, whichever is greater unless directed by project engineer.

GENERAL NOTES

1. Signs wider than 4 feet or 20 sq.ft or larger, shall be mounted on multiple posts. Refer to plate A4-4.
2. If signs are mounted on barrier wall, see A4-10 sign plate.
3. For expressways and freeways, mounting height is 7'- 3" (±) or 6'-3" (±) depending upon existence of a sub-sign.
4. Minimum mounting height for J assemblies (A2-1S) is 7'-3" (±) or 6'-3" (±) per urban or rural detail respectively.
5. Minimum mounting height for signs mounted on traffic signal poles is 5'- 3" (±).
6. Offset distance shall be consistent with existing signs or consistent throughout length of project.
7. The (±) tolerance for mounting height is 3 inches.
8. Folding signs shall be mounted at a height of 5'-3" (±) or as directd by the Engineer.
9. The Double Arrow sign (W12-1) shall be mounted at a height of 2'-3" (±). The Chevron sign (W1-8), Roundabout Chevron panel (R6-4B), Enhanced Reference Markers, Clearance Markers (W5-52), Mile Markers (D10 series), In Road Object Markers (W5-54) & End of Road Markers (W5-56) shall be mounted at a height of 4'-3" (±).

POST EMBEDMENT DEPTH

Area of Sign Installation (Sq. Ft.)	D (Min)
20 or Less	4'
Greater than 20	5'

TYPICAL INSTALLATION OF PERMANENT TYPE II SIGNS ON SINGLE POSTS

WISCONSIN DEPT OF TRANSPORTATION

APPROVED Matthew R Rauch for State Traffic Engineer

DATE 7/23/15 PLATE NO. A4-3.20

PROJECT NO:	HWY:	COUNTY:		SHEET NO:	E

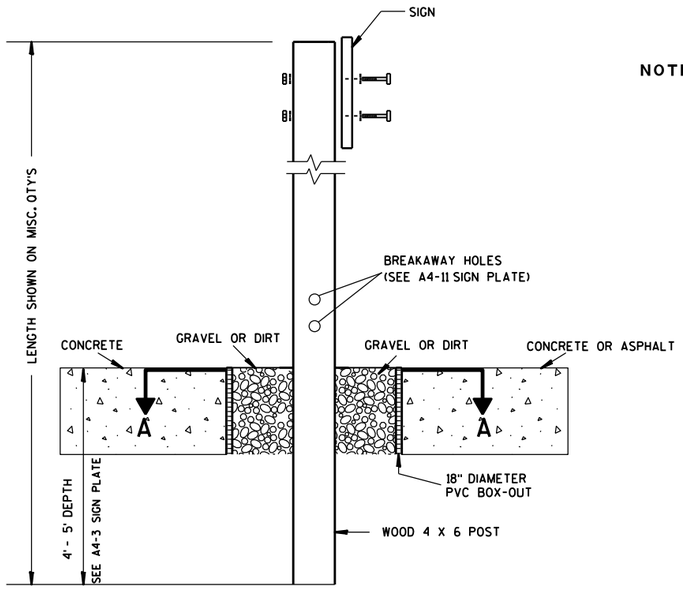

ELEVATION VIEW

DETAIL OF WOOD 4 X 6 SIGN POST IN BOX-OUT

NOTES:
1. ALL MATERIAL TO BE APPROVED BY ENGINEER PRIOR TO INSTALLATION
2. SEE SIGN PLATE A4-8 FOR SIGN HARDWARE REQUIREMENTS
3. 18 INCH X 18 INCH SQUARE BOX-OUTS MAY BE USED FOR INSTALLATIONS IN EXISTING CONCRETE OR ASPHALT LOCATIONS.

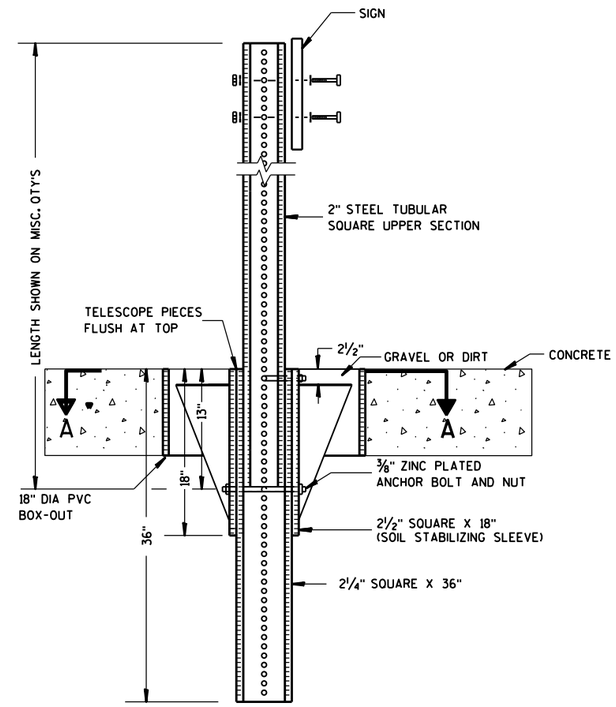

ELEVATION VIEW

DETAIL OF STEEL 2 X 2 SIGN POST IN BOX-OUT

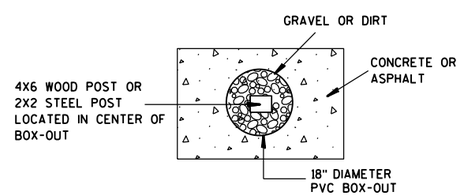

PLAN VIEW

FOR NEW CONCRETE/ASPHALT INSTALLATIONS

SIGN POST
BOX-OUTS
A4-3B

WISCONSIN DEPT OF TRANSPORTATION

APPROVED Matthew R Rauch
for State Traffic Engineer

DATE 1/27/14 PLATE NO. A4-3B.1

PROJECT NO:	HWY:	COUNTY:		SHEET NO:	E

URBAN AREA

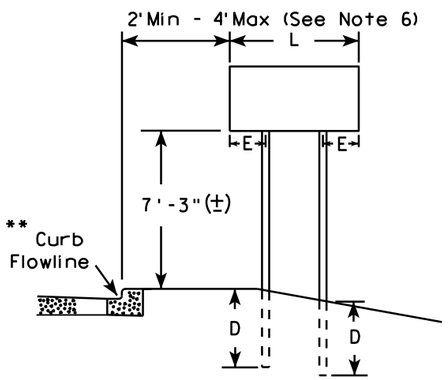

RURAL AREA (See Note 3)

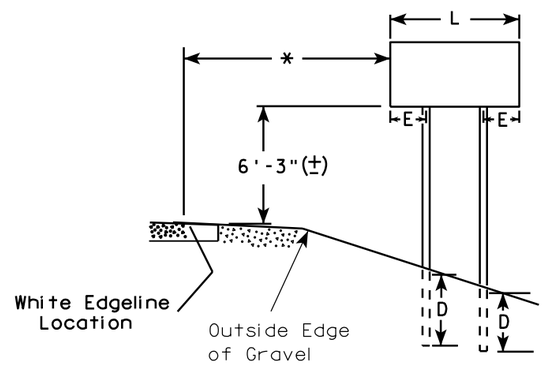

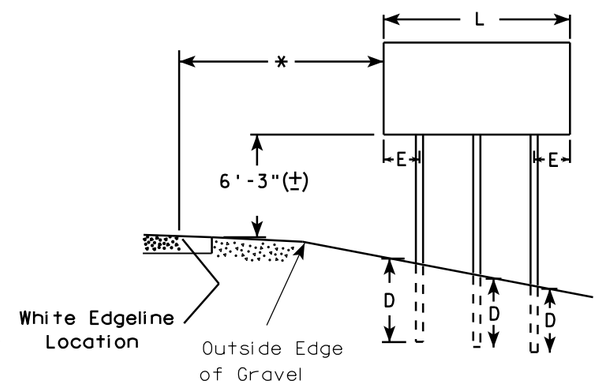

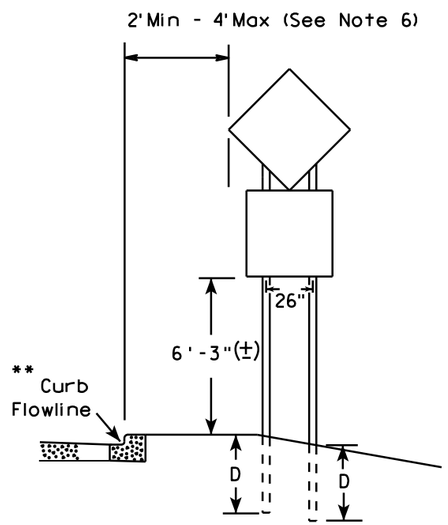

48" DIAMOND WARNING SIGN

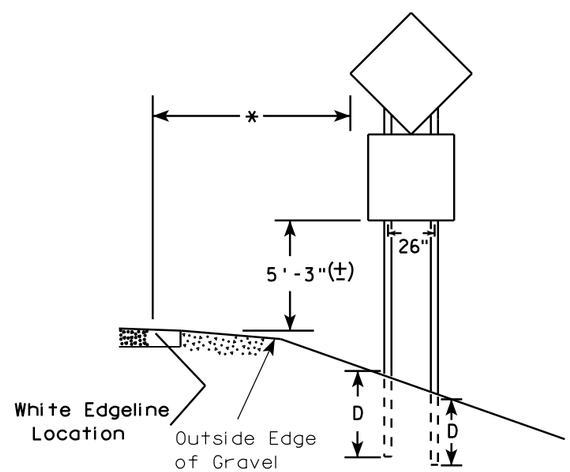

48" DIAMOND WARNING SIGN

GENERAL NOTES

1. For 3 or 4 post installations, individual post spacing shall be greater than 3'-6".
2. See tables below for required number of posts.
3. For expressways and freeways, mounting height is 7'-3" (±) or 6'-3" (±) depending upon existence of sub-sign.
4. The (±) tolerance for mounting height is 3 inches.
5. Minimum mounting height for J assemblies (A2-1S) is 7'-3" (±) or 6'-3" (±) per urban or rural detail respectively.
6. Offset distance shall be consistent with existing signs or consistent throughout length of project.
7. Folding signs shall be mounted at a height of 5'-3" (±) or as directed by the engineer.
8. The Double Arrow sign (W12-1) shall be mounted at a height of 2'-3" (±). The Chevron sign (W1-8), Roundabout Chevron panel (R6-4B), Clearance Markers (W5-52), Mile Markers (D10 series), In Road Object Markers (W5-54) & End of Road Markers (W5-56) shall be mounted at a height of 4"-3" (±).

* 6 feet from edge of a paved shoulder or 12 feet from the edge of pavement (edge line location) or 2 feet from outside edge of gravel, whichever is greater unless directed by project engineer.

** The existence of curb and gutter does not in itself mandate the vertical clearance illustrated. That height is typically measured where there is sidewalk adjacent to the roadway or parking is permitted. In the absence of sidewalk vertical clearance is measured from the top of the curb. Offset of signs is measured from the flow line.

*** See A4-3 sign plate for signs 4' or less in width and less than 20 S.F. in area.

SIGN SHAPE OTHER THAN DIAMOND (TWO POSTS REQUIRED)	
L	E
*** Greater than 48" Less than 60"	12"
60" to 120"	L/5

SIGN SHAPE OTHER THAN DIAMOND (THREE POSTS REQUIRED)	
L	E
Greater than 120" less than 168"	12"

SIGN SHAPE OTHER THAN DIAMOND (FOUR POSTS REQUIRED)	
L	E
168" and greater	12"

POST EMBEDMENT DEPTH

Area of Sign Installation (Sq. Ft.)	D (Min)
20 or Less	4'
Greater than 20	5'

TYPICAL INSTALLATION OF TYPE II SIGNS ON MULTIPLE POSTS

WISCONSIN DEPT OF TRANSPORTATION

APPROVED Matthew R Rauch
for State Traffic Engineer

DATE 7/23/15 PLATE NO. A4-4 14 68

PROJECT NO:	HWY:	COUNTY:		SHEET NO:	E

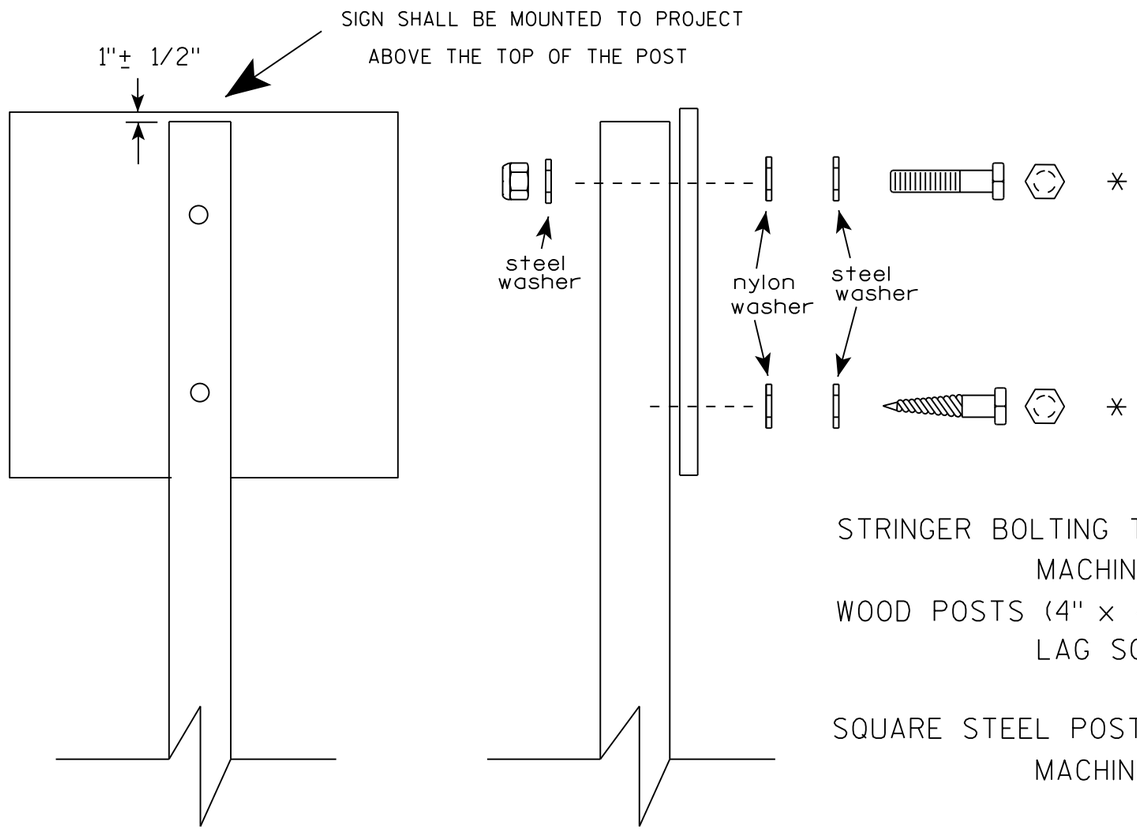

Nuts, bolts and lags used for mounting signs shall have hexagonal heads and shall be either :

a. Hot dip galvanized in accordance with ASTM Designation: A 153, Class D, or SC 3

b. Electro-galvanized in accordance with ASTM Designation : B 633, TYPE III, SC 3.

Threads on bolts and nuts shall be manufactured with sufficient allowance for the cadmium plate or galvanized coating to permit the nuts to run freely on the bolts.

STRINGER BOLTING TO ALUMINUM SIGNS (SEE SIGN PLATE A4-18)

MACHINE BOLTS - 5/16" X 1-3/4" Length w/ lock nuts

WOOD POSTS (4" x 4" or 4" x 6")

LAG SCREWS - 3/8" X 3" (NO STRINGERS ON BACK OF SIGN)

3/8" X 4" (STRINGERS ON BACK OF SIGN)

SQUARE STEEL POSTS (2" x 2")

MACHINE BOLTS - 3/8" X 3-1/4" Length w/ nuts (NO STRINGER ON BACK OF SIGN)

3/8" X 5" Length w/ nuts (STRINGERS ON BACK OF SIGN)

RIVETS - 9/32 " (6605-9-6) BULB-TITE, TRI-FOLD, ALUMINUM BODY/MANDREL

O.D. FLANGE .720-.765 INCH, GRIP RANGE .042-.375 INCH

WASHERS (ALL POSTS) -

1-1/4" O.D. X 3/8" I.D. X 1/16" STEEL

1-1/4" O.D. X 3/8" I.D. X .080 NYLON

* Two different fastening systems are shown for illustration purposes. On any individual sign, either one or the other system shall be used. Actual number of fasteners per sign varies with the sign area, but normally there are two. For a single post installation, all signs greater than 9 sq. ft. require the use of 3 fasteners.

ATTACHMENT OF SIGNS TO POSTS

WISCONSIN DEPT OF TRANSPORTATION

APPROVED Matthew R Rauch
for State Traffic Engineer

DATE 8/11/16 PLATE NO. A4-8.8

PROJECT NO:

SHEET NO: E

TELESCOPIC TUBING ANCHORS
TWO PIECE SYSTEM

2 1/4" SQUARE
12 GAUGE
PERFORATED
GALVANIZED FINISH

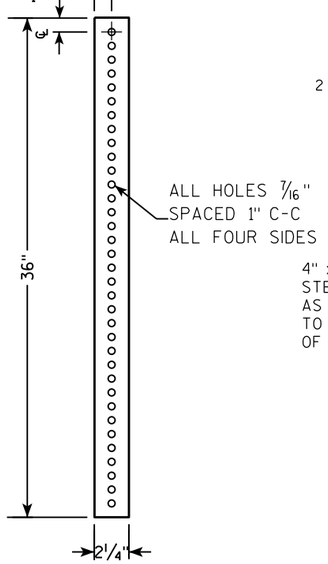

2 1/2" SQUARE
12 GAUGE
OMNI-DIRECTIONAL
PERFORATED
SOIL STABILIZING SLEEVE
GALVANIZED FINISH

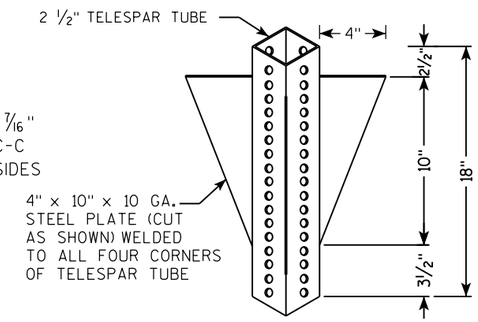

DETAIL OF TUBULAR STEEL SIGN POST
(IN POURED CONCRETE OR ASPHALT)

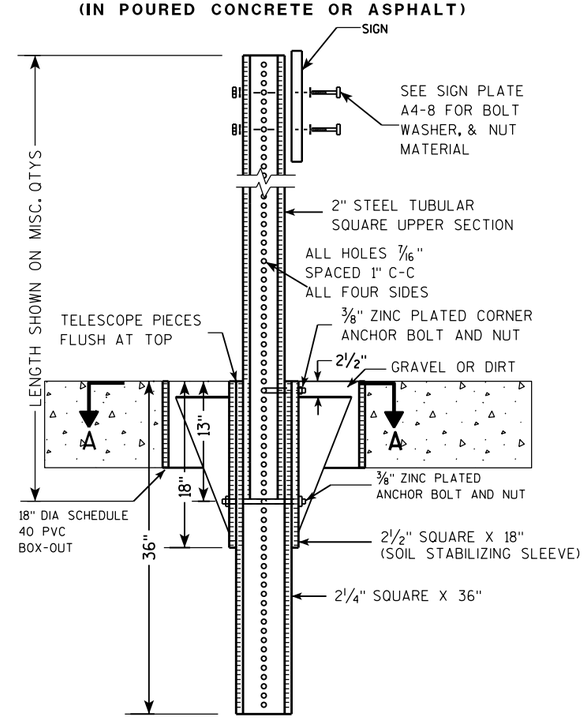

DETAIL OF TUBULAR STEEL SIGN POST
(IN LOCATIONS OTHER THAN POURED CONCRETE OR ASPHALT)

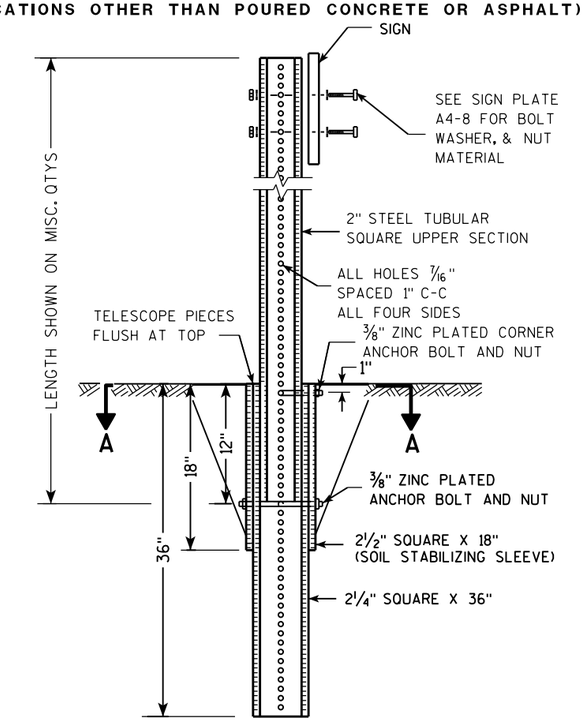

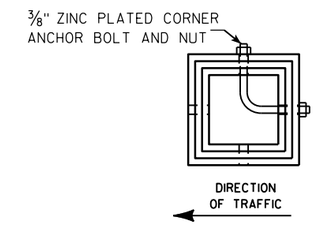

SECTION A-A

Area of Sign Installation (Sq. Ft.)	Number of Required Posts
9 or less	1
Greater than 9 less than or equal to 18	2
Greater than 18 less than or equal to 27	3

Signs wider than 3 feet or larger than 9 sq. ft shall be mounted on multiple posts (see above table).

TUBULAR STEEL
SIGN POST
A4-9

WISCONSIN DEPT OF TRANSPORTATION

APPROVED Matthew R Rauch
for State Traffic Engineer

DATE 2/05/15 PLATE A4-9.9

7 7

PROJECT NO:	HWY:	COUNTY:		SHEET NO:	E

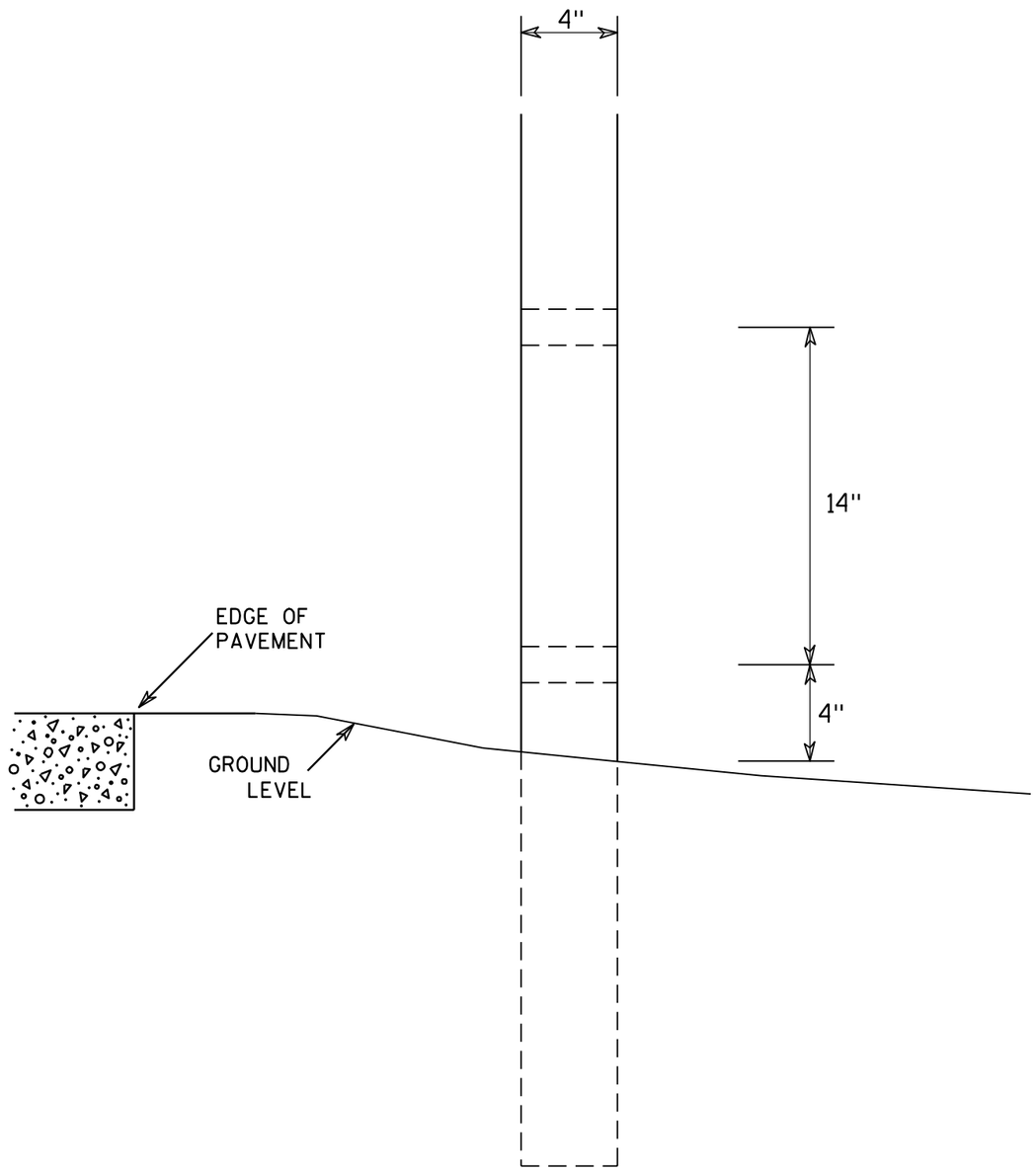

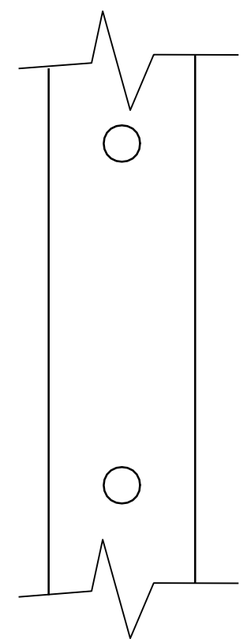

SIDE VIEW

GENERAL NOTES

1. All 4 x 6 Wood Posts shall be modified by having two 1½" diameter holes drilled perpendicular to the roadway centerline.

4 X 6 WOOD POST MODIFICATIONS

WISCONSIN DEPT OF TRANSPORTATION

APPROVED Chester J Spang for State Traffic Engineer

DATE 3/27/97 PLATE NO. A4-11.2

PROJECT NO:	HWY:	COUNTY:		SHEET NO: 71	E

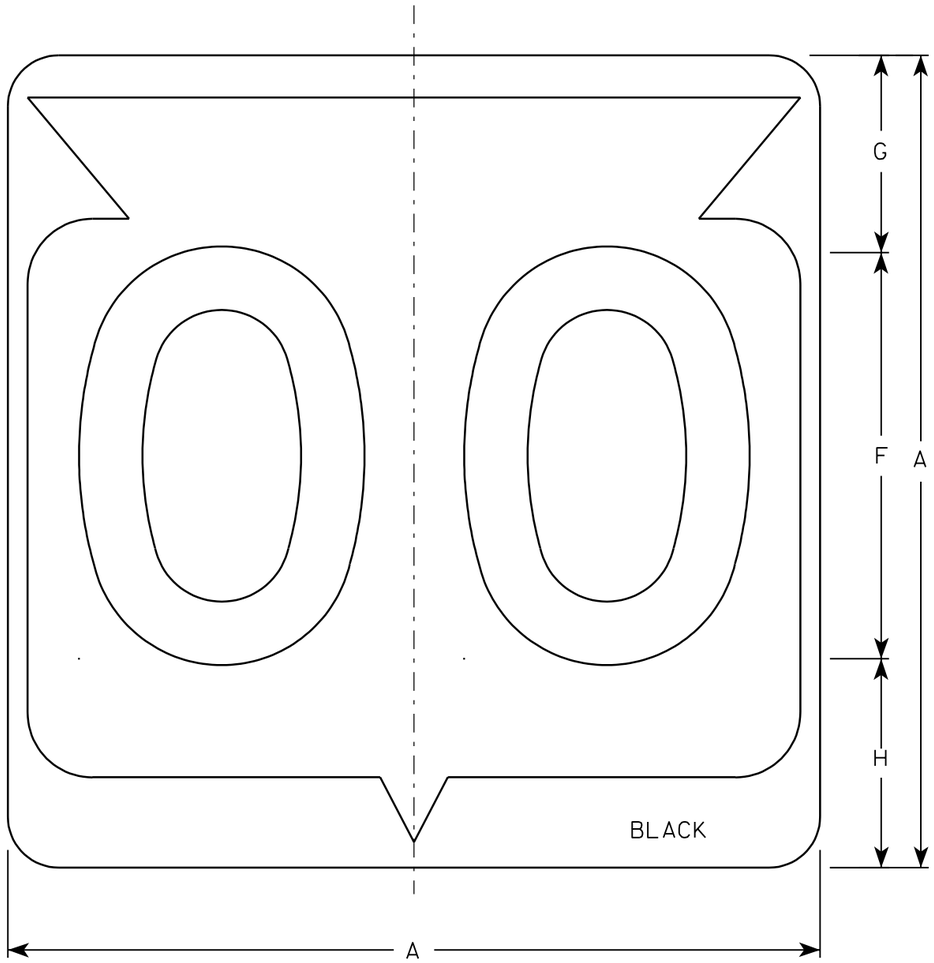

M1-6

NOTES

1. Sign is Type II - See Note 6 - reference WIS DOT Standard Specification for HIGHWAY and STRUCTURE CONSTRUCTION latest edition.
2. Color:
   Background - White & Black - See Note 6
   Message - Black
3. Message Series - See note 5
4. Corners may be square or rounded when base material is plywood but borders shall be rounded as shown. When base material is metal, the corners and borders shall be rounded.
5. Substitute appropriate Series numerals and adjust spacing as per plate A10-1.
6. Permanent Signs
   Background - Type H Reflective
   Detour or temporary Signs
   Background - Reflective

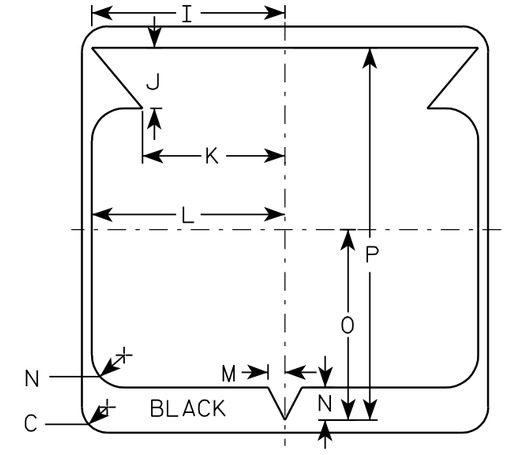

Metric equivalent for this sign is:

SIZE	
1	
2	600 mm X 600 mm
3	900 mm X 900 mm
4	900 mm X 900 mm
5	900 mm X 900 mm

SIZE	A	B	C	D	E	F	G	H	I	J	K	L	M	N	O	P	Q	R	S	T	U	V	W	X	Y	Z	Area sq. ft.	Area m2
1																												
2	24		1 1/2			12	5 1/2	6 1/2	10 1/4	2 1/2	8 7/8	11 1/2	1	1 7/8	11 1/4	21 7/8											4.0	.36
3	36		2 1/4			18	8 3/4	9 1/4	15 3/8	5 3/8	12 5/8	17 1/8	1 1/2	2 7/8	16 7/8	33											9.0	.81
4	36		2 1/4			18	8 3/4	9 1/4	15 3/8	5 3/8	12 5/8	17 1/8	1 1/2	2 7/8	16 7/8	33											9.0	.81
5	36		2 1/4			18	8 3/4	9 1/4	15 3/8	5 3/8	12 5/8	17 1/8	1 1/2	2 7/8	16 7/8	33											9.0	.81

STATE ROUTE MARKER
M1-6 FOR ASSEMBLIES

WISCONSIN DEPT OF TRANSPORTATION

APPROVED Chester J Spang
for State Traffic Engineer

DATE 3/20/02 PLATE NO. M1-6.9

PROJECT NO: | HWY: | COUNTY: | SHEET NO: 72 | E

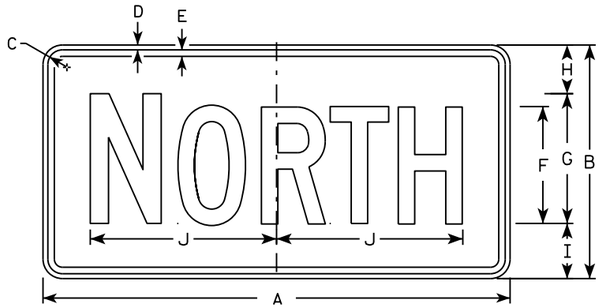

M3-1
MM3-1
MP3-1

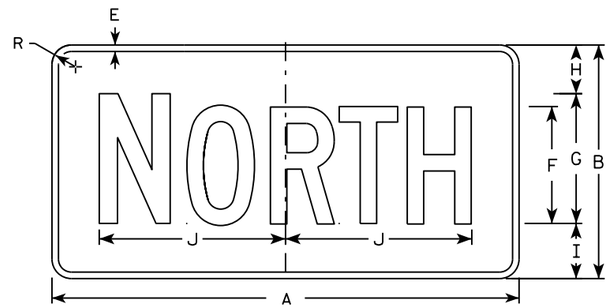

MB3-1
MK3-1
MN3-1

M3-2
MM3-2
MP3-2

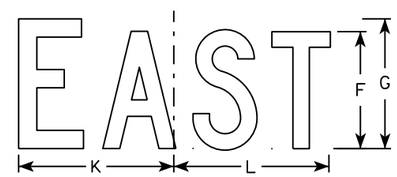

MB3-2
MK3-2
MN3-2

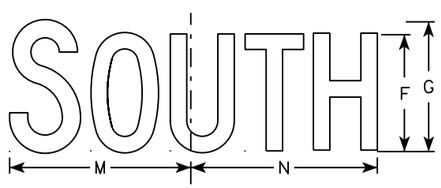

M3-3
MM3-3
MP3-3

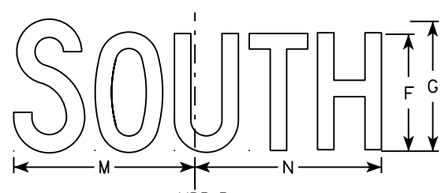

MB3-3
MK3-3
MN3-3

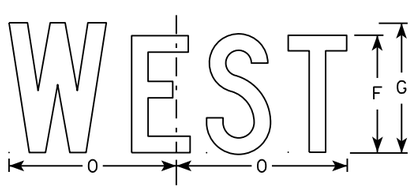

M3-4
MM3-4
MP3-4

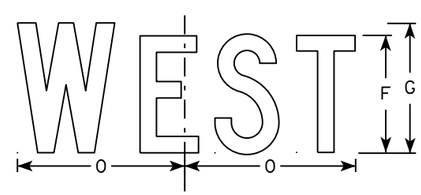

MB3-4
MK3-4
MN3-4

NOTES

1. All Signs Type II - Type H
2. Color:
   Background - See note 5
   Message - See note 5
3. Message Series - C
4. Corners may be square or rounded when base material is plywood but borders shall be rounded as shown. When base material is metal, the corners and borders shall be rounded.
5. M3-1 thru M3-4 Background - White
   Message - Black
   MB3-1 thru MB3-4 Background - Blue
   Message - White
   MK3-1 thru MK3-4 Background - Green
   Message - White
   MM3-1 thru MM3-4 Background - White
   Message - Green
   MN3-1 thru MN3-4 Background - Brown
   Message - White
   MP3-1 thru MP3-4 Background - White
   Message - Blue
6. Note the first letter of each direction is larger than the remainder of the message.

SIZE	A	B	C	D	E	F	G	H	I	J	K	L	M	N	O	P	Q	R	S	T	U	V	W	X	Y	Z	Area sq. ft.
1																											
2	24	12	1 1/8	3/8	3/8	6	7	2 1/4	2 3/4	10 1/4	7 7/8	8 3/8	10 1/4	9 3/4	8 3/4			1 1/2									2.00
3	36	18	1 1/8	3/8	1/2	9	10	3 3/4	4 1/4	14 3/8	12	12 1/8	14	14 1/8	13			1 1/2									4.5
4	36	18	1 1/8	3/8	1/2	9	10	3 3/4	4 1/4	14 3/8	12	12 1/8	14	14 1/8	13			1 1/2									4.5
5	36	18	1 1/8	3/8	1/2	9	10	3 3/4	4 1/4	14 3/8	12	12 1/8	14	14 1/8	13			1 1/2									4.5

STANDARD SIGNS
M3-1 thur M3-4
SERIES

WISCONSIN DEPT OF TRANSPORTATION

APPROVED Matthew R Rauch
for State Traffic Engineer

DATE 10/15/15 PLATE NO M3-1.14

PROJECT NO: | HWY: | COUNTY: | SHEET NO: | E

FILE NAME : C:\CAEfiles\Projects\tr_stdplate\M31.DGN PLOT DATE : 01-DEC-2015 17:54 PLOT BY : $$ plotuser $$ PLOT NAME : PLOT SCALE : 11.675051:1.000000

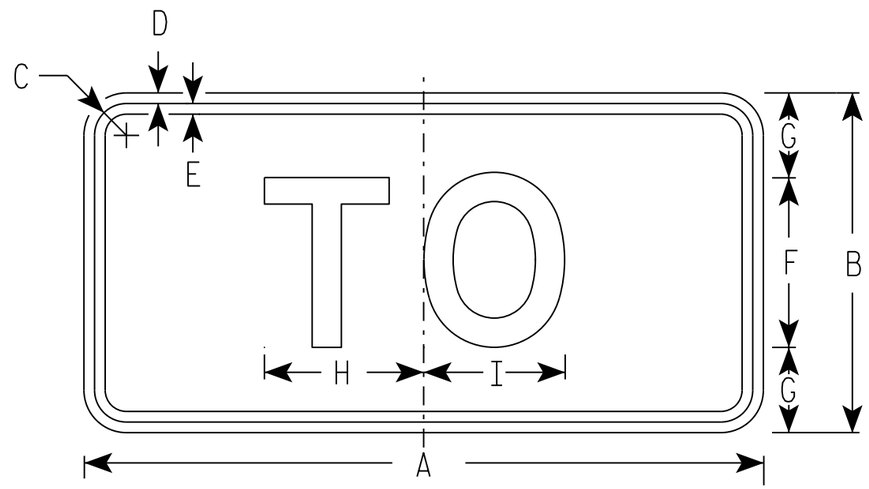

M4-5
MM4-5
MP4-5

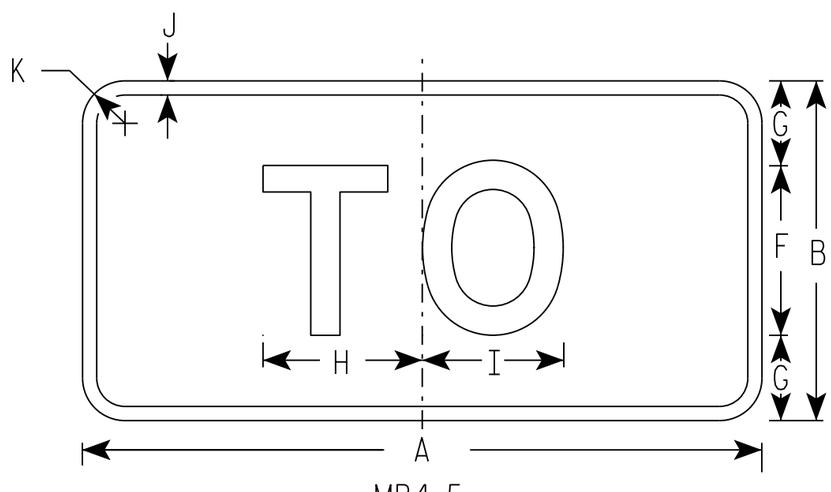

MB4-5
MK4-5
MN4-5

NOTES

1. Sign is Type II - Type H
2. Color:
   Background - See note 5
   Message - See note 5
3. Message Series - E
4. Corners may be square or rounded when base material is plywood but borders shall be rounded as shown. When base material is metal, the corners and borders shall be rounded.
5. M4-5 Background - White
   Message - Black
   MB4-5 Background - Blue
   Message - White
   MK4-5 Background - Green
   Message - White
   MM4-5 Background - White
   Message - Green
   MN4-5 Background - Brown
   Message - White
   MP4-5 Background - White
   Message - Blue

SIZE	A	B	C	D	E	F	G	H	I	J	K	L	M	N	O	P	Q	R	S	T	U	V	W	X	Y	Z	Area sq. ft.
1																											
2	24	12	1 1/8	3/8	3/8	6	3	5 3/8	5 1/4	1/2	1 1/2																2.00
3	36	18	1 3/8	3/8	1/2	9	4 1/2	8 1/4	8 3/8	1/2	1 1/2																4.5
4	36	18	1 3/8	3/8	1/2	9	4 1/2	8 1/4	8 3/8	1/2	1 1/2																4.5
5	36	18	1 3/8	3/8	1/2	9	4 1/2	8 1/4	8 3/8	1/2	1 1/2																4.5

STANDARD SIGN
M4-5

WISCONSIN DEPT OF TRANSPORTATION

APPROVED Matthew R Rauch
for State Traffic Engineer

DATE 10/15/15 PLATE 74 M4-5.8

PROJECT NO: | HWY: | COUNTY: | SHEET NO: E

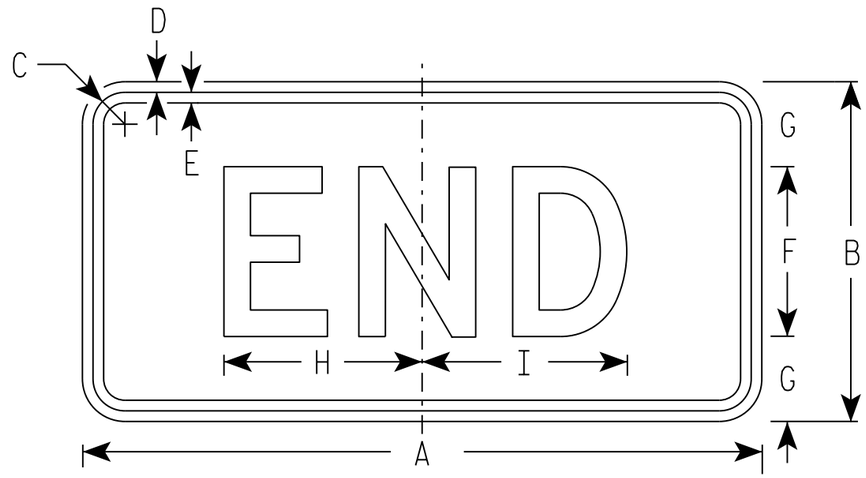

M4-6
MM4-6
MP4-6

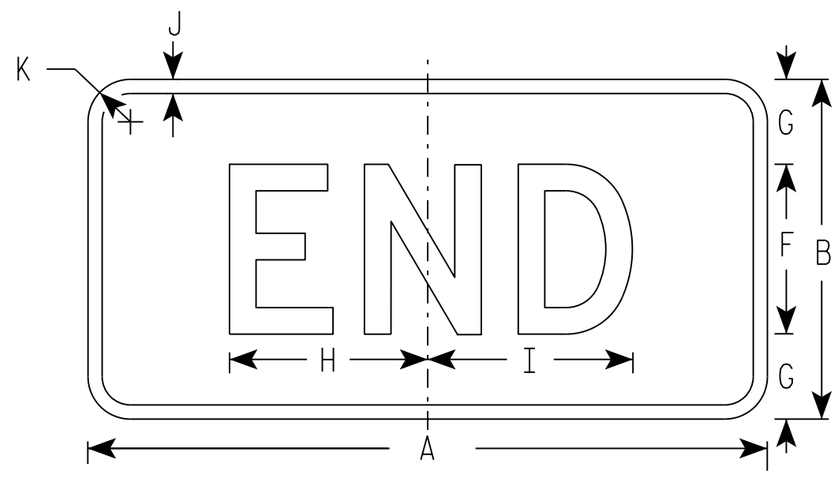

MB4-6
MK4-6
MN4-6
MR4-6

NOTES

1. Sign is Type II - Type H
2. Color:
   Background - See note 5
   Message - See note 5
3. Message Series - D
4. Corners may be square or rounded when base material is plywood but borders shall be rounded as shown. When base material is metal, the corners and borders shall be rounded.
5. M4-6 Background - White
   Message - Black

   MB4-6 Background - Blue
   Message - White

   MK4-6 Background - Green
   Message - White

   MM4-6 Background - White
   Message - Green

   MN4-6 Background - Brown
   Message - White

   MP4-6 Background - White
   Message - Blue

   MR4-6 Background - Brown
   Message - Yellow

SIZE	A	B	C	D	E	F	G	H	I	J	K	L	M	N	O	P	Q	R	S	T	U	V	W	X	Y	Z	Area sq. ft.
1																											
2	24	12	1 1/8	3/8	3/8	6	3	7	7 1/4	1/2	1 1/2																2.00
3	36	18	1 1/8	3/8	1/2	9	4 1/2	12	11 7/8	1/2	1 1/2																4.5
4	36	18	1 1/8	3/8	1/2	9	4 1/2	12	11 7/8	1/2	1 1/2																4.5
5	36	18	1 1/8	3/8	1/2	9	4 1/2	12	11 7/8	1/2	1 1/2																4.5

STANDARD SIGN
M4-6

WISCONSIN DEPT OF TRANSPORTATION

APPROVED Matthew R Rauch
for State Traffic Engineer

DATE 10/15/15 PLATE 75 '14-7.9

PROJECT NO: | HWY: | COUNTY: | SHEET NO: E

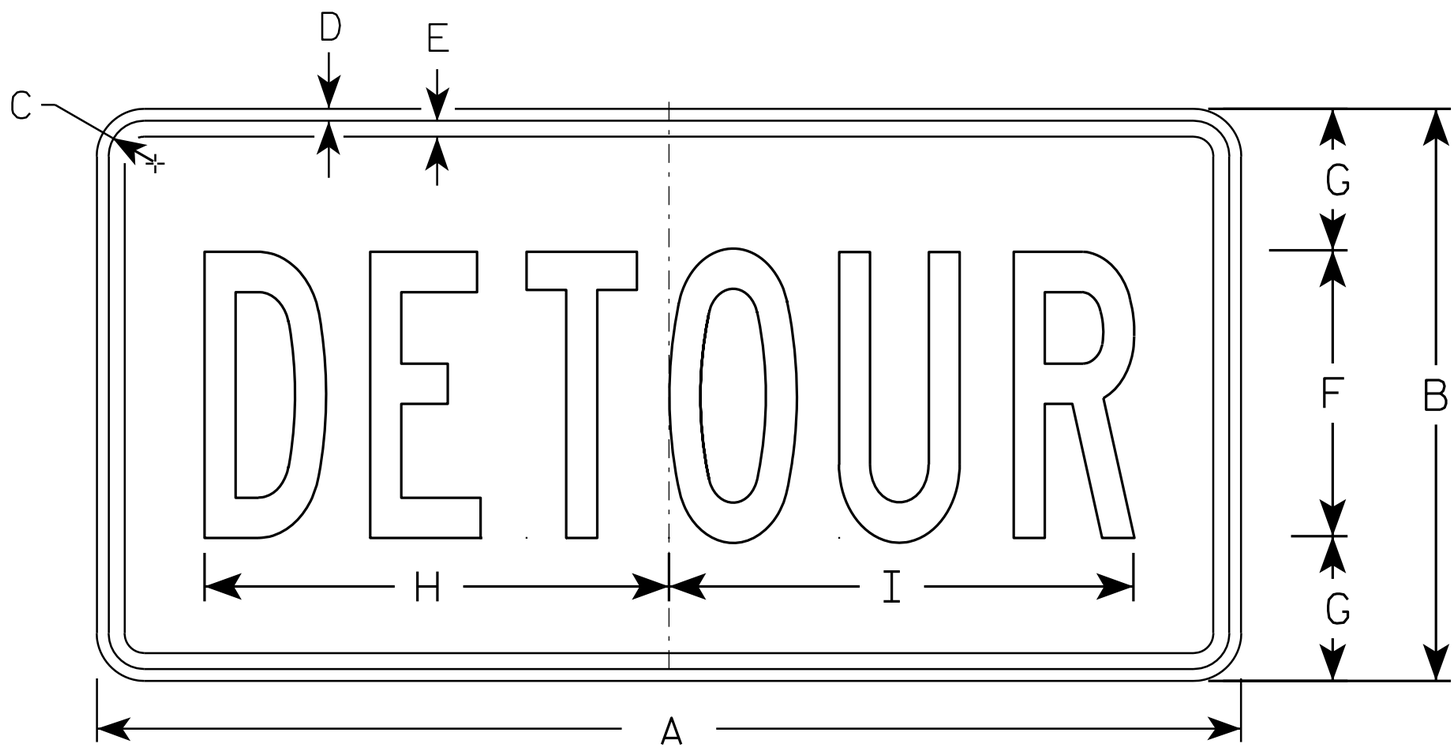

M4-8

NOTES

1. Sign is Type II - Type F Reflective - reference WIS DOT Standard Specification for HIGHWAY and STRUCTURE CONSTRUCTION latest edition.
2. Color:
   Background - Orange
   Message - Black
3. Message Series - B
4. Corners may be square or rounded when base material is plywood but borders shall be rounded as shown. When base material is metal, the corners and borders shall be rounded.

SIZE	A	B	C	D	E	F	G	H	I	J	K	L	M	N	O	P	Q	R	S	T	U	V	W	X	Y	Z	Area sq. ft.
1																											
2	24	12	1 1/8	3/8	3/8	6	3	10	10 1/4																		2.0
3	36	18	1 1/8	3/8	1/2	9	4 1/2	14 5/8	14 1/2																		4.5
4																											
5																											

STANDARD SIGN
M4-8

WISCONSIN DEPT OF TRANSPORTATION

APPROVED Matthew R Rauch
for State Traffic Engineer

DATE 11/10/10 PLATE NO. M4-8.2

PROJECT NO: | HWY: | COUNTY: | SHEET NO: 76 | E

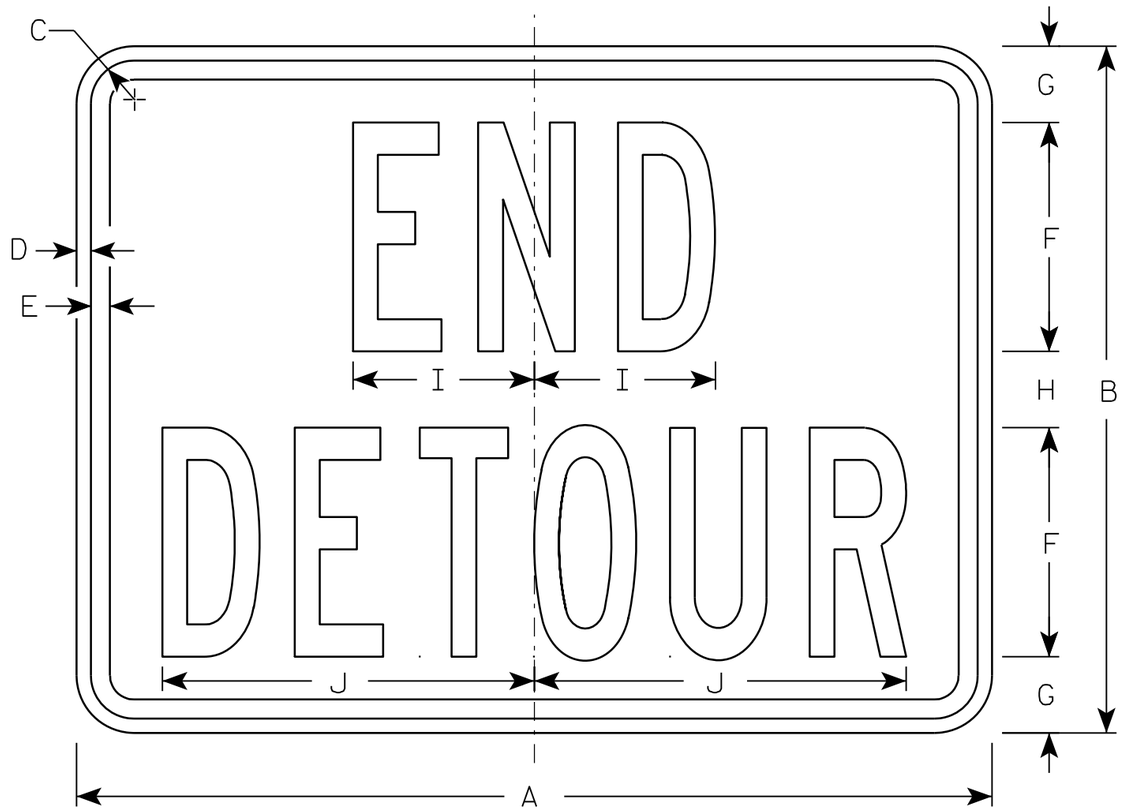

M4-8A

NOTES

1. Sign is Type II - Type F Reflective - reference WIS DOT Standard Specification for HIGHWAY and STRUCTURE CONSTRUCTION latest edition.
2. Color:
   Background - Orange
   Message - Black
3. Message Series - B
4. Corners may be square or rounded when base material is plywood but borders shall be rounded as shown. When base material is metal, the corners and borders shall be rounded.

SIZE	A	B	C	D	E	F	G	H	I	J	K	L	M	N	O	P	Q	R	S	T	U	V	W	X	Y	Z	Area sq. ft.
1																											
2	24	18	1 1/8	3/8	1/2	6	2	2	4 3/4	9 3/4																	3.0
3	30	24	1 1/8	3/8	1/2	8	2 1/2	3	6 3/4	13																	5.0
4																											
5																											

STANDARD SIGN
M4-8A

WISCONSIN DEPT OF TRANSPORTATION

APPROVED Matthew R Rauch
for State Traffic Engineer

DATE 3/9/11 PLATE NO. M4-8A.2

PROJECT NO: | HWY: | COUNTY: | SHEET NO: 77 | E

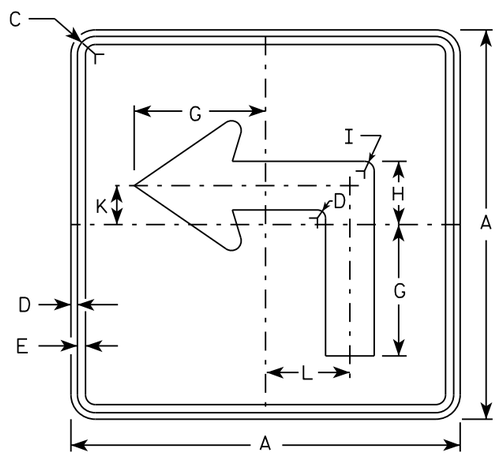

M5-1L
MM5-1L
MO5-1L
MP5-1L

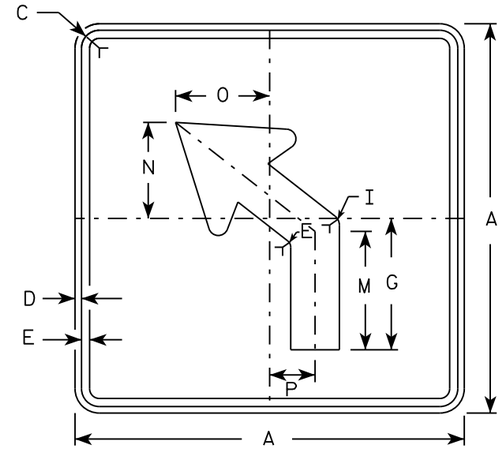

M5-2L
MM5-2L
MO5-2L
MP5-2L

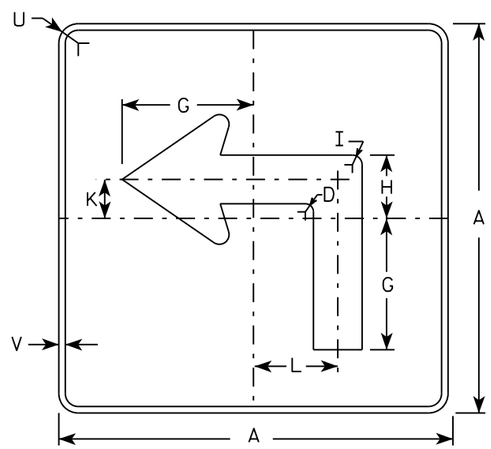

MB5-1L
MK5-1L
MN5-1L
MR5-1L

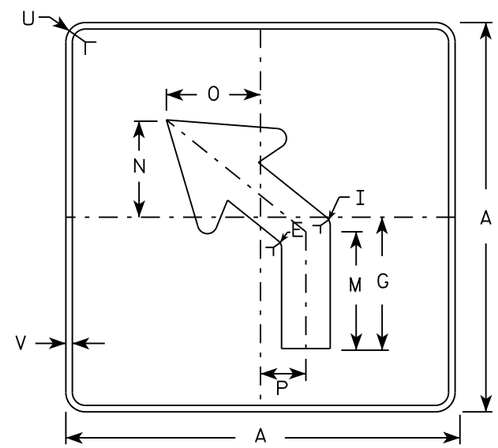

MB5-2L
MK5-2L
MN5-2L
MR5-2L

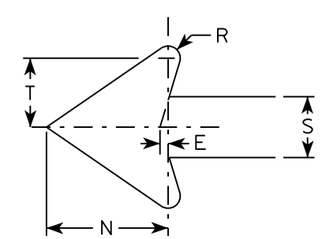

NOTES

1. Signs are Type II - Type H reflective except as shown
2. Color:
   Background - See note 4
   Message - See note 4
3. Corners may be square or rounded when base material is plywood but borders shall be rounded as shown. When base material is metal, the corners and borders shall be rounded.
4. M5-1 and M5-2 Background - White
   Message - Black
   MB5-1 and MB5-2 Background - Blue
   Message - White
   MK5-1 and MK5-2 Background - Green
   Message - White
   MM5-1 and MM5-2 Background - White
   Message - Green
   MN5-1 and MN5-2 Background - Brown
   Message - White
   MO5-1 and MO5-2 Background - Orange - Type F Reflective
   Message - Black
   MP5-1 and MP5-2 Background - White - Type H Reflective
   Message - Blue
   MR5-1 and MR5-2 Background - Brown
   Message - Yellow
5. M5-1R same as M5-1L except arrow points right.
6. M5-2R same as M5-2L except arrow tilts right.

SIZE	A	B	C	D	E	F	G	H	I	J	K	L	M	N	O	P	Q	R	S	T	U	V	W	X	Y	Z	Area sq. ft.
1																											
2	21		1 1/8	3/8	3/8		7	3 3/8	5/8		2 1/8	4 1/2	6 3/8	5 1/4	5	2 1/2		1/2	2 5/8	3	1 1/2	1/2					3.06
3	30		1 3/8	1/2	5/8		10 1/8	4 7/8	7/8		3	6 1/2	9 1/8	7 1/2	7 1/4	3 1/2		3/4	3 3/4	4 1/4	1 7/8	1/2					6.25
4	30		1 3/8	1/2	5/8		10 1/8	4 7/8	7/8		3	6 1/2	9 1/8	7 1/2	7 1/4	3 1/2		3/4	3 3/4	4 1/4	1 7/8	1/2					6.25
5	30		1 3/8	1/2	5/8		10 1/8	4 7/8	7/8		3	6 1/2	9 1/8	7 1/2	7 1/4	3 1/2		3/4	3 3/4	4 1/4	1 7/8	1/2					6.25

STANDARD SIGN
M5-1 & M5-2

WISCONSIN DEPT OF TRANSPORTATION

APPROVED Matthew R Rauch
for State Traffic Engineer

DATE 10/15/15 PLATE NO. M5-1.13

PROJECT NO:	HWY:	COUNTY:		SHEET NO:	E

FILE NAME : C:\CAEfiles\Projects\tr stdplate\M51.DGN PLOT DATE : 01-DEC-2015 18:07 PLOT BY : $$ plotuser $$ PLOT NAME : PLOT SCALE : 11.675051:1.000000

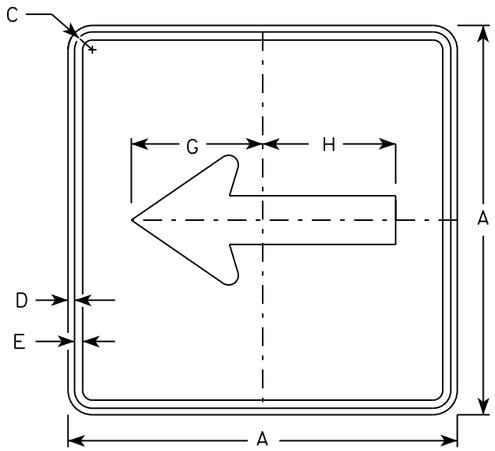

M6-1
MM6-1
MO6-1
MP6-1

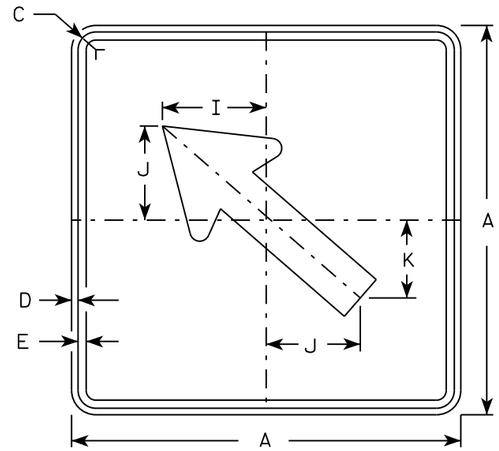

M6-2
MM6-2
MO6-2
MP6-2

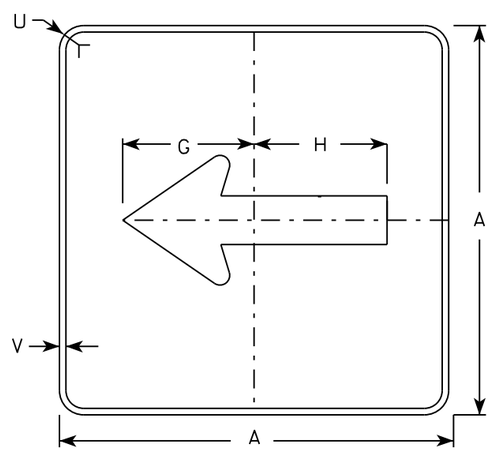

MB6-1
MK6-1
MN6-1
MR6-1

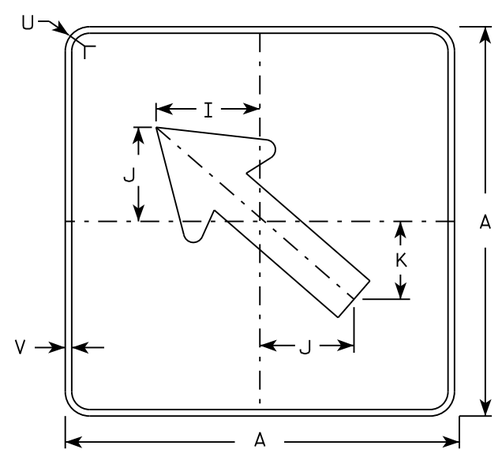

MB6-2
MK6-2
MN6-2
MR6-2

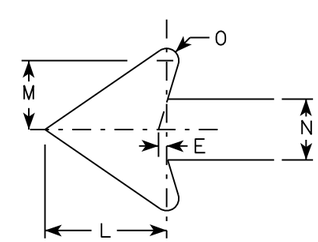

NOTES

1. Signs are Type II - Type H except as Shown
2. Color:
   Background - See note 4
   Message - See note 4
3. Corners may be square or rounded when base material is plywood but borders shall be rounded as shown. When base material is metal, the corners and borders shall be rounded.
4. M6-1 and M6-2 Background - White
   Message - Black
   MB6-1 and MB6-2 Background - Blue
   Message - White
   MK6-1 and MK6-2 Background - Green
   Message - White
   MM6-1 and MM6-2 Background - White
   Message - Green
   MN6-1 and MN6-2 Background - Brown
   Message - White
   MO6-1 and MO6-2 Background - Orange - Type F Reflective
   Message - Black
   MP6-1 and MP6-2 Background - White
   Message - Blue
   MR6-1 and MR6-2 Background - Brown
   Message - Yellow

SIZE	A	B	C	D	E	F	G	H	I	J	K	L	M	N	O	P	Q	R	S	T	U	V	W	X	Y	Z	Area sq. ft.
1																											
2	21		1 1/8	3/8	3/8		7 1/2	7 1/8	5 5/8	5	4 1/4	5 1/4	3	2 5/8	1/2						1 1/2	1/2					3.06
3	30		1 3/8	1/2	5/8		10 3/4	10 1/4	8	7 1/4	6	7 1/2	4 1/4	3 3/4	3/4						1 7/8	1/2					6.25
4	30		1 3/8	1/2	5/8		10 3/4	10 1/4	8	7 1/4	6	7 1/2	4 1/4	3 3/4	3/4						1 7/8	1/2					6.25
5	30		1 3/8	1/2	5/8		10 3/4	10 1/4	8	7 1/4	6	7 1/2	4 1/4	3 3/4	3/4						1 7/8	1/2					6.25

STANDARD SIGN
M6-1 & M6-2
SERIES

WISCONSIN DEPT OF TRANSPORTATION

APPROVED Matthew R Rauch
for State Traffic Engineer

DATE 10/15/15 PLATE 79 M6-1.15

PROJECT NO: | HWY: | COUNTY: | SHEET NO: | E

FILE NAME : C:\CAEfiles\Projects\tr stdplate\M61.DGN PLOT DATE : 01-DEC-2015 17:57 PLOT BY : $$ plotuser $$ PLOT NAME : PLOT SCALE : 11.675051:1.000000

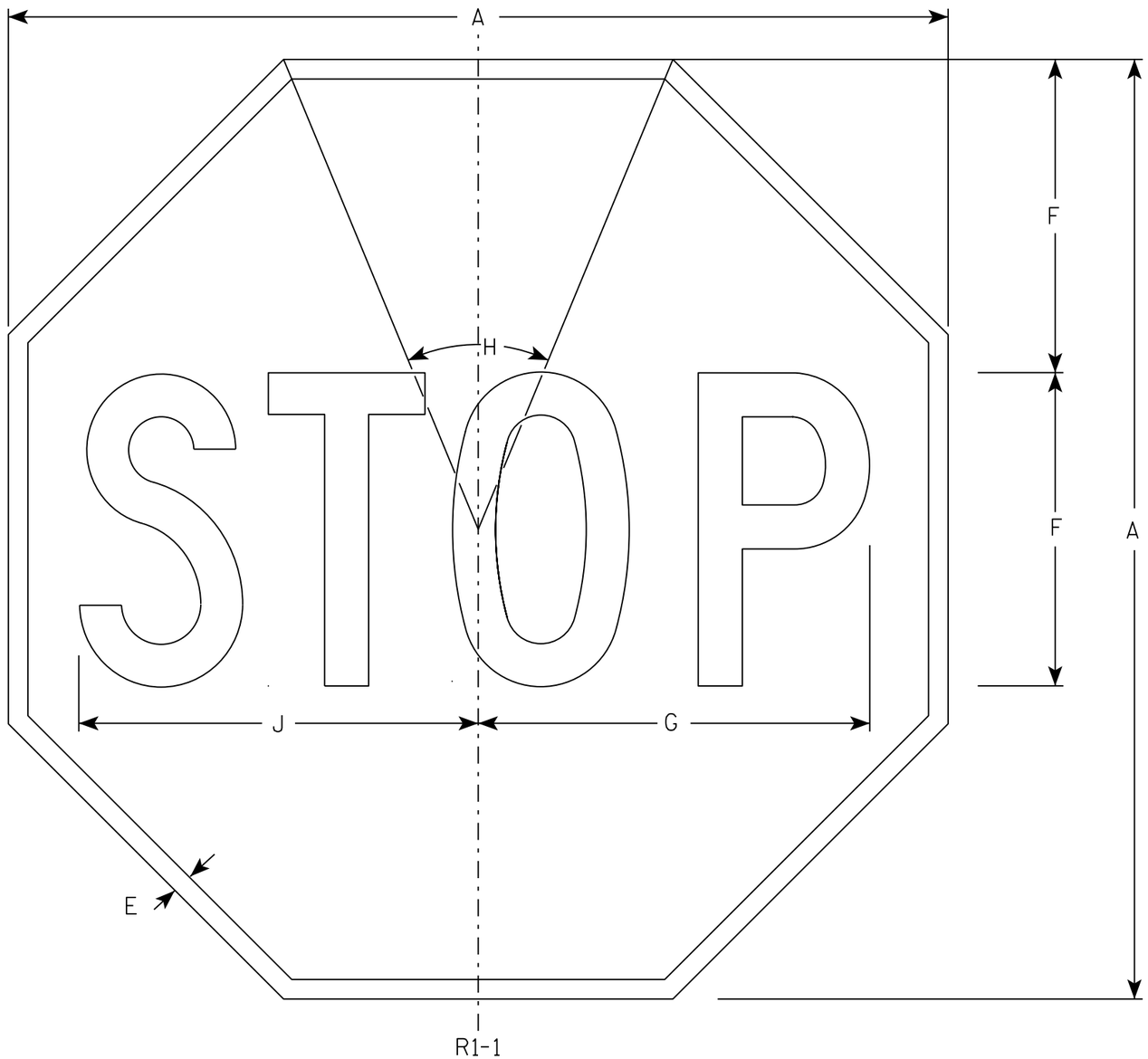

NOTES

1. Sign is Type II - Type H Reflective - reference WIS DOT Standard Specification for HIGHWAY and STRUCTURE CONSTRUCTION latest edition.
2. Color:
   Background - Red
   Message - White
3. Message Series - C

SIZE	A	B	C	D	E	F	G	H	I	J	K	L	M	N	O	P	Q	R	S	T	U	V	W	X	Y	Z	Area sq. ft.
1	30				5/8	10	12 1/2	45°		12 3/4																	5.18
2S	30				5/8	10	12 1/2	45°		12 3/4																	5.18
2M	36				3/4	12	15	45°		15 3/8																	7.46
3	36				3/4	12	15	45°		15 3/8																	7.46
4	48				1	16	20	45°		20 1/2																	13.25
5	48				1	16	20	45°		20 1/2																	13.25
6	18				3/8	6	7 3/4	45°		7 3/4																	1.86
7	12				1/4	4	5	45°		5 1/8																	0.78

STANDARD SIGN
R1-1

WISCONSIN DEPT OF TRANSPORTATION

APPROVED Matthew R Rauch
for State Traffic Engineer

DATE 11/12/15 PLATE 80 R1-1.13

PROJECT NO:	HWY:	COUNTY:		SHEET NO:	E

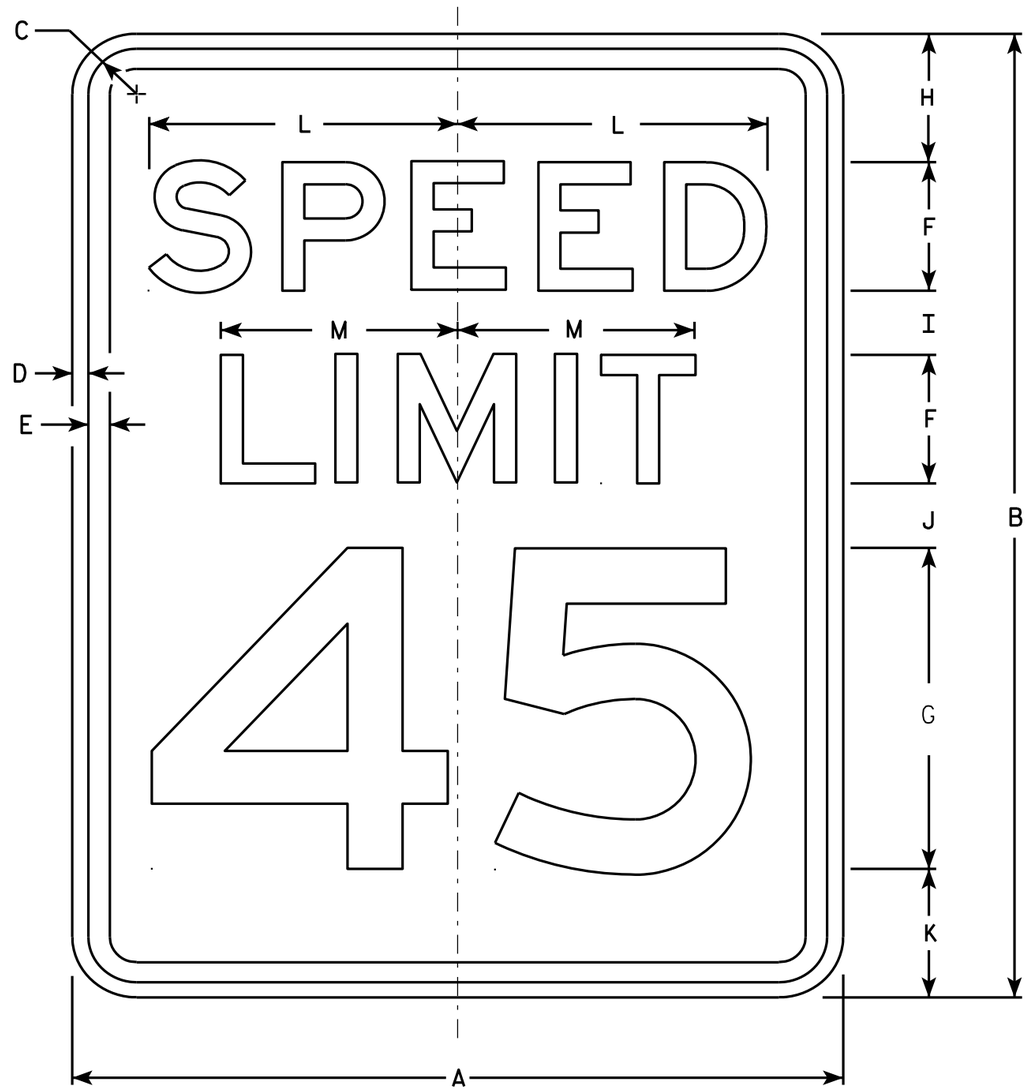

R2-1

NOTES

1. Sign is Type II - Type H Reflective - reference WIS DOT Standard Specification for HIGHWAY and STRUCTURE CONSTRUCTION latest edition.
2. Color:
   Background - White
   Message - Black
3. Message Series - E
4. Corners may be square or rounded when base material is plywood but borders shall be rounded as shown. When base material is metal, the corners and borders shall be rounded.
5. Substitute appropriate numerals and optically adjust spacing to achieve proper balance.

SIZE	A	B	C	D	E	F	G	H	I	J	K	L	M	N	O	P	Q	R	S	T	U	V	W	X	Y	Z	Area sq. ft.
1	18	24	1 1/8	3/8	1/2	3	8	3	2	2	3	7 1/4	5 1/2														3.0
2S	24	30	1 1/8	3/8	1/2	4	10	3	2 1/4	3 3/8	3 3/8	9 5/8	7 3/8														5.0
2M	30	36	1 3/8	1/2	5/8	5	12	5	2 1/2	2 1/2	4	12	9 1/4														7.5
3	36	48	1 3/8	1/2	5/8	6	14	6	5	5	6	14 3/8	11														12.0
4	36	48	1 3/8	1/2	5/8	6	14	6	5	5	6	14 3/8	11														12.0
5	48	60	2 1/4	3/4	1	8	20	6	4 1/2	6 3/4	6 3/4	19 1/4	14 5/8														20.0

STANDARD SIGN
R2-1

WISCONSIN DEPT OF TRANSPORTATION

APPROVED Matthew R Rauch
for State Traffic Engineer

DATE 5/26/10 PLATE NO. R2-1.13

PROJECT NO: | HWY: | COUNTY: | SHEET NO: 81 | E

NOTES

1. Sign is Type II - Type H Reflective
2. Color:
   Background - White
   Message - Black
3. Message Series - C
4. Corners may be square or rounded when base material is plywood but borders shall be rounded as shown. When base material is metal, the corners and borders shall be rounded.
5. Substitute appropriate numerals to nearest quarter mile and optically adjust spacing to achieve proper balance.

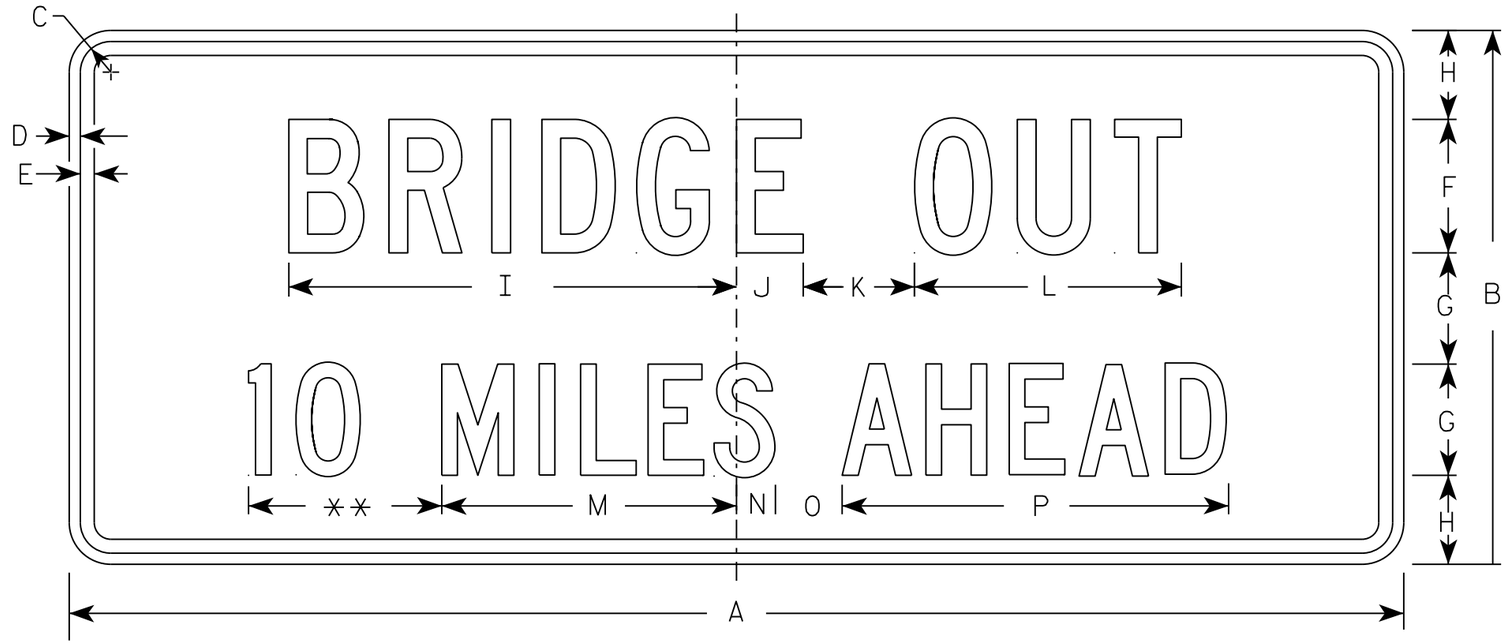

R11-3C

** See Note 5

SIZE	A	B	C	D	E	F	G	H	I	J	K	L	M	N	O	P	Q	R	S	T	U	V	W	X	Y	Z	Area sq. ft.
1	36	15	1 3/8	1/2	5/8	4	3	2 1/2	13 1/4	2 1/4	3	8	8	1 1/2	2	10 3/4											3.75
2S	60	24	1 3/8	1/2	5/8	6	5	4	20 1/8	3	5	12	13 1/4	1 3/4	3	17 3/8											10.0
2M	60	24	1 3/8	1/2	5/8	6	5	4	20 1/8	3	5	12	13 1/4	1 3/4	3	17 3/8											10.0
3																											
4																											
5																											

STANDARD SIGN
R11-3C

WISCONSIN DEPT OF TRANSPORTATION

APPROVED Matthew R Rauch
for State Traffic Engineer

DATE 7/28/16 PLATE R11-3C.3

PROJECT NO:

SHEET NO: E

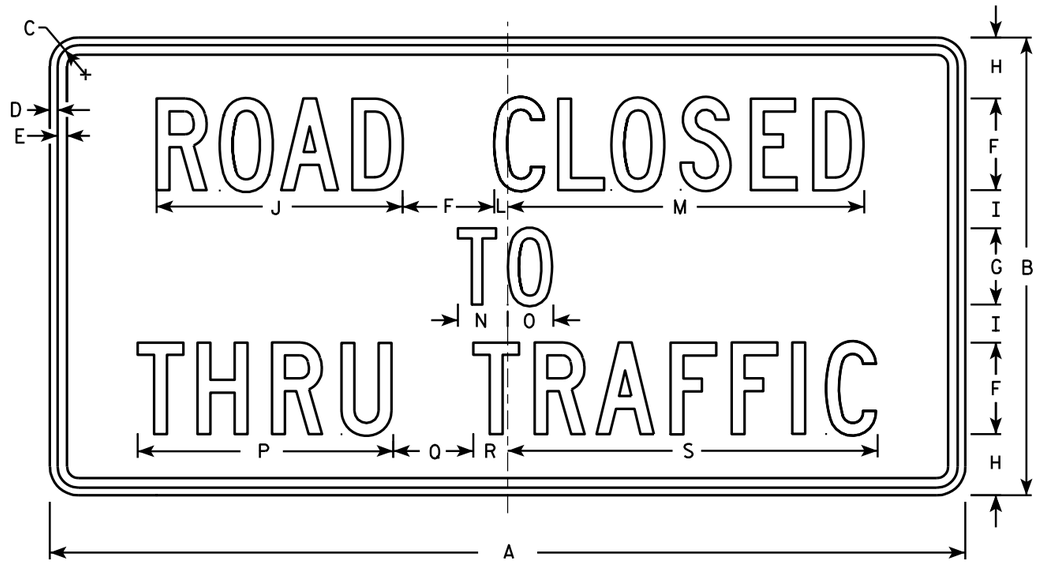

R11-4

NOTES

1. Sign is Type II - Type H Reflective - reference WIS DOT Standard Specification for HIGHWAY and STRUCTURE CONSTRUCTION latest edition.
2. Color:
   Background - White
   Message - Black
3. Message Series - C
4. Corners may be square or rounded when base material is plywood but borders shall be rounded as shown. When base material is metal, the corners and borders shall be rounded.

SIZE	A	B	C	D	E	F	G	H	I	J	K	L	M	N	O	P	Q	R	S	T	U	V	W	X	Y	Z	Area sq. ft.
1																											
2S	60	30	1 3/8	1/2	5/8	6	5	4	2 1/2	16 1/8		7/8	23 3/8	3 1/4	3	16 3/4	5 1/4	2 1/4	24 1/4								12.5
2M	60	30	1 3/8	1/2	5/8	6	5	4	2 1/2	16 1/8		7/8	23 3/8	3 1/4	3	16 3/4	5 1/4	2 1/4	24 1/4								12.5
3																											
4																											
5																											

STANDARD SIGN
R11 - 4

WISCONSIN DEPT OF TRANSPORTATION

APPROVED Matthew R Rauch
for State Traffic Engineer

DATE 4/1/11 PLATE NO. R11-4.3

PROJECT NO: | HWY: | COUNTY: | SHEET NO: 83 | E

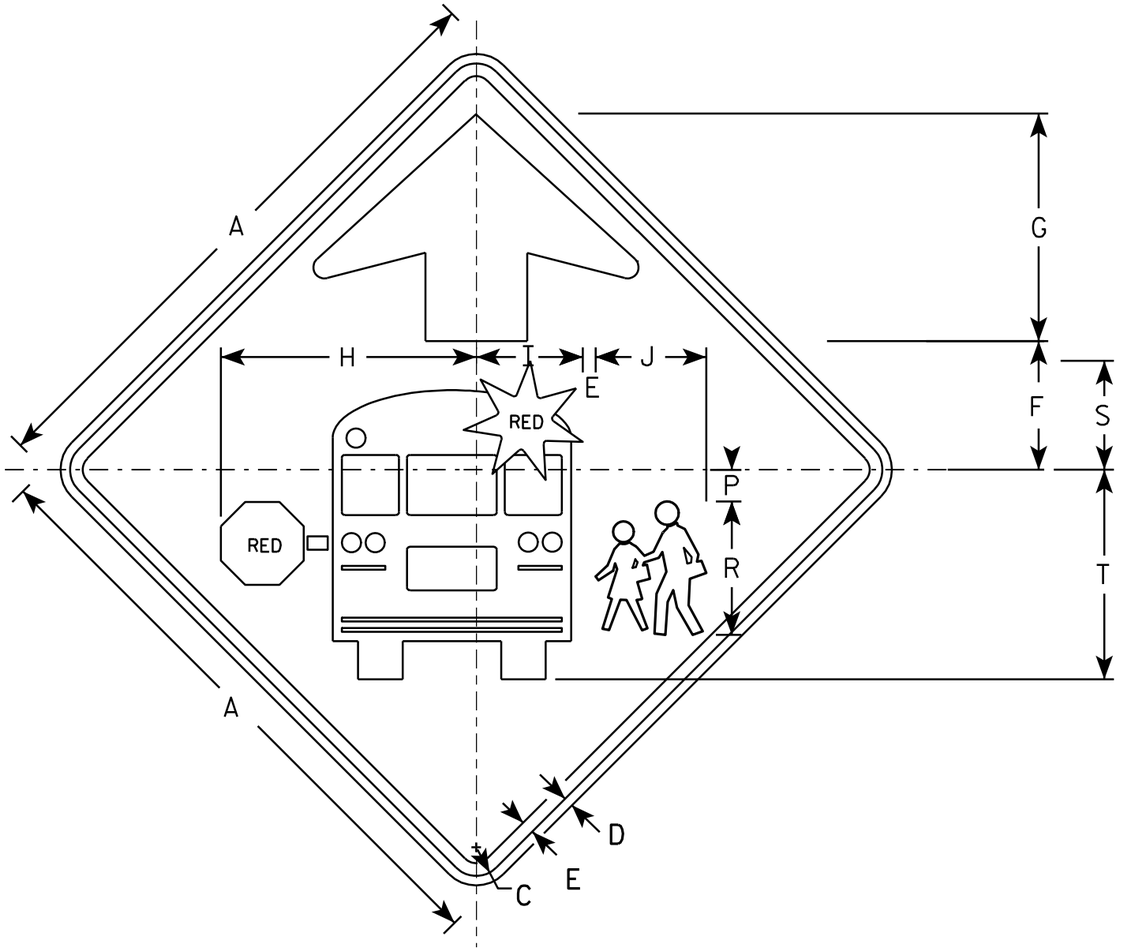

S3-1

NOTES

1. All Signs Type II - Type F Reflective - reference WIS DOT Standard Specification for HIGHWAY and STRUCTURE CONSTRUCTION latest edition.
2. Color:
   Background - YELLOW-GREEN
   Message - BLACK except as noted
   Circles except PEDS- RED BACKGROUND
3. Corners may be square or rounded when base material is plywood but borders shall be rounded as shown. When base material is metal, the corners and borders shall be rounded.

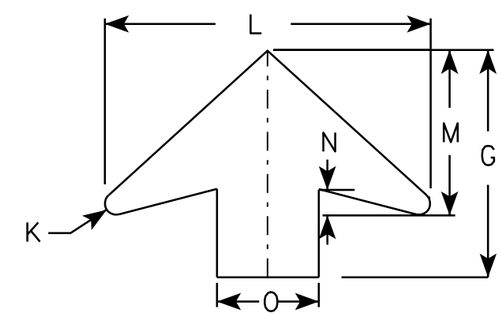

ARROW DETAIL

SIZE	A	B	C	D	E	F	G	H	I	J	K	L	M	N	O	P	Q	R	S	T	U	V	W	X	Y	Z	Area sq. ft.
1	30		1 3/8	1/2	5/8	6 1/4	11 1/4	12 1/2	5 1/4	5 1/2	1/2	16	8	1 1/4	5	1 1/2		6 5/8	5 3/8	10 3/8							6.25
2	36		1 5/8	5/8	3/4	7 1/2	13 1/2	15 1/8	6 1/4	6 1/2	5/8	19 1/4	9 3/4	1 5/8	6	1 7/8		7 7/8	6 3/8	12 3/8							9.0
3	48		2 1/4	3/4	1	10	17 7/8	20 1/8	8 3/8	8 3/4	7/8	25 5/8	13	2	8	2 1/2		10 1/2	8 1/2	16 1/2							16.0
4	48		2 1/4	3/4	1	10	17 7/8	20 1/8	8 3/8	8 3/4	7/8	25 5/8	13	2	8	2 1/2		10 1/2	8 1/2	16 1/2							16.0
5																											

STANDARD SIGN
S3-1

WISCONSIN DEPT OF TRANSPORTATION

APPROVED Matthew R Rauch
for State Traffic Engineer

DATE 6/8/10 PLATE NO. S3-1.6

PROJECT NO:

SHEET NO: 84 E

NOTES

1. Sign is Type II - Type F Reflective - reference WIS DOT Standard Specification for HIGHWAY and STRUCTURE CONSTRUCTION latest edition.
2. Color:
   Background - Yellow
   Message - Black
3. Corners may be square or rounded when base material is plywood but borders shall be rounded as shown. When base material is metal, the corners and borders shall be rounded.
4. W1-2L is the same as W1-2R except the arrow is reversed along the vertical centerline.

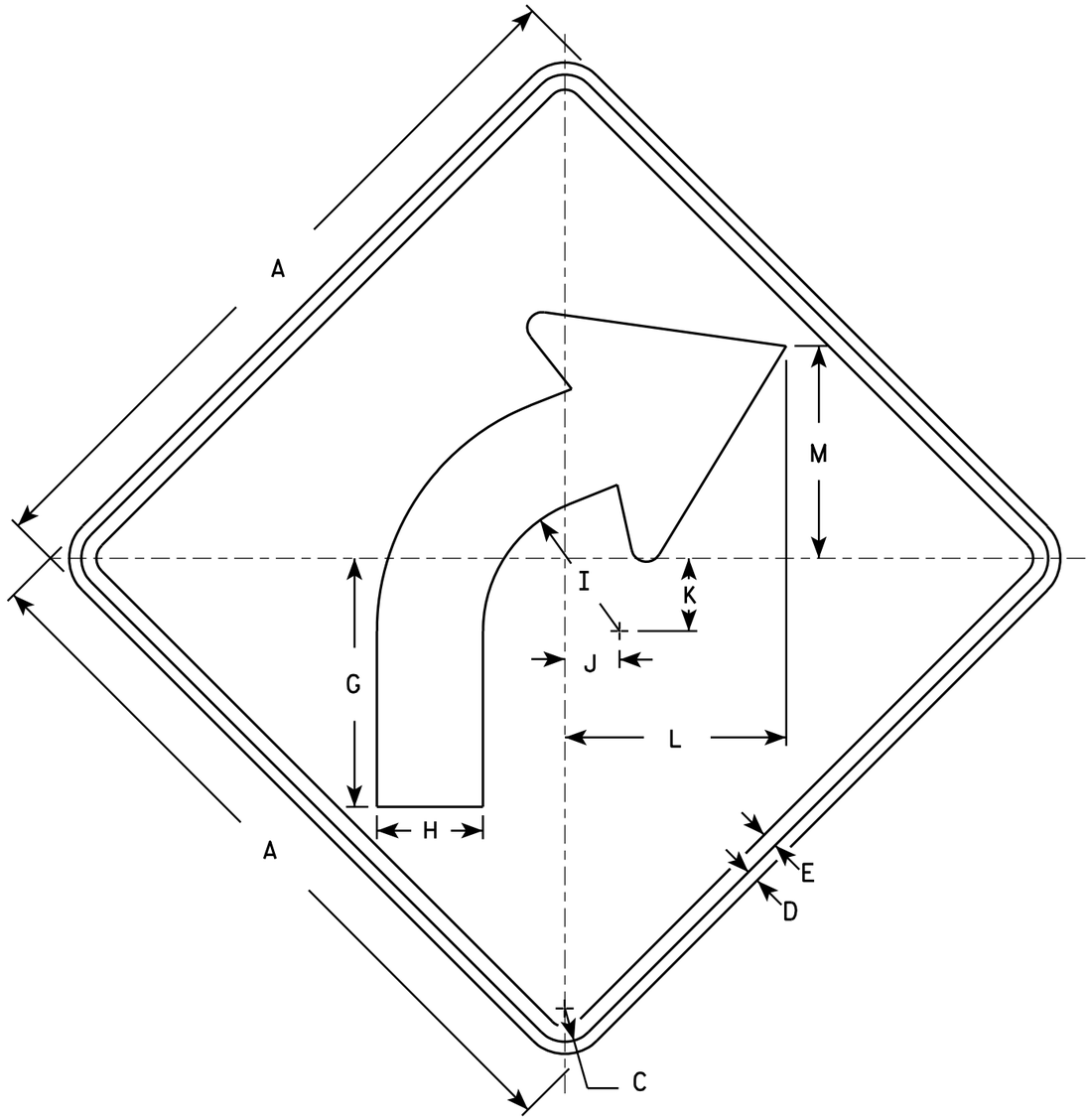

W1-2R

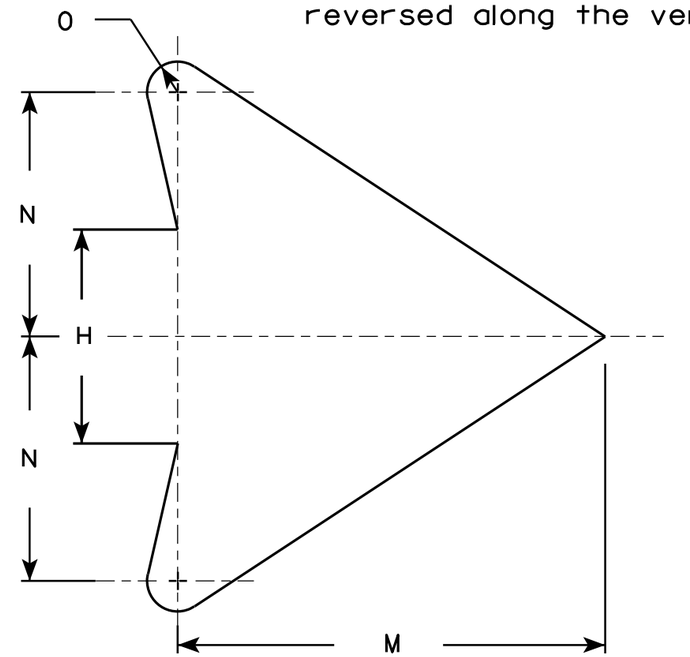

ARROW DETAIL

SIZE	A	B	C	D	E	F	G	H	I	J	K	L	M	N	O	P	Q	R	S	T	U	V	W	X	Y	Z	Area sq. ft.
1	24		1 1/8	3/8	1/2		8 1/4	3 1/2	4 1/2	1 3/4	2 3/8	7 1/4	7	4	1/2												4.0
2S	30		1 3/8	1/2	5/8		10 1/4	4 3/8	5 5/8	2 1/4	3	9 1/8	8 3/4	5	5/8												6.25
2M	36		1 5/8	5/8	3/4		12 3/8	5 1/4	6 3/4	2 5/8	3 1/2	10 7/8	10 1/2	6	3/4												9.0
3	36		1 5/8	5/8	3/4		12 3/8	5 1/4	6 3/4	2 5/8	3 1/2	10 7/8	10 1/2	6	3/4												9.0
4	36		1 5/8	5/8	3/4		12 3/8	5 1/4	6 3/4	2 5/8	3 1/2	10 7/8	10 1/2	6	3/4												9.0
5	48		2 1/4	3/4	1		16 1/2	7	9	3 1/2	4 5/8	14 1/2	14	8	1												16.0

STANDARD SIGN
W1-2

WISCONSIN DEPT OF TRANSPORTATION

APPROVED Matthew R Rauch
for State Traffic Engineer

DATE 5/15/12 PLATE NO. W1-2.10

PROJECT NO:	HWY:	COUNTY:		SHEET NO: 85	E

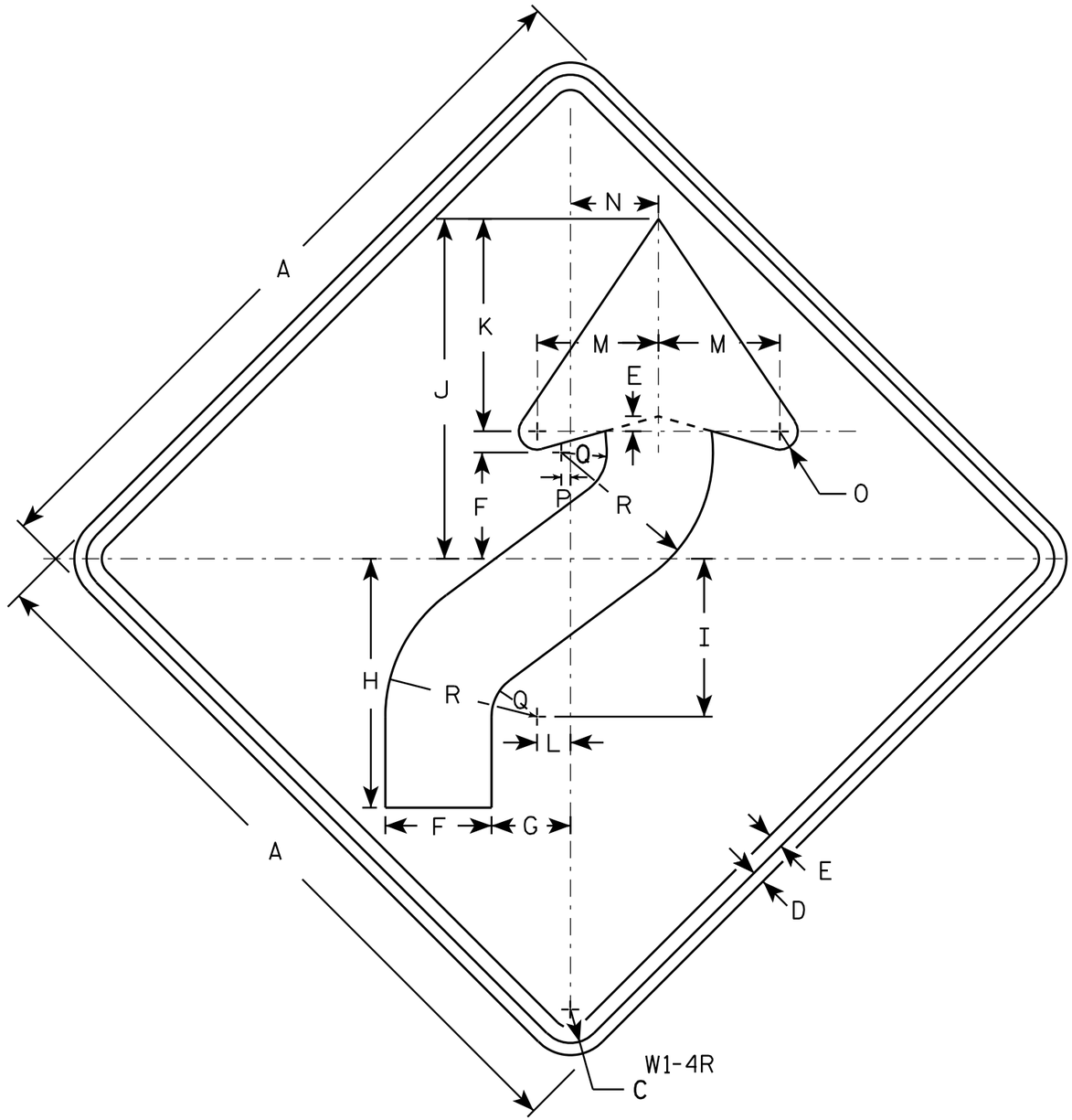

NOTES

1. Sign is Type II - Type F Reflective - reference WIS DOT Standard Specification for HIGHWAY and STRUCTURE CONSTRUCTION latest edition.
2. Color:
   Background - Yellow
   Message - Black
3. Corners may be square or rounded when base material is plywood but borders shall be rounded as shown. When base material is metal, the corners and borders shall be rounded.
4. W1-4L is the same as W1-4R except the arrow is reversed along the vertical centerline.

SIZE	A	B	C	D	E	F	G	H	I	J	K	L	M	N	O	P	Q	R	S	T	U	V	W	X	Y	Z	Area sq. ft.
1	24		1 1/8	3/8	1/2	3 1/2	2 5/8	8 1/4	5 1/4	11 1/4	7	1 1/8	4	3	5/8	1/4	1 1/2	5									4.0
2S	30		1 3/8	1/2	5/8	4 3/8	3 1/4	10 1/4	6 1/2	14	8 3/4	1 3/8	5	3 5/8	3/4	3/8	1 7/8	6 1/4									6.25
2M	36		1 5/8	5/8	3/4	5 1/4	4	12 3/8	7 7/8	16 7/8	10 1/2	1 5/8	6	4 1/2	1	1/2	2 1/4	7 1/2									9.0
3	36		1 5/8	5/8	3/4	5 1/4	4	12 3/8	7 7/8	16 7/8	10 1/2	1 5/8	6	4 1/2	1	1/2	2 1/4	7 1/2									9.0
4	36		1 5/8	5/8	3/4	5 1/4	4	12 3/8	7 7/8	16 7/8	10 1/2	1 5/8	6	4 1/2	1	1/2	2 1/4	7 1/2									9.0
5	48		2 1/4	3/4	1	7	5 1/4	16 1/2	10 1/2	22 1/2	14	2 1/4	8	6	1 1/4	5/8	3	10									16.0

STANDARD SIGN
W1-4

WISCONSIN DEPT OF TRANSPORTATION

APPROVED Matthew R Rauch for State Traffic Engineer

DATE 5/17/12 PLATE NO. W1-4.11

PROJECT NO:	HWY:	COUNTY:		SHEET NO: 86	E

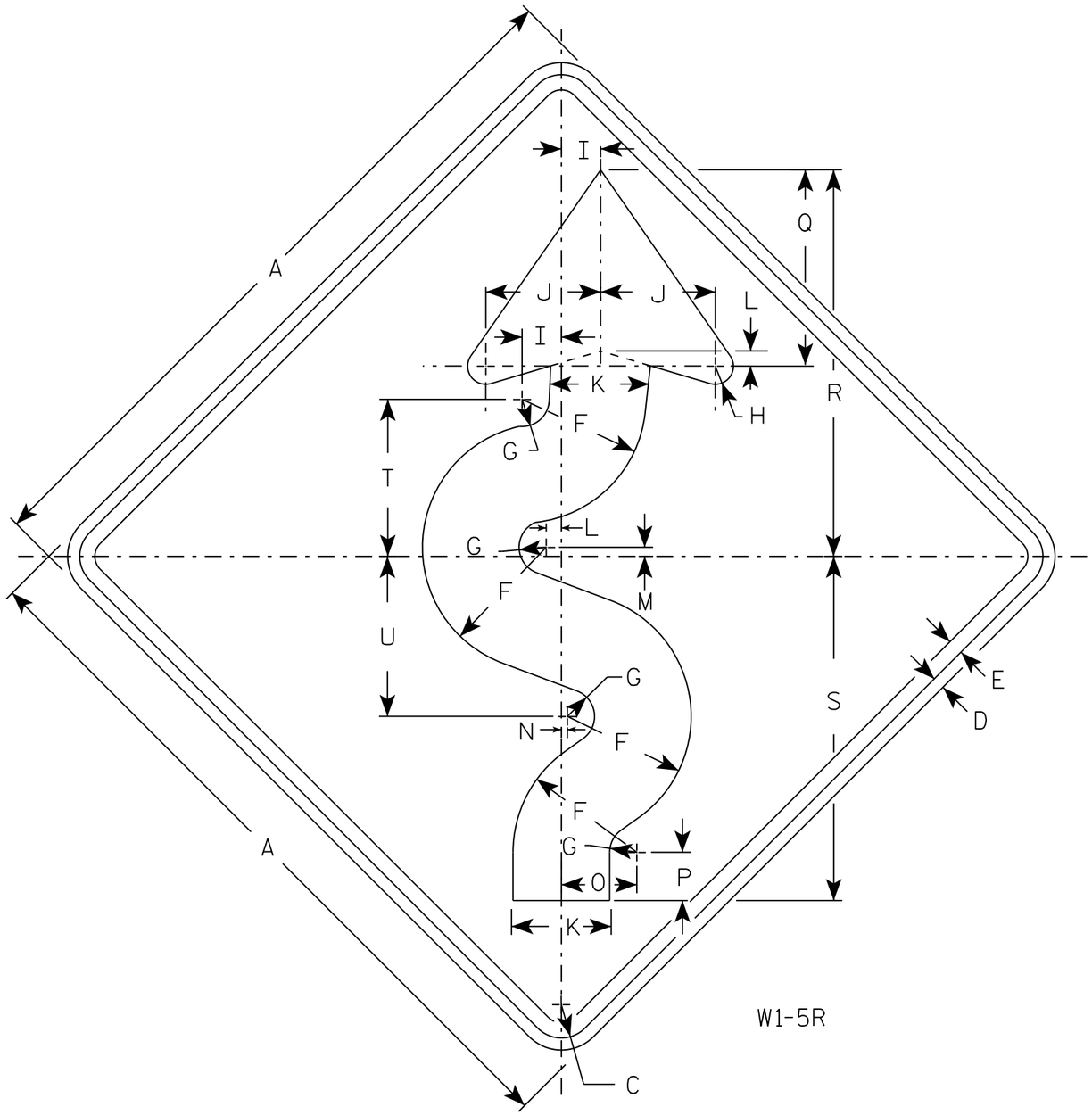

W1-5R

NOTES

1. Sign is Type II - Type F Reflective
2. Color:
   Background - Yellow
   Message - Black
3. W1-5L is the same as W1-5R except the arrow is reversed along the vertical centerline.
4. If used with W13-1 of 30 MPH or less, use 36" sign for Size 2S.

SIZE	A	B	C	D	E	F	G	H	I	J	K	L	M	N	O	P	Q	R	S	T	U	V	W	X	Y	Z	Area sq. ft.
1	24		1 1/8	3/8	1/2	4 1/8	7/8	5/8	1 1/4	3 3/4	3 1/4	1/2	1/4	1/8	2 1/2	1 5/8	6 1/2	12 3/4	11 3/8	5 1/4	5 1/4						4.0
2S	30		1 3/8	1/2	5/8	5 1/8	1 1/8	3/4	1 5/8	4 3/4	4 1/8	5/8	3/8	1/4	3 1/8	2	8 1/8	16	14 1/4	6 1/2	6 5/8						6.25
2M	36		1 5/8	5/8	3/4	6 1/4	1 3/8	1	1 7/8	5 5/8	4 7/8	3/4	3/8	1/4	3 3/4	2 7/8	9 3/4	19 1/8	17 1/8	7 3/4	7 7/8						9.0
3	36		1 5/8	5/8	3/4	6 1/4	1 3/8	1	1 7/8	5 5/8	4 7/8	3/4	3/8	1/4	3 3/4	2 7/8	9 3/4	19 1/8	17 1/8	7 3/4	7 7/8						9.0
4	36		1 5/8	5/8	3/4	6 1/4	1 3/8	1	1 7/8	5 5/8	4 7/8	3/4	3/8	1/4	3 3/4	2 7/8	9 3/4	19 1/8	17 1/8	7 3/4	7 7/8						9.0
5	48		2 1/4	3/4	1	8 1/4	1 3/4	1 1/4	2 1/2	7 1/2	6 1/2	1	1/2	3/8	5	3 1/4	13	25 1/2	22 3/4	10 3/8	10 1/2						16.0

STANDARD SIGN
W1-5

WISCONSIN DEPT OF TRANSPORTATION

APPROVED Matthew R Rauch for State Traffic Engineer

DATE 8/1/16 PLATE NO W1-5.9

87

PROJECT NO: | HWY: | COUNTY: | SHEET NO: | E

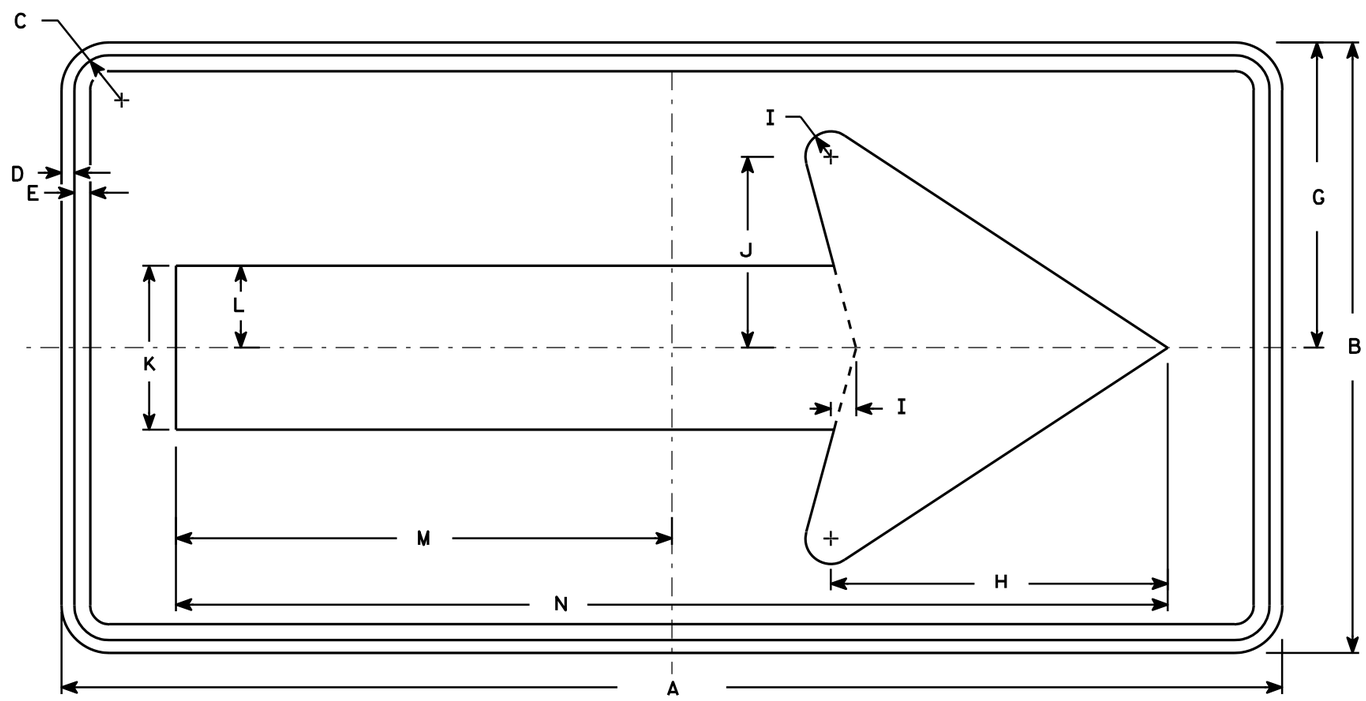

W1-6

NOTES

1. Sign is Type II - Type F Reflective - reference WIS DOT Standard Specification for HIGHWAY and STRUCTURE CONSTRUCTION latest edition.
2. Color:
   Background - Yellow
   Message - Black
3. Corners may be square or rounded when base material is plywood but borders shall be rounded as shown. When base material is metal, the corners and borders shall be rounded.

SIZE	A	B	C	D	E	F	G	H	I	J	K	L	M	N	O	P	Q	R	S	T	U	V	W	X	Y	Z	Area sq. ft.
1	36	18	1 1/8	3/8	3/8		9	10	3/4	5 5/8	4 3/4	2 3/8	14 5/8	29 1/4													4.5
2S	48	24	1 3/8	1/2	5/8		12	13 1/4	1	7 1/2	6 1/2	3 1/4	19 1/2	39													8.0
2M	48	24	1 3/8	1/2	5/8		12	13 1/4	1	7 1/2	6 1/2	3 1/4	19 1/2	39													8.0
3	60	30	1 3/8	1/2	5/8		15	16 1/4	1 1/4	9 1/4	8	4	24 3/8	48 3/4													12.5
4	60	30	1 3/8	1/2	5/8		15	16 1/4	1 1/4	9 1/4	8	4	24 3/8	48 3/4													12.5
5	96	48	2 1/4	3/4	1		24	26 1/2	2	15	13	6 1/2	39	78													32.0

STANDARD SIGN
W1-6

WISCONSIN DEPT OF TRANSPORTATION

APPROVED Matthew R Rauch
for State Traffic Engineer

DATE 6/7/10 PLATE NO. W1-6.8

PROJECT NO:	HWY:	COUNTY:		SHEET NO: 88	E

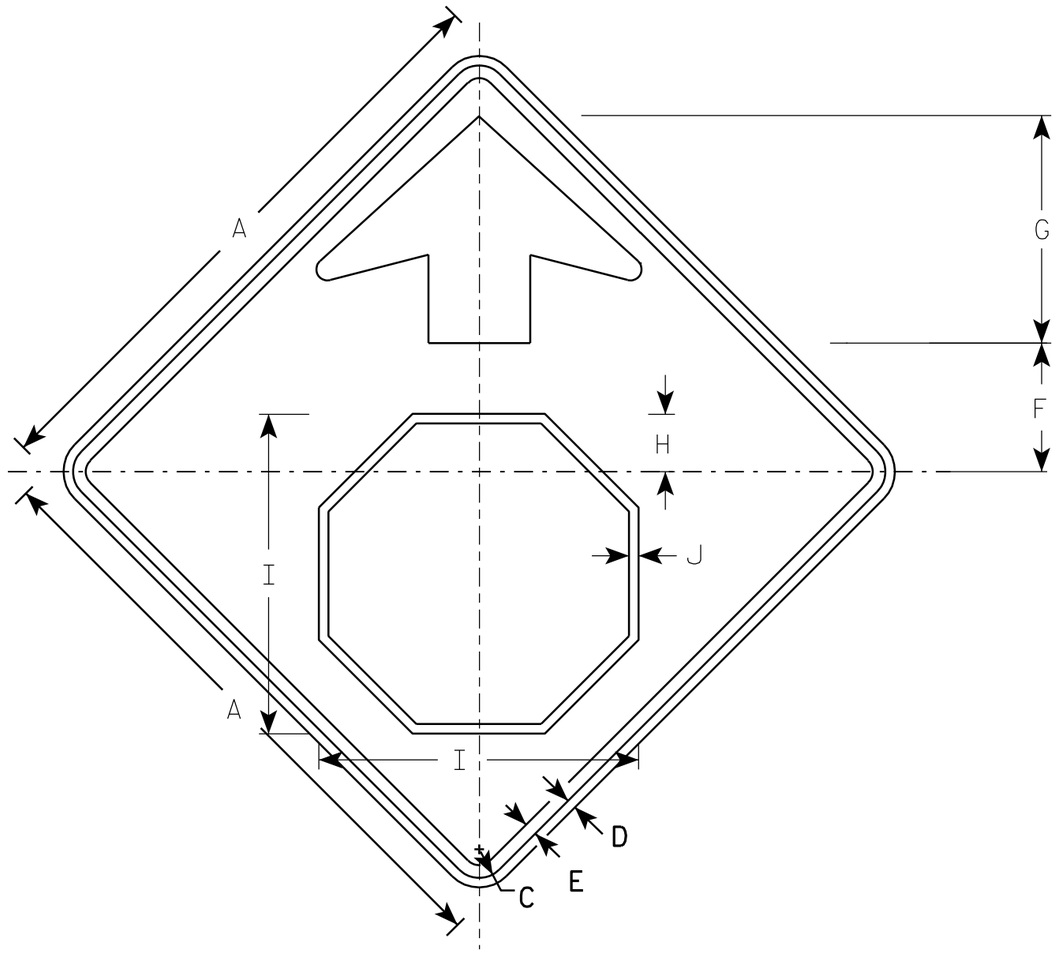

W3-1

NOTES

1. All Signs Type II - Type F Reflective - reference WIS DOT Standard Specification for HIGHWAY and STRUCTURE CONSTRUCTION latest edition.
2. Color:
   - Background - YELLOW
   - Arrow & Border - BLACK
   - Stop Symbol - WHITE BORDER ON RED BACKGROUND

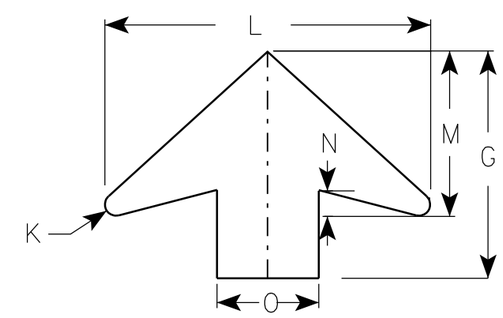

ARROW DETAIL

SIZE	A	B	C	D	E	F	G	H	I	J	K	L	M	N	O	P	Q	R	S	T	U	V	W	X	Y	Z	Area sq. ft.
1	30		1 3/8	1/2	5/8	6 1/4	11 1/4	2 7/8	15 3/4	1/2	1/2	16	8	1 1/4	5												6.25
2S	36		1 5/8	5/8	3/4	7 1/2	13 1/2	3 1/2	19	5/8	5/8	19 1/4	9 3/4	1 5/8	6												9.0
2M	36		1 5/8	5/8	3/4	7 1/2	13 1/2	3 1/2	19	5/8	5/8	19 1/4	9 3/4	1 5/8	6												9.0
3	36		1 5/8	5/8	3/4	7 1/2	13 1/2	3 1/2	19	5/8	5/8	19 1/4	9 3/4	1 5/8	6												9.0
4	48		2 1/4	3/4	1	10	17 7/8	4 1/2	25 1/8	3/4	7/8	25 5/8	13	2	8												16.0
5	48		2 1/4	3/4	1	10	17 7/8	4 1/2	25 1/8	3/4	7/8	25 5/8	13	2	8												16.0

STANDARD SIGN
W3-1

WISCONSIN DEPT OF TRANSPORTATION

APPROVED Matthew R Rauch
for State Traffic Engineer

DATE 6/7/10 PLATE NO. W3-1.12

PROJECT NO:

SHEET NO: 89 E

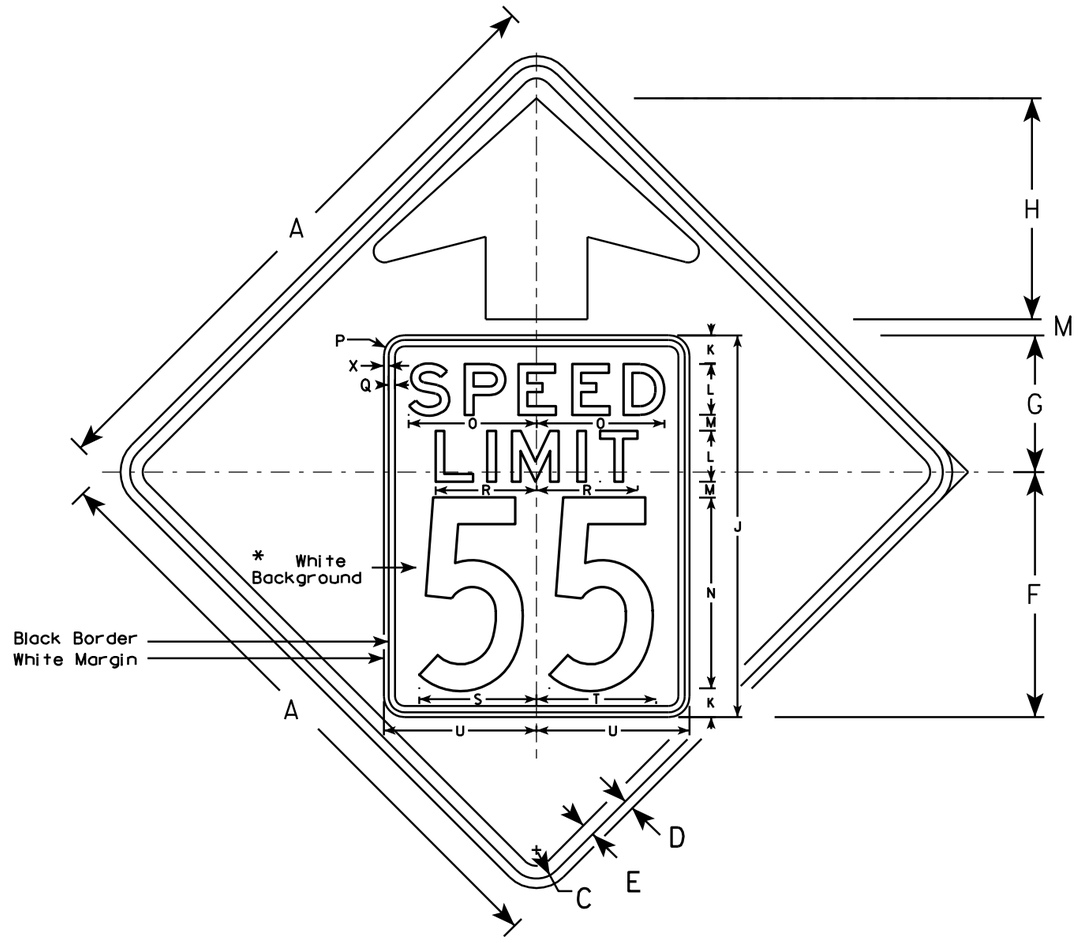

W3-5

NOTES

1. Sign is Type II - Type F Reflective - reference WIS DOT Standard Specification for HIGHWAY and STRUCTURE CONSTRUCTION latest edition.
2. Color: *
   Background - YELLOW*
   Message - BLACK
3. Message Series - C for numbers Series E for wording
4. Substitute appropriate numerals and optically adjust spacing to achieve proper balance

*Speed Limit Sign shall have a White Background

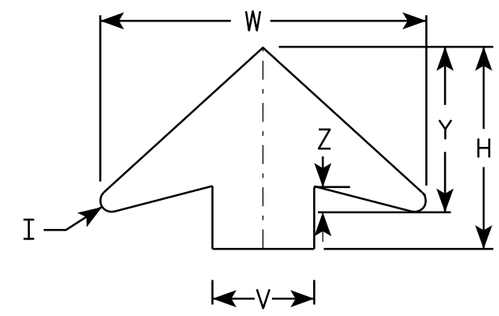

ARROW DETAIL

SIZE	A	B	C	D	E	F	G	H	I	J	K	L	M	N	O	P	Q	R	S	T	U	V	W	X	Y	Z	Area sq. ft.
1																											
2S	36		1 5/8	5/8	3/4	14 1/2	9 1/2	11 1/2	5/8	24	2	3	1	12	7 1/8	1 1/2	3/8	5 3/4	7 1/4	7 1/8	9	6	19 1/4	3/8	9 3/4	1 5/8	9.0
2M	36		1 5/8	5/8	3/4	14 1/2	9 1/2	11 1/2	5/8	24	2	3	1	12	7 1/8	1 1/2	3/8	5 3/4	7 1/4	7 1/8	9	6	19 1/4	3/8	9 3/4	1 5/8	9.0
3	36		1 5/8	5/8	3/4	14 1/2	9 1/2	11 1/2	5/8	24	2	3	1	12	7 1/8	1 1/2	3/8	5 3/4	7 1/4	7 1/8	9	6	19 1/4	3/8	9 3/4	1 5/8	9.0
4	48		2 1/4	3/4	1	19 1/4	10 3/4	17 3/8	7/8	30	2 1/4	4	1 1/4	15	10	1 5/8	1/2	8	9 1/4	9 3/8	12	8	25 5/8	3/8	13	2	16.0
5	48		2 1/4	3/4	1	19 1/4	10 3/4	17 3/8	7/8	30	2 1/4	4	1 1/4	15	10	1 5/8	1/2	8	9 1/4	9 3/8	12	8	25 5/8	3/8	13	2	16.0

STANDARD SIGN
W3-5

WISCONSIN DEPT OF TRANSPORTATION

APPROVED Matthew R Rauch
for State Traffic Engineer

DATE 5/29/12 PLATE NO. W3-5.5

PROJECT NO:

SHEET NO: 90 E

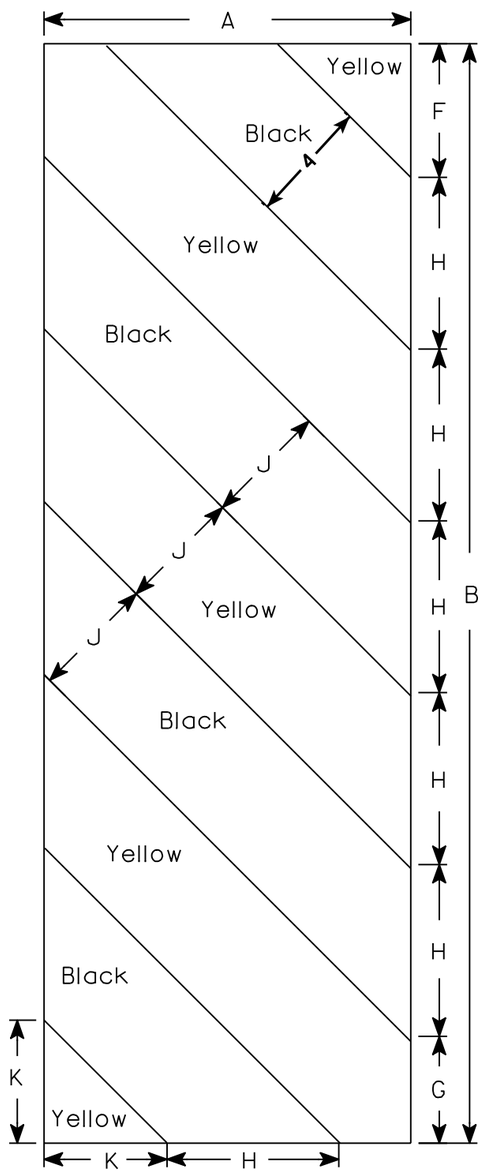

W5-52L

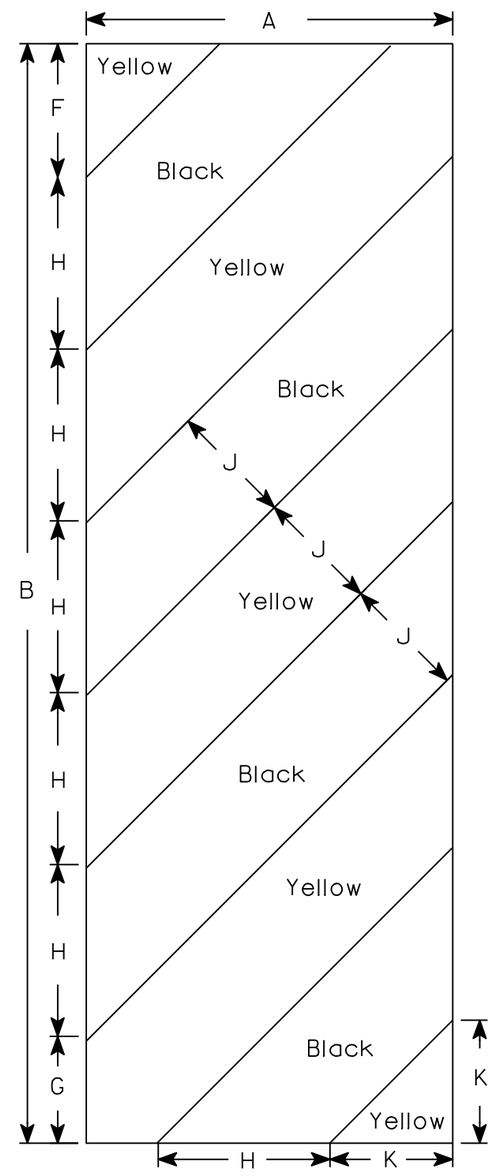

W5-52R

NOTES

1. Sign is Type II - Type F Reflective - reference WIS DOT Standard Specification for HIGHWAY and STRUCTURE CONSTRUCTION latest edition.
2. Color:
   Background - Yellow
   Message - Black
3. Corners may be square or rounded when base material is plywood but borders shall be rounded as shown. When base material is metal, the corners and borders shall be rounded.
4. Alternate colors of stripes as shown.

SIZE	A	B	C	D	E	F	G	H	I	J	K	L	M	N	O	P	Q	R	S	T	U	V	W	X	Y	Z	Area sq. ft.
1																											
2S	12	36				4 3/8	3 1/2	5 5/8	45°	4	4																3.0
2M	12	36				4 3/8	3 1/2	5 5/8	45°	4	4																3.0
3	18	54				6	5 1/2	8 1/2	45°	6	6 9/16																6.75
4																											
5																											

STANDARD SIGN
W5-52L & W5-52R

WISCONSIN DEPT OF TRANSPORTATION

APPROVED Matthew R Rauch
for State Traffic Engineer

DATE 5/29/12 PLATE NO. W5-52.9

PROJECT NO: | HWY: | COUNTY: | SHEET NO: 91 | E

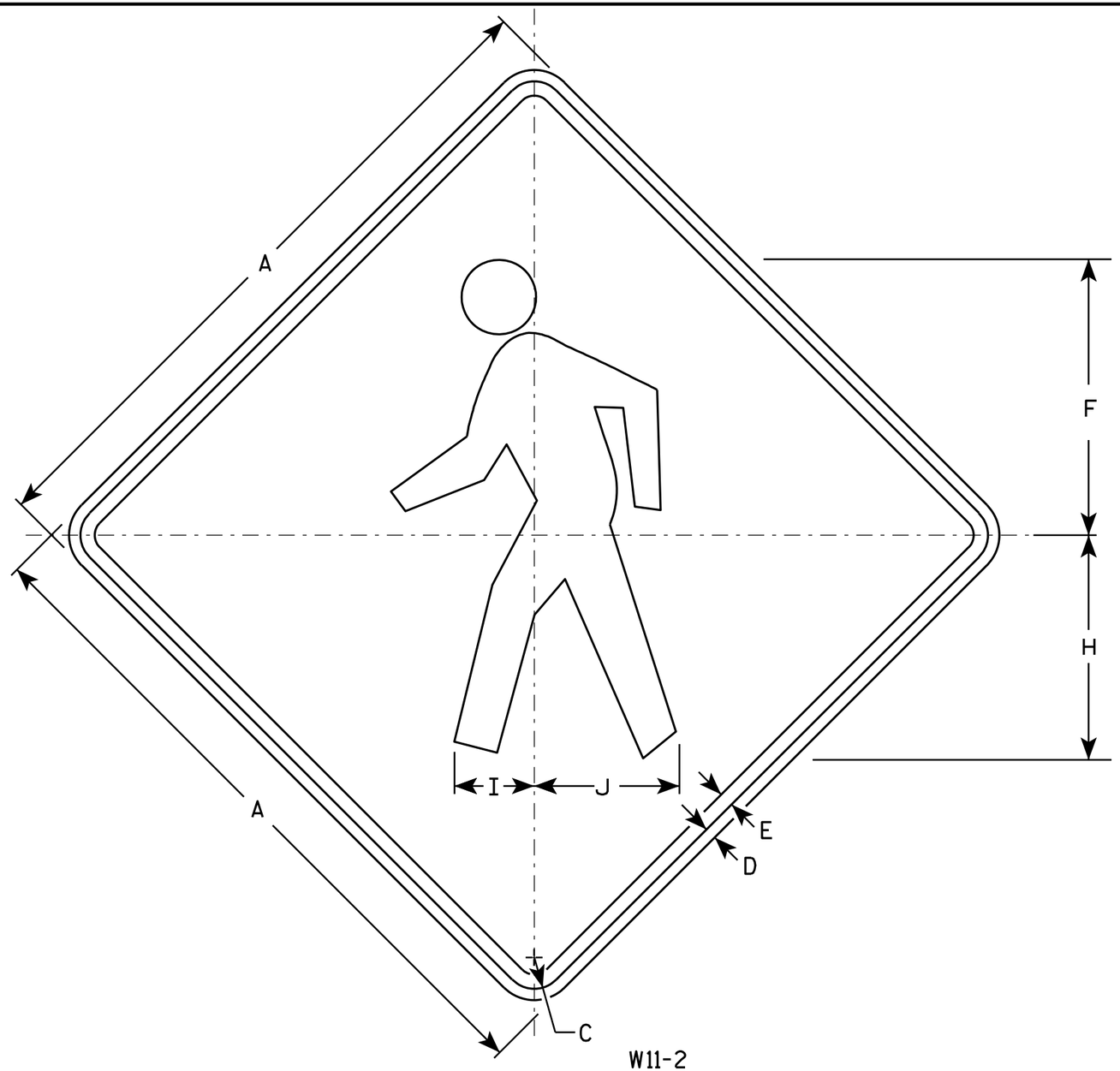

W11-2

NOTES

1. Sign is Type II - Type F Reflective - reference WIS DOT Standard Specification for HIGHWAY and STRUCTURE CONSTRUCTION latest edition.
2. Color:
   Background - Yellow
   Message - Black
3. Corners may be square or rounded when base material is plywood but borders shall be rounded as shown. When base material is metal, the corners and borders shall be rounded.

SIZE	A	B	C	D	E	F	G	H	I	J	K	L	M	N	O	P	Q	R	S	T	U	V	W	X	Y	Z	Area sq. ft.
1	24		1 1/8	3/8	1/2	9 3/4		7 7/8	2 7/8	5 1/8																	4.0
2S	30		1 3/8	1/2	5/8	12 1/8		9 7/8	3 1/2	6 3/8																	6.25
2M	36		1 5/8	5/8	3/4	14 1/2		11 7/8	4 1/4	7 5/8																	9.0
3	36		1 5/8	5/8	3/4	14 1/2		11 7/8	4 1/4	7 5/8																	9.0
4	48		2 1/4	3/4	1	19 3/8		15 3/4	5 5/8	10 1/4																	16.0
5																											

STANDARD SIGN
W11-2

WISCONSIN DEPT OF TRANSPORTATION

APPROVED Matthew R Rauch
for State Traffic Engineer

DATE 6/7/10 PLATE NO. W11-2.7

PROJECT NO:	HWY:	COUNTY:		SHEET NO: 92	E

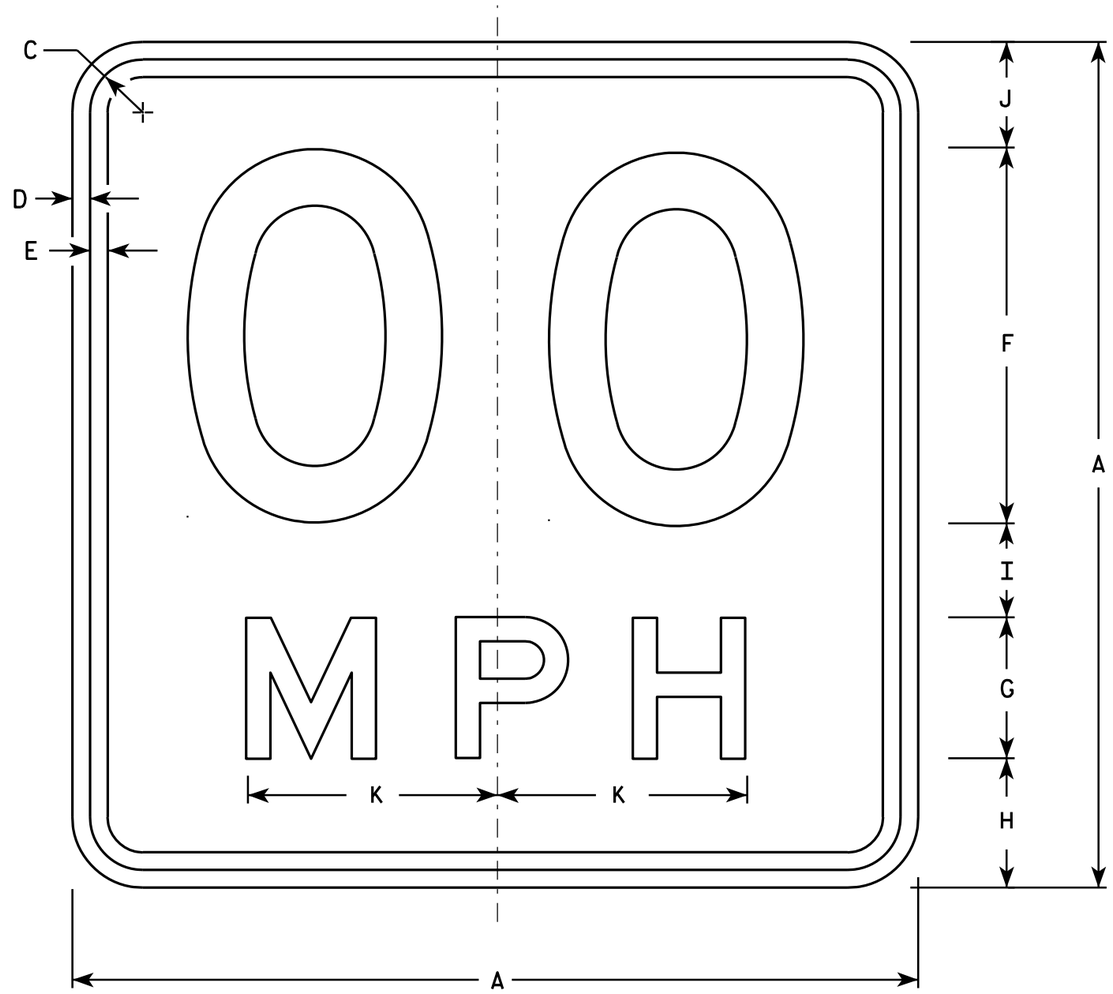

W13-1

* For 30" x 30" Warning Signs, use 18" x 18" W13-1 signs.
For 36" x 36" Warning Signs, use 24" x 24" W13-1 signs.

NOTES

1. Sign is Type II - Type F Reflective - reference WIS DOT Standard Specification for HIGHWAY and STRUCTURE CONSTRUCTION latest edition.
2. Color:
   Background - Yellow
   Message - Black
3. Message Series - See Note 6
4. Corners may be square or rounded when base material is plywood but borders shall be rounded as shown. When base material is metal, the corners and borders shall be rounded.
5. Substitute appropriate numerals and optically space about centerline to achieve proper balance.
6. Line 1 is Series D
   Line 2 is Series E

SIZE	A	B	C	D	E	F	G	H	I	J	K	L	M	N	O	P	Q	R	S	T	U	V	W	X	Y	Z	Area sq. ft.
1	18		1 1/8	3/8	3/8	8	3	2 3/4	2	2 1/4	5 3/8																2.25
* 2S	18		1 1/8	3/8	3/8	8	3	2 3/4	2	2 1/4	5 3/8																2.25
* 2M	18		1 1/8	3/8	3/8	8	3	2 3/4	2	2 1/4	5 3/8																2.25
3	24		1 1/8	3/8	1/2	10	4	4	2 3/4	3 1/4	6 5/8																4.00
4	36		1 5/8	5/8	3/4	16	6	5 1/2	4	4 1/2	10 5/8																9.00
5	36		1 5/8	5/8	3/4	16	6	5 1/2	4	4 1/2	10 5/8																9.00

STANDARD SIGN
W13-1

WISCONSIN DEPT OF TRANSPORTATION

APPROVED Matthew R Rauch
For State Traffic Engineer

DATE 5/31/12 PLATE NO. W13-1.16

PROJECT NO:	HWY:	COUNTY:		SHEET NO: 93	E

NOTES

1. Sign is Type II - Type F Reflective - reference WIS DOT Standard Specification for HIGHWAY and STRUCTURE CONSTRUCTION latest edition.
2. Color:
   Background - Yellow
   Message - Black
3. Message Series - See note 5
4. Corners and borders shall be rounded on all base materials for this sign.
5. Lines 1 and 2 are Series D.
   Line 3 is series C.

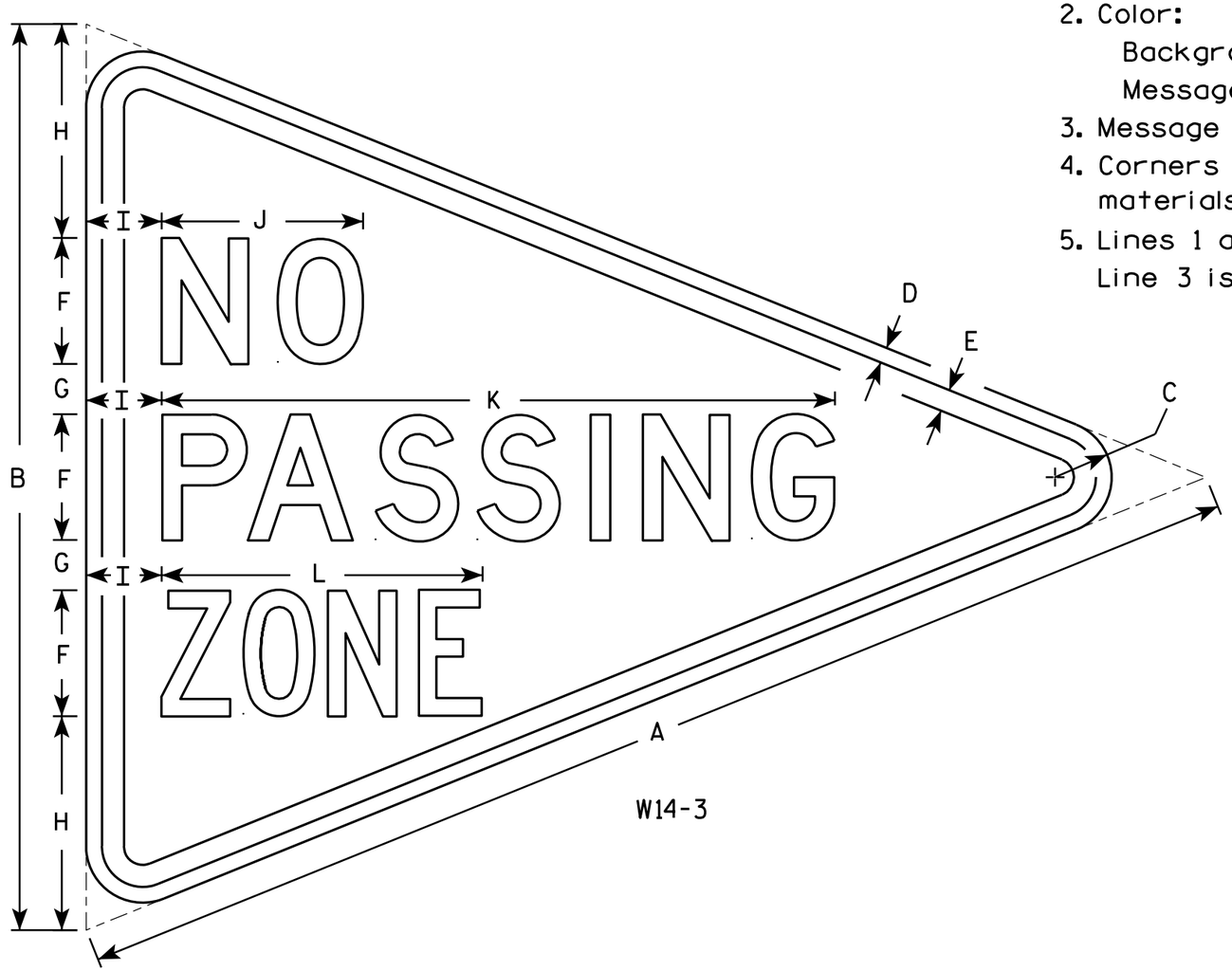

W14-3

SIZE	A	B	C	D	E	F	G	H	I	J	K	L	M	N	O	P	Q	R	S	T	U	V	W	X	Y	Z	Area sq. ft.
1																											
2S	48	36	2 1/4	5/8	7/8	5	2	8 1/2	3	8	26 3/4	12 3/4															6.0
2M	48	36	2 1/4	5/8	7/8	5	2	8 1/2	3	8	26 3/4	12 3/4															6.0
3	64	48	3	3/4	1 1/4	6	3	12	4	10 3/4	33 5/8	16 1/2															10.7
4																											
5																											

STANDARD SIGN
W14-3

WISCONSIN DEPT OF TRANSPORTATION

APPROVED Matthew R Rauch
for State Traffic Engineer
DATE 6/7/10 PLATE NO. W14-3.9

PROJECT NO: | HWY: | COUNTY: | SHEET NO: 94 | E

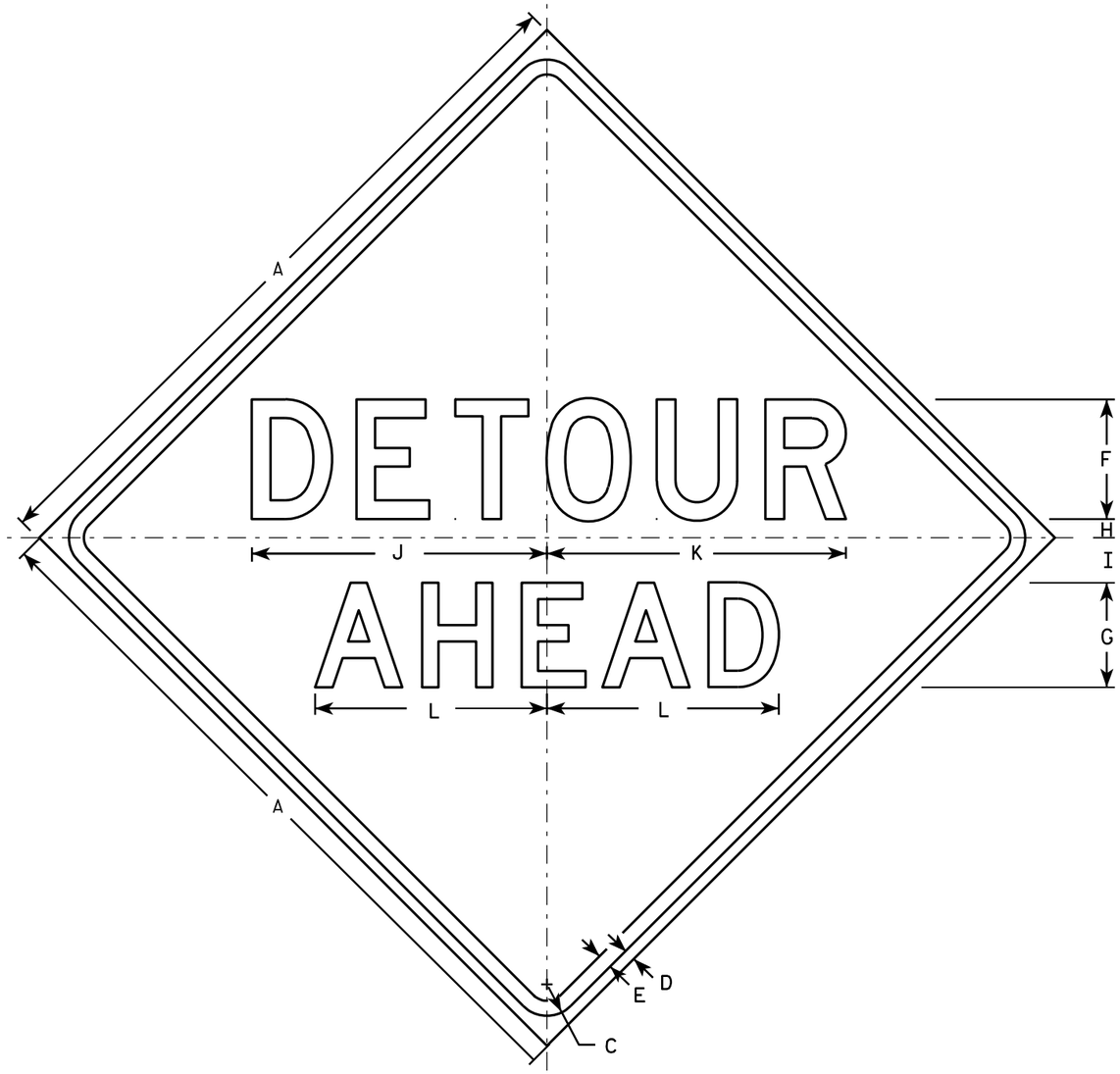

W20-2A

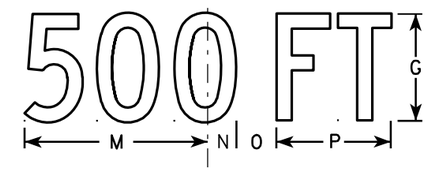

W20-2D

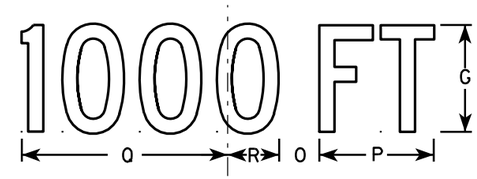

W20-2C

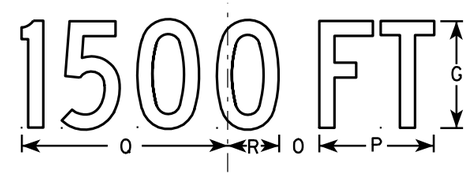

W20-2B

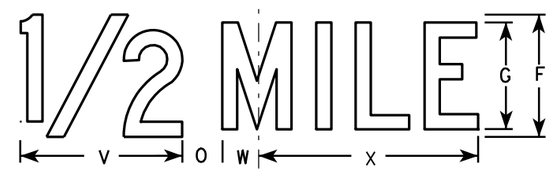

W20-2G

W20-2F

NOTES

1. Sign is Type II - Type F Reflective - reference WIS DOT Standard Specification for HIGHWAY and STRUCTURE CONSTRUCTION latest edition.
2. Color:
   Background - Orange
   Message - Black
3. Message Series - See note 5
4. Corners may be square or rounded when base material is plywood but borders shall be rounded as shown. When base material is metal, the corners and borders shall be rounded.
5. Line 1 is Series D.
   Line 2 is Series D for AHEAD and Series C for all other distances.

SIZE	A	B	C	D	E	F	G	H	I	J	K	L	M	N	O	P	Q	R	S	T	U	V	W	X	Y	Z	Area sq. ft.
1	36		1 5/8	5/8	3/4	6	5	1	2 1/4	14 3/4	15	11 5/8	9	1 3/8	1 7/8	5 5/8	10 1/8	2 1/2	1 1/8	4 1/2	3 1/2	8	1 3/4	10 3/4			9.0
2S	48		2 1/4	3/4	1	8	7	1 1/4	3	19 3/4	20	15 1/2	12	1 7/8	2 5/8	7 1/2	13 1/2	3 3/8	1 1/2	6	4 5/8	10 5/8	2 3/8	14 3/8			16.0
2M	48		2 1/4	3/4	1	8	7	1 1/4	3	19 3/4	20	15 1/2	12	1 7/8	2 5/8	7 1/2	13 1/2	3 3/8	1 1/2	6	4 5/8	10 5/8	2 3/8	14 3/8			16.0
3	48		2 1/4	3/4	1	8	7	1 1/4	3	19 3/4	20	15 1/2	12	1 7/8	2 5/8	7 1/2	13 1/2	3 3/8	1 1/2	6	4 5/8	10 5/8	2 3/8	14 3/8			16.0
4	48		2 1/4	3/4	1	8	7	1 1/4	3	19 3/4	20	15 1/2	12	1 7/8	2 5/8	7 1/2	13 1/2	3 3/8	1 1/2	6	4 5/8	10 5/8	2 3/8	14 3/8			16.0
5	48		2 1/4	3/4	1	8	7	1 1/4	3	19 3/4	20	15 1/2	12	1 7/8	2 5/8	7 1/2	13 1/2	3 3/8	1 1/2	6	4 5/8	10 5/8	2 3/8	14 3/8			16.0

STANDARD SIGN
W20-2A,B,C,D,F & G

WISCONSIN DEPT OF TRANSPORTATION

APPROVED Matthew R Rauch
for State Traffic Engineer
DATE 3/18/11 PLATE NO. W20-2.6

PROJECT NO: | HWY: | COUNTY: | SHEET NO: 95 | E

STATE PROJECT NUMBER
8590-01-73

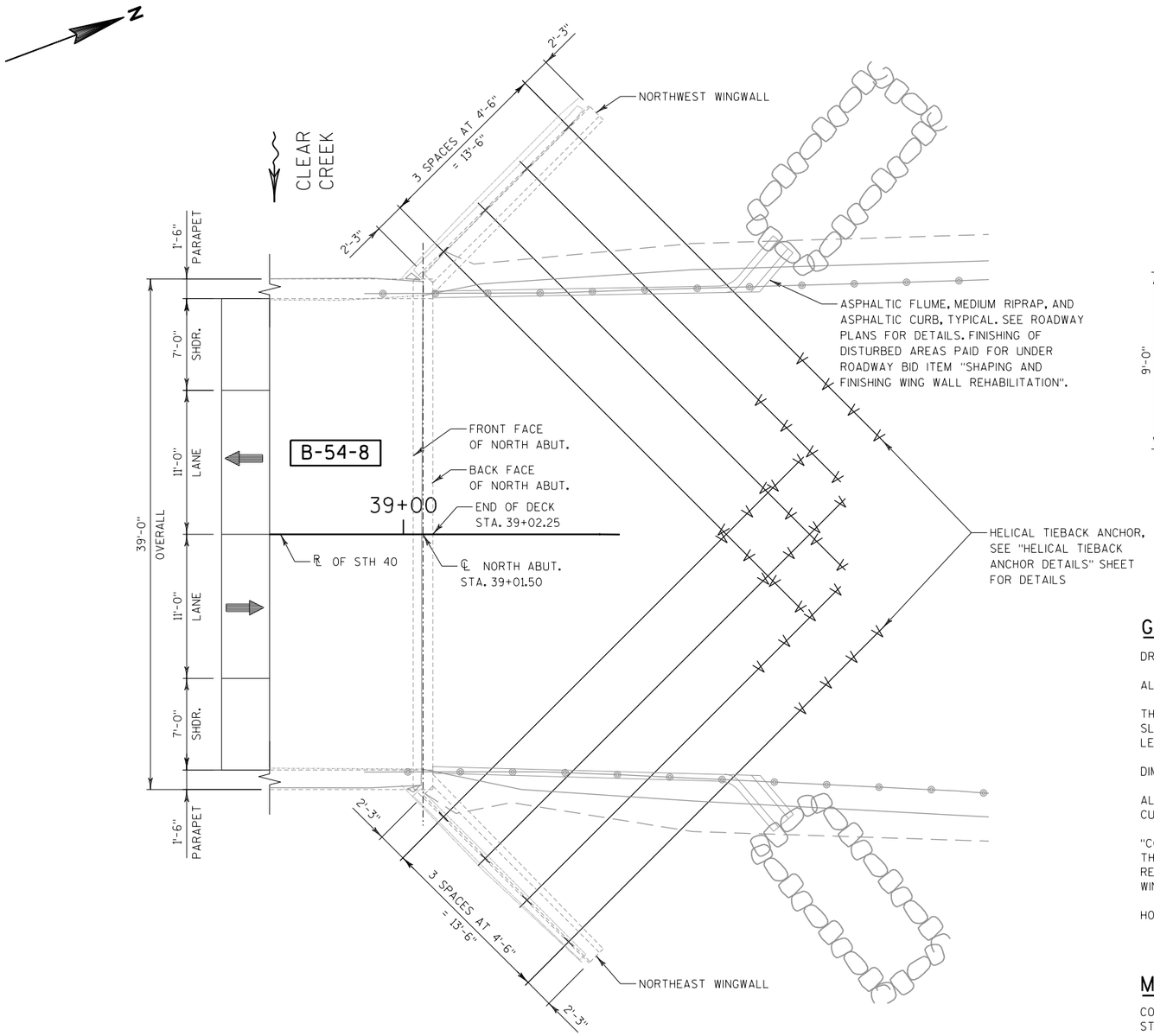

PARTIAL PLAN

(SINGLE SPAN CONCRETE FLAT SLAB BRIDGE)
NORTH ABUTMENT SHOWN

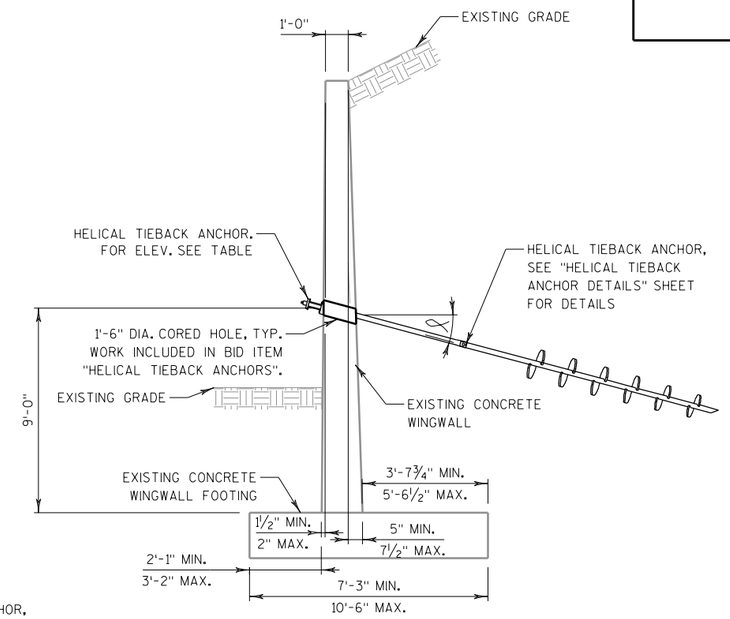

TYPICAL WING SECTION

GENERAL NOTES

DRAWINGS SHALL NOT BE SCALED.

ALL DIMENSIONS ARE IN FEET AND INCHES UNLESS OTHERWISE NOTED.

THE EXISTING STRUCTURE, B-54-8, IS A SINGLE SPAN CONCRETE FLAT SLAB BRIDGE WITH AN OVERALL WIDTH OF 39'-0" AND AN OVERALL LENGTH OF 43'-0".

DIMENSIONS SHOWN ARE BASED ON THE ORIGINAL STRUCTURE PLANS.

ALL CONCRETE REMOVAL SHALL BE DEFINED BY A 1-INCH DEEP SAW CUT.

"CONCRETE SURFACE REPAIR" SHALL BE USED FOR NEEDED REPAIRS ON THE EXISTING ABUTMENT AND WINGWALLS. LOCATION AND LIMITS OF REPAIR SHALL BE DETERMINED IN THE FIELD BY THE ENGINEER. SEE WINGWALL ELEVATION FOR DETAILS.

HOT-DIP GALVANIZE ANCHORS AND HARDWARE PER ASTM A153.

DESIGN DATA

LIVE LOAD SURCHARGE = 240 PSF
TOTAL UNIT WEIGHT OF SOIL (DRY) = 120 PCF
TOTAL UNIT WEIGHT OF SOIL (SATURATED) = 130 PCF
AT REST EARTH PRESSURE COEFFICIENT (Ko) = 0.5

MATERIAL PROPERTIES

CONCRETE MASONRY_____f'c = 3.5 K.S.I.
STRUCTURAL CHANNELS, PLATES & BARS
ASTM A709 GRADE 36_____ fy=36,000 PSI
ANCHOR BOLTS
ASTM F1554 GRADE 55_____fy=55,000 PSI
HIGH STRENGTH BOLTS
A325_____fy=92,000 PSI
STRUCTURAL MEMBERS GALVANIZED____A123
HARDWARE GALVANIZED_____A153 CLASS C

LIST OF DRAWINGS

1. GENERAL PLAN
2. HELICAL TIEBACK ANCHOR DETAILS

STRUCTURE DESIGN CONTACTS

BRIDGE OFFICE: WILLIAM DREHER (608) 266-8489
CONSULTANT: MIKE RADTKE (414) 347-1607

TOTAL ESTIMATED QUANTITIES

BID ITEM NO.	BID ITEMS	UNIT	TOTAL
502.4105	ADHESIVE ANCHORS 5/8-INCH	EACH	32
506.0105	STRUCTURAL STEEL CARBON	LB	3059
509.1500	CONCRETE SURFACE REPAIR	SF	19
SPV.0060	HELICAL TIEBACK ANCHORS	EACH	8

WISCONSIN MICHAEL D. RADTKE 40967 Elm Grove WI PROFESSIONAL ENGINEER
OCT 28, 2016

NO.	DATE	REVISION	BY

emcs inc
1300 W. Canal Street, Suite 200
Milwaukee, WI 53233
414.347.1607 Fax 414.347.1347

STATE OF WISCONSIN
DEPARTMENT OF TRANSPORTATION
ACCEPTED William C. Dreher SDR 01/23/17
CHIEF STRUCTURES DESIGN ENGINEER DATE

STRUCTURE B-54-8

STH 40 OVER CLEAR CREEK

COUNTY RUSK TOWN MURRY
DESIGN SPEC. REHABILITATION N/A
DESIGNED BY AJC CK'D. MDR DRAWN BY AJC PLANS CK'D. MDR

GENERAL PLAN

SHEET 1 OF 2
96

8

8

STATE PROJECT NUMBER

8590-01-73

CONCRETE SURFACE REPAIR REQUIRED. LOCATIONS AND DIMENSIONS OF SPALL AREAS ARE APPROXIMATE AND SHOULD BE USED AS A GUIDE ONLY. AREAS TO BE DETERMINED BY ENGINEER IN THE FIELD.

1'-6" CORED HOLE IN WINGWALL. FILL CORE WITH CEMENTIOUS GROUT AFTER FULL TORQUING OF ANCHOR (TYP.). WORK TO BE PAID UNDER BID ITEM "HELICAL TIEBACK ANCHORS".

X TIEBACK ANCHOR NUMBER

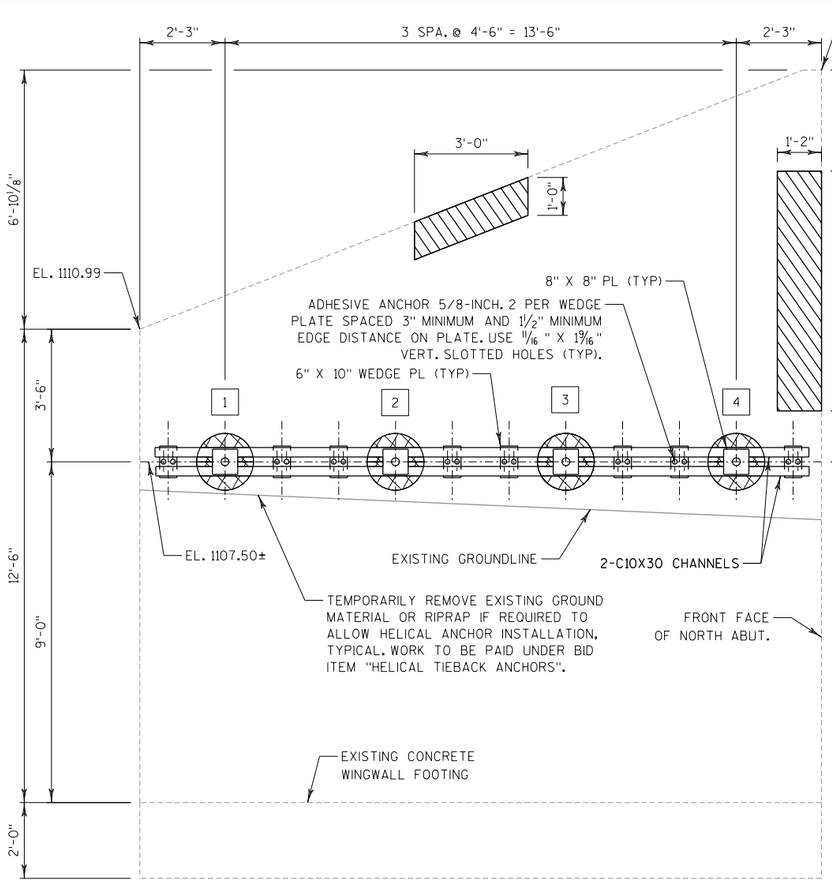

ELEVATION

NORTHWEST WINGWALL

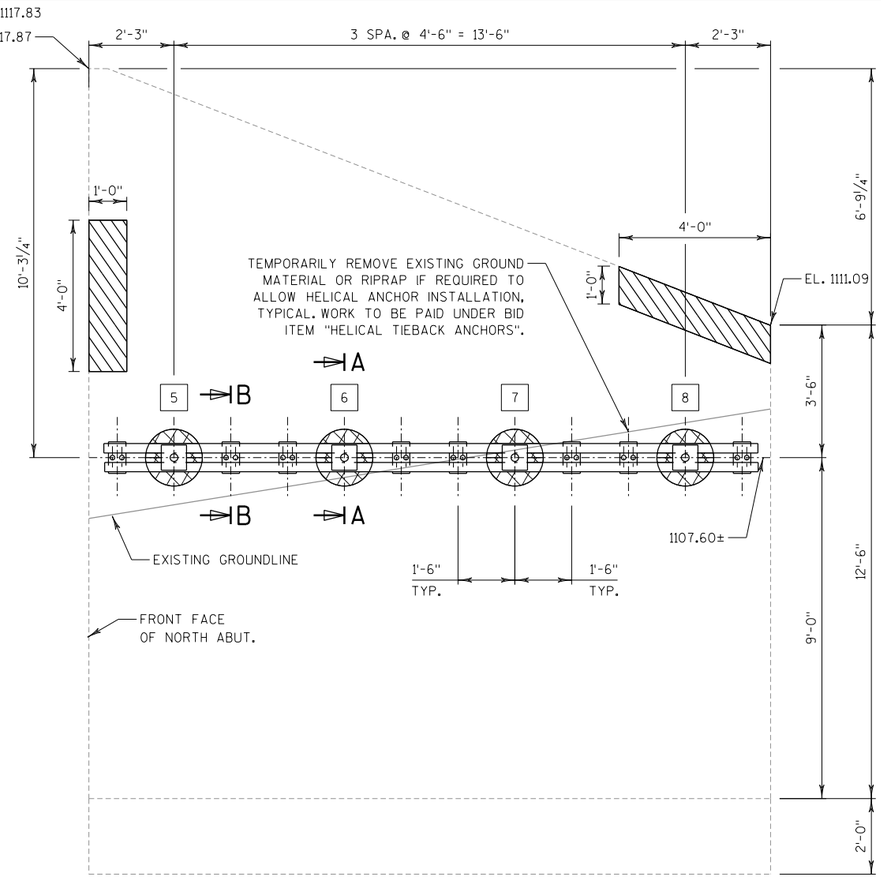

ELEVATION

NORTHEAST WINGWALL

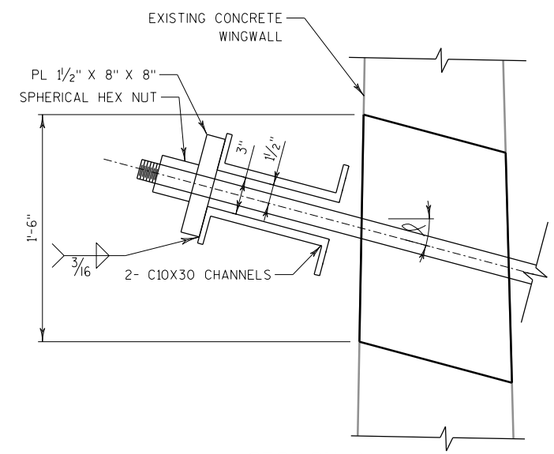

SECTION A-A

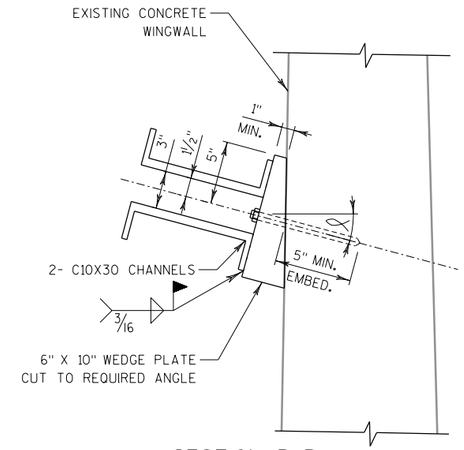

SECTION B-B

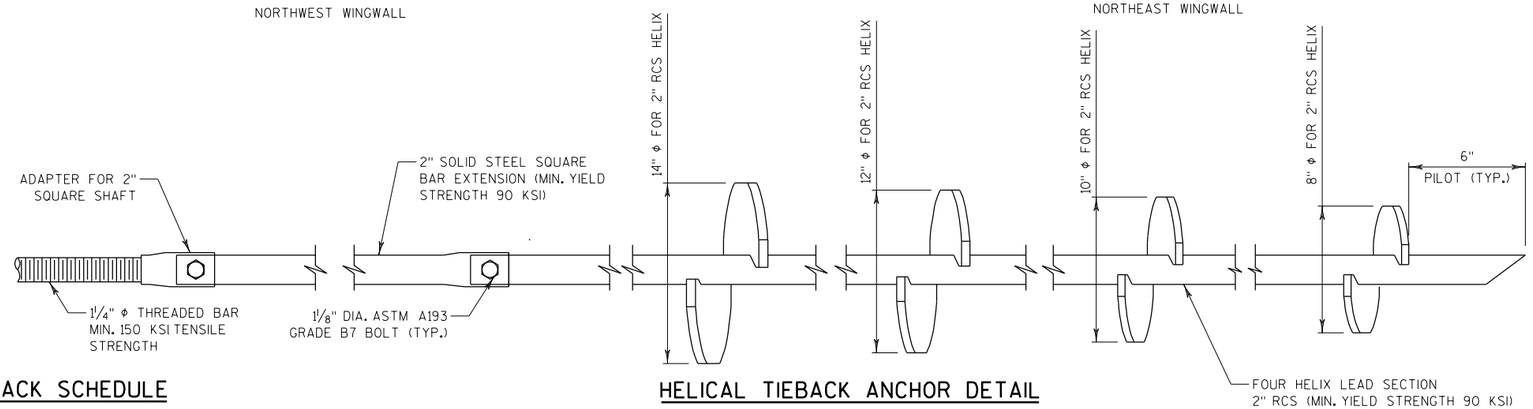

HELICAL TIEBACK ANCHOR DETAIL

HELICAL TIEBACK SCHEDULE

TIEBACK NO.	TIEBACK ELEVATION (FEET)	RECOMMENDED MINIMUM SHAFT SIZE	TIEBACK VERTICAL ORIENTATION (DEGREES)	TIEBACK HORIZONTAL ORIENTATION (DEGREES)	MINIMUM ANCHORED LENGTH (FEET)	MINIMUM ANCHOR CAPACITY (KIPS)	DESIGN LOAD (KIPS)
1	1107.50	2"	15	90	30	75	50
2	1107.50	2"	15	90	30	105	70
3	1107.50	2"	15	90	35	135	90
4	1107.50	2"	15	90	35	160	105
5	1107.60	2"	25	90	35	160	105
6	1107.60	2"	25	90	35	135	90
7	1107.60	2"	25	90	30	105	70
8	1107.60	2"	25	90	30	75	50

NOTES:

MINIMUM ANCHORED LENGTH IS MINIMUM DISTANCE FROM BACK FACE OF WALL TO LARGEST HELICAL PLATE IN ORDER TO ACHIEVE REQUIRED GEOTECHNICAL CAPACITY.

EACH COUPLING CONNECTION AND ALL ASSOCIATED HARDWARE SHALL BE CAPABLE OF TRANSMITTING THE MINIMUM ANCHOR CAPACITY.

THE DESIGN LOAD IS A FACTORED LOAD USING AASHTO LRFD LOAD FACTORS.

ANY LOAD TEST PERFORMED MUST BE ON TIEBACK ANCHORS 1, 2, 7, OR 8.

NO.	DATE	REVISION	BY

STATE OF WISCONSIN
DEPARTMENT OF TRANSPORTATION

STRUCTURE B-54-8

DRAWN BY TEO | PLANS CK'D. MDR

HELICAL TIEBACK ANCHOR DETAILS

SHEET 2 OF 2

97

8

8

STATE PROJECT NUMBER
8590-01-73

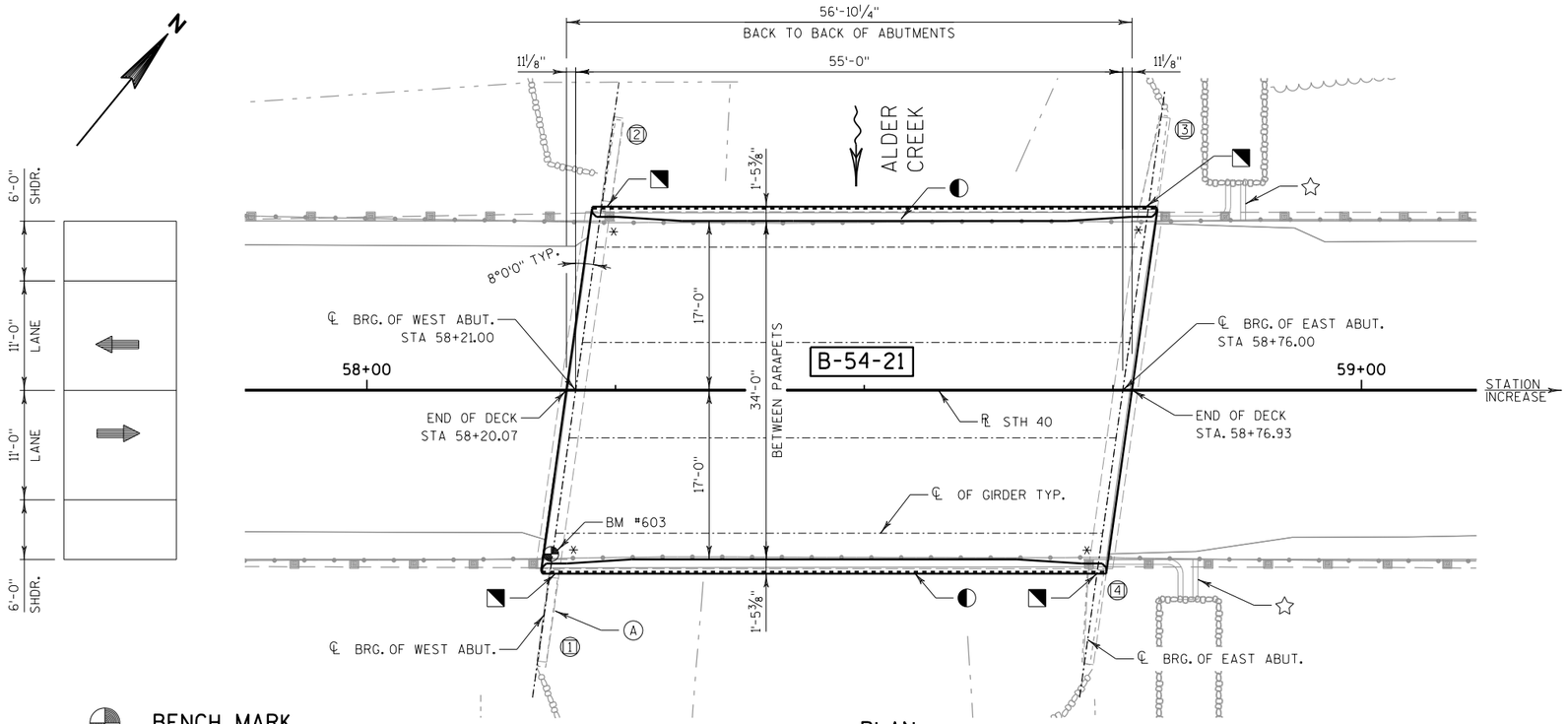

PLAN

SINGLE SPAN-45" PRESTRESSED GIRDERS - BRIDGE REDECK

BENCH MARK

NO.	STATION	DESCRIPTION	ELEV.
603	58+19, RT	WISDOT ALUMINUM CAP IN BRIDGE DECK	1114.82

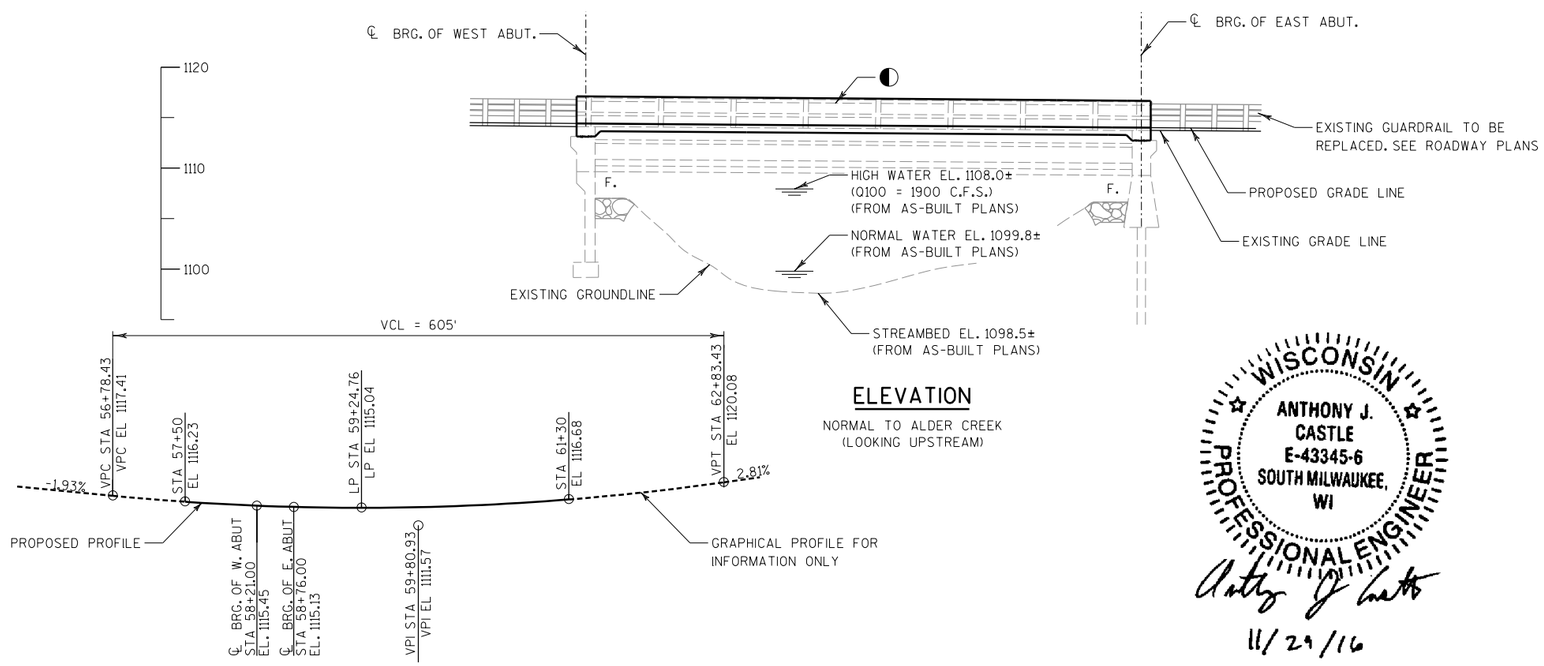

ELEVATION

NORMAL TO ALDER CREEK (LOOKING UPSTREAM)

PROFILE GRADE LINE - STH 40

NOTES

Ⓐ NAME PLATE LOCATION

ⓧ DENOTES WINGWALL NUMBER

* THRIE BEAM RAIL ATTACHMENT (SEE ROADWAY PLANS FOR GUARDRAIL DETAILS)

◐ REMOVE AND DISPOSE OF EXISTING STEEL RAILING TYPE "W". CAULK AROUND EXISTING RAILING IS AN ASBESTOS CONTAINING MATERIAL. SEE SPECIAL PROVISIONS FOR PROPER ABATEMENT PROCEDURES. REMOVAL WORK PAID UNDER BID ITEM "REMOVING OLD STRUCTURE OVER WATERWAY WITH DEBRIS CAPTURE SYSTEM". ABATEMENT WORK PAID UNDER BID ITEM "ABATEMENT OF ASBESTOS CONTAINING MATERIAL". REPLACE STEEL RAIL WITH SINGLE SLOPE 32SS CONCRETE PARAPET. SEE "SINGLE SLOPE PARAPET 32SS" SHEET FOR DETAILS.

◥ REMOVE PORTION OF WINGWALL TO ACCOMMODATE ADDITIONAL BRIDGE WIDTH. TYPICAL AT ALL CORNERS OF BRIDGE. SEE "SUPERSTRUCTURE DETAILS 2" SHEET FOR DETAILS.

☆ CONSTRUCT DRAINAGE FLUMES AT EAST CORNERS OF BRIDGE. SEE ROADWAY PLANS FOR DETAILS. WORK TO BE PAID FOR UNDER ROADWAY BID ITEMS.

DESIGN DATA

LIVE LOAD:
DESIGN LOADING: HS-20
INVENTORY RATING: HS-19
OPERATING RATING: HS-32
WISCONSIN STD. PERMIT VEHICLE (WIS-SPV) = 230 KIPS

MATERIAL PROPERTIES:
CONCRETE MASONRY _____ f'c = 4,000 psi
HIGH STRENGTH BAR STEEL
REINFORCEMENT, GRADE 60 _____ fy = 60,000 psi

TRAFFIC DATA

ADT = 625 (2017)
ADT = 725 (2037)
RDS = 55 M.P.H.

HYDRAULIC DATA

(FROM EXISTING PLANS DATED 1977)

Q_{100} = 1900 C.F.S.
$VELOCITY_{100}$ = 6.8 F.P.S.
$HIGH\ WATER_{100}$ = EL. 1108.0
$WATERWAY\ AREA_{100}$ = 280 SF
DRAINAGE AREA 11.3 SQ. MI.

LIST OF DRAWINGS

1. GENERAL PLAN & ELEVATION
2. CROSS SECTION AND QUANTITIES
3. SUPERSTRUCTURE
4. SUPERSTRUCTURE DETAILS 1
5. SUPERSTRUCTURE DETAILS 2
6. STEEL DIAPHRAGM
7. SINGLE SLOPE PARAPET 32SS

STRUCTURE DESIGN CONTACTS

BRIDGE OFFICE: WILLIAM DREHER (608) 266-8489
CONSULTANT: MIKE RADTKE (414) 347-1607

WISCONSIN ANTHONY J. CASTLE E-43345-6 SOUTH MILWAUKEE, WI PROFESSIONAL ENGINEER
11/29/16

NO.	DATE	REVISION	BY

emcs inc
1300 W. Canal Street, Suite 200
Milwaukee, WI 53233
414.347.1607 Fax 414.347.1347

STATE OF WISCONSIN
DEPARTMENT OF TRANSPORTATION
ACCEPTED William C. Dreher SDR 12/05/16
CHIEF STRUCTURES DESIGN ENGINEER DATE

STRUCTURE B-54-21

STH 40 OVER ALDER CREEK

COUNTY	TOWN
RUSK	ATLANTA

DESIGN SPEC. REHABILITATION N/A

DESIGNED BY	MDR	DESIGN CK'D.	AJC	DRAWN BY	MDR	PLANS CK'D.	AJC

GENERAL PLAN & ELEVATION

SHEET 1 OF 7
98

8

8

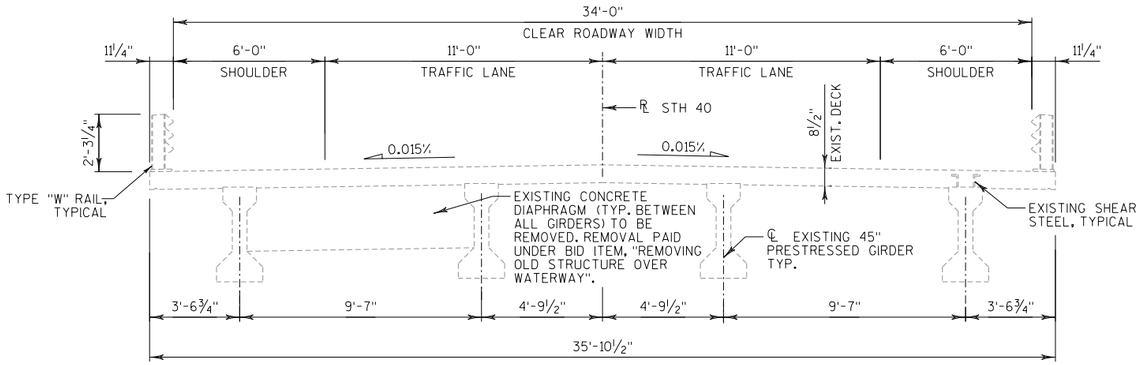

TYPICAL EXISTING SECTION THRU STH 40

LOOKING UPSTATION

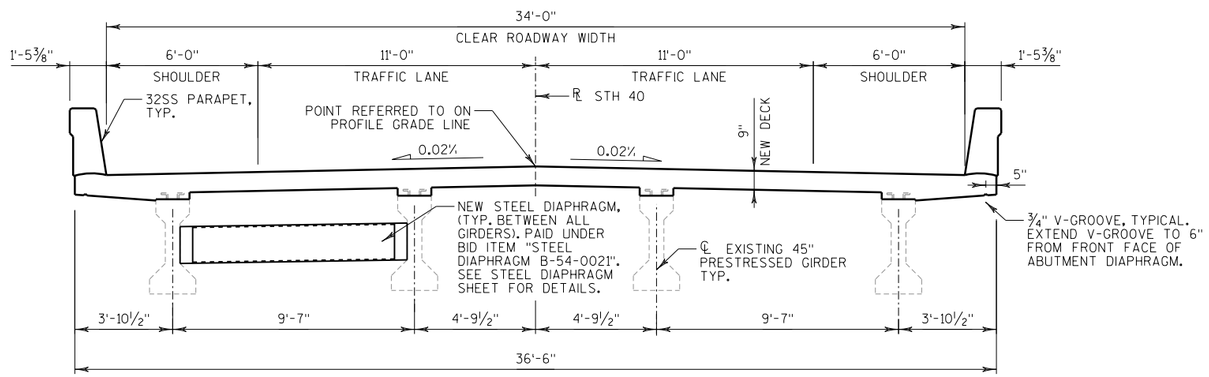

TYPICAL PROPOSED SECTION THRU STH 40

LOOKING UPSTATION

TOTAL ESTIMATED QUANTITIES

BID ITEM NO.	BID ITEMS	UNIT	TOTAL
203.0210.S	ABATEMENT OF ASBESTOS CONTAINING MATERIAL B-54-0021	LS	1
203.0700.S	REMOVING OLD STRUCTURE OVER WATERWAY WITH DEBRIS CAPTURE SYSTEM STATION 58+20	LS	1
502.0100	CONCRETE MASONRY BRIDGES	CY	77
502.3200	PROTECTIVE SURFACE TREATMENT	SY	215
502.3210	PIGMENTED SURFACE SEALER	SY	48
505.0600	BAR STEEL REINFORCEMENT HS COATED STRUCTURES	LB	15890
506.4000	STEEL DIAPHRAGMS B-54-0021	EACH	3
614.0150	ANCHOR ASSEMBLIES FOR STEEL PLATE BEAM GUARD	EACH	4
	NON-BID ITEMS		
	PREFORMED JOINT FILLER	SIZE	1/2"
	NON-BITUMINOUS JOINT SEALER		

GENERAL NOTES

DRAWINGS SHALL NOT BE SCALED.

ALL DIMENSIONS ARE IN FEET AND INCHES UNLESS OTHERWISE NOTED.

ALL STATIONS AND ALL ELEVATIONS ARE IN FEET. ELEVATIONS REFERENCED TO NAVD 88, 2011 ADJUSTMENT.

ALL CONCRETE REMOVAL NOT COVERED WITH NEW CONCRETE SHALL BE DEFINED BY A 1" DEEP SAW CUT.

IF EXISTING NAME PLATE IS DAMAGED DURING REMOVAL ACTIVITIES, SUPPLY A NEW NAME PLATE IN ACCORDANCE WITH SECTION 502.3.11 OF THE STANDARD SPECIFICATIONS AND THE STANDARD DETAIL DRAWINGS. NAME PLATE TO SHOW THE ORIGINAL CONSTRUCTION DATE OF 1977. NEW NAME PLATE TO BE PLACED IN PARAPET AS SHOWN ON "SINGLE SLOPE PARAPET 32SS" SHEET.

BEVEL EXPOSED EDGES OF CONCRETE ¾" UNLESS OTHERWISE NOTED.

BAR STEEL REINFORCEMENT SHALL BE EMBEDDED 2" CLEAR UNLESS OTHERWISE SHOWN OR NOTED.

ALL REINFORCING BARS ARE ENGLISH DESIGNATION AND THE FIRST DIGIT OF A 3-DIGIT BAR MARK OR FIRST TWO DIGITS OF A 4-DIGIT BAR MARK SIGNIFY THE BAR SIZE.

DIMENSIONS SHOWN ARE BASED ON THE ORIGINAL STRUCTURE PLANS.

PROTECT THE EXISTING REINFORCEMENT STEEL, EXISTING GIRDERS, AND THE EXISTING GIRDER SHEAR STIRRUPS DURING DEMOLITION. REPLACEMENT OF BRIDGE COMPONENTS DAMAGED DURING THE REMOVAL OF THE EXISTING DECK WILL BE THE CONTRACTOR'S RESPONSIBILITY AND REPLACED AT NO ADDITIONAL COST TO THE OWNER.

PROTECTIVE SURFACE TREATMENT SHALL BE APPLIED TO THE ENTIRE ROADWAY TOP SURFACE OF THE NEW CONCRETE DECK.

PIGMENTED SURFACE SEALER SHALL BE APPLIED TO ENDS, INSIDE FACE, AND TOP OF PARAPETS.

ANY EXCAVATION REQUIRED TO COMPLETE THE DECK REPLACEMENT AT THE ABUTMENTS IS TO BE INCLUDED IN WORK FOR BID ITEM "CONCRETE MASONRY BRIDGES".

THE HAUNCH CONCRETE QUANTITY IS BASED ON THE AVERAGE HAUNCH SHOWN ON THE "SUPERSTRUCTURE DETAILS 2" SHEET.

JOINT FILLER SHALL CONFORM TO THE REQUIREMENTS OF AASHTO M153 TYPE 1, 2, OR 3, OR AASHTO M213.

UTILIZE EXISTING BAR STEEL REINFORCEMENT WHERE SHOWN AND EXTEND 24 BAR DIAMETERS INTO NEW WORK, UNLESS NOTED OTHERWISE.

VARIATIONS TO THE NEW GRADE LINE OVER ¼" MUST BE SUBMITTED BY THE FIELD ENGINEER TO THE STRUCTURES DESIGN SECTION FOR REVIEW.

8

8

NO.	DATE	REVISION	BY

STATE OF WISCONSIN
DEPARTMENT OF TRANSPORTATION

STRUCTURE B-54-21

DRAWN BY MDR | PLANS CK'D. AJC

CROSS SECTION AND QUANTITIES

STATE PROJECT NUMBER

8590-01-73

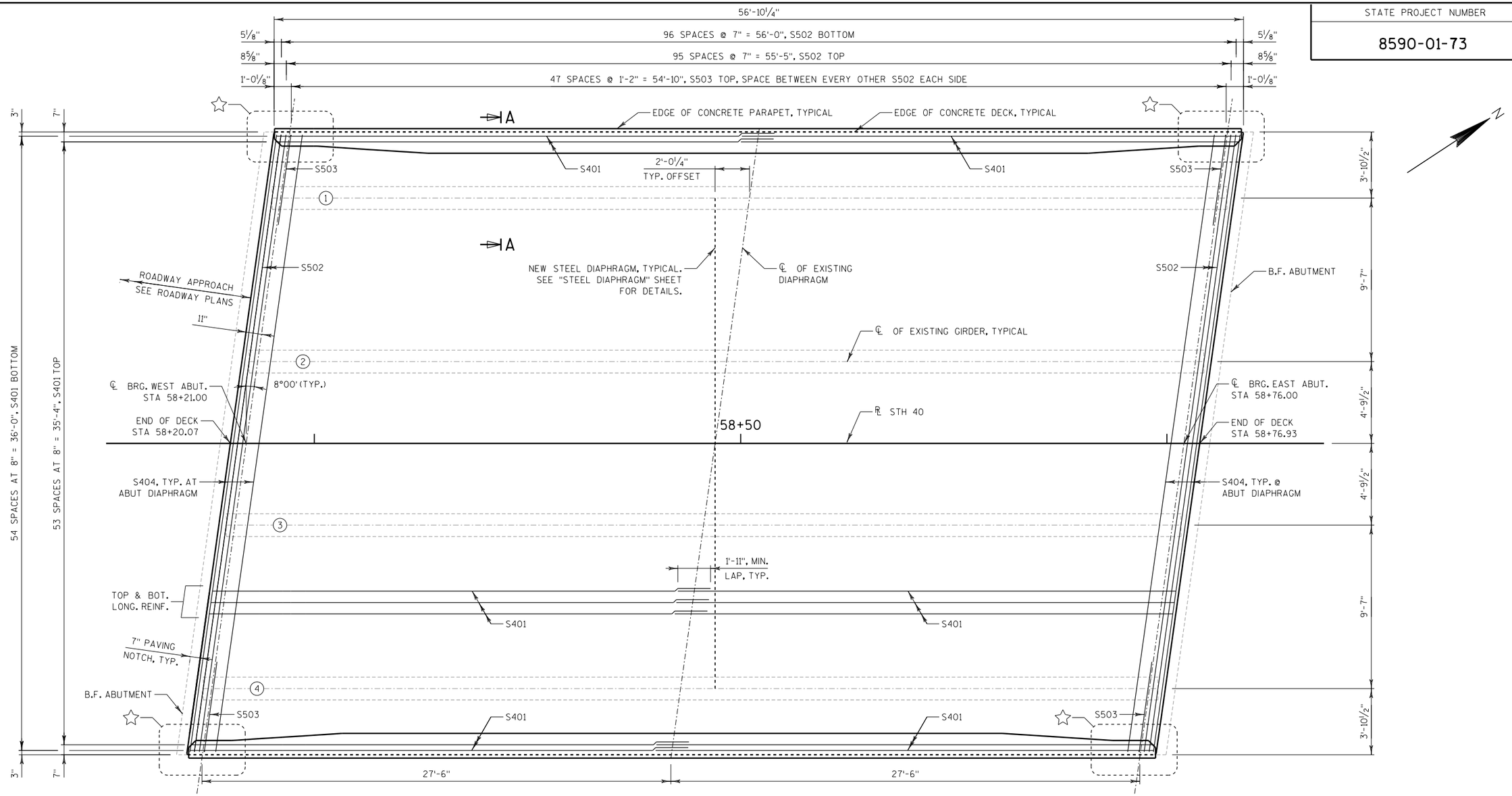

NOTE: SEE "SUPERSTRUCTURE DETAILS 1" SHEET FOR SECTION A-A

DECK PLAN

NOTES:

SEE "SUPERSTRUCTURE DETAILS 1" SHEET FOR SECTION A-A.

☆ SEE "SUPERSTRUCTURE DETAILS 2" SHEET FOR DETAILS AT DECK CORNERS.

(X) DENOTES GIRDER NUMBER

TOP OF DECK ELEVATIONS

LOCATION	WEST ABUT	0.1 PT	0.2 PT	0.3 PT	0.4 PT	0.5 PT	0.6 PT	0.7 PT	0.8 PT	0.9 PT	EAST ABUT
N. FLOW LINE	1115.10	1115.05	1115.01	1114.98	1114.94	1114.91	1114.88	1114.85	1114.82	1114.80	1114.78
GIRDER 1	1115.15	1115.11	1115.07	1115.03	1114.99	1114.96	1114.93	1114.90	1114.88	1114.85	1114.83
GIRDER 2	1115.35	1115.31	1115.27	1115.23	1115.19	1115.16	1115.13	1115.10	1115.07	1115.05	1115.03
GIRDER 3	1115.36	1115.32	1115.28	1115.24	1115.20	1115.17	1115.14	1115.11	1115.08	1115.06	1115.03
GIRDER 4	1115.18	1115.14	1115.10	1115.06	1115.02	1114.99	1114.95	1114.92	1114.89	1114.87	1114.85
S. FLOW LINE	1115.13	1115.09	1115.05	1115.01	1114.97	1114.94	1114.90	1114.87	1114.84	1114.82	1114.80

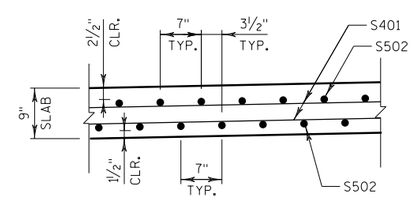

TYPICAL SECTION THRU DECK

NO.	DATE	REVISION	BY

STATE OF WISCONSIN
DEPARTMENT OF TRANSPORTATION

STRUCTURE B-54-21

DRAWN BY PLR | PLANS CK'D. AJC

SUPERSTRUCTURE

SHEET 3 OF 7

100

8

8

STATE PROJECT NUMBER

8590-01-73

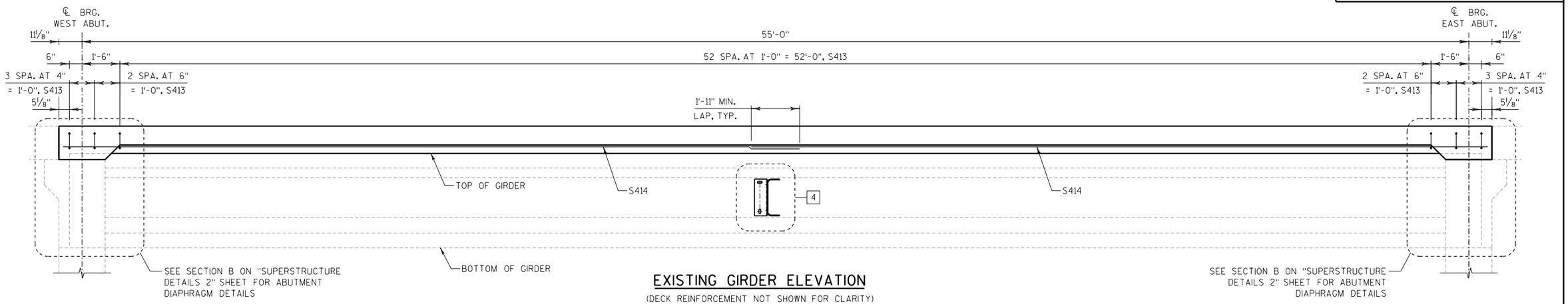

EXISTING GIRDER ELEVATION

(DECK REINFORCEMENT NOT SHOWN FOR CLARITY)

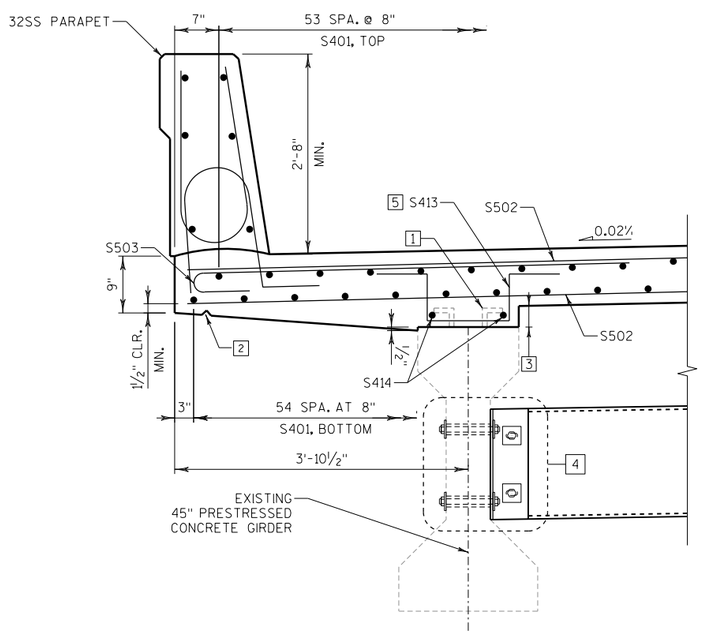

SECTION A-A

BILL OF BARS

BAR MARK	COAT	NO.	LENGTH	BENT	LOCATION
S401	X	218	29'-3"		SLAB LONG. TOP & BOTTOM
S502	X	193	36'-6"		SLAB TRANS. TOP AND BOTTOM
S503	X	96	5'-11"	X	SLAB TRANS. TOP
S404	X	4	36'-6"		ABUT. DIAPHRAGM TRANS.
S505	X	120	4'-5"	X	PARAPET VERT.
S506	X	120	5'-0"	X	PARAPET VERT.
S507	X	48	2'-9"	X	PARAPET VERT.
S508	X	68	4'-4"	X	PARAPET VERT.
S509	X	44	4'-9"	X	PARAPET VERT.
S510	X	24	4'-10"	X	PARAPET VERT.
S511	X	4	29'-6"	X	PARAPET HORIZ.
S512	X	20	29'-6"		PARAPET HORIZ.
S413	X	252	3'-5"	X	GIRDER HAUNCH STIRRUP
S414	X	16	29'-3"		GIRDER HAUNCH HORIZ.

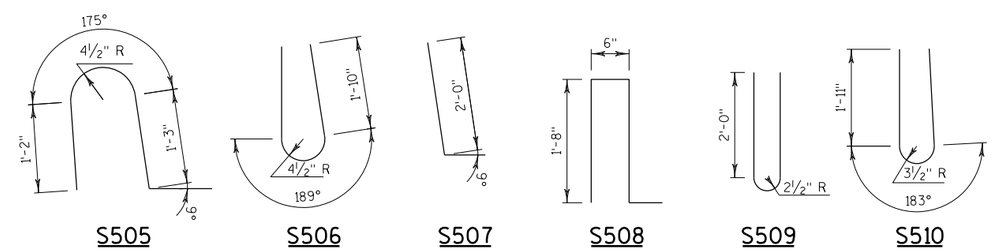

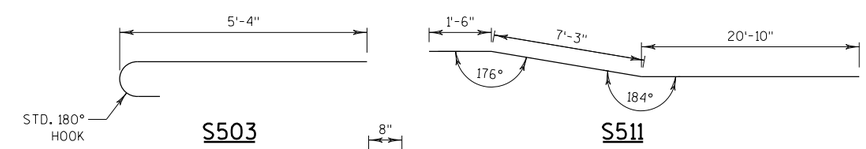

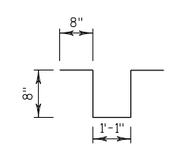

NOTES

PARAPET REINFORCEMENT NOT DETAILED FOR CLARITY. SEE "SINGLE SLOPE PARAPET 32SS" SHEET FOR PARAPET REINFORCEMENT DETAILS.

1. PROTECT AND PRESERVE EXISTING GIRDER SHEAR STIRRUPS. FIELD ENGINEER TO DETERMINE THE ADEQUACY OF ALL EXISTING SALVAGED REBAR. SALVAGING REINFORCEMENT WILL INCLUDE CLEANING AND ALIGNING AS PER STANDARD SPECIFICATION 509. IF EXISTING STEEL IS DAMAGED DURING REMOVAL, THE CONTRACTOR MUST PROVIDE SOLUTION APPROVED BY FIELD ENGINEER AT NO ADDITIONAL COST TO THE OWNER.
2. PROVIDE ¾" V GROOVE 5" FROM EDGE, TYPICAL. EXTEND V-GROOVE TO 6" FROM FRONT FACE OF ABUTMENT DIAPHRAGM.
3. VARIES FROM FROM APPROXIMATELY 5" HAUNCH AT THE ABUTMENTS TO 2" AT MIDSPAN. AVERAGE HAUNCH USED FOR COMPUTATIONS AND QUANTITIES IS 4".
4. REMOVE EXISTING CONCRETE DIAPHRAGM AND REPLACE WITH NEW STEEL DIAPHRAGM. CUT EXISTING DOWELS BETWEEN CONCRETE DIAPHRAGM AND GIRDERS AND GRIND FLUSH WITH SURFACE. TO PREVENT WATER INFILTRATION AND POTENTIAL CORROSION, FILL REMAINING HOLES IN EXISTING GIRDERS WITH EPOXY PER THE APPROVAL OF THE FIELD ENGINEER. REMOVAL OF EXISTING DIAPHRAGM PAID UNDER BID ITEM "REMOVING OLD STRUCTURE OVER WATERWAY WITH DEBRIS CAPTURE SYSTEM STATION 58+20". INSTALLATION AND MATERIALS FOR NEW STEEL DIAPHRAGM TO BE PAID UNDER BID ITEM "STEEL DIAPHRAGM B-54-0021". SEE "SUPERSTRUCTURE" AND "STEEL DIAPHRAGM" SHEETS FOR MORE DETAILS.
5. HAT BARS CAN BE TILTED IF NEEDED TO MAINTAIN 2" MINIMUM CLEARANCE AT TOP AND BOTTOM.

NO.	DATE	REVISION	BY

STATE OF WISCONSIN
DEPARTMENT OF TRANSPORTATION

STRUCTURE B-54-21

DRAWN BY PLR | PLANS CK'D. AJC

SUPERSTRUCTURE DETAILS 1

SHEET 4 OF 7

101

8

8

STATE PROJECT NUMBER

8590-01-73

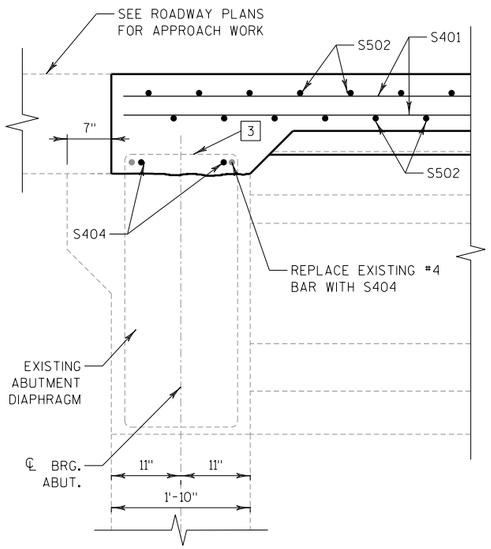

SECTION B-B

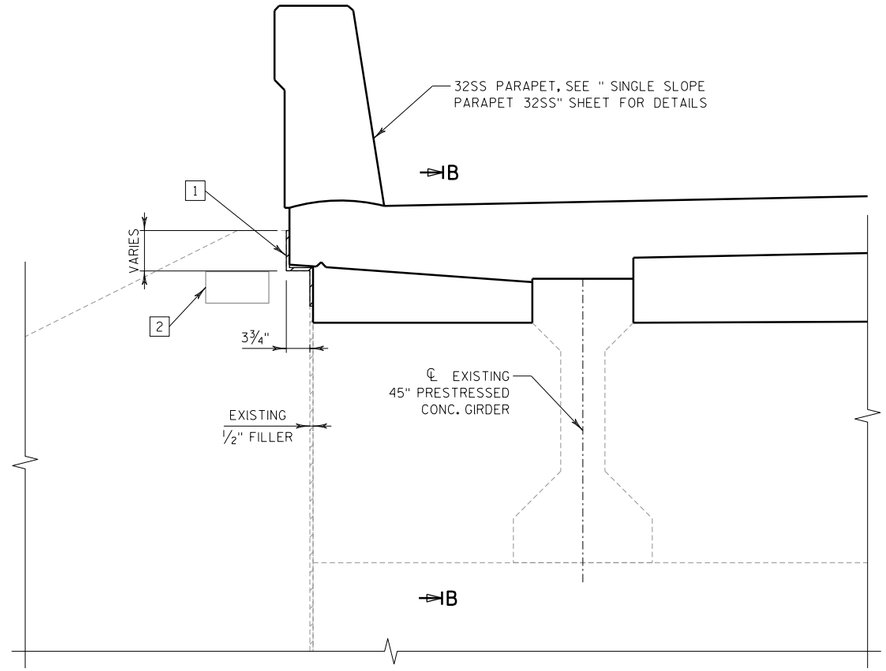

ELEVATION AT ABUTMENT CORNER

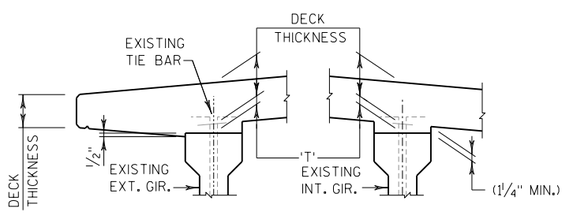

DECK HAUNCH DETAIL

IF 1¼" MINIMUM HAUNCH HEIGHT AT EDGE OF GIRDER CANNOT BE MAINTAINED, THE GRADE LINE MAY BE REVISED BY THE ENGINEER AT THE OPTION OF THE CONTRACTOR. THE PLAN DECK THICKNESS SHALL BE HELD. NOTIFY THE STRUCTURES SECTION IF THE GRADE LINE IS RAISED FROM THE PLAN PROFILE BY MORE THAN ½"

TO DETERMINE 'T', ELEVATIONS OF TOP OF GIRDERS AT ℄ OF SUBSTRUCTURE UNITS & AT 1/10 POINTS OF EACH SPAN SHALL BE TAKEN. THEN FOLLOW THIS PROCESS:

TOP OF DECK ELEV. AT FINAL GRADE
- TOP OF GIRDER ELEVATION
+ DEAD LOAD DEFLECTION
- DECK THICKNESS
= HAUNCH HEIGHT 'T'

NOTE:
AN AVERAGE HAUNCH ('T') OF 3" WAS USED IN THE QUANTITY "CONCRETE MASONRY BRIDGES".

THE THEORETICAL CAMBER VALUE AT THE TIME OF NEW DECK POUR. VALUE EQUALS THE SURVEYED CAMBER AT MIDSPAN PLUS CAMBER CAUSED BY REMOVING EXISTING DEAD LOAD.

GIRDER	CAMBER (IN.)
1	1.3
2	1.2
3	1.7
4	1.4

THESE VALUES ARE NOT TO BE USED IN DETERMINING 'T', USE ACTUAL GIRDER SHOTS. THESE VALUES ARE FOR INFORMATIONAL PURPOSES ONLY.

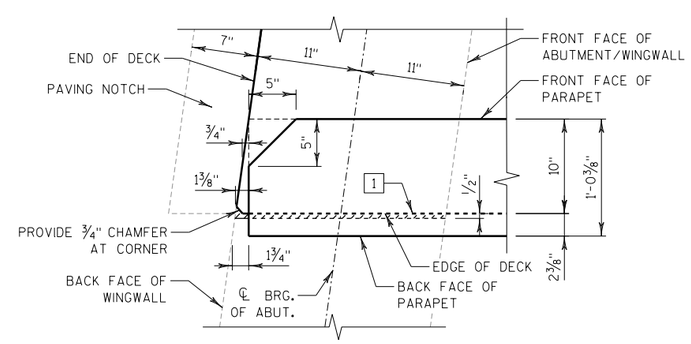

DECK CORNER DETAIL AT ACUTE ANGLE

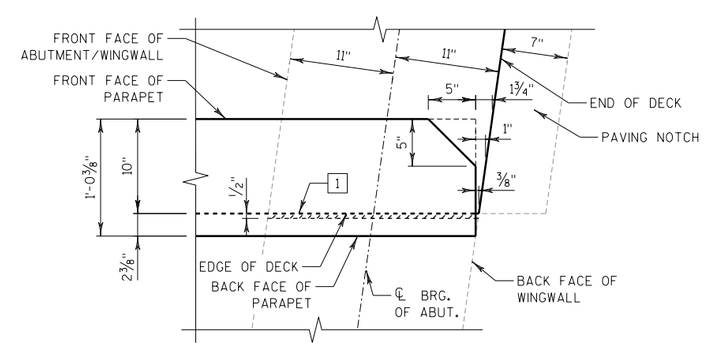

DECK CORNER DETAIL AT OBTUSE ANGLE

GIRDER	LENGTH "L"	DEAD LOAD DEFL. (IN)								
		1/10	2/10	3/10	4/10	5/10	6/10	7/10	8/10	9/10
1-4	56'-0"	0.1	0.2	0.3	0.3	0.3	0.3	0.3	0.2	0.1

GIRDER DATA

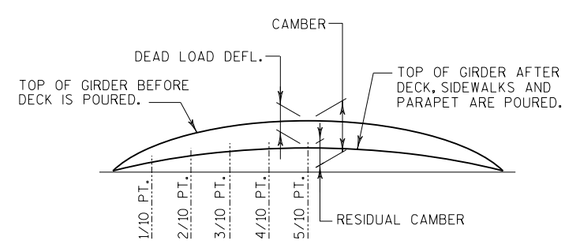

DEAD LOAD DEFLECTION DIAGRAM

NOTES

1. SAWCUT AND REMOVE NOTCH IN TOP OF EXISTING WINGWALL TO ALLOW CONSTRUCTION OF NEW DECK OVERHANG. GRIND EXISTING REINFORCEMENT FLUSH WITH SURFACE. TO PREVENT WATER INFILTRATION AND POTENTIAL CORROSION, FILL REMAINING HOLE IN EXISTING WINGWALL WITH EPOXY PER THE APPROVAL OF THE FIELD ENGINEER. PROVIDE ½" FILLER BETWEEN NEW AND EXISTING CONCRETE. WORK TO BE INCLUDED IN BID ITEM "CONCRETE MASONRY BRIDGES". EXISTING CAULK IN WINGWALL JOINT IS AN ASBESTOS CONTAINING MATERIAL. SEE SPECIAL PROVISIONS FOR PROPER ABATEMENT PROCEDURES. ABATEMENT WORK PAID UNDER BID ITEM "ABATEMENT OF ASBESTOS CONTAINING MATERIAL". SEAL NEW JOINT WITH NON-BITUMINOUS JOINT SEALER.
2. IF THE EXISTING NAME PLATE IS DAMAGED AND A NEW NAME PLATE IS REQUIRED, THE ORIGINAL CONSTRUCTION DATE IS 1977. SEE "SINGLE SLOPE PARAPET 32SS" DETAILS FOR LOCATION OF NEW NAME PLATE IF REQUIRED.
3. PRESERVE AND INCORPORATE EXISTING REINFORCEMENT INTO NEW WORK. FIELD ENGINEER TO DETERMINE THE ADEQUACY OF ALL EXISTING SALVAGED REINFORCEMENT. CLEAN & PREPARE STEEL PER SPECIFICATION 509. IF EXISTING STEEL IS DAMAGED DURING REMOVAL THE CONTRACTOR MUST PROVIDE SOLUTION APPROVED BY ENGINEER AT NO ADDITIONAL COST TO THE OWNER.

8

8

NO.	DATE	REVISION	BY

STATE OF WISCONSIN
DEPARTMENT OF TRANSPORTATION

STRUCTURE B-54-21

DRAWN BY PLR | PLANS CK'D. AJC

SUPERSTRUCTURE DETAILS 2

SHEET 5 OF 7

102

STATE PROJECT NUMBER

8590-01-73

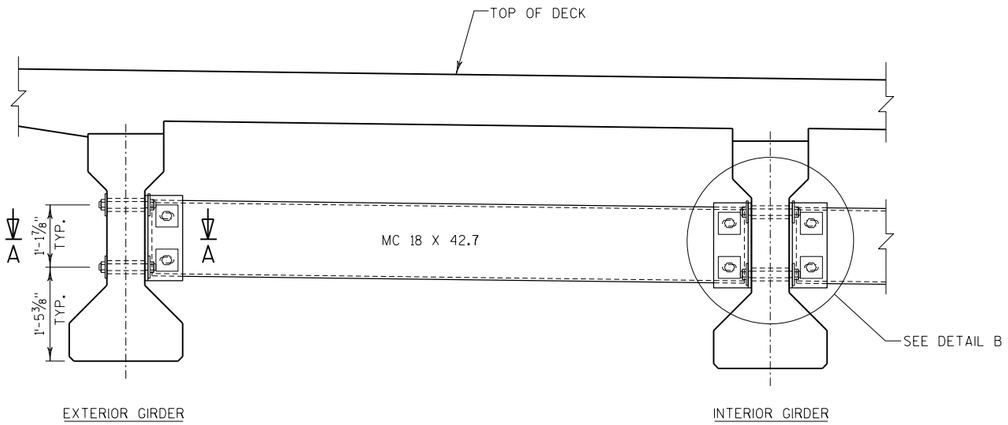

PART TRANSVERSE SECTION AT DIAPHRAGM

NOTES

ALL DIAPHRAGM MATERIAL NOT EMBEDDED IN THE CONCRETE GIRDER SHALL BE PAID FOR AT THE UNIT PRICE BID FOR "STEEL DIAPHRAGMS B-54-0021", EACH.

EACH DIAPHRAGM BETWEEN GIRDERS SHALL CONSTITUTE ONE UNIT.

ALL DIAPHRAGM STRUCTURAL STEEL SHALL BE ASTM A709 GRADE 36.

ALL DIAPHRAGM MATERIAL INCLUDING BOLTS, NUTS, AND WASHERS SHALL BE GALVANIZED AFTER FABRICATION.

STEEL DIAPHRAGM TO CONCRETE WEB CONNECTION SHALL BE SNUG-TIGHT PLUS 1/4 TURN, UNLESS NOTED OTHERWISE. HIGH STRENGTH BOLTS FOR WEB CONNECTION SHALL MEET THE REQUIREMENTS FOR ASTM A325 OR ASTM A449.

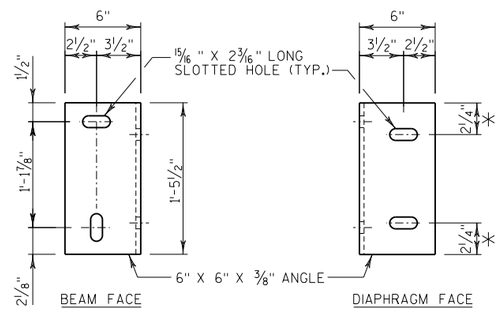

DIAPHRAGM SUPPORT

✳ 2½" FOR ALTERNATE PLATE DIAPHRAGM

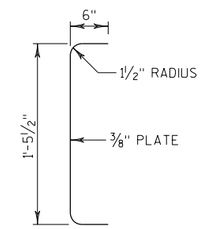

SECTION THRU ALTERNATE DIAPHRAGM

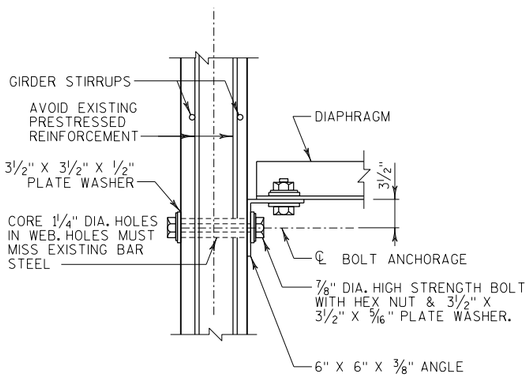

SECTION A-A

(FOR EXTERIOR ATTACHMENT)

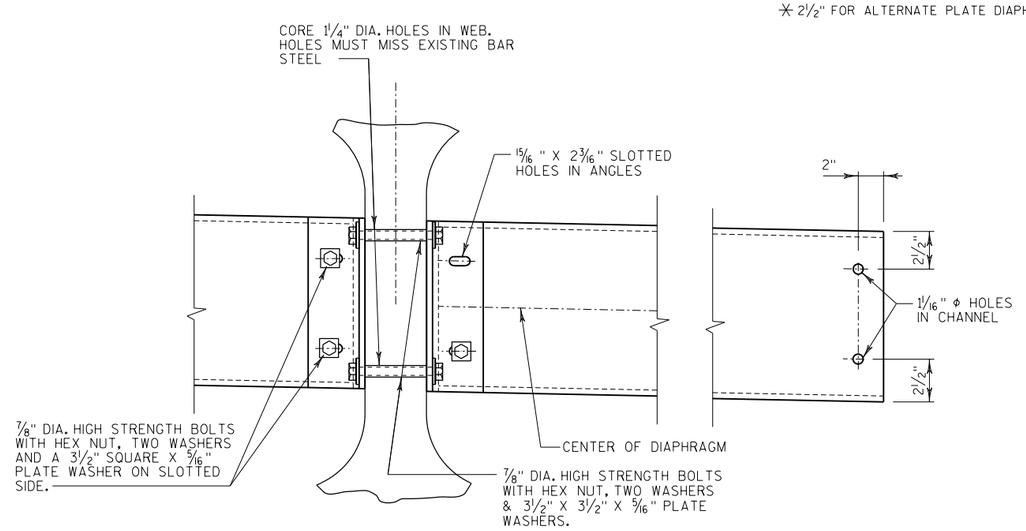

DETAIL B

(FOR CONTINUOUS LINE OF DIAPHRAGMS)

8

8

NO.	DATE	REVISION	BY

STATE OF WISCONSIN
DEPARTMENT OF TRANSPORTATION

STRUCTURE B-54-21

DRAWN BY PLR | PLANS CK'D. AJC

STEEL DIAPHRAGM

SHEET 6 OF 7

STATE PROJECT NUMBER

8590-01-73

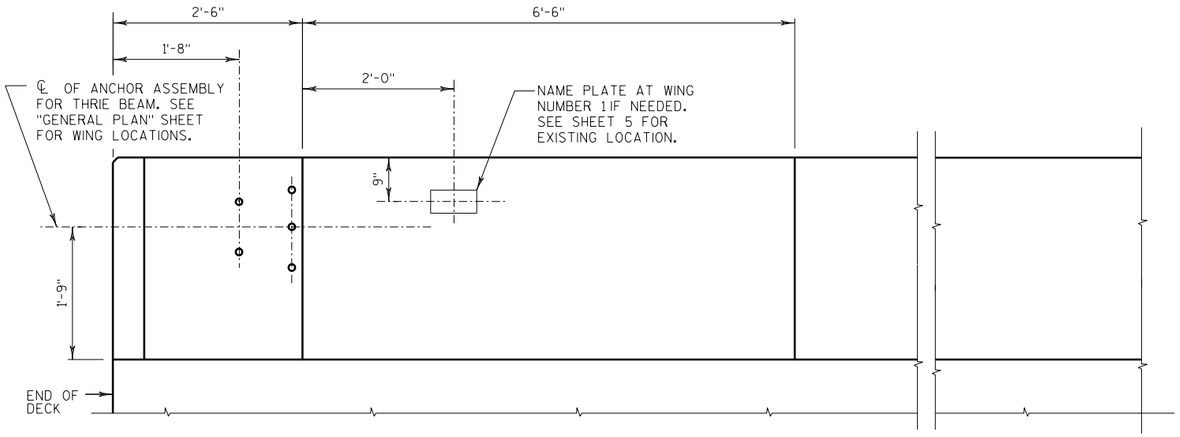

INSIDE ELEVATION

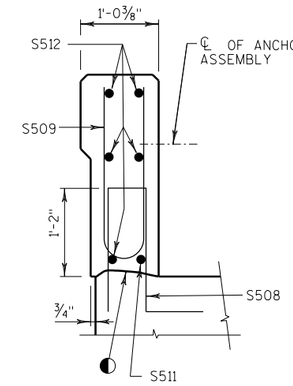

SECTION A

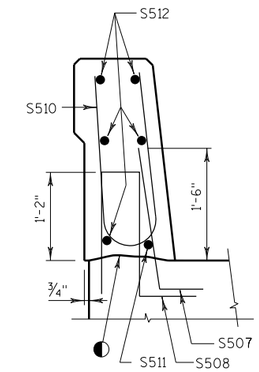

SECTION B

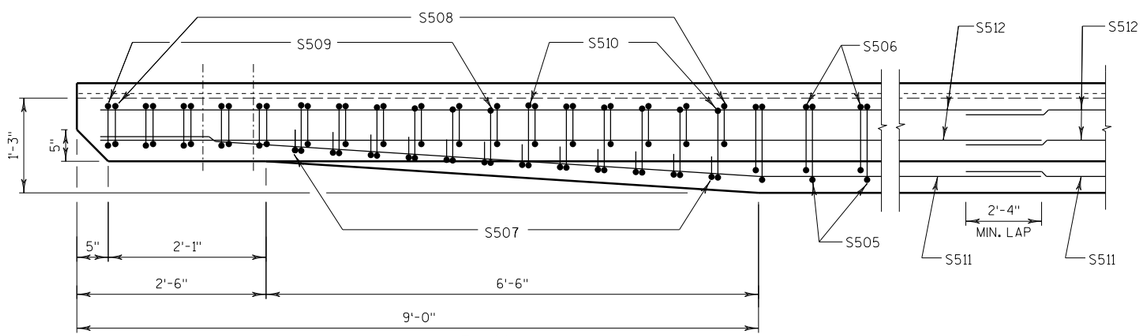

PLAN

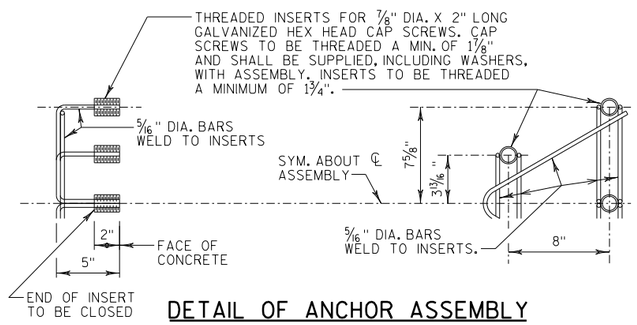

DETAIL OF ANCHOR ASSEMBLY

NOTE: HEX HEAD CAP SCREWS & WASHERS TO BE GALVANIZED IN ACCORDANCE WITH AASHTO M232 CLASS C.

ASSEMBLY SHALL BE BID ITEM "ANCHOR ASSEMBLIES FOR STEEL PLATE BEAM GUARD", EACH.

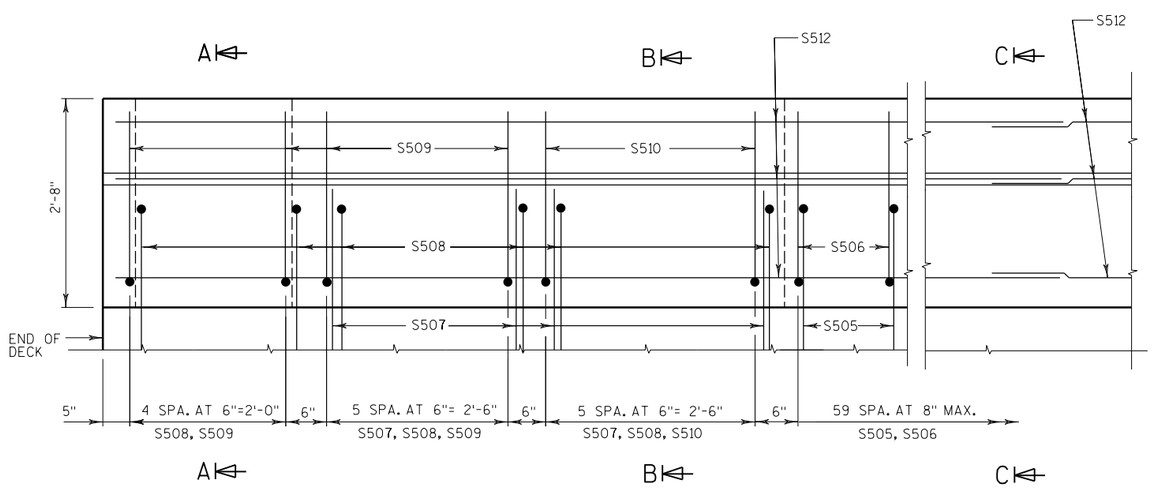

OUTSIDE ELEVATION

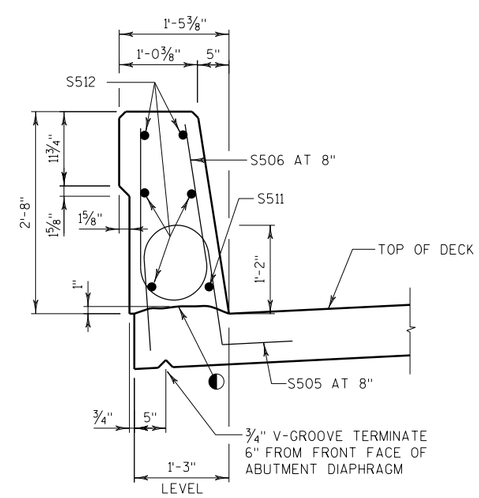

SECTION C

◐ CONST. JOINT - STRIKE OFF AS SHOWN.

NOTES

SEE SHEET 4 FOR BILL OF BARS AND BEND DIAGRAMS

8

8

NO.	DATE	REVISION	BY

STATE OF WISCONSIN
DEPARTMENT OF TRANSPORTATION

STRUCTURE B-54-21

DRAWN BY PLR | PLANS CK'D. AJC

SINGLE SLOPE PARAPET 32SS

SHFT 7 OF 7

104

STATE PROJECT NUMBER
8590-01-73

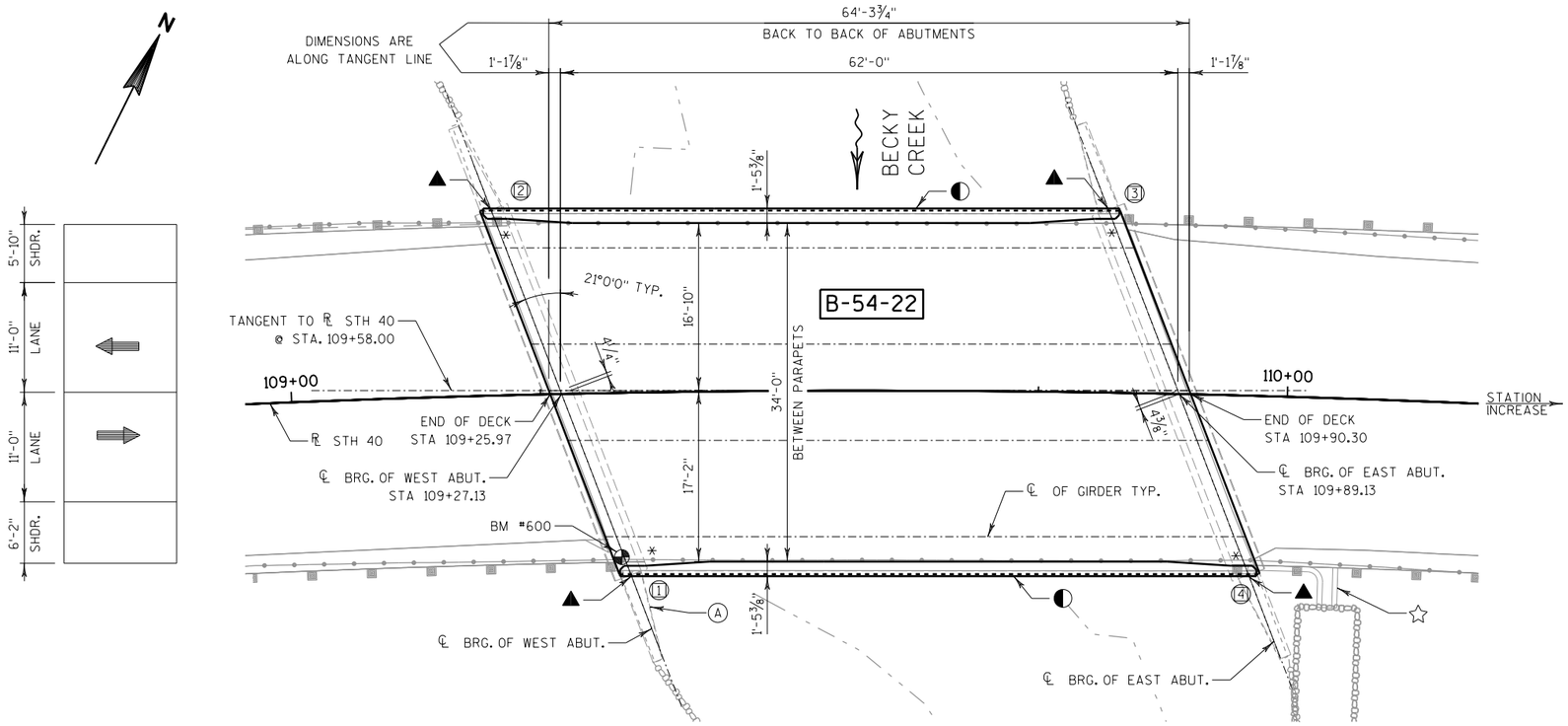

PLAN

SINGLE SPAN-45" PRESTRESSED GIRDERS - BRIDGE REDECK

NOTES

(A) NAME PLATE LOCATION

(X) DENOTES WINGWALL NUMBER

* THRIE BEAM RAIL ATTACHMENT (SEE ROADWAY PLANS FOR GUARDRAIL DETAILS)

◐ REMOVE AND DISPOSE OF EXISTING STEEL RAILING TYPE "W". CAULK AROUND EXISTING RAILING IS ASBESTOS CONTAINING MATERIAL. SEE SPECIAL PROVISIONS FOR PROPER ABATEMENT PROCEDURES. REMOVAL WORK PAID UNDER BID ITEM "REMOVING OLD STRUCTURE OVER WATERWAY WITH DEBRIS CAPTURE SYSTEM". ABATEMENT WORK PAID UNDER BID ITEM "ABATEMENT OF ASBESTOS CONTAINING MATERIAL". REPLACE STEEL RAIL WITH SINGLE SLOPE 32SS CONCRETE PARAPET. SEE "SINGLE SLOPE PARAPET 32SS" SHEET FOR DETAILS.

◥ REPAIR END OF EXISTING GIRDER, SEE "SUPERSTRUCTURE DETAILS 2" SHEET FOR DETAILS.

▲ REMOVE PORTION OF WINGWALL TO ACCOMMODATE ADDITIONAL BRIDGE WIDTH. TYPICAL AT ALL CORNERS OF BRIDGE. SEE "SUPERSTRUCTURE DETAILS 2" SHEET FOR DETAILS.

☆ CONSTRUCT DRAINAGE FLUMES AT SOUTHEAST CORNER OF BRIDGE. SEE ROADWAY PLANS FOR DETAILS. WORK TO BE PAID FOR UNDER ROADWAY BID ITEMS.

DESIGN DATA

LIVE LOAD:

DESIGN LOADING: HS-20
INVENTORY RATING: HS-19
OPERATING RATING: HS-31
WISCONSIN STD. PERMIT VEHICLE (WIS-SPV) = 220 KIPS

MATERIAL PROPERTIES:

CONCRETE MASONRY _____ f'c = 4,000 psi
HIGH STRENGTH BAR STEEL
REINFORCEMENT, GRADE 60 _____ fy = 60,000 psi

TRAFFIC DATA

ADT = 625 (2017)
ADT = 725 (2037)
RDS = 60 MPH

HORIZONTAL ALIGNMENT

℞ STH 40:

PI STA = 107+52.08
Y = 576821.43
X = 771187.08
DELTA = 27°37'03" RT
D = 03°59'59"
T = 352.08
L = 690.48
R = 1432.48
PC STA = 104+00.00
PT STA = 110+90.48
SE = 6.0%

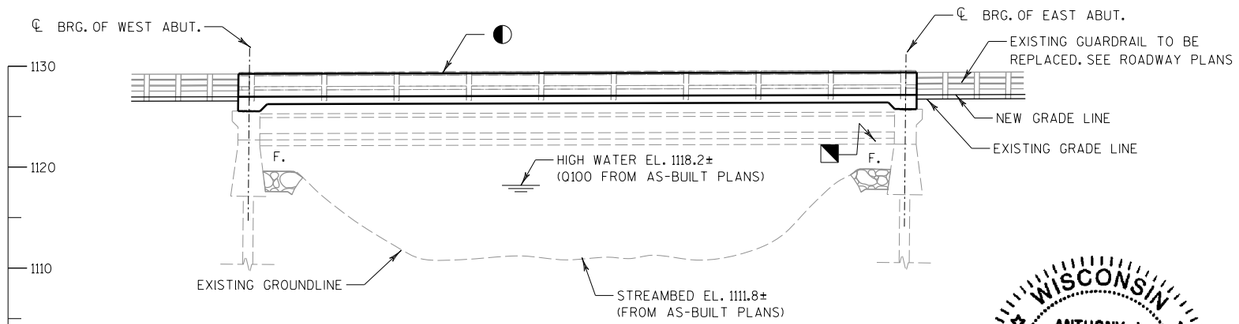

ELEVATION

NORMAL TO BECKY CREEK
(LOOKING UPSTREAM)

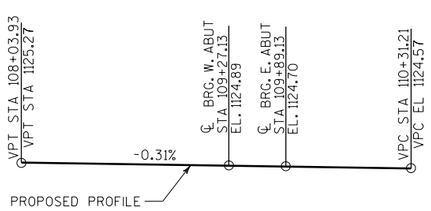

PROFILE GRADE LINE - STH 40

BENCH MARK

NO.	STATION	DESCRIPTION	ELEV.
600	109+33, RT	WISDOT ALUMINUM CAP IN BRIDGE DECK	1123.50

WISCONSIN
ANTHONY J. CASTLE
E-43345-6
SOUTH MILWAUKEE, WI
PROFESSIONAL ENGINEER
10/28/2016

HYDRAULIC DATA

(FROM EXISTING PLANS DATED 1977)

Q_{100} = 2000 C.F.S.
$VELOCITY_{100}$ = 7.8 F.P.S.
HIGH $WATER_{100}$ = EL. 1118.2
WATERWAY $AREA_{100}$ = 255 SF
DRAINAGE AREA 11.2 SQ. MI.

LIST OF DRAWINGS

1. GENERAL PLAN & ELEVATION
2. CROSS SECTION AND QUANTITIES
3. SUPERSTRUCTURE
4. SUPERSTRUCTURE DETAILS 1
5. SUPERSTRUCTURE DETAILS 2
6. STEEL DIAPHRAGM
7. SINGLE SLOPE PARAPET 32SS

STRUCTURE DESIGN CONTACTS

BRIDGE OFFICE: WILLIAM DREHER (608) 266-8489
CONSULTANT: MIKE RADTKE (414) 347-1607

NO.	DATE	REVISION	BY

emcs INC
1300 W. Canal Street, Suite 200
Milwaukee, WI 53233
414.347.1607 Fax 414.347.1347

STATE OF WISCONSIN
DEPARTMENT OF TRANSPORTATION
ACCEPTED William C. Dreher SOR 01/23/17
CHIEF STRUCTURES DESIGN ENGINEER DATE

STRUCTURE B-54-22

STH 40 OVER BECKY CREEK

COUNTY RUSK TOWN ATLANTA

DESIGN SPEC. REHABILITATION N/A

DESIGNED BY	MDR	DESIGN CK'D.	AJC	DRAWN BY	MDR	PLANS CK'D.	AJC

GENERAL PLAN & ELEVATION

SHEET 1 OF 7
105

8

8

STATE PROJECT NUMBER

8590-01-73

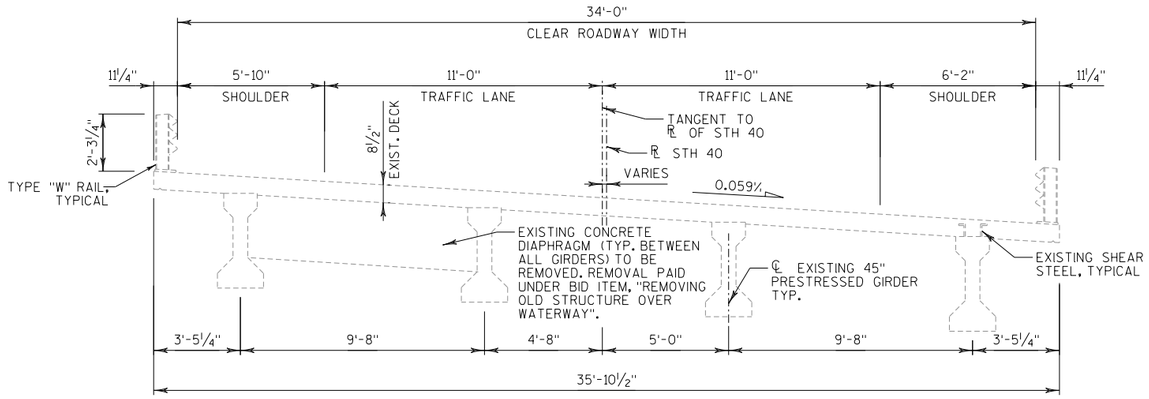

TYPICAL EXISTING SECTION THRU STH 40

LOOKING UPSTATION

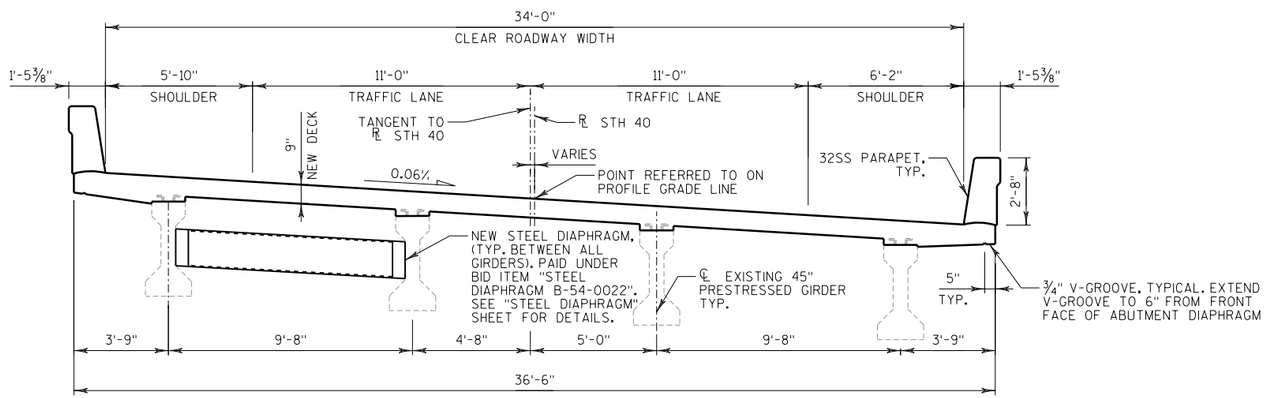

TYPICAL PROPOSED SECTION THRU STH 40

LOOKING UPSTATION

GENERAL NOTES

DRAWINGS SHALL NOT BE SCALED.

ALL DIMENSIONS ARE IN FEET AND INCHES UNLESS OTHERWISE NOTED.

ALL STATIONS AND ALL ELEVATIONS ARE IN FEET. ELEVATIONS REFERENCED TO NAVD 88, 2011 ADJUSTMENT.

ALL CONCRETE REMOVAL NOT COVERED WITH NEW CONCRETE SHALL BE DEFINED BY A 1" DEEP SAW CUT.

IF EXISTING NAME PLATE IS DAMAGED DURING REMOVAL ACTIVITIES, SUPPLY A NEW NAME PLATE IN ACCORDANCE WITH SECTION 502.3.11 OF THE STANDARD SPECIFICATIONS AND THE STANDARD DETAIL DRAWINGS. NAME PLATE TO SHOW THE ORIGINAL CONSTRUCTION DATE OF 1977. NEW NAME PLATE TO BE PLACED IN PARAPET AS SHOWN ON "SINGLE SLOPE PARAPET 32SS" SHEET.

BEVEL EXPOSED EDGES OF CONCRETE ¾" UNLESS OTHERWISE NOTED.

BAR STEEL REINFORCEMENT SHALL BE EMBEDDED 2" CLEAR UNLESS OTHERWISE SHOWN OR NOTED.

ALL REINFORCING BARS ARE ENGLISH DESIGNATION AND THE FIRST DIGIT OF A 3-DIGIT BAR MARK OR FIRST TWO DIGITS OF A 4-DIGIT BAR MARK SIGNIFY THE BAR SIZE.

DIMENSIONS SHOWN ARE BASED ON THE ORIGINAL STRUCTURE PLANS.

PROTECT THE EXISTING REINFORCEMENT STEEL, EXISTING GIRDERS, AND THE EXISTING GIRDER SHEAR STIRRUPS DURING DEMOLITION. REPLACEMENT OF BRIDGE COMPONENTS DAMAGED DURING THE REMOVAL OF THE EXISTING DECK WILL BE THE CONTRACTOR'S RESPONSIBILITY AND REPLACED AT NO ADDITIONAL COST TO THE OWNER.

PROTECTIVE SURFACE TREATMENT SHALL BE APPLIED TO THE ENTIRE ROADWAY TOP SURFACE OF THE NEW CONCRETE DECK.

PIGMENTED SURFACE SEALER SHALL BE APPLIED TO ENDS, INSIDE FACE, AND TOP OF PARAPETS.

ANY EXCAVATION REQUIRED TO COMPLETE THE DECK REPLACEMENT AT THE ABUTMENTS IS TO BE INCLUDED IN WORK FOR BID ITEM "CONCRETE MASONRY BRIDGES".

THE HAUNCH CONCRETE QUANTITY IS BASED ON THE AVERAGE HAUNCH SHOWN ON THE "SUPERSTRUCTURE DETAILS 2" SHEET.

JOINT FILLER SHALL CONFORM TO THE REQUIREMENTS OF AASHTO M153 TYPE 1, 2, OR 3, OR AASHTO M213.

UTILIZE EXISTING BAR STEEL REINFORCEMENT WHERE SHOWN AND EXTEND 24 BAR DIAMETERS INTO NEW WORK, UNLESS NOTED OTHERWISE.

VARIATIONS TO THE NEW GRADE LINE OVER ¼" MUST BE SUBMITTED BY THE FIELD ENGINEER TO THE STRUCTURES DESIGN SECTION FOR REVIEW.

8

TOTAL ESTIMATED QUANTITIES

	BID ITEM NO.	BID ITEMS	UNIT	TOTAL
	203.0210.S	ABATEMENT OF ASBESTOS CONTAINING MATERIAL B-54-0022	LS	1
	203.0700.S	REMOVING OLD STRUCTURE OVER WATERWAY WITH DEBRIS CAPTURE SYSTEM STATION 109+26	LS	1
	502.0100	CONCRETE MASONRY BRIDGES	CY	87
	502.3200	PROTECTIVE SURFACE TREATMENT	SY	243
	502.3210	PIGMENTED SURFACE SEALER	SY	54
	505.0600	BAR STEEL REINFORCEMENT HS COATED STRUCTURES	LB	17810
	506.4000	STEEL DIAPHRAGMS B-54-0022	EACH	3
☆	509.1500	CONCRETE SURFACE REPAIR	SF	10
	614.0150	ANCHOR ASSEMBLIES FOR STEEL PLATE BEAM GUARD	EACH	4
		NON-BID ITEMS		
		PREFORMED JOINT FILLER	SIZE	1/2"
		NON-BITUMINOUS JOINT SEALER		

☆ UNDISTRIBUTED - AS DETERMINED BY ENGINEER IN THE FIELD

8

NO.	DATE	REVISION	BY

STATE OF WISCONSIN
DEPARTMENT OF TRANSPORTATION

STRUCTURE B-54-22

DRAWN BY MDR | PLANS CK'D. AJC

CROSS SECTION AND QUANTITIES

SHEET 2 OF 7

STATE PROJECT NUMBER

8590-01-73

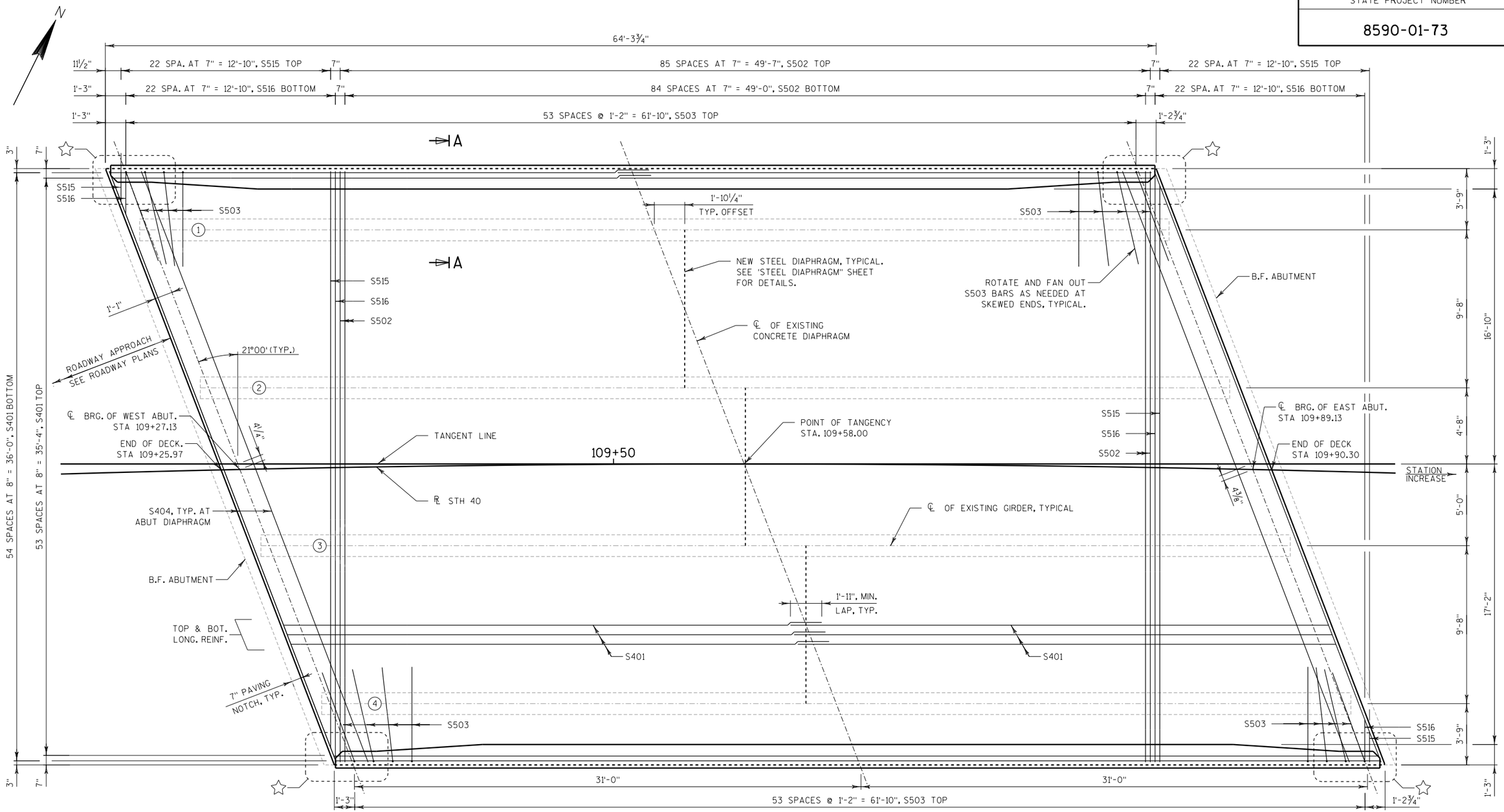

DECK PLAN

NOTES:

SEE "SUPERSTRUCTURE DETAILS 1" SHEET FOR SECTION A-A.

LONGITUDINAL DECK STEEL, GIRDERS, AND DECK EDGES ARE PARALLEL TO TANGENT.

DIAPHRAGMS AND TRANSVERSE DECK STEEL ARE PERPENDICULAR TO TANGENT.

☆ SEE "SUPERSTRUCTURE DETAILS 2" SHEET FOR DETAILS AT DECK CORNERS.

(X) DENOTES GIRDER NUMBER

TOP OF DECK ELEVATIONS

LOCATION	WEST ABUT	0.1 PT	0.2 PT	0.3 PT	0.4 PT	0.5 PT	0.6 PT	0.7 PT	0.8 PT	0.9 PT	EAST ABUT
N. FLOW LINE	1125.95	1125.92	1125.89	1125.87	1125.84	1125.82	1125.80	1125.79	1125.77	1125.75	1125.74
GIRDER 1	1125.79	1125.76	1125.74	1125.71	1125.69	1125.67	1125.65	1125.63	1125.62	1125.60	1125.59
GIRDER 2	1125.20	1125.17	1125.14	1125.12	1125.10	1125.08	1125.06	1125.04	1125.03	1125.01	1125.00
GIRDER 3	1124.60	1124.57	1124.55	1124.53	1124.51	1124.49	1124.47	1124.45	1124.44	1124.42	1124.41
GIRDER 4	1124.01	1123.98	1123.96	1123.93	1123.91	1123.90	1123.88	1123.86	1123.85	1123.84	1123.83
S. FLOW LINE	1123.85	1123.83	1123.80	1123.78	1123.76	1123.74	1123.73	1123.71	1123.70	1123.68	1123.67

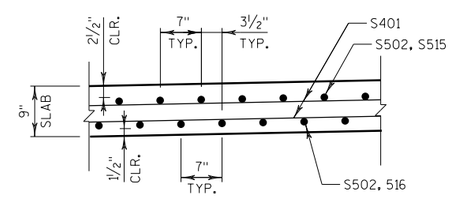

TYPICAL SECTION THRU DECK

NO.	DATE	REVISION	BY

STATE OF WISCONSIN
DEPARTMENT OF TRANSPORTATION

STRUCTURE B-54-22

DRAWN BY PLR | PLANS CK'D. AJC

SUPERSTRUCTURE

SHEET 3 OF 7

107

8

8

STATE PROJECT NUMBER

8590-01-73

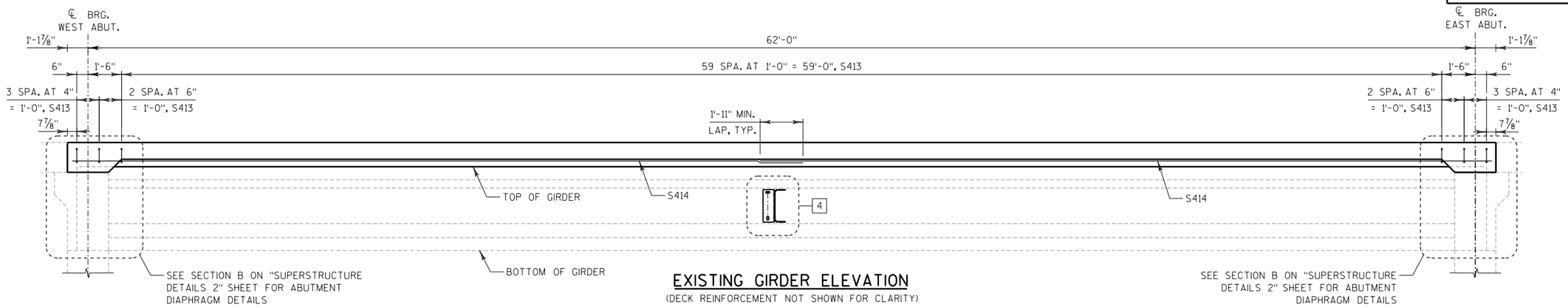

EXISTING GIRDER ELEVATION

(DECK REINFORCEMENT NOT SHOWN FOR CLARITY)

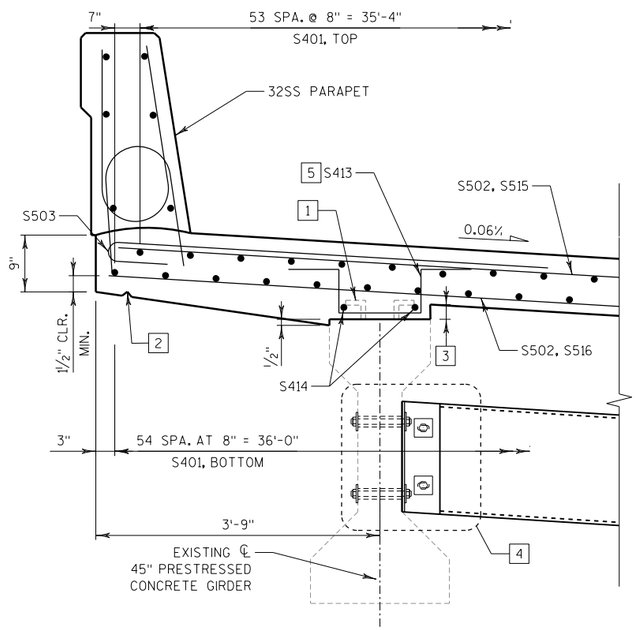

SECTION A-A

BILL OF BARS

BAR MARK	NO.	LENGTH	COAT	SERIES	BENT	LOCATION
S401	218	33'-0"	X			SLAB LONG. TOP & BOTTOM
S502	171	36'-2"	X			SLAB TRANS. TOP AND BOTTOM
S503	108	5'-8"	X		X	SLAB TRANS. TOP
S404	4	38'-8"	X			ABUT. DIAPHRAGM TRANS.
S505	142	4'-5"	X		X	PARAPET VERT.
S506	142	5'-0"	X		X	PARAPET VERT.
S507	48	2'-9"	X		X	PARAPET VERT.
S508	68	4'-4"	X		X	PARAPET VERT.
S509	44	4'-9"	X		X	PARAPET VERT.
S510	24	4'-10"	X		X	PARAPET VERT.
S511	4	33'-2"	X		X	PARAPET HORIZ.
S512	20	33'-2"	X			PARAPET HORIZ.
S413	280	3'-5"	X		X	GIRDER HAUNCH STIRRUP
S414	16	33'-0"	X			GIRDER HAUNCH HORIZ.
S515	46	18'-6"	X	X		SLAB LONG. TOP CORNERS
S516	46	19'-3"	X	X		SLAB LONG. BOT. CORNERS

BAR SERIES TABLE

BAR MARK	NO. REQ'D.	LENGTHS FOR EACH SERIES
S515	2 SERIES OF 23	1'-10" TO 35'-2"
S516	2 SERIES OF 23	2'-6" TO 36'-0"

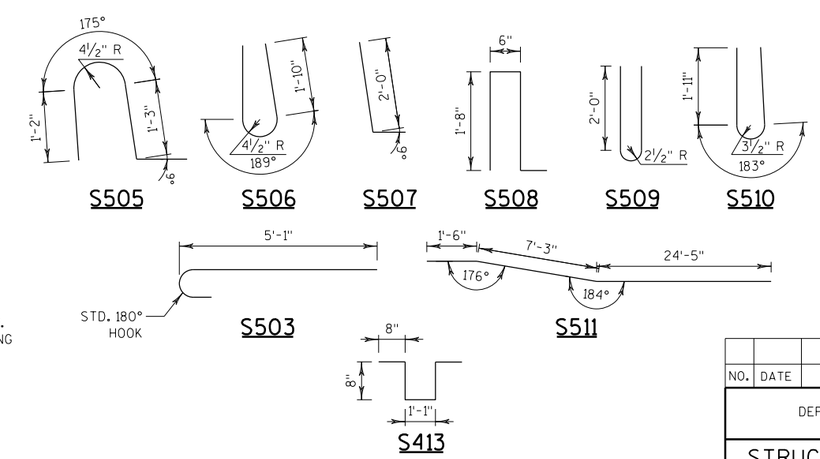

NOTES

PARAPET REINFORCEMENT NOT DETAILED FOR CLARITY. SEE "SINGLE SLOPE PARAPET 32SS" SHEET FOR PARAPET REINFORCEMENT DETAILS.

1 PROTECT AND PRESERVE EXISTING GIRDER SHEAR STIRRUPS. FIELD ENGINEER TO DETERMINE THE ADEQUACY OF ALL EXISTING SALVAGED REBAR. SALVAGING REINFORCEMENT WILL INCLUDE CLEANING AND ALIGNING AS PER STANDARD SPECIFICATION 509. IF EXISTING STEEL IS DAMAGED DURING REMOVAL, THE CONTRACTOR MUST PROVIDE SOLUTION APPROVED BY FIELD ENGINEER AT NO ADDITIONAL COST TO THE OWNER.

2 PROVIDE ¾" V GROOVE 5" FROM EDGE, TYPICAL. EXTEND V-GROOVE TO 6" FROM FRONT FACE OF ABUTMENT DIAPHRAGM.

3 VARIES FROM FROM APPROXIMATELY 5 " HAUNCH AT THE ABUTMENTS TO 2 " AT MIDSPAN. AVERAGE HAUNCH USED FOR COMPUTATIONS AND QUANTITIES IS 3".

4 REMOVE EXISTING CONCRETE DIAPHRAGM AND REPLACE WITH NEW STEEL DIAPHRAGM. CUT EXISTING DOWELS BETWEEN CONCRETE DIAPHRAGM AND GIRDERS AND GRIND FLUSH WITH SURFACE. TO PREVENT WATER INFILTRATION AND POTENTIAL COROSION, FILL REMAINING HOLES IN EXISTING GIRDERS WITH EPOXY PER THE APPROVAL OF THE FIELD ENGINEER. REMOVAL OF EXISTING DIAPHRAGM PAID UNDER BID ITEM "REMOVING OLD STRUCTURE OVER WATERWAY WITH DEBRIS CAPTURE SYSTEM STATION 109+26". INSTALLATION AND MATERIALS FOR NEW STEEL DIAPHRAGM TO BE PAID UNDER BID ITEM "STEEL DIAPHRAGM B-54-0022". SEE "SUPERSTRUCTURE" AND "STEEL DIAPHRAGM" SHEETS FOR MORE DETAILS.

5 HAT BARS CAN BE TILTED IF NEEDED TO MAINTAIN 2" MINIMUM CLEARANCE AT TOP AND BOTTOM.

NO.	DATE	REVISION	BY

STATE OF WISCONSIN
DEPARTMENT OF TRANSPORTATION

STRUCTURE B-54-22

DRAWN BY PLR | PLANS CK'D. AJC

SUPERSTRUCTURE DETAILS 1

SHFT 4 OF 7
108

8

8

STATE PROJECT NUMBER

8590-01-73

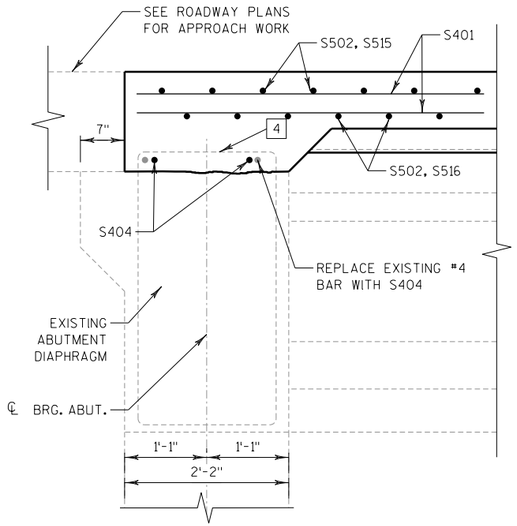

SECTION B-B

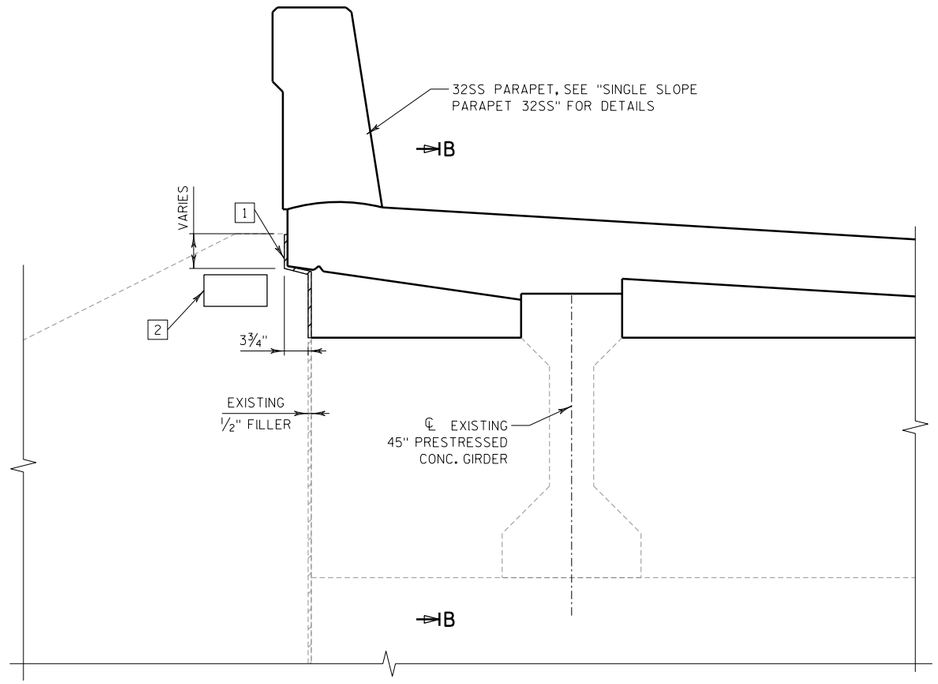

ELEVATION AT ABUTMENT CORNER

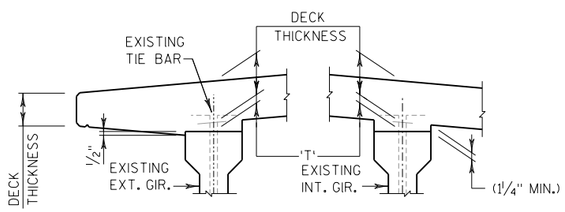

DECK HAUNCH DETAIL

IF 1¼" MINIMUM HAUNCH HEIGHT AT EDGE OF GIRDER CANNOT BE MAINTAINED, THE GRADE LINE MAY BE REVISED BY THE ENGINEER AT THE OPTION OF THE CONTRACTOR. THE PLAN DECK THICKNESS SHALL BE HELD. NOTIFY THE STRUCTURES SECTION IF THE GRADE LINE IS RAISED FROM THE PLAN PROFILE BY MORE THAN ½"

TO DETERMINE 'T', ELEVATIONS OF TOP OF GIRDERS AT ℄ OF SUBSTRUCTURE UNITS & AT 1/10 POINTS OF EACH SPAN SHALL BE TAKEN. THEN FOLLOW THIS PROCESS:

TOP OF DECK ELEV. AT FINAL GRADE
- TOP OF GIRDER ELEVATION
+ DEAD LOAD DEFLECTION
- DECK THICKNESS

= HAUNCH HEIGHT 'T'

NOTE:
AN AVERAGE HAUNCH ('T') OF 3" WAS USED IN THE QUANTITY "CONCRETE MASONRY BRIDGES".

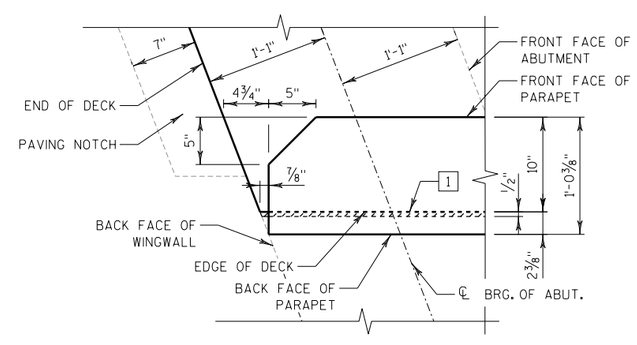

DECK CORNER DETAIL AT OBTUSE ANGLE

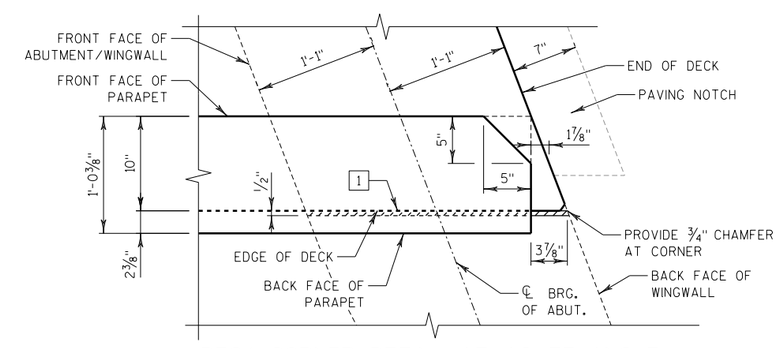

DECK CORNER DETAIL AT ACUTE ANGLE

NOTES

1. SAWCUT AND REMOVE NOTCH IN TOP OF EXISTING WINGWALL TO ALLOW CONSTRUCTION OF NEW DECK OVERHANG. GRIND EXISTING REINFORCEMENT FLUSH WITH SURFACE. TO PREVENT WATER INFILTRATION AND POTENTIAL CORROSION, FILL REMAINING HOLE IN EXISTING WINGWALL WITH EPOXY PER THE APPROVAL OF THE FIELD ENGINEER. PROVIDE ½" FILLER BETWEEN NEW AND EXISTING CONCRETE. WORK TO BE INCLUDED IN BID ITEM "CONCRETE MASONRY BRIDGES". EXISTING CAULK IN WINGWALL JOINT IS AN ASBESTOS CONTAINING MATERIAL. SEE SPECIAL PROVISIONS FOR PROPER ABATEMENT PROCEDURES. ABATEMENT WORK PAID UNDER BID ITEM "ABATEMENT OF ASBESTOS CONTAINING MATERIAL". SEAL NEW JOINT WITH NON-BITUMINOUS JOINT SEALER.
2. IF THE EXISTING NAME PLATE IS DAMAGED AND A NEW NAME PLATE IS REQUIRED, THE ORIGINAL CONSTRUCTION DATE IS 1977. SEE "SINGLE SLOPE PARAPET 32SS" DETAILS FOR LOCATION OF NEW NAME PLATE IF REQUIRED.
3. CONCRETE SURFACE REPAIR REQUIRED ON EXTERIOR GIRDER. LOCATION AND QUANTITIES ARE APPROXIMATE AND SHOULD BE USED AS A GUIDE ONLY. EXACT EXTENTS TO BE DETERMINED BY ENGINEER IN THE FIELD.
4. PRESERVE AND INCORPORATE EXISTING REINFORCEMENT INTO NEW WORK. FIELD ENGINEER TO DETERMINE THE ADEQUACY OF ALL EXISTING SALVAGED REINFORCEMENT. CLEAN & PREPARE STEEL PER SPECIFICATION 509. IF EXISTING STEEL IS DAMAGED DURING REMOVAL THE CONTRACTOR MUST PROVIDE SOLUTION APPROVED BY ENGINEER AT NO ADDITIONAL COST TO THE OWNER.
5. LEAVE EXISTING CONCRETE SURFACE ROUGH. REMOVE CONCRETE TO SOUND CONCRETE OR TO ONE INCH BEHIND THE EXISTING REINFORCING STEEL. NOTIFY ENGINEER IMMEDIATELY IF MORE THAN TWO REINFORCEMENT STRANDS ARE EXPOSED. DESIGN CONSIDERS ONLY TWO STRANDS WILL BE EXPOSED.

THE THEORETICAL CAMBER VALUE AT THE TIME OF NEW DECK POUR. VALUE EQUALS THE SURVEYED CAMBER AT MIDSPAN PLUS CAMBER CAUSED BY REMOVING EXISTING DEAD LOAD

GIRDER	CAMBER (IN.)
1	2.0
2	2.5
3	2.2
4	2.4

THESE VALUES ARE NOT TO BE USED IN DETERMINING 'T'. USE ACTUAL GIRDER SHOTS. THESE VALUES ARE FOR INFORMATIONAL PURPOSES ONLY.

GIRDER DATA

GIRDER	LENGTH "L"	DEAD LOAD DEFL. (IN)								
		1/10	2/10	3/10	4/10	5/10	6/10	7/10	8/10	9/10
1,4	63'-0"	0.2	0.3	0.4	0.5	0.5	0.5	0.4	0.3	0.2
2-3	63'-0"	0.2	0.3	0.4	0.5	0.6	0.5	0.4	0.3	0.2

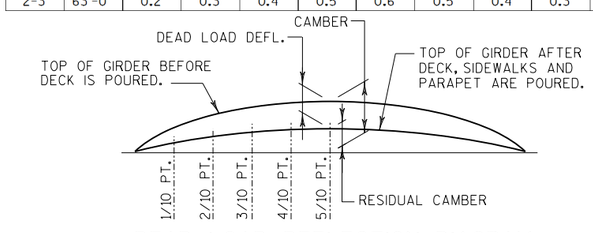

DEAD LOAD DEFLECTION DIAGRAM

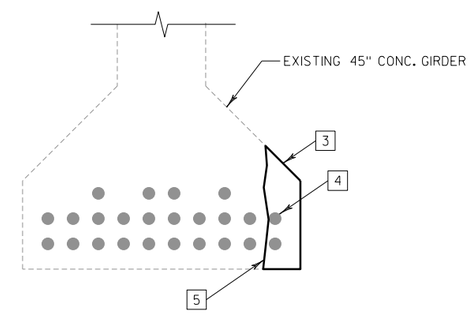

CONCRETE SURFACE REPAIR

NO.	DATE	REVISION	BY

STATE OF WISCONSIN
DEPARTMENT OF TRANSPORTATION

STRUCTURE B-54-22

DRAWN BY MDR | PLANS CK'D. AJC

SUPERSTRUCTURE DETAILS 2

SHFT 5 OF 7

109

8

8

STATE PROJECT NUMBER

8590-01-73

NOTES

ALL DIAPHRAGM MATERIAL NOT EMBEDDED IN THE CONCRETE GIRDER SHALL BE PAID FOR AT THE UNIT PRICE BID FOR "STEEL DIAPHRAGMS B-54-0022", EACH.

EACH DIAPHRAGM BETWEEN GIRDERS SHALL CONSTITUTE ONE UNIT.

ALL DIAPHRAGM STRUCTURAL STEEL SHALL BE ASTM A709 GRADE 36.

ALL DIAPHRAGM MATERIAL INCLUDING BOLTS, NUTS, AND WASHERS SHALL BE GALVANIZED AFTER FABRICATION.

STEEL DIAPHRAGM TO CONCRETE WEB CONNECTION SHALL BE SNUG-TIGHT PLUS 1/4 TURN, UNLESS NOTED OTHERWISE. HIGH STRENGTH BOLTS FOR WEB CONNECTION SHALL MEET THE REQUIREMENTS FOR ASTM A325 OR ASTM A449.

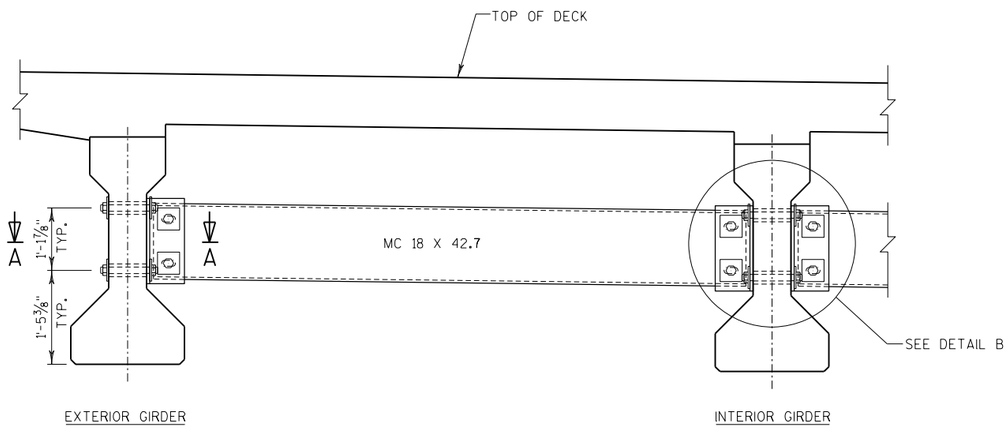

PART TRANSVERSE SECTION AT DIAPHRAGM

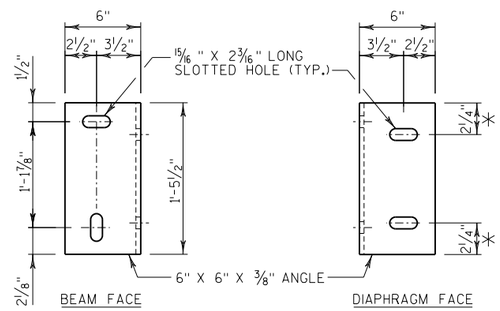

DIAPHRAGM SUPPORT

✳ 2 1/2" FOR ALTERNATE PLATE DIAPHRAGM

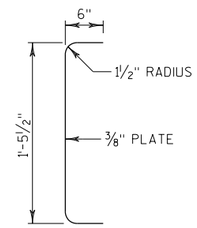

SECTION THRU ALTERNATE DIAPHRAGM

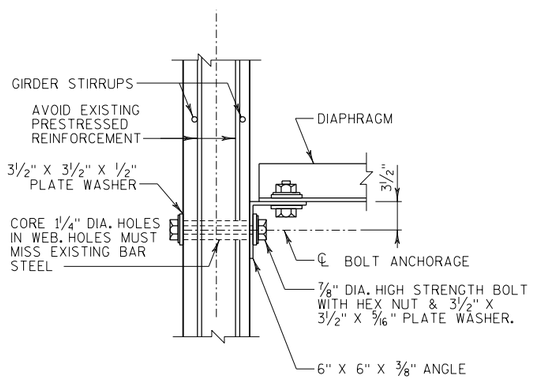

SECTION A-A

(FOR EXTERIOR ATTACHMENT)

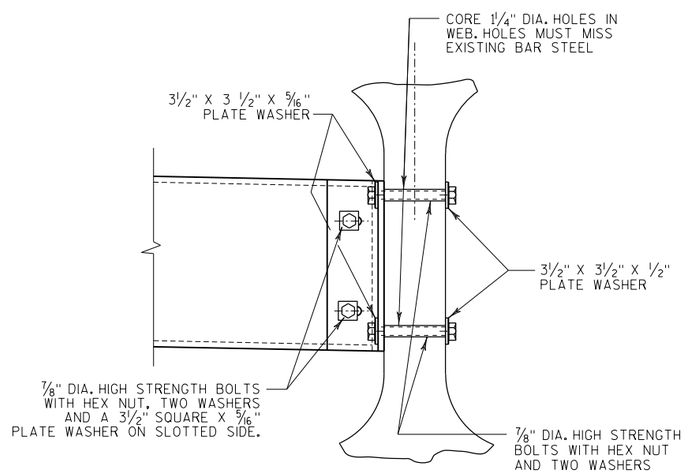

DETAIL B

8

8

NO.	DATE	REVISION	BY

STATE OF WISCONSIN
DEPARTMENT OF TRANSPORTATION

STRUCTURE B-54-22

DRAWN BY PLR | PLANS CK'D. AJC

STEEL DIAPHRAGM

SHEET 6 OF 7

STATE PROJECT NUMBER

8590-01-73

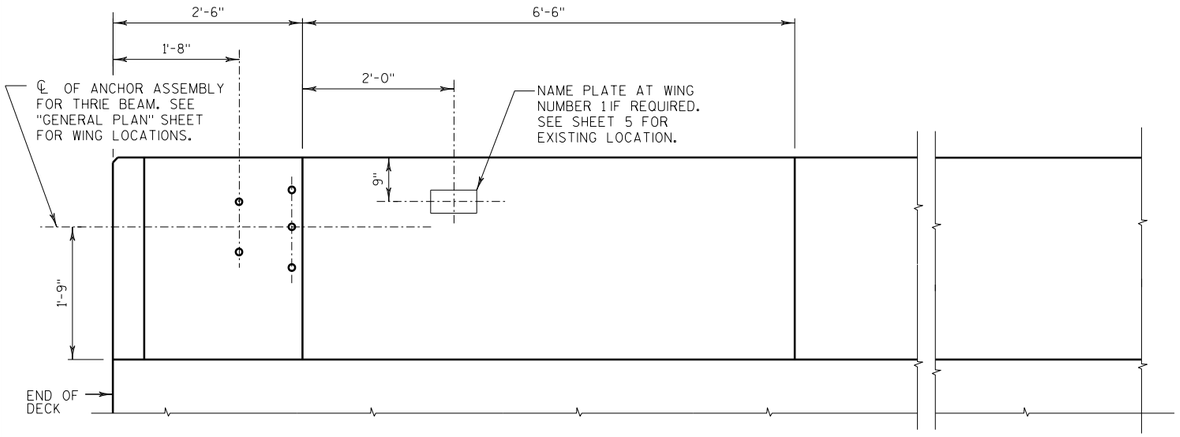

INSIDE ELEVATION

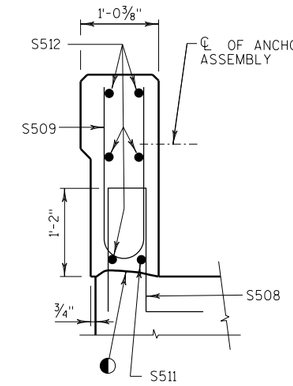

SECTION A

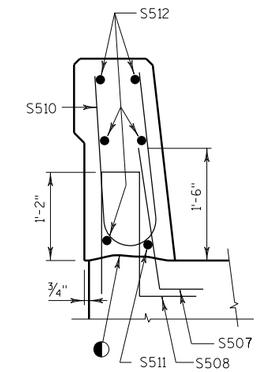

SECTION B

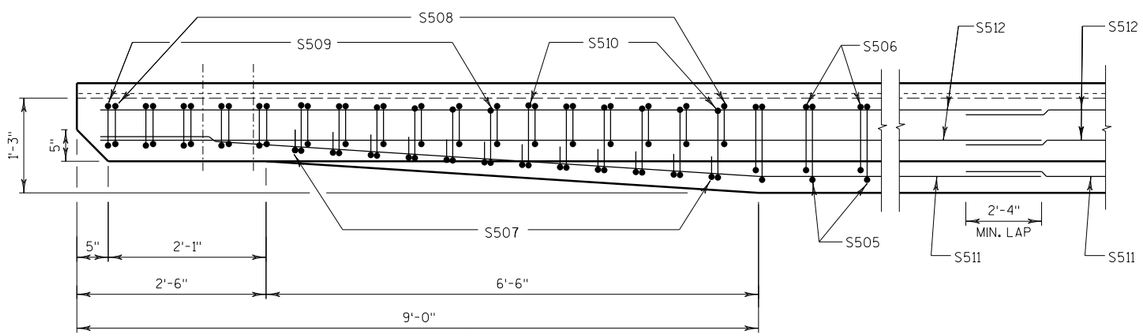

PLAN

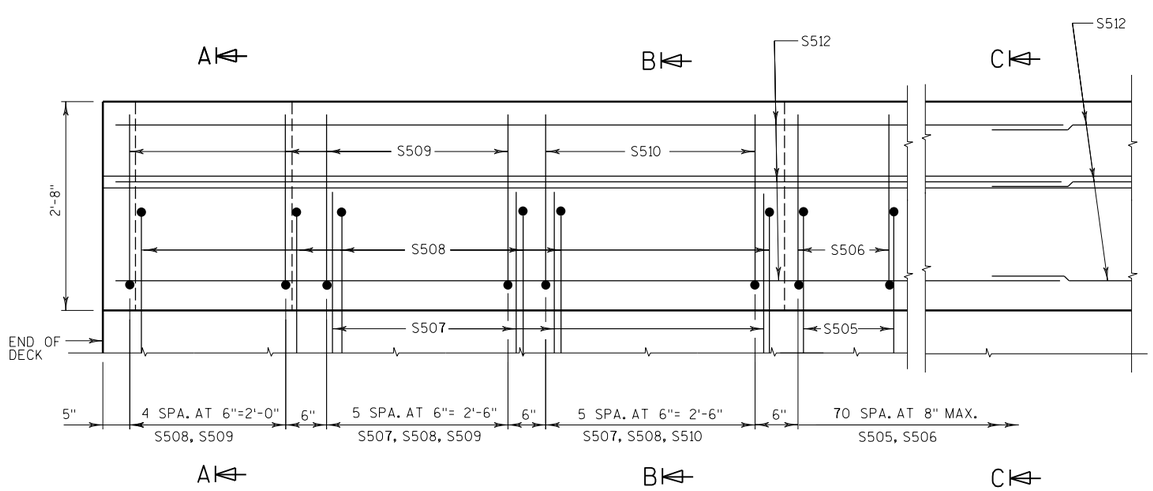

OUTSIDE ELEVATION

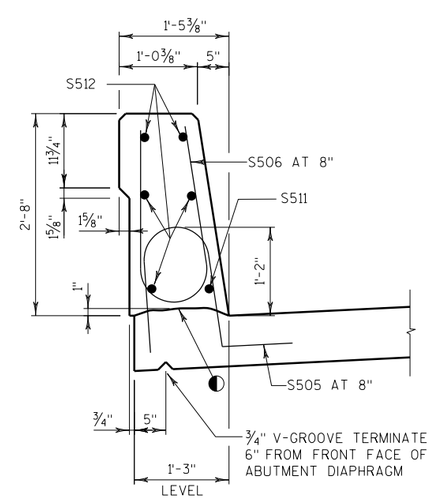

SECTION C

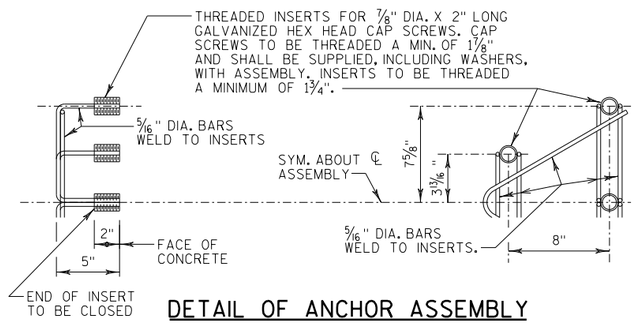

DETAIL OF ANCHOR ASSEMBLY

NOTE: HEX HEAD CAP SCREWS & WASHERS TO BE GALVANIZED IN ACCORDANCE WITH AASHTO M232 CLASS C.

ASSEMBLY SHALL BE BID ITEM "ANCHOR ASSEMBLIES FOR STEEL PLATE BEAM GUARD", EACH.

NOTES

SEE SHEET 4 FOR BILL OF BARS AND BEND DIAGRAMS

◐ CONST. JOINT - STRIKE OFF AS SHOWN.

NO.	DATE	REVISION	BY

STATE OF WISCONSIN
DEPARTMENT OF TRANSPORTATION

STRUCTURE B-54-22

DRAWN BY MDR | PLANS CK'D. AJC

SINGLE SLOPE PARAPET 32SS

SHEET 7 OF 7

8

8

SOUTH OF ALDER CREEK

STATION	DISTANCE	AREA (SF)		INCREMENTAL VOL (CY) (UNADJUSTED)		CUMULATIVE VOL (CY)		MASS ORDINATE
		CUT	FILL	CUT NOTE 1	FILL NOTE 2	CUT 1.00 NOTE 1	EXPANDED FILL 1.25 NOTE 3	NOTE 4
55+18		0	0	0	0	0	0	0
55+50	32	0	0	0	0	0	0	0
55+73	23	0	4	0	2	0	2	-2
55+75	2	0	3	0	0	0	2	-2
55+76	1	0	4	0	0	0	2	-2
56+00	24	16	5	7	4	7	7	0
56+50	50	103	12	110	16	118	26	91
56+53	3	105	13	10	1	128	28	100
56+54	1	104	12	5	1	133	29	105
56+78	24	92	11	86	10	219	41	178
56+95	17	83	10	56	7	275	49	226
57+00	5	81	9	15	2	291	52	239
57+03	3	84	8	8	1	299	53	246
57+20	17	108	4	62	4	360	58	303
57+45	25	138	4	114	4	474	62	412
57+50	5	244	0	36	0	510	63	447
58+00	50	161	5	375	5	885	69	816
58+18	18	97	0	84	2	969	71	898
58+22	5	35	0	12	0	981	71	910
			COLUMN TOTALS	981	57			

NOTES:	
1 - CUT	CUT INCLUDES SALVAGED/UNUSABLE PAVEMENT MATERIAL. SALVAGED/UNUSABLE PAVEMENT MATERIAL IS CALCULATED ON THE SUMMARY SHEET.
2 - FILL	DOES NOT INCLUDE UNUSABLE PAVEMENT EXC VOLUME. SALVAGED/UNUSABLE PAVEMENT MATERIAL IS CALCULATED ON THE SUMMARY SHEET.
3 - EXPANDED FILL	(UNEXPANDED FILL)*(FILL FACTOR)
4 - MASS ORDINATE	CUT - (EXPANDED FILL); PLUS INDICATES AN EXCESS OF MATERIAL

NORTH OF ALDER CREEK

STATION	DISTANCE	AREA (SF)		INCREMENTAL VOL (CY) (UNADJUSTED)		CUMULATIVE VOL (CY)		MASS ORDINATE
		CUT	FILL	CUT NOTE 1	FILL NOTE 2	CUT 1.00 NOTE 1	EXPANDED FILL 1.25 NOTE 3	NOTE 4
58+75		35	0	0	0	0	0	0
58+79	5	68	12	9	1	9	1	8
59+00	21	76	40	55	20	64	26	38
59+50	50	84	52	148	85	212	133	79
59+52	2	84	52	6	4	218	138	81
59+77	25	85	52	78	48	297	198	99
59+94	17	84	50	54	33	351	238	113
60+00	6	84	51	18	11	369	252	117
60+02	2	83	52	6	4	375	256	118
60+19	17	83	55	53	34	428	299	129
60+44	25	86	74	77	59	505	373	132
60+50	6	86	66	19	15	524	393	132
61+00	50	94	14	167	74	691	486	205
61+30	30	90	3	102	10	793	498	295
61+42	12	0	1	20	1	813	499	314
61+64	22	0	0	0	1	813	500	314
			COLUMN TOTALS	813	400			

NOTES:	
1 - CUT	CUT INCLUDES SALVAGED/UNUSABLE PAVEMENT MATERIAL. SALVAGED/UNUSABLE PAVEMENT MATERIAL IS CALCULATED ON THE SUMMARY SHEET.
2 - FILL	DOES NOT INCLUDE UNUSABLE PAVEMENT EXC VOLUME. SALVAGED/UNUSABLE PAVEMENT MATERIAL IS CALCULATED ON THE SUMMARY SHEET.
3 - EXPANDED FILL	(UNEXPANDED FILL)*(FILL FACTOR)
4 - MASS ORDINATE	CUT - (EXPANDED FILL); PLUS INDICATES AN EXCESS OF MATERIAL

SOUTH OF BECKY CREEK

STATION	DISTANCE	AREA (SF)		INCREMENTAL VOL (CY) (UNADJUSTED)		CUMULATIVE VOL (CY)		MASS ORDINATE
		CUT	FILL	CUT NOTE 1	FILL NOTE 2	CUT 1.00 NOTE 1	EXPANDED FILL 1.25 NOTE 3	NOTE 4
106+46		0	0	0	0	0	0	0
107+00	54	0	4	0	4	0	5	-5
107+06	6	0	5	0	1	0	6	-6
107+22	16	0	9	0	4	0	11	-11
107+45	23	105	0	45	4	45	16	29
107+50	5	105	0	19	0	64	16	48
107+66	16	104	0	61	0	125	16	109
107+75	9	110	1	37	0	162	16	145
107+81	6	111	2	26	0	188	17	171
107+91	10	106	1	39	1	226	17	209
108+00	9	100	1	34	0	261	18	243
108+06	6	96	1	22	0	283	18	264
108+16	10	91	2	36	1	318	19	299
108+31	14	83	1	47	1	365	20	345
108+50	19	80	4	59	2	424	22	402
109+00	50	66	12	135	15	559	40	518
109+20	20	68	0	50	4	608	46	563
109+32	12	32	0	23	0	631	46	585
			COLUMN TOTALS	631	37			

NOTES:	
1 - CUT	CUT INCLUDES SALVAGED/UNUSABLE PAVEMENT MATERIAL. SALVAGED/UNUSABLE PAVEMENT MATERIAL IS CALCULATED ON THE SUMMARY SHEET.
2 - FILL	DOES NOT INCLUDE UNUSABLE PAVEMENT EXC VOLUME. SALVAGED/UNUSABLE PAVEMENT MATERIAL IS CALCULATED ON THE SUMMARY SHEET.
3 - EXPANDED FILL	(UNEXPANDED FILL)*(FILL FACTOR)
4 - MASS ORDINATE	CUT - (EXPANDED FILL); PLUS INDICATES AN EXCESS OF MATERIAL

NORTH OF BECKY CREEK

STATION	DISTANCE	AREA (SF)		INCREMENTAL VOL (CY) (UNADJUSTED)		CUMULATIVE VOL (CY)		MASS ORDINATE
		CUT	FILL	CUT NOTE 1	FILL NOTE 2	CUT 1.00 NOTE 1	EXPANDED FILL 1.25 NOTE 3	NOTE 4
109+84		32	0	0	0	0	0	0
109+97	14	65	3	25	1	25	1	24
110+00	3	64	3	6	0	31	2	30
110+50	50	84	3	137	5	169	8	160
110+76	26	90	13	84	7	252	17	235
110+95	19	92	11	65	9	317	28	289
111+00	5	2	22	9	3	326	32	294
111+01	1	2	23	0	1	326	33	293
111+09	8	2	26	1	7	326	42	284
111+26	17	3	34	1	19	328	66	262
111+34	8	3	34	1	10	328	78	250
111+50	16	2	32	1	19	330	103	227
111+59	9	1	27	1	10	330	115	215
111+71	12	1	24	1	12	331	129	201
111+74	3	1	23	0	3	331	133	198
112+00	26	0	19	0	20	331	158	174
112+31	31	0	2	0	12	331	174	158
112+50	19	0	1	0	1	331	175	156
112+78	28	0	0	0	0	331	176	156
113+02	24	0	0	0	0	331	176	156
			COLUMN TOTALS	331	140			

NOTES:	
1 - CUT	CUT INCLUDES SALVAGED/UNUSABLE PAVEMENT MATERIAL. SALVAGED/UNUSABLE PAVEMENT MATERIAL IS CALCULATED ON THE SUMMARY SHEET.
2 - FILL	DOES NOT INCLUDE UNUSABLE PAVEMENT EXC VOLUME. SALVAGED/UNUSABLE PAVEMENT MATERIAL IS CALCULATED ON THE SUMMARY SHEET.
3 - EXPANDED FILL	(UNEXPANDED FILL)*(FILL FACTOR)
4 - MASS ORDINATE	CUT - (EXPANDED FILL); PLUS INDICATES AN EXCESS OF MATERIAL

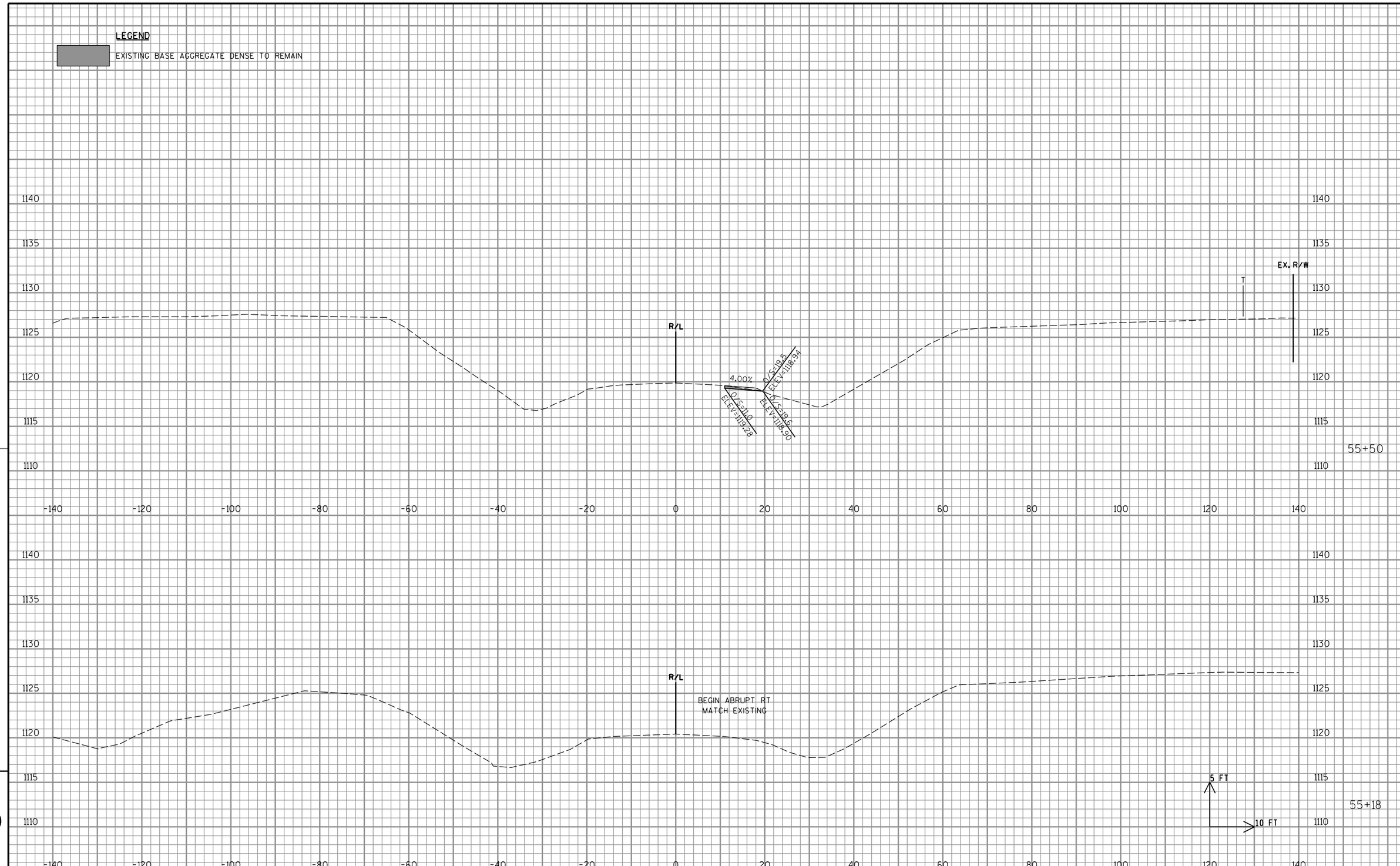

9

9

PROJECT NO:8590-01-73	HWY:STH 40	COUNTY:RUSK	CROSS SECTIONS: ALDER CREEK	SHEET 116	E

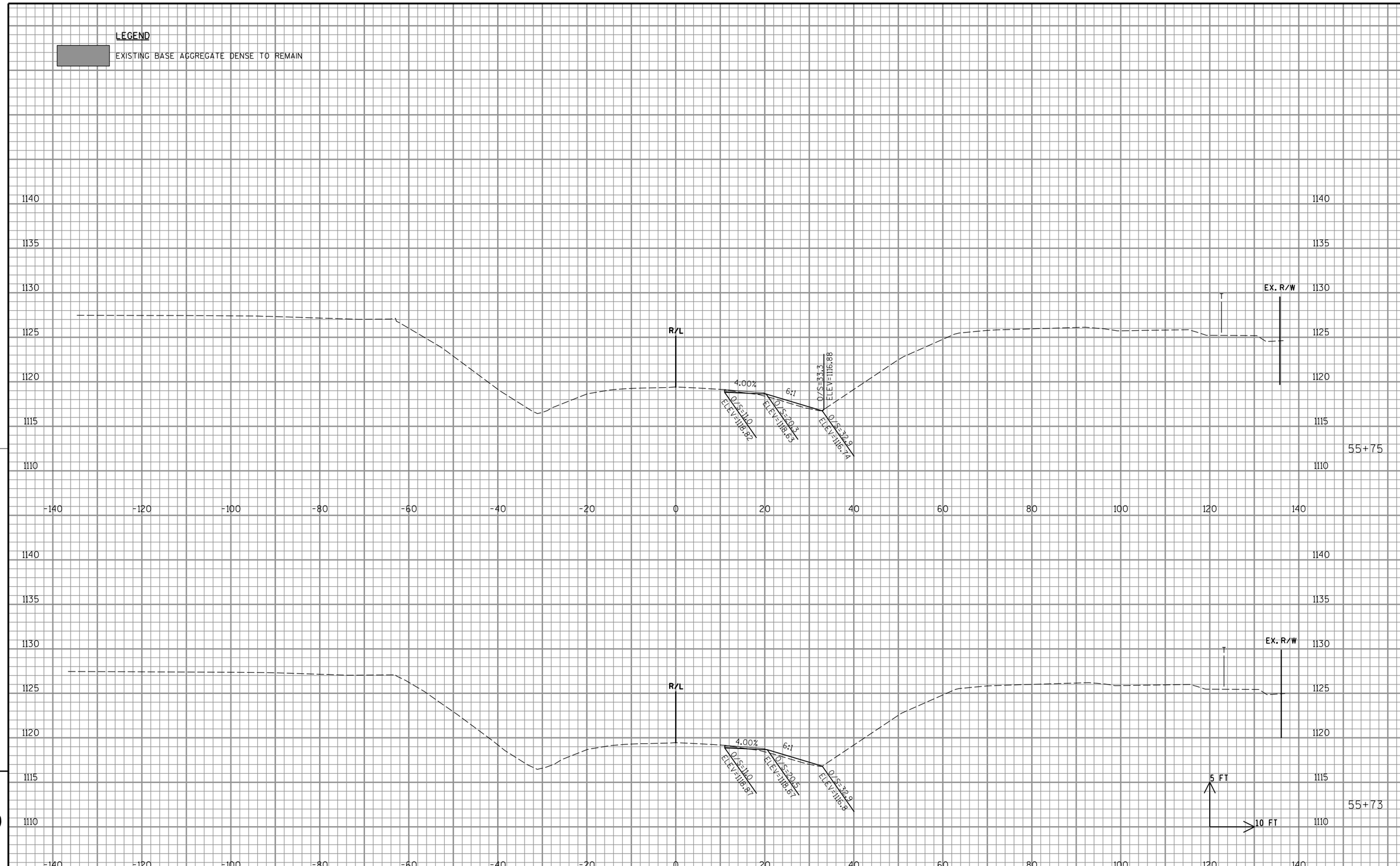

9

9

PROJECT NO:8590-01-73	HWY:STH 40	COUNTY:RUSK	CROSS SECTIONS: ALDER CREEK	SHEET 117	E

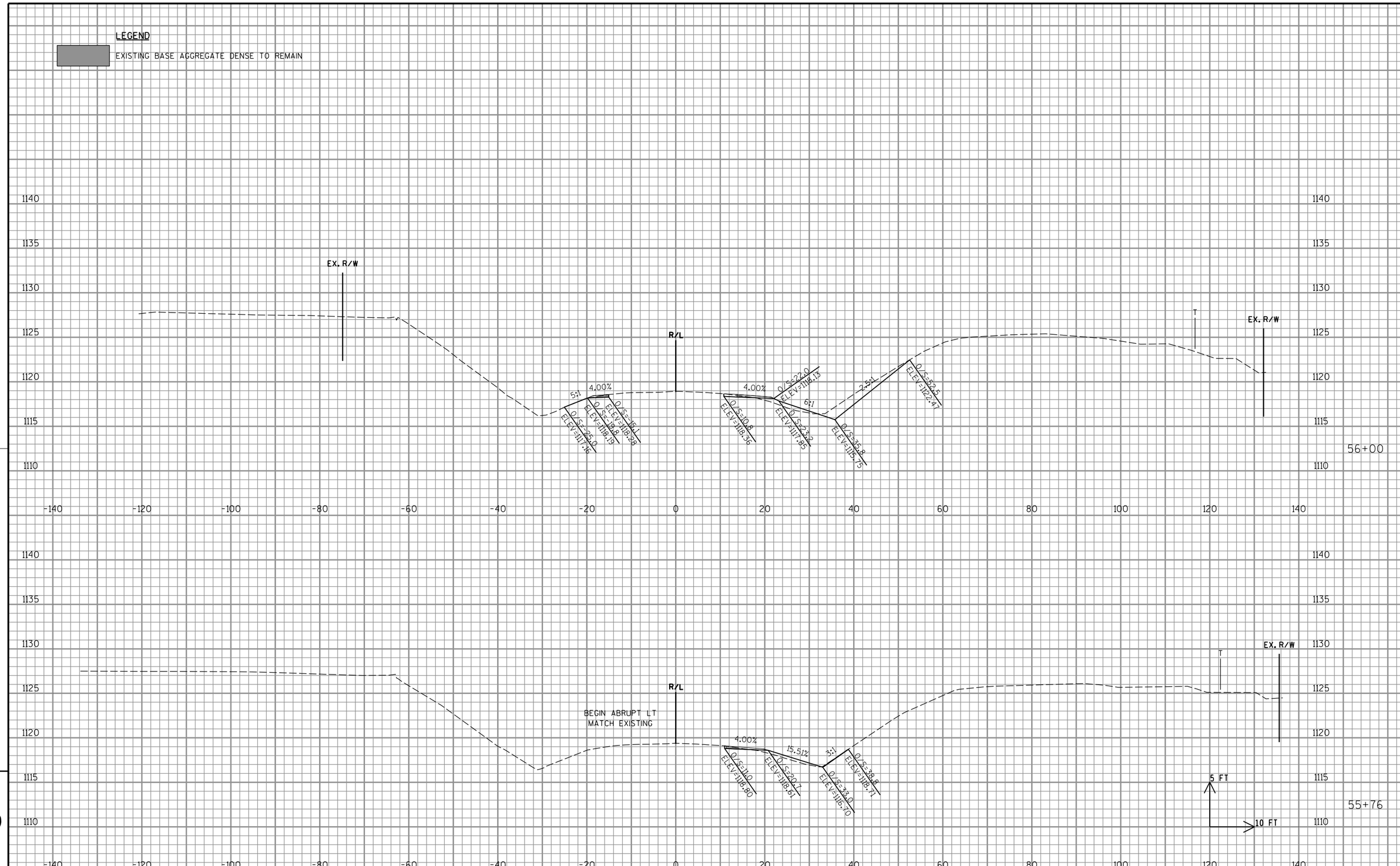

PROJECT NO:8590-01-73	HWY:STH 40	COUNTY:RUSK	CROSS SECTIONS: ALDER CREEK	SHEET 118	E

FILE NAME : P:\48xx\4879.DP.14.STH40.RSK\CADDS\85900173\SheetsPlan\090201_xs.dgn PLOT DATE : 11/28/2016 PLOT BY : emo PLOT NAME : PLOT SCALE : 1:20

WISDOT/CADDS SHEET 21

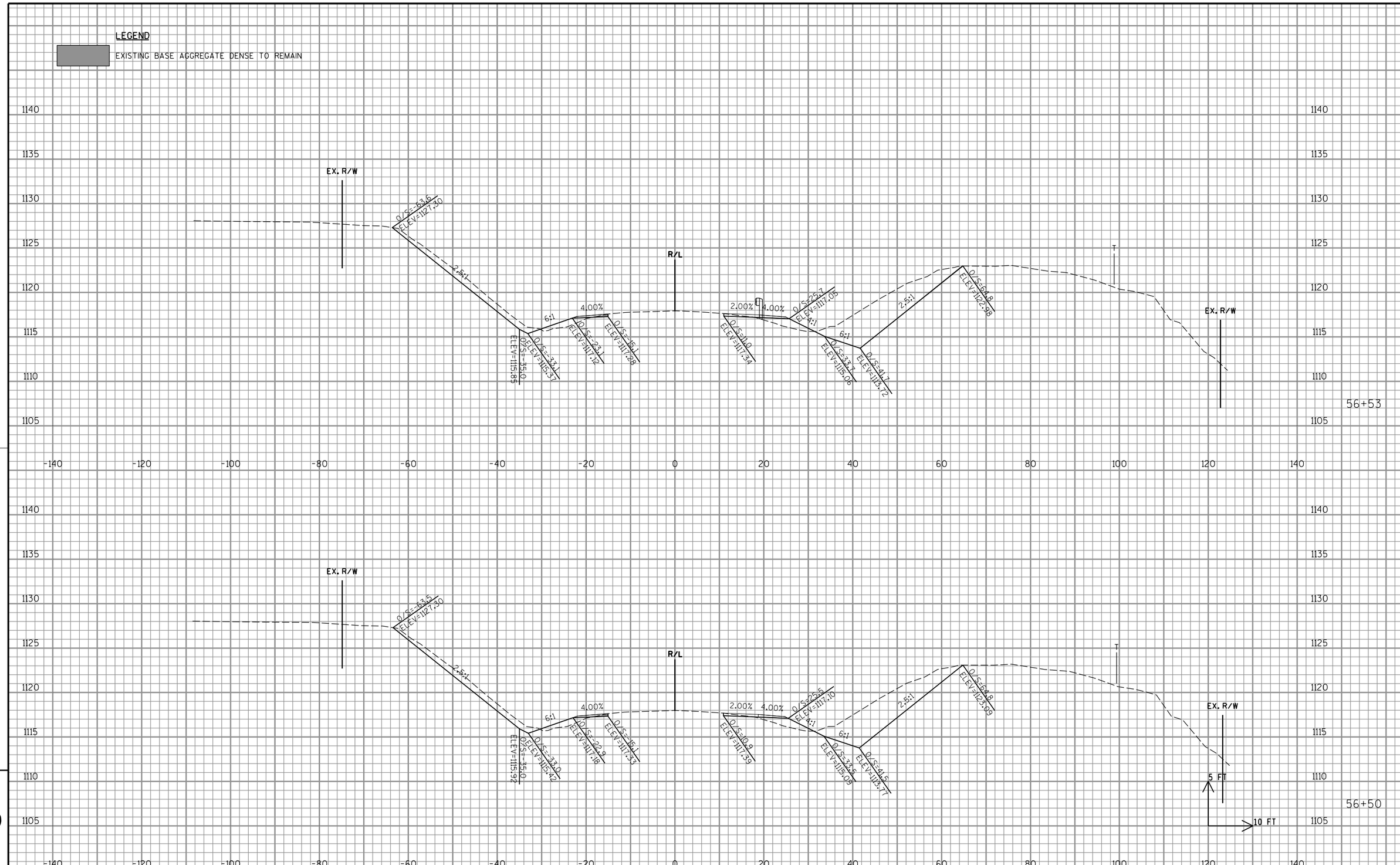

PROJECT NO:8590-01-73	HWY:STH 40	COUNTY:RUSK	CROSS SECTIONS: ALDER CREEK	SHEET 119	E

FILE NAME : P:\48xx\4879.DP.14.STH40.RSK\CADDS\85900173\SheetsPlan\090201_xs.dgn PLOT DATE : 11/28/2016 PLOT BY : emo PLOT NAME : PLOT SCALE : 1:20

WISDOT/CADDS SHEET 21

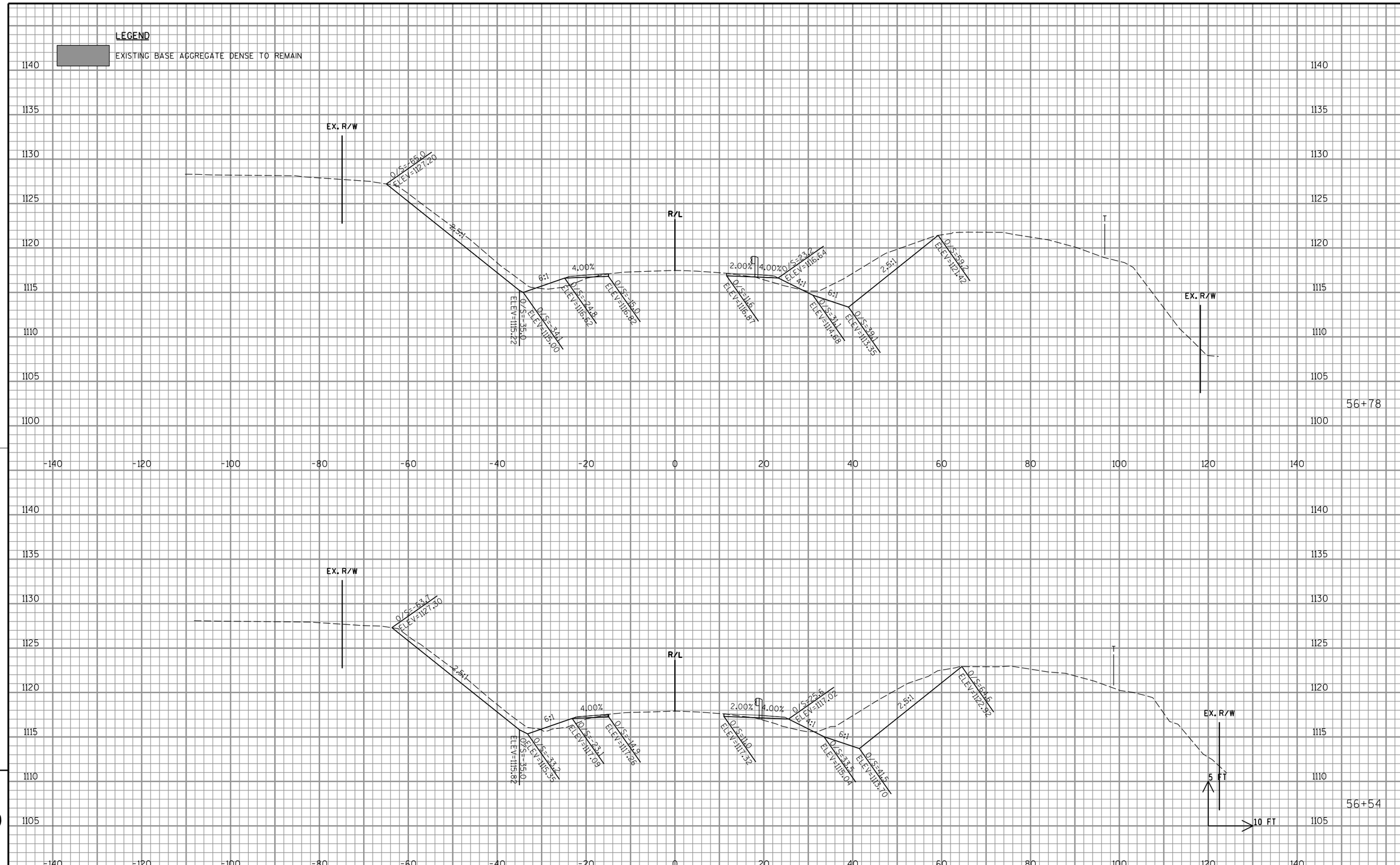

PROJECT NO:8590-01-73	HWY:STH 40	COUNTY:RUSK	CROSS SECTIONS: ALDER CREEK	SHEET 120	E

FILE NAME : P:\48xx\4879.DP.14.STH40.RSK\CADDS\85900173\SheetsPlan\090201_xs.dgn PLOT DATE : 11/28/2016 PLOT BY : emo PLOT NAME : PLOT SCALE : 1:20

WISDOT/CADDS SHEET 21

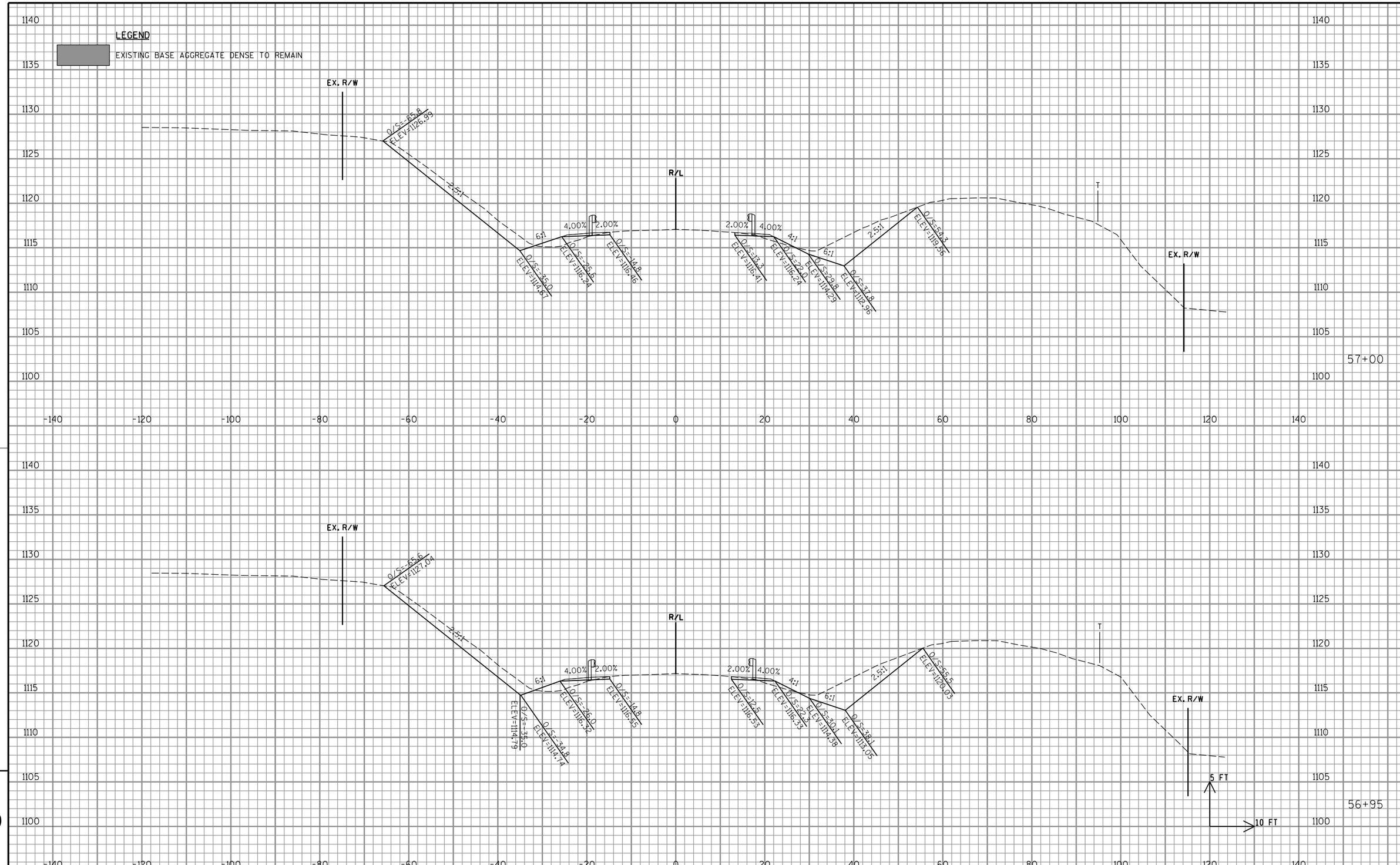

9

PROJECT NO:8590-01-73	HWY:STH 40	COUNTY:RUSK	CROSS SECTIONS: ALDER CREEK	SHEET 121	E

FILE NAME : P:\48xx\4879.DP.14.STH40.RSK\CADDS\85900173\SheetsPlan\090201_xs.dgn PLOT DATE : 11/28/2016 PLOT BY : emo PLOT NAME : PLOT SCALE : 1:20

WISDOT/CADDS SHEET 21

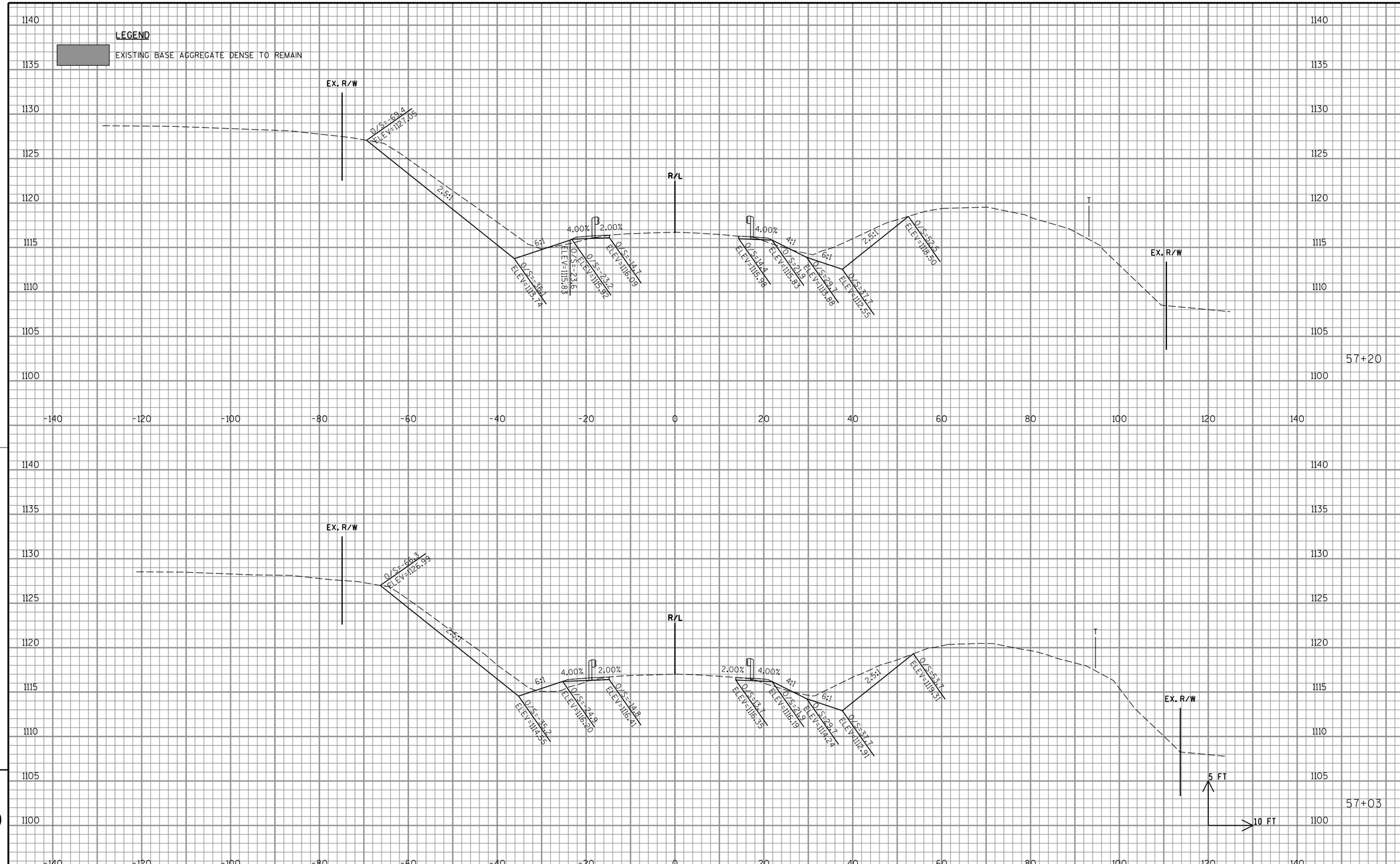

9

9

PROJECT NO:8590-01-73	HWY:STH 40	COUNTY:RUSK	CROSS SECTIONS: ALDER CREEK	SHEET 122	E

FILE NAME : P:\48xx\4879.DP.14.STH40.RSK\CADDS\85900173\SheetsPlan\090201_xs.dgn PLOT DATE : 11/28/2016 PLOT BY : emo PLOT NAME : PLOT SCALE : 1:20

WISDOT/CADDS SHEET 21

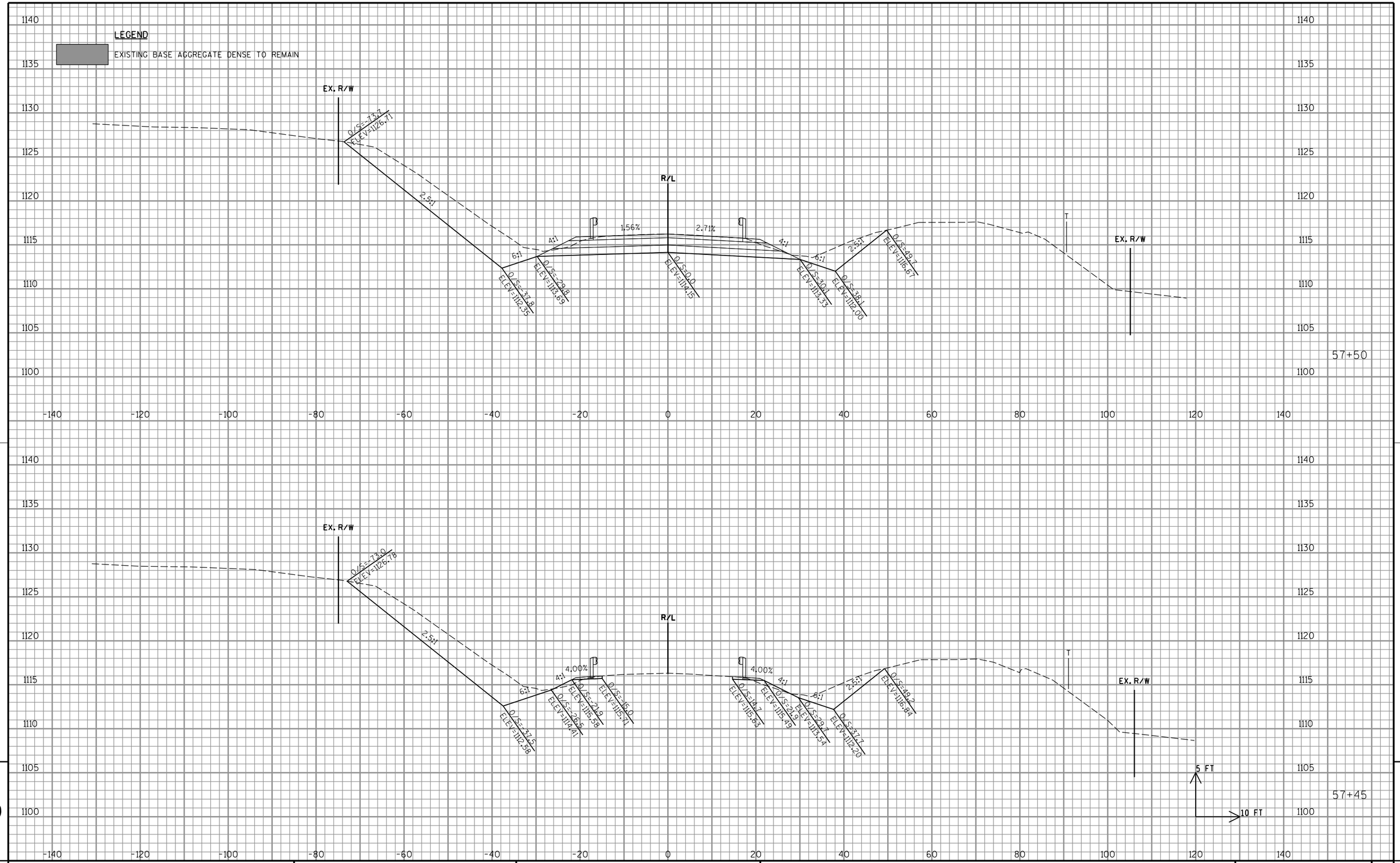

PROJECT NO:8590-01-73	HWY:STH 40	COUNTY:RUSK	CROSS SECTIONS: ALDER CREEK	SHEET 123	E

FILE NAME : P:\48xx\4879.DP.14.STH40.RSK\CADDS\85900173\SheetsPlan\090201_xs.dgn PLOT DATE : 11/28/2016 PLOT BY : emo PLOT NAME : PLOT SCALE : 1:20

WISDOT/CADDS SHEET 21

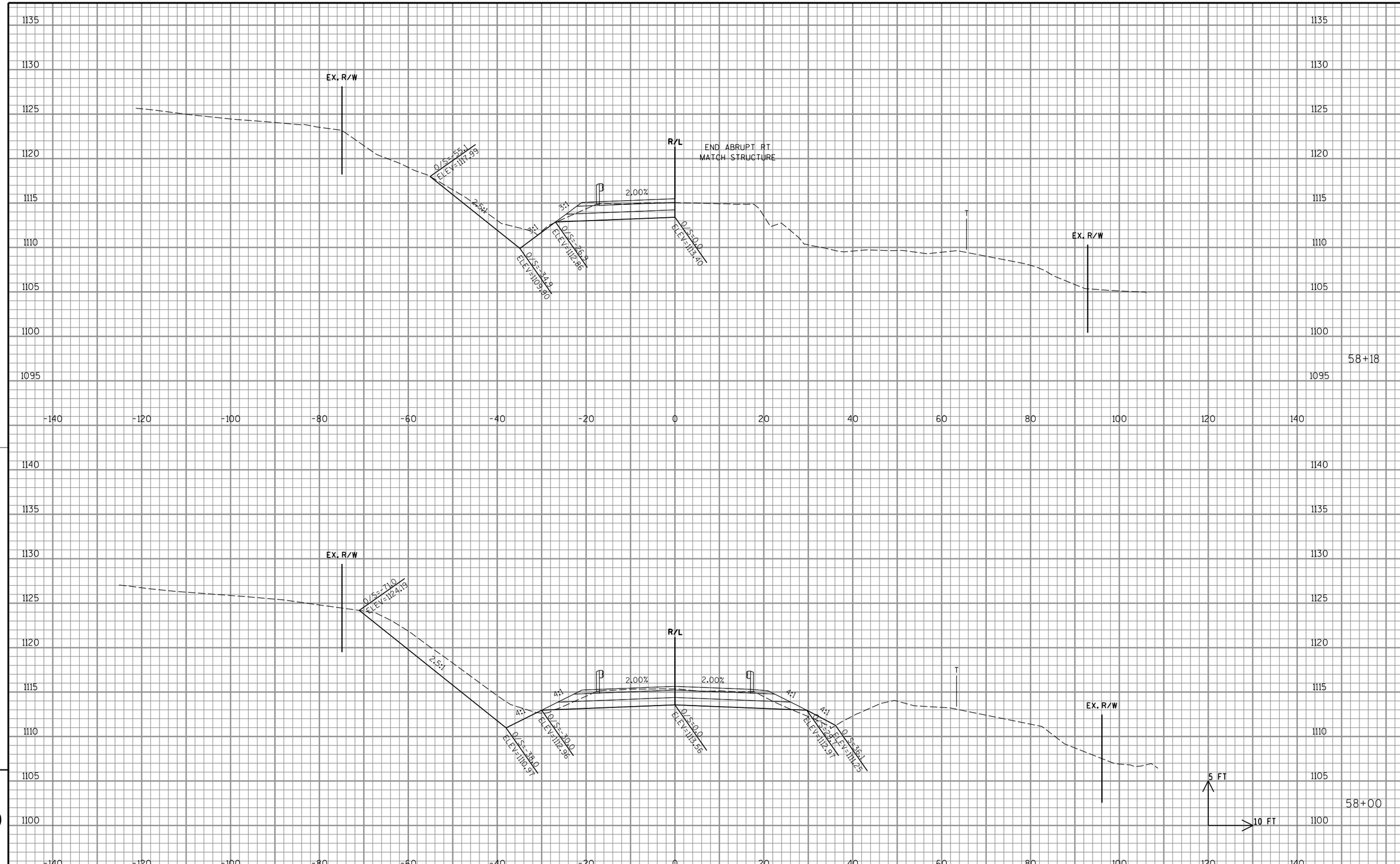

PROJECT NO:8590-01-73	HWY:STH 40	COUNTY:RUSK	CROSS SECTIONS: ALDER CREEK	SHEET 124	E

FILE NAME : P:\48xx\4879.DP.14.STH40.RSK\CADDS\85900173\SheetsPlan\090201_xs.dgn PLOT DATE : 11/28/2016 PLOT BY : emo PLOT NAME : PLOT SCALE : 1:20

WISDOT/CADDS SHEET 21

9

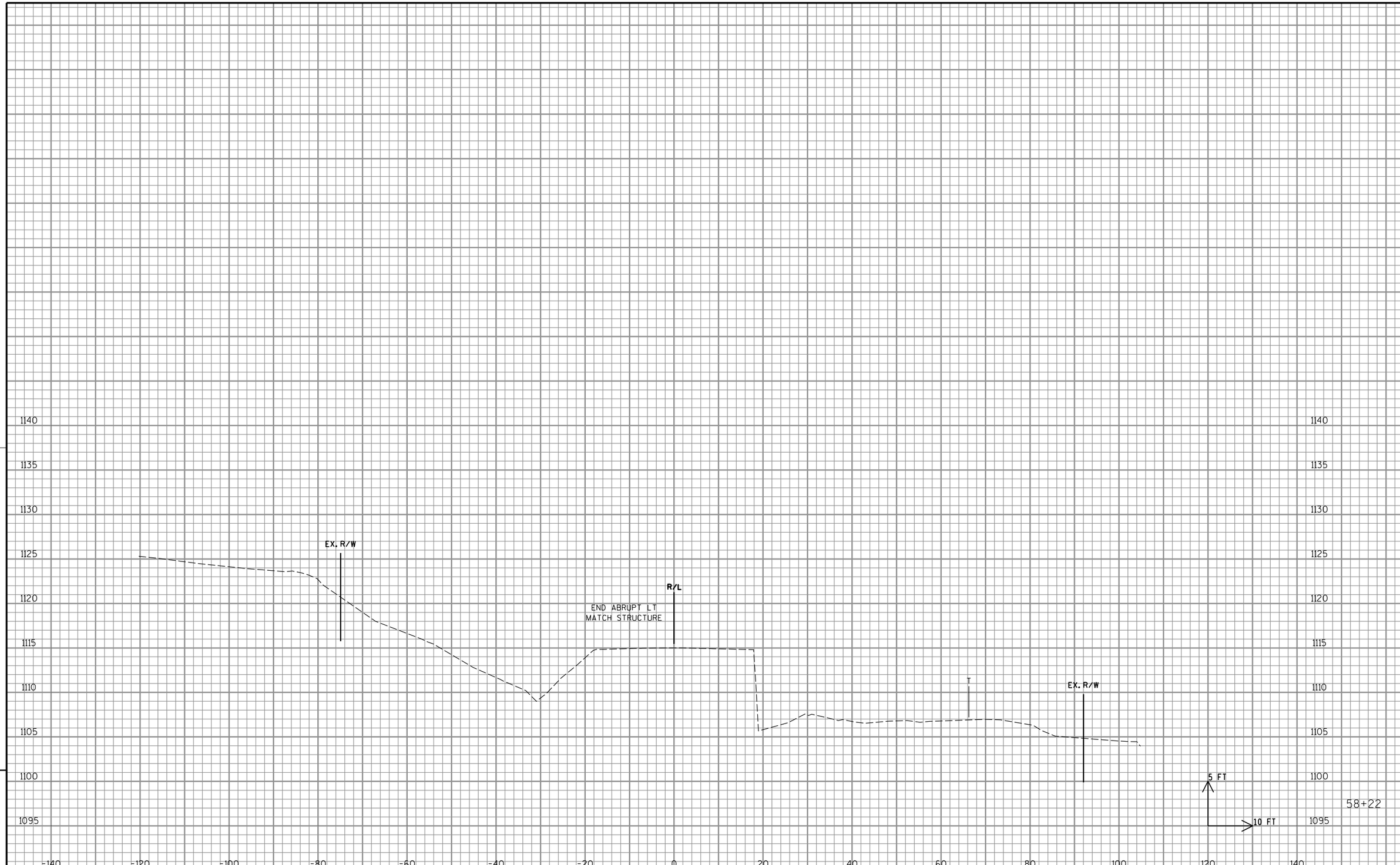

9

9

PROJECT NO:8590-01-73	HWY:STH 40	COUNTY:RUSK	CROSS SECTIONS: ALDER CREEK	SHEET 125	E

FILE NAME : P:\48xx\4879.DP.14.STH40.RSK\CADDS\85900173\SheetsPlan\090201_xs.dgn PLOT DATE : 11/28/2016 PLOT BY : emo PLOT NAME : PLOT SCALE : 1:20

WISDOT/CADDS SHEET 21

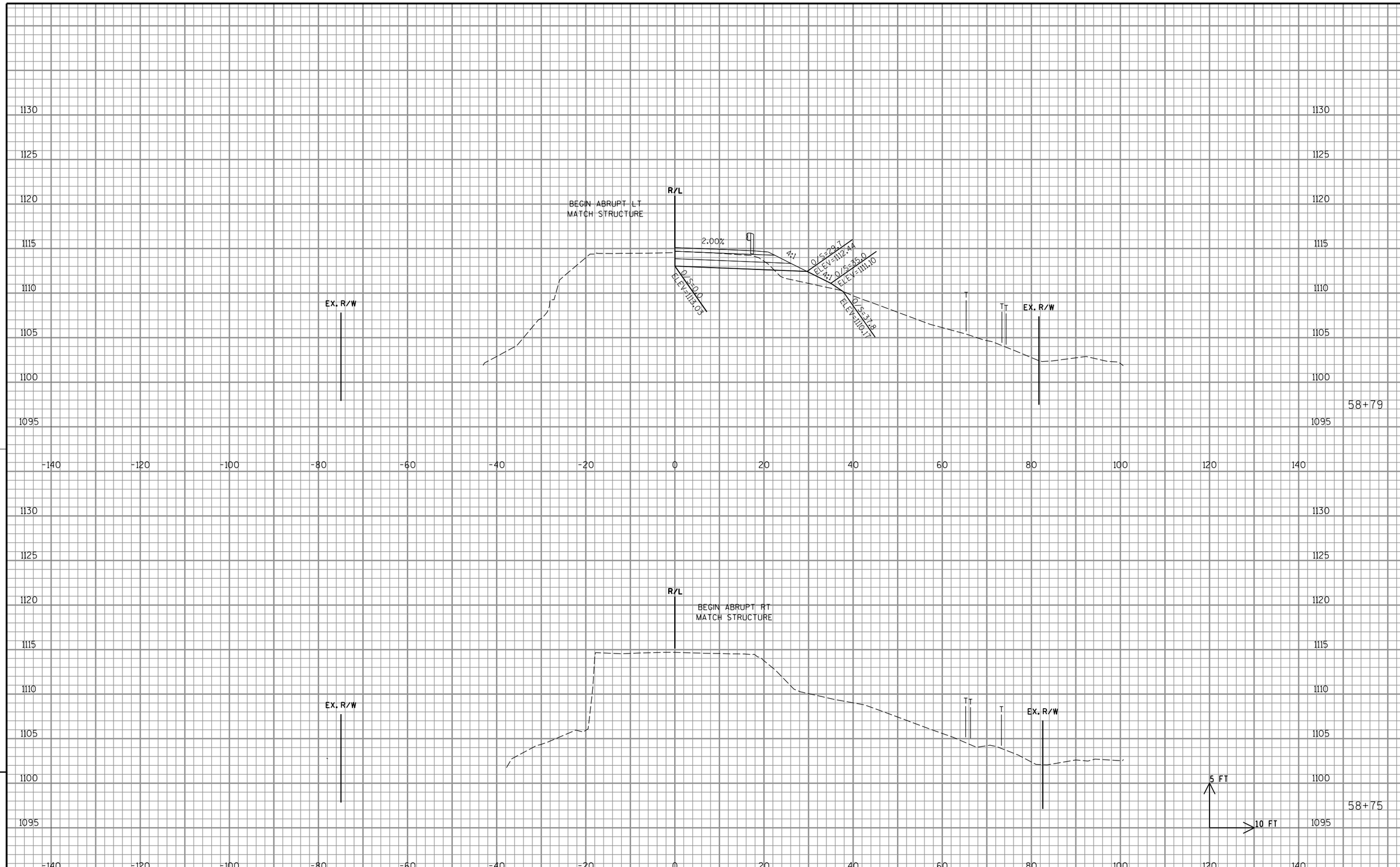

9

9

PROJECT NO:8590-01-73	HWY:STH 40	COUNTY:RUSK	CROSS SECTIONS: ALDER CREEK	SHEET 126	E

FILE NAME : P:\48xx\4879.DP.14.STH40.RSK\CADDS\85900173\SheetsPlan\090202_xs.dgn PLOT DATE : 11/28/2016 PLOT BY : emo PLOT NAME : PLOT SCALE : 1:20

WISDOT/CADDS SHEET 21

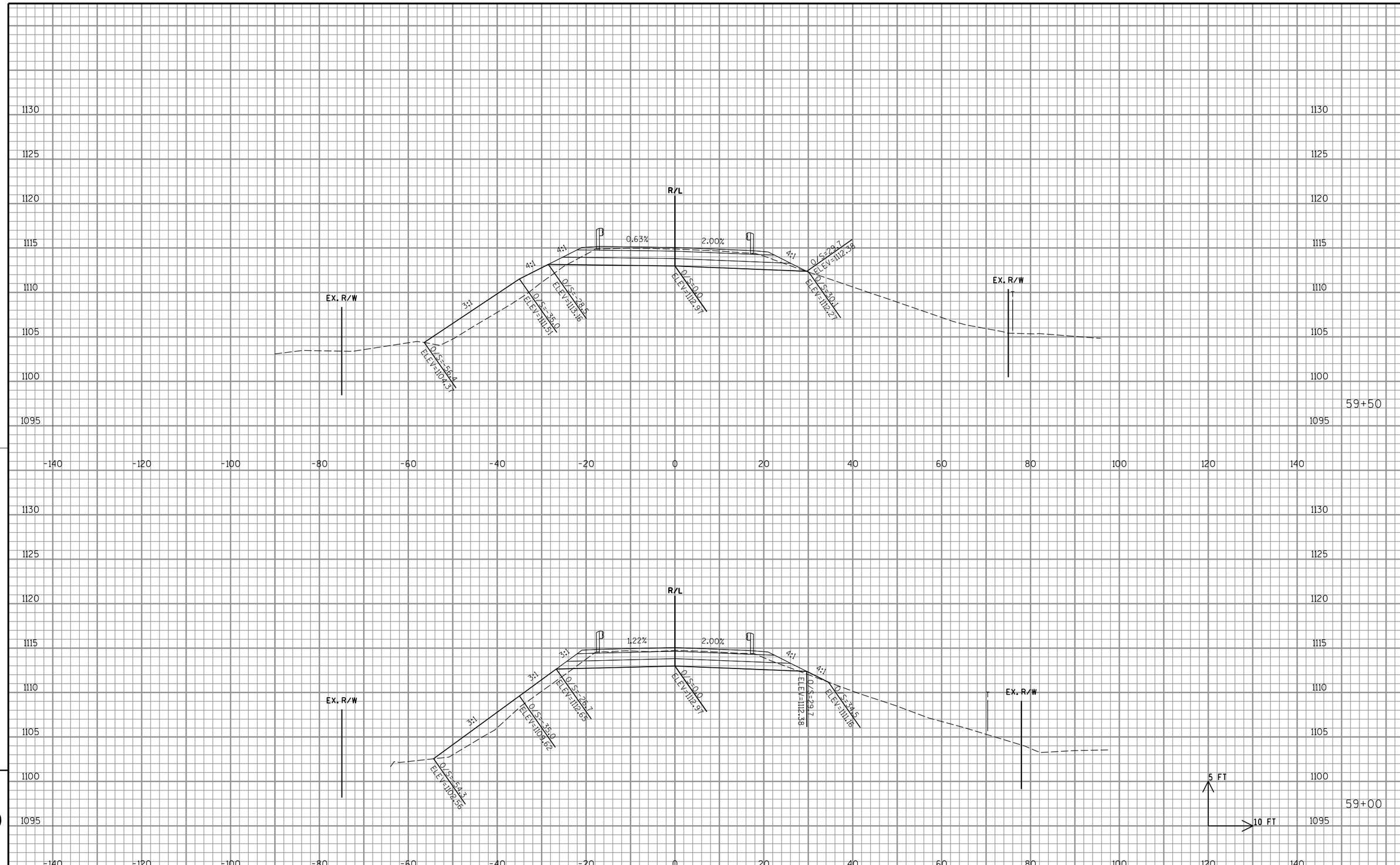

9

9

PROJECT NO:8590-01-73	HWY:STH 40	COUNTY:RUSK	CROSS SECTIONS: ALDER CREEK	SHEET 127	E

FILE NAME : P:\48xx\4879.DP.14.STH40.RSK\CADDS\85900173\SheetsPlan\090202_xs.dgn PLOT DATE : 11/28/2016 PLOT BY : emo PLOT NAME : PLOT SCALE : 1:20

WISDOT/CADDS SHEET 21

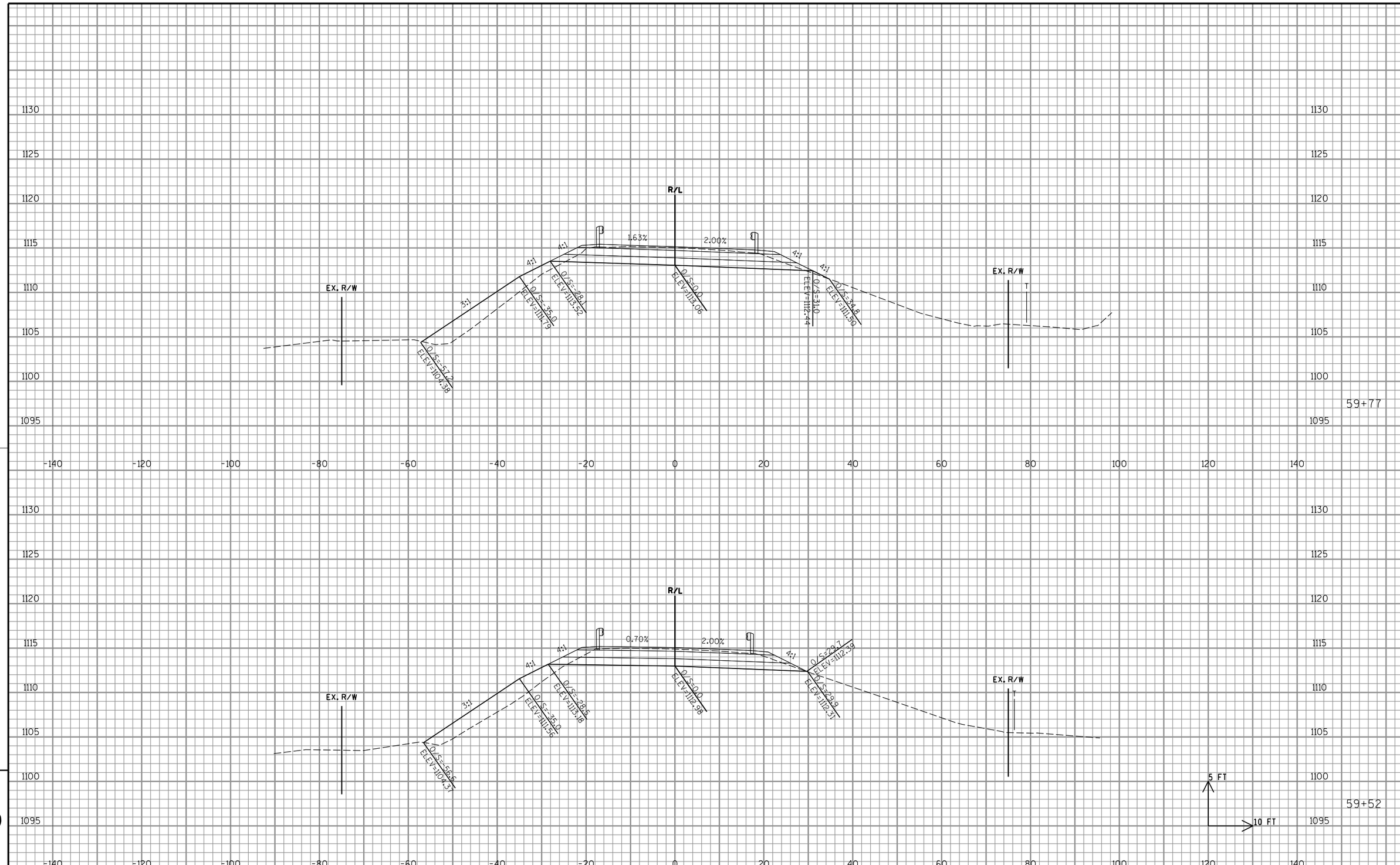

PROJECT NO:8590-01-73	HWY:STH 40	COUNTY:RUSK	CROSS SECTIONS: ALDER CREEK	SHEET 128	E

FILE NAME : P:\48xx\4879.DP.14.STH40.RSK\CADDS\85900173\SheetsPlan\090202_xs.dgn PLOT DATE : 11/28/2016 PLOT BY : emo PLOT NAME : PLOT SCALE : 1:20

WISDOT/CADDS SHEET 21

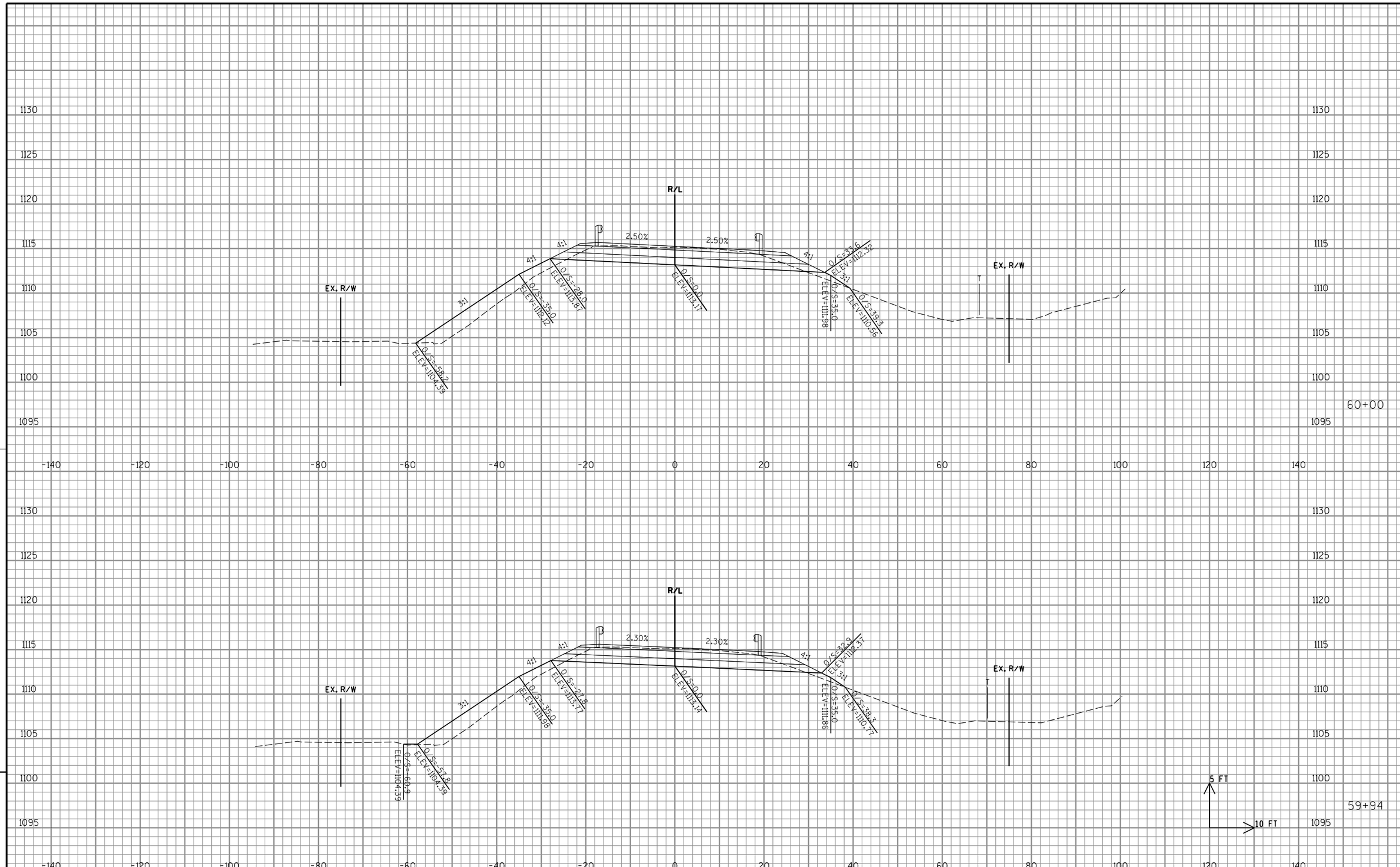

PROJECT NO:8590-01-73	HWY:STH 40	COUNTY:RUSK	CROSS SECTIONS: ALDER CREEK	SHEET 129	E

FILE NAME : P:\48xx\4879.DP.14.STH40.RSK\CADDS\85900173\SheetsPlan\090202_xs.dgn PLOT DATE : 11/28/2016 PLOT BY : emo PLOT NAME : PLOT SCALE : 1:20

WISDOT/CADDS SHEET 21

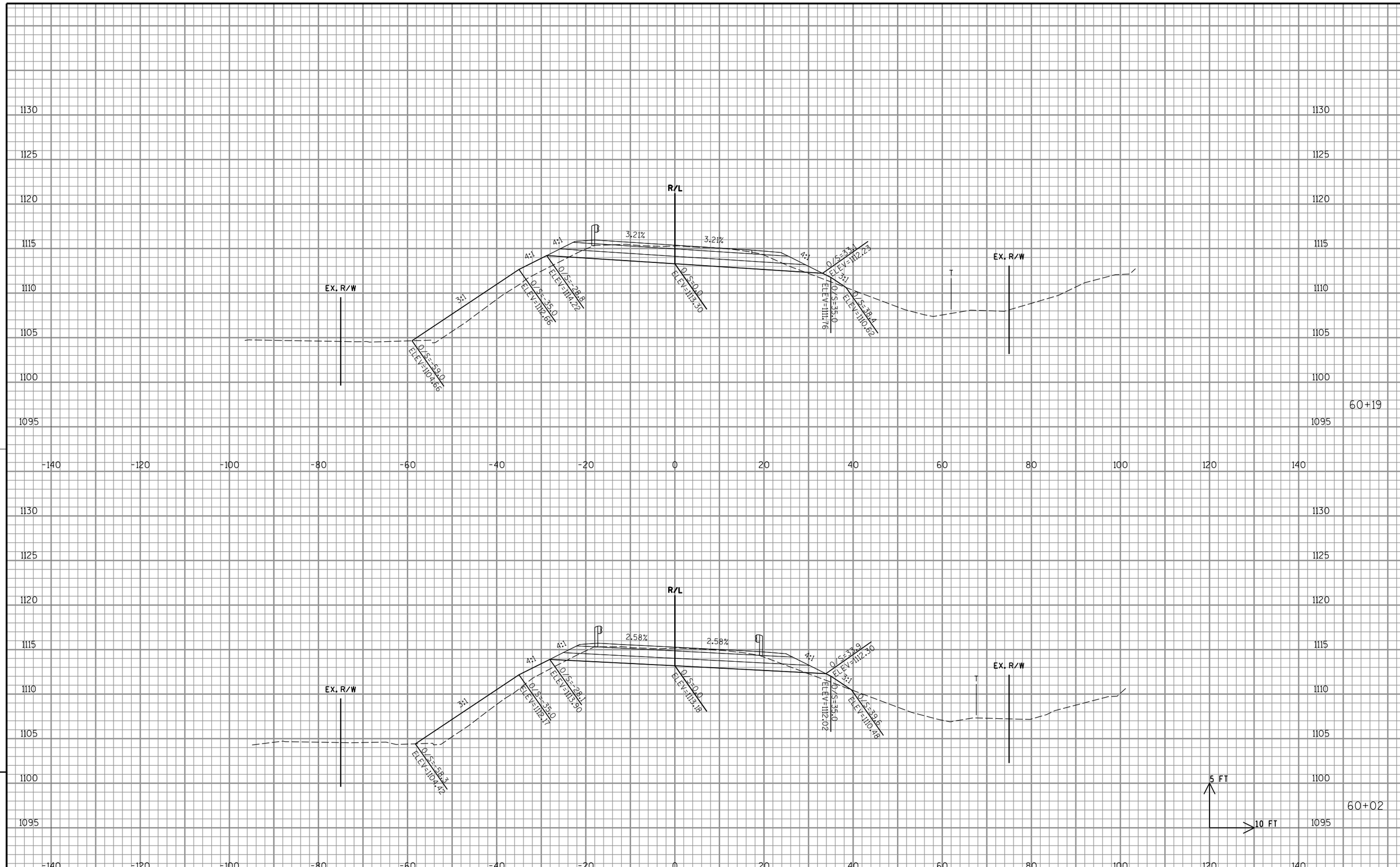

PROJECT NO:8590-01-73	HWY:STH 40	COUNTY:RUSK	CROSS SECTIONS: ALDER CREEK	SHEET 130	E

FILE NAME : P:\48xx\4879.DP.14.STH40.RSK\CADDS\85900173\SheetsPlan\090202_xs.dgn PLOT DATE : 11/28/2016 PLOT BY : emo PLOT NAME : PLOT SCALE : 1:20

WISDOT/CADDS SHEET 21

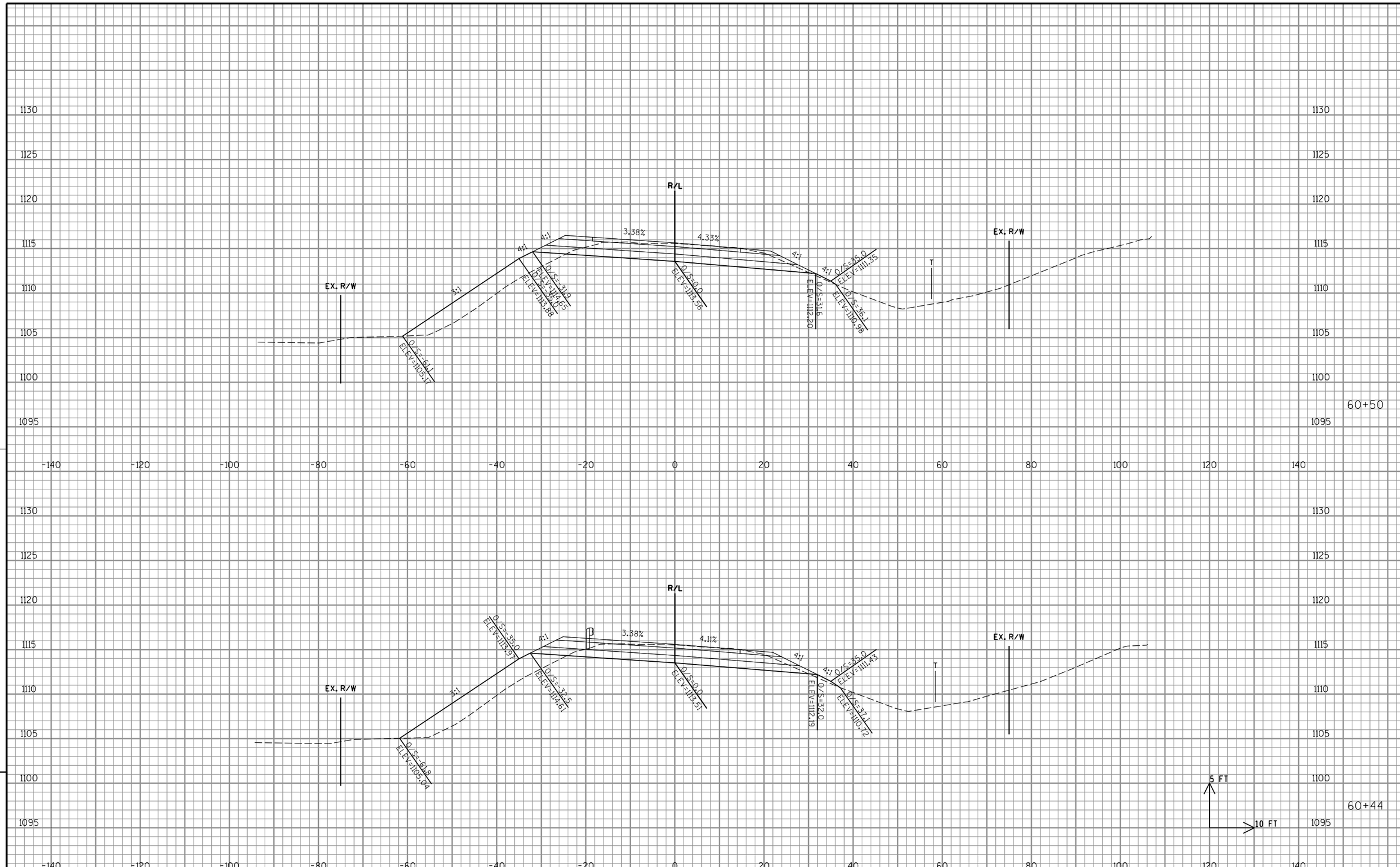

PROJECT NO:8590-01-73	HWY:STH 40	COUNTY:RUSK	CROSS SECTIONS: ALDER CREEK	SHEET 131	E

FILE NAME : P:\48xx\4879.DP.14.STH40.RSK\CADDS\85900173\SheetsPlan\090202_xs.dgn PLOT DATE : 11/28/2016 PLOT BY : emo PLOT NAME : PLOT SCALE : 1:20

WISDOT/CADDS SHEET 21

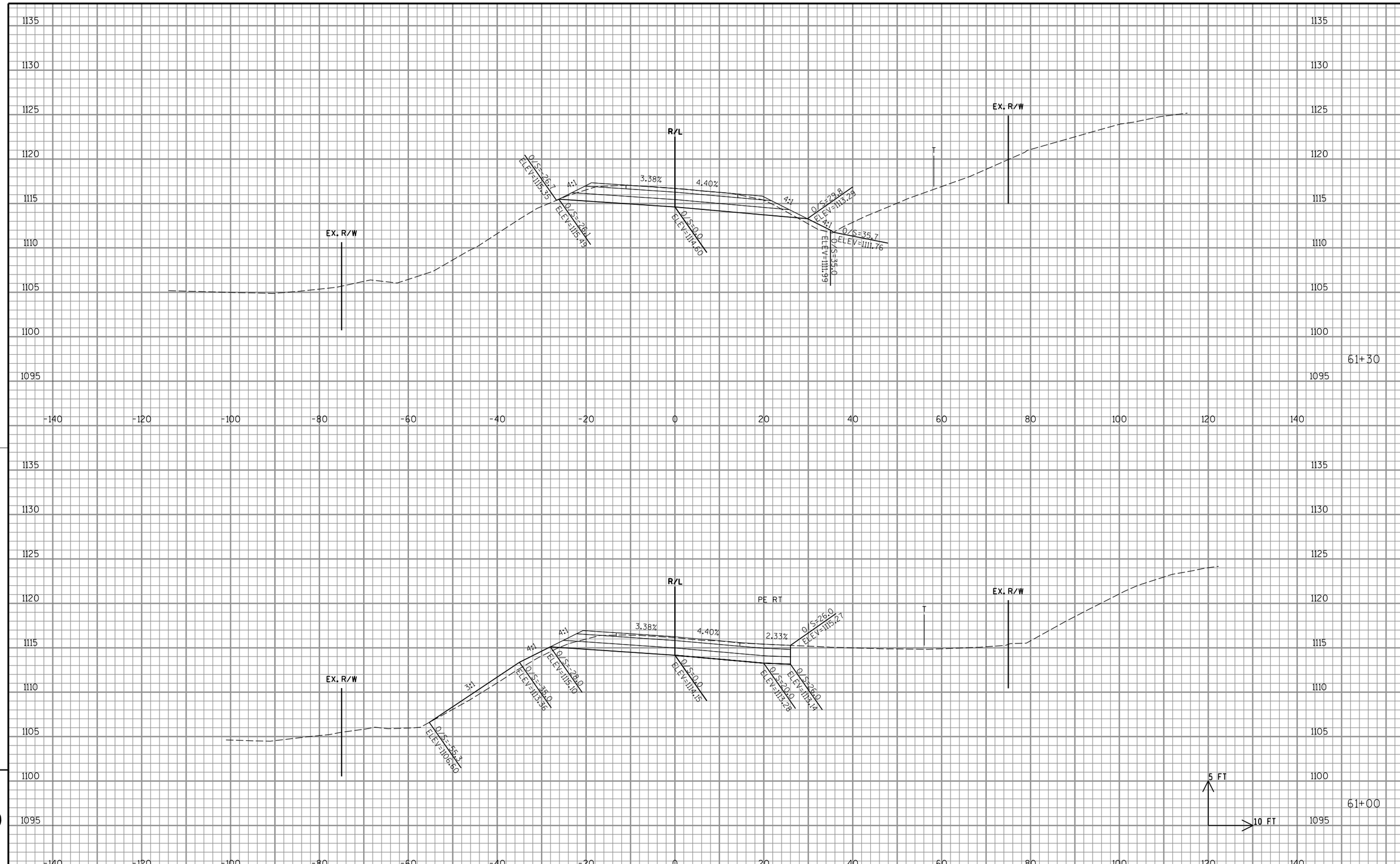

9

9

PROJECT NO:8590-01-73	HWY:STH 40	COUNTY:RUSK	CROSS SECTIONS: ALDER CREEK	SHEET 132	E

FILE NAME : P:\48xx\4879.DP.14.STH40.RSK\CADDS\85900173\SheetsPlan\090202_xs.dgn PLOT DATE : 11/28/2016 PLOT BY : emo PLOT NAME : PLOT SCALE : 1:20

WISDOT/CADDS SHEET 21

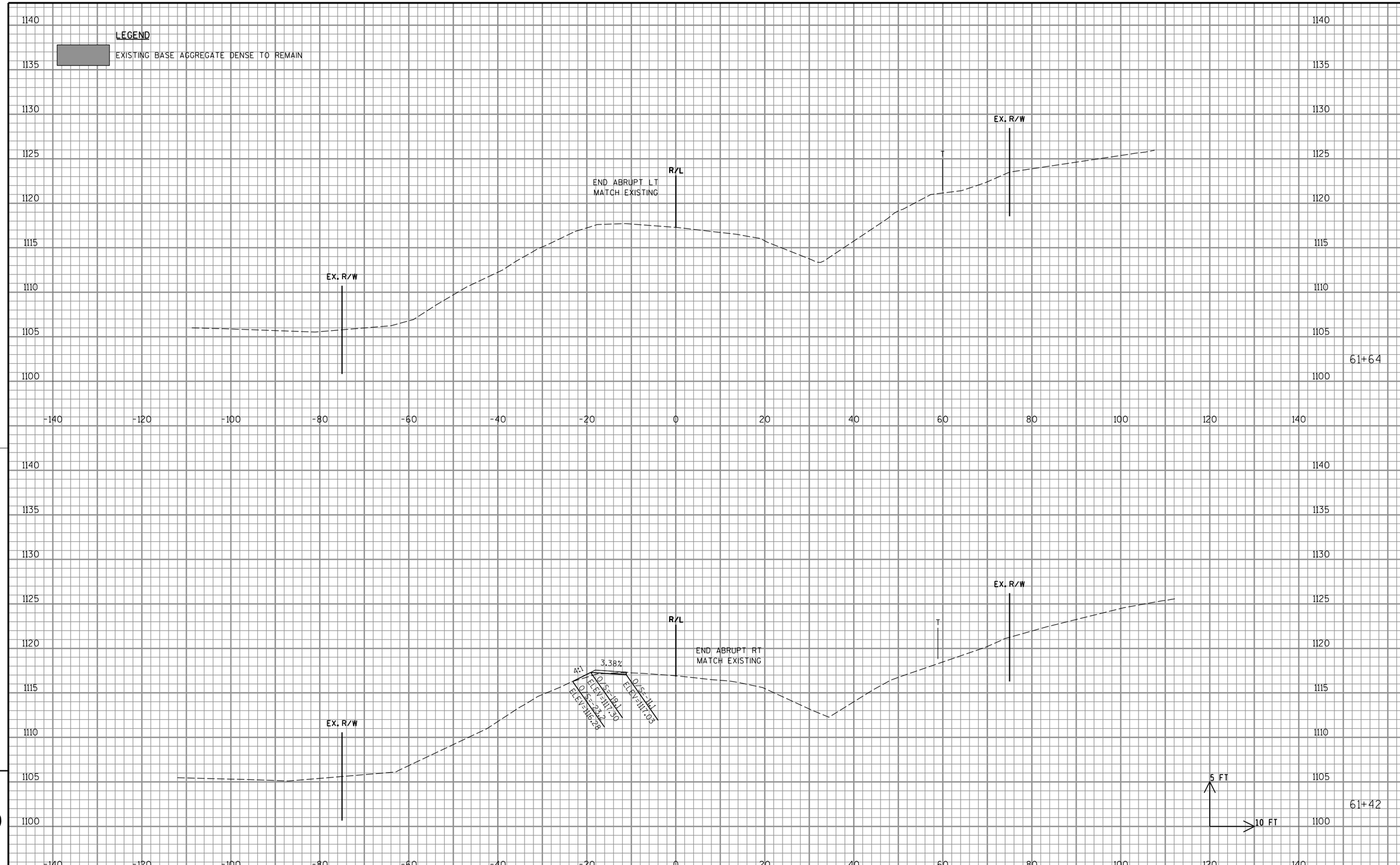

9

9

PROJECT NO:8590-01-73	HWY:STH 40	COUNTY:RUSK	CROSS SECTIONS:ALDER CREEK	SHEET 133	E

FILE NAME : P:\48xx\4879.DP.14.STH40.RSK\CADDS\85900173\SheetsPlan\090202_xs.dgn PLOT DATE : 11/28/2016 PLOT BY : emo PLOT NAME : PLOT SCALE : 1:20

WISDOT/CADDS SHEET 21

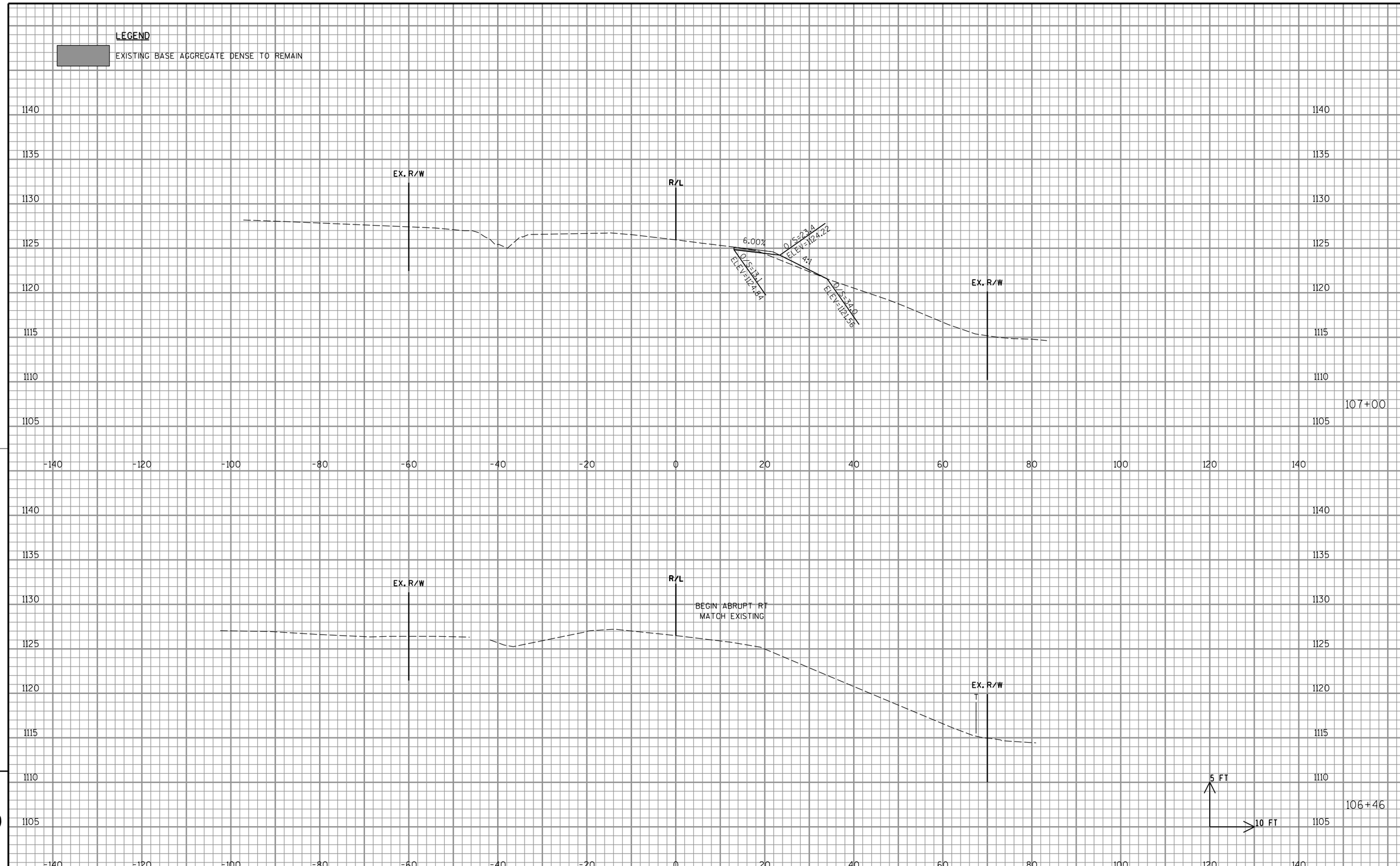

9

9

PROJECT NO:8590-01-73	HWY:STH 40	COUNTY:RUSK	CROSS SECTIONS:BECKY CREEK	SHEET 134	E

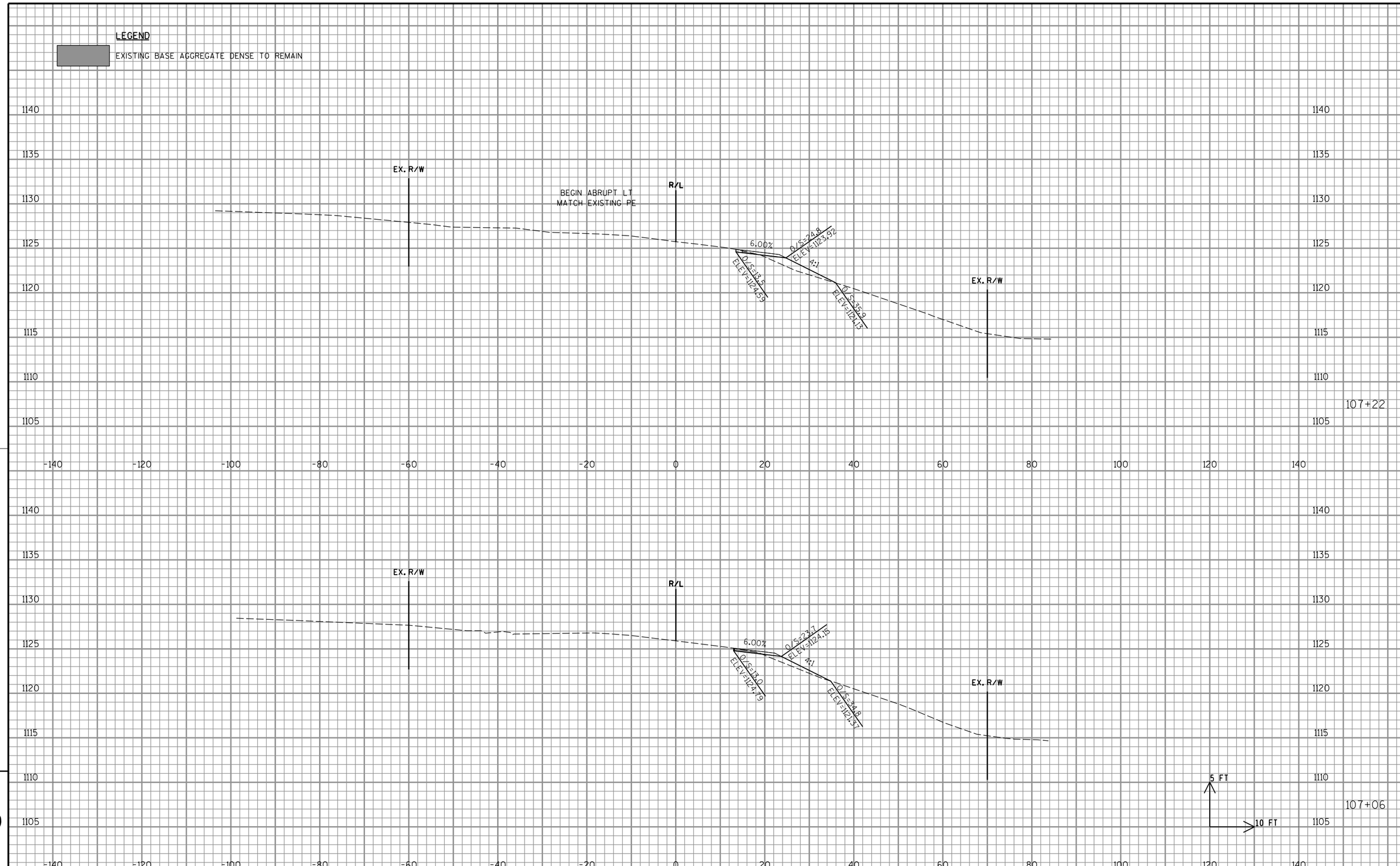

PROJECT NO:8590-01-73	HWY:STH 40	COUNTY:RUSK	CROSS SECTIONS:BECKY CREEK	SHEET 135	E

FILE NAME : P:\48xx\4879.DP.14.STH40.RSK\CADDS\85900173\SheetsPlan\090203_xs.dgn PLOT DATE : 11/28/2016 PLOT BY : emo PLOT NAME : PLOT SCALE : 1:20

WISDOT/CADDS SHEET 21

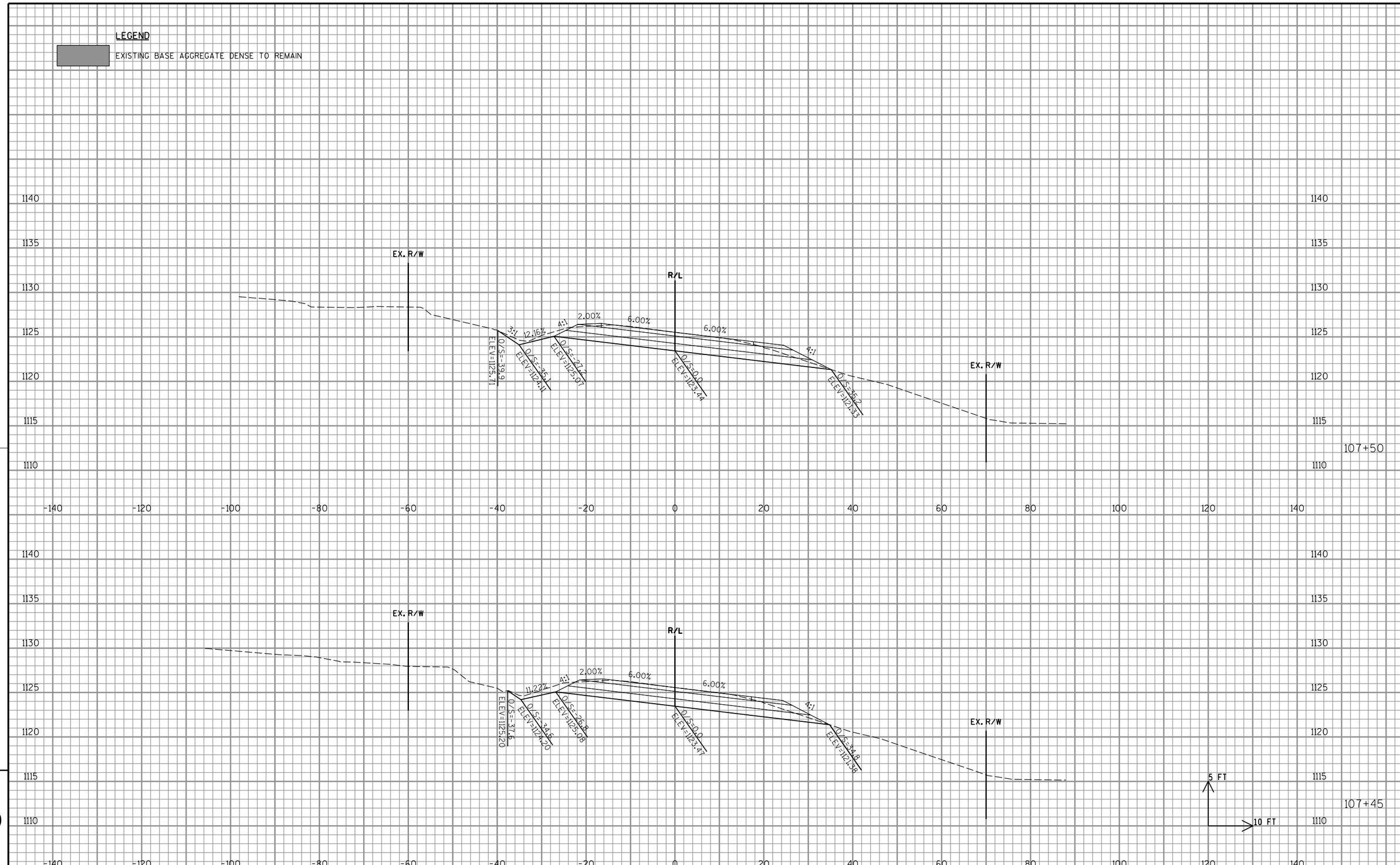

9

9

PROJECT NO:8590-01-73	HWY:STH 40	COUNTY:RUSK	CROSS SECTIONS:BECKY CREEK	SHEET 136	E

FILE NAME : P:\48xx\4879.DP.14.STH40.RSK\CADDS\85900173\SheetsPlan\090203_xs.dgn PLOT DATE : 11/28/2016 PLOT BY : emo PLOT NAME : PLOT SCALE : 1:20

WISDOT/CADDS SHEET 21

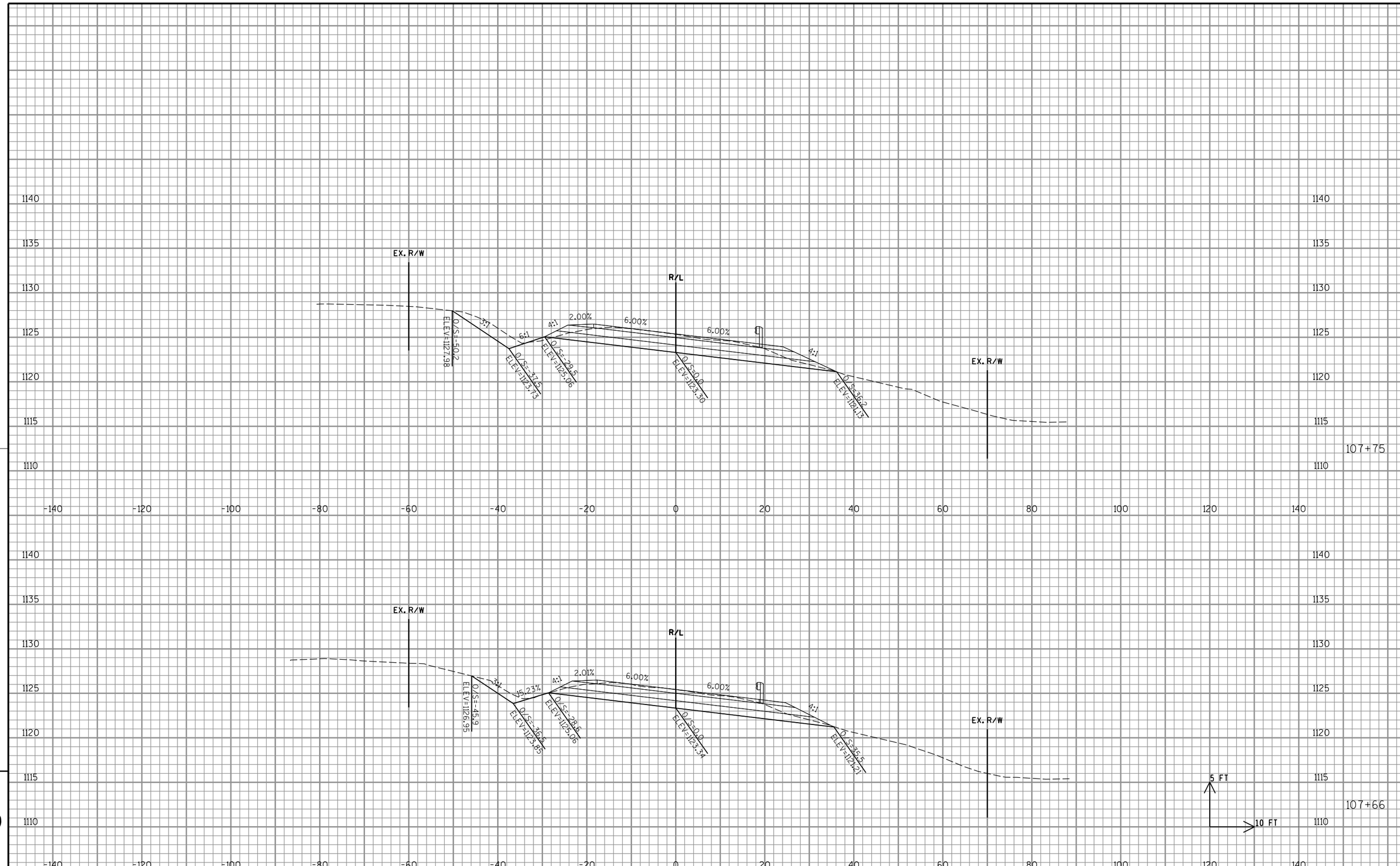

9

9

PROJECT NO:8590-01-73	HWY:STH 40	COUNTY:RUSK	CROSS SECTIONS:BECKY CREEK	SHEET 137	E

FILE NAME : P:\48xx\4879.DP.14.STH40.RSK\CADDS\85900173\SheetsPlan\090203_xs.dgn PLOT DATE : 11/28/2016 PLOT BY : emo PLOT NAME : PLOT SCALE : 1:20

WISDOT/CADDS SHEET 21

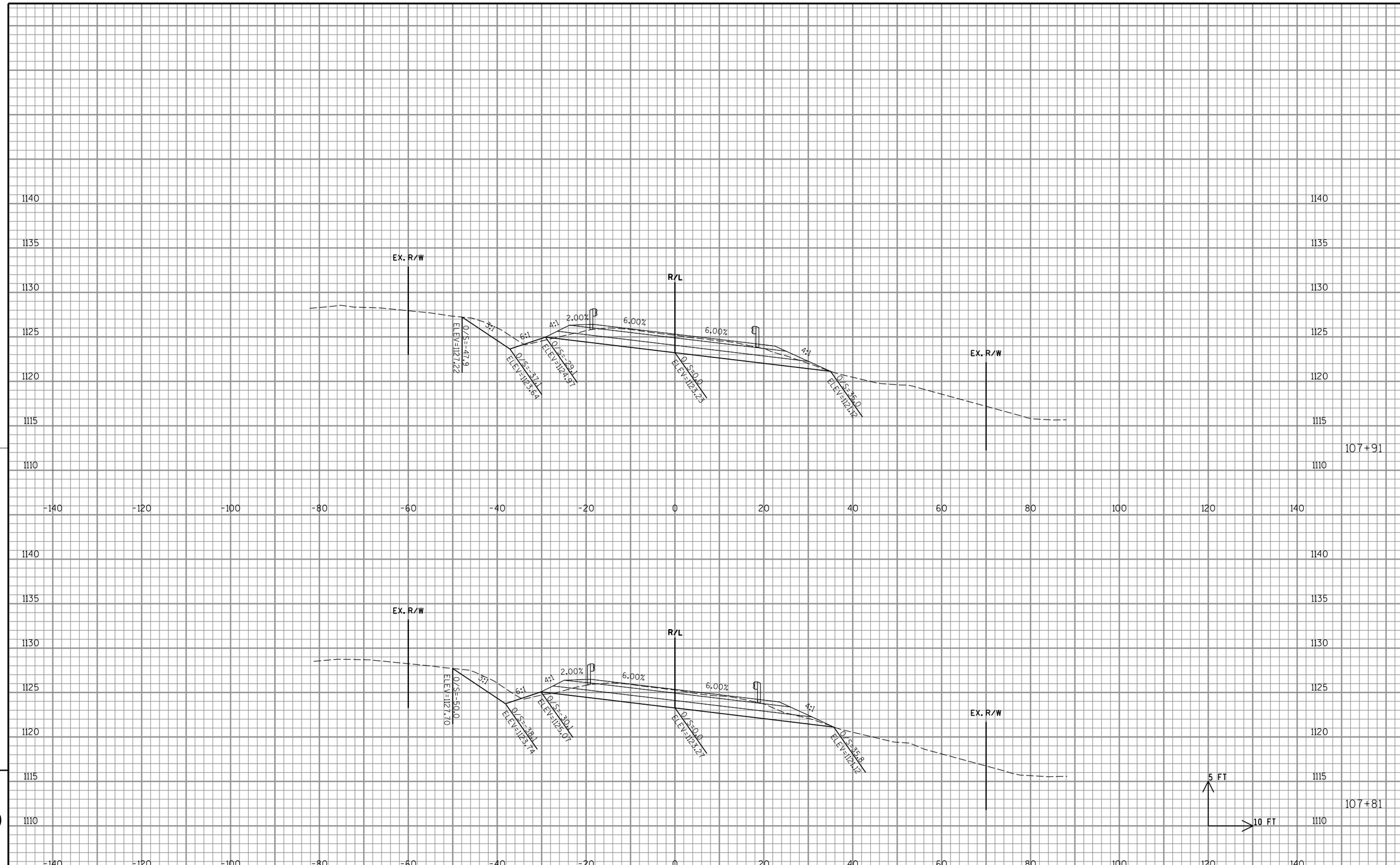

9

PROJECT NO:8590-01-73	HWY:STH 40	COUNTY:RUSK	CROSS SECTIONS:BECKY CREEK	SHEET 138	E

FILE NAME : P:\48xx\4879.DP.14.STH40.RSK\CADDS\85900173\SheetsPlan\090203_xs.dgn PLOT DATE : 11/28/2016 PLOT BY : emo PLOT NAME : PLOT SCALE : 1:20

WISDOT/CADDS SHEET 21

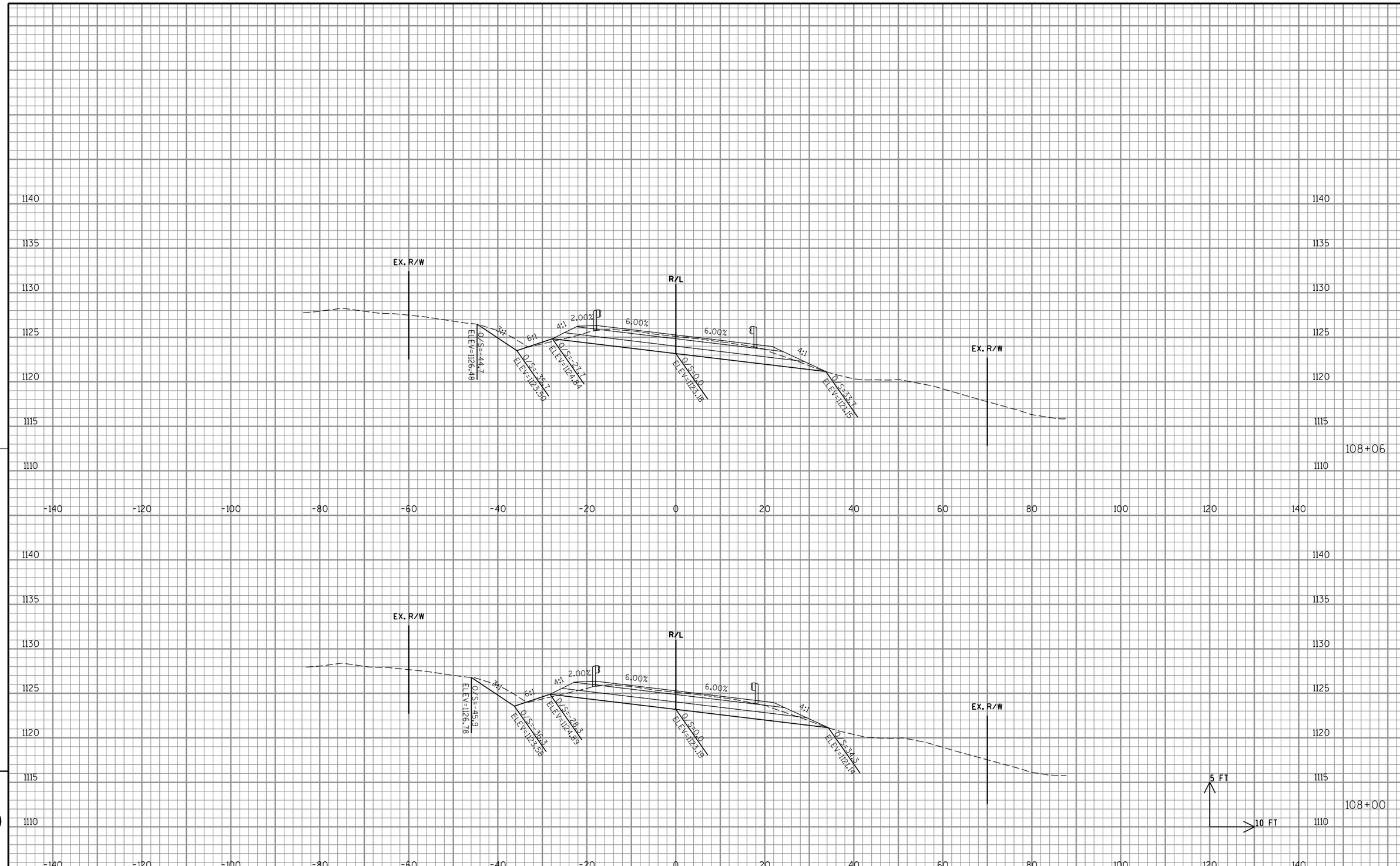

9

9

PROJECT NO:8590-01-73	HWY:STH 40	COUNTY:RUSK	CROSS SECTIONS:BECKY CREEK	SHEET 139	E

FILE NAME : P:\48xx\4879.DP.14.STH40.RSK\CADDS\85900173\SheetsPlan\090203_xs.dgn PLOT DATE : 11/28/2016 PLOT BY : emo PLOT NAME : PLOT SCALE : 1:20

WISDOT/CADDS SHEET 21

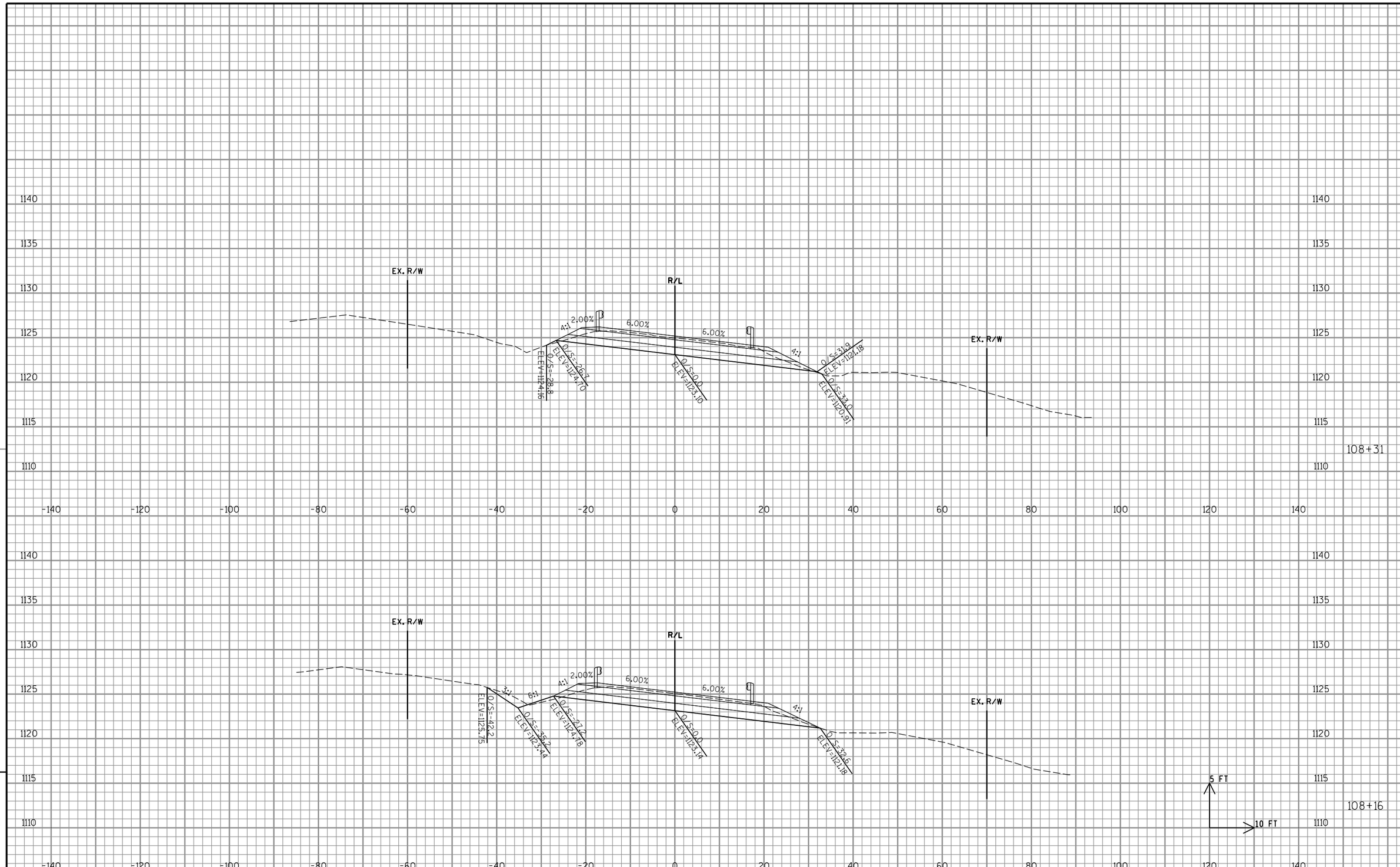

9

9

PROJECT NO:8590-01-73	HWY:STH 40	COUNTY:RUSK	CROSS SECTIONS:BECKY CREEK	SHEET 140	E

FILE NAME : P:\48xx\4879.DP.14.STH40.RSK\CADDS\85900173\SheetsPlan\090203_xs.dgn PLOT DATE : 11/28/2016 PLOT BY : emo PLOT NAME : PLOT SCALE : 1:20

WISDOT/CADDS SHEET 21

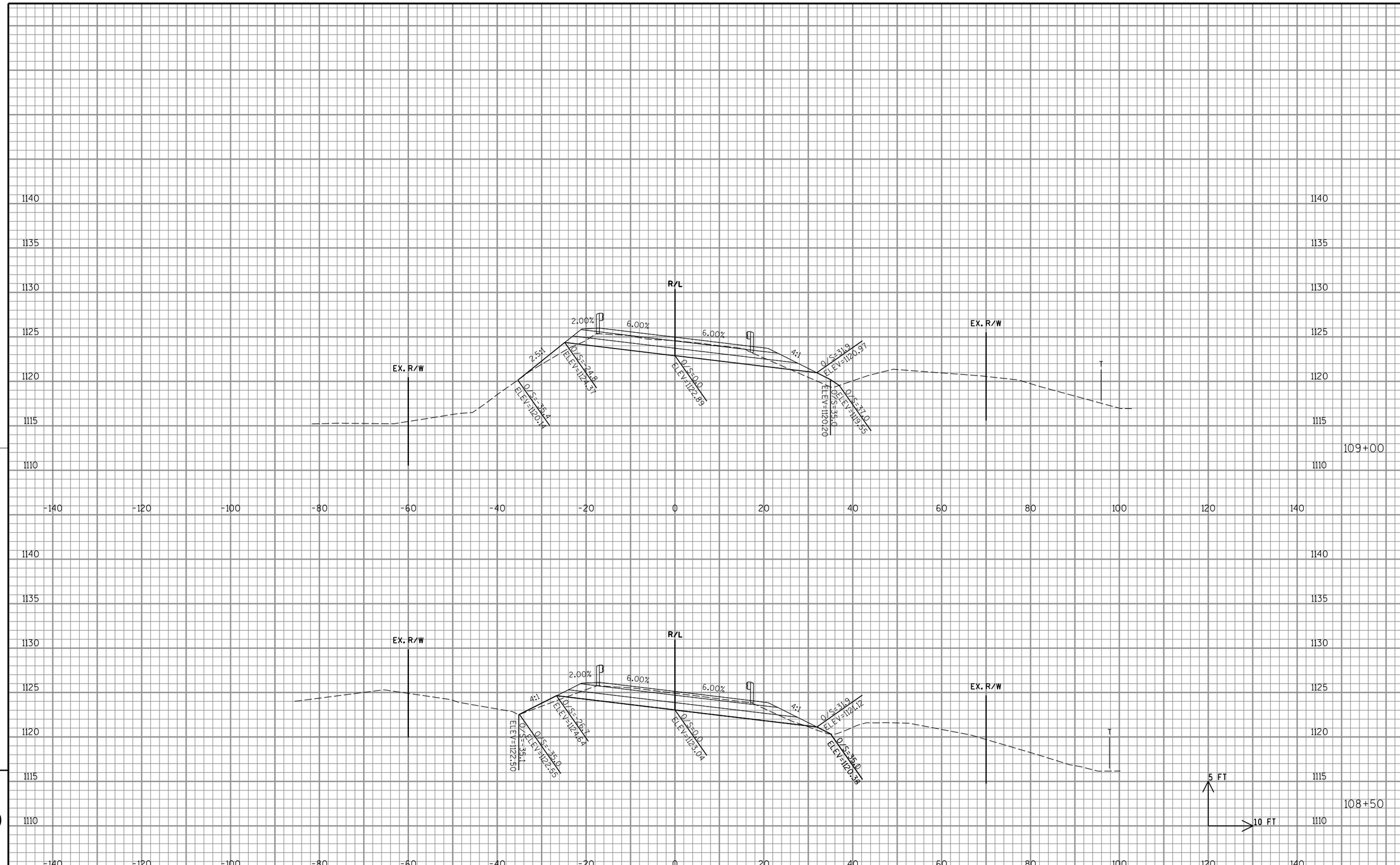

PROJECT NO:8590-01-73	HWY:STH 40	COUNTY:RUSK	CROSS SECTIONS:BECKY CREEK	SHEET 141	E

FILE NAME : P:\48xx\4879.DP.14.STH40.RSK\CADDS\85900173\SheetsPlan\090203_xs.dgn PLOT DATE : 11/28/2016 PLOT BY : emo PLOT NAME : PLOT SCALE : 1:20

WISDOT/CADDS SHEET 21

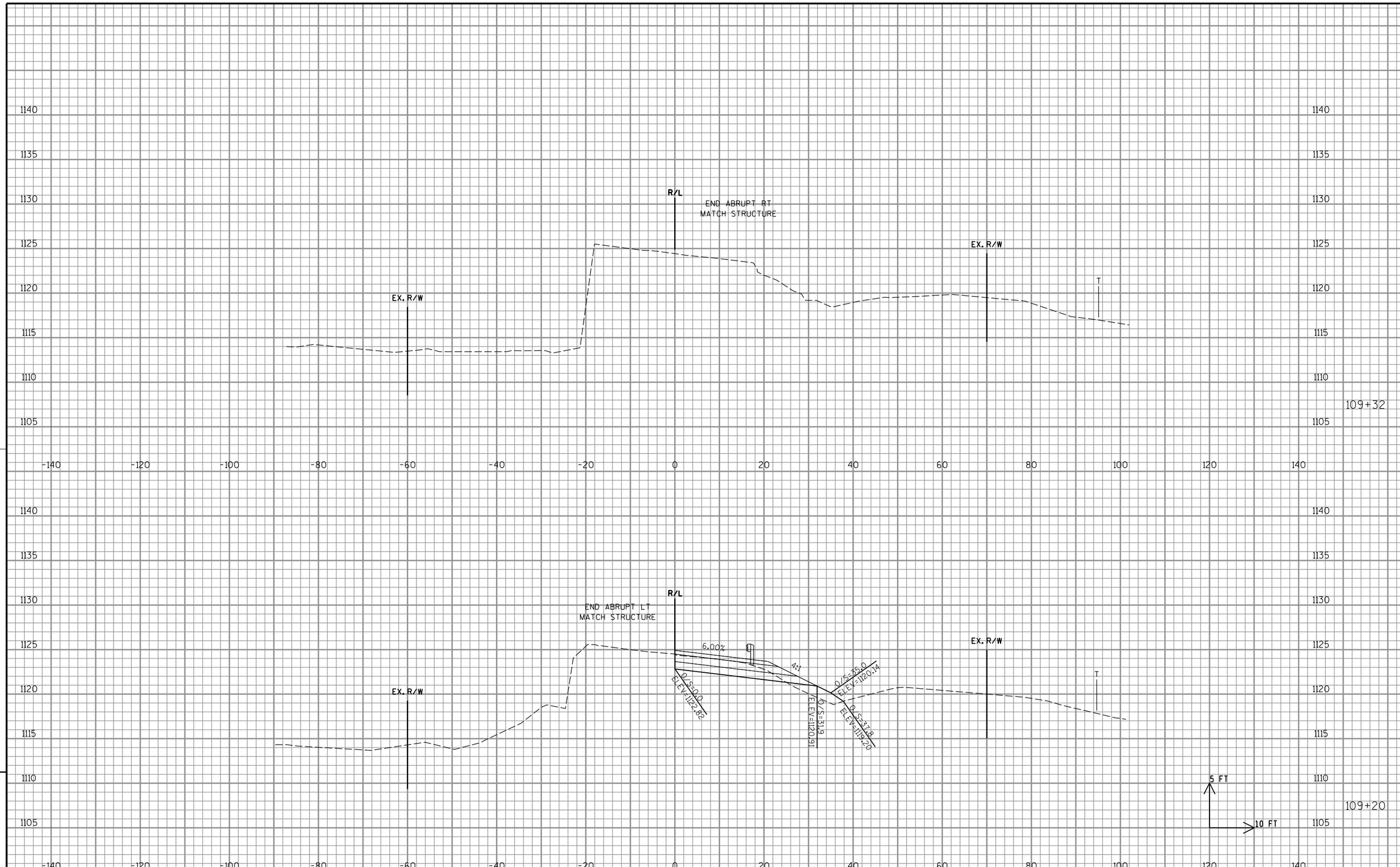

9

9

PROJECT NO:8590-01-73	HWY:STH 40	COUNTY:RUSK	CROSS SECTIONS:BECKY CREEK	SHEET 142	E

FILE NAME : P:\48xx\4879.DP.14.STH40.RSK\CADDS\85900173\SheetsPlan\090203_xs.dgn PLOT DATE : 11/28/2016 PLOT BY : emo PLOT NAME : PLOT SCALE : 1:20

WISDOT/CADDS SHEET 21

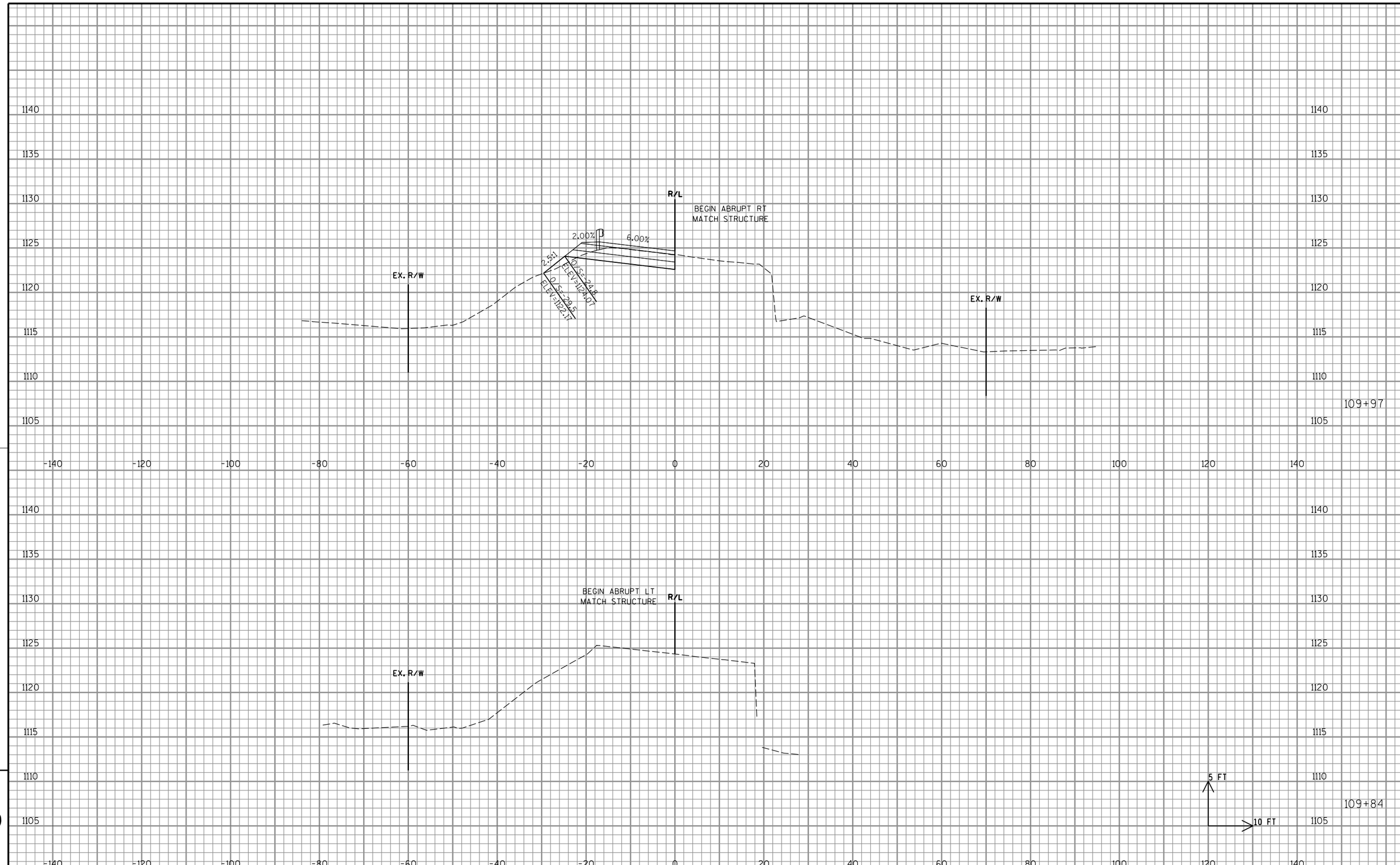

9

9

PROJECT NO:8590-01-73	HWY:STH 40	COUNTY:RUSK	CROSS SECTIONS:BECKY CREEK	SHEET 143	E

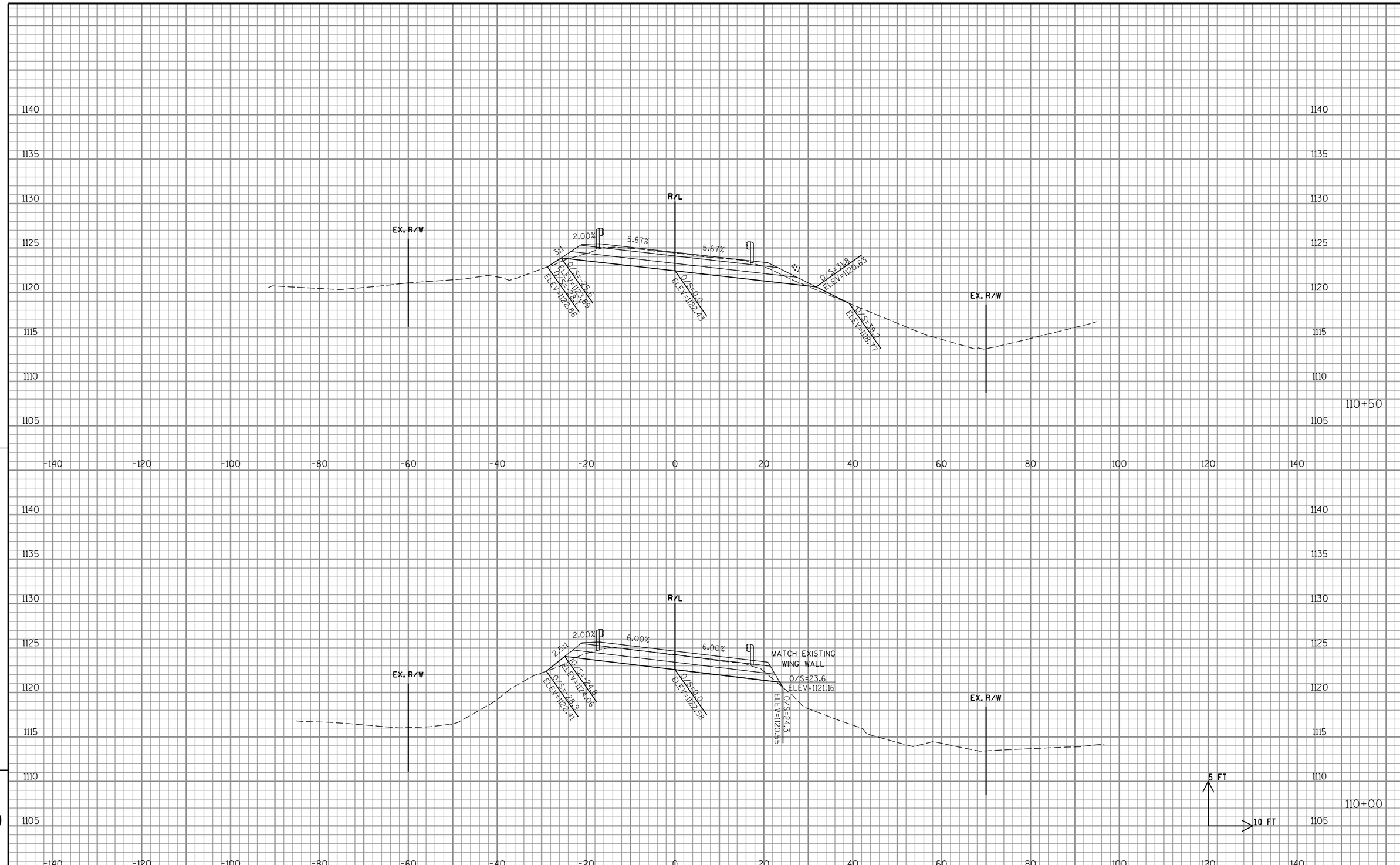

PROJECT NO:8590-01-73	HWY:STH 40	COUNTY:RUSK	CROSS SECTIONS:BECKY CREEK	SHEET 144	E

FILE NAME : P:\48xx\4879.DP.14.STH40.RSK\CADDS\85900173\SheetsPlan\090204_xs.dgn PLOT DATE : 11/28/2016 PLOT BY : emo PLOT NAME : PLOT SCALE : 1:20

WISDOT/CADDS SHEET 21

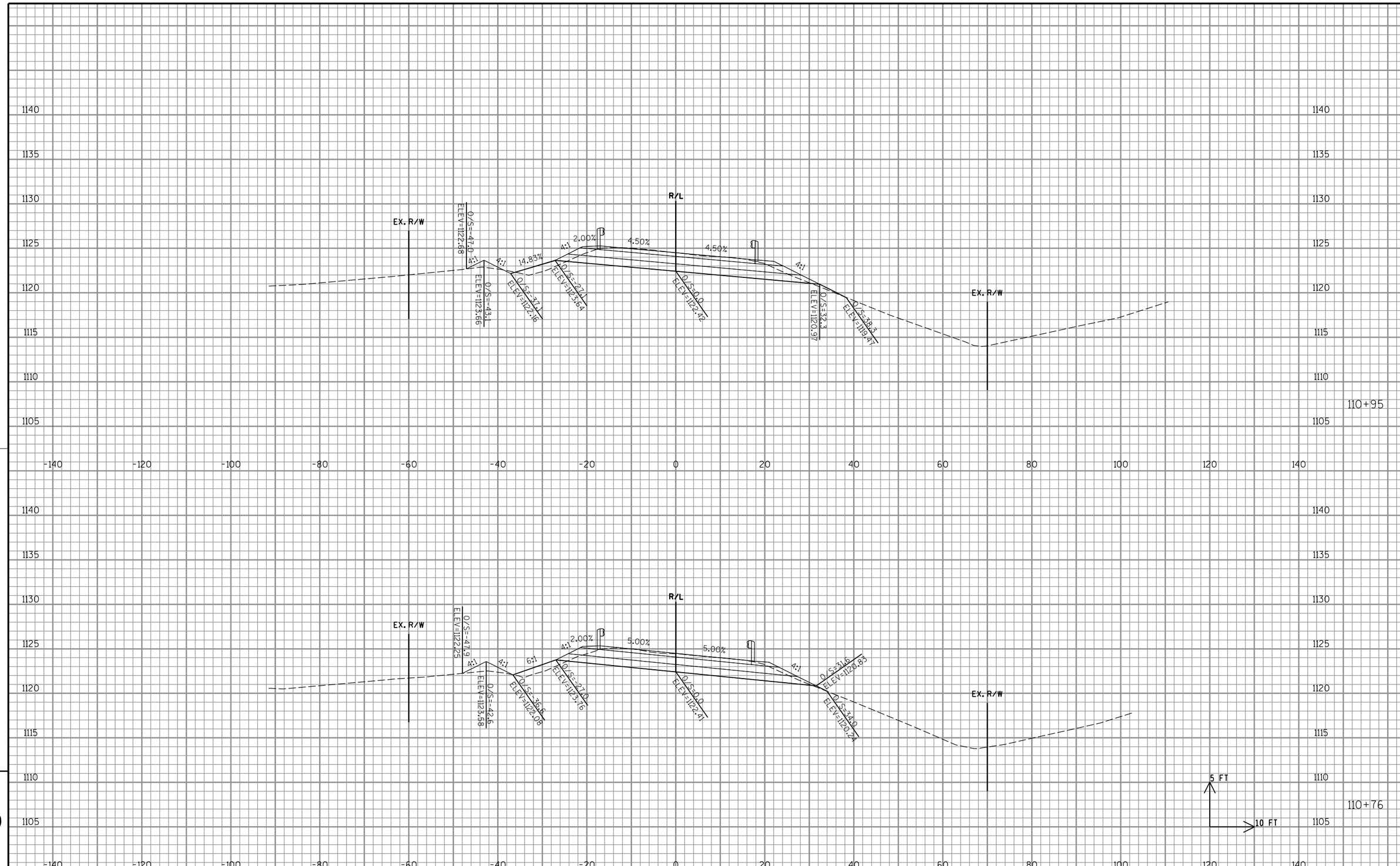

9

9

PROJECT NO:8590-01-73	HWY:STH 40	COUNTY:RUSK	CROSS SECTIONS:BECKY CREEK	SHEET 145	E

FILE NAME : P:\48xx\4879.DP.14.STH40.RSK\CADDS\85900173\SheetsPlan\090204_xs.dgn PLOT DATE : 11/28/2016 PLOT BY : emo PLOT NAME : PLOT SCALE : 1:20

WISDOT/CADDS SHEET 21

LEGEND

EXISTING BASE AGGREGATE DENSE TO REMAIN

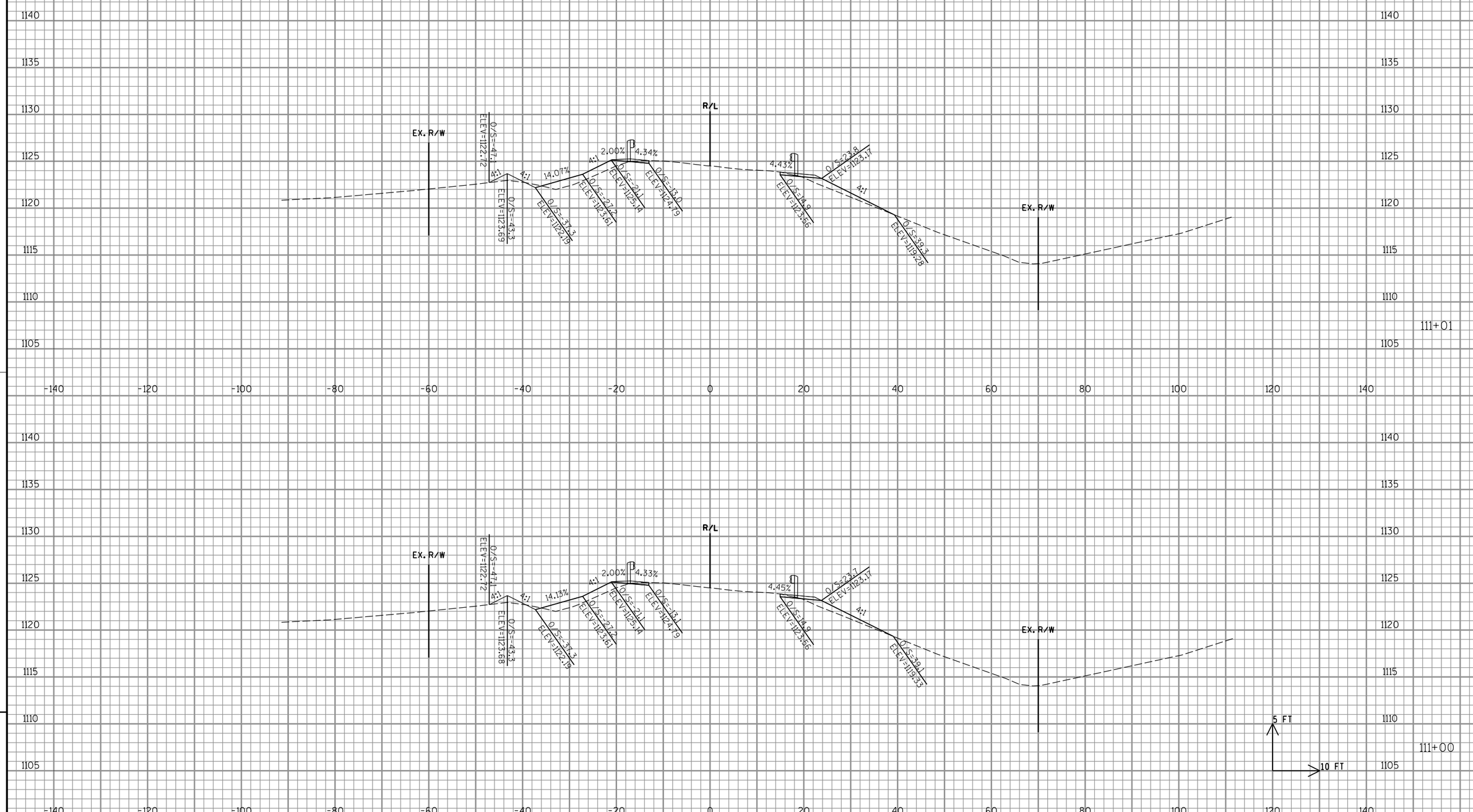

9

9

PROJECT NO:8590-01-73	HWY:STH 40	COUNTY:RUSK	CROSS SECTIONS:BECKY CREEK	SHEET 146	E

FILE NAME : P:\48xx\4879.DP.14.STH40.RSK\CADDS\85900173\SheetsPlan\090204_xs.dgn PLOT DATE : 11/28/2016 PLOT BY : emo PLOT NAME : PLOT SCALE : 1:20

WISDOT/CADDS SHEET 21

LEGEND

EXISTING BASE AGGREGATE DENSE TO REMAIN

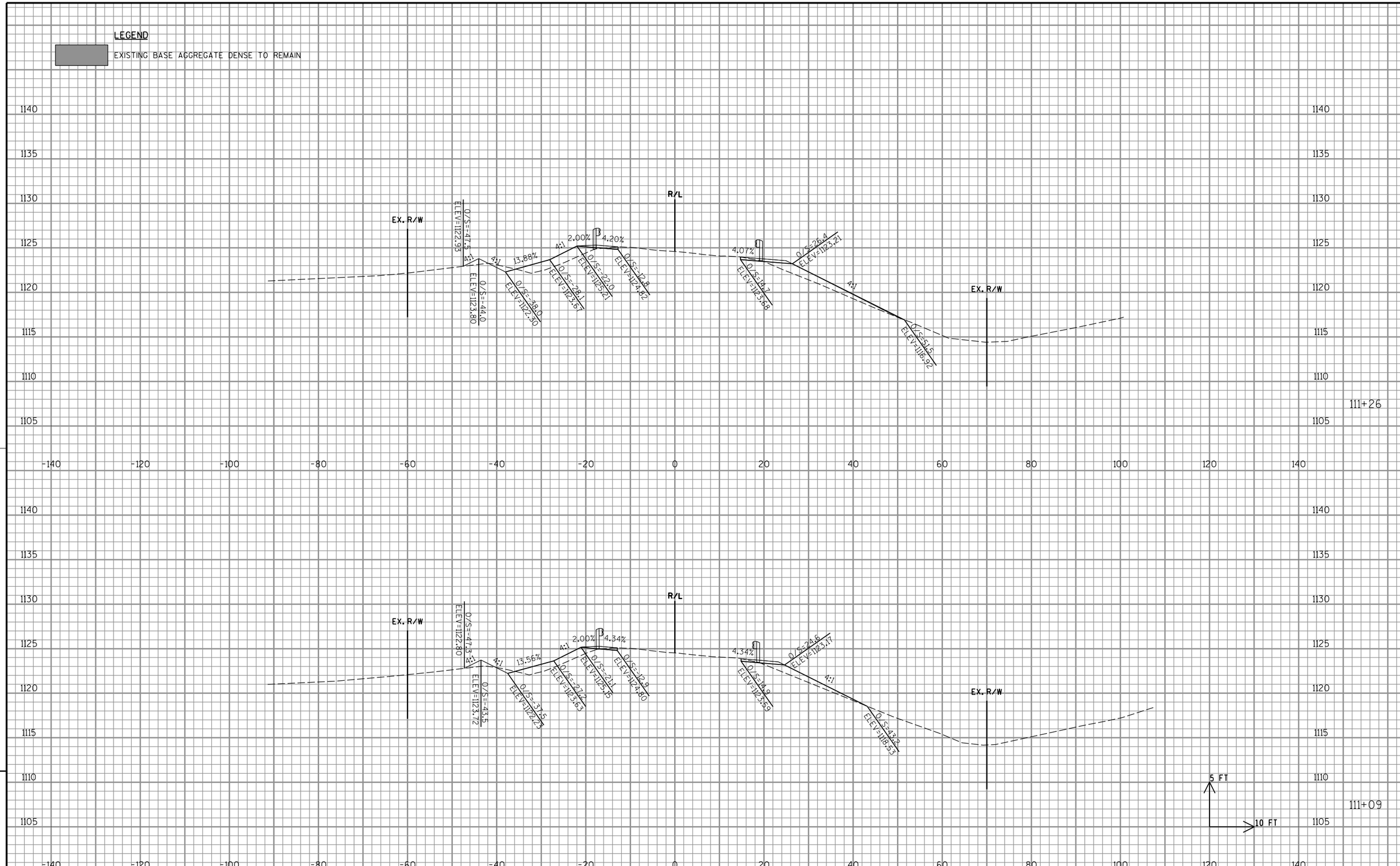

9

9

PROJECT NO:8590-01-73	HWY:STH 40	COUNTY:RUSK	CROSS SECTIONS:BECKY CREEK	SHEET 147	E

FILE NAME : P:\48xx\4879.DP.14.STH40.RSK\CADDS\85900173\SheetsPlan\090204_xs.dgn PLOT DATE : 11/28/2016 PLOT BY : emo PLOT NAME : PLOT SCALE : 1:20

WISDOT/CADDS SHEET 21

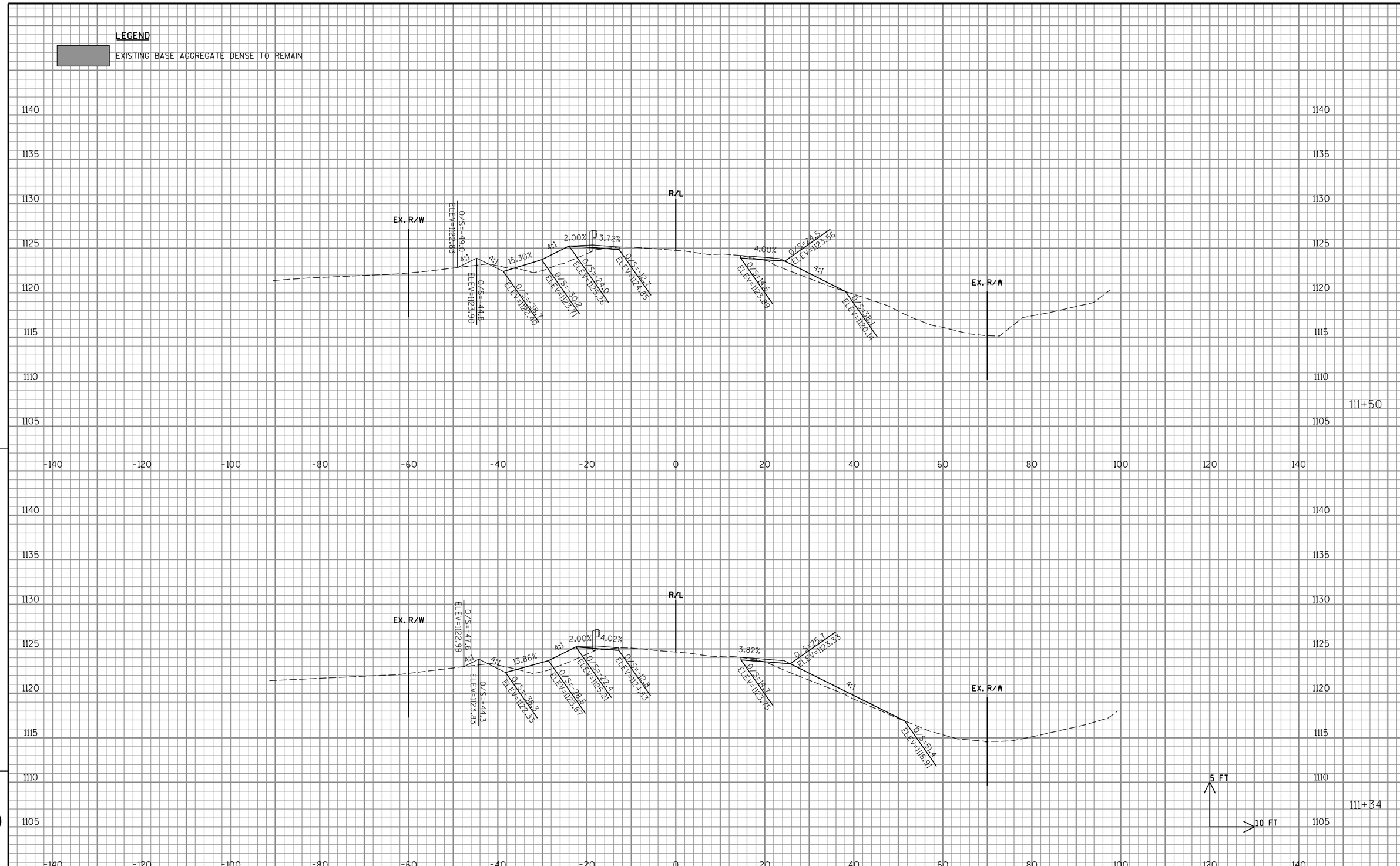

9

9

PROJECT NO:8590-01-73	HWY:STH 40	COUNTY:RUSK	CROSS SECTIONS:BECKY CREEK	SHEET 148	E

FILE NAME : P:\48xx\4879.DP.14.STH40.RSK\CADDS\85900173\SheetsPlan\090204_xs.dgn PLOT DATE : 11/28/2016 PLOT BY : emo PLOT NAME : PLOT SCALE : 1:20

WISDOT/CADDS SHEET 21

LEGEND

EXISTING BASE AGGREGATE DENSE TO REMAIN

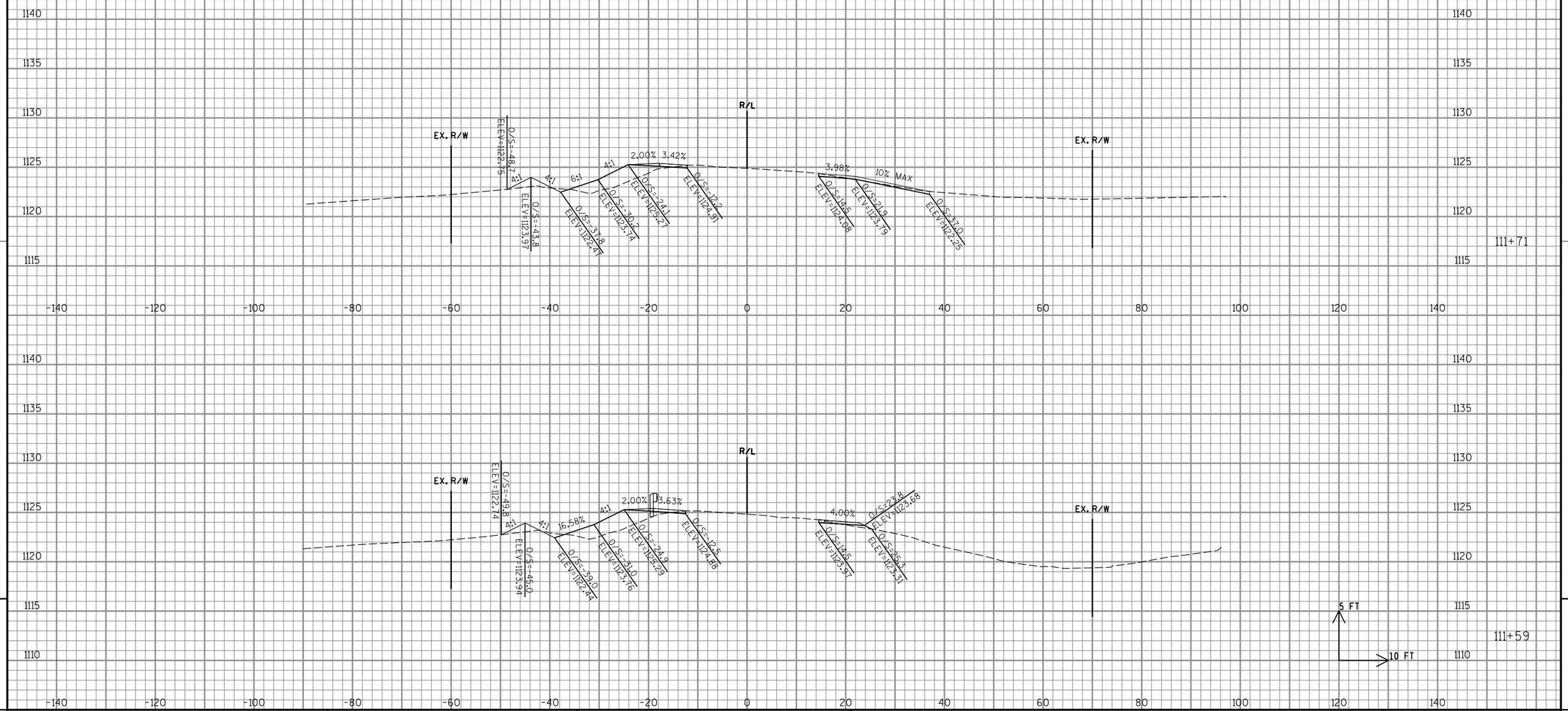

9

9

PROJECT NO:8590-01-73	HWY:STH 40	COUNTY:RUSK	CROSS SECTIONS:BECKY CREEK	SHEET 149	E

FILE NAME : P:\48xx\4879.DP.14.STH40.RSK\CADDS\85900173\SheetsPlan\090204_xs.dgn PLOT DATE : 11/28/2016 PLOT BY : emo PLOT NAME : PLOT SCALE : 1:20

WISDOT/CADDS SHEET 21

LEGEND

EXISTING BASE AGGREGATE DENSE TO REMAIN

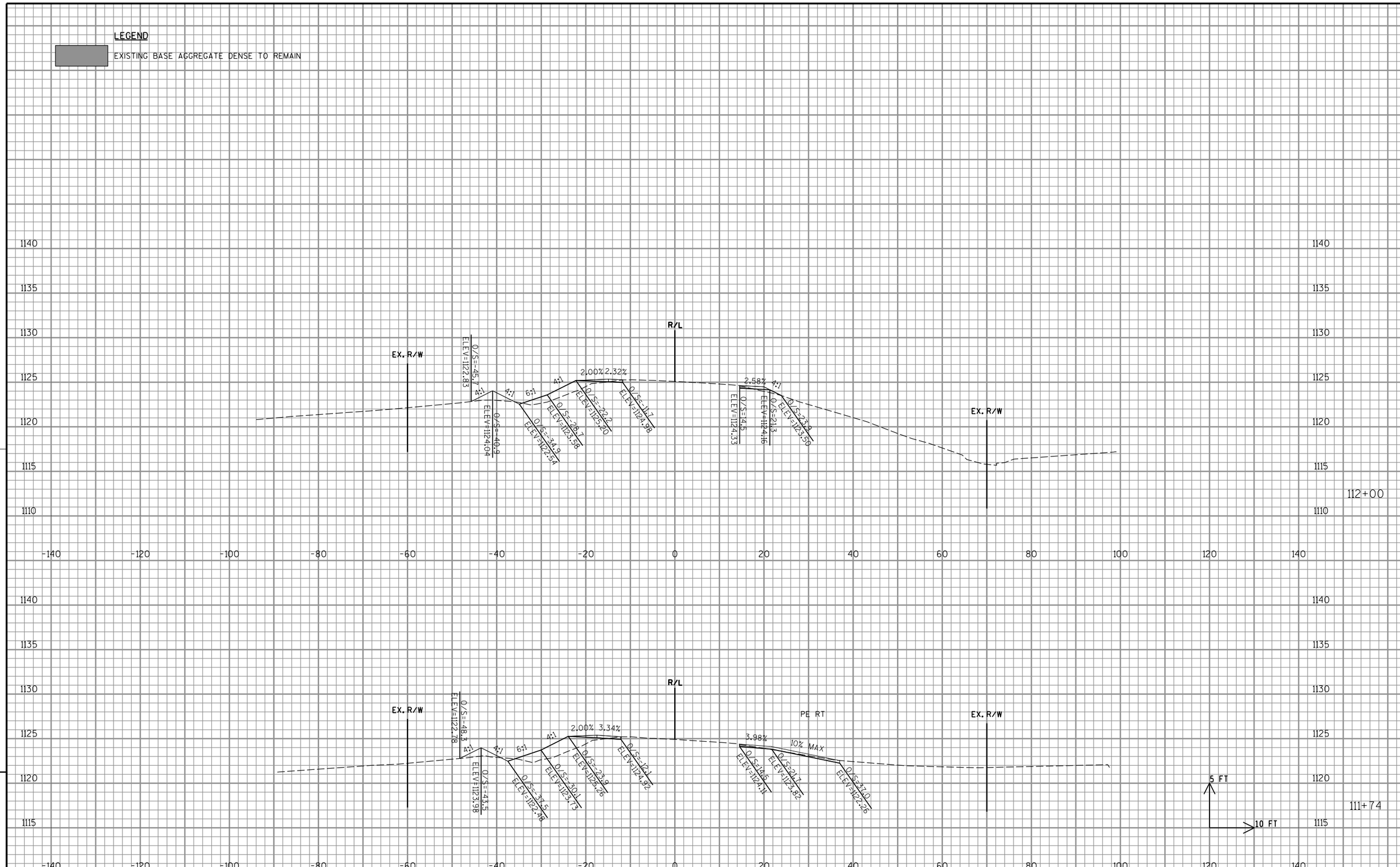

PROJECT NO:8590-01-73	HWY:STH 40	COUNTY:RUSK	CROSS SECTIONS:BECKY CREEK	SHEET 150	E

FILE NAME : P:\48xx\4879.DP.14.STH40.RSK\CADDS\85900173\SheetsPlan\090204_xs.dgn PLOT DATE : 11/28/2016 PLOT BY : emo PLOT NAME : PLOT SCALE : 1:20

WISDOT/CADDS SHEET 21

LEGEND

EXISTING BASE AGGREGATE DENSE TO REMAIN

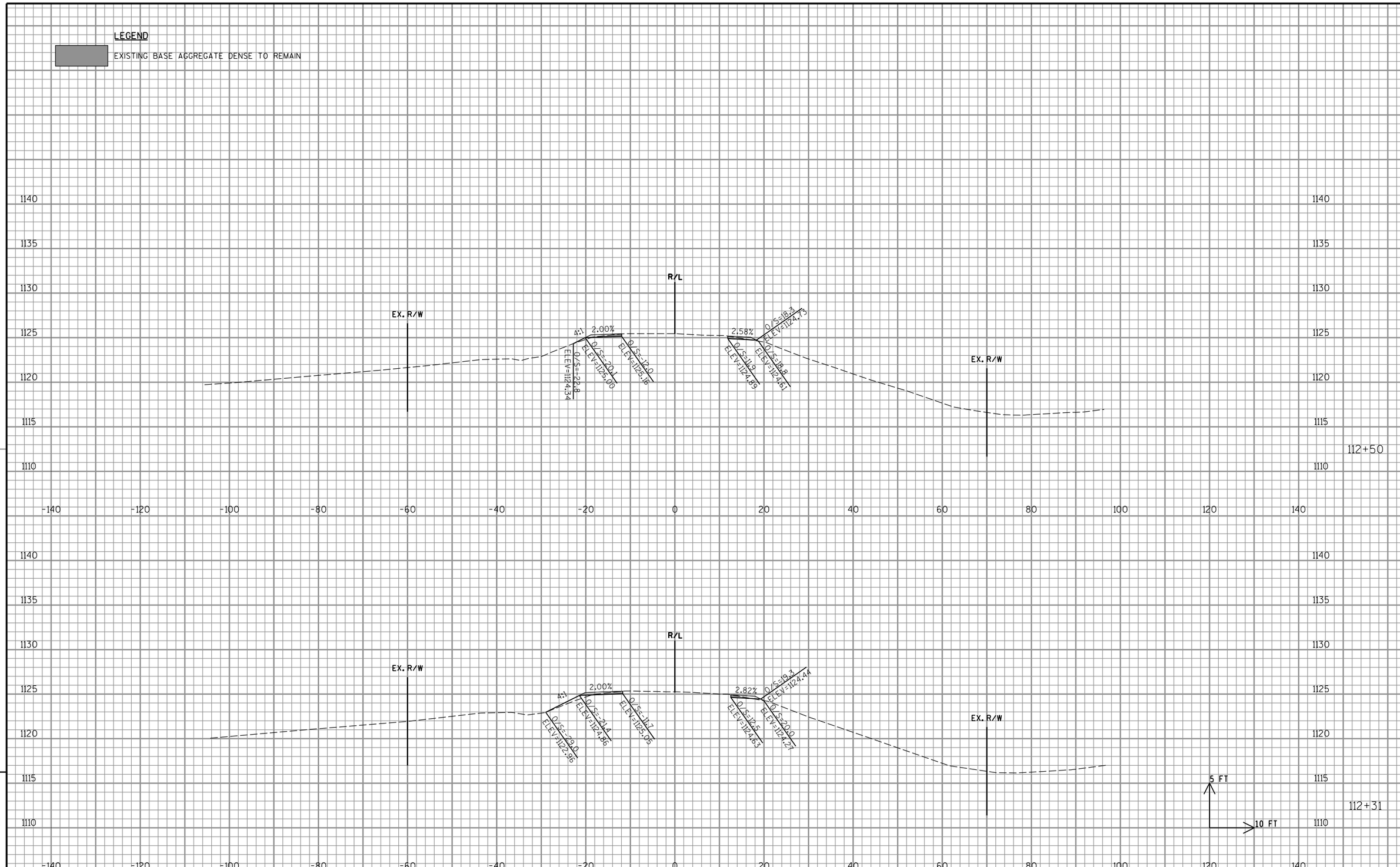

9

9

PROJECT NO:8590-01-73	HWY:STH 40	COUNTY:RUSK	CROSS SECTIONS:BECKY CREEK	SHEET 151	E

FILE NAME : P:\48xx\4879.DP.14.STH40.RSK\CADDS\85900173\SheetsPlan\090204_xs.dgn PLOT DATE : 11/28/2016 PLOT BY : emo PLOT NAME : PLOT SCALE : 1:20

WISDOT/CADDS SHEET 21

LEGEND

EXISTING BASE AGGREGATE DENSE TO REMAIN

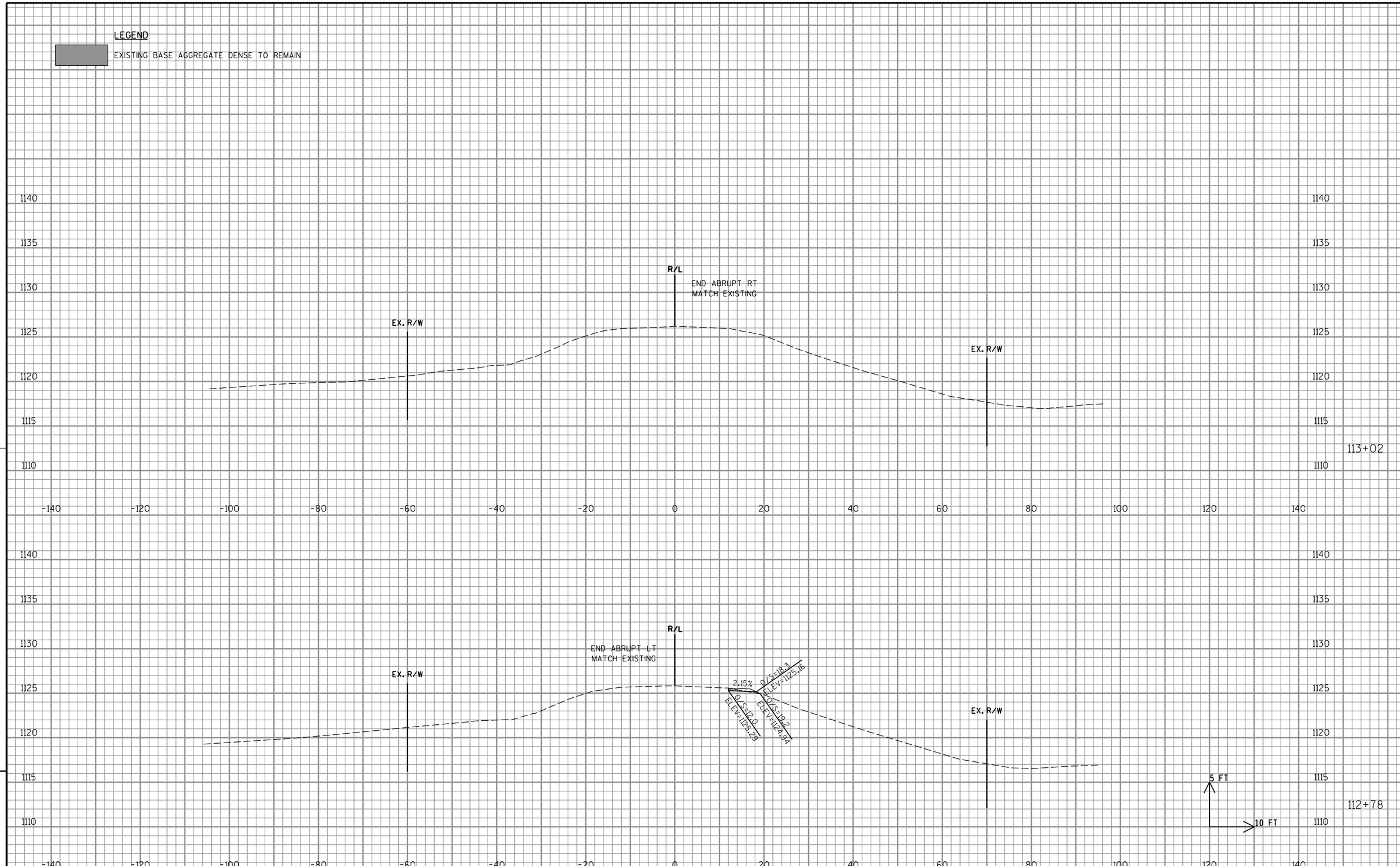

9

9

PROJECT NO:8590-01-73	HWY:STH 40	COUNTY:RUSK	CROSS SECTIONS:BECKY CREEK	SHEET 152	E

FILE NAME : P:\48xx\4879.DP.14.STH40.RSK\CADDS\85900173\SheetsPlan\090204_xs.dgn PLOT DATE : 11/28/2016 PLOT BY : emo PLOT NAME : PLOT SCALE : 1:20

WISDOT/CADDS SHEET 21

Notes

Wisconsin Department of Transportation

Dedicated people creating transportation solutions through innovation and exceptional service.

http://www.dot.wisconsin.gov