MAD APR 2017

PROJECT ID: 5145-00-60
WITH: N/A

COUNTY: DANE

10

ORDER OF SHEETS

TOTAL SHEETS = 154

STATE PROJECT	FEDERAL PROJECT	
	PROJECT	CONTRACT
5145-00-60	—	—

STATE OF WISCONSIN
DEPARTMENT OF TRANSPORTATION

PLAN OF PROPOSED IMPROVEMENT

MAZOMANIE - SUN PRAIRIE

STH 78 TO USH 12

STH 19
DANE COUNTY

STATE PROJECT NUMBER
5145-00-60

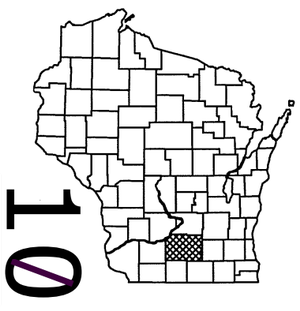

N

BEGIN PROJECT
STA. 1+00.00
Y=522,545.73
X=721,239.53

END PROJECT
STA. 507+85.00

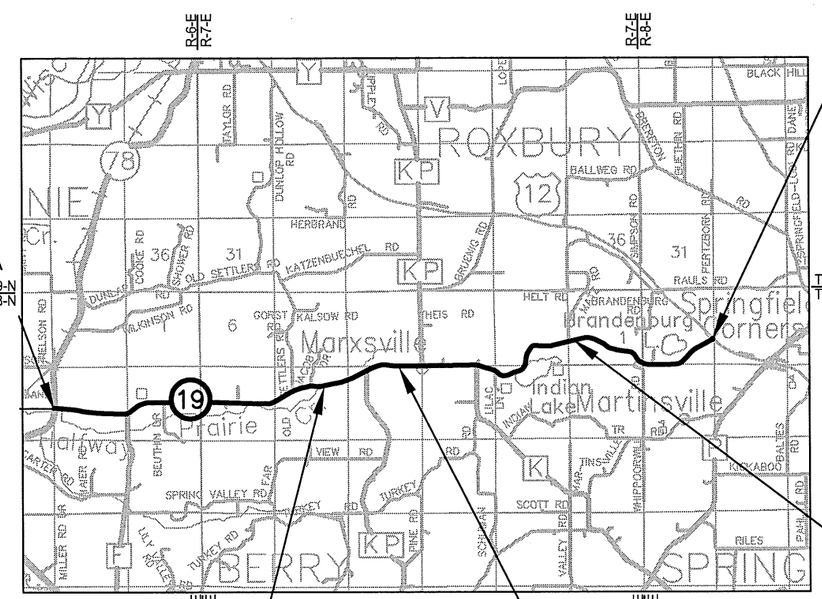

C-13-5007
REMOVING OLD STRUCTURE
(STA. 395+42) REQ'D

EXCEPTION TO NET ℄ LENGTH
B-13-077
STA. 195+01.70 TO 195+32.80

EXCEPTION TO NET ℄ LENGTH
B-13-593
STA. 263+41.02 TO 264+04.92

DESIGN DESIGNATION

A.A.D.T.	2017	=	2,600
A.A.D.T.	2037	=	4,000
D.H.V.	(7.6%)	=	304
D.D.		=	60/40
T.		=	9.1%
DESIGN SPEED		=	55 MPH - STH 78 TO CTH KP (SOUTH)
		=	45 MPH - CTH KP (SOUTH) TO CTH KP (NORTH)
		=	55 MPH - CTH KP (NORTH) TO USH 12
ESALS		=	730,000

CONVENTIONAL SYMBOLS

PLAN
- CORPORATE LIMITS
- PROPERTY LINE
- LOT LINE
- LIMITED HIGHWAY EASEMENT
- EXISTING RIGHT OF WAY
- PROPOSED OR NEW R/W LINE
- SLOPE INTERCEPT
- REFERENCE LINE
- EXISTING CULVERT
- PROPOSED CULVERT (Box or Pipe)
- COMBUSTIBLE FLUIDS — CAUTION
- MARSH AREA
- WOODED OR SHRUB AREA

PROFILE
- GRADE LINE
- ORIGINAL GROUND
- MARSH OR ROCK PROFILE (To be noted as such) — ROCK
- SPECIAL DITCH — LABEL
- GRADE ELEVATION — 95.36
- CULVERT (Profile View)

UTILITIES
- ELECTRIC — E
- FIBER OPTIC — FO
- GAS — G
- SANITARY SEWER — SAN
- STORM SEWER — SS
- TELEPHONE — T
- WATER — W
- UTILITY PEDESTAL
- POWER POLE
- TELEPHONE POLE

LAYOUT
SCALE 0 1 MI

TOTAL NET LENGTH OF CENTERLINE = 9.581 MI.

COORDINATES ON THIS PLAN ARE REFERENCED TO THE WISCONSIN COUNTY COORDINATE SYSTEM (WCCS), DANE COUNTY, NAD83 (91).

ELEVATIONS ON THIS PLAN ARE REFERENCED TO THE NORTH AMERICAN DATUM OF NGVD 88.

STATE OF WISCONSIN
DEPARTMENT OF TRANSPORTATION

PREPARED BY

Surveyor	WISDOT/ EMCS, Inc.
Designer	BRIAN RICE, P.E.
Project Manager	LALITHA BALACHANDRAN, P.E.
Regional Examiner	
Regional Supervisor	WILLIAM STROBEL, P.E.

APPROVED FOR THE DEPARTMENT
DATE: 10/31/16 William Strobel (Signature)

E

2

GENERAL NOTES

PAVING LIMITS AT INTERSECTIONS ARE TO BE DETERMINED IN THE FIELD BY THE ENGINEER.

THE LOCATION OF STOP LINES SHALL BE DETERMINED IN THE FIELD BY THE ENGINEER.

THE CENTERLINE OF STH 19 IS APPROXIMATELY THE MAINLINE REFERENCE LINE.

NO TREES OR SHRUBS ARE TO BE REMOVED WITHOUT APPROVAL OF THE ENGINEER.

DISTURBED AREAS WITHIN THE RIGHT OF WAY SHALL BE RESTORED AS DIRECTED BY THE ENGINEER

WHEN THE QUANTITY OF BASE AGGREGATE DENSE IS MEASURED FOR PAYMENT IN TONS, THE DEPTH OR THICKNESS AS SHOWN ON THE PLAN IS APPROXIMATE AND THE ACTUAL THICKNESS WILL DEPEND UPON THE DISTRIBUTION OF THE MATERIAL AS DIRECTED BY THE ENGINEER IN THE FIELD.

EROSION CONTROL FEATURES WILL BE DETERMINED BY THE EROSION CONTROL IMPLEMENTATION PLAN (ECIP). ALL EROSION CONTROL MEASURES SHALL BE MAINTAINED UNTIL SUCH A TIME AS THE ENGINEER DETERMINES THE MEASURE IS NO LONGER NECESSARY.

LIMITS AND LOCATIONS OF BEAM GUARD REPLACEMENTS AND ADJUSTMENTS MAY BE ADJUSTED BY THE ENGINEER. COORDINATE EXACT LOCATIONS WITH THE ENGINEER IN THE FIELD.

EXACT LOCATIONS AND WIDTHS OF DRIVEWAYS AND PRIVATE FIELD ENTRANCES SHALL BE DETERMINED BY THE ENGINEER IN THE FIELD.

THE LOCATION OF THE EXISTING AND PROPOSED UTILITY INSTALLATIONS AS SHOWN ON THE PLANS ARE APPROXIMATE.

THERE ARE UTILITY FACILITIES WITHIN THE PROJECT AREA THAT ARE NOT SHOWN ON THE PLANS. THE CONTRACTOR SHALL COORDINATE HIS CONSTRUCTION ACTIVITIES WITH A CALL TO DIGGERS HOTLINE AND/OR A DIRECT CALL TO THE UTILITIES THAT HAVE FACILITIES IN THAT AREA. NOT ALL UTILITIES ARE MEMBERS OF DIGGERS HOTLINE.

ADJUST THE LOCATIONS OF CONTRACT ITEMS UNDER THIS CONTRACT TO AVOID CONFLICT WITH THE EXISTING UTILITY FACILITIES, UNLESS OTHERWISE SPECIFIED IN THE CONTRACT SPECIAL PROVISIONS.

HMA PAVEMENT WEIGHT CALCULATIONS ARE BASED ON 112 LB/SY/IN.

PLACE 3 INCHES OF HMA PAVEMENT 4 LT 58-28 S IN ONE LIFT.

PLACE 4 INCHES OF HMA PAVEMENT 4 LT 58-28 S IN TWO LIFTS.

DO NOT STORE EQUIPMENT OR MATERIAL IN ENVIRONMENTALLY SENSITIVE AREAS, WETLANDS OR WATERWAYS.

ALL EXISTING SIGNS SHALL REMAIN IN PLACE UNTIL CONSTRUCTION OPERATIONS REQUIRE THEIR REMOVAL OR UNLESS ENGINEER APPROVES THEIR REMOVAL.

ARCHAEOLOGICAL SITE, HISTORICAL SITE, AND WETLAND BOUNDARIES SHOWN IN THE PLANS ARE APPROXIMATE AND SHOULD BE USED FOR REFERENCE PURPOSES ONLY.

ABBREVIATIONS

AADT	AVERAGE ANNUAL DAILY TRAFFIC
ASPH	ASPHALTIC SURFACE DRIVEWAYS AND FIELD ENTRANCES
CE	COMMERCIAL ENTRANCE
CP	CULVERT PIPE
CPCS	CULVERT PIPE CORRUGATED STEEL
CPRC	CULVERT PIPE REINFORCED CONCRETE
DHV	DESIGN HOURLY VOLUME
D	DEGREE OF CURVE
DIA	DIAMETER
E	EAST
EAT	STEEL PLATE BEAM GUARD ENERGY ABSORBING TERMINAL
EL	ELEVATION
ESALS	EQUIVALENT SINGLE AXLE LOADS
EOP	EDGE OF PAVEMENT
EXIST	EXISTING
F.E.	FIELD ENTRANCE
G	GARAGE
H	HOUSE
HES	HIGH EARLY STRENGTH
IP	IRON PIN
L	LENGTH (OF CURVE)
LHF	LEFT HAND FORWARD
LC	LONG CHORD
NOM	NOMINAL
N	NORTH
PCC	POINT OF COMPOUND CURVATURE
PE	PRIVATE ENTRANCE
PL	PROPERTY LINE
RCPA	REINFORCED CONCRETE PIPE ARCH
RHF	RIGHT HAND FORWARD
RD	ROAD
RT	RIGHT
R/W	RIGHT OF WAY
SDD	STANDARD DETAIL DRAWING
SHR	SHRINKAGE
SE	SUPERELEVATION
T	PERCENT TRUCKS
TEL	TELEPHONE
TN	TOWN
TC	TOP OF CURB
TRANS	TRANSITION
VOL	VOLUME
W	WEST
V	DESIGN SPEED

UTILITY CONTACTS

UTILITY OR MUNICIPALITY	ADDRESS	CONTACT	PHONE NUMBER	UTILITY TYPE
AT&T WISCONSIN	316 W WASHINGTON AVE MADISON, WI 53703	CAROL ANASON	(608) 252-2385	COMMUNICATION LINE
		EMAIL: CA2624@ATT.COM		
ALLIANT ENERGY	SUITE 1000 4902 N BILTMORE LANE MADISON, WI 53718	JASON HOGAN	(608) 458-4871	ELECTRICITY
		EMAIL: JASONHOGAN@ALLIANTENERGY.COM		
CENTURYLINK	333 N FRONT ST P.O. BOX 4800 LA CROSSE, WI 54602	STEVE BISHOP	(608) 796-5543	COMMUNICATION LINE
		EMAIL: STEVEN.BISHOP@CENTURYLINK.COM		
MADISON GAS AND ELECTRIC COMPANY	P.O. BOX 1231 MADISON, WI 53701-1231	TIM STATZ	(608) 252-4727	ELECTRICITY
		EMAIL: TSTATZ@MGE.COM		
MERRIMAC COMMUNICATIONS LTD.	327 PALISADE ST MERRIMAC, WI 53561	BRANDON SUCHLA	(877) 493-9470	COMMUNICATION LINE
		EMAIL: BRANDON.SUCHLA3@GMAIL.COM		
TDS TELECOM (MID-PLAINS)	525 JUNCTION RD MADISON, WI 53717	JERRY MYERS	(608) 664-4404	COMMUNICATION LINE
		EMAIL: JERRY.MYERS@TDSTELECOM.COM		
TDS TELECOM (BLACK EARTH)	525 JUNCTION RD MADISON, WI 53717	JERRY MYERS	(608) 664-4404	COMMUNICATION LINE
		EMAIL: JERRY.MYERS@TDSTELECOM.COM		

DIGGERS HOTLINE

Dial 811 or (800)242-8511

www.DiggersHotline.com

2

SECTION 2 ORDER OF SHEETS

WISDOT PROJECT MANAGER

LALITHA BALACHANDRAN, P.E.
WISDOT SW REGION
2101 WRIGHT STREET
MADISON, WI 53704
(608) 243-3382
LALITHA.BALACHANDRAN@DOT.WI.GOV

WISDOT PROJECT LEADER

BRIAN RICE, P.E.
WISDOT SW REGION
2101 WRIGHT STREET
MADISON, WI 53704
(608) 246-3857
BRIAN.RICE@DOT.WI.GOV

DNR LIAISON

ERIC HEGGELUND
DNR SOUTH CENTRAL REGION HQ
3911 FISH HATCHERY ROAD
FITCHBURG, WI 53711
(608) 275-3301
ERIC.HEGGELUND@WISCONSIN.GOV

RUNOFF COEFFICIENT TABLE
ONLY IN CULVERT REPLACEMENT LOCATION

	HYDROLOGIC SOIL GROUP											
	A			B			C			D		
	SLOPE RANGE (PERCENT)			SLOPE RANGE (PERCENT)			SLOPE RANGE (PERCENT)			SLOPE RANGE (PERCENT)		
LAND USE:	0-2	2-6	6 & OVER	0-2	2-6	6 & OVER	0-2	2-6	6 & OVER	0-2	2-6	6 & OVER
ROW CROPS	.08 .22	.16 .30	.22 .38	.12 .26	.20 .34	.27 .44	.15 .30	.24 .37	.33 .50	.19 .34	.28 .41	.38 .56
MEDIAN STRIP-TURF	.19 .24	.20 .26	.24 .30	.19 .25	.22 .28	.26 .33	.20 .26	.23 .30	.30 .37	.20 .27	.25 .32	.30 .40
SIDE SLOPE-TURF			.25 .32			.27 .34			.28 .36			.30 .38
PAVEMENT:												
ASPHALT	.70 - .95											
CONCRETE	.80 - .95											
BRICK	.70 - .80											
DRIVES, WALKS	.75 - .85											
ROOFS	.75 - .95											
GRAVEL ROADS, SHOULDERS	.40 - .60											

TOTAL PROJECT AREA = 0.71 ACRES
TOTAL AREA EXPECTED TO BE DISTURBED BY CONSTRUCTION ACTIVITIES = 0.51 ACRES

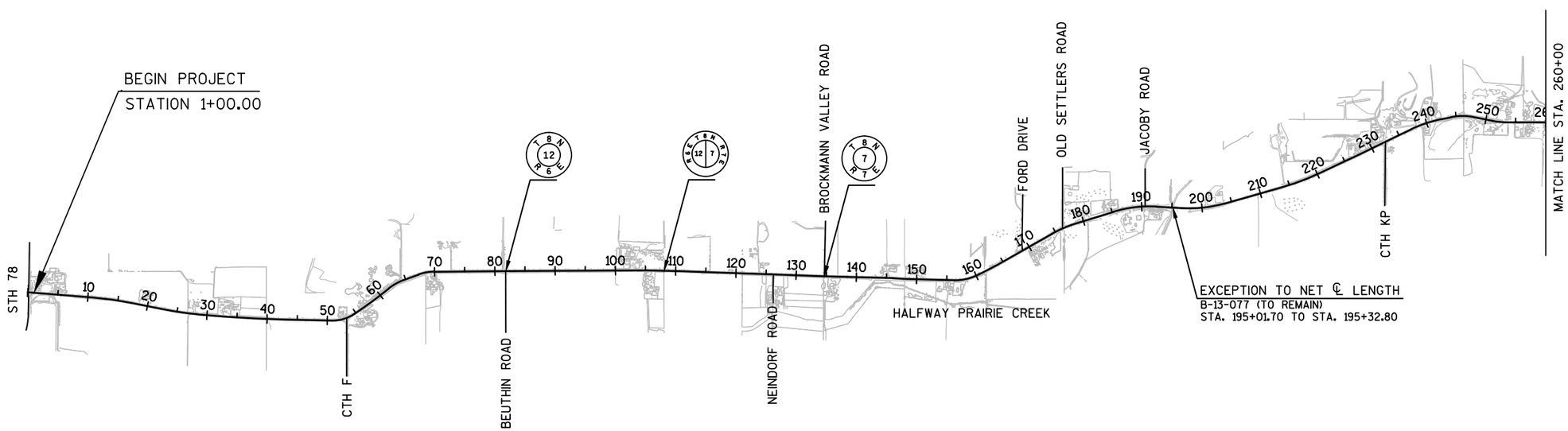

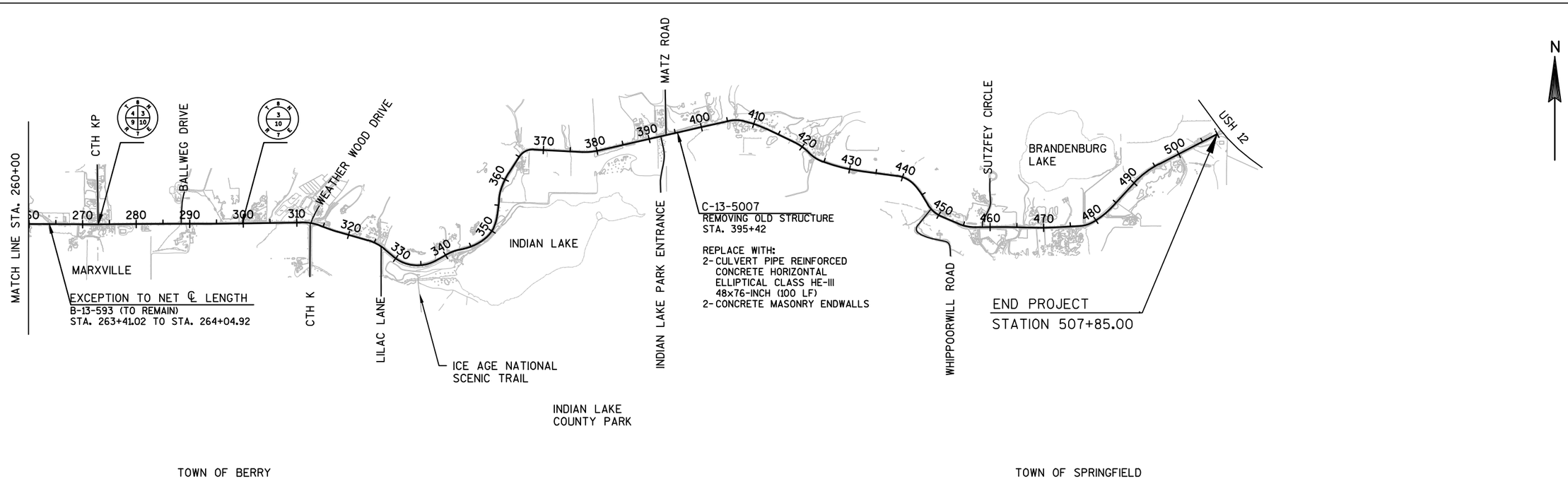

PROJECT NO:5145-00-60	HWY:STH 19	COUNTY:DANE	PROJECT OVERVIEW	SHEET 3	E

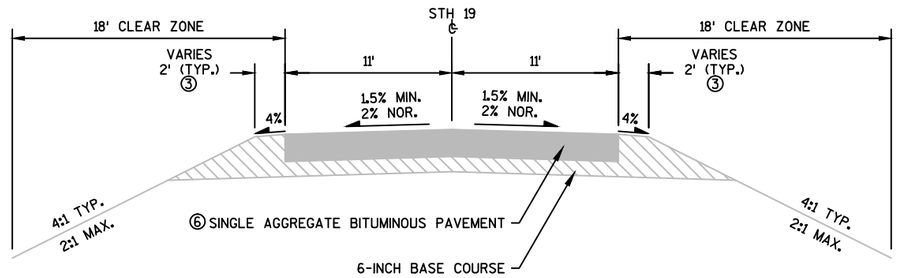

EXISTING TYPICAL SECTION - STH 19

STA. 1+00 TO STA. 507+85

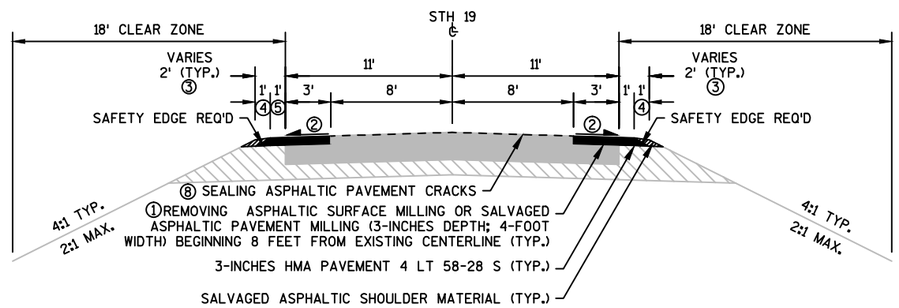

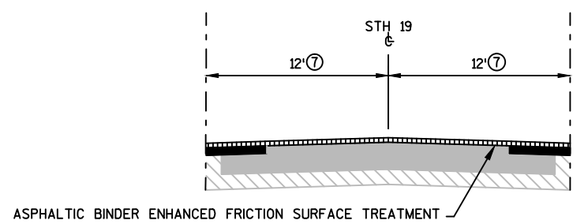

STA. 49+25 TO STA. 56+25
STA. 363+50 TO STA. 369+75
STA. 403+75 TO STA. 414+00

PROPOSED TYPICAL SECTION - STH 19

STA. 1+00 TO STA. 394+70
STA. 396+14 TO STA. 403+75
STA. 414+00 TO STA. 507+85

① MILLING WIDTH INCLUDES PORTIONS OF THE EXISTING AGGREGATE SHOULDER. WIDTH VARIATIONS:
6.0' FROM STA. 192+90 RT TO STA 196+60 RT
6.0' FROM STA. 193+70 LT TO STA. 197+40 LT
9.0' FROM STA. 261+30 RT TO STA. 265+65 RT
9.0' FROM STA, 261+75 LT TO STA. 266+15 LT
6.0' FROM STA. 392+90 RT TO STA. 394+63 RT
6.0' FROM STA. 396+27 RT TO STA 396+95 RT
6.0' FROM STA. 394+35 LT TO STA. 394+63 LT
6.0' FROM STA. 396+27 LT TO STA. 397+35 LT

② MATCH EXISTING ROADWAY CROSS SLOPE INCLUDING EXISTING SUPERELEVATION AND SUPERELVATION RATES

③ 5' SHOULDER FROM STA 180+00 TO 206+00 LT AND RT
5' SHOULDER FROM STA 259+30 TO 268+30 LT AND RT

④ AGGREGATE SHOULDER WIDTH VARIATION
STATION LEFT
0.5' FROM STA. 85+00 TO STA. 86+50
0.5' FROM STA. 130+50 TO STA. 132+00
0.5' FROM STA. 173+00 TO STA. 175+00
0.0' FROM STA. 178+00 TO STA. 179+00
0.5' FROM STA. 211+25 TO STA. 211+75
0.0' FROM STA. 237+25 TO STA. 273+75
0.5' FROM STA. 244+50 TO STA. 245+00
0.5' FROM STA. 286+00 TO STA. 287+50
0.0' FROM STA. 296+00 TO STA. 299+00
0.0' FROM STA. 317+50 TO STA. 325+00
0.0' FROM STA. 353+00 TO STA. 364+00
0.5' FROM STA. 368+00 TO STA. 369+00
0.5' FROM STA. 374+00 TO STA. 375+00
0.5' FROM STA. 394+00 TO STA. 395+00
0.0' FROM STA. 416+50 TO STA. 419+00
0.0' FROM STA. 430+00 TO STA. 435+00
0.5' FROM STA. 435+00 TO STA 441+50
0.0' FROM STA. 441+50 TO STA. 446+50
0.0' FROM STA. 462+00 TO STA. 465+50
0.0' FROM STA. 485+50 TO STA. 501+50

STATION RIGHT
0.5' FROM STA. 65+50 TO STA. 66+50
0.5' FROM STA. 73+00 TO STA. 80+00
0.0' FROM STA. 88+50 TO STA. 94+00
0.5' FROM STA. 94+00 TO STA. 104+00
0.5' FROM STA. 122+50 TO STA. 131+00
0.0' FROM STA. 144+00 TO STA. 147+50
0.5' FROM STA. 151+50 TO STA. 153+50
0.0' FROM STA. 240+50 TO STA. 247+00
0.5' FROM STA. 276+50 TO STA. 277+50
0.5' FROM STA. 276+50 TO STA. 277+50
0.5' FROM STA. 282+00 TO STA. 282+50
0.5' FROM STA. 292+50 TO STA. 293+00
0.5' FROM STA. 300+50 TO STA. 306+50
0.0' FROM STA. 306+50 TO STA. 308+00
0.0' FROM STA. 363+00 TO STA. 364+50
0.5' FROM STA. 376+50 TO STA. 377+50
0.5' FROM STA. 384+50 TO STA. 385+00
0.5' FROM STA. 397+00 TO STA. 398+50
0.0' FROM STA. 408+50 TO STA. 409+50
0.0' FROM STA. 414+50 TO STA. 417+50
0.0' FROM STA. 462+00 TO STA. 465+50
0.5' FROM STA. 483+00 TO STA. 484+50
0.0' FROM STA. 490+50 TO STA. 492+50
0.0' FROM STA. 494+50 TO STA. 500+00
0.0' FROM STA. 500+00 TO STA. 501+50
0.0' FROM STA. 503+00 TO STA. 504+00

⑤ ASPHALT SHOULDER WIDTH VARIATION
3.0' FROM STA. 192+90 RT TO STA 196+60 RT
3.0' FROM STA. 193+70 LT TO STA. 197+40 LT
5.0' FROM STA. 261+30 RT TO STA. 265+65 RT
5.0' FROM STA, 261+75 LT TO STA. 266+15 LT
3.0' FROM STA. 392+90 RT TO STA. 394+63 RT
3.0' FROM STA. 396+27 RT TO STA 396+95 RT
3.0' FROM STA. 394+35 LT TO STA. 394+63 LT
3.0' FROM STA. 396+27 LT TO STA. 397+35 LT
0.0' FROM STA. 494+50 LT TO STA. 500+00 LT

⑥ 10¾-INCH: STH 78 TO CTH KP (NORTH)
8¾-INCH: CTH KP (NORTH) TO USH 12

⑦ MAINTAIN 24' (TYP.) ASPHALTIC BINDER ENHANCED FRICTION SURFACE TREATMENT WIDTH THROUGH INTERSECTIONS

⑧ ROUT AND SEAL REMAINING ASPHALTIC PAVEMENT IN NON-MILLED AREAS (16' TYPICAL WIDTH-MAINLINE)

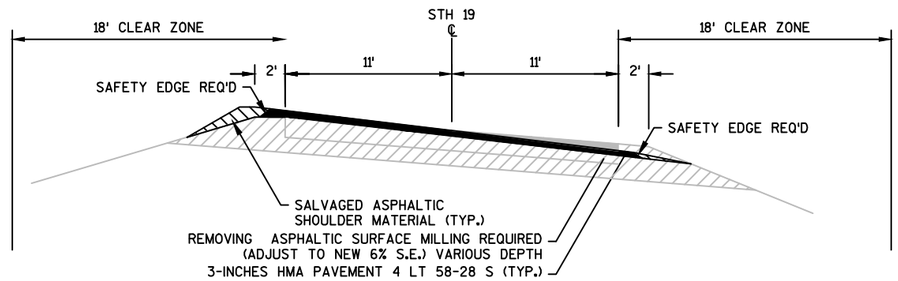

PROPSED TYPICAL SECTION - S.E. CORRECTION

STA. 403+70 TO STA. 414+00

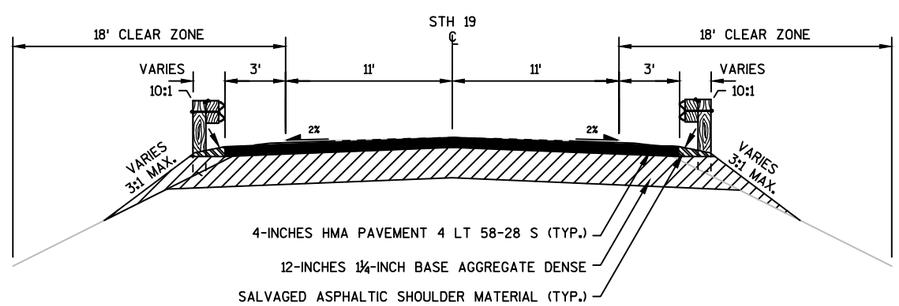

PROPOSED TYPICAL SECTION - CULVERT REPLACEMENT

STA. 394+70 TO STA. 396+14

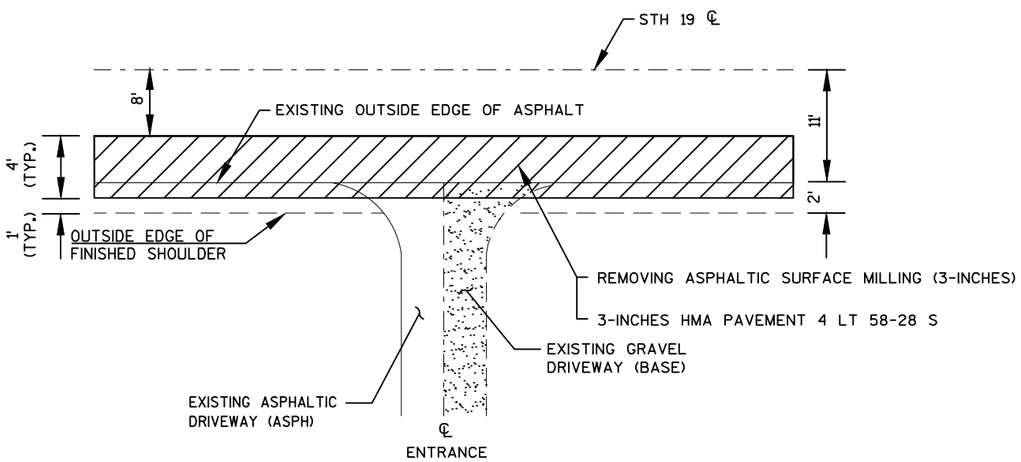

RURAL DRIVEWAY DETAIL

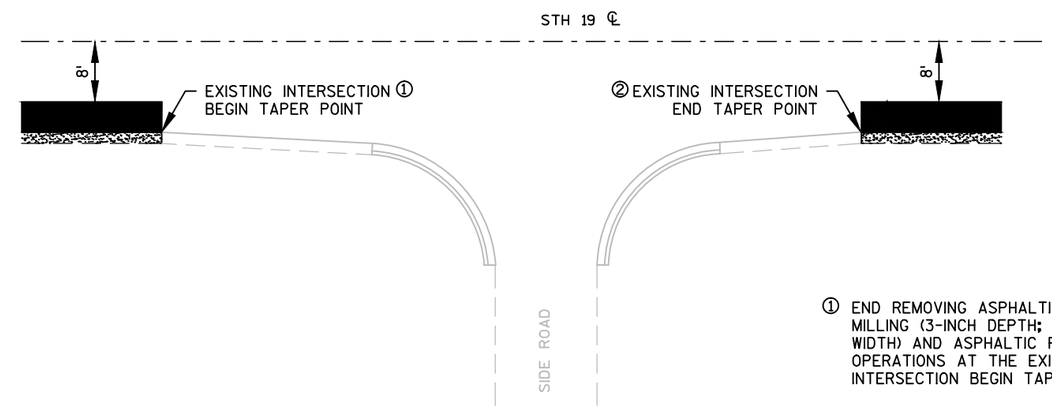

SIDE ROAD PAVING DETAIL

① END REMOVING ASPHALTIC SURFACE MILLING (3-INCH DEPTH; 4-FOOT WIDTH) AND ASPHALTIC PAVING OPERATIONS AT THE EXISTING INTERSECTION BEGIN TAPER POINT.

② BEGIN REMOVING ASPHALTIC SURFACE MILLING (3-INCH DEPTH; 4-FOOT WIDTH) AND ASPHALTIC PAVING OPERATIONS AT THE EXISTING INTERSECTION END TAPER POINT.

① LOCATIONS, WIDTHS, AND LENGTHS OF DISTRESSED PAVEMENT REPAIR AREAS TO BE DETERMINED BY THE ENGINEER.

② EDGE OF TYPICAL REMOVING ASPHALTIC SURFACE MILLING OPERATION (3-INCH DEPTH; 4-FOOT WIDTH). SEE TYPICALS FOR ADDITIONAL INFORMATION.

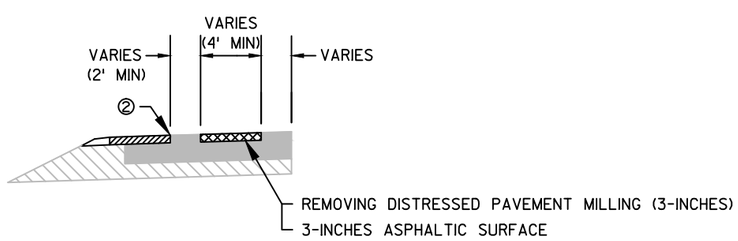

ELEVATION VIEW: SECTION A-A

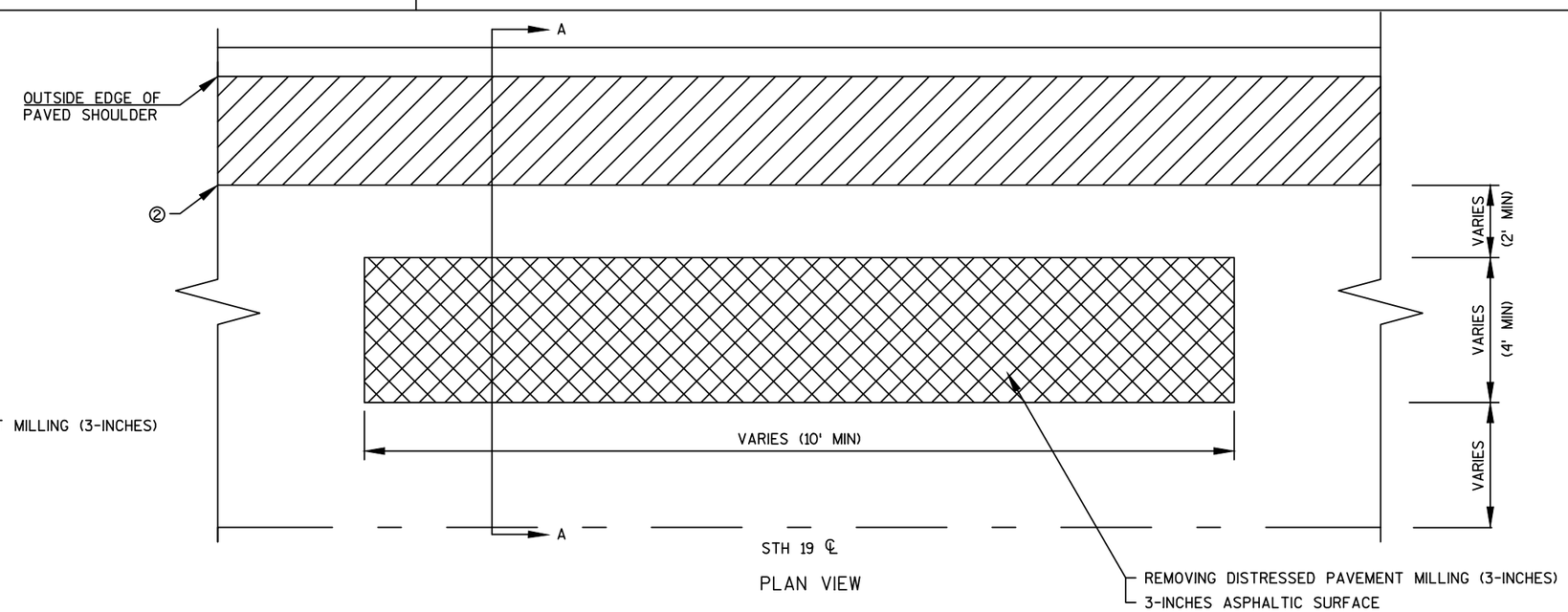

PLAN VIEW

MAINLINE DISTRESSED PAVEMENT REPAIR DETAIL

PROJECT NO:5145-00-60	HWY:STH 19	COUNTY:DANE	CONSTRUCTION DETAILS	SHEET 6	E

2

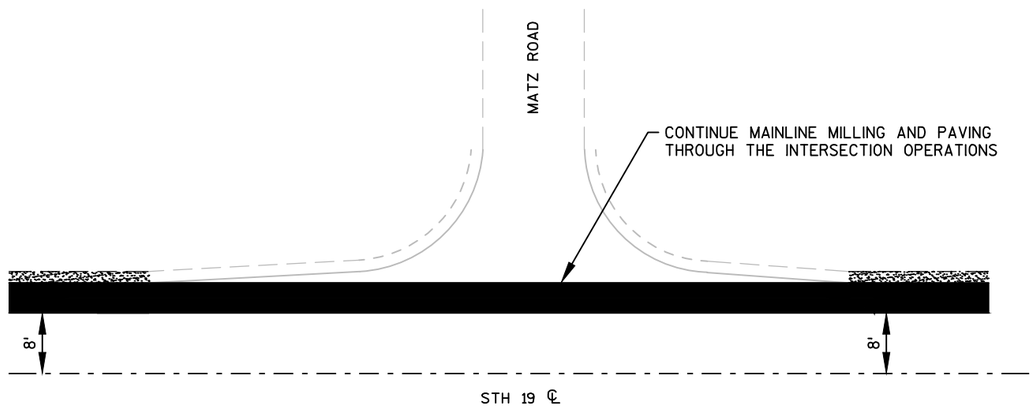

N

SIDE ROAD DISTRESSED PAVEMENT REPAIR DETAIL

MATZ ROAD (NORTH) - STA. 392+40

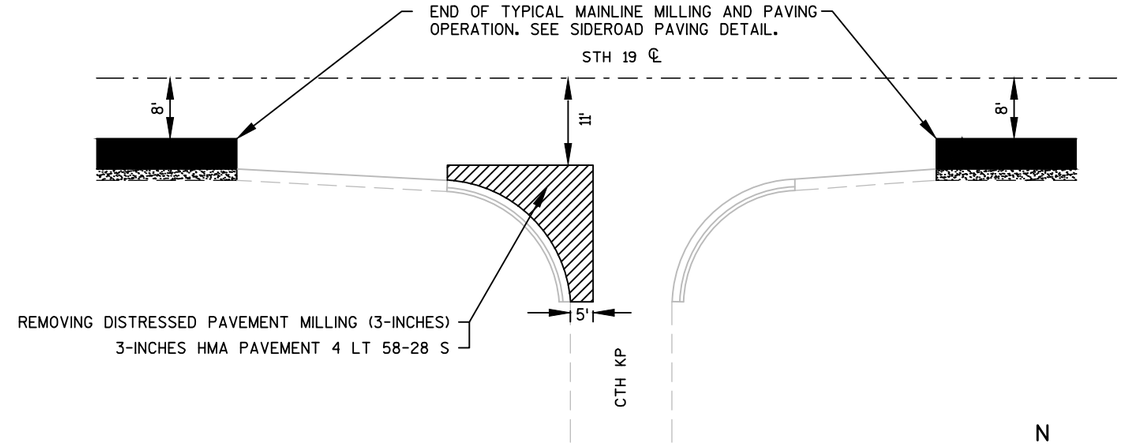

N

SIDE ROAD DISTRESSED PAVEMENT REPAIR DETAIL

CTH KP (SOUTH) - STA. 232+32

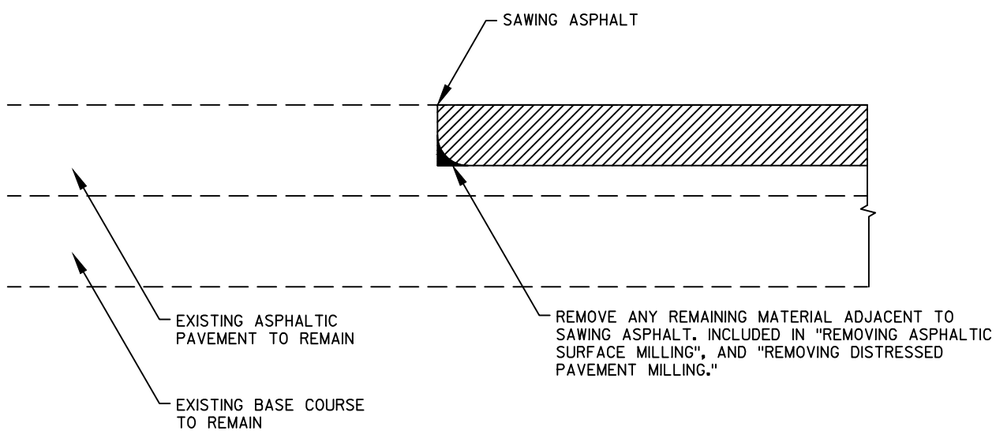

BEGIN/END MILLING OPERATIONS DETAIL

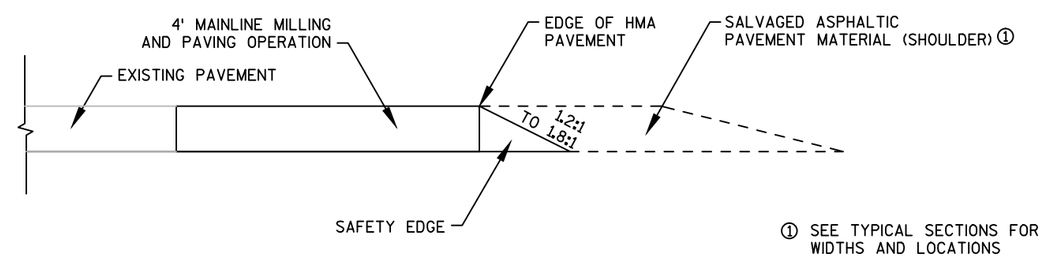

SAFETY EDGE DETAIL

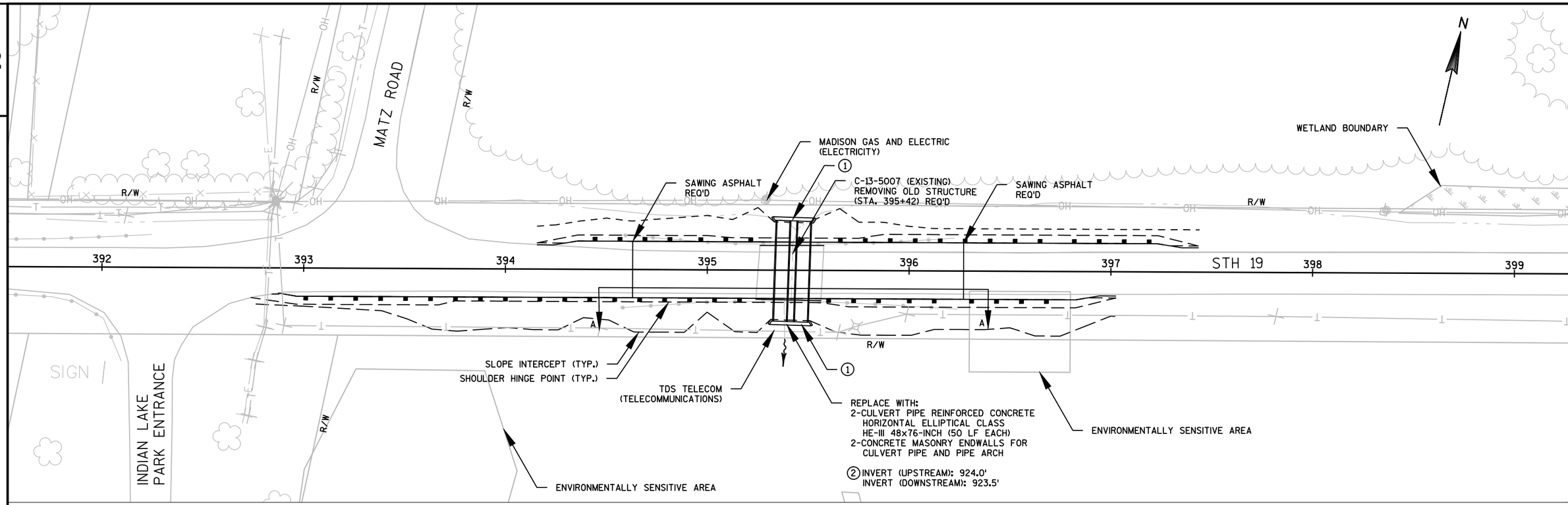

1 REFER TO STANDARD DETAIL DRAWING "CONCRETE MASONRY ENDWALLS FOR CULVERT PIPE AND PIPE ARCH" FOR CONCRETE MASONRY ENDWALL DETAILS (D-48")

2 REFER TO CROSS SECTIONS FOR ADDITIONAL INFORMATION

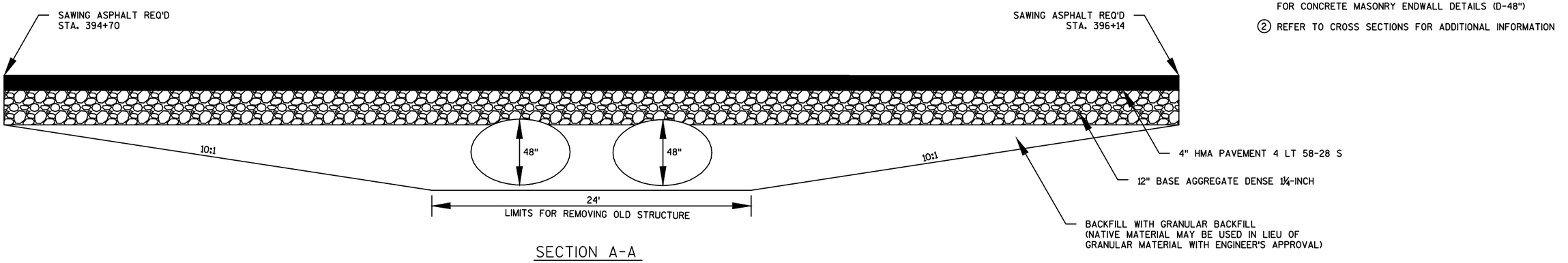

SECTION A-A

C-13-5007 CULVERT REPLACEMENT DETAIL

PROJECT NO:5145-00-60	HWY:STH 19	COUNTY:DANE	CONSTRUCTION DETAILS - C-13-5007 REPLACEMENT	SHEET 8	E

GENERAL NOTES

POSTS 1 THROUGH 3 ARE CONTROLLED RELEASE TERMINAL (CRT) POSTS. ALL OTHER POSTS SHALL BE WOOD OR STEEL.

REFER TO SDD "MIDWEST GUARDRAIL SYSTEM (MGS) GUARDRAIL" FOR ADDITIONAL INFORMATION.

2

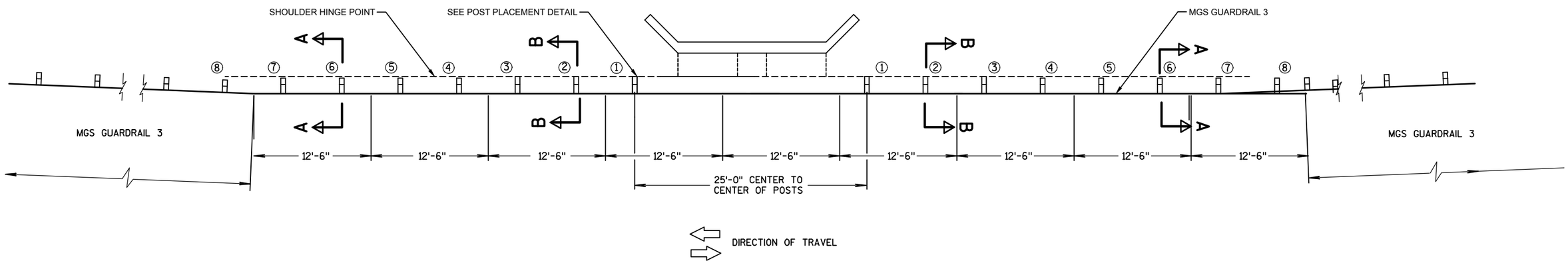

PLAN VIEW

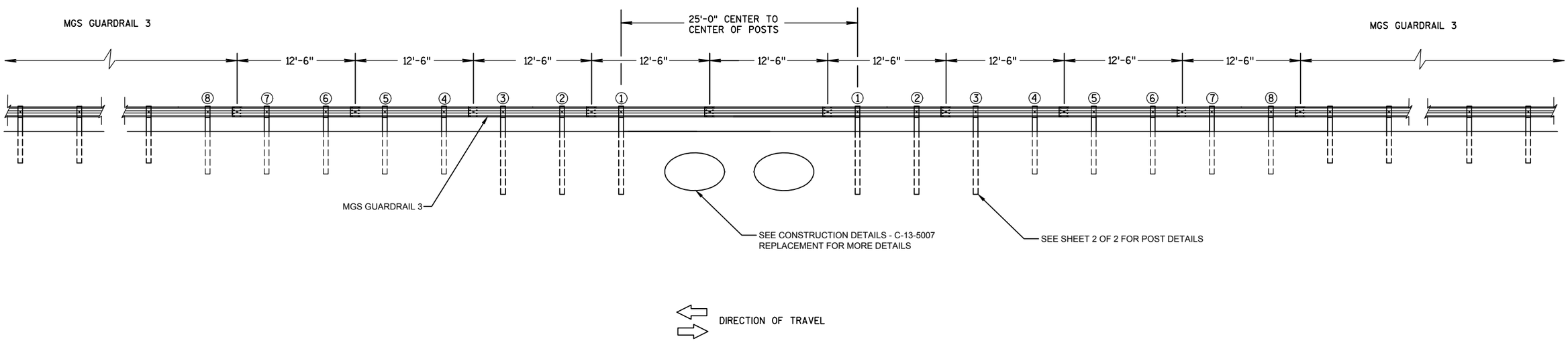

ELEVATION VIEW

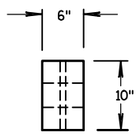

PLAN VIEW

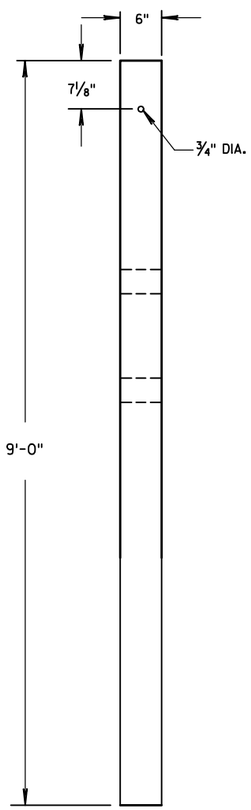

FRONT VIEW

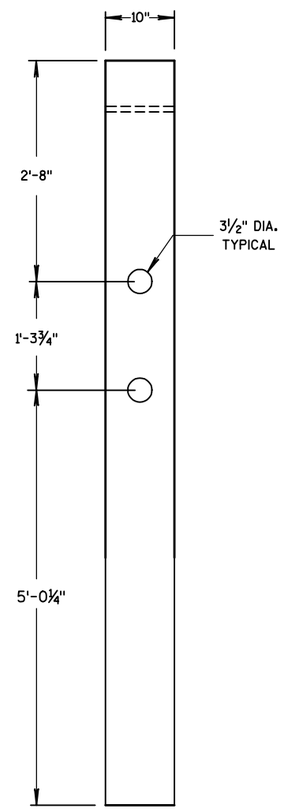

SIDE VIEW

CONTROLLED RELEASE TERMINAL (CRT) WOOD POST

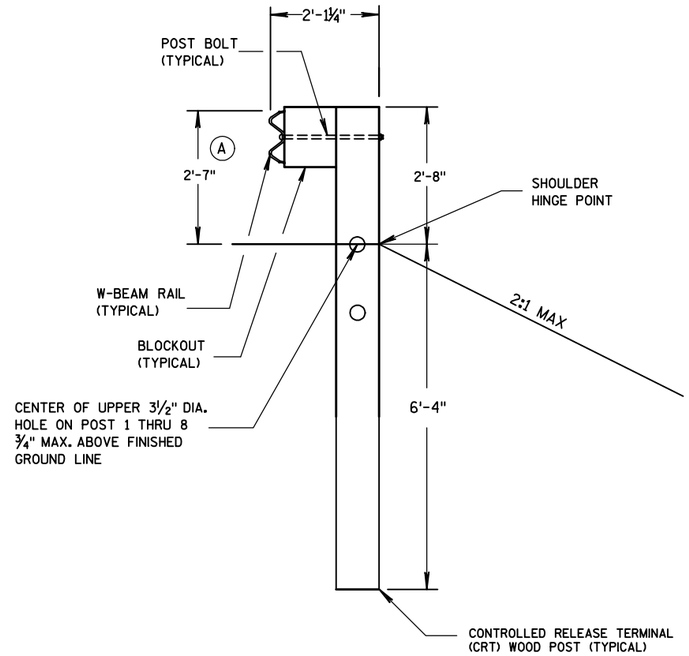

SECTION B-B

POSTS NO. 1-3

SEE OTHER DETAILS

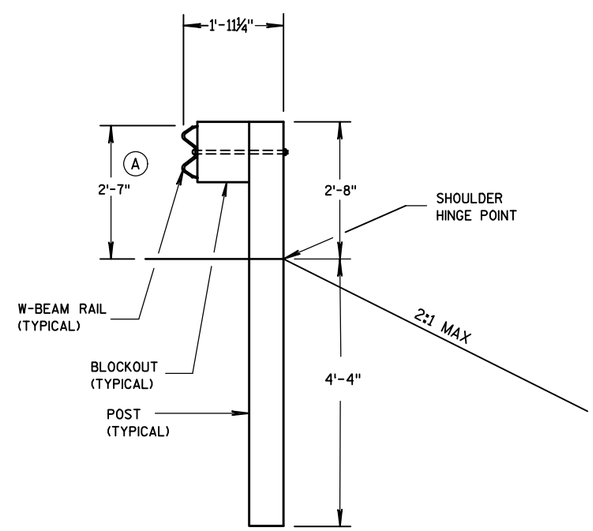

SECTION A-A

POSTS NO. 4-8

SEE OTHER DETAILS

GENERAL NOTES

(A) TOLERANCE FOR TOP OF W-BEAM RAIL IS ± 1".

REFER TO SDD "MIDWEST GUARDRAIL SYSTEM (MGS) GUARDRAIL" FOR ADDITIONAL INFORMATION.

2

STA. 193+20.30 RT - STA. 193+73.40 RT - MGS GUARDRAIL TERMINAL EAT
STA. 193+73.40 RT - STA. 194+60.90 RT - MGS GUARDRAIL 3 HS
STA. 194+60.90 RT - STA. 195+00.30 RT - MGS THRIE BEAM TRANSITION

STA. 195+25.90 RT - STA. 195+65.30 RT - MGS THRIE BEAM TRANSITION
STA. 195+65.30 RT - STA. 195+77.80 RT - MGS GUARDRAIL 3 HS
STA. 195+77.80 RT - STA. 196+30.90 RT - MGS GUARDRAIL TERMINAL EAT

STA. 194+02.30 LT - STA. 194+55.40 LT - MGS GUARDRAIL TERMINAL EAT
STA. 194+55.40 LT - STA. 194+67.90 LT - MGS GUARDRAIL 3 HS
STA. 194+67.90 LT - STA. 195+07.30 LT - MGS THRIE BEAM TRANSITION

STA. 195+32.30 LT - STA. 195+71.70 LT - MGS THRIE BEAM TRANSITION
STA. 195+71.70 LT - STA. 196+59.20 LT - MGS GUARDRAIL 3 HS
STA. 196+59.20 LT - STA. 197+12.30 LT - MGS GUARDRAIL TERMINAL EAT

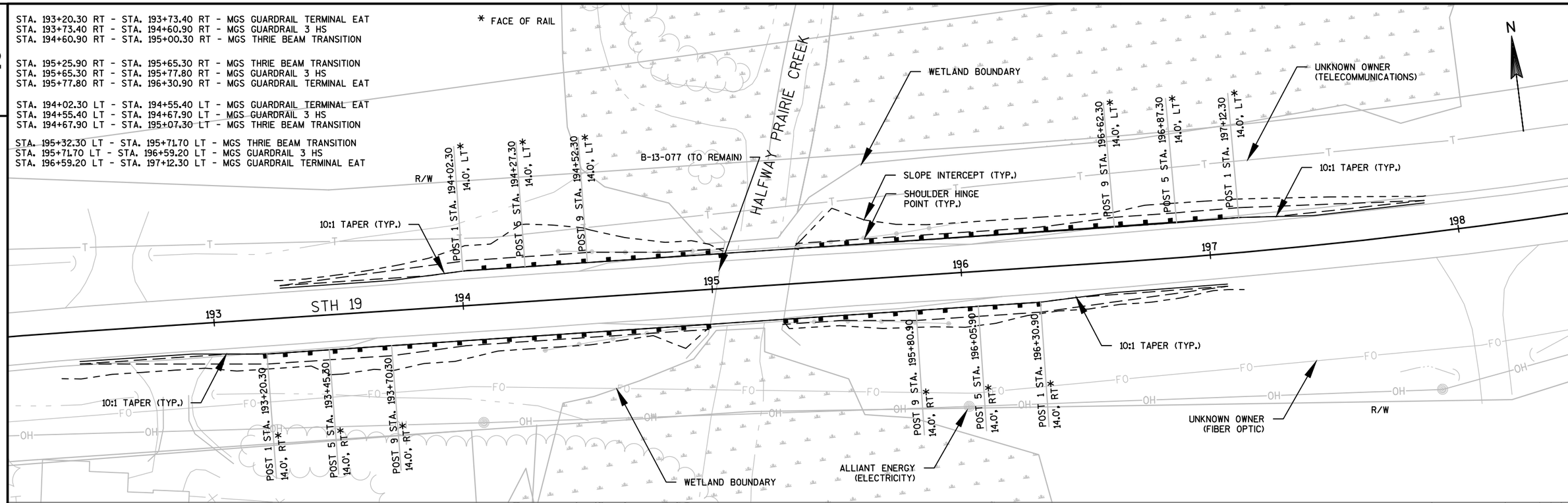

2

STA. 261+88.30 RT - STA. 262+41.40 RT - MGS GUARDRAIL TERMINAL EAT
STA. 262+41.40 RT - STA. 263+03.90 RT - MGS GUARDRAIL 3
STA. 263+03.90 RT - STA. 263+41.40 RT - MGS THRIE BEAM TRANSITION

STA. 264+04.00 RT - STA. 264+41.50 RT - MGS THRIE BEAM TRANSITION
STA. 264+41.50 RT - STA. 264+54.00 RT - MGS GUARDRAIL 3
STA. 264+54.00 RT - STA. 265+07.10 RT - MGS GUARDRAIL TERMINAL EAT

STA. 262+37.50 LT - STA. 262+90.60 LT - MGS GUARDRAIL TERMINAL EAT
STA. 262+60.90 LT - STA. 263+03.10 LT - MGS GUARDRAIL 3
STA. 263+03.90 LT - STA. 263+40.60 LT - MGS THRIE BEAM TRANSITION

STA. 264+04.20 LT - STA. 264+41.70 LT - MGS THRIE BEAM TRANSITION
STA. 264+41.70 LT - STA. 265+04.20 LT - MGS GUARDRAIL 3
STA. 265+04.20 LT - STA. 265+57.30 LT - MGS GUARDRAIL TERMINAL EAT

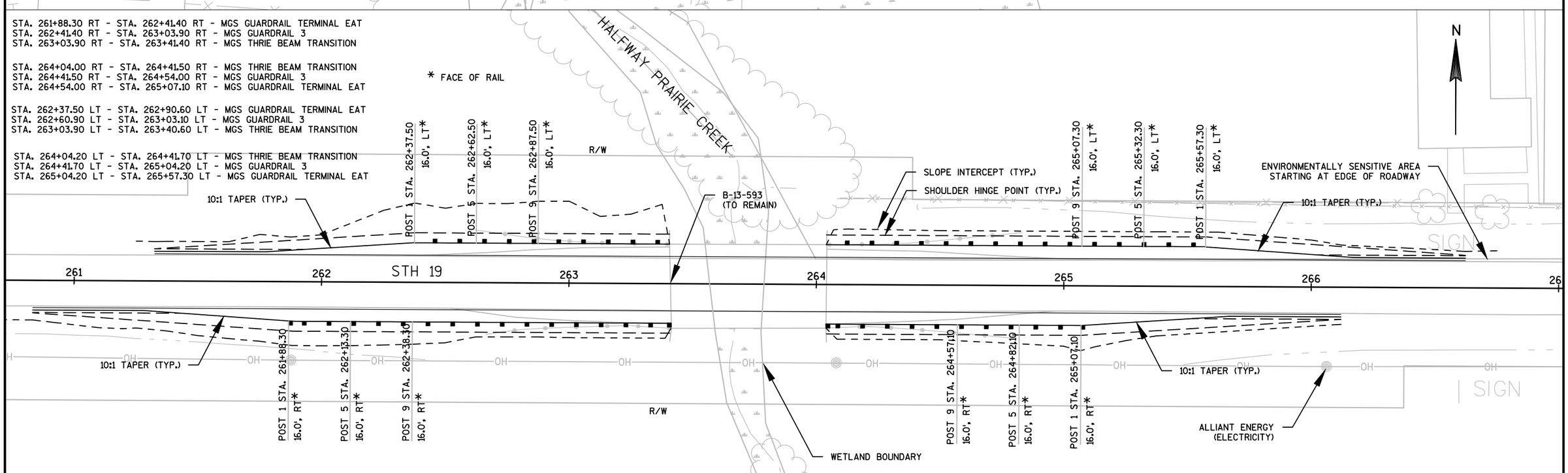

PROJECT NO:5145-00-60	HWY:STH 19	COUNTY:DANE	GUARDRAIL LAYOUT DETAILS	SHEET 11	E

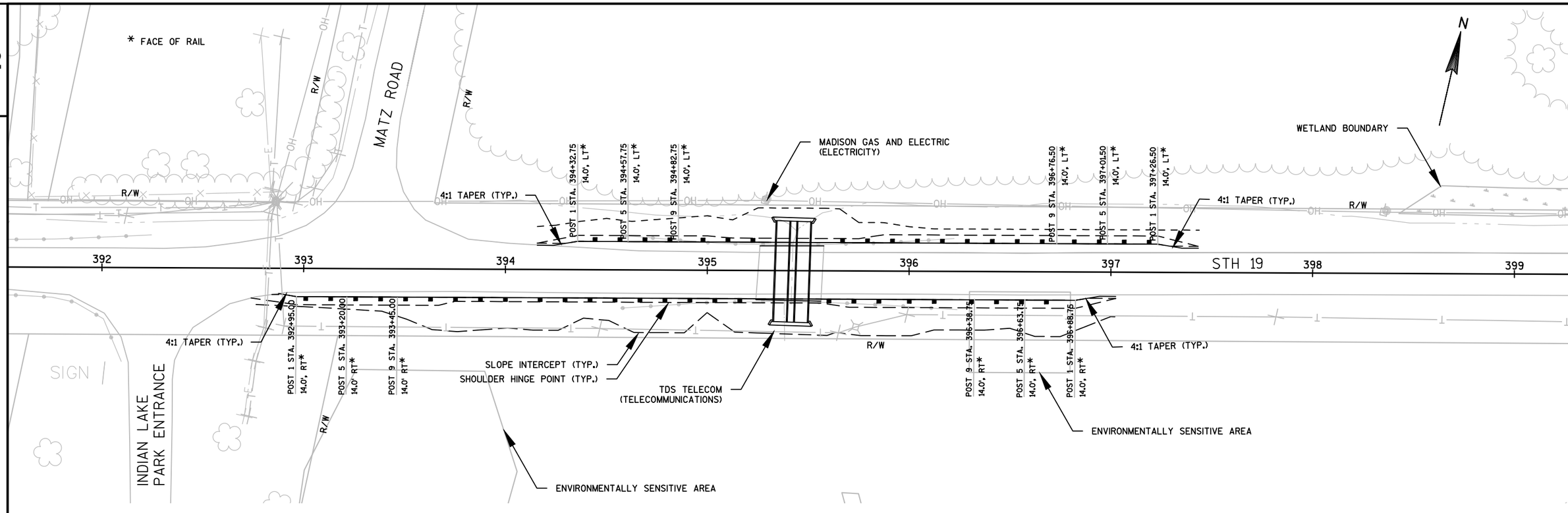

STA. 394+32.75 LT - STA. 394+85.88 LT - MGS GUARDRAIL TERMINAL EAT
STA. 394+85.88 LT - STA. 395+98.38 LT - MGS GUARDRAIL 3 L
STA. 395+98.38 LT - STA. 396+73.38 LT - MGS GUARDRAIL 3
STA. 396+73.38 LT - STA. 397+26.50 LT - MGS GUARDRAIL TERMINAL EAT

STA. 392+95.00 RT - STA. 393+48.13 RT - MGS GUARDRAIL TERMINAL EAT
STA. 393+48.13 RT - STA. 394+85.63 RT - MGS GUARDRAIL 3
STA. 394+85.63 RT - STA. 395+98.13 RT - MGS GUARDRAIL 3 L
STA. 395+98.13 RT - STA. 396+35.63 RT - MGS GUARDRAIL 3 HS
STA. 396+35.63 RT - STA. 396+88.75 RT - MGS GUARDRAIL TERMINAL EAT

PROJECT NO:5145-00-60	HWY:STH 19	COUNTY:DANE	GUARDRAIL LAYOUT DETAILS	SHEET 12	E

NOTE:
FINAL LOCATIONS OF W14-3 NO PASSING ZONE PERMENANTS TO BE DETERMINED AFTER NO PASSING ZONE SPOTTING IS COMPLETE.

SIGNING LEGEND
(XX-XX) DENOTES SIGN NUMBER
PROPOSED SIGN(S) MOUNTED ON POST
PROPOSED SIGNS MOUNTED ON 2 POSTS

N

PROJECT NO:5145-00-60	HWY:STH 19	COUNTY:DANE	PERMANENT SIGNING	SHEET 13	E

2

NOTE:
FINAL LOCATIONS OF W14-3 NO PASSING ZONE PERMENANTS TO BE DETERMINED AFTER NO PASSING ZONE SPOTTING IS COMPLETE

SIGNING LEGEND

- (XX-XX) DENOTES SIGN NUMBER
- PROPOSED SIGN(S) MOUNTED ON POST
- PROPOSED SIGNS MOUNTED ON 2 POSTS

2

PROJECT NO:5145-00-60	HWY:STH 19	COUNTY:DANE	PERMANENT SIGNING	SHEET 14	E

2

NOTE:
FINAL LOCATIONS OF W14-3 NO PASSING ZONE PERMENANTS TO BE DETERMINED AFTER NO PASSING ZONE SPOTTING IS COMPLETE

SIGNING LEGEND

(XX-XX) DENOTES SIGN NUMBER

PROPOSED SIGN(S) MOUNTED ON POST

PROPOSED SIGNS MOUNTED ON 2 POSTS

N

2

03-01 REMOVE W11-5 30"X30"

03-02 JCT COUNTY F REMOVE JCT COUNTY F J1-1 24"X39"

03-03 50 M.P.H. REMOVE W1-2L 30"X30"

03-04 NO PASSING ZONE REMOVE NO PASSING ZONE W14-3 48"X36"

03-05 STOP REMOVE STOP R1-1 30"X30"

PROJECT NO:5145-00-60	HWY:STH 19	COUNTY:DANE	PERMANENT SIGNING	SHEET 15	E

FILE NAME : N:\PDS\C3D\51450030\SHEETSPLAN\021101-SP.DWG
LAYOUT NAME - SHEET - (37)
PLOT DATE : 10/4/2016 5:37 PM PLOT BY : RICE, BRIAN J PLOT NAME : PLOT SCALE : 1 IN:200 FT

WISDOT/CADDS SHEET 42

SIGNING LEGEND

(XX-XX) DENOTES SIGN NUMBER

PROPOSED SIGN(S) MOUNTED ON POST

PROPOSED SIGNS MOUNTED ON 2 POSTS

N

2

NOTE:
FINAL LOCATIONS OF W14-3 NO PASSING ZONE PERMENANTS TO BE DETERMINED AFTER NO PASSING ZONE SPOTTING IS COMPLETE

SIGNING LEGEND

(XX-XX) DENOTES SIGN NUMBER

PROPOSED SIGN(S) MOUNTED ON POST

PROPOSED SIGNS MOUNTED ON 2 POSTS

N

2

PROJECT NO:5145-00-60	HWY:STH 19	COUNTY:DANE	PERMANENT SIGNING	SHEET 17	E

FILE NAME : N:\PDS\C3D\51450030\SHEETSPLAN\021101-SP.DWG
LAYOUT NAME - SHEET - (39)
PLOT DATE : 10/4/2016 5:37 PM PLOT BY : RICE, BRIAN J PLOT NAME : PLOT SCALE : 1 IN:200 FT

WISDOT/CADDS SHEET 42

2

SIGNING LEGEND

(XX-XX) DENOTES SIGN NUMBER

PROPOSED SIGN(S) MOUNTED ON POST

PROPOSED SIGNS MOUNTED ON 2 POSTS

06-01

REMOVE

S3-1
36"X36"

06-02

50
M.P.H.
REMOVE

W1-2L
30"X30"

06-05

REMOVE

W1-6
48"X24"

06-04

REMOVE

W1-6
48"X24"

REMOVE

06-03

2

PROJECT NO:5145-00-60	HWY:STH 19	COUNTY:DANE	PERMANENT SIGNING	SHEET 18	E

2

SIGNING LEGEND

(XX-XX) DENOTES SIGN NUMBER

PROPOSED SIGN(S) MOUNTED ON POST

PROPOSED SIGNS MOUNTED ON 2 POSTS

2

PROJECT NO:5145-00-60	HWY:STH 19	COUNTY:DANE	PERMANENT SIGNING	SHEET 19	E

FILE NAME : N:\PDS\C3D\51450030\SHEETSPLAN\021101-SP.DWG
LAYOUT NAME - 050206-PP2

PLOT DATE : 10/4/2016 5:37 PM PLOT BY : RICE, BRIAN J PLOT NAME : PLOT SCALE : 1 IN:200 FT

WISDOT/CADDS SHEET 42

2

NOTE:
FINAL LOCATIONS OF W14-3 NO PASSING ZONE PERMENANTS TO BE DETERMINED AFTER NO PASSING ZONE SPOTTING IS COMPLETE

SIGNING LEGEND
(XX-XX) DENOTES SIGN NUMBER
PROPOSED SIGN(S) MOUNTED ON POST
PROPOSED SIGNS MOUNTED ON 2 POSTS

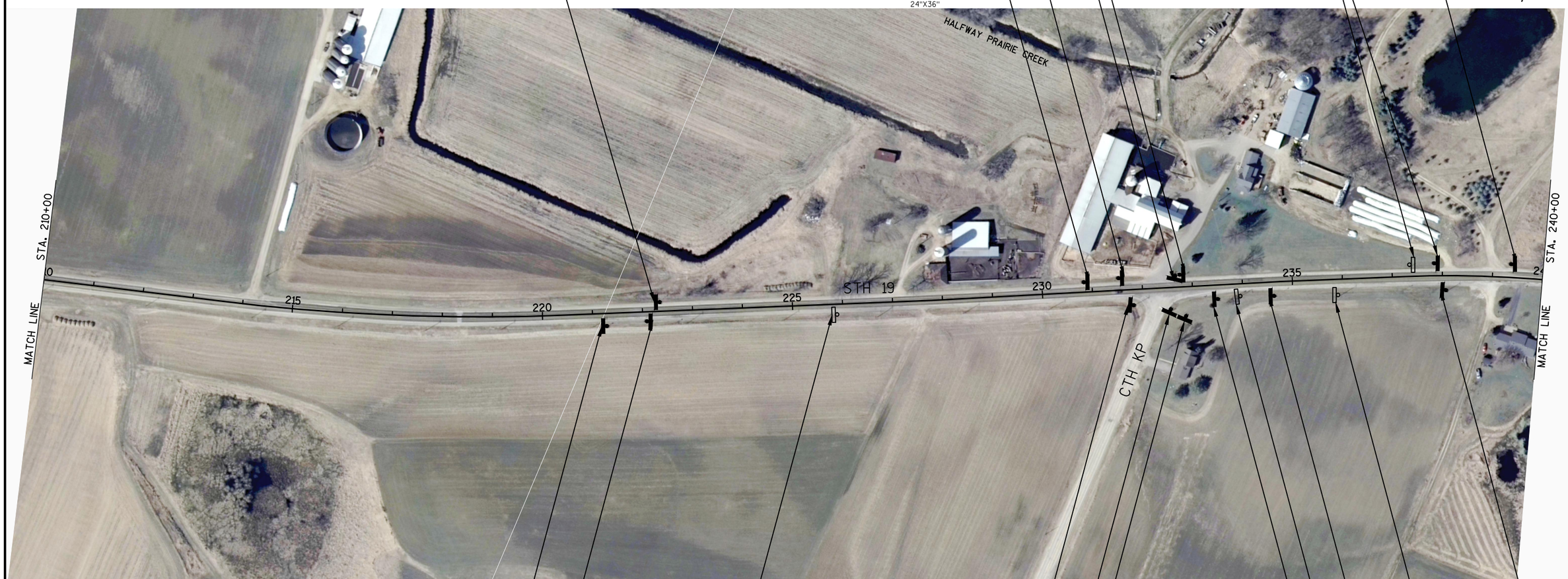

08-01 JCT COUNTY KP J1-1 24"X39" REMOVE

08-02 NO PASSING ZONE W14-3 48"X36" REMOVE

08-03 NO PASSING ZONE W14-3 48"X36" REMOVE

08-04 SPEED LIMIT 45 REMOVE

08-05 WEST 19 J4-1 24"X36" REMOVE

08-06 UNIT 1 BELOW 11 SPONSOR ROADSIDE 4 WHEELERS I55-56 30"X36" REMOVE

08-07 COUNTY KP J13-1 24"X45" REMOVE

08-08 W1-7 48"X24" REMOVE

08-09 STOP R1-1 30"X30" REMOVE

08-10 COUNTY KP J13-1 24"X45" REMOVE

08-11 19 COUNTY KP J13-2 48"X45" REMOVE

08-12 45 M.P.H. REMOVE

08-13 W2-2 30"X30" REMOVE

08-14 EAST 19 COUNTY KP J4-2 48"X36"

08-15 SPEED LIMIT 45 W3-5 36"X36"

08-16 EAST 19 COUNTY KP REMOVE

08-17 SPEED LIMIT 55 REMOVE; SPEED LIMIT 55 R2-1 24"X30"

08-18 SPEED LIMIT 45 REMOVE; SPEED LIMIT 45 R2-1 24"X30"

2

PROJECT NO:5145-00-60	HWY:STH 19	COUNTY:DANE	PERMANENT SIGNING	SHEET 20	E

2

NOTE:
FINAL LOCATIONS OF W14-3 NO PASSING ZONE PERMENANTS TO BE DETERMINED AFTER NO PASSING ZONE SPOTTING IS COMPLETE

SIGNING LEGEND

- (XX-XX) DENOTES SIGN NUMBER
- PROPOSED SIGN(S) MOUNTED ON POST
- PROPOSED SIGNS MOUNTED ON 2 POSTS

09-01 — COUNTY KP REMOVE; COUNTY KP J13-1 24"X45"

09-02 — REMOVE; S3-1 36"X36"

09-03 — SPEED LIMIT 45 REMOVE; SPEED LIMIT 45 R2-1 24"X30"

09-04 — REMOVE

09-05 — NO PASSING ZONE REMOVE; NO PASSING ZONE W14-3 48"X36"

09-06 — REMOVE; S3-1 36"X36"

09-07 — Marxville UNINCORPORATED REMOVE; Marxville UNINCORPORATED I2-3-U 66"X24" SEE SIGN PLATE DETAIL

09-08 — SPEED LIMIT 45 REMOVE; SPEED LIMIT 45 R2-1 24"X30"

09-09 — SPEED LIMIT 45 REMOVE; SPEED LIMIT 45 R2-1 24"X30"

09-10 — REMOVE; W5-52L 12"X36"

09-11 — REMOVE; W5-52R 12"X36"

09-12 — REMOVE; W5-52R 12"X36"

09-13 — REMOVE; W5-52L 12"X36"

09-14 — COUNTY KP REMOVE; COUNTY KP J13-1 24"X45"

N

2

PROJECT NO:5145-00-60	HWY:STH 19	COUNTY:DANE	PERMANENT SIGNING	SHEET 21	E

NOTE:
FINAL LOCATIONS OF W14-3 NO PASSING ZONE PERMENANTS TO BE DETERMINED AFTER NO PASSING ZONE SPOTTING IS COMPLETE

SIGNING LEGEND
(XX-XX) DENOTES SIGN NUMBER
PROPOSED SIGN(S) MOUNTED ON POST
PROPOSED SIGNS MOUNTED ON 2 POSTS

N

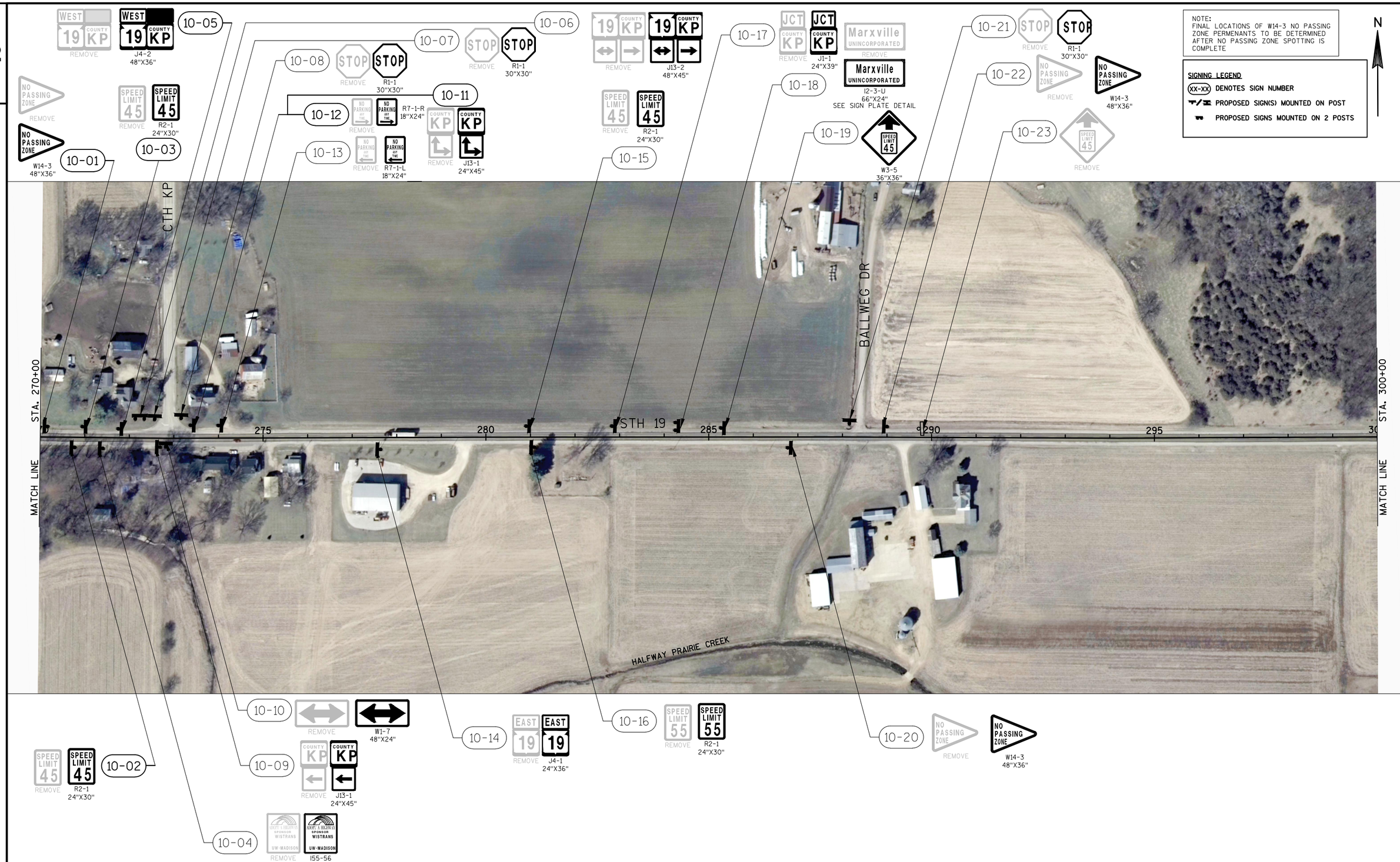

PROJECT NO:5145-00-60	HWY:STH 19	COUNTY:DANE	PERMANENT SIGNING	SHEET 22	E

FILE NAME : N:\PDS\C3D\51450030\SHEETSPLAN\021101-SP.DWG
LAYOUT NAME - SHEET - (44)
PLOT DATE : 10/4/2016 5:37 PM PLOT BY : RICE, BRIAN J PLOT NAME : PLOT SCALE : 1 IN:200 FT

NOTE:
FINAL LOCATIONS OF W14-3 NO PASSING ZONE PERMENANTS TO BE DETERMINED AFTER NO PASSING ZONE SPOTTING IS COMPLETE

SIGNING LEGEND

- (XX-XX) DENOTES SIGN NUMBER
- PROPOSED SIGN(S) MOUNTED ON POST
- PROPOSED SIGNS MOUNTED ON 2 POSTS

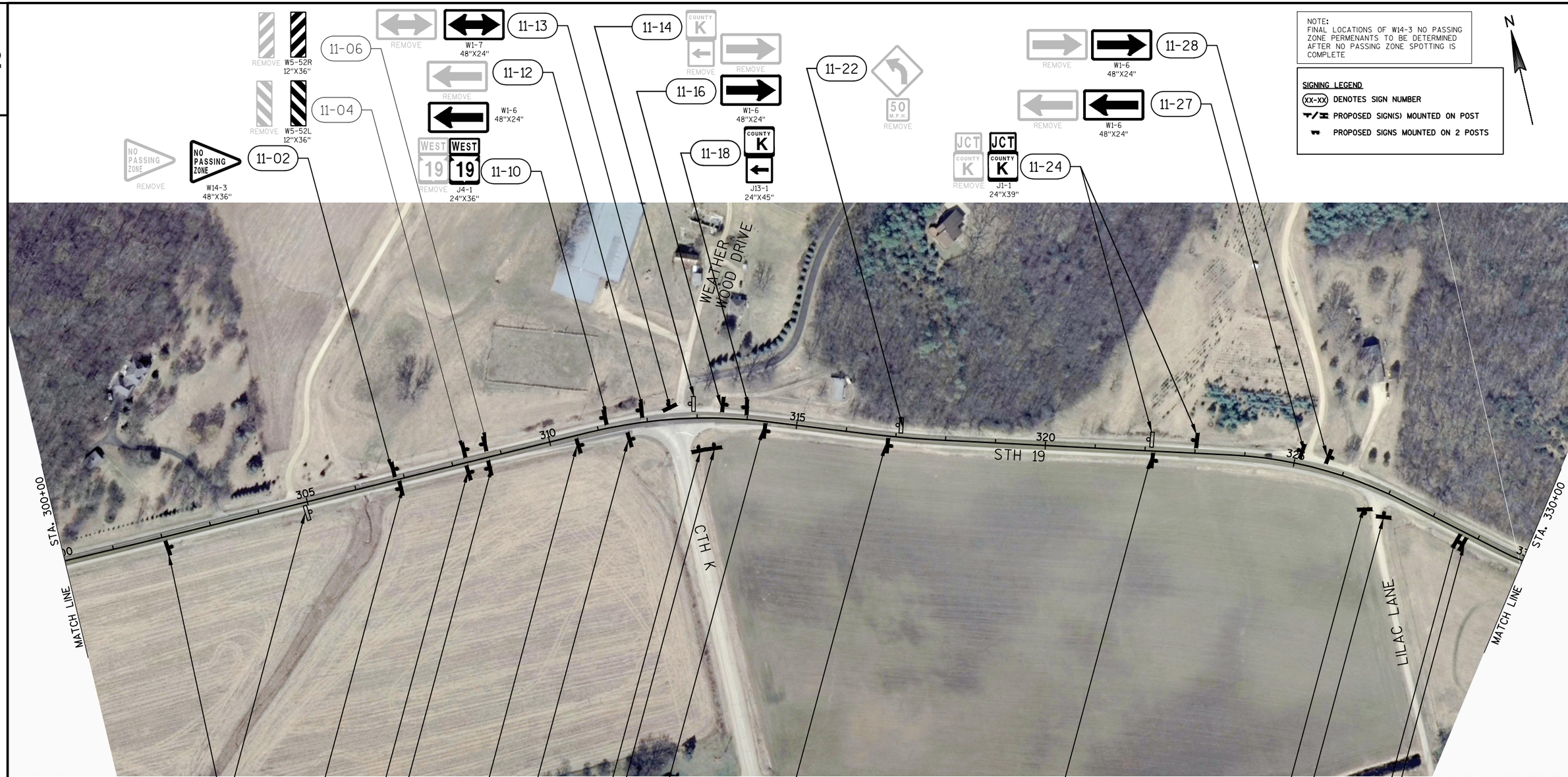

PROJECT NO:5145-00-60	HWY:STH 19	COUNTY:DANE	PERMANENT SIGNING	SHEET 23	E

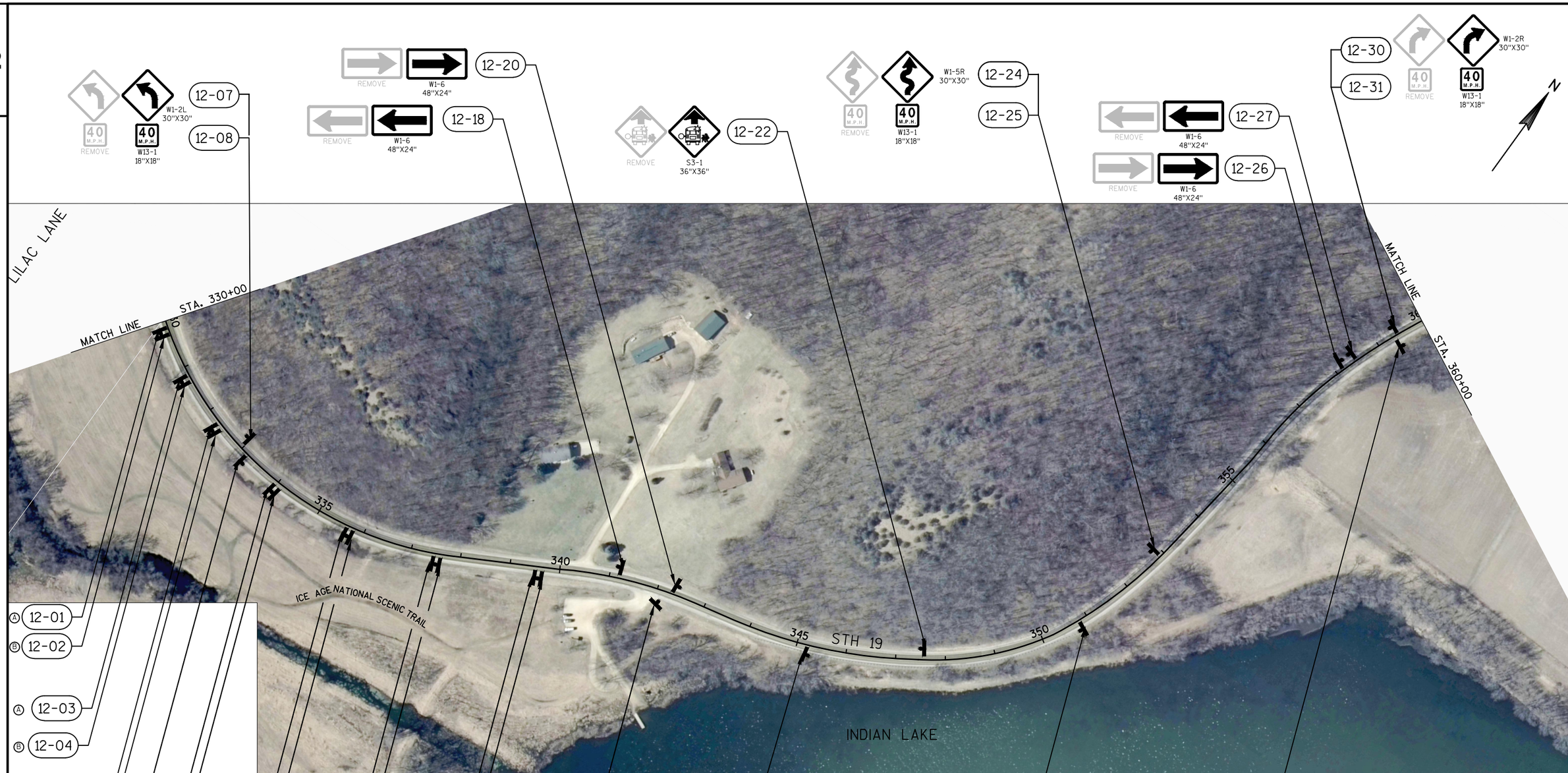

NOTE:
FINAL LOCATIONS OF W14-3 NO PASSING ZONE PERMENANTS TO BE DETERMINED AFTER NO PASSING ZONE SPOTTING IS COMPLETE

SIGNING LEGEND

- (XX-XX) DENOTES SIGN NUMBER
- PROPOSED SIGN(S) MOUNTED ON POST
- PROPOSED SIGNS MOUNTED ON 2 POSTS

PROJECT NO:5145-00-60	HWY:STH 19	COUNTY:DANE	PERMANENT SIGNING	SHEET 24	E

SIGNING LEGEND

(XX-XX) DENOTES SIGN NUMBER

PROPOSED SIGN(S) MOUNTED ON POST

PROPOSED SIGNS MOUNTED ON 2 POSTS

PROJECT NO:5145-00-60	HWY:STH 19	COUNTY:DANE	PERMANENT SIGNING	SHEET 25	E

PROJECT NO:5145-00-60	HWY:STH 19	COUNTY:DANE	PERMANENT SIGNING	SHEET 26	E

FILE NAME : N:\PDS\C3D\51450030\SHEETSPLAN\021101-SP.DWG
LAYOUT NAME - SHEET - (48)
PLOT DATE : 10/4/2016 5:37 PM PLOT BY : RICE, BRIAN J PLOT NAME : PLOT SCALE : 1 IN:200 FT

15-01 REMOVE W1-6 48"X24"

15-02 REMOVE W1-6 48"X24"

15-03 REMOVE W1-6 48"X24"

15-04 REMOVE S3-1 36"X36"

15-05 REMOVE 40 M.P.H. W13-1 18"X18" W1-4R 30"X30"

15-06

15-07 35 M.P.H. REMOVE 35 M.P.H. W13-1 18"X18" W1-4R 30"X30"

15-08

15-09 REMOVE W11-6 30"X30"

15-10 REMOVE W1-6 48"X24"

15-11 REMOVE W1-6 48"X24"

15-12 REMOVE W1-6 48"X24"

15-13 STOP REMOVE STOP R1-1 30"X30"

15-14 REMOVE W1-6 48"X24"

NOTE:
FINAL LOCATIONS OF W14-3 NO PASSING ZONE PERMENANTS TO BE DETERMINED AFTER NO PASSING ZONE SPOTTING IS COMPLETE

SIGNING LEGEND

- (XX-XX) DENOTES SIGN NUMBER
- PROPOSED SIGN(S) MOUNTED ON POST
- PROPOSED SIGNS MOUNTED ON 2 POSTS

PROJECT NO:5145-00-60	HWY:STH 19	COUNTY:DANE	PERMANENT SIGNING	SHEET 27	E

2

NOTE:
FINAL LOCATIONS OF W14-3 NO PASSING ZONE PERMENANTS TO BE DETERMINED AFTER NO PASSING ZONE SPOTTING IS COMPLETE

SIGNING LEGEND

- (XX-XX) DENOTES SIGN NUMBER
- PROPOSED SIGN(S) MOUNTED ON POST
- PROPOSED SIGNS MOUNTED ON 2 POSTS

N

2

PROJECT NO:5145-00-60	HWY:STH 19	COUNTY:DANE	PERMANENT SIGNING	SHEET 28	E

FILE NAME : N:\PDS\C3D\51450030\SHEETSPLAN\021101-SP.DWG
LAYOUT NAME - SHEET - (50)
PLOT DATE : 10/4/2016 5:37 PM PLOT BY : RICE, BRIAN J PLOT NAME : PLOT SCALE : 1 IN:200 FT

WISDOT/CADDS SHEET 42

2

NOTE:
FINAL LOCATIONS OF W14-3 NO PASSING ZONE PERMENANTS TO BE DETERMINED AFTER NO PASSING ZONE SPOTTING IS COMPLETE

SIGNING LEGEND

- (XX-XX) DENOTES SIGN NUMBER
- PROPOSED SIGN(S) MOUNTED ON POST
- PROPOSED SIGNS MOUNTED ON 2 POSTS

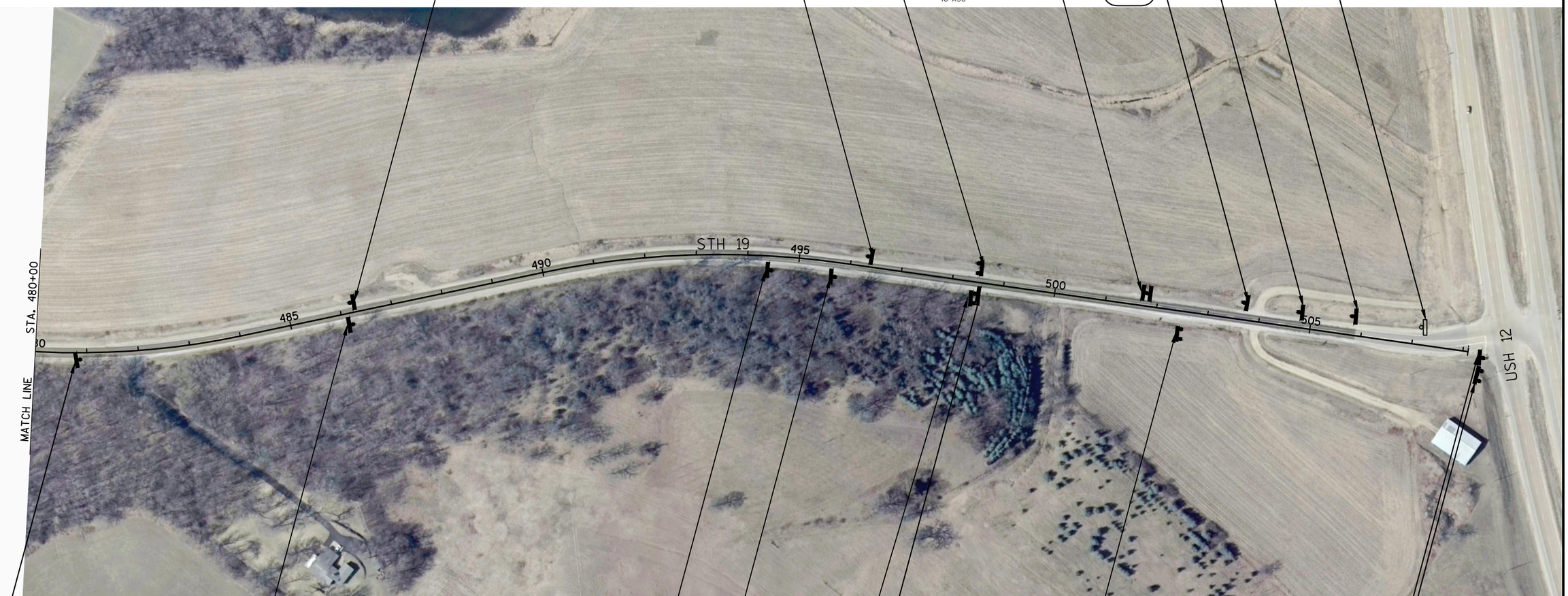

17-01 REMOVE; W1-6 48"X24"

17-02 REMOVE; W1-2R 30"X30"

17-03 REMOVE; 40 M.P.H.

17-04 W13-1 18"X18"; W1-2R 30"X30"

17-05 JCT 12 REMOVE; JCT 12 J1-1 24"X39"

17-06 REMOVE; W3-1 36"X36"

17-07 REMOVE; W1-2L 30"X30"

Mazomanie 13 REMOVE

Mazomanie 13 D2-1 84"X15" SEE SIGN PLATE DETAIL

17-08 WEST 12 EAST 12 EAST 19 REMOVE; WEST 12 EAST 12 EAST 19 J2-3 72"X57"

17-09 NO PASSING ZONE REMOVE; NO PASSING ZONE W14-3 48"X36"

17-10 NO PASSING ZONE W14-3 48"X36"

17-11 MAX 11' WIDTH; NEXT 10 MILES ESTR

17-13 Sauk City / Waunakee / Madison REMOVE; Sauk City / Waunakee / Madison D1-2 72"X36" SEE SIGN PLATE DETAIL

17-14 SPEED LIMIT 55 R2-1 24"X30"

17-15 ONE WAY REMOVE; ONE WAY R6-1-R 36"X12"

17-16 WEST 19 REMOVE; WEST 19 J4-1 24"X36"

17-17 REMOVE

17-18 WEST 12 EAST 12 EAST 19 REMOVE; WEST 12 EAST 12 EAST 19 J3-3 72"X57"

17-19 STOP REMOVE; STOP R1-1 36"X36"

17-20 DIVIDED HIGHWAY REMOVE; DIVIDED HIGHWAY R6-3 30"X24"

17-21

2

PROJECT NO:5145-00-60	HWY:STH 19	COUNTY:DANE	PERMANENT SIGNING	SHEET 29	E

2

LEGEND

EROSION MAT CLASS III TYPE C

SILT FENCE

N

WETLAND BOUNDARY

UNKNOWN OWNER (TELECOMMUNICATIONS)

HALFWAY PRAIRIE CREEK

B-13-077 (TO REMAIN)

SLOPE INTERSECPT (TYP.)

SHOULDER HINGE POINT (TYP.)

R/W

STH 19

193 194 195 196 197 198

UNKNOWN OWNER (FIBER OPTIC)

R/W

ALLIANT ENERGY (ELECTRICITY)

WETLAND BOUNDARY

2

LEGEND

EROSION MAT CLASS III TYPE C

SILT FENCE

N

HALFWAY PRAIRIE CREEK

R/W

SLOPE INTERSECPT (TYP.)

SHOULDER HINGE POINT (TYP.)

ENVIRONMENTALLY SENSITIVE AREA

B-13-593 (TO REMAIN)

261 262 STH 19 263 264 265 266 26

SIGN

R/W

ALLIANT ENERGY (ELECTRICITY)

WETLAND BOUNDARY

PROJECT NO:5145-00-60	HWY:STH 19	COUNTY:DANE	EROSION CONTROL	SHEET 30	E

FILE NAME : N:\PDS\C3D\51450030\SHEETSPLAN\022001-EC.DWG
LAYOUT NAME - SHEET - (35)

PLOT DATE : 1/30/2017 7:47 PM PLOT BY : RICE, BRIAN J PLOT NAME : PLOT SCALE : 1 IN:40 FT

WISDOT/CADDS SHEET 42

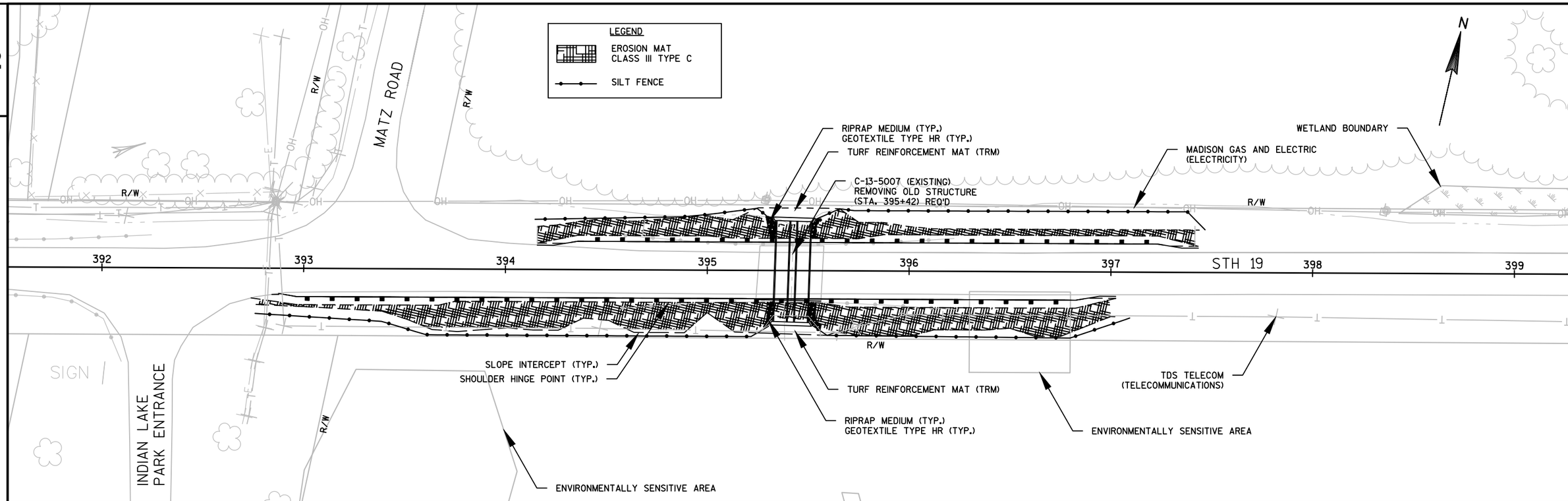

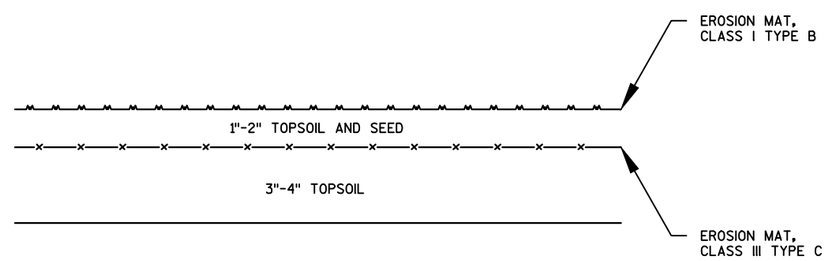

TURF REINFORCEMENT MAT (TRM) DETAIL

PROJECT NO:5145-00-60	HWY:STH 19	COUNTY:DANE	EROSION CONTROL	SHEET 31	E

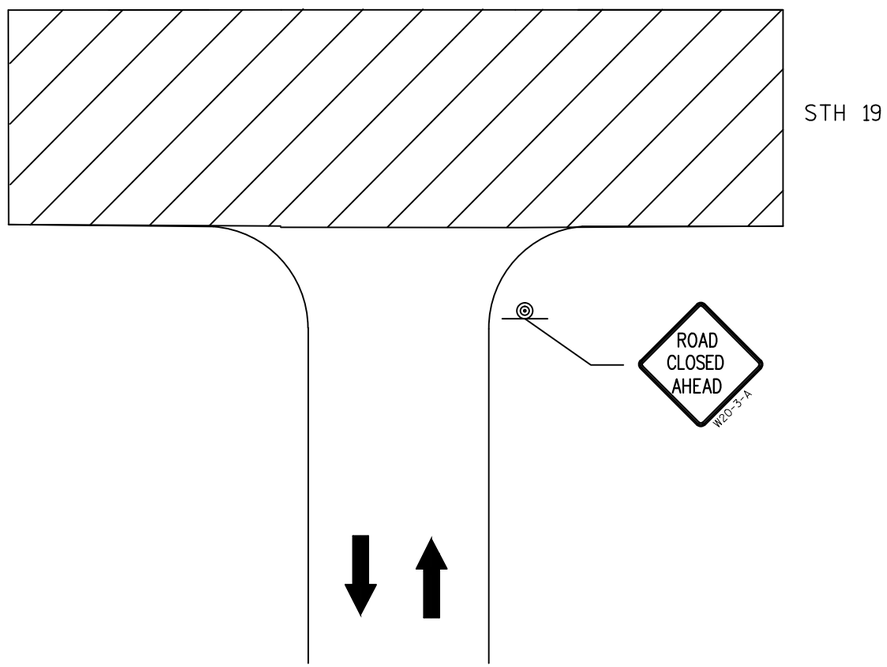

MINOR SIDEROAD TRAFFIC CONTROL SIGNAGE
BEUTHIN RD
NIENDORF RD
BROCKMANN VALLEY RD
FORD DR
JACOBY DR
BALLWEG DR
WEATHERWOOD DR
LILAC LN
INDIAN LAKE PARK ENTRANCE
SUTZFEY CR

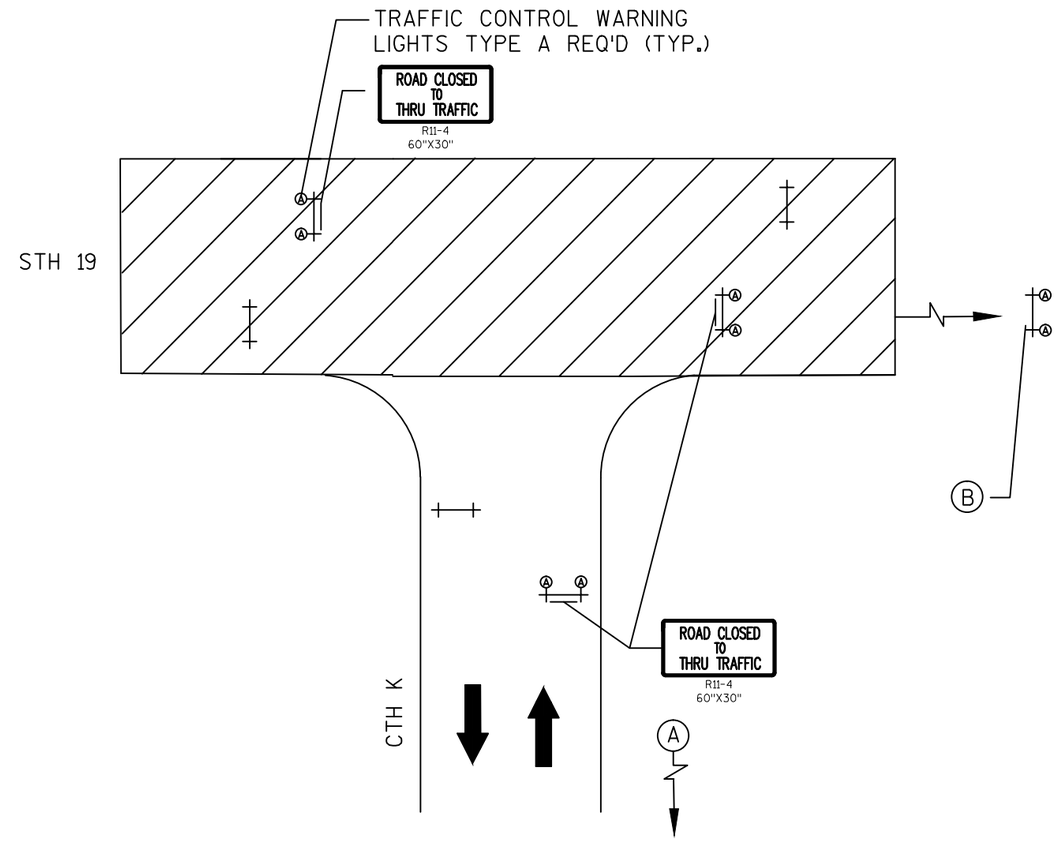

MAJOR SIDEROAD TRAFFIC CONTROL SIGNAGE
CTH F
OLD SETTLERS RD
CTH KP (SOUTH)
CTH KP (NORTH)
CTH K (SHOWN ABOVE)
MATZ RD
WHIPPOORWILL RD

LEGEND

- WORK ZONE
- BARRICADES TYPE III WITH/WITHOUT SIGN
- TRAFFIC FLOW ARROW
- TRAFFIC CONTROL CONES WITH/WITHOUT LIGHT, TYPE C
- SIGN MOUNTED ON TEMPORARY SUPPORT
- SIGN MOUNTED ON PERMANENT SUPPORT

(A) ADVANCED WARNING PER S.D.D. "BARRICADES AND SIGNS FOR SIDEROAD CLOSURES" DETAIL 4.

(B) FROM EAST OF CTH K TO USH 12 SPACE BARRICADES TYPE III EVERY 1000' ALTERNATING PLACEMENT IN EASTBOUND AND WESTBOUND LANES

PROJECT NO:5145-00-60	HWY:STH 19	COUNTY:DANE	TRAFFIC CONTROL ADVANCE WARNING SIGNING	SHEET 32	E

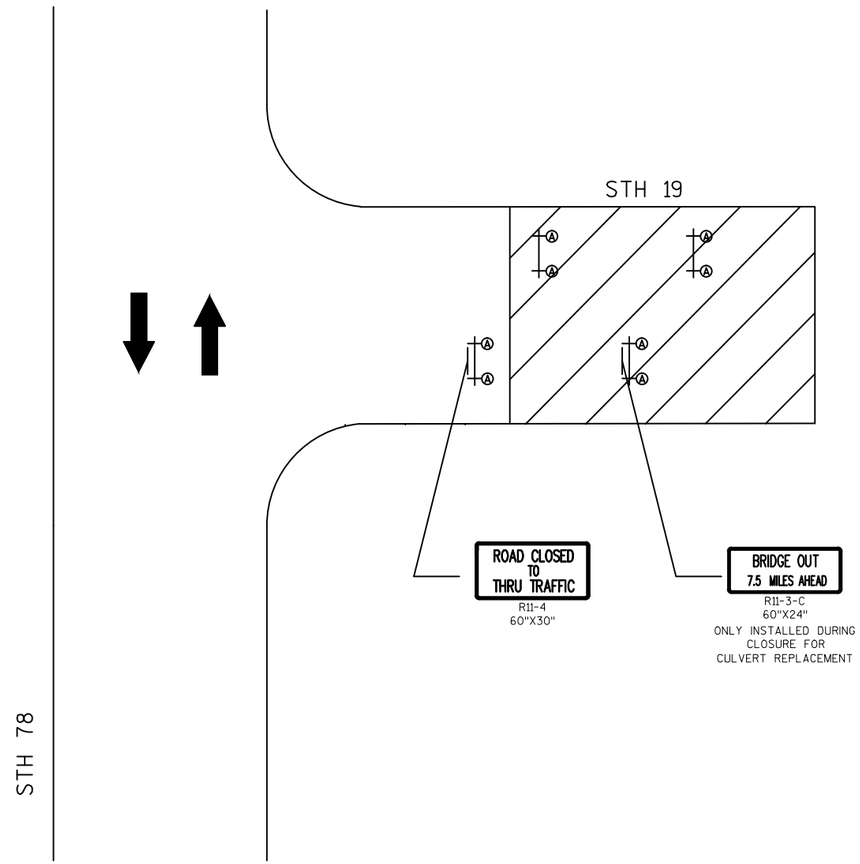

TRAFFIC CONTROL STH 78 INTERSECTION
SEE DETOUR PLAN FOR MORE SIGNING INFORMATION

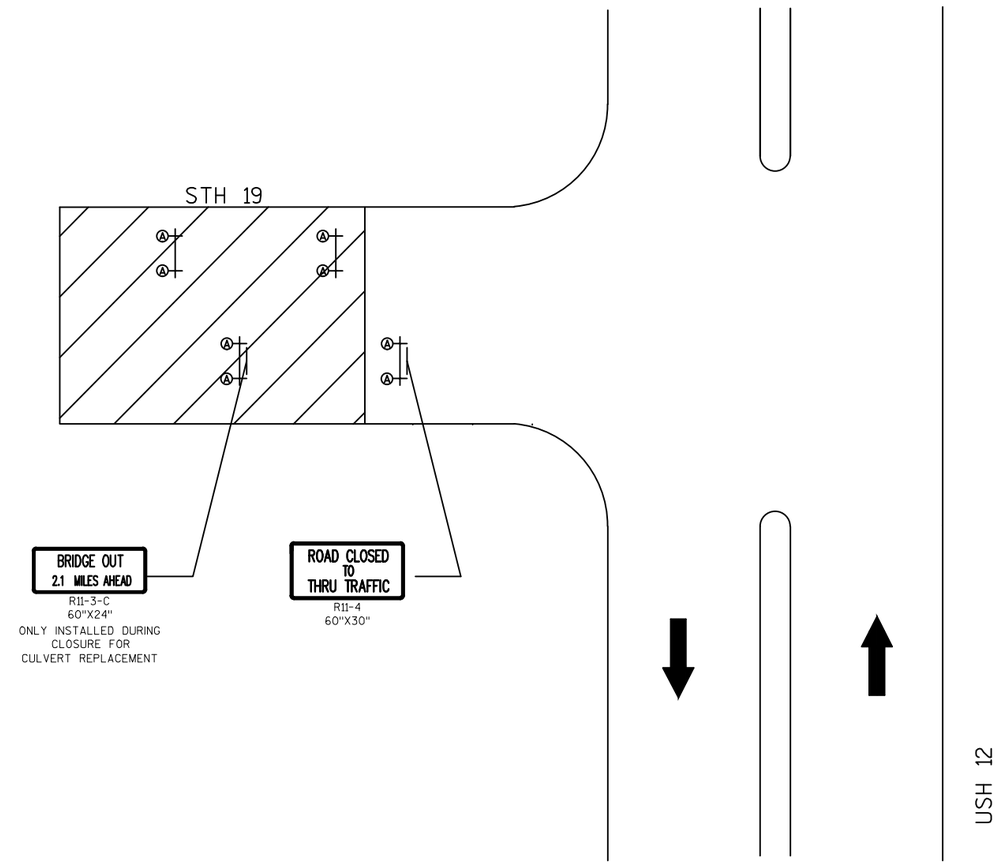

TRAFFIC CONTROL USH 12 INTERSECTION
SEE DETOUR PLAN FOR MORE SIGNING INFORMATION

LEGEND

- WORK ZONE
- BARRICADES TYPE III WITH/WITHOUT SIGN
- TRAFFIC FLOW ARROW
- TRAFFIC CONTROL CONES WITH/WITHOUT LIGHT, TYPE C
- SIGN MOUNTED ON TEMPORARY SUPPORT
- SIGN MOUNTED ON PERMANENT SUPPORT

PROJECT NO:5145-00-60	HWY:STH 19	COUNTY:DANE	TRAFFIC CONTROL ADVANCE WARNING SIGNING	SHEET 33	E

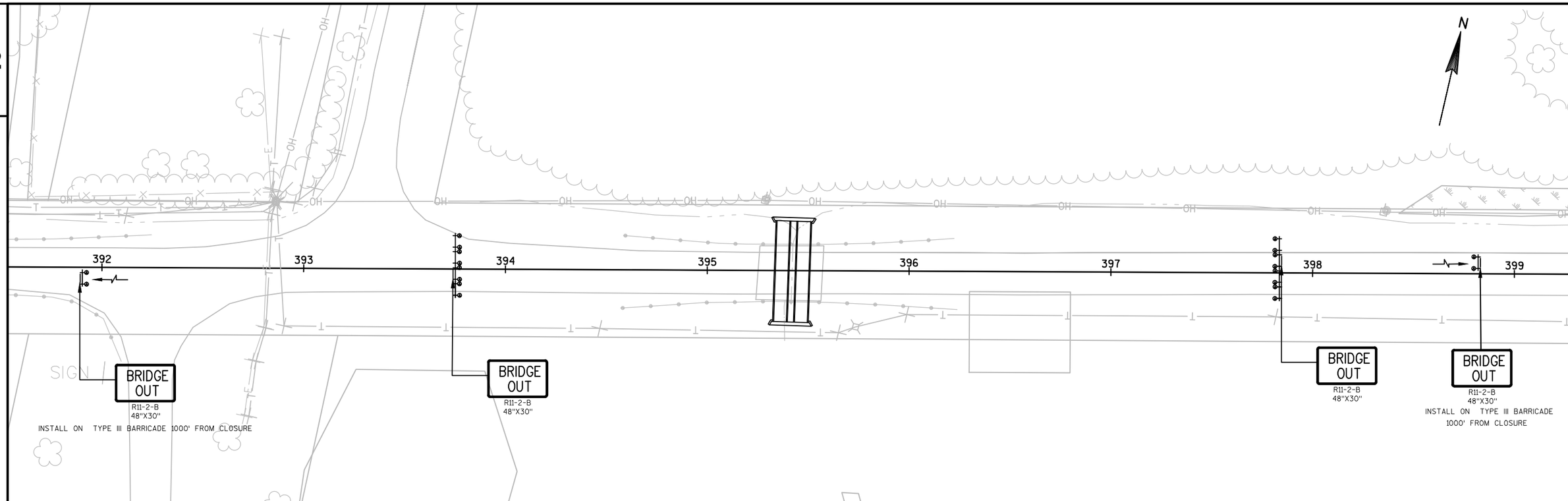

LEGEND

- WORK ZONE
- BARRICADES TYPE III WITH/WITHOUT SIGN
- TRAFFIC FLOW ARROW
- TRAFFIC CONTROL CONES WITH/WITHOUT LIGHT, TYPE C
- SIGN MOUNTED ON TEMPORARY SUPPORT
- SIGN MOUNTED ON PERMANENT SUPPORT

PROJECT NO:5145-00-60	HWY:STH 19	COUNTY:DANE	TRAFFIC CONTROL ADVANCE WARNING SIGNING	SHEET 34	E

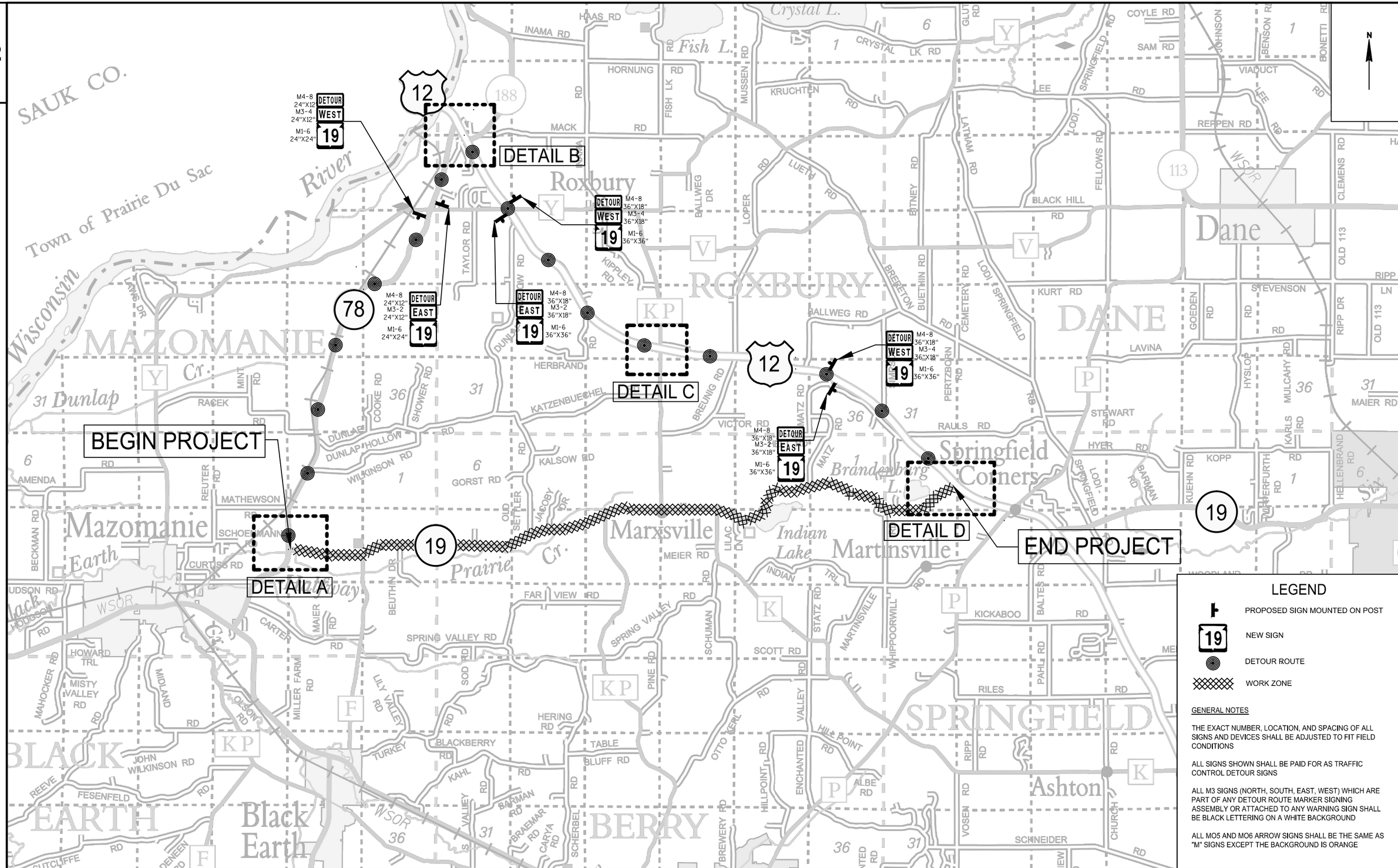

PROJECT NO:5145-00-60	HWY:STH 19	COUNTY:DANE	TRAFFIC CONTROL DETOUR PLAN (STH 19)	SHEET 35	E

FILE NAME : N:\PDS\C3D\51450030\SHEETSPLAN\027101-DT.DWG
LAYOUT NAME - ####
PLOT DATE : 9/8/2016 10:30 AM PLOT BY : RICE, BRIAN J PLOT NAME : PLOT SCALE :

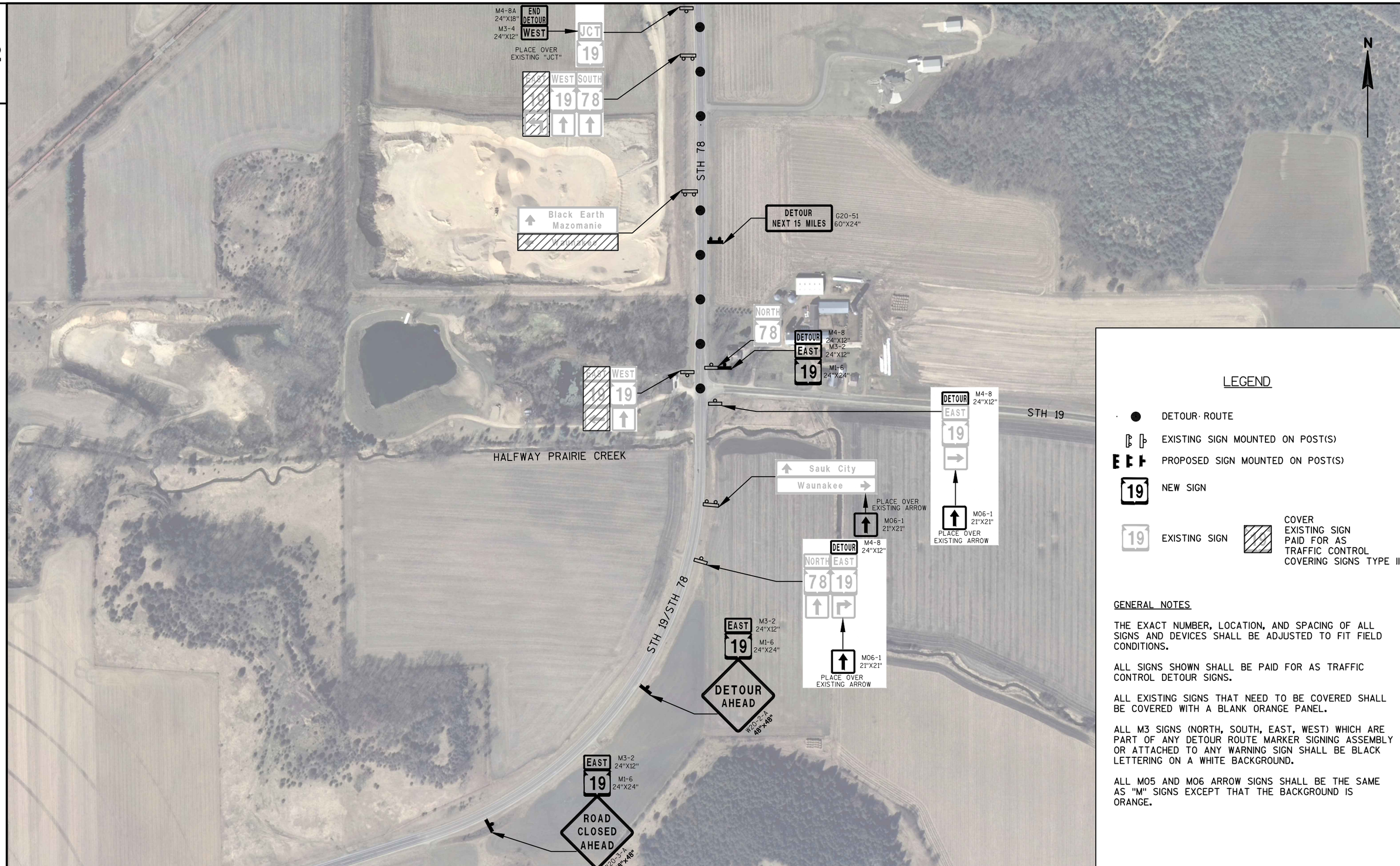

LEGEND

- DETOUR ROUTE
- EXISTING SIGN MOUNTED ON POST(S)
- PROPOSED SIGN MOUNTED ON POST(S)
- 19 — NEW SIGN
- 19 — EXISTING SIGN
- COVER EXISTING SIGN PAID FOR AS TRAFFIC CONTROL COVERING SIGNS TYPE II

GENERAL NOTES

THE EXACT NUMBER, LOCATION, AND SPACING OF ALL SIGNS AND DEVICES SHALL BE ADJUSTED TO FIT FIELD CONDITIONS.

ALL SIGNS SHOWN SHALL BE PAID FOR AS TRAFFIC CONTROL DETOUR SIGNS.

ALL EXISTING SIGNS THAT NEED TO BE COVERED SHALL BE COVERED WITH A BLANK ORANGE PANEL.

ALL M3 SIGNS (NORTH, SOUTH, EAST, WEST) WHICH ARE PART OF ANY DETOUR ROUTE MARKER SIGNING ASSEMBLY OR ATTACHED TO ANY WARNING SIGN SHALL BE BLACK LETTERING ON A WHITE BACKGROUND.

ALL MO5 AND MO6 ARROW SIGNS SHALL BE THE SAME AS "M" SIGNS EXCEPT THAT THE BACKGROUND IS ORANGE.

PROJECT NO:5145-00-60	HWY:STH 19	COUNTY:DANE	DETOUR - DETAIL A	SHEET 36	E

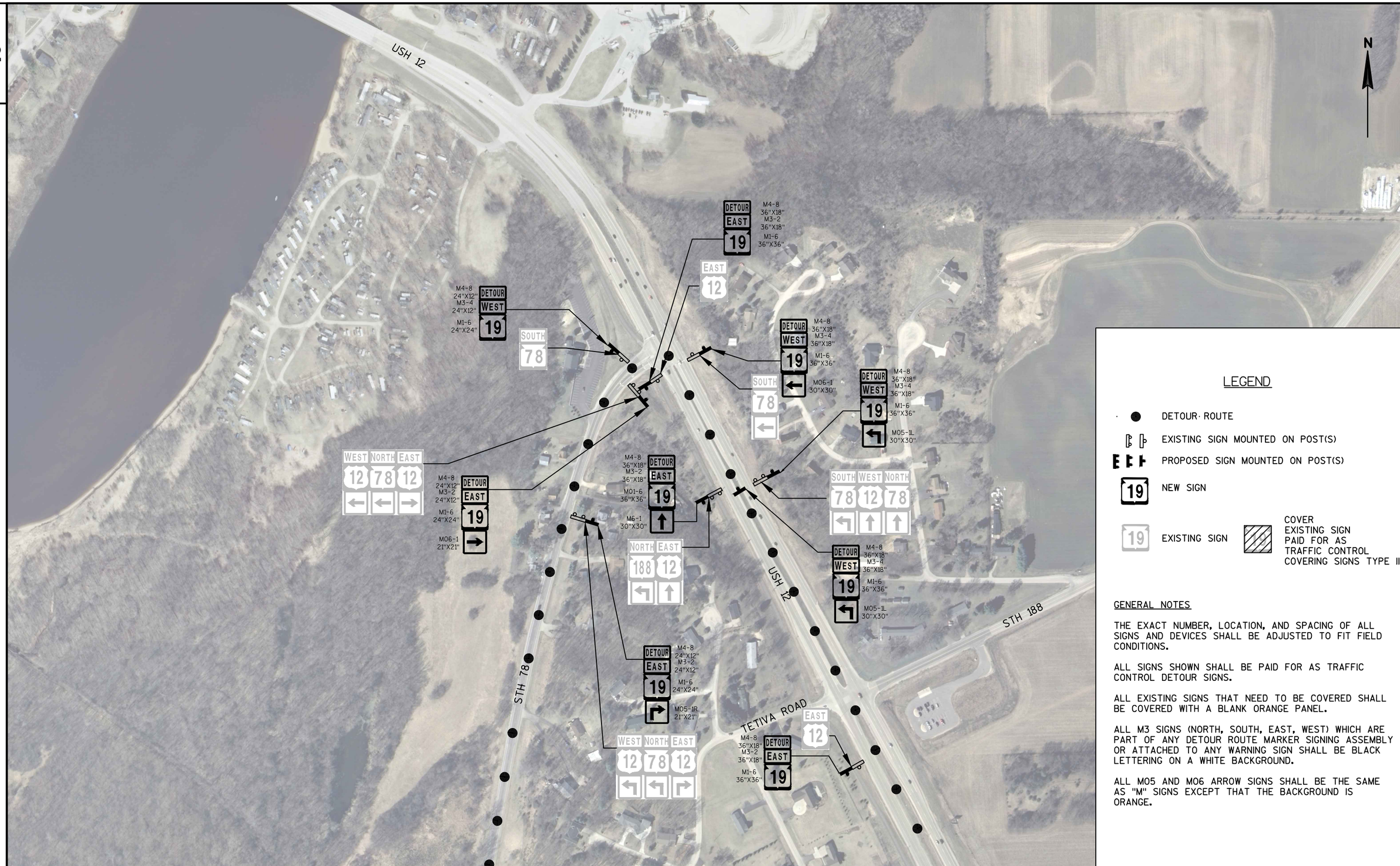

LEGEND

- DETOUR ROUTE
- EXISTING SIGN MOUNTED ON POST(S)
- PROPOSED SIGN MOUNTED ON POST(S)
- 19 NEW SIGN
- 19 EXISTING SIGN
- COVER EXISTING SIGN PAID FOR AS TRAFFIC CONTROL COVERING SIGNS TYPE II

GENERAL NOTES

THE EXACT NUMBER, LOCATION, AND SPACING OF ALL SIGNS AND DEVICES SHALL BE ADJUSTED TO FIT FIELD CONDITIONS.

ALL SIGNS SHOWN SHALL BE PAID FOR AS TRAFFIC CONTROL DETOUR SIGNS.

ALL EXISTING SIGNS THAT NEED TO BE COVERED SHALL BE COVERED WITH A BLANK ORANGE PANEL.

ALL M3 SIGNS (NORTH, SOUTH, EAST, WEST) WHICH ARE PART OF ANY DETOUR ROUTE MARKER SIGNING ASSEMBLY OR ATTACHED TO ANY WARNING SIGN SHALL BE BLACK LETTERING ON A WHITE BACKGROUND.

ALL M05 AND M06 ARROW SIGNS SHALL BE THE SAME AS "M" SIGNS EXCEPT THAT THE BACKGROUND IS ORANGE.

PROJECT NO:5145-00-60	HWY:STH 19	COUNTY:DANE	DETOUR - DETAIL B	SHEET 37	E

LEGEND

- DETOUR ROUTE
- EXISTING SIGN MOUNTED ON POST(S)
- PROPOSED SIGN MOUNTED ON POST(S)
- 19 NEW SIGN
- 19 EXISTING SIGN
- COVER EXISTING SIGN PAID FOR AS TRAFFIC CONTROL COVERING SIGNS TYPE II

GENERAL NOTES

THE EXACT NUMBER, LOCATION, AND SPACING OF ALL SIGNS AND DEVICES SHALL BE ADJUSTED TO FIT FIELD CONDITIONS.

ALL SIGNS SHOWN SHALL BE PAID FOR AS TRAFFIC CONTROL DETOUR SIGNS.

ALL EXISTING SIGNS THAT NEED TO BE COVERED SHALL BE COVERED WITH A BLANK ORANGE PANEL.

ALL M3 SIGNS (NORTH, SOUTH, EAST, WEST) WHICH ARE PART OF ANY DETOUR ROUTE MARKER SIGNING ASSEMBLY OR ATTACHED TO ANY WARNING SIGN SHALL BE BLACK LETTERING ON A WHITE BACKGROUND.

ALL M05 AND M06 ARROW SIGNS SHALL BE THE SAME AS "M" SIGNS EXCEPT THAT THE BACKGROUND IS ORANGE.

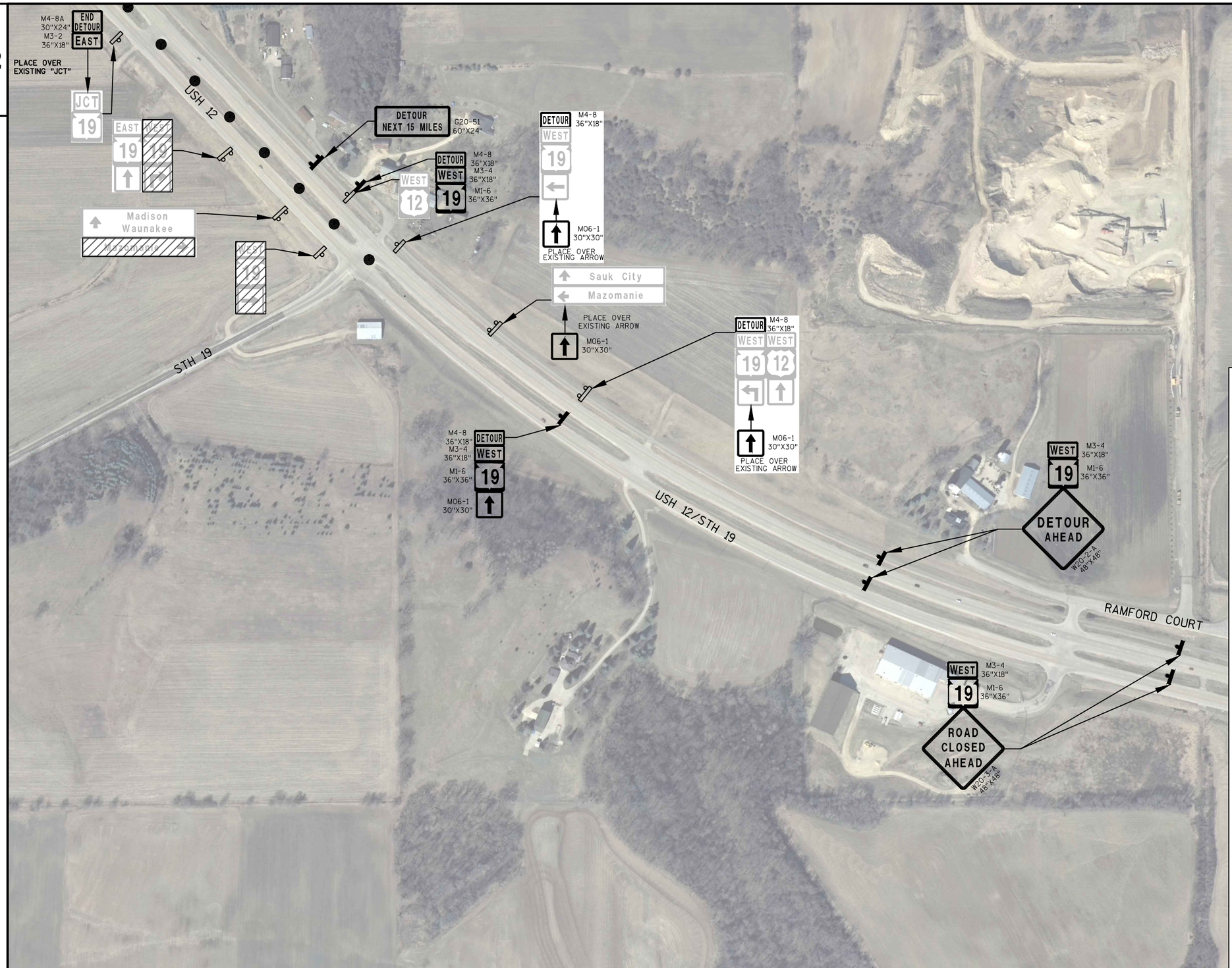

LEGEND

- DETOUR ROUTE
- EXISTING SIGN MOUNTED ON POST(S)
- PROPOSED SIGN MOUNTED ON POST(S)
- 19 — NEW SIGN
- 19 — EXISTING SIGN
- COVER EXISTING SIGN PAID FOR AS TRAFFIC CONTROL COVERING SIGNS TYPE II

GENERAL NOTES

THE EXACT NUMBER, LOCATION, AND SPACING OF ALL SIGNS AND DEVICES SHALL BE ADJUSTED TO FIT FIELD CONDITIONS.

ALL SIGNS SHOWN SHALL BE PAID FOR AS TRAFFIC CONTROL DETOUR SIGNS.

ALL EXISTING SIGNS THAT NEED TO BE COVERED SHALL BE COVERED WITH A BLANK ORANGE PANEL.

ALL M3 SIGNS (NORTH, SOUTH, EAST, WEST) WHICH ARE PART OF ANY DETOUR ROUTE MARKER SIGNING ASSEMBLY OR ATTACHED TO ANY WARNING SIGN SHALL BE BLACK LETTERING ON A WHITE BACKGROUND.

ALL M05 AND M06 ARROW SIGNS SHALL BE THE SAME AS "M" SIGNS EXCEPT THAT THE BACKGROUND IS ORANGE.

PROJECT NO:5145-00-60	HWY:STH 19	COUNTY:DANE	DETOUR - DETAIL D	SHEET 39	E

Estimate Of Quantities

5145-00-60

Line	Item	Item Description	Unit	Total	Qty
0010	203.0200	Removing Old Structure (station) 01. Sta. 395+42	LS	1.000	1.000
0020	204.0120	Removing Asphaltic Surface Milling	SY	44,800.000	44,800.000
0030	204.0165	Removing Guardrail	LF	900.000	900.000
0040	205.0100	Excavation Common	CY	450.000	450.000
0050	209.2500	Backfill Granular Grade 2	TON	430.000	430.000
0060	213.0100	Finishing Roadway (project) 01. 5145-00-60	EACH	1.000	1.000
0070	305.0120	Base Aggregate Dense 1 1/4-Inch	TON	410.000	410.000
0080	455.0605	Tack Coat	GAL	2,495.000	2,495.000
0090	460.2000	Incentive Density HMA Pavement	DOL	6,076.000	6,076.000
0100	460.5224	HMA Pavement 4 LT 58-28 S	TON	7,595.000	7,595.000
0110	465.0105	Asphaltic Surface	TON	895.000	895.000
0120	504.0900	Concrete Masonry Endwalls	CY	5.200	5.200
0130	523.0148	Culvert Pipe Reinforced Concrete Horizontal Elliptical Class HE-III 48x76-Inch	LF	100.000	100.000
0140	606.0200	Riprap Medium	CY	30.000	30.000
0150	614.0010	Barrier System Grading Shaping Finishing	EACH	8.000	8.000
0160	614.2300	MGS Guardrail 3	LF	187.500	187.500
0170	614.2310	MGS Guardrail 3 HS	LF	412.500	412.500
0180	614.2340	MGS Guardrail 3 L	LF	225.000	225.000
0190	614.2500	MGS Thrie Beam Transition	LF	307.600	307.600
0200	614.2610	MGS Guardrail Terminal EAT	EACH	12.000	12.000
0210	618.0100	Maintenance And Repair of Haul Roads (project) 01. 5145-00-60	EACH	1.000	1.000
0220	619.1000	Mobilization	EACH	1.000	1.000
0230	625.0500	Salvaged Topsoil	SY	844.000	844.000
0240	628.1104	Erosion Bales	EACH	20.000	20.000
0250	628.1504	Silt Fence	LF	2,790.000	2,790.000
0260	628.1520	Silt Fence Maintenance	LF	5,580.000	5,580.000
0270	628.1905	Mobilizations Erosion Control	EACH	6.000	6.000
0280	628.1910	Mobilizations Emergency Erosion Control	EACH	3.000	3.000
0290	628.2004	Erosion Mat Class I Type B	SY	1,702.000	1,702.000
0300	628.2037	Erosion Mat Class III Type C	SY	32.000	32.000
0310	629.0210	Fertilizer Type B	CWT	0.600	0.600
0320	630.0130	Seeding Mixture No. 30	LB	17.000	17.000
0330	630.0200	Seeding Temporary	LB	9.000	9.000
0340	633.5200	Markers Culvert End	EACH	4.000	4.000
0350	634.0614	Posts Wood 4x6-Inch X 14-FT	EACH	14.000	14.000
0360	634.0616	Posts Wood 4x6-Inch X 16-FT	EACH	23.000	23.000
0370	634.0618	Posts Wood 4x6-Inch X 18-FT	EACH	136.000	136.000
0380	634.0620	Posts Wood 4x6-Inch X 20-FT	EACH	45.000	45.000

5145-00-60

Line	Item	Item Description	Unit	Total	Qty
0390	634.0622	Posts Wood 4x6-Inch X 22-FT	EACH	3.000	3.000
0400	637.2210	Signs Type II Reflective H	SF	705.250	705.250
0410	637.2230	Signs Type II Reflective F	SF	869.250	869.250
0420	638.2602	Removing Signs Type II	EACH	212.000	212.000
0430	638.3000	Removing Small Sign Supports	EACH	226.000	226.000
0440	642.5001	Field Office Type B	EACH	1.000	1.000
0450	643.0100	Traffic Control (project) 01. 5145-00-60	EACH	1.000	1.000
0460	643.0300	Traffic Control Drums	DAY	1,680.000	1,680.000
0470	643.0420	Traffic Control Barricades Type III	DAY	5,010.000	5,010.000
0480	643.0705	Traffic Control Warning Lights Type A	DAY	8,550.000	8,550.000
0490	643.0900	Traffic Control Signs	DAY	3,030.000	3,030.000
0500	643.0920	Traffic Control Covering Signs Type II	EACH	6.000	6.000
0510	643.1050	Traffic Control Signs PCMS	DAY	14.000	14.000
0520	643.2000	Traffic Control Detour (project) 01. 5145-00-60	EACH	1.000	1.000
0530	643.3000	Traffic Control Detour Signs	DAY	7,575.000	7,575.000
0540	645.0120	Geotextile Type HR	SY	20.000	20.000
0550	646.0106	Pavement Marking Epoxy 4-Inch	LF	171,600.000	171,600.000
0560	646.0690.S	Removing Pavement Markings Water Blasting	LF	2,500.000	2,500.000
0570	647.0566	Pavement Marking Stop Line Epoxy 18-Inch	LF	53.000	53.000
0580	648.0100	Locating No-Passing Zones	MI	9.600	9.600
0590	649.2100	Temporary Raised Pavement Markers Type I	EACH	257.000	257.000
0600	650.6000	Construction Staking Pipe Culverts	EACH	2.000	2.000
0610	650.8000	Construction Staking Resurfacing Reference	LF	50,785.000	50,785.000
0620	650.9910	Construction Staking Supplemental Control (project) 01. 5145-00-60	LS	1.000	1.000
0630	650.9920	Construction Staking Slope Stakes	LF	500.000	500.000
0640	690.0150	Sawing Asphalt	LF	395.000	395.000
0650	SPV.0060	Special 01. Landmark Reference Monuments Special	EACH	5.000	5.000
0660	SPV.0120	Special 01. Water for Seeded Areas	MGAL	175.000	175.000
0670	SPV.0125	Special 01. Sealing Asphaltic Pavement Cracks, STH 19, Dane County	MI	9.600	9.600
0680	SPV.0180	Special 01. Removing Distressed Pavement Milling	SY	5,350.000	5,350.000
0690	SPV.0180	Special 02. Asphaltic Binder Enhanced Friction Surface Treatment	SY	6,250.000	6,250.000
0700	SPV.0195	Special 01. Salvaged Asphaltic Shoulder Material	TON	3,550.000	3,550.000

3

REMOVING OLD STRUCTURE

CATEGORY	STATION	203.0200.01 LS
0010	395+42	1

FINISHING ROADWAY

CATEGORY	PROJECT	213.0100.01 EACH
0010	5145-00-60	1

EARTHWORK SUMMARY TABLE

CATEGORY	STATION - STATION	LOCATION	205.0100 EXCAVATION COMMON C.Y.	UNUSABLE EXCAVATION(1) C.Y.	COMMON EXCAVATION USABLE FOR FILL(2) C.Y.	EXPANDED FILL 30% C.Y.	CUMMULATIVE VOLUME C.Y.	
0010	394+63 - 396+27	RT/LT	450	152	298	---	298	
		TOTALS	450	152	298	0	298	(MASS HAUL)

NOTES

(1) UNUSABLE EXCAVATION INCUDES THE EXISTING PAVMENT STRUCTURE INCLUDING (8 $^{3}/_{4}$-INCH SURFACE AND 6-INCH BASE COURSE)

(2) COMMON EXCAVATION USABLE FOR FILL IS COMPUTED AS FOLLOWS (COMMON EXCAVATION-UNUSABLE EXCAVATION-EXPANDED FILL)

REMOVING GUARDRAIL

CATEGORY	STATION - STATION	LOCATION	204.0165 LF
0010	194+38 - 195+05	LT	65
	195+34 - 196+00	LT	65
	194+31 - 194+98	RT	65
	195+28 - 195+95	RT	65
	262+62 - 263+41	LT	80
	264+04 - 264+83	LT	80
	262+67 - 263+41	RT	75
	264+04 - 264+80	RT	75
	394+58 - 396+22	LT	160
	394+57 - 396+24	RT	170
		TOTAL	900

REMOVING ASPHALTIC SURFACE MILLING ITEMS

CATEGORY	STATION - STATION	LOCATION	204.0120 REMOVING ASPHALTIC SURFACE MILLING SY	SPV.0180.01 REMOVING DISTRESSED PAVEMENT MILLING SY
0010	1+00 - 394+63	LT	17,450	---
	1+00 - 394+63	RT	17,450	---
	396+27 - 507+85	LT	4,950	
	396+27 - 507+85	RT	4,950	
	ML DISTRESSED PAVEMENT	LT/RT	---	5,350
		TOTALS	44,800	5,350

ASPHALTIC ITEMS

CATEGORY	STATION - STATION	LOCATION	455.0605 TACK COAT GAL	460.5224 HMA PAVEMENT 4 LT 58-28 S TON	465.0105 ASPHALTIC SURFACE TON
0010	1+00 - 169+00	LT	370	1,250	---
	1+00 - 169+00	RT	365	1,230	---
	169+00 - 327+00	LT	350	1,180	---
	169+00 - 327+00	RT	345	1,160	---
	327+00 - 394+63	LT	150	500	---
	327+00 - 394+63	RT	150	500	---
	394+63 - 396+27	LT/RT	0	115	---
	396+27 - 507+85	LT	250	830	---
	396+27 - 507+85	RT	250	830	---
	ML DISTRESSED PAVEMENT	---	265	0	895
		TOTALS	2,495	7,595	895

BASE AGGREGATE DENSE 1 1/4-INCH

CATEGORY	STATION - STATION	LOCATION	305.0120 TON
0010	394+63 - 396+27	LT/RT	410

BACKFILL GRANULAR GRADE 2

CATEGORY	STATION - STATION	LOCATION	209.2500 TON
0010	394+63 - 396+27	LT/RT	430

CONCRETE CULVERT PIPES

CATEGORY	INLET STATION	INLET OFFSET	INLET ELEV.	OUTLET STATION	OUTLET OFFSET	OUTLET ELEV.	SLOPE %	523.0148 CULVERT PIPE REINFORCED CONCRETE HORIZONTAL ELLIPTICAL CLASS HE-III 48x76-INCH LF	633.5200 MARKERS CULVERT END EACH	650.6000 CONSTRCTION STAKING PIPE CULVERTS EACH	504.0900 CONCRETE MASONARY ENDWALLS CY
0010	395+37.40	25.00' LT	924.0'	395+37.40	25.00' RT	923.5'	1.0	50	2	1	---
	395+47.82	25.00' LT	924.0'	395+47.82	25.00' RT	923.5'	1.0	50	2	1	---
	395+42.61	25.00' LT	---	---	---	---	---	---	---	---	2.6
	---	---	---	395+42.61	25.00' RT	---	---	---	---	---	2.6
							TOTALS	100	4	2	5.2

3

MGS GUARDRAIL SUMMARY

CATEGORY	STATION - STATION	LOCATION	614.2300 MGS GUARDRAIL 3 LF	614.2310 MGS GUARDRAIL 3 HS LF	614.2340 MGS GUARDRAIL 3 L LF	614.2500 MGS THRIE BEAM TRANSITION LF	614.2610 MGS GUARDRAIL TERMINAL EAT EACH	REMARKS
0010	193+20 - 195+00	RT	---	87.5	---	39.4	1	
	194+02 - 195+04	LT	---	12.5	---	39.4	1	
	195+31 - 196+31	RT	---	12.5	---	39.4	1	
	195+31 - 197+12	LT	---	87.5	---	39.4	1	
	261+88 - 263+41	RT	62.5	---	---	37.5	1	
	262+38 - 263+41	LT	12.5	---	---	37.5	1	
	264+04 - 265+07	RT	12.5	---	---	37.5	1	
	264+04 - 265+57	LT	62.5	---	---	37.5	1	
	392+95 - 396+89	RT	37.5	137.5	112.5	---	2	SEE EARTHWORK TABLE
	394+33 - 397+26	LT	0	75	112.5	---	2	SEE EARTHWORK TABLE
		TOTALS	187.5	412.5	225	307.6	12	

MOBILIZATION

CATEGORY	PROJECT	619.1000 EACH
0010	5145-00-60	1

FIELD OFFICE TYPE B

CATEGORY	PROJECT	642.5001 EACH
0010	5145-00-60	1

BARRIER SYSTEM GRADING SHAPING FINISHING

CATEGORY	STATION - STATION	LOCATION	614.0010 BARRIER SYSTEM GRADING SHAPING FINISHING EACH	FOR INFORMATIONAL USE ONLY BORROW CY.	SALVAGED TOPSOIL SY	FERTILIZER TYPE B CWT	SEEDING MIXTURE NO. 30 LB	SEEDING TEMPORARY LB	CONSTRUCTION STAKING SLOPE STAKES LF
0010	193+20 - 195+00	RT	1	2	70	0.05	1.5	2.0	200
	194+02 - 195+04	LT	1	5	70	0.05	1.5	1.0	100
	195+31 - 196+31	RT	1	2	105	0.05	2.0	1.5	100
	195+31 - 197+12	LT	1	2	105	0.05	2.0	1.5	200
	261+88 - 263+41	RT	1	4	135	0.05	1.5	1.5	200
	262+38 - 263+41	LT	1	16	135	0.05	1.5	1.5	100
	264+04 - 265+07	RT	1	2	110	0.05	2.0	1.5	100
	264+04 - 265+57	LT	1	2	110	0.05	2.0	1.5	200
		TOTALS	8	35	840	0.4	14	12	1200

EROSION CONTROL AND FINISHING ITEMS

CATEGORY	STATION-STATION	LOCATION	628.1504 SILT FENCE LF	628.1520 SILT FENCE MAINTENANCE LF	628.1104 EROSION BALES EACH	628.1905 MOBILIZATIONS EROSION CONTROL EACH	628.1910 MOBILIZATIONS EMERGENCY EROSION CONTROL EACH	625.0500 SALVAGED TOPSOIL SY	628.2004 EROSION MAT CLASS I TYPE B SY	628.2037 EROSION MAT CLASS III TYPE C SY	629.0210 FERTILIZER TYPE B CWT	630.0130 SEEDING MIXTURE NO. 30 LB	630.0200 SEEDING TEMPORARY LB	606.0200 RIPRAP MEDIUM CY	645.0120 GEOTEXTILE TYPE HR SY	SPV.0120.01 WATER FOR SEEDED AREAS MGAL	REMARKS
0010	192+40 - 198+00	RT	420	840	---	---	---	---	140	---	---	---	---	---	---	15	
	192+40 - 198+00	LT	430	860	---	---	---	---	210	---	---	---	---	---	---	25	
	260+50 - 266+75	RT	470	940	---	---	---	---	170	---	---	---	---	---	---	20	
	260+50 - 266+75	LT	480	960	---	---	---	---	220	---	---	---	---	---	---	25	
	392+75 - 397+50	RT	430	860	---	---	---	520	520	---	0.3	9	5	15	10	60	
	392+75 - 397+50	LT	310	620	---	---	---	260	260	---	0.2	5	2	15	10	30	
	395+20 - 395+60	RT	---	---	---	---	---	32	16	16	---	---	---	---	---	---	TRM (16 SY)
	395+20 - 395+60	LT	---	---	---	---	---	32	16	16	---	---	---	---	---	---	TRM (16 SY)
	UNDISTRIBUTED	LT/RT	250	500	20	6	3	---	150	---	0.1	3	2	---	---	---	
		TOTALS	2,790	5,580	20	6	3	844	1,702	32	0.6	17	9	30	20	175	

TRM - TURF REINFORCMENT MAT

3

3

PERMANENT SIGNS

SIGN NO.	LOCATION	SIGN FACES	SIGN WORDING & PICTORIALS	CODE	SIGN WIDTH (IN)	SIGN HEIGHT (IN)	637.2210 SIGNS TYPE II REFLECTIVE H SF	637.2230 SIGNS TYPE II REFLECTIVE F SF	634.0614 POSTS WOOD 4X6-IN X 14-FT EACH	634.0616 POSTS WOOD 4X6-IN X 16-FT EACH	634.0618 POSTS WOOD 4X6-IN X 18-FT EACH	634.0620 POSTS WOOD 4X6-IN X 20-FT EACH	634.0622 POSTS WOOD 4X6-IN X 22-FT EACH	638.2602 REMOVING SIGNS TYPE II EACH	638.3000 REMOVING SMALL SIGN SUPPORTS EACH	REMARKS
01-01	1+00 LT	WB	WEST STH 19 LEFT; SOUTH STH 78 LEFT; NORTH STH 78 RIGHT	J3-3	72	57	28.50	---	---	---	---	1	1	1	2	
01-02	1+00 LT	WB	STOP	R1-1	30	30	5.18	---	---	---	1	---	---	1	1	
01-03	1+25 RT	EB	EAST STH 19	J4-1	24	36	6.00	---	---	---	1	---	---	1	1	
01-04	2+50 RT	EB	MAX 11' WIDTH, NEXT 10 MILES	---	---	---	---	---	---	---	---	---	---	---	---	ESTR
01-05	3+60 RT	EB	55	R2-1	24	30	5.00	---	---	---	1	---	---	1	1	
01-06	3+75 LT	WB	BLACK EARTH; MAZOMANIE; SAUK CITY	D1-2	84	36	21.00	---	---	---	---	2	---	1	2	
01-07	5+20 RT	EB	WAUNAKEE 17	D2-1	78	15	8.13	---	---	1	1	---	---	1	2	
01-08	6+25 LT	WB	WEST STH 19 LEFT; SOUTH STH 78 LEFT; NORTH STH 78 RIGHT	J3-3	72	57	28.50	---	---	1	1	---	---	1	2	
01-09	7+25 RT	WB	NO PASSING ZONE	W14-3	48	36	---	6.00	---	---	1	---	---	1	1	
01-10	8+50 LT	WB	STOP AHEAD	W3-1	36	36	---	9.00	---	---	---	1	---	1	1	
01-11	10+25 LT	EB	NO PASSING ZONE	W14-3	48	36	---	6.00	---	---	1	---	---	1	1	
01-12	10+25 LT	WB	JCT STH 78	J1-1	24	39	6.50	---	---	---	1	---	---	---	---	MOUNT BEHIND 01-11
01-13	27+10 RT	WB	NO PASSING ZONE	W14-3	48	36	---	6.00	---	---	1	---	---	1	1	
					SUBTOTALS		108.81	27.00	0	2	9	4	1	11	15	
02-01	41+80 LT	EB	NO PASSING ZONE	W14-3	48	36	---	6.00	---	---	1	---	---	1	1	
02-02	43+00 RT	EB	JCT CTH F	J1-1	24	39	6.50	---	---	---	1	---	---	1	1	
02-03	46+00 RT	EB	LEFT CURVE	W1-2L	30	30	---	6.25	---	---	---	1	---	1	1	
02-04	46+00 RT	EB	ADVISORY SPEED	W13-1	42	30	---	8.75	---	---	---	---	---	---	---	MOUNT BELOW 02-03
02-05	48+00 RT	EB	HALFWAY PRAIRIE COUNTY PARK	D2-1	78	36	19.50	---	---	---	1	1	---	1	2	
02-06	50+00 RT	EB	ADOPT A HIGHWAY	I55-56	30	36	7.50	---	---	---	1	---	---	1	1	
02-07	51+70 LT	WB	WEST STH 19	J4-1	24	36	6.00	---	---	---	1	---	---	1	1	
02-08	52+25 RT	EB	NIGHT ARROW - LEFT	W1-6	48	24	---	8.00	---	---	1	---	---	1	1	
02-09	52+25 RT	EB	CTH F RIGHT	J13-1	24	45	7.50	---	---	---	1	---	---	1	1	
02-10	52+70 RT	WB	NIGHT ARROW - RIGHT	W1-6	48	24	---	8.00	---	---	1	---	---	1	1	
02-11	53+50 LT	NB	DOUBLE NIGHT ARROW	W1-7	48	24	---	8.00	---	---	1	---	---	1	1	
02-12	53+50 RT	NB	STOP	R1-1	30	30	5.18	---	---	---	1	---	---	1	1	
02-13	53+75 LT	WB	CTH F LEFT	J13-1	24	45	7.50	---	---	---	1	---	---	1	1	
02-14	54+00 RT	EB	EAST STH 19	J4-1	24	36	6.00	---	---	---	1	---	---	1	1	
02-15	56+75 RT	EB	RIGHT CURVE	W1-2R	30	30	---	6.25	---	---	---	1	---	1	1	
02-16	57+30 LT	WB	HALFWAY PRAIRIE COUNTY PARK	D2-1	78	36	19.50	---	---	---	1	1	---	1	2	
02-17	58+50 LT	WB	RIGHT CURVE	W1-2R	30	30	---	6.25	---	---	---	1	---	1	1	
02-18	58+50 LT	WB	ADVISORY SPEED - 40	W13-1	18	18	---	2.25	---	---	---	---	---	---	---	MOUNT BELOW 02-17
					SUBTOTALS		85.18	59.75	0	0	13	5	0	16	18	
03-01	63+00 LT	WB	FARM MACHINERY	W11-5	30	30	---	6.25	---	---	1	---	---	1	1	
03-02	64+00 LT	WB	JCT CTH F	J1-1	24	39	6.50	---	---	---	1	---	---	1	1	
03-03	70+20 LT	WB	LEFT CURVE	W1-2L	30	30	---	6.25	---	---	1	---	---	1	1	
03-04	76+85 RT	WB	NO PASSING ZONE	W14-3	48	36	---	6.00	---	---	1	---	---	1	1	
03-05	82+00 RT	NB	STOP	R1-1	30	30	5.18	---	---	---	1	---	---	1	1	
					SUBTOTALS		11.68	18.50	0	0	5	0	0	5	5	
05-01	126+40 RT	NB	STOP	R1-1	30	30	5.18	---	---	---	1	---	---	1	1	
05-02	134+45 LT	SB	STOP	R1-1	30	30	5.18	---	---	---	1	---	---	1	1	
05-03	147+00 LT	EB	NO PASSING ZONE	W14-3	48	36	---	6.00	---	---	1	---	---	1	1	
					SUBTOTALS		10.36	6.00	0	0	3	0	0	3	3	
06-01	150+90 RT	EB	SCHOOL BUS STOP AHEAD	S3-1	36	36	---	9.00	---	---	---	1	---	1	1	
06-02	154+90 RT	EB	LEFT CURVE	W1-2L	30	30	---	6.25	---	---	1	---	---	1	1	
06-03	177+95 RT	EB	ADOPT A HIGHWAY	I55-56	---	---	---	---	---	---	---	---	---	1	1	
06-04	158+01 RT	EB	NIGHT ARROW - LEFT	W1-6	48	24	---	8.75	---	---	1	---	---	1	1	
06-05	158+76 RT	WB	NIGHT ARROW - RIGHT	W1-6	48	24	---	8.75	---	---	1	---	---	1	1	
06-06	165+95 LT	WB	SCHOOL BUS STOP AHEAD	S3-1	36	36	---	9.00	---	---	---	1	---	1	1	
06-07	169+20 LT	WB	RIGHT CURVE	W1-2R	30	30	---	6.25	---	---	1	---	---	1	1	
06-08	176+15 LT	S	STOP	R1-1	30	30	5.18	---	---	---	1	---	---	1	1	
06-09	175+20 LT	WB	ADOPT A HIGHWAY	I55-56	30	36	7.50	---	---	---	1	---	---	1	1	
					SUBTOTALS		12.68	48.00	0	0	6	2	0	9	9	

CON'T ON NEXT PAGE

3

PERMANENT SIGNS CON'T

SIGN NO.	LOCATION	SIGN FACES	SIGN WORDING & PICTORIALS	CODE	SIGN WIDTH (IN)	SIGN HEIGHT (IN)	637.2210 SIGNS TYPE II REFLECTIVE H SF	637.2230 SIGNS TYPE II REFLECTIVE F SF	634.0614 POSTS WOOD 4X6-IN X 14-FT EACH	634.0616 POSTS WOOD 4X6-IN X 16-FT EACH	634.0618 POSTS WOOD 4X6-IN X 18-FT EACH	634.0620 POSTS WOOD 4X6-IN X 20-FT EACH	634.0622 POSTS WOOD 4X6-IN X 22-FT EACH	638.2602 REMOVING SIGNS TYPE II EACH	638.3000 REMOVING SMALL SIGN SUPPORTS EACH	REMARKS
07-01	190+25 LT	SB	STOP	R1-1	30	30	5.18	---	---	---	1	---	---	1	1	
07-02	194+95 RT	EB	CLEARANCE STRIPE RIGHT	W5-52R	12	36	---	3.00	---	1	---	---	---	1	1	
07-03	194+95 LT	EB	CLEARANCE STRIPE LEFT	W5-52L	12	36	---	3.00	---	1	---	---	---	1	1	
07-04	195+50 RT	WB	CLEARANCE STRIPE LEFT	W5-52L	12	36	---	3.00	---	1	---	---	---	1	1	
07-05	195+50 LT	WB	CLEARANCE STRIPE RIGHT	W5-52R	12	36	---	3.00	---	1	---	---	---	1	1	
					SUBTOTALS		5.18	12.00	0	4	1	0	0	5	5	
08-01	221+25 RT	EB	JCT CTH KP	J1-1	24	39	6.50	---	---	---	1	---	---	1	1	
08-02	222+10 RT	WB	NO PASSING ZONE	W14-3	48	36	---	6.00	---	---	1	---	---	1	1	
08-03	222+10 LT	EB	NO PASSING ZONE	W14-3	48	36	---	6.00	---	---	1	---	---	1	1	
08-04	225+85 RT	EB	SPEED REDUCTION AHEAD - 45	W3-5	---	---	---	---	---	---	---	---	---	1	1	
08-05	230+90 LT	WB	WEST STH 19	J4-1	24	36	6.00	---	---	---	1	---	---	1	1	
08-06	231+50 LT	WB	ADOPT A HIGHWAY	155-56	---	---	---	---	---	---	---	---	---	1	1	
08-07	231+85 RT	EB	CTH KP AHEAD RIGHT	J13-1	24	45	7.50	---	---	---	1	---	---	1	1	
08-08	232+60 LT	NB	DOUBLE NIGHT ARROW	W1-7	48	24	---	8.00	---	---	1	---	---	1	1	
08-09	232+60 RT	NB	STOP	R1-1	30	30	5.18	---	---	---	1	---	---	1	1	
08-10	232+75 LT	WB	CTH KP LEFT	J13-1	24	45	7.50	---	---	---	1	---	---	1	1	
08-11	232+75 RT	NB	STH 19 LEFT RIGHT; CTH KP RIGHT	J13-2	48	45	15.00	---	---	---	---	1	---	1	1	
08-12	233+95 RT	EB	CURVES AHEAD	W1-4	---	---	---	---	---	---	---	---	---	1	1	
08-13	239+25 LT	WB	T-INTERSECTION - LEFT	W2-2	30	30	---	6.25	---	---	1	---	---	1	1	
08-14	233+50 RT	EB	EAST STH 19; CTH KP	J4-2	48	36	12.00	---	---	---	1	---	---	---	---	
08-15	234+65 RT	EB	SPEED REDUCTION AHEAD - 45	W3-5	36	36	---	9.00	---	---	---	1	---	---	---	
08-16	235+80 RT	EB	EAST STH 19; CTH KP	J4-2	---	---	---	---	---	---	---	---	---	1	1	
08-17	237+50 LT	WB	55	R2-1	24	30	5.00	---	---	---	1	---	---	1	1	
08-18	238+00 RT	EB	45	R2-1	24	30	5.00	---	---	---	1	---	---	1	1	
					SUBTOTALS		69.68	35.25	0	0	12	2	0	16	16	
09-01	240+15 LT	WB	CTH KP LEFT	J13-1	24	45	7.50	---	---	---	1	---	---	1	1	
09-02	248+50 RT	EB	SCHOOL BUS STOP AHEAD	S3-1	36	36	---	9.00	---	---	---	1	---	1	1	
09-03	253+60 RT	EB	45	R2-1	24	30	5.00	---	---	---	1	---	---	1	1	
09-04	257+80 LT	WB	CURVES AHEAD	W1-4	---	---	---	---	---	---	---	---	---	1	1	
09-05	264+70 RT	WB	NO PASSING ZONE	W14-3	48	36	---	6.00	---	---	1	---	---	1	1	
09-06	260+25 LT	WB	SCHOOL BUS STOP AHEAD	S3-1	36	36	---	9.00	---	---	---	1	---	1	1	
09-07	261+50 RT	EB	MARXVILLE - UNINCORPORATED	I2-3-U	66	24	11.00	---	---	1	1	---	---	1	2	
09-08	262+50 RT	EB	45	R2-1	24	30	5.00	---	---	---	1	---	---	1	1	
09-09	262+55 LT	WB	45	R2-1	24	30	5.00	---	---	---	1	---	---	1	1	
09-10	263+25 LT	EB	CLEARANCE STRIPE LEFT	W5-52L	12	36	---	3.00	---	1	---	---	---	1	1	
09-11	263+25 RT	EB	CLEARANCE STRIPE RIGHT	W5-52R	12	36	---	3.00	---	1	---	---	---	1	1	
09-12	264+15 LT	WB	CLEARANCE STRIPE RIGHT	W5-52R	12	36	---	3.00	---	1	---	---	---	1	1	
09-13	264+15 RT	WB	CLEARANCE STRIPE LEFT	W5-52L	12	36	---	3.00	---	1	---	---	---	1	1	
09-14	264+70 RT	EB	CTH KP LEFT	J13-1	24	45	7.50	---	---	---	---	---	---	---	---	MOUNT BEHIND 09-05
					SUBTOTALS		41.00	36.00	0	5	6	2	0	13	14	
10-01	270+20 LT	EB	NO PASSING ZONE	W14-3	48	36	---	6.00	---	---	1	---	---	1	1	
10-02	270+75 RT	EB	45	R2-1	24	30	5.00	---	---	---	1	---	---	1	1	
10-03	270+95 LT	WB	45	R2-1	24	30	5.00	---	---	---	1	---	---	1	1	
10-04	271+40 RT	EB	ADOPT A HIGHWAY	I55-56	30	36	7.50	---	---	---	1	---	---	1	1	
10-05	271+75 LT	WB	WEST STH 19; CTH KP	J4-2	48	36	12.00	---	---	---	1	---	---	1	1	
10-06	272+25 LT	SB	STH 19 LEFT RIGHT; CTH KP RIGHT	J13-2	48	45	15.00	---	---	---	---	1	---	1	1	
10-07	272+30 LT	SB	STOP	R1-1	30	30	5.18	---	---	---	1	---	---	1	1	
10-08	273+15 LT	SB	STOP	R1-1	30	30	5.18	---	---	---	1	---	---	1	1	
10-09	272+70 RT	EB	CTH KP LEFT	J13-1	24	45	7.50	---	---	---	1	---	---	1	1	
10-10	272+80 RT	SB	DOUBLE NIGHT ARROW	W1-7	48	24	---	8.00	---	---	1	---	---	1	1	
10-11	273+45 LT	WB	CTH KP AHEAD RIGHT	J13-1	24	45	7.50	---	---	---	1	---	---	1	1	
10-12	273+45 LT	NB	NO PARKING RIGHT	R7-1-R	18	24	3.00	---	---	---	---	---	---	---	---	MOUNT BELOW 10-11

CON'T ON NEXT PAGE

PERMANENT SIGNS CON'T

SIGN NO.	LOCATION	SIGN FACES	SIGN WORDING & PICTORIALS	CODE	SIGN WIDTH (IN)	SIGN HEIGHT (IN)	637.2210 SIGNS TYPE II REFLECTIVE H SF	637.2230 SIGNS TYPE II REFLECTIVE F SF	634.0614 POSTS WOOD 4X6-IN X 14-FT EACH	634.0616 POSTS WOOD 4X6-IN X 16-FT EACH	634.0618 POSTS WOOD 4X6-IN X 18-FT EACH	634.0620 POSTS WOOD 4X6-IN X 20-FT EACH	634.0622 POSTS WOOD 4X6-IN X 22-FT EACH	638.2602 REMOVING SIGNS TYPE II EACH	638.3000 REMOVING SMALL SIGN SUPPORTS EACH	REMARKS
10-13	274+00 LT	NB	NO PARKING LEFT	R7-1-L	18	24	3.00	---	---	1	---	---	---	1	1	
10-14	277+65 RT	EB	EAST STH 19	J4-1	24	36	6.00	---	---	---	1	---	---	1	1	
10-15	280+95 LT	WB	45	R2-1	24	30	5.00	---	---	---	1	---	---	1	1	
10-16	281+05 RT	EB	55	R2-1	24	30	5.00	---	---	---	1	---	---	1	1	
10-17	282+90 LT	WB	JCT CTH KP	J1-1	24	39	6.50	---	---	---	1	---	---	1	1	
10-18	284+20 LT	WB	MARXVILLE - UNINCORPORATED	I2-3-U	66	24	11.00	---	---	1	1	---	---	1	2	
10-19	285+25 LT	WB	SPEED LIMIT REDUCTION AHEAD - 45	W3-5	36	36	---	9.00	---	---	---	1	---	---	---	
10-20	286+75 RT	WB	NO PASSING ZONE	W14-3	48	36	---	6.00	---	---	1	---	---	1	1	
10-21	288+15 LT	SB	STOP	R1-1	30	30	5.18	---	---	---	1	---	---	1	1	
10-22	289+00 LT	EB	NO PASSING ZONE	W14-3	48	36	---	6.00	---	---	1	---	---	1	1	
10-23	289+80 LT	WB	SPEED LIMIT REDUCTION AHEAD - 45	W3-5	---	---	---	---	---	---	---	---	---	1	1	
					SUBTOTALS		114.54	35.00	0	3	18	2	0	22	23	
11-01	305+00 RT	EB	JCT CTH K	J1-1	24	39	6.50	---	---	---	1	---	---	1	1	
11-02	306+80 LT	EB	NO PASSING ZONE	W14-3	48	36	---	6.00	---	---	1	---	---	1	1	
11-03	306+80 RT	WB	NO PASSING ZONE	W14-3	48	36	---	6.00	---	---	1	---	---	1	1	
11-04	308+30 LT	EB	CLEARANCE STRIPE LEFT	W5-52L	12	36	---	3.00	---	1	---	---	---	1	1	
11-05	308+30 RT	EB	CLEARANCE STRIPE RIGHT	W5-52R	12	36	---	3.00	---	1	---	---	---	1	1	
11-06	308+60 LT	WB	CLEARANCE STRIPE RIGHT	W5-52R	12	36	---	3.00	---	1	---	---	---	1	1	
11-07	308+60 RT	WB	CLEARENCE STRIPE LEFT	W5-52L	12	36	---	3.00	---	1	---	---	---	1	1	
11-08	310+50 RT	EB	RIGHT CURVE	W1-2R	30	30	---	6.25	---	---	1	---	---	1	1	
11-09	329+00 RT	WB	CHEVRON RIGHT	W1-8	18	24	---	3.00	1	---	---	---	---	1	1	
11-10	311+25 LT	WB	WEST STH 19	J4-1	24	36	6.00	---	---	---	1	---	---	1	1	
11-11	311+50 RT	EB	CTH K RIGHT	J13-1	24	45	7.50	---	---	---	1	---	---	1	1	
11-12	311+75 LT	WB	NIGHT ARROW - LEFT	W1-6	48	24	---	8.00	---	---	1	---	---	1	1	
11-13	312+30 LT	NB	DOUBLE NIGHT ARROW	W1-7	48	24	---	8.00	---	---	1	---	---	1	1	
11-14	312+35 LT	NB	CTH K LEFT	J13-1	---	---	---	---	---	---	---	---	---	1	1	
11-15	313+15 RT	NB	STOP	R1-1	30	30	5.18	---	---	---	1	---	---	1	1	
11-16	313+55 LT	EB	NIGHT ARROW - RIGHT	W1-6	48	24	---	8.00	---	---	1	---	---	1	1	
11-17	313+35 RT	NB	STH 19 LEFT RIGHT	J13-1	24	45	7.50	---	---	---	1	---	---	1	1	
11-18	313+90 LT	WB	CTH K LEFT	J13-1	24	45	7.50	---	---	---	1	---	---	1	1	
11-19	314+35 RT	EB	EAST STH 19	J4-1	24	36	6.00	---	---	---	1	---	---	1	1	
11-20	317+00 RT	EB	RIGHT CURVE	W1-2R	30	30	---	6.25	---	---	---	1	---	1	1	
11-21	317+00 RT	EB	ADVISORY SPEED - 45	W13-1	18	18	---	2.25	---	---	---	---	---	---	---	MOUNT BELOW 11-20
11-22	317+00 LT	WB	LEFT CURVE	W1-2L	---	---	---	---	---	---	---	---	---	1	1	
11-23	329+00 RT	EB	CHEVRON LEFT	W1-8	18	24	---	3.00	---	---	---	---	---	---	---	MOUNT WITH 11-09
11-24	323+00 LT	WB	JCT CTH K	J1-1	24	39	6.50	---	---	---	1	---	---	1	1	
11-25	322+05 RT	EB	RIGHT WINDING ROAD	W1-5R	30	30	---	6.25	---	---	---	1	---	1	1	
11-26	322+05 RT	EB	ADVISORY SPEED - 40	W13-1	18	18	---	2.25	---	---	---	---	---	---	---	MOUNT BELOW 11-25
11-27	325+00 LT	WB	NIGHT ARROW - LEFT	W1-6	48	24	---	8.00	---	---	1	---	---	1	1	
11-28	325+60 LT	EB	NIGHT ARROW - RIGHT	W1-6	48	24	---	8.00	---	---	1	---	---	1	1	
11-29	326+50 RT	S	DEAD END	W14-1	30	30	---	6.25	---	---	1	---	---	1	1	
11-30	327+00 RT	NB	STOP	R1-1	30	30	5.18	---	---	---	1	---	---	1	1	
					SUBTOTALS		57.86	99.50	1	4	18	2	0	27	27	
12-01	330+50 RT	EB	CHEVRON LEFT	W1-8	18	24	---	3.00	1	---	---	---	---	1	1	
12-02	330+50 RT	WB	CHEVRON RIGHT	W1-8	18	24	---	3.00	---	---	---	---	---	---	---	MOUNT WITH 12-01
12-03	332+00 RT	EB	CHEVRON LEFT	W1-8	18	24	---	3.00	1	---	---	---	---	1	1	
12-04	332+00 RT	WB	CHEVRON RIGHT	W1-8	18	24	---	3.00	---	---	---	---	---	---	---	MOUNT WITH 12-03
12-05	333+50 RT	EB	CHEVRON LEFT	W1-8	18	24	---	3.00	1	---	---	---	---	1	1	
12-06	333+50 RT	WB	CHEVRON RIGHT	W1-8	18	24	---	3.00	---	---	---	---	---	---	---	MOUNT WITH 12-05
12-07	333+75 LT	WB	LEFT CURVE	W1-2L	30	30	---	6.25	---	---	---	1	---	1	1	
12-08	333+75 LT	WB	ADVISORY SPEED - 40	W13-1	18	18	---	2.25	---	---	---	---	---	---	---	MOUNT BELOW 12-07
12-09	334+25 RT	EB	SCHOOL BUS STOP AHEAD	S3-1	36	36	---	9.00	---	---	---	1	---	1	1	
12-10	335+00 RT	EB	CHEVRON LEFT	W1-8	18	24	---	3.00	1	---	---	---	---	1	1	
12-11	335+00 RT	WB	CHEVRON RIGHT	W1-8	18	24	---	3.00	---	---	---	---	---	---	---	MOUNT WITH 12-10
12-12	336+50 RT	EB	CHEVRON LEFT	W1-8	18	24	---	3.00	1	---	---	---	---	1	1	
12-13	336+50 RT	WB	CHEVRON RIGHT	W1-8	18	24	---	3.00	---	---	---	---	---	---	---	MOUNT WITH 12-12
12-14	338+00 RT	EB	CHEVRON LEFT	W1-8	18	24	---	3.00	1	---	---	---	---	1	1	

CON'T ON NEXT PAGE

3

PERMANENT SIGNS CON'T

SIGN NO.	LOCATION	SIGN FACES	SIGN WORDING & PICTORIALS	CODE	SIGN WIDTH (IN)	SIGN HEIGHT (IN)	637.2210 SIGNS TYPE II REFLECTIVE H SF	637.2230 SIGNS TYPE II REFLECTIVE F SF	634.0614 POSTS WOOD 4X6-IN X 14-FT EACH	634.0616 POSTS WOOD 4X6-IN X 16-FT EACH	634.0618 POSTS WOOD 4X6-IN X 18-FT EACH	634.0620 POSTS WOOD 4X6-IN X 20-FT EACH	634.0622 POSTS WOOD 4X6-IN X 22-FT EACH	638.2602 REMOVING SIGNS TYPE II EACH	638.3000 REMOVING SMALL SIGN SUPPORTS EACH	REMARKS
15-01	420+25 LT	EB	NIGHT ARROW - RIGHT	W1-6	48	24	---	8.00	---	---	1	---	---	1	1	
15-02	423+50 RT	EB	NIGHT ARROW - LEFT	W1-6	48	24	---	8.00	---	---	1	---	---	1	1	
15-03	423+80 RT	WB	NIGHT ARROW - RIGHT	W1-6	48	24	---	8.00	---	---	1	---	---	1	1	
15-04	430+30 LT	WB	SCHOOL BUS STOP AHEAD	S3-1	36	36	---	9.00	---	---	---	1	---	1	1	
15-05	437+25 LT	WB	RIGHT REVERSE CURVE	W1-4R	30	30	---	6.25	---	---	---	1	---	1	1	
15-06	437+25 LT	WB	ADVISORY SPEED - 40	W13-1	18	18	---	2.25	---	---	---	---	---	---	---	MOUNT BELOW 15-05
15-07	438+90 RT	EB	RIGHT REVERSE CURVE	W1-4R	30	30	---	6.25	---	---	---	1	---	1	1	
15-08	438+90 RT	EB	ADVISORY SPEED - 35	W13-1	18	18	---	2.25	---	---	---	---	---	---	---	MOUNT BELOW 15-07
15-09	440+40 RT	EB	SNOWMOBILE CROSSING	W11-6	30	30	---	6.25	---	---	1	---	---	1	1	
15-10	441+50 LT	EB	NIGHT ARROW - RIGHT	W1-6	48	24	---	8.00	---	---	1	---	---	1	1	
15-11	443+65 LT	WB	NIGHT ARROW - LEFT	W1-6	48	24	---	8.00	---	---	1	---	---	1	1	
15-12	448+45 RT	EB	NIGHT ARROW - LEFT	W1-6	48	24	---	8.00	---	---	1	---	---	1	1	
15-13	448+45 RT	NB	STOP	R1-1	30	30	5.18	---	---	---	1	---	---	1	1	
15-14	448+50 RT	WB	NIGHT ARROW - RIGHT	W1-6	48	24	---	8.00	---	---	1	---	---	1	1	
					SUBTOTALS		5.18	88.25	0	0	9	3	0	12	12	
16-01	456+20 LT	WB	RIGHT REVERSE CURVE	W1-4R	30	30	---	6.25	---	---	---	1	---	1	1	
16-02	456+20 LT	WB	ADVISORY SPEED - 40	W13-1	18	18	---	2.25	---	---	---	---	---	---	---	MOUNT BELOW 16-01
16-03	457+50 LT	WB	SNOWMOBILE CROSSING	W11-6	30	30	---	6.25	---	---	1	---	---	1	1	
16-04	458+25 LT	SB	STOP	R1-1	30	30	5.18	---	---	---	1	---	---	1	1	
16-05	462+00 RT	WB	NO PASSING ZONE	W14-3	48	36	---	6.00	---	---	1	---	---	1	1	
16-06	464+15 LT	WB	RIGHT REVERSE CURVE	W1-4R	30	30	---	6.25	---	---	---	1	---	1	1	
16-07	464+15 LT	WB	ADVISORY SPEED - 35	W13-1	18	18	---	2.25	---	---	---	---	---	---	---	MOUNT BELOW 16-07
16-08	469+75 LT	EB	NO PASSING ZONE	W14-3	48	36	---	6.00	---	---	1	---	---	1	1	
16-09	473+10 RT	EB	LEFT CURVE	W1-2L	30	30	---	6.25	---	---	---	1	---	1	1	
16-10	473+10 RT	EB	ADVISORY SPEED -40	W13-1	18	18	---	2.25	---	---	---	---	---	---	---	MOUNT BELOW 16-09
16-11	477+80 RT	EB	NIGHT ARROW - LEFT	W1-6	48	24	---	8.00	---	---	1	---	---	1	1	
					SUBTOTALS		5.18	51.75	0	0	5	3	0	8	8	
17-01	480+75 RT	WB	NIGHT ARROW - RIGHT	W1-6	48	24	---	8.00	---	---	1	---	---	1	1	
17-02	486+25 RT	EB	RIGHT CURVE	W1-2R	30	30	---	6.25	---	---	1	---	---	1	1	
17-03	486+25 LT	WB	RIGHT CURVE	W1-2R	30	30	---	6.25	---	---	---	1	---	1	1	
17-04	486+25 LT	WB	ADVISORY SPEED - 40	W13-1	18	18	---	2.25	---	---	---	---	---	---	---	MOUNT BELOW 17-03
17-05	494+50 RT	EB	JCT USH 12	J1-1	24	39	6.50	---	---	---	1	---	---	1	1	
17-06	495+75 RT	EB	STOP AHEAD	W3-1	36	36	---	9.00	---	---	---	1	---	1	1	
17-07	496+35 LT	WB	LEFT CURVE	W1-2L	30	30	---	6.25	---	---	1	---	---	1	1	
17-08	498+50 RT	EB	WEST USH 12 LEFT; EAST USH 12 RIGHT; EAST STH 19 RIGHT	J2-3	72	57	28.50	---	---	---	---	1	1	1	2	
17-09	498+50 RT	WB	NO PASSING ZONE	W14-3	48	36	---	6.00	---	---	1	---	---	---	---	MOUNT BEHIND 17-08
17-10	498+50 LT	WB	MAZOMANIE 13	D2-1	84	15	8.75	---	---	1	1	---	---	1	2	
17-11	501+75 LT	EB	NO PASSING ZONE	W14-3	48	36	---	6.00	---	---	1	---	---	1	1	
17-13	502+50 RT	EB	SAUK CITY; WAUNAKEE; MADISON	D1-2	72	36	18.00	---	---	---	1	1	---	1	2	
17-14	503+50 LT	WB	45	R2-1	24	30	5.00	---	---	---	1	---	---	---	---	
17-15	504+95 LT	WB	MAX WIDTH 11', NEXT TO MILES	---	---	---	---	---	---	---	---	---	---	---	---	ESTR
17-16	505+75 LT	WB	WEST STH 19	J4-1	24	36	6.00	---	---	---	1	---	---	1	1	
17-17	507+20 LT	WB	ADOPT A HIGHWAY	---	---	---	---	---	---	---	---	---	---	1	1	
17-18	-- RT	EB	WEST USH 12 LEFT; EAST USH 12 RIGHT; EAST STH 19 RIGHT	J3-3	72	57	28.50	---	---	---	---	1	1	1	2	OUT OF PROJECT LIMITS
17-19	-- RT	EB	ONE WAY ARROW - RIGHT	R6-1-R	36	12	3.00	---	---	---	---	---	---	---	---	OUT OF PROJECT LIMITS
17-20	-- RT	EB	STOP	R1-1	30	30	5.18	---	---	---	---	1	---	1	1	OUT OF PROJECT LIMITS
17-21	-- RT	EB	DIVIDED HIGHWAY THROUGH	R6-3	30	24	5.00	---	---	---	---	---	---	---	---	OUT OF PROJECT LIMITS
					SUBTOTALS		121.93	50.00	0	1	11	6	2	15	19	
						TOTALS	705.28	869.25	14	23	136	45	3	212	226	

3

3

PERMANENT SIGNS CON'T

SIGN NO.	LOCATION	SIGN FACES	SIGN WORDING & PICTORIALS	CODE	SIGN WIDTH (IN)	SIGN HEIGHT (IN)	637.2210 SIGNS TYPE II REFLECTIVE H SF	637.2230 SIGNS TYPE II REFLECTIVE F SF	634.0614 POSTS WOOD 4X6-IN X 14-FT EACH	634.0616 POSTS WOOD 4X6-IN X 16-FT EACH	634.0618 POSTS WOOD 4X6-IN X 18-FT EACH	634.0620 POSTS WOOD 4X6-IN X 20-FT EACH	634.0622 POSTS WOOD 4X6-IN X 22-FT EACH	638.2602 REMOVING SIGNS TYPE II EACH	638.3000 REMOVING SMALL SIGN SUPPORTS EACH	REMARKS
15-01	420+25 LT	EB	NIGHT ARROW - RIGHT	W1-6	48	24	---	8.00	---	---	1	---	---	1	1	
15-02	423+50 RT	EB	NIGHT ARROW - LEFT	W1-6	48	24	---	8.00	---	---	1	---	---	1	1	
15-03	423+80 RT	WB	NIGHT ARROW - RIGHT	W1-6	48	24	---	8.00	---	---	1	---	---	1	1	
15-04	430+30 LT	WB	SCHOOL BUS STOP AHEAD	S3-1	36	36	---	9.00	---	---	---	1	---	1	1	
15-05	437+25 LT	WB	RIGHT REVERSE CURVE	W1-4R	30	30	---	6.25	---	---	---	1	---	1	1	
15-06	437+25 LT	WB	ADVISORY SPEED - 40	W13-1	18	18	---	2.25	---	---	---	---	---	---	---	MOUNT BELOW 15-05
15-07	438+90 RT	EB	RIGHT REVERSE CURVE	W1-4R	30	30	---	6.25	---	---	---	1	---	1	1	
15-08	438+90 RT	EB	ADVISORY SPEED - 35	W13-1	18	18	---	2.25	---	---	---	---	---	---	---	MOUNT BELOW 15-07
15-09	440+40 RT	EB	SNOWMOBILE CROSSING	W11-6	30	30	---	6.25	---	---	1	---	---	1	1	
15-10	441+50 LT	EB	NIGHT ARROW - RIGHT	W1-6	48	24	---	8.00	---	---	1	---	---	1	1	
15-11	443+65 LT	WB	NIGHT ARROW - LEFT	W1-6	48	24	---	8.00	---	---	1	---	---	1	1	
15-12	448+45 RT	EB	NIGHT ARROW - LEFT	W1-6	48	24	---	8.00	---	---	1	---	---	1	1	
15-13	448+45 RT	NB	STOP	R1-1	30	30	5.18	---	---	---	1	---	---	1	1	
15-14	448+50 RT	WB	NIGHT ARROW - RIGHT	W1-6	48	24	---	8.00	---	---	1	---	---	1	1	
					SUBTOTALS		5.18	88.25	0	0	9	3	0	12	12	
16-01	456+20 LT	WB	RIGHT REVERSE CURVE	W1-4R	30	30	---	6.25	---	---	---	1	---	1	1	
16-02	456+20 LT	WB	ADVISORY SPEED - 40	W13-1	18	18	---	2.25	---	---	---	---	---	---	---	MOUNT BELOW 16-01
16-03	457+50 LT	WB	SNOWMOBILE CROSSING	W11-6	30	30	---	6.25	---	---	1	---	---	1	1	
16-04	458+25 LT	SB	STOP	R1-1	30	30	5.18	---	---	---	1	---	---	1	1	
16-05	462+00 RT	WB	NO PASSING ZONE	R14-3	48	36	---	12.00	---	---	1	---	---	1	1	
16-06	464+15 LT	WB	RIGHT REVERSE CURVE	W1-4R	30	30	---	6.25	---	---	---	1	---	1	1	
16-07	464+15 LT	WB	ADVISORY SPEED - 35	W13-1	18	18	---	2.25	---	---	---	---	---	---	---	MOUNT BELOW 16-07
16-08	469+75 LT	EB	NO PASSING ZONE	R14-3	48	36	---	12.00	---	---	1	---	---	1	1	
16-09	473+10 RT	EB	LEFT CURVE	W1-2L	30	30	---	6.25	---	---	---	1	---	1	1	
16-10	473+10 RT	EB	ADVISORY SPEED -40	W13-1	18	18	---	2.25	---	---	---	---	---	---	---	MOUNT BELOW 16-09
16-11	477+80 RT	EB	NIGHT ARROW - LEFT	W1-6	48	24	---	8.00	---	---	1	---	---	1	1	
					SUBTOTALS		5.18	63.75	0	0	5	3	0	8	8	
17-01	480+75 RT	WB	NIGHT ARROW - RIGHT	W1-6	48	24	---	8.00	---	---	1	---	---	1	1	
17-02	486+25 RT	EB	RIGHT CURVE	W1-2R	30	30	---	6.25	---	---	1	---	---	1	1	
17-03	486+25 LT	WB	RIGHT CURVE	W1-2R	30	30	---	6.25	---	---	---	1	---	1	1	
17-04	486+25 LT	WB	ADVISORY SPEED - 40	W13-1	18	18	---	2.25	---	---	---	---	---	---	---	MOUNT BELOW 17-03
17-05	494+50 RT	EB	JCT USH 12	J1-1	24	39	6.50	---	---	---	1	---	---	1	1	
17-06	495+75 RT	EB	STOP AHEAD	W3-1	36	36	---	9.00	---	---	---	1	---	1	1	
17-07	496+35 LT	WB	LEFT CURVE	W1-2L	30	30	---	6.25	---	---	1	---	---	1	1	
17-08	498+50 RT	EB	WEST USH 12 LEFT; EAST USH 12 RIGHT; EAST STH 19 RIGHT	J2-3	72	57	28.50	---	---	---	---	1	1	1	2	
17-09	498+50 RT	WB	NO PASSING ZONE	W14-3	48	36	---	12.00	---	---	1	---	---	---	---	MOUNT BEHIND 17-08
17-10	498+50 LT	WB	MAZOMANIE 13	D2-1	84	15	---	---	---	1	1	---	---	1	2	
17-11	501+75 LT	EB	NO PASSING ZONE	W14-3	48	36	---	12.00	---	---	1	---	---	1	1	
17-13	502+50 RT	EB	SAUK CITY; WAUNAKEE; MADISON	D1-2	72	36	18.00	---	---	---	1	1	---	1	2	
17-14	503+50 LT	WB	45	R2-1	24	30	5.00	---	---	---	1	---	---	---	---	
17-15	504+95 LT	WB	MAX WIDTH 11', NEXT TO MILES	---	---	---	---	---	---	---	---	---	---	---	---	ESTR
17-16	505+75 LT	WB	WEST STH 19	J4-1	24	36	6.00	---	---	---	1	---	---	1	1	
17-17	507+20 LT	WB	ADOPT A HIGHWAY	---	---	---	---	---	---	---	---	---	---	1	1	
17-18	--	RT	EB	WEST USH 12 LEFT; EAST USH 12 RIGHT; EAST STH 19 RIGHT	J3-3	72	57	28.50	---	---	---	---	1	1	1	2	OUT OF PROJECT LIMITS
17-19	--	RT	EB	ONE WAY ARROW - RIGHT	R6-1-R	36	12	3.00	---	---	---	---	---	---	---	---	OUT OF PROJECT LIMITS
17-20	--	RT	EB	STOP	R1-1	30	30	5.18	---	---	---	---	1	---	1	1	OUT OF PROJECT LIMITS
17-21	--	RT	EB	DIVIDED HIGHWAY THROUGH	R6-3	30	24	5.00	---	---	---	---	---	---	---	---	OUT OF PROJECT LIMITS
					SUBTOTALS		113.18	62.00	0	1	11	6	2	15	19	
						TOTALS	662.55	992.00	14	23	136	45	3	212	226	

3

3

TRAFFIC CONTROL

CATEGORY	PROJECT	643.0100.01 EACH
0010	5145-00-60	1

REMOVING PAVEMENT MARKINGS WATER BLASTING

CATEGORY	LOCATION	646.0690.S LF	REMARKS
0010	UNDISTRIBUTED	2,500	FOR RELOCATING NO PASSING ZONES

LOCATING NO-PASSING ZONES

CATEGORY	STATION - STATION	648.0100 MI
0010	1+00 - 507+85	9.6

TRAFFIC CONTROL

CATEGORY	LOCATION	DURATION (DAYS)	643.0300 TRAFFIC CONTROL DRUMS		643.0420 TRAFFIC CONTROL BARRICADES TYPE III		643.0705 TRAFFIC CONTROL WARNING LIGHTS TYPE A		643.0900 TRAFFIC CONTROL SIGNS		643.0920 TRAFFIC CONTROL COVERING SIGNS TYPE II			643.1050 TRAFFIC CONTROL SIGNS PCMS		643.3000 TRAFFIC CONTROL DETOUR SIGNS	
			EACH	DAY	EACH	DAY	EACH	DAY	EACH	DAY	EACH	NO. OF CYCLES	EACH	EACH	DAY	EACH	DAY
0010	PROJECT PRE-WARNING	7	---	---	---	---	---	---	---	---	---	---	---	2	14	---	---
	TRAFFIC DETOUR SIGNING	75	---	---	---	---	---	---	---	---	6	1	6	---	---	101	7,575
	START/END PROJECT	75	---	---	4	300	8	600	2	150	---	---	---	---	---	---	---
	MAJOR INTERSECTIONS	75	---	---	42	3,150	42	3,150	28	2,100	---	---	---	---	---	---	---
	MINOR INTERSECTIONS	75	---	---	---	---	---	---	10	750	---	---	---	---	---	---	---
	CTH K - USH 12	75	---	---	20	1,500	40	3,000	0	0	---	---	---	---	---	---	---
	BEAM GUARD PROTECTION	14	120	1,680	---	---	120	1,680	---	---	---	---	---	---	---	---	---
	BRIDGE OUT	5	---	---	12	60	24	120	6	30	---	---	---	---	---	---	---
		TOTALS		1,680		5,010		8,550		3,030			6		14		7,575

TRAFFIC CONTROL DETOUR

CATEGORY	PROJECT	643.2000.01 EACH
0010	5145-00-60	1

TEMPORARY RAISED PAVEMENT MARKERS TYPE I (YELLOW)

CATEGORY	STATION	-	STATION	649.2100 EACH
0010	49+25	-	56+25	29
	363+50	-	369+75	26
	403+75	-	414+00	42
	ML DISTRESSED PAVEMENT			160
			TOTAL	257

PAVEMENT MARKING SUMMARY

CATEGORY	STATION - STATION	LOCATION	646.0106 PAVEMENT MARKING EPOXY 4-INCH (WHITE) LF	646.0106 PAVEMENT MARKING EPOXY 4-INCH (YELLOW) LF	647.0566 PAVEMENT MARKING STOP LINE EPOXY 18-INCH LF
0010	1+00 - 169+00	LT	16,800	---	19
	1+00 - 169+00	CL	---	13,900	---
	1+00 - 169+00	RT	16,800	---	---
	169+00 - 327+00	LT	15,700	---	---
	169+00 - 327+00	CL	---	25,100	---
	169+00 - 327+00	RT	15,500	---	---
	327+00 - 507+85	LT	18,100	---	---
	327+00 - 507+85	CL	---	31,500	---
	327+00 - 507+85	RT	18,200	---	34
		TOTALS	101,100	70,500	53
		ITEM TOTALS	171,600		53

3

3

CONSTRUCTION STAKING SUPPLEMENTAL CONTROL

CATEGORY	PROJECT	650.9910.01 LS
0010	5145-00-60	1

CONSTRUCTION STAKING SLOPE STAKES

CATEGORY	STATION - STATION	650.9920 LF
0010	392+50 - 397+50	500

SAWING ASPHALT

CATEGORY	STATION - STATION	LOCATION	690.0150 LF
0010	1+00 - 169+00	LT	9
	1+00 - 169+00	RT	20
	169+00 - 327+00	LT	25
	169+00 - 327+00	RT	15
	327+00 - 507+85	LT	6
	327+00 - 507+85	RT	70
	UNDISTRIBUTED	---	250
		TOTAL	395

SEALING ASPHALTIC PAVEMENT CRACKS, STH 19, DANE COUNTY

CATEGORY	STATION - STATION	SPV.0125.01 MI
0010	1+00 - 507+85	9.6

CONSTRUCTION STAKING RESURFACING REFERENCE

CATEGORY	STATION - STATION	650.8000 LF
0010	1+00 - 507+85	50,785

ASPHALTIC BINDER ENHANCED FRICTION SURFACE TREATMENT

CATEGORY	STATION - STATION	SPV.0180.02 SY
0010	49+25 - 56+25	1,850
	363+50 - 369+75	1,650
	403+75 - 414+00	2,750
	TOTAL	6,250

SALVAGED ASPHALTIC SHOULDER MATERIAL

CATEGORY	STATION - STATION	LOCATION	SPV.0195.01 TON
0010	1+00 - 169+00	LT	600
	1+00 - 169+00	RT	590
	169+00 - 327+00	LT	540
	169+00 - 327+00	RT	540
	327+00 - 507+85	LT	640
	327+00 - 507+85	RT	640
		TOTAL	3,550

LANDMARK REFERENCE MONUMENTS SPECIAL

CATEGORY	STATION	LOCATION	OFFSET	SPV.0060.01 EACH
0010	81+65.2	LT	5.39	1
	108+04.4	LT	0.33	1
	134+50.89	RT	3.35	1
	272+87.69	LT	0.91	1
	299+21.50	RT	1.38	1
	TOTAL			5

3

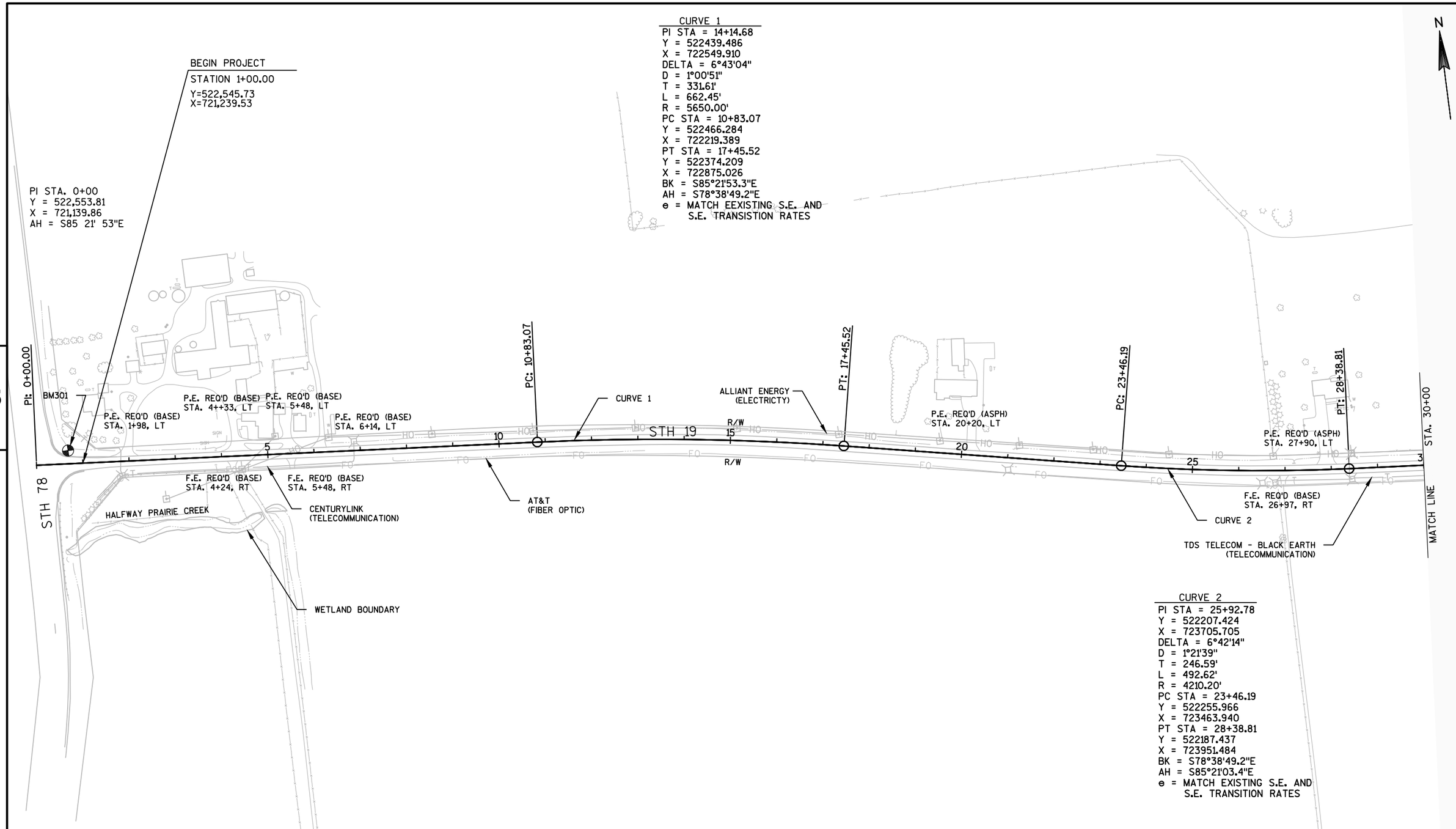

CURVE 2
PI STA = 25+92.78
Y = 522207.424
X = 723705.705
DELTA = 6°42'14"
D = 1°21'39"
T = 246.59'
L = 492.62'
R = 4210.20'
PC STA = 23+46.19
Y = 522255.966
X = 723463.940
PT STA = 28+38.81
Y = 522187.437
X = 723951.484
BK = S78°38'49.2"E
AH = S85°21'03.4"E
e = MATCH EXISTING S.E. AND
S.E. TRANSITION RATES

BENCHMARK DATA TABLE

POINT NUMBER	STATION	OFFSET	DESCRIPTION	ELEVATION
BM301	0+69.63	28.4', LT	CHIS 'X' IN 24" CMCP	808.38'

PROJECT NO:5145-00-60	HWY:STH 19	COUNTY:DANE	PLAN	SHEET 51	E

FILE NAME : N:\PDS\C3D\51450030\SHEETSPLAN\050201-PP.DWG
LAYOUT NAME - SHEET - (35)
PLOT DATE : 1/30/2017 7:48 PM PLOT BY : RICE, BRIAN J PLOT NAME : PLOT SCALE : 1 IN:200 FT
WISDOT/CADDS SHEET 44

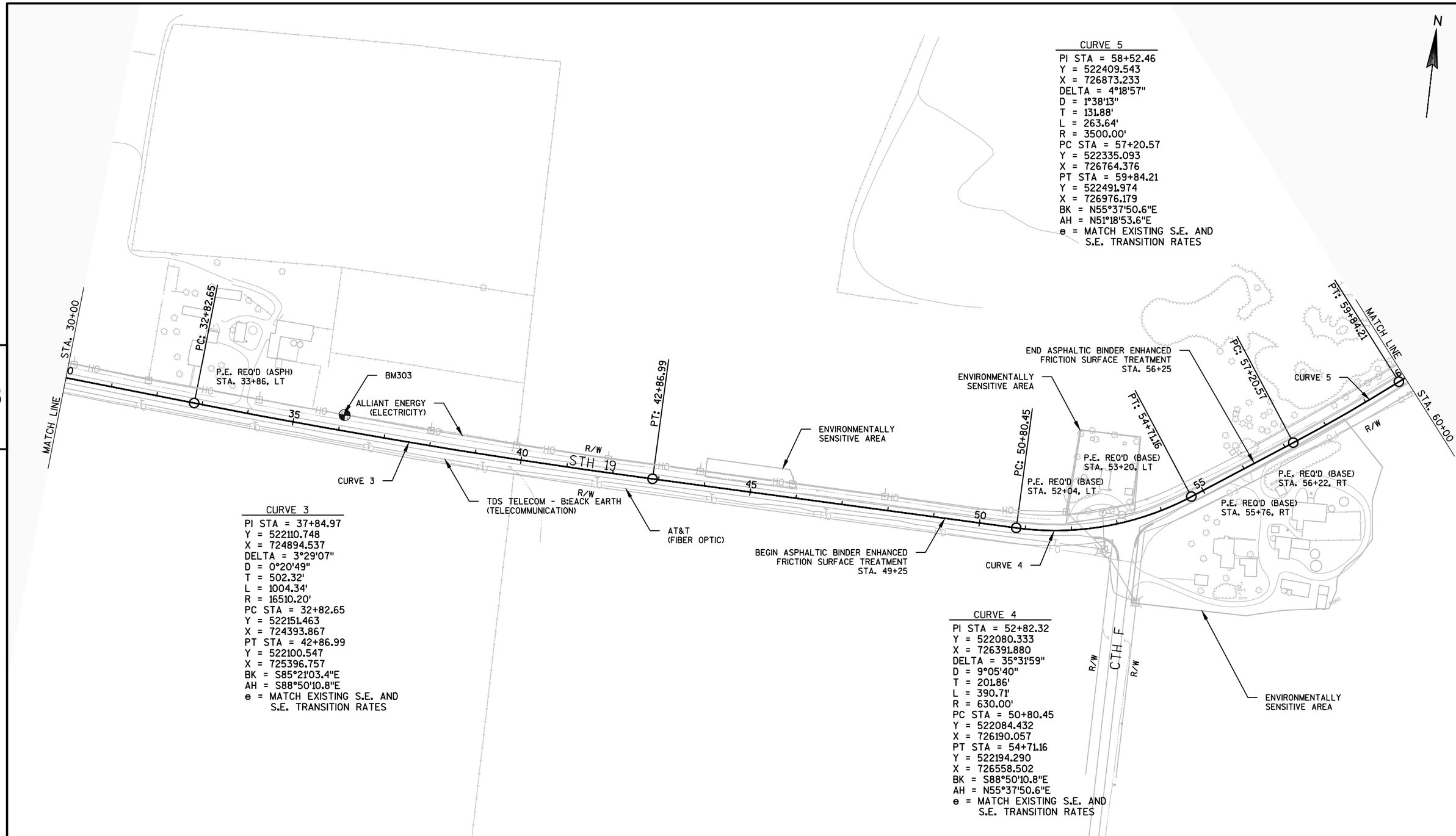

CURVE 3

PI STA = 37+84.97
Y = 522110.748
X = 724894.537
DELTA = 3°29'07"
D = 0°20'49"
T = 502.32'
L = 1004.34'
R = 16510.20'
PC STA = 32+82.65
Y = 522151.463
X = 724393.867
PT STA = 42+86.99
Y = 522100.547
X = 725396.757
BK = S85°21'03.4"E
AH = S88°50'10.8"E
e = MATCH EXISTING S.E. AND S.E. TRANSITION RATES

CURVE 4

PI STA = 52+82.32
Y = 522080.333
X = 726391.880
DELTA = 35°31'59"
D = 9°05'40"
T = 201.86'
L = 390.71'
R = 630.00'
PC STA = 50+80.45
Y = 522084.432
X = 726190.057
PT STA = 54+71.16
Y = 522194.290
X = 726558.502
BK = S88°50'10.8"E
AH = N55°37'50.6"E
e = MATCH EXISTING S.E. AND S.E. TRANSITION RATES

CURVE 5

PI STA = 58+52.46
Y = 522409.543
X = 726873.233
DELTA = 4°18'57"
D = 1°38'13"
T = 131.88'
L = 263.64'
R = 3500.00'
PC STA = 57+20.57
Y = 522335.093
X = 726764.376
PT STA = 59+84.21
Y = 522491.974
X = 726976.179
BK = N55°37'50.6"E
AH = N51°18'53.6"E
e = MATCH EXISTING S.E. AND S.E. TRANSITION RATES

BENCHMARK DATA TABLE

POINT NUMBER	STATION	OFFSET	DESCRIPTION	ELEVATION
BM303	36+07.61	34.1', LT	RR SPIKE IN PP	825.90'

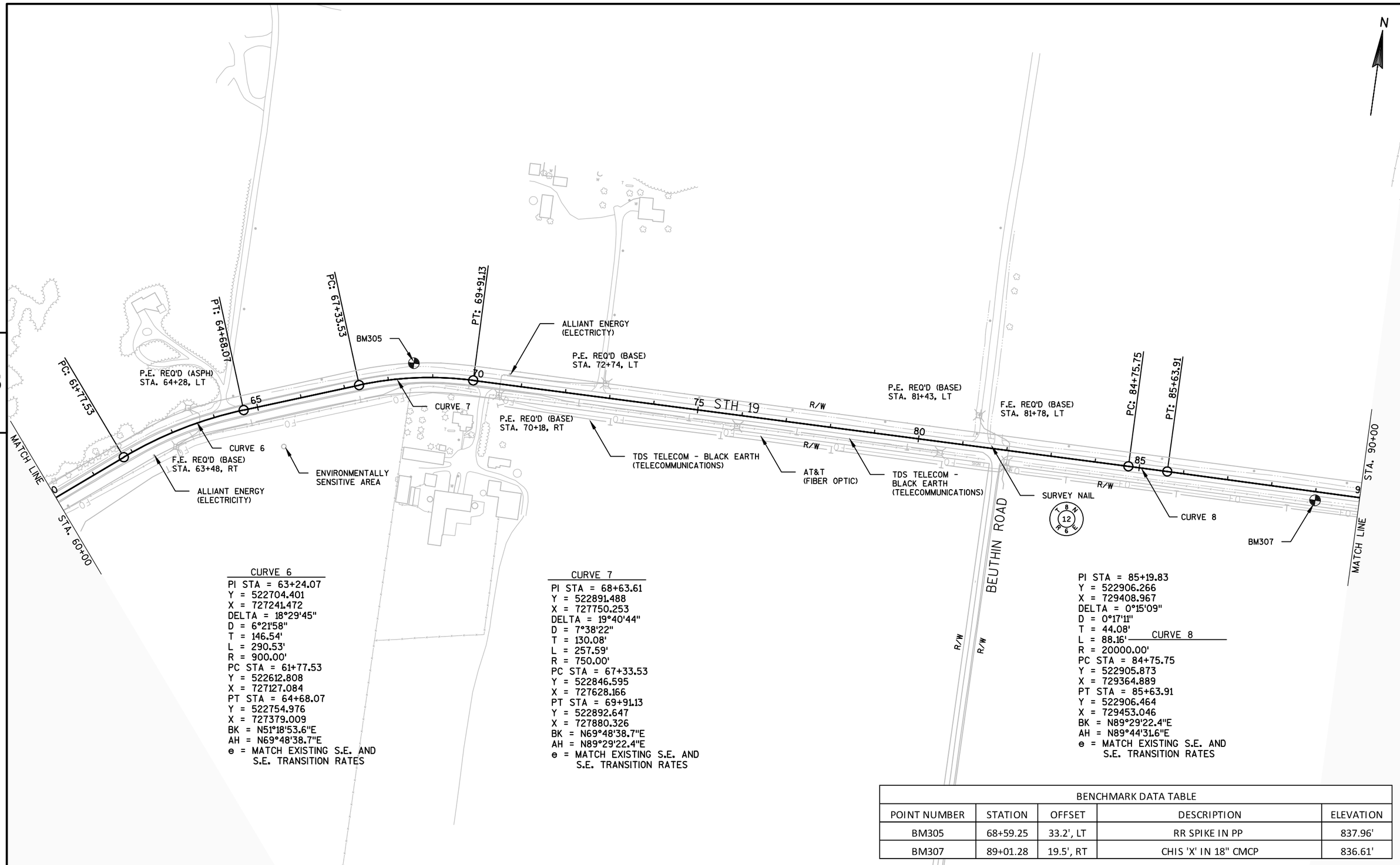

CURVE 6

PI STA = 63+24.07
Y = 522704.401
X = 727241.472
DELTA = 18°29'45"
D = 6°21'58"
T = 146.54'
L = 290.53'
R = 900.00'
PC STA = 61+77.53
Y = 522612.808
X = 727127.084
PT STA = 64+68.07
Y = 522754.976
X = 727379.009
BK = N51°18'53.6"E
AH = N69°48'38.7"E
e = MATCH EXISTING S.E. AND
S.E. TRANSITION RATES

CURVE 7

PI STA = 68+63.61
Y = 522891.488
X = 727750.253
DELTA = 19°40'44"
D = 7°38'22"
T = 130.08'
L = 257.59'
R = 750.00'
PC STA = 67+33.53
Y = 522846.595
X = 727628.166
PT STA = 69+91.13
Y = 522892.647
X = 727880.326
BK = N69°48'38.7"E
AH = N89°29'22.4"E
e = MATCH EXISTING S.E. AND
S.E. TRANSITION RATES

CURVE 8

PI STA = 85+19.83
Y = 522906.266
X = 729408.967
DELTA = 0°15'09"
D = 0°17'11"
T = 44.08'
L = 88.16'
R = 20000.00'
PC STA = 84+75.75
Y = 522905.873
X = 729364.889
PT STA = 85+63.91
Y = 522906.464
X = 729453.046
BK = N89°29'22.4"E
AH = N89°44'31.6"E
e = MATCH EXISTING S.E. AND
S.E. TRANSITION RATES

BENCHMARK DATA TABLE

POINT NUMBER	STATION	OFFSET	DESCRIPTION	ELEVATION
BM305	68+59.25	33.2', LT	RR SPIKE IN PP	837.96'
BM307	89+01.28	19.5', RT	CHIS 'X' IN 18" CMCP	836.61'

PROJECT NO:5145-00-60	HWY:STH 19	COUNTY:DANE	PLAN	SHEET 53	E

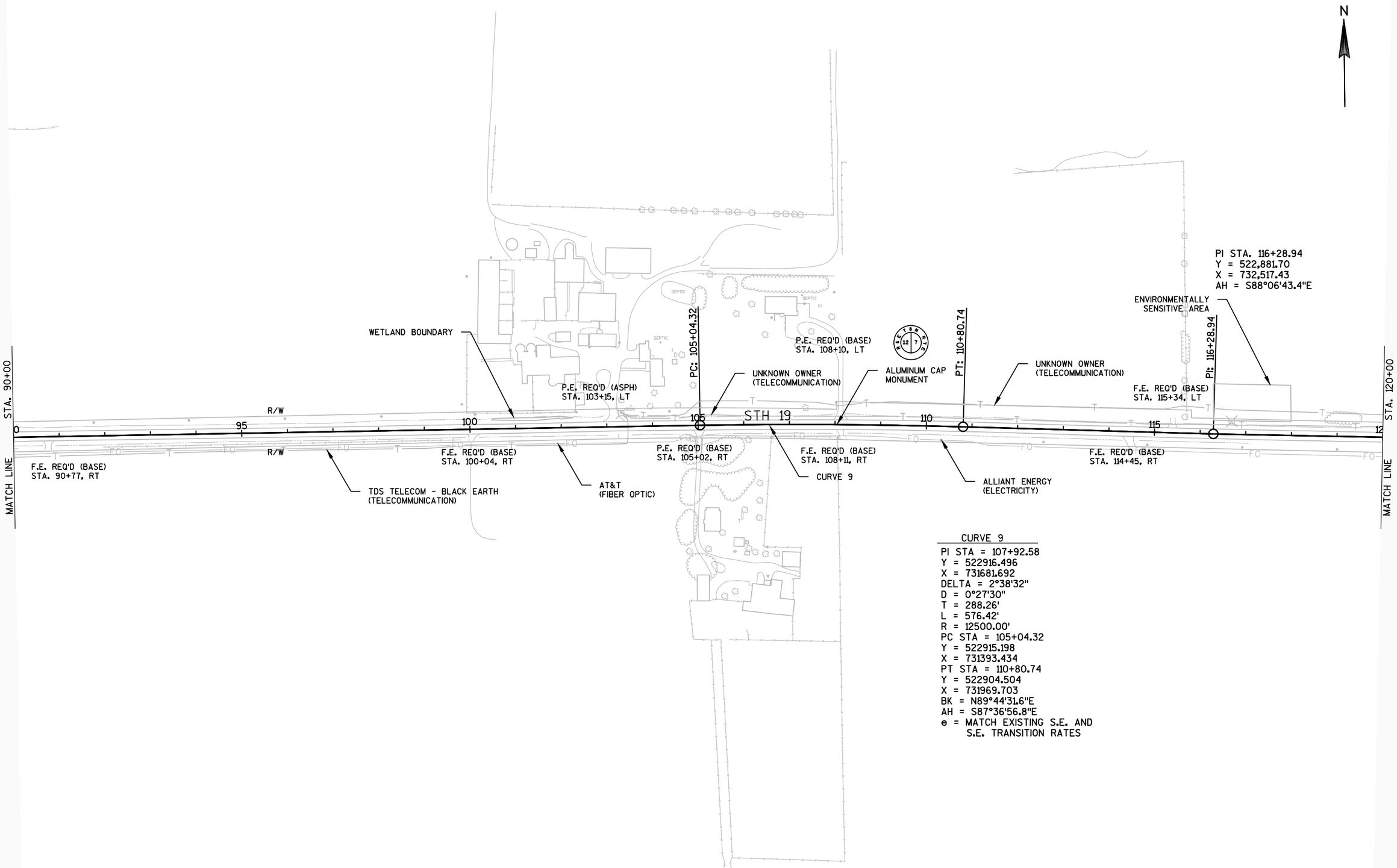

CURVE 9

PI STA = 107+92.58
Y = 522916.496
X = 731681.692
DELTA = 2°38'32"
D = 0°27'30"
T = 288.26'
L = 576.42'
R = 12500.00'
PC STA = 105+04.32
Y = 522915.198
X = 731393.434
PT STA = 110+80.74
Y = 522904.504
X = 731969.703
BK = N89°44'31.6"E
AH = S87°36'56.8"E
e = MATCH EXISTING S.E. AND S.E. TRANSITION RATES

5

5

PROJECT NO:5145-00-60	HWY:STH 19	COUNTY:DANE	PLAN	SHEET 54	E

FILE NAME : N:\PDS\C3D\51450030\SHEETSPLAN\050201-PP.DWG
LAYOUT NAME - SHEET - (38)
PLOT DATE : 1/30/2017 7:49 PM PLOT BY : RICE, BRIAN J PLOT NAME : PLOT SCALE : 1 IN:200 FT

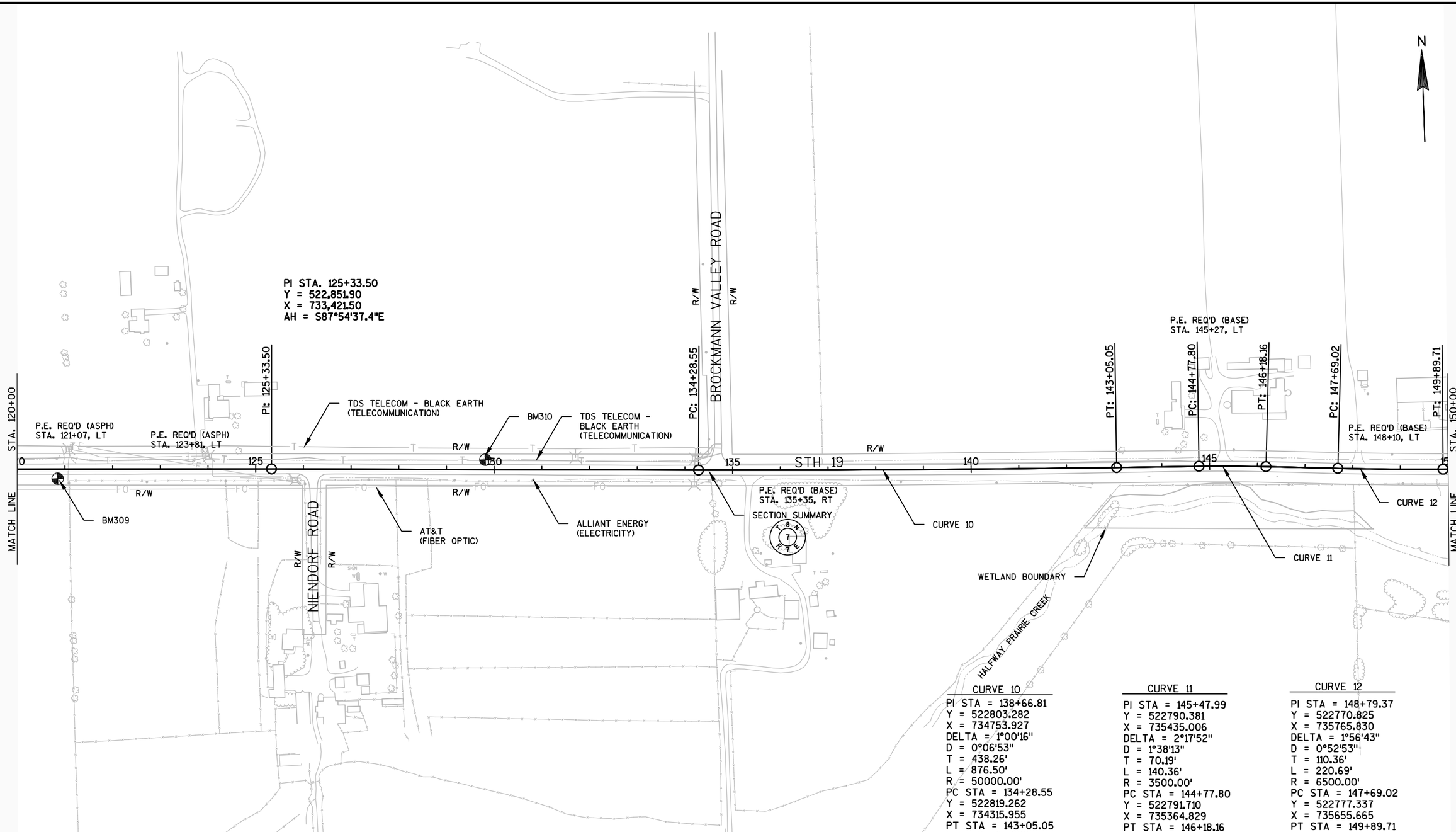

BENCHMARK DATA TABLE				
POINT NUMBER	STATION	OFFSET	DESCRIPTION	ELEVATION
BM309	120+84.90	20.0', RT	CHIS 'X' IN SQUASH CMCP	850.24'
BM310	129+81.50	20.6', LT	CHIS 'X' IN 24" CMCP	851.92'

CURVE 10

PI STA = 138+66.81
Y = 522803.282
X = 734753.927
DELTA = 1°00'16"
D = 0°06'53"
T = 438.26'
L = 876.50'
R = 50000.00'
PC STA = 134+28.55
Y = 522819.262
X = 734315.955
PT STA = 143+05.05
Y = 522794.982
X = 735192.112
BK = S87°54'37.4"E
AH = S88°54'53.3"E
e = MATCH EXISTING S.E. AND S.E. TRANSITION RATES

CURVE 11

PI STA = 145+47.99
Y = 522790.381
X = 735435.006
DELTA = 2°17'52"
D = 1°38'13"
T = 70.19'
L = 140.36'
R = 3500.00'
PC STA = 144+77.80
Y = 522791.710
X = 735364.829
PT STA = 146+18.16
Y = 522786.239
X = 735505.072
BK = S88°54'53.3"E
AH = S86°37'01.5"E
e = MATCH EXISTING S.E. AND S.E. TRANSITION RATES

CURVE 12

PI STA = 148+79.37
Y = 522770.825
X = 735765.830
DELTA = 1°56'43"
D = 0°52'53"
T = 110.36'
L = 220.69'
R = 6500.00'
PC STA = 147+69.02
Y = 522777.337
X = 735655.665
PT STA = 149+89.71
Y = 522768.057
X = 735876.152
BK = S86°37'01.5"E
AH = S88°33'44.8"E
e = MATCH EXISTING S.E. AND S.E. TRANSITION RATES

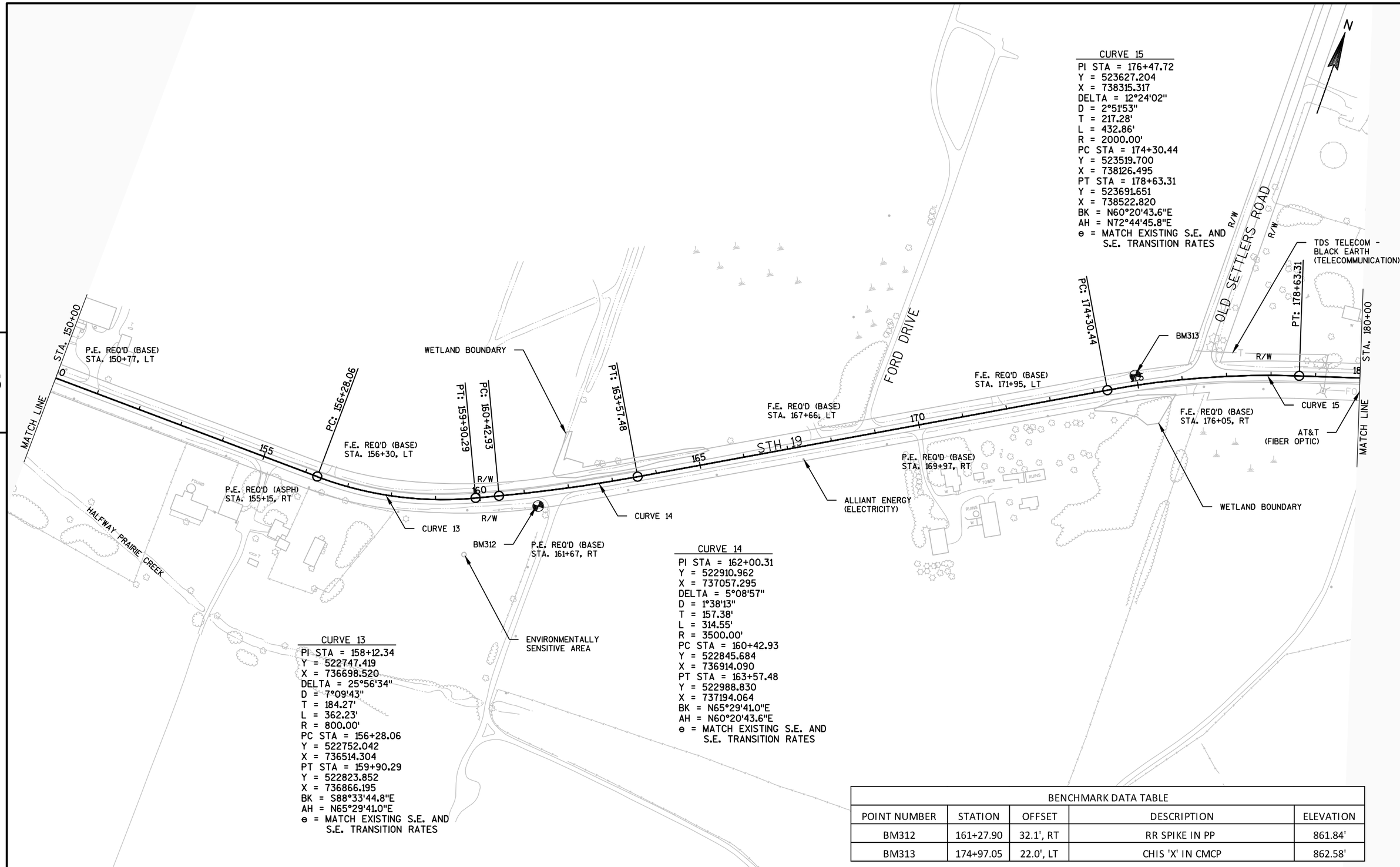

CURVE 15
PI STA = 176+47.72
Y = 523627.204
X = 738315.317
DELTA = 12°24'02"
D = 2°51'53"
T = 217.28'
L = 432.86'
R = 2000.00'
PC STA = 174+30.44
Y = 523519.700
X = 738126.495
PT STA = 178+63.31
Y = 523691.651
X = 738522.820
BK = N60°20'43.6"E
AH = N72°44'45.8"E
e = MATCH EXISTING S.E. AND
S.E. TRANSITION RATES

CURVE 13
PI STA = 158+12.34
Y = 522747.419
X = 736698.520
DELTA = 25°56'34"
D = 7°09'43"
T = 184.27'
L = 362.23'
R = 800.00'
PC STA = 156+28.06
Y = 522752.042
X = 736514.304
PT STA = 159+90.29
Y = 522823.852
X = 736866.195
BK = S88°33'44.8"E
AH = N65°29'41.0"E
e = MATCH EXISTING S.E. AND
S.E. TRANSITION RATES

CURVE 14
PI STA = 162+00.31
Y = 522910.962
X = 737057.295
DELTA = 5°08'57"
D = 1°38'13"
T = 157.38'
L = 314.55'
R = 3500.00'
PC STA = 160+42.93
Y = 522845.684
X = 736914.090
PT STA = 163+57.48
Y = 522988.830
X = 737194.064
BK = N65°29'41.0"E
AH = N60°20'43.6"E
e = MATCH EXISTING S.E. AND
S.E. TRANSITION RATES

BENCHMARK DATA TABLE

POINT NUMBER	STATION	OFFSET	DESCRIPTION	ELEVATION
BM312	161+27.90	32.1', RT	RR SPIKE IN PP	861.84'
BM313	174+97.05	22.0', LT	CHIS 'X' IN CMCP	862.58'

5

5

PROJECT NO:5145-00-60	HWY:STH 19	COUNTY:DANE	PLAN	SHEET 56	E

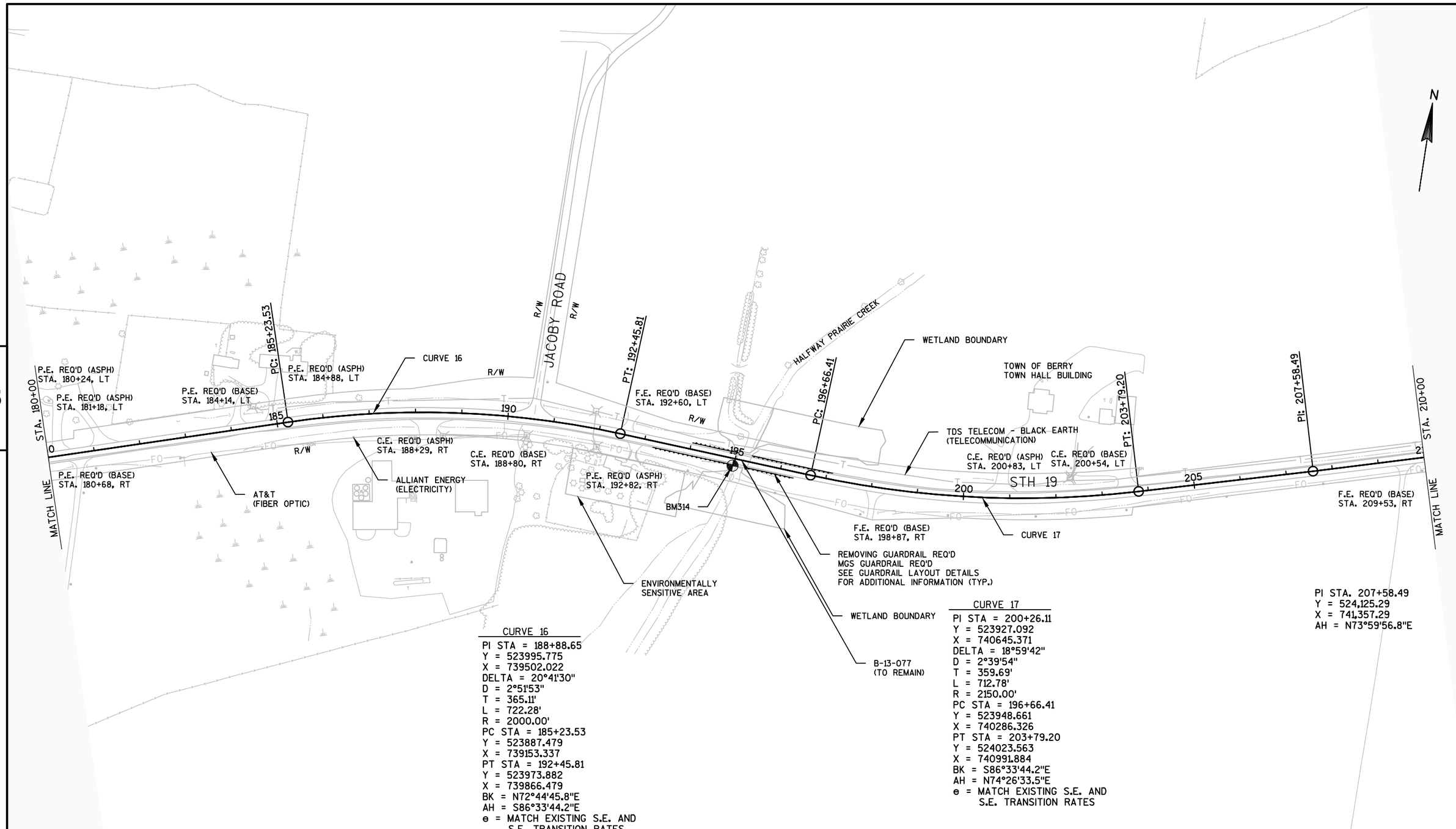

CURVE 16

PI STA = 188+88.65
Y = 523995.775
X = 739502.022
DELTA = 20°41'30"
D = 2°51'53"
T = 365.11'
L = 722.28'
R = 2000.00'
PC STA = 185+23.53
Y = 523887.479
X = 739153.337
PT STA = 192+45.81
Y = 523973.882
X = 739866.479
BK = N72°44'45.8"E
AH = S86°33'44.2"E
e = MATCH EXISTING S.E. AND
S.E. TRANSITION RATES

CURVE 17

PI STA = 200+26.11
Y = 523927.092
X = 740645.371
DELTA = 18°59'42"
D = 2°39'54"
T = 359.69'
L = 712.78'
R = 2150.00'
PC STA = 196+66.41
Y = 523948.661
X = 740286.326
PT STA = 203+79.20
Y = 524023.563
X = 740991.884
BK = S86°33'44.2"E
AH = N74°26'33.5"E
e = MATCH EXISTING S.E. AND
S.E. TRANSITION RATES

PI STA. 207+58.49
Y = 524,125.29
X = 741,357.29
AH = N73°59'56.8"E

BENCHMARK DATA TABLE

POINT NUMBER	STATION	OFFSET	DESCRIPTION	ELEVATION
BM314	194+97.25	16.0', RT	WISDOT DISK SW WINGWALL	868.88'

PROJECT NO:5145-00-60	HWY:STH 19	COUNTY:DANE	PLAN	SHEET 57	E

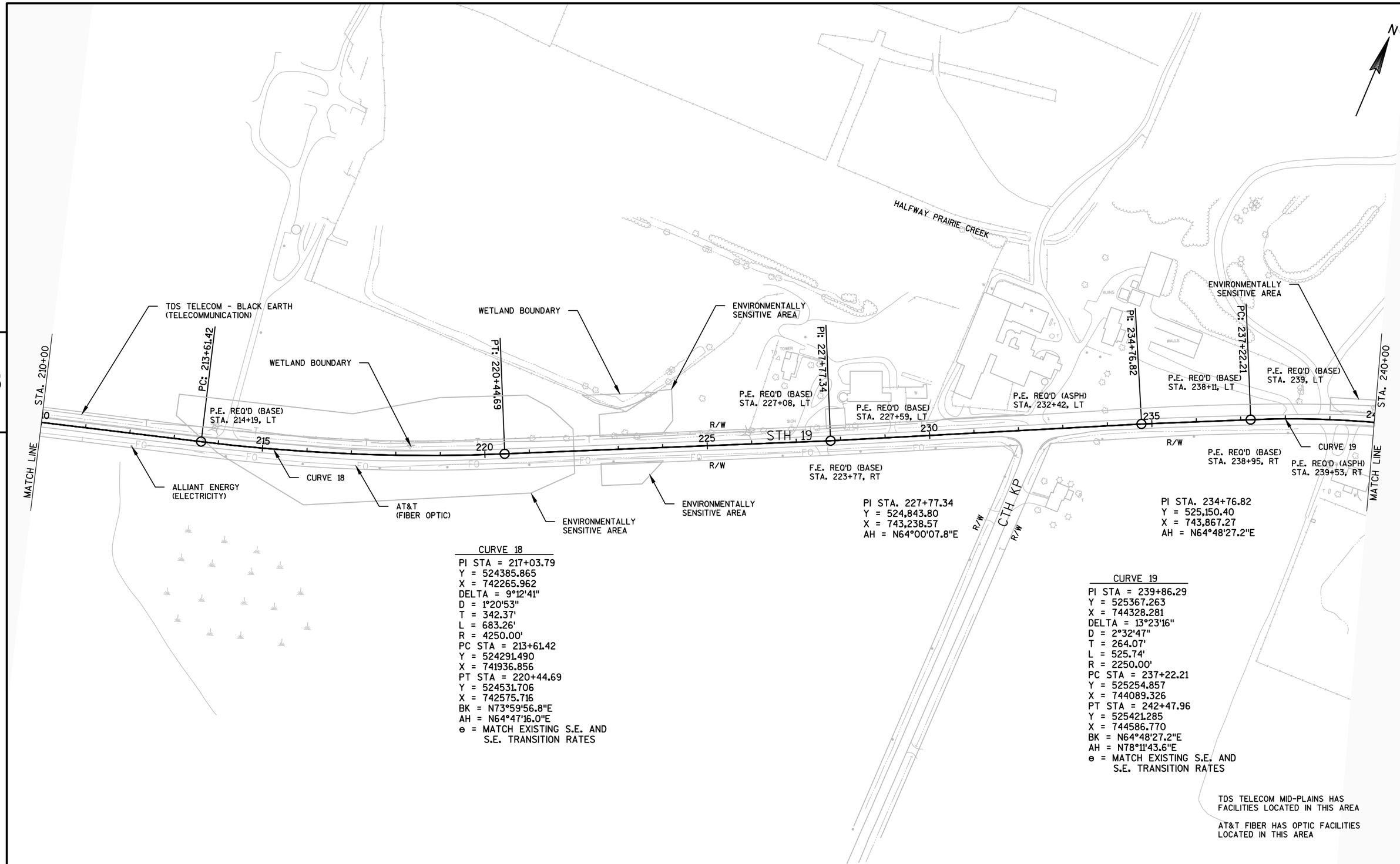

PROJECT NO:5145-00-60	HWY:STH 19	COUNTY:DANE	PLAN	SHEET 58	E

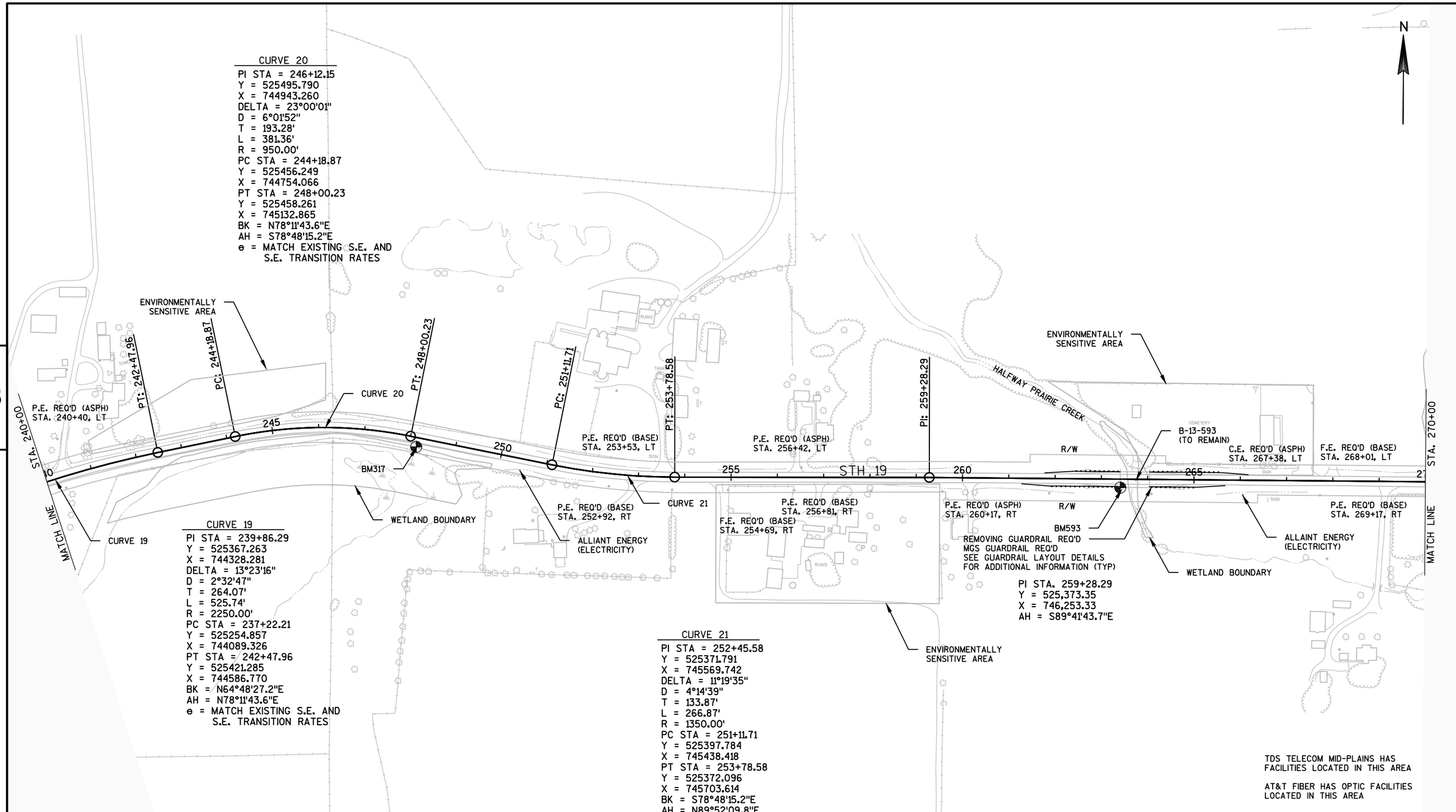

5

5

BENCHMARK DATA TABLE

POINT NUMBER	STATION	OFFSET	DESCRIPTION	ELEVATION
BM317	248+16.55	20.1', RT	CHIS 'X' IN 30" CMCP	878.31'
BM593	263+41.25	18.4', RT	DISK SW CORNER	893.96'

PROJECT NO:5145-00-60	HWY:STH 19	COUNTY:DANE	PLAN	SHEET 59	E

FILE NAME : N:\PDS\C3D\51450030\SHEETSPLAN\050201-PP.DWG
LAYOUT NAME - SHEET - (43)
PLOT DATE : 1/30/2017 7:50 PM PLOT BY : RICE, BRIAN J PLOT NAME : PLOT SCALE : 1 IN:200 FT
WISDOT/CADDS SHEET 44

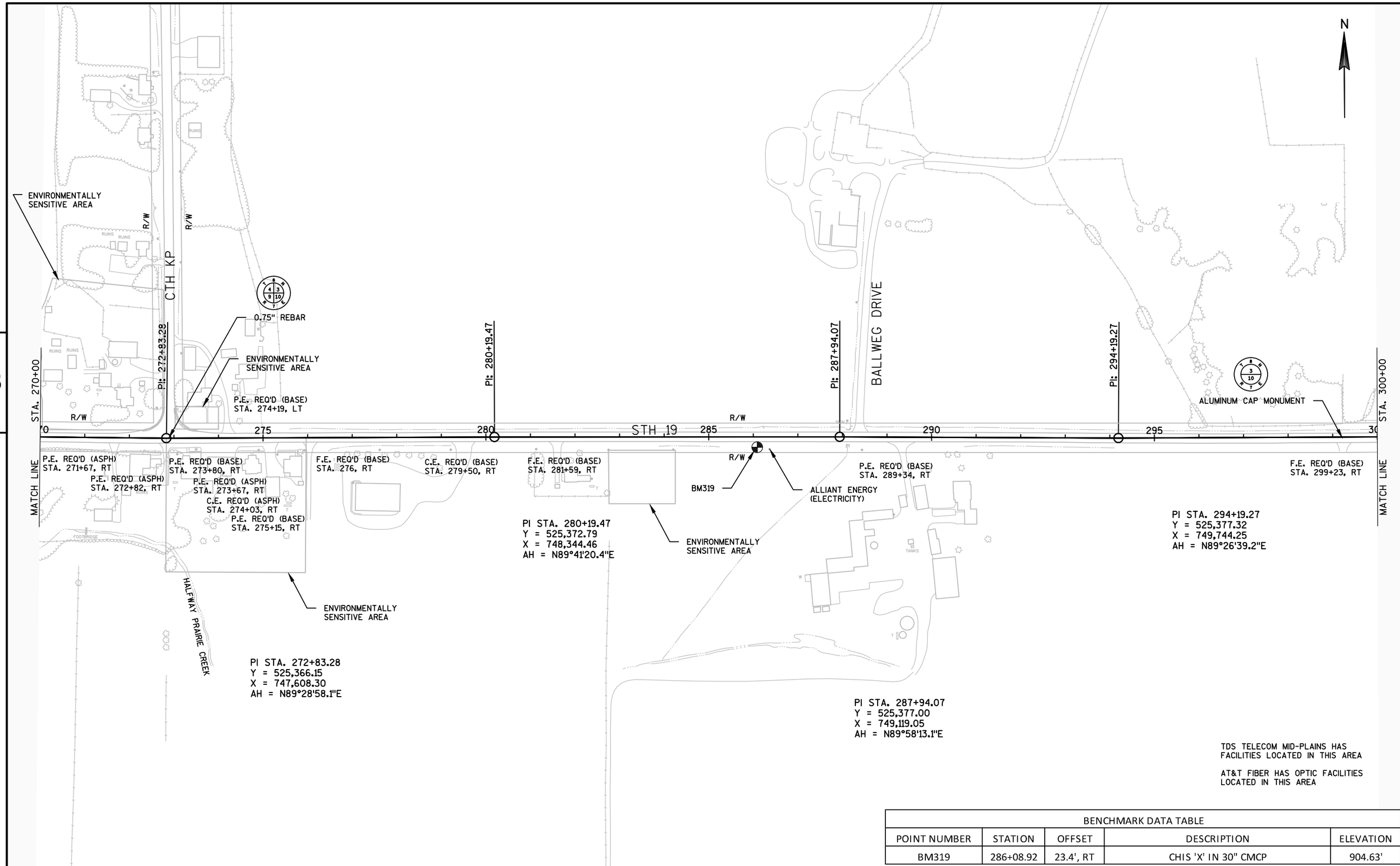

BENCHMARK DATA TABLE				
POINT NUMBER	STATION	OFFSET	DESCRIPTION	ELEVATION
BM319	286+08.92	23.4', RT	CHIS 'X' IN 30" CMCP	904.63'

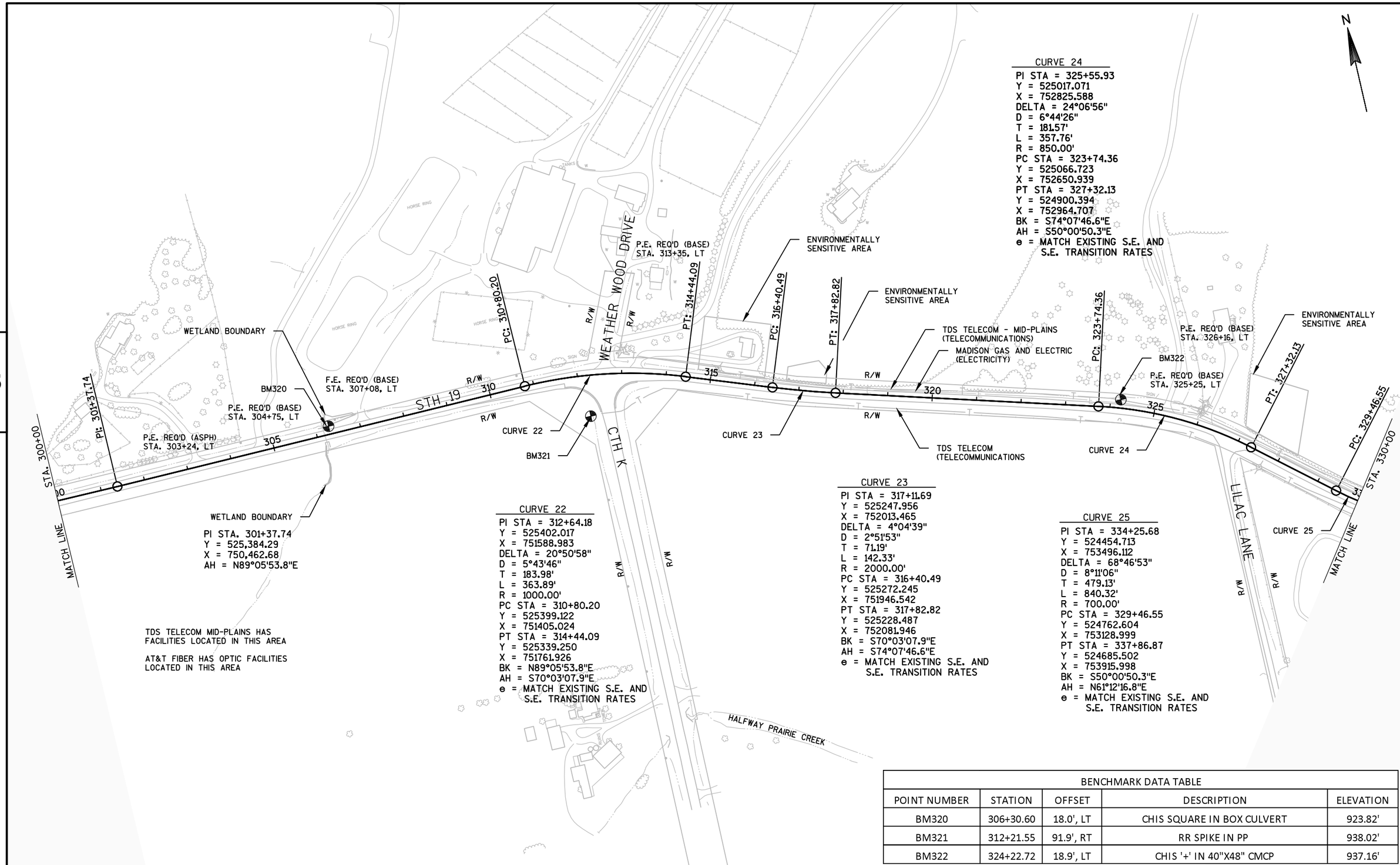

CURVE 24

PI STA = 325+55.93
Y = 525017.071
X = 752825.588
DELTA = 24°06'56"
D = 6°44'26"
T = 181.57'
L = 357.76'
R = 850.00'
PC STA = 323+74.36
Y = 525066.723
X = 752650.939
PT STA = 327+32.13
Y = 524900.394
X = 752964.707
BK = S74°07'46.6"E
AH = S50°00'50.3"E
e = MATCH EXISTING S.E. AND S.E. TRANSITION RATES

CURVE 22

PI STA = 312+64.18
Y = 525402.017
X = 751588.983
DELTA = 20°50'58"
D = 5°43'46"
T = 183.98'
L = 363.89'
R = 1000.00'
PC STA = 310+80.20
Y = 525399.122
X = 751405.024
PT STA = 314+44.09
Y = 525339.250
X = 751761.926
BK = N89°05'53.8"E
AH = S70°03'07.9"E
e = MATCH EXISTING S.E. AND S.E. TRANSITION RATES

CURVE 23

PI STA = 317+11.69
Y = 525247.956
X = 752013.465
DELTA = 4°04'39"
D = 2°51'53"
T = 71.19'
L = 142.33'
R = 2000.00'
PC STA = 316+40.49
Y = 525272.245
X = 751946.542
PT STA = 317+82.82
Y = 525228.487
X = 752081.946
BK = S70°03'07.9"E
AH = S74°07'46.6"E
e = MATCH EXISTING S.E. AND S.E. TRANSITION RATES

CURVE 25

PI STA = 334+25.68
Y = 524454.713
X = 753496.112
DELTA = 68°46'53"
D = 8°11'06"
T = 479.13'
L = 840.32'
R = 700.00'
PC STA = 329+46.55
Y = 524762.604
X = 753128.999
PT STA = 337+86.87
Y = 524685.502
X = 753915.998
BK = S50°00'50.3"E
AH = N61°12'16.8"E
e = MATCH EXISTING S.E. AND S.E. TRANSITION RATES

BENCHMARK DATA TABLE

POINT NUMBER	STATION	OFFSET	DESCRIPTION	ELEVATION
BM320	306+30.60	18.0', LT	CHIS SQUARE IN BOX CULVERT	923.82'
BM321	312+21.55	91.9', RT	RR SPIKE IN PP	938.02'
BM322	324+22.72	18.9', LT	CHIS '+' IN 40"X48" CMCP	937.16'

BENCHMARK DATA TABLE				
POINT NUMBER	STATION	OFFSET	DESCRIPTION	ELEVATION
BM323	336+22.00	22.5', RT	CHIS '+' IN 30" CMCP	926.79'
BM324	341+12.98	33.9', RT	RR SPIKE IN END FENCE POST	927.63'
BM325	350+41.12	18.0', RT	RR SPIKE IN BEAM GUARD POST	931.90'

PI STA. 355+51.37
Y = 525,772.03
X = 755,098.23
AH = N04°18'31.2"E

CURVE 31
PI STA = 359+73.32
Y = 526182.375
X = 755188.848
DELTA = 15°57'27"
D = 4°32'26"
T = 176.87'
L = 351.44'
R = 1261.86'
PC STA = 357+96.46
Y = 526013.406
X = 755136.590
PT STA = 361+47.90
Y = 526330.465
X = 755285.545
BK = N17°11'08.3"E
AH = N33°08'35.0"E
e = MATCH EXISTING S.E. AND S.E. TRANSITION RATES

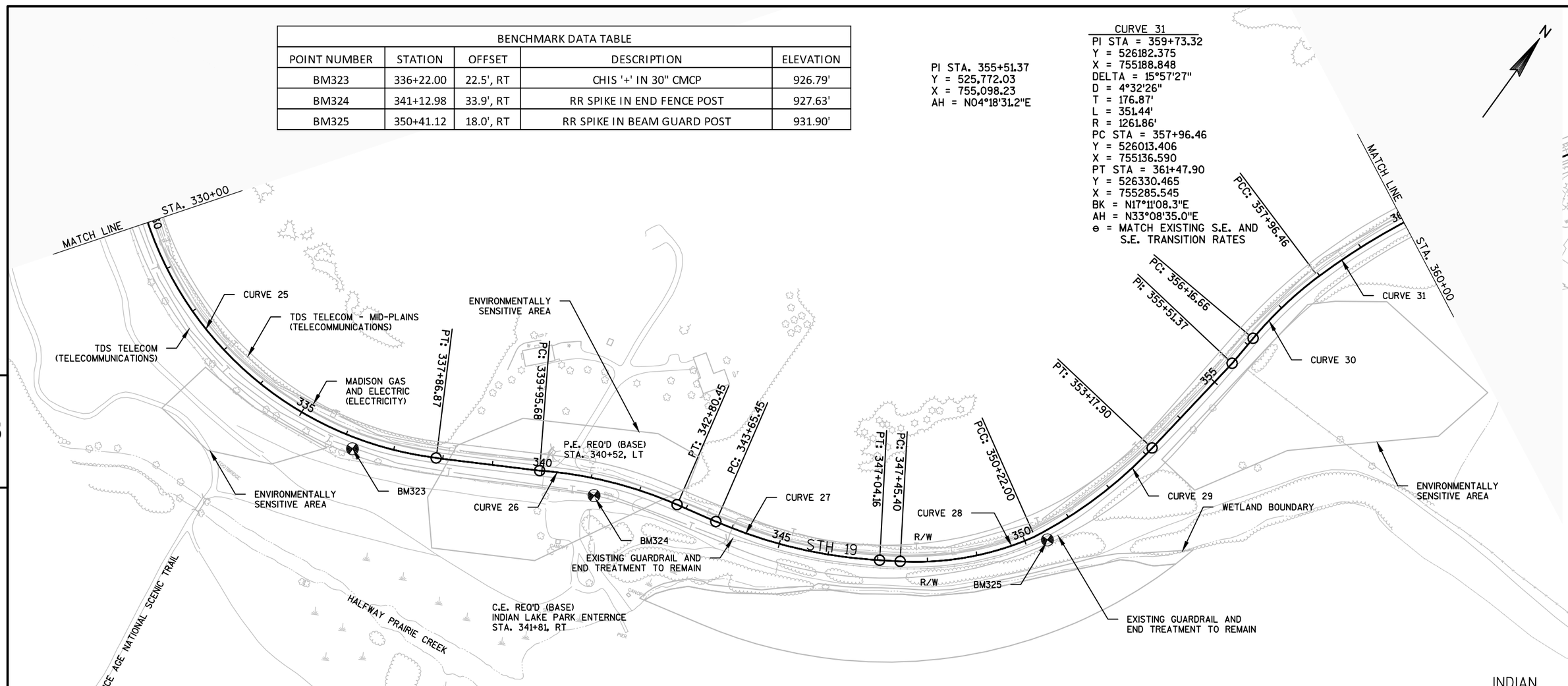

CURVE 25
PI STA = 334+25.68
Y = 524454.713
X = 753496.112
DELTA = 68°46'53"
D = 8°11'06"
T = 479.13'
L = 840.32'
R = 700.00'
PC STA = 329+46.55
Y = 524762.604
X = 753128.999
PT STA = 337+86.87
Y = 524685.502
X = 753915.998
BK = S50°00'50.3"E
AH = N61°12'16.8"E
e = MATCH EXISTING S.E. AND S.E. TRANSITION RATES

CURVE 26
PI STA = 341+39.41
Y = 524861.165
X = 754221.544
DELTA = 19°10'58"
D = 6°44'10"
T = 143.73'
L = 284.77'
R = 850.56'
PC STA = 339+95.68
Y = 524786.081
X = 754098.984
PT STA = 342+80.45
Y = 524891.810
X = 754361.970
BK = N58°30'24.8"E
AH = N77°41'23.0"E
e = MATCH EXISTING S.E. AND S.E. TRANSITION RATES

CURVE 27
PI STA = 345+36.62
Y = 524946.428
X = 754612.252
DELTA = 20°25'41"
D = 6°01'52"
T = 171.17'
L = 338.71'
R = 950.00'
PC STA = 343+65.45
Y = 524909.933
X = 754445.016
PT STA = 347+04.16
Y = 525038.999
X = 754756.232
BK = N77°41'21.7"E
AH = N57°15'40.9"E
e = MATCH EXISTING S.E. AND S.E. TRANSITION RATES

CURVE 28
PI STA = 348+86.32
Y = 525137.512
X = 754909.455
DELTA = 27°01'49"
D = 9°46'21"
T = 140.92'
L = 276.60'
R = 586.30'
PC STA = 347+45.40
Y = 525061.300
X = 754790.918
PT STA = 350+22.00
Y = 525259.269
X = 754980.408
BK = N57°15'40.9"E
AH = N30°13'52.2"E
e = MATCH EXISTING S.E. AND S.E. TRANSITION RATES

CURVE 29
PI STA = 351+71.37
Y = 525392.504
X = 755047.940
DELTA = 19°19'52"
D = 6°31'58"
T = 149.37'
L = 295.90'
R = 877.04'
PC STA = 350+22.00
Y = 525259.269
X = 754980.408
PT STA = 353+17.90
Y = 525540.582
X = 755067.560
BK = N26°52'43.8"E
AH = N07°32'51.7"E
e = MATCH EXISTING S.E. AND S.E. TRANSITION RATES

CURVE 30
PI STA = 357+06.94
Y = 525927.158
X = 755109.915
DELTA = 12°52'37"
D = 7°09'43"
T = 90.28'
L = 179.80'
R = 800.00'
PC STA = 356+16.66
Y = 525837.135
X = 755103.133
PT STA = 357+96.46
Y = 526013.406
X = 755136.590
BK = N04°18'31.2"E
AH = N17°11'08.3"E
e = MATCH EXISTING S.E. AND S.E. TRANSITION RATES

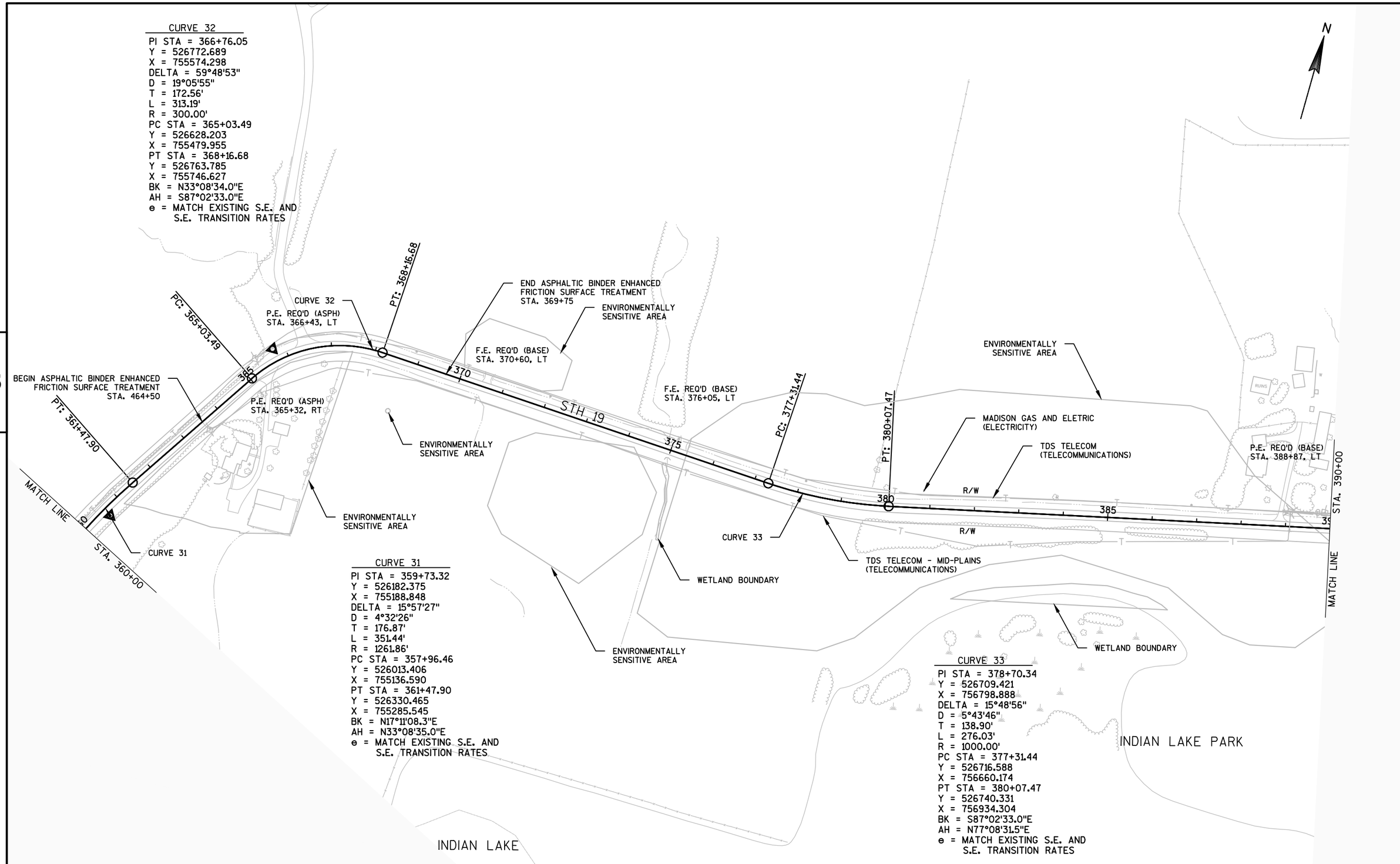

PROJECT NO:5145-00-60	HWY:STH 19	COUNTY:DANE	PLAN	SHEET 63	E

FILE NAME : N:\PDS\C3D\51450030\SHEETSPLAN\050201-PP.DWG
LAYOUT NAME - SHEET - (47)
PLOT DATE : 1/30/2017 7:50 PM PLOT BY : RICE, BRIAN J PLOT NAME : PLOT SCALE : 1 IN:200 FT
WISDOT/CADDS SHEET 44

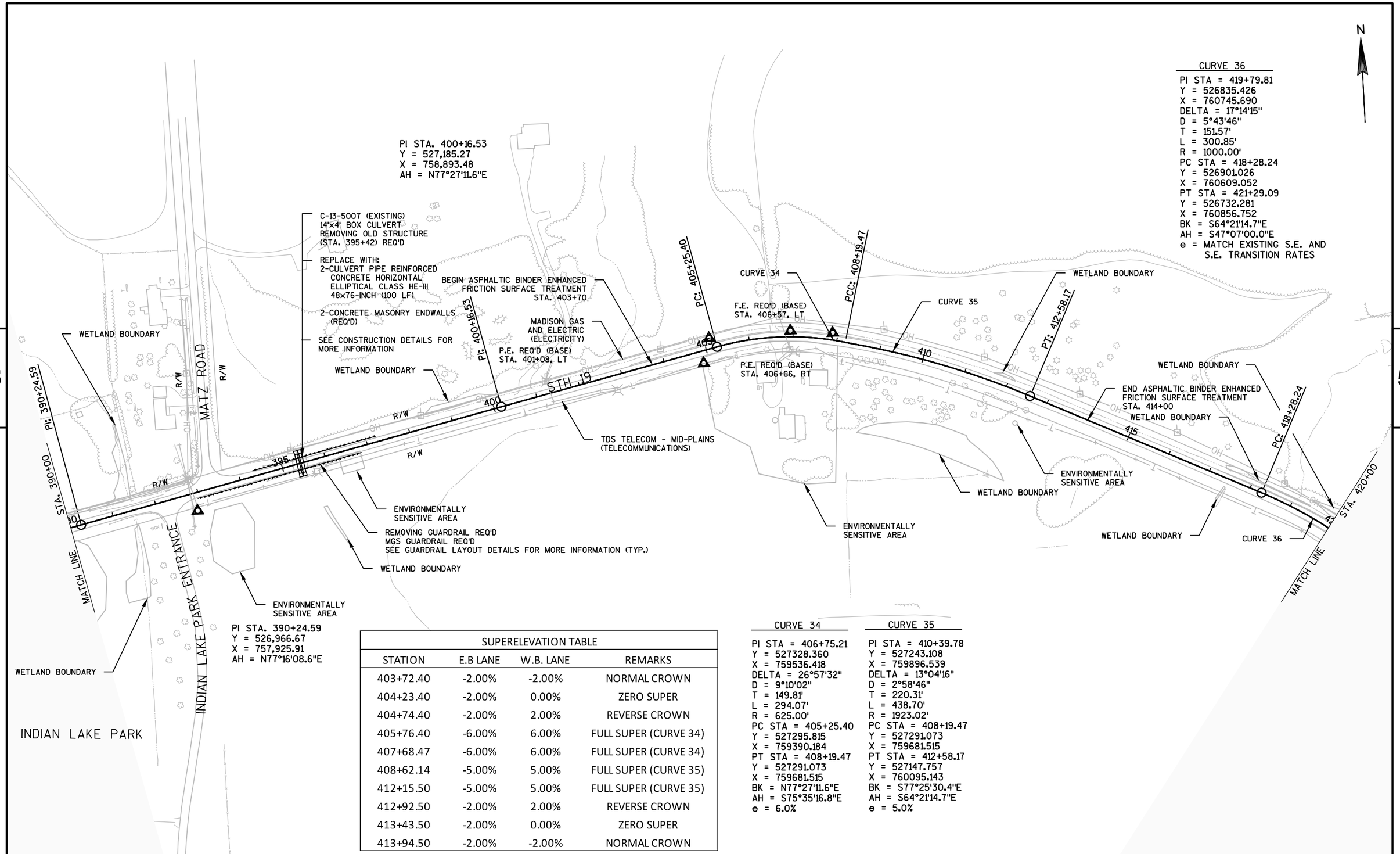

CURVE 36

PI STA = 419+79.81
Y = 526835.426
X = 760745.690
DELTA = 17°14'15"
D = 5°43'46"
T = 151.57'
L = 300.85'
R = 1000.00'
PC STA = 418+28.24
Y = 526901.026
X = 760609.052
PT STA = 421+29.09
Y = 526732.281
X = 760856.752
BK = S64°21'14.7"E
AH = S47°07'00.0"E
e = MATCH EXISTING S.E. AND
S.E. TRANSITION RATES

SUPERELEVATION TABLE

STATION	E.B LANE	W.B. LANE	REMARKS
403+72.40	-2.00%	-2.00%	NORMAL CROWN
404+23.40	-2.00%	0.00%	ZERO SUPER
404+74.40	-2.00%	2.00%	REVERSE CROWN
405+76.40	-6.00%	6.00%	FULL SUPER (CURVE 34)
407+68.47	-6.00%	6.00%	FULL SUPER (CURVE 34)
408+62.14	-5.00%	5.00%	FULL SUPER (CURVE 35)
412+15.50	-5.00%	5.00%	FULL SUPER (CURVE 35)
412+92.50	-2.00%	2.00%	REVERSE CROWN
413+43.50	-2.00%	0.00%	ZERO SUPER
413+94.50	-2.00%	-2.00%	NORMAL CROWN

CURVE 34

PI STA = 406+75.21
Y = 527328.360
X = 759536.418
DELTA = 26°57'32"
D = 9°10'02"
T = 149.81'
L = 294.07'
R = 625.00'
PC STA = 405+25.40
Y = 527295.815
X = 759390.184
PT STA = 408+19.47
Y = 527291.073
X = 759681.515
BK = N77°27'11.6"E
AH = S75°35'16.8"E
e = 6.0%

CURVE 35

PI STA = 410+39.78
Y = 527243.108
X = 759896.539
DELTA = 13°04'16"
D = 2°58'46"
T = 220.31'
L = 438.70'
R = 1923.02'
PC STA = 408+19.47
Y = 527291.073
X = 759681.515
PT STA = 412+58.17
Y = 527147.757
X = 760095.143
BK = S77°25'30.4"E
AH = S64°21'14.7"E
e = 5.0%

PROJECT NO:5145-00-60	HWY:STH 19	COUNTY:DANE	PLAN	SHEET 64	E

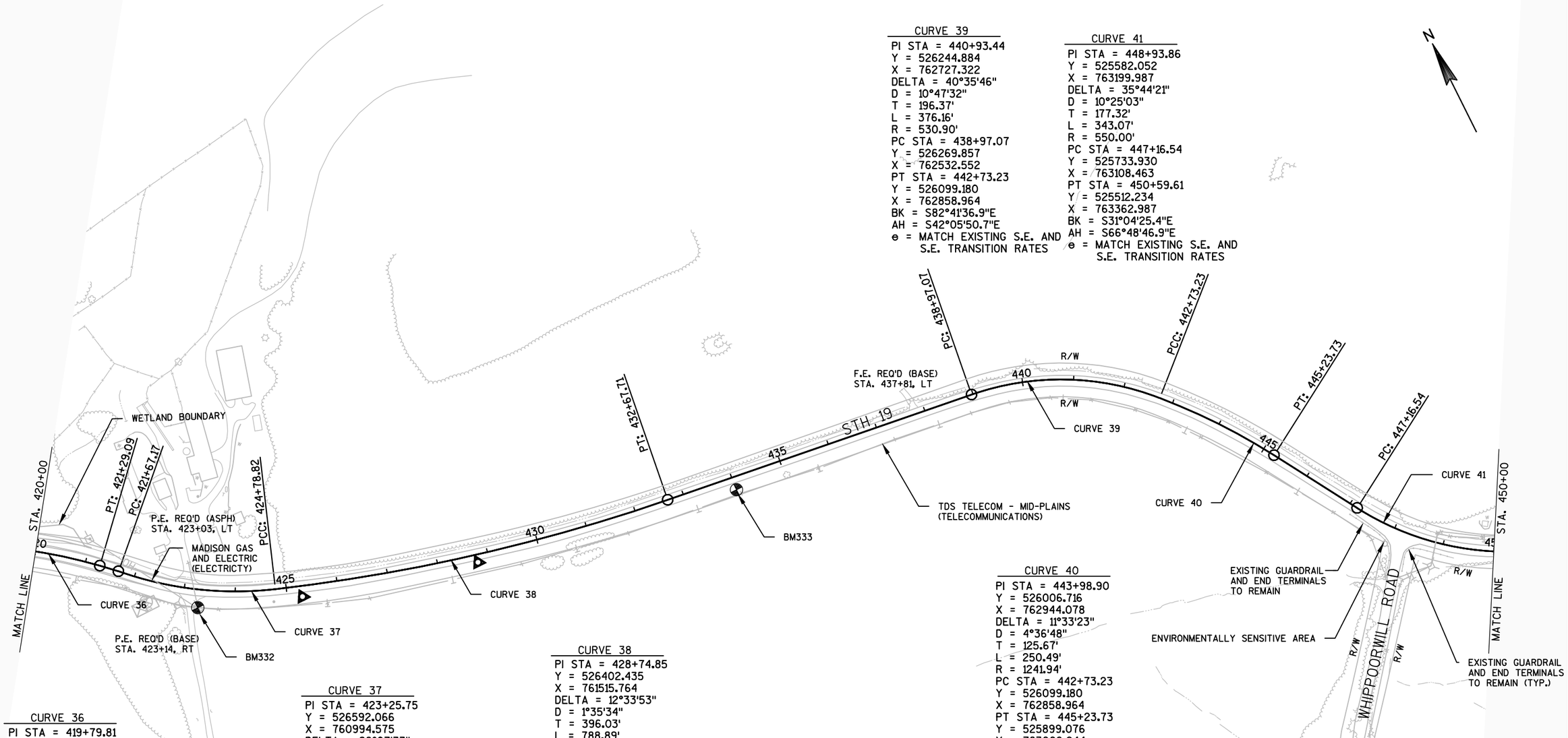

CURVE 39

PI STA = 440+93.44
Y = 526244.884
X = 762727.322
DELTA = 40°35'46"
D = 10°47'32"
T = 196.37'
L = 376.16'
R = 530.90'
PC STA = 438+97.07
Y = 526269.857
X = 762532.552
PT STA = 442+73.23
Y = 526099.180
X = 762858.964
BK = S82°41'36.9"E
AH = S42°05'50.7"E
e = MATCH EXISTING S.E. AND S.E. TRANSITION RATES

CURVE 41

PI STA = 448+93.86
Y = 525582.052
X = 763199.987
DELTA = 35°44'21"
D = 10°25'03"
T = 177.32'
L = 343.07'
R = 550.00'
PC STA = 447+16.54
Y = 525733.930
X = 763108.463
PT STA = 450+59.61
Y = 525512.234
X = 763362.987
BK = S31°04'25.4"E
AH = S66°48'46.9"E
e = MATCH EXISTING S.E. AND S.E. TRANSITION RATES

CURVE 36

PI STA = 419+79.81
Y = 526835.426
X = 760745.690
DELTA = 17°14'15"
D = 5°43'46"
T = 151.57'
L = 300.85'
R = 1000.00'
PC STA = 418+28.24
Y = 526901.026
X = 760609.052
PT STA = 421+29.09
Y = 526732.281
X = 760856.752
BK = S64°21'14.7"E
AH = S47°07'00.0"E
e = MATCH EXISTING S.E. AND S.E. TRANSITION RATES

CURVE 37

PI STA = 423+25.75
Y = 526592.066
X = 760994.575
DELTA = 26°07'33"
D = 8°22'59"
T = 158.58'
L = 311.65'
R = 683.47'
PC STA = 421+67.17
Y = 526706.369
X = 760884.652
PT STA = 424+78.82
Y = 526537.845
X = 761143.599
BK = S43°52'50.6"E
AH = S70°00'23.2"E
e = MATCH EXISTING S.E. AND S.E. TRANSITION RATES

CURVE 38

PI STA = 428+74.85
Y = 526402.435
X = 761515.764
DELTA = 12°33'53"
D = 1°35'34"
T = 396.03'
L = 788.89'
R = 3597.36'
PC STA = 424+78.82
Y = 526537.845
X = 761143.599
PT STA = 432+67.71
Y = 526351.231
X = 761908.473
BK = S70°00'23.3"E
AH = S82°34'16.5"E
e = MATCH EXISTING S.E. AND S.E. TRANSITION RATES

CURVE 40

PI STA = 443+98.90
Y = 526006.716
X = 762944.078
DELTA = 11°33'23"
D = 4°36'48"
T = 125.67'
L = 250.49'
R = 1241.94'
PC STA = 442+73.23
Y = 526099.180
X = 762858.964
PT STA = 445+23.73
Y = 525899.076
X = 763008.944
BK = S42°37'48.3"E
AH = S31°04'25.4"E
e = MATCH EXISTING S.E. AND S.E. TRANSITION RATES

BENCHMARK DATA TABLE

POINT NUMBER	STATION	OFFSET	DESCRIPTION	ELEVATION
BM332	423+30.28	36.0', RT	RR SPIKE IN PP	976.76'
BM333	434+01.46	25.4', RT	CHIS '+' in 18" CMCP	990.65'

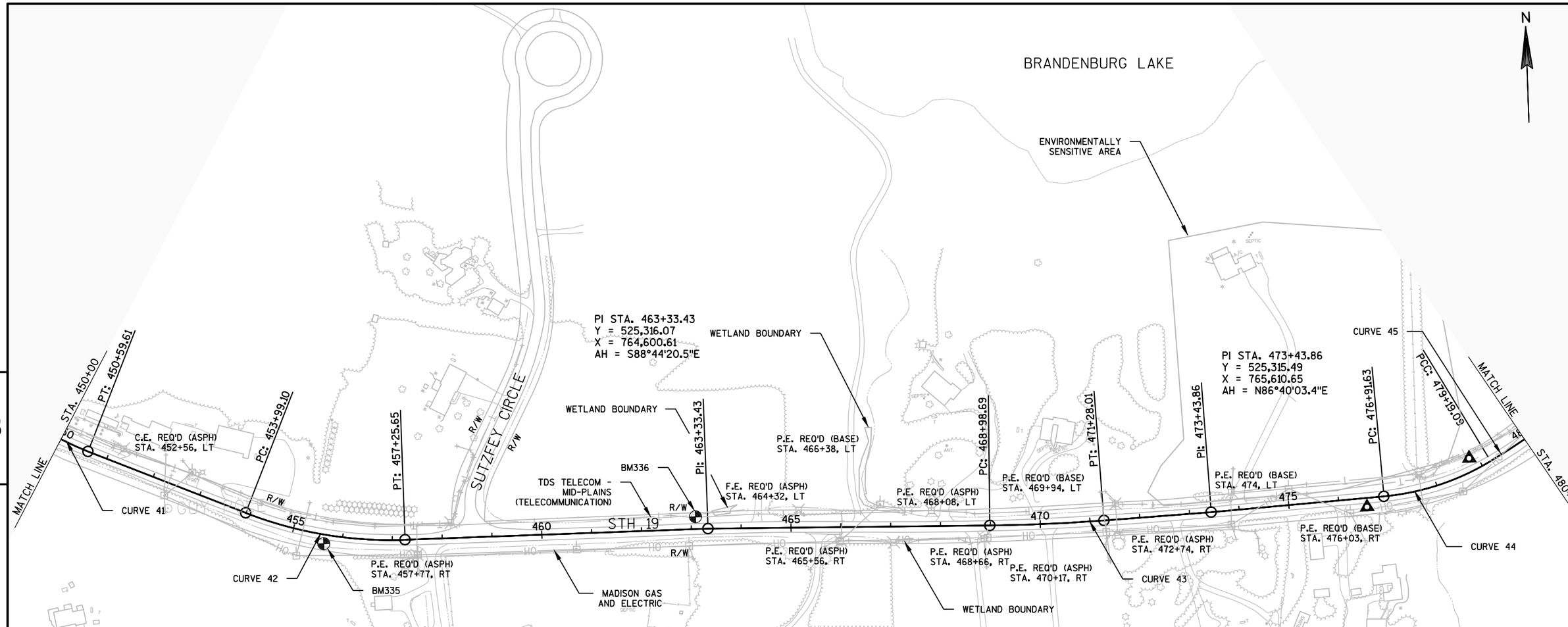

CURVE 41
PI STA = 448+93.86
Y = 525582.052
X = 763199.987
DELTA = 35°44'21"
D = 10°25'03"
T = 177.32'
L = 343.07'
R = 550.00'
PC STA = 447+16.54
Y = 525733.930
X = 763108.463
PT STA = 450+59.61
Y = 525512.234
X = 763362.987
BK = S31°04'25.4"E
AH = S66°48'46.9"E
e = MATCH EXISTING S.E. AND S.E. TRANSITION RATES

CURVE 42
PI STA = 455+64.68
Y = 525313.371
X = 763827.259
DELTA = 23°23'13"
D = 7°09'43"
T = 165.58'
L = 326.54'
R = 800.00'
PC STA = 453+99.10
Y = 525378.565
X = 763675.056
PT STA = 457+25.65
Y = 525313.949
X = 763992.836
BK = S66°48'46.9"E
AH = N89°47'59.9"E
e = MATCH EXISTING S.E. AND S.E. TRANSITION RATES

CURVE 43
PI STA = 470+13.39
Y = 525301.108
X = 765280.408
DELTA = 3°45'14"
D = 1°38'13"
T = 114.70'
L = 229.32'
R = 3500.00'
PC STA = 468+98.69
Y = 525303.632
X = 765165.736
PT STA = 471+28.01
Y = 525306.097
X = 765394.999
BK = S88°44'20.5"E
AH = N87°30'25.2"E
e = MATCH EXISTING S.E. AND S.E. TRANSITION RATES

CURVE 44
PI STA = 478+07.36
Y = 525342.428
X = 766073.365
DELTA = 26°03'56"
D = 11°27'33"
T = 115.73'
L = 227.46'
R = 500.00'
PC STA = 476+91.63
Y = 525335.701
X = 765957.826
PT STA = 479+19.09
Y = 525399.239
X = 766174.197
BK = N86°40'03.4"E
AH = N60°36'07.9"E
e = MATCH EXISTING S.E. AND S.E. TRANSITION RATES

CURVE 45
PI STA = 481+64.17
Y = 525519.541
X = 766387.717
DELTA = 17°53'27"
D = 3°40'48"
T = 245.08'
L = 486.17'
R = 1556.96'
PC STA = 479+19.09
Y = 525399.239
X = 766174.197
PT STA = 484+05.26
Y = 525699.619
X = 766553.955
BK = N60°36'07.9"E
AH = N42°42'40.8"E
e = MATCH EXISTING S.E. AND S.E. TRANSITION RATES

BENCHMARK DATA TABLE

POINT NUMBER	STATION	OFFSET	DESCRIPTION	ELEVATION
BM335	455+64.79	18.3', RT	CHIS '+' in 18" CMCP	1003.76'
BM336	463+09.37	24.7', LT	CHIS '+' in 18" CMCP	994.40'

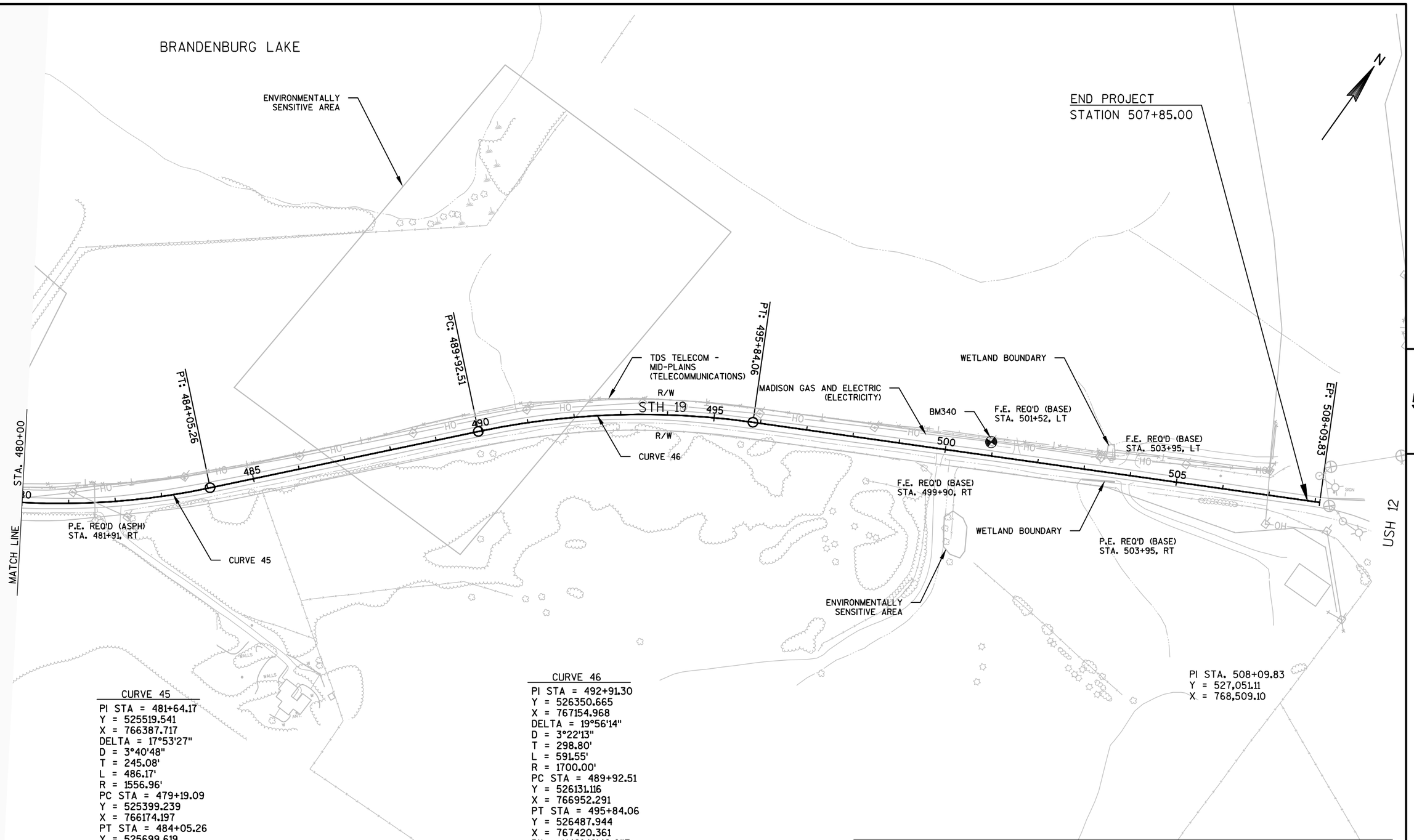

CURVE 45

PI STA = 481+64.17
Y = 525519.541
X = 766387.717
DELTA = 17°53'27"
D = 3°40'48"
T = 245.08'
L = 486.17'
R = 1556.96'
PC STA = 479+19.09
Y = 525399.239
X = 766174.197
PT STA = 484+05.26
Y = 525699.619
X = 766553.955
BK = N60°36'07.9"E
AH = N42°42'40.8"E
e = MATCH EXISTING S.E. AND S.E. TRANSITION RATES

CURVE 46

PI STA = 492+91.30
Y = 526350.665
X = 767154.968
DELTA = 19°56'14"
D = 3°22'13"
T = 298.80'
L = 591.55'
R = 1700.00'
PC STA = 489+92.51
Y = 526131.116
X = 766952.291
PT STA = 495+84.06
Y = 526487.944
X = 767420.361
BK = N42°42'42.0"E
AH = N62°38'56.2"E
e = MATCH EXISTING S.E. AND S.E. TRANSITION RATES

BENCHMARK DATA TABLE

POINT NUMBER	STATION	OFFSET	DESCRIPTION	ELEVATION
BM340	500+95.02	29.5', LT	RR SPIKE IN PP	987.12'

PROJECT NO:5145-00-60	HWY:STH 19	COUNTY:DANE	PLAN	SHEET 67	E

Standard Detail Drawing List

08E08-03	TYPICAL INSTALLATIONS OF EROSION BALES / TEMPORARY DITCH CHECKS
08E09-06	SILT FENCE
08F04-07	JOINT TIES FOR CONCRETE PIPE AND CONCRETE COLLAR DETAIL
08F10-01	CONCRETE MASONRY ENDWALLS FOR CULVERT PIPE AND PIPE ARCH
14B42-04A	MIDWEST GUARDRAIL SYSTEM (MGS) GUARDRAIL
14B42-04B	MIDWEST GUARDRAIL SYSTEM (MGS) GUARDRAIL
14B42-04C	MIDWEST GUARDRAIL SYSTEM (MGS) GUARDRAIL
14B43-03A	MIDWEST GUARDRAIL SYSTEM LONG SPAN MGS (L)
14B43-03B	MIDWEST GUARDRAIL SYSTEM LONG SPAN MGS (L)
14B43-03C	MIDWEST GUARDRAIL SYSTEM LONG SPAN MGS (L)
14B44-02A	MIDWEST GUARDRAIL SYSTEM ENERGY ABSORBING TERMINAL (MGS)
14B44-02B	MIDWEST GUARDRAIL SYSTEM ENERGY ABSORBING TERMINAL (MGS)
14B44-02C	MIDWEST GUARDRAIL SYSTEM ENERGY ABSORBING TERMINAL (MGS)
14B45-04A	MIDWEST GUARDRAIL SYSTEM THRIE BEAM TRANSITION (MGS)
14B45-04B	MIDWEST GUARDRAIL SYSTEM THRIE BEAM TRANSITION (MGS)
14B45-04C	MIDWEST GUARDRAIL SYSTEM THRIE BEAM TRANSITION (MGS)
14B45-04F	MIDWEST GUARDRAIL SYSTEM THRIE BEAM TRANSITION (MGS)
14B45-04G	MIDWEST GUARDRAIL SYSTEM THRIE BEAM TRANSITION (MGS)
14B45-04L	MIDWEST GUARDRAIL SYSTEM THRIE BEAM TRANSITION (MGS)
15A03-02A	FLEXIBLE MARKER POST FOR CULVERT END
15A03-02B	FLEXIBLE MARKER POST FOR CULVERT END
15C02-06A	BARRICADES AND SIGNS FOR MAINLINE CLOSURES
15C02-06B	BARRICADES AND SIGNS FOR MAINLINE CLOSURES
15C02-06C	DETOUR SIGNING FOR MAINLINE CLOSURES
15C03-03	BARRICADES AND SIGNS FOR SIDEROAD CLOSURES
15C08-16A	PAVEMENT MARKING (MAINLINE)
15C08-16B	PAVEMENT MARKING (INTERSECTIONS)
15C33-02	STOP LINE AND CROSSWALK PAVEMENT MARKING

6

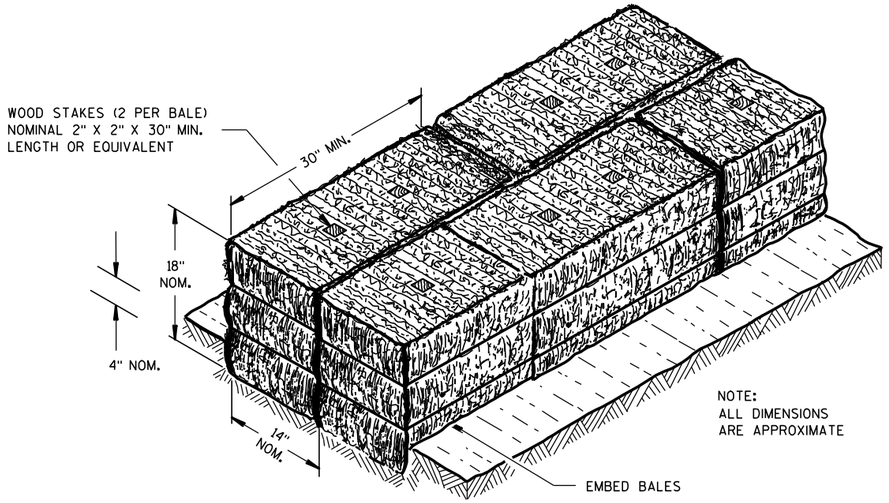

SECTION A-A

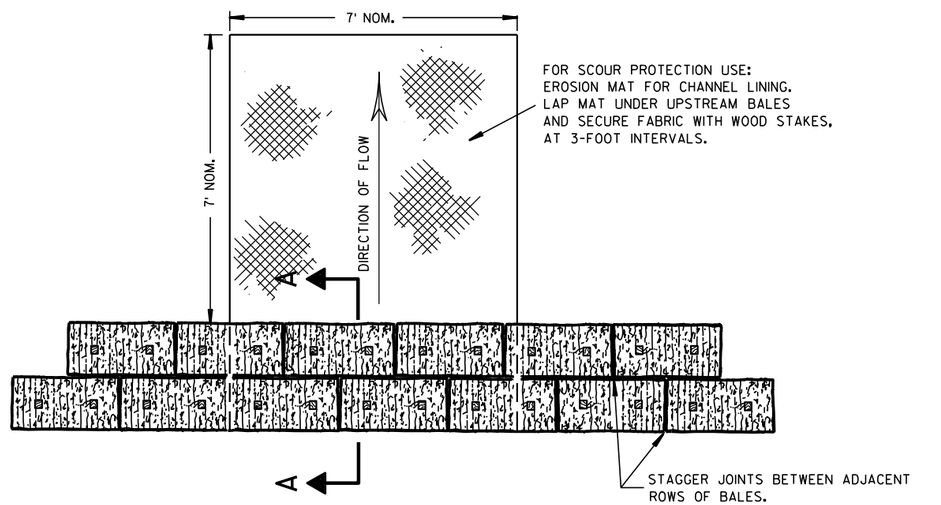

PLAN VIEW

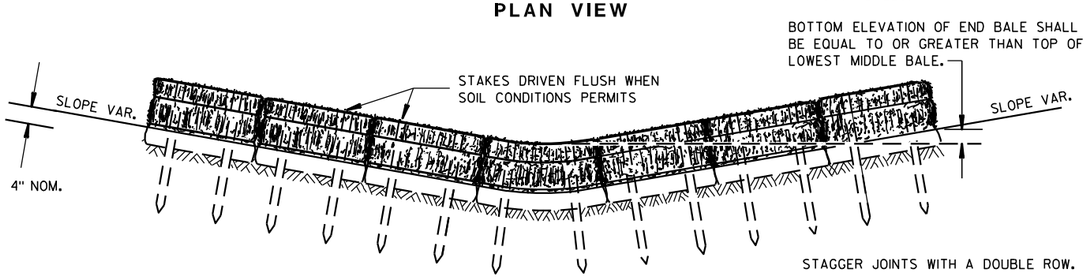

FRONT ELEVATION

TEMPORARY DITCH CHECK USING EROSION BALES ①

GENERAL NOTES

DETAILS OF CONSTRUCTION, MATERIALS AND WORKMANSHIP NOT SHOWN ON THIS DRAWING SHALL CONFORM TO THE PERTINENT REQUIREMENTS OF THE STANDARD SPECIFICATIONS AND THE APPLICABLE SPECIAL PROVISIONS.

① TEMPORARY DITCH CHECKS EITHER EROSION BALES OR MANUFACTURED SHALL BE PAID FOR UNDER THE BID ITEM OF TEMPORARY DITCH CHECK. THE DEPARTMENT WILL NOT PAY FOR TEMPORARY DITCH CHECKS CONSTRUCTED OF A SINGLE ROW OF EROSION BALES.

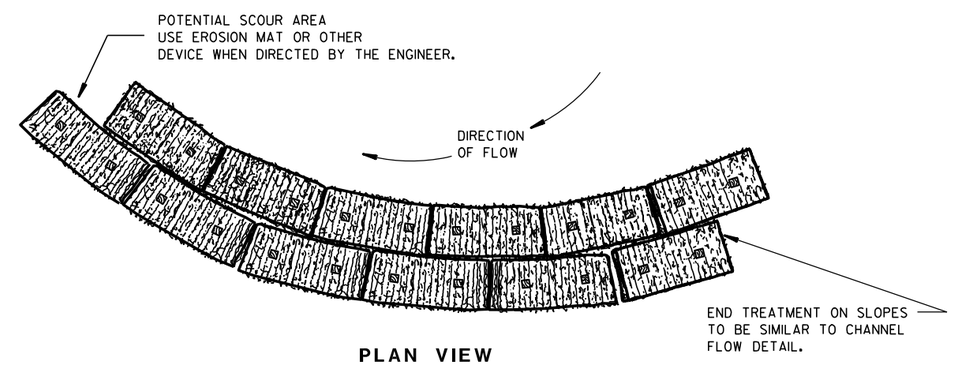

PLAN VIEW

WHEN ALTERING THE DIRECTION OF FLOW

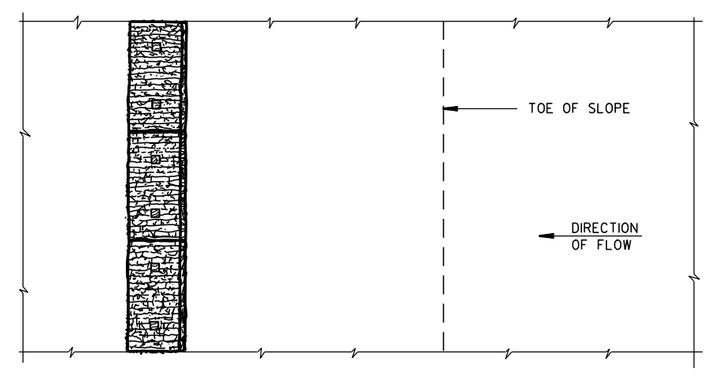

PLAN VIEW

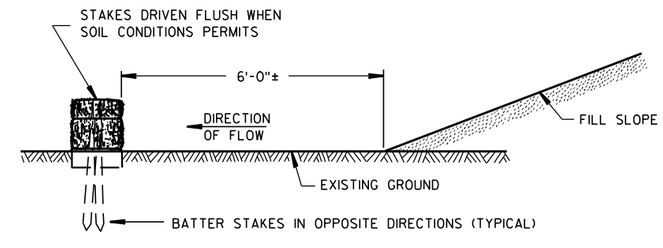

FRONT ELEVATION

WHEN EXISTING GROUND SLOPES AWAY FROM FILL SLOPE

EROSION BALES FOR SHEET FLOW

TYPICAL INSTALLATIONS OF EROSION BALES / TEMPORARY DITCH CHECKS

STATE OF WISCONSIN
DEPARTMENT OF TRANSPORTATION

APPROVED

6/04/02 — DATE

/S/ Beth Cann — CHIEF ROADWAY DEVELOPMENT ENGINEER

FHWA

6

6

S.D.D. 8 E 8-3

S.D.D. 8 E 8-3

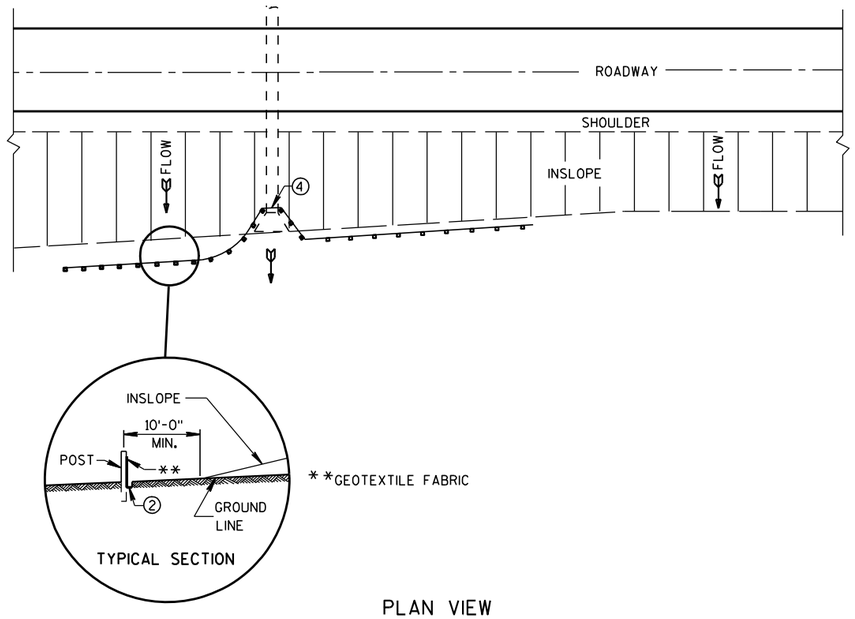

PLAN VIEW

TYPICAL APPLICATION OF SILT FENCE

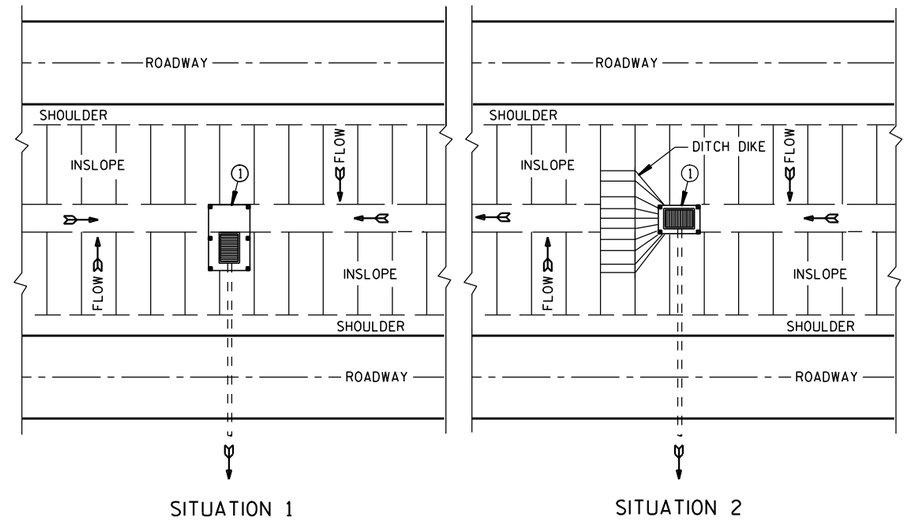

PLAN VIEW

SILT FENCE AT MEDIAN SURFACE DRAINS

GENERAL NOTES

DETAILS OF CONSTRUCTION NOT SHOWN ON THIS DRAWING SHALL CONFORM TO THE PERTINENT REQUIREMENTS OF THE STANDARD SPECIFICATIONS AND APPLICABLE SPECIAL PROVISIONS.

① HORIZONTAL BRACE REQUIRED WITH 2" X 4" WOODEN FRAME OR EQUIVALENT AT TOP OF POSTS.

② FOR MANUAL INSTALLATIONS THE TRENCH SHALL BE A MINIMUM OF 4" WIDE & 6" DEEP TO BURY AND ANCHOR THE GEOTEXTILE FABRIC. FOLD MATERIAL TO FIT TRENCH AND BACKFILL & COMPACT TRENCH WITH EXCAVATED SOIL.

③ WOOD POSTS SHALL BE A MINIMUM SIZE OF 1⅛" X 1⅛" OF OAK OR HICKORY.

④ SILT FENCE TO EXTEND ACROSS THE TOP OF THE PIPE.

⑤ CONSTRUCT SILT FENCE FROM A CONTINUOUS ROLL IF POSSIBLE BY CUTTING LENGTHS TO AVOID JOINTS. IF A JOINT IS NECESSARY USE ONE OF THE FOLLOWING TWO METHODS; A) OVERLAP THE END POSTS AND TWIST, OR ROTATE, AT LEAST 180 DEGREES. B) HOOK THE END OF EACH SILT FENCE LENGTH.

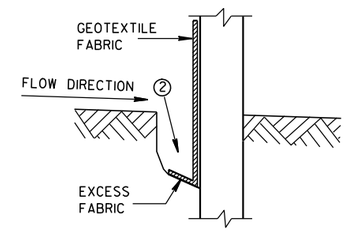

TRENCH DETAIL

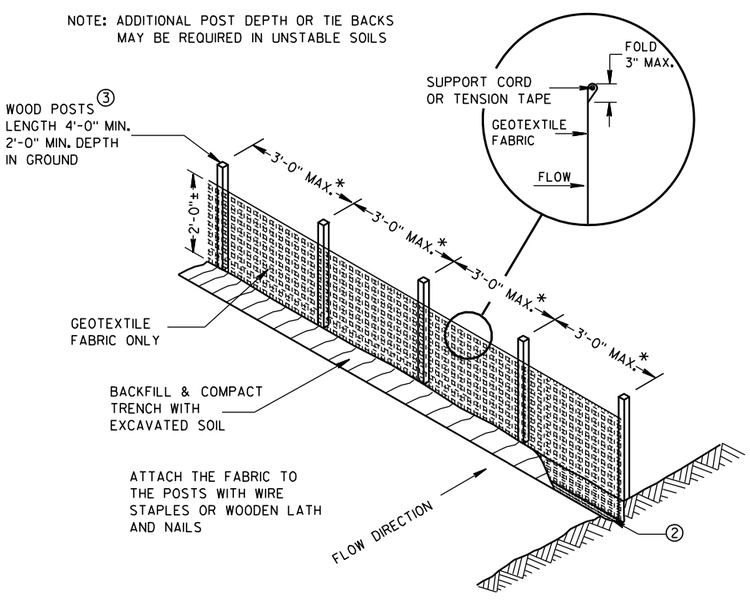

*NOTE: 8'-0" POST SPACING ALLOWED IF A WOVEN GEOTEXTILE FABRIC IS USED.

SILT FENCE

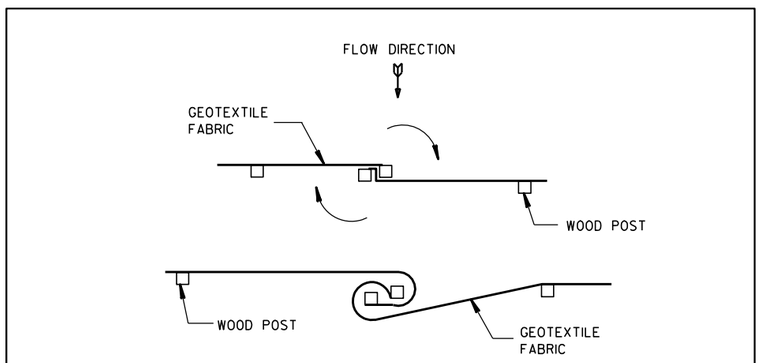

TWIST METHOD

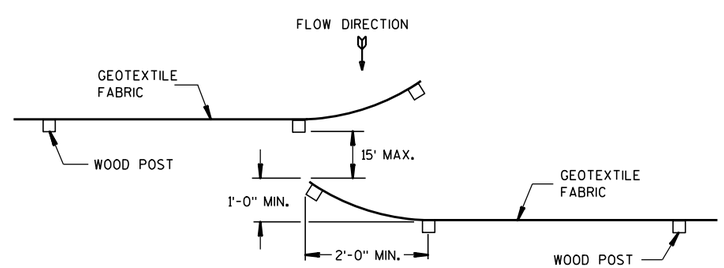

HOOK METHOD

JOINING TWO LENGTHS OF SILT FENCE ⑤

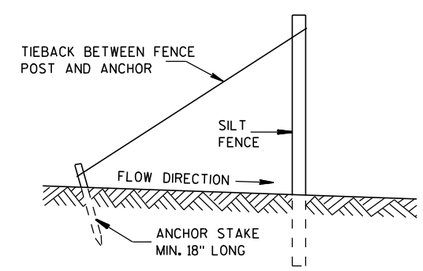

SILT FENCE TIE BACK

(WHEN REQUIRED BY THE ENGINEER)

SILT FENCE
STATE OF WISCONSIN DEPARTMENT OF TRANSPORTATION
APPROVED 4-29-05 /S/ Beth Cann----- DATE CHIEF ROADWAY DEVELOP ENGINEER FHWA

6

6

S.D.D. 8 E 9-6

S.D.D. 8 E 9-6

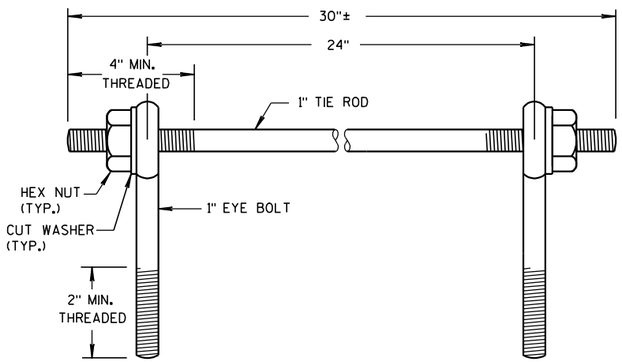

EYE BOLTS AND TIE ROD

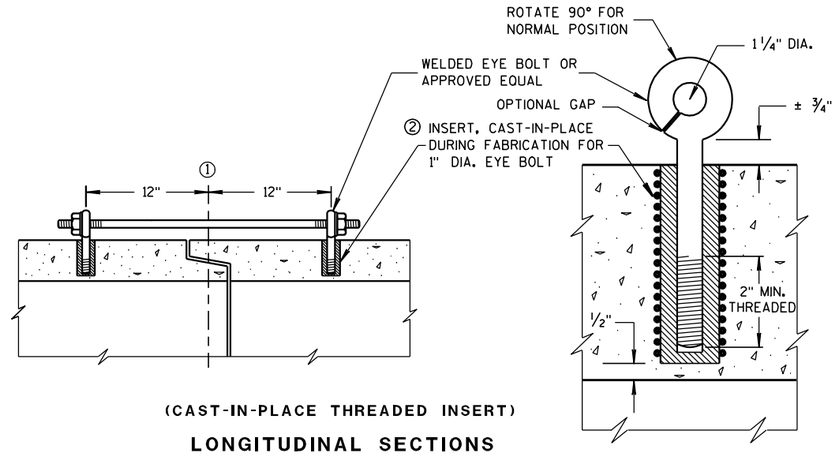

(CAST-IN-PLACE THREADED INSERT)

LONGITUDINAL SECTIONS

EYE BOLT AND TIE ROD ASSEMBLY (ALTERNATE NO. 1)

GENERAL NOTES

DETAILS OF CONSTRUCTION, MATERIALS, AND WORKMANSHIP NOT SHOWN ON THIS DRAWING SHALL CONFORM TO THE PERTINENT REQUIREMENTS OF THE STANDARD SPECIFICATIONS AND APPLICABLE SPECIAL PROVISIONS.

CONCRETE CULVERT AND STORM SEWER PIPE SHALL BE TIED TOGETHER IN THE MANNER ILLUSTRATED BY THIS DETAIL AT LOCATIONS DESIGNATED IN THE STANDARD SPECIFICATIONS AND THE PLAN. THE CONTRACTOR MAY USE EITHER ALTERNATE 1, 2 OR 3 FOR DRAINAGE STRUCTURES. ONLY ALTERNATE 1 AND 3 MAY BE USED FOR CATTLE PASSES, UNLESS OTHERWISE STATED IN THE CONTRACT. THE MATERIALS, FABRICATION AND WORK NECESSARY TO TIE THE PIPE BY THIS DETAIL WILL BE CONSIDERED INCIDENTAL TO THE PIPE AND APRON ENDWALLS IF REQUIRED.

DETAILED DRAWINGS FOR PROPOSED ALTERNATE DESIGNS FOR JOINT TIES SHALL BE SUBMITTED TO THE ENGINEER FOR APPROVAL.

JOINT TIES TO BE HOT-DIP GALVANIZED PER ASTM A 153.

① ℄ OF TONGUE AND GROOVE OR BELL AND SPIGOT JOINTS.

② THE INSIDE OF THE THREADED INSERTS SHALL BE CLEAN TO ALLOW THE INSERTION OF THREADED EYE BOLTS.

③ HOLES SHALL BE CAST-IN-PLACE OR DRILLED 12 INCHES FROM ℄ OF TONGUE AND GROOVE.

④ BOLT PROJECTION INSIDE OF PIPE SHALL NOT EXCEED 2 INCHES.

⑤ OPENING TO BE ROD DIAMETER PLUS 1 INCH.

⑥ LENGTH ADEQUATE TO EXTEND TO WITHIN 1/2 INCH OF THE INNER SURFACE OF THE PIPE.

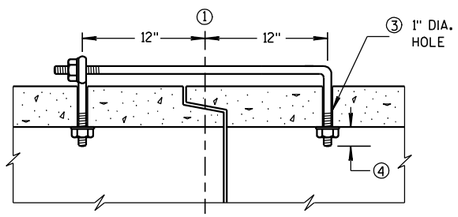

(TONGUE & GROOVE PIPE)

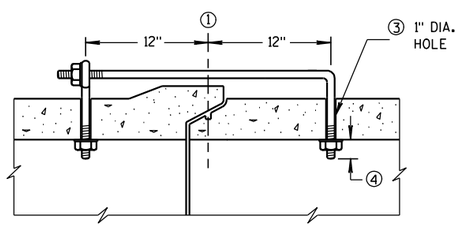

(MODIFIED BELL PIPE)

LONGITUDINAL SECTION

EYE BOLT DIMENSION TABLE

PIPE SIZE	L = LENGTH	
	TONGUE & GROOVE PIPE	MODIFIED BELL PIPE
18" TO 24"	4 1/2"	6 1/4"
30"	5"	7"
36"	5 1/2"	7"
42"	6"	
48"	6 1/2"	
60"	7 1/2"	
66"	8"	

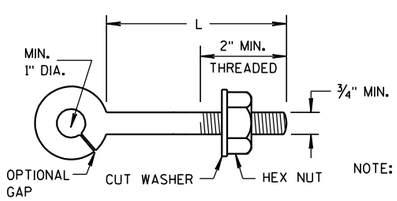

EYE BOLT

NOTE:

NOTE: TWO EYE BOLTS MAY BE USED WITH A 30" LONG THREADED ROD IN LIEU OF THE 90° BENT TIE ROD.

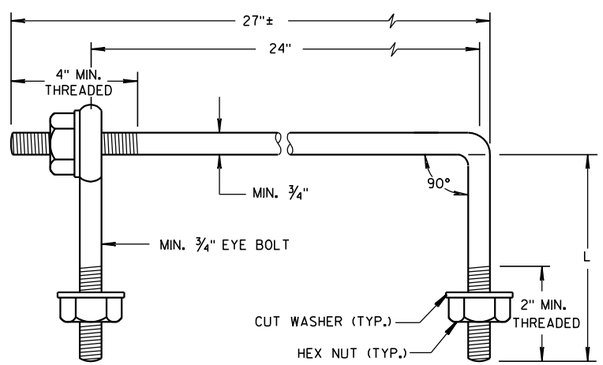

EYE BOLT AND TIE ROD

(JOINT TIES FOR 18" TO 66" DIA. CONCRETE PIPE)

EYE BOLT AND TIE ROD ASSEMBLY (ALTERNATE NO. 2)

ADJUSTABLE TIE ROD TABLE

PIPE DIAMETER	TIE ROD DIAMETER	D	L_1	N
12-60	5/8	5/8	5	1/2
66-84	3/4	3/4	5	1/2
90-108	1	1	7	1 7/16

DIMENSIONS SHOWN ARE IN INCHES

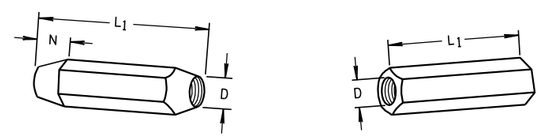

TAPERED PLAIN

RIGHT AND LEFT THREADS

SLEEVE NUTS

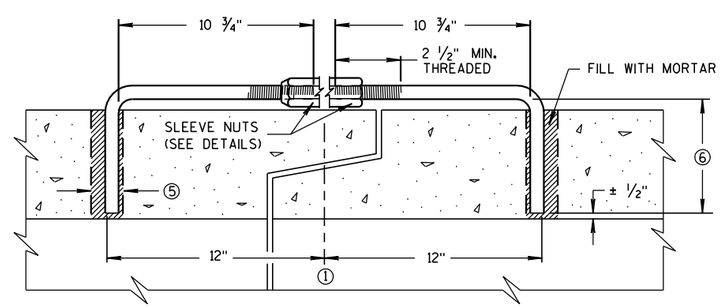

LONGITUDINAL SECTION

(JOINT TIES FOR 12" TO 108" DIA. CONCRETE PIPE)

ADJUSTABLE TIE ROD (ALTERNATE NO. 3)

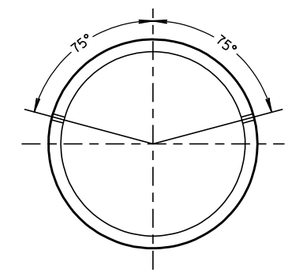

PLACEMENT OF (2) CAST-IN-PLACE INSERTS OR HOLES DURING FABRICATION FOR PIPE SECTIONS REQUIRING TIE RODS

TRANSVERSE SECTION

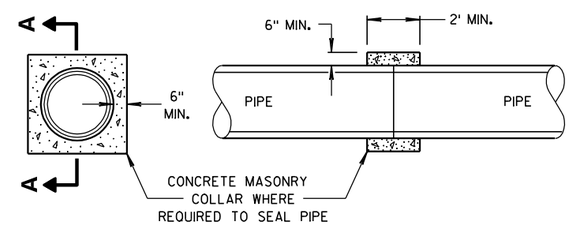

SECTION A-A

CONCRETE COLLAR DETAIL

JOINT TIES FOR CONCRETE PIPE AND CONCRETE COLLAR DETAIL

STATE OF WISCONSIN
DEPARTMENT OF TRANSPORTATION

APPROVED
6/5/2012 /S/ Jerry H. Zogg
DATE ROADWAY STANDARDS DEVELOPMENT ENGINEER
FHWA

6

S.D.D. 8 F 4-7

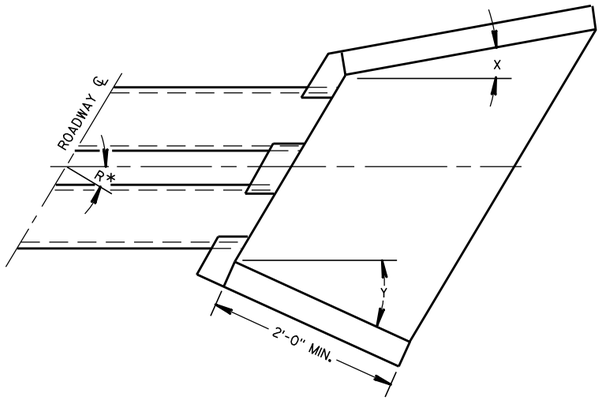

WINGWALL ANGLE DETAILS

INLET			OUTLET		
R*	X	Y	R*	X	Y
0 - 7°	30°	30°	0 - 15°	15°	15°
8 - 22°	25°	"	16 - 45°	10°	"
23 - 37°	20°	"	46 - 75°	5°	"
38 - 52°	15°	"	OVER 75°	0°	"
53 - 67°	10°	"			
68 - 82°	5°	"			
OVER 82°	0°	"			

*R = NUMBER OF DEGREES RIGHT OR LEFT HAND FORWARD

GENERAL NOTES

DETAILS OF CONSTRUCTION, MATERIALS AND WORKMANSHIP NOT SHOWN ON THIS DRAWING SHALL CONFORM TO THE PERTINENT REQUIREMENTS OF THE STANDARD SPECIFICATIONS AND THE APPLICABLE SPECIAL PROVISIONS.

FILL SLOPES FLATTER THAN 2 ½:1 SHALL BE WARPED TO MEET THE TOP OF THE WINGWALLS.

ALL STEEL REINFORCEMENT AND WELDED STEEL WIRE FABRIC SHALL BE EMBEDDED 2 INCHES CLEAR UNLESS OTHERWISE NOTED.

(1) MINIMUM REINFORCEMENT SHALL BE 6" X 6" - W4.0 X W4.0 OR NO. 3 BARS SPACED 12" C-C IN BOTH DIRECTIONS.

(2) THE SPACE BETWEEN PIPES SHALL BE AS FOLLOWS:

DIAMETER OR SPAN	SPACE
UP TO AND INCLUDING 48"	2'-0"
OVER 48" TO 72"	½ DIA. OR SPAN
OVER 72"	3'-0"

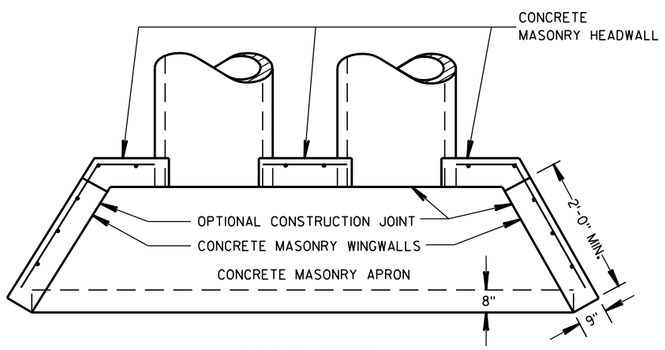

PLAN VIEW

CULVERT PIPE AND PIPE ARCH

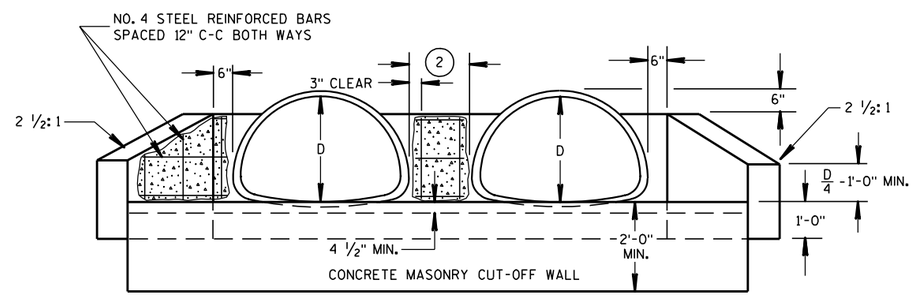

END ELEVATION

PIPE ARCH

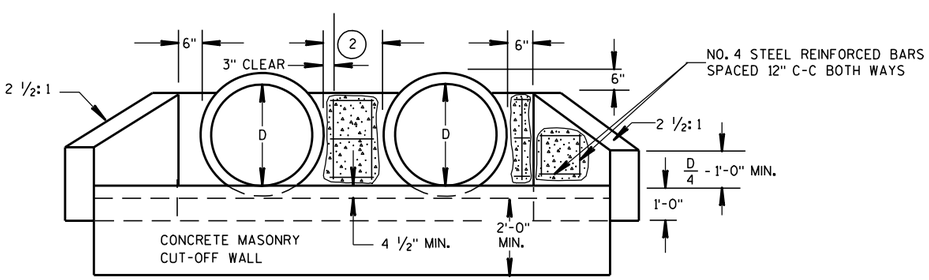

END ELEVATION

CULVERT PIPE

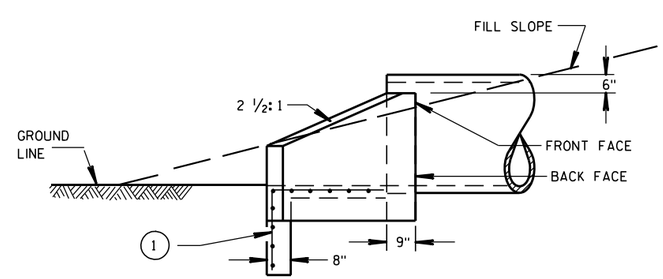

SIDE ELEVATION

CULVERT PIPE AND PIPE ARCH

CONCRETE MASONRY ENDWALLS FOR CULVERT PIPE AND PIPE ARCH

STATE OF WISCONSIN
DEPARTMENT OF TRANSPORTATION

APPROVED

9/14/98 — DATE

/S/ Rory L. Rhinehart — CHIEF ROADWAY DEVELOPMENT ENGINEER

FHWA

6

6

S.D.D. 8 F 10-1

S.D.D. 8 F 10-1

1. WOOD OR STEEL POSTS (w6X9 OR w6X8.5) MAY BE USED. DO NOT INTERMIX WOOD AND STEEL POSTS. INSTALL STEEL POSTS WITH HOLES ON APPROACHING TRAFFIC SIDE.

2. USE WOOD OR APPROVED PLASTIC BLOCKOUTS. WOOD BLOCKOUTS MAY BE CONSTRUCTED OUT OF TWO OR MORE WOOD BLOCKOUTS. SEE ALTERNATE WOOD BLOCKOUT DETAIL. DIMENSIONS OF APPROVED PLASTIC BLOCKOUTS MAY VARY.

3. IF ROCK IS ENCOUNTERED DURING EXCAVATION, PROVIDE A HOLE 12 INCHES IN DIAMETER EXTENDING 20 INCHES DEEP INTO THE ROCK. PLACE APPROXIMATELY 2½ INCHES OF GRANULAR MATERIAL IN THE BOTTOM OF THE HOLE. CUT THE POSTS THE TO LENGTH AMD INSTALL. BACKFILL WITH EXCAVATED MATERIAL AND COMPACT. BACKFILL IS TO BE FREE OF LARGE ROCKS.

4. WHEN THE DISTANCE FROM BACK OF POST TO SHOULDER HINGE POINT IS LESS THAN 2 FEET INSTALL LONGER POST AT HALF POST SPACING (K).

5. FOR NEW MGS INSTALLATION TOP OF W-BEAM RAIL TOLERANCE IS ± 1". FOR EXISTING MGS INSTALLATION TOP OF W-BEAM IS BETWEEN 27¾" TO 32".

6. WHEN USING STEEL POST AND WOOD BLOCKOUTS INSTALL FOUR 16D GALVANIZED NAILS. INSTALL NAILS AT THE BACK CORNERS OF THE BLOCK AND BEND THE NAILS OVER THE FLANGE OF THE STEEL POST.

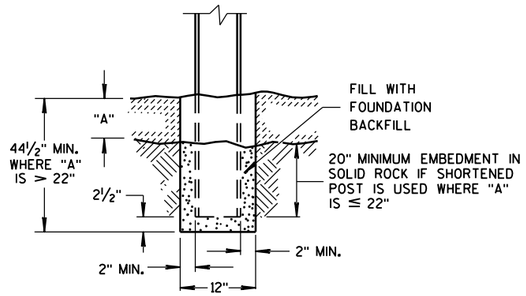

END VIEW
SETTING STEEL OR WOOD POST IN ROCK (3)

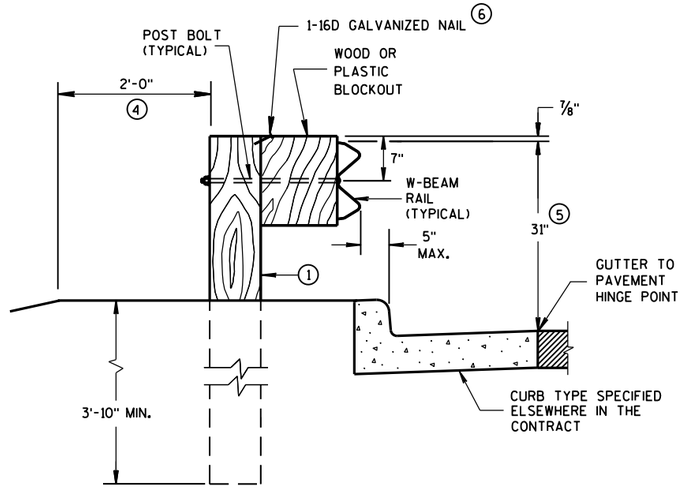

END VIEW
LOCATED ALONG A CURBED ROADWAY

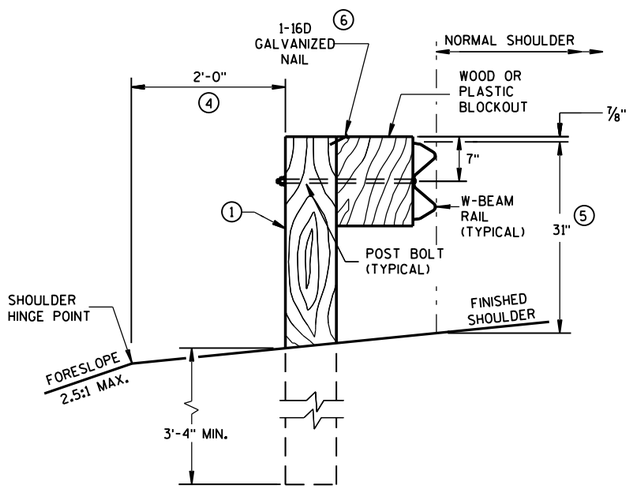

END VIEW
LOCATED ALONG A ROADWAY SHOULDER
STANDARD INSTALLATION

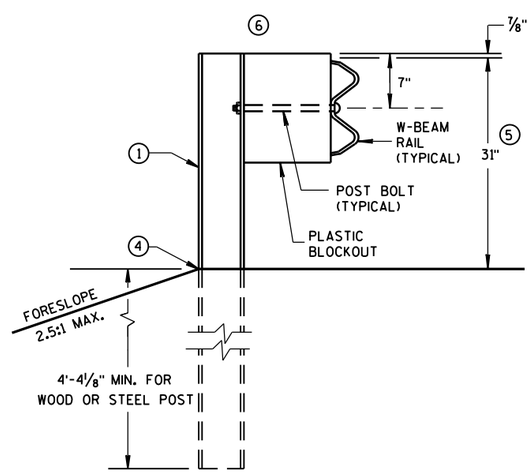

END VIEW
MGS LONGER POST AT HALFPOST SPACING W BEAM (K)

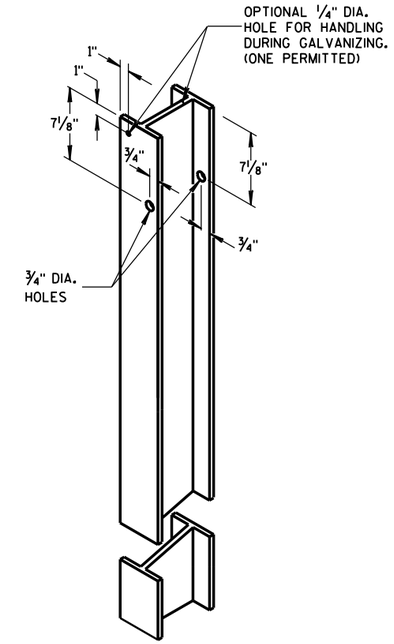

STEEL POST &
HOLE PUNCHING DETAIL
(w6X9) (1)

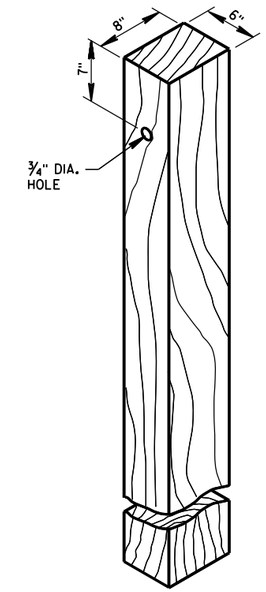

WOOD POST
(6" X 8") NOMINAL (1)

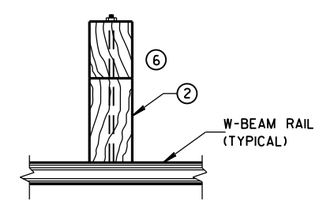

PLAN VIEW
WOOD POST,
BLOCKOUT & BEAM

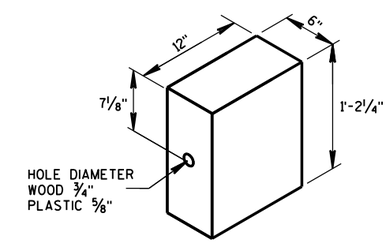

WOOD OR
PLASTIC BLOCKOUT (2)

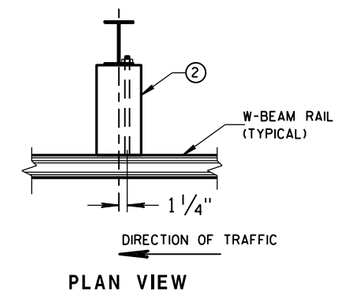

PLAN VIEW
STEEL POST,
PLASTIC BLOCKOUT & BEAM

MIDWEST GUARDRAIL SYSTEM
(MGS) GUARDRAIL

STATE OF WISCONSIN
DEPARTMENT OF TRANSPOI

6
S.D.D. 14 B 42-4a

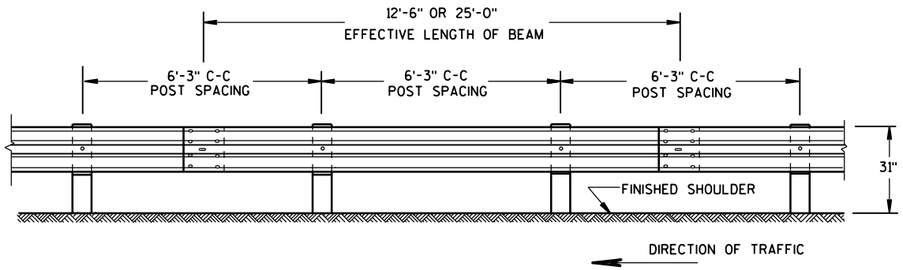

FRONT VIEW

POST SPACING STANDARD INSTALLATION

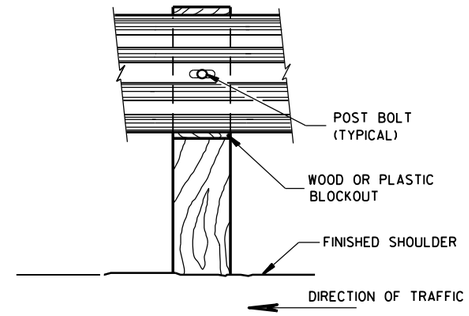

FRONT VIEW AT WOOD POST

7. PROVIDE SILVER REFLECTIVE SHEETING ON ALL REFLECTORS EXCEPT THOSE LOCATED ALONG THE LEFT EDGE OF ONE-WAY ROADWAYS, WHICH SHALL BE PROVIDED WITH YELLOW REFLECTIVE SHEETING. SHEETING IS TYPE H. SEE STANDARD SPECIFICATION 637.

8. DO NOT INSTALL REFLECTORS ON THE FIRST 50 FEET OF THE APPROACH END OF THE ENERGY ABSORBING TERMINAL. RAIL SPLICE LOCATIONS ARE THE ONLY ACCEPTABLE LOCATIONS FOR REFLECTORS.

9. REVERSE EVERY OTHER REFLECTOR FOR 2-WAY VISIBILITY. THE CONTRACTOR MAY FURNISH TWO-SIDED REFLECTORS IN LIEU OF ONE-SIDED REFLECTORS.

10. PROVIDE AN ANGLE OF BEND OF 90° ± 1° FOR TWO-SIDED REFLECTORS.

11. 25 FEET OF HALF POST SPACING IS REQUIRED ON APPROACH AND DEPARTURE ENDS OF QUARTER POST SPACING.

POST BOLTS ARE A 5/8" DIAMETER ASTM A307 GUARDRAIL BOLT. A POST BOLT REQUIRES 5/8" DIAMETER A563A DOUBLE RECESSED (DR) HEAVY HEX NUT AND 5/8" DIAMETER F844 FLAT WASHER. POST BOLTS MAY BE LONGER IF MULTIPLE BLOCKOUTS ARE BEING USED.

GUARD RAIL SPLICE BOLTS ARE A 5/8" DIAMETER ASTM A307 GUARDRAIL HEAD BOLT. A GUARDRAIL SPLICE BOLT REQUIRES 5/8" DIAMETER A563A DOUBLE RECESSED (DR) HEAVY HEX NUT.

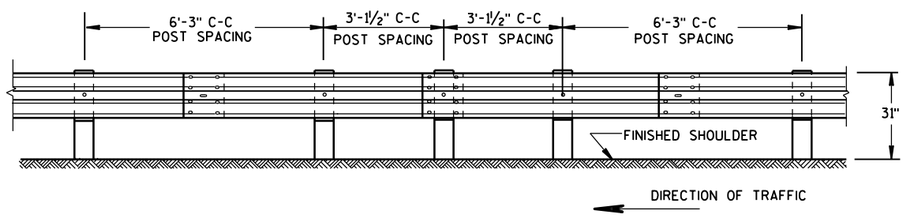

FRONT VIEW

HALF POST SPACING (HS) AND HALF POST SPACING WITH LONGER POSTS (K)

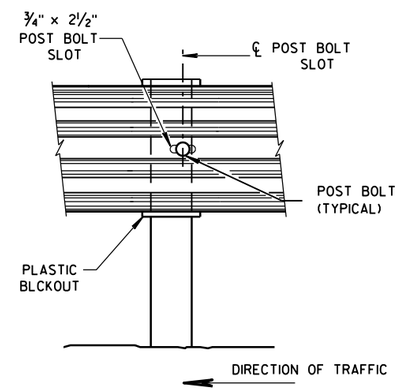

FRONT VIEW AT STEEL POST

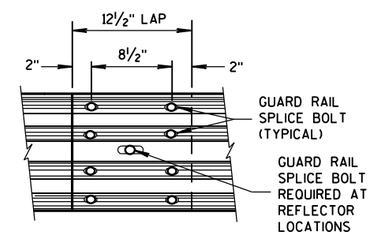

FRONT VIEW

MID-SPAN BEAM SPLICE

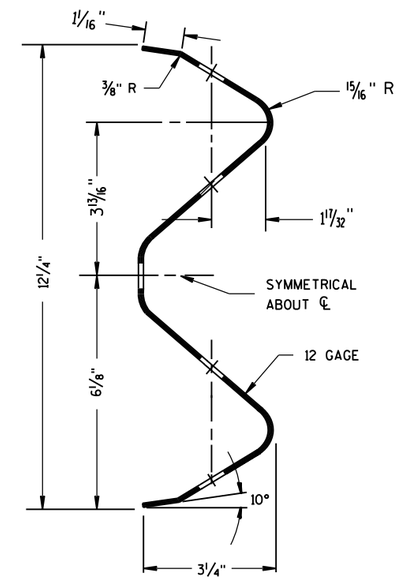

SECTION THRU W-BEAM RAIL

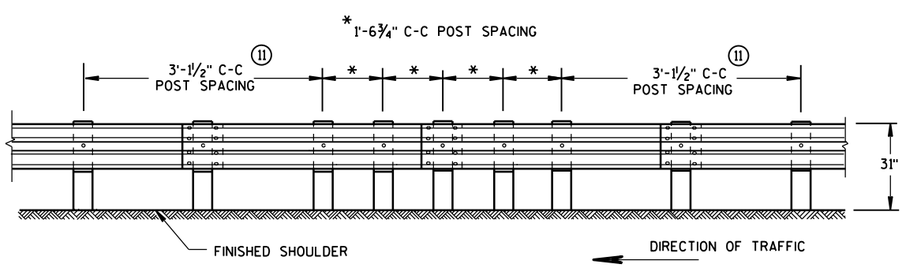

FRONT VIEW

QUARTER POST SPACING (QS)

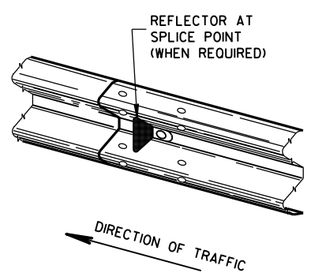

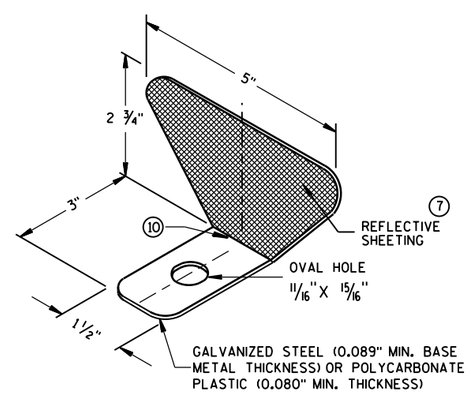

ONE SIDED REFLECTOR DETAIL AND TYPICAL INSTALLATION 7

REFLECTOR SPACING 8

	BEAM GUARD LENGTH	REFLECTOR SPACING	NO. SURFACES REFLECTORIZED	MIN. NO. REFLECTORS
ONE WAY TRAFFIC	< 200' > 200'	50' C-C 100' C-C	1 1	3
TWO WAY TRAFFIC	< 200' > 200'	25' C-C 50' C-C	1 9 1	6
TWO WAY TRAFFIC	< 200' > 200'	50' C-C 100' C-C	2 10 2	3

MIDWEST GUARDRAIL SYSTEM (MGS) GUARDRAIL

STATE OF WISCONSIN
DEPARTMENT OF TRANSPOR

6

S.D.D. 14 B 42-4b

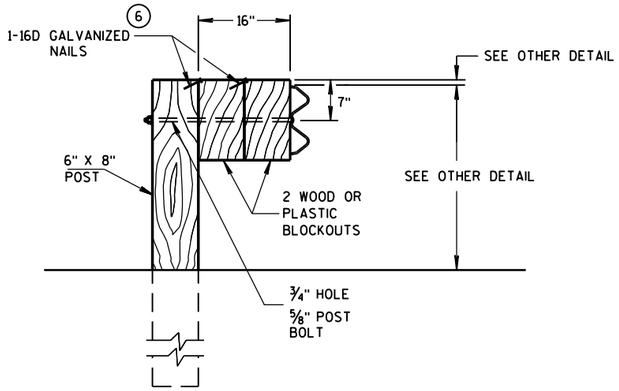

DETAIL FOR 16" BLOCKOUT DEPTH

IT IS ACCEPTABLE TO USE BLOCKOUTS UP TO 16" DEEP TO INCREASE THE POST OFFSET TO AVOID UNDERGROUND OBSTACLES. THERE IS NO LIMIT TO THE NUMBER OF POSTS THAT CAN HAVE ADDITIONAL BLOCKOUTS UP TO 16" DEEP.

NOTE: 1. ALL FILLETS SHALL HAVE A MINIMUM RADIUS OF 1/16".
2. IF THE BOLT EXTENDS MORE THAN 1/4" FROM THE NUT THE BOLT SHOULD BE TRIMMED BACK.

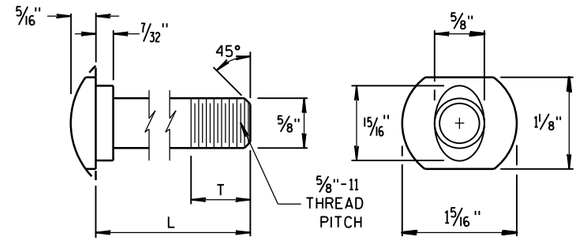

POST BOLT TABLE

L	T (MIN.)
1 1/4"	1 1/8"
2"	1 3/4"
10"	4"
14"	4 1/16"
18"	4"
21"	4 1/16"
25"	4"

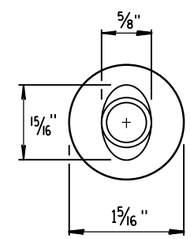

ALTERNATE BOLT HEAD

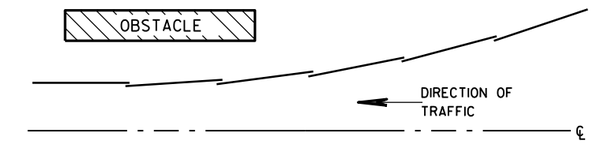

PLAN VIEW

BEAM LAPPING DETAIL

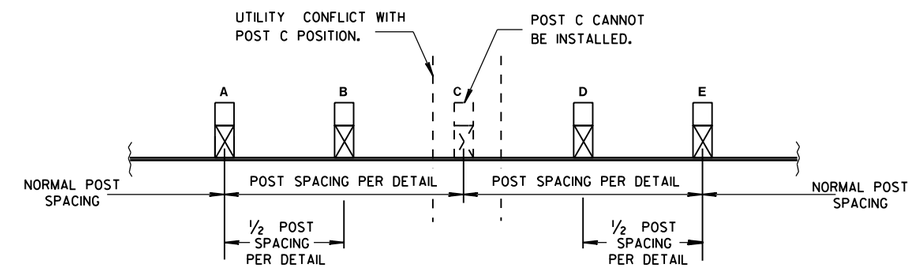

POST DRIVING FOR CONTINUOUS UNDERGROUND OBSTRUCTION

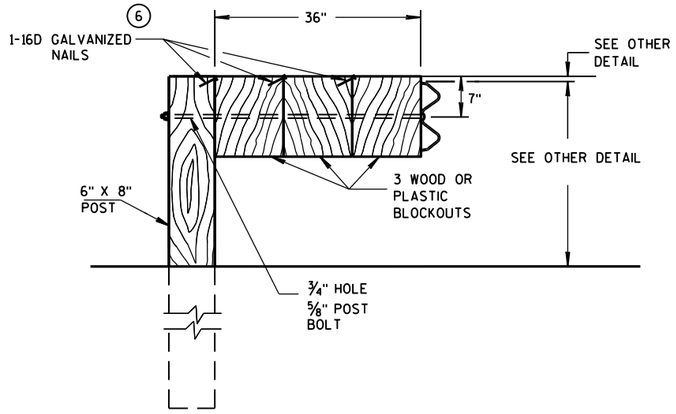

DETAIL FOR 36" BLOCKOUT DEPTH

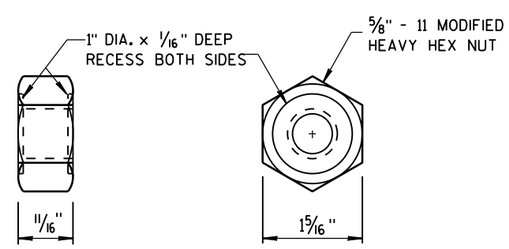

POST BOLT, SPLICE BOLT AND RECESS NUT

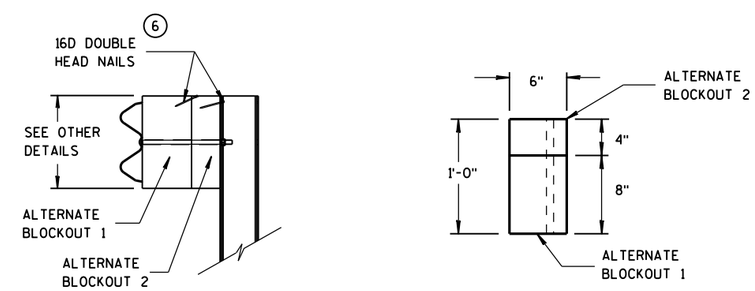

SIDE VIEW TOP VIEW

ALTERNATE WOOD BLOCKOUT DETAIL

NOTES: UNDER SPECIAL CIRCUMSTANCES, SUCH AS AVOIDING OBSTACLES THAT ARE NOT RELOCATED, IT IS ACCEPTABLE TO INSTALL ADDITIONAL BLOCKOUTS TO OBTAIN UP TO 36" DEPTH FOR ONE OR TWO POSTS IN A SECTION OF GUARDRAIL.

DO NOT USE 16" OR 36" BLOCKOUTS IF IT CAUSES THE POST TO BE DRIVEN BEYOND SHOULDER HINGE POINT OR CAUSES A FIXED OBJECT TO BE WITHIN THE DEFLECTION DISTANCE OF THE BARRIER.

MIDWEST GUARDRAIL SYSTEM (MGS) GUARDRAIL

STATE OF WISCONSIN
DEPARTMENT OF TRANSPORTATION

APPROVED
June 2016 — DATE
/S/ Jerry H. Zogg — ROADWAY STANDARDS DEVELOPMENT ENGINEER
FHWA

6

S.D.D. 14 B 42-4c

GENERAL NOTES

POSTS 1 THROUGH 3 ARE CRT POSTS.
ALL OTHER POSTS SHALL BE WOOD OR STEEL.

SEE SDD 14 B 42 FOR MORE DETAILS.

(A) FLARE FOR MGS EAT SHOWN. IF INSTALLING MGS NO FLARE NEEDED.

(B) VALUES SHOWN ON DRAWING REPRESENT THE MAXIMUM LENGTH. SHORTER DIMENSIONS ARE POSSIBLE. SEE OTHER SECTION OF PLAN FOR MORE INFORMATION.

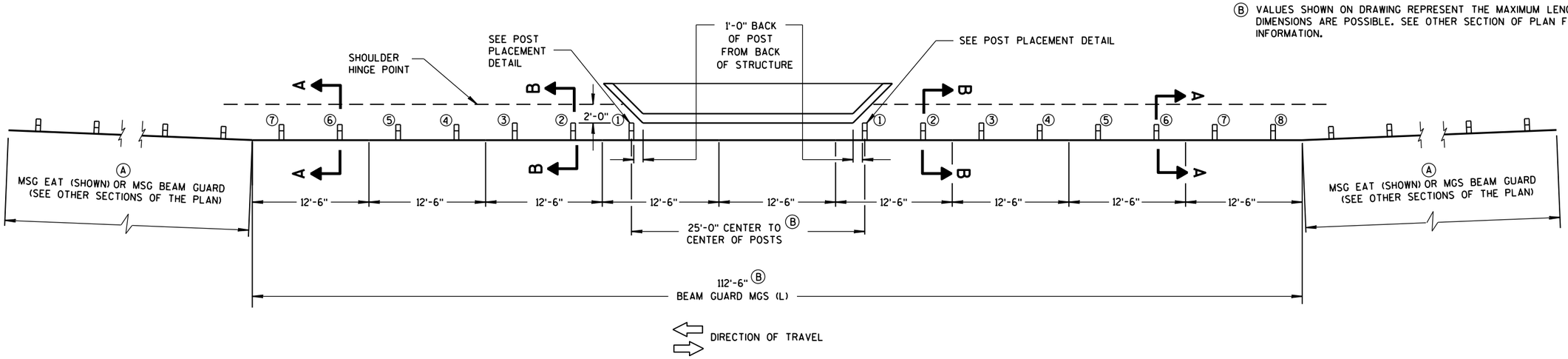

PLAN VIEW

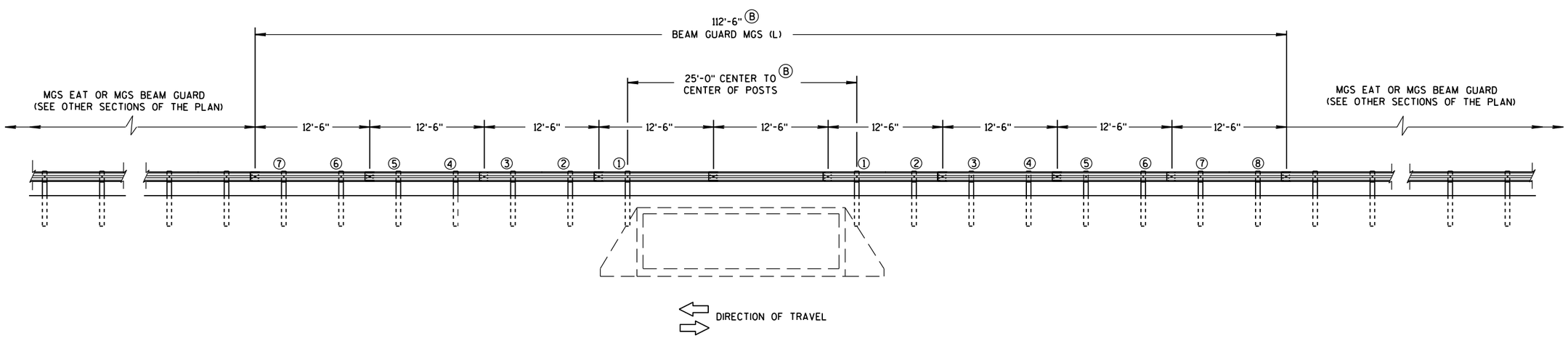

ELEVATION VIEW

MIDWEST GUARDRAIL SYSTEM LONG SPAN MGS (L) TWO-WAY TRAFFIC

MIDWEST GUARDRAIL SYSTEM
LONG SPAN MGS (L)

STATE OF WISCONSIN
DEPARTMENT OF TRANSPOI

6

S.D.D. 14 B 43-3a

GENERAL NOTES

POSTS 1 THROUGH 3 ARE CRT POSTS.
ALL OTHER POSTS SHALL BE WOOD OR STEEL.

SEE SDD 14 B 42 FOR MORE DETAILS.

(A) FLARE FOR MGS EAT SHOWN. IF INSTALLING MGS NO FLARE NEEDED.

(B) VALUES SHOWN ON DRAWING REPRESENT THE MAXIMUM LENGTH. SHORTER DIMENSIONS ARE POSSIBLE. SEE OTHER SECTION OF PLAN FOR MORE INFORMATION.

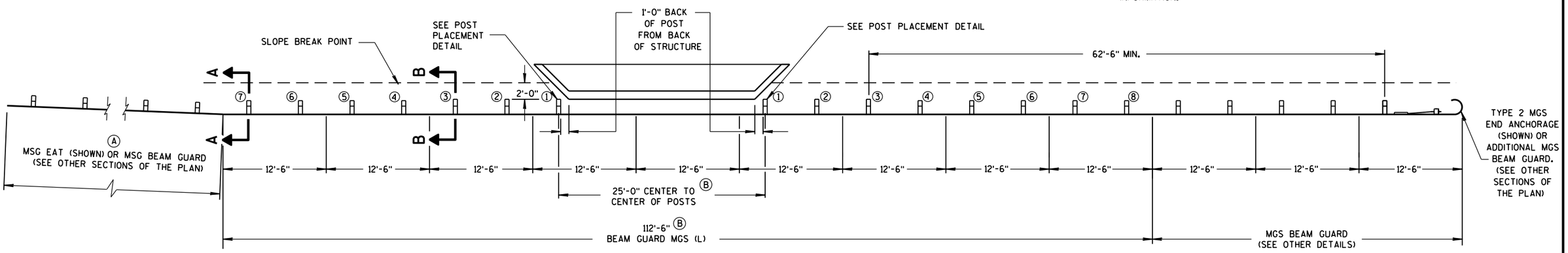

PLAN VIEW

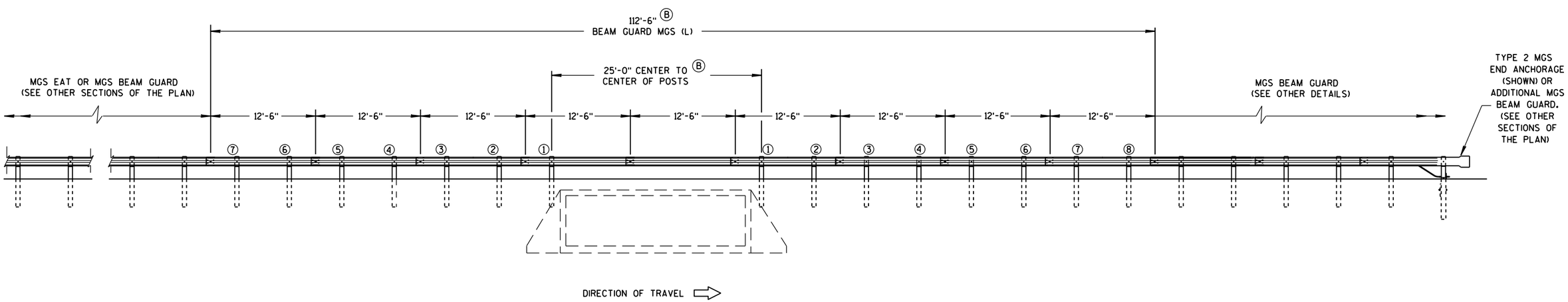

ELEVATION VIEW

MIDWEST GUARDRAIL SYSTEM LONG SPAN MGS (L) ONE-WAY TRAFFIC

MIDWEST GUARDRAIL SYSTEM
LONG SPAN MGS (L)

STATE OF WISCONSIN
DEPARTMENT OF TRANSPOR

6

S.D.D. 14 B 43-3b

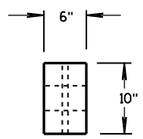

PLAN VIEW

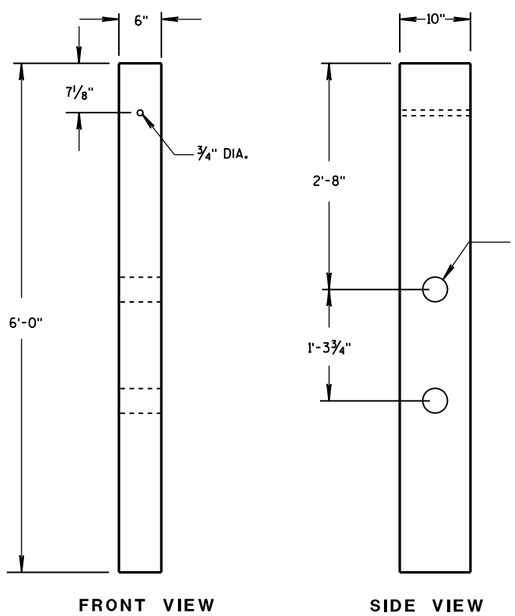

CRT WOOD POST

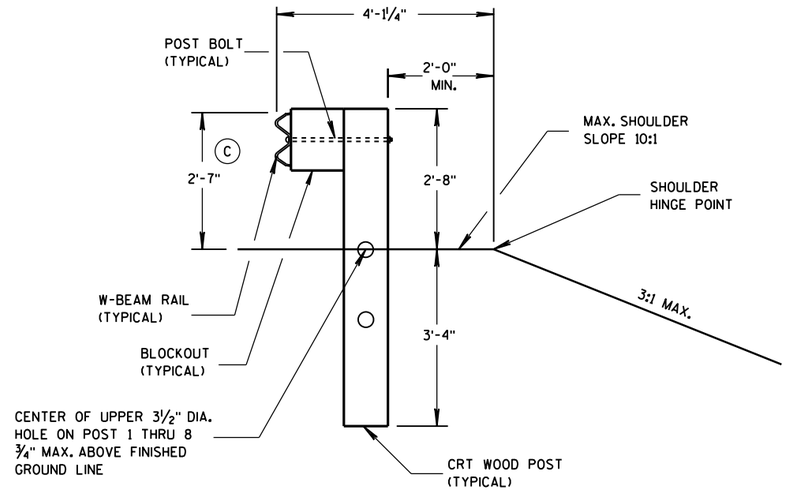

SECTION B-B

POSTS NO. 1-3

SEE OTHER DETAILS

GENERAL NOTES

(C) TOLERANCE FOR TOP OF W-BEAM RAIL IS ± 1".

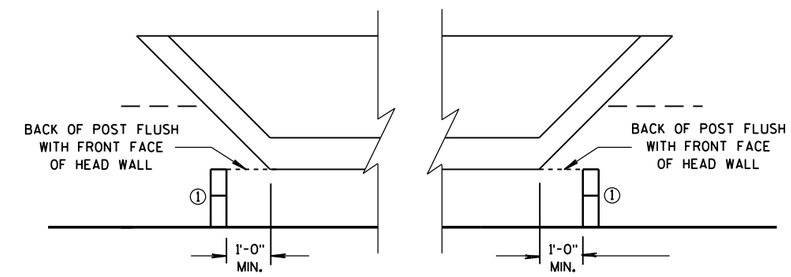

POST PLACEMENT DETAIL

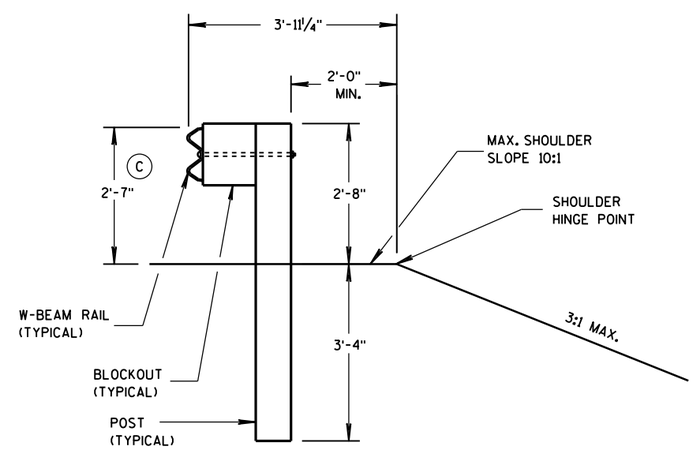

SECTION A-A

POSTS NO. 4-8

SEE OTHER DETAILS

MIDWEST GUARDRAIL SYSTEM LONG SPAN MGS (L)
STATE OF WISCONSIN DEPARTMENT OF TRANSPORTATION
APPROVED 5/10/2013 — DATE /S/ Jerry H. Zogg — ROADWAY STANDARDS DEVELOPMENT ENGINEER FHWA

6

6

S.D.D. 14 B 43-3c

S.D.D. 14 B 43-3c

GENERAL NOTES

(A) THE SLOPE IN THE AREA BOUNDED BY THE GRADELINE, THE HINGE POINT LINE (HPL), AND THE CLEAR ZONE LIMITS (CZL) SHALL BE 4:1 OR FLATTER.

(B) AFTER FINAL ASSEMBLY, RECHECK CABLE TO BE SURE IT IS TAUT AND HAS NOT RELAXED.

(C) DIFFERENT MANUFACTURES REQUIRE DIFFERENT PERFORATED W-BEAM RAIL END PANELS. SEE MANUFACTURES INFORMATION.

(D) THE TOP OF THE STEEL TUBE ON POST 1 AND POST 2 SHALL NOT BE MORE THAN 3" ABOVE THE FINISH GROUND ELEVATION.

(F) ATTACH ALUMINUM SHEET TO E.A.T. HEAD USING 4 STAINLESS STEEL SELF-TAPPING SCREWS. ONE SCREW PER CORNER.

(G) 1/2" DIAMETER X 3" LONG LAG BOLT AND WASHER.

(H) HARDWARE VARIES BETWEEN DIFFERENT MANUFACTURES. SEE MANUFACTURE'S DRAWING FOR INFORMATION.

(I) DIMENSIONS MAY VARY. SEE MANUFACTURE'S INFORMATION.

SEE SDD 14B42 FOR MORE INFORMATION.

* DO NOT ATTACH BLOCKOUTS TO POSTS 1 AND 2.

DO NOT INSTALL REFLECTORS ON THE FIRST 50 FEET OF THE APPROACH END OF THE ENERGY ABSORBING TERMINAL.

W-BEAM RAIL SPLICES ARE LOCATED AT POST NUMBER 3, AND BETWEEN POST 5 AND 6, BETWEEN POSTS 7 AND 8, AND MIDDLE OF THE SPAN AFTER POST 9.

THE CENTER OF THE UPPER 3 1/2" DIAMETER HOLE ON POST NUMBER 3 THROUGH POST 9 IS TO BE FLUSH WITH THE GROUND LINE UP TO A MAXIMUM OF 2" ABOVE GROUND LINE.

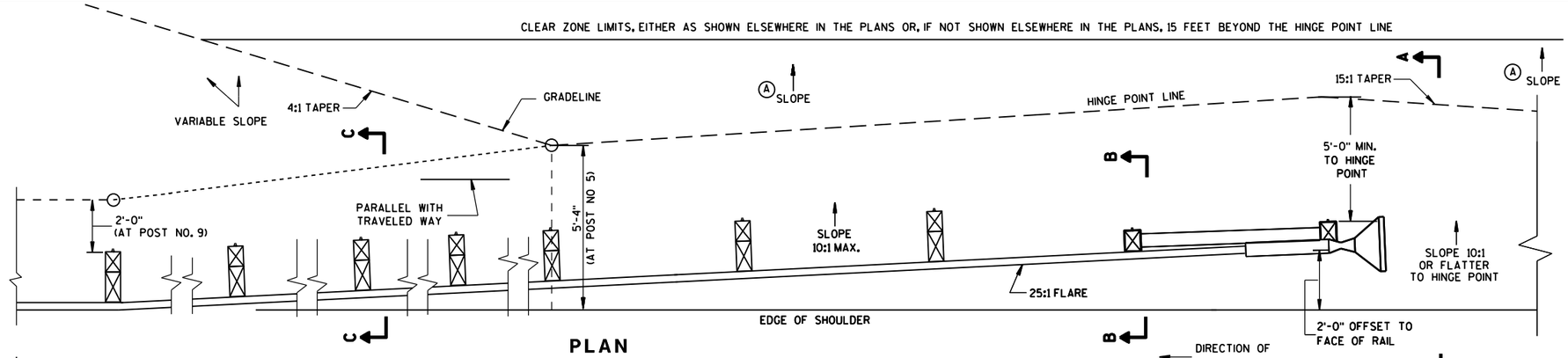

PLAN

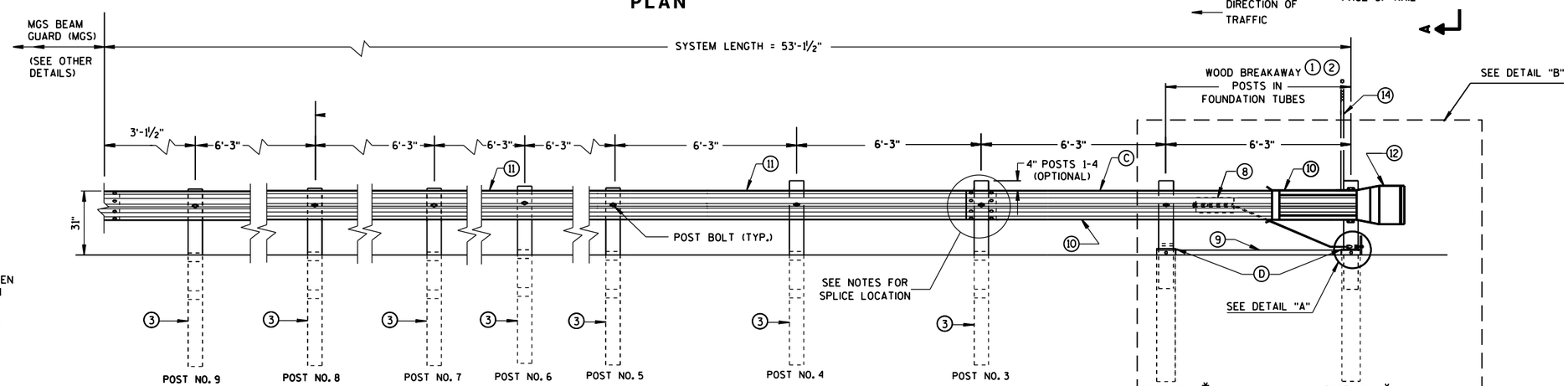

ELEVATION

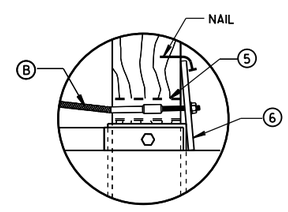

DETAIL "A"

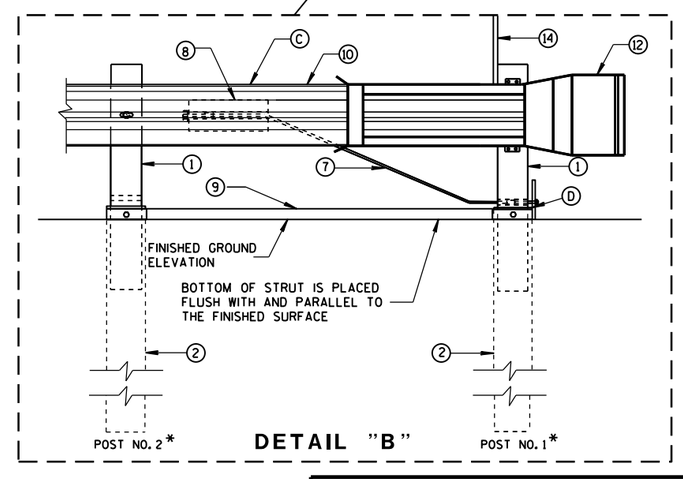

DETAIL "B"

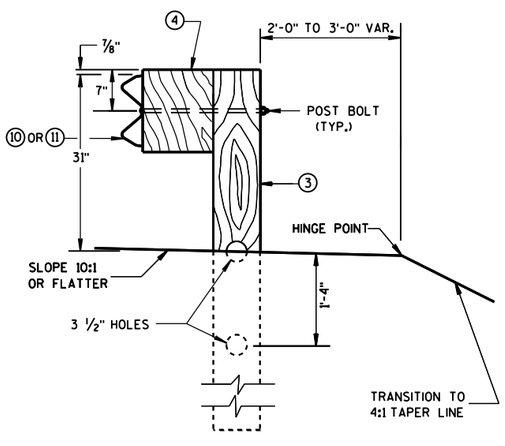

SECTION C-C
TYPICAL AT POST NOS. 3-9

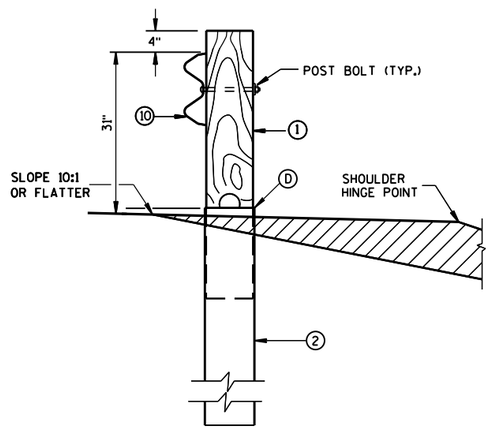

SECTION B-B
TYPICAL AT POST NO. 2*

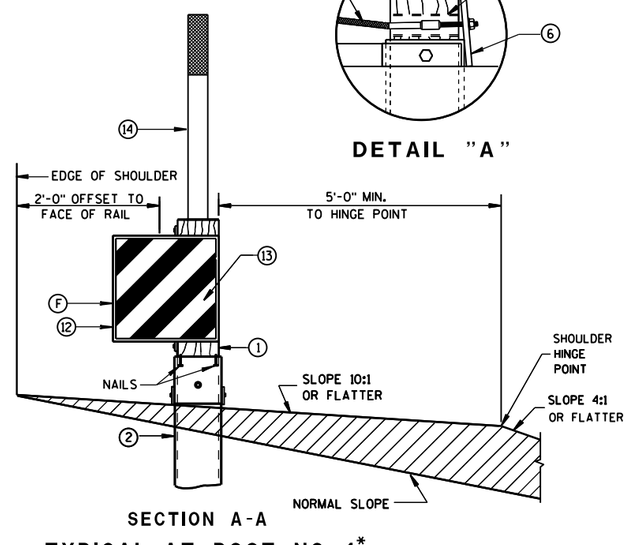

SECTION A-A
TYPICAL AT POST NO. 1*

MIDWEST GUARDRAIL SYSTEM ENERGY ABSORBING TERMINAL (MGS)

STATE OF WISCONSIN
DEPARTMENT OF TRANSPO

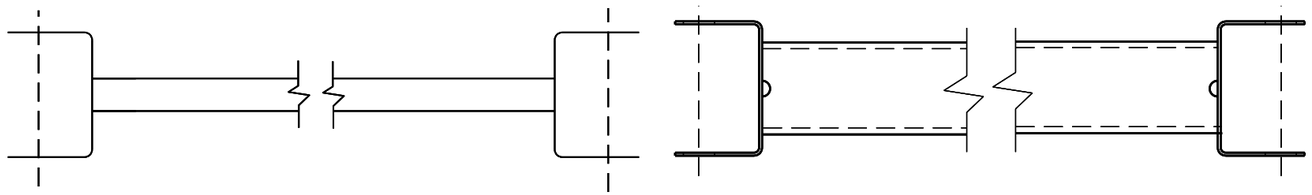

GENERIC GROUND STRUT (9) (H)

BILL OF MATERIALS

PART NO.	DESCRIPTION MATERIALS PROVIDED BY MGS EAT MANUFACTURER. SEE MANUFACTURER'S DETAILS FOR MORE INFORMATION.
1	WOOD BREAKAWAY POST
2	6" X 8" X 0.188", 6'-0" LONG FOUNDATION TUBE AT POSTS 1 AND 2
3	WOOD CRT
4	WOOD BLOCKOUT
5	PIPE SLEEVE
6	BEARING PLATE
7	BCT CABLE ASSEMBLY
8	ANCHOR CABLE BOX
9	GROUND STRUT
10	PERFORATED W-BEAM RAIL END PANEL, 12'-6" LONG.
11	STANDARD W-BEAM RAIL. MULTIPLE SECTIONS REQUIRED. SECTIONS VARY IN LENGTH.
12	END SECTION EAT
13	0.040" ALUMINUM SHEET WITH REFLECTIVE SHEETING TYPE F PER SECTION 637 OF THE STANDARD SPECIFICATIONS
14	EAT MARKER POST - YELLOW (SEE APPROVED PRODUCTS LIST)

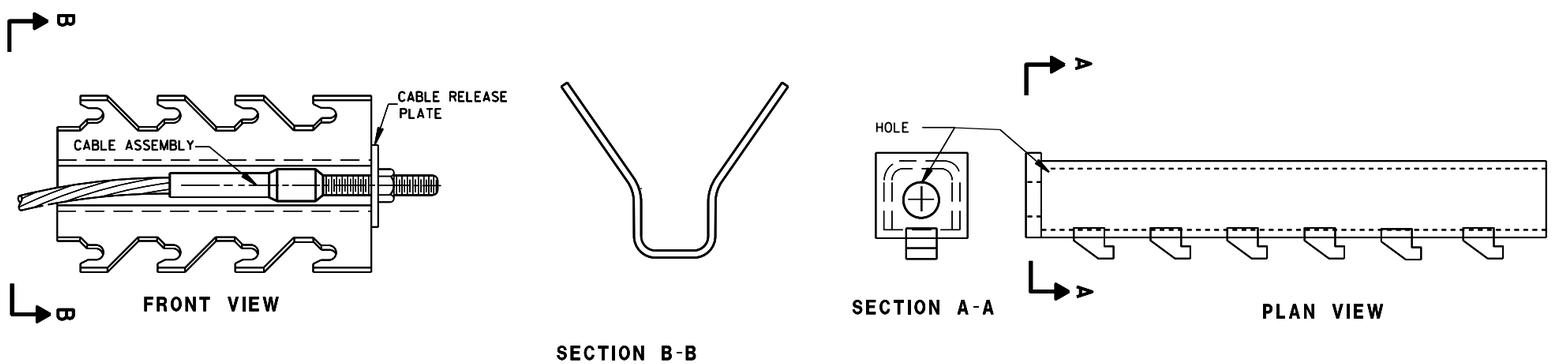

GENERIC ANCHOR CABLE BOX (8) (H)

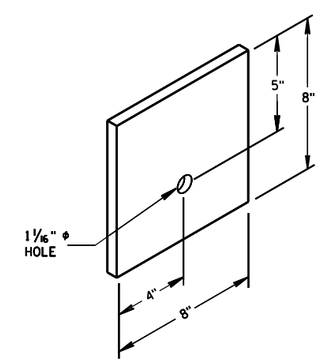

BEARING PLATE (6)

6

6

S.D.D. 14 B 44-2b

S.D.D. 14 B 44-2b

MIDWEST GUARDRAIL SYSTEM
ENERGY ABSORBING TERMINAL
(MGS)

STATE OF WISCONSIN
DEPARTMENT OF TRANSPOR

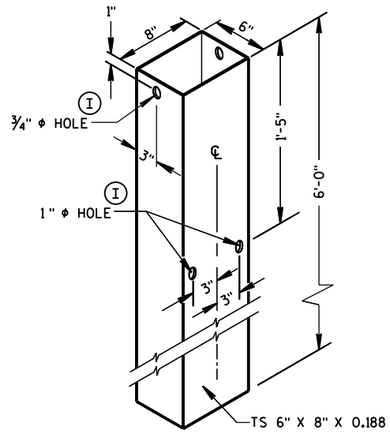

FOUNDATION TUBE (2)

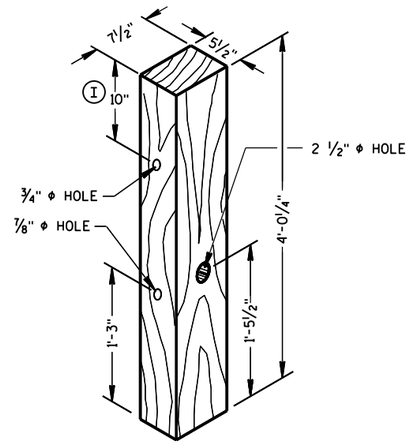

POSTS NUMBER 1 AND 2

WOOD BREAKAWAY POST (1)

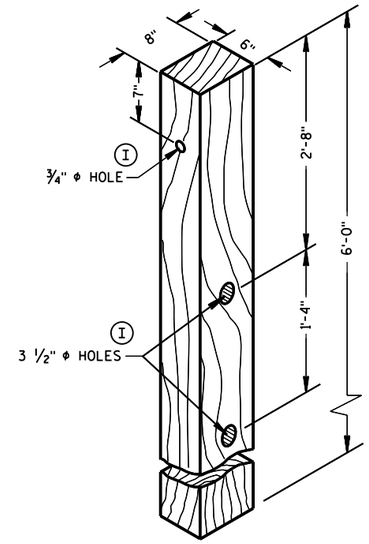

POSTS NUMBER 3-9

WOOD CRT POST (3)

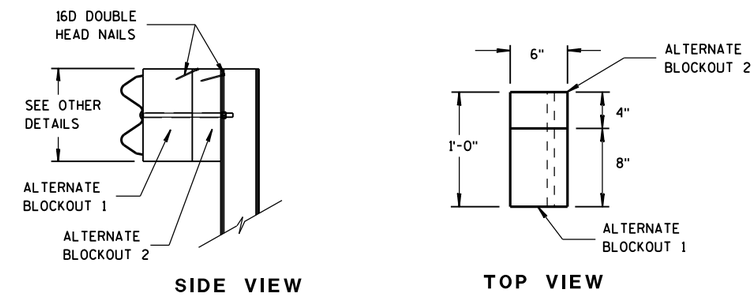

ALTERNATE WOOD BLOCKOUT DETAIL

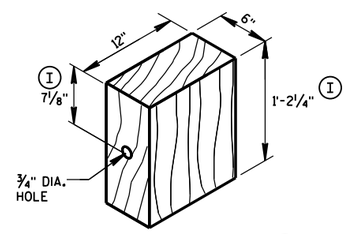

WOOD BLOCKOUT (4)

REQ'D. AT ALL POSTS EXCEPT POST NO'S 1 & 2

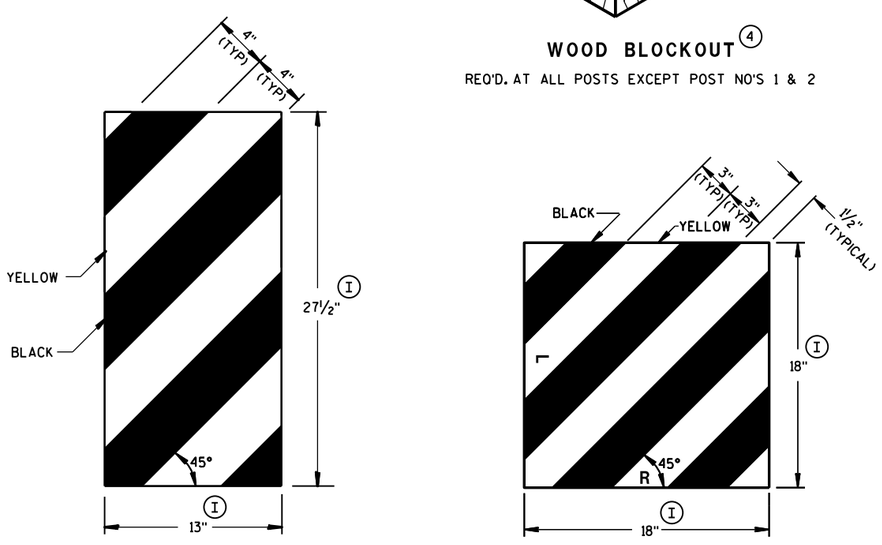

GENERIC REFLECTIVE SHEETING (13) (H)

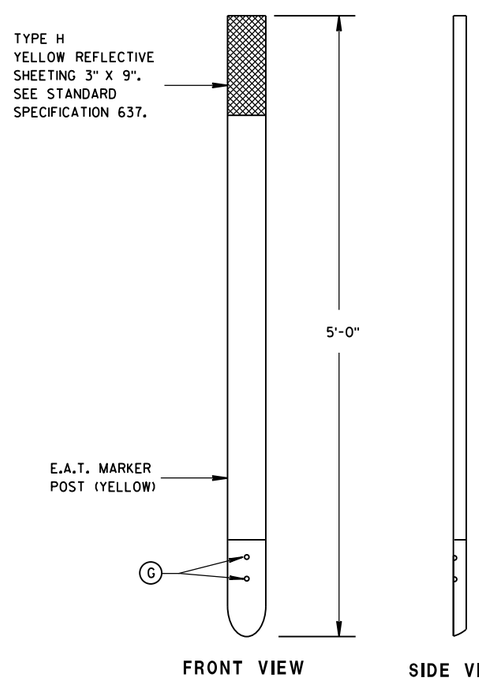

E.A.T. MARKER POST (14)

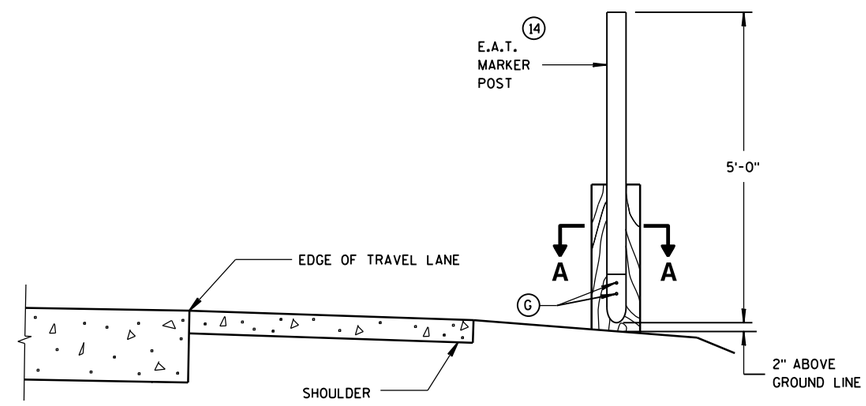

TYPICAL INSTALLATION OF E.A.T. MARKER POST BACKSIDE OF POST NO. 1

(E.A.T. AND RAIL REMOVED FOR CLARITY)

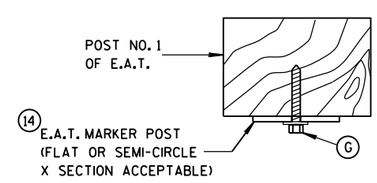

SECTION A-A

MIDWEST GUARDRAIL SYSTEM ENERGY ABSORBING TERMINAL (MGS)

STATE OF WISCONSIN
DEPARTMENT OF TRANSPORTATION

APPROVED
June 2014 — DATE
/S/ Jerry H. Zogg — ROADWAY STANDARDS DEVELOPMENT ENGINEER
FHWA

6

6

S.D.D. 14 B 44-2c

S.D.D. 14 B 44-2c

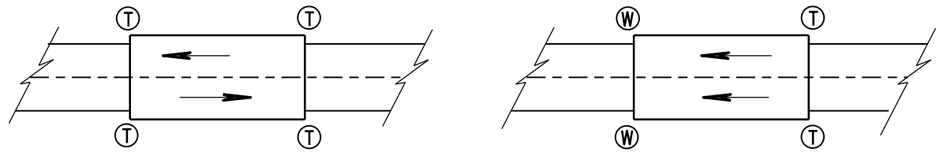

TWO WAY TRAFFIC

ONE WAY TRAFFIC

(T) THRIE BEAM CONNECTION

(W) W-BEAM CONNECTION WHEN REQUIRED

TYPICAL LOCATIONS OF THRIE BEAM AND W-BEAM CONNECTIONS TO BRIDGE

GENERAL NOTES

IF ROCK IS ENCOUNTERED, REMOVE ROCK TO FULL DEPTH OF POST PLUS 2½", AND 12" DIAMETER AROUND POST. SEE 14B42 FOR MORE DETAILS.

TRANSITION USES STEEL POSTS ONLY.

SEE STANDARD DETAIL DRAWING 14 B 42 FOR MORE INFORMATION.

(1) BRIDGE RAILING TYPE "W" DOES NOT REQUIRE A TERMINAL CONNECTOR.

(2) OPTIONAL CURB AND GUTTER OR DRAINAGE FEATURE SEE PLAN FOR INFORMATION.

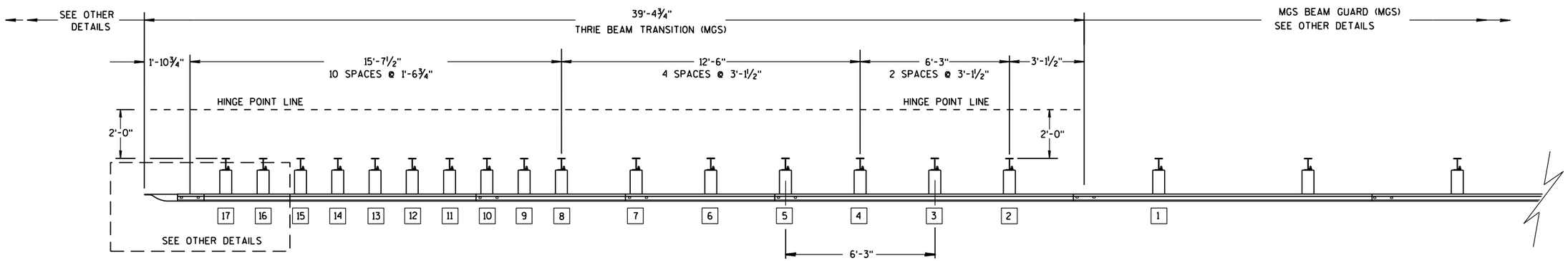

PLAN VIEW

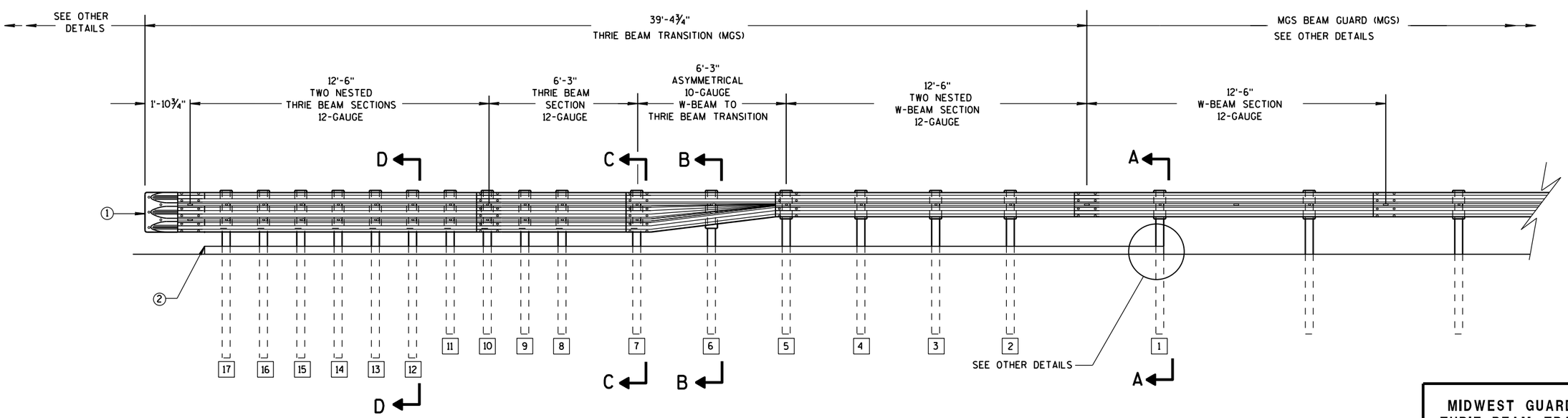

ELEVATION VIEW

MIDWEST GUARDRAIL SYSTEM THRIE BEAM TRANSITION

MIDWEST GUARDRAIL SYSTEM
THRIE BEAM TRANSITION (MGS)

STATE OF WISCONSIN
DEPARTMENT OF TRANSPORTATION

6

6

S.D.D. 14 B 45-4a

S.D.D. 14 B 45-4a

GENERAL NOTES

(2) OPTIONAL CURB AND GUTTER OR DRAINAGE_FEATURE SEE PLAN FOR INFORMATION.

(3) WHEN USING STEEL POSTS AND WOOD BLOCKOUTS INSTALL FOUR 10D GALVANIZED NAILS. INSTALL NAILS AT THE BACK CORNERS OF THE BLOCK AND BEND THE NAILS OVER THE FLANGE OF THE STEEL POST.

(4) TOLERANCE FOR TOP OF W-BEAM RAIL IS ± 1".

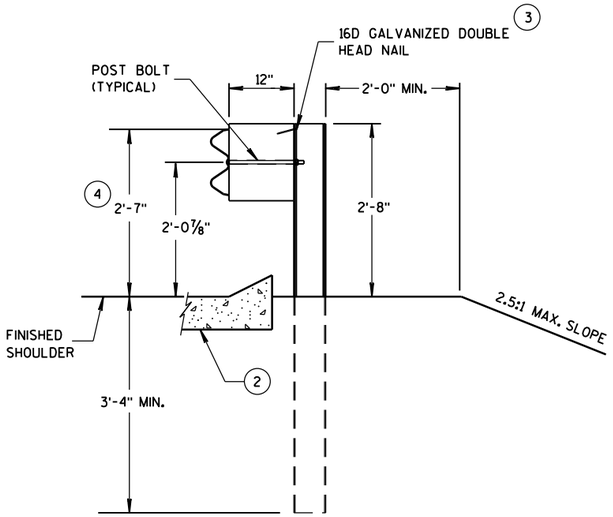

SECTION A-A
POSTS 1-5

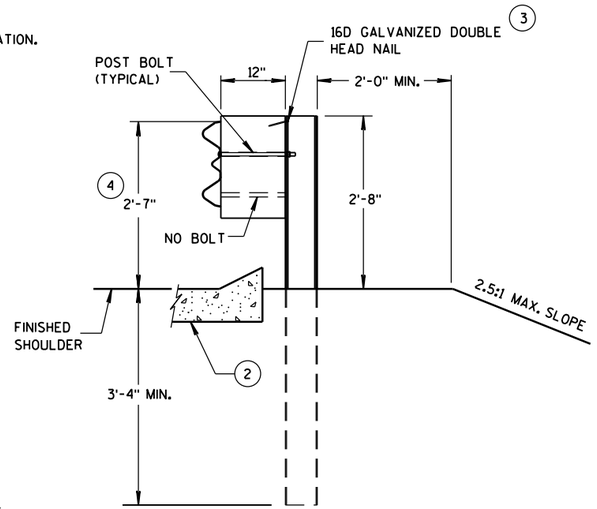

SECTION B-B
POST 6

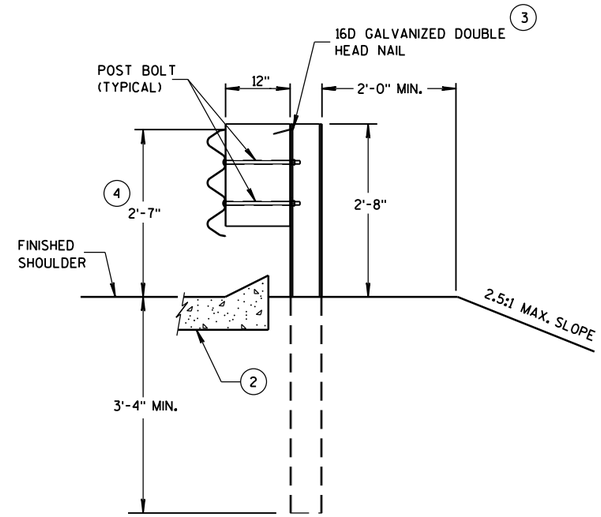

SECTION C-C
POSTS 7-11

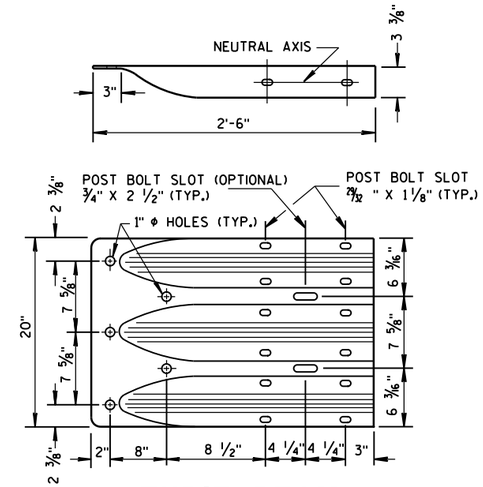

THRIE BEAM
TERMINAL CONNECTOR

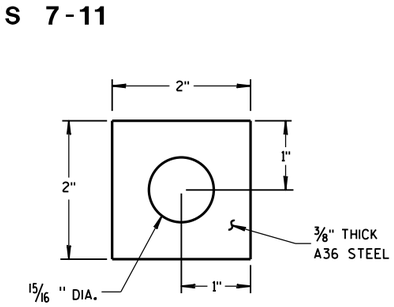

PLATE WASHER DETAIL

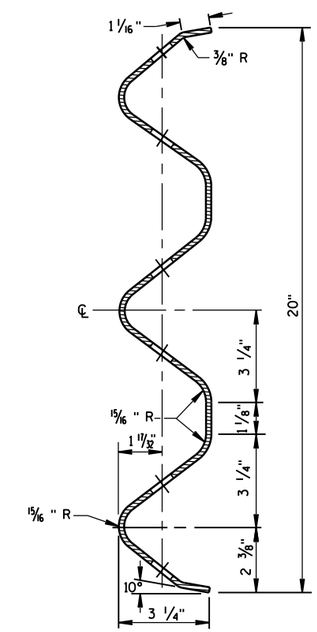

SECTION THRU THRIE
BEAM RAIL ELEMENT

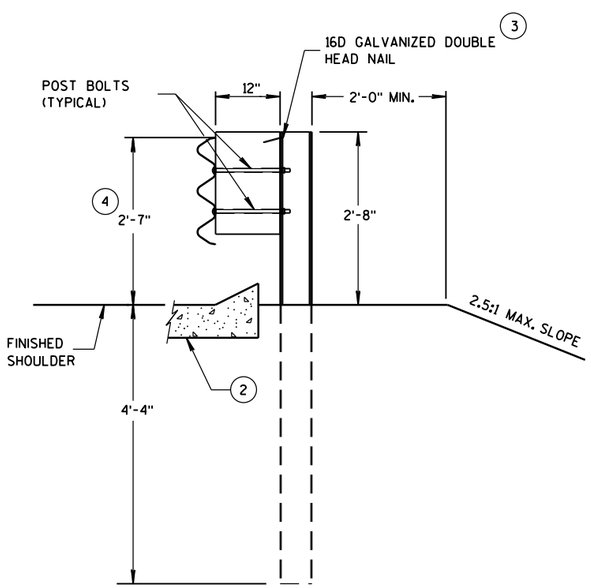

SECTION D-D
POSTS 12-17

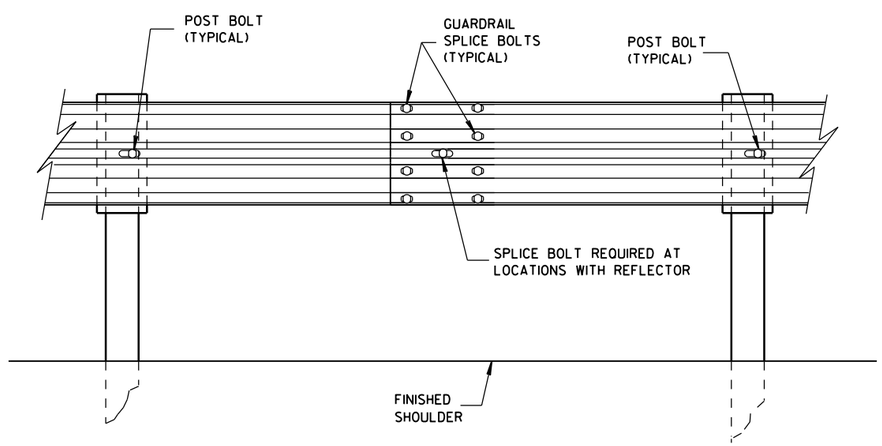

SPLICE DETAIL

MIDWEST GUARDRAIL SYSTEM
THRIE BEAM TRANSITION (MGS)

STATE OF WISCONSIN
DEPARTMENT OF TRANSPO

6

S.D.D. 14 B 45-4b

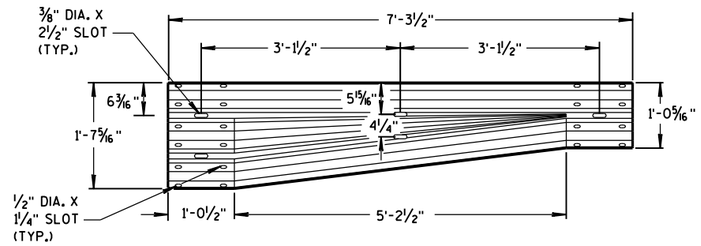

W-BEAM TO THRIE BEAM TRANSITION SECTION

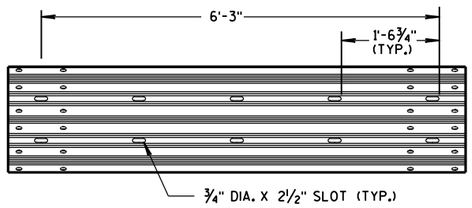

6'-3" THRIE BEAM SECTION

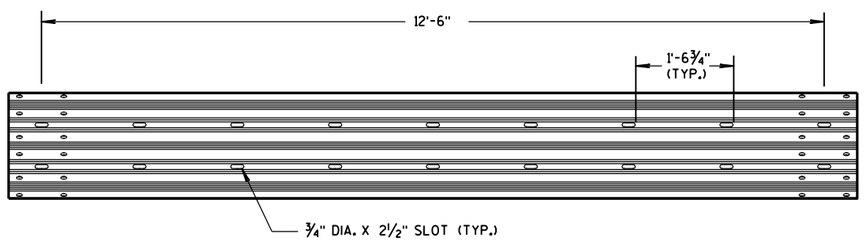

12'-6" THRIE BEAM SECTION

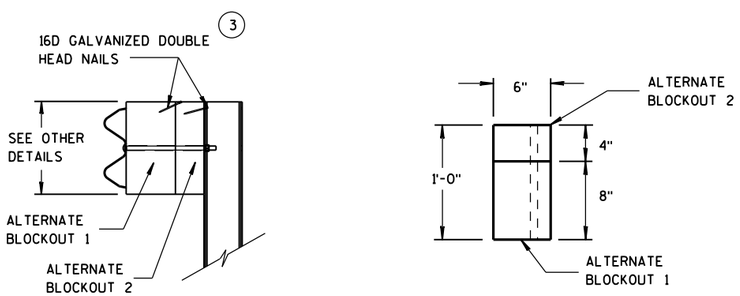

SIDE VIEW TOP VIEW

ALTERNATE WOOD BLOCKOUT DETAIL

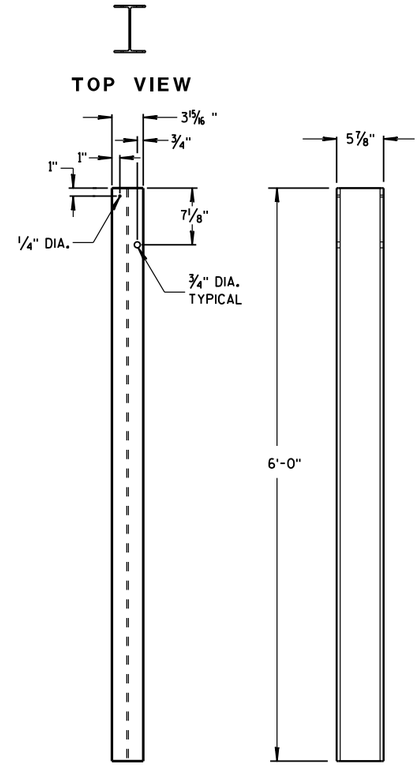

STEEL POSTS 1-5

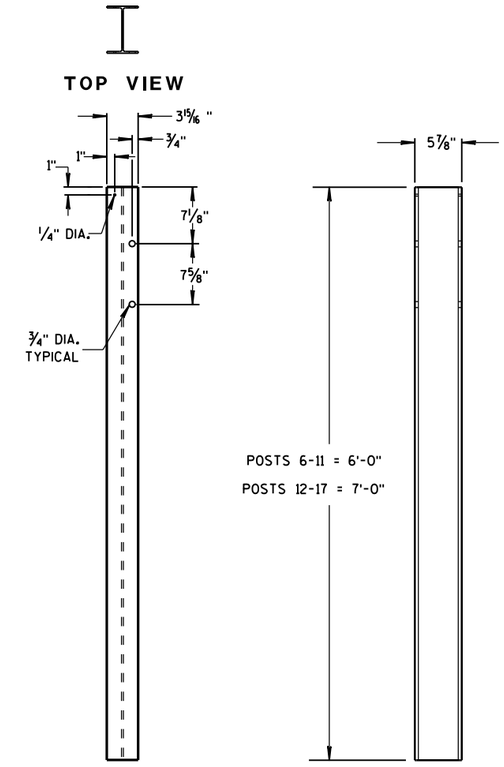

STEEL POSTS 6-17

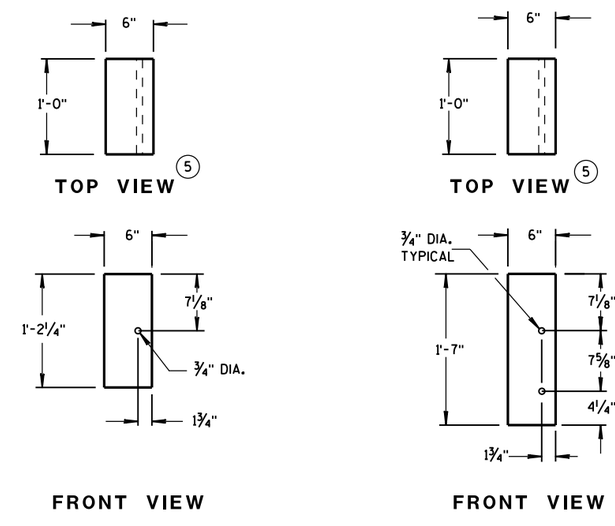

BLOCKOUT POSTS 1-5

BLOCKOUT POSTS 6-17

GENERAL NOTES

STEEL POSTS ARE W6X9 OR W6X8.5.

BOLT HOLES FOR POST ARE ON FRONT AND OF SIDE OF POST.

3 WHEN USING STEEL POSTS AND WOOD BLOCKOUTS INSTALL FOUR 16D GALVANIZED NAILS. INSTALL NAILS AT THE BACK CORNERS OF THE BLOCK AND BEND THE NAILS OVER THE FLANGE OF THE STEEL POST.

5 WOOD BLOCKS MAY BE CONSTRUCTED OUT OF 2 WOOD BLOCKS. SEE ALTERNATE WOOD BLOCK DETAIL.

MIDWEST GUARDRAIL SYSTEM
THRIE BEAM TRANSITION (MGS)

STATE OF WISCONSIN
DEPARTMENT OF TRANSPORTATION

6

6

S.D.D. 14 B 45-4c

S.D.D. 14 B 45-4c

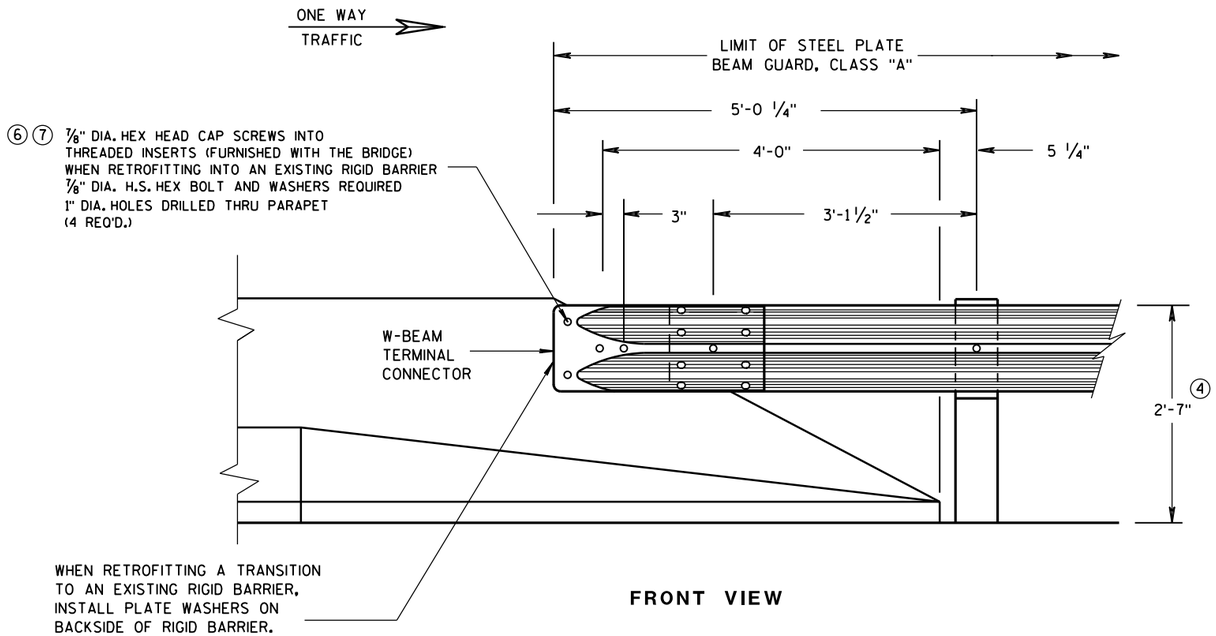

FRONT VIEW

W BEAM CONNECTION TO PARAPETS WITH SLOPED ENDS

(USE ONLY AT TRAFFIC EXIT END OF ONE WAY BRIDGE)

GENERAL NOTES

② OPTIONAL CURB AND GUTTER OR DRAINAGE FEATURE SEE PLAN FOR INFORMATION.

④ TOLERANCE FOR TOP OF BEAM IS ± 1".

⑥ DRILLING BOLT HOLES THROUGH THE PARAPET, BOLTS, NUTS, WASHERS AND REPAIRING DAMAGED CONCRETE ARE INCIDENTAL TO THE CONTRACT.

⑦ BOLTS MAY BE A325 BOLTS OR A449 BOLTS. BOLT LENGTH AND THREADING LENGTH ARE TO ALLOW FOR A TIGHT CONNECTION BETWEEN RIGID BARRIER AND THRIE BEAM CONNECTION PLATE. CONTRACTOR IS TO FIELD VERIFY BOLT LENGTH AND THREAD LENGTH. ONE ROUND WASHER REQUIRED BETWEEN BOLT HEAD AND THRIE BEAM CONNECTOR PLATE. BOLTS THAT EXTEND THROUGH THE PARAPET AND OUT THE BACK FACE REQUIRE A HARDENED ROUND STEEL WASHER THAT IS 2" O.D. X 5/8" THICK AND ONE PLATE WASHER. REPAIR ANY DAMAGED CONCRETE FROM BOLT INSTALLATION.

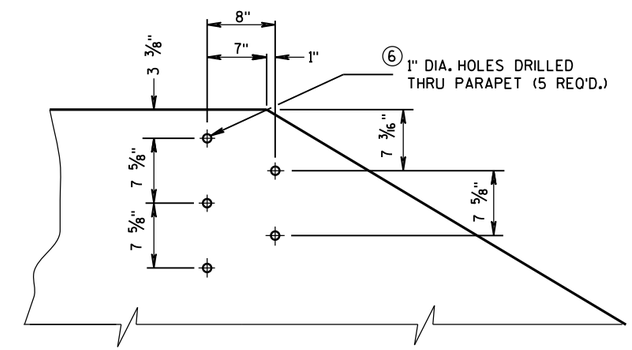

DRILL HOLE LOCATION AND PATTERN FOR THRIE BEAM CONNECTION

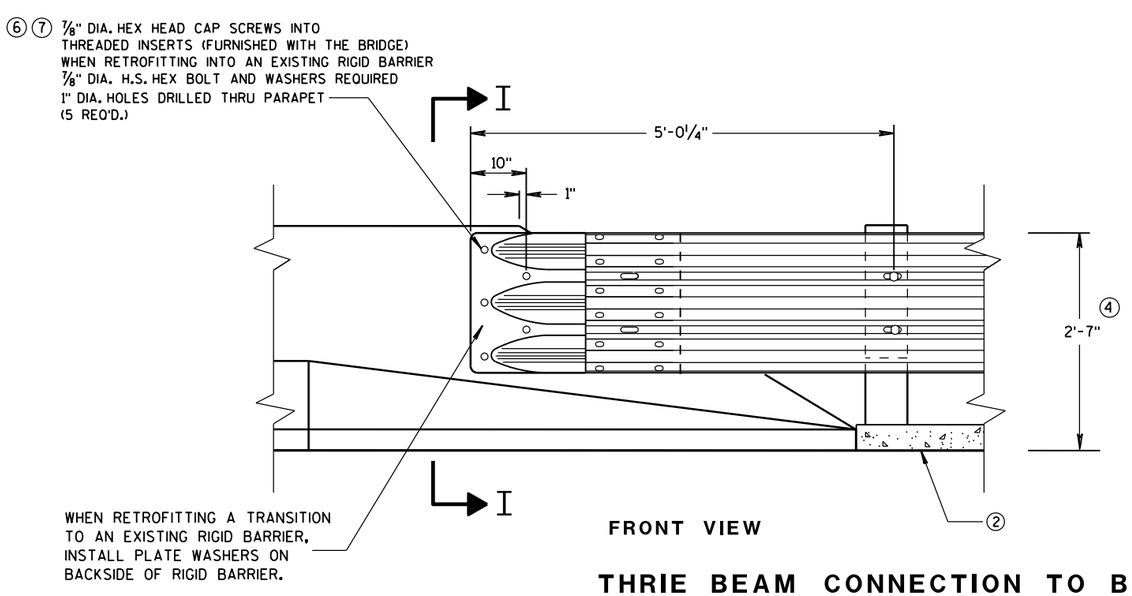

FRONT VIEW

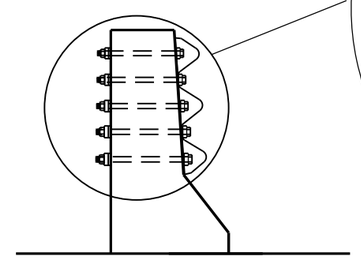

SECTION I-I

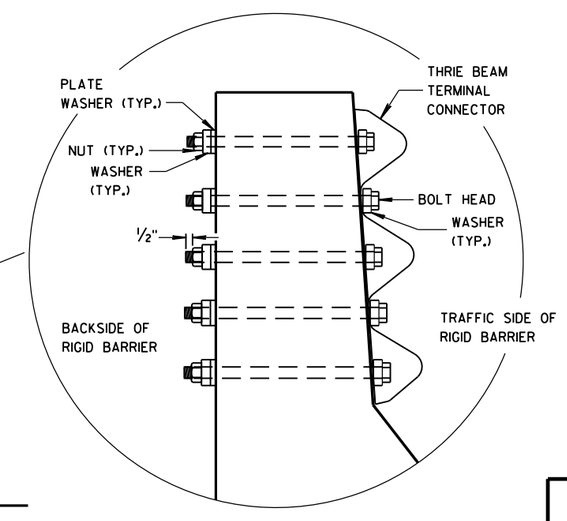

THRIE BEAM CONNECTION TO BRIDGE PARAPETS WITH SLOPED ENDS

MIDWEST GUARDRAIL SYSTEM
THRIE BEAM TRANSITION (MGS)

STATE OF WISCONSIN
DEPARTMENT OF TRANSPORTATION

APPROVED
June, 2015 — DATE
/S/ Jerry H. Zogg — ROADWAY STANDARDS DEVELOPMENT ENGINEER
FHWA

6

S.D.D. 14 B 45-4f

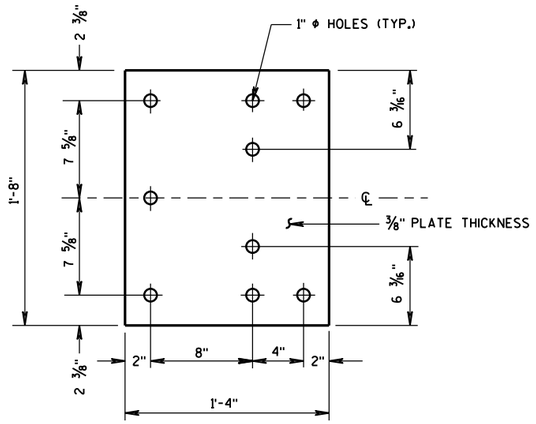

BACK-UP PLATE DETAIL

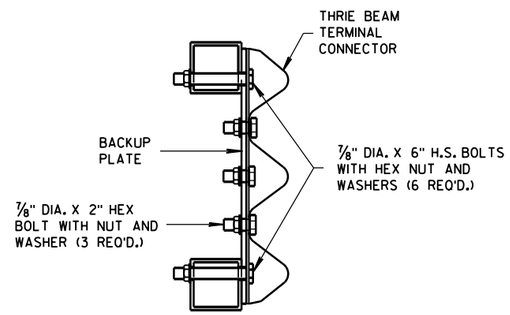

SECTION J-J

GENERAL NOTES

(4) TOLERANCE FOR TOP OF BEAM IS ± 1".

(6) DRILLING HOLES THROUGH THE PAPRPET, BOLTS, NUTS, WASHERS AND REPAIRING DAMAGED CONCRETE ARE INCIDENTAL TO THE CONTRACT.

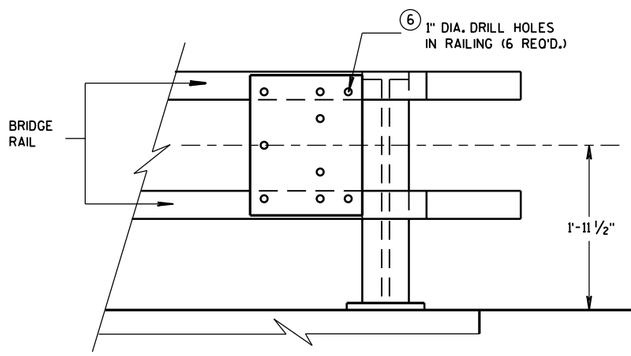

BACK-UP PLATE MOUNTING ONTO BRIDGE RAILING

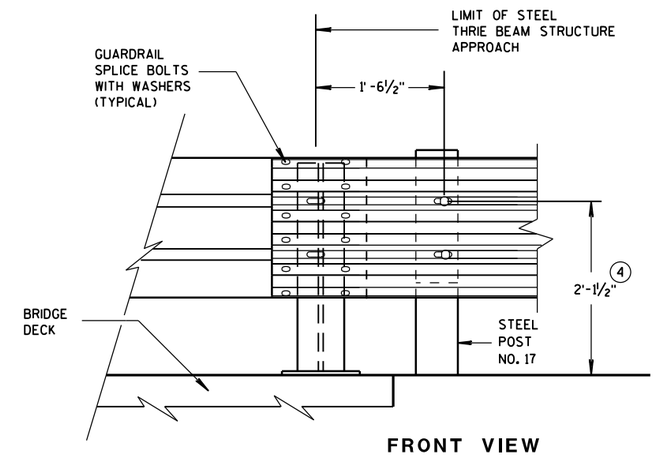

FRONT VIEW

THRIE BEAM CONNECTION TO STEEL RAILING TYPE "W"

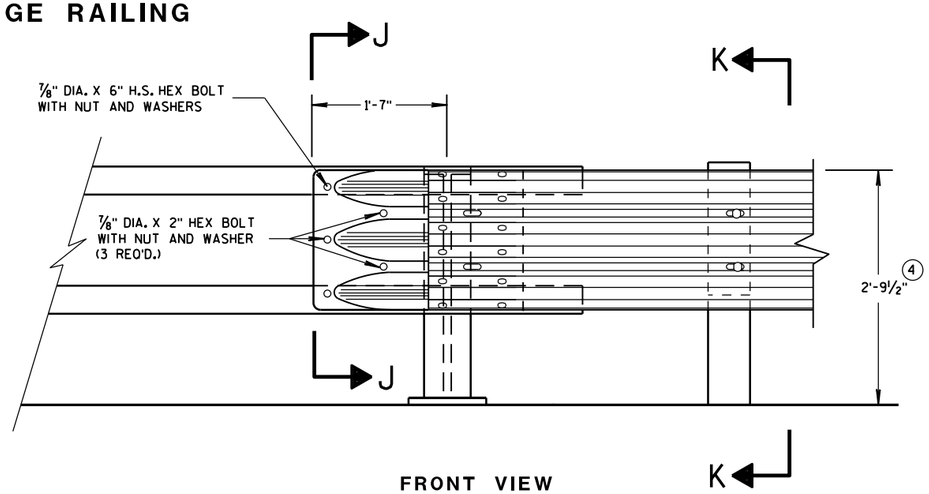

FRONT VIEW

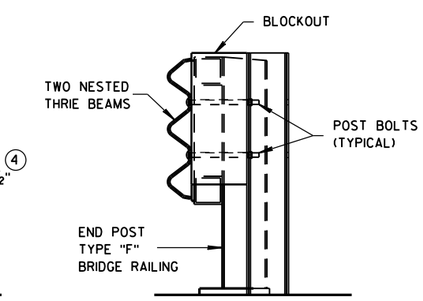

SECTION K-K

THRIE BEAM CONNECTION TO TUBULAR RAILING TYPE "F"

MIDWEST GUARDRAIL SYSTEM
THRIE BEAM TRANSITION (MGS)

STATE OF WISCONSIN
DEPARTMENT OF TRANSPORTATION

APPROVED
June, 2015 — DATE
/S/ Jerry H. Zogg — ROADWAY STANDARDS DEVELOPMENT ENGINEER
FHWA
NT

6

6

S.D.D. 14 B 45-4g

S.D.D. 14 B 45-4g

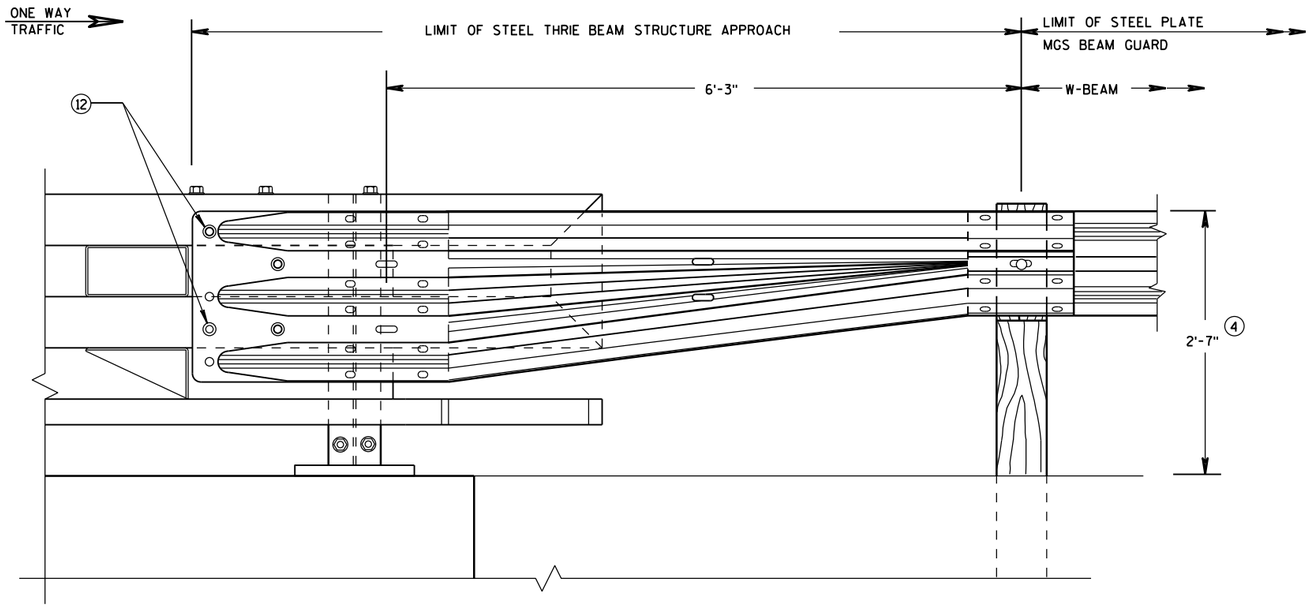

FRONT VIEW

W BEAM TRANSITION AND CONNECTION TO BRIDGE RAILING TYPE "NY3"

(USE ONLY ON THE TRAFFIC EXIT END OF ONE WAY BRIDGES)

GENERAL NOTES

(4) TOLERANCE FOR TOP OF BEAM IS ± 1".

(12) BOLTS MAY BE A325 BOLTS OR A449 BOLTS. BOLT LENGTH AND THREADING LENGTH ARE TO ALLOW FOR A TIGHT CONNECTION BETWEEN RIGID BARRIER AND THRIE BEAM CONNECTION PLATE. CONTRACTOR IS TO FIELD VERIFY BOLT LENGTH AND THREAD LENGTH. ONE ROUND WASHER REQUIRED BETWEEN BOLT HEAD AND THRIE BEAM CONNECTOR PLATE. ON BACKSIDE OF PARAPET ONE ROUND WASHER, AND NUT REQUIRED. BOLT THREAD IS TO EXTEND ½-INCH BEYOND NUT.

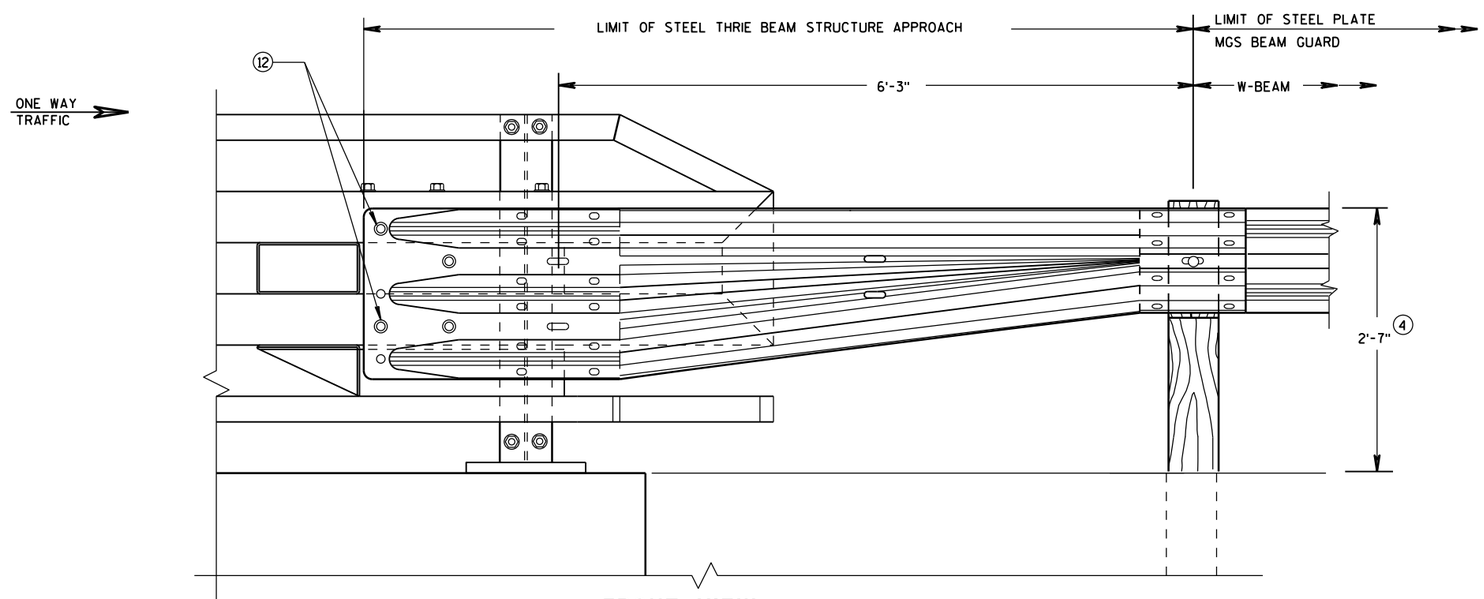

FRONT VIEW

W BEAM TRANSITION AND CONNECTION TO BRIDGE RAILING TYPE "NY4"

(USE ONLY ON THE TRAFFIC EXIT END OF ONE WAY BRIDGES)

MIDWEST GUARDRAIL SYSTEM
THRIE BEAM TRANSITION (MGS)

STATE OF WISCONSIN
DEPARTMENT OF TRANSPORTATION

APPROVED
June, 2015 — DATE
/S/ Jerry H. Zogg — ROADWAY STANDARDS DEVELOPMENT ENGINEER
NT
FHWA

GENERAL NOTES

DETAILS OF CONSTRUCTION, MATERIALS AND WORKMANSHIP NOT SHOWN ON THIS DRAWING SHALL CONFORM TO THE PERTINENT REQUIREMENTS OF THE STANDARD SPECIFICATIONS AND THE APPLICABLE SPECIAL PROVISIONS.

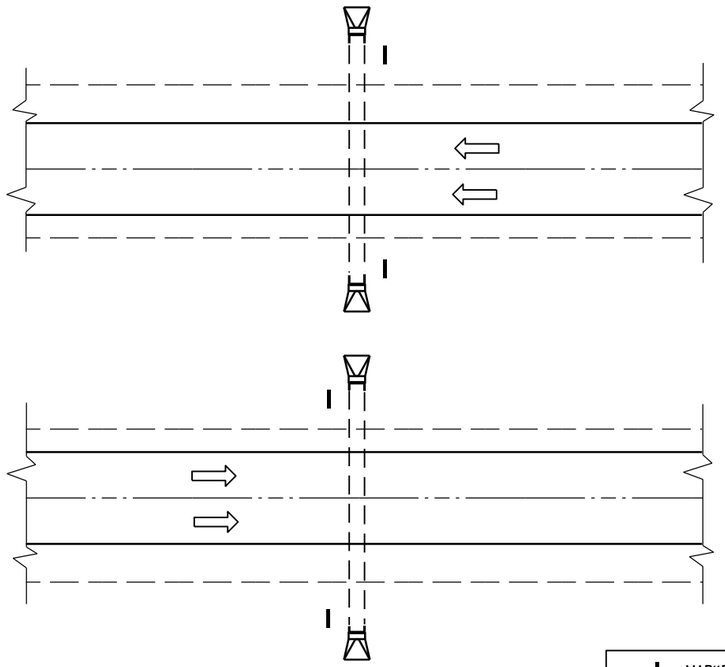

PLAN VIEW

DIVIDED HIGHWAY

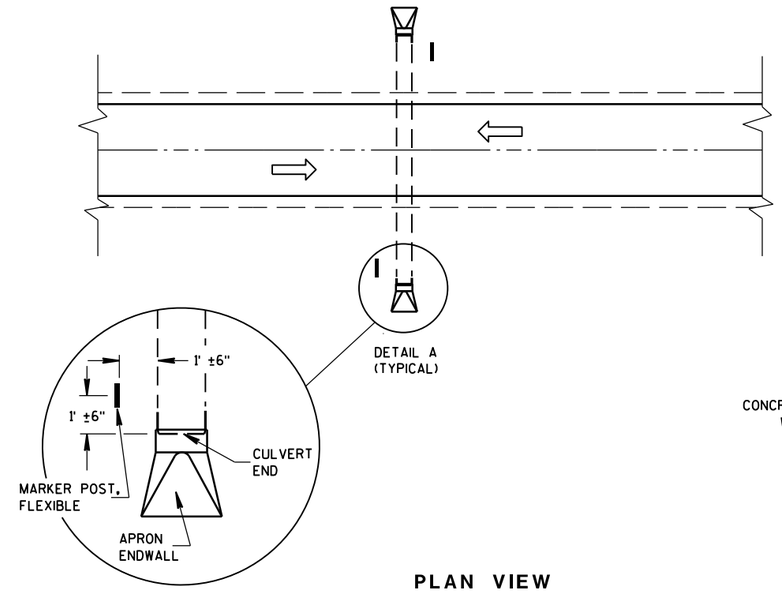

DETAIL A
(TYPICAL)

PLAN VIEW

UNDIVIDED HIGHWAY

MARKER POST, FLEXIBLE

DIRECTION OF TRAFFIC FLOW

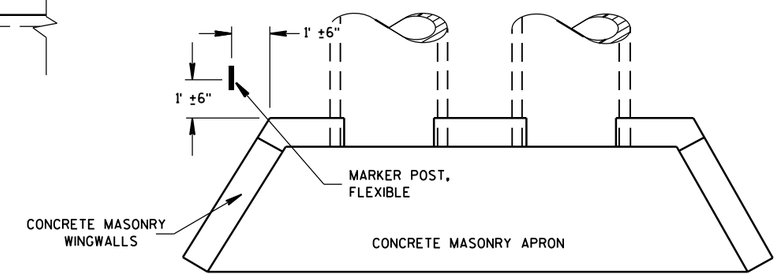

PLAN VIEW

CONCRETE MASONRY ENDWALLS FOR CULVERT PIPE AND PIPE ARCH

FLEXIBLE MARKER POST LOCATION

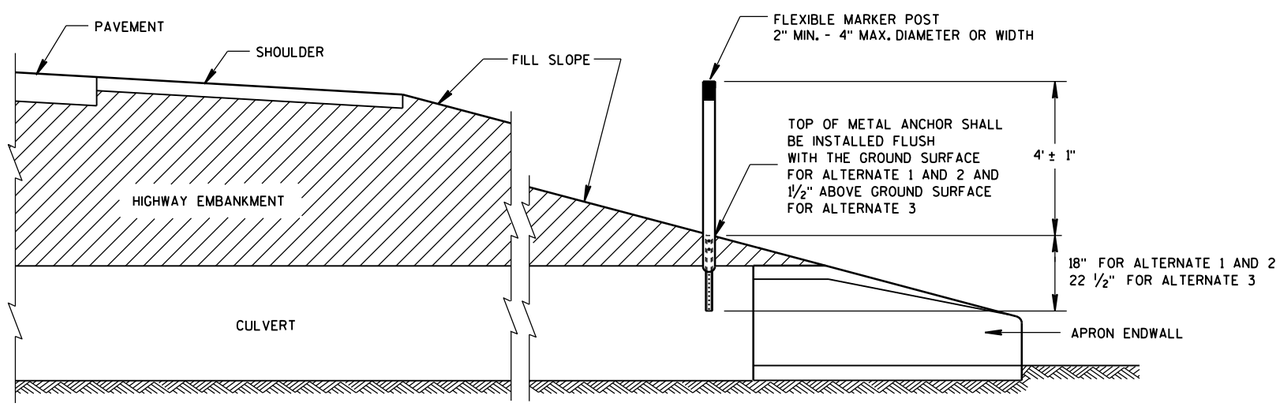

CROSS SECTION

FLEXIBLE MARKER POST

FLEXIBLE MARKER POST FOR CULVERT END

STATE OF WISCONSIN
DEPARTMENT OF TRANSPOR

6

S.D.D. 15 A 3-2a

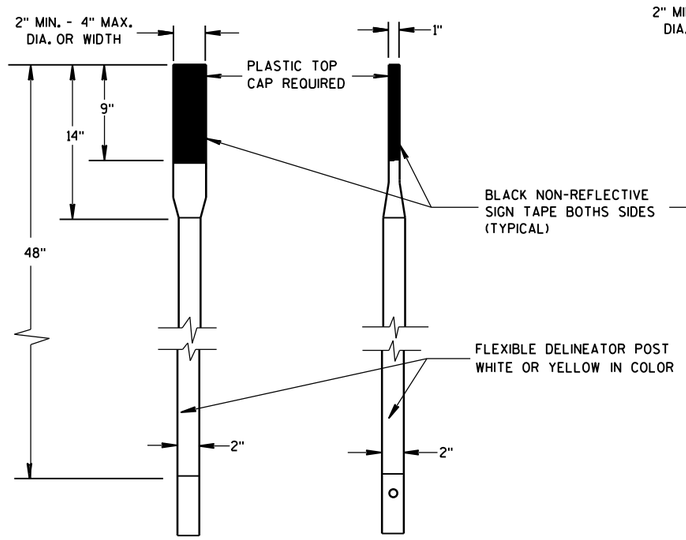

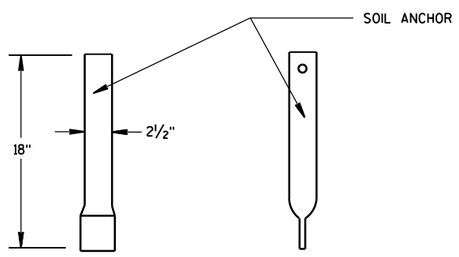

FRONT VIEW SIDE VIEW

ALTERNATE 1

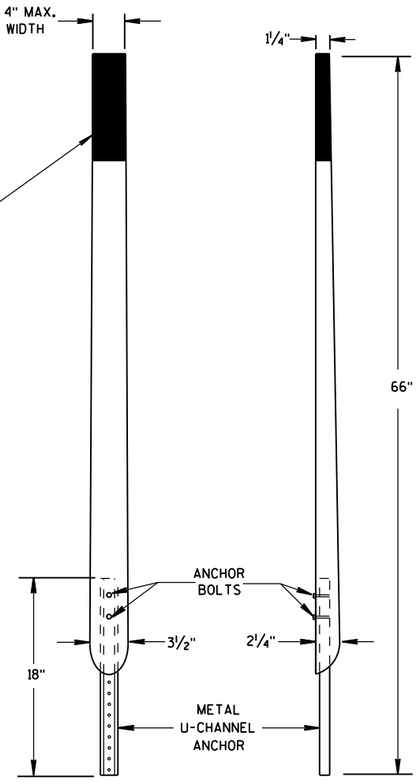

FRONT VIEW SIDE VIEW

ALTERNATE 2

FLEXIBLE MARKER POSTS

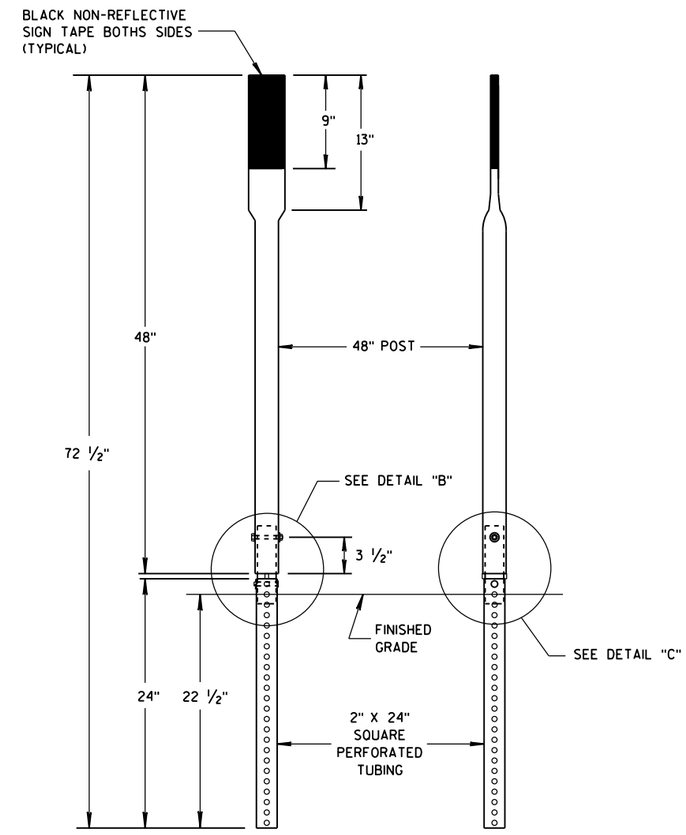

FRONT VIEW SIDE VIEW

ALTERNATE 3

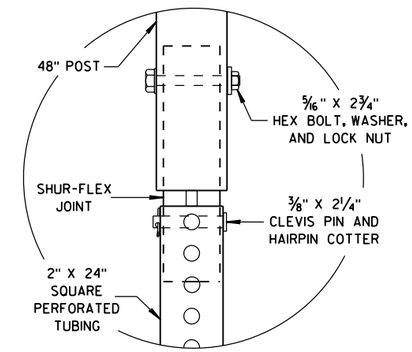

DETAIL B

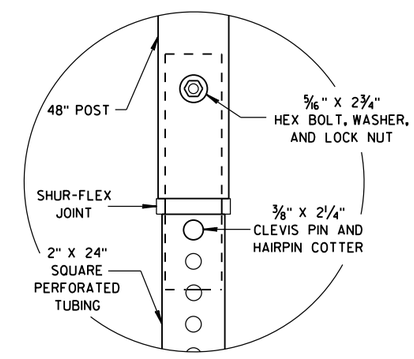

DETAIL C

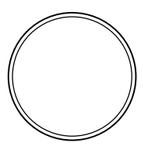

SECTION A-A

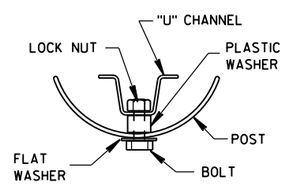

SECTION B-B

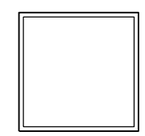

SECTION C-C

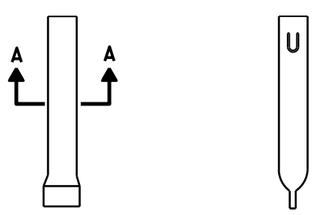

FRONT VIEW SIDE VIEW

ALTERNATE 1

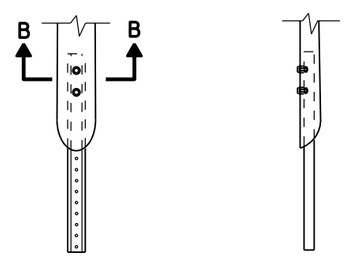

FRONT VIEW SIDE VIEW

ALTERNATE 2

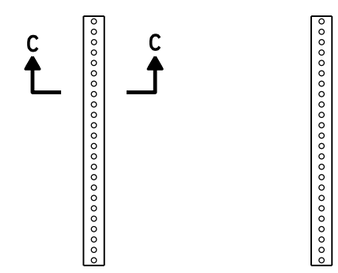

FRONT VIEW SIDE VIEW

ALTERNATE 3

FLEXIBLE MARKER POST ANCHORS

FLEXIBLE MARKER POST
FOR CULVERT END

STATE OF WISCONSIN
DEPARTMENT OF TRANSPORTATION

APPROVED
10/1/2012 /S/ Travis Feltes
DATE STATE TRAFFIC ENGINEER
FHWA

6

6

S.D.D. 15 A 3-2b

S.D.D. 15 A 3-2b

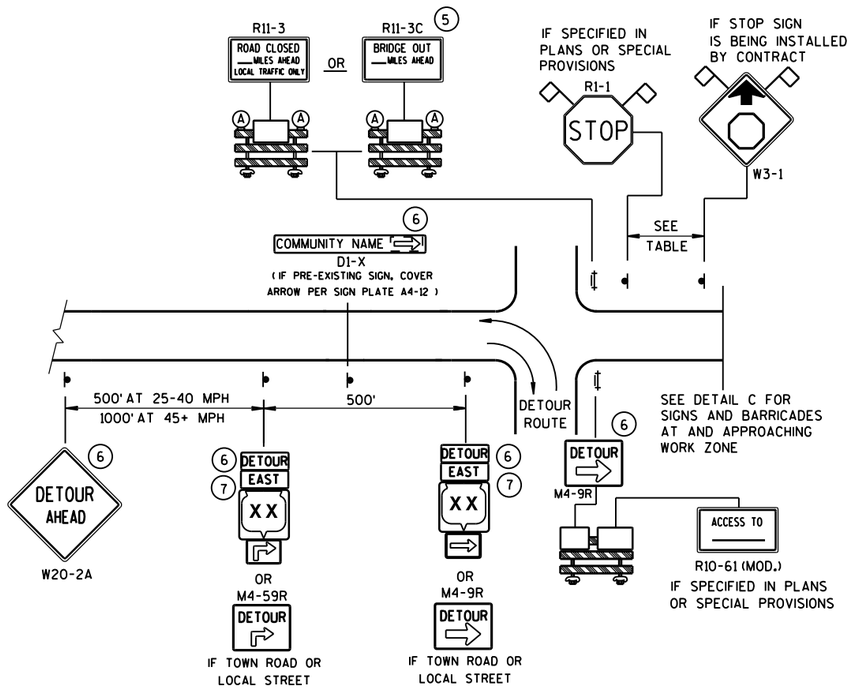

DETAIL A

MAINLINE CLOSURE WITH POSTED DETOUR

WORK ZONE GREATER THAN ½ MILE FROM DETOUR ROUTE (1000 FEET IF URBAN)

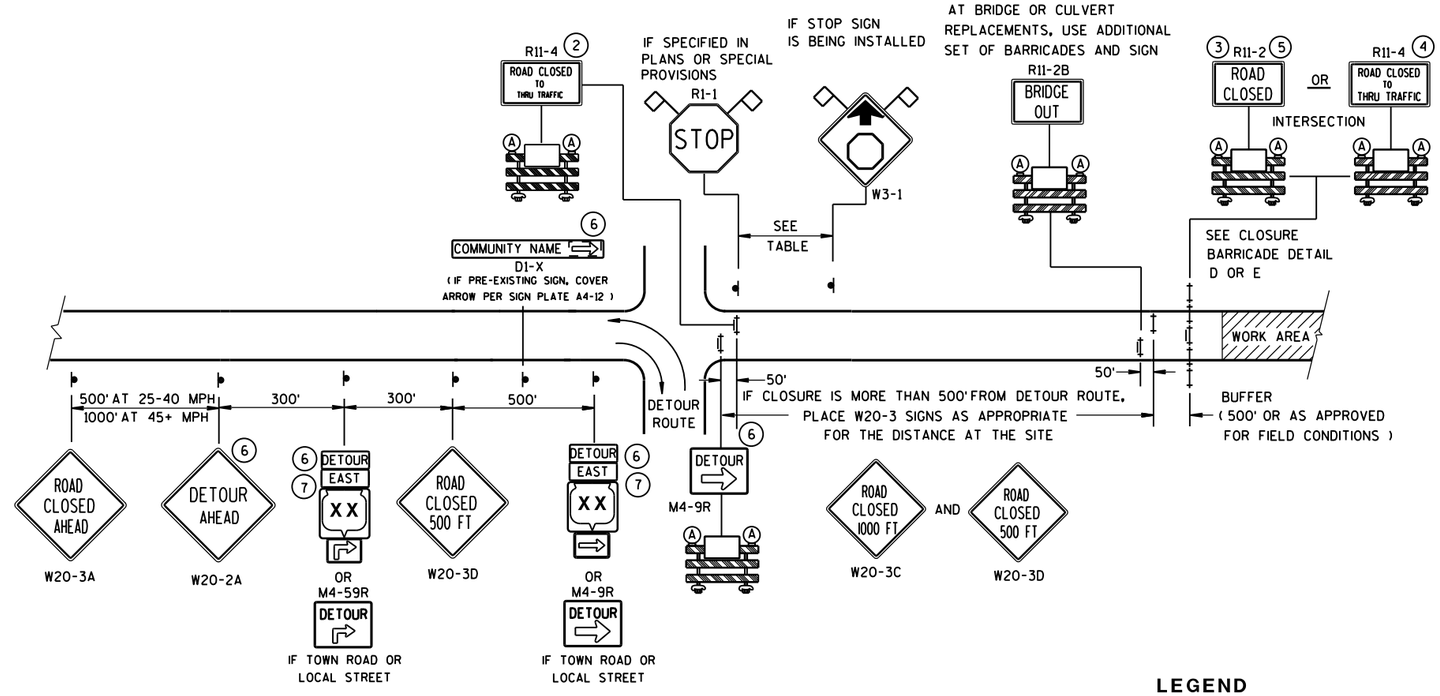

DETAIL B

MAINLINE CLOSURE WITH POSTED DETOUR

WORK ZONE LESS THAN ½ MILE FROM DETOUR ROUTE (1000 FEET IF URBAN)

LEGEND

- SIGN ON PERMANENT SUPPORT
- TYPE III BARRICADE
- TYPE III BARRICADE WITH ATTACHED SIGN
- (A) TYPE "A" WARNING LIGHT (FLASHING)
- WORK AREA
- DETOUR / EAST — M4-8 / M3-X
- XX — M1-4; COUNTY XX — M1-5A; XX — M1-6
- M05-1 OR M06-1
- FLAGS, 16" X 16" MIN., (ORANGE)

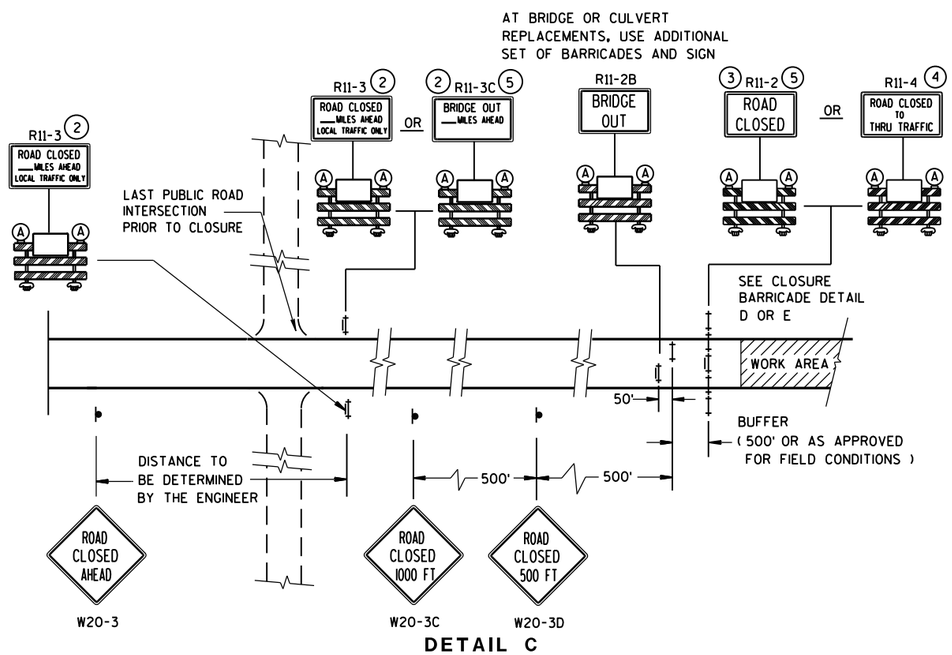

DETAIL C

MAINLINE CLOSURE, NO POSTED DETOUR

SPEED LIMIT (MPH)	"STOP AHEAD" ADVANCE WARNING DISTANCE (FT)
25	200
30	200
35	350
40	350
45	500
50	550
55	750

SEE SDD 15C2-SHEET "**b**" FOR GENERAL NOTES AND FOOTNOTES (1) THROUGH (7)

BARRICADES AND SIGNS FOR MAINLINE CLOSURES

STATE OF WISCONSIN
DEPARTMENT OF TRANSPORTATION

Sept. 2015 — DATE
/S/ Peter Amakobe Atepe — STATEWIDE WORK ZONE TRAFFIC SAFETY ENGINEER
FHWA

6

6

S.D.D. 15 C 2-6a

S.D.D. 15 C 2-6a

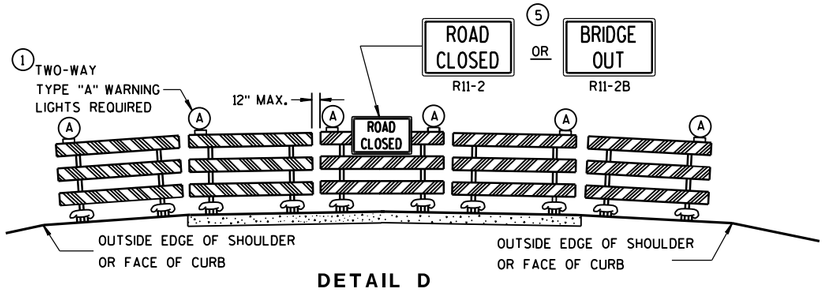

DETAIL D

ROAD CLOSURE BARRICADE DETAIL

APPROACH VIEW

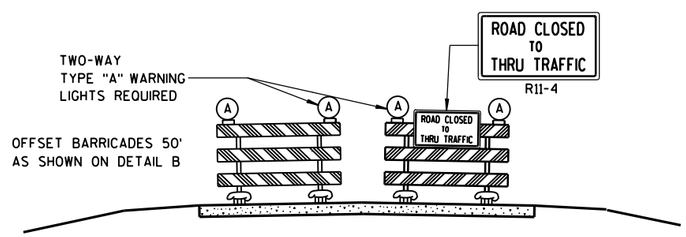

DETAIL E

LANE CLOSURE BARRICADE DETAIL

APPROACH VIEW

SEE SDD 15C2-SHEET "**a**" FOR LEGEND

GENERAL NOTES

THE EXACT NUMBER, LOCATION, AND SPACING OF ALL SIGNS AND BARRICADES SHALL BE ADJUSTED TO FIT FIELD CONDITIONS AS APPROVED BY THE ENGINEER.

ANY SIGNS TEMPORARY OR EXISTING, WHICH CONFLICT WITH TRAFFIC CONTROL "IN USE" SHALL BE REMOVED OR COVERED AS NEEDED AND AS APPROVED BY THE ENGINEER.

THE SPACING BETWEEN TRAFFIC CONTROL SIGNS SHOULD BE ADJUSTED TO NOT CONFLICT WITH AND SHOULD PROVIDE A DESIRABLE MINIMUM OF 200 FEET CLEARANCE TO EXISTING SIGNS THAT WILL REMAIN IN PLACE.

BARRICADES THAT MUST BE MOVED FOR A WORK OPERATION SHALL BE IMMEDIATELY RE-ESTABLISHED UPON COMPLETION OF THE OPERATION OR, FOR CONTINUING OPERATIONS, AT THE END OF EACH WORKING DAY.

SIGNS THAT WILL BE IN PLACE LESS THAN 7 CONTINUOUS DAYS AND NIGHTS MAY BE MOUNTED ON PORTABLE SUPPORTS.

ALL TYPE III BARRICADES SHALL HAVE RAILS REFLECTORIZED ON BOTH FACES. STRIPES SHALL BE PROPERLY SLOPED DOWN TOWARD THE TRAFFIC SIDE OR AS SHOWN IN THE ROAD CLOSURE BARRICADE DETAIL D FOR FULL ROAD CLOSURES.

TYPE "A" LOW-INTENSITY FLASHING WARNING LIGHTS SHALL BE VISIBLE ON BOTH SIDES OF THE BARRICADE.

THE R11-2, R11-3, M4-9, R11-4 AND R10-61 SIGNS PLACED ON BARRICADES SHALL COVER NO MORE THAN THE TOP RAIL. THE SIGNS SHALL NOT COVER ANY PORTION OF THE MIDDLE OR BOTTOM RAILS.

"WO AND "MO" SIGNS ARE THE SAME AS "W" AND "M" SIGNS EXCEPT THE BACKGROUND IS ORANGE.

ALL SIGNS SHALL BE 48" X 48" UNLESS OTHERWISE NOTED BELOW:

R11-2 SHALL BE 48" X 30".
R11-3, R11-4 AND R10-61 SHALL BE 60" X 30".
M4-9 SHALL BE 30" X 24".
M3-X SHALL BE 24" X 12". (36" X 18" IF NEEDED TO MATCH EXISTING SIGNS.)
M4-8 SHALL BE 24" X 12". (30" X 15" IF NEEDED TO MATCH EXISTING SIGNS.)
M1-4, M1-5A, AND M1-6 SHALL BE 24" X 24". (36" X 36" IF NEEDED TO MATCH EXISTING SIGNS.)
M05-1 AND M06-1 SHALL BE 21" X 21". (30" X 30" IF NEEDED TO MATCH EXISTING SIGNS.)
D1-X SHALL BE AS SHOWN ON SPECIFIC PROJECT SIGNING DETAIL SHEETS.
R1-1 SHALL BE 36" X 36".

1. TWO WARNING LIGHTS SHALL BE PROVIDED ON THE CENTER BARRICADE AND A MINIMUM OF ONE WARNING LIGHT SHALL BE PROVIDED ON EACH OF THE OTHER BARRICADES WITHIN THE ROADWAY LIMITS. SPACING OF THE WARNING LIGHTS SHALL BE UNIFORM TO THE EDGE OF ROADWAY AS SHOWN (APPROX. 8-FOOT LIGHT SPACING).
2. THESE SIGNS AND BARRICADES ARE NOT REQUIRED IF ROAD CLOSURE BEGINS AT INTERSECTION.
3. FOR ROAD CLOSURE WITHOUT LOCAL ACCESS TO PROJECT, SEE ROAD CLOSURE BARRICADE DETAIL D.
4. FOR ROAD CLOSURE WITH LOCAL ACCESS TO PROJECT, SEE LANE CLOSURE BARRICADE DETAIL E.
5. FOR BRIDGE OR CULVERT REPLACEMENTS, SUBSTITUTE "BRIDGE OUT" INSTEAD OF "ROAD CLOSED" ON R11-2 AND R11-3 SIGNS.
6. INSTALL DETOUR AND COMMUNITY GUIDE SIGNS AND ARROWS ONLY IF SPECIFIED IN THE CONTRACT. IF THERE ARE EXISTING ROUTE MARKER ASSEMBLIES THAT WILL REMAIN IN PLACE, ADJUST THE LOCATION OF THE DETOUR ROUTE SIGNS TO CORRESPOND WITH THE EXISTING ASSEMBLIES. MODIFY EXISTING SIGNS WHERE POSSIBLE. SEE SPECIFIC PROJECT DETOUR SIGNING DETAIL SHEETS. IF DETOUR SIGNS ARE BEING INSTALLED BY OTHERS, PLACE THE CONTRACTED TRAFFIC CONTROL SIGNS TO ALLOW FOR PLACEMENT OF ALL WARNING, DETOUR AND GUIDE SIGNS AS SHOWN.
7. "EAST" CARDINAL DIRECTION MARKERS AND RIGHT TURN ARROWS ARE SHOWN. USE OTHER CARDINAL DIRECTIONS AND ARROWS AS APPROPRIATE.

BARRICADES AND SIGNS FOR MAINLINE CLOSURES

STATE OF WISCONSIN
DEPARTMENT OF TRANSPORTATION

Sept. 2015 — DATE
/S/ Peter Amakobe Atepe — STATEWIDE WORK ZONE TRAFFIC SAFETY ENGINEER
FHWA

THIS DRAWING PROVIDES GENERAL GUIDANCE ON TYPICAL DETOUR SIGN LAYOUT AND SPACING. SEE PROJECT DETOUR SIGNING SHEETS FOR SPECIFIC DETAILS FOR EACH PROJECT.

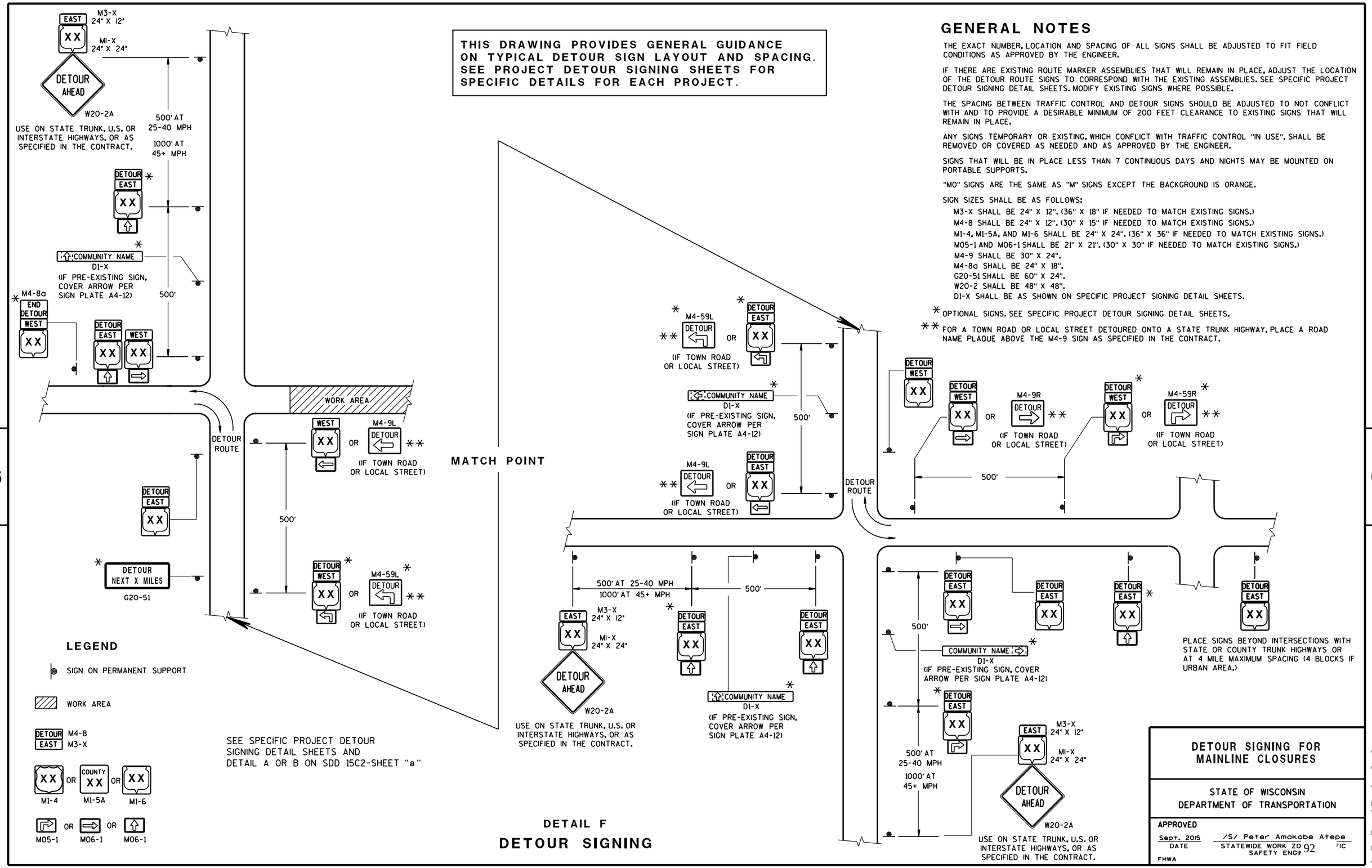

GENERAL NOTES

THE EXACT NUMBER, LOCATION AND SPACING OF ALL SIGNS SHALL BE ADJUSTED TO FIT FIELD CONDITIONS AS APPROVED BY THE ENGINEER.

IF THERE ARE EXISTING ROUTE MARKER ASSEMBLIES THAT WILL REMAIN IN PLACE, ADJUST THE LOCATION OF THE DETOUR ROUTE SIGNS TO CORRESPOND WITH THE EXISTING ASSEMBLIES. SEE SPECIFIC PROJECT DETOUR SIGNING DETAIL SHEETS. MODIFY EXISTING SIGNS WHERE POSSIBLE.

THE SPACING BETWEEN TRAFFIC CONTROL AND DETOUR SIGNS SHOULD BE ADJUSTED TO NOT CONFLICT WITH AND TO PROVIDE A DESIRABLE MINIMUM OF 200 FEET CLEARANCE TO EXISTING SIGNS THAT WILL REMAIN IN PLACE.

ANY SIGNS TEMPORARY OR EXISTING, WHICH CONFLICT WITH TRAFFIC CONTROL "IN USE", SHALL BE REMOVED OR COVERED AS NEEDED AND AS APPROVED BY THE ENGINEER.

SIGNS THAT WILL BE IN PLACE LESS THAN 7 CONTINUOUS DAYS AND NIGHTS MAY BE MOUNTED ON PORTABLE SUPPORTS.

"MO" SIGNS ARE THE SAME AS "M" SIGNS EXCEPT THE BACKGROUND IS ORANGE.

SIGN SIZES SHALL BE AS FOLLOWS:

- M3-X SHALL BE 24" X 12". (36" X 18" IF NEEDED TO MATCH EXISTING SIGNS.)
- M4-8 SHALL BE 24" X 12". (30" X 15" IF NEEDED TO MATCH EXISTING SIGNS.)
- M1-4, M1-5A, AND M1-6 SHALL BE 24" X 24". (36" X 36" IF NEEDED TO MATCH EXISTING SIGNS.)
- M05-1 AND M06-1 SHALL BE 21" X 21". (30" X 30" IF NEEDED TO MATCH EXISTING SIGNS.)
- M4-9 SHALL BE 30" X 24".
- M4-8a SHALL BE 24" X 18".
- G20-51 SHALL BE 60" X 24".
- W20-2 SHALL BE 48" X 48".
- D1-X SHALL BE AS SHOWN ON SPECIFIC PROJECT SIGNING DETAIL SHEETS.

* OPTIONAL SIGNS. SEE SPECIFIC PROJECT DETOUR SIGNING DETAIL SHEETS.

** FOR A TOWN ROAD OR LOCAL STREET DETOURED ONTO A STATE TRUNK HIGHWAY, PLACE A ROAD NAME PLAQUE ABOVE THE M4-9 SIGN AS SPECIFIED IN THE CONTRACT.

DETOUR SIGNING FOR MAINLINE CLOSURES

STATE OF WISCONSIN
DEPARTMENT OF TRANSPORTATION

APPROVED
Sept. 2015 — DATE
/S/ Peter Amakobe Atepe — STATEWIDE WORK ZONE TRAFFIC SAFETY ENGINEER
FHWA

6

S.D.D. 15 C 2-6c

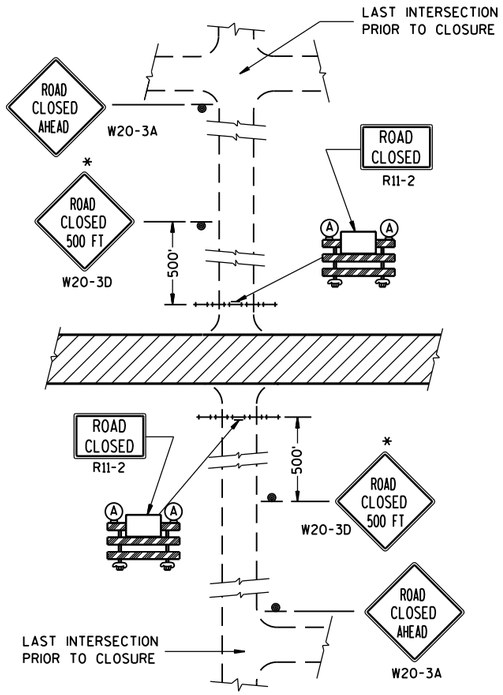

DETAIL 1

(NO ACCESS TO PROJECT)

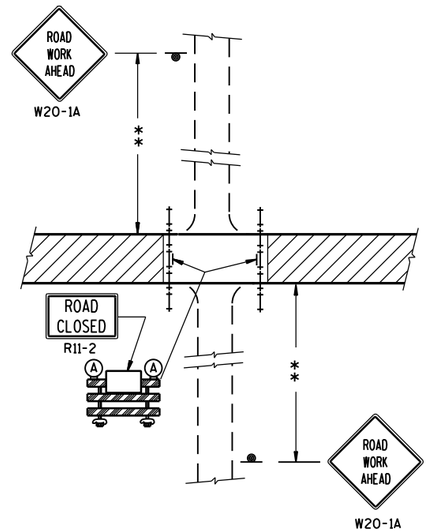

DETAIL 2

(PUBLIC CROSS-TRAFFIC MAINTAINED.
NO ACCESS TO PROJECT).

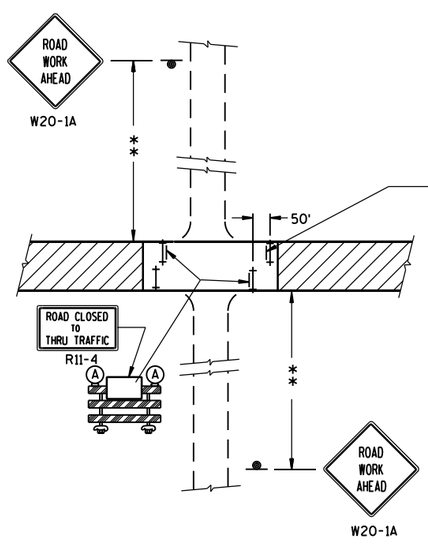

DETAIL 3

(PUBLIC CROSS-TRAFFIC MAINTAINED. CONTRACTOR,
LOCAL BUSINESS AND RESIDENT ACCESS).

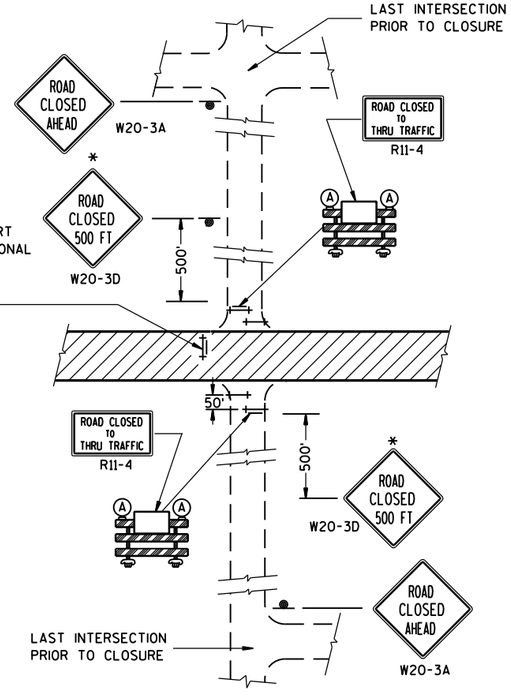

DETAIL 4

(CONTRACTOR, LOCAL BUSINESS AND
RESIDENT ACCESS TO PROJECT)

GENERAL NOTES

THE EXACT NUMBER, LOCATION, AND SPACING OF ALL SIGNS AND BARRICADES SHALL BE ADJUSTED TO FIT FIELD CONDITIONS AS APPROVED BY THE ENGINEER.

ANY SIGNS TEMPORARY OR EXISTING, WHICH CONFLICT WITH TRAFFIC CONTROL "IN USE" SHALL BE REMOVED OR COVERED AS NEEDED AND AS APPROVED BY THE ENGINEER.

THE SPACING BETWEEN TRAFFIC CONTROL SIGNS SHOULD BE ADJUSTED TO NOT CONFLICT WITH AND SHOULD PROVIDE A DESIRABLE MINIMUM OF 200 FEET CLEARANCE TO EXISTING SIGNS THAT WILL REMAIN IN PLACE.

IF A "STOP" SIGN MUST BE REMOVED FOR A WORK OPERATION, A TEMPORARY "STOP" SIGN SHALL BE PLACED PRIOR TO THE SIGN REMOVAL, OR A FLAGGER SHALL BE PROVIDED UNTIL THE SIGN IS RE-ESTABLISHED.

BARRICADES THAT MUST BE MOVED FOR A WORK OPERATION SHALL BE IMMEDIATELY RE-ESTABLISHED UPON COMPLETION OF THE OPERATION OR, FOR CONTINUING OPERATIONS, AT THE END OF EACH WORKING DAY.

SIGNS THAT WILL BE IN PLACE LESS THAN 7 CONTINUOUS DAYS AND NIGHTS MAY BE MOUNTED ON PORTABLE SUPPORTS.

ALL TYPE III BARRICADES SHALL HAVE RAILS REFLECTORIZED ON BOTH FACES. STRIPES SHALL BE PROPERLY SLOPED DOWN TOWARD THE TRAFFIC SIDE OR AS SHOWN IN THE ROAD CLOSURE BARRICADE DETAIL D FOR FULL ROAD CLOSURES.

TYPE "A" LOW-INTENSITY FLASHING WARNING LIGHTS SHALL BE VISIBLE ON BOTH SIDES OF THE BARRICADE.

THE R11-2, R11-3 AND R11-4 SIGNS PLACED ON BARRICADES SHALL COVER NO MORE THAN THE TOP RAIL. THE SIGNS SHALL NOT COVER ANY PORTION OF THE MIDDLE OR BOTTOM RAILS.

ALL SIGNS SHALL BE 48" X 48" UNLESS OTHERWISE NOTED BELOW:
R11-2 SHALL BE 48" X 30".
R11-4 AND R11-3 SHALL BE 60" X 30".

*OMIT THE "ROAD CLOSED 500 FT." SIGN IF THE LAST INTERSECTION IS 500 FT. OR LESS FROM THE WORK ZONE.

**500' MAX. OR AT LAST INTERSECTION WHICHEVER IS CLOSER.

LEGEND

- SIGN ON PERMANENT SUPPORT
- TYPE III BARRICADE
- TYPE III BARRICADE WITH ATTACHED SIGN
- (A) TYPE "A" WARNING LIGHT (FLASHING)
- WORK AREA

BARRICADES AND SIGNS FOR SIDEROAD CLOSURES

STATE OF WISCONSIN
DEPARTMENT OF TRANSPORTATION

APPROVED
Sept. 2015 — DATE
/S/ Peter Amakobe Atepe
STATEWIDE WORK ZONE TRAFFIC SAFETY ENGINEER
FHWA

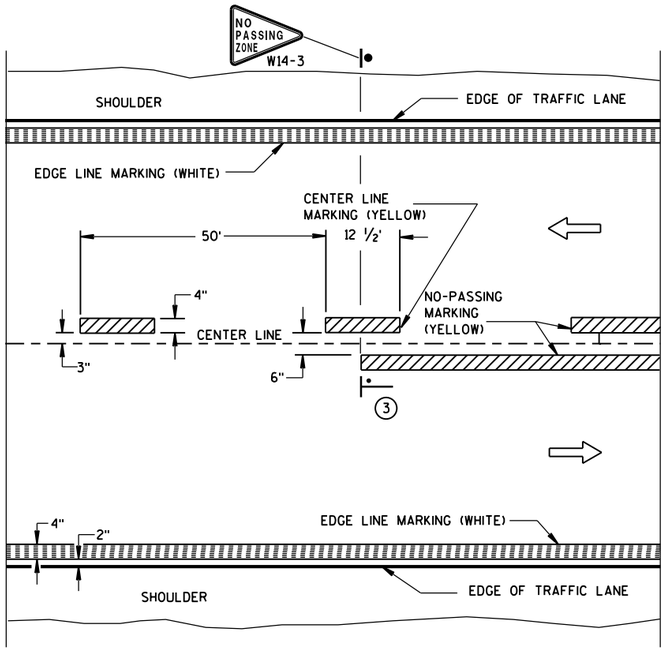

TWO WAY TRAFFIC

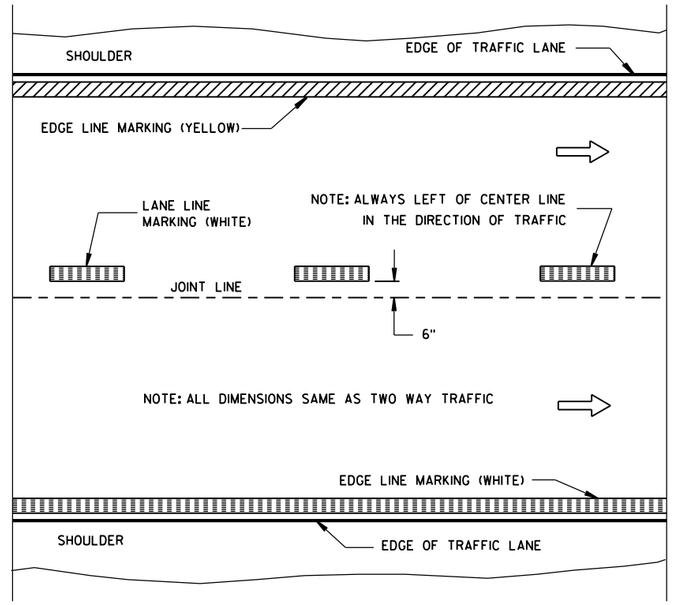

ONE WAY TRAFFIC

PERMANENT PAVEMENT MARKING

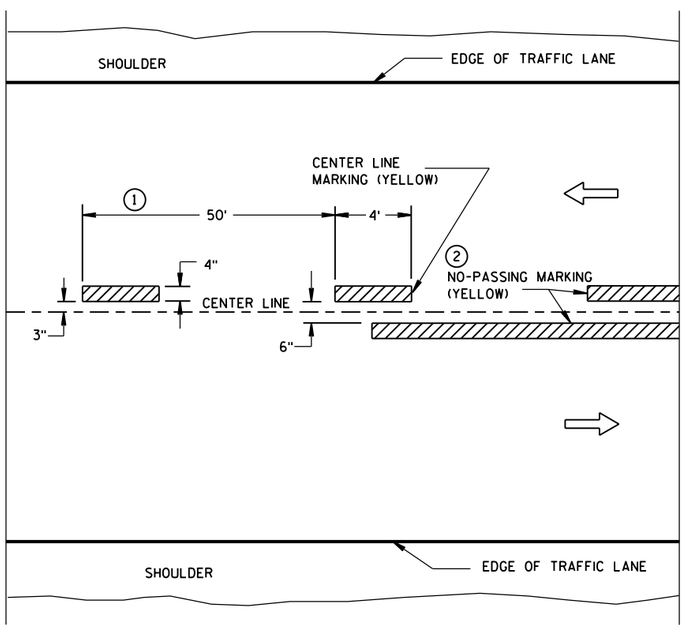

TWO WAY TRAFFIC

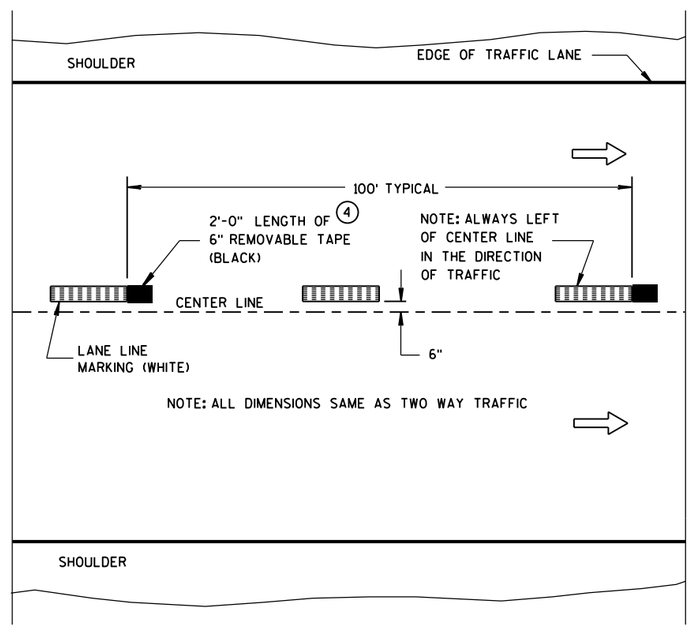

ONE WAY TRAFFIC

TEMPORARY (INTERMEDIATE) PAVEMENT MARKING

(SHOWS CYCLE FOR TEMPORARY CENTER LINE OR TEMPORARY LANE LINE MARKING)

GENERAL NOTES

DETAILS OF CONSTRUCTION NOT SHOWN ON THIS DRAWING SHALL CONFORM TO STANDARD SPECIFICATIONS AND SPECIAL PROVISIONS.

1. HALF CYCLE LENGTHS (25'±) WITH 2' MINIMUM STRIPE LENGTHS SHALL BE PROVIDED ON ROADWAYS (INCLUDING TEMPORARY TRAVELED WAYS) WITH REVERSE CURVATURE, CURVATURE OF OVER 5 DEGREES OR WHEN DIRECTED BY THE ENGINEER TO MARK UNUSUAL ALIGNMENT OF THE TRAVELED WAY.
2. NO PASSING ZONE TEMPORARY PAVEMENT MARKING IS REQUIRED TO BE PLACED, WHERE APPROPRIATE, ALONG WITH CENTERLINE TEMPORARY PAVEMENT MARKING WHEN A SAME DAY PERMANENT PAVEMENT MARKING ITEM IS INCLUDED IN THE CONTRACT.
3. NO PASSING ZONE MARKINGS ARE PLACED ACCORDING TO "T" MARKINGS. IF EXISTING NO PASSING ZONE W14-3 SIGNS ARE BEYOND 50 FEET IN EITHER DIRECTION, THE SIGNS SHALL BE MOVED TO THE "T" MARKINGS.
4. CONCRETE ONLY.

NOTE

ARROW SYMBOL (⇨) SHOWS DIRECTION OF TRAVEL

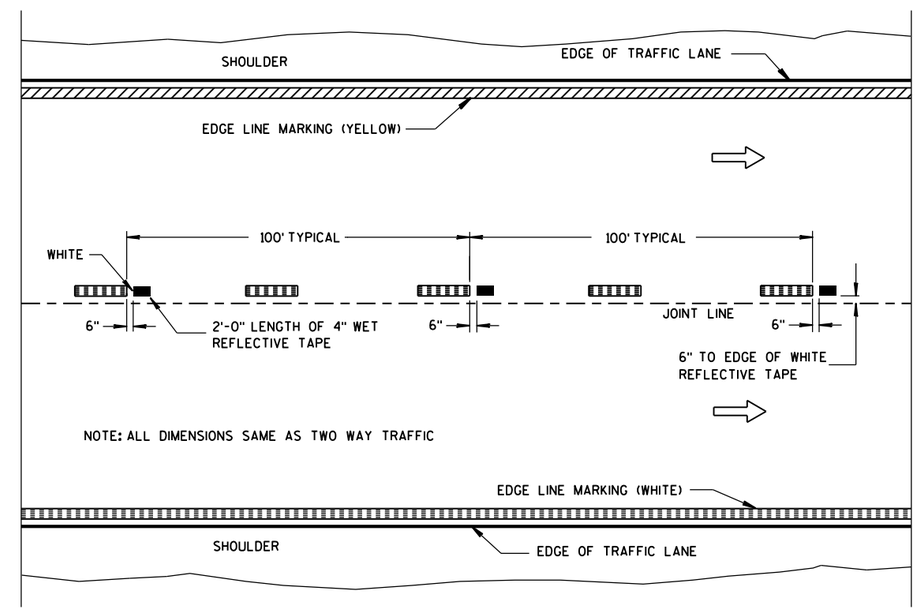

WET REFLECTIVE TAPE SUPPLEMENT TO SPRAYED OR NON WET REFLECTIVE TAPE LANE LINE

LEGEND

"T" MARKING

POST MOUNTED SIGN

PAVEMENT MARKING (MAINLINE)

STATE OF WISCONSIN
DEPARTMENT OF TRANSPORTATION

APPROVED
5-13-2013 — DATE
/S/ Travis Feltes — STATE TRAFFIC E
FHWA

6

S.D.D. 15 C 8-16a

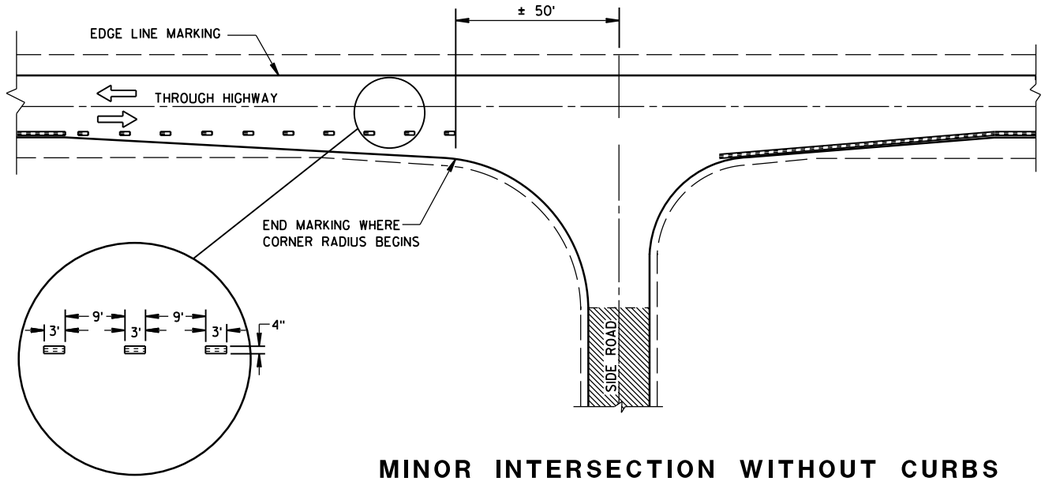

MINOR INTERSECTION WITHOUT CURBS

GENERAL NOTES

EDGE LINES SHALL BE OMITTED THROUGH INTERSECTIONS. EDGE LINES SHALL BE CONTINUED THROUGH DRIVEWAYS.

(1) WHEN DISTANCE "A" IS LESS THAN 250 FEET, OMIT LANE LINE.

(2) WHEN DISTANCE "B" IS LESS THAN 100 FEET, OMIT CHANNELIZING LANE LINE.

(3) ALTERNATIVE MARKING SHALL BE PROVIDED WHEN SPECIFIED IN THE CONTRACT. TYPICAL SITUATIONS WHERE THIS MARKING MAY BE REQUIRED ARE WHERE THE INTERSECTION IS ON A SHARP HORIZONTAL CURVE OR CREST VERTICAL CURVE IN AN UNLIGHTED AREA SUCH THAT THE EDGE LINE MAY BE MISLEADING TO THE MOTORIST OR DISAPPEAR FROM SIGHT.

(4) THE EDGE LINE IN THE TAPER AREAS OF THE BYPASS LANE AND THE BYPASS LANE SHALL BE LOCATED 1-FOOT FROM EDGE OF PAVEMENT TO THE OUTSIDE EDGE OF EDGE LINE.

(5) BARRIER LINE ENDS AT SIDE ROAD PAVEMENT/SURFACE EDGE EXTENSION.

(6) BARRIER LINE STARTS 500 FEET PRIOR TO THE BYPASS TAPER.

(7) IF THE DISTANCE BETWEEN 2 SUCCESSIVE NO-PASSING ZONES IS LESS THAN THE MINIMUM DISTANCE BETWEEN ZONES, CONNECT THE 2 ZONES.

(8) 3' LINE 9' GAP, EXCEPT RETRACE THE EXISTING LINE - GAP PATTERN WHERE EXISTING MARKINGS ARE IN PLACE.

ARROW SYMBOL (⇨) SHOWS DIRECTION OF TRAVEL

(7)

POSTED SPEED (MPH)	MINIMUM DISTANCE BETWEEN ZONES (FEET)
25 - 30	528
35 - 40	528
45 - 50	686
55	792

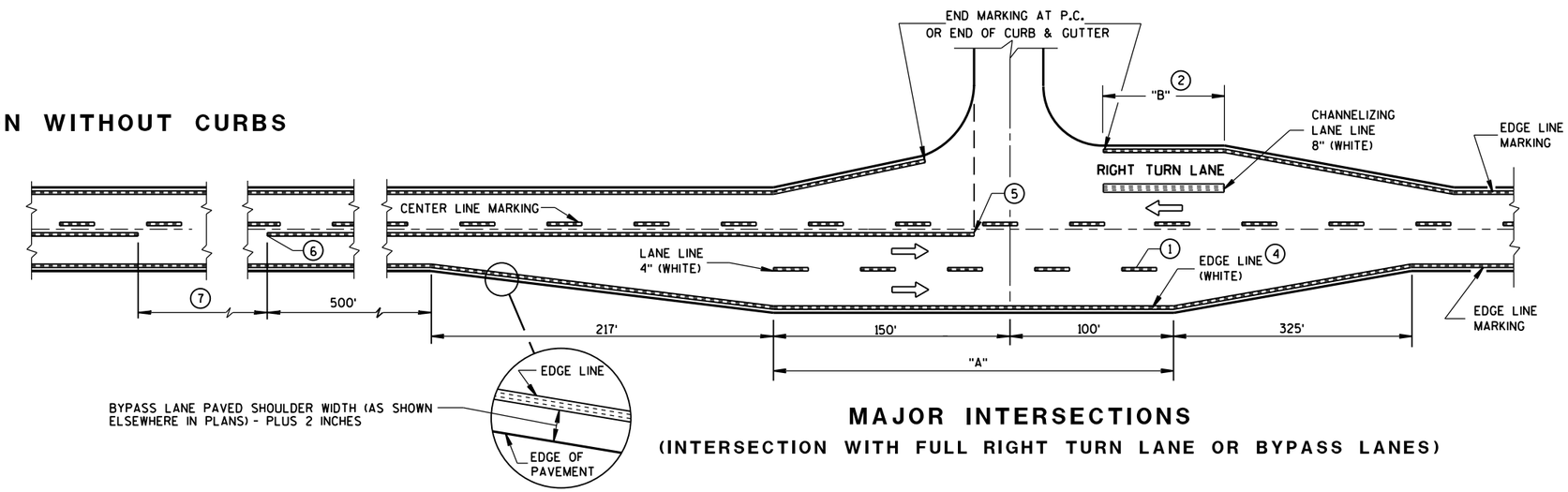

MAJOR INTERSECTIONS

(INTERSECTION WITH FULL RIGHT TURN LANE OR BYPASS LANES)

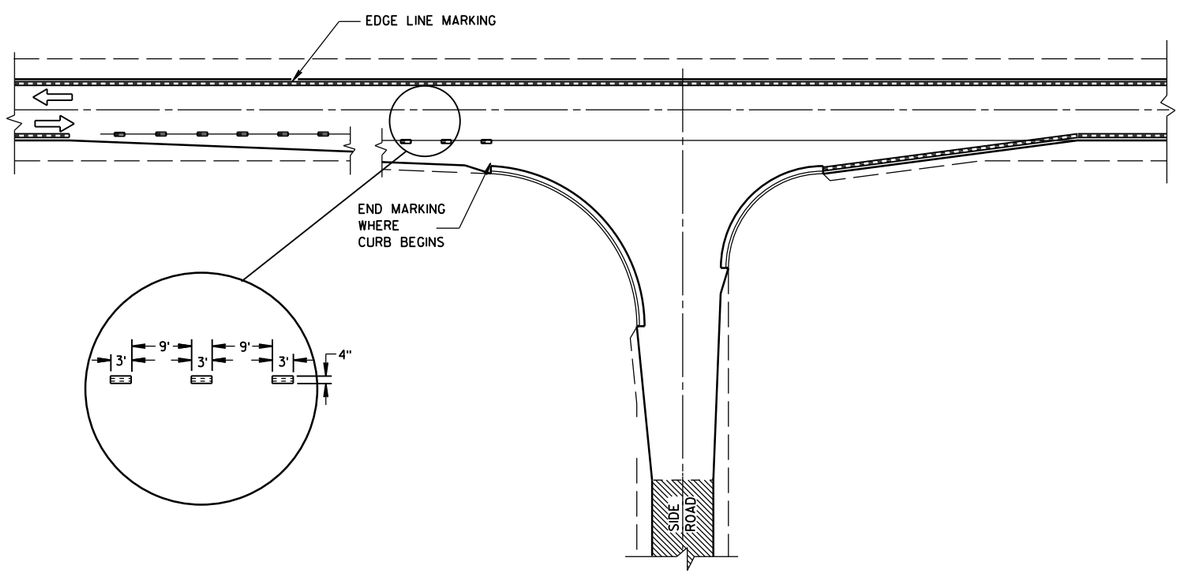

MINOR INTERSECTION WITH CURBS

(TYPICAL MARKING)

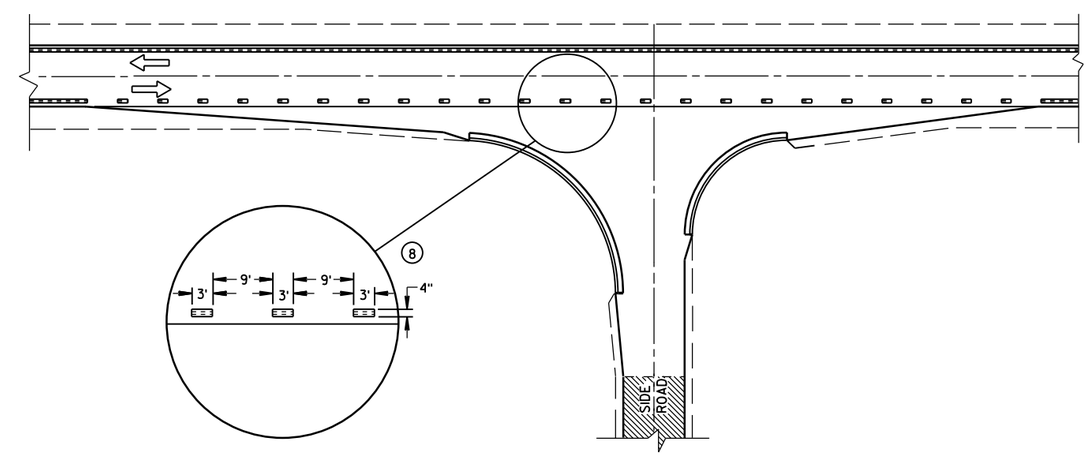

MINOR INTERSECTION WITH CURBS

(3) (FOR SPECIAL CONDITIONS AS SPECIFIED)

PAVEMENT MARKING
(INTERSECTIONS)

STATE OF WISCONSIN
DEPARTMENT OF TRANSPOR

6

S.D.D. 15 C 8-16b

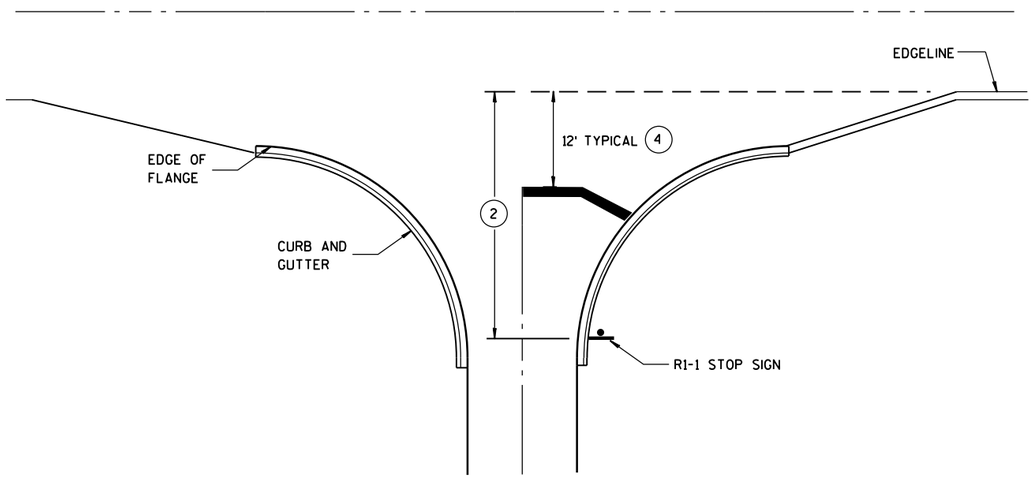

TYPICAL STOP LINE PAVEMENT MARKING WITH CURB AND GUTTER

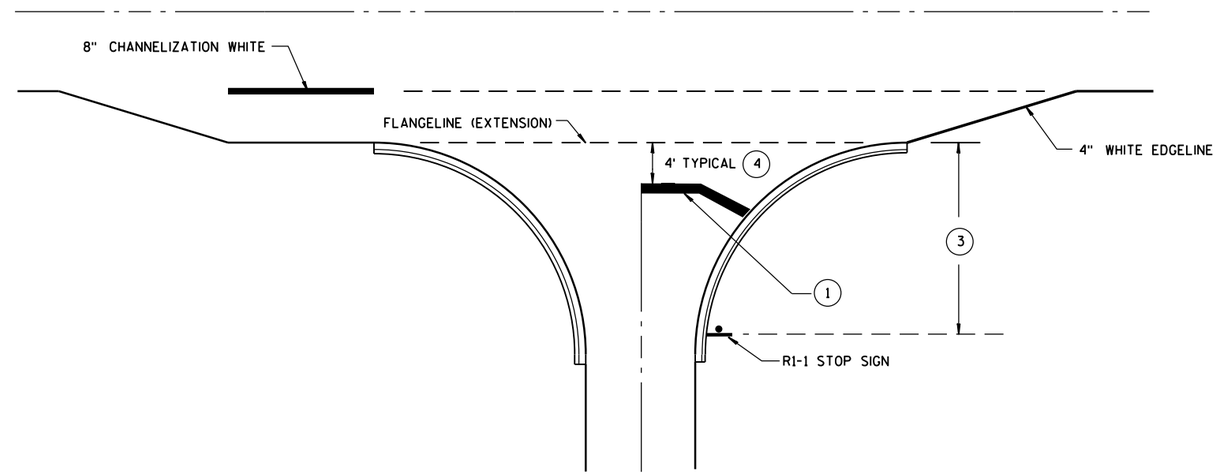

TYPICAL STOP LINE PAVEMENT MARKING FOR SIDEROADS WITH RIGHT TURN LANE

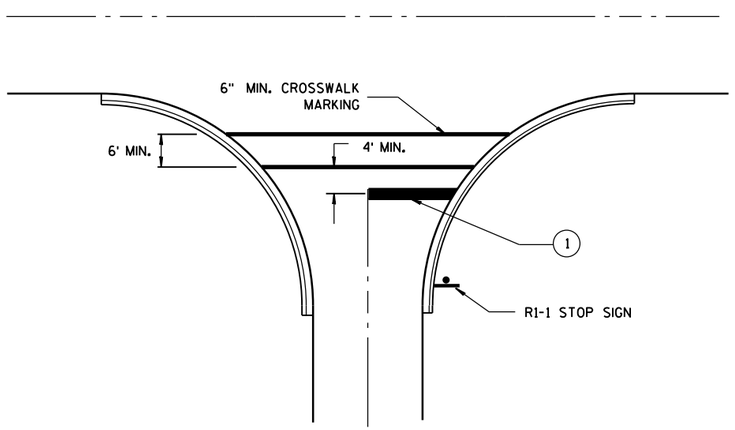

TYPICAL STOP LINE PAVEMENT MARKING FOR SIDEROADS WITH CROSSWALK MARKING

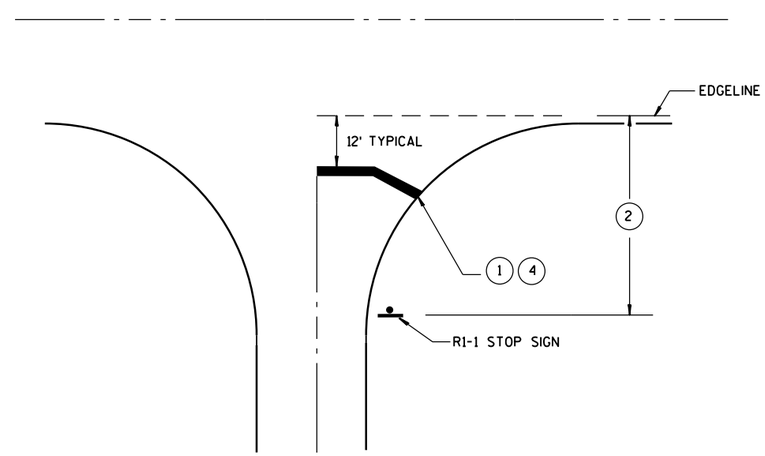

TYPICAL STOP LINE PAVEMENT MARKING WITHOUT CURB AND GUTTER

GENERAL NOTES

1. 18-INCH STOP LINES MAY BE DELETED OR ADDED BY THE PROJECT ENGINEER BASED ON VISIBILITY AND SIGHT LINES.
2. IF STOP SIGN IS LESS THAN OR EQUAL TO 40 FEET FROM THE EDGELINE THAN NO STOP LINE IS REQUIRED.
3. IF STOP SIGN IS LESS THAN OR EQUAL TO 30 FEET FROM THE FLANGELINE EXTENSION THAN NO STOP LINE IS REQUIRED.
4. MOVE CLOSER TO EDGE OF TRAVEL LANE AS NEEDED FOR VISIBILITY AND SIGHT LINES. (NO CLOSER THAN 4 FEET).

STOP LINE AND CROSSWALK PAVEMENT MARKING

STATE OF WISCONSIN
DEPARTMENT OF TRANSPORTATION

APPROVED

4-18-2016 — DATE

/S/ Matthew R. Rauch — STATE SIGNING AND MAR NEER

FHWA

NOTES

1. All Signs Type II - Type H Reflective
2. Color:
   Background - Green except as noted
   Message - White
3. Message Series - E except as noted

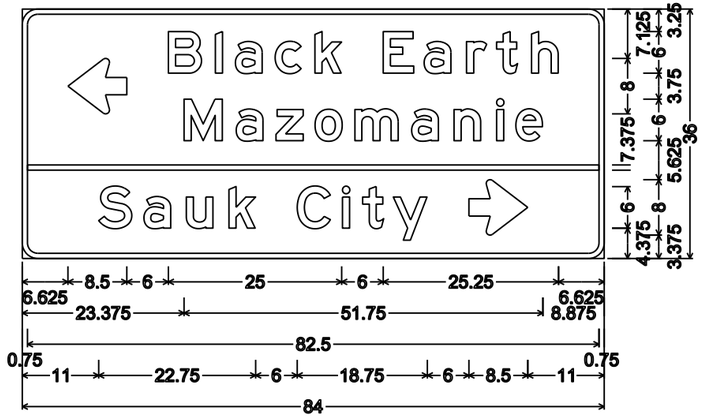

D1-3; 2.250" Radius, 0.750" Border

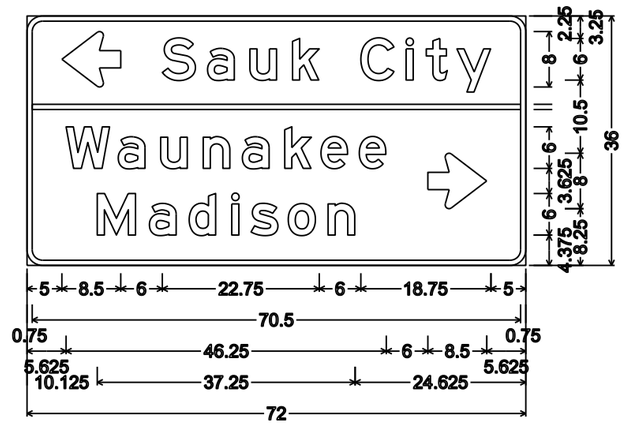

D1-3; 2.250" Radius, 0.750" Border

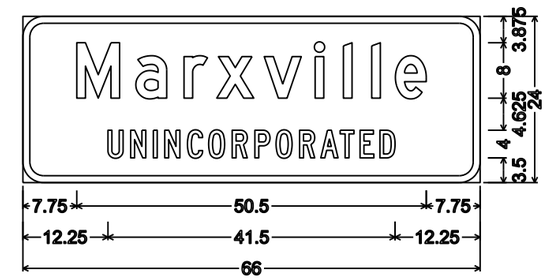

I2-3; 3.000" Radius, 1.000" Border
"Marxville" D; "UNINCORPORATED" C

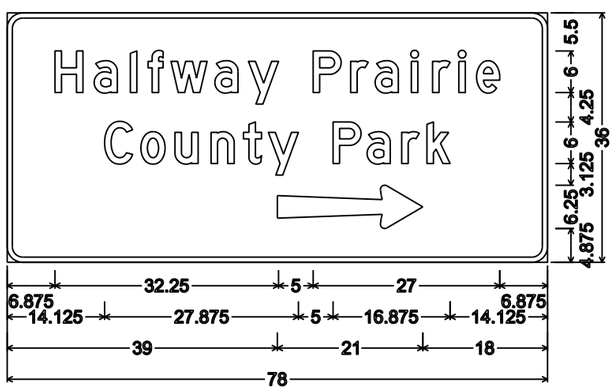

D7-68R; 2.250" Radius, 0.750" Border, White on Brown;
"Halfway" D; "Prairie" D; "County" D; "Park" D

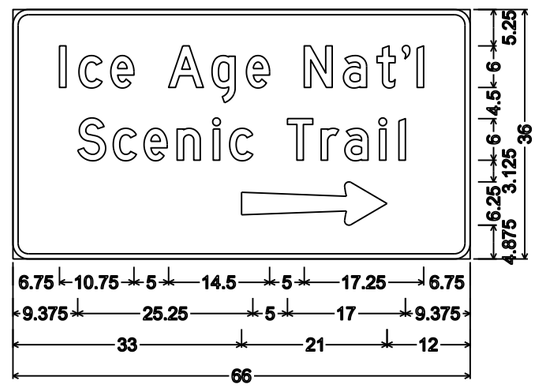

2.250" Radius, 0.750" Border, White on Brown;
"Ice" D; "Age" D; "Nat'l" D; "Scenic" D; "Trail" D

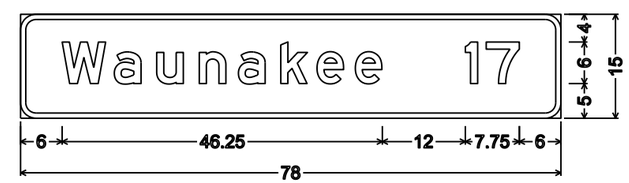

D2-1; 2.250" Radius, 0.750" Border

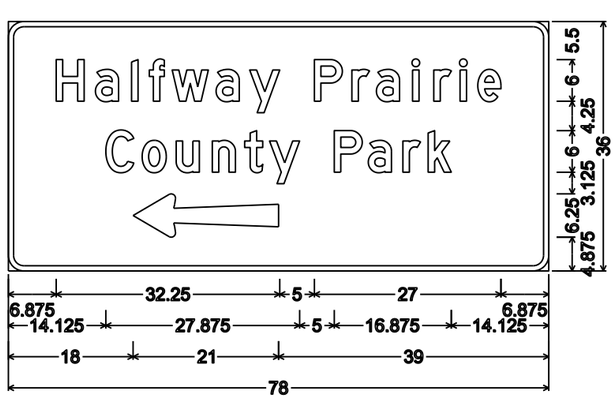

D7-68L; 2.250" Radius, 0.750" Border, White on Brown;
"Halfway" D; "Prairie" D; "County" D; "Park" D

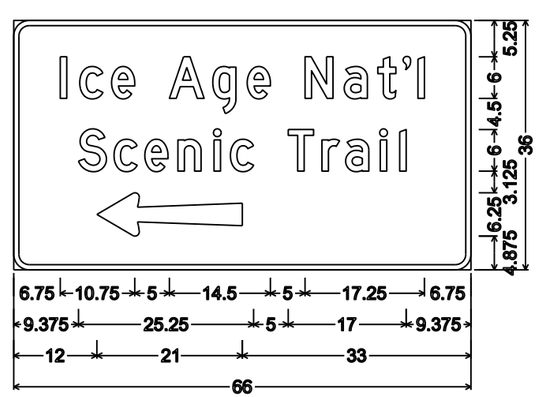

2.250" Radius, 0.750" Border, White on Brown;
"Ice" D; "Age" D; "Nat'l" D; "Scenic" D; "Trail" D

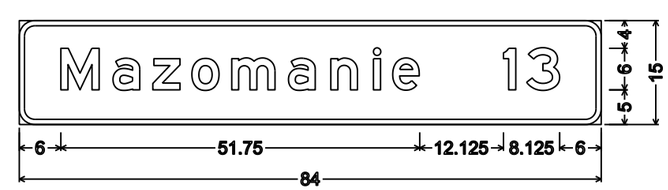

D2-1; 2.250" Radius, 0.750" Border

7

PROJECT NO:5145-00-60	HWY: STH 19	COUNTY:DANE	PERMANENT SIGNING	SHEET NO:	E

TYPICAL ASSEMBLIES

J1-1

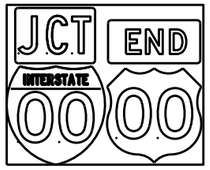

J1-2

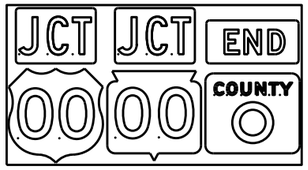

J1-3

J2-1

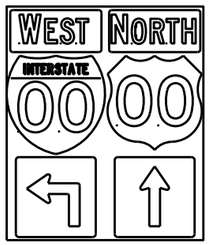

J2-2

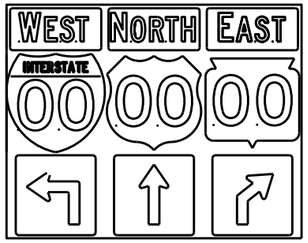

J2-3

JV

(Typical Vertical J-Assembly
See Note 10 and 11)

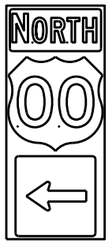

J3-1

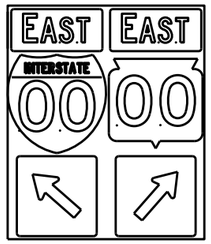

J3-2

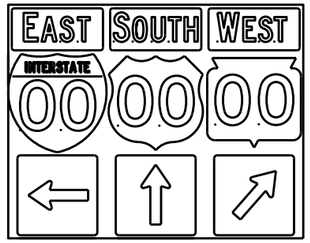

J3-3

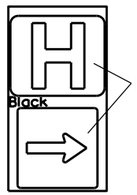

Blue Background

JH-1

J4-1

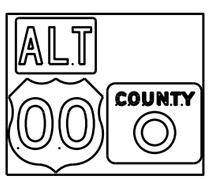

J4-2

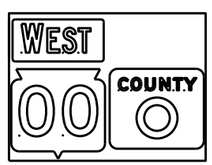

J4-2

J13-1

J12-1

J32-1

J33-1

J23-1

J22-1

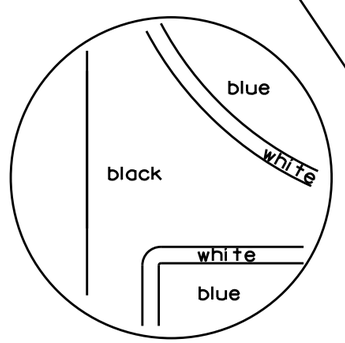

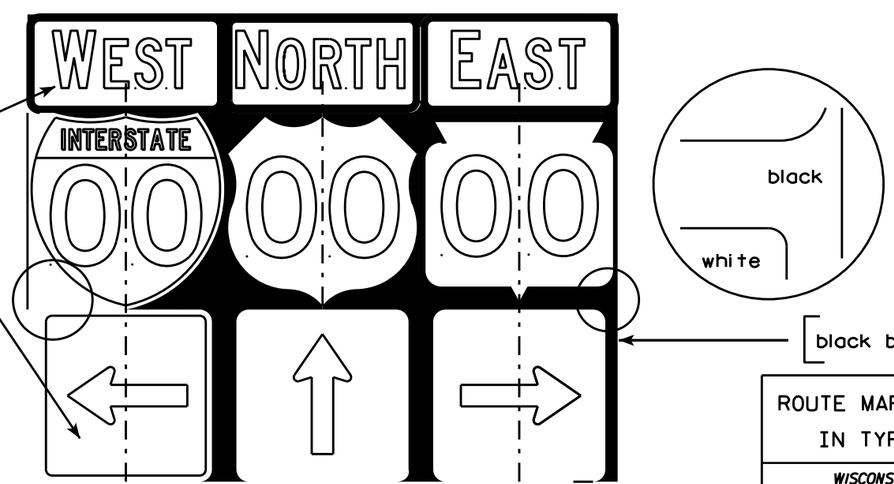

NOTES

1. Signs are Type II - Type H Reflective - reference WIS DOT Standard Specification for HIGHWAY and STRUCTURE CONSTRUCTION latest edition.
2. Color:
   Background - Black Non-reflective
   Message - see Note 5
3. Message Series - See Note 5
4. Corners shall be square or rounded if base material is plywood. If base material is metal the corners shall be rounded.
5. The colors and message spacing on each marker shall be according to the applicable route marker panel specifications.
6. Certain marker heads require the component pieces to be the same color. As an example, all the components used with an M1-1 Interstate marker shall be blue.
7. Single panel j-assemblies shall only be used with route marker shields that are same size. If the route marker shields are different size use multiple piece component.
8. Route assemblies that have 24 inch route shields and have dimensions greater than 48 inches (both vertical and horizontal) shall have one horizontal splice between the arrows and route shields. Vertical splices shall not be used on route assemblies with a horizontal dimension of 144 inches or less. The contractor shall not use more than one vertical joint per sign and the joint shall be between route shields.
9. Route assemblies that have 36 inch shields and have dimensions greater than 48 inchs (both vertical and horizontal) shall have two horizontal splices. One horizontal splice shall be between the cardinal direction and route shields and the other horizontal splice shall be between the arrows and route shields. Vertical splices shall not be used on route assemblies with a horizontal dimension of 144 or less. The contractor shall not use more than one vertical joint per sign and the joint shall be between route shields.
10. All Vertical J Assemblies are given a Sign Code of JV
11. For JV Assemblies that have a mixture of Interstate and non Interstate shields, arrows and cardinals shall be white on blue.

ROUTE MARKERS & COMPONENTS
IN TYPICAL ASSEMBLIES

WISCONSIN DEPT OF TRANSPORTATION

APPROVED Matthew R Rauch
for State Traffic Engineer

DATE 2/06/14 PLATE A2-1S.8

PROJECT NO: | SHEET NO: | E

URBAN AREA

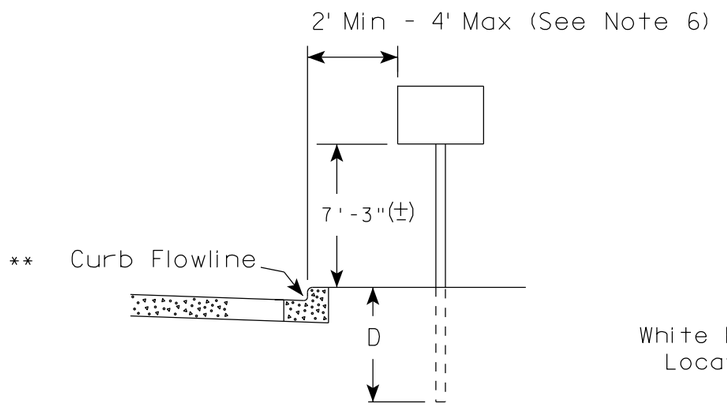

RURAL AREA (See Note 2)

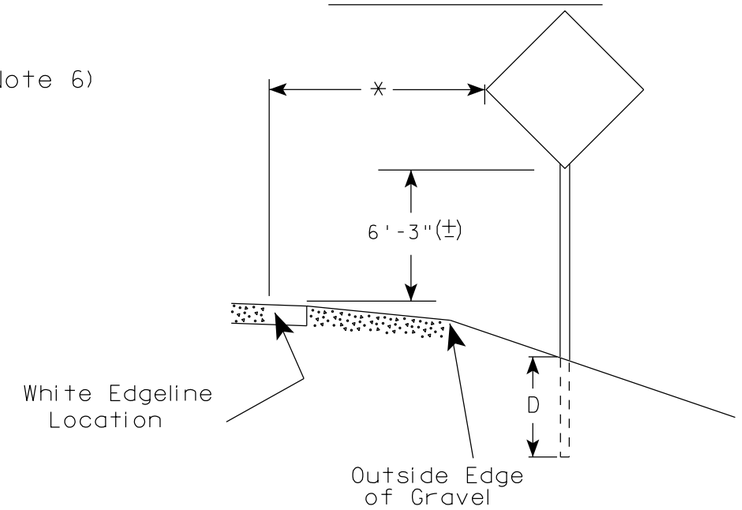

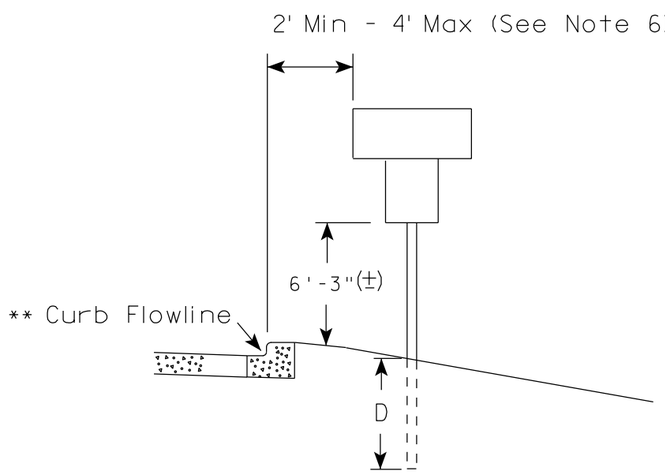

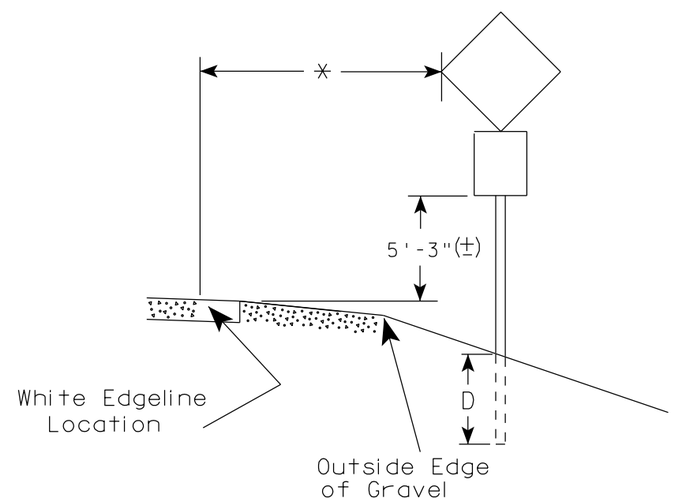

** The existence of curb and gutter does not in itself mandate the vertical clearance illustrated. That height is typically measured where there is sidewalk adjacent to the roadway or parking is permitted. In the absence of sidewalk vertical clearance is measured from the top of the curb. Offset of signs is measured from the flow line.

* 6 feet from edge of a paved shoulder or 12 feet from the edge of pavement (edge line location) or 2 feet from outside edge of gravel, whichever is greater unless directed by project engineer.

GENERAL NOTES

1. Signs wider than 4 feet or 20 sq.ft or larger, shall be mounted on multiple posts. Refer to plate A4-4.
2. If signs are mounted on barrier wall, see A4-10 sign plate.
3. For expressways and freeways, mounting height is 7'- 3" (±) or 6'-3" (±) depending upon existence of a sub-sign.
4. Minimum mounting height for J assemblies (A2-1S) is 7'-3" (±) or 6'-3" (±) per urban or rural detail respectively.
5. Minimum mounting height for signs mounted on traffic signal poles is 5'- 3" (±).
6. Offset distance shall be consistent with existing signs or consistent throughout length of project.
7. The (±) tolerance for mounting height is 3 inches.
8. Folding signs shall be mounted at a height of 5'-3" (±) or as directd by the Engineer.
9. The Double Arrow sign (W12-1) shall be mounted at a height of 2'-3" (±). The Chevron sign (W1-8), Roundabout Chevron panel (R6-4B), Enhanced Reference Markers, Clearance Markers (W5-52), Mile Markers (D10 series), In Road Object Markers (W5-54) & End of Road Markers (W5-56) shall be mounted at a height of 4'-3" (±).

POST EMBEDMENT DEPTH

Area of Sign Installation (Sq. Ft.)	D (Min)
20 or Less	4'
Greater than 20	5'

TYPICAL INSTALLATION OF PERMANENT TYPE II SIGNS ON SINGLE POSTS

WISCONSIN DEPT OF TRANSPORTATION

APPROVED Matthew R Rauch for State Traffic Engineer

DATE 7/23/15 PLATE NO. A4-3.20

PROJECT NO:	HWY:	COUNTY:		SHEET NO:	E

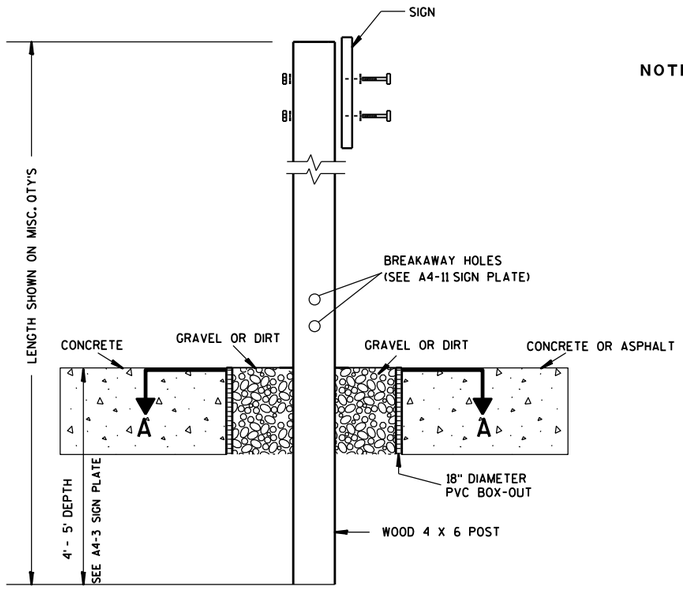

ELEVATION VIEW

DETAIL OF WOOD 4 X 6 SIGN POST IN BOX-OUT

NOTES:
1. ALL MATERIAL TO BE APPROVED BY ENGINEER PRIOR TO INSTALLATION
2. SEE SIGN PLATE A4-8 FOR SIGN HARDWARE REQUIREMENTS
3. 18 INCH X 18 INCH SQUARE BOX-OUTS MAY BE USED FOR INSTALLATIONS IN EXISTING CONCRETE OR ASPHALT LOCATIONS.

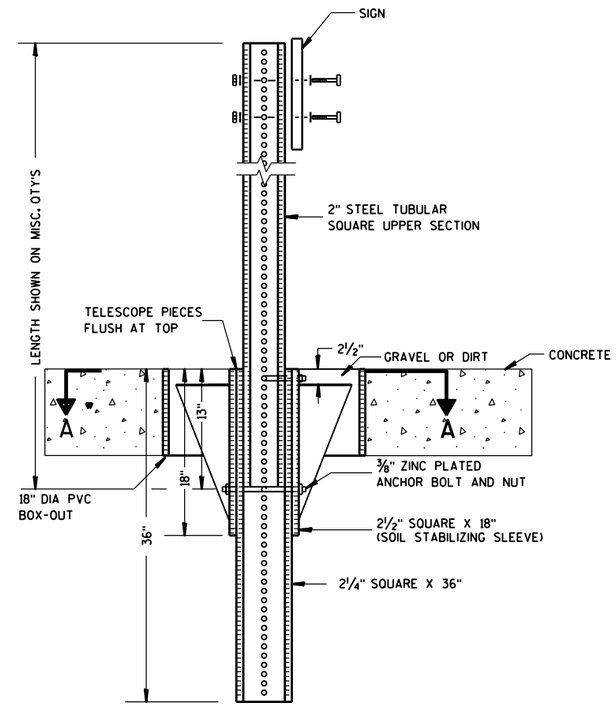

ELEVATION VIEW

DETAIL OF STEEL 2 X 2 SIGN POST IN BOX-OUT

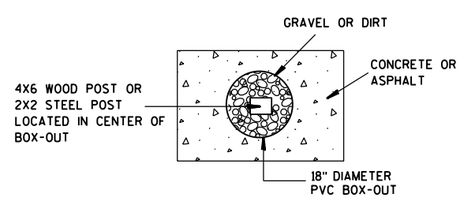

PLAN VIEW

FOR NEW CONCRETE/ASPHALT INSTALLATIONS

SIGN POST
BOX-OUTS
A4-3B

WISCONSIN DEPT OF TRANSPORTATION

APPROVED Matthew R Rauch
for State Traffic Engineer

DATE 1/27/14 PLATE NO. A4-3B.1

PROJECT NO:	HWY:	COUNTY:		SHEET NO:	E

URBAN AREA

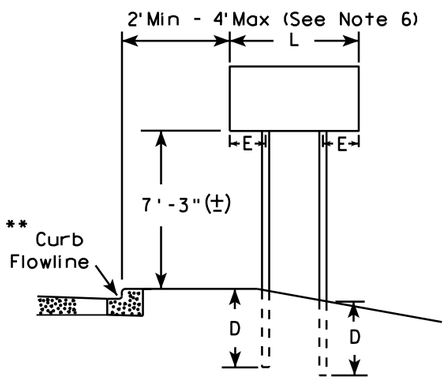

RURAL AREA (See Note 3)

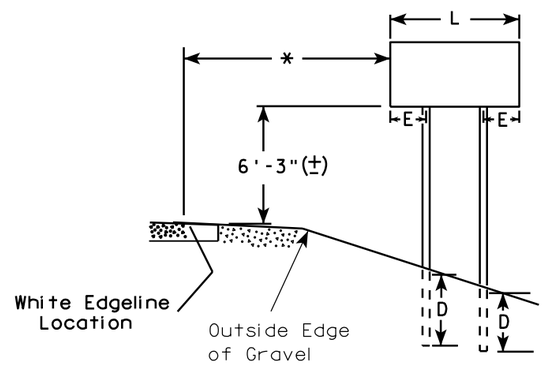

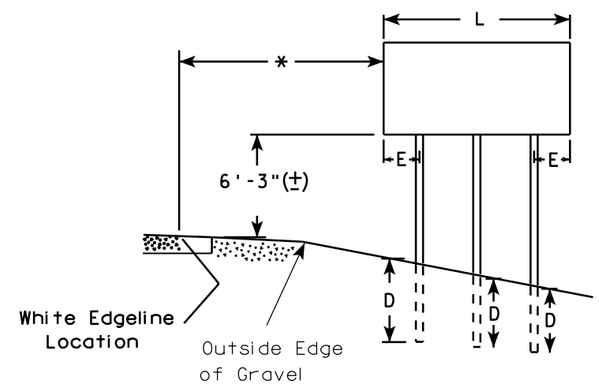

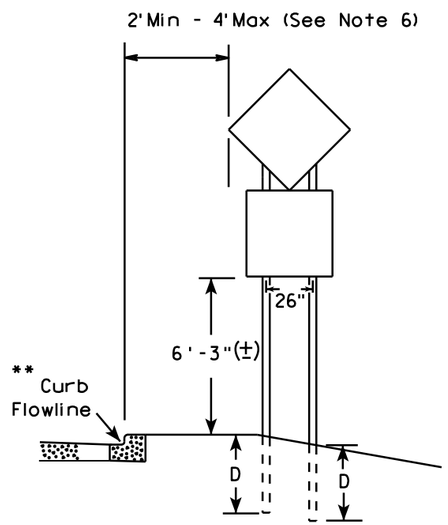

48" DIAMOND WARNING SIGN

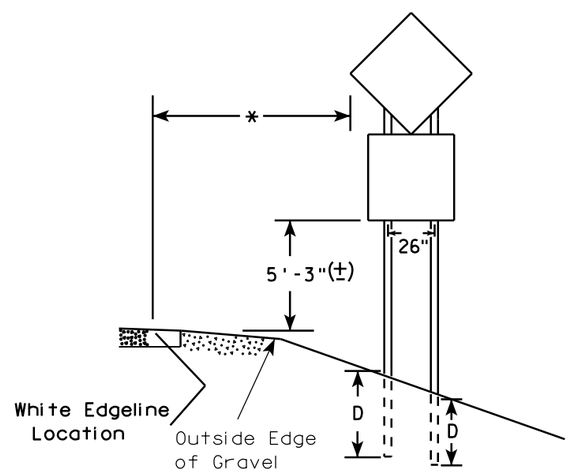

48" DIAMOND WARNING SIGN

GENERAL NOTES

1. For 3 or 4 post installations, individual post spacing shall be greater than 3'-6".
2. See tables below for required number of posts.
3. For expressways and freeways, mounting height is 7'-3" (±) or 6'-3" (±) depending upon existence of sub-sign.
4. The (±) tolerance for mounting height is 3 inches.
5. Minimum mounting height for J assemblies (A2-1S) is 7'-3" (±) or 6'-3" (±) per urban or rural detail respectively.
6. Offset distance shall be consistent with existing signs or consistent throughout length of project.
7. Folding signs shall be mounted at a height of 5'-3" (±) or as directed by the engineer.
8. The Double Arrow sign (W12-1) shall be mounted at a height of 2'-3" (±). The Chevron sign (W1-8), Roundabout Chevron panel (R6-4B), Clearance Markers (W5-52), Mile Markers (D10 series), In Road Object Markers (W5-54) & End of Road Markers (W5-56) shall be mounted at a height of 4"-3" (±).

* 6 feet from edge of a paved shoulder or 12 feet from the edge of pavement (edge line location) or 2 feet from outside edge of gravel, whichever is greater unless directed by project engineer.

** The existence of curb and gutter does not in itself mandate the vertical clearance illustrated. That height is typically measured where there is sidewalk adjacent to the roadway or parking is permitted. In the absence of sidewalk vertical clearance is measured from the top of the curb. Offset of signs is measured from the flow line.

*** See A4-3 sign plate for signs 4' or less in width and less than 20 S.F. in area.

SIGN SHAPE OTHER THAN DIAMOND (TWO POSTS REQUIRED)	
L	E
*** Greater than 48" Less than 60"	12"
60" to 120"	L/5

SIGN SHAPE OTHER THAN DIAMOND (THREE POSTS REQUIRED)	
L	E
Greater than 120" less than 168"	12"

SIGN SHAPE OTHER THAN DIAMOND (FOUR POSTS REQUIRED)	
L	E
168" and greater	12"

POST EMBEDMENT DEPTH

Area of Sign Installation (Sq. Ft.)	D (Min)
20 or Less	4'
Greater than 20	5'

TYPICAL INSTALLATION OF TYPE II SIGNS ON MULTIPLE POSTS

WISCONSIN DEPT OF TRANSPORTATION

APPROVED Matthew R Rauch
for State Traffic Engineer

DATE 7/23/15 PLATE NO. A4-4 14

PROJECT NO:	HWY:	COUNTY:		SHEET NO:	E

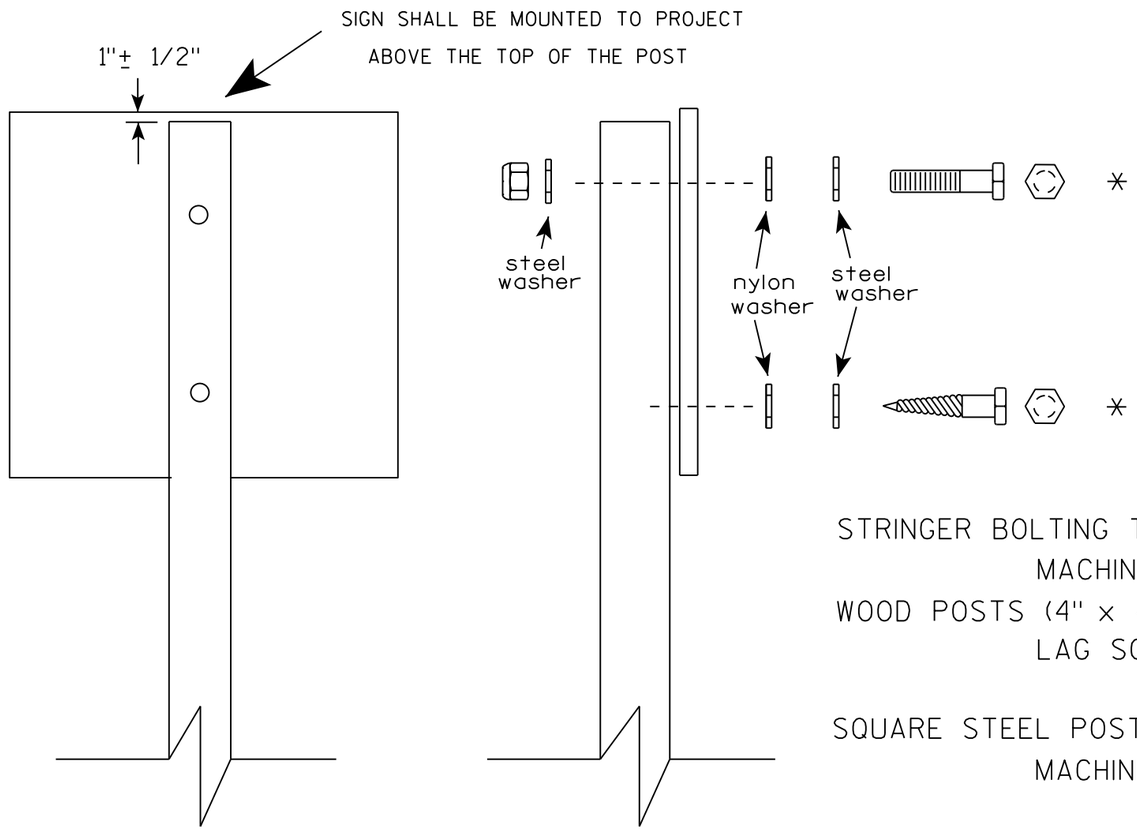

Nuts, bolts and lags used for mounting signs shall have hexagonal heads and shall be either :

a. Hot dip galvanized in accordance with ASTM Designation: A 153, Class D, or SC 3

b. Electro-galvanized in accordance with ASTM Designation : B 633, TYPE III, SC 3.

Threads on bolts and nuts shall be manufactured with sufficient allowance for the cadmium plate or galvanized coating to permit the nuts to run freely on the bolts.

STRINGER BOLTING TO ALUMINUM SIGNS (SEE SIGN PLATE A4-18)

MACHINE BOLTS - 5/16" X 1-3/4" Length w/ lock nuts

WOOD POSTS (4" x 4" or 4" x 6")

LAG SCREWS - 3/8" X 3" (NO STRINGERS ON BACK OF SIGN)

3/8" X 4" (STRINGERS ON BACK OF SIGN)

SQUARE STEEL POSTS (2" x 2")

MACHINE BOLTS - 3/8" X 3-1/4" Length w/ nuts (NO STRINGER ON BACK OF SIGN)

3/8" X 5" Length w/ nuts (STRINGERS ON BACK OF SIGN)

RIVETS - 9/32 " (6605-9-6) BULB-TITE, TRI-FOLD, ALUMINUM BODY/MANDREL

O.D. FLANGE .720-.765 INCH, GRIP RANGE .042-.375 INCH

WASHERS (ALL POSTS) -

1-1/4" O.D. X 3/8" I.D. X 1/16" STEEL

1-1/4" O.D. X 3/8" I.D. X .080 NYLON

* Two different fastening systems are shown for illustration purposes. On any individual sign, either one or the other system shall be used. Actual number of fasteners per sign varies with the sign area, but normally there are two. For a single post installation, all signs greater than 9 sq. ft. require the use of 3 fasteners.

ATTACHMENT OF SIGNS TO POSTS

WISCONSIN DEPT OF TRANSPORTATION

APPROVED Matthew R Rauch
for State Traffic Engineer

DATE 8/11/16 PLATE NO. A4-8.8

PROJECT NO: SHEET NO: E

TELESCOPIC TUBING ANCHORS
TWO PIECE SYSTEM

2 1/4" SQUARE
12 GAUGE
PERFORATED
GALVANIZED FINISH

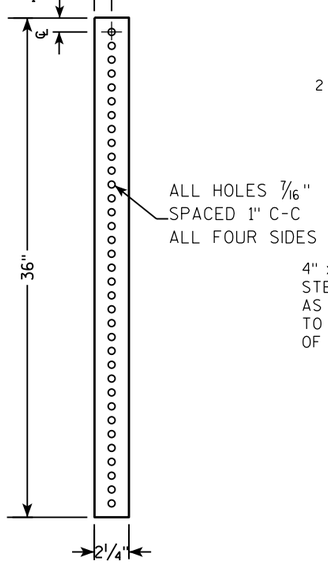

2 1/2" SQUARE
12 GAUGE
OMNI-DIRECTIONAL
PERFORATED
SOIL STABILIZING SLEEVE
GALVANIZED FINISH

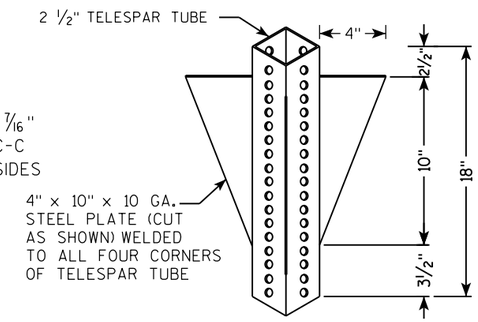

DETAIL OF TUBULAR STEEL SIGN POST
(IN POURED CONCRETE OR ASPHALT)

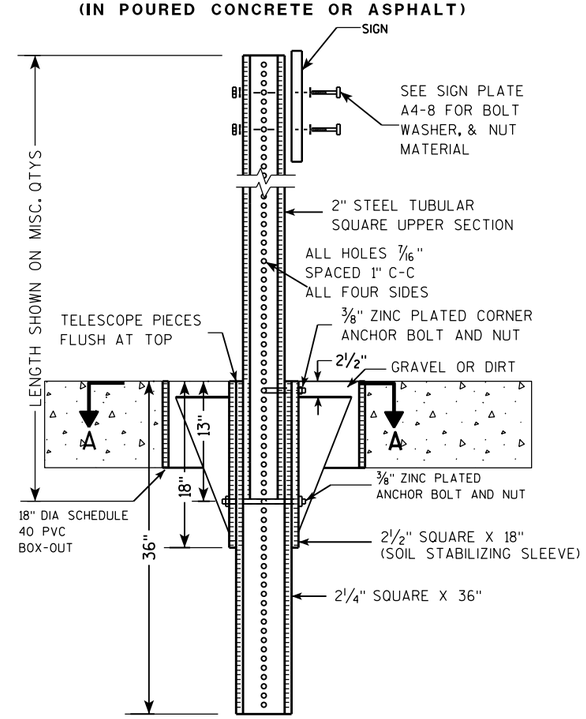

DETAIL OF TUBULAR STEEL SIGN POST
(IN LOCATIONS OTHER THAN POURED CONCRETE OR ASPHALT)

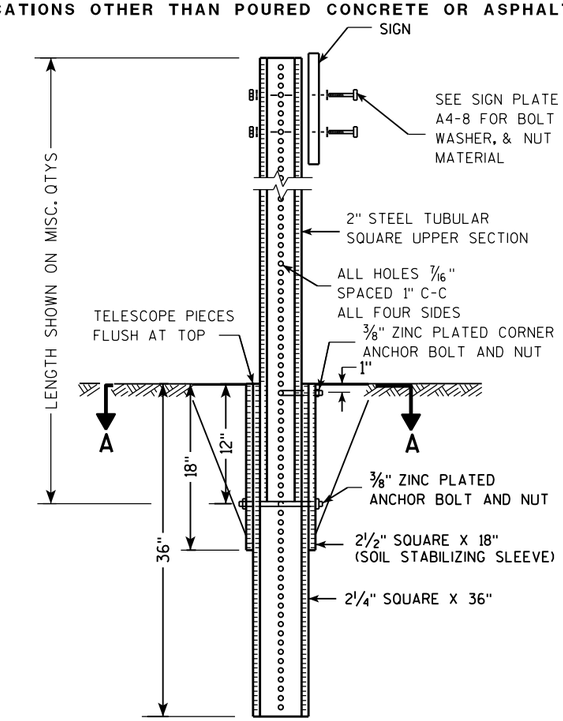

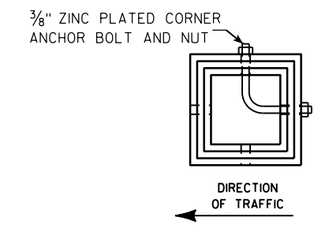

SECTION A-A

Area of Sign Installation (Sq. Ft.)	Number of Required Posts
9 or less	1
Greater than 9 less than or equal to 18	2
Greater than 18 less than or equal to 27	3

Signs wider than 3 feet or larger than 9 sq. ft shall be mounted on multiple posts (see above table).

TUBULAR STEEL
SIGN POST
A4-9

WISCONSIN DEPT OF TRANSPORTATION

APPROVED Matthew R Rauch
for State Traffic Engineer

DATE 2/05/15 PLATE A4-9.9

7

7

PROJECT NO:	HWY:	COUNTY:		SHEET NO:	E

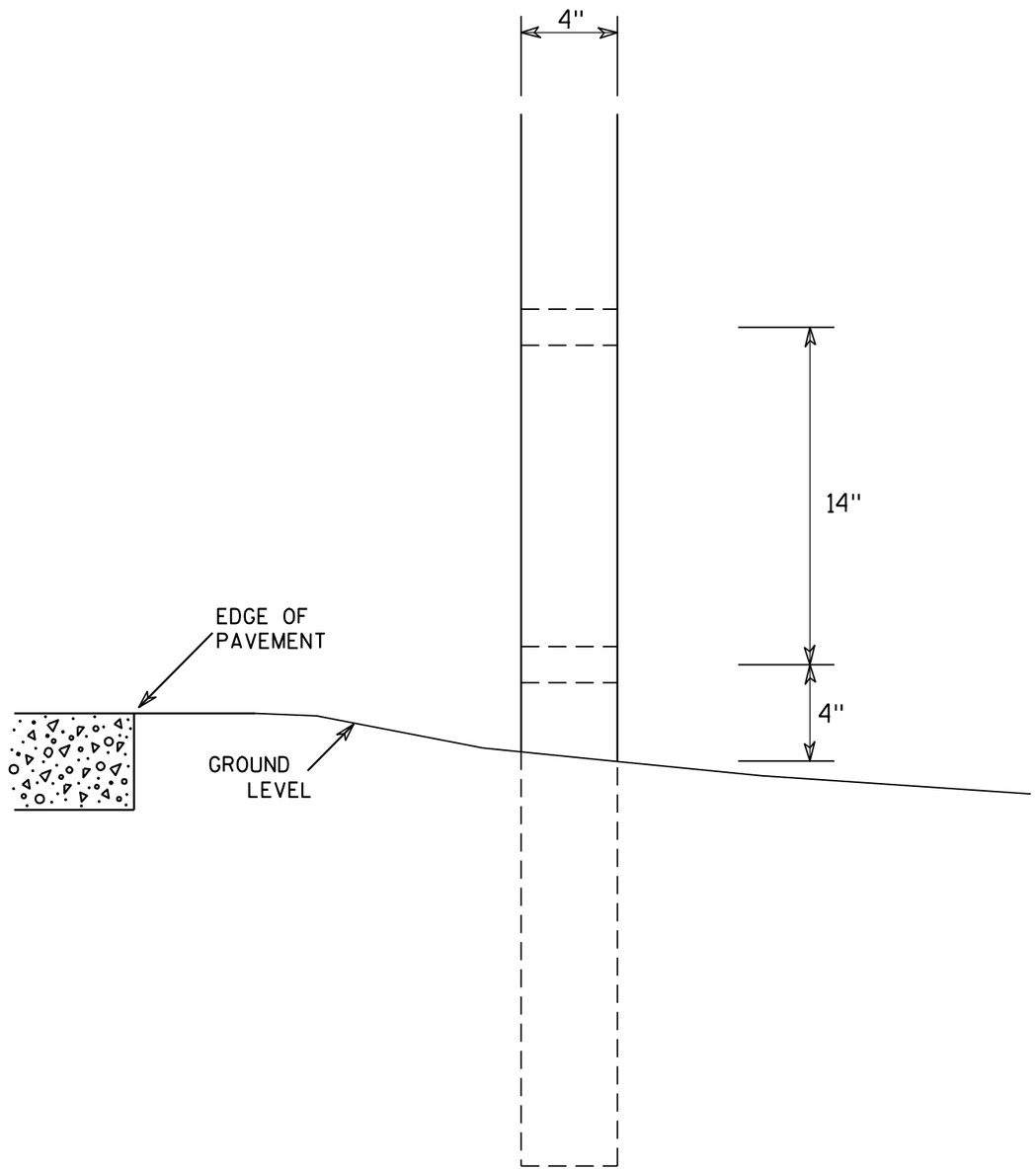

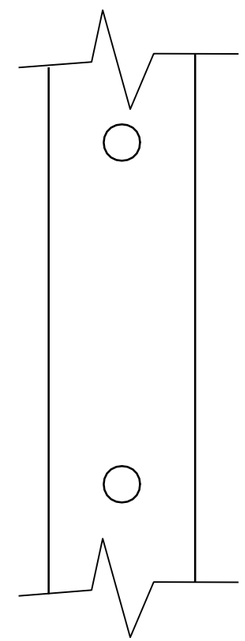

SIDE VIEW

GENERAL NOTES

1. All 4 x 6 Wood Posts shall be modified by having two 1½" diameter holes drilled perpendicular to the roadway centerline.

4 X 6 WOOD POST MODIFICATIONS

WISCONSIN DEPT OF TRANSPORTATION

APPROVED Chester J Spang for State Traffic Engineer

DATE 3/27/97 PLATE NO. A4-11.2

PROJECT NO:	HWY:	COUNTY:		SHEET NO: 104	E

BANDING

SINGLE SIGN

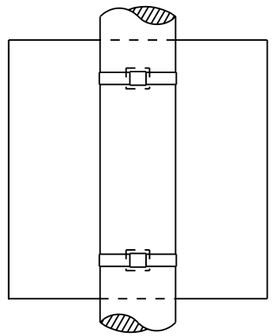

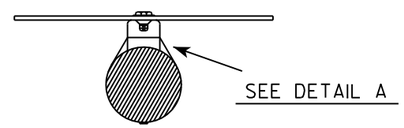

"J" ASSEMBLY

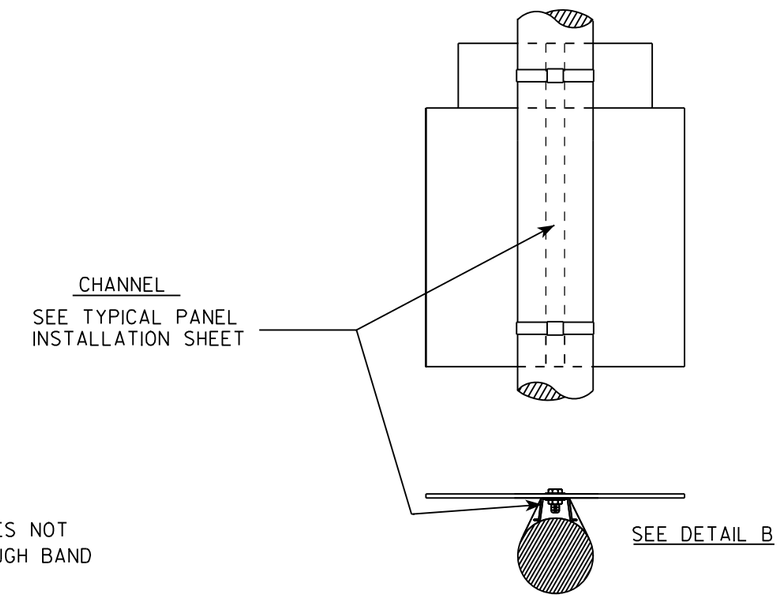

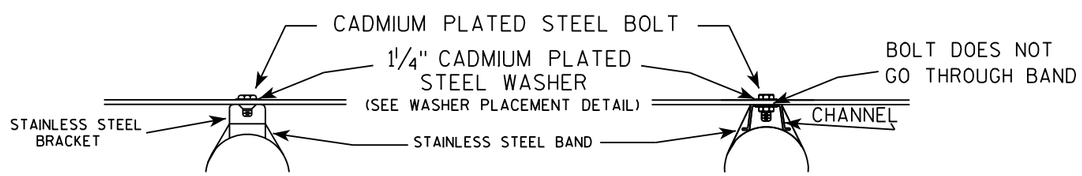

DETAIL A

DETAIL B

WASHER PLACEMENT

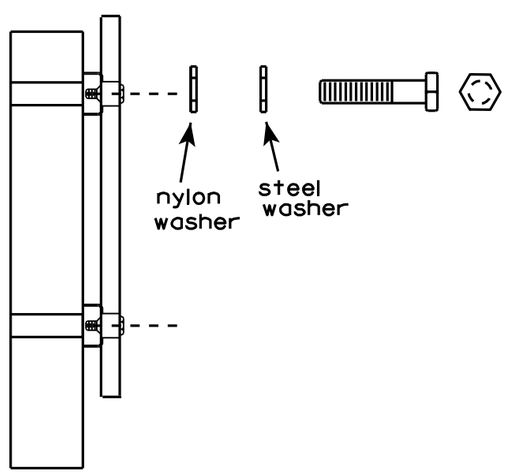

WASHERS (ALL POSTS) -

1-1/4" O.D. X 3/8" I.D. X 1/16" STEEL

1-1/4" O.D. X 3/8" I.D. X .080 NYLON

FOR ALL TYPE H SIGNS

GENERAL NOTES

1. Any sign over 3 feet in width shall use the V-Block banding method. See A5-10 standard plate.
2. Signs 3 feet or greater in height shall have three bracket bands installed. Signs less than 3 feet in height shall have two bracket bands installed.
3. Banding and assembly bracket shall be stainless steel. All bands shall be ¾" in width and 0.025" thickness.

STANDARD SIGN

SIGN BANDING DETAILS

WISCONSIN DEPT OF TRANSPORTATION

APPROVED Matthew R Rauch for State Traffic Engineer

DATE 8/16/13 PLATE NO. A5-9.3

PROJECT NO:	HWY:	COUNTY:		SHEET NO: 105	E

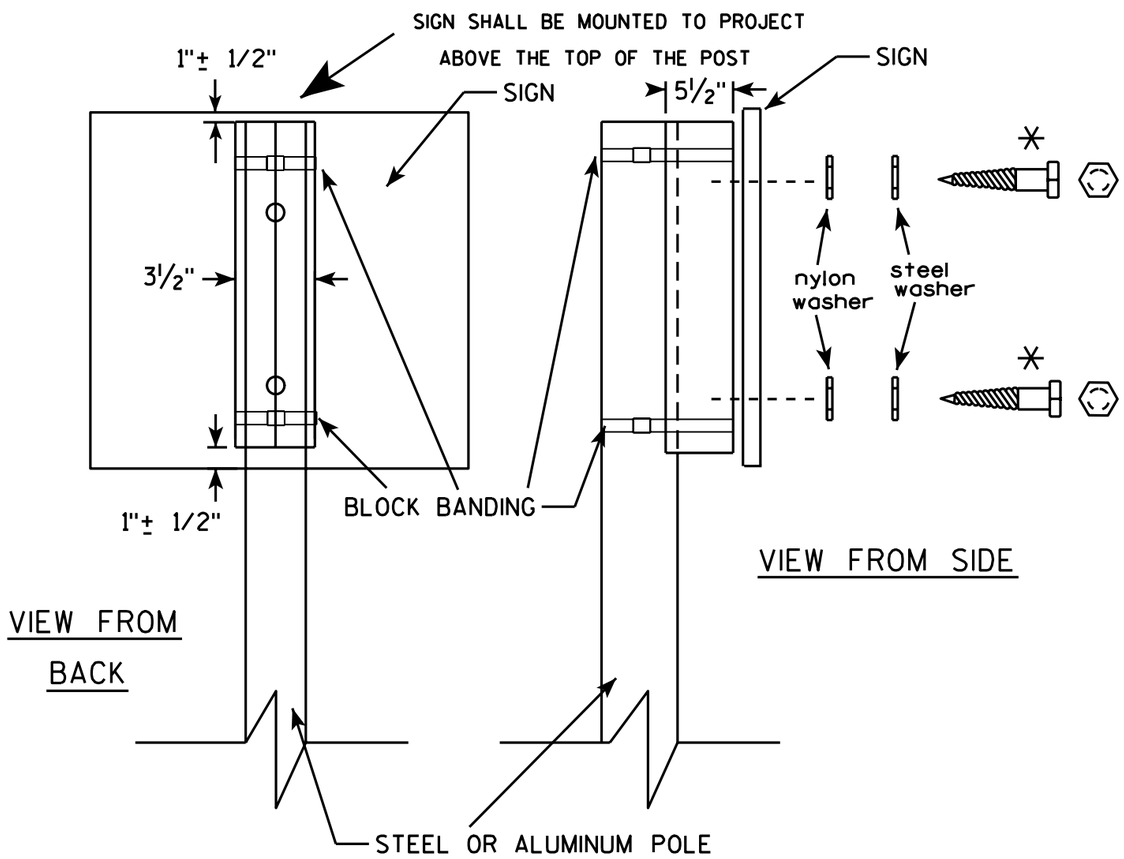

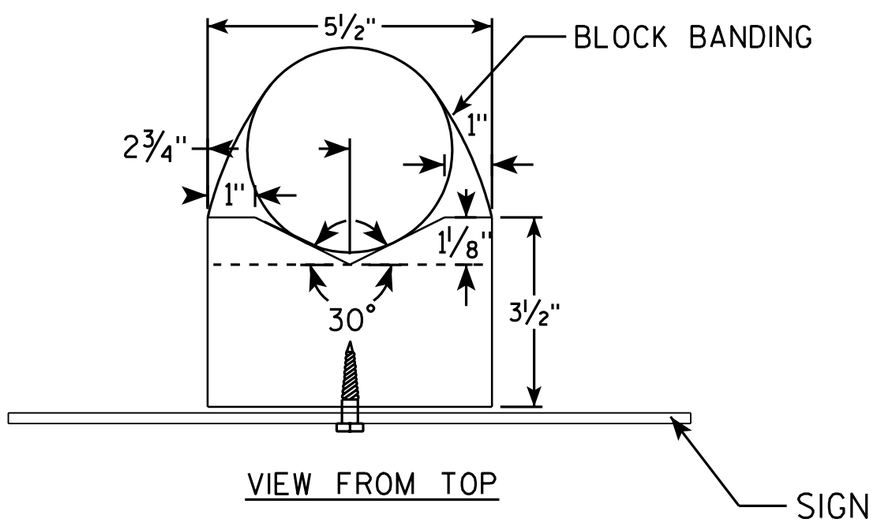

GENERAL NOTES

1. WOOD 4"X6" POST MATERIAL SHALL CONFORM TO 507.2.2 OF THE WisDOT STANDARD SPECIFICATIONS
2. BLOCK BANDING AND CLIPS SHALL BE STAINLESS STEEL, ¾" WIDTH AND 0.025" THICKNESS
3. SIGNS 3' OR GREATER IN HEIGHT SHALL UTILIZE 3 BLOCK BANDS. SIGNS UNDER 3' IN HEIGHT SHALL UTILIZE 2 BLOCK BANDS
4. ACTUAL NUMBER OF FASTENERS PER SIGN VARIES WITH THE SIGN AREA, BUT NORNALLY THERE ARE TWO. FOR SIGNS GREATER THAN 9 S.F. 3 FASTENERS SHALL BE USED.
5. ALL SIGN MOUNTING BOLTS AND WASHERS SHALL BE EITHER:
   a. Hot dip or mechanically galvanized in accordance with ASTM Designation: A 153, Class D, or
   b. Cadmium plated in accordance with ASTM Designation : B 766 TYPE 3, Class 12, or
   c. Electro-galvanized in accordance with ASTM Designation : B 633, TYPE III, SC 3.
6. ALL BOLTS SHALL HAVE HEXAGONAL HEADS.
7. STEEL WASHERS SHALL BE 1¼" O.D. X ⅜" I.D. X 1/16"
8. NYLON WASHERS SHALL BE 1¼" O.D. X ⅜" I.D. X .080 FOR TYPE H OR TYPE F FACE SIGN

✳ LAG BOLTS SHALL BE ⅜" X 2½"

BLOCK BANDING DETAIL
(V-BLOCK OPTION)

WISCONSIN DEPT OF TRANSPORTATION

APPROVED Matthew R Rauch
for State Traffic Engineer

DATE 7/12/07 PLATE NO. A5-10.1

PROJECT NO:				SHEET NO: 106	E

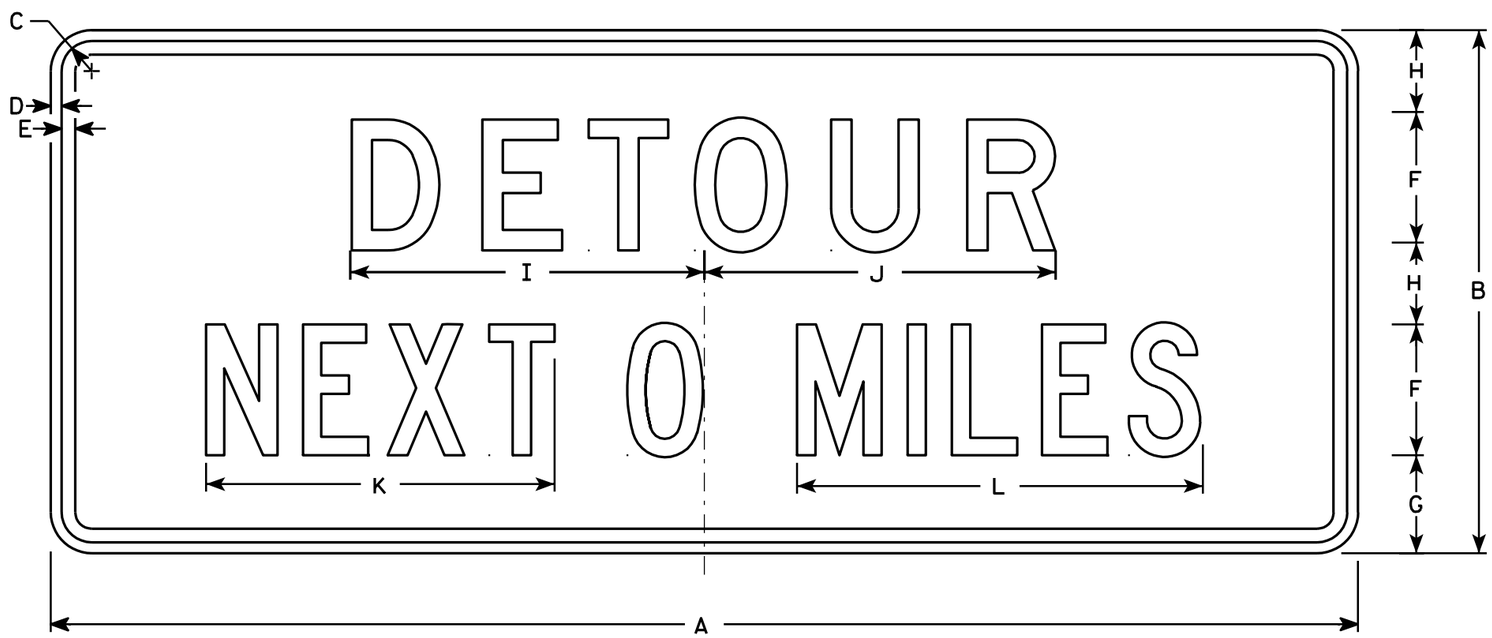

G20-51

NOTES

1. Sign is Type II - Type F Reflective - reference WIS DOT Standard Specification for HIGHWAY and STRUCTURE CONSTRUCTION latest edition.
2. Color:
   Background - Orange
   Message - Black
3. Message Series - Line 1 is D and Line 2 is C
4. Corners may be square or rounded when base material is plywood but borders shall be rounded as shown. When base material is metal, the corners and borders shall be rounded.
5. Substitute appropriate numerals and optically adjust spacing to achieve proper balance

Metric equivalent for this sign is:

SIZE	
1	
2	1500 mm X 600 mm
3	
4	1500 mm X 600 mm
5	

SIZE	A	B	C	D	E	F	G	H	I	J	K	L	M	N	O	P	Q	R	S	T	U	V	W	X	Y	Z	Area sq. ft.	Area m2
1																												
2	60	24	1 3/8	1/2	5/8	6	4 1/2	3 3/4	16 1/4	16 1/8	16	18 5/8															10	.90
3																												
4	60	24	1 3/8	1/2	5/8	6	4 1/2	3 3/4	16 1/4	16 1/8	16	18 5/8															10	.90
5																												

STANDARD SIGN
G20-51

WISCONSIN DEPT OF TRANSPORTATION

APPROVED Matthew R Rauch
for State Traffic Engineer

DATE 12/20/02 PLATE NO. G20-51.1

PROJECT NO:	HWY:	COUNTY:		SHEET NO: 107	E

NOTES

1. Sign is Type II - Type H Reflective - reference WIS DOT Standard Specification for HIGHWAY and STRUCTURE CONSTRUCTION latest edition.
2. Color:
   Background - White
   Message - (See Note 5)
3. Message Series - (See Note 6)
4. Corners may be square or rounded when base material is plywood but borders shall be rounded as shown. When base material is metal, the corners and borders shall be rounded.
5. Border - Blue
   Line 1 - Red
   Line 2 - Black
   Line 3-5 - Blue
6. Line 1 - Dutch 8011L
   Line 2 - Series E
   Line 3-5 - Series C
7. Contractor shall provide and install a new post bracket in accordance with the I55-56B sign detail.

Background Colors of Symbol*

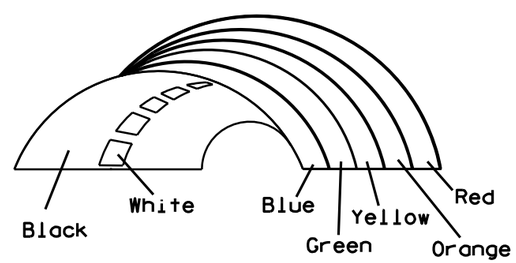

*1/4" Black Border between each color of rainbow and border of rainbow

SIZE	A	B	C	D	E	F	G	H	I	J	K	L	M	N	O	P	Q	R	S	T	U	V	W	X	Y	Z	Area sq. ft.
1																											
2	30	36	1 1/2	1/2	5/8	3	2	3 1/2	2 7/8	1	8	2 1/8	11 1/4	11 1/8	9 3/8	1 1/4		3/4	12 5/8	7 1/2							7.5
3																											
4																											
5																											

STANDARD SIGN
I55-56

WISCONSIN DEPT OF TRANSPORTATION

APPROVED Matthew R Rauch
for State Traffic Engineer

DATE 4/27/11 PLATE NO. 155-56.3

PROJECT NO:	HWY:	COUNTY:		SHEET NO: 108

ISOMETRIC VIEW

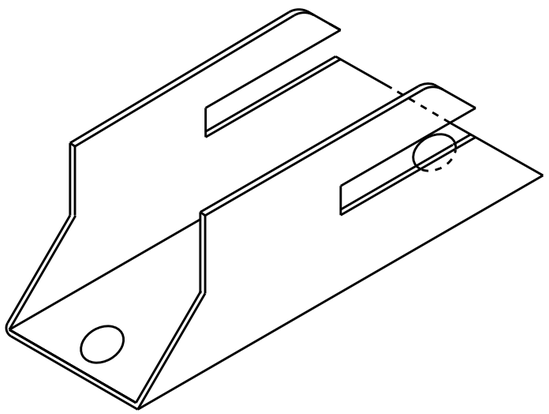

TOP VIEW

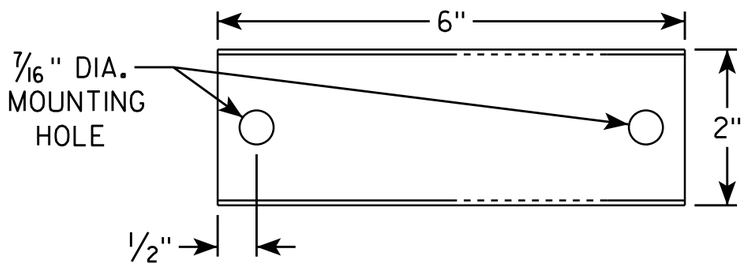

SIDE VIEW

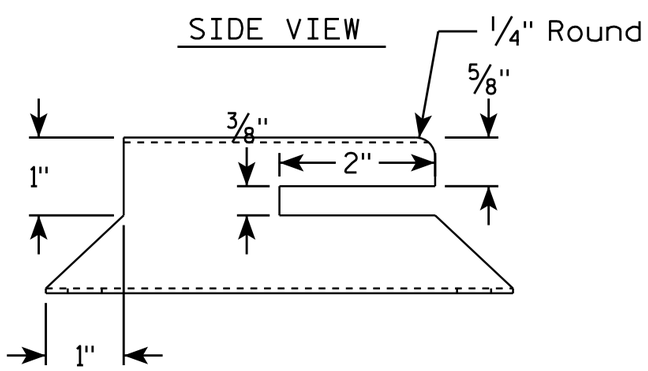

END VIEW

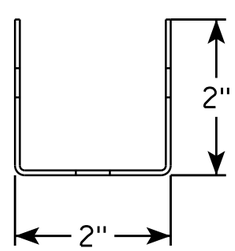

NOTES

1. Must be capable of permanent attachment to a wood or steel channel sign post utilizing the fastening hardware specified on the A4-8 sign plate.
2. Shall be entirely primed and painted with two coats of a black powder coated enamel paint.
3. Shall be made with 12 gauge steel, and incorporate no welds, no hinged components, no threaded lock-type components, and no parts which are loose or can be separated from the main body.
4. Shall have rounded edges with at least 1/8" radii.
5. Shall not have unrounded and uncoated metal edges which can contact the back surface of the roll-up sign.
6. Top of bracket shall be mounted 2' below the bottom of the I55-56 sign.
7. Cost of bracket and fastening hardware shall be incidental to the I55-56 sign.

SIDE VIEW

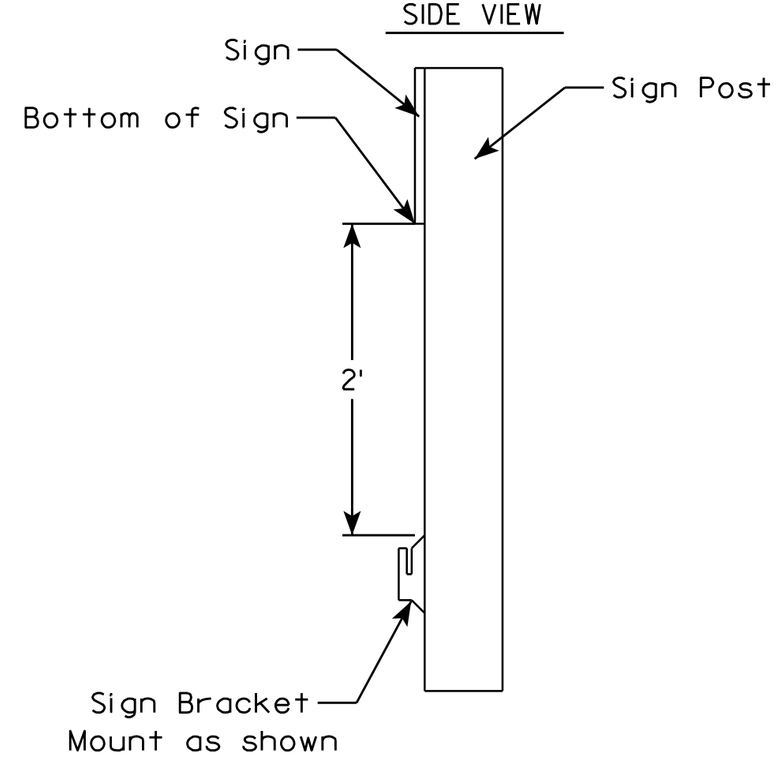

ROLLUP SIGN BRACKET
I55-56B

WISCONSIN DEPT OF TRANSPORTATION

APPROVED Matthew R Rauch
for State Traffic Engineer

DATE 4/26/16 PLATE I55-56B.2

PROJECT NO:	HWY:	COUNTY:		SHEET NO:	E

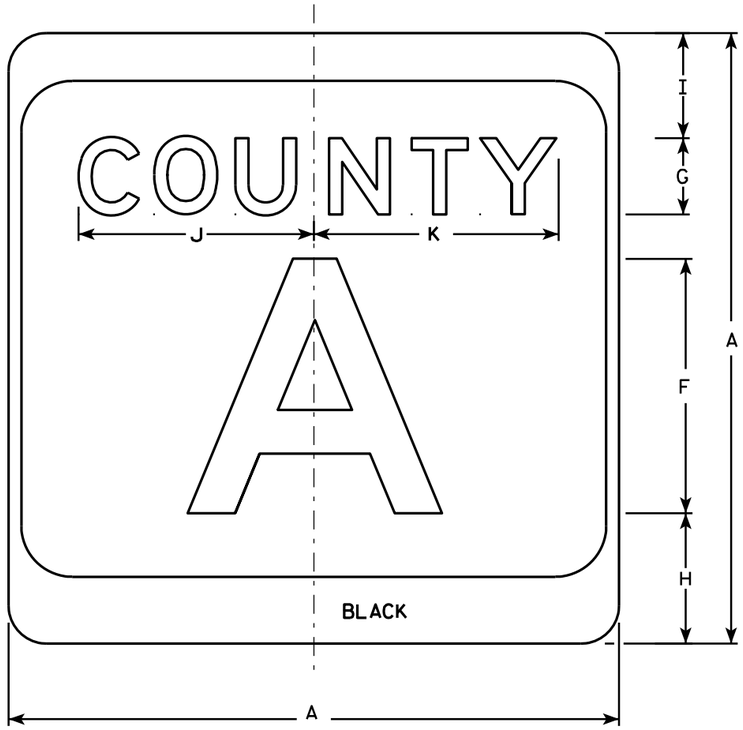

M1-5A

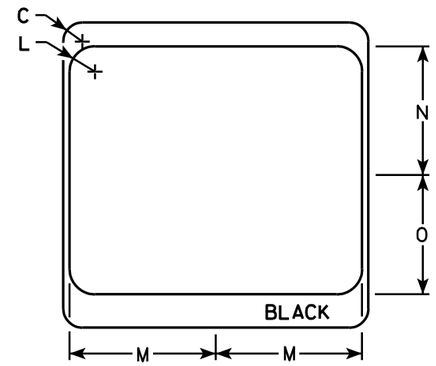

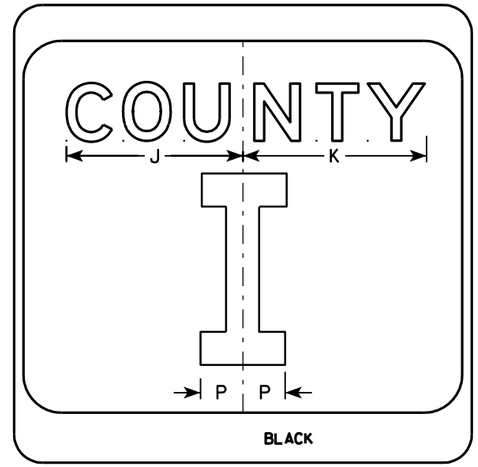

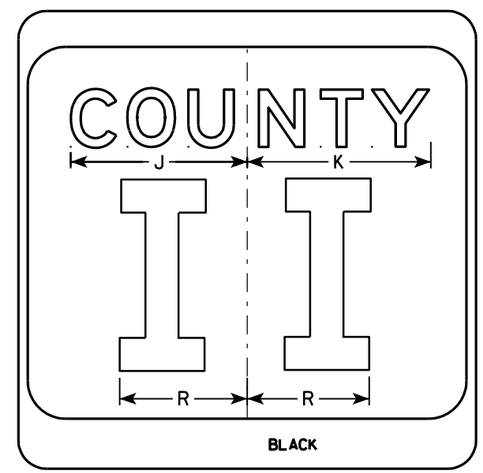

NOTES

1. Sign is Type II - see Note 7 - reference WIS DOT Standard Specification for HIGHWAY and STRUCTURE CONSTRUCTION latest edition.
2. Color:
   Background - White & Black - See Note 7
   Message - Black
3. Message Series - see Note 5
4. Corners may be square or rounded when base material is plywood but borders shall be rounded as shown. When base material is metal, the corners and borders shall be rounded.
5. Message Series E for 1 letter.
   Message Series D for 2 letters unless message is too big then Series C.
   Message Series C for 3 letters unless message is too big then Series B.
6. Substitute appropriate letters & optically center to achieve proper balance.
7. Permanent Signs
   Background - Type H Reflective
   Detour or temporary Signs
   Background - Reflective

SIZE	A	B	C	D	E	F	G	H	I	J	K	L	M	N	O	P	Q	R	S	T	U	V	W	X	Y	Z	Area sq. ft.
1																											
2	24		1 1/2			10	3	5 1/8	4 1/8	9 1/4	9 5/8	2	11 1/2	10 1/8	9 3/8	2 1/4		6 5/8									4.0
3	36		2 1/4			16	4	7 5/8	5 5/8	12 1/4	12 7/8	3	17 1/8	15 1/4	14	3 3/8		10									9.0
4	36		2 1/4			16	4	7 5/8	5 5/8	12 1/4	12 7/8	3	17 1/8	15 1/4	14	3 3/8		10									9.0
5	36		2 1/4			16	4	7 5/8	5 5/8	12 1/4	12 7/8	3	17 1/8	15 1/4	14	3 3/8		10									9.0

CTH MARKER
M1-5A FOR ASSEMBLIES

WISCONSIN DEPT OF TRANSPORTATION

APPROVED Matthew R Rauch
for State Traffic Engineer

DATE 9/27/11 PLATE NO. M1-5A.8

PROJECT NO: | HWY: | COUNTY: | SHEET NO: 110 | E

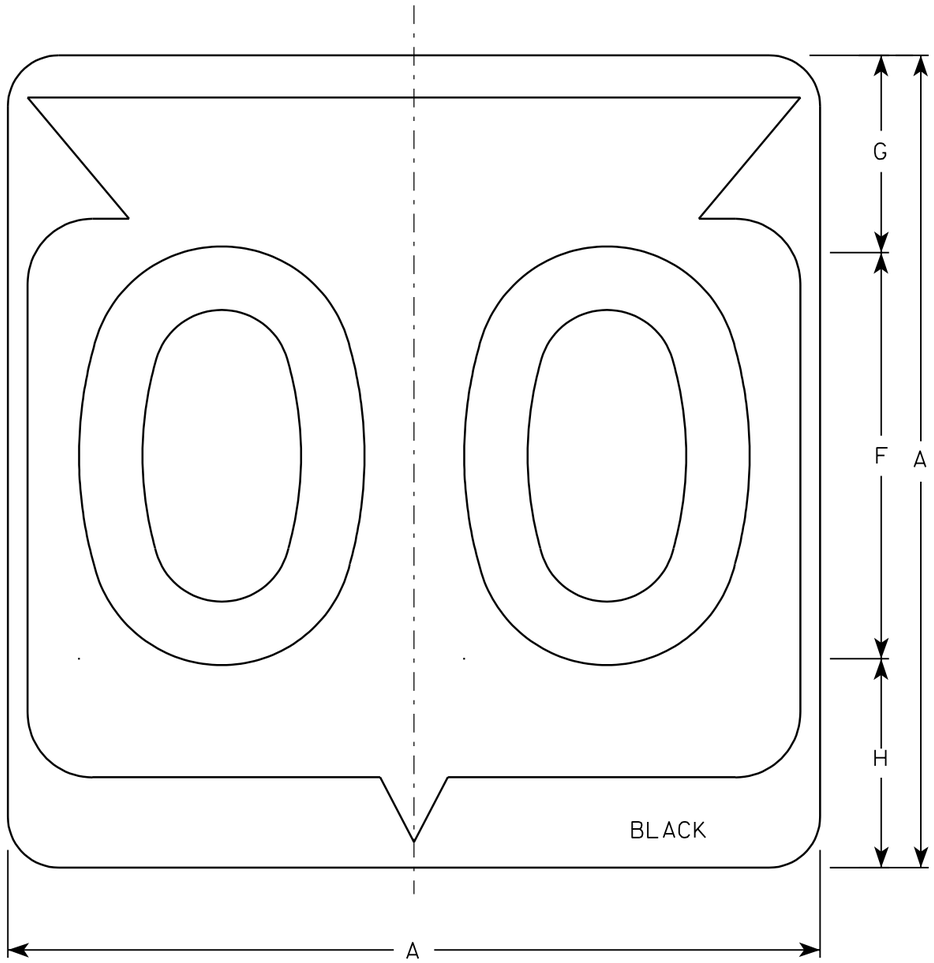

M1-6

NOTES

1. Sign is Type II - See Note 6 - reference WIS DOT Standard Specification for HIGHWAY and STRUCTURE CONSTRUCTION latest edition.
2. Color:
   Background - White & Black - See Note 6
   Message - Black
3. Message Series - See note 5
4. Corners may be square or rounded when base material is plywood but borders shall be rounded as shown. When base material is metal, the corners and borders shall be rounded.
5. Substitute appropriate Series numerals and adjust spacing as per plate A10-1.
6. Permanent Signs
   Background - Type H Reflective
   Detour or temporary Signs
   Background - Reflective

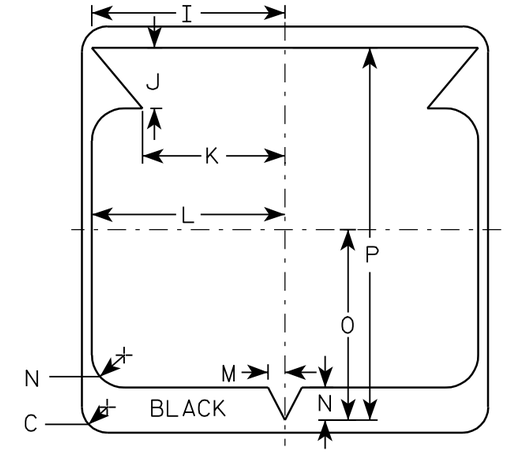

Metric equivalent for this sign is:

SIZE	
1	
2	600 mm X 600 mm
3	900 mm X 900 mm
4	900 mm X 900 mm
5	900 mm X 900 mm

SIZE	A	B	C	D	E	F	G	H	I	J	K	L	M	N	O	P	Q	R	S	T	U	V	W	X	Y	Z	Area sq. ft.	Area m2
1																												
2	24		1 1/2			12	5 1/2	6 1/2	10 1/4	2 1/2	8 7/8	11 1/2	1	1 7/8	11 1/4	21 7/8											4.0	.36
3	36		2 1/4			18	8 3/4	9 1/4	15 3/8	5 3/8	12 5/8	17 1/8	1 1/2	2 7/8	16 7/8	33											9.0	.81
4	36		2 1/4			18	8 3/4	9 1/4	15 3/8	5 3/8	12 5/8	17 1/8	1 1/2	2 7/8	16 7/8	33											9.0	.81
5	36		2 1/4			18	8 3/4	9 1/4	15 3/8	5 3/8	12 5/8	17 1/8	1 1/2	2 7/8	16 7/8	33											9.0	.81

STATE ROUTE MARKER
M1-6 FOR ASSEMBLIES

WISCONSIN DEPT OF TRANSPORTATION

APPROVED Chester J Spang
for State Traffic Engineer

DATE 3/20/02 PLATE NO. M1-6.9

PROJECT NO: | HWY: | COUNTY: | SHEET NO: 111 | E

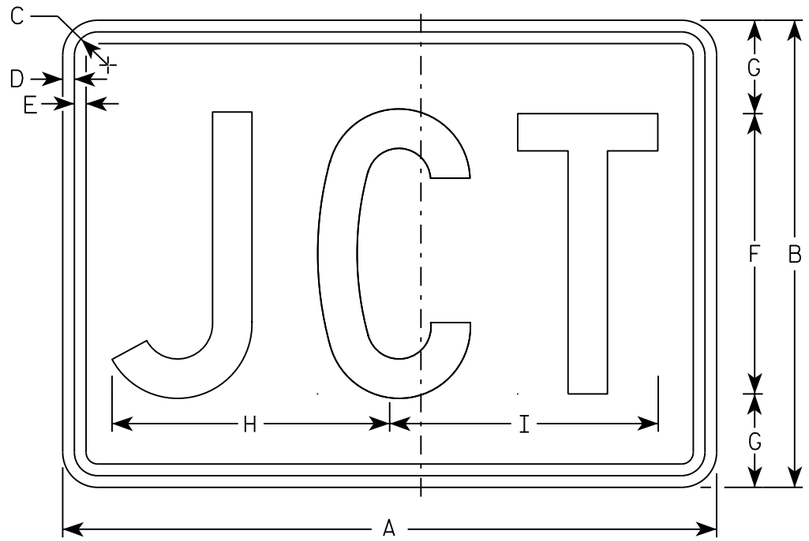

M2-1
MM2-1
MP2-1

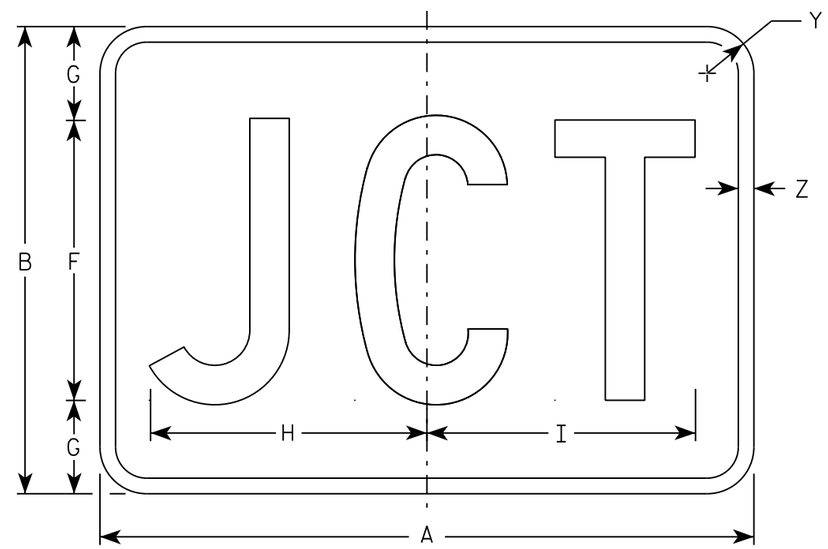

MB2-1
MK2-1
MN2-1
MR2-1

NOTES

1. Sign is Type II - Type H
2. Color:
   Background - See note 5
   Message - See note 5
3. Message Series - C
4. Corners may be square or rounded when base material is plywood but borders shall be rounded as shown. When base material is metal, the corners and borders shall be rounded.
5. M2-1 Background - White
   Message - Black
   MB2-1 Background - Blue
   Message - White
   MK2-1 Background - Green
   Message - White
   MM2-1 Background - White
   Message - Green
   MN2-1 Background - Brown
   Message - White
   MP2-1 Background - White
   Message - Blue
   MR2-1 Background - Brown
   Message - Yellow

SIZE	A	B	C	D	E	F	G	H	I	J	K	L	M	N	O	P	Q	R	S	T	U	V	W	X	Y	Z	Area sq. ft.
1																											
2	21	15	1 1/8	3/8	3/8	9	3	8 7/8	8 5/8																1 1/2	1/2	2.20
3	30	21	1 1/8	3/8	3/8	13	4	12 7/8	12 3/8																1 1/2	1/2	4.40
4	30	21	1 1/8	3/8	3/8	13	4	12 7/8	12 3/8																1 1/2	1/2	4.40
5	30	21	1 1/8	3/8	3/8	13	4	12 7/8	12 3/8																1 1/2	1/2	4.40

STANDARD SIGN
M2-1

WISCONSIN DEPT OF TRANSPORTATION

APPROVED Matthew R Rauch
for State Traffic Engineer

DATE 10/15/15 PLATE 112 M2-1.12

PROJECT NO: | HWY: | COUNTY: | SHEET NO: | E

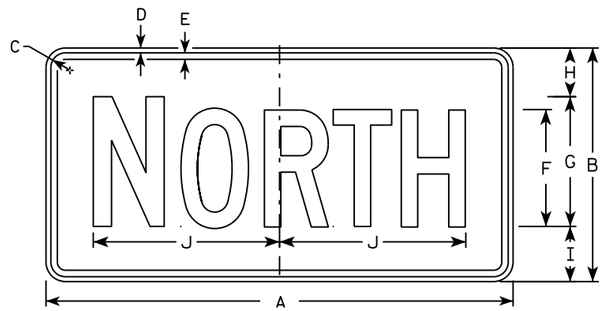

M3-1
MM3-1
MP3-1

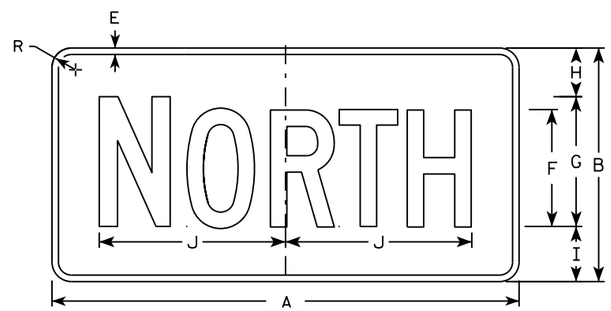

MB3-1
MK3-1
MN3-1

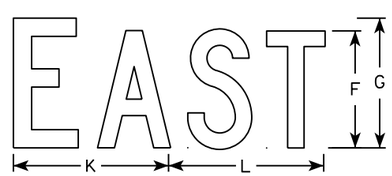

M3-2
MM3-2
MP3-2

MB3-2
MK3-2
MN3-2

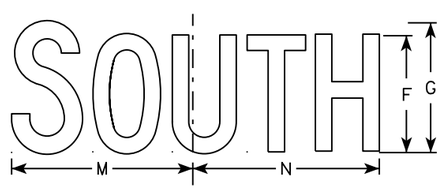

M3-3
MM3-3
MP3-3

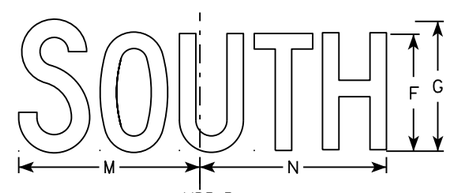

MB3-3
MK3-3
MN3-3

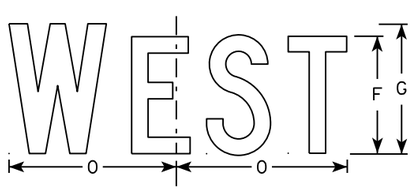

M3-4
MM3-4
MP3-4

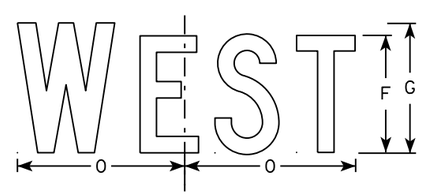

MB3-4
MK3-4
MN3-4

NOTES

1. All Signs Type II - Type H
2. Color:
   Background - See note 5
   Message - See note 5
3. Message Series - C
4. Corners may be square or rounded when base material is plywood but borders shall be rounded as shown. When base material is metal, the corners and borders shall be rounded.
5. M3-1 thru M3-4 Background - White
   Message - Black
   MB3-1 thru MB3-4 Background - Blue
   Message - White
   MK3-1 thru MK3-4 Background - Green
   Message - White
   MM3-1 thru MM3-4 Background - White
   Message - Green
   MN3-1 thru MN3-4 Background - Brown
   Message - White
   MP3-1 thru MP3-4 Background - White
   Message - Blue
6. Note the first letter of each direction is larger than the remainder of the message.

SIZE	A	B	C	D	E	F	G	H	I	J	K	L	M	N	O	P	Q	R	S	T	U	V	W	X	Y	Z	Area sq. ft.
1																											
2	24	12	1 1/8	3/8	3/8	6	7	2 1/4	2 3/4	10 1/4	7 7/8	8 3/8	10 1/4	9 3/4	8 3/4			1 1/2									2.00
3	36	18	1 1/8	3/8	1/2	9	10	3 3/4	4 1/4	14 3/8	12	12 1/8	14	14 1/8	13			1 1/2									4.5
4	36	18	1 1/8	3/8	1/2	9	10	3 3/4	4 1/4	14 3/8	12	12 1/8	14	14 1/8	13			1 1/2									4.5
5	36	18	1 1/8	3/8	1/2	9	10	3 3/4	4 1/4	14 3/8	12	12 1/8	14	14 1/8	13			1 1/2									4.5

STANDARD SIGNS
M3-1 thur M3-4
SERIES

WISCONSIN DEPT OF TRANSPORTATION

APPROVED Matthew R Rauch
for State Traffic Engineer

DATE 10/15/15 PLATE NO M3-1.14

PROJECT NO: | HWY: | COUNTY: | SHEET NO: | E

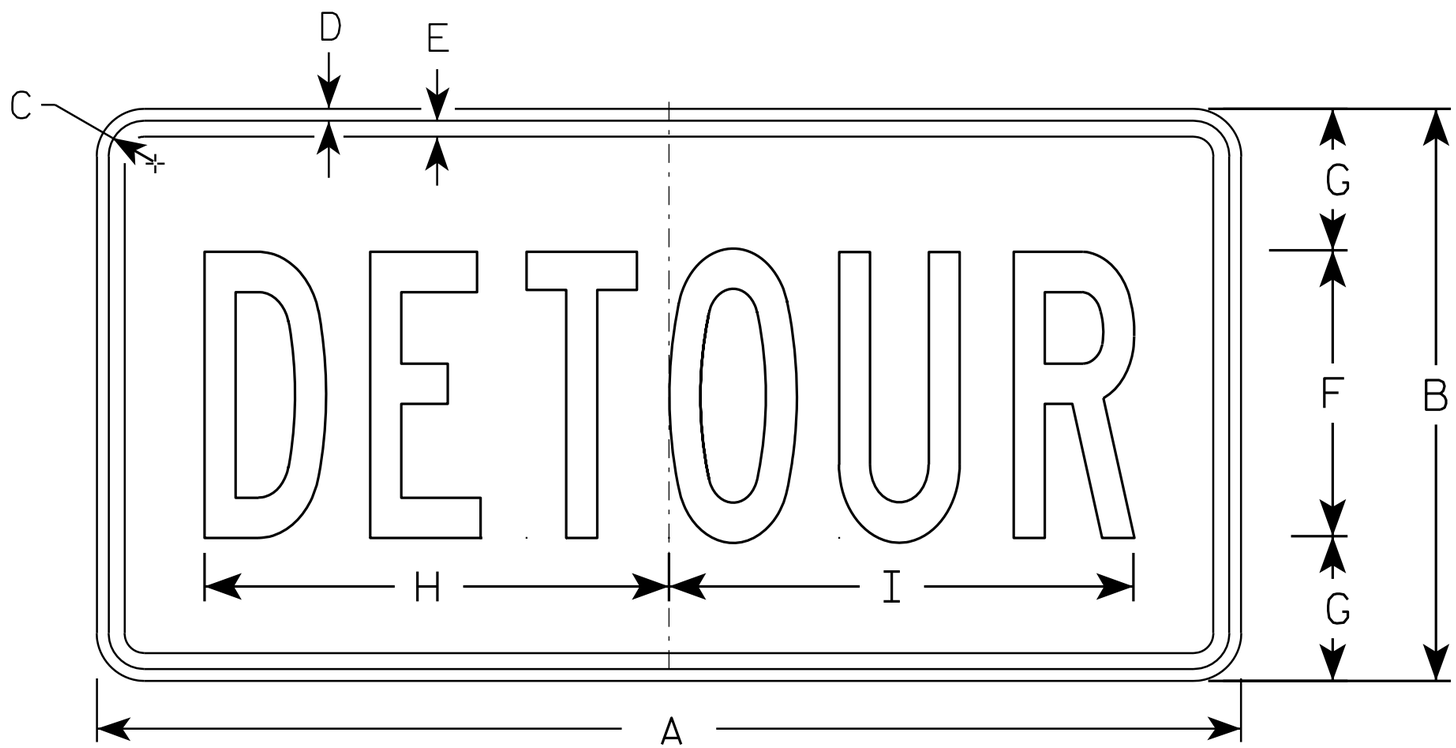

M4-8

NOTES

1. Sign is Type II - Type F Reflective - reference WIS DOT Standard Specification for HIGHWAY and STRUCTURE CONSTRUCTION latest edition.
2. Color:
   Background - Orange
   Message - Black
3. Message Series - B
4. Corners may be square or rounded when base material is plywood but borders shall be rounded as shown. When base material is metal, the corners and borders shall be rounded.

SIZE	A	B	C	D	E	F	G	H	I	J	K	L	M	N	O	P	Q	R	S	T	U	V	W	X	Y	Z	Area sq. ft.
1																											
2	24	12	1 1/8	3/8	3/8	6	3	10	10 1/4																		2.0
3	36	18	1 1/8	3/8	1/2	9	4 1/2	14 5/8	14 1/2																		4.5
4																											
5																											

STANDARD SIGN
M4-8

WISCONSIN DEPT OF TRANSPORTATION

APPROVED Matthew R Rauch
for State Traffic Engineer

DATE 11/10/10 PLATE NO. M4-8.2

PROJECT NO: | HWY: | COUNTY: | SHEET NO: 114 | E

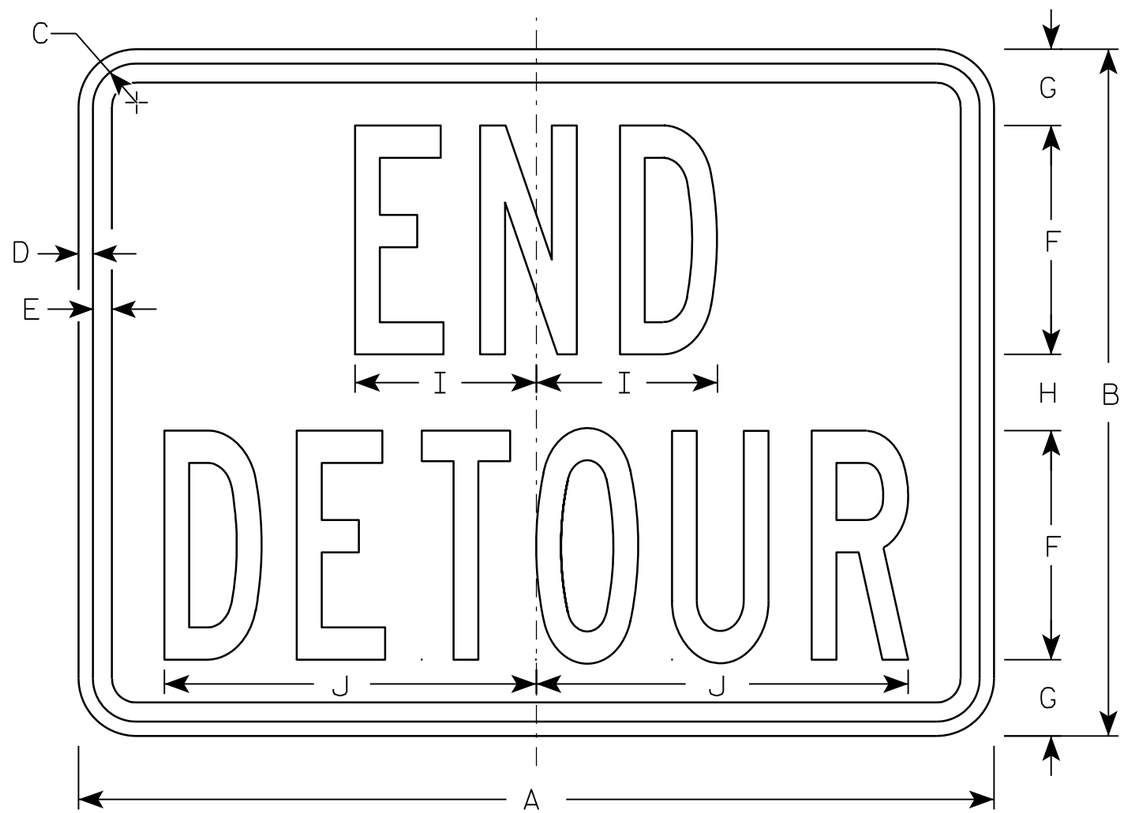

M4-8A

NOTES

1. Sign is Type II - Type F Reflective - reference WIS DOT Standard Specification for HIGHWAY and STRUCTURE CONSTRUCTION latest edition.
2. Color:
   Background - Orange
   Message - Black
3. Message Series - B
4. Corners may be square or rounded when base material is plywood but borders shall be rounded as shown. When base material is metal, the corners and borders shall be rounded.

SIZE	A	B	C	D	E	F	G	H	I	J	K	L	M	N	O	P	Q	R	S	T	U	V	W	X	Y	Z	Area sq. ft.
1																											
2	24	18	1 1/8	3/8	1/2	6	2	2	4 3/4	9 3/4																	3.0
3	30	24	1 1/8	3/8	1/2	8	2 1/2	3	6 3/4	13																	5.0
4																											
5																											

STANDARD SIGN
M4-8A

WISCONSIN DEPT OF TRANSPORTATION

APPROVED Matthew R Rauch
for State Traffic Engineer

DATE 3/9/11 PLATE NO. M4-8A.2

PROJECT NO: | HWY: | COUNTY: | SHEET NO: 115 | E

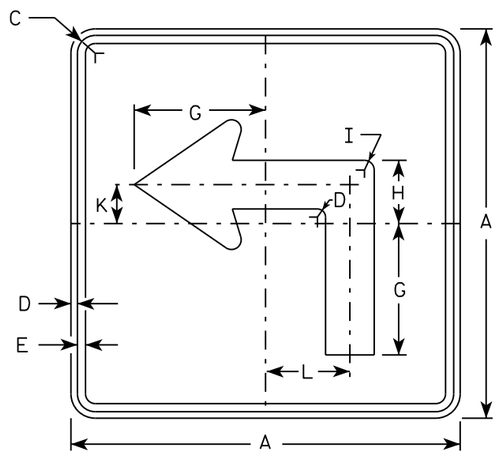

M5-1L
MM5-1L
MO5-1L
MP5-1L

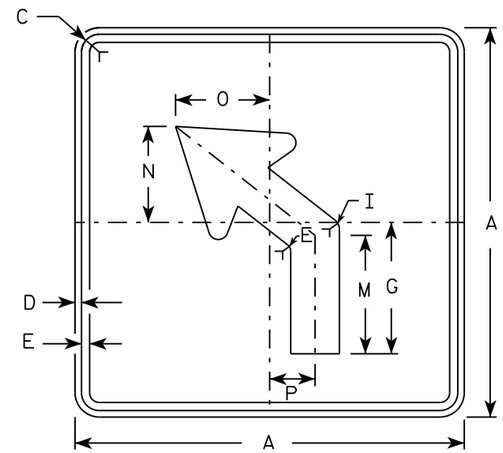

M5-2L
MM5-2L
MO5-2L
MP5-2L

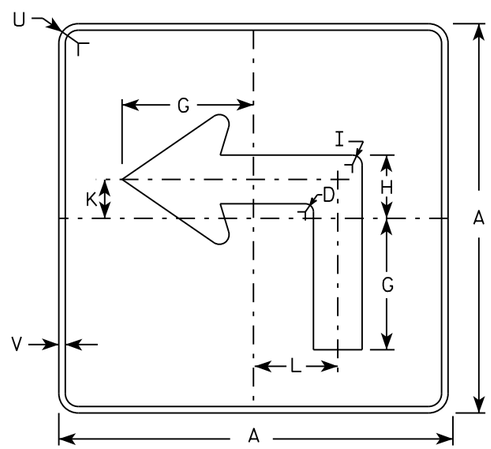

MB5-1L
MK5-1L
MN5-1L
MR5-1L

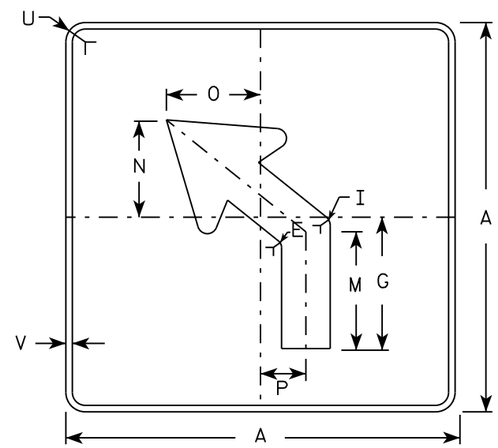

MB5-2L
MK5-2L
MN5-2L
MR5-2L

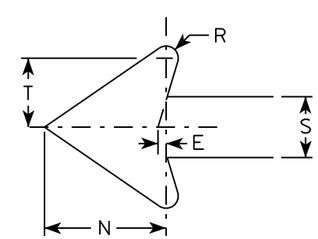

NOTES

1. Signs are Type II - Type H reflective except as shown
2. Color:
   Background - See note 4
   Message - See note 4
3. Corners may be square or rounded when base material is plywood but borders shall be rounded as shown. When base material is metal, the corners and borders shall be rounded.
4. M5-1 and M5-2 Background - White
   Message - Black
   MB5-1 and MB5-2 Background - Blue
   Message - White
   MK5-1 and MK5-2 Background - Green
   Message - White
   MM5-1 and MM5-2 Background - White
   Message - Green
   MN5-1 and MN5-2 Background - Brown
   Message - White
   MO5-1 and MO5-2 Background - Orange - Type F Reflective
   Message - Black
   MP5-1 and MP5-2 Background - White - Type H Reflective
   Message - Blue
   MR5-1 and MR5-2 Background - Brown
   Message - Yellow
5. M5-1R same as M5-1L except arrow points right.
6. M5-2R same as M5-2L except arrow tilts right.

SIZE	A	B	C	D	E	F	G	H	I	J	K	L	M	N	O	P	Q	R	S	T	U	V	W	X	Y	Z	Area sq. ft.
1																											
2	21		1 1/8	3/8	3/8		7	3 3/8	5/8		2 1/8	4 1/2	6 3/8	5 1/4	5	2 1/2		1/2	2 5/8	3	1 1/2	1/2					3.06
3	30		1 3/8	1/2	5/8		10 1/8	4 7/8	7/8		3	6 1/2	9 1/8	7 1/2	7 1/4	3 1/2		3/4	3 3/4	4 1/4	1 7/8	1/2					6.25
4	30		1 3/8	1/2	5/8		10 1/8	4 7/8	7/8		3	6 1/2	9 1/8	7 1/2	7 1/4	3 1/2		3/4	3 3/4	4 1/4	1 7/8	1/2					6.25
5	30		1 3/8	1/2	5/8		10 1/8	4 7/8	7/8		3	6 1/2	9 1/8	7 1/2	7 1/4	3 1/2		3/4	3 3/4	4 1/4	1 7/8	1/2					6.25

STANDARD SIGN
M5-1 & M5-2

WISCONSIN DEPT OF TRANSPORTATION

APPROVED Matthew R Rauch
for State Traffic Engineer

DATE 10/15/15 PLATE NO. M5-1.13

PROJECT NO: | HWY: | COUNTY: | SHEET NO: E

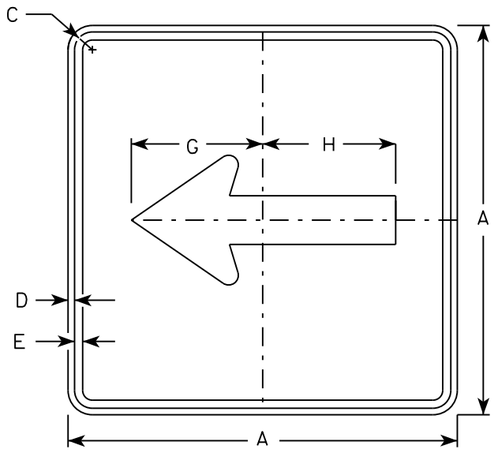

M6-1
MM6-1
MO6-1
MP6-1

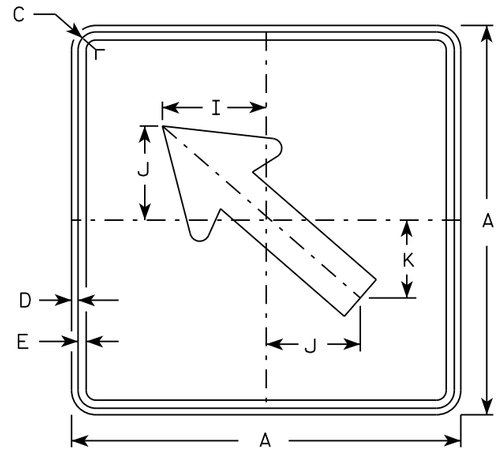

M6-2
MM6-2
MO6-2
MP6-2

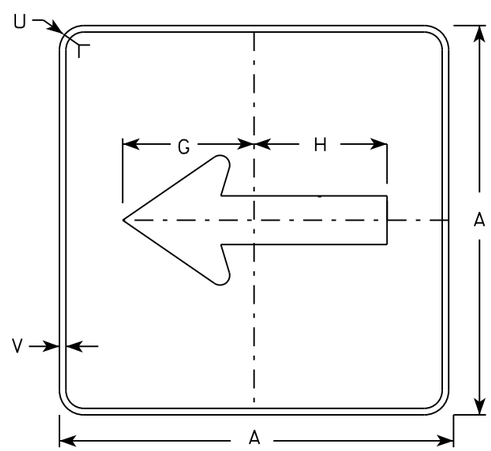

MB6-1
MK6-1
MN6-1
MR6-1

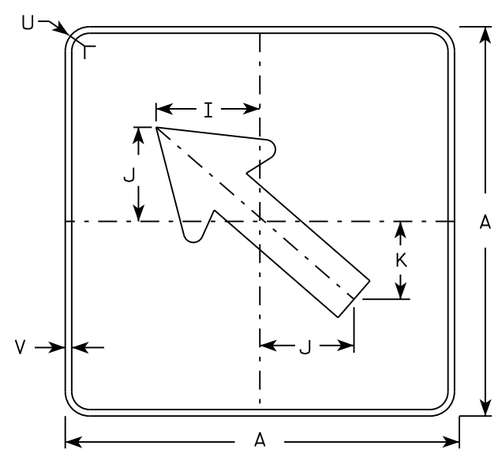

MB6-2
MK6-2
MN6-2
MR6-2

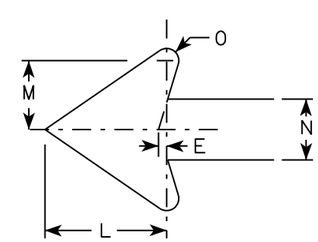

NOTES

1. Signs are Type II - Type H except as Shown
2. Color:
   Background - See note 4
   Message - See note 4
3. Corners may be square or rounded when base material is plywood but borders shall be rounded as shown. When base material is metal, the corners and borders shall be rounded.
4. M6-1 and M6-2 Background - White
   Message - Black
   MB6-1 and MB6-2 Background - Blue
   Message - White
   MK6-1 and MK6-2 Background - Green
   Message - White
   MM6-1 and MM6-2 Background - White
   Message - Green
   MN6-1 and MN6-2 Background - Brown
   Message - White
   MO6-1 and MO6-2 Background - Orange - Type F Reflective
   Message - Black
   MP6-1 and MP6-2 Background - White
   Message - Blue
   MR6-1 and MR6-2 Background - Brown
   Message - Yellow

SIZE	A	B	C	D	E	F	G	H	I	J	K	L	M	N	O	P	Q	R	S	T	U	V	W	X	Y	Z	Area sq. ft.
1																											
2	21		1 1/8	3/8	3/8		7 1/2	7 1/8	5 5/8	5	4 1/4	5 1/4	3	2 5/8	1/2						1 1/2	1/2					3.06
3	30		1 3/8	1/2	5/8		10 3/4	10 1/4	8	7 1/4	6	7 1/2	4 1/4	3 3/4	3/4						1 7/8	1/2					6.25
4	30		1 3/8	1/2	5/8		10 3/4	10 1/4	8	7 1/4	6	7 1/2	4 1/4	3 3/4	3/4						1 7/8	1/2					6.25
5	30		1 3/8	1/2	5/8		10 3/4	10 1/4	8	7 1/4	6	7 1/2	4 1/4	3 3/4	3/4						1 7/8	1/2					6.25

STANDARD SIGN
M6-1 & M6-2
SERIES

WISCONSIN DEPT OF TRANSPORTATION

APPROVED Matthew R Rauch
for State Traffic Engineer

DATE 10/15/15 PLATE 117 M6-1.15

PROJECT NO: | HWY: | COUNTY: | SHEET NO: | E

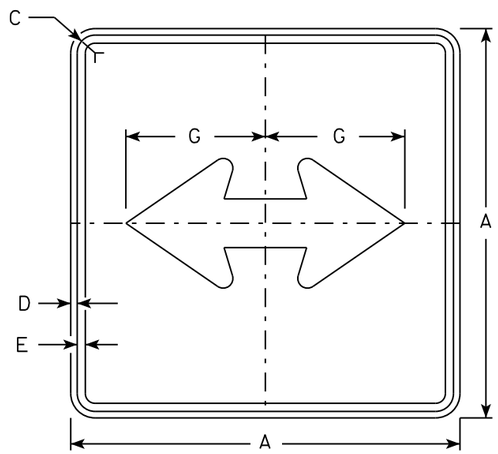

M6-4
MM6-4
MO6-4
MP6-4

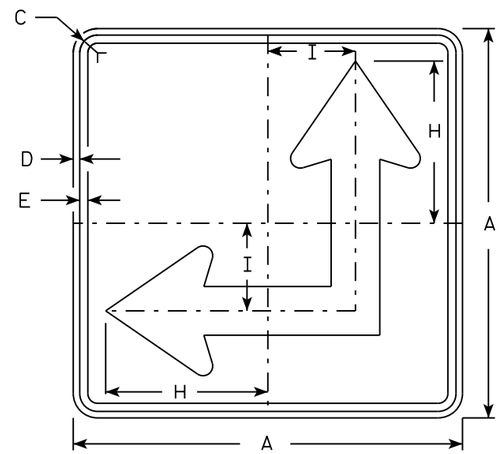

M6-6
MM6-6
MO6-6
MP6-6

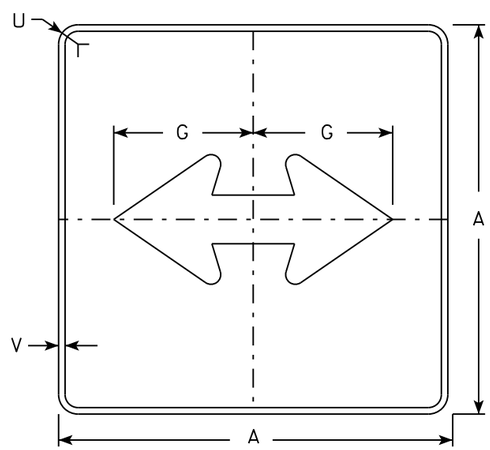

MB6-4
MK6-4
MN6-4
MR6-4

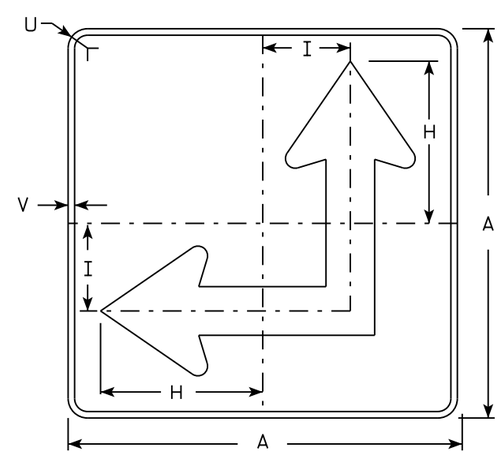

MB6-6
MK6-6
MN6-6
MR6-6

NOTES

1. Signs are Type II - Type H except as Shown
2. Color:
   Background - See Note 4
   Message - See Note 4
3. Corners may be square or rounded when base material is plywood but borders shall be rounded as shown. When base material is metal, the corners and borders shall be rounded.
4. M6-4 and M6-6 Background - White
   Message - Black
   MB6-4 and MB6-6 Background - Blue
   Message - White
   MK6-4 and MK6-6 Background - Green
   Message - White
   MM6-4 and MM6-6 Background - White
   Message - Green
   MN6-4 and MN6-6 Background - Brown
   Message - White
   MO6-4 and MO6-6 Background - Orange - Type F Reflective
   Message - Black
   MP6-4 and MP6-6 Background - White
   Message - Blue
   MR6-4 and MR6-6 Background - Brown
   Message - Yellow
5. M6-6R same as M6-6L except arrow points ahead and right.

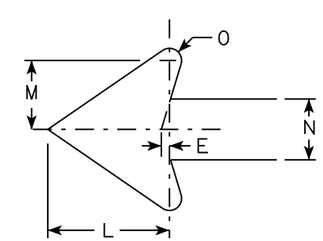

SIZE	A	B	C	D	E	F	G	H	I	J	K	L	M	N	O	P	Q	R	S	T	U	V	W	X	Y	Z	Area sq. ft.
1																											
2	21		1 1/8	3/8	3/8		7 1/2	8 3/4	4 1/4			5 1/4	3	2 5/8	1/2						1 1/2	1/2					3.06
3	30		1 3/8	1/2	5/8		10 3/4	12 1/2	6 3/4			7 1/2	4 1/4	3 3/4	3/4						1 7/8	1/2					6.25
4	30		1 3/8	1/2	5/8		10 3/4	12 1/2	6 3/4			7 1/2	4 1/4	3 3/4	3/4						1 7/8	1/2					6.25
5	30		1 3/8	1/2	5/8		10 3/4	12 1/2	6 3/4			7 1/2	4 1/4	3 3/4	3/4						1 7/8	1/2					6.25

STANDARD SIGN
M6-4 & M6-6
SERIES

WISCONSIN DEPT OF TRANSPORTATION

APPROVED Matthew R Rauch
for State Traffic Engineer

DATE 10/15/15 PLATE M6-4.10

PROJECT NO: HWY: COUNTY: SHEET NO: E

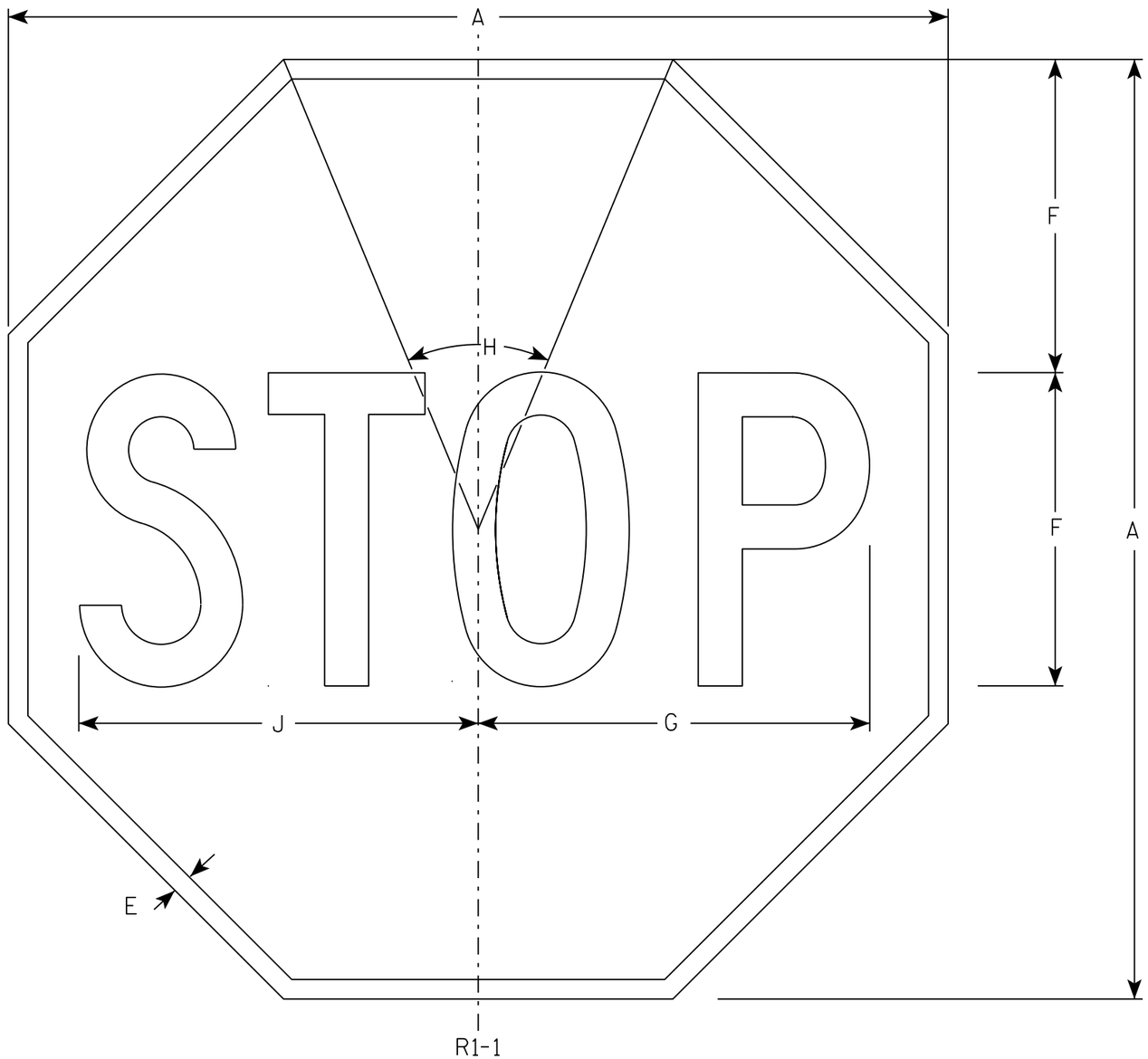

NOTES

1. Sign is Type II - Type H Reflective - reference WIS DOT Standard Specification for HIGHWAY and STRUCTURE CONSTRUCTION latest edition.
2. Color:
   Background - Red
   Message - White
3. Message Series - C

SIZE	A	B	C	D	E	F	G	H	I	J	K	L	M	N	O	P	Q	R	S	T	U	V	W	X	Y	Z	Area sq. ft.
1	30				5/8	10	12 1/2	45°		12 3/4																	5.18
2S	30				5/8	10	12 1/2	45°		12 3/4																	5.18
2M	36				3/4	12	15	45°		15 3/8																	7.46
3	36				3/4	12	15	45°		15 3/8																	7.46
4	48				1	16	20	45°		20 1/2																	13.25
5	48				1	16	20	45°		20 1/2																	13.25
6	18				3/8	6	7 3/4	45°		7 3/4																	1.86
7	12				1/4	4	5	45°		5 1/8																	0.78

STANDARD SIGN
R1-1

WISCONSIN DEPT OF TRANSPORTATION

APPROVED Matthew R Rauch
for State Traffic Engineer

DATE 11/12/15 PLATE NO. R1-1.13

PROJECT NO:	HWY:	COUNTY:		SHEET NO:	E

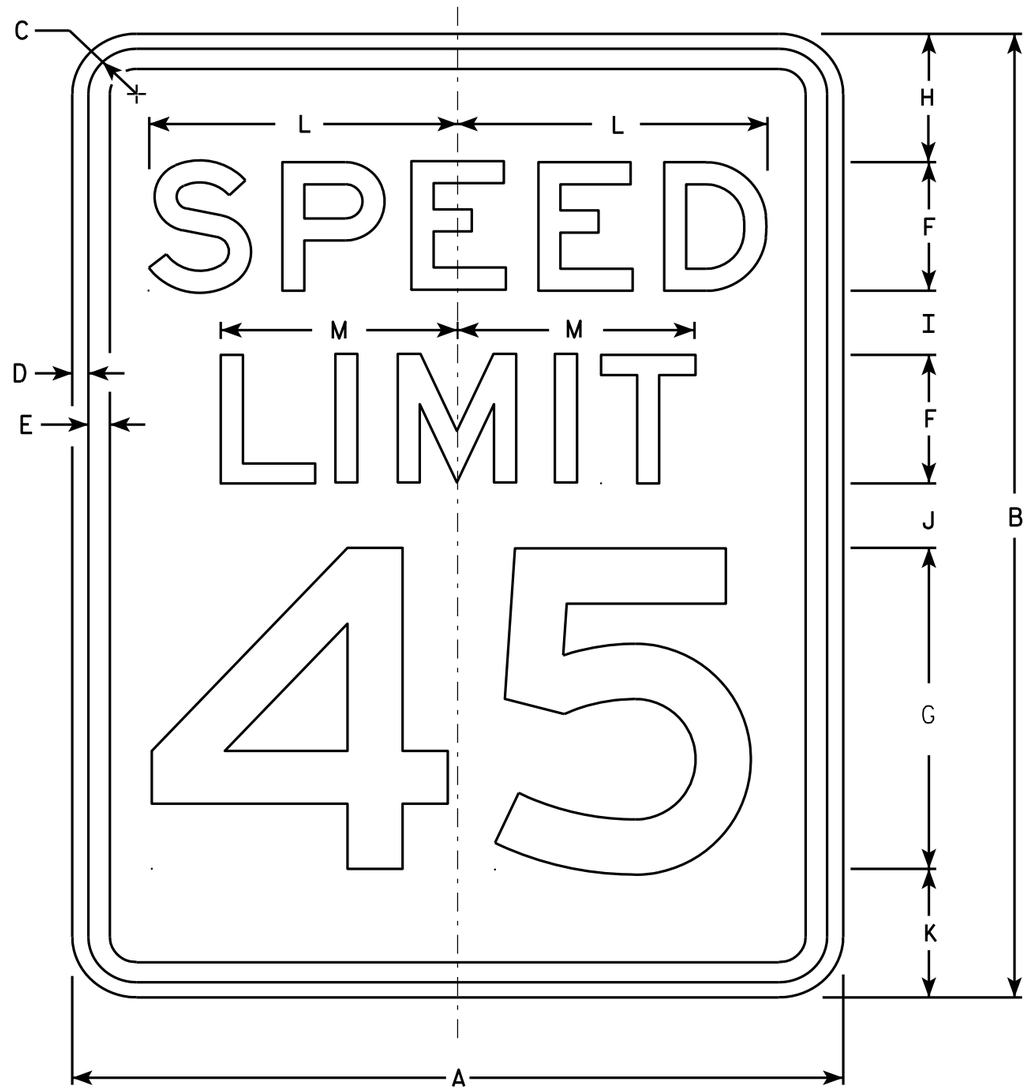

R2-1

NOTES

1. Sign is Type II - Type H Reflective - reference WIS DOT Standard Specification for HIGHWAY and STRUCTURE CONSTRUCTION latest edition.
2. Color:
   Background - White
   Message - Black
3. Message Series - E
4. Corners may be square or rounded when base material is plywood but borders shall be rounded as shown. When base material is metal, the corners and borders shall be rounded.
5. Substitute appropriate numerals and optically adjust spacing to achieve proper balance.

SIZE	A	B	C	D	E	F	G	H	I	J	K	L	M	N	O	P	Q	R	S	T	U	V	W	X	Y	Z	Area sq. ft.
1	18	24	1 1/8	3/8	1/2	3	8	3	2	2	3	7 1/4	5 1/2														3.0
2S	24	30	1 1/8	3/8	1/2	4	10	3	2 1/4	3 3/8	3 3/8	9 5/8	7 3/8														5.0
2M	30	36	1 3/8	1/2	5/8	5	12	5	2 1/2	2 1/2	4	12	9 1/4														7.5
3	36	48	1 3/8	1/2	5/8	6	14	6	5	5	6	14 3/8	11														12.0
4	36	48	1 3/8	1/2	5/8	6	14	6	5	5	6	14 3/8	11														12.0
5	48	60	2 1/4	3/4	1	8	20	6	4 1/2	6 3/4	6 3/4	19 1/4	14 5/8														20.0

STANDARD SIGN
R2-1

WISCONSIN DEPT OF TRANSPORTATION

APPROVED Matthew R Rauch
for State Traffic Engineer

DATE 5/26/10 PLATE NO. R2-1.13

PROJECT NO: | HWY: | COUNTY: | SHEET NO: 120 | E

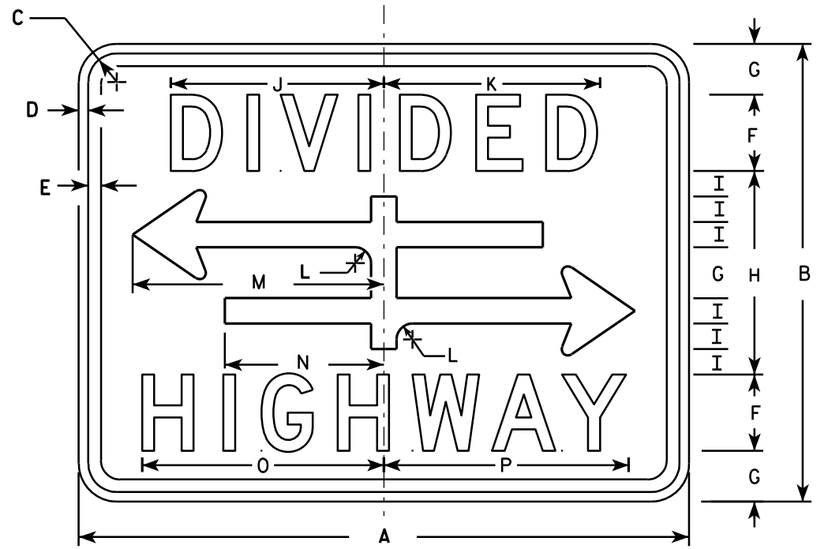

R6-3

NOTES

1. Sign is Type II - Type H Reflective - reference WIS DOT Standard Specification for HIGHWAY and STRUCTURE CONSTRUCTION latest edition.
2. Color:
   Background - White
   Message - Black
3. Message Series - D
4. Corners may be square or rounded when base material is plywood but borders shall be rounded as shown. When base material is metal, the corners and borders shall be rounded.

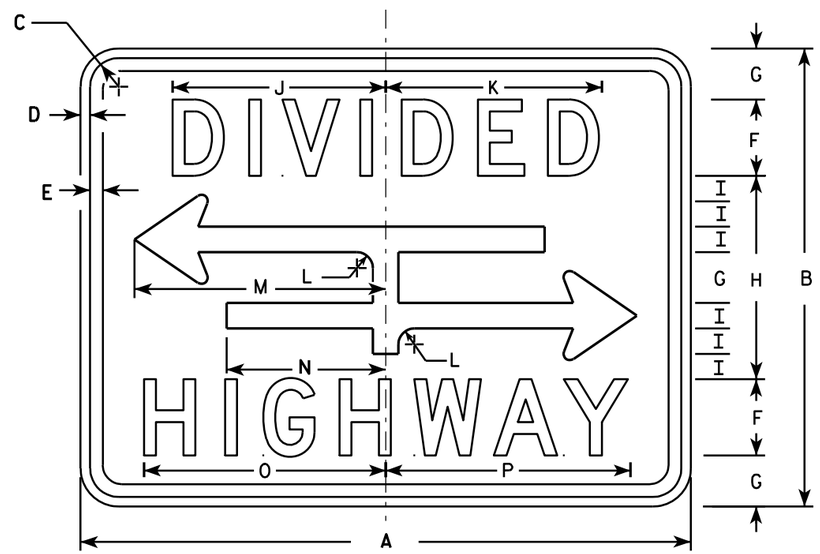

R6-3A

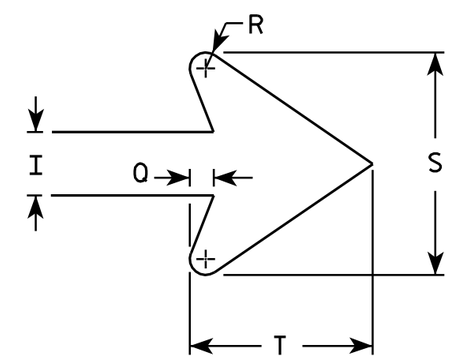

ARROW DETAIL

SIZE	A	B	C	D	E	F	G	H	I	J	K	L	M	N	O	P	Q	R	S	T	U	V	W	X	Y	Z	Area sq. ft.
1	24	18	1 1/8	3/8	3/8	3	2	8	1	8 3/8	8 1/2	5/8	9 7/8	6 1/4	9 1/2	9 5/8	3/8	1/4	3 1/2	2 3/4							3.0
2S	30	24	1 1/8	3/8	1/2	4	2 5/8	10 3/4	1 3/8	10 1/2	10 5/8	7/8	12 1/2	7 7/8	12 1/4	12 3/8	1/2	3/8	4 5/8	3 5/8							5.0
2M	30	24	1 1/8	3/8	1/2	4	2 5/8	10 3/4	1 3/8	10 1/2	10 5/8	7/8	12 1/2	7 7/8	12 1/4	12 3/8	1/2	3/8	4 5/8	3 5/8							5.0
3																											
4																											
5																											

STANDARD SIGN
R6-3 & R6-3A

WISCONSIN DEPT OF TRANSPORTATION

APPROVED Matthew R Rauch
for State Traffic Engineer

DATE 3/31/2011 PLATE NO. R6-3.5

PROJECT NO:

SHEET NO: 121 E

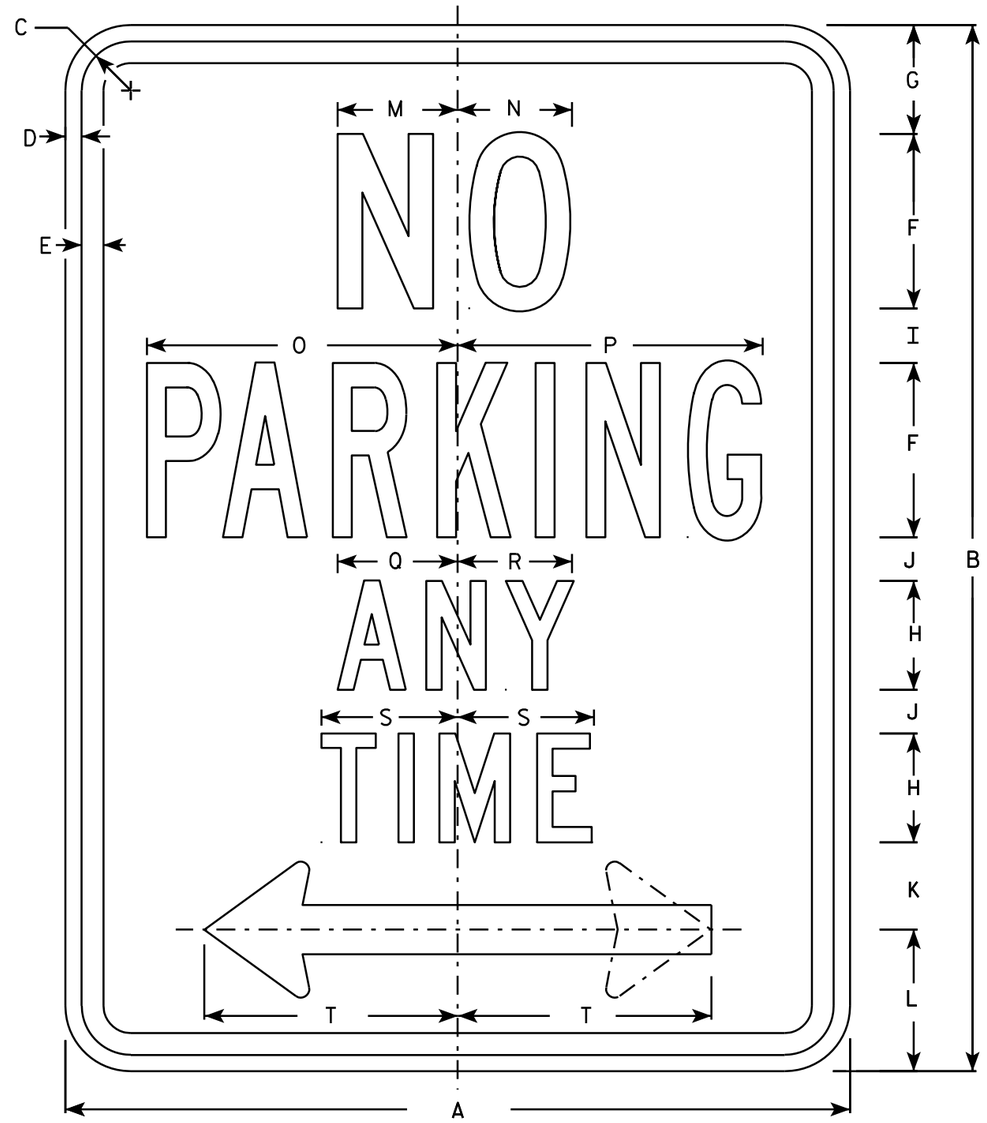

R7-1

NOTES

1. Sign is Type II - Type H Reflective - reference WIS DOT Standard Specification for HIGHWAY and STRUCTURE CONSTRUCTION latest edition.
2. Color:
   Background - White
   Message - Red
3. Message Series - See Note 5
4. Corners may be square or rounded when base material is plywood but borders shall be rounded as shown. When base material is metal, the corners and borders shall be rounded.
5. Lines 1, 3 and 4 are series C, line 2 is series B.
6. R7-1D (double arrow)
   R7-1L (left arrow)
   R7-1R (right arrow)

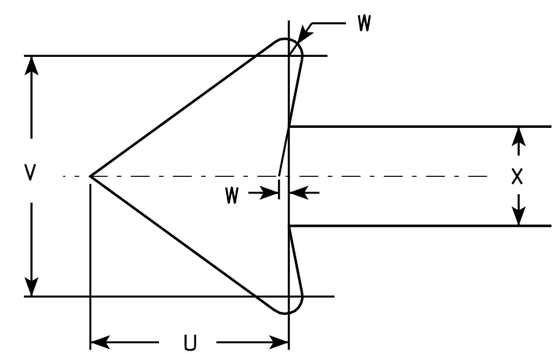

SIZE	A	B	C	D	E	F	G	H	I	J	K	L	M	N	O	P	Q	R	S	T	U	V	W	X	Y	Z	Area sq. ft.
1	12	18	1 1/8	3/8	3/8	3	1 7/8	2	7/8	5/8	1 1/2	2 1/2	2	2	4 7/8	4 7/8	2 1/4	2 1/8	2 1/2	3 7/8	1 1/2	1 3/4	1/8	3/4			1.5
2S	18	24	1 1/8	3/8	1/2	4	2 1/2	2 1/2	1 1/4	1	2	3 1/4	2 3/4	2 5/8	7 1/8	7	2 3/4	2 5/8	3 1/8	5 7/8	2 1/4	2 5/8	1/4	1 1/8			3.0
2M	24	30	1 1/8	3/8	1/2	5	3	3	2	1 1/4	2 1/2	4	3 1/4	3 3/8	9 1/4	9 1/4	3 1/4	3 1/4	3 3/4	7 3/4	3	3 1/2	1/4	1 1/2			5.0
3	24	30	1 1/8	3/8	1/2	5	3	3	2	1 1/4	2 1/2	4	3 1/4	3 3/8	9 1/4	9 1/4	3 1/4	3 1/4	3 3/4	7 3/4	3	3 1/2	1/4	1 1/2			5.0
4																											
5																											

STANDARD SIGN
R7-1

WISCONSIN DEPT OF TRANSPORTATION

APPROVED Matthew R Rauch
for State Traffic Engineer

DATE 3/31/2011 PLATE NO. R7-1.9

PROJECT NO:	HWY:	COUNTY:		SHEET NO: 122	E

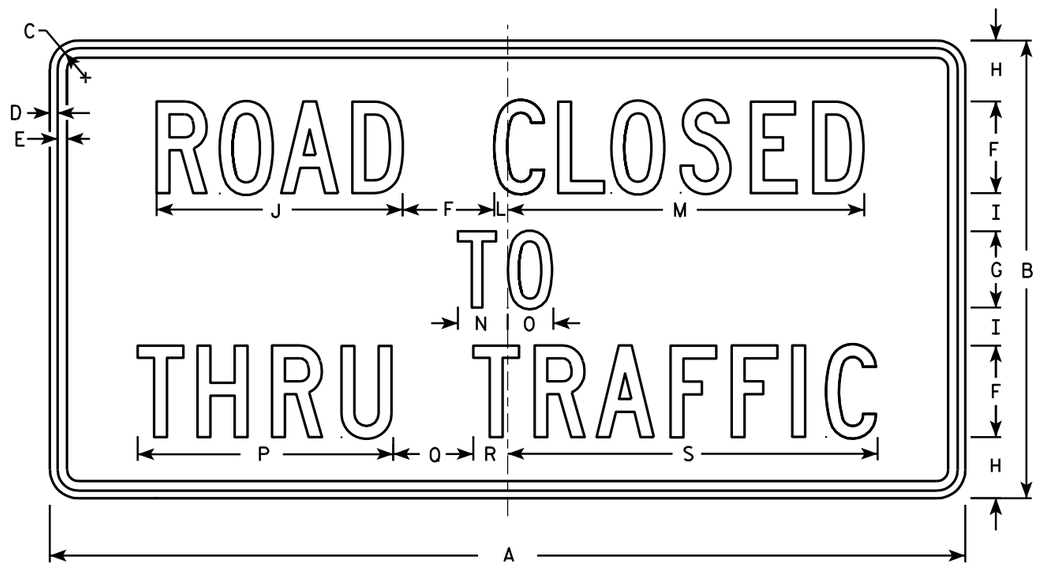

R11-4

NOTES

1. Sign is Type II - Type H Reflective - reference WIS DOT Standard Specification for HIGHWAY and STRUCTURE CONSTRUCTION latest edition.
2. Color:
   Background - White
   Message - Black
3. Message Series - C
4. Corners may be square or rounded when base material is plywood but borders shall be rounded as shown. When base material is metal, the corners and borders shall be rounded.

SIZE	A	B	C	D	E	F	G	H	I	J	K	L	M	N	O	P	Q	R	S	T	U	V	W	X	Y	Z	Area sq. ft.
1																											
2S	60	30	1 3/8	1/2	5/8	6	5	4	2 1/2	16 1/8		7/8	23 3/8	3 1/4	3	16 3/4	5 1/4	2 1/4	24 1/4								12.5
2M	60	30	1 3/8	1/2	5/8	6	5	4	2 1/2	16 1/8		7/8	23 3/8	3 1/4	3	16 3/4	5 1/4	2 1/4	24 1/4								12.5
3																											
4																											
5																											

STANDARD SIGN
R11 - 4

WISCONSIN DEPT OF TRANSPORTATION

APPROVED Matthew R Rauch
for State Traffic Engineer

DATE 4/1/11 PLATE NO. R11-4.3

PROJECT NO: | HWY: | COUNTY: | SHEET NO: 123 | E

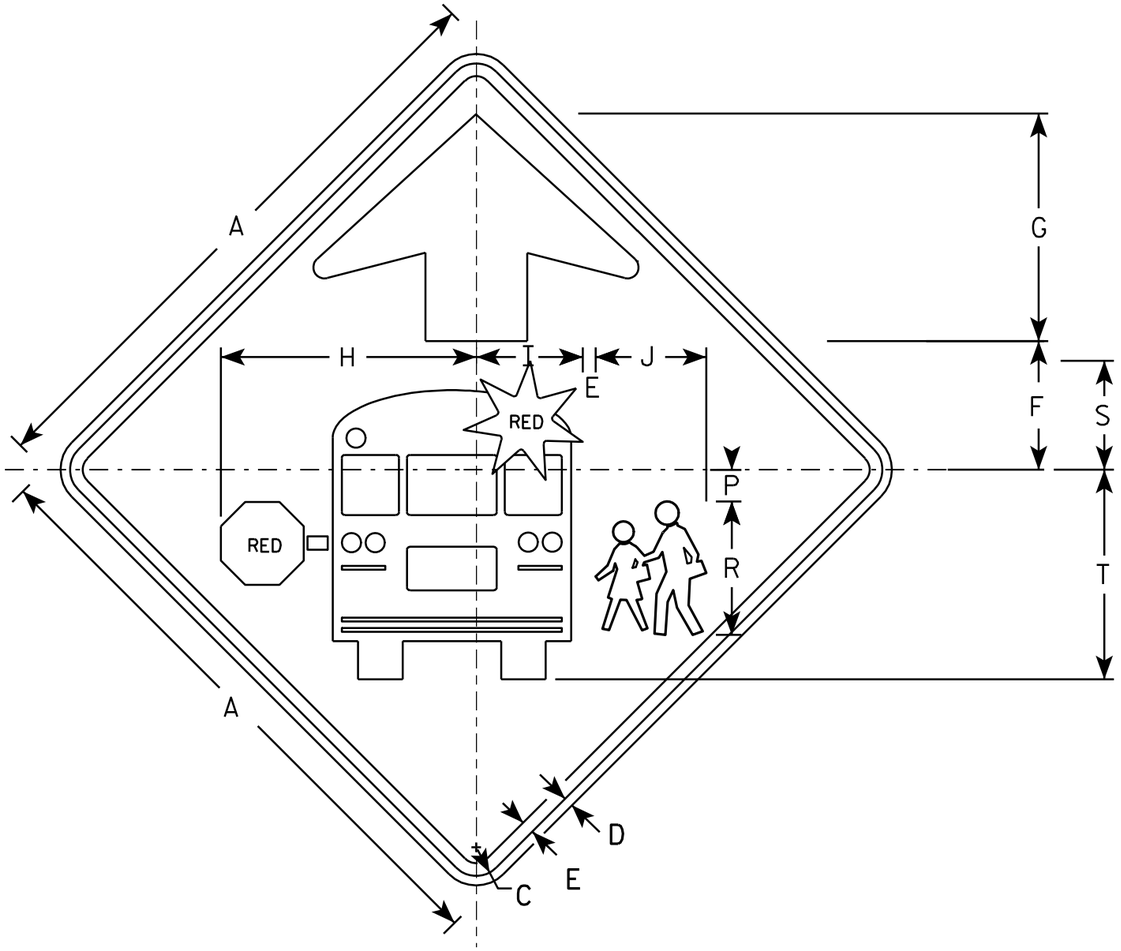

S3-1

NOTES

1. All Signs Type II - Type F Reflective - reference WIS DOT Standard Specification for HIGHWAY and STRUCTURE CONSTRUCTION latest edition.
2. Color:
   Background - YELLOW-GREEN
   Message - BLACK except as noted
   Circles except PEDS- RED BACKGROUND
3. Corners may be square or rounded when base material is plywood but borders shall be rounded as shown. When base material is metal, the corners and borders shall be rounded.

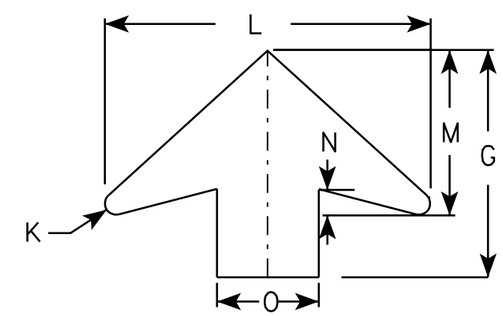

ARROW DETAIL

SIZE	A	B	C	D	E	F	G	H	I	J	K	L	M	N	O	P	Q	R	S	T	U	V	W	X	Y	Z	Area sq. ft.
1	30		1 3/8	1/2	5/8	6 1/4	11 1/4	12 1/2	5 1/4	5 1/2	1/2	16	8	1 1/4	5	1 1/2		6 5/8	5 3/8	10 3/8							6.25
2	36		1 5/8	5/8	3/4	7 1/2	13 1/2	15 1/8	6 1/4	6 1/2	5/8	19 1/4	9 3/4	1 5/8	6	1 7/8		7 7/8	6 3/8	12 3/8							9.0
3	48		2 1/4	3/4	1	10	17 7/8	20 1/8	8 3/8	8 3/4	7/8	25 5/8	13	2	8	2 1/2		10 1/2	8 1/2	16 1/2							16.0
4	48		2 1/4	3/4	1	10	17 7/8	20 1/8	8 3/8	8 3/4	7/8	25 5/8	13	2	8	2 1/2		10 1/2	8 1/2	16 1/2							16.0
5																											

STANDARD SIGN
S3-1

WISCONSIN DEPT OF TRANSPORTATION

APPROVED Matthew R Rauch
for State Traffic Engineer

DATE 6/8/10 PLATE NO. S3-1.6

PROJECT NO:

SHEET NO: 124 E

NOTES

1. Sign is Type II - Type F Reflective - reference WIS DOT Standard Specification for HIGHWAY and STRUCTURE CONSTRUCTION latest edition.
2. Color:
   Background - Yellow
   Message - Black
3. Corners may be square or rounded when base material is plywood but borders shall be rounded as shown. When base material is metal, the corners and borders shall be rounded.
4. W1-2L is the same as W1-2R except the arrow is reversed along the vertical centerline.

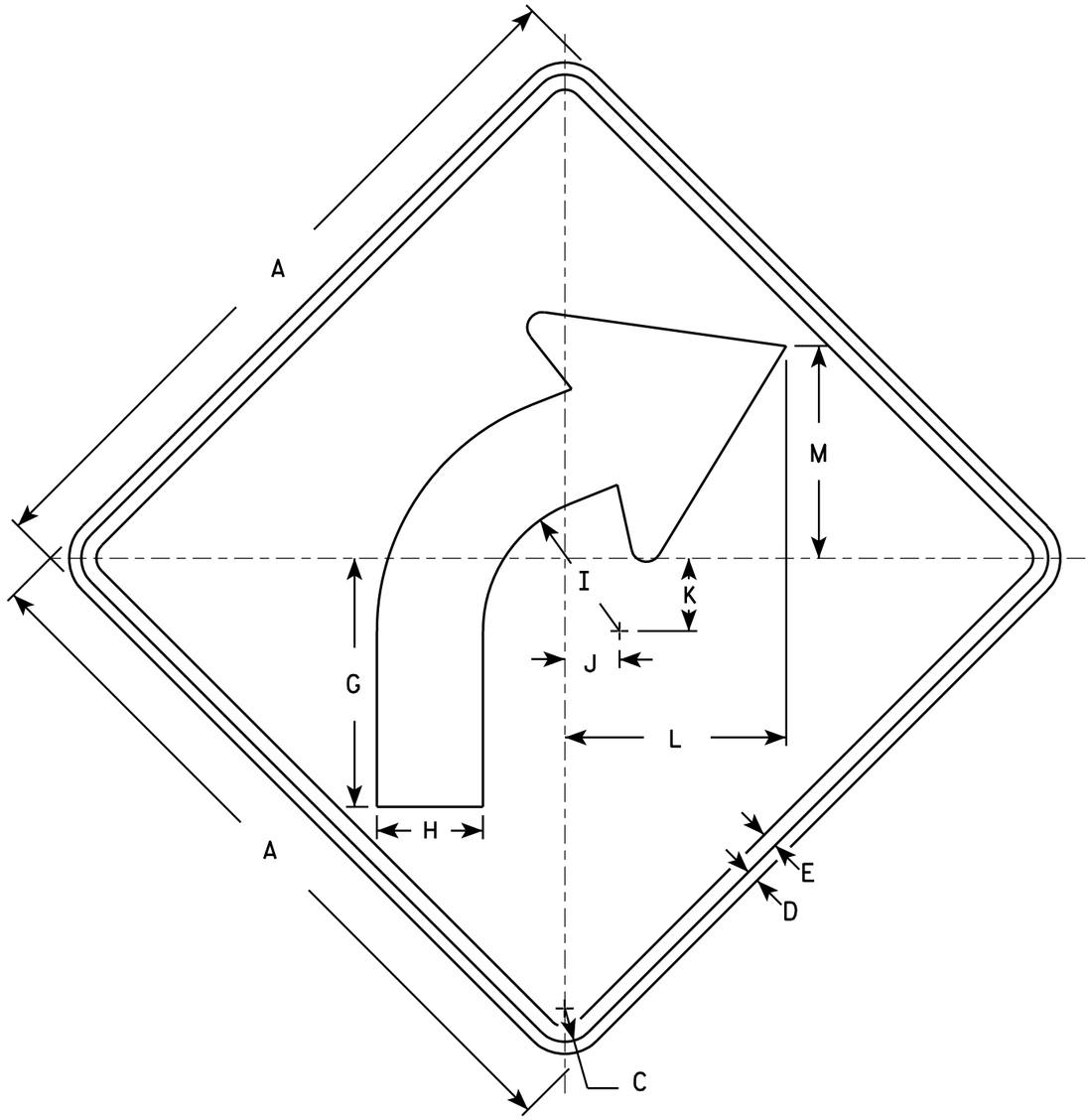

W1-2R

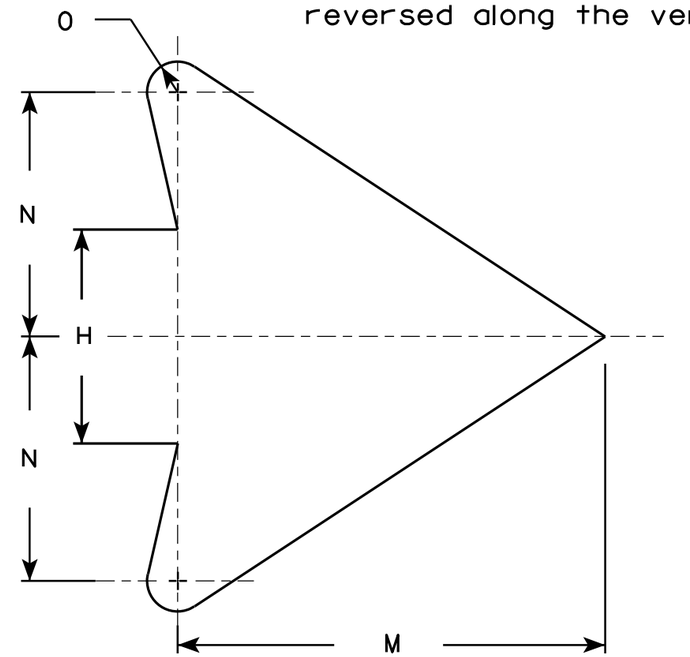

ARROW DETAIL

SIZE	A	B	C	D	E	F	G	H	I	J	K	L	M	N	O	P	Q	R	S	T	U	V	W	X	Y	Z	Area sq. ft.
1	24		1 1/8	3/8	1/2		8 1/4	3 1/2	4 1/2	1 3/4	2 3/8	7 1/4	7	4	1/2												4.0
2S	30		1 3/8	1/2	5/8		10 1/4	4 3/8	5 5/8	2 1/4	3	9 1/8	8 3/4	5	5/8												6.25
2M	36		1 5/8	5/8	3/4		12 3/8	5 1/4	6 3/4	2 5/8	3 1/2	10 7/8	10 1/2	6	3/4												9.0
3	36		1 5/8	5/8	3/4		12 3/8	5 1/4	6 3/4	2 5/8	3 1/2	10 7/8	10 1/2	6	3/4												9.0
4	36		1 5/8	5/8	3/4		12 3/8	5 1/4	6 3/4	2 5/8	3 1/2	10 7/8	10 1/2	6	3/4												9.0
5	48		2 1/4	3/4	1		16 1/2	7	9	3 1/2	4 5/8	14 1/2	14	8	1												16.0

STANDARD SIGN
W1-2

WISCONSIN DEPT OF TRANSPORTATION

APPROVED Matthew R Rauch
for State Traffic Engineer

DATE 5/15/12 PLATE NO. W1-2.10

PROJECT NO:	HWY:	COUNTY:		SHEET NO: 125	E

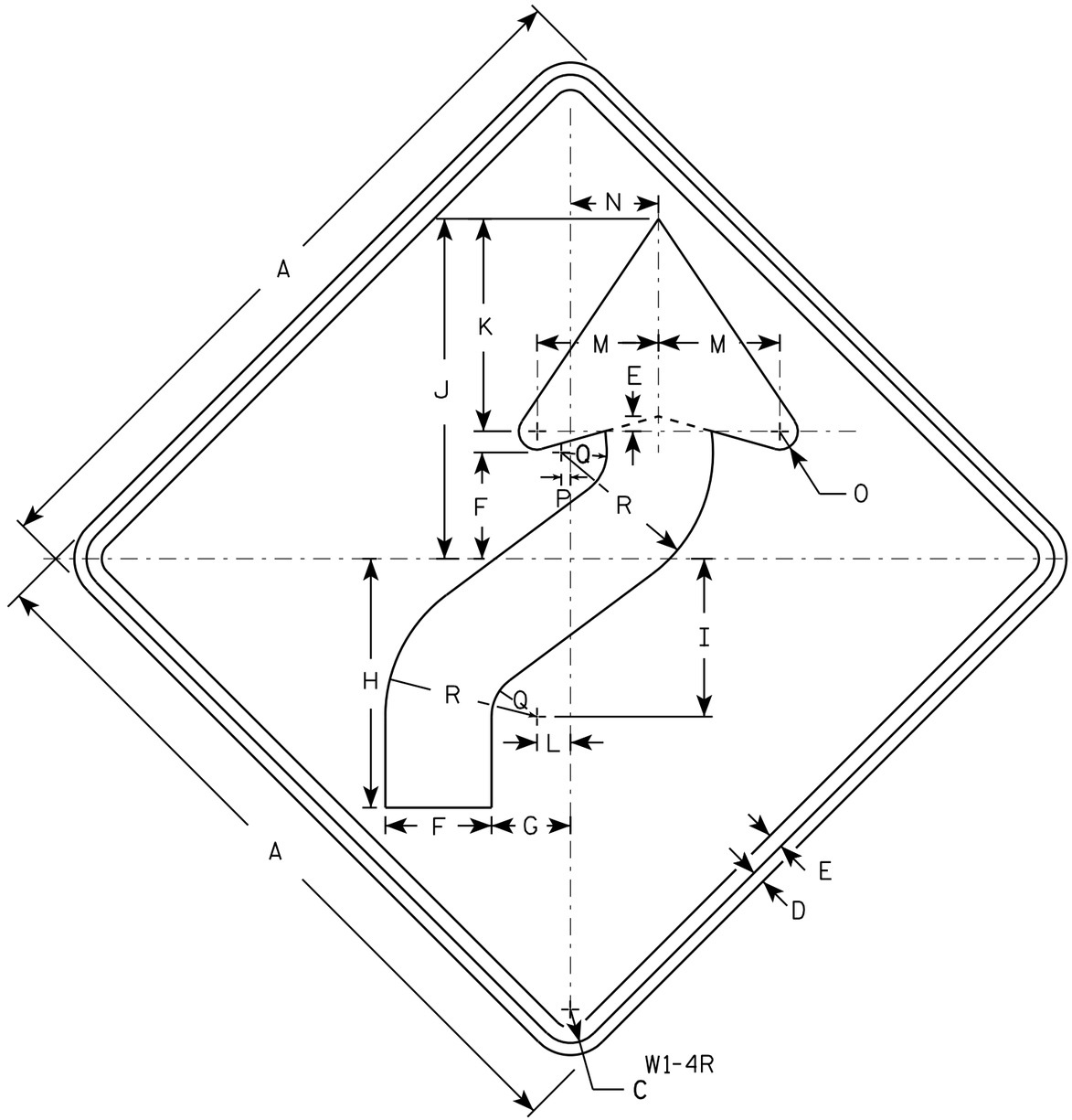

NOTES

1. Sign is Type II - Type F Reflective - reference WIS DOT Standard Specification for HIGHWAY and STRUCTURE CONSTRUCTION latest edition.
2. Color:
   Background - Yellow
   Message - Black
3. Corners may be square or rounded when base material is plywood but borders shall be rounded as shown. When base material is metal, the corners and borders shall be rounded.
4. W1-4L is the same as W1-4R except the arrow is reversed along the vertical centerline.

SIZE	A	B	C	D	E	F	G	H	I	J	K	L	M	N	O	P	Q	R	S	T	U	V	W	X	Y	Z	Area sq. ft.
1	24		1 1/8	3/8	1/2	3 1/2	2 5/8	8 1/4	5 1/4	11 1/4	7	1 1/8	4	3	5/8	1/4	1 1/2	5									4.0
2S	30		1 3/8	1/2	5/8	4 3/8	3 1/4	10 1/4	6 1/2	14	8 3/4	1 3/8	5	3 5/8	3/4	3/8	1 7/8	6 1/4									6.25
2M	36		1 5/8	5/8	3/4	5 1/4	4	12 3/8	7 7/8	16 7/8	10 1/2	1 5/8	6	4 1/2	1	1/2	2 1/4	7 1/2									9.0
3	36		1 5/8	5/8	3/4	5 1/4	4	12 3/8	7 7/8	16 7/8	10 1/2	1 5/8	6	4 1/2	1	1/2	2 1/4	7 1/2									9.0
4	36		1 5/8	5/8	3/4	5 1/4	4	12 3/8	7 7/8	16 7/8	10 1/2	1 5/8	6	4 1/2	1	1/2	2 1/4	7 1/2									9.0
5	48		2 1/4	3/4	1	7	5 1/4	16 1/2	10 1/2	22 1/2	14	2 1/4	8	6	1 1/4	5/8	3	10									16.0

STANDARD SIGN
W1-4

WISCONSIN DEPT OF TRANSPORTATION

APPROVED Matthew R Rauch
for State Traffic Engineer

DATE 5/17/12 PLATE NO. W1-4.11

PROJECT NO: | HWY: | COUNTY: | SHEET NO: 126 | E

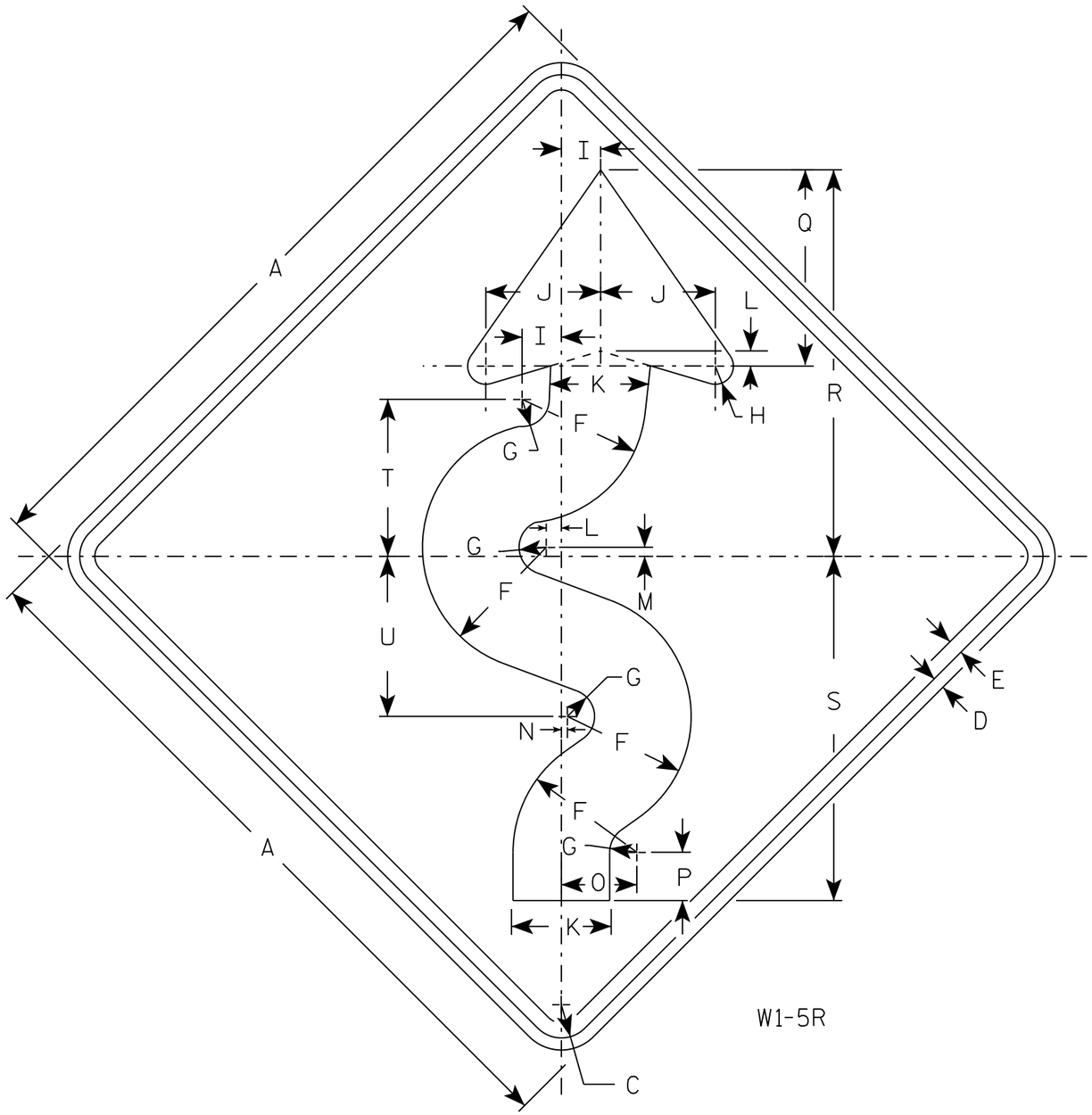

W1-5R

NOTES

1. Sign is Type II - Type F Reflective
2. Color:
   Background - Yellow
   Message - Black
3. W1-5L is the same as W1-5R except the arrow is reversed along the vertical centerline.
4. If used with W13-1 of 30 MPH or less, use 36" sign for Size 2S.

SIZE	A	B	C	D	E	F	G	H	I	J	K	L	M	N	O	P	Q	R	S	T	U	V	W	X	Y	Z	Area sq. ft.
1	24		1 1/8	3/8	1/2	4 1/8	7/8	5/8	1 1/4	3 3/4	3 1/4	1/2	1/4	1/8	2 1/2	1 5/8	6 1/2	12 3/4	11 3/8	5 1/4	5 1/4						4.0
2S	30		1 3/8	1/2	5/8	5 1/8	1 1/8	3/4	1 5/8	4 3/4	4 1/8	5/8	3/8	1/4	3 1/8	2	8 1/8	16	14 1/4	6 1/2	6 5/8						6.25
2M	36		1 5/8	5/8	3/4	6 1/4	1 3/8	1	1 7/8	5 5/8	4 7/8	3/4	3/8	1/4	3 3/4	2 7/8	9 3/4	19 1/8	17 1/8	7 3/4	7 7/8						9.0
3	36		1 5/8	5/8	3/4	6 1/4	1 3/8	1	1 7/8	5 5/8	4 7/8	3/4	3/8	1/4	3 3/4	2 7/8	9 3/4	19 1/8	17 1/8	7 3/4	7 7/8						9.0
4	36		1 5/8	5/8	3/4	6 1/4	1 3/8	1	1 7/8	5 5/8	4 7/8	3/4	3/8	1/4	3 3/4	2 7/8	9 3/4	19 1/8	17 1/8	7 3/4	7 7/8						9.0
5	48		2 1/4	3/4	1	8 1/4	1 3/4	1 1/4	2 1/2	7 1/2	6 1/2	1	1/2	3/8	5	3 1/4	13	25 1/2	22 3/4	10 3/8	10 1/2						16.0

STANDARD SIGN
W1-5

WISCONSIN DEPT OF TRANSPORTATION

APPROVED Matthew R Rauch
for State Traffic Engineer

DATE 8/1/16 PLATE NO. W1-5.9

PROJECT NO: | HWY: | COUNTY: | SHEET NO: E

NOTES

1. Sign is Type II - Type F Reflective - reference WIS DOT Standard Specification for HIGHWAY and STRUCTURE CONSTRUCTION latest edition.
2. Color:
   Background - Yellow
   Message - Black
3. Corners may be square or rounded when base material is plywood but borders shall be rounded as shown. When base material is metal, the corners and borders shall be rounded.

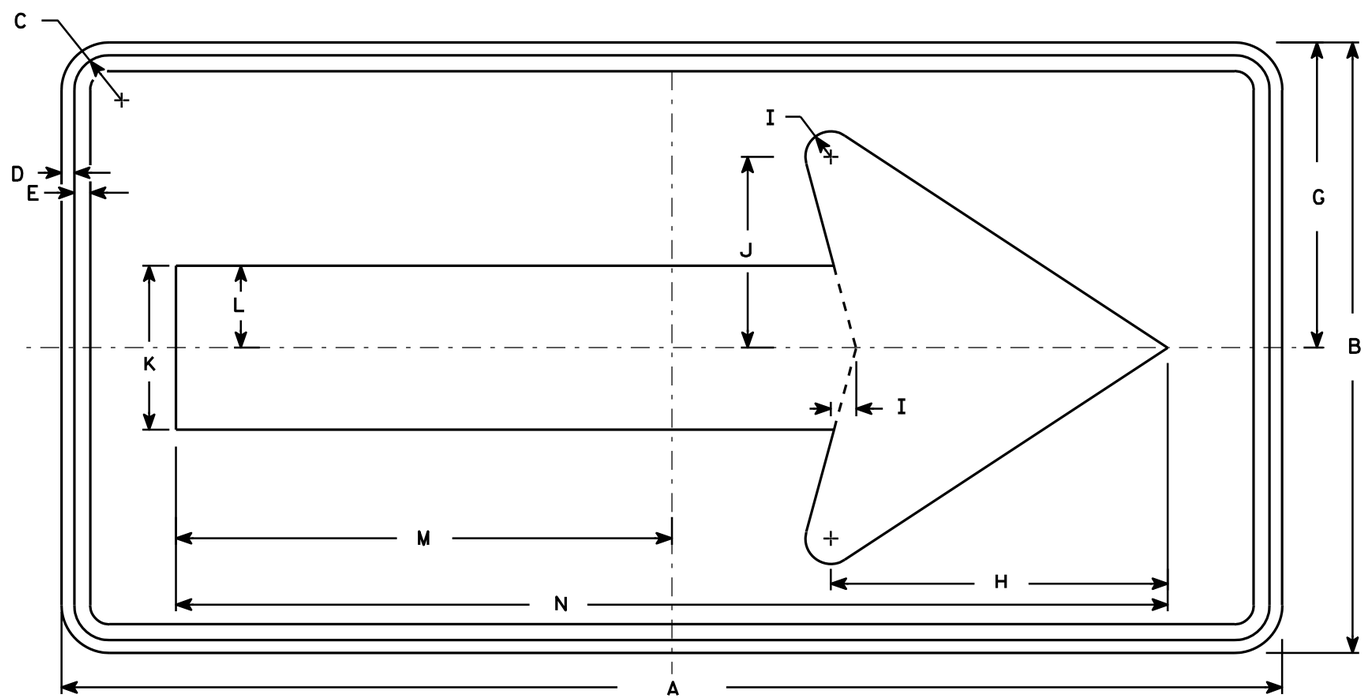

W1-6

SIZE	A	B	C	D	E	F	G	H	I	J	K	L	M	N	O	P	Q	R	S	T	U	V	W	X	Y	Z	Area sq. ft.
1	36	18	1 1/8	3/8	3/8		9	10	3/4	5 5/8	4 3/4	2 3/8	14 5/8	29 1/4													4.5
2S	48	24	1 3/8	1/2	5/8		12	13 1/4	1	7 1/2	6 1/2	3 1/4	19 1/2	39													8.0
2M	48	24	1 3/8	1/2	5/8		12	13 1/4	1	7 1/2	6 1/2	3 1/4	19 1/2	39													8.0
3	60	30	1 3/8	1/2	5/8		15	16 1/4	1 1/4	9 1/4	8	4	24 3/8	48 3/4													12.5
4	60	30	1 3/8	1/2	5/8		15	16 1/4	1 1/4	9 1/4	8	4	24 3/8	48 3/4													12.5
5	96	48	2 1/4	3/4	1		24	26 1/2	2	15	13	6 1/2	39	78													32.0

STANDARD SIGN
W1-6

WISCONSIN DEPT OF TRANSPORTATION

APPROVED Matthew R Rauch
for State Traffic Engineer

DATE 6/7/10 PLATE NO. W1-6.8

PROJECT NO:	HWY:	COUNTY:		SHEET NO: 128	E

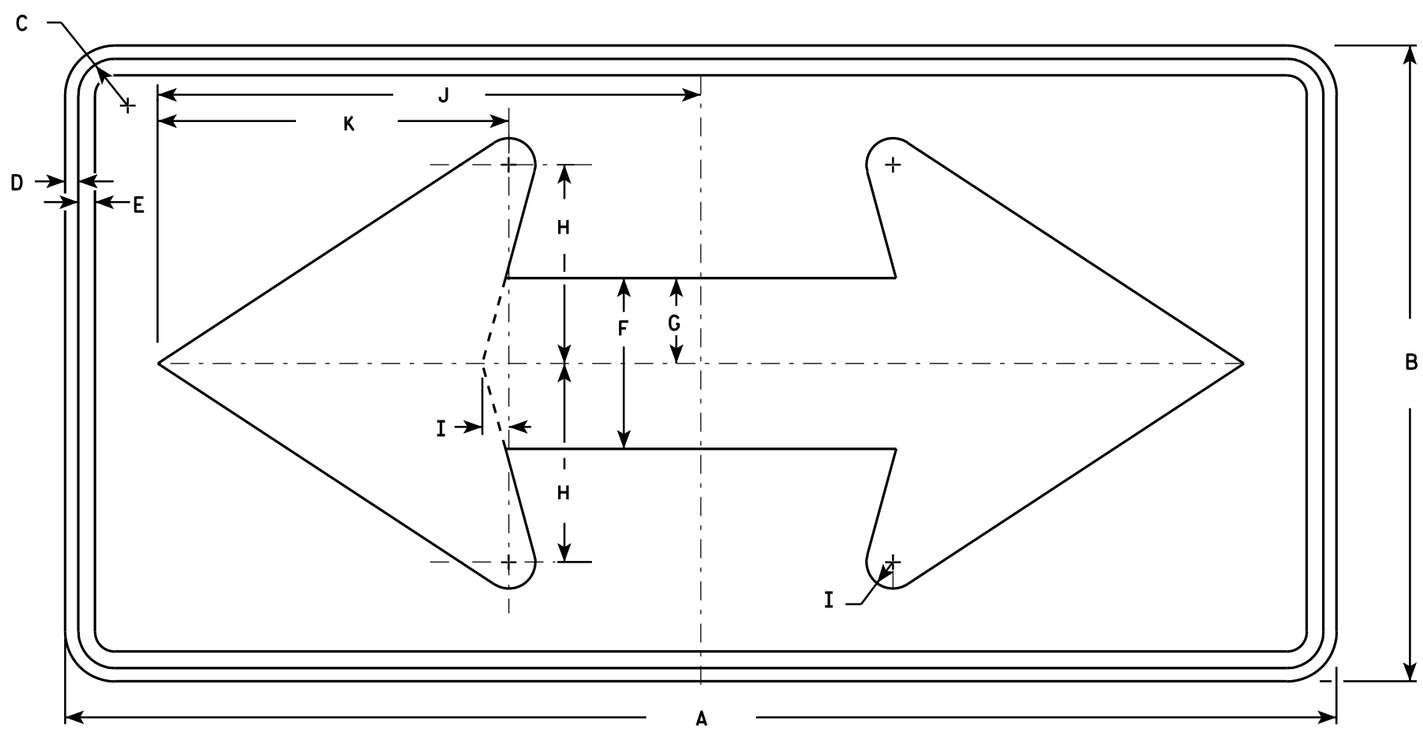

W1-7

NOTES

1. Sign is Type II - Type F Reflective - reference WIS DOT Standard Specification for HIGHWAY and STRUCTURE CONSTRUCTION latest edition.
2. Color:
   Background - Yellow
   Message - Black
3. Corners may be square or rounded when base material is plywood but borders shall be rounded as shown. When base material is metal, the corners and borders shall be rounded.

SIZE	A	B	C	D	E	F	G	H	I	J	K	L	M	N	O	P	Q	R	S	T	U	V	W	X	Y	Z	Area sq. ft.
1	36	18	1 1/8	3/8	1/2	5	2 1/2	5 3/4	3/4	15 5/8	10 1/8																4.5
2S	48	24	1 3/8	1/2	5/8	6 1/2	3 1/4	7 1/2	1	20 1/2	13 1/4																8.0
2M	48	24	1 3/8	1/2	5/8	6 1/2	3 1/4	7 1/2	1	20 1/2	13 1/4																8.0
3	60	30	1 3/8	1/2	5/8	8	4	9 1/4	1 1/4	25 3/8	16 1/4																12.5
4	60	30	1 3/8	1/2	5/8	8	4	9 1/4	1 1/4	25 3/8	16 1/4																12.5
5	96	48	2 1/4	3/4	1	13	6 1/2	15	2	41	26 1/2																32.0

STANDARD SIGN
W1-7

WISCONSIN DEPT OF TRANSPORTATION

APPROVED Matthew R Rauch
for State Traffic Engineer

DATE 6/7/10 PLATE NO. W1-7.7

PROJECT NO: | HWY: | COUNTY: | SHEET NO: 129 | E

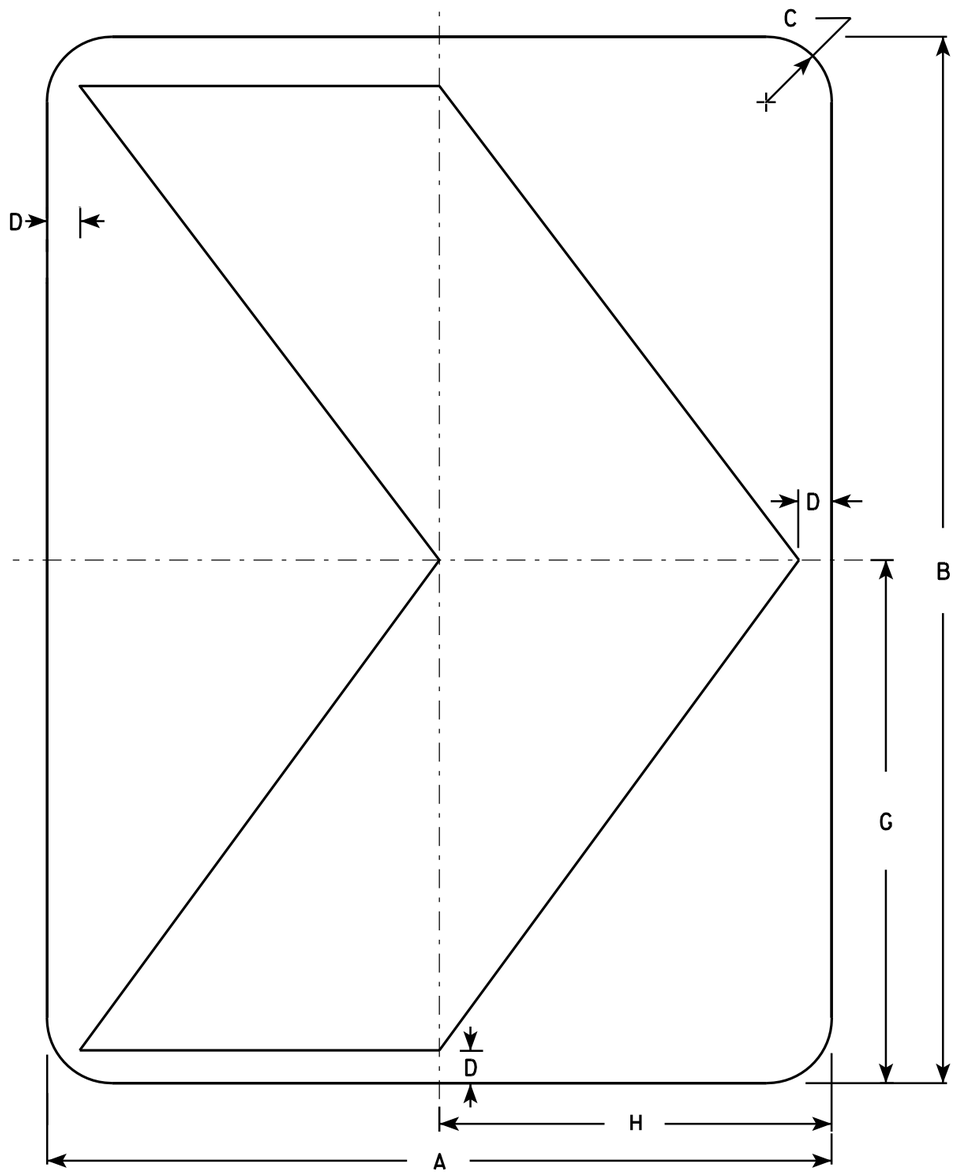

W1-8

NOTES

1. Sign is Type II - Type F Reflective - reference WIS DOT Standard Specification for HIGHWAY and STRUCTURE CONSTRUCTION latest edition.
2. Color:
   Background - Yellow
   Message - Black
3. Corners may be square or rounded when base material is plywood but borders shall be rounded as shown. When base material is metal, the corners and borders shall be rounded.

SIZE	A	B	C	D	E	F	G	H	I	J	K	L	M	N	O	P	Q	R	S	T	U	V	W	X	Y	Z	Area sq. ft.
1	12	18	1 1/2	1/2			9	6																			1.5
2S	18	24	1 1/2	3/4			12	9																			3.0
2M	18	24	1 1/2	3/4			12	9																			3.0
3	24	30	1 1/2	1			15	12																			5.0
4	30	36	1 7/8	1 1/4			18	15																			7.5
5	36	48	2 1/4	1 1/2			24	18																			12.0

STANDARD SIGN
W1-8

WISCONSIN DEPT OF TRANSPORTATION

APPROVED Matthew R Rauch for State Traffic Engineer

DATE 6/7/10 PLATE NO. W1-8.6

PROJECT NO:

SHEET NO: 130 E

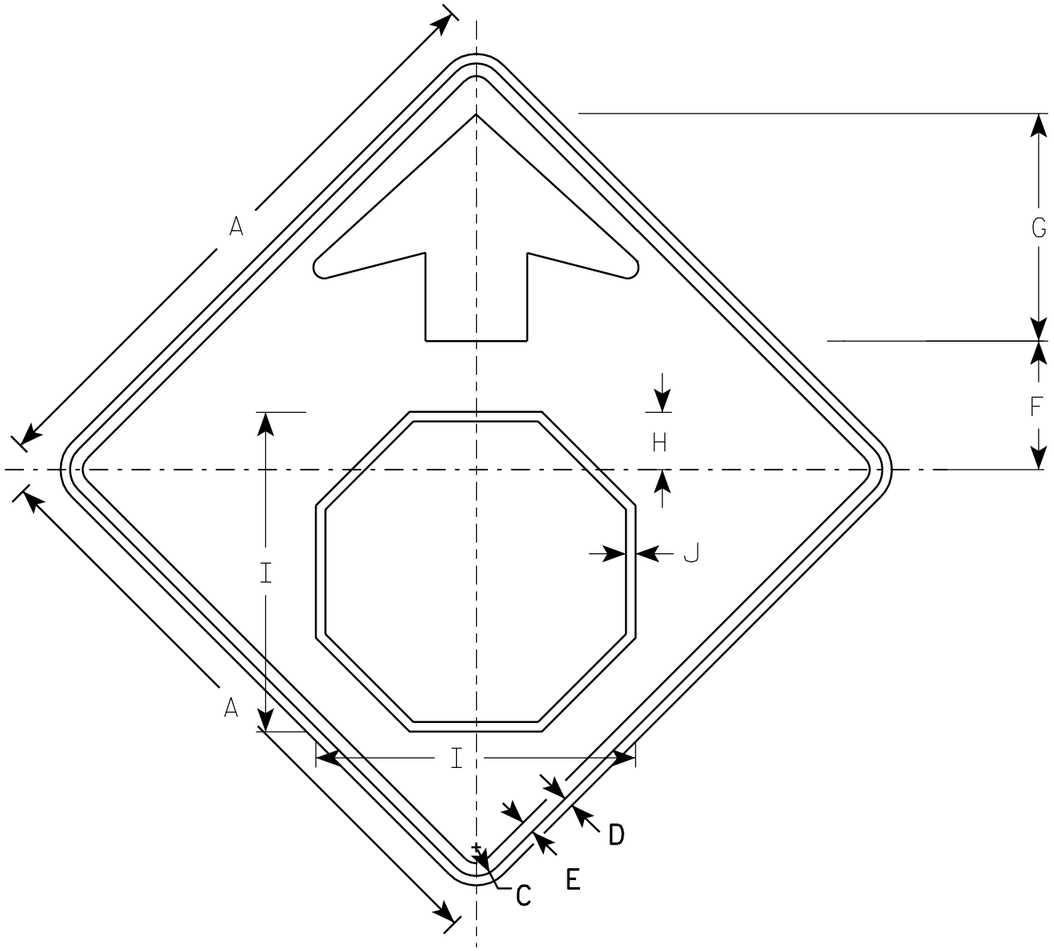

W3-1

NOTES

1. All Signs Type II - Type F Reflective - reference WIS DOT Standard Specification for HIGHWAY and STRUCTURE CONSTRUCTION latest edition.
2. Color:
   - Background - YELLOW
   - Arrow & Border - BLACK
   - Stop Symbol - WHITE BORDER ON RED BACKGROUND

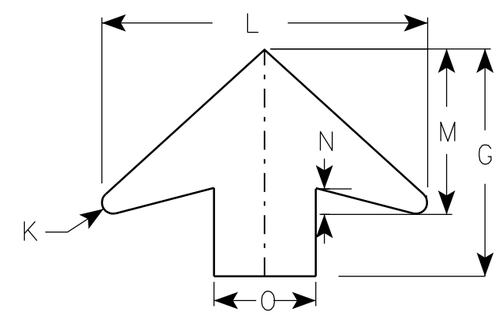

ARROW DETAIL

SIZE	A	B	C	D	E	F	G	H	I	J	K	L	M	N	O	P	Q	R	S	T	U	V	W	X	Y	Z	Area sq. ft.
1	30		1 3/8	1/2	5/8	6 1/4	11 1/4	2 7/8	15 3/4	1/2	1/2	16	8	1 1/4	5												6.25
2S	36		1 5/8	5/8	3/4	7 1/2	13 1/2	3 1/2	19	5/8	5/8	19 1/4	9 3/4	1 5/8	6												9.0
2M	36		1 5/8	5/8	3/4	7 1/2	13 1/2	3 1/2	19	5/8	5/8	19 1/4	9 3/4	1 5/8	6												9.0
3	36		1 5/8	5/8	3/4	7 1/2	13 1/2	3 1/2	19	5/8	5/8	19 1/4	9 3/4	1 5/8	6												9.0
4	48		2 1/4	3/4	1	10	17 7/8	4 1/2	25 1/8	3/4	7/8	25 5/8	13	2	8												16.0
5	48		2 1/4	3/4	1	10	17 7/8	4 1/2	25 1/8	3/4	7/8	25 5/8	13	2	8												16.0

STANDARD SIGN
W3-1

WISCONSIN DEPT OF TRANSPORTATION

APPROVED Matthew R Rauch
for State Traffic Engineer

DATE 6/7/10 PLATE NO. W3-1.12

PROJECT NO:

SHEET NO: 131 E

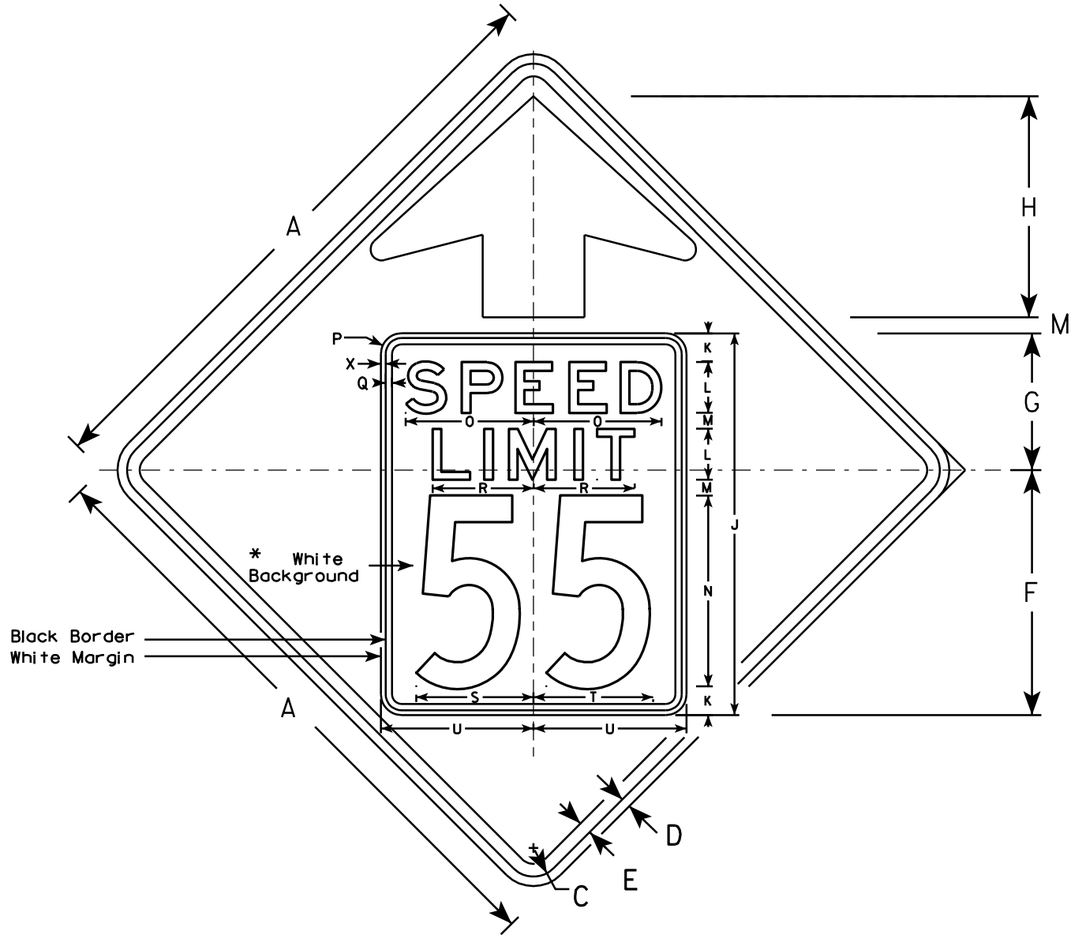

W3-5

NOTES

1. Sign is Type II - Type F Reflective - reference WIS DOT Standard Specification for HIGHWAY and STRUCTURE CONSTRUCTION latest edition.
2. Color: *
   Background - YELLOW*
   Message - BLACK
3. Message Series - C for numbers Series E for wording
4. Substitute appropriate numerals and optically adjust spacing to achieve proper balance

*Speed Limit Sign shall have a White Background

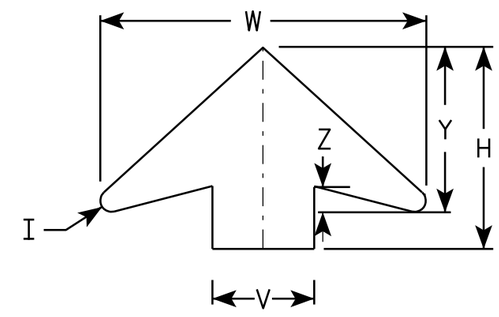

ARROW DETAIL

SIZE	A	B	C	D	E	F	G	H	I	J	K	L	M	N	O	P	Q	R	S	T	U	V	W	X	Y	Z	Area sq. ft.
1																											
2S	36		1 5/8	5/8	3/4	14 1/2	9 1/2	11 1/2	5/8	24	2	3	1	12	7 1/8	1 1/2	3/8	5 3/4	7 1/4	7 1/8	9	6	19 1/4	3/8	9 3/4	1 5/8	9.0
2M	36		1 5/8	5/8	3/4	14 1/2	9 1/2	11 1/2	5/8	24	2	3	1	12	7 1/8	1 1/2	3/8	5 3/4	7 1/4	7 1/8	9	6	19 1/4	3/8	9 3/4	1 5/8	9.0
3	36		1 5/8	5/8	3/4	14 1/2	9 1/2	11 1/2	5/8	24	2	3	1	12	7 1/8	1 1/2	3/8	5 3/4	7 1/4	7 1/8	9	6	19 1/4	3/8	9 3/4	1 5/8	9.0
4	48		2 1/4	3/4	1	19 1/4	10 3/4	17 3/8	7/8	30	2 1/4	4	1 1/4	15	10	1 5/8	1/2	8	9 1/4	9 3/8	12	8	25 5/8	3/8	13	2	16.0
5	48		2 1/4	3/4	1	19 1/4	10 3/4	17 3/8	7/8	30	2 1/4	4	1 1/4	15	10	1 5/8	1/2	8	9 1/4	9 3/8	12	8	25 5/8	3/8	13	2	16.0

STANDARD SIGN
W3-5

WISCONSIN DEPT OF TRANSPORTATION

APPROVED Matthew R Rauch
for State Traffic Engineer

DATE 5/29/12 PLATE NO. W3-5.5

PROJECT NO:

SHEET NO: 132 E

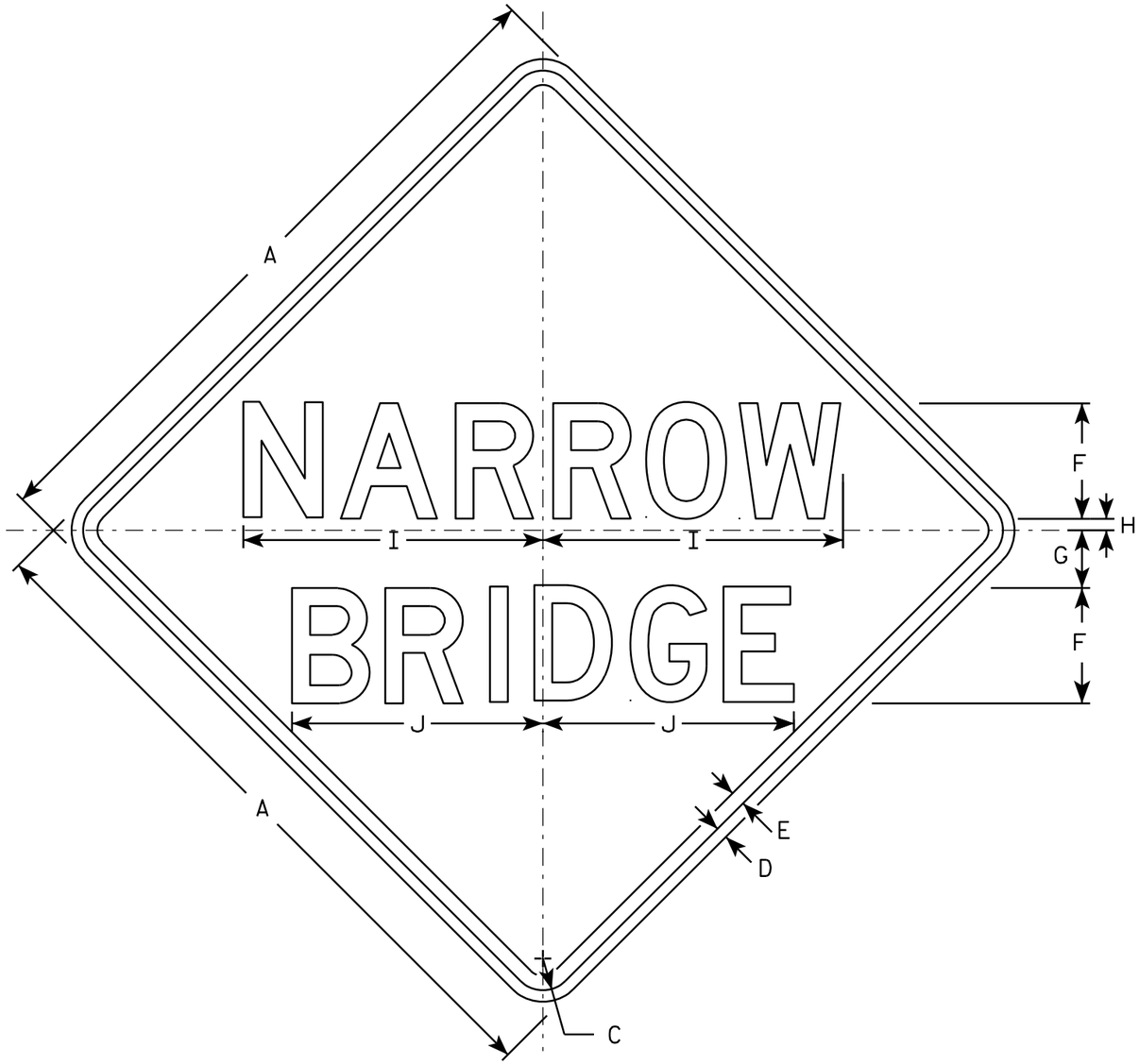

W5-2

NOTES

1. Sign is Type II - Type F Reflective - reference WIS DOT Standard Specification for HIGHWAY and STRUCTURE CONSTRUCTION latest edition.
2. Color:
   Background - Yellow
   Message - Black
3. Message Series - D
4. Corners may be square or rounded when base material is plywood but borders shall be rounded as shown. When base material is metal, the corners and borders shall be rounded.

SIZE	A	B	C	D	E	F	G	H	I	J	K	L	M	N	O	P	Q	R	S	T	U	V	W	X	Y	Z	Area sq. ft.
1	30		1 3/8	1/2	5/8	5	2 1/2	1/2	13	10 7/8																	6.25
2S	36		1 5/8	5/8	3/4	6	3	3/4	15 5/8	13 1/8																	9.0
2M	36		1 5/8	5/8	3/4	6	3	3/4	15 5/8	13 1/8																	9.0
3	36		1 5/8	5/8	3/4	6	3	3/4	15 5/8	13 1/8																	9.0
4	48		2 1/4	3/4	1	8	4	3/4	20 3/4	17 3/8																	16.0
5																											

STANDARD SIGN
W5-2

WISCONSIN DEPT OF TRANSPORTATION

APPROVED Matthew R Rauch
for State Traffic Engineer

DATE 03/12/13 PLATE NO. W5-2.8

PROJECT NO:	HWY:	COUNTY:		SHEET NO: 133	E

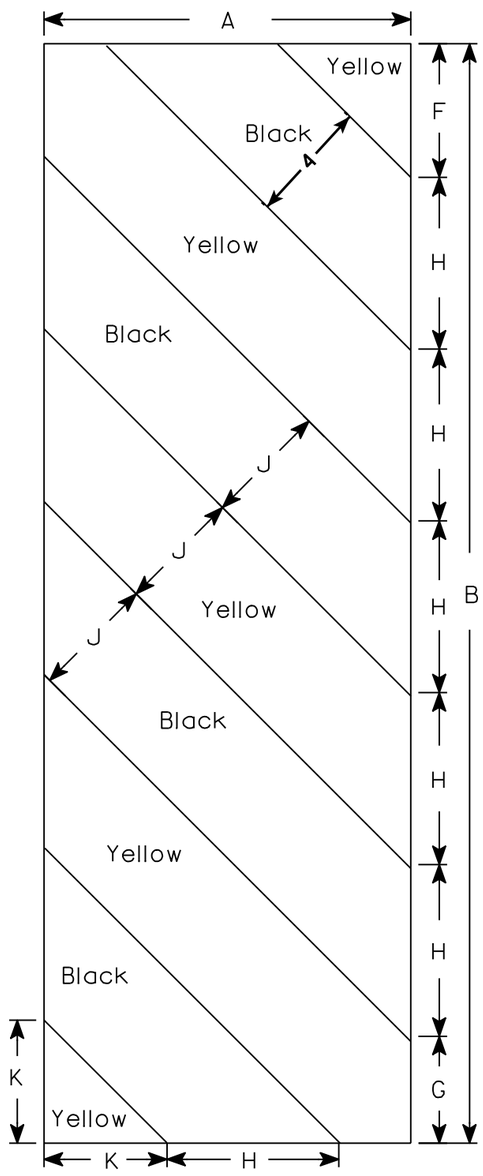

W5-52L

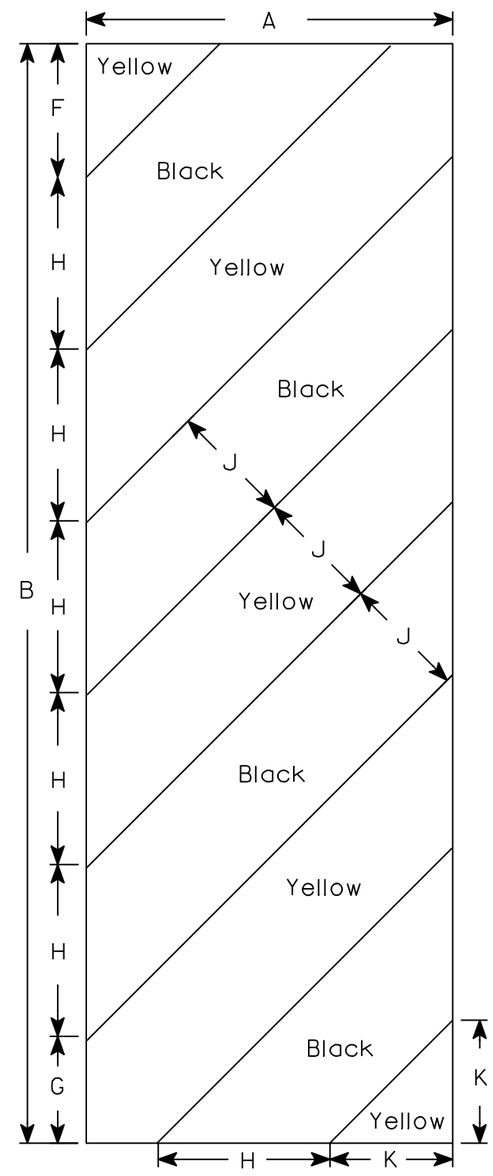

W5-52R

NOTES

1. Sign is Type II - Type F Reflective - reference WIS DOT Standard Specification for HIGHWAY and STRUCTURE CONSTRUCTION latest edition.
2. Color:
   Background - Yellow
   Message - Black
3. Corners may be square or rounded when base material is plywood but borders shall be rounded as shown. When base material is metal, the corners and borders shall be rounded.
4. Alternate colors of stripes as shown.

SIZE	A	B	C	D	E	F	G	H	I	J	K	L	M	N	O	P	Q	R	S	T	U	V	W	X	Y	Z	Area sq. ft.
1																											
2S	12	36				4 3/8	3 1/2	5 5/8	45°	4	4																3.0
2M	12	36				4 3/8	3 1/2	5 5/8	45°	4	4																3.0
3	18	54				6	5 1/2	8 1/2	45°	6	6 9/16																6.75
4																											
5																											

STANDARD SIGN
W5-52L & W5-52R

WISCONSIN DEPT OF TRANSPORTATION

APPROVED Matthew R Rauch
for State Traffic Engineer

DATE 5/29/12 PLATE NO. W5-52.9

PROJECT NO: | HWY: | COUNTY: | SHEET NO: 134 | E

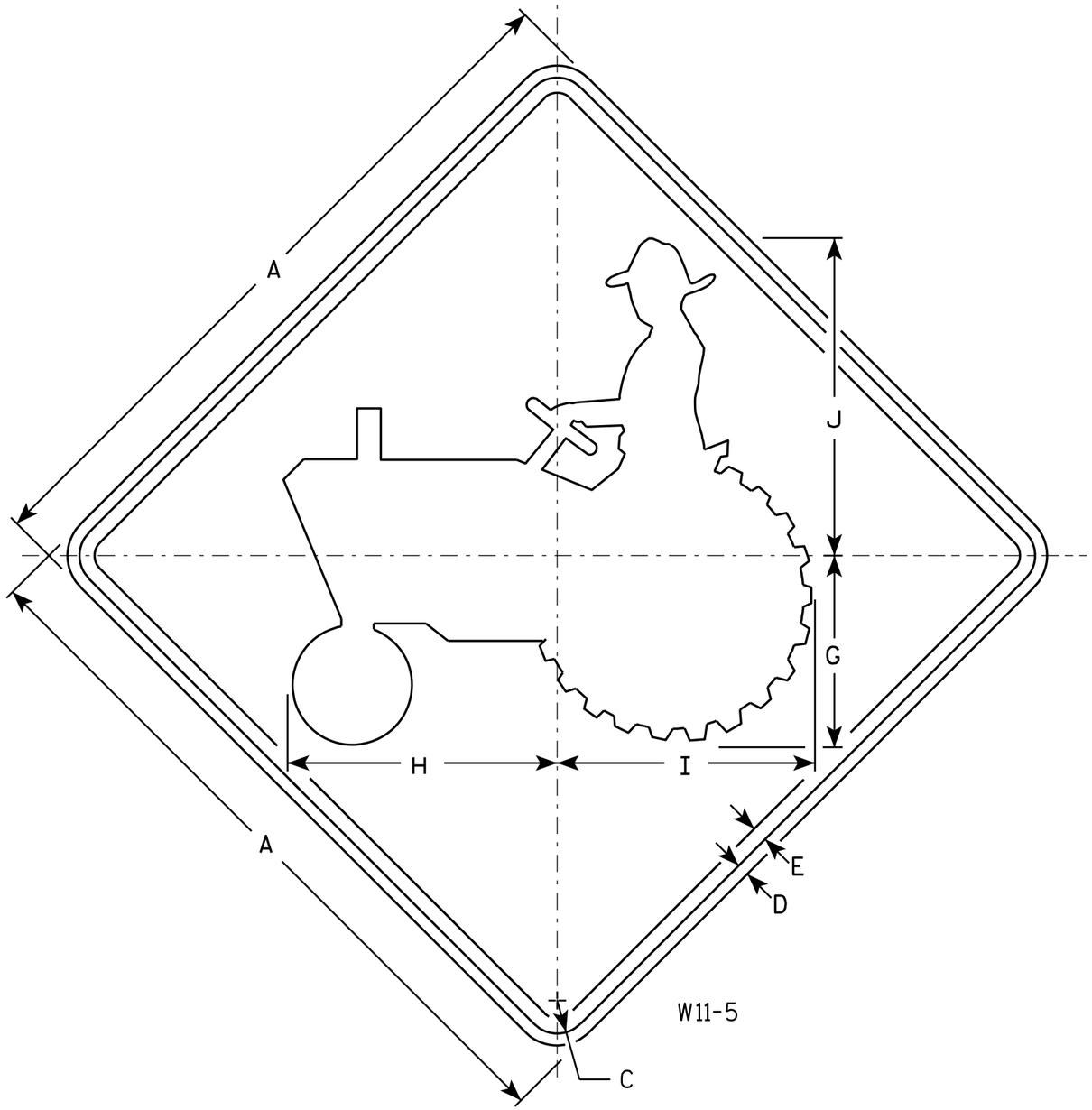

NOTES

1. Sign is Type II - Type F Reflective - reference WIS DOT Standard Specification for HIGHWAY and STRUCTURE CONSTRUCTION latest edition.
2. Color:
   Background - Yellow
   Message - Black
3. Corners may be square or rounded when base material is plywood but borders shall be rounded as shown. When base material is metal, the corners and borders shall be rounded.

SIZE	A	B	C	D	E	F	G	H	I	J	K	L	M	N	O	P	Q	R	S	T	U	V	W	X	Y	Z	Area sq. ft.
1	24		1 1/8	3/8	1/2		6 3/8	9	8 5/8	10 5/8																	4.0
2S	30		1 3/8	1/2	5/8		8	11 1/4	10 3/4	13 1/4																	6.25
2M	30		1 3/8	1/2	5/8		8	11 1/4	10 3/4	13 1/4																	6.25
3																											
4	36		1 5/8	5/8	3/4		9 5/8	13 1/2	12 7/8	16																	9.0
5	48		2 1/4	3/4	1		12 3/4	18	17 1/4	21 1/8																	16.0

STANDARD SIGN
W11-5

WISCONSIN DEPT OF TRANSPORTATION

APPROVED Matthew R Rauch
for State Traffic Engineer
DATE 3/13/13 PLATE NO. W11-5.6

PROJECT NO: | HWY: | COUNTY: | SHEET NO: 135 | E

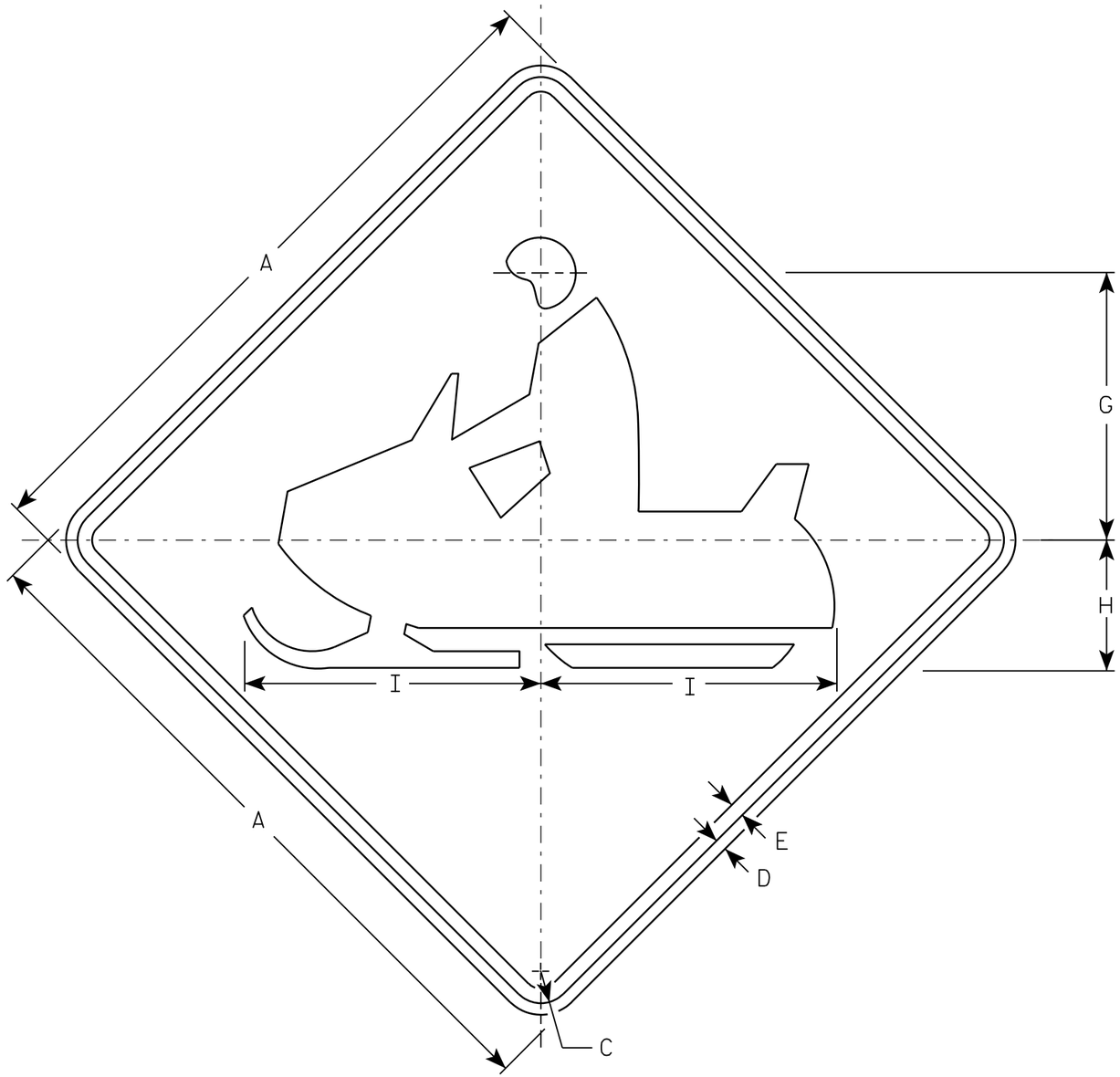

W11-6

NOTES

1. Sign is Type II - Type F Reflective - reference WIS DOT Standard Specification for HIGHWAY and STRUCTURE CONSTRUCTION latest edition.
2. Color:
   Background - Yellow
   Message - Black
3. Corners may be square or rounded when base material is plywood but borders shall be rounded as shown. When base material is metal, the corners and borders shall be rounded.

SIZE	A	B	C	D	E	F	G	H	I	J	K	L	M	N	O	P	Q	R	S	T	U	V	W	X	Y	Z	Area sq. ft.
1	24		1 1/8	3/8	1/2		9 1/2	4 1/2	10 1/4																		4.0
2S	30		1 3/8	1/2	5/8		11 1/2	5 5/8	12 3/4																		6.25
2M	30		1 3/8	1/2	5/8		11 1/2	5 5/8	12 3/4																		6.25
3	36		1 5/8	5/8	3/4		14 1/8	6 3/4	15 1/4																		9.0
4	48		2 1/4	3/4	1		19	9	20 1/2																		16.0
5																											

STANDARD SIGN
W11-6

WISCONSIN DEPT OF TRANSPORTATION

APPROVED Matthew R Rauch
for State Traffic Engineer

DATE 3/13/13 PLATE NO. W11-6.8

PROJECT NO:	HWY:	COUNTY:		SHEET NO: 136	E

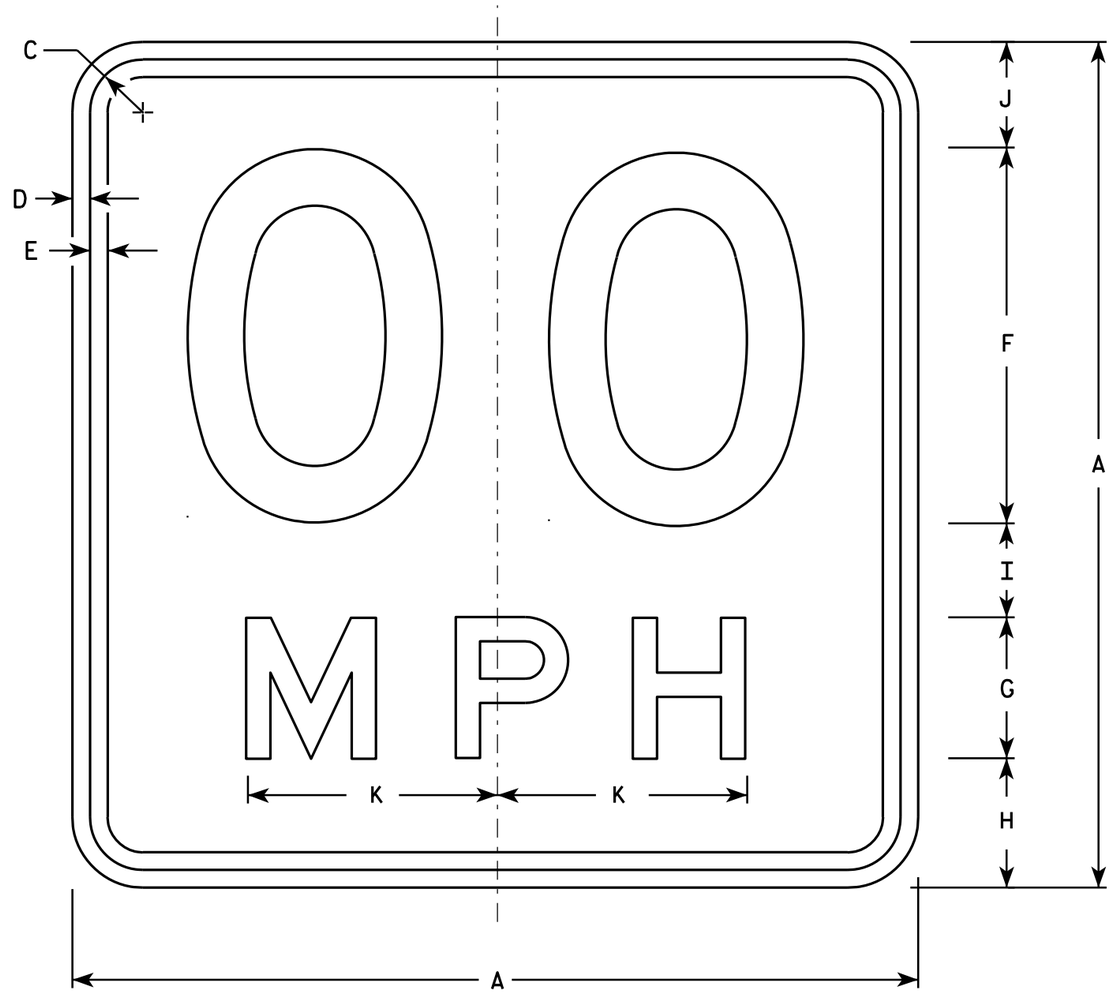

W13-1

* For 30" x 30" Warning Signs, use 18" x 18" W13-1 signs.
For 36" x 36" Warning Signs, use 24" x 24" W13-1 signs.

NOTES

1. Sign is Type II - Type F Reflective - reference WIS DOT Standard Specification for HIGHWAY and STRUCTURE CONSTRUCTION latest edition.
2. Color:
   Background - Yellow
   Message - Black
3. Message Series - See Note 6
4. Corners may be square or rounded when base material is plywood but borders shall be rounded as shown. When base material is metal, the corners and borders shall be rounded.
5. Substitute appropriate numerals and optically space about centerline to achieve proper balance.
6. Line 1 is Series D
   Line 2 is Series E

SIZE	A	B	C	D	E	F	G	H	I	J	K	L	M	N	O	P	Q	R	S	T	U	V	W	X	Y	Z	Area sq. ft.
1	18		1 1/8	3/8	3/8	8	3	2 3/4	2	2 1/4	5 3/8																2.25
* 2S	18		1 1/8	3/8	3/8	8	3	2 3/4	2	2 1/4	5 3/8																2.25
* 2M	18		1 1/8	3/8	3/8	8	3	2 3/4	2	2 1/4	5 3/8																2.25
3	24		1 1/8	3/8	1/2	10	4	4	2 3/4	3 1/4	6 5/8																4.00
4	36		1 5/8	5/8	3/4	16	6	5 1/2	4	4 1/2	10 5/8																9.00
5	36		1 5/8	5/8	3/4	16	6	5 1/2	4	4 1/2	10 5/8																9.00

STANDARD SIGN
W13-1

WISCONSIN DEPT OF TRANSPORTATION

APPROVED Matthew R Rauch
For State Traffic Engineer

DATE 5/31/12 PLATE NO. W13-1.16

PROJECT NO: | HWY: | COUNTY: | SHEET NO: 137 | E

NOTES

1. Sign is Type II - Type F Reflective - reference WIS DOT Standard Specification for HIGHWAY and STRUCTURE CONSTRUCTION latest edition.
2. Color:
   Background - Yellow
   Message - Black
3. Message Series - See note 5
4. Corners and borders shall be rounded on all base materials for this sign.
5. Lines 1 and 2 are Series D.
   Line 3 is series C.

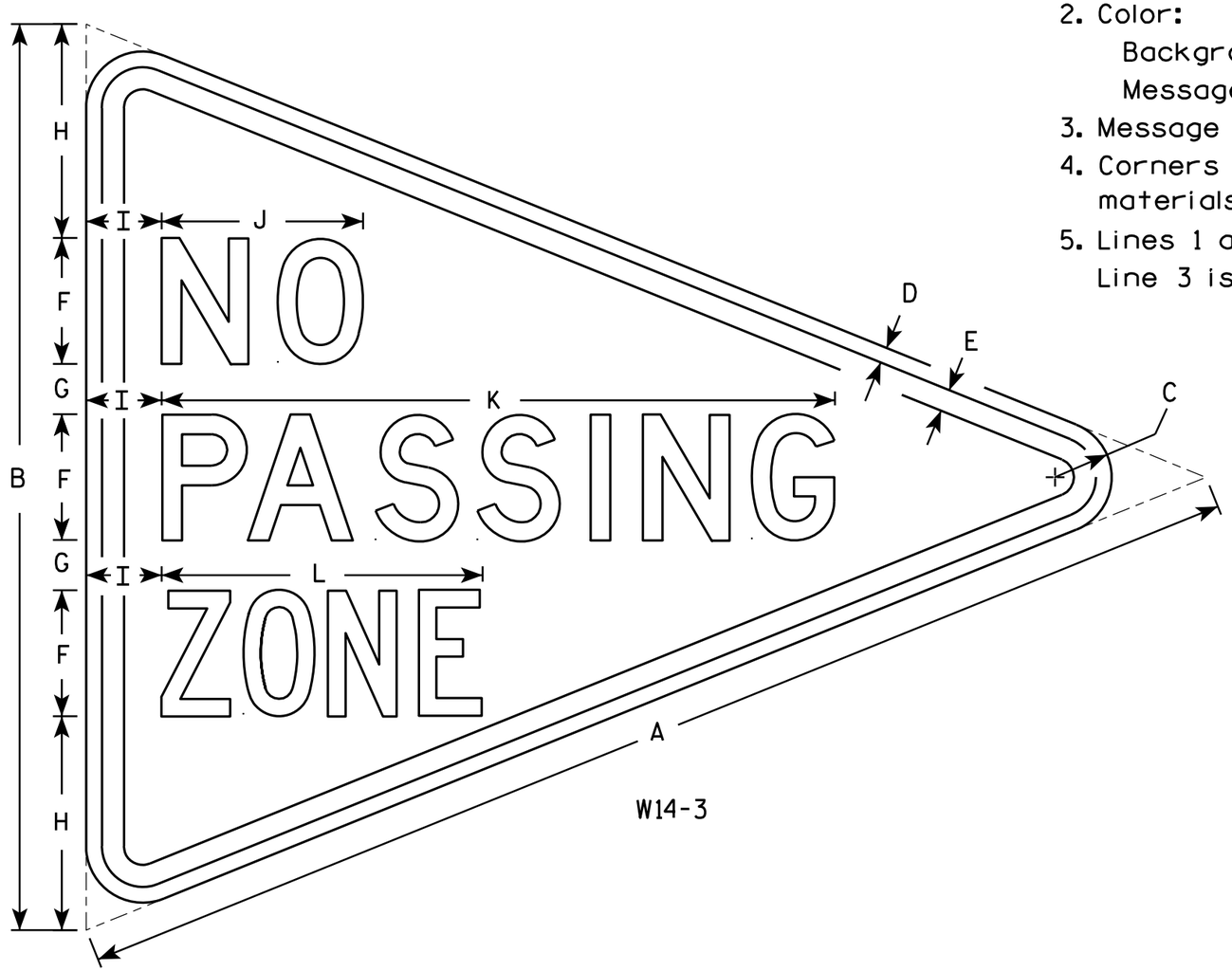

W14-3

SIZE	A	B	C	D	E	F	G	H	I	J	K	L	M	N	O	P	Q	R	S	T	U	V	W	X	Y	Z	Area sq. ft.
1																											
2S	48	36	2 1/4	5/8	7/8	5	2	8 1/2	3	8	26 3/4	12 3/4															6.0
2M	48	36	2 1/4	5/8	7/8	5	2	8 1/2	3	8	26 3/4	12 3/4															6.0
3	64	48	3	3/4	1 1/4	6	3	12	4	10 3/4	33 5/8	16 1/2															10.7
4																											
5																											

STANDARD SIGN
W14-3

WISCONSIN DEPT OF TRANSPORTATION

APPROVED Matthew R Rauch
for State Traffic Engineer
DATE 6/7/10 PLATE NO. W14-3.9

PROJECT NO: | HWY: | COUNTY: | SHEET NO: 138 | E

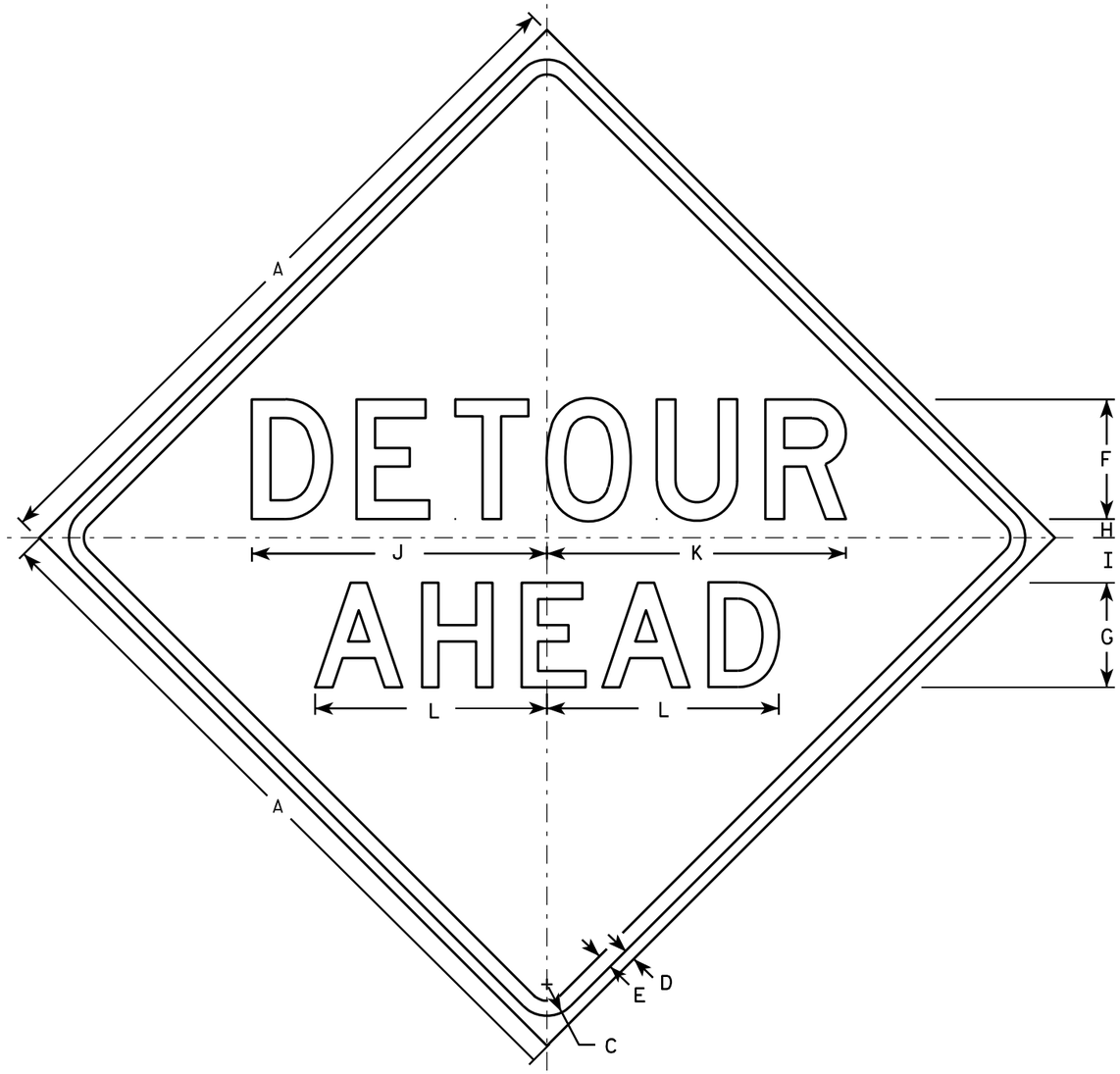

W20-2A

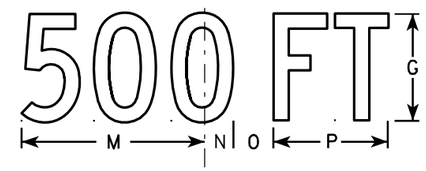

W20-2D

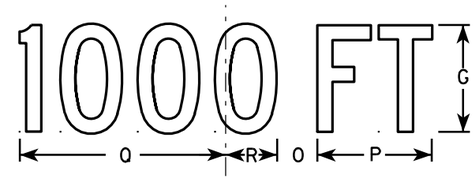

W20-2C

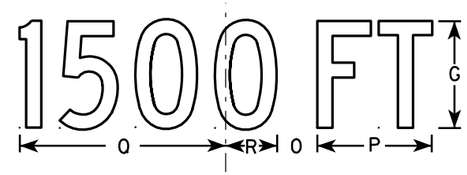

W20-2B

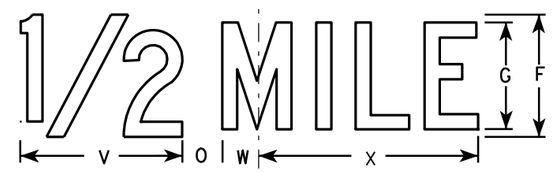

W20-2G

W20-2F

NOTES

1. Sign is Type II - Type F Reflective - reference WIS DOT Standard Specification for HIGHWAY and STRUCTURE CONSTRUCTION latest edition.
2. Color:
   Background - Orange
   Message - Black
3. Message Series - See note 5
4. Corners may be square or rounded when base material is plywood but borders shall be rounded as shown. When base material is metal, the corners and borders shall be rounded.
5. Line 1 is Series D.
   Line 2 is Series D for AHEAD and Series C for all other distances.

SIZE	A	B	C	D	E	F	G	H	I	J	K	L	M	N	O	P	Q	R	S	T	U	V	W	X	Y	Z	Area sq. ft.
1	36		1 5/8	5/8	3/4	6	5	1	2 1/4	14 3/4	15	11 5/8	9	1 3/8	1 7/8	5 5/8	10 1/8	2 1/2	1 1/8	4 1/2	3 1/2	8	1 3/4	10 3/4			9.0
2S	48		2 1/4	3/4	1	8	7	1 1/4	3	19 3/4	20	15 1/2	12	1 7/8	2 5/8	7 1/2	13 1/2	3 3/8	1 1/2	6	4 5/8	10 5/8	2 3/8	14 3/8			16.0
2M	48		2 1/4	3/4	1	8	7	1 1/4	3	19 3/4	20	15 1/2	12	1 7/8	2 5/8	7 1/2	13 1/2	3 3/8	1 1/2	6	4 5/8	10 5/8	2 3/8	14 3/8			16.0
3	48		2 1/4	3/4	1	8	7	1 1/4	3	19 3/4	20	15 1/2	12	1 7/8	2 5/8	7 1/2	13 1/2	3 3/8	1 1/2	6	4 5/8	10 5/8	2 3/8	14 3/8			16.0
4	48		2 1/4	3/4	1	8	7	1 1/4	3	19 3/4	20	15 1/2	12	1 7/8	2 5/8	7 1/2	13 1/2	3 3/8	1 1/2	6	4 5/8	10 5/8	2 3/8	14 3/8			16.0
5	48		2 1/4	3/4	1	8	7	1 1/4	3	19 3/4	20	15 1/2	12	1 7/8	2 5/8	7 1/2	13 1/2	3 3/8	1 1/2	6	4 5/8	10 5/8	2 3/8	14 3/8			16.0

STANDARD SIGN
W20-2A,B,C,D,F & G

WISCONSIN DEPT OF TRANSPORTATION

APPROVED Matthew R Rauch
for State Traffic Engineer
DATE 3/18/11 PLATE NO. W20-2.6

PROJECT NO:	HWY:	COUNTY:		SHEET NO: 139	E

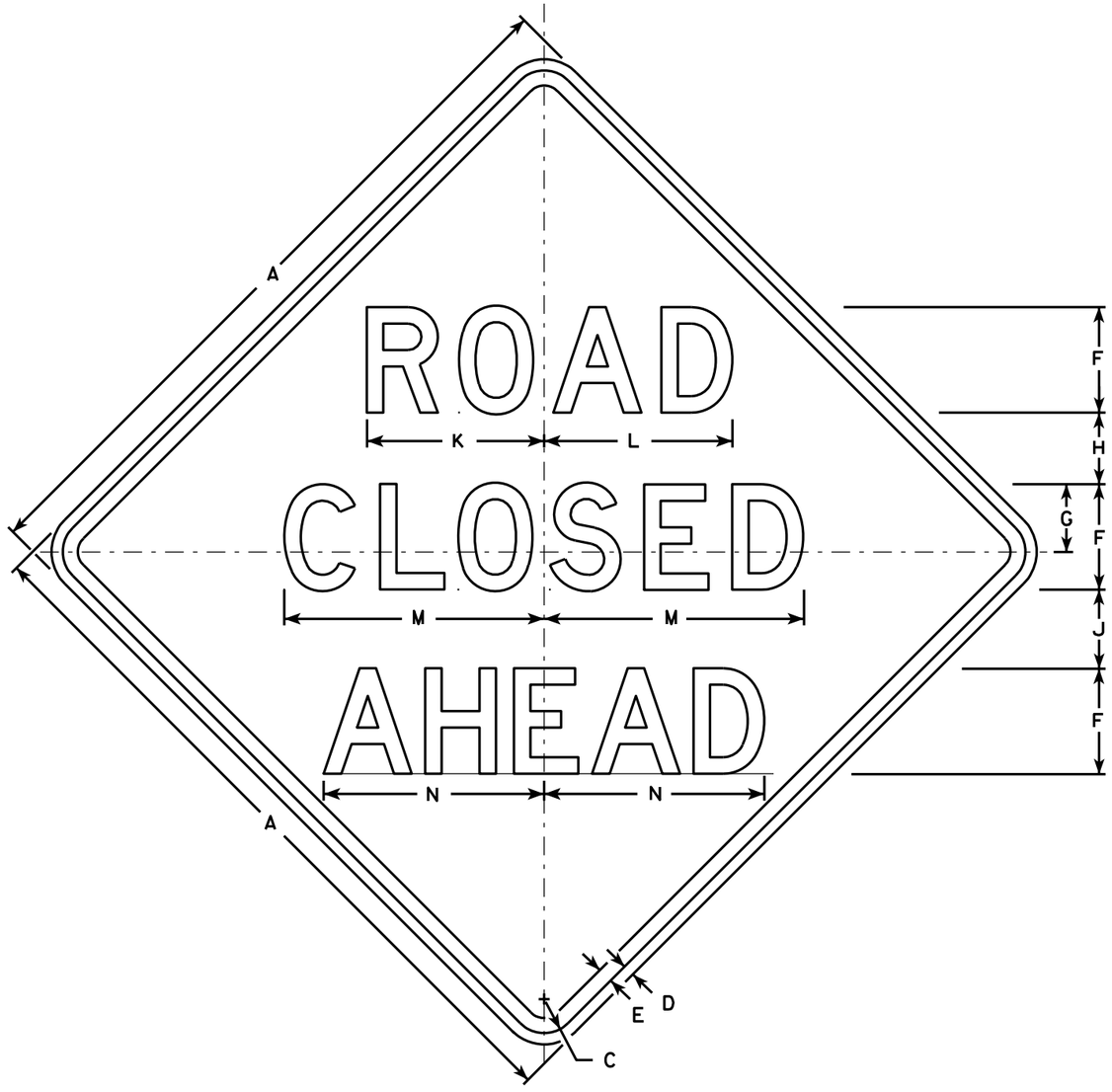

W20-3A

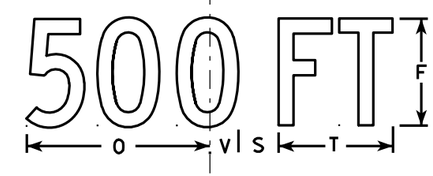

W20-3D

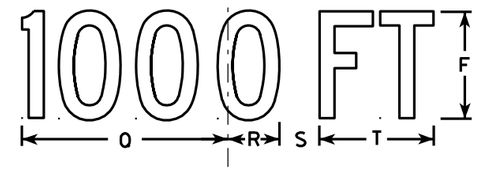

W20-3C

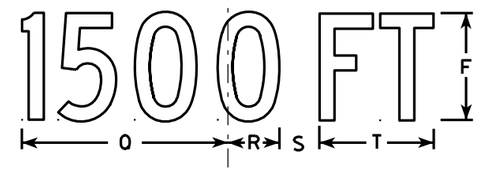

W20-3B

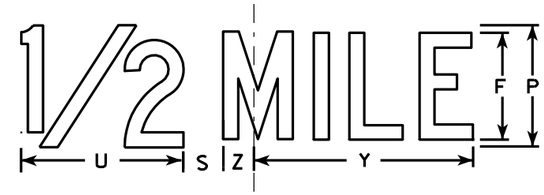

W20-3G

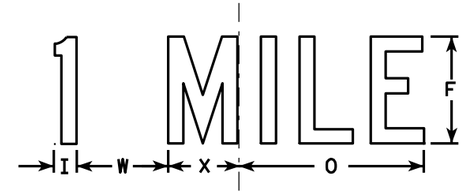

W20-3F

NOTES

1. Sign is Type II - Type F Reflective - reference WIS DOT Standard Specification for HIGHWAY and STRUCTURE CONSTRUCTION latest edition.
2. Color:
   Background - Orange
   Message - Black
3. Message Series - see note 5
4. Corners may be square or rounded when base material is plywood but borders shall be rounded as shown. When base material is metal, the corners and borders shall be rounded.
5. Lines 1 and 2 are Series D.
   Line 3 is Series D for AHEAD and Series C for all other distances.

SIZE	A	B	C	D	E	F	G	H	I	J	K	L	M	N	O	P	Q	R	S	T	U	V	W	X	Y	Z	Area sq. ft.
1	36		1 5/8	5/8	3/4	5	3 3/8	3 1/2	1 1/8	4	8 3/8	8 7/8	12 1/2	11	9	6	10 1/8	2 1/2	1 7/8	5 5/8	8	1 3/8	4 1/2	3 1/2	10 3/4	1 3/4	9.0
2S	48		2 1/4	3/4	1	7	4 1/2	4 3/4	1 1/2	5 1/4	11 3/4	12 1/2	17 1/4	14 5/8	12	8	13 1/2	3 3/8	2 5/8	7 1/2	10 5/8	1 7/8	6	4 5/8	14 3/8	2 3/8	16.0
2M	48		2 1/4	3/4	1	7	4 1/2	4 3/4	1 1/2	5 1/4	11 3/4	12 1/2	17 1/4	14 5/8	12	8	13 1/2	3 3/8	2 5/8	7 1/2	10 5/8	1 7/8	6	4 5/8	14 3/8	2 3/8	16.0
3	48		2 1/4	3/4	1	7	4 1/2	4 3/4	1 1/2	5 1/4	11 3/4	12 1/2	17 1/4	14 5/8	12	8	13 1/2	3 3/8	2 5/8	7 1/2	10 5/8	1 7/8	6	4 5/8	14 3/8	2 3/8	16.0
4	48		2 1/4	3/4	1	7	4 1/2	4 3/4	1 1/2	5 1/4	11 3/4	12 1/2	17 1/4	14 5/8	12	8	13 1/2	3 3/8	2 5/8	7 1/2	10 5/8	1 7/8	6	4 5/8	14 3/8	2 3/8	16.0
5	48		2 1/4	3/4	1	7	4 1/2	4 3/4	1 1/2	5 1/4	11 3/4	12 1/2	17 1/4	14 5/8	12	8	13 1/2	3 3/8	2 5/8	7 1/2	10 5/8	1 7/8	6	4 5/8	14 3/8	2 3/8	16.0

STANDARD SIGN
W20-3A, B, C, D, F & G

WISCONSIN DEPT OF TRANSPORTATION

APPROVED Matthew R Rauch
for State Traffic Engineer
DATE 3/18/11 PLATE NO. W20-3.7

7

7

PROJECT NO: | HWY: | COUNTY: | SHEET NO: 140 | E

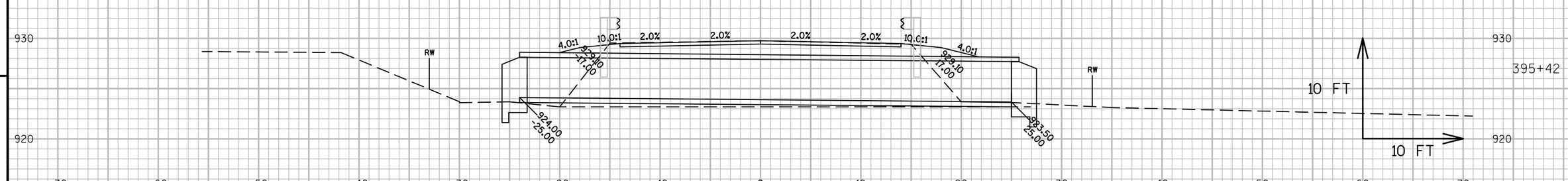

9

9

PROJECT NO:5145-00-60	HWY:STH 19	COUNTY:DANE	CROSS SECTIONS: CULVERT REPLACEMENT	SHEET 141	E

FILE NAME : N:\PDS\C3D\51450030\SHEETSPLAN\090203-XS-FOR DESIGN.DWG
LAYOUT NAME - SECTION SHEET - (14)

PLOT DATE : 10/17/2016 2:50 PM PLOT BY : RICE, BRIAN J PLOT NAME : PLOT SCALE : 1 IN:10 FT

WISDOT/CADDS SHEET 49

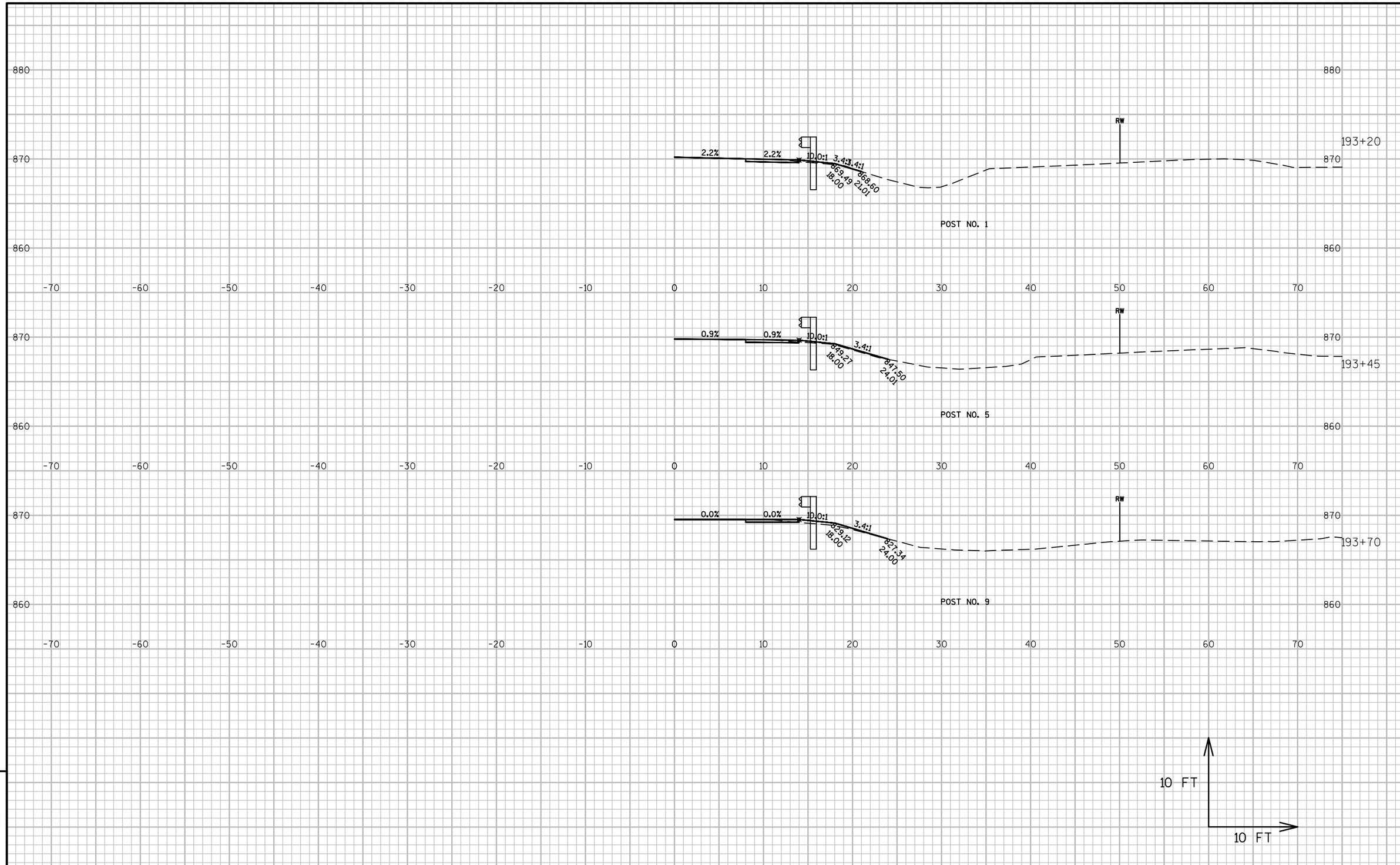

9

9

PROJECT NO:5145-00-60	HWY:STH 19	COUNTY:DANE	CROSS SECTIONS: MGS GUARDRAIL	SHEET 142	E

FILE NAME : N:\PDS\C3D\51450030\SHEETSPLAN\090201-XS.DWG
LAYOUT NAME - SECTION SHEET - (2)
PLOT DATE : 9/9/2016 4:39 PM PLOT BY : RICE, BRIAN J PLOT NAME : PLOT SCALE : 1 IN:10 FT

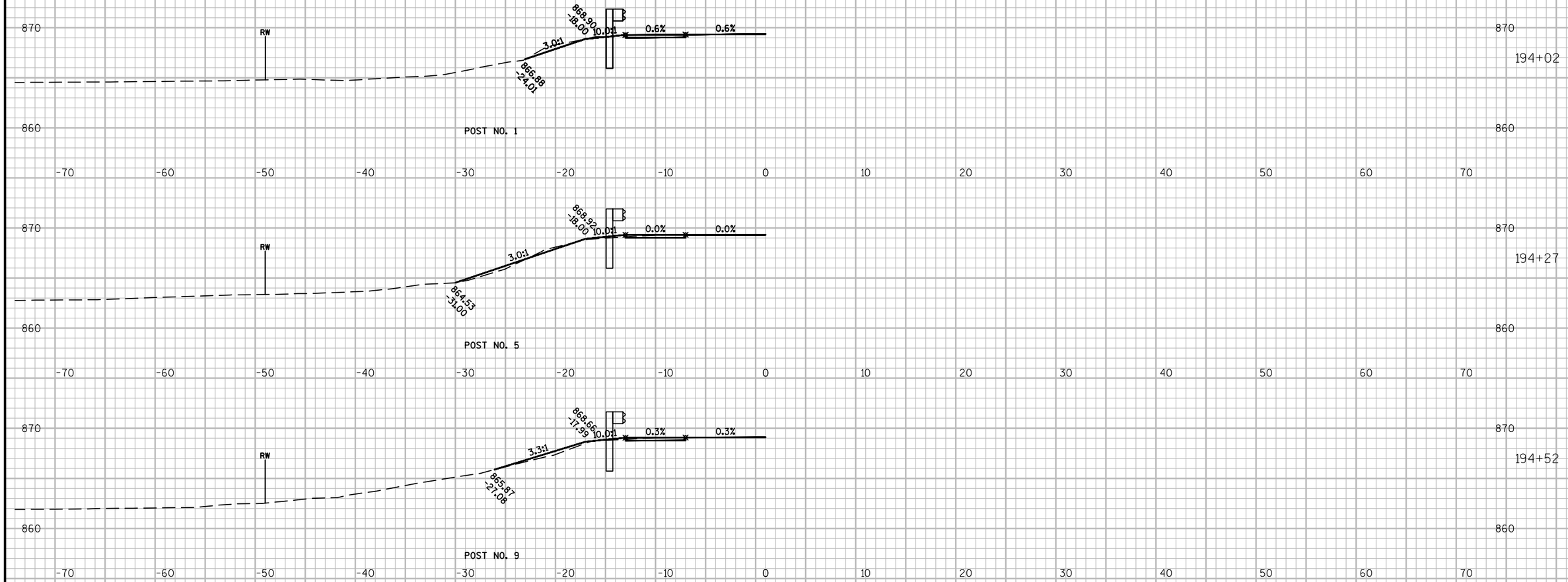

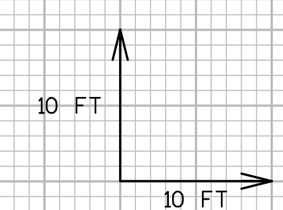

9

9

PROJECT NO:5190-02-60	HWY:STH 19	COUNTY:DANE	CROSS SECTIONS: MGS GUARDRAIL	SHEET 143	E

FILE NAME : N:\PDS\C3D\51450030\SHEETSPLAN\090201-XS.DWG
LAYOUT NAME - ****
PLOT DATE : 9/9/2016 4:39 PM PLOT BY : RICE, BRIAN J PLOT NAME : PLOT SCALE : 1 IN:10 FT

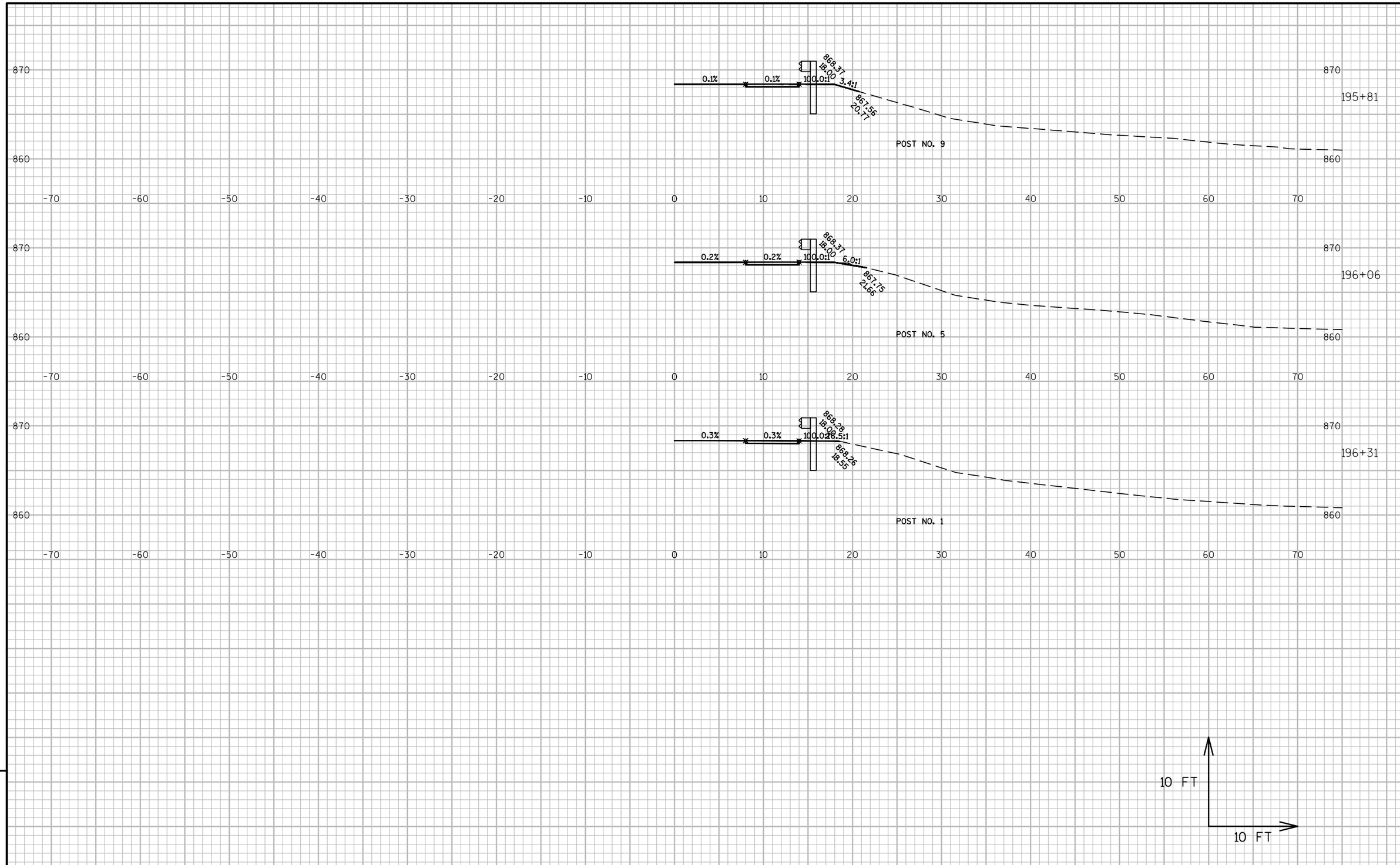

9

9

PROJECT NO:5145-00-60	HWY:STH 19	COUNTY:DANE	CROSS SECTIONS: MGS GUARDRAIL	SHEET 144	E

FILE NAME : N:\PDS\C3D\51450030\SHEETSPLAN\090201-XS.DWG
LAYOUT NAME - SECTION SHEET - (4)
PLOT DATE : 9/9/2016 4:39 PM PLOT BY : RICE, BRIAN J PLOT NAME : PLOT SCALE : 1 IN:10 FT

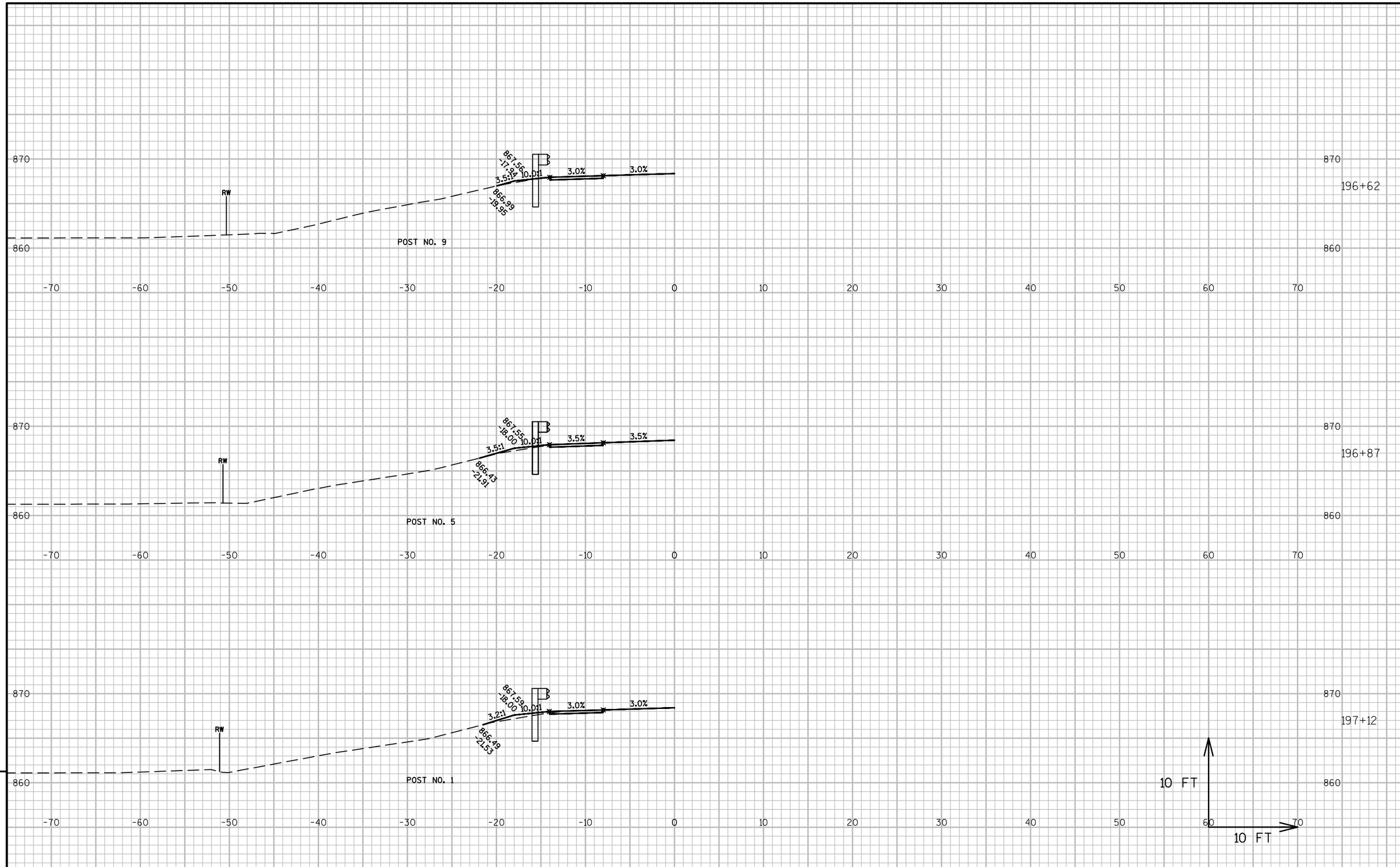

9

9

PROJECT NO:5145-00-60	HWY:STH 19	COUNTY:DANE	CROSS SECTIONS: MGS GUARDRAIL	SHEET 145	E

FILE NAME : N:\PDS\C3D\51450030\SHEETSPLAN\090201-XS.DWG
LAYOUT NAME - SECTION SHEET - (5)
PLOT DATE : 9/9/2016 4:40 PM PLOT BY : RICE, BRIAN J PLOT NAME : PLOT SCALE : 1 IN:10 FT

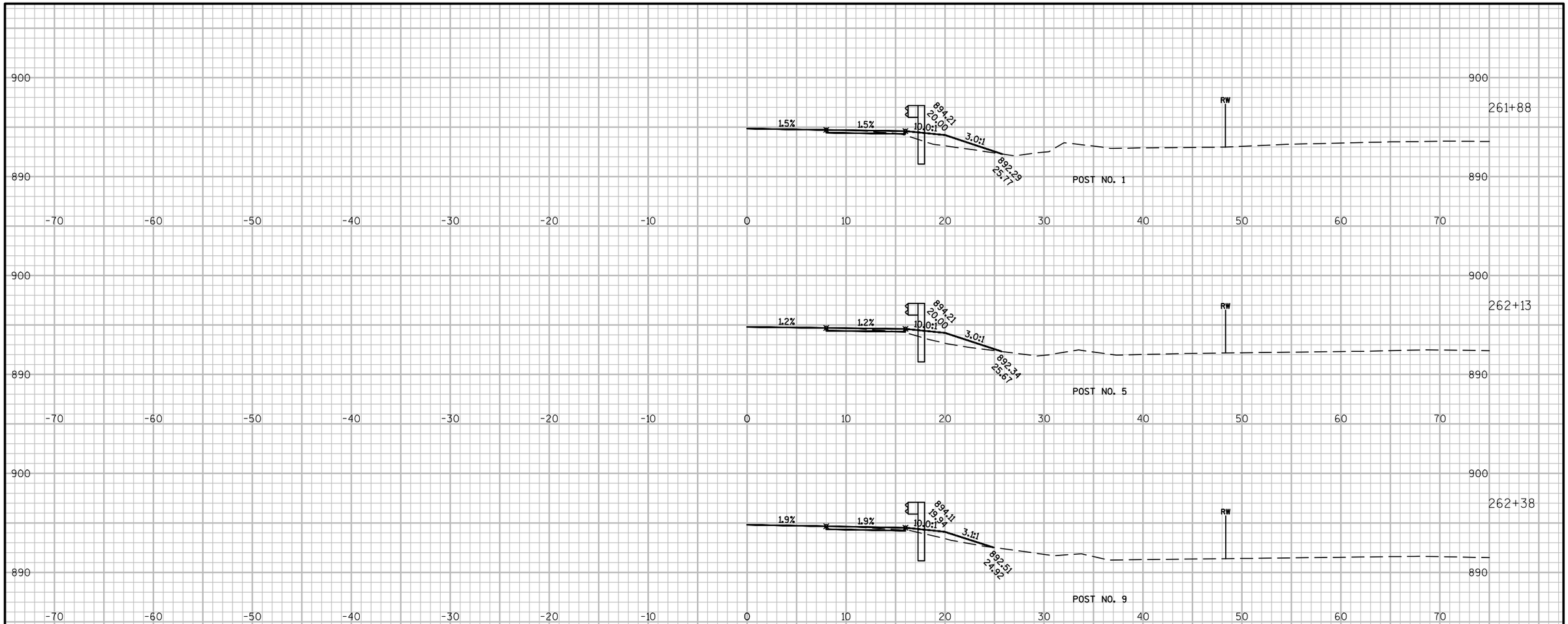

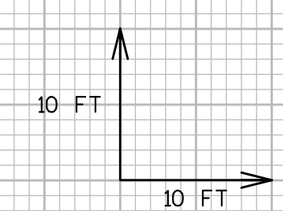

9

9

PROJECT NO:5145-00-60	HWY:STH 19	COUNTY:DANE	CROSS SECTIONS: MGS GUARDRAIL	SHEET 146	E

FILE NAME : N:\PDS\C3D\51450030\SHEETSPLAN\090201-XS.DWG
LAYOUT NAME - SECTION SHEET - (6)
PLOT DATE : 9/9/2016 4:40 PM PLOT BY : RICE, BRIAN J PLOT NAME : PLOT SCALE : 1 IN:10 FT

WISDOT/CADDS SHEET 49

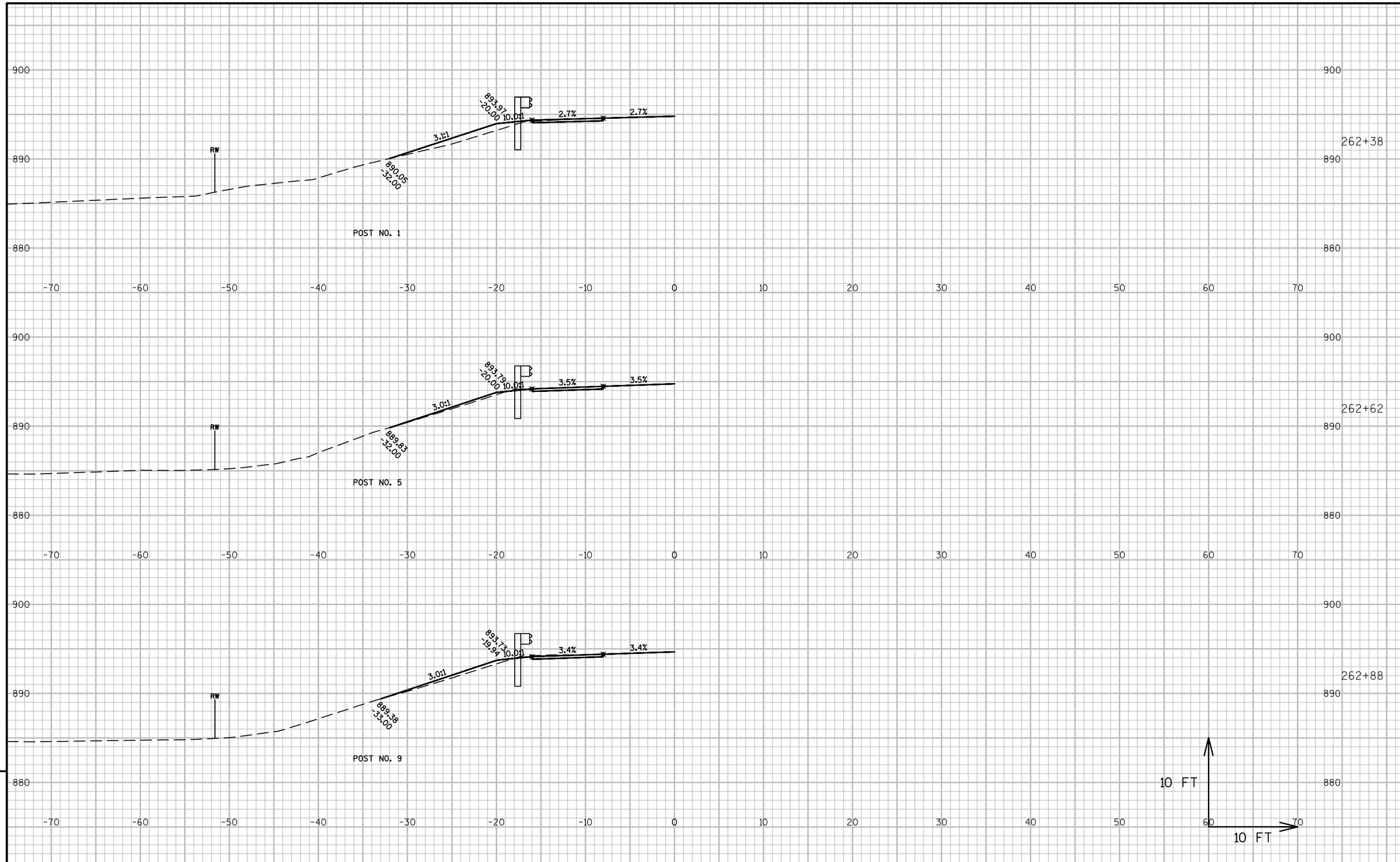

9

9

PROJECT NO:5145-00-60	HWY:STH 19	COUNTY:DANE	CROSS SECTIONS: MGS GUARDRAIL	SHEET 147	E

FILE NAME : N:\PDS\C3D\51450030\SHEETSPLAN\090201-XS.DWG
LAYOUT NAME - SECTION SHEET - (7)

PLOT DATE : 9/9/2016 4:40 PM PLOT BY : RICE, BRIAN J PLOT NAME : PLOT SCALE : 1 IN:10 FT

WISDOT/CADDS SHEET 49

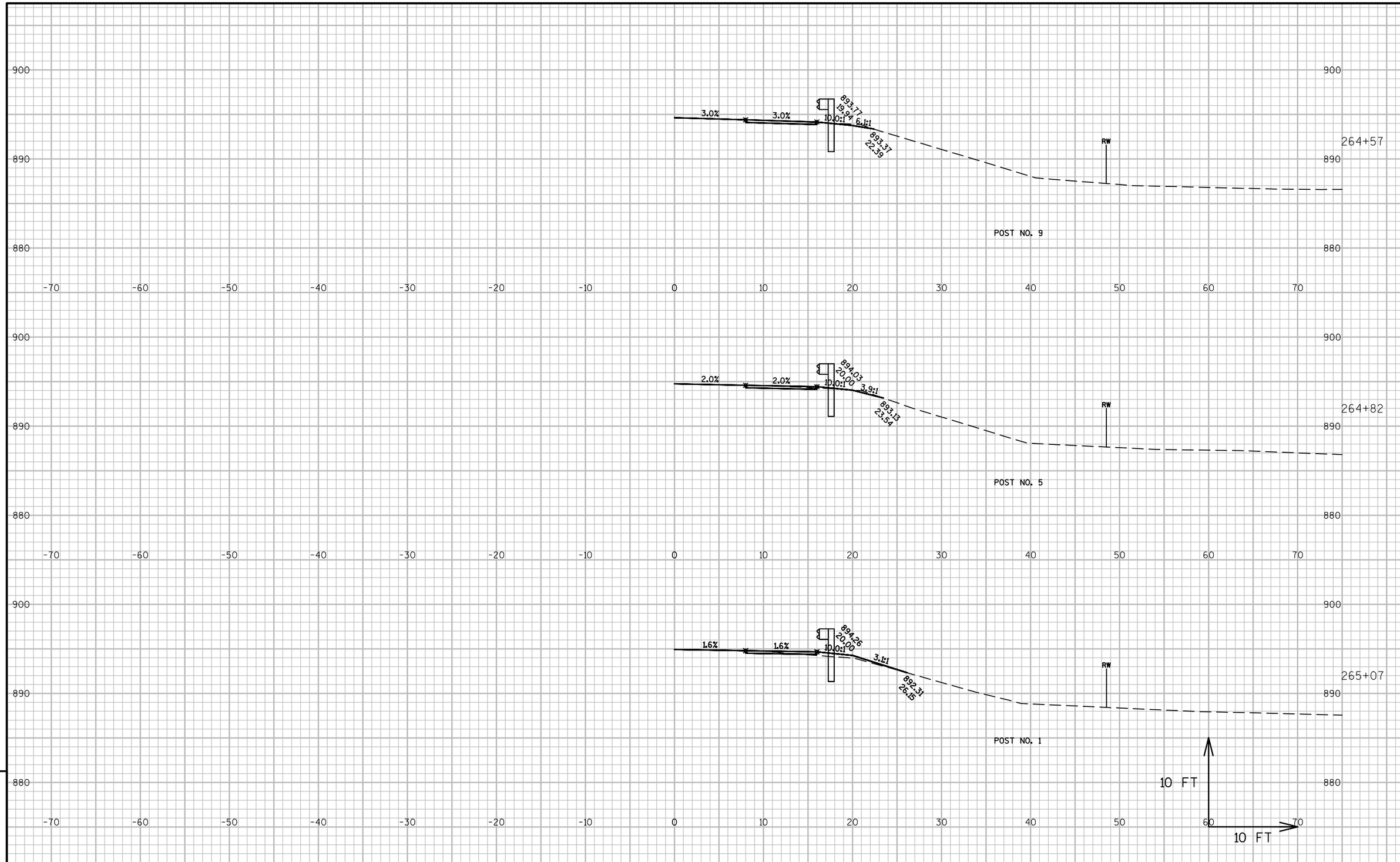

9

9

PROJECT NO:5145-00-60	HWY:STH 19	COUNTY:DANE	CROSS SECTIONS: MGS GUARDRAIL	SHEET 148	E

FILE NAME : N:\PDS\C3D\51450030\SHEETSPLAN\090201-XS.DWG
LAYOUT NAME - SECTION SHEET - (8)
PLOT DATE : 9/9/2016 4:41 PM PLOT BY : RICE, BRIAN J PLOT NAME : PLOT SCALE : 1 IN:10 FT

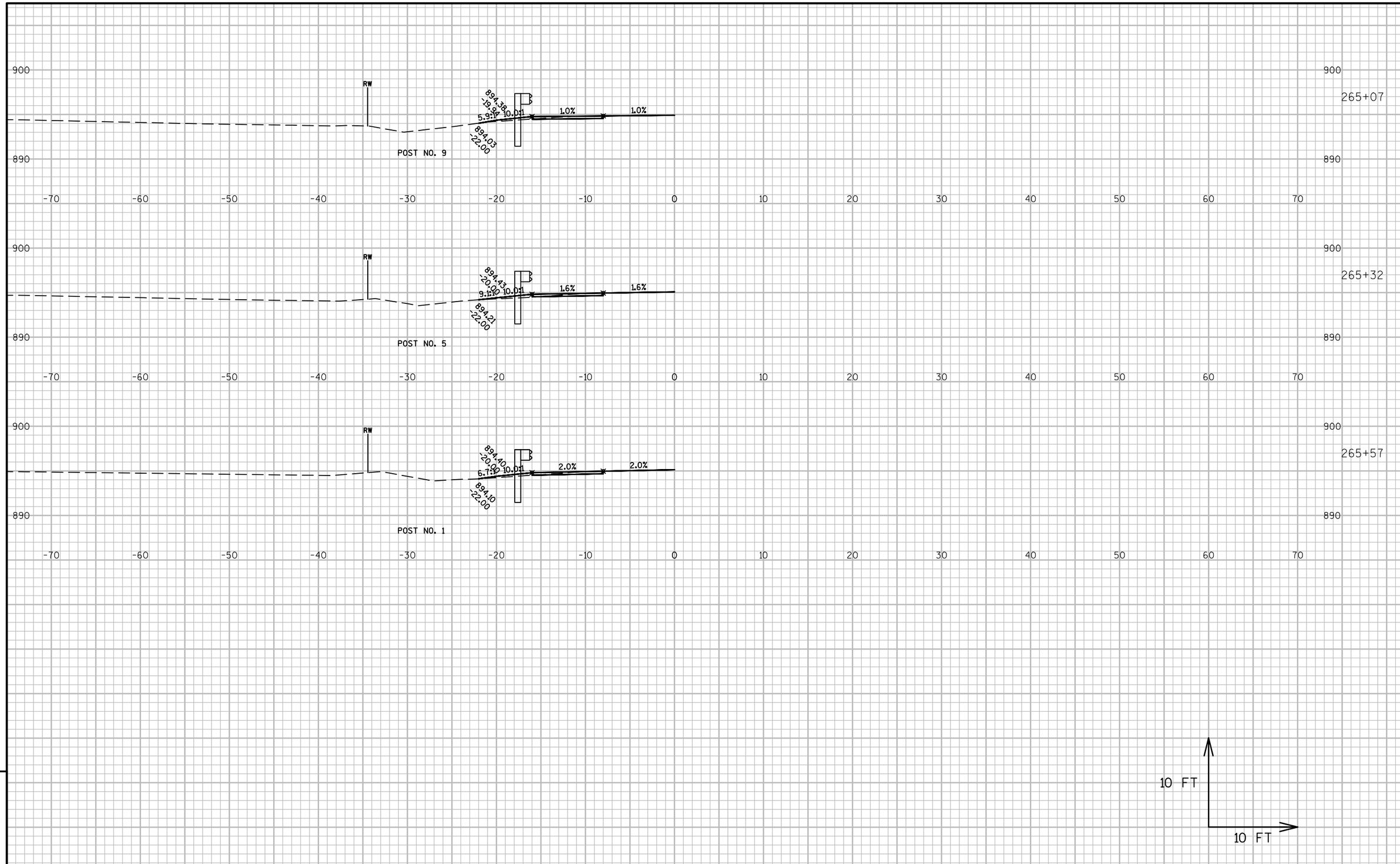

9

9

PROJECT NO:5145-00-60	HWY:STH 19	COUNTY:DANE	CROSS SECTIONS: MGS GUARDRAIL	SHEET 149	E

FILE NAME : N:\PDS\C3D\51450030\SHEETSPLAN\090201-XS.DWG
LAYOUT NAME - A-1-002
PLOT DATE : 9/9/2016 4:41 PM PLOT BY : RICE, BRIAN J PLOT NAME : PLOT SCALE : 1 IN:10 FT

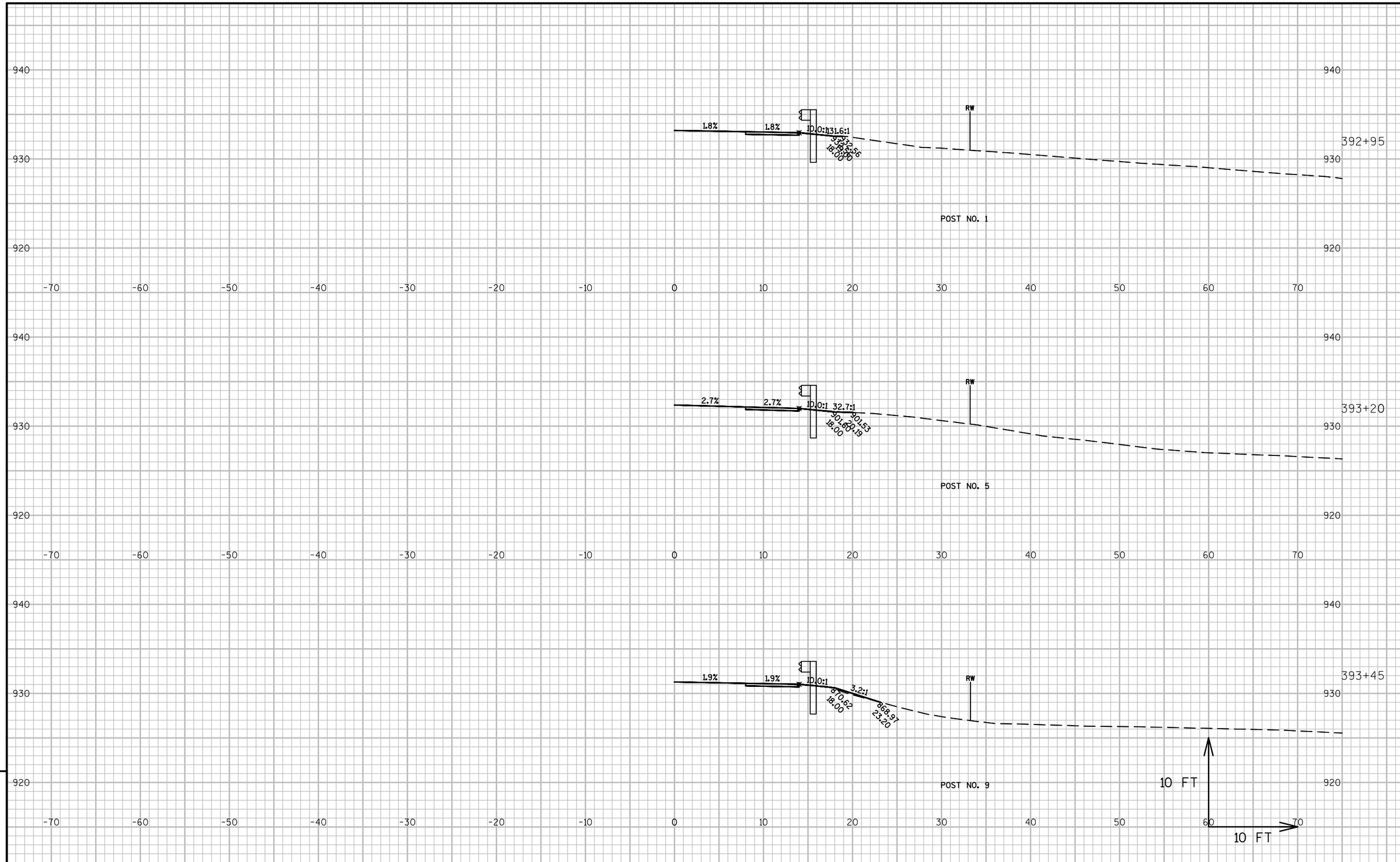

9

9

PROJECT NO:5145-00-60	HWY:STH 19	COUNTY:DANE	CROSS SECTIONS: MGS GUARDRAIL	SHEET 150	E

FILE NAME : N:\PDS\C3D\51450030\SHEETSPLAN\090203-XS.DWG
LAYOUT NAME - SECTION SHEET - (2)

PLOT DATE : 9/9/2016 4:52 PM PLOT BY : RICE, BRIAN J PLOT NAME : PLOT SCALE : 1 IN:10 FT

WISDOT/CADDS SHEET 49

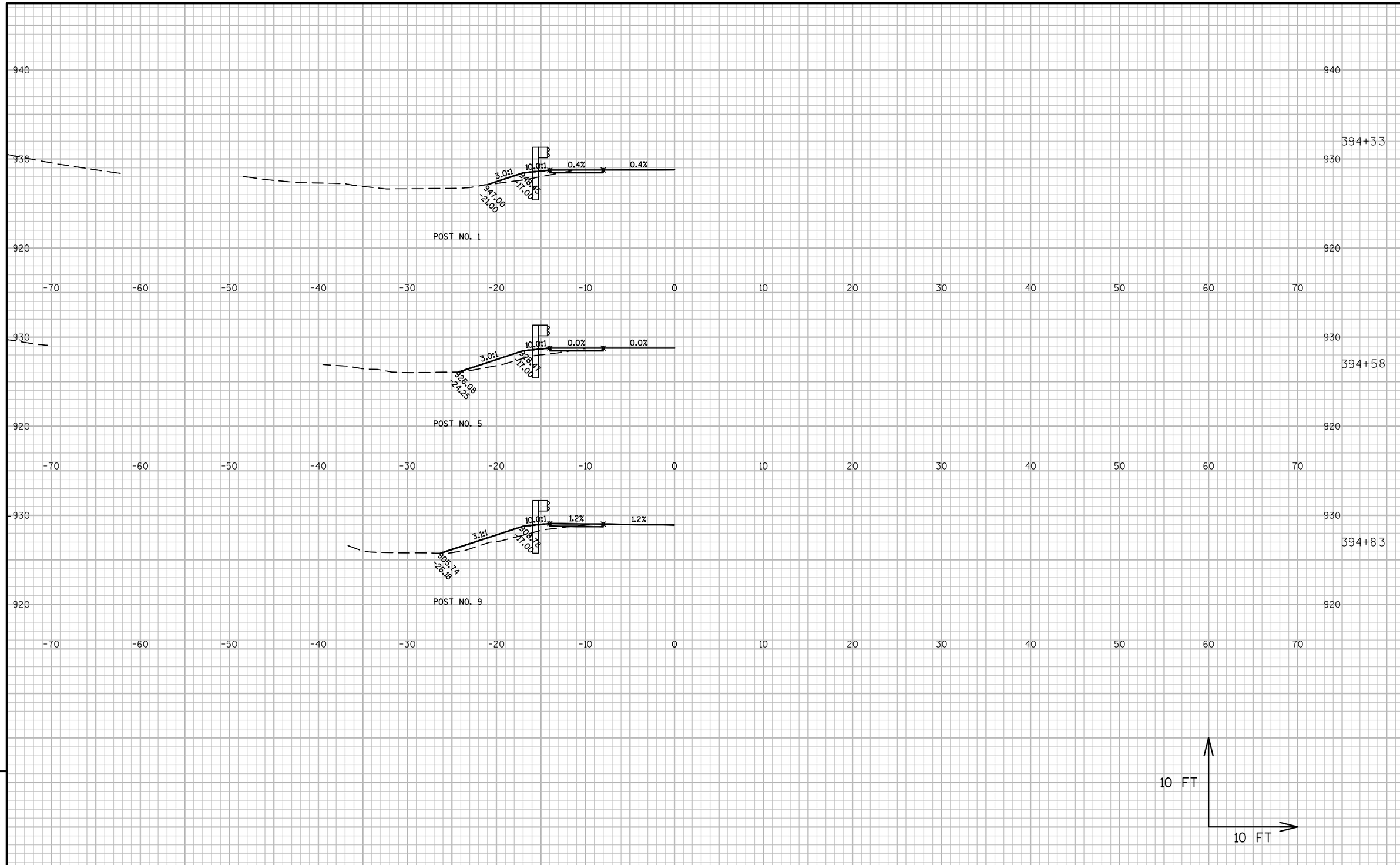

9

9

PROJECT NO:5290-02-60	HWY:STH 19	COUNTY:DANE	CROSS SECTIONS: MGS GUARDRAIL	SHEET 151	E

FILE NAME : N:\PDS\C3D\51450030\SHEETSPLAN\090203-XS.DWG
LAYOUT NAME - ****

PLOT DATE : 9/9/2016 4:52 PM PLOT BY : RICE, BRIAN J PLOT NAME : PLOT SCALE : 1 IN:10 FT

WISDOT/CADDS SHEET 49

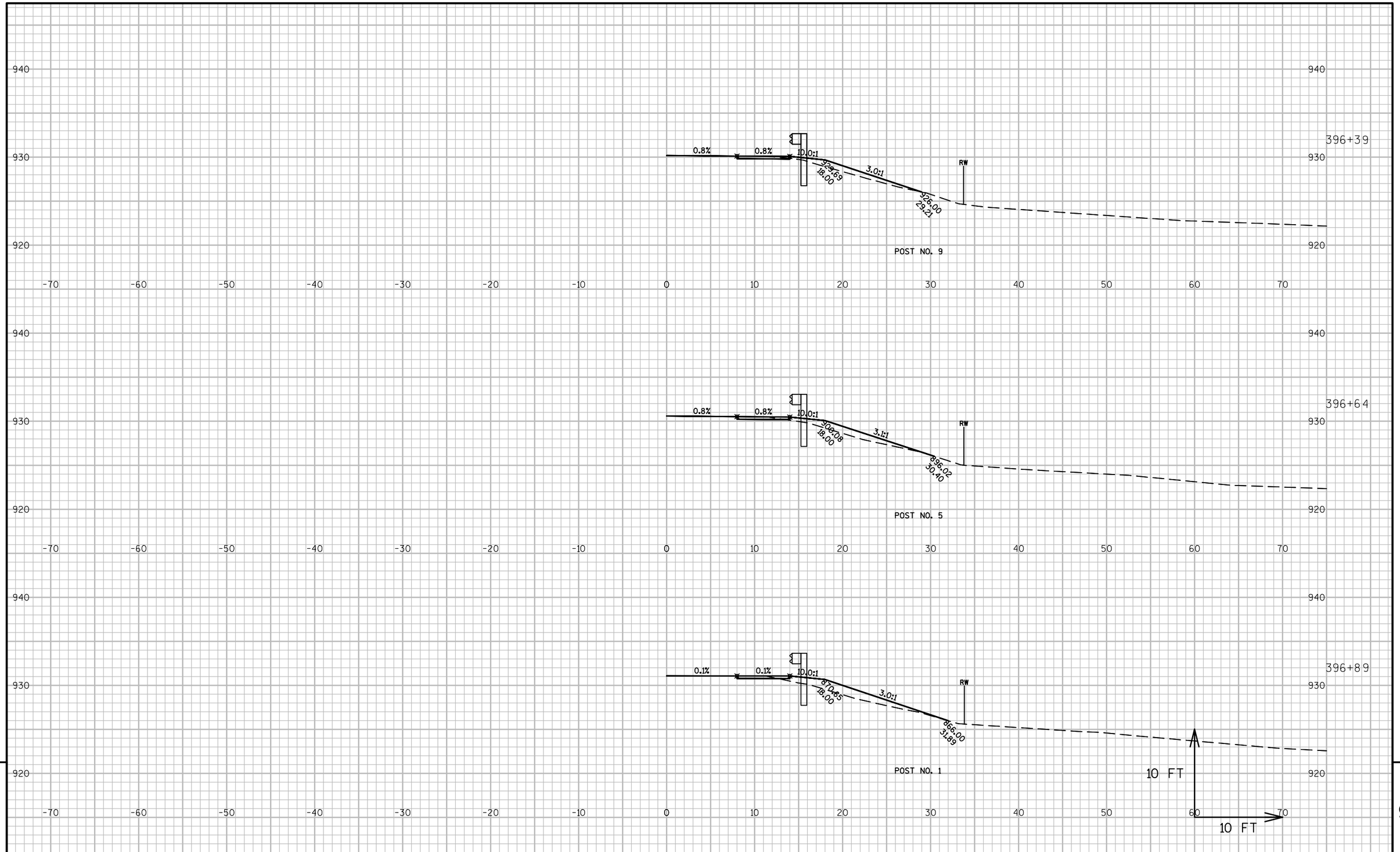

9

9

PROJECT NO:5145-00-60	HWY:STH 19	COUNTY:DANE	CROSS SECTIONS: MGS GUARDRAIL	SHEET 152	E

FILE NAME : N:\PDS\C3D\51450030\SHEETSPLAN\090203-XS.DWG
LAYOUT NAME - SECTION SHEET - (4)

PLOT DATE : 9/9/2016 4:54 PM PLOT BY : RICE, BRIAN J PLOT NAME : PLOT SCALE : 1 IN:10 FT

WISDOT/CADDS SHEET 49

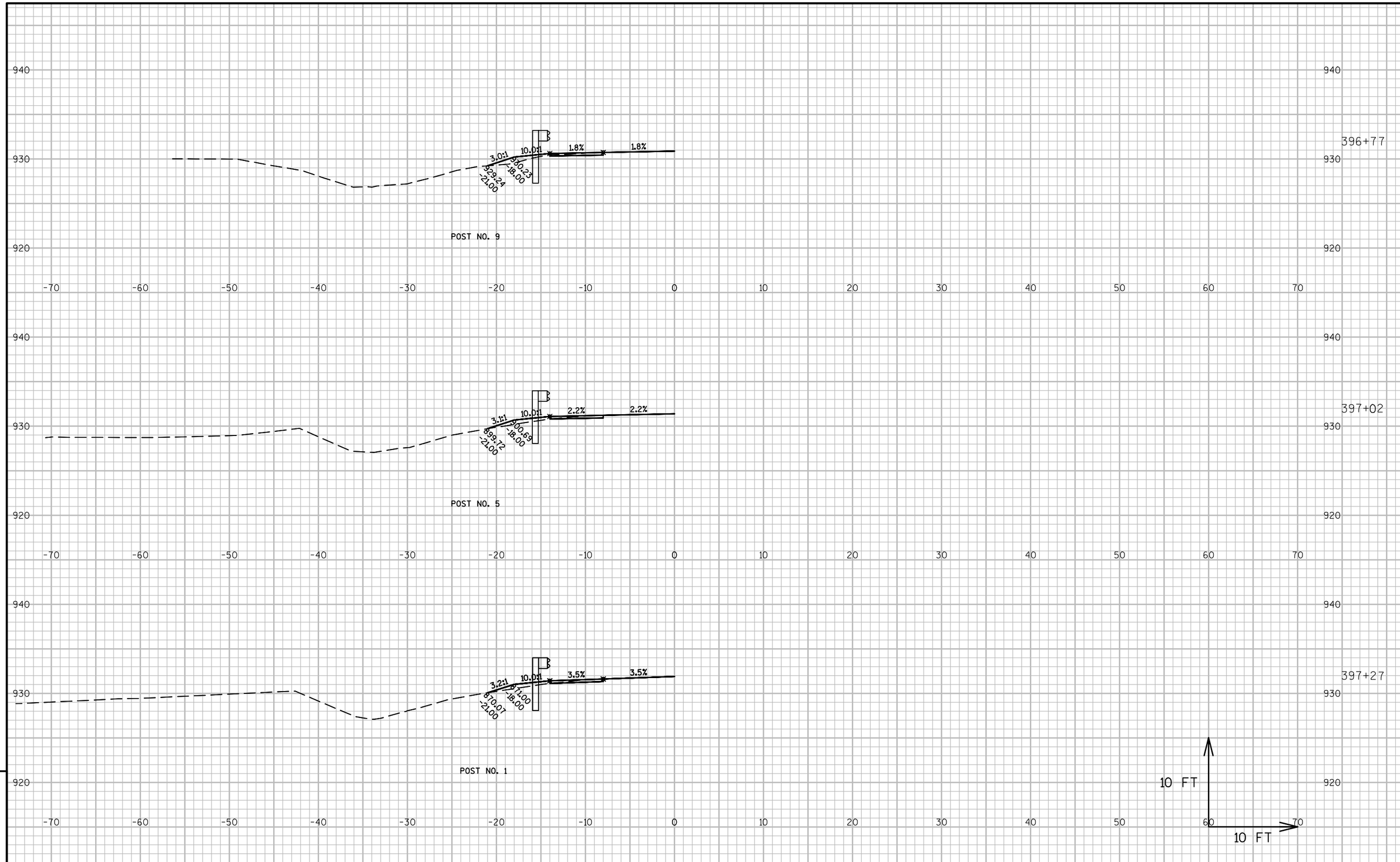

9

9

PROJECT NO:5145-00-60	HWY:STH 19	COUNTY:DANE	CROSS SECTIONS: MGS GUARDRAIL	SHEET 153	E

FILE NAME : N:\PDS\C3D\51450030\SHEETSPLAN\090203-XS.DWG
LAYOUT NAME - SECTION SHEET - (5)
PLOT DATE : 9/9/2016 4:53 PM PLOT BY : RICE, BRIAN J PLOT NAME : PLOT SCALE : 1 IN:10 FT

Wisconsin Department of Transportation

Dedicated people creating transportation solutions through innovation and exceptional service.

http://www.dot.wisconsin.gov