WIS DEC 2016

PROJECT ID: 6290-05-75
WITH: N/A

COUNTY: PORTAGE

33

ORDER OF SHEETS

TOTAL SHEETS = 228

STATE OF WISCONSIN
DEPARTMENT OF TRANSPORTATION

PLAN OF PROPOSED IMPROVEMENT

STEVENS POINT - WAUPACA

COUNTRY CLUB DRIVE TO BADGER AVENUE

USH 10

PORTAGE COUNTY

STATE PROJECT	FEDERAL PROJECT	
	PROJECT	CONTRACT
6290-05-75	WISC 2016493	1

STATE PROJECT NUMBER
6290-05-75

N

DESIGN DESIGNATION

A.A.D.T. 2008	=	17,100 - 32,700
A.A.D.T. 2035	=	22,600 - 43,300
D.H.V. 2035	=	2193 - 9200
D.D.	=	59/41
T.	=	11.3%
DESIGN SPEED	=	40 MPH
ESALS	=	10,906,200

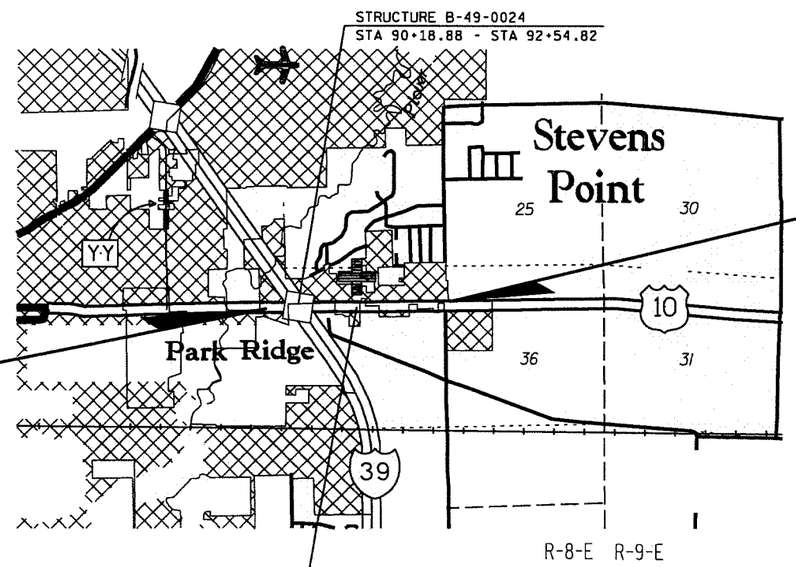

BEGIN PROJECT
STA 79+00.00
Y = 202959.68
X = 176622.11

EQUATION
STA 100+01.31 BK=
STA 101+37.11 AH

CONVENTIONAL SYMBOLS

PLAN
- CORPORATE LIMITS
- PROPERTY LINE
- LOT LINE
- LIMITED HIGHWAY EASEMENT
- EXISTING RIGHT OF WAY
- PROPOSED OR NEW R/W LINE
- SLOPE INTERCEPT
- REFERENCE LINE
- EXISTING CULVERT
- PROPOSED CULVERT (Box or Pipe)
- COMBUSTIBLE FLUIDS — CAUTION
- MARSH AREA
- WOODED OR SHRUB AREA

PROFILE
- GRADE LINE
- ORIGINAL GROUND
- MARSH OR ROCK PROFILE (To be noted as such) — ROCK
- SPECIAL DITCH — LABEL
- GRADE ELEVATION — 95.36
- CULVERT (Profile View)

UTILITIES
- ELECTRIC — E
- FIBER OPTIC — FO
- GAS — G
- SANITARY SEWER — SAN
- STORM SEWER — SS
- TELEPHONE — T
- WATER — W
- UTILITY PEDESTAL
- POWER POLE
- TELEPHONE POLE

LAYOUT
SCALE 0 — 1 MI.

TOTAL NET LENGTH OF CENTERLINE = 1.736 MI.

COORDINATES ON THIS PLAN ARE REFERENCED TO THE WISCONSIN COUNTY COORDINATE SYSTEM (WCCS), NAD 83 (1991) PORTAGE COUNTY

ELEVATIONS ON THIS PLAN ARE REFERENCED TO NAVD 88

ORIGINAL PLANS PREPARED BY

Mead & Hunt
Mead & Hunt, Inc.
1345B North Road
Green Bay, WI 54313
920.496.0500
fax: 920.496.0576
www.meadhunt.com

WISCONSIN
CHRISTOPHER M. ROSSMILLER
E-37423
De Pere, Wisconsin
PROFESSIONAL ENGINEER

7/14/2016 (Date) (Signature)

STATE OF WISCONSIN
DEPARTMENT OF TRANSPORTATION

PREPARED BY

Surveyor	QUEST CIVIL ENGINEERS, LLC.
Designer	MEAD & HUNT, INC.
Project Manager	JEFFREY STEWART
Regional Examiner	NCR
Regional Supervisor	MICHAEL KRETSCHMER
C.O. Examiner	

APPROVED FOR THE DEPARTMENT
DATE: 7/18/16 (Signature)

E

GENERAL NOTES

NO TREES OR SHRUBS SHALL BE REMOVED WITHOUT APPROVAL OF THE ENGINEER

THE LOCATIONS OF EXISTING AND PROPOSED UTILITY INSTALLATIONS AS SHOWN ON THE PLANS ARE APPROXIMATE. THERE MAY BE OTHER UTILITY INSTALLATIONS WITHIN THE PROJECT AREA THAT ARE NOT SHOWN.

THE CONTRACTOR SHALL NOTIFY DIGGERS HOTLINE AND AFFECTED UTILITIES PRIOR TO THE START OF WORK. ANY LOCAL MUNICIPAL UTILITY WHICH IS NOT A MEMBER OF THE DIGGERS HOTLINE MUST BE CONTACTED SEPARATELY.

WHEN THE QUANTITY OF HMA PAVEMENT OR BASE AGGREGATE DENSE IS MEASURED FOR PAYMENT BY THE TON, THE DEPTH OR THICKNESS OF THE COURSE SHOWN ON THE PLAN IS APPROXIMATE AND THE ACTUAL THICKNESS WILL DEPEND ON THE DISTRIBUTION OF THE MATERIAL AS DIRECTED BY THE ENGINEER.

ALL CONCRETE PAVEMENT REPLACEMENT WHICH ARE LONGITUDUNALLY IN EXCESS OF 10 FEET AND ARE ADJACENT TO EXISTING CONCRETE PAVEMENT SHALL BE TIED TO THE EXISTING PAVEMENT USING PAVEMENT TIES. DETAILS FOR PAVEMENT TIE CONSTRUCTION SHALL CONFORM TO THE STANDARD SPECIFICATIONS AND STANDARD DETAIL DRAWINGS.

THE CONTRACTOR WILL BE RESPONSIBLE FOR RESHAPING AND RESEEDING ANY PREVIOUSLY GRASS AREAS WHICH ARE DISTURBED BY THEIR OPERATION. THIS SHALL BE INCIDENTAL TO THE FINSHING ROADWAY ITEM.

ORDER OF SECTION 2 SHEETS

COMMUNICATIONS

AT&T WISCONSIN
ATTN: RICK POLOLAK
304 SOUTH DEWEY STREET - 4TH FLR
EAU CLAIRE, WI 54701
PHONE: 715-893-5565

ELECTRIC

WISCONSIN PUBLIC SERVICE
ATTN: DON LUTZOW
P.O. BOX 1166
WAUSAU, WI 54402
PHONE: 715-848-7487
MOBILE: 715-493-7802

GAS

WISCONSIN PUBLIC SERVICE
ATTN: MATT CURTIN
2001 PLOVER ROAD
PLOVER, WI 54467
PHONE: 715-345-7582
MOBILE: 920-493-0050

SANITARY SEWER,

CITY OF STEVENS POINT
ATTN: ROB MOLSKI
300 BLISS AVENUE
STEVENS POINT, WI 54481
PHONE: 715-341-2012
MOBILE: 715-340-6472

STREET LIGHTING

CITY OF STEVENS POINT
ATTN: LANCE MUSACK
1515 STRONGS AVENUE
STEVENS POINT, WI 54481
PHONE: 715-346-1560
MOBILE: 715-340-6471

WATER

CITY OF STEVENS POINT
ATTN: GARY KUPLIC
300 BLISS AVENUE
STEVENS POINT, WI 54481
PHONE: 715-345-5260

COMMUNICATIONS

WINDSTREAM KDL INC
ATTN: DENNIS RUESS
13935 BISHOPS DRIVE
BROOKFIELD, WI 53005
PHONE: 812-456-1249
MOBILE: 608-514-5587

COMMUNICATIONS

CHARTER COMMUNICATIONS
ATTN: RUDY RUDIGER
5024 HEFFRON STREET
STEVENS POINT, WI 54481
PHONE: 715-204-5339

COMMUNICATIONS

AMHERST TELEPHONE COMPANY
ATTN: TOM IVERSON
120 MILL STREET - P.O. BOX 279
AMHERST, WI 54406
PHONE: 715-824-2006

OTHER AGENCIES

WI DEPT OF NATURAL RESOURCES
ATTN: MARC HERSHFIELD
473 GRIFFITH DRIVE
WISCONSIN RAPIDS, WI 54494
PHONE: 715-421-7867
marc.hershfield@wisconsin.gov

DIGGERS HOTLINE
Dial 811 or (800) 242-8511
www.DiggersHotline.com

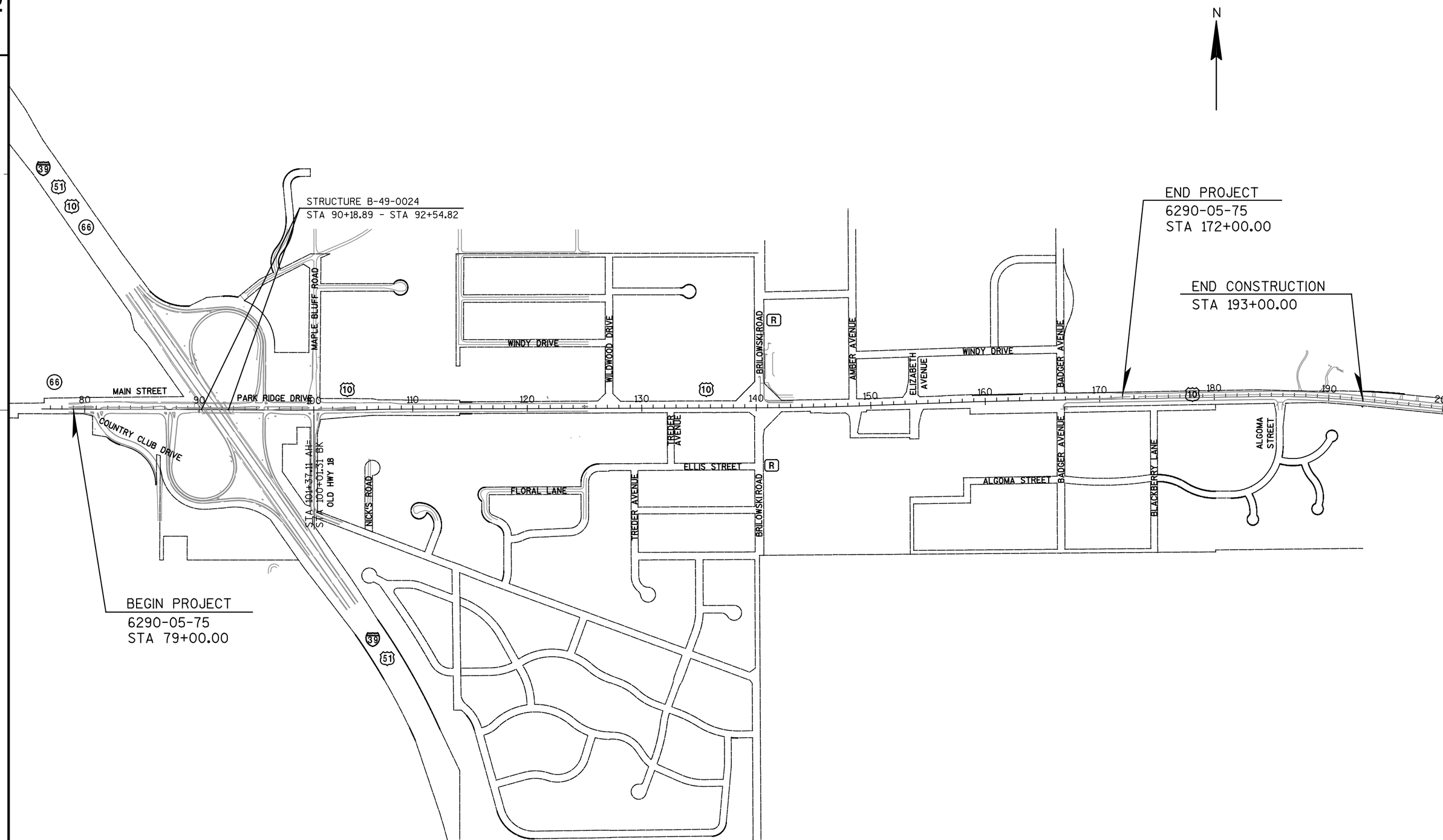

PROJECT NO:6290-05-75	HWY:USH 10	COUNTY:PORTAGE	PROJECT OVERVIEW	SHEET 3	E

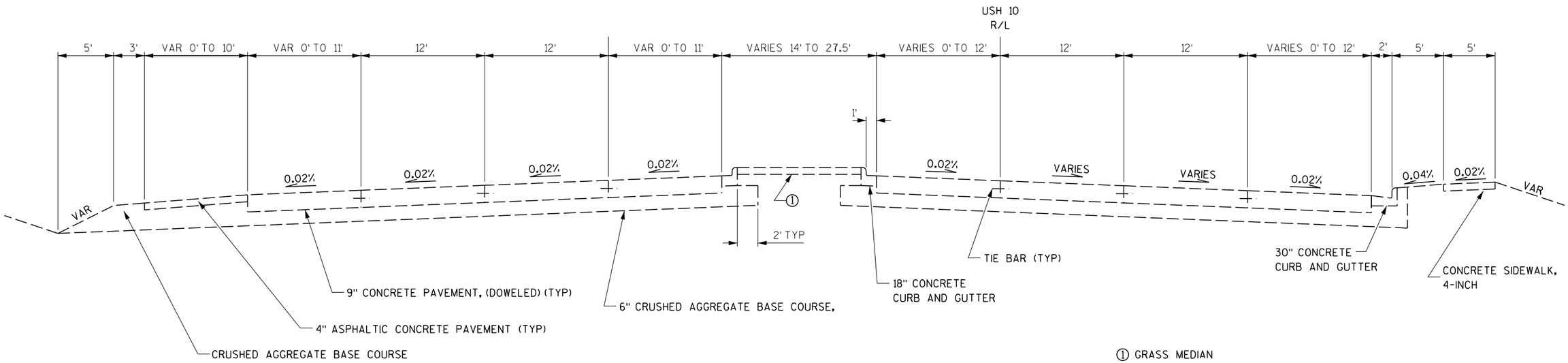

EXISTING TYPICAL SECTION USH 10

STA 79+00.00 TO STA 90+18.89
STA 92+54.82 TO STA 100+16.00

① GRASS MEDIAN
STA 81+41.00 TO STA 89+15.00
STA 93+36.00 TO STA 97+61.00

4" CONCRETE PAVEMENT
STA 79+00.00 TO STA 81+41.00
STA 89+15.00 TO STA 93+36.00

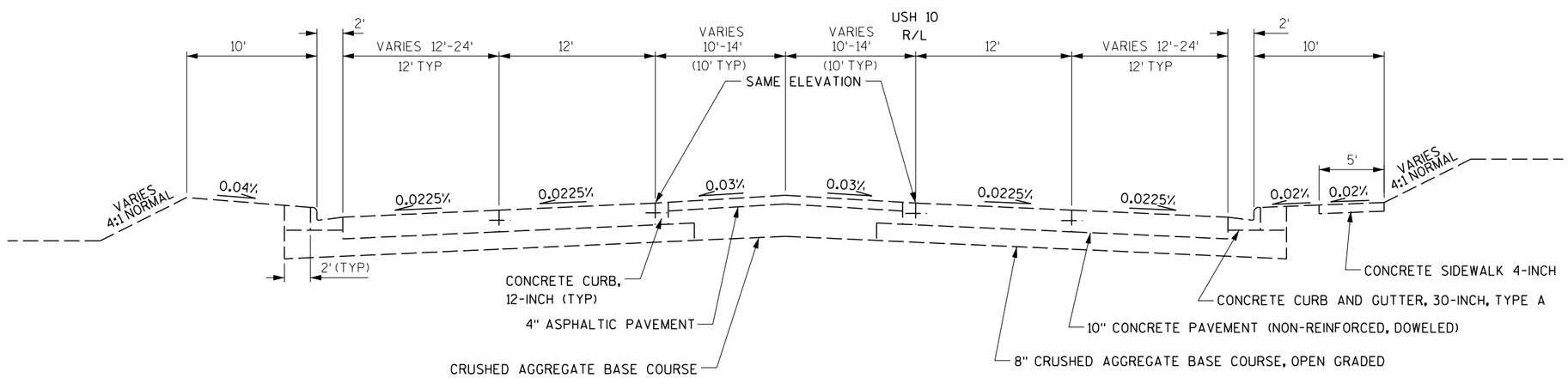

EXISTING TYPICAL SECTION USH 10

STA 100+16.00 TO STA 172+00.00

PROJECT NO:6290-05-75	HWY:USH 10	COUNTY:PORTAGE	EXISTING TYPICAL SECTIONS	SHEET 4	E

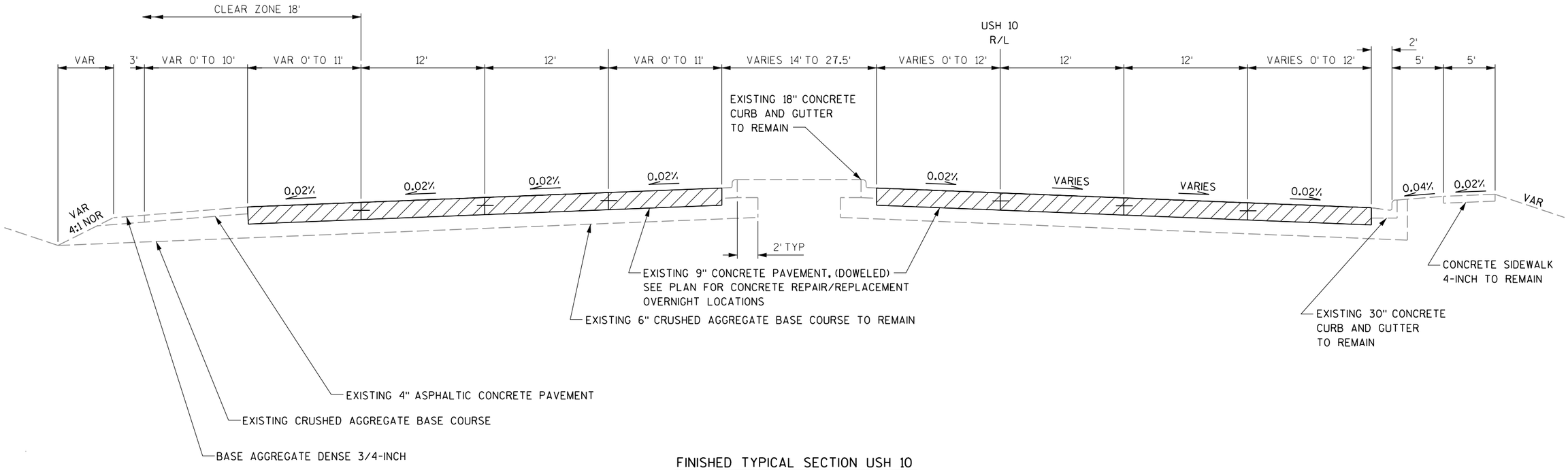

FINISHED TYPICAL SECTION USH 10

STA 79+00.00 TO STA 90+18.89
STA 92+54.82 TO STA 100+16.00

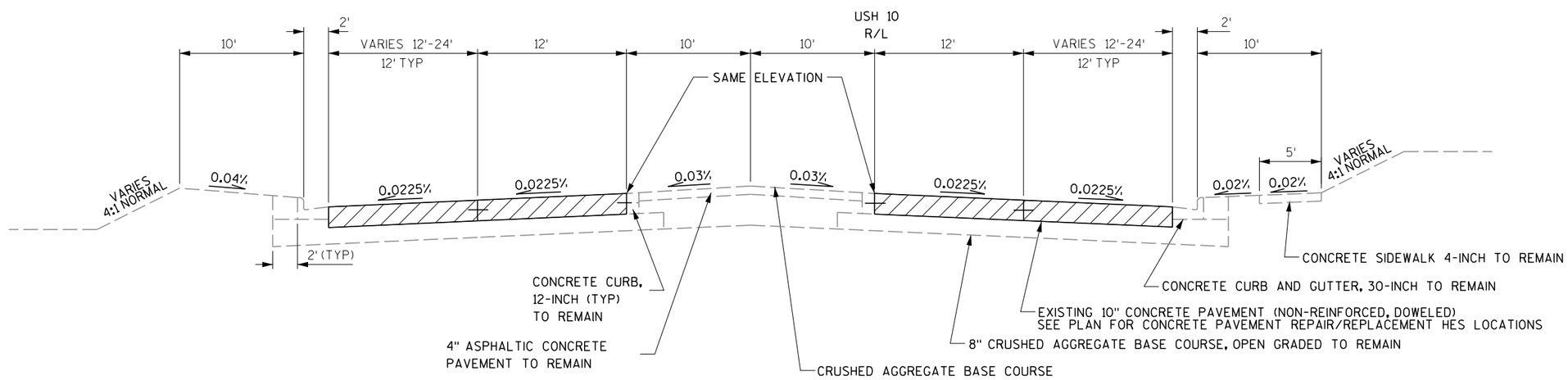

FINISHED TYPICAL SECTION USH 10

STA 100+16.00 TO STA 172+00.00

PROJECT NO:6290-05-75	HWY:USH 10	COUNTY:PORTAGE	FINISHED TYPICAL SECTIONS	SHEET 5	E

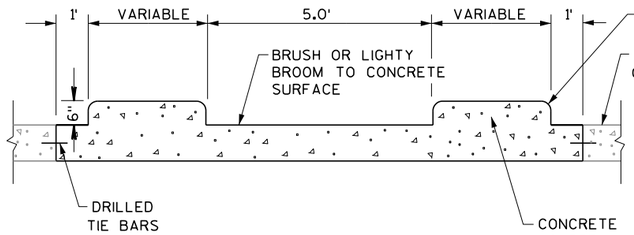

ISLAND DETAILS

POINT NO.	NORTHING	EASTING	RADIUS LENGTH
70	203005.58	178676.74	2.5'
71	203007.17	178692.18	6.0'

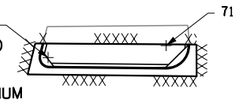

NOTES:

CONTRACTOR

NOTIFY WISDOT ELECTRICIAN, KEN RADKE (715)459-4264, (5) WORKING DAYS PRIOR TO ELECTRICAL WORK AT THE USH 10/MAPLE DRIVE INTERSECTION.

CONTRACTOR TO INSTALL (TYPE 1 CONCRETE BASE, PEDESTAL BASE, 3.5 FT ALUMINUM TRAFFIC SIGNAL STANDARD, AND 2-INCH SCHEDULE 40 CONDUIT).

WISDOT ELECTRICIAN

AFTER NOTIFICATION BY CONTRACTOR, WILL TERMINATE EXISTING PED BUTTON WIRES, REMOVE EXISTING PED BUTTONS, SUPPLY AND INSTALL NEW PED BUTTONS ON THE CONTRACTOR INSTALLED STANDARD, SUPPLY AND INSTALL NEW SIGNAL CABLE AND TERMINATE WIRES ON NEW PED BUTTONS, AND WILL SUPPLY AND INSTALL INSTRUCTIONAL DECALS VERSUS SIGNS).

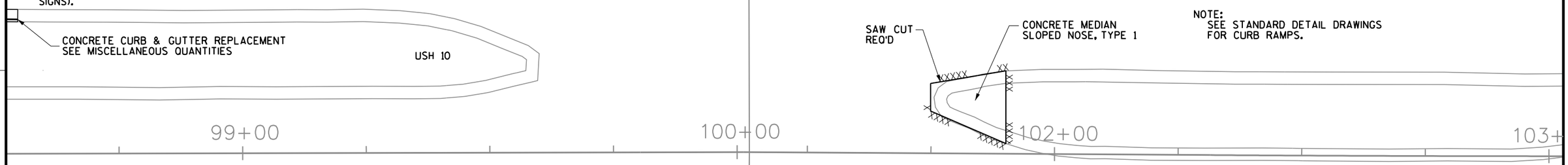

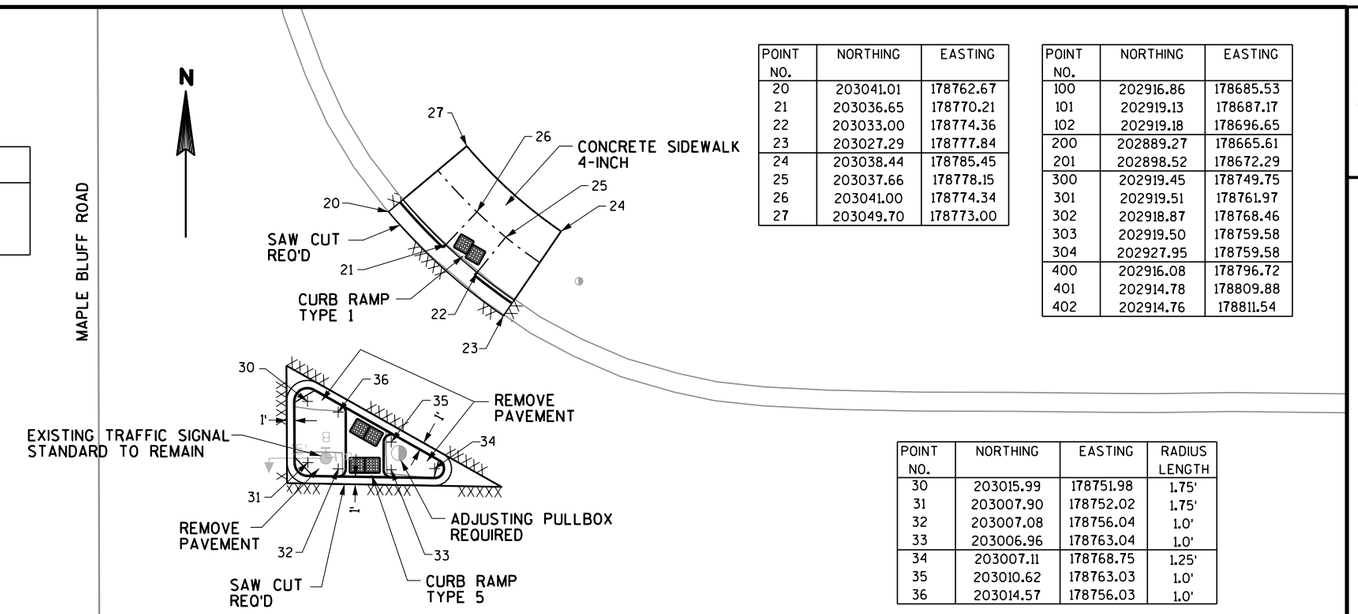

POINT NO.	NORTHING	EASTING
20	203041.01	178762.67
21	203036.65	178770.21
22	203033.00	178774.36
23	203027.29	178777.84
24	203038.44	178785.45
25	203037.66	178778.15
26	203041.00	178774.34
27	203049.70	178773.00

POINT NO.	NORTHING	EASTING
100	202916.86	178685.53
101	202919.13	178687.17
102	202919.18	178696.65
200	202889.27	178665.61
201	202898.52	178672.29
300	202919.45	178749.75
301	202919.51	178761.97
302	202918.87	178768.46
303	202919.50	178759.58
304	202927.95	178759.58
400	202916.08	178796.72
401	202914.78	178809.88
402	202914.76	178811.54

POINT NO.	NORTHING	EASTING	RADIUS LENGTH
30	203015.99	178751.98	1.75'
31	203007.90	178752.02	1.75'
32	203007.08	178756.04	1.0'
33	203006.96	178763.04	1.0'
34	203007.11	178768.75	1.25'
35	203010.62	178763.03	1.0'
36	203014.57	178756.03	1.0'

NOTE:
SEE STANDARD DETAIL DRAWINGS FOR CURB RAMPS.

POINT NO.	NORTHING	EASTING	RADIUS LENGTH
1	202923.74	178674.95	1.25'
2	202919.97	178683.46	1.0'
3	202916.64	178688.46	-
4	202915.92	178693.86	1.75'
5	202915.67	178694.57	1.0'
6	202922.67	178694.68	1.0'
7	202923.28	178693.94	1.75'
8	202921.63	178685.89	-

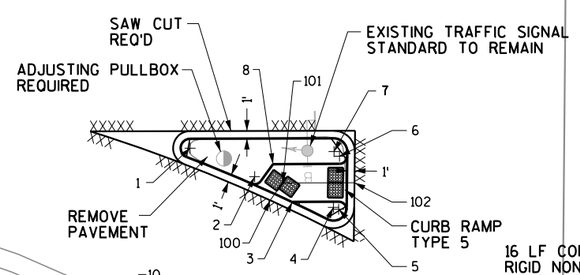

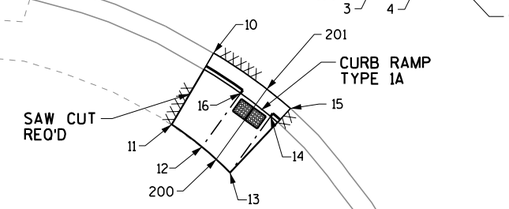

POINT NO.	NORTHING	EASTING
10	202903.30	178665.25
11	202893.87	178659.71
12	202890.91	178663.72
13	202887.51	178667.42
14	202894.92	178672.77
15	202895.97	178675.38
16	202897.99	178668.83

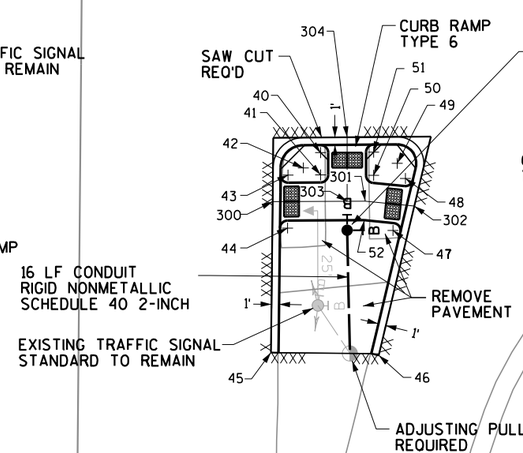

1-CONCRETE BASE TYPE 1
1-PEDESTAL BASE
1-TRAFFIC SIGNAL STANDARD ALUMINUM 3.5 FEET

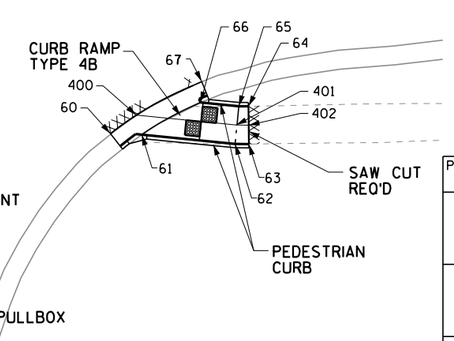

POINT NO.	NORTHING	EASTING
60	202913.63	178793.29
61	202913.50	178797.39
62	202912.28	178809.75
63	202912.26	178811.58
64	202917.27	178811.50
65	202917.26	178810.24
66	202917.76	178805.18
67	202920.52	178805.35

POINT NO.	NORTHING	EASTING	RADIUS LENGTH
40	202925.93	178756.08	1.0'
41	202922.98	178756.08	1.0'
42	202923.91	178753.80	3.0'
43	202922.96	178751.79	1.0'
44	202915.96	178751.71	1.0'
45	202899.52	178749.53	-
46	202899.14	178763.74	-
47	202915.64	178765.63	1.0'
48	202922.51	178767.27	1.0'
49	202924.50	178766.21	2.5'
50	202922.92	178763.08	1.0'
51	202925.97	178763.08	1.0'
52	202917.01	178761.85	-

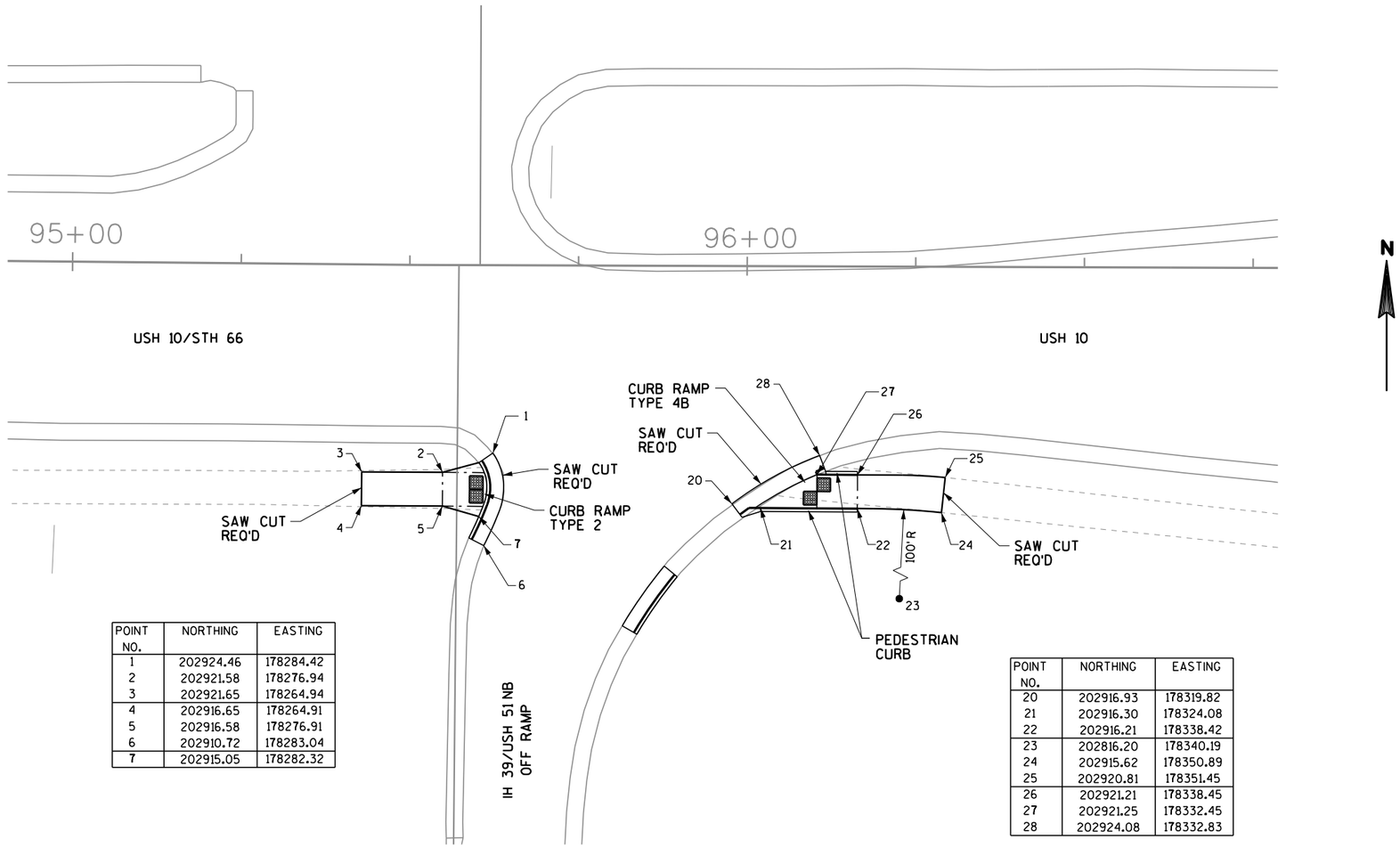

POINT NO.	NORTHING	EASTING
1	202924.46	178284.42
2	202921.58	178276.94
3	202921.65	178264.94
4	202916.65	178264.91
5	202916.58	178276.91
6	202910.72	178283.04
7	202915.05	178282.32

POINT NO.	NORTHING	EASTING
20	202916.93	178319.82
21	202916.30	178324.08
22	202916.21	178338.42
23	202816.20	178340.19
24	202915.62	178350.89
25	202920.81	178351.45
26	202921.21	178338.45
27	202921.25	178332.45
28	202924.08	178332.83

2

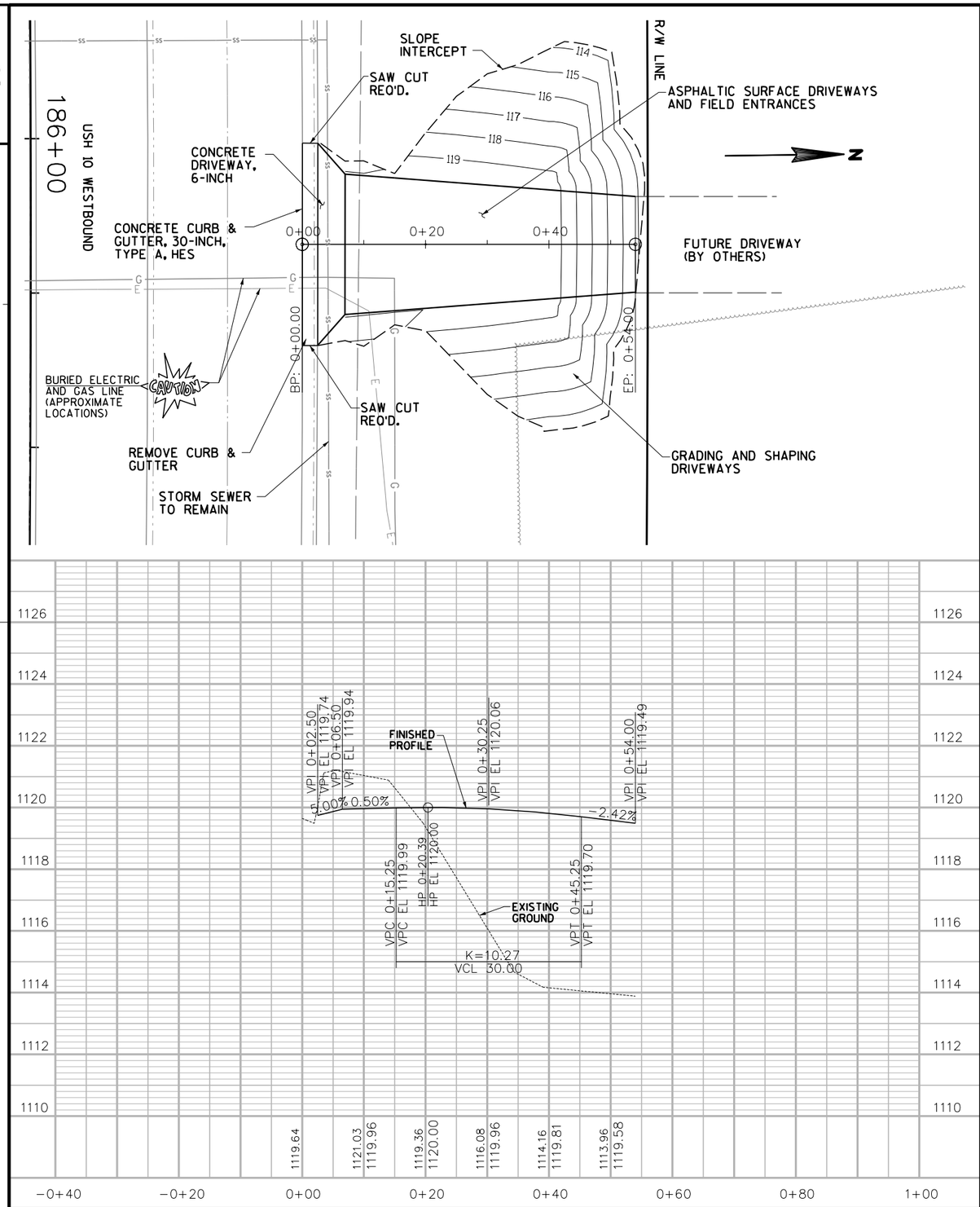

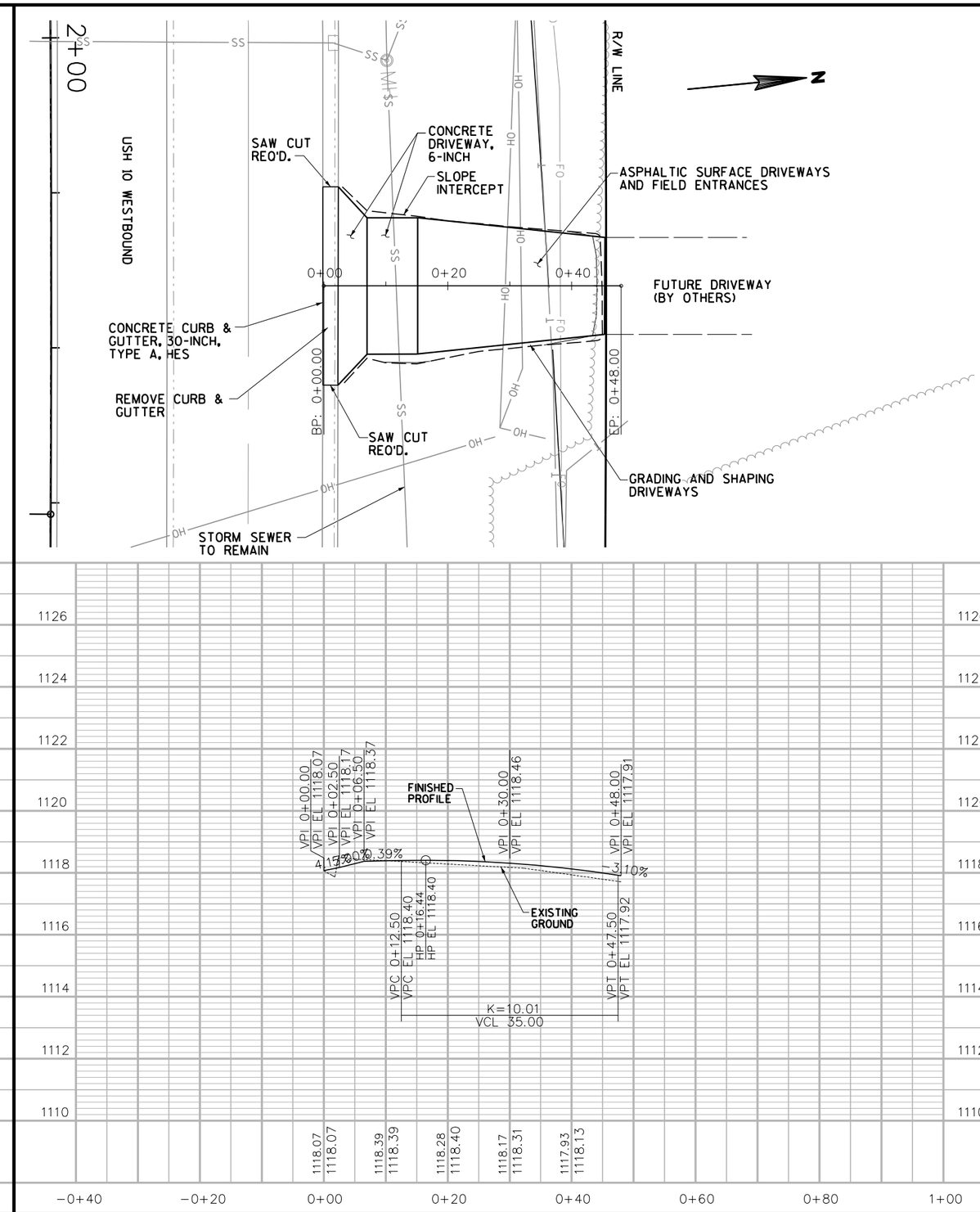

2

PROJECT NO:6290-05-75	HWY:USH 10	COUNTY:PORTAGE	CONSTRUCTION DETAIL - DRIVEWAYS EAST	SHEET 8	E

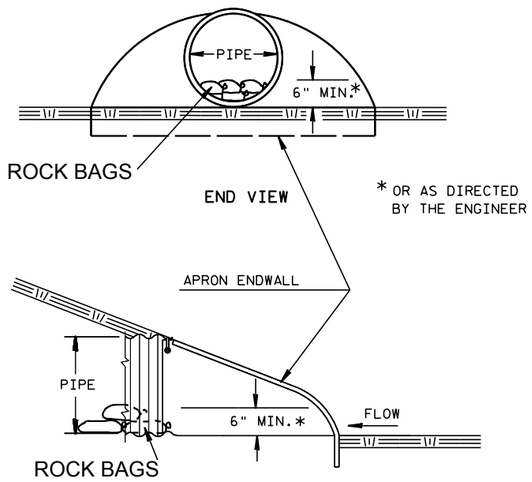

CULVERT PIPE CHECK

2

LEGEND

EXISTING SIGN MOUNTED ON POST(S)

PROPOSED SIGN MOUNTED ON POST(S)

(XXX) DENOTES SIGN NUMBER

SIGNING NOTES:

PERMANENT SIGN LOCATIONS ARE APPROXIMATE. FINAL LOCATIONS SHALL BE PLACED IN ACCORDANCE TO DETAILS AND MUTCD.

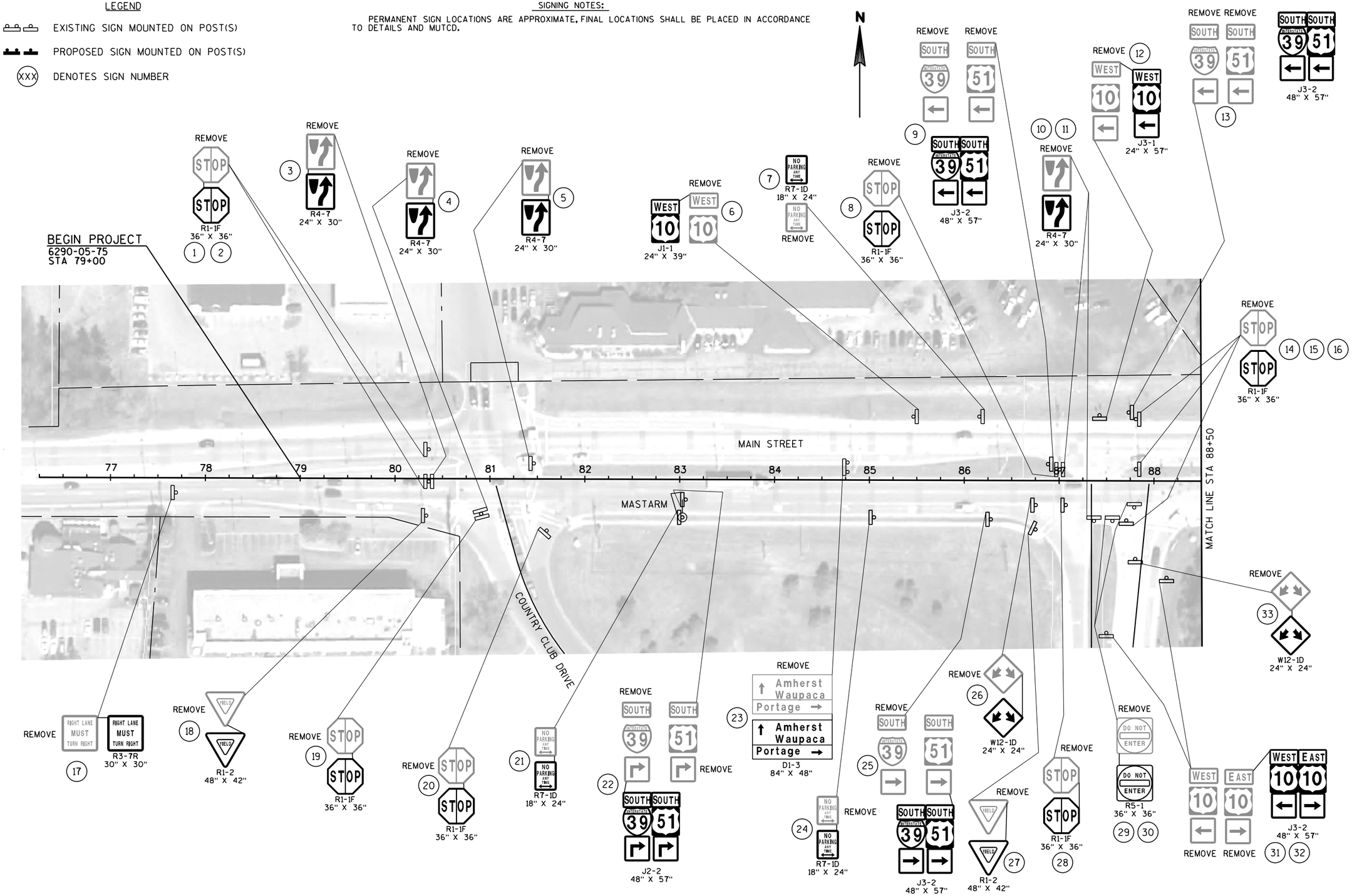

2

PROJECT NO:6290-05-75	HWY:USH 10	COUNTY:PORTAGE	PERMANENT SIGNING	SHEET 10	E

2

SIGNING NOTES:

PERMANENT SIGN LOCATIONS ARE APPROXIMATE. FINAL LOCATIONS SHALL BE PLACED IN ACCORDANCE TO DETAILS AND MUTCD.

LEGEND

EXISTING SIGN MOUNTED ON POST(S)

PROPOSED SIGN MOUNTED ON POST(S)

(XXX) DENOTES SIGN NUMBER

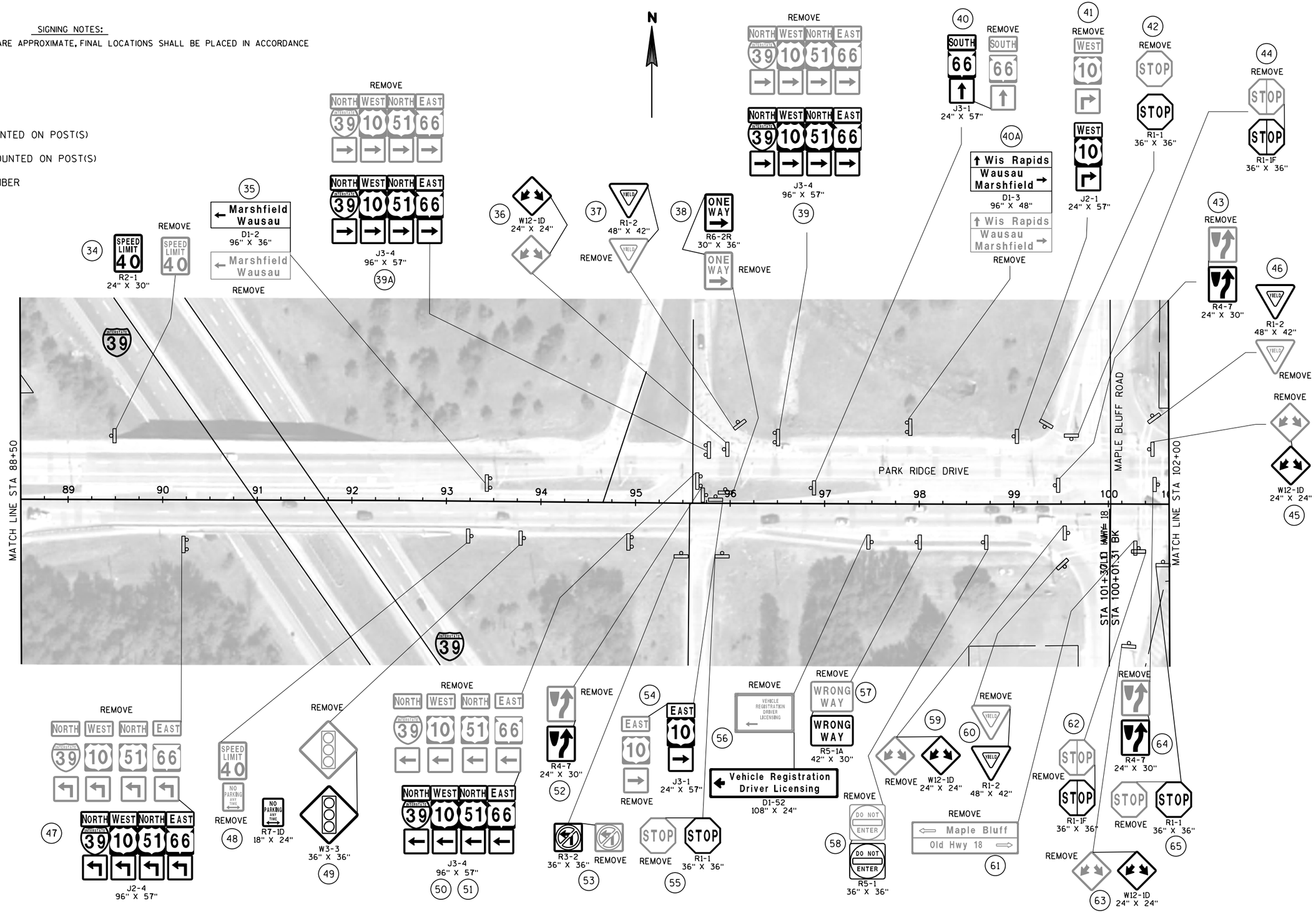

PROJECT NO:6290-05-75	HWY:USH 10	COUNTY:PORTAGE	PERMANENT SIGNING	SHEET 11	E

2

SIGNING NOTES:

PERMANENT SIGN LOCATIONS ARE APPROXIMATE. FINAL LOCATIONS SHALL BE PLACED IN ACCORDANCE TO DETAILS AND MUTCD.

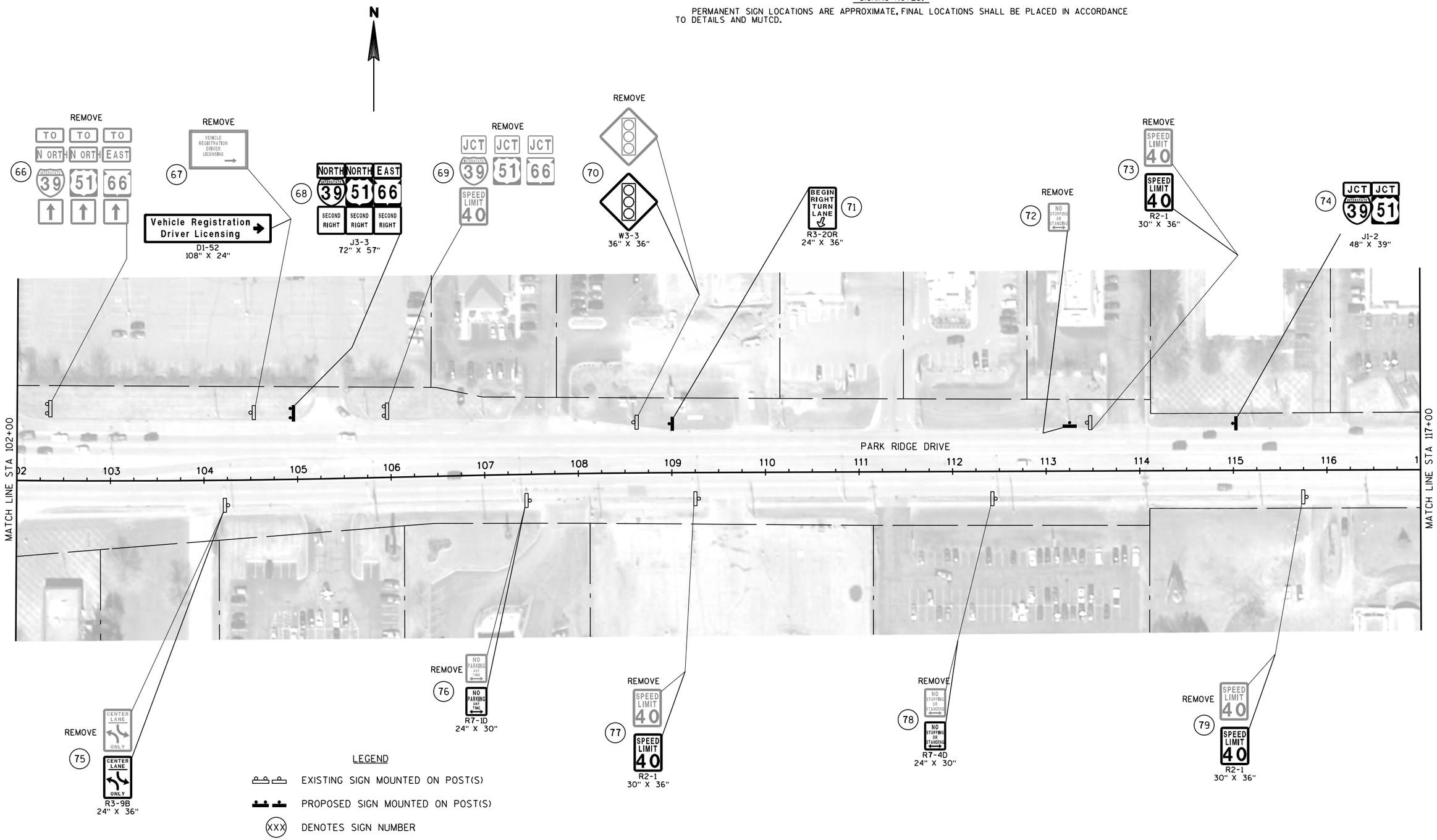

PROJECT NO:6290-05-75	HWY:USH 10	COUNTY:PORTAGE	PERMANENT SIGNING	SHEET 12	E

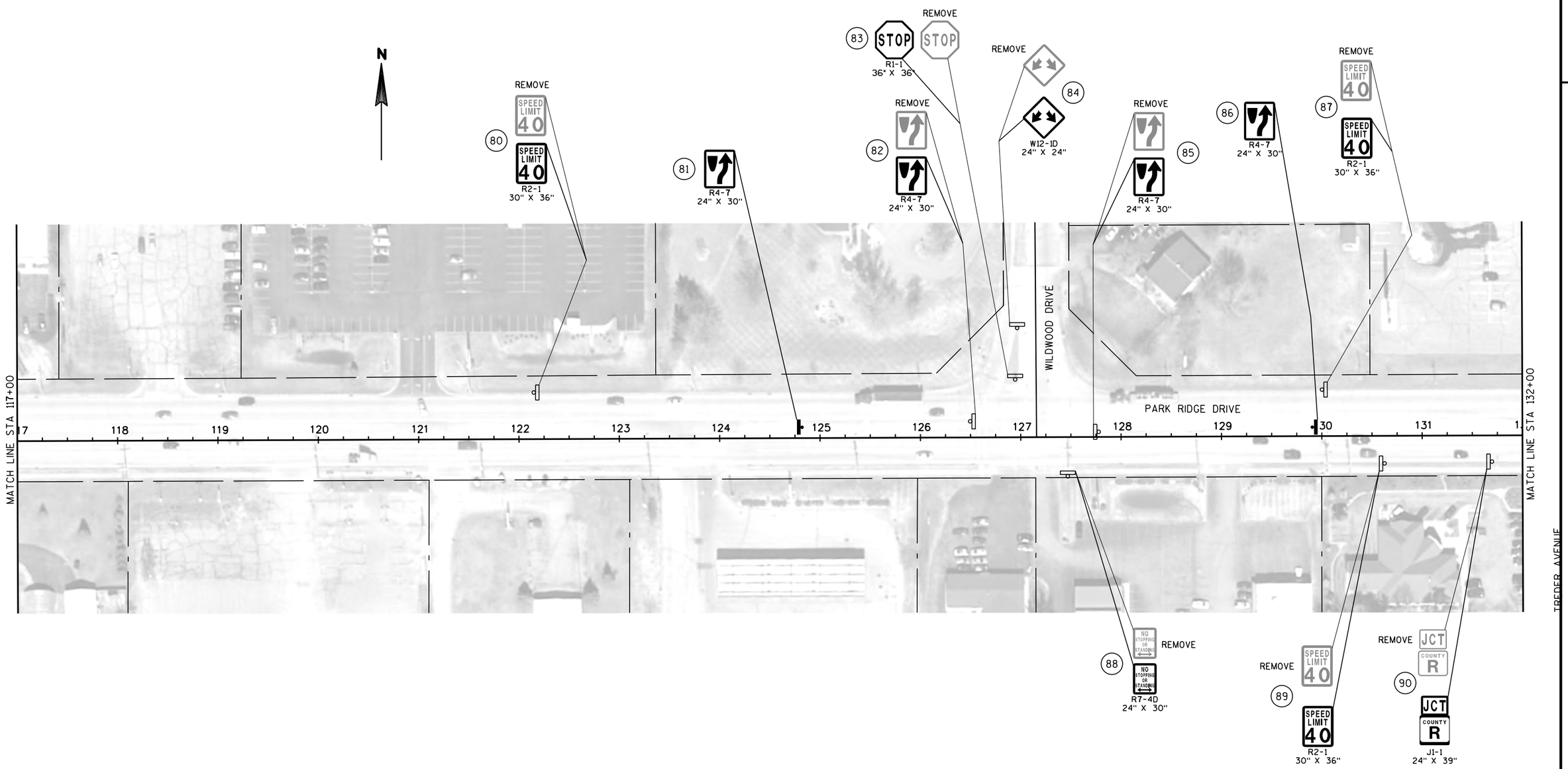

SIGNING NOTES:

PERMANENT SIGN LOCATIONS ARE APPROXIMATE, FINAL LOCATIONS SHALL BE PLACED IN ACCORDANCE TO DETAILS AND MUTCD.

LEGEND

EXISTING SIGN MOUNTED ON POST(S)

PROPOSED SIGN MOUNTED ON POST(S)

(XXX) DENOTES SIGN NUMBER

PROJECT NO:6290-05-75	HWY:USH 10	COUNTY:PORTAGE	PERMANENT SIGNING	SHEET 13	E

2

SIGNING NOTES:

PERMANENT SIGN LOCATIONS ARE APPROXIMATE. FINAL LOCATIONS SHALL BE PLACED IN ACCORDANCE TO DETAILS AND MUTCD.

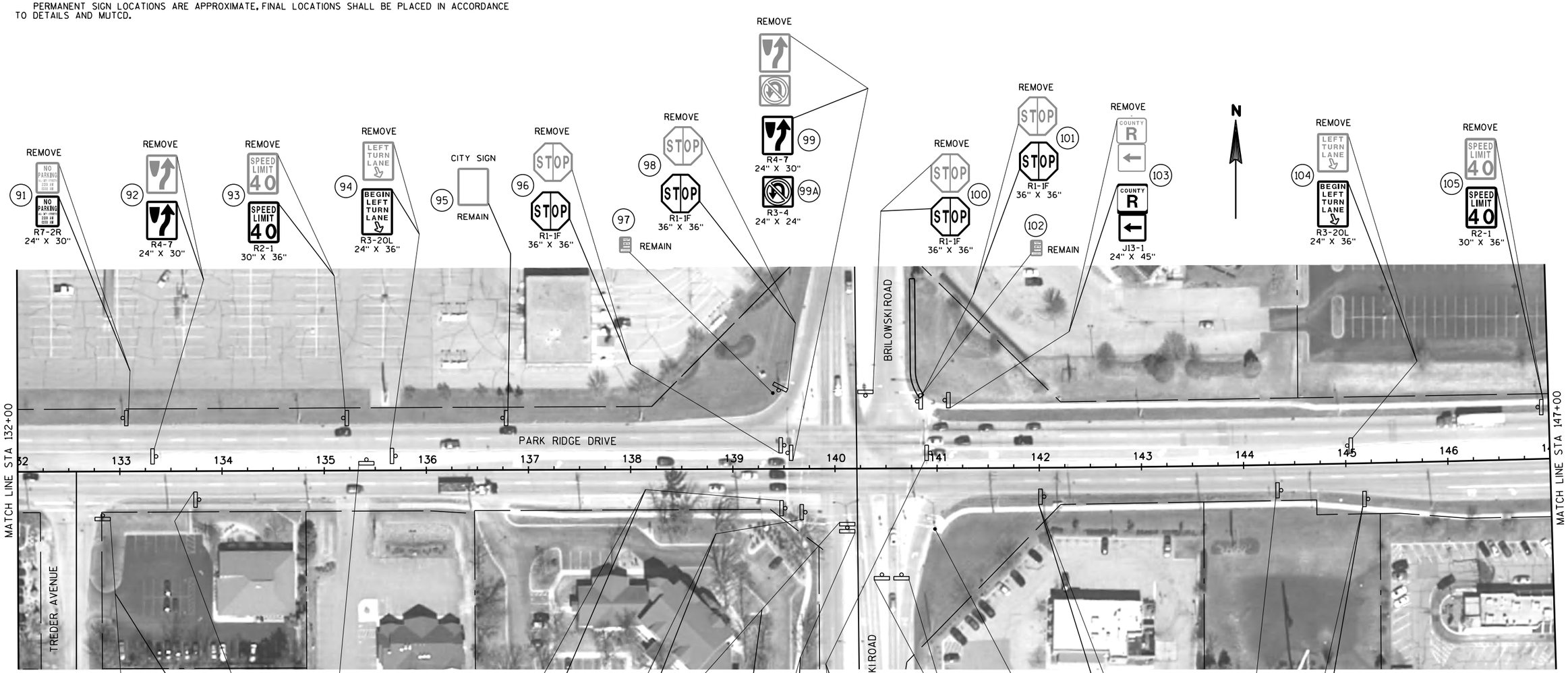

PROJECT NO:6290-05-75	HWY:USH 10	COUNTY:PORTAGE	PERMANENT SIGNING	SHEET 14	E

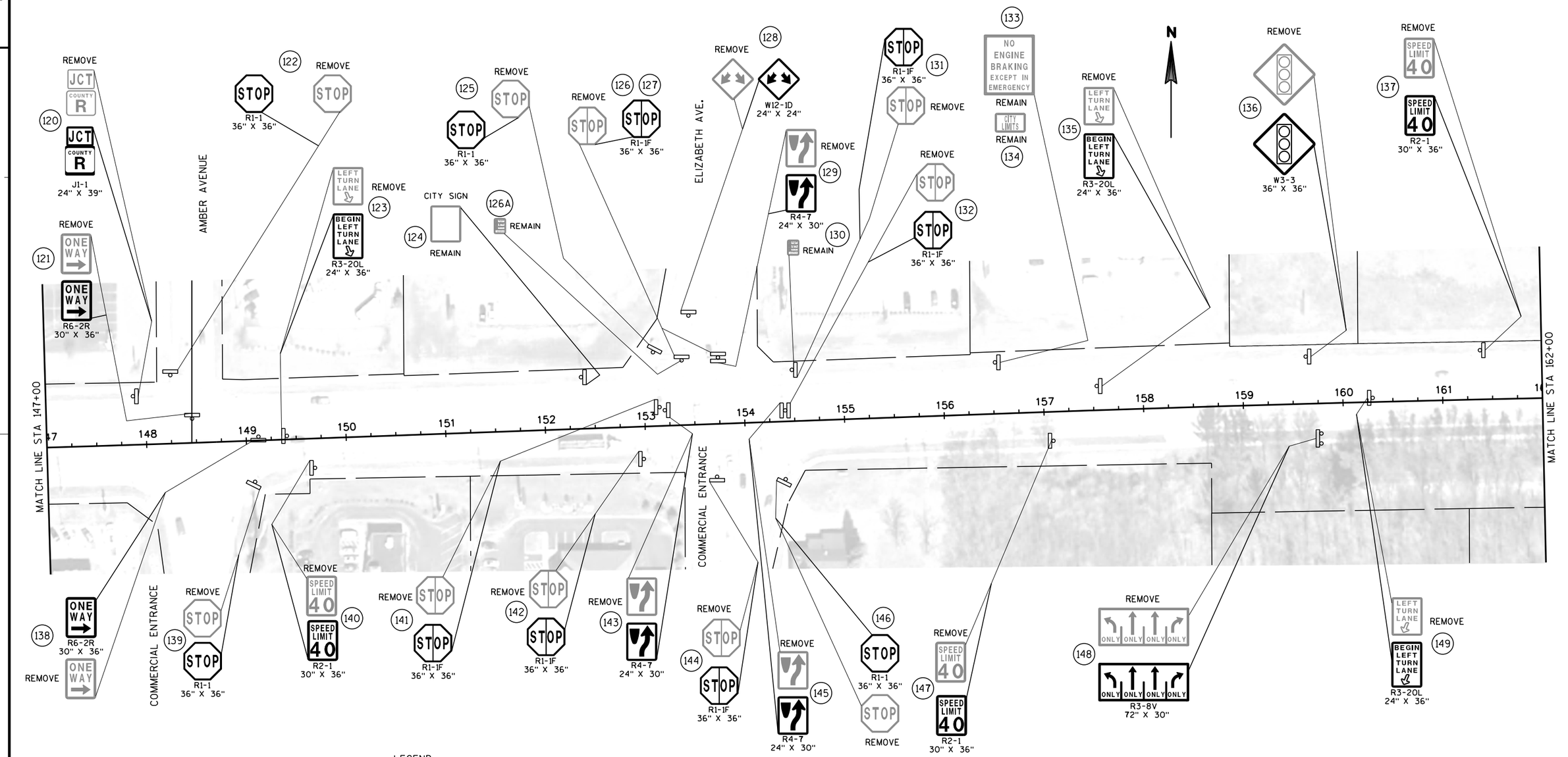

LEGEND

EXISTING SIGN MOUNTED ON POST(S)

PROPOSED SIGN MOUNTED ON POST(S)

(XXX) DENOTES SIGN NUMBER

SIGNING NOTES:

PERMANENT SIGN LOCATIONS ARE APPROXIMATE, FINAL LOCATIONS SHALL BE PLACED IN ACCORDANCE TO DETAILS AND MUTCD.

PROJECT NO:6290-05-75	HWY:USH 10	COUNTY:PORTAGE	PERMANENT SIGNING	SHEET 15	E

2

SIGNING NOTES:

PERMANENT SIGN LOCATIONS ARE APPROXIMATE, FINAL LOCATIONS SHALL BE PLACED IN ACCORDANCE TO DETAILS AND MUTCD.

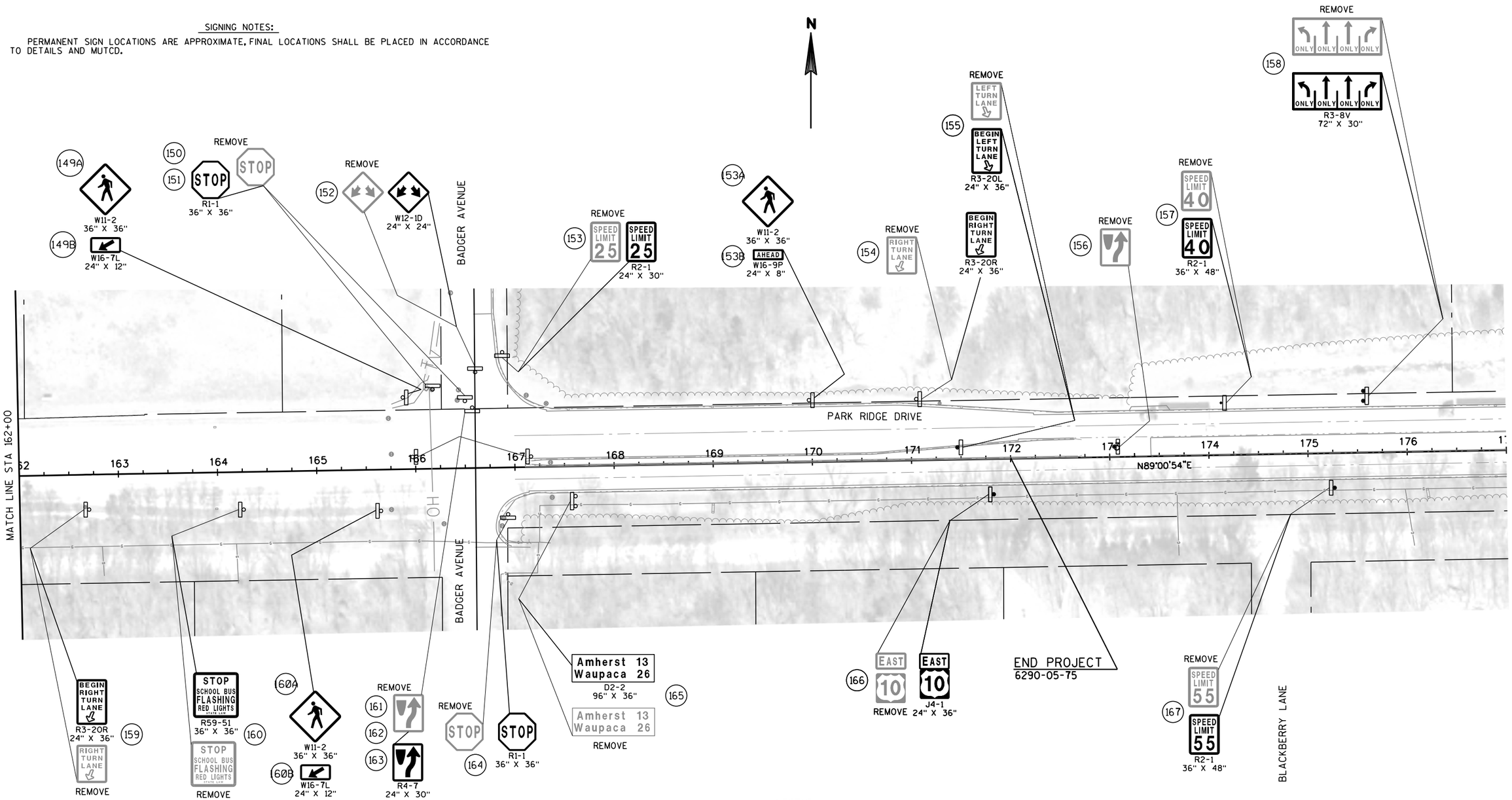

LEGEND

EXISTING SIGN MOUNTED ON POST(S)

PROPOSED SIGN MOUNTED ON POST(S)

(XXX) DENOTES SIGN NUMBER

2

PROJECT NO:6290-05-75	HWY:USH 10	COUNTY:PORTAGE	PERMANENT SIGNING	SHEET 16	E

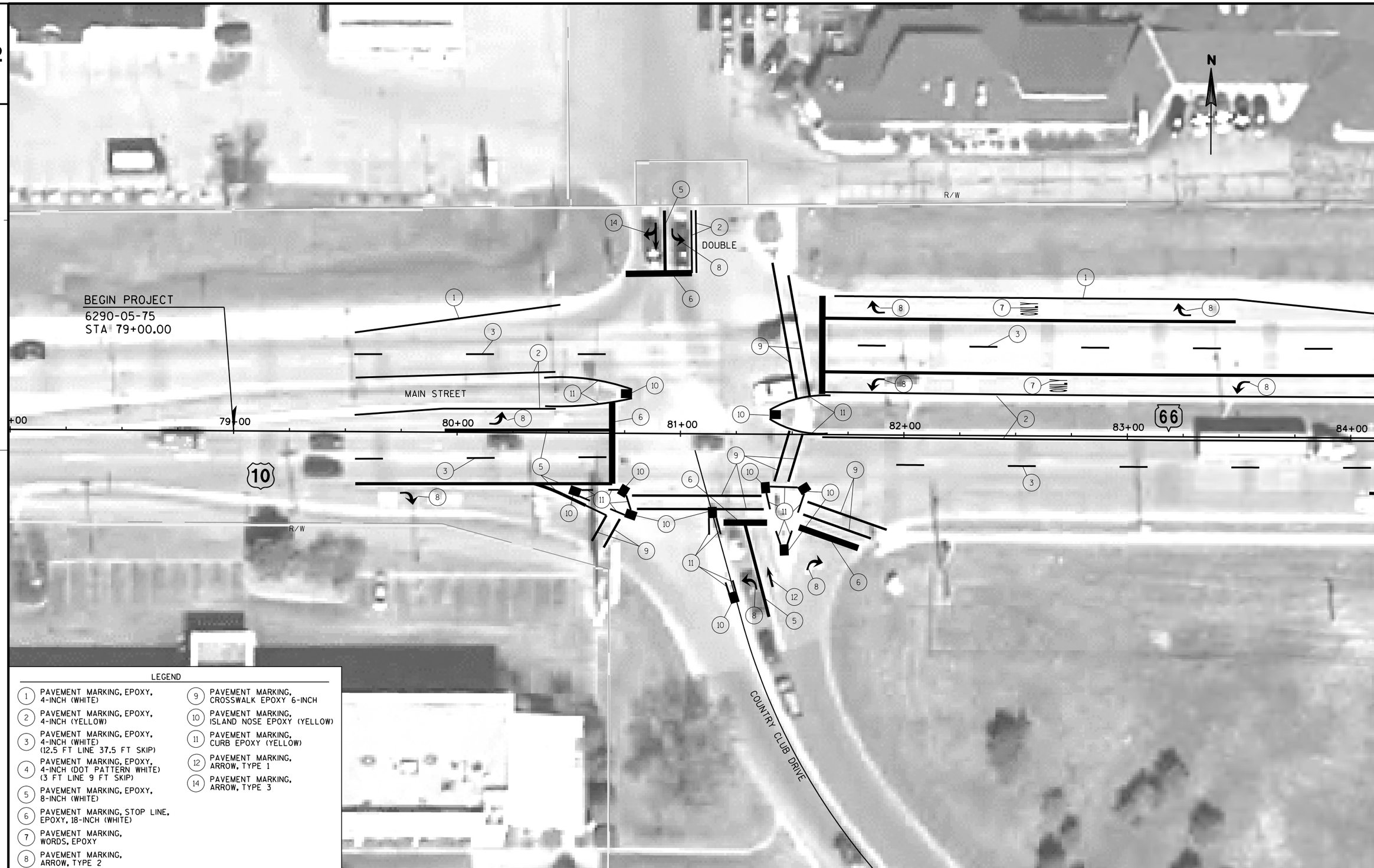

LEGEND

1. PAVEMENT MARKING, EPOXY, 4-INCH (WHITE)
2. PAVEMENT MARKING, EPOXY, 4-INCH (YELLOW)
3. PAVEMENT MARKING, EPOXY, 4-INCH (WHITE) (12.5 FT LINE 37.5 FT SKIP)
4. PAVEMENT MARKING, EPOXY, 4-INCH (DOT PATTERN WHITE) (3 FT LINE 9 FT SKIP)
5. PAVEMENT MARKING, EPOXY, 8-INCH (WHITE)
6. PAVEMENT MARKING, STOP LINE, EPOXY, 18-INCH (WHITE)
7. PAVEMENT MARKING, WORDS, EPOXY
8. PAVEMENT MARKING, ARROW, TYPE 2
9. PAVEMENT MARKING, CROSSWALK EPOXY 6-INCH
10. PAVEMENT MARKING, ISLAND NOSE EPOXY (YELLOW)
11. PAVEMENT MARKING, CURB EPOXY (YELLOW)
12. PAVEMENT MARKING, ARROW, TYPE 1
14. PAVEMENT MARKING, ARROW, TYPE 3

PROJECT NO:6290-05-75	HWY:USH 10	COUNTY:PORTAGE	PAVEMENT MARKING	SHEET 17	E

2

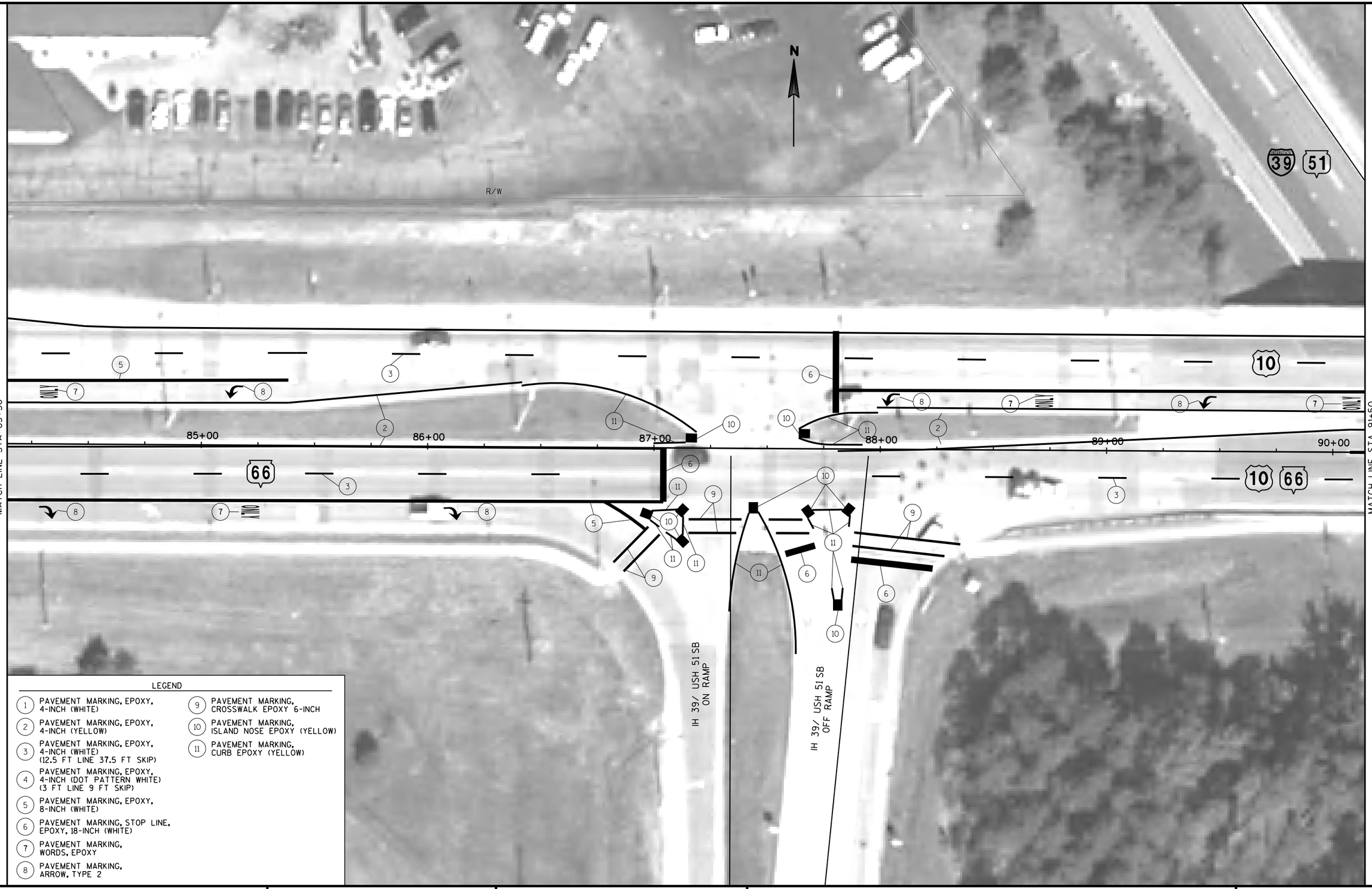

LEGEND

1. PAVEMENT MARKING, EPOXY, 4-INCH (WHITE)
2. PAVEMENT MARKING, EPOXY, 4-INCH (YELLOW)
3. PAVEMENT MARKING, EPOXY, 4-INCH (WHITE) (12.5 FT LINE 37.5 FT SKIP)
4. PAVEMENT MARKING, EPOXY, 4-INCH (DOT PATTERN WHITE) (3 FT LINE 9 FT SKIP)
5. PAVEMENT MARKING, EPOXY, 8-INCH (WHITE)
6. PAVEMENT MARKING, STOP LINE, EPOXY, 18-INCH (WHITE)
7. PAVEMENT MARKING, WORDS, EPOXY
8. PAVEMENT MARKING, ARROW, TYPE 2
9. PAVEMENT MARKING, CROSSWALK EPOXY 6-INCH
10. PAVEMENT MARKING, ISLAND NOSE EPOXY (YELLOW)
11. PAVEMENT MARKING, CURB EPOXY (YELLOW)

PROJECT NO:6290-05-75	HWY:USH 10	COUNTY:PORTAGE	PAVEMENT MARKING	SHEET 18	E

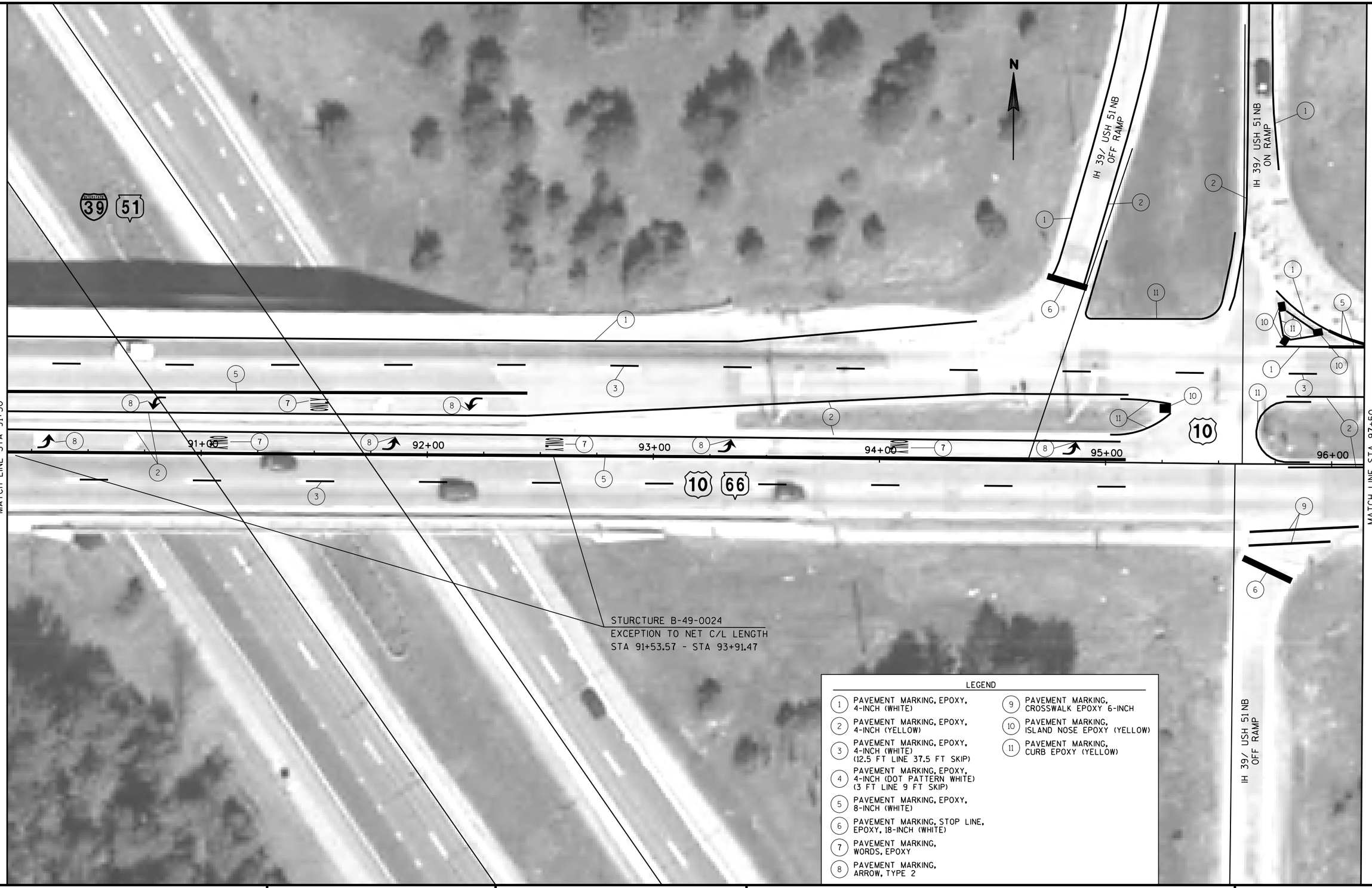

PROJECT NO:6290-05-75	HWY:USH 10	COUNTY:PORTAGE	PAVEMENT MARKING	SHEET 19	E

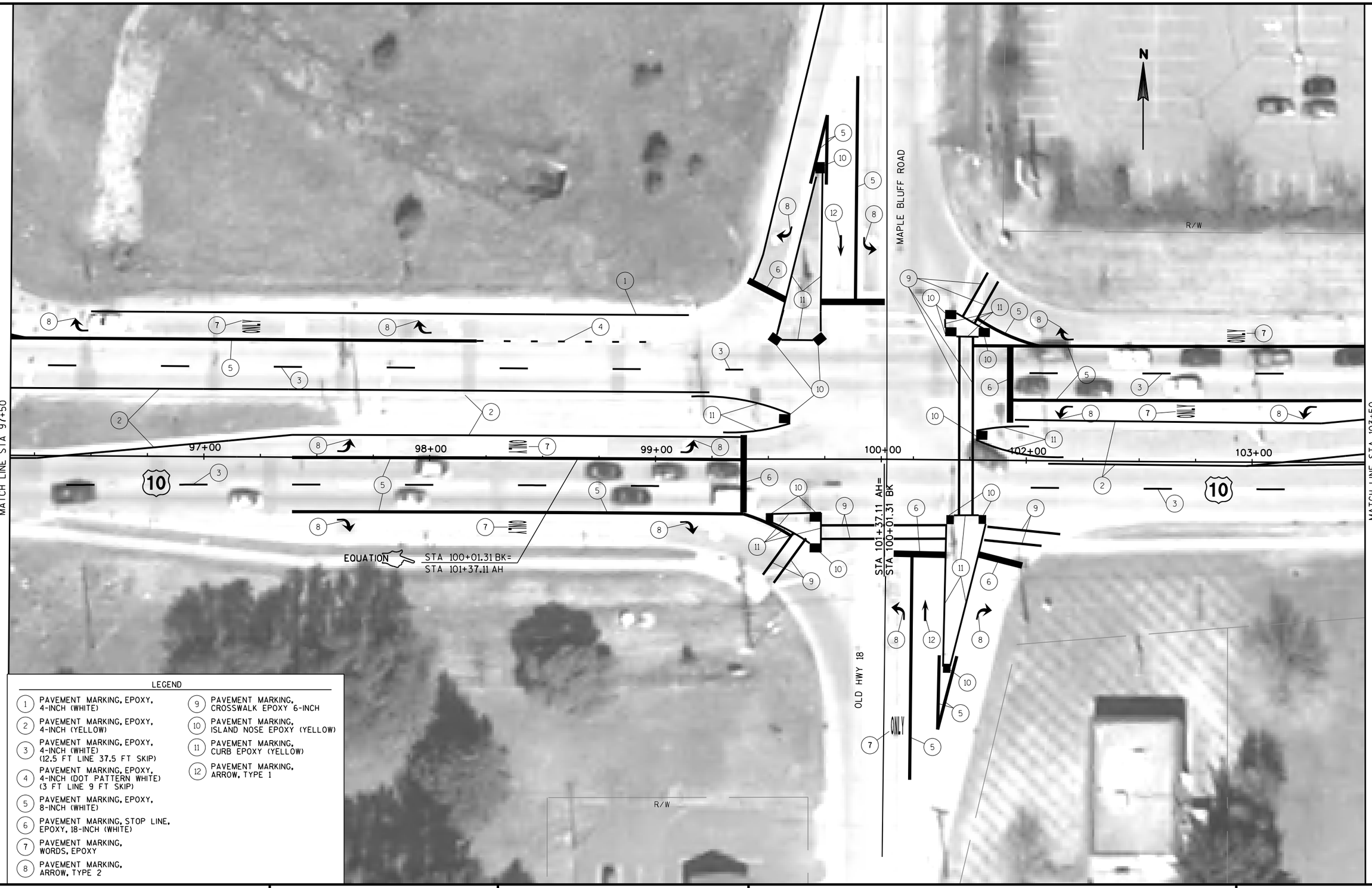

LEGEND

1. PAVEMENT MARKING, EPOXY, 4-INCH (WHITE)
2. PAVEMENT MARKING, EPOXY, 4-INCH (YELLOW)
3. PAVEMENT MARKING, EPOXY, 4-INCH (WHITE) (12.5 FT LINE 37.5 FT SKIP)
4. PAVEMENT MARKING, EPOXY, 4-INCH (DOT PATTERN WHITE) (3 FT LINE 9 FT SKIP)
5. PAVEMENT MARKING, EPOXY, 8-INCH (WHITE)
6. PAVEMENT MARKING, STOP LINE, EPOXY, 18-INCH (WHITE)
7. PAVEMENT MARKING, WORDS, EPOXY
8. PAVEMENT MARKING, ARROW, TYPE 2
9. PAVEMENT MARKING, CROSSWALK EPOXY 6-INCH
10. PAVEMENT MARKING, ISLAND NOSE EPOXY (YELLOW)
11. PAVEMENT MARKING, CURB EPOXY (YELLOW)
12. PAVEMENT MARKING, ARROW, TYPE 1

PROJECT NO:6290-05-75	HWY:USH 10	COUNTY:PORTAGE	PAVEMENT MARKING	SHEET 20	E

PROJECT NO:6290-05-75	HWY:USH 10	COUNTY:PORTAGE	PAVEMENT MARKING	SHEET 21	E

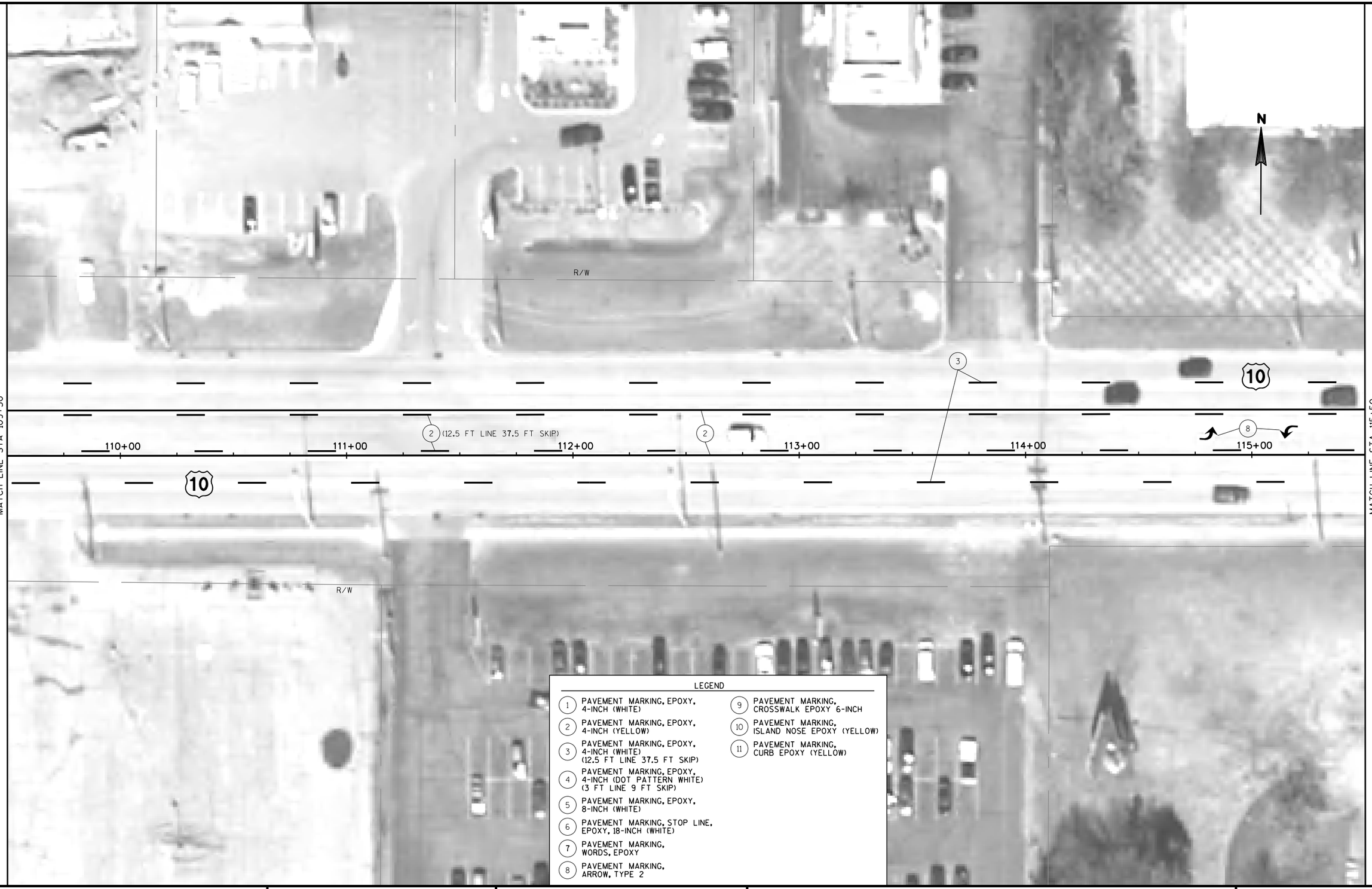

LEGEND

1. PAVEMENT MARKING, EPOXY, 4-INCH (WHITE)
2. PAVEMENT MARKING, EPOXY, 4-INCH (YELLOW)
3. PAVEMENT MARKING, EPOXY, 4-INCH (WHITE) (12.5 FT LINE 37.5 FT SKIP)
4. PAVEMENT MARKING, EPOXY, 4-INCH (DOT PATTERN WHITE) (3 FT LINE 9 FT SKIP)
5. PAVEMENT MARKING, EPOXY, 8-INCH (WHITE)
6. PAVEMENT MARKING, STOP LINE, EPOXY, 18-INCH (WHITE)
7. PAVEMENT MARKING, WORDS, EPOXY
8. PAVEMENT MARKING, ARROW, TYPE 2
9. PAVEMENT MARKING, CROSSWALK EPOXY 6-INCH
10. PAVEMENT MARKING, ISLAND NOSE EPOXY (YELLOW)
11. PAVEMENT MARKING, CURB EPOXY (YELLOW)

PROJECT NO:6290-05-75	HWY:USH 10	COUNTY:PORTAGE	PAVEMENT MARKING	SHEET 22	E

LEGEND

1. PAVEMENT MARKING, EPOXY, 4-INCH (WHITE)
2. PAVEMENT MARKING, EPOXY, 4-INCH (YELLOW)
3. PAVEMENT MARKING, EPOXY, 4-INCH (WHITE) (12.5 FT LINE 37.5 FT SKIP)
4. PAVEMENT MARKING, EPOXY, 4-INCH (DOT PATTERN WHITE) (3 FT LINE 9 FT SKIP)
5. PAVEMENT MARKING, EPOXY, 8-INCH (WHITE)
6. PAVEMENT MARKING, STOP LINE, EPOXY, 18-INCH (WHITE)
7. PAVEMENT MARKING, WORDS, EPOXY
8. PAVEMENT MARKING, ARROW, TYPE 2
9. PAVEMENT MARKING, CROSSWALK EPOXY 6-INCH
10. PAVEMENT MARKING, ISLAND NOSE EPOXY (YELLOW)
11. PAVEMENT MARKING, CURB EPOXY (YELLOW)

PROJECT NO:6290-05-75	HWY:USH 10	COUNTY:PORTAGE	PAVEMENT MARKING	SHEET 23	E

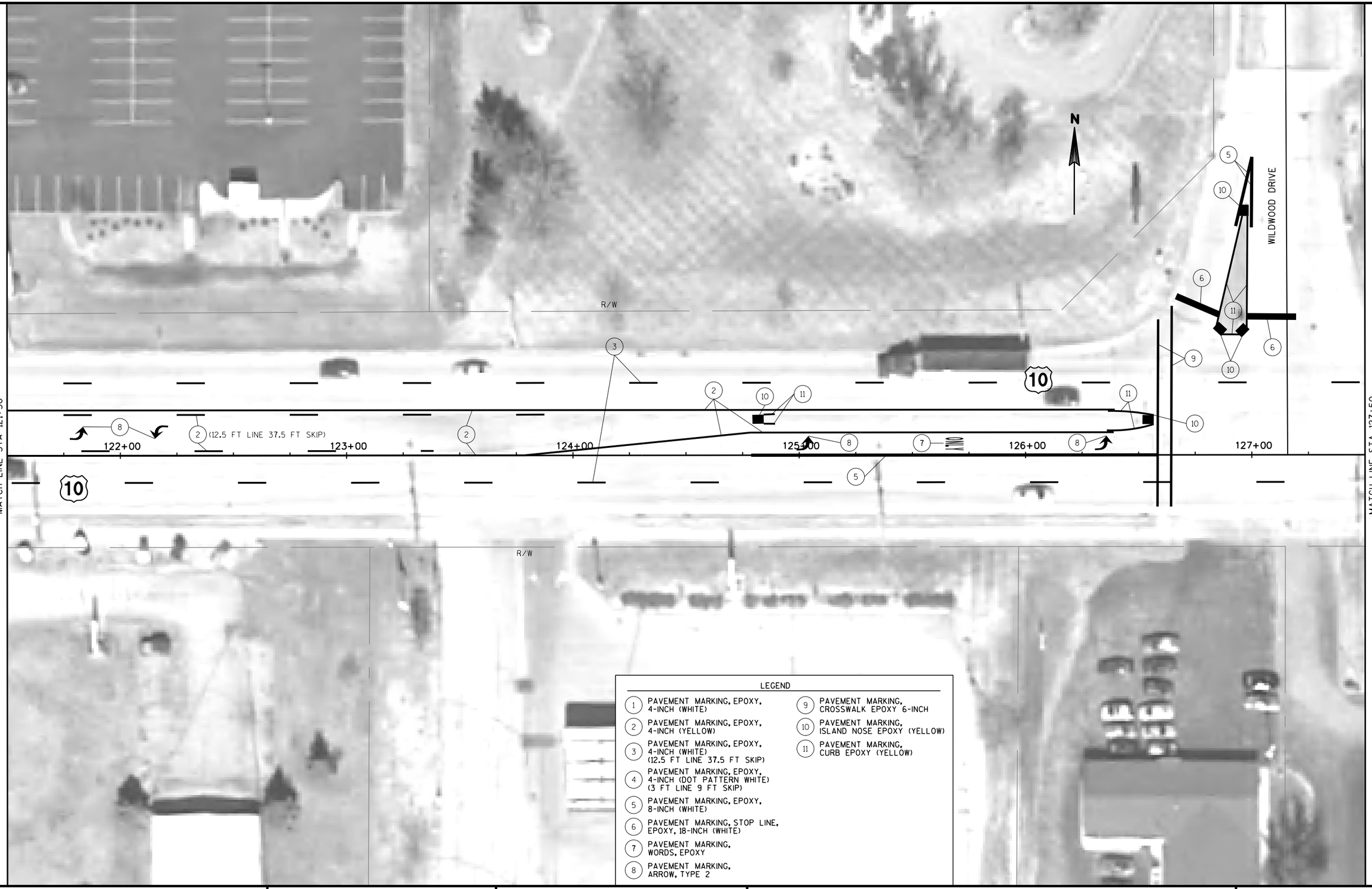

LEGEND

1. PAVEMENT MARKING, EPOXY, 4-INCH (WHITE)
2. PAVEMENT MARKING, EPOXY, 4-INCH (YELLOW)
3. PAVEMENT MARKING, EPOXY, 4-INCH (WHITE) (12.5 FT LINE 37.5 FT SKIP)
4. PAVEMENT MARKING, EPOXY, 4-INCH (DOT PATTERN WHITE) (3 FT LINE 9 FT SKIP)
5. PAVEMENT MARKING, EPOXY, 8-INCH (WHITE)
6. PAVEMENT MARKING, STOP LINE, EPOXY, 18-INCH (WHITE)
7. PAVEMENT MARKING, WORDS, EPOXY
8. PAVEMENT MARKING, ARROW, TYPE 2
9. PAVEMENT MARKING, CROSSWALK EPOXY 6-INCH
10. PAVEMENT MARKING, ISLAND NOSE EPOXY (YELLOW)
11. PAVEMENT MARKING, CURB EPOXY (YELLOW)

PROJECT NO:6290-05-75	HWY:USH 10	COUNTY:PORTAGE	PAVEMENT MARKING	SHEET 24	E

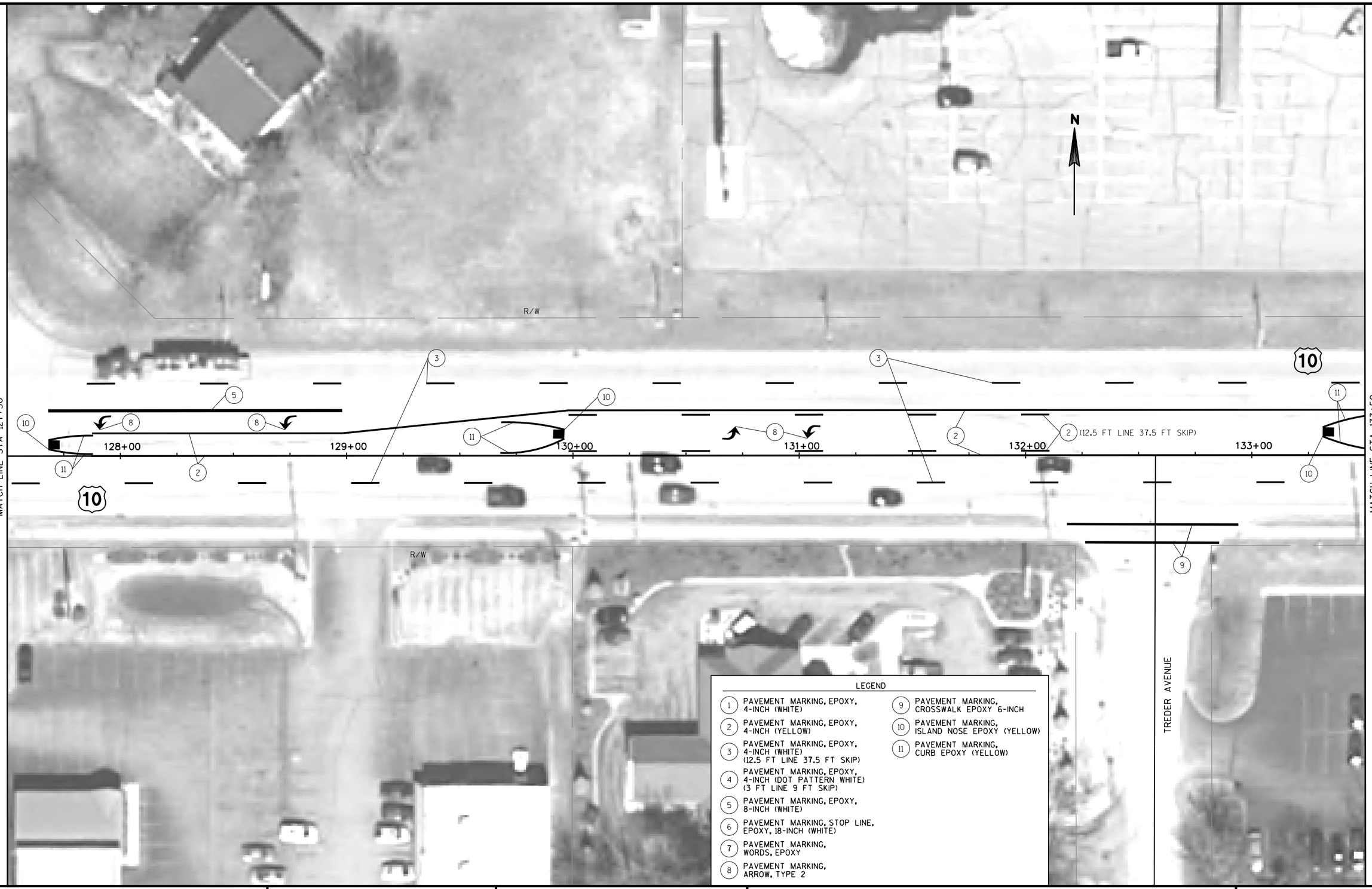

PROJECT NO:6290-05-75	HWY:USH 10	COUNTY:PORTAGE	PAVEMENT MARKING	SHEET 25	E

FILE NAME : X:\3230400\113516.01\TECH\CADD\DWG\024509_pm.dgn PLOT DATE : 9/22/2016 PLOT BY : 1362cmr PLOT NAME : PLOT SCALE : 40.0000 sf / in.

2

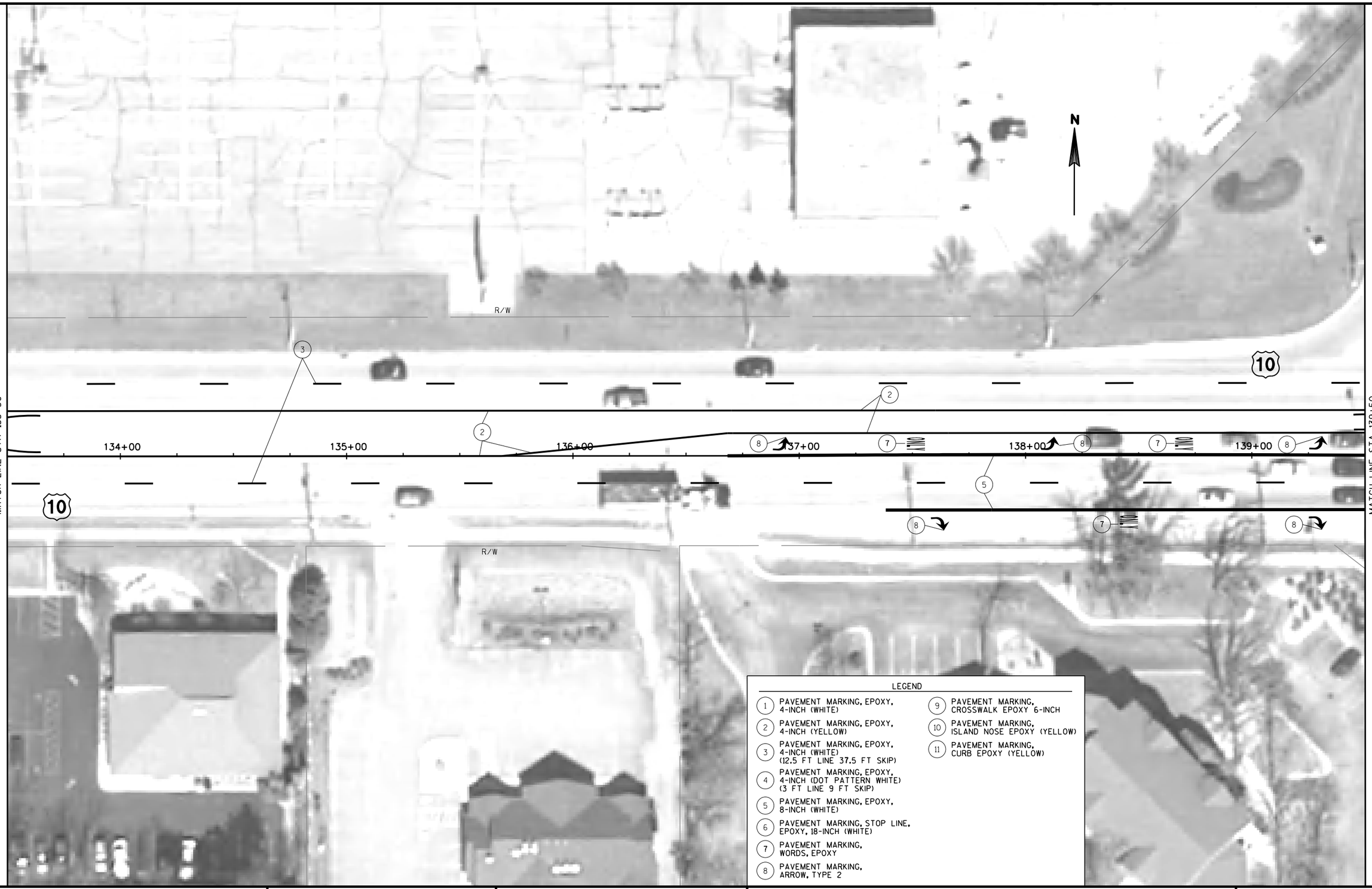

LEGEND

1. PAVEMENT MARKING, EPOXY, 4-INCH (WHITE)
2. PAVEMENT MARKING, EPOXY, 4-INCH (YELLOW)
3. PAVEMENT MARKING, EPOXY, 4-INCH (WHITE) (12.5 FT LINE 37.5 FT SKIP)
4. PAVEMENT MARKING, EPOXY, 4-INCH (DOT PATTERN WHITE) (3 FT LINE 9 FT SKIP)
5. PAVEMENT MARKING, EPOXY, 8-INCH (WHITE)
6. PAVEMENT MARKING, STOP LINE, EPOXY, 18-INCH (WHITE)
7. PAVEMENT MARKING, WORDS, EPOXY
8. PAVEMENT MARKING, ARROW, TYPE 2
9. PAVEMENT MARKING, CROSSWALK EPOXY 6-INCH
10. PAVEMENT MARKING, ISLAND NOSE EPOXY (YELLOW)
11. PAVEMENT MARKING, CURB EPOXY (YELLOW)

2

PROJECT NO:6290-05-75	HWY:USH 10	COUNTY:PORTAGE	PAVEMENT MARKING	SHEET 26	E

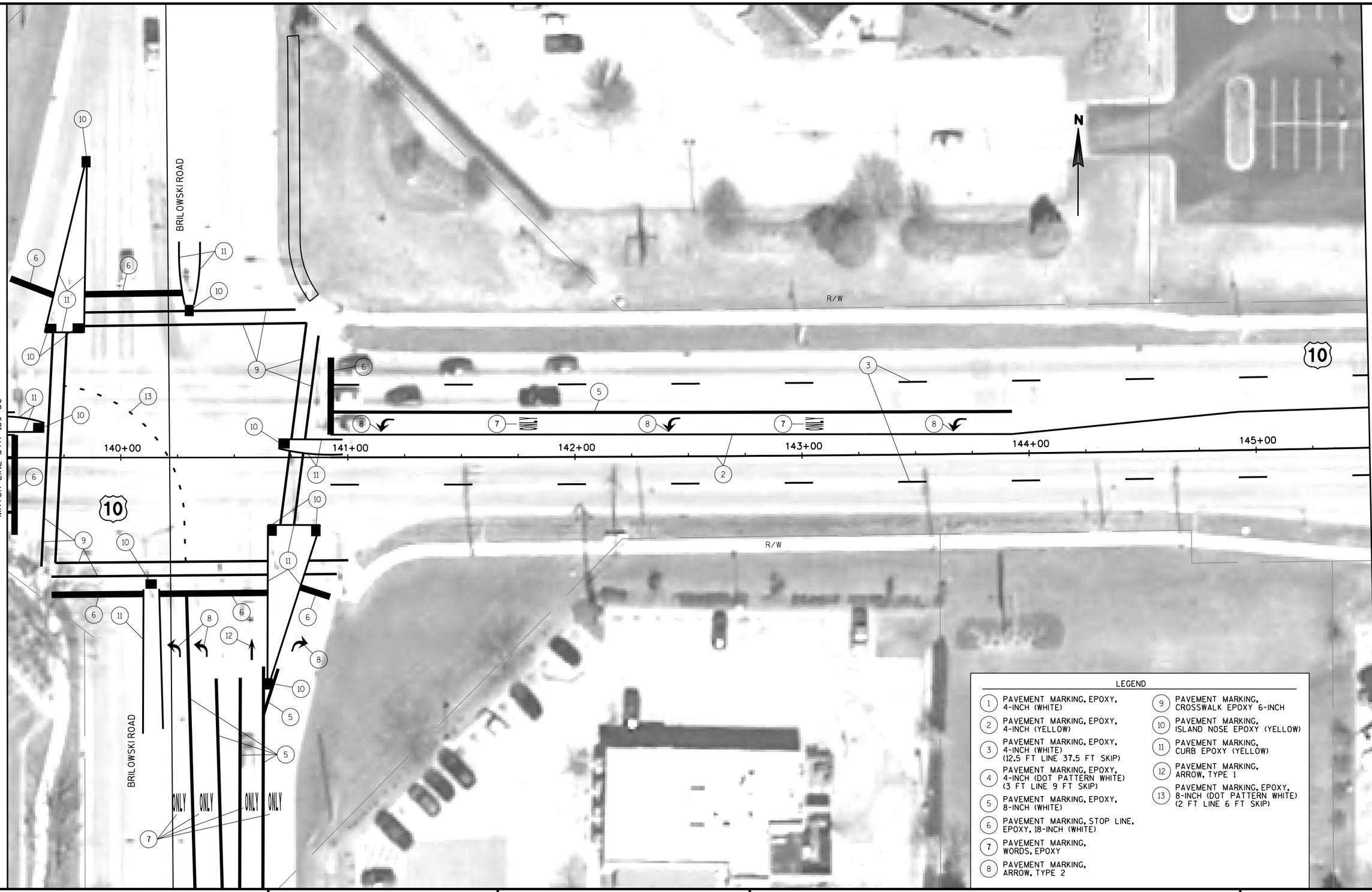

PROJECT NO:6290-05-75	HWY:USH 10	COUNTY:PORTAGE	PAVEMENT MARKING	SHEET 27	E

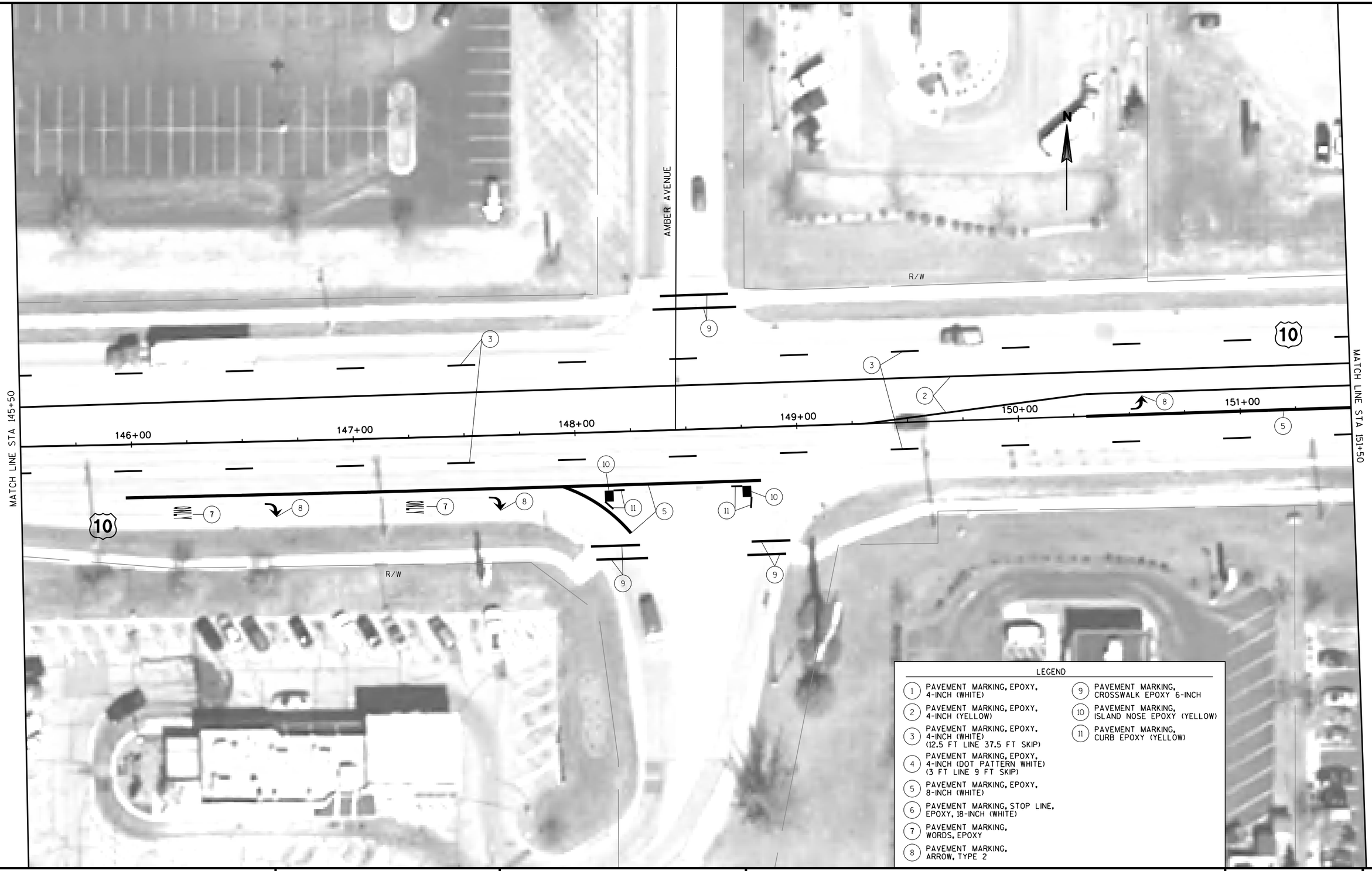

LEGEND

1. PAVEMENT MARKING, EPOXY, 4-INCH (WHITE)
2. PAVEMENT MARKING, EPOXY, 4-INCH (YELLOW)
3. PAVEMENT MARKING, EPOXY, 4-INCH (WHITE) (12.5 FT LINE 37.5 FT SKIP)
4. PAVEMENT MARKING, EPOXY, 4-INCH (DOT PATTERN WHITE) (3 FT LINE 9 FT SKIP)
5. PAVEMENT MARKING, EPOXY, 8-INCH (WHITE)
6. PAVEMENT MARKING, STOP LINE, EPOXY, 18-INCH (WHITE)
7. PAVEMENT MARKING, WORDS, EPOXY
8. PAVEMENT MARKING, ARROW, TYPE 2
9. PAVEMENT MARKING, CROSSWALK EPOXY 6-INCH
10. PAVEMENT MARKING, ISLAND NOSE EPOXY (YELLOW)
11. PAVEMENT MARKING, CURB EPOXY (YELLOW)

PROJECT NO:6290-05-75	HWY:USH 10	COUNTY:PORTAGE	PAVEMENT MARKING	SHEET 28	E

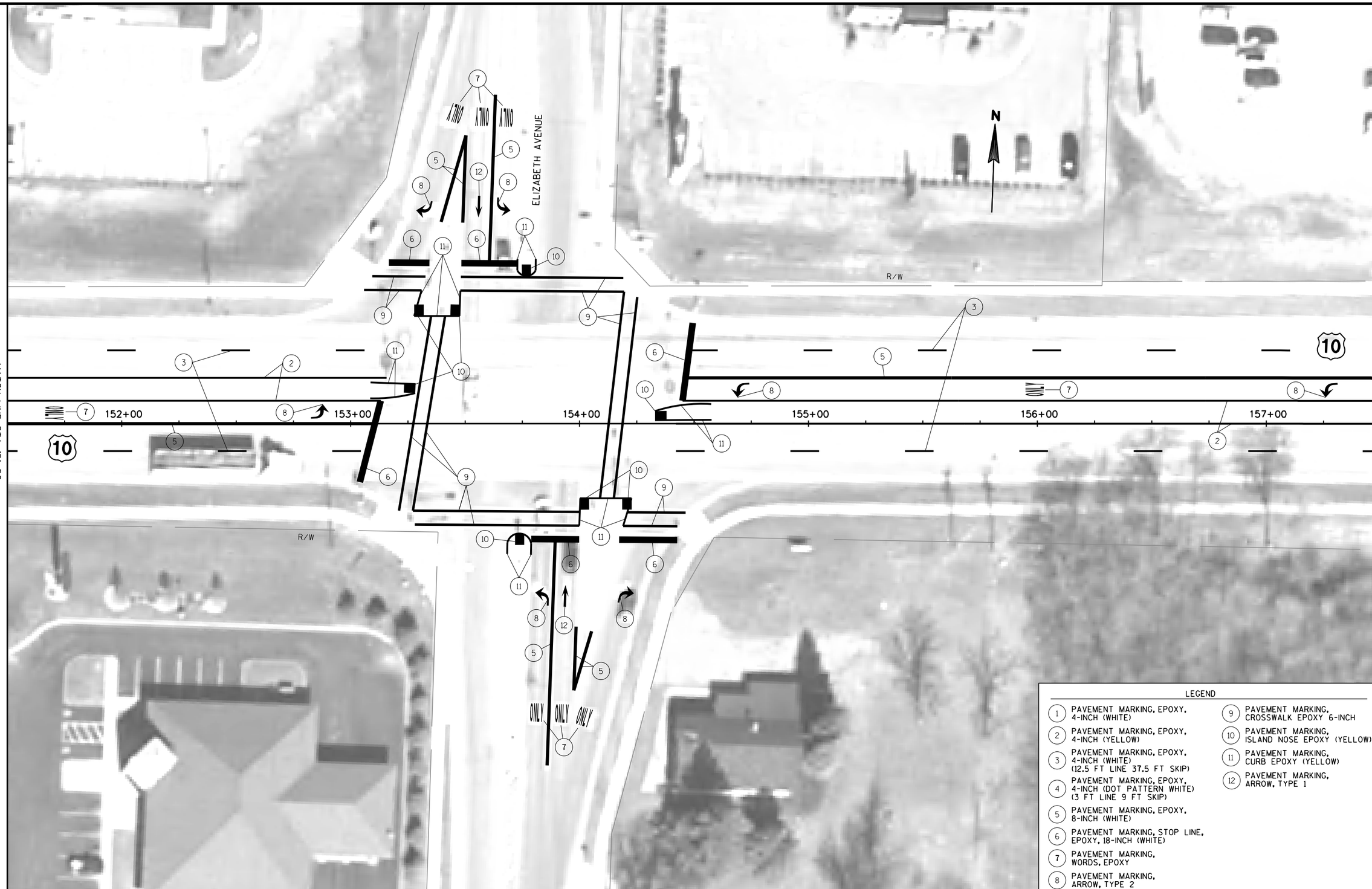

LEGEND

1. PAVEMENT MARKING, EPOXY, 4-INCH (WHITE)
2. PAVEMENT MARKING, EPOXY, 4-INCH (YELLOW)
3. PAVEMENT MARKING, EPOXY, 4-INCH (WHITE) (12.5 FT LINE 37.5 FT SKIP)
4. PAVEMENT MARKING, EPOXY, 4-INCH (DOT PATTERN WHITE) (3 FT LINE 9 FT SKIP)
5. PAVEMENT MARKING, EPOXY, 8-INCH (WHITE)
6. PAVEMENT MARKING, STOP LINE, EPOXY, 18-INCH (WHITE)
7. PAVEMENT MARKING, WORDS, EPOXY
8. PAVEMENT MARKING, ARROW, TYPE 2
9. PAVEMENT MARKING, CROSSWALK EPOXY 6-INCH
10. PAVEMENT MARKING, ISLAND NOSE EPOXY (YELLOW)
11. PAVEMENT MARKING, CURB EPOXY (YELLOW)
12. PAVEMENT MARKING, ARROW, TYPE 1

PROJECT NO:6290-05-75	HWY:USH 10	COUNTY:PORTAGE	PAVEMENT MARKING	SHEET 29	E

PROJECT NO:6290-05-75	HWY:USH 10	COUNTY:PORTAGE	PAVEMENT MARKING	SHEET 30	E

2

LEGEND

1. PAVEMENT MARKING, EPOXY, 4-INCH (WHITE)
2. PAVEMENT MARKING, EPOXY, 4-INCH (YELLOW)
3. PAVEMENT MARKING, EPOXY, 4-INCH (WHITE) (12.5 FT LINE 37.5 FT SKIP)
4. PAVEMENT MARKING, EPOXY, 4-INCH (DOT PATTERN WHITE) (3 FT LINE 9 FT SKIP)
5. PAVEMENT MARKING, EPOXY, 8-INCH (WHITE)
6. PAVEMENT MARKING, STOP LINE, EPOXY, 18-INCH (WHITE)
7. PAVEMENT MARKING, WORDS, EPOXY
8. PAVEMENT MARKING, ARROW, TYPE 2
9. PAVEMENT MARKING, CROSSWALK EPOXY 6-INCH
10. PAVEMENT MARKING, ISLAND NOSE EPOXY (YELLOW)
11. PAVEMENT MARKING, CURB EPOXY (YELLOW)

2

PROJECT NO:6290-05-75	HWY:USH 10	COUNTY:PORTAGE	PAVEMENT MARKING	SHEET 31	E

FILE NAME : X:\3230400\113516.01\TECH\CADD\DWG\024515_pm.dgn PLOT DATE : 9/22/2016 PLOT BY : 1362cmr PLOT NAME : PLOT SCALE : 40.0000 sf / in.

WISDOT/CADDS SHEET 42

2

LEGEND

1. PAVEMENT MARKING, EPOXY, 4-INCH (WHITE)
2. PAVEMENT MARKING, EPOXY, 4-INCH (YELLOW)
3. PAVEMENT MARKING, EPOXY, 4-INCH (WHITE) (12.5 FT LINE 37.5 FT SKIP)
4. PAVEMENT MARKING, EPOXY, 4-INCH (DOT PATTERN WHITE) (3 FT LINE 9 FT SKIP)
5. PAVEMENT MARKING, EPOXY, 8-INCH (WHITE)
6. PAVEMENT MARKING, STOP LINE, EPOXY, 18-INCH (WHITE)
7. PAVEMENT MARKING, WORDS, EPOXY
8. PAVEMENT MARKING, ARROW, TYPE 2
9. PAVEMENT MARKING, CROSSWALK EPOXY 6-INCH
10. PAVEMENT MARKING, ISLAND NOSE EPOXY (YELLOW)
11. PAVEMENT MARKING, CURB EPOXY (YELLOW)
12. PAVEMENT MARKING, DIAGONAL EPOXY, 12-INCH (YELLOW)

2

PROJECT NO:6290-05-75	HWY:USH 10	COUNTY:PORTAGE	PAVEMENT MARKING	SHEET 32	E

2

2

TRAFFIC

USH 10 WESTBOUND

OPEN TO TRAFFIC - 1 THROUGH TRAVEL LANE
INSIDE TRAVEL LANE CLOSED TO TRAFFIC

USH 10 EASTBOUND

OPEN TO TRAFFIC - 1 THROUGH TRAVEL LANE
INSIDE TRAVEL LANE CLOSED TO TRAFFIC

SIDE ROADS

OPEN TO TRAFFIC

CONSTRUCTION

USH 10 WESTBOUND

CONCRETE PAVEMENT REPAIR
REPLACE SIGNAL DETECTOR LOOPS

USH 10 EASTBOUND

CONCRETE PAVEMENT REPAIR
REPLACE SIGNAL DETECTOR LOOPS

LEGEND

SIGN ON PERMANENT SUPPORT

DIRECTION OF TRAFFIC

WORK AREA

PROJECT NO:6290-05-75	HWY:USH 10	COUNTY:PORTAGE	TRAFFIC CONTROL OVERVIEW - STAGE 1	SHEET 33	E

2

2

TRAFFIC

USH 10 WESTBOUND

OPEN TO TRAFFIC - 1 THROUGH TRAVEL LANE
OUTSIDE TRAVEL LANE CLOSED TO TRAFFIC

USH 10 EASTBOUND

OPEN TO TRAFFIC - 1 THROUGH TRAVEL LANE
OUTSIDE TRAVEL LANE CLOSED TO TRAFFIC

SIDE ROADS

OPEN TO TRAFFIC

CONSTRUCTION

USH 10 WESTBOUND

CONCRETE PAVEMENT REPAIR
REPLACE SIGNAL DETECTOR LOOPS

USH 10 EASTBOUND

CONCRETE PAVEMENT REPAIR
REPLACE SIGNAL DETECTOR LOOPS

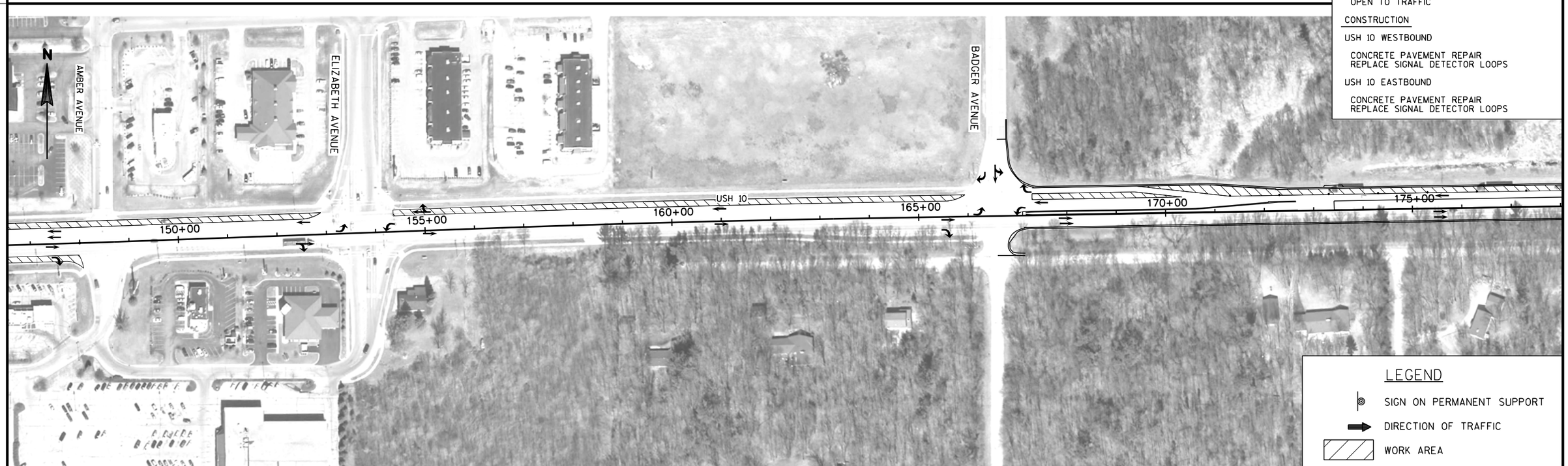

LEGEND

SIGN ON PERMANENT SUPPORT

DIRECTION OF TRAFFIC

WORK AREA

PROJECT NO:6290-05-75	HWY:USH 10	COUNTY:PORTAGE	TRAFFIC CONTROL OVERVIEW - STAGE 2	SHEET 34	E

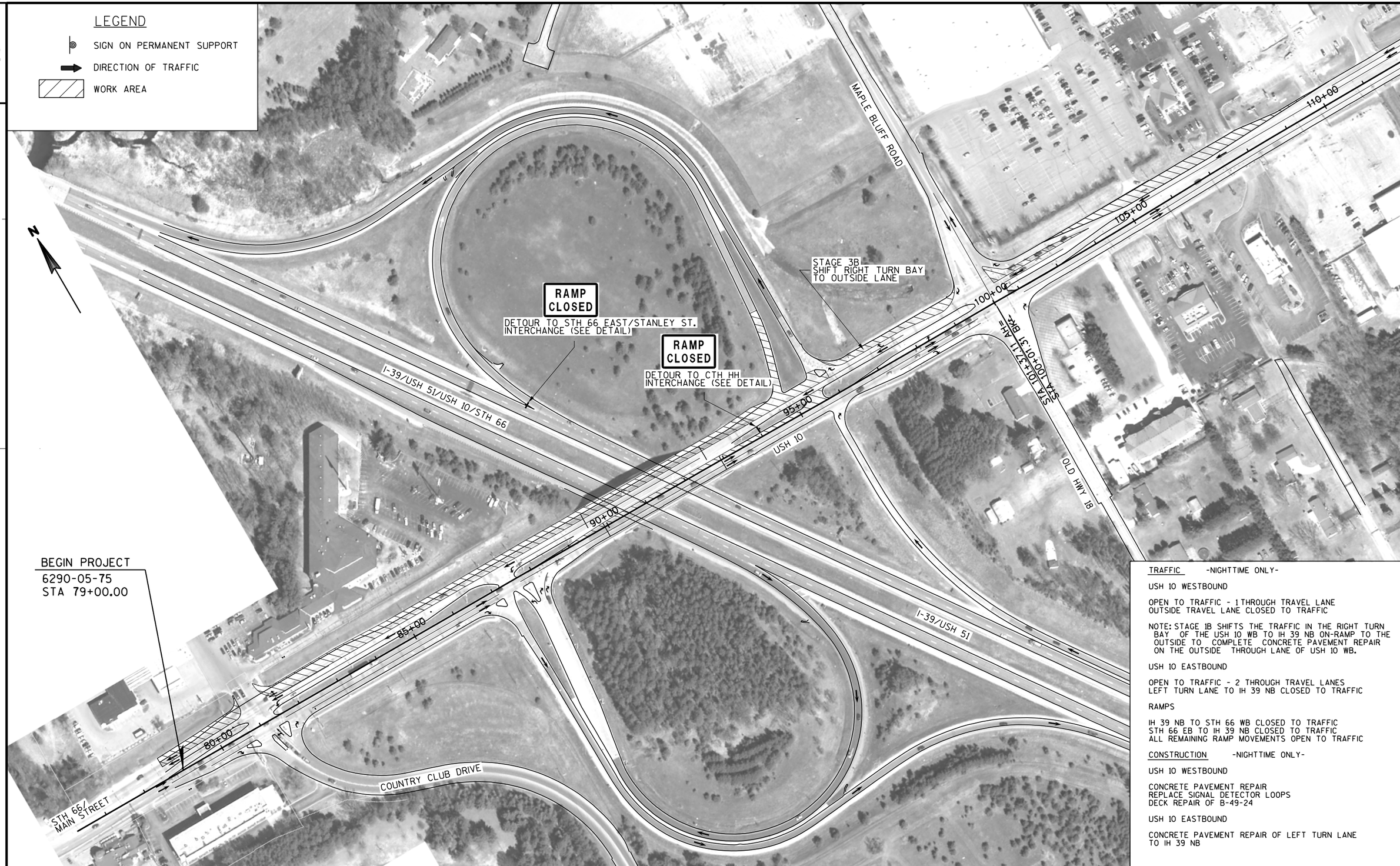

TRAFFIC -NIGHTTIME ONLY-

USH 10 WESTBOUND

OPEN TO TRAFFIC - 1 THROUGH TRAVEL LANE
OUTSIDE TRAVEL LANE CLOSED TO TRAFFIC

NOTE: STAGE 1B SHIFTS THE TRAFFIC IN THE RIGHT TURN BAY OF THE USH 10 WB TO IH 39 NB ON-RAMP TO THE OUTSIDE TO COMPLETE CONCRETE PAVEMENT REPAIR ON THE OUTSIDE THROUGH LANE OF USH 10 WB.

USH 10 EASTBOUND

OPEN TO TRAFFIC - 2 THROUGH TRAVEL LANES
LEFT TURN LANE TO IH 39 NB CLOSED TO TRAFFIC

RAMPS

IH 39 NB TO STH 66 WB CLOSED TO TRAFFIC
STH 66 EB TO IH 39 NB CLOSED TO TRAFFIC
ALL REMAINING RAMP MOVEMENTS OPEN TO TRAFFIC

CONSTRUCTION -NIGHTTIME ONLY-

USH 10 WESTBOUND

CONCRETE PAVEMENT REPAIR
REPLACE SIGNAL DETECTOR LOOPS
DECK REPAIR OF B-49-24

USH 10 EASTBOUND

CONCRETE PAVEMENT REPAIR OF LEFT TURN LANE TO IH 39 NB

PROJECT NO:6290-05-75	HWY:USH 10	COUNTY:PORTAGE	TRAFFIC CONTROL OVERVIEW - STAGE 3	SHEET 35	E

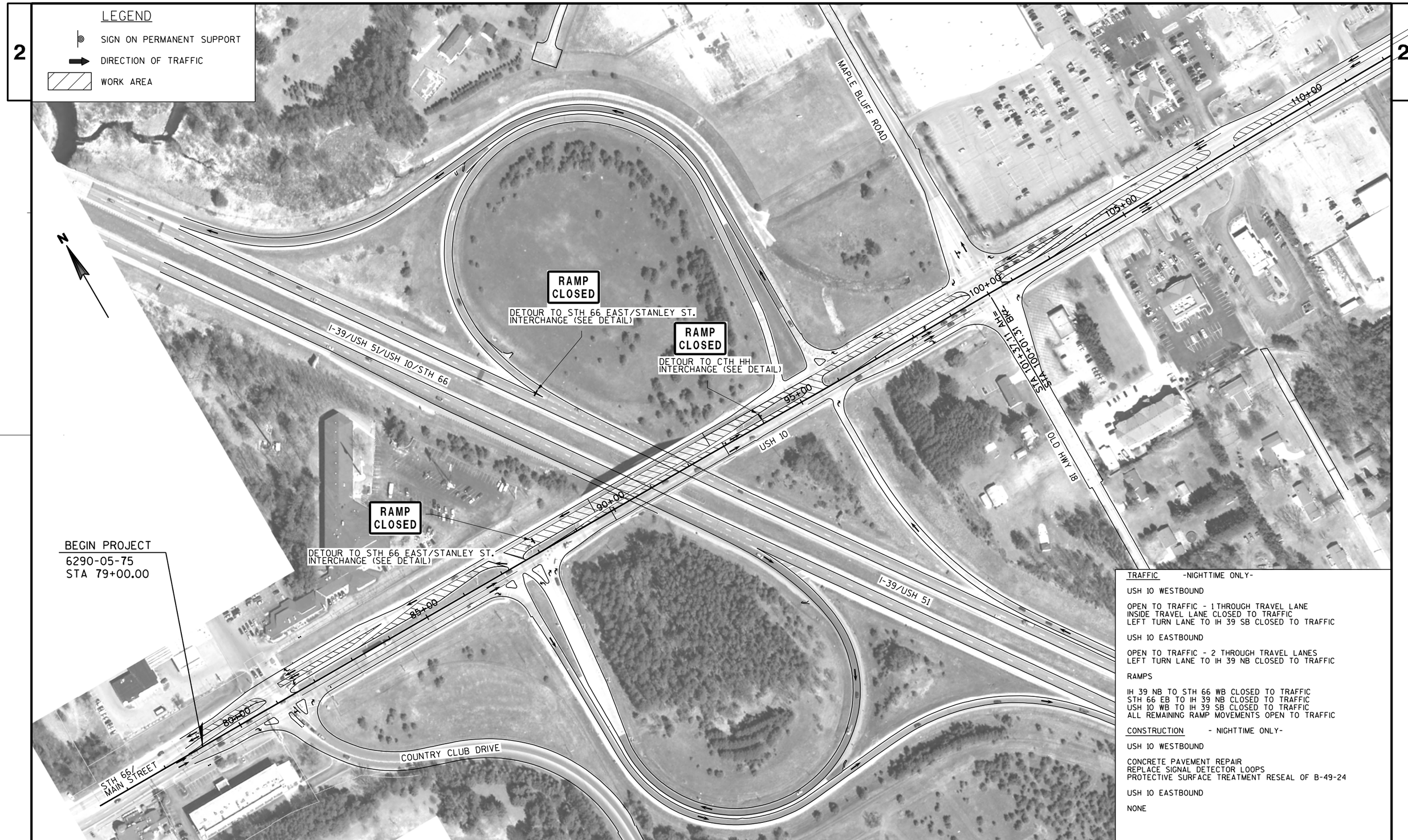

TRAFFIC -NIGHTTIME ONLY-

USH 10 WESTBOUND

OPEN TO TRAFFIC - 1 THROUGH TRAVEL LANE
INSIDE TRAVEL LANE CLOSED TO TRAFFIC
LEFT TURN LANE TO IH 39 SB CLOSED TO TRAFFIC

USH 10 EASTBOUND

OPEN TO TRAFFIC - 2 THROUGH TRAVEL LANES
LEFT TURN LANE TO IH 39 NB CLOSED TO TRAFFIC

RAMPS

IH 39 NB TO STH 66 WB CLOSED TO TRAFFIC
STH 66 EB TO IH 39 NB CLOSED TO TRAFFIC
USH 10 WB TO IH 39 SB CLOSED TO TRAFFIC
ALL REMAINING RAMP MOVEMENTS OPEN TO TRAFFIC

CONSTRUCTION - NIGHTTIME ONLY-

USH 10 WESTBOUND

CONCRETE PAVEMENT REPAIR
REPLACE SIGNAL DETECTOR LOOPS
PROTECTIVE SURFACE TREATMENT RESEAL OF B-49-24

USH 10 EASTBOUND

NONE

PROJECT NO:6290-05-75	HWY:USH 10	COUNTY:PORTAGE	TRAFFIC CONTROL OVERVIEW - STAGE 4	SHEET 36	E

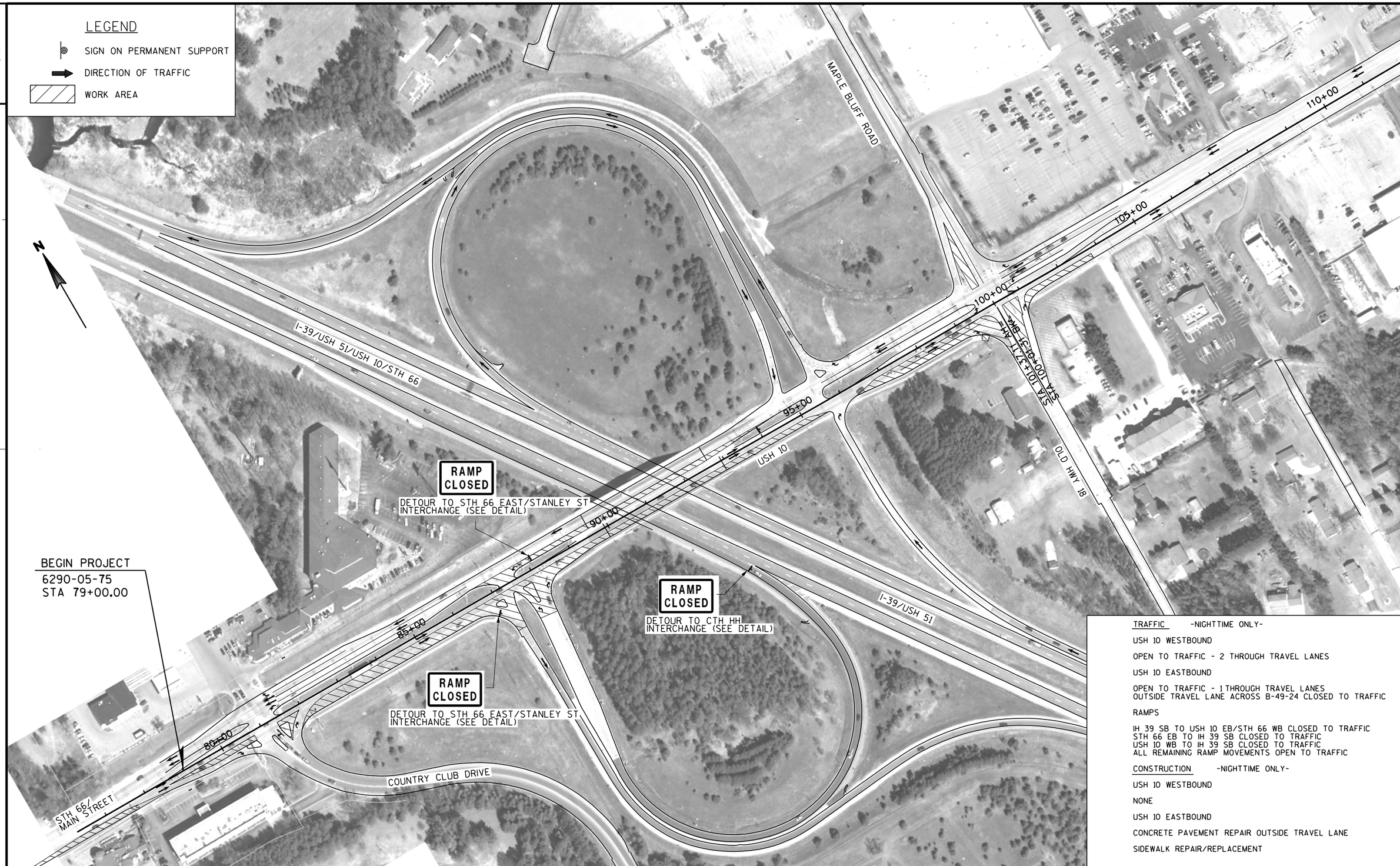

TRAFFIC -NIGHTTIME ONLY-

USH 10 WESTBOUND

OPEN TO TRAFFIC - 2 THROUGH TRAVEL LANES

USH 10 EASTBOUND

OPEN TO TRAFFIC - 1 THROUGH TRAVEL LANES
OUTSIDE TRAVEL LANE ACROSS B-49-24 CLOSED TO TRAFFIC

RAMPS

IH 39 SB TO USH 10 EB/STH 66 WB CLOSED TO TRAFFIC
STH 66 EB TO IH 39 SB CLOSED TO TRAFFIC
USH 10 WB TO IH 39 SB CLOSED TO TRAFFIC
ALL REMAINING RAMP MOVEMENTS OPEN TO TRAFFIC

CONSTRUCTION -NIGHTTIME ONLY-

USH 10 WESTBOUND

NONE

USH 10 EASTBOUND

CONCRETE PAVEMENT REPAIR OUTSIDE TRAVEL LANE

SIDEWALK REPAIR/REPLACEMENT

PROJECT NO:6290-05-75	HWY:USH 10	COUNTY:PORTAGE	TRAFFIC CONTROL OVERVIEW - STAGE 5	SHEET 37	E

TRAFFIC -NIGHTTIME ONLY-

USH 10 WESTBOUND

OPEN TO TRAFFIC

USH 10 EASTBOUND

OPEN TO TRAFFIC - 1 THROUGH TRAVEL LANE
INSIDE TRAVEL LANE CLOSED TO TRAFFIC

RAMPS

IH 39 NB TO USH 10 EB CLOSED TO TRAFFIC
ALL REMAINING RAMP MOVEMENTS OPEN TO TRAFFIC

CONSTRUCTION -NIGHTTIME ONLY-

USH 10 WESTBOUND

NONE

USH 10 EASTBOUND

CONCRETE PAVEMENT REPAIR INSIDE TRAVEL LANE

PROTECTIVE SURFACE TREATMENT RESEAL OF B-49-24

PROJECT NO:6290-05-75	HWY:USH 10	COUNTY:PORTAGE	TRAFFIC CONTROL OVERVIEW - STAGE 6	SHEET 38	E

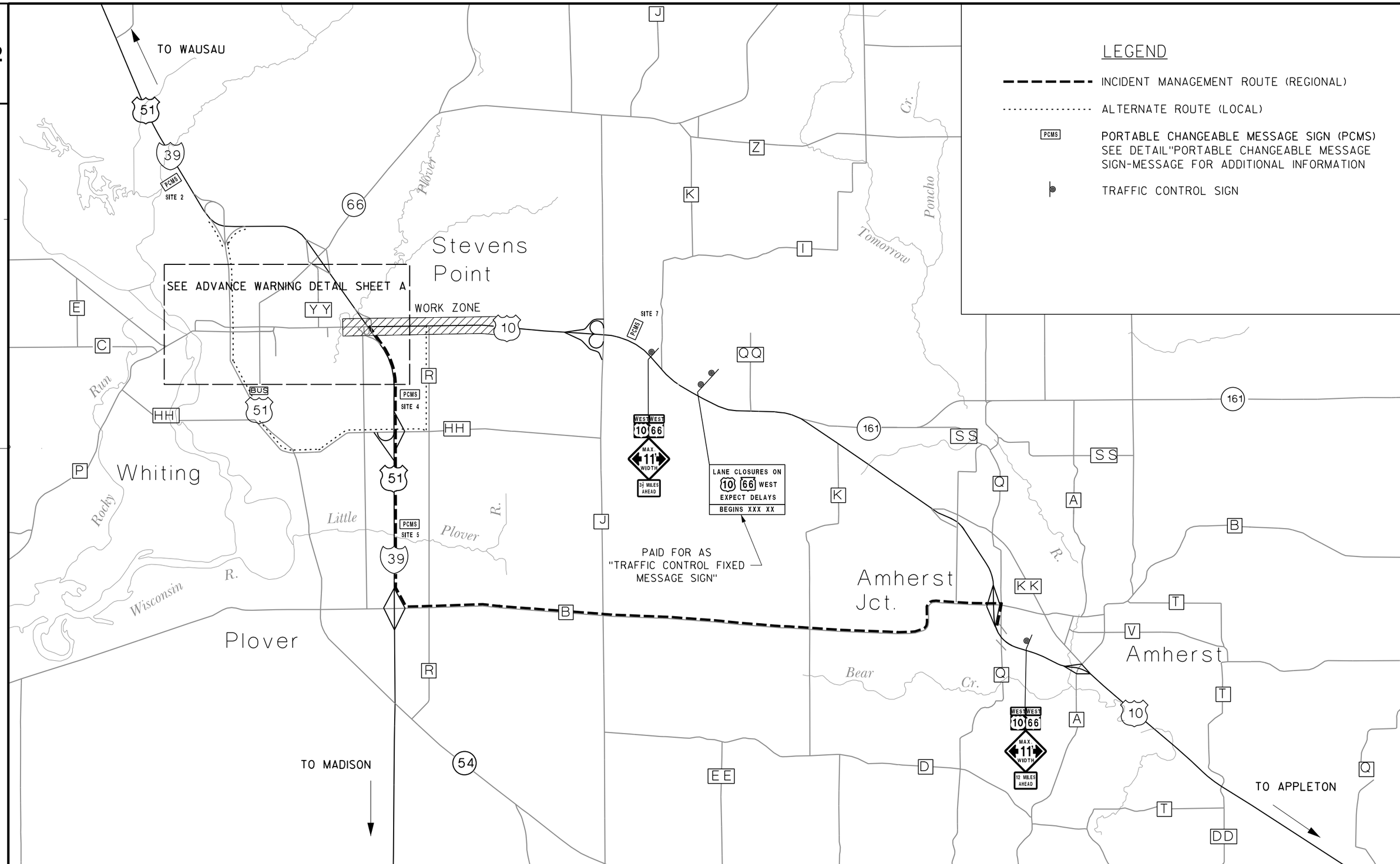

PROJECT NO:6290-05-75	HWY:USH 10	COUNTY:PORTAGE	TRAFFIC CONTROL ADVANCE WARNING SIGN DETAIL	SHEET 39	E

FILE NAME : X:\3230400\113516.01\TECH\CADD\DWG\025010_tc.dgn PLOT DATE : 9/26/2016 PLOT BY : 1362cmr PLOT NAME : PLOT SCALE : 8000.0014 sf / in.

WISDOT/CADDS SHEET 42

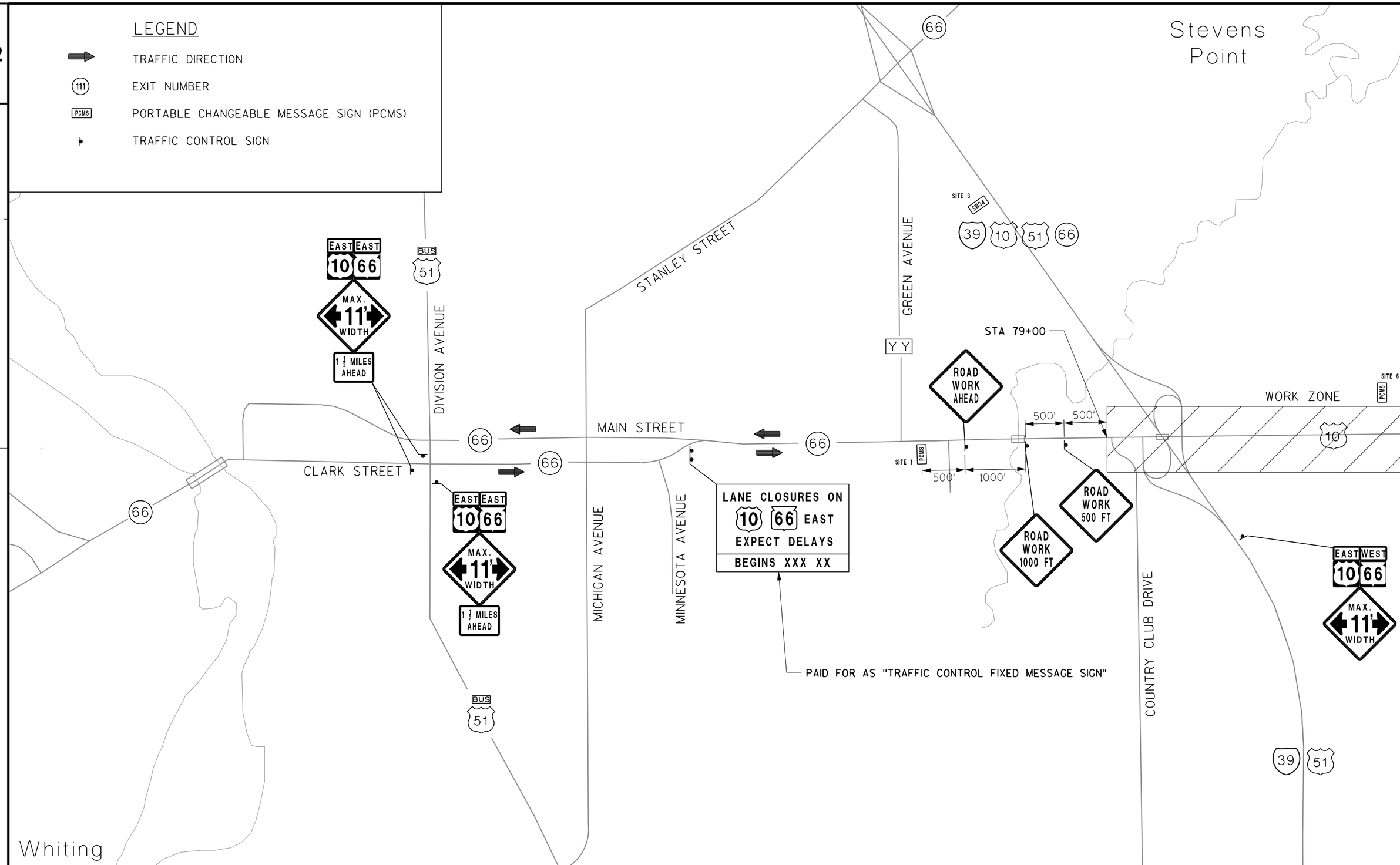

PROJECT NO:6290-05-75	HWY:USH 10	COUNTY:PORTAGE	TRAFFIC CONTROL - ADVANCE WARNING SIGN DETAIL A	SHEET 40	E

2

MESSAGES FOR PORTABLE CHANGEABLE MESSAGE SIGNS (PCMS)

	PRIOR TO CONSTRUCTION		STAGE 1		STAGE 2		STAGE 3 (NIGHTTIME ONLY)		STAGE 4 (NIGHTTIME ONLY)		STAGE 5 (NIGHTTIME ONLY)		STAGE 6 (NIGHTTIME ONLY)		EMERGENCY MESSAGE		
SITE NO.	PHASE 1 (2 SEC.)	PHASE 2 (2 SEC.)	PHASE 1 (2 SEC.)	PHASE 2 (2 SEC.)	PHASE 1 (2 SEC.)	PHASE 2 (2 SEC.)	PHASE 1 (2 SEC.)	PHASE 2 (2 SEC.)	PHASE 1 (2 SEC.)	PHASE 2 (2 SEC.)	PHASE 1 (2 SEC.)	PHASE 2 (2 SEC.)	PHASE 1 (2 SEC.)	PHASE 2 (2 SEC.)	PHASE 1 (2 SEC.)	PHASE 2 (2 SEC.)	PHASE 3 (2 SEC.)
SITE 1 EB USH 10 STATION 101+00 (*)	US 10 EB LANE CLOSURE	BEGINS XX/XX/XX	LEFT LANE CLOSED	MERGE RIGHT	RIGHT LANE CLOSED	MERGE LEFT	I-39 NB RAMP CLOSED	FOLLOW HWY 66 DETOUR	I-39 NB RAMP CLOSED	FOLLOW HWY 66 DETOUR	I-39 SB RAMP CLOSED	FOLLOW IH-39 SB DETOUR	N/A	N/A	TRAFFIC STOPPED AHEAD	BE PREPARED TO STOP	N/A
SITE 2 SB IH 39 0.9 MILES NORTH OF EXIT 161	N/A	N/A	N/A	N/A	N/A	N/A	N/A	N/A	N/A	N/A	RAMP CLOSED AHEAD	AT HWY 10 66 WB	N/A	N/A	TRAFFIC STOPPED	ON HWY 10 66 WB	USE ALT ROUTE
SITE 3 SB IH 39 1.0 MILES NORTH OF EXIT 158	N/A	N/A	N/A	N/A	N/A	N/A	N/A	N/A	N/A	N/A	RAMP CLOSED AHEAD	FOLLOW DETOUR	N/A	N/A	TRAFFIC STOPPED	ON HWY 10 66 WB	USE ALT ROUTE
SITE 4 NB IH 39 0.2 MILES SOUTH OF EXIT 158	N/A	N/A	N/A	N/A	N/A	N/A	66 WEST RAMP CLOSED	FOLLOW DETOUR	66 WEST RAMP CLOSED	FOLLOW DETOUR	N/A	N/A	RAMPS CLOSED AHEAD	FOLLOW DETOUR	TRAFFIC STOPPED	ON HWY 10 66 WB	USE ALT ROUTE
SITE 5 NB IH 39 0.5 MILES SOUTH OF EXIT 156	N/A	N/A	N/A	N/A	N/A	N/A	RAMP CLOSED	AT HWY 66 WEST	RAMP CLOSED	AT HWY 66 WEST	N/A	N/A	RAMP CLOSED AHEAD	AT HWY 10 EAST	TRAFFIC STOPPED	ON HWY 10 66 WB	USE ALT ROUTE
SITE 6 WB USH 10 1.5 MILES EAST OF BADGER AVENUE(**)	US 10 WB LANE CLOSURE	BEGINS XX/XX/XX	LEFT LANE CLOSED	MERGE RIGHT	RIGHT LANE CLOSED	MERGE LEFT	N/A	N/A	I-39 SB RAMP CLOSED	FOLLOW IH-39 SB DETOUR	I-39 SB RAMP CLOSED	FOLLOW IH-39 SB DETOUR	N/A	n/A	TRAFFIC STOPPED AHEAD	BE PREPARED TO STOP	N/A
SITE 7 WB USH 10 1.0 MILES EAST OF CTH K	N/A	N/A	N/A	N/A	N/A	N/A	N/A	N/A	N/A	N/A	N/A	N/A	N/A	N/A	TRAFFIC STOPPED AHEAD	USE ALT ROUTE	N/A

* MOVE PCMS AT SITE 1 TO 325 EAST OF CTH YY AFTER COMPLETION OF STAGE 2 AND PRIOR TO STAGE 3

** MOVE PCMS AT SITE 6 TO 250 FEET WEST OF WILDWOOD DRIVE UPON COMPLETION OF STAGE 2 AND PRIOR TO STAGE 3

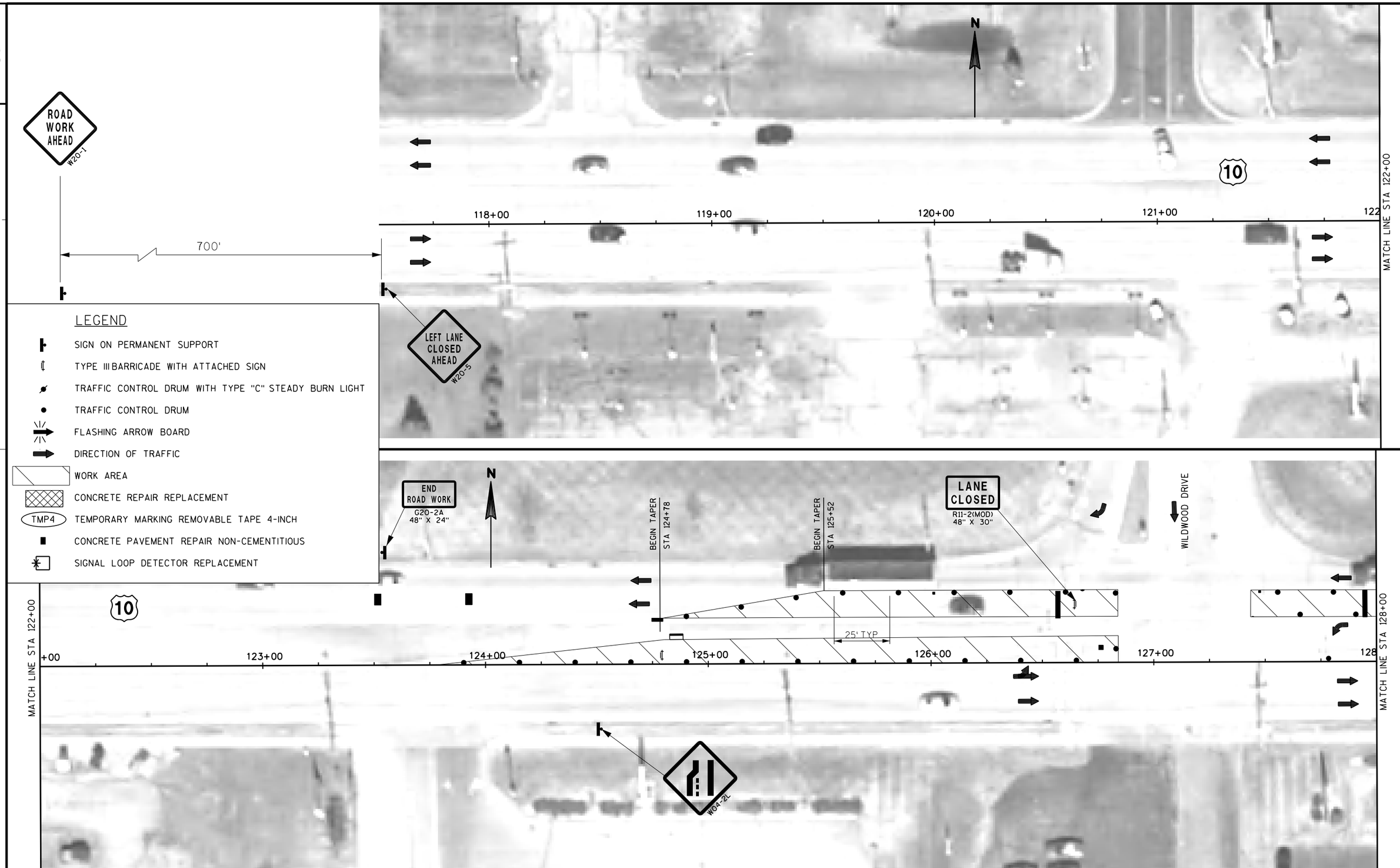

LEGEND

- SIGN ON PERMANENT SUPPORT
- TYPE III BARRICADE WITH ATTACHED SIGN
- TRAFFIC CONTROL DRUM WITH TYPE "C" STEADY BURN LIGHT
- TRAFFIC CONTROL DRUM
- FLASHING ARROW BOARD
- DIRECTION OF TRAFFIC
- WORK AREA
- CONCRETE REPAIR REPLACEMENT
- TMP4 TEMPORARY MARKING REMOVABLE TAPE 4-INCH
- CONCRETE PAVEMENT REPAIR NON-CEMENTITIOUS
- SIGNAL LOOP DETECTOR REPLACEMENT

PROJECT NO:6290-05-75	HWY:USH 10	COUNTY:PORTAGE	TRAFFIC CONTROL - STAGE 1	SHEET 42	E

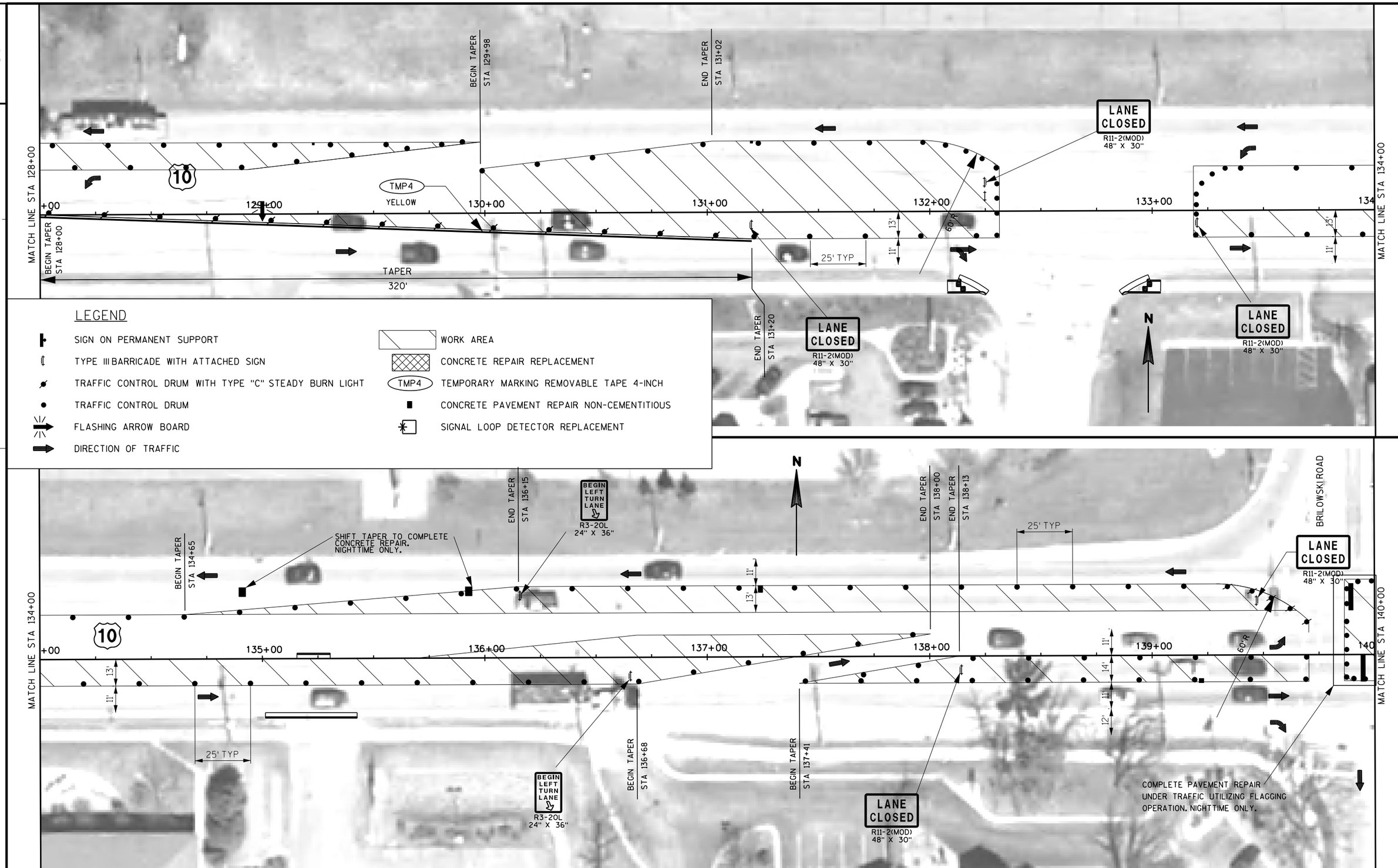

PROJECT NO:6290-05-75	HWY:USH 10	COUNTY:PORTAGE	TRAFFIC CONTROL - STAGE 1	SHEET 43	E

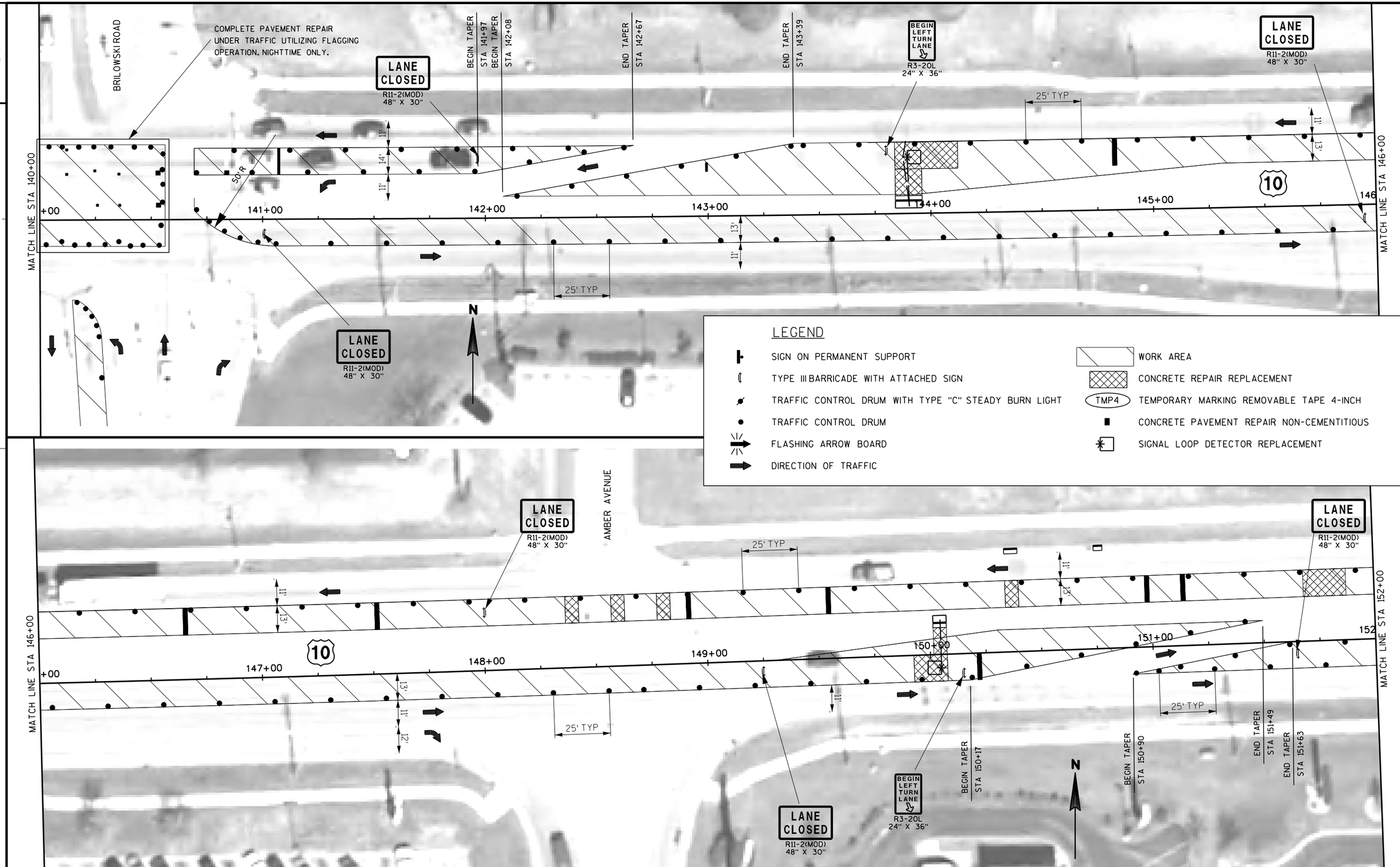

PROJECT NO:6290-05-75	HWY:USH 10	COUNTY:PORTAGE	TRAFFIC CONTROL - STAGE 1	SHEET 44	E

2

2

PROJECT NO:6290-05-75	HWY:USH 10	COUNTY:PORTAGE	TRAFFIC CONTROL - STAGE 1	SHEET 45	E

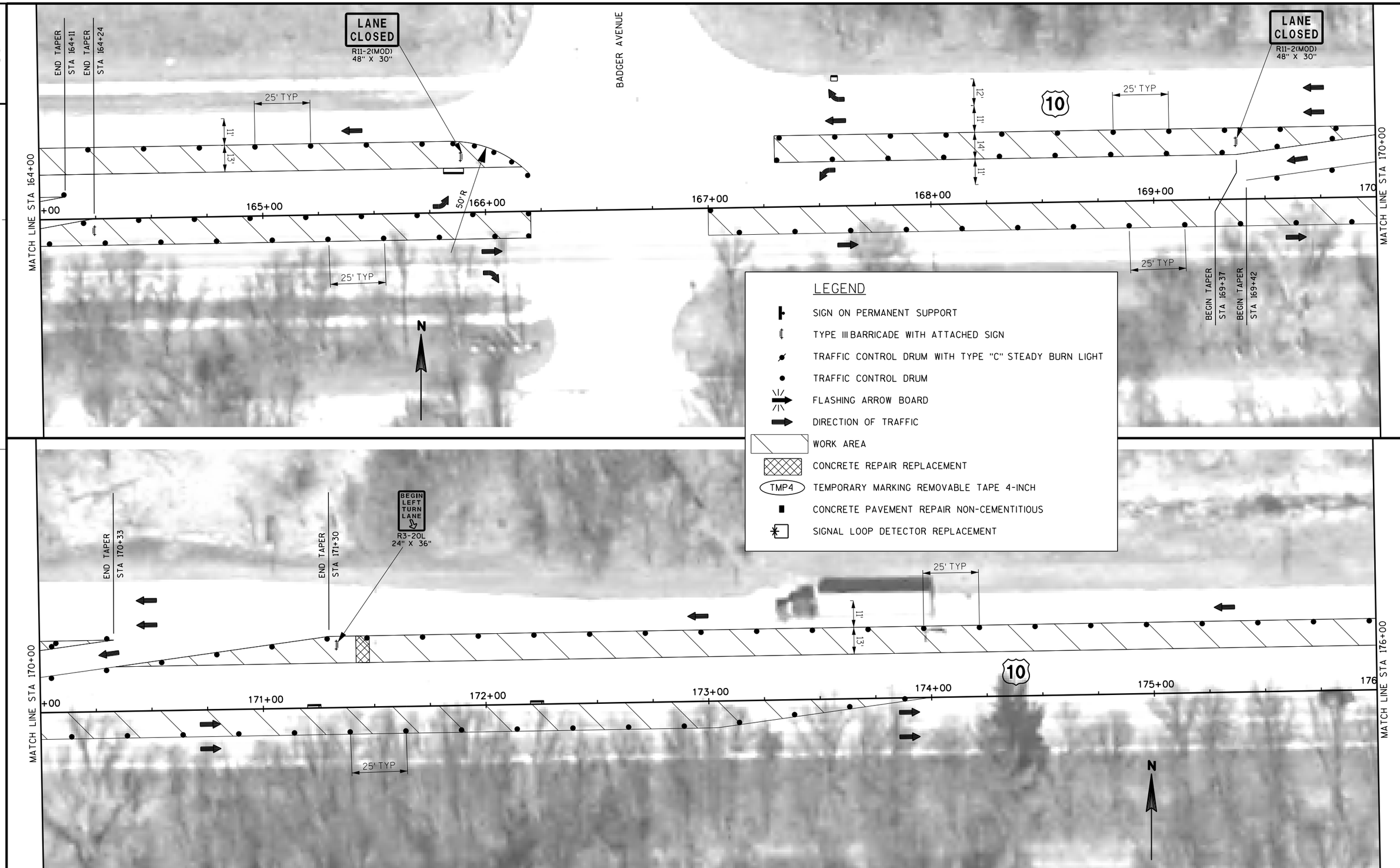

PROJECT NO:6290-05-75	HWY:USH 10	COUNTY:PORTAGE	TRAFFIC CONTROL - STAGE 1	SHEET 46	E

FILE NAME : X:\3230400\113516.01\TECH\CADD\DWG\026005_s1.dgn PLOT DATE : 9/22/2016 PLOT BY : 1362cmr PLOT NAME : PLOT SCALE : 40.0000 sf / in.

WISDOT/CADDS SHEET 42

LEGEND

- SIGN ON PERMANENT SUPPORT
- TYPE III BARRICADE WITH ATTACHED SIGN
- TRAFFIC CONTROL DRUM WITH TYPE "C" STEADY BURN LIGHT
- TRAFFIC CONTROL DRUM
- FLASHING ARROW BOARD
- DIRECTION OF TRAFFIC
- WORK AREA
- CONCRETE REPAIR REPLACEMENT
- TMP4 — TEMPORARY MARKING REMOVABLE TAPE 4-INCH
- CONCRETE PAVEMENT REPAIR NON-CEMENTITIOUS
- SIGNAL LOOP DETECTOR REPLACEMENT

PROJECT NO:6290-05-75	HWY:USH 10	COUNTY:PORTAGE	TRAFFIC CONTROL - STAGE 1	SHEET 47	E

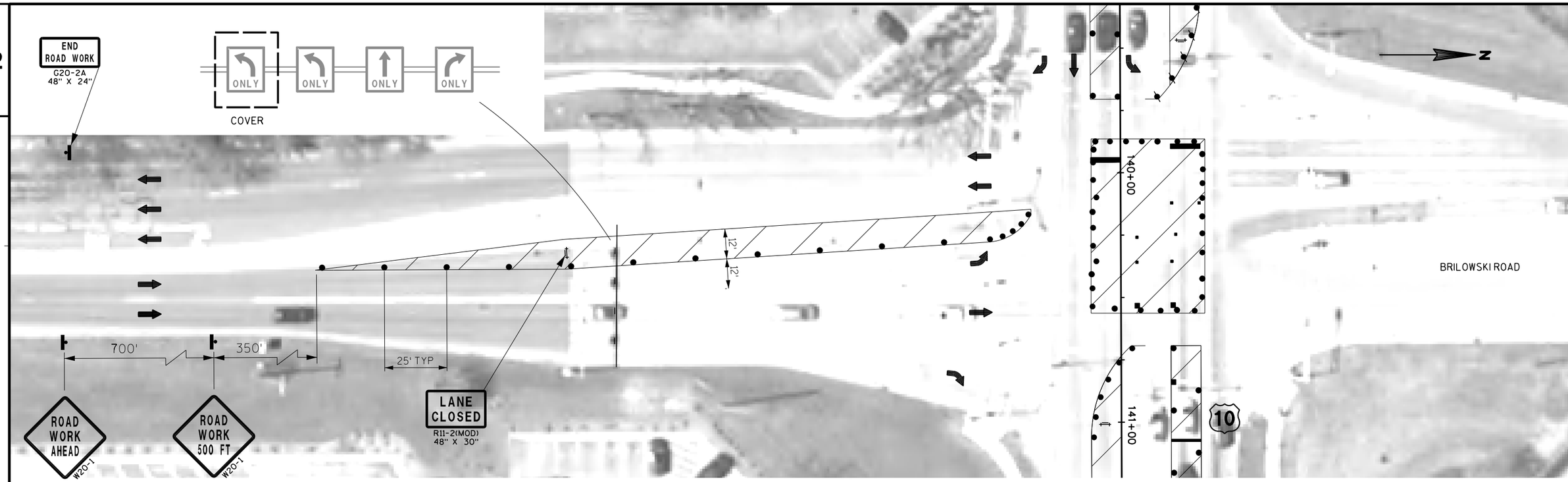

LEGEND

- SIGN ON PERMANENT SUPPORT
- TYPE III BARRICADE WITH ATTACHED SIGN
- TRAFFIC CONTROL DRUM WITH TYPE "C" STEADY BURN LIGHT
- TRAFFIC CONTROL DRUM
- FLASHING ARROW BOARD
- DIRECTION OF TRAFFIC
- WORK AREA
- CONCRETE REPAIR REPLACEMENT
- TMP4 — TEMPORARY MARKING REMOVABLE TAPE 4-INCH
- CONCRETE PAVEMENT REPAIR NON-CEMENTITIOUS
- SIGNAL LOOP DETECTOR REPLACEMENT

PROJECT NO:6290-05-75	HWY:USH 10	COUNTY:PORTAGE	TRAFFIC CONTROL - STAGE 1	SHEET 48	E

2

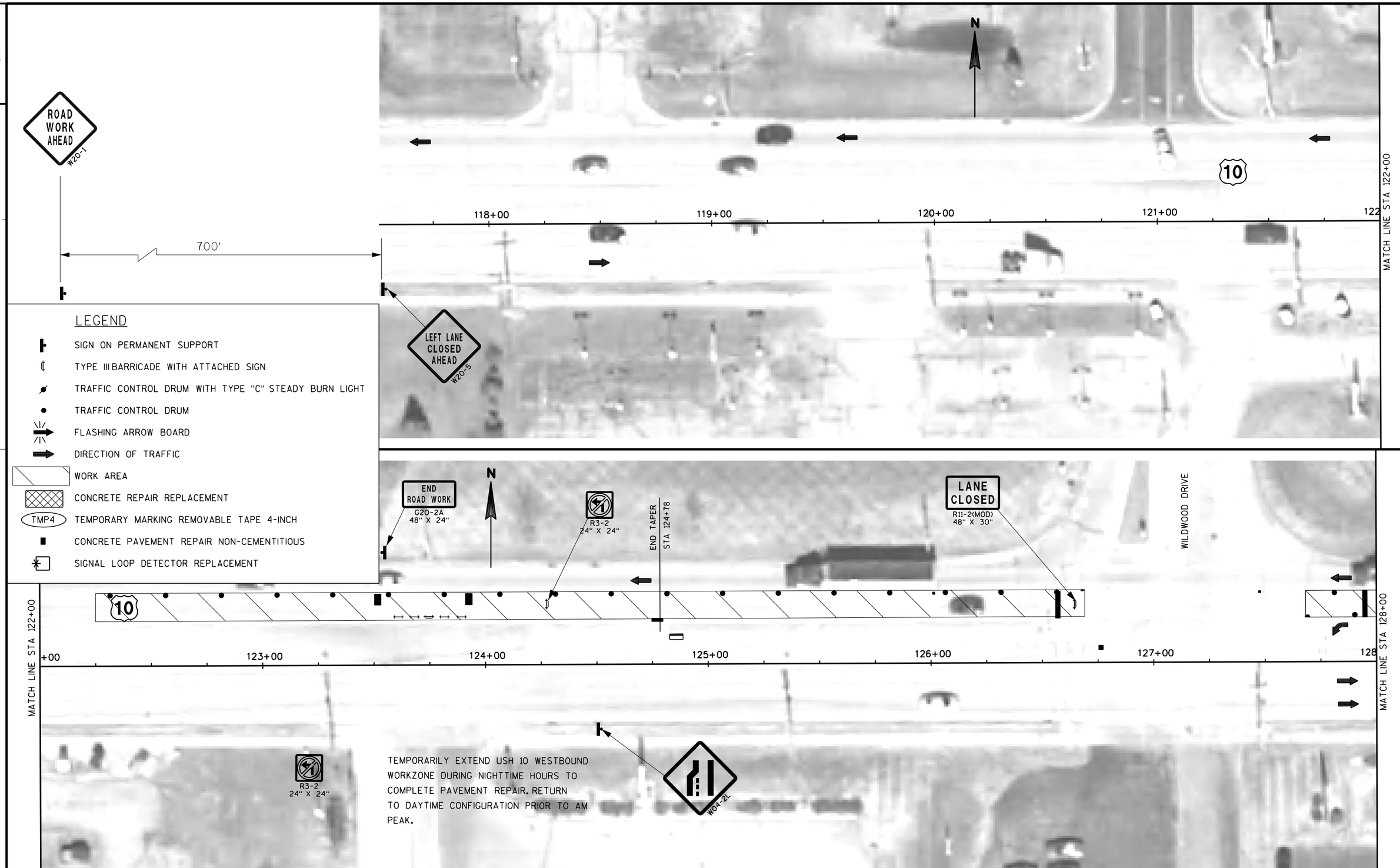

LEGEND

- SIGN ON PERMANENT SUPPORT
- TYPE III BARRICADE WITH ATTACHED SIGN
- TRAFFIC CONTROL DRUM WITH TYPE "C" STEADY BURN LIGHT
- TRAFFIC CONTROL DRUM
- FLASHING ARROW BOARD
- DIRECTION OF TRAFFIC
- WORK AREA
- CONCRETE REPAIR REPLACEMENT
- TMP4 TEMPORARY MARKING REMOVABLE TAPE 4-INCH
- CONCRETE PAVEMENT REPAIR NON-CEMENTITIOUS
- SIGNAL LOOP DETECTOR REPLACEMENT

PROJECT NO:6290-05-75	HWY:USH 10	COUNTY:PORTAGE	TRAFFIC CONTROL - STAGE 1A (NIGHTTIME ONLY)	SHEET 49	E

2

STAGE 2A - NIGHTTIME ONLY
EXTEND USH 10 EASTBOUND AND WESTBOUND WORKZONE WESTERLY TO STA 109+00 AND COMPLETE CONCRETE PATCHING

END ROAD WORK
G20-2A
48" X 24"

BEGIN TAPER
STA 117+61

TAPER
320'

BUFFER
170'

END TAPER
STA 120+81

BEGIN TAPER
STA 121+65

10

TMP4
WHITE

118+00 119+00 120+00 121+00 122

25' TYP

11'
13'

MATCH LINE STA 122+00

700' 700' 350'

ROAD WORK AHEAD
W20-1

RIGHT LANE CLOSED AHEAD
W20-5

W04-2R

LANE CLOSED
R11-2(MOD)
48" X 30"

N

LEGEND

- SIGN ON PERMANENT SUPPORT
- TYPE III BARRICADE WITH ATTACHED SIGN
- TRAFFIC CONTROL DRUM WITH TYPE "C" STEADY BURN LIGHT
- TRAFFIC CONTROL DRUM
- FLASHING ARROW BOARD
- DIRECTION OF TRAFFIC
- WORK AREA
- CONCRETE REPAIR REPLACEMENT
- TMP4 TEMPORARY MARKING REMOVABLE TAPE 4-INCH
- CONCRETE PAVEMENT REPAIR NON-CEMENTITIOUS
- SIGNAL LOOP DETECTOR REPLACEMENT

END TAPER
STA 121+37

25' TYP

13'
11'

10

MATCH LINE STA 122+00

+00 123+00 124+00 125+00 126+00 127+00 128

12'
11'
13'

25' TYP

LANE CLOSED
R11-2(MOD)
48" X 30"

WILDWOOD DRIVE

UPON COMPLETION OF PATCHING IN SOUTHBOUND RIGHT TURN BAY REOPEN TO TRAFFIC AND ADJUST TRAFFIC CONTROL DEVICES TO COMPLETE PATCH.

MATCH LINE STA 128+00

PROJECT NO:6290-05-75	HWY:USH 10	COUNTY:PORTAGE	TRAFFIC CONTROL - STAGE 2	SHEET 50	E

2

LANE CLOSED
R11-2(MOD)
48" X 30"

25' TYP

13'
11'
12'

10

MATCH LINE STA 128+00

+00 129+00 130+00 131+00 132+00 133+00 134

50'R

N

MATCH LINE STA 134+00

LEGEND

- SIGN ON PERMANENT SUPPORT
- TYPE III BARRICADE WITH ATTACHED SIGN
- TRAFFIC CONTROL DRUM WITH TYPE "C" STEADY BURN LIGHT
- TRAFFIC CONTROL DRUM
- FLASHING ARROW BOARD
- DIRECTION OF TRAFFIC
- WORK AREA
- CONCRETE REPAIR REPLACEMENT
- TMP4 — TEMPORARY MARKING REMOVABLE TAPE 4-INCH
- CONCRETE PAVEMENT REPAIR NON-CEMENTITIOUS
- SIGNAL LOOP DETECTOR REPLACEMENT

TEMPORARILY CLOSE BRILOWSKI ROAD SOUTHBOUND THROUGH LANE TO COMPLETE CONCRETE REPAIR DURING NIGHTTIME HOURS ONLY.

TEMPORARILY CLOSE BRILOWSKI ROAD SOUTHBOUND RIGHT TURN BAY TO COMPLETE CONCRETE REPAIR DURING NIGHTTIME HOURS ONLY.

DO NOT CLOSE SOUTHBOUND THROUGH LANE AND RIGHT TURN BAY CONCURRENTLY.

BRILOWSKI ROAD

MATCH LINE STA 134+00

+00 135+00 136+00 137+00 138+00 139+00 140

BEGIN RIGHT TURN LANE
R3-20R
24" X 36"

BEGIN TAPER STA 136+90

BEGIN TAPER STA 137+63

END TAPER STA 138+34

END TAPER STA 138+35

MATCH LINE STA 140+00

PROJECT NO:6290-05-75	HWY:USH 10	COUNTY:PORTAGE	TRAFFIC CONTROL - STAGE 2	SHEET 51	E

PROJECT NO:6290-05-75	HWY:USH 10	COUNTY:PORTAGE	TRAFFIC CONTROL - STAGE 2	SHEET 52	E

FILE NAME : X:\3230400\113516.01\TECH\CADD\DWG\026103_s2.dgn PLOT DATE : 9/22/2016 PLOT BY : 1362cmr PLOT NAME : PLOT SCALE : 40.0000 sf / in.

WISDOT/CADDS SHEET 42

PROJECT NO:6290-05-75	HWY:USH 10	COUNTY:PORTAGE	TRAFFIC CONTROL - STAGE 2	SHEET 53	E

FILE NAME : X:\3230400\113516.01\TECH\CADD\DWG\026104_s2.dgn PLOT DATE : 9/22/2016 PLOT BY : 1362cmr PLOT NAME : PLOT SCALE : 40.0000 sf / in.

WISDOT/CADDS SHEET 42

2

LANE CLOSED
R11-2(MOD)
48" X 30"

BADGER AVENUE

25' TYP

13'
11'
12'
11'
14'
11'

MATCH LINE STA 164+00

+00
165+00
166+00
167+00
168+00
169+00
170

END TAPER
STA 164+27

BEGIN TAPER
STA 169+37

BEGIN TAPER
STA 169+42

10

MATCH LINE STA 170+00

N

LEGEND

- SIGN ON PERMANENT SUPPORT
- TYPE III BARRICADE WITH ATTACHED SIGN
- TRAFFIC CONTROL DRUM WITH TYPE "C" STEADY BURN LIGHT
- TRAFFIC CONTROL DRUM
- FLASHING ARROW BOARD
- DIRECTION OF TRAFFIC
- WORK AREA
- CONCRETE REPAIR REPLACEMENT
- TMP4 TEMPORARY MARKING REMOVABLE TAPE 4-INCH
- CONCRETE PAVEMENT REPAIR NON-CEMENTITIOUS
- SIGNAL LOOP DETECTOR REPLACEMENT

END TAPER
STA 170+33

END TAPER
STA 171+30

BEGIN RIGHT TURN LANE
R3-20R
24" X 36"

100'

13'
11'

MATCH LINE STA 170+00

11'
12'

+00
171+00
172+00
173+00
174+00
175+00
176

END ROAD WORK
G20-2A
48" X 24"

MATCH LINE STA 176+00

PROJECT NO:6290-05-75	HWY:USH 10	COUNTY:PORTAGE	TRAFFIC CONTROL - STAGE 2	SHEET 54	E

2

LANE CLOSED
R11-2(MOD)
48" X 30"

100' TYP

12'
12'

10

MATCH LINE STA 176+00

+00 177+00 178+00 179+00 180+00 181+00 182

MATCH LINE STA 182+00

N

LEGEND

- SIGN ON PERMANENT SUPPORT
- TYPE III BARRICADE WITH ATTACHED SIGN
- TRAFFIC CONTROL DRUM WITH TYPE "C" STEADY BURN LIGHT
- TRAFFIC CONTROL DRUM
- FLASHING ARROW BOARD
- DIRECTION OF TRAFFIC
- WORK AREA
- CONCRETE REPAIR REPLACEMENT
- TMP4 TEMPORARY MARKING REMOVABLE TAPE 4-INCH
- CONCRETE PAVEMENT REPAIR NON-CEMENTITIOUS
- SIGNAL LOOP DETECTOR REPLACEMENT

100' TYP

12'
12'

10

MATCH LINE STA 182+00

+00 183+00 184+00 185+00 186+00 187+00 188

MATCH LINE STA 188+00

ALGOMA STREET

N

PROJECT NO:6290-05-75	HWY:USH 10	COUNTY:PORTAGE	TRAFFIC CONTROL - STAGE 2	SHEET 55	E

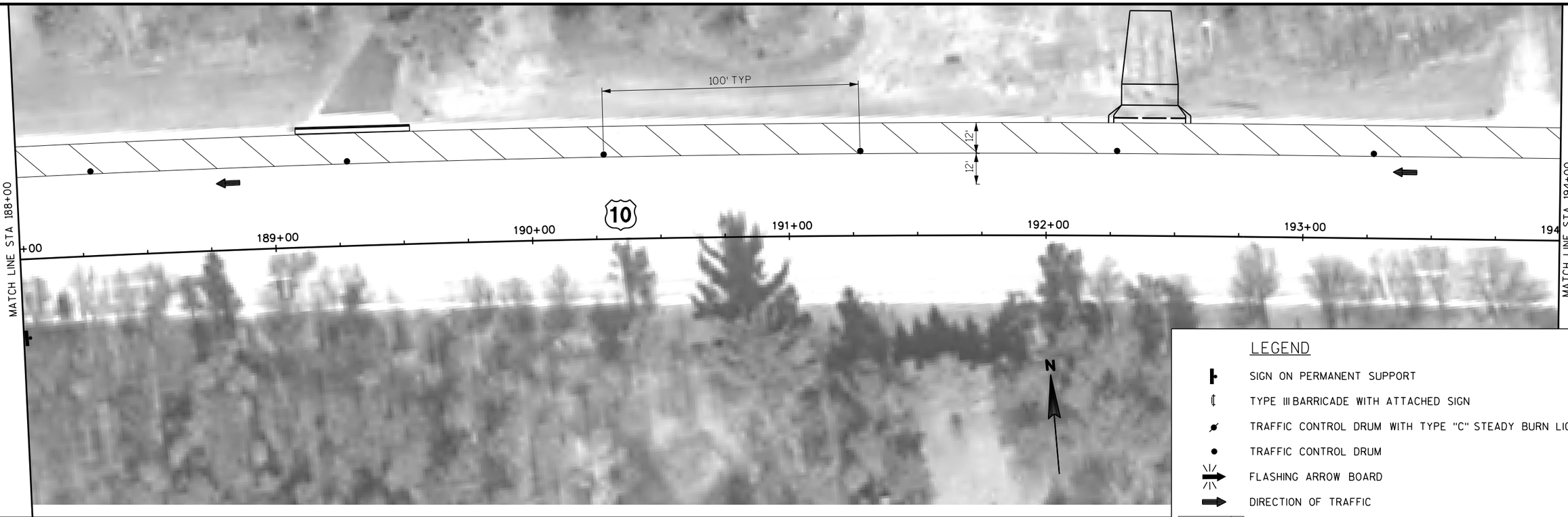

LEGEND

- SIGN ON PERMANENT SUPPORT
- TYPE III BARRICADE WITH ATTACHED SIGN
- TRAFFIC CONTROL DRUM WITH TYPE "C" STEADY BURN LIGHT
- TRAFFIC CONTROL DRUM
- FLASHING ARROW BOARD
- DIRECTION OF TRAFFIC
- WORK AREA
- CONCRETE REPAIR REPLACEMENT
- TMP4 — TEMPORARY MARKING REMOVABLE TAPE 4-INCH
- CONCRETE PAVEMENT REPAIR NON-CEMENTITIOUS
- SIGNAL LOOP DETECTOR REPLACEMENT

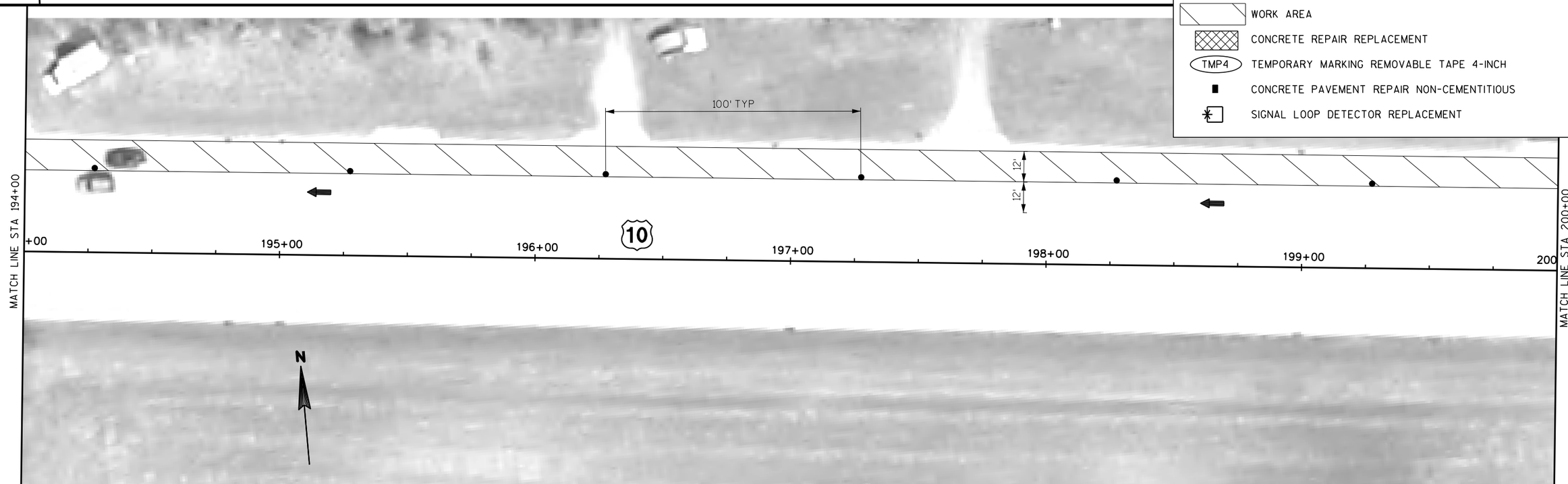

PROJECT NO:6290-05-75	HWY:USH 10	COUNTY:PORTAGE	TRAFFIC CONTROL - STAGE 2	SHEET 56	E

2

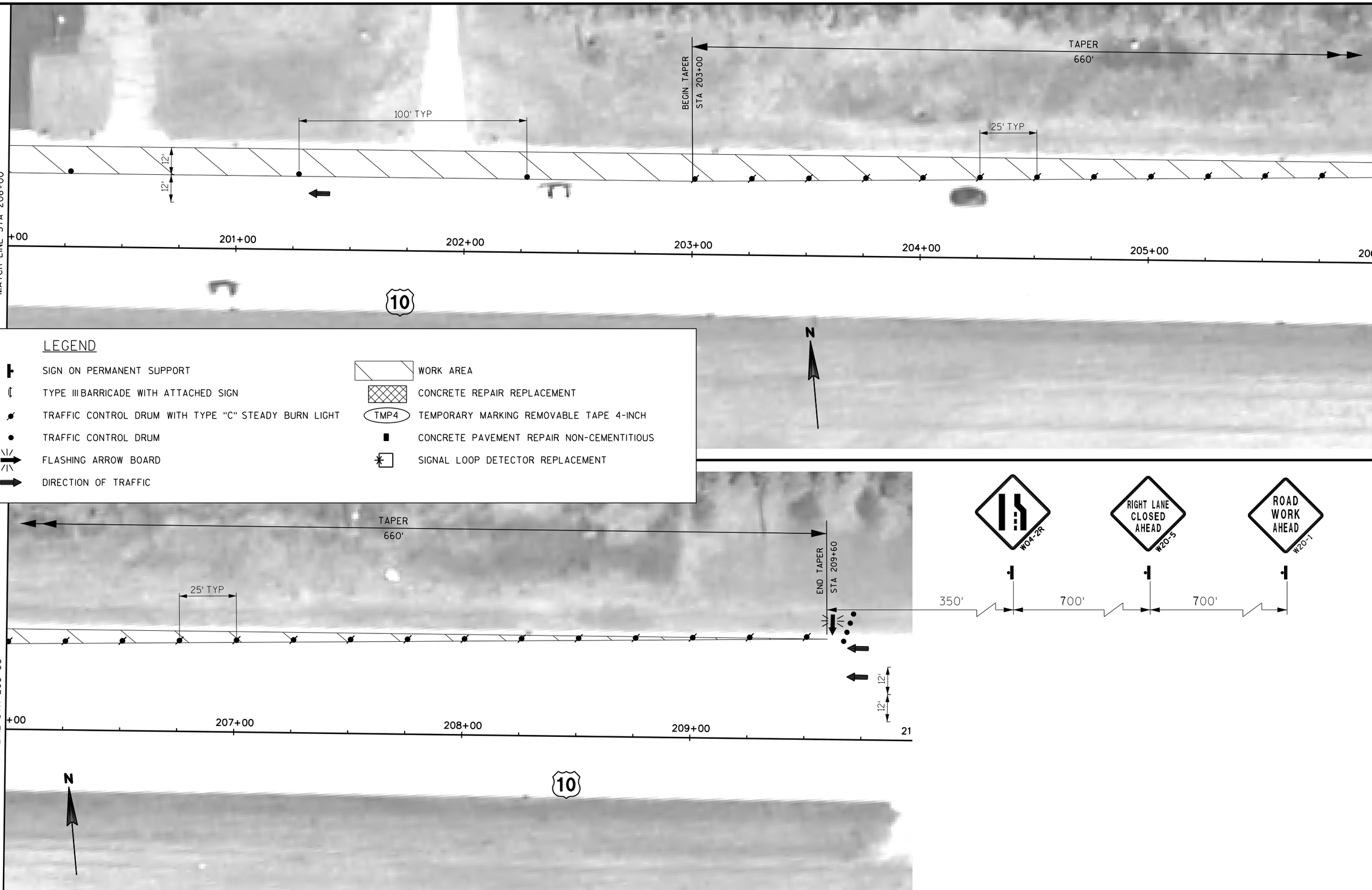

LEGEND

- SIGN ON PERMANENT SUPPORT
- TYPE III BARRICADE WITH ATTACHED SIGN
- TRAFFIC CONTROL DRUM WITH TYPE "C" STEADY BURN LIGHT
- TRAFFIC CONTROL DRUM
- FLASHING ARROW BOARD
- DIRECTION OF TRAFFIC
- WORK AREA
- CONCRETE REPAIR REPLACEMENT
- TMP4 TEMPORARY MARKING REMOVABLE TAPE 4-INCH
- CONCRETE PAVEMENT REPAIR NON-CEMENTITIOUS
- SIGNAL LOOP DETECTOR REPLACEMENT

2

PROJECT NO:6290-05-75	HWY:USH 10	COUNTY:PORTAGE	TRAFFIC CONTROL - STAGE 2	SHEET 57	E

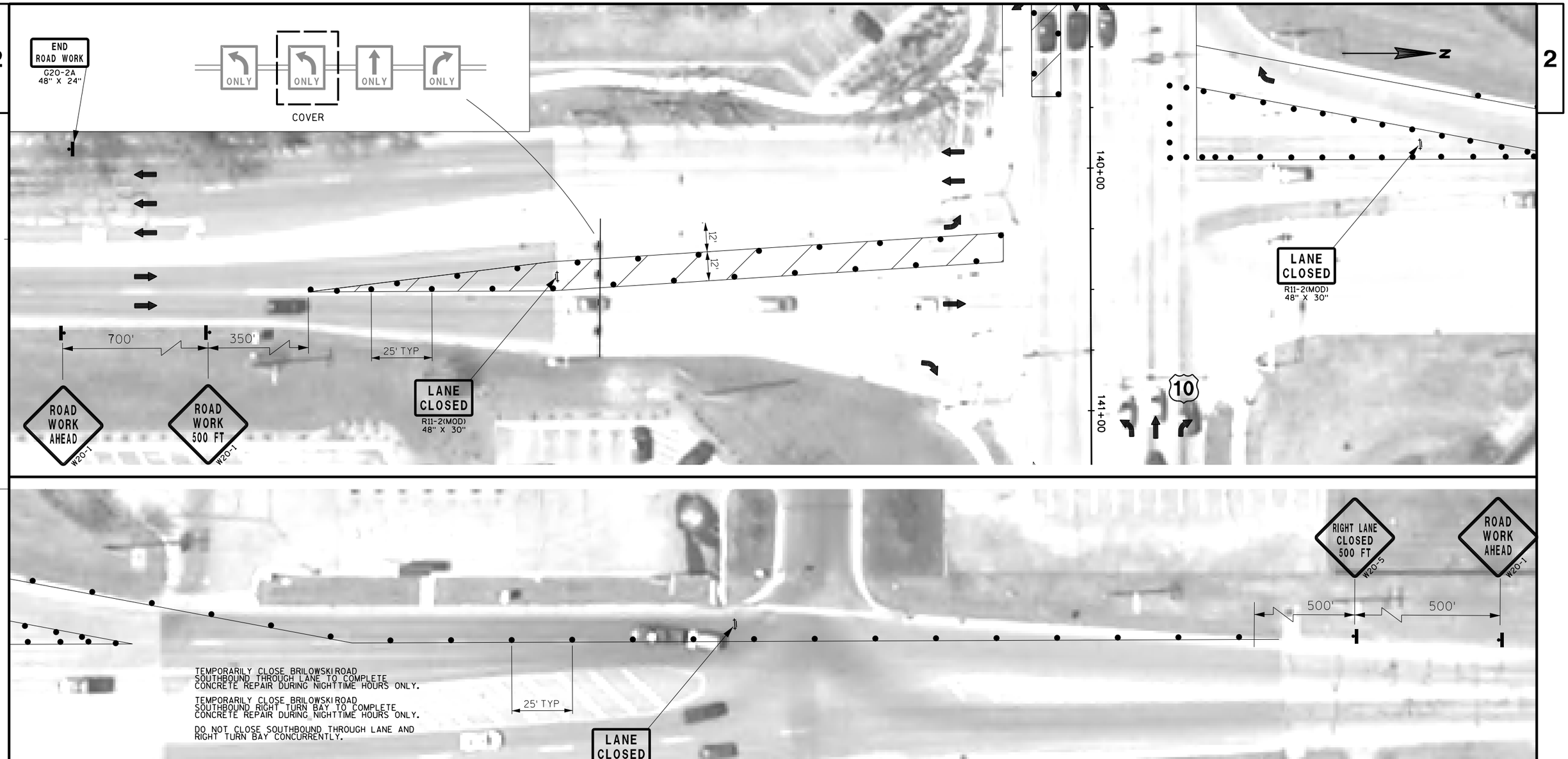

LEGEND

- SIGN ON PERMANENT SUPPORT
- TYPE III BARRICADE WITH ATTACHED SIGN
- TRAFFIC CONTROL DRUM WITH TYPE "C" STEADY BURN LIGHT
- TRAFFIC CONTROL DRUM
- FLASHING ARROW BOARD
- DIRECTION OF TRAFFIC
- WORK AREA
- CONCRETE REPAIR REPLACEMENT
- TMP4 — TEMPORARY MARKING REMOVABLE TAPE 4-INCH
- CONCRETE PAVEMENT REPAIR NON-CEMENTITIOUS
- SIGNAL LOOP DETECTOR REPLACEMENT

PROJECT NO:6290-05-75	HWY:USH 10	COUNTY:PORTAGE	TRAFFIC CONTROL - STAGE 2	SHEET 58	E

2

BEGIN TAPER
STA 109+00

END ROAD WORK
G20-2A
48" X 24"

TAPER
320'

STAGE 2A - STA 109+00 TO STA 121+00
TEMPORARILY EXTEND USH 10 EB AND WB
PATCHING WORKZONE WESTERLY DURING
NIGHTTIME ONLY. SEE STAGE 2 SHEETS FOR
TRAFFIC CONTROL LAYOUT EAST OF
STA 121+00.

END TAPER
STA 112+20

BUFFER
170'

LANE CLOSED
R11-2(MOD)
48" X 30"

N

2

10

109+00 110+00 111+00 112+00 113+00 114+00

25' TYP

ROAD WORK AHEAD
W20-1
STA 91+50

RIGHT LANE CLOSED AHEAD
W20-5
STA 98+50

W04-2R
STA 105+50

LANE CLOSED
R11-2(MOD)
48" X 30"

LEGEND

- SIGN ON PERMANENT SUPPORT
- TYPE III BARRICADE WITH ATTACHED SIGN
- TRAFFIC CONTROL DRUM WITH TYPE "C" STEADY BURN LIGHT
- TRAFFIC CONTROL DRUM
- FLASHING ARROW BOARD
- DIRECTION OF TRAFFIC
- WORK AREA
- CONCRETE REPAIR REPLACEMENT
- TMP4 — TEMPORARY MARKING REMOVABLE TAPE 4-INCH
- CONCRETE PAVEMENT REPAIR NON-CEMENTITIOUS
- SIGNAL LOOP DETECTOR REPLACEMENT

N

LANE CLOSED
R11-2(MOD)
48" X 30"

LANE CLOSED
R11-2(MOD)
48" X 30"

LANE CLOSED
R11-2(MOD)
48" X 30"

10

115+00 116+00 117+00 118+00 119+00 120+00

25' TYP

LANE CLOSED
R11-2(MOD)
48" X 30"

LANE CLOSED
R11-2(MOD)
48" X 30"

PROJECT NO:6290-05-75	HWY:USH 10	COUNTY:PORTAGE	TRAFFIC CONTROL - STAGE 2A (NIGHTTIME ONLY)	SHEET 59	E

FILE NAME : X:\3230400\113516.01\TECH\CADD\DWG\026110_s2A.dgn PLOT DATE : 9/22/2016 PLOT BY : 1362cmr PLOT NAME : PLOT SCALE : 40.0000 sf / in.

WISDOT/CADDS SHEET 42

2

N

R/W

END ROAD WORK
G20-2A
48" X 24"

CONSTRUCT PATCH IN STAGES
FLAGGING OPERATION REQUIRED
AT DRIVEWAY.

SEE TRAFFIC CONTROL
DETOUR DETAILS FOR
PLACEMENT OF ADVANCE
WARNING SIGNS AND
PCMS

12'
12'
11'
12'

79+00 80+00 81+00 82+00 83+00 84+00

12'
12'
12'

66

MATCH LINE STA 84+25

BEGIN PROJECT
6290-05-75
STA 79+00.00

R/W

COUNTRY CLUB DRIVE

SOUTH 39 SOUTH 51

COVER SIGN WHEN DETOUR
NOT IN USE

M4-5 36" X 18"	TO NORTH	TO WEST	M4-5 36" X 18"	M4-5 36" X 18"	TO NORTH	DETOUR EAST	M4-8 36" X 18"
M3-1 36" X 18"			M3-4 36" X 18"	M3-1 36" X 18"			M3-2 36" X 18"
M1-1 36" X 36"	39	10	M1-4 36" X 36"	M1-4 36" X 36"	51	66	M1-6 36" X 36"
M05-1R 30" X 30"			M05-1R 30" X 30"	M05-1R 30" X 30"			M05-1R 30" X 30"

*PAID FOR AS "TRAFFIC CONTROL DETOUR SIGNS"

ROAD WORK AHEAD
W20-1

LEGEND

- TYPE III BARRICADE WITH ATTACHED SIGN
- SIGN ON PERMANENT SUPPORT
- TRAFFIC CONTROL DRUM WITH TYPE "C" STEADY BURN LIGHT
- TRAFFIC CONTROL DRUM
- FLASHING ARROW BOARD
- DIRECTION OF TRAFFIC
- XXXXXX REMOVING PAVEMENT MARKING
- WORK AREA
- BASE PATCH AREA
- TMP4 TEMPORARY PAVEMENT MARKING REMOVABLE TAPE 4-INCH
- CONCRETE PAVEMENT REPAIR NON-CEMENTITIOUS
- SIGNAL LOOP DETECTOR REPLACEMENT

2

PROJECT NO:6290-05-75	HWY:USH 10	COUNTY:PORTAGE	TRAFFIC CONTROL - STAGE 3 (NIGHTTIME ONLY)	SHEET 60	E

LEGEND

- TYPE III BARRICADE WITH ATTACHED SIGN
- SIGN ON PERMANENT SUPPORT
- TRAFFIC CONTROL DRUM WITH TYPE "C" STEADY BURN LIGHT
- TRAFFIC CONTROL DRUM
- FLASHING ARROW BOARD
- DIRECTION OF TRAFFIC
- XXXXXX REMOVING PAVEMENT MARKING
- WORK AREA
- BASE PATCH AREA
- TMP4 TEMPORARY PAVEMENT MARKING REMOVABLE TAPE 4-INCH
- CONCRETE PAVEMENT REPAIR NON-CEMENTITIOUS
- SIGNAL LOOP DETECTOR REPLACEMENT

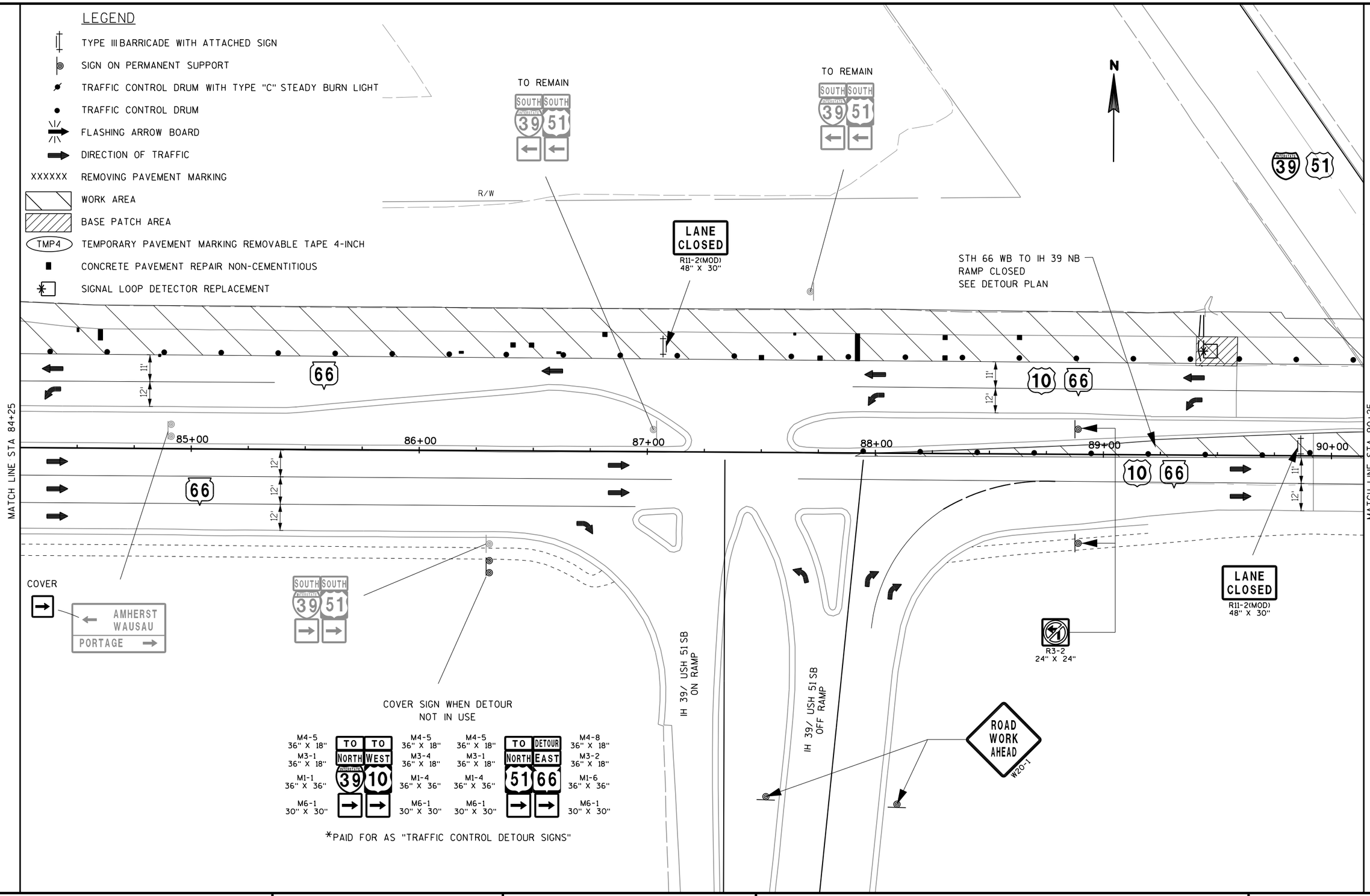

PROJECT NO:6290-05-75	HWY:USH 10	COUNTY:PORTAGE	TRAFFIC CONTROL - STAGE 3 (NIGHTTIME ONLY)	SHEET 61	E

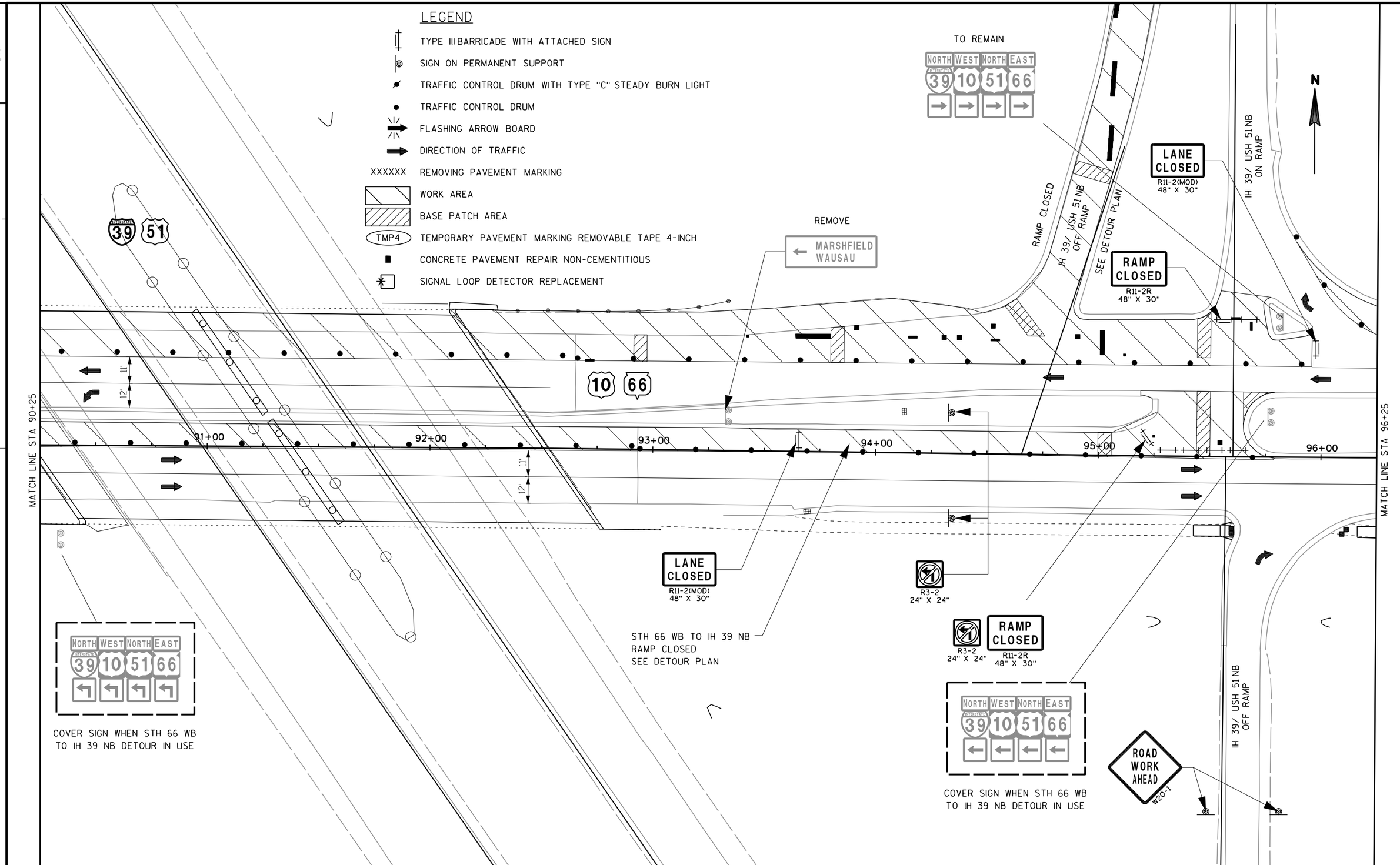

PROJECT NO:6290-05-75	HWY:USH 10	COUNTY:PORTAGE	TRAFFIC CONTROL - STAGE 3 (NIGHTTIME ONLY)	SHEET 62	E

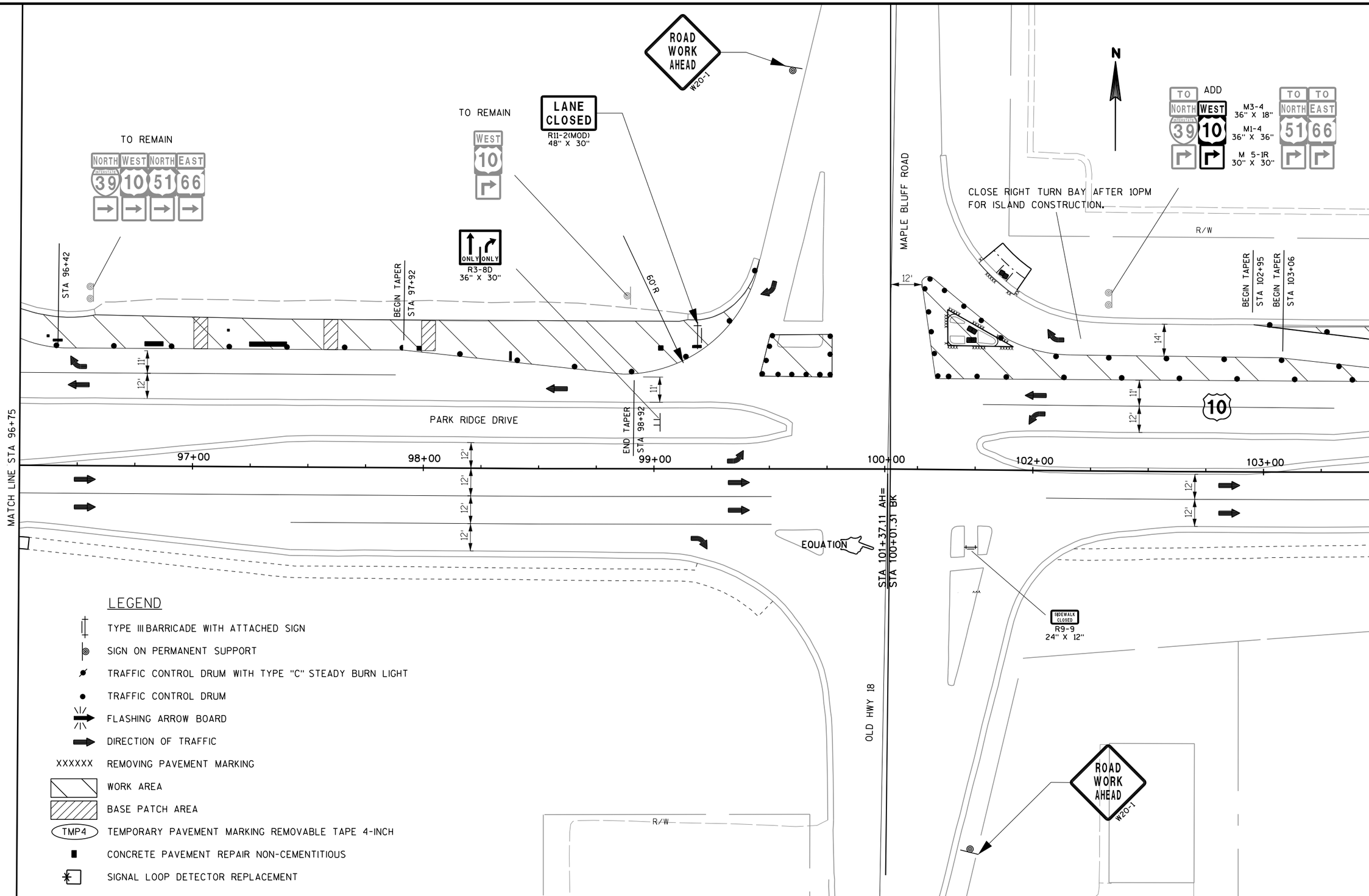

PROJECT NO:6290-05-75	HWY:USH 10	COUNTY:PORTAGE	TRAFFIC CONTROL - STAGE 3 (NIGHTTIME ONLY)	SHEET 63	E

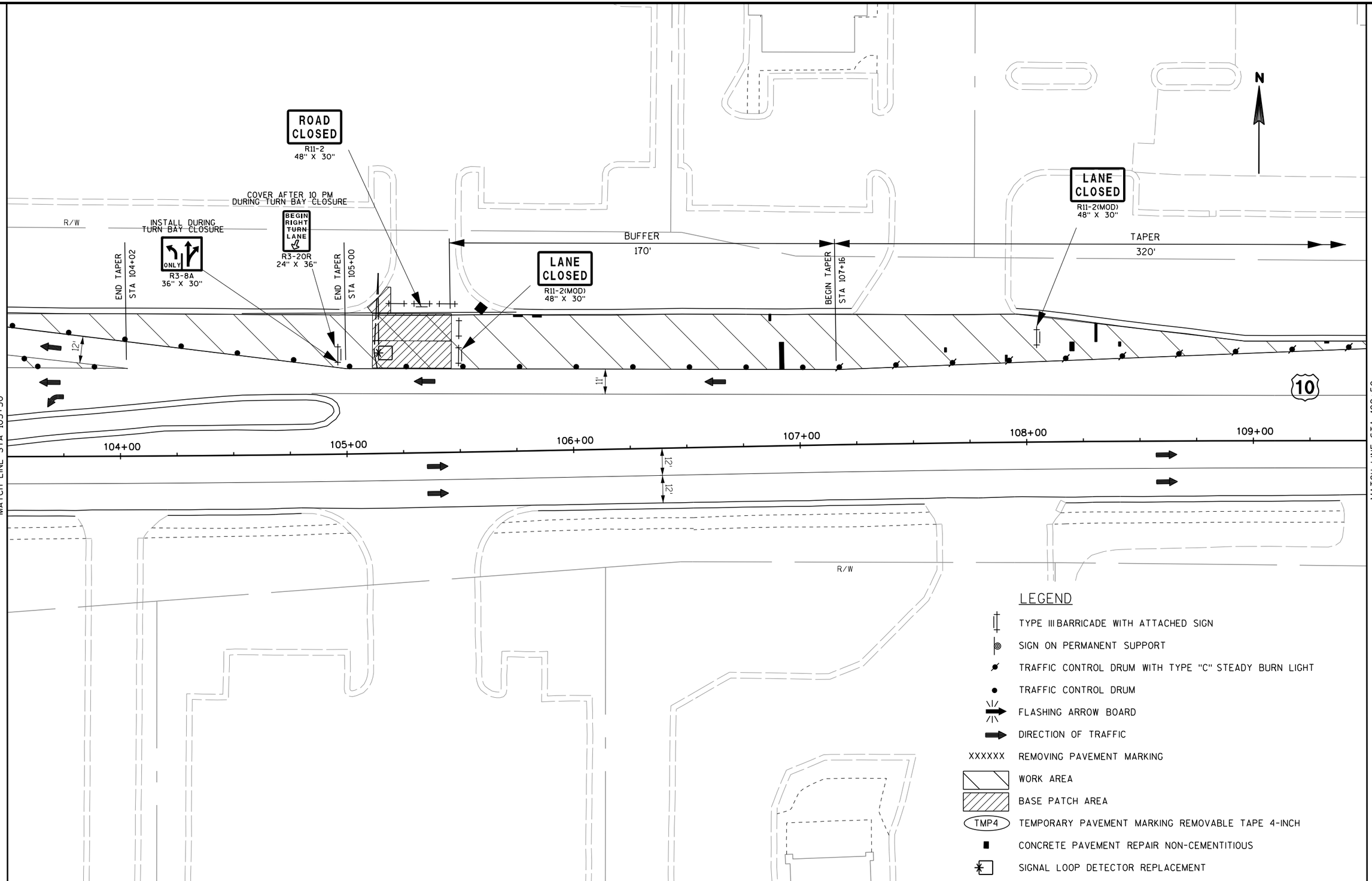

PROJECT NO:6290-05-75	HWY:USH 10	COUNTY:PORTAGE	TRAFFIC CONTROL - STAGE 3 (NIGHTTIME ONLY)	SHEET 64	E

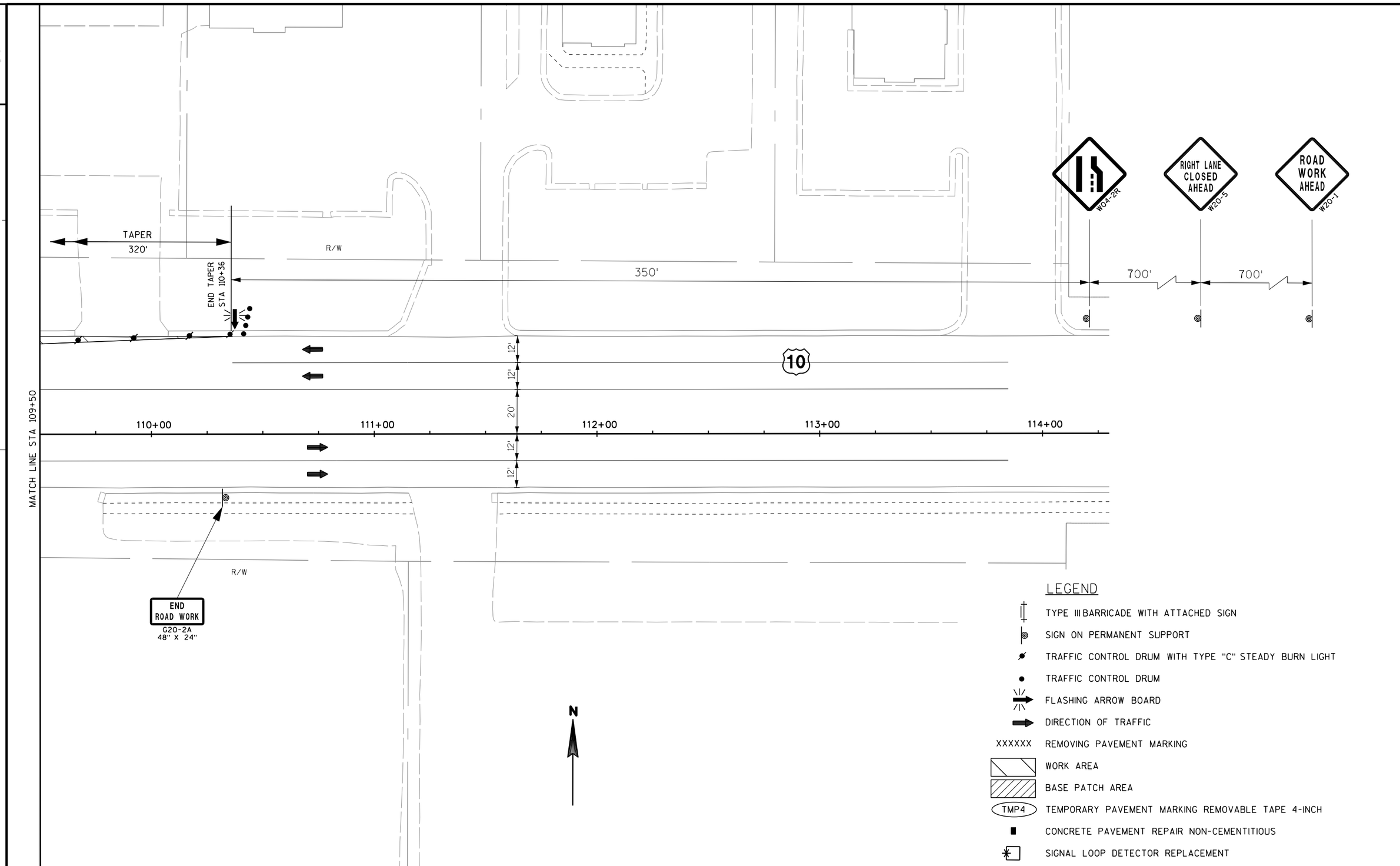

PROJECT NO:6290-05-75	HWY:USH 10	COUNTY:PORTAGE	TRAFFIC CONTROL - STAGE 3 (NIGHTTIME ONLY)	SHEET 65	E

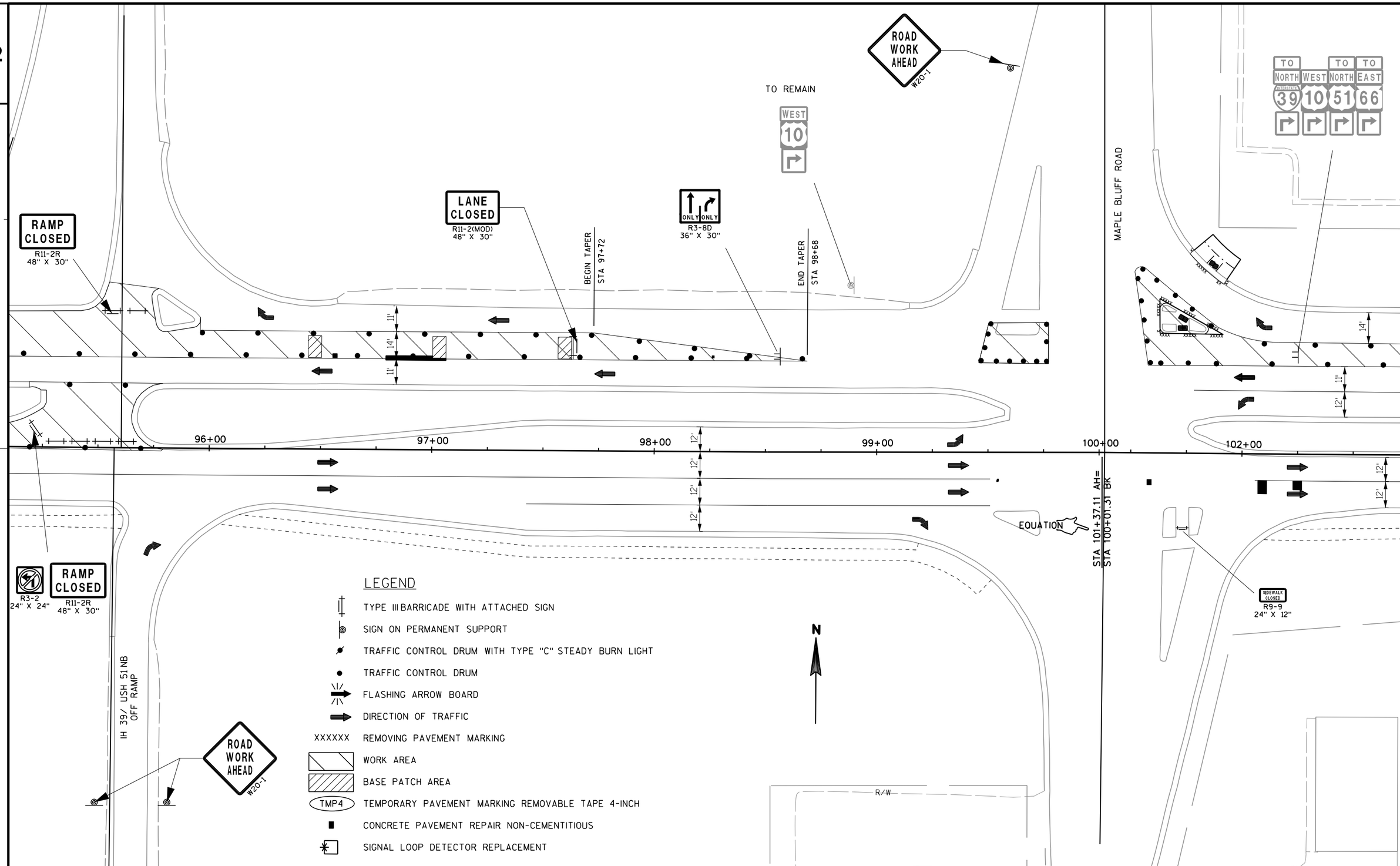

PROJECT NO:6290-05-75	HWY:USH 10	COUNTY:PORTAGE	TRAFFIC CONTROL - STAGE 3A (NIGHTTIME ONLY)	SHEET 66	E

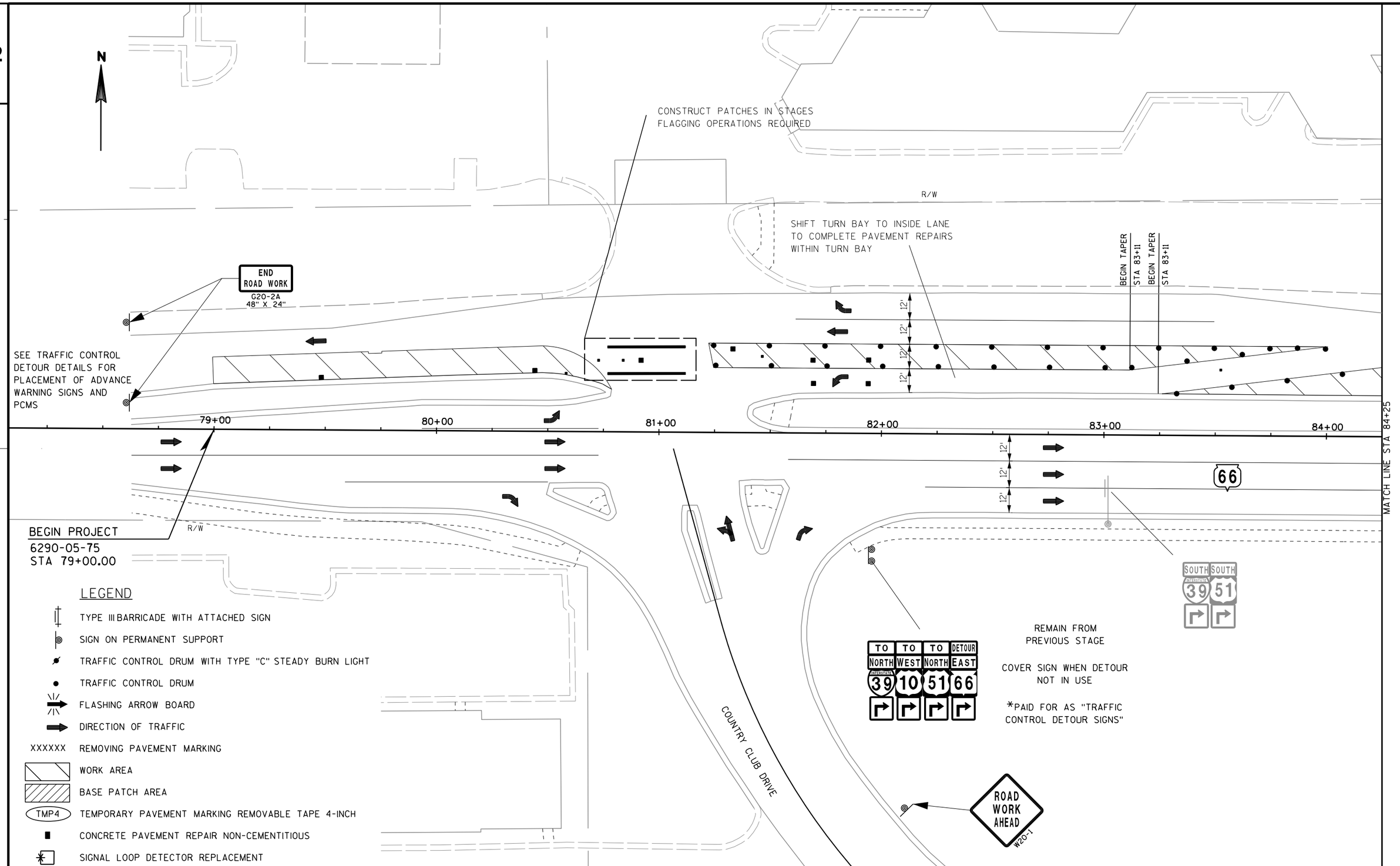

PROJECT NO:6290-05-75	HWY:USH 10	COUNTY:PORTAGE	TRAFFIC CONTROL - STAGE 4 (NIGHTTIME ONLY)	SHEET 67	E

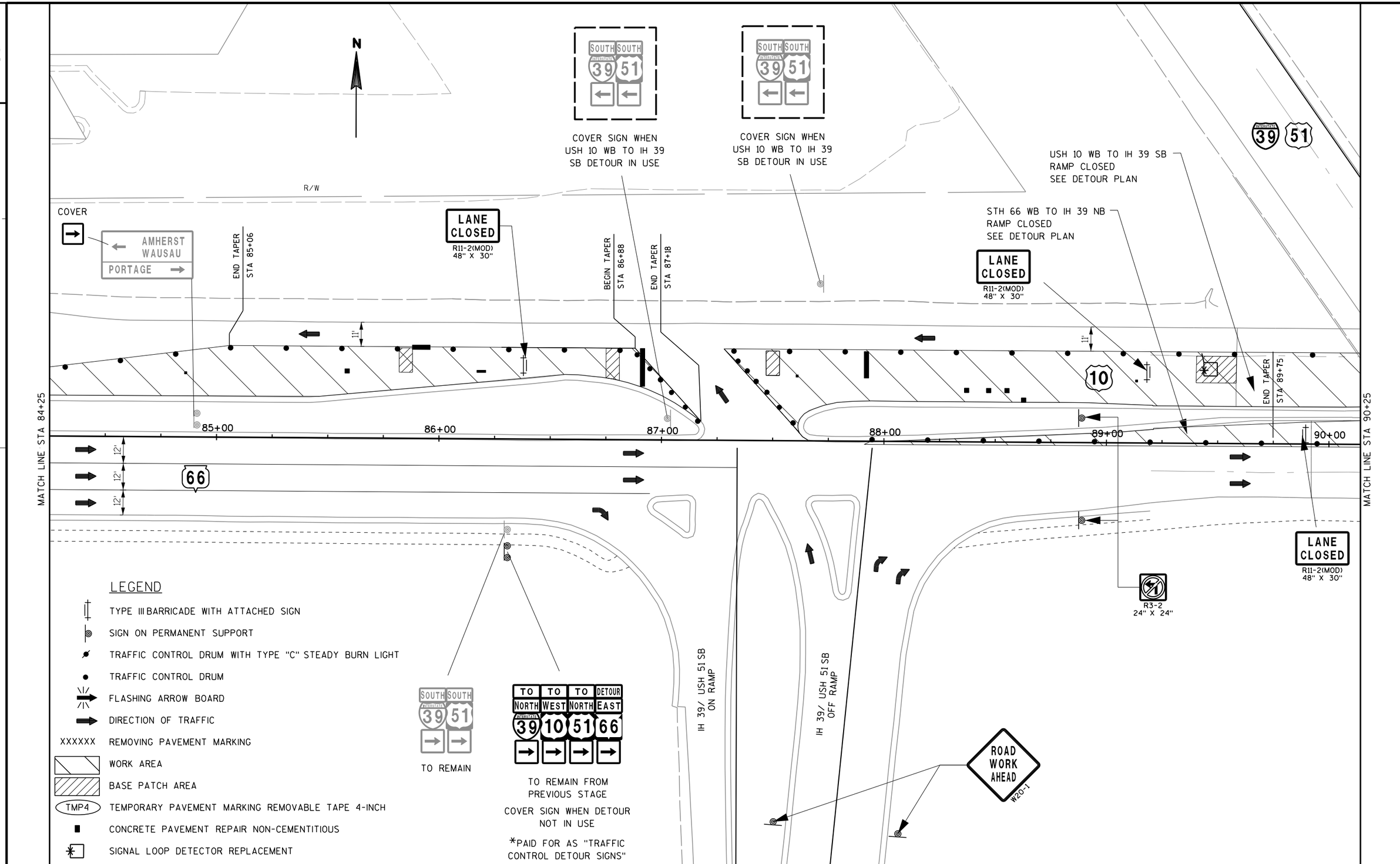

PROJECT NO:6290-05-75	HWY:USH 10	COUNTY:PORTAGE	TRAFFIC CONTROL - STAGE 4 (NIGHTTIME ONLY)	SHEET 68	E

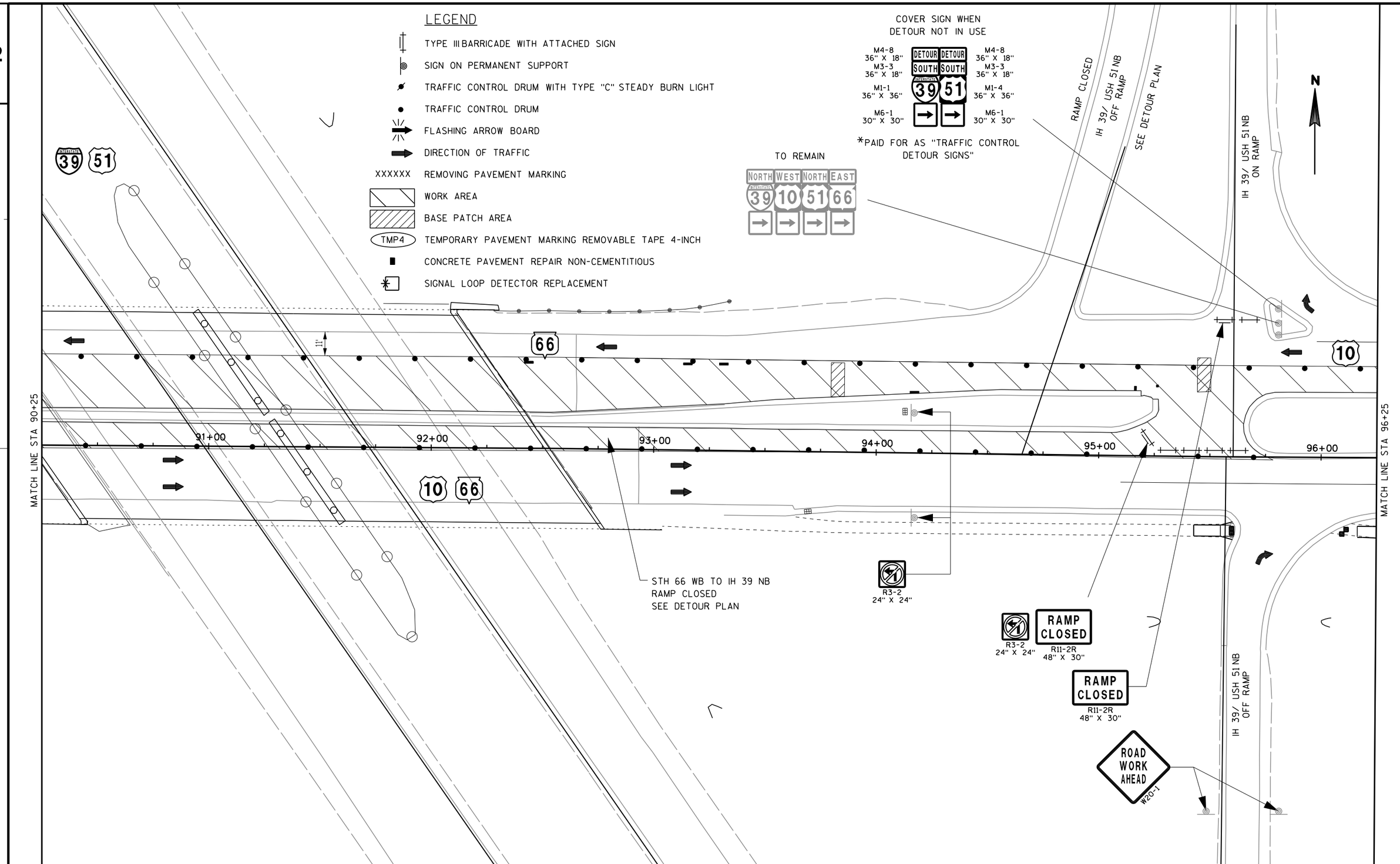

PROJECT NO:6290-05-75	HWY:USH 10	COUNTY:PORTAGE	TRAFFIC CONTROL - STAGE 4 (NIGHTTIME ONLY)	SHEET 69	E

COVER SIGN WHEN DETOUR NOT IN USE

M4-8 36" X 18" | DETOUR SOUTH | M4-8 36" X 18"
M3-3 36" X 18" | DETOUR SOUTH | M3-3 36" X 18"
M1-1 36" X 36" | INTERSTATE 39 51 | M1-4 36" X 36"
M6-1 30" X 30" | M6-1 30" X 30"

*PAID FOR AS "TRAFFIC CONTROL DETOUR SIGNS"

COVER SIGN WHEN DETOUR NOT IN USE

M4-8 36" X 18" | DETOUR SOUTH | M4-8 36" X 18"
M3-3 36" X 18" | DETOUR SOUTH | M3-3 36" X 18"
M1-1 36" X 36" | INTERSTATE 39 51 | M1-4 36" X 36"
M05-1R 30" X 30" | M05-1R 30" X 30"

*PAID FOR AS "TRAFFIC CONTROL DETOUR SIGNS"

ROAD WORK AHEAD W20-1

TO REMAIN

NORTH WEST NORTH EAST
INTERSTATE 39 10 51 66

LANE CLOSED
R11-2(MOD)
48" X 30"

MAPLE BLUFF ROAD

N

REMAIN FROM PREVIOUS STAGE

TO NORTH | TO WEST | TO NORTH | TO EAST
INTERSTATE 39 10 51 66

R/W

BEGIN TAPER STA 102+65

BEGIN TAPER STA 102+65

10

12'
11'

30'R

MATCH LINE STA 96+75

97+00 98+00 99+00 100+00 102+00 103+00

MATCH LINE STA 103+50

EQUATION

STA 101+37.11 AH=
STA 100+01.31 BK

OLD HWY 18

ROAD WORK AHEAD W20-1

R/W

LEGEND

- TYPE III BARRICADE WITH ATTACHED SIGN
- SIGN ON PERMANENT SUPPORT
- TRAFFIC CONTROL DRUM WITH TYPE "C" STEADY BURN LIGHT
- TRAFFIC CONTROL DRUM
- FLASHING ARROW BOARD
- DIRECTION OF TRAFFIC
- XXXXXX REMOVING PAVEMENT MARKING
- WORK AREA
- BASE PATCH AREA
- TMP4 TEMPORARY PAVEMENT MARKING REMOVABLE TAPE 4-INCH
- CONCRETE PAVEMENT REPAIR NON-CEMENTITIOUS
- SIGNAL LOOP DETECTOR REPLACEMENT

PROJECT NO:6290-05-75	HWY:USH 10	COUNTY:PORTAGE	TRAFFIC CONTROL - STAGE 4 (NIGHTTIME ONLY)	SHEET 70	E

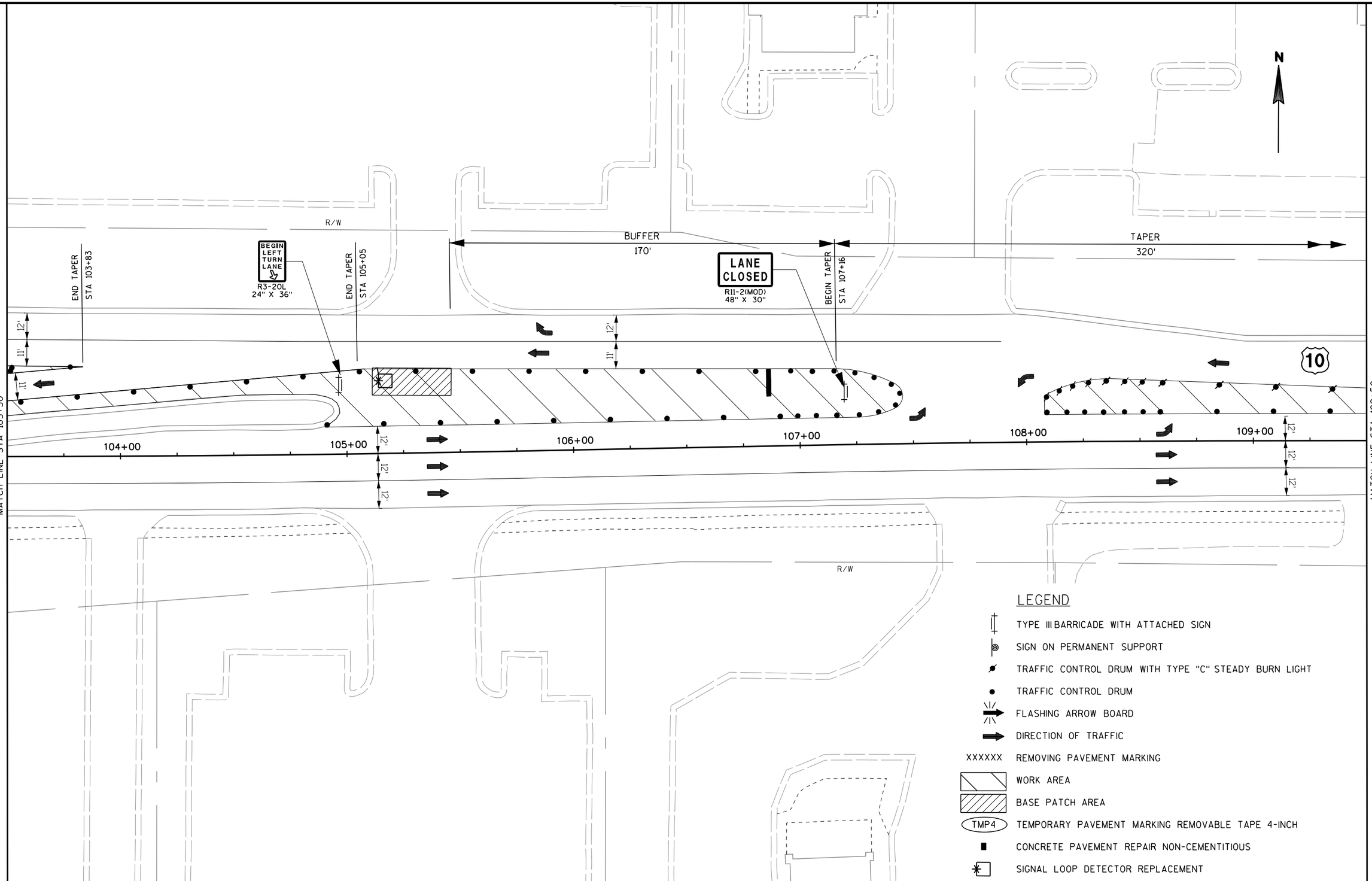

PROJECT NO:6290-05-75	HWY:USH 10	COUNTY:PORTAGE	TRAFFIC CONTROL - STAGE 4 (NIGHTTIME ONLY)	SHEET 71	E

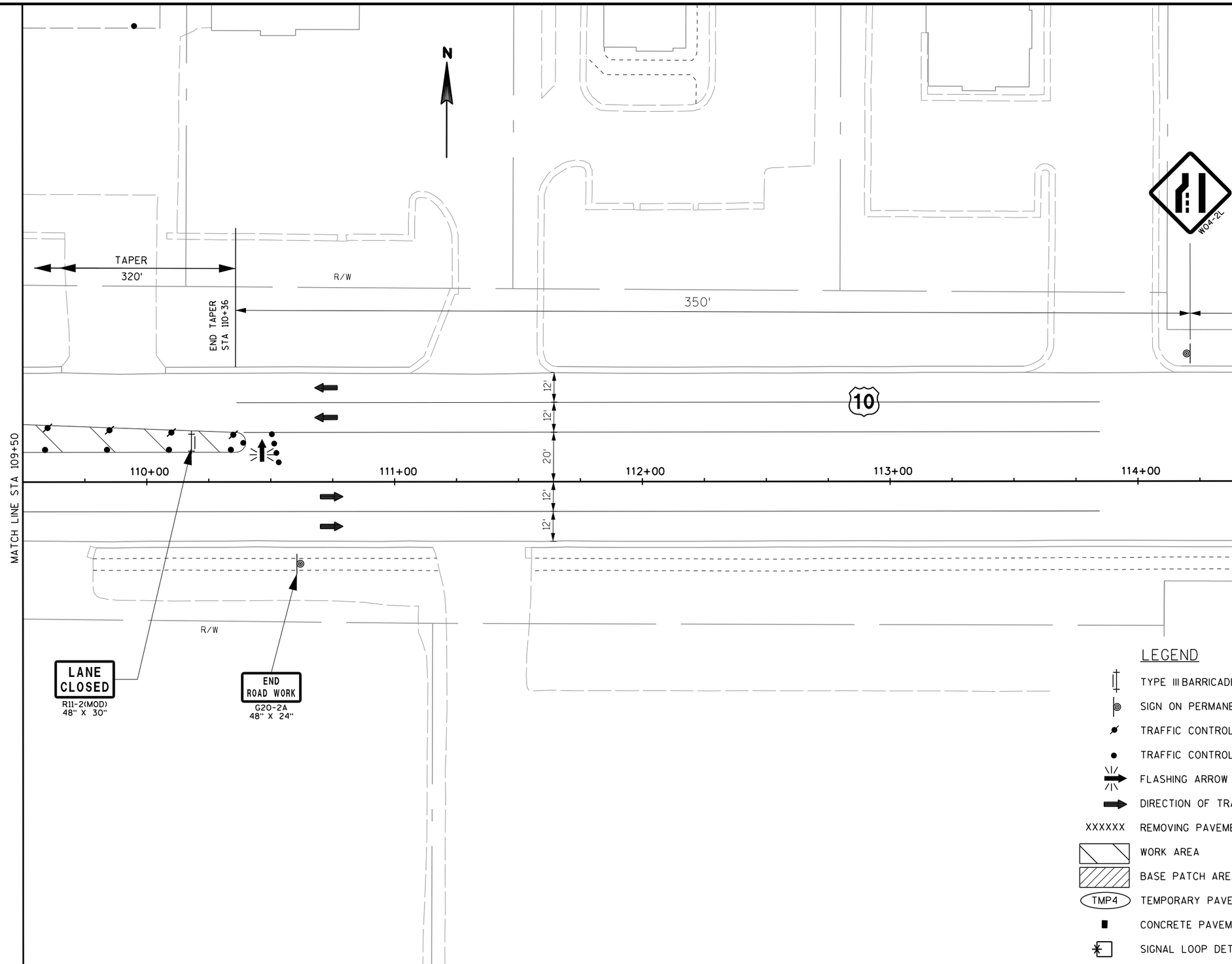

LEGEND

- TYPE III BARRICADE WITH ATTACHED SIGN
- SIGN ON PERMANENT SUPPORT
- TRAFFIC CONTROL DRUM WITH TYPE "C" STEADY BURN LIGHT
- TRAFFIC CONTROL DRUM
- FLASHING ARROW BOARD
- DIRECTION OF TRAFFIC
- XXXXXX REMOVING PAVEMENT MARKING
- WORK AREA
- BASE PATCH AREA
- TMP4 TEMPORARY PAVEMENT MARKING REMOVABLE TAPE 4-INCH
- CONCRETE PAVEMENT REPAIR NON-CEMENTITIOUS
- SIGNAL LOOP DETECTOR REPLACEMENT

PROJECT NO:6290-05-75	HWY:USH 10	COUNTY:PORTAGE	TRAFFIC CONTROL - STAGE 4 (NIGHTTIME ONLY)	SHEET 72	E

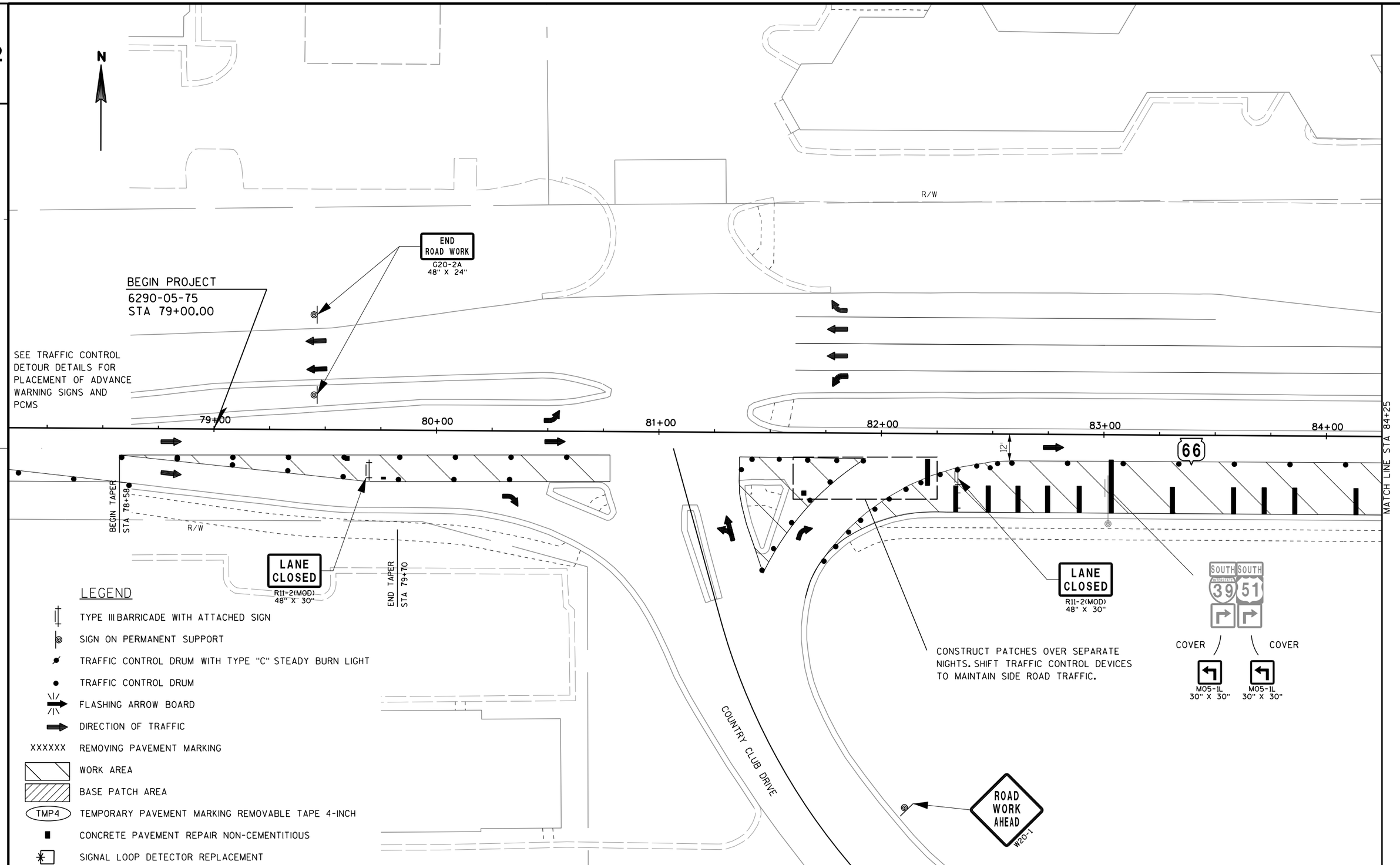

PROJECT NO:6290-05-75	HWY:USH 10	COUNTY:PORTAGE	TRAFFIC CONTROL - STAGE 5 (NIGHTTIME ONLY)	SHEET 73	E

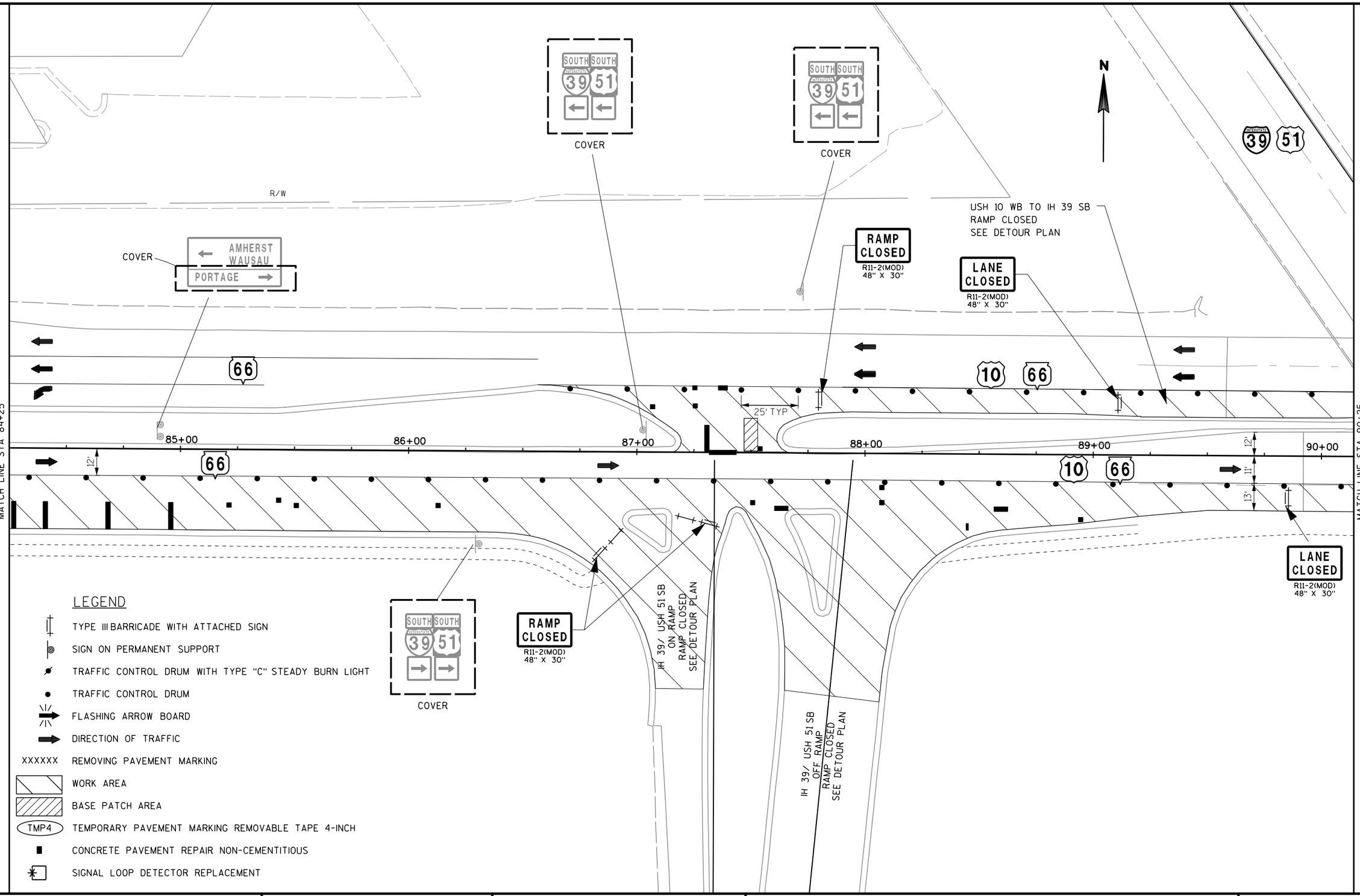

PROJECT NO:6290-05-75	HWY:USH 10	COUNTY:PORTAGE	TRAFFIC CONTROL - STAGE 5 (NIGHTTIME ONLY)	SHEET 74	E

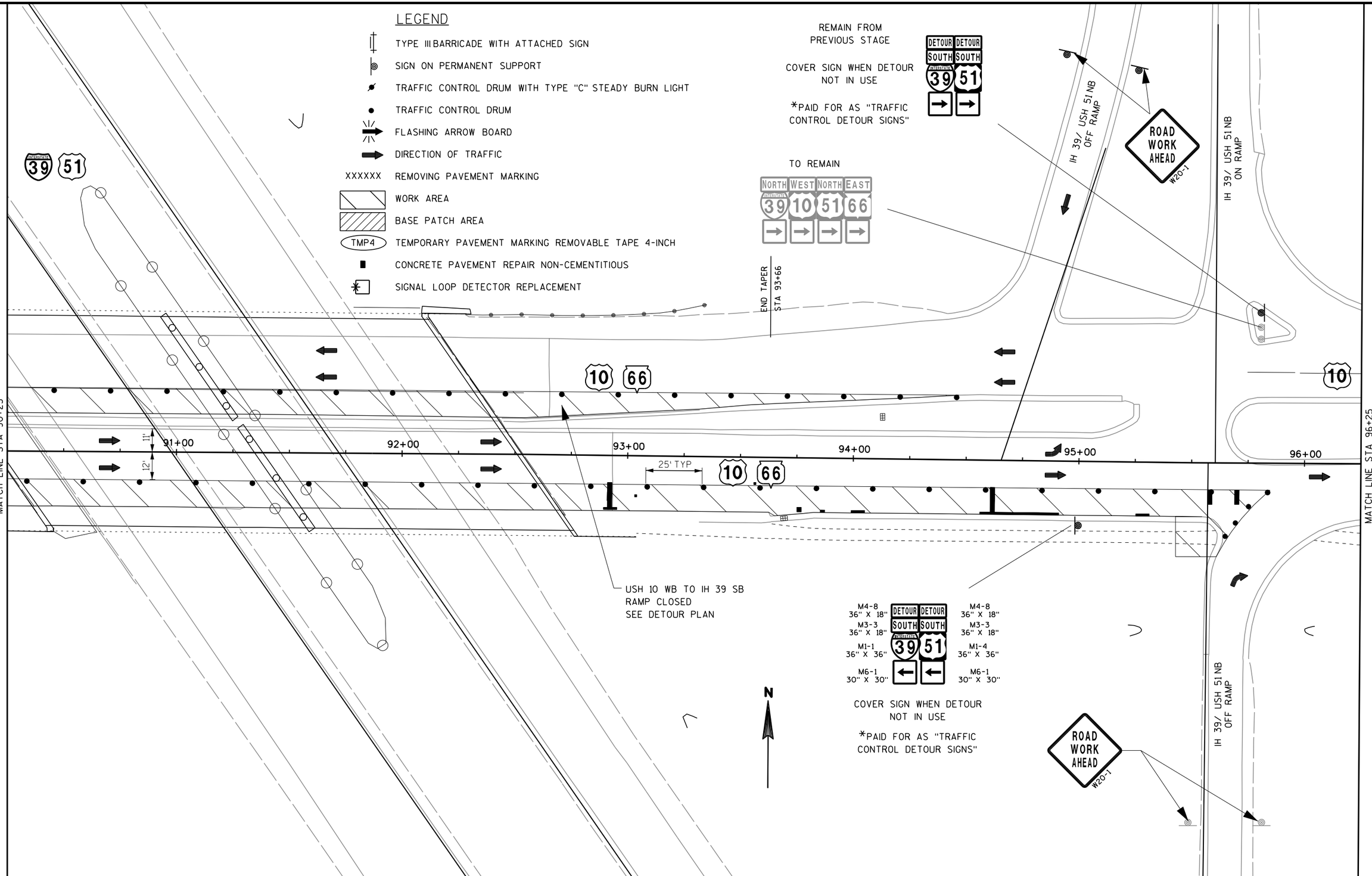

PROJECT NO:6290-05-75	HWY:USH 10	COUNTY:PORTAGE	TRAFFIC CONTROL - STAGE 5 (NIGHTTIME ONLY)	SHEET 75	E

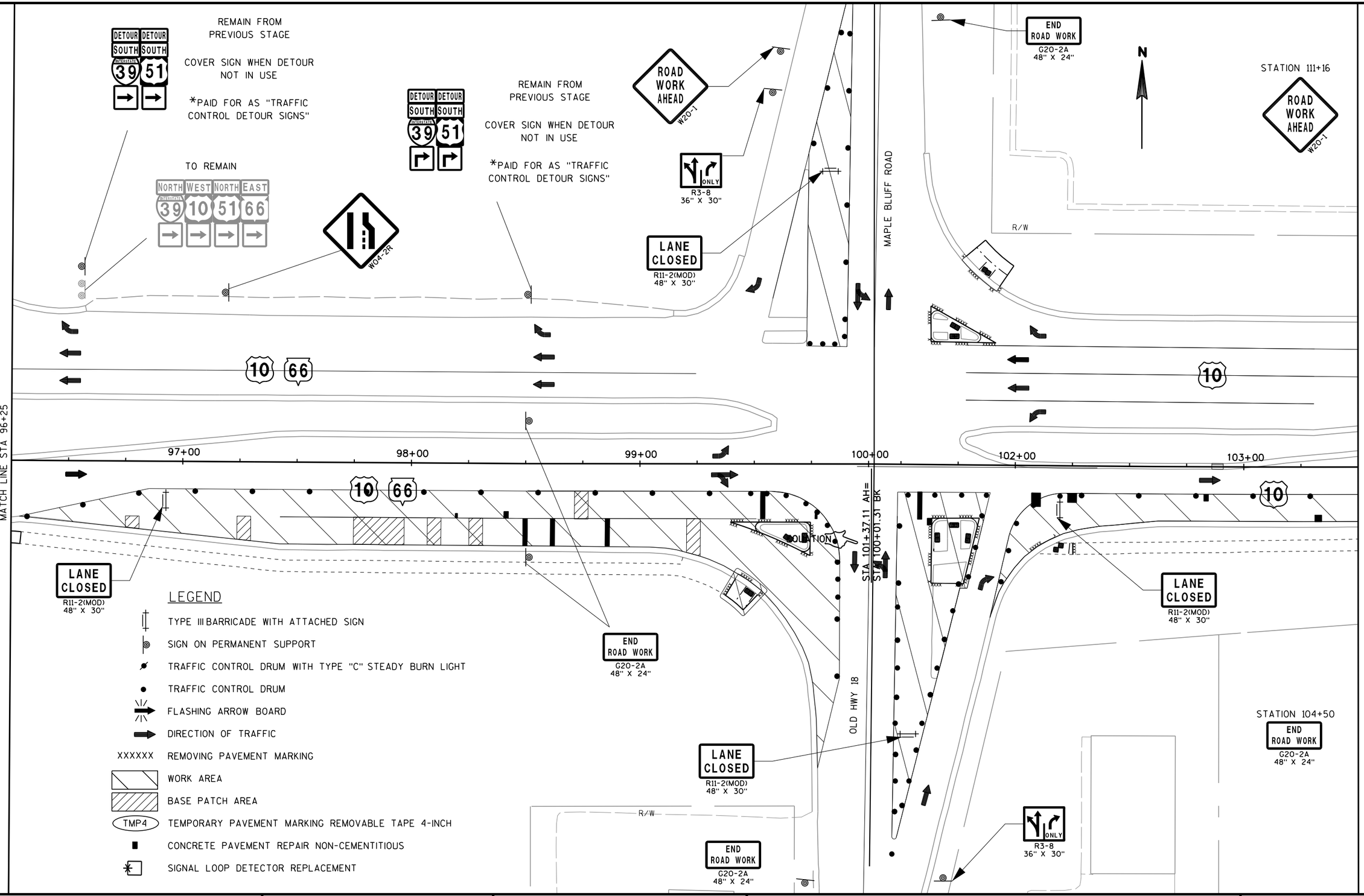

PROJECT NO:6290-05-75	HWY:USH 10	COUNTY:PORTAGE	TRAFFIC CONTROL - STAGE 5 (NIGHTTIME ONLY)	SHEET 76	E

2

N

R/W

SHIFT LEFT TURN BAY TRAFFIC
TO INSIDE TRAVEL LANE TO
COMPLETE CONCRETE PATCHING

END
ROAD WORK
G20-2A
48" X 24"

BEGIN PROJECT
6290-05-75
STA 79+00.00

SEE TRAFFIC CONTROL
DETOUR DETAILS FOR
PLACEMENT OF ADVANCE
WARNING SIGNS AND
PCMS

END TAPER
STA 79+85

79+00

80+00

81+00

82+00

83+00

84+00

MATCH LINE STA 84+25

12'

12'

66

BEGIN TAPER
STA 78+58

R/W

LANE
CLOSED
R11-2(MOD)
48" X 30"

LANE
CLOSED
R11-2(MOD)
48" X 30"

SOUTH 39 SOUTH 51
REMAIN

CONSTRUCT PATCHES IN STAGES
FLAGGING OPERATIONS REQUIRED

COUNTRY CLUB DRIVE

ROAD
WORK
AHEAD
W20-1

LEGEND

- TYPE III BARRICADE WITH ATTACHED SIGN
- SIGN ON PERMANENT SUPPORT
- TRAFFIC CONTROL DRUM WITH TYPE "C" STEADY BURN LIGHT
- TRAFFIC CONTROL DRUM
- FLASHING ARROW BOARD
- DIRECTION OF TRAFFIC
- XXXXXX REMOVING PAVEMENT MARKING
- WORK AREA
- BASE PATCH AREA
- TMP4 TEMPORARY PAVEMENT MARKING REMOVABLE TAPE 4-INCH
- CONCRETE PAVEMENT REPAIR NON-CEMENTITIOUS
- SIGNAL LOOP DETECTOR REPLACEMENT

2

PROJECT NO:6290-05-75	HWY:USH 10	COUNTY:PORTAGE	TRAFFIC CONTROL - STAGE 6 (NIGHTTIME ONLY)	SHEET 77	E

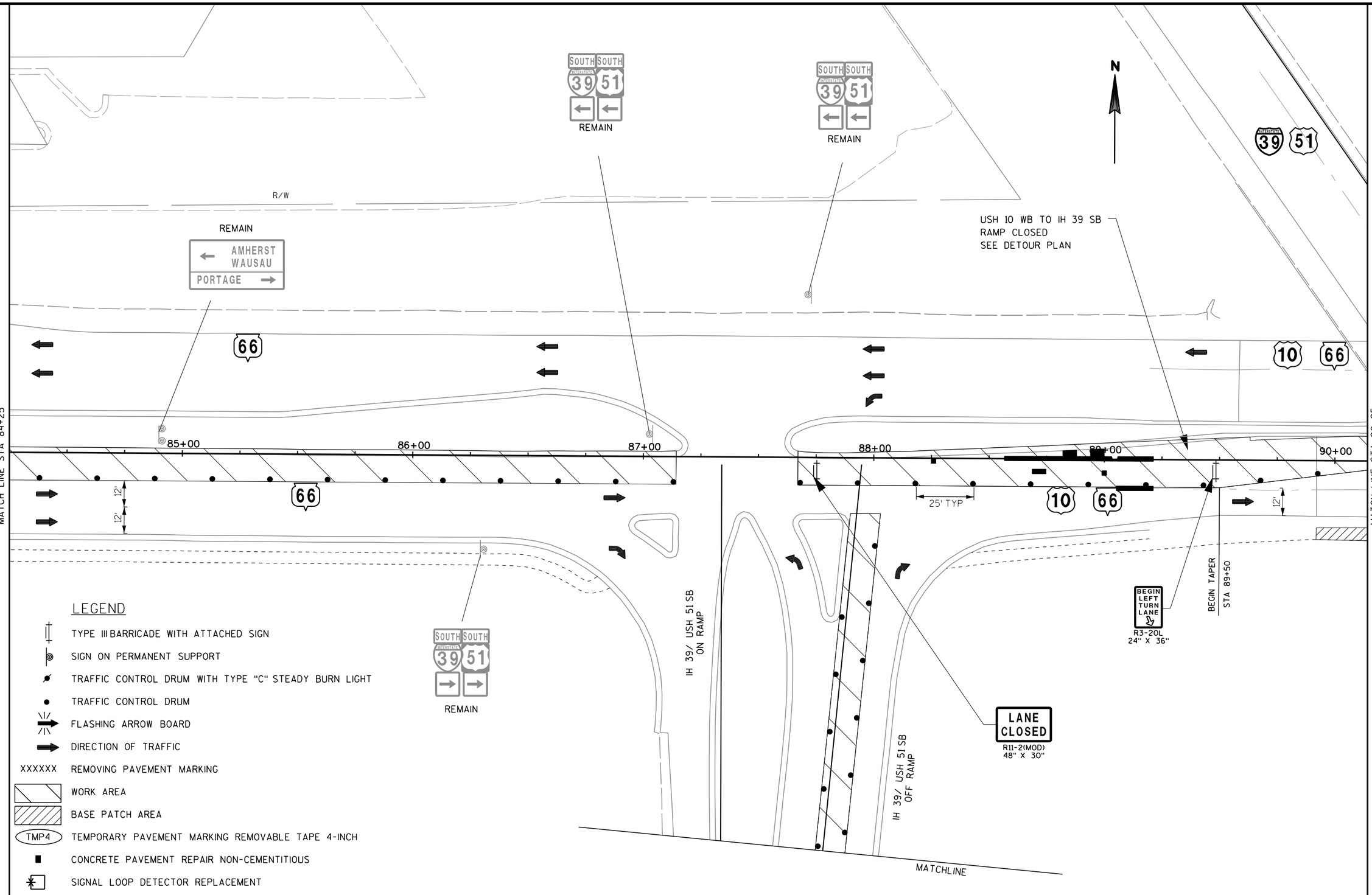

PROJECT NO:6290-05-75	HWY:USH 10	COUNTY:PORTAGE	TRAFFIC CONTROL - STAGE 6 (NIGHTTIME ONLY)	SHEET 78	E

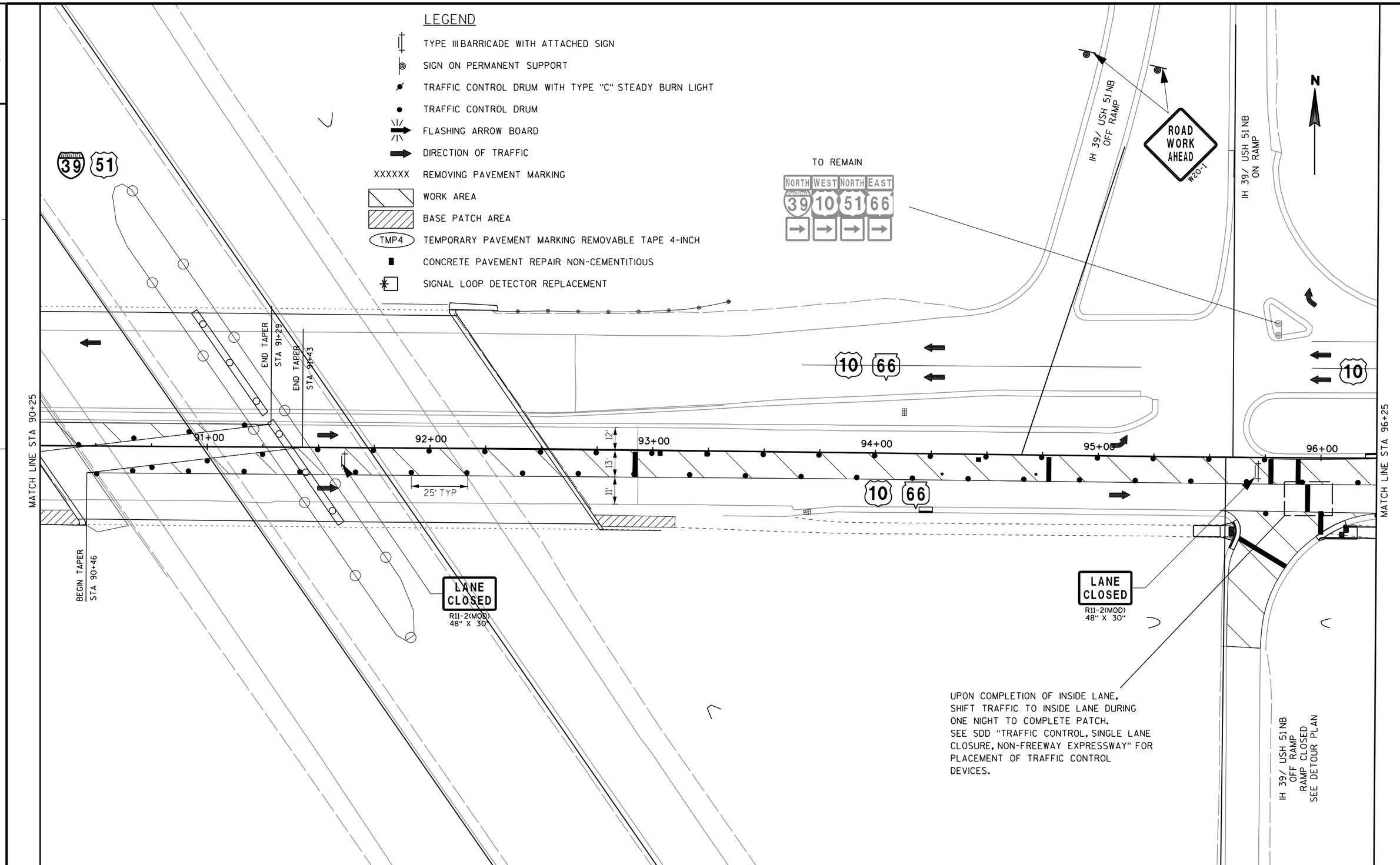
LEGEND
TYPE III BARRICADE WITH ATTACHED SIGN
SIGN ON PERMANENT SUPPORT
TRAFFIC CONTROL DRUM WITH TYPE "C" STEADY BURN LIGHT
TRAFFIC CONTROL DRUM
FLASHING ARROW BOARD
DIRECTION OF TRAFFIC
XXXXXX REMOVING PAVEMENT MARKING
WORK AREA
BASE PATCH AREA
TMP4 TEMPORARY PAVEMENT MARKING REMOVABLE TAPE 4-INCH
CONCRETE PAVEMENT REPAIR NON-CEMENTITIOUS
SIGNAL LOOP DETECTOR REPLACEMENT
TO REMAIN
NORTH WEST NORTH EAST
39 10 51 66
39 51
10 66
IH 39/ USH 51 NB OFF RAMP
ROAD WORK AHEAD
W20-1
IH 39/ USH 51 NB ON RAMP
N
END TAPER STA 91+29
END TAPER STA 91+43
MATCH LINE STA 90+25
MATCH LINE STA 96+25
BEGIN TAPER STA 90+46
91+00
92+00
93+00
94+00
95+00
96+00
12'
13'
11'
25' TYP
LANE CLOSED
R11-2(MOD)
48" X 30"
LANE CLOSED
R11-2(MOD)
48" X 30"
UPON COMPLETION OF INSIDE LANE, SHIFT TRAFFIC TO INSIDE LANE DURING ONE NIGHT TO COMPLETE PATCH. SEE SDD "TRAFFIC CONTROL, SINGLE LANE CLOSURE, NON-FREEWAY EXPRESSWAY" FOR PLACEMENT OF TRAFFIC CONTROL DEVICES.
IH 39/ USH 51 NB OFF RAMP RAMP CLOSED SEE DETOUR PLAN

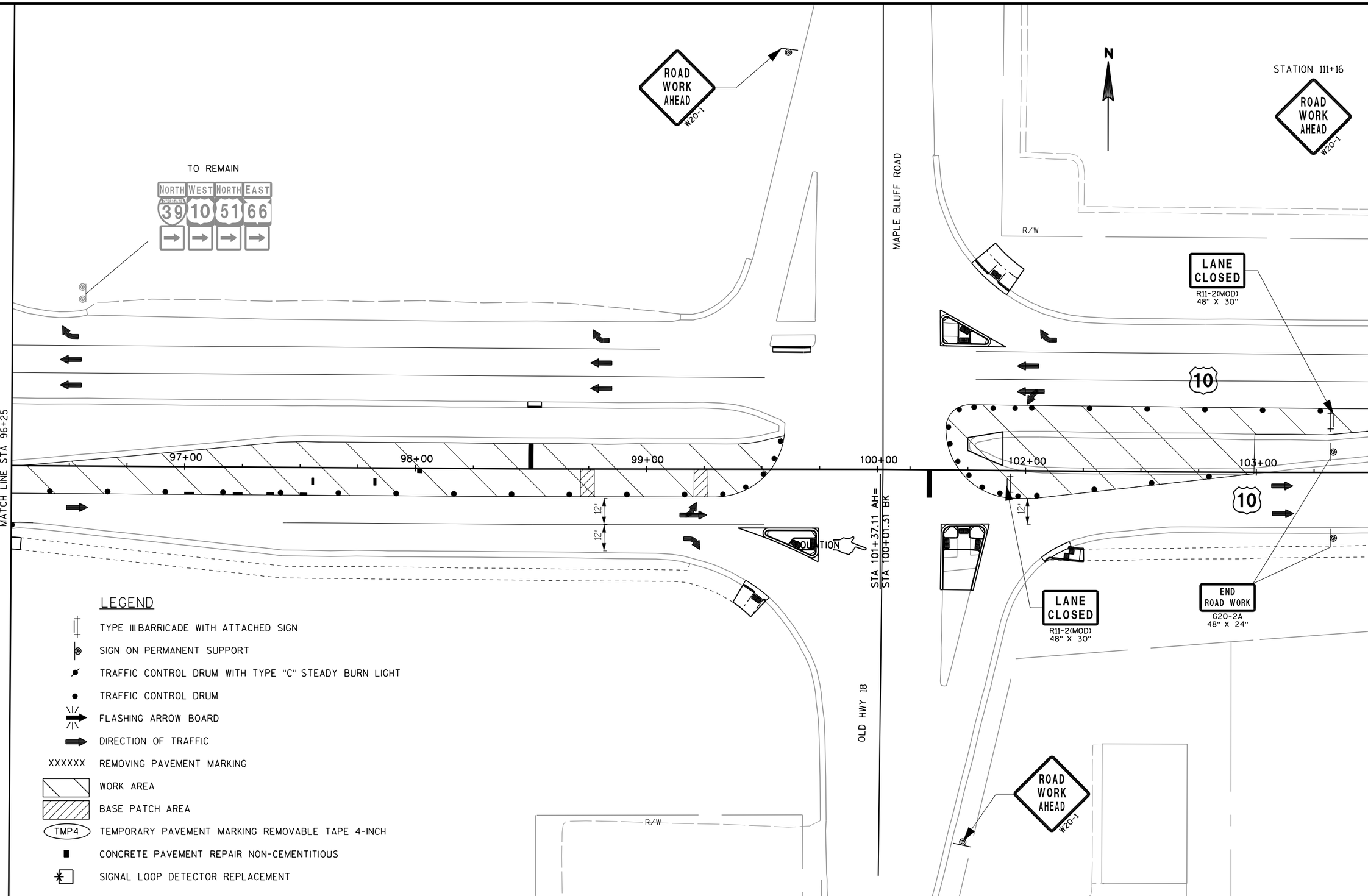

PROJECT NO:6290-05-75	HWY:USH 10	COUNTY:PORTAGE	TRAFFIC CONTROL - STAGE 6 (NIGHTTIME ONLY)	SHEET 80	E

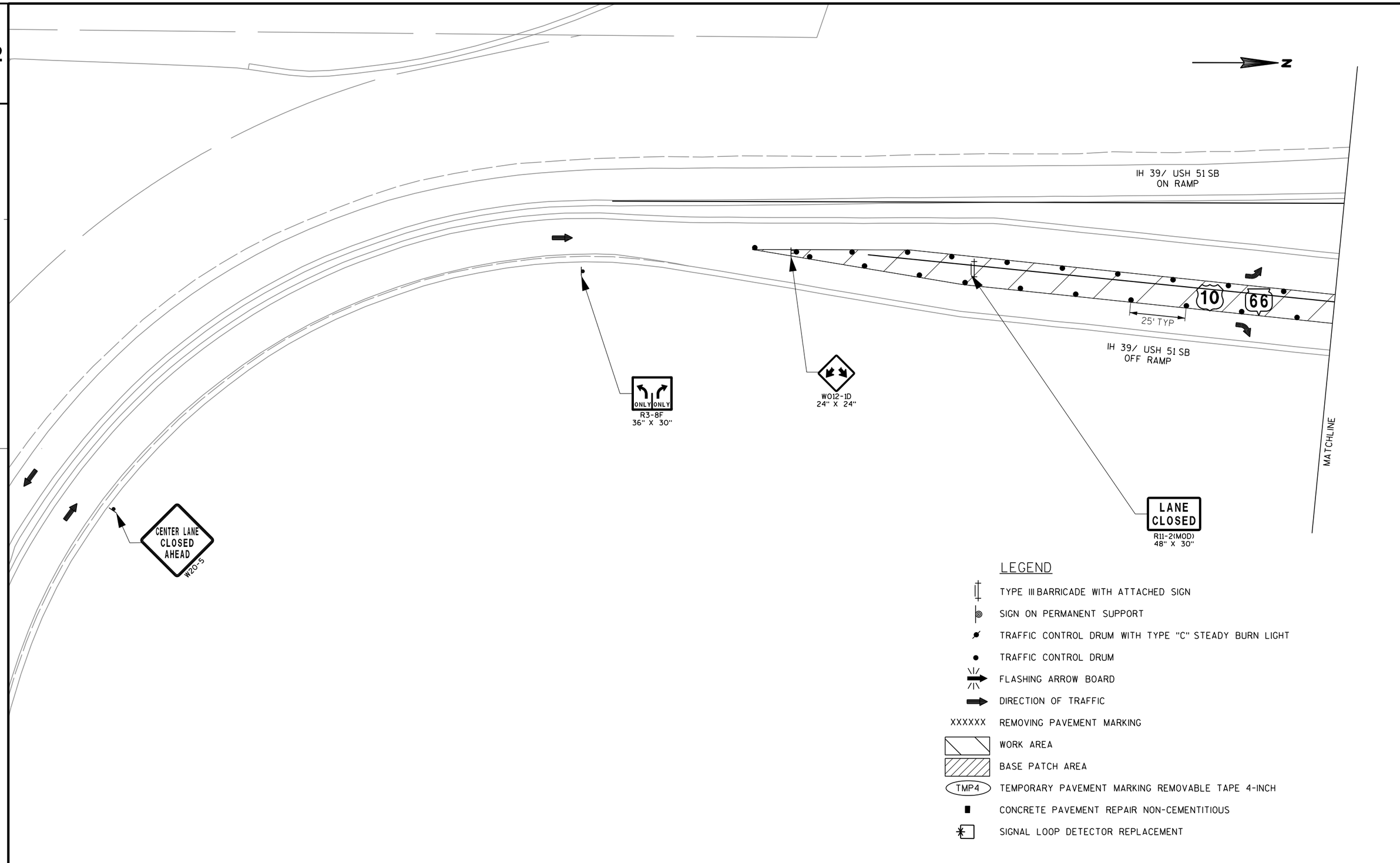

PROJECT NO:6290-05-75	HWY:USH 10	COUNTY:PORTAGE	TRAFFIC CONTROL - STAGE 6 (NIGHTTIME ONLY)	SHEET 81	E

DETOUR NOTES:

USE THIS DETOUR WHEN THE NORTHBOUND IH-39 ON RAMP AT USH 10 EAST/STH 66 EAST INTERCHANGE RAMP IS CLOSED.

COVER ALL TYPE 2 SIGNS THAT CONFLICT WITH DETOUR SIGNING.

SEE S.D.D. "DETOUR SIGNING FOR MAINLINE CLOSURES" FOR ADDITIONAL GUIDANCE.

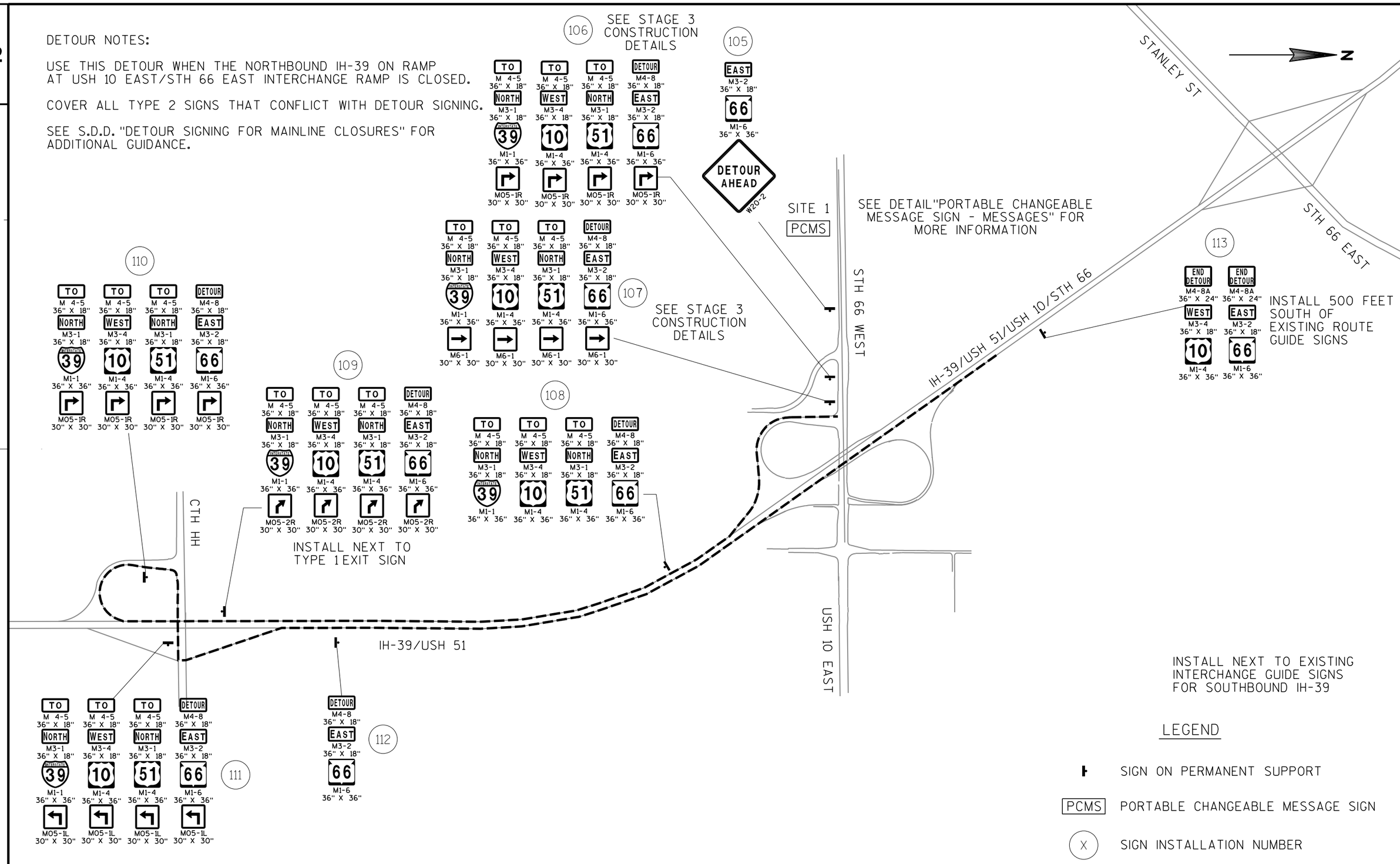

PROJECT NO:6290-05-75	HWY:USH 10	COUNTY:PORTAGE	DETOUR PLAN STAGES 3 AND 4	SHEET 82	E

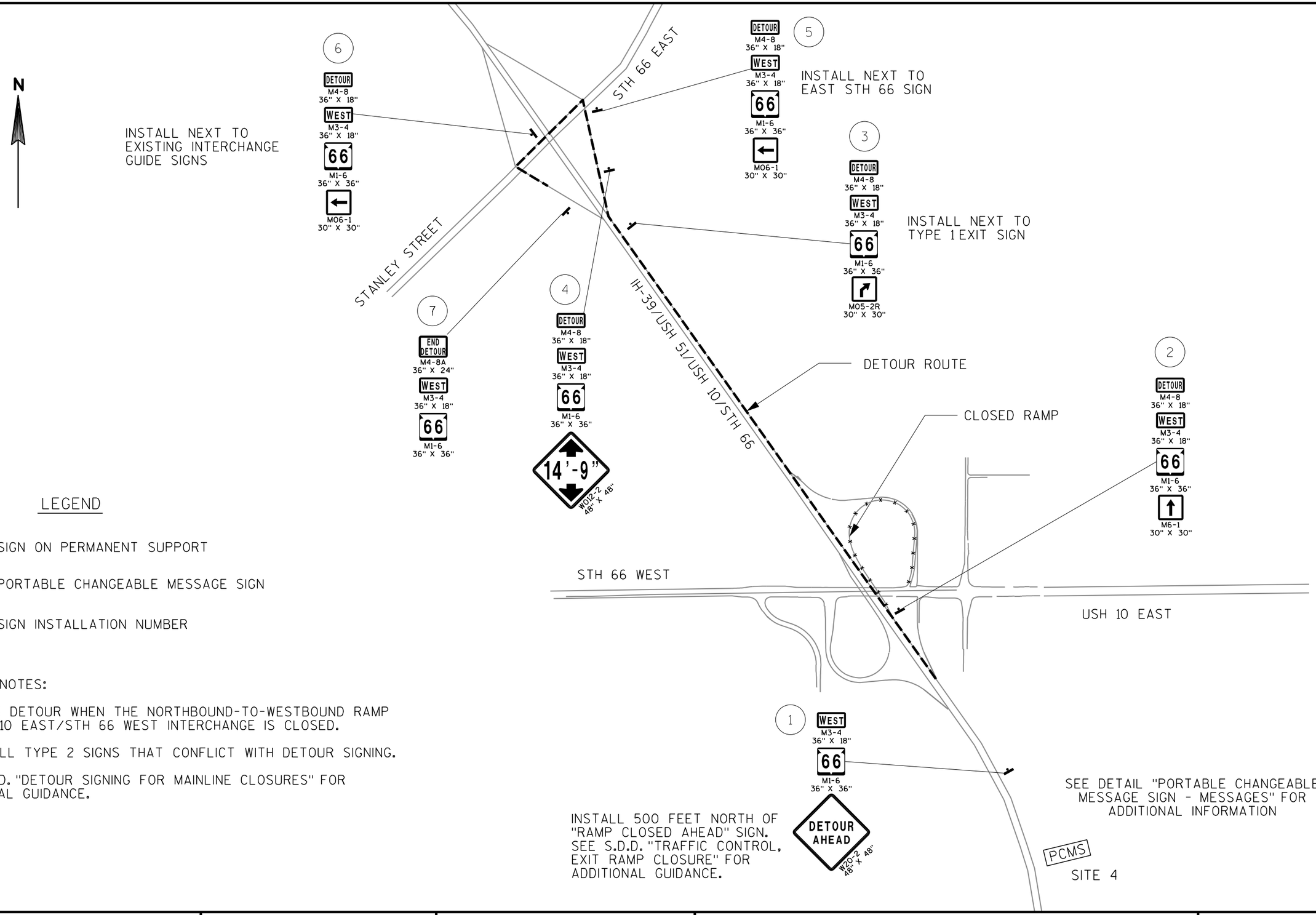

LEGEND

- SIGN ON PERMANENT SUPPORT
- PCMS — PORTABLE CHANGEABLE MESSAGE SIGN
- (X) — SIGN INSTALLATION NUMBER

DETOUR NOTES:

USE THIS DETOUR WHEN THE NORTHBOUND-TO-WESTBOUND RAMP AT USH 10 EAST/STH 66 WEST INTERCHANGE IS CLOSED.

COVER ALL TYPE 2 SIGNS THAT CONFLICT WITH DETOUR SIGNING.

SEE S.D.D. "DETOUR SIGNING FOR MAINLINE CLOSURES" FOR ADDITIONAL GUIDANCE.

PROJECT NO:6290-05-75	HWY:USH 10	COUNTY:PORTAGE	DETOUR PLAN STAGE 3	SHEET 83	E

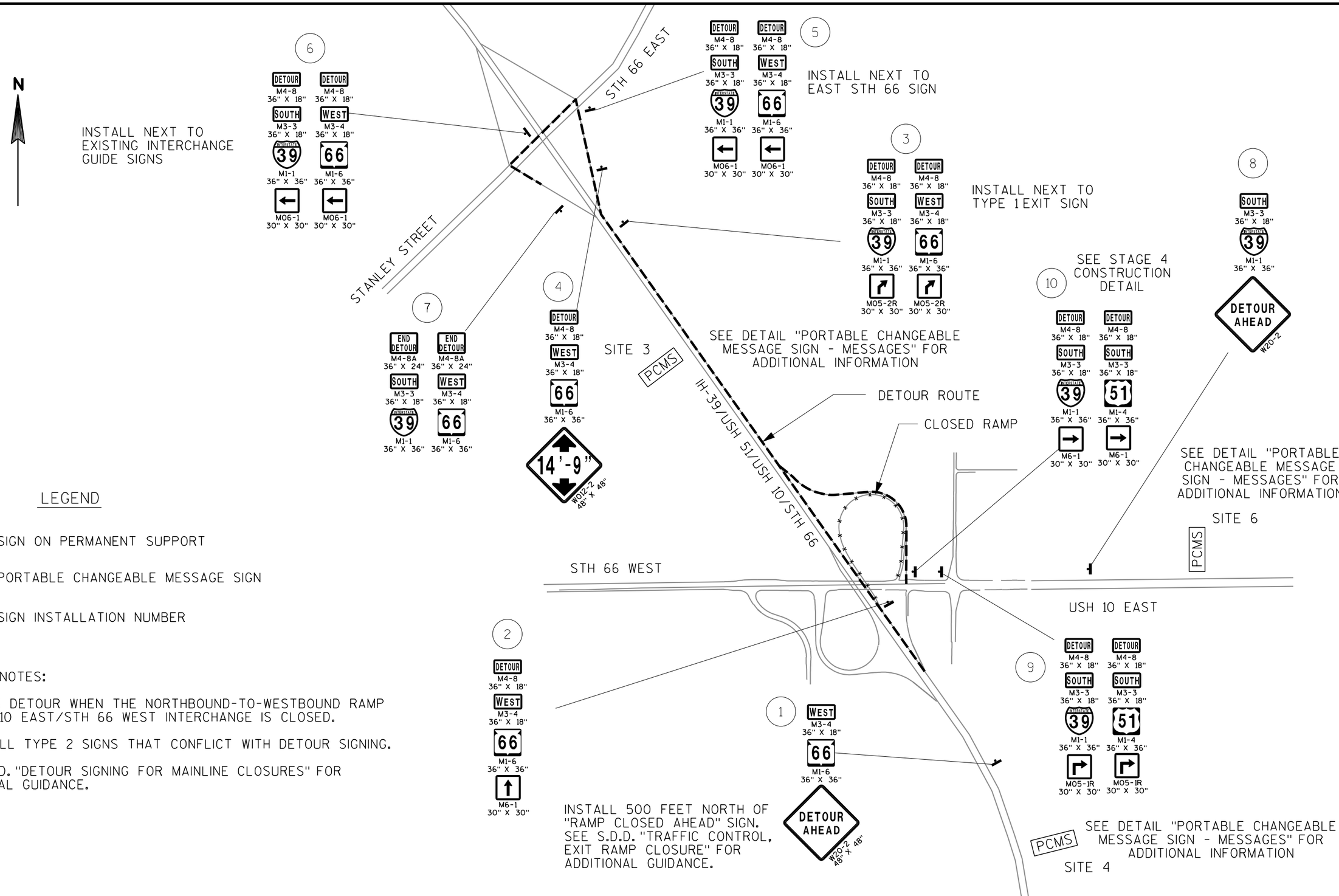

LEGEND

- SIGN ON PERMANENT SUPPORT
- PCMS — PORTABLE CHANGEABLE MESSAGE SIGN
- (X) — SIGN INSTALLATION NUMBER

DETOUR NOTES:

USE THIS DETOUR WHEN THE NORTHBOUND-TO-WESTBOUND RAMP AT USH 10 EAST/STH 66 WEST INTERCHANGE IS CLOSED.

COVER ALL TYPE 2 SIGNS THAT CONFLICT WITH DETOUR SIGNING.

SEE S.D.D. "DETOUR SIGNING FOR MAINLINE CLOSURES" FOR ADDITIONAL GUIDANCE.

PROJECT NO:6290-05-75	HWY:USH 10	COUNTY:PORTAGE	DETOUR PLAN STAGE 4	SHEET 84	E

2

DETOUR NOTES:

USE THIS DETOUR WHEN THE NORTHBOUND IH-39 ON RAMP AT USH 10 EAST/STH 66 WEST INTERCHANGE IS CLOSED.

COVER ALL TYPE 2 SIGNS THAT CONFLICT WITH DETOUR SIGNING.

SEE S.D.D. "DETOUR SIGNING FOR MAINLINE CLOSURES" FOR ADDITIONAL GUIDANCE.

LEGEND

- SIGN ON PERMANENT SUPPORT
- PCMS — PORTABLE CHANGEABLE MESSAGE SIGN
- (X) — SIGN INSTALLATION NUMBER

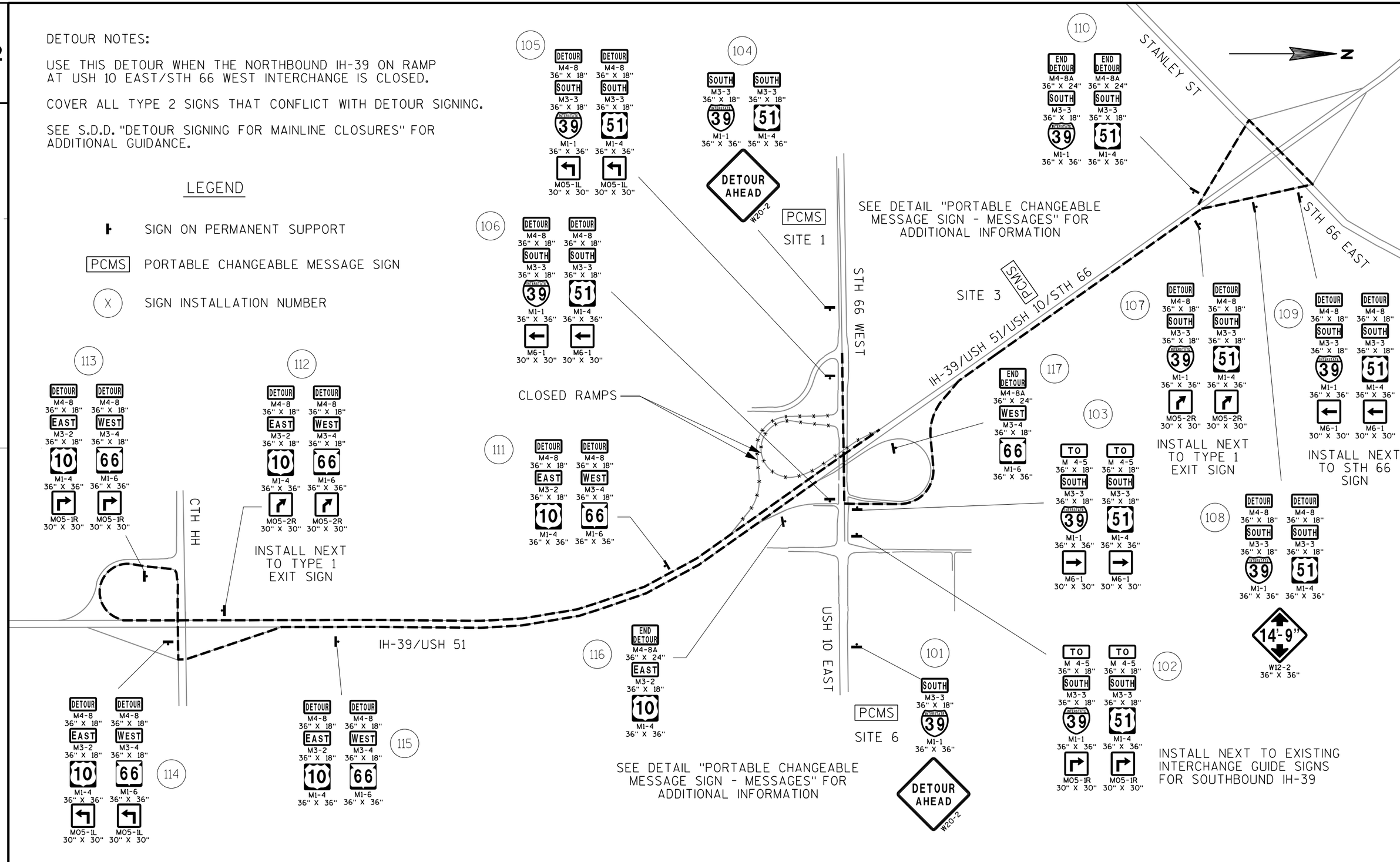

2

PROJECT NO:6290-05-75	HWY:USH 10	COUNTY:PORTAGE	DETOUR PLAN STAGE 5	SHEET 85	E

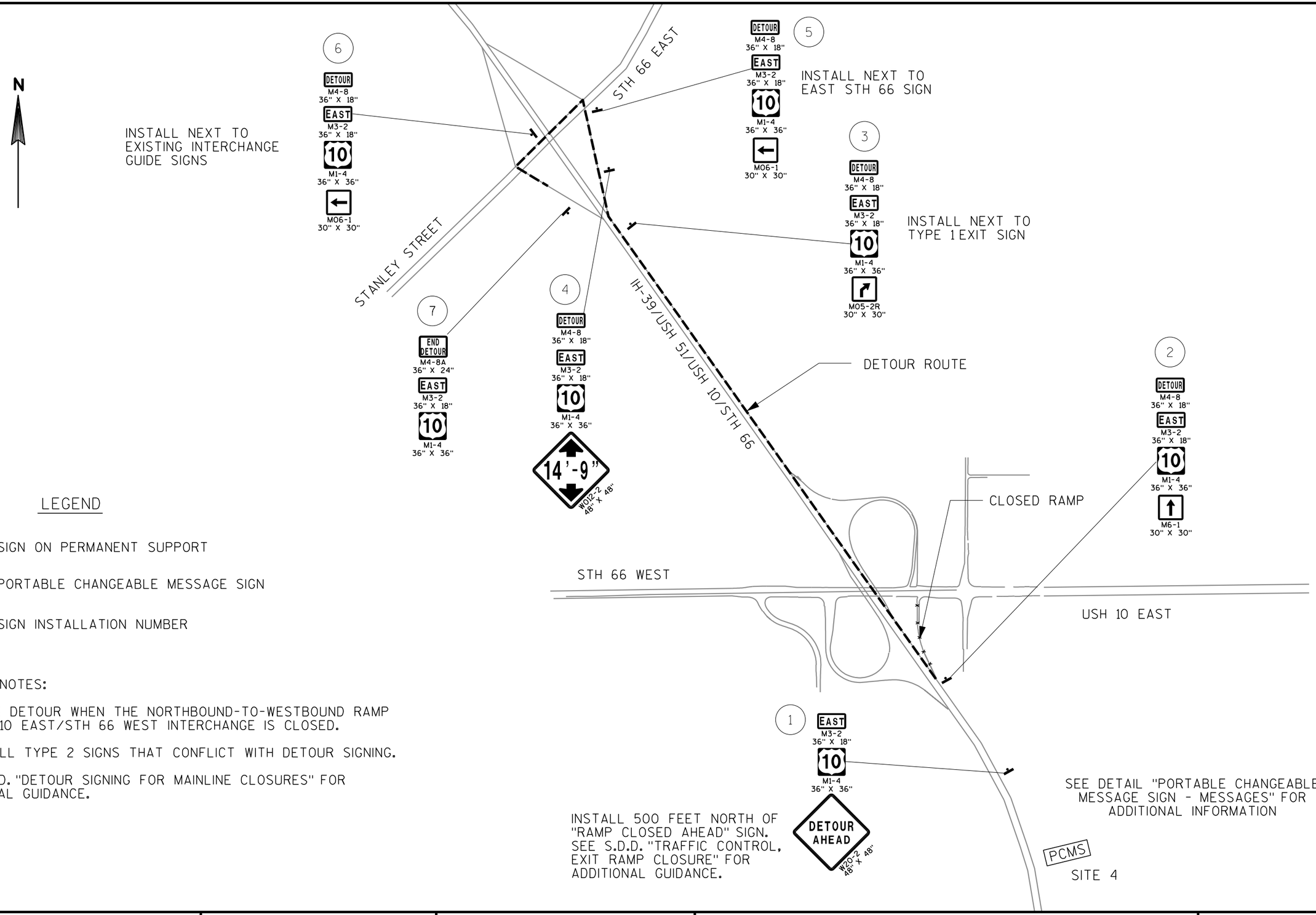

LEGEND

- SIGN ON PERMANENT SUPPORT
- PCMS — PORTABLE CHANGEABLE MESSAGE SIGN
- (X) — SIGN INSTALLATION NUMBER

DETOUR NOTES:

USE THIS DETOUR WHEN THE NORTHBOUND-TO-WESTBOUND RAMP AT USH 10 EAST/STH 66 WEST INTERCHANGE IS CLOSED.

COVER ALL TYPE 2 SIGNS THAT CONFLICT WITH DETOUR SIGNING.

SEE S.D.D. "DETOUR SIGNING FOR MAINLINE CLOSURES" FOR ADDITIONAL GUIDANCE.

PROJECT NO:6290-05-75	HWY:USH 10	COUNTY:PORTAGE	DETOUR PLAN STAGE 6	SHEET 86	E

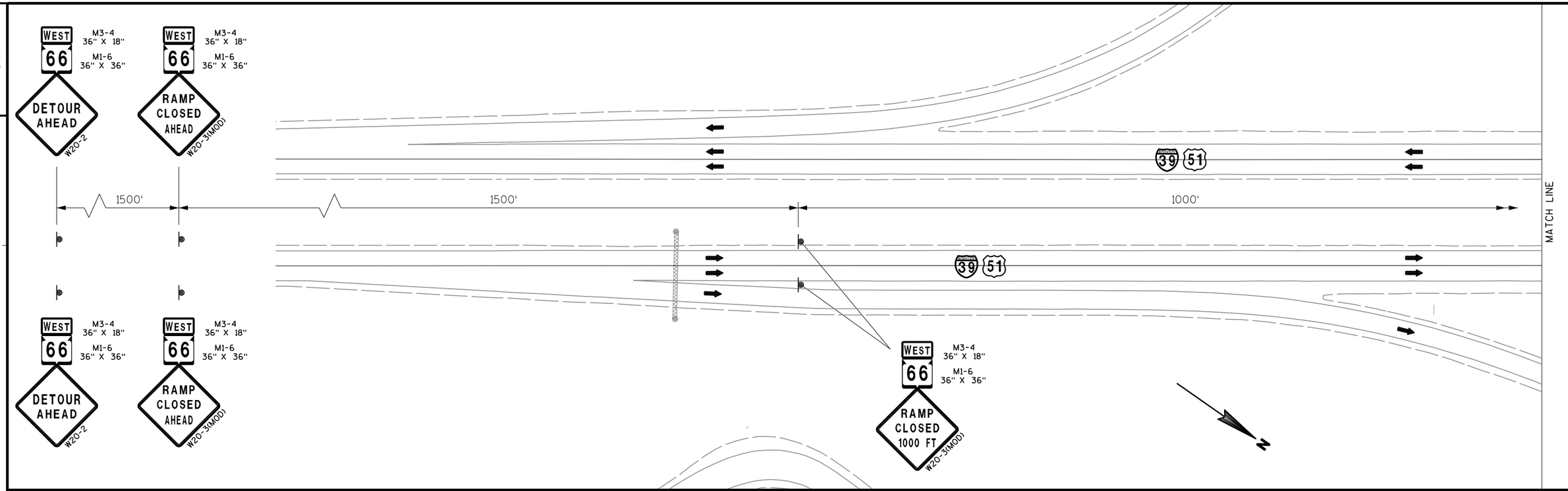

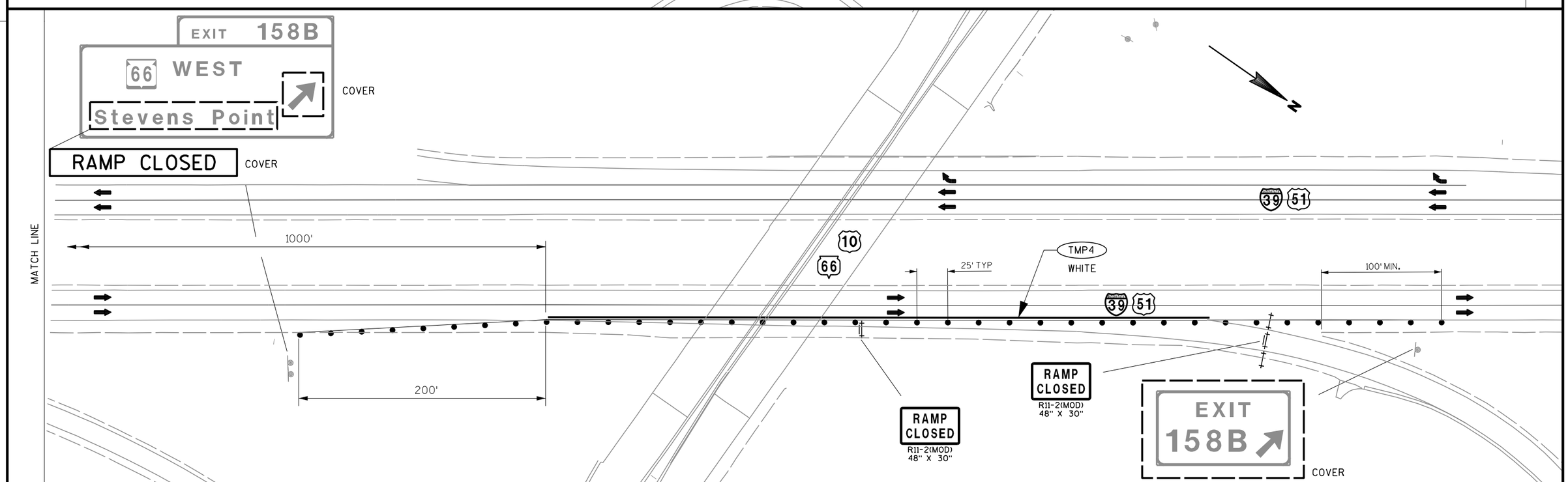

PROJECT NO:6290-05-75	HWY:USH 10	COUNTY:PORTAGE	DETOUR DETAIL - IH 39 NB TO STH 66 WB CLOSURE	SHEET 87	E

FILE NAME : X:\3230400\113516.01\TECH\CADD\DWG\0270x1_dt.dgn PLOT DATE : 4/30/2015 PLOT BY : 1362cmr PLOT NAME : PLOT SCALE : 80.0000 sf / in.

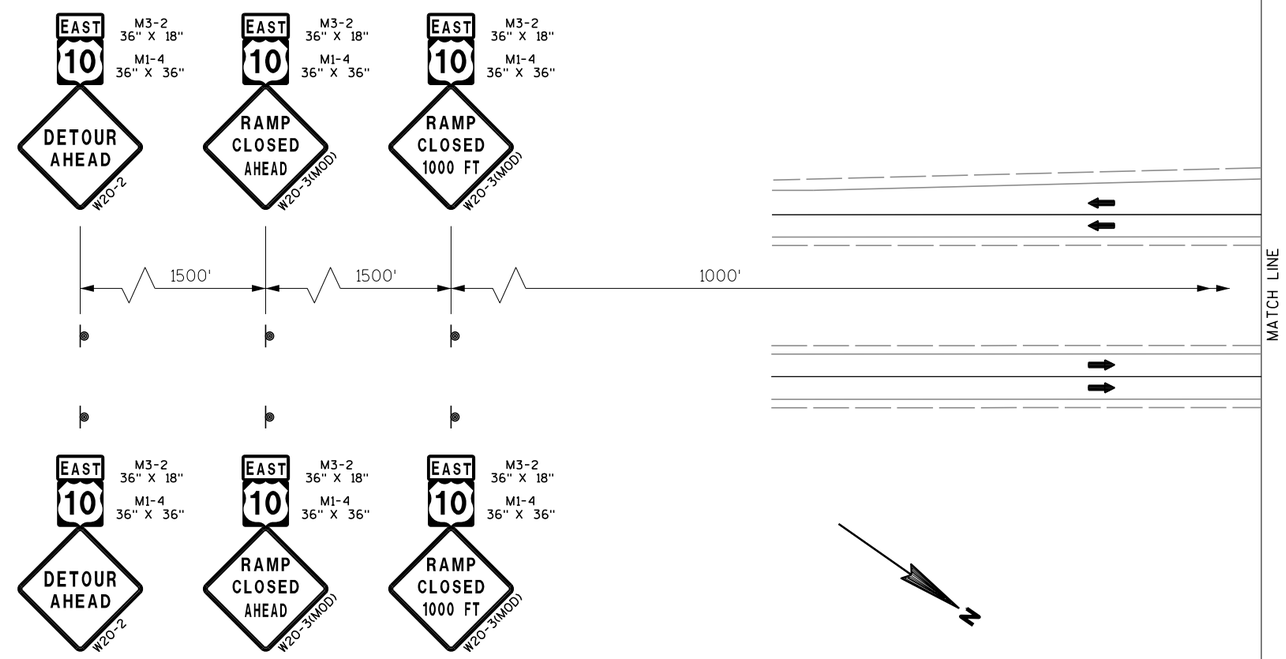

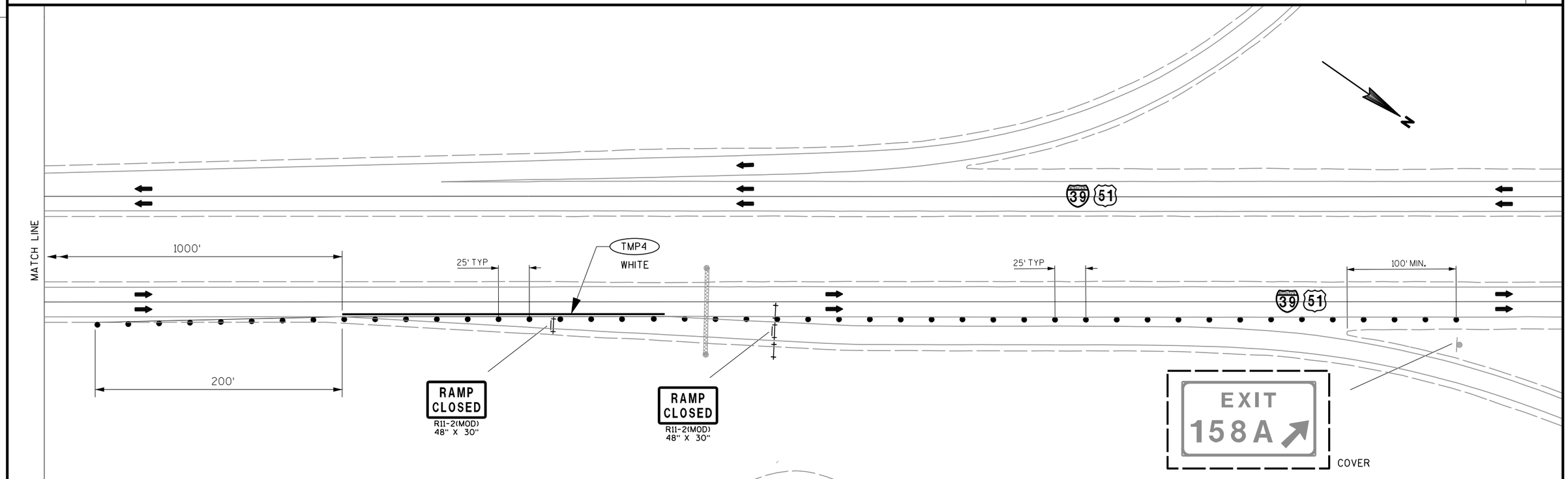

PROJECT NO:6290-05-75	HWY:USH 10	COUNTY:PORTAGE	DETOUR DETAIL - IH 39 NB TO USH 10 EB CLOSURE	SHEET 88	E

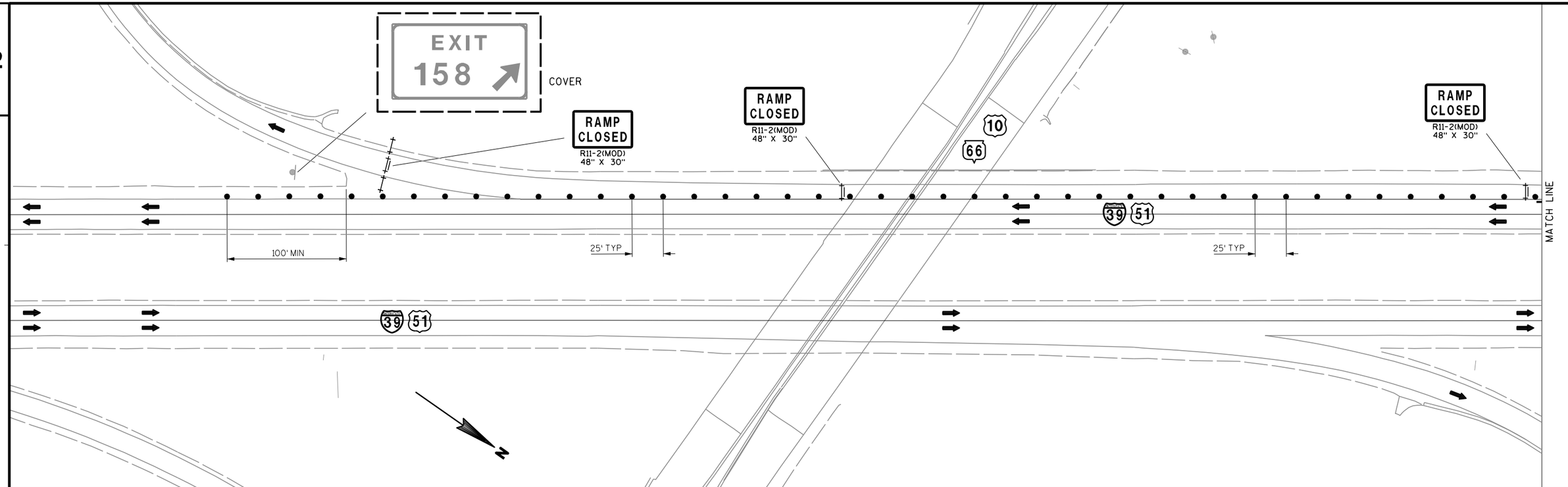

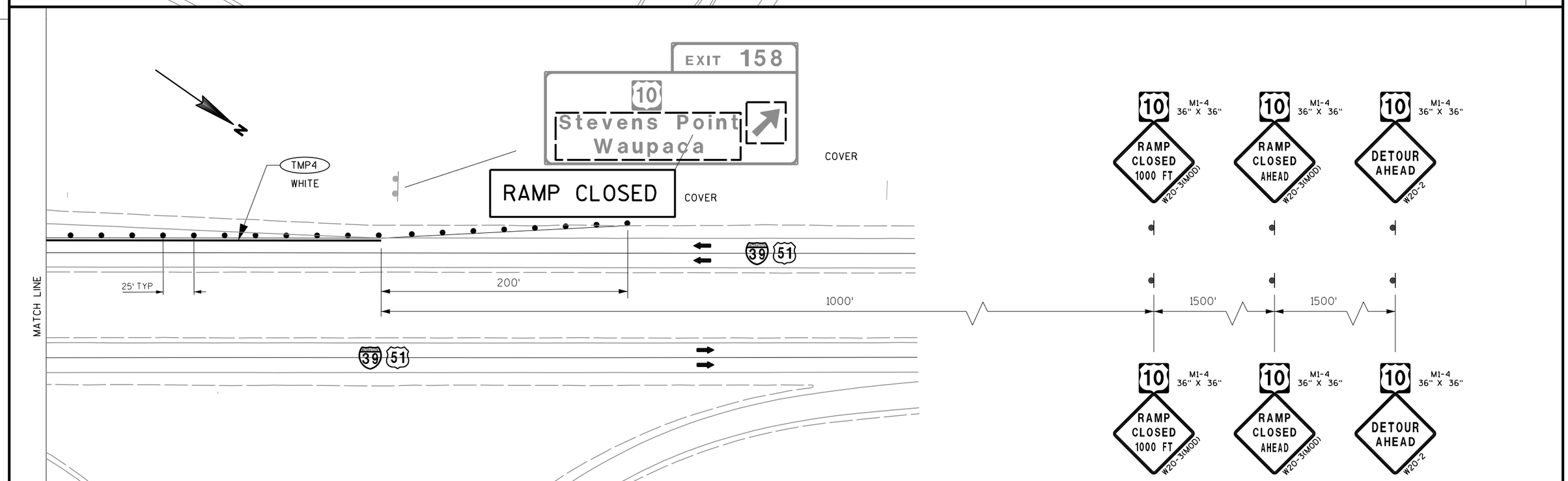

PROJECT NO:6290-05-75	HWY:USH 10	COUNTY:PORTAGE	DETOUR DETAIL - IH 39 SB TO 10EB / 66WB CLOSURE	SHEET 89	E

3

DATE 10OCT16 E S T I M A T E O F Q U A N T I T I E S

LINE NUMBER	ITEM	ITEM DESCRIPTION	UNIT	TOTAL	6290-05-75 QUANTITY
0010	203.0210.S	Abatement of Asbestos Containing Material (structure) 01. B-49-24	LS	1.000	1.000
0020	204.0100	Removing Pavement	SY	112.000	112.000
0030	204.0110	Removing Asphaltic Surface	SY	188.000	188.000
0040	204.0150	Removing Curb & Gutter	LF	897.000	897.000
0050	204.0155	Removing Concrete Sidewalk	SY	118.000	118.000
0060	204.0165	Removing Guardrail	LF	100.000	100.000
0070	213.0100	Finishing Roadway (project) 01. 6290-05-75	EACH	1.000	1.000
0080	305.0110	Base Aggregate Dense 3/4-Inch	TON	70.000	70.000
0090	416.0160	Concrete Driveway 6-Inch	SY	24.000	24.000
0100	416.0610	Drilled Tie Bars	EACH	912.000	912.000
0110	416.0620	Drilled Dowel Bars	EACH	1,454.000	1,454.000
0120	416.1710	Concrete Pavement Repair	SY	281.000	281.000
0130	416.1720	Concrete Pavement Replacement	SY	290.000	290.000
0140	465.0105	Asphaltic Surface	TON	1.000	1.000
0150	465.0120	Asphaltic Surface Driveways and Field Entrances	TON	43.000	43.000
0160	502.3215.S	Protective Surface Treatment Reseal	SY	2,375.000	2,375.000
0170	505.0600	Bar Steel Reinforcement HS Coated Structures	LB	10.000	10.000
0180	505.0904	Bar Couplers No. 4	EACH	2.000	2.000
0190	505.0905	Bar Couplers No. 5	EACH	2.000	2.000
0200	509.0301	Preparation Decks Type 1	SY	15.000	15.000
0210	509.0302	Preparation Decks Type 2	SY	6.000	6.000
0220	509.1500	Concrete Surface Repair	SF	146.000	146.000
0230	602.0505	Curb Ramp Detectable Warning Field Yellow	SF	128.000	128.000
0240	602.2400	Concrete Safety Islands	SF	954.000	954.000
0250	614.0010	Barrier System Grading Shaping Finishing	EACH	2.000	2.000
0260	614.0370	Steel Plate Beam Guard Energy Absorbing Terminal	EACH	2.000	2.000
0270	614.0400	Adjusting Steel Plate Beam Guard	LF	104.000	104.000
0280	616.0700.S	Fence Safety	LF	238.000	238.000
0290	618.0100	Maintenance And Repair of Haul Roads (project) 01. 6290-05-75	EACH	1.000	1.000
0300	619.1000	Mobilization	EACH	1.000	1.000
0310	624.0100	Water	MGAL	5.000	5.000
0320	625.0100	Topsoil	SY	918.000	918.000
0330	628.1905	Mobilizations Erosion Control	EACH	8.000	8.000
0340	628.1910	Mobilizations Emergency Erosion Control	EACH	3.000	3.000
0350	628.2004	Erosion Mat Class I Type B	SY	518.000	518.000
0360	628.7005	Inlet Protection Type A	EACH	3.000	3.000
0370	628.7015	Inlet Protection Type C	EACH	120.000	120.000
0380	628.7555	Culvert Pipe Checks	EACH	3.000	3.000
0390	629.0210	Fertilizer Type B	CWT	1.000	1.000
0400	630.0130	Seeding Mixture No. 30	LB	10.000	10.000
0410	631.0300	Sod Water	MGAL	9.200	9.200
0420	631.1000	Sod Lawn	SY	400.000	400.000
0430	634.0612	Posts Wood 4x6-Inch X 12-FT	EACH	7.000	7.000
0440	634.0614	Posts Wood 4x6-Inch X 14-FT	EACH	33.000	33.000
0450	634.0616	Posts Wood 4x6-Inch X 16-FT	EACH	84.000	84.000
0460	634.0618	Posts Wood 4x6-Inch X 18-FT	EACH	2.000	2.000
0470	637.2210	Signs Type II Reflective H	SF	1,190.020	1,190.020
0480	637.2215	Signs Type II Reflective H Folding	SF	179.040	179.040

3

DATE 10OCT16 E S T I M A T E O F Q U A N T I T I E S

LINE NUMBER	ITEM	ITEM DESCRIPTION	UNIT	TOTAL	6290-05-75 QUANTITY
0490	637.2230	Signs Type II Reflective F	SF	113.000	113.000
0500	638.2602	Removing Signs Type II	EACH	158.000	158.000
0510	638.3000	Removing Small Sign Supports	EACH	126.000	126.000
0520	642.5201	Field Office Type C	EACH	1.000	1.000
0530	643.0100	Traffic Control (project) 01. 6290-05-75	EACH	1.000	1.000
0540	643.0300	Traffic Control Drums	DAY	24,210.000	24,210.000
0550	643.0420	Traffic Control Barricades Type III	DAY	1,539.000	1,539.000
0560	643.0705	Traffic Control Warning Lights Type A	DAY	3,060.000	3,060.000
0570	643.0715	Traffic Control Warning Lights Type C	DAY	2,457.000	2,457.000
0580	643.0800	Traffic Control Arrow Boards	DAY	63.000	63.000
0590	643.0900	Traffic Control Signs	DAY	2,394.000	2,394.000
0600	643.0910	Traffic Control Covering Signs Type I	EACH	18.000	18.000
0610	643.0920	Traffic Control Covering Signs Type II	EACH	92.000	92.000
0620	643.1000	Traffic Control Signs Fixed Message	SF	108.000	108.000
0630	643.1050	Traffic Control Signs PCMS	DAY	441.000	441.000
0640	643.2000	Traffic Control Detour (project) 01. 6290-05-75	EACH	1.000	1.000
0650	643.3000	Traffic Control Detour Signs	DAY	3,572.000	3,572.000
0660	644.1420.S	Temporary Pedestrian Surface Plywood	SF	180.000	180.000
0670	644.1601.S	Temporary Curb Ramp	EACH	6.000	6.000
0680	646.0106	Pavement Marking Epoxy 4-Inch	LF	25,388.000	25,388.000
0690	646.0126	Pavement Marking Epoxy 8-Inch	LF	7,135.000	7,135.000
0700	646.0600	Removing Pavement Markings	LF	30,595.000	30,595.000
0710	647.0156	Pavement Marking Arrows Epoxy Type 1	EACH	6.000	6.000
0720	647.0166	Pavement Marking Arrows Epoxy Type 2	EACH	77.000	77.000
0730	647.0176	Pavement Marking Arrows Epoxy Type 3	EACH	1.000	1.000
0740	647.0356	Pavement Marking Words Epoxy	EACH	42.000	42.000
0750	647.0456	Pavement Marking Curb Epoxy	LF	2,409.000	2,409.000
0760	647.0566	Pavement Marking Stop Line Epoxy 18-Inch	LF	972.000	972.000
0770	647.0606	Pavement Marking Island Nose Epoxy	EACH	71.000	71.000
0780	647.0766	Pavement Marking Crosswalk Epoxy 6-Inch	LF	3,251.000	3,251.000
0790	647.0955	Removing Pavement Markings Arrows	EACH	84.000	84.000
0800	647.0965	Removing Pavement Markings Words	EACH	42.000	42.000
0810	649.0400	Temporary Pavement Marking Removable Tape 4-Inch	LF	2,940.000	2,940.000
0820	650.9910	Construction Staking Supplemental Control (project) 01. 6290-05-75	LS	1.000	1.000
0830	652.0225	Conduit Rigid Nonmetallic Schedule 40 2-Inch	LF	16.000	16.000
0840	652.0700.S	Install Conduit into Existing Item	EACH	6.000	6.000
0850	652.0800	Conduit Loop Detector	LF	475.000	475.000
0860	653.0900	Adjusting Pull Boxes	EACH	6.000	6.000
0870	654.0101	Concrete Bases Type 1	EACH	1.000	1.000
0880	655.0700	Loop Detector Lead In Cable	LF	3,282.000	3,282.000
0890	655.0800	Loop Detector Wire	LF	3,670.000	3,670.000
0900	657.0100	Pedestal Bases	EACH	1.000	1.000
0910	657.0405	Traffic Signal Standards Aluminum 3.5-FT	EACH	1.000	1.000
0920	690.0250	Sawing Concrete	LF	5,014.000	5,014.000
0930	ASP.1T0A	On-the-Job Training Apprentice at $5.00/HR	HRS	1,200.000	1,200.000
0940	ASP.1T0G	On-the-Job Training Graduate at $5.00/HR	HRS	600.000	600.000
0950	SPV.0030	Special 01. Fertilizer For Lawn Type Turf	CWT	25.500	25.500

3

3

DATE 10OCT16 E S T I M A T E O F Q U A N T I T I E S

LINE NUMBER	ITEM	ITEM DESCRIPTION	UNIT	TOTAL	6290-05-75 QUANTITY
0960	SPV.0045	Special 01. Portable Changeable Message Sign (PCMS) Cellular Communications	DAY	329.000	329.000
0970	SPV.0060	Special 01. Grading And Shaping Driveways	EACH	4.000	4.000
0980	SPV.0085	Special 01. Concrete Pavement Repair Non-Cementitious	LB	80,641.000	80,641.000
0990	SPV.0085	Special 02. Concrete Overlay Deck Patching Non-Cementitious	LB	6,280.000	6,280.000
1000	SPV.0090	Special 01. Concrete Curb And Gutter HES 18-Inch Type A	LF	141.000	141.000
1010	SPV.0090	Special 02. Concrete Curb And Gutter HES 30-Inch Type A	LF	786.000	786.000
1020	SPV.0090	Special 03. Concrete Curb Pedestrian HES	LF	129.000	129.000
1030	SPV.0090	Special 04. Reconstruct Concrete Parapet	LF	3.000	3.000
1040	SPV.0105	Special 01. Remove And Reinstall Railing	LS	1.000	1.000
1050	SPV.0165	Special 01. Concrete Sidewalk HES 4-Inch	SF	1,426.000	1,426.000
1060	SPV.0165	Special 02. Concrete Median Sloped Nose HES	SF	43.000	43.000
1070	SPV.0180	Special 01. Preparing Topsoil For Lawn Type Turf	SY	400.000	400.000
1080	SPV.0180	Special 02. Removing Concrete Masonry Overlay	SY	25.000	25.000
1090	SPV.0180	Special 03. Pigmented Protective Surface Treatment Reseal	SY	650.000	650.000
1100	SPV.0180	Special 04. Concrete Pavement Repair Overnight	SY	351.000	351.000
1110	SPV.0180	Special 05. Concrete Pavement Replacement Overnight	SY	241.000	241.000

3

3

CURB AND GUTTER ITEMS

LOCATION	STAGE	STATION - STATION	OFFSET	204.0150 REMOVING CURB & GUTTER (LF)	* 416.0610 DRILLED TIE BARS (EA)	SPV.0090.01 CONCRETE CURB & GUTTER HES 18-INCH TYPE A (LF)	SPV.0090.02 CONCRETE CURB & GUTTER HES 30-INCH TYPE A (LF)	* 690.0250 SAWING CONCRETE (LF)	REMARKS
USH 10	1/1A	124+83 - 124+89	12' LT	6	3	6	--	9	
		135+15 - 135+30	24' RT	15	5	15	--	18	
		143+84 - 143+96	8' LT	12	4	12	--	15	LOOP DETECTOR
		150+02 - 150+08	12' LT	6	3	6	--	9	LOOP DETECTOR
		159+20 - 159+26	20' LT	6	3	6	--	9	
		165+81 - 165+91	20' LT	9	4	9	--	12	
		171+20 - 171+26	0' LT	6	3	6	--	9	
		172+20 - 172+26	0' LT	6	3	6	--	9	
	2/2A	111+13 - 111+16	24' RT	3	1	--	3	8	
		113+52 - 113+55	24' RT	3	1	--	3	8	
		113+70 - 113+73	24' RT	3	1	--	3	8	
		115+63 - 115+68	44' LT	5	2	--	5	10	
		126+51 - 126+64	58' LT	18	6	--	18	23	CURB RAMP REPLACEMENT
		132+13 - 132+27	29' RT	15	5	--	15	20	CURB RAMP REPLACEMENT
		132+85 - 132+98	29' RT	15	5	--	15	20	CURB RAMP REPLACEMENT
		135+01 - 135+43	24' RT	42	18	--	42	47	
		150+34 - 150+40	44' LT	6	3	--	6	11	
		150+75 - 150+79	44' LT	4	2	--	4	9	
		167+56 - 16759	56' LT	3	1	--	3	8	
		186+02 - 186+34	44' LT	32	12	--	32	37	DRIVEWAY REPLACEMENT
		187+26 - 187+71	44' LT	45	18	--	45	50	DRIVEWAY REMOVAL
		189+09 - 189+54	44' LT	45	18	--	45	50	DRIVEWAY REMOVAL
		192+24 - 192+56	44' LT	32	12	--	32	37	DRIVEWAY REPLACEMENT
	3	99+52 - 99+74	54' LT	--	--	30	--	--	ISLAND CURB REPAIR
		100+41 - 100+57	90' LT	21	7	--	21	26	CURB RAMP REPLACEMENT
		105+10 - 105+18	65' LT	12	--	--	12	17	LOOP DETECTOR
	4	86+62 - 86+90	29' LT	29	10	29	--	32	
		98+48 - 98+54	29' LT	6	3	6	--	9	
	5	82+15 - 86+30	36' RT	415	140	--	415	420	
		94+20 - 94+26	24' RT	6	3	--	6	11	
		99+42 - 99+53	50' RT	13	4	--	13	18	CURB RAMP REPLACEMENT
		102+07 - 102+20	40' RT	13	4	--	13	18	CURB RAMP REPLACEMENT
		107+50 - 107+55	24' RT	5	2	--	5	10	
	6	95+61 - 95+64	42' RT	15	5	--	15	20	CURB RAMP REPLACEMENT
		95+98 - 96+12	37' RT	15	5	--	15	20	CURB RAMP REPLACEMENT
		96+20 - 96+25	0' LT	5	2	5	--	8	
		102+85 - 102+90	0' LT	5	2	5	--	8	
		TOTAL:		897	320	141	786	1053	

*ADDITIONAL QUANTITIES LISTED ELSEWHERE

FINISHING ROADWAY (PROJECT)

PROJECT	213.0100 FINISHING ROADWAY (EACH)
6290-05-75	1
TOTAL	1

3

ALL ITEMS ARE CATEGORY 0010 UNLESS OTHERWISE SPECIFIED.

3

CONCRETE REPAIR AND REPLACEMENT SUMMARY (STAGE 1)

STATION	STATION	LOCATION	AREA L	AREA W	* 416.0610 DRILLED TIE BARS EACH	* 416.0620 DRILLED DOWEL BARS EACH	* 416.1710 CONCRETE PAVEMENT REPAIR SY	* 416.1720 CONCRETE PAVEMENT REPLACEMENT SY	* 690.0250 SAWING CONCRETE LF	* SPV.0085.01 CONCRETE PAVEMENT REPAIR NON-CEMENTITIOUS LBS
123+50 -	123+53	WB USH 10 LEFT LANE	4 x	5	--	--	--	--	--	521
123+91 -	123+96	WB USH 10 LEFT LANE	4 x	5	--	--	--	--	--	521
124+75 -	124+80	WB USH 10 MEDIAN	2 x	5	--	--	--	--	--	261
126+01 -	126+02	WB USH 10 LEFT LANE	1 x	1	--	--	--	--	--	27
126+56 -	126+58	WB USH 10 LEFT LANE	0.7 x	12	--	--	--	--	--	219
126+73 -	126+74	WB USH 10 MEDIAN	2 x	2	--	--	--	--	--	105
126+72 -	126+78	WB USH 10 LEFT LANE	4 x	2	--	--	--	--	--	209
127+47 -	127+48	WB USH 10 LEFT LANE	1 x	1	--	--	--	--	--	27
127+94 -	127+95	WB USH 10 LEFT LANE	0.7 x	12	--	--	--	--	--	219
129+23 -	129+24	WB USH 10 LEFT LANE	1 x	1	--	--	--	--	--	27
131+20 -	131+21	WB USH 10 LEFT LANE	1 x	1	--	--	--	--	--	27
134+90 -	134+93	WB USH 10 LEFT LANE	3 x	4	--	--	--	--	--	313
135+91 -	135+94	WB USH 10 LEFT LANE	3 x	4	--	--	--	--	--	313
137+23 -	137+25	WB USH 10 LEFT LANE	2 x	3	--	--	--	--	--	157
139+21 -	139+23	EB USH 10 LEFT LANE	2 x	2	--	--	--	--	--	105
139+88 -	139+89	WB USH 10 LEFT LANE	0.7 x	12	--	--	--	--	--	219
139+94 -	139+95	EB USH 10 LEFT LANE	0.7 x	12	--	--	--	--	--	219
140+12 -	140+13	WB USH 10 LEFT LANE	1 x	1	--	--	--	--	--	27
140+12 -	140+13	WB USH 10 LEFT LANE	1 x	1	--	--	--	--	--	27
140+24 -	140+25	WB USH 10 LEFT LANE	1 x	1	--	--	--	--	--	27
140+25 -	140+26	USH 10 MEDIAN	1 x	1	--	--	--	--	--	27
140+35 -	140+36	WB USH 10 LEFT LANE	1 x	1	--	--	--	--	--	27
140+35 -	140+36	USH 10 MEDIAN	1 x	1	--	--	--	--	--	27
140+52 -	140+54	WB USH 10 LEFT LANE	2 x	2	--	--	--	--	--	105
140+52 -	140+54	USH 10 MEDIAN	2 x	2	--	--	--	--	--	105
140+82 -	140+84	WB USH 10 LEFT LANE	2 x	2	--	--	--	--	--	105
141+07 -	141+08	WB USH 10 LEFT LANE	1 x	12	--	--	--	--	--	313
143+84 -	144+12	WB USH 10 LEFT LANE	28 x	12	18	16	--	38	80	--
143+84 -	143+96	WB USH 10 LEFT LANE	12 x	12	8	16	16	--	48	--
143+99 -	144+00	WB USH 10 LEFT LANE	1 x	4	--	--	--	--	--	105
144+82 -	144+84	WB USH 10 LEFT LANE	0.7 x	12	--	--	--	--	--	219
146+65 -	146+67	WB USH 10 LEFT LANE	0.7 x	12	--	--	--	--	--	219
147+52 -	147+54	WB USH 10 LEFT LANE	0.7 x	12	--	--	--	--	--	219
148+36 -	148+42	WB USH 10 LEFT LANE	6 x	12	4	16	8	--	36	--
148+57 -	148+63	WB USH 10 LEFT LANE	6 x	12	4	16	8	--	36	--
		SUBTOTAL			34	64	32	38	200	5041

* ADDITIONAL QUANTITES LISTED ELSEWHERE

ALL ITEMS ARE CATEGORY 0010 UNLESS OTHERWISE SPECIFIED.

3

CONCRETE REPAIR AND REPLACEMENT SUMMARY (STAGE 1) - CONTINUED

STATION	STATION	LOCATION	AREA L	AREA W	* 416.0610 DRILLED TIE BARS EACH	* 416.0620 DRILLED DOWEL BARS EACH	* 416.1710 CONCRETE PAVEMENT REPAIR SY	* 416.1720 CONCRETE PAVEMENT REPLACEMENT SY	* 690.0250 SAWING CONCRETE LF	* SPV.0085.01 CONCRETE PAVEMENT REPAIR NON-CEMENTITIOUS LB
148+80 -	148+86	WB USH 10 LEFT LANE	6 x	12	4	16	8	--	36	--
148+91 -	148+92	WB USH 10 LEFT LANE	1 x	4	--	--	--	--	--	105
149+54 -	149+56	WB USH 10 LEFT LANE	0.7 x	12	--	--	--	--	--	219
149+93 -	150+08	EB USH 10 LEFT LANE	15 x	12	10	16	--	20	54	--
150+02 -	150+08	EB USH 10 LEFT TURN LANE	6 x	12	4	16	8	--	36	--
150+21 -	150+22	EB USH 10 LEFT LANE	0.7 x	12	--	--	--	--	--	219
150+34 -	150+40	WB USH 10 LEFT LANE	6 x	12	4	16	8	--	36	--
150+97 -	150+99	WB USH 10 LEFT LANE	0.7 x	12	--	--	--	--	--	219
151+13 -	151+15	WB USH 10 LEFT LANE	0.7 x	12	--	--	--	--	--	219
151+68 -	151+87	WB USH 10 LEFT LANE	19 x	12	12	16	--	26	62	--
152+43 -	152+62	WB USH 10 LEFT LANE	19 x	12	12	16	--	26	62	--
157+49 -	157+50	WB USH 10 LEFT LANE	0.7 x	12	--	--	--	--	--	219
159+65 -	159+67	WB USH 10 LEFT LANE	2 x	2	--	--	--	--	--	105
162+66 -	162+68	WB USH 10 LEFT LANE	2 x	2	--	--	--	--	--	105
162+69 -	162+71	EB USH 10 LEFT LANE	2 x	4	--	--	--	--	--	209
163+38 -	163+40	EB USH 10 LEFT LANE	2 x	2	--	--	--	--	--	105
171+42 -	171+48	WB USH 10 LEFT LANE	6 x	12	4	16	8	--	48	--
UNDISTRIBUTED					8	18	6	11	53	1691
			TOTAL		92	194	70	121	587	8456

* ADDITIONAL QUANTITES LISTED ELSEWHERE

ALL ITEMS ARE CATEGORY 0010 UNLESS OTHERWISE SPECIFIED.

3

CONCRETE REPAIR AND REPLACEMENT SUMMARY (STAGE 2)

STATION		STATION	LOCATION	AREA L		W	* 416.0610 DRILLED TIE BARS EACH	* 416.0620 DRILLED DOWEL BARS EACH	* 416.1710 CONCRETE PAVEMENT REPAIR SY	* 416.1720 CONCRETE PAVEMENT REPLACEMENT SY	* 690.0250 SAWING CONCRETE LF	* SPV.0085.01 CONCRETE PAVEMENT REPAIR NON-CEMENTITIOUS LB
11134	-	11138	WB USH 10 RIGHT LANE	4	x	1	--	--	--	--	--	105
11250	-	11252	EB USH 10 RIGHT LANE	2	x	2	--	--	--	--	--	105
11300	-	11304	EB USH 10 RIGHT LANE	4	x	4	--	--	--	--	--	417
11356	-	11359	WB USH 10 RIGHT LANE	3	x	4	--	--	--	--	--	313
11372	-	11373	EB USH 10 RIGHT LANE	1	x	2	--	--	--	--	--	53
11445	-	11448	WB USH 10 RIGHT LANE	3	x	3	--	--	--	--	--	235
11477	-	11479	WB USH 10 RIGHT LANE	3	x	5	--	--	--	--	--	391
11483	-	11487	WB USH 10 RIGHT LANE	4	x	2	--	--	--	--	--	209
11517	-	11520	WB USH 10 RIGHT LANE	3	x	3	--	--	--	--	--	235
11521	-	11521	EB USH 10 RIGHT LANE	2	x	2	--	--	--	--	--	105
11650	-	11654	EB USH 10 RIGHT LANE	4	x	6	--	--	--	--	--	625
11935	-	11939	WB USH 10 RIGHT LANE	4	x	6	--	--	--	--	--	625
12021	-	12025	EB USH 10 RIGHT LANE	4	X	6	--	--	--	--	--	625
12225	-	12228	WB USH 10 RIGHT LANE	3	x	5	--	--	--	--	--	391
12237	-	12240	WB USH 10 RIGHT LANE	3	x	3	--	--	--	--	--	235
12249	-	12255	WB USH 10 RIGHT LANE	6	x	12	4	16	8	--	36	--
12313	-	12317	WB USH 10 RIGHT LANE	4	x	6	--	--	--	--	--	625
12375	-	12378	EB USH 10 RIGHT LANE	3	x	4	--	--	--	--	--	313
12401	-	12407	WB USH 10 RIGHT LANE	6	x	12	4	16	8	--	36	--
12597	-	12599	WB USH 10 RIGHT LANE	2	x	4	--	--	--	--	--	209
12599	-	12601	WB USH 10 RIGHT LANE	2	x	4	--	--	--	--	--	209
12656	-	12658	WB USH 10 RIGHT LANE AND TAPER	0.7	x	28	--	--	--	--	--	511
12662	-	12685	WILDWOOD DRIVE RIGHT TURN LANE	23	x	0.7	--	--	--	--	--	420
12676	-	12680	WB USH 10 RIGHT LANE	4	x	2	--	--	--	--	--	209
12748	-	12754	WB USH 10 RIGHT LANE	6	x	2	--	--	--	--	--	313
12755	-	12756	WB USH 10 RIGHT LANE	0.7	x	12	--	--	--	--	--	219
12923	-	12924	WB USH 10 RIGHT LANE	1	x	1	--	--	--	--	--	27
13000	-	13003	EB USH 10 RIGHT LANE	3	x	3	--	--	--	--	--	235
13043	-	13049	WB USH 10 RIGHT LANE	6	x	12	4	16	8	--	36	--
13060	-	13066	WB USH 10 RIGHT LANE	6	x	12	4	16	8	--	36	--
13113	-	13119	WB USH 10 RIGHT LANE	6	x	12	4	16	8	--	36	--
13208	-	13214	WB USH 10 RIGHT LANE	6	x	12	4	16	8	--	36	--
13224	-	13226	EB USH 10 RIGHT LANE	2	x	2	--	--	--	--	--	105
13227	-	13229	TREDER AVE (SOUTH)	2	x	2	--	--	--	--	--	105
13228	-	13234	WB USH 10 RIGHT LANE	6	x	12	4	16	8	--	36	--
			SUBTOTAL				28	112	56	0	252	8169

* ADDITIONAL QUANTITES LISTED ELSEWHERE

ALL ITEMS ARE CATEGORY 0010 UNLESS OTHERWISE SPECIFIED.

3

CONCRETE REPAIR AND REPLACEMENT SUMMARY (STAGE 2) - CONTINUED

STATION		STATION	LOCATION	AREA L		W	* 416.0610 DRILLED TIE BARS EACH	* 416.0620 DRILLED DOWEL BARS EACH	* 416.1710 CONCRETE PAVEMENT REPAIR SY	* 416.1720 CONCRETE PAVEMENT REPLACEMENT SY	* 690.0250 SAWING CONCRETE LF	* SPV.0085.01 CONCRETE PAVEMENT REPAIR NON-CEMENTITIOUS LB
13265	-	13271	WB USH 10 RIGHT LANE	6	x	12	4	16	8	--	36	--
13284	-	13287	TREDER AVE (SOUTH)	3	x	2	--	--	--	--	--	157
13302	-	13308	WB USH 10 RIGHT LANE	6	x	12	4	16	8	--	36	--
13321	-	13324	WB USH 10 RIGHT LANE	3	x	3	--	--	--	--	--	235
13431	-	13432	EB USH 10 RIGHT LANE	1	x	2	--	--	--	--	--	53
13498	-	13504	WB USH 10 RIGHT LANE	6	x	12	4	16	--	--	36	--
13574	-	13576	EB USH 10 RIGHT LANE	2	x	2	--	--	--	--	--	105
13594	-	13597	WB USH 10 RIGHT LANE	3	x	4	--	--	--	--	--	313
13603	-	13606	WB USH 10 RIGHT LANE	3	x	2	--	--	--	--	--	157
13614	-	13617	WB USH 10 RIGHT LANE	3	x	4	--	--	--	--	--	313
13716	-	13722	WB USH 10 RIGHT LANE	6	x	12	4	16	8	--	36	--
13811	-	13814	EB USH 10 RIGHT LANE	3	x	3	--	--	--	--	--	235
13833	-	13836	WB USH 10 RIGHT LANE	3	x	6	--	--	--	--	--	469
13844	-	13848	EB USH 10 RIGHT LANE	4	x	3	--	--	--	--	--	313
13850	-	13856	WB USH 10 RIGHT LANE	6	x	12	4	16	8	--	36	--
13876	-	13882	WB USH 10 RIGHT LANE	6	x	12	4	16	8	--	36	--
13899	-	13902	WB USH 10 RIGHT LANE	3	x	2	--	--	--	--	--	157
13900	-	13902	WB USH 10 RIGHT LANE	2	x	2	--	--	--	--	--	105
13914	-	13916	WB USH 10 RIGHT LANE	0.7	x	12	--	--	--	--	--	219
13922	-	13925	WB USH 10 RIGHT LANE	3	x	6	--	--	--	--	--	469
13955	-	13957	WB USH 10 RIGHT LANE	2	x	3	--	--	--	--	--	157
13971	-	13972	WB USH 10 RIGHT LANE	1	x	5	--	--	--	--	--	131
13984	-	13985	WB USH 10 RIGHT LANE	0.7	x	12	--	--	--	--	--	219
13989	-	13993	WB USH 10 RIGHT LANE	4	x	1	--	--	--	--	--	105
13999	-	14000	EB USH 10 RIGHT LANE	0.7	x	12	--	--	--	--	--	219
14052	-	14054	WB USH 10 RIGHT LANE	2	x	2	--	--	--	--	--	105
14052	-	14052	EB USH 10 RIGHT LANE	2	x	4	--	--	--	--	--	209
14160	-	14166	EB USH 10 RIGHT LANE	6	x	12	4	16	8	--	36	--
14183	-	14185	EB USH 10 RIGHT LANE	2	x	2	--	--	--	--	--	105
14200	-	14206	EB USH 10 RIGHT LANE	6	x	12	4	16	8	--	36	--
14207	-	14208	WB USH 10 RIGHT LANE	0.7	x	12	--	--	--	--	--	219
14274	-	14278	WB USH 10 RIGHT LANE	3	x	4	--	--	--	--	--	313
14275	-	14277	EB USH 10 RIGHT LANE	2	x	5	--	--	--	--	--	261
14280	-	14285	WB USH 10 RIGHT LANE	4	x	5	--	--	--	--	--	521
14296	-	14300	WB USH 10 RIGHT LANE	4	x	3	--	--	--	--	--	313
			SUBTOTAL				32	128	56	0	288	6177

* ADDITIONAL QUANTITES LISTED ELSEWHERE

ALL ITEMS ARE CATEGORY 0010 UNLESS OTHERWISE SPECIFIED.

3

CONCRETE REPAIR AND REPLACEMENT SUMMARY (STAGE 2) - CONTINUED

STATION	STATION	LOCATION	AREA L	x	AREA W	* 416.0610 DRILLED TIE BARS EACH	* 416.0620 DRILLED DOWEL BARS EACH	* 416.1710 CONCRETE PAVEMENT REPAIR SY	* 416.1720 CONCRETE PAVEMENT REPLACEMENT SY	* 690.0250 SAWING CONCRETE LF	* SPV.0085.01 CONCRETE PAVEMENT REPAIR NON-CEMENTITIOUS LB
14314 -	14317	EB USH 10 RIGHT LANE	3	x	4	--	--	--	--	--	313
14331 -	14334	WB USH 10 RIGHT LANE	3	x	4	--	--	--	--	--	313
14345 -	14346	WB USH 10 RIGHT LANE	1	x	2	--	--	--	--	--	53
14360 -	14361	EB USH 10 RIGHT LANE	1	x	2	--	--	--	--	--	53
14384 -	14412	WB USH 10 RIGHT LANE	28	x	12	18	16	--	38	80	--
14418 -	14419	EB USH 10 RIGHT LANE	1	x	1	--	--	--	--	--	27
14425 -	14427	EB USH 10 RIGHT LANE	2	x	2	--	--	--	--	--	105
14444 -	14446	WB USH 10 RIGHT LANE	2	x	3	--	--	--	--	--	157
14457 -	14458	EB USH 10 RIGHT LANE	1	x	1	--	--	--	--	--	27
14470 -	14476	EB USH 10 RIGHT LANE	2	x	6	--	--	--	--	--	313
14482 -	14484	WB USH 10 RIGHT LANE	0.7	x	12	--	--	--	--	--	219
14500 -	14502	EB USH 10 RIGHT TURN LANE	0.7	x	12	--	--	--	--	--	219
14520 -	14521	EB USH 10 RIGHT TURN LANE	1	x	4	--	--	--	--	--	105
14560 -	14561	EB USH 10 RIGHT TURN LANE	1	x	5	--	--	--	--	--	131
14577 -	14581	WB USH 10 RIGHT LANE	4	x	4	--	--	--	--	--	417
14596 -	14600	WB USH 10 RIGHT LANE	4	x	2	--	--	--	--	--	209
14643 -	14646	EB USH 10 RIGHT LANE	3	x	4	--	--	--	--	--	313
14665 -	14667	WB USH 10 RIGHT LANE	0.7	x	12	--	--	--	--	--	219
14704 -	14710	WB USH 10 RIGHT LANE	6	x	12	4	16	8	--	36	--
14725 -	14729	EB USH 10 RIGHT LANE	4	x	6	--	--	--	--	--	625
14751 -	14753	WB USH 10 RIGHT LANE	0.7	x	12	--	--	--	--	--	219
14770 -	14776	EB USH 10 RIGHT LANE	6	x	4	--	--	--	--	--	625
14813 -	14815	EB USH 10 RIGHT LANE	2	x	2	--	--	--	--	--	105
14857 -	14863	WB USH 10 RIGHT LANE	6	x	12	4	16	8	--	36	--
14878 -	14884	WB USH 10 RIGHT LANE	6	x	12	4	16	8	--	36	--
14891 -	14892	WB USH 10 RIGHT LANE	0.7	x	12	--	--	--	--	--	219
14906 -	14912	WB USH 10 RIGHT LANE	6	x	12	4	16	8	--	36	--
14954 -	14956	WB USH 10 RIGHT LANE	0.7	x	12	--	--	--	--	--	219
15020 -	15077	WB USH 10 RIGHT LANE	57	x	12	38	16	--	76	--	--
15097 -	15099	WB USH 10 RIGHT LANE	0.7	x	12	--	--	--	--	--	219
15113 -	15115	WB USH 10 RIGHT LANE	0.7	x	12	--	--	--	--	--	219
15168 -	15172	WB USH 10 RIGHT LANE	6	x	12	4	16	8	--	36	--
15243 -	15262	WB USH 10 RIGHT LANE	19	x	12	16	16	--	26	--	--
15333 -	15336	WB USH 10 RIGHT LANE	3	x	5	--	--	--	--	--	391
15436 -	15442	WB USH 10 RIGHT LANE	6	x	12	4	16	8	--	36	--
		SUBTOTAL				96	144	48	140	296	6034

* ADDITIONAL QUANTITES LISTED ELSEWHERE

ALL ITEMS ARE CATEGORY 0010 UNLESS OTHERWISE SPECIFIED.

CONCRETE REPAIR AND REPLACEMENT SUMMARY (STAGE 2) - CONTINUED

STATION	STATION	LOCATION	AREA L		AREA W	* 416.0610 DRILLED TIE BARS EACH	* 416.0620 DRILLED DOWEL BARS EACH	* 416.1710 CONCRETE PAVEMENT REPAIR SY	* 416.1720 CONCRETE PAVEMENT REPLACEMENT SY	* 690.0250 SAWING CONCRETE LF	* SPV.0085.01 CONCRETE PAVEMENT REPAIR NON-CEMENTITIOUS LB
15850	- 15852	WB USH 10 RIGHT LANE	2	x	2	--	--	--	--	--	105
15963	- 15966	WB USH 10 RIGHT LANE	3	x	2	--	--	--	--	--	157
15963	- 15966	WB USH 10 RIGHT LANE	3	x	2	--	--	--	--	--	157
16199	- 16202	EB USH 10 RIGHT LANE	3	x	1	--	--	--	--	--	79
16259	- 16265	WB USH 10 RIGHT LANE	6	x	12	4	16	8	--	36	--
16324	- 16327	WB USH 10 RIGHT LANE	3	x	4	--	--	--	--	--	313
16421	- 16427	WB USH 10 RIGHT LANE	2	x	2	--	--	--	--	--	105
16609	- 16611	BADGER AVENUE (SOUTH)	2	x	2	--	--	--	--	--	105
16704	- 16707	BADGER AVENUE (SOUTH)	3	x	2	--	--	--	--	--	157
16826	- 16829	EB USH 10 RIGHT LANE	3	x	2	--	--	--	--	--	157
16840	- 16843	EB USH 10 RIGHT LANE	3	x	2	--	--	--	--	--	157
16862	- 16868	WB USH 10 RIGHT LANE	6	x	12	4	16	8	--	36	--
16980	- 16983	WB USH 10 RIGHT LANE	3	x	5	--	--	--	--	--	391
17009	- 17013	WB USH 10 RIGHT LANE	4	x	5	--	--	--	--	--	521
17075	- 17078	WB USH 10 RIGHT LANE	3	x	4	--	--	--	--	--	313
17100	- 17103	WB USH 10 RIGHT LANE	3	x	3	--	--	--	--	--	235
17142	- 17142	WB USH 10 RIGHT LANE AND RIGHT TURN LANE	6	x	20	4	26	--	14	52	--
18537	- 18543	WB USH 10 RIGHT LANE	6	x	12	4	16	8	--	36	--
18556	- 18562	WB USH 10 RIGHT LANE	6	x	12	4	16	8	--	36	--
UNDISTRIBUTED						18	47	19	15	103	5833
					TOTAL	194	521	211	169	1135	29165

* ADDITIONAL QUANTITES LISTED ELSEWHERE

ALL ITEMS ARE CATEGORY 0010 UNLESS OTHERWISE SPECIFIED.

3

CONCRETE REPAIR AND REPLACEMENT SUMMARY (STAGE 3)

STATION - STATION	LOCATION	AREA L	x	W	* 416.0610 DRILLED TIE BARS EACH	* 416.0620 DRILLED DOWEL BARS EACH	* 690.0250 SAWING CONCRETE LF	* SPV.0085.01 CONCRETE PAVEMENT REPAIR NON-CEMENTITIOUS LB	* SPV.0180.04 CONCRETE PAVEMENT REPAIR OVERNIGHT SY	* SPV.0180.05 CONCRETE PAVEMENT REPLACEMENT OVERNIGHT SY
78+80 - 78+86	WB USH 10 RIGHT LANE	6	x	12	4	16	36	--	8	--
78+99 - 79+02	WB USH 10 RIGHT LANE	3	x	4	--	--	--	313	--	--
79+69 - 79+75	WB USH 10 RIGHT LANE	6	x	12	4	16	36	--	8	--
80+42 - 80+44	WB USH 10 RIGHT LANE	2	x	2	--	--	--	105	--	--
80+56 - 80+58	WB USH 10 RIGHT LANE	0.7	x	12	--	--	--	219	--	--
80+76 - 81+12	WB USH 10 RIGHT LANE	35	x	0.7	--	--	--	638	--	--
80+85 - 80+87	WB USH 10 RIGHT LANE	2	x	2	--	--	--	105	--	--
82+47 - 82+53	WB USH 10 RIGHT LANE	6	x	12	2	16	28	--	8	--
83+22 - 83+24	WB USH 10 RIGHT LANE	2	x	2	--	--	--	105	--	--
83+33 - 83+35	WB USH 10 RIGHT LANE	2	x	2	--	--	--	105	--	--
83+45 - 83+53	WB USH 10 RIGHT LANE	8	x	0.7	--	--	--	146	--	--
83+51 - 83+52	WB USH 10 RIGHT LANE	1	x	1	--	--	--	27	--	--
83+68 - 83+74	WB USH 10 RIGHT LANE	6	x	6	2	8	24	--	4	--
83+94 - 83+96	WB USH 10 RIGHT LANE	2	x	3	--	--	--	157	--	--
84+15 - 84+17	WB USH 10 RIGHT LANE	2	x	1	--	--	--	53	--	--
84+50 - 84+51	WB USH 10 RIGHT LANE	1	x	2	--	--	--	53	--	--
84+59 - 84+61	WB USH 10 RIGHT TURN LANE	2	x	5	--	--	--	261	--	--
84+85 - 84+86	WB USH 10 RIGHT LANE	1	x	1	--	--	--	27	--	--
86+17 - 86+19	WB USH 10 RIGHT LANE	2	x	1	--	--	--	53	--	--
86+40 - 86+42	WB USH 10 RIGHT LANE	2	x	2	--	--	--	105	--	--
86+48 - 86+50	WB USH 10 RIGHT LANE	2	x	2	--	--	--	105	--	--
86+60 - 86+62	WB USH 10 RIGHT LANE	2	x	1	--	--	--	53	--	--
86+80 - 86+82	WB USH 10 RIGHT LANE	2	x	2	--	--	--	105	--	--
87+48 - 87+50	WB USH 10 RIGHT LANE	2	x	2	--	--	--	105	--	--
87+64 - 87+65	WB USH 10 RIGHT LANE	1	x	1	--	--	--	27	--	--
87+75 - 87+77	WB USH 10 RIGHT LANE	2	x	2	--	--	--	105	--	--
87+90 - 87+91	WB USH 10 RIGHT LANE	0.7	x	12	--	--	--	219	--	--
88+30 - 88+32	WB USH 10 RIGHT LANE	2	x	2	--	--	--	105	--	--
88+30 - 88+32	WB USH 10 RIGHT LANE	2	x	2	--	--	--	105	--	--
88+61 - 88+63	WB USH 10 RIGHT LANE	2	x	2	--	--	--	105	--	--
88+88 - 88+89	WB USH 10 RIGHT LANE	1	x	1	--	--	--	27	--	--
89+40 - 89+58	WB USH 10 RIGHT LANE	18	x	12	7	16	42	--	--	24
92+70 - 92+74	WB USH 10 RIGHT LANE	4	x	1	--	--	--	105	--	--
92+91 - 92+97	WB USH 10 RIGHT LANE	6	x	12	2	16	28	--	8	--
93+42 - 93+43	WB USH 10 RIGHT LANE	1	x	1	--	--	--	27	--	--
		SUBTOTAL			21	88	194	3665	36	24

* ADDITIONAL QUANTITES LISTED ELSEWHERE

ALL ITEMS ARE CATEGORY 0010 UNLESS OTHERWISE SPECIFIED.

3

CONCRETE REPAIR AND REPLACEMENT SUMMARY (STAGE 3) - CONTINUED

STATION	-	STATION	LOCATION	AREA L	x	AREA W	* 416.0610 DRILLED TIE BARS EACH	* 416.0620 DRILLED DOWEL BARS EACH	* 690.0250 SAWING CONCRETE LF	* SPV.0085.01 CONCRETE PAVEMENT REPAIR NON-CEMENTITIOUS LB	* SPV.0180.04 CONCRETE PAVEMENT REPAIR OVERNIGHT SY	* SPV.0180.05 CONCRETE PAVEMENT REPLACEMENT OVERNIGHT SY
93+64	-	93+80	WB USH 10 RIGHT LANE	16	x	0.7	--	--	--	292	--	--
93+80	-	93+86	WB USH 10 RIGHT LANE	6	x	16	2	16	54	--	11	--
93+92	-	93+94	WB USH 10 RIGHT LANE	2	x	2	--	--	--	105	--	--
94+14	-	94+18	WB USH 10 RIGHT LANE	4	x	1	--	--	--	105	--	--
94+29	-	94+31	WB USH 10 RIGHT LANE	2	x	2	--	--	--	105	--	--
94+36	-	94+38	WB USH 10 RIGHT LANE	2	x	2	--	--	--	105	--	--
94+51	-	94+53	WB USH 10 RIGHT LANE	2	x	2	--	--	--	105	--	--
94+51	-	94+54	WB USH 10 RIGHT LANE	3	x	1	--	--	--	79	--	--
94+60	-	94+75	RIGHT TURN LANE FROM IH39 NB OFF RAMP	6	x	21	4	30	38	--	14	--
94+87	-	95+05	IH 39 NB OFF RAMP	6	x	17	4	22	46	--	12	--
94+89	-	94+91	WB USH 10 RIGHT LANE	2	x	2	--	--	--	105	--	--
95+00	-	95+06	EB USH 10 LEFT TURN LANE	6	x	10	4	12	32	--	7	--
95+02	-	95+05	IH 39 NB OFF RAMP	16	x	2	--	--	--	834	--	--
95+03	-	95+06	IH 39 NB OFF RAMP	16	x	0.7	--	--	--	292	--	--
95+04	-	95+08	IH 39 NB OFF RAMP	16	x	0.7	--	--	--	292	--	--
95+06	-	95+24	IH 39 NB OFF RAMP	6	x	17	4	22	46	--	12	--
95+11	-	95+12	WB USH 10 RIGHT LANE	1	x	1	--	--	--	27	--	--
95+18	-	95+20	IH 39 NB OFF RAMP	2	x	2	--	--	--	105	--	--
95+24	-	95+25	EB USH 10 LEFT TURN LANE	1	x	1	--	--	--	27	--	--
95+44	-	95+50	EB USH 10 LEFT TURN LANE	6	x	30	4	40	72	--	20	--
95+43	-	95+49	WB USH 10 RIGHT LANE	6	x	20	4	24	52	--	14	--
95+54	-	95+56	EB USH 10 LEFT TURN LANE	2	x	2	--	--	--	105	--	--
95+59	-	95+63	IH 39 NB ON RAMP	4	x	1	--	--	--	105	--	--
95+67	-	65+68	IH 39 NB ON RAMP	1	x	4	--	--	--	105	--	--
95+65	-	95+79	EB USH 10 LEFT TURN LANE	14	x	14	5	8	50	--	11	--
96+36	-	96+37	WB USH 10 RIGHT TURN LANE	1	x	1	--	--	--	27	--	--
96+39	-	96+43	WB USH 10 RIGHT TURN LANE	4	x	1	--	--	--	105	--	--
96+44	-	96+50	WB USH 10 RIGHT LANE	6	x	12	4	16	36	--	8	--
96+55	-	96+57	WB USH 10 RIGHT LANE	2	x	2	--	--	--	105	--	--
96+79	-	96+87	WB USH 10 RIGHT TURN LANE	8	x	0.7	--	--	--	146	--	--
96+79	-	97+00	WB USH 10 RIGHT LANE	21	x	0.7	--	--	--	383	--	--
97+00	-	97+06	WB USH 10 RIGHT TURN LANE	6	x	12	--	16	30	--	8	--
97+00	-	97+06	WB USH 10 RIGHT LANE	6	x	12	2	16	36	--	8	--
97+15	-	97+16	WB USH 10 RIGHT TURN LANE	1	x	1	--	--	--	27	--	--
97+24	-	97+40	WB USH 10 RIGHT TURN LANE	16	x	0.7	--	--	--	292	--	--
				SUBTOTAL			37	222	492	3978	125	0

* ADDITIONAL QUANTITES LISTED ELSEWHERE

ALL ITEMS ARE CATEGORY 0010 UNLESS OTHERWISE SPECIFIED.

3

CONCRETE REPAIR AND REPLACEMENT SUMMARY (STAGE 3) - CONTINUED

STATION	-	STATION	LOCATION	AREA L		AREA W	* 416.0610 DRILLED TIE BARS EACH	* 416.0620 DRILLED DOWEL BARS EACH	* 690.0250 SAWING CONCRETE LF	* SPV.0085.01 CONCRETE PAVEMENT REPAIR NON-CEMENTITIOUS LB	* SPV.0180.04 CONCRETE PAVEMENT REPAIR OVERNIGHT SY	* SPV.0180.05 CONCRETE PAVEMENT REPLACEMENT OVERNIGHT SY
97+56	-	97+62	WB USH 10 RIGHT TURN LANE	6	x	12	--	16	30	--	8	--
97+56	-	97+62	WB USH 10 RIGHT LANE	6	x	12	2	16	36	--	8	--
97+97	-	97+99	WB USH 10 RIGHT TURN LANE	2	x	2	--	--	--	105	--	--
97+98	-	98+04	WB USH 10 RIGHT TURN LANE	6	x	12	2	16	36	--	8	--
98+26	-	98+27	WB USH 10 RIGHT LANE	1	x	1	--	--	--	27	--	--
98+37	-	98+38	WB USH 10 RIGHT LANE	1	x	4	--	--	--	105	--	--
99+02	-	99+04	WB USH 10 RIGHT TURN LANE	2	x	2	--	--	--	105	--	--
99+16	-	99+20	WB USH 10 RIGHT TURN LANE	4	x	1	--	--	--	105	--	--
105+10	-	105+20	PRIVATE DRIVEWAY	10	x	12	6	--	25	--	14	--
105+12	-	105+47	WB USH 10 RIGHT LANE & TURN LANE	35	x	24	14	32	118	--	--	94
105+57	-	105+65	PRIVATE DRIVEWAY	4	x	4	--	--	--	417	--	--
105+74	-	105+78	WB USH 10 RIGHT TURN LANE	4	x	1	--	--	--	105	--	--
105+83	-	105+87	WB USH 10 RIGHT TURN LANE	4	x	1	--	--	--	105	--	--
106+87	-	106+88	WB USH 10 RIGHT TURN LANE	1	x	2	--	--	--	53	--	--
106+92	-	106+93	WB USH 10 RIGHT LANE	0.7	x	12	--	--	--	219	--	--
107+65	-	107+66	WB USH 10 RIGHT LANE	1	x	2	--	--	--	53	--	--
107+91	-	107+92	WB USH 10 RIGHT LANE	1	x	3	--	--	--	79	--	--
108+20	-	108+24	WB USH 10 RIGHT TURN LANE	4	x	2	--	--	--	209	--	--
108+30	-	108+39	WB USH 10 RIGHT TURN LANE	9	x	1	--	--	--	235	--	--
108+41	-	108+43	WB USH 10 RIGHT TURN LANE	2	x	1	--	--	--	53	--	--
109+32	-	109+34	WB USH 10 RIGHT LANE	2	x	1	--	--	--	53	--	--
UNDISTRIBUTED							8	39	93	2418	20	12
				TOTAL			90	429	1024	12089	219	130

* ADDITIONAL QUANTITES LISTED ELSEWHERE

ALL ITEMS ARE CATEGORY 0010 UNLESS OTHERWISE SPECIFIED.

3

CONCRETE REPAIR AND REPLACEMENT SUMMARY (STAGE 4)

STATION	-	STATION	LOCATION	AREA L		AREA W	* 416.0610 DRILLED TIE BARS EACH	* 416.0620 DRILLED DOWEL BARS EACH	* 690.0250 SAWING CONCRETE LF	* SPV.0085.01 CONCRETE PAVEMENT REPAIR NON-CEMENTITIOUS LB	* SPV.0180.04 CONCRETE PAVEMENT REPAIR OVERNIGHT SY	* SPV.0180.05 CONCRETE PAVEMENT REPLACEMENT OVERNIGHT SY
79+47	-	79+49	WB USH 10 LEFT LANE	2	x	2	--	--	--	105	--	--
80+43	-	80+45	WB USH 10 LEFT LANE	2	x	2	--	--	--	105	--	--
80+57	-	80+58	WB USH 10 LEFT LANE	1	x	1	--	--	--	27	--	--
80+72	-	80+73	WB USH 10 LEFT LANE	1	x	1	--	--	--	27	--	--
80+77	-	81+12	WB USH 10 LEFT LANE	35	x	2	--	--	--	1823	--	--
80+77	-	81+12	WB USH 10 LEFT LANE	35	x	2	--	--	--	1823	--	--
80+83	-	80+84	WB USH 10 LEFT LANE	1	x	1	--	--	--	27	--	--
80+90	-	80+92	WB USH 10 LEFT LANE	2	x	2	--	--	--	105	--	--
81+32	-	81+34	WB USH 10 LEFT LANE	2	x	2	--	--	--	105	--	--
81+45	-	81+46	WB USH 10 LEFT LANE	1	x	1	--	--	--	27	--	--
81+68	-	81+70	WB USH 10 LEFT LANE	2	x	2	--	--	--	105	--	--
81+68	-	81+70	WB USH 10 LEFT LANE	2	x	2	--	--	--	105	--	--
81+93	-	81+95	WB USH 10 LEFT TURN LANE	2	x	2	--	--	--	105	--	--
81+93	-	81+95	WB USH 10 LEFT TURN LANE	2	x	2	--	--	--	105	--	--
83+52	-	83+53	WB USH 10 LEFT LANE	1	x	1	--	--	--	27	--	--
84+85	-	84+86	WB USH 10 LEFT LANE	1	x	1	--	--	--	27	--	--
85+58	-	85+60	WB USH 10 LEFT LANE	2	x	2	--	--	--	105	--	--
85+82	-	85+88	WB USH 10 LEFT LANE	6	x	12	4	16	36	--	8	--
85+88	-	85+96	WB USH 10 LEFT LANE	8	x	0.7	--	--	--	146	--	--
86+17	-	86+21	WB USH 10 LEFT LANE	4	x	1	--	--	--	105	--	--
86+75	-	86+81	WB USH 10 LEFT LANE	6	x	13	4	16	38	--	9	--
86+90	-	86+92	WB USH 10 LEFT LANE	0.7	x	17	--	--	--	310	--	--
87+47	-	87+53	WB USH 10 LEFT LANE	6	x	12	4	16	36	--	8	--
87+60	-	87+61	WB USH 10 LEFT LANE	1	x	1	--	--	--	27	--	--
87+90	-	87+91	WB USH 10 LEFT LANE	0.7	x	12	--	--	--	219	--	--
88+36	-	88+38	WB USH 10 LEFT TURN LANE	2	x	2	--	--	--	105	--	--
88+46	-	88+48	WB USH 10 LEFT TURN LANE	2	x	2	--	--	--	105	--	--
88+54	-	88+56	WB USH 10 LEFT TURN LANE	2	x	2	--	--	--	105	--	--
88+62	-	88+64	WB USH 10 LEFT TURN LANE	2	x	2	--	--	--	105	--	--
89+13	-	89+14	WB USH 10 LEFT LANE	1	x	1	--	--	--	27	--	--
89+40	-	89+58	WB USH 10 LEFT LANE	18	x	12	14	16	60	--	--	24
92+42	-	92+46	WB USH 10 LEFT LANE	4	x	1	--	--	--	105	--	--
93+13	-	93+15	WB USH 10 LEFT LANE	4	x	1	--	--	--	105	--	--
93+29	-	93+33	WB USH 10 LEFT LANE	4	x	1	--	--	--	105	--	--
93+79	-	93+85	WB USH 10 LEFT LANE AND LEFT TURN LANE	6	x	16	2	20	43	--	11	--
				SUBTOTAL			28	84	213	6322	36	24

* ADDITIONAL QUANTITES LISTED ELSEWHERE

ALL ITEMS ARE CATEGORY 0010 UNLESS OTHERWISE SPECIFIED.

3

CONCRETE REPAIR AND REPLACEMENT SUMMARY (STAGE 4) - CONTINUED

STATION - STATION	LOCATION	AREA L	x	W	* 416.0610 DRILLED TIE BARS EACH	* 416.0620 DRILLED DOWEL BARS EACH	* 690.0250 SAWING CONCRETE LF	* SPV.0085.01 CONCRETE PAVEMENT REPAIR NON-CEMENTITIOUS LB	* SPV.0180.04 CONCRETE PAVEMENT REPAIR OVERNIGHT SY	* SPV.0180.05 CONCRETE PAVEMENT REPLACEMENT OVERNIGHT SY
94+15 - 94+19	WB USH 10 LEFT LANE	4	x	1	--	--	--	105	--	--
95+16 - 95+17	WB USH 10 LEFT LANE	1	x	2	--	--	--	53	--	--
95+26 - 95+27	WB USH 10 LEFT LANE	1	x	1	--	--	--	27	--	--
95+43 - 95+49	WB USH 10 LEFT LANE	6	x	12	4	16	36	--	8	--
97+43 - 97+44	WB USH 10 LEFT LANE	1	x	1	--	--	--	27	--	--
98+36 - 98+40	WB USH 10 LEFT LANE	2	x	2	--	--	--	105	--	--
105+12 - 105+47	WB USH 10 LEFT LANE	35	x	12	28	16	94	--	--	47
106+86 - 106+87	WB USH 10 LEFT LANE	0.7	x	12	--	--	--	219	--	--
UNDISTRIBUTED					6	12	34	1715	4	7
		TOTAL			66	128	377	8573	48	78

* ADDITIONAL QUANTITES LISTED ELSEWHERE

ALL ITEMS ARE CATEGORY 0010 UNLESS OTHERWISE SPECIFIED.

3

CONCRETE REPAIR AND REPLACEMENT SUMMARY (STAGE 5)

STATION	-	STATION	LOCATION	AREA L	x	AREA W	* 416.0610 DRILLED TIE BARS EACH	* 416.0620 DRILLED DOWEL BARS EACH	* 690.0250 SAWING CONCRETE LF	* SPV.0085.01 CONCRETE PAVEMENT REPAIR NON-CEMENTITIOUS LB	* SPV.0180.04 CONCRETE PAVEMENT REPAIR OVERNIGHT SY	* SPV.0180.05 CONCRETE PAVEMENT REPLACEMENT OVERNIGHT SY
79+59	-	79+61	EB USH 10 RIGHT LANE	2	x	2	--	--	--	105	--	--
79+75	-	79+77	EB USH 10 RIGHT LANE	2	x	1	--	--	--	53	--	--
81+64	-	81+66	EB USH 10 RIGHT AUXILERY LANE	2	x	2	--	--	--	105	--	--
82+20	-	82+22	EB USH 10 RIGHT LANE	0.7	x	12	--	--	--	219	--	--
82+32	-	82+34	EB USH 10 RIGHT AUXILERY LANE	0.7	x	12	--	--	--	219	--	--
82+47	-	82+49	EB USH 10 RIGHT AUXILERY LANE	0.7	x	12	--	--	--	219	--	--
82+60	-	82+62	EB USH 10 RIGHT AUXILERY LANE	0.7	x	12	--	--	--	219	--	--
82+74	-	82+76	EB USH 10 RIGHT AUXILERY LANE	0.7	x	12	--	--	--	219	--	--
82+88	-	82+90	EB USH 10 RIGHT AUXILERY LANE	0.7	x	12	--	--	--	219	--	--
83+03	-	83+05	EB USH 10 RIGHT LANE & AUXILERY LANE	0.7	x	24	--	--	--	438	--	--
83+29	-	83+31	EB USH 10 RIGHT AUXILERY LANE	0.7	x	12	--	--	--	219	--	--
83+57	-	83+59	EB USH 10 RIGHT AUXILERY LANE	0.7	x	12	--	--	--	219	--	--
83+71		83+73	EB USH 10 RIGHT AUXILERY LANE	0.7	x	12	--	--	--	219	--	--
83+85	-	83+87	EB USH 10 RIGHT AUXILERY LANE	0.7	x	12	--	--	--	219	--	--
84+13	-	84+15	EB USH 10 RIGHT AUXILERY LANE	0.7	x	12	--	--	--	219	--	--
84+26		84+28	EB USH 10 RIGHT AUXILERY LANE	0.7	x	12	--	--	--	219	--	--
84+40	-	84+42	EB USH 10 RIGHT AUXILERY LANE	0.7	x	12	--	--	--	219	--	--
84+67	-	84+69	EB USH 10 RIGHT AUXILERY LANE	0.7	x	12	--	--	--	219	--	--
84+95	-	84+97	EB USH 10 RIGHT AUXILERY LANE	0.7	x	12	--	--	--	219	--	--
85+20	-	85+22	EB USH 10 RIGHT AUXILERY LANE	2	x	2	--	--	--	105	--	--
85+42	-	85+44	EB USH 10 RIGHT LANE	2	x	2	--	--	--	105	--	--
85+50	-	85+52	EB USH 10 RIGHT AUXILERY LANE	2	x	2	--	--	--	105	--	--
86+12	-	86+14	EB USH 10 RIGHT AUXILERY LANE	2	x	2	--	--	--	105	--	--
87+06	-	87+08	USH 10 MEDIAN	2	x	2	--	--	--	105	--	--
87+24	-	87+26	USH 10 MEDIAN	2	x	2	--	--	--	105	--	--
87+25	-	87+27	USH 10 MEDIAN	2	x	2	--	--	--	105	--	--
87+29	-	87+31	USH 10 MEDIAN	0.7	x	12	--	--	--	219	--	--
87+31	-	87+43	USH 10 MEDIAN	12	x	0.7	--	--	--	219	--	--
87+36	-	87+40	USH 10 MEDIAN	4	x	2	--	--	--	209	--	--
87+47	-	87+53	USH 10 MEDIAN	6	x	15	4	18	42	--	10	--
87+49	-	87+50	EB USH 10 RIGHT LANE	2	x	2	--	--	--	105	--	--
87+53	-	87+55	USH 10 MEDIAN	2	x	2	--	--	--	105	--	--
87+60	-	87+66	EB USH 10 RIGHT LANE	6	x	1	--	--	--	157	--	--
88+07	-	88+09	EB USH 10 RIGHT LANE	2	x	2	--	--	--	105	--	--
88+07	-	88+09	EB USH 10 RIGHT LANE	2	x	2	--	--	--	105	--	--
				SUBTOTAL			4	18	42	5945	10	0

* ADDITIONAL QUANTITES LISTED ELSEWHERE

ALL ITEMS ARE CATEGORY 0010 UNLESS OTHERWISE SPECIFIED.

3

3

CONCRETE REPAIR AND REPLACEMENT SUMMARY (STAGE 5)

STATION - STATION	LOCATION	AREA L	x	W	* 416.0610 DRILLED TIE BARS EACH	* 416.0620 DRILLED DOWEL BARS EACH	* 690.0250 SAWING CONCRETE LF	* SPV.0085.01 CONCRETE PAVEMENT REPAIR NON-CEMENTITIOUS LB	* SPV.0180.04 CONCRETE PAVEMENT REPAIR OVERNIGHT SY	* SPV.0180.05 CONCRETE PAVEMENT REPLACEMENT OVERNIGHT SY
88+44 - 88+45	EB USH 10 RIGHT LANE	1	x	3	--	--	--	79	--	--
88+57 - 88+63	EB USH 10 RIGHT LANE	6	x	0.7	--	--	--	110	--	--
88+94 - 88+96	EB USH 10 RIGHT LANE	2	x	2	--	--	--	105	--	--
92+91 - 92+92	EB USH 10 RIGHT LANE	0.7	x	12	--	--	--	219	--	--
92+89 - 92+95	EB USH 10 RIGHT LANE	6	x	0.7	--	--	--	110	--	--
93+04 - 93+05	EB USH 10 RIGHT LANE	1	x	1	--	--	--	27	--	--
93+56 - 93+57	EB USH 10 RIGHT LANE	1	x	1	--	--	--	27	--	--
93+75 - 93+77	EB USH 10 RIGHT LANE	2	x	2	--	--	--	105	--	--
93+86 - 93+88	EB USH 10 RIGHT LANE	2	x	1	--	--	--	53	--	--
93+99 - 64+02	EB USH 10 RIGHT LANE	6	x	0.7						
94+56 - 94+91	EB USH 10 RIGHT LANE	35	x	0.7	--	--	--	638	--	--
94+61 - 94+63	EB USH 10 RIGHT LANE	0.7	x	12	--	--	--	219	--	--
95+25 - 95+31	EB USH 10 RIGHT LANE	6	x	0.7	--	--	--	110	--	--
95+57 - 95+59	EB USH 10 RIGHT LANE	0.7	x	12	--	--	--	219	--	--
95+69 - 95+71	EB USH 10 RIGHT LANE	0.7	x	12	--	--	--	219	--	--
95+93 - 95+94	EB USH 10 RIGHT LANE	0.7	x	12	--	--	--	219	--	--
95+99 - 96+00	EB USH 10 RIGHT LANE	0.7	x	10	--	--	--	183	--	--
96+75 - 96+81	EB USH 10 RIGHT TURN LANE	6	x	5	2	8	24	--	4	--
97+23 - 97+29	EB USH 10 RIGHT TURN LANE	6	x	11	4	16	34	--	8	--
97+75 - 97+97	EB USH 10 RIGHT TURN LANE	22	x	12	14	16	68	--	--	30
98+07 - 98+13	EB USH 10 RIGHT TURN LANE	6	x	12	4	16	36	--	8	--
98+19 - 98+20	EB USH 10 RIGHT LANE	1	x	2	--	--	--	53	--	--
98+25 - 98+31	EB USH 10 RIGHT TURN LANE	6	x	12	4	16	36	--	8	--
98+41 - 98+43	EB USH 10 RIGHT LANE	2	x	4	--	--	--	209	--	--
98+49 - 98+50	EB USH 10 RIGHT TURN LANE	0.7	x	12	--	--	--	219	--	--
98+61 - 98+62	EB USH 10 RIGHT TURN LANE	0.7	x	12	--	--	--	219	--	--
98+72 - 98+78	EB USH 10 RIGHT LANE	6	x	12	4	16	36	--	8	--
98+85 - 98+86	EB USH 10 RIGHT TURN LANE	0.7	x	12	--	--	--	219	--	--
99+21 - 99+27	EB USH 10 RIGHT TURN LANE	6	x	16	4	20	44	--	11	--
99+53 - 99+55	EB USH 10 RIGHT LANE	0.7	x	12	--	--	--	219	--	--
99+77 - 99+78	EB USH 10 RIGHT LANE	1	x	2	--	--	--	53	--	--
101+32 - 101+34	EB USH 10 RIGHT LANE	0.7	x	12	--	--	--	219	--	--
101+62 - 101+64	EB USH 10 RIGHT LANE	2	x	3	--	--	--	157	--	--
102+07 - 102+13	EB USH 10 RIGHT TURN LANE	4	x	6	2	8	24	--	3	--
102+23 - 102+26	EB USH 10 RIGHT LANE	4	x	4	--	--	--	417	--	--
		SUBTOTAL			38	116	302	4626	50	30

* ADDITIONAL QUANTITES LISTED ELSEWHERE

ALL ITEMS ARE CATEGORY 0010 UNLESS OTHERWISE SPECIFIED.

3

CONCRETE REPAIR AND REPLACEMENT SUMMARY (STAGE 5)

STATION - STATION	LOCATION	AREA L	x	AREA W	* 416.0610 DRILLED TIE BARS EACH	* 416.0620 DRILLED DOWEL BARS EACH	* 690.0250 SAWING CONCRETE LF	* SPV.0085.01 CONCRETE PAVEMENT REPAIR NON-CEMENTITIOUS LB	* SPV.0180.04 CONCRETE PAVEMENT REPAIR OVERNIGHT SY	* SPV.0180.05 CONCRETE PAVEMENT REPLACEMENT OVERNIGHT SY
102+83 - 102+85	EB USH 10 RIGHT LANE	2	x	4	--	--	--	209	--	--
103+31 - 103+34	EB USH 10 RIGHT LANE	3	x	3	--	--	--	235	--	--
103+73 - 103+74	EB USH 10 RIGHT LANE	0.7	x	12	--	--	--	219	--	--
UNDISTRIBUTED					4	13	34	2809	6	3
		TOTAL			46	147	378	14043	66	33

* ADDITIONAL QUANTITES LISTED ELSEWHERE

ALL ITEMS ARE CATEGORY 0010 UNLESS OTHERWISE SPECIFIED.

CONCRETE REPAIR AND REPLACEMENT SUMMARY (STAGE 6)

STATION - STATION	LOCATION	AREA L	x	W	* 416.0610 DRILLED TIE BARS EACH	* 416.0620 DRILLED DOWEL BARS EACH	* 690.0250 SAWING CONCRETE LF	* SPV.0085.01 CONCRETE PAVEMENT REPAIR NON-CEMENTITIOUS LB	* SPV.0180.04 CONCRETE PAVEMENT REPAIR OVERNIGHT SY
79+43 - 79+44	EB USH 10 LEFT LANE	0.7	x	12	--	--	--	219	--
80+78 - 80+80	EB USH 10 LEFT TURN LANE	2	x	2	--	--	--	105	--
80+84 - 80+85	EB USH 10 LEFT TURN LANE	1	x	1	--	--	--	27	--
80+85 - 80+86	EB USH 10 LEFT LANE	0.7	x	12	--	--	--	219	--
80+90 - 80+91	EB USH 10 LEFT TURN LANE	1	x	1	--	--	--	27	--
81+09 - 81+11	EB USH 10 LEFT TURN LANE	2	x	2	--	--	--	105	--
81+15 - 81+16	EB USH 10 LEFT LANE	1	x	1	--	--	--	27	--
82+13 - 82+15	EB USH 10 LEFT LANE	2	x	2	--	--	--	105	--
88+25 - 88+27	EB USH 10 LEFT LANE	2	x	2	--	--	--	105	--
88+57 - 89+22	EB USH 10 LEFT TURN LANE	65	x	0.7	--	--	--	1185	--
88+69 - 88+75	EB USH 10 LEFT LANE	6	x	0.7	--	--	--	110	--
88+82 - 88+88	EB USH 10 LEFT TURN LANE	6	x	6	--	--	--	938	--
88+94 - 89+00	EB USH 10 LEFT TURN LANE	6	x	2	--	--	--	313	--
88+99 - 89+01	EB USH 10 LEFT LANE	2	x	2	--	--	--	105	--
89+10 - 89+22	EB USH 10 LEFT LANE	16	x	0.7	--	--	--	292	--
92+91 - 91+92	EB USH 10 LEFT LANE	0.7	x	12	--	--	--	219	--
93+03 - 93+05	EB USH 10 LEFT LANE	2	x	2	--	--	--	105	--
93+23 - 93+25	EB USH 10 LEFT LANE	2	x	2	--	--	--	105	--
94+30 - 94+31	EB USH 10 LEFT LANE	1	x	1	--	--	--	27	--
94+45 - 94+47	EB USH 10 LEFT LANE	2	x	2	--	--	--	105	--
94+72 - 94+73	EB USH 10 LEFT LANE	1	x	1	--	--	--	27	--
94+77 - 94+78	EB USH 10 LEFT LANE	0.7	x	12	--	--	--	219	--
95+63 - 95+85	IH 39 NB OFF RAMP	0.7	x	25	--	--	--	456	--
95+77 - 95+79	EB USH 10 LEFT LANE	0.7	x	12	--	--	--	219	--
98+89 - 98+91	EB USH 10 LEFT LANE	0.7	x	12	--	--	--	219	--
97+00 - 97+04	EB USH 10 LEFT LANE	4	x	1	--	--	--	105	--
97+21 - 97+25	EB USH 10 LEFT LANE	4	x	1	--	--	--	105	--
97+36 - 97+39	EB USH 10 LEFT LANE	3	x	1	--	--	--	79	--
97+53 - 97+56	EB USH 10 LEFT LANE	3	x	1	--	--	--	79	--
97+55 - 97+56	EB USH 10 LEFT LANE	1	x	3	--	--	--	79	--
97+81 - 97+82	EB USH 10 LEFT LANE	1	x	3	--	--	--	79	--
98+01 - 98+03	EB USH 10 LEFT LANE	2	x	2	--	--	--	105	--
98+49 - 98+51	EB USH 10 LEFT TURN LANE	0.7	x	12	--	--	--	219	--
98+72 - 98+78	EB USH 10 LEFT LANE	6	x	12	4	16	36	--	8
99+19 - 99+25	EB USH 10 LEFT LANE	6	x	12	4	16	36	--	8
101+32 - 101+34	EB USH 10 LEFT LANE	0.7	x	12	--	--	--	219	--
UNDISTRIBUTED					1	3	7	1663	2
	TOTAL				9	35	79	8315	18

* ADDITIONAL QUANTITES LISTED ELSEWHERE

ALL ITEMS ARE CATEGORY 0010 UNLESS OTHERWISE SPECIFIED.

3

CONCRETE SIDEWALK ITEMS

LOCATION	STAGE	STATION - STATION	OFFSET	204.0100 REMOVING PAVEMENT (SY)	204.0110 REMOVING ASPHALTIC SURFACE (SY)	204.0155 REMOVING CONCRETE SIDEWALK (SY)	* 416.0610 DRILLED TIE BARS (EA)	465.0105 ASPHALTIC SURFACE (TON)	SPV.0090.03 CONCRETE CURB PEDESTRIAN HES (LF)	SPV.0165.01 CONCRETE SIDEWALK HES 4-INCH (SF)	602.0505 CURB RAMP DETECTABLE WARNING FIELD YELLOW (SF)	602.2400 CONCRETE SAFETY ISLAND (SF)	SPV.0165.02 CONCRETE MEDIAN SLOPED NOSE HES (SF)	* 690.0250 SAWING CONCRETE (LF)	644.1420.S TEMPORARY PEDESTRIAN SURFACE PLYWOOD (SF)	644.1601.S TEMPORARY CURB RAMP (EA)
USH 10	1	143+84 - 143+97	LT	--	--	4	--	--	--	36	--	--	--	6	--	--
		150+02 - 150+08	LT	--	--	2	--	--	--	18	--	--	--	6	--	--
	2	126+47 - 126+63	LT	--	--	--	--	--	15	95	8	--	--	--	--	--
		126+50 - 126+69	RT	--	--	--	--	--	19	127	8	--	--	--	--	--
		132+08 - 132+27	RT	--	--	9	--	--	25	55	8	--	--	5	30	1
		132+85 - 133+04	RT	--	--	9	--	--	25	55	8	--	--	5	30	1
	3	99+52 - 99+74	LT	5	6	--	10	1	--	--	--	--	5	52	--	--
		100+28 - 100+48	LT	25	--	--	25	--	--	--	16	220	18	77	--	--
		100+42 - 100+64	LT	--	--	--	--	--	--	202	8	--	--	--	--	--
	5	89+92 - 90+43	RT	--	--	33	--	--	--	290	--	--	--	13	--	--
		92+73 - 93+10	RT	--	--	19	--	--	--	173	--	--	--	11	--	--
		99+34 - 99+51	RT	--	--	11	--	--	--	97	8	--	--	9	30	1
		99+40 - 99+75	RT	26	--	--	30	--	--	--	16	234	7	88	--	--
		100+28 - 100+48	RT	56	--	--	30	--	--	--	24	500	10	93	--	--
		101+06 - 101+24	RT	--	--	7	--	--	23	58	8	--	3	6	30	1
	6	95+43 - 95+62	RT	--	--	12	--	--	--	100	8	--	--	5	30	1
		96+01 - 96+30	RT	--	--	12	--	--	22	120	8	--	--	5	30	1
		TOTAL:		112	6	118	95	1	129	1426	128	954	43	381	180	6

*ADDITIONAL QUANTITIES LISTED ELSEWHERE

ALL ITEMS ARE CATEGORY 0010 UNLESS OTHERWISE SPECIFIED.

3

DRIVEWAY RELOCATION ITEMS

LOCATION	STAGE	STATION	-	STATION	204.0110 REMOVING ASPHALTIC SURFACE (SY)	305.0110 BASE AGGREGATE DENSE 3/4-INCH (TON)	416.0160 CONCRETE DRIVEWAY 6-INCH (SY)	465.0120 ASPHALTIC SURFACE DRIVEWAYS AND FIELD ENTRANCES (TON)	SPV.0060.01 GRADING AND SHAPING DRIVEWAYS (EA)	REMARKS
USH 10	2	186+06	-	186+28	--	40	12	24	1	DRIVEWAY REPLACEMENT
		187+33	-	186+65	90	--	--	--	1	DRIVEWAY REMOVAL
		189+16	-	189+48	92	--	--	--	1	DRIVEWAY REMOVAL
		192+29	-	192+51	--	30	12	19	1	DRIVEWAY REPLACEMENT
		TOTAL:			182	70	24	43	4	

DRIVEWAY REMOVAL INCLUDES PAVEMENT WITHIN RIGHT OF WAY ONLY.
*ADDITIONAL QUANTITIES LISTED ELSEWHERE

GUARDRAIL ITEMS

LOCATION	STAGE	STATION	-	STATION	OFFSET	204.0165 REMOVING GUARDRAIL (LF)	614.0370 STEEL PLATE BEAM GUARD, ENERGY ABSORBING TERMINAL (EA)	614.0400 ADJUSTING STEEL PLATE BEAM GUARD (LF)	614.0010 BARRIER SYSTEM GRADING SHAPING FINISHING (EA)	* FOR INFORMATION ONLY EXCAVATION COMMON (CY)	BORROW (CY)	SOD WATER (MGAL)	SOD LAWN (SY)	FERTILIZER FOR LAWN TURF (CWT)	PREPARTING TOPSOIL FOR LAWN TURF (SY)
USH 10	3	92+30	-	93+35	LT	50	1	57	1	--	0.5	0.11	19	1.2	19
	5	88+56	-	89+52	RT	50	1	47	1	--	0.5	0.09	16	1	16
		TOTAL:				100	2	104	2	0	1	0.2	35	2.2	35

EROSION CONTROL ITEMS

LOCATION	ROADWAY	ROADWAY	628.7005 INLET PROTECTION TYPE A (EA)	628.7015 INLET PROTECTION TYPE C (EA)	628.7555 CULVERT PIPE CHECKS (EA)
USH 10	COUNTRY CLUB DRIVE -	MAPLE BLUFF ROAD	2	15	2
	MAPLE BLUFF ROAD -	WILDWOOD DRIVE	--	40	--
	WILDWOOD DRIVE	BRILOWSKI ROAD	--	15	--
	BRILOWSKI ROAD	ELIZABETH AVENUE	--	15	--
	ELIZABETH AVENUE	BADGER ROAD	--	10	--
IH 39 NB TO STH 66 WB	USH 10	IH 39 NB	--	1	--
	UNDISTRIBUTED		1	24	1
			3	120	3

ALL ITEMS ARE CATEGORY 0010 UNLESS OTHERWISE SPECIFIED.

3

MAINTENANCE AND REPAIR OF HAUL ROADS (PROJECT)

PROJECT	618.0100 MAINTENANCE AND REPAIR OF HAUL ROADS (PROJECT) (EACH)
6290-05-75	1
TOTAL	1

MOBILIZATION

PROJECT	619.1000 MOBILIZATION (EACH)
6290-05-75	1
TOTAL	1

MOBILIZATION EROSION CONTROL

PROJECT	628.1905 MOBILIZATIONS EROSION CONTROL (EACH)	628.1910 MOBILIZATIONS EMERGENCY EROSION CONTROL (EACH)
6290-05-75	8	3
TOTAL	8	3

3

RESTORATION ITEMS

LOCATION	STAGE	STATION	-	STATION	OFFSET	624.0100 WATER (MGAL)	625.0100 TOPSOIL (SY)	628.2004 EROSION MAT CLASS I TYPE B (SY)	629.0210 FERTILIZER TYPE B (CWT)	630.0130 SEEDING MIXTURE NO. 30 (LBS)	631.0300 SOD WATER (MGAL)	631.1000 SOD LAWN (SY)	SPV.0030.01 FERTILIZER FOR LAWN TYPE TURF (CWT)	SPV.0180.01 PREPARING TOPSOIL FOR LAWN TURF (SY)
USH 10	2	115+63	-	115+68	LT	--	5	--	--	--	0.1	5	0.4	5
		126+47	-	126+63	LT	--	6	--	--	--	0.1	6	0.4	6
		126+50	-	126+69	RT	--	6	--	--	--	0.1	6	0.4	6
		132+08	-	132+27	RT	--	7	--	--	--	0.2	7	0.4	7
		132+85	-	133+04	RT	--	7	--	--	--	0.2	7	0.4	7
		136+15	-	136+30	RT	--	10	--	--	--	0.3	10	0.6	10
		157+47	-	157+62	LT	--	10	--	--	--	0.3	10	0.6	10
		186+02	-	186+34	LT	1	139	139	0.1	3	--	--	--	--
		187+26	-	187+71	LT	1	129	129	0.1	2	--	--	--	--
		189+09	-	189+54	LT	1	132	132	0.1	2	--	--	--	--
		192+24	-	192+56	LT	1	8	8	0.5	1	--	--	--	--
	3	100+42	-	100+64	LT	--	12	--	--	--	0.3	12	0.8	12
		105+10	-	105+18	LT	--	6	--	--	--	0.1	6	0.4	6
	4	86+62	-	86+90	LT	--	18	--	--	--	0.4	18	1.2	18
	5	82+16	-	85+50	RT	--	149	--	--	--	3.4	149	9.4	149
		89+92	-	90+43	RT	--	30	--	--	--	0.7	30	1.9	30
		92+73	-	93+10	RT	--	23	--	--	--	0.5	23	1.5	23
		99+40	-	99+53	RT	--	6	--	--	--	0.1	6	0.4	6
		102+07	-	102+20	RT	--	6	--	--	--	0.1	6	0.4	6
		107+50	-	107+55	RT	--	5	--	--	--	0.1	5	0.4	5
	6	95+43	-	95+64	RT	--	7	--	--	--	0.2	7	0.4	7
		95+98	-	96+30	RT	--	7	--	--	--	0.2	7	0.4	7
		UNDISTRIBUTED				1	190	110	0.2	2	1.9	80	5.1	80
					TOTAL	5	918	518	1.0	10.0	9.2	400	25.5	400

ALL ITEMS ARE CATEGORY 0010 UNLESS OTHERWISE SPECIFIED.

3

ERECTION AND REMOVAL OF TYPE II SIGNS AND SUPPORTS

SIGN NO.	SIGN CODE	W X H	637.2210 SIGNS TYPE II REFLECTIVE H (SF)	637.2215 SIGNS TYPE II REFLECTIVE H (FOLDING) (SF)	637.2230 SIGNS TYPE II REFLECTIVE F (SF)	634.0612 POSTS WOOD 4X6-INCH X 12-FT (EACH)	634.0614 POSTS WOOD 4X6-INCH X 14-FT (EACH)	634.0616 POSTS WOOD 4X6-INCH X 16-FT (EACH)	634.0618 POSTS WOOD 4X6-INCH X 18-FT (EACH)	638.2602 REMOVING SIGNS TYPE II (EACH)	638.3000 REMOVING SMALL SIGN SUPPORTS (EACH)	REMARKS
1	R1-1F	36" X 36"	--	7.46	--	--	--	--	--	1	--	
2	R1-1F	36" X 36"	--	7.46	--	--	--	--	--	1	--	
3	R4-7	24" X 30"	5.00	--	--	--	--	--	--	1	--	
4	R4-7	24" X 30"	5.00	--	--	--	--	--	--	1	--	
5	R4-7	24" X 30"	5.00	--	--	--	--	--	--	1	--	
6	J1-1	24" X 39"	6.50	--	--	--	1	--	--	1	1	
7	R7-1D	18" X 24"	3.00	--	--	--	1	--	--	1	1	
8	R1-1F	36" X 36"	--	7.46	--	--	--	--	--	1	--	
9	J3-2	48" X 57"	19.00	--	--	--	--	1	--	1	1	
10	R4-7	24" X 30"	5.00	--	--	--	--	--	--	1	--	
11	R4-7	24" X 30"	5.00	--	--	--	1	--	--	1	1	
12	J3-1	24" X 57"	9.50	--	--	--	--	1	--	1	1	
13	J3-2	48" X 57"	19.00	--	--	--	--	1	--	1	1	
14	R1-1F	36" X 36"	--	7.46	--	--	--	--	--	1	--	
15	R1-1F	36" X 36"	--	7.46	--	--	--	--	--	1	--	
16	R1-1F	36" X 36"	--	7.46	--	--	--	--	--	1	--	
17	R3-7R	30" X 30"	6.25	--	--	--	1	--	--	1	1	
18	R1-2	48" X 42"	14.00	--	--	--	--	1	--	1	1	
19	R1-1F	36" X 36"	--	7.46	--	--	--	--	--	1	--	
20	R1-1F	36" X 36"	--	7.46	--	--	--	--	--	1	--	
21	R7-1D	18" X 24"	3.00	--	--	--	--	--	--	1	--	
22	J2-2	48" X 57"	19.00	--	--	--	--	--	--	1	--	
23	D1-3	84"X48"	28.00	--	--	--	--	2	--	1	2	
24	R7-1D	18" X 24"	3.00	--	--	--	1	--	--	1	1	
25	J3-2	48" X 57"	19.00	--	--	--	--	1	--	1	1	
26	W12-1D	24" X 24"	--	--	4.00	1	--	--	--	1	1	
27	R1-2	48" X 42"	14.00	--	--	--	--	--	--	1	--	
28	R1-1F	36" X 36"	--	7.46	--	--	--	--	--	1	--	
29	R5-1	36" X 36"	9.00	--	--	--	--	1	--	1	1	
30	R5-1	36" X 36"	9.00	--	--	--	--	1	--	1	1	
31	J3-2	48" X 57"	19.00	--	--	--	--	1	--	1	1	
32	J3-2	48" X 57"	19.00	--	--	--	--	1	--	1	1	
33	W12-1D	24" X 24"	--	--	4.00	1	--	--	--	1	1	
34	R2-1	24" X 30"	5.00	--	--	--	1	--	--	1	1	
35	D1-2	96"X36"	24.00	--	--	--	--	2	--	1	2	
36	W12-1D	24" X 24"	--	--	4.00	1	--	--	--	1	1	
37	R1-2	48" X 42"	14.00	--	--	--	--	1	--	1	1	
38	R6-2R	30" X 36"	7.50	--	--	--	--	1	--	1	1	
39	J3-4	96" X 57"	38.00	--	--	--	--	2	--	1	2	
39A	J3-4	96" X 57"	38.00	--	--	--	--	2	--	1	2	
	SUBTOTAL		370.75	67.14	12.00	3	6	19	--	40	28	

ALL ITEMS ARE CATEGORY 0010 UNLESS OTHERWISE SPECIFIED.

3

ERECTION AND REMOVAL OF TYPE II SIGNS AND SUPPORTS - CONTINUED

SIGN NO.	SIGN CODE	W X H	637.2210 SIGNS TYPE II REFLECTIVE H (SF)	637.2215 SIGNS TYPE II REFLECTIVE H (FOLDING) (SF)	637.2230 SIGNS TYPE II REFLECTIVE F (SF)	634.0612 POSTS WOOD 4X6-INCH X 12-FT (EACH)	634.0614 POSTS WOOD 4X6-INCH X 14-FT (EACH)	634.0616 POSTS WOOD 4X6-INCH X 16-FT (EACH)	634.0618 POSTS WOOD 4X6-INCH X 18-FT (EACH)	638.2602 REMOVING SIGNS TYPE II (EACH)	638.3000 REMOVING SMALL SIGN SUPPORTS (EACH)	REMARKS
40	J3-1	24" X 57"	9.50	--	--	--	--	1	--	1	1	
40A	D1-3	96"X48"	32.00	--	--	--	--	2	--	1	2	
41	J2-1	24" X 57"	9.50	--	--	--	--	1	--	1	1	
42	R1-1	36" X 36"	7.46	--	--	--	1	--	--	1	1	
43	R4-7	24" X 30"	5.00	--	--	--	--	--	--	1	--	
44	R1-1F	36" X 36"	--	7.46	--	--	--	--	--	1	--	
45	W12-1D	24" X 24"	--	--	4.00	1	--	--	--	1	1	
46	R1-2	48" X 42"	14.00	--	--	--	--	1	--	1	1	
47	J2-4	96" X 57"	38.00	--	--	--	--	2	--	1	2	
48	R7-1D	18" X 24"	3.00	--	--	--	1	--	--	1	1	
49	W3-3	36" X 36"	--	--	9.00	--	--	1	--	1	1	
50	J3-4	96" X 57"	38.00	--	--	--	--	2	--	1	2	
51	J3-4	96" X 57"	38.00	--	--	--	--	2	--	1	2	
52	R4-7	24" X 30"	5.00	--	--	--	1	--	--	1	1	
53	R3-2	36" X 36"	9.00	--	--	--	--	--	--	1	--	
54	J3-1	24" X 57"	9.50	--	--	--	--	1	--	1	1	
55	R1-1	36" X 36"	7.46	--	--	--	--	1	--	1	1	
56	D1-52	108" X 24"	18.00	--	--	--	2	--	--	1	1	
57	R5-1A	42" X 30"	8.75	--	--	--	1	--	--	1	1	
58	R5-1	36" X 36"	9.00	--	--	--	--	1	--	1	1	
59	W12-1D	24" X 24"	--	--	4.00	--	--	--	--	--	--	
60	R1-2	48" X 42"	14.00	--	--	--	--	1	--	1	1	
61			--	--	--	--	--	--	--	1	--	
62	R1-1F	36" X 36"	--	7.46	--	--	--	--	--	1	--	
63	W12-1D	24" X 24"	--	--	4.00	1	--	--	--	1	1	
64	R4-7	24" X 30"	5.00	--	--	--	--	--	--	1	--	
65	R1-1	36" X 36"	7.46	--	--	--	--	1	--	1	1	
66			--	--	--	--	--	--	--	1	2	
67	D1-52	108" X 24"	18.00	--	--	--	2	--	--	1	1	
68	J3-3	72" X 57"	28.50	--	--	--	--	--	2	--	--	
69			--	--	--	--	--	--	--	1	2	
70	W3-3	36" X 36"	--	--	9.00	--	--	1	--	1	1	
71	R3-20R	24" X 36"	6.00	--	--	--	--	1	--	1	1	
72			--	--	--	--	--	--	--	1	1	
73	R2-1	30" X 36"	7.50	--	--	--	--	1	--	1	1	
74	JI-2	48" X 39"	13.00	--	--	--	--	1	--	--	--	
75	R3-9B	24" X 36"	6.00	--	--	--	--	1	--	1	1	
76	R7-1D	24" X 30"	5.00	--	--	--	1	--	--	1	1	
77	R2-1	30" X 36"	7.50	--	--	--	--	1	--	1	1	
78	R7-4D	24" X 30"	5.00	--	--	--	1	--	--	1	1	
	SUBTOTAL		384.13	14.92	30.00	2	10	23	2	37	37	

3

ALL ITEMS ARE CATEGORY 0010 UNLESS OTHERWISE SPECIFIED.

3

ERECTION AND REMOVAL OF TYPE II SIGNS AND SUPPORTS - CONTINUED

SIGN NO.	SIGN CODE	W X H	637.2210 SIGNS TYPE II REFLECTIVE H (SF)	637.2215 SIGNS TYPE II REFLECTIVE H (FOLDING) (SF)	637.2230 SIGNS TYPE II REFLECTIVE F (SF)	634.0612 POSTS WOOD 4X6-INCH X 12-FT (EACH)	634.0614 POSTS WOOD 4X6-INCH X 14-FT (EACH)	634.0616 POSTS WOOD 4X6-INCH X 16-FT (EACH)	634.0618 POSTS WOOD 4X6-INCH X 18-FT (EACH)	638.2602 REMOVING SIGNS TYPE II (EACH)	638.3000 REMOVING SMALL SIGN SUPPORTS (EACH)	REMARKS
79	R2-1	30" X 36"	7.50	--	--	--	--	1	--	1	1	
80	R2-1	30" X 36"	7.50	--	--	--	--	1	--	1	1	
81	R4-7	24" X 30"	5.00	--	--	--	1	--	--	1	1	
82	R4-7	24" X 30"	5.00	--	--	--	1	--	--	1	1	
83	R1-1	36" X 36"	7.46	--	--	--	1	--	--	1	1	
84	W12-1D	24" X 24"	--	--	4.00	--	1	--	--	1	1	
85	R4-7	24" X 30"	5.00	--	--	--	1	--	--	1	1	
86	R4-7	24" X 30"	5.00	--	--	--	1	--	--	--	--	
87	R2-1	30" X 36"	7.50	--	--	--	--	1	--	1	1	
88	R7-4D	24" X 30"	5.00	--	--	--	1	--	--	1	1	
89	R2-1	30" X 36"	7.50	--	--	--	--	1	--	1	1	
90	J1-1	24" X 39"	6.50	--	--	--	--	1	--	1	1	
91	R7-2R	24" X 30"	5.00	--	--	--	1	--	--	1	1	
92	R4-7	24" X 30"	5.00	--	--	--	1	--	--	1	1	
93	R2-1	30" X 36"	7.50	--	--	--	--	1	--	1	1	
94	R3-20L	24" X 36"	6.00	--	--	--	--	1	--	1	1	
95			--	--	--	--	--	--	--	--	--	EXISTING TO REMAIN
96	R1-1F	36" X 36"	--	7.46	--	--	--	--	--	1	--	
97			--	--	--	--	--	--	--	--	--	EXISTING TO REMAIN
98	R1-1F	36" X 36"	--	7.46	--	--	--	--	--	1	--	
99	R4-7	24" X 30"	5.00	--	--	--	--	--	--	1	--	
99 A	R3-4	24" X 24"	4.00	--	--	--	--	--	--	1	--	
100	R1-1F	36" X 36"	--	7.46	--	--	--	--	--	1	--	
101	R1-1F	36" X 36"	--	7.46	--	--	--	--	--	1	--	
102			--	--	--	--	--	--	--	--	--	EXISTING TO REMAIN
103	J13-1	24" X 45"	7.50	--	--	--	--	1	--	1	1	
104	R3-20L	24" X 36"	6.00	--	--	--	--	1	--	1	1	
105	R2-1	30" X 36"	7.50	--	--	--	--	1	--	1	1	
106	R1-1	36" X 36"	7.46	--	--	--	--	1	--	1	1	
107	W3-3	36" X 36"	--	--	9.00	--	--	1	--	1	1	
108	R6-2R	24" X 30"	5.00	--	--	--	1	--	--	1	1	
109	J13-1	24" X 45"	7.50	--	--	--	--	1	--	1	1	
110	R1-1F	36" X 36"	--	7.46	--	--	--	--	--	1	--	
111	R4-7	24" X 30"	5.00	--	--	--	--	--	--	1	--	
112	R1-1F	36" X 36"	--	7.46	--	--	--	--	--	1	--	
113	R4-7	24" X 30"	5.00	--	--	--	--	--	--	1	--	
113 A	R3-4	36" X 36"	9.00	--	--	--	--	--	--	1	--	
114	W12-1D	24" X 24"	--	--	4.00	--	--	--	--	1	--	
115	W12-1D	24" X 24"	--	--	4.00	--	--	--	--	1	--	
116			--	--	--	--	--	--	--	--	--	EXISTING TO REMAIN
	SUBTOTAL		161.42	44.76	21.00	--	10	13	--	35	22	

3

ALL ITEMS ARE CATEGORY 0010 UNLESS OTHERWISE SPECIFIED.

3

ERECTION AND REMOVAL OF TYPE II SIGNS AND SUPPORTS - CONTINUED

SIGN NO.	SIGN CODE	W X H	637.2210 SIGNS TYPE II REFLECTIVE H (SF)	637.2215 SIGNS TYPE II REFLECTIVE H (FOLDING) (SF)	637.2230 SIGNS TYPE II REFLECTIVE F (SF)	634.0612 POSTS WOOD 4X6-INCH X 12-FT (EACH)	634.0614 POSTS WOOD 4X6-INCH X 14-FT (EACH)	634.0616 POSTS WOOD 4X6-INCH X 16-FT (EACH)	634.0618 POSTS WOOD 4X6-INCH X 18-FT (EACH)	638.2602 REMOVING SIGNS TYPE II (EACH)	638.3000 REMOVING SMALL SIGN SUPPORTS (EACH)	REMARKS
117	R2-1	30" X 36"	7.50	--	--	--	--	1	--	1	1	
118			--	--	--	--	--	--	--	--	--	EXISTING TO REMAIN
119	R3-20R	24" X 36"	6.00	--	--	--	--	1	--	1	1	
120	J1-1	24" X 39"	6.50	--	--	--	--	1	--	1	1	
121	R6-2R	30" X 36"	7.50	--	--	--	--	1	--	1	1	
122	R1-1	36" X 36"	7.46	--	--	--	--	1	--	1	1	
123	R3-20L	24" X 36"	6.00	--	--	--		1	--	1	1	
124			--	--	--	--	--	--	--	--	--	EXISTING TO REMAIN
125	R1-1	36" X 36"	7.46	--	--	--	--	1	--	1	1	
126	R1-1F	36" X 36"	--	7.46	--	--	--	--	--	1	--	
126 A			--	--	--	--	--	--	--	--	--	EXISTING TO REMAIN
127	R1-1F	36" X 36"	--	7.46	--	--	--	--	--	1	--	
128	W12-1D	24" X 24"	--	--	4.00	1	--	--	--	1	1	
129	R4-7	24" X 30"	5.00	--	--	--	--	--	--	1	--	
130			--	--	--	--	--	--	--	--	--	EXISTING TO REMAIN
131	R1-1F	36" X 36"	--	7.46	--	--	--	--	--	1	--	
132	R1-1F	36" X 36"	--	7.46	--	--	--	--	--	1	--	
133			--	--	--	--	--	--	--	--	--	EXISTING TO REMAIN
134			--	--	--	--	--	--	--	--	--	EXISTING TO REMAIN
135	R3-20L	24" X 36"	6.00	--	--	--	--	1	--	1	1	
136	W3-3	36" X 36"	--	--	9.00	--	--	1	--	1	1	
137	R2-1	30" X 36"	7.50	--	--	--	--	1	--	1	1	
138	R6-2R	30" X 36"	7.50	--	--	--	--	1	--	1	1	
139	R1-1	36" X 36"	7.46	--	--	--	--	1	--	1	1	
140	R2-1	30" X 36"	7.50	--	--	--	--	1	--	1	1	
141	R1-1F	36" X 36"	--	7.46	--	--	--	--	--	1	--	
142	R1-1F	36" X 36"	--	7.46	--	--	--	--	--	1	--	
143	R4-7	24" X 30"	5.00	--	--	--	--	--	--	1	--	
144	R1-1F	36" X 36"	--	7.46	--	--	--	--	--	1	--	
145	R4-7	24" X 30"	5.00	--	--	--	--	--	--	1	--	
146	R1-1	36" X 36"	7.46	--	--	--	--	1	--	1	1	
147	R2-1	30" X 36"	7.50	--	--	--	--	1	--	1	1	
148	R3-8V	72" X 30"	15.00	--	--	--	2	--	--	1	2	
149	R3-20L	24" X 36"	6.00	--	--	--	--	1	--	1	1	
149A	W11-2	36" X 36"	--	--	9.00	--	--	--	--	--	--	
149B	W16-7R	24" X 12"	--	--	2.00	--	--	--	--	--	--	
150	R1-1	36" X 36"	7.46	--	--	--	--	1	--	1	1	
151	R1-1	36" X 36"	7.46	--	--	--	--	1	--	1	1	
152	W12-1D	24" X 24"	--	--	4.00	1	--	--	--	1	1	
153	R2-1	24" X 30"	5.00	--	--	--	--	1	--	1	1	
	SUBTOTAL		155.26	52.22	28.00	2	2	19	--	32	23	

3

ALL ITEMS ARE CATEGORY 0010 UNLESS OTHERWISE SPECIFIED.

ERECTION AND REMOVAL OF TYPE II SIGNS AND SUPPORTS - CONTINUED

SIGN NO.	SIGN CODE	W X H	637.2210 SIGNS TYPE II REFLECTIVE H (SF)	637.2215 SIGNS TYPE II REFLECTIVE H (FOLDING) (SF)	637.2230 SIGNS TYPE II REFLECTIVE F (SF)	634.0612 POSTS WOOD 4X6-INCH X 12-FT (EACH)	634.0614 POSTS WOOD 4X6-INCH X 14-FT (EACH)	634.0616 POSTS WOOD 4X6-INCH X 16-FT (EACH)	634.0618 POSTS WOOD 4X6-INCH X 18-FT (EACH)	638.2602 REMOVING SIGNS TYPE II (EACH)	638.3000 REMOVING SMALL SIGN SUPPORTS (EACH)	REMARKS
153A	W11-2	36" X 36"	--	--	9.00	--	--	--	--	--	--	
153B	W16-9P	24" X 12"	--	--	2.00	--	--	--	--	--	--	
154	R3-20R	24" X 36"	6.00	--	--	--	--	1	--	1	1	
155	R3-20L	24" X 36"	6.00	--	--	--	--	1	--	1	1	
156			--	--	--	--	--	--	--	1	1	
157	R2-1	24" X 36"	12.00	--	--	--	--	1	--	1	1	
158	R3-8V	72" X 30"	15.00	--	--	--	2	--	--	1	2	
159	R3-20R	24" X 36"	6.00	--	--	--	--	1	--	1	1	
160	R59-51	36" X 36"	9.00	--	--	--	--	1	--	1	1	
160A	W11-2	36" X 36"	--	--	9.00	--	--	--	--	--	--	
160B	W16-7L	24" X 12"	--	--	2.00	--	--	--	--	--	--	
161	R4-7	24" X 30"	5.00	--	--	--	1	--	--	1	1	
162	R4-7	24" X 30"	5.00	--	--	--	1	--	--	1	1	
163	R4-7	24" X 30"	5.00	--	--	--	1	--	--	1	1	
164	R1-1	36" X 36"	7.46	--	--	--	--	1	--	1	1	
165	D2-2	96" X 36"	24.00	--	--	--	--	2	--	1	2	
166	J4-1	24" X 36"	6.00	--	--	--	--	1	--	1	1	
167	R2-1	36" X 48"	12.00	--	--	--	--	1	--	1	1	
	SUBTOTAL		118.46	--	22.00	--	5	10	--	14	16	
		TOTAL	1,190.02	179.04	113.00	7	33	84	2	158	126	

TRAFFIC CONTROL (PROJECT)

PROJECT	643.0100 TRAFFIC CONTROL (PROJECT) (EACH)
6290-05-75	1
TOTAL	1

FIELD FACILITIES

PROJECT	642.5201 FIELD OFFICE TYPE C (EACH)
6290-05-75	1
TOTAL	1

TRAFFIC CONTROL DETOUR (PROJECT)

PROJECT	643.2000 TRAFFIC CONTROL DETOUR (PROJECT) (EACH)
6290-05-75	1
TOTAL	1

ALL ITEMS ARE CATEGORY 0010 UNLESS OTHERWISE SPECIFIED.

3

TRAFFIC CONTROL

LOCATION	STAGE	DAYS	DRUMS (EA)	643.0300 TRAFFIC CONTROL DRUMS (DAY)	BARRICADES TYPE III (EA)	643.0420 TRAFFIC CONTROL BARRICADES TYPE III (DAY)	TRAFFIC CONTROL WARNING LIGHTS TYPE A (EA)	643.0705 TRAFFIC CONTROL WARNING LIGHTS TYPE A (DAY)	TRAFFIC CONTROL WARNING LIGHTS TYPE C (EA)	643.0715 TRAFFIC CONTROL WARNING LIGHTS TYPE C (DAY)	TRAFFIC CONTROL ARROW BOARDS (EA)	643.0800 TRAFFIC CONTROL ARROW BOARDS (DAY)	TRAFFIC CONTROL SIGNS (EA)	643.0900 TRAFFIC CONTROL SIGNS (DAY)	TRAFFIC CONTROL SIGNS PCMS (EA)	643.1050 TRAFFIC CONTROL SIGNS PCMS (DAY)	649.0400 TEMPORARY PAVEMENT MARKING REMOVABLE TAPE 4-INCH WHITE (LF)	YELLOW (LF)
USH 10	1/1A	6	550	3,300	40	240	75	450	45	270	1	6	45	270	7	42		980
USH 10	2/2A	12	690	8,280	40	480	80	960	85	1,020	3	36	55	660	7	84	980	--
USH 10	3/3A	6	175	1,050	14	84	39	234	17	102	--	--	36	216	7	42	--	--
USH 10	4	6	203	1,218	14	84	23	138	22	132	--	--	25	150	7	42	--	--
USH 10	5	6	201	1,206	14	84	25	150	11	66	--	--	28	168	7	42	--	--
USH 10	6	6	181	1,086	9	54	18	108	8	48	--	--	22	132	7	42	--	--
UNDISTRIBUTED				8,070		513		1,020		819		21		798		147	490	490
	TOTAL			24,210		1539		3060		2457		63		2394		441	1,470	1,470
																	2,940	

3

TRAFFIC CONTROL DETOUR SIGNS

LOCATION	STAGE	643.1000 TRAFFIC CONTROL SIGNS FIXED MESSAGE (SF)	SIGNS (EA)	STAGE LENGTH (DAYS)	643.3000 TRAFFIC CONTROL DETOUR SIGNS (DAYS)
PROJECT	3	108	148	6	888
	4	--	182	6	1,092
	5	--	117	6	702
	6	--	20	6	120
	UNDISTRIBUTED				770
	TOTAL	108	467		3,572

TRAFFIC CONTROL COVERING SIGNS

STAGE	643.0910 TRAFFIC CONTROL COVERING SIGNS TYPE 1 EACH	NUMBER OF CYCLES	NUMBER OF SIGNS	643.0920 TRAFFIC CONTROL COVERING SIGNS TYPE II EACH	NUMBER OF CYCLES	NUMBER OF SIGNS
1	--	--	--	--	--	--
2	--	--	--	--	--	--
3	4	4	1	24	4	6
4	4	4	1	32	4	8
5	4	4	1	32	4	8
6	--	4	--	4	4	1
UNDISTRIBUTED	6			46		
TOTAL	18			92		

PORTABLE CHANGEABLE MESSAGE SIGN CELLULAR COMMUNICATIONS

STAGE	# OF PCMS	DAYS	SPV.0045.01 PORTABLE CHANGEABLE MESSAGE SIGN (PCMS) CELLULAR COMMUNICATIONS (DAY)
1/1A	7	6	42
2/2A	7	12	84
3	7	6	42
4	7	6	42
5	7	6	42
6	7	6	42
UNDISTRIBUTED			35
TOTAL			329

ALL ITEMS ARE CATEGORY 0010 UNLESS OTHERWISE SPECIFIED.

PAVEMENT MARKING

LOCATION	STATION -	STATION	646.0106 PAVEMENT MARKING EPOXY 4-INCH WHITE (LF)	3 FT SKIPS WHITE (LF)	12.5 FT SKIPS WHITE (LF)	12.5 FT SKIPS YELLOW (LF)	YELLOW (LF)	646.0126 PAVEMENT MARKING EPOXY 8-INCH WHITE (LF)	647.0566 PAVEMENT MARKING, STOP LINE, EPOXY 18-INCH WHITE (LF)	647.0156 PAVEMENT MARKING ARROWS EPOXY TYPE 1 WHITE (EA)	647.0166 PAVEMENT MARKING ARROWS EPOXY TYPE 2 WHITE (EA)	647.0176 PAVEMENT MARKING ARROWS EPOXY TYPE 3 WHTIE (EA)	647.0356 PAVEMENT MARKING WORDS EPOXY WHITE (EA)	647.0456 PAVEMENT MARKING CURB EPOXY YELLOW (LF)	647.0606 PAVEMENT MARKING ISLAND NOSE EPOXY YELLOW (EA)	647.0766 PAVEMENT MARKING, CROSSWALK, EPOXY 6-INCH WHITE (LF)
USH 10 EB	79+00	81+00	--	--	38	--	116	215	34	--	2	--	--	40	1	--
USH 10 WB	79+00	81+00	93	--	38	--	116	--	--	--	--	--	--	65	3	--
USH 10 EB & WB	80+59	81+85	--	--	--	--	--	72	77	1	3	1	--	--	--	387
USH 10 EB	81+00	87+50	--	--	125	--	541	318	24	--	2	--	1	110	1	--
USH 10 WB	81+00	87+50	582	--	150	--	479	560	44	--	5	--	3	90	10	--
USH 10 EB & WB	86+80	88+33	--	--	--	--	--	--	50	--	--	--	--	--	--	170
USH 10 EB	87+50	95+50	--	--	188	--	729	501	--	--	4	--	3	91	4	--
USH 10 WB	87+50	95+50	687	--	200	--	728	463	36	--	4	--	3	190	1	--
USH 10 EB	95+50	100+00	--	--	75	--	359	438	34	--	4	--	2	157	3	--
USH 10 WB	95+50	100+00	265	21	100	--	358	--	--	--	2	--	1	219	7	--
USH 10 EB & WB	95+63	96+12	446	--	--	--	511	--	42	--	--	--	--	--	--	89
USH 10 EB & WB	99+48	101+72	228	--	--	--	--	328	94	2	4	--	1	--	--	416
USH 10 EB	100+00	127+00	--	--	625	469	2,462	--	--	--	5	--	1	227	4	--
USH 10 WB	100+00	127+00	--	105	625	469	2,461	399	34	--	7	--	2	209	9	--
USH 10 EB & WB	126+60		--	--	25	--	--	62	43	--	--	--	--	--	--	172
USH 10 EB	127+00	140+00	--	--	313	63	1,186	500	44	--	6	--	3	104	2	--
USH 10 WB	127+00	140+00	--	--	300	63	1,186	130	--	--	3	--	--	274	5	--
USH 10 EB & WB	139+65	150+00	--	27	--	--	--	484	165	1	3	--	4	--	--	792
USH 10 EB	140+00	153+50	--	--	313	--	1,221	604	37	--	4	--	3	220	5	
USH 10 WB	140+00	153+50	--	--	313	--	1,223	300	34	--	3	--	2	148	4	69
USH 10 EB & WB	153+05	154+46	--	--	--	--	--	304	88	2	4	--	6	--	--	762
USH 10 EB	153+50	167+00	--	--	300	--	1,172	450	--	--	4	--	2	115	4	--
USH 10 WB	153+50	167+00	--	--	300	--	1,170	305	34	--	2	--	1	118	7	--
USH 10 EB & WB	166+00	166+42	--	--	--	--	--	--	58	--	--	--	--	--	--	394
USH 10 EB	167+00	171+00	446	--	113	--	359	--	--	--	--	--	--	16	1	--
USH 10 WB	167+00	171+00	491	--	113	--	359	702	--	--	6	--	4	16	--	--
USH 10 WB	170+92	172+42	--	39	--	--	--	--	--	--	--	--	--	--	--	--
		TOTAL	3,145	192	4251	1,064	16,736	7,135	972	6	77	1	42	2,409	71	3,251
					25,388											

*ADDITIONAL QUANTITIES LISTED ELSEWHERE

3

ALL ITEMS ARE CATEGORY 0010 UNLESS OTHERWISE SPECIFIED.

3

SIGNAL ADJUSTMENT & INSTALLATION ITEMS

INTERSECTION	STATION	OFFSET	652.0225 CONDUIT RIGID NONMETALLIC SCHEDULE 40 2-INCH (LF)	* 652.0700.S INSTALL CONDUIT INTO EXISTING ITEM (EACH)	653.0900 ADJUSTING PULL BOXES (EA)	654.0101 CONCRETE BASE TYPE 1 (EA)	657.0100 PEDESTAL BASES (EA)	657.0405 TRAFFIC SIGNAL STANDARDS ALUMINUM 3.5 FT (EA)	Remarks
MAPLE BLUFF ROAD	99+57.3	29.1' RT	--	--	1	--	--	--	EXISTING PULL BOX
	100+37.4	35.7' RT	16	--	--	1	1	1	NEW PUSH BUTTON STANDARD
	100+37.8	51.9' RT		1	1	--	--	--	EXISTING PULL BOX
	100+42.1	57.9' LT	--	--	1	--	--	--	EXISTING PULL BOX
WILDWOOD DRIVE	126+52.2	62.0' LT	--	--	1	--	--	--	EXISTING PULL BOX
BRILOWSKI ROAD	143+90.2	3.2' LT	--	--	1	--	--	--	EXISTING PULL BOX
ELIZABETH AVENUE	150+04.8	15.5' LT	--	--	1	--	--	--	EXISTING PULL BOX
			16	1	6	1	1	1	

*ADDITIONAL QUANTITIES LISTED ELSEWHERE

CONSTRUCTION STAKING

PROJECT	650.9910 CONSTRUCTION STAKING SUPPLEMENTAL CONTROL (PROJECT) (LS)
6290-05-75	1
	1

3

REMOVING PAVEMENT MARKINGS

LOCATION	STATION	-	STATION	646.0600 REMOVING PAVEMENT MARKINGS (LF)	647.0955 REMOVING PAVEMENT MARKINGS ARROWS (EA)	647.0965 REMOVING PAVEMENT MARKINGS WORDS (EA)
USH 10	79+00	-	87+50	1491	14	4
USH 10	87+50	-	99+50	1813	8	6
USH 10	95+50	-	100+00	1131	6	3
USH 10	100+00	-	127+00	8008	18	4
USH 10	127+00	-	140+00	4134	9	3
USH 10	140+00	-	153+50	4588	11	9
USH 10	153+50	-	167+00	6776	12	9
USH 10	167+00	-	172+42	2654	6	4
			TOTAL	30,595	84	42

LOOP DETECTOR REPLACEMENT ITEMS

INTERSECTION	STATION	OFFSET	LOOP NUMBER	TURNS	* 652.0700.S INSTALL CONDUIT INTO EXISTING ITEM (EACH)	652.0800 CONDUIT LOOP DETECTOR (LF)	655.0700 LOOP DETECTOR LEAD IN CABLE (LF)	655.0800 LOOP DETECTOR WIRE (LF)	Remarks
IH 39/US 51 SB RAMPS	89+44	46' LT	22	5	1	41	314	290	EAST OF INTERSECTION RIGHT LANE
	89+44	34' LT	21	5		54	314	420	EAST OF INTERSECTION LEFT LANE
MAPLE BLUFF ROAD	105+15	44' LT	21	5	1	59	340	470	EAST OF INTERSECTION RIGHT LANE
	105+15	32' LT	22	5		72	340	600	EAST OF INTERSECTION LEFT LANE
CTH R/ BRILOWSKI DRIVE	143+90	38' LT	22	5	1	60	466	480	EAST OF INTERSECTION RIGHT LANE
	143+90	26' LT	21	5		48	466	360	EAST OF INTERSECTION LEFT LANE
ELIZABETH ROAD	150+04	6' RT	61	5	1	57	272	450	WEST OF INTERSECTION LEFT LANE
	157+51	38' LT	21	5	1	36	385	240	EAST OF INTERSECTION RIGHT LANE
	157+51	26' LT	22	5		48	385	360	EAST OF INTERSECTION LEFT LANE
				Total	5	475	3282	3670	

*ADDITIONAL QUANTITIES LISTED ELSEWHERE

ALL ITEMS ARE CATEGORY 0010 UNLESS OTHERWISE SPECIFIED.

STATE OF WISCONSIN
DEPARTMENT OF TRANSPORTATION
TRANSPORTATION PROJECT PLAT TITLE SHEET
PROJECT NO. 6290-05-25

STEVENS POINT - WAUPACA

COUNTRY CLUB DRIVE - CTH J

USH 10

PORTAGE COUNTY

CONVENTIONAL SYMBOLS

SECTION LINE
QUARTER LINE
SIXTEENTH LINE
NEW REFERENCE LINE
NEW R/W LINE
EXISTING R/W LINE
PROPERTY LINE (P.L.)
LOT, TIE & OTHER MINOR LINES
CORPORATE LIMITS
UNDERGROUND FACILITY (COMMUNICATIONS, ELECTRIC, ETC) (W) (TYPE)
FEE ACQUISITION AREA (HATCHING VARIES BY OWNER)
TEMPORARY LIMITED EASEMENT AREA
EASEMENT AREA (HIGHWAY, PERMANENT LIMITED, OR RESTRICTED DEVELOPMENT)
TRANSMISSION STRUCTURES
BUILDING
NATIONAL GEODETIC SURVEY MONUMENT
SIXTEENTH CORNER MONUMENT

SECTION CORNER (18, 23, 24, 16, 15, 9)
NOTATION FOR COMBUSTIBLE FLUIDS (CAUTION)
NOTATION FOR HIGH VOLTAGE TRANSMISSION LINES (CAUTION)
BRIDGE

R/W MONUMENT
NON-MONUMENTED R/W POINT
FOUND IRON PIN (IP)
VALVE (GAS, WATER, ETC.) (TYPE)
SIGN
OFF-PREMISE SIGN (I-25) (SIGN)

	COMPENSABLE	NON-COMPENSABLE
ELECTRIC POLE		
TELEPHONE POLE		
PEDESTAL (LABEL TYPE) (TV, TEL, ELEC, ETC.)		
LIGHT POLE		

ACCESS CONTROLLED BY ACQUISITION
NO ACCESS (BY STATUTORY AUTHORITY)
ACCESS RESTRICTED (BY PREVIOUS PROJECT OR CONTROL)

PARCEL NUMBER (25)
UTILITY NUMBER (40)
EXISTING MONUMENT NUMBER (PROP ***)
R/W BOUNDARY POINT NUMBER (***)

CONVENTIONAL ABBREVIATIONS

ACCESS RIGHTS	AR	POINT OF COMPOUND CURVE	PCC
ACRES	AC	POINT OF INTERSECTION	PI
AHEAD	AH	PROPERTY LINE	PL
ALUMINUM	ALUM	RECORDED AS	(100')
AND OTHERS	ET AL	REFERENCE LINE	R/L
BACK	BK	REMAINING	REM
BLOCK	BLK	RIGHT	RT
CENTERLINE	C/L	RIGHT OF WAY	R/W
CERTIFIED SURVEY MAP	CSM	SECTION	SEC
CONCRETE	CONC	SEPTIC VENT	SEPV
COUNTY	CO	SQUARE FEET	SF
COUNTY TRUNK HIGHWAY	CTH	STATE TRUNK HIGHWAY	STH
DISTANCE	DIST	STATION	STA
CORNER	COR	SUBDIVISION	SUBD
DOCUMENT NUMBER	DOC	TANGENT	TAN
EASEMENT	EASE	TELEPHONE PEDESTAL	TP
EXISTING	EX	TEMPORARY LIMITED EASEMENT	TLE
GAS VALVE	GV	TRANSPORTATION PROJECT PLAT	TPP
GRID NORTH	GN	UNITED STATES HIGHWAY	USH
HIGHWAY EASEMENT	HE	VOLUME	V
IDENTIFICATION	ID		
LAND CONTRACT	LC		
LEFT	LT		
MONUMENT	MON		
NATIONAL GEODETIC SURVEY	NGS		
NUMBER	NO		
OUTLOT	OL		
PAGE	P		
POINT OF TANGENCY	PT		
PERMANENT LIMITED EASEMENT	PLE		
POINT OF BEGINNING	POB		
POINT OF CURVATURE	PC		

CURVE DATA

LONG CHORD	LC
LONG CHORD BEARING	LCB
RADIUS	R
DEGREE OF CURVE	D
CENTRAL ANGLE OR DELTA	Δ
LENGTH OF CURVE	L
TANGENT	T
DIRECTION AHEAD	DA
DIRECTION BACK	DB

CONVENTIONAL UTILITY SYMBOLS

WATER	W
GAS	G
TELEPHONE	T
OVERHEAD LINES	OH
ELECTRIC	E
CABLE TELEVISION	TV
FIBER OPTIC	FO
SANITARY SEWER	SAN
STORM SEWER	SS

SHEET LOCATION

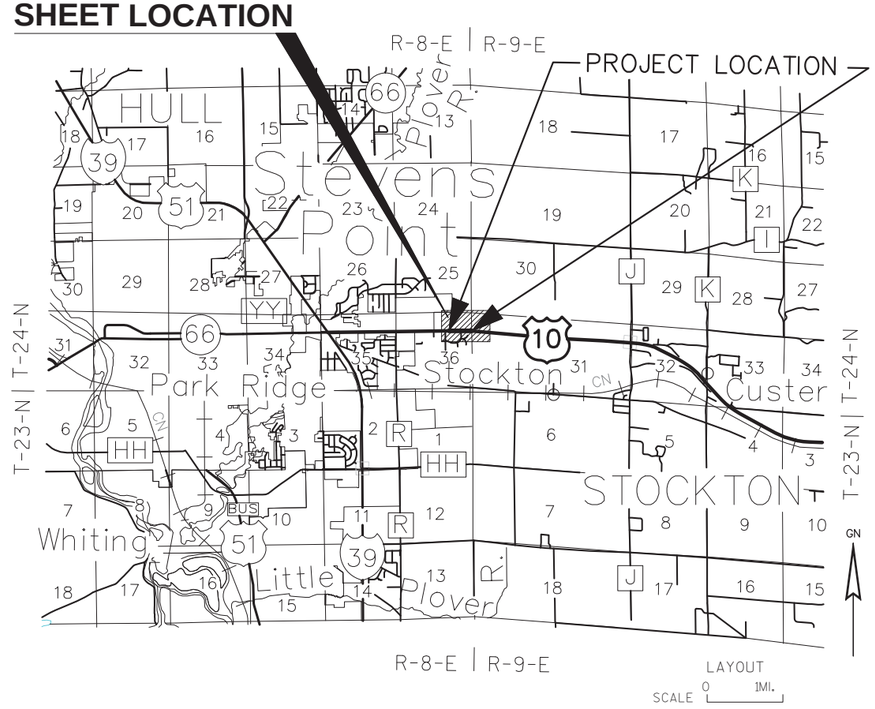

THE NOTES,CONVENTIONAL SIGNS, AND ABBREVIATIONS ARE ASSOCIATED WITH EACH TRANSPORTATION PROJECT PLAT FOR PROJECT 6990-05-25

NOTES:

POSITIONS SHOWN ON THIS PLAT ARE WISCONSIN COUNTY COORDINATES, PORTAGE COUNTY, NAD83(2011), IN U.S. SURVEY FEET. VALUES ARE GRID COORDINATES, GRID BEARINGS, AND GRID DISTANCES. GRID DISTANCES MAY BE USED AS GROUND DISTANCES.

ALL NEW RIGHT-OF-WAY MONUMENTS WILL BE TYPE 2 (TYPICALLY 1" I.D. X 24" IRON PIPE), UNLESS OTHERWISE NOTED, AND WILL BE PLACED PRIOR TO THE COMPLETION OF THE PROJECT.

ALL RIGHT-OF-WAY LINES DEPICTED IN THE NON-ACQUISITION AREAS ARE INTENDED TO RE-ESTABLISH EXISTING RIGHT-OF-WAY LINES AS DETERMINED FROM PREVIOUS PROJECTS, OTHER RECORDED DOCUMENTS, OR FROM CENTERLINE OF EXISTING PAVEMENTS.

RIGHT-OF-WAY BOUNDARIES ARE DEFINED WITH COURSES OF THE PERIMETER OF THE HIGHWAY LANDS REFERENCED TO THE U.S. PUBLIC LAND SURVEY SYSTEM OR OTHER "SURVEYS" OF PUBLIC RECORD.

A TEMPORARY LIMITED EASEMENT (TLE) IS A RIGHT FOR CONSTRUCTION PURPOSES, AS DEFINED HEREIN, INCLUDING THE RIGHT TO OPERATE NECESSARY EQUIPMENT THEREON, THE RIGHT OF INGRESS AND EGRESS, AS LONG AS REQUIRED FOR SUCH PUBLIC PURPOSE, INCLUDING THE RIGHT TO PRESERVE, PROTECT, REMOVE, OR PLANT THEREON ANY VEGETATION THAT THE HIGHWAY AUTHORITIES MAY DEEM DESIRABLE. ALL (TLE's) ON THIS PLAT EXPIRE AT THE COMPLETION OF THE CONSTRUCTION PROJECT FOR WHICH THIS INSTRUMENT IS GIVEN.

PROPERTY LINES SHOWN ON THIS PLAT ARE DRAWN FROM DATA DERIVED FROM MAPS AND DOCUMENTS OF PUBLIC RECORD AND/OR EXISTING OCCUPATIONAL LINES. THIS PLAT MAY NOT BE A TRUE REPRESENTATION OF EXISTING PROPERTY LINES, EXCLUDING RIGHT-OF-WAY, AND SHOULD NOT BE USED AS A SUBSTITUTE FOR AN ACCURATE FIELD SURVEY.

FOR THE LATEST ACCESS/DRIVEWAY INFORMATION, CONTACT THE PLANNING UNIT OF THE WISCONSIN DEPARTMENT OF TRANSPORTATION OFFICE IN WISCONSIN RAPIDS.

PARCEL IDENTIFICATION NUMBERS MAY NOT POINT TO ALL AREAS OF ACQUISITION, AS NOTED ON THE SCHEDULE OF LANDS & INTERESTS REQUIRED.

EXISTING ACCESS CONTROL ALONG U.S.H. 10 HAS BEEN ESTABLISHED FROM PREVIOUS PROJECT 6291-02-21

EXISTING HIGHWAY RIGHT-OF-WAY SHOWN HEREIN IS BASED ON THE FOLLOWING POINTS OF REFERENCE:
EXISTING HIGHWAY RIGHT-OF-WAY FOR U.S.H. 10 ESTABLISHED FROM PREVIOUS PROJECTS 6291-02-21 & 6290-2-21

RESERVED FOR REGISTER OF DEEDS
PROJECT NUMBER 6290-05-25 - 4.01
SHEET 2 OF 2
AMENDMENT NO:

FILE NAME : S:\SURVEY\LAND SURVEYS\2011 PROJECTS\6290-05-05 USH 10 MEAD & HUNT\TPP\DRAWINGS\TPP 4.01.DWG
APPRAISAL PLAT DATE : 2/17/2014
PLOT DATE : February 17, 2014
PLOT BY : KOLBY SCHERTZ
PLOT NAME : USH 10

QUEST
Civil Engineers, LLC
320 West Grand Avenue, Suite 302
Wisconsin Rapids, WI 54495
Office: 715-423-3525
Fax: 715-423-3597

I, KOLBY F. SCHERTZ PROFESSIONAL LAND SURVEYOR, HEREBY CERTIFY THAT IN FULL COMPLIANCE WITH THE PROVISIONS OF SECTION 84.095 OF THE WISCONSIN STATUTES AND UNDER THE DIRECTION OF THE DEPARTMENT OF TRANSPORTATION, I HAVE MAPPED THIS TRANSPORTATION PROJECT PLAT AND SUCH PLAT CORRECTLY REPRESENTS ALL EXTERIOR BOUNDARIES OF THE SURVEYED LAND.

WISCONSIN KOLBY F. SCHERTZ S-2862 SEYMOUR WI LAND SURVEYOR

SIGNATURE: Kolby F. Schertz DATE: 10/20/2015
PRINT NAME: KOLBY F. SCHERTZ
REGISTRATION NUMBER: S-2862

THIS PLAT AND RELOCATION ORDER ARE APPROVED FOR THE WISCONSIN DEPARTMENT OF TRANSPORTATION NORTH CENTRAL REGION
SIGNATURE: Brent L. Stella DATE: 10/20/2015
PRINT NAME: BRENT L. STELLA

SCHEDULE OF LANDS AND INTERESTS REQUIRED			OWNER NAMES ARE SHOWN FOR REFERENCE PURPOSES ONLY AND ARE SUBJECT TO CHANGE PRIOR TO THE TRANSFER OF LAND INTERESTS TO THE DEPARTMENT			
PARCEL NUMBER	OWNERS	INTEREST REQUIRED	R/W AC. REQUIRED			TLE S.F. REQUIRED
			NEW	EXISTING	TOTAL	
1	BRICKFORD FAMILY TRUST	FEE	0.52	0.31	0.83	----
2	MYSTIC MOON LLC	FEE	0.17	----	0.17	----
3	MARY NIGBOR	TLE	----	----	----	5,266
4	GENE HAHN & CHIN-FENG LAI	TLE	----	----	----	898

UTILITY INTERESTS REQUIRED		
UTILITY #	OWNER(S)	INTEREST REQUIRED
105	AT&T INC.	RELEASE OF RIGHTS
106	CHARTER COMMUNICATIONS	RELEASE OF RIGHTS
107	WISCONSIN PUBLIC SERVICE (ELECTRIC)	RELEASE OF RIGHTS
108	WISCONSIN PUBLIC SERVICE (GAS)	RELEASE OF RIGHTS

UTILITY INTEREST TABLE			
UTILITY #	PARCEL #	INTEREST DESCRIPTION	RECORDING DATA
105	1	EASEMENT	VOL. 310 P. 353
	2	NO EASEMENT OF RECORD	---
	3	NO EASEMENT OF RECORD	---
	4	NO EASEMENT OF RECORD	---
106	4	NO EASEMENT OF RECORD	---
107	2	NO EASEMENT OF RECORD	---
	3	NO EASEMENT OF RECORD	---
	4	NO EASEMENT OF RECORD	---
108	1	NO EASEMENT OF RECORD	---
	3	NO EASEMENT OF RECORD	---
	4	NO EASEMENT OF RECORD	---

TRANSPORTATION PROJECT PLAT NO: 6290-05-25 - 4.01 AMENDMENT NO. 1

AMENDS UTILITY NUMBER 107 AND 108 AND UTILITY INTEREST TABLE TO TRANSPORTATION PROJECT PLAT NO: 6290-05-25 -4.01, RECORDED AS DOCUMENT NUMBER 793697, LOCATED IN PART OF THE NORTHEAST 1/4 OF THE NORTHEAST 1/4 AND PART OF LOTS 2 AND 3 OF DEERWOOD PARK SUBDIVISION BEING PART OF SOUTHEAST 1/4 OF THE NORTHEAST 1/4; ALL IN SECTION 36, TOWNSHIP 24 NORTH, RANGE 8 EAST, CITY OF STEVENS POINT, PORTAGE COUNTY, WISCONSIN

RELOCATION ORDER USH 10 STEVENS POINT - WAUPACA (COUNTRY CLUB DRIVE - CTH J) PORTAGE COUNTY

TO PROPERLY ESTABLISH, LAY OUT, WIDEN, ENLARGE, EXTEND, CONSTRUCT, RECONSTRUCT, IMPROVE, OR MAINTAIN A PORTION OF THE HIGHWAY DESIGNATED ABOVE, THE STATE OF WISCONSIN DEPARTMENT OF TRANSPORTATION DEEMS IT NECESSARY TO RELOCATE OR CHANGE SAID HIGHWAY AND ACQUIRE CERTAIN LANDS AND INTERESTS OR RIGHTS IN LANDS FOR THE ABOVE PROJECT.

TO EFFECT THIS CHANGE, PURSUANT TO AUTHORITY GRANTED UNDER SECTION 84.02 (3), 84.09 AND 84.30, WISCONSIN STATUTES, THE DEPARTMENT OF TRANSPORTATION HEREBY ORDERS THAT:
1. THAT PORTION OF SAID HIGHWAY AS SHOWN ON THIS PLAT IS LAID OUT AND ESTABLISHED TO THE LINES AND WIDTHS AS SO SHOWN FOR THE ABOVE PROJECT.
2. THE LANDS OR INTERESTS OR RIGHTS IN LANDS AS SHOWN ON THIS PLAT ARE REQUIRED BY THE DEPARTMENT FOR THE ABOVE PROJECT AND SHALL BE ACQUIRED IN THE NAME OF THE STATE OF WISCONSIN, PURSUANT TO THE PROVISIONS OF SECTION 84.09 (1) OR (2), WISCONSIN STATUTES.

ACCEPTED FOR RECORDING AND FILING IN THE OFFICE OF THE REGISTER OF DEEDS IN PORTAGE COUNTY, WISCONSIN AT 9:19 AM ON 10/27/2015 AS DOCUMENT # 811834 AND FILED IN env #65
Cynthia M. Leonard
SIGNATURE OF REGISTER OF DEEDS
pd $25.00

RESERVED FOR REGISTER OF DEEDS
PROJECT NUMBER 6290-05-25 - 4.01
SHEET 1 OF 1
AMENDMENT NO: 1

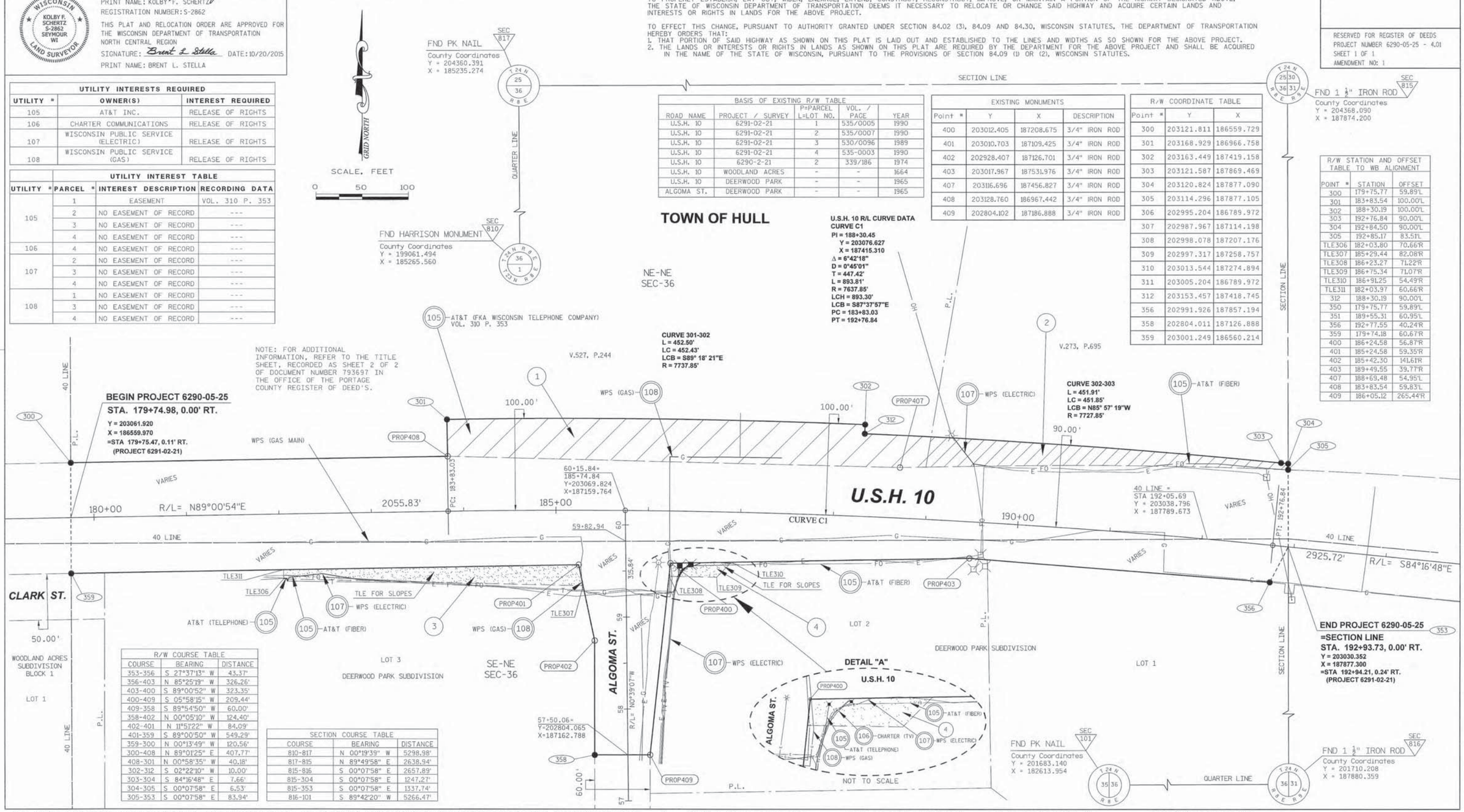

BASIS OF EXISTING R/W TABLE				
ROAD NAME	PROJECT / SURVEY	P=PARCEL L=LOT NO.	VOL. / PAGE	YEAR
U.S.H. 10	6291-02-21	1	535/0005	1990
U.S.H. 10	6291-02-21	2	535/0007	1990
U.S.H. 10	6291-02-21	3	530/0096	1989
U.S.H. 10	6291-02-21	4	535-0003	1990
U.S.H. 10	6290-2-21	2	339/186	1974
U.S.H. 10	WOODLAND ACRES	-	-	1664
U.S.H. 10	DEERWOOD PARK	-	-	1965
ALGOMA ST.	DEERWOOD PARK	-	-	1965

EXISTING MONUMENTS			
Point #	Y	X	DESCRIPTION
400	203012.405	187208.675	3/4" IRON ROD
401	203010.703	187109.425	3/4" IRON ROD
402	202928.407	187126.701	3/4" IRON ROD
403	203017.967	187531.976	3/4" IRON ROD
407	203116.696	187456.827	3/4" IRON ROD
408	203128.760	186967.442	3/4" IRON ROD
409	202804.102	187186.888	3/4" IRON ROD

R/W COORDINATE TABLE		
Point #	Y	X
300	203121.811	186559.729
301	203168.929	186966.758
302	203163.449	187419.158
303	203121.587	187869.469
304	203120.824	187877.090
305	203114.296	187877.105
306	202995.204	186789.972
307	202987.967	187114.198
308	202998.078	187207.176
309	202997.317	187258.757
310	203013.544	187274.894
311	203005.204	186789.972
312	203153.457	187418.745
356	202991.926	187857.194
358	202804.011	187126.888
359	203001.249	186560.214

R/W STATION AND OFFSET TABLE TO WB ALIGNMENT		
POINT #	STATION	OFFSET
300	179+75.77	59.89'L
301	183+83.54	100.00'L
302	188+30.19	100.00'L
303	192+76.84	90.00'L
304	192+84.50	90.00'L
305	192+85.17	83.51'L
TLE306	182+03.80	70.66'R
TLE307	185+29.44	82.08'R
TLE308	186+23.27	71.22'R
TLE309	186+75.34	71.07'R
TLE310	186+91.25	54.49'R
TLE311	182+03.97	60.66'R
312	188+30.19	90.00'L
350	179+75.77	59.89'L
351	189+55.31	60.95'L
356	192+77.55	40.24'R
359	179+74.18	60.67'R
400	186+24.58	56.87'R
401	185+24.58	59.35'R
402	185+42.30	141.61'R
403	189+49.55	39.77'R
407	188+69.48	54.95'L
408	183+83.54	59.83'L
409	186+05.12	265.44'R

R/W COURSE TABLE		
COURSE	BEARING	DISTANCE
353-356	S 27°37'13" W	43.37'
356-403	N 85°25'19" W	326.26'
403-400	S 89°00'52" W	323.35'
400-409	S 05°58'15" W	209.44'
409-358	S 89°54'50" W	60.00'
358-402	N 00°05'10" W	124.40'
402-401	N 11°51'22" W	84.09'
401-359	S 89°00'50" W	549.29'
359-300	N 00°13'49" W	120.56'
300-408	N 89°01'25" E	407.77'
408-301	N 00°58'35" W	40.18'
302-312	S 02°22'10" W	10.00'
303-304	S 84°16'48" E	7.66'
304-305	S 00°07'58" E	6.53'
305-353	S 00°07'58" E	83.94'

SECTION COURSE TABLE		
COURSE	BEARING	DISTANCE
810-817	N 00°19'39" W	5298.98'
817-815	N 89°49'58" E	2638.94'
815-816	S 00°07'58" E	2657.89'
815-304	S 00°07'58" E	1247.27'
815-353	S 00°07'58" E	1337.74'
816-101	S 89°42'20" W	5266.47'

WISCONSIN DOT NC REGION ELECTRICAL UNIT SHALL APPROVE FINAL LOCATIONS FOR ALL LOOP DETECTORS IN THE FIELD PRIOR TO CONSTRUCTION. THEY MAY BE REACHED AT (715)-421-3007

LOCATION IS FRONT COVER OF DETECTOR LOOP IN THE TRAFFIC LANE AND INSTALL LOOPS IN THE BASE AGGREGATE DENSE IN ACCORDING TO SDD "LOOP DETECTORS INSTALLED IN BASE COURSE WITH PULL (SPLICES) BOX OFF ROADWAY (OPTION 2).

EACH LOOP DETECTOR SHALL HAVE A SEPARATE LEAD-IN CABLE TO THE CONTROL CABINET.

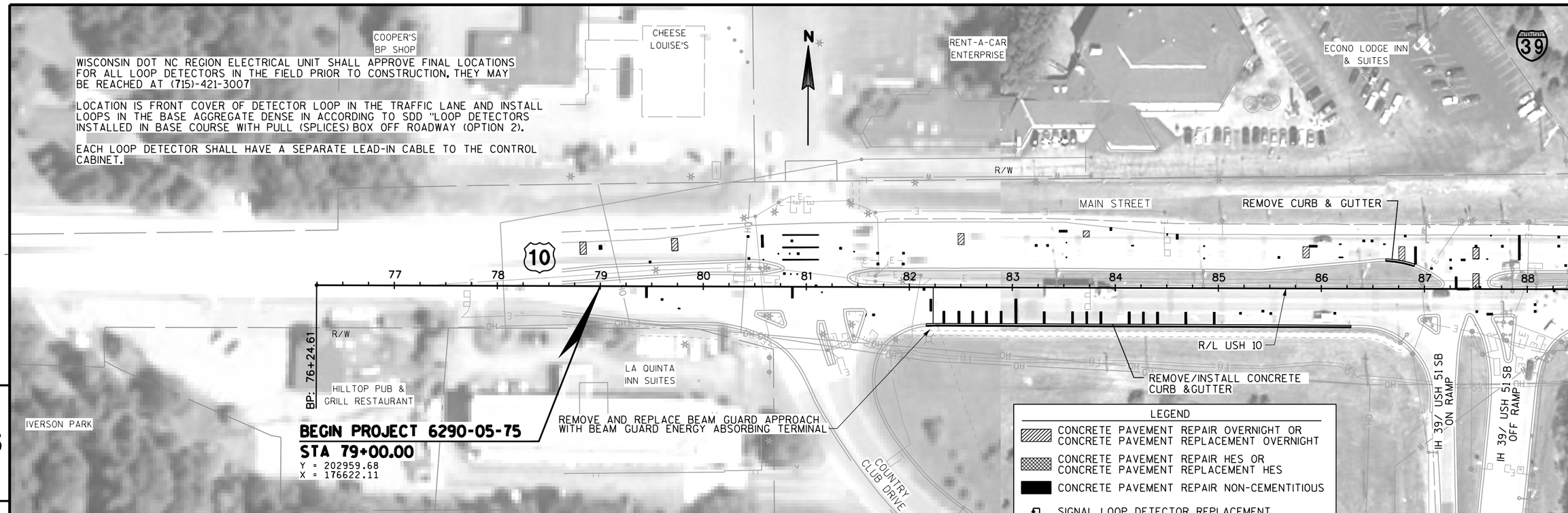

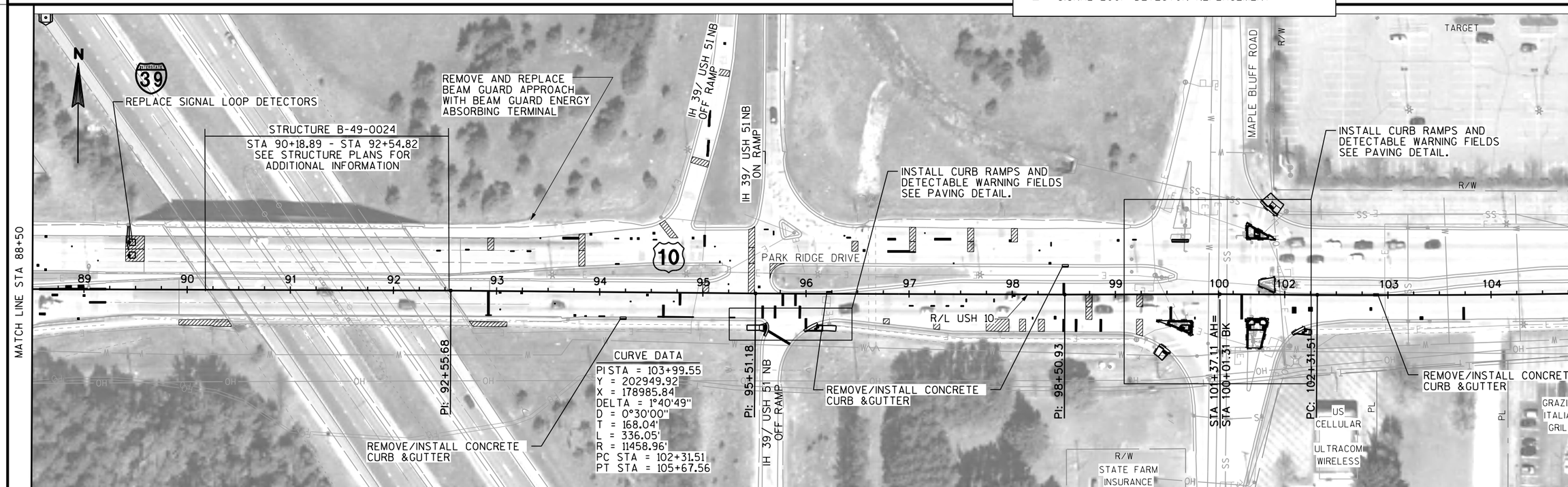

PROJECT NO:6290-05-75	HWY:USH 10	COUNTY:PORTAGE	PLAN	SHEET 122	E

WISCONSIN DOT NC REGION ELECTRICAL UNIT SHALL APPROVE FINAL LOCATIONS FOR ALL LOOP DETECTORS IN TEH FIELD PRIOR TO CONSTRUCTION, THEY MAY BE REACHED AT (715)-421-3007.

LOCATION IS FRONT COVER OF DETECTOR LOOP IN THE TRAFFIC LANE AND INSTALL LOOPS IN THE BASE AGGREGATE DENSE IN ACCORDING TO SDD "LOOP DETECTORS INSTALLED IN BASE COURSE WITH PULL (SPLICES) BOX OFF ROADWAY (OPTION 2).

EACH LOOP DETECTOR SHALL HAVE A SEPERATE LEAD-IN CABLE TO THE CONTROL CABINET.

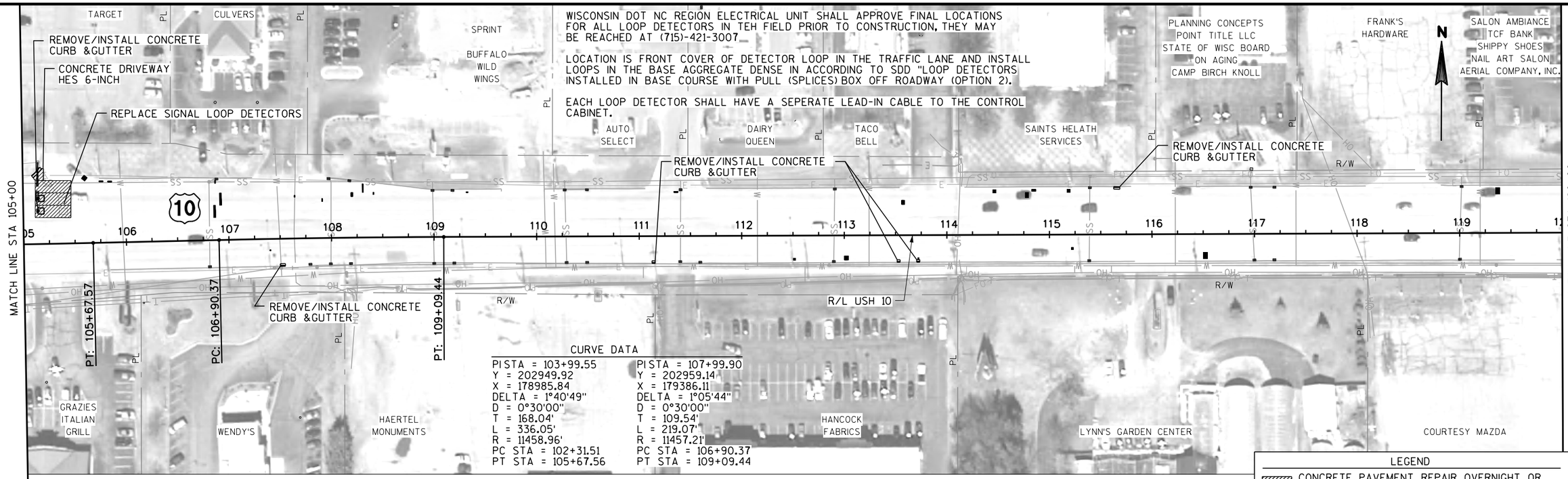

CURVE DATA

PI STA = 103+99.55	PI STA = 107+99.90
Y = 202949.92	Y = 202959.14
X = 178985.84	X = 179386.11
DELTA = 1°40'49"	DELTA = 1°05'44"
D = 0°30'00"	D = 0°30'00"
T = 168.04'	T = 109.54'
L = 336.05'	L = 219.07'
R = 11458.96'	R = 11457.21'
PC STA = 102+31.51	PC STA = 106+90.37
PT STA = 105+67.56	PT STA = 109+09.44

LEGEND

- CONCRETE PAVEMENT REPAIR OVERNIGHT OR CONCRETE PAVEMENT REPLACEMENT OVERNIGHT
- CONCRETE PAVEMENT REPAIR HES OR CONCRETE PAVEMENT REPLACEMENT HES
- CONCRETE PAVEMENT REPAIR NON-CEMENTITIOUS
- SIGNAL LOOP DETECTOR REPLACEMENT

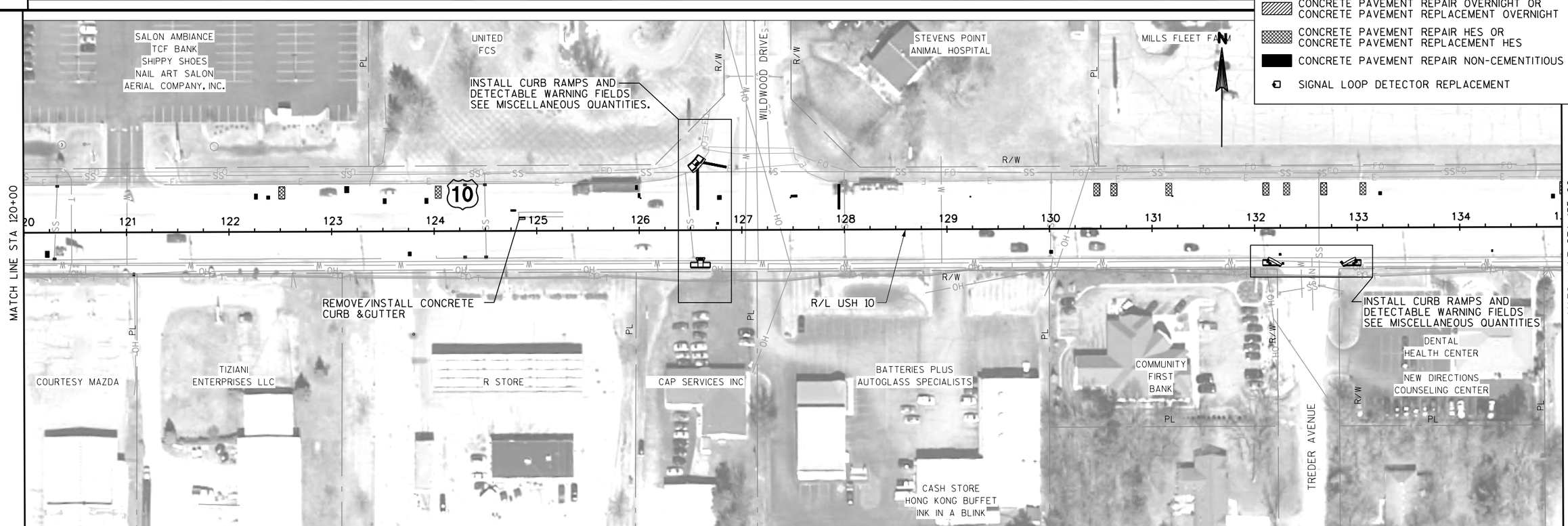

PROJECT NO:6290-05-75	HWY:USH 10	COUNTY:PORTAGE	PLAN	SHEET 123	E

WISCONSIN DOT NC REGION ELECTRICAL UNIT SHALL APPROVE FINAL LOCATIONS FOR ALL LOOP DETECTORS IN TEH FIELD PRIOR TO CONSTRUCTION. THEY MAY BE REACHED AT (715)-421-3007

LOCATION IS FRONT COVER OF DETECTOR LOOP IN THE TRAFFIC LANE AND INSTALL LOOPS IN THE BASE AGGREGATE DENSE IN ACCORDING TO SDD "LOOP DETECTORS INSTALLED IN BASE COURSE WITH PULL (SPLICES) BOX OFF ROADWAY (OPTION 2).

EACH LOOP DETECTOR SHALL HAVE A SEPERATE LEAD-IN CABINET.

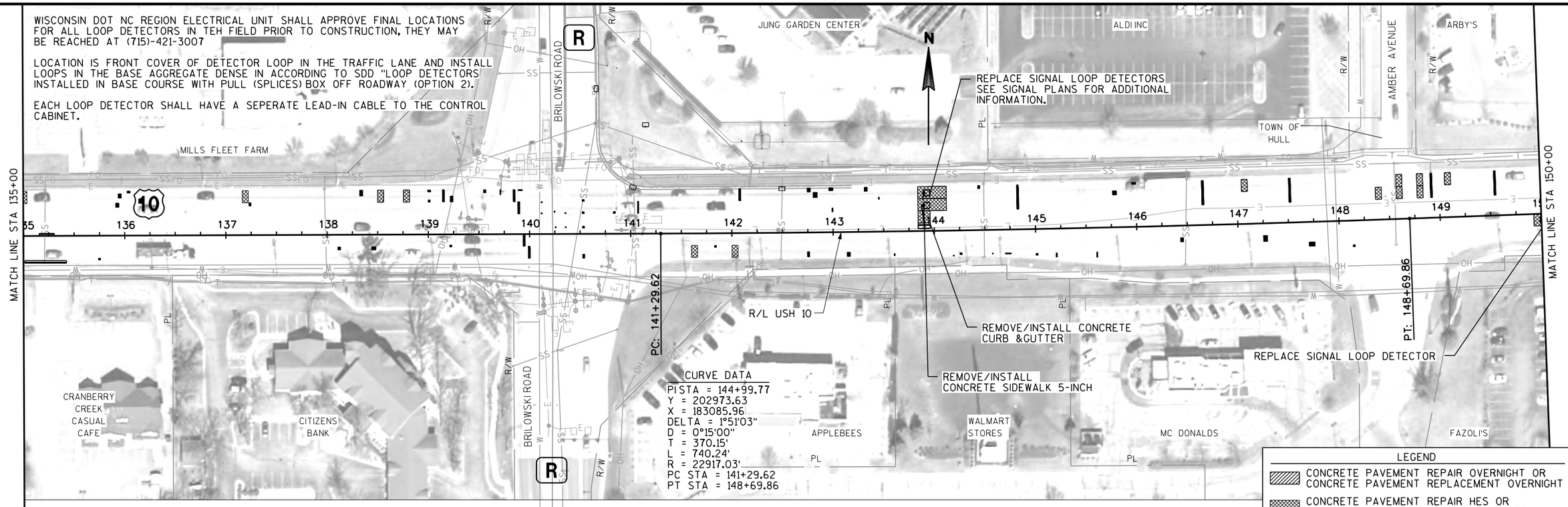

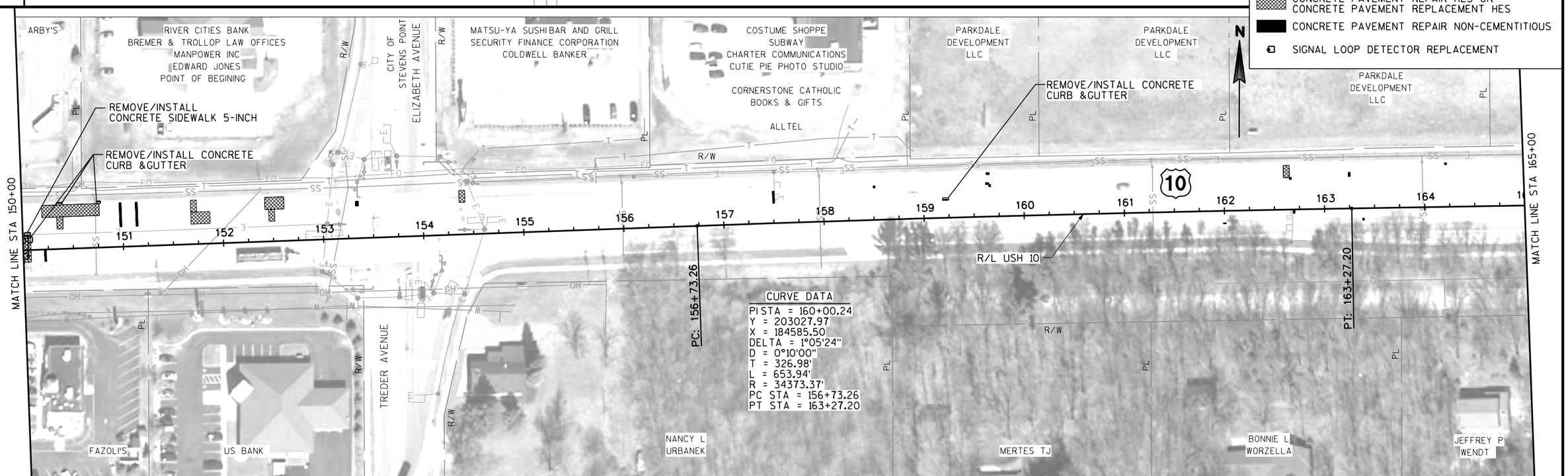

PROJECT NO:6290-05-75	HWY:USH 10	COUNTY:PORTAGE	PLAN	SHEET 124	E

PROJECT NO:6290-05-75	HWY:USH 10	COUNTY:PORTAGE	PLAN	SHEET 125	E

FILE NAME : X:\3230400\113516.01\TECH\CADD\DWG\050204_pn.dgn PLOT DATE : 7/27/2016 PLOT BY : 1362cmr PLOT NAME : PLOT SCALE : 100.0000 sf / in.

WISDOT/CADDS SHEET 44

Standard Detail Drawing List

08D01-18	CONCRETE CURB, CONCRETE CURB AND GUTTER AND TIES
08D05-17A	CURB RAMPS TYPES 1 AND 1-A
08D05-17B	CURB RAMPS TYPES 2 AND 3
08D05-17C	CURB RAMPS TYPES 4A AND 4A1
08D05-17D	CURB RAMPS TYPE 4B AND 4B1
08E10-02	INLET PROTECTION TYPE A, B, C AND D
09B02-09	CONDUIT
09C02-07	CONCRETE BASES, TYPES 1, 2, 5, & 6
09C03-04	TRANSFORMER/PEDESTAL BASES
09E07-05	TRAFFIC SIGNAL STANDARD PEDESTRIAN AND FLASHER TYPICAL MOUNTING DETAILS
09F15-04B	LOOP DETECTOR INSTALLED IN BASE COURSE WITH PULL (SPLICE) BOX OFF ROADWAY (OPTION 2)
11B02-02	CONCRETE MEDIAN NOSE
13A03-06	CONCRETE PAVEMENT SHOULDERS
13C09-13A	CONCRETE PAVEMENT REPAIR AND REPLACEMENT
13C09-13B	CONCRETE PAVEMENT REPAIR AND REPLACEMENT
13C09-13C	CONCRETE PAVEMENT REPAIR AND REPLACEMENT
13C13-08	URBAN DOWELED CONCRETE PAVEMENT
14B15-09A	STEEL PLATE BEAM GUARD, CLASS "A" INSTALLATION & ELEMENTS
14B15-09B	STEEL PLATE BEAM GUARD, CLASS "A" INSTALLATION & ELEMENTS
14B18-06A	STEEL PLATE BEAM GUARD, CLASS "A" (AT BRIDGES, OBSTACLES AND SIDEROADS/DRIVEWAYS)
14B24-08A	STEEL PLATE BEAM GUARD ENERGY ABSORBING TERMINAL
14B24-08B	STEEL PLATE BEAM GUARD ENERGY ABSORBING TERMINAL
14B24-08C	STEEL PLATE BEAM GUARD ENERGY ABSORBING TERMINAL
15C02-06C	DETOUR SIGNING FOR MAINLINE CLOSURES
15C05-03	TRAFFIC CONTROL, ADVANCE WARNING SIGNS 40 M.P.H. OR LESS
15C07-13B	PAVEMENT MARKING WORDS
15C07-13C	PAVEMENT MARKING ARROWS
15C08-16A	PAVEMENT MARKING (MAINLINE)
15C08-16B	PAVEMENT MARKING (INTERSECTIONS)
15C08-16E	PAVEMENT MARKING (LEFT TURN LANE)
15C08-16F	PAVEMENT MARKING (ISLANDS)
15C19-04B	MOVING PAVEMENT MARKING OPERATION MULTI-LANE UNDIVIDED ROADWAY
15C19-04C	MOVING PAVEMENT MARKING OPERATION MULTI-LANE DIVIDED ROADWAY
15C33-01	STOP LINE AND CROSSWALK PAVEMENT MARKING
15D12-06A	TRAFFIC CONTROL, LANE CLOSURE
15D12-06B	TRAFFIC CONTROL, LANE CLOSURE, SPEED REDUCTION
15D16-03	TRAFFIC CONTROL, EXIT RAMP CLOSURE
15D20-04	TRAFFIC CONTROL, SINGLE LANE CLOSURE, NON-FREEWAY/EXPRESSWAY
15D30-03B	TRAFFIC CONTROL, TEMPORARY ADA COMPLIANT PEDESTRIAN ACCOMMODATION
15D30-03C	TRAFFIC CONTROL, PEDESTRIAN ACCOMMODATION
15D38-01A	TEMPORARY TRAFFIC CONTROL FIXED MESSAGE SIGNS
15D38-01B	ATTACHMENT OF SIGNS TO POSTS

6

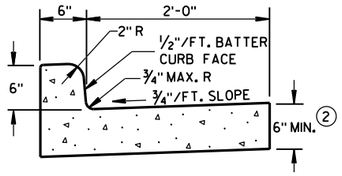

TYPES A & D ①

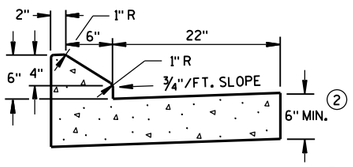

6" SLOPED CURB TYPES G & J ①

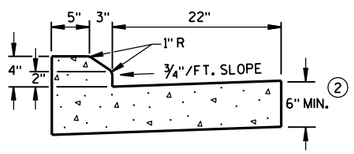

4" SLOPED CURB TYPES G & J ①

CONCRETE CURB & GUTTER 30"

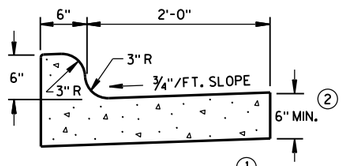

TYPES K & L ①

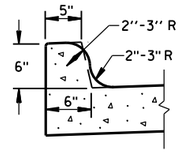

OPTIONAL CURB SHAPE
FOR TYPES K & L ①

CONCRETE CURB & GUTTER 30"

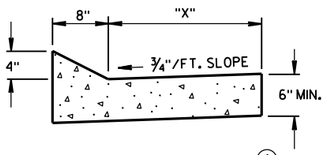

TYPES TBT & TBTT ①

CONCRETE CURB & GUTTER

TBT & TBTT	"X"
30"	22"
36"	28"

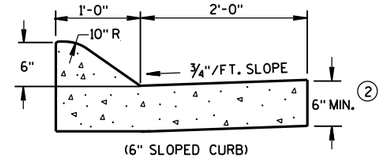

(6" SLOPED CURB)

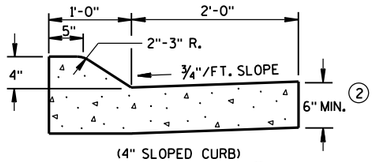

(4" SLOPED CURB)

TYPES A & D ①

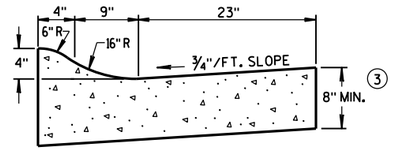

4" SLOPED CURB TYPES R & T ① ④

CONCRETE CURB & GUTTER 36"

GENERAL NOTES

DETAILS OF CONSTRUCTION, MATERIALS AND WORKMANSHIP NOT SHOWN ON THIS DRAWING SHALL CONFORM TO THE PERTINENT REQUIREMENTS OF THE CONTRACT.

PAVEMENT TIES AND TIE BARS SHALL BE EPOXY COATED IN CONFORMANCE WITH SUBSECTION 505.2.6.2 OF THE STANDARD SPECIFICATIONS.

INTEGRAL CURB & GUTTER SHALL CONFORM TO THE DETAILS SHOWN FOR CONCRETE CURB & GUTTER INCLUDING THE TRANSVERSE GUTTER SLOPE. A LONGITUDINAL CONSTRUCTION JOINT IS NOT REQUIRED WITH INTEGRAL CURB AND GUTTER.

WHERE THE TRANSVERSE JOINTS IN THE PAVEMENT ARE REQUIRED TO BE SEALED, THE JOINTS IN THE INTEGRAL CURB AND GUTTER SHALL BE SEALED TO THE FACE OF CURB WITH THE SAME TYPE OF SEALANT. THE COST OF FURNISHING AND INSTALLING THIS SEALANT SHALL BE INCIDENTAL TO THE ITEM CONCRETE CURB AND GUTTER.

UNLESS OTHERWISE SHOWN ON THE TYPICAL CROSS SECTIONS, THE BASE AGGREGATE AND COMMON EXCAVATION LIMITS ARE 2'-0" BEHIND THE BACK OF CURBS.

① TIE BARS ARE REQUIRED FOR CURB AND GUTTER TYPES A, G, K, R AND TBTT.

② THE BOTTOM OF CURB AND GUTTER MAY BE CONSTRUCTED EITHER LEVEL OR PARALLEL TO THE SLOPE OF THE SUBGRADE OR BASE AGGREGATE PROVIDED A 6" MINIMUM GUTTER THICKNESS IS MAINTAINED.

③ THE BOTTOM OF CURB AND GUTTER MAY BE CONSTRUCTED EITHER LEVEL OR PARALLEL TO THE SLOPE OF THE SUBGRADE OR BASE AGGREGATE PROVIDED A 8" MINIMUM GUTTER THICKNESS IS MAINTAINED.

④ THE FACE OF CURB IS 6" FROM THE BACK OF CURB.

⑤ WHEN REVERSE SLOPE GUTTER IS REQUIRED, THE LOCATION(S) WILL BE SHOWN ELSEWHERE IN THE PLAN.

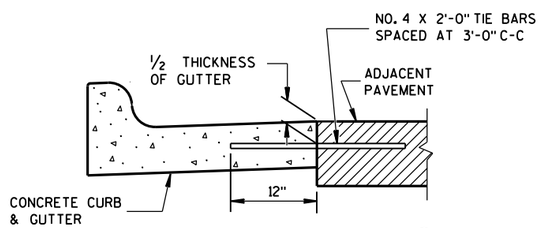

TYPICAL TIE BAR LOCATION ①

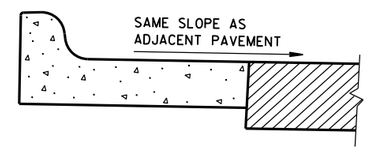

REVERSE SLOPE GUTTER ⑤
(TYPICAL FOR ALL CURB & GUTTER TYPES)

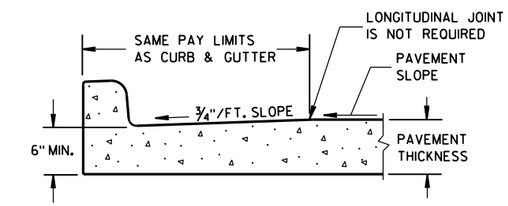

PARTIAL SECTION OF PAVEMENT
WITH INTEGRAL CURB & GUTTER

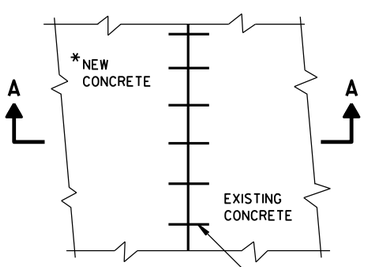

*NEW CURB & GUTTER, SURFACE DRAINS, CONCRETE PAVEMENT OR OTHER NEW CONCRETE.

PLAN VIEW

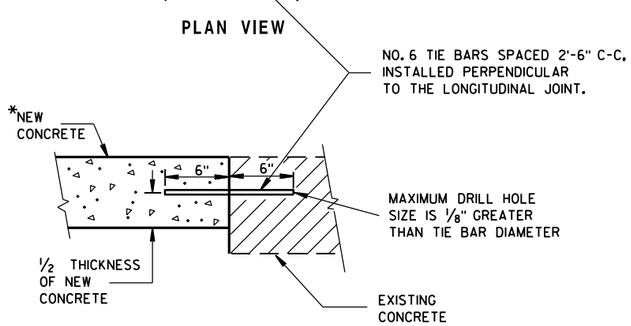

SECTION A-A

TIE BARS DRILLED
INTO EXISTING PAVEMENT

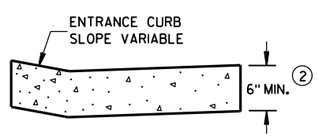

DRIVEWAY ENTRANCE CURB
(WHEN DIRECTED BY THE ENGINEER)

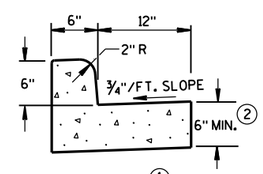

① TYPES A & D

CONCRETE CURB & GUTTER 18"

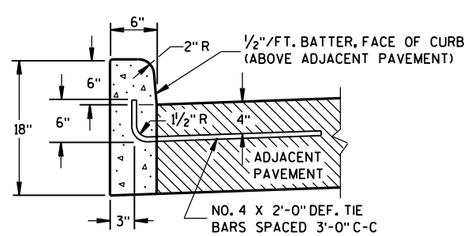

① TYPES A & D

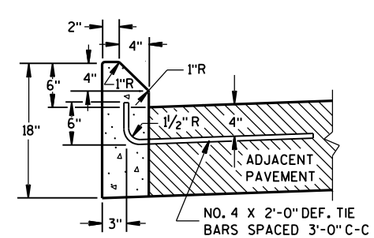

① TYPES G & J

CONCRETE CURB

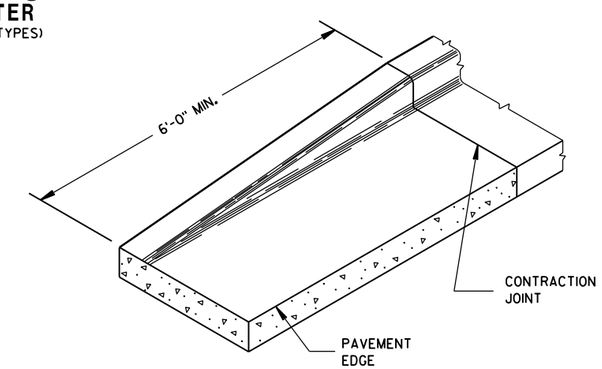

END SECTION CURB & GUTTER

CONCRETE CURB, CONCRETE CURB & GUTTER AND TIES

STATE OF WISCONSIN
DEPARTMENT OF TRANSPORTATION

APPROVED
June, 2015 — DATE
/S/ Jerry H. Zogg — ROADWAY STANDARDS DEVELOPMENT ENGINEER
FHWA

6

6

S.D.D. 8 D 1-18

S.D.D. 8 D 1-18

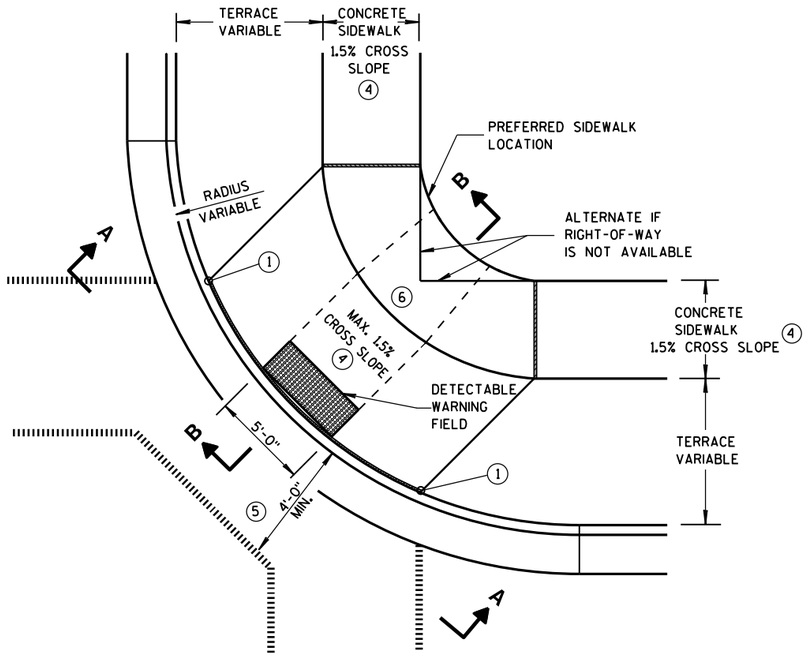

PLAN VIEW

TYPE 1 RAMP

(CENTER OF CORNER RADIUS)

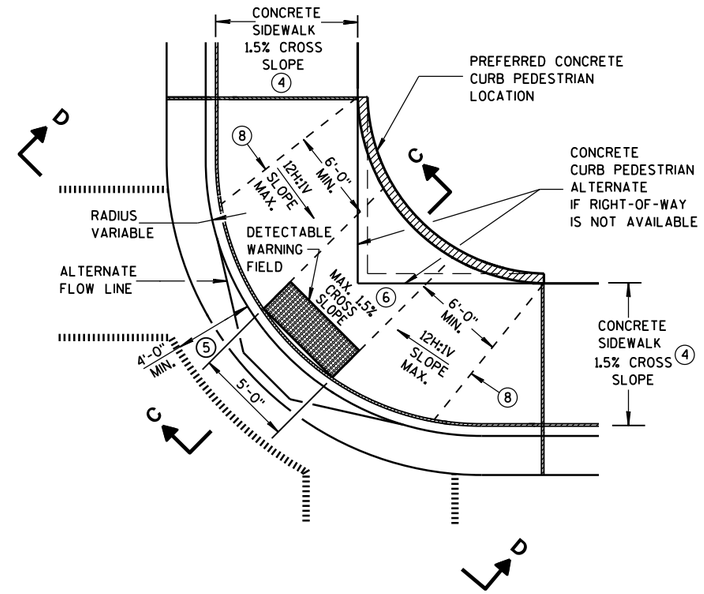

PLAN VIEW

TYPE 1-A RAMP

(NO TERRACE)

GENERAL NOTES

DETAILS OF CONSTRUCTION, MATERIALS AND WORKMANSHIP NOT SHOWN ON THIS DRAWING SHALL CONFORM TO THE PERTINENT REQUIREMENTS OF THE STANDARD SPECIFICATIONS AND THE APPLICABLE SPECIAL PROVISIONS.

WHEN NECESSARY, THE SIDEWALK ELEVATION MAY BE LOWERED TO MEET THE HIGH POINT ON THE RAMP.

TYPE 1 RAMPS SHALL HAVE A NORMAL SIDEWALK APRON AND CURB ON BOTH SIDES OF RAMP.

DETECTABLE WARNING FIELD SHALL BE MEASURED AND PAID BY THE SQUARE FOOT AS "CURB RAMP DETECTABLE WARNING FIELD". THE CONCRETE PEDESTRIAN CURB, IF NEEDED, SHALL BE MEASURED AND PAID BY THE LINEAL FOOT AS "CONCRETE CURB PEDESTRIAN". CONCRETE SIDEWALK IN THE CURB RAMP AREA SHALL BE MEASURED AND PAID BY THE SQUARE FOOT AS CONCRETE SIDEWALK, INCLUDING THE AREA UNDER THE DETECTABLE WARNING FIELD.

SELECT CURB RAMP DETECTABLE WARNING FIELD MATERIALS AND DEVICES FROM THE DEPARTMENT'S APPROVED MATERIALS LIST. THE COLOR OF THE DETECTABLE WARNING FIELD IS SPECIFIED ELSEWHERE AND IS INCIDENTAL TO THE BID ITEM OF "CURB RAMP DETECTABLE WARNING FIELD".

DETECTABLE WARNING FIELDS THAT ARE INSTALLED AS A GROUP OR SIDE BY SIDE, SHALL BE FROM THE SAME MANUFACTURER.

SURFACE TEXTURE OF THE RAMP SHALL BE OBTAINED BY COARSE BROOMING TRANSVERSE TO THE SLOPE OF THE RAMP.

1. THIS POINT IS AN EXTENSION OF OUTSIDE EDGE OF APPROACHING SIDEWALK WHERE IT MEETS THE BACK OF CONCRETE CURB. POINT LOCATION MAY BE ADJUSTED TO ALIGN WITH BEGINNING OF FULL-HEIGHT CURB IF THIS DISTANCE IS SHORT.

2. GRADE CHANGE BETWEEN GUTTER FLAG SLOPE AND THE CURB RAMP SLOPE SHALL NOT EXCEED 11%. MAXIMUM GUTTER FLAG SLOPE IS 4%. PROVIDE LONGITUDINAL DRAINAGE AROUND CURB AND AWAY FROM CURB RAMP. NO VERTICAL LIPS OR DISCONTINUITIES GREATER THAN 1/4-INCH ARE ALLOWED. SLOPE OF CURB HEAD OPENING SHALL NOT EXCEED 7%.

3. ABSOLUTE MAXIMUM 12H:1V (8.33%) CURB RAMP SLOPE IS ALLOWABLE WITH FLATTENED GUTTER FLAG SLOPE AND NOT TO EXCEED 11% GRADE CHANGE.

4. ±0.5% CONSTRUCTION TOLERANCE IN SIDEWALK CROSS SLOPE. THE SIDEWALK CROSS SLOPE SHALL NOT EXCEED 2% WITHOUT PRIOR APPROVAL FROM THE ENGINEER.

5. PROVIDE A LEVEL LANDING IN THE STREET AND GUTTER AREA. (2% MAXIMUM SLOPE IN ANY DIRECTION). WHEN THE GUTTER SLOPE EXCEEDS 2%, CONSTRUCT THE LEVEL LANDING IN THE STREET AREA.

6. PROVIDE A LEVEL LANDING (MAXIMUM 2% SLOPE) IN ANY DIRECTION OF PEDESTRIAN TRAVEL. STANDARD LANDING SIZE IS 5 FEET X 5 FEET (MINIMUM 4 FEET X 4 FEET).

8. PROVIDE GRADE BREAK PERPENDICULAR TO DIRECTION OF WHEELCHAIR TRAVEL.

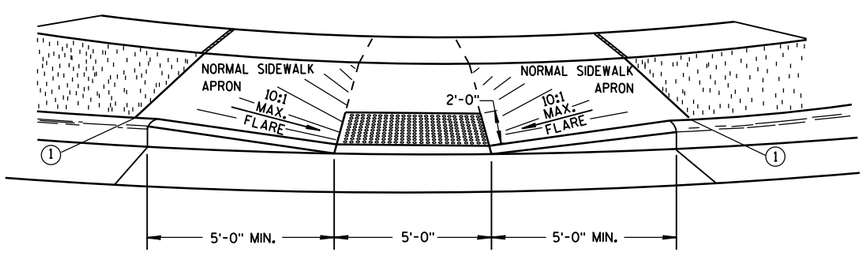

VIEW A-A

** WIDTH SHOWN ELSEWHERE IN THE PLANS

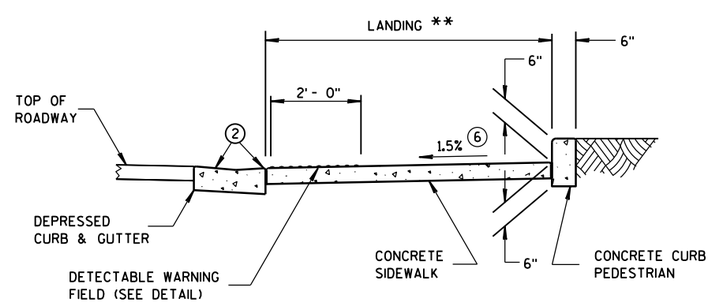

SECTION C-C

LEGEND

- 1/2" EXPANSION JOINT-SIDEWALK
- CONTRACTION JOINT FIELD LOCATED
- PAVEMENT MARKING CROSSWALK (WHITE)
- ALTERNATIVE LAYOUT

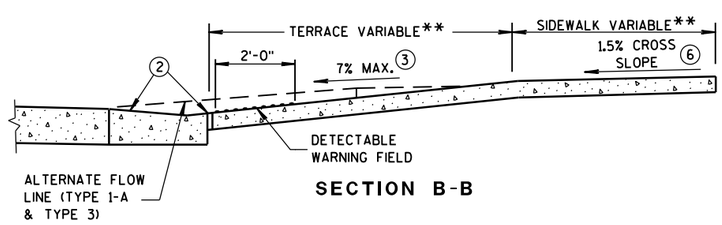

SECTION B-B

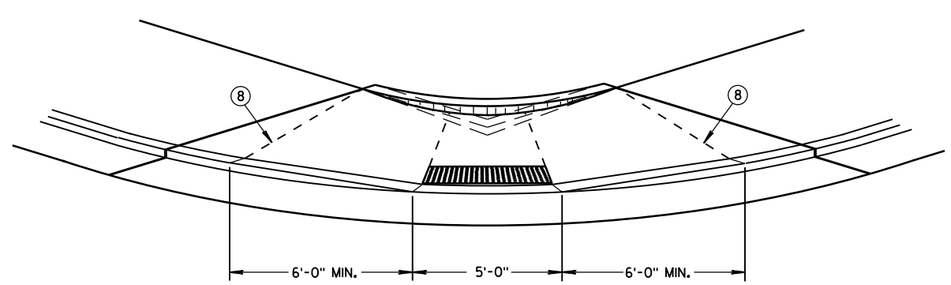

VIEW D-D

CURB RAMPS
TYPES 1 AND 1-A

STATE OF WISCONSIN
DEPARTMENT OF TRANSPO

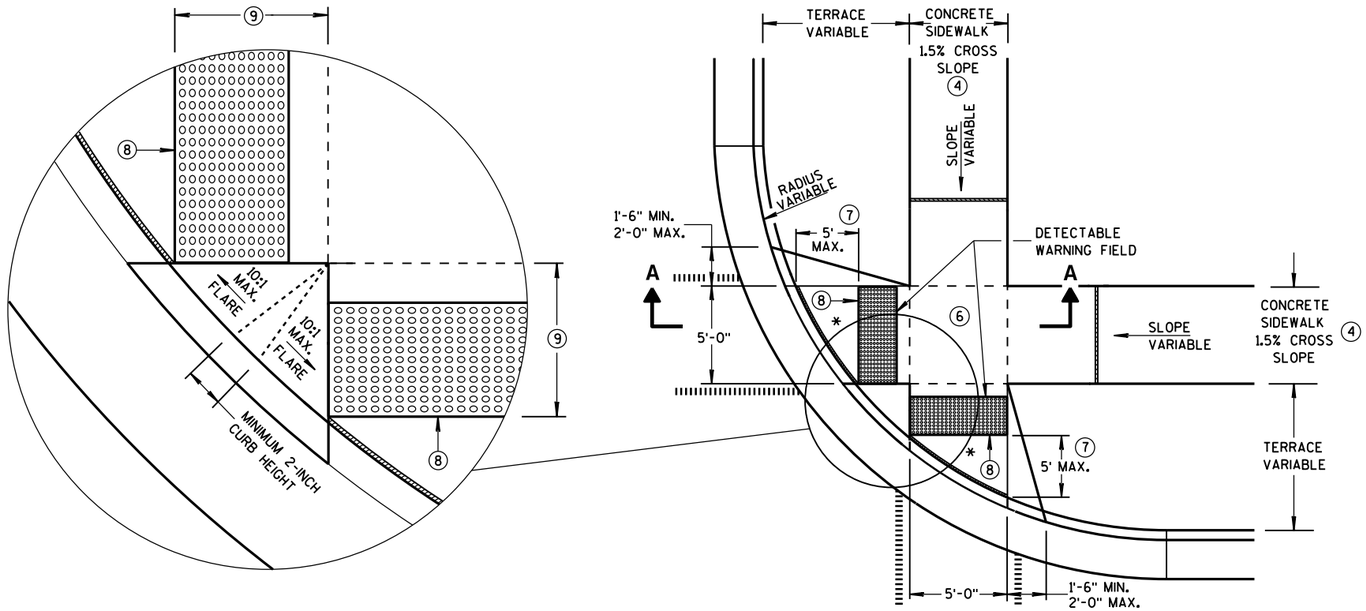

PLAN VIEW
TYPE 2 RAMP
(ON LINE WITH SIDEWALK)

* MAXIMUM 2.0% SLOPE IN ALL DIRECTIONS IN FRONT OF GRADE BREAK

GENERAL NOTES

DETECTABLE WARNING FIELDS THAT ARE INSTALLED AS A GROUP OR SIDE BY SIDE, SHALL BE FROM THE SAME MANUFACTURER.

(2) GRADE CHANGE BETWEEN GUTTER FLAG SLOPE AND THE CURB RAMP SLOPE SHALL NOT EXCEED 11%. MAXIMUM GUTTER FLAG SLOPE IS 4%. PROVIDE LONGITUDINAL DRAINAGE AROUND CURB AND AWAY FROM CURB RAMP. NO VERTICAL LIPS OR DISCONTINUITIES GREATER THAN 1/4-INCH ARE ALLOWED. SLOPE OF CURB HEAD OPENING SHALL NOT EXCEED 7%.

(3) ABSOLUTE MAXIMUM 12H:1V (8.33%) CURB RAMP SLOPE IS ALLOWABLE WITH FLATTENED GUTTER FLAG SLOPE AND NOT TO EXCEED 11% GRADE CHANGE.

(4) ±0.5% CONSTRUCTION TOLERANCE IN SIDEWALK CROSS SLOPE. THE SIDEWALK CROSS SLOPE SHALL NOT EXCEED 2% WITHOUT PRIOR APPROVAL FROM THE ENGINEER.

(6) PROVIDE A LEVEL LANDING (MAXIMUM 2% SLOPE) IN ANY DIRECTION OF PEDESTRIAN TRAVEL. STANDARD LANDING SIZE IS 5 FEET X 5 FEET (MINIMUM 4 FEET X 4 FEET).

(7) WHEN THIS DISTANCE EXCEEDS 5 FEET, STAGGER ADDITIONAL DETECTABLE WARNING PANEL FORWARD TO REDUCE THIS DISTANCE. PROVIDE MINIMUM 12-INCH ROW OVERLAP TO AVOID SIDESTEP OF DOME DETECTION. ALIGN DOMES BETWEEN OVERLAPPING ROWS AND IN DIRECTION OF PEDESTRIAN TRAVEL.

(8) PROVIDE GRADE BREAK PERPENDICULAR TO DIRECTION OF WHEELCHAIR TRAVEL.

(9) WHEN THIS DISTANCE IS LESS THAN 6'-0", IT MAY BE DIFFICULT TO ACHIEVE A 7% SLOPE OR FLATTER ALONG THE RAMP. REDUCE CURB HEIGHT IN TRIANGLE AREA TO ACHIEVE 7% SLOPE OR FLATTER ON RAMP. CONSTRUCT 2-INCH MINIMUM CURB HEIGHT BETWEEN 10:1 FLARES.

LEGEND

- 1/2" EXPANSION JOINT-SIDEWALK
- CONTRACTION JOINT FIELD LOCATED
- PAVEMENT MARKING CROSSWALK (WHITE)
- ALTERNATIVE LAYOUT

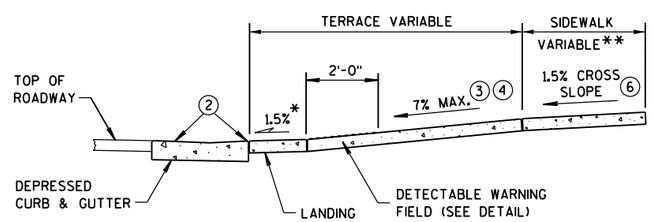

SECTION A-A

** WIDTH SHOWN ELSEWHERE IN THE PLANS

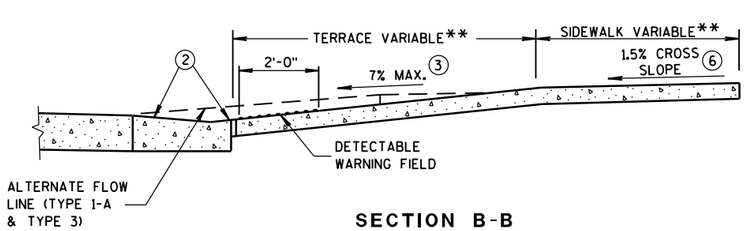

SECTION B-B

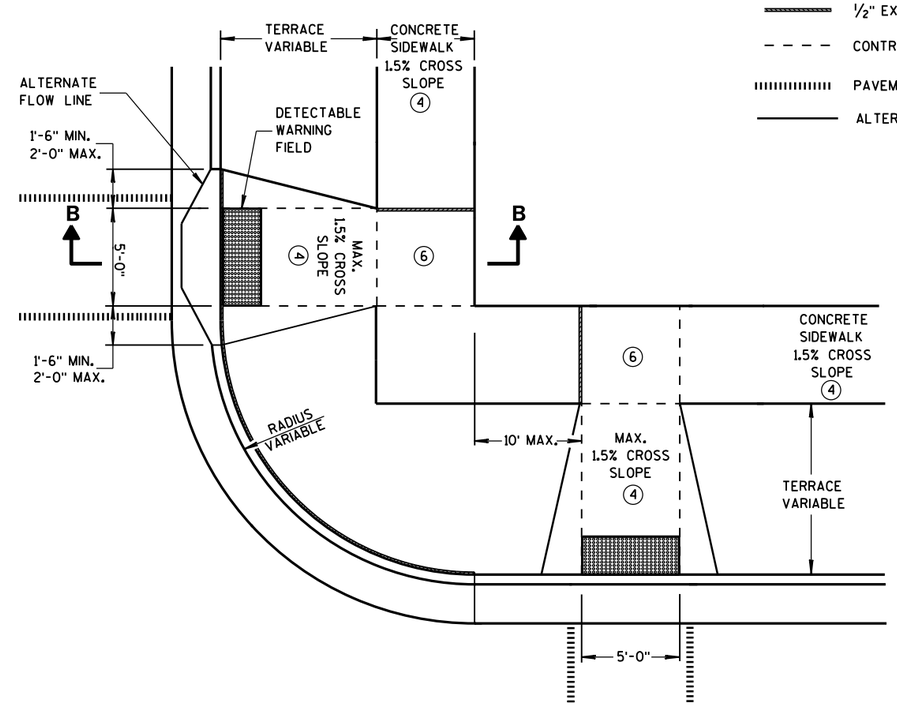

PLAN VIEW
TYPE 3 RAMP
(OUTSIDE OF CROSSWALK AREA)

CURB RAMPS
TYPES 2 AND 3

STATE OF WISCONSIN
DEPARTMENT OF TRANSPOI

6

S.D.D. 8 D 5-17b

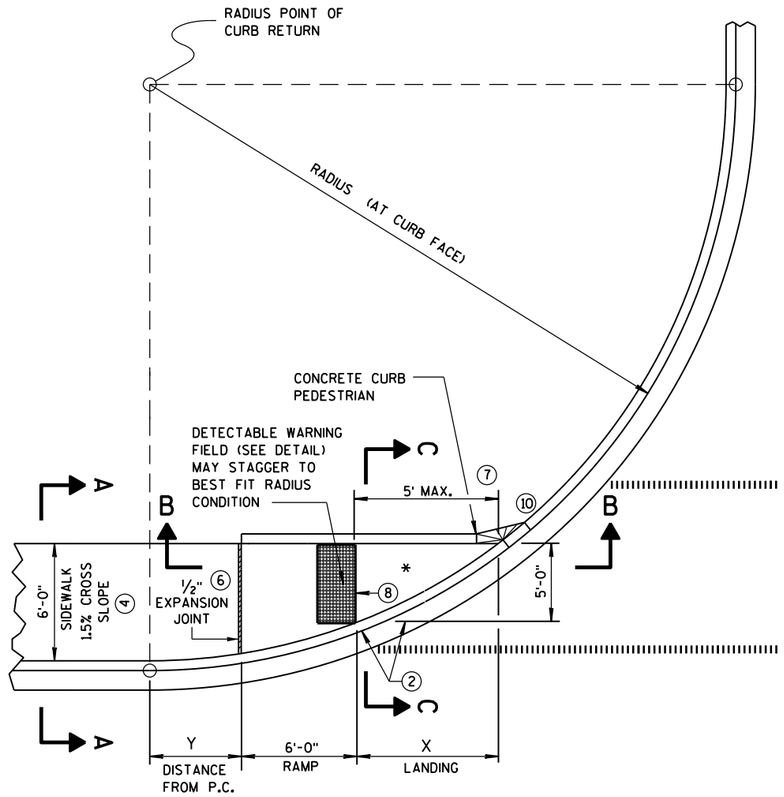

CURB RAMP TYPE 4A

PLAN VIEW

RADIUS (AT CURB FACE)	X	Y
20 FEET	7'-11"	0'-2"
30 FEET	10'-2¾"	1'-7½"
40 FEET	12'-1¼"	2'-10"
50 FEET	13'-8¾"	3'-10¾"
60 FEET	15'-2"	4'-10¼"

INTERMEDIATE RADII CAN BE INTERPOLATED

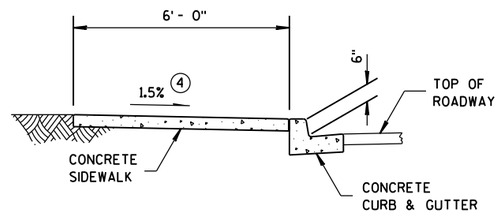

SECTION A-A FOR TYPE 4A

GENERAL NOTES

AVOID PLACING DRAINAGE STRUCTURES, JUNCTION BOXES OR OTHER OBSTRUCTIONS IN FRONT OF RAMP ACCESS AREAS.

DETECTABLE WARNING FIELDS THAT ARE INSTALLED AS A GROUP OR SIDE BY SIDE, SHALL BE FROM THE SAME MANUFACTURER.

(2) GRADE CHANGE BETWEEN GUTTER FLAG SLOPE AND THE CURB RAMP SLOPE SHALL NOT EXCEED 11%. MAXIMUM GUTTER FLAG SLOPE IS 4%. PROVIDE LONGITUDINAL DRAINAGE AROUND CURB AND AWAY FROM CURB RAMP. NO VERTICAL LIPS OR DISCONTINUITIES GREATER THAN ¼-INCH ARE ALLOWED. SLOPE OF CURB HEAD OPENING SHALL NOT EXCEED 7%.

(3) ABSOLUTE MAXIMUM 12H:1V (8.33%) CURB RAMP SLOPE IS ALLOWABLE WITH FLATTENED GUTTER FLAG SLOPE AND NOT TO EXCEED 11% GRADE CHANGE.

(4) ±0.5% CONSTRUCTION TOLERANCE IN SIDEWALK CROSS SLOPE. THE SIDEWALK CROSS SLOPE SHALL NOT EXCEED 2% WITHOUT PRIOR APPROVAL FROM THE ENGINEER.

(6) PROVIDE A LEVEL LANDING (MAXIMUM 2% SLOPE) IN ANY DIRECTION OF PEDESTRIAN TRAVEL. STANDARD LANDING SIZE IS 5 FEET X 5 FEET (MINIMUM 4 FEET X 4 FEET).

(7) WHEN THIS DISTANCE EXCEEDS 5 FEET, STAGGER ADDITIONAL DETECTABLE WARNING PANEL FORWARD TO REDUCE THIS DISTANCE. PROVIDE MINIMUM 12-INCH ROW OVERLAP TO AVOID SIDESTEP OF DOME DETECTION. ALIGN DOMES BETWEEN OVERLAPPING ROWS AND IN DIRECTION OF PEDESTRIAN TRAVEL.

(8) PROVIDE GRADE BREAK PERPENDICULAR TO DIRECTION OF WHEELCHAIR TRAVEL.

(10) INSTALL TRANSITION NOSE. (INCIDENTAL TO OTHER PAY ITEMS). DO NOT MARK TRANSITION NOSE.

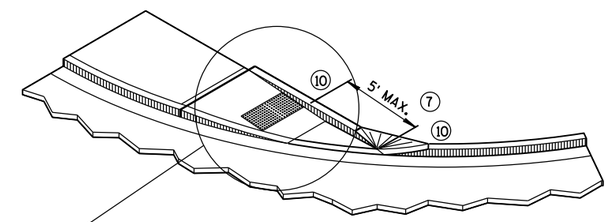

ISOMETRIC VIEW FOR TYPE 4A

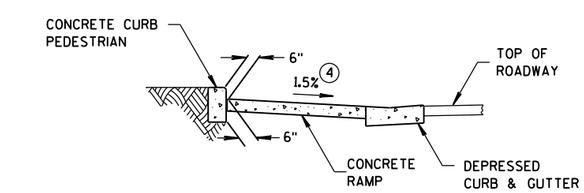

SECTION C-C FOR TYPE 4A

* MAXIMUM 2.0% SLOPE IN ALL DIRECTIONS IN FRONT OF GRADE BREAK

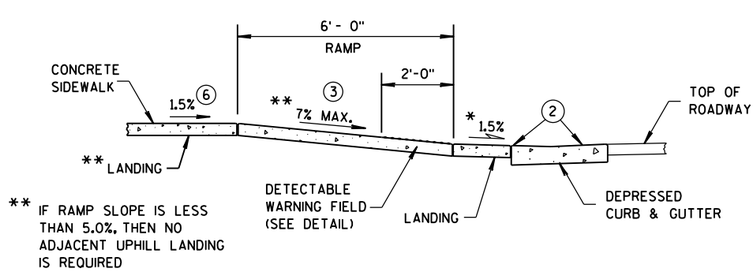

** IF RAMP SLOPE IS LESS THAN 5.0%, THEN NO ADJACENT UPHILL LANDING IS REQUIRED

SECTION B-B FOR TYPE 4A

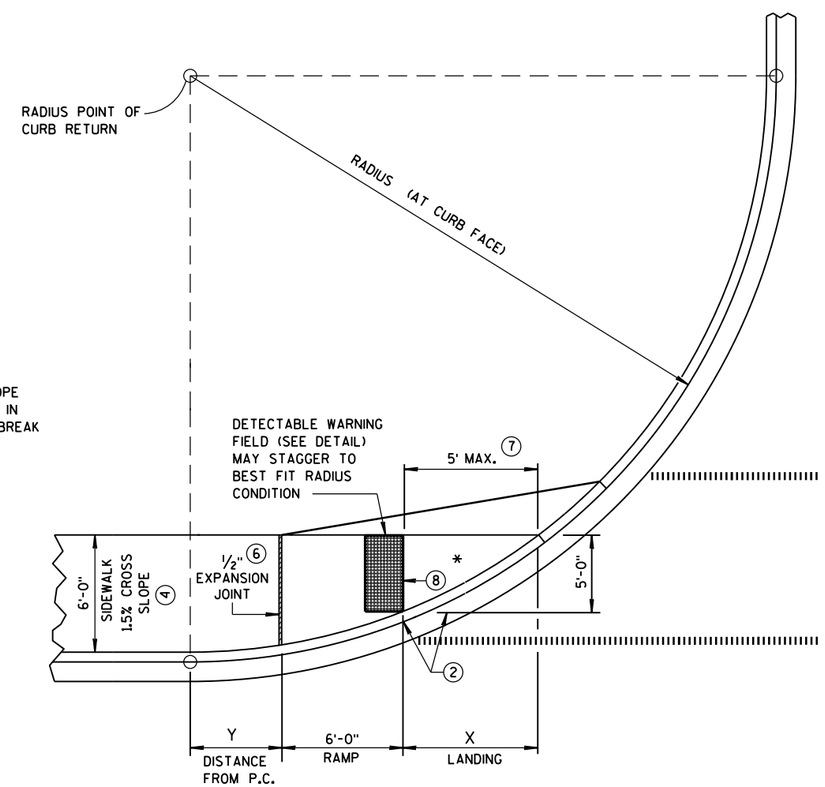

CURB RAMP TYPE 4A1

PLAN VIEW

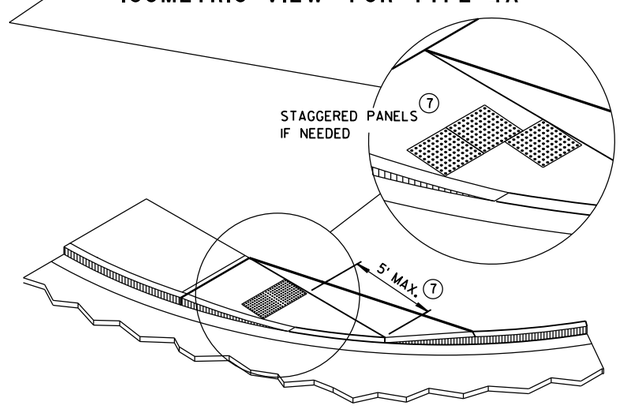

ISOMETRIC VIEW FOR TYPE 4A1

LEGEND

- ½" EXPANSION JOINT-SIDEWALK
- CONTRACTION JOINT FIELD LOCATED
- PAVEMENT MARKING CROSSWALK (WHITE)

CURB RAMPS
TYPES 4A AND 4A1

STATE OF WISCONSIN
DEPARTMENT OF TRANSPO

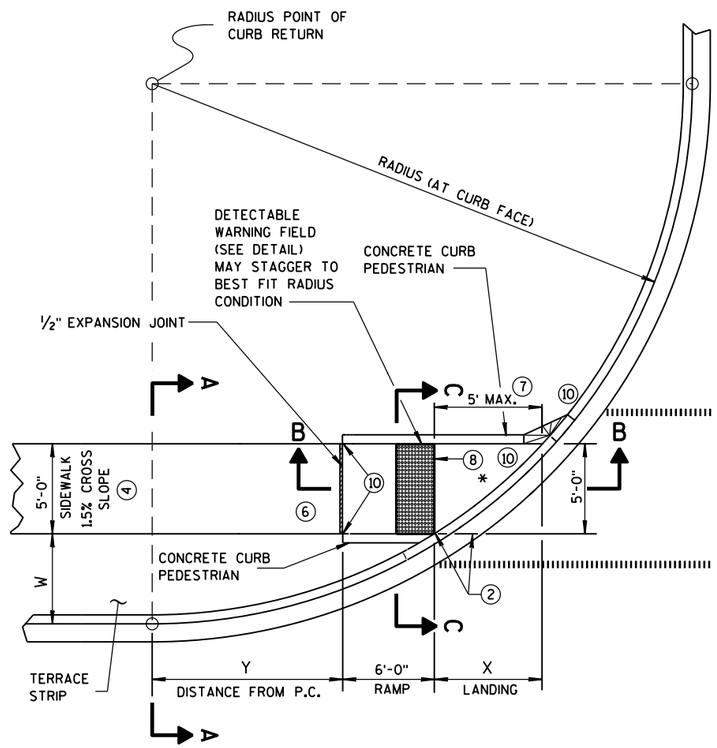

CURB RAMP TYPE 4B
PLAN VIEW

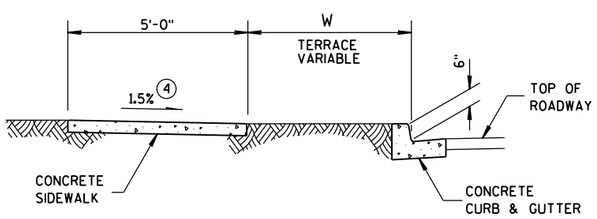

SECTION A-A FOR TYPE 4B

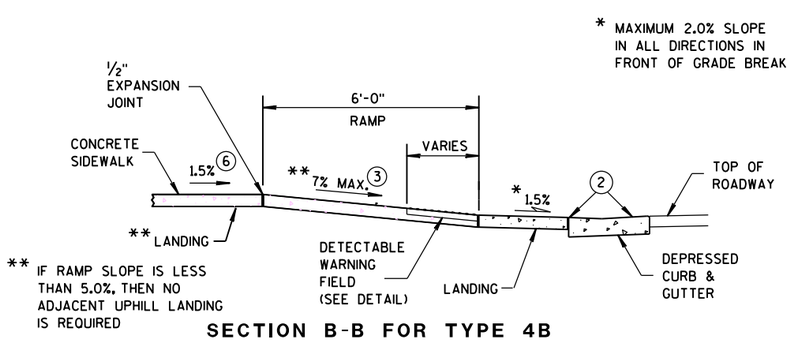

SECTION B-B FOR TYPE 4B

LEGEND

- ½" EXPANSION JOINT-SIDEWALK
- CONTRACTION JOINT FIELD LOCATED
- PAVEMENT MARKING CROSSWALK (WHITE)

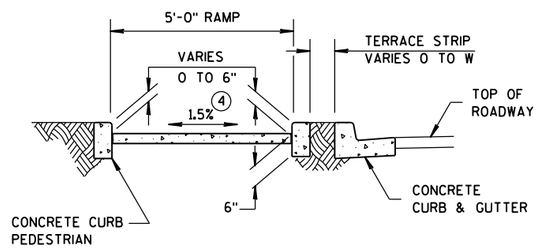

SECTION C-C FOR TYPE 4B

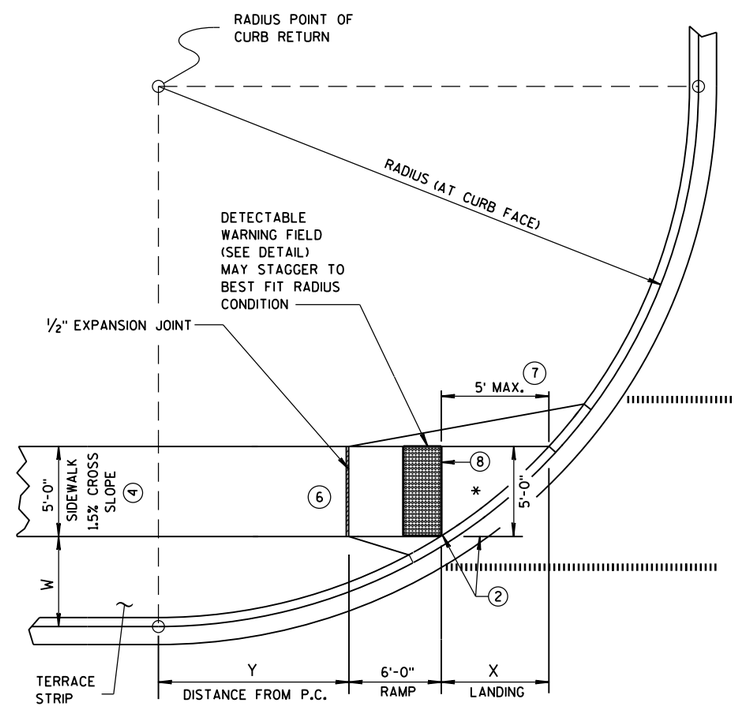

CURB RAMP TYPE 4B1
PLAN VIEW

RADIUS (AT CURB FACE)	W = 3' - 0"		W = 4' - 0"		W = 5' - 0"		W = 6' - 0"		W = 7' - 0"	
	X	Y	X	Y	X	Y	X	Y	X	Y
20 FEET	5'-9¾"	3'-6½"	4'-11½"	5'-1¾"	4'-3¼"	6'-5½"	3'-8¾"	7'-6¾"	3'-3"	8'-6¼"
30 FEET	7'-9¼"	5'-10½"	6'-9½"	7'-11¼"	6'-0¼"	9'-8"	5'-5"	11'-1¾"	4'-10¾"	12'-5¾"
40 FEET	9'-4"	7'-10"	8'-2¾"	10'-3"	7'-4¾"	12'-3¾"	6'-8½"	14'-1¼"	6'-1¾"	15'-8½"
50 FEET	10'-8"	9'-6½"	9'-5½"	12'-3¼"	8'-6½"	14'-7½"	7'-9¾"	16'-8¼"	7'-2½"	18'-6¼"
60 FEET	11'-10¼"	11'-0¾"	10'-6½"	14'-1¼"	9'-6½"	16'-8½"	8'-9¼"	18'-11¾"	8'-1½"	21'-0½"

INTERMEDIATE RADII CAN BE INTERPOLATED

GENERAL NOTES

AVOID PLACING DRAINAGE STRUCTURES, JUNCTION BOXES OR OTHER OBSTRUCTIONS IN FRONT OF RAMP ACCESS AREAS.

DETECTABLE WARNING FIELDS THAT ARE INSTALLED AS A GROUP OR SIDE BY SIDE, SHALL BE FROM THE SAME MANUFACTURER.

(2) GRADE CHANGE BETWEEN GUTTER FLAG SLOPE AND THE CURB RAMP SLOPE SHALL NOT EXCEED 11%. MAXIMUM GUTTER FLAG SLOPE IS 4%. PROVIDE LONGITUDINAL DRAINAGE AROUND CURB AND AWAY FROM CURB RAMP. NO VERTICAL LIPS OR DISCONTINUITIES GREATER THAN ¼-INCH ARE ALLOWED. SLOPE OF CURB HEAD OPENING SHALL NOT EXCEED 7%.

(3) ABSOLUTE MAXIMUM 12H:1V (8.33%) CURB RAMP SLOPE IS ALLOWABLE WITH FLATTENED GUTTER FLAG SLOPE AND NOT TO EXCEED 11% GRADE CHANGE.

(4) ±0.5% CONSTRUCTION TOLERANCE IN SIDEWALK CROSS SLOPE. THE SIDEWALK CROSS SLOPE SHALL NOT EXCEED 2% WITHOUT PRIOR APPROVAL FROM THE ENGINEER.

(6) PROVIDE A LEVEL LANDING (MAXIMUM 2% SLOPE) IN ANY DIRECTION OF PEDESTRIAN TRAVEL. STANDARD LANDING SIZE IS 5 FEET X 5 FEET (MINIMUM 4 FEET X 4 FEET).

(7) WHEN THIS DISTANCE EXCEEDS 5 FEET, STAGGER ADDITIONAL DETECTABLE WARNING PANEL FORWARD TO REDUCE THIS DISTANCE. PROVIDE MINIMUM 12-INCH ROW OVERLAP TO AVOID SIDESTEP OF DOME DETECTION. ALIGN DOMES BETWEEN OVERLAPPING ROWS AND IN DIRECTION OF PEDESTRIAN TRAVEL.

(8) PROVIDE GRADE BREAK PERPENDICULAR TO DIRECTION OF WHEELCHAIR TRAVEL.

(10) INSTALL TRANSITION NOSE. (INCIDENTAL TO OTHER PAY ITEMS). DO NOT MARK TRANSITION NOSE.

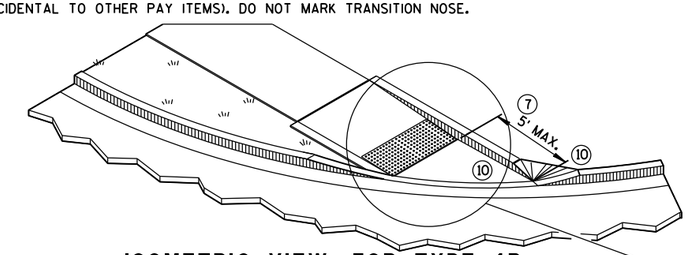

ISOMETRIC VIEW FOR TYPE 4B

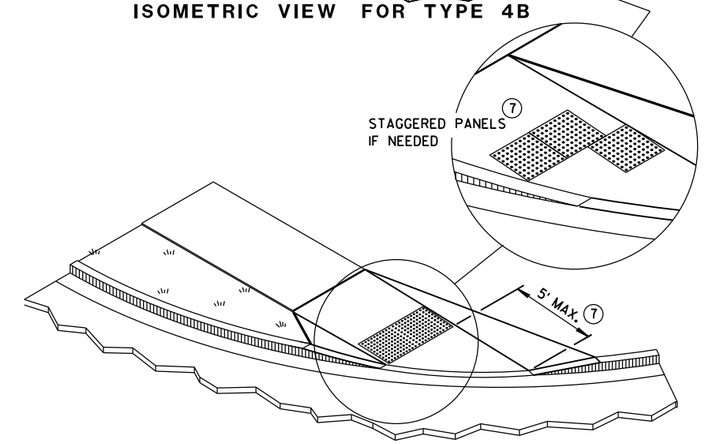

ISOMETRIC VIEW FOR TYPE 4B1

CURB RAMPS
TYPE 4B AND 4B1

STATE OF WISCONSIN
DEPARTMENT OF TRANSPO

6

S.D.D. 8 D 5-17d

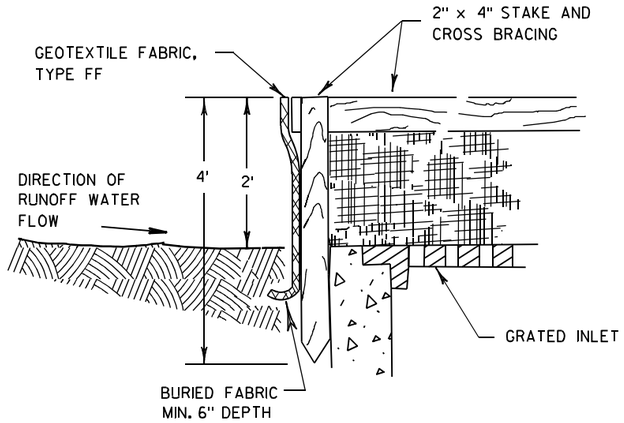

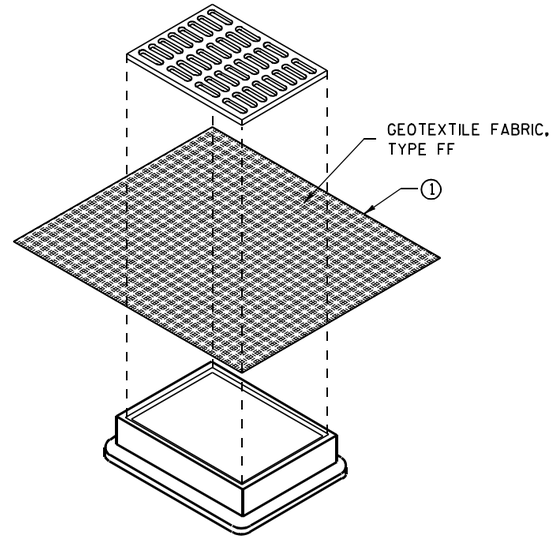

INLET PROTECTION, TYPE B
(WITHOUT CURB BOX)

(CAN BE INSTALLED IN ANY INLET WITHOUT A CURB BOX)

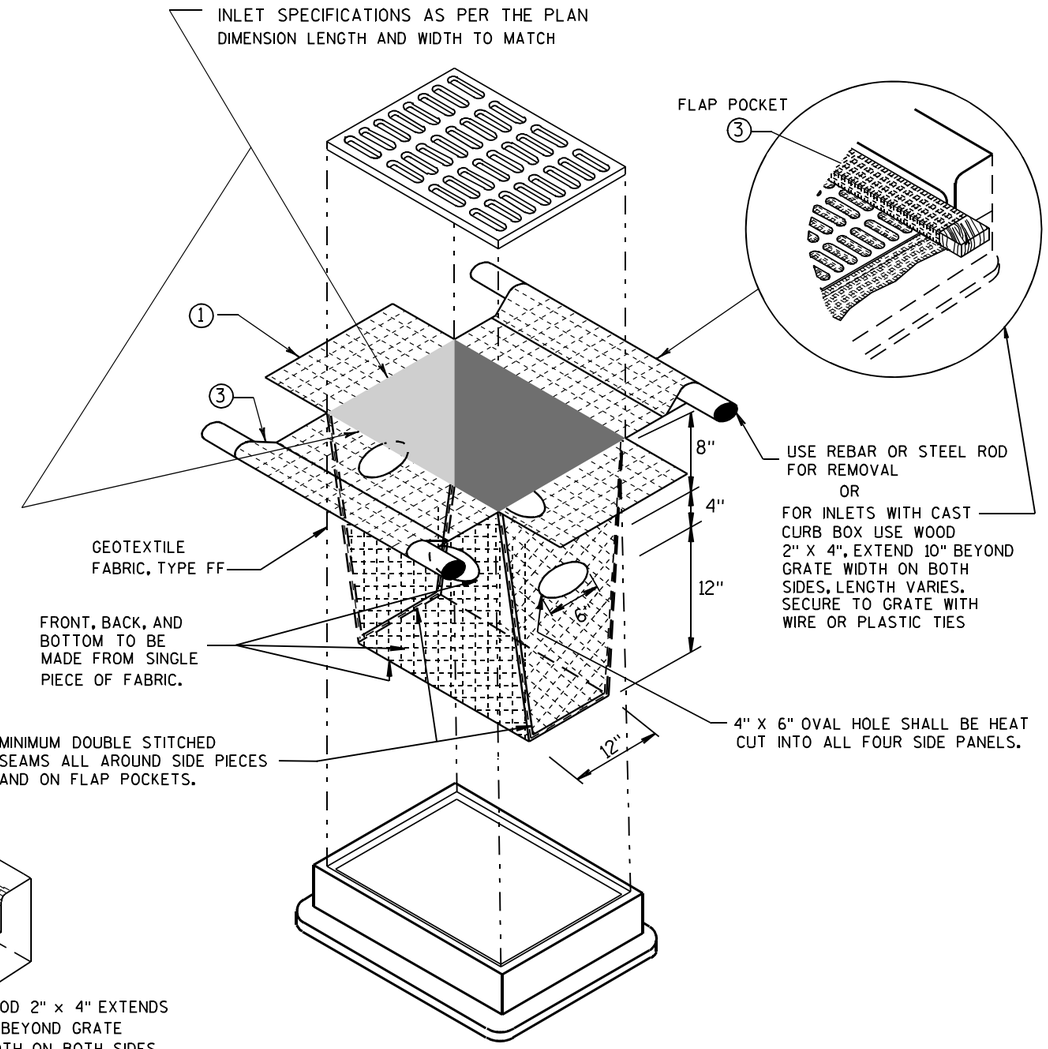

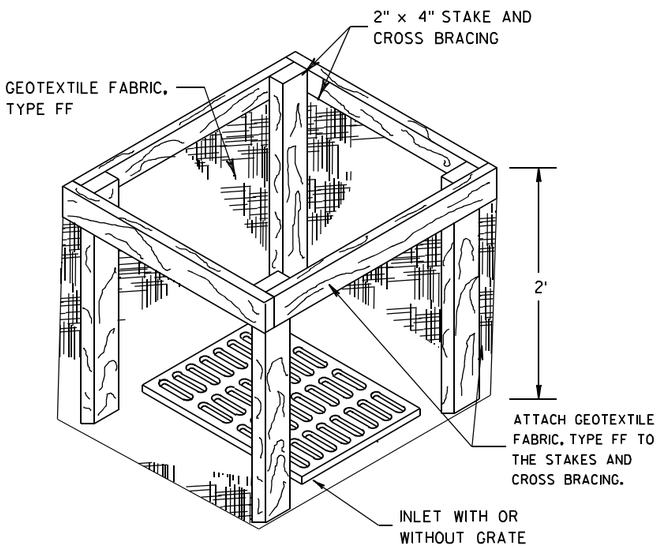

INLET PROTECTION, TYPE A

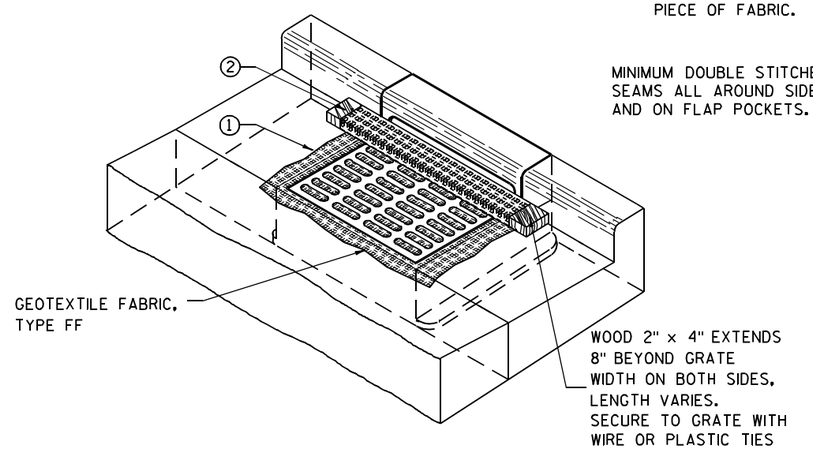

INLET PROTECTION, TYPE C (WITH CURB BOX)

INLET PROTECTION, TYPE D

(CAN BE INSTALLED IN ANY INLET TYPE WITH OR WITHOUT A CURB BOX AS PER NOTE ②)

GENERAL NOTES

INLET PROTECTION DEVICES SHALL BE MAINTAINED OR REPLACED AT THE DIRECTION OF THE ENGINEER.

MANUFACTURED ALTERNATIVES APPROVED AND LISTED ON THE DEPARTMENT'S EROSION CONTROL PRODUCT ACCEPTABILITY LIST MAY BE SUBSTITUTED.

WHEN REMOVING OR MAINTAINING INLET PROTECTION, CARE SHALL BE TAKEN SO THAT THE SEDIMENT TRAPPED ON THE GEOTEXTILE FABRIC DOES NOT FALL INTO THE INLET. ANY MATERIAL FALLING INTO THE INLET SHALL BE REMOVED IMMEDIATELY.

① FINISHED SIZE, INCLUDING FLAP POCKETS WHERE REQUIRED, SHALL EXTEND A MINIMUM OF 10" AROUND THE PERIMETER TO FACILITATE MAINTENANCE OR REMOVAL.

② FOR INLET PROTECTION, TYPE C (WITH CURB BOX), AN ADDITIONAL 18" OF FABRIC IS WRAPPED AROUND THE WOOD AND SECURED WITH STAPLES. THE WOOD SHALL NOT BLOCK THE ENTIRE HEIGHT OF THE CURB BOX OPENING.

③ FLAP POCKETS SHALL BE LARGE ENOUGH TO ACCEPT WOOD 2X4.

INSTALLATION NOTES

TYPE B & C

TRIM EXCESS FABRIC IN THE FLOW LINE TO WITHIN 3" OF THE GRATE.

THE CONTRACTOR SHALL DEMONSTRATE A METHOD OF MAINTENANCE, USING A SEWN FLAP, HAND HOLDS OR OTHER METHOD TO PREVENT ACCUMULATED SEDIMENT FROM ENTERING THE INLET.

TYPE D

DO NOT INSTALL INLET PROTECTION TYPE D IN INLETS SHALLOWER THAN 30", MEASURED FROM THE BOTTOM OF THE INLET TO THE TOP OF THE GRATE.

TRIM EXCESS FABRIC IN THE FLOW LINE TO WITHIN 3" OF THE GRATE.

THE INSTALLED BAG SHALL HAVE A MINIMUM SIDE CLEARANCE, BETWEEN THE INLET WALLS AND THE BAG, MEASURED AT THE BOTTOM OF THE OVERFLOW HOLES, OF 3". WHERE NECESSARY THE CONTRACTOR SHALL CINCH THE BAG, USING PLASTIC ZIP TIES, TO ACHIEVE THE 3" CLEARANCE. THE TIES SHALL BE PLACED AT A MAXIMUM OF 4" FROM THE BOTTOM OF THE BAG.

INLET PROTECTION
TYPE A, B, C, AND D

STATE OF WISCONSIN
DEPARTMENT OF TRANSPORTATION

APPROVED
10/16/02 — DATE
/S/ Beth Cannon — CHIEF ROADWAY DEVELOPMENT ENGINEER
FHWA

6

S.D.D. 8 E 10-2

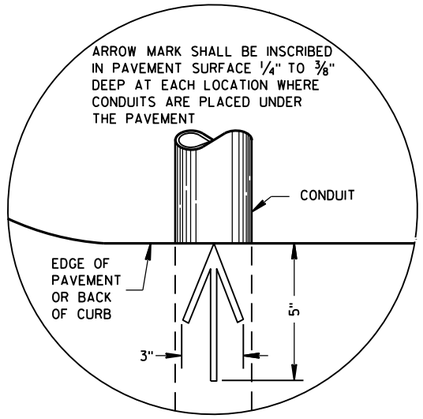

PLAN VIEW

ARROW MARK

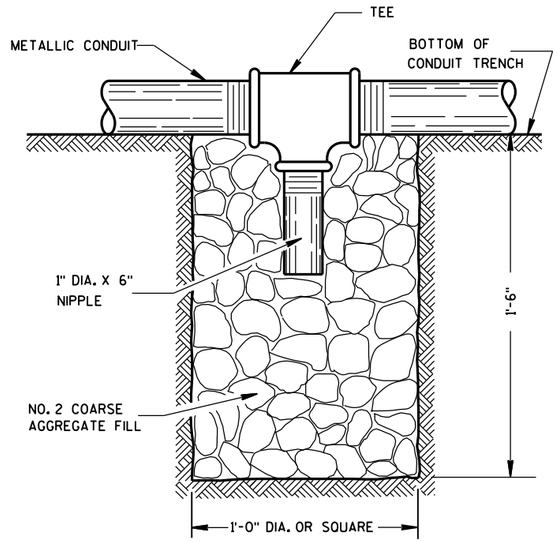

NOTE: INSTALL AT LOCATIONS WHERE METALLIC CONDUITS CANNOT BE PITCHED TO DRAIN INTO A PULL BOX.

DRAIN SUMP FOR METALLIC CONDUIT

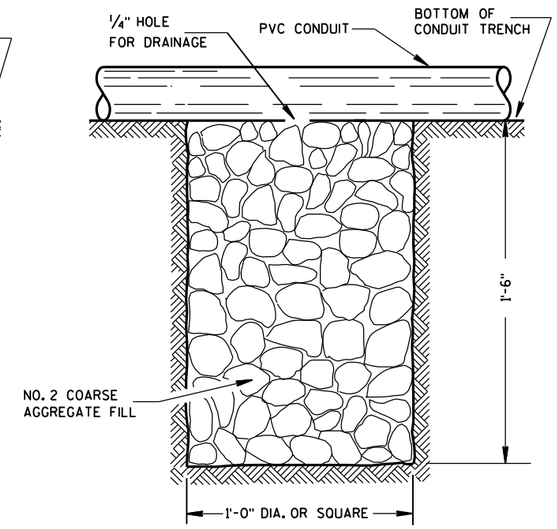

NOTE: INSTALL AT LOCATIONS WHERE PVC CONDUITS CANNOT BE PITCHED TO DRAIN INTO A PULL BOX.

DRAIN SUMP FOR PVC CONDUIT

GENERAL NOTES

DETAILS OF CONSTRUCTION, MATERIALS AND WORKMANSHIP NOT SHOWN ON THIS DRAWING SHALL CONFORM TO THE PERTINENT REQUIREMENTS OF THE CONTRACT.

METALLIC (STANDARD SPECIFICATION 652.2.2) OR NONMETALLIC (STANDARD SPECIFICATION 652.2.3) CONDUIT SHALL BE FURNISHED AND PLACED AS SHOWN.

DEPTH OF CONDUIT INSTALLED BELOW THE TRAVELED WAY SHALL BE 24 INCHES MINIMUM AND 36 INCHES MAXIMUM.

DEPTH OF CONDUIT INSTALLED THAT IS NOT BELOW THE TRAVELED WAY SHALL BE 18 INCHES MINIMUM AND 36 INCHES MAXIMUM.

ANY EXCEPTION TO THE MAXIMUM DEPTH SHALL BE ONLY WITH THE WRITTEN APPROVAL OF THE ENGINEER.

THE TRENCH SHALL NOT BE BACKFILLED PRIOR TO INSPECTION OF THE CONDUIT.

ALL METALLIC CONDUIT RACEWAY ENDS SHALL BE REAMED AND THREADED.

ALL METALLIC CONDUIT IN WHICH WIRE OR CABLE IS TO BE INSTALLED SHALL BE BUSHED WITH APPROVED THREADED BUSHINGS BEFORE INSTALLATION OF THE WIRE OR CABLE.

ALL METALLIC CONDUITS IN WHICH WIRE OR CABLE IS NOT TO BE INSTALLED SHALL BE CAPPED WITH THREADED PROTECTIVE CAPS, AS APPROVED BY THE ENGINEER.

ALL NONMETALLIC CONDUIT SHALL BE CAPPED OR PLUGGED IMMEDIATELY AFTER INSTALLATION AND SHALL REMAIN CAPPED OR PLUGGED UNTIL WIRE/CABLES ARE INSTALLED.

NONMETALLIC CONDUITS IN WHICH WIRE OR CABLE IS NOT BEING INSTALLED SHALL REMAIN CAPPED OR PLUGGED.

BENDING OF PVC ELECTRICAL CONDUIT SHALL BE ACCOMPLISHED BY USING A BLANKET OR EMERSION TYPE TANK DESIGNED FOR THE PURPOSE OF BENDING PVC ELECTRICAL CONDUIT.

ALL CUT ENDS SHALL BE TRIMMED INSIDE AND OUTSIDE TO REMOVE ALL ROUGH EDGES ON NONMETALLIC CONDUIT. (SEE NEC 347.5)

WHEN REQUIRED TO CONNECT NONMETALLIC CONDUIT TO METALLIC CONDUIT, ONLY U.L. LISTED ADAPTER FITTINGS SHALL BE USED.

PRIOR TO CONDUIT ACCEPTANCE, CONDUIT CAPS OR PLUGS SHALL BE REMOVED, AND THE CAPS, PLUGS AND CONDUIT ENDS SHALL BE THOROUGHLY CLEANED AND THEN THE CAPS OR PLUGS REINSTALLED TO ENSURE THAT THE CAPS OR PLUGS CAN BE EASILY REMOVED IN THE FUTURE.

ALL CONDUIT BEING FURNISHED AND INSTALLED SHALL HAVE THE U.L. LABEL FIRMLY ATTACHED.

CONDUIT RUNS SHALL BE THE SAME SIZE OF CONDUIT FROM ONE END TO THE OTHER (FROM PULL BOX TO PULL BOX-OR-JUNCTION BOX TO JUNCTION BOX-OR-BASE TO BASE, ETC.).

TRACER WIRE SHALL BE INSTALLED AS STATED IN THE STANDARD SPECIFICATION, ITEM 652.3.1.1.

ALL CONDUIT RUNS SHALL BE STRAIGHT (WITHOUT BENDS) FROM PULL BOX TO PULL BOX, PULL BOX TO BASE AND BASE TO BASE AS SHOWN ON THE PLANS.

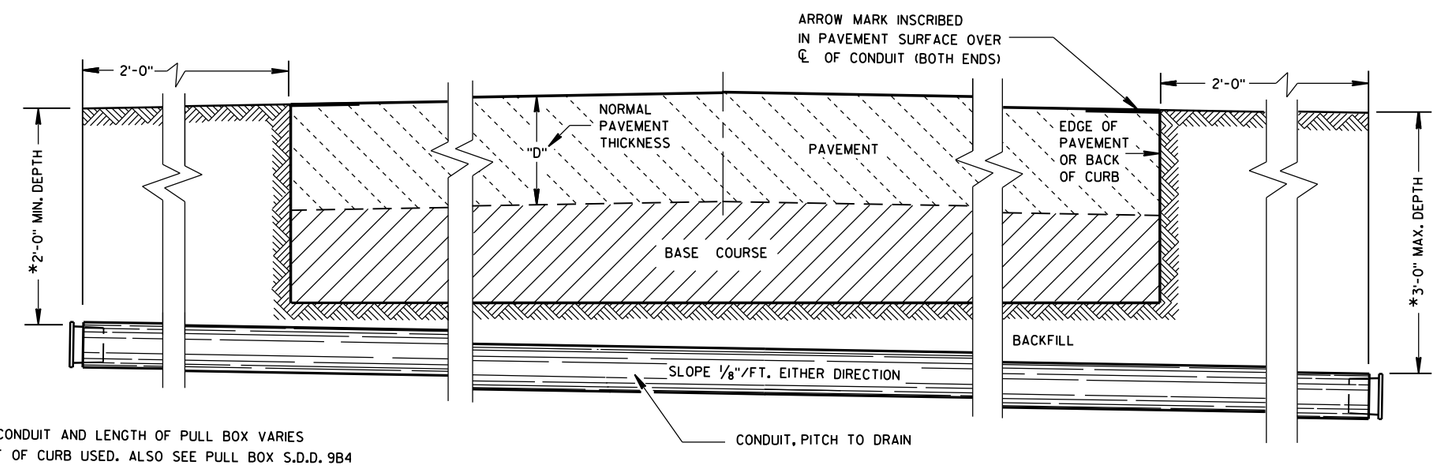

*DEPTH OF CONDUIT AND LENGTH OF PULL BOX VARIES WITH HEIGHT OF CURB USED. ALSO SEE PULL BOX S.D.D. 9B4

SIDE ELEVATION

DETAIL FOR CONDUIT UNDER PAVED HIGHWAYS

6

6

S.D.D. 9 B 2-9

S.D.D. 9 B 2-9

CONDUIT

STATE OF WISCONSIN
DEPARTMENT OF TRANSPORTATION

APPROVED
June, 2015 — DATE
/S/ Ahmet Demirbilek — STATE ELECTRICAL
FHWA

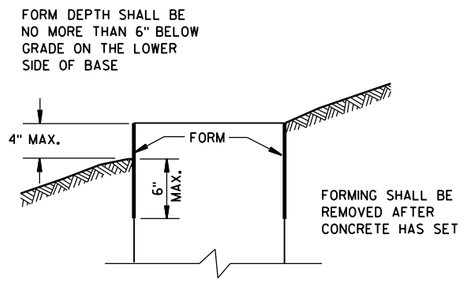

FORMING DETAIL

QUANTITY REQUIREMENTS	CONCRETE BASE TYPE		
	1	2	5 & 6
APPROX. CUBIC YARDS OF CONCRETE	0.40	0.57	0.40
LBS. OF HOOP BAR STEEL	NONE	23	16
LBS. OF VERTICAL BAR STEEL	NONE	60	18

GENERAL NOTES

DETAILS OF CONSTRUCTION, MATERIALS AND WORKMANSHIP NOT SHOWN ON THIS DRAWING SHALL CONFORM TO THE PERTINENT REQUIREMENTS OF THE CONTRACT.

BASES SHALL BE EXCAVATED BY USE OF A CIRCULAR AUGER.

TOP SURFACES OF CONCRETE BASES SHALL BE TROWEL FINISHED SMOOTH AND LEVEL.

CONDUIT SIZES AND LOCATIONS SHALL BE AS SHOWN ON THE PLANS.

THE FINAL OR TERMINATING CONCRETE BASE IN A CONDUIT RUN SHALL HAVE A 6" EXIT STUB INSTALLED FOR FUTURE CABLING USE. THE EXIT STUB SHALL BE SIZED AS USED THROUGHOUT THE CONDUIT RUN AS SHOWN AT THE ENTRANCE OF THE BASE.

MINIMUM BENDING RADIUS OF CONDUIT IS EQUAL TO 6 X THE DIAMETER.

CONDUIT HEIGHT ABOVE CONCRETE BASES SHALL BE 1 INCH. ALL METALLIC CONDUIT ENDS SHALL BE REAMED AND THREADED.

ALL CONDUIT ENDS AT THE TOP OF CONCRETE BASES SHALL BE CAPPED IF METALLIC OR PLUGGED IF NONMETALLIC IMMEDIATELY AFTER PLACEMENT AND BEFORE CONCRETE IS POURED. CONDUITS IN WHICH WIRE OR CABLE IS NOT INSTALLED SHALL REMAIN CAPPED OR PLUGGED.

GENERAL NOTES (CONTINUED)

BELL ENDS SHALL BE INSTALLED ON ALL PVC CONDUIT EXPOSED AT THE TOP OF CONCRETE BASES BEFORE INSTALLATION OF CABLE OR WIRE.

ENDS OF CONDUIT INSTALLED BELOW GRADE FOR FUTURE USE SHALL BE CAPPED IF METALLIC OR PLUGGED IF NONMETALLIC.

WHEN REQUIRED TO CONNECT NONMETALLIC CONDUIT TO METALLIC CONDUIT, ONLY ADAPTER FITTINGS, U.L. LISTED FOR ELECTRICAL USE, SHALL BE USED.

IF A BASE REQUIRES A DEEP FORM BECAUSE OF LOOSE DIRT OR FILL, THE FORM SHALL BE REMOVED BEFORE BACKFILLING AROUND THE BASE. BACKFILL SHALL BE TAMPED TIGHT AGAINST THE BARE CONCRETE BASE IN LAYERS OF 1 FOOT OR LESS.

A NO. 4 AWG, STRANDED COPPER EQUIPMENT GROUNDING CONDUCTOR SHALL BE EXOTHERMICALLY WELDED TO THE EQUIPMENT GROUNDING ELECTRODE (GROUND ROD) FOR TYPE 1, TYPE 2, TYPE 5, AND TYPE 6 BASES.

THE EQUIPMENT GROUNDING CONDUCTOR SHALL BE FURNISHED AND INSTALLED TO ENTER THE BASE OF THE TYPE 2 AND TYPE 5 BASES THROUGH A 1 INCH CONDUIT INSTALLED FOR GROUNDING PURPOSES, LEAVING A 4 FOOT COIL OF WIRE ABOVE THE CONCRETE BASE. THE EQUIPMENT GROUNDING CONDUCTOR SHALL BE NEATLY COILED AND THE COILS TIED TOGETHER.

ANCHOR RODS SHALL BE THREADED 12" IN LENGTH ON EACH END OF THE ROD. ANCHOR RODS SHALL BE MANUFACTURED IN ACCORDANCE WITH SECTION 654.2.1 OF THE STANDARD SPECIFICATIONS.

WASHERS AND LOCK WASHERS ARE REQUIRED ON ALL ANCHOR RODS.

WHEN ANCHOR RODS USING THE ALTERNATE "L" BEND ARE FURNISHED, THE 4" "L" BEND SHALL BE IN ADDITION TO THE SPECIFIED ANCHOR ROD BAR LENGTH. THE "L" BEND END SHALL NOT BE THREADED.

ANCHOR RODS SHALL BE INSTALLED WITH MISALIGNMENTS OF LESS THAN 1:40 FROM VERTICAL.

WELDING OF THE ANCHOR RODS TO THE CAGE IS UNACCEPTABLE. TIE WIRES SHALL BE USED.

BAR STEEL REINFORCEMENT SHALL BE COATED WITH POWDERED EPOXY RESIN IN ACCORDANCE WITH SECTION 505 OF THE STANDARD SPECIFICATIONS (LATEST EDITION).

(1) THE MINIMUM DEPTH OF CONDUIT EXITING THE CONCRETE BASE AND INSTALLED BELOW THE TRAVELED WAY SHALL BE 24 INCHES. THE MINIMUM DEPTH OF CONDUIT EXITING THE CONCRETE BASE THAT IS NOT INSTALLED BELOW THE TRAVELED WAY SHALL BE 18 INCHES. THE MAXIMUM DEPTH OF ALL CONDUIT SHALL BE 36 INCHES EXCEPT WITH WRITTEN APPROVAL BY THE ENGINEER.

(2) (4) 1" DIA. X 3'-6" ANCHOR RODS.

(3) (4) 1" DIA. X 5'-0" ANCHOR RODS.

(4) (6) NO. 6 X 6'-8" BAR STEEL REINFORCEMENT.

(5) (7) NO. 4 X 5'-1" BAR STEEL REINFORCEMENT @ 1'-0" C-C.

(6) (4) 1" DIA. X 3'-6" ANCHOR RODS.

(7) (6) NO.4 X 4'-8" BAR STEEL REINFORCEMENT.

(8) (5) NO. 4 X 5'-1" BAR STEEL REINFORCEMENT @ 1'-0" C-C.

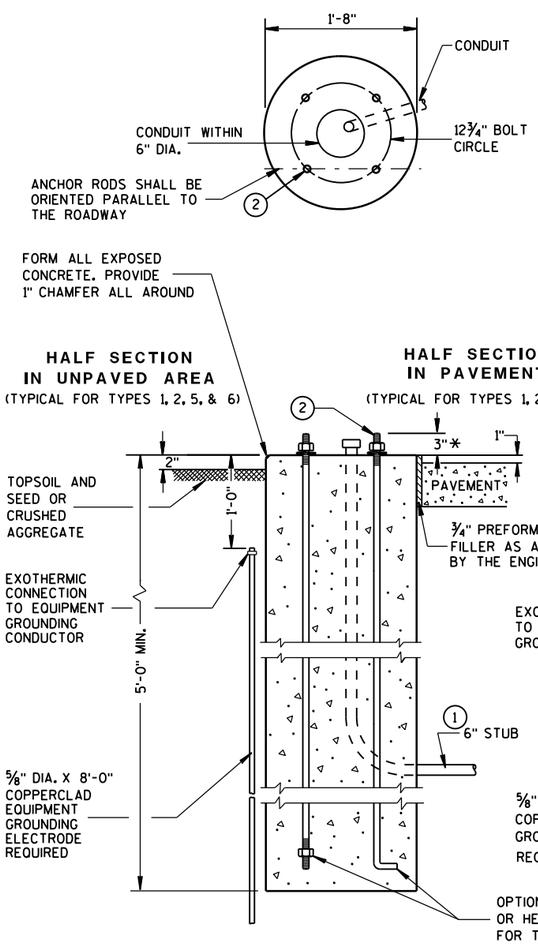

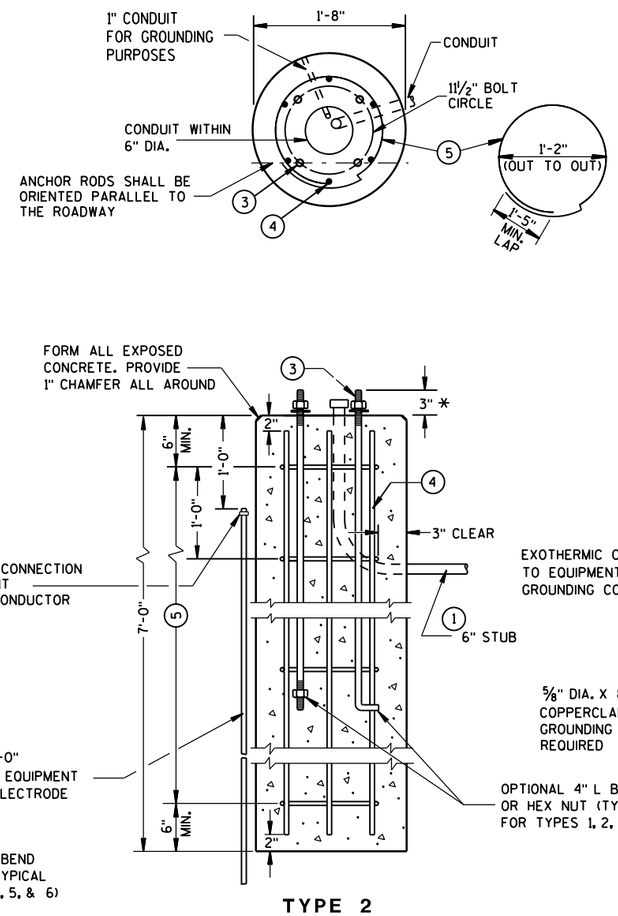

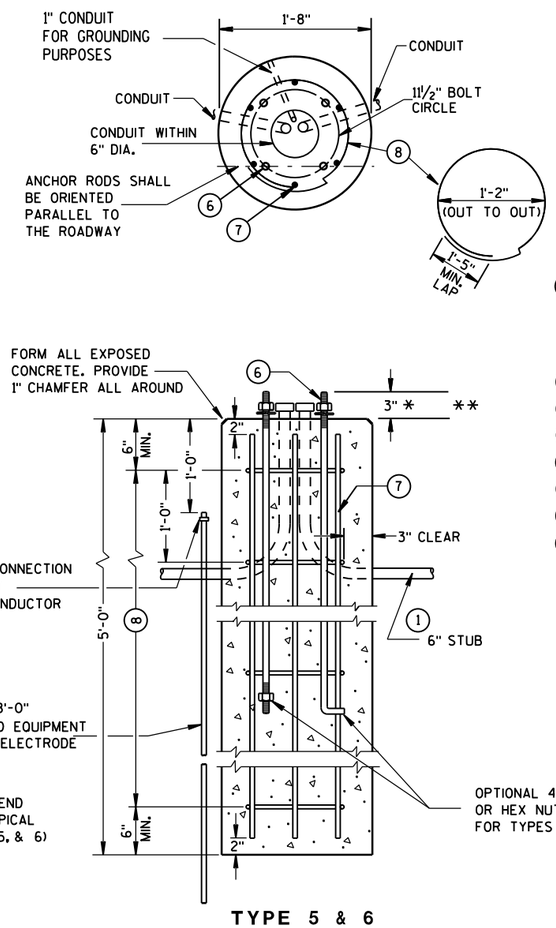

CONCRETE BASES

* ANY ANCHOR ROD PROJECTION SHORTER THAN 2¾" OR LONGER THAN 3¼" SHALL REQUIRE THE BASE TO BE REMOVED AND REPLACED AT THE CONTRACTORS EXPENSE.

** FOR NONBREAKAWAY INSTALLATIONS, 4½" ± ANCHOR ROD PROJECTION WITH THE USE OF LEVELING NUTS. RODENT SCREEN REQUIRED.

CONCRETE BASES, TYPES 1, 2, 5, & 6

STATE OF WISCONSIN
DEPARTMENT OF TRANSPORTATION

APPROVED
Sept. 2014 — /S/ Ahmet Demirbilek
DATE — STATE ELECTRICAL
FHWA

6

S.D.D. 9 C 2-7

GENERAL NOTES

DETAILS OF CONSTRUCTION, MATERIALS AND WORKMANSHIP NOT SHOWN ON THIS DRAWING SHALL CONFORM TO THE PERTINENT REQUIREMENTS OF THE CONTRACT.

FOUR (4) BOLTS SHALL BE FURNISHED WITH EACH TRANSFORMER BASE. BOLTS SHALL BE 1" DIAMETER, 4" IN LENGTH, WITH WASHERS, LOCK WASHERS AND NUTS. BOLTS, NUTS AND WASHERS SHALL BE MANUFACTURED IN ACCORDANCE WITH SECTION 641.2.2 OF THE STANDARD SPECIFICATIONS.

LEVELING SHIMS, IF NEEDED, SHALL BE DESIGNED FOR THE PURPOSE AND USED UNDER CAST BASES WHEN PLUMBING POLES OR STANDARDS DURING INSTALLATION. THE USE OF WASHERS IN LIEU OF PROPER LEVELING SHIMS IS NOT ACCEPTABLE.

SHIM LENGTH SHALL BE LONG ENOUGH TO COMPLETELY COVER THE AREA UNDER THE LENGTH AND WIDTH OF THE BASE MOUNTING FLANGE.

DOUBLE NUTTING IS NOT ACCEPTABLE FOR LEVELING OR MOUNTING PURPOSES.

A NEMA APPROVED, U.L. LISTED, COPPER WITH BRASS OR STAINLESS STEEL SET SCREW, DIRECT BURY RATED, MECHANICAL CONNECTOR (LUG), SIZED TO ACCEPT AWG. #10 TO #4 COPPER STRANDED WIRE SHALL BE FURNISHED AND INSTALLED IN THE PEDESTAL AND TRANSFORMER BASES.

THE MECHANICAL CONNECTOR SHALL BE INSTALLED USING A 1/4" - 20 (TPI) STAINLESS STEEL HEX HEAD BOLT OF SUFFICIENT LENGTH TO FIRMLY ATTACH THE LUG TO THE BASE.

SHOULD THE MANNER OF ATTACHMENT OF THE LUG REQUIRE WASHERS, HEX NUTS, LOCK WASHER - THEY SHALL BE STAINLESS STEEL AS IS THE BOLT. THE MANNER OF ATTACHMENT SHALL NOT BLOCK ACCESSIBILITY TO WIRE PLACEMENT IN THE CONNECTOR.

PEDESTAL BASE COLLAR THREADING SHALL BE TAPERED AND IN ACCORDANCE WITH NATIONAL PIPE THREADING DIMENSIONS.

BASE COLLAR THREADING SHALL EXTEND INTO THE BASE COLLAR WITH SUFFICIENT DEPTH TO ACCEPT THE INSTALLATION OF TRAFFIC SIGNAL STANDARDS TO A DEPTH OF 1 1/2", THEN TIGHTENING TO A POINT OF BEING IMMOVABLE.

THE ACCESS DOOR SHALL BE OF THE SAME MATERIAL AS THE BASE.

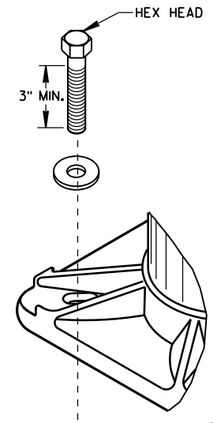

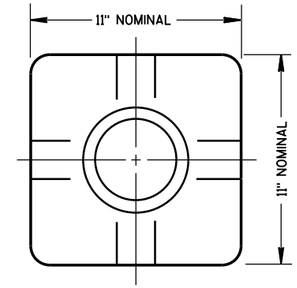

TOP VIEW
(PEDESTAL BASE)

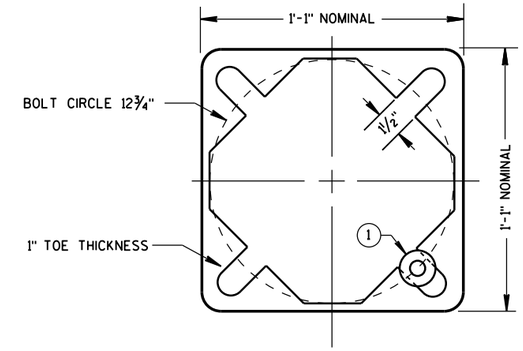

BOTTOM VIEW
(PEDESTAL BASE)

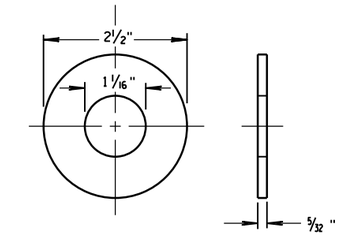

ZINC COATED STEEL WASHER
TO BE PROVIDED BY THE CONTRACTOR

PEDESTAL BASE WASHER (1)

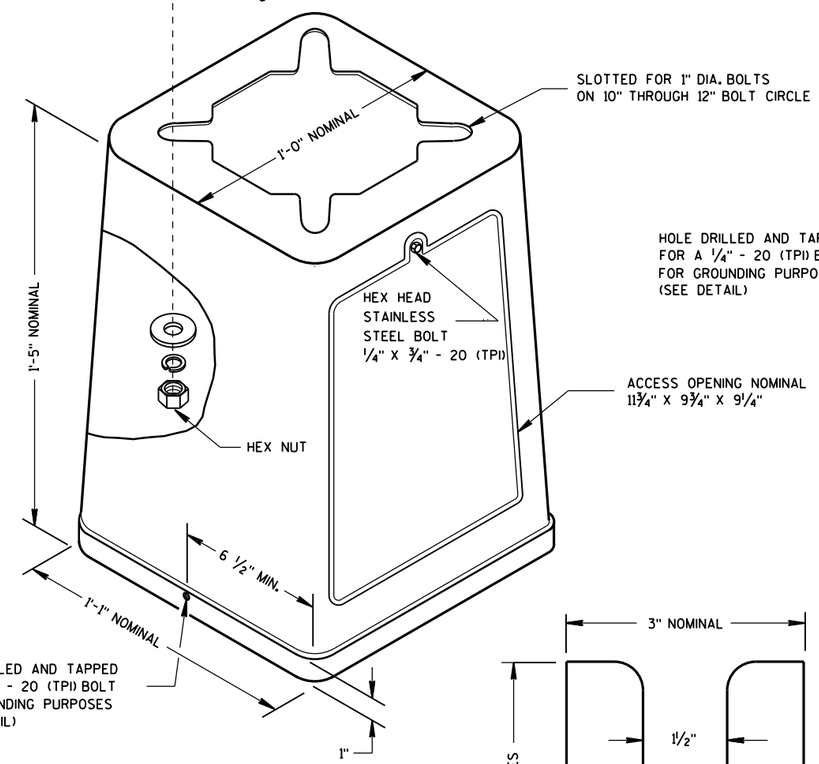

ISOMETRIC VIEW

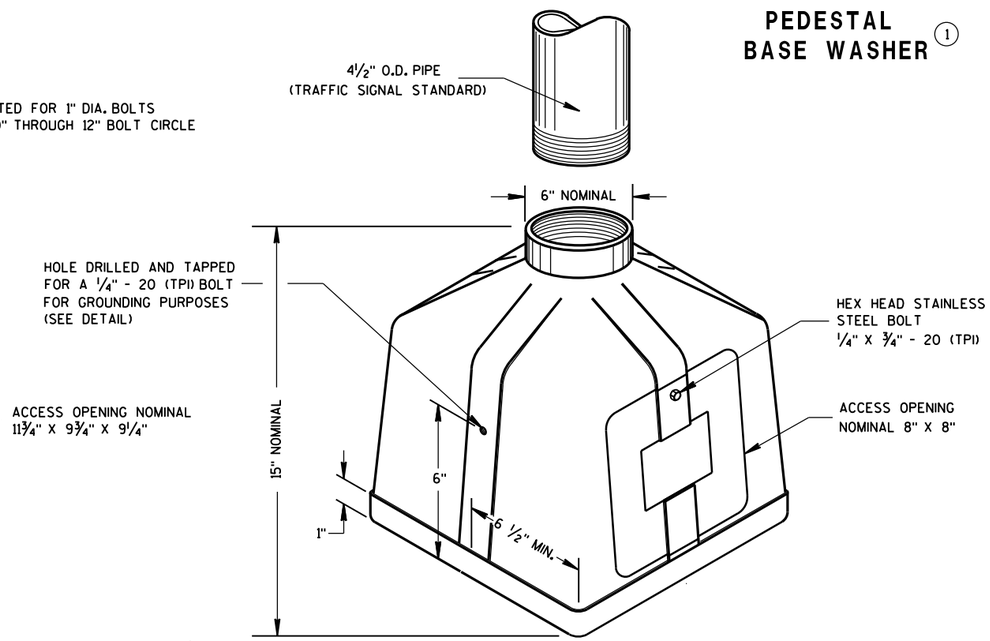

ISOMETRIC VIEW
PEDESTAL BASE

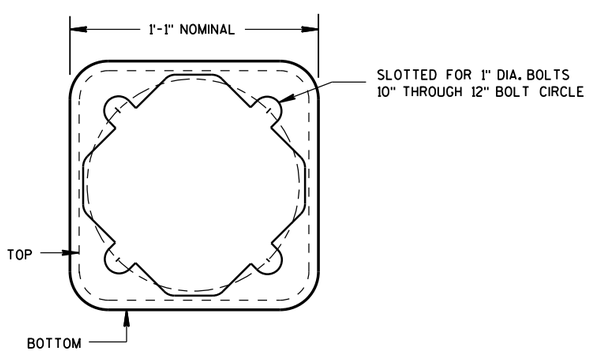

BOTTOM VIEW
(TRANSFORMER BASE)

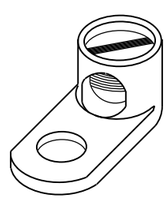

TYPICAL MECHANICAL CONNECTOR LUG

TO BE FURNISHED WITH EACH BASE

TRANSFORMER BASE

INTENDED FOR USE WITH TYPE 2, 3, 4, 5 & 6 POLES

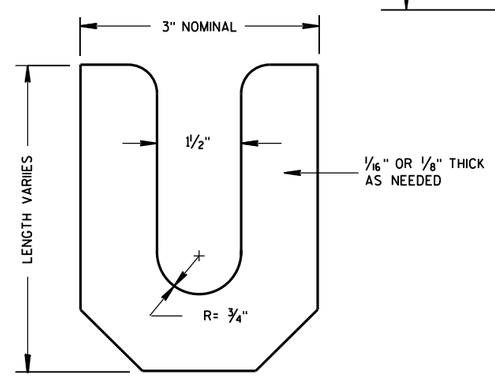

LEVELING SHIM

TRANSFORMER/PEDESTAL BASES	
STATE OF WISCONSIN DEPARTMENT OF TRANSPORTATION	
APPROVED Sept. 2014 DATE FHWA	/S/ Ahmet Demirbilek STATE ELECTRICAL

6

6

S.D.D. 9 C 3-4

S.D.D. 9 C 3-4

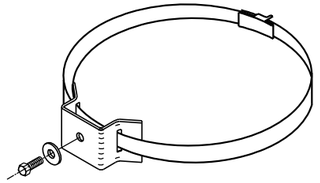

TYPICAL SIGN MOUNTING BAND

(TOP AND BOTTOM OF SIGN)

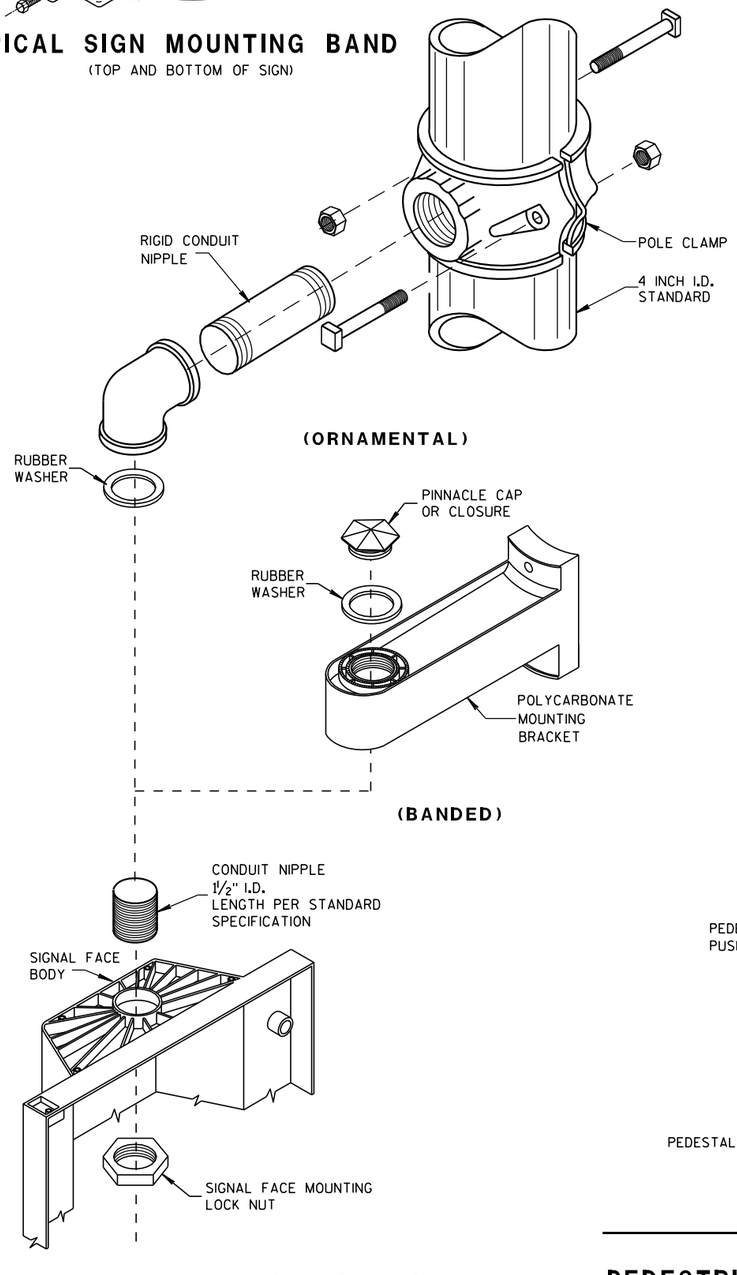

SIGNAL FACE MOUNTING DETAILS

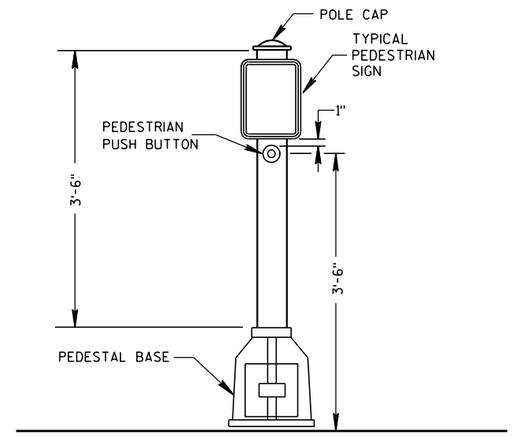

PEDESTRIAN PUSH BUTTON TYPICAL MOUNTING

GENERAL NOTES

DETAILS OF CONSTRUCTION, MATERIALS AND WORKMANSHIP NOT SHOWN ON THIS DRAWING SHALL CONFORM TO THE PERTINENT REQUIREMENTS OF THE CONTRACT.

SEE THE SIGNAL PLAN FOR REQUIRED SIGNAL FACE SIZES.

LOCATIONS SHALL BE AS SHOWN ON THE PLANS.

ALL PEDESTAL BASES SHALL BE MOUNTED ON CONCRETE BASE - TYPE 1.

FOR APPROVED MOUNTING HARDWARE, SEE THE CONTRACT SPECIFICATIONS.

POLYCARBONATE SIGNAL FACE MOUNTING BRACKETS SHALL BE USED UNLESS ORNAMENTAL POLE CLAMPS ARE SPECIFIED.

LENGTH OF TRAFFIC STANDARDS SHALL BE AS SHOWN ON THE PLANS.

MOUNTINGS AND BRACKETS SHALL BE AS SHOWN ON THE PLANS OR DESCRIBED IN THE SPECIAL PROVISIONS (BY THE DISTRICT TRAFFIC ENGINEER).

PEDESTRIAN SIGNS SHALL BE AS DESIGNATED IN THE PLANS.

FURNISH AND INSTALL VENTILATED, CAST, METALLIC (ALUMINUM ALLOY) CAPS. FASTEN CAPS WITH ONE (1) ¼" X ¾" - 20 TPI STAINLESS STEEL, HEX HEAD BOLT.

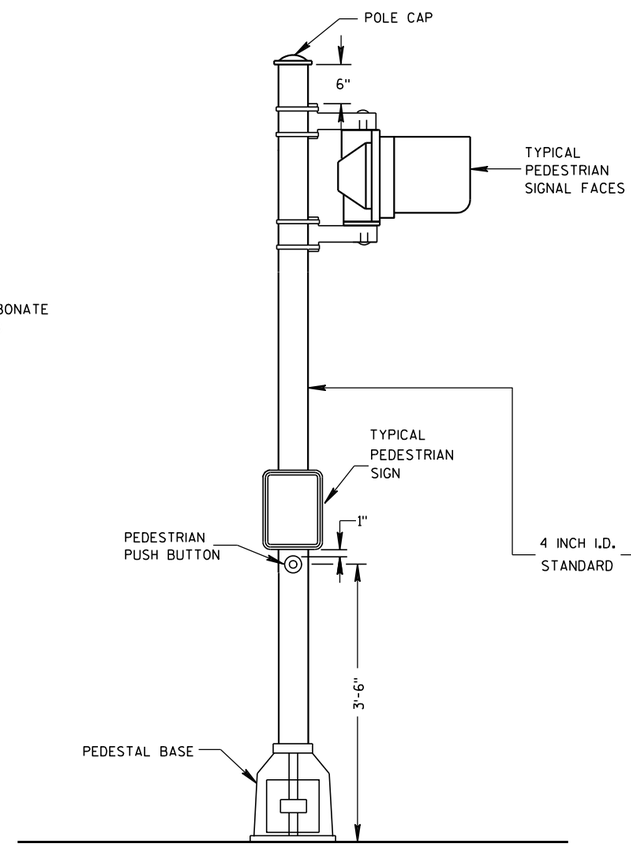

PEDESTRIAN FACE STANDARD-10 FT.

(WALK-DON'T WALK)

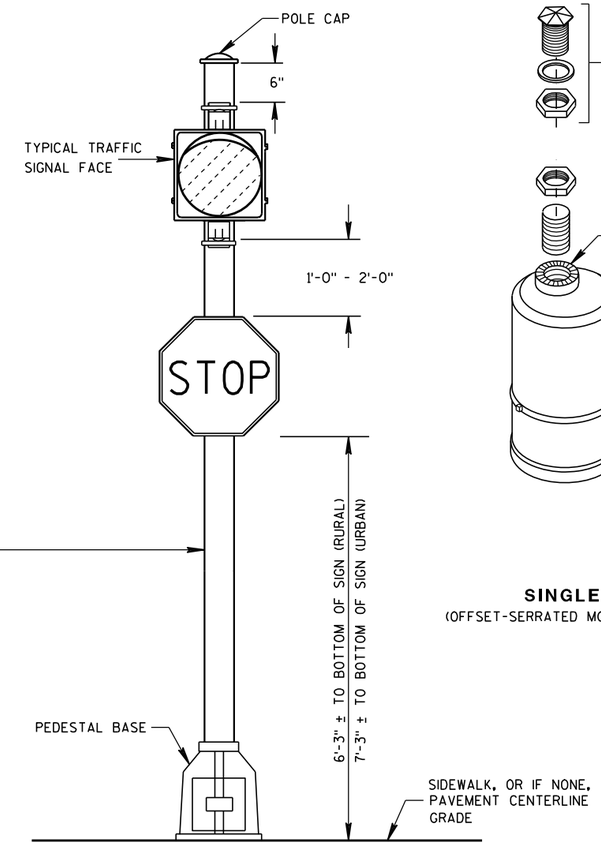

STANDARD FLASHER.

10 FOOT, 13 FOOT OR 15 FOOT AS REQUIRED

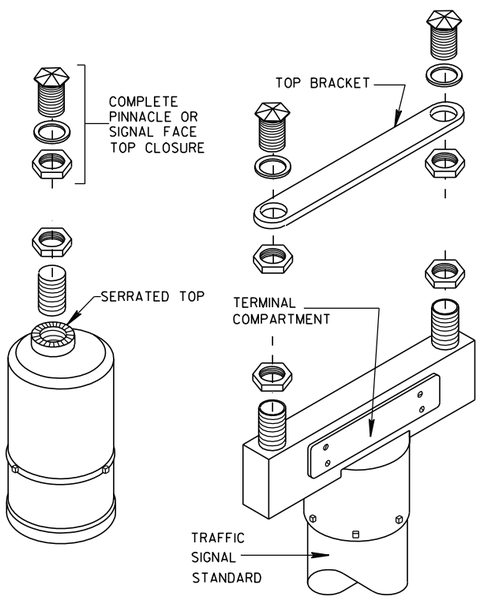

SINGLE
(OFFSET-SERRATED MOUNTING)

DOUBLE
(SERRATED MOUNTING)

SLIPFITTERS

TRAFFIC SIGNAL STANDARD PEDESTRIAN AND FLASHER TYPICAL MOUNTING DETAILS

STATE OF WISCONSIN
DEPARTMENT OF TRANSPORTATION

APPROVED

5/11/10 — DATE
/S/ John Corbin — STATE ELECTRICAL ENGI
FHWA — HWYS

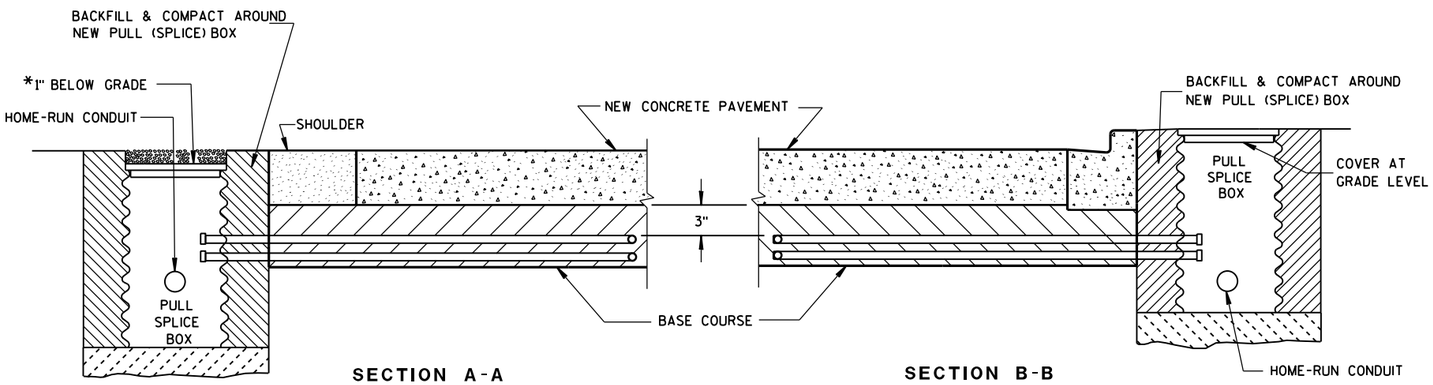

SECTION A-A
NO CURB & GUTTER

SECTION B-B
CURB & GUTTER

*RECESS PULL (SPLICE) BOX SO THAT THE COVER IS 3" BELOW GRADE IN SHOULDER AREAS OF CRUSHED AGGREGATE. BACKFILL OVER COVER WITH THE CRUSHED AGGREGATE TO BRING THE AREA TO GRADE LEVEL.

LOOP DETECTOR INSTALLATION DETAIL

GENERAL NOTES

DETAILS OF CONSTRUCTION, MATERIALS AND WORKMANSHIP NOT SHOWN ON THIS DRAWING SHALL CONFORM TO THE PERTINENT REQUIREMENTS OF THE CONTRACT.

LOOP SIZE, CONFIGURATION LOCATION, NUMBER OF TURNS OF WIRE AND ASSOCIATED SIGNAL PHASE SHALL BE AS SHOWN ON THE PLANS.

PITCH LEAD OUT CONDUIT TO DRAIN TO ROADSIDE PULL (SPLICE) BOX.

SPLICES SHALL BE INSTALLED BY USING CAST IN PLACE SPLICE KITS LISTED ON THE DEPARTMENTS APPROVED PRODUCTS LIST OR AN ENGINEER APPROVED EQUAL. NON-INSULATED BUTT SPLICES TO FIT #12 AWG STRANDED WIRE SHALL BE USED. SPLICES SHALL BE SOLDERED AND INSULATED FROM EACH OTHER AS PER INSTRUCTIONS INCLUDED IN THE SPLICE KIT.

MEASURE GROUND RESISTANCE USING A MEGGER. REPLACE LOOP WIRE NOT ATTAINING A READING OF INFINITY TO GROUND.

AFTER SPLICING THE LOOP WIRE TO THE LOOP LEAD-IN CABLE, THE CONTRACTOR SHALL MEASURE INDUCTANCE, GROUND RESISTANCE AND WIRE RESISTANCE AT THE CABINET END OF THE LEAD-IN CABLE AND FURNISH A COPY OF THE READINGS TO THE PROJECT ENGINEER FOR EVALUATION.

LOOP DETECTOR LEADS SHALL BE IDENTIFIED WITH THEIR ASSOCIATED LOOP BY USE OF WATERPROOF TAGS AT BOTH ENDS OF THE CABLE. A LISTING OF THE CABLE IDENTIFICATION PER INDIVIDUAL LOOP LEAD-IN SHALL BE PLACED IN THE CABINET.

THE #12 AWG. LOOP WIRE IN THE PULL (SPLICE) BOX SHALL BE HAND TWISTED AT LEAST 3 TWISTS PER FOOT BEFORE BEING SPLICED TO THE LOOP LEAD-IN CABLE.

SPLICES OF LOOP WIRE TO LEAD-IN CABLE SHALL BE MADE ONLY IN PULL (SPLICE) BOXES AT THE SIDE OF THE ROAD.

THE #12 AWG LOOP WIRE SHALL BE INSTALLED FROM THE ROADSIDE PULL (SPLICE) BOX, THROUGH THE LOOP CONDUIT, BACK TO THE ROADSIDE PULL (SPLICE) BOX, AND BE INSTALLED IN ONE, NON-SPLICED CONTINUOUS LENGTH.

PROTECTION OF THE CONDUITS IN THE BASE COURSE SHALL BE REQUIRED AFTER INSTALLATION AND BEFORE NEW PAVEMENT IS INSTALLED.

SHOULD INSTALLATION REPAIR BE REQUIRED, IT SHALL BE DONE UNDER THE DIRECTION OF THE PROJECT ENGINEER.

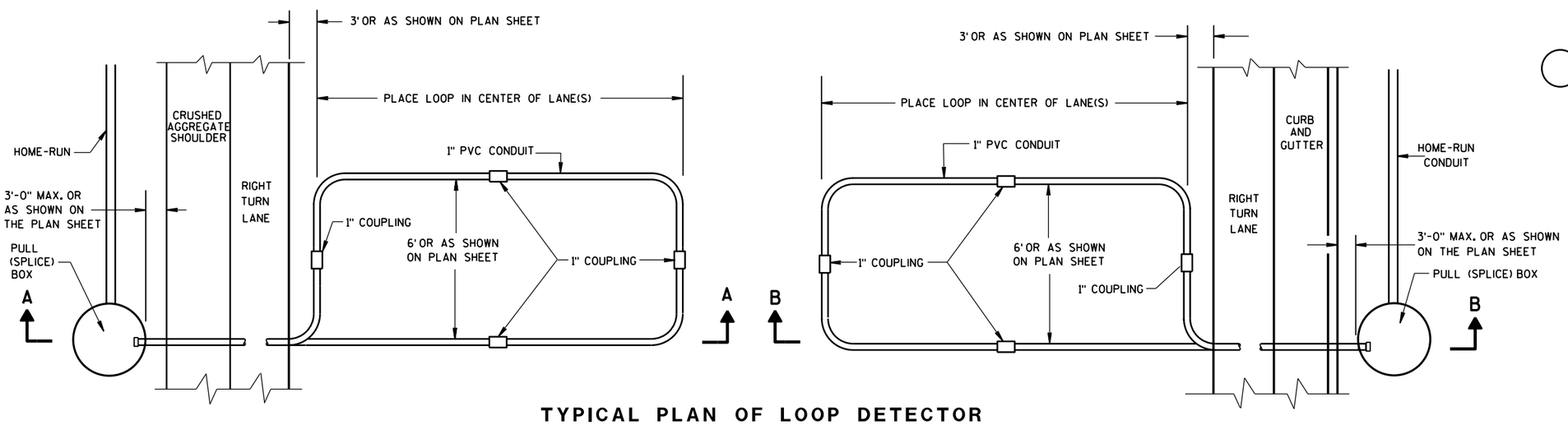

TYPICAL PLAN OF LOOP DETECTOR WITH 24" PULL (SPLICE) BOX

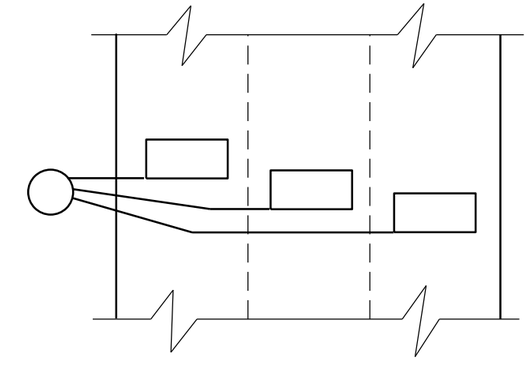

MULTI-LANE INSTALLATION

LOOP DETECTOR INSTALLED IN BASE COURSE WITH PULL (SPLICE) BOX OFF ROADWAY (OPTION 2)
STATE OF WISCONSIN DEPARTMENT OF TRANSPORTATION
APPROVED Sept. 2014 DATE — /S/ Ahmet Demirbilek STATE ELECTRICAL — FHWA

6

6

S.D.D. 9 F 15-4b

S.D.D. 9 F 15-4b

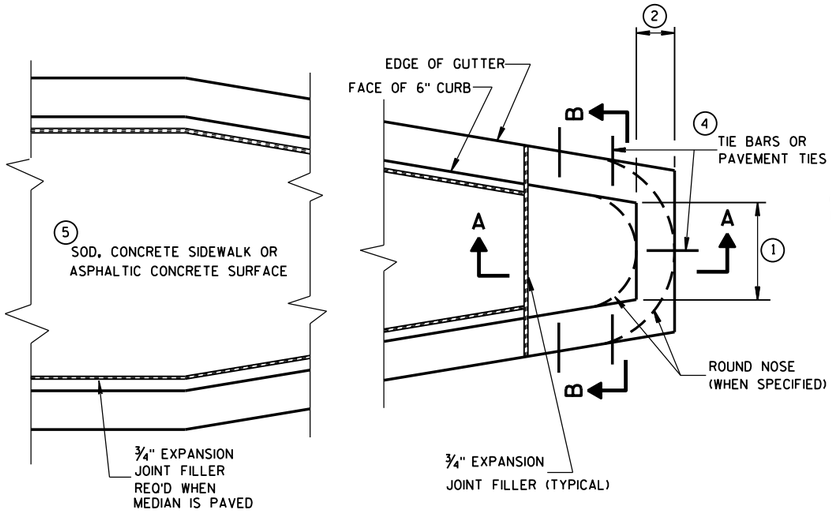

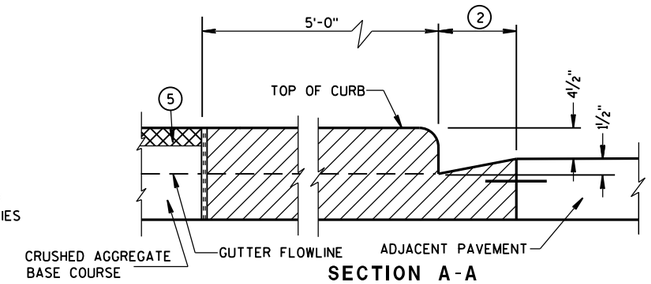

SECTION A-A

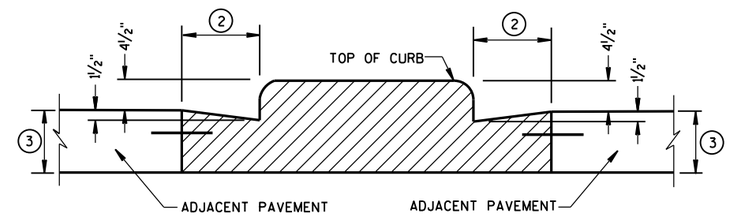

SECTION B-B

CONCRETE MEDIAN BLUNT NOSE DETAIL

GENERAL NOTES

DETAILS OF CONSTRUCTION, MATERIALS AND WORKMANSHIP NOT SHOWN ON THIS DRAWING SHALL CONFORM TO THE PERTINENT REQUIREMENTS OF THE STANDARD SPECIFICATIONS AND THE APPLICABLE SPECIAL PROVISIONS.

1. SEE PLAN FOR MEDIAN NOSE WIDTH AND RADIUS (FOR ROUND NOSE ALTERNATE).
2. WIDTH OF GUTTER TO MATCH EXISTING ADJACENT GUTTER OR AS SPECIFIED ELSEWHERE IN THE PLAN.
3. DEPTH EQUAL TO ADJACENT PAVEMENT. ADJACENT PAVEMENT STRUCTURE DETAILS ARE SHOWN ON THE PLAN. TYPICAL OPTIONS ARE:
   (1) NEW OR EXISTING CONCRETE PAVEMENT.
   (2) ASPHALTIC CONCRETE PAVEMENT OVER NEW OR EXISTING CONCRETE BASE COURSE.
   (3) ASPHALTIC CONCRETE PAVEMENT OVER CRUSHED AGGREGATE BASE COURSE.
4. TIE BARS OR PAVEMENT TIES REQUIRED IN NEW CONCRETE PAVEMENT OR CONCRETE BASE COURSE. TIE BARS SHALL BE NO. 4 X 2'-0" SPACED AT 2'-0" C-C.

   PAVEMENT TIES REQUIRED IN EXISTING CONCRETE BASE COURSE. PAVEMENT TIES SHALL BE NO. 6 X 1'-0" SPACED AT 3'-0" C-C INSTALLED ON A HORIZONTAL SKEW OF 6:1. THE DIRECTION OF SKEW SHALL ALTERNATE AFTER EVERY ONE OR TWO BARS.
5. SURFACE TYPE AND DETAILS ARE SHOWN ELSEWHERE IN THE PLAN.

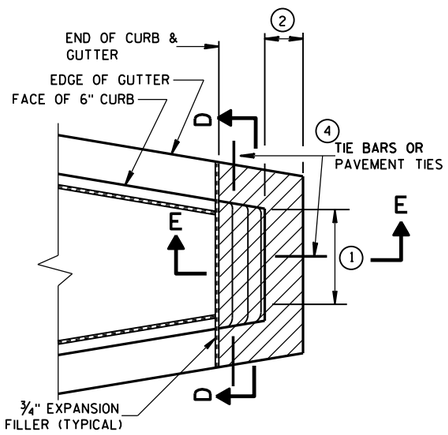

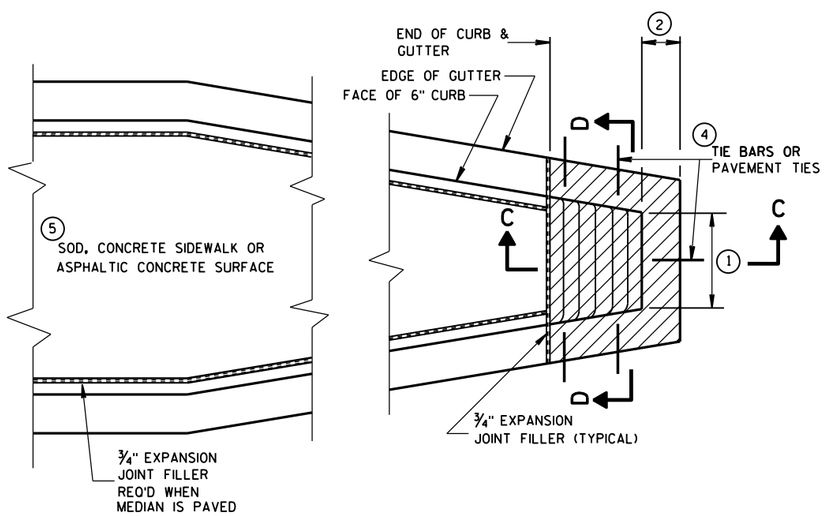

CONCRETE MEDIAN SLOPED NOSE TYPE 1

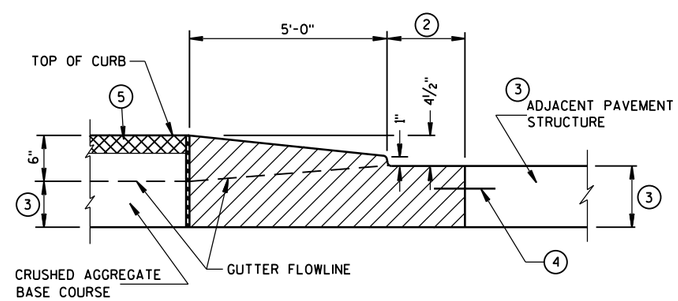

SECTION C-C

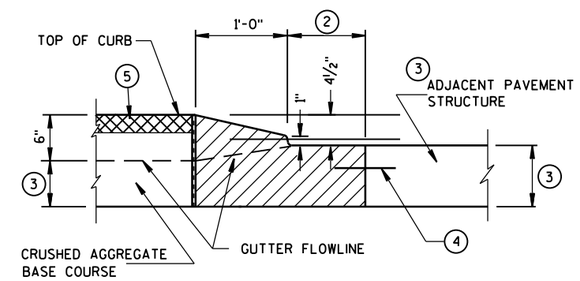

SECTION E-E

CONCRETE MEDIAN SLOPED NOSE TYPE 2

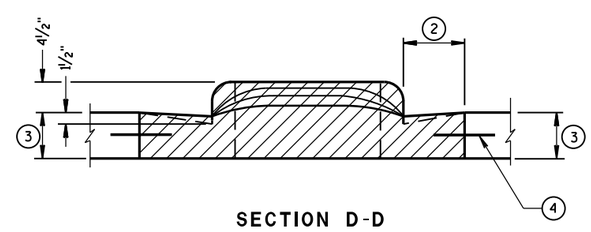

SECTION D-D

CONCRETE MEDIAN NOSE

STATE OF WISCONSIN
DEPARTMENT OF TRANSPORTATION

APPROVED
6/8/2006 — DATE
/S/ Jerry H. Zogg — ROADWAY STANDARDS DEVELOPMENT ENGINEER
FHWA

6

S.D.D. 11 B 2-2

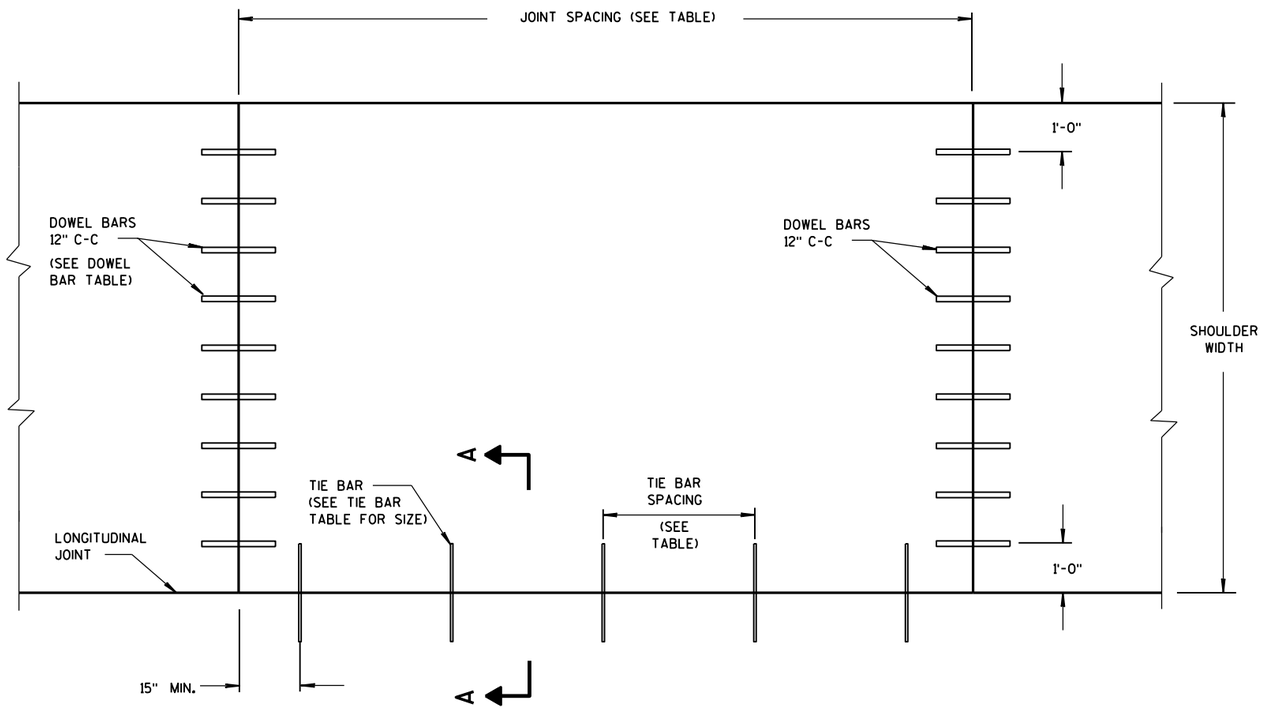

PLAN VIEW

CONCRETE PAVEMENT SHOULDER

GENERAL NOTES

DETAILS OF CONSTRUCTION, MATERIALS AND WORKMANSHIP NOT SHOWN ON THIS DRAWING SHALL CONFORM TO THE PERTINENT REQUIREMENTS OF THE STANDARD SPECIFICATIONS AND THE APPLICABLE SPECIAL PROVISIONS.

TRANSVERSE JOINT DETAILS ARE SHOWN ELSEWHERE IN THE PLAN.

FINISH THE SHOULDER PAVEMENT CONFORMING TO SUBSECTION 415.3.8 OF THE STANDARD SPECIFICATIONS.

TIE BARS SHALL CONFORM TO SUBSECTION 505.2.4 OF THE STANDARD SPECIFICATIONS.

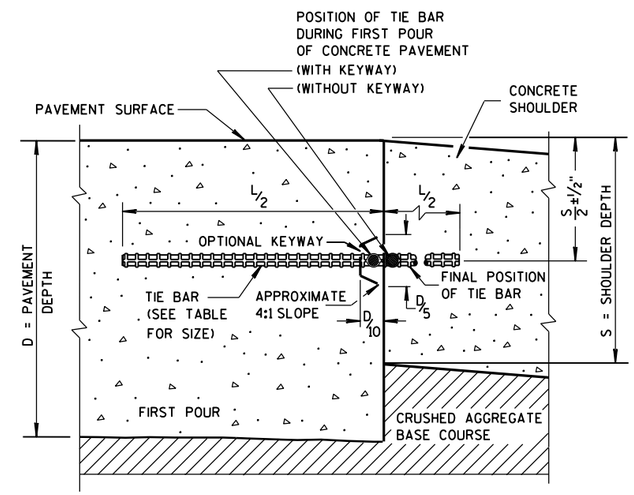

SECTION A-A

LONGITUDINAL CONSTRUCTION JOINT

TIE BAR TABLE

PAVEMENT DEPTH (D)	TIE BAR SIZE	TIE BAR LENGTH (L)	MAX. TIE BAR SPACING
< 10 ½"	NO. 4	30"	36"
≥ 10 ½"	NO. 5	36"	36"
	NO. 4*	30"	24"**

* SUBSTITUTE BENT BARS AT LONGITUDINAL JOINTS WHEN EQUIPMENT LIMITATIONS DURING CONSTRUCTION WARRANT (e.g. AUXILIARY LANES OR TURN LANES)

** CONFORM TO 15" MINUMUM SPACING FROM TRANSVERSE JOINTS; SPACING BETWEEN TIE BARS WILL BE 30" AT TRANSVERSE JOINTS.

PAVEMENT DEPTH, DOWEL BAR SIZE AND JOINT SPACING TABLE

PAVEMENT DEPTH (D)	DOWEL BAR DIAMETER***	CONTRACTION JOINT SPACING
5 ½", 6", 6 ½"	NONE	12'
7", 7 ½"	1"	14'
8", 8 ½"	1¼"	15'
9", 9 ½"	1¼"	15'
10" & ABOVE	1½"	15'

*** FOR DOWELED CONCRETE SHOULDERS WITH TRAPEZOIDAL CROSS SECTIONS, CHOSE THE APPROPRIATE DOWEL BAR DIAMETER BASED ON THE SMALLER PAVEMENT DEPTH (LIKELY THE OUTSIDE EDGE OF THE SHOULDER). IF USING BASKETS, USE BASKETS FOR THE AVERAGE THICKNESS OF THE CROSS SECTION.

CONCRETE PAVEMENT SHOULDERS

STATE OF WISCONSIN
DEPARTMENT OF TRANSPORTATION

APPROVED
June, 2015 — /S/ Peter Kemp, P.E.
DATE — PAVEMENT SUPER
FHWA

GENERAL NOTES

SAW CUT, DRILL, AND LIFT OUT EXISTING CONCRETE PAVEMENT WITHIN THE BOUNDARIES OF CONCRETE REPAIR AREAS. THE CONTRACTOR MAY MAKE ADDITIONAL SAW CUTS INSIDE THE REPAIR LIMITS TO REDUCE WEIGHT AND SIZE OF CONCRETE PIECES.

PROVIDE A 6-FOOT MINIMUM DISTANCE FROM BOUNDARIES OF CONCRETE REPAIR AREAS TO ADJACENT TRANSVERSE JOINT OR CRACK IN THE SAME LANE.

THE LENGTH OF THE REPAIRS MAY VARY FROM THE DIMENSIONS SHOWN IF THE EXISTING CONCRETE PAVEMENT IS NONDOWELED AND THE PAVEMENT IS TO BE OVERLAID AFTER REPAIRING.

(1) DOWEL BARS MIGHT NOT EXIST.

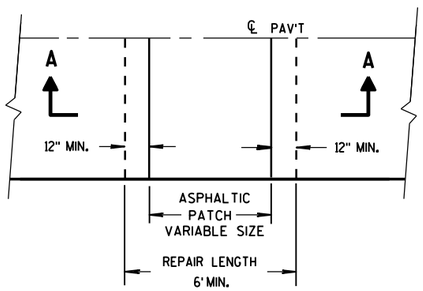

PLAN VIEW

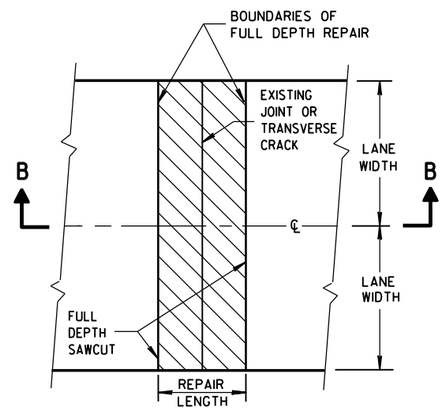

PLAN VIEW
(DOUBLE LANE REPAIR)

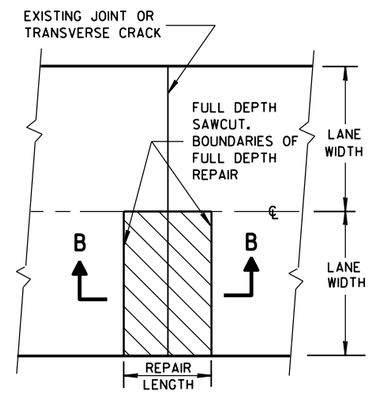

PLAN VIEW
(SINGLE LANE REPAIR)

FULL DEPTH CONCRETE PAVEMENT REMOVAL

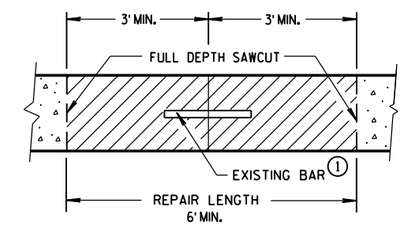

SECTION B-B

CONCRETE REMOVAL

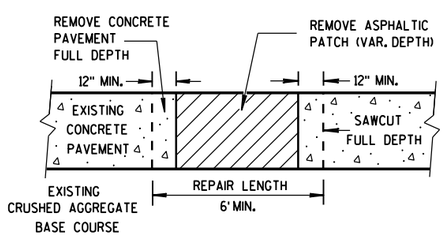

SECTION A-A

HMA PATCH REMOVAL

CONCRETE PAVEMENT REPAIR AND REPLACEMENT

STATE OF WISCONSIN
DEPARTMENT OF TRANSPO

6

S.D.D. 13 C 9-13a

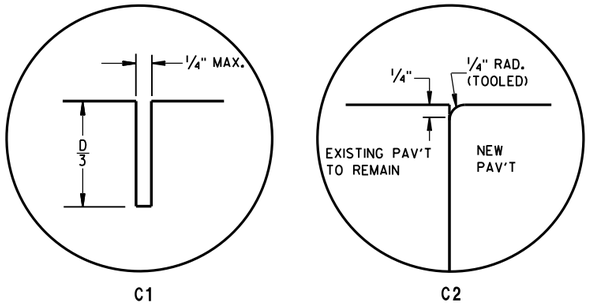

TRANSVERSE JOINTS

TIE BAR TABLE

PAVEMENT DEPTH (D)	TIE BAR SIZE	TIE BAR LENGTH (L)	MAX. TIE BAR SPACING
< 10 1/2"	NO. 4	30"	36"
≥ 10 1/2"	NO. 5	36"	36"
	NO. 4 *	30"	24" **

* SUBSTITUTE BENT BARS AT LONGITUDINAL JOINTS WHEN EQUIPMENT LIMITATIONS DURING CONSTRUCTION WARRANT (e.g. AUXILIARY LANES OR TURN LANES)

** CONFORM TO 15" MINUMUM SPACING FROM TRANSVERSE JOINTS; SPACING BETWEEN TIE BARS WILL BE 30" AT TRANSVERSE JOINTS.

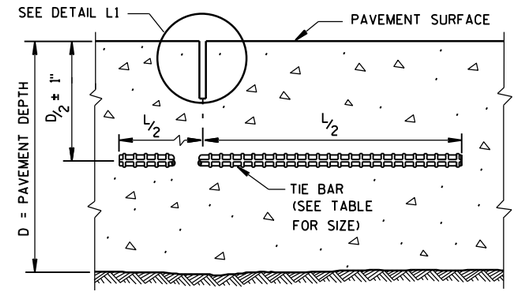

SECTION C-C

SAWED LONGITUDINAL JOINT

GENERAL NOTES

INSTALL DOWEL BARS PARALLEL TO THE PAVEMENT CENTERLINE AND PAVEMENT SURFACE.

CONCRETE PAVEMENT REPAIRS OF EXISTING NONDOWELED CONCRETE PAVEMENTS DO NOT NEED TO BE DOWELED.

DO NOT SEAL OR FILL JOINTS.

ANCHOR DOWEL BARS AND TIE BARS INTO DRILLED HOLES WITH AN EPOXY.

FOR MULTI-LANE CONCRETE PAVEMENT REPLACEMENTS, PROVIDE A MINIMUM DISTANCE OF 15 INCHES FROM ALL TRANSVERSE JOINTS OR EDGES OF REPLACEMENT TO THE CENTER OF THE TIE BAR NEAREST THAT JOINT OR EDGE.

(1) APPLY A THIN UNIFORM COATING OF SURFACE TREATMENT TO THE FREE END OF DOWEL BARS TO PREVENT BONDING.

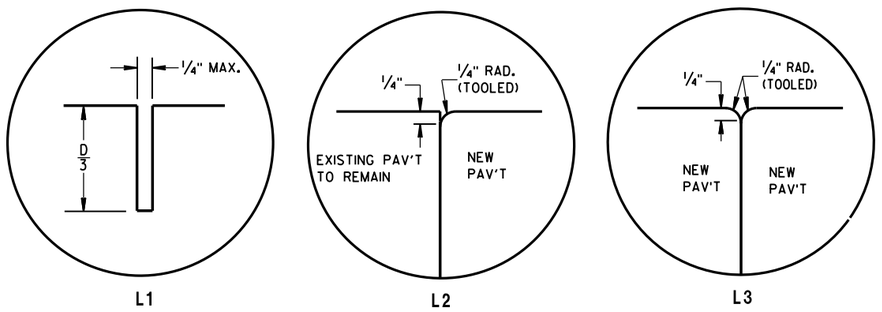

LONGITUDINAL JOINTS

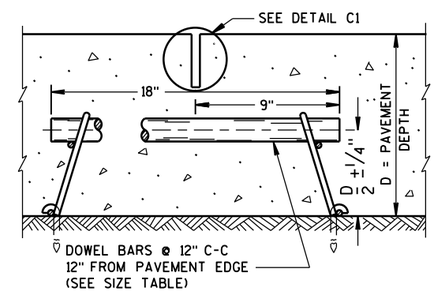

SECTION F-F

CONTRACTION JOINT

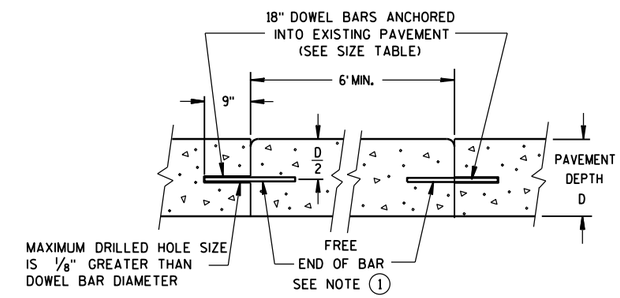

SECTION D-D

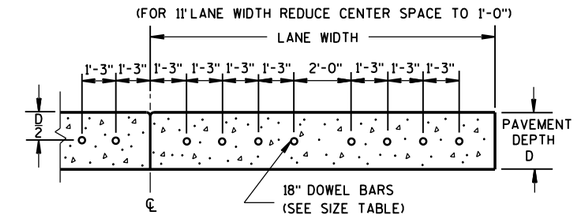

SECTION E-E

DRILLED DOWEL BAR CONSTRUCTION JOINT

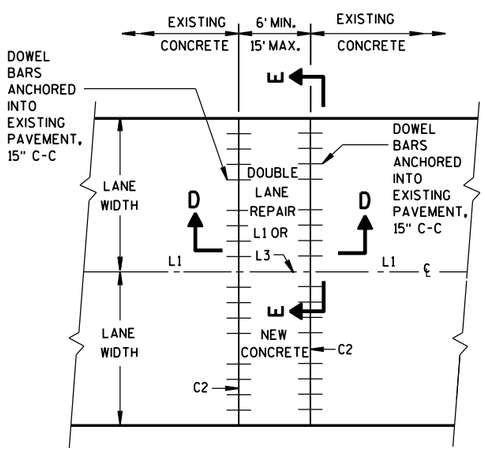

PLAN VIEW

MULTI-LANE CONCRETE PAVEMENT REPAIR

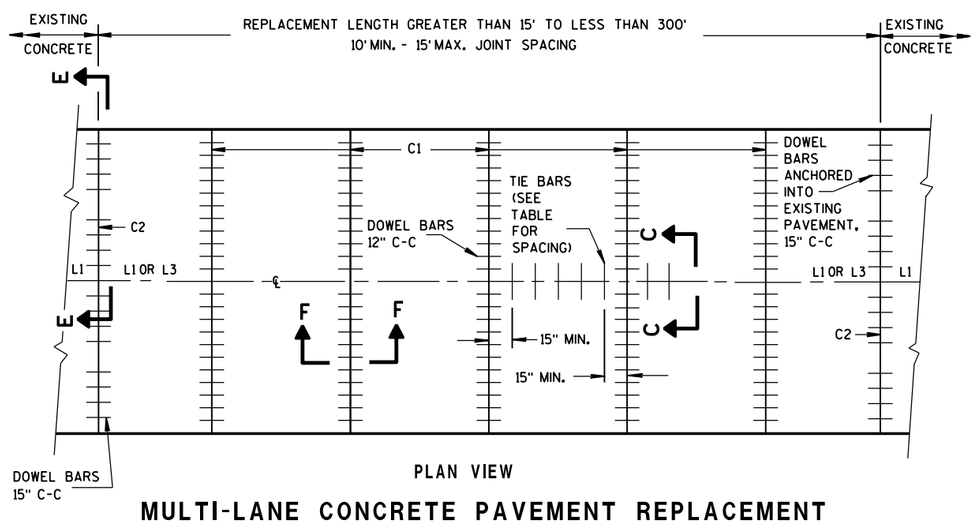

PLAN VIEW

MULTI-LANE CONCRETE PAVEMENT REPLACEMENT

PAVEMENT DEPTH, DOWEL BAR SIZE AND JOINT SPACING TABLE

PAVEMENT DEPTH (D)	DOWEL BAR DIAMETER	CONTRACTION JOINT SPACING
5 1/2", 6", 6 1/2"	NONE	12'
7", 7 1/2"	1"	14'
8", 8 1/2"	1 1/4"	15'
9", 9 1/2"	1 1/4"	15'
10" & ABOVE	1 1/2"	15'

CONCRETE PAVEMENT REPAIR AND REPLACEMENT

STATE OF WISCONSIN
DEPARTMENT OF TRANSPOR

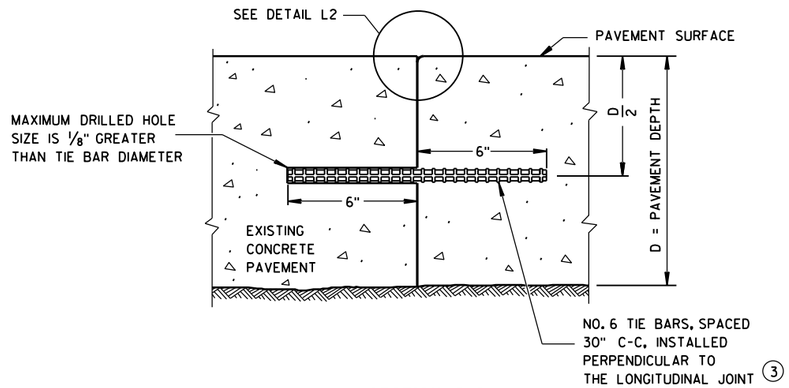

SECTION G-G

TIE BARS ANCHORED INTO EXISTING PAVEMENT

GENERAL NOTES

(1) WITH THE APPROVAL OF THE ENGINEER, FOR SINGLE LANE PAVEMENT REPLACEMENTS LESS THAN 30 FEET IN LENGTH, THE CONTRACTOR MAY INSTALL DRILLED TIE BARS ON 6:1 SKEW HORIZONTALLY, DIRECTION OF SKEW ALTERNATING WITH EACH SUCCESSIVE BAR. DRIVE SKEWED TIE BARS TO A DEPTH OF 6 INCHES IN A HOLE OF SUCH A DIAMETER AS TO PROVIDE A TIGHT DRIVEN FIT.

(2) USE AN ENGINEER-APPROVED BOND BREAKER (E.G. RELEASE AGENT, CURING COMPOUND) FOR SINGLE LANE REPAIRS UP TO 15 FEET IN LENGTH.

(3) ANCHOR TIE BARS INTO DRILLED HOLES WITH AN EPOXY.

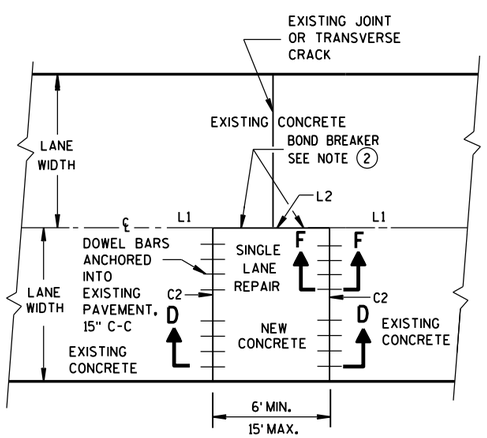

PLAN VIEW

SINGLE LANE CONCRETE PAVEMENT REPAIR

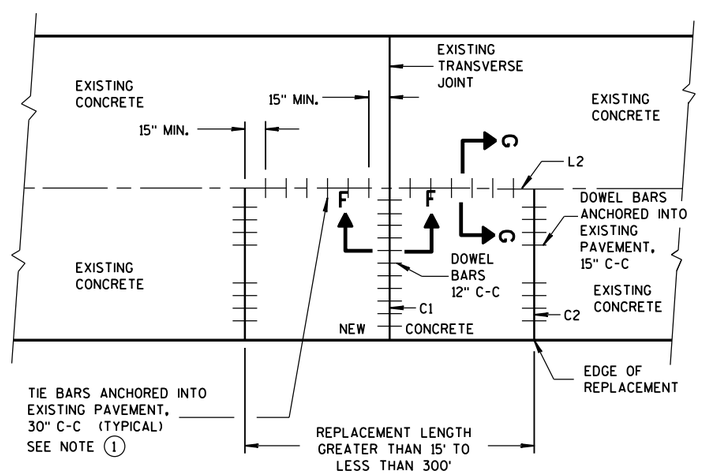

PLAN VIEW

SINGLE LANE CONCRETE PAVEMENT REPLACEMENT

CONCRETE PAVEMENT REPAIR AND REPLACEMENT

STATE OF WISCONSIN
DEPARTMENT OF TRANSPORTATION

APPROVED
Sept., 2015 — DATE
/S/ Peter Kemp, P.E. — PAVEMENT SUPER
FHWA

6

S.D.D. 13 C 9-13c

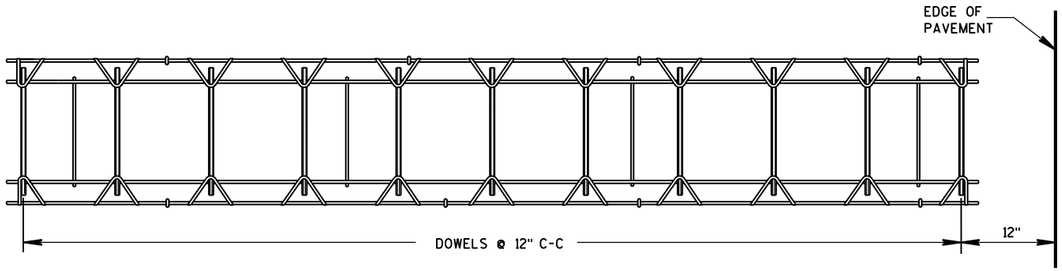

PLAN VIEW

SIDE VIEW

CONTRACTION JOINT DOWEL ASSEMBLY ①

PAVEMENT DEPTH, DOWEL BAR SIZE AND JOINT SPACING TABLE

PAVEMENT DEPTH (D)	DOWEL BAR DIAMETER	CONTRACTION JOINT SPACING
5 ½", 6", 6 ½"	NONE	12'
7", 7 ½"	1"	14'
8", 8 ½"	1 ¼"	15'
9", 9 ½"	1 ¼"	15'
10" & ABOVE	1 ½"	15'

GENERAL NOTES

CONTRACTION JOINTS

CONSTRUCT TRANSVERSE CONTRACTION JOINTS NORMAL TO THE CENTERLINE. SHOW THE LOCATION OF CONTRACTION JOINTS THROUGH INTERSECTIONS ON THE PLANS OR AS DIRECTED BY THE ENGINEER.

DO NOT SEAL OR FILL CONTRACTION JOINTS.

INSTALL DOWEL BARS PARALLEL TO THE PAVEMENT CENTERLINE AND PAVEMENT SURFACE.

FOR PAVEMENT SLABS OF VARYING WIDTHS, LOCATE THE OUTER MOST DOWEL BAR SO THAT THE CENTER OF THE BAR IS A MINIMUM OF 6 INCHES AND A MAXIMUM OF 18 INCHES FROM THE LONGITUDINAL JOINT AND THE FREE EDGE OF PAVEMENT.

CONSTRUCTION JOINTS

LOCATE CONSTRUCTION JOINTS A MINIMUM OF 6 FEET FROM THE NEAREST CONTRACTION JOINT AND ALIGN PARALLEL TO CONTRACTION JOINTS.

① OBTAIN THE ENGINEER'S APPROVAL FOR THE USE OF ALTERNATIVE DESIGNS OF THE DOWEL ASSEMBLY. USE MECHANICAL DOWEL BAR INSERTERS OR DOWEL ASSEMBLIES WHEN CONSTRUCTING CONTRACTION JOINTS.

② SECURE BASKETS WITH ANCHORS TO HOLD DOWEL BARS IN THE CORRECT POSITION AND ALIGNMENT. TYPE, LOCATION, NUMBER AND LENGTH OF ANCHORS ARE DEPENDENT UPON FIELD CONDITIONS.

③ FORM OR SAW CONSTRUCTION JOINTS. PROVIDE A ¼-INCH RADIUS AT FORMED JOINTS.

④ PROVIDE A SMOOTH VERTICAL FACE FOR THE ENTIRE DEPTH OF THE PAVEMENT WHEN FORMING CONSTRUCTION JOINTS.

⑤ INSTALL DOWEL BARS AT CONSTRUCTION JOINTS BY FORMING OR DRILLING. INSTALL FORMED DOWEL BARS 12 INCHES C-C AND 12 INCHES FROM PAVEMENT EDGE. REMOVE EXCESS CONCRETE FROM THE FREE END OF THE DOWEL BAR IF DOWEL BARS ARE FORMED THROUGH A HEADER BOARD. INSTALL DRILLED DOWEL BARS ACCORDING TO *DRILLED DOWEL BAR CONSTRUCTION JOINT* DETAIL.

⑥ APPLY A THIN UNIFORM COATING OF SURFACE TREATMENT TO THE FREE END OF DOWEL BARS TO PREVENT BONDING.

⑦ ANCHOR DOWEL BARS INTO DRILLED HOLES WITH AN EPOXY. MAXIMUM DRILLED HOLE SIZE IS ⅛-INCH GREATER THAN DOWEL BAR DIAMETER, 9 INCHES IN LENGTH.

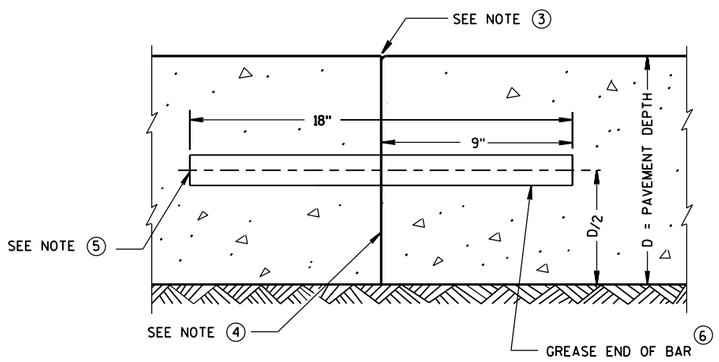

TRANSVERSE CONSTRUCTION JOINT

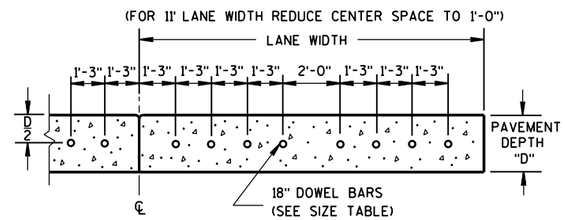

DRILLED DOWEL BAR CONSTRUCTION JOINT ⑦

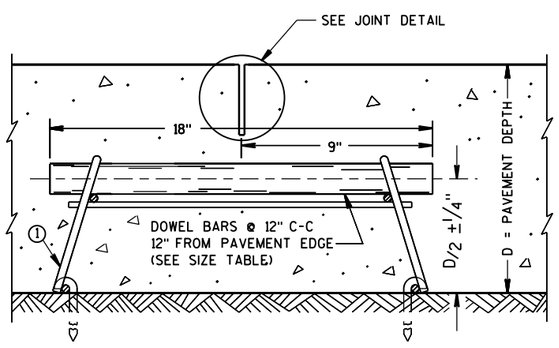

DOWELED CONTRACTION JOINT

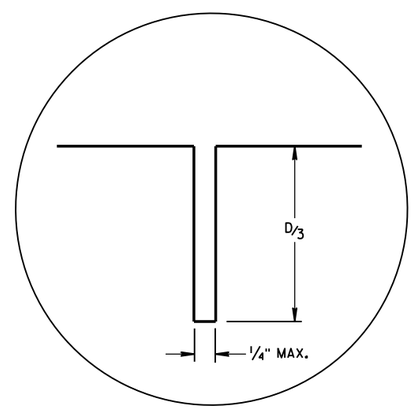

JOINT DETAIL

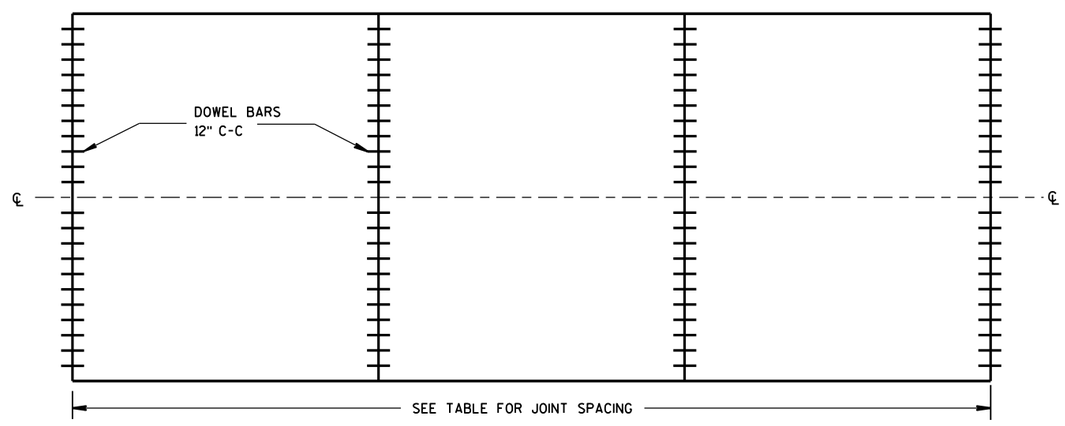

CONTRACTION JOINT LOCATIONS

URBAN DOWELED CONCRETE PAVEMENT

STATE OF WISCONSIN
DEPARTMENT OF TRANSPORTATION

APPROVED

5/3/2013 — DATE

/S/ Deb Bischoff — PAVEMENT POLICY & DE ... NEER

FHWA

GENERAL NOTES

1. W6 X 9 OR W6 X 8.5 STEEL POSTS AND NOTCHED PLASTIC BLOCKOUTS ARE ACCEPTABLE ALTERNATIVES FOR 6" X 8" WOOD POSTS WITH WOOD OR PLASTIC BLOCKOUTS. USE APPROVED NOTCHED PLASTIC BLOCKOUTS WITH STEEL POSTS. APPROVED PLASTIC BLOCKOUT DESIGNS MAY VARY FROM THIS TYPICAL DETAIL WHEN USED IN CONJUNCTION WITH STEEL POSTS.

   DO NOT MIX STEEL POSTS AND WOOD POSTS IN A SINGLE INSTALLATION.
2. USE STRUCTURAL STEEL POSTS CONFORMING TO ASTM A 36. GALVANIZED POSTS ACCORDING TO AASHTO M 111. EITHER SET THE POSTS IN DRILLED HOLES OR DRIVE TO GRADE. REMOVE MUSHROOMING CAUSED BY DRIVING AND REPAIR DAMAGED SPELTER COATING ON GALVANIZED POSTS.
3. INSTALL STEEL POSTS WITH HOLES ON APPROACHING TRAFFIC SIDE.
4. USE EITHER WOOD OR APPROVED PLASTIC BLOCKOUTS ON WOOD POSTS.
5. IF THE DISTANCE FROM BACK OF POST TO SHOULDER HINGE POINT IS LESS THAN 2 FEET INSTALL LONGER POST AT HALF POST SPACING, W BEAM (LHW).
6. IF ROCK IS ENCOUNTERED DURING EXCAVATION, THE ENGINEER MAY APPROVE USING A 12 INCH DIAMETER POST HOLE EXTENDING 20 INCHES DEEP INTO THE ROCK. PLACE GRANULAR MATERIAL IN THE BOTTOM OF THE HOLE APPROXIMATELY 2½ INCHES DEEP. CUT THE POSTS TO LENGTH AND PLACE IN YHE HOLE. BACKFILL WITH MATERIAL EXCAVATED FROM THE HOLE AND COMPACT ADEQUATEY.
7. WHEN USING STEEL POSTS AND WOOD BLOCKOUTS INSTALL FOUR 16D GALVANIZED NAILS. INSTALL NAILS AT THE BACK CORNERS OF THE BLOCK AND BEND THE NAILS OVER THE FLANGE OF THE STEEL POST.

INSTALL BEAM GUARD SECTIONS AND ALL NECESSARY HARDWARE ACCORDING TO THE APPLICABLE PLAN AND CURRENT STANDARD AND SUPPLEMENTAL SPECIFICATIONS.

ALL DIMENSIONS ARE SUBJECT TO MANUFACTURER'S TOLERANCES EXCEPT WHERE ALLOWABLE TOLERANCES ARE SHOWN.

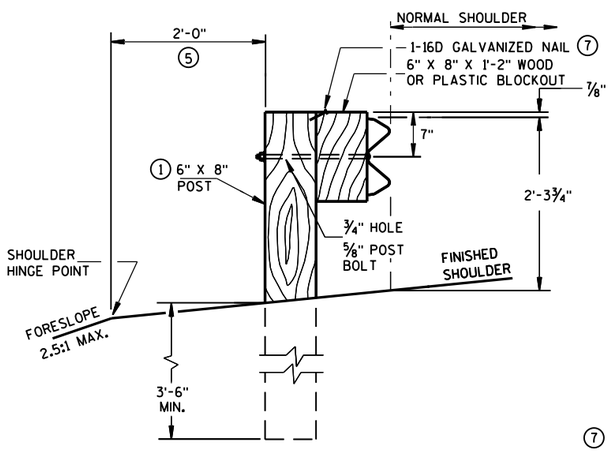

END VIEW
LOCATED ALONG A ROADWAY SHOULDER
STANDARD INSTALLATION

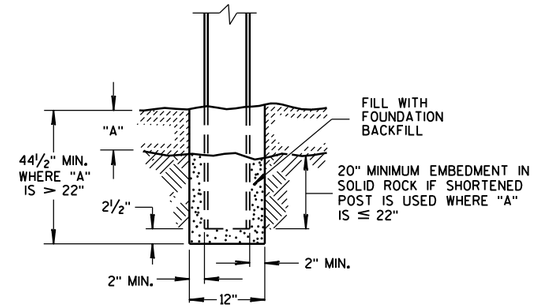

END VIEW
SETTING STEEL OR WOOD POST IN ROCK 6

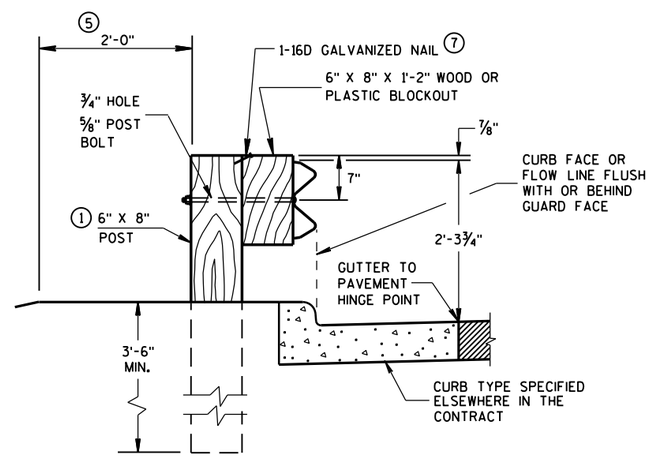

END VIEW
LOCATED ALONG A CURBED ROADWAY

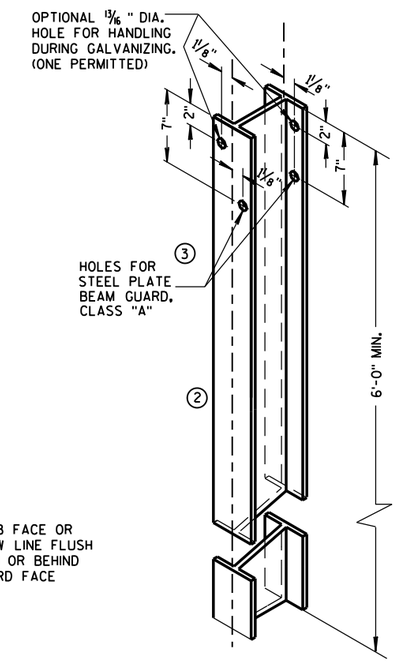

STEEL POST &
HOLE PUNCHING DETAIL
(W6 X 9) 1

ALL HOLES 13/16" DIAMETER EXCEPT AS NOTED

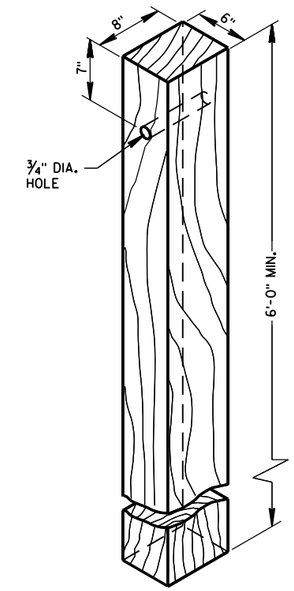

WOOD POST
(6"X8") NOMINAL

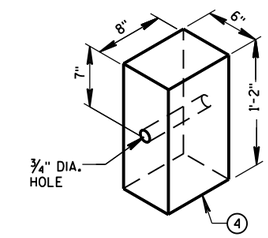

WOOD OR PLASTIC
BLOCKOUT FOR
WOOD POSTS

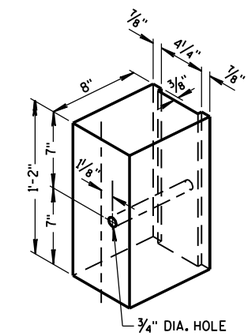

TYPICAL NOTCHED 1
PLASTIC BLOCKOUT
FOR STEEL POSTS

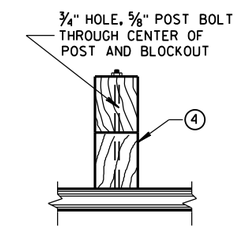

PLAN VIEW
WOOD POST, BLOCKOUT & BEAM

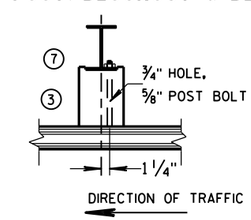

PLAN VIEW
STEEL POST, NOTCHED
PLASTIC BLOCKOUT & BEAM

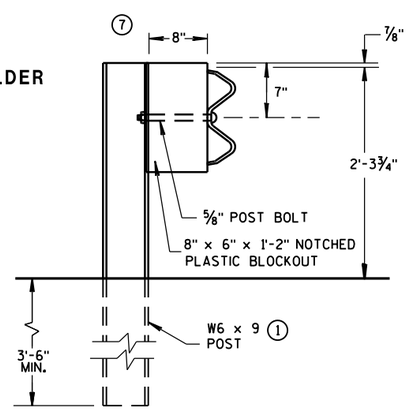

END VIEW
STEEL POST & NOTCHED
PLASTIC BLOCKOUT ALTERNATIVE
STANDARD INSTALLATION

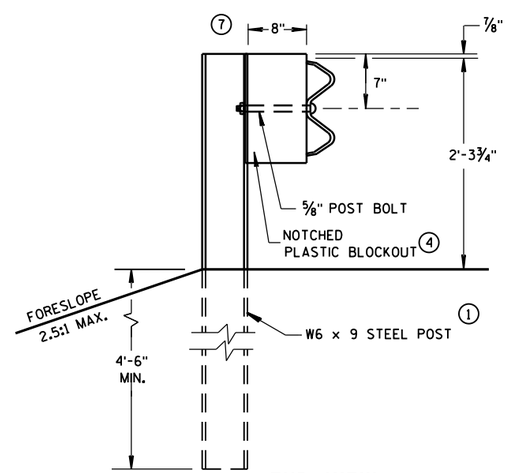

END VIEW
LONGER POST AT HALF
POST SPACING W BEAM
(LHW)

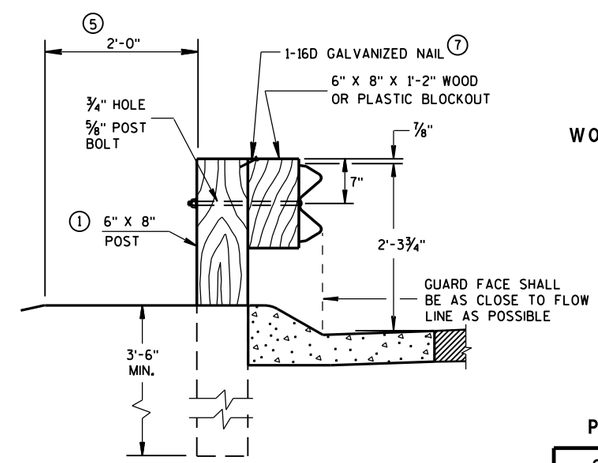

END VIEW
LOCATED ALONG A
MOUNTABLE CURBED ROADWAY

TYPICAL INSTALLATION OF STEEL PLATE BEAM GUARD

STEEL PLATE BEAM GUARD,
CLASS "A"
INSTALLATION & ELEMENTS

STATE OF WISCONSIN
DEPARTMENT OF TRANSPO

6

S.D.D. 14 B 15-9a

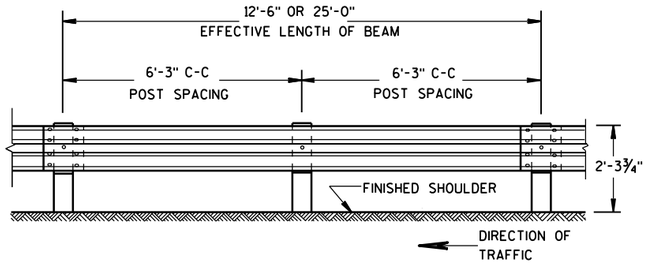

FRONT VIEW

POST SPACING STANDARD INSTALLATION

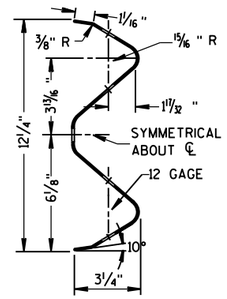

SECTION THRU W BEAM

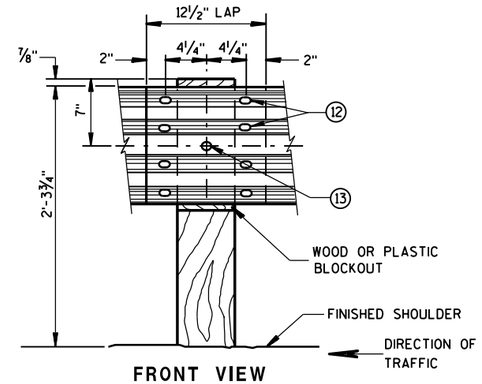

FRONT VIEW

BEAM SPLICE AT WOOD POST AND POST MOUNTING DETAIL

GENERAL NOTES

(8) PROVIDE SILVER REFLECTIVE SHEETING ON ALL REFLECTORS EXCEPT THOSE LOCATED ALONG THE LEFT EDGE OF ONE-WAY ROADWAYS, WHICH SHALL BE PROVIDED WITH YELLOW REFLECTIVE SHEETING. SHEETING IS TYPE H. SEE STANDARD SPECIFICATION 637.

(9) DO NOT INSTALL REFLECTORS ON THE FIRST 50 FEET OF THE APPROACH END OF THE ENERGY ABSORBING TERMINAL.

(10) REVERSE EVERY OTHER REFLECTOR FOR 2-WAY VISIBILITY. THE CONTRACTOR MAY FURNISH TWO-SIDED REFLECTORS IN LIEU OF ONE-SIDED REFLECTORS.

(11) PROVIDE AN ANGLE OF BEND OF 90° ± 1° FOR TWO-SIDED REFLECTORS.

(12) 8 -⅝" ϕ X 2" BUTTON HEAD BOLTS WITH OVAL SHOULDERS & RECESS NUTS.

(13) ⅝" DIA. BUTTON HEAD BOLT AND RECESS NUT WITH ⅝" DIA. F844 FLAT WASHER UNDER NUT.

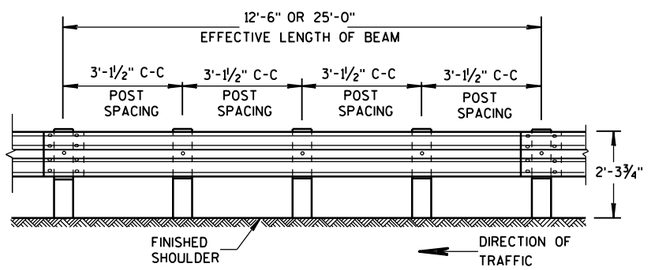

FRONT VIEW

POST SPACING FOR LONGER POST AT HALF POST SPACING W BEAM (LHW)

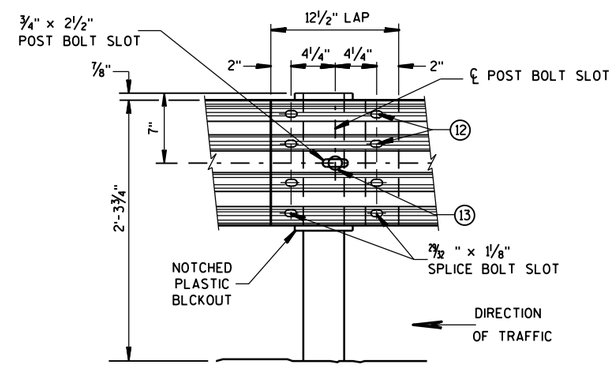

FRONT VIEW

BEAM SPLICE AT STEEL POST

TYPICAL SPLICING DETAILS OF STEEL PLATE BEAM GUARD

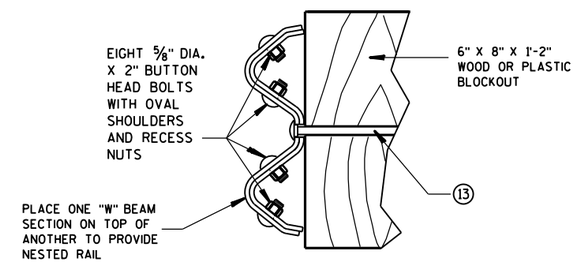

NESTED W BEAM (NW)

USE ALL OTHER STANDARD BEAM GUARD DETAILS FOR CONSTRUCTING NESTED W BEAM (NW)

REFLECTOR SPACING (9)

	BEAM GUARD LENGTH	REFLECTOR SPACING	NO. SURFACES REFLECTORIZED	MIN. NO. REFLECTORS
ONE WAY TRAFFIC	< 200' > 200'	50' C-C 100' C-C	1 1	3
TWO WAY TRAFFIC	< 200' > 200'	25' C-C 50' C-C	1 (10) 1	6
TWO WAY TRAFFIC	< 200' > 200'	50' C-C 100' C-C	2 (11) 2	3

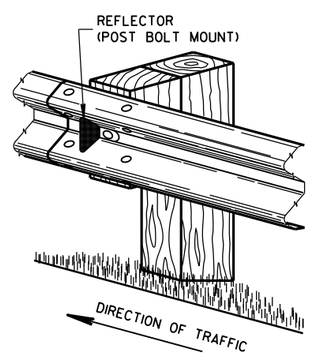

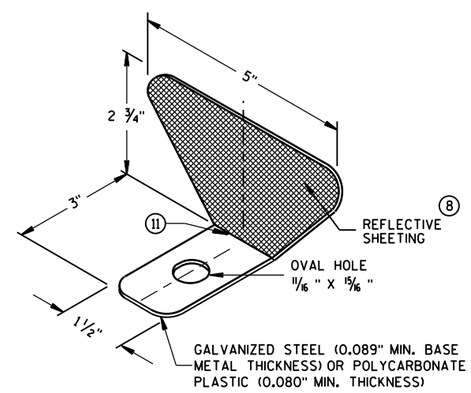

ONE SIDED REFLECTOR DETAIL AND TYPICAL INSTALLATION (8)

STEEL PLATE BEAM GUARD, CLASS "A", INSTALLATION & ELEMENTS

STATE OF WISCONSIN
DEPARTMENT OF TRANSPOI

6

6

S.D.D. 14 B 15-9b

S.D.D. 14 B 15-9b

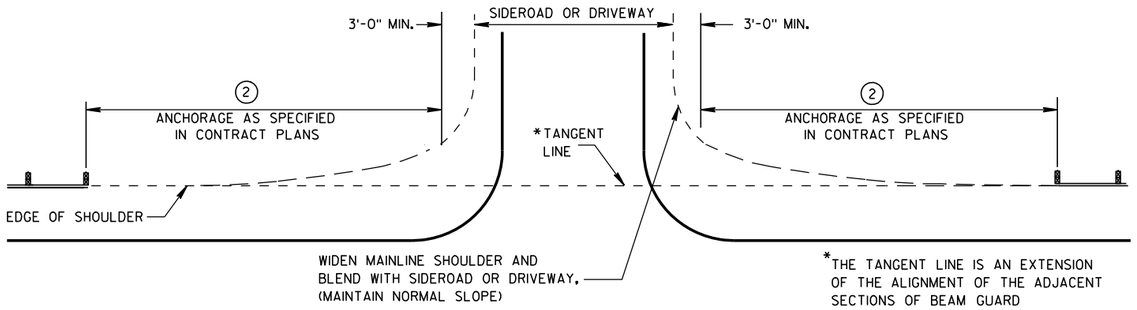

BEAM GUARD AT SIDEROADS OR DRIVEWAYS

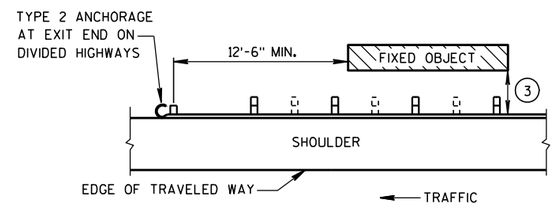

BEAM GUARD AT OBSTACLES EXIT END - ONE WAY TRAFFIC

GENERAL NOTES

DETAILS OF CONSTRUCTION, MATERIALS AND WORKMANSHIP SHALL CONFORM TO THE PERTINENT STANDARD SPECIFICATIONS AND THE APPLICABLE SPECIAL PROVISIONS.

W6 X 9 OR W6 X 8.5 STEEL POSTS WITH NOTCHED PLASTIC BLOCKOUTS ARE ACCEPTABLE ALTERNATIVES FOR 6" X 8" WOOD POSTS WITH WOOD OR PLASTIC BLOCKOUTS. USE APPROVED NOTCHED PLASTIC BLOCKOUTS WITH STEEL POSTS.

THE LOCATIONS AND LENGTHS OF BEAM GUARD ARE SHOWN ELSEWHERE IN THE PLAN.

1. STEEL THRIE BEAM STRUCTURAL APPROACH (STBSA) - SEE CURRENT SDD 14B20.
2. USE AN APPROVED END TREATMENT FOR THE TRAFFIC APPROACH SIDE OF BRIDGE/OBSTACLES. USE TYPE 2 ANCHORAGE ONLY AT THE DOWNSTREAM ENDS OF BEAM GUARD LOCATED ALONG ROADWAYS WITH ONE WAY TRAFFIC.
3.

MINIMUM LATERAL DISTANCE FROM FACE OF BEAM GUARD TO FIXED OBJECT	POST SPACING
3'-6"	3' - 1½"
4'-6"	6' - 3"

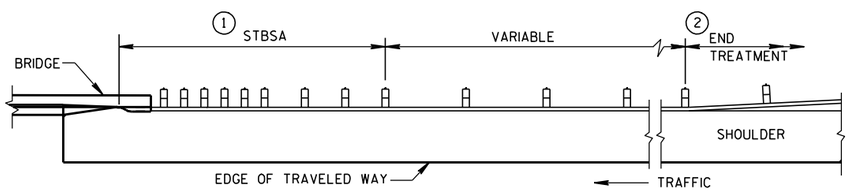

BEAM GUARD AT FULL WIDTH BRIDGES

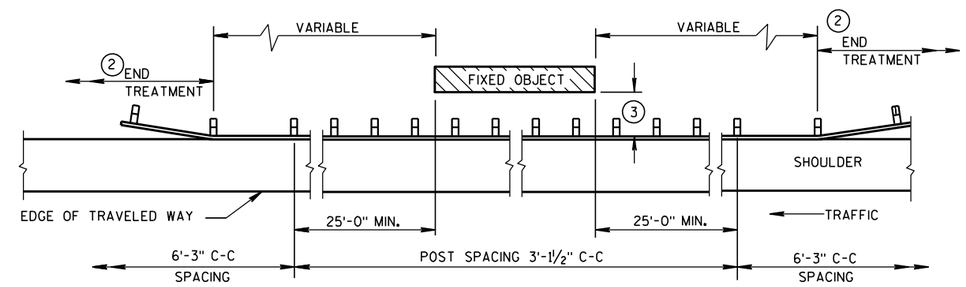

BEAM GUARD AT OBSTACLES - TWO WAY TRAFFIC

(RAIL TO OBSTACLE CLEARANCE 3'-6" TO 4'-6")

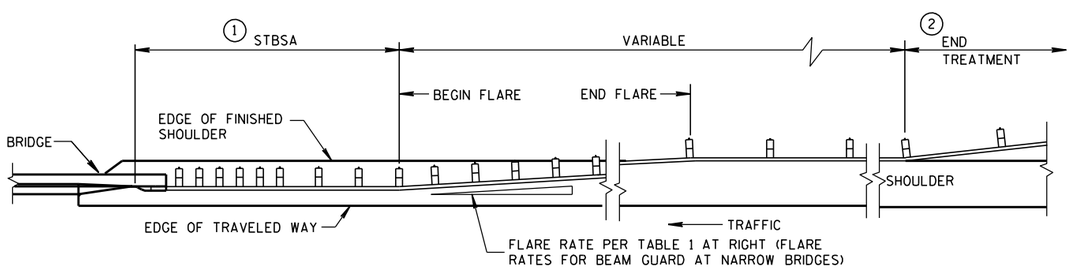

BEAM GUARD AT NARROW BRIDGES

(FLARED TO SHOULDER EDGE, THEN PARALLEL TO ROADWAY)

TABLE 1
FLARE RATES FOR BEAM GUARD AT NARROW BRIDGES

POSTED SPEED (MPH)	FLARE RATE
25	13:1
30	15:1
35	16:1
40	18:1
45	21:1
50	24:1
55	26:1
65	30:1

STEEL PLATE BEAM GUARD CLASS "A" AT BRIDGES, OBSTACLES AND SIDEROADS/DRIVEWAYS

STATE OF WISCONSIN
DEPARTMENT OF TRANSPORTATION

APPROVED
8-21-07 — DATE
/S/ Jerry H. Zogg — ROADWAY STANDARDS DEVELOPMENT ENGINEER
FHWA

6

S.D.D. 14 B 18-6a

BILL OF MATERIALS

NOTE NO.	QTY.	DESCRIPTION
1	4	WOOD BREAKAWAY TERMINAL POST: 5½" X 7½" X 3'-9"
2	**	STEEL TUBE: OPTION 1 - QUANITY OF 4 TS 8" X 6" X 0.188", 4'-6" LONG OR OPTION 2 - QUANITY OF 2 TS 8" X 6" X 0.188", 6'-0" AND 2 TS 8" X 6" X 0.188", 4'-6" LONG
3	2	SOIL PLATE: 2'-0" X 1'-6" X ¼" **
4	4	WOOD BREAKAWAY CRT POST: 6" X 8" X 6'-0"
5	6	WOOD OFFSET BLOCKS: 6" X 8" X 1'-2"
6	1	PIPE SLEEVE: 2" X 5 ½" STANDARD PIPE
7	1	BEARING PLATE
8	1	BCT CABLE ASSEMBLY
9	1	CABLE ANCHOR BOX
10	1	STRUT & YOKE
11	1	STEEL PLATE BEAM, END PANEL 12 GA. 13'-6½" LONG FOR SKT-350, ET-2000 AND ET-2000 PLUS
12	3	STEEL PLATE BEAM: 12 GA. 13'-6½"
13	1	ET-2000/ET-2000 PLUS GUARDRAIL EXTRUDER OR SKT-350 IMPACT HEAD: AS FURNISHED BY MANUFACTURER
14	1	0.040" ALUMINUM SHEET WITH REFLECTIVE SHEETING TYPE F PER SECTION 637 OF THE STANDARD SPECIFICATIONS
15	1	E.A.T. MARKER POST

GENERAL NOTES

FOLLOW MANUFACTURE'S BOLTING RECOMMENDATIONS. IF NONE ARE AVAILABLE, INSTALL ⅝" ø X 1'-6" BUTTON HEAD BOLTS AT ALL POSTS EXCEPT FOR POST 1.

(A) THE SLOPE IN THE AREA BOUNDED BY THE GRADELINE, THE HINGE POINT LINE (HPL), AND THE CLEAR ZONE LIMITS (CZL) SHALL BE 4:1 OR FLATTER.

(B) AFTER FINAL ASSEMBLY, RECHECK CABLE TO BE SURE IT IS TAUT AND HAS NOT RELAXED.

(C) THE 13 SLOT FIRST RAIL PANEL MAY BE USED IN LIEU OF THE 3 SLOT RAIL PANEL ON SKT-350 ONLY.

(D) THE TOP OF THE STEEL TUBE ON POSTS 1 THROUGH 4 SHALL NOT BE MORE THAN 3" ABOVE THE FINISH GROUND ELEVATION.

(E) THE CENTER OF THE UPPER 3½" DIAMETER HOLE ON POST 5 THROUGH 8 SHALL BE ¾" ABOVE THE FINISHED GROUND LINE.

(F) ATTACH ALUMINUM SHEET TO E.A.T. HEAD USING 4 STAINLESS STEEL SELF-TAPPING SCREWS. ONE SCREW PER CORNER.

STEEL POSTS SHALL NOT BE ALLOWED FOR USE WITH ENERGY ABSORBING TERMINALS.

DO NOT INSTALL REFLECTORS ON THE FIRST 50 FEET OF THE APPROACH END OF THE ENERGY ABSORBING TERMINAL.

* DO NOT ATTACH BLOCKOUTS TO POSTS 1 AND 2.

** SDD SHOWS 4 - 54 INCH STEEL TUBES WITH SOIL PLATES INSTALLED ON POST 1 AND POST 2. POST 3 AND 4 DO NOT NEED SOIL PLATES. AN ALTERNATIVE INSTALLATION WOULD CONSIST OF 2 - 72 INCH STEEL TUBES ON POST 1 AND POST 2 AND 54 INCH SOIL TUBES ON POSTS 3 AND 4. THE ALTERNATIVE INSTALLATION DOES NOT REQUIRE SOIL PLATES.

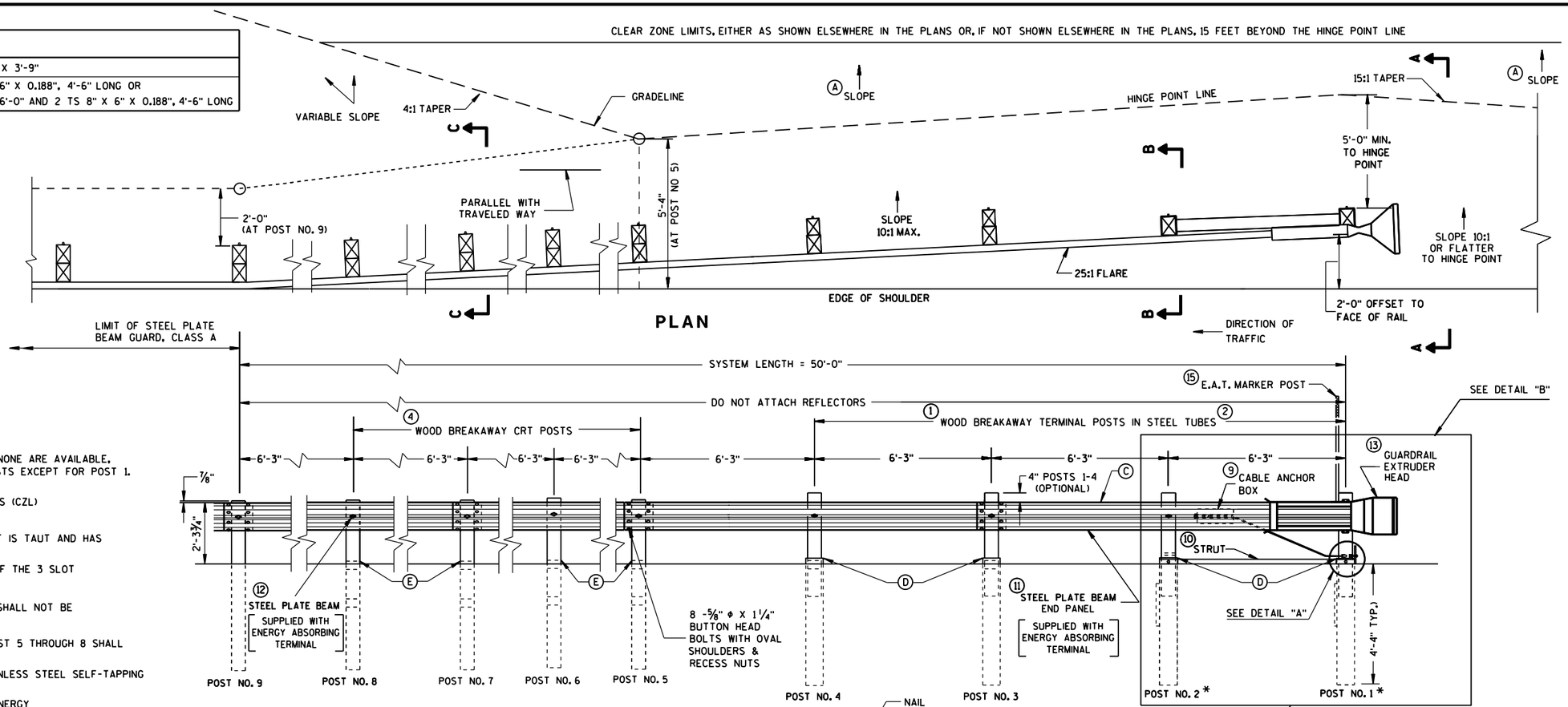

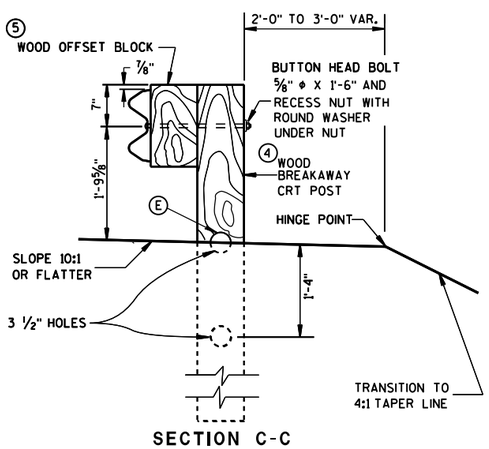

SECTION C-C
TYPICAL AT POST NOS. 6, 8

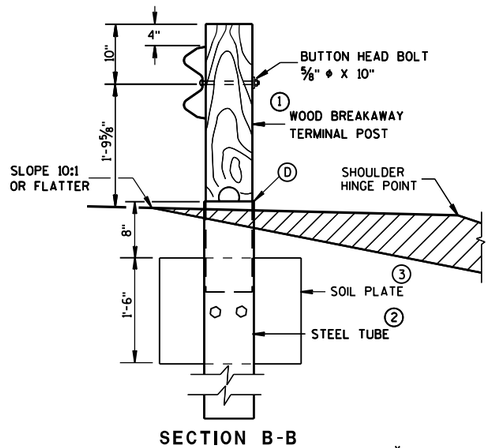

SECTION B-B
TYPICAL AT POST NO. 2*

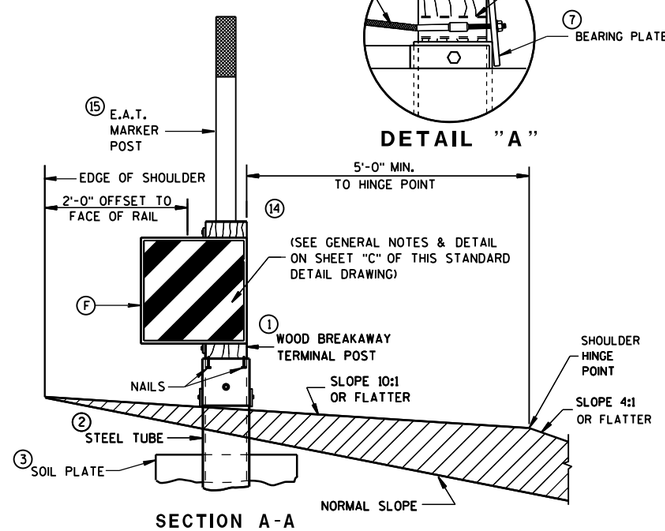

SECTION A-A
TYPICAL AT POST NO. 1*

STEEL PLATE BEAM GUARD
ENERGY ABSORBING TERMINAL

STATE OF WISCONSIN
DEPARTMENT OF TRANSPORTATION

6

S.D.D. 14 B 24-8a

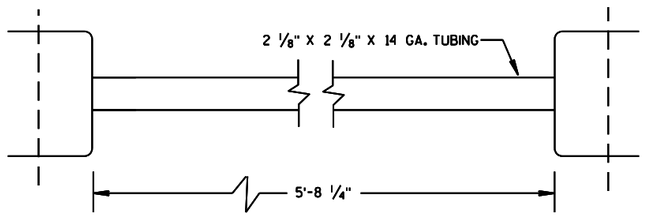

⑩ STRUT DETAIL (SKT-350)

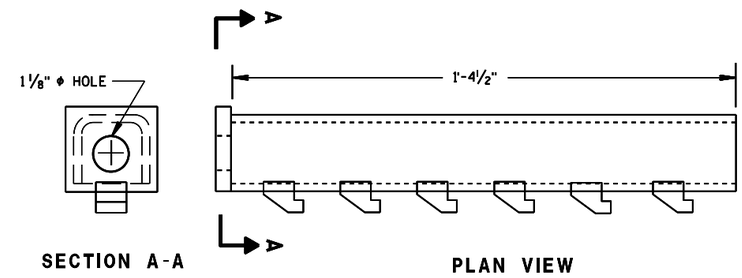

⑨ CABLE ANCHOR BOX (ET-2000/ET-2000 PLUS)

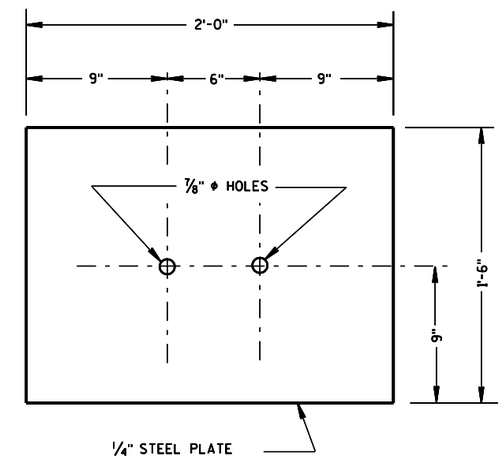

③ SOIL PLATE

(SKT-350, ET-2000/ET-2000 PLUS)

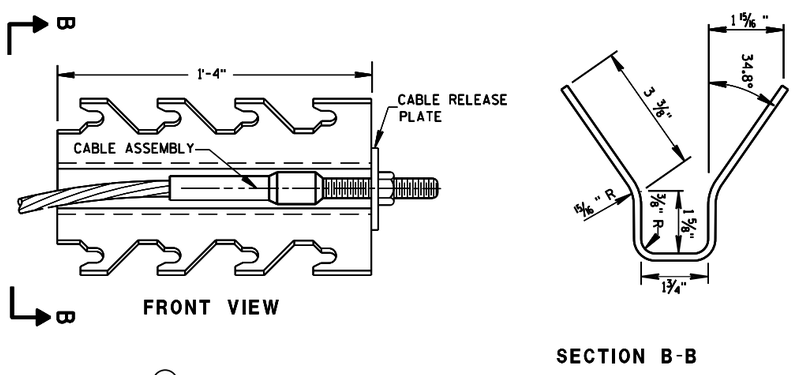

⑨ CABLE ANCHOR BOX (SKT-350)

(SKT-350)

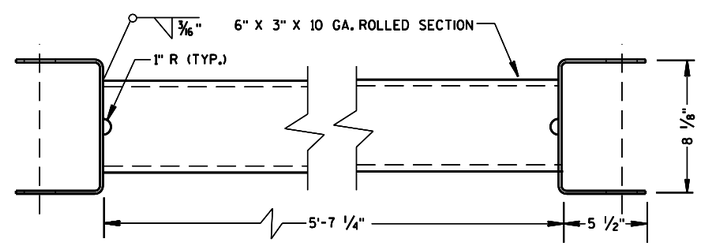

⑩ STRUT DETAIL (ET-2000/ET-2000 PLUS)

(ET-2000/ET-2000 PLUS)

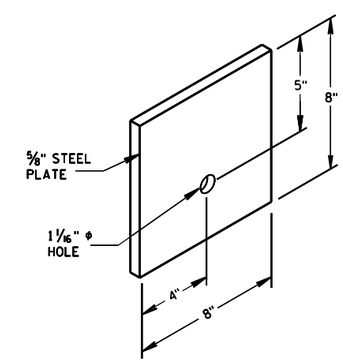

⑦ STEEL BEARING PLATE

(SKT-350, ET-2000/ET-2000 PLUS)

STEEL PLATE BEAM GUARD
ENERGY ABSORBING TERMINAL

STATE OF WISCONSIN
DEPARTMENT OF TRANSPO

6

S.D.D. 14 B 24-8b

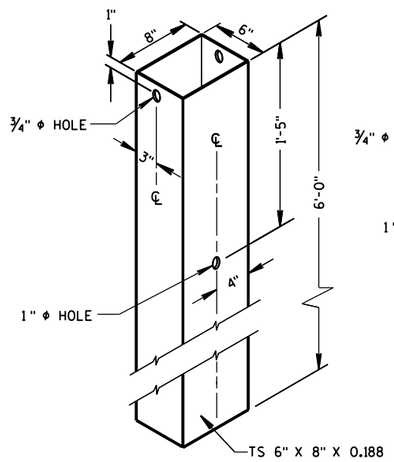

② 72" STEEL TUBE
(POSTS NO. 1-4

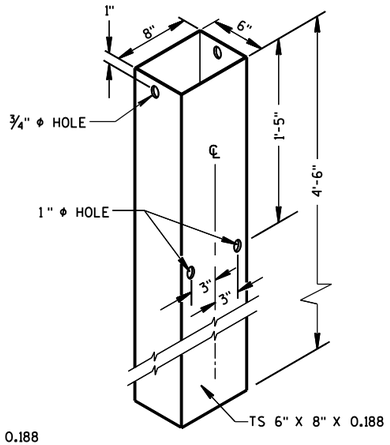

② 54" STEEL TUBE
(POSTS NO. 1-4

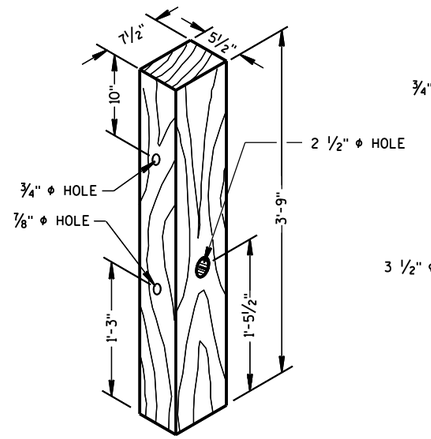

① TERMINAL POST
(POSTS NO. 1-4

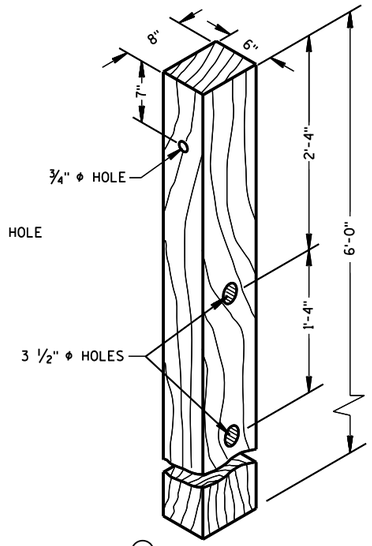

④ CRT POST
(POSTS NO'S 5-8

WOOD BREAKAWAY POSTS

GENERAL NOTES

WHEN ROCK IS ENCOUNTERED DURING EXCAVATION, A 12 INCH DIA. POST HOLE EXTENDING 20 INCHES DEEP INTO THE ROCK MAY BE USED IF APPROVED BY THE ENGINEER. GRANULAR MATERIAL SHALL BE PLACED IN THE BOTTOM OF THE HOLE APPROXIMATELY 2 1/2" INCHES DEEP TO PROVIDE DRAINAGE. THE SOIL TUBES SHALL BE FIELD CUT TO LENGTH, PLACED IN THE HOLE AND BACKFILLED WITH ADEQUATELY COMPACTED MATERIAL EXCAVATED FROM THE HOLE.

SEE APPROVED PRODUCTS LIST FOR ACCEPTABLE E. A. T. MARKER POST.

(G) 1/2" DIA. X 3" LAG BOLT WITH WASHER.

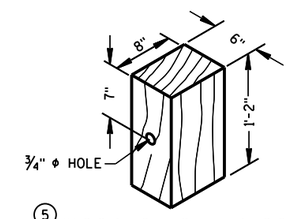

⑤ WOOD OFFSET BLOCK
REQ'D. AT ALL POSTS EXCEPT POST NO'S 1 & 2

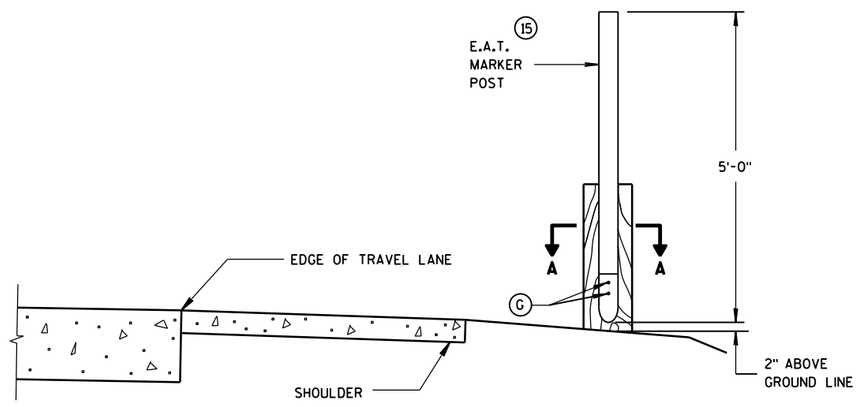

TYPICAL INSTALLATION OF E.A.T. MARKER POST BACKSIDE OF POST NO. 1

(E.A.T. AND RAIL REMOVED FOR CLARITY)

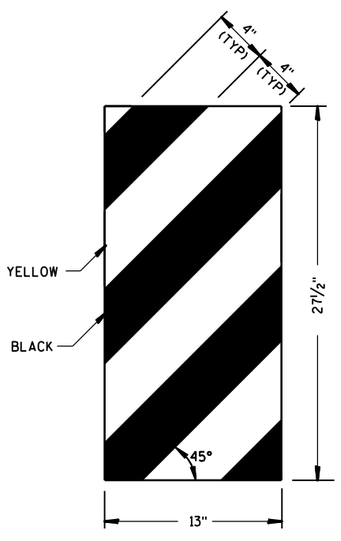

ET-2000 PLUS ONLY

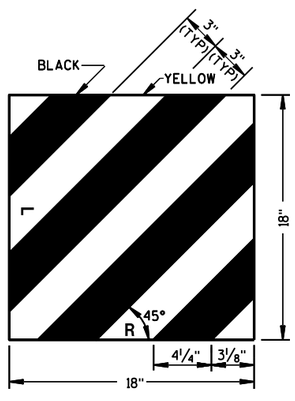

ET-2000 AND SKT-350

⑭ REFLECTIVE SHEETING DETAILS

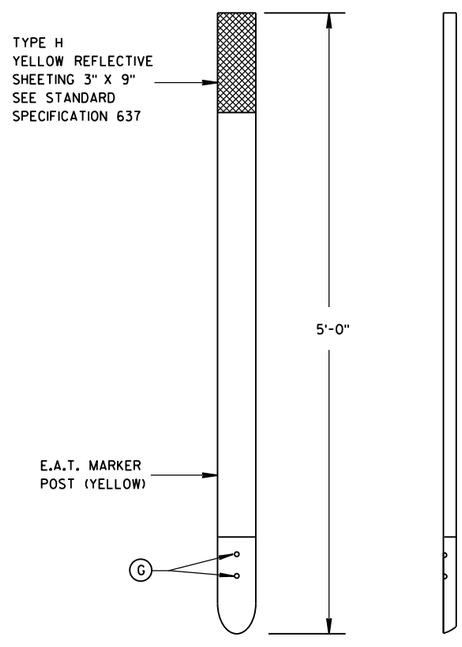

FRONT VIEW SIDE VIEW

⑮ E.A.T. MARKER POST

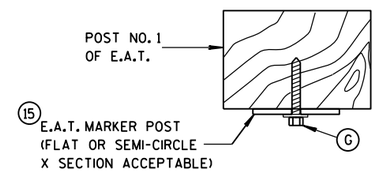

SECTION A-A

STEEL PLATE BEAM GUARD
ENERGY ABSORBING TERMINAL

STATE OF WISCONSIN
DEPARTMENT OF TRANSPORTATION

APPROVED
June 2014 — DATE
/S/ Jerry H. Zogg — ROADWAY STANDARDS DEVELOPMENT ENGINEER
FHWA

6

6

S.D.D. 14 B 24-8c

S.D.D. 14 B 24-8c

THIS DRAWING PROVIDES GENERAL GUIDANCE ON TYPICAL DETOUR SIGN LAYOUT AND SPACING. SEE PROJECT DETOUR SIGNING SHEETS FOR SPECIFIC DETAILS FOR EACH PROJECT.

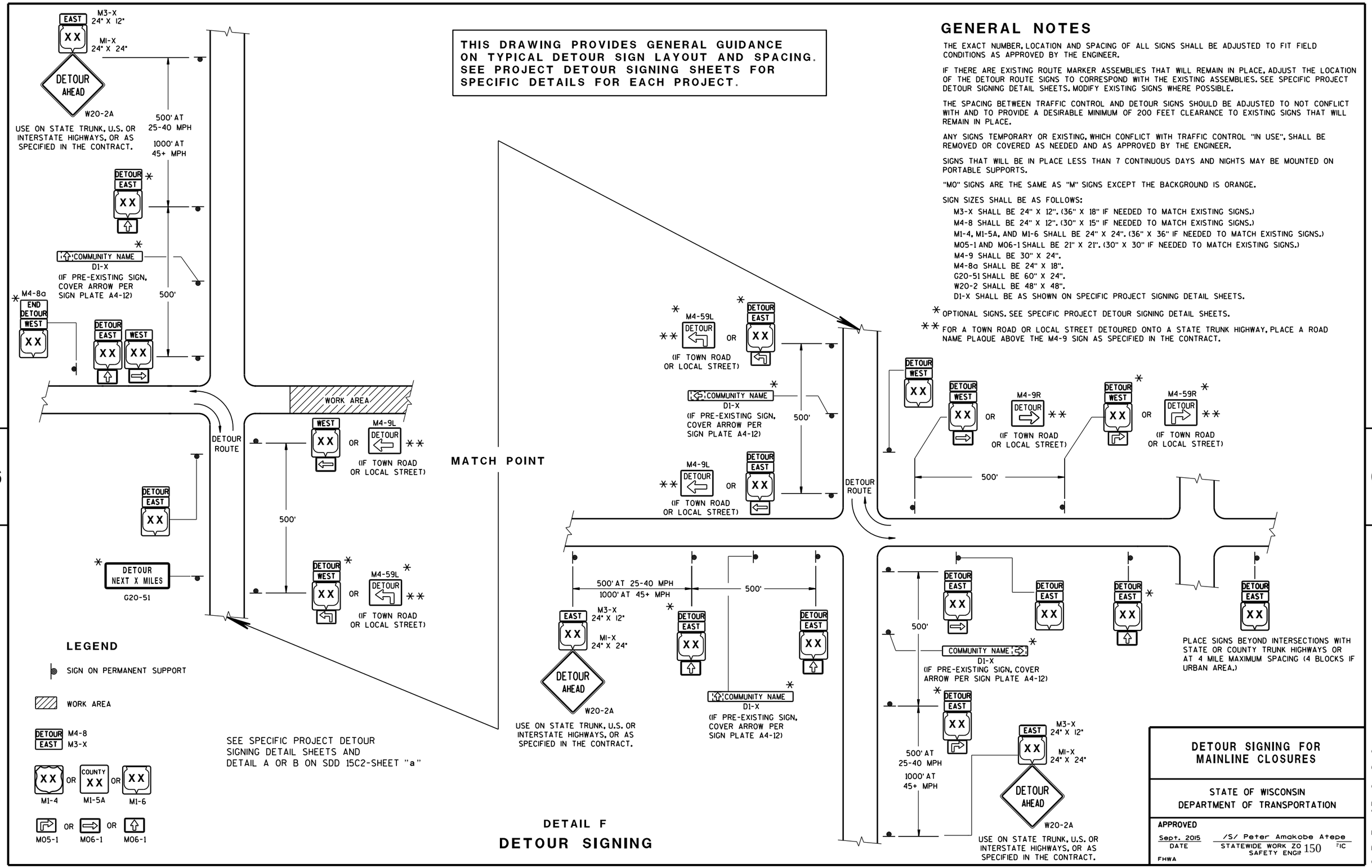

GENERAL NOTES

THE EXACT NUMBER, LOCATION AND SPACING OF ALL SIGNS SHALL BE ADJUSTED TO FIT FIELD CONDITIONS AS APPROVED BY THE ENGINEER.

IF THERE ARE EXISTING ROUTE MARKER ASSEMBLIES THAT WILL REMAIN IN PLACE, ADJUST THE LOCATION OF THE DETOUR ROUTE SIGNS TO CORRESPOND WITH THE EXISTING ASSEMBLIES. SEE SPECIFIC PROJECT DETOUR SIGNING DETAIL SHEETS. MODIFY EXISTING SIGNS WHERE POSSIBLE.

THE SPACING BETWEEN TRAFFIC CONTROL AND DETOUR SIGNS SHOULD BE ADJUSTED TO NOT CONFLICT WITH AND TO PROVIDE A DESIRABLE MINIMUM OF 200 FEET CLEARANCE TO EXISTING SIGNS THAT WILL REMAIN IN PLACE.

ANY SIGNS TEMPORARY OR EXISTING, WHICH CONFLICT WITH TRAFFIC CONTROL "IN USE", SHALL BE REMOVED OR COVERED AS NEEDED AND AS APPROVED BY THE ENGINEER.

SIGNS THAT WILL BE IN PLACE LESS THAN 7 CONTINUOUS DAYS AND NIGHTS MAY BE MOUNTED ON PORTABLE SUPPORTS.

"MO" SIGNS ARE THE SAME AS "M" SIGNS EXCEPT THE BACKGROUND IS ORANGE.

SIGN SIZES SHALL BE AS FOLLOWS:

- M3-X SHALL BE 24" X 12". (36" X 18" IF NEEDED TO MATCH EXISTING SIGNS.)
- M4-8 SHALL BE 24" X 12". (30" X 15" IF NEEDED TO MATCH EXISTING SIGNS.)
- M1-4, M1-5A, AND M1-6 SHALL BE 24" X 24". (36" X 36" IF NEEDED TO MATCH EXISTING SIGNS.)
- M05-1 AND M06-1 SHALL BE 21" X 21". (30" X 30" IF NEEDED TO MATCH EXISTING SIGNS.)
- M4-9 SHALL BE 30" X 24".
- M4-8a SHALL BE 24" X 18".
- G20-51 SHALL BE 60" X 24".
- W20-2 SHALL BE 48" X 48".
- D1-X SHALL BE AS SHOWN ON SPECIFIC PROJECT SIGNING DETAIL SHEETS.

* OPTIONAL SIGNS. SEE SPECIFIC PROJECT DETOUR SIGNING DETAIL SHEETS.

** FOR A TOWN ROAD OR LOCAL STREET DETOURED ONTO A STATE TRUNK HIGHWAY, PLACE A ROAD NAME PLAQUE ABOVE THE M4-9 SIGN AS SPECIFIED IN THE CONTRACT.

DETOUR SIGNING FOR MAINLINE CLOSURES

STATE OF WISCONSIN
DEPARTMENT OF TRANSPORTATION

APPROVED
Sept. 2015 — DATE
/S/ Peter Amakobe Atepe — STATEWIDE WORK ZONE TRAFFIC SAFETY ENGINEER
FHWA

6

S.D.D. 15 C 2-6c

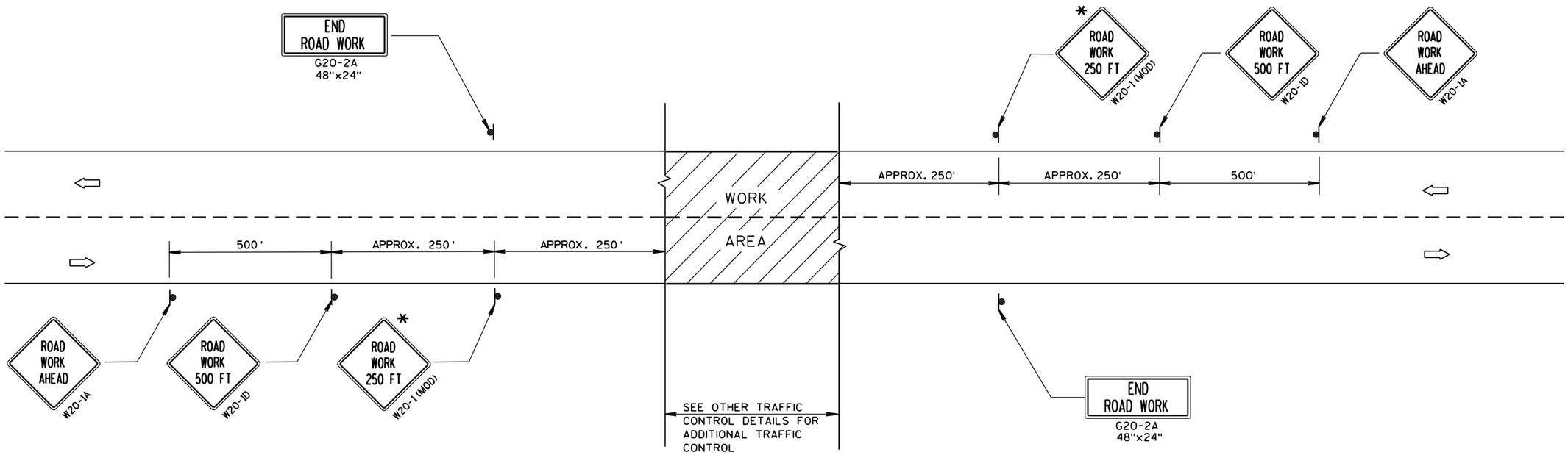

TYPICAL SIDEROAD APPROACH WARNING SIGN DETAIL

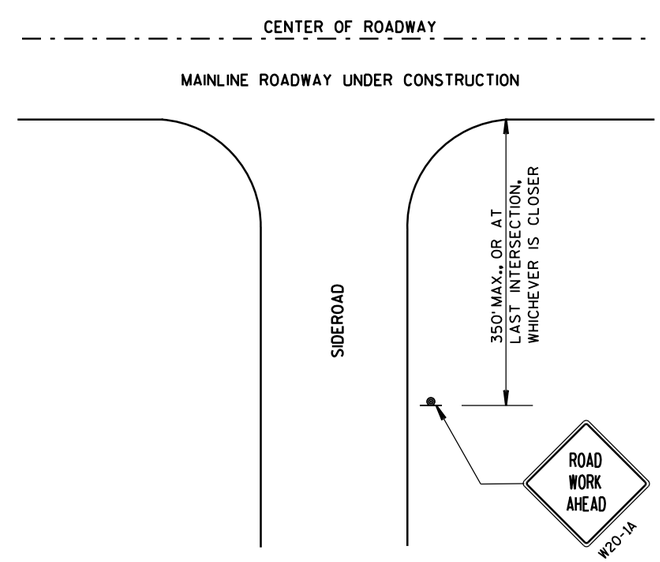

LEGEND

- SIGN ON PERMANENT SUPPORT
- DIRECTION OF TRAFFIC
- WORK AREA

GENERAL NOTES

THE EXACT NUMBER, LOCATION, AND SPACING OF ALL SIGNS AND DEVICES SHALL BE ADJUSTED TO FIT FIELD CONDITIONS.

THE SPACING BETWEEN TRAFFIC CONTROL SIGNS SHOULD BE ADJUSTED TO NOT CONFLICT WITH AND SHOULD PROVIDE A DESIRABLE MINIMUM OF 200 FEET CLEARANCE TO EXISTING SIGNS THAT WILL REMAIN IN PLACE.

ALL SIGNS ARE 48"x48" UNLESS OTHERWISE NOTED. IF NECESSARY DUE TO SPACE CONSTRAINTS, 36"x36" SIGNS MAY BE USED INSTEAD OF 48"x48" SIGNS.

SIGNS THAT WILL BE IN PLACE LESS THAN 7 CONTINUOUS DAYS AND NIGHTS MAY BE MOUNTED ON PORTABLE SUPPORTS.

IF A "STOP" SIGN MUST BE REMOVED FOR A WORK OPERATION, A TEMPORARY "STOP" SIGN SHALL BE PLACED PRIOR TO THE SIGN REMOVAL, OR A FLAGGER SHALL BE PROVIDED UNTIL THE SIGN IS RE-ESTABLISHED.

* THE THIRD W20-1 SIGN IS REQUIRED ONLY IF THERE IS AN INTERSECTION BETWEEN THE "ROAD WORK 500 FT" SIGN AND THE WORK ZONE. ADJUST THE PLACEMENT OF THIS SIGN BASED ON INTERSECTION LOCATION AND OTHER FIELD CONDITIONS.

TRAFFIC CONTROL, ADVANCE WARNING SIGNS 40 M.P.H. OR LESS TWO-WAY UNDIVIDED ROAD OPEN TO TRAFFIC

STATE OF WISCONSIN
DEPARTMENT OF TRANSPORTATION

APPROVED
Sept. 2015 — DATE
/S/ Peter Amakobe Atepe
STATEWIDE WORK ZONE SAFETY ENGIN
FHWA

S.D.D. 15 C 5-3
6

GENERAL NOTES

DETAILS OF INSTALLATION, MATERIALS AND WORKMANSHIP NOT SHOWN ON THIS DRAWING SHALL CONFORM TO THE PERTINENT REQUIREMENTS OF THE STANDARD SPECIFICATIONS AND APPLICABLE SPECIAL PROVISIONS.

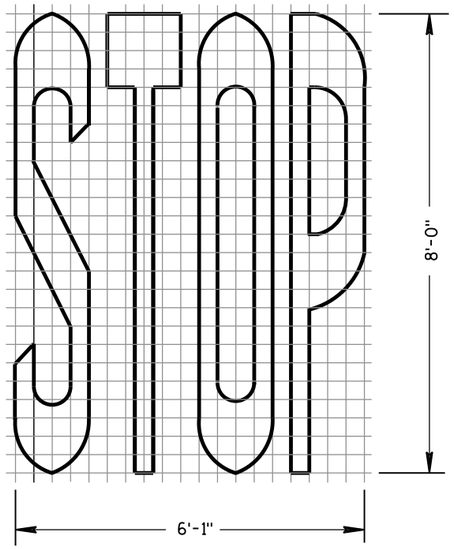

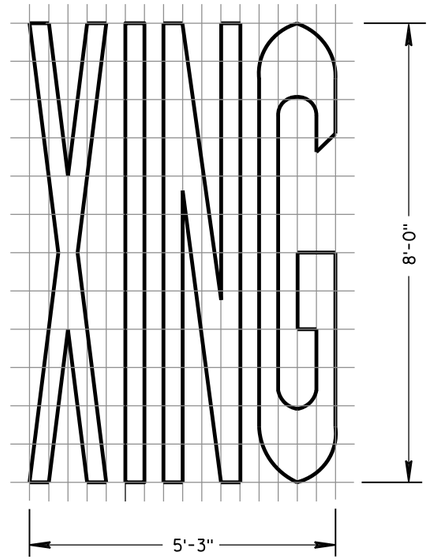

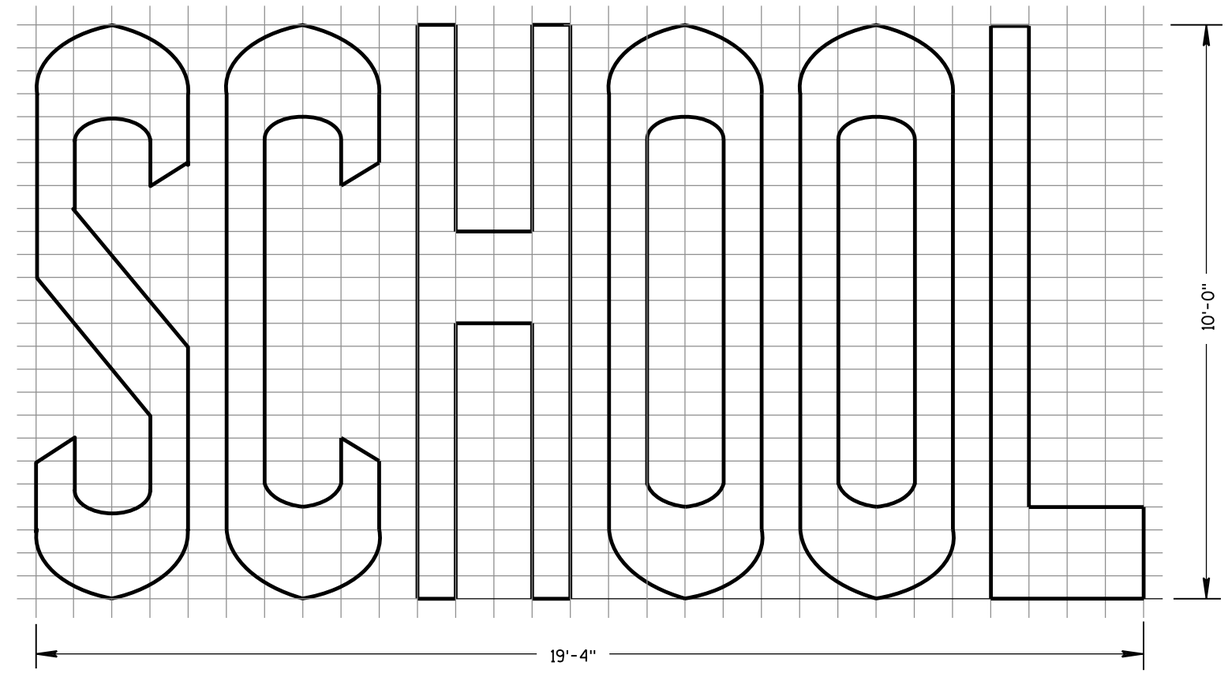

TWO-LANE

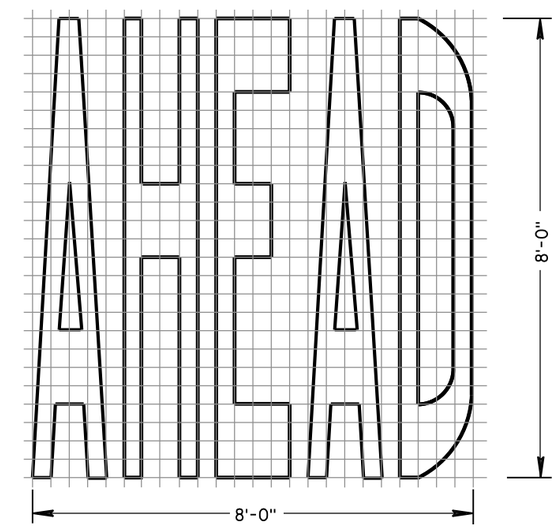

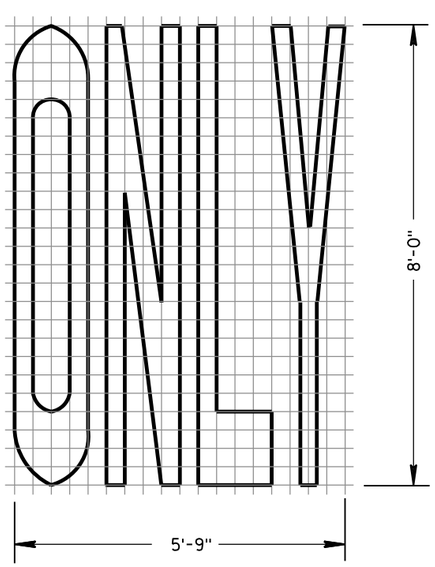

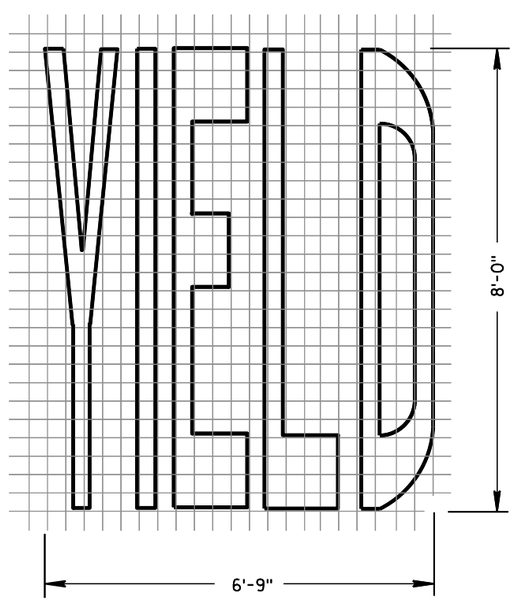

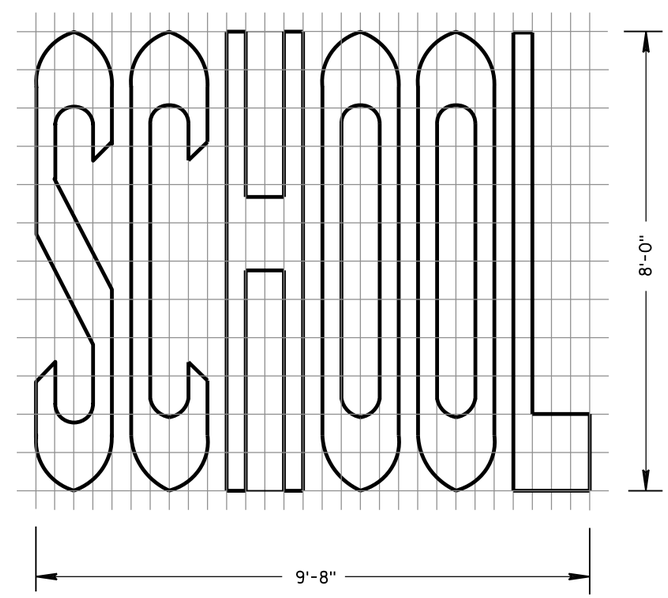

SINGLE-LANE

6

6

S.D.D. 15 C 7-13b

S.D.D. 15 C 7-13b

PAVEMENT MARKING WORDS

STATE OF WISCONSIN
DEPARTMENT OF TRANSPORTATION

APPROVED

4-18-16	/S/ Matthew R. Rauch
DATE	STATE SIGNING AND MARK EER

FHWA

GENERAL NOTES

DETAILS OF INSTALLATION, MATERIALS AND WORKMANSHIP NOT SHOWN ON THIS DRAWING SHALL CONFORM TO THE PERTINENT REQUIREMENTS OF THE STANDARD SPECIFICATIONS AND APPLICABLE SPECIAL PROVISIONS.

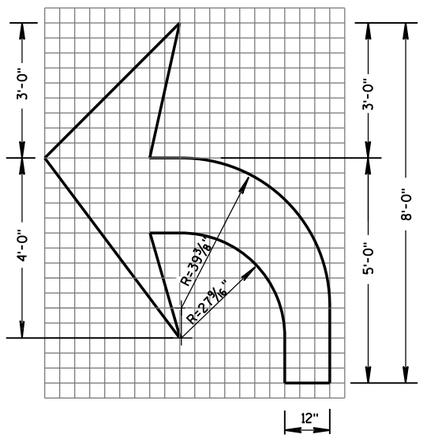

TYPE 2

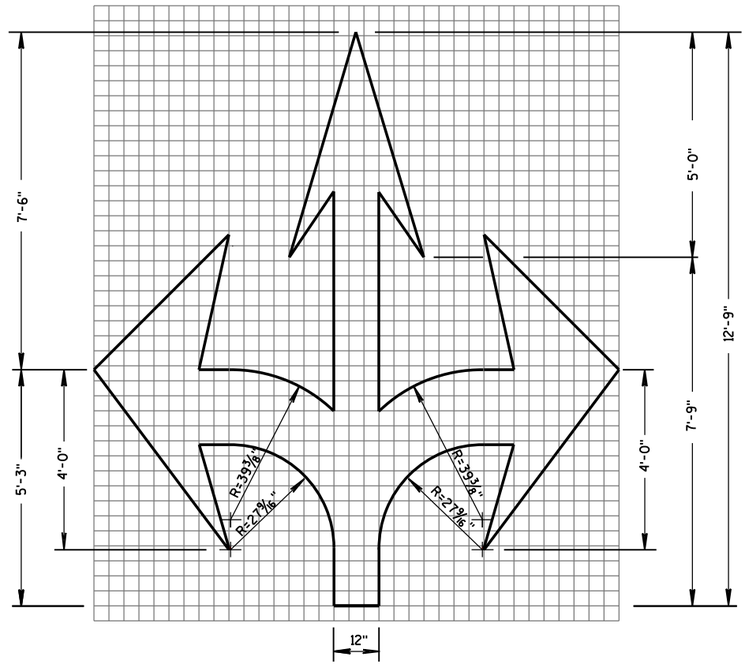

TYPE 6

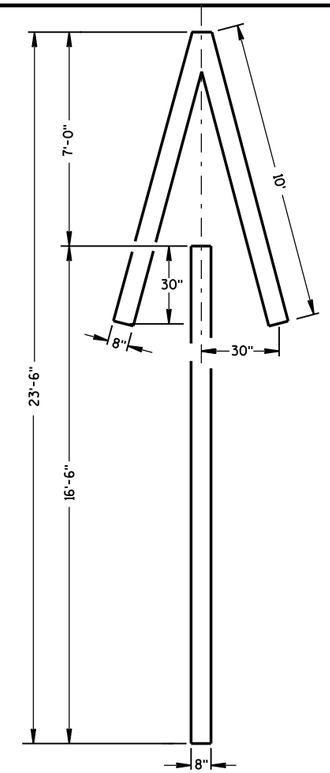

TYPE 4

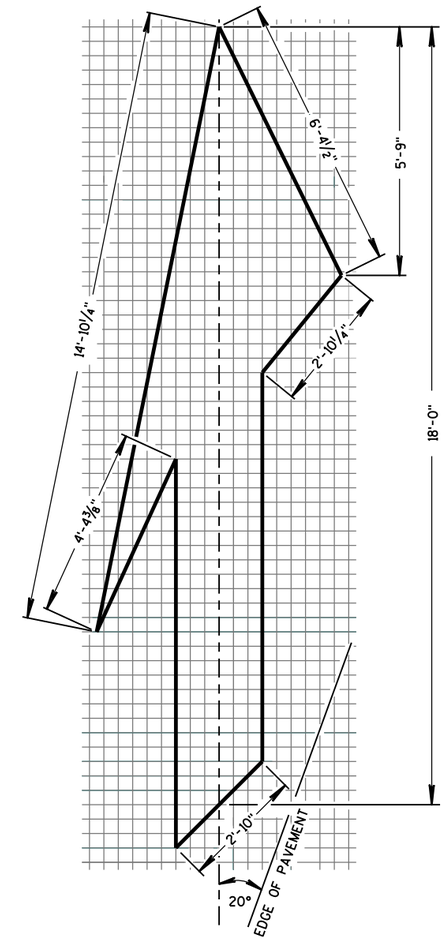

TYPE 5 LANE DROP ARROW

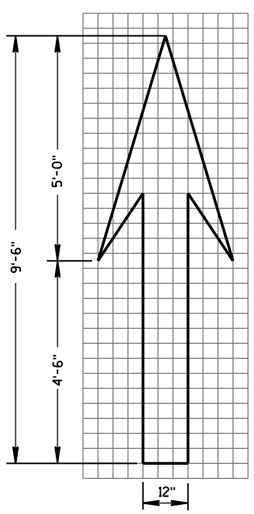

TYPE 1

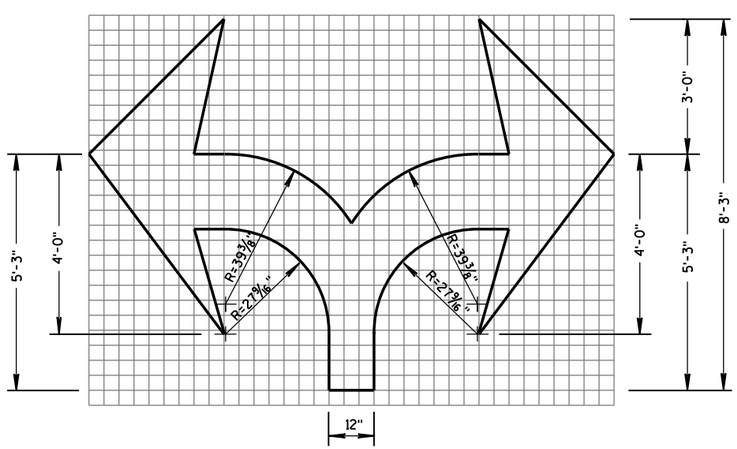

TYPE 7

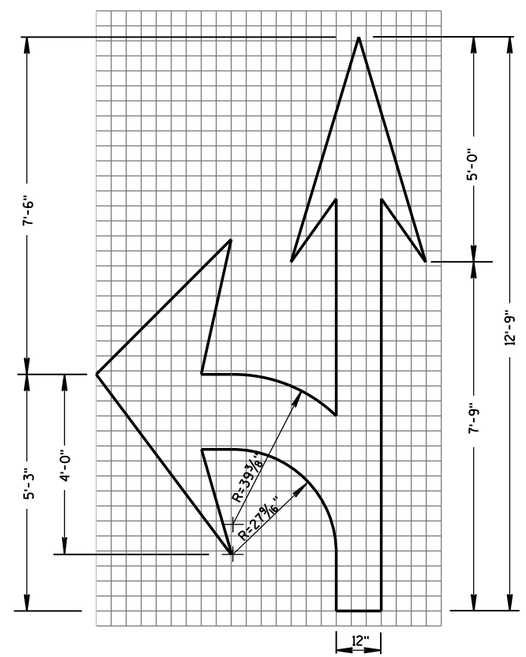

TYPE 3

PAVEMENT MARKING ARROWS

STATE OF WISCONSIN
DEPARTMENT OF TRANSPORTATION

APPROVED
4-18-16 /S/ Matthew R. Rauch
DATE STATE SIGNING AND MAR NEER
FHWA

6

S.D.D. 15 C 7-13c

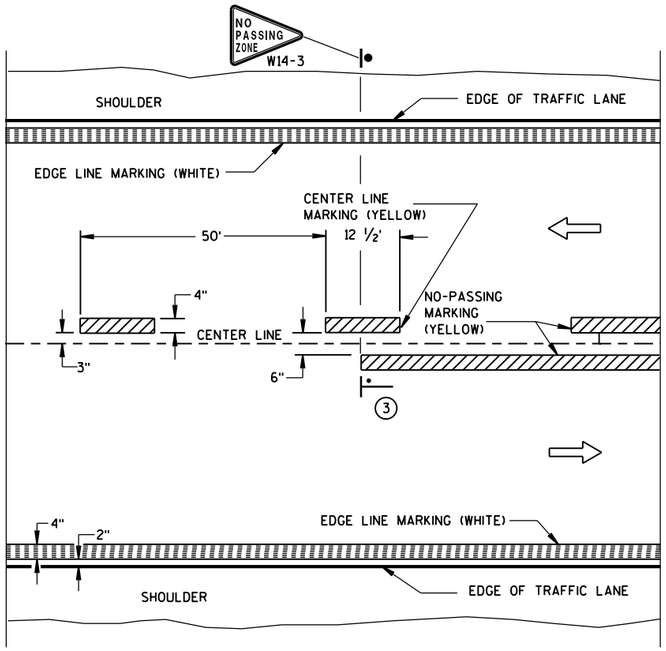

TWO WAY TRAFFIC

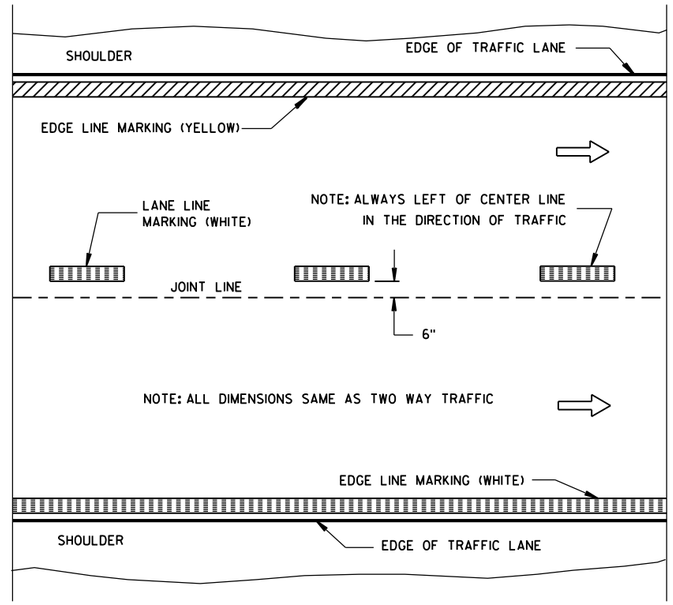

ONE WAY TRAFFIC

PERMANENT PAVEMENT MARKING

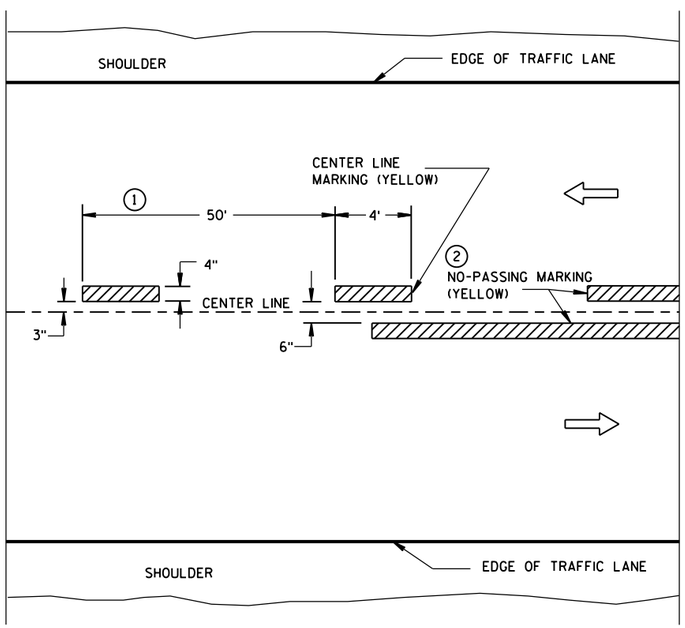

TWO WAY TRAFFIC

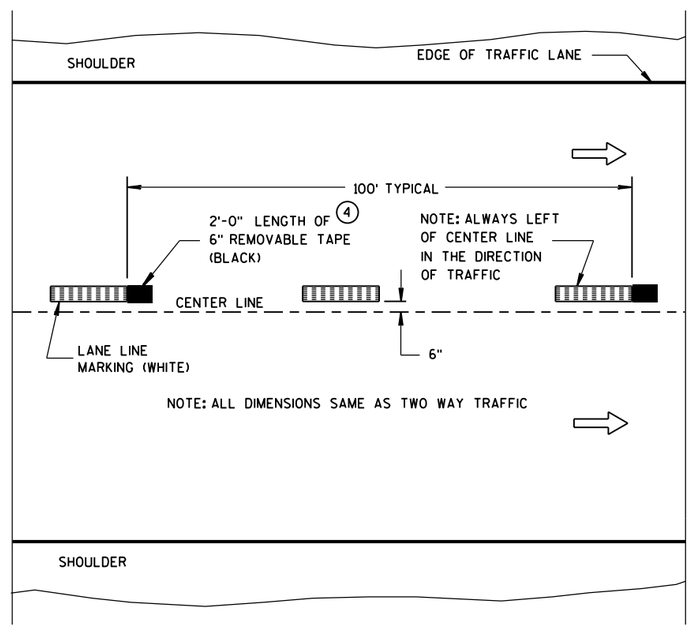

ONE WAY TRAFFIC

TEMPORARY (INTERMEDIATE) PAVEMENT MARKING

(SHOWS CYCLE FOR TEMPORARY CENTER LINE OR TEMPORARY LANE LINE MARKING)

GENERAL NOTES

DETAILS OF CONSTRUCTION NOT SHOWN ON THIS DRAWING SHALL CONFORM TO STANDARD SPECIFICATIONS AND SPECIAL PROVISIONS.

1. HALF CYCLE LENGTHS (25'±) WITH 2' MINIMUM STRIPE LENGTHS SHALL BE PROVIDED ON ROADWAYS (INCLUDING TEMPORARY TRAVELED WAYS) WITH REVERSE CURVATURE, CURVATURE OF OVER 5 DEGREES OR WHEN DIRECTED BY THE ENGINEER TO MARK UNUSUAL ALIGNMENT OF THE TRAVELED WAY.
2. NO PASSING ZONE TEMPORARY PAVEMENT MARKING IS REQUIRED TO BE PLACED, WHERE APPROPRIATE, ALONG WITH CENTERLINE TEMPORARY PAVEMENT MARKING WHEN A SAME DAY PERMANENT PAVEMENT MARKING ITEM IS INCLUDED IN THE CONTRACT.
3. NO PASSING ZONE MARKINGS ARE PLACED ACCORDING TO "T" MARKINGS. IF EXISTING NO PASSING ZONE W14-3 SIGNS ARE BEYOND 50 FEET IN EITHER DIRECTION, THE SIGNS SHALL BE MOVED TO THE "T" MARKINGS.
4. CONCRETE ONLY.

NOTE

ARROW SYMBOL (⇨) SHOWS DIRECTION OF TRAVEL

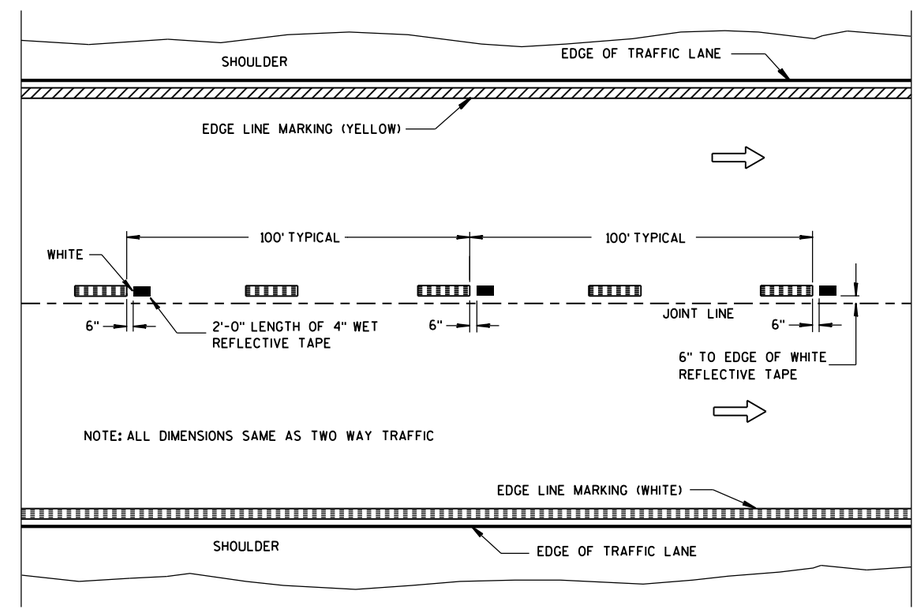

WET REFLECTIVE TAPE SUPPLEMENT TO SPRAYED OR NON WET REFLECTIVE TAPE LANE LINE

LEGEND

"T" MARKING

POST MOUNTED SIGN

PAVEMENT MARKING (MAINLINE)	
STATE OF WISCONSIN DEPARTMENT OF TRANSPORTATION	
APPROVED 5-13-2013 DATE	/S/ Travis Feltes STATE TRAFFIC E
FHWA	

6

6

S.D.D. 15 C 8-16a

S.D.D. 15 C 8-16a

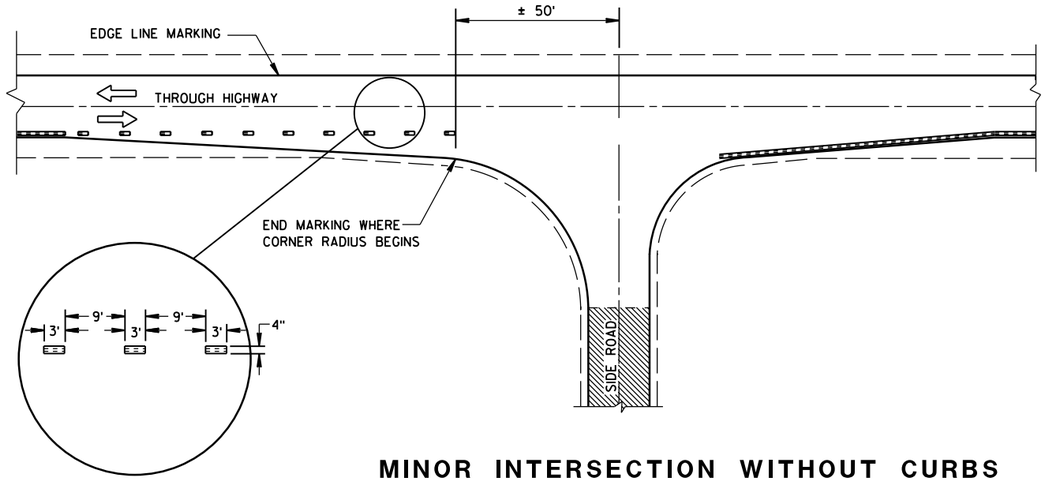

MINOR INTERSECTION WITHOUT CURBS

GENERAL NOTES

EDGE LINES SHALL BE OMITTED THROUGH INTERSECTIONS. EDGE LINES SHALL BE CONTINUED THROUGH DRIVEWAYS.

1. WHEN DISTANCE "A" IS LESS THAN 250 FEET, OMIT LANE LINE.
2. WHEN DISTANCE "B" IS LESS THAN 100 FEET, OMIT CHANNELIZING LANE LINE.
3. ALTERNATIVE MARKING SHALL BE PROVIDED WHEN SPECIFIED IN THE CONTRACT. TYPICAL SITUATIONS WHERE THIS MARKING MAY BE REQUIRED ARE WHERE THE INTERSECTION IS ON A SHARP HORIZONTAL CURVE OR CREST VERTICAL CURVE IN AN UNLIGHTED AREA SUCH THAT THE EDGE LINE MAY BE MISLEADING TO THE MOTORIST OR DISAPPEAR FROM SIGHT.
4. THE EDGE LINE IN THE TAPER AREAS OF THE BYPASS LANE AND THE BYPASS LANE SHALL BE LOCATED 1-FOOT FROM EDGE OF PAVEMENT TO THE OUTSIDE EDGE OF EDGE LINE.
5. BARRIER LINE ENDS AT SIDE ROAD PAVEMENT/SURFACE EDGE EXTENSION.
6. BARRIER LINE STARTS 500 FEET PRIOR TO THE BYPASS TAPER.
7. IF THE DISTANCE BETWEEN 2 SUCCESSIVE NO-PASSING ZONES IS LESS THAN THE MINIMUM DISTANCE BETWEEN ZONES, CONNECT THE 2 ZONES.
8. 3' LINE 9' GAP, EXCEPT RETRACE THE EXISTING LINE - GAP PATTERN WHERE EXISTING MARKINGS ARE IN PLACE.

ARROW SYMBOL (⇨) SHOWS DIRECTION OF TRAVEL

(7)

POSTED SPEED (MPH)	MINIMUM DISTANCE BETWEEN ZONES (FEET)
25 - 30	528
35 - 40	528
45 - 50	686
55	792

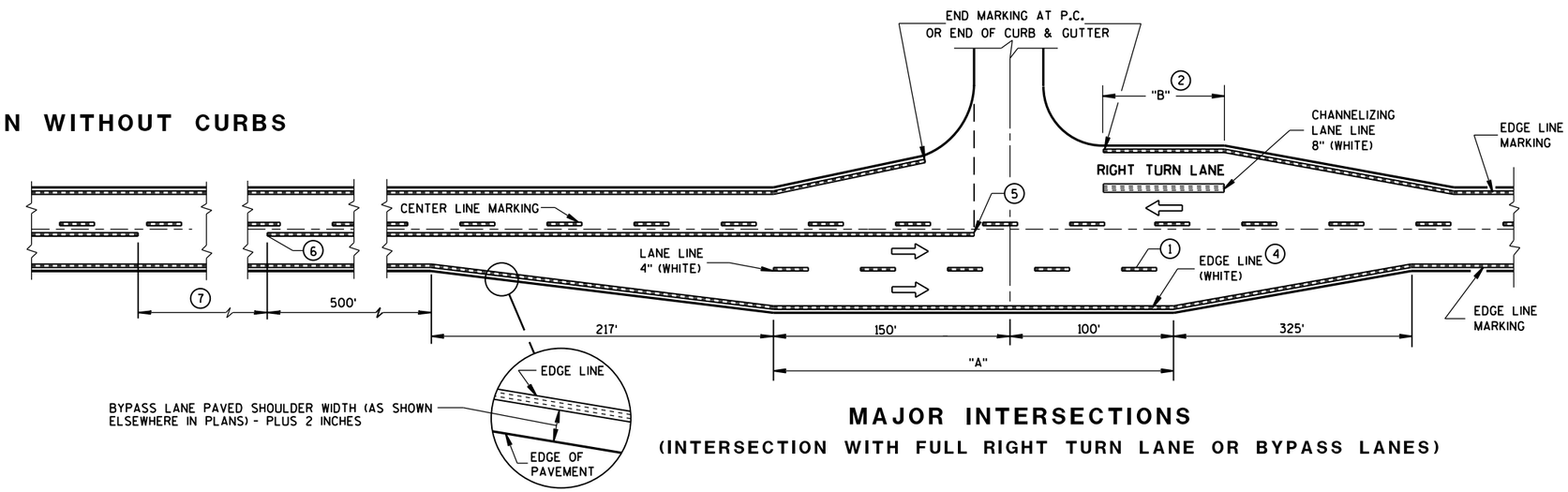

MAJOR INTERSECTIONS

(INTERSECTION WITH FULL RIGHT TURN LANE OR BYPASS LANES)

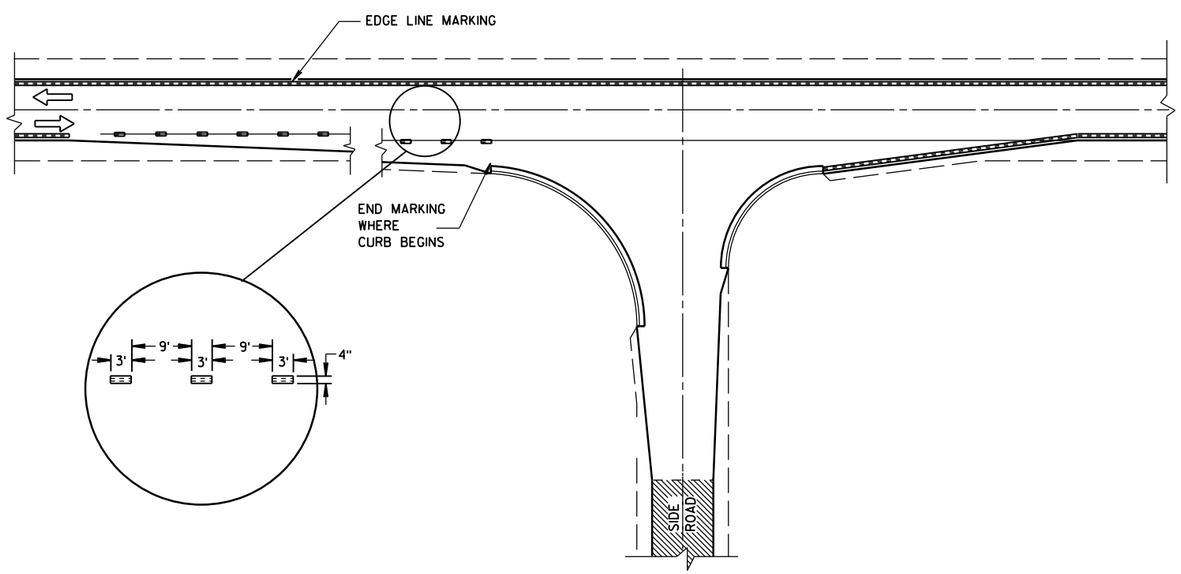

MINOR INTERSECTION WITH CURBS

(TYPICAL MARKING)

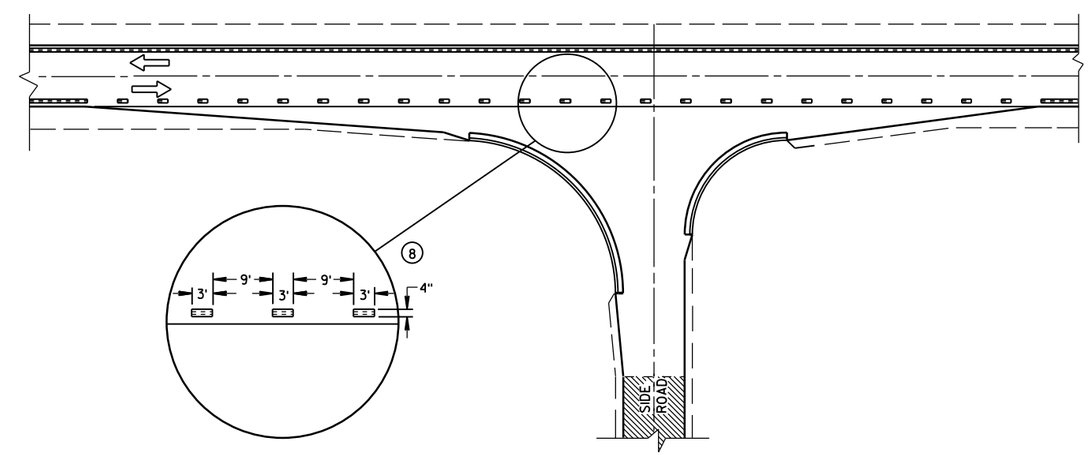

MINOR INTERSECTION WITH CURBS

(3) (FOR SPECIAL CONDITIONS AS SPECIFIED)

PAVEMENT MARKING
(INTERSECTIONS)

STATE OF WISCONSIN
DEPARTMENT OF TRANSPO

6

S.D.D. 15 C 8-16b

6

S.D.D. 15 C 8-16b

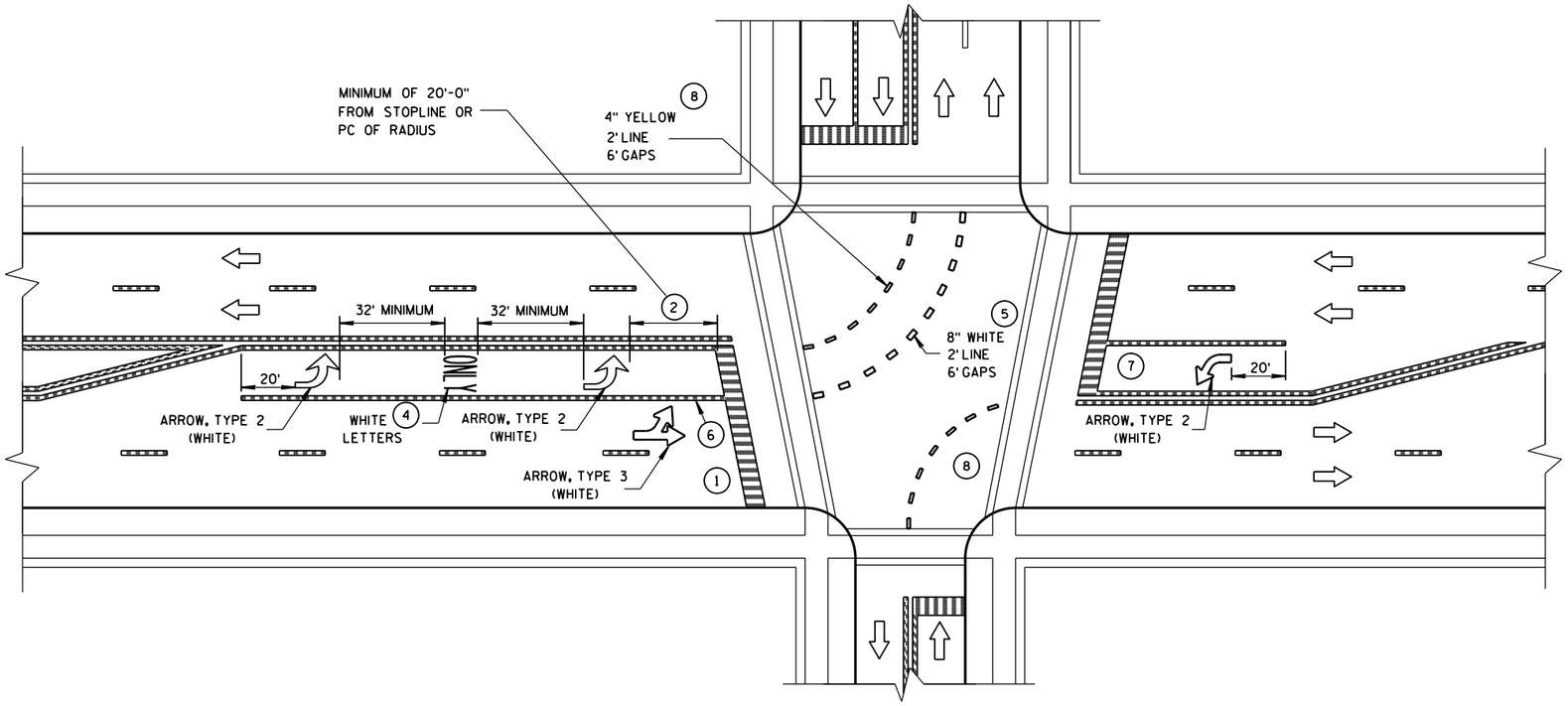

GENERAL NOTES

1. STOP BAR IS REQUIRED ONLY WHEN SPECIFIED IN THE CONTRACT.
2. DISTANCE MAY BE ADJUSTED TO ACCOMODATE SHORT LEFT TURN LANES. AS APPROVED BY THE ENGINEER.
3. A SET OF ARROWS IS REQUIRED EVERY 400 FEET OR NEAR INTERSECTIONS OR DRIVEWAYS WITH TURNING TRAFFIC.
4. ADD EXTRA SETS OF ONE ARROW AND ONE ONLY PER 160 FEET OR WHEN ON A CURVE.
5. 8" WHITE WITH 2' LINE 6' GAPS FOR DUAL TURN LANE.
6. 8" WHITE
7. ADD SECOND ARROW WHEN TURN BAY IS GREATER THAN OR EQUAL TO 108 FEET.
8. REQUIRED ONLY WHEN SPECIFIED IN THE CONTRACT.

NOTE:
ARROW SYMBOL (⇨)
SHOWS DIRECTION OF TRAVEL

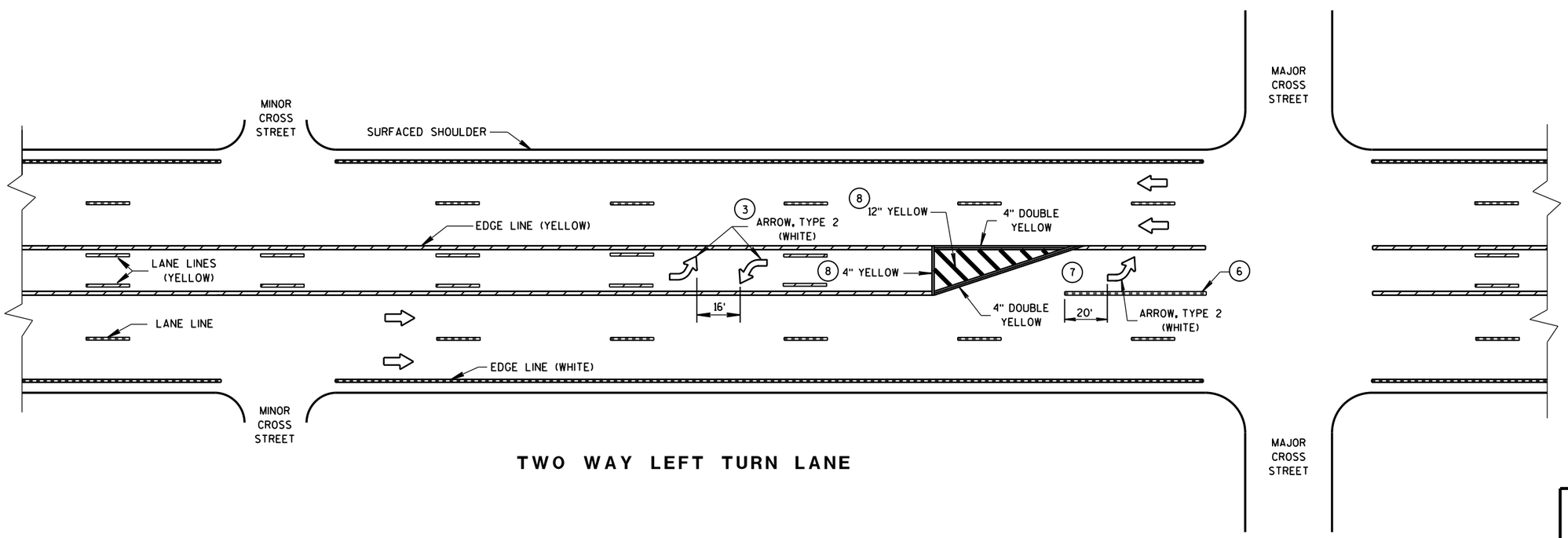

TWO WAY LEFT TURN LANE

PAVEMENT MARKING
(LEFT TURN LANE)

STATE OF WISCONSIN
DEPARTMENT OF TRANSPORTATION

6

S.D.D. 15 C 8-16e

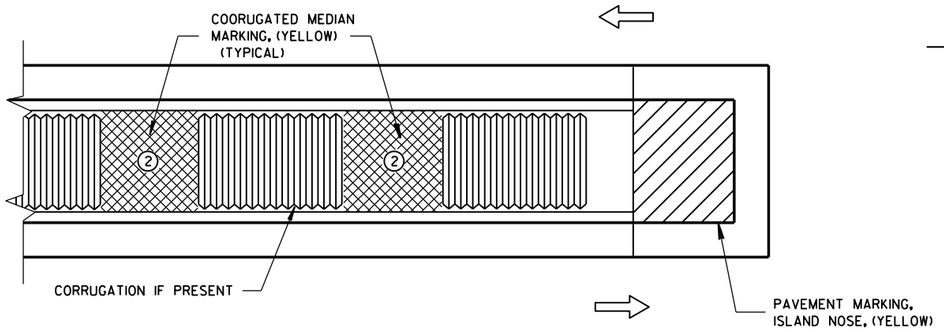

MEDIAN ISLAND WITH SQUARE BLUNT NOSE

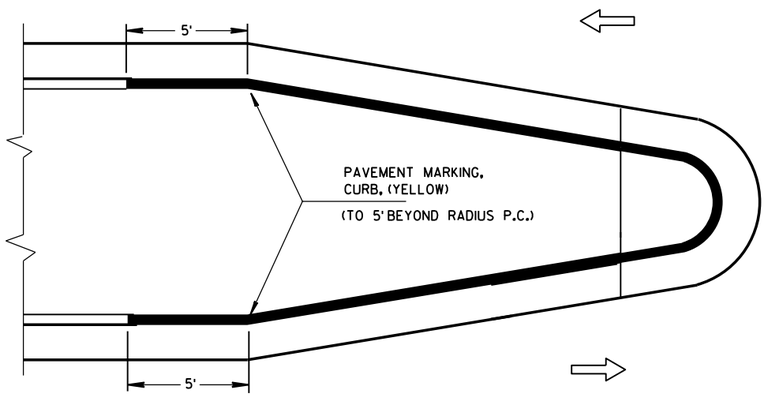

MEDIAN ISLAND WITH ROUND BLUNT NOSE

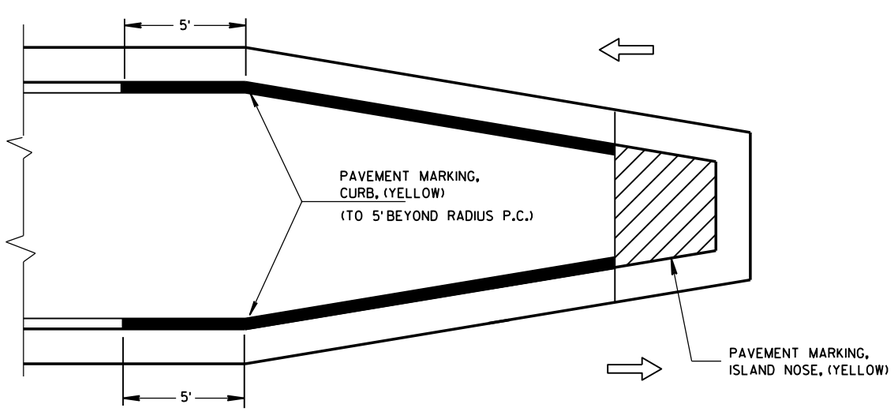

MEDIAN ISLAND WITH SLOPED NOSE

TYPICAL PLACEMENT OF PAVEMENT MARKING ON MEDIAN ISLANDS

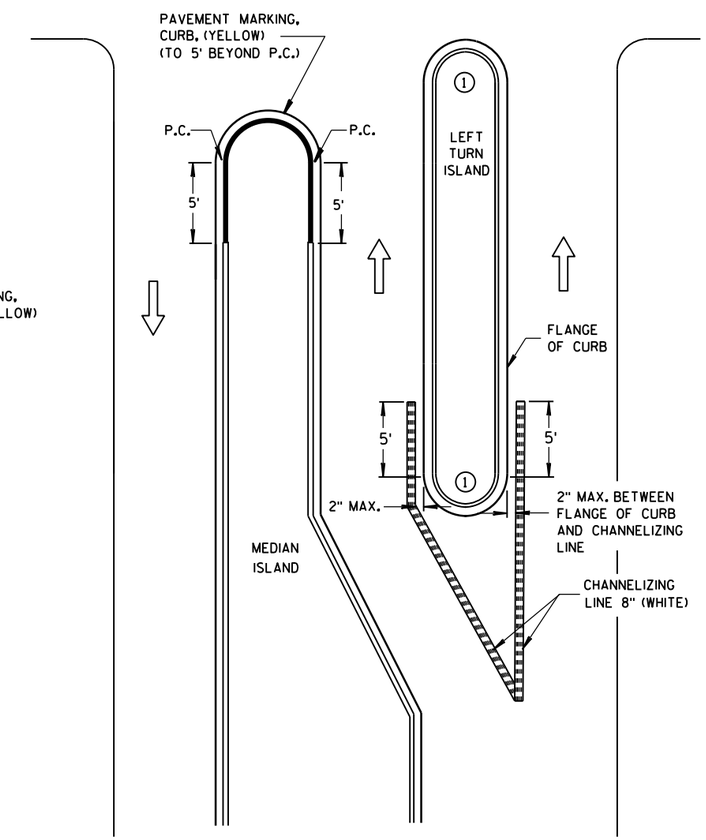

LEFT TURN & MEDIAN ISLAND

GENERAL NOTES

1. DO NOT MARK CURB NOSES THAT SEPARATE LANES OF TRAFFIC TRAVELING IN THE SAME DIRECTION.

2. WHEN CONCRETE CORRUGATED MEDIAN IS CONSTRUCTED TO SEPARATE TRAFFIC OPERATING IN THE OPPOSING DIRECTION YELLOW PAVEMENT MARKING SHALL BE APPLIED TO THE FLAT PORTION OF THE CONCRETE CORRUGATED MEDIAN. THE ITEM OF PAVEMENT MARKING, CONCRETE CORRUGATED MEDIAN, WILL BE MEASURED IN PLACE AND AND ACCEPTED IN ACCORDANCE WITH THE CONTRACT AND PAID FOR AT THE CONTRACT UNIT PRICE PER SQUARE FOOT.

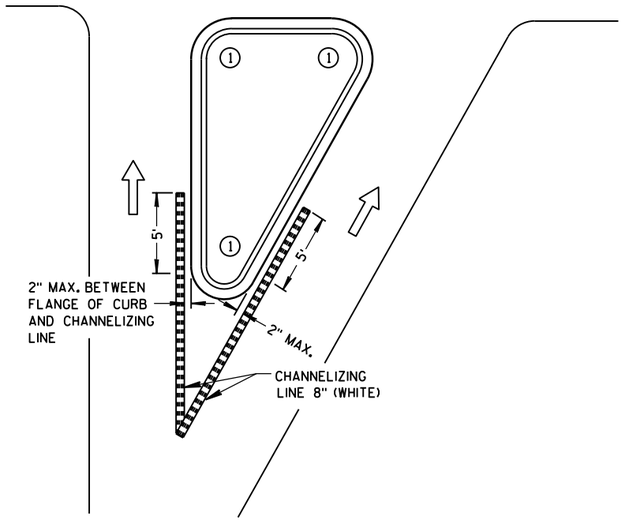

RIGHT TURN ISLAND

LEGEND

- ISLAND NOSE MARKING
- CURB MARKING
- CORRUGATED MEDIAN MARKING
- DIRECTION OF TRAVEL

PAVEMENT MARKING (ISLANDS)

STATE OF WISCONSIN
DEPARTMENT OF TRANSPOI

6

6

S.D.D. 15 C 8-16f

S.D.D. 15 C 8-16f

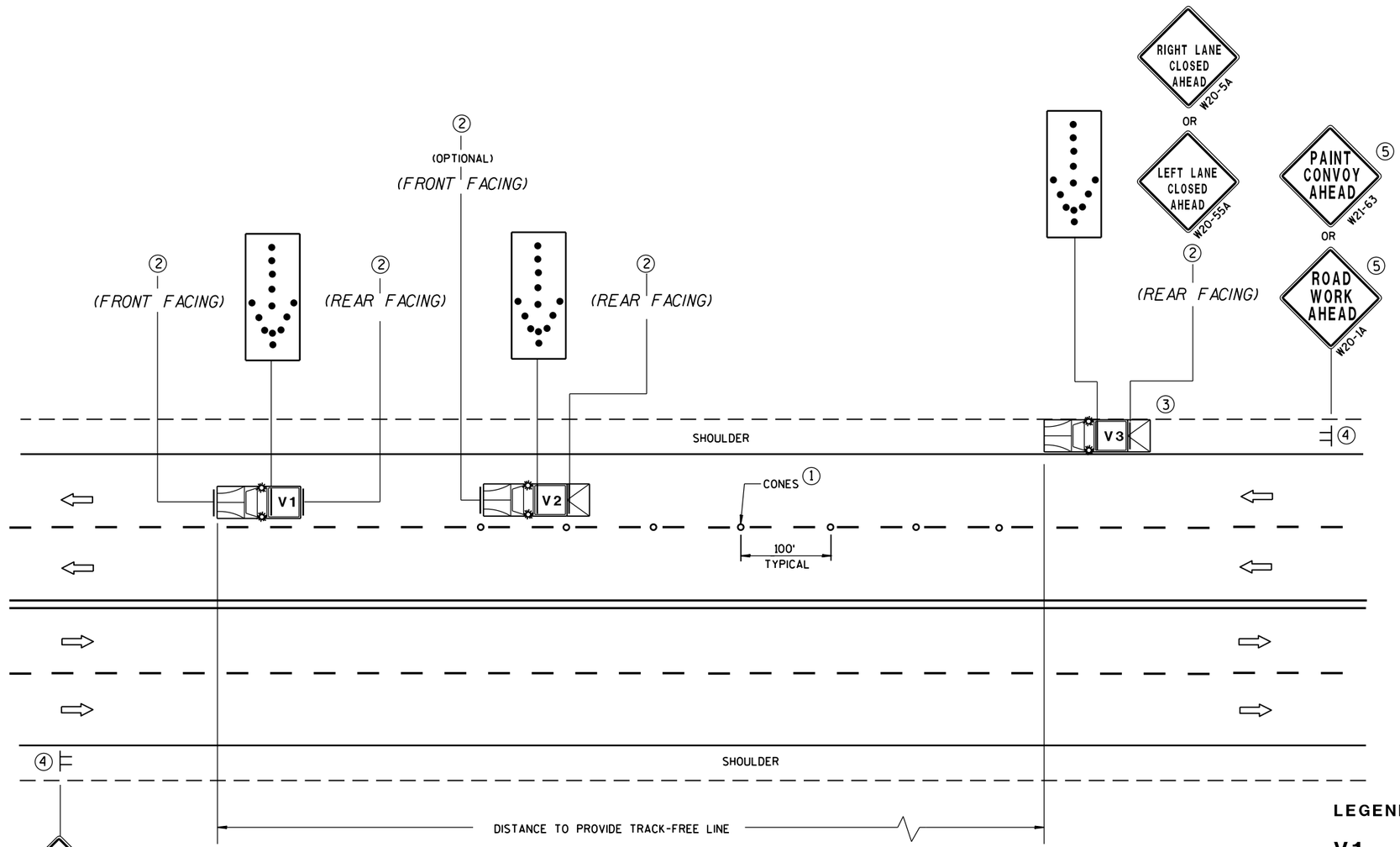

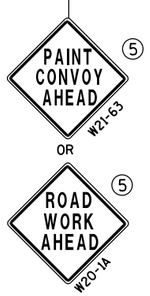

MOVING PAVEMENT MARKING OPERATIONS
MULTI-LANE UNDIVIDED ROADWAY

GENERAL NOTES

ALL VEHICLES SHALL BE EQUIPPED WITH TWO 360 DEGREE HIGH INTENSITY YELLOW FLASHING LIGHTS OR STROBE LIGHTS AND OPERATED WITH HEADLIGHTS TURNED ON.

ALL VEHICLES SHALL BE EQUIPPED WITH REAR FACING TYPE B OR C FLASHING ARROW PANEL. SIGNS PLACED ON VEHICLES MUST NOT OBSCURE THE ARROW PANEL.

ALL SIGNS ARE 48" X 48" UNLESS OTHERWISE SPECIFIED.

IF SPEED LIMIT IS 40 MPH OR LESS STATIONARY SIGNS MAY BE OMITTED IF CONES ARE USED.

ALTERNATE SIGN MESSAGES, SUCH AS "PAINT CREW AHEAD" OR "ROAD PAINTING AHEAD" MAY BE USED.

DISTANCE BETWEEN VEHICLES MAY VARY ACCORDING TO TERRAIN, SIGHT DISTANCE, PAINT DRYING TIME, AND OTHER FACTORS. WHENEVER ADEQUATE STOPPING SIGHT DISTANCE EXISTS TO THE REAR, SHADOW VEHICLES SHOULD MAINTAIN THE MINIMUM DISTANCE FROM THE WORK VEHICLE AND PROCEED AT THE SAME SPEED AS THE WORK VEHICLE. SHADOW VEHICLES SHOULD SLOW DOWN IN ADVANCE OF VERTICAL OR HORIZONTAL CURVES THAT RESTRICT SIGHT DISTANCE.

WHEN WORK ACTIVITY BLOCKS THE LEFT LANE, REVERSE TRAFFIC CONTROL.

WHEN A RAMP INTERSECTS THE FACILITY ON WHICH THE WORK IS BEING PERFORMED, PROVIDE ADDITIONAL TRAFFIC CONTROLS AS SPECIFIED IN THE CONTRACT OR AS APPROVED BY THE ENGINEER.

USE AN ATTENUATOR ON THE REARMOST VEHICLE THAT BLOCKS ALL OR PART OF THE TRAFFIC LANE.

FOR EDGELINE MARKING OR IF CONES ARE NOT USED, POSITION THE REARMOST SHADOW VEHICLE ON THE SHOULDER AS SHOWN IN THE MUTCD IF THE SHOULDER HAS ADEQUATE WIDTH.

WHEN NO WORK ACTIVITY IS TAKING PLACE, REMOVE OR TURN THE STATIONARY WARNING SIGNS AWAY FROM TRAFFIC.

THIS DRAWING SHALL BE USED FOR CENTERLINE OR EDGELINE OR LANELINE MARKING FOR MULTILANE UNDIVIDED ROADWAYS.

1. CONES MAY BE OMITTED ON PAINTED LINE IF APPROVED BY THE ENGINEER. CONSIDER PAVEMENT MARKING DRY OR CURE TIMES AND TRAFFIC VOLUME.
2. USE STANDARD SIGN W21-64 WITH APPROPRIATE ARROW.

   WET PAINT (W21-64) OR WET PAINT (W21-64)

3. OPTIONAL TRUCK-MOUNTED ATTENUATOR.
4. SIGNS SHALL BE REPEATED APPROXIMATELY EVERY THREE MILES.
5. IF CONSTRUCTION WORK ZONE SIGNS ARE IN PLACE, W20-1 OR W21-63 ARE NOT REQUIRED.

LEGEND

V1	LEAD VEHICLE
V2	SHADOW VEHICLE
V3	TRAIL VEHICLE WITH TMA
TMA	TRUCK-MOUNTED ATTENUATOR
	SIGN ON TEMPORARY SUPPORT
	DIRECTION OF TRAFFIC
	CONES
	FLASHING ARROW PANEL (MERGE)

MOVING PAVEMENT MARKING OPERATION
MULTI-LANE UNDIVIDED ROADWAY

STATE OF WISCONSIN
DEPARTMENT OF TRANSPORTATION

APPROVED
June 2016 — DATE
/S/ Peter Amakobe Atepe — STATEWIDE WORK ZONE SAFETY ENGINEER
FHWA

6

S.D.D. 15 C 19-4b

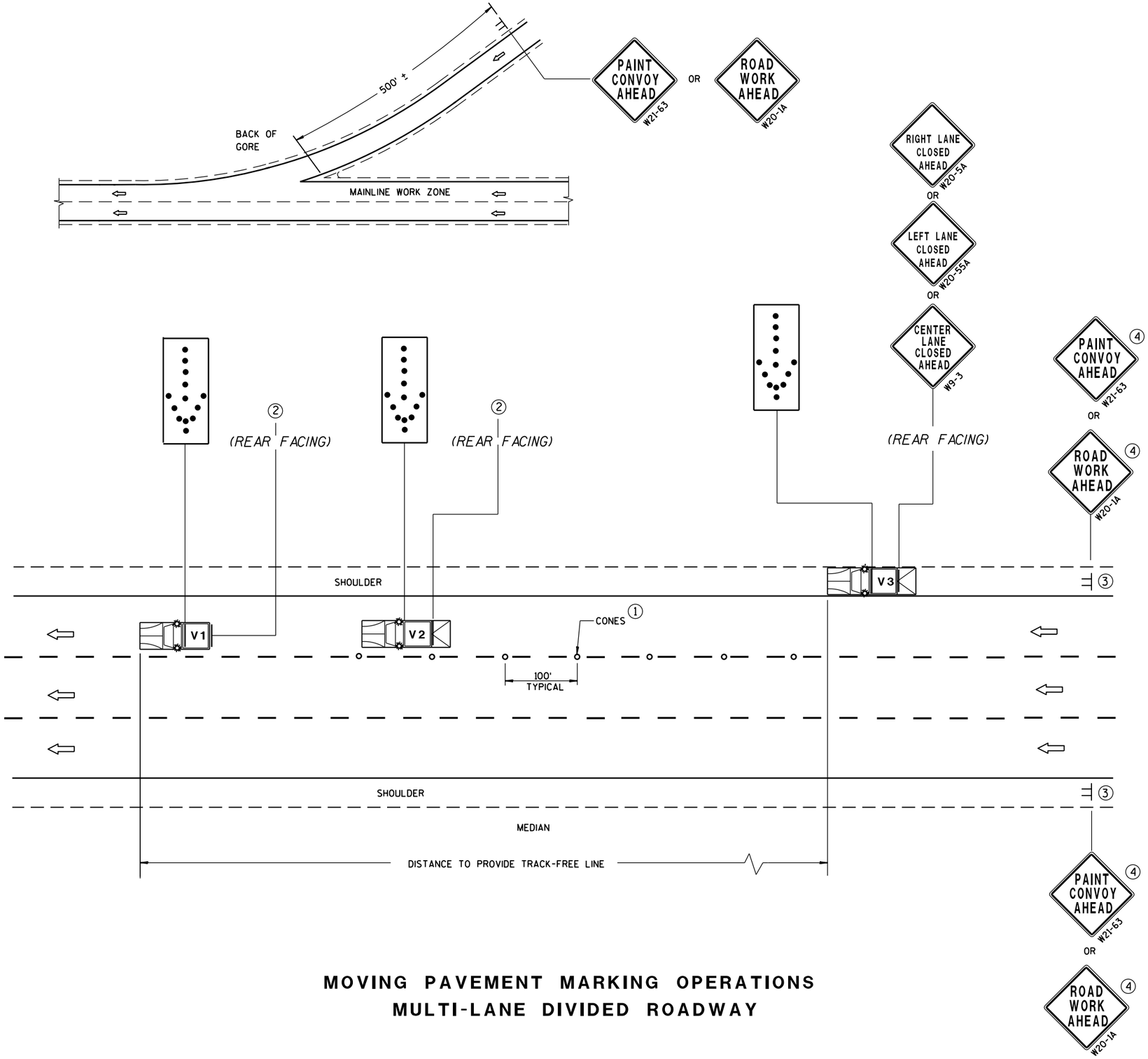

MOVING PAVEMENT MARKING OPERATIONS
MULTI-LANE DIVIDED ROADWAY

GENERAL NOTES

ALL VEHICLES SHALL BE EQUIPPED WITH TWO 360 DEGREE HIGH INTENSITY YELLOW FLASHING LIGHTS OR STROBE LIGHTS AND OPERATED WITH HEADLIGHTS TURNED ON.

ALL VEHICLES SHALL BE EQUIPPED WITH REAR FACING TYPE B OR C FLASHING ARROW PANEL. SIGNS PLACED ON VEHICLES MUST NOT OBSCURE THE ARROW PANEL.

ALL SIGNS ARE 48" X 48" UNLESS OTHERWISE SPECIFIED.

IF SPEED LIMIT IS 40 MPH OR LESS STATIONARY SIGNS MAY BE OMITTED IF CONES ARE USED.

ALTERNATE SIGN MESSAGES, SUCH AS "PAINT CREW AHEAD" OR "ROAD PAINTING AHEAD" MAY BE USED.

DISTANCE BETWEEN VEHICLES MAY VARY ACCORDING TO TERRAIN, SIGHT DISTANCE, PAINT DRYING TIME, AND OTHER FACTORS. WHENEVER ADEQUATE STOPPING SIGHT DISTANCE EXISTS TO THE REAR, SHADOW VEHICLES SHOULD MAINTAIN THE MINIMUM DISTANCE FROM THE WORK VEHICLE AND PROCEED AT THE SAME SPEED AS THE WORK VEHICLE. SHADOW VEHICLES SHOULD SLOW DOWN IN ADVANCE OF VERTICAL OR HORIZONTAL CURVES THAT RESTRICT SIGHT DISTANCE.

WHEN WORK ACTIVITY BLOCKS THE LEFT LANE, REVERSE TRAFFIC CONTROL.

WHEN A RAMP INTERSECTS THE FACILITY ON WHICH THE WORK IS BEING PERFORMED, PROVIDE ADDITIONAL TRAFFIC CONTROLS AS SPECIFIED IN THE CONTRACT OR AS APPROVED BY THE ENGINEER.

USE AN ATTENUATOR ON THE REARMOST VEHICLE THAT BLOCKS ALL OR PART OF THE TRAFFIC LANE.

FOR EDGELINE MARKING OR IF CONES ARE NOT USED, POSITION THE REARMOST SHADOW VEHICLE ON THE SHOULDER AS SHOWN IN THE MUTCD IF THE SHOULDER HAS ADEQUATE WIDTH. USE DOUBLE ARROWS WHEN CONVOY IS IN CENTER LANE ONLY.

WHEN NO WORK ACTIVITY IS TAKING PLACE, REMOVE OR TURN THE STATIONARY WARNING SIGNS AWAY FROM TRAFFIC.

THIS DRAWING SHALL BE USED FOR EDGELINE OR LANELINE MARKING FOR MULTILANE DIVIDED ROADWAYS.

① CONES MAY BE OMITTED ON PAINTED LINE IF APPROVED BY THE ENGINEER. CONSIDER PAVEMENT MARKING DRY OR CURE TIMES AND TRAFFIC VOLUME.

② USE STANDARD SIGN W21-64 WITH APPROPRIATE ARROW.

WET PAINT W21-64 OR WET PAINT W21-64

③ SIGNS SHALL BE REPEATED AFTER EVERY ON RAMP OR EVERY THREE MILES.

④ IF CONSTRUCTION WORK ZONE SIGNS ARE IN PLACE, W20-1 OR W21-63 ARE NOT REQUIRED.

LEGEND

V1	LEAD VEHICLE
V2	SHADOW VEHICLE
V3	TRAIL VEHICLE WITH TMA
TMA	TRUCK-MOUNTED ATTENUATOR
	SIGN ON TEMPORARY SUPPORT
	DIRECTION OF TRAFFIC
	CONES
	FLASHING ARROW PANEL (MERGE)

MOVING PAVEMENT MARKING OPERATION MULTI-LANE DIVIDED ROADWAY

STATE OF WISCONSIN
DEPARTMENT OF TRANSPORTATION

APPROVED
June 2016 — DATE
/S/ Peter Amakobe Atepe — STATEWIDE WORK ZONE SAFETY ENGINEER
FHWA

6

S.D.D. 15 C 19-4c

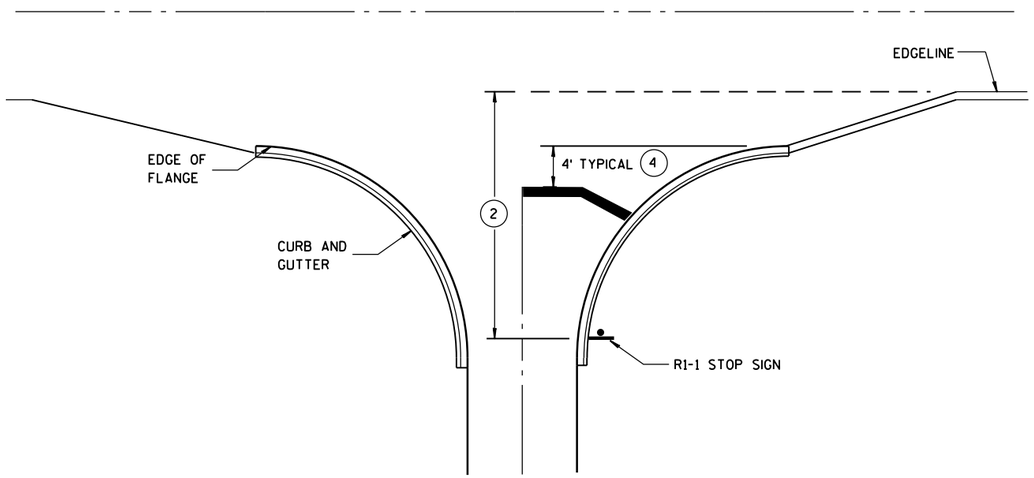

TYPICAL STOP LINE PAVEMENT MARKING WITH CURB AND GUTTER

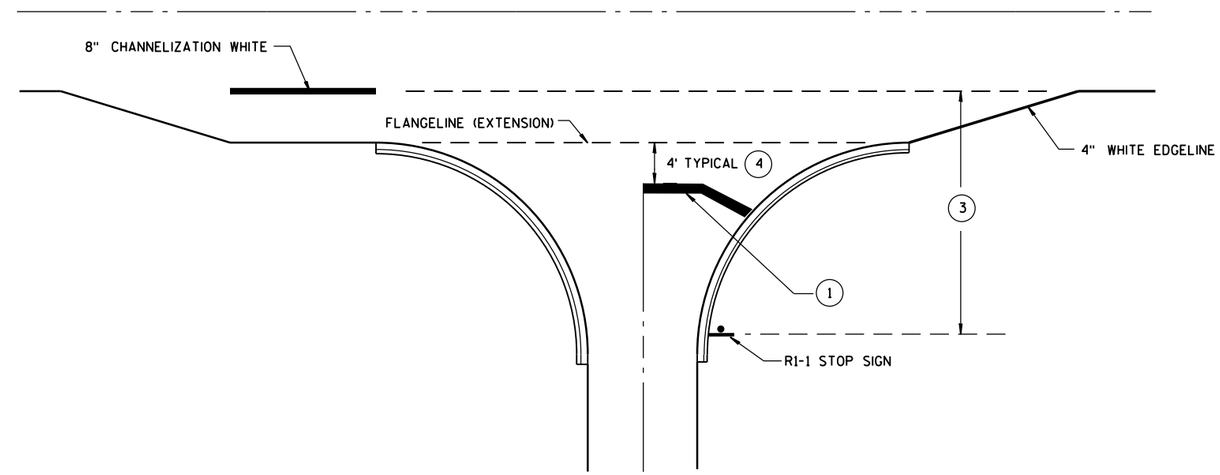

TYPICAL STOP LINE PAVEMENT MARKING FOR SIDEROADS WITH RIGHT TURN LANE

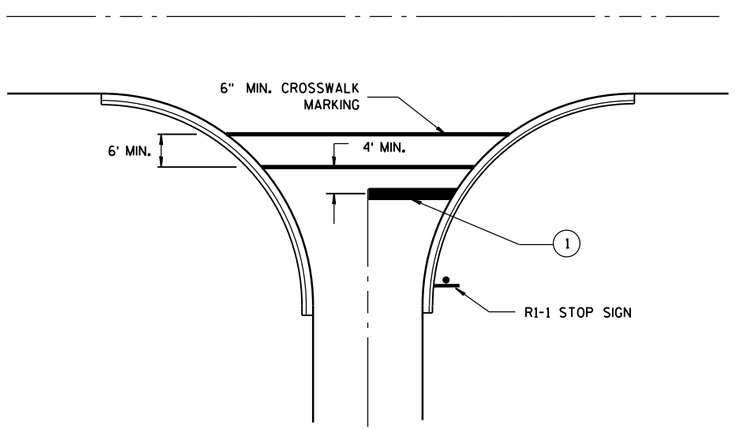

TYPICAL STOP LINE PAVEMENT MARKING FOR SIDEROADS WITH CROSSWALK MARKING

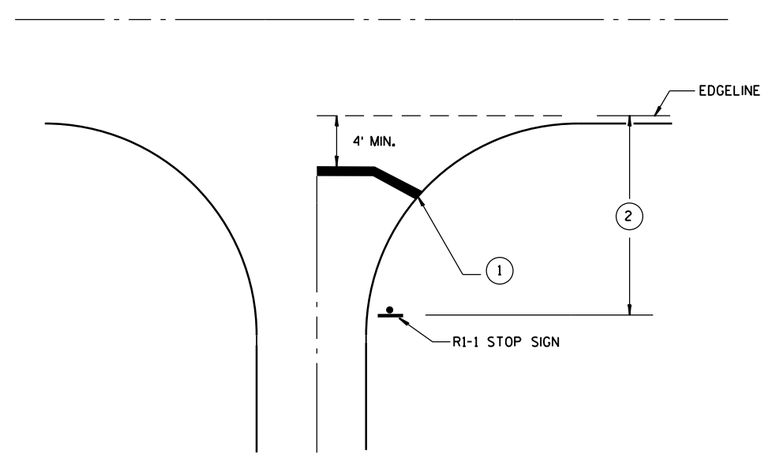

TYPICAL STOP LINE PAVEMENT MARKING WITHOUT CURB AND GUTTER

GENERAL NOTES

1. 18-INCH STOP LINES MAY BE DELETED OR ADDED BY THE PROJECT ENGINEER BASED ON VISIBILITY AND SIGHT LINES.
2. IF STOP SIGN IS LESS THAN OR EQUAL TO 40 FEET FROM THE EDGELINE THAN NO STOP LINE IS REQUIRED.
3. IF STOP SIGN IS LESS THAN OR EQUAL TO 30 FEET FROM THE FLANGELINE EXTENSION THAN NO STOP LINE IS REQUIRED.
4. MOVE CLOSER TO EDGE OF TRAVEL LANE AS NEEDED FOR VISIBILITY AND SIGHT LINES.

STOP LINE AND CROSSWALK PAVEMENT MARKING

STATE OF WISCONSIN
DEPARTMENT OF TRANSPORTATION

APPROVED
4/30/2013 — DATE
/S/ Travis Feltes — STATE TRAFFIC E
FHWA

6

S.D.D. 15 C 33-1

LEGEND

- TYPE III BARRICADE WITH ATTACHED SIGN
- SIGN ON PERMENENT SUPPORT
- TRAFFIC CONTROL DRUM WITH TYPE "C" STEADY BURN LIGHT
- TRAFFIC CONTROL DRUM
- FLASHING ARROW BOARD
- TYPE "A" WARNING LIGHT (FLASHING)
- REMOVING PAVEMENT MARKING
- DIRECTION OF TRAFFIC
- WORK AREA

GENERAL NOTES

THE EXACT NUMBER, LOCATION, AND SPACING OF ALL SIGNS AND DEVICES SHALL BE ADJUSTED TO FIT FIELD CONDITIONS AS APPROVED BY THE ENGINEER.

THE SPACING BETWEEN SIGNS SHOULD BE ADJUSTED TO NOT CONFLICT WITH AND TO PROVIDE A MINIMUM OF 200 FEET, (500 FEET DESIREABLE) DISTANCE TO EXISTING SIGNS.

THIS LANE CLOSURE IS TYPICAL FOR CLOSING RIGHT LANE - REVERSE FOR CLOSING LEFT LANE.

ALL SIGNS ARE 48"×48" UNLESS OTHERWISE NOTED.

"WO" IS THE SAME AS "W" EXCEPT THE BACKGROUND IS ORANGE.

ANY SIGNS TEMPORARY OR EXISTING, WHICH CONFLICT WITH TRAFFIC CONTROL "IN USE" SHALL BE REMOVED OR COVERED AS NEEDED AND AS APPROVED BY THE ENGINEER. NO WARNING LIGHTS SHALL BE WORKING ON "COVERED" OR "DOWNED" SIGNS.

CONSIDER GEOMETRICS WHEN LOCATING SIGNS AND ARROW BOARD SO THE DRIVER HAS A CLEAR VIEW OF THE ARROW BOARD AND LANE CLOSURE DRUMS FOR A MINIMUM 1500 FEET IN FRONT OF DRUMS.

FOR A LANE CLOSURE THAT IS IN PLACE LESS THAN 7 CONTINUOUS DAYS AND NIGHTS, THE ADVANCED WARNING SIGNS MAY BE MOUNTED ON PORTABLE SUPPORTS.

REMOVE PAVEMENT MARKINGS IF LANE CLOSURE IS TO BE IN PLACE FOR LONGER THAN 4 OR MORE DAYS AND NIGHTS.

WARNING LIGHTS ARE NOT REQUIRED IF THE LANE CLOSURE IS A DAYTIME ONLY OPERATION.

IF THE HORIZONTAL ALIGNMENT IS SUCH THAT A CURVE MAY REQUIRE ADDITIONAL DELINEATION, THE DEVICE SPACING MAY BE DECREASED TO 50 FEET.

ADJUSTMENTS IN BUFFER SPACE NEED TO BE INCORPORATED WHEN THE LANE CLOSURE OCCURS NEAR AN INTERCHANGE EXIT OR ENTRANCE RAMP. THE LANE CLOSURE MUST MUST TAKE PLACE FAR ENOUGH IN ADVANCE OF AN EXIT OR ENTRANCE RAMP TO STILL ALLOW FOR ADEQUATE BUFFER SPACE. THE MINIMUM LENGTH OF THE BUFFER SPACE BEFORE AN EXIT RAMP SHOULD BE 1/2 THE LENGTH OF THE TRANSITION AREA. THE ENTRANCE RAMP SHOULD BE FOLLOWED BY THE ORIGINAL BUFFER SPACE LENGTH OF 800 FEET DESIRABLE PRIOR TO ANOTHER TRAFFIC CONTROL CHANGE SUCH AS A CROSSOVER MANEUVER.

* THE LEFT REVERSE CURVE SIGN (WO1-4L) IS ONLY REQUIRED WHEN THIS DETAIL IS USED IN COMBINATION WITH "SINGLE LANE CROSSOVER" DETAIL.

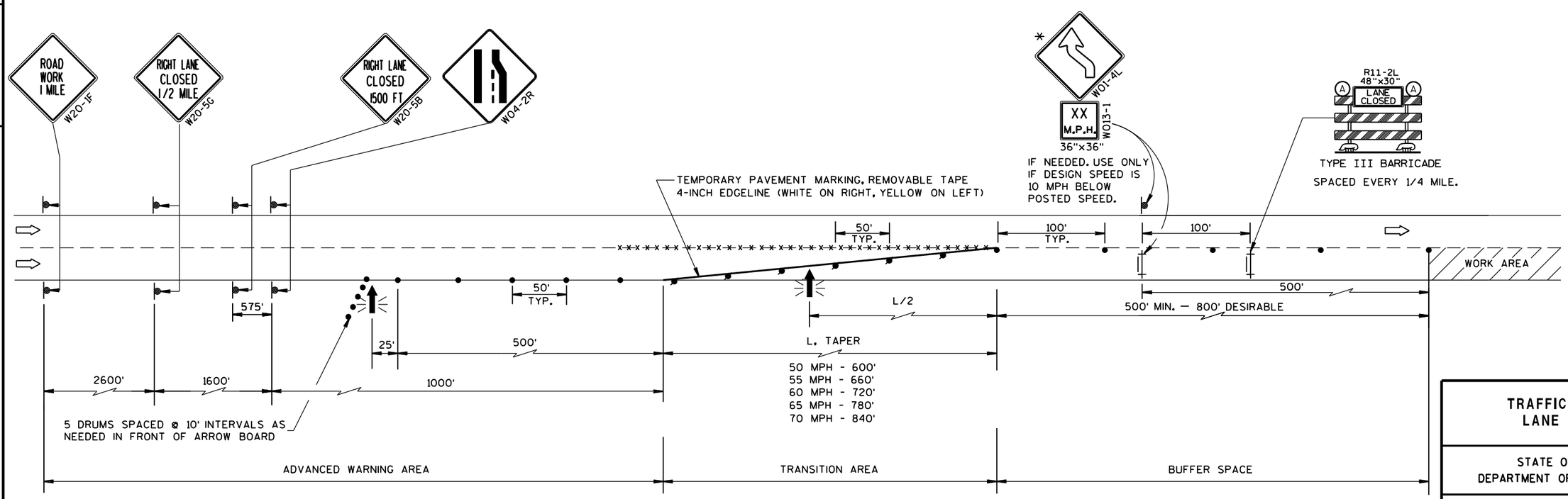

TRAFFIC CONTROL, LANE CLOSURE

STATE OF WISCONSIN
DEPARTMENT OF TRANSPORTATION

APPROVED
March 2016 — DATE
/S/ Peter Amakobe Atepe — STATEWIDE WORK ZONE TRAFFIC SAFETY ENGINEER
FHWA

6

S.D.D. 15 D 12-6a

LEGEND

- TYPE III BARRICADE WITH ATTACHED SIGN
- SIGN ON PERMENENT SUPPORT
- TRAFFIC CONTROL DRUM WITH TYPE "C" STEADY BURN LIGHT
- TRAFFIC CONTROL DRUM
- FLASHING ARROW BOARD
- TYPE "A" WARNING LIGHT (FLASHING)
- REMOVING PAVEMENT MARKING
- DIRECTION OF TRAFFIC
- WORK AREA

GENERAL NOTES

THE EXACT NUMBER, LOCATION, AND SPACING OF ALL SIGNS AND DEVICES SHALL BE ADJUSTED TO FIT FIELD CONDITIONS AS APPROVED BY THE ENGINEER.

THE SPACING BETWEEN SIGNS SHOULD BE ADJUSTED TO NOT CONFLICT WITH AND TO PROVIDE A MINIMUM OF 200 FEET, (500 FEET DESIREABLE) DISTANCE TO EXISTING SIGNS.

THIS LANE CLOSURE IS TYPICAL FOR CLOSING RIGHT LANE - REVERSE FOR CLOSING LEFT LANE.

ALL SIGNS ARE 48"×48" UNLESS OTHERWISE NOTED.

"WO" IS THE SAME AS "W" EXCEPT THE BACKGROUND IS ORANGE.

ANY SIGNS TEMPORARY OR EXISTING, WHICH CONFLICT WITH TRAFFIC CONTROL "IN USE" SHALL BE REMOVED OR COVERED AS NEEDED AND AS APPROVED BY THE ENGINEER. NO WARNING LIGHTS SHALL BE WORKING ON "COVERED" OR "DOWNED" SIGNS.

CONSIDER GEOMETRICS WHEN LOCATING SIGNS AND ARROW BOARD SO THE DRIVER HAS A CLEAR VIEW OF THE ARROW BOARD AND LANE CLOSURE DRUMS FOR A MINIMUM 1500 FEET IN FRONT OF DRUMS.

FOR A LANE CLOSURE THAT IS IN PLACE LESS THAN 7 CONTINUOUS DAYS AND NIGHTS, THE ADVANCED WARNING SIGNS MAY BE MOUNTED ON PORTABLE SUPPORTS.

REMOVE PAVEMENT MARKINGS IF LANE CLOSURE IS TO BE IN PLACE FOR LONGER THAN 4 OR MORE DAYS AND NIGHTS.

WARNING LIGHTS ARE NOT REQUIRED IF THE LANE CLOSURE IS A DAYTIME ONLY OPERATION.

IF THE HORIZONTAL ALIGNMENT IS SUCH THAT A CURVE MAY REQUIRE ADDITIONAL DELINEATION, THE DEVICE SPACING MAY BE DECREASED TO 50 FEET.

ADJUSTMENTS IN BUFFER SPACE NEED TO BE INCORPORATED WHEN THE LANE CLOSURE OCCURS NEAR AN INTERCHANGE EXIT OR ENTRANCE RAMP. THE LANE CLOSURE MUST MUST TAKE PLACE FAR ENOUGH IN ADVANCE OF AN EXIT OR ENTRANCE RAMP TO STILL ALLOW FOR ADEQUATE BUFFER SPACE. THE MINIMUM LENGTH OF THE BUFFER SPACE BEFORE AN EXIT RAMP SHOULD BE 1/2 THE LENGTH OF THE TRANSITION AREA. THE ENTRANCE RAMP SHOULD BE FOLLOWED BY THE ORIGINAL BUFFER SPACE LENGTH OF 800 FEET DESIRABLE PRIOR TO ANOTHER TRAFFIC CONTROL CHANGE SUCH AS A CROSSOVER MANEUVER.

* THE LEFT REVERSE CURVE SIGN (W01-4L) IS ONLY REQUIRED WHEN THIS DETAIL IS USED IN COMBINATION WITH "SINGLE LANE CROSSOVER" DETAIL.

** A SPEED LIMIT SIGN SHALL BE LOCATED 1500 FEET BEYOND THE END OF THE ACCELERATION LANE OF EACH ENTRANCE RAMP. THERE SHOULD BE A SPEED LIMIT SIGN INCORPORATED A MINIMUM OF EVERY 2 OR 3 MILES. INCLUDE A RESUME SPEED LIMIT SIGN 200 FEET MINIMUM (500 FEET DESIREABLE) BEYOND THE "END OF ROADWORK" SIGN.

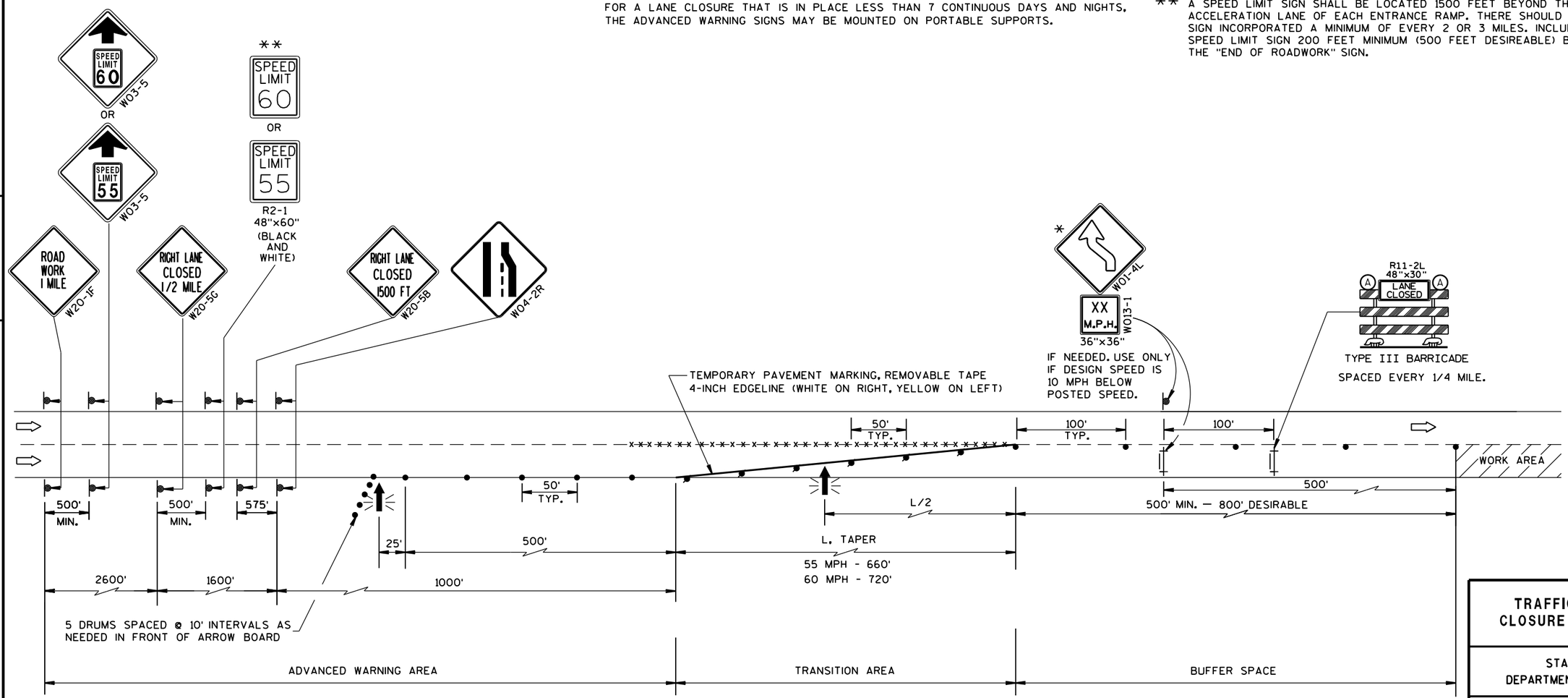

TRAFFIC CONTROL, LANE CLOSURE, SPEED REDUCTION

STATE OF WISCONSIN
DEPARTMENT OF TRANSPORTATION

APPROVED
March 2016 — DATE
/S/ Peter Amakobe Atepe
STATEWIDE WORK ZONE SAFETY ENGINEER
FHWA

6

S.D.D. 15 D 12-6b

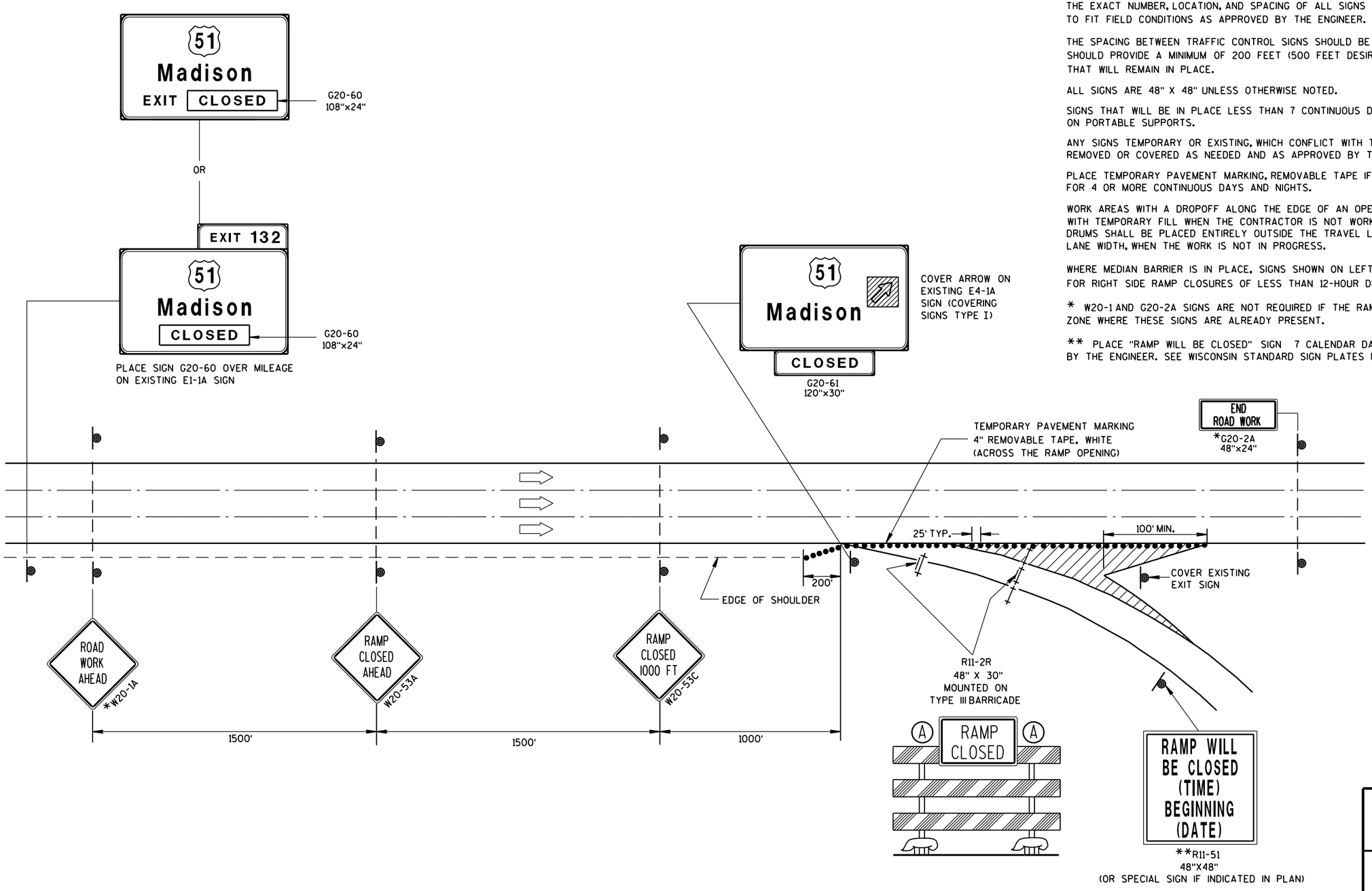

GENERAL NOTES

THIS RAMP CLOSURE DETAIL IS TYPICAL FOR CLOSING A RIGHT SIDE EXIT RAMP. FOR A LEFT SIDE EXIT RAMP, REVERSE THE TRAFFIC CONTROL.

THE EXACT NUMBER, LOCATION, AND SPACING OF ALL SIGNS AND DEVICES SHALL BE ADJUSTED TO FIT FIELD CONDITIONS AS APPROVED BY THE ENGINEER.

THE SPACING BETWEEN TRAFFIC CONTROL SIGNS SHOULD BE ADJUSTED TO NOT CONFLICT WITH AND SHOULD PROVIDE A MINIMUM OF 200 FEET (500 FEET DESIRABLE) CLEARANCE TO EXISTING SIGNS THAT WILL REMAIN IN PLACE.

ALL SIGNS ARE 48" X 48" UNLESS OTHERWISE NOTED.

SIGNS THAT WILL BE IN PLACE LESS THAN 7 CONTINUOUS DAYS AND NIGHTS MAY BE MOUNTED ON PORTABLE SUPPORTS.

ANY SIGNS TEMPORARY OR EXISTING, WHICH CONFLICT WITH TRAFFIC CONTROL "IN USE" SHALL BE REMOVED OR COVERED AS NEEDED AND AS APPROVED BY THE ENGINEER.

PLACE TEMPORARY PAVEMENT MARKING, REMOVABLE TAPE IF RAMP CLOSURE IS TO BE IN PLACE FOR 4 OR MORE CONTINUOUS DAYS AND NIGHTS.

WORK AREAS WITH A DROPOFF ALONG THE EDGE OF AN OPEN TRAVEL LANE SHALL BE LEVELED WITH TEMPORARY FILL WHEN THE CONTRACTOR IS NOT WORKING ADJACENT TO THE TRAVEL LANE. DRUMS SHALL BE PLACED ENTIRELY OUTSIDE THE TRAVEL LANE, ALLOWING THE FULL UNOBSTRUCTED LANE WIDTH, WHEN THE WORK IS NOT IN PROGRESS.

WHERE MEDIAN BARRIER IS IN PLACE, SIGNS SHOWN ON LEFT SIDE OF ROADWAY MAY BE OMITTED FOR RIGHT SIDE RAMP CLOSURES OF LESS THAN 12-HOUR DURATION.

* W20-1 AND G20-2A SIGNS ARE NOT REQUIRED IF THE RAMP CLOSURE IS WITHIN A LARGER WORK ZONE WHERE THESE SIGNS ARE ALREADY PRESENT.

** PLACE "RAMP WILL BE CLOSED" SIGN 7 CALENDAR DAYS PRIOR TO CLOSURE OR AS DIRECTED BY THE ENGINEER. SEE WISCONSIN STANDARD SIGN PLATES FOR SIGN LAYOUT.

LEGEND

- TYPE III BARRICADE
- TYPE III BARRICADE WITH ATTACHED SIGN
- TRAFFIC CONTROL DRUM
- SIGN ON PERMANENT SUPPORT
- (A) TYPE "A" WARNING LIGHT (FLASHING)
- DIRECTION OF TRAFFIC

TRAFFIC CONTROL, EXIT RAMP CLOSURE

STATE OF WISCONSIN
DEPARTMENT OF TRANSPORTATION

APPROVED
Sept. 2015 — DATE
/S/ Peter Amakobe Atepe — STATEWIDE WORK ZONE SAFETY ENGINEER
FHWA

6

S.D.D. 15 D 16-3

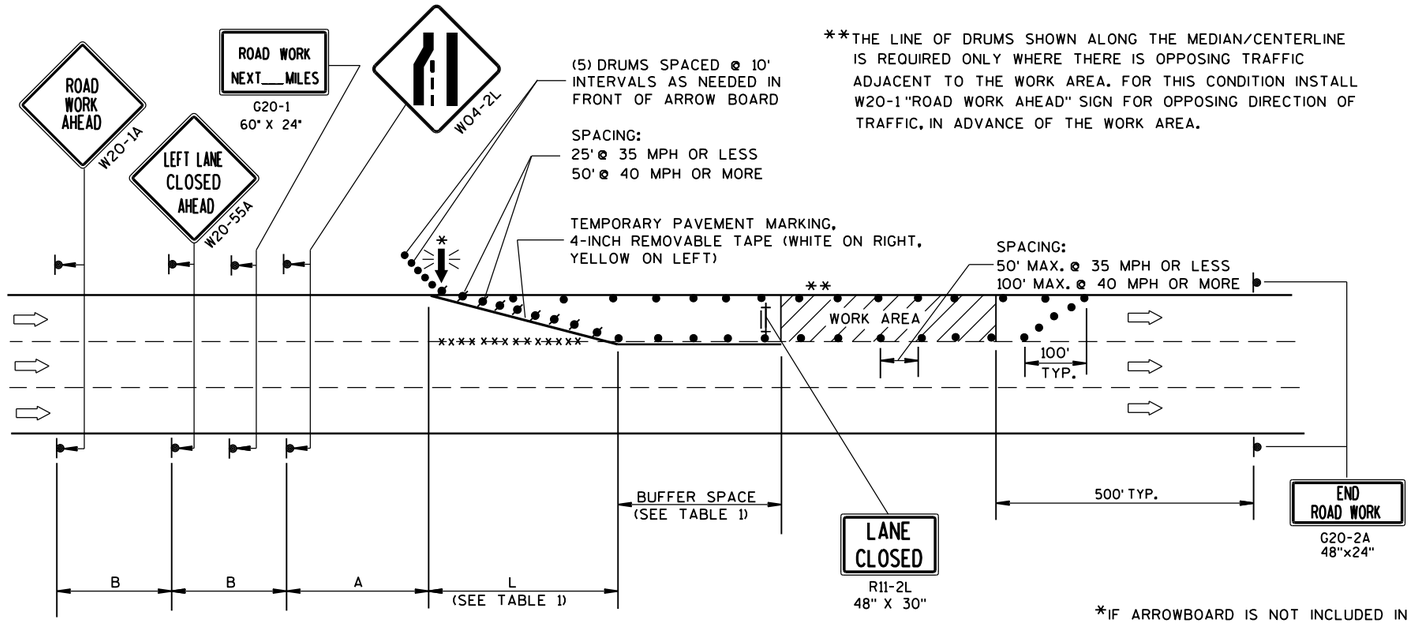

**THE LINE OF DRUMS SHOWN ALONG THE MEDIAN/CENTERLINE IS REQUIRED ONLY WHERE THERE IS OPPOSING TRAFFIC ADJACENT TO THE WORK AREA. FOR THIS CONDITION INSTALL W20-1 "ROAD WORK AHEAD" SIGN FOR OPPOSING DIRECTION OF TRAFFIC, IN ADVANCE OF THE WORK AREA.

B=400' AT 25-30 MPH
700' AT 35-40 MPH
1000' AT 45-55 MPH

A=200' AT 25-30 MPH
350' AT 35-40 MPH
500' AT 45-55 MPH

(PLACE BARRICADE AND SIGN APPROX. EVERY 1000' ACROSS THE CLOSED LANE)

*IF ARROWBOARD IS NOT INCLUDED IN MISCELLANEOUS QUANTITIES, SUBSTITUTE A TYPE III BARRICADE WITH W01-6 SIGN IN THE LANE CLOSURE TAPER.

W01-6
48"x24"

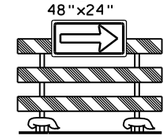

GENERAL NOTES

THIS LANE CLOSURE DETAIL IS TYPICAL FOR CLOSING THE LEFT LANE. FOR A RIGHT LANE CLOSURE, REVERSE THE TRAFFIC CONTROL.

THIS DETAIL MAY BE USED FOR ROADWAYS WITH EITHER TWO OR THREE LANES IN EACH DIRECTION.

THE EXACT NUMBER, LOCATION, AND SPACING OF ALL SIGNS AND DEVICES SHALL BE ADJUSTED TO FIT FIELD CONDITIONS AS APPROVED BY THE ENGINEER.

THE SPACING BETWEEN TRAFFIC CONTROL SIGNS SHOULD BE ADJUSTED TO NOT CONFLICT WITH AND SHOULD PROVIDE A DESIRABLE MINIMUM OF 200 FEET CLEARANCE TO EXISTING SIGNS THAT WILL REMAIN IN PLACE.

ALL SIGNS ARE 48"x48" UNLESS OTHERWISE NOTED. IF NECESSARY DUE TO SPACE CONSTRAINTS IN URBAN AREAS, 36" X 36" SIGNS MAY BE USED IF APPROVED BY DISTRICT TRAFFIC UNIT.

"WO" SIGNS ARE THE SAME AS "W" SIGNS EXCEPT THE BACKGROUND IS ORANGE.

SIGNS THAT WILL BE IN PLACE LESS THAN 7 CONTINUOUS DAYS AND NIGHTS, OR THAT WILL BE PLACED IN A CLOSED LANE, MAY BE MOUNTED ON PORTABLE SUPPORTS.

ANY SIGNS TEMPORARY OR EXISTING, WHICH CONFLICT WITH TRAFFIC CONTROL "IN USE" SHALL BE REMOVED OR COVERED AS NEEDED AND AS APPROVED BY THE ENGINEER.

REMOVE PAVEMENT MARKINGS AND PLACE TEMPORARY PAVEMENT MARKING, REMOVABLE TAPE IF LANE CLOSURE IS TO BE IN PLACE FOR 4 OR MORE CONTINUOUS DAYS AND NIGHTS.

ON UNDIVIDED ROADWAYS, OMIT THE SIGNS SHOWN ON LEFT SIDE OF ROAD.

W20-1A, G20-1 AND G20-2A SIGNS ARE NOT REQUIRED IF THE LANE CLOSURE IS WITHIN A LARGER WORK ZONE WHERE THESE SIGNS ARE ALREADY PRESENT.

OMIT G20-1 SIGNS IF LENGTH OF WORK AREA IS 2 MILES OR LESS.

CONSIDER GEOMETRICS WHEN LOCATING SIGNS AND ARROWBOARDS SO THE APPROACHING DRIVER HAS A CLEAR VIEW OF THE ARROWBOARDS AND LANE CLOSURE DRUMS.

PLACE THE ARROWBOARD AS CLOSE AS POSSIBLE TO THE BEGINNING OF THE LANE CLOSURE TAPER, PREFERABLY ON THE SHOULDER OR TERRACE.

CHANNELIZING DEVICES PLACED ADJACENT TO WORK AREA SHALL BE PULLED BACK FROM THE TRAVEL LANE WHEN WORK IS NOT IN PROGRESS.

BARRICADES IN A CLOSED LANE THAT MUST BE MOVED FOR A WORK OPERATION SHALL BE IMMEDIATELY RE-ESTABLISHED UPON COMPLETION OF THE OPERATION OR, FOR CONTINUING OPERATIONS, AT THE END OF EACH WORKING DAY.

WARNING LIGHTS ARE NOT REQUIRED IF THE LANE CLOSURE IS A DAYTIME ONLY OPERATION.

TABLE 1
TAPER AND BUFFER SPACE
FOR 12' LANE WIDTH

S	L	BUFFER SPACE
25	125'	55'
30	180'	85'
35	245'	120'
40	320'	170'
45	540'	220'
50	600'	280'
55	660'	335'

FOR LANE WIDTH OTHER THAN 12':

L = WS AT 45 MPH OR GREATER

$L = \frac{WS^2}{60}$ AT 40 MPH OR LESS

L = TAPER LENGTH IN FEET

S = NON-CONSTRUCTION SPEED LIMIT (MPH)

W = WIDTH OF LANE CLOSURE

LEGEND

TYPE III BARRICADE WITH ATTACHED SIGN

SIGN ON PERMANENT SUPPORT

TRAFFIC CONTROL DRUM WITH TYPE "C" STEADY BURN LIGHT

TRAFFIC CONTROL DRUM

FLASHING ARROW BOARD

DIRECTION OF TRAFFIC

REMOVING PAVEMENT MARKING (SEE GENERAL NOTES)

WORK AREA

TRAFFIC CONTROL, SINGLE LANE CLOSURE, NON-FREEWAY/EXPRESSWAY

STATE OF WISCONSIN
DEPARTMENT OF TRANSPORTATION

APPROVED
June 2016 — DATE
/S/ Peter Amakobe Atepe — STATEWIDE WORK ZONE SAFETY ENGINEER
FHWA

6

S.D.D. 15 D 20-4

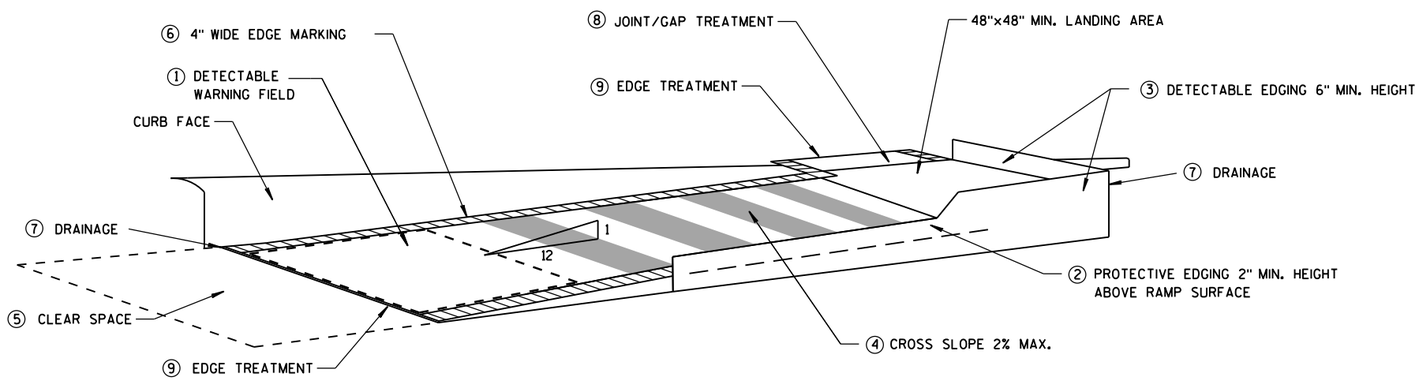

TEMPORARY CURB RAMP PARALLEL TO CURB

GENERAL NOTES

NOTIFY THE BUS COMPANY 7 DAYS IN ADVANCE OF THE BUS STOP RELOCATION.

ALTERNATE SIDEWALK WORK BETWEEN LEFT AND RIGHT SIDE OF ROADWAY TO MAINTAIN PEDESTRIAN ACCESS.

① CURB RAMPS SHALL BE 48" MIN. WIDTH WITH A FIRM, STABLE AND SLIP RESISTANT SURFACE. INSTALL CONTRASTING DETECTABLE WARNING FIELD AT PEDESTRIAN STREET CROSSINGS. REFER TO SDD 8D5 SHEET "E".

② PROTECTIVE EDGING WITH A 2" MIN. HEIGHT SHALL BE INSTALLED WHEN A CURB RAMP OR LANDING PLATFORM HAS A VERTICAL DROP OF 6" OR GREATER OR HAS A SIDE APRON SLOPE STEEPER THAN 1:3 (33%). PROTECTIVE EDGING SHOULD BE CONSIDERED WHEN CURB RAMPS OR LANDING PLATFORMS HAVE A VERTICAL DROP OF 3" OR MORE.

③ DETECTABLE EDGING WITH 6" MIN. HEIGHT AND CONTRASTING COLOR SHALL BE INSTALLED ON ALL CURB RAMP LANDINGS WHERE THE WALKWAY CHANGES DIRECTION (TURNS).

④ CURB RAMPS AND LANDINGS SHALL HAVE A 1:50 (2%) MAX. CROSS-SLOPE.

⑤ CLEAR SPACE OF 48"X48" MIN. SHALL BE PROVIDED ABOVE AND BELOW THE CURB RAMP.

⑥ THE CURB RAMP WALKWAY EDGE SHALL BE MARKED WITH A YELLOW COLOR, 4" WIDE MARKING, UNLESS A CONTRASTING DETECTABLE WARNING FIELD IS PROVIDED.

⑦ DO NOT RESTRICT WATER FLOW IN THE GUTTER SYSTEM.

⑧ LATERAL JOINTS OR GAPS BETWEEN SURFACES SHALL BE LESS THAN 1/2" WIDTH.

⑨ CHANGES BETWEEN SURFACE HEIGHTS SHALL NOT EXCEED 1/2". LATERAL EDGES SHALL BE VERTICAL UP TO 1/4" HIGH, AND BEVELED AT 1:2 BETWEEN 1/4" AND 1/2".

⑩ 5' WIDE MIN. WITH PEDSETRIAN SAFETY FENCE, 10' WIDE MIN. WITHOUT PEDESTRIAN SAFETY FENCE.

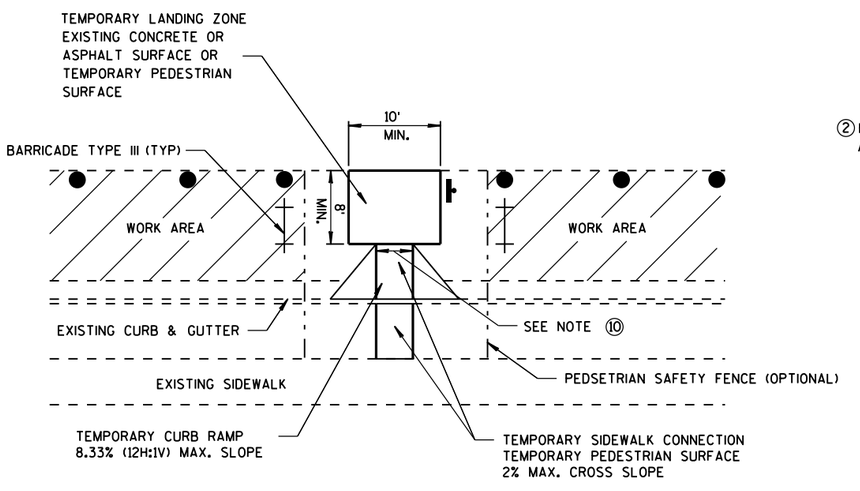

TEMPORARY BUS STOP PAD

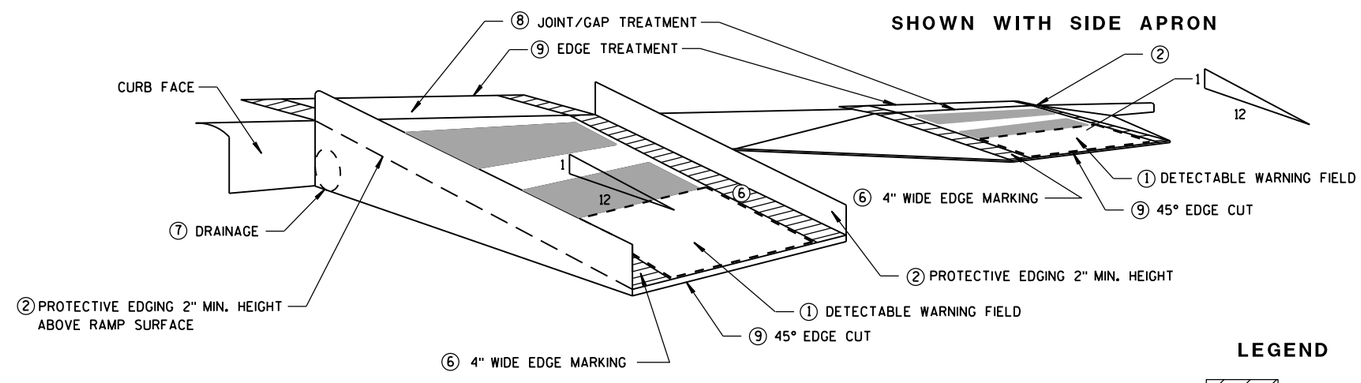

SHOWN WITH PROTECTIVE EDGE

TEMPORARY CURB RAMP PERPENDICULAR TO CURB

LEGEND

- WORK AREA
- TYPE III BARRICADE
- TRAFFIC CONTOL DRUM

TRAFFIC CONTROL, TEMPORARY ADA COMPLIANT PEDESTRIAN ACCOMMODATION

STATE OF WISCONSIN
DEPARTMENT OF TRANSPORTATION

APPROVED
June 2016 — DATE
/S/ Peter Amakobe Atepe — STATEWIDE WORK ZONE TRAFFIC SAFETY ENGINEER
FHWA

6

S.D.D. 15 D 30-3b

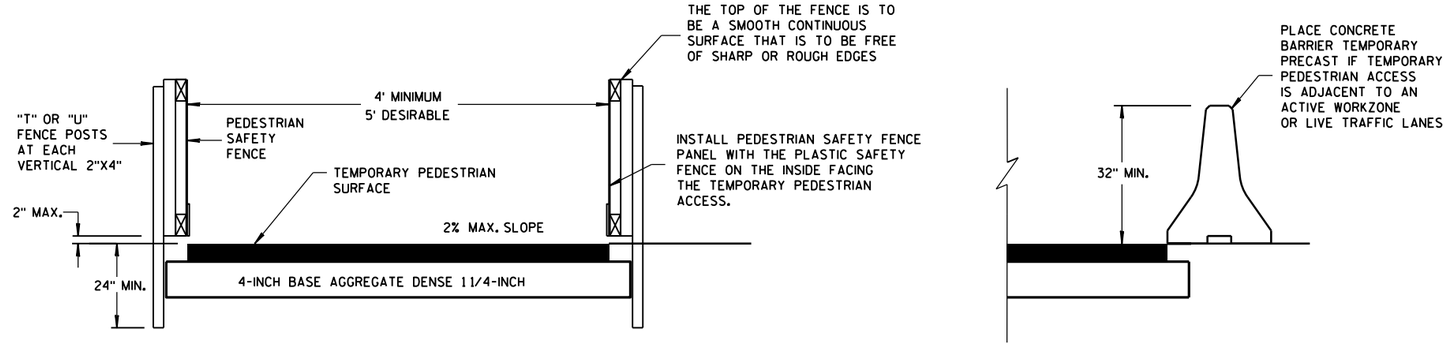

TEMPORARY PEDESTRIAN ACCESS

GENERAL NOTES

1. INTERCHANGEABLE WITH THE PEDESTRIAN SAFETY FENCE.

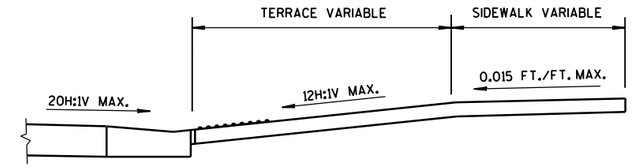

SECTION A-A

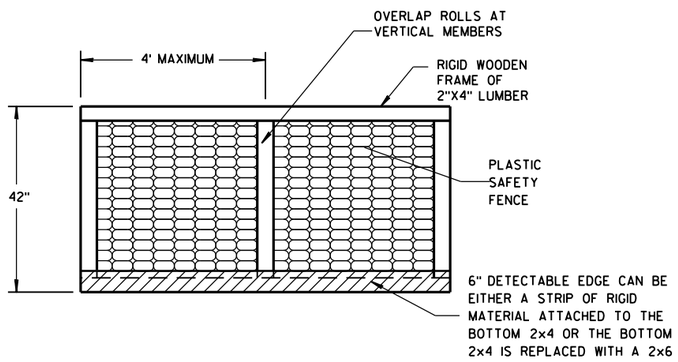

PEDESTRIAN SAFETY FENCE

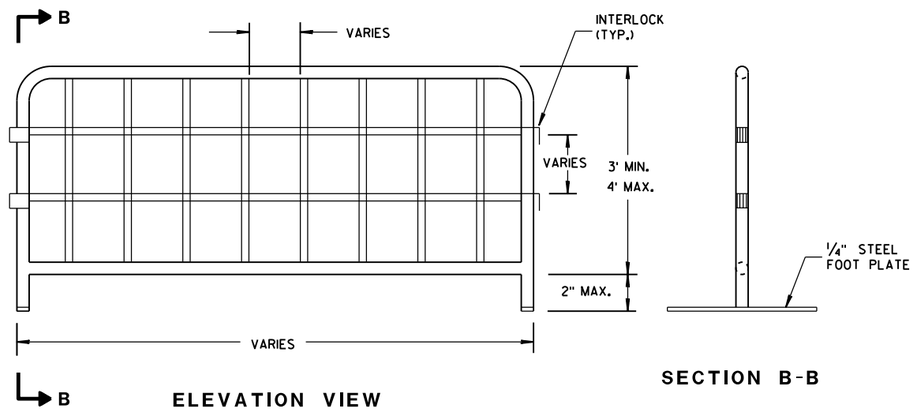

ELEVATION VIEW

SECTION B-B

TEMPORARY PEDESTRIAN STEEL BARRICADE (1)

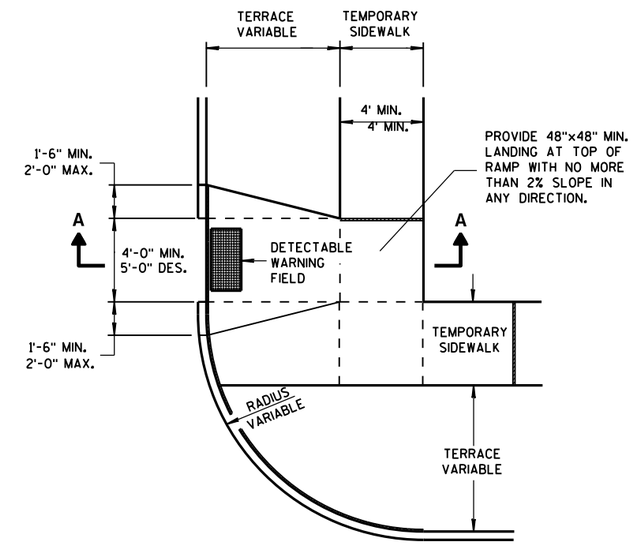

PLAN VIEW

TEMPORARY TYPE 3 RAMP

(OUTSIDE OF CROSSWALK AREA)

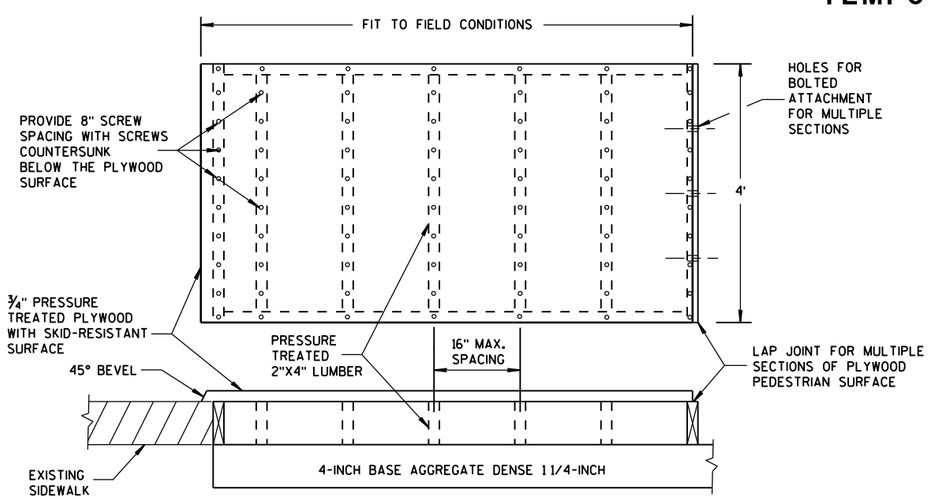

TEMPORARY PEDESTRIAN SURFACE PLYWOOD

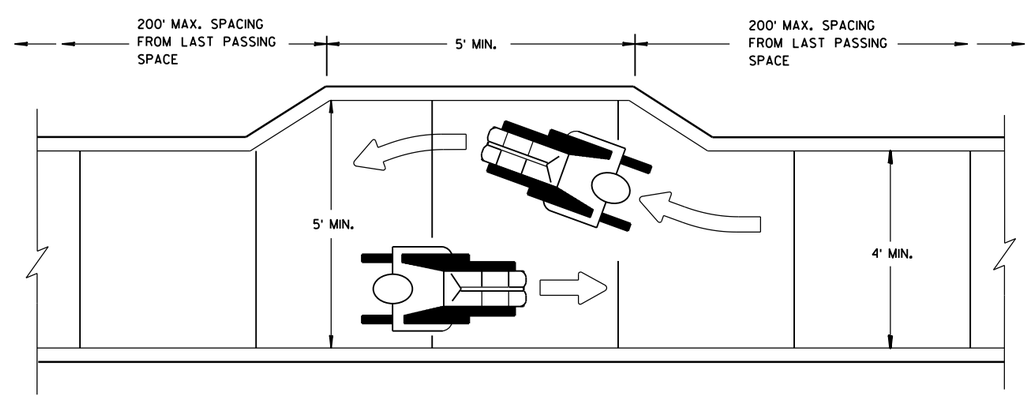

NARROW SIDEWALK PASSING DETAIL

TRAFFIC CONTROL, PEDESTRIAN ACCOMMODATION

STATE OF WISCONSIN
DEPARTMENT OF TRANSPORTATION

APPROVED
June 2016 — DATE
/S/ Peter Amakobe Atepe
STATEWIDE WORK ZONE TRAFFIC SAFETY ENGINEER
FHWA

6

6

S.D.D. 15 D 30-3c

S.D.D. 15 D 30-3c

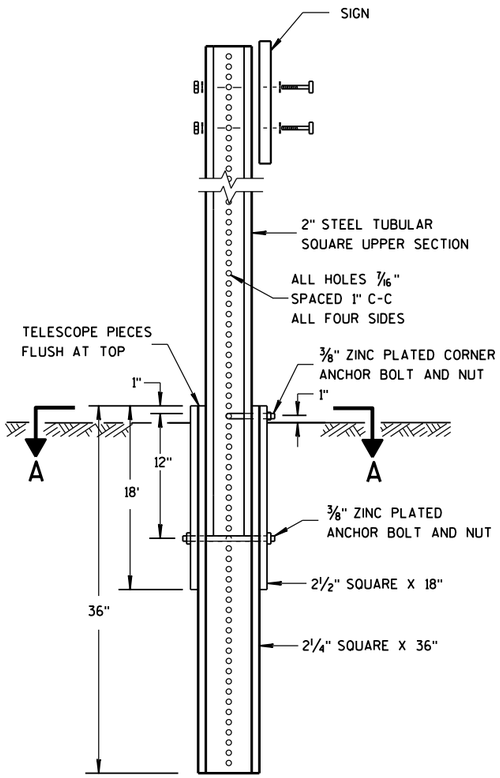

DETAIL OF TUBULAR STEEL SIGN POST

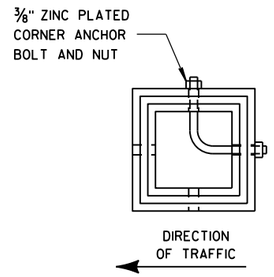

SECTION A-A

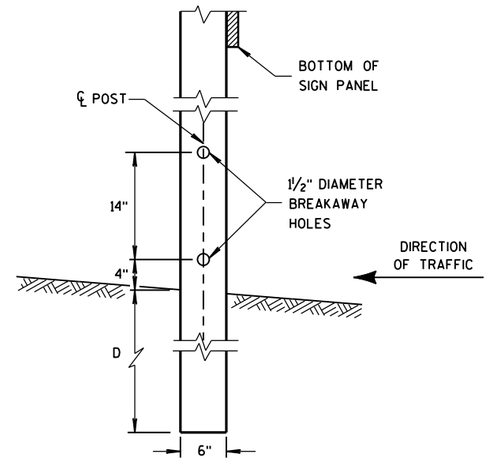

4"x6" WOOD POST MODIFICATION

GENERAL NOTES

1. 6 FEET FROM THE EDGE OF PAVEMENT (EDGE LINE LOCATION) UNLESS OTHERWISE DIRECTED BY THE PROJECT ENGINEER. LATERAL OFFSET SHOULD BE ADJUSTED TO AVOID THE DITCH FLOWLINE.
2. THE EXISTENCE OF CURB AND GUTTER DOES NOT IN ITSELF MANDATE THE VERTICAL CLEARANCE ILLUSTRATED. THAT HEIGHT IS TYPICALLY MEASURED WHERE THERE IS SIDEWALK ADJACENT TO THE ROADWAY OR PARKING IS PERMITTED. IN THE ABSENCE OF SIDEWALK, VERTICAL CLEARANCE IS MEASURED FROM THE TOP OF THE CURB. IF NO SIDEWALK AND NO PARKING, VERTICAL CLEARANCE MAY BE REDUCED TO 5 FOOT MINIMUM. OFFSET OF SIGNS IS MEASURED FROM THE CURB FLOWLINE.
3. FOR SIGNS REQUIRING 4 POSTS, SPACE INTERMEDIATE POSTS EVENLY.

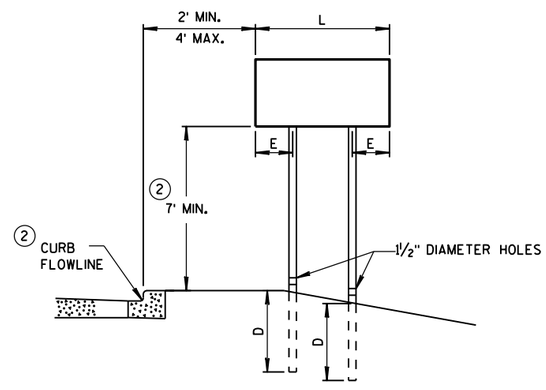

URBAN AREA

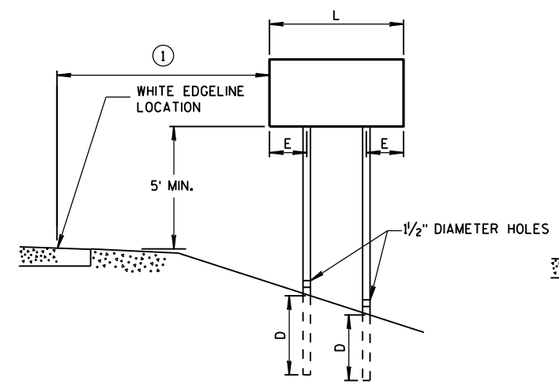

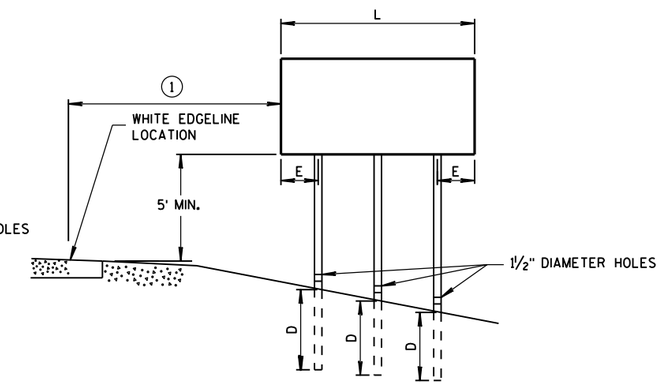

RURAL AREA

POST MOUNTING DETAIL FOR TEMPORARY TRAFFIC CONTROL FIXED MESSAGE SIGNS

TUBULAR STEEL POSTS

AREA OF SIGN INSTALLATION (SQ. FT.)	NUMBER OF REQUIRED TUBULAR STEEL POSTS
9 OR LESS	1
GREATER THAN 9 LESS THAN OR EQUAL TO 18	2
GREATER THAN 18 LESS THAN OR EQUAL TO 27	3

SIGNS WIDER THAN 3 FEET OR LARGER THAN 9 SQ. FT. SHALL BE MOUNTED ON MULTIPLE POSTS (SEE ABOVE TABLE).

SIGNS LARGER THAN 27 SQ. FT. SHALL NOT BE MOUNTED ON TUBULAR STEEL POSTS.

WOOD POST EMBEDMENT DEPTH

AREA OF SIGN INSTALLATION (SQ. FT.)	D (MIN)
20 OR LESS	4'
GREATER THAN 20	5'

4" X 6" WOOD POST

POST SPACING REQUIREMENTS		NUMBER OF WOOD POSTS REQUIRED
L	E	
48" OR LESS AND LESS THAN 20 SQ. FT.	-	1
LESS THAN 60"	12"	2
60" TO 120"	L/5	2
GREATER THAN 120" LESS THAN 168"	12"	3
168" AND GREATER	12"	4

SEE NOTE 3

TEMPORARY TRAFFIC CONTROL FIXED MESSAGE SIGNS

STATE OF WISCONSIN
DEPARTMENT OF TRANSPO

6

S.D.D. 15 D 38-1a

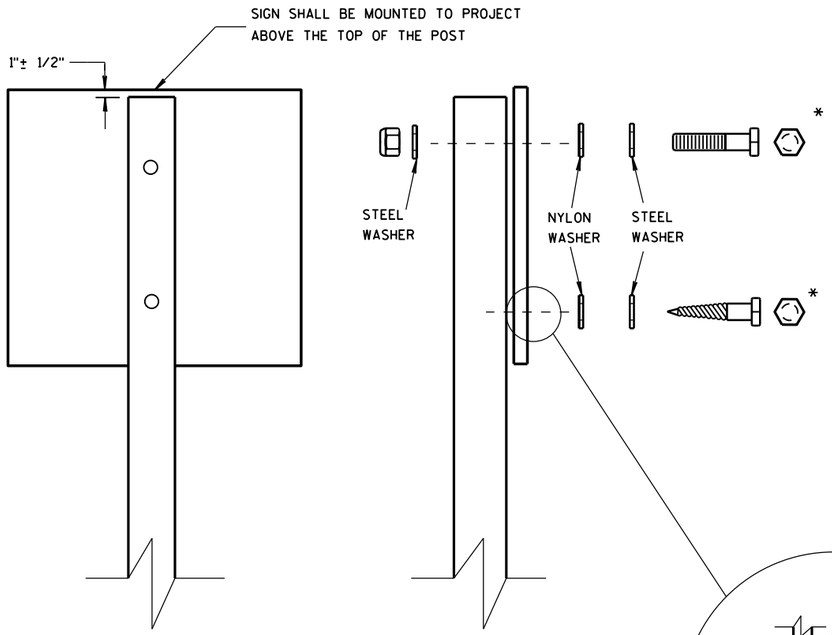

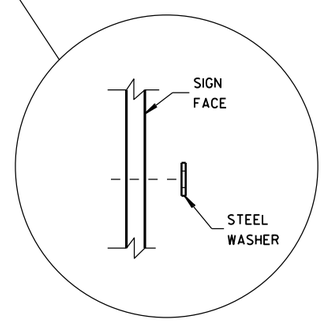

WASHER PLACEMENT WHEN SIGN HAS OTHER THAN TYPE H OR TYPE F FACE

NUTS, BOLTS AND LAGS USED FOR MOUNTING SIGNS SHALL HAVE HEXAGONAL HEADS AND SHALL BE EITHER:

A. HOT DIP GALVANIZED IN ACCORDANCE WITH ASTM DESIGNATION: A 153, CLASS D, OR SC 3

B. ELECTRO-GALVANIZED IN ACCORDANCE WITH ASTM DESIGNATION: B 633, TYPE III, SC 3

THREADS ON BOLTS AND NUTS SHALL BE MANUFACTURED WITH SUFFICIENT ALLOWANCE FOR THE CADMIUM PLATE OR GALVANIZED COATING TO PERMIT THE NUTS TO RUN FREELY ON THE BOLTS.

WOOD POSTS (4" x 4" or 4" x 6")

LAG SCREWS - 3/8" X 3"

MACHINE BOLTS - 5/16" X 6-1/2" OR 7" LENGTH W/ NUTS

SQUARE STEEL POSTS (2" x 2")

MACHINE BOLTS - 3/8" X 3-1/4" LENGTH W/ NUTS

RIVETS - 9/32" (6605-9-6) BULB-TITE, TRI-FOLD, ALUMINUM BODY/MANDREL O.D. FLANGE .720-.765 INCH, GRIP RANGE .042-.375 INCH

WASHERS (ALL POSTS) -

1-1/4" O.D. X 3/8" I.D. X 1/16" STEEL

1-1/4" O.D. X 3/8" I.D. X .080 NYLON FOR ALL TYPE H SIGNS

* TWO DIFFERENT FASTENING SYSTEMS ARE SHOWN FOR ILLUSTRATION PURPOSES. ON ANY INDIVIDUAL SIGN, EITHER ONE OR THE OTHER SYSTEM SHALL BE USED. ACTUAL NUMBER OF FASTENERS PER SIGN VARIES WITH THE SIGN AREA. FOR A SINGLE POST INSTALLATION, ALL SIGNS GREATER THAN 9 SQ. FT. REQUIRE THE USE OF 3 FASTENERS.

6

6

S.D.D. 15 D 38-1b

S.D.D. 15 D 38-1b

ATTACHMENT OF SIGNS TO POSTS

STATE OF WISCONSIN
DEPARTMENT OF TRANSPORTATION

APPROVED
Feb. 2015 /S/ Travis Feltes
DATE STATE TRAFFIC ENGINEER SIGN
FHWA

NOTES

1. All Signs Type II - Type H Reflective
2. Color:
   Background - GREEN
   Message - WHITE
3. Message Series - E

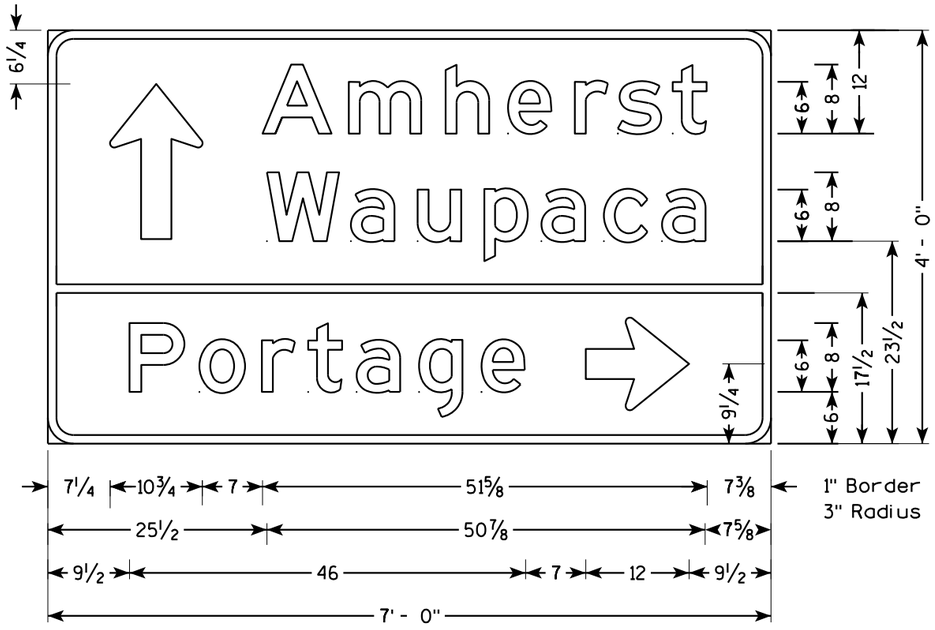

D1-3

(23)

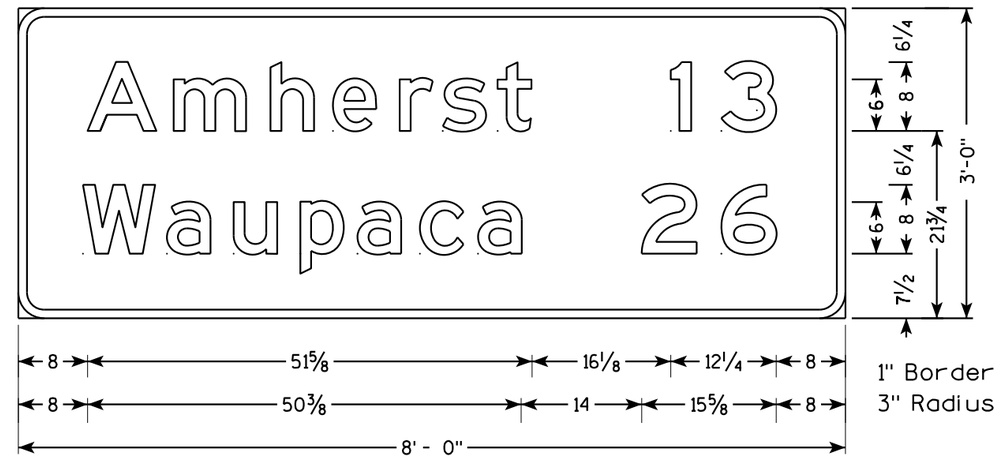

D2-2

(165)

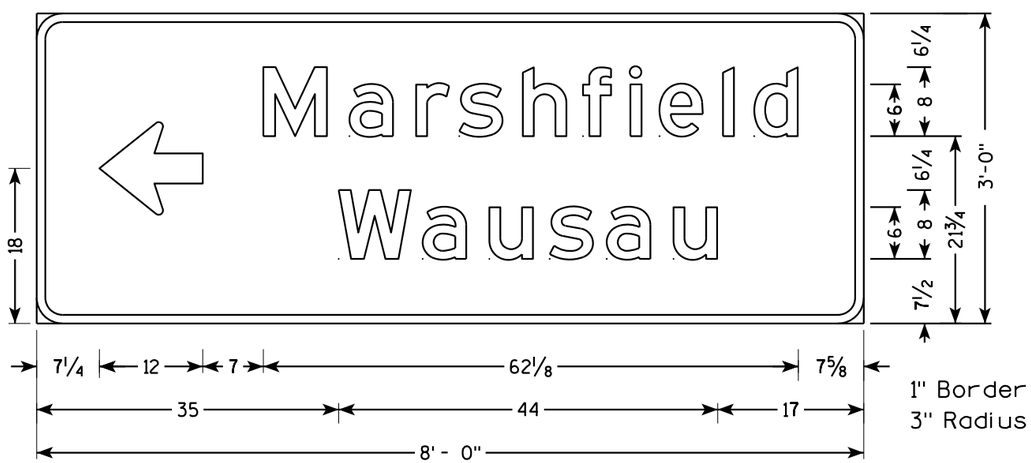

D1-2

(35)

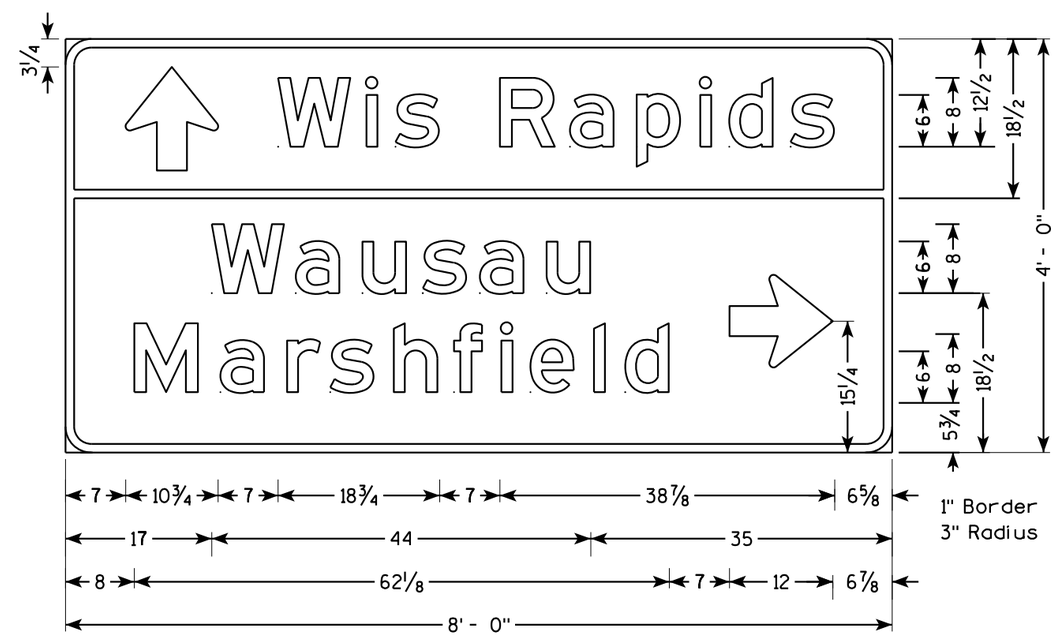

D1-3

(40A)

7

7

PROJECT NO: 6290-05-75	HWY: USH 10	COUNTY: PORTAGE	PERMANENT SIGNING	SHEET NO: 169	E

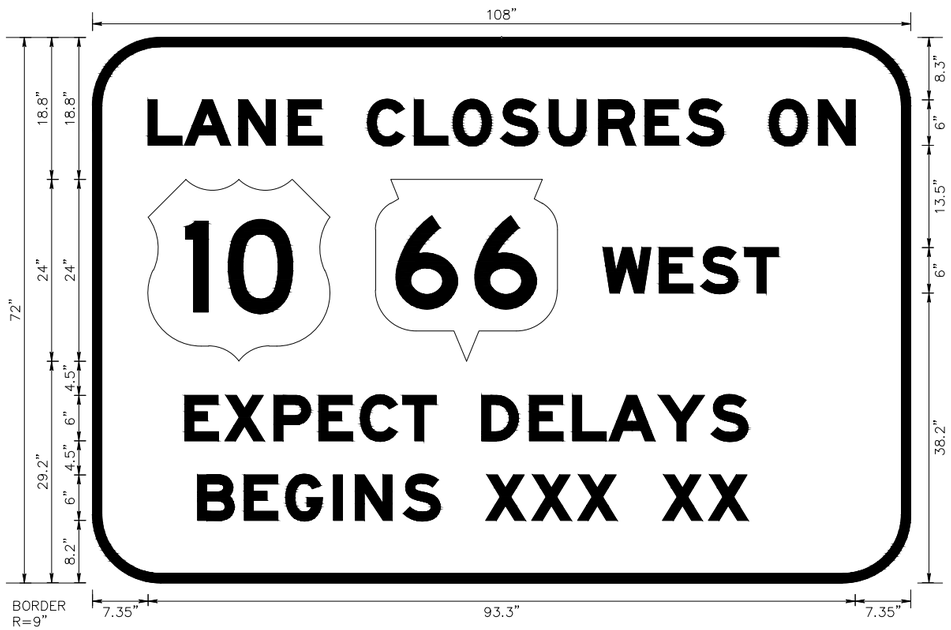

Panel Style: guide_exp_advance_a.ssi
M.U.T.C.D.: 2009 Edition

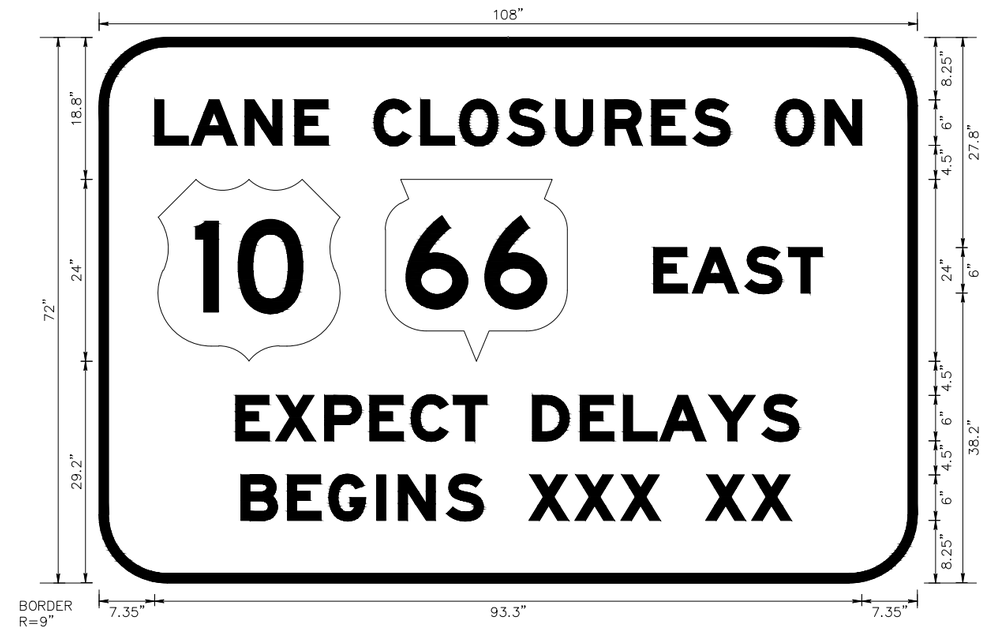

Panel Style: guide_exp_advance_a.ssi
M.U.T.C.D.: 2009 Edition

7

7

PROJECT NO:6290-05-75	HWY:USH 10	COUNTY:PORTAGE	SIGN DETAILS	SHEET 170	E

TYPICAL ASSEMBLIES

J1-1

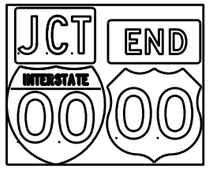

J1-2

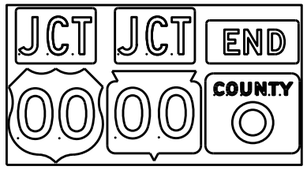

J1-3

J2-1

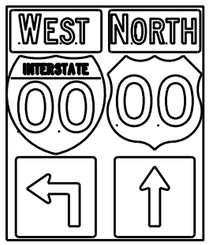

J2-2

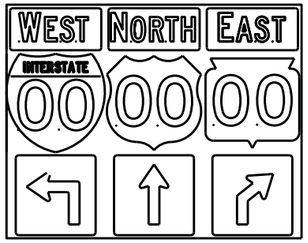

J2-3

JV

(Typical Vertical J-Assembly
See Note 10 and 11)

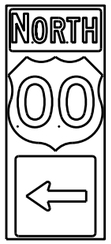

J3-1

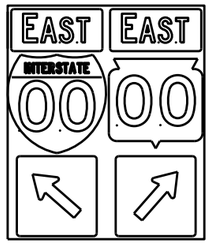

J3-2

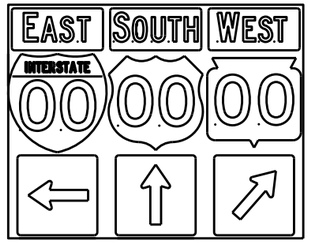

J3-3

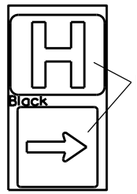

Blue Background

JH-1

J4-1

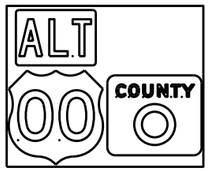

J4-2

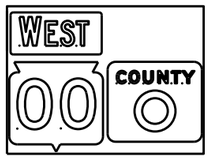

J4-2

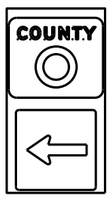

J13-1

J12-1

J32-1

J33-1

J23-1

J22-1

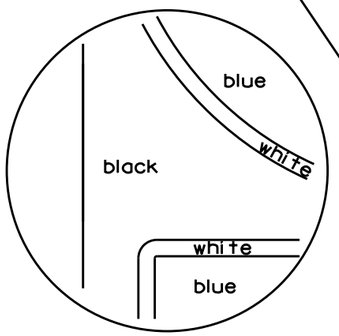

[blue background with interstate]

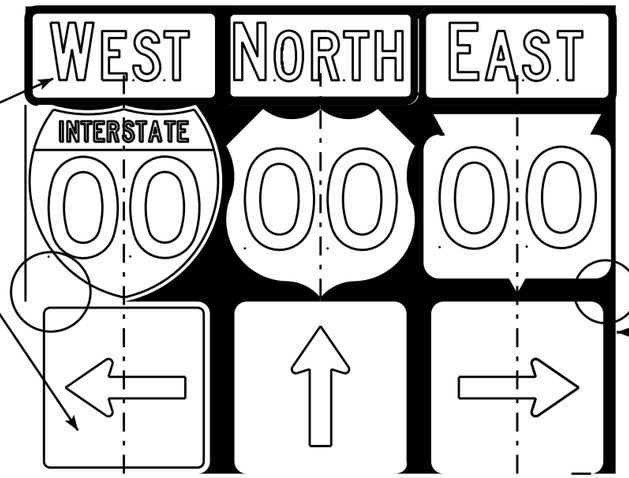

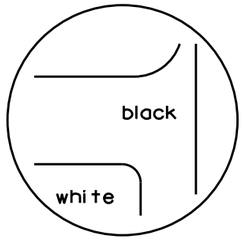

[black background]

NOTES

1. Signs are Type II - Type H Reflective - reference WIS DOT Standard Specification for HIGHWAY and STRUCTURE CONSTRUCTION latest edition.
2. Color:
   Background - Black Non-reflective
   Message - see Note 5
3. Message Series - See Note 5
4. Corners shall be square or rounded if base material is plywood. If base material is metal the corners shall be rounded.
5. The colors and message spacing on each marker shall be according to the applicable route marker panel specifications.
6. Certain marker heads require the component pieces to be the same color. As an example, all the components used with an M1-1 Interstate marker shall be blue.
7. Single panel j-assemblies shall only be used with route marker shields that are same size. If the route marker shields are different size use multiple piece component.
8. Route assemblies that have 24 inch route shields and have dimensions greater than 48 inches (both vertical and horizontal) shall have one horizontal splice between the arrows and route shields. Vertical splices shall not be used on route assemblies with a horizontal dimension of 144 inches or less. The contractor shall not use more than one vertical joint per sign and the joint shall be between route shields.
9. Route assemblies that have 36 inch shields and have dimensions greater than 48 inchs (both vertical and horizontal) shall have two horizontal splices. One horizontal splice shall be between the cardinal direction and route shields and the other horizontal splice shall be between the arrows and route shields. Vertical splices shall not be used on route assemblies with a horizontal dimension of 144 or less. The contractor shall not use more than one vertical joint per sign and the joint shall be between route shields.
10. All Vertical J Assemblies are given a Sign Code of JV
11. For JV Assemblies that have a mixture of Interstate and non Interstate shields, arrows and cardinals shall be white on blue.

ROUTE MARKERS & COMPONENTS IN TYPICAL ASSEMBLIES

WISCONSIN DEPT OF TRANSPORTATION

APPROVED Matthew R Rauch
for State Traffic Engineer

DATE 2/06/14 PLATE A2-1S.8

PROJECT NO: | SHEET NO: E

URBAN AREA

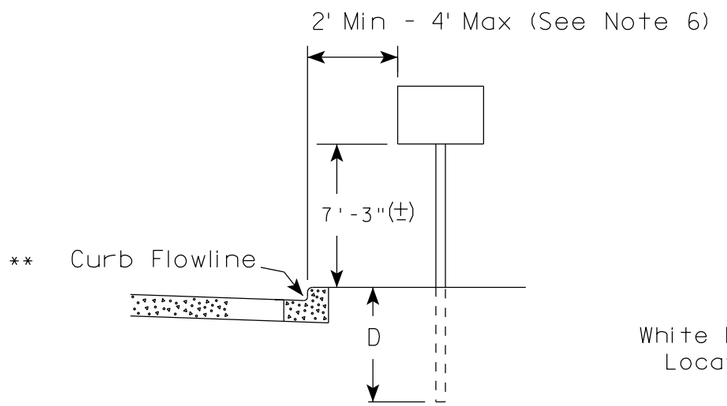

RURAL AREA (See Note 2)

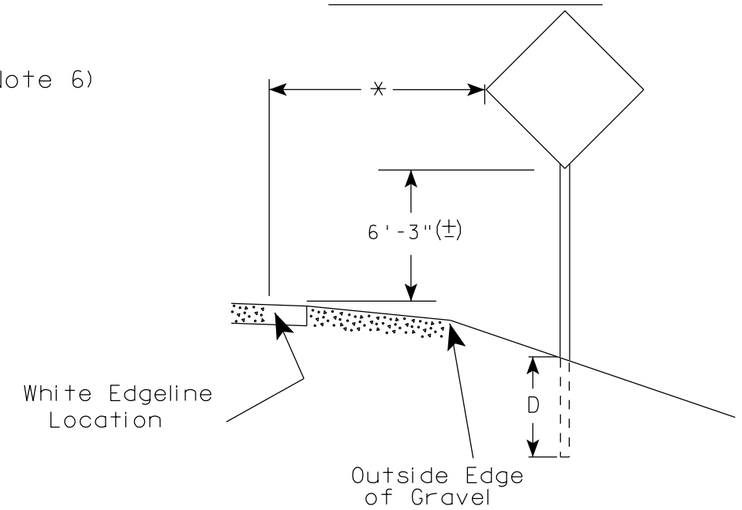

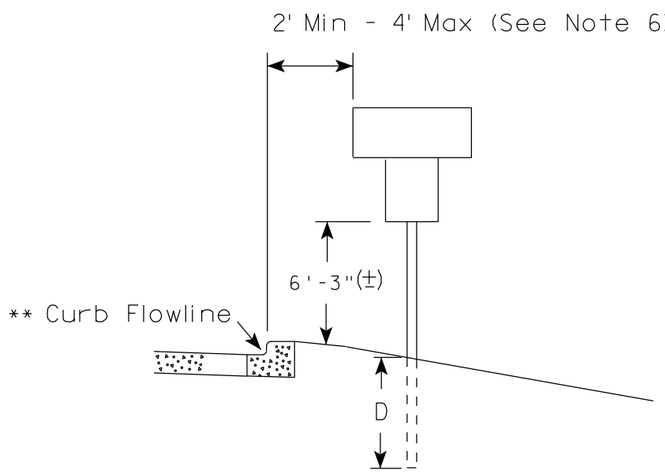

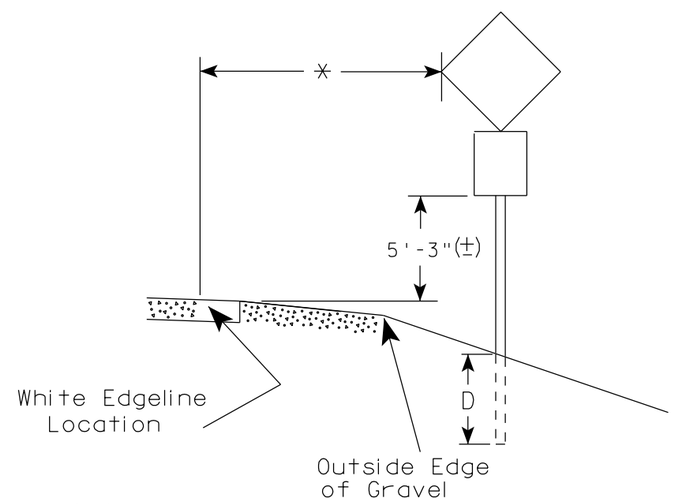

** The existence of curb and gutter does not in itself mandate the vertical clearance illustrated. That height is typically measured where there is sidewalk adjacent to the roadway or parking is permitted. In the absence of sidewalk vertical clearance is measured from the top of the curb. Offset of signs is measured from the flow line.

* 6 feet from edge of a paved shoulder or 12 feet from the edge of pavement (edge line location) or 2 feet from outside edge of gravel, whichever is greater unless directed by project engineer.

GENERAL NOTES

1. Signs wider than 4 feet or 20 sq.ft or larger, shall be mounted on multiple posts. Refer to plate A4-4.
2. If signs are mounted on barrier wall, see A4-10 sign plate.
3. For expressways and freeways, mounting height is 7'- 3" (±) or 6'-3" (±) depending upon existence of a sub-sign.
4. Minimum mounting height for J assemblies (A2-1S) is 7'-3" (±) or 6'-3" (±) per urban or rural detail respectively.
5. Minimum mounting height for signs mounted on traffic signal poles is 5'- 3" (±).
6. Offset distance shall be consistent with existing signs or consistent throughout length of project.
7. The (±) tolerance for mounting height is 3 inches.
8. Folding signs shall be mounted at a height of 5'-3" (±) or as directd by the Engineer.
9. The Double Arrow sign (W12-1) shall be mounted at a height of 2'-3" (±). The Chevron sign (W1-8), Roundabout Chevron panel (R6-4B), Enhanced Reference Markers, Clearance Markers (W5-52), Mile Markers (D10 series), In Road Object Markers (W5-54) & End of Road Markers (W5-56) shall be mounted at a height of 4'-3" (±).

POST EMBEDMENT DEPTH

Area of Sign Installation (Sq. Ft.)	D (Min)
20 or Less	4'
Greater than 20	5'

TYPICAL INSTALLATION OF PERMANENT TYPE II SIGNS ON SINGLE POSTS

WISCONSIN DEPT OF TRANSPORTATION

APPROVED Matthew R Rauch for State Traffic Engineer

DATE 7/23/15 PLATE NO. A4-3.20

PROJECT NO:	HWY:	COUNTY:		SHEET NO:	E

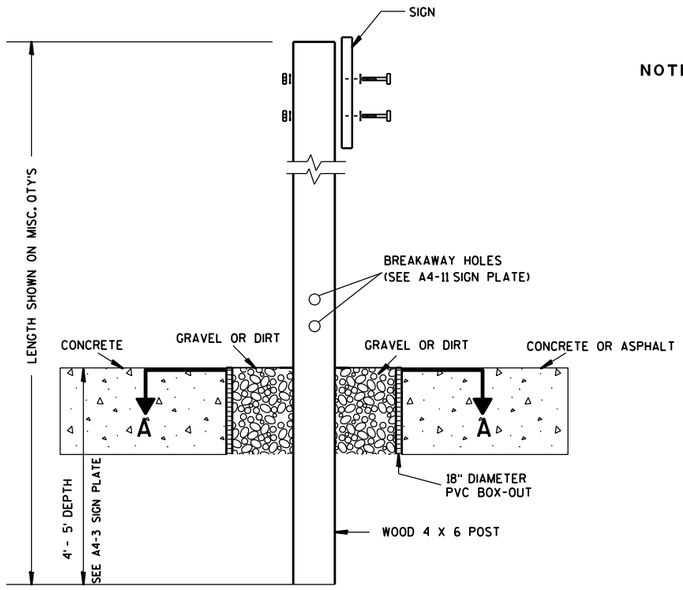

ELEVATION VIEW

DETAIL OF WOOD 4 X 6 SIGN POST IN BOX-OUT

NOTES:
1. ALL MATERIAL TO BE APPROVED BY ENGINEER PRIOR TO INSTALLATION
2. SEE SIGN PLATE A4-8 FOR SIGN HARDWARE REQUIREMENTS
3. 18 INCH X 18 INCH SQUARE BOX-OUTS MAY BE USED FOR INSTALLATIONS IN EXISTING CONCRETE OR ASPHALT LOCATIONS.

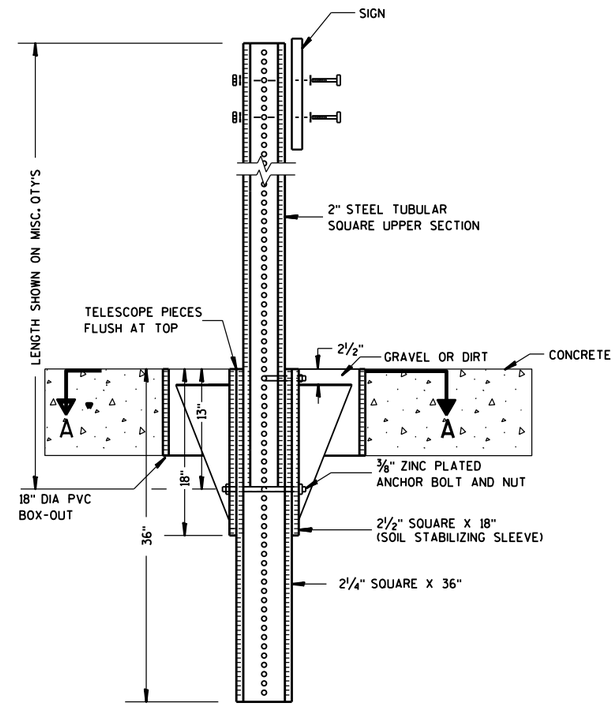

ELEVATION VIEW

DETAIL OF STEEL 2 X 2 SIGN POST IN BOX-OUT

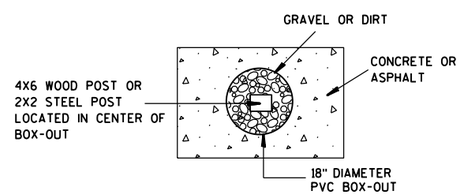

PLAN VIEW

FOR NEW CONCRETE/ASPHALT INSTALLATIONS

SIGN POST
BOX-OUTS
A4-3B

WISCONSIN DEPT OF TRANSPORTATION

APPROVED Matthew R Rauch
for State Traffic Engineer

DATE 1/27/14 PLATE NO. A4-3B.1

PROJECT NO:	HWY:	COUNTY:		SHEET NO:	E

URBAN AREA

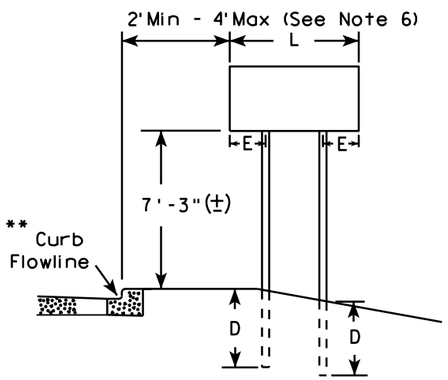

RURAL AREA (See Note 3)

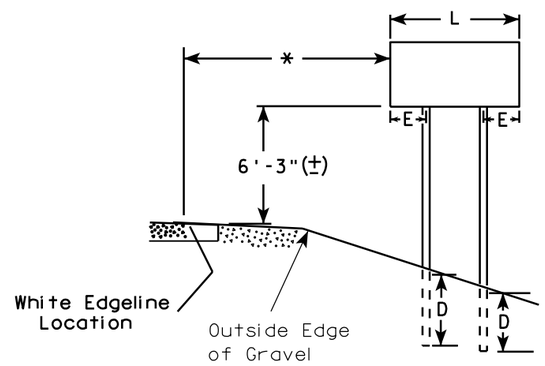

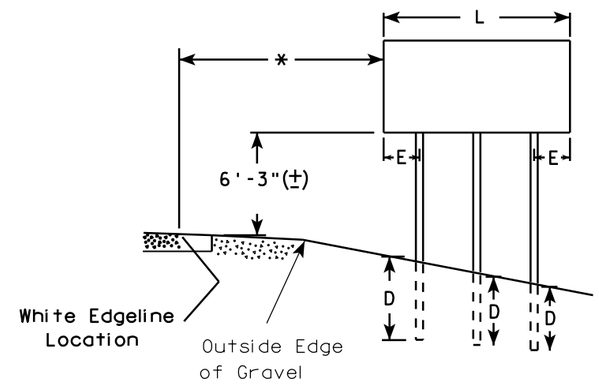

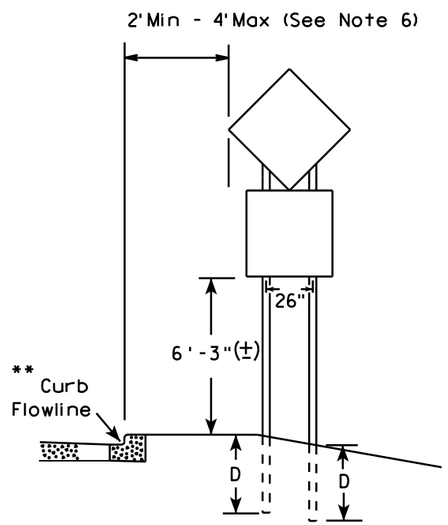

48" DIAMOND WARNING SIGN

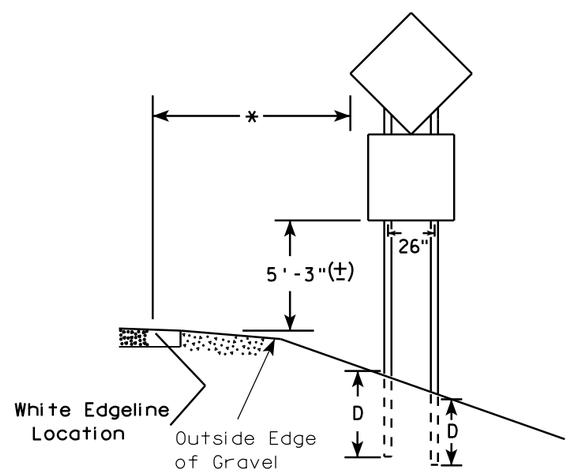

48" DIAMOND WARNING SIGN

GENERAL NOTES

1. For 3 or 4 post installations, individual post spacing shall be greater than 3'-6".
2. See tables below for required number of posts.
3. For expressways and freeways, mounting height is 7'-3" (±) or 6'-3" (±) depending upon existence of sub-sign.
4. The (±) tolerance for mounting height is 3 inches.
5. Minimum mounting height for J assemblies (A2-1S) is 7'-3" (±) or 6'-3" (±) per urban or rural detail respectively.
6. Offset distance shall be consistent with existing signs or consistent throughout length of project.
7. Folding signs shall be mounted at a height of 5'-3" (±) or as directed by the engineer.
8. The Double Arrow sign (W12-1) shall be mounted at a height of 2'-3" (±). The Chevron sign (W1-8), Roundabout Chevron panel (R6-4B), Clearance Markers (W5-52), Mile Markers (D10 series), In Road Object Markers (W5-54) & End of Road Markers (W5-56) shall be mounted at a height of 4"-3" (±).

* 6 feet from edge of a paved shoulder or 12 feet from the edge of pavement (edge line location) or 2 feet from outside edge of gravel, whichever is greater unless directed by project engineer.

** The existence of curb and gutter does not in itself mandate the vertical clearance illustrated. That height is typically measured where there is sidewalk adjacent to the roadway or parking is permitted. In the absence of sidewalk vertical clearance is measured from the top of the curb. Offset of signs is measured from the flow line.

*** See A4-3 sign plate for signs 4' or less in width and less than 20 S.F. in area.

SIGN SHAPE OTHER THAN DIAMOND (TWO POSTS REQUIRED)	
L	E
*** Greater than 48" Less than 60"	12"
60" to 120"	L/5

SIGN SHAPE OTHER THAN DIAMOND (THREE POSTS REQUIRED)	
L	E
Greater than 120" less than 168"	12"

SIGN SHAPE OTHER THAN DIAMOND (FOUR POSTS REQUIRED)	
L	E
168" and greater	12"

POST EMBEDMENT DEPTH

Area of Sign Installation (Sq. Ft.)	D (Min)
20 or Less	4'
Greater than 20	5'

TYPICAL INSTALLATION OF TYPE II SIGNS ON MULTIPLE POSTS

WISCONSIN DEPT OF TRANSPORTATION

APPROVED Matthew R Rauch
for State Traffic Engineer

DATE 7/23/15 PLATE NO. A4-4 14 174

PROJECT NO:	HWY:	COUNTY:		SHEET NO:	E

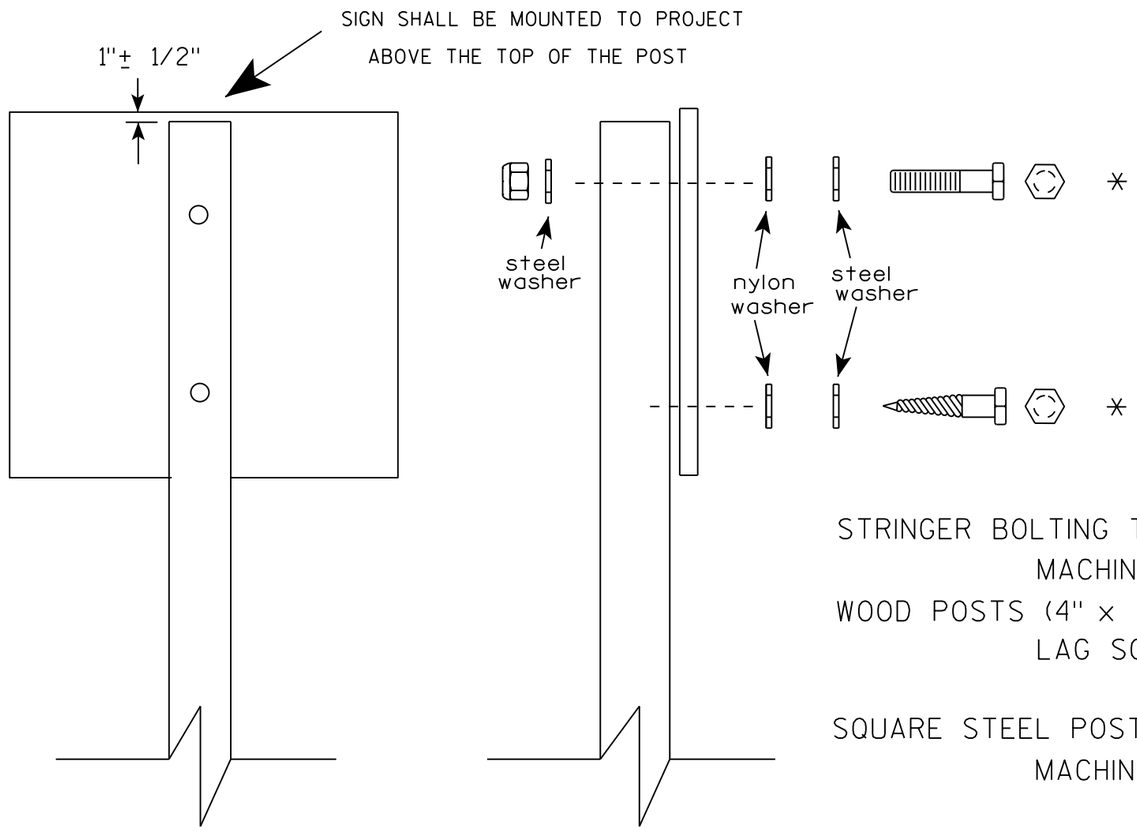

Nuts, bolts and lags used for mounting signs shall have hexagonal heads and shall be either :

a. Hot dip galvanized in accordance with ASTM Designation: A 153, Class D, or SC 3

b. Electro-galvanized in accordance with ASTM Designation : B 633, TYPE III, SC 3.

Threads on bolts and nuts shall be manufactured with sufficient allowance for the cadmium plate or galvanized coating to permit the nuts to run freely on the bolts.

STRINGER BOLTING TO ALUMINUM SIGNS (SEE SIGN PLATE A4-18)

MACHINE BOLTS - 5/16" X 1-3/4" Length w/ lock nuts

WOOD POSTS (4" x 4" or 4" x 6")

LAG SCREWS - 3/8" X 3" (NO STRINGERS ON BACK OF SIGN)

3/8" X 4" (STRINGERS ON BACK OF SIGN)

SQUARE STEEL POSTS (2" x 2")

MACHINE BOLTS - 3/8" X 3-1/4" Length w/ nuts (NO STRINGER ON BACK OF SIGN)

3/8" X 5" Length w/ nuts (STRINGERS ON BACK OF SIGN)

RIVETS - 9/32 " (6605-9-6) BULB-TITE, TRI-FOLD, ALUMINUM BODY/MANDREL

O.D. FLANGE .720-.765 INCH, GRIP RANGE .042-.375 INCH

WASHERS (ALL POSTS) -

1-1/4" O.D. X 3/8" I.D. X 1/16" STEEL

1-1/4" O.D. X 3/8" I.D. X .080 NYLON

* Two different fastening systems are shown for illustration purposes. On any individual sign, either one or the other system shall be used. Actual number of fasteners per sign varies with the sign area, but normally there are two. For a single post installation, all signs greater than 9 sq. ft. require the use of 3 fasteners.

ATTACHMENT OF SIGNS TO POSTS

WISCONSIN DEPT OF TRANSPORTATION

APPROVED Matthew R Rauch for State Traffic Engineer

DATE 8/11/16 PLATE NO. A4-8.8

PROJECT NO: SHEET NO: E

TELESCOPIC TUBING ANCHORS
TWO PIECE SYSTEM

2 1/4 " SQUARE
12 GAUGE
PERFORATED
GALVANIZED FINISH

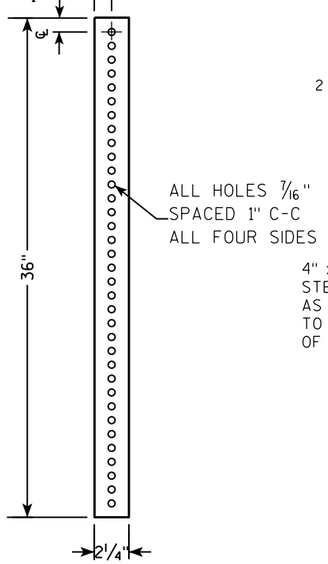

2 1/2 " SQUARE
12 GAUGE
OMNI-DIRECTIONAL
PERFORATED
SOIL STABILIZING SLEEVE
GALVANIZED FINISH

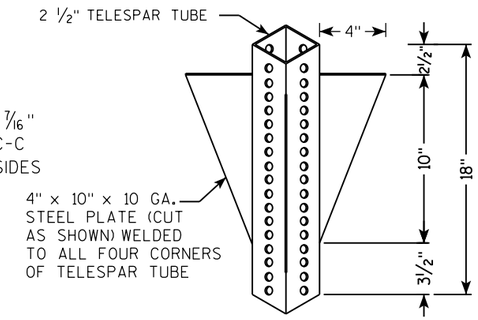

DETAIL OF TUBULAR STEEL SIGN POST
(IN POURED CONCRETE OR ASPHALT)

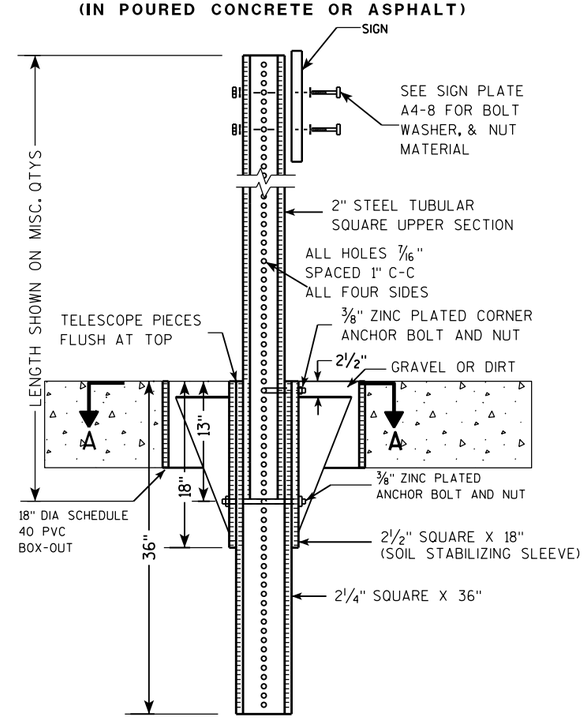

DETAIL OF TUBULAR STEEL SIGN POST
(IN LOCATIONS OTHER THAN POURED CONCRETE OR ASPHALT)

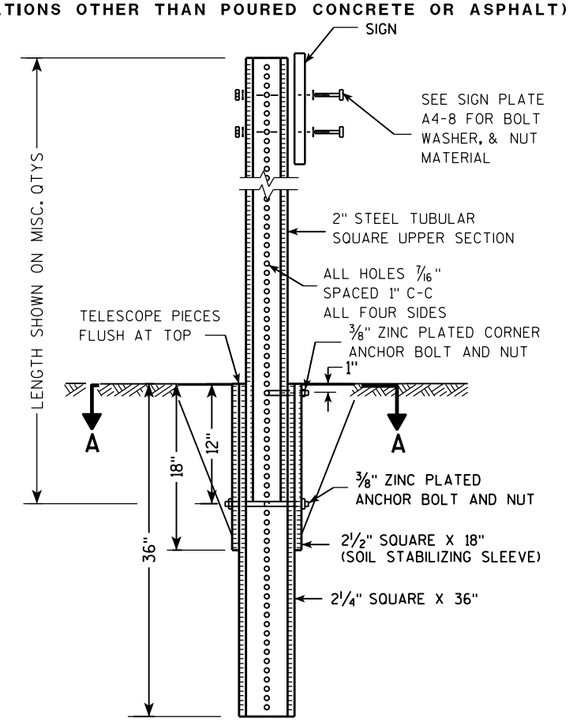

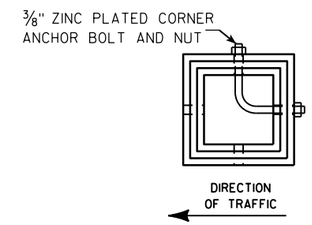

SECTION A-A

Area of Sign Installation (Sq. Ft.)	Number of Required Posts
9 or less	1
Greater than 9 less than or equal to 18	2
Greater than 18 less than or equal to 27	3

Signs wider than 3 feet or larger than 9 sq. ft shall be mounted on multiple posts (see above table).

TUBULAR STEEL
SIGN POST
A4-9

WISCONSIN DEPT OF TRANSPORTATION

APPROVED Matthew R Rauch
for State Traffic Engineer

DATE 2/05/15 PLATE A4-9.9

7 7

PROJECT NO:	HWY:	COUNTY:		SHEET NO:	E

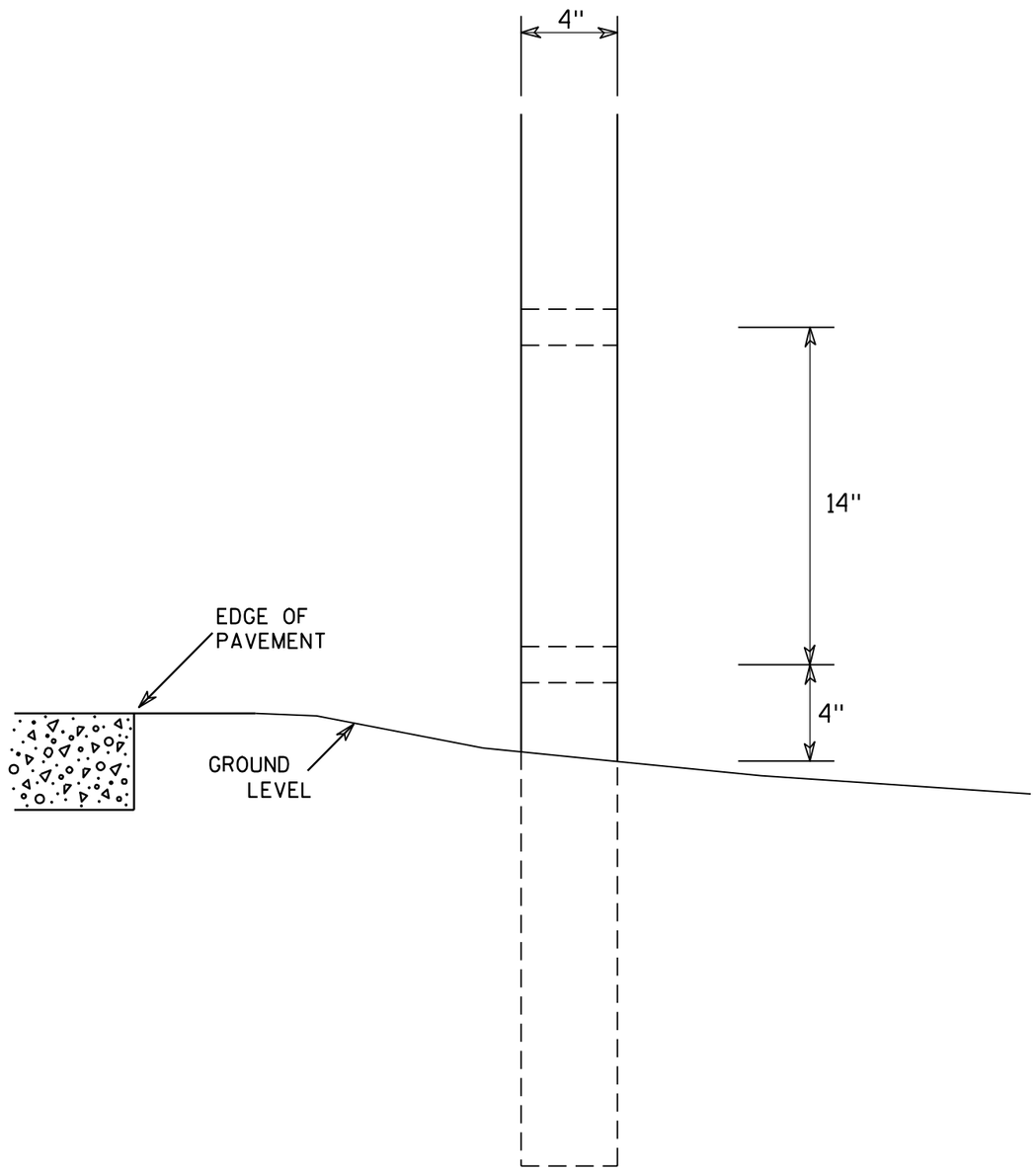

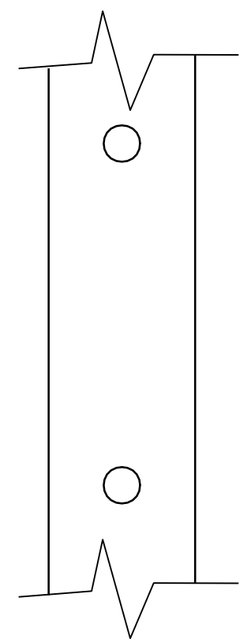

SIDE VIEW

GENERAL NOTES

1. All 4 x 6 Wood Posts shall be modified by having two 1½" diameter holes drilled perpendicular to the roadway centerline.

7

7

4 X 6 WOOD POST MODIFICATIONS

WISCONSIN DEPT OF TRANSPORTATION

APPROVED Chester J Spang for State Traffic Engineer

DATE 3/27/97 PLATE NO. A4-11.2

PROJECT NO:	HWY:	COUNTY:		SHEET NO: 177	E

D1-52

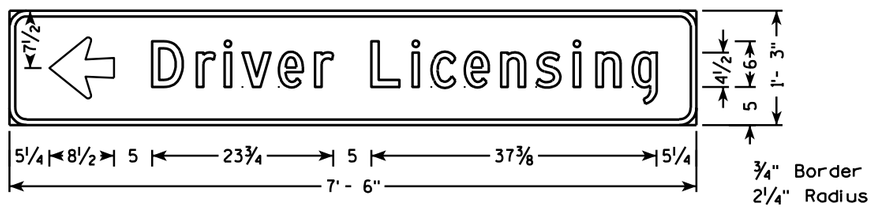

D1-51

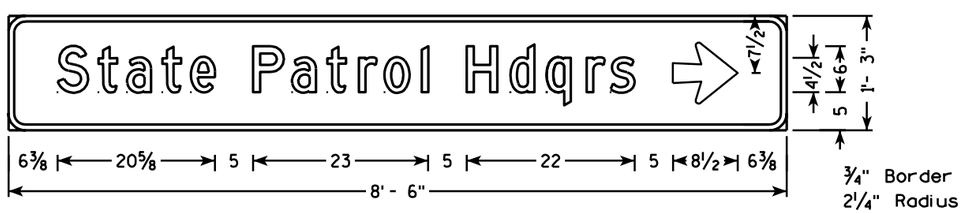

D1-53

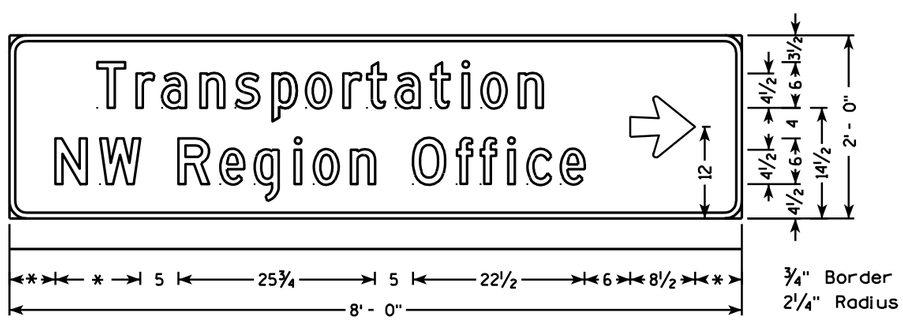

D1-54

*Varies

NOTES

1. Sign is Type II - Type H Reflective - reference WIS DOT Standard Specification for HIGHWAY and STRUCTURE CONSTRUCTION latest edition.
2. Color:
   Background - Green
   Message - White
3. Message Series - D
4. Corners may be square or rounded when base material is plywood but borders shall be rounded as shown. When base material is metal, the corners and borders shall be rounded.
5. For Region Offices Substitute appropriate message and adjust horizontal spacing as needed.

TYPICAL STANDARD
D1-51 THRU D1-54

WISCONSIN DEPT OF TRANSPORTATION

APPROVED Matthew R Rauch
for State Traffic Engineer

DATE 11/07/05 PLATE NO. D1-51.2

PROJECT NO:	HWY:	COUNTY:		SHEET NO: 178	E

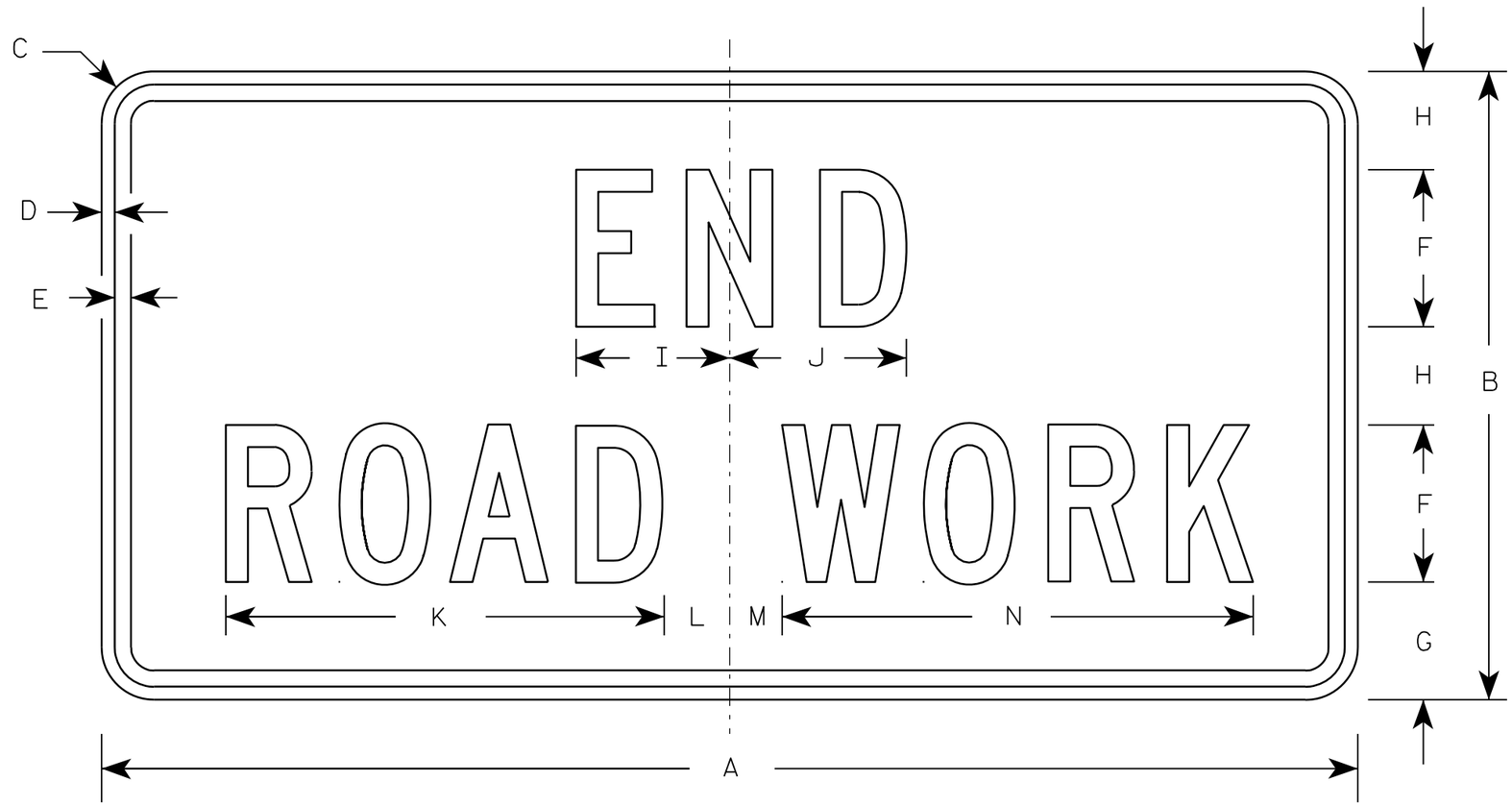

G20-2A

NOTES

1. Sign is Type II - Type F Reflective - reference WIS DOT Standard Specification for HIGHWAY and STRUCTURE CONSTRUCTION latest edition.
2. Color:
   Background - Orange
   Message - Black
3. Message Series - C
4. Corners may be square or rounded when base material is plywood but borders shall be rounded as shown. When base material is metal, the corners and borders shall be rounded.

Metric equivalent for this sign is:

SIZE	
1	900 mm X 450 mm
2	1200 mm X 600 mm
3	1200 mm X 600 mm
4	1200 mm X 600 mm
5	1200 mm X 600 mm

SIZE	A	B	C	D	E	F	G	H	I	J	K	L	M	N	O	P	Q	R	S	T	U	V	W	X	Y	Z	Area sq. ft.	Area m2
1	36	18	1 1/8	3/8	1/2	4	3 3/4	2 1/2	4 1/8	4 1/8	11 1/8	2	1	12 1/8													4.5	0.41
2	48	24	1 1/2	1/2	5/8	6	4 1/2	3 3/4	5 7/8	6 3/4	16 3/4	2 1/2	1 3/4	18 1/2													8.0	0.72
3	48	24	1 1/2	1/2	5/8	6	4 1/2	3 3/4	5 7/8	6 3/4	16 3/4	2 1/2	1 3/4	18 1/2													8.0	0.72
4	48	24	1 1/2	1/2	5/8	6	4 1/2	3 3/4	5 7/8	6 3/4	16 3/4	2 1/2	1 3/4	18 1/2													8.0	0.72
5	48	24	1 1/2	1/2	5/8	6	4 1/2	3 3/4	5 7/8	6 3/4	16 3/4	2 1/2	1 3/4	18 1/2													8.0	0.72

STANDARD SIGN

G20-2A

WISCONSIN DEPT OF TRANSPORTATION

APPROVED Matthew R Rauch
for State Traffic Engineer

DATE 9/30/09 PLATE NO. G20-2A.8

PROJECT NO:	HWY:	COUNTY:		SHEET NO: 179	E

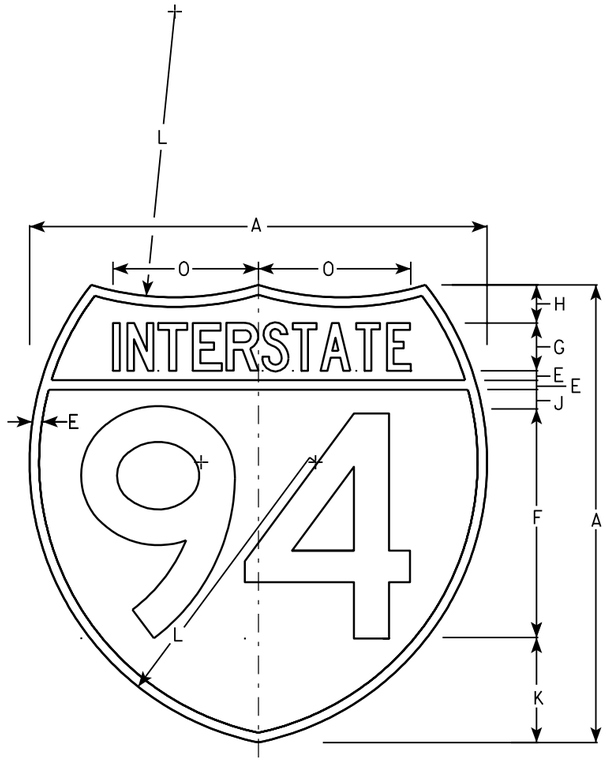

M1-1

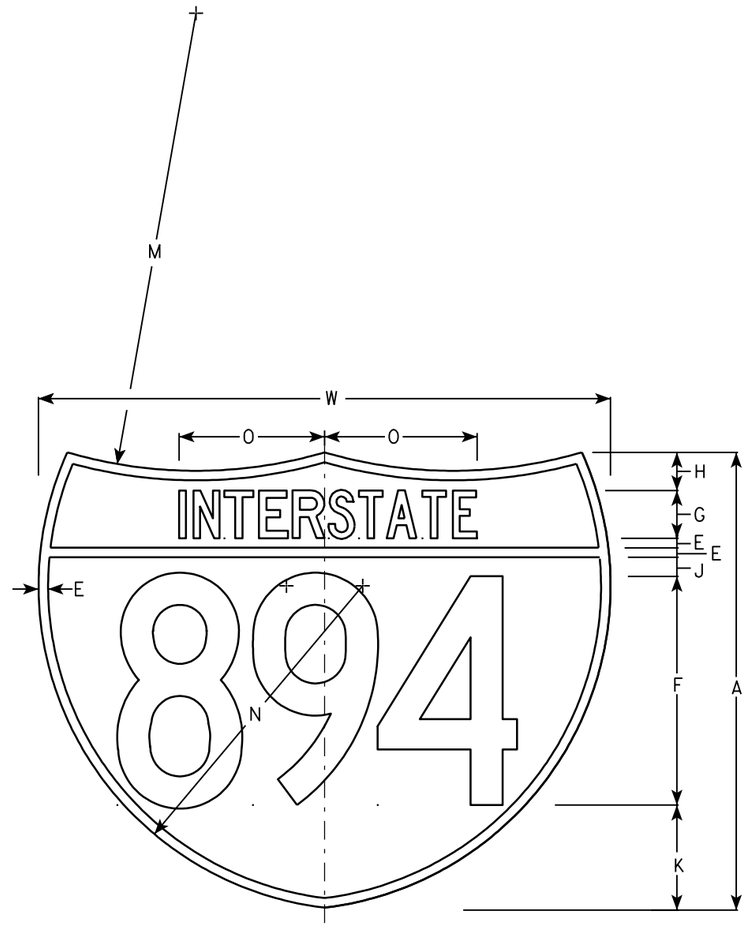

M1-1A

NOTES

1. Sign is Type II - See Note 6 - reference WIS DOT Standard Specification for HIGHWAY and STRUCTURE CONSTRUCTION latest edition.
2. Color:
   Background - Top Red - Bottom Blue (See Note 6)
   Message - White - See Note 6
3. Message Series - See note 5
4. Substitute appropriate numerals & ajust spacing as per plate A10-1.
5. M1-1 - Numerals - D
   Interstate - C
   M1-1A - All copy - C
6. Permanent Signs
   Message - Type H Reflective
   Detour or other temporary signs
   Background - Reflective
   Message - Reflective

Metric equivalent for these signs are:

SIZE	M1-1	SIZE	M1-1A
1			
2	600 mm X 600 mm	2	600 mm X 750 mm
3	900 mm X 900 mm	3	900 mm X 1125 mm
4	900 mm X 900 mm	4	900 mm X 1125 mm
5	900 mm X 900 mm	5	900 mm X 1125 mm

SIZE	A	B	C	D	E	F	G	H	I	J	K	L	M	N	O	P	Q	R	S	T	U	V	W	X	Y	M1-1 Area sq. ft.	M1-1A Area sq. ft.	M1-1 Area m2	M1-1A Area m2
1																													
2	24				1/2	12	2 1/2	2		1	5 1/2	15	24	17	7 7/8								30			3.13	3.91	.36	.46
3	36				3/4	18	3 3/4	3		1 1/2	8 1/4	22 1/2	36	25 1/2	11 3/4								45			7.03	8.79	.81	1.05
4	36				3/4	18	3 3/4	3		1 1/2	8 1/4	22 1/2	36	25 1/2	11 3/4								45			7.03	8.79	.81	1.05
5	36				3/4	18	3 3/4	3		1 1/2	8 1/4	22 1/2	36	25 1/2	11 3/4								45			7.03	8.79	.81	1.05

INTERSTATE ROUTE MARKER
M1-1 FOR ASSEMBLIES

WISCONSIN DEPT OF TRANSPORTATION

APPROVED Matthew R Rauch
for State Traffic Engineer

DATE 08/23/05 PLATE NO. M1-1.8

PROJECT NO: | HWY: | COUNTY: | SHEET NO: 180 | E

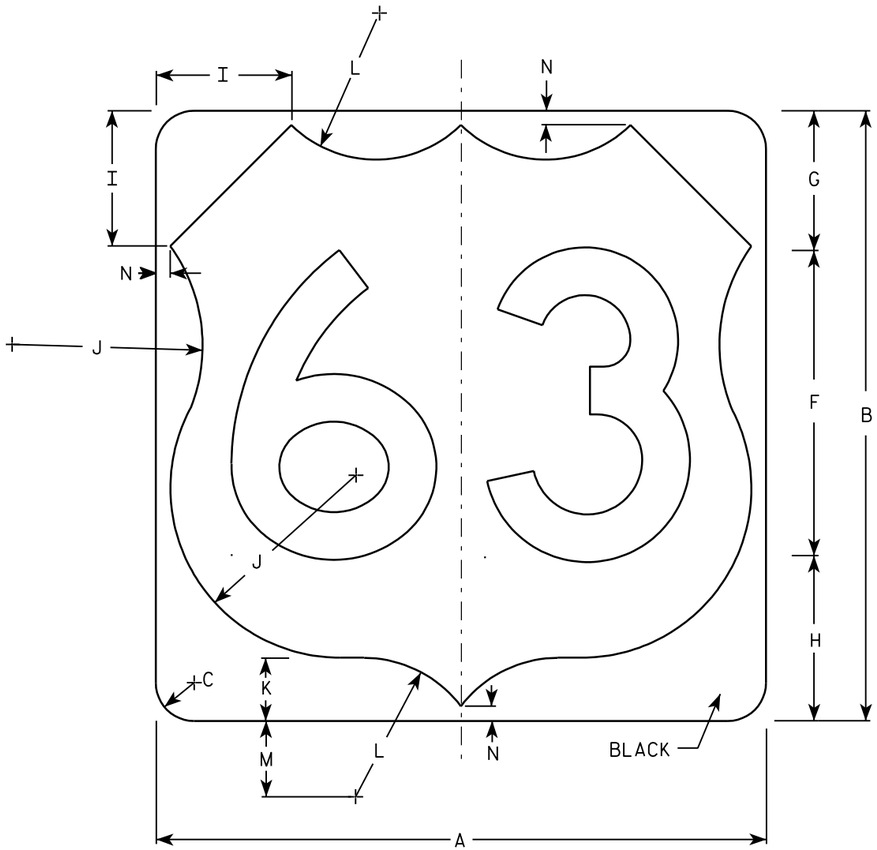

M1-4

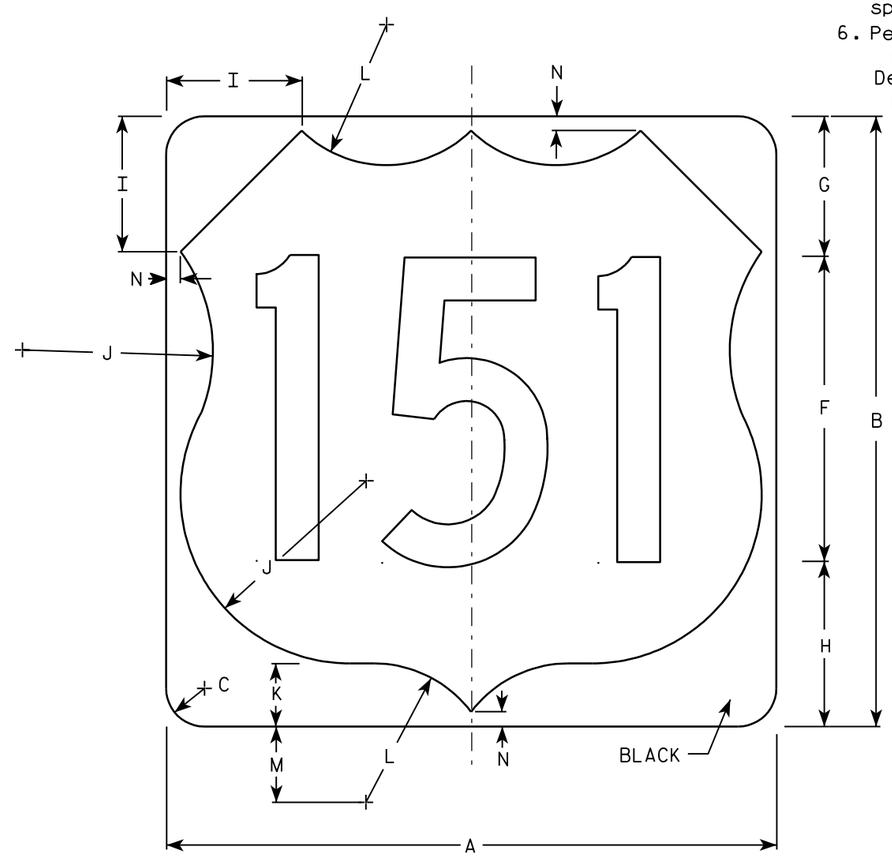

M1-4

NOTES

1. Sign is Type II - See Note 6 - reference WIS DOT Standard Specification for HIGHWAY and STRUCTURE CONSTRUCTION latest edition.
2. Color:
   Background - White & Black - See Note 6
   Message - Black
3. Message Series - See note 5
4. Corners may be square or rounded when base material is plywood but borders shall be rounded as shown. When base material is metal, the corners and borders shall be rounded.
5. Substitute appropriate numerals and adjust spacing as per Plate A10-1.
6. Permanent Signs
   Background - Type H Reflective
   Detour or other temporary signs
   Background - Reflective

Metric equivalent for this sign is:

SIZE	
1	
2	600 mm X 600 mm
3	900 mm X 900 mm
4	900 mm X 900 mm
5	900 mm X 900 mm

SIZE	A	B	C	D	E	F	G	H	I	J	K	L	M	N	O	P	Q	R	S	T	U	V	W	X	Y	Z	Area sq. ft.	Area m2
1																												
2	24	24	1 1/2			12	5 1/2	6 1/2	5	7 1/2	2 1/2	5 1/2	3	1/2													4.0	.36
3	36	36	2 1/4			18	8 1/4	9 1/4	7 1/4	11 1/4	3 3/4	8 1/4	4 1/2	3/4													9.0	.81
4	36	36	2 1/4			18	8 1/4	9 1/4	7 1/4	11 1/4	3 3/4	8 1/4	4 1/2	3/4													9.0	.81
5	36	36	2 1/4			18	8 1/4	9 1/4	7 1/4	11 1/4	3 3/4	8 1/4	4 1/2	3/4													9.0	.81

USH MARKER
M1-4 FOR ASSEMBLIES

WISCONSIN DEPT OF TRANSPORTATION

APPROVED Matthew R Rauch
for State Traffic Engineer

DATE 08/25/05 PLATE NO. M1-4.9

PROJECT NO: | HWY: | COUNTY: | SHEET NO: 181 | E

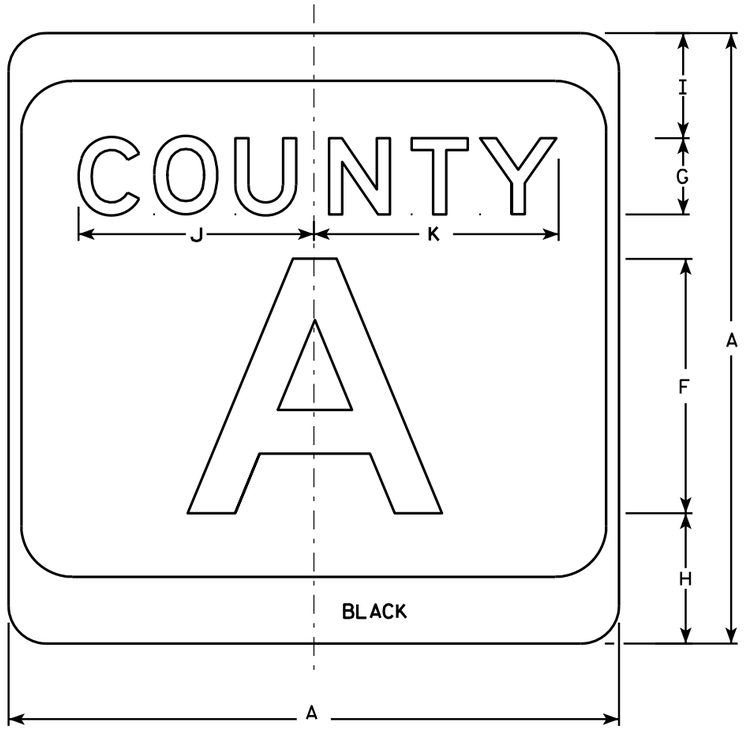

M1-5A

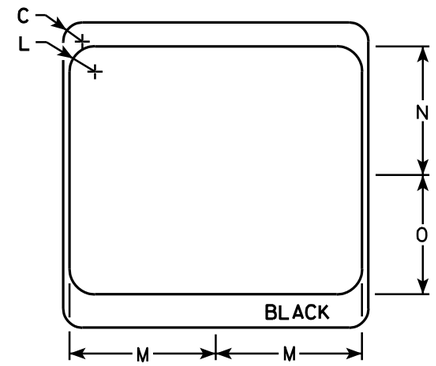

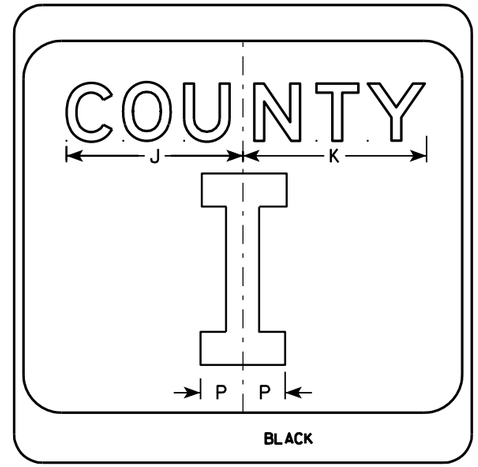

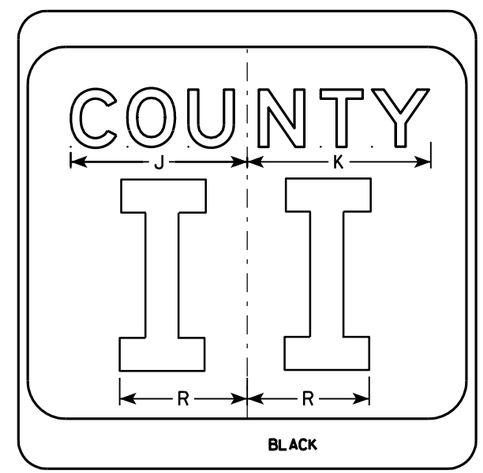

NOTES

1. Sign is Type II - see Note 7 - reference WIS DOT Standard Specification for HIGHWAY and STRUCTURE CONSTRUCTION latest edition.
2. Color:
   Background - White & Black - See Note 7
   Message - Black
3. Message Series - see Note 5
4. Corners may be square or rounded when base material is plywood but borders shall be rounded as shown. When base material is metal, the corners and borders shall be rounded.
5. Message Series E for 1 letter.
   Message Series D for 2 letters unless message is too big then Series C.
   Message Series C for 3 letters unless message is too big then Series B.
6. Substitute appropriate letters & optically center to achieve proper balance.
7. Permanent Signs
   Background - Type H Reflective
   Detour or temporary Signs
   Background - Reflective

SIZE	A	B	C	D	E	F	G	H	I	J	K	L	M	N	O	P	Q	R	S	T	U	V	W	X	Y	Z	Area sq. ft.
1																											
2	24		1 1/2			10	3	5 1/8	4 1/8	9 1/4	9 5/8	2	11 1/2	10 1/8	9 3/8	2 1/4		6 5/8									4.0
3	36		2 1/4			16	4	7 5/8	5 5/8	12 1/4	12 7/8	3	17 1/8	15 1/4	14	3 3/8		10									9.0
4	36		2 1/4			16	4	7 5/8	5 5/8	12 1/4	12 7/8	3	17 1/8	15 1/4	14	3 3/8		10									9.0
5	36		2 1/4			16	4	7 5/8	5 5/8	12 1/4	12 7/8	3	17 1/8	15 1/4	14	3 3/8		10									9.0

CTH MARKER
M1-5A FOR ASSEMBLIES

WISCONSIN DEPT OF TRANSPORTATION

APPROVED Matthew R Rauch
for State Traffic Engineer

DATE 9/27/11 PLATE NO. M1-5A.8

PROJECT NO: | HWY: | COUNTY: | SHEET NO: 182 | E

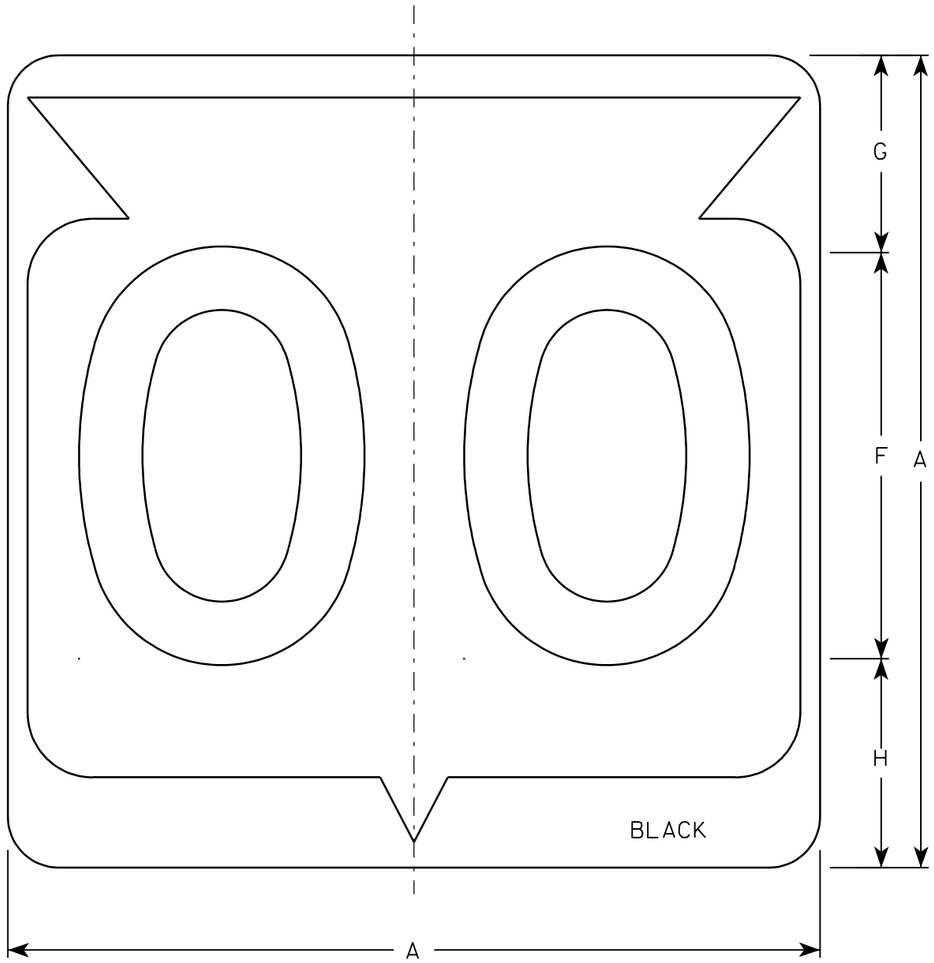

M1-6

NOTES

1. Sign is Type II - See Note 6 - reference WIS DOT Standard Specification for HIGHWAY and STRUCTURE CONSTRUCTION latest edition.
2. Color:
   Background - White & Black - See Note 6
   Message - Black
3. Message Series - See note 5
4. Corners may be square or rounded when base material is plywood but borders shall be rounded as shown. When base material is metal, the corners and borders shall be rounded.
5. Substitute appropriate Series numerals and adjust spacing as per plate A10-1.
6. Permanent Signs
   Background - Type H Reflective
   Detour or temporary Signs
   Background - Reflective

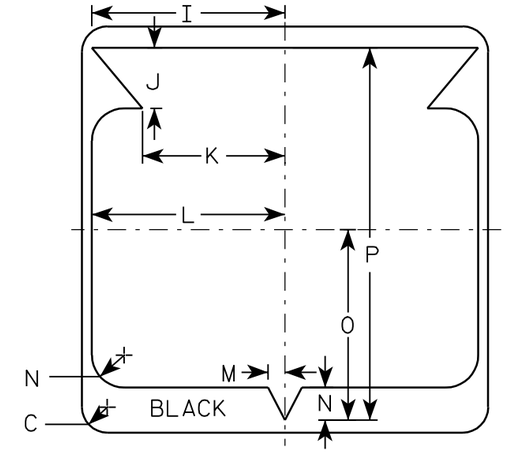

Metric equivalent for this sign is:

SIZE	
1	
2	600 mm X 600 mm
3	900 mm X 900 mm
4	900 mm X 900 mm
5	900 mm X 900 mm

SIZE	A	B	C	D	E	F	G	H	I	J	K	L	M	N	O	P	Q	R	S	T	U	V	W	X	Y	Z	Area sq. ft.	Area m2
1																												
2	24		1 1/2			12	5 1/2	6 1/2	10 1/4	2 1/2	8 7/8	11 1/2	1	1 7/8	11 1/4	21 7/8											4.0	.36
3	36		2 1/4			18	8 3/4	9 1/4	15 3/8	5 3/8	12 5/8	17 1/8	1 1/2	2 7/8	16 7/8	33											9.0	.81
4	36		2 1/4			18	8 3/4	9 1/4	15 3/8	5 3/8	12 5/8	17 1/8	1 1/2	2 7/8	16 7/8	33											9.0	.81
5	36		2 1/4			18	8 3/4	9 1/4	15 3/8	5 3/8	12 5/8	17 1/8	1 1/2	2 7/8	16 7/8	33											9.0	.81

STATE ROUTE MARKER
M1-6 FOR ASSEMBLIES

WISCONSIN DEPT OF TRANSPORTATION

APPROVED Chester J Spang
for State Traffic Engineer

DATE 3/20/02 PLATE NO. M1-6.9

PROJECT NO: | HWY: | COUNTY: | SHEET NO: 183 | E

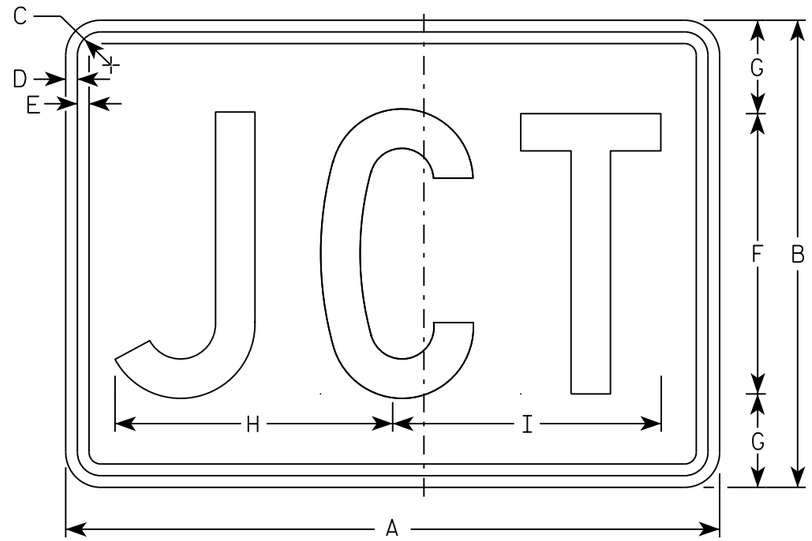

M2-1
MM2-1
MP2-1

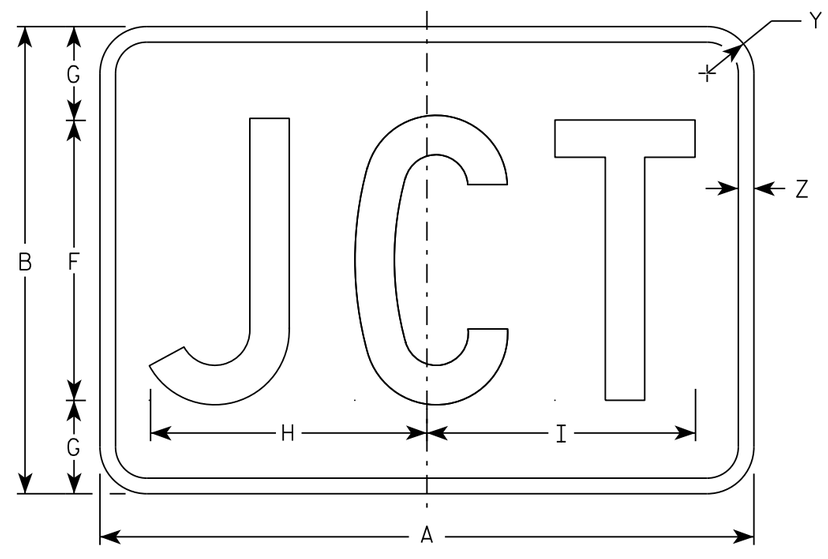

MB2-1
MK2-1
MN2-1
MR2-1

NOTES

1. Sign is Type II - Type H
2. Color:
   Background - See note 5
   Message - See note 5
3. Message Series - C
4. Corners may be square or rounded when base material is plywood but borders shall be rounded as shown. When base material is metal, the corners and borders shall be rounded.
5. M2-1 Background - White
   Message - Black
   MB2-1 Background - Blue
   Message - White
   MK2-1 Background - Green
   Message - White
   MM2-1 Background - White
   Message - Green
   MN2-1 Background - Brown
   Message - White
   MP2-1 Background - White
   Message - Blue
   MR2-1 Background - Brown
   Message - Yellow

SIZE	A	B	C	D	E	F	G	H	I	J	K	L	M	N	O	P	Q	R	S	T	U	V	W	X	Y	Z	Area sq. ft.
1																											
2	21	15	1 1/8	3/8	3/8	9	3	8 7/8	8 5/8																1 1/2	1/2	2.20
3	30	21	1 1/8	3/8	3/8	13	4	12 7/8	12 3/8																1 1/2	1/2	4.40
4	30	21	1 1/8	3/8	3/8	13	4	12 7/8	12 3/8																1 1/2	1/2	4.40
5	30	21	1 1/8	3/8	3/8	13	4	12 7/8	12 3/8																1 1/2	1/2	4.40

STANDARD SIGN
M2-1

WISCONSIN DEPT OF TRANSPORTATION

APPROVED Matthew R Rauch
for State Traffic Engineer

DATE 10/15/15 PLATE 184 M2-1.12

PROJECT NO: | HWY: | COUNTY: | SHEET NO: E

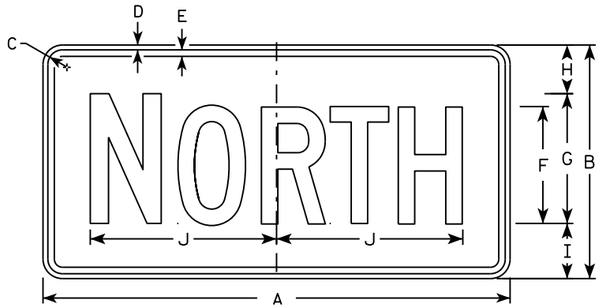

M3-1
MM3-1
MP3-1

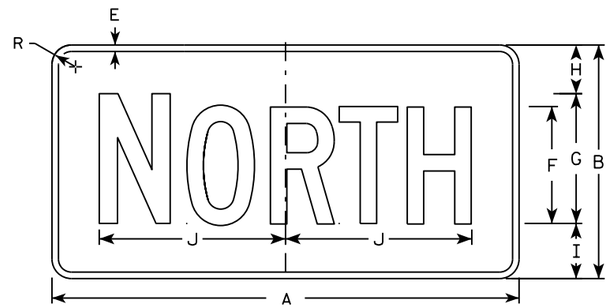

MB3-1
MK3-1
MN3-1

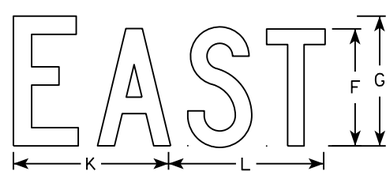

M3-2
MM3-2
MP3-2

MB3-2
MK3-2
MN3-2

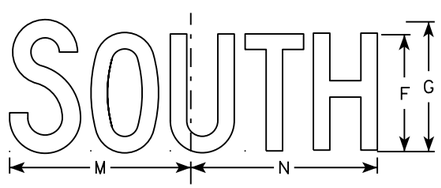

M3-3
MM3-3
MP3-3

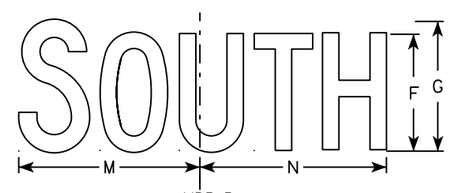

MB3-3
MK3-3
MN3-3

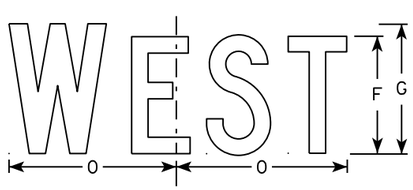

M3-4
MM3-4
MP3-4

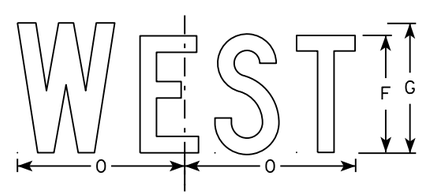

MB3-4
MK3-4
MN3-4

NOTES

1. All Signs Type II - Type H
2. Color:
   Background - See note 5
   Message - See note 5
3. Message Series - C
4. Corners may be square or rounded when base material is plywood but borders shall be rounded as shown. When base material is metal, the corners and borders shall be rounded.
5. M3-1 thru M3-4 Background - White
   Message - Black
   MB3-1 thru MB3-4 Background - Blue
   Message - White
   MK3-1 thru MK3-4 Background - Green
   Message - White
   MM3-1 thru MM3-4 Background - White
   Message - Green
   MN3-1 thru MN3-4 Background - Brown
   Message - White
   MP3-1 thru MP3-4 Background - White
   Message - Blue
6. Note the first letter of each direction is larger than the remainder of the message.

SIZE	A	B	C	D	E	F	G	H	I	J	K	L	M	N	O	P	Q	R	S	T	U	V	W	X	Y	Z	Area sq. ft.
1																											
2	24	12	1 1/8	3/8	3/8	6	7	2 1/4	2 3/4	10 1/4	7 7/8	8 3/8	10 1/4	9 3/4	8 3/4			1 1/2									2.00
3	36	18	1 1/8	3/8	1/2	9	10	3 3/4	4 1/4	14 3/8	12	12 1/8	14	14 1/8	13			1 1/2									4.5
4	36	18	1 1/8	3/8	1/2	9	10	3 3/4	4 1/4	14 3/8	12	12 1/8	14	14 1/8	13			1 1/2									4.5
5	36	18	1 1/8	3/8	1/2	9	10	3 3/4	4 1/4	14 3/8	12	12 1/8	14	14 1/8	13			1 1/2									4.5

STANDARD SIGNS
M3-1 thur M3-4
SERIES

WISCONSIN DEPT OF TRANSPORTATION

APPROVED Matthew R Rauch
for State Traffic Engineer

DATE 10/15/15 PLATE NO M3-1.14

PROJECT NO: | HWY: | COUNTY: | SHEET NO: | E

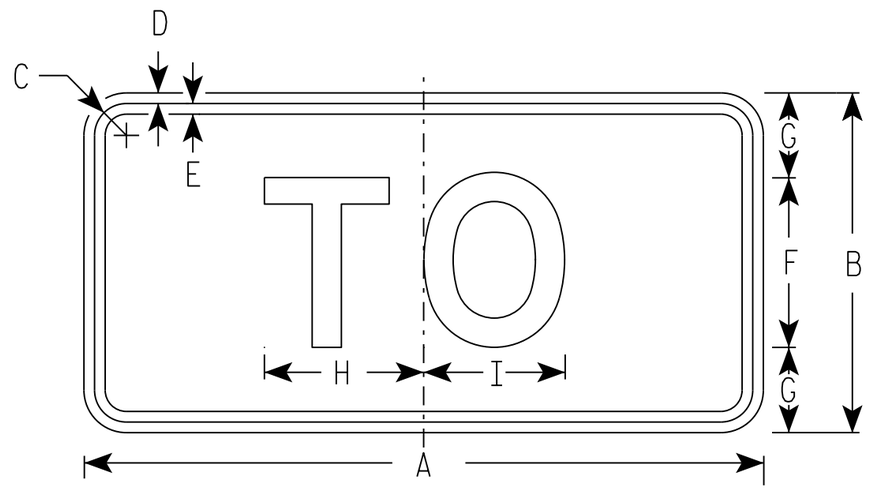

M4-5
MM4-5
MP4-5

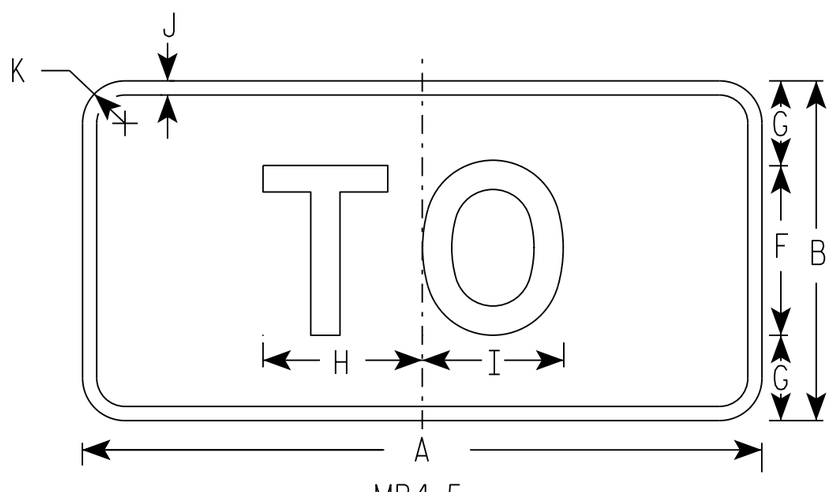

MB4-5
MK4-5
MN4-5

NOTES

1. Sign is Type II - Type H
2. Color:
   Background - See note 5
   Message - See note 5
3. Message Series - E
4. Corners may be square or rounded when base material is plywood but borders shall be rounded as shown. When base material is metal, the corners and borders shall be rounded.
5. M4-5 Background - White
   Message - Black
   MB4-5 Background - Blue
   Message - White
   MK4-5 Background - Green
   Message - White
   MM4-5 Background - White
   Message - Green
   MN4-5 Background - Brown
   Message - White
   MP4-5 Background - White
   Message - Blue

SIZE	A	B	C	D	E	F	G	H	I	J	K	L	M	N	O	P	Q	R	S	T	U	V	W	X	Y	Z	Area sq. ft.
1																											
2	24	12	1 1/8	3/8	3/8	6	3	5 3/8	5 1/4	1/2	1 1/2																2.00
3	36	18	1 3/8	3/8	1/2	9	4 1/2	8 1/4	8 3/8	1/2	1 1/2																4.5
4	36	18	1 3/8	3/8	1/2	9	4 1/2	8 1/4	8 3/8	1/2	1 1/2																4.5
5	36	18	1 3/8	3/8	1/2	9	4 1/2	8 1/4	8 3/8	1/2	1 1/2																4.5

STANDARD SIGN
M4-5

WISCONSIN DEPT OF TRANSPORTATION

APPROVED Matthew R Rauch
for State Traffic Engineer

DATE 10/15/15 PLATE M4-5.8

PROJECT NO: | HWY: | COUNTY: | SHEET NO: E

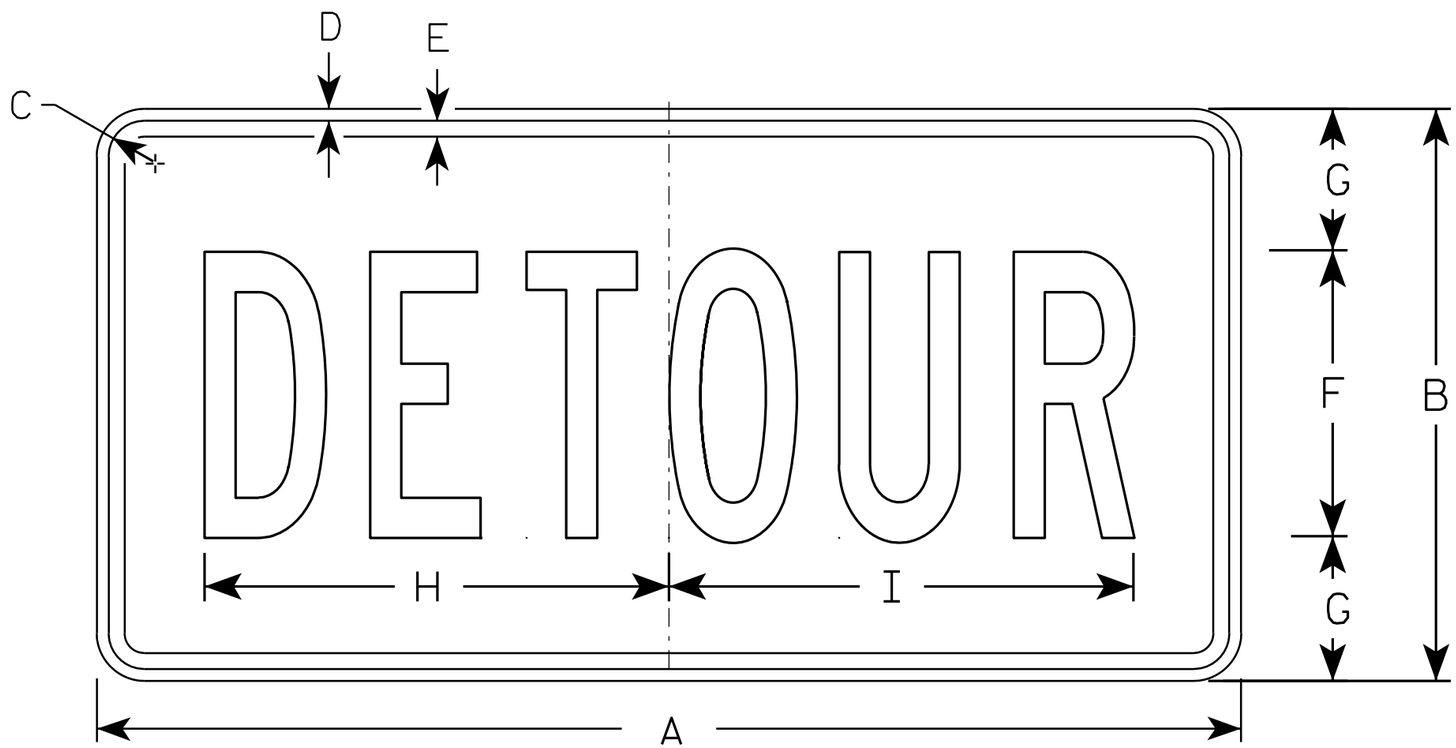

M4-8

NOTES

1. Sign is Type II - Type F Reflective - reference WIS DOT Standard Specification for HIGHWAY and STRUCTURE CONSTRUCTION latest edition.
2. Color:
   Background - Orange
   Message - Black
3. Message Series - B
4. Corners may be square or rounded when base material is plywood but borders shall be rounded as shown. When base material is metal, the corners and borders shall be rounded.

SIZE	A	B	C	D	E	F	G	H	I	J	K	L	M	N	O	P	Q	R	S	T	U	V	W	X	Y	Z	Area sq. ft.
1																											
2	24	12	1 1/8	3/8	3/8	6	3	10	10 1/4																		2.0
3	36	18	1 1/8	3/8	1/2	9	4 1/2	14 5/8	14 1/2																		4.5
4																											
5																											

STANDARD SIGN
M4-8

WISCONSIN DEPT OF TRANSPORTATION

APPROVED Matthew R Rauch
for State Traffic Engineer

DATE 11/10/10 PLATE NO. M4-8.2

PROJECT NO: | HWY: | COUNTY: | SHEET NO: 187 | E

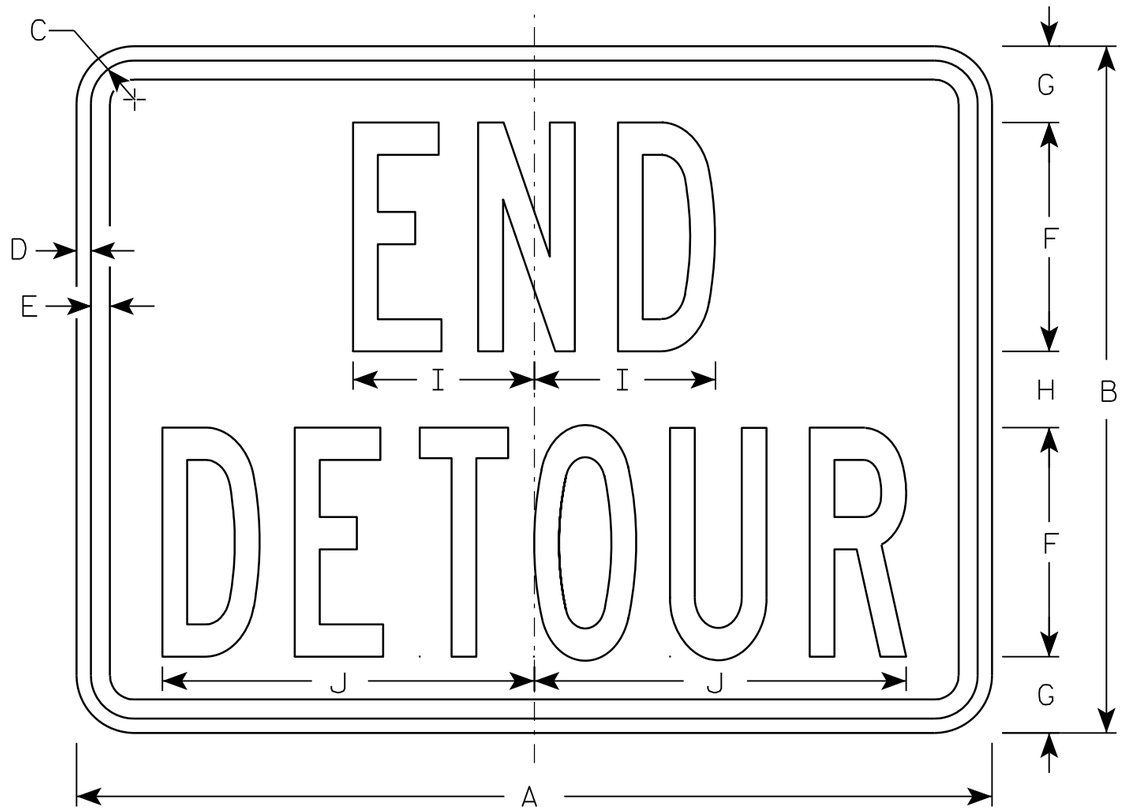

M4-8A

NOTES

1. Sign is Type II - Type F Reflective - reference WIS DOT Standard Specification for HIGHWAY and STRUCTURE CONSTRUCTION latest edition.
2. Color:
   Background - Orange
   Message - Black
3. Message Series - B
4. Corners may be square or rounded when base material is plywood but borders shall be rounded as shown. When base material is metal, the corners and borders shall be rounded.

SIZE	A	B	C	D	E	F	G	H	I	J	K	L	M	N	O	P	Q	R	S	T	U	V	W	X	Y	Z	Area sq. ft.
1																											
2	24	18	1 1/8	3/8	1/2	6	2	2	4 3/4	9 3/4																	3.0
3	30	24	1 1/8	3/8	1/2	8	2 1/2	3	6 3/4	13																	5.0
4																											
5																											

STANDARD SIGN
M4-8A

WISCONSIN DEPT OF TRANSPORTATION

APPROVED Matthew R Rauch
for State Traffic Engineer

DATE 3/9/11 PLATE NO. M4-8A.2

PROJECT NO: | HWY: | COUNTY: | SHEET NO: 188 | E

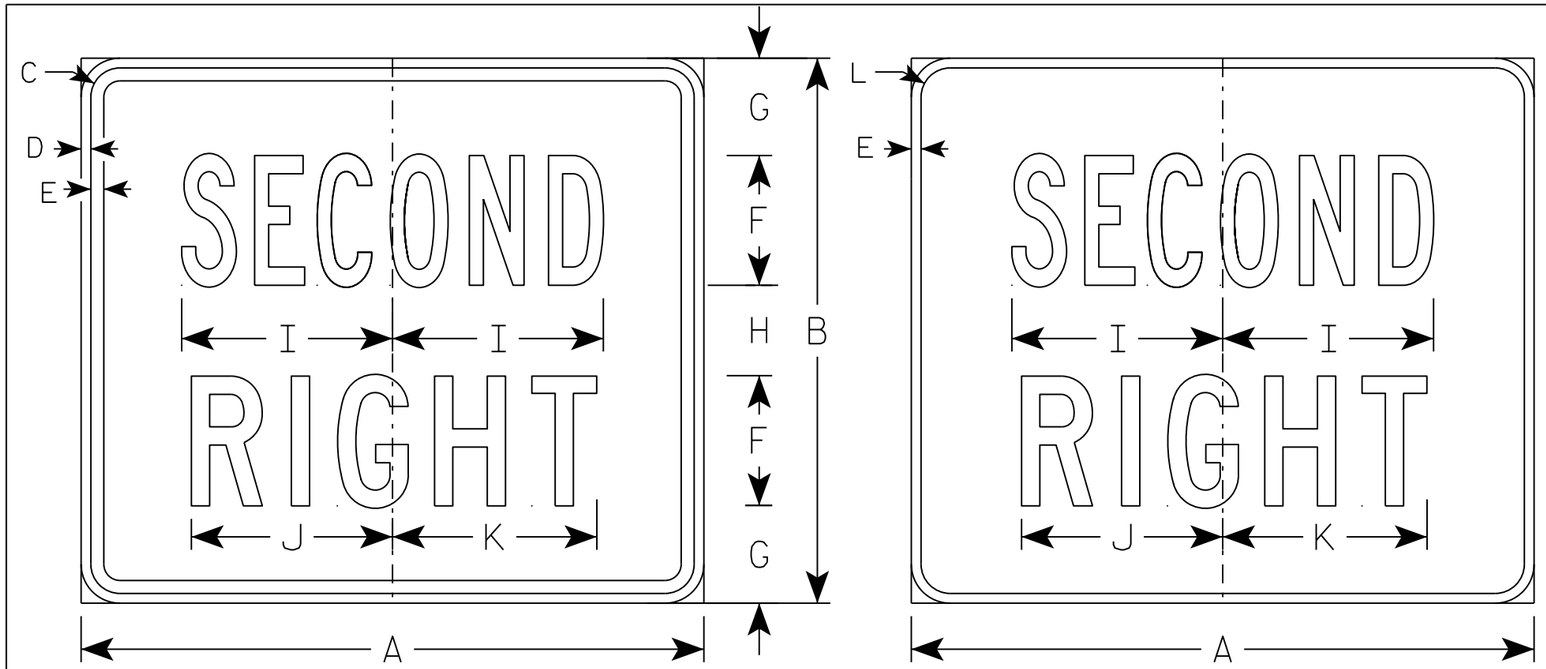

M4-22R
MM4-22R
M04-22R
MP4-22R

MB4-22R
MK4-22R
MN4-22R
MR4-22R

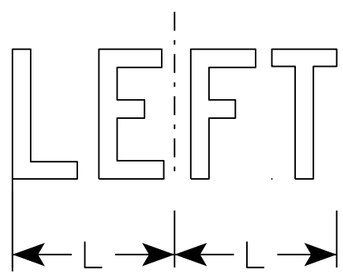

M4-22L
MB4-22L
MK4-22L
MM4-22L
MN4-22L
M04-22L
MP4-22L
MR4-22L

NOTES

1. Sign is Type II - Type H except as Shown
2. Color:
   Background - See note 5
   Message - See note 5
3. Message Series - C
4. Corners may be square or rounded when base material is plywood but borders shall be rounded as shown. When base material is metal, the corners and borders shall be rounded.
5. M4-22 Background - White
   Message - Black
   MB4-22 Background - Blue
   Message - White
   MK4-22 Background - Green
   Message - White
   MM4-22 Background - White
   Message - Green
   MN4-22 Background - Brown
   Message - White
   M04-22 Background - Orange - Type F Reflective
   Message - Black
   MP4-22 Background - White
   Message - Blue
   MR4-22 Background - Brown
   Message - Yellow

SIZE	A	B	C	D	E	F	G	H	I	J	K	L	M	N	O	P	Q	R	S	T	U	V	W	X	Y	Z	Area sq. ft.
1																											
2	24	21	1 1/8	3/8	1/2	5	3 3/4	3 1/2	8 1/8	7 3/4	7 7/8	1 1/2															3.5
3	36	30	1 5/8	5/8	3/4	8	4 3/4	4 1/2	13 1/8	12 5/8	12 1/2	1 7/8															7.5
4																											
5																											

STANDARD SIGN
M4-22

WISCONSIN DEPT OF TRANSPORTATION

APPROVED Matthew R Rauch
For State Traffic Engineer

DATE 10/15/15 PLATE NO. M4-22.4

PROJECT NO: | HWY: | COUNTY: | SHEET NO: | E

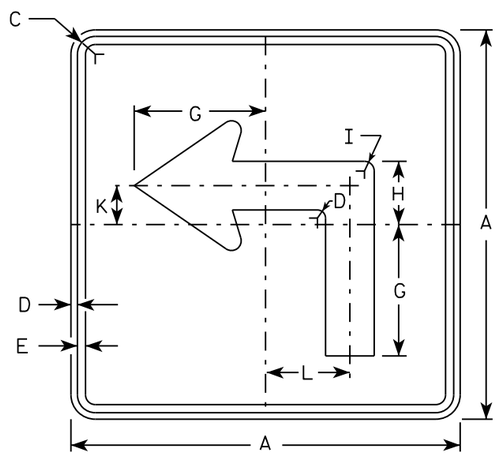

M5-1L
MM5-1L
MO5-1L
MP5-1L

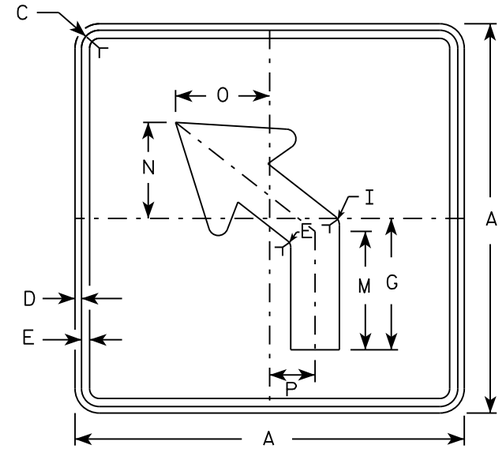

M5-2L
MM5-2L
MO5-2L
MP5-2L

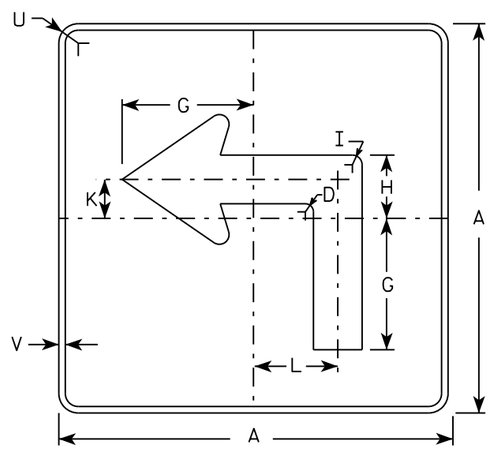

MB5-1L
MK5-1L
MN5-1L
MR5-1L

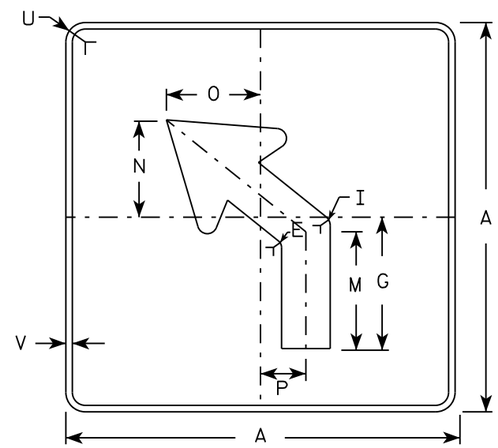

MB5-2L
MK5-2L
MN5-2L
MR5-2L

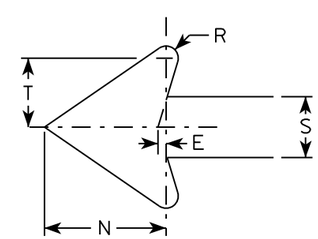

NOTES

1. Signs are Type II - Type H reflective except as shown
2. Color:
   Background - See note 4
   Message - See note 4
3. Corners may be square or rounded when base material is plywood but borders shall be rounded as shown. When base material is metal, the corners and borders shall be rounded.
4. M5-1 and M5-2 Background - White
   Message - Black
   MB5-1 and MB5-2 Background - Blue
   Message - White
   MK5-1 and MK5-2 Background - Green
   Message - White
   MM5-1 and MM5-2 Background - White
   Message - Green
   MN5-1 and MN5-2 Background - Brown
   Message - White
   MO5-1 and MO5-2 Background - Orange - Type F Reflective
   Message - Black
   MP5-1 and MP5-2 Background - White - Type H Reflective
   Message - Blue
   MR5-1 and MR5-2 Background - Brown
   Message - Yellow
5. M5-1R same as M5-1L except arrow points right.
6. M5-2R same as M5-2L except arrow tilts right.

SIZE	A	B	C	D	E	F	G	H	I	J	K	L	M	N	O	P	Q	R	S	T	U	V	W	X	Y	Z	Area sq. ft.
1																											
2	21		1 1/8	3/8	3/8		7	3 3/8	5/8		2 1/8	4 1/2	6 3/8	5 1/4	5	2 1/2		1/2	2 5/8	3	1 1/2	1/2					3.06
3	30		1 3/8	1/2	5/8		10 1/8	4 7/8	7/8		3	6 1/2	9 1/8	7 1/2	7 1/4	3 1/2		3/4	3 3/4	4 1/4	1 7/8	1/2					6.25
4	30		1 3/8	1/2	5/8		10 1/8	4 7/8	7/8		3	6 1/2	9 1/8	7 1/2	7 1/4	3 1/2		3/4	3 3/4	4 1/4	1 7/8	1/2					6.25
5	30		1 3/8	1/2	5/8		10 1/8	4 7/8	7/8		3	6 1/2	9 1/8	7 1/2	7 1/4	3 1/2		3/4	3 3/4	4 1/4	1 7/8	1/2					6.25

STANDARD SIGN
M5-1 & M5-2

WISCONSIN DEPT OF TRANSPORTATION

APPROVED Matthew R Rauch
for State Traffic Engineer

DATE 10/15/15 PLATE NO. M5-1.13

PROJECT NO:	HWY:	COUNTY:		SHEET NO:	E

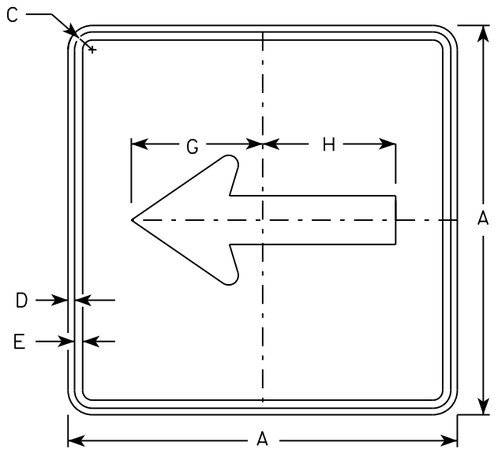

M6-1
MM6-1
MO6-1
MP6-1

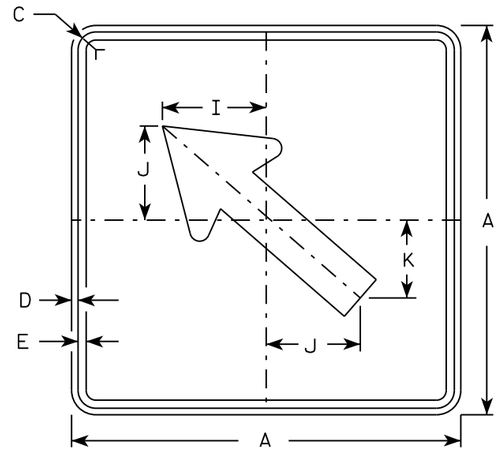

M6-2
MM6-2
MO6-2
MP6-2

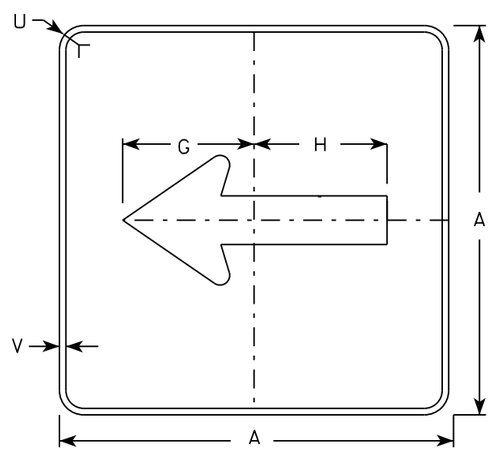

MB6-1
MK6-1
MN6-1
MR6-1

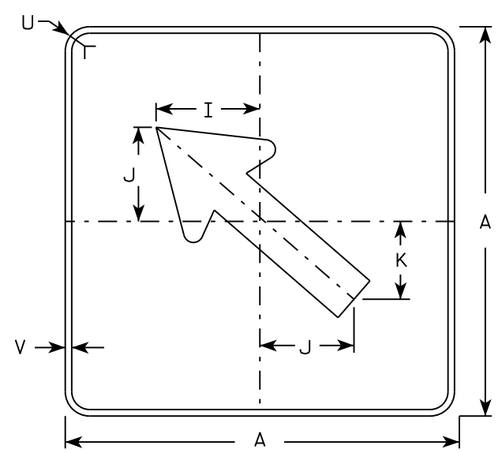

MB6-2
MK6-2
MN6-2
MR6-2

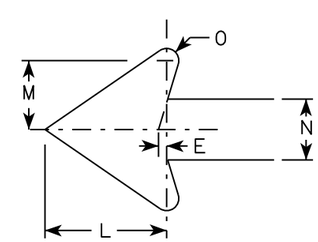

NOTES

1. Signs are Type II - Type H except as Shown
2. Color:
   Background - See note 4
   Message - See note 4
3. Corners may be square or rounded when base material is plywood but borders shall be rounded as shown. When base material is metal, the corners and borders shall be rounded.
4. M6-1 and M6-2 Background - White
   Message - Black
   MB6-1 and MB6-2 Background - Blue
   Message - White
   MK6-1 and MK6-2 Background - Green
   Message - White
   MM6-1 and MM6-2 Background - White
   Message - Green
   MN6-1 and MN6-2 Background - Brown
   Message - White
   MO6-1 and MO6-2 Background - Orange - Type F Reflective
   Message - Black
   MP6-1 and MP6-2 Background - White
   Message - Blue
   MR6-1 and MR6-2 Background - Brown
   Message - Yellow

SIZE	A	B	C	D	E	F	G	H	I	J	K	L	M	N	O	P	Q	R	S	T	U	V	W	X	Y	Z	Area sq. ft.
1																											
2	21		1 1/8	3/8	3/8		7 1/2	7 1/8	5 5/8	5	4 1/4	5 1/4	3	2 5/8	1/2						1 1/2	1/2					3.06
3	30		1 3/8	1/2	5/8		10 3/4	10 1/4	8	7 1/4	6	7 1/2	4 1/4	3 3/4	3/4						1 7/8	1/2					6.25
4	30		1 3/8	1/2	5/8		10 3/4	10 1/4	8	7 1/4	6	7 1/2	4 1/4	3 3/4	3/4						1 7/8	1/2					6.25
5	30		1 3/8	1/2	5/8		10 3/4	10 1/4	8	7 1/4	6	7 1/2	4 1/4	3 3/4	3/4						1 7/8	1/2					6.25

STANDARD SIGN
M6-1 & M6-2
SERIES

WISCONSIN DEPT OF TRANSPORTATION

APPROVED Matthew R Rauch
for State Traffic Engineer

DATE 10/15/15 PLATE 191 M6-1.15

PROJECT NO: | HWY: | COUNTY: | SHEET NO: | E

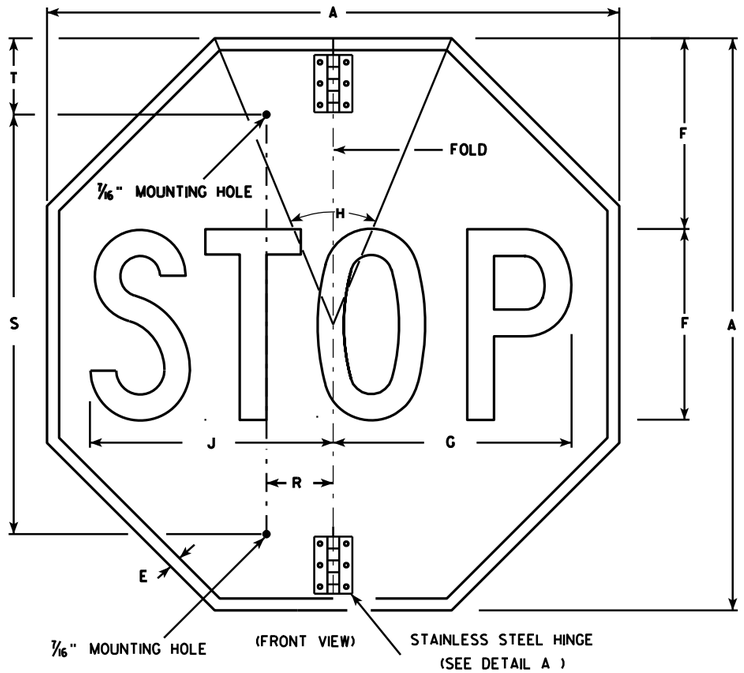

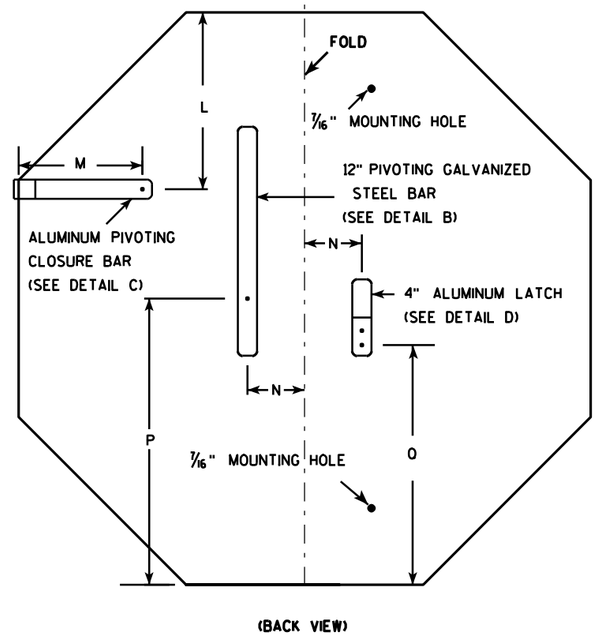

NOTES

1. Sign is Type II - Type H Reflective - reference WIS DOT Standard Specification for HIGHWAY and STRUCTURE CONSTRUCTION latest edition.
2. Color:
   Background - Red
   Message - White
3. Message Series - C
4. All hardware used on the folding STOP sign installation shall conform to 637.2.4 of the WIS DOT Standard Specification.

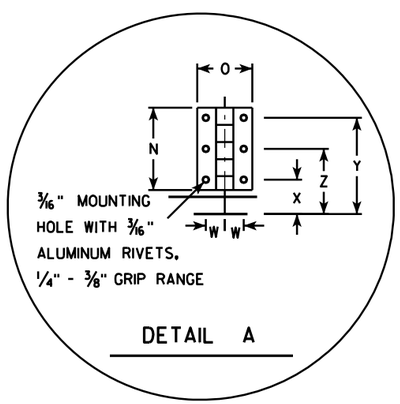

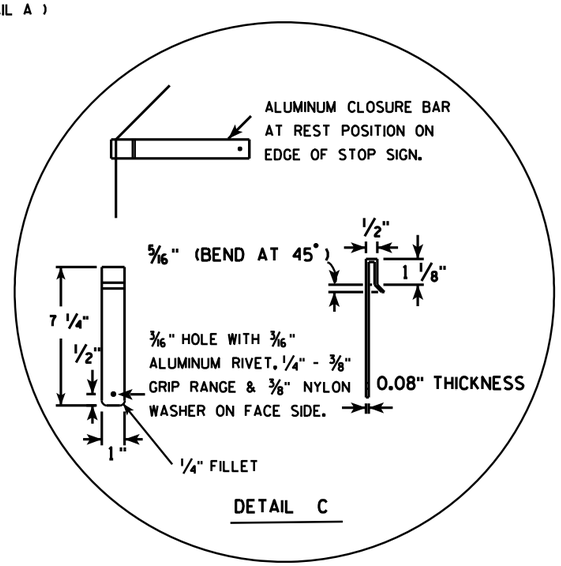

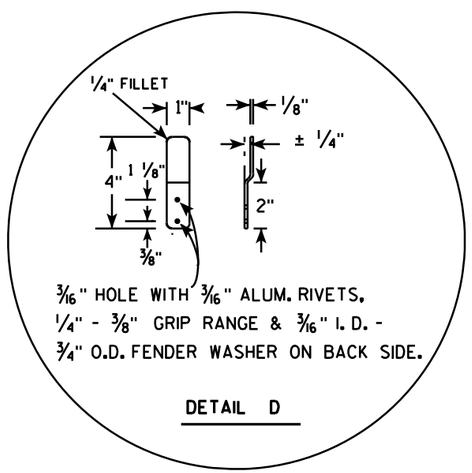

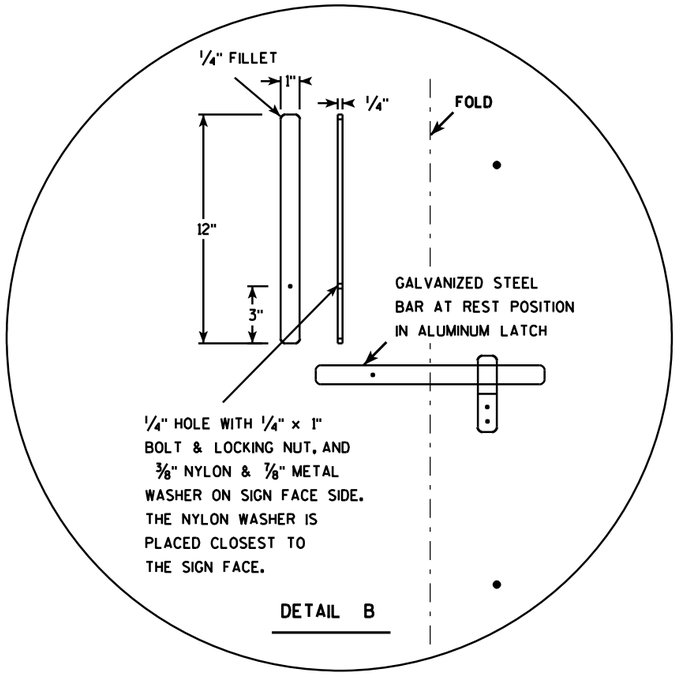

SIZE	A	B	C	D	E	F	G	H	I	J	K	L	M	N	O	P	Q	R	S	T	U	V	W	X	Y	Z	Area sq. ft.
1																											
2S	30				5/8	10	12 1/2	45		12 3/4		9 1/4	6 1/2	3	2	15	12 3/8	2 1/2	22	5			11/16	1 1/4	3 1/2	2 3/8	5.18
2M	36				3/4	12	15	45		15 3/8		11	6 1/2	3	2	18	15 3/8	2 1/2	26	5			11/16	1 1/4	3 1/2	2 3/8	7.46
3	36				3/4	12	15	45		15 3/8		11	6 1/2	3	2	18	15 3/8	2 1/2	26	5			11/16	1 1/4	3 1/2	2 3/8	7.46
4																											
5																											

STANDARD SIGN
R1-1F

WISCONSIN DEPT OF TRANSPORTATION

APPROVED Matthew R Rauch
for State Traffic Engineer

DATE 12/03/10 PLATE NO. R1-1F.3

PROJECT NO:	HWY:	COUNTY:		SHEET NO: 192	E

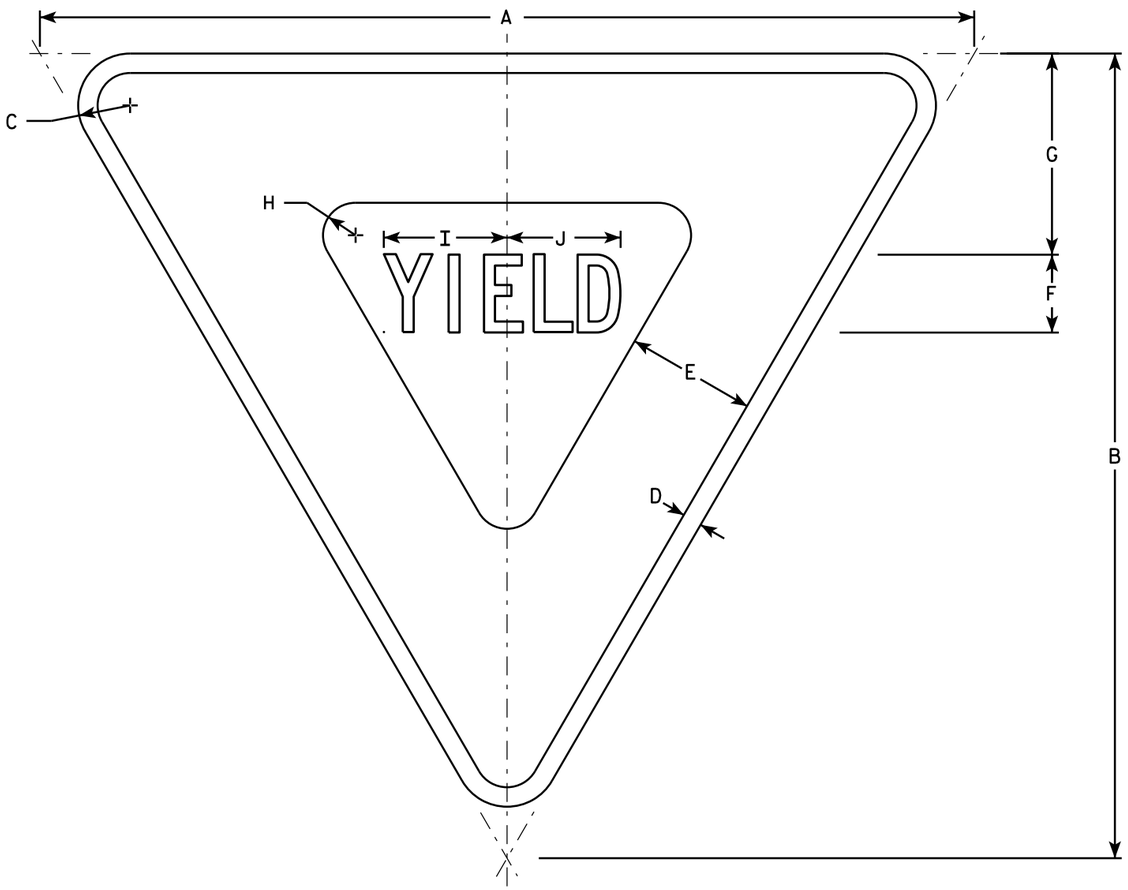

R1-2

NOTES

1. Sign is Type II - Type H Reflective - reference WIS DOT Standard Specification for HIGHWAY and STRUCTURE CONSTRUCTION latest edition.
2. Color:
   Background - White
   Message - See note 5
3. Message Series - C
4. Corners may be square or rounded when base material is plywood but borders shall be rounded as shown. When base material is metal, the corners and borders shall be rounded.
5. The border strip and word message are reflectorized red.

SIZE	A	B	C	D	E	F	G	H	I	J	K	L	M	N	O	P	Q	R	S	T	U	V	W	X	Y	Z	Area sq. ft.
1	30	26	1 1/2	5/8	4	2 1/2	6 3/8	7/8	4	3 5/8																	2.71
2S	36	31	2	3/4	5	3	7 3/4	1 1/4	4 3/4	4 3/8																	3.88
2M	48	42	3	1	6	4	9 3/4	2	6 1/4	5 7/8																	7.00
3	48	42	3	1	6	4	9 3/4	2	6 1/4	5 7/8																	7.00
4	48	42	3	1	6	4	9 3/4	2	6 1/4	5 7/8																	7.00
5	60	52	3	1 1/2	8	5	13	2 1/2	7 7/8	7 1/4																	10.83
6																											
7	18	15 1/2	1	3/8	2 1/2	1 1/2	3 7/8	5/8	2 3/8	2 1/4																	0.97

STANDARD SIGN
R1-2

WISCONSIN DEPT OF TRANSPORTATION

APPROVED Matthew R Rauch
for State Traffic Engineer

DATE 10/13/14 PLATE R1-2.12

PROJECT NO: | HWY: | COUNTY: | SHEET NO: | E

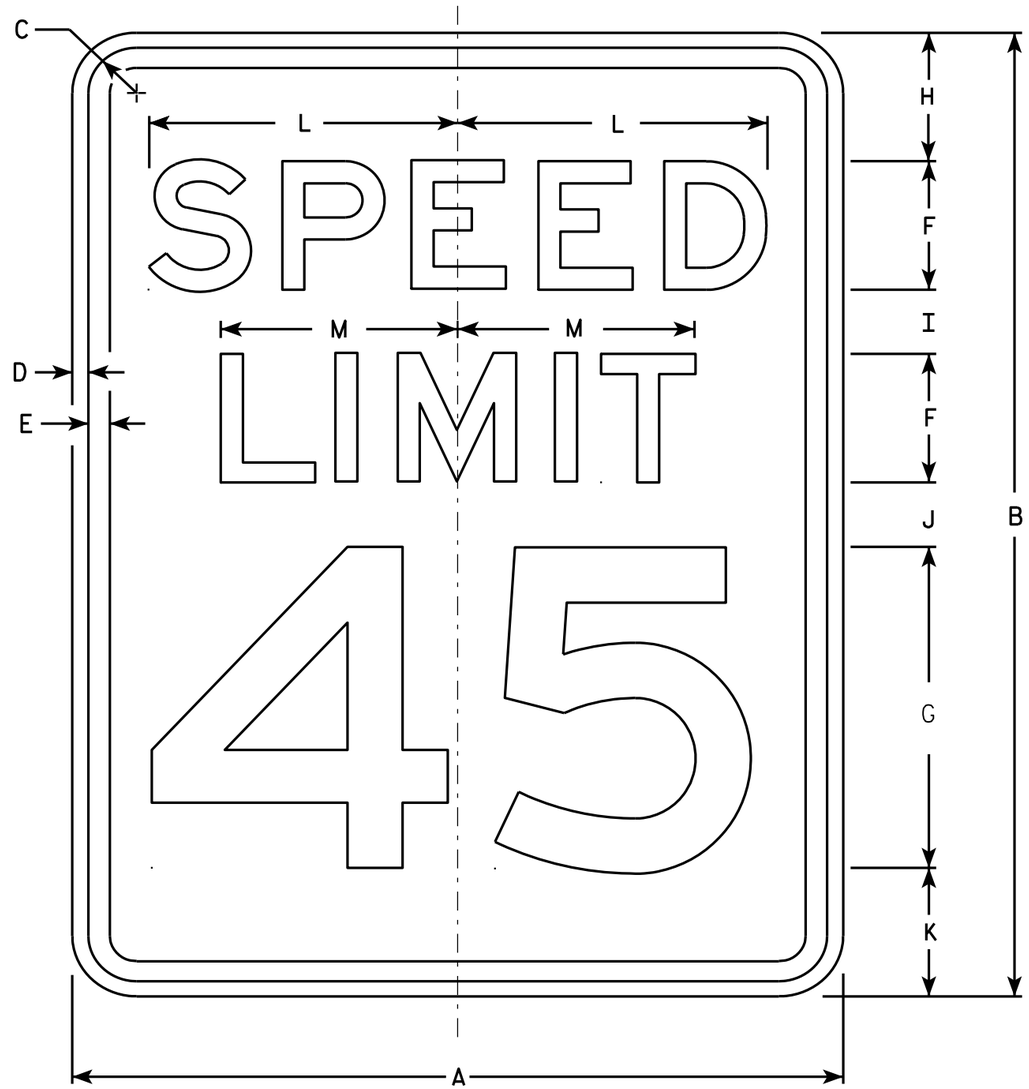

R2-1

NOTES

1. Sign is Type II - Type H Reflective - reference WIS DOT Standard Specification for HIGHWAY and STRUCTURE CONSTRUCTION latest edition.
2. Color:
   Background - White
   Message - Black
3. Message Series - E
4. Corners may be square or rounded when base material is plywood but borders shall be rounded as shown. When base material is metal, the corners and borders shall be rounded.
5. Substitute appropriate numerals and optically adjust spacing to achieve proper balance.

SIZE	A	B	C	D	E	F	G	H	I	J	K	L	M	N	O	P	Q	R	S	T	U	V	W	X	Y	Z	Area sq. ft.
1	18	24	1 1/8	3/8	1/2	3	8	3	2	2	3	7 1/4	5 1/2														3.0
2S	24	30	1 1/8	3/8	1/2	4	10	3	2 1/4	3 3/8	3 3/8	9 5/8	7 3/8														5.0
2M	30	36	1 3/8	1/2	5/8	5	12	5	2 1/2	2 1/2	4	12	9 1/4														7.5
3	36	48	1 3/8	1/2	5/8	6	14	6	5	5	6	14 3/8	11														12.0
4	36	48	1 3/8	1/2	5/8	6	14	6	5	5	6	14 3/8	11														12.0
5	48	60	2 1/4	3/4	1	8	20	6	4 1/2	6 3/4	6 3/4	19 1/4	14 5/8														20.0

STANDARD SIGN
R2-1

WISCONSIN DEPT OF TRANSPORTATION

APPROVED Matthew R Rauch
for State Traffic Engineer

DATE 5/26/10 PLATE NO. R2-1.13

PROJECT NO: | HWY: | COUNTY: | SHEET NO: 194 | E

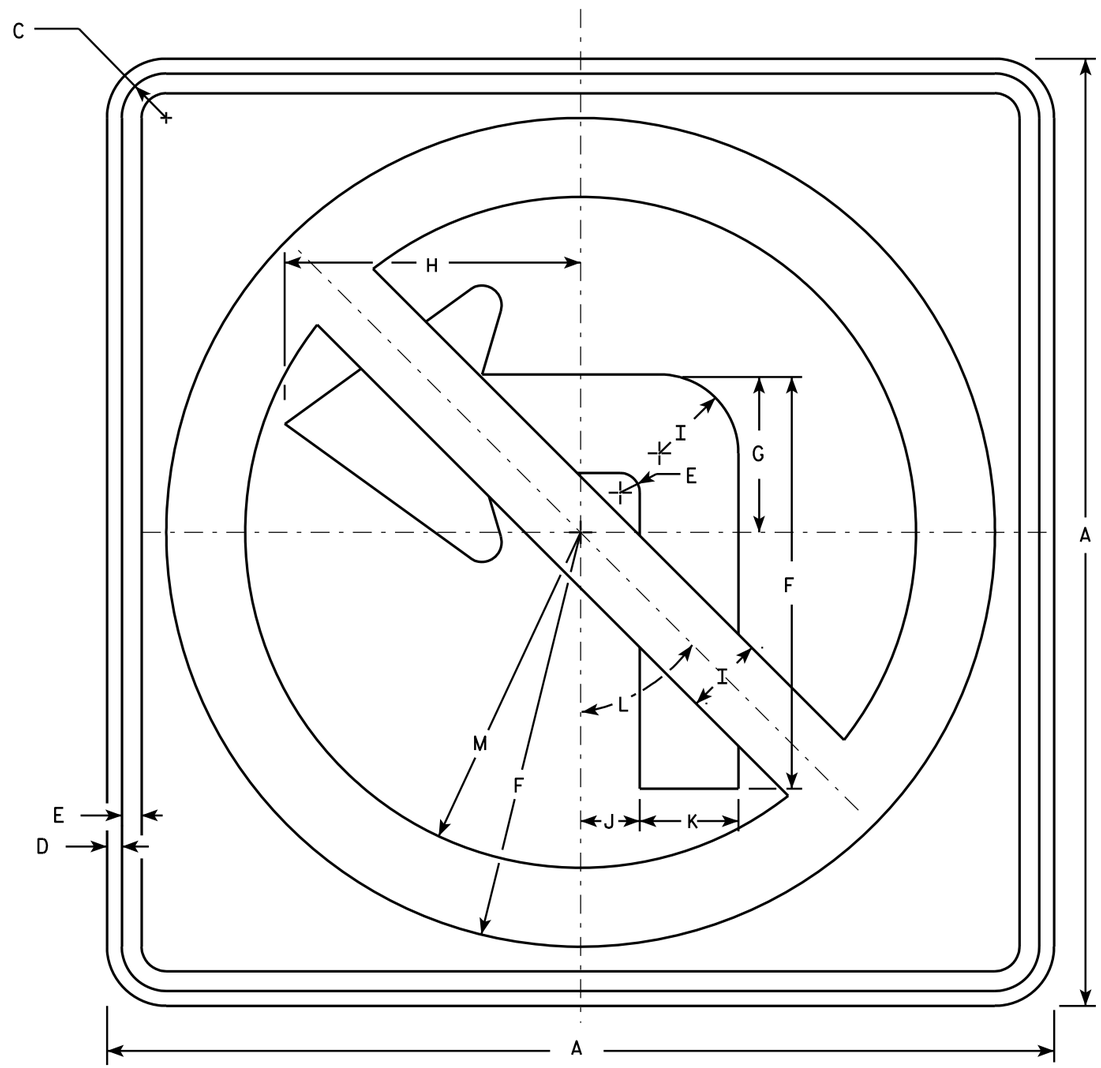

R3-2

NOTES

1. Sign is Type II - Type H Reflective - reference WIS DOT Standard Specification for HIGHWAY and STRUCTURE CONSTRUCTION latest edition.
2. Color:
   Background - White
   Message - See note 4
3. Corners may be square or rounded when base material is plywood but borders shall be rounded as shown. When base material is metal, the corners and borders shall be rounded.
4. Border & Arrow are non reflective black, the circle with diagonal bar is reflective red.

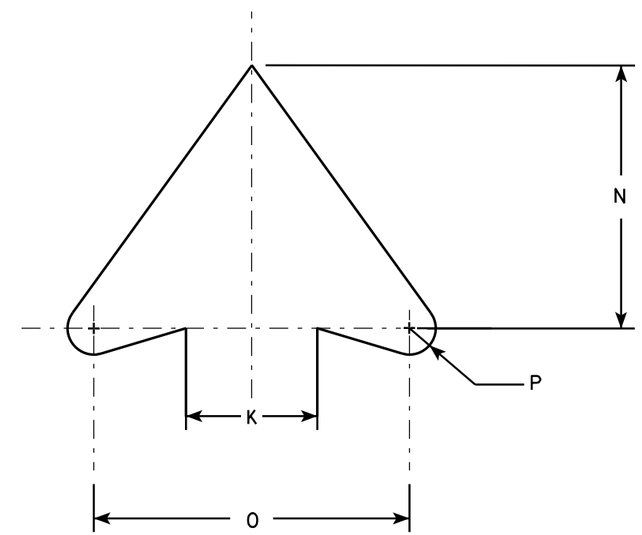

ARROW DETAIL

SIZE	A	B	C	D	E	F	G	H	I	J	K	L	M	N	O	P	Q	R	S	T	U	V	W	X	Y	Z	Area sq. ft.
1	24		1 1/8	3/8	1/2	10 1/2	4	7 1/2	2	1 1/2	2 1/2	45°	8 1/2	5	6	1/2											4.0
2S	24		1 1/8	3/8	1/2	10 1/2	4	7 1/2	2	1 1/2	2 1/2	45°	8 1/2	5	6	1/2											4.0
2M	36		1 5/8	5/8	3/4	15 3/4	6	11 1/4	3	2 1/4	3 3/4	45°	12 3/4	7 1/2	9	3/4											9.0
3	36		1 5/8	5/8	3/4	15 3/4	6	11 1/4	3	2 1/4	3 3/4	45°	12 3/4	7 1/2	9	3/4											9.0
4	36		1 5/8	5/8	3/4	15 3/4	6	11 1/4	3	2 1/4	3 3/4	45°	12 3/4	7 1/2	9	3/4											9.0
5	48		2 1/4	3/4	1	21	8	15	4	3	5	45°	17	10	12	1											16.0

STANDARD SIGN
R3-2

WISCONSIN DEPT OF TRANSPORTATION

APPROVED Matthew R Rauch
for State Traffic Engineer

DATE 12/08/10 PLATE NO. R3-2.10

PROJECT NO:	HWY:	COUNTY:		SHEET NO: 195	E

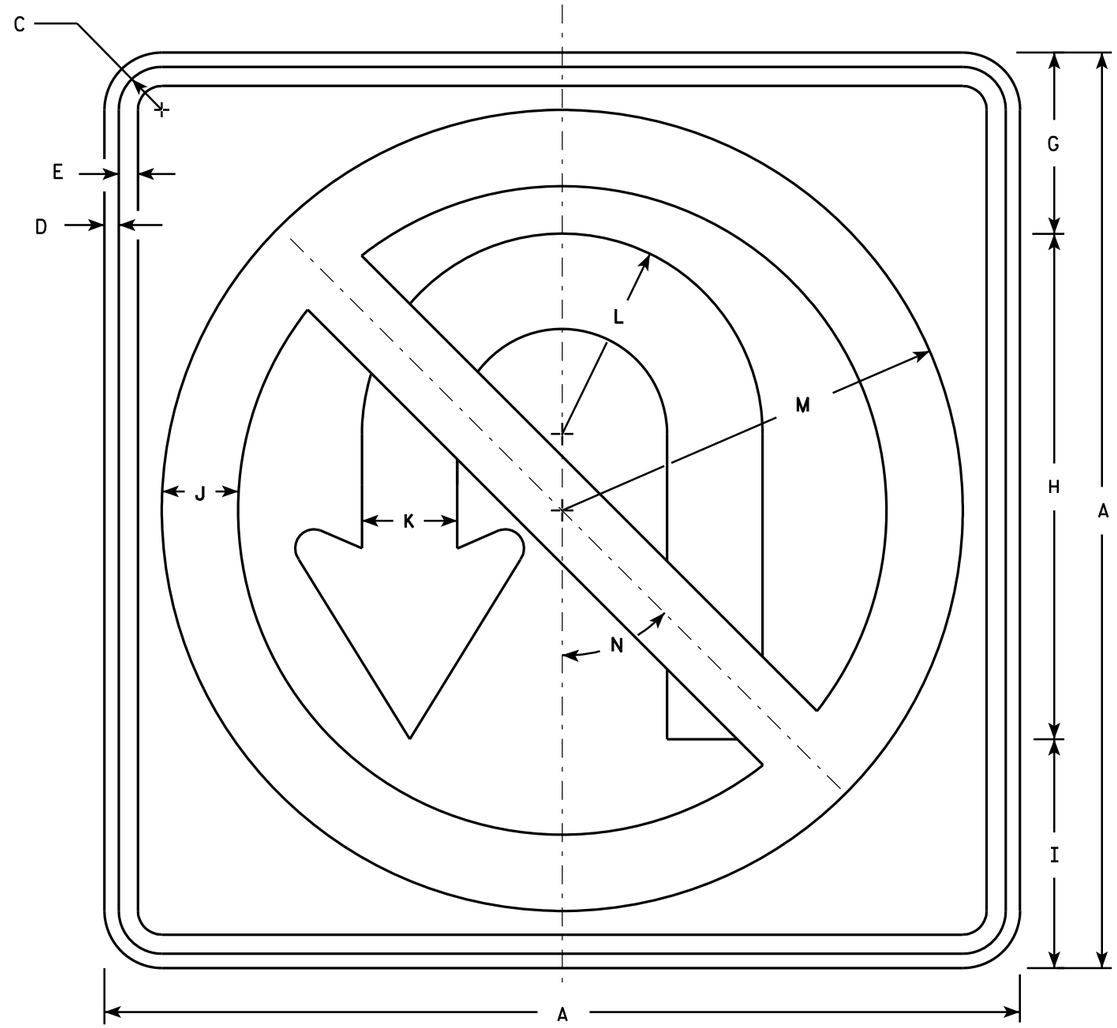

R3-4

NOTES

1. Sign is Type II - Type H Reflective - reference WIS DOT Standard Specification for HIGHWAY and STRUCTURE CONSTRUCTION latest edition.
2. Color:
   Background - White
   Message - See note 4
3. Corners may be square or rounded when base material is plywood but borders shall be rounded as shown. When base material is metal, the corners and borders shall be rounded.
4. Border & Arrow are non reflective black, the circle with diagonal bar is reflective red.

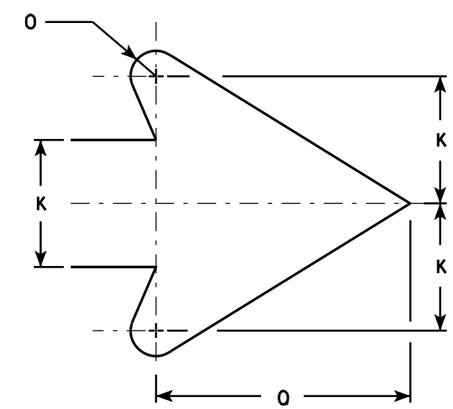

ARROW DETAIL

SIZE	A	B	C	D	E	F	G	H	I	J	K	L	M	N	O	P	Q	R	S	T	U	V	W	X	Y	Z	Area sq. ft.
1																											
2S	24		1 1/8	3/8	1/2		4 3/4	13 1/4	6	2	2 1/2	5 1/4	10 1/2	45°	1/2		5										4.0
2M	36		1 5/8	5/8	3/4		7 1/8	19 7/8	9	3	3 3/4	7 7/8	15 3/4	45°	3/4		7 5/8										9.0
3	36		1 5/8	5/8	3/4		7 1/8	19 7/8	9	3	3 3/4	7 7/8	15 3/4	45°	3/4		7 5/8										9.0
4	36		1 5/8	5/8	3/4		7 1/8	19 7/8	9	3	3 3/4	7 7/8	15 3/4	45°	3/4		7 5/8										9.0
5	36		1 5/8	5/8	3/4		7 1/8	19 7/8	9	3	3 3/4	7 7/8	15 3/4	45°	3/4		7 5/8										9.0

STANDARD SIGN
R3-4

WISCONSIN DEPT OF TRANSPORTATION

APPROVED Matthew R Rauch
for State Traffic Engineer

DATE 12/08/10 PLATE NO. R3-4.11

PROJECT NO: | HWY: | COUNTY: | SHEET NO: 196 | E

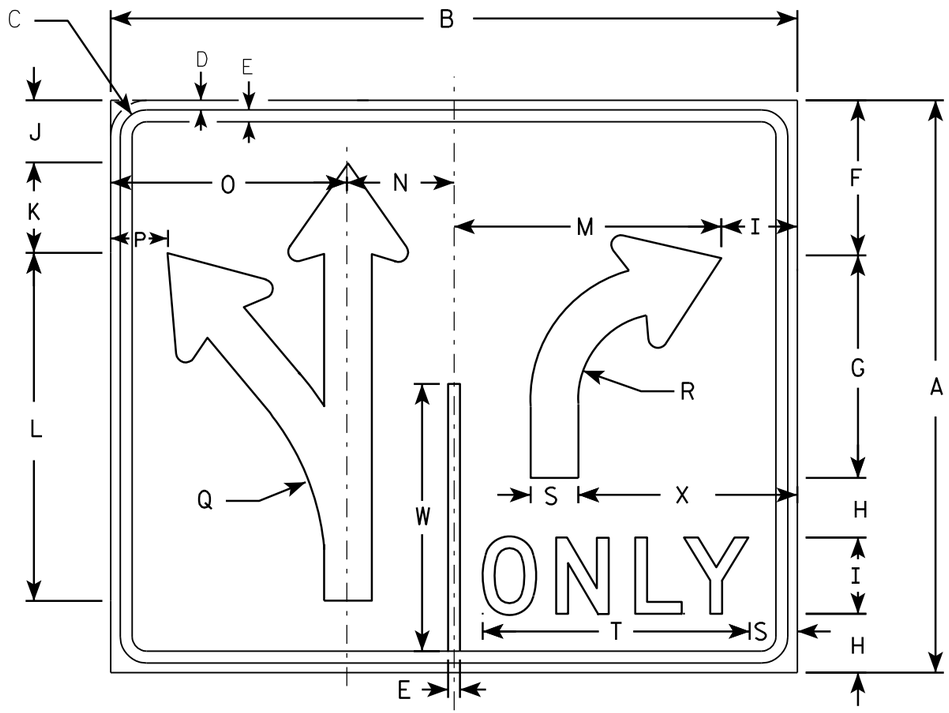

R3-8

NOTES

1. Sign is Type II - Type H Reflective - reference WIS DOT Standard Specification for HIGHWAY and STRUCTURE CONSTRUCTION latest edition.
2. Color:
   Background - WHITE
   Message - BLACK
3. Message Series - D
4. Corners may be square or rounded when base material is plywood but borders shall be rounded as shown. When base material is metal, the corners and borders shall be rounded.

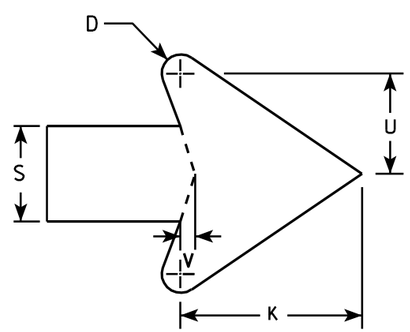

ARROW DETAIL

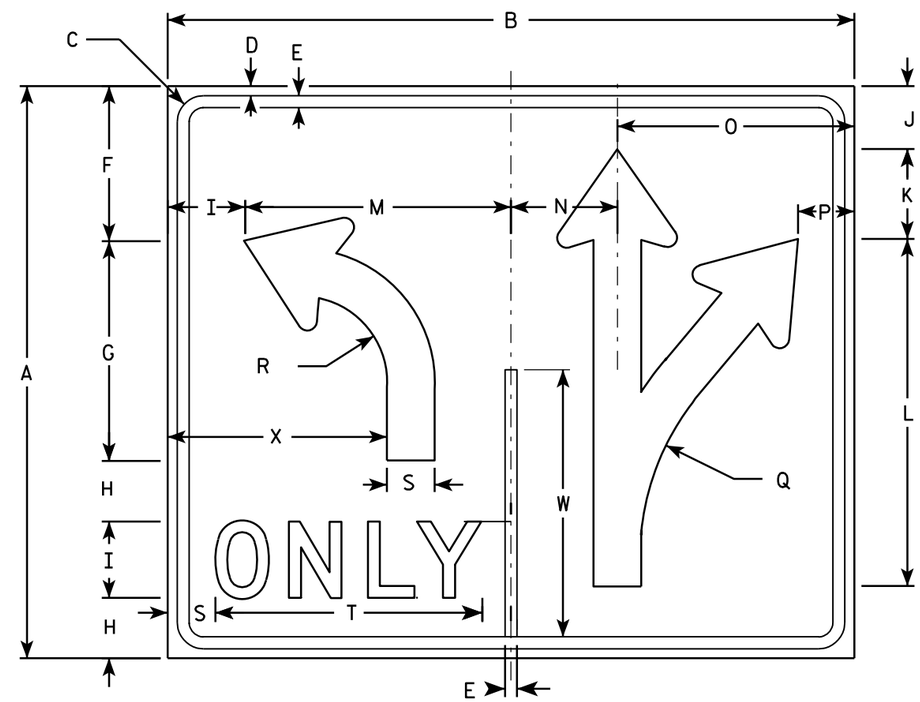

R3-8A

SIZE	A	B	C	D	E	F	G	H	I	J	K	L	M	N	O	P	Q	R	S	T	U	V	W	X	Y	Z	Area sq. ft.
1																											
2S	30	36	1 3/8	1/2	5/8	8 1/8	11 5/8	3 1/8	4	3 1/4	4 3/4	18 1/4	14	5 5/8	12 3/8	3	13 1/4	4 1/2	2 1/2	14	2 5/8	3/8	14	11 1/2			7.5
2M	30	36	1 3/8	1/2	5/8	8 1/8	11 5/8	3 1/8	4	3 1/4	4 3/4	18 1/4	14	5 5/8	12 3/8	3	13 1/4	4 1/2	2 1/2	14	2 5/8	3/8	14	11 1/2			7.5
3																											
4	48	54	2 1/4	3/4	1	13 1/4	18 1/2	5 1/8	6	5 1/4	7 1/8	29 1/8	21	8 3/8	18 5/8	4 3/8	21 7/8	7 1/4	3 3/4	20 5/8	4	5/8	22 3/8	17 1/4			18.0
5	48	54	2 1/4	3/4	1	13 1/4	18 1/2	5 1/8	6	5 1/4	7 1/8	29 1/8	21	8 3/8	18 5/8	4 3/8	21 7/8	7 1/4	3 3/4	20 5/8	4	5/8	22 3/8	17 1/4			18.0

STANDARD SIGN
R3-8 & R3-8A

WISCONSIN DEPT OF TRANSPORTATION

APPROVED Matthew R Rauch
for State Traffic Engineer

DATE 3/18/2011 PLATE NO. R3-8.5

PROJECT NO: | HWY: | COUNTY: | SHEET NO: 197 | E

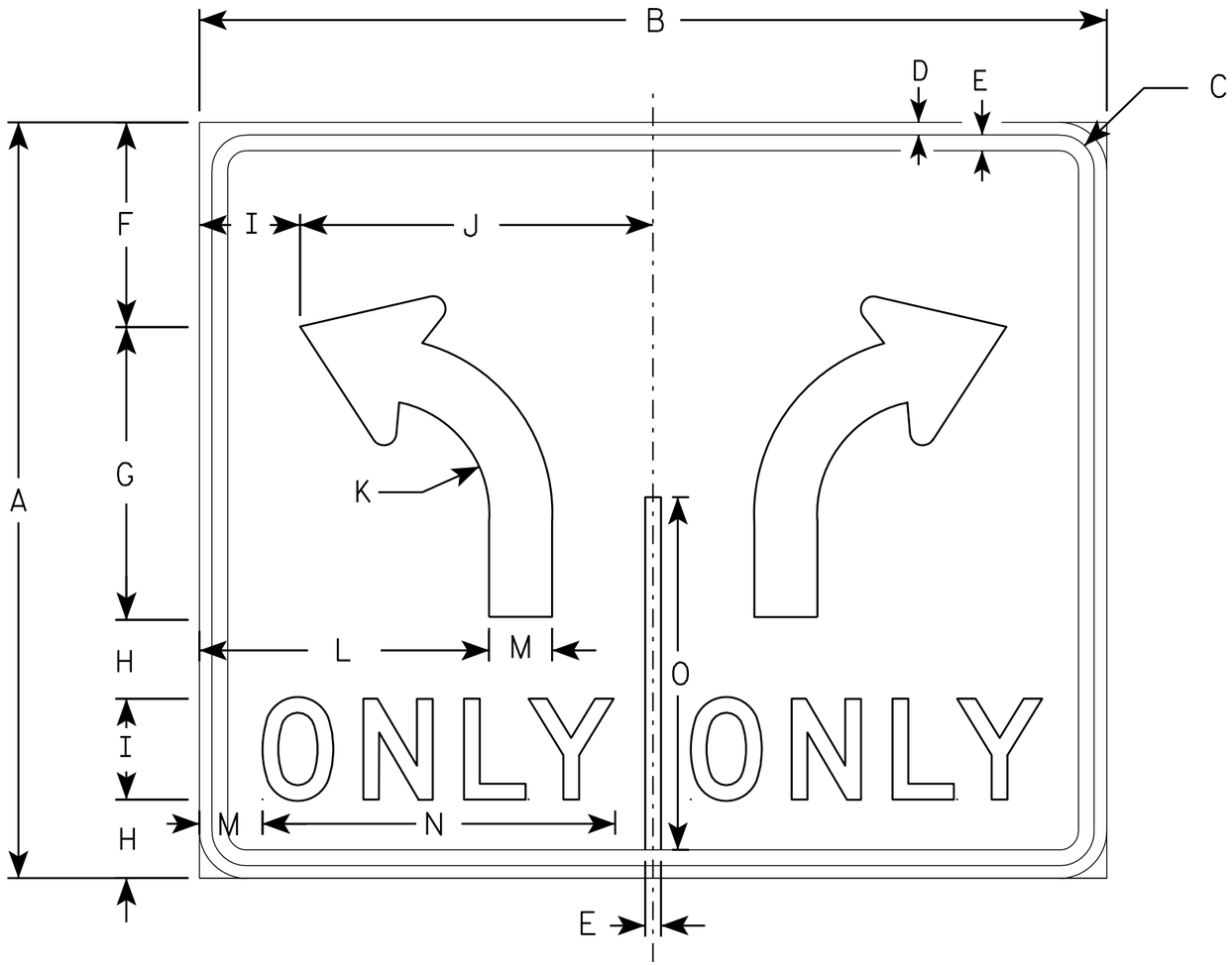

R3-8F

NOTES

1. Sign is Type II - Type H Reflective - reference WIS DOT Standard Specification for HIGHWAY and STRUCTURE CONSTRUCTION latest edition.
2. Color:
   Background - WHITE
   Message - BLACK
3. Message Series - D
4. Corners may be square or rounded when base material is plywood but borders shall be rounded as shown. When base material is metal, the corners and borders shall be rounded.

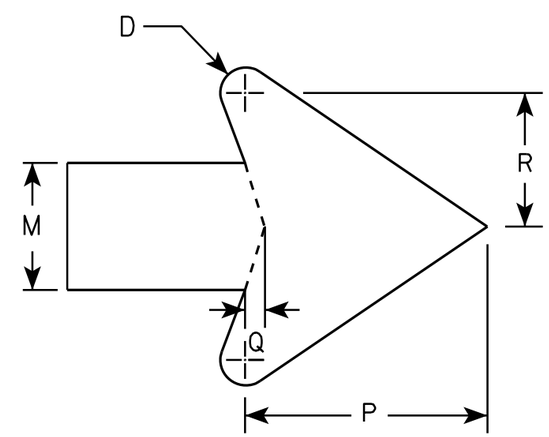

ARROW DETAIL

SIZE	A	B	C	D	E	F	G	H	I	J	K	L	M	N	O	P	Q	R	S	T	U	V	W	X	Y	Z	Area sq. ft.
1																											
2S	30	36	1 3/8	1/2	5/8	8 1/8	11 5/8	3 1/8	4	14	4 1/2	11 1/2	2 1/2	14	14	4 3/4	3/8	2 5/8									7.5
2M	30	36	1 3/8	1/2	5/8	8 1/8	11 5/8	3 1/8	4	14	4 1/2	11 1/2	2 1/2	14	14	4 3/4	3/8	2 5/8									7.5
3																											
4	48	54	2 1/4	3/4	1	13 1/4	18 1/2	5 1/8	6	21	7 1/4	17 1/4	3 3/4	20 5/8	22 3/8	7 1/8	5/8	4									18.0
5	48	54	2 1/4	3/4	1	13 1/4	18 1/2	5 1/8	6	21	7 1/4	17 1/4	3 3/4	20 5/8	22 3/8	7 1/8	5/8	4									18.0

STANDARD SIGN
R3-8F

WISCONSIN DEPT OF TRANSPORTATION

APPROVED Matthew R Rauch
for State Traffic Engineer

DATE 3/18/2011 PLATE NO. R3-8F.2

PROJECT NO: | HWY: | COUNTY: | SHEET NO: 198 | E

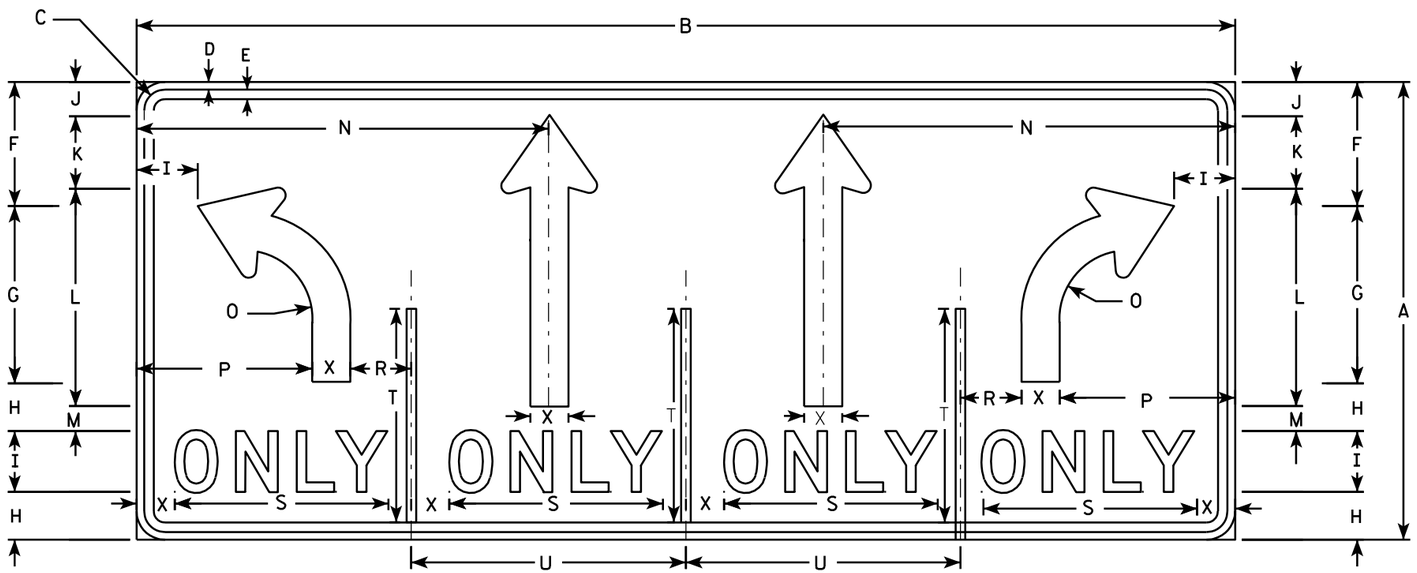

R3-8V

NOTES

1. Sign is Type II - Type H Reflective - reference WIS DOT Standard Specification for HIGHWAY and STRUCTURE CONSTRUCTION latest edition.
2. Color:
   Background - WHITE
   Message - BLACK
3. Message Series - D
4. Corners may be square or rounded when base material is plywood but borders shall be rounded as shown. When base material is metal, the corners and borders shall be rounded.

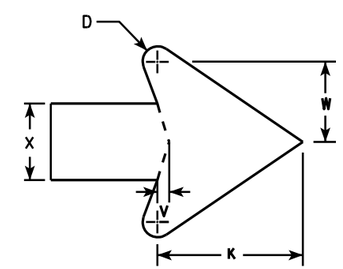

ARROW DETAIL

SIZE	A	B	C	D	E	F	G	H	I	J	K	L	M	N	O	P	Q	R	S	T	U	V	W	X	Y	Z	Area sq. ft.
1																											
2S	30	72	1 3/8	1/2	5/8	8 1/8	11 5/8	3 1/8	4	2 1/4	4 3/4	14 1/4	1 5/8	27	4 1/2	11 1/2		4	14	14	18	3/8	2 5/8	2 1/2			15.0
2M	30	72	1 3/8	1/2	5/8	8 1/8	11 5/8	3 1/8	4	2 1/4	4 3/4	14 1/4	1 5/8	27	4 1/2	11 1/2		4	14	14	18	3/8	2 5/8	2 1/2			15.0
3																											
4	48	108	2 1/4	3/4	1	14 3/8	17 1/4	5 3/8	6	5 3/8	7 1/8	21 1/2	3	40 1/2	7 1/4	17 1/4		6	20 5/8	22 3/8	27	5/8	4	3 3/4			36.0
5	48	108	2 1/4	3/4	1	14 3/8	17 1/4	5 3/8	6	5 3/8	7 1/8	21 1/2	3	40 1/2	7 1/4	17 1/4		6	20 5/8	22 3/8	27	5/8	4	3 3/4			36.0

STANDARD SIGN
R3-8V

WISCONSIN DEPT OF TRANSPORTATION

APPROVED Matthew R Rauch
for State Traffic Engineer

DATE 2/18/11 PLATE NO. R3-8V.3

PROJECT NO:

SHEET NO: 199 E

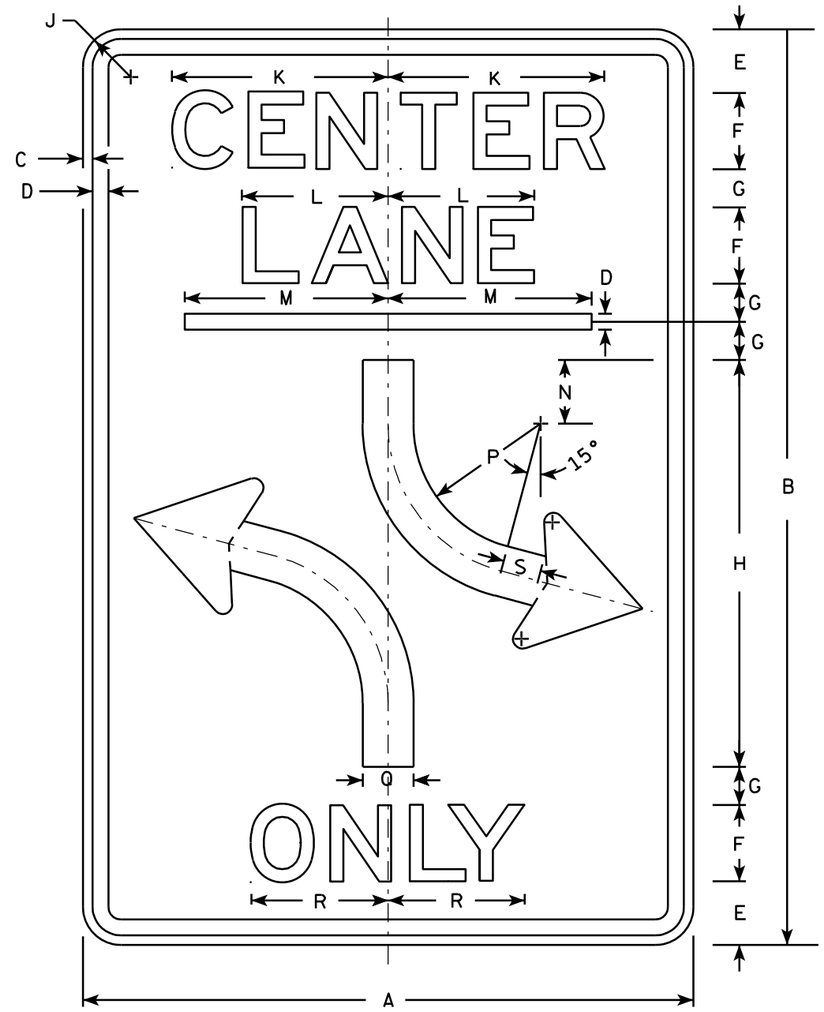

R3-9B

NOTES

1. Sign is Type II - Type H Reflective - reference WIS DOT Standard Specification for HIGHWAY and STRUCTURE CONSTRUCTION latest edition.
2. Color:
   Background - White
   Message - Black
3. Message Series - E
4. Corners may be square or rounded when base material is plywood but borders shall be rounded as shown. When base material is metal, the corners and borders shall be rounded.

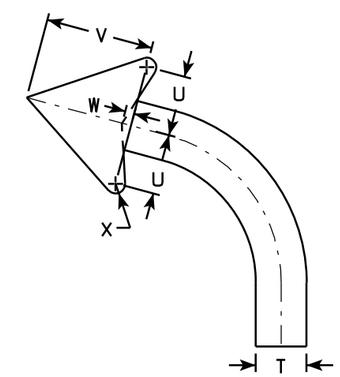

ARROW DETAIL

SIZE	A	B	C	D	E	F	G	H	I	J	K	L	M	N	O	P	Q	R	S	T	U	V	W	X	Y	Z	Area sq. ft.
1																											
2S	24	36	3/8	1/2	2 1/2	3	1 1/2	16		1 1/2	8 1/2	5 3/4	8	2 1/2		6	2	5 1/8	1 1/2		2 3/8	4 3/8	3/8				6.0
2M	24	36	3/8	1/2	2 1/2	3	1 1/2	16		1 1/2	8 1/2	5 3/4	8	2 1/2		6	2	5 1/8	1 1/2		2 3/8	4 3/8	3/8				6.0
3	36	48	5/8	7/8	3 1/2	5	1 1/2	20		2 1/4	14 1/8	9 1/2	12	3		4	3	9 7/8	2		3 1/2	6 1/8	1/2				12.0
4																											
5																											

STANDARD SIGN
R3-9B

WISCONSIN DEPT OF TRANSPORTATION

APPROVED Matthew R Rauch
for State Traffic Engineer

DATE 3/24/2011 PLATE NO. R3-9B.5

PROJECT NO: | HWY: | COUNTY: | SHEET NO: 200 | E

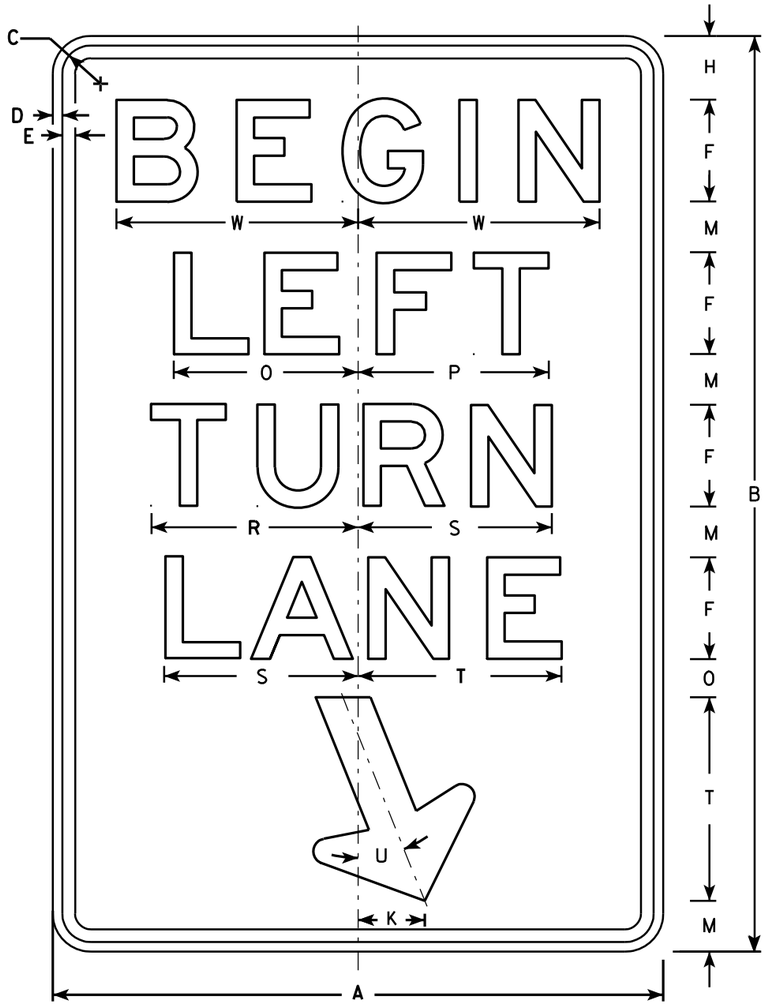

R3-20L

NOTES

1. Sign is Type II - Type H Reflective - reference WIS DOT Standard Specification for HIGHWAY and STRUCTURE CONSTRUCTION latest edition.
2. Color:
   Background - White
   Message - Black
3. Message Series - E
4. Corners may be square or rounded when base material is plywood but borders shall be rounded as shown. When base material is metal, the corners and borders shall be rounded.

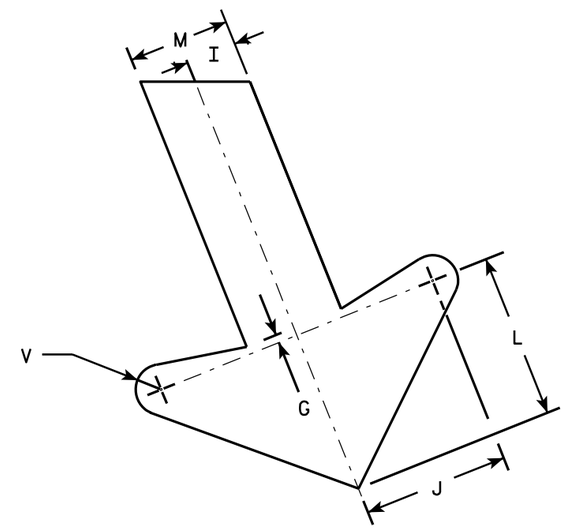

ARROW DETAIL

SIZE	A	B	C	D	E	F	G	H	I	J	K	L	M	N	O	P	Q	R	S	T	U	V	W	X	Y	Z	Area sq. ft.
1																											
2S	24	36	1 1/8	3/8	1/2	4	1/4	2 1/2	1	2 7/8	2 5/8	3 1/4	2	1 1/2	7 1/4	7 1/2		8 1/8	7 5/8	8	22°	1/2	9 1/2				6.0
2M	24	36	1 1/8	3/8	1/2	4	1/4	2 1/2	1	2 7/8	2 5/8	3 1/4	2	1 1/2	7 1/4	7 1/2		8 1/8	7 5/8	8	22°	1/2	9 1/2				6.0
3	36	54	1 3/4	1/2	5/8	6	3/8	3 3/4	1 1/2	4 1/4	4	4 7/8	3	2 1/4	10 7/8	11 1/4		12 1/4	11 1/2	12	22°	3/4	13 1/4				13.5
4																											
5																											

STANDARD SIGN
R3-20L

WISCONSIN DEPT OF TRANSPORTATION

APPROVED Matthew R Rauch
for State Traffic Engineer

DATE 10/18/10 PLATE NO. R3-20L.7

PROJECT NO: | HWY: | COUNTY: | SHEET NO: 201 | E

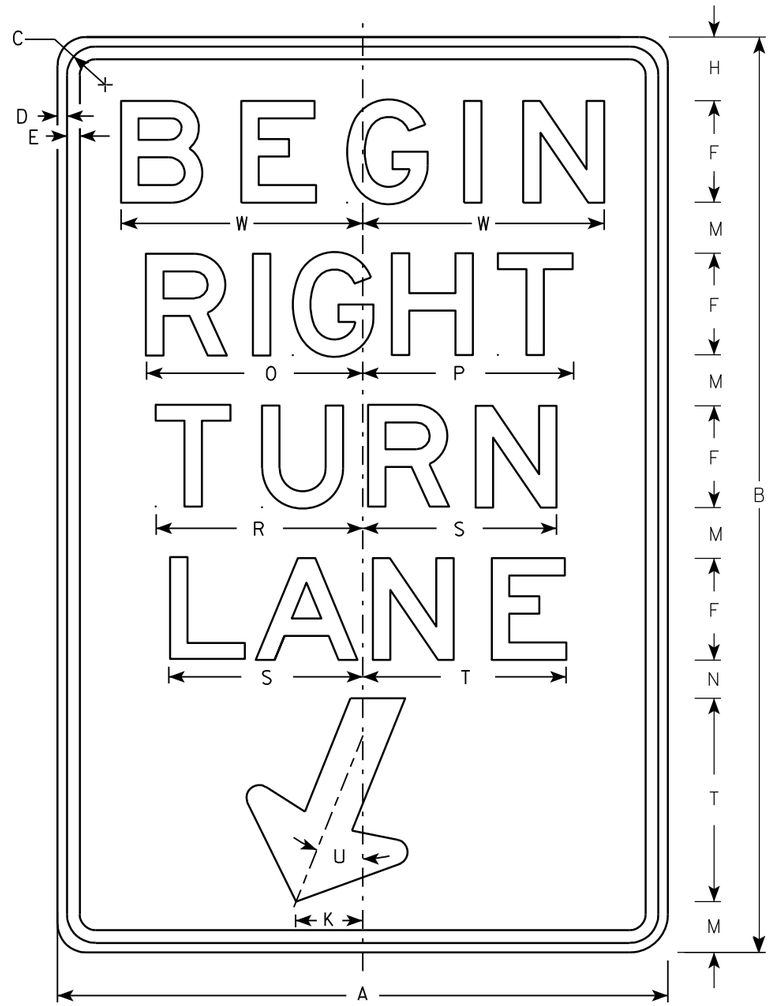

R3-20R

NOTES

1. Sign is Type II - Type H Reflective - reference WIS DOT Standard Specification for HIGHWAY and STRUCTURE CONSTRUCTION latest edition.
2. Color:
   Background - White
   Message - Black
3. Message Series - E
4. Corners may be square or rounded when base material is plywood but borders shall be rounded as shown. When base material is metal, the corners and borders shall be rounded.

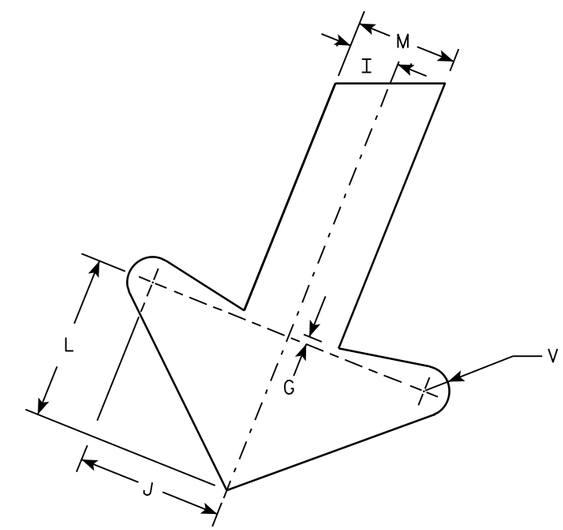

ARROW DETAIL

SIZE	A	B	C	D	E	F	G	H	I	J	K	L	M	N	O	P	Q	R	S	T	U	V	W	X	Y	Z	Area sq. ft.
1																											
2S	24	36	1 1/8	3/8	1/2	4	1/4	2 1/2	1	2 7/8	2 5/8	3 1/4	2	1 1/2	8 1/2	8 1/4		8 1/8	7 5/8	8	22°	1/2	9 1/2				6.0
2M	24	36	1 1/8	3/8	1/2	4	1/4	2 1/2	1	2 7/8	2 5/8	3 1/4	2	1 1/2	8 1/2	8 1/4		8 1/8	7 5/8	8	22°	1/2	9 1/2				6.0
3	36	54	1 3/4	1/2	5/8	6	3/8	3 3/4	1 1/2	4 1/4	4	4 7/8	3	2 1/4	12 3/4	12 1/2		12 1/4	11 1/2	12	22°	3/4	13 1/4				13.5
4																											
5																											

STANDARD SIGN
R3-20R

WISCONSIN DEPT OF TRANSPORTATION

APPROVED Matthew R Rauch
for State Traffic Engineer

DATE 10/18/10 PLATE NO. R3-20R.6

PROJECT NO:	HWY:	COUNTY:		SHEET NO: 202	E

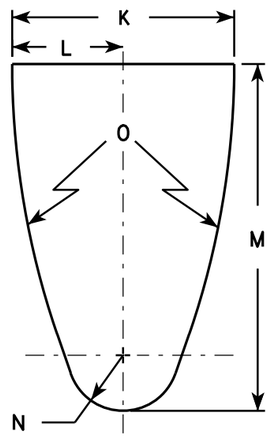

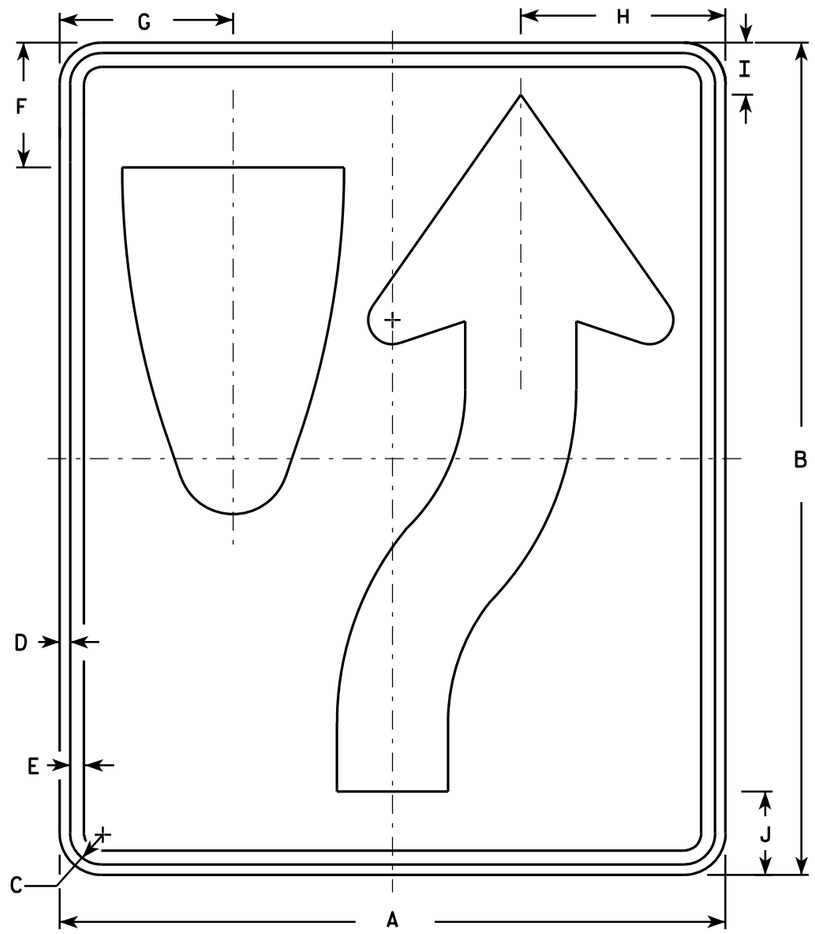

R4-7

NOTES

1. Sign is Type II - Type H Reflective - reference WIS DOT Standard Specification for HIGHWAY and STRUCTURE CONSTRUCTION latest edition. material is plywood but borders shall be rounded
2. Color:
   Background - White
   Message - Black
3. Corners may be square or rounded when base as shown. When base material is metal, the corners and borders shall be rounded.
4. R4-8 is the same as R4-7 except Legend is reversed.

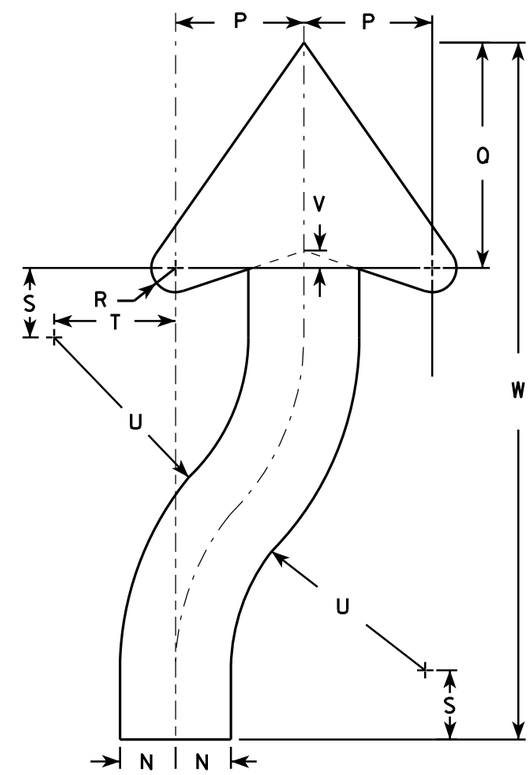

ARROW DETAIL

SIZE	A	B	C	D	E	F	G	H	I	J	K	L	M	N	O	P	Q	R	S	T	U	V	W	X	Y	Z	Area sq. ft.
1	18	24	1 1/8	3/8	1/2	3 3/8	4 3/4	5 1/2	1 3/8	2 1/4	6	3	9 3/8	1 1/2	22 1/2	3 1/2	6 1/8	5/8	1 7/8	3 1/4	6 3/4	1/2	20 3/8				3.0
2S	24	30	1 1/8	3/8	1/2	4 1/2	6 1/4	7 3/8	1 7/8	3	8	4	12 1/2	2	30	4 5/8	8 1/8	7/8	2 1/2	4 3/8	9	5/8	25 1/8				5.0
2M	24	30	1 1/8	3/8	1/2	4 1/2	6 1/4	7 3/8	1 7/8	3	8	4	12 1/2	2	30	4 5/8	8 1/8	7/8	2 1/2	4 3/8	9	5/8	25 1/8				5.0
3	36	48	1 3/4	1/2	5/8	6 3/4	9 3/8	11 1/8	2 7/8	4 1/2	12	6	18 3/4	3	45	6 7/8	12 1/4	1 1/4	3 3/4	6 5/8	13 1/2	1	40 3/4				12.0
4	36	48	1 3/4	1/2	5/8	6 3/4	9 3/8	11 1/8	2 7/8	4 1/2	12	6	18 3/4	3	45	6 7/8	12 1/4	1 1/4	3 3/4	6 5/8	13 1/2	1	40 3/4				12.0
5	48	60	2 1/4	3/4	1	9	12 1/2	14 3/4	3 3/4	6	16	8	25	4	60	9 1/4	16 1/4	1 5/8	5	8 3/4	18	1 1/4	50 1/4				20.0

STANDARD SIGN
R4-7 & R4-8

WISCONSIN DEPT OF TRANSPORTATION

APPROVED Matthew R Rauch for State Traffic Engineer

DATE 3/25/2011 PLATE NO. R4-7.8

PROJECT NO:	HWY:	COUNTY:		SHEET NO: 203	E

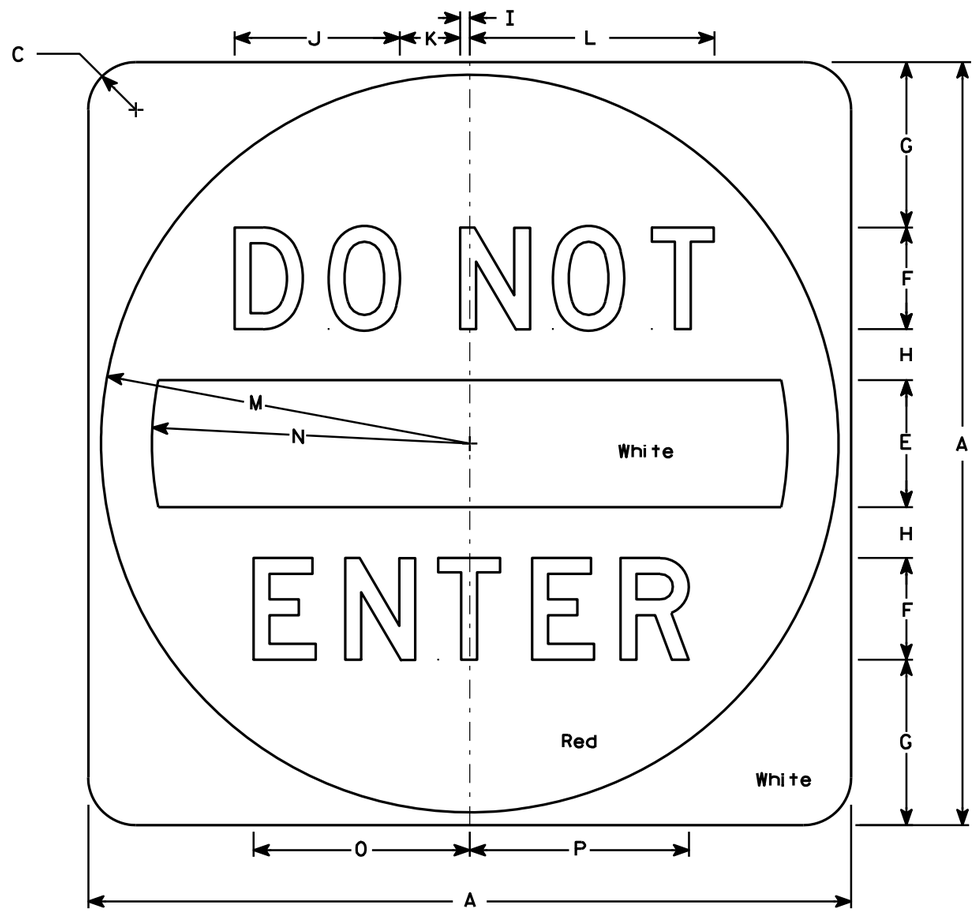

R5-1

NOTES

1. Sign is Type II - Type H Reflective - reference WIS DOT Standard Specification for HIGHWAY and STRUCTURE CONSTRUCTION latest edition.
2. Color:
   Background - See detail
   Message - White - Type H Reflective
3. Message Series - D
4. Corners may be square or rounded when base material is plywood but when base material is metal, the cornors shall be rounded.

SIZE	A	B	C	D	E	F	G	H	I	J	K	L	M	N	O	P	Q	R	S	T	U	V	W	X	Y	Z	Area sq. ft.
1																											
2S	30		1 7/8		5	4	6 1/2	2	3/8	6 1/2	2 3/8	9 5/8	14 1/2	12 1/2	8 1/2	8 5/8											6.26
2M	36		2 1/4		6	5	7 1/2	2 1/2	1/2	8 1/8	3	12 1/8	17 1/2	15	10 5/8	10 3/4											9.0
3	36		2 1/4		6	5	7 1/2	2 1/2	1/2	8 1/8	3	12 1/8	17 1/2	15	10 5/8	10 3/4											9.0
4	36		2 1/4		6	5	7 1/2	2 1/2	1/2	8 1/8	3	12 1/8	17 1/2	15	10 5/8	10 3/4											9.0
5	48		3		8	6	11	3	5/8	9 3/4	3 5/8	14 1/2	23 1/2	20	12 3/4	12 7/8											16.0

STANDARD SIGN
R5-1

WISCONSIN DEPT OF TRANSPORTATION

APPROVED Matthew R Rauch
for State Traffic Engineer

DATE 12/17/10 PLATE NO. R5-1.15

PROJECT NO: | HWY: | COUNTY: | SHEET NO: 204 | E

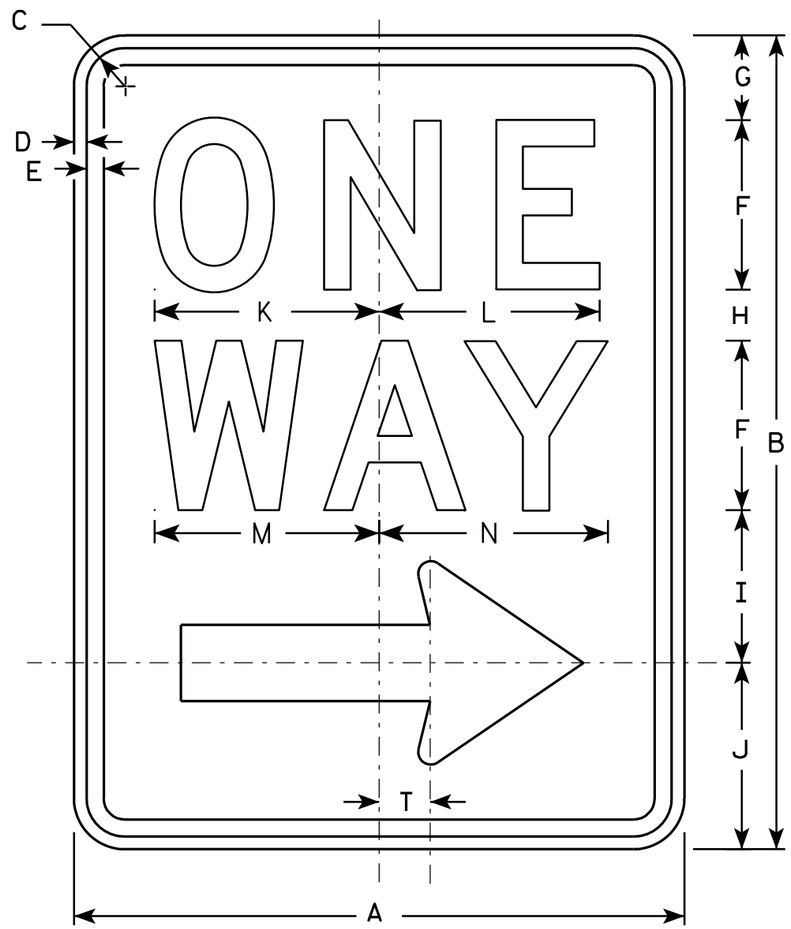

R6-2R

NOTES

1. Sign is Type II - Type H Reflective - reference WIS DOT Standard Specification for HIGHWAY and STRUCTURE CONSTRUCTION latest edition.
2. Color:
   Background - White
   Message - Black
3. Message Series - D
4. Corners may be square or rounded when base material is plywood but borders shall be rounded as shown. When base material is metal, the corners and borders shall be rounded.
5. R6-2L same as R6-2R except arrow points to the left.

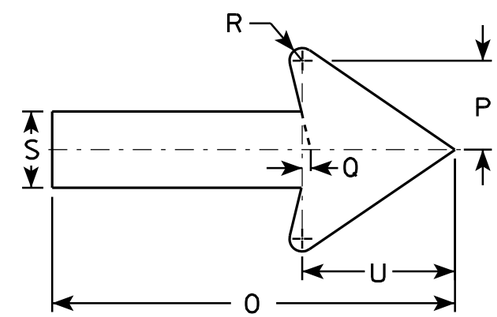

SIZE	A	B	C	D	E	F	G	H	I	J	K	L	M	N	O	P	Q	R	S	T	U	V	W	X	Y	Z
1	18	24	1 1/8	3/8	1/2	5	2 1/2	1 1/2	4 1/2	5 1/2	6 5/8	6 1/2	6 5/8	6 3/4	11 7/8	2 5/8	1/4	3/8	2 1/4	1 1/2	4 1/2					
2S	24	30	1 1/8	3/8	1/2	6	3	2 1/2	5 1/2	7	8 1/8	8 1/8	8 1/2	8 5/8	16	3 1/2	3/8	1/2	3	2	6					
2M	30	36	1 3/8	1/2	5/8	8	2 1/2	2 5/8	6 7/8	8	10 1/2	10 1/2	11 1/4	11 1/4	20	4 3/8	1/2	5/8	3 3/4	2 1/2	7 1/2					
3	36	48	1 7/8	1/2	5/8	10	5 1/4	3 1/4	9	10 1/2	12 3/4	12 3/4	13 1/4	13 1/2	24	5 5/8	1/2	3/4	4 3/4	3	9					
4	36	48	1 7/8	1/2	5/8	10	5 1/4	3 1/4	9	10 1/2	12 3/4	12 3/4	13 1/4	13 1/2	24	5 5/8	1/2	3/4	4 3/4	3	9					
5																										

STANDARD SIGN
R6-2 R&L

WISCONSIN DEPT OF TRANSPORTATION

APPROVED Matthew R Rauch
for State Traffic Engineer

DATE 11/2/10 PLATE NO. R6-2.8

PROJECT NO:	HWY:	COUNTY:		SHEET NO: 205	E

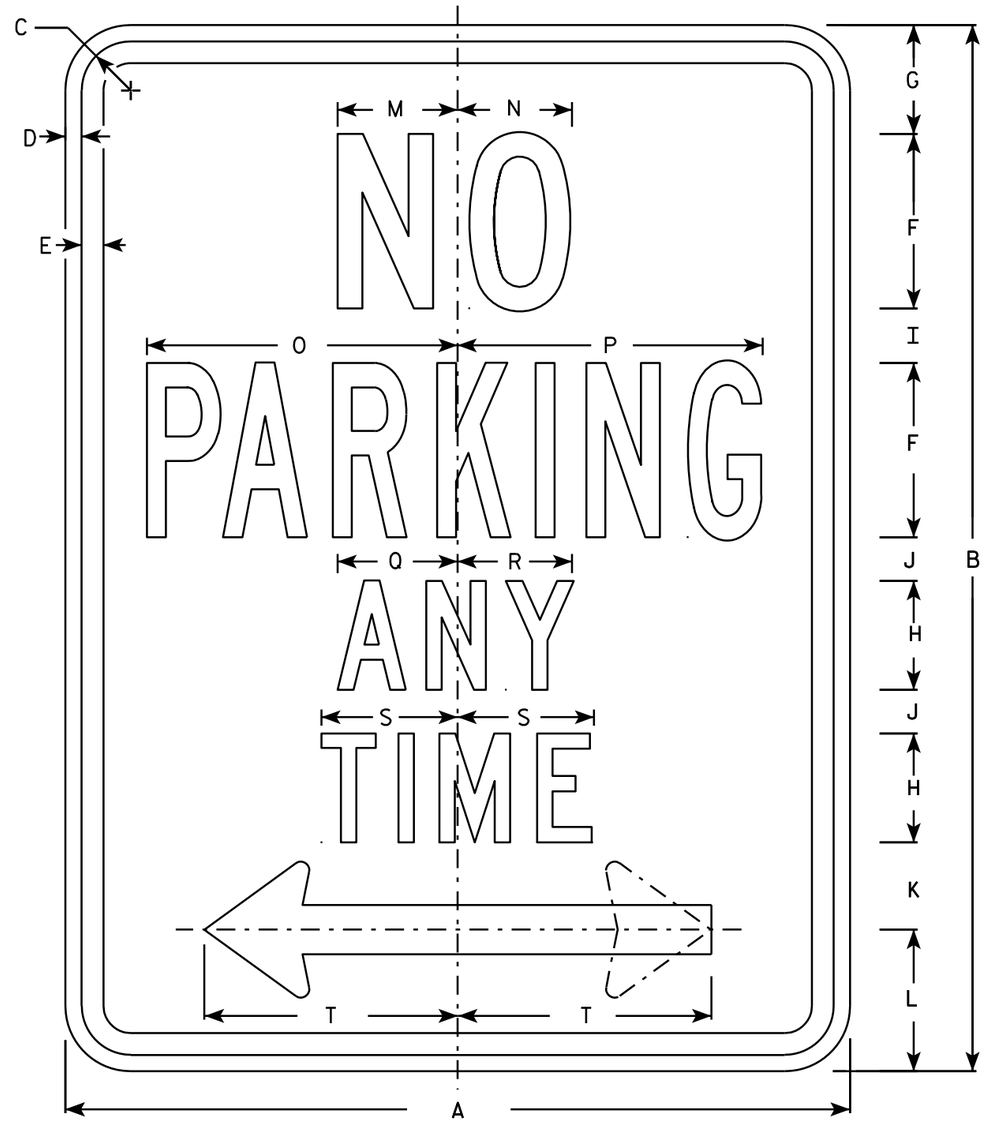

R7-1

NOTES

1. Sign is Type II - Type H Reflective - reference WIS DOT Standard Specification for HIGHWAY and STRUCTURE CONSTRUCTION latest edition.
2. Color:
   Background - White
   Message - Red
3. Message Series - See Note 5
4. Corners may be square or rounded when base material is plywood but borders shall be rounded as shown. When base material is metal, the corners and borders shall be rounded.
5. Lines 1, 3 and 4 are series C, line 2 is series B.
6. R7-1D (double arrow)
   R7-1L (left arrow)
   R7-1R (right arrow)

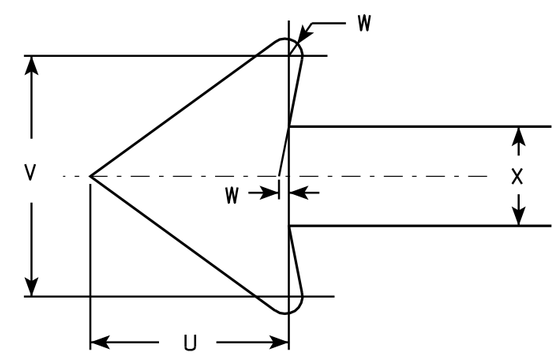

SIZE	A	B	C	D	E	F	G	H	I	J	K	L	M	N	O	P	Q	R	S	T	U	V	W	X	Y	Z	Area sq. ft.
1	12	18	1 1/8	3/8	3/8	3	1 7/8	2	7/8	5/8	1 1/2	2 1/2	2	2	4 7/8	4 7/8	2 1/4	2 1/8	2 1/2	3 7/8	1 1/2	1 3/4	1/8	3/4			1.5
2S	18	24	1 1/8	3/8	1/2	4	2 1/2	2 1/2	1 1/4	1	2	3 1/4	2 3/4	2 5/8	7 1/8	7	2 3/4	2 5/8	3 1/8	5 7/8	2 1/4	2 5/8	1/4	1 1/8			3.0
2M	24	30	1 1/8	3/8	1/2	5	3	3	2	1 1/4	2 1/2	4	3 1/4	3 3/8	9 1/4	9 1/4	3 1/4	3 1/4	3 3/4	7 3/4	3	3 1/2	1/4	1 1/2			5.0
3	24	30	1 1/8	3/8	1/2	5	3	3	2	1 1/4	2 1/2	4	3 1/4	3 3/8	9 1/4	9 1/4	3 1/4	3 1/4	3 3/4	7 3/4	3	3 1/2	1/4	1 1/2			5.0
4																											
5																											

STANDARD SIGN
R7-1

WISCONSIN DEPT OF TRANSPORTATION

APPROVED Matthew R Rauch
for State Traffic Engineer

DATE 3/31/2011 PLATE NO. R7-1.9

PROJECT NO:	HWY:	COUNTY:		SHEET NO: 206	E

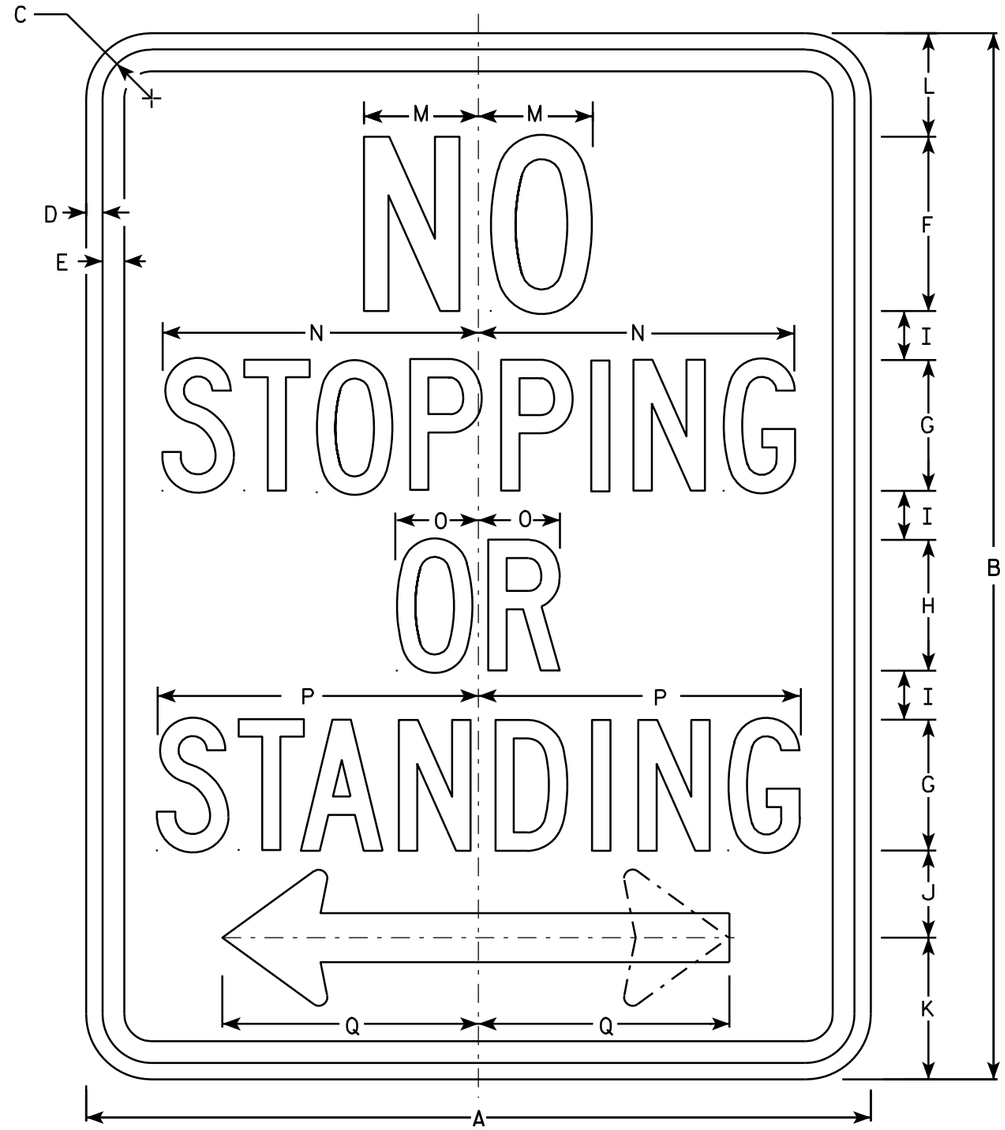

R7-4

NOTES

1. Sign is Type II - Type H Reflective - reference WIS DOT Standard Specification for HIGHWAY and STRUCTURE CONSTRUCTION latest edition.
2. Color:
   Background - White
   Message - Red
3. Message Series - C
4. Corners may be square or rounded when base material is plywood but borders shall be rounded as shown. When base material is metal, the corners and borders shall be rounded.
5. R7-4L (left arrow)
   R7-4R (right arrow)
   R7-4D (double arrow)

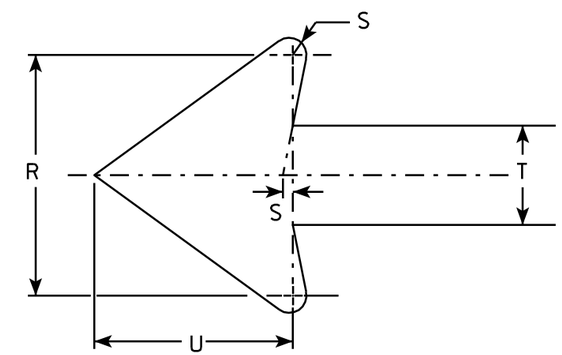

ARROW DETAIL

SIZE	A	B	C	D	E	F	G	H	I	J	K	L	M	N	O	P	Q	R	S	T	U	V	W	X	Y	Z	Area sq. ft.
1	12	18	1 1/8	3/8	3/8	3	2	2	1	1 1/2	2 1/2	2	2	4 7/8	1 1/4	4 7/8	3 7/8	1 3/4	1/8	3/4	1 1/2						1.5
2S	18	24	1 1/8	3/8	1/2	4	3	3	1 1/8	2	3 1/4	2 3/8	2 5/8	7 1/4	1 7/8	7 3/8	5 7/8	2 5/8	1/4	1 1/8	2 1/4						3.0
2M	24	30	1 1/8	3/8	1/2	5	4	3	1 1/2	3	4	2 1/2	3 3/8	10	2 1/2	10 1/4	7 3/4	3 1/2	1/4	1 1/2	3						5.0
3	24	30	1 1/8	3/8	1/2	5	4	3	1 1/2	3	4	2 1/2	3 3/8	10	2 1/2	10 1/4	7 3/4	3 1/2	1/4	1 1/2	3						5.0
4																											
5																											

STANDARD SIGN
R7-4

WISCONSIN DEPT OF TRANSPORTATION

APPROVED Matthew R Rauch
for State Traffic Engineer

DATE 3/31/2011 PLATE NO. R7-4.8

PROJECT NO:	HWY:	COUNTY:		SHEET NO: 207	E

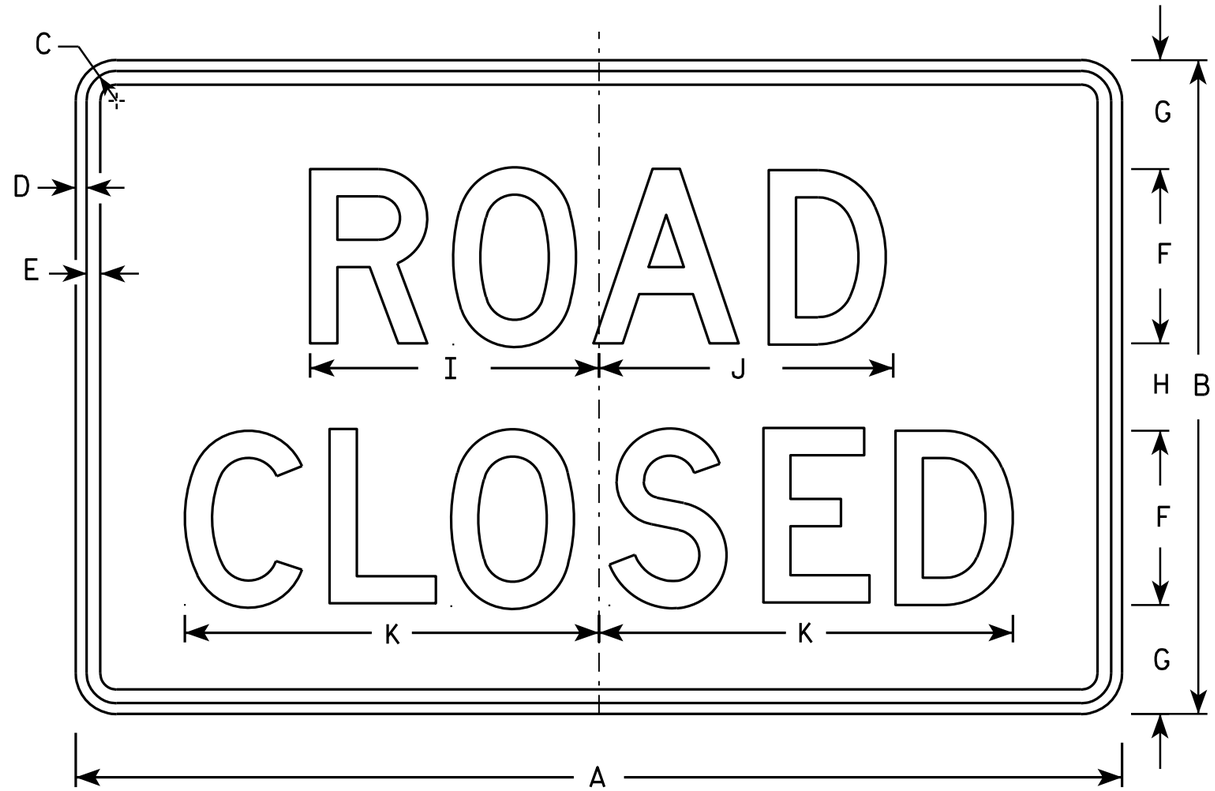

R11-2

NOTES

1. Sign is Type II - Type H Reflective - reference WIS DOT Standard Specification for HIGHWAY and STRUCTURE CONSTRUCTION latest edition.
2. Color:
   Background - White
   Message - Black
3. Message Series - D
4. Corners may be square or rounded when base material is plywood but borders shall be rounded as shown. When base material is metal, the corners and borders shall be rounded.
5. Modify the message as required.

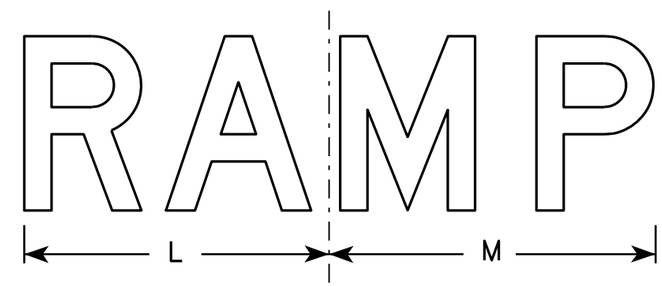

R11-2R

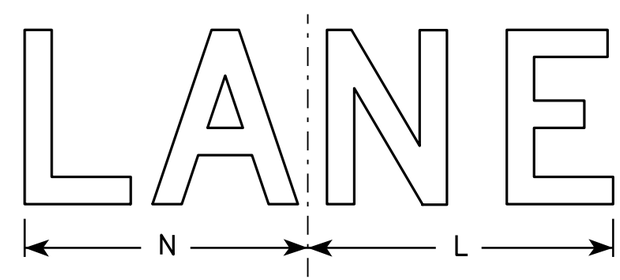

R11-2L

SIZE	A	B	C	D	E	F	G	H	I	J	K	L	M	N	O	P	Q	R	S	T	U	V	W	X	Y	Z	Area sq. ft.
1																											
2S	48	30	1 3/8	1/2	5/8	8	5	4	13 1/4	13 1/2	19	14	15	13													10.0
2M	48	30	1 3/8	1/2	5/8	8	5	4	13 1/4	13 1/2	19	14	15	13													10.0
3	48	30	1 3/8	1/2	5/8	8	5	4	13 1/4	13 1/2	19	14	15	13													10.0
4	48	30	1 3/8	1/2	5/8	8	5	4	13 1/4	13 1/2	19	14	15	13													10.0
5	48	30	1 3/8	1/2	5/8	8	5	4	13 1/4	13 1/2	19	14	15	13													10.0

STANDARD SIGN
R11-2

WISCONSIN DEPT OF TRANSPORTATION

APPROVED Matthew R Rauch
for State Traffic Engineer

DATE 4/1/11 PLATE NO. R11-2.10

PROJECT NO:	HWY:	COUNTY:		SHEET NO: 208	E

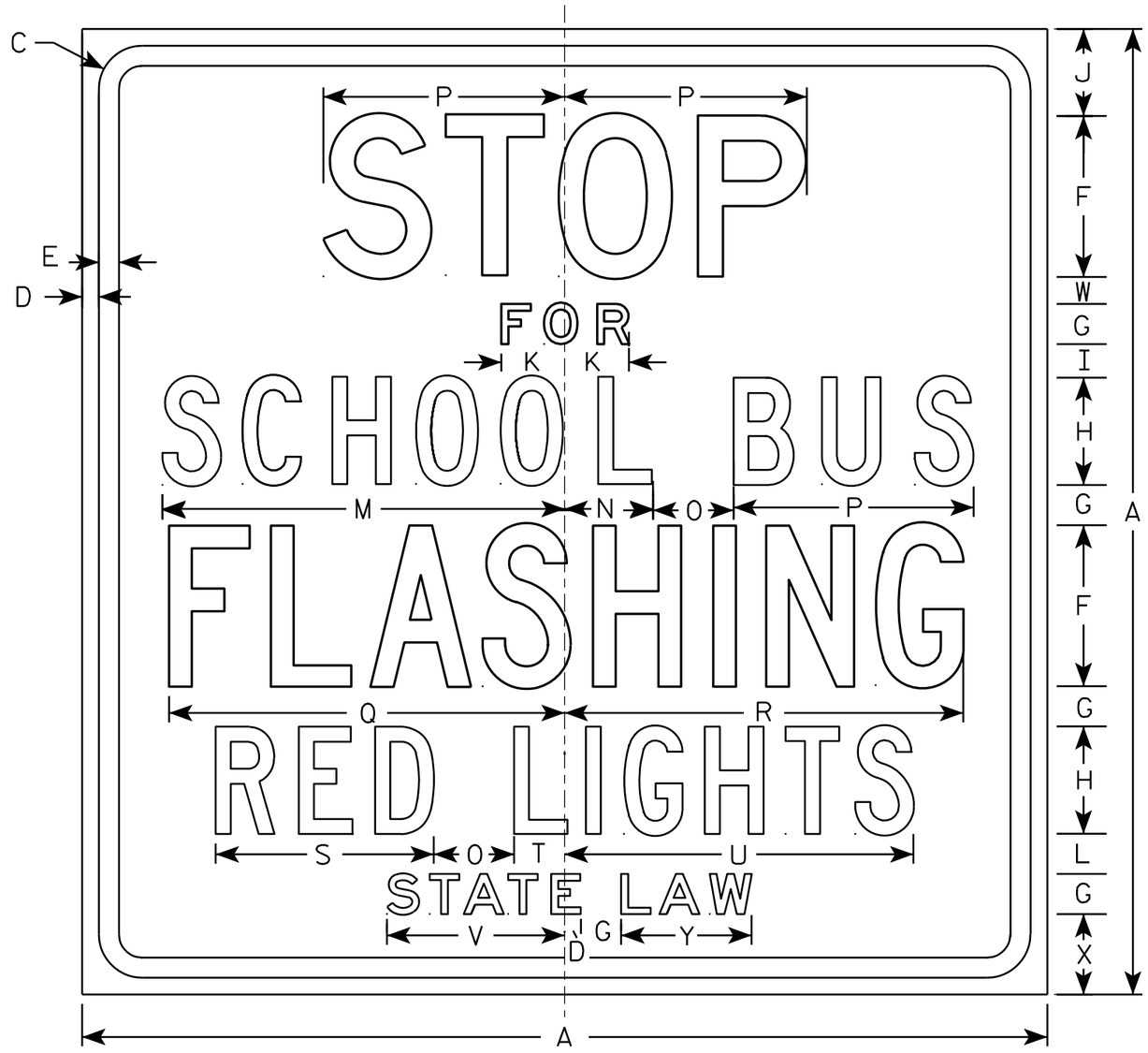

R59-51

NOTES

1. Sign is Type II - Type H Reflective - reference WIS DOT Standard Specification for HIGHWAY and STRUCTURE CONSTRUCTION latest edition.
2. Color:
   Background - White
   Message - Black
3. Message Series - See note 5
4. Corners may be square or rounded when base material is plywood but borders shall be rounded as shown. When base material is metal, the corners and borders shall be rounded.
5. Line 1 is Series D
   Lines 2 & 6 are Series E
   Line 3, 4 & 5 are Series C

SIZE	A	B	C	D	E	F	G	H	I	J	K	L	M	N	O	P	Q	R	S	T	U	V	W	X	Y	Z	Area sq. ft.
1																											
2S	36		1 5/8	5/8	3/4	6	1 1/2	4	1 1/4	3 1/4	2 3/8	1 1/2	15	3 1/4	3	9	14 3/4	14 7/8	8 1/8	1 7/8	13	6 5/8	1	3	4 7/8		9.0
2M	36		1 5/8	5/8	3/4	6	1 1/2	4	1 1/4	3 1/4	2 3/8	1 1/2	15	3 1/4	3	9	14 3/4	14 7/8	8 1/8	1 7/8	13	6 5/8	1	3	4 7/8		9.0
3	48		2 1/4	3/4	1	8	2	6	1 1/4	4 3/4	3 1/4	1 1/2	20 1/4	5	3 5/8	12	19 1/2	20	11 5/8	3 3/4	19	9 1/2	1	3 1/2	6 3/4		16.0
4	48		2 1/4	3/4	1	8	2	6	1 1/4	4 3/4	3 1/4	1 1/2	20 1/4	5	3 5/8	12	19 1/2	20	11 5/8	3 3/4	19	9 1/2	1	3 1/2	6 3/4		16.0
5																											

STANDARD SIGN
R59-51

WISCONSIN DEPT OF TRANSPORTATION

APPROVED Matthew R Rauch
for State Traffic Engineer

DATE 3/30/11 PLATE NO. R59-51.10

PROJECT NO:	HWY:	COUNTY:		SHEET NO: 209	E

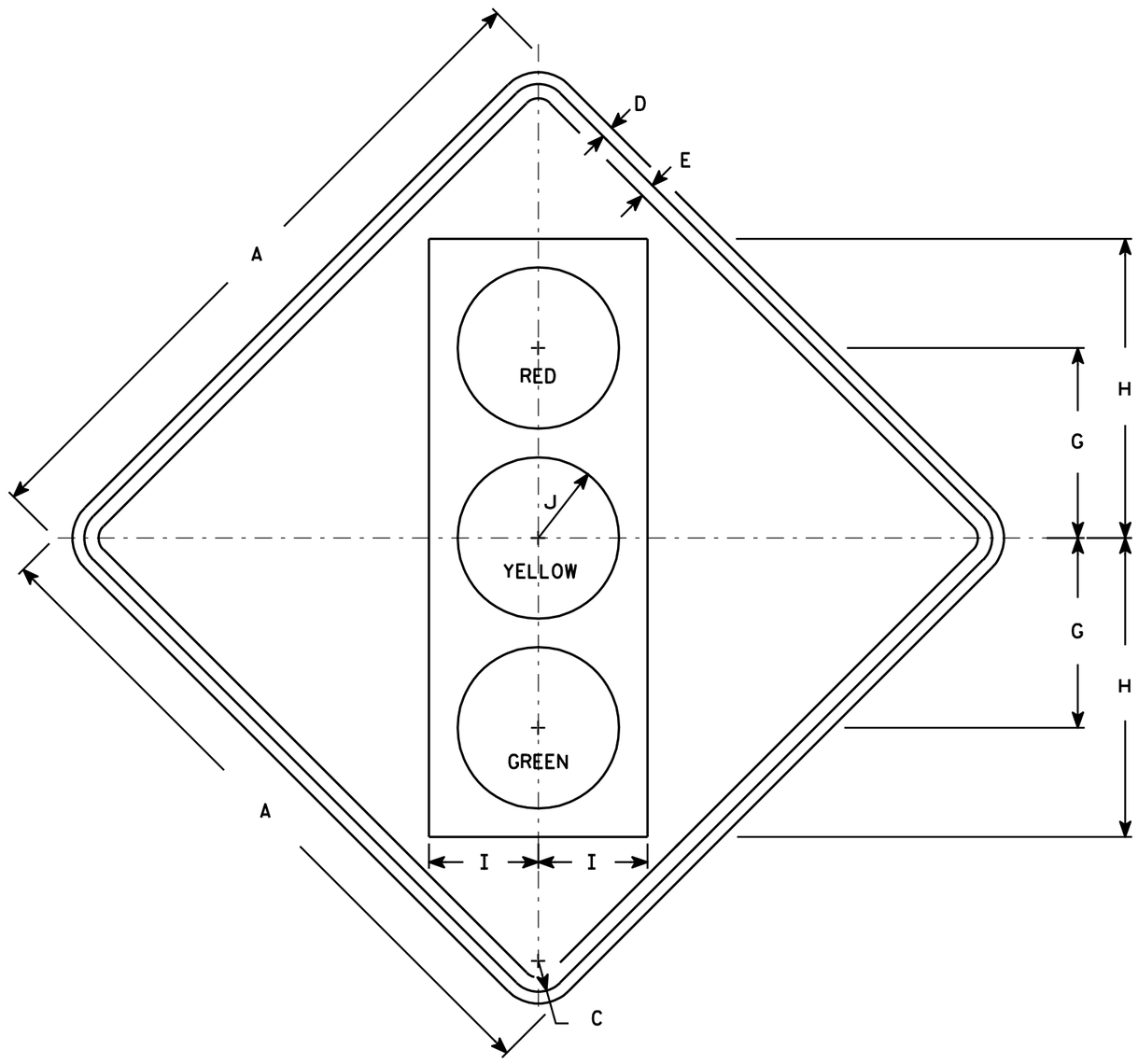

W3-3

NOTES

1. Sign is Type II - Type F Reflective - reference WIS DOT Standard Specification for HIGHWAY and STRUCTURE CONSTRUCTION latest edition.
2. Color:
   Background - Yellow
   Message - See Note 4
3. Corners may be square or rounded when base material is plywood but borders shall be rounded as shown. When base material is metal, the corners and borders shall be rounded.
4. Symbol and border are non-reflective black.
   Top circle - Type H Reflectorized Red
   Center circle - Same as background
   Bottom circle - Type H Reflectorized Green

SIZE	A	B	C	D	E	F	G	H	I	J	K	L	M	N	O	P	Q	R	S	T	U	V	W	X	Y	Z	Area sq. ft.
1	30		1 3/8	1/2	5/8		8 3/4	13 3/4	5	3 3/4																	6.25
2S	36		1 5/8	5/8	3/4		10	15 3/4	5 3/4	4 1/4																	9.0
2M	36		1 5/8	5/8	3/4		10	15 3/4	5 3/4	4 1/4																	9.0
3	36		1 5/8	5/8	3/4		10	15 3/4	5 3/4	4 1/4																	9.0
4	48		2 1/4	3/4	1		12 1/2	20	7 1/2	5																	16.0
5	48		2 1/4	3/4	1		12 1/2	20	7 1/2	5																	16.0

STANDARD SIGN
W3-3

WISCONSIN DEPT OF TRANSPORTATION

APPROVED Matthew R Rauch
for State Traffic Engineer

DATE 6/7/10 PLATE NO. W3-3.11

PROJECT NO: | HWY: | COUNTY: | SHEET NO: 210 | E

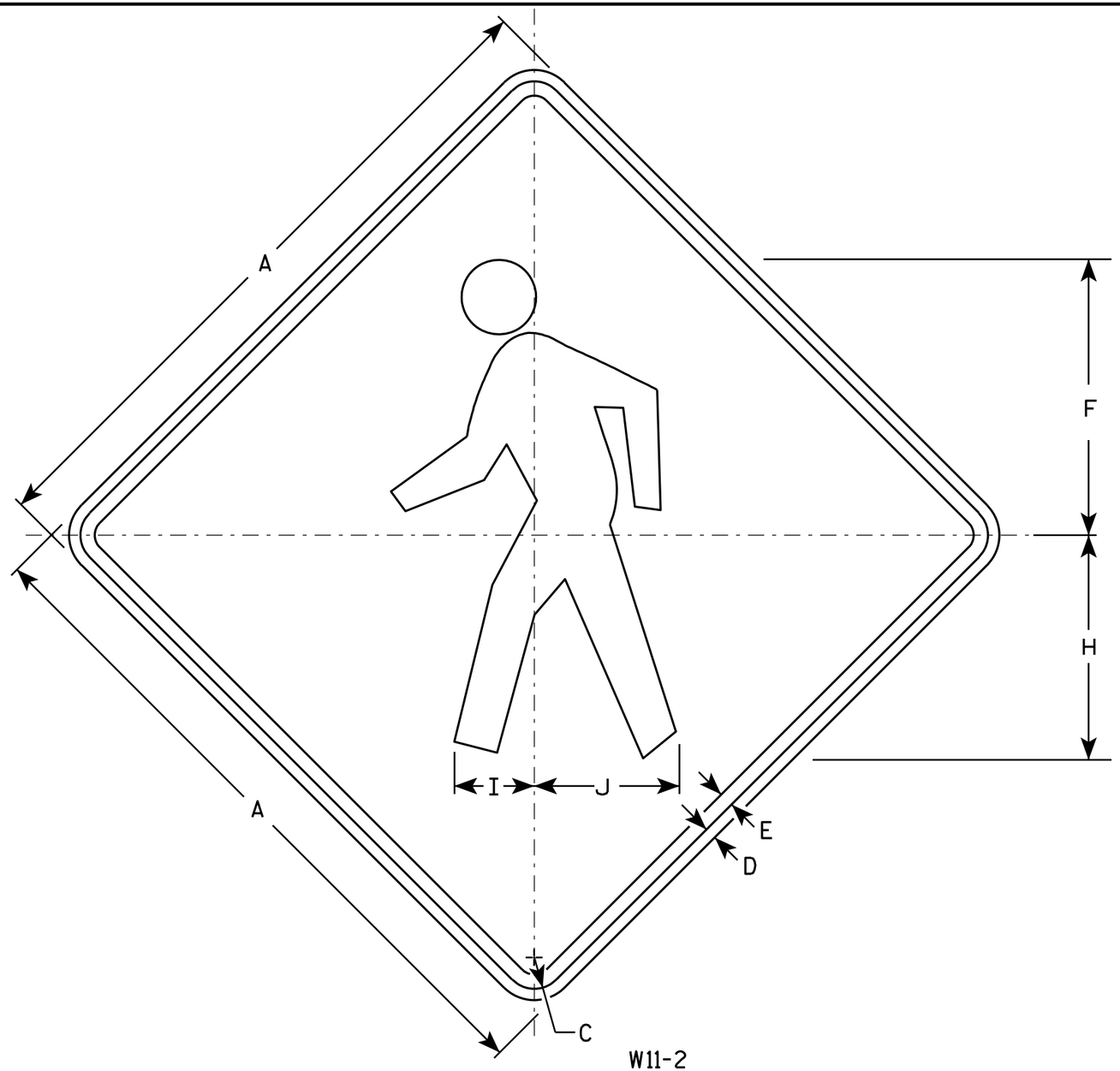

W11-2

NOTES

1. Sign is Type II - Type F Reflective - reference WIS DOT Standard Specification for HIGHWAY and STRUCTURE CONSTRUCTION latest edition.
2. Color:
   Background - Yellow
   Message - Black
3. Corners may be square or rounded when base material is plywood but borders shall be rounded as shown. When base material is metal, the corners and borders shall be rounded.

SIZE	A	B	C	D	E	F	G	H	I	J	K	L	M	N	O	P	Q	R	S	T	U	V	W	X	Y	Z	Area sq. ft.
1	24		1 1/8	3/8	1/2	9 3/4		7 7/8	2 7/8	5 1/8																	4.0
2S	30		1 3/8	1/2	5/8	12 1/8		9 7/8	3 1/2	6 3/8																	6.25
2M	36		1 5/8	5/8	3/4	14 1/2		11 7/8	4 1/4	7 5/8																	9.0
3	36		1 5/8	5/8	3/4	14 1/2		11 7/8	4 1/4	7 5/8																	9.0
4	48		2 1/4	3/4	1	19 3/8		15 3/4	5 5/8	10 1/4																	16.0
5																											

STANDARD SIGN
W11-2

WISCONSIN DEPT OF TRANSPORTATION

APPROVED Matthew R Rauch
for State Traffic Engineer

DATE 6/7/10 PLATE NO. W11-2.7

PROJECT NO:	HWY:	COUNTY:		SHEET NO: 211	E

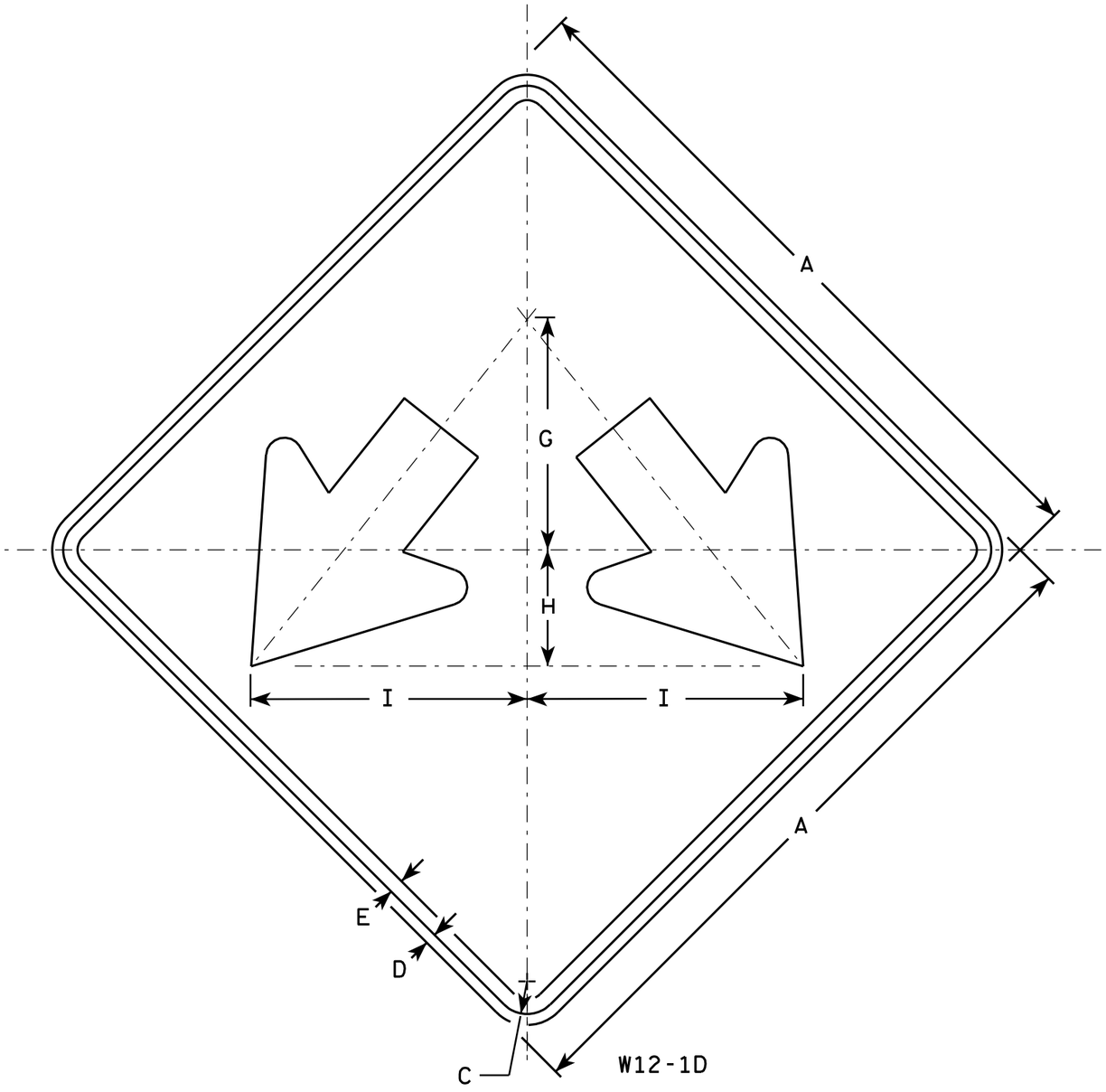

NOTES

1. Sign is Type II - Type F Reflective - reference WIS DOT Standard Specification for HIGHWAY and STRUCTURE CONSTRUCTION latest edition.
2. Color:
   Background - Yellow
   Message - Black
3. Corners may be square or rounded when base material is plywood but borders shall be rounded as shown. When base material is metal, the corners and borders shall be rounded.

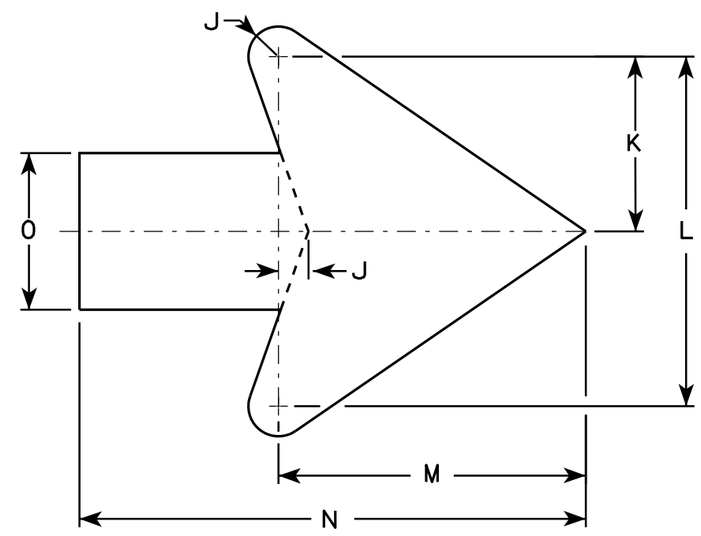

Arrow Detail

SIZE	A	B	C	D	E	F	G	H	I	J	K	L	M	N	O	P	Q	R	S	T	U	V	W	X	Y	Z	Area sq. ft.
1																											
2S	24		1 1/8	1/2	3/8		8	4	9 1/2	3/8	3 3/8	7 1/4	6 3/8	10 3/8	3 1/4												4.0
2M	24		1 1/8	1/2	3/8		8	4	9 1/2	3/8	3 3/8	7 1/4	6 3/8	10 3/8	3 1/4												4.0
3	30		1 3/8	1/2	5/8		10	5	11 7/8	3/4	4 1/2	9	7 7/8	13	4												6.25
4	36		1 3/8	1/2	5/8		12	6	14 1/4	1	5 1/2	10 7/8	9 5/8	15 3/4	4 3/4												9.0
5	48		2 1/4	3/4	1		16	8	19	1 1/4	7 1/4	14 1/2	12 3/4	21	6 1/4												16.0

STANDARD SIGN
W12-1D

WISCONSIN DEPT OF TRANSPORTATION

APPROVED Matthew R Rauch
for State Traffic Engineer

DATE 3/13/13 PLATE NO. W12-1D.15

PROJECT NO: | HWY: | COUNTY: | SHEET NO: 212 | E

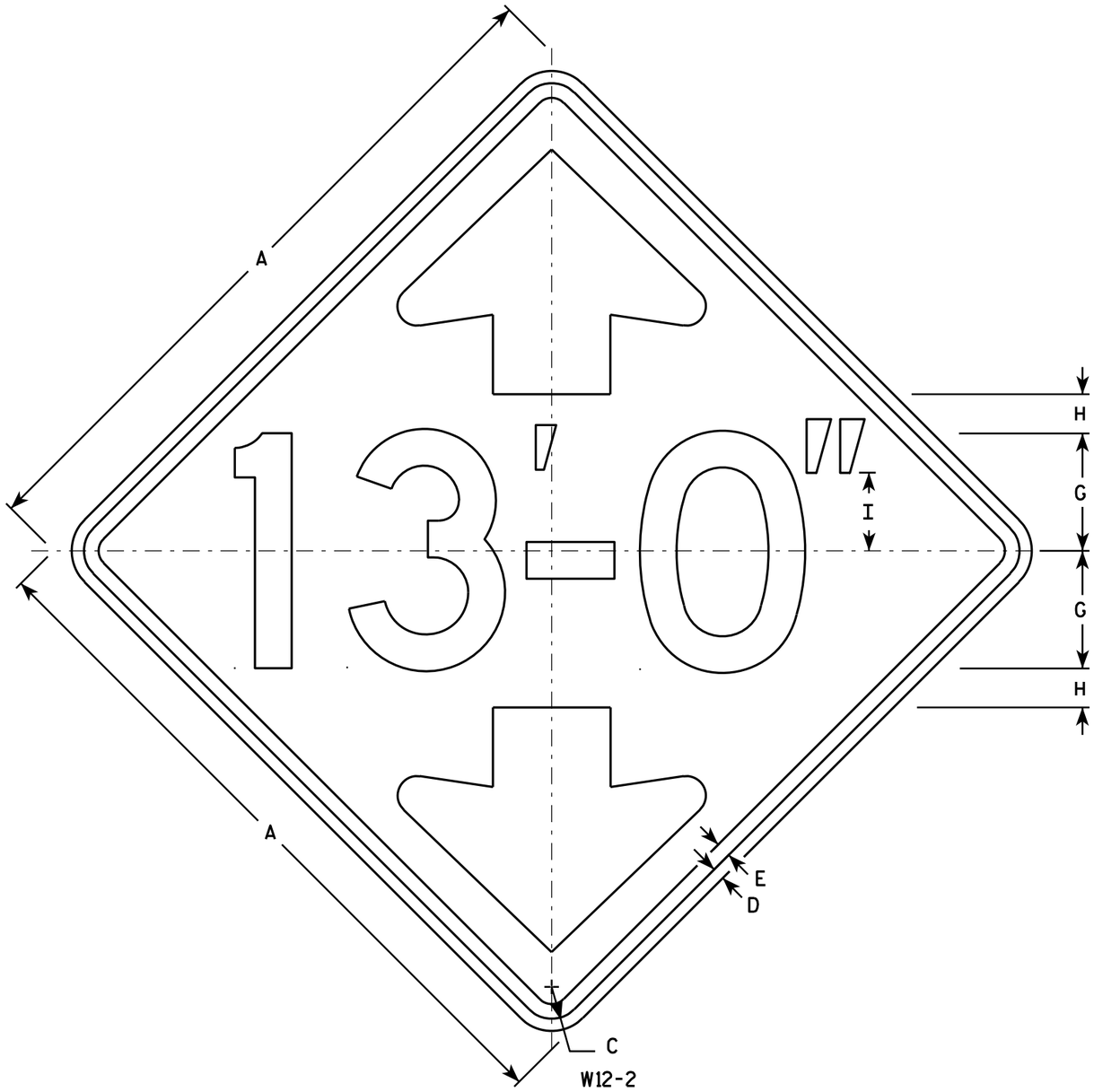

W12-2

NOTES

1. Sign is Type II - Type F Reflective - reference WIS DOT Standard Specification for HIGHWAY and STRUCTURE CONSTRUCTION latest edition.
2. Color:
   Background - Yellow
   Message - Black
3. Message Series - D
4. Corners may be square or rounded when base material is plywood but borders shall be rounded as shown. When base material is metal, the corners and borders shall be rounded.
5. Substitute appropriate numerals and optically adjust spacing of numerals, hyphen, foot & inch marks to achieve proper balance.

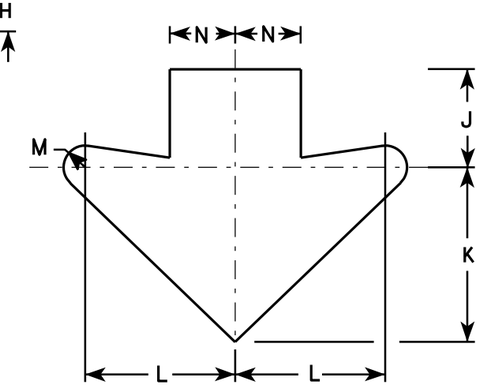

Arrow Detail

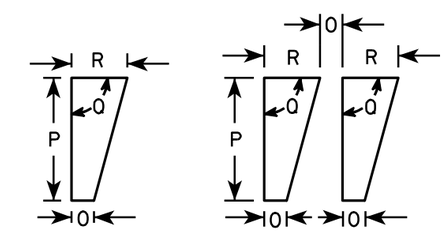

Foot Mark & Inch Mark Detail

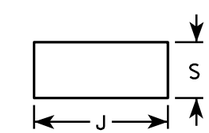

Hyphen Detail

SIZE	A	B	C	D	E	F	G	H	I	J	K	L	M	N	O	P	Q	R	S	T	U	V	W	X	Y	Z	Area sq. ft.
1	30		1 3/8	1/2	5/8		5	1 5/8	3 3/8	3 3/4	6 5/8	5 3/4	3/4	2 1/2	1/2	2 1/4	90°	1	1 5/8								6.25
2S	36		1 5/8	5/8	3/4		6	2	4	4 1/2	8	6 7/8	1	3	1/2	2 3/4	90°	1 1/4	1 7/8								9.00
2M	36		1 5/8	5/8	3/4		6	2	4	4 1/2	8	6 7/8	1	3	1/2	2 3/4	90°	1 1/4	1 7/8								9.00
3	36		1 5/8	5/8	3/4		6	2	4	4 1/2	8	6 7/8	1	3	1/2	2 3/4	90°	1 1/4	1 7/8								9.00
4	36		1 5/8	5/8	3/4		6	2	4	4 1/2	8	6 7/8	1	3	1/2	2 3/4	90°	1 1/4	1 7/8								9.00
5	48		2 1/4	3/4	1		8	2 5/8	5 1/2	5 7/8	10 5/8	9 1/4	1 3/8	4	5/8	3 5/8	90°	1 5/8	2 1/2								16.00

STANDARD SIGN
W12-2

WISCONSIN DEPT OF TRANSPORTATION

APPROVED Matthew R Rauch
for State Traffic Engineer

DATE 3/13/13 PLATE NO. W12-2.9

PROJECT NO:	HWY:	COUNTY:		SHEET NO: 213	E

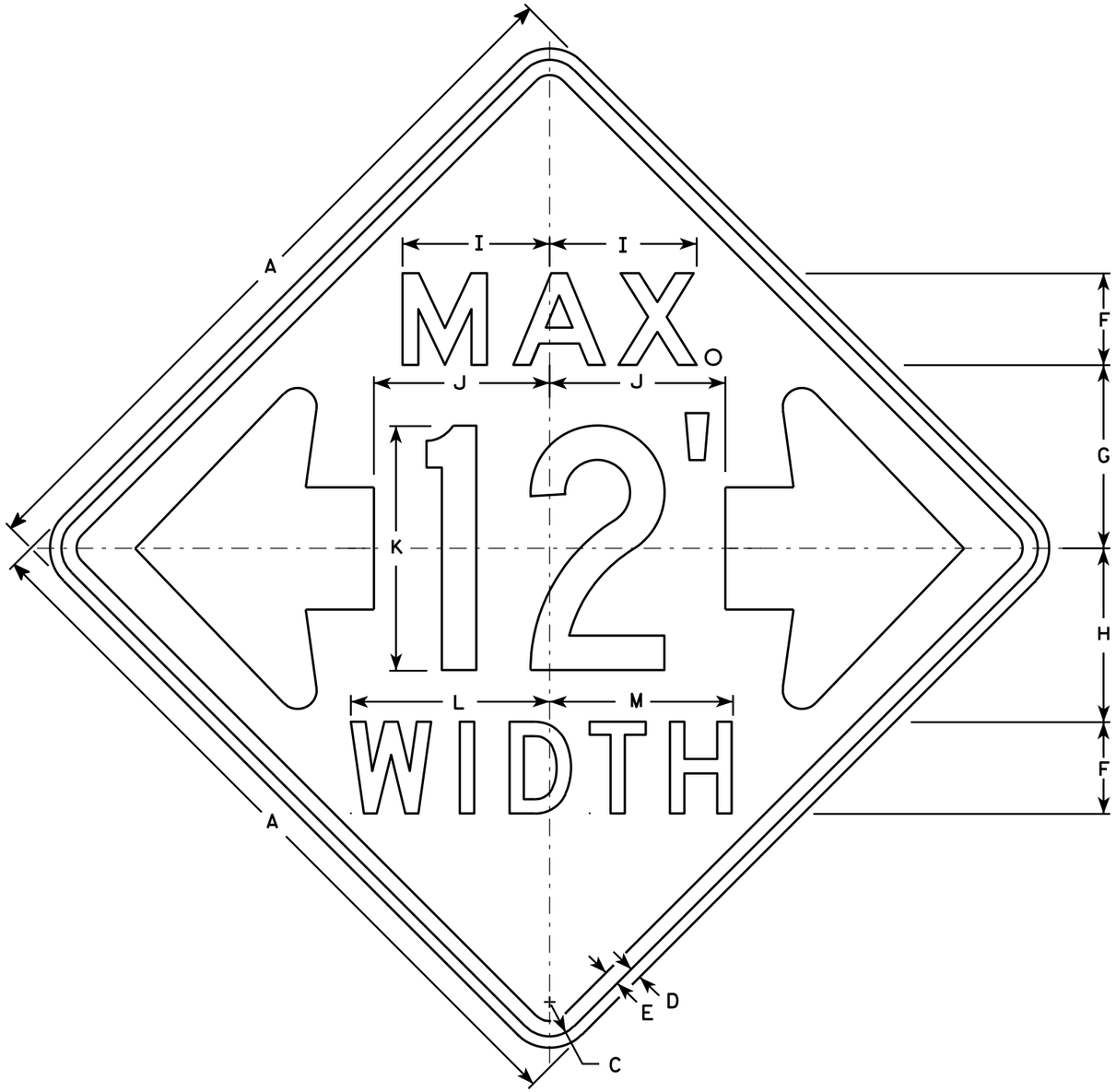

W12-52

NOTES

1. Sign is Type II - Type F Reflective - reference WIS DOT Standard Specification for HIGHWAY and STRUCTURE CONSTRUCTION latest edition.
2. Color:
   Background - Orange
   Message - Black
3. Message Series - See note 5
4. Corners may be square or rounded when base material is plywood but borders shall be rounded as shown. When base material is metal, the corners and borders shall be rounded.
5. The top line is series E, the numerals are series C, and the bottom line is series D.
6. Substitute appropriate numerals and adjust spacing as required.

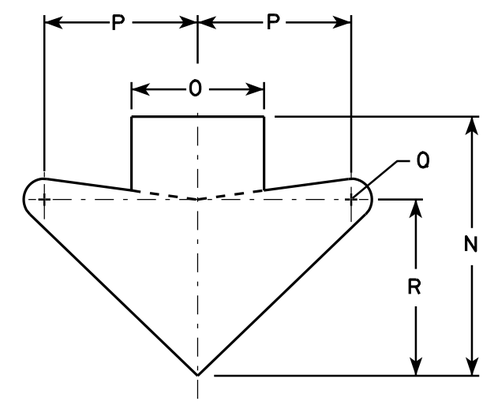

ARROW DETAIL

SIZE	A	B	C	D	E	F	G	H	I	J	K	L	M	N	O	P	Q	R	S	T	U	V	W	X	Y	Z	Area sq. ft.
1																											
2S	48		2 1/4	3/4	1	6	12	11 3/8	9 5/8	11 1/2	16	13	12	15 5/8	8	9 1/4	1 1/4	10 5/8									16.0
2M	48		2 1/4	3/4	1	6	12	11 3/8	9 5/8	11 1/2	16	13	12	15 5/8	8	9 1/4	1 1/4	10 5/8									16.0
3																											
4																											
5																											

STANDARD SIGN
W12-52

WISCONSIN DEPT OF TRANSPORTATION

APPROVED Matthew R Rauch
for State Traffic Engineer

DATE 3/16/11 PLATE NO. W12-52.7

PROJECT NO:	HWY:	COUNTY:		SHEET NO: 214	E

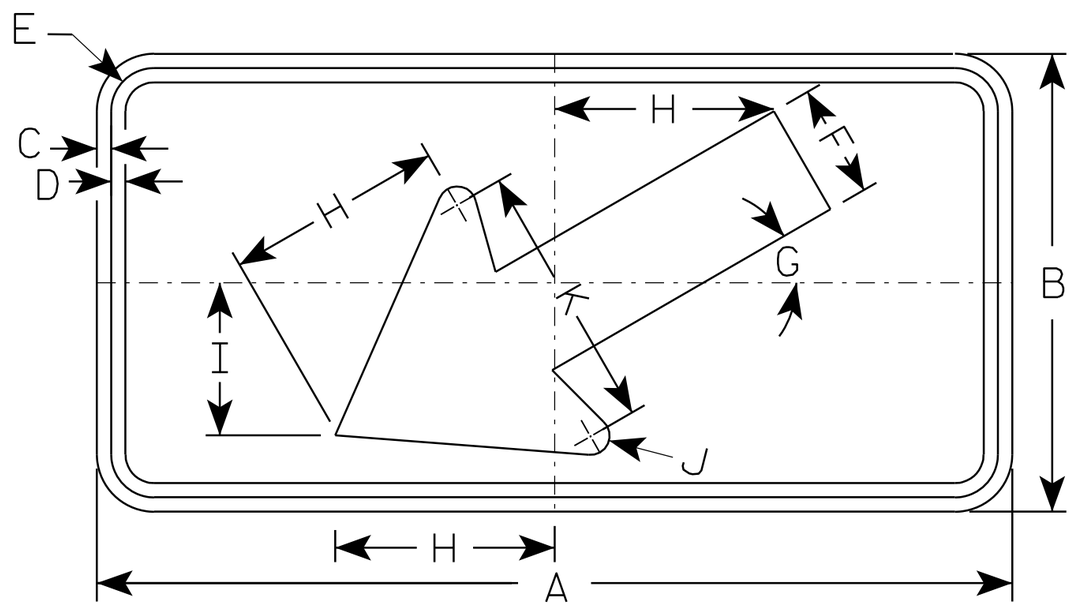

W16-7L

NOTES

1. Sign is Type II - Type F Reflective - reference WIS DOT Standard Specification for HIGHWAY and STRUCTURE CONSTRUCTION latest edition.
2. Color:
   Background - Yellow
   Message - Black
3. Corners may be square or rounded when base material is plywood but borders shall be rounded as shown. When base material is metal, the corners and borders shall be rounded.
4. W16-7R is the same as W16-L except the arrow is reversed along the vertical centerline.

SIZE	A	B	C	D	E	F	G	H	I	J	K	L	M	N	O	P	Q	R	S	T	U	V	W	X	Y	Z	Area sq. ft.
1																											
2S	24	12	3/8	3/8	1 1/8	3	30°	5 3/4	4	1/2	7																2.0
2M	30	18	3/8	1/2	1 1/8	4 1/2	30°	8 1/2	6	5/8	10 1/4																3.75
3	30	18	3/8	1/2	1 1/8	4 1/2	30°	8 1/2	6	5/8	10 1/4																3.75
4																											8
5																											8

STANDARD SIGN
W16-7

WISCONSIN DEPT OF TRANSPORTATION

APPROVED Matthew R Rauch
for State Traffic Engineer

DATE 11/02/10 PLATE NO. W16-7.5

PROJECT NO: | HWY: | COUNTY: | SHEET NO: 215 | E

NOTES

1. Sign is Type II - Type F Reflective - reference WIS DOT Standard Specification for HIGHWAY and STRUCTURE CONSTRUCTION latest edition.
2. Color:
   Background - Yellow
   Message - Black
3. Message Series - C
4. Corners may be square or rounded when base material is plywood but borders shall be rounded as shown. When base material is metal, the corners and borders shall be rounded.

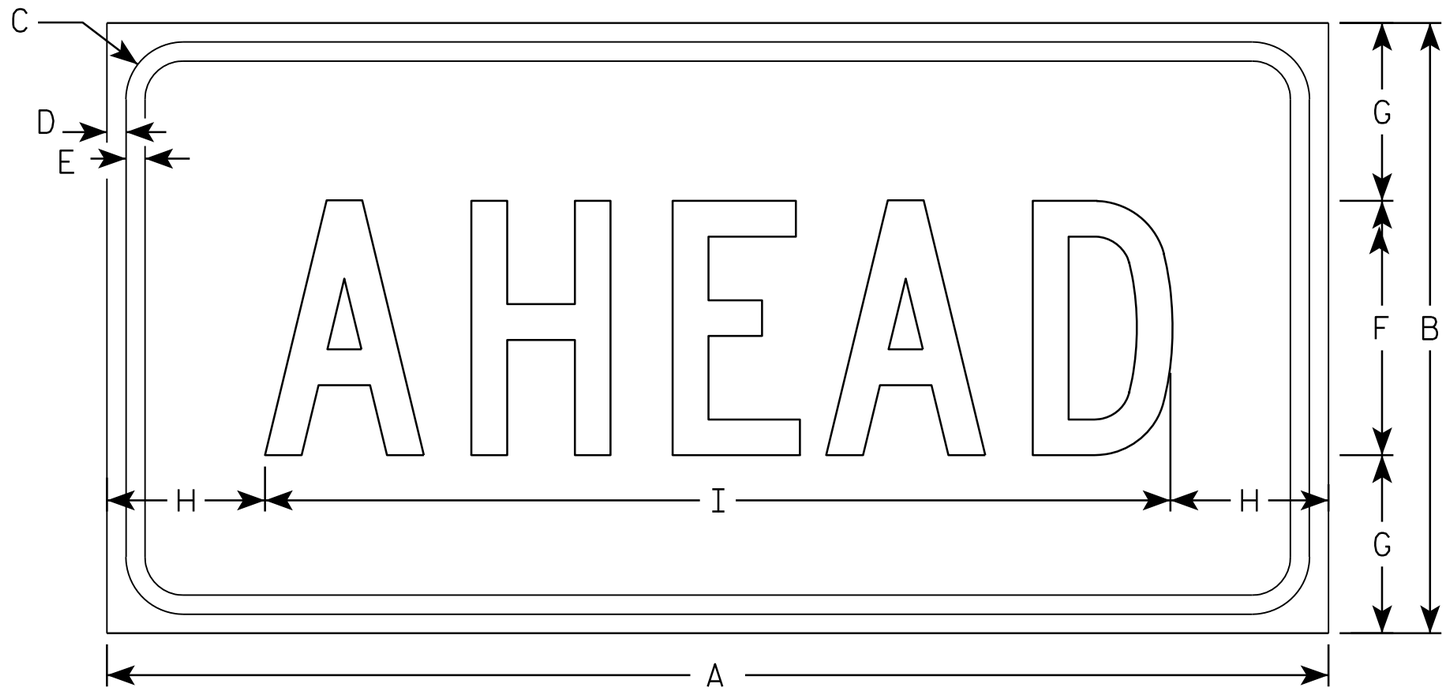

W16-9P

SIZE	A	B	C	D	E	F	G	H	I	J	K	L	M	N	O	P	Q	R	S	T	U	V	W	X	Y	Z	Area sq. ft.
1																											
2S	24	12	1 1/8	3/8	3/8	5	3 1/2	3 1/8	17 3/4																		2.0
2M	30	18	1 1/8	3/8	1/2	7	5 1/2	2 3/4	24 1/2																		3.75
3	30	18	1 1/8	3/8	1/2	7	3 1/2	2 3/4	24 1/2																		3.75
4	48	24	1 3/8	1/2	5/8	10	7	6 1/8	35 3/4																		8.0
5																											

STANDARD SIGN
W16-9P

WISCONSIN DEPT OF TRANSPORTATION

APPROVED Matthew R Rauch
for State Traffic Engineer

DATE 12/28/10 PLATE NO. W16-9P.6

PROJECT NO: | HWY: | COUNTY: | SHEET NO: 216 | E

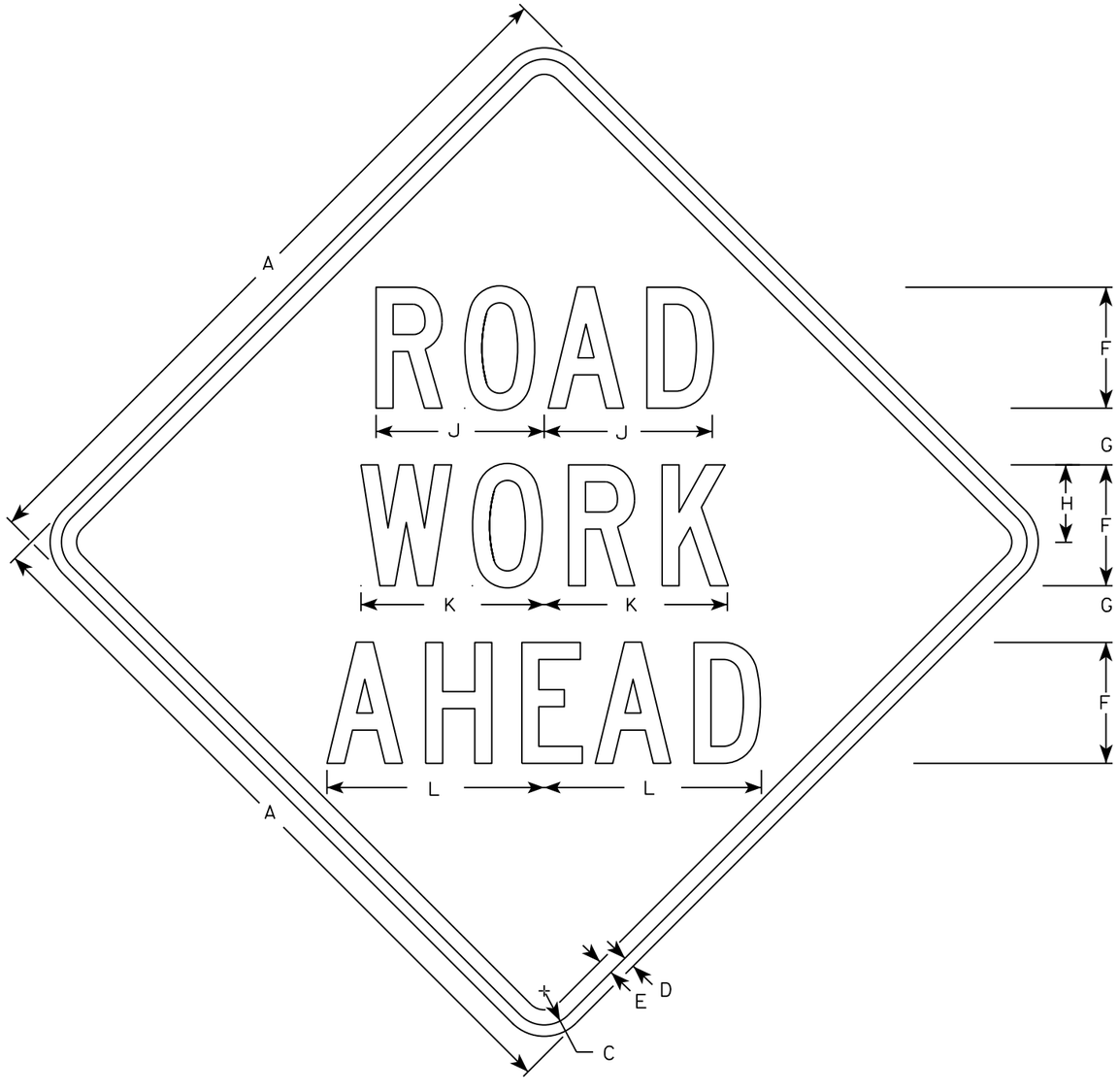

W20-1A

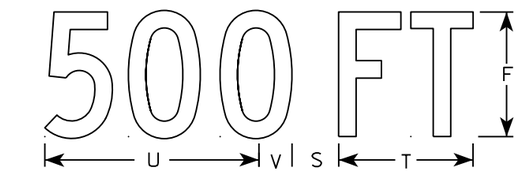

W20-1D

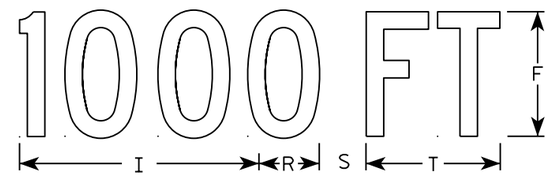

W20-1C

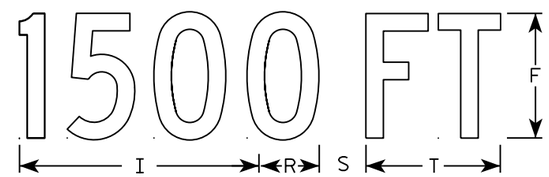

W20-1B

W20-1G

W20-1F

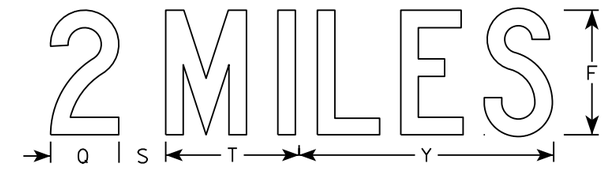

W20-1E

NOTES

1. Sign is Type II - Type F Reflective
2. Color:
   Background - Orange
   Message - Black
3. Message Series - C
4. Corners may be square or rounded when base material is plywood but borders shall be rounded as shown. When base material is metal, the corners and borders shall be rounded.

SIZE	A	B	C	D	E	F	G	H	I	J	K	L	M	N	O	P	Q	R	S	T	U	V	W	X	Y	Z	Area sq. ft.
1	36		1 3/8	1/2	5/8	5	2 5/8	3 1/4	10 1/8	7	7 5/8	8 7/8	1 1/8	4 1/2	3 1/2	9		2 1/2	2 1/4	5 5/8	9	1 3/8	8	1 3/4	10 3/4	6	9.0
2S	48		2 1/4	3/4	1	8	3 3/4	5 1/8	15 3/8	11 1/8	12 1/8	14 3/8	1 5/8	6 7/8	5 3/8	13 7/8	4 3/8	3 7/8	3	8 5/8	13 3/4	2 1/8	11 7/8	2 3/4	16 3/8	9	16.0
2M	48		2 1/4	3/4	1	8	3 3/4	5 1/8	15 3/8	11 1/8	12 1/8	14 3/8	1 5/8	6 7/8	5 3/8	13 7/8	4 3/8	3 7/8	3	8 5/8	13 3/4	2 1/8	11 7/8	2 3/4	16 3/8	9	16.0
3	48		2 1/4	3/4	1	8	3 3/4	5 1/8	15 3/8	11 1/8	12 1/8	14 3/8	1 5/8	6 7/8	5 3/8	13 7/8	4 3/8	3 7/8	3	8 5/8	13 3/4	2 1/8	11 7/8	2 3/4	16 3/8	9	16.0
4	48		2 1/4	3/4	1	8	3 3/4	5 1/8	15 3/8	11 1/8	12 1/8	14 3/8	1 5/8	6 7/8	5 3/8	13 7/8	4 3/8	3 7/8	3	8 5/8	13 3/4	2 1/8	11 7/8	2 3/4	16 3/8	9	16.0
5	48		2 1/4	3/4	1	8	3 3/4	5 1/8	15 3/8	11 1/8	12 1/8	14 3/8	1 5/8	6 7/8	5 3/8	13 7/8	4 3/8	3 7/8	3	8 5/8	13 3/4	2 1/8	11 7/8	2 3/4	16 3/8	9	16.0

STANDARD SIGN
W20-1A, B, C, D, F & G

WISCONSIN DEPT OF TRANSPORTATION

APPROVED Matthew R Rauch
for State Traffic Engineer

DATE 5/07/15 PLATE NO. W20-1.10

PROJECT NO:

SHEET NO: E

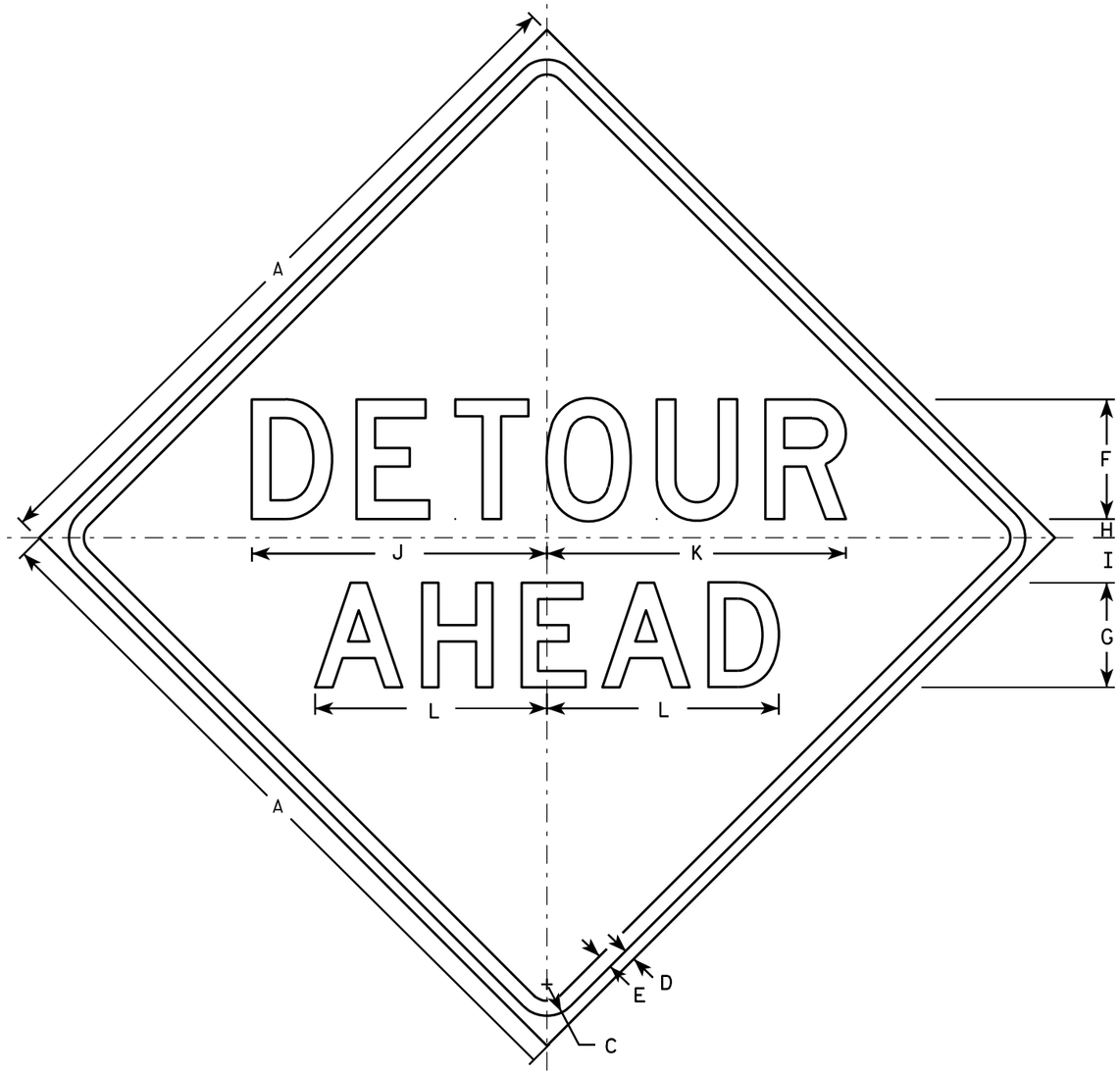

W20-2A

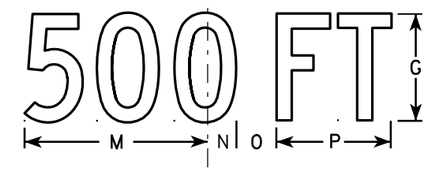

W20-2D

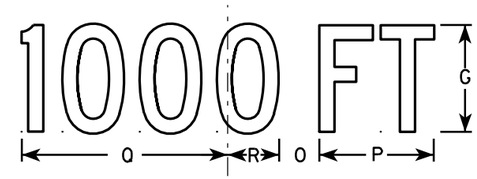

W20-2C

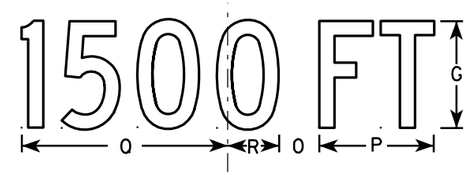

W20-2B

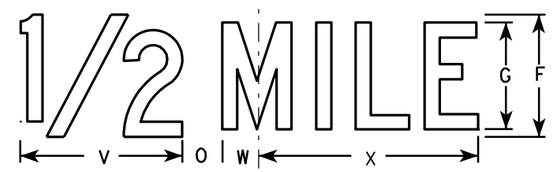

W20-2G

W20-2F

NOTES

1. Sign is Type II - Type F Reflective - reference WIS DOT Standard Specification for HIGHWAY and STRUCTURE CONSTRUCTION latest edition.
2. Color:
   Background - Orange
   Message - Black
3. Message Series - See note 5
4. Corners may be square or rounded when base material is plywood but borders shall be rounded as shown. When base material is metal, the corners and borders shall be rounded.
5. Line 1 is Series D.
   Line 2 is Series D for AHEAD and Series C for all other distances.

SIZE	A	B	C	D	E	F	G	H	I	J	K	L	M	N	O	P	Q	R	S	T	U	V	W	X	Y	Z	Area sq. ft.
1	36		1 5/8	5/8	3/4	6	5	1	2 1/4	14 3/4	15	11 5/8	9	1 3/8	1 7/8	5 5/8	10 1/8	2 1/2	1 1/8	4 1/2	3 1/2	8	1 3/4	10 3/4			9.0
2S	48		2 1/4	3/4	1	8	7	1 1/4	3	19 3/4	20	15 1/2	12	1 7/8	2 5/8	7 1/2	13 1/2	3 3/8	1 1/2	6	4 5/8	10 5/8	2 3/8	14 3/8			16.0
2M	48		2 1/4	3/4	1	8	7	1 1/4	3	19 3/4	20	15 1/2	12	1 7/8	2 5/8	7 1/2	13 1/2	3 3/8	1 1/2	6	4 5/8	10 5/8	2 3/8	14 3/8			16.0
3	48		2 1/4	3/4	1	8	7	1 1/4	3	19 3/4	20	15 1/2	12	1 7/8	2 5/8	7 1/2	13 1/2	3 3/8	1 1/2	6	4 5/8	10 5/8	2 3/8	14 3/8			16.0
4	48		2 1/4	3/4	1	8	7	1 1/4	3	19 3/4	20	15 1/2	12	1 7/8	2 5/8	7 1/2	13 1/2	3 3/8	1 1/2	6	4 5/8	10 5/8	2 3/8	14 3/8			16.0
5	48		2 1/4	3/4	1	8	7	1 1/4	3	19 3/4	20	15 1/2	12	1 7/8	2 5/8	7 1/2	13 1/2	3 3/8	1 1/2	6	4 5/8	10 5/8	2 3/8	14 3/8			16.0

STANDARD SIGN
W20-2A,B,C,D,F & G

WISCONSIN DEPT OF TRANSPORTATION

APPROVED Matthew R Rauch
for State Traffic Engineer
DATE 3/18/11 PLATE NO. W20-2.6

7

7

PROJECT NO: | HWY: | COUNTY: | SHEET NO: 218 | E

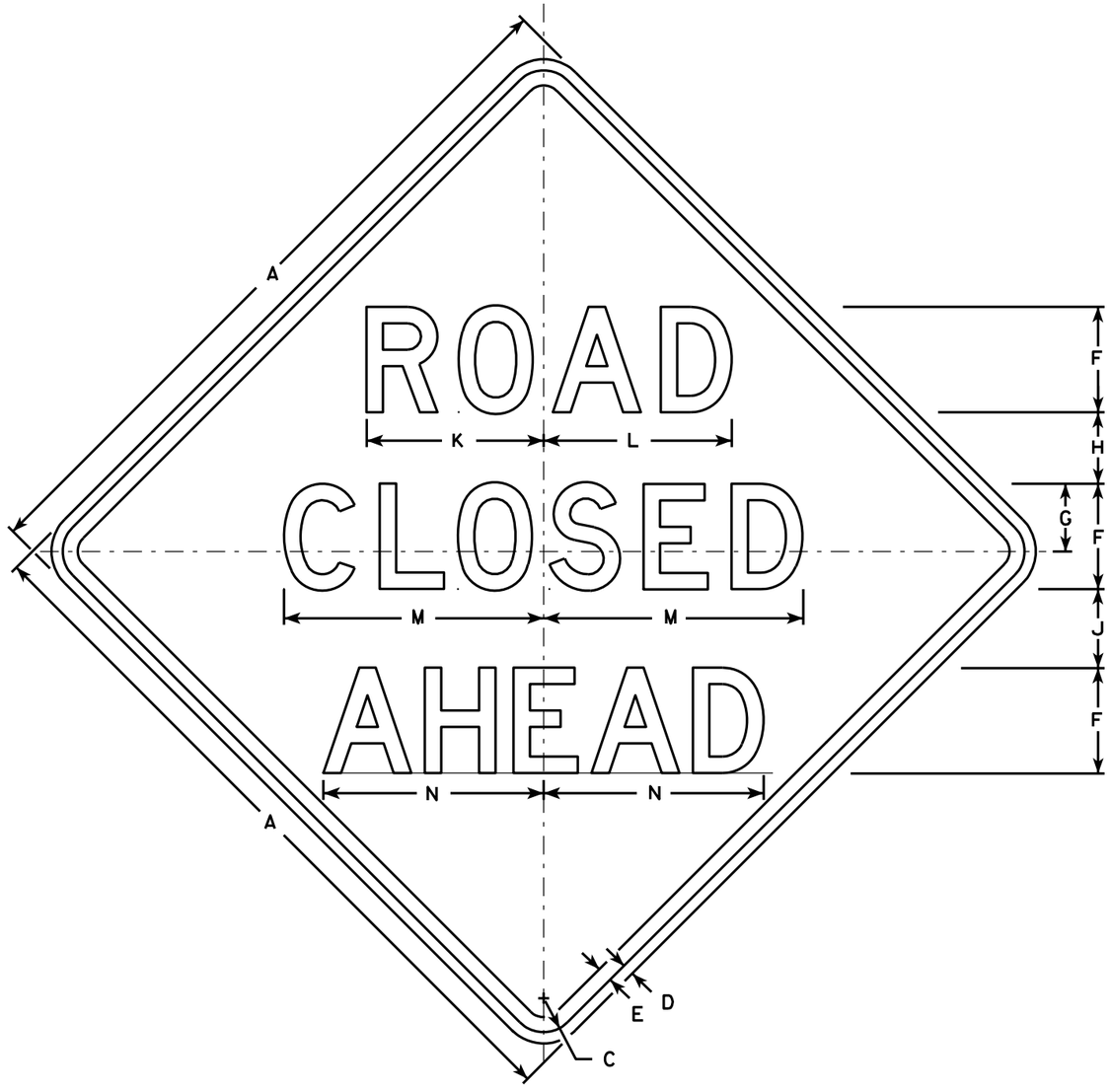

W20-3A

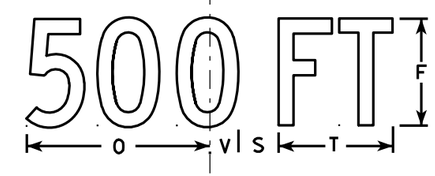

W20-3D

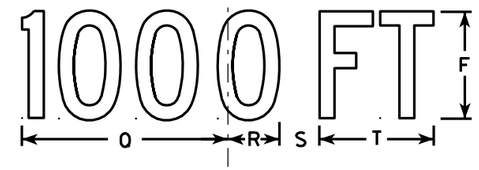

W20-3C

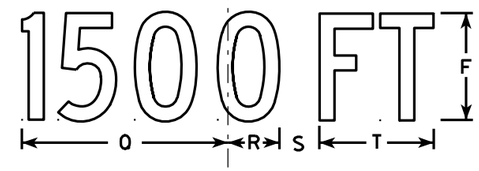

W20-3B

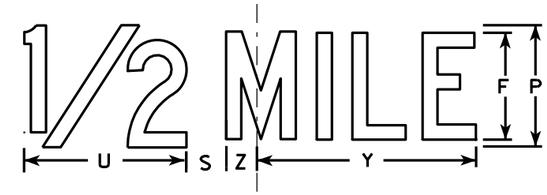

W20-3G

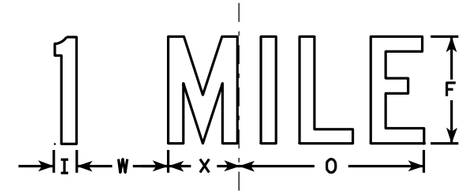

W20-3F

NOTES

1. Sign is Type II - Type F Reflective - reference WIS DOT Standard Specification for HIGHWAY and STRUCTURE CONSTRUCTION latest edition.
2. Color:
   Background - Orange
   Message - Black
3. Message Series - see note 5
4. Corners may be square or rounded when base material is plywood but borders shall be rounded as shown. When base material is metal, the corners and borders shall be rounded.
5. Lines 1 and 2 are Series D.
   Line 3 is Series D for AHEAD and Series C for all other distances.

SIZE	A	B	C	D	E	F	G	H	I	J	K	L	M	N	O	P	Q	R	S	T	U	V	W	X	Y	Z	Area sq. ft.
1	36		1 5/8	5/8	3/4	5	3 3/8	3 1/2	1 1/8	4	8 3/8	8 7/8	12 1/2	11	9	6	10 1/8	2 1/2	1 7/8	5 5/8	8	1 3/8	4 1/2	3 1/2	10 3/4	1 3/4	9.0
2S	48		2 1/4	3/4	1	7	4 1/2	4 3/4	1 1/2	5 1/4	11 3/4	12 1/2	17 1/4	14 5/8	12	8	13 1/2	3 3/8	2 5/8	7 1/2	10 5/8	1 7/8	6	4 5/8	14 3/8	2 3/8	16.0
2M	48		2 1/4	3/4	1	7	4 1/2	4 3/4	1 1/2	5 1/4	11 3/4	12 1/2	17 1/4	14 5/8	12	8	13 1/2	3 3/8	2 5/8	7 1/2	10 5/8	1 7/8	6	4 5/8	14 3/8	2 3/8	16.0
3	48		2 1/4	3/4	1	7	4 1/2	4 3/4	1 1/2	5 1/4	11 3/4	12 1/2	17 1/4	14 5/8	12	8	13 1/2	3 3/8	2 5/8	7 1/2	10 5/8	1 7/8	6	4 5/8	14 3/8	2 3/8	16.0
4	48		2 1/4	3/4	1	7	4 1/2	4 3/4	1 1/2	5 1/4	11 3/4	12 1/2	17 1/4	14 5/8	12	8	13 1/2	3 3/8	2 5/8	7 1/2	10 5/8	1 7/8	6	4 5/8	14 3/8	2 3/8	16.0
5	48		2 1/4	3/4	1	7	4 1/2	4 3/4	1 1/2	5 1/4	11 3/4	12 1/2	17 1/4	14 5/8	12	8	13 1/2	3 3/8	2 5/8	7 1/2	10 5/8	1 7/8	6	4 5/8	14 3/8	2 3/8	16.0

STANDARD SIGN
W20-3A, B, C, D, F & G

WISCONSIN DEPT OF TRANSPORTATION

APPROVED Matthew R Rauch
for State Traffic Engineer
DATE 3/18/11 PLATE NO. W20-3.7

PROJECT NO:	HWY:	COUNTY:		SHEET NO: 219	E

W20-56A

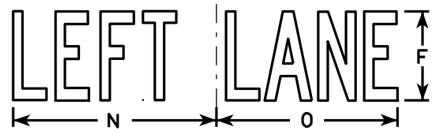

W20-55A

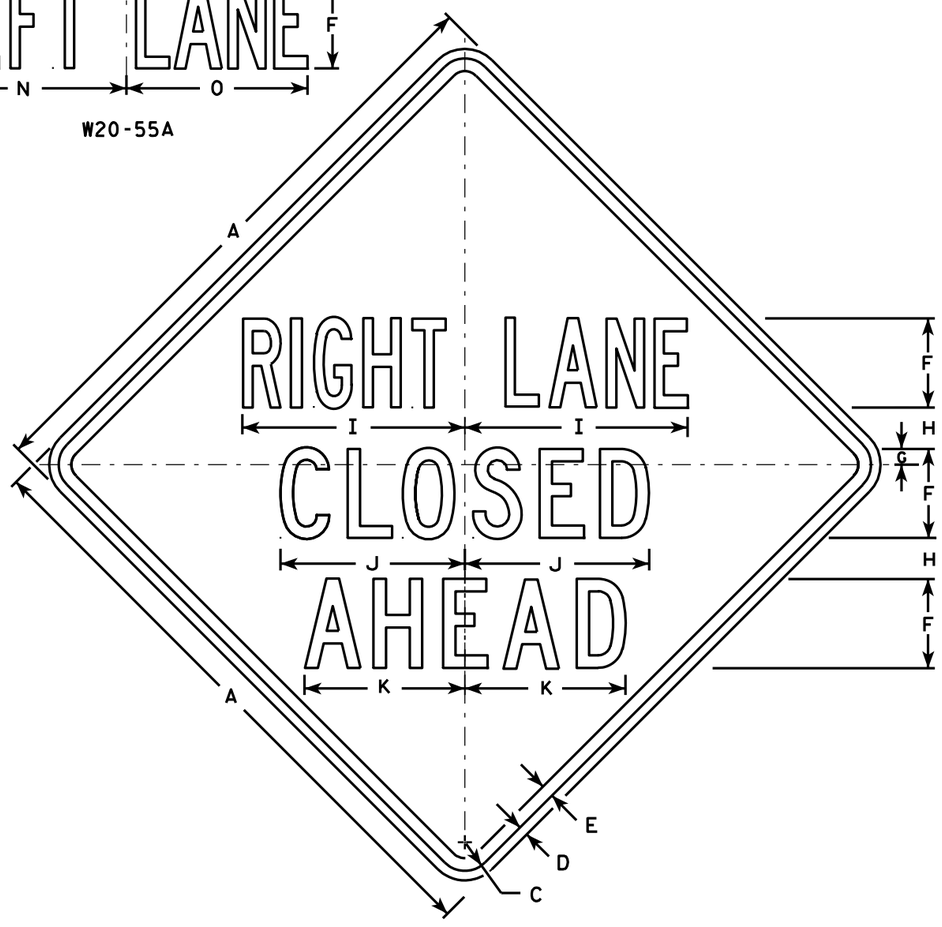

W20-5A

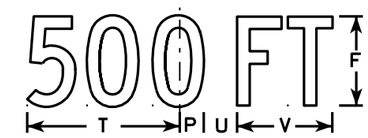

W20-5D

W20-5C

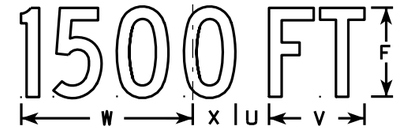

W20-5B

W20-5G

W20-5F

NOTES

1. Sign is Type II - Type F Reflective - reference WIS DOT Standard Specification for HIGHWAY and STRUCTURE CONSTRUCTION latest edition.
2. Color:
   Background - Orange
   Message - Black
3. Message Series - See Note 5
4. Corners may be square or rounded when base material is plywood but borders shall be rounded as shown. When base material is metal, the corners and borders shall be rounded.
5. " ------- LANE" is Series B.
   All other copy is Series C.

SIZE	A	B	C	D	E	F	G	H	I	J	K	L	M	N	O	P	Q	R	S	T	U	V	W	X	Y	Z	Area sq. ft.
1	36	6	1 5/8	5/8	3/4	5	7/8	2 1/2	13 1/8	10 3/4	9 1/2	14 1/4	13 5/8	12	12	1 3/8	1 1/8	4 1/2	3 1/2	9	1 7/8	5 5/8	10 1/8	2 1/2	1 3/4	8	9.0
2S	48	8	2 1/4	3/4	1	7	1 1/4	3 1/4	17 1/2	14 3/8	12 5/8	19	18 3/8	16	14 1/4	1 7/8	1 1/2	6	4 5/8	12	2 5/8	7 1/2	13 1/2	3 3/8	2 3/8	10 5/8	16.0
2M	48	8	2 1/4	3/4	1	7	1 1/4	3 1/4	17 1/2	14 3/8	12 5/8	19	18 3/8	16	14 1/4	1 7/8	1 1/2	6	4 5/8	12	2 5/8	7 1/2	13 1/2	3 3/8	2 3/8	10 5/8	16.0
3	48	8	2 1/4	3/4	1	7	1 1/4	3 1/4	17 1/2	14 3/8	12 5/8	19	18 3/8	16	14 1/4	1 7/8	1 1/2	6	4 5/8	12	2 5/8	7 1/2	13 1/2	3 3/8	2 3/8	10 5/8	16.0
4	48	8	2 1/4	3/4	1	7	1 1/4	3 1/4	17 1/2	14 3/8	12 5/8	19	18 3/8	16	14 1/4	1 7/8	1 1/2	6	4 5/8	12	2 5/8	7 1/2	13 1/2	3 3/8	2 3/8	10 5/8	16.0
5	48	8	2 1/4	3/4	1	7	1 1/4	3 1/4	17 1/2	14 3/8	12 5/8	19	18 3/8	16	14 1/4	1 7/8	1 1/2	6	4 5/8	12	2 5/8	7 1/2	13 1/2	3 3/8	2 3/8	10 5/8	16.0

STANDARD SIGN
W20-5A, B, C, D, F & G

WISCONSIN DEPT OF TRANSPORTATION

APPROVED Matthew R Rauch
for State Traffic Engineer

DATE 3/18/11 PLATE NO. W20-5.11

PROJECT NO:	HWY:	COUNTY:		SHEET NO: 220	E

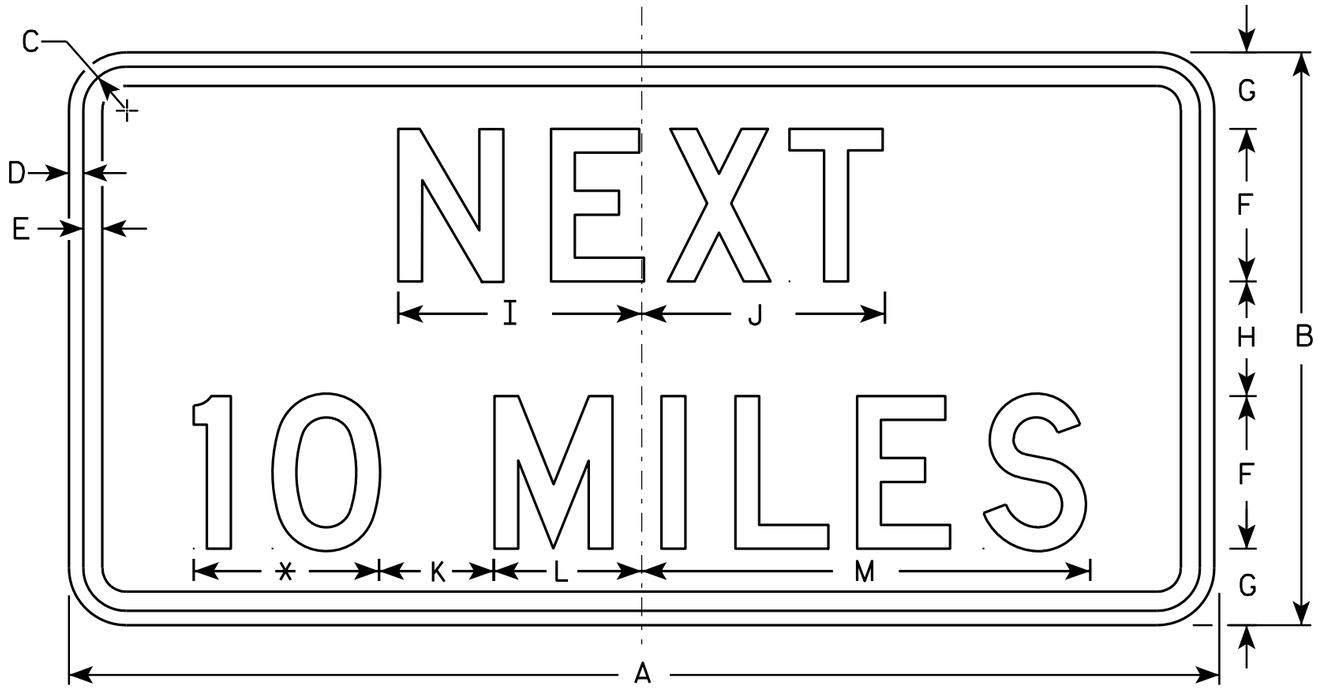

W57-51

NOTES

1. Sign is Type II - Type F Reflective - reference WIS DOT Standard Specification for HIGHWAY and STRUCTURE CONSTRUCTION latest edition.
2. Color:
   Background - Yellow
   Message - Black
3. Message Series - D
4. Corners may be square or rounded when base material is plywood but borders shall be rounded as shown. When base material is metal, the corners and borders shall be rounded.
5. Substitute appropriate numerals and optically adjust spacing to achieve proper balance.

* See note 5

SIZE	A	B	C	D	E	F	G	H	I	J	K	L	M	N	O	P	Q	R	S	T	U	V	W	X	Y	Z	Area sq. ft.
1	24	12	1 1/8	3/8	3/8	3	1 3/4	2 1/2	5	5 1/8	3	2 3/4	9 5/8														2.0
2S	30	15	1 1/8	3/8	1/2	4	2	3	6 3/8	6 3/8	3	3 7/8	11 3/4														3.13
2M	36	18	1 1/8	3/8	1/2	5	2 5/8	2 3/4	7 7/8	8	5	4 1/8	15 3/8														4.5
3	36	18	1 1/8	3/8	1/2	5	2 5/8	2 3/4	7 7/8	8	5	4 1/8	15 3/8														4.5
4	48	24	1 3/8	1/2	5/8	6	3 1/2	5	10	10 1/8	6	5 5/8	19														8.0
5	48	24	1 3/8	1/2	5/8	6	3 1/2	5	10	10 1/8	6	5 5/8	19														8.0

STANDARD SIGN
W57-51

WISCONSIN DEPT OF TRANSPORTATION

APPROVED Matthew R Rauch
for State Traffic Engineer

DATE 3/13/13 PLATE NO. W57-51.9

PROJECT NO: | HWY: | COUNTY: | SHEET NO: 221 | E

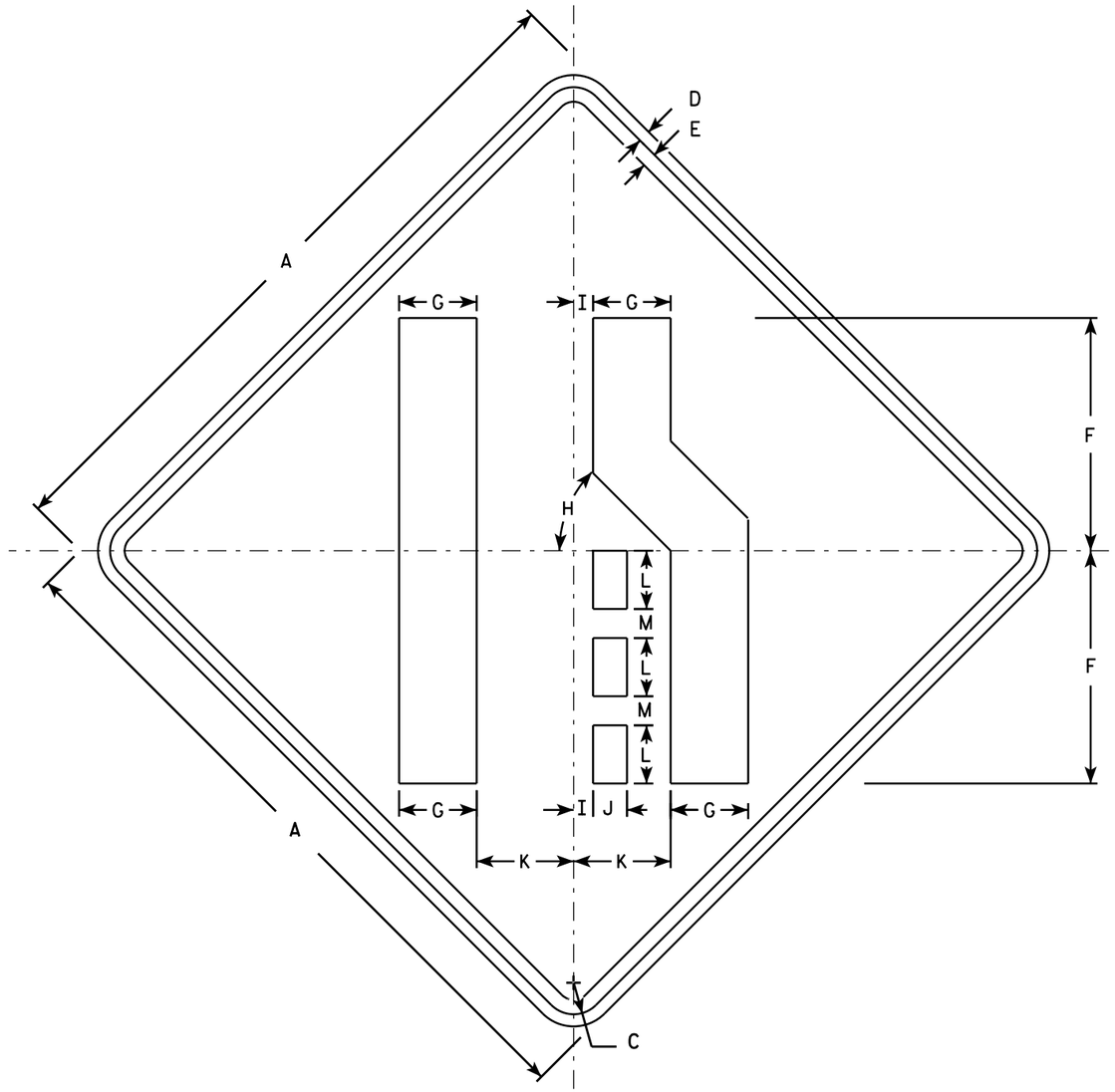

W04-2R

NOTES

1. Sign is Type II - Type F Reflective - reference WIS DOT Standard Specification for HIGHWAY and STRUCTURE CONSTRUCTION latest edition.
2. Color:
   Background - Orange
   Message - Black
3. Corners may be square or rounded when base material is plywood but borders shall be rounded as shown. When base material is metal, the corners and borders shall be rounded.
4. W04-2L is the same as W04-2R except the symbol is reversed along the vertical centerline.

SIZE	A	B	C	D	E	F	G	H	I	J	K	L	M	N	O	P	Q	R	S	T	U	V	W	X	Y	Z	Area sq. ft.
1	36		1 5/8	5/8	3/4	12	4	45°	1	1 3/4	5	3	1 1/2														9.0
2S	48		2 1/4	3/4	1	16	5 3/8	45°	1 1/4	2 3/8	6 3/4	4	2														16.0
2M	48		2 1/4	3/4	1	16	5 3/8	45°	1 1/4	2 3/8	6 3/4	4	2														16.0
3	48		2 1/4	3/4	1	16	5 3/8	45°	1 1/4	2 3/8	6 3/4	4	2														16.0
4	48		2 1/4	3/4	1	16	5 3/8	45°	1 1/4	2 3/8	6 3/4	4	2														16.0
5	48		2 1/4	3/4	1	16	5 3/8	45°	1 1/4	2 3/8	6 3/4	4	2														16.0

STANDARD SIGN
W04-2

WISCONSIN DEPT OF TRANSPORTATION

APPROVED Matthew R Rauch
for State Traffic Engineer

DATE 11/20/13 PLATE 222 W04-2.1

PROJECT NO:

SHEET NO: E

STATE PROJECT NUMBER

6290-05-75

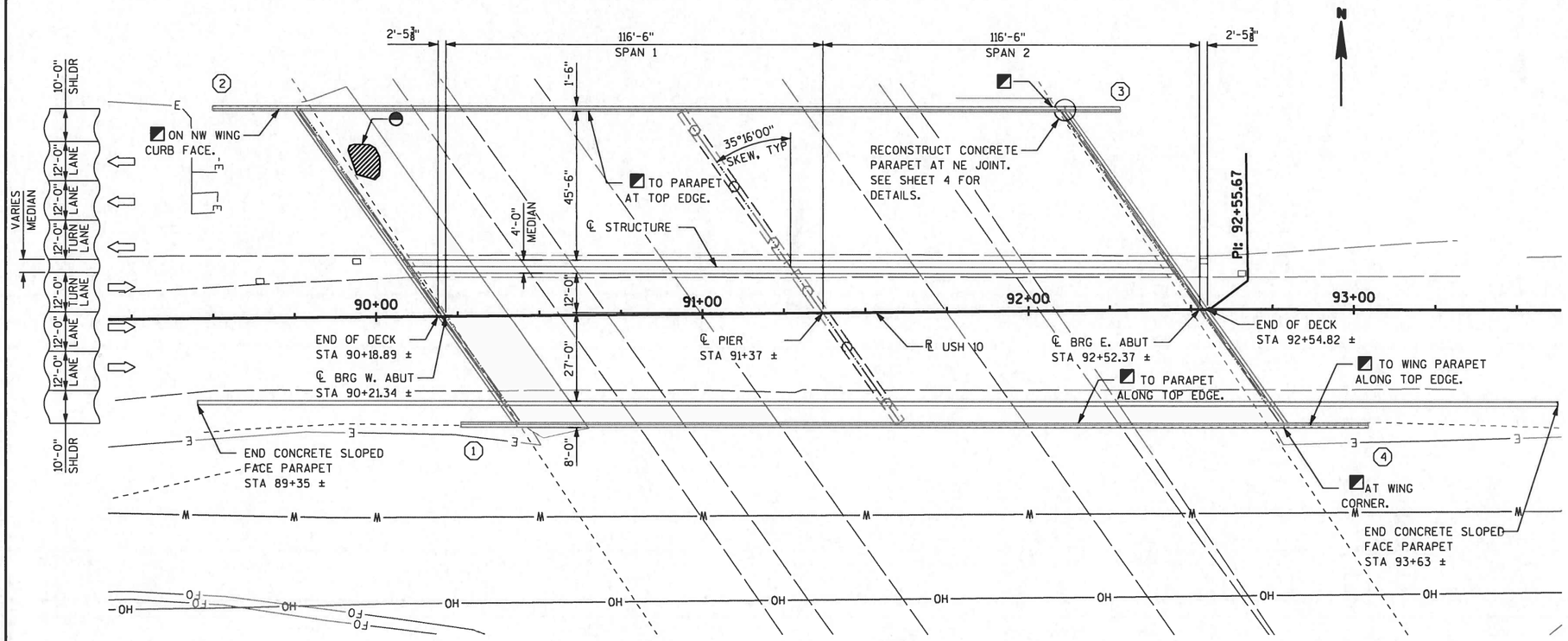

PLAN

(CONCRETE REPAIRS TO TWO SPAN STEEL GIRDER BRIDGE)

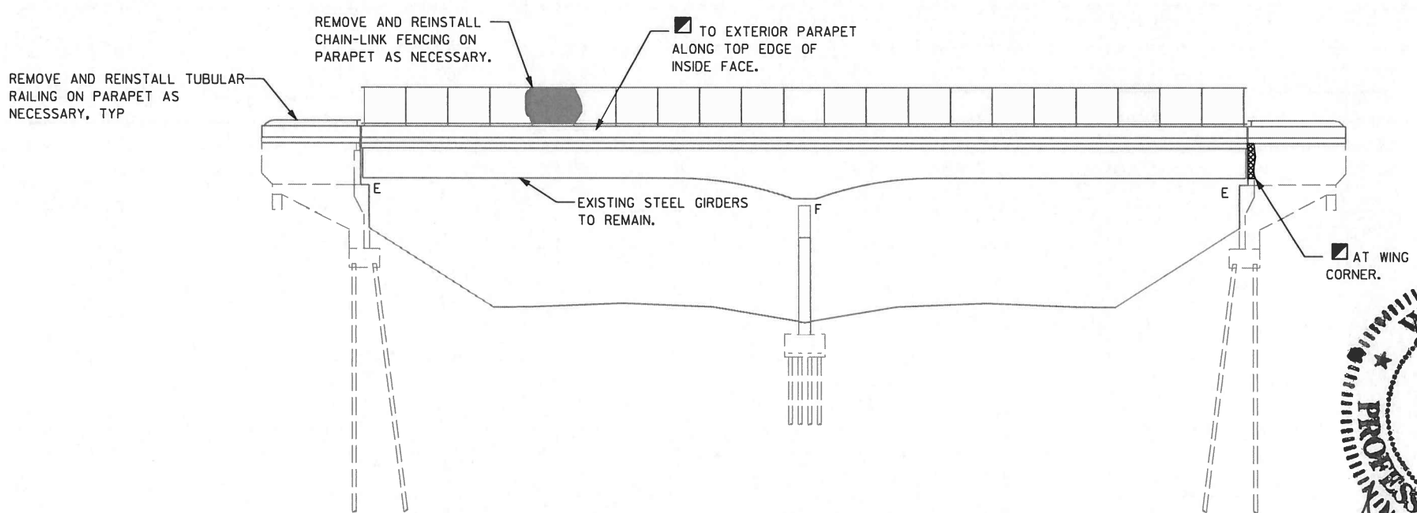

ELEVATION

TRAFFIC DATA:

ADT (2008) = 17,100 - 32,700
ADT (2035) = 22,600 - 43,300
ROADWAY DESIGN SPEED = 40 MPH / 60 MPH

GENERAL NOTES:

DRAWINGS SHALL NOT BE SCALED.

DIMENSION SHOWN ARE BASED ON THE ORIGINAL STRUCTURE PLANS.

ALL STATIONS AND ELEVATIONS ARE IN FEET.

ALL CONCRETE REMOVAL SHALL BE DEFINED BY A 1-INCH DEEP SAW CUT.

◓ REMOVING CONCRETE MASONRY OVERLAY, PREPARATION DECKS AND CONCRETE OVERLAY DECK PATCHING NON-CEMENTITIOUS. AREAS TO BE DETERMINED BY THE ENGINEER IN THE FIELD. SEE SHEET 3 FOR ESTIMATED LIMITS.

◪ CONCRETE SURFACE REPAIR. AREAS TO BE DETERMINED BY THE ENGINEER IN THE FIELD. SEE SHEET 3 FOR ESTIMATED LIMITS.

(#) INDICATES WING NUMBER

FF - FRONT FACE
BF - BACK FACE

ULTIMATE DESIGN STRESSES:

CONCRETE MASONRY ——— 4,000 PSI
HIGH STRENGTH BAR STEEL REINFORCEMENT ——— 60,000 PSI

LIST OF DRAWINGS:

NO.	DATE	REVISION	BY

Mead & Hunt
Mead & Hunt, Inc.
2440 Deming Way
Middleton, WI 53562
608.273.6380
www.meadhunt.com

STATE OF WISCONSIN
DEPARTMENT OF TRANSPORTATION

ACCEPTED William C. Dreher SDR 02/01/16
CHIEF STRUCTURES DESIGN ENGINEER DATE

WISCONSIN GARY A. RUCHTI E-30936 MADISON WI PROFESSIONAL ENGINEER
1/28/16

BRIDGE OFFICE CONTACT
WILLIAM DREHER, P.E.
TELEPHONE: (608) 266-8489

CONSULTANT CONTACT
GARY RUCHTI, P.E.
TELEPHONE: (608) 273-6380

STRUCTURE B-49-24

USH 10 OVER USH 51 - IH 39

COUNTY	TOWN/~~CITY/VILLAGE~~
PORTAGE	HULL

DESIGN SPEC.
REHABILITATION N/A

DESIGNED BY	DESIGN CK'D.	DRAWN BY	PLANS CK'D.
MJB	GAR	MJB	GAR

GENERAL PLAN

SHEET 1 OF 4

8

8

FILE NAME : X:±3230400±140786.01±TECH±CAD±XXXXXXXX±Design±Structure±080101_gp.dgn PLOT DATE : 1/27/2016 PLOT SCALE : 40.0000 ' / in.

STATE PROJECT NUMBER

6290-05-75

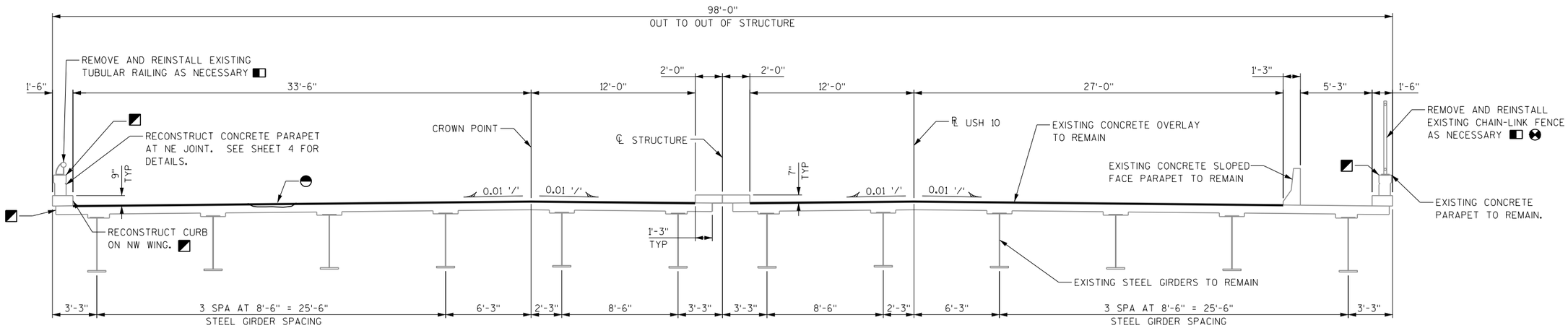

CROSS SECTION THRU BRIDGE

(LOOKING EAST)

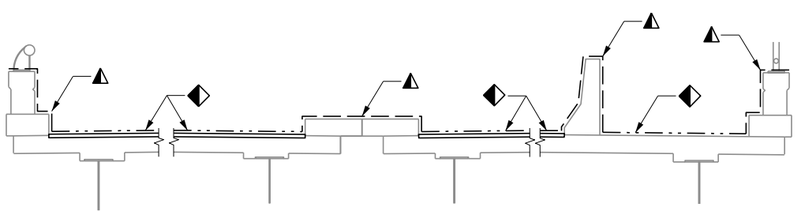

PROTECTIVE SURFACE TREATMENT RESEAL LIMITS

NOTES:

- ◭ PIGMENTED PROTECTIVE SURFACE TREATMENT RESEAL TO BE APPLIED TO ALL EXISTING AND RESTORED CONCRETE SURFACES IN NON-TRAFFICKED AREAS AS SHOWN ON THIS SHEET. LIMITS TO EXTEND TO WING TIPS FOR OUTSIDE PARAPETS AND CURBS, TO END OF DECK FOR MEDIAN, AND TO PARAPET ENDS FOR INTERIOR SLOPED FACE PARAPET.
- ◭ PROTECTIVE SURFACE TREATMENT RESEAL TO BE APPLIED TO ALL EXISTING AND RESTORED CONCRETE SURFACES IN VEHICLE AND PEDESTRIAN TRAFFICKED AREAS AS SHOWN ON THIS SHEET. LIMITS TO EXTEND TO END OF DECK.
- REMOVING CONCRETE MASONRY OVERLAY, PREPARATION DECKS AND CONCRETE OVERLAY DECK PATCHING NON-CEMENTITIOUS. AREAS TO BE DETERMINED BY THE ENGINEER IN THE FIELD. SEE SHEET 3 FOR ESTIMATED LIMITS.
- CONCRETE SURFACE REPAIR. AREAS TO BE DETERMINED BY THE ENGINEER IN THE FIELD. SEE SHEET 3 FOR ESTIMATED LIMITS.
- ★ QUANTITY FOR THE BID ITEM "CONCRETE OVERLAY DECK PATCHING NON-CEMENTITIOUS" INCLUDES THE MATERIAL VOLUME TO FILL VOIDS FROM PREPARATION OF DECKS TYPES 1 AND 2.
- REMOVAL AND REINSTALLATION OF CHAIN-LINK FENCE AND TUBULAR RAILING TO BE INCLUDED IN THE BID ITEM "REMOVE AND REINSTALL RAILING".
- IF ANY COMPONENT OF CHAIN-LINK FENCE IS NOT REINSTALLED PRIOR TO END OF WORKING HOURS THE BID ITEM "FENCE SAFETY" SHALL BE USED.
- ▲ BAR STEEL REINFORCEMENT AND BAR COUPLERS, AS DIRECTED BY THE ENGINEER, FOR PARAPET RECONSTRUCTION. QUANTITIES SHOWN ESTIMATES FOR BIDDING PURPOSES ONLY.

TOTAL ESTIMATED QUANTITIES

	BID ITEM NO.	BID ITEMS	UNIT	W ABUT	PIER 1	E ABUT	SUPER	TOTALS
	203.0210.S	ABATEMENT OF ASBESTOS CONTAINING MATERIAL B-49-24	LS	---	---	---	---	1
◭	502.3215.S	PROTECTIVE SURFACE TREATMENT RESEAL	SY	---	---	---	2375	2375
▲	505.0600	BAR STEEL REINFORCEMENT HS COATED STRUCTURES	LB	---	---	---	10	10
▲	505.0904	BAR COUPLERS NO. 4	EA	---	---	---	2	2
▲	505.0905	BAR COUPLERS NO. 5	EA	---	---	---	2	2
	509.0301	PREPARATION DECKS TYPE 1	SY	---	---	---	15	15
	509.0302	PREPARATION DECKS TYPE 2	SY	---	---	---	6	6
	509.1500	CONCRETE SURFACE REPAIR	SF	15	---	24	107	146
	616.0700.S	FENCE SAFETY	LF	---	---	---	238	238
★	SPV.0085.02	CONCRETE OVERLAY DECK PATCHING NON-CEMENTITIOUS	LB	---	---	---	6280	6280
	SPV.0090.04	RECONSTRUCT CONCRETE PARAPET	LF	---	---	1.5	1.5	3
	SPV.0105.01	REMOVE AND REINSTALL RAILING	LS	---	---	---	---	1
	SPV.0180.02	REMOVING CONCRETE MASONRY OVERLAY	SY	---	---	---	25	25
◭	SPV.0180.03	PIGMENTED PROTECTIVE SURFACE TREATMENT RESEAL	SY	79	---	76	495	650

8

8

NO.	DATE	REVISION	BY

STATE OF WISCONSIN
DEPARTMENT OF TRANSPORTATION

STRUCTURE B-49-24

DRAWN BY MJB | PLANS CK'D. GAR

TYPICAL SECTION & QUANTITIES

SHEET 2 OF 4

224

STATE PROJECT NUMBER

6290-05-75

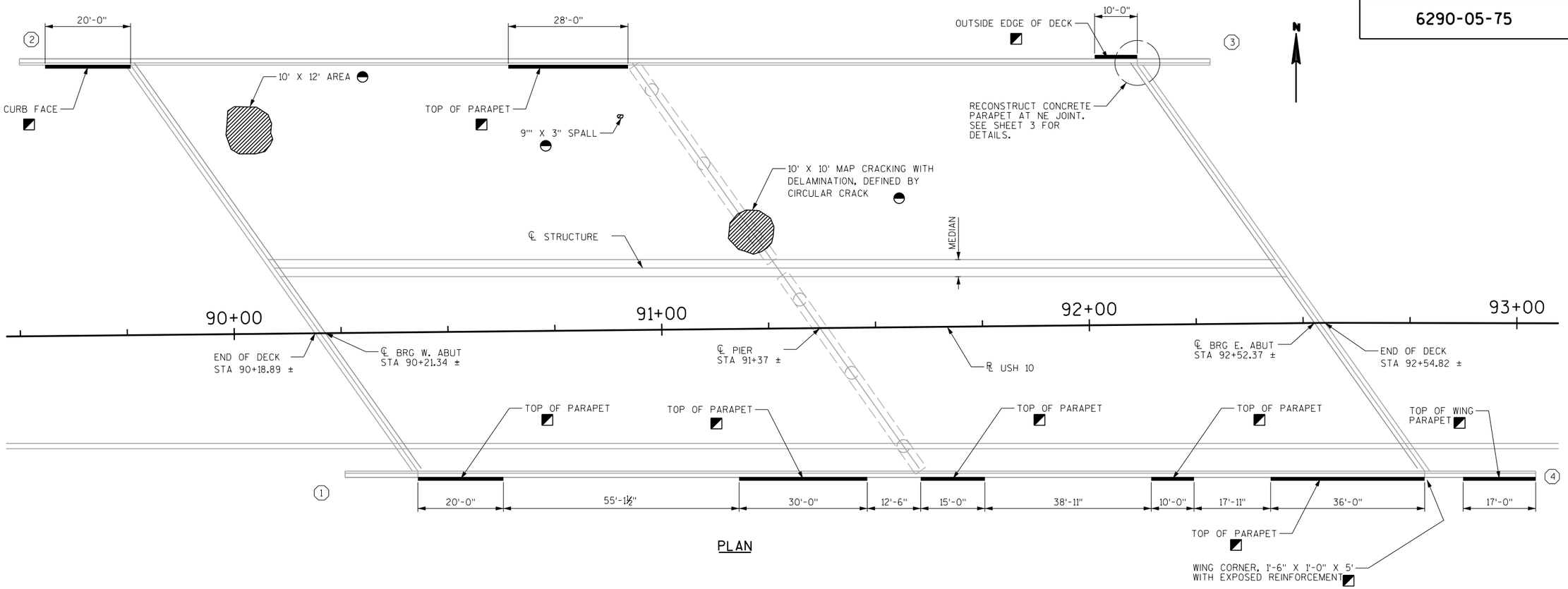

PLAN

NOTES:

- REMOVAL AREAS FOR CONCRETE MASONRY OVERLAY, PREPARATION DECKS AND CONCRETE OVERLAY DECK PATCHING NON-CEMENTITIOUS. AREAS TO BE DETERMINED BY THE ENGINEER IN THE FIELD. SEE THIS SHEET FOR ESTIMATED LIMITS.
- CONCRETE SURFACE REPAIR. RECONSTRUCT TO ORIGINAL CONSTRUCTION LINES UNLESS OTHERWISE SHOWN OR NOTED. SEE THIS SHEET FOR ESTIMATED LOCATIONS AND LIMITS.
- (#) INDICATES WING NUMBER

FF - FRONT FACE
BF - BACK FACE

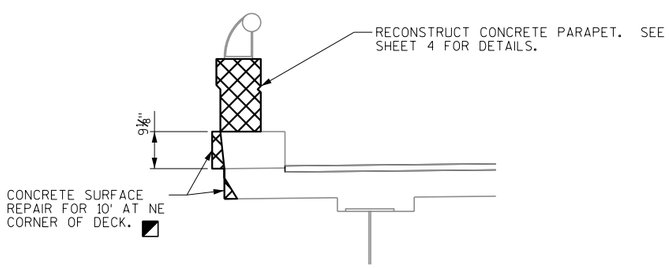

SECTION AT PARAPET RECONSTRUCTION

(NORTHEAST CORNER)

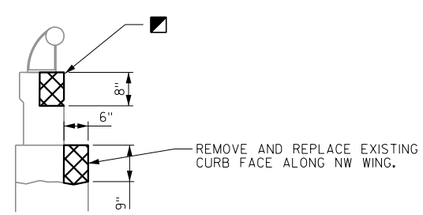

NORTH PARAPET AND CURB

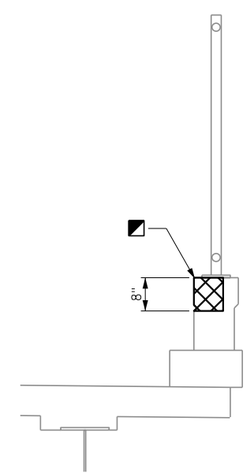

TYPICAL REPAIR ON TOP OF SOUTH PARAPET

NO.	DATE	REVISION	BY

STATE OF WISCONSIN
DEPARTMENT OF TRANSPORTATION

STRUCTURE B-49-24

DRAWN BY MJB | PLANS CK'D. GAR

DETAILS

SHEET 3 OF 4

225

8

8

STATE PROJECT NUMBER
6290-05-75

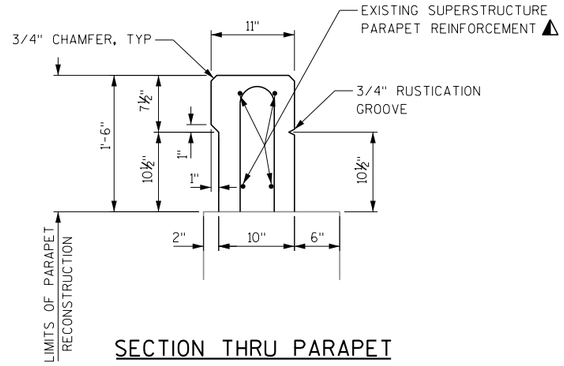

SECTION THRU PARAPET

(ALUMINUM RAILING NOT SHOWN)

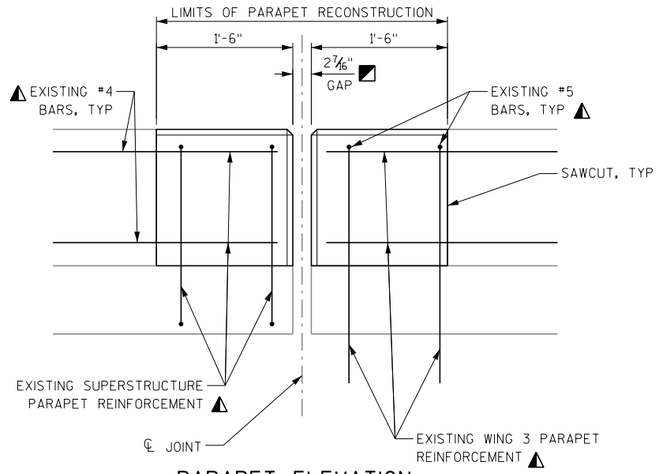

PARAPET ELEVATION

NOTES:

BID ITEM SHALL BE "RECONSTRUCT CONCRETE PARAPET" WHICH INCLUDES ALL ITEMS AND WORK SHOWN ON THIS SHEET.

◪ FIELD VERIFY JOINT GAP.

◭ UTILIZE EXISTING BAR STEEL REINFORCEMENT WITHIN LIMITS OF PARAPET RECONSTRUCTION AND INCORPORATE INTO NEW WORK.

AS REQUIRED, NEW BAR STEEL REINFORCEMENT AND BARS COUPLERS TO BE ADDED AS DIRECTED BY THE ENGINEER, SHALL BE PAID FOR UNDER THE BID ITEMS:

- 505.0605 BAR STEEL REINFORCEMENT HS COATED BRIDGES
- 505.0904 BAR COUPLERS NO. 4
- 505.0905 BAR COUPLERS NO. 5

BAR STEEL REINFORCEMENT SHALL BE EMBEDDED 2" CLEAR UNLESS NOTED.

(#) INDICATES WING NUMBER

FF - FRONT FACE
BF - BACK FACE

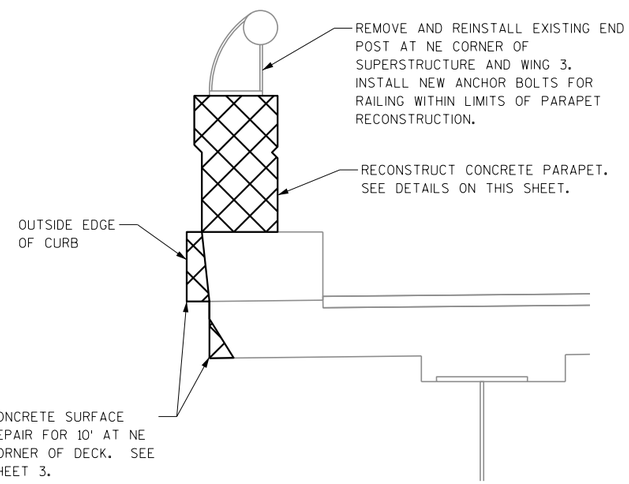

SECTION AT PARAPET RECONSTRUCTION

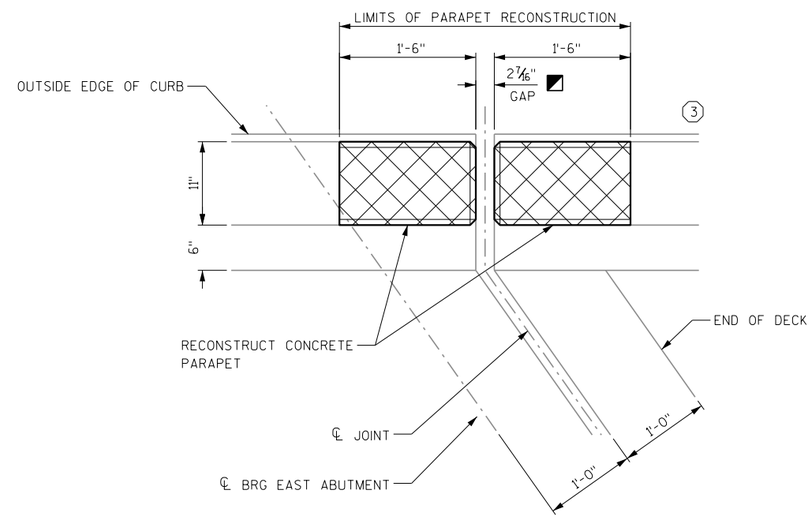

PLAN VIEW OF REPAIRS AT NE CORNER

(ALUMINUM RAILING NOT SHOWN)

(NORTHEAST CORNER)

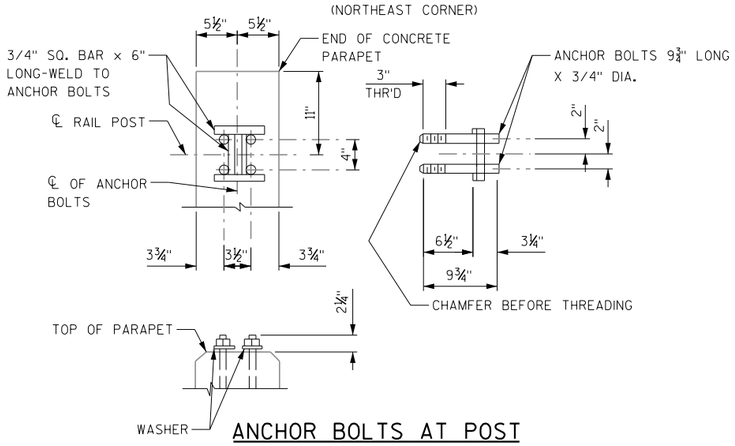

ANCHOR BOLTS AT POST

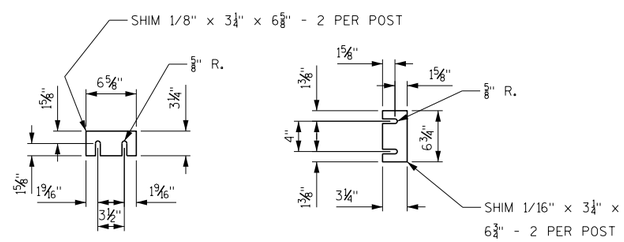

POST SHIM DETAILS

POST ANCHORAGE NOTES:

ANCHOR BOLTS, NUTS AND WASHERS SHALL BE STAINLESS STEEL.

STEEL SHIMS SHALL BE PROVIDED AND USED UNDER POSTS WHERE REQUIRED FOR ALIGNMENT AND SHALL BE GALVANIZED.

FILL ALL EXPOSED OPENINGS BETWEEN SHIMS AND POST ANCHOR BOLTS HOLES WITH NON-STAINING GRAY NON-BITUMINOUS JOINT SEALER.

8

8

NO.	DATE	REVISION	BY

STATE OF WISCONSIN
DEPARTMENT OF TRANSPORTATION

STRUCTURE B-49-24

DRAWN BY MJB | PLANS CK'D. GAR

PARAPET RECONSTRUCTION DETAILS

SHEET 4 OF 4

Notes

Wisconsin Department of Transportation

Dedicated people creating transportation solutions through innovation and exceptional service.

http://www.dot.wisconsin.gov