GRE

PROJECT ID: 1517-75-88

WITH:

COUNTY: WINNEBAGO

DECEMBER 2016

ORDER OF SHEETS

Section No.	1	Title
Section No.	2	Typical Sections and Details
Section No.	3	Estimate of Quantities
Section No.	3	Miscellaneous Quantities
~~Section No.~~	~~4~~	~~Right of Way Plat~~
Section No.	5	Plan and Profile
Section No.	6	Standard Detail Drawings
Section No.	7	Sign Plates
Section No.	8	Structure Plans
Section No.	9	Computer Earthwork Data
Section No.	9	Cross Sections

TOTAL SHEETS = 238

STATE PROJECT	FEDERAL PROJECT	
	PROJECT	CONTRACT
1517-75-88	WISC 2016483	1

STATE OF WISCONSIN
DEPARTMENT OF TRANSPORTATION

PLAN OF PROPOSED IMPROVEMENT

USH 10 - USH 10/STH 441

COUNTY CB - ONEIDA STREET

USH 10

WINNEBAGO COUNTY

B-70-115 & B-70-116

STATE PROJECT NUMBER
1517-75-88

23

N

DESIGN DESIGNATION			ONEIDA STREET	ONEIDA STREET/ USH 10
A.A.D.T.	2020	=	22,700	26,600
A.A.D.T.	2038	=	25,800	33,400
D.H.V.		=	2,270	3,440
D.D.		=	59/41	59/41
T.		=	5.4%	5.4%
DESIGN SPEED		=	35 MPH	40 MPH
ESALS		=	4,247,000	4,935,000

CONVENTIONAL SYMBOLS

PLAN

- CORPORATE LIMITS
- PROPERTY LINE
- LOT LINE
- LIMITED HIGHWAY EASEMENT
- EXISTING RIGHT OF WAY
- PROPOSED OR NEW R/W LINE
- SLOPE INTERCEPT
- REFERENCE LINE
- EXISTING CULVERT
- PROPOSED CULVERT (Box or Pipe)
- COMBUSTIBLE FLUIDS — CAUTION
- MARSH AREA
- WOODED OR SHRUB AREA

PROFILE

- GRADE LINE
- ORIGINAL GROUND
- MARSH OR ROCK PROFILE (To be noted as such) — ROCK
- SPECIAL DITCH — LABEL
- GRADE ELEVATION — 95.36
- CULVERT (Profile View)

UTILITIES

- COMMUNICATION OVERHEAD — OH
- COMMUNICATION UNDERGROUND — C
- ELECTRIC OVERHEAD — OH
- ELECTRIC UNDERGROUND — E
- FIBER OPTIC — FO
- GAS — G
- SANITARY SEWER — SAN
- STORM SEWER — SS
- WATER — W
- UTILITY PEDESTAL
- POWER POLE
- TELEPHONE POLE

R-17-E | R-18-E

T-21-N

T-20-N

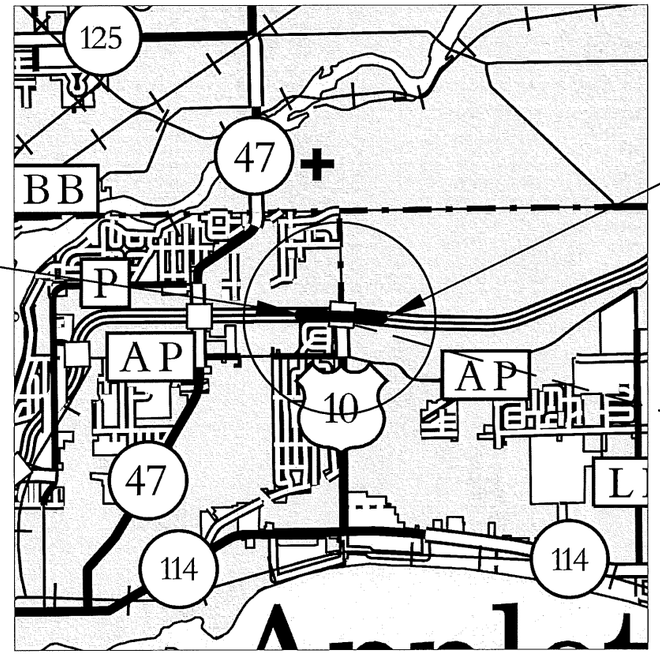

BEGIN PROJECT 1517-75-88
STA 324EB+45.00
Y=551993.605
X=826447.578

END PROJECT 1517-75-88
STA 360EB+80.00
Y=551738.149
X=830069.681

BRIDGES
B-70-115
B-70-116

LAYOUT

SCALE 0 — 1 MI

TOTAL NET LENGTH OF CENTERLINE = 0.689

COORDINATES ON THIS PLAN ARE REFERENCED TO THE WISCONSIN COUNTY COORDINATE SYSTEM (WCCS). WINNEBAGO COUNTY NAD83 (1991).

ELEVATIONS SHOWN ON THIS PLAN ARE REFERENCED TO THE NATIONAL GEODETIC VERTICAL DATUM OF 1929, NGVD 29.

STATE OF WISCONSIN
DEPARTMENT OF TRANSPORTATION

PREPARED BY

Surveyor	WISDOT/KAPUR
Designer	M. COHEN
Project Manager	K. SLATTERY
Regional Examiner	
Regional Supervisor	C. DEGRAVE

APPROVED FOR THE DEPARTMENT

DATE: 30 Aug 2016 Kathleen Slattery (Signature)

E

2

TO OBTAIN LOCATIONS OF
PARTICIPANTS UNDERGROUND
FACILITIES BEFORE YOU
DIG IN WISCONSIN

WIS. STATUTE 182.0175 (1974)
REQUIRES MIN. OF 3 WORK DAYS
NOTICE BEFORE YOU EXCAVATE

DIGGERS HOTLINE
Dial 811 or (800)242-8511
www.DiggersHotline.com

UTILITY CONTACTS

AMERICAN TRANSMISSION COMPANY LLC - ELECTRIC TRANMISSION
MIKE OLSEN
801 O'KEEFE ROAD
PO BOX 6113
DEPERE, WI 54115-6113
920-338-6582; CELL: 920-660-2390
MOlsen@atcllc.com

ATT TCG
DON DIETSCH
C/O NORTHWIND TECHNICAL SERVICES LLC
383 WILLIAMSTOWNE STE B
DELAFIELD, WI 53018
262-646-5602; FAX: 262-646-5603
CELL: 414-651-2862
d.dietsch@northwindtech.com

AT&T WISCONSIN
GARY LAABS
221 WEST WASHINGTON ST. 4TH FL.
APPLETON, WI 54911
920-735-3063
GL1784@att.com

CITY OF APPLETON, DEPT. OF PUBLIC WORKS - SANITARY SEWER AND WATER
PAULA VANDEHEY
100 NORTH APPLETON STREET
APPLETON, WI 54911
920-832-6474

MENASHA - UTILITIES
GREG SHULL
321 MILWAUKEE STREET
PO BOX 340
MENASHA, WI 54952-0340
920-967-3422
GShull@wppiEnergy.org

VILLAGE OF FOX CROSSING - ELECTRIC
RANDY GALLOW
STREET DEPARTMENT
2000 MUNICIPAL DRIVE
NEENAH, WI 54956
920-720-7110

VILLAGE OF FOX CROSSING - SANITARY SEWER
MARK SCHMITT
UTILITY DISTRICT
2340 AMERICAN DRIVE
NEENAH, WI 54956
920-720-710; CELL: 920-419-3874

VILLAGE OF FOX CROSSING - WATER
JEFF ROTH
UTILITY DISTRICT
2340 AMERICAN DRIVE
NEENAH, WI 54956
920-720-7175; CELL: 920-419-3866

TDS METROCOM
STEVE JAKUBIEC
10 COLLEGE AVE STE 218A
APPLETON, WI 54911
920-882-4166; CELL: 920-562-7221
steve.jakubiec@tdstelecom.com

CHARTER - COMMUNICATION
VINCE ALBIN
3520 E DESTINATION DRIVE
APPLETON, WI 54915
920-831-9249
vince.albin@charter.com

WE ENERGIES - ELECTRIC & GAS
LATROY BRUMFIELD
333 W EVERETT STREET
ROOM A299
MILWAUKEE, WI 53203
414-221-5617; CELL: 414-975-9053
latroy.brumfield@we-energies.com

WE ENERGIES - ELECTRIC
CHRIS SCHULZ
500 S 116 ST
WEST ALLIS, WI 53214
414-944-5553; CELL: 414-550-8289
chris.schulz@we-energies.com

WE ENERGIES - GAS
LISA MAYNE
1921 8 STREET SOUTH
WISCONSIN RAPIDS, WI 54494
715-421-7227
lisa.mayne@we-energies.com

COUNTY SURVEYOR CONTACT

JERRY BOUGIE
WINNEBAGO COUNTY COURT HOUSE
445 ALGOMA BLVD
OSHKOSH, WI 54903
920-236-4839

DNR AREA LIASON

JAY SCHIEFELBEIN
DEPARTMENT OF NATURAL RESOURCES
2984 SHAWANO AVENUE
GREEN BAY, WI 54313
920-360-3784
jeremiah.schiefelbein@wisconsin.gov

US ARMY CORP OF ENGINEERS

NICK DOMER
OLD FORT SQUARE
211 N. BROADWAY, STE 221
GREEN BAY, WI 54303
651-290-5855
T.Dormer@usace.army.mil

WINNEBAGO COUNTY HIGHWAY COMMISSIONER

ERNIE WINTERS
901 WEST COUNTY ROAD Y
P.O. BOX 2764
OSHKOSH, WI 54903
920-232-1700

EMERGENCY CONTACT NUMBERS FOR WE ENERGIES

ELECTRIC 24 HOUR EMERGENCY SERVICE: 1-800-662-4797
GAS 24 HOUR EMERGENCY SERVICE: 1-800-261-5325

ORDER OF PLAN SHEETS

TITLE SHEET
UTILITIES & GENERAL NOTES
PROJECT OVERVIEW
TYPICAL SECTIONS
CONSTRUCTION DETAILS
REMOVAL PLAN
PLAN DETAILS
INVASIVE SPECIES & DISTURBED WETLANDS
EROSION CONTROL
STORM SEWER PLAN
PIPE UNDERDRAIN
PAVEMENT MARKING
TRAFFIC CONTROL/STAGE CONSTRUCTION
ALIGNMENT DETAIL
ESTIMATE OF QUANTITIES
MISCELLANEOUS QUANTITIES
PLAN & PROFILE
SIGN DETAIL
STRUCTURE PLANS
EARTHWORK QUANTITIES
CROSS SECTIONS

FILE NAME : S:\PDS\C3D\WIS441\15177574_79\SHEETSPLAN\15177588\020100-GN\NE-15177588-020101-GN.DWG
020101_gn - 01
PLOT DATE : 8/25/2016 12:55 PM PLOT BY : MARTENS, JOHN M PLOT NAME : PLOT SCALE : 1 IN:10 FT
WISDOT/CADDS SHEET 42

GENERAL NOTES

THE CONTRACTOR SHALL CONTACT THE UTILITIES AND DIGGERS HOTLINE TO LOCATE AND FIELD VERIFY UTILITIES. THE LOCATIONS OF EXISTING AND PROPOSED UTILITY INSTALLATIONS AS SHOWN ON THE PLANS ARE APPROXIMATE. THERE MAY BE OTHER UTILITY INSTALLATIONS WITHIN THE PROJECT AREA THAT ARE NOT SHOWN.

THE CONTRACTOR SHALL NOTIFY DIGGERS HOTLINE AND AFFECTED UTILITIES PRIOR TO THE START OF WORK. ANY LOCAL MUNICIPAL UTILITY WHICH IS NOT A MEMBER OF THE DIGGERS HOTLINE MUST BE CONTACTED SEPARATELY.

NO TREES OR SHRUBS ARE TO BE REMOVED WITHOUT APPROVAL OF THE ENGINEER.

RIGHT OF WAY LINES SHOWN ON CROSS SECTIONS ARE APPROXIMATE.

PROTECT INLETS WITH PROPER INLET PROTECTION AT LOCATIONS EXHIBITING RISK OF BEING IMPACTED BY CONSTRUCTION OPERATIONS AS SHOWN ON THE PLANS, OR AS DIRECTED BY THE ENGINEER.

THE CONTRACTOR SHALL BE RESPONSIBLE FOR RESHAPING AND SEEDING ANY PREVIOUSLY GRASSED AREAS WHICH ARE DISTURBED BY ANY OPERATION OUTSIDE OF THE NORMAL CONSTRUCTION LIMITS AT THE CONTRACTOR EXPENSE.

ALL HOLES OR OPENINGS BELOW SUBGRADE RESULTING FROM ABANDONMENT OR REMOVAL OF EXISTING STRUCTURES SHALL BE FILLED WITH COMPACTED GRANULAR BACKFILL OR AS DIRECTED BY THE ENGINEER.

A SAWED JOINT IS REQUIRED WHERE NEW HMA PAVEMENT MEETS EXISTING HMA PAVEMENT.

CURB AND GUTTER GRADES ARE GIVEN TO THE FLANGE. CURB AND GUTTER RADII ARE MEASURED TO THE FLANGE.

TEMPORARY STORAGE OF ANY EXCAVATED MATERIAL WILL NOT BE PERMITTED IN WETLANDS, FLOODWAY OR FLOODPLAIN OF ANY WATERWAY.

CONTRACTOR SHALL CLOSE SIDEWALK FOR PEDESTRIANS ON ONEDIA STREET DURING DEMOLITION OF BRIDGE DECK.

MEDIAN TOPSOIL AVERAGE DEPTH IS 8 INCHES AND IS INCLUDED IN THE EXCAVATION COMMON BID ITEM QUANTITY. REMOVING UNDERDRAIN PIPE IS INCIDENTAL TO EXCAVATION COMMON.

CROSS SECTIONS SHOWN INCLUDE THE EXISTING TOPSOIL SURFACE.

THE EROSION CONTROL FEATURES AS SHOWN ON THE PLANS ARE AT SUGGESTED LOCATIONS. EXACT LOCATION WILL BE DETERMINED BY THE ENGINEER.

ALL ELEVATIONS NOTED IN THE PLAN SET SHALL BE FIELD VERIFIED

REMOVAL OF EROSION CONTROL DEVICES IS INCIDENTAL TO THE COST OF THEIR RESPECTIVE BID ITEMS.

EROSION CONTROL DEVICES SHALL BE PLACED IN SEQUENCE WITH CONSTRUCTION OPERATIONS OR AS DETERMINED BY THE ENGINEER.

TRAFFIC CONTROL DEVICES SHALL BE ADJUSTED TO FIELD CONDITIONS AS DIRECTED BY THE ENGINEER.

SIGNS IN CONFLICT WITH TRAFFIC CONTROL "IN USE" SHALL BE COVERED AS DIRECTED BY THE ENGINEER AND PAID FOR UNDER THE ITEM "TRAFFIC CONTROL COVERING SIGNS TYPE 1 OR TYPE 2".

BENCHMARK LOCATIONS SHOWN ON PLAN ARE APPROXIMATE AND SHOULD BE VERIFIED.

ALL ITEMS ASSOCIATED WITH SIGNING REMOVALS ARE SHOWN ON SIGNING PLAN, EXCEPT FOR REMOVING OLD SIGN STRUCTURES.

REMOVAL PLAN DOES NOT INCLUDE REMOVAL OF TEMPORARY PAVEMENT, SEE TRAFFIC CONTROL PLAN.

PRIOR TO ORDERING DRAINAGE PIPES AND STRUCTURES, THE CONTRACTOR SHALL VERIFY RELATED DRAINAGE INFORMATION IN THE PLAN AND PROVIDE DOCUMENTATION TO THE ENGINEER IN ACCORDANCE WITH THE SPECIFICATIONS. THIS ALSO INCLUDES VERIFICATION OF INVERT ELEVATIONS AT ALL PROPOSED STORM SEWER CONNECTION POINTS TO EXISTING SYSTEMS.

ANY MESH MATERIAL THAT IS FOUND IN EXISTING PAVEMENT WILL BE INCIDENTAL TO THE REMOVAL OF THE PAVEMENT IN THAT SECTION. EXISTING PAVEMENT DEPTHS ARE BASED ON AS-BUILT DATA AND MAY VARY IN THE FIELD.

STATIONING, DISTANCES AND OFFSETS FOR SIGNS SHOWN IN THE PLANS ARE APPROXIMATE AND THE FINAL LOCATIONS ARE TO BE DETERMINED BY THE ENGINEER.

COORDINATES ON THIS PLAN ARE REFERENCED TO THE WISCONSIN COUNTY COORDINATE SYSTEM (WCCS). WINNEBAGO COUNTY NAD 83 (1991)

ELEVATIONS SHOWN THIS PLAN ARE REFERENCED TO THE NATIONAL GEODETIC VERTICAL DATUM OF 1929, NGVD29.

ALIGNMENT IDENTIFIERS	
EB	US 10/WIS 441 EB
TSB	ONEIDA STREET SB
WB	US10/WIS 441 WB

ABBREVIATIONS

AEW	APRON END WALL
AGG	AGGREGATE
BAD	BASE AGGREGATE DENSE
BM	BENCH MARK
C&G	CURB AND GUTTER
C/L	CENTER OR CONSTRUCTION LINE
CMCP	CORRUGATED METAL CULVERT PIPE
CONC	CONCRETE
CP	CULVERT PIPE
CPRC	CULVERT PIPE REINFORCED CONCRETE
CSD	CONCRETE SURFACE DRAIN
CY	CUBIC YARD
D	DEGREE OF CURVE
Δ	DELTA
DISCH	DISCHARGE
EB	EAST BOUND
EL OR ELEV	ELEVATION
EAT	ENERGY ABSORBING TERMINAL
EXIST	EXISTING
FE	FIELD ENTRANCE
FT	FOOT
HMA	HOT MIX ASPHALT
INL	INLET
INV	INVERT
L	LENGTH OF CURVE
LHF	LEFT HAND FORWARD
LT	LEFT
LF	LINEAR FOOT
MIN	MINIMUM
MH	MANHOLE
M/L	MATCHLINE
NB	NORTHBOUND
NC	NORMAL CROWN
PAVT	PAVEMENT
PC	POINT OF CURVE
PCC	POINT OF COMPOUND CURVE
PE	PRIVATE ENTRANCE
PI	POINT OF INTERSECTION
PLE	PERMANENT LIMITED EASEMENT
PT	POINT OF TANGENT
R	RADIUS OF CURVE
R/L	REFERENCE LINE
RC	REVERSE CROWN
RCAEW	REINFORCED CONCRETE APRON ENDWALL FOR CULVERT PIPE
REQ'D	REQUIRED
RHF	RIGHT HAND FORWARD
RO	RUN OFF LENGTH
RRSP	RAIL ROAD SPIKE
RT	RIGHT
RW OR R/W	RIGHT OF WAY
SALV	SALVAGED
SAPBC	SALVAGED ASPHALTIC PAVEMENT BASE COURSE
SB	SOUTHBOUND
SDD	STANDARD DETAIL DRAWING
SE	SUPER ELEVATION
SF	SQUARE FOOT
SSPRC	STORM SEWER PIPE REINFORCED CONCRETE
STA	STATION
SY	SQUARE YARD
T	TANGENT LENGTH
TEMP	TEMPORARY
TLE	TEMPORARY LIMITED EASEMENT
TYP	TYPICAL
VCL	VERTICAL CURVE LENGTH
VPC	POINT OF VERTICAL CURVE
VPI	POINT OF VERTICAL INTERSECTION
VPT	POINT OF VERTICAL TANGENT
WB	WESTBOUND
YD	YARD

FILE NAME : S:\PDS\C3D\WIS441\151775?4_79\SHEETSPLAN\15177588\020100-GN\NE-15177588-020101-GN.DWG
020101_gn - 03
PLOT DATE : 8/25/2016 12:55 PM PLOT BY : MARTENS, JOHN M PLOT NAME : PLOT SCALE : 1 IN:10 FT
WISDOT/CADDS SHEET 42

2

N

USH 10/STH 441

S ONEIDA ST

USH 10/ONEIDA ST

STH 441

STRUCTURE
B-70-116

℄ WEST ABUTMENT
B-70-116
STA 340WB+66.70

℄ EAST ABUTMENT
B-70-116
STA 342WB+33.74

320WB
320EB

330WB
330EB

340WB
340EB

350WB
350EB

360WB
360EB

370WB
370EB

BEGIN PROJECT
STA 324EB+45.00
Y=551993.605
X=826447.578

℄ WEST ABUTMENT
B-70-115
STA 340EB+67.30

℄ EAST ABUTMENT
B-70-115
STA 342EB+34.30

STRUCTURE
B-70-115

END PROJECT
STA 360EB+80.00
Y=551738.149
X=830069.681

PROJECT NO: 1517-75-88	HWY: STH 441/USH 10	COUNTY: WINNEBAGO	PROJECT OVERVIEW	SHEET 5	E

FILE NAME : S:\PDS\C3D\WIS441\15177574_79\SHEETSPLAN\15177588\020200-PO\NE-15177588-020201-PO.DWG
LAYOUT NAME - 020201-po

PLOT DATE : 8/17/2016 9:56 AM PLOT BY : COHEN, MICHAEL J PLOT NAME : PLOT SCALE : 1 IN:400 FT

WISDOT/CADDS SHEET 42

*CARDINAL SOUTHBOUD DIRECTION = WESTBOUND

*CARDINAL NORTHBOUD DIRECTION = EASTBOUND

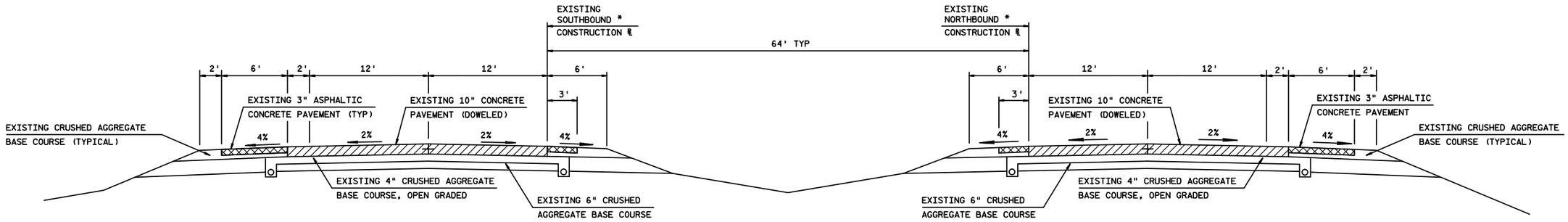

TYPICAL EXISTING CROSS SECTION FOR STH 441

STA 324EB+45 - STA 335EB+00
STA 348EB+00 - STA 360EB+80

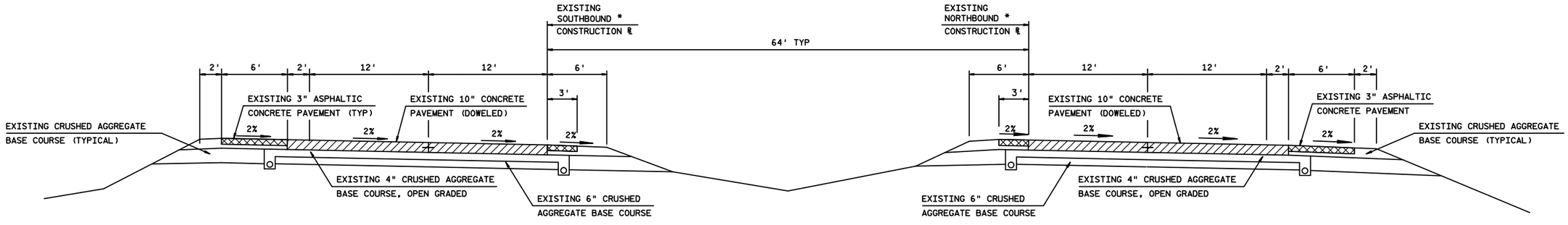

TYPICAL EXISTING CROSS SECTION FOR STH 441 IN FULL SUPERELEVATION

STA 335EB+00 - STA 340EB+66
STA 342EB+35 - STA 348EB+00

PROJECT NO: 1517-75-88	HWY: STH 441/USH 10	COUNTY: WINNEBAGO	TYPICAL SECTIONS	SHEET 6	E

2

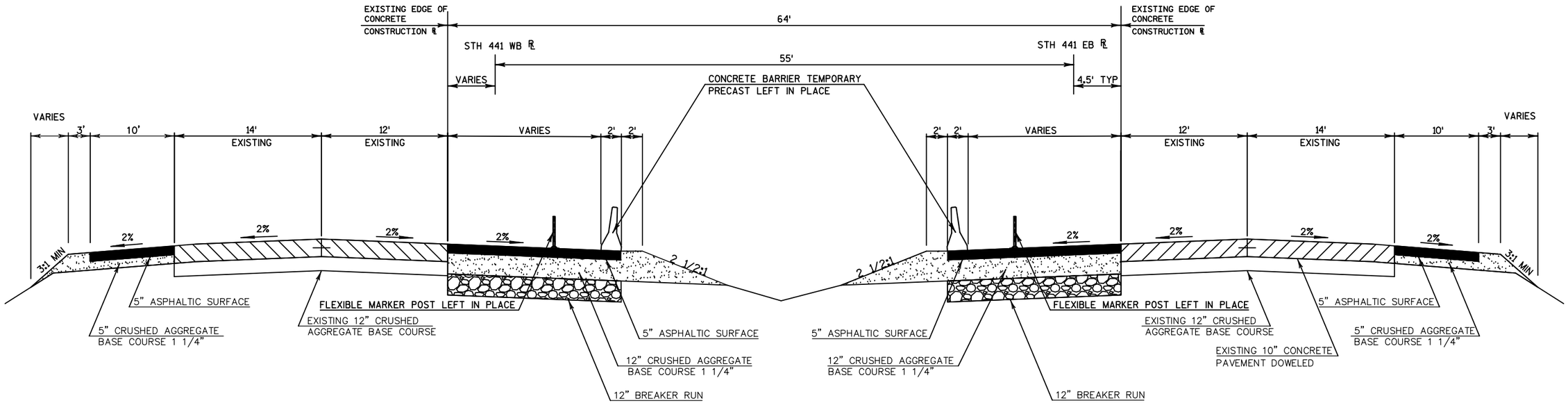

TYPICAL PROPOSED CROSS SECTION FOR MAINLINE STH 441

STA 324EB+45 - STA 333EB+00
STA 350EB+50 - STA 360EB+80

PROJECT NO: 1517-75-88	HWY: STH 441/USH 10	COUNTY: WINNEBAGO	TYPICAL SECTIONS	SHEET 7	E

FILE NAME : S:\PDS\C3D\WIS441\15177574_79\SHEETSPLAN\15177588\020300-TS\NE-15177588-020301-TS.DWG
LAYOUT NAME - 020301-ts2
PLOT DATE : 9/20/2016 3:08 PM PLOT BY : COHEN, MICHAEL J PLOT NAME : PLOT SCALE : 1 IN:10 FT
WISDOT/CADDS SHEET 42

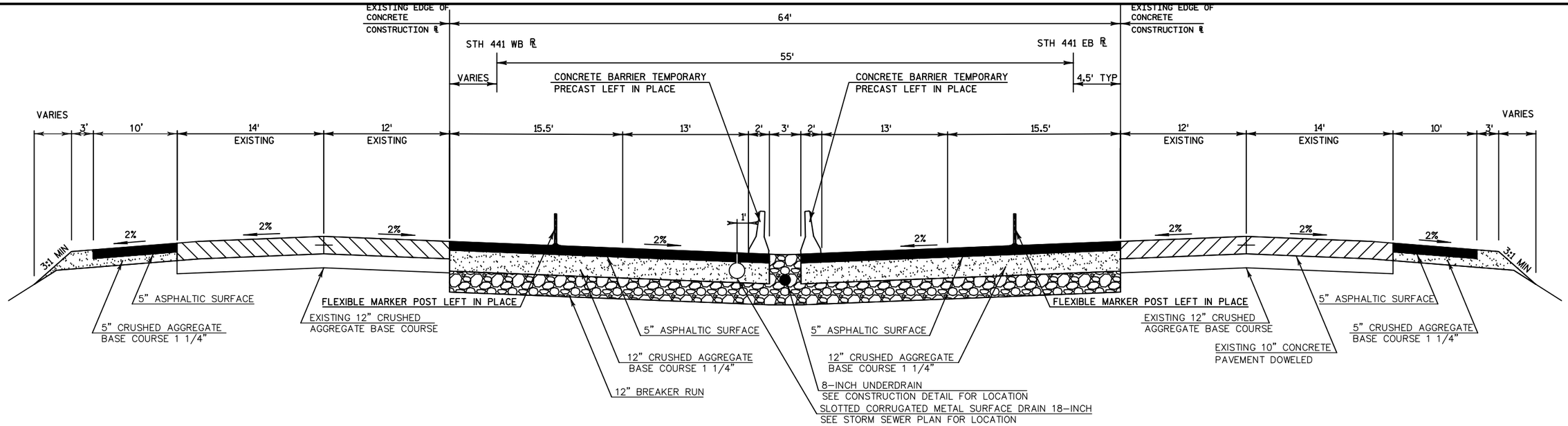

TYPICAL PROPOSED CROSS SECTION FOR MAINLINE STH 441

STA 333EB+00 - STA 340EB+66
STA 342EB+35 - STA 350EB+50

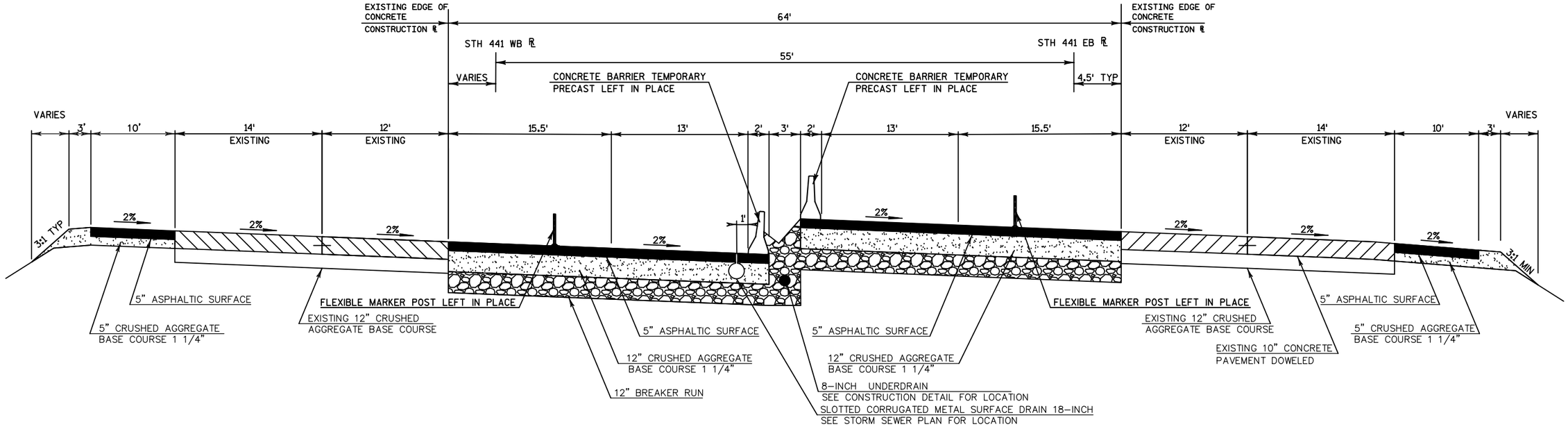

TYPICAL PROPOSED CROSS SECTION FOR MAINLINE STH 441 IN FULL SUPERELEVATION

STA 333EB+00 - STA 340EB+66
STA 342EB+35 - STA 350EB+50

2

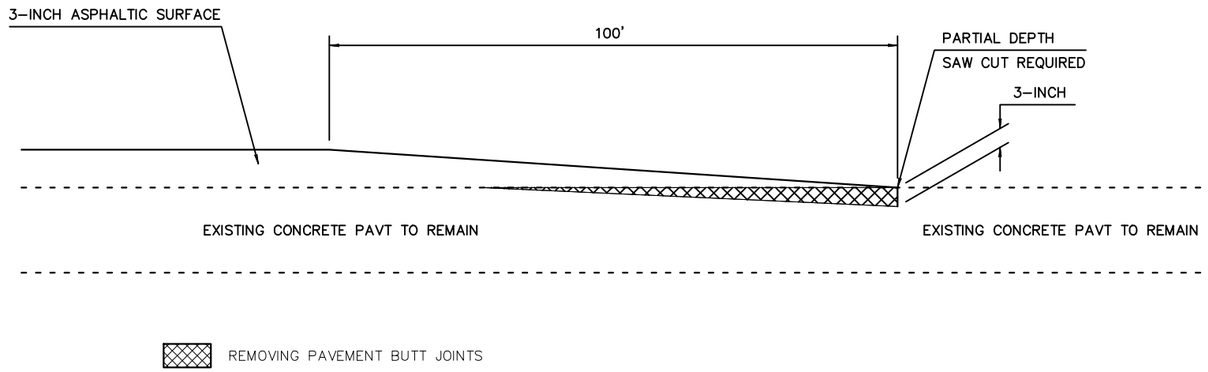

REMOVING PAVEMENT BUTT JOINT DETAIL

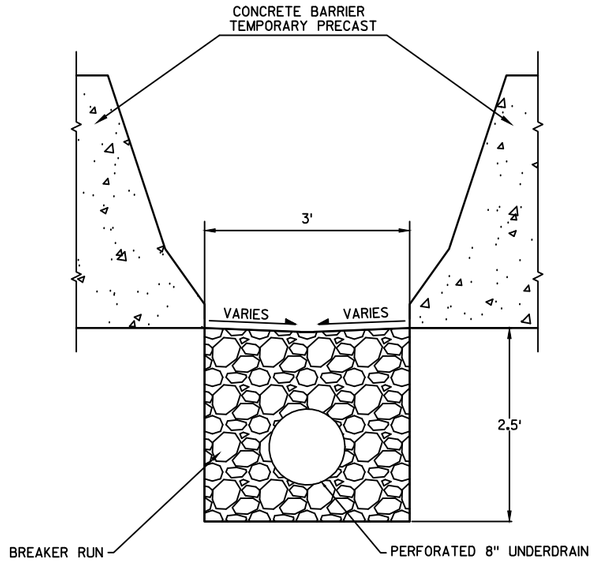

8" UNDERDRAIN INSTALLATION AT MEDIAN BARRIER

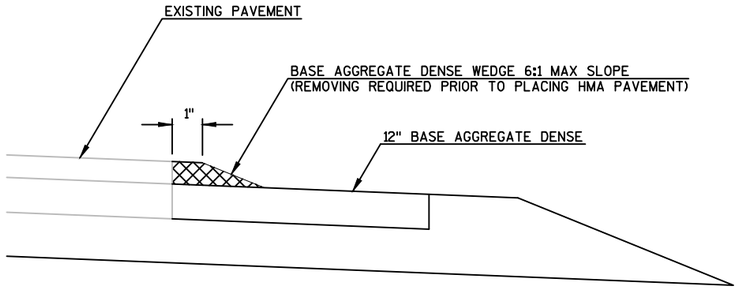

PLACE WEDGE OF BASE AGGREGATE DENSE AT DROP OFF BETWEEN EDGE OF EXISTING PAVEMENT AND LOWER 12" BASE AGGREGATE DENSE.

WEDGE INSTALLATION AND REMOVAL IS INCIDENTAL TO THE BASE AGGREGATE DENSE STANDARD BID ITEM.

INSTALL AS DIRECTED BY THE ENGINEER.

SAFETY EDGE

(NOT TO SCALE)

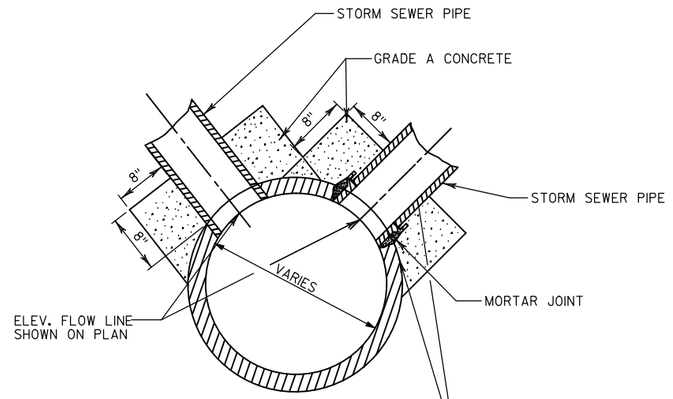

AT MANHOLE

INCIDENTAL TO NEW STRUCTURE AND NEW PIPE ITEMS

CLEAN PIPE AND STRUCTURE SURFACES AND APPLY BONDING AGENT PRIOR TO INSTALLING CONCRETE COLLAR (INCIDENTAL TO CONCRETE COLLAR BID ITEM)

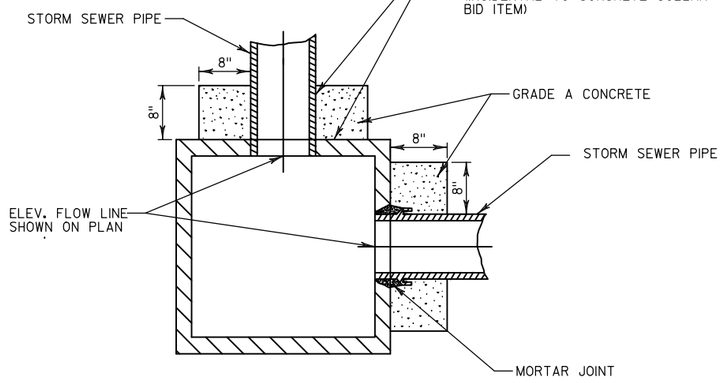

AT STORM SEWER INLET

INCIDENTAL TO NEW STRUCTURE AND NEW PIPE ITEMS

NOTE

CONCRETE COLLAR TO BE PAID AS A BID ITEM WHEN:

A) CONNECTING AN EXISTING PIPE TO A NEW STRUCTURE AND
B) CONNECTING AN EXISTING STRUCTURE TO A NEW PIPE

CONCRETE COLLAR DETAIL

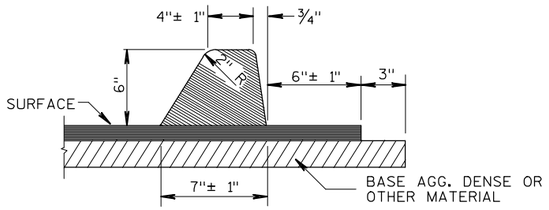

ASPHALTIC CURB DETAIL

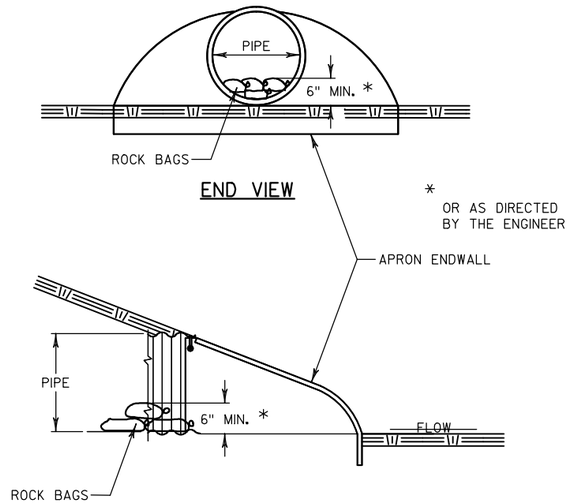

END VIEW

* OR AS DIRECTED BY THE ENGINEER

SIDE VIEW

CULVERT PIPE CHECKS

AT INLET LOCATIONS

LEGEND

- REMOVE PAVEMENT
- XXXX SAWCUT
- REMOVE PIPE UNDERDRAIN
- REMOVE UNDERDRAIN OUTFALL
- SS REMOVE STORM SEWER
- REMOVE INLET AND STRUCTURE
- REMOVE GUARDRAIL
- REMOVE ASPHALTIC SURFACE
- REMOVE DELINIATORS AND MARKERS

REMOVAL PLAN KEY MAP

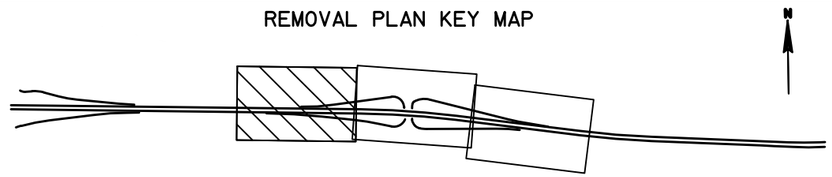

N

STH 441/USH 10

320WB 322WB 324WB 326WB 328WB 330WB 332WB 334WB

320EB 322EB 324EB 326EB 328EB 330EB 332EB 334EB

STA 324+44, -5.05' LT

STA 324+45, 4.43' RT

USH 10/ONEIDA ST NW RAMP

STA 332+07, -28.91' LT

STA 331+58, 27.55' RT

USH 10/ONEIDA ST SW RAMP

FOOTBRIDGE

SIGN

MH

INL

W

PROJECT NO: 1517-75-88	HWY: STH 441/USH 10	COUNTY: WINNEBAGO	REMOVAL PLAN STA 318EB+90-334EB+62	SHEET 12	E

FILE NAME : S:\PDS\C3D\WIS441\15177574_79\SHEETSPLAN\15177588\021100-RM\NE-15177588-021100-RM.DWG
LAYOUT NAME - 021100-rm - 01

PLOT DATE : 8/17/2016 11:35 AM PLOT BY : MARTENS, JOHN M PLOT NAME : PLOT SCALE : 1 IN:100 FT

WISDOT/CADDS SHEET 42

LEGEND

- REMOVE PAVEMENT
- XXXX SAWCUT
- REMOVE PIPE UNDERDRAIN
- REMOVE UNDERDRAIN OUTFALL
- REMOVE STORM SEWER
- REMOVE INLET AND STRUCTURE
- REMOVE GUARDRAIL
- REMOVE ASPHALTIC SURFACE
- REMOVE DELINIATORS AND MARKERS

N

REMOVAL PLAN KEY MAP

N

S. ONEIDA ST

USH 10/ONEIDA ST NW RAMP

USH 10/ONEIDA ST NE RAMP

USH 10/ONEIDA ST SW RAMP

USH 10/ONEIDA ST SE RAMP

USH 10/ONEIDA ST

STH 441

STA 337+66, -27.94' LT

STA 337+67, -4.47' LT

STA 337+70, -2.56' LT

STA 337+70, 4.15' RT

STA 337+64, 38.32' RT

SALVAGE AND REINSTALL BEAMGUARD

STA 340+64, -28.91' LT

REMOVE INLET
STA 340WB+58

STA 340+66, -5.01' LT

REMOVE 20.5'-12" STORM SEWER
STA 340WB+58

STA 340+67, 4.26' RT

REMOVE GUARDRAIL

STA 340+67, 12.56' RT

STA 340+68, 27.32' RT

STA 340+69, 37.92' RT

STA 342+33, -29.15' LT

STA 342+34, -5.63' LT

STA 342+35, 4.60' RT

REMOVE CURB & GUTTER

STA 342+37, 27.94' RT

SALVAGE AND REINSTALL BEAM GUARD

STA 345+25, -30.82' LT

REMOVE GUARDRAIL

STA 345+25, -7.50' LT

STA 345+25, 4.44' RT

STA 345+22, 27.82' RT

REMOVE PAVEMENT

336WB 338WB 340WB 342WB 344WB 346WB 348WB 350WB

336EB 338EB 340EB 342EB 344EB 346EB 348EB 350EB

PROJECT NO: 1517-75-88	HWY: STH 441/USH 10	COUNTY: WINNEBAGO	REMOVAL PLAN STA 334EB+63-350EB+12	SHEET 13	E

2

LEGEND

- REMOVE PAVEMENT
- XXXX SAWCUT
- REMOVE PIPE UNDERDRAIN
- REMOVE UNDERDRAIN OUTFALL
- REMOVE STORM SEWER
- REMOVE INLET AND STRUCTURE
- REMOVE GUARDRAIL
- REMOVE ASPHALTIC SURFACE
- REMOVE DELINIATORS AND MARKERS

REMOVAL PLAN KEY MAP

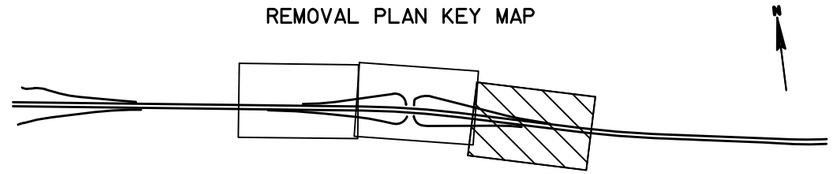

2

STA 351+82, -32.51' LT USH 10/ONEIDA ST NE RAMP

STA 360+76, -9.29' LT STH 441

350WB 352WB 354WB 356WB 358WB 360WB 362WB 364WB

350EB 352EB 354EB 356EB 358EB 360EB 362EB 364EB

STA 360+74, 3.97' RT STH 441

STA 351+92, 27.70' RT USH 10/ONEIDA ST SE RAMP

PROJECT NO: 1517-75-88	HWY: STH 441/USH 10	COUNTY: WINNEBAGO	REMOVAL PLAN STA 350EB+13-365EB+53	SHEET 14	E

FILE NAME : S:\PDS\C3D\WIS441\15177574_79\SHEETSPLAN\15177588\021100-RM\NE-15177588-021100-RM.DWG
LAYOUT NAME - 021100-rm - 03

PLOT DATE : 8/17/2016 11:36 AM PLOT BY : MARTENS, JOHN M PLOT NAME : PLOT SCALE : 1 IN:100 FT

WISDOT/CADDS SHEET 42

2

LEGEND

REMOVING PAVEMENT

REMOVING STORM SEWER

SAWCUT

N

USH 10/ONEIDA ST SW RAMP

STH 441/USH 10

STH 441/USH 10

USH 10/ONEIDA ST NW RAMP

57TSB

58TSB

TSB+70.94
24.68' RT

TSB+05.82
37.21' RT

TSB+70.16
37.19' RT

TSB+67.96
24.75' RT

TSB+67.98
37.57' RT

TSB+69.69
37.63' RT

TSB+68.85
49.21' RT

TSB+72.64
49.20' RT

TSB+90.85
49.22' RT

TSB+90.87
61.77' RT

TSB+05.84
49.24' RT

TSB+72.66
61.76' RT

USH 10/ONEIDA ST

S ONEIDA ST

USH 10/ONEIDA ST SE RAMP

STH 441

STH 441

USH 10/ONEIDA ST NE RAMP

PROJECT NO: 1517-75-88	HWY: STH 441/USH 10	COUNTY: WINNEBAGO	REMOVAL PLAN STA 56TSB+00-58TSB+24.91	SHEET 15	E

FILE NAME : S:\PDS\C3D\WIS441\15177574_79\SHEETSPLAN\15177588\021100-RM\NE-15177588-021101-RM.DWG PLOT DATE : 8/19/2016 7:37 AM PLOT BY : COHEN, MICHAEL J PLOT NAME : PLOT SCALE : 1 IN:40 FT

2

LEGEND

AG02 BASE AGGREGATE DENSE 1 1/4-INCH

PV06 ASPHALTIC SURFACE, 5-INCH

CB08 CONCRETE BARRIER TEMPORARY PRECAST LEFT IN PLACE

N

335+75.00 MATCH LINE

2

STH 441/USH 10

WB+47.94
-5.05' LT

325WB

WB+47.24
-1.06' LT

CRASH CUSHION LEFT IN PLACE

325EB

STH 441/USH 10

EB+44.97
0.43' RT

EB+44.96
4.43' RT

SLOPE INTERCEPTS

330WB

330EB

CB08

SLOPE INTERCEPTS

WB+09.09
-38.91' LT

WB+09.09
-28.91' LT

10'

SLOPE INTERCEPTS

PV06

AG02

WB+27.01
19.06' RT

335WB

PV06

AG02

PV06

AG02

335EB

EB+25.01
-26.20' LT

EB+58.27
27.51' RT

EB+58.26
37.51' RT

PV06

10'

AG02

SLOPE INTERCEPTS

FOOTBRIDGE

FOOTBRIDGE

FOOTBRIDGE

FOOTBRIDGE

FOOTBRIDGE

FOOTBRIDGE

BLEACHERS

SIGN

MH

W

INL

PROJECT NO: 1517-75-88	HWY: STH 441/USH 10	COUNTY: WINNEBAGO	PLAN DETAILS	SHEET 16	E

2

2

LEGEND

- AGO2 BASE AGGREGATE DENSE 1 1/4-INCH
- PVO6 ASPHALTIC SURFACE, 5-INCH
- CB08 CONCRETE BARRIER TEMPORARY PRECAST LEFT IN PLACE
- PVO8 ASPHALTIC CURB

N

350+38.00 MATCH LINE

335+75.00 MATCH LINE

S. ONEIDA ST

USH 10/ONEIDA ST NW RAMP

USH 10/ONEIDA ST NE RAMP

USH 10/ONEIDA ST SW RAMP

USH 10/ONEIDA ST SE RAMP

USH 10/ONEIDA ST

B-70-116 STRUCTURE WIDENING

B-70-115 STRUCTURE WIDENING

SLOPE INTERCEPTS

SALVAGE AND REINSTALL BEAMGUARD

SALVAGE AND REINSTALL BEAMGUARD

SLOPE INTERCEPTS

STH 441/USH 10

STH 441

STH 441/USH 10

STH 441

340WB

340EB

345WB

345EB

350WB

350EB

30.5

10'

WB+65.65
-38.91' LT

WB+66.24
-28.91' LT

WB+67.66
-5.01' LT

WB+33.91
-39.12' LT

WB+34.68
-29.15' LT

WB+37.28
-5.64' LT

WB+38.88
25.56' RT

WB+13.17
21.19' RT

WB+69.54
25.92' RT

EB+66.73
4.26' RT

EB+68.09
27.35' RT

EB+68.69
37.36' RT

EB+35.42
4.60' RT

EB+37.10
27.76' RT

EB+37.83
37.76' RT

EB+76.45
-26.00' LT

500 WE ENERGIES-ELECTRIC
CONVEYANCE OF RIGHTS IN LAND BY PUBLIC UTILITY
DOC. 118363, 1501-1-21

PROJECT NO: 1517-75-88	HWY: STH 441/USH 10	COUNTY: WINNEBAGO	PLAN DETAILS	SHEET 17	E

2

2

LEGEND

- AG02 BASE AGGREGATE DENSE 1 1/4-INCH
- PV06 ASPHALTIC SURFACE, 5-INCH
- CB08 CONCRETE BARRIER TEMPORARY PRECAST LEFT IN PLACE

N

SLOPE INTERCEPTS

PV06

AG02

WB+89.60
-42.51' LT

10'

WB+89.65
-32.51' LT

STH 441

355WB

SLOPE INTERCEPTS

CRASH CUSHION LEFT IN PLACE

WB+87.74
-9.30' LT

360WB

WB+87.75
-5.30' LT

365WB

355EB

360EB

365EB

PV06

STH 441

EB+90.65
27.70' RT

10'

AG02

EB+90.67
37.70' RT

SLOPE INTERCEPTS

CB08

SLOPE INTERCEPTS

EB+80.75
-0.04' LT

EB+80.75
3.95' RT

350+38.00 MATCH LINE

PROJECT NO: 1517-75-88	HWY: STH 441/USH 10	COUNTY: WINNEBAGO	PLAN DETAILS	SHEET 18	E

2

LEGEND

- (AGO2) BASE AGGREGATE DENSE 1 1/4-INCH
- (PV06) ASPHALTIC SURFACE, 5-INCH
- (CGO6) CONCRETE CURB AND GUTTER 30-INCH TYPE D
- (PV14) SLOPE PAVING SELECT CRUSHED MATERIAL

N

USH 10/ONEIDA ST SW RAMP

USH 10/STH 441

USH 10/STH 441

USH 10/ONEIDA ST NW RAMP

EXISTING CONCRETE SLOPE PAVING TO REMAIN IN PLACE

EXISTING CONCRETE SLOPE PAVING TO REMAIN IN PLACE

TSB+17.41
-38.33' LT

TSB+67.20
-38.57' LT

PV14

TSB+15.16
-5.72' LT

TSB+64.96
-5.59' LT

PI STATION 58TSB+24.91
Y=552075.97
X=828109.76

57TSB

58TSB

N0° 04' 36" E 224.91'

PI STATION 56TSB+00.00
Y=551851.06
X=828109.46

TSB+67.96
24.75' RT

CGO6

TSB+70.93
24.68' RT

AGO2 PV06

TSB+67.95
37.57' RT

TSB+70.16
37.19' RT

AGO2 PV06

TSB+72.64
49.20' RT

TSB+90.85
49.22' RT

AGO2 PV06

CGO6

TSB+72.66
61.66' RT

TSB+90.87
61.77' RT

USH 10/ONEIDA ST

EXISTING CONCRETE SLOPE PAVING TO REMAIN IN PLACE

EXISTING CONCRETE SLOPE PAVING TO REMAIN IN PLACE

TSB+09.30
92.05' RT

TSB+58.17
92.24' RT

PV14

TSB+07.06
125.41' RT

TSB+56.07
125.10' RT

USH 10/ONEIDA ST SE RAMP

STH 441

STH 441

USH 10/ONEIDA ST NE RAMP

PROJECT NO: 1517-75-88	HWY: STH 441/USH 10	COUNTY: WINNEBAGO	PLAN DETAILS	SHEET 19	E

FILE NAME : S:\PDS\C3D\WIS441\15177574_79\SHEETSPLAN\15177588\021200-PD\NE-15177588-021210-PD.DWG PLOT DATE : 9/20/2016 3:25 PM PLOT BY : COHEN, MICHAEL J PLOT NAME : PLOT SCALE : 1 IN:40 FT

2

2

335+75.00 MATCH LINE

N

USH 10/ONEIDA ST NW RAMP

SIGN

USH 10/STH 441

325WB

STH 441/USH 10

330WB

STH 441

335WB

325EB

330EB

335EB

USH 10/STH 441

STH 441/USH 10

STH 441

USH 10/ONEIDA ST SW RAMP

SIGN

FOOTBRIDGE

BLEACHERS

LEGEND

- PHRAGMITES
- PURPLE LOOSESTRIFE
- TEASEL
- WETLAND
- DISTURBED WETLAND

PROJECT NO: 1517-75-88	HWY: STH 441/USH 10	COUNTY: WINNEBAGO	INVASIVE SPECIES & DISTURBED WETLANDS	SHEET 20	E

FILE NAME : S:\PDS\C3D\WIS441\15177574_79\SHEETSPLAN\15177588\021700-IS\NE-15177588-021700-IS.DWG
LAYOUT NAME - 021701-is

PLOT DATE : 8/17/2016 12:29 PM PLOT BY : COHEN, MICHAEL J PLOT NAME : PLOT SCALE : 1 IN:100 FT

WISDOT/CADDS SHEET 42

2

2

N

S. ONEIDA ST

USH 10/ONEIDA ST NW RAMP

USH 10/ONEIDA ST NE RAMP

STH 441/USH 10

340WB

STH 441

345WB

350WB

340EB

345EB

350EB

STH 441/USH 10

STH 441

STH 441

USH 10/ONEIDA ST

USH 10/ONEIDA ST SW RAMP

USH 10/ONEIDA ST SE RAMP

335+75.00 MATCH LINE

350+39.49 MATCH LINE

ACORN CT.

POOL

LEGEND

PHRAGMITES

PURPLE LOOSESTRIFE

TEASEL

WETLAND

DISTURBED WETLAND

PROJECT NO: 1517-75-88	HWY: STH 441/USH 10	COUNTY: WINNEBAGO	INVASIVE SPECIES & DISTURBED WETLANDS	SHEET 21	E

FILE NAME : S:\PDS\C3D\WIS441\15177574_79\SHEETSPLAN\15177588\021700-IS\NE-15177588-021700-IS.DWG
LAYOUT NAME - 021702-is

PLOT DATE : 8/17/2016 12:31 PM PLOT BY : COHEN, MICHAEL J PLOT NAME : PLOT SCALE : 1 IN:100 FT

2

E. MITCHELL AVE.

S. SUMMER LN.

JACKSON ST.

E. MITCHELL AVE.

POOL

POOL

USH 10/ONEIDA ST NE RAMP

SIGN

SIGN

STH 441

STH 441

STH 441

355WB

360WB

365WB

355EB

360EB

365EB

STH 441

STH 441

STH 441

USH 10/ONEIDA ST SE RAMP

POOL

E. JAMES ST.

E. JAMES ST.

E. WHITE BIRCH CT.

S. SYCAMORE LN.

S. BLUE SPRUCE LN.

S. HEMLOCK LN.

S. POPLAR LN.

350+39.49 MATCH LINE

LEGEND

PHRAGMITES

PURPLE LOOSESTRIFE

TEASEL

WETLAND

DISTURBED WETLAND

PROJECT NO: 1517-75-88	HWY: STH 441/USH 10	COUNTY: WINNEBAGO	INVASIVE SPECIES & DISTURBED WETLANDS	SHEET 22	E

FILE NAME : S:\PDS\C3D\WIS441\15177574_79\SHEETSPLAN\15177588\021700-IS\NE-15177588-021700-IS.DWG
LAYOUT NAME - 021703-is

PLOT DATE : 8/17/2016 12:32 PM PLOT BY : COHEN, MICHAEL J PLOT NAME : PLOT SCALE : 1 IN:100 FT

WISDOT/CADDS SHEET 42

2

2

335+75.00 MATCH LINE

N

USH 10/ONEIDA ST NW RAMP

STH 441/USH 10

325WB 330WB 335WB

325EB 330EB 335EB

STH 441/USH 10

USH 10/ONEIDA ST SW RAMP

FOOTBRIDGE

BLEACHERS

SIGN

MH

LEGEND

- SILT FENCE
- INLET PROTECTION (A) TYPE A (C) TYPE C
- SLOPE INTERCEPT
- TEMPORARY DITCH CHECK
- CULVERT PIPE DITCH CHECK
- SURFACE WATER FLOW

PROJECT NO: 1517-75-88	HWY: STH 441/USH 10	COUNTY: WINNEBAGO	EROSION CONTROL	SHEET 23	E

FILE NAME : S:\PDS\C3D\WIS441\15177574_79\SHEETSPLAN\15177588\022000-EC\NE-15177588-022000-EC.DWG
LAYOUT NAME - 022000-ec1

PLOT DATE : 8/18/2016 8:42 AM PLOT BY : COHEN, MICHAEL J PLOT NAME : PLOT SCALE : 1 IN:100 FT

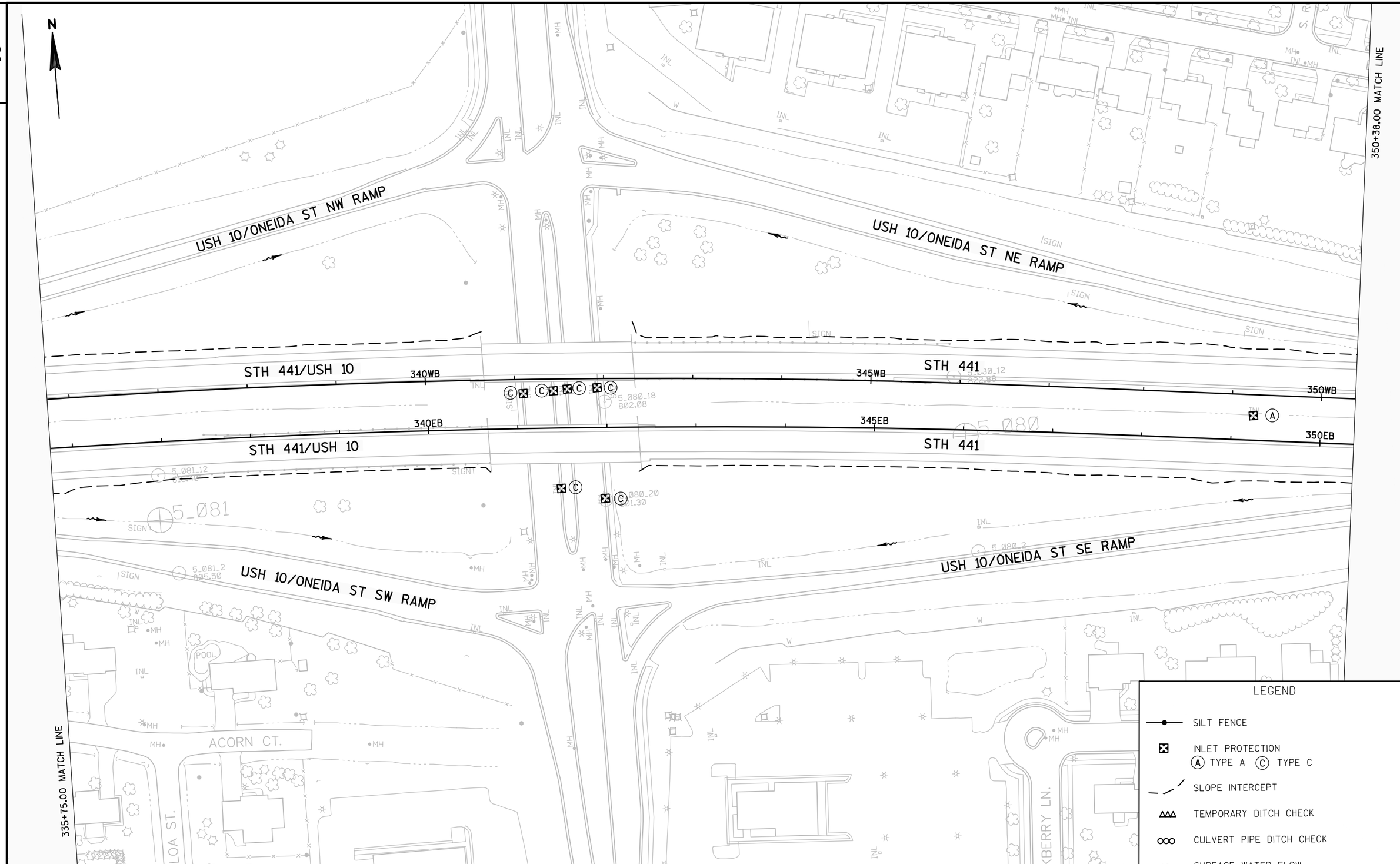

PROJECT NO:1517-75-88	HWY:STH 441/USH 10	COUNTY:WINNEBAGO	EROSION CONTROL	SHEET 24	E

FILE NAME : S:\PDS\C3D\WIS441\15177574_79\SHEETSPLAN\15177588\022000-EC\NE-15177588-022000-EC.DWG
LAYOUT NAME - 022000-ec2
PLOT DATE : 8/18/2016 8:43 AM PLOT BY : COHEN, MICHAEL J PLOT NAME : PLOT SCALE : 1 IN:100 FT
WISDOT/CADDS SHEET 42

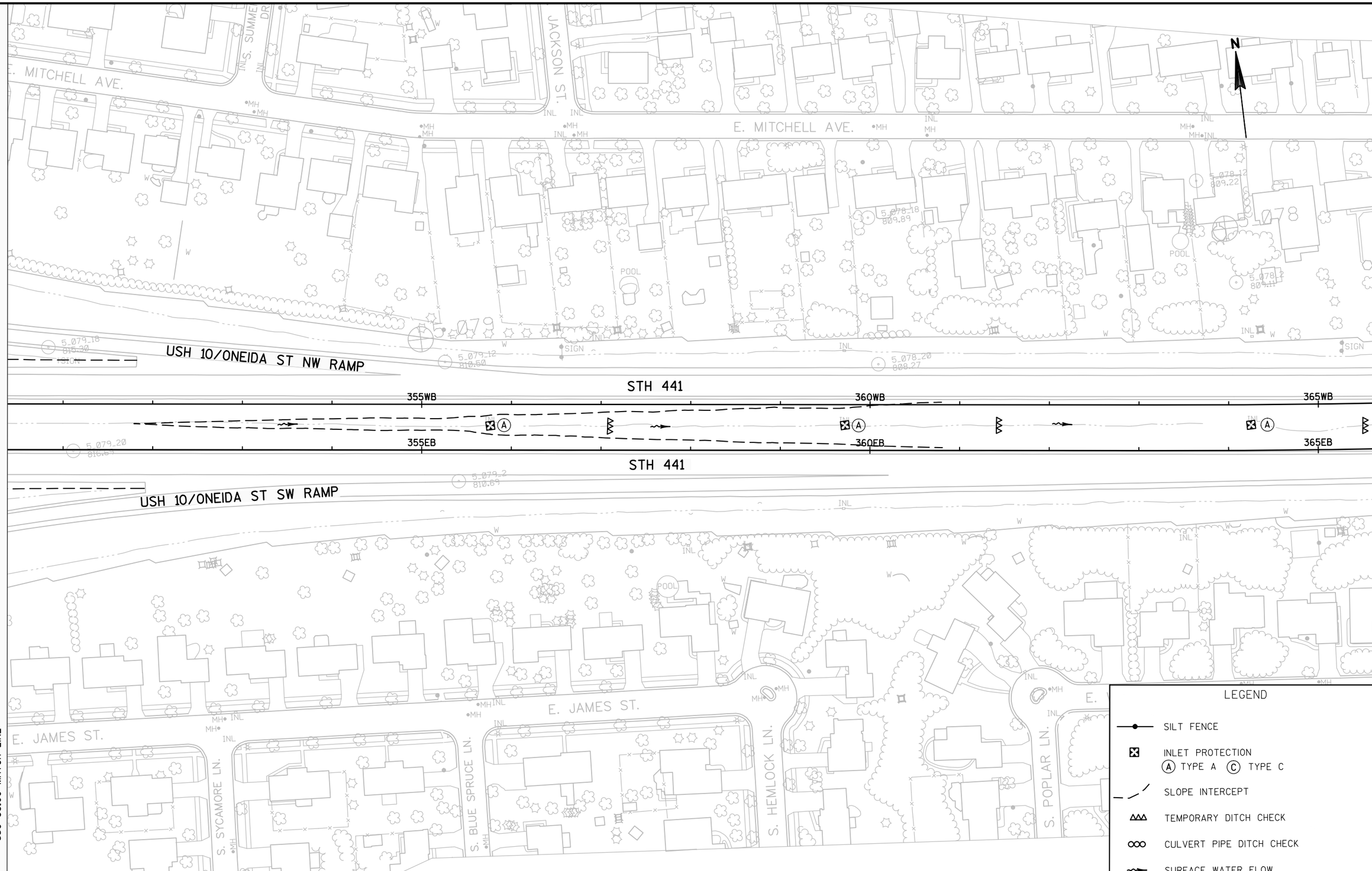

PROJECT NO:1517-75-88	HWY:STH 441/USH 10	COUNTY:WINNEBAGO	EROSION CONTROL	SHEET 25	E

FILE NAME : S:\PDS\C3D\WIS441\15177574_79\SHEETSPLAN\15177588\022000-EC\NE-15177588-022000-EC.DWG
LAYOUT NAME - 022000-ec3
PLOT DATE : 8/18/2016 8:44 AM PLOT BY : COHEN, MICHAEL J PLOT NAME : PLOT SCALE : 1 IN:100 FT
WISDOT/CADDS SHEET 42

2

N

ONEIDA ST
SW RAMP

USH 10 (STH 441)

USH 10 (STH 441)

ONEIDA ST
NW RAMP

57TSB

58TSB

USH 10/ONEIDA ST

S. ONEIDA ST

ONEIDA ST
NE RAMP

ONEIDA ST
SE RAMP

LEGEND

SILT FENCE

INLET PROTECTION
(A) TYPE A (C) TYPE C

PROJECT NO: 1517-75-88	HWY: STH 441/USH 10	COUNTY: WINNEBAGO	EROSION CONTROL	SHEET 26	E

FILE NAME : S:\PDS\C3D\WIS441\15177574_79\SHEETSPLAN\15177588\022000-EC\NE-15177588-022001-EC.DWG PLOT DATE : 8/18/2016 8:53 AM PLOT BY : COHEN, MICHAEL J PLOT NAME : PLOT SCALE : 1 IN:40 FT

2

STORM SEWER GENERAL NOTES

1) FIELD VERIFY EXISTING PIPE INVERT ELEVATION AND RECALCULATE SLOPE IF NECESSARY.
2) THE INVERT ELEVATION IS MEASURED AT THE FLOW LINE WHICH IS THE BOTTOM INSIDE OF THE PIPE.
3) IN LOCATIONS WHERE PROPOSED PIPES ARE BEING TIED INTO EXISTING DRAINAGE STRUCTURES, FIELD VERIFY PIPE SIZE AND INVERT ELEVATION.
4) ADJUSTMENT RINGS FOR TOP OF STRUCTURES = 6 INCHES (UNLESS OTHERWISE NOTED AS INLET TYPE 2, SPECIAL; ADJUSTMENT = 3 INCHES)
5) STATION/OFFSETS ARE GIVEN AT THE CENTER OF STRUCTURE.
6) RIM ELEVATIONS ARE GIVEN AT THE FLOW LINE FOR INLET GRATES OR THE CENTER OF THE MANHOLE COVER FOR MANHOLESS UNLESS OTHERWISE NOTED.

2

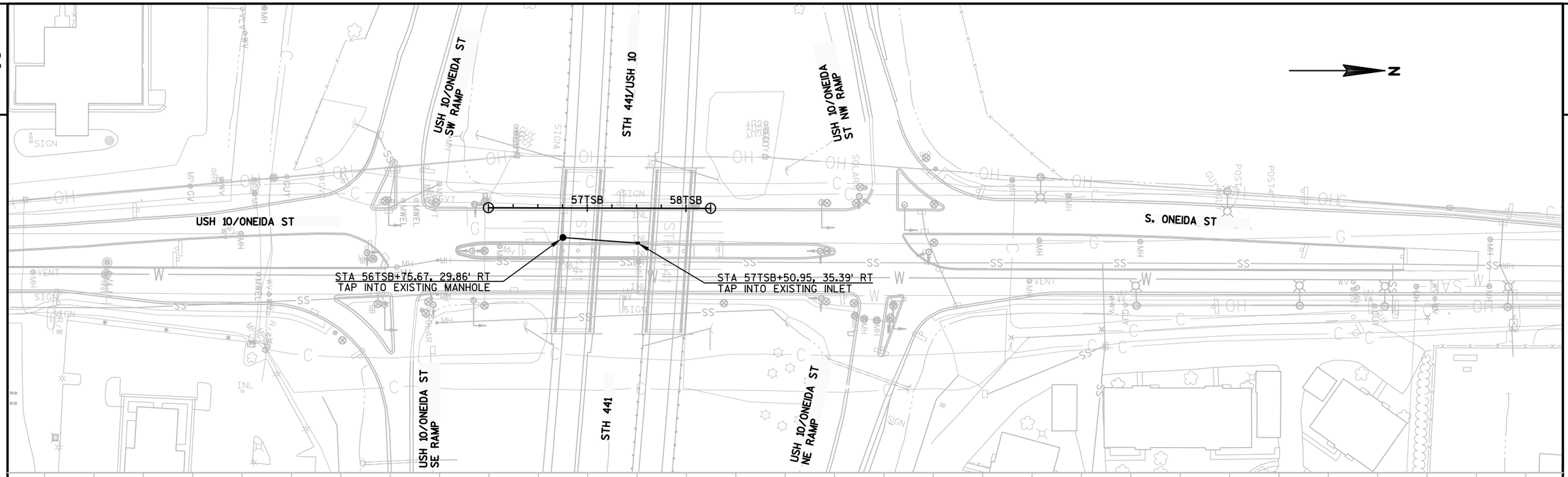

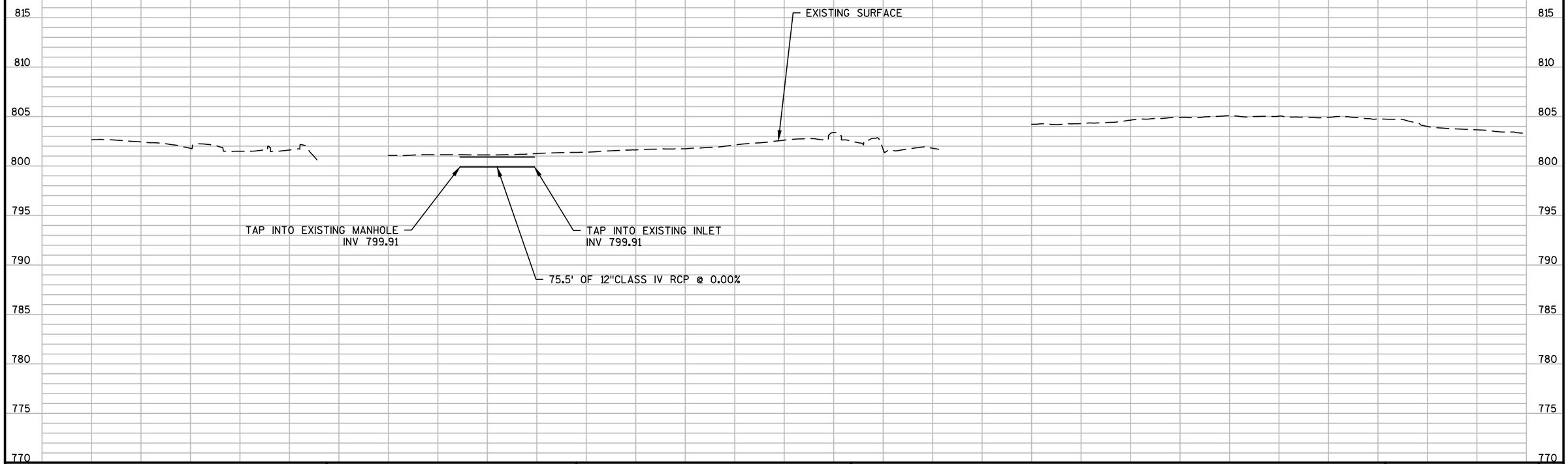

PROJECT NO: 1517-75-88	HWY: STH 441/USH 10	COUNTY: WINNEBAGO	STORM SEWER	SHEET 28	E

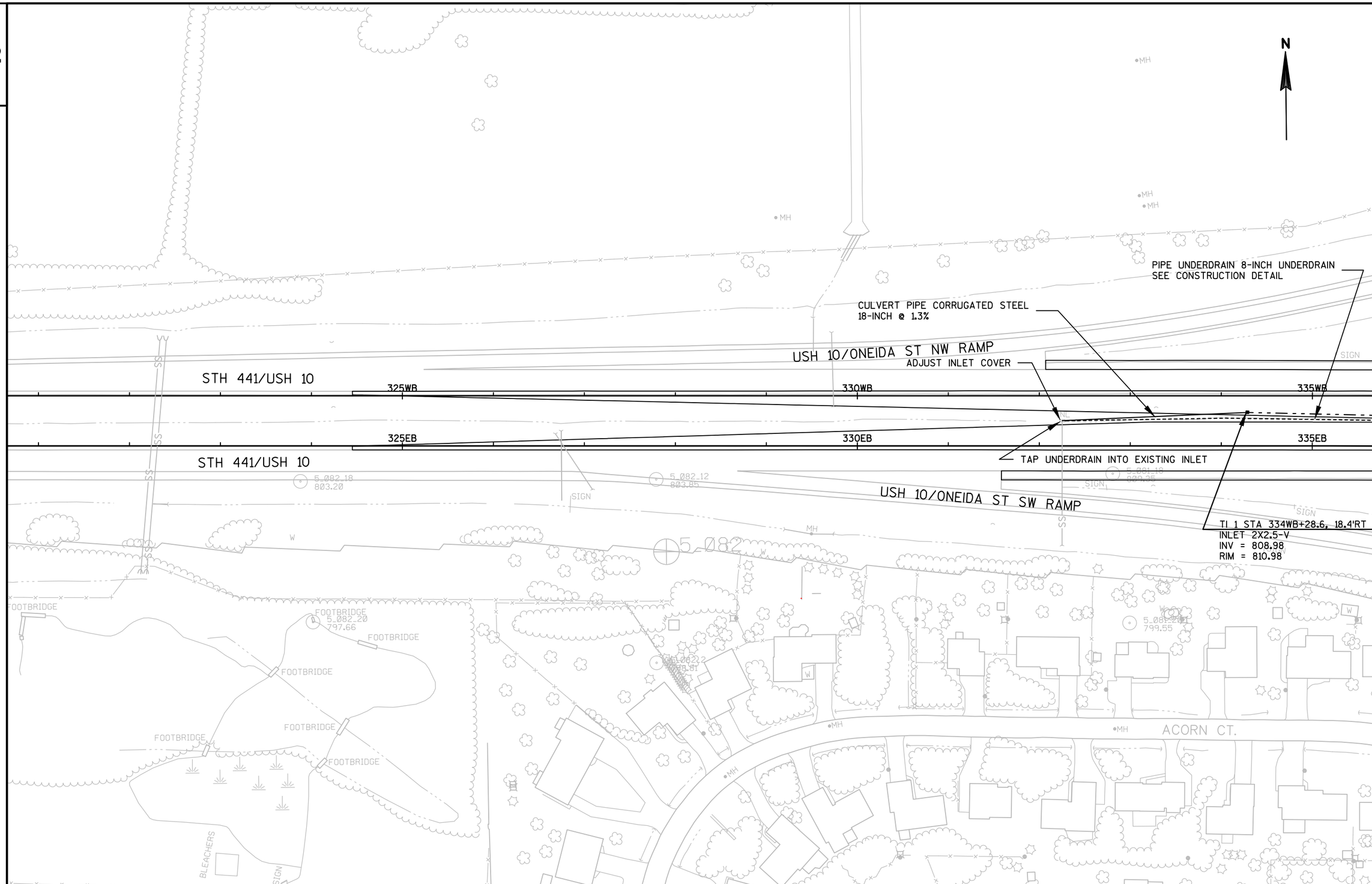

PROJECT NO:1517-75-88	HWY:STH 441/USH 10	COUNTY:WINNEBAGO	PIPE UNDERDRAIN	SHEET 29	E

FILE NAME : S:\PDS\C3D\WIS441\15177574_79\SHEETSPLAN\15177588\022600-PU\NE-15177588-022600-PU.DWG
LAYOUT NAME - 022600-pu1
PLOT DATE : 8/30/2016 2:30 PM PLOT BY : COHEN, MICHAEL J PLOT NAME : PLOT SCALE : 1 IN:100 FT
WISDOT/CADDS SHEET 42

2

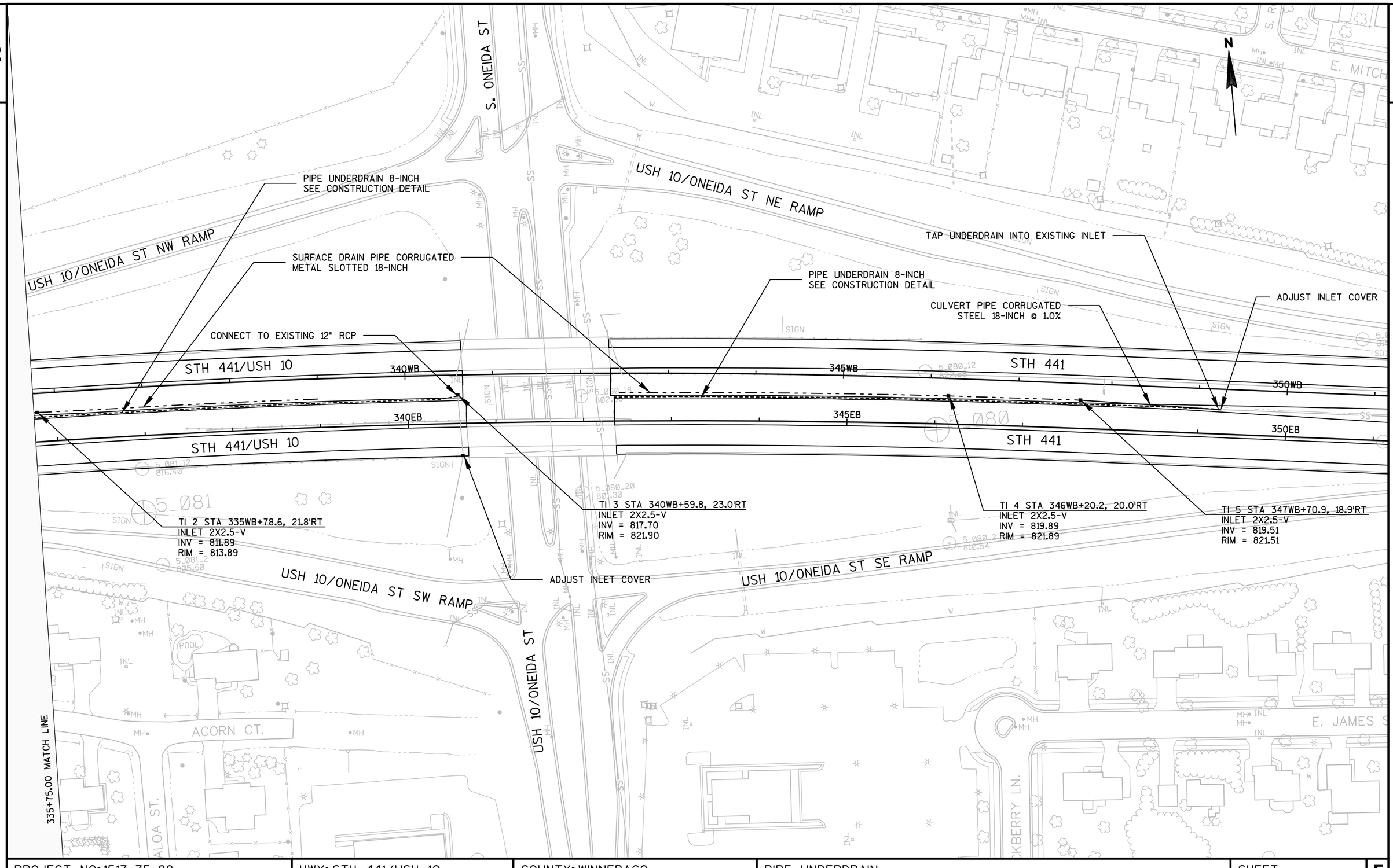

PROJECT NO: 1517-75-88	HWY: STH 441/USH 10	COUNTY: WINNEBAGO	PIPE UNDERDRAIN	SHEET 30	E

FILE NAME : S:\PDS\C3D\WIS441\15177574_79\SHEETSPLAN\15177588\022600-PU\NE-15177588-022600-PU.DWG
LAYOUT NAME - 022600-pu2
PLOT DATE : 8/30/2016 2:31 PM PLOT BY : COHEN, MICHAEL J PLOT NAME : PLOT SCALE : 1 IN:100 FT
WISDOT/CADDS SHEET 42

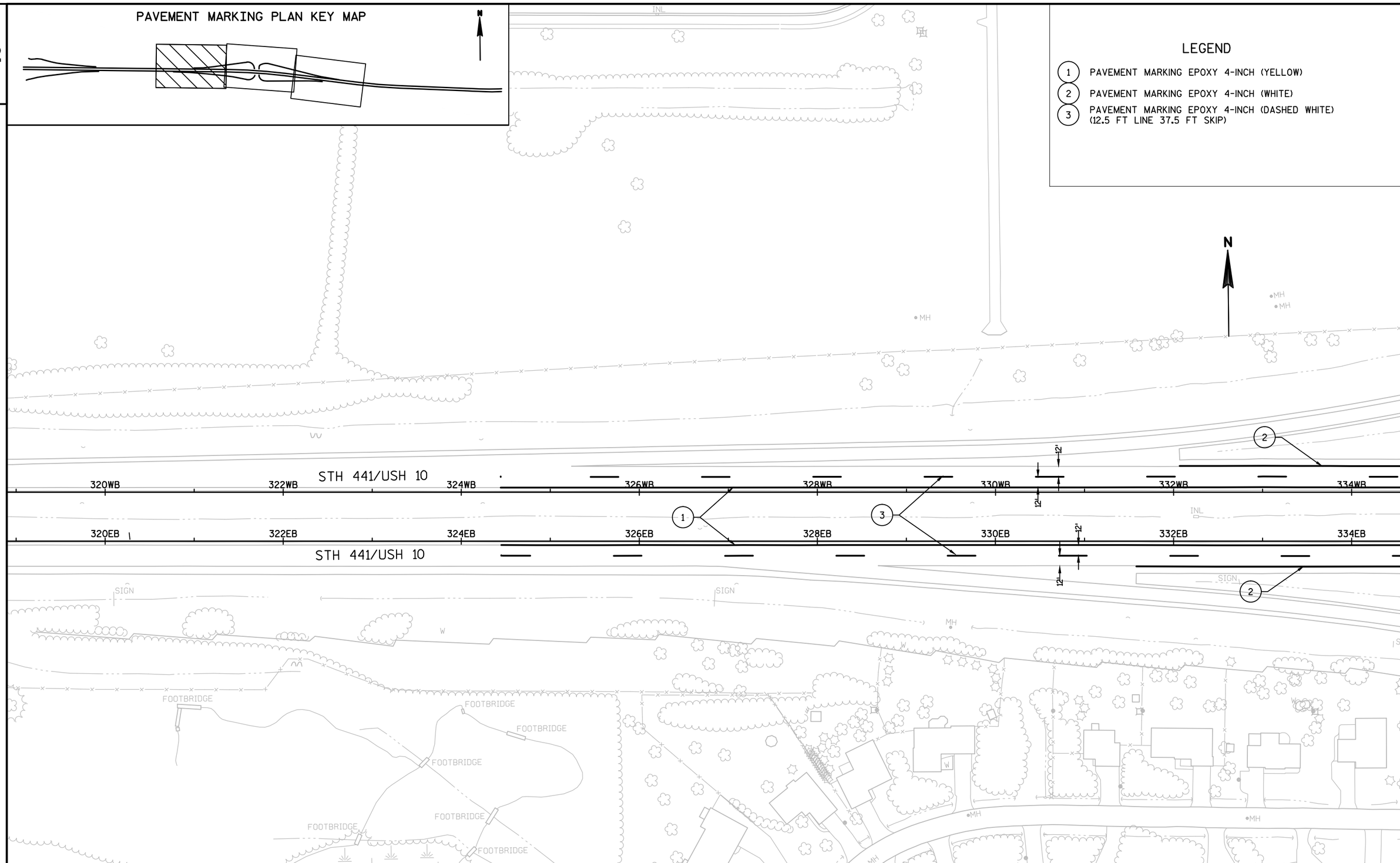

PROJECT NO:1517-75-88	HWY:STH 441/USH 10	COUNTY:WINNEBAGO	PAVEMENT MARKING	SHEET 31	E

FILE NAME : S:\PDS\C3D\WIS441\15177574_79\SHEETSPLAN\15177588\024500-PM\NE-15177588-024500-PM.DWG
LAYOUT NAME - 024500-pm1
PLOT DATE : 8/30/2016 1:01 PM PLOT BY : COHEN, MICHAEL J PLOT NAME : PLOT SCALE : 1 IN:100 FT

PAVEMENT MARKING PLAN KEY MAP

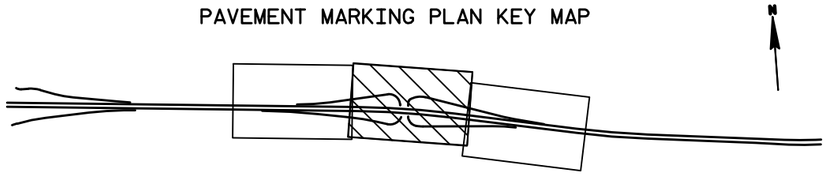

LEGEND

1. PAVEMENT MARKING EPOXY 4-INCH (YELLOW)
2. PAVEMENT MARKING EPOXY 4-INCH (WHITE)
3. PAVEMENT MARKING EPOXY 4-INCH (DASHED WHITE) (12.5 FT LINE 37.5 FT SKIP)

S. ONEIDA ST

S. ONEIDA ST

USH 10/ONEIDA ST NW RAMP

USH 10/ONEIDA ST NE RAMP

STH 441/USH 10

336WB 338WB 340WB 342WB 344WB 346WB 348WB 350WB

336EB 338EB 340EB 342EB 344EB 346EB 348EB 350EB

STH 441

STH 441/USH 10

STH 441

USH 10/ONEIDA ST

USH 10/ONEIDA ST

USH 10/ONEIDA ST SW RAMP

USH 10/ONEIDA ST SE RAMP

POOL

N

PROJECT NO: 1517-75-88	HWY: STH 441/USH 10	COUNTY: WINNEBAGO	PAVEMENT MARKING	SHEET 32	E

PAVEMENT MARKING PLAN KEY MAP

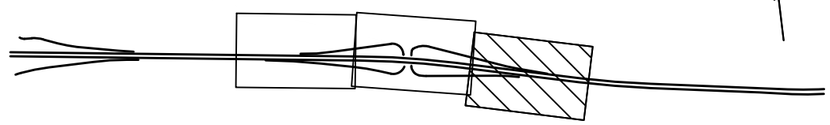

LEGEND

1. PAVEMENT MARKING EPOXY 4-INCH (YELLOW)
2. PAVEMENT MARKING EPOXY 4-INCH (WHITE)
3. PAVEMENT MARKING EPOXY 4-INCH (DASHED WHITE) (12.5 FT LINE 37.5 FT SKIP)

STH 441

350WB 352WB 354WB 356WB 358WB 360WB 362WB 364WB

350EB 352EB 354EB 356EB 358EB 360EB 362EB 364EB

STH 441

PROJECT NO: 1517-75-88	HWY: STH 441/USH 10	COUNTY: WINNEBAGO	PAVEMENT MARKING	SHEET 33	E

LEGEND

(6) PAVEMENT MARKING EPOXY 8-INCH (WHITE)

2

N

USH 10/ONEIDA ST SW RAMP

STH 441/USH 10

STH 441/USH 10

USH 10/ONEIDA ST NW RAMP

57TSB

58TSB

56+70.94, 24.68' RT

57+67.96, 24.75' RT

12'

12'

6

12'

12'

56+90.87, 61.77' RT

57+72.66, 61.76' RT

USH 10/ONEIDA ST

USH 10/ONEIDA ST SE RAMP

STH 441

STH 441

USH 10/ONEIDA ST NE RAMP

PROJECT NO: 1517-75-88	HWY: STH 441/USH 10	COUNTY: WINNEBAGO	PAVEMENT MARKING	SHEET 34	E

FILE NAME : S:\PDS\C3D\WIS441\151775?4_79\SHEETSPLAN\15177588\024500-PM\NE-15177588-024501-PM.DWG PLOT DATE : 8/17/2016 2:36 PM PLOT BY : COHEN, MICHAEL J PLOT NAME : PLOT SCALE : 1 IN:40 FT

TRAFFIC CONTROL NARRATIVE

STAGE 1:
1) MAINTAIN SINGLE LANE OF TRAFFIC ON INSIDE LANE
2) WIDEN EB & WB OUTSIDE SHOULDER PER TYPICAL SECTION

STAGE 2:
1) MAINTAIN 2 LANES OF TRAFFIC ON EB & WB AS SHOWN ON THE TYPICAL SECTION
2) EXCAVATE AND PLACE BREAKER RUN AND AGGREGATE
3) CONSTRUCT BRIDGE WIDENING TO THE INSIDE MEDIAN
4) PAVE INSIDE MEDIAN AND PLACE TEMPORARY PRECAST CONCRETE BARRIER

STAGE 3:
1) MAINTAIN TRAFFIC ON INSIDE MEDIAN AS SHOWN IN TYPICAL SECTION
2) RECONSTRUCT BRIDGE DECK & PARAPET WALL ON THE OUTSIDE

STAGE 4:
1) MAINTAIN TRAFFIC ON EXISTING MAINLINE LANES
2) PLACE PERMANENT PAVEMENT MARKINGS, DELINEATORS, & RUMBLE STRIPS

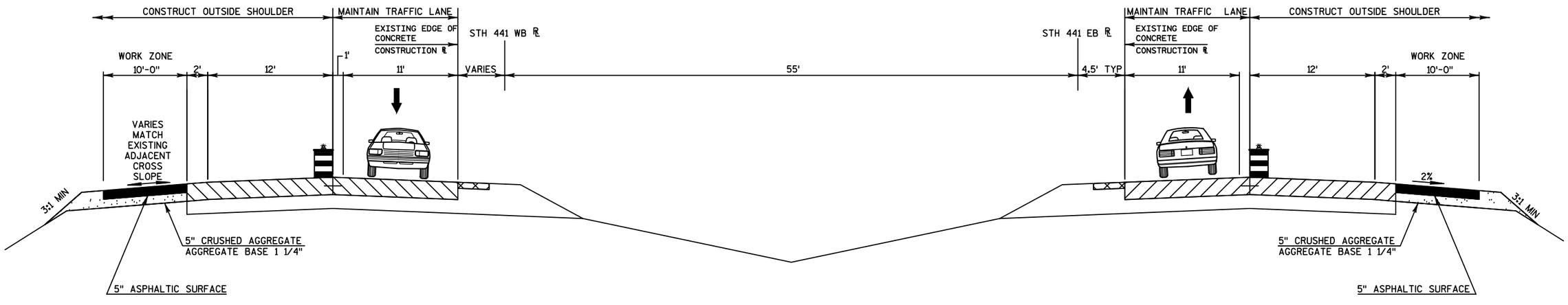

TYPICAL CROSS SECTION FOR MAINLINE STH 441 STAGE 1

STA 331EB+58 - STA 340EB+66
STA 342EB+35 - STA 351EB+91

PROJECT NO: 1517-75-88	HWY: STH 441/USH 10	COUNTY: WINNEBAGO	TRAFFIC CONTROL: TYPICAL CROSS SECTIONS	SHEET 35	E

FILE NAME : S:\PDS\C3D\WIS441\15177574_79\SHEETSPLAN\15177588\025001-TC\NE-15177588-025001-TC.DWG
LAYOUT NAME - NE-15177588-025002-tc
PLOT DATE : 9/20/2016 3:38 PM PLOT BY : COHEN, MICHAEL J PLOT NAME : PLOT SCALE : 1 IN:10 FT
WISDOT/CADDS SHEET 42

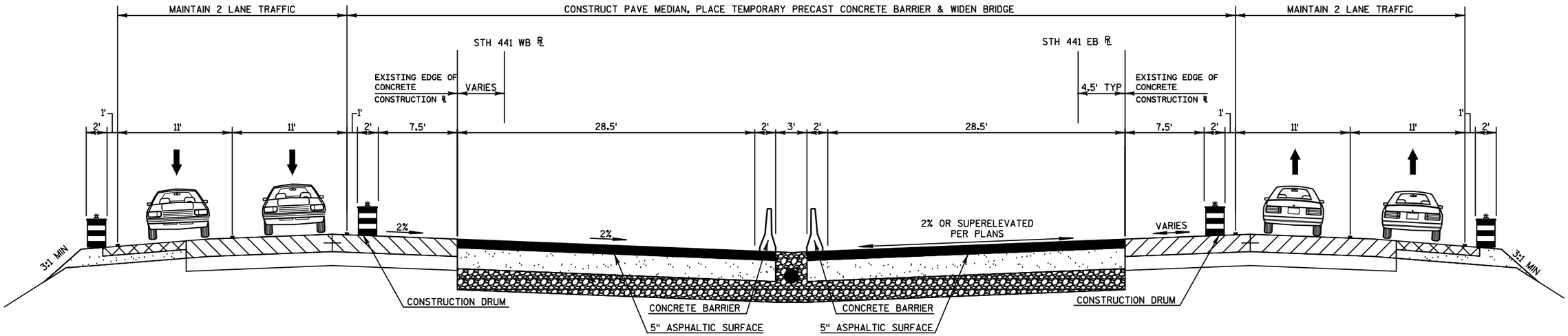

TYPICAL CROSS SECTION FOR MAINLINE STH 441 STAGE 2

STA 324EB+45 - STA 340EB+66
STA 342EB+35 - STA 360EB+81

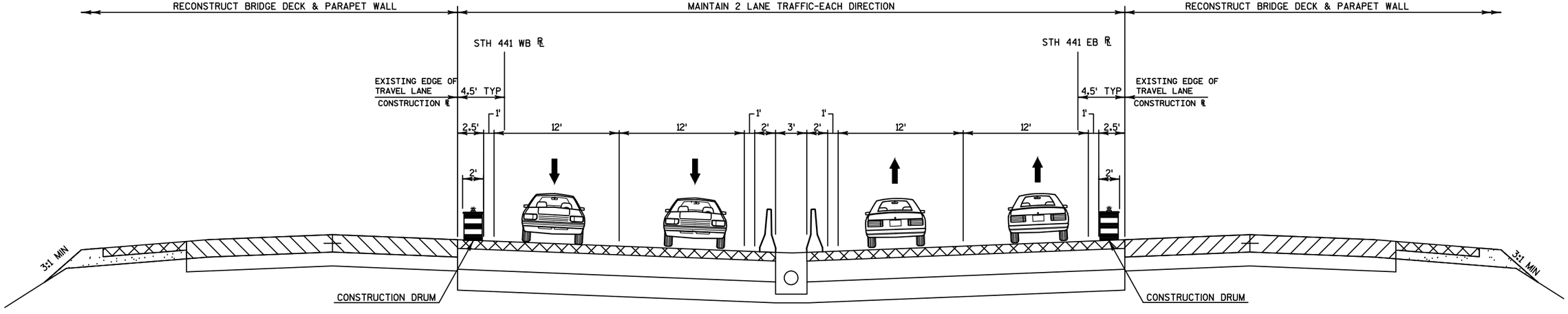

TYPICAL CROSS SECTION FOR MAINLINE STH 441 STAGE 3

STA 324EB+45 - STA 340EB+66
STA 342EB+35 - STA 360EB+81

PROJECT NO: 1517-75-88	HWY: STH 441/USH 10	COUNTY: WINNEBAGO	TRAFFIC CONTROL: TYPICAL CROSS SECTIONS	SHEET 36	E

TRAFFIC CONTROL NOTES

THE EXACT NUMBER, LOCATION AND SPACING OF ALL SIGNS AND TRAFFIC CONTROL DEVICES SHALL BE ADJUSTED TO FIT FIELD CONDITIONS AS DIRECTED BY ENGINEER.

THE SPACING BETWEEN SIGNS SHOULD BE ADJUSTED TO NOT CONFLICT WITH AND TO PROVIDE A MINIMUM OF 200 FEET, (500 FEET DESIRABLE) CLEARANCE TO EXISTING SIGNS.

ALL SIGNS ARE 48" X 48" AS "W" UNLESS OTHERWISE NOTED.

ALL "WO" SIGNS ARE THE SAME AS "W" SIGNS EXCEPT THE BACKGROUND IS ORANGE.

ANY SIGNS TEMPORARY OR EXISTING, WHICH CONFLICT WITH TRAFFIC CONTROL "IN USE" SHALL BE REMOVED OR COVERED AS NEEDED AND AS APPROVED BY THE ENGINEER.

CONSIDER ROADWAY GEOMETRICS WHEN LOCATING SIGNS AND ARROW BOARD SO THE DRIVER HAS A CLEAR VIEW OF THE ARROW BOARD AND LAND CLOSURE DRUMS FOR A MINIMUM 1500 FEET IN FRONT OF DRUMS.

FOR LANE CLOSURE THAT IS IN PLACE LESS THAN 7 CONTINUOUS DAYS AND NIGHTS, THE ADVANCED WARNING SIGNS MAY BE MOUNTED ON PORTABLE SUPPORTS.

REMOVAL OF PAVEMENT MARKINGS AND PLACEMENT OF TEMPORARY PAVEMENT MARKINGS REQUIRED IF LANE CLOSURE IS TO BE IN PLACE FOR LONGER THAN 4 CONTINUOUS DAYS AND NIGHTS.

IF THE HORIZONTAL ALIGNMENT IS SUCH THAT A CURVE MAY REQUIRE ADDITIONAL DELINEATION, THE DEVICE SPACING MAY BE DECREASED TO 50 FEET.

ADJUSTMENTS IN BUFFER SPACE NEED TO BE INCORPORATED WHEN THE LANE CLOSURE OCCURS NEAR AN INTERCHANGE EXIT OR ENTRANCE RAMP OR INTERSECTION. THE LANE CLOSURE MUST TAKE PLACE FAR ENOUGH IN ADVANCE OF AN EXIT OR ENTRANCE RAMP TO STILL ALLOW FOR ADEQUATE BUFFER SPACE. THE MINIMUM LENGTH OF THE BUFFER SPACE BEFORE AN EXIT RAMP SHOULD BE ½ THE LENGTH OF THE TRANSITION AREA. THE ENTRANCE RAMP SHOULD BE FOLLOWED BY THE ORIGINAL BUFFER SPACE LENGTH OF 800 FEET DESIRABLE PRIOR TO ANOTHER TRAFFIC CONTROL CHANGE SUCH AS A CROSSOVER MANEUVER.

NO EQUIPMENT OR MATERIAL SHALL BE LOCATED WITHIN THE WORK ZONE OTHER THAN BEHIND THE PRECAST CONCRETE BARRIER.

WARNING SIGNS THAT WILL BE IN PLACE LESS THAN 7 CONTINUOUS DAYS AND NIGHTS MAY BE MOUNTED ON PORTABLE SUPPORTS.

N

ROAD WORK 1 MILE W20-1

SPEED LIMIT 55 W13-5

USH 10/STH 441

320WB
320EB
330WB
330EB
340WB
340EB
350WB
350EB
360WB
360EB
370WB
370EB

5280' 5280' 750' 750' 1000'

BEGIN PROJECT
STA 324EB+45.00

STRUCTURE
B-70-116

S ONEIDA ST

STRUCTURE
B-70-115

USH 10/ONEIDA ST

STH 441

END PROJECT
STA 360EB+80.00

END ROAD WORK G20-2A 48"X24"

W01-4bR

SPEED LIMIT 55 R2-1 48"X60"

WORK ZONE W21-62-Q 30"X48"
FINES DOUBLE W21-62-R 30"X48"

SWITCH TO WB01-4bL FOR STAGE 3

ROAD WORK 2 MILES W20-1

LEGEND

SIGN ON PERMANENT SUPPORT

EASTBOUND ROADWAY SHOWN - WESTBOUND IS REVERSE LAYOUT

PROJECT NO: 1517-75-88	HWY: STH 441/USH 10	COUNTY: WINNEBAGO	TRAFFIC CONTROL OVERVIEW	SHEET 37	E

2

2

N

S. ONEIDA ST

USH 10/ONEIDA ST NW RAMP

STH 441/USH 10

℄ STH 441 EB

STH 441/USH 10

328EB 330EB 332EB 334EB 336EB 338EB 340EB 342EB

SALVAGE AND REINSTALL
BEAM GUARD
STA 340+69, 37.3' RT

EAT POST #1
STA 336+10, 41.0' RT

STA 331+58, 37.5' RT

SDD 15D12: TRAFFIC CONTROL:
LANE CLOSURE, SPEED REDUCTION

USH 10/ONEIDA ST SW RAMP

USH 10/ONEIDA ST

EASTBOUND ROADWAY SHOWN - WESTBOUND IS REVERSE LAYOUT

LEGEND

- SIGN ON PERMANENT SUPPORT
- DIRECTION OF TRAFFIC
- WORK AREA

PROJECT NO: 1517-75-88	HWY: STH 441/USH 10	COUNTY: WINNEBAGO	TRAFFIC CONTROL - STAGE 1	SHEET 38	E

FILE NAME : S:\PDS\C3D\WIS441\15177574_79\SHEETSPLAN\15177588\026000-S1\NE-15177588-026001-S1.DWG
LAYOUT NAME - 026001-s1A

PLOT DATE : 8/17/2016 3:32 PM PLOT BY : COHEN, MICHAEL J PLOT NAME : PLOT SCALE : 1 IN:100 FT

2

2

N

S. ONEIDA ST

USH 10/ONEIDA ST NE RAMP

SALVAGE AND REINSTALL BEAM GUARD

STH 441

346+82.32, -97.00' LT

℄ STH 441 EB

STH 441

342EB 344EB 346EB 348EB 350EB 352EB 354EB 356EB

11'

STA 342+38, 38.5' RT

SDD 15D12: TRAFFIC CONTROL:
LANE CLOSURE, SPEED REDUCTION

STA 351+92, 37.7' RT

SDD: TRAFFIC CONTROL:
LANE CLOSURE, SPEED REDUCTION

USH 10/ONEIDA ST

USH 10/ONEIDA ST SE RAMP

EASTBOUND ROADWAY SHOWN - WESTBOUND IS REVERSE LAYOUT

LEGEND

- SIGN ON PERMANENT SUPPORT
- DIRECTION OF TRAFFIC
- WORK AREA

PROJECT NO: 1517-75-88	HWY: STH 441/USH 10	COUNTY: WINNEBAGO	TRAFFIC CONTROL - STAGE 1	SHEET 39	E

FILE NAME : S:\PDS\C3D\WIS441\15177574_79\SHEETSPLAN\15177588\026000-S1\NE-15177588-026001-S1.DWG
LAYOUT NAME - 026002-s1A

PLOT DATE : 8/17/2016 3:32 PM PLOT BY : COHEN, MICHAEL J PLOT NAME : PLOT SCALE : 1 IN:100 FT

2

N

USH 10/ONEIDA ST NW RAMP

W01-6

TYPE III BARRICADE

DRUMS AT 10' INTERVAL AS NEEDED

TEMPORARY PAVEMENT MARKING
TEMPORARY PAINT
4-INCH EDGE LINE WHITE

USH 10/STH 441

℄ STH 441 EB

475'

660' TAPER

50' TYP

12'

326EB

328EB

330EB

332EB

334EB

336EB

338EB

340EB

USH 10/STH 441

RAMP TO REMAIN OPEN DURING ALL STAGES OF CONSTRUCTION

CRASH CUSHION

TAPER 8:1 TO OUTSIDE EDGE OF WORK ZONE CLEAR ZONE

TEMPORARY PAVEMENT MARKING
TEMPORARY PAINT
4-INCH EDGE LINE WHITE

TEMPORARY PAVEMENT MARKING
TEMPORARY PAINT
8-INCH EDGE LINE SOLID WHITE

USH 10/ONEIDA ST SW RAMP

LEGEND

- TYPE III BARRICADE
- TYPE III BARRICADE WTH ATTACHED SIGN
- TRAFFIC CONTROL DRUM
- TRAFFIC CONTROL DRUM WITH TYPE C STEADY BURN LIGHT
- SIGN ON PERMANENT SUPPORT
- SIGN ON TEMPORARY SUPPORT
- CONCRETE BARRIER TEMPORARY PRECAST
- WORK AREA
- DIRECTION OF TRAFFIC
- FLASHING ARROW BOARD
- WORK COMPLETED IN PREVIOUS STAGES
- xxxxxxxxxxx REMOVE EXISTING PAVEMENT MARKING

EASTBOUND ROADWAY SHOWN - WESTBOUND IS REVERSE LAYOUT

PROJECT NO:1517-75-88	HWY: STH 441/USH 10	COUNTY: WINNEBAGO	TRAFFIC CONTROL - STAGE 2	SHEET 40	E

FILE NAME : S:\PDS\C3D\WIS441\15177574_79\SHEETSPLAN\15177588\026000-S1\NE-15177588-026003-S2.DWG
LAYOUT NAME - 026003-s1B

PLOT DATE : 8/17/2016 3:44 PM PLOT BY : COHEN, MICHAEL J PLOT NAME : PLOT SCALE : 1 IN:100 FT

WISDOT/CADDS SHEET 42

2

2

N

S. ONEIDA ST

USH 10/ONEIDA ST NE RAMP

TEMPORARY PAVEMENT MARKING
TEMPORARY PAINT
4-INCH EDGE LINE YELLOW

STH 441

STA 340+67, 12.6' RT

℄ STH 441 EB

720' TAPER

50'
TYP

12'

342EB

344EB

346EB

348EB

350EB

352EB

354EB

356EB

STH 441

℄ STH 441 EB

12'

TEMPORARY PAVEMENT MARKING
TEMPORARY PAINT
8-INCH LANE LINE SOLID WHITE

USH 10/ONEIDA ST SE RAMP

USH 10/ONEIDA ST

TEMPORARY PAVEMENT MARKING
TEMPORARY PAINT
4-INCH LANE LINE DASHED WHITE

TEMPORARY PAVEMENT MARKING
TEMPORARY PAINT
4-INCH EDGE LINE DASHED WHITE

EASTBOUND ROADWAY SHOWN - WESTBOUND IS REVERSE LAYOUT

LEGEND

- TYPE III BARRICADE
- TYPE III BARRICADE WTH ATTACHED SIGN
- TRAFFIC CONTROL DRUM
- TRAFFIC CONTROL DRUM WITH TYPE C STEADY BURN LIGHT
- SIGN ON PERMANENT SUPPORT
- SIGN ON TEMPORARY SUPPORT
- CONCRETE BARRIER TEMPORARY PRECAST
- WORK AREA
- DIRECTION OF TRAFFIC
- FLASHING ARROW BOARD
- WORK COMPLETED IN PREVIOUS STAGES
- xxxxxxxxxxx REMOVE EXISTING PAVEMENT MARKING

PROJECT NO: 1517-75-88	HWY: STH 441/USH 10	COUNTY: WINNEBAGO	TRAFFIC CONTROL - STAGE 2	SHEET 41	E

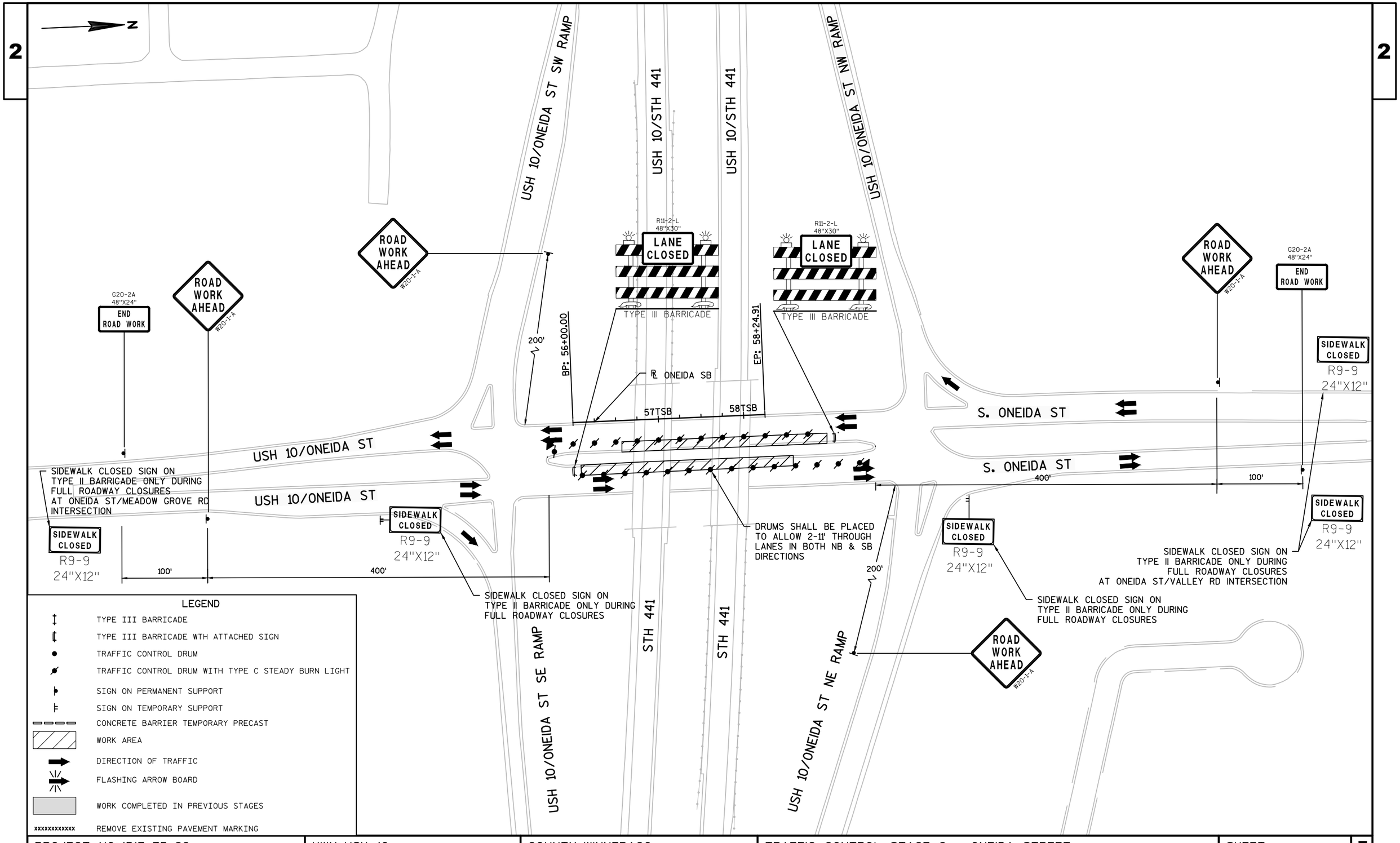

PROJECT NO: 1517-75-88	HWY: USH 10	COUNTY: WINNEBAGO	TRAFFIC CONTROL STAGE 2 - ONEIDA STREET	SHEET 42	E

2

N

TEMPORARY PAVEMENT MARKING
TEMPORARY PAINT
4-INCH LANE LINE DASHED WHITE

TEMPORARY PAVEMENT MARKING
TEMPORARY PAINT
4-INCH EDGE LINE YELLOW

TEMPORARY PAVEMENT MARKING
TEMPORARY PAINT
8-INCH LANE LINE WHITE

USH 10/ONEIDA ST NW RAMP

USH 10/STH 441

CRASH CUSHION LEFT IN PLACE

BEGIN TAPER
324+45.12, 4.43' RT

DRUMS AT 10'
INTERVAL
AS NEEDED

℄ STH 441 EB

316EB 318EB 320EB 322EB 324EB 326EB 328EB 330EB

12' 12'

USH 10/STH 441

USH 10/ONEIDA ST SW RAMP

TEMPORARY PAVEMENT MARKING
TEMPORARY PAINT
4-INCH EDGE LINE WHITE

RAMP TO REMAIN OPEN DURING
ALL CONSTRUCTION PHASES

880' TAPER

LEGEND

- TYPE III BARRICADE
- TYPE III BARRICADE WTH ATTACHED SIGN
- TRAFFIC CONTROL DRUM
- TRAFFIC CONTROL DRUM WITH TYPE C STEADY BURN LIGHT
- SIGN ON PERMANENT SUPPORT
- SIGN ON TEMPORARY SUPPORT
- CONCRETE BARRIER TEMPORARY PRECAST
- WORK AREA
- DIRECTION OF TRAFFIC
- FLASHING ARROW BOARD
- WORK COMPLETED IN PREVIOUS STAGES
- xxxxxxxxxxx REMOVE EXISTING PAVEMENT MARKING

EASTBOUND ROADWAY SHOWN - WESTBOUND IS REVERSE LAYOUT

PROJECT NO: 1517-75-88	HWY: STH 441/USH 10	COUNTY: WINNEBAGO	TRAFFIC CONTROL - STAGE 3	SHEET 43	E

2

N

USH 10/ONEIDA ST NW RAMP

S. ONEIDA ST

USH 10/ONEIDA ST NE RAMP

TEMPORARY PAVEMENT MARKING
TEMPORARY PAINT
4-INCH EDGE LINE YELLOW

INSTALL CAP FOR TEMPORARY CONCRETE BARRIER TO 56" PERMANENT CONCRETE BARRIER: SDD 14B7G & 14B7H (INCIDENTAL TO TEMPORARY PRECAST CONCRETE BARRIER)

TEMPORARY PAVEMENT MARKING
TEMPORARY PAINT
8-INCH LANE LINE WHITE

TEMPORARY PAVEMENT MARKING
TEMPORARY PAINT
4-INCH EDGE LINE WHITE

USH 10/STH 441

INSTALL STEEL THRIE BEAM

REMOVE STEEL PLATE BEAM GUARD

℄ STH 441 EB

STH 441

100'
TYP

50'
TYP

332EB

334EB

12'

336EB

338EB

340EB

342EB

344EB

12'

12'

346EB

USH 10/STH 441

STH 441

880'
SHIFTING TAPER

TAPER 8:1 TO OUTSIDE EDGE OF WORK ZONE CLEAR ZONE

W5-52R
12"X36"

W1-4B
48"X48"

USH 10/ONEIDA ST SW RAMP

USH 10/ONEIDA ST

USH 10/ONEIDA ST SE RAMP

RAMP OPEN CONDITION SHOWN,
DURING CLOSED STAGES, USE
SDD: TRAFFIC CONTROL: EXIT RAMP CLOSURE

EASTBOUND ROADWAY SHOWN - WESTBOUND IS REVERSE LAYOUT

LEGEND

- TYPE III BARRICADE
- TYPE III BARRICADE WTH ATTACHED SIGN
- TRAFFIC CONTROL DRUM
- TRAFFIC CONTROL DRUM WITH TYPE C STEADY BURN LIGHT
- SIGN ON PERMANENT SUPPORT
- SIGN ON TEMPORARY SUPPORT
- CONCRETE BARRIER TEMPORARY PRECAST
- WORK AREA
- DIRECTION OF TRAFFIC
- FLASHING ARROW BOARD
- WORK COMPLETED IN PREVIOUS STAGES
- xxxxxxxxxxx REMOVE EXISTING PAVEMENT MARKING

PROJECT NO: 1517-75-88	HWY: STH 441/USH 10	COUNTY: WINNEBAGO	TRAFFIC CONTROL - STAGE 3	SHEET 44	E

FILE NAME : S:\PDS\C3D\WIS441\15177574_79\SHEETSPLANS\15177588\026000-S1\NE-15177588-026009-S3.DWG
LAYOUT NAME - 026010-s2B

PLOT DATE : 8/30/2016 2:03 PM PLOT BY : COHEN, MICHAEL J PLOT NAME : PLOT SCALE : 1 IN:100 FT

WISDOT/CADDS SHEET 42

2

N

USH 10/ONEIDA ST NE RAMP

TEMPORARY PAVEMENT MARKING
TEMPORARY PAINT
4-INCH EDGE LINE YELLOW

TEMPORARY PAVEMENT MARKING
TEMPORARY PAINT
8-INCH LANE LINE WHITE

STH 441

1200' TAPER

℄ STH 441 EB

348EB 350EB 352EB 354EB 356EB 358EB 360EB 362EB

12' 12'

STH 441

50' TYP

TEMPORARY PAVEMENT MARKING
TEMPORARY PAINT
4-INCH EDGE LINE WHITE

USH 10/ONEIDA ST SE RAMP

EASTBOUND ROADWAY SHOWN - WESTBOUND IS REVERSE LAYOUT

LEGEND

- TYPE III BARRICADE
- TYPE III BARRICADE WTH ATTACHED SIGN
- TRAFFIC CONTROL DRUM
- TRAFFIC CONTROL DRUM WITH TYPE C STEADY BURN LIGHT
- SIGN ON PERMANENT SUPPORT
- SIGN ON TEMPORARY SUPPORT
- CONCRETE BARRIER TEMPORARY PRECAST
- WORK AREA
- DIRECTION OF TRAFFIC
- FLASHING ARROW BOARD
- WORK COMPLETED IN PREVIOUS STAGES
- xxxxxxxxxxx REMOVE EXISTING PAVEMENT MARKING

PROJECT NO: 1517-75-88	HWY: STH 441/USH 10	COUNTY: WINNEBAGO	TRAFFIC CONTROL - STAGE 3	SHEET 45	E

FILE NAME : S:\PDS\C3D\WIS441\15177574_79\SHEETSPLAN\15177588\026000-S1\NE-15177588-026009-S3.DWG
LAYOUT NAME - 026011-s2B

PLOT DATE : 8/17/2016 4:58 PM PLOT BY : COHEN, MICHAEL J PLOT NAME : PLOT SCALE : 1 IN:100 FT

WISDOT/CADDS SHEET 42

2

2

N

STH 441/USH 10

USH 10/ONEIDA ST NW RAMP

℄ STH 441 EB

CRASH CUSHION LEFT IN PLACE

FLEXIBLE TUBULAR MARKER POSTS LEFT IN PLACE
(100' SPACING)

CONCRETE BARRIER TEMPORARY PRECAST
LEFT IN PLACE

316EB 318EB 320EB 322EB 324EB 326EB 328EB 330EB

STH 441/USH 10

USH 10/ONEIDA ST SW RAMP

SEE PAVEMENT
MARKING SHEETS

EASTBOUND ROADWAY SHOWN - WESTBOUND IS REVERSE LAYOUT

LEGEND

- TRAFFIC CONTROL FLEXIBLE DELINEATOR
- CONCRETE BARRIER TEMPORARY PRECAST
- DIRECTION OF TRAFFIC
- WORK COMPLETED IN PREVIOUS STAGES

PROJECT NO:1517-75-88	HWY: STH 441/USH 10	COUNTY: WINNEBAGO	TRAFFIC CONTROL - STAGE 4	SHEET 46	E

2

2

N

USH 10/ONEIDA ST NW RAMP

S. ONEIDA ST

USH 10/ONEIDA ST NE RAMP

CONCRETE BARRIER TEMPORARY PRECAST
LEFT IN PLACE

FLEXIBLE TUBULAR MARKER POSTS LEFT IN PLACE
(100' SPACING)

USH 10/STH 441

℄ STH 441 EB

STH 441

332EB 334EB 336EB 338EB 340EB 342EB 344EB 346EB

USH 10/STH 441

STH 441

SEE PAVEMENT
MARKING SHEETS

USH 10/ONEIDA ST

USH 10/ONEIDA ST SW RAMP

EASTBOUND ROADWAY SHOWN - WESTBOUND IS REVERSE LAYOUT

USH 10/ONEIDA ST SE RAMP

LEGEND

- TRAFFIC CONTROL FLEXIBLE DELINEATOR
- CONCRETE BARRIER TEMPORARY PRECAST
- DIRECTION OF TRAFFIC
- WORK COMPLETED IN PREVIOUS STAGES

PROJECT NO: 1517-75-88	HWY: STH 441/USH 10	COUNTY: WINNEBAGO	TRAFFIC CONTROL - STAGE 4	SHEET 47	E

2

2

N

USH 10/ONEIDA ST NE RAMP

FLEXIBLE TUBULAR MARKER POSTS LEFT IN PLACE
(100' SPACING)

STH 441

CONCRETE BARRIER TEMPORARY PRECAST
LEFT IN PLACE

348EB 350EB 352EB 354EB 356EB 358EB 360EB 362EB

℄ STH 441 EB

STH 441

SEE PAVEMENT
MARKING SHEETS

USH 10/ONEIDA ST SE RAMP

EASTBOUND ROADWAY SHOWN - WESTBOUND IS REVERSE LAYOUT

LEGEND

- TRAFFIC CONTROL FLEXIBLE DELINEATOR
- CONCRETE BARRIER TEMPORARY PRECAST
- DIRECTION OF TRAFFIC
- WORK COMPLETED IN PREVIOUS STAGES

PROJECT NO: 1517-75-88	HWY: STH 441/USH 10	COUNTY: WINNEBAGO	TRAFFIC CONTROL - STAGE 4	SHEET 48	E

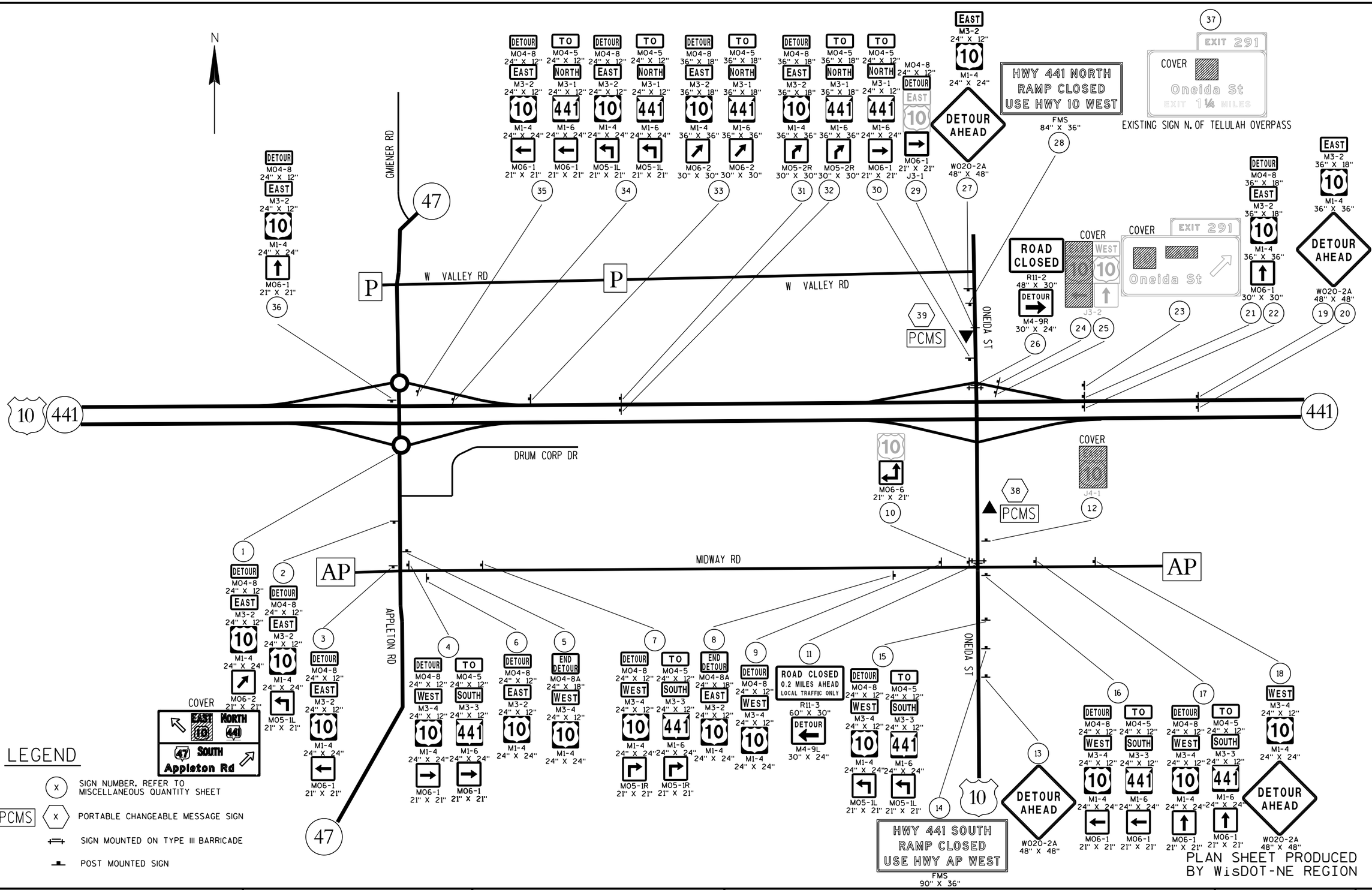

PROJECT NO: 1517-75-88	HWY: USH 10/STH 441	COUNTY: WINNEBAGO	DETOUR SIGNING DETAIL- USH 10 CLOSURE	SHEET 49	E

FILE NAME : N:\spo\traffic\A Work Zone\Detours\Winnebago County\US 10\US 10 -1517-75-88\027001_dt.dgn PLOT DATE : 09-AUG-2016 08:09 PLOT BY : dotj1f PLOT NAME : PLOT SCALE : 300:1

WISDOT/CADDS SHEET 42

NOTE: CURVE NOTES FOR ALIGNMENTS EB & WB ARE FOR FUTURE PROPOSED ROADWAY AND ARE FOR REFERENCE ONLY IN THIS PROJECT

CURVE: WB-1
PI STA = 341WB+20.84
Y = 552032.70
X = 828124.06
DELTA = 6°18'49"
D = 0°33'32"
T = 565.32'
L = 1129.50'
R = 10250.00'
PC STA = 335WB+55.52
Y = 552039.56
X = 827558.78
PT STA = 346WB+85.02
Y = 551963.72
X = 828685.16

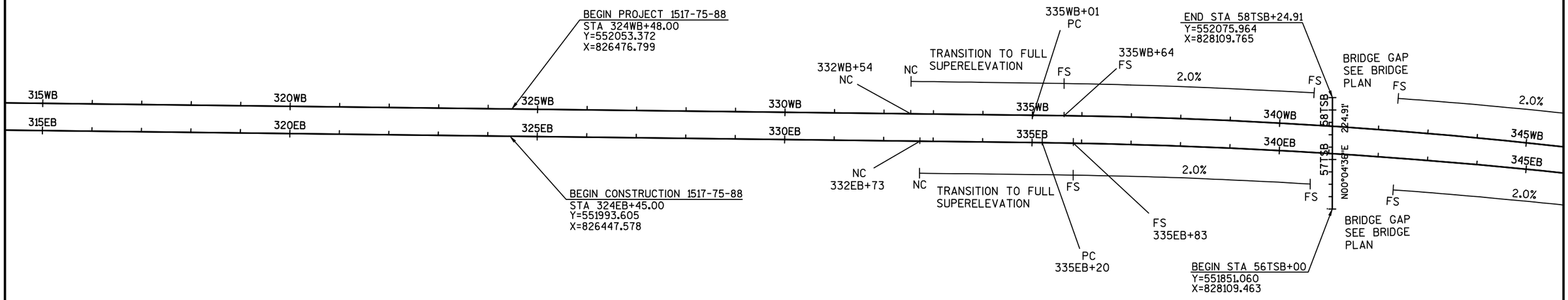

NOTE: SUPER ELEVATION STATIONING IS APPROXIMATE AND NEEDS TO BE VERIFIED IN THE FIELD

CURVE: EB-1
PI STA = 341EB+54.19
Y = 551977.30
X = 828156.73
DELTA = 6°18'49"
D = 0°29'59"
T = 632.28'
L = 1263.28'
R = 11464.00'
PC STA = 335EB+21.91
Y = 551984.97
X = 827524.50
PT STA = 347EB+85.19
Y = 551900.15
X = 828784.28

PROJECT NO: 1517-75-88	HWY: STH 441/USH 10	COUNTY: WINNEBAGO	ALIGNMENT DETAIL	SHEET 50	E

2

CURVE: WB-2
PI STA = 369WB+04.42
Y = 551692.18
X = 830893.93
DELTA = 4°43'11"
D = 0°24'13"
T = 584.93'
L = 1169.19'
R = 14193.77'
PC STA = 363WB+19.49
Y = 551763.55
X = 830313.37
PT STA = 374WB+92.88
Y = 551668.82
X = 831478.39

NOTE: CURVE NOTES FOR ALIGNMENTS EB & WB ARE FOR FUTURE PROPOSED ROADWAY AND ARE FOR REFERENCE ONLY IN THIS PROJECT

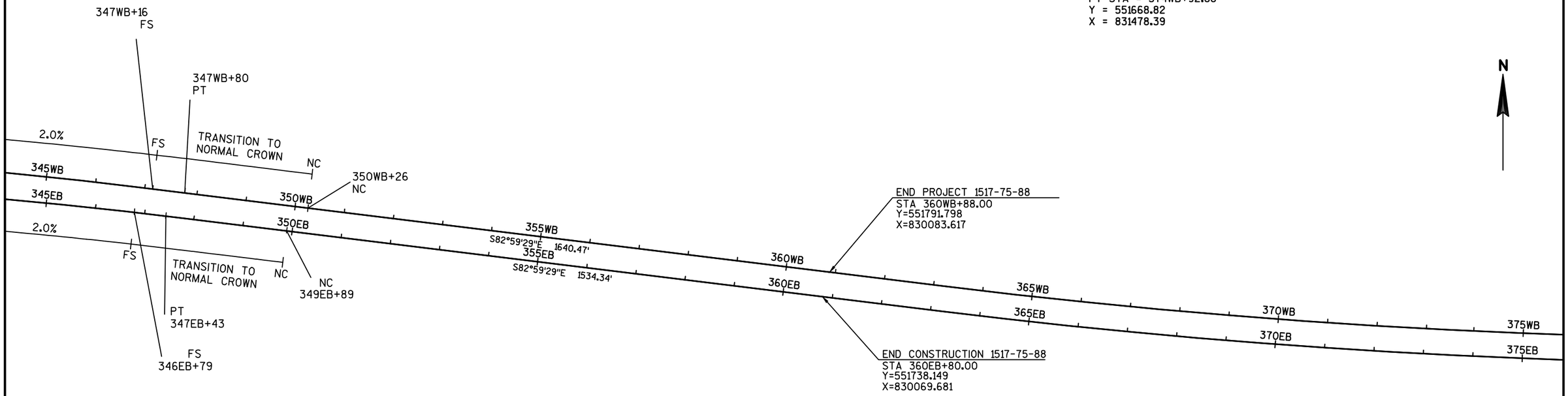

NOTE: SUPER ELEVATION STATIONING IS APPROXIMATE AND NEEDS TO BE VERIFIED IN THE FIELD

CURVE: EB-2
PI STA = 369EB+06.57
Y = 551641.30
X = 830889.81
DELTA = 4°43'17"
D = 0°24'08"
T = 587.05'
L = 1173.43'
R = 14240.22'
PC STA = 363EB+19.52
Y = 551712.93
X = 830307.15
PT STA = 374EB+92.95
Y = 551617.87
X = 831476.39

PROJECT NO: 1517-75-88	HWY: STH 441/USH 10	COUNTY: WINNEBAGO	ALIGNMENT DETAIL	SHEET 51	E

FILE NAME : S:\PDS\C3D\WIS441\15177574_79\SHEETSPLAN\15177588\027200-AD\NE-15177588-027200-AD.DWG
LAYOUT NAME - NE-15177588-027200-AD - 027203-AD
PLOT DATE : 8/23/2016 3:05 PM PLOT BY : COHEN, MICHAEL J PLOT NAME : PLOT SCALE : 1 IN:200 FT
WISDOT/CADDS SHEET 42

DATE 11OCT16 E S T I M A T E O F Q U A N T I T I E S

LINE NUMBER	ITEM	ITEM DESCRIPTION	UNIT	TOTAL	1517-75-88 QUANTITY
0010	203.0200	Removing Old Structure (station) 001. Station 341EB+50.78	LS	1.000	1.000
0020	203.0200	Removing Old Structure (station) 002. Station 341WB+51	LS	1.000	1.000
0030	204.0100	Removing Pavement	SY	2,292.000	2,292.000
0040	204.0105	Removing Pavement Butt Joints	SY	1,156.000	1,156.000
0050	204.0180	Removing Delineators and Markers	EACH	16.000	16.000
0060	204.0220	Removing Inlets	EACH	1.000	1.000
0070	204.0245	Removing Storm Sewer (size) 001. 12-15-inch	LF	39.000	39.000
0080	205.0100	Excavation Common	CY	10,252.000	10,252.000
0090	206.1000	Excavation for Structures Bridges (structure) 001. B-70-115	LS	1.000	1.000
0100	206.1000	Excavation for Structures Bridges (structure) 002. B-70-116	LS	1.000	1.000
0110	210.1500	Backfill Structure Type A	TON	680.000	680.000
0120	211.0100	Prepare Foundation for Asphaltic Paving (project) 001. 1517-75-88	LS	1.000	1.000
0130	213.0100	Finishing Roadway (project) 001. 1517-75-88	EACH	1.000	1.000
0140	305.0120	Base Aggregate Dense 1 1/4-Inch	TON	15,241.000	15,241.000
0150	305.0500	Shaping Shoulders	STA	37.000	37.000
0160	311.0110	Breaker Run	TON	10,686.000	10,686.000
0170	455.0605	Tack Coat	GAL	1,067.000	1,067.000
0180	465.0105	Asphaltic Surface	TON	6,335.000	6,335.000
0190	465.0310	Asphaltic Curb	LF	15.000	15.000
0200	501.1000.S	Ice Hot Weather Concreting	LB	6,900.000	6,900.000
0210	502.3200	Protective Surface Treatment	SY	2,430.000	2,430.000
0220	502.3210	Pigmented Surface Sealer	SY	380.000	380.000
0230	502.4206	Adhesive Anchors No. 6 Bar	EACH	92.000	92.000
0240	502.4207	Adhesive Anchors No. 7 Bar	EACH	32.000	32.000
0250	503.0145	Prestressed Girder Type I 45-Inch	LF	1,008.000	1,008.000
0260	505.0400	Bar Steel Reinforcement HS Structures	LB	1,510.000	1,510.000
0270	505.0600	Bar Steel Reinforcement HS Coated Structures	LB	218,190.000	218,190.000
0280	506.2605	Bearing Pads Elastomeric Non-Laminated	EACH	24.000	24.000
0290	506.4000	Steel Diaphragms (structure) 001. B-70-115	EACH	12.000	12.000
0300	506.4000	Steel Diaphragms (structure) 002. B-70-116	EACH	12.000	12.000
0310	511.1200	Temporary Shoring (structure) 001. B-70-115	SF	540.000	540.000
0320	511.1200	Temporary Shoring (structure) 002. B-70-116	SF	540.000	540.000
0330	516.0500	Rubberized Membrane Waterproofing	SY	34.000	34.000
0340	517.1010.S	Concrete Staining (structure) 001. B-70-115	SF	4,990.000	4,990.000
0350	517.1010.S	Concrete Staining (structure) 002. B-70-116	SF	4,880.000	4,880.000
0360	517.1050.S	Architectural Surface Treatment (structure) 001. B-70-115	SF	425.000	425.000
0370	517.1050.S	Architectural Surface Treatment (structure) 002. B-70-116	SF	425.000	425.000
0380	520.8000	Concrete Collars for Pipe	EACH	4.000	4.000
0390	521.0118	Culvert Pipe Corrugated Steel 18-Inch	LF	360.000	360.000
0400	521.1018	Apron Endwalls for Culvert Pipe Steel 18-Inch	EACH	2.000	2.000

3

DATE 11OCT16 E S T I M A T E O F Q U A N T I T I E S

LINE NUMBER	ITEM	ITEM DESCRIPTION	UNIT	TOTAL	1517-75-88 QUANTITY
0410	521.2005.S	Surface Drain Pipe Corrugated Metal Slotted (inch) 001. 18-INCH	LF	995.000	995.000
0420	550.1100	Piling Steel HP 10-Inch X 42 Lb	LF	3,400.000	3,400.000
0430	601.0411	Concrete Curb & Gutter 30-Inch Type D	LF	179.000	179.000
0440	603.8000	Concrete Barrier Temporary Precast Delivered	LF	8,475.000	8,475.000
0450	603.8125	Concrete Barrier Temporary Precast Installed	LF	8,475.000	8,475.000
0460	604.0600	Slope Paving Select Crushed Material	SY	360.000	360.000
0470	608.0412	Storm Sewer Pipe Reinforced Concrete Class IV 12-Inch	LF	76.000	76.000
0480	611.0654	Inlet Covers Type V	EACH	5.000	5.000
0490	611.3225	Inlets 2x2.5-FT	EACH	5.000	5.000
0500	611.8110	Adjusting Manhole Covers	EACH	2.000	2.000
0510	611.8115	Adjusting Inlet Covers	EACH	5.000	5.000
0520	612.0108	Pipe Underdrain 8-Inch	LF	1,524.000	1,524.000
0530	612.0406	Pipe Underdrain Wrapped 6-Inch	LF	160.000	160.000
0540	614.0150	Anchor Assemblies for Steel Plate Beam Guard	EACH	4.000	4.000
0550	614.0905	Crash Cushions Temporary	EACH	2.000	2.000
0560	614.0920	Salvaged Rail	LF	652.000	652.000
0570	614.0925	Salvaged Guardrail End Treatments	EACH	4.000	4.000
0580	614.1100	MGS Guardrail Temporary Thrie Beam Transition	LF	100.000	100.000
0590	614.2610	MGS Guardrail Terminal EAT	EACH	2.000	2.000
0600	618.0100	Maintenance And Repair of Haul Roads (project) 001. 1517-75-88	EACH	1.000	1.000
0610	619.1000	Mobilization	EACH	1.000	1.000
0620	624.0100	Water	MGAL	255.000	255.000
0630	628.1504	Silt Fence	LF	150.000	150.000
0640	628.1520	Silt Fence Maintenance	LF	150.000	150.000
0650	628.1905	Mobilizations Erosion Control	EACH	4.000	4.000
0660	628.1910	Mobilizations Emergency Erosion Control	EACH	2.000	2.000
0670	628.7005	Inlet Protection Type A	EACH	4.000	4.000
0680	628.7015	Inlet Protection Type C	EACH	9.000	9.000
0690	628.7504	Temporary Ditch Checks	LF	180.000	180.000
0700	628.7555	Culvert Pipe Checks	EACH	24.000	24.000
0710	628.7560	Tracking Pads	EACH	2.000	2.000
0720	633.0100	Delineator Posts Steel	EACH	16.000	16.000
0730	633.0500	Delineator Reflectors	EACH	16.000	16.000
0740	642.5201	Field Office Type C	EACH	1.000	1.000
0750	643.0200.S	Traffic Control Surveillance and Maintenance (project) 001.1517-75-88	DAY	125.000	125.000
0760	643.0300	Traffic Control Drums	DAY	15,999.000	15,999.000
0770	643.0410	Traffic Control Barricades Type II	DAY	30.000	30.000
0780	643.0420	Traffic Control Barricades Type III	DAY	444.000	444.000
0790	643.0705	Traffic Control Warning Lights Type A	DAY	888.000	888.000
0800	643.0715	Traffic Control Warning Lights Type C	DAY	14,357.000	14,357.000
0810	643.0800	Traffic Control Arrow Boards	DAY	548.000	548.000
0820	643.0900	Traffic Control Signs	DAY	4,775.000	4,775.000
0830	643.0910	Traffic Control Covering Signs Type I	EACH	2.000	2.000
0840	643.0920	Traffic Control Covering Signs Type II	EACH	2.000	2.000
0850	643.1000	Traffic Control Signs Fixed Message	SF	44.000	44.000
0860	643.1050	Traffic Control Signs PCMS	DAY	56.000	56.000

3

DATE 11OCT16 E S T I M A T E O F Q U A N T I T I E S

LINE NUMBER	ITEM	ITEM DESCRIPTION	UNIT	TOTAL	1517-75-88 QUANTITY
0870	643.2000	Traffic Control Detour (project) 001. 1517-75-88	EACH	1.000	1.000
0880	643.3000	Traffic Control Detour Signs	DAY	280.000	280.000
0890	646.0106	Pavement Marking Epoxy 4-Inch	LF	13,098.000	13,098.000
0900	646.0126	Pavement Marking Epoxy 8-Inch	LF	179.000	179.000
0910	646.0600	Removing Pavement Markings	LF	49,429.000	49,429.000
0920	649.0402	Temporary Pavement Marking Paint 4-Inch	LF	22,889.000	22,889.000
0930	649.0802	Temporary Pavement Marking Paint 8-Inch	LF	11,266.000	11,266.000
0940	652.0125	Conduit Rigid Metallic 2-Inch	LF	180.000	180.000
0950	690.0150	Sawing Asphalt	LF	38.000	38.000
0960	690.0250	Sawing Concrete	LF	2,614.000	2,614.000
0970	715.0502	Incentive Strength Concrete Structures	DOL	5,514.000	5,514.000
0980	ASP.1T0A	On-the-Job Training Apprentice at $5.00/HR	HRS	2,000.000	2,000.000
0990	ASP.1T0G	On-the-Job Training Graduate at $5.00/HR	HRS	1,320.000	1,320.000
1000	SPV.0035	Special 700. Modified High Performance Concrete (HPC) Masonry Bridges	CY	919.000	919.000
1010	SPV.0060	Special 200. Crash Cushion Temporary Left In Place	EACH	2.000	2.000
1020	SPV.0060	Special 201. Traffic Control Felxible Tubular Marker Posts Left In Place	EACH	26.000	26.000
1030	SPV.0060	Special 202. Traffic Control Flexible Tubular Marker Bases Left In Place	EACH	26.000	26.000
1040	SPV.0060	Special 206. Temporary Thrie Beam Connection Left In Place	EACH	4.000	4.000
1050	SPV.0060	Special 701. Junction Boxes Fiberglass 18x12x6-Inch	EACH	2.000	2.000
1060	SPV.0075	Special 001. Street Sweeping	HRS	90.000	90.000
1070	SPV.0090	Special 203. Concrete Barrier Temporary Precast Left In Place	LF	6,935.000	6,935.000
1080	SPV.0090	Special 204. Concrete Barrier Temporary Precast Anchoring	LF	7,335.000	7,335.000
1090	SPV.0090	Special 205. Salvage and Reinstall Beam Guard	LF	716.000	716.000
1100	SPV.0105	Special 002. Survey Project 1517-75-88	LS	1.000	1.000

REMOVING PAVEMENT

CATEGORY	STATION	TO	STATION	OFFSET	LOCATION	204.0100 REMOVING PAVEMENT SY	REMARKS
1000	56TSB+71	-	57TSB+68	25' RT	ONEIDA ST	135	Turn Lane
	56TSB+91	-	57TSB+73	50' RT	ONEIDA ST	198	Turn Lane & MEDIAN
	337EB+70.5	-	340EB+66.6	R/L	USH 10/STH 441	589	Shoulders
	342EB+34.8	-	345EB+24.9	R/L	USH 10/STH 441	401	Shoulders
	337WB+67.3	-	340WB+66.0	R/L	USH 10/STH 441	392	Shoulders
	342WB+34.9	-	345WB+25.7	R/L	USH 10/STH 441	577	Shoulders
					TOTAL	2,292	

REMOVING PAVEMENT BUTT JOINTS

CATEGORY	STATION	TO	STATION	OFFSET	LOCATION	204.0105 REMOVING PAVEMENT BUTT JOINTS SY
1000	338EB+00	-	339EB+00	RT	USH 10/STH 441	289
	344EB+00	-	345EB+00	RT	USH 10/STH 441	289
	338WB+00	-	229WB+00	LT	USH 10/STH 441	289
	344WB+00	-	345WB+00	LT	USH 10/STH 441	289
					TOTAL	1,156

SAWING PAVEMENT SUMMARY

CATEGORY	STATION	TO	STATION	OFFSET	LOCATION	690.0150 SAWING ASPHALT LF	690.0250 SAWING CONCRETE LF	REMARKS
1000	324EB+45			RT	USH 10/STH 441	4	-	SHOULDER REMOVAL
	331EB+58			RT	USH 10/STH 441	9	-	SHOULDER REMOVAL
	351EB+91			RT	USH 10/STH 441	9	-	SHOULDER REMOVAL
	360EB+74			RT	USH 10/STH 441	4	-	SHOULDER REMOVAL
	324WB+44			LT	USH 10/STH 441	4	-	SHOULDER REMOVAL
	332WB+07			LT	USH 10/STH 441	8	-	SHOULDER REMOVAL
	337EB+70	-	340EB+67	R/L	USH 10/STH 441	-	600	SHOULDER REMOVAL
	342EB+35	-	345EB+25	R/L	USH 10/STH 441	-	574	SHOULDER REMOVAL
	337WB+67	-	340WB+66	R/L	USH 10/STH 441	-	598	SHOULDER REMOVAL
	342WB+35		345WB+26	R/L	USH 10/STH 441	-	585	SHOULDER REMOVAL
	56TSB+71	-	57TSB+68	RT	ONEIDA ST	-	125	LANE REMOVAL
	56TSB+91	-	57TSB+72	RT	ONEIDA ST	-	108	LANE REMOVAL
	57TSB+06	-	57TSB+70	RT	ONEIDA ST	-	24	MEDIAN REMOVAL
					TOTALS	38	2,614	

3

REMOVING DELINEATORS AND MARKERS

CATEGORY	STATION	TO	STATION	OFFSET	LOCATION	204.0180 EACH	REMARKS
1000	331EB+58	-	351EB+92	RT	USH 10/STH 441	8	WIS 441
	332WB+07	-	351WB+82	LT	USH 10/STH 441	8	WIS 441
					TOTAL	16	

STORM SEWER STRUCTURE REMOVALS

CATEGORY	STATION	OFFSET	204.0220 REMOVING INLETS EACH	DESCRIPTION
1000	340WB+58.3	RT	1	
		TOTAL	1	

3

REMOVING STORM SEWER PIPE SUMMARY

CATEGORY	STATION	LOCATION	DESCRIPTIONS/REMARKS	204.0245.01 12-15 INCH LF
1000	340WB+58 RT	USH 10/STH 441		21
	57TSB+51 RT	ONEIDA ST	BEYOND CURB BACK, MEDIAN	18
			TOTAL	39

PREPARATION FOUNDATION FOR ASPHALTIC PAVEMENT

CATEGORY	STATION TO STATION	LOCATION	211.0100 LS	REMARKS
1000	1517-75-88	PROJECT	1	
		TOTAL	1	

FINISHING ROADWAY (PROJECT) 1517-75-88

CATEGORY	STATION TO STATION	LOCATION	213.0100 EACH	REMARKS
1000	1517-75-88	PROJECT	1	
		TOTAL	1	

FILE NAME : _____ PLOT DATE : _____ PLOT BY : _____ PLOT NAME : _____ PLOT SCALE : 1:1

Category	Division	From / To Station	Location	Common Excavation (1) (item # 205.0100)		Fill (CY)	Mass Ordinate + / - (14)
				Cut (2)	EBS Excavation (3)		
1000	Division 1		Outside Shoulder Widening				
		332WB+07 to 351WB+81	Westbound	529	0	0	529
		331EB+58 to 351EB+91	Eastbound	546	0	0	546
	Division 1 Subtotal			1,075	0	0	1,075
	Division 2		Median Widening				
		324EB+45 to 360EB+80		9,177	0	828	8,349
	Division 2 Subtotal			9,177	0	828	8,349
	PROJECT 1517-75-88 Totals			10,252.00	0.00	828.00	9,424.00
			Total Common Exc		**10,252.00**		

1) Common Excavation is the sum of the Cut and EBS Excavation columns. Item number 205.0100
2) Salvaged/Unsuable Pavement Material is included in Cut.
3) EBS Excavation to be backfilled with Cut
14) The Mass Ordinate + or - Qty calculated for the Division. Plus quantity indicates an excess of material within the Division. Minus indicates a shortage of material within the Division.

BASE AGGREGATE DENSE, BREAKER RUN, SHAPING SHOULDERS

CATEGORY	STATION	TO	STATION	OFFSET	LOCATION	305.0120 BASE AGGREGATE DENSE 1 1/4-INCH TON	305.0500 SHAPING SHOULDERS STA	311.0110 BREAKER RUN TON	REMARKS
1000	331EB+58	-	340EB+68	RT	USH 10/STH 441	393	9	-	STAGE 1 - OUTSIDE WIDENING
	342EB+37	-	351EB+91	RT	USH 10/STH 441	412	10	-	STAGE 1 - OUTSIDE WIDENING
	332WB+09	-	340WB+66	LT	USH 10/STH 441	372	8	-	STAGE 1 - OUTSIDE WIDENING
	342WB+35	-	351WB+90	LT	USH 10/STH 441	413	10	-	STAGE 1 - OUTSIDE WIDENING
	324EB+45	-	340EB+67	R/L	USH 10/STH 441	6,460	-	5,056	STAGE 2 - INSIDE WIDENING
	342EB+35	-	360EB+81	R/L	USH 10/STH 441	7,097	-	5,630	STAGE 2 - INSIDE WIDENING
	56TSB+71	-	57TSB+73	RT	ONEDIA ST	94	-	-	STAGE 2 - MEDIAN/TURN LANES
					TOTALS	15,241	37	10,686	

ASPHALTIC SURFACE

CATEGORY	STATION	TO	STATION	LOCATION	465.0105 ASPHALTIC SURFACE TON	REMARKS
1000	331EB+58	-	340EB+68	USH 10/STH 441	277	STAGE 1 - OUTSIDE SHOULDER
	340EB+37	-	351EB+91	USH 10/STH 441	291	STAGE 1 - OUTSIDE SHOULDER
	332WB+09	-	340WB+66	USH 10/STH 441	262	STAGE 1 - OUTSIDE SHOULDER
	342WB+35	-	351WB+90	USH 10/STH 441	292	STAGE 1 - OUTSIDE SHOULDER
	324EB+45	-	340EB+67	USH 10/STH 441	1161	STAGE 2 - INSIDE SHOULDER
	342EB+39	-	360EB+81	USH 10/STH 441	1230	STAGE 2 - INSIDE SHOULDER
	324WB+48	-	340WB+69	USH 10/STH 441	1048	STAGE 2 - INSIDE SHOULDER
	342WB+37	-	360WB+88	USH 10/STH 441	1220	STAGE 2 - INSIDE SHOULDER
	337EB+68	-	340EB+68	USH 10/STH 441	119	BRIDGE WEDGE
	342EB+35	-	345EB+35	USH 10/STH 441	119	BRIDGE WEDGE
	337WB+68	-	340WB+68	USH 10/STH 441	119	BRIDGE WEDGE
	342WB+35	-	345WB+35	USH 10/STH 441	119	BRIDGE WEDGE
	56TSB+71	-	57TSB+73	ONEIDA ST	78	TURN LANES/MEDIAN
				TOTAL	6,335	

TACK COAT

CATEGORY	STATION	TO	STATION	LOCATION	455.0605 TACK COAT GAL	REMARKS
1000	331EB+58	-	340EB+68	USH 10/STH 441	51	
	340EB+37	-	351EB+91	USH 10/STH 441	53	
	332WB+09	-	340WB+66	USH 10/STH 441	48	
	342WB+35	-	351WB+90	USH 10/STH 441	53	
	324EB+45	-	340EB+67	USH 10/STH 441	211	
	342EB+39	-	360EB+81	USH 10/STH 441	224	
	324WB+48	-	340WB69	USH 10/STH 441	191	
	342WB+37	-	360WB+88	USH 10/STH 441	222	
	56TSB+71	-	57TSB+73	ONEIDA ST	14	
				TOTAL	1,067	

ASPHALTIC CURB

CATEGORY	STATION	TO	STATION	OFFSET	LOCATION	465.0310 LF
1000	340EB+53	-	340EB+68	RT	USH10/STH 441	15
					TOTAL	15

CONCRETE CURB & GUTTER 30-INCH TYPE D

CATEGORY	STATION	TO	STATION	OFFSET	LOCATION	601.0411 LF
1000	56TSB+71	-	57TSB+68	37' RT	ONEIDA ST	97
	56TSB+91	-	57TSB+73	49' RT	ONEIDA ST	82
					TOTAL	179

3

CONCRETE BARRIER TEMPORARY PRECAST

CATEGORY	STATION	TO	STATION	OFFSET	LOCATION	603.8000 CONCRETE BARRIER TEMPORARY PRECAST DELIVERED LF	603.8125 CONCRETE BARRIER TEMPORARY PRECAST INSTALLED LF	SPV.0090.203 CONCRETE BARRIER TEMPORARY PRECAST LEFT IN PLACE LF	SPV.0090.204 CONCRETE BARRIER TEMPORARY PRECAST ANCHORING LF	REMARKS
STAGE 2										
1000	339EB+00	-	339EB+81	RT	USH 10/STH 441	84	84	-	-	TAPER
	339EB+81	-	342EB+38	RT	USH 10/STH 441	252	252	-	200	ANCHORED ON BRIDGE
	343WB+16	-	344WB+00	LT	USH 10/STH 441	84	84	-	-	TAPER
	340WB+52	-	343WB+16	LT	USH 10/STH 441	264	264	-	200	ANCHORED ON BRIDGE
STAGE 3										
1000	324EB+50	-	360EB+79	LT	USH 10/STH 441	3,465	3,465	-	3,465	MEDIAN-ANCHORED
	338EB+25	-	339EB+85	RT	USH 10/STH 441	168	168	-	-	TAPER
	339EB+85	-	342EB+35	RT	USH 10/STH 441	252	252	-	-	
	324WB+48	-	360WB+85	RT	USH 10/STH 441	3,470	3,470	-	3,470	MEDIAN-ANCHORED
	343WB+20	-	344WB+75	LT	USH 10/STH 441	168	168	-	-	TAPER
	340WB+52	-	343WB+20	LT	USH 10/STH 441	268	268	-	-	
STAGE 4										
1000	324EB+50	-	360EB+79	LT	USH 10/STH 441	-	-	3,465	-	MEDIAN
	324WB+48	-	360WB+85	RT	USH 10/STH 441	-	-	3,470	-	MEDIAN
					TOTALS	8,475	8,475	6,935	7,335	

SURFACE DRAIN PIPE CORRUGATED METAL SLOTTED (INCH) 18-INCH

CATEGORY	STATION TO STATION	OFFSET	LOCATION	521.2005.S LF	REMARK
1000	334WB+30 - 339WB+00	RT	USH 10/STH 441	470	
	342WB+44 - 347WB+69	RT	USH 10/STH 441	525	
			TOTAL	995	

STORM SEWER PIPE

CATEGORY	STRUCTURE		INVERT ELEV.		608.0412 STORM SEWER PIPE REINFORCED CONCRETE CLASS IV 12-INCH LF	DESCRIPTION
	FROM	TO	INLET	DISCHARGE		
1000	57TSB+51	56TSB+76	799.91	799.91	76	
				TOTALS	76	

SEWER STRUCTURE BY TYPE

CATEGORY	STRUCTURE NUMBER	STATION	OFFSET	SIZE (FT)	520.8000 CONCRETE COLLARS FOR PIPE EACH	521.1018 APRON ENDWALLS FOR CULVERT PIPE STEEL 18-INCH EACH	611.0654 INLET COVERS TYPE V EACH	611.3225 INLETS 2X2.5-FT EACH	611.8110 ADJUSTING MANHOLE COVERS EACH	611.8115 ADJUSTING INLET COVERS EACH	REMARKS
1000	TI 1	334WB+28.6	18.4'RT	2'X2.5'	-	-	1	1	-	-	
	TI 2	335WB+78.6	21.8'RT	2'X2.5'	-	-	1	1	-	-	
	TI 3	340WB+59.8	23.0'RT	2'X2.5'	-	-	1	1	-	-	
	TI 4	346WB+20.2	20.0'RT	2'X2.5'	-	-	1	1	-	-	
	TI 5	347WB+70.9	18.9'RT	2'X2.5'	-	-	1	1	-	-	
	-	349WB+25	23'RT	-		1	-	-	-	-	
	-	332WB+25	27'RT	-		1	-	-	-	-	
	EXISTING INL	340EB+62	38' RT	-	-	-	-	-	-	1	
	EXISTING INL	349WB+25	23'RT	-	1	-	-	-	-	1	8-INCH UNDERDRAIN
	EXISTING INL	332WB+25	27'RT	-	1	-	-	-	-	1	8-INCH UNDERDRAIN
	EXISTING INL	57TSB+52	34'RT	-	1	-	-	-	-	1	12-INCH
	EXISTING INL	57TSB+52	51' RT	-	-	-	-	-	-	1	
	EXISTING MH	56TSB+75	30' RT	-	1	-	-	-	1	-	12-INCH
	EXISTING MH	57TSB+52	54' RT	-	-	-	-	-	1	-	
				TOTALS	4	2	5	5	2	5	

PIPE UNDERDRAIN 8-INCH & CULVERT PIPE CORRUGATED STEEL 18-INCH

CATEGORY	STATION	TO	STATION	OFFSET	LOCATION	521.1018 CULVERT PIPE CORRUGATED STEEL 18-INCH LF	612.0108 PIPE UNDERDRAIN 8-INCH LF
1000	332EB+25	-	334EB+28	LT	USH 10/STH 441	158	-
	347EB+65	-	349EB+23	LT	USH 10/STH 441	202	-
	332EB+25	-	340EB+63	LT	USH 10/STH 441	-	835
	342EB+35	-	349EB+23	LT	USH 10/STH 441	-	689
					TOTALS	360	1,524

3

GUARDRAIL SUMMARY

CATEGORY	STATION TO STATION	OFFSET	LOCATION	614.0920 SALVAGED RAIL LF	614.0925 SALVAGED GUARDRAIL END TREATMENTS EACH	614.1100 MGS GUARDRAIL TEMPORARY THRIE BEAM TRANSITION LF	614.2610 MGS GAUARDRAIL TERMINAL EAT EACH	SPV.0090.205 SALVAGE AND REINSTALL BEAM GUARD LF	SPV.0060.206 TEMPORARY THRIE BEAM CONNECTION LEFT IN PLACE EACH
1000	340EB+66	LT	USH 10/STH 441	-	-	25	-	-	1
	342EB+34	LT	USH 10/STH 441	-	-	25	-	-	1
	340WB+66	RT	USH 10/STH 441	-	-	25	-	-	1
	342WB+37	RT	USH 10/STH 441	-	-	25	-	-	1
	337EB+10 - 340EB+68	RT	USH 10/STH 441	-	1	-	1	358	-
	342WB+34 - 345WB+88	LT	USH 10/STH 441	-	1	-	1	358	-
	357EB+47 - 340EB+66	LT	USH 10/STH 441	320	1	-	-	-	-
	342WB+37 - 345WB+67	RT	USH 10/STH 441	332	1	-	-	-	-
			TOTALS	652	4	100	2	716	4

CRASH CUSHIONS TEMPORARY

CATEGORY	STATION	OFFSET	LOCATION	CRASH CUSHION TEMPORARY 614.0905 EACH	BACK WIDTH FT	OBJECT MARKING PATTERN	CRASH TEST LEVEL	TRAFFIC DIRECTION	CRASH CUSION SHIELDS	CRASH CUSHION TEMPORARY LEFT IN PLACE SPV.0060.200 EACH	REMARKS
STAGE 2											
1000	324EB+50	3' RT	USH 10/STH 441	1	4	OM-3R (W05-58R)	TL-3	UNIDIRECTIONAL	TEMPORARY CONCRETE BARRER	-	
	360WB+85	3' LT	USH 10/STH 441	1	4	OM-3R (W05-58R)	TL-3	UNIDIRECTIONAL	TEMPORARY CONCRETE BARRER	-	
STAGE 3											
1000	338EB+25	26' RT	USH 10/STH 441	-	4	OM-3R (W05-58R)	TL-3	UNIDIRECTIONAL	TEMPORARY CONCRETE BARRER	1	
	344WB+75	26' LT	USH 10/STH 441	-	4	OM-3R (W05-58R)	TL-3	UNIDIRECTIONAL	TEMPORARY CONCRETE BARRER	1	
			TOTALS	2						2	

MOBILIZATION

CATEGORY	STATION TO STATION	LOCATION	619.1000 MOBILIZATION EACH	REMARKS
1000	1517-75-88	PROJECT	1	
		TOTAL	1	

WATER

CATEGORY	STATION TO STATION	LOCATION	624.0100 WATER MGAL	REMARKS
1000	1517-75-88	PROJECT	40	DUST CONTROL
	1517-75-88	PROJECT	215	COMPACTION
		TOTAL	255	

FIELD OFFICE TYPE C (PROJECT) 1517-75-88

CATEGORY	LOCATION	642.5201 EACH	REMARKS
1000	PROJECT	1	
	TOTAL	1	

3

MOBILIZATION EROSION CONTROL

CATEGORY	STATION TO STATION	LOCATION	628.1905 MOBILIZATION EROSION CONTROL EACH	628.1910 MOBILIZATION EMERGENCY EROSION CONTROL EACH
1000	1517-75-88	PROJECT	4	2
		TOTAL	4	2

CULVERT PIPE CHECKS

CATEGORY	STATION	OFFSET	LOCATION	628.7555 CULVERT PIPE CHECKS EACH	REMARKS
1000	324WB+25	15' RT	USH 10/STH 441	8	
	326EB+70	20' LT	USH 10/STH 441	8	
	329WB+75	15' RT	USH 10/STH 441	8	
			TOTAL	24	

3

TRACKING PAD

CATEGORY	STATION	LOCATION	628.7560 TRACKING PAD EACH	REMARKS
1000	VARIES	USH 10/STH 441	2	UNDISTRIBUTED
		TOTAL	2	

INLET PROTECTION, SILT FENCE, DITCH CHECKS FOR EROSION CONTROL

CATEGORY	STATION	OFFSET	LOCATION	628.7005 INLET PROTECTION TYPE A EACH	628.7015 INLET PROTECTION TYPE C EACH	628.1504 SILT FENCE LF	628.1520 SILT FENCE MAINTENANCE	628.7504 TEMPORARY DITCH CHECKS LF	DESCRIPTION
1000	332EB+25	27' LT	USH 10/STH 441	1	-	-	-	-	
	349EB+25	27' LT	USH 10/STH 441	1	-	-	-	-	
	355EB+77	27' LT	USH 10/STH 441	1	-	-	-	-	
	359EB+72	27' LT	USH 10/STH 441	1	-	-	-	-	
	57TSB+50	RT	ONEIDA ST	-	4	-	-	-	
	56TSB+75	RT	ONEIDA ST	-	3	-	-	-	
	56TSB+40	RT	ONEIDA ST	-	2	-	-	-	
	57TSB+40	LT	ONEIDA ST	-	-	50	50	-	
	57TSB+25	RT	ONEIDA ST	-	-	50	50	-	
	322EB+50	LT	USH 10/STH 441	-	-	-	-	30	
	325EB+50	LT	USH 10/STH 441	-	-	-	-	30	
	327EB+90	LT	USH 10/STH 441	-	-	-	-	30	
	356EB+00	LT	USH 10/STH 441	-	-	-	-	30	
	361EB+50	LT	USH 10/STH 441	-	-	-	-	30	
	365EB+50	LT	USH 10/STH 441	-	-	-	-	30	
	UNDISTRIBUTED		PROJECT	-	-	50	50	-	
			TOTALS	4	9	150	150	180	

3

DELINEATORS AND MARKERS

CATEGORY	STATION	TO	STATION	OFFSET	LOCATION	633.0100 DELINEATOR POSTS STEEL EACH	633.0500 DELINEATOR REFLECTORS EACH	SPV.0060.201 TRAFFIC CONTROL FLEXIBLE TUBULAR MARKER POSTS LEFT IN PLACE EACH	SPV.0060.202 TRAFFIC CONTROL FLEXIBLE TUBULAR MARKER BASES LEFT IN PLACE EACH	REMARKS
1000	331EB+58	-	351EB+92	RT	USH 10/STH 441	8	8	-	-	
	332WB+07	-	351WB+82	LT	USH 10/STH 441	8	8	-	-	
	330EB+50	-	352EB+50	LT	USH 10/STH 441	-	-	13	13	
	330WB+50	-	352WB+50	RT	USH 10/STH 441	-	-	13	13	
					TOTALS	16	16	26	26	

TRAFFIC CONTROL SURVEILLANCE AND MAINTENANCE (PROJECT) 1517-75-88

CATEGORY	STATION TO STATION	LOCATION	643.02000.S DAY
1000	1517-75-88	PROJECT	125
		TOTAL	125

TRAFFIC CONTROL SUMMARY

STATION	DAYS	643.0300 TRAFFIC CONTROL DRUMS EACH	643.0300 TRAFFIC CONTROL DRUMS DAYS	643.0410 TRAFFIC CONTROL BARRICADES TYPE II EACH	643.0410 TRAFFIC CONTROL BARRICADES TYPE II DAYS**	643.0420 TRAFFIC CONTROL BARRICADES TYPE III EACH	643.0420 TRAFFIC CONTROL BARRICADES TYPE III DAYS**	643.0705 TRAFFIC CONTROL WARNING LIGHTS TYPE A EACH	643.0705 TRAFFIC CONTROL WARNING LIGHTS TYPE A DAYS**	643.0715 TRAFFIC CONTROL WARNING LIGHTS TYPE C EACH	643.0715 TRAFFIC CONTROL WARNING LIGHTS TYPE C DAYS	643.0800 TRAFFIC CONTROL ARROW BOARDS EACH	643.0800 TRAFFIC CONTROL ARROW BOARDS DAYS	643.0900 TRAFFIC CONTROL SIGNS EACH	643.0900 TRAFFIC CONTROL SIGNS DAYS	643.1050 SIGNS PORTABLE CHANGEABLE MESSAGE EACH	643.1050 SIGNS PORTABLE CHANGEABLE MESSAGE DAYS**	REMARKS
STAGE 1	4	90	360	0	0	6	24	12	48	12	48	4	16	34	136	0	0	MAINLINE (EB AND WB)
STAGE 2	75	125	9,375	5	20	4	300	8	600	115	8,625	4	300	38	2,850	6	42	MAINLINE (EB AND WB) & ONEIDA ST
STAGE 3	55	108	5,940	5	10	2	110	4	220	98	5,390	4	220	31	1,705	0	0	MAINLINE (EB AND WB)
STAGE 4	3	108	324	0	0	2	6	4	12	98	294	4	12	28	84	0	0	MAINLINE (EB AND WB)
	TOTALS	431	15,999	10	30	14	440	28	880	323	14,357	16	548	131	4,775	6	42	

** QUANTITIES SHOWN ELSEWHERE ON PLAN (TRAFFIC CONTROL DETOUR SIGN SUMMARY)

3

TRAFFIC CONTROL SUMMARY CONTINUED

STATION	TO	STATION	OFFSET	LOCATION	646.0600 REMOVING PAVEMENT MARKINGS LF	649.0402 TEMPORARY PAVEMENT MARKING PAINT 4-INCH EDGE LINE YELLOW LF	EDGE LINE WHITE LF	LANE LINE DASHED WHITE LF	649.0802 TEMPORARY PAVEMENT MARKING PAINT 8-INCH LANE LINE WHITE LF	REMARKS
STAGE 2										
331EB+09	-	352EB+59	RT	USH 10/STH 441	4,838	2,146	2,146	42	1,980	
331WB+50	-	352WB+10	LT	USH 10/STH 441	4,838	2,150	2,150	42	1,986	
STAGE 3										
324EB+25	-	360EB+80	R/L	USH 10/STH 441	9,115	3,640	3,453	-	3,640	
324WB+25	-	360WB+88	R/L	USH 10/STH 441	9,125	3,660	3,460	-	3,660	
STAGE 4										
324EB+25	-	360EB+80	R/L	USH 10/STH 441	10,733	-	-	-	-	
324WB+25	-	360WB+88	R/L	USH 10/STH 441	10,780	-	-	-	-	
				TOTALS	49,429	11,596	11,209	84	11,266	
				OVERALL TOTAL	49,429		22,889		11,266	

FILE NAME : _____ PLOT DATE : _____ PLOT BY : _____ PLOT NAME : _____ PLOT SCALE : 1:1

3

TRAFFIC CONTROL DETOUR SIGN SUMMARY

SIGN NO.	LOCATION	SIGN CODE	SIZE W X H	NUMBER IN SERVICE	APPROX. SERVICE PERIOD DAYS	643.0420 BARRICADES TYPE III DAYS**	643.0705 WARNING LIGHTS TYPE A DAYS**	643.1000 SIGNS FIXED MESSAGE S.F.	643.3000 DETOUR SIGNS DAYS	643.1050 SIGNS PORTABLE CHANGEABLE MESSAGE DAYS**	NO OF CYCLES	643.0910 COVERING SIGNS TYPE I EACH	643.0920 COVERING SIGNS TYPE II EACH	REMARKS
1	STH 47 ROUNDABOUT, PLACE ABOVE EXISTING SPLITTER ISLAND SIGN	MO 4-8	24"X12"	1	2	-	-	-	2	-	-	-	-	
	"	M 3-2	24"X12"	1	2	-	-	-	2	-	-	-	-	
	"	M 1-4	24"X24"	1	2	-	-	-	2	-	-	-	-	10
	"	MO 6-2	21"X21"	1	2	-	-	-	2	-	-	-	-	TILT RIGHT
	"	-	-	-	-	-	-	-	-	-	1	-	1	COVER "EAST 10"
2	STH 47, PLACE 400' N. OF CTH AP INTERSECTION	MO 4-8	24"X12"	1	2	-	-	-	2	-	-	-	-	
	"	M 3-2	24"X12"	1	2	-	-	-	2	-	-	-	-	
	"	M 1-4	24"X24"	1	2	-	-	-	2	-	-	-	-	10
	"	MO 5-1L	21"X21"	1	2	-	-	-	2	-	-	-	-	
3	STH 47, PLACE 150' N. OF CTH AP INTERSECTION	MO 4-8	24"X12"	1	2	-	-	-	2	-	-	-	-	
	"	M 3-2	24"X12"	1	2	-	-	-	2	-	-	-	-	
	"	M 1-4	24"X24"	1	2	-	-	-	2	-	-	-	-	10
	"	MO 6-1	21"X21"	1	2	-	-	-	2	-	-	-	-	LEFT
4	CTH AP, PLACE 250' E. OF STH 47 INTERSECTION	MO 4-8	24"X12"	1	2	-	-	-	2	-	-	-	-	
	"	M 3-4	24"X12"	1	2	-	-	-	2	-	-	-	-	
	"	M 1-4	24"X24"	1	2	-	-	-	2	-	-	-	-	10
	"	MO 6-1	21"X21"	1	2	-	-	-	2	-	-	-	-	RIGHT
	"	MO 4-5	24"X12"	1	2	-	-	-	2	-	-	-	-	
	"	M 3-3	24"X12"	1	2	-	-	-	2	-	-	-	-	
	"	M 1-6	24"X24"	1	2	-	-	-	2	-	-	-	-	441
	"	MO 6-1	21"X21"	1	2	-	-	-	2	-	-	-	-	RIGHT
5	STH 47, PLACE 50' N. OF CTH AP INTERSECTION	MO 4-8A	24"X18"	1	2	-	-	-	2	-	-	-	-	
	"	M 3-4	24"X12"	1	2	-	-	-	2	-	-	-	-	
	"	M 1-4	24"X24"	1	2	-	-	-	2	-	-	-	-	10
6	CTH AP, PLACE 50' E. OF STH 47 INTERSECTION	MO 4-8	24"X12"	1	2	-	-	-	2	-	-	-	-	
	"	M 3-2	24"X12"	1	2	-	-	-	2	-	-	-	-	
	"	M 1-4	24"X24"	1	2	-	-	-	2	-	-	-	-	10
7	CTH AP, PLACE 750' E. OF STH 47 INTERSECTION	MO 4-8	24"X12"	1	2	-	-	-	2	-	-	-	-	
	"	M 3-4	24"X12"	1	2	-	-	-	2	-	-	-	-	
	"	M 1-4	24"X24"	1	2	-	-	-	2	-	-	-	-	10
	"	MO 5-1R	21"X21"	1	2	-	-	-	2	-	-	-	-	
	"	MO 4-5	24"X12"	1	2	-	-	-	2	-	-	-	-	
	"	M 3-3	24"X12"	1	2	-	-	-	2	-	-	-	-	
	"	M 1-6	24"X24"	1	2	-	-	-	2	-	-	-	-	441
	"	MO 5-1R	21"X21"	1	2	-	-	-	2	-	-	-	-	
8	CTH AP, PLACE 1000' W. OF US 10 INTERSECTION	MO 4-8A	24"X18"	1	2	-	-	-	2	-	-	-	-	
	"	M 3-2	24"X12"	1	2	-	-	-	2	-	-	-	-	
	"	M 1-4	24"X24"	1	2	-	-	-	2	-	-	-	-	10
9	CTH AP, PLACE 50' W. OF US 10 INTERSECTION	MO 4-8	24"X12"	1	2	-	-	-	2	-	-	-	-	
	"	M 3-4	24"X12"	1	2	-	-	-	2	-	-	-	-	
	"	M 1-4	24"X24"	1	2	-	-	-	2	-	-	-	-	10
10	CTH AP, AT US 10 INTERSECTION, MODIFY EXISTING J13-1 ON TRAFFIC SIGNAL AS SHOWN	MO 6-6	21"X21"	1	2	-	-	-	2	-	-	-	-	
11	US 10, PLACE IN ROADWAY NORTH SIDE OF CTH AP INTERSECTION	R 11-3	60"X30"	1	2	2	4	-	2	-	-	-	-	0.2 MILES AHEAD
	"	M 4-9L	30"X24"	1	2	-	-	-	2	-	-	-	-	
	PAGE SUBTOTALS			43		2	4	0	86	0		0	1	

3

3

TRAFFIC CONTROL DETOUR SIGN SUMMARY

SIGN NO.	LOCATION	SIGN CODE	SIZE W X H	NUMBER IN SERVICE	APPROX. SERVICE PERIOD DAYS	643.0420 BARRICADES TYPE III DAYS**	643.0705 WARNING LIGHTS TYPE A DAYS**	643.1000 SIGNS FIXED MESSAGE S.F.	643.3000 DETOUR SIGNS DAYS	643.1050 SIGNS PORTABLE CHANGEABLE MESSAGE DAYS**	NO OF CYCLES	643.0910 COVERING SIGNS TYPE I EACH	643.0920 COVERING SIGNS TYPE II EACH	REMARKS
12	US 10, N. OF CTH AP INTERSECTION, COVER EXISTING J4-1 SIGN	-	-	-	-	-	-	-	-	-	1	-	1	COVER "EAST US 10"
13	US 10, PLACE 1300' S. OF CTH AP INTERSECTION	WO 20-2A	48"X48"	1	2	-	-	-	2	-	-	-	-	
14	US 10, PLACE 1000' S. OF CTH AP INTERSECTION	FMS	90"X36"	1	2	-	-	22.5		-	-	-	-	
15	US 10, PLACE 700' S. OF CTH AP INTERSECTION	MO 4-8	24"X12"	1	2	-	-	-	2	-	-	-	-	
	"	M 3-4	24"X12"	1	2	-	-	-	2	-	-	-	-	
	"	M 1-4	24"X24"	1	2	-	-	-	2	-	-	-	-	10
	"	MO 5-1L	21"X21"	1	2	-	-	-	2	-	-	-	-	
	"	MO 4-5	24"X12"	1	2	-	-	-	2	-	-	-	-	
	"	M 3-3	24"X12"	1	2	-	-	-	2	-	-	-	-	
	"	M 1-6	24"X24"	1	2	-	-	-	2	-	-	-	-	441
	"	MO 5-1L	21"X21"	1	2	-	-	-	2	-	-	-	-	
16	US 10, PLACE 200' S. OF CTH AP INTERSECTION	MO 4-8	24"X12"	1	2	-	-	-	2	-	-	-	-	
	"	M 3-4	24"X12"	1	2	-	-	-	2	-	-	-	-	
	"	M 1-4	24"X24"	1	2	-	-	-	2	-	-	-	-	10
	"	MO 6-1	21"X21"	1	2	-	-	-	2	-	-	-	-	LEFT
	"	MO 4-5	24"X12"	1	2	-	-	-	2	-	-	-	-	
	"	M 3-3	24"X12"	1	2	-	-	-	2	-	-	-	-	
	"	M 1-6	24"X24"	1	2	-	-	-	2	-	-	-	-	441
	"	MO 6-1	21"X21"	1	2	-	-	-	2	-	-	-	-	LEFT
17	CTH AP, PLACE 400' E. OF US 10 INTERSECTION	MO 4-8	24"X12"	1	2	-	-	-	2	-	-	-	-	
	"	M 3-4	24"X12"	1	2	-	-	-	2	-	-	-	-	
	"	M 1-4	24"X24"	1	2	-	-	-	2	-	-	-	-	10
	"	MO 6-1	21"X21"	1	2	-	-	-	2	-	-	-	-	AHEAD
	"	MO 4-5	24"X12"	1	2	-	-	-	2	-	-	-	-	
	"	M 3-3	24"X12"	1	2	-	-	-	2	-	-	-	-	
	"	M 1-6	24"X24"	1	2	-	-	-	2	-	-	-	-	441
	"	MO 6-1	21"X21"	1	2	-	-	-	2	-	-	-	-	AHEAD
18	CTH AP, PLACE 1000' E. OF US 10 INTERSECTION	M 3-4	24"X12"	1	2	-	-	-	2	-	-	-	-	
	"	M 1-4	24"X24"	1	2	-	-	-	2	-	-	-	-	10
	"	WO 20-2A	48"X48"	1	2	-	-	-	2	-	-	-	-	
19	STH 441, E. OF US 10, PLACE 1000' E. OF US 10 OFF-RAMP ON RIGHT SHOULDER	M 3-2	36"X18"	1	2	-	-	-	2	-	-	-	-	
	"	M 1-4	36"X36"	1	2	-	-	-	2	-	-	-	-	10
	"	WO 20-2A	48"X48"	1	2	-	-	-	2	-	-	-	-	
20	STH 441, E. OF US 10, PLACE 1000' E. OF US 10 OFF-RAMP IN MEDIAN	M 3-2	36"X18"	1	2	-	-	-	2	-	-	-	-	
	"	M 1-4	36"X36"	1	2	-	-	-	2	-	-	-	-	10
	"	WO 20-2A	48"X48"	1	2	-	-	-	2	-	-	-	-	
21	STH 441, E. OF US 10, PLACE ADJACENT TO EXISTING TYPE I GROUND MOUNT EXIT SIGN	MO 4-8	36"X18"	1	2	-	-	-	2	-	-	-	-	
	"	M 3-2	36"X18"	1	2	-	-	-	2	-	-	-	-	
	"	M 1-4	36"X36"	1	2	-	-	-	2	-	-	-	-	10
	"	MO 6-1	30"X30"	1	2	-	-	-	2	-	-	-	-	AHEAD
22	STH 441, E. OF US 10, PLACE ACROSS FROM SIGN #27 IN MEDIAN	MO 4-8	36"X18"	1	2	-	-	-	2	-	-	-	-	
	"	M 3-2	36"X18"	1	2	-	-	-	2	-	-	-	-	
	"	M 1-4	36"X36"	1	2	-	-	-	2	-	-	-	-	10
	"	MO 6-1	30"X30"	1	2	-	-	-	2	-	-	-	-	AHEAD
23	STH 441, E. OF US 10, COVER EXISTING GROUND MOUNT TYPE I SIGN AS SHOWN	-	-	-	-	-	-	-	-	-	1	1	-	COVER "US 10 EAST"
24	STH 441 SB OFF-RAMP TO US 10, COVER EXISTING TYPE II SIGN AS SHOWN	-	-	-	-	-	-	-	-	-	-	-	-	
25	STH 441 SB OFF-RAMP TO US 10, COVER EXISTING TYPE II SIGN AS SHOWN	-	-	-	-	-	-	-	-	-	-	-	-	
26	US 10, AT STH 441 SB OFF-RAMP INTERSECTION, PLACE ON SOUTH LEG OF INTERSECTION	R 11-2	48"X30"	1	2	2	4	-	2	-	-	-	-	
	"	M 4-9R	30"X24"	1	2	-	-	-	2	-	-	-	-	
	PAGE SUBTOTALS			45		2	4	22.5	88	0		1	1	

3

TRAFFIC CONTROL DETOUR SIGN SUMMARY

SIGN NO.	LOCATION	SIGN CODE	SIZE W X H	NUMBER IN SERVICE	APPROX. SERVICE PERIOD DAYS	643.0420 BARRICADES TYPE III DAYS**	643.0705 WARNING LIGHTS TYPE A DAYS**	643.1000 SIGNS FIXED MESSAGE S.F.	643.3000 DETOUR SIGNS DAYS	643.1050 SIGNS PORTABLE CHANGEABLE MESSAGE DAYS**	NO OF CYCLES	643.0910 COVERING SIGNS TYPE I EACH	643.0920 COVERING SIGNS TYPE II EACH	REMARKS
27	ONEIDA ST, S. OF VALLEY RD, PLACE 875' N. OF STH 441 RAMP INTERSECTION ON RIGHT SIDE	M 3-2	24"X12"	1	2	-	-	-	2	-	-	-	-	
	"	M 1-4	24"X24"	1	2	-	-	-	2	-	-	-	-	10
	"	WO 20-2A	48"X48"	1	2	-	-	-	2	-	-	-	-	
28	ONEIDA ST, S. OF VALLEY RD, PLACE 600' N. OF STH 441 RAMP INTRSECTION ON RIGHT SIDE	FMS	84"X36"	1	2	-	-	21	-	-	-	-	-	
29	ONEIDA ST, S. OF VALLEY RD, MODIFY EXISTING TYPE II SIGN AS SHOWN	MO 4-8	24"X12"	1	2	-	-	-	2	-	-	-	-	
	"	MO 6-1	21"X21"	1	2	-	-	-	2	-	-	-	-	RIGHT
30	ONEIDA ST, S. OF VALLEY RD, PLACE 250' N. OF STH 441 RAMP INTERSECTION ON RIGHT SIDE	MO 4-5	24"X12"	1	2	-	-	-	2	-	-	-	-	
	"	M 3-1	24"X12"	1	2	-	-	-	2	-	-	-	-	
	"	M 1-6	24"X24"	1	2	-	-	-	2	-	-	-	-	441
	"	MO 6-1	21"X21"	1	2	-	-	-	2	-	-	-	-	RIGHT
31	US 10/STH 441, E. OF STH 47, PLACE 700' E. OF STH 47 EXIT RAMP ON RIGHT SHOULDER	MO 4-8	36"X18"	1	2	-	-	-	2	-	-	-	-	
	"	M 3-2	36"X18"	1	2	-	-	-	2	-	-	-	-	
	"	M 1-4	36"X36"	1	2	-	-	-	2	-	-	-	-	10
	"	MO 5-2R	30"X30"	1	2	-	-	-	2	-	-	-	-	
	"	MO 4-5	36"X18"	1	2	-	-	-	2	-	-	-	-	
	"	M 3-1	36"X18"	1	2	-	-	-	2	-	-	-	-	
	"	M 1-6	36"X36"	1	2	-	-	-	2	-	-	-	-	10
	"	MO 5-2R	30"X30"	1	2	-	-	-	2	-	-	-	-	
32	US 10/STH 441, E. OF STH 47, PLACE 700' E. OF STH 47 EXIT RAMP IN MEDIAN	MO 4-8	36"X18"	1	2	-	-	-	2	-	-	-	-	
	"	M 3-2	36"X18"	1	2	-	-	-	2	-	-	-	-	
	"	M 1-4	36"X36"	1	2	-	-	-	2	-	-	-	-	441
	"	MO 5-2R	30"X30"	1	2	-	-	-	2	-	-	-	-	
	"	MO 4-5	36"X18"	1	2	-	-	-	2	-	-	-	-	
	"	M 3-1	36"X18"	1	2	-	-	-	2	-	-	-	-	
	"	M 1-6	36"X36"	1	2	-	-	-	2	-	-	-	-	10
	"	MO 5-2R	30"X30"	1	2	-	-	-	2	-	-	-	-	
33	US 10/STH 441, E. OF STH 47, PLACE ADJACENT TO EXISTING TYPE I EXIT SIGN	MO 4-8	36"X18"	1	2	-	-	-	2	-	-	-	-	
	"	M 3-2	36"X18"	1	2	-	-	-	2	-	-	-	-	
	"	M 1-4	36"X36"	1	2	-	-	-	2	-	-	-	-	10
	"	MO 6-2	30"X30"	1	2	-	-	-	2	-	-	-	-	TILT RIGHT
	"	MO 4-5	36"X18"	1	2	-	-	-	2	-	-	-	-	
	"	M 3-1	36"X18"	1	2	-	-	-	2	-	-	-	-	
	"	M 1-6	36"X36"	1	2	-	-	-	2	-	-	-	-	441
	"	MO 6-2	30"X30"	1	2	-	-	-	2	-	-	-	-	TILT RIGHT
34	US 10/STH 441 OFF-RAMP TO STH 47, PLACE 750' PRIOR TO ROUNDABOUT ON LEFT SIDE	MO 4-8	24"X12"	1	2	-	-	-	2	-	-	-	-	
	"	M 3-1	24"X12"	1	2	-	-	-	2	-	-	-	-	
	"	M 1-4	24"X24"	1	2	-	-	-	2	-	-	-	-	10
	"	MO 5-1L	21"X21"	1	2	-	-	-	2	-	-	-	-	
	"	MO 4-5	24"X12"	1	2	-	-	-	2	-	-	-	-	
	"	M 3-1	24"X12"	1	2	-	-	-	2	-	-	-	-	
	"	M 1-6	24"X24"	1	2	-	-	-	2	-	-	-	-	441
	"	MO 5-1L	21"X21"	1	2	-	-	-	2	-	-	-	-	
	PAGE SUBTOTALS			42		0	0	21	82	0		0	0	

3

TRAFFIC CONTROL DETOUR SIGN SUMMARY

SIGN NO.	LOCATION	SIGN CODE	SIZE W X H	NUMBER IN SERVICE	APPROX. SERVICE PERIOD DAYS	643.0420 BARRICADES TYPE III DAYS**	643.0705 WARNING LIGHTS TYPE A DAYS**	643.1000 SIGNS FIXED MESSAGE S.F.	643.3000 DETOUR SIGNS DAYS	643.1050 SIGNS PORTABLE CHANGEABLE MESSAGE DAYS**	NO OF CYCLES	643.0910 COVERING SIGNS TYPE I EACH	643.0920 COVERING SIGNS TYPE II EACH	REMARKS
35	US 10/STH 441 OFF-RAMP TO STH 47, PLACE 100' E. OF S-70-233 SIGN BRIDGE ON LEFT SIDE	MO 4-8	24"X12"	1	2	-	-	-	2	-	-	-	-	
	"	M 3-2	24"X12"	1	2	-	-	-	2	-	-	-	-	
	"	M 1-4	24"X24"	1	2	-	-	-	2	-	-	-	-	10
	"	MO 6-1	21"X21"	1	2	-	-	-	2	-	-	-	-	LEFT
	"	MO 4-5	24"X12"	1	2	-	-	-	2	-	-	-	-	
	"	M 3-1	24"X12"	1	2	-	-	-	2	-	-	-	-	
	"	M 1-6	24"X24"	1	2	-	-	-	2	-	-	-	-	441
	"	MO 6-1	21"X21"	1	2	-	-	-	2	-	-	-	-	LEFT
36	STH 47, JUST N. OF US 10/STH 441, PLACE IN TERRACE NEAR S-70-232	MO 4-8	24"X12"	1	2	-	-	-	2	-	-	-	-	
	"	M 3-2	24"X12"	1	2	-	-	-	2	-	-	-	-	
	"	M 1-4	24"X24"	1	2	-	-	-	2	-	-	-	-	10
	"	MO 6-1	21"X21"	1	2	-	-	-	2	-	-	-	-	AHEAD
37	STH 441, E. OF US 10, PLACE ON EXISTING TYPE I SIGN AS SHOWN	-	-	-	-	-	-	-	-	-	1	1	-	COVER "US 10"
38	US 10, PLACE IN TERRACE N. OF MEADOW GROVE BLVD, FIELD DETERMINED	PCMS	-	-	-	-	-	-	-	7	-	-	-	
39	ONEIDA ST, PLACE IN MEDIAN N. OF US 10 WB OFF-RAMP INTERSECTION, FIELD DETERMINED	PCMS	-	-	-	-	-	-	-	7	-	-	-	
	PAGE SUBTOTALS			12		0	0	0	24	14		1	0	

** QUANTITIES SHOWN ELSEWHERE ON PLAN (TRAFFIC CONTROL SUMMARY)

3

PAVEMENT MARKING EPOXY 4-INCH

CATEGORY	STATION	TO	STATION	OFFSET	LOCATION	646.0106 YELLOW LF	646.0106 WHITE LF	REMARKS
1000	331EB+58	-	331EB+92	RT	USH 10/STH 441	-	2,030	
	324EB+45	-	360EB+74	RT	USH 10/STH 441	3,629	907	
	332WB+07	-	351WB+82	LT	USH 10/STH 441	-	1,984	
	324WB+44	-	360WB+76	LT	USH 10/STH 441	3,638	910	
					TOTALS	7,267	5,831	
					OVERALL TOTAL	13,098		

PAVEMENT MARKING EPOXY 8-INCH

CATEGORY	STATION	TO	STATION	OFFSET	LOCATION	646.0126 WHITE LF	REMARKS
1000	56TSB+71	-	57TSB+68	25' RT	ONEIDA ST	97	
	56TSB+91	-	57TSB+73	62' RT	ONEIDA ST	82	
					TOTAL	179	

SURVEY PROJECT

CATEGORY	LOCATION	SPV.0105.002 SURVEY PROJECT 1517-75-88 LS
1000	1517-75-88	1
	TOTAL	1

STREET SWEEPING

CATEGORY	LOCATION	SPV.0075.001 STREET SWEEPING HRS
1000	PROJECT 1517-75-88	90
	TOTAL	90

BENCHMARKS					
NUMBER	STATION	NORTHING	EASTING	DESCRIPTION	ELEVATION
ON1	390SB+09.49 37.03' LT	550170	828117	SW TAG BOLT ON SECOND HYDRANT SOUTH OF CTH AP (MIDWAY) ON THE WEST SIDE OF ONEIDA ST	799.08
ON2	450NB+23.84 27.96' RT	550784	828202	NE TAG BOLT ON FIRST FIRE HYDRANT NORTH OF CTH AP (MIDWAY) ON THE EAST SIDE OF ONEIDA ST	801.15
ON3	490SB+36.64 22.05' LT	551197	828124	SW TAG BOLT ON FIRE HYDRANT AT THE NW QUADRANT OF ONEDIA ST AND EAST MEADOW GROVE BLVD	804.67
ON4	530SB+15.14 34.00' LT	551579	828081	NW TAG BOLT ON THE FIRST FIRE HYDRANT SOUTH OF THE STH 441 EB OFF RAMP ON THE WEST SIDE OF ONEDIA ST	804.93
ON5	560NB+73.98 16.47' LT	551925	828069.3	3" DISK ON TOP OF SW WINGWALL ON STH 441 EB BRIDGE OVER ONEDIA ST	822.03
ON6	570NB+66.22 43.38' LT	552017.3	828069.6	3" DISK ON TOP OF SW WINGWALL ON STH 441 WB BRIDGE OVER ONEDIA ST	822.29
ON7	600SB+18.54 25.05' RT	552261.5	828205.3	TOP OF SW BOLT ON TRAFFIC SIGNAL IN MEDIAN OF STH 441 WB RAMP ON THE EAST SIDE OF ONEDIA ST	805.21
ON8	650NB+68.46 36.62' RT	552809.3	828208.7	WEST-SOUTHWEST FLANGE BOLT ON SECOND FIRE HYDRANT SOUTH OF VALLEY RD/ROELAND ON EAST SIDE OF ONEIDA ST	805.47
ON10	410SB+81.69 36.33' LT	550442.2	828117.7	SW TAG BOLT ON FIRST FIRE HYDRANT SOUTH OF CTH AP (MIDWAY) ON THE WEST SIDE OF ONEIDA ST	800.22
ON11	700SB+28.74 77.09' LT	553268.4	828080.3	NW TAG BOLT OF FIRE HYDRANT AT THE NW QUADRANT OF VALLEY RD AND ONEDIA ST	803.81
ML13	313WB+74.45 2.09' LT	552068.1	825377.9	SW TAG BOLT ON SIGN STRUCTURE *S-70-19, MEDIAN 441	804.84
ML14	318EB+24.85 19.55' LT	552025.1	825827.8	CHISELED SQUARE TOP OF NORTH END OF 24" RCCP AEW IN MEDIAN 441	799.72
ML15	326EB+74.46 16.35' LT	552011.6	826677.3	CHISELED SQUARE TOP NORTH END OF 24" RCCP AEW IN MEDIAN 441	800.47
ML16	332WB+52.16 28.24' RT	552015.0	827225.1	CHISELED SQUARE TOP SOUTHWEST CORNER OF INLET IN MEDIAN 441	803.60
ML17	349EB+28.48 29.45' LT	551911.9	828930.1	CHISELED SQUARE TOP OF NE CORNER OF INLET IN MEDIAN 441 FIRST INLET EAST OF ONEDIA ST	815.83
ML18	355WB+78.54 21.83' RT	551832.3	829575.3	CHISELED SQUARE TOP OF NE CORNER OF INLET IN MEDIAN 441 SECOND INLET EAST OF ONEDIA ST	807.36
ML19	359WB+70.57 24.31' RT	551782.0	829964.1	CHISELED SQUARE TOP OF NE CORNER OF INLET IN MEDIAN 441 THRID INLET EAST OF ONEDIA ST	804.51
ML20	364WB+21.60 24.12' RT	551727.5	830412.0	CHISELED SQUARE TOP SW CORNER OF INLET IN MEDIAN 441	806.20
ML21	370EB+74.28 19.32' LT	551660.0	831059.7	PK NAIL IN SOUTH FACE OF PIER OF PEDESTRIAN BRIDGE OVER 441 STRUCTURE *B-8-33	811.62
ML22	372EB+61.64 24.06' LT	551653.0	831246.7	CHISELED SQUARE TOP SW CORNER OF INLET IN MEDIAN 441 FIRST INLET EAST OF PEDESTRIAN BRIDGE	808.96

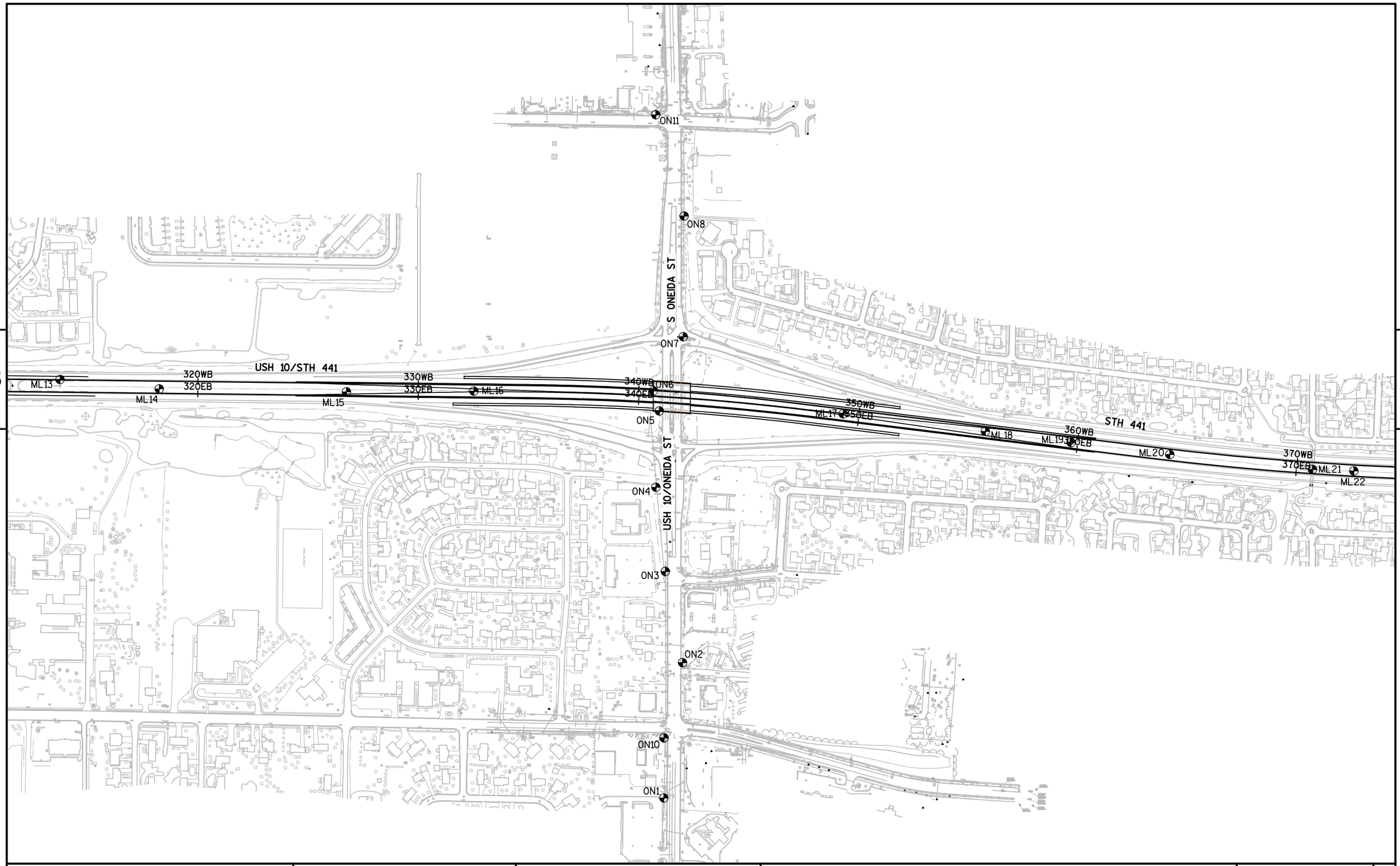

PROJECT NO:1517-75-88	HWY:STH 441/USH 10	COUNTY:WINNEBAGO	BENCHMARKS LOCATIONS	SHEET 73	E

FILE NAME : S:\PDS\C3D\WIS441\15177574_79\SHEETSPLAN\15177588\050000-BM\NE-15177588-050000-BM.DWG
LAYOUT NAME - NE-15177588-050000-BM - 050000-BM-L
PLOT DATE : 8/18/2016 4:09 PM PLOT BY : MARTENS, JOHN M PLOT NAME : PLOT SCALE : 1 IN:400 FT
WISDOT/CADDS SHEET 44

For Information Only
Not Part of This Project

MATCH LINE STA 332+00WB

MATCH LINE STA 347+00WB

ONEIDA ST/USH 10 NW RAMP

ONEIDA ST/USH 10 NE RAMP

ONEIDA ST/USH 10 SW RAMP

ONEIDA ST/USH 10 SE RAMP

USH 10/STH 441

STH 441

S. ONEIDA ST

USH 10/ONEIDA ST

TLE

PROPOSED R/W

EXIST R/W

R/L NW RAMP TNW

END CONSTRUCTION
338TNW+11.87

340TNW

CAUTION

CITY OF APPLETON CABLE

WE-ENERGIES OVERHEAD

AT&T CABLE

TOWN OF MENASHA SANITARY

R/L STH 441WB

PC: 335+55.52WB

PT: 346+85.02WB

BEGIN CONSTRUCTION
344TNE+18.34

345TNE

R/L NE RAMP TNE

CITY OF APPLETON WATERMAIN

WE-ENERGIES GAS

WE-ENERGIES ELECTRIC

UTILITY EASEMENT

500 WE ENERGIES-ELECTRIC
CONVEYANCE OF RIGHTS IN LAND BY PUBLIC UTILITY
DOC. 118363, 1501-1-21

N

5

5

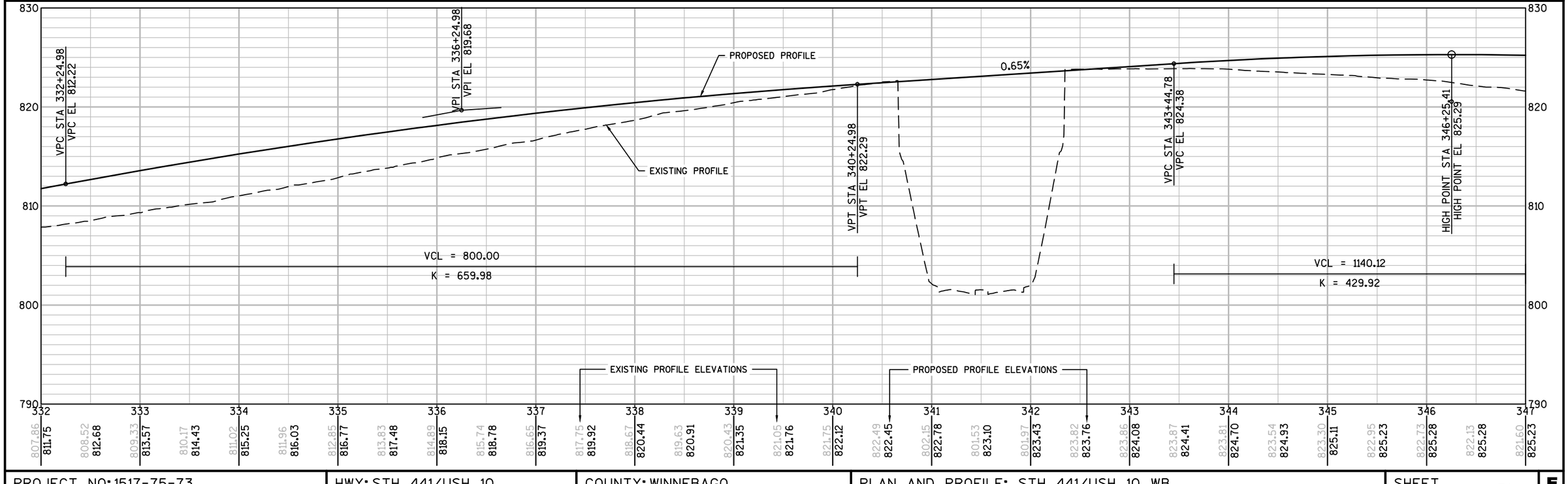

PROJECT NO: 1517-75-73	HWY: STH 441/USH 10	COUNTY: WINNEBAGO	PLAN AND PROFILE: STH 441/USH 10 WB	SHEET 74	E

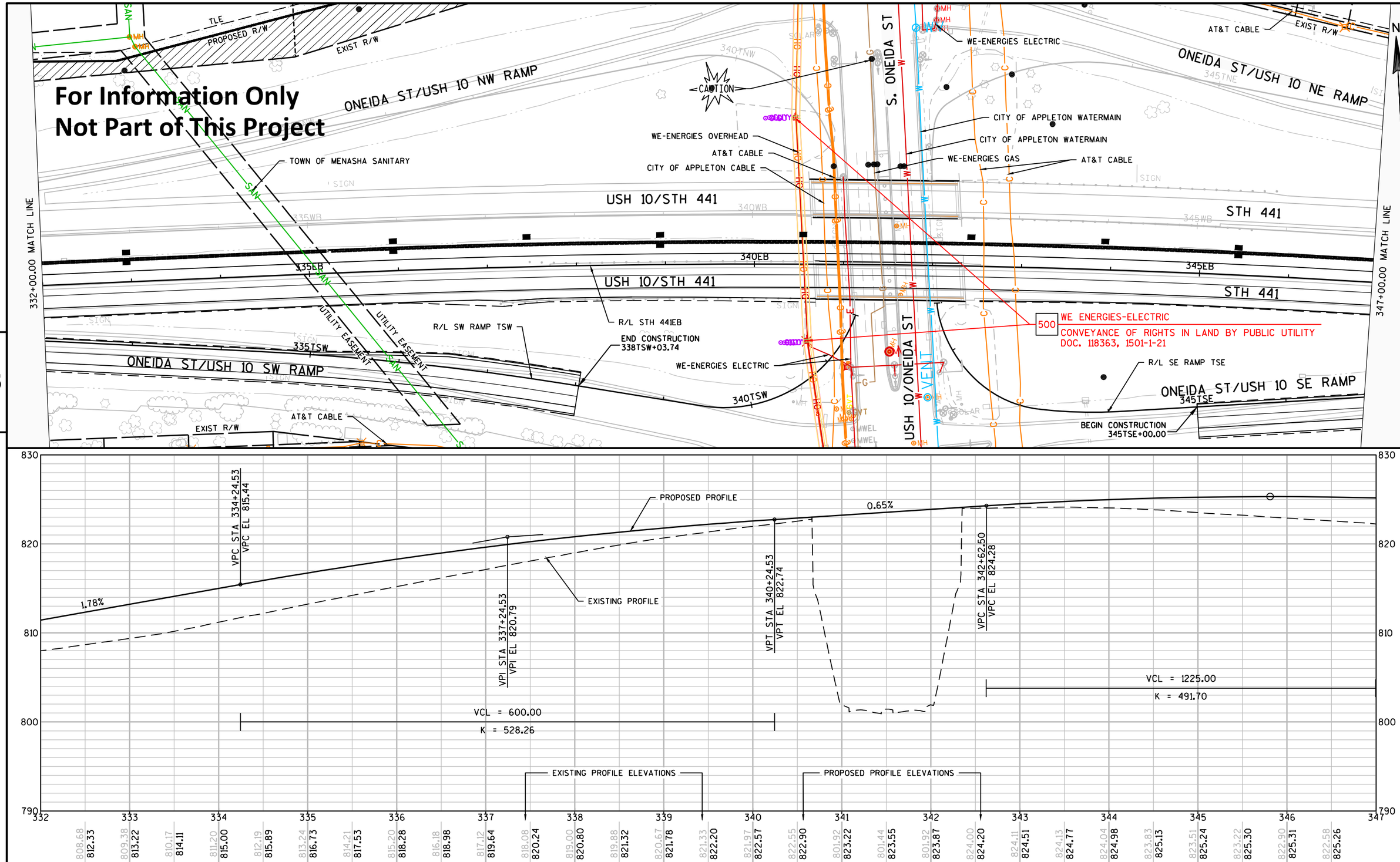

PROJECT NO:1517-75-74	HWY:STH 441/USH 10	COUNTY:WINNEBAGO	PLAN AND PROFILE: STH 441/USH 10 EB	SHEET 75	E

FILE NAME : S:\PDS\C3D\WIS441\15177574_79\SHEETSPLAN\15177574\050100_PP\1517-75-74\NE-15177574-050101-PP.DWG
LAYOUT NAME - 050104-PP
PLOT DATE : 10/24/2016 9:25 AM PLOT BY : VICKMAN, GARRETT T PLOT NAME : PLOT SCALE : 1 IN:100 FT
WISDOT/CADDS SHEET 44

Standard Detail Drawing List

08A05-19C	INLET COVERS TYPE F, HM, HM-S, S, T, V, HM-GJ, & HM-GJ-S
08C07-01	INLETS 2X2-FT, 2X2.5-FT, 2X3-FT AND 2.5X3-FT
08D01-19	CONCRETE CURB, CONCRETE CURB AND GUTTER AND TIES
08D13-01	SLOTTED CORRUGATED METAL PIPE SURFACE DRAINS
08E08-03	TYPICAL INSTALLATIONS OF EROSION BALES / TEMPORARY DITCH CHECKS
08E09-06	SILT FENCE
08E10-02	INLET PROTECTION TYPE A, B, C AND D
08E14-01	TRACKING PAD
08F01-11	APRON ENDWALLS FOR CULVERT PIPE
12A03-10	NAME PLATE (STRUCTURES)
14B07-14A	CONCRETE BARRIER TEMPORARY PRECAST, 12'-6"
14B07-14B	CONCRETE BARRIER TEMPORARY PRECAST, 12'-6"
14B07-14C	CONCRETE BARRIER TEMPORARY PRECAST, 12'-6"
14B07-14D	CONCRETE BARRIER TEMPORARY PRECAST, 12'-6"
14B07-14E	CONCRETE BARRIER TEMPORARY PRECAST, 12'-6"
14B07-14F	CONCRETE BARRIER TEMPORARY PRECAST, 12'-6"
14B07-14G	CONCRETE BARRIER TEMPORARY PRECAST, 12'-6"
14B07-14H	CONCRETE BARRIER TEMPORARY PRECAST, 12'-6"
14B08-02A	CRASH CUSHION/SAND BARREL ARRAY AND OTHER TEMPORARY BARRIER LAYOUT DETAILS
14B08-02B	CRASH CUSHION/SAND BARREL ARRAY AND OTHER TEMPORARY BARRIER LAYOUT DETAILS
14B08-02C	CRASH CUSHION/SAND BARREL ARRAY AND OTHER TEMPORARY BARRIER LAYOUT DETAILS
14B08-02D	CRASH CUSHION/SAND BARREL ARRAY AND OTHER TEMPORARY BARRIER LAYOUT DETAILS
14B08-02E	CRASH CUSHION/SAND BARREL ARRAY AND OTHER TEMPORARY BARRIER LAYOUT DETAILS
14B18-06A	STEEL PLATE BEAM GUARD, CLASS "A" (AT BRIDGES, OBSTACLES AND SIDEROADS/DRIVEWAYS)
14B20-11B	STEEL THRIE BEAM STRUCTURE APPROACH, CONNECTION TO SQUARE END PARAPETS
14B24-08A	STEEL PLATE BEAM GUARD ENERGY ABSORBING TERMINAL
14B24-08B	STEEL PLATE BEAM GUARD ENERGY ABSORBING TERMINAL
14B24-08C	STEEL PLATE BEAM GUARD ENERGY ABSORBING TERMINAL
14B44-02A	MIDWEST GUARDRAIL SYSTEM ENERGY ABSORBING TERMINAL (MGS)
14B44-02B	MIDWEST GUARDRAIL SYSTEM ENERGY ABSORBING TERMINAL (MGS)
14B44-02C	MIDWEST GUARDRAIL SYSTEM ENERGY ABSORBING TERMINAL (MGS)
14B45-04A	MIDWEST GUARDRAIL SYSTEM THRIE BEAM TRANSITION (MGS)
14B45-04B	MIDWEST GUARDRAIL SYSTEM THRIE BEAM TRANSITION (MGS)
14B45-04C	MIDWEST GUARDRAIL SYSTEM THRIE BEAM TRANSITION (MGS)
14B45-04I	MIDWEST GUARDRAIL SYSTEM THRIE BEAM TRANSITION (MGS)
14B45-04J	MIDWEST GUARDRAIL SYSTEM THRIE BEAM TRANSITION (MGS)
15A02-09	DELINEATOR POST, DELINEATOR REFLECTOR AND DELINEATOR BRACKET WITH REFLECTIVE SHEETING
15A06-02	DELINEATOR LAYOUT
15C02-06A	BARRICADES AND SIGNS FOR MAINLINE CLOSURES
15C02-06B	BARRICADES AND SIGNS FOR MAINLINE CLOSURES
15C08-16A	PAVEMENT MARKING (MAINLINE)
15C11-06	FLEXIBLE TUBULAR MARKER POST
15D12-06B	TRAFFIC CONTROL, LANE CLOSURE, SPEED REDUCTION

6

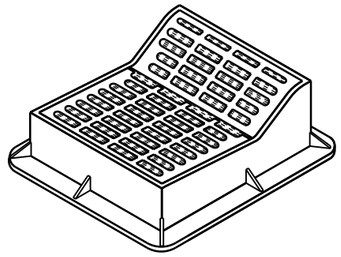

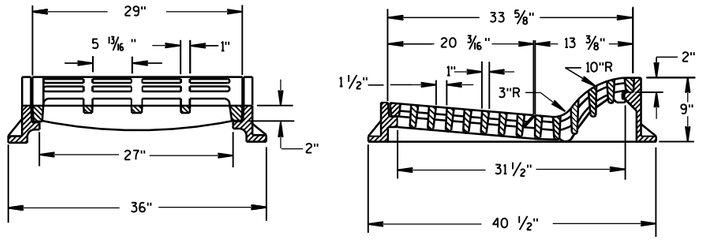

TYPE "F"

USE WITH TYPES A & D CONCRETE CURB & GUTTER, 36 INCH.

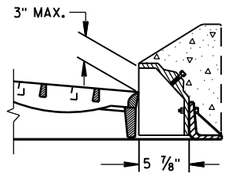

ALTERNATIVE CURB BOX FOR TYPE "HM" COVER

USE WITH TYPES G & J CONCRETE CURB & GUTTER, 30 INCH
NOTED AS TYPE HM-GJ ON DRAINAGE TABLE

NOTE:
SPECIAL GRATE FOR THE
TYPE "H" COVER MAY ALSO BE
USED FOR THE TYPE "HM-GJ" COVER
NOTED AS TYPE HM-GJ-S ON DRAINAGE TABLE

GENERAL NOTES

DETAILS OF CONSTRUCTION, MATERIALS AND WORKMANSHIP NOT SHOWN ON THIS DRAWING SHALL CONFORM TO THE PERTINENT REQUIREMENTS OF THE STANDARD SPECIFICATIONS AND THE APPLICABLE SPECIAL PROVISIONS.

DETAIL DRAWINGS FOR PROPOSED ALTERNATE DESIGNS FOR INLET COVERS SHALL BE SUBMITTED TO THE ENGINEER FOR APPROVAL PROVIDING THAT SUCH ALTERNATE DESIGNS MAKE PROVISION FOR EQUIVALENT CAPACITY AND STRENGTH.

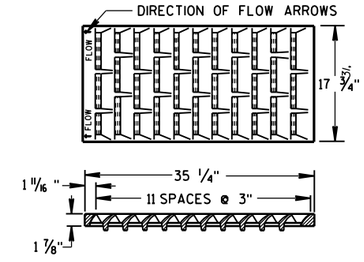

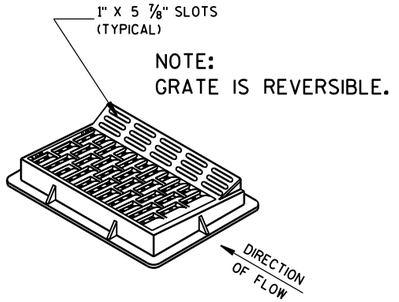

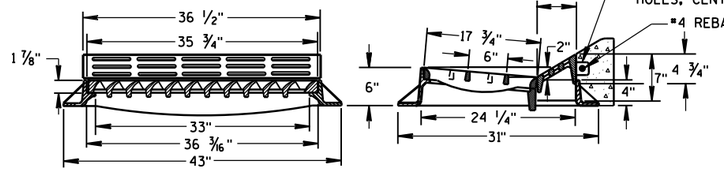

TYPE "HM"

USE WITH TYPES A & D CONCRETE CURB & GUTTER, 36 INCH.

NOTE:
SPECIAL GRATE FOR THE
TYPE "H" COVER MAY ALSO BE
USED FOR THE TYPE "HM" COVER
NOTED AS TYPE HM-S ON DRAINAGE TABLE

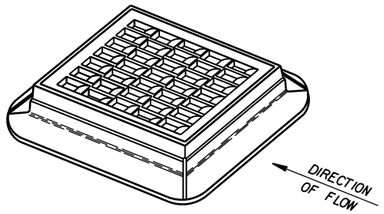

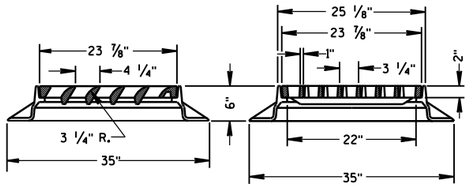

TYPE "S"

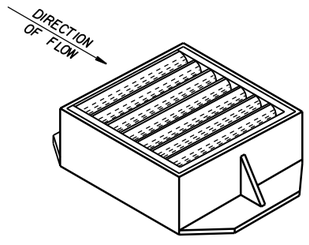

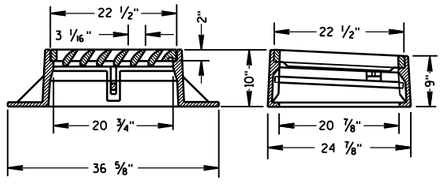

TYPE "V"

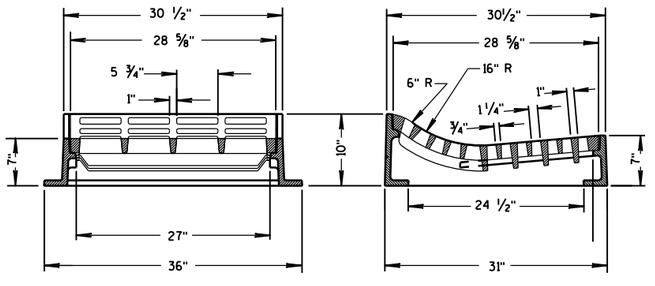

TYPE "T"

USE WITH TYPES R & T CONCRETE CURB & GUTTER, 36 INCH.

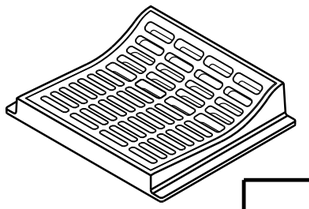

INLET COVERS
TYPE F, HM, HM-S, S, T, V, HM-GJ, & HM-GJ-S

STATE OF WISCONSIN
DEPARTMENT OF TRANSPORTATION

APPROVED
11/27/2013
DATE

/S/ Jerry H. Zogg
ROADWAY STANDARDS ENGINEER

FHWA

6
S.D.D. 8 A 5-19c

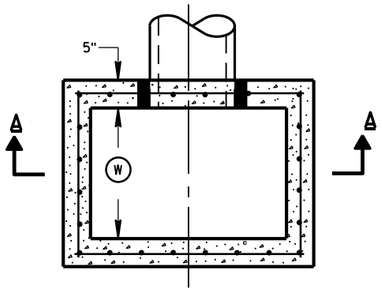

PLAN VIEW

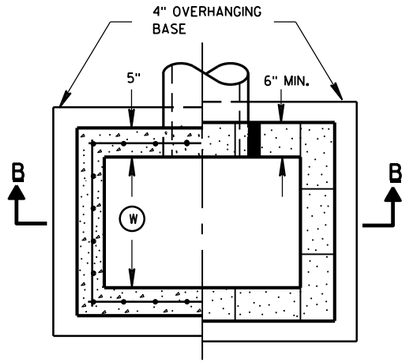

PLAN VIEW

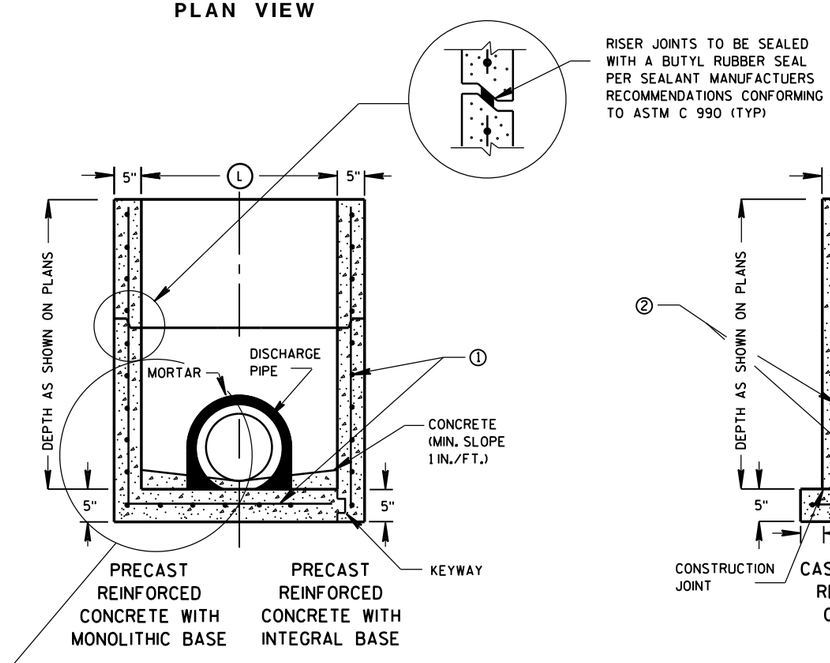

SECTION A-A

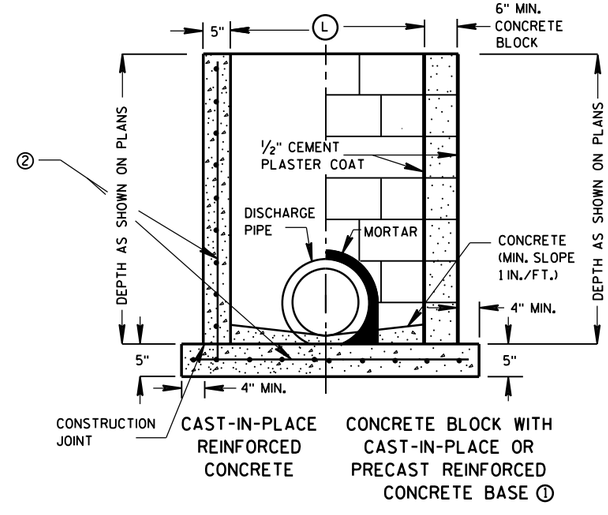

SECTION B-B

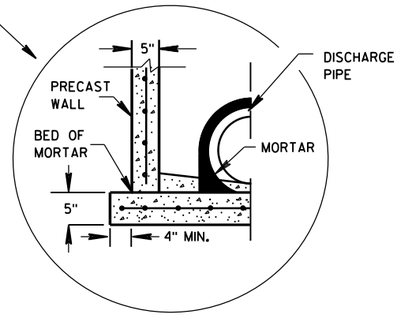

SEPARATE PRECAST REINFORCED CONCRETE BASE OPTION

GENERAL NOTES

DETAILS OF CONSTRUCTION, MATERIALS AND WORKMANSHIP NOT SHOWN ON THIS DRAWING SHALL CONFORM TO THE PERTINENT REQUIREMENTS OF THE STANDARD SPECIFICATIONS AND THE APPLICABLE SPECIAL PROVISIONS.

UNLESS OTHERWISE AUTHORIZED IN WRITING BY THE ENGINEER, THE CONTRACTOR SHALL NOT ORDER AND DELIVER PRECAST INLET UNITS REQUIRED FOR THE PROJECT UNTIL A LIST OF SIZES IS FURNISHED BY THE ENGINEER.

DETAILED DRAWINGS FOR PROPOSED ALTERNATE DESIGNS FOR UNDERGROUND DRAINAGE STRUCTURES SHALL BE SUBMITTED TO THE ENGINEER FOR APPROVAL PROVIDING THAT SUCH ALTERNATE DESIGNS MAKE PROVISION FOR EQUIVALENT CAPACITY AND STRENGTH.

ALL PRECAST INLET UNITS SHALL CONFORM TO THE PERTINENT REQUIREMENTS OF ASTM C 913.

ALL DRAINAGE STRUCTURES ARE DESIGNATED ON THE PLANS AS "MANHOLES 3X3-L", "CATCH BASINS 4-B", "INLETS 2X3-H", ETC. THE FIRST NUMBERS DESIGNATES THE SIZE OF THE STRUCTURE, AND THE FOLLOWING LETTER DESIGNATES THE TYPE OF COVER TO BE USED TO COMPRISE THE COMPLETE UNIT.

BASES SHALL BE PLACED ON A BED OF MATERIAL AT LEAST 6 INCHES IN DEPTH, WHICH MEETS THE REQUIREMENTS OF GRANULAR BACKFILL. THIS BEDDING SHALL BE COMPACTED AND PROVIDE UNIFORM SUPPORT FOR THE ENTIRE AREA OF THE BASE.

ALL BAR STEEL REINFORCEMENT SHALL BE EMBEDDED 2 INCHES CLEAR UNLESS OTHERWISE SHOWN OR NOTED.

PRECAST REINFORCED RISERS SHALL HAVE A TONGUE AND GROOVE JOINT WITH TONGUE UP OR DOWN.

4" OVERHANGING BASES ARE REQUIRED FOR CAST-IN-PLACE REINFORCED CONCRETE AND CONCRETE BLOCK INSTALLATIONS.
4" OVERHANG IS REQUIRED WHEN SEPARATE PRECAST BASE IS PROVIDED.
OVERHANG IS NOT REQUIRED ON PRECAST STRUCTURES WITH AN INTEGRAL OR MONOLITHIC BASE.

MAXIMUM INSIDE PIPE DIAMETER DETERMINED BY 3 INCH CLEARANCE ON EACH SIDE OF THE OUTSIDE WALL OF THE PIPE. SEE DETAIL "A". ASSUMES PIPE ENTERS PERPENDICULAR TO THE STRUCTURE.

① FOR PRECAST INLETS PROVIDE REINFORCING STEEL IN ACCORDANCE TO ASTM C 913.

② CONTRACTOR TO PROVIDE DRAWING(S) STAMPED BY A PROFESSIONAL ENGINEER FOR STEEL REINFORCING DESIGN FOR CAST-IN-PLACE STRUCTURES.

INLET COVER MATRIX

INLET SIZE		INLET COVER TYPE	ALL A'S	ALL B'S	BW	F	ALL H'S	S	T	V	WM
	WIDTH (W) (FT)	LENGTH (L) (FT)									
2X2-FT	2	2	X	X				X		X	
2X2.5-FT	2	2.5			X			X	X	X	X
2X3-FT	2	3					X				
2.5X3-FT	2.5	3				X					

PIPE MATRIX

INLET SIZE	MAXIMUM INSIDE PIPE DIAMETER	
	WIDTH (IN)	LENGTH (IN)
2X2-FT	12	12
2X2.5-FT	12	18
2X3-FT	12	24
2.5X3-FT	18	24

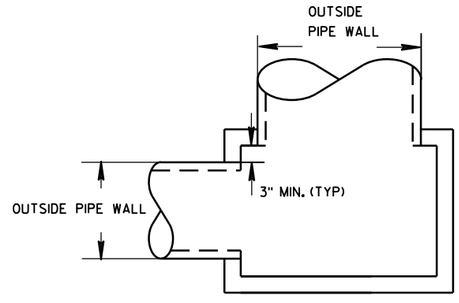

DETAIL "A"

INLETS 2X2-FT, 2X2.5-FT, 2X3-FT AND 2.5X3-FT

STATE OF WISCONSIN
DEPARTMENT OF TRANSPORTATION

APPROVED
6/5/2012
DATE
FHWA

/S/ Jerry H. Zogg
ROADWAY STANDARDS DE
ENGINEER

6
S.D.D. 8 C 7-1

INLETS 2X2-FT, 2X2.5-FT, 2X3-FT AND 2.5X3-FT

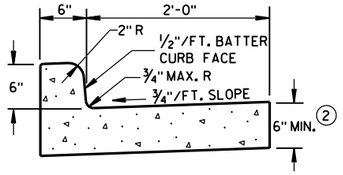

TYPES A & D ①

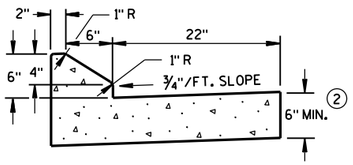

6" SLOPED CURB TYPES G & J ①

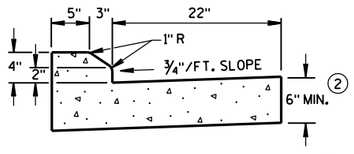

4" SLOPED CURB TYPES G & J ①

CONCRETE CURB & GUTTER 30"

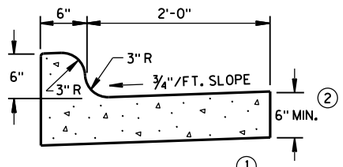

TYPES K & L ①

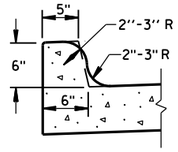

OPTIONAL CURB SHAPE FOR TYPES K & L ①

CONCRETE CURB & GUTTER 30"

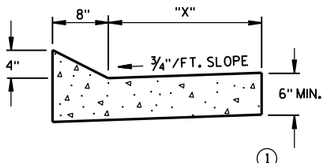

TYPES TBT & TBTT ①

CONCRETE CURB & GUTTER

TBT & TBTT	"X"
30"	22"
36"	28"

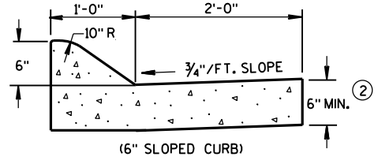

(6" SLOPED CURB)

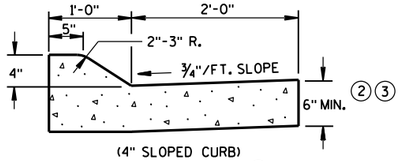

(4" SLOPED CURB)

TYPES A & D ①

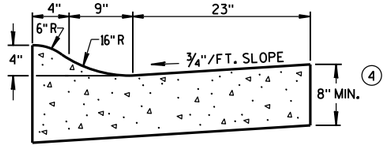

4" SLOPED CURB TYPES R & T ①⑤

CONCRETE CURB & GUTTER 36"

GENERAL NOTES

DETAILS OF CONSTRUCTION, MATERIALS AND WORKMANSHIP NOT SHOWN ON THIS DRAWING SHALL CONFORM TO THE PERTINENT REQUIREMENTS OF THE CONTRACT.

PAVEMENT TIES AND TIE BARS SHALL BE EPOXY COATED IN CONFORMANCE WITH SUBSECTION 505.2.6.2 OF THE STANDARD SPECIFICATIONS.

INTEGRAL CURB & GUTTER SHALL CONFORM TO THE DETAILS SHOWN FOR CONCRETE CURB & GUTTER INCLUDING THE TRANSVERSE GUTTER SLOPE. A LONGITUDINAL CONSTRUCTION JOINT IS NOT REQUIRED WITH INTEGRAL CURB AND GUTTER.

WHERE THE TRANSVERSE JOINTS IN THE PAVEMENT ARE REQUIRED TO BE SEALED, THE JOINTS IN THE INTEGRAL CURB AND GUTTER SHALL BE SEALED TO THE FACE OF CURB WITH THE SAME TYPE OF SEALANT. THE COST OF FURNISHING AND INSTALLING THIS SEALANT SHALL BE INCIDENTAL TO THE ITEM CONCRETE CURB AND GUTTER.

UNLESS OTHERWISE SHOWN ON THE TYPICAL CROSS SECTIONS, THE BASE AGGREGATE AND COMMON EXCAVATION LIMITS ARE 2'-0" BEHIND THE BACK OF CURBS.

① TIE BARS ARE REQUIRED FOR CURB AND GUTTER TYPES A, G, K, R AND TBTT.

② THE BOTTOM OF CURB AND GUTTER MAY BE CONSTRUCTED EITHER LEVEL OR PARALLEL TO THE SLOPE OF THE SUBGRADE OR BASE AGGREGATE PROVIDED A 6" MINIMUM GUTTER THICKNESS IS MAINTAINED.

③ USE 8" MINIMUM GUTTER THICKNESS WHEN USED WITH AN ADJACENT CONCRETE TRUCK APRON PLACED BEHIND BACK OF CURB.

④ THE BOTTOM OF CURB AND GUTTER MAY BE CONSTRUCTED EITHER LEVEL OR PARALLEL TO THE SLOPE OF THE SUBGRADE OR BASE AGGREGATE PROVIDED A 8" MINIMUM GUTTER THICKNESS IS MAINTAINED.

⑤ THE FACE OF CURB IS 6" FROM THE BACK OF CURB.

⑥ WHEN REVERSE SLOPE GUTTER IS REQUIRED, THE LOCATION(S) WILL BE SHOWN ELSEWHERE IN THE PLAN.

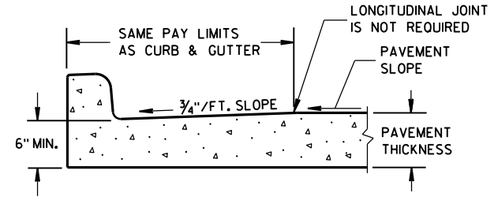

PARTIAL SECTION OF PAVEMENT WITH INTEGRAL CURB & GUTTER

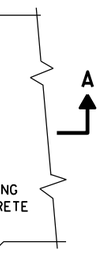

PLAN VIEW

*NEW CURB & GUTTER, SURFACE DRAINS, CONCRETE PAVEMENT OR OTHER NEW CONCRETE.

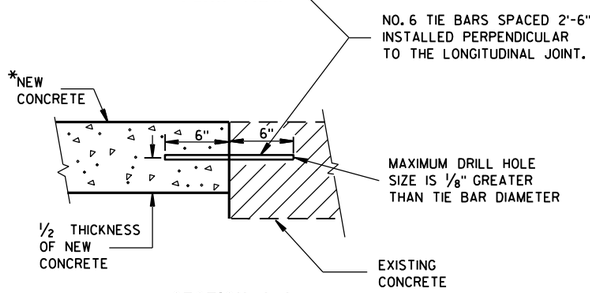

SECTION A-A

TIE BARS DRILLED INTO EXISTING PAVEMENT

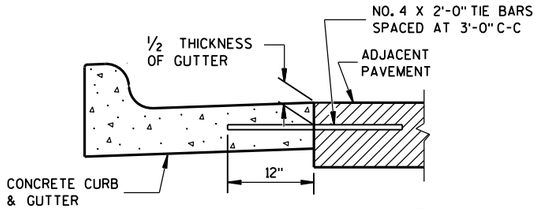

TYPICAL TIE BAR LOCATION ①

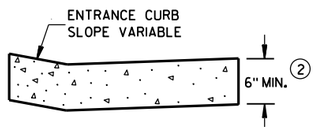

DRIVEWAY ENTRANCE CURB
(WHEN DIRECTED BY THE ENGINEER)

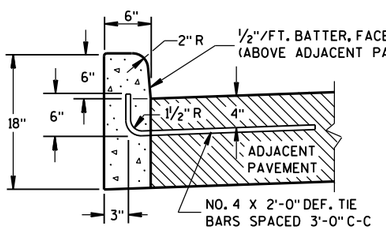

① TYPES A & D

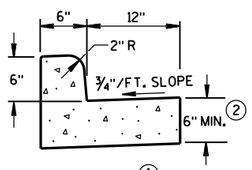

① TYPES A & D

CONCRETE CURB & GUTTER 18"

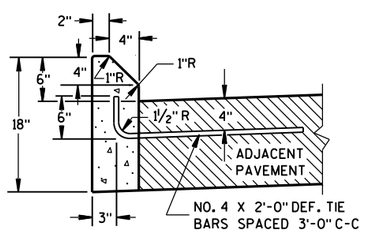

① TYPES G & J

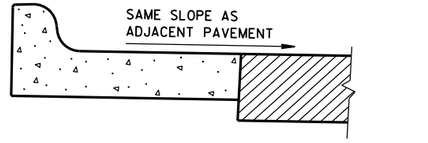

⑥ REVERSE SLOPE GUTTER
(TYPICAL FOR ALL CURB & GUTTER TYPES)

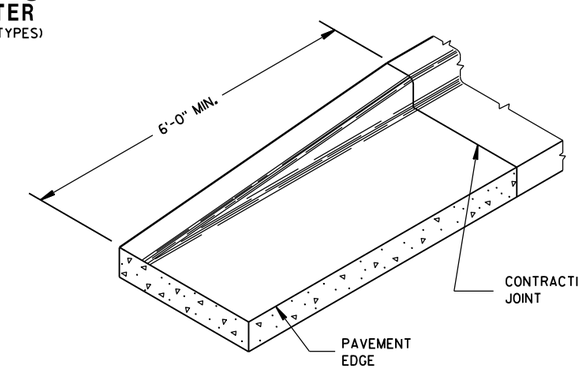

END SECTION CURB & GUTTER

CONCRETE CURB

CONCRETE CURB, CONCRETE CURB & GUTTER AND TIES

STATE OF WISCONSIN
DEPARTMENT OF TRANSPORTATION

APPROVED
June, 2016 — DATE
/S/ Jerry H. Zogg — ROADWAY STANDARDS DEVELOPMENT ENGINEER
FHWA

6

S.D.D. 8 D 1-19

6

S.D.D. 8 D 1-19

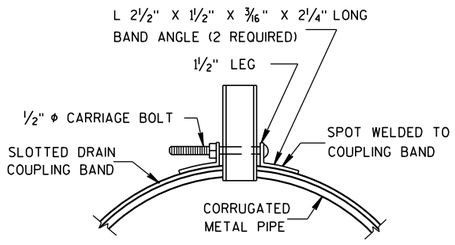

SECTION A-A

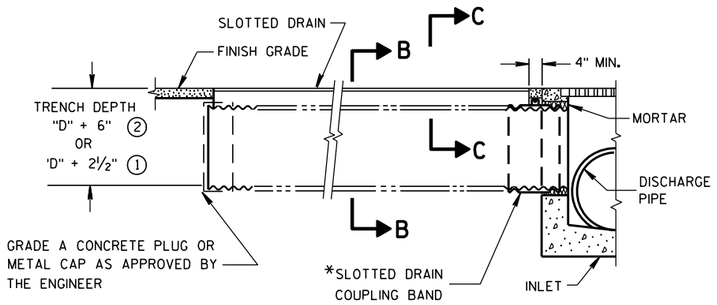

SLOTTED DRAIN INSTALLATION TYPE "A"

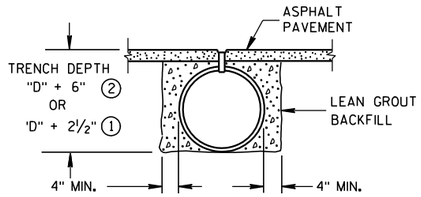

SECTION B-B

GENERAL NOTES

DETAILS OF CONSTRUCTION, MATERIALS AND WORKMANSHIP NOT SHOWN ON THIS DRAWING SHALL CONFORM TO THE PERTINENT REQUIREMENTS OF THE STANDARD SPECIFICATIONS AND THE APPLICABLE SPECIAL PROVISIONS.

BACKFILL MATERIAL

THE LEAN GROUT BACKFILL MATERIAL SHALL BE A FINE AGGREGATE, IN ACCORDANCE WITH SUBSECTION 501.3.6.3.6 OF THE STANDARD SPECIFICATIONS, MIXED WITH 150 POUNDS OF CEMENT AND APPROXIMATELY 30 GALLONS OF WATER FOR EACH 3000 POUNDS OF FINE AGGREGATE.

THE PIPE FOR THE SLOTTED DRAIN SHALL MEET AASHTO DESIGNATION M-36, AND THE GRATE ASSEMBLIES SHALL BE MADE FROM STRUCTURAL STEEL SUITABLY WELDED TO FORM THE OPEN SLOT AND HOT-DIP GALVANIZED TO MEET THE PROVISIONS OF AASHTO DESIGNATION M-111.

NORMAL PIPE SIZES ARE 12-INCH THROUGH 24-INCH DIAMETER IN 0.064 INCH THICKNESS, AND 30-INCH DIAMETER PIPE IN 0.079 INCH THICKNESS.

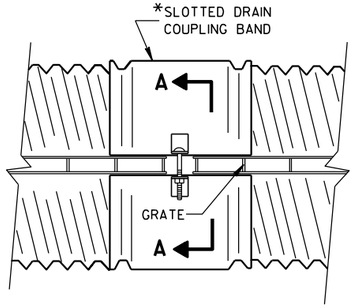

PLAN VIEW

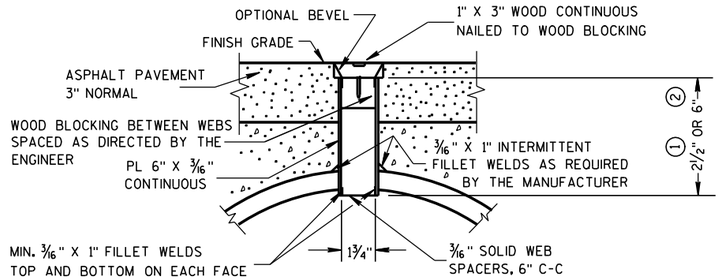

SECTION C-C

GRATE SLOT DETAIL

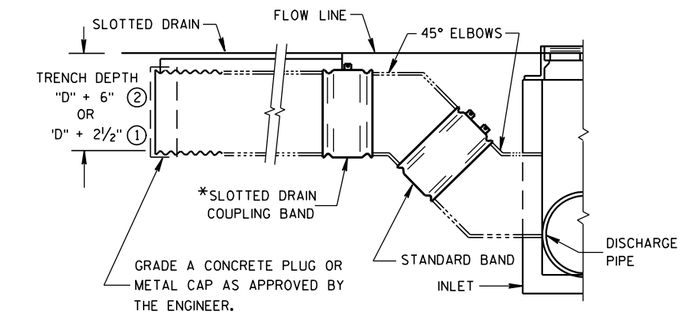

SLOTTED DRAIN INSTALLATION TYPE "B"

NOTE:

TO PREVENT "FLOATING" OF THE SLOTTED DRAIN DURING BACKFILL OPERATIONS PROVIDE ADEQUATE WEDGES, OR POUR THE LEAN GROUT ON TOP OF THE PLUGGED SLOT ALLOWING IT TO SLOUGH TO THE SIDES OF THE PIPE. THIS WILL PROVIDE ENOUGH WEIGHT ON TOP TO KEEP THE PIPE FROM FLOATING.

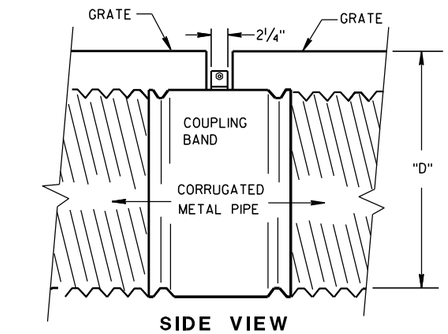

SIDE VIEW

*TYPICAL COUPLING BAND FOR SLOTTED DRAIN

(ALTERNATES PERMITTED AS APPROVED BY THE ENGINEER)

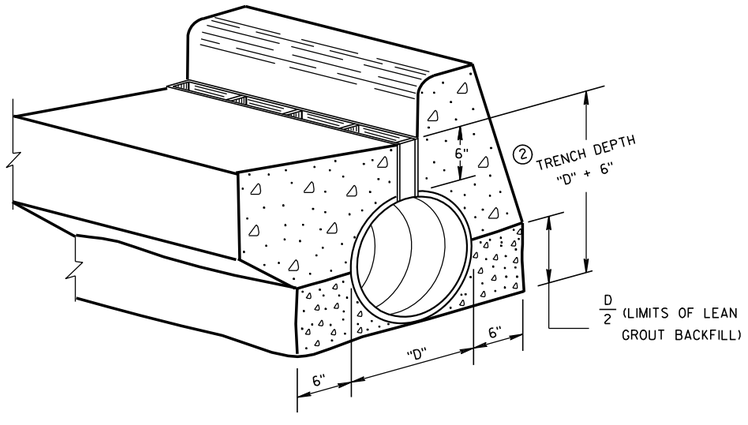

SLOTTED DRAIN INSTALLATION IN FLOW LINE OF CURB & GUTTER TYPE "C"

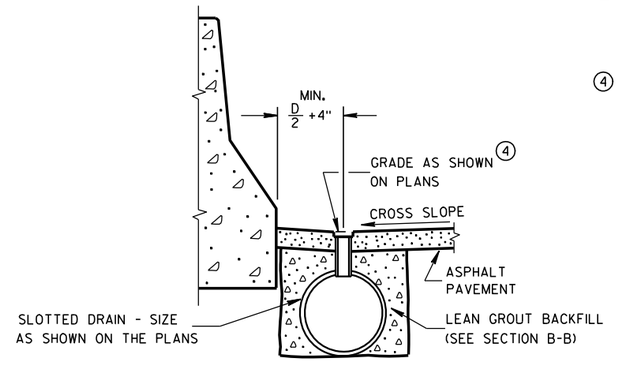

SLOTTED DRAIN INSTALLATION AT MEDIAN BARRIER TYPE "D"

① 2½" NORMAL GRATE DEPTH.

② 6" SPECIAL GRATE DEPTH, WHEN SPECIFIED ON THE PLANS.

③ FOR SCREEDING DIRECTLY OVER THE SLOTTED DRAIN WITH ASPHALT PAVER. FOR CONCRETE SURFACE USE 3" WIDE TAPE OVER THE SLOT TO KEEP MATERIAL OUT OF THE PIPE.

④ WHEN THE SURFACE IS CONCRETE PAVEMENT THE GRADE AS SHOWN ON THE PLANS WILL BE FLUSH WITH THE TOP OF THE SLOTTED DRAIN.

SLOTTED CORRUGATED METAL PIPE SURFACE DRAINS

STATE OF WISCONSIN
DEPARTMENT OF TRANSPORTATION

APPROVED

8/30/79 DATE

/S/ D. L. Str--- CHIEF ROADWAY DEVELOP--- ENGINEER

FHWA

6

S.D.D. 13 D 13-1

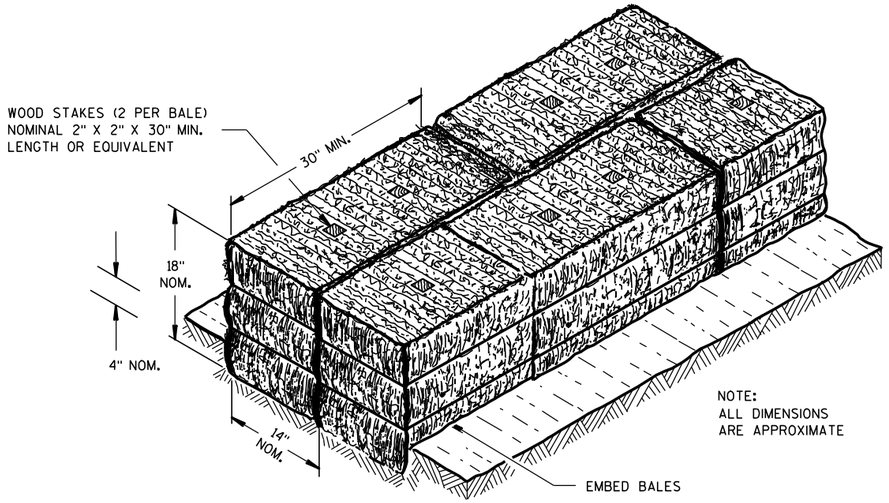

SECTION A-A

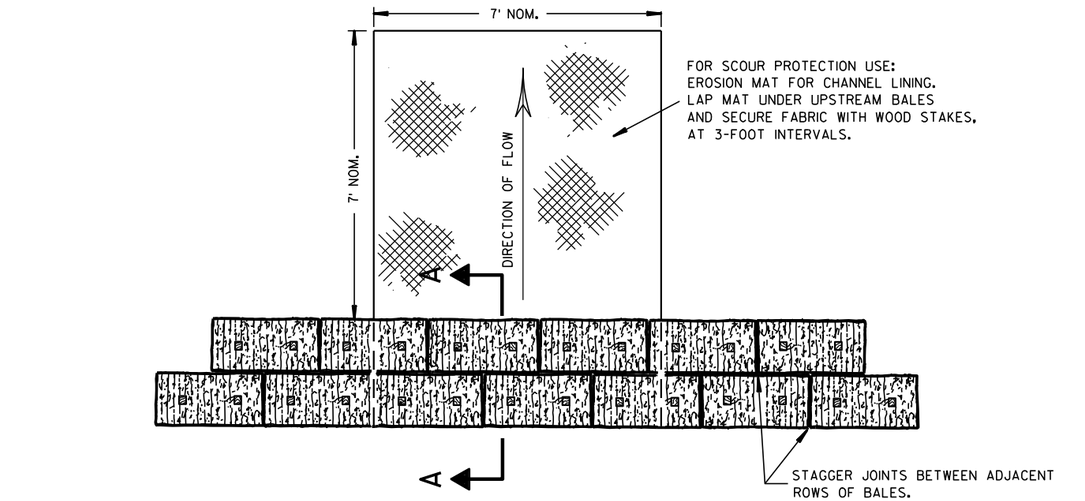

PLAN VIEW

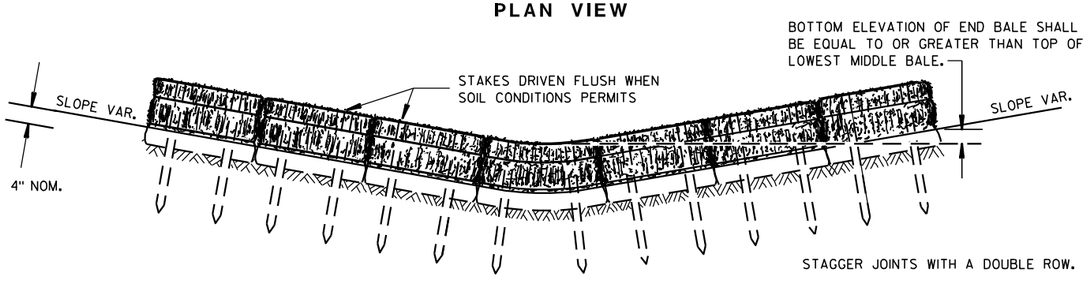

FRONT ELEVATION

TEMPORARY DITCH CHECK USING EROSION BALES ①

GENERAL NOTES

DETAILS OF CONSTRUCTION, MATERIALS AND WORKMANSHIP NOT SHOWN ON THIS DRAWING SHALL CONFORM TO THE PERTINENT REQUIREMENTS OF THE STANDARD SPECIFICATIONS AND THE APPLICABLE SPECIAL PROVISIONS.

① TEMPORARY DITCH CHECKS EITHER EROSION BALES OR MANUFACTURED SHALL BE PAID FOR UNDER THE BID ITEM OF TEMPORARY DITCH CHECK. THE DEPARTMENT WILL NOT PAY FOR TEMPORARY DITCH CHECKS CONSTRUCTED OF A SINGLE ROW OF EROSION BALES.

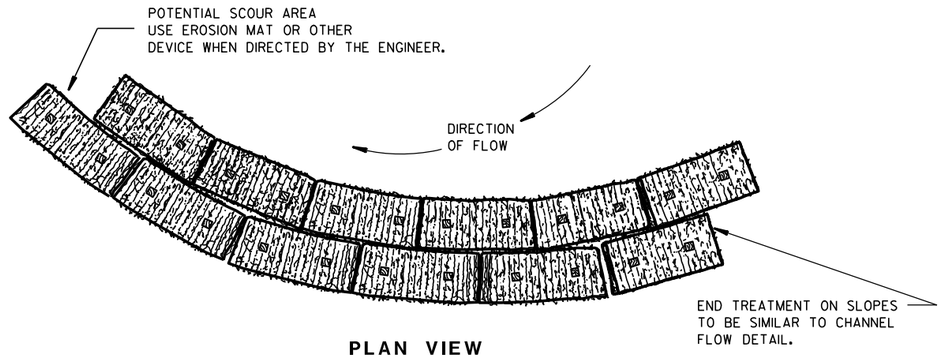

PLAN VIEW

WHEN ALTERING THE DIRECTION OF FLOW

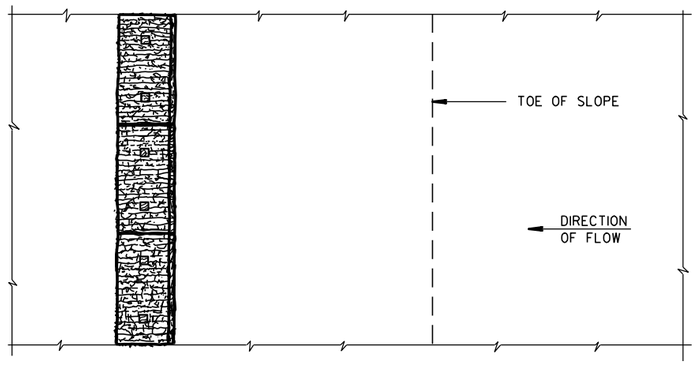

PLAN VIEW

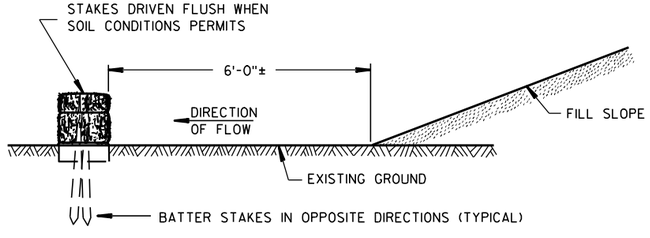

FRONT ELEVATION

WHEN EXISTING GROUND SLOPES AWAY FROM FILL SLOPE

EROSION BALES FOR SHEET FLOW

TYPICAL INSTALLATIONS OF EROSION BALES / TEMPORARY DITCH CHECKS

STATE OF WISCONSIN
DEPARTMENT OF TRANSPORTATION

APPROVED

6/04/02 DATE — /S/ Beth Cannestra CHIEF ROADWAY DEVELOPMENT ENGINEER

FHWA

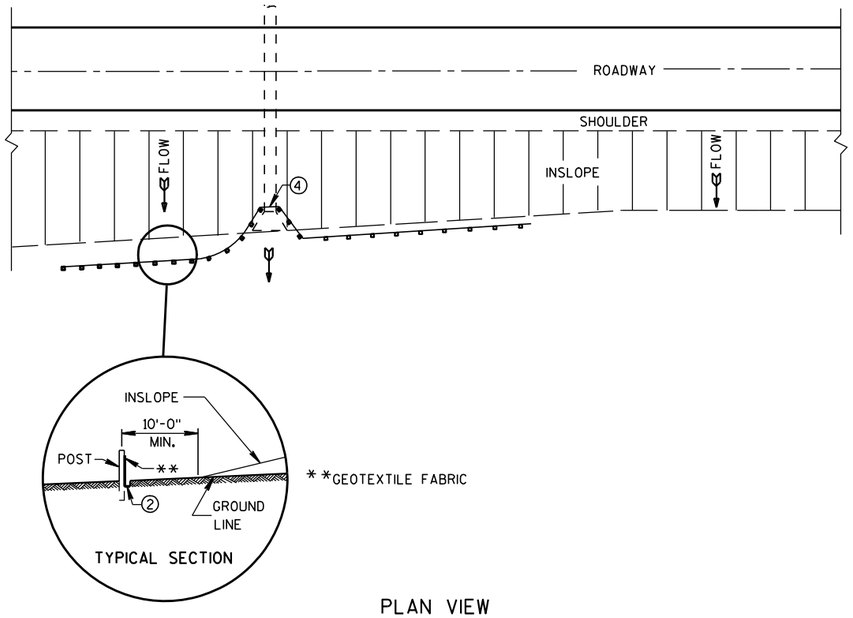

PLAN VIEW

TYPICAL APPLICATION OF SILT FENCE

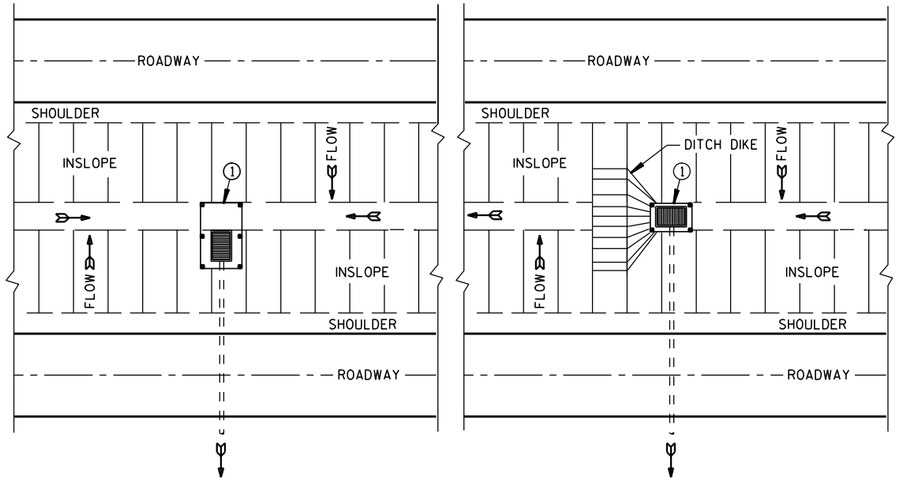

PLAN VIEW

SILT FENCE AT MEDIAN SURFACE DRAINS

GENERAL NOTES

DETAILS OF CONSTRUCTION NOT SHOWN ON THIS DRAWING SHALL CONFORM TO THE PERTINENT REQUIREMENTS OF THE STANDARD SPECIFICATIONS AND APPLICABLE SPECIAL PROVISIONS.

1. HORIZONTAL BRACE REQUIRED WITH 2" X 4" WOODEN FRAME OR EQUIVALENT AT TOP OF POSTS.
2. FOR MANUAL INSTALLATIONS THE TRENCH SHALL BE A MINIMUM OF 4" WIDE & 6" DEEP TO BURY AND ANCHOR THE GEOTEXTILE FABRIC. FOLD MATERIAL TO FIT TRENCH AND BACKFILL & COMPACT TRENCH WITH EXCAVATED SOIL.
3. WOOD POSTS SHALL BE A MINIMUM SIZE OF 1⅛" X 1⅛" OF OAK OR HICKORY.
4. SILT FENCE TO EXTEND ACROSS THE TOP OF THE PIPE.
5. CONSTRUCT SILT FENCE FROM A CONTINUOUS ROLL IF POSSIBLE BY CUTTING LENGTHS TO AVOID JOINTS. IF A JOINT IS NECESSARY USE ONE OF THE FOLLOWING TWO METHODS; A) OVERLAP THE END POSTS AND TWIST, OR ROTATE, AT LEAST 180 DEGREES, B) HOOK THE END OF EACH SILT FENCE LENGTH.

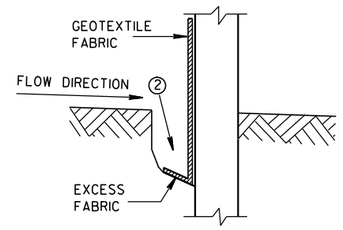

TRENCH DETAIL

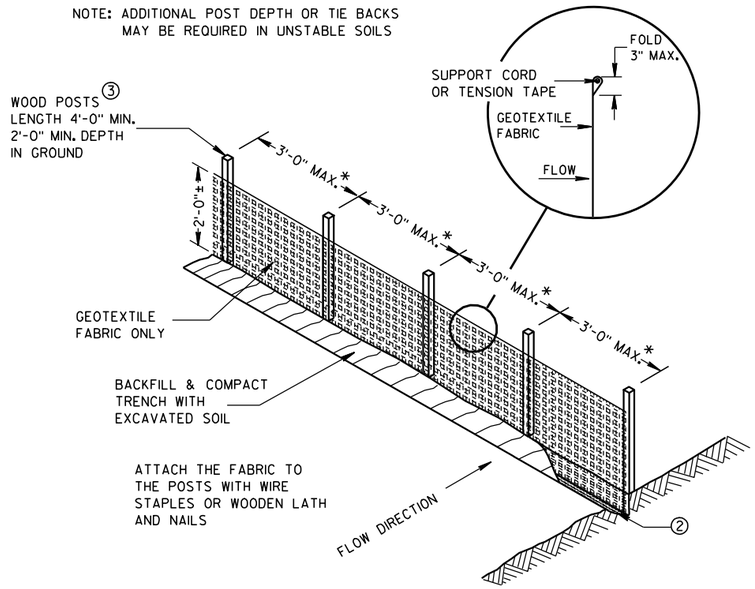

SILT FENCE

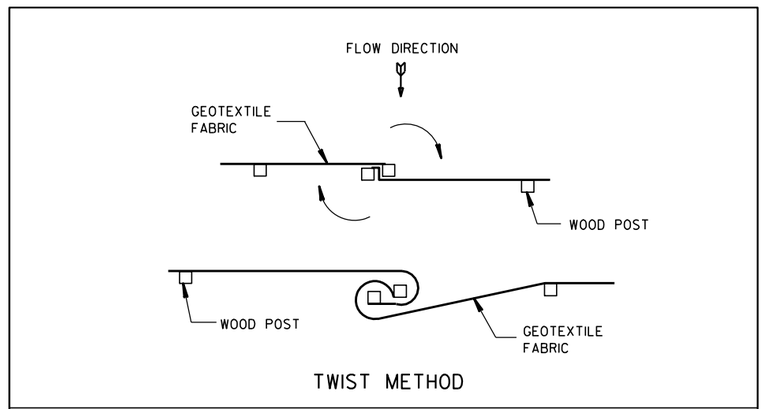

JOINING TWO LENGTHS OF SILT FENCE 5

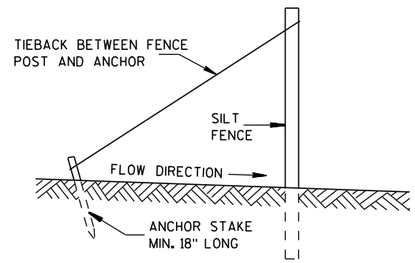

SILT FENCE TIE BACK

(WHEN REQUIRED BY THE ENGINEER)

SILT FENCE

STATE OF WISCONSIN
DEPARTMENT OF TRANSPORTATION

APPROVED
4-29-05 DATE
/S/ Beth Cannestra
CHIEF ROADWAY DEVELOPMENT ENGINEER
FHWA

6

S.D.D. 8 E 9-6

6

S.D.D. 8 E 9-6

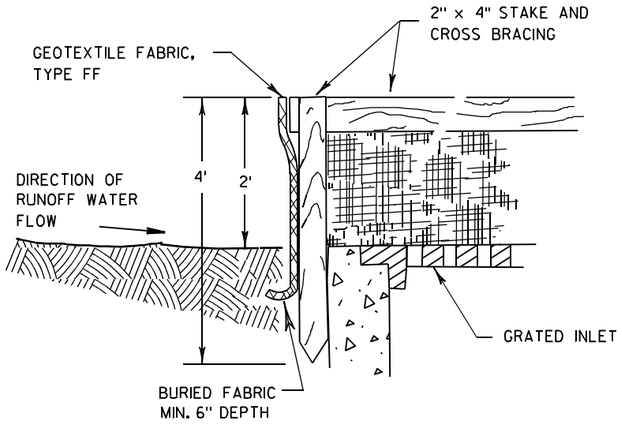

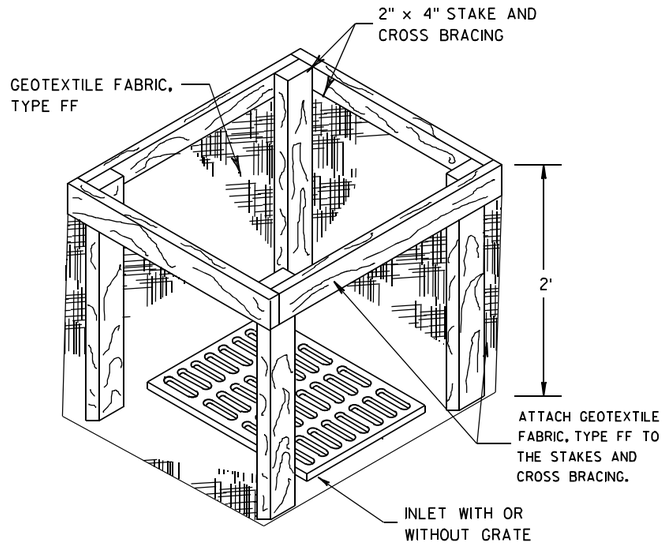

INLET PROTECTION, TYPE A

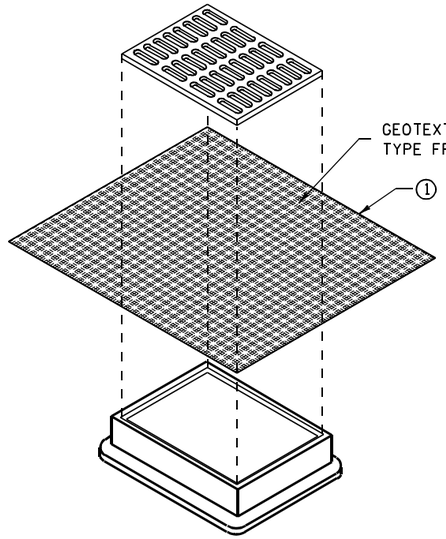

INLET PROTECTION, TYPE B
(WITHOUT CURB BOX)

(CAN BE INSTALLED IN ANY INLET WITHOUT A CURB BOX)

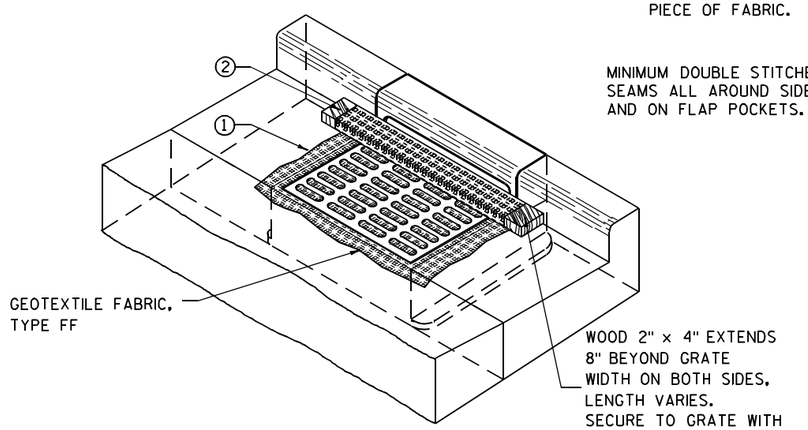

INLET PROTECTION, TYPE C (WITH CURB BOX)

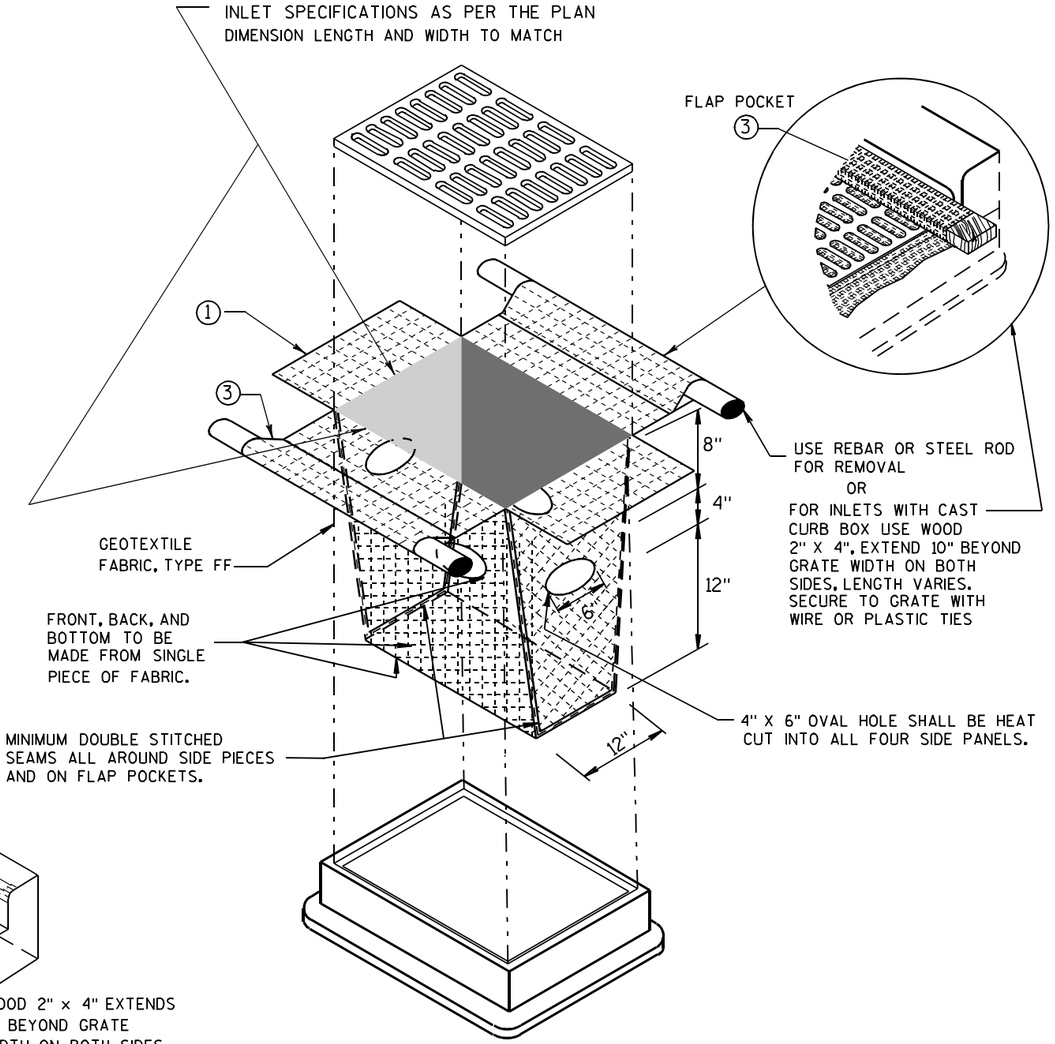

INLET PROTECTION, TYPE D

(CAN BE INSTALLED IN ANY INLET TYPE WITH
OR WITHOUT A CURB BOX AS PER NOTE ②)

GENERAL NOTES

INLET PROTECTION DEVICES SHALL BE MAINTAINED OR REPLACED AT THE DIRECTION OF THE ENGINEER.

MANUFACTURED ALTERNATIVES APPROVED AND LISTED ON THE DEPARTMENT'S EROSION CONTROL PRODUCT ACCEPTABILITY LIST MAY BE SUBSTITUTED.

WHEN REMOVING OR MAINTAINING INLET PROTECTION, CARE SHALL BE TAKEN SO THAT THE SEDIMENT TRAPPED ON THE GEOTEXTILE FABRIC DOES NOT FALL INTO THE INLET. ANY MATERIAL FALLING INTO THE INLET SHALL BE REMOVED IMMEDIATELY.

① FINISHED SIZE, INCLUDING FLAP POCKETS WHERE REQUIRED, SHALL EXTEND A MINIMUM OF 10" AROUND THE PERIMETER TO FACILITATE MAINTENANCE OR REMOVAL.

② FOR INLET PROTECTION, TYPE C (WITH CURB BOX), AN ADDITIONAL 18" OF FABRIC IS WRAPPED AROUND THE WOOD AND SECURED WITH STAPLES. THE WOOD SHALL NOT BLOCK THE ENTIRE HEIGHT OF THE CURB BOX OPENING.

③ FLAP POCKETS SHALL BE LARGE ENOUGH TO ACCEPT WOOD 2X4.

INSTALLATION NOTES

TYPE B & C

TRIM EXCESS FABRIC IN THE FLOW LINE TO WITHIN 3" OF THE GRATE.

THE CONTRACTOR SHALL DEMONSTRATE A METHOD OF MAINTENANCE, USING A SEWN FLAP, HAND HOLDS OR OTHER METHOD TO PREVENT ACCUMULATED SEDIMENT FROM ENTERING THE INLET.

TYPE D

DO NOT INSTALL INLET PROTECTION TYPE D IN INLETS SHALLOWER THAN 30", MEASURED FROM THE BOTTOM OF THE INLET TO THE TOP OF THE GRATE.

TRIM EXCESS FABRIC IN THE FLOW LINE TO WITHIN 3" OF THE GRATE.

THE INSTALLED BAG SHALL HAVE A MINIMUM SIDE CLEARANCE, BETWEEN THE INLET WALLS AND THE BAG, MEASURED AT THE BOTTOM OF THE OVERFLOW HOLES, OF 3". WHERE NECESSARY THE CONTRACTOR SHALL CINCH THE BAG, USING PLASTIC ZIP TIES, TO ACHIEVE THE 3" CLEARANCE. THE TIES SHALL BE PLACED AT A MAXIMUM OF 4" FROM THE BOTTOM OF THE BAG.

INLET PROTECTION
TYPE A, B, C, AND D

STATE OF WISCONSIN
DEPARTMENT OF TRANSPORTATION

APPROVED
10/16/02
DATE
/S/ Beth Cannestra
CHIEF ROADWAY DEVELOPMENT ENGINEER
FHWA

6
S.D.D. 8 E 10-2

GENERAL NOTES

DETAILS OF CONSTRUCTION, MATERIALS AND WORKMANSHIP NOT SHOWN ON THIS DRAWING SHALL CONFORM TO THE PERTINENT REQUIREMENTS OF THE STANDARD SPECIFICATIONS AND THE APPLICABLE SPECIAL PROVISIONS.

TRACKING PAD SHALL BE INSPECTED DAILY. DEFICIENT AREAS SHALL BE REPAIRED OR REPLACED IMMEDIATELY.

TRACKING PAD TO BE REMOVED AFTER CONSTRUCTION IS COMPLETED.

TRACKING PAD SHALL BE THE FULL WIDTH OF THE EGRESS POINT.

SURFACE WATER MUST BE PREVENTED FROM PASSING THROUGH THE TRACKING PAD. FLOWS SHALL BE DIVERTED AWAY, AROUND OR CONVEYED UNDER THE TRACKING PAD.

CULVERT PIPE OR OTHER BMP USED TO DIVERT WATER AWAY, AROUND OR UNDER THE TRACKING PAD SHALL BE DESIGNED TO CONVEY THE 2 YEAR - 24 HOUR EVENT.

THE COST OF ADDITIONAL BMP TO DIVERT WATER ARE INCIDENTAL TO THE TRACKING PAD BID ITEM.

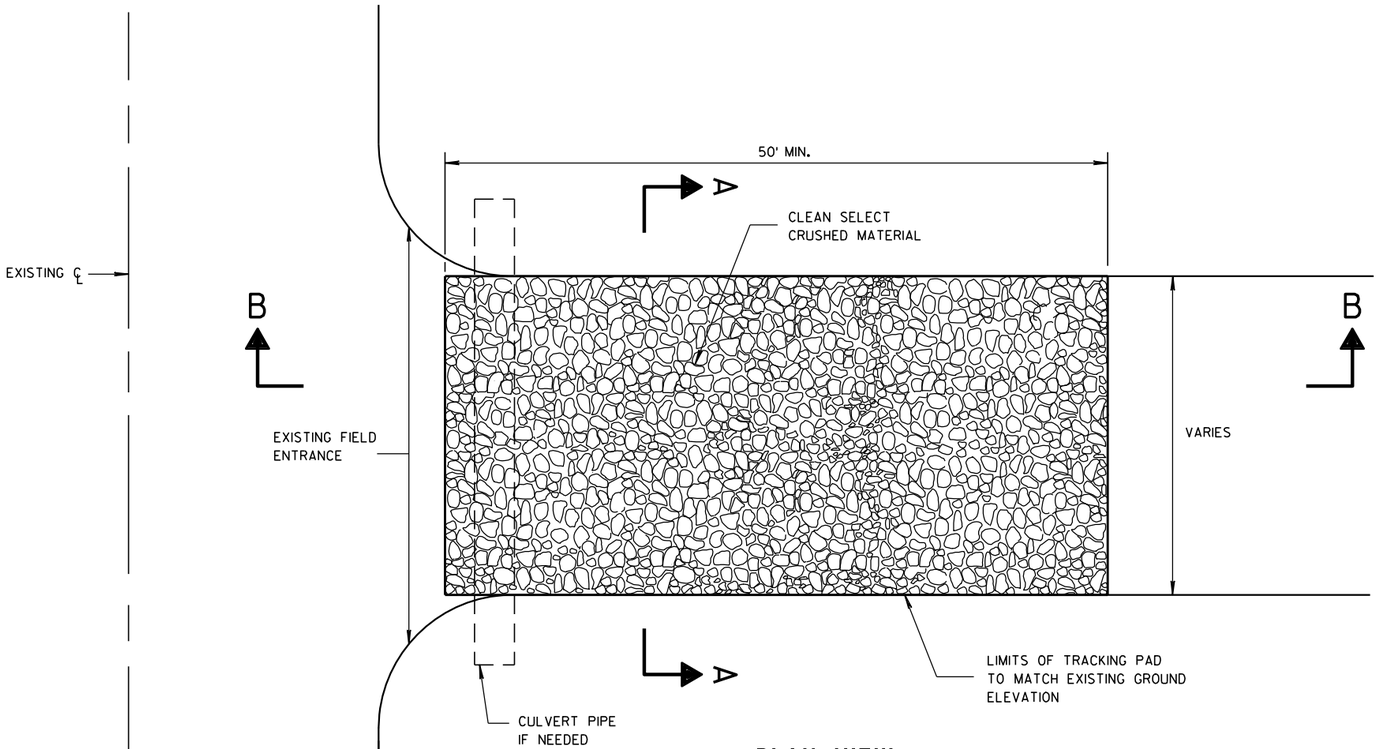

PLAN VIEW

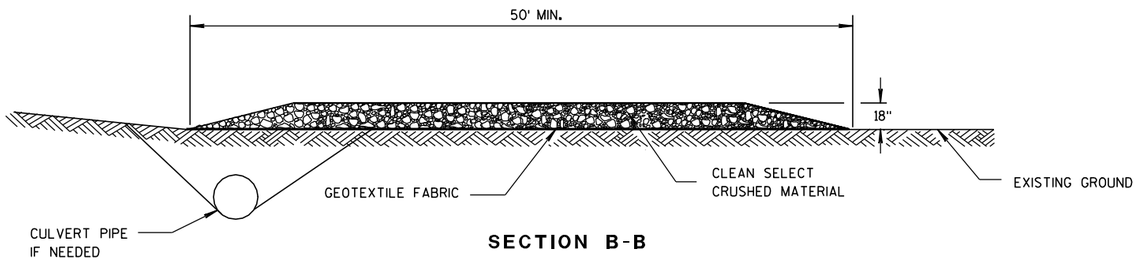

SECTION B-B

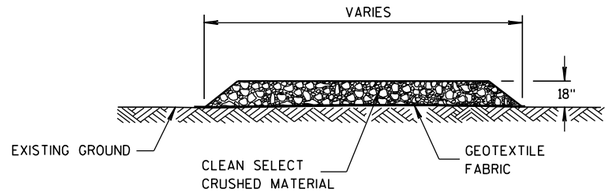

SECTION A-A

TRACKING PAD

TRACKING PAD

STATE OF WISCONSIN
DEPARTMENT OF TRANSPORTATION

APPROVED
3/24/2011 — DATE
/S/ Jerry H. Zona — ROADWAY STANDARDS ENGINEER
84
ENT
FHWA

6
S.D.D. 8 E 14-1

METAL APRON ENDWALLS

PIPE DIA. (IN.)	MIN. THICK. (Inches) STEEL	MIN. THICK. (Inches) ALUM.	DIMENSIONS (Inches) A (±1")	B (MAX.)	H (±1")	L (±1 1/2")	L1 ①	L2 ①	W (±2")	APPROX. SLOPE	BODY
12	.064	.060	6	6	6	21	12	17 1/2	24	2 1/2 to 1	1 Pc.
15	.064	.060	7	8	6	26	14	21 3/4	30	2 1/2 to 1	1 Pc.
18	.064	.060	8	10	6	31	15	28 1/4	36	2 1/2 to 1	1 Pc.
21	.064	.060	9	12	6	36	18	29 5/8	42	2 1/2 to 1	1 Pc.
24	.064	.075	10	13	6	41	18	37 1/4	48	2 1/2 to 1	1 Pc.
30	.079	.075	12	16	8	51	18	52 1/4	60	2 1/2 to 1	1 Pc.
36	.079	.105	14	19	9	60	24	59 3/4	72	2 1/2 to 1	2 Pc.
42	.109	.105	16	22	11	69	24	75 5/8	84	2 1/2 to 1	2 Pc.
48	.109	.105	18	27	12	78	24	81	90	2 1/4 to 1	3 Pc.
54	.109	.105	18	30	12	84	30	85 1/2	102	2 1/4 to 1	3 Pc.
60	.109×	.105×	18	33	12	87	—	—	114	2 to 1	3 Pc.
66	.109×	.105×	18	36	12	87	—	—	120	2 to 1	3 Pc.
72	.109×	.105×	18	39	12	87	—	—	126	2 to 1	3 Pc.
78	.109×	.105×	18	42	12	87	—	—	132	1 1/2 to 1	3 Pc.
84	.109×	.105×	18	45	12	87	—	—	138	1 1/2 to 1	3 Pc.
90	.109×	.105×	18	37	12	87	—	—	144	1 1/2 to 1	3 Pc.
96	.109×	.105×	18	35	12	87	—	—	150	1 1/2 to 1	3 Pc.

× EXCEPT CENTER PANEL SEE GENERAL NOTES

REINFORCED CONCRETE APRON ENDWALLS

PIPE DIA. (IN.)	DIMENSIONS (Inches) T	A	B	C	D	E	G	APPROX. SLOPE
12	2	4	24	48 7/8	72 1/8	24	2	3 to 1
15	2 1/4	6	27	46	73	30	2 1/4	3 to 1
18	2 1/2	9	27	46	73	36	2 1/2	3 to 1
21	2 3/4	9	36	37 1/2	73 1/2	42	2 3/4	3 to 1
24	3	9 1/2	43 1/2	30	73 1/2	48	3	3 to 1
27	3 1/4	10 1/2	49 1/2	24	73 1/2	54	3 1/4	3 to 1
30	3 1/2	12	54	19 3/4	73 1/2	60	3 1/2	3 to 1
36	4	15	63	34 3/4	97 3/4	72	4	3 to 1
42	4 1/2	21	63	35	98	78	4 1/2	3 to 1
48	5	24	72	26	98	84	5	3 to 1
54	5 1/2	27	65	* 33 1/4 - ** 35	* 98 1/4 - ** 100	90	5 1/2	2 2/5 to 1
60	6	* 30 - ** 35	60	39	99	96	5	2 to 1
66	6 1/2	* 24 - ** 30	* 72 - ** 78	* 21 - ** 27	99	102	5 1/2	2 to 1
72	7	* 24 - ** 36	78	21	99	108	6	2 to 1
78	7 1/2	* 24 - ** 36	78	21	99	114	6 1/2	2 to 1
84	8	36	90 1/2	21	111 1/2	120	6 1/2	1 1/2 to 1
90	8 1/2	41	87 1/2	24	111 1/2	132	6 1/2	1 1/2 to 1

*MINIMUM
**MAXIMUM

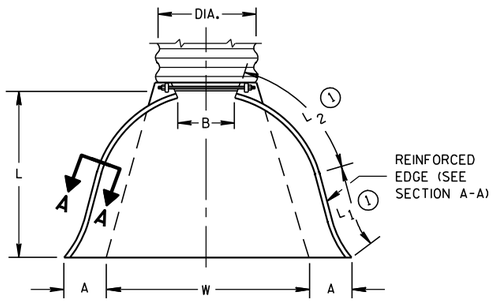

PLAN VIEW

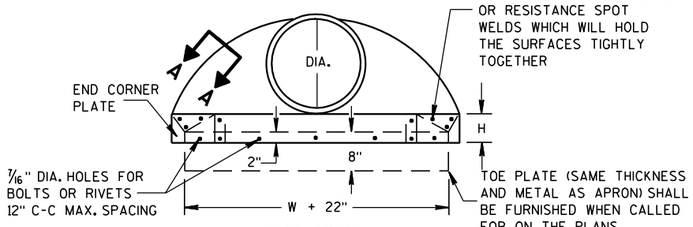

END VIEW

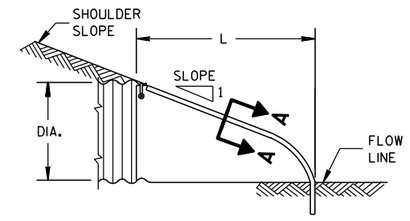

SIDE ELEVATION

METAL ENDWALLS

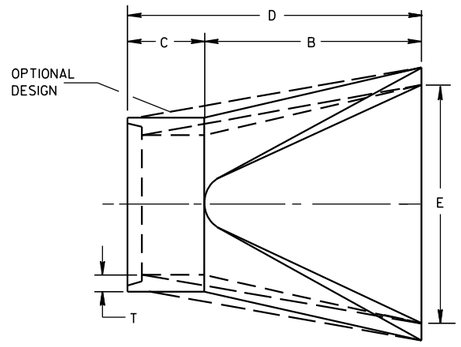

PLAN

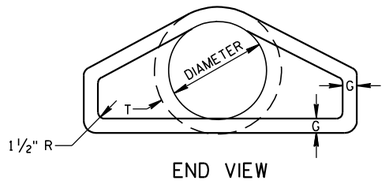

END VIEW

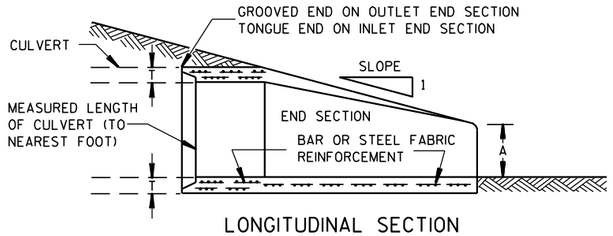

LONGITUDINAL SECTION

CONCRETE ENDWALLS

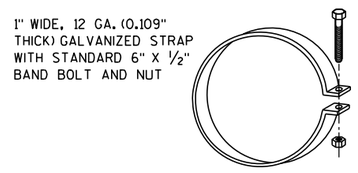

ALTERNATE FOR TYPE 1 CONNECTION

END SECTION CONNECTOR STRAP

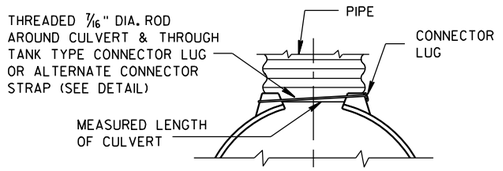

TYPE 1
FOR 12" THRU 24" CORR. PIPE

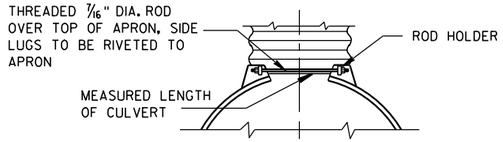

TYPE 2
FOR 30" THRU 96" CORR. PIPE

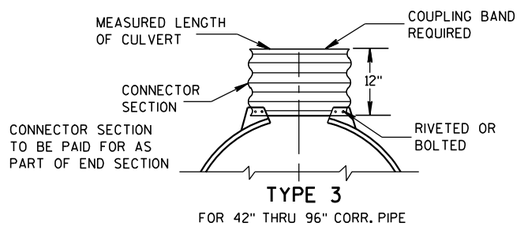

TYPE 3
FOR 42" THRU 96" CORR. PIPE

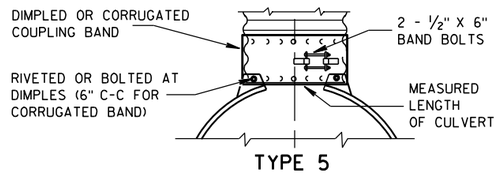

TYPE 5
ALTERNATE FOR:
ALL SIZES CORRUGATED CIRCULAR PIPE

NOTE: DIMPLED BAND FITS OVER OUTSIDE OF ENDWALL. AND CORRUGATED BAND FITS INSIDE ENDWALL. DIMPLED BAND MAY BE USED WITH HELICALLY CORRUGATED PIPE.

FOR CIRCUMFERENTIALLY CORRUGATED PIPE USE ENDWALL CONNECTION DETAILS 1, 2, 3 OR 5 AS APPLICABLE.

FOR HELICALLY CORRUGATED PIPE USE ENDWALL CONNECTION DETAILS 1, 2 OR 5.

FOR HELICALLY CORRUGATED PIPES WITH TWO CIRCUMFERENTIAL CORRUGATIONS AT EACH END USE ENDWALL CONNECTION DETAILS 1, 2 OR 3.

CONNECTION DETAILS

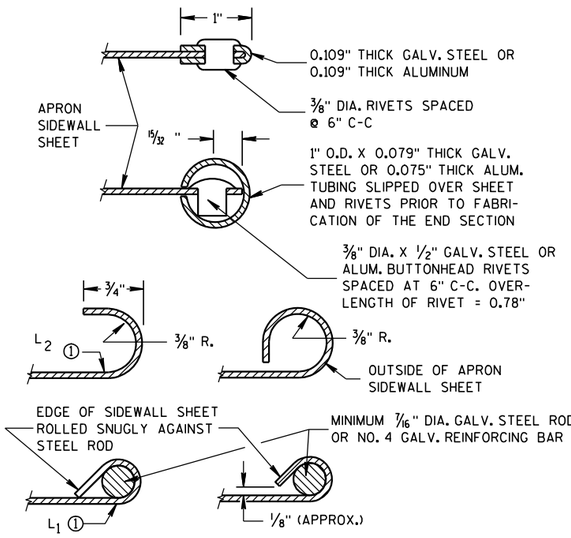

SECTION A-A

GENERAL NOTES

DETAILS OF CONSTRUCTION, MATERIALS AND WORKMANSHIP NOT SHOWN ON THIS DRAWING SHALL CONFORM TO THE PERTINENT REQUIREMENTS OF THE STANDARD SPECIFICATIONS AND THE APPLICABLE SPECIAL PROVISIONS.

CONCRETE CULVERT ENDWALLS MAY NOT BE USED WITH GALVANIZED STEEL OR ALUMINUM CULVERT PIPE OR VISE VERSA. GALVANIZED STEEL OR ALUMINUM ENDWALLS SHALL NORMALLY BE INSTALLED ON CULVERT PIPE OF THE SAME METAL.

ALL THREE PIECE STEEL APRON ENDWALLS FOR 60" DIAMETER PIPE AND LARGER SHALL HAVE 0.109" SIDES AND 0.138" CENTER PANELS. ALL THREE PIECE ALUMINUM APRON ENDWALLS FOR 60" DIAMETER PIPE AND LARGER SHALL HAVE 0.105" SIDES AND 0.134" CENTER PANELS. THE WIDTH OF CENTER PANELS SHALL BE GREATER THAN 20 PERCENT OF THE PIPE PERIMETER.

LAP SEAMS SHALL BE TIGHTLY JOINED BY GALVANIZED RIVETS OR BOLTS FOR STEEL UNITS AND ALUMINUM RIVETS AND BOLTS FOR ALUMINUM UNITS. FOR THE 60" THROUGH 96" DIAMETER APRON ENDWALL SIZES, THE REINFORCED EDGES AND CENTER PANEL SEAMS SHALL BE FURTHER REINFORCED WITH GALVANIZED STEEL OR ALUMINUM STIFFENER ANGLES. THE ANGLES SHALL BE ATTACHED BY GALVANIZED NUTS AND BOLTS FOR STEEL UNITS AND ALUMINUM NUTS AND BOLTS FOR ALUMINUM UNITS.

WHERE TWO OR MORE PIPES WITH APRON ENDWALLS ARE LAID ADJACENT TO EACH OTHER, THEY SHALL BE SEPARATED BY A DISTANCE SUFFICIENT TO PROVIDE A MINIMUM CLEARANCE OF 6 INCHES BETWEEN APRON ENDWALLS.

① FOR PIPE SIZES UP TO 60" DIAMETER, A 180° ROLLED EDGE MAY BE USED INSTEAD OF STEEL ROD REINFORCEMENT. SEE SECTION A-A.

APRON ENDWALLS FOR CULVERT PIPE

STATE OF WISCONSIN
DEPARTMENT OF TRANSPORTATION

APPROVED
11/30/94 DATE
/S/ Rory L. Rhinesmith
CHIEF ROADWAY DEVELOP 85 NEER
FHWA

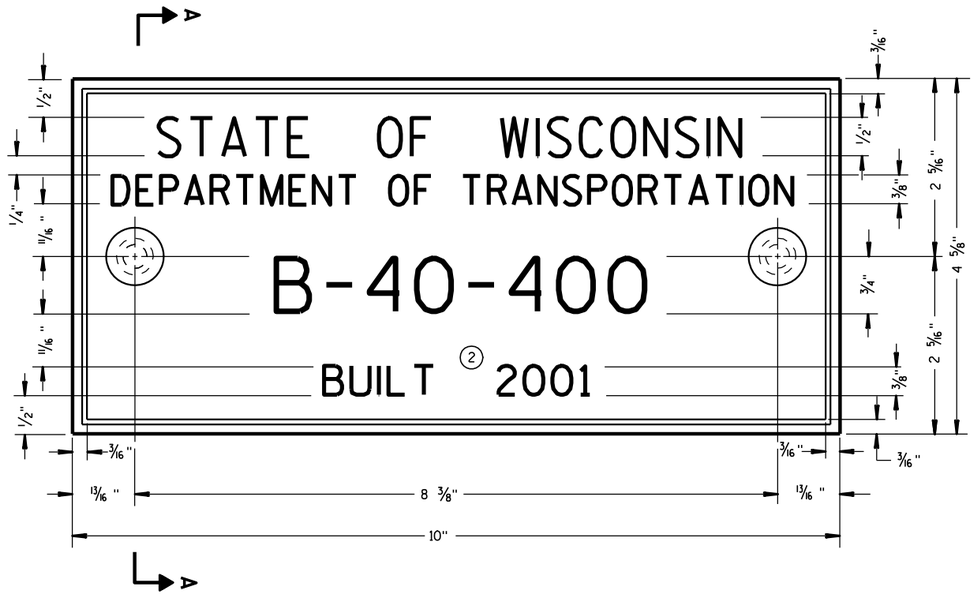

TYPICAL NAME PLATE

(BRIDGES, CULVERTS, AND RETAINING WALLS)

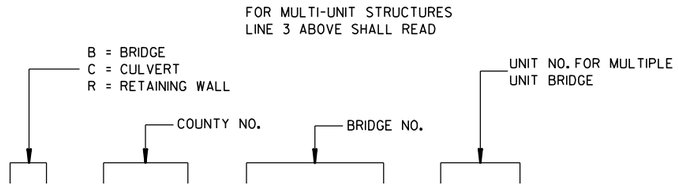

NUMBERING DESIGNATION MULTI-UNIT STRUCTURES

GENERAL NOTES

NAME PLATES TO BE INSTALLED ON BRIDGES, CULVERTS, AND RETAINING WALLS SHALL CONFORM TO THE REQUIREMENTS OF SECTION 502.3.11 OF THE STANDARD SPECIFICATIONS.

THE BRIDGE NUMBER AND YEAR BUILT SHOWN ON THIS DRAWING ARE EXAMPLES ONLY. SEE CONSTRUCTION PLANS FOR INDIVIDUAL NUMBERING AND YEAR BUILT.

(1) EPOXY RESIN SHALL BE FROM AN APPROVED MANUFACTURER AND USED IN ACCORDANCE WITH MANUFACTURER'S RECOMMENDATIONS.

(2) REHABILITATION OF AN EXISTING STRUCTURE SHOULD USE THE DATE OF ORIGINAL STRUCTURE CONSTRUCTION.

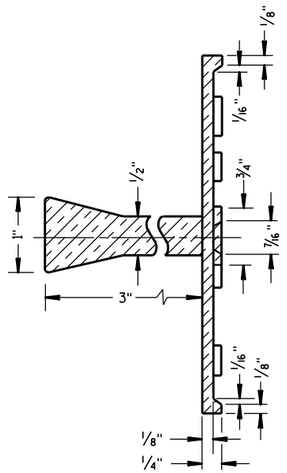

SECTION A-A

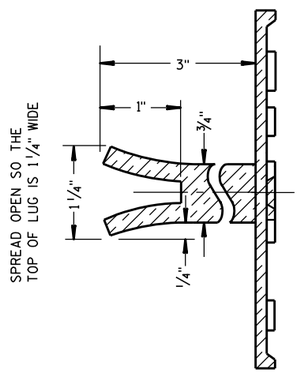

ALTERNATE LUG

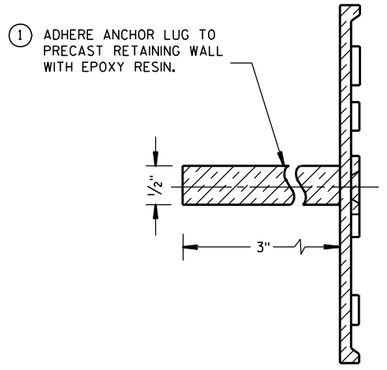

ALTERNATE LUG

(FOR ATTACHMENT TO PRECAST STRUCTURES)

NAME PLATE (STRUCTURES)	
STATE OF WISCONSIN DEPARTMENT OF TRANSPORTATION	
APPROVED	
3/26/10 DATE	/S/ Scot Beck -- CHIEF STRUCTURAL DEVELOP ENGINEER
FHWA	

6

S.D.D. 12 A 3-10

6

S.D.D. 12 A 3-10

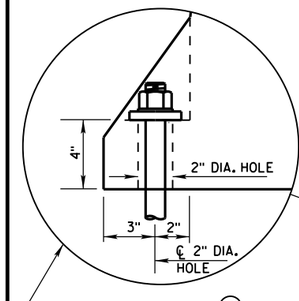

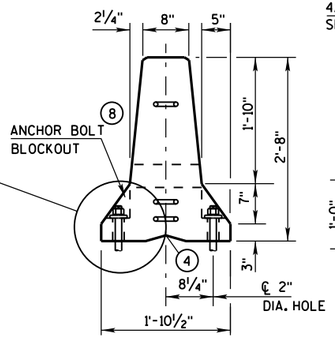

END VIEW

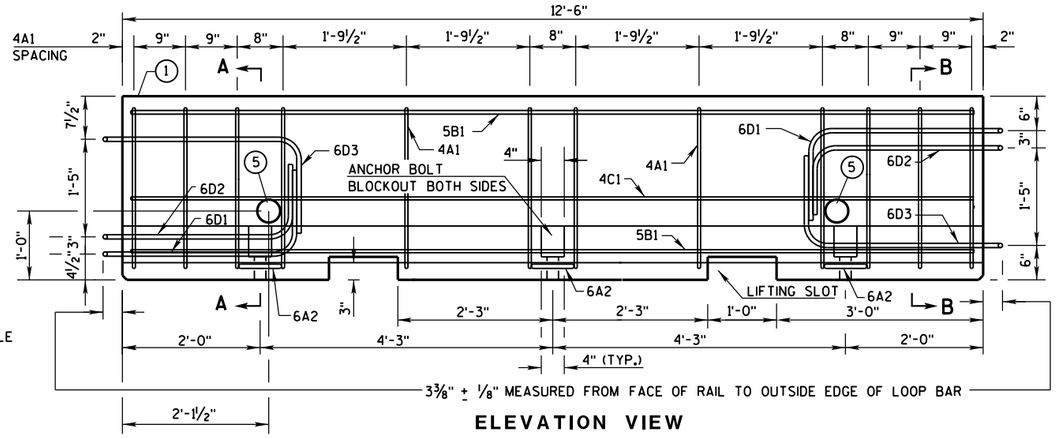

ELEVATION VIEW

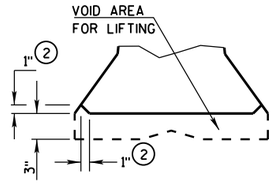

DETAIL "B"
LIFTING SLOT DETAIL

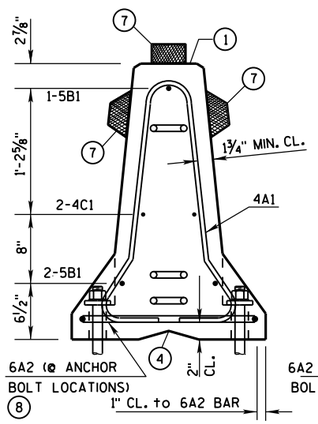

SECTION A-A
(STIRRUP PLACEMENT)

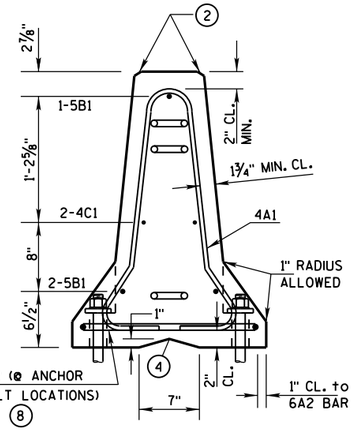

SECTION B-B
(STIRRUP PLACEMENT)

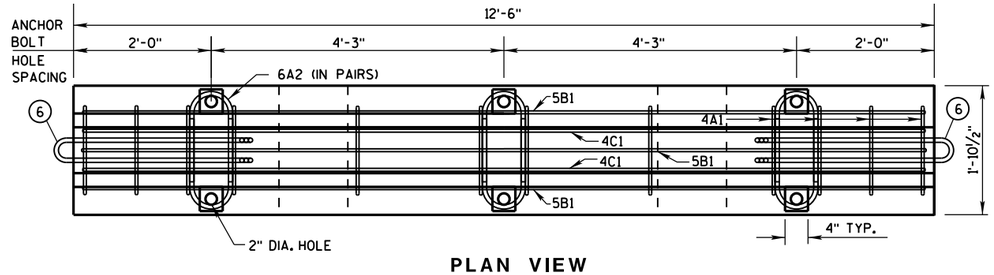

PLAN VIEW

DETAILS OF BARRIER SECTION

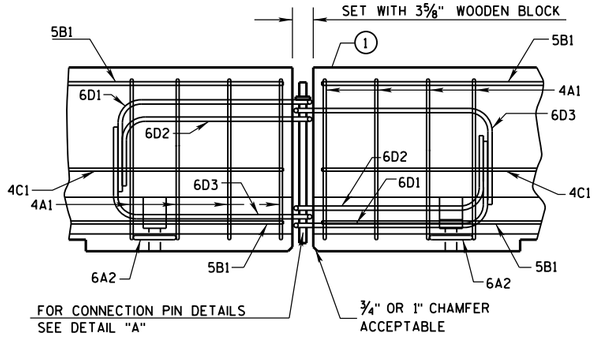

DETAILS OF BARRIER CONNECTION

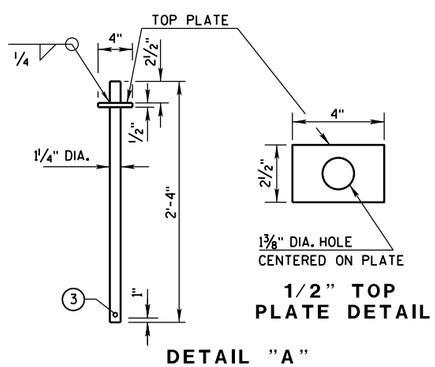

1/2" TOP
PLATE DETAIL

DETAIL "A"
CONNECTION PIN
(A36 STEEL (10.9 LB EACH))

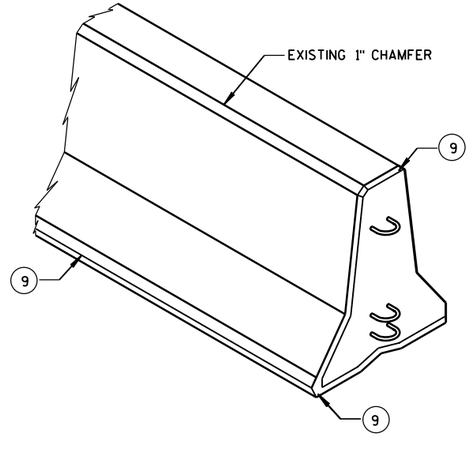

GENERAL NOTES

THESE GENERAL NOTES APPLY TO SHEETS 14B7-14(a) THRU 14B7-14(h).

DO NOT INTERMIX CONCRETE BARRIER TEMPORARY PRCAST, 12'-6" (CBTP12.5) WITH OTHER TEMPORARY CONCRETE BARRIERS.

USE ASTM A-615, GRADE 60, DEFORMED STEEL BARS FOR BARS 4A1, 6A2, 5B1 AND 4C1 IN THE BARRIER SECTION AND FOR 4V1, 4V2, 4V3, 4V4, 4V5, 4V6, 4F1, 4F2 AND 5F3 IN THE BARRIER TAPER SECTION.

LOOP BARS 6D1, 6D2 AND 6D3 SHALL BE ¾" SMOOTH STEEL BARS WITH A MINIMUM YIELD STRENGTH OF 60 KSI, A TENSILE STRENGTH OF NOT LESS THAN 1.25 TIMES THE YIELD STRENGTH BUT A MINIMUM OF 80 KSI, A MINIMUM 14% ELONGATION IN 8 INCHES AND PASSING A 180 DEGREE BEND TEST USING A 3-½" PIN BEND DIAMETER FOR BEND TESTS. THE LOOPS SHALL BE INSTALLED WITHIN ⅛" OF THE PLAN DIMENSION.

CONSTRUCT LIFTING SLOTS AS SPECIFIED ON THE PLANS TO FACILITATE THE DRAINAGE OF WATER AFTER INSTALLATION.

PLACE BARRIER ON A PAVED SURFACE. REMOVE ALL LOOSE DIRT AND SAND FROM THE ROADWAY SURFACE PRIOR TO PLACEMENT OF THE BARRIER.

INSTALL MECHANICAL OR ADHESIVE ANCHORS PER MANUFACTURER'S RECOMMENDATIONS. PROVIDE MANUFACTURER'S INFORMATION TO PROJECT ENGINEER.

(1) MARK ONE END OF EACH BARRIER PERMANENTLY BY FORMING INTO THE BARRIER THE FOLLOWING INFORMATION:
- a. TYPE: WI CBTP
- b. MANUFACTURER
- c. DATE MANUFACTURED (MONTH AND YEAR)

(2) 1" CHAMFER TO PREVENT SPALLING.

(3) A ⅜" HOLE IN THE CONNECTION PIN, AT THE LOCATION SHOWN, IS ACCEPTABLE, BUT NOT REQUIRED..

(4) "V" NOTCH IS OPTIONAL.

(5) THE 4" DIAMETER, 11 GAUGE STEEL, ROUND MECHANICAL TUBING SLEEVE FOR LIFTING (OPTIONAL).

(6) NEVER USE LOOP BARS (6D1, 6D2 OR 6D3) TO LIFT, MOVE OR REPOSITION THE BARRIER.

(7) USE DELINEATORS CONFORMING TO SECTION 633 OF THE STANDARD SPECIFICATIONS. CONTRACTOR MAY USE ALTERNATE SHAPES AND HOUSING. INSTALL DELINEATORS ACCORDING TO MANUFACTURES INSTRUCTION. INSTALL YELLOW REFLECTORS WHEN BARRIER IS LOCATED TO THE LEFT OF TRAFFIC AND WHITE REFLECTORS WHEN BARRIER IS LOCATED TO THE RIGHT OF TRAFFIC. SPACE DELINEATORS A MAXIMUM OF 25 FEET APART. PROVIDE TOP MOUNTED DELINEATORS IN ADDITION TO THE SIDE MOUNTED DELINEATORS ON ALL BARRIER INSTALLATIONS LOCATED ON A CURVED ALIGNMENT LONGER THAN 200 FEET AND ON BARRIERS USED TO SEPARATE OPPOSING TRAFFIC.

(8) SEE SHEET D FOR ANCHORING CRITERIA.

(9) 1" CHAMFER OPTIONAL.

CONCRETE BARRIER TEMPORARY PRECAST, 12'-6"

STATE OF WISCONSIN
DEPARTMENT OF TRANSPOR 87

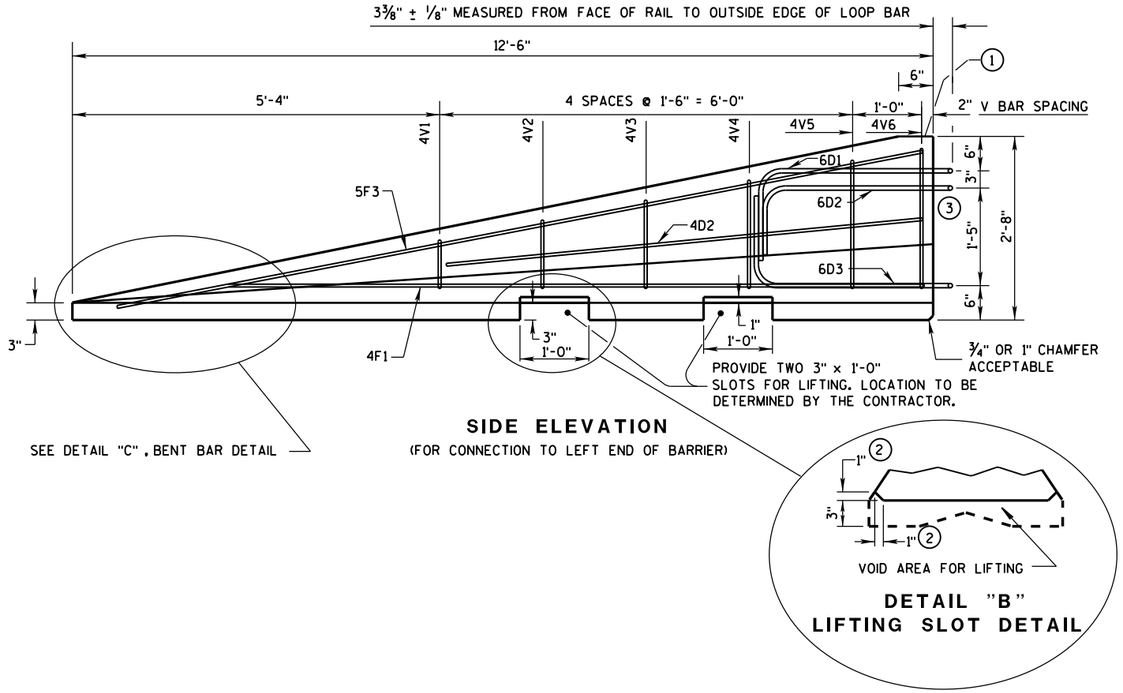

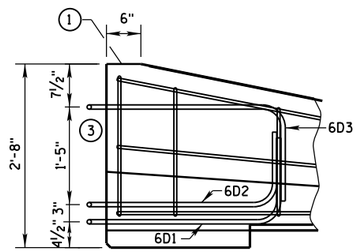

GENERAL NOTES

1. MARK ONE END OF EACH BARRIER PERMANENTLY BY FORMING INTO THE BARRIER THE FOLLOWING INFORMATION:
   a. TYPE WICBTP
   b. MANUFACTURER
   c. DATE MANUFACTURED (MONTH AND YEAR)
2. 1" CHAMFER TO PREVENT SPALLING.
3. NEVER USE LOOP BARS (6D1, 6D2 OR 6D3) TO LIFT, MOVE OR REPOSITION THE BARRIER.

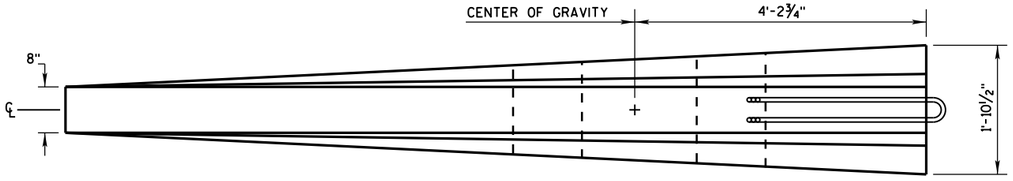

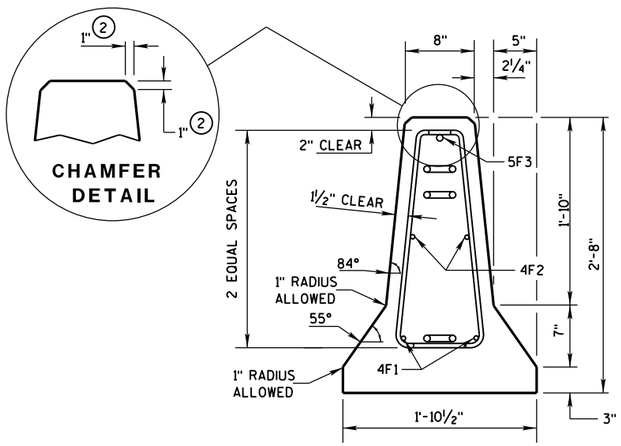

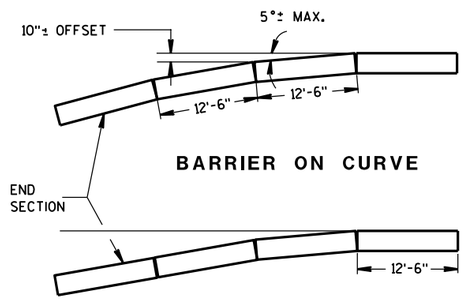

POSTED SPEED, (MPH)	FLARE RATE
40 OR LESS	6:1
45 OR GREATER	8:1

DETAILS OF BARRIER TAPER SECTION

CONCRETE BARRIER
TEMPORARY PRECAST, 12'-6"

STATE OF WISCONSIN
DEPARTMENT OF TRANSPOI

6

S.D.D. 14 B 7-14b

BARRIER TAPER SECTION BILL OF MATERIALS

(PER 12'-6" BARRIER TAPER SECTION)

BAR	BAR SIZE	NO. OF BARS	LENGTH FT.
4V1	4	2	1'-11"
4V2	4	2	2'-2"
4V3	4	2	2'-6"
4V4	4	2	2'-9"
4V5	4	2	3'-2"
4V6	4	2	3'-4"
4F1	4	2	12'-0"
4F2	4	2	7'-6"
5F3	5	1	11'-9"
LOOP ASSEMBLY			
6D1	6	1	8'-5"
6D2	6	1	7'-7"
6D3	6	1	8'-6"

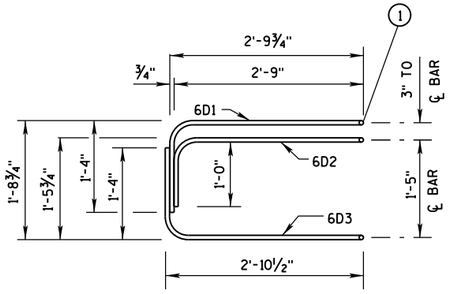

ELEVATION
LOOP BAR ASSEMBLY

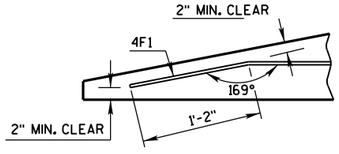

DETAIL "C"
BENT BAR DETAIL

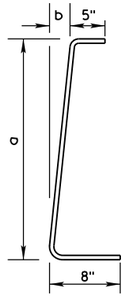

BAR	a	b
V1	10"	1"
V2	1'-1"	1¼"
V3	1'-5"	1⅝"
V4	1'-8"	1⅞"
V5	2'-0½"	2⅜"
V6	2'-3"	2¾"

4V BARS
2 AT EACH SIZE REQUIRED
FOR STIRRUP ASSEMBLY

TAPER BARRIER SECTION

GENERAL NOTES

(1) NEVER USE LOOP BARS (6D1, 6D2 OR 6D3) TO LIFT, MOVE OR REPOSITION THE BARRIER.

BARRIER SECTION BILL OF MATERIALS

(PER 12'-6" BARRIER SECTION)

BAR	BAR SIZE	NO. OF BARS	LENGTH FT.
4A1	4	12	6'-0"
6A2	6	6	2'-11"
5B1	5	3	12'-2"
4C1	4	2	12'-2"
LOOP ASSEMBLY			
6D1	6	2	8'-5"
6D2	6	2	7'-7"
6D3	6	2	8'-6"

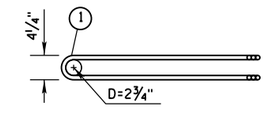

PLAN VIEW
LOOP BAR ASSEMBLY
(MARKED END SHOWN, INVERT FOR OTHER END)

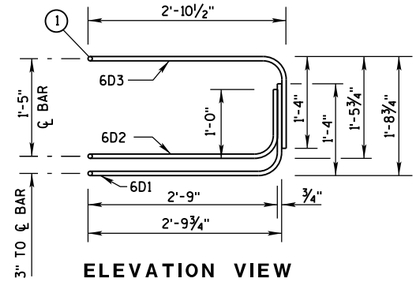

ELEVATION VIEW

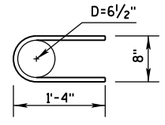

6A2

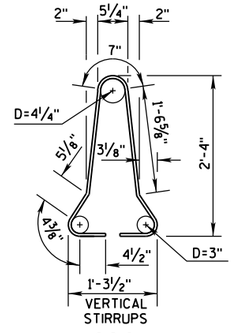

4A1

BARRIER SECTION

CONCRETE BARRIER
TEMPORARY PRECAST, 12'-6"

STATE OF WISCONSIN
DEPARTMENT OF TRANSPOR

6

S.D.D. 14 B 7-14c

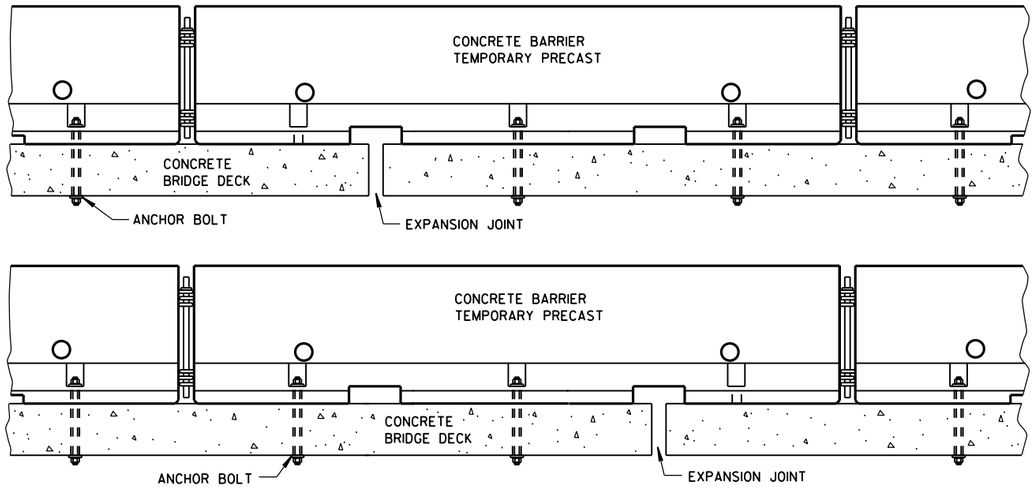

TREATMENT AT BRIDGE DECK EXPANSION JOINTS

(NO SINGLE CONCRETE BARRIER SECTION SHALL BE ANCHORED TO BOTH THE BRIDGE DECK AND THE APPROACH SLAB. ALL ANCHOR BOLT LOCATIONS SHALL BE ANCHORED TO THE DECK IN ACCORDANCE WITH THE DETAIL. NO MORE THAN ONE ANCHOR BOLT SHALL BE ELIMINATED FROM A BARRIER SECTION WHEN SPANNING AN EXPANSION JOINT.)

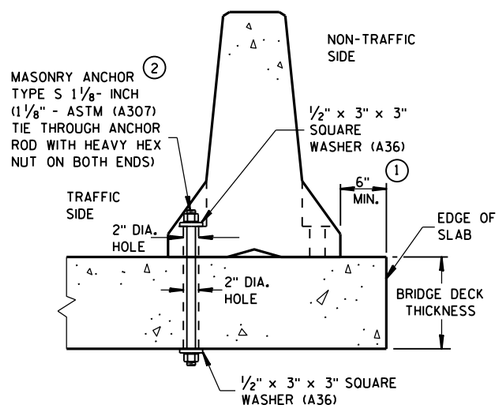

THROUGH BOLTED ANCHOR INSTALLATION ON BRIDGE DECK

(DO NOTUSE ON CONCRETE BRIDGE DECK WITH ASPHALT OVERLAY)

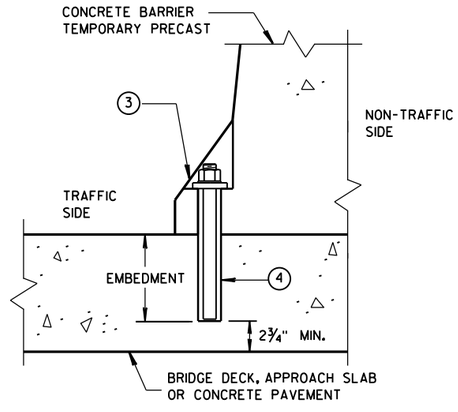

REMOVABLE ADHESIVE BONDED ANCHOR ② INSTALLATION ON CONCRETE BRIDGE DECK, CONCRETE APPROACH SLAB, OR CONCRETE PAVEMENT

(DO NOT USE ON CONCRETE WITH AN ASPHALTIC OVERLAY)

GENERAL NOTES

① CONCRETE BARRIER TEMPORARY PRECAST, 12'-6" SHALL BE ANCHORED IF:
THE DISTANCE TO A 2 FOOT OR GREATER DROPOFF THAT IS STEEPER THAN 3H : 1V, FOR EXAMPLE THE EDGE OF A BRIDGE DECK OR A DROPOFF AT THE EDGE OF PAVEMENT, IS LESS THAN 4 FEET FROM THE SIDE OF THE BARRIER CLOSEST TO THE DROPOFF AND THE POSTED SPEED IS 45 MPH OR GREATER, OR

THE DISTANCE TO A 2 FOOT OR GREATER DROPOFF THAT IS STEEPER THAN 3H : 1V, FOR EXAMPLE THE EDGE OF A BRIDGE DECK OR A DROPOFF AT THE EDGE OF PAVEMENT, IS LESS THAN 2 FEET FROM THE SIDE OF THE BARRIER CLOSEST TO THE DROPOFF AND THE POSTED SPEED IS 40 MPH OR LESS.

② ANCHORING IS INCIDENTAL TO CONCRETE BARRIER TEMPORARY PRECAST.

WITH THE APPROVAL OF THE ENGINEER, REMOVABLE ADHESIVE BONDED ANCHOR BOLT INSTALLATION MAY BE USED IN LIEU OF THROUGH BOLTED ANCHOR INSTALLATION. THE ADHESIVE BONDED ANCHOR BOLT MUST BE REMOVABLE. USE ASTM (A307) MASONRY ANCHORS TYPE S 1⅛-INCH, EMBEDDED TO A DEPTH SUFFICIENT TO DEVELOP THE ULTIMATE CAPACITY OF THE ANCHOR BOLT AND PROVIDE DOCUMENTATION TO CONFIRM THIS.

UPON REMOVAL OR RELOCATION OF THE BARRIER UNITS, REMOVE ALL ANCHOR BOLTS AND COMPLETELY FILL IN THE REMAINING HOLES IN CONCRETE BRIDGE DECKS, CONCRETE APPROACH SLABS AND CONCRETE PAVEMENTS THAT ARE TO REMAIN, WITH A NON-SHRINK COMMERICAL GROUT OR MATERIAL IDENTIFIED ON THE CURRENT WISDOT APPROVED PRODUCTS LIST.

③ 1⅛" DIAMENTER A307 THREADED ROD, ½" X 3" X 3" SQUARE PLATE WASHER WITH ASTM A36 STEEL, ASTM A563A HEAVY HEX NUT.

④ ADHESIVE ANCHORS WITH A MINIMUM BOND STRENGTH OF 1,800 PSI AND 5¼" EMBEDMENT. SEE 603.2 AND 603.3.1.2 OF THE WISCONSIN STANDARD SPECIFICATIONS FOR MORE INFORMATION ON ADHESIVE ANCHORS.

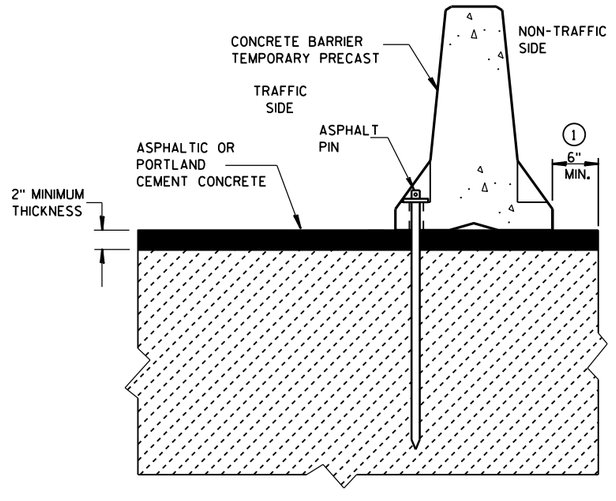

STAKE DOWN INSTALLATION FOR ASPHALTIC OR PORTLAND CEMENT CONCRETE SURFACE

(STAKING IS INCIDENTAL TO CONCRETE BARRIER TEMPORARY PRECAST)

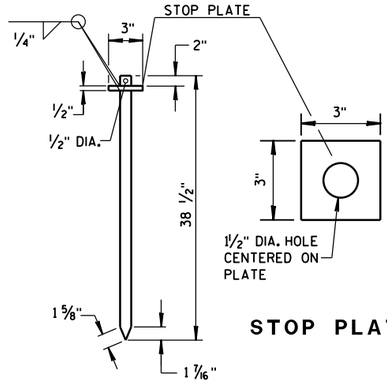

STOP PLATE

ASPHALT PIN

(ASTM A36 STEEL)

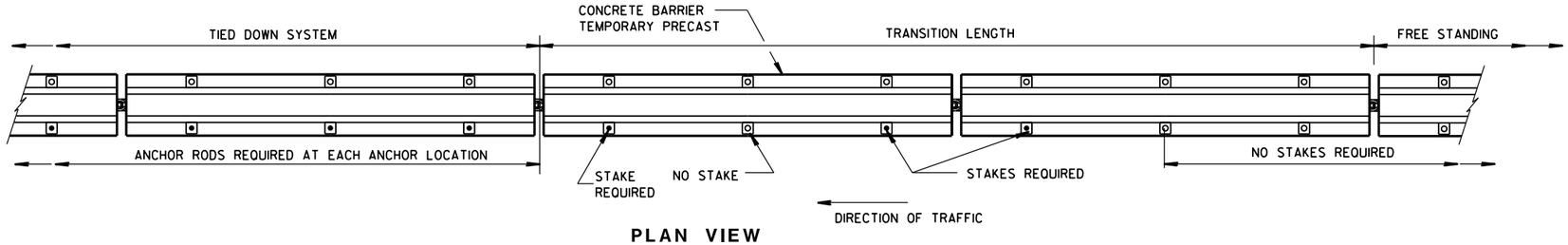

PLAN VIEW

FREE STANDING TRANSITION TO TIED-DOWN SYSTEM

(PLACE TRANSITION IN A TANGENT SECTION OF BARRIER PARALLEL TO THE ROADWAY. IF TRANSITION OCCURS ON STRUCTURAL SLAB, ANCHOR AS SHOWN.)

CONCRETE BARRIER
TEMPORARY PRECAST, 12'-6"

STATE OF WISCONSIN
DEPARTMENT OF TRANSPOR

6

S.D.D. 14 B 7-14d

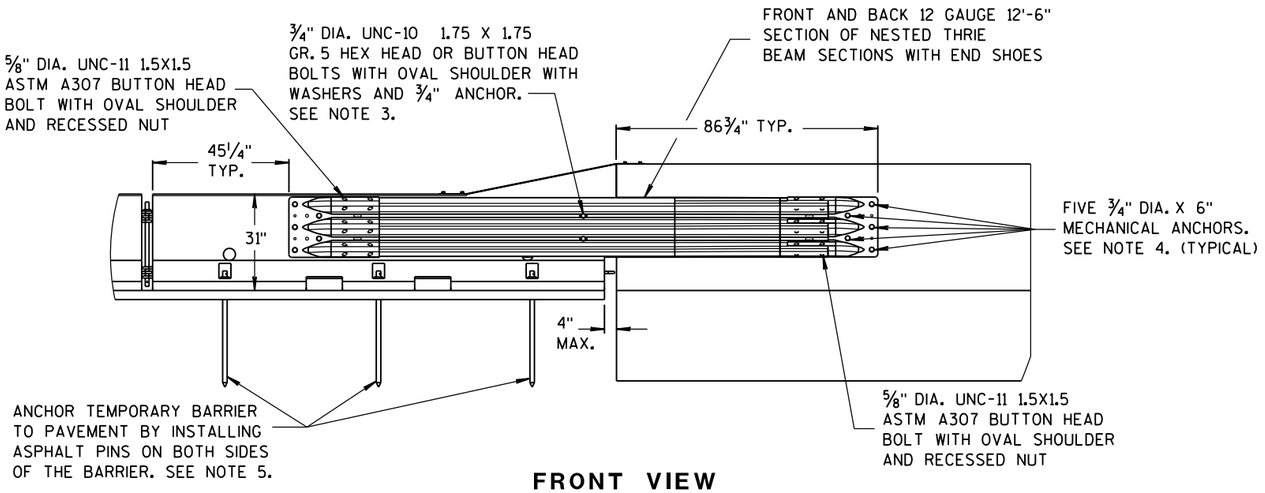

FRONT VIEW

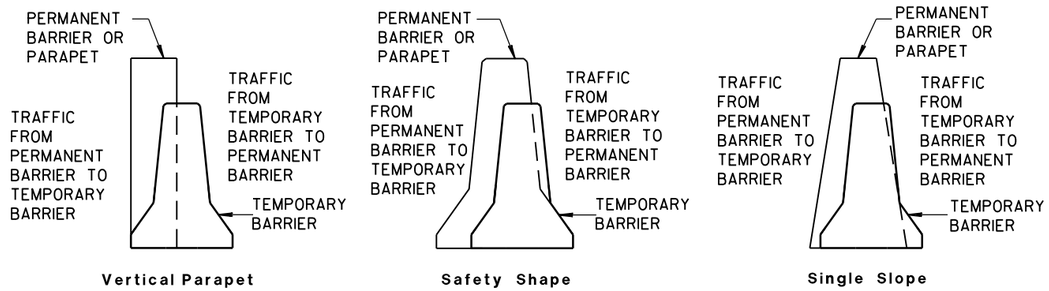

TEMPORARY BARRIER PLACEMENT FOR BI-DIRECTIONAL TRANSITION TO TIED-DOWN SYSTEM

NOTES

NESTED THRIE BEAM IS REQUIRED ON BOTH SIDES OF THE TEMPORARY BARRIER FOR ALL INSTALLATIONS.

1. CAP END PLATE PLACED FLUSH WITH UPSTREAM END OF PERMANENT BARRIER OR PARAPET.
2. THRIE BEAM PIECES ARE OFFSET 15 1/4" TO PREVENT INTERFERENCE FROM THE ANCHORS ON OPPOSING SIDES.
3. MINIMUM MECHANICAL OR ADHESIVE ANCHOR STRENGTH REQUIREMENTS: ULTIMATE TENSILE LOAD 9.48 KIPS AND ULTIMATE SHEAR LOAD 10.48 KIPS.
4. MINIMUM MECHANICAL OR ADHESIVE ANCHOR STRENGTH REQUIREMENTS: ULTIMATE TENSILE LOAD 17.9 KIPS AND ULTIMATE SHEAR LOAD 21.96 KIPS.
5. MAY BE USED ON CONCRETE OR ASPHALT PAVEMENTS. ASPHALT OPTION SHOWN. FOR CONCRETE OPTION SEE OTHER DETAILS.
6. MINIMUM MECHANICAL OR ADHESIVE ANCHOR STRENGTH REQUIREMENTS: ULTIMATE TENSILE LOAD 12.14 KIPS AND ULTIMATE SHEAR LOAD 17.5 KIPS.

BACK VIEW

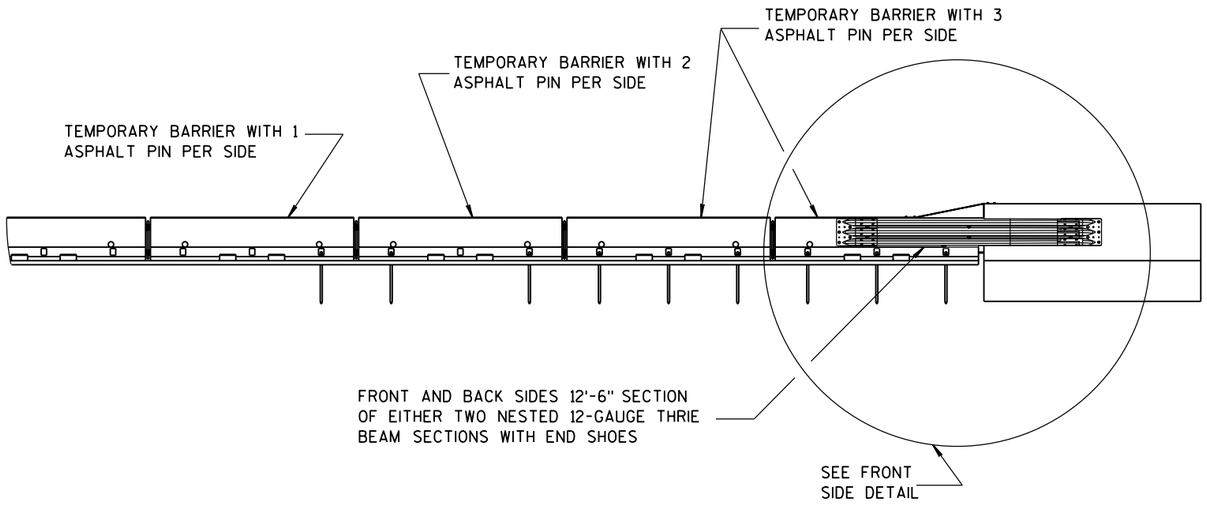

FRONT VIEW

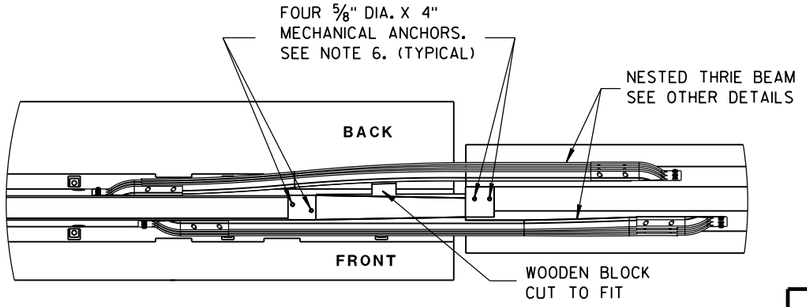

PLAN VIEW

BI-DIRECTIONAL TRANSITION TO TIED-DOWN SYSTEM

CONCRETE BARRIER
TEMPORARY PRECAST, 12'-6"

STATE OF WISCONSIN
DEPARTMENT OF TRANSPO

6
S.D.D. 14 B 7-14e

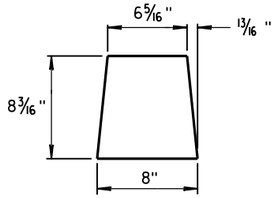

GUSSET 1

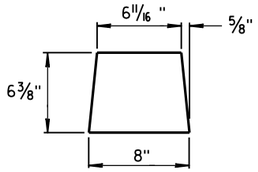

GUSSET 2

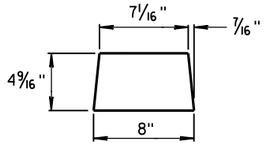

GUSSET 3

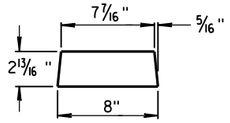

GUSSET 4

GUSSETS

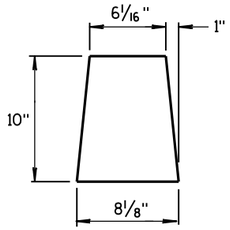

END PLATE

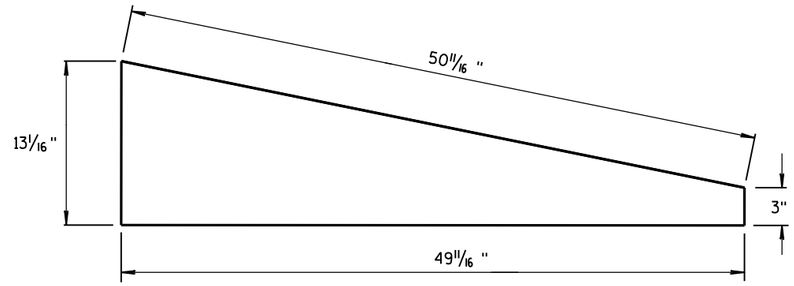

SIDE PLATE

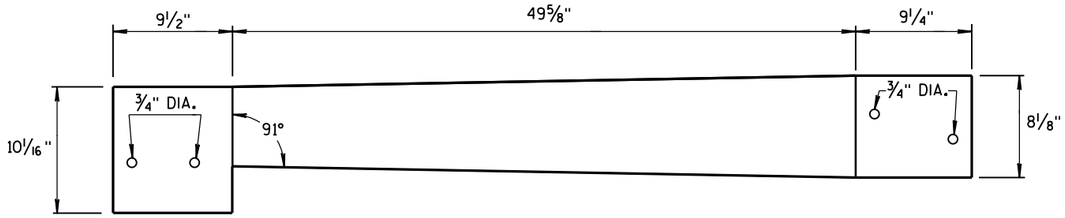

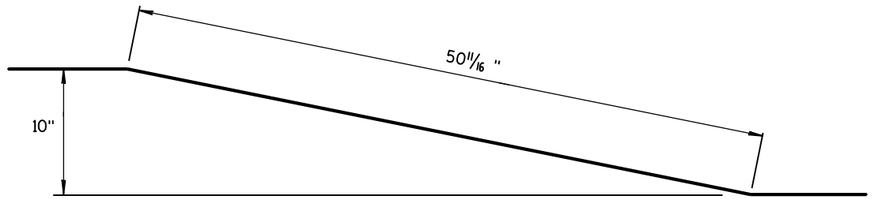

TOP PLATE

SIDE, TOP AND END PLATES FOR CAP FROM TEMPORARY CONCRETE BARRIER TO 42" PERMANENT CONCRETE BARRIER

SIDE PLATES, TOP PLATE, END PLATE AND GUSSETS ARE 12 GAUGE ASTM A36 GALVANIZED STEEL.

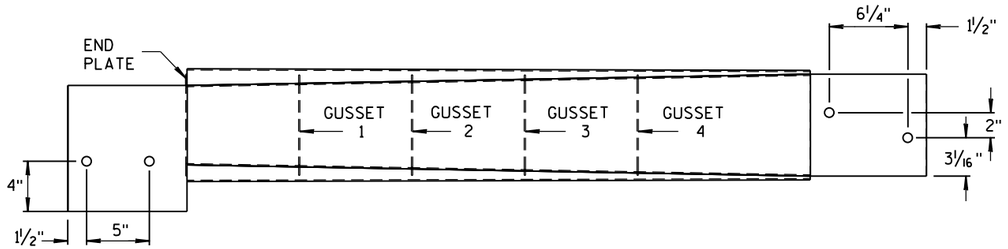

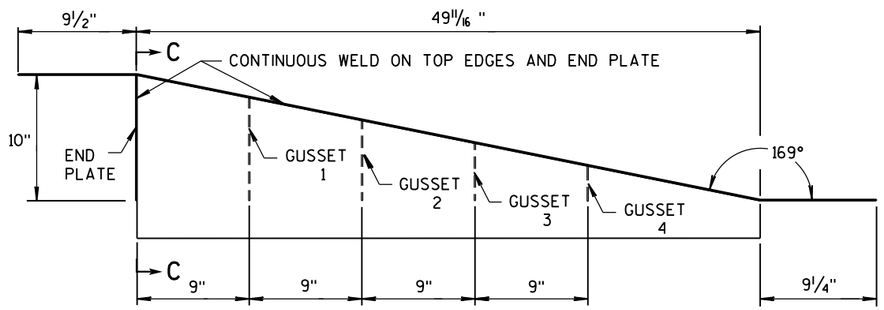

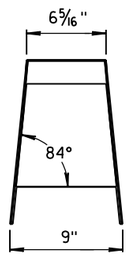

SECTION C-C

NOTES

1. FOUR GUSSETS AND END PLATE ARE STITCH WELDED ON THREE SIDES.
2. TWO TRIANGULAR SIDE PLATES ARE STITCH WELDED TO TOP PLATE, END PLATE, AND GUSSETS.

CAP DETAILS FOR TEMPORARY CONCRETE BARRIER TO 42" PERMANENT CONCRETE BARRIER

CONCRETE BARRIER
TEMPORARY PRECAST, 12'-6"

STATE OF WISCONSIN
DEPARTMENT OF TRANSPOI

6
S.D.D. 14 B 7-14f

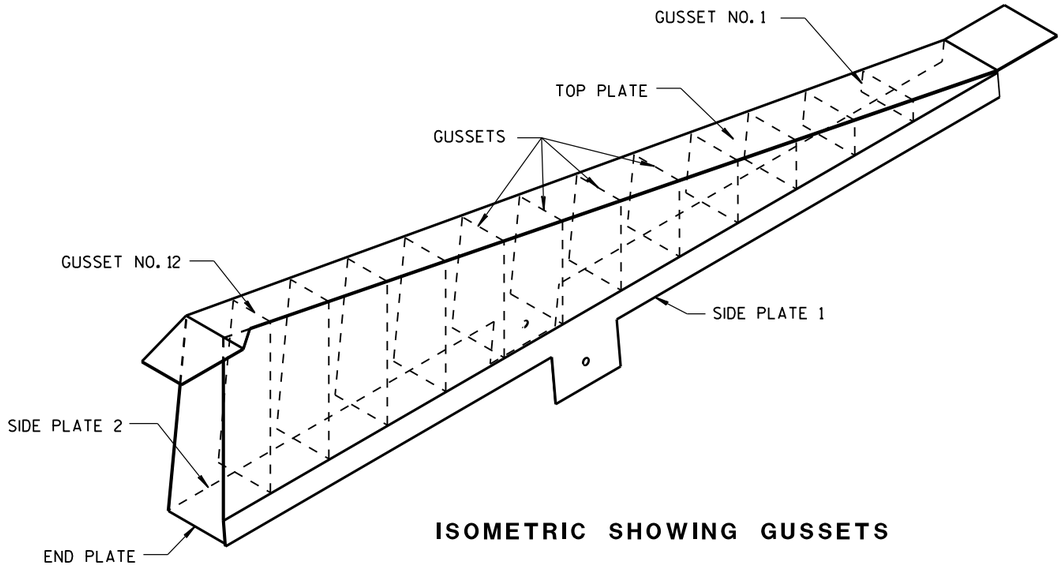

ISOMETRIC SHOWING GUSSETS

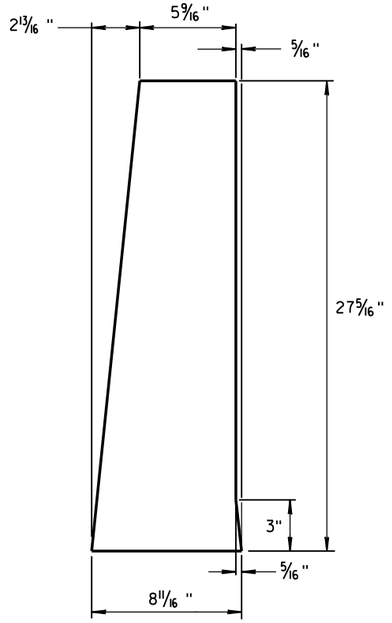

END PLATE

1/8" STEEL PLATE

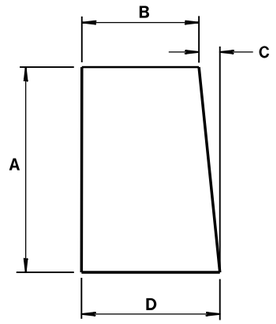

GUSSETS 1 - 12

ALL GUSSETS 1/8" STEEL PLATE

GUSSET DIMENSIONS				
GUSSET NO.	A	B	C	D
1	2 7/8"	7 3/4"	1/4"	8
2	4 11/16 "	7 9/16 "	1/2"	8
3	6 1/2"	7 3/8"	11/16 "	8 1/16 "
4	8 5/16 "	7 3/16 "	7/8"	8 1/16 "
5	10 1/8"	7"	1 1/16 "	8 1/16 "
6	11 15/16 "	6 13/16 "	1 1/4"	8 1/16 "
7	13 3/4"	6 5/8"	1 7/16 "	8 1/16 "
8	15 9/16 "	6 7/16 "	1 9/16 "	8 1/16 "
9	17 3/8"	6 1/4"	1 13/16 "	8 1/16 "
10	19 3/16 "	6 1/16 "	1 15/16 "	8 1/16 "
11	21"	5 7/8"	2 3/16 "	8 1/16 "
12	22 13/16 "	5 11/16 "	2 5/16 "	8 1/16 "

SIDE PLATES, TOP PLATE, END PLATE AND GUSSETS ARE 12 GAUGE ASTM A36 STEEL AND GALVANIZED.

GUSSETS AND END PLATE ARE STITCH WELDED ON 3 SIDES. TWO TRIANGULAR SIDE PLATES ARE STITCH WELDED TO TOP PLATE, END PLATE AND GUSSETS.

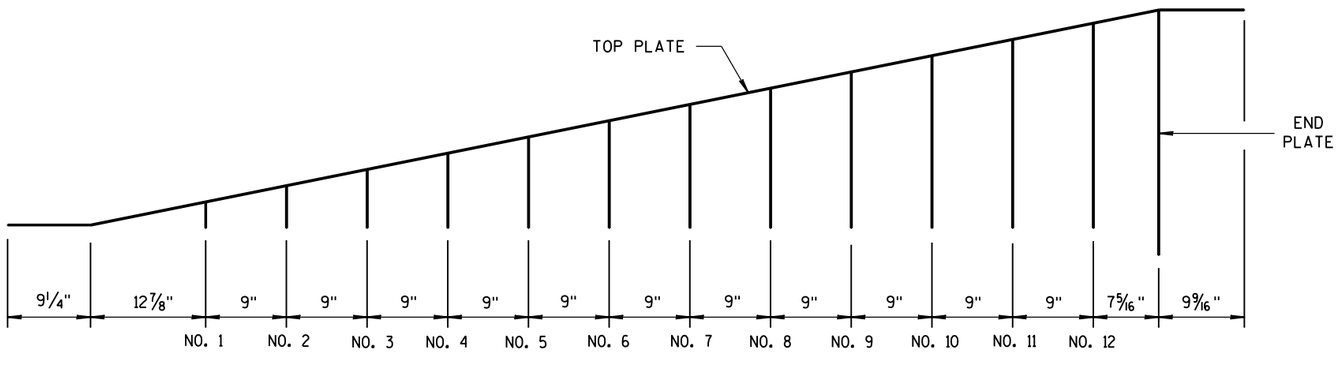

GUSSET LOCATION

CAP DETAILS FOR TEMPORARY CONCRETE BARRIER TO 56" PERMANENT CONCRETE BARRIER

CONCRETE BARRIER
TEMPORARY PRECAST, 12'-6"

STATE OF WISCONSIN
DEPARTMENT OF TRANSPOR

6

S.D.D. 14 B 7-14g

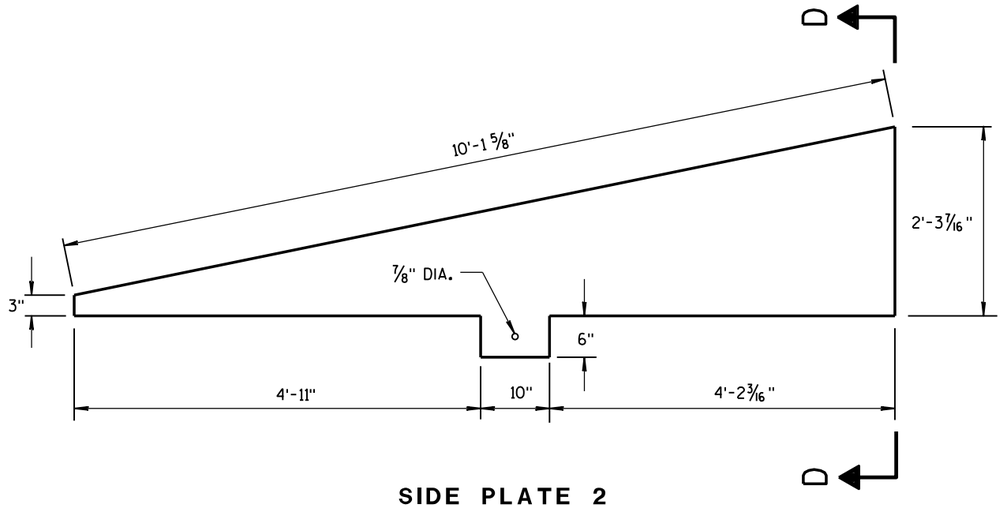

SIDE PLATE 2

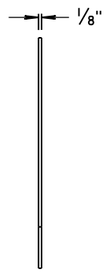

END VIEW

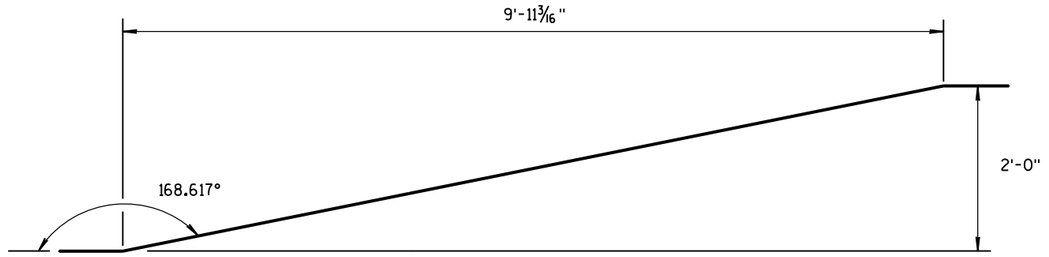

SIDE VIEW

TOP PLATE

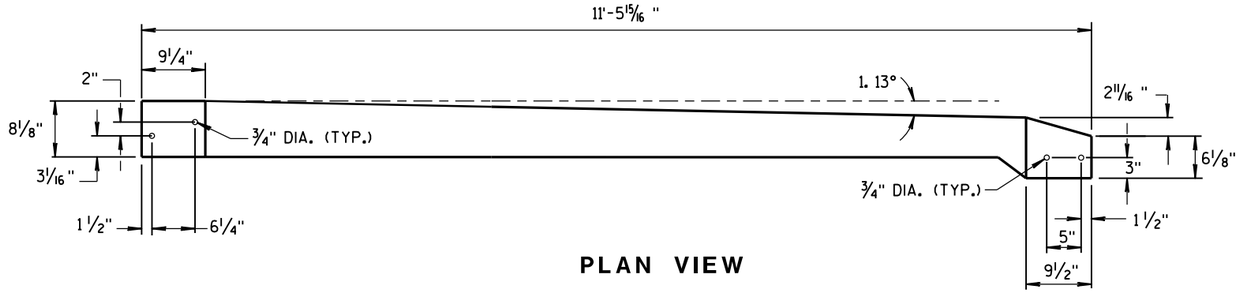

PLAN VIEW

TOP PLATE

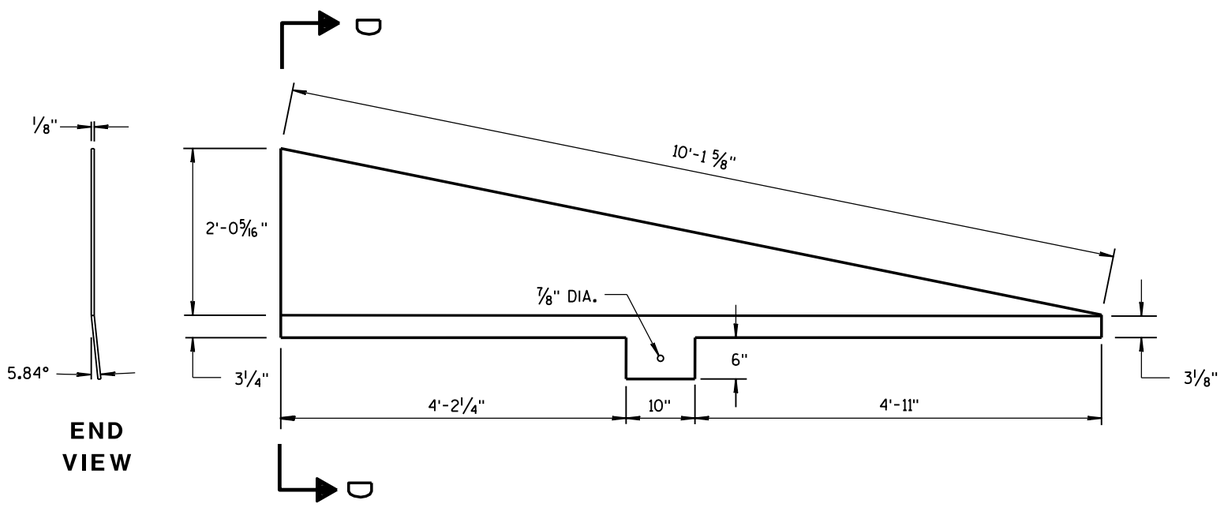

END VIEW

SIDE PLATE 1

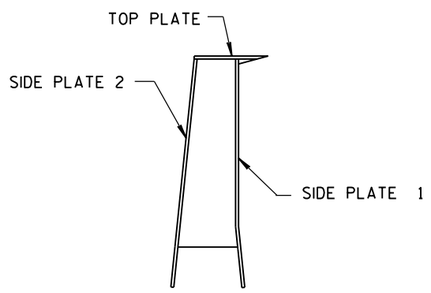

SECTION D-D

CAP DETAILS FOR TEMPORARY CONCRETE BARRIER TO 56" PERMANENT CONCRETE BARRIER

CONCRETE BARRIER
TEMPORARY PRECAST, 12'-6"

STATE OF WISCONSIN
DEPARTMENT OF TRANSPORTATION

APPROVED
June 2014 — DATE
/S/ Jerry H. Zoda — ROADWAY STANDARDS ENGINEER
FHWA

6

S.D.D. 14 B 7-14h

6

S.D.D. 14 B 7-14h

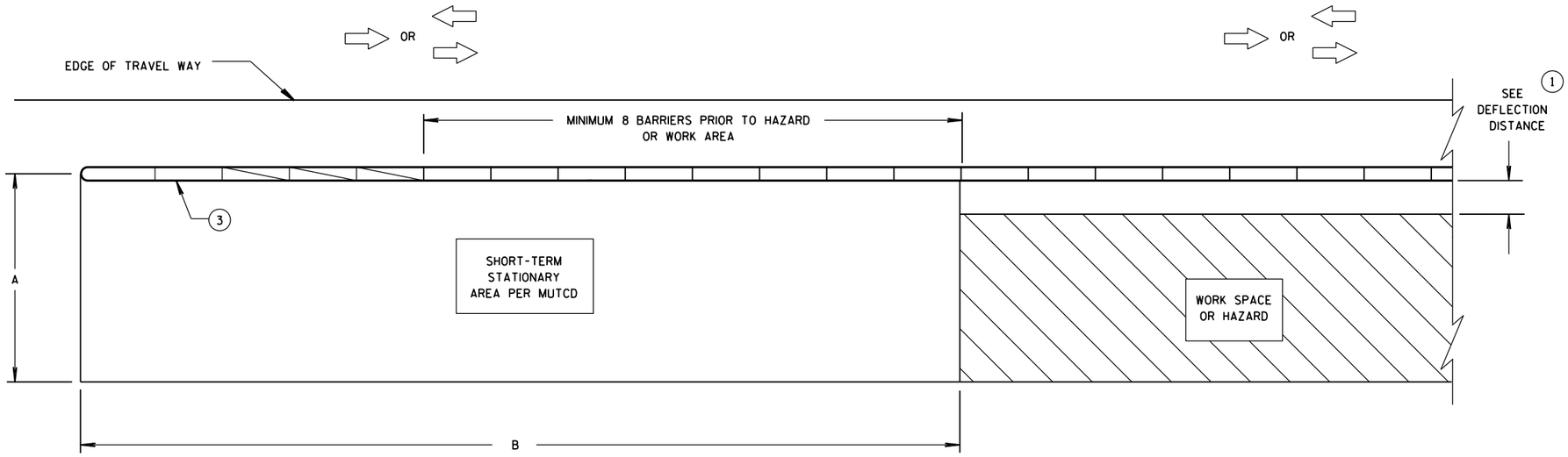

CRASH CUSHION/SAND BARREL ARRAY AND TEMPORARY BARRIER INSTALLATION FOR TRAFFIC ON ONE SIDE OF BARRIER

DIMENSION A TABLE (2)

FACILITY	POSTED SPEED MPH	DIMENSION A	
		MIN. FT	MAX. FT
FREEWAY/EXPRESSWAY	ALL	15	20
NON-FREEWAY/EXPRESSWAY	GREATER THAN OR EQUAL TO 45	10	15
NON-FREEWAY/EXPRESSWAY	LESS THAN 45	8	10
AADT LESS THAN 1,500	ALL	8	10

DIMENSION B TABLE (2)

POSTED SPEEDS MPH	DIMENSION B FT
20	115
25	155
30	200
35	250
40	305
45	360
50	425
55	495
60	570
65	645

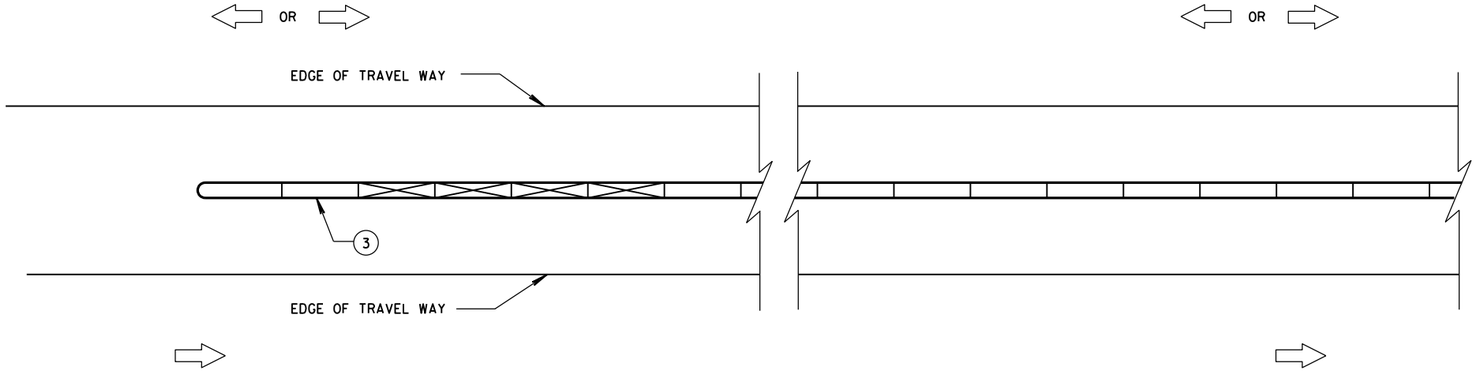

CRASH CUSHION/SAND BARREL ARRAY AND TEMPORARY BARRIER INSTALLATION FOR TRAFFIC ON BOTH SIDES OF BARRIER

LEGEND

- DIRECTION OF TRAVEL
- CRASH CUSHION OR SAND BARREL ARRAY
- SEE FREE STANDING TRANSITION TO TIED-DOWN SYSTEM DETAILS
- SEE BI-DIRECTIONAL TRANSITION TO TIED-DOWN SYSTEM DETAILS
- 3 PINS PLACED ON TRAFFIC SIDE OF BARRIER
- PERMANENT CONCRETE BARRIER OR CONCRETE PARAPET
- FREE STANDING TEMPORARY BARRIER

GENERAL NOTES

SEE STANDARD DETAIL DRAWING 14B7 FOR MORE INFORMATION.

DETAILS PROVIDE A GENERAL LAYOUT OF TEMPORARY CONCRETE BARRIER, CRASH CUSHIONS, SAND BARREL ARRAYS AND TIE DOWN TRANSITIONS. DETAILS PROVIDED MAY NOT FIT ALL POSSIBLE SITUATIONS OR SITE CONDITIONS. SEE OTHER SECTIONS OF THE CONTRACT OR PROJECT ENGINEER FOR MORE DETAILS.

ADDITIONAL TEMPORARY BARRIER MAY BE REQUIRED TO PROTECT TRAVELING PUBLIC FROM HAZARDS, CONTRACTOR'S OPERATIONS OR TO CONTROL TRAFFIC.

TEMPORARY BARRIER MAY BE REQUIRED TO BE ANCHORED TO PAVEMENT OR BRIDGE DECK.

FOR DETAILS ON CRASH CUSHION OR SAND BARREL ARRAYS SEE OTHER SECTIONS OF THE PLAN AND MANUFACTURE'S DETAILS.

SLOPES LEADING TO TEMPORARY BARRIER, CRASH CUSHION OR SAND BARREL ARRAY ARE 10:1 OR LESS.

(1) FOR DEFLECTION INFORMATION SEE STANDARD DETAIL DRAWING 14B7.

(2) VALUES PROVIDED MAY NOT FIT ALL POSSIBLE SITUATIONS OR SITE CONDITIONS. SEE OTHER SECTIONS OF THE CONTRACT OR PROJECT ENGINEER FOR MORE DETAILS.

(3) ANCHOR TEMPORARY BARRIER ACCORDING TO CRASH CUSHION OR SAND BARREL MANUFACTURER'S RECOMMENDATIONS. IF MANUFACTURER'S RECOMMENDATIONS ARE NOT PROVIDED, ANCHOR 3 PINS ON TRAFFIC SIDE.

CRASH CUSHION/SAND BARREL ARRAY AND OTHER TEMPORARY BARRIER LAYOUT DETAILS

STATE OF WISCONSIN
DEPARTMENT OF TRANSPOR

6

S.D.D. 14 B 8-2a

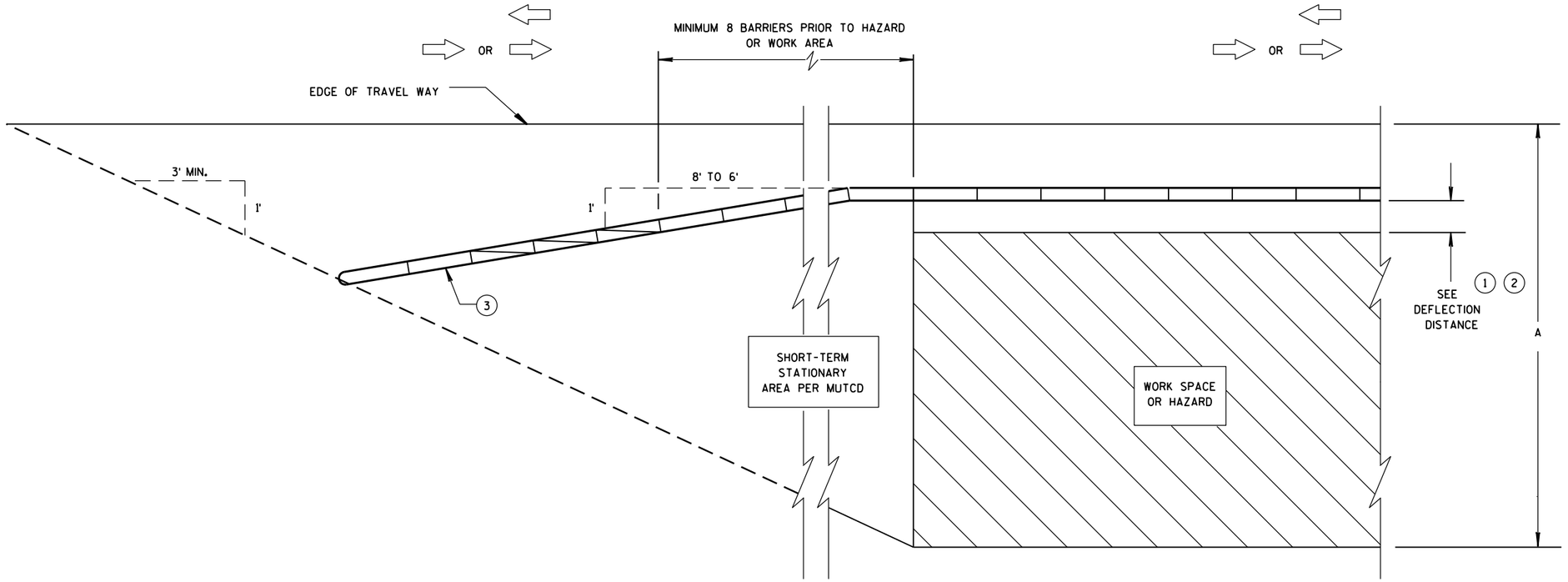

CRASH CUSHION/SAND BARREL ARRAY AND TEMPORARY BARRIER INSTALLATION FOR TRAFFIC ON ONE SIDE - FLARED INSTALLATION

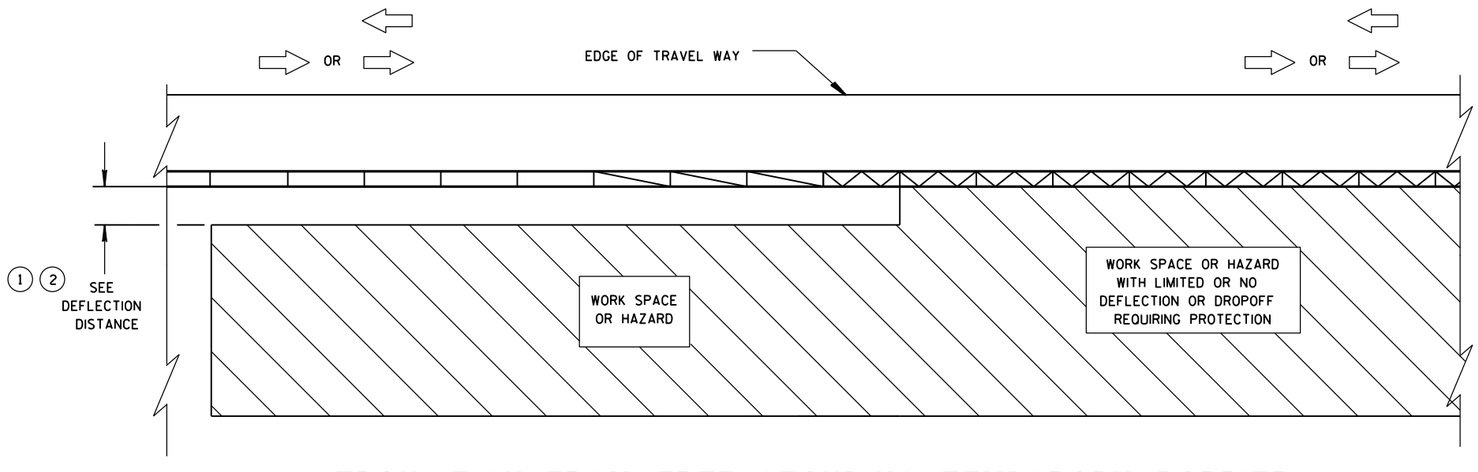

TRANSITION FROM FREE STANDING TEMPORARY BARRIER TO ANCHORED BARRIER

LEGEND

- DIRECTION OF TRAVEL
- CRASH CUSHION OR SAND BARREL ARRAY
- SEE FREE STANDING TRANSITION TO TIED-DOWN SYSTEM DETAILS
- SEE BI-DIRECTIONAL TRANSITION TO TIED-DOWN SYSTEM DETAILS
- 3 PINS PLACED ON TRAFFIC SIDE OF BARRIER
- PERMANENT CONCRETE BARRIER OR CONCRETE PARAPET
- FREE STANDING TEMPORARY BARRIER

CRASH CUSHION/SAND BARREL ARRAY AND OTHER TEMPORARY BARRIER LAYOUT DETAILS

STATE OF WISCONSIN
DEPARTMENT OF TRANSPOI

6

S.D.D. 14 B 8-2b

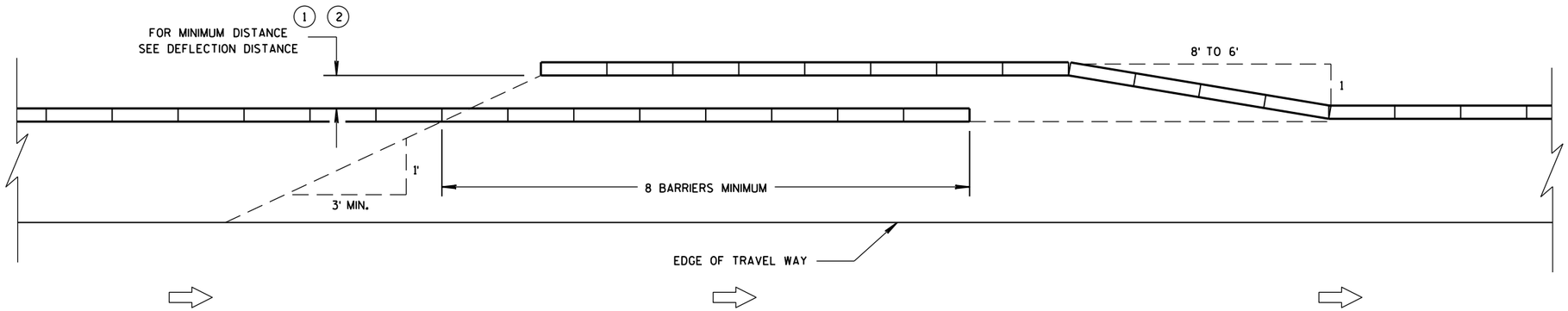

TEMPORARY BARRIER OVERLAP - ONE-WAY TRAFFIC

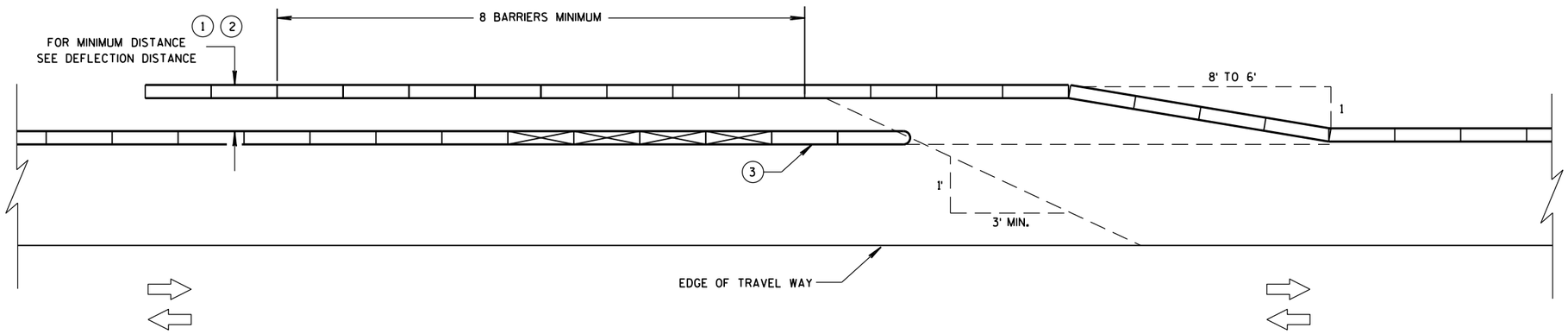

TEMPORARY BARRIER OVERLAP - TWO-WAY TRAFFIC

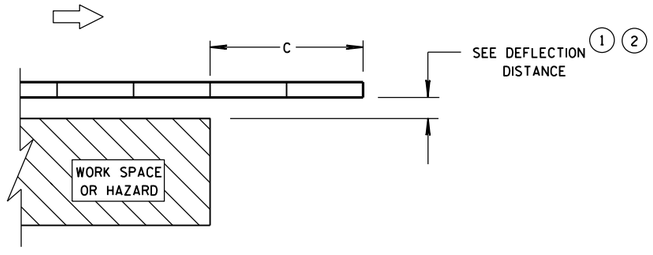

ENDING TEMPORARY BARRIER DOWNSTREAM - UNANCHORED

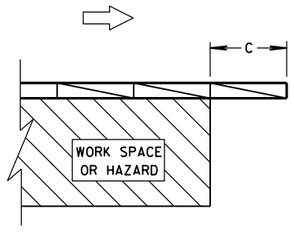

ENDING TEMPORARY BARRIER DOWNSTREAM - ANCHORED

LEGEND

- DIRECTION OF TRAVEL
- CRASH CUSHION OR SAND BARREL ARRAY
- SEE FREE STANDING TRANSITION TO TIED-DOWN SYSTEM DETAILS
- SEE BI-DIRECTIONAL TRANSITION TO TIED-DOWN SYSTEM DETAILS
- 3 PINS PLACED ON TRAFFIC SIDE OF BARRIER
- PERMANENT CONCRETE BARRIER OR CONCRETE PARAPET
- FREE STANDING TEMPORARY BARRIER

CRASH CUSHION/SAND BARREL ARRAY AND OTHER TEMPORARY BARRIER LAYOUT DETAILS

STATE OF WISCONSIN
DEPARTMENT OF TRANSPOR

6

S.D.D. 14 B 8-2c

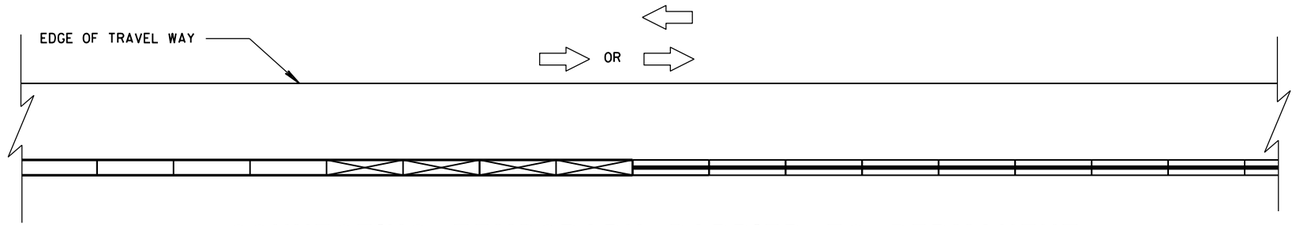

CONNECTING TEMPORARY BARRIER TO PERMANENT
CONCRETE BARRIER-TRAFFIC ON ONE SIDE

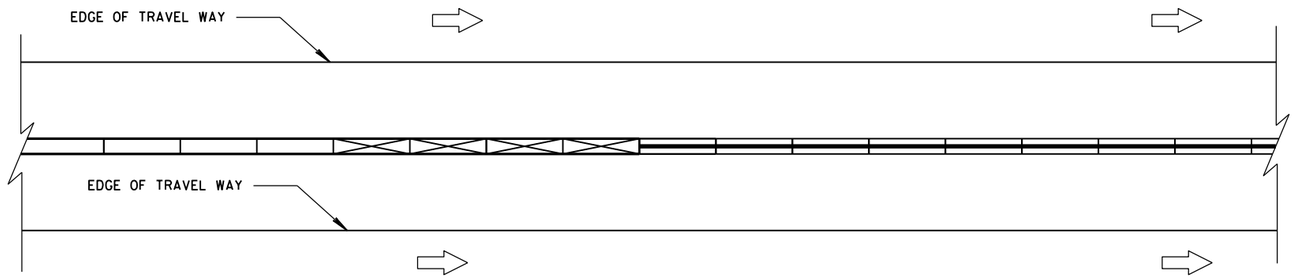

CONNECTING TEMPORARY BARRIER TO PERMANENT
CONCRETE BARRIER-TRAFFIC ON BOTH SIDES

LEGEND

- DIRECTION OF TRAVEL
- CRASH CUSHION OR SAND BARREL ARRAY
- SEE FREE STANDING TRANSITION TO TIED-DOWN SYSTEM DETAILS
- SEE BI-DIRECTIONAL TRANSITION TO TIED-DOWN SYSTEM DETAILS
- 3 PINS PLACED ON TRAFFIC SIDE OF BARRIER
- PERMANENT CONCRETE BARRIER OR CONCRETE PARAPET
- FREE STANDING TEMPORARY BARRIER

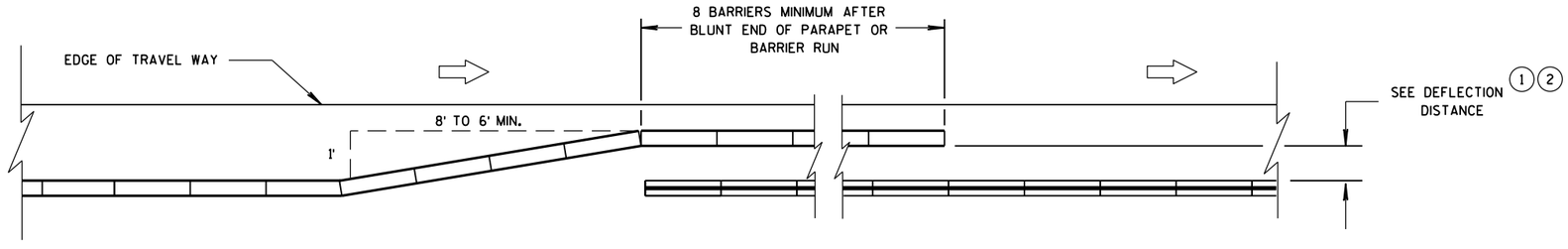

OVERLAPPING TEMPORARY BARRIER AND PERMANENT BARRIER -
ONE WAY TRAFFIC

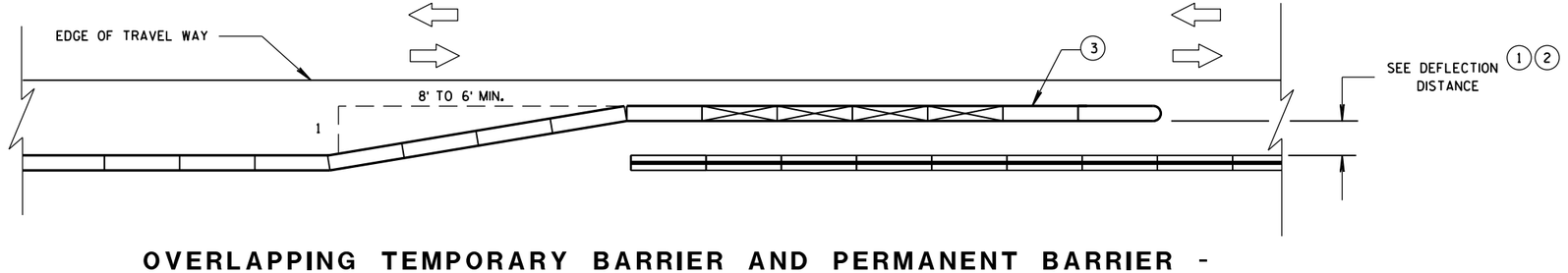

OVERLAPPING TEMPORARY BARRIER AND PERMANENT BARRIER -
TWO WAY TRAFFIC

CRASH CUSHION/SAND BARREL ARRAY AND OTHER TEMPORARY BARRIER LAYOUT DETAILS

STATE OF WISCONSIN
DEPARTMENT OF TRANSPOI

6

S.D.D. 14 B 8-2d

LEGEND

DIRECTION OF TRAVEL

CRASH CUSHION OR SAND BARREL ARRAY

SEE FREE STANDING TRANSITION TO TIED-DOWN SYSTEM DETAILS

SEE BI-DIRECTIONAL TRANSITION TO TIED-DOWN SYSTEM DETAILS

3 PINS PLACED ON TRAFFIC SIDE OF BARRIER

PERMANENT CONCRETE BARRIER OR CONCRETE PARAPET

FREE STANDING TEMPORARY BARRIER

DIMENSION C TABLE (2)

AVAILABLE DEFLECTION DISTANCE	MINIMUM LENGTH OF BARRIER BEYOND HAZARD FT
GREATER THAN 8'	12.5
LESS THAN OR EQUAL TO 8' BUT GREATER THAN 4'	50
LESS THAN OR EQUAL TO 4'	100

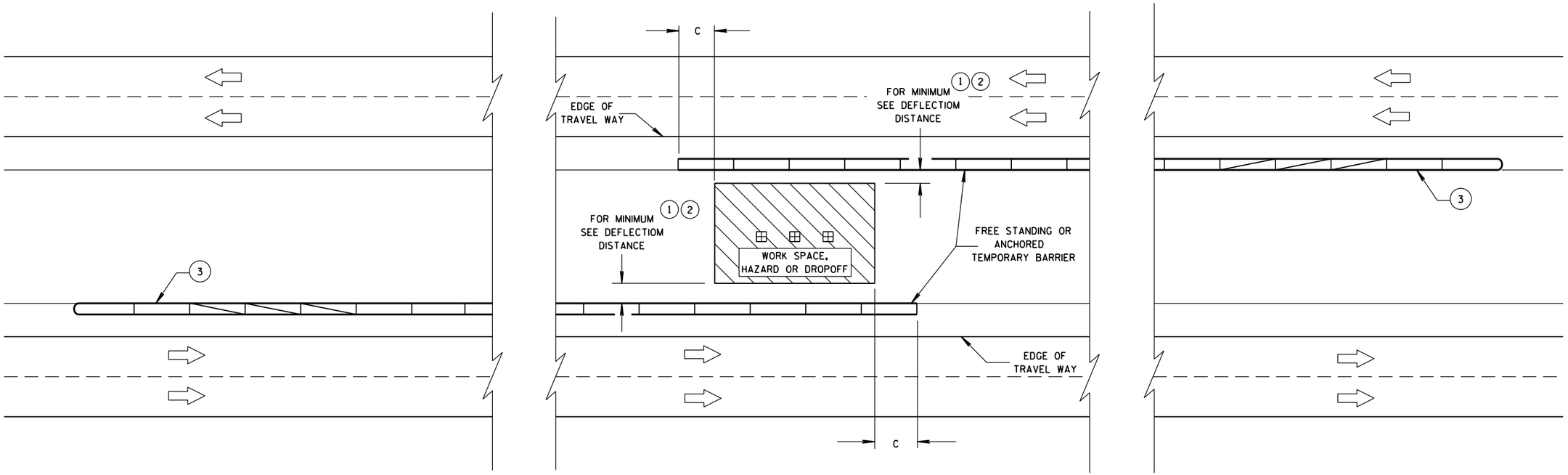

CRASH CUSHION/SAND BARREL ARRAY AND OTHER TEMPORARY BARRIER LAYOUT DETAILS

STATE OF WISCONSIN
DEPARTMENT OF TRANSPORTATION

APPROVED
June, 2015
DATE
/S/ Jerry H. Zogg
ROADWAY STANDARDS ENGINNER
FHWA

6

S.D.D. 14 B 8-2e

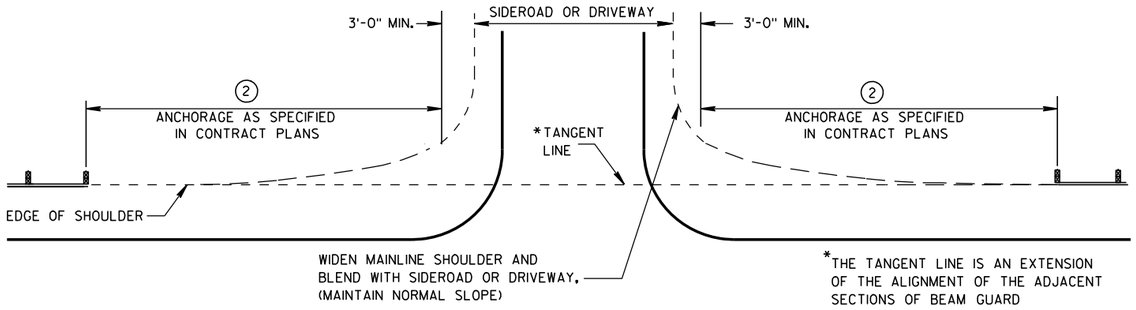

BEAM GUARD AT SIDEROADS OR DRIVEWAYS

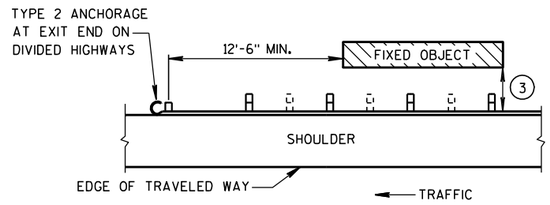

BEAM GUARD AT OBSTACLES EXIT END - ONE WAY TRAFFIC

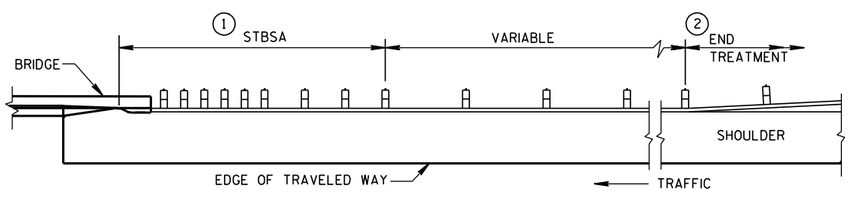

BEAM GUARD AT FULL WIDTH BRIDGES

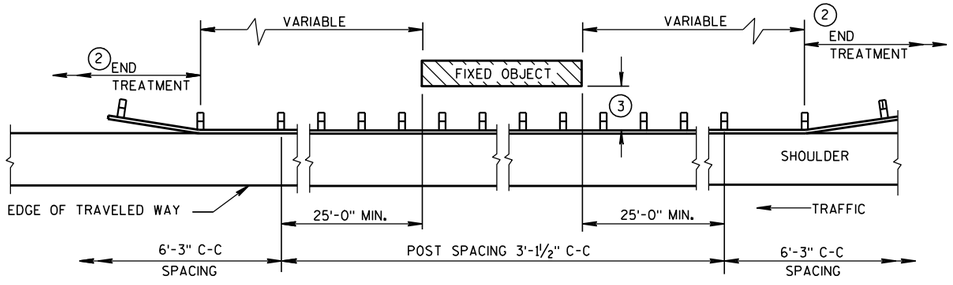

BEAM GUARD AT OBSTACLES - TWO WAY TRAFFIC

(RAIL TO OBSTACLE CLEARANCE 3'-6" TO 4'-6")

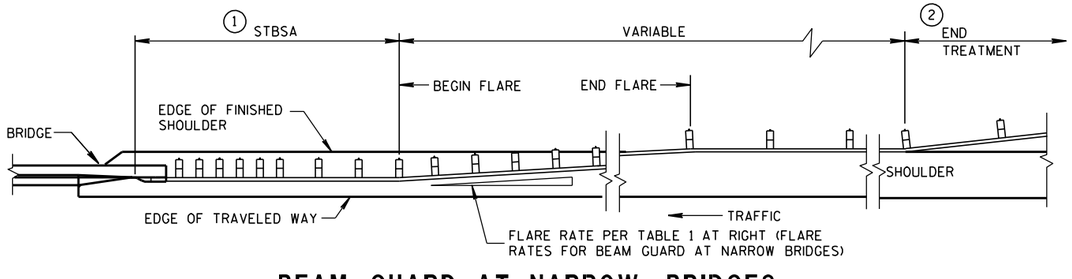

BEAM GUARD AT NARROW BRIDGES

(FLARED TO SHOULDER EDGE, THEN PARALLEL TO ROADWAY)

TABLE 1
FLARE RATES FOR BEAM GUARD AT NARROW BRIDGES

POSTED SPEED (MPH)	FLARE RATE
25	13:1
30	15:1
35	16:1
40	18:1
45	21:1
50	24:1
55	26:1
65	30:1

GENERAL NOTES

DETAILS OF CONSTRUCTION, MATERIALS AND WORKMANSHIP SHALL CONFORM TO THE PERTINENT STANDARD SPECIFICATIONS AND THE APPLICABLE SPECIAL PROVISIONS.

W6 X 9 OR W6 X 8.5 STEEL POSTS WITH NOTCHED PLASTIC BLOCKOUTS ARE ACCEPTABLE ALTERNATIVES FOR 6" X 8" WOOD POSTS WITH WOOD OR PLASTIC BLOCKOUTS. USE APPROVED NOTCHED PLASTIC BLOCKOUTS WITH STEEL POSTS.

THE LOCATIONS AND LENGTHS OF BEAM GUARD ARE SHOWN ELSEWHERE IN THE PLAN.

(1) STEEL THRIE BEAM STRUCTURAL APPROACH (STBSA) - SEE CURRENT SDD 14B20.

(2) USE AN APPROVED END TREATMENT FOR THE TRAFFIC APPROACH SIDE OF BRIDGE/OBSTACLES. USE TYPE 2 ANCHORAGE ONLY AT THE DOWNSTREAM ENDS OF BEAM GUARD LOCATED ALONG ROADWAYS WITH ONE WAY TRAFFIC.

(3)

MINIMUM LATERAL DISTANCE FROM FACE OF BEAM GUARD TO FIXED OBJECT	POST SPACING
3'-6"	3' - 1½"
4'-6"	6' - 3"

STEEL PLATE BEAM GUARD CLASS "A" AT BRIDGES, OBSTACLES AND SIDEROADS/DRIVEWAYS

STATE OF WISCONSIN
DEPARTMENT OF TRANSPORTATION

APPROVED

8-21-07 — DATE

/S/ Jerry H. Zogg — ROADWAY STANDARDS DEVELOPMENT ENGINEER

FHWA

6

S.D.D. 14 B 18-6a

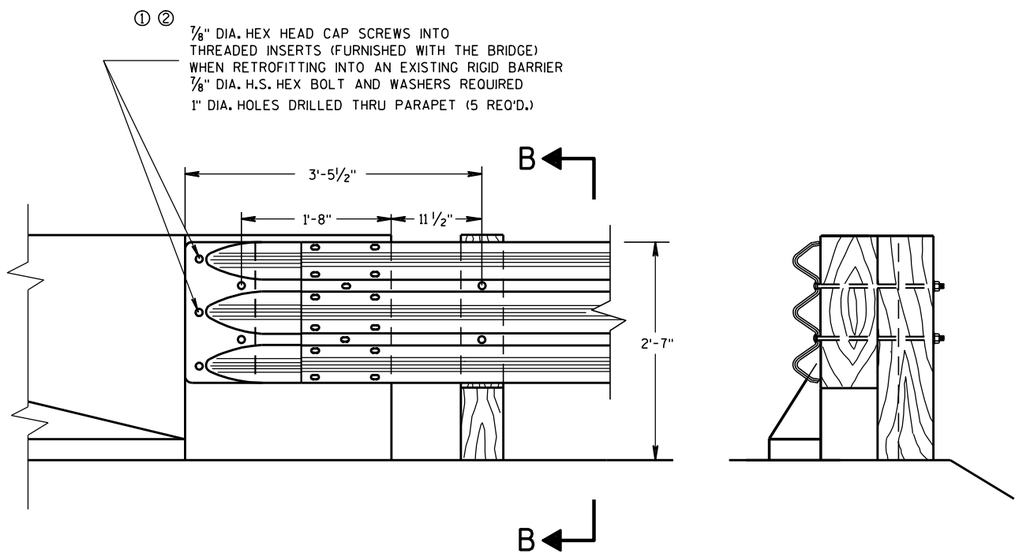

FRONT VIEW

SECTION B-B

THRIE BEAM CONNECTION TO BRIDGE PARAPET WITH SQUARE ENDS

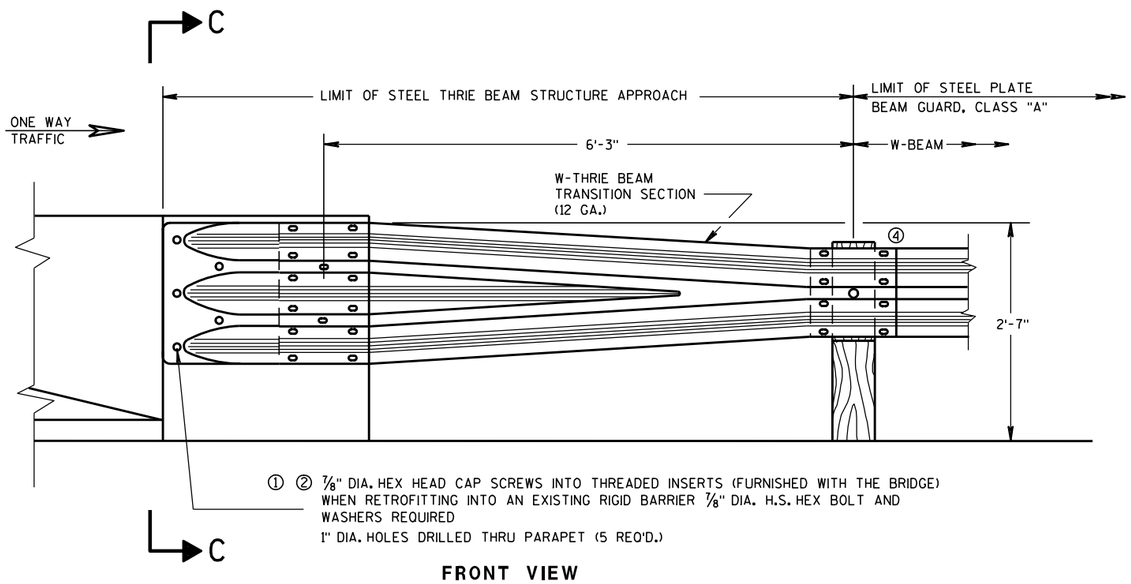

① ② ⅞" DIA. HEX HEAD CAP SCREWS INTO THREADED INSERTS (FURNISHED WITH THE BRIDGE) WHEN RETROFITTING INTO AN EXISTING RIGID BARRIER ⅞" DIA. H.S. HEX BOLT AND WASHERS REQUIRED
1" DIA. HOLES DRILLED THRU PARAPET (5 REQ'D.)

FRONT VIEW

W BEAM TRANSITION AND CONNECTION TO BRIDGE PARAPETS WITH SQUARE ENDS

(USE ONLY ON THE TRAFFIC EXIT END OF ONE WAY BRIDGES)

GENERAL NOTES

THESE ARE TYPICAL CONNECTION DETAILS. ADJUST THE POSTION OF CONNECTIONS TO EXISTING BRIDGES TO FIT THE ACTUAL BRIDGE AND SITE DIMENSIONS.

BOLTS, NUTS AND WASHERS SHALL CONFORM TO ASTM A325, A449 AND GALVANIZED PER STANDARD SPECIFICATIONS 614.

① DRILLING BOLT HOLES THROUGH THE PARAPET, BOLTS, NUTS, WASHERS AND REPAIRING DAMAGED CONCRETE ARE INCIDENTAL TO THE CONTRACT.

② BOLTS MAY BE A325 BOLTS OR A449 BOLTS. BOLT LENGTH AND THREADING LENGTH ARE TO ALLOW FOR A TIGHT CONNECTION BETWEEN RIGID BARRIER AND THRIE BEAM CONNECTION PLATE. CONTRACTOR IS TO FIELD VERIFY BOLT LENGTH AND THREAD LENGTH. ONE ROUND WASHER REQUIRED BETWEEN BOLT HEAD AND THRIE BEAM TERMINAL CONNECTOR. BOLTS THAT EXTEND THROUGH THE PARAPET AND OUT THE BACK FACE REQUIRE A HARDENED ROUND STEEL WASHER THAT IS 2" O.D. X ⅝" THICK AND ONE PLATE WASHER. REPAIR ANY DAMAGED CONCRETE FROM BOLT INSTALLATION.

③ THE RECESS FOR A W-BEAM CONNECTION, WHICH EXISTS ON SOME PARAPETS OF THIS TYPE, SHALL BE FILLED WITH A TREATED TIMBER BLOCKOUT. BLOCKOUT SIZE IS 1'-6" X 2'-0" X 3 ½".

④ W6 X 9 OR W6 X 8.5 STEEL POSTS AND NOTCHED PLASTIC BLOCKOUTS ARE ACCEPTABLE ALTERNATIVES FOR 6" X 8" WOOD POST WITH WOOD OR PLASTIC BLOCKOUTS. USE APPROVED NOTCHED PLASTIC BLOCKOUTS WITH STEEL POSTS.

DO NOT USE STEEL POSTS AND NOTCHED PLASTIC BLOCKOUTS IN THE STEEL THRIE BEAM STRUCTURAL APPROACH AND THE TRANSITION SECTION OF STEEL PLATE BEAM GUARD, CLASS "A" INSTALLATIONS.

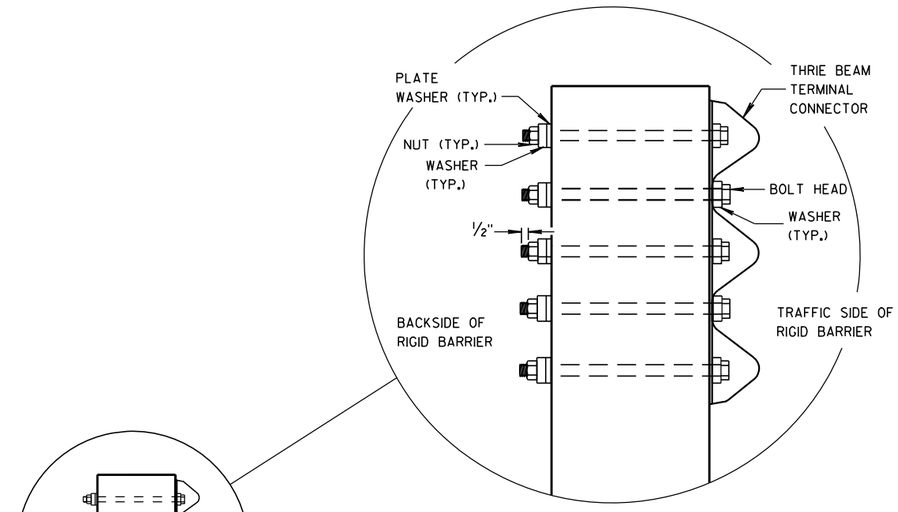

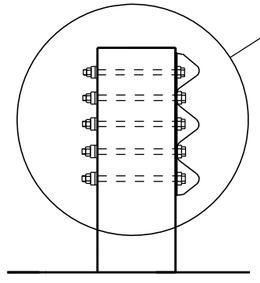

SECTION C-C

STEEL THRIE BEAM STRUCTURE APPROACH, CONNECTION TO SQUARE END PARAPETS

STATE OF WISCONSIN
DEPARTMENT OF TRANSPORTATION

APPROVED
8/31/2012 — DATE
/S/ Jerry H. [illegible] — ROADWAY STANDARDS [illegible] ENGINEER
FHWA

BILL OF MATERIALS

NOTE NO.	QTY.	DESCRIPTION
①	4	WOOD BREAKAWAY TERMINAL POST: 5½" X 7½" X 3'-9"
②	**	STEEL TUBE: OPTION 1 - QUANITY OF 4 TS 8" X 6" X 0.188", 4'-6" LONG OR OPTION 2 - QUANITY OF 2 TS 8" X 6" X 0.188", 6'-0" AND 2 TS 8" X 6" X 0.188", 4'-6" LONG
③	2	SOIL PLATE: 2'-0" X 1'-6" X ¼" **
④	4	WOOD BREAKAWAY CRT POST: 6" X 8" X 6'-0"
⑤	6	WOOD OFFSET BLOCKS: 6' X 8" X 1'-2"
⑥	1	PIPE SLEEVE: 2" X 5 ½" STANDARD PIPE
⑦	1	BEARING PLATE
⑧	1	BCT CABLE ASSEMBLY
⑨	1	CABLE ANCHOR BOX
⑩	1	STRUT & YOKE
⑪	1	STEEL PLATE BEAM, END PANEL 12 GA. 13'-6½" LONG FOR SKT-350, ET-2000 AND ET-2000 PLUS
⑫	3	STEEL PLATE BEAM: 12 GA. 13'-6½"
⑬	1	ET-2000/ET-2000 PLUS GUARDRAIL EXTRUDER OR SKT-350 IMPACT HEAD: AS FURNISHED BY MANUFACTURER
⑭	1	0.040" ALUMINUM SHEET WITH REFLECTIVE SHEETING TYPE F PER SECTION 637 OF THE STANDARD SPECIFICATIONS
⑮	1	E.A.T. MARKER POST

GENERAL NOTES

FOLLOW MANUFACTURE'S BOLTING RECOMMENDATIONS. IF NONE ARE AVAILABLE, INSTALL ⅝" ø X 1'-6" BUTTON HEAD BOLTS AT ALL POSTS EXCEPT FOR POST 1.

(A) THE SLOPE IN THE AREA BOUNDED BY THE GRADELINE, THE HINGE POINT LINE (HPL), AND THE CLEAR ZONE LIMITS (CZL) SHALL BE 4:1 OR FLATTER.

(B) AFTER FINAL ASSEMBLY, RECHECK CABLE TO BE SURE IT IS TAUT AND HAS NOT RELAXED.

(C) THE 13 SLOT FIRST RAIL PANEL MAY BE USED IN LIEU OF THE 3 SLOT RAIL PANEL ON SKT-350 ONLY.

(D) THE TOP OF THE STEEL TUBE ON POSTS 1 THROUGH 4 SHALL NOT BE MORE THAN 3" ABOVE THE FINISH GROUND ELEVATION.

(E) THE CENTER OF THE UPPER 3½" DIAMETER HOLE ON POST 5 THROUGH 8 SHALL BE ¾" ABOVE THE FINISHED GROUND LINE.

(F) ATTACH ALUMINUM SHEET TO E.A.T. HEAD USING 4 STAINLESS STEEL SELF-TAPPING SCREWS. ONE SCREW PER CORNER.

STEEL POSTS SHALL NOT BE ALLOWED FOR USE WITH ENERGY ABSORBING TERMINALS.

DO NOT INSTALL REFLECTORS ON THE FIRST 50 FEET OF THE APPROACH END OF THE ENERGY ABSORBING TERMINAL.

* DO NOT ATTACH BLOCKOUTS TO POSTS 1 AND 2.

** SDD SHOWS 4 - 54 INCH STEEL TUBES WITH SOIL PLATES INSTALLED ON POST 1 AND POST 2. POST 3 AND 4 DO NOT NEED SOIL PLATES. AN ALTERNATIVE INSTALLATION WOULD CONSIST OF 2 - 72 INCH STEEL TUBES ON POST 1 AND POST 2 AND 54 INCH SOIL TUBES ON POSTS 3 AND 4. THE ALTERNATIVE INSTALLATION DOES NOT REQUIRE SOIL PLATES.

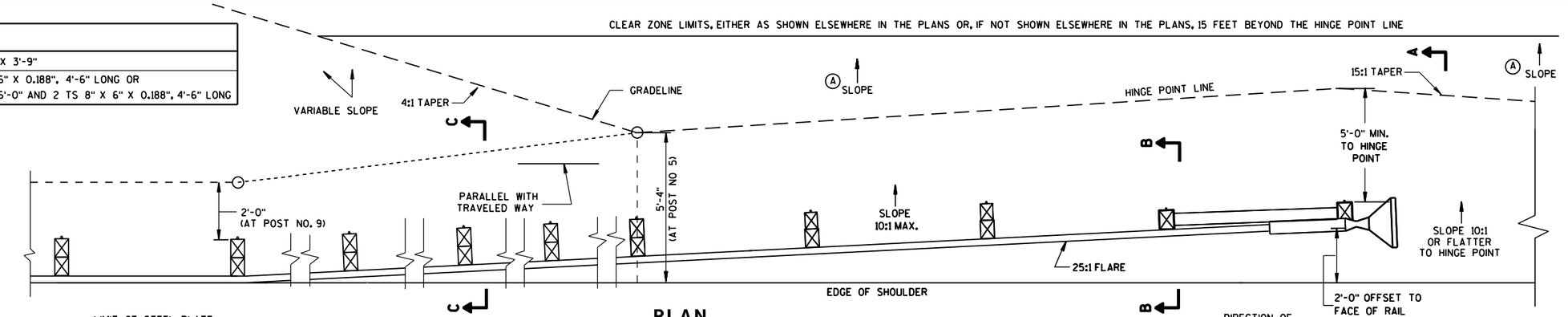

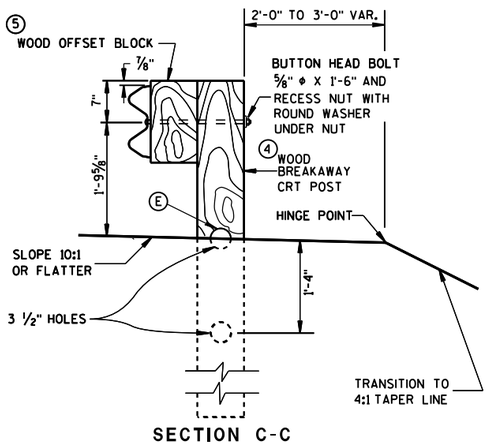

SECTION C-C
TYPICAL AT POST NOS. 6, 8

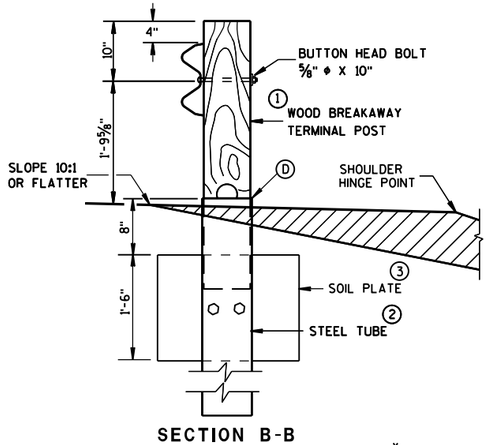

SECTION B-B
TYPICAL AT POST NO. 2*

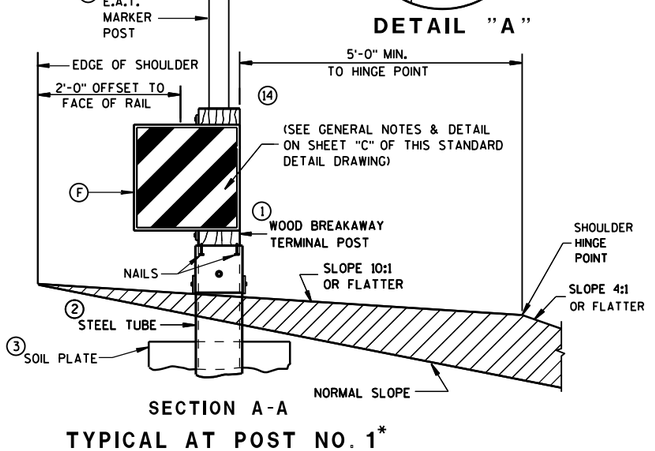

SECTION A-A
TYPICAL AT POST NO. 1*

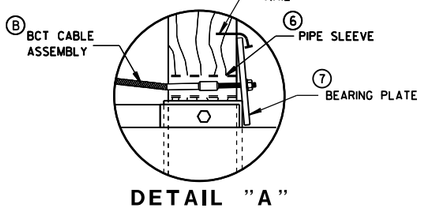

DETAIL "A"

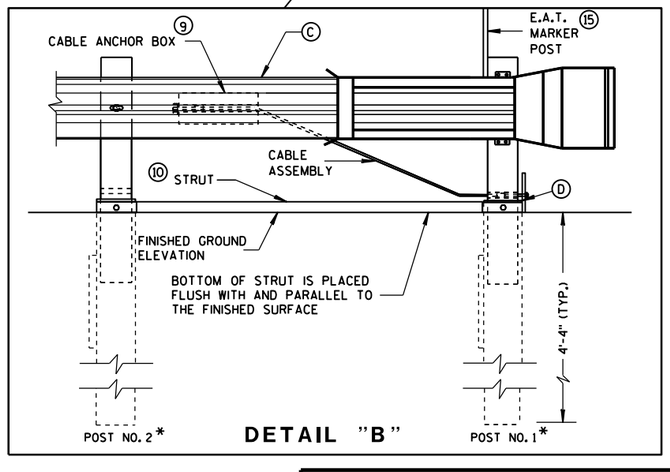

DETAIL "B"

STEEL PLATE BEAM GUARD ENERGY ABSORBING TERMINAL

STATE OF WISCONSIN
DEPARTMENT OF TRANSPO

6

S.D.D. 14 B 24-8a

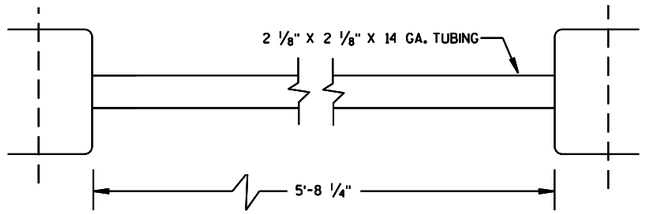

⑩ STRUT DETAIL (SKT-350)

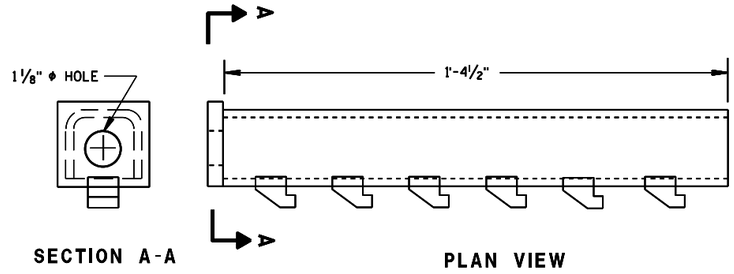

⑨ CABLE ANCHOR BOX (ET-2000/ET-2000 PLUS)

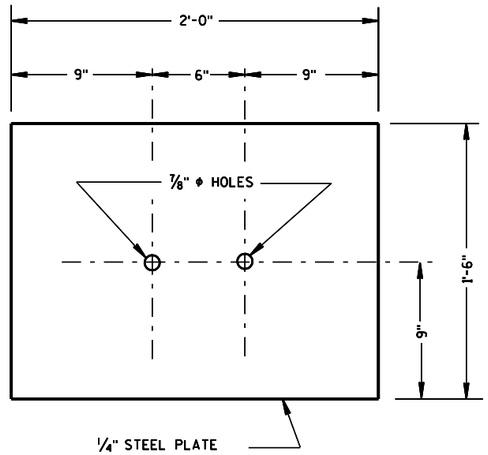

③ SOIL PLATE

(SKT-350, ET-2000/ET-2000 PLUS)

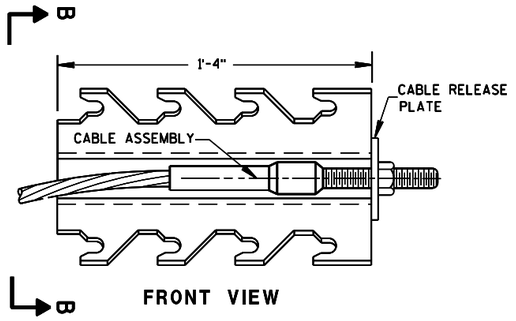

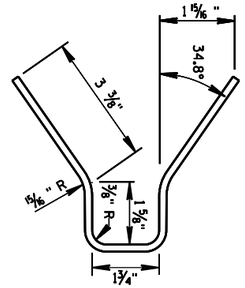

⑨ CABLE ANCHOR BOX (SKT-350)

(SKT-350)

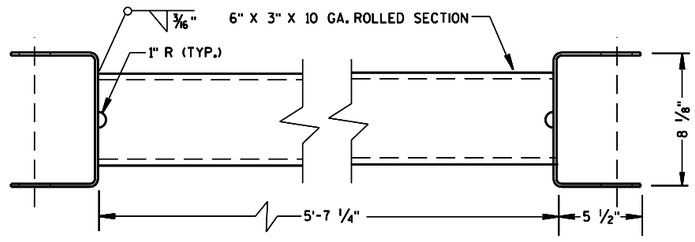

⑩ STRUT DETAIL (ET-2000/ET-2000 PLUS)

(ET-2000/ET-2000 PLUS)

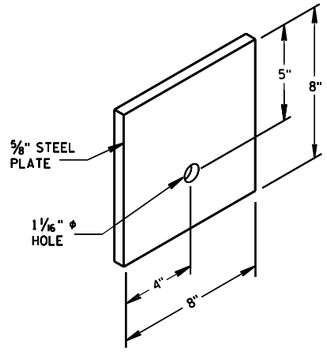

⑦ STEEL BEARING PLATE

(SKT-350, ET-2000/ET-2000 PLUS)

STEEL PLATE BEAM GUARD
ENERGY ABSORBING TERMINAL

STATE OF WISCONSIN
DEPARTMENT OF TRANSPOI

6

S.D.D. 14 B 24-8b

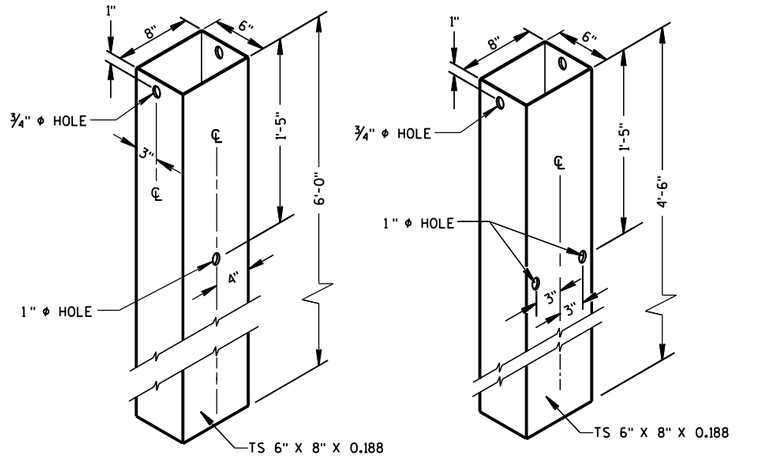

② 72" STEEL TUBE
(POSTS NO. 1-4

② 54" STEEL TUBE
(POSTS NO. 1-4

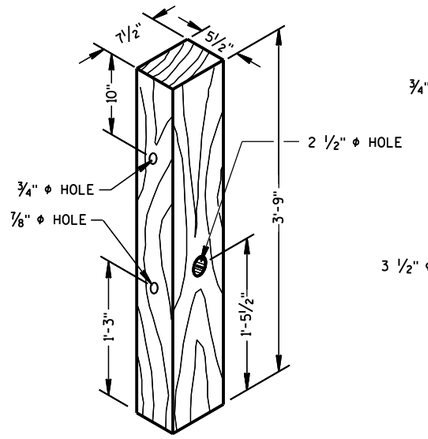

① TERMINAL POST
(POSTS NO. 1-4

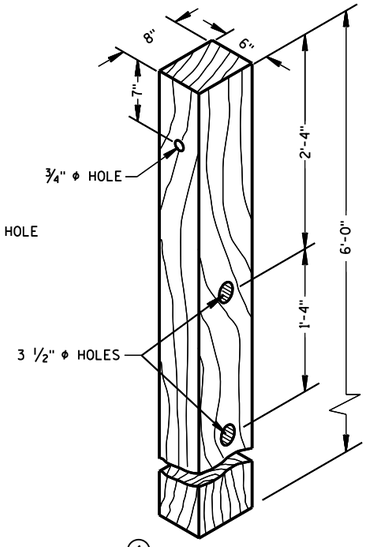

④ CRT POST
(POSTS NO'S 5-8

WOOD BREAKAWAY POSTS

GENERAL NOTES

WHEN ROCK IS ENCOUNTERED DURING EXCAVATION, A 12 INCH DIA. POST HOLE EXTENDING 20 INCHES DEEP INTO THE ROCK MAY BE USED IF APPROVED BY THE ENGINEER. GRANULAR MATERIAL SHALL BE PLACED IN THE BOTTOM OF THE HOLE APPROXIMATELY 2 ½" INCHES DEEP TO PROVIDE DRAINAGE. THE SOIL TUBES SHALL BE FIELD CUT TO LENGTH, PLACED IN THE HOLE AND BACKFILLED WITH ADEQUATELY COMPACTED MATERIAL EXCAVATED FROM THE HOLE.

SEE APPROVED PRODUCTS LIST FOR ACCEPTABLE E. A. T. MARKER POST.

(G) ½" DIA. X 3" LAG BOLT WITH WASHER.

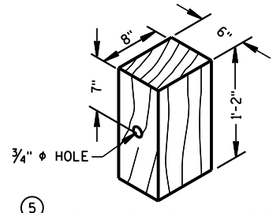

⑤ WOOD OFFSET BLOCK
REQ'D. AT ALL POSTS EXCEPT POST NO'S 1 & 2

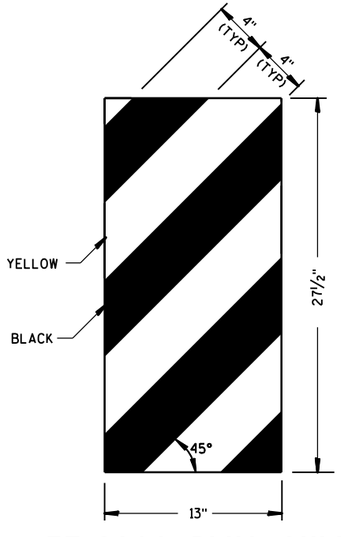

ET-2000 PLUS ONLY

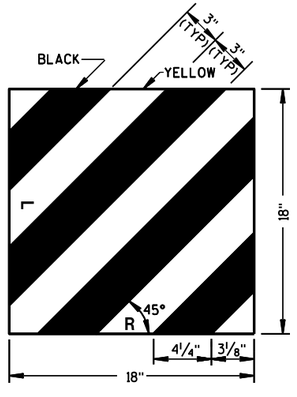

ET-2000 AND SKT-350

⑭ REFLECTIVE SHEETING DETAILS

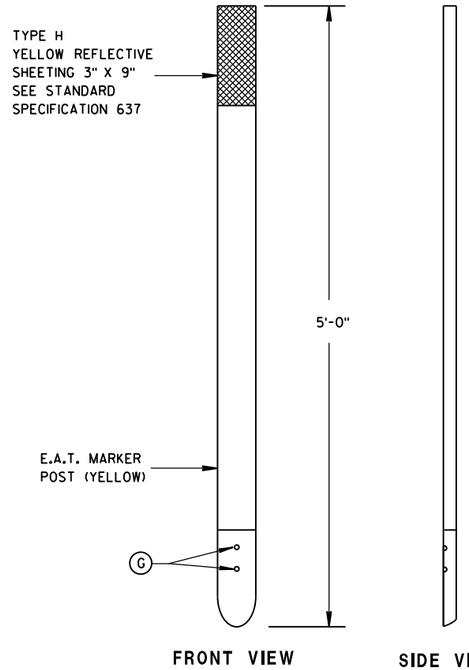

FRONT VIEW SIDE VIEW

⑮ E.A.T. MARKER POST

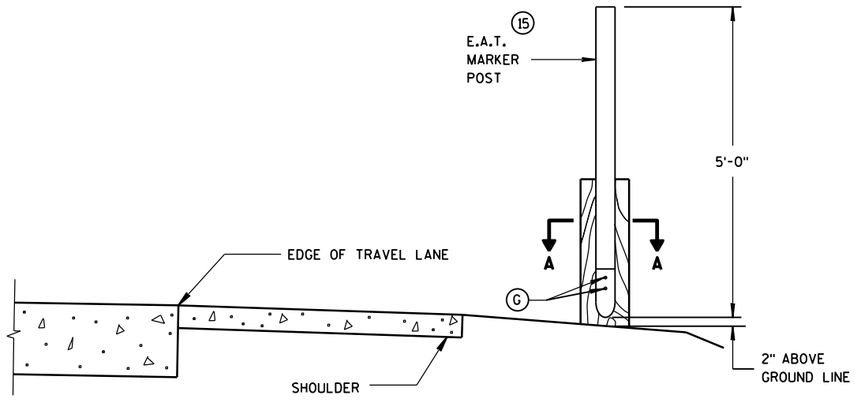

TYPICAL INSTALLATION OF E.A.T.
MARKER POST BACKSIDE OF POST NO. 1
(E.A.T. AND RAIL REMOVED FOR CLARITY)

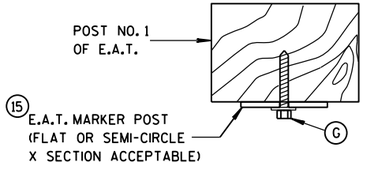

SECTION A-A

STEEL PLATE BEAM GUARD
ENERGY ABSORBING TERMINAL

STATE OF WISCONSIN
DEPARTMENT OF TRANSPORTATION

APPROVED
June 2014 — DATE
/S/ Jerry H. Zoda — ROADWAY STANDARDS ENGINEER
FHWA

6

S.D.D. 14 B 24-8c

6

S.D.D. 14 B 24-8c

GENERAL NOTES

(A) THE SLOPE IN THE AREA BOUNDED BY THE GRADELINE, THE HINGE POINT LINE (HPL), AND THE CLEAR ZONE LIMITS (CZL) SHALL BE 4:1 OR FLATTER.

(B) AFTER FINAL ASSEMBLY, RECHECK CABLE TO BE SURE IT IS TAUT AND HAS NOT RELAXED.

(C) DIFFERENT MANUFACTURES REQUIRE DIFFERENT PERFORATED W-BEAM RAIL END PANELS. SEE MANUFACTURES INFORMATION.

(D) THE TOP OF THE STEEL TUBE ON POST 1 AND POST 2 SHALL NOT BE MORE THAN 3" ABOVE THE FINISH GROUND ELEVATION.

(F) ATTACH ALUMINUM SHEET TO E.A.T. HEAD USING 4 STAINLESS STEEL SELF-TAPPING SCREWS. ONE SCREW PER CORNER.

(G) ½" DIAMETER X 3" LONG LAG BOLT AND WASHER.

(H) HARDWARE VARIES BETWEEN DIFFERENT MANUFACTURES. SEE MANUFACTURE'S DRAWING FOR INFORMATION.

(I) DIMENSIONS MAY VARY. SEE MANUFACTURE'S INFORMATION.

SEE SDD 14B42 FOR MORE INFORMATION.

* DO NOT ATTACH BLOCKOUTS TO POSTS 1 AND 2.

DO NOT INSTALL REFLECTORS ON THE FIRST 50 FEET OF THE APPROACH END OF THE ENERGY ABSORBING TERMINAL.

W-BEAM RAIL SPLICES ARE LOCATED AT POST NUMBER 3, AND BETWEEN POST 5 AND 6, BETWEEN POSTS 7 AND 8, AND MIDDLE OF THE SPAN AFTER POST 9.

THE CENTER OF THE UPPER 3½" DIAMETER HOLE ON POST NUMBER 3 THROUGH POST 9 IS TO BE FLUSH WITH THE GROUND LINE UP TO A MAXIMUM OF 2" ABOVE GROUND LINE.

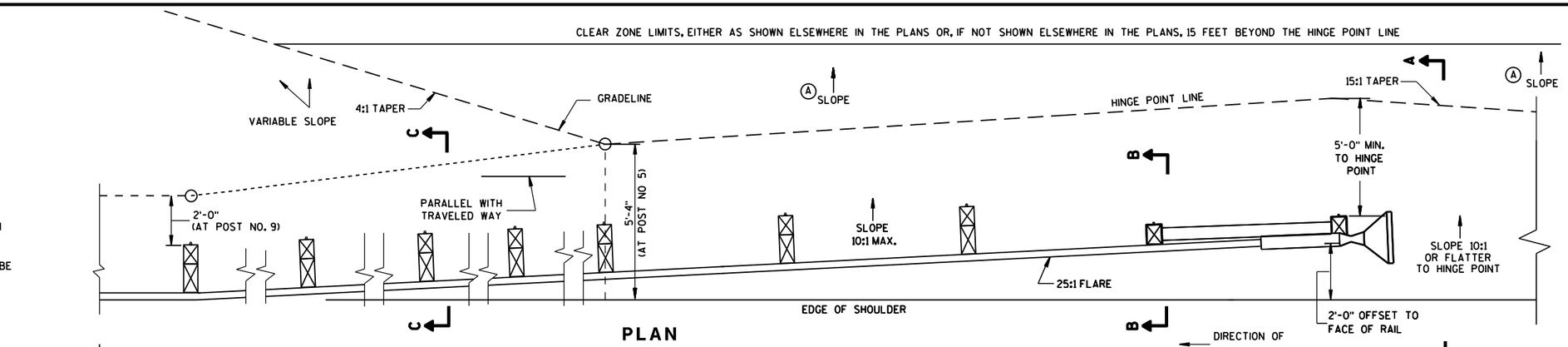

ELEVATION

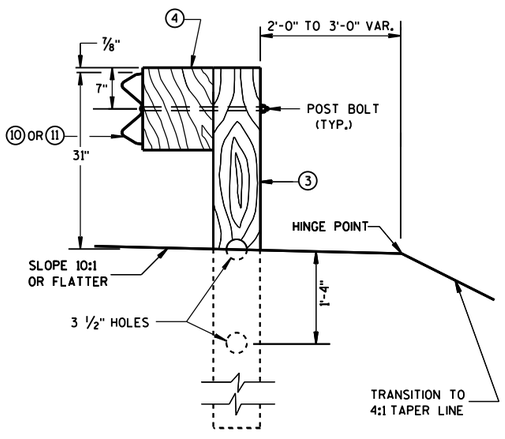

SECTION C-C
TYPICAL AT POST NOS. 3-9

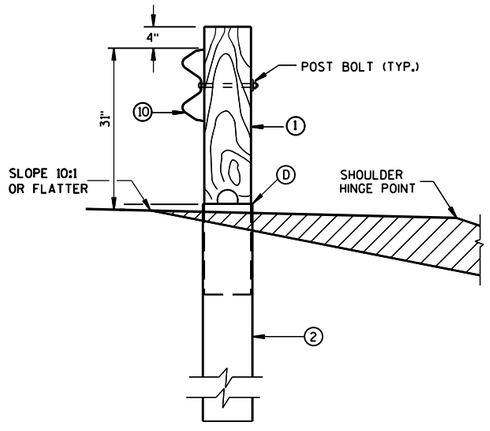

SECTION B-B
TYPICAL AT POST NO. 2*

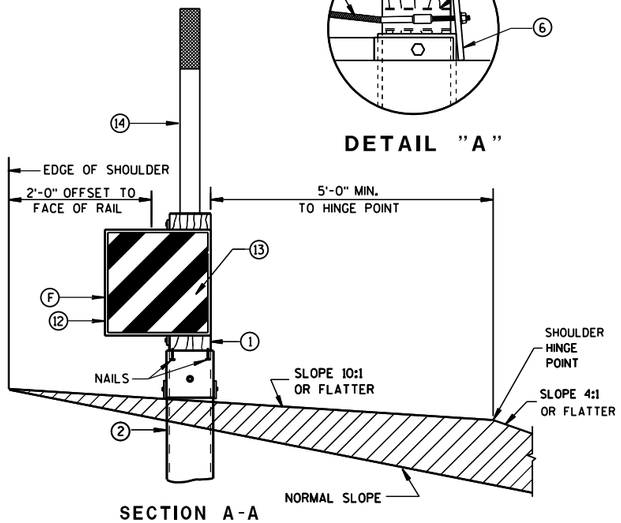

SECTION A-A
TYPICAL AT POST NO. 1*

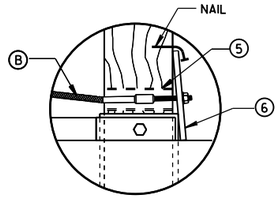

DETAIL "A"

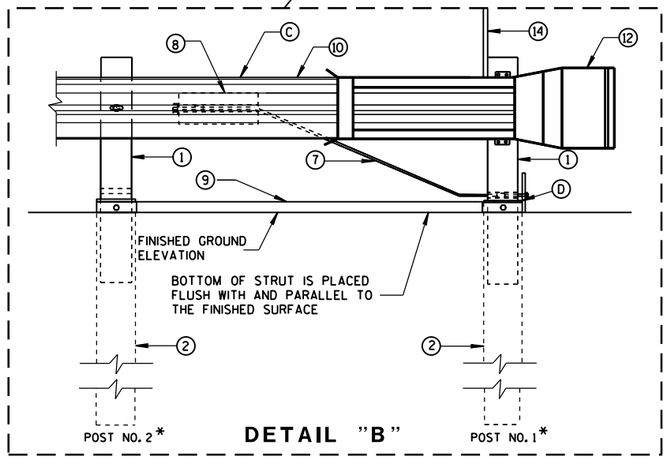

DETAIL "B"

MIDWEST GUARDRAIL SYSTEM
ENERGY ABSORBING TERMINAL (MGS)

STATE OF WISCONSIN
DEPARTMENT OF TRANSPO

S.D.D. 14 B 44-2a

S.D.D. 14 B 44-2a

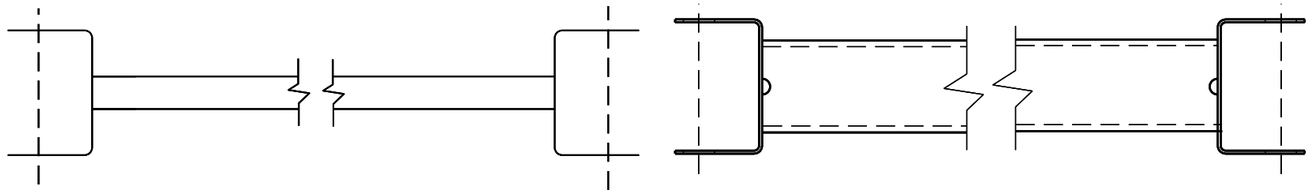

(9) (H)

GENERIC GROUND STRUT

BILL OF MATERIALS

PART NO.	DESCRIPTION MATERIALS PROVIDED BY MGS EAT MANUFACTURER. SEE MANUFACTURER'S DETAILS FOR MORE INFORMATION.
(1)	WOOD BREAKAWAY POST
(2)	6" X 8" X 0.188", 6'-0" LONG FOUNDATION TUBE AT POSTS 1 AND 2
(3)	WOOD CRT
(4)	WOOD BLOCKOUT
(5)	PIPE SLEEVE
(6)	BEARING PLATE
(7)	BCT CABLE ASSEMBLY
(8)	ANCHOR CABLE BOX
(9)	GROUND STRUT
(10)	PERFORATED W-BEAM RAIL END PANEL, 12'-6" LONG.
(11)	STANDARD W-BEAM RAIL. MULTIPLE SECTIONS REQUIRED. SECTIONS VARY IN LENGTH.
(12)	END SECTION EAT
(13)	0.040" ALUMINUM SHEET WITH REFLECTIVE SHEETING TYPE F PER SECTION 637 OF THE STANDARD SPECIFICATIONS
(14)	EAT MARKER POST - YELLOW (SEE APPROVED PRODUCTS LIST)

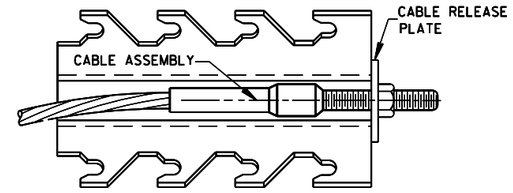

FRONT VIEW

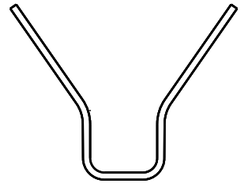

SECTION B-B

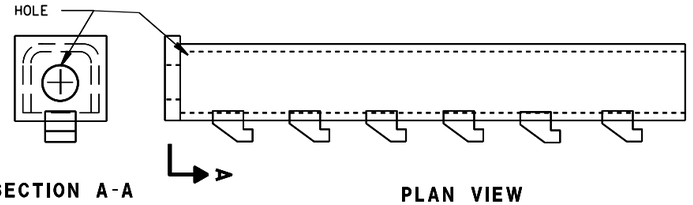

SECTION A-A

PLAN VIEW

GENERIC ANCHOR CABLE BOX (8) (H)

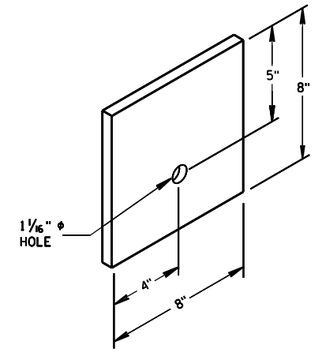

BEARING PLATE (6)

MIDWEST GUARDRAIL SYSTEM
ENERGY ABSORBING TERMINAL
(MGS)

STATE OF WISCONSIN
DEPARTMENT OF TRANSPOI

6

S.D.D. 14 B 44-2b

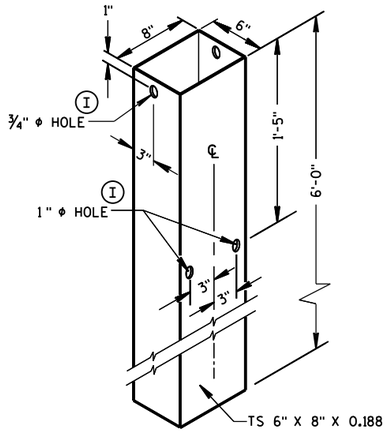

FOUNDATION TUBE (2)

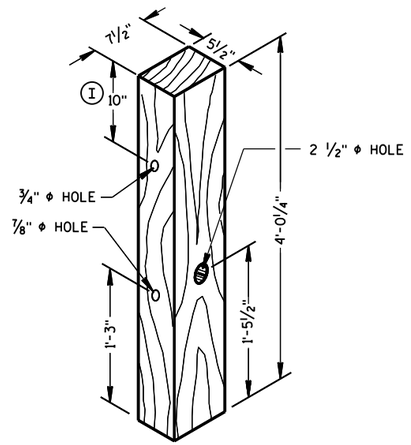

POSTS NUMBER 1 AND 2

WOOD BREAKAWAY POST (1)

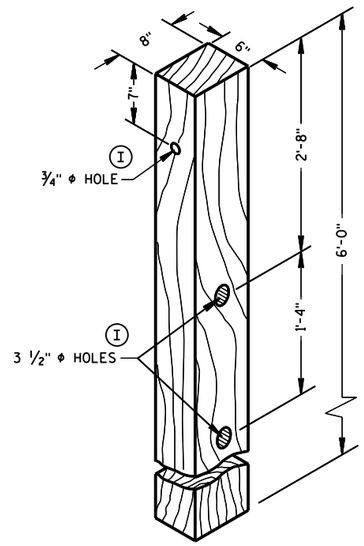

POSTS NUMBER 3-9

WOOD CRT POST (3)

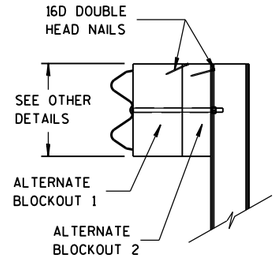

SIDE VIEW

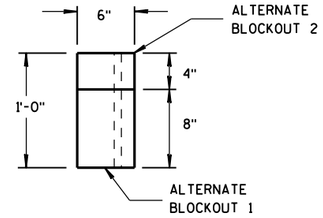

TOP VIEW

ALTERNATE WOOD BLOCKOUT DETAIL

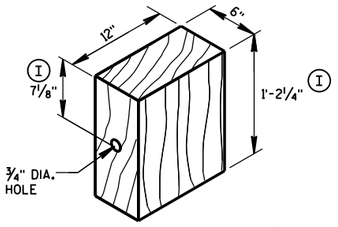

WOOD BLOCKOUT (4)

REQ'D. AT ALL POSTS EXCEPT POST NO'S 1 & 2

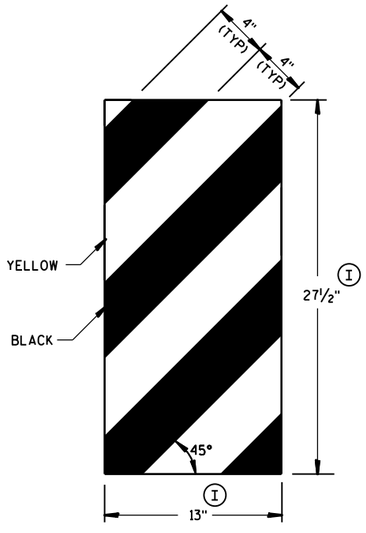

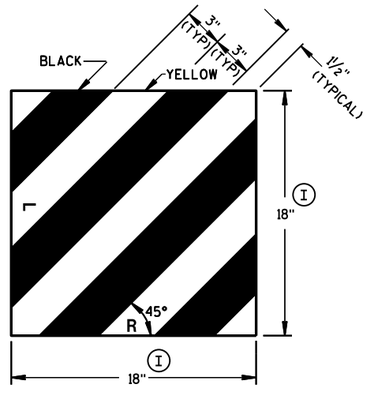

GENERIC REFLECTIVE SHEETING (13) (H)

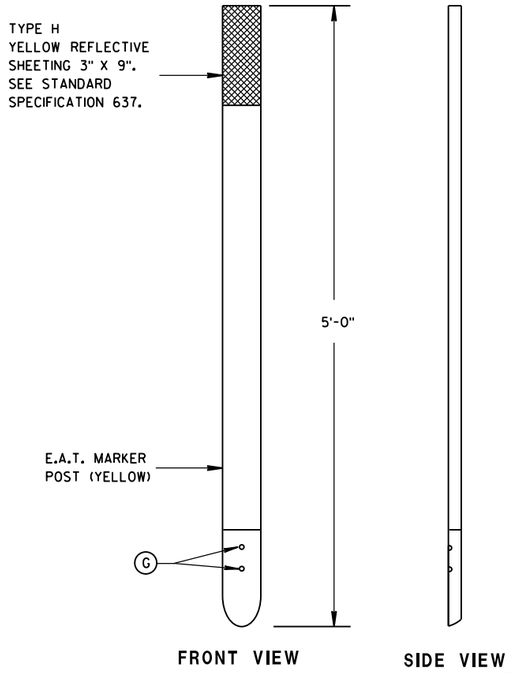

FRONT VIEW

SIDE VIEW

E.A.T. MARKER POST (14)

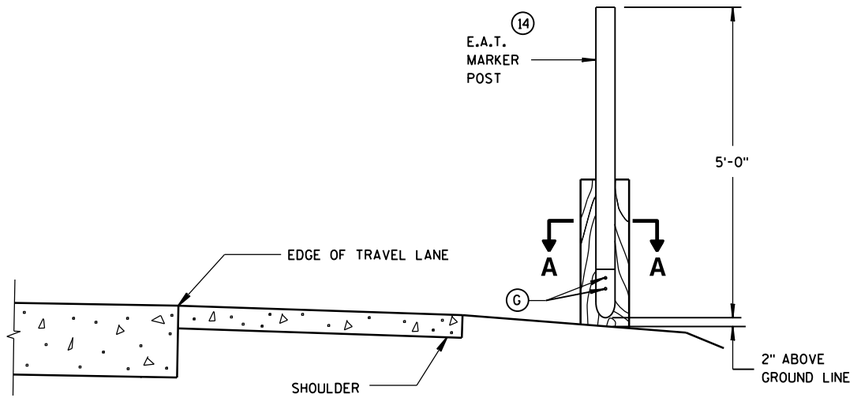

TYPICAL INSTALLATION OF E.A.T. MARKER POST BACKSIDE OF POST NO. 1

(E.A.T. AND RAIL REMOVED FOR CLARITY)

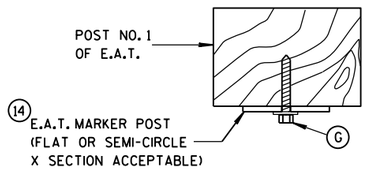

SECTION A-A

MIDWEST GUARDRAIL SYSTEM ENERGY ABSORBING TERMINAL (MGS)

STATE OF WISCONSIN
DEPARTMENT OF TRANSPORTATION

APPROVED
June 2014 — DATE
/S/ Jerry H. Zogg — ROADWAY STANDARDS ENGINEER
FHWA

6

S.D.D. 14 B 44-2c

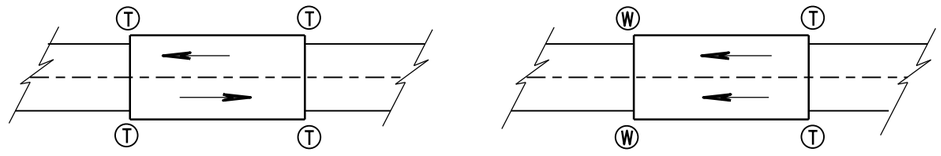

TWO WAY TRAFFIC

ONE WAY TRAFFIC

Ⓣ THRIE BEAM CONNECTION

Ⓦ W-BEAM CONNECTION WHEN REQUIRED

TYPICAL LOCATIONS OF THRIE BEAM AND W-BEAM CONNECTIONS TO BRIDGE

GENERAL NOTES

IF ROCK IS ENCOUNTERED, REMOVE ROCK TO FULL DEPTH OF POST PLUS 2½", AND 12" DIAMETER AROUND POST. SEE 14B42 FOR MORE DETAILS.

TRANSITION USES STEEL POSTS ONLY.

SEE STANDARD DETAIL DRAWING 14 B 42 FOR MORE INFORMATION.

① BRIDGE RAILING TYPE "W" DOES NOT REQUIRE A TERMINAL CONNECTOR.

② OPTIONAL CURB AND GUTTER OR DRAINAGE FEATURE SEE PLAN FOR INFORMATION.

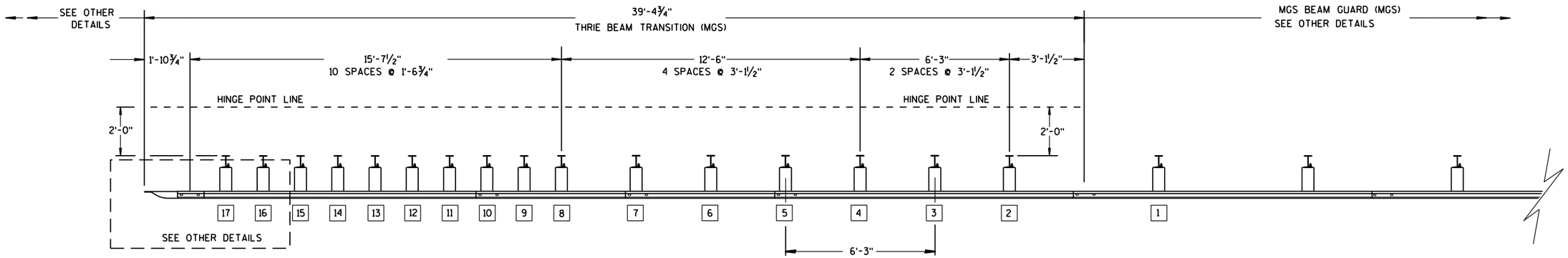

PLAN VIEW

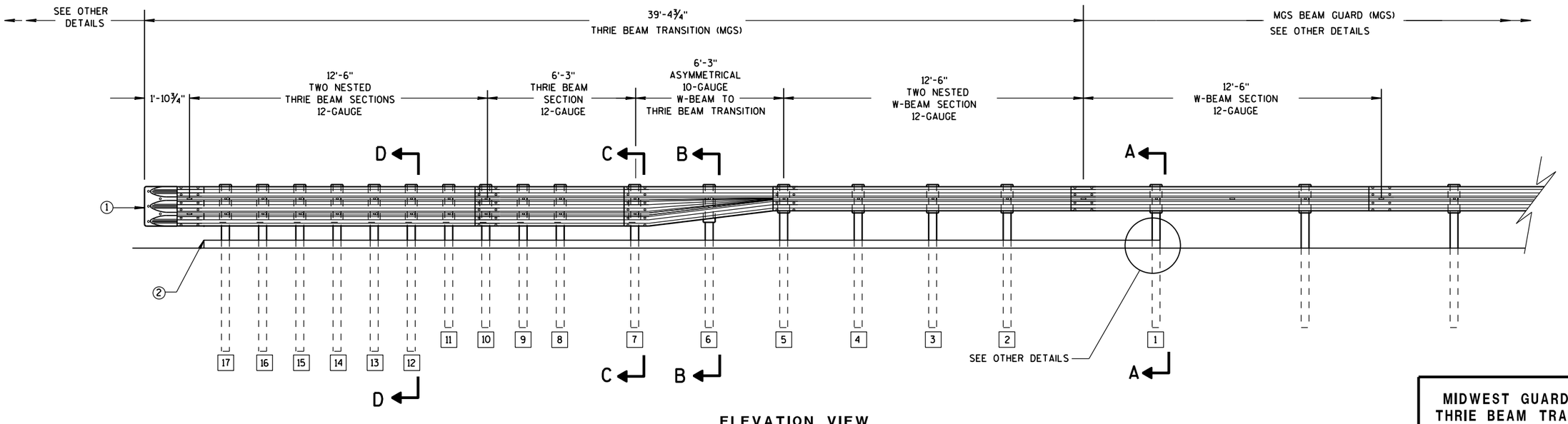

ELEVATION VIEW

MIDWEST GUARDRAIL SYSTEM THRIE BEAM TRANSITION

MIDWEST GUARDRAIL SYSTEM
THRIE BEAM TRANSITION (MGS)

STATE OF WISCONSIN
DEPARTMENT OF TRANSPOR

6

S.D.D. 14 B 45-4a

6

S.D.D. 14 B 45-4a

GENERAL NOTES

(2) OPTIONAL CURB AND GUTTER OR DRAINAGE_FEATURE SEE PLAN FOR INFORMATION.

(3) WHEN USING STEEL POSTS AND WOOD BLOCKOUTS INSTALL FOUR 10D GALVANIZED NAILS. INSTALL NAILS AT THE BACK CORNERS OF THE BLOCK AND BEND THE NAILS OVER THE FLANGE OF THE STEEL POST.

(4) TOLERANCE FOR TOP OF W-BEAM RAIL IS ± 1".

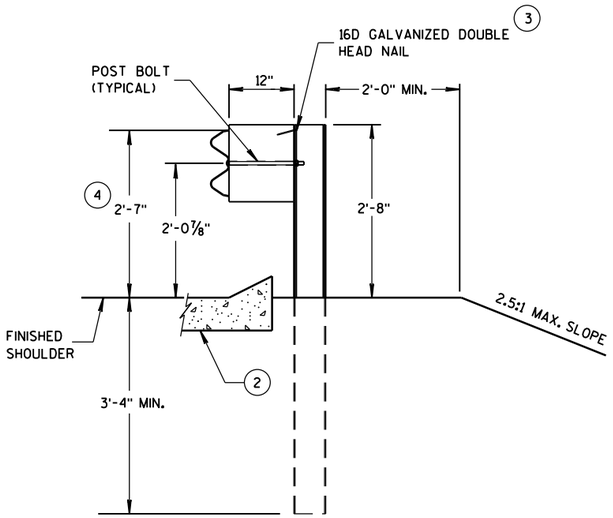

SECTION A-A

POSTS 1-5

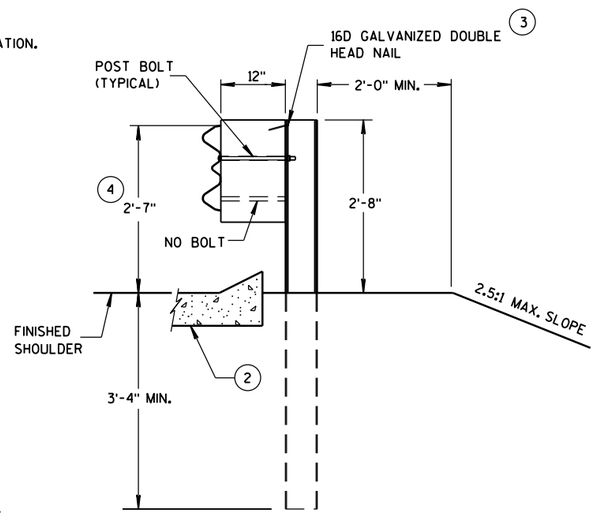

SECTION B-B

POST 6

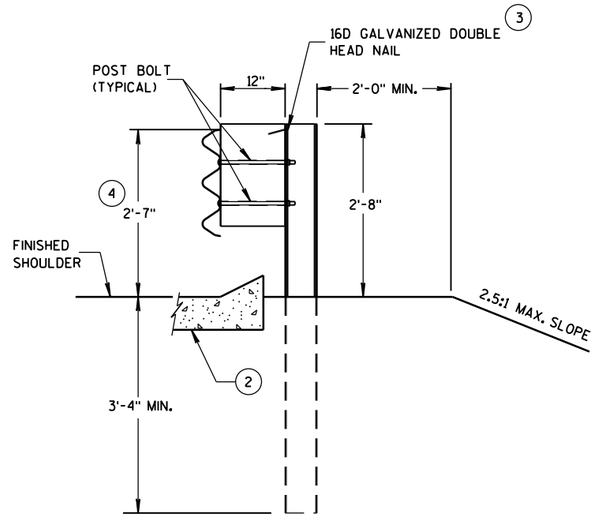

SECTION C-C

POSTS 7-11

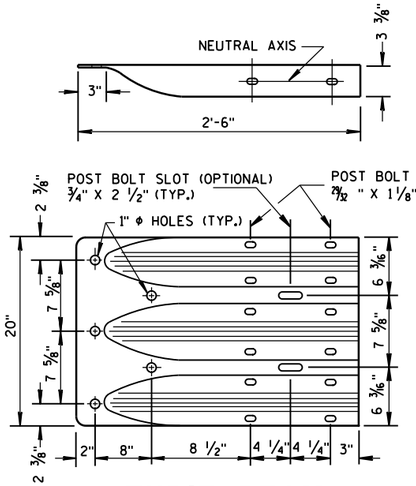

THRIE BEAM TERMINAL CONNECTOR

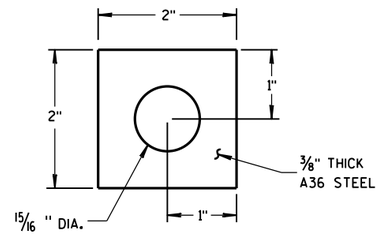

PLATE WASHER DETAIL

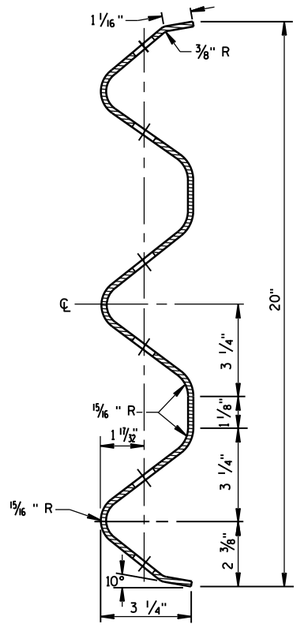

SECTION THRU THRIE BEAM RAIL ELEMENT

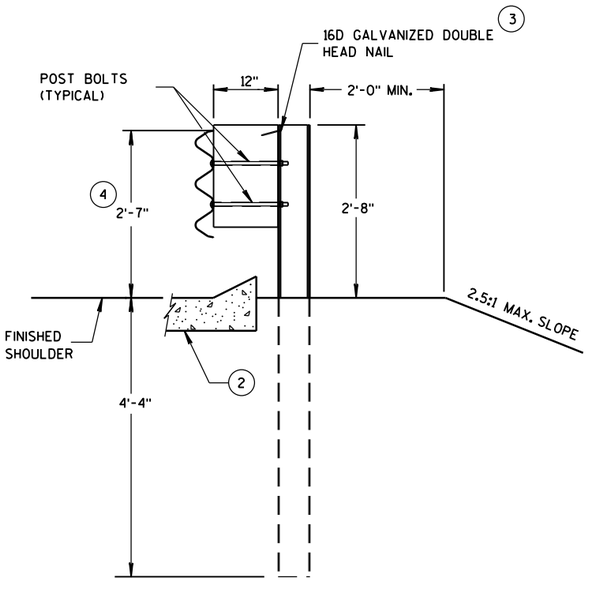

SECTION D-D

POSTS 12-17

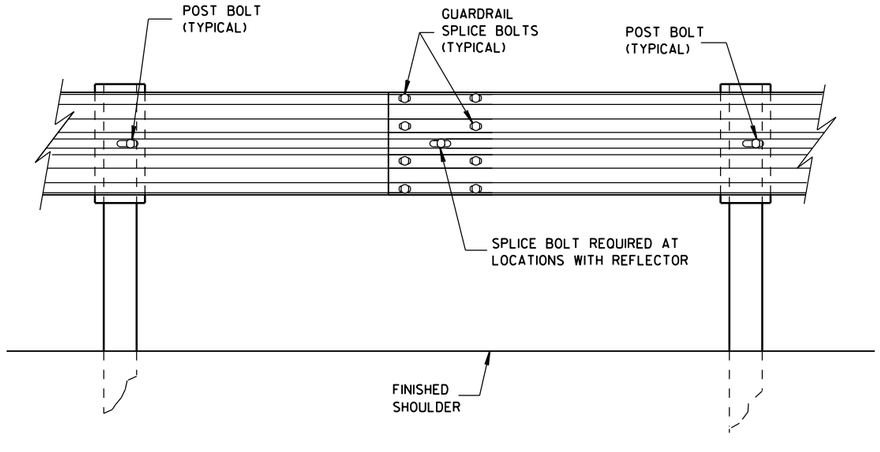

SPLICE DETAIL

MIDWEST GUARDRAIL SYSTEM
THRIE BEAM TRANSITION (MGS)

STATE OF WISCONSIN
DEPARTMENT OF TRANSPOI

6

S.D.D. 14 B 45-4b

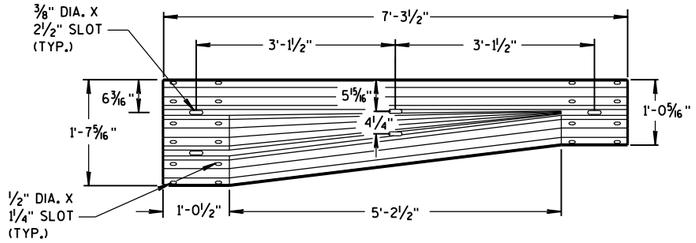

W-BEAM TO THRIE BEAM TRANSITION SECTION

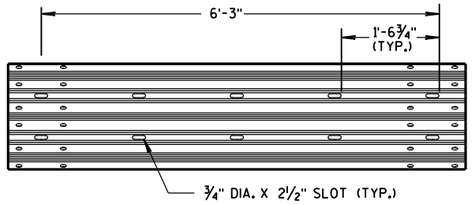

6'-3" THRIE BEAM SECTION

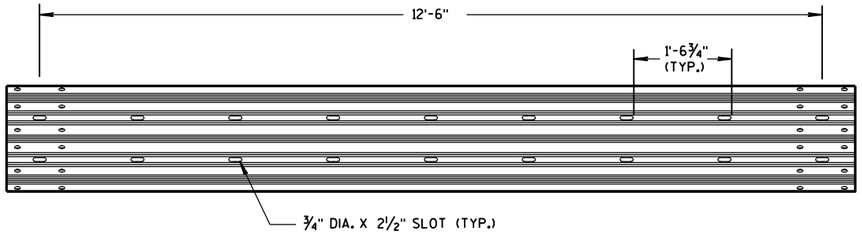

12'-6" THRIE BEAM SECTION

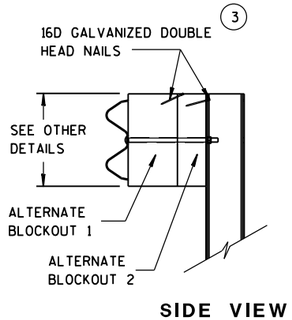

SIDE VIEW

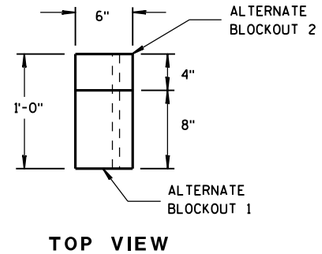

TOP VIEW

ALTERNATE WOOD BLOCKOUT DETAIL

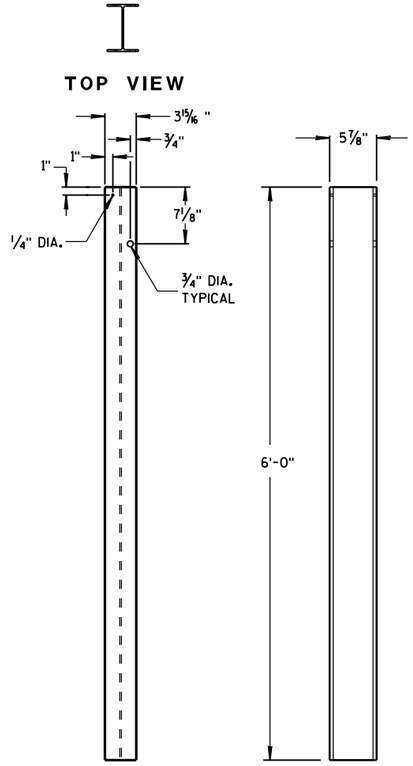

STEEL POSTS 1-5

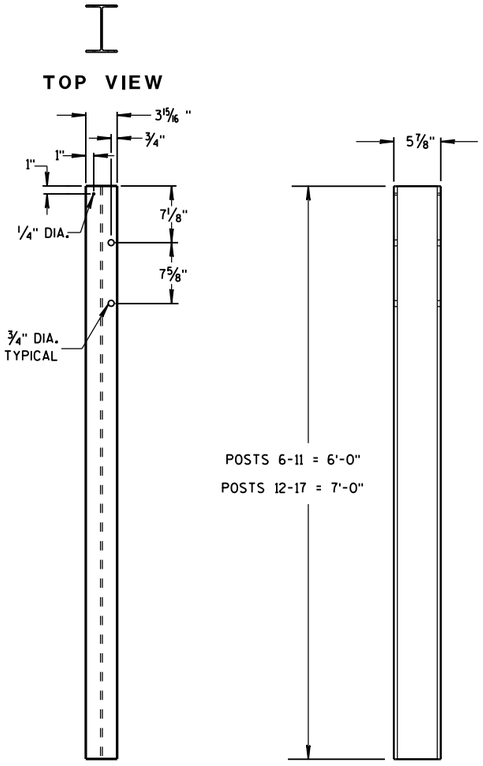

STEEL POSTS 6-17

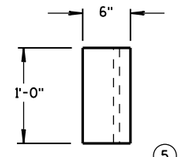

TOP VIEW (5)

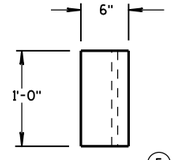

TOP VIEW (5)

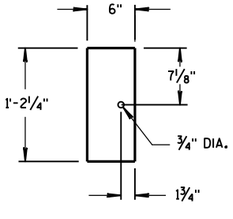

FRONT VIEW

BLOCKOUT POSTS 1-5

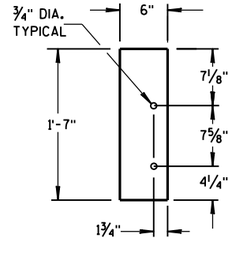

FRONT VIEW

BLOCKOUT POSTS 6-17

GENERAL NOTES

STEEL POSTS ARE W6X9 OR W6X8.5.

BOLT HOLES FOR POST ARE ON FRONT AND OF SIDE OF POST.

(3) WHEN USING STEEL POSTS AND WOOD BLOCKOUTS INSTALL FOUR 16D GALVANIZED NAILS. INSTALL NAILS AT THE BACK CORNERS OF THE BLOCK AND BEND THE NAILS OVER THE FLANGE OF THE STEEL POST.

(5) WOOD BLOCKS MAY BE CONSTRUCTED OUT OF 2 WOOD BLOCKS. SEE ALTERNATE WOOD BLOCK DETAIL.

MIDWEST GUARDRAIL SYSTEM
THRIE BEAM TRANSITION (MGS)

STATE OF WISCONSIN
DEPARTMENT OF TRANSPOI

6

S.D.D. 14 B 45-4c

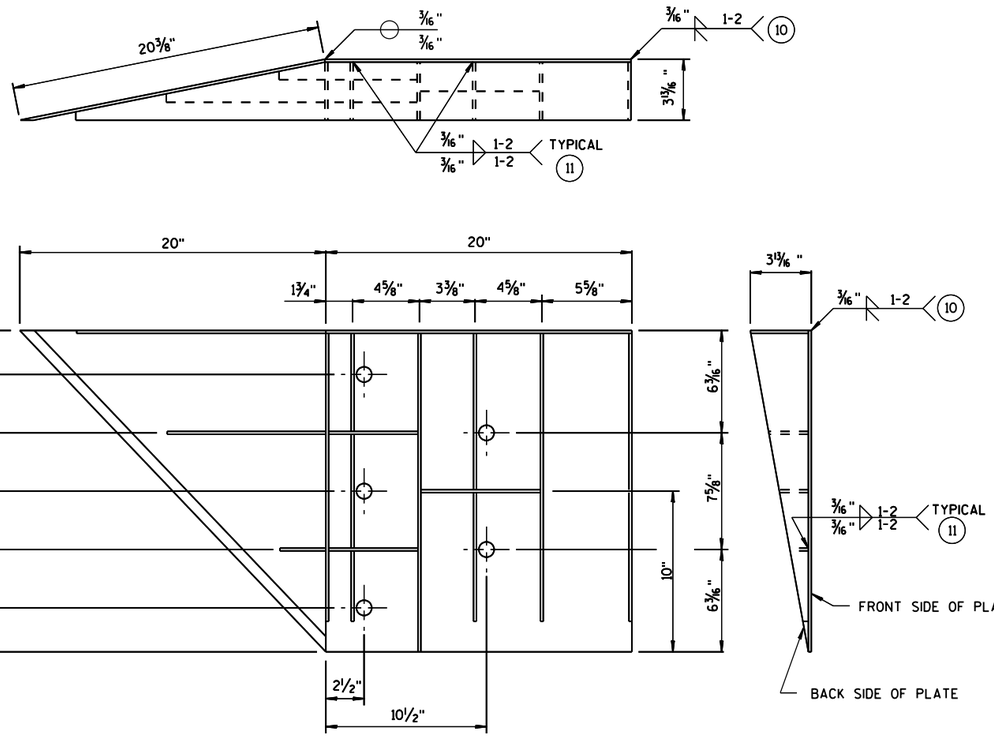

WELDING INSTRUCTION

(VIEWED FROM BACK SIDE OF PLATE)

GENERAL NOTES

COVER PLATE PANELS ARE 3/16" THICK.

ALL STIFFENERS ARE 1/4" THICK.

CONNECTOR PLATE SHALL BE FABRICATED FROM ASTM GRADE A36 STEEL AND GALVANIZED.

FOR GALVANIZED REQUIREMENTS, SEE SECTION 614 OF THE STANDARD SPECIFICATIONS.

ALL HOLE DIAMETERS SHALL BE 1".

FOR OPPOSITE SIDE INSTALLATION MIRROR DRAWINGS.

(10) STIFFENERS LOCATED AT THE OUTSIDE EDGES OF THE COVER PLATES SHALL BE WELDED AS FOLLOWS:
SINGLE BEVEL GROOVE WELD ON EXTERNAL SIDES AND 3/16" FILLET WELD BY 1" LONG SPACED AT 2" ON INTERNAL SIDES.

(11) STIFFENERS LOCATED ON THE INSIDE OF THE COVER PLATE SHALL BE WELDED AS FOLLOWS:
3/16" FILLET WELD BY 1" LONG SPACED AT 2".

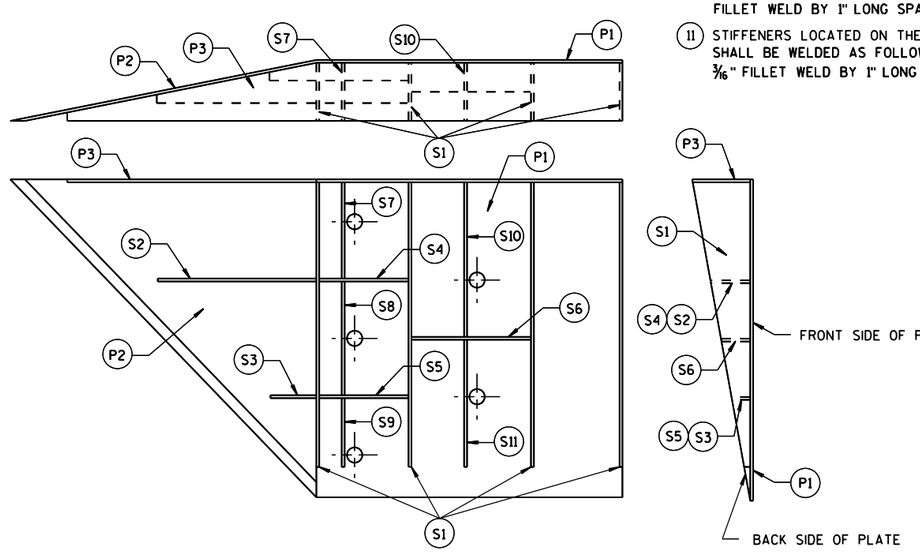

PLATE AND STIFFENER IDENTIFICATION

(VIEWED FROM BACK SIDE OF PLATE)

CONNECTOR PLATE DIMENSION (PER ASSEMBLY)

PLATE	QUANTITY	SHAPE	SIZE (A x B x C x D)	THICKNESS
P1	1		20" x 20"	3/16"
P2	1		20" x 20" x 28 9/16"	3/16"
P3	1		39" x 3 5/8" x 20" x 19 5/16"	3/16"
S1	4		18 7/16" x 3 3/8" x 18 3/4"	1/4"
S2	1		10 1/4" x 2 7/16" x 10 3/8" x 1/2"	1/4"
S3	1		3" x 1 1/16" x 3 1/8" x 1/2"	1/4"
S4	1		6 1/8" x 2 7/16"	1/4"
S5	1		6 1/8" x 1 1/16"	1/4"
S6	1		7 3/4" x 1 3/4"	1/4"
S7	1		2 9/16" x 6" x 3 5/8" x 5 7/8"	1/4"
S8	1		1 5/32" x 7 1/2" x 2 1/2" x 7 3/8"	1/4"
S9	1		6 1/16" x 6 3/16" x 1 1/32"	1/4"
S10	1		1 7/8" x 9 7/8" x 3 5/8" x 9 11/16"	1/4"
S11	1		8 1/2" x 8 3/4" x 1 13/16"	1/4"

SINGLE SLOPE CONNECTION PLATE

MIDWEST GUARDRAIL SYSTEM
THRIE BEAM TRANSITION (MGS)

STATE OF WISCONSIN
DEPARTMENT OF TRANSPORTATION

APPROVED
June, 2015 — DATE
/S/ Jerry H. Zogg — ROADWAY STANDARDS ENGINEER
FHWA

6

S.D.D. 14 B 45-4i

6

S.D.D. 14 B 45-4i

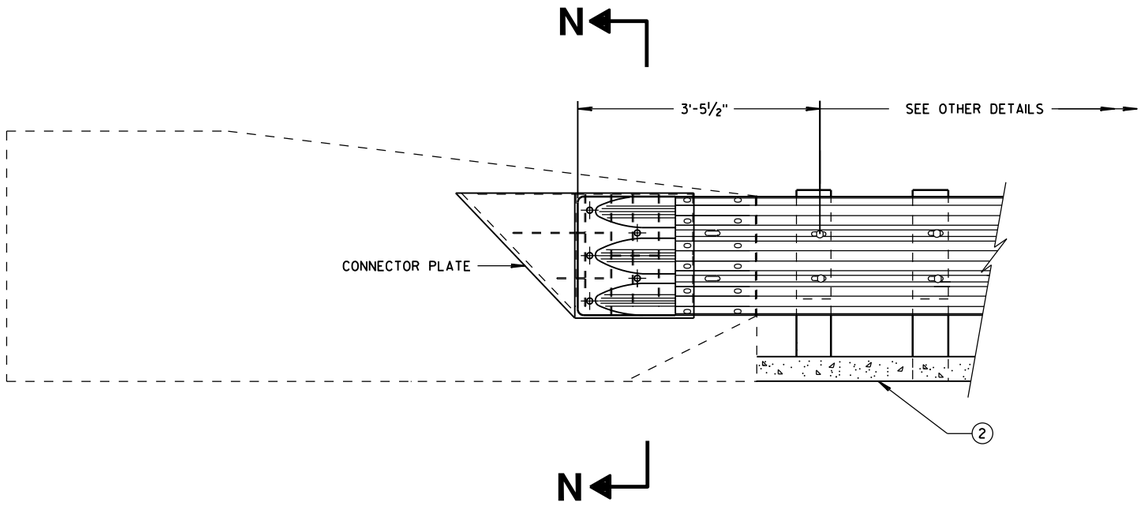

THRIE BEAM CONNECTION TO SINGLE SLOPE BARRIER

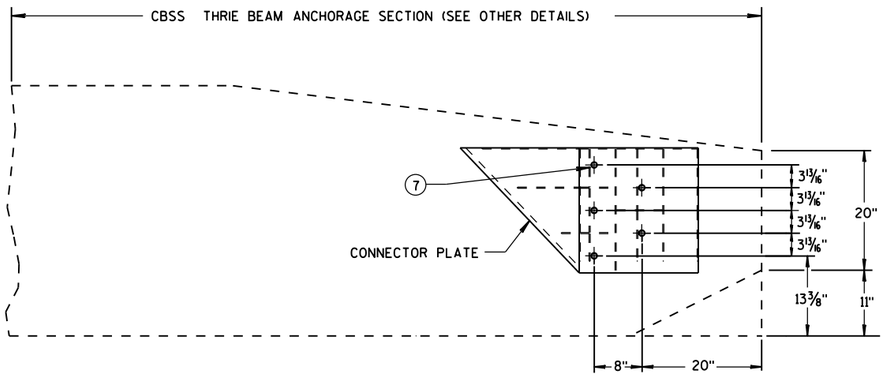

SINGLE SLOPE CONNECTION PLATE PLACEMENT

GENERAL NOTES

CONNECTOR PLATE, DRILLING BOLT HOLES THROUGH THE PARAPET, BOLTS, NUTS, WASHERS AND REPAIRING DAMAGED CONCRETE ARE INCIDENTAL TO THE CONTRACT.

(2) OPTIONAL CURB AND GUTTER OR DRAINAGE FEATURE SEE PLAN FOR INFORMATION.

(7) BOLTS MAY BE A325 BOLTS OR A449 BOLTS. BOLT LENGTH AND THREADING LENGTH ARE TO ALLOW FOR A TIGHT CONNECTION BETWEEN RIGID BARRIER AND THRIE BEAM CONNECTION PLATE. CONTRACTOR IS TO FIELD VERIFY BOLT LENGTH AND THREAD LENGTH. ONE ROUND WASHER REQUIRED BETWEEN BOLT HEAD AND THRIE BEAM CONNECTOR PLATE. BOLTS THAT EXTEND THROUGH THE PARAPET AND OUT THE BACK FACE REQUIRE A HARDENED ROUND STEEL WASHER THAT IS 2" O.D. X 5/8" THICK AND ONE PLATE WASHER. REPAIR ANY DAMAGED CONCRETE FROM BOLT INSTALLATION.

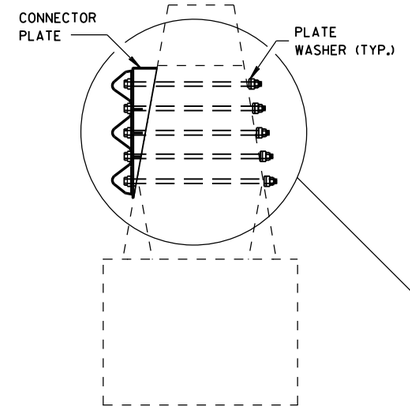

SECTION N-N

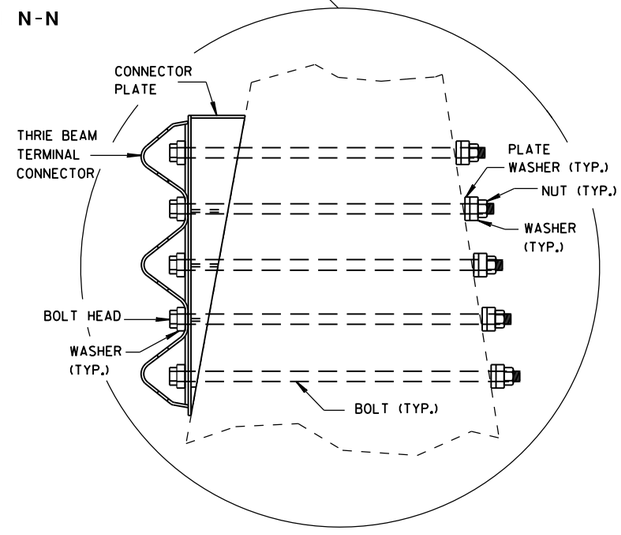

MIDWEST GUARDRAIL SYSTEM
THRIE BEAM TRANSITION (MGS)

STATE OF WISCONSIN
DEPARTMENT OF TRANSPORTATION

APPROVED
June, 2015 — DATE
/S/ Jerry H. Zoga — ROADWAY STANDARDS DEVELOPMENT ENGINEER
NT
FHWA

6

S.D.D. 14 B 45-4j

6

S.D.D. 14 B 45-4j

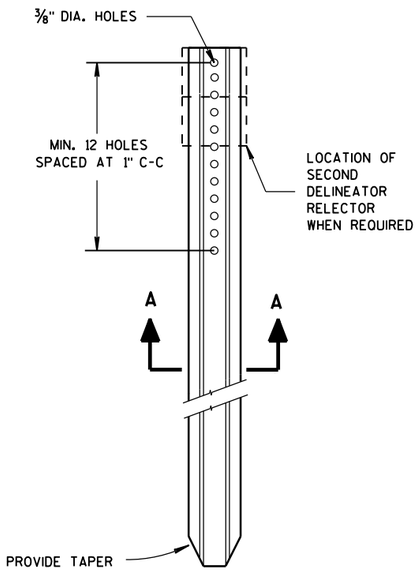

DELINEATOR POST

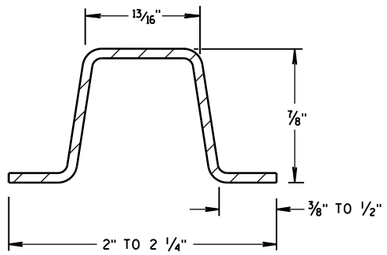

SECTION A-A

WEIGHT 1.12 LBS PER FT. ± 0.1 LB.

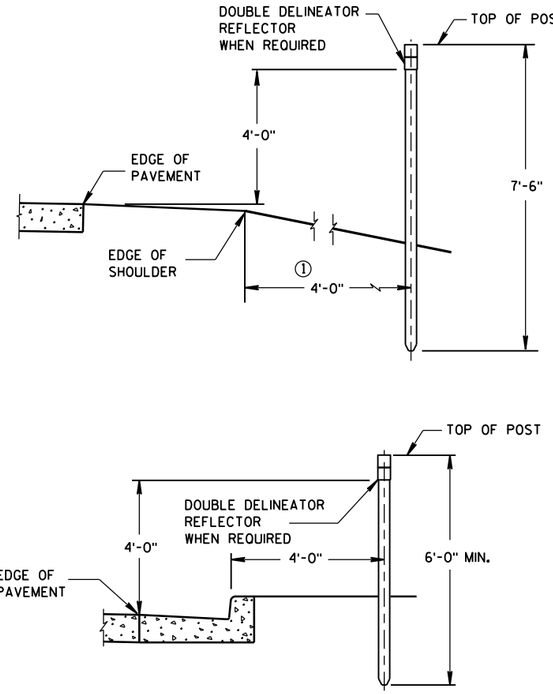

TYPICAL INSTALLATIONS OF DELINEATOR POSTS

GENERAL NOTES

DETAILS OF CONSTRUCTION NOT SHOWN ON THIS DRAWING SHALL CONFORM TO THE PERTINENT REQUIREMENTS OF THE STANDARD SPECIFICATIONS AND THE APPLICABLE SPECIAL PROVISIONS.

① DELINEATORS SHALL BE PLACED AT A CONSTANT DISTANCE FROM THE EDGE OF THE SHOULDER FOR THE LENGTH OF THE INSTALLATION.

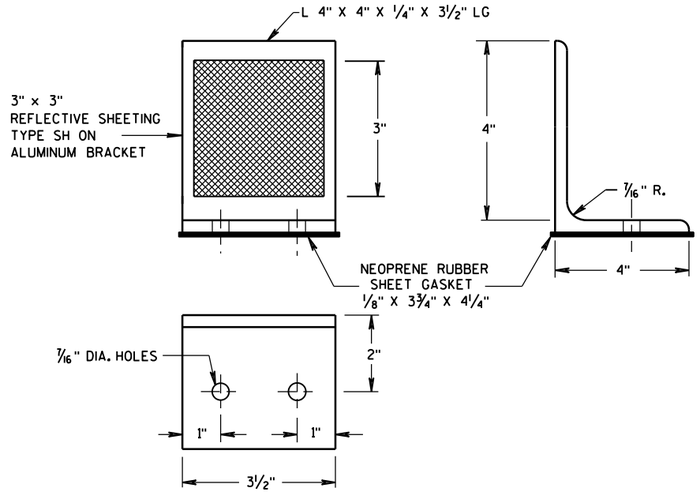

DELINEATOR BRACKET

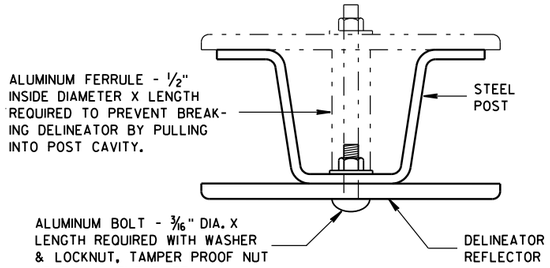

MOUNTING DETAIL FOR DELINEATOR REFLECTOR

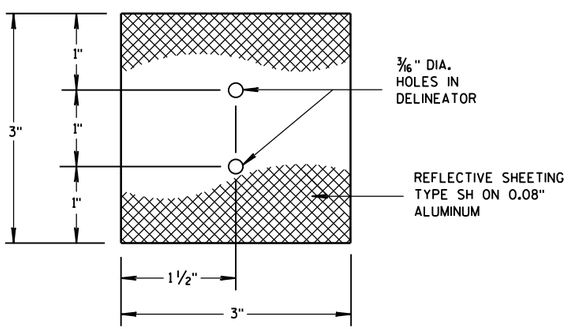

3"x 3" DELINEATOR REFLECTOR

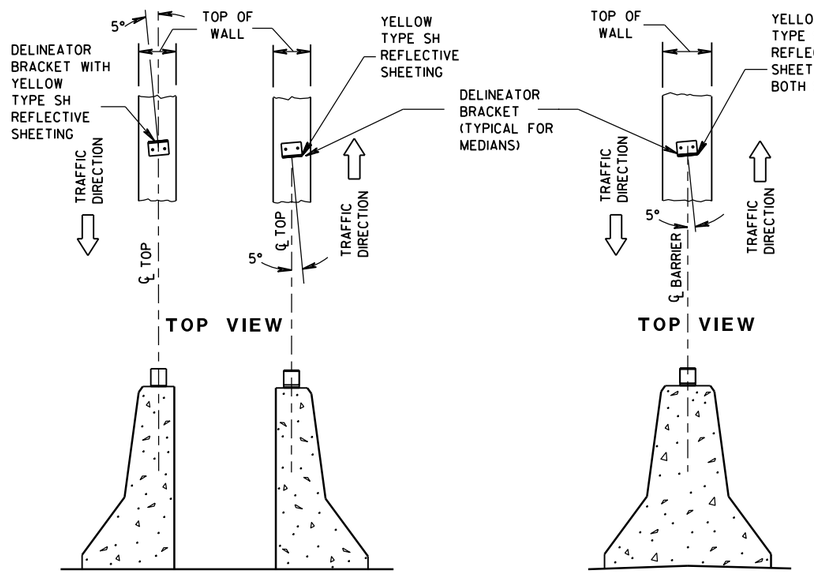

DOUBLE BARRIERS IN MEDIAN | **MEDIAN BARRIER** | **BARRIER LOCATED TO RT. OF TRAFFIC FLOW**

LOCATION AND AIMING DETAILS FOR DELINEATOR BRACKETS MOUNTED ON CONCRETE BARRIERS

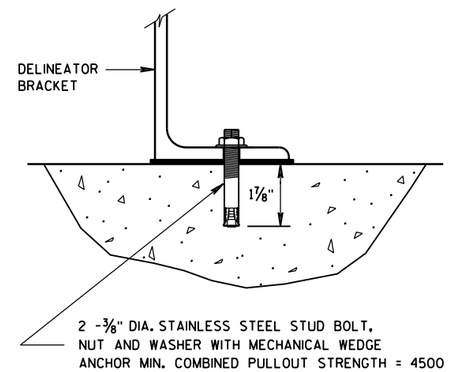

DELINEATOR BRACKET MOUNTING DETAIL

DELINEATOR POST, DELINEATOR REFLECTOR AND DELINEATOR BRACKET WITH REFLECTIVE SHEETING

STATE OF WISCONSIN
DEPARTMENT OF TRANSPORTATION

APPROVED
4-18-16 DATE
/S/ Matthew R. Rauch
STATE SIGNING AND MAR[illegible] GINEER
FHWA

6

S.D.D. 15 A 2-9

6

S.D.D. 15 A 2-9

GENERAL NOTES

* USE DOUBLE DELINEATOR ALONG ACCELERATION-DECELERATION LANES AND TAPERS. USE SINGLE DELINEATOR WHEN RAMP PAVEMENT IS FULL WIDTH.

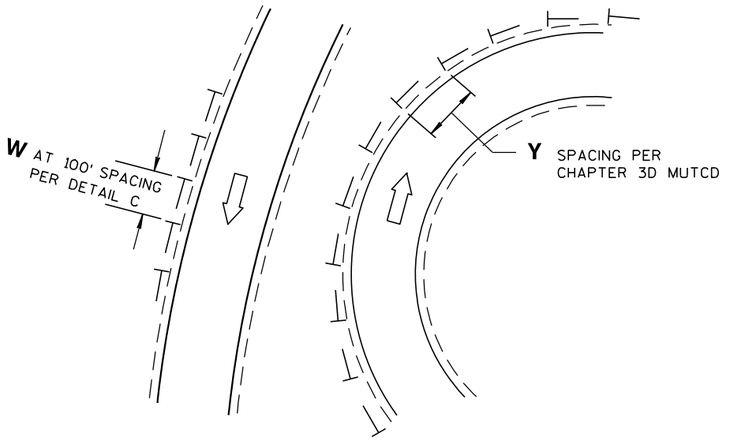

DETAIL A
DELINEATOR LAYOUT AT CURVED RAMP

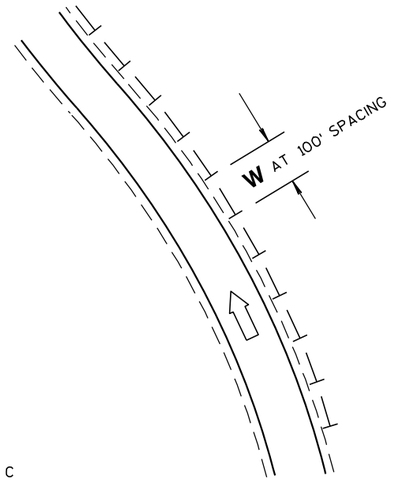

DETAIL C
DELINEATOR LAYOUT ALONG RAMP

LEGEND

- DIRECTION OF TRAFFIC FLOW
- SINGLE DELINEATOR
- DOUBLE DELINEATOR
- W — WHITE
- Y — YELLOW

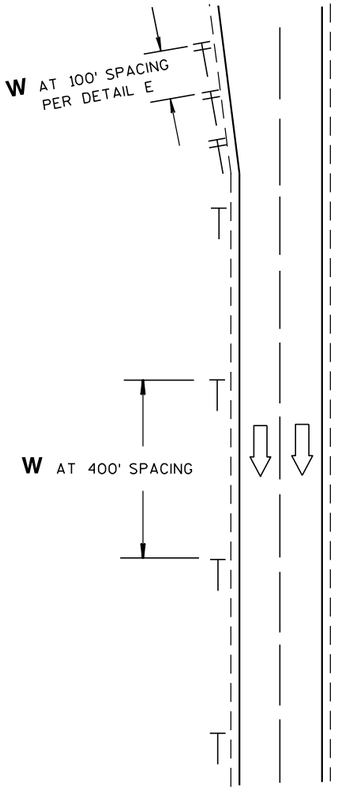

DETAIL B
DELINEATOR LAYOUT ALONG MAINLINE

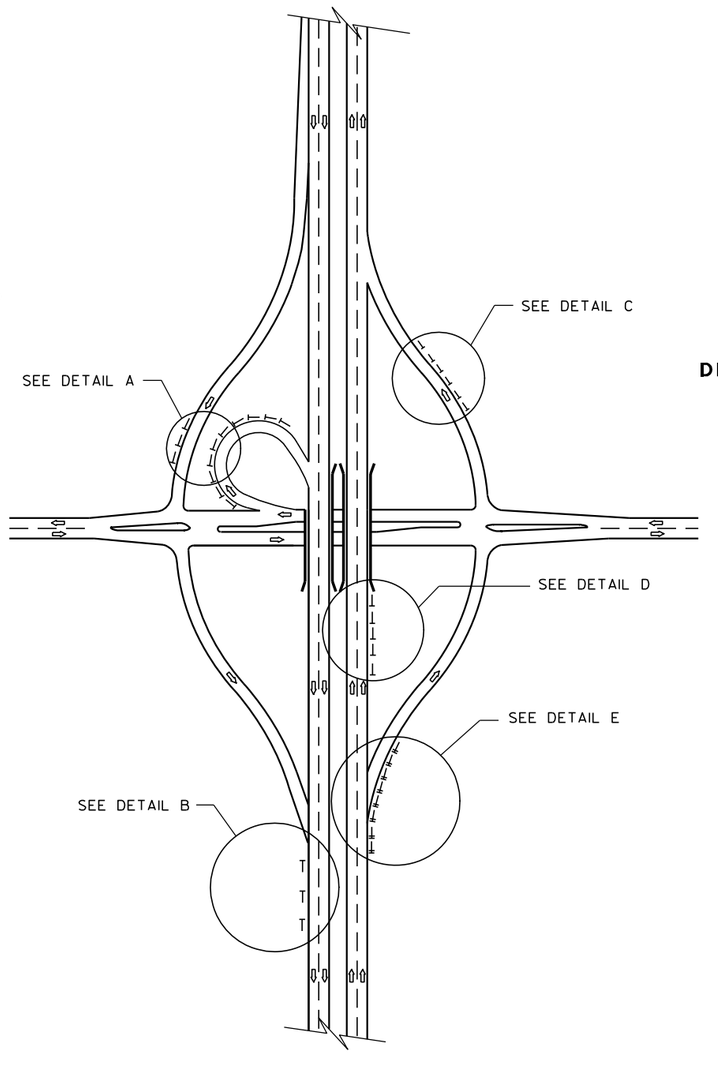

DELINEATOR LAYOUT

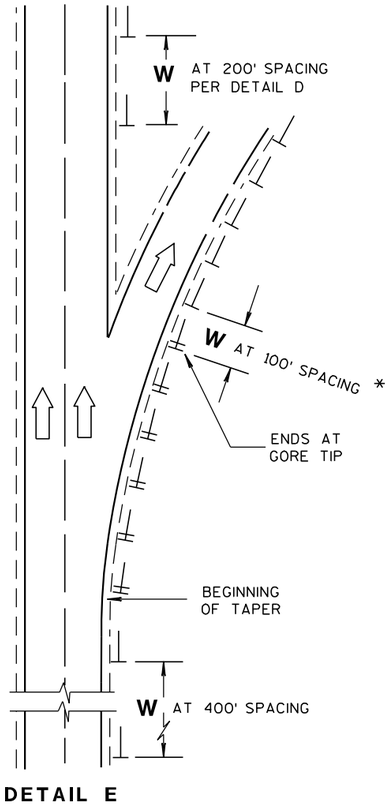

DETAIL E
DELINEATOR LAYOUT FOR ACCELERATION - DECELERATION LANES AND TAPERS AT RAMPS

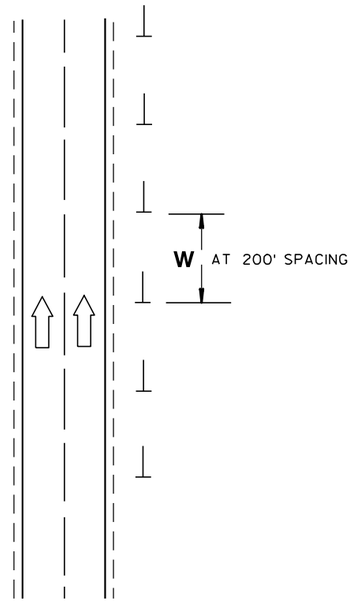

DETAIL D
DELINEATOR LAYOUT BETWEEN INTERCHANGE RAMPS

DELINEATOR LAYOUT

STATE OF WISCONSIN
DEPARTMENT OF TRANSPORTATION

APPROVED
2/5/09 DATE
/S/ Thomas N. Nothdurft
STATE TRAFFIC ENGINEER
FHWA

6

S.D.D. 15 A 6-2

6

S.D.D. 15 A 6-2

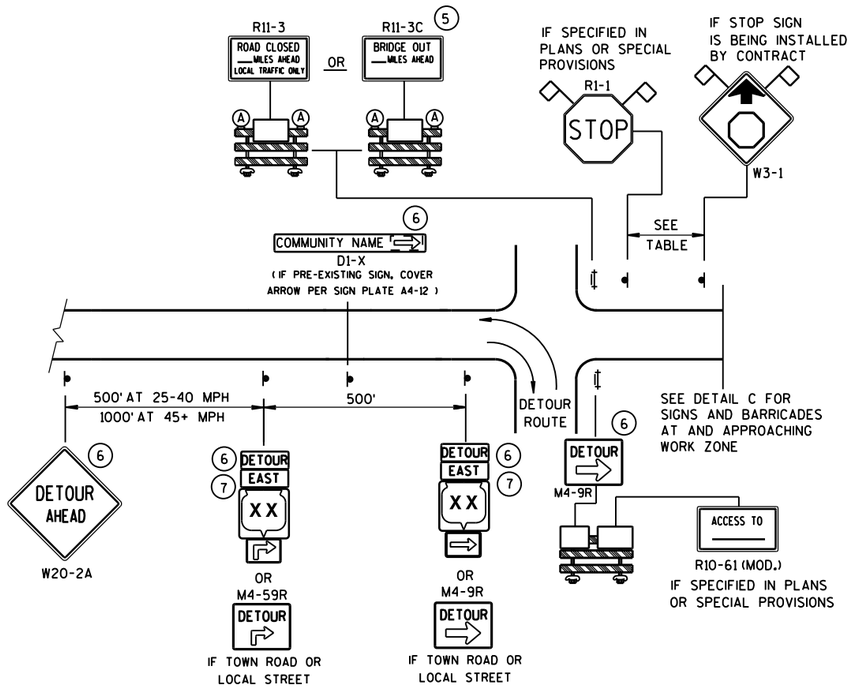

DETAIL A
MAINLINE CLOSURE WITH POSTED DETOUR

WORK ZONE GREATER THAN ½ MILE FROM DETOUR ROUTE (1000 FEET IF URBAN)

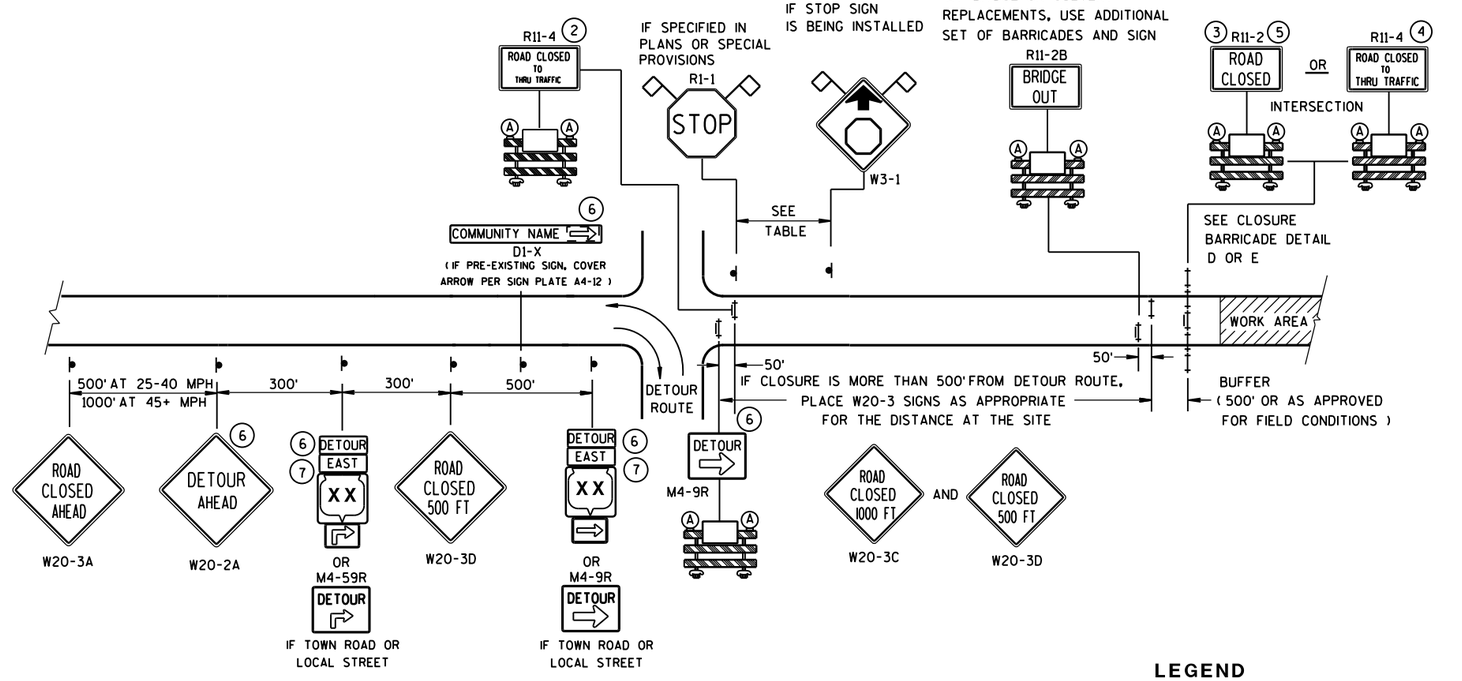

DETAIL B
MAINLINE CLOSURE WITH POSTED DETOUR

WORK ZONE LESS THAN ½ MILE FROM DETOUR ROUTE (1000 FEET IF URBAN)

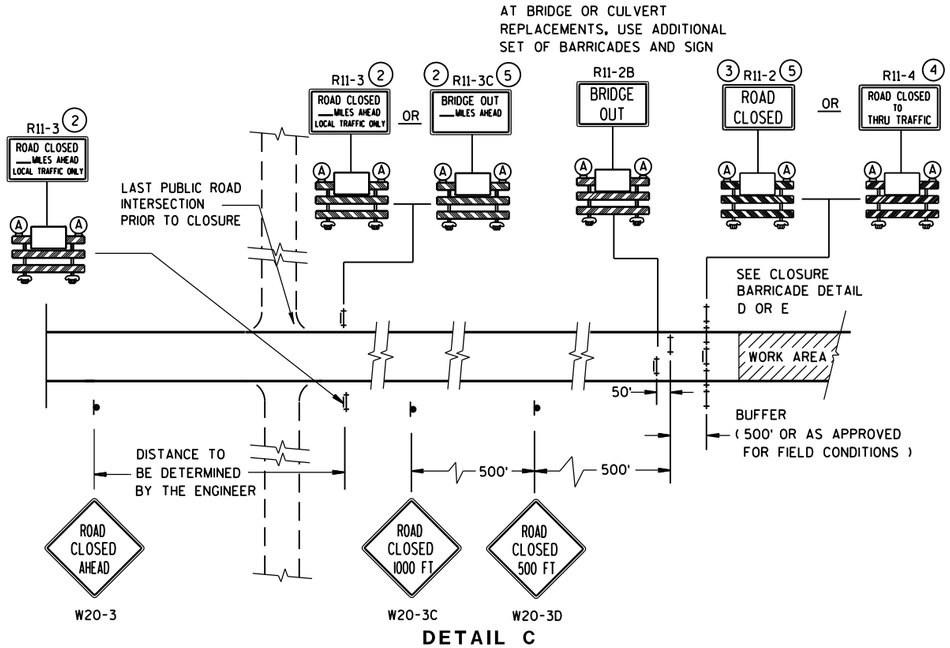

DETAIL C
MAINLINE CLOSURE, NO POSTED DETOUR

SPEED LIMIT (MPH)	"STOP AHEAD" ADVANCE WARNING DISTANCE (FT)
25	200
30	200
35	350
40	350
45	500
50	550
55	750

LEGEND

- SIGN ON PERMANENT SUPPORT
- TYPE III BARRICADE
- TYPE III BARRICADE WITH ATTACHED SIGN
- (A) TYPE "A" WARNING LIGHT (FLASHING)
- WORK AREA
- DETOUR / EAST — M4-8 / M3-X
- XX — M1-4; COUNTY XX — M1-5A; XX — M1-6
- M05-1 OR M06-1
- FLAGS, 16" X 16" MIN., (ORANGE)

SEE SDD 15C2-SHEET "**b**" FOR GENERAL NOTES AND FOOTNOTES (1) THROUGH (7)

BARRICADES AND SIGNS FOR MAINLINE CLOSURES

STATE OF WISCONSIN
DEPARTMENT OF TRANSPORTATION

Sept. 2015 — DATE
/S/ Peter Amakobe Atepe
STATEWIDE WORK ZONE TRAFFIC SAFETY ENGINEER
FHWA

S.D.D. 15 C 2-6a

6

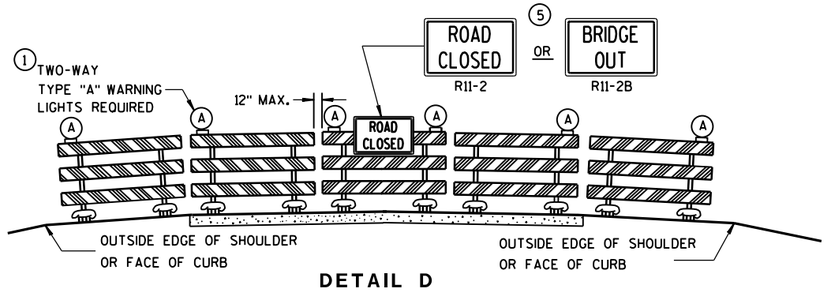

DETAIL D

ROAD CLOSURE BARRICADE DETAIL

APPROACH VIEW

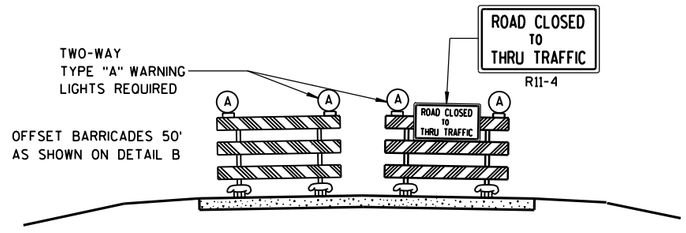

DETAIL E

LANE CLOSURE BARRICADE DETAIL

APPROACH VIEW

SEE SDD 15C2-SHEET "**a**" FOR LEGEND

GENERAL NOTES

THE EXACT NUMBER, LOCATION, AND SPACING OF ALL SIGNS AND BARRICADES SHALL BE ADJUSTED TO FIT FIELD CONDITIONS AS APPROVED BY THE ENGINEER.

ANY SIGNS TEMPORARY OR EXISTING, WHICH CONFLICT WITH TRAFFIC CONTROL "IN USE" SHALL BE REMOVED OR COVERED AS NEEDED AND AS APPROVED BY THE ENGINEER.

THE SPACING BETWEEN TRAFFIC CONTROL SIGNS SHOULD BE ADJUSTED TO NOT CONFLICT WITH AND SHOULD PROVIDE A DESIRABLE MINIMUM OF 200 FEET CLEARANCE TO EXISTING SIGNS THAT WILL REMAIN IN PLACE.

BARRICADES THAT MUST BE MOVED FOR A WORK OPERATION SHALL BE IMMEDIATELY RE-ESTABLISHED UPON COMPLETION OF THE OPERATION OR, FOR CONTINUING OPERATIONS, AT THE END OF EACH WORKING DAY.

SIGNS THAT WILL BE IN PLACE LESS THAN 7 CONTINUOUS DAYS AND NIGHTS MAY BE MOUNTED ON PORTABLE SUPPORTS.

ALL TYPE III BARRICADES SHALL HAVE RAILS REFLECTORIZED ON BOTH FACES. STRIPES SHALL BE PROPERLY SLOPED DOWN TOWARD THE TRAFFIC SIDE OR AS SHOWN IN THE ROAD CLOSURE BARRICADE DETAIL D FOR FULL ROAD CLOSURES.

TYPE "A" LOW-INTENSITY FLASHING WARNING LIGHTS SHALL BE VISIBLE ON BOTH SIDES OF THE BARRICADE.

THE R11-2, R11-3, M4-9, R11-4 AND R10-61 SIGNS PLACED ON BARRICADES SHALL COVER NO MORE THAN THE TOP RAIL. THE SIGNS SHALL NOT COVER ANY PORTION OF THE MIDDLE OR BOTTOM RAILS.

"WO AND "MO" SIGNS ARE THE SAME AS "W" AND "M" SIGNS EXCEPT THE BACKGROUND IS ORANGE.

ALL SIGNS SHALL BE 48" X 48" UNLESS OTHERWISE NOTED BELOW:
- R11-2 SHALL BE 48" X 30".
- R11-3, R11-4 AND R10-61 SHALL BE 60" X 30".
- M4-9 SHALL BE 30" X 24".
- M3-X SHALL BE 24" X 12". (36" X 18" IF NEEDED TO MATCH EXISTING SIGNS.)
- M4-8 SHALL BE 24" X 12". (30" X 15" IF NEEDED TO MATCH EXISTING SIGNS.)
- M1-4, M1-5A, AND M1-6 SHALL BE 24" X 24". (36" X 36" IF NEEDED TO MATCH EXISTING SIGNS.)
- M05-1 AND M06-1 SHALL BE 21" X 21". (30" X 30" IF NEEDED TO MATCH EXISTING SIGNS.)
- D1-X SHALL BE AS SHOWN ON SPECIFIC PROJECT SIGNING DETAIL SHEETS.
- R1-1 SHALL BE 36" X 36".

(1) TWO WARNING LIGHTS SHALL BE PROVIDED ON THE CENTER BARRICADE AND A MINIMUM OF ONE WARNING LIGHT SHALL BE PROVIDED ON EACH OF THE OTHER BARRICADES WITHIN THE ROADWAY LIMITS. SPACING OF THE WARNING LIGHTS SHALL BE UNIFORM TO THE EDGE OF ROADWAY AS SHOWN (APPROX. 8-FOOT LIGHT SPACING).

(2) THESE SIGNS AND BARRICADES ARE NOT REQUIRED IF ROAD CLOSURE BEGINS AT INTERSECTION.

(3) FOR ROAD CLOSURE WITHOUT LOCAL ACCESS TO PROJECT, SEE ROAD CLOSURE BARRICADE DETAIL D.

(4) FOR ROAD CLOSURE WITH LOCAL ACCESS TO PROJECT, SEE LANE CLOSURE BARRICADE DETAIL E.

(5) FOR BRIDGE OR CULVERT REPLACEMENTS, SUBSTITUTE "BRIDGE OUT" INSTEAD OF "ROAD CLOSED" ON R11-2 AND R11-3 SIGNS.

(6) INSTALL DETOUR AND COMMUNITY GUIDE SIGNS AND ARROWS ONLY IF SPECIFIED IN THE CONTRACT. IF THERE ARE EXISTING ROUTE MARKER ASSEMBLIES THAT WILL REMAIN IN PLACE, ADJUST THE LOCATION OF THE DETOUR ROUTE SIGNS TO CORRESPOND WITH THE EXISTING ASSEMBLIES. MODIFY EXISTING SIGNS WHERE POSSIBLE. SEE SPECIFIC PROJECT DETOUR SIGNING DETAIL SHEETS. IF DETOUR SIGNS ARE BEING INSTALLED BY OTHERS, PLACE THE CONTRACTED TRAFFIC CONTROL SIGNS TO ALLOW FOR PLACEMENT OF ALL WARNING, DETOUR AND GUIDE SIGNS AS SHOWN.

(7) "EAST" CARDINAL DIRECTION MARKERS AND RIGHT TURN ARROWS ARE SHOWN. USE OTHER CARDINAL DIRECTIONS AND ARROWS AS APPROPRIATE.

BARRICADES AND SIGNS FOR MAINLINE CLOSURES

STATE OF WISCONSIN
DEPARTMENT OF TRANSPORTATION

Sept. 2015 — DATE

/S/ Peter Amakobe Atepe
STATEWIDE WORK ZO[illegible] FIC
SAFETY ENGI[illegible]
FHWA

6

S.D.D. 15 C 2-6b

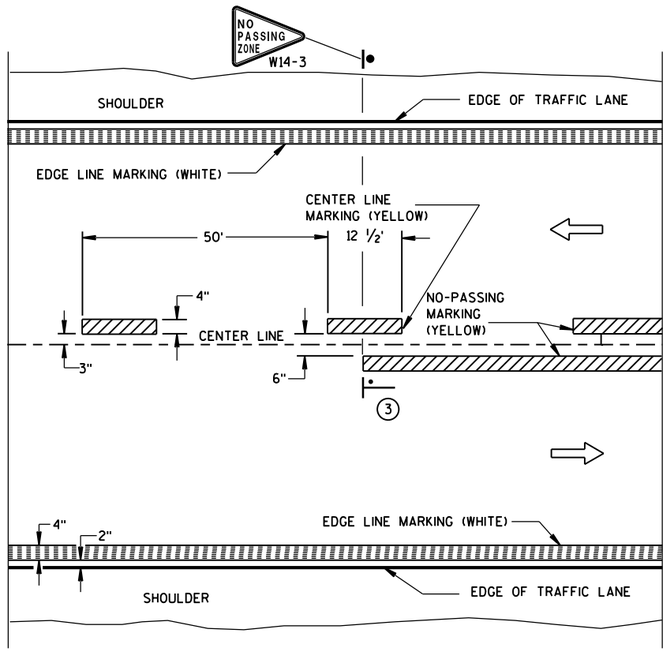

TWO WAY TRAFFIC

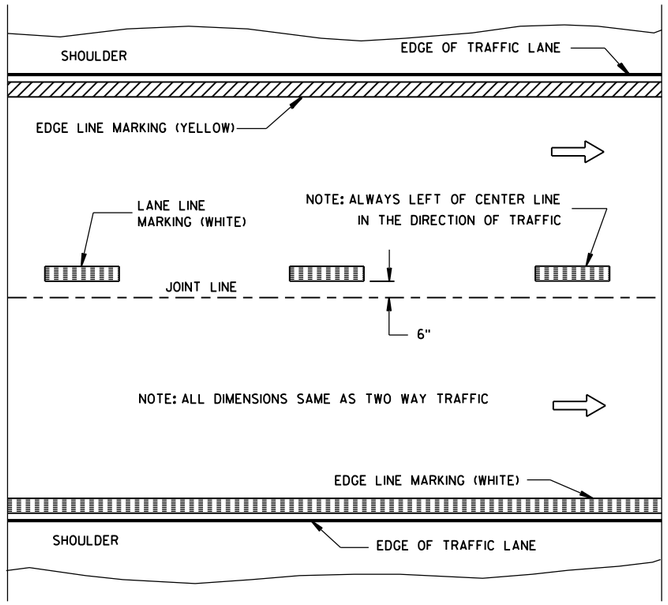

ONE WAY TRAFFIC

PERMANENT PAVEMENT MARKING

GENERAL NOTES

DETAILS OF CONSTRUCTION NOT SHOWN ON THIS DRAWING SHALL CONFORM TO STANDARD SPECIFICATIONS AND SPECIAL PROVISIONS.

1. HALF CYCLE LENGTHS (25'±) WITH 2' MINIMUM STRIPE LENGTHS SHALL BE PROVIDED ON ROADWAYS (INCLUDING TEMPORARY TRAVELED WAYS) WITH REVERSE CURVATURE, CURVATURE OF OVER 5 DEGREES OR WHEN DIRECTED BY THE ENGINEER TO MARK UNUSUAL ALIGNMENT OF THE TRAVELED WAY.
2. NO PASSING ZONE TEMPORARY PAVEMENT MARKING IS REQUIRED TO BE PLACED, WHERE APPROPRIATE, ALONG WITH CENTERLINE TEMPORARY PAVEMENT MARKING WHEN A SAME DAY PERMANENT PAVEMENT MARKING ITEM IS INCLUDED IN THE CONTRACT.
3. NO PASSING ZONE MARKINGS ARE PLACED ACCORDING TO "T" MARKINGS. IF EXISTING NO PASSING ZONE W14-3 SIGNS ARE BEYOND 50 FEET IN EITHER DIRECTION, THE SIGNS SHALL BE MOVED TO THE "T" MARKINGS.
4. CONCRETE ONLY.

NOTE

ARROW SYMBOL (⇨) SHOWS DIRECTION OF TRAVEL

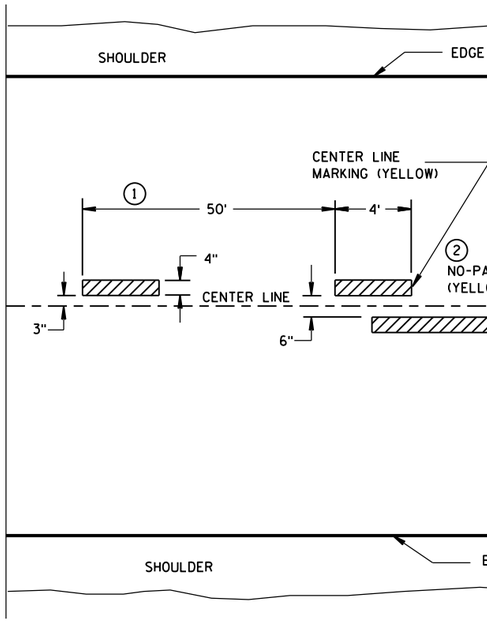

TWO WAY TRAFFIC

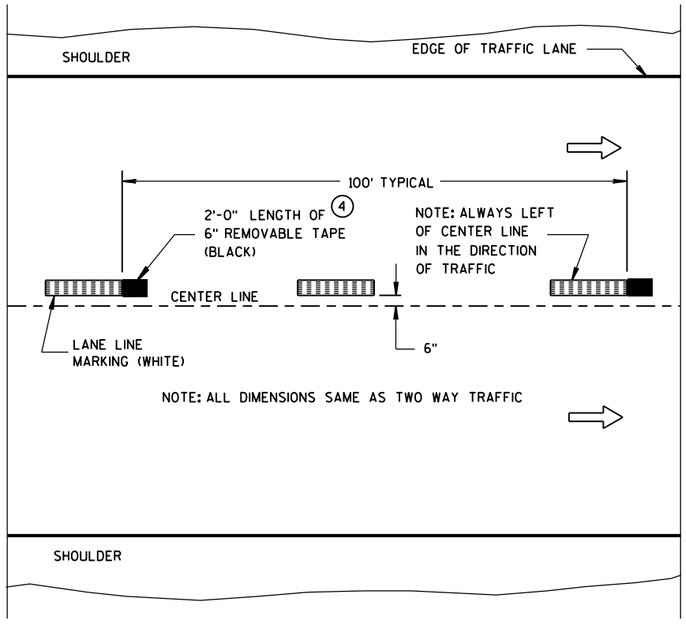

ONE WAY TRAFFIC

TEMPORARY (INTERMEDIATE) PAVEMENT MARKING

(SHOWS CYCLE FOR TEMPORARY CENTER LINE OR TEMPORARY LANE LINE MARKING)

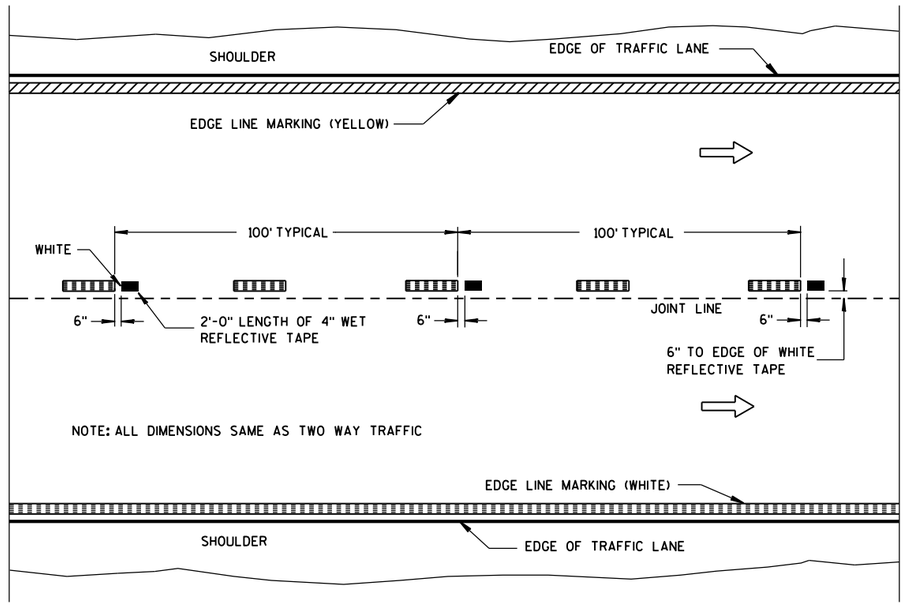

WET REFLECTIVE TAPE SUPPLEMENT TO
SPRAYED OR NON WET REFLECTIVE TAPE LANE LINE

LEGEND

"T" MARKING

POST MOUNTED SIGN

PAVEMENT MARKING (MAINLINE)

STATE OF WISCONSIN
DEPARTMENT OF TRANSPORTATION

APPROVED

5-13-2013
DATE

/S/ Travis Feltes
STATE TRAFFIC E

FHWA

6

S.D.D. 15 C 8-16a

6

S.D.D. 15 C 8-16a

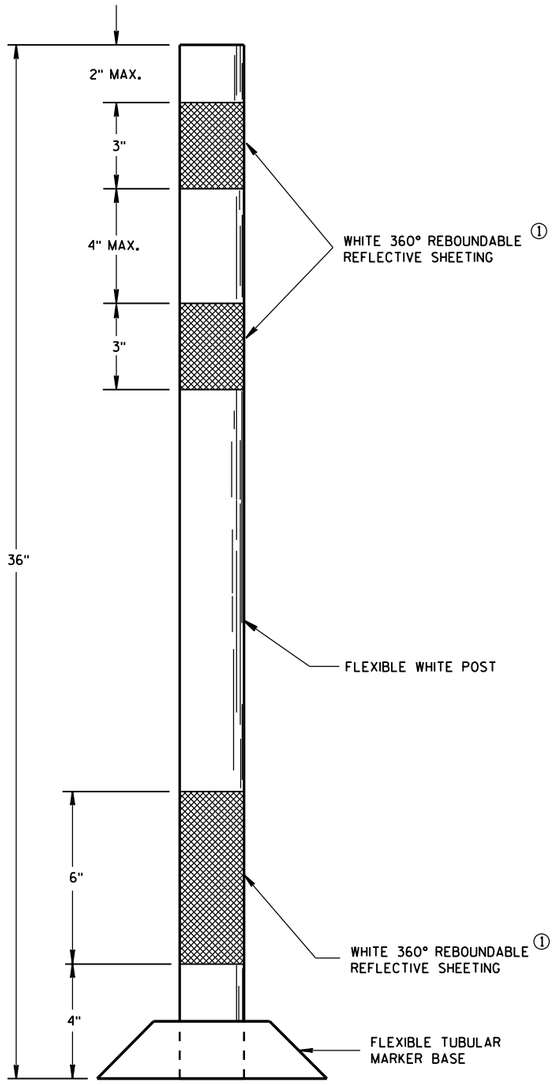

FLEXIBLE
TUBULAR MARKER POST
PERMANENT CROSSOVER

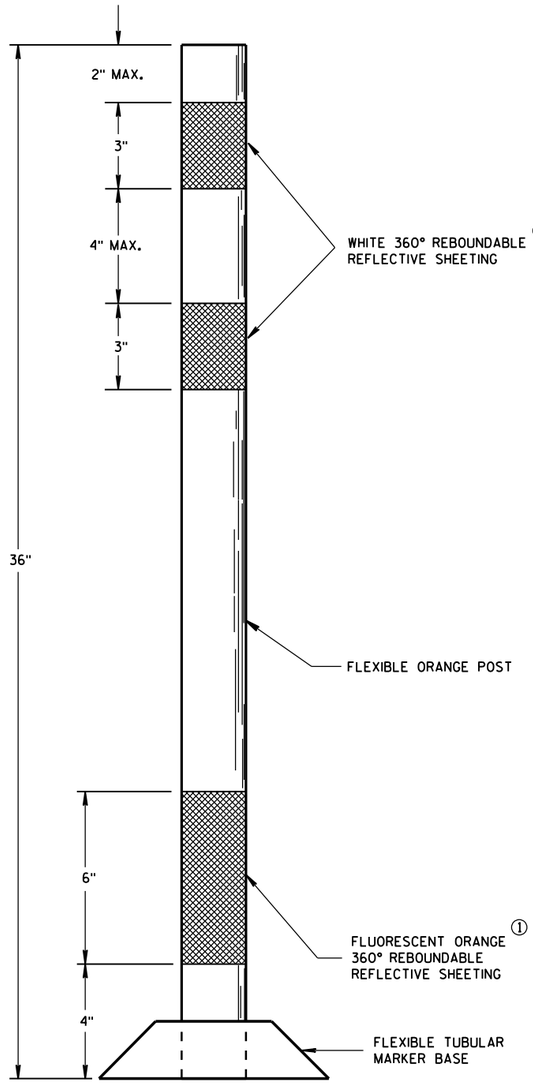

FLEXIBLE
TUBULAR MARKER POST
WORK ZONE

GENERAL NOTES

DETAILS OF CONSTRUCTION NOT SHOWN ON THIS DRAWING SHALL CONFORM TO THE PERTINENT REQUIREMENTS OF THE STANDARD SPECIFICATIONS AND APPLICABLE SPECIAL PROVISIONS.

SURFACE MOUNTED BASES SHALL BE FURNISHED IN ACCORDANCE WITH MANUFACTURERS RECOMMENDATIONS TO BE COMPATIBLE WITH FLEXIBLE TUBULAR MARKER POSTS TO A SIZE AND SHAPE THAT WILL PROVIDE A STABLE POST FOUNDATION WHEN SECURED TO THE PAVEMENT.

THE ASPHALTIC ADHESIVE OR BUTYL PAD FURNISHED SHALL BE IN ACCORDANCE WITH MANUFACTURERS RECOMMENDATIONS.

① REFLECTIVE SHEETING SHALL FOLLOW THE REQUIREMENTS IN THE APPROVED PRODUCTS LISTING FOR SIGN SHEETING.

FLEXIBLE TUBULAR MARKER POST	
STATE OF WISCONSIN DEPARTMENT OF TRANSPORTATION	
APPROVED 10-16-2015 DATE FHWA	/S/ Peter Amakobe Atepe STATEWIDE WORK ZON SAFETY ENGINE

6

S.D.D. 15 C 11-6

LEGEND

- TYPE III BARRICADE WITH ATTACHED SIGN
- SIGN ON PERMENENT SUPPORT
- TRAFFIC CONTROL DRUM WITH TYPE "C" STEADY BURN LIGHT
- TRAFFIC CONTROL DRUM
- FLASHING ARROW BOARD
- (A) TYPE "A" WARNING LIGHT (FLASHING)
- REMOVING PAVEMENT MARKING
- DIRECTION OF TRAFFIC
- WORK AREA

GENERAL NOTES

THE EXACT NUMBER, LOCATION, AND SPACING OF ALL SIGNS AND DEVICES SHALL BE ADJUSTED TO FIT FIELD CONDITIONS AS APPROVED BY THE ENGINEER.

THE SPACING BETWEEN SIGNS SHOULD BE ADJUSTED TO NOT CONFLICT WITH AND TO PROVIDE A MINIMUM OF 200 FEET, (500 FEET DESIREABLE) DISTANCE TO EXISTING SIGNS.

THIS LANE CLOSURE IS TYPICAL FOR CLOSING RIGHT LANE - REVERSE FOR CLOSING LEFT LANE.

ALL SIGNS ARE 48"×48" UNLESS OTHERWISE NOTED.

"WO" IS THE SAME AS "W" EXCEPT THE BACKGROUND IS ORANGE.

ANY SIGNS TEMPORARY OR EXISTING, WHICH CONFLICT WITH TRAFFIC CONTROL "IN USE" SHALL BE REMOVED OR COVERED AS NEEDED AND AS APPROVED BY THE ENGINEER. NO WARNING LIGHTS SHALL BE WORKING ON "COVERED" OR "DOWNED" SIGNS.

CONSIDER GEOMETRICS WHEN LOCATING SIGNS AND ARROW BOARD SO THE DRIVER HAS A CLEAR VIEW OF THE ARROW BOARD AND LANE CLOSURE DRUMS FOR A MINIMUM 1500 FEET IN FRONT OF DRUMS.

FOR A LANE CLOSURE THAT IS IN PLACE LESS THAN 7 CONTINUOUS DAYS AND NIGHTS, THE ADVANCED WARNING SIGNS MAY BE MOUNTED ON PORTABLE SUPPORTS.

REMOVE PAVEMENT MARKINGS IF LANE CLOSURE IS TO BE IN PLACE FOR LONGER THAN 4 OR MORE DAYS AND NIGHTS.

WARNING LIGHTS ARE NOT REQUIRED IF THE LANE CLOSURE IS A DAYTIME ONLY OPERATION.

IF THE HORIZONTAL ALIGNMENT IS SUCH THAT A CURVE MAY REQUIRE ADDITIONAL DELINEATION, THE DEVICE SPACING MAY BE DECREASED TO 50 FEET.

ADJUSTMENTS IN BUFFER SPACE NEED TO BE INCORPORATED WHEN THE LANE CLOSURE OCCURS NEAR AN INTERCHANGE EXIT OR ENTRANCE RAMP. THE LANE CLOSURE MUST MUST TAKE PLACE FAR ENOUGH IN ADVANCE OF AN EXIT OR ENTRANCE RAMP TO STILL ALLOW FOR ADEQUATE BUFFER SPACE. THE MINIMUM LENGTH OF THE BUFFER SPACE BEFORE AN EXIT RAMP SHOULD BE 1/2 THE LENGTH OF THE TRANSITION AREA. THE ENTRANCE RAMP SHOULD BE FOLLOWED BY THE ORIGINAL BUFFER SPACE LENGTH OF 800 FEET DESIRABLE PRIOR TO ANOTHER TRAFFIC CONTROL CHANGE SUCH AS A CROSSOVER MANEUVER.

* THE LEFT REVERSE CURVE SIGN (W01-4L) IS ONLY REQUIRED WHEN THIS DETAIL IS USED IN COMBINATION WITH "SINGLE LANE CROSSOVER" DETAIL.

** A SPEED LIMIT SIGN SHALL BE LOCATED 1500 FEET BEYOND THE END OF THE ACCELERATION LANE OF EACH ENTRANCE RAMP. THERE SHOULD BE A SPEED LIMIT SIGN INCORPORATED A MINIMUM OF EVERY 2 OR 3 MILES. INCLUDE A RESUME SPEED LIMIT SIGN 200 FEET MINIMUM (500 FEET DESIREABLE) BEYOND THE "END OF ROADWORK" SIGN.

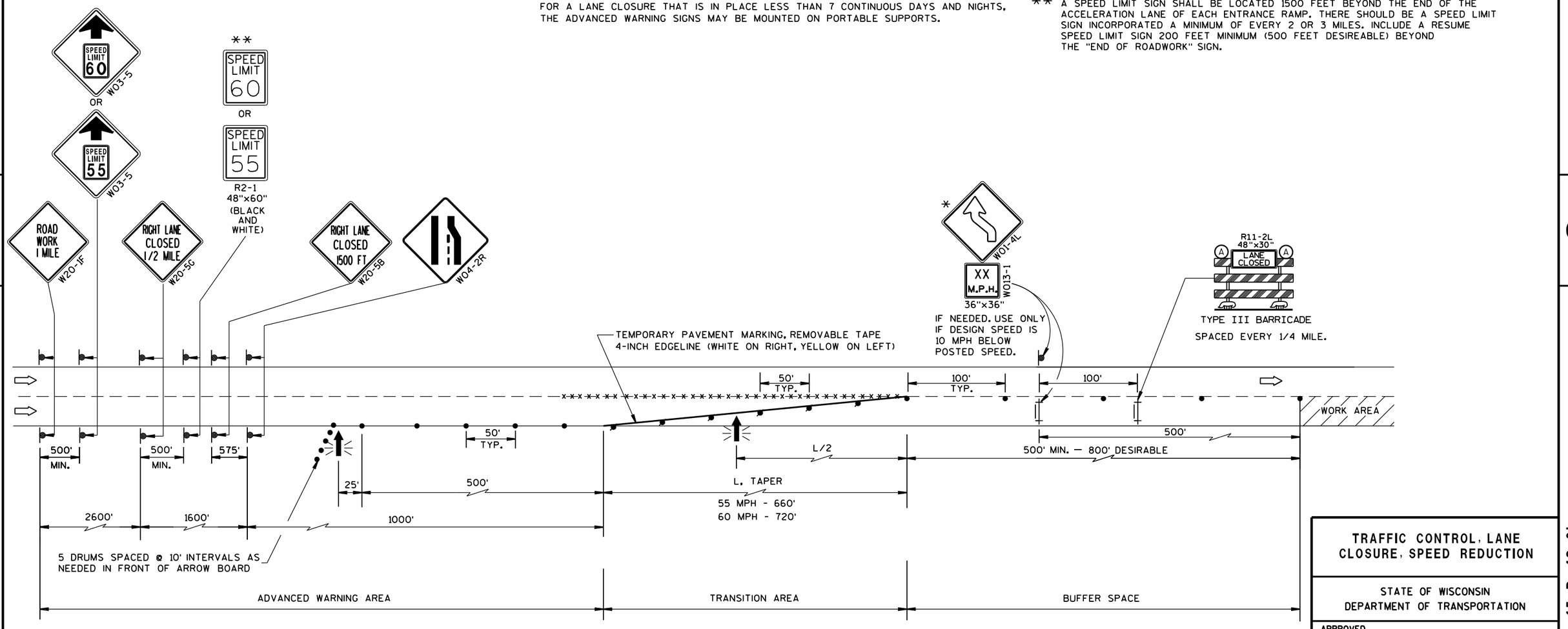

TRAFFIC CONTROL, LANE CLOSURE, SPEED REDUCTION

STATE OF WISCONSIN
DEPARTMENT OF TRANSPORTATION

APPROVED
March 2016 — DATE
/S/ Peter Amakobe Atepe
STATEWIDE WORK ZONE TRAFFIC ENGINEER
FHWA

6

S.D.D. 15 D 12-6b

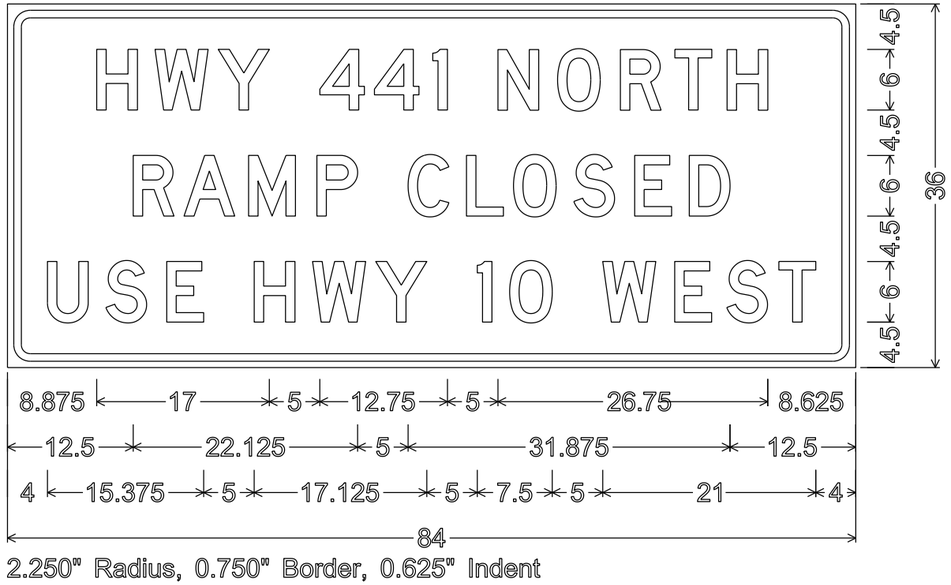

2.250" Radius, 0.750" Border, 0.625" Indent

NOTES

1. Sign is Type II - Type F Reflective
2. Color:
   Background - Orange
   Message - Black
3. Message Series - D

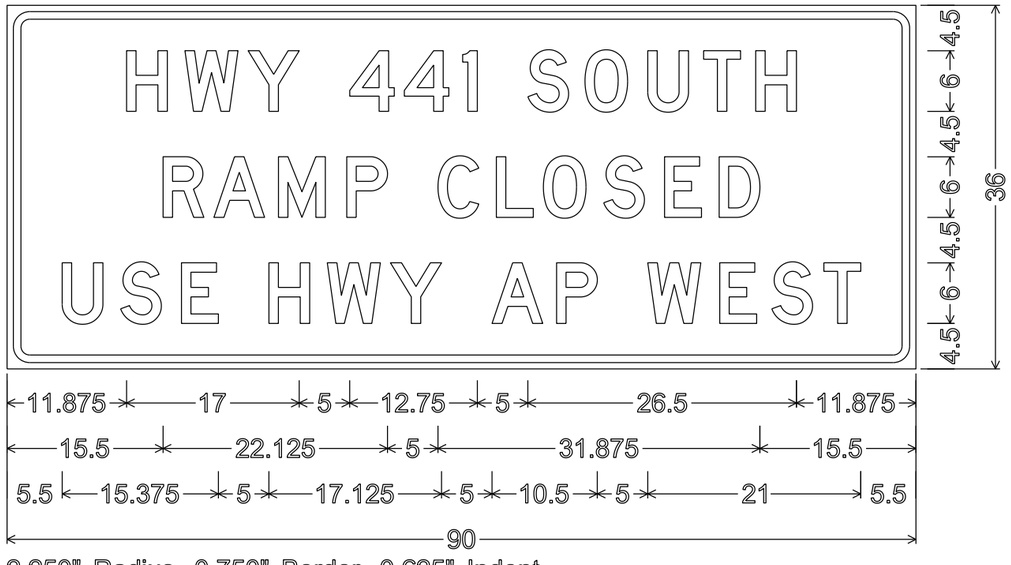

2.250" Radius, 0.750" Border, 0.625" Indent

PROJECT NO: 1517-75-88	HWY: USH 10/STH 441	COUNTY: WINNEBAGO	FIXED MESSAGE SIGN DETAILS	SHEET NO: 120	E

STATE PROJECT NUMBER
1517-75-88

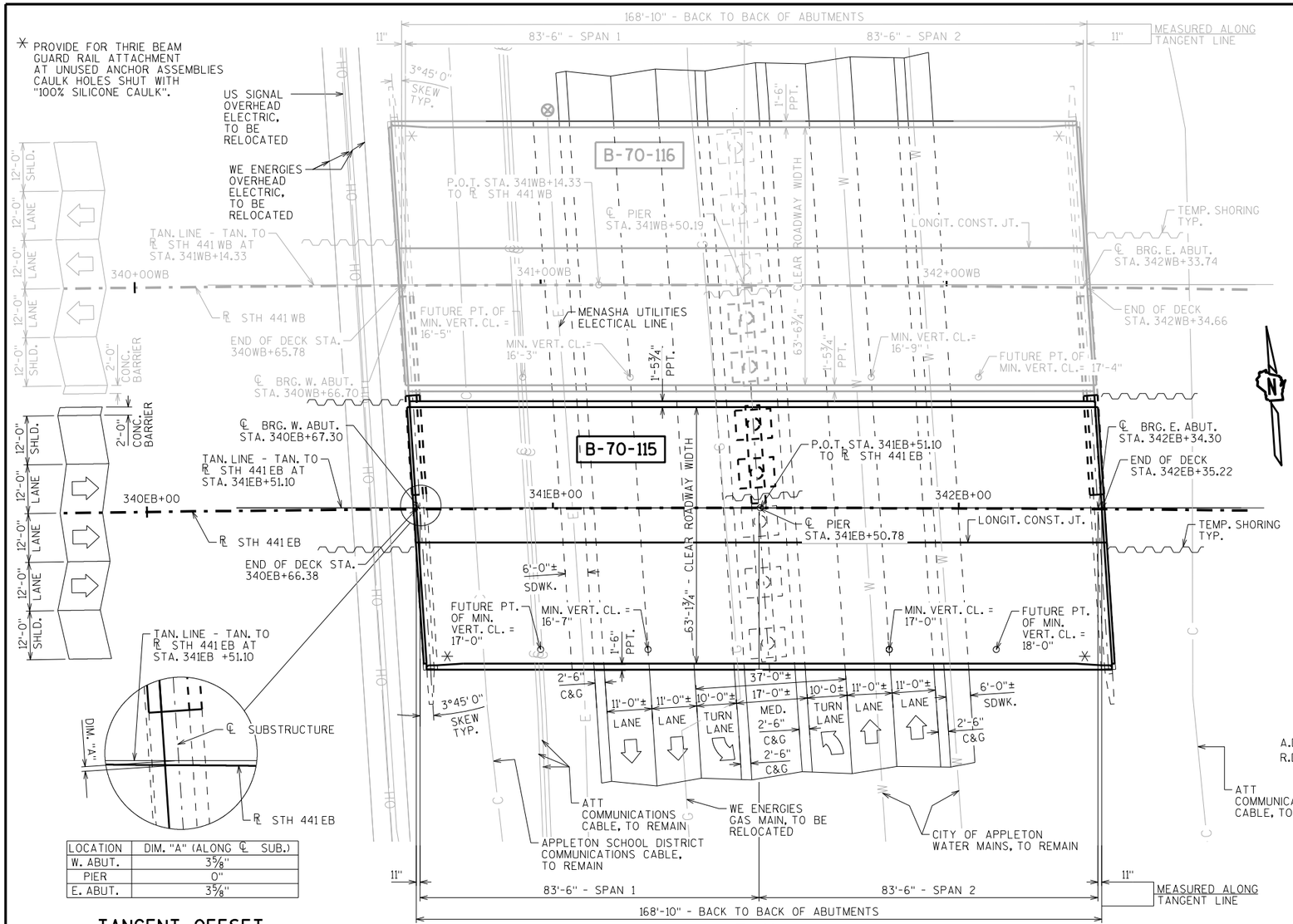

LOCATION	DIM. "A" (ALONG ℄ SUB.)
W. ABUT.	3⅝"
PIER	0"
E. ABUT.	3⅝"

TANGENT OFFSET DETAIL

PLAN

2-SPAN - 45" PRESTRESSED GIRDERS

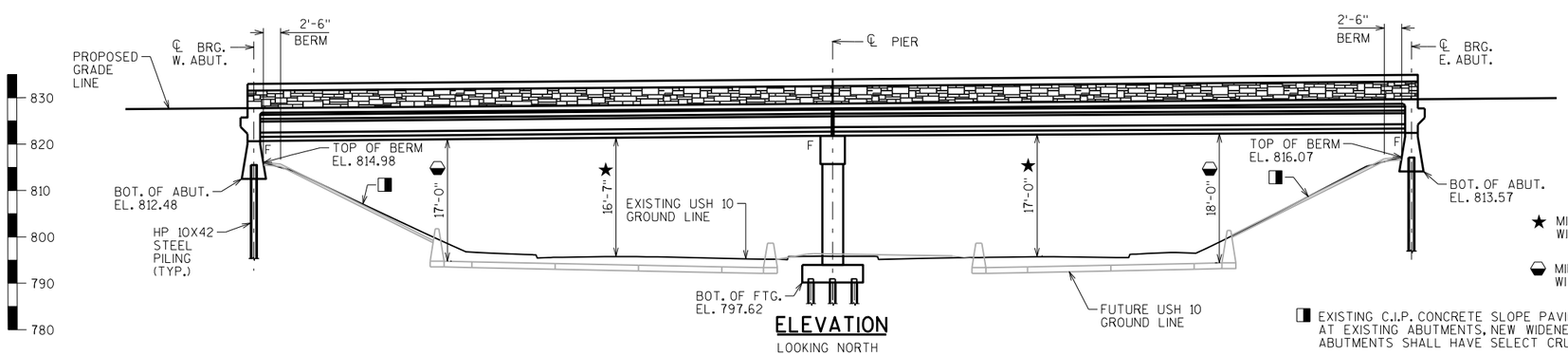

ELEVATION

LOOKING NORTH

★ MIN. VERTICAL UNDERCLEARANCE WITH EXISTING USH 10 SECTION

⬣ MIN. VERTICAL UNDERCLEARANCE WITH FUTURE USH 10 SECTION

◨ EXISTING C.I.P. CONCRETE SLOPE PAVING SHALL REMAIN AT EXISTING ABUTMENTS, NEW WIDENED PORTION OF ABUTMENTS SHALL HAVE SELECT CRUSHED SLOPE PAVING

DESIGN DATA

LIVE LOAD:

DESIGN LOADING: HS-20
INVENTORY RATING: HS-18
OPERATING RATING: HS-41
WISCONSIN STANDARD PERMIT VEHICLE (WIS.-SPV): 220 (KIPS)

STRUCTURE IS DESIGNED FOR A FUTURE WEARING SURFACE OF 20 POUNDS PER SQUARE FOOT AND AN ADDITIONAL 5 PSF PREVENTATIVE POLYMER OVERLAY.

MATERIAL PROPERTIES:

CONCRETE MASONRY (HPC) — f'c = 4,000 P.S.I.
BAR STEEL REINFORCEMENT, GRADE 60 — fy = 60,000 P.S.I.
45" PRESTRESSED GIRDERS, CONCRETE MASONRY — f'c = 8,000 P.S.I.
STRANDS- 0.6" DIA. WITH ULTIMATE TENSILE STRENGTH OF 270,000 P.S.I.

FOUNDATION DATA

ABUTMENTS TO BE SUPPORTED ON HP 10X42 PILING DRIVEN TO A REQUIRED DRIVING RESISTANCE OF 180 TONS ** PER PILE AS DETERMINED BY THE MODIFIED GATES DYNAMIC FORMULA. ESTIMATED 95'-0" LONG.

PIER TO BE SUPPORTED ON HP 10X42 PILING DRIVEN TO A REQUIRED DRIVING RESISTANCE OF 180 TONS ** PER PILE AS DETERMINED BY THE MODIFIED GATES DYNAMIC FORMULA. ESTIMATED 75'-0" LONG.

** THE FACTORED AXIAL RESISTANCE OF PILES IN COMPRESSION USED FOR DESIGN IS THE REQUIRED DRIVING RESISTANCE MULTIPLIED BY A RESISTANCE FACTOR OF 0.5 USING MODIFIED GATES TO DETERMINE DRIVEN PILE CAPACITY.

CURVE DATA

STH 441 EB

P.I. = 341+54.19
Δ = 06°-18'-49.36"
D = 00°-29'-59.24"
T = 632.28'
L = 1263.28'
R = 11464.02'
S.E. = 0.02%
P.C. = 335+21.91
P.T. = 347+85.19

TRAFFIC VOLUME

STH 441	USH 10
A.D.T.=62,200 (2038)	A.D.T.=33,400 (2038)
R.D.S.=70 M.P.H.	R.D.S.=40 M.P.H.

LIST OF DRAWINGS

1. NEW DECK & WIDENING
2. CROSS SECTIONS
3. GENERAL NOTES AND QUANTITIES
4. CONSTRUCTION STAGING
5. SUBSURFACE EXPLORATION
6. REMOVAL DETAILS
7. WEST ABUTMENT
8. WEST ABUTMENT DETAILS
9. EAST ABUTMENT
10. EAST ABUTMENT DETAILS
11. PIER
12. PIER DETAILS
13. 45" PRESTRESSED GIRDER DETAILS
14. STEEL DIAPHRAGM
15. SUPERSTRUCTURE
16. SUPERSTRUCTURE DETAILS 1
17. SUPERSTRUCTURE DETAILS 2
18. TOP OF DECK ELEVATIONS
19. SINGLE SLOPE PARAPET 42SS MODIFIED
20. SINGLE SLOPE PARAPET 56SS
21. SINGLE SLOPE PARAPET 56SS ELECTRICAL
22. SLOPE PAVING SELECT CRUSHED
23. AESTHETIC DETAILS

STRUCTURE DESIGN CONTACTS:

MAX KULICK (608) 261-6108
AARON BONK (608) 261-0261

NO.	DATE	REVISION	BY

Plans Prepared By WISDOT
BUREAU OF STRUCTURES

ACCEPTED William C. Dreher — CHIEF STRUCTURES DESIGN ENGINEER — 9/7/16 DATE

STRUCTURE B-70-115

STH 441 EB OVER USH 10 (ONEIDA ST.)

COUNTY: WINNEBAGO — ~~TOWN~~/CITY/~~VILLAGE~~: APPLETON

DESIGN SPEC.: AASHTO LRFD BRIDGE DESIGN SPECIFICATIONS

DESIGNED BY	MJK	DESIGN CK'D.		DRAWN BY	MJK	PLANS CK'D.	EMK

NEW DECK & WIDENING

SHEET 1 OF 23

121

I.D. 1517-07-04B

DATE: AUG. 2016

SCALE = 15

STATE PROJECT NUMBER

1517-75-88

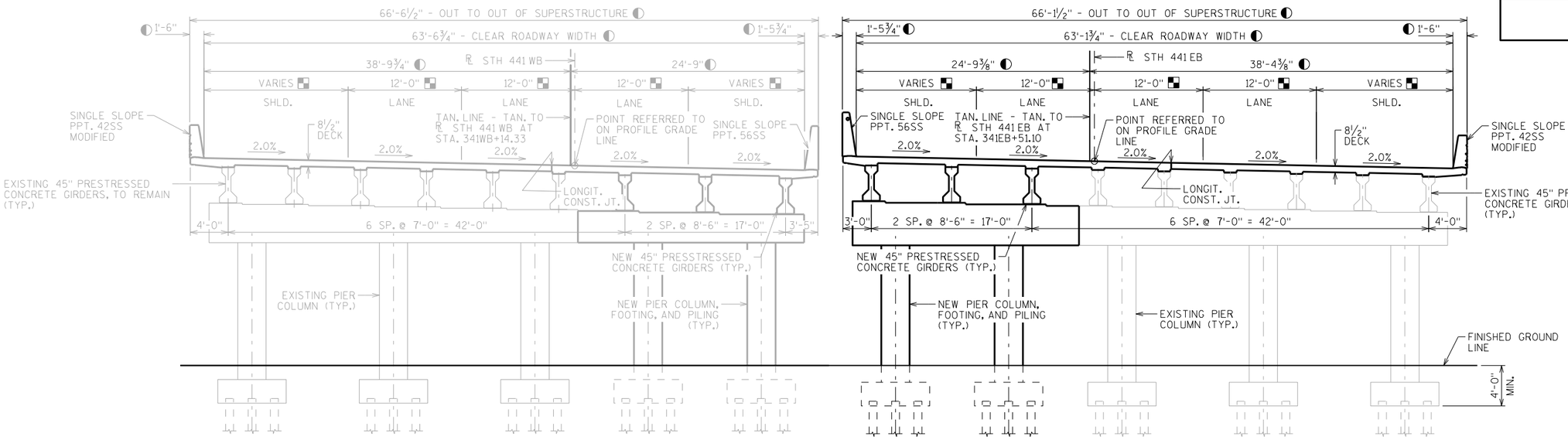

B-70-116

B-70-115

CROSS SECTION THRU STH 441

LOOKING EAST

▪ DIMENSION MEASURED RADIALLY - NORMAL TO THE ℄

◐ DIMENSION MEASURED NORMAL TO THE TANGENT LINE

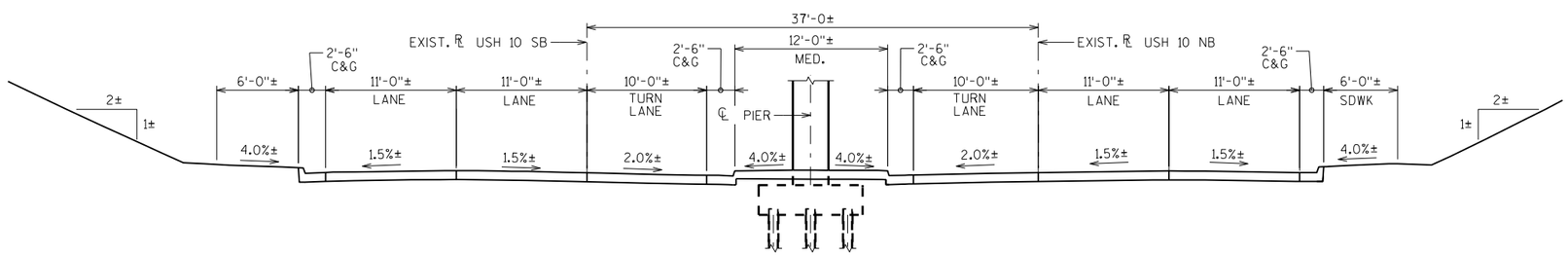

TYPICAL EXISTING SECTION THRU USH 10 (ONEIDA ST.)

LOOKING NORTH

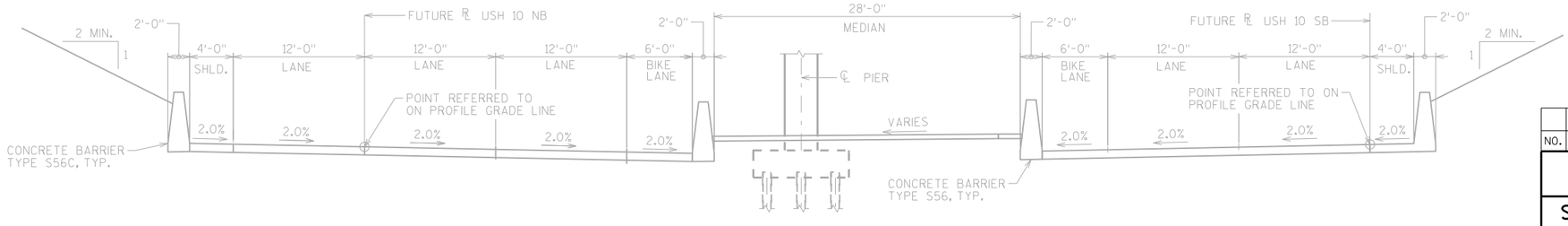

TYPICAL FUTURE SECTION THRU USH 10 (ONEIDA ST.)

LOOKING NORTH

NO.	DATE	REVISION	BY

STATE OF WISCONSIN
DEPARTMENT OF TRANSPORTATION
STRUCTURES DESIGN SECTION

STRUCTURE B-70-115

DRAWN BY MJK | PLANS CK'D. EMK

CROSS SECTIONS

SHEET 2

122

SCALE = 6.0

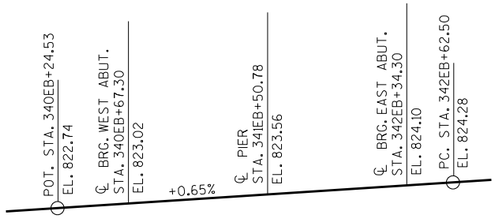

PROFILE GRADE LINE STH 441 EB

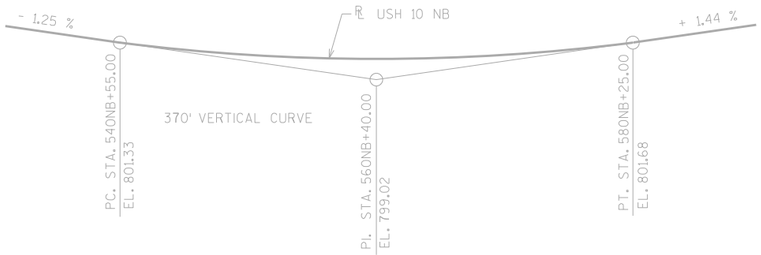

FUTURE PROFILE GRADE LINE USH 10 NB (ONB ALIGNMENT)

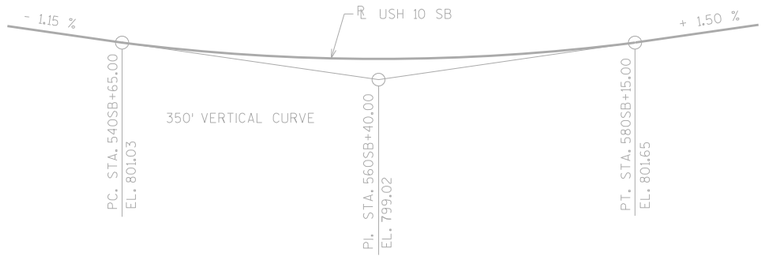

FUTURE PROFILE GRADE LINE USH 10 SB (OSB ALIGNMENT)

TOTAL ESTIMATED QUANTITIES

BID ITEM NUMBER	BID ITEMS	UNIT	SUPER.	WEST ABUT.	PIER	EAST ABUT.	TOTALS
203.0200	REMOVING OLD STRUCTURE STA. 341EB+50.78	LS	———	———	———	———	1
206.1000	EXCAVATION FOR STRUCTURES BRIDGES B-70-115	LS	———	———	———	———	1
210.1500	BACKFILL STRUCTURE TYPE A	TON	———	185	———	185	370
501.1000.S	ICE HOT WEATHER CONCRETING	LB	2,980	105	255	105	3,445
502.3200	PROTECTIVE SURFACE TREATMENT	SY	1,210	———	———	———	1,210
502.3210	PIGMENTED SURFACE SEALER	SY	190	———	———	———	190
502.4206	ADHESIVE ANCHORS NO. 6 BAR	EACH	16	15	———	15	46
502.4207	ADHESIVE ANCHORS NO. 7 BAR	EACH	———	———	16	———	16
503.0145	PRESTRESSED GIRDER TYPE I 45-INCH	LF	504	———	———	———	504
505.0400	BAR STEEL REINFORCEMENT HS STRUCTURES	LB	———	———	755	———	755
505.0600	BAR STEEL REINFORCEMENT HS COATED STRUCTURES	LB	101,750	1,600	4,385	1,600	109,335
506.2605	BEARING PADS ELASTOMERIC NON-LAMINATED	EACH	12	———	———	———	12
506.4000	STEEL DIAPHRAGMS B-70-115	EACH	12	———	———	———	12
511.1200	TEMPORARY SHORING B-70-115	SF	———	220	100	220	540
516.0500	RUBBERIZED MEMBRANE WATERPROOFING	SY	3	7	———	7	17
517.1010.S	CONCRETE STAINING B-70-115	SF	2,900	355	1,380	355	4,990
517.1050.S	ARCHITECTURAL SURFACE TREATMENT B-70-115	SF	425	———	———	———	425
550.1100	PILING STEEL HP 10-INCH X 42 LB	LF	———	475	750	475	1,700
604.0600	SLOPE PAVING SELECT CRUSHED MATERIAL	SY	———	90	———	90	180
612.0406	PIPE UNDERDRAIN WRAPPED 6-INCH	LF	———	40	———	40	80
614.0150	ANCHOR ASSEMBLIES FOR STEEL PLATE BEAM GUARD	EACH	2	———	———	———	2
652.0125	CONDUIT RIGID METALLIC 2-INCH	LF	180	———	———	———	180
SPV.0035	MODIFIED HIGH PERFORMANCE CONCRETE (HPC) MASONRY BRIDGES	CY	397	14	34	14	459
SPV.0060.709	JUNCTION BOXES FIBERGLASS 18X12X6-INCH	EACH	2	———	———	———	2
	NON-BID ITEMS						
	FILLER	SIZE					½" & ¾"

GENERAL NOTES

DRAWINGS SHALL NOT BE SCALED.

BAR STEEL REINFORCEMENT SHALL BE EMBEDDED 2"CLEAR UNLESS OTHERWISE SHOWN OR NOTED.

THE FIRST OR FIRST TWO DIGITS OF THE BAR MARK SIGNIFIES THE BAR SIZE.

BEVEL EXPOSED EDGES OF CONCRETE ¾" UNLESS OTHERWISE NOTED.

THE UPPER LIMITS OF "EXCAVATION FOR STRUCTURES BRIDGES B-70-115" SHALL BE THE EXISTING GROUNDLINE.

◪ BACKFILL PAY LIMITS. BACKFILL BEYOND BACKFILL PAY LIMITS SHALL BE INCIDENTAL TO EXCAVATION FOR STRUCTURES. LIMITS OF EXCAVATION SHALL BE DETERMINED BY THE CONTRACTOR.

AT THE BACK FACE OF ABUTMENT ALL VOLUME WHICH CANNOT BE PLACED BEFORE ABUTMENT CONSTRUCTION AND IS NOT OCCUPIED BY THE NEW STRUCTURE SHALL BE BACKFILLED WITH STRUCTURE BACKFILL.

ELASTOMERIC BEARING PADS NEED NOT BE INDIVIDUALLY MOLDED PROVIDED THE CUT EDGES ARE SMOOTH AND TRUE.

PROTECTIVE SURFACE TREATMENT TO BE APPLIED TO THE ENTIRE TOP OF DECK, INCLUDING PAVING NOTCHES.

PIGMENTED PROTECTIVE SURFACE SEALER TO BE APPLIED TO THE FRONT FACE AND THE TOP OF THE PARAPETS.

THE SLOPE OF THE FILL IN FRONT OF THE ABUTMENTS SHALL BE COVERED WITH SLOPE PAVING MATERIAL TO THE EXTENT SHOWN ON SHEET 22 AND THE ABUTMENT DETAILS.

AT ABUTMENTS AND PIERS, HP 12X53 STEEL PILING MAY BE USED IN LIEU OF HP 10X42 STEEL PILING. PAYMENT SHALL BE BASED ON BID PRICE FOR HP 10X42 STEEL PILING.

THE HAUNCH CONCRETE QUANTITY IS BASED ON THE AVERAGE HAUNCH SHOWN ON THE "45" PRESTRESSED GIRDER DETAILS" SHEET.

DIMENSIONS FOR EXISTING STRUCTURE ARE BASED ON THE ORIGINAL STRUCTURE PLANS.

THE EXISTING GROUND LINE SHALL BE USED AS THE UPPER LIMITS OF EXCAVATION AT THE PIERS.

THE CONTRACTOR SHALL SUPPLY A NEW NAME PLATE IN ACCORDANCE WITH SECTION 502.3.11 OF THE STANDARD SPECIFICATIONS AND THE STANDARD DETAIL DRAWINGS. NAME PLATE TO SHOW ORIGINAL CONSTRUCTION YEAR 1993.

THE CONCRETE QUANTITY FOR ALL SUPERSTRUCTURE AND SUBSTRUCTURE CONCRETE (EXCLUDING THE GIRDERS) SHALL BE PAID FOR UNDER THE BID ITEM "MODIFIED HIGH PERFORMANCE CONCRETE (HPC) MASONRY BRIDGES".

TRANSVERSE TINING OF THE BRIDGE DECK SHALL BE DONE BY HAND AND SHALL BE PAID FOR UNDER THE BID ITEM "MODIFIED HIGH PERFORMANCE CONCRETE (HPC) MASONRY BRIDGES".

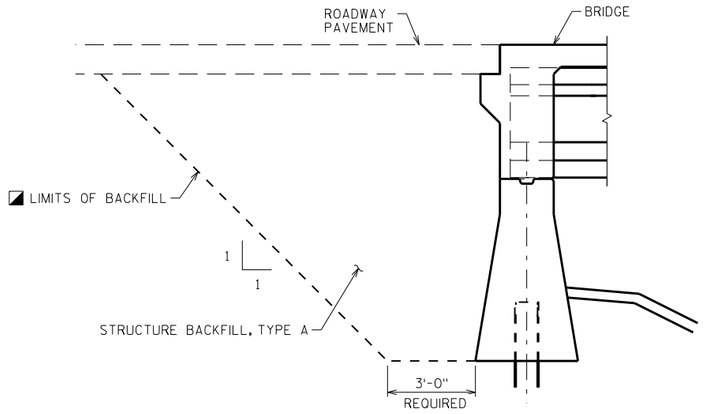

TYPICAL SECTION THRU ABUTMENT

SHOWING BACKFILL PAY LIMITS

NO.	DATE	REVISION	BY

STATE OF WISCONSIN
DEPARTMENT OF TRANSPORTATION
STRUCTURES DESIGN SECTION

STRUCTURE B-70-115

DRAWN BY MJK | PLANS CK'D. EMK

GENERAL NOTES & QUANTITIES

SHEET 3

123

STATE PROJECT NUMBER

1517-75-88

8

8

SCALE = 5

STATE PROJECT NUMBER

1517-75-88

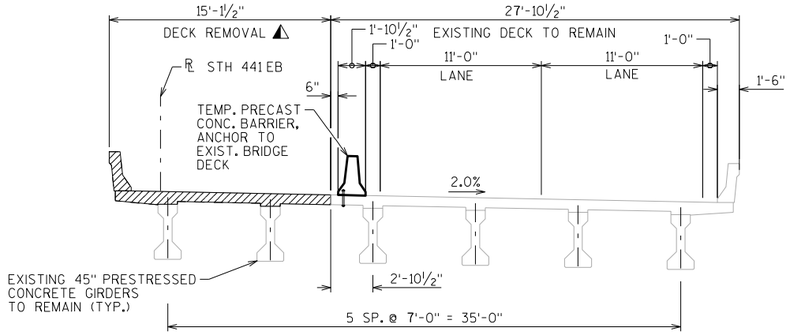

STAGE 2 REMOVAL

LOOKING EAST

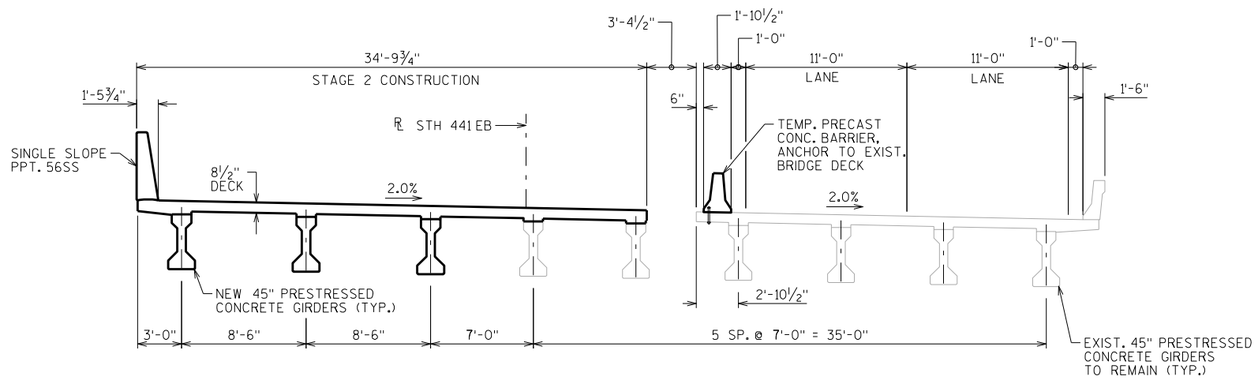

STAGE 2 CONSTRUCTION

LOOKING EAST

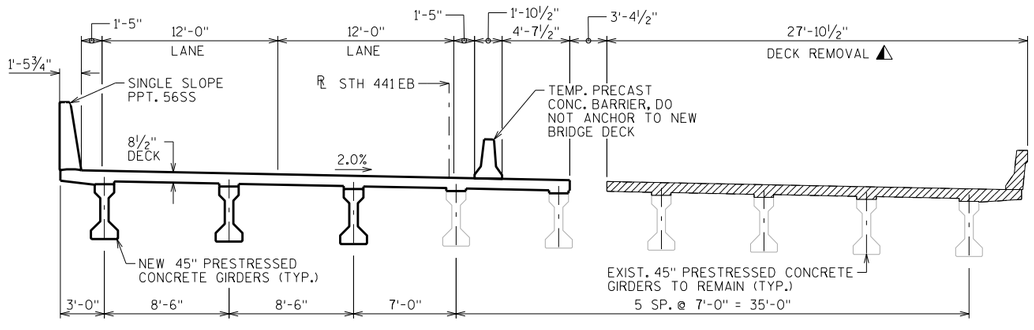

STAGE 3 REMOVAL

LOOKING EAST

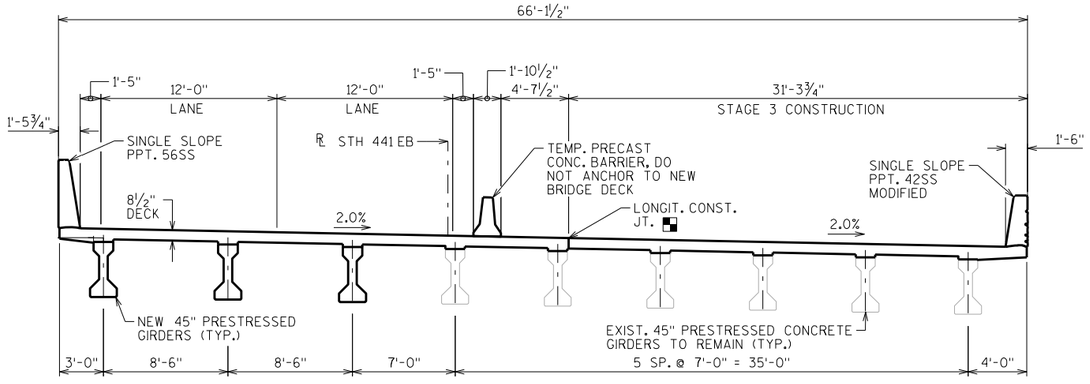

STAGE 3 CONSTRUCTION

LOOKING EAST

CONCRETE REMOVAL

⚠ USE EXTREME CARE DURING DECK REMOVAL TO AVOID DAMAGING THE TOP FLANGE OF EXISTING GIRDERS. ANY DAMAGE TO THE EXISTING STRUCTURE IS TO BE REPAIRED OR REPLACED AT THE COST OF THE CONTRACTOR.

ROUTE OUT ¼" X ⅜" DEEP AT JOINT. FILL IN WITH CRACK SEALER PER THE APPROVED PRODUCTS LIST. (INCIDENTAL TO "MODIFIED HIGH PERFORMANCE CONCRETE (HPC) MASONRY BRIDGES")

NO.	DATE	REVISION	BY

STATE OF WISCONSIN
DEPARTMENT OF TRANSPORTATION
STRUCTURES DESIGN SECTION

STRUCTURE B-70-115

DRAWN BY MJK | PLANS CK'D. EMK

CONSTRUCTION STAGING

SHEET 4

124

8

8

SCALE = 5.0

USH 10/STH 441

BORING #	DATE COMPLETED	NORTHING (Y)	EASTING (X)
B427-G1	2/9/2012	551976	828288
B428-G1	2/7/2012	551995	828032
BORINGS COMPLETED BY: GESTRA			
REPORT COMPLETED BY: GESTRA			
ALL COORDINATES REFERENCED TO WCCS NAD 83(91) WINNEBAGO COUNTY			

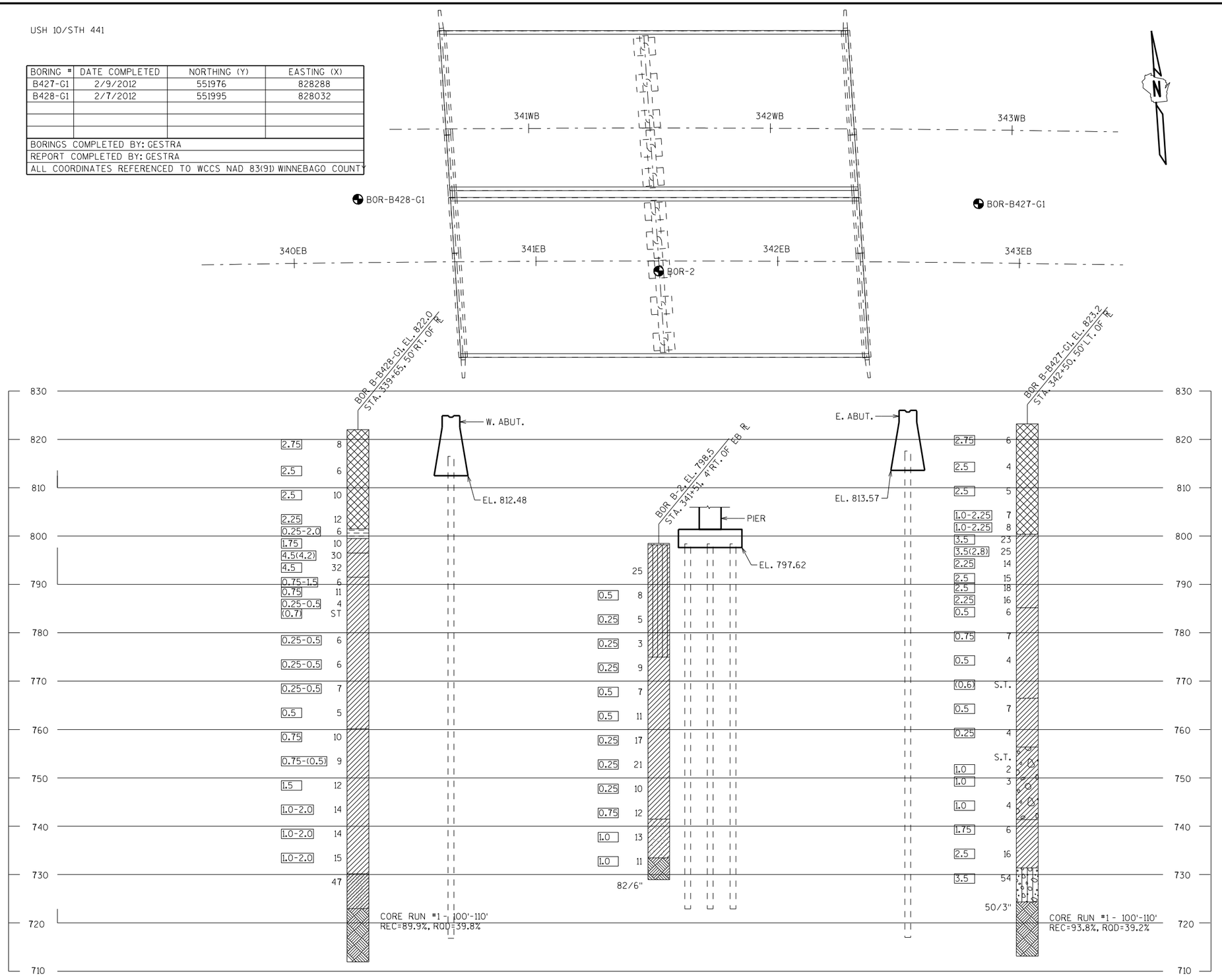

STATE PROJECT NUMBER

1517-75-88

MATERIAL SYMBOLS

ASPHALT	TOPSOIL	PEAT
CONCRETE	FILL	GRAVEL
SAND	CLAY	SILT
BOULDERS OR COBBLES	LIMESTONE	BEDROCK (UNKNOWN)
SHALE	SANDSTONE	IGNEOUS/ META

LEGEND OF BORING

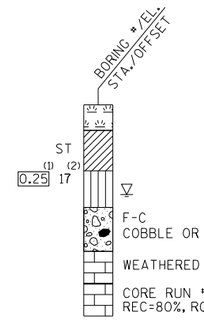

(1) UNCONFINED STRENGTH, AS DETERMINED BY A POCKET PENETROMETER (TSF)

(2) UNLESS OTHERWISE, SPECIFIED THE SPT 'N' VALUE IS BASED ON AASHTO T-206, STANDARD PENETRATION TEST. THE SPT 'N' VALUE PRESENTED HAS NOT BEEN CORRECTED FOR OVERBURDEN PRESSURE OR HAMMER EFFICIENCY.

GROUND WATER ELEVATION

- AT TIME OF DRILLING
- END OF DRILLING
- AFTER DRILLING

ABBREVIATIONS

F-FINE M-MEDIUM C-COARSE ST-SHELBY TUBE

SUBSURFACE EXPLORATION FOR FOUNDATION DESIGN AND BIDDERS INFORMATION

BORINGS WERE COMPLETED AT POINTS APPROXIMATELY AS INDICATED ON THIS DRAWING TO OBTAIN INFORMATION CONCERNING THE CHARACTER OF SUBSURFACE MATERIALS FOUND AT THE SITE. BECAUSE THE INVESTIGATED DEPTHS ARE LIMITED AND THE AREA OF THE BORINGS IS VERY SMALL IN RELATION TO THE ENTIRE SITE, THE WISCONSIN DEPARTMENT OF TRANSPORTATION DOES NOT WARRANT SIMILAR SUBSURFACE CONDITIONS BELOW, BETWEEN, OR BEYOND THESE BORINGS. VARIATIONS IN SOIL CONDITIONS SHOULD BE EXPECTED AND FLUCTUATIONS IN GROUNDWATER LEVELS MAY OCCUR.

NO.	DATE	REVISION	BY

STATE OF WISCONSIN
DEPARTMENT OF TRANSPORTATION
STRUCTURES DESIGN SECTION

STRUCTURE B-70-115

DRAWN BY PR/MJK | PLANS CK'D. EMK

SUBSURFACE EXPLORATION

SHEET 5

125

SCALE = 2.0

STATE PROJECT NUMBER

1517-75-88

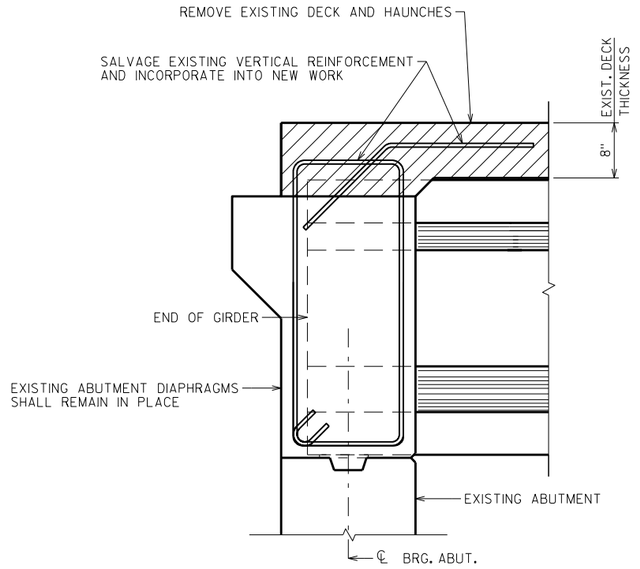

SECTION THRU EXISTING ABUTMENT DIAPHRAGM

SHOWING REMOVAL

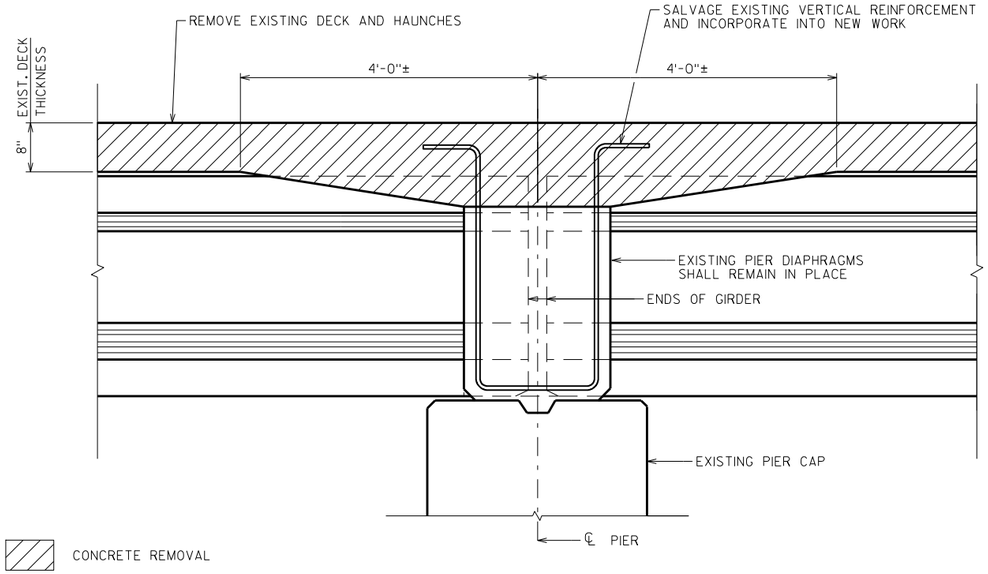

SECTION THRU EXISTING PIER DIAPHRAGM

SHOWING REMOVAL

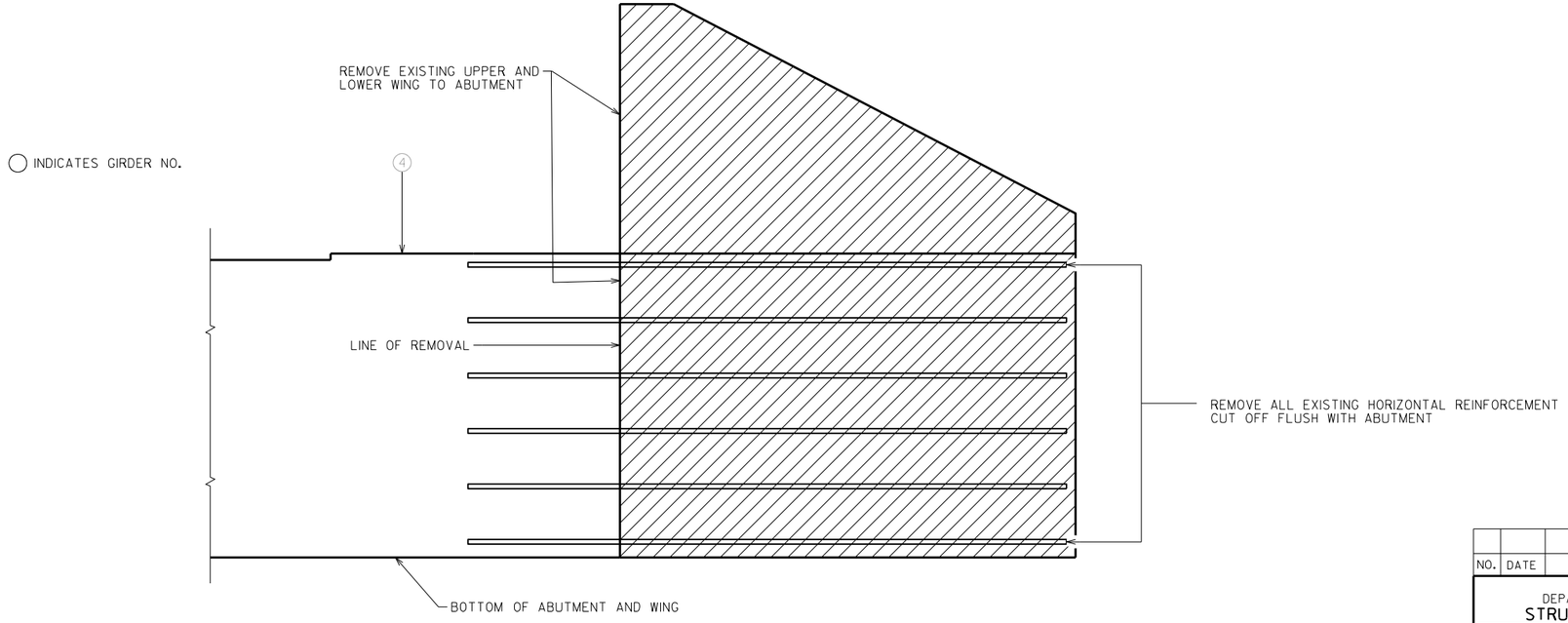

ELEVATION AT EXISTING ABUTMENT

SHOWING REMOVAL

F.F. WEST ABUTMENT SHOWN, EAST ABUTMENT SIMILAR

8

8

NO.	DATE	REVISION	BY

STATE OF WISCONSIN
DEPARTMENT OF TRANSPORTATION
STRUCTURES DESIGN SECTION

STRUCTURE B-70-115

DRAWN BY MJK | PLANS CK'D. EMK

REMOVAL DETAILS

SHEET 6

126

SCALE = 1.0

STATE PROJECT NUMBER
1517-75-88

✱ ELEVATION TAKEN FROM SURVEY DATA

◨ ELEVATION TAKEN FROM ORIGINAL STRUCTURE PLANS (1993)

▨ CONCRETE REMOVAL

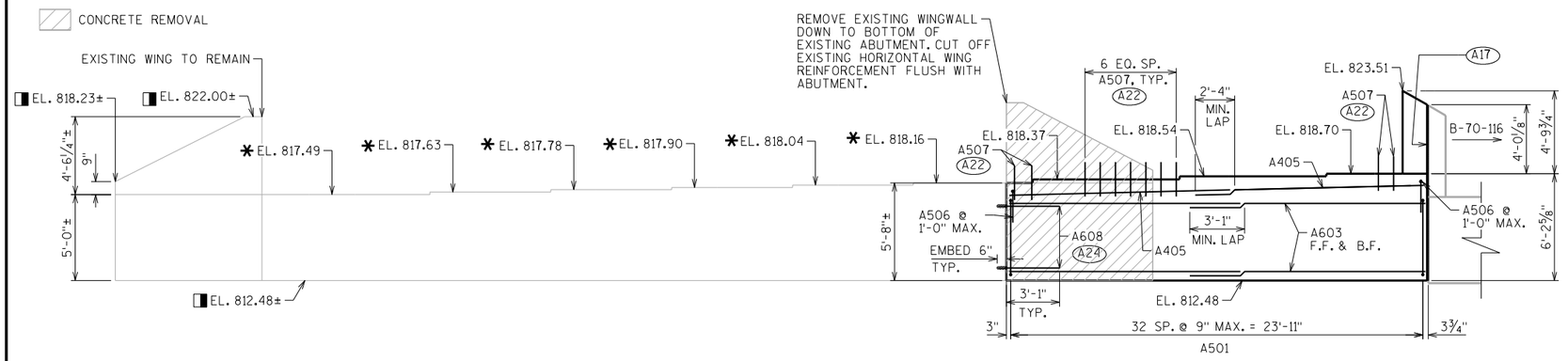

ELEVATION

LOOKING WEST
ADJUST A501 BARS TO MISS PILES

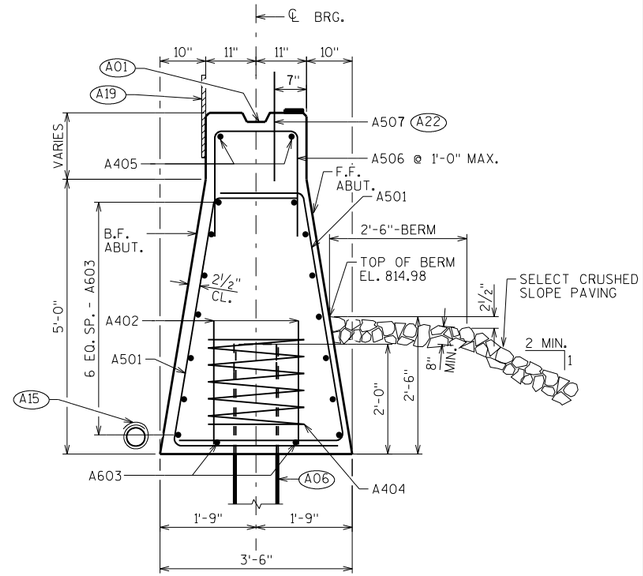

SECTION THRU BODY

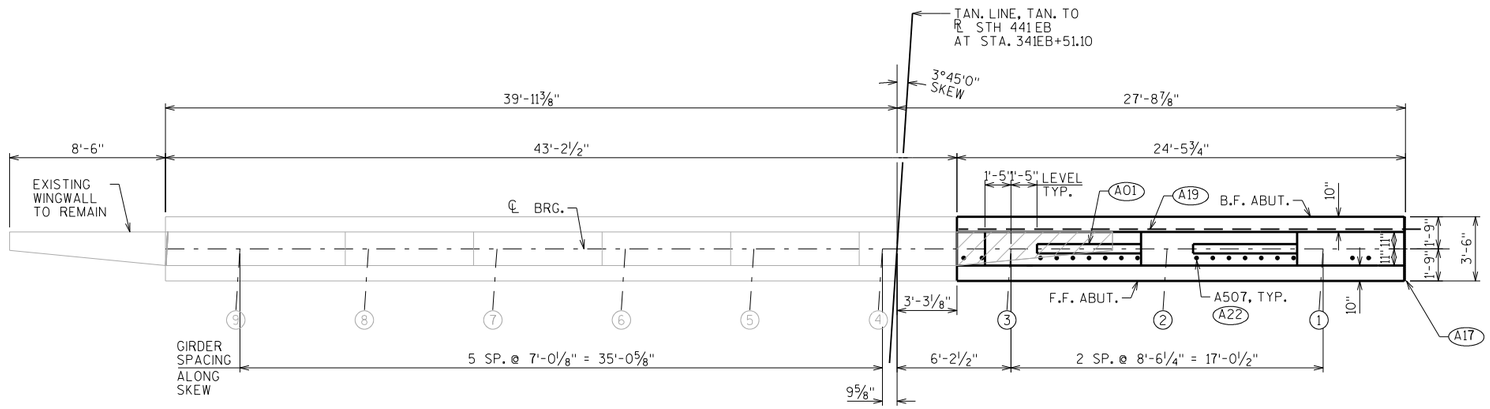

PLAN

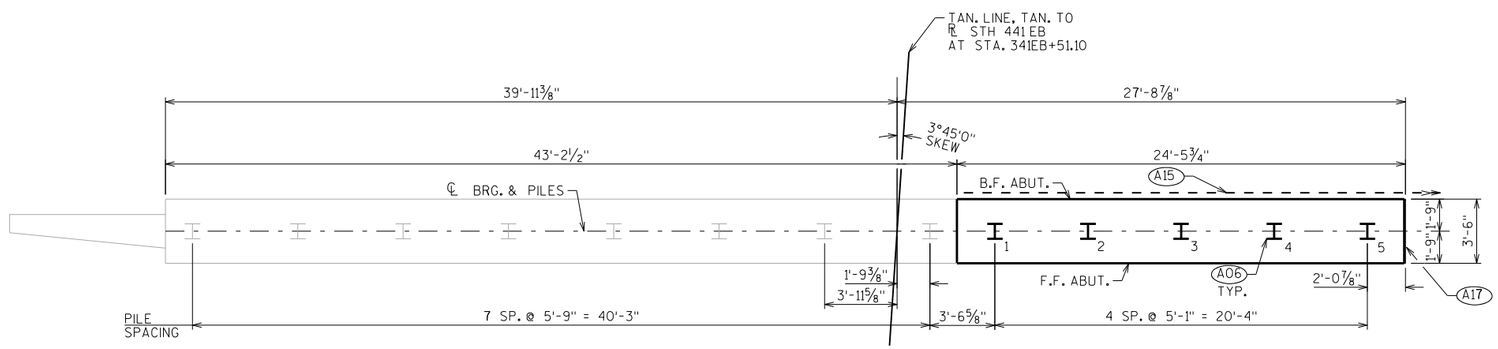

PILE PLAN

(A01) CONST. JOINT: KEYWAY FORMED BY A BEVELED 2 x 6.

(A06) SUPPORT ABUTMENT ON HP 10 x 42 STEEL PILING, ESTIMATED 95'-0" LONG WITH A REQUIRED DRIVING RESISTANCE OF 180 TONS PER PILE.

(A15) PIPE UNDERDRAIN WRAPPED (6-INCH). TIE INTO B-70-116 UNDERDRAIN AND SLOPE 0.5% MIN. TO SUITABLE DRAINAGE. RODENT SHIELD REQUIRED SEE "WEST ABUTMENT DETAILS" SHEET FOR DETAILS.

(A17) 3/4" FILLER (INCLUDED IN ABUTMENT LENGTH); SEAL ALL EXPOSED HORIZ. & VERT. SURFACES OF 3/4" FILLER WITH NON-STAINING GRAY NON-BITUMINOUS JOINT SEALER. (1" DEEP AND HOLD 1/8" BELOW SURFACE OF CONCRETE).

(A19) 18" (RMW) RUBBERIZED MEMBRANE WATERPROOFING SEAL ALL HORIZ. & VERT. JOINTS AT BACKFACE.

(A22) BARS @ 1'-0" CTRS. BETWEEN BEAM SEATS. MAY BE PLACED AFTER CONCRETE IS POURED BUT BEFORE INITIAL SET HAS TAKEN PLACE. (EMBED 1'-0" INTO CONC.)

(A24) A608 ADHESIVE ANCHORS NO. 6 BARS. EMBED 6" INTO EXISTING CONCRETE. SEE "WEST ABUTMENT DETAILS" SHEET FOR DETAILS.

NO.	DATE	REVISION	BY

STATE OF WISCONSIN
DEPARTMENT OF TRANSPORTATION
STRUCTURES DESIGN SECTION

STRUCTURE B-70-115

DRAWN BY MJK | PLANS CK'D. EMK

WEST ABUTMENT

SHEET 7

127

SCALE = 4.0

8

8

STATE PROJECT NUMBER

1517-75-88

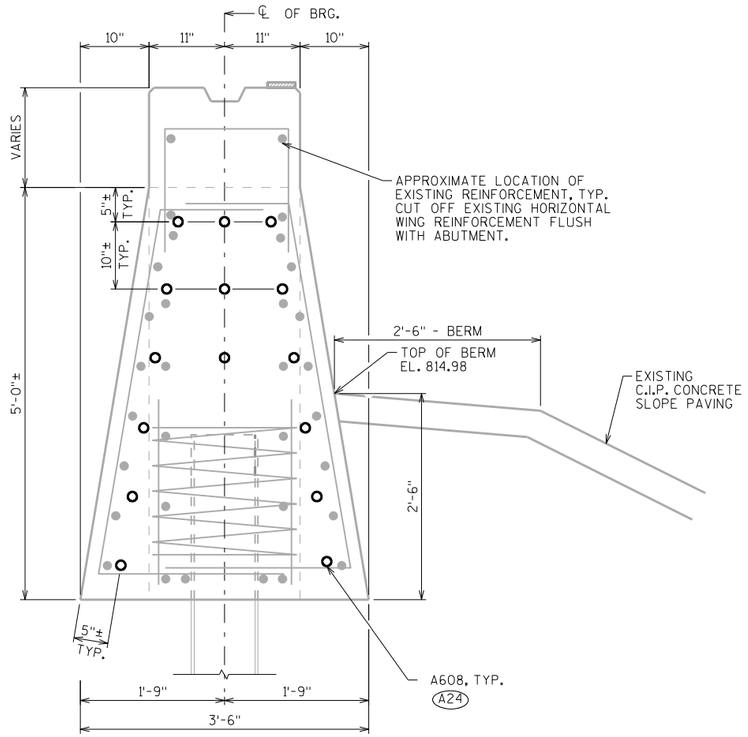

ADHESIVE ANCHOR LAYOUT

EXISTING ABUTMENT AND APPROXIMATE LOCATION OF EXISTING REINFORCEMENT SHOWN

BILL OF BARS

NOTE: THE FIRST OR FIRST TWO DIGITS OF THE BAR MARK SIGNIFIES THE BAR SIZE

	BAR MARK	COAT	NO. REQ'D	LENGTH	BENT	BAR SERIES	LOCATION
	A501	X	66	8'-11"	X		BODY - VERT.
	A402	X	10	2'-3"			PILES - 2 PER BODY PILE
	A603	X	32	13'-8"			BODY - HORIZ.
	A404	X	5	28'-0"	X		BODY - VERT. - AT BODY PILES
	A405	X	4	13'-3"			BODY - HORIZ.
	A506	X	25	5'-9"	X		BODY - VERT.
	A507	X	18	2'-0"			BODY - VERT. - BTWN. BEAM SEATS
A24	A608	X	15	3'-7"			BODY - HORIZ. - ANCHORS

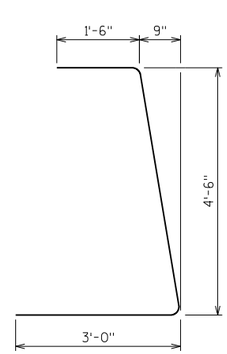

A501

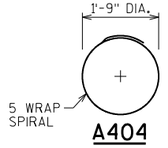

A404

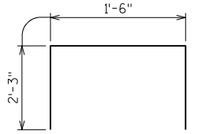

A506

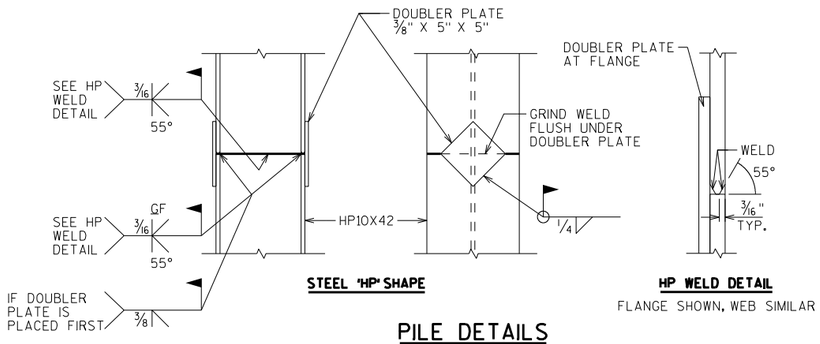

STEEL 'HP' SHAPE

HP WELD DETAIL

FLANGE SHOWN, WEB SIMILAR

PILE DETAILS

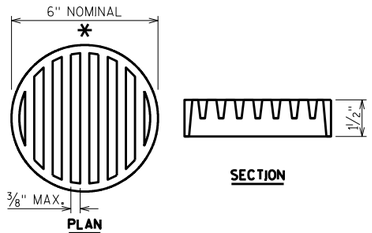

PLAN

SECTION

RODENT SHIELD DETAIL

* DIMENSIONS ARE APPROXIMATE. THE GRATE IS SIZED TO FIT INTO A PIPE COUPLING. ORIENT SO SLOTS ARE VERTICAL.

THE RODENT SHIELD, PIPE COUPLING AND SCREWS SHALL BE CONSIDERED INCIDENTAL TO THE BID ITEM "PIPE UNDERDRAIN WRAPPED 6-INCH".

THE RODENT SHIELD SHALL BE A PVC GRATE SIMILAR TO THIS DETAIL. THE GRATE IS COMMERCIALLY AVAILABLE AS A FLOOR STRAINER. A PIPE COUPLING IS REQUIRED FOR THE ATTACHEMENT OF THIS SHIELD TO THE EXPOSED END OF THE PIPE UNDERDRAIN. THE SHIELD SHALL BE FASTENED TO THE PIPE COUPLING WITH TWO OR MORE NO. 10 X 1-INCH STAINLESS STEEL SHEET METAL SCREWS.

A24 A608 ADHESIVE ANCHORS NO. 6 BARS. EMBED 6" INTO EXISTING CONCRETE.

NO.	DATE	REVISION	BY

STATE OF WISCONSIN
DEPARTMENT OF TRANSPORTATION
STRUCTURES DESIGN SECTION

STRUCTURE B-70-115

DRAWN BY MJK | PLANS CK'D. EMK

WEST ABUTMENT DETAILS

SHEET 8

128

8

8

SCALE = 4.0

STATE PROJECT NUMBER

1517-75-88

✱ ELEVATION TAKEN FROM SURVEY DATA

◨ ELEVATION TAKEN FROM ORIGINAL STRUCTURE PLANS (1993)

▨ CONCRETE REMOVAL

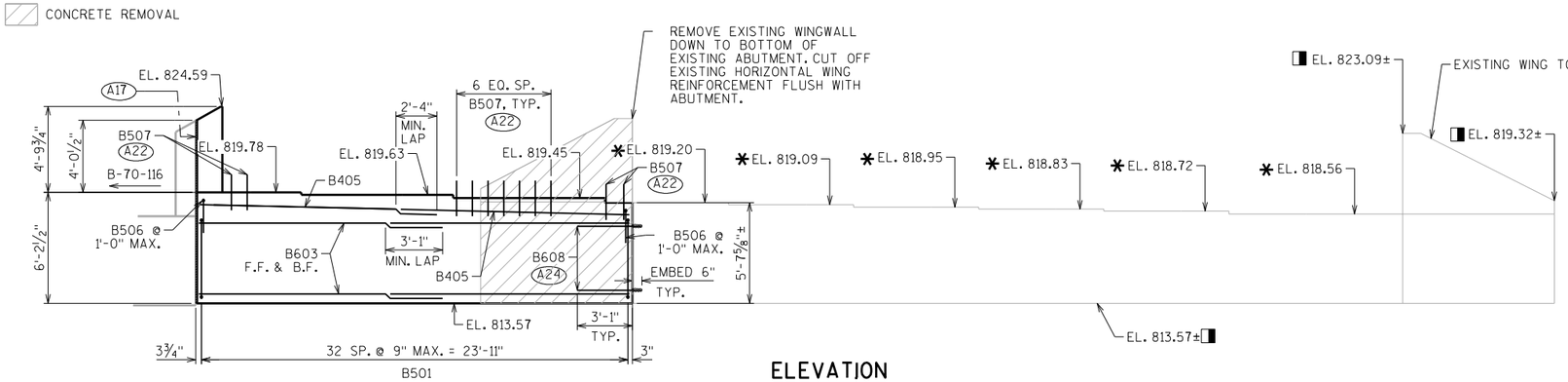

ELEVATION

LOOKING EAST
ADJUST B501 BARS TO MISS PILES

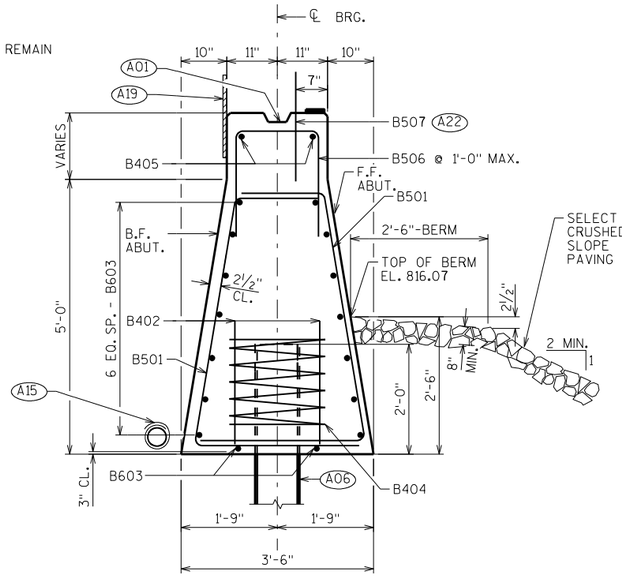

SECTION THRU BODY

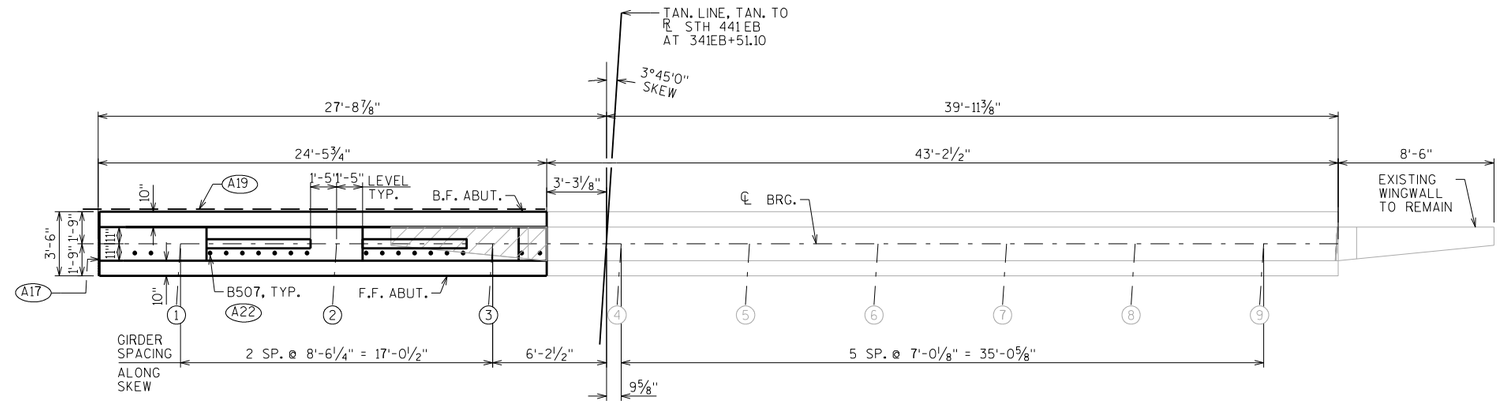

PLAN

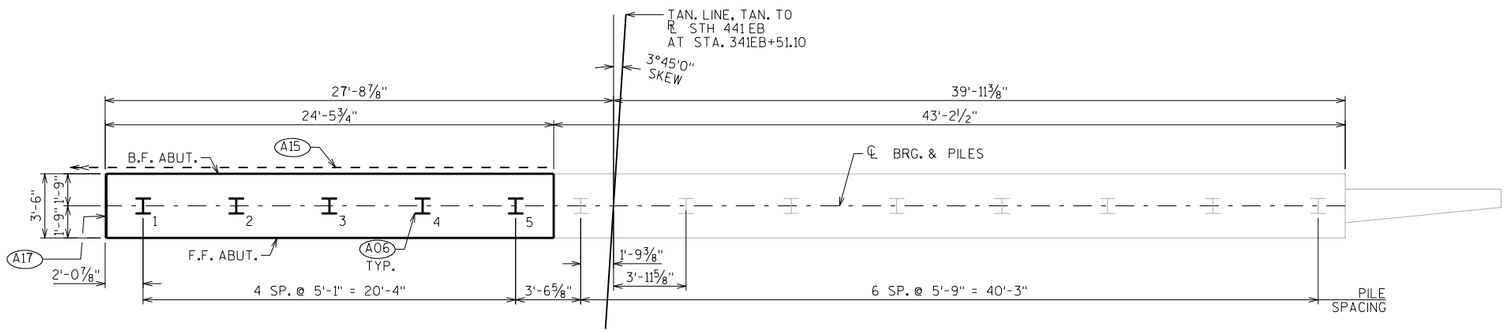

PILE PLAN

A01 CONST. JOINT: KEYWAY FORMED BY A BEVELED 2 x 6.

A06 SUPPORT ABUTMENT ON HP 10 x 42 STEEL PILING. ESTIMATED 95'-0" LONG WITH A REQUIRED DRIVING RESISTANCE OF 180 TONS PER PILE.

A15 PIPE UNDERDRAIN WRAPPED (6-INCH). TIE INTO B-70-116 UNDERDRAIN AND SLOPE 0.5% MIN. TO SUITABLE DRAINAGE. RODENT SHIELD REQUIRED SEE "EAST ABUTMENT DETAILS" SHEET FOR DETAILS.

A17 3/4" FILLER (INCLUDED IN ABUTMENT LENGTH): SEAL ALL EXPOSED HORIZ. & VERT. SURFACES OF 3/4" FILLER WITH NON-STAINING GRAY NON-BITUMINOUS JOINT SEALER. (1" DEEP AND HOLD 1/8" BELOW SURFACE OF CONCRETE).

A19 18" (RMW) RUBBERIZED MEMBRANE WATERPROOFING SEAL ALL HORIZ. & VERT. JOINTS AT BACKFACE.

A22 BARS @ 1'-0" CTRS. BETWEEN BEAM SEATS. MAY BE PLACED AFTER CONCRETE IS POURED BUT BEFORE INITIAL SET HAS TAKEN PLACE. (EMBED 1'-0" INTO CONC.)

A24 B608 ADHESIVE ANCHORS NO. 6 BARS, EMBED 6" INTO EXISTING CONCRETE. SEE "EAST ABUTMENT DETAILS" SHEET FOR DETAILS.

NO.	DATE	REVISION	BY

STATE OF WISCONSIN
DEPARTMENT OF TRANSPORTATION
STRUCTURES DESIGN SECTION

STRUCTURE B-70-115

DRAWN BY MJK | PLANS CK'D. EMK

EAST ABUTMENT

SHEET 9

129

SCALE = 4.0

8

8

STATE PROJECT NUMBER

1517-75-88

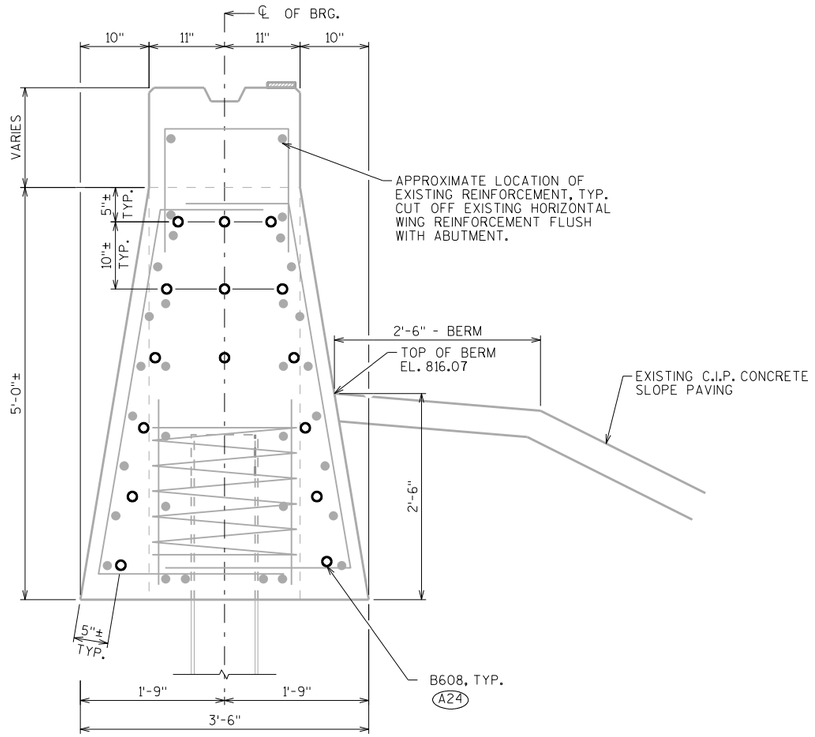

ADHESIVE ANCHOR LAYOUT

EXISTING ABUTMENT AND APPROXIMATE LOCATION OF EXISTING REINFORCEMENT SHOWN

BILL OF BARS

NOTE: THE FIRST OR FIRST TWO DIGITS OF THE BAR MARK SIGNIFIES THE BAR SIZE

	BAR MARK	COAT	NO. REQ'D	LENGTH	BENT	BAR SERIES	LOCATION
	B501	X	66	8'-11"	X		BODY - VERT.
	B402	X	10	2'-3"			PILES - 2 PER BODY PILE
	B603	X	32	13'-8"			BODY - HORIZ.
	B404	X	5	28'-0"	X		BODY - VERT. - AT BODY PILES
	B405	X	4	13'-3"			BODY - HORIZ.
	B506	X	25	5'-9"	X		BODY - VERT.
	B507	X	18	2'-0"			BODY - VERT. - BTWN. BEAM SEATS
A24	B608	X	15	3'-7"			BODY - HORIZ. - ANCHORS

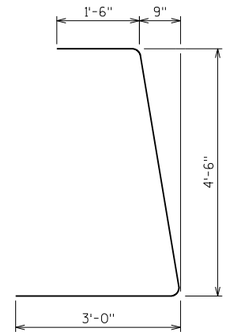

B501

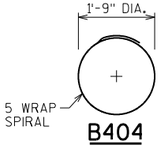

B404

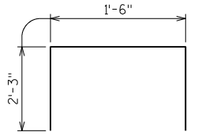

B506

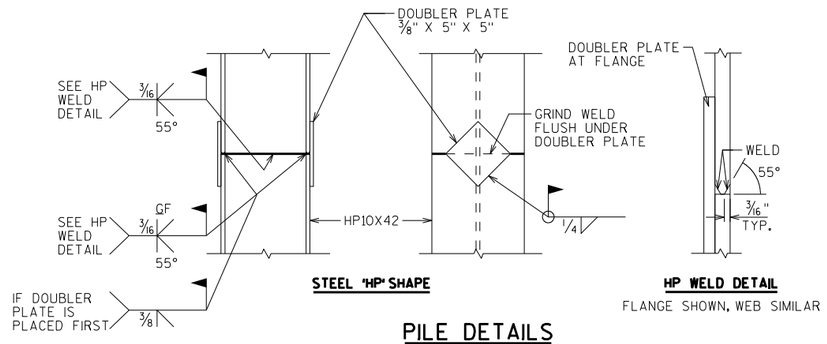

STEEL 'HP' SHAPE

HP WELD DETAIL

FLANGE SHOWN, WEB SIMILAR

PILE DETAILS

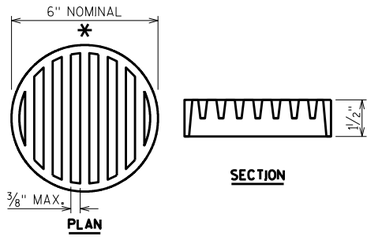

PLAN

SECTION

RODENT SHIELD DETAIL

* DIMENSIONS ARE APPROXIMATE. THE GRATE IS SIZED TO FIT INTO A PIPE COUPLING. ORIENT SO SLOTS ARE VERTICAL.

THE RODENT SHIELD, PIPE COUPLING AND SCREWS SHALL BE CONSIDERED INCIDENTAL TO THE BID ITEM "PIPE UNDERDRAIN WRAPPED 6-INCH".

THE RODENT SHIELD SHALL BE A PVC GRATE SIMILAR TO THIS DETAIL. THE GRATE IS COMMERCIALLY AVAILABLE AS A FLOOR STRAINER. A PIPE COUPLING IS REQUIRED FOR THE ATTACHEMENT OF THIS SHIELD TO THE EXPOSED END OF THE PIPE UNDERDRAIN. THE SHIELD SHALL BE FASTENED TO THE PIPE COUPLING WITH TWO OR MORE NO. 10 X 1-INCH STAINLESS STEEL SHEET METAL SCREWS.

A24 B608 ADHESIVE ANCHORS NO. 6 BARS. EMBED 6" INTO EXISTING CONCRETE.

NO.	DATE	REVISION	BY

STATE OF WISCONSIN
DEPARTMENT OF TRANSPORTATION
STRUCTURES DESIGN SECTION

STRUCTURE B-70-115

DRAWN BY MJK | PLANS CK'D. EMK

EAST ABUTMENT DETAILS

SHEET 10

130

SCALE = 4.0

8

8

STATE PROJECT NUMBER

1517-75-88

✱ ELEVATION TAKEN FROM SURVEY DATA

◨ ELEVATION TAKEN FROM ORIGINAL STRUCTURE PLANS (1993)

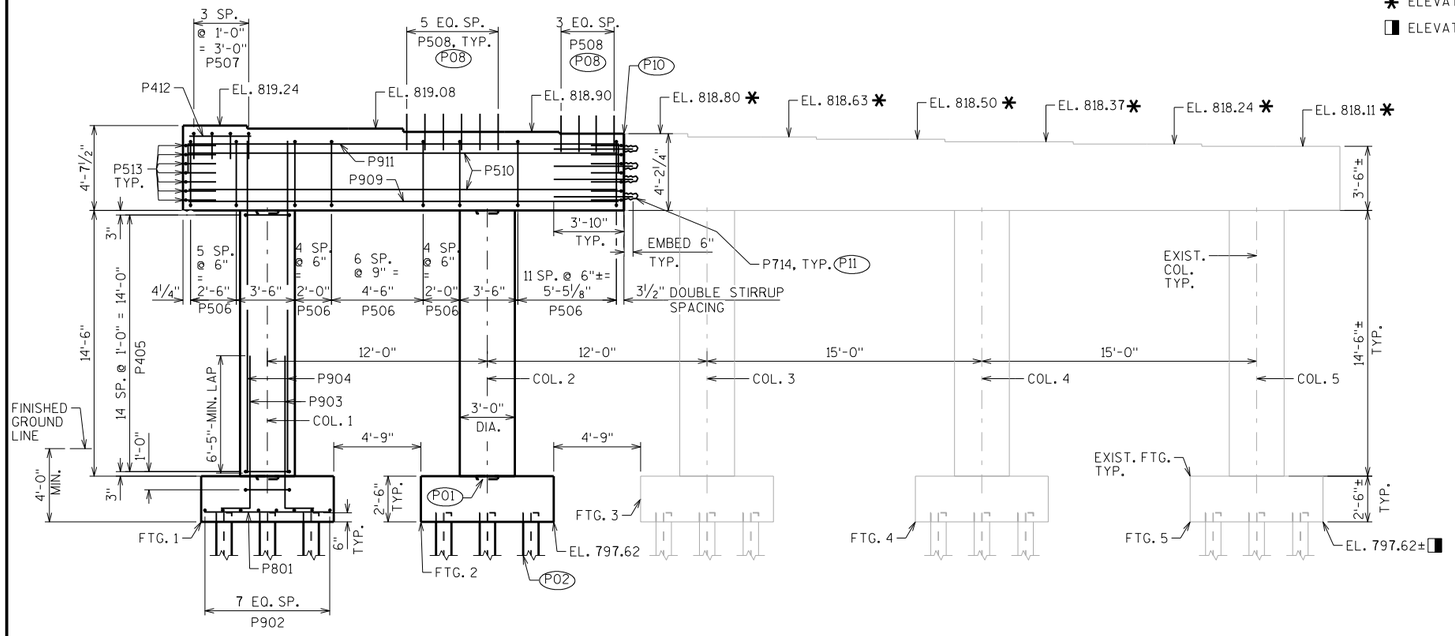

ELEVATION

LOOKING EAST

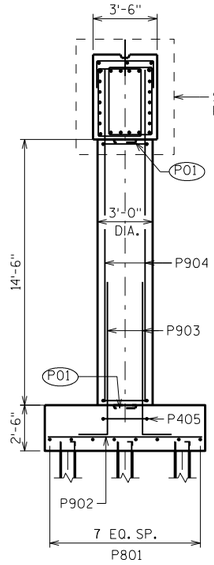

COLUMN SIDE VIEW

LOOKING NORTH

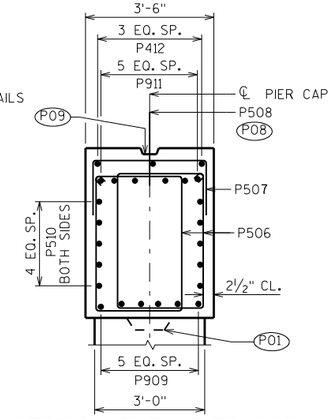

SECTION THRU PIER CAP

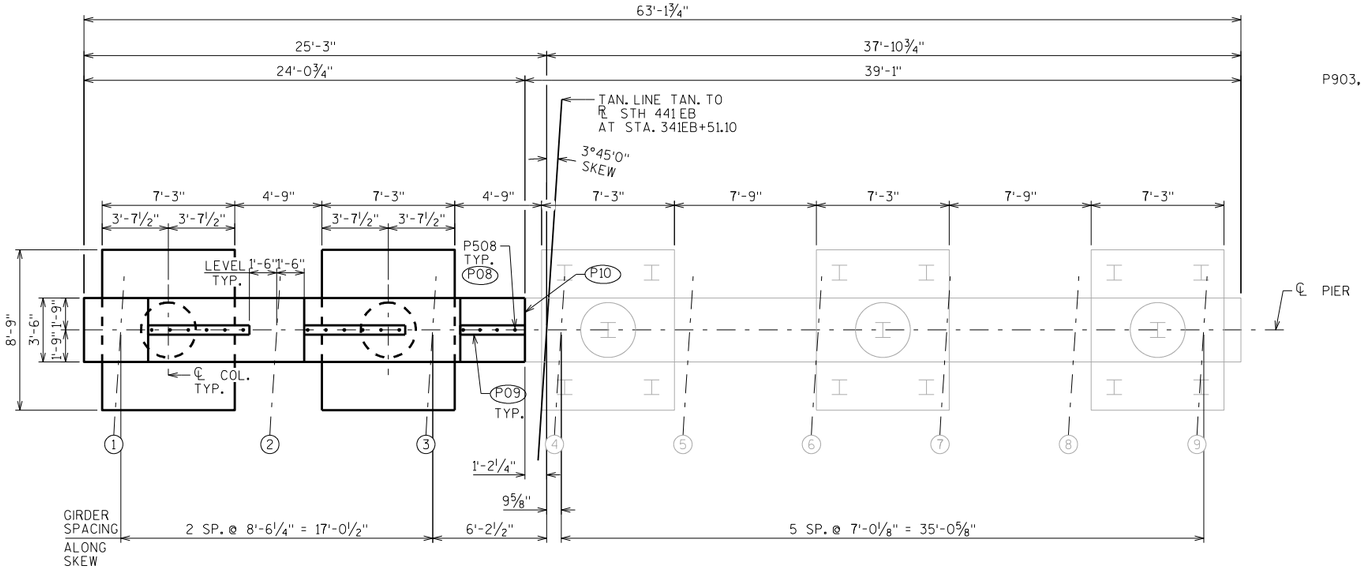

PLAN

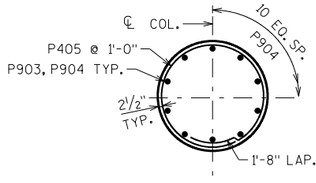

SECTION THRU COLUMN

TYP. AT COL. 1 AND 2

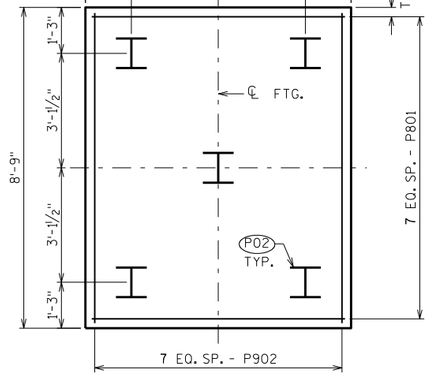

FOOTING PLAN

TYP. AT FTG. 1 AND 2

P01 1'-3" x 1'-3" x 2" CONST. JOINT FORMED BY BEVELED KEYWAY.

P02 SUPPORT PIER ON HP 10 x 42 STEEL PILING, ESTIMATED 75'-0" LONG WITH A REQUIRED DRIVING RESISTANCE OF 180 TONS PER PILE.

P08 P508 BARS @ 1'-0" CTRS. BETWEEN BEAM SEATS. MAY BE PLACED AFTER CONCRETE IS POURED BUT BEFORE INITIAL SET HAS TAKEN PLACE. (EMBED 1'-0" INTO CONC.)

P09 KEYED CONST. JOINT-FORMED BY BEVELED 2 x 6 BETWEEN BEAM SEATS.

P10 ROUGHEN SURFACE OF CONCRETE ¼" DEEP MINIMUM AT ALL AREAS WHERE NEW CONCRETE CONTACTS EXISTING CONCRETE.

P11 P714 ADHESIVE ANCHORS NO. 7 BARS. EMBED 6" INTO EXISTING CONCRETE.

NO.	DATE	REVISION	BY

STATE OF WISCONSIN
DEPARTMENT OF TRANSPORTATION
STRUCTURES DESIGN SECTION

STRUCTURE B-70-115

DRAWN BY MJK | PLANS CK'D. EMK

PIER

SHEET 11

131

SCALE = 4.0

8

8

STATE PROJECT NUMBER

1517-75-88

BILL OF BARS

NOTE: THE FIRST OR FIRST TWO DIGITS OF THE BAR MARK SIGNIFIES THE BAR SIZE

BAR MARK	COAT	NO. REQ'D.	LENGTH	BENT	BAR SERIES	LOCATION
P801		16	6'-11"			FOOTING - HORIZ.
P902		16	8'-5"			FOOTING - HORIZ.
P903	X	20	9'-8"	X		FOOTING/COLUMN - VERT.
P904	X	20	18'-1"			COLUMN - VERT.
P405	X	32	9'-9"	X		FOOTING/COLUMN - HORIZ.
P506	X	66	12'-8"	X		CAP - VERT. - STIRRUPS
P507	X	4	5'-10"	X		CAP - VERT. - OVER GIRDER 1
P508	X	16	2'-0"			CAP - VERT. - BTWN. BEAM SEATS
P909	X	6	23'-6"			CAP - HORIZ. - BOT.
P510	X	10	23'-6"			CAP - HORIZ. - SIDES
P911	X	6	26'-2"	X		CAP - HORIZ. - TOP
P412	X	3	3'-5"			CAP - HORIZ. - TOP -OVER GIDER 1
P513	X	14	6'-3"	X		CAP - HORIZ. - ENDS
(P11) P714	X	16	4'-4"			CAP - HORIZ. - ANCHORS

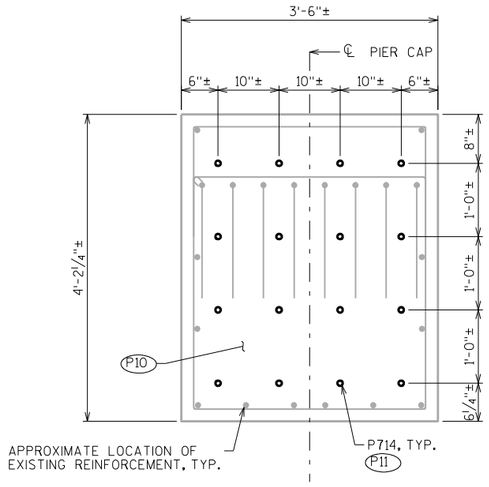

ADHESIVE ANCHOR LAYOUT

EXISTING PIER CAP END AND APPROXIMATE LOCATION OF EXISTING REINFORCEMENT SHOWN

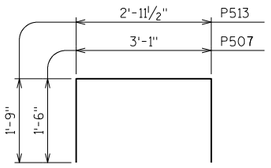

P507, P513

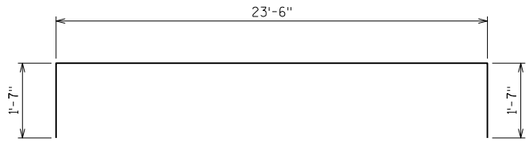

P911

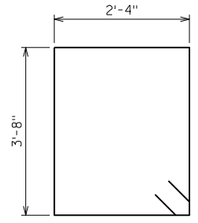

P506

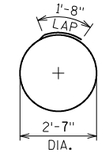

P405

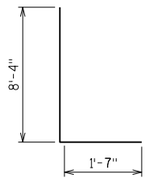

P903

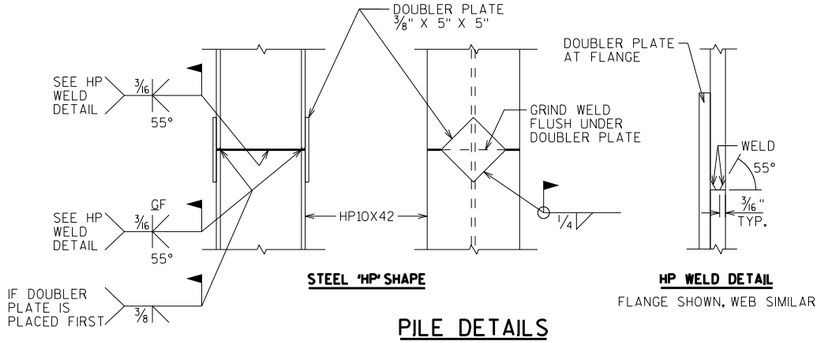

STEEL 'HP' SHAPE

HP WELD DETAIL

FLANGE SHOWN, WEB SIMILAR

PILE DETAILS

(P10) ROUGHEN SURFACE OF CONCRETE ¼" DEEP MINIMUM AT ALL AREAS WHERE NEW CONCRETE CONTACTS EXISTING CONCRETE.

(P11) P714 ADHESIVE ANCHORS NO. 7 BARS. EMBED 6" INTO EXISTING CONCRETE.

NO.	DATE	REVISION	BY

STATE OF WISCONSIN
DEPARTMENT OF TRANSPORTATION
STRUCTURES DESIGN SECTION

STRUCTURE B-70-115

DRAWN BY MJK | PLANS CK'D. EMK

PIER DETAILS

SHEET 12

132

SCALE = 4.0

8

8

STATE PROJECT NUMBER

1517-75-88

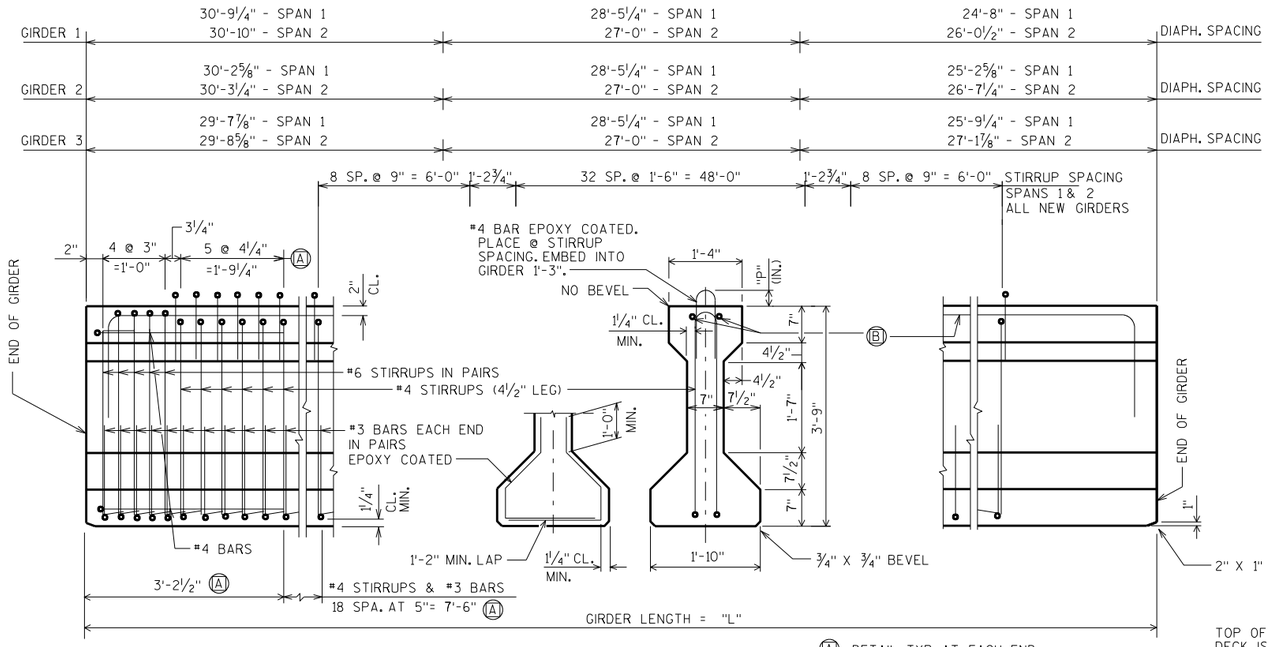

SIDE VIEW & TYP. SECTION IN SPAN

Ⓐ DETAIL TYP. AT EACH END

Ⓑ 2 #4 BARS BEND DOWN 16 BAR DIA. AT ENDS

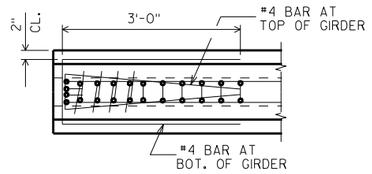

TOP VIEW OF GIRDER ENDS

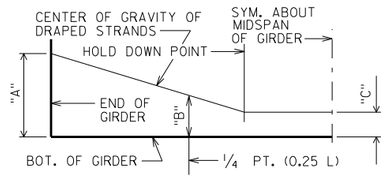

DRAPED STRAND PROFILE

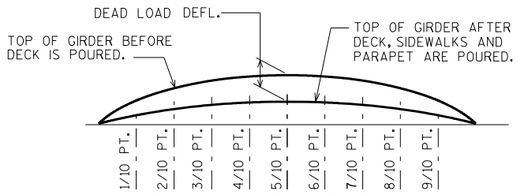

DEAD LOAD DEFLECTION DIAGRAM

NOTES

TOP OF GIRDER TO BE ROUGH FLOATED AND BROOMED TRANSVERSELY, EXCEPT THE OUTSIDE 2" OF GIRDER, WHICH SHALL RECEIVE A SMOOTH FINISH. AN APPROVED CONCRETE SEALER SHALL BE APPLIED TO ALL SMOOTH SURFACES INCLUDING THE OUTSIDE 2" OF THE TOP FLANGE.

DO NOT APPLY CONCRETE SEALER OR EPOXY TO SURFACES RECEIVING APPLICATION OF CONCRETE STAINING.

THE GIRDERS SHALL BE PROVIDED WITH A SUITABLE LIFTING DEVICE FOR HANDLING AND ERECTING THE GIRDERS.

ALL GIRDERS SHALL BE CAST FULL LENGTH AS SHOWN.

STRANDS SHALL BE FLUSH WITH END OF GIRDER. FOR GIRDER ENDS EMBEDDED COMPLETELY IN CONCRETE, END OF STRANDS SHALL BE COATED WITH NON-BITUMINOUS JOINT SEALER. FOR GIRDER ENDS THAT ARE FINALLY EXPOSED, COAT THE GIRDER ENDS, EXPOSED STRAND ENDS AND ALL NON-BONDING SURFACES WITHIN 2 FEET OF THE GIRDER ENDS WITH A NON-PIGMENTED EPOXY CONFORMING TO AASHTO M-235 TYPE III, GRADE 2, CLASS B OR C. THE EPOXY SHALL BE APPLIED AT LEAST 3 DAYS AFTER MOIST CURING HAS CEASED AND PRIOR TO THE APPLICATION OF THE SEALER.

SPACING SHOWN FOR #4 STIRRUPS IS FOR GRADE 60 REINFORCEMENT.

AN ALTERNATE EQUIVALENT OF WELDED WIRE FABRIC (WWF) ASTM A497 MAY BE SUBSTITUTED FOR THE STIRRUP REINFORCEMENT SHOWN, UPON APPROVAL OF THE STRUCTURES DEVELOPMENT SECTION

PRESTRESSING STRANDS SHALL BE (0.6" DIA.)-7 WIRE LOW-RELAXATION STRANDS WITH AN ULTIMATE STRENGTH OF 270,000 PSI.

BEND EACH END OF #4 STIRRUPS 4½" AND #6 STIRRUPS 6½".

FOR DIAPHRAGM INSERT & CONNECTION DETAILS SEE "STEEL DIAPHRAGM" SHEET.

IT IS THE RESPONSIBILITY OF THE CONTRACTOR TO VERIFY THE LOCATIONS OF THE EXISTING STEEL DIAPHRAGMS.

FOR DIAPHRAGM SPACING WITH RESPECT TO THE ℄ OF SUBSTRUCTURES SEE "TOP OF DECK ELEVATIONS" SHEET.

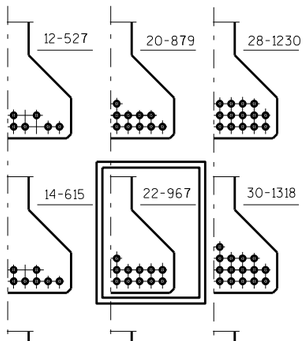

DRAPED PATTERN

0.6"Φ STRANDS

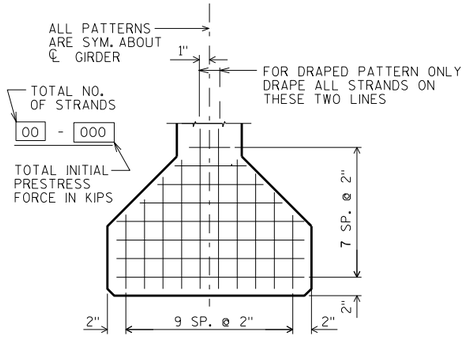

TYP. STRAND PATTERN

* THE THEORETICAL INITIAL CAMBER VALUE AT THE TIME OF STRAND RELEASE AT MIDSPAN MULTIPLIED BY A FACTOR OF 1.4 TO ACCOUNT FOR CAMBER GROWTH FROM THE TIME OF STRAND RELEASE TO JOBSITE PLACEMENT.

GIRDER	SPAN	CAMBER (IN.) ✳
1-3	1&2	2.45

THESE VALUES ARE NOT TO BE USED IN DETERMINING 'T', USE ACTUAL GIRDER SHOTS.

THESE VALUES ARE FOR INFORMATIONAL PURPOSES ONLY.

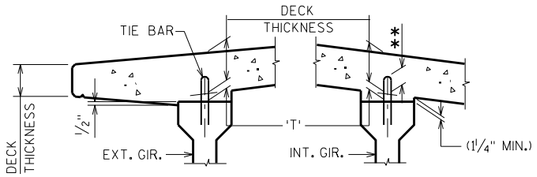

DECK HAUNCH DETAIL

IF 1¼" MINIMUM HAUNCH HEIGHT AT EDGE OF GIRDER CANNOT BE MAINTAINED, THE GRADE LINE MAY BE REVISED BY THE ENGINEER AT THE OPTION OF THE CONTRACTOR, THE PLAN DECK THICKNESS SHALL BE HELD. NOTIFY THE STRUCTURES SECTION IF THE GRADE LINE IS RAISED FROM THE PLAN PROFILE BY MORE THAN ½" OR,

** IF 3" MINIMUM DECK EMBEDMENT OF TIE BAR CANNOT BE OBTAINED.

TO DETERMINE 'T', ELEV. OF TOP OF GIR'S. AT ℄ OF SUBSTRUCTURE UNITS & AT 1/10 POINTS OF EACH SPAN SHALL BE TAKEN. THEN FOLLOW THIS PROCESS:

TOP OF DECK ELEV. AT FINAL GRADE
- TOP OF GIRDER ELEVATION
+ DEAD LOAD DEFLECTION
- DECK THICKNESS
= HAUNCH HEIGHT 'T'

NOTE: AN AVERAGE HAUNCH ('T') OF 3" WAS USED IN THE QUANTITY "HIGH PERFORMANCE CONCRETE (HPC) MASONRY STRUCTURES".

✳ MINIMUM CYLINDER STRENGTH OF CONCRETE @ TIME OF TRANSFER OF PRESTRESS FORCE.

GIRDER DATA

SPAN	GIRDER	GIRDER LENGTH "L"	DEAD LOAD DEFL. (IN.) 1/10	2/10	3/10	4/10	5/10	6/10	7/10	8/10	9/10	CONC. STRGTH. f'c (P.S.I.)	"P" 1ST ⅓ OF GIRDER	"P" MID ⅓ OF GIRDER	"P" END ⅓ OF GIRDER	DIA. OF STRAND (IN.)	DRAPED PATTERN TOTAL NO. OF STRANDS	f'ci (P.S.I.) ✳	(IN.) "A"	"B" MIN.	"B" MAX.	"C"	UNDRAPED PATTERN TOTAL NO. OF STRANDS	f'ci (P.S.I.) ✳
1&2	1&3 (NEW)	83.875	0.4	0.7	1.0	1.2	1.2	1.2	1.0	0.7	0.4	8,000	7	7	7	0.6	22	6,800	41	13.25	16.25	4		
1&2	2 (NEW)	83.875	0.4	0.8	1.1	1.3	1.4	1.3	1.1	0.8	0.4	8,000	7	7	7	0.6	22	6,800	41	13.25	16.25	4		
1&2	4-8 (EXIST.)	83.875	0.4	0.8	1.1	1.3	1.3	1.3	1.1	0.8	0.4	6,000	5	5	5	0.5	28	4,800	41	13.25	16.25	4		
1&2	9 (EXIST.)	83.875	0.5	0.9	1.2	1.5	1.5	1.5	1.2	0.9	0.5	6,000	5	5	5	0.5	28	4,800	41	13.25	16.25	4		

◔ EXISTING GIRDER DATA WITH NEW SUPERSTRUCTURE, INCLUDED FOR INFORMATIONAL PURPOSES ONLY

NO.	DATE	REVISION	BY

STATE OF WISCONSIN
DEPARTMENT OF TRANSPORTATION
STRUCTURES DESIGN SECTION

STRUCTURE B-70-115

DRAWN BY MJK | PLANS CK'D. EMK

45" PRESTRESSED GIRDER DETAILS

SHEET 13

133

8

LV = 1234 9

SCALE = 2.6667

STATE PROJECT NUMBER

1517-75-88

TABLE

GIRDER HEIGHT	DIM. "A"	DIM. "B"	DIM. "L"	* DIM. "X"
45"	1'-5 3/8"	1'-1 7/8"	1'-5 1/2"	2 1/4"

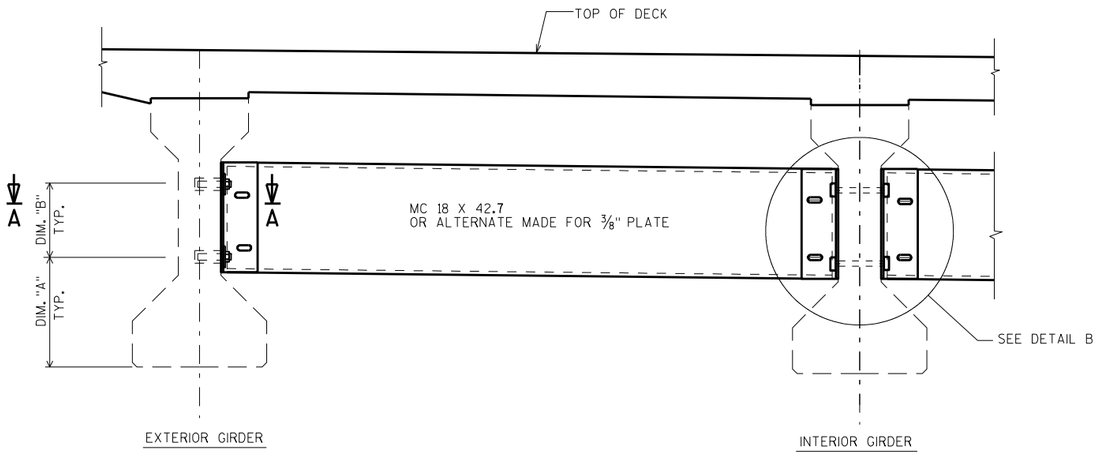

PART TRANSVERSE SECTION AT DIAPHRAGM

NOTES

ALL DIAPHRAGM MATERIAL AND CORED HOLES SHALL BE PAID FOR AT THE UNIT PRICE BID FOR "STEEL DIAPHRAGMS B-70-115", EACH.

EACH DIAPHRAGM BETWEEN GIRDERS SHALL CONSTITUTE ONE UNIT.

ALL DIAPHRAGM STRUCTURAL STEEL SHALL BE ASTM A709 GRADE 36. ALL BOLTS, NUTS AND WASHERS SHALL BE ASTM A325 TYPE 1.

ALL DIAPHRAGM MATERIAL INCLUDING BOLTS, NUTS AND WASHERS SHALL BE GALVANIZED AFTER FABRICATION.

STEEL DIAPHRAGM TO CONCRETE WEB CONNECTION SHALL BE SNUG TIGHT PLUS 1/4 TURN, UNLESS NOTED OTHERWISE. HIGH STRENGTH BOLTS FOR WEB CONNECTION SHALL MEET THE REQUIREMENTS FOR ASTM A325 OR ASTM A449.

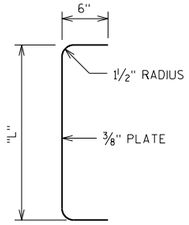

SECTION THRU ALTERNATE DIAPHRAGM

*DIM "X" = 2 1/2" FOR ALTERNATE PLATE DIAPHRAGM

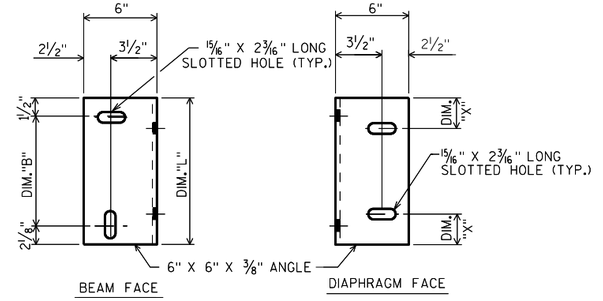

DIAPHRAGM SUPPORT

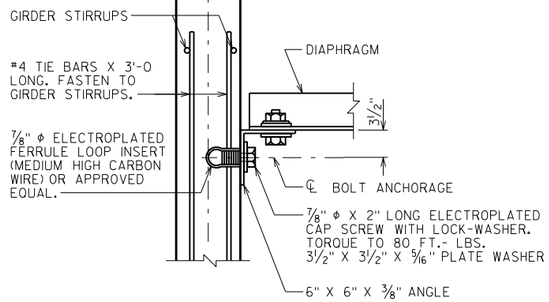

SECTION A-A

(FOR EXTERIOR ATTACHMENT)

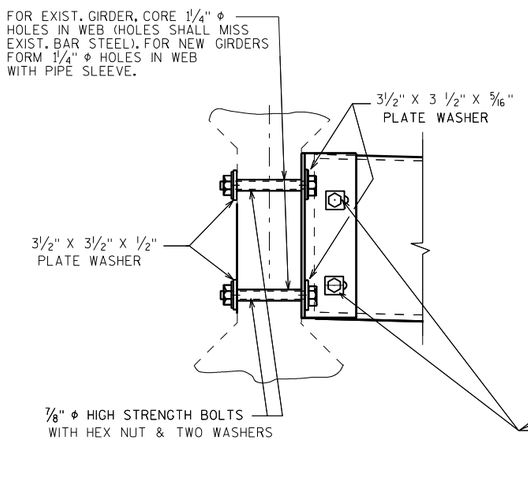

(FOR STAGGERED DIAPHRAGMS)

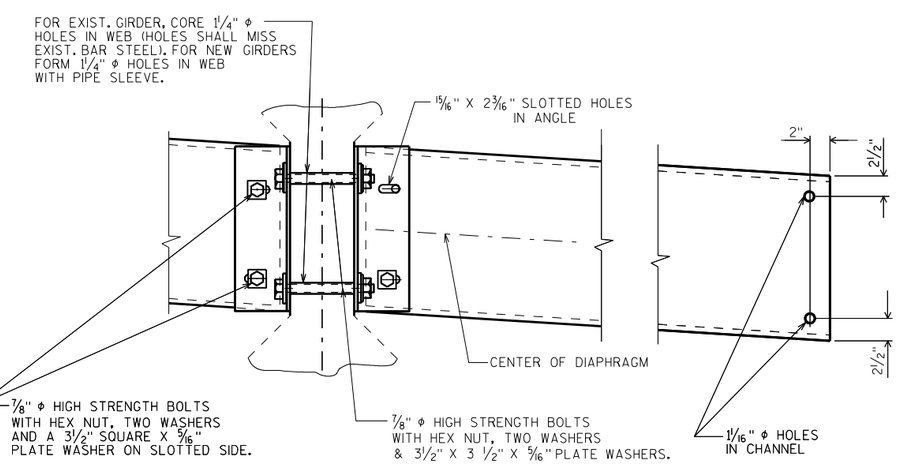

(FOR CONTINUOUS LINE OF DIAPHRAGMS)

DETAIL B

NO.	DATE	REVISION	BY

STATE OF WISCONSIN
DEPARTMENT OF TRANSPORTATION
STRUCTURES DESIGN SECTION

STRUCTURE B-70-115

DRAWN BY MJK | PLANS CK'D. EMK

STEEL DIAPHRAGMS

SHEET 14

134

SCALE = 1.0

8

8

STATE PROJECT NUMBER
1517-75-88

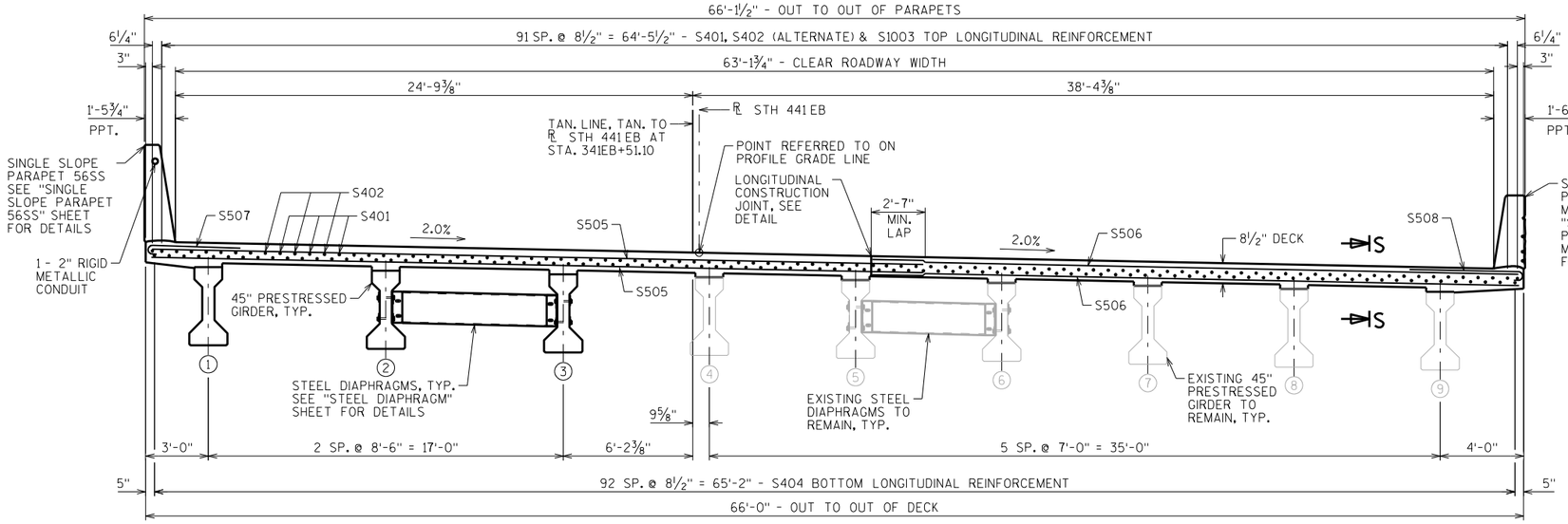

CROSS SECTION THRU ROADWAY

LOOKING EAST

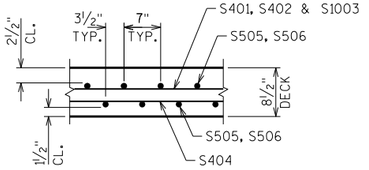

SECTION S-S

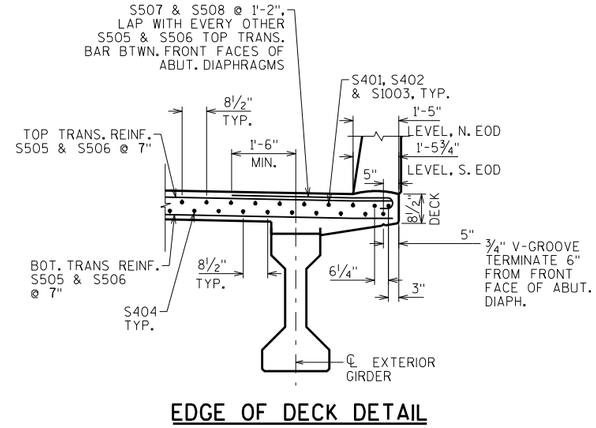

EDGE OF DECK DETAIL

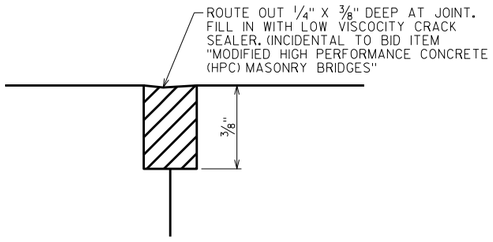

LONGITUDINAL CONSTRUCTION JOINT DETAIL

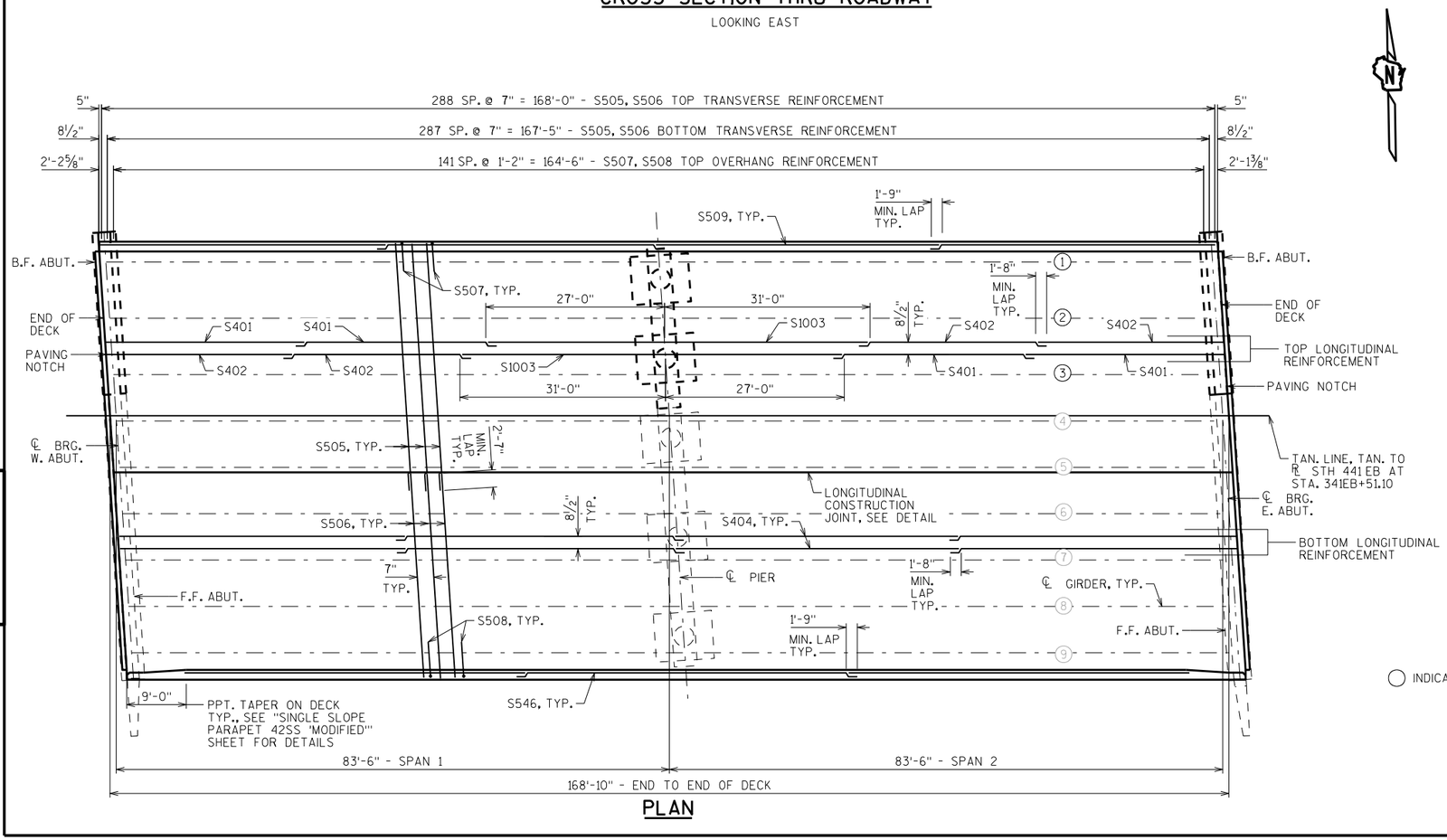

PLAN

○ INDICATES GIRDER NO.

NO.	DATE	REVISION	BY

STATE OF WISCONSIN
DEPARTMENT OF TRANSPORTATION
STRUCTURES DESIGN SECTION

STRUCTURE B-70-115

DRAWN BY MJK | PLANS CK'D. EMK

SUPERSTRUCTURE

SHEET 15

135

SCALE = 10

8

8

STATE PROJECT NUMBER
1517-75-88

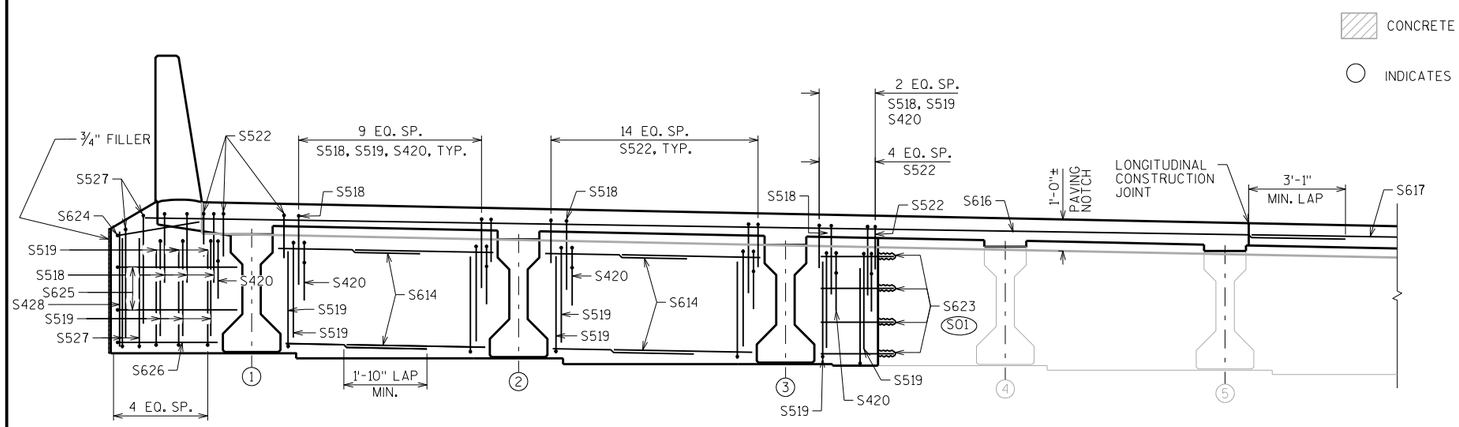

PART TRANSVERSE SECTION THRU ABUTMENT DIAPHRAGM

LOOKING EAST
EAST ABUTMENT FRONT FACE SHOWN
WEST ABUTMENT FRONT FACE SIMILAR

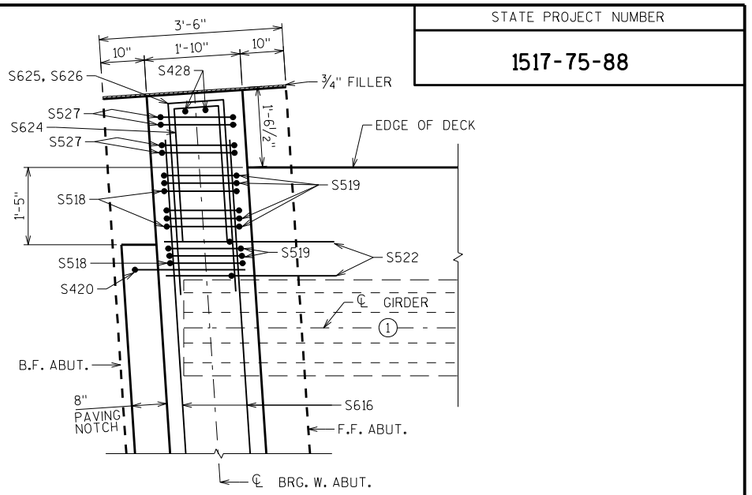

PLAN - EXTERIOR ABUTMENT DIAPHRAGM

WEST ABUTMENT, NORTHWEST EXTERIOR SHOWN
EAST ABUTMENT, NORTHEAST EXTERIOR SHOWN

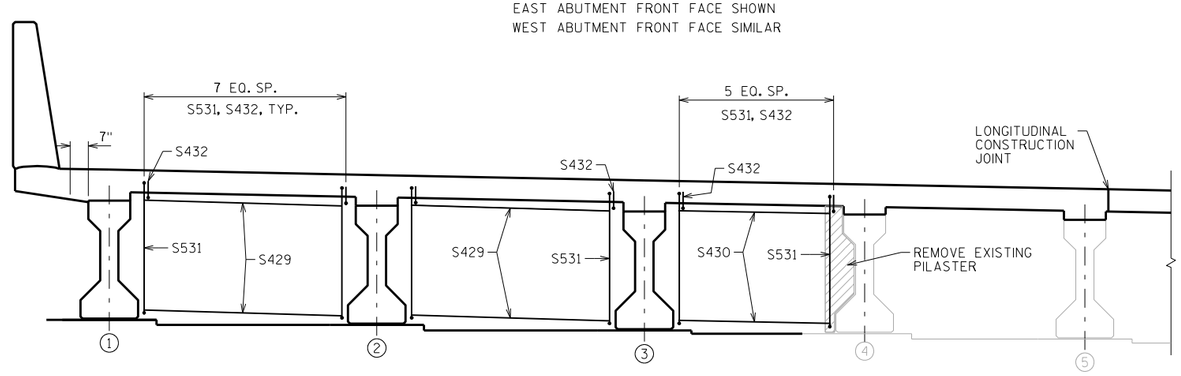

PART TRANSVERSE SECTION THRU PIER DIAPHRAGM

LOOKING EAST

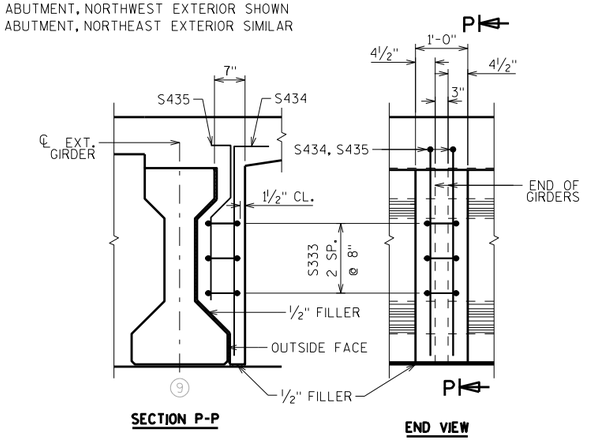

SECTION P-P **END VIEW**

PILASTER DETAILS AT PIER

AT EXISTING EXTERIOR GIRDER 9 ONLY

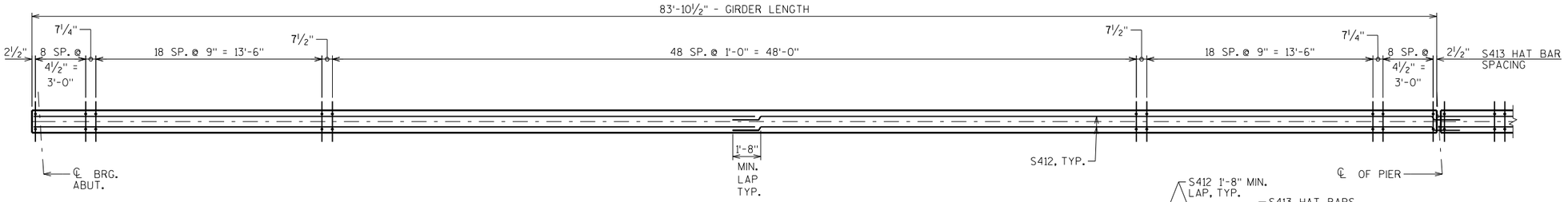

PLAN OF GIRDER HAUNCH

TYPICAL AT GIRDERS 4 THRU 9 (EXISTING GIRDERS)
SPAN 1 SHOWN, SPAN 2 SIMILAR

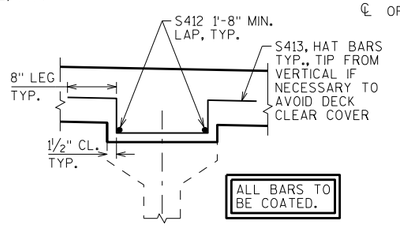

GIRDER HAUNCH DETAIL

TYPICAL AT GIRDERS 4 THRU 9 (EXISTING GIRDERS)

(S01) S623 ADHESIVE ANCHORS NO. 6 BARS, EMBED 6" INTO EXISTING CONCRETE.

NO.	DATE	REVISION	BY

STATE OF WISCONSIN
DEPARTMENT OF TRANSPORTATION
STRUCTURES DESIGN SECTION

STRUCTURE B-70-115

DRAWN BY MJK | PLANS CK'D. EMK

SUPERSTRUCTURE DETAILS 1

SHEET 16

136

SCALE = 7.0

STATE PROJECT NUMBER

1517-75-88

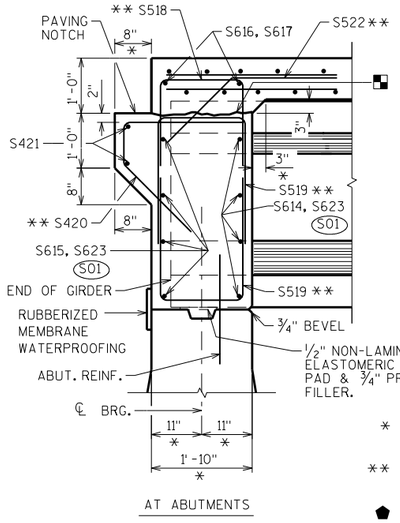

AT ABUTMENTS

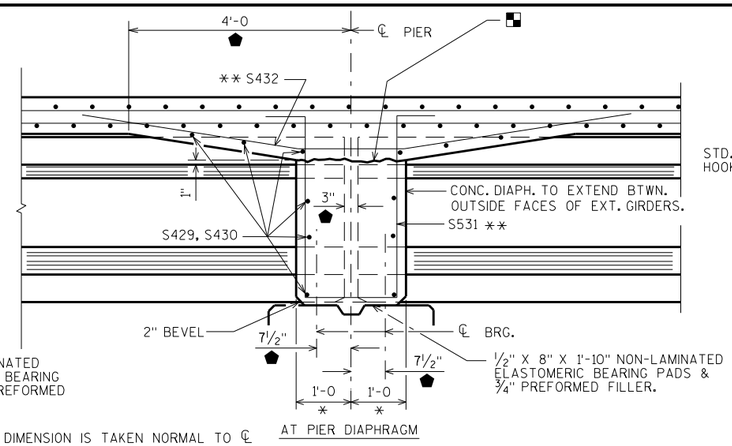

AT PIER DIAPHRAGM

* DIMENSION IS TAKEN NORMAL TO ℄ SUBSTRUCTURE UNITS.

** BARS PLACED PARALLEL TO GIRDERS SPACING PERPENDICULAR TO ℄ GIRDERS.

⬟ DIMENSION IS TAKEN PARALLEL TO ℄ GIRDER.

◪ OPTIONAL CONSTRUCTION JOINT. IF USED, DECK POUR MUST BE WITHIN 2 WEEKS FROM THE TIME OF THE DIAPHRAGM POUR.

PART LONGIT. SECTION

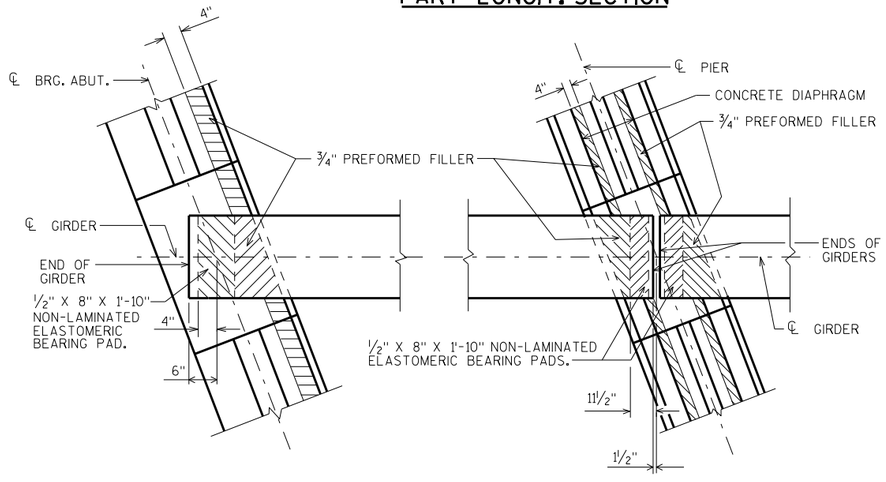

BEARING PAD DETAIL

FOR NEW GIRDER LOCATIONS

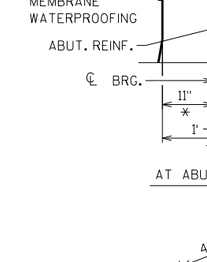

S536

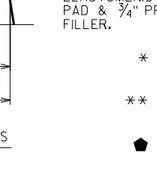

S537

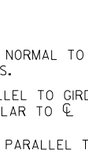

S538

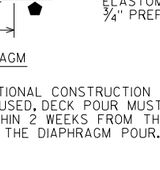

S333

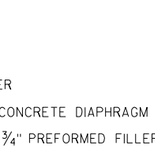

S539

S540

S545

S544

S420

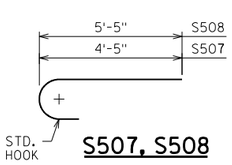

S507, S508

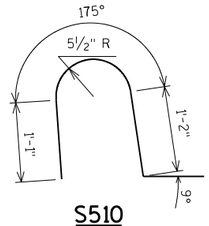

S510

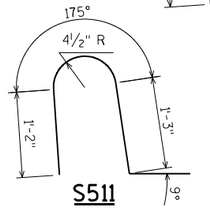

S511

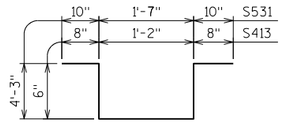

S413, S531

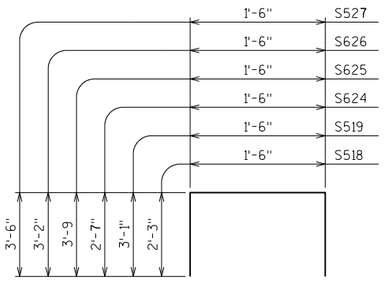

S518, S519, S624, S625
S626, S527

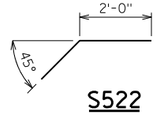

S522

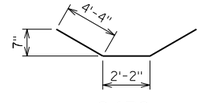

S432

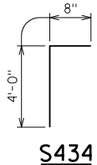

S434

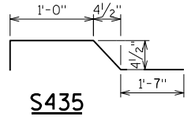

S435

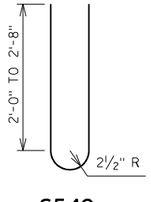

S542

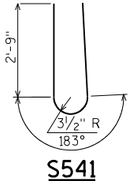

S541

BILL OF BARS

NOTE: THE FIRST OR FIRST TWO DIGITS OF THE BAR MARK SIGNIFIES THE BAR SIZE

BAR MARK	COAT	NO. REQ'D.	LENGTH	BENT	BAR SERIES	LOCATION
S401	X	188	30'-4"			DECK - TOP - HORIZ. - LONGIT.
S402	X	188	28'-4"			DECK - TOP - HORIZ. - LONGIT.
S1003	X	94	58'-0"			DECK - TOP - HORIZ. - LONGIT. - CONTINUITY OVER PIER
S404	X	372	43'-5"			DECK - BOT.- HORIZ. - LONGIT.
S505	X	577	37'-6"			DECK - TOP & BOT. - HORIZ. - TRANS. - STAGE 2 CONST.
S506	X	577	31'-0"			DECK - TOP & BOT. - HORIZ. - TRANS. - STAGE 3 CONST.
S507	X	142	5'-0"	X		DECK - TOP - TRANS. - HOOK BARS - N. EDGE OF DECK
S508	X	142	6'-0"	X		DECK - TOP - TRANS. - HOOK BARS - S. EDGE OF DECK
S509	X	40	43'-5"			56SS PPT. - HORIZ. - LONGIT.
S510	X	254	4'-6"	X		56SS PPT. - VERT. - TRANS.
S511	X	227	4'-5"	X		42SS PPT. - VERT. - TRANS.
S412	X	48	43'-5"			HAUNCH - HORIZ. - LONGIT. - GIR. 4-9
S413	X	1260	3'-2"	X		HAUNCH - VERT. - HAT BARS - GIR. 4-9
S614	X	32	4'-9"			ABUT. DIAPH. - HORIZ.
S615	X	8	24'-0"			ABUT. DIAPH. - HORIZ.
S616	X	4	38'-2"			ABUT. DIAPH. - HORIZ. - DECK STAGE 2 CONST.
S617	X	4	30'-11"			ABUT. DIAPH. - HORIZ. - DECK STAGE 3 CONST.
S518	X	52	5'-9"	X		ABUT. DIAPH. - VERT.
S519	X	104	7'-5"	X		ABUT. DIAPH. - VERT.
S420	X	48	4'-10"	X		ABUT. DIAPH. - VERT. - CORBELS
S421	X	4	21'-2"			ABUT. DIAPH. - HORIZ. - CORBELS
S522	X	74	4'-0"	X		ABUT. DIAPH. - VERT.
S623	X	16	2'-4"			ABUT. DIAPH. - HORIZ. - INT. - ANCHORS
S624	X	2	6'-4"	X		ABUT. DIAPH. - HORIZ. - EXT.
S625	X	4	8'-8"	X		ABUT. DIAPH. - HORIZ. - EXT.
S626	X	2	7'-6"	X		ABUT. DIAPH. - HORIZ. - EXT.
S527	X	8	8'-3"	X		ABUT. DIAPH. - VERT. - EXT.
S428	X	4	3'-8"			ABUT. DIAPH. - VERT. - EXT.
S429	X	24	6'-4"			PIER DIAPH. - HORIZ.
S430	X	12	4'-10"			PIER DIAPH. - HORIZ.
S531	X	22	11'-3"	X		PIER DIAPH. - VERT.
S432	X	22	10'-8"	X		PIER DIAPH. - VERT.
S333	X	3	3'-1"	X		PILASTER - HORIZ. - STIRRUPS
S434	X	2	4'-7"	X		PILASTER - VERT.
S435	X	2	3'-7"	X		PILASTER - VERT.
S536	X	254	9'-1"	X		56SS PPT. - VERT.
S537	X	227	6'-8"	X		42SS PPT. - VERT.
S538	X	22	2'-9"	X		42SS PPT. - VERT.
S539	X	34	4'-4"	X		42SS PPT.- VERT.
S540	X	10	6'-5"	X		42SS PPT. - VERT.
S541	X	12	6'-6"	X		42SS PPT. - VERT.
S542	X	12	5'-5"	X	⚠	42SS PPT. - VERT.
S543	X	10	12'-0"			42SS PPT. - HORIZ.
S544	X	4	12'-0"	X		42SS PPT. - HORIZ.
S545	X	2	12'-0"	X		42SS PPT. - HORIZ.
S546	X	24	50'-6"			42SS PPT. - HORIZ.

⚠ LENGTH SHOWN FOR BAR IS AN AVERAGE LENGTH AND SHOULD ONLY BE USED FOR BAR WEIGHT CALCULATIONS. SEE BAR SERIES TABLE FOR ACTUAL LENGTHS.

BAR SERIES TABLE

MARK	NO. REQD.	LENGTH
S542	2 SERIES OF 6	4'-9" TO 6'-1"

BUNDLE AND TAG EACH SERIES SEPARATELY.

(S01) S623 ADHESIVE ANCHORS NO. 6 BARS. EMBED 6" INTO EXISTING CONCRETE.

NO.	DATE	REVISION	BY

STATE OF WISCONSIN
DEPARTMENT OF TRANSPORTATION
STRUCTURES DESIGN SECTION

STRUCTURE B-70-115

DRAWN BY MJK | PLANS CK'D. EMK

SUPERSTRUCTURE DETAILS 2

SHEET 17

137

SCALE = 1.3333

8

8

STATE PROJECT NUMBER
1517-75-88

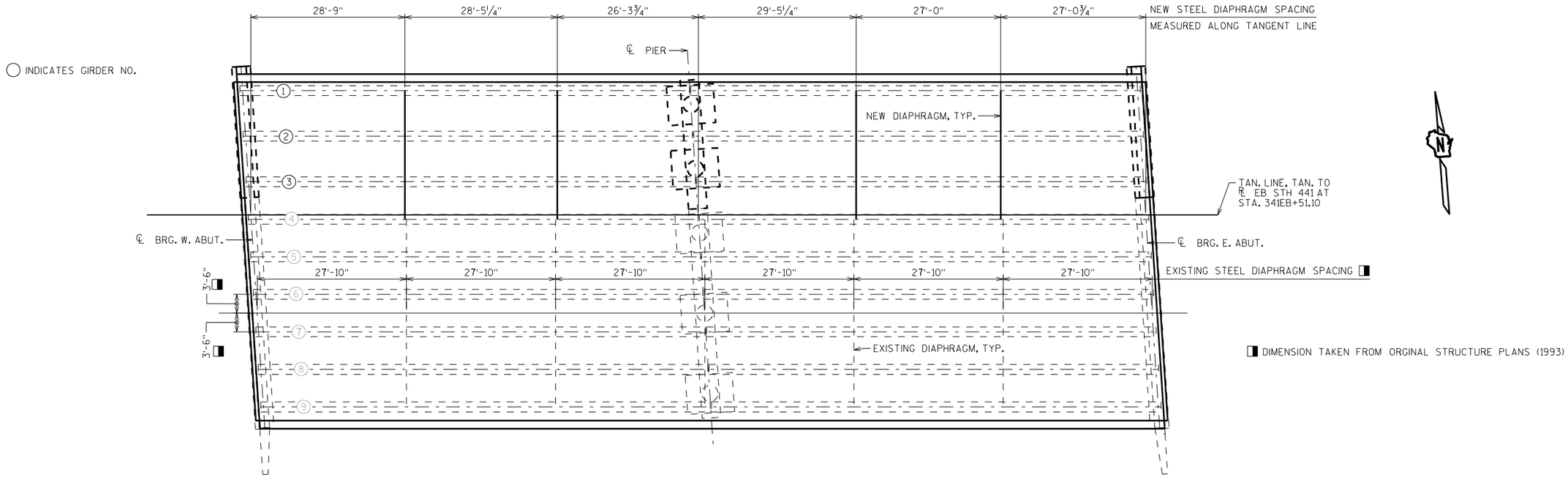

STEEL DIAPHRAGM FRAMING PLAN

SEE "45" PRESTRESSED GIRDER DETAILS" SHEET FOR GIRDER LENGTHS

NOTES

IT IS THE RESPONSIBILITY OF THE CONTRACTOR TO VERIFY THE LOCATIONS OF THE EXISTING STEEL DIAPHRAGMS.

FOR DIAPHRAGM SPACING WITH RESPECT TO THE ENDS OF THE GIRDERS SEE "45" PRESTRESSED GIRDER DETAILS" SHEET.

TOP OF DECK ELEVATIONS

LOCATION	℄ BRG. W. ABUT.	1/10 PT.	2/10 PT.	3/10 PT.	4/10 PT.	5/10 PT.	6/10 PT.	7/10 PT.	8/10 PT.	9/10 PT.	℄ BRG. PIER	1/10 PT.	2/10 PT.	3/10 PT.	4/10 PT.	5/10 PT.	6/10 PT.	7/10 PT.	8/10 PT.	9/10 PT.	℄ BRG. E. ABUT.
N. EOD	823.51	823.56	823.62	823.67	823.72	823.78	823.83	823.88	823.94	823.99	824.05	824.1	824.15	824.21	824.26	824.32	824.37	824.43	824.48	824.54	824.59
GIRDER 1	823.48	823.53	823.59	823.64	823.69	823.75	823.80	823.85	823.91	823.96	824.02	824.07	824.12	824.18	824.23	824.29	824.34	824.40	824.45	824.51	824.56
GIRDER 2	823.31	823.37	823.42	823.47	823.53	823.58	823.63	823.69	823.74	823.79	823.85	823.90	823.96	824.01	824.07	824.12	824.18	824.23	824.29	824.34	824.40
GIRDER 3	823.15	823.20	823.25	823.31	823.36	823.41	823.47	823.52	823.57	823.63	823.68	823.74	823.79	823.85	823.90	823.96	824.01	824.07	824.12	824.18	824.23
TAN. LINE	823.02	823.08	823.13	823.18	823.24	823.29	823.35	823.40	823.45	823.51	823.56	823.62	823.67	823.72	823.78	823.83	823.89	823.94	824.00	824.05	824.11
℞ STH 441 EB	823.02	823.07	823.13	823.18	823.23	823.29	823.34	823.40	823.45	823.51	823.56	823.61	823.67	823.72	823.78	823.83	823.89	823.94	823.99	824.05	824.10
GIRDER 4	823.01	823.06	823.12	823.17	823.22	823.28	823.33	823.38	823.44	823.49	823.55	823.60	823.65	823.71	823.76	823.82	823.87	823.93	823.98	824.04	824.09
GIRDER 5	822.87	822.92	822.98	823.03	823.08	823.14	823.19	823.25	823.30	823.35	823.41	823.46	823.52	823.57	823.63	823.68	823.74	823.79	823.85	823.90	823.96
CONST. JT.	822.86	822.91	822.96	823.02	823.07	823.12	823.18	823.23	823.29	823.34	823.39	823.45	823.50	823.56	823.61	823.67	823.72	823.78	823.83	823.89	823.94
GIRDER 6	822.73	822.79	822.84	822.89	822.95	823.00	823.06	823.11	823.16	823.22	823.27	823.33	823.38	823.44	823.49	823.54	823.60	823.65	823.71	823.77	823.82
GIRDER 7	822.60	822.65	822.70	822.76	822.81	822.86	822.92	822.97	823.03	823.08	823.13	823.19	823.24	823.30	823.35	823.41	823.46	823.52	823.57	823.63	823.68
GIRDER 8	822.46	822.51	822.57	822.62	822.67	822.73	822.78	822.83	822.89	822.94	823.00	823.05	823.11	823.16	823.22	823.27	823.33	823.38	823.44	823.49	823.55
GIRDER 9	822.32	822.38	822.43	822.48	822.54	822.59	822.64	822.70	822.75	822.81	822.86	822.91	822.97	823.02	823.08	823.13	823.19	823.24	823.30	823.36	823.41
S. EOD	822.27	822.32	822.38	822.43	822.49	822.54	822.59	822.65	822.70	822.76	822.81	822.86	822.92	822.97	823.03	823.08	823.14	823.19	823.25	823.31	823.36

NO.	DATE	REVISION	BY

STATE OF WISCONSIN
DEPARTMENT OF TRANSPORTATION
STRUCTURES DESIGN SECTION

STRUCTURE B-70-115

DRAWN BY MJK | PLANS CK'D. EMK

TOP OF DECK ELEVATIONS

SHEET 18

138

8

8

SCALE = 10.0

STATE PROJECT NUMBER
1517-75-88

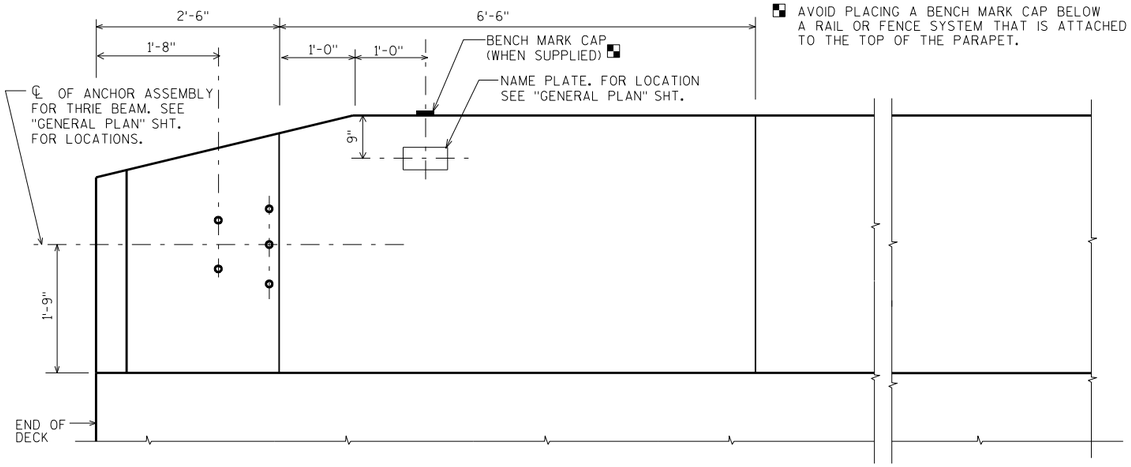

AVOID PLACING A BENCH MARK CAP BELOW A RAIL OR FENCE SYSTEM THAT IS ATTACHED TO THE TOP OF THE PARAPET.

INSIDE ELEVATION

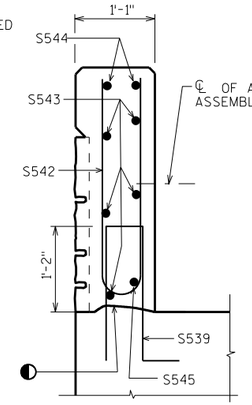

SECTION A-A

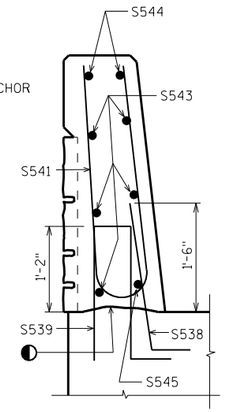

SECTION B-B

SEE "SUPERSTRUCTURE DETAILS 2" SHEET FOR BILL OF BARS

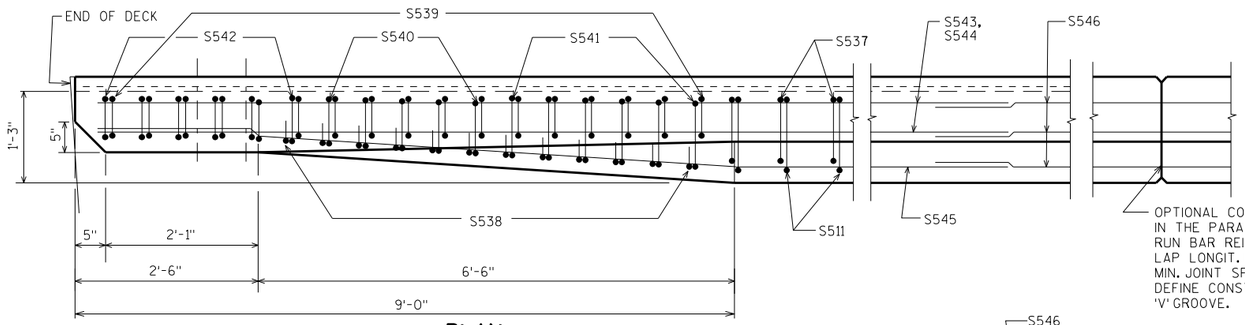

PLAN

OPTIONAL CONSTRUCTION JOINTS IN THE PARAPETS MAY BE USED. RUN BAR REINF. THRU THE JOINT. LAP LONGIT. BARS A MIN. OF 1'-9". MIN. JOINT SPACING OF 80'-0". DEFINE CONST. JOINT WITH A ¾" - 'V' GROOVE.

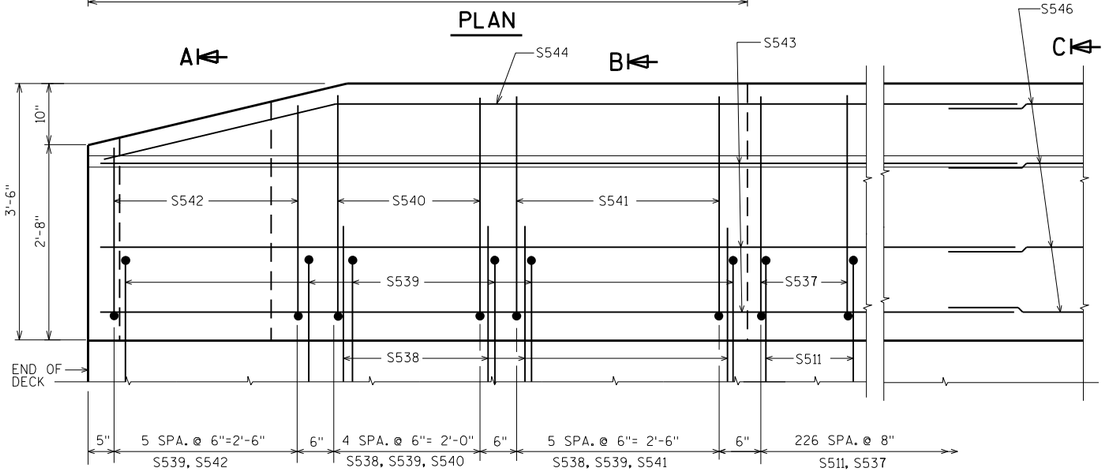

OUTSIDE ELEVATION

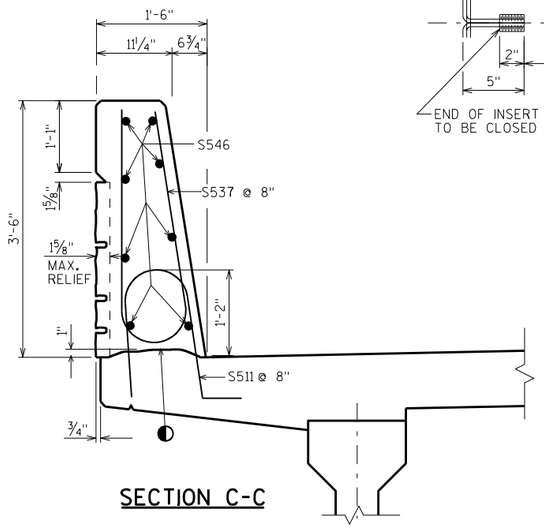

SECTION C-C

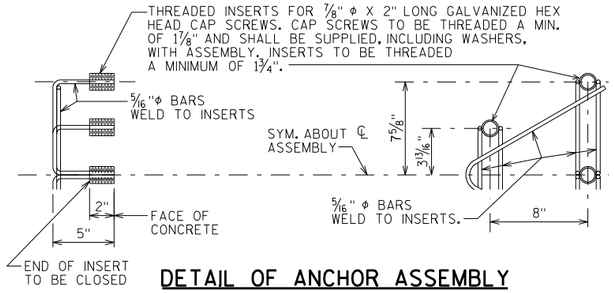

DETAIL OF ANCHOR ASSEMBLY

NOTE: HEX HEAD CAP SCREWS & WASHERS TO BE GALVANIZED IN ACCORDANCE WITH AASHTO M232 CLASS C.

ASSEMBLY SHALL BE BID ITEM "ANCHOR ASSEMBLIES FOR STEEL PLATE BEAM GUARD", EACH.

◐ CONST. JOINT - STRIKE OFF AS SHOWN.

NO.	DATE	REVISION	BY

STATE OF WISCONSIN
DEPARTMENT OF TRANSPORTATION
STRUCTURES DESIGN SECTION

STRUCTURE B-70-115

DRAWN BY MJK | PLANS CK'D. EMK

SINGLE SLOPE PARAPET 42SS "MODIFIED"

SHEET 19

139

8

8

1 2 3 4 6

SCALE = 1

STATE PROJECT NUMBER
1517-75-88

SEE "SUPERSTRUCTURE DETAILS 2" SHEET FOR BILL OF BARS

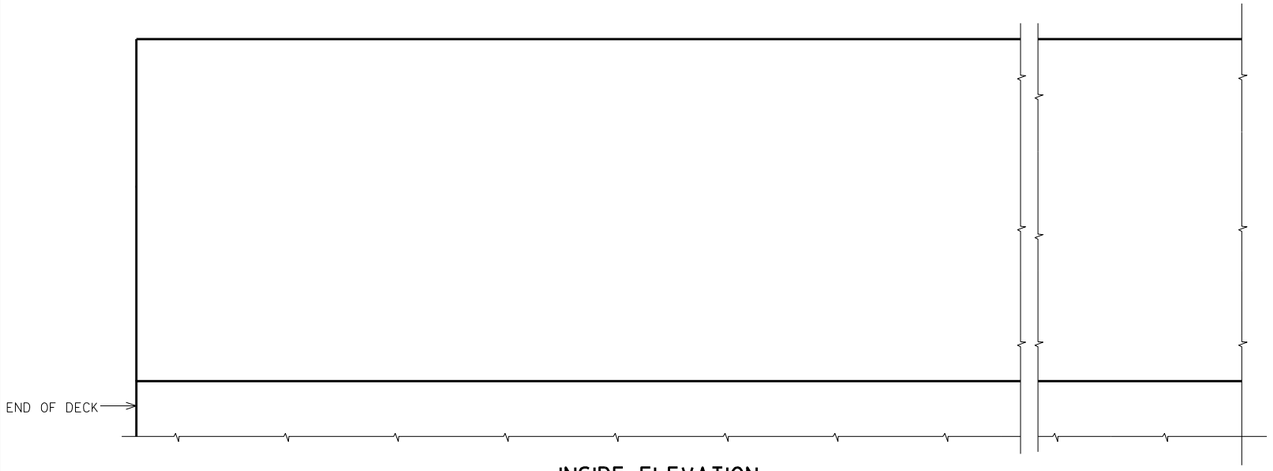

INSIDE ELEVATION

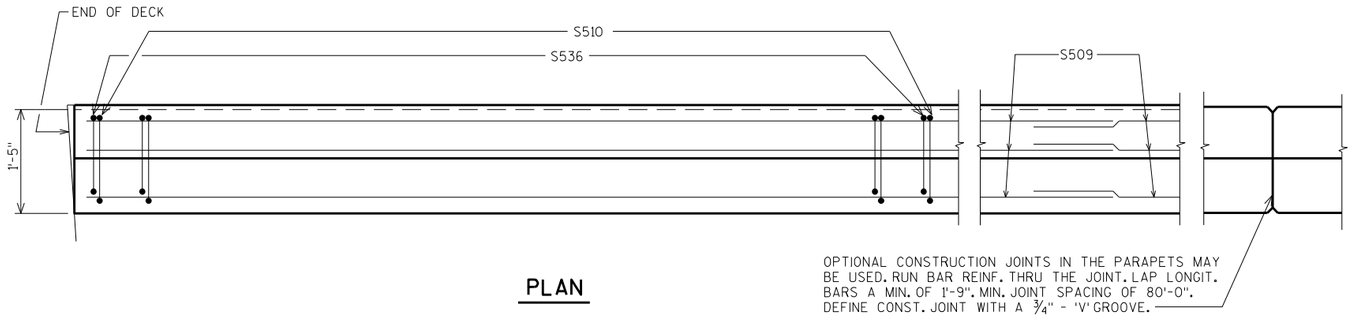

PLAN

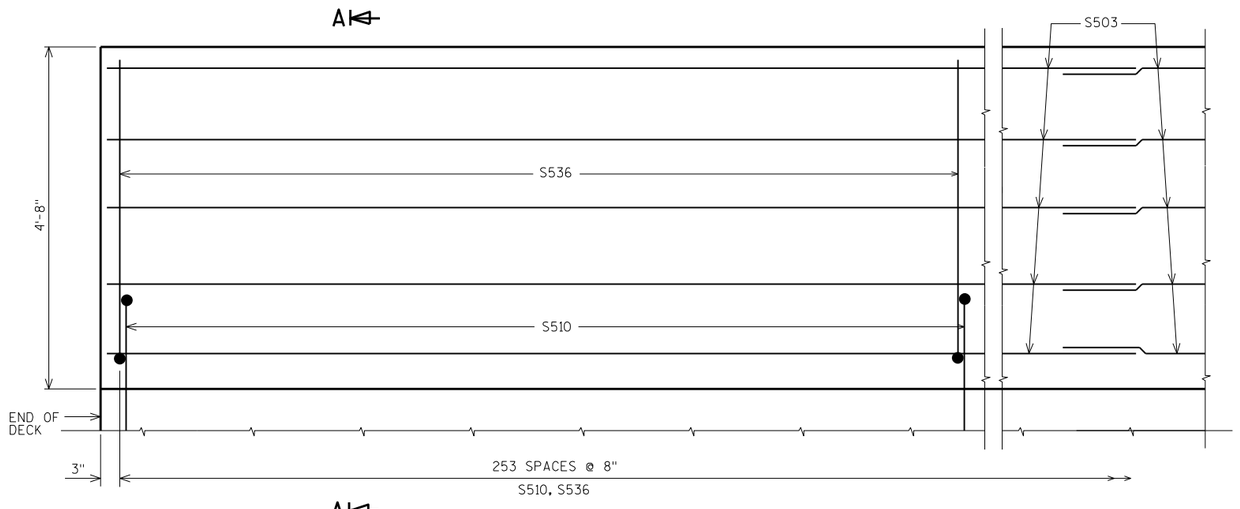

OUTSIDE ELEVATION

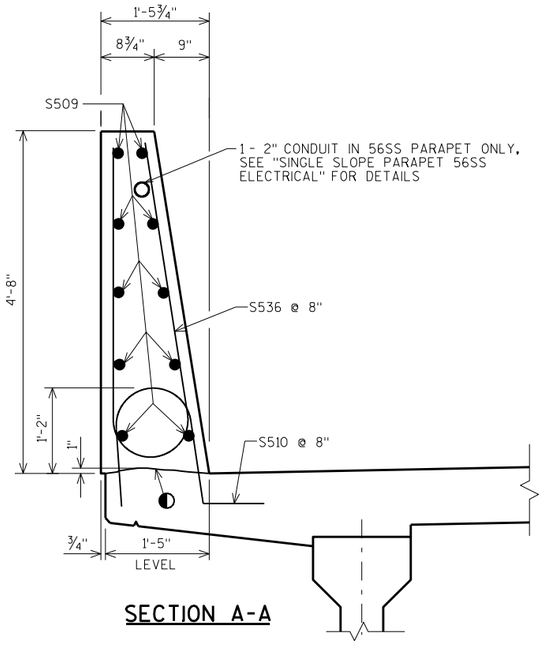

SECTION A-A

◐ CONST. JOINT - STRIKE OFF AS SHOWN.

NO.	DATE	REVISION	BY

STATE OF WISCONSIN
DEPARTMENT OF TRANSPORTATION
STRUCTURES DESIGN SECTION

STRUCTURE B-70-115

DRAWN BY MJK | PLANS CK'D. EMK

SINGLE SLOPE PARAPET 56SS

SHEET 20

140

SCALE = 1

8

8

STATE PROJECT NUMBER

1517-75-88

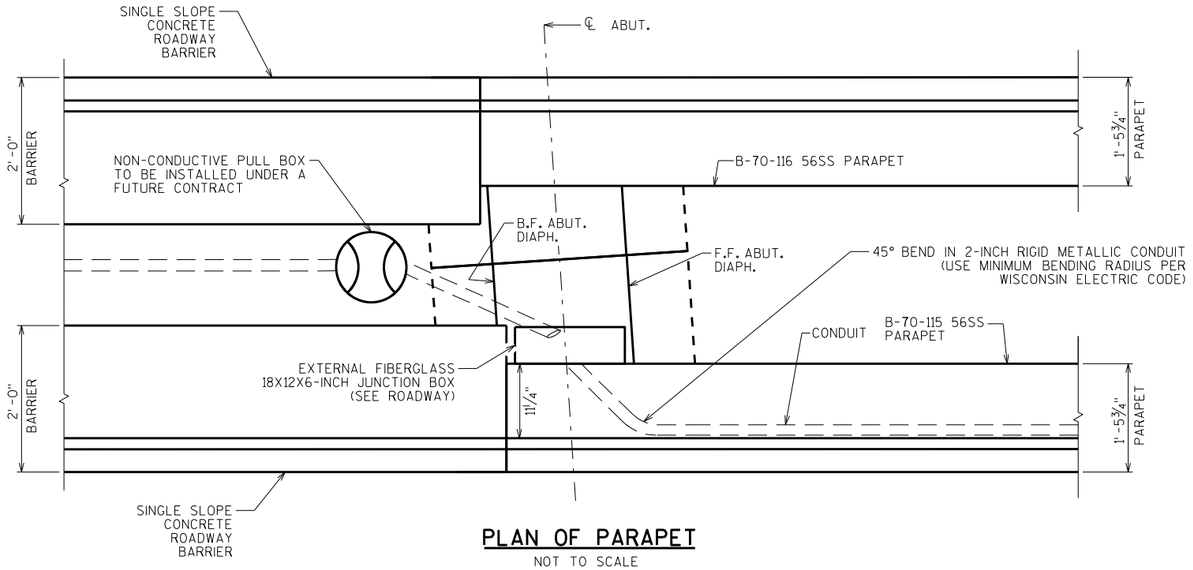

PLAN OF PARAPET

NOT TO SCALE

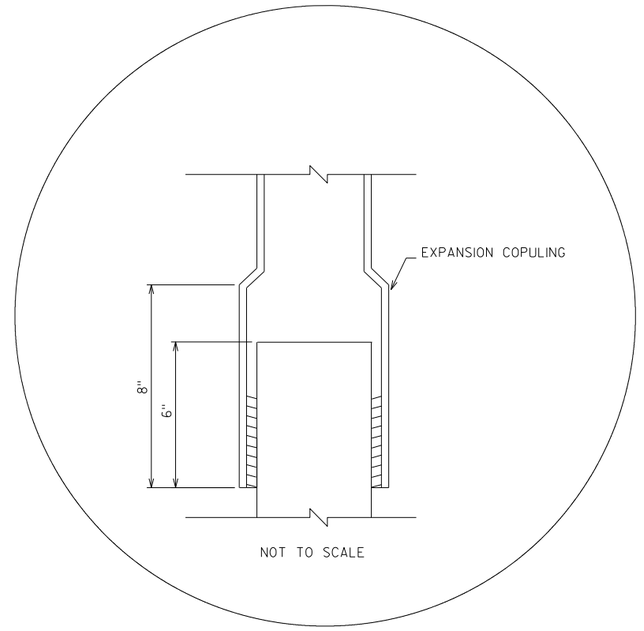

NOT TO SCALE

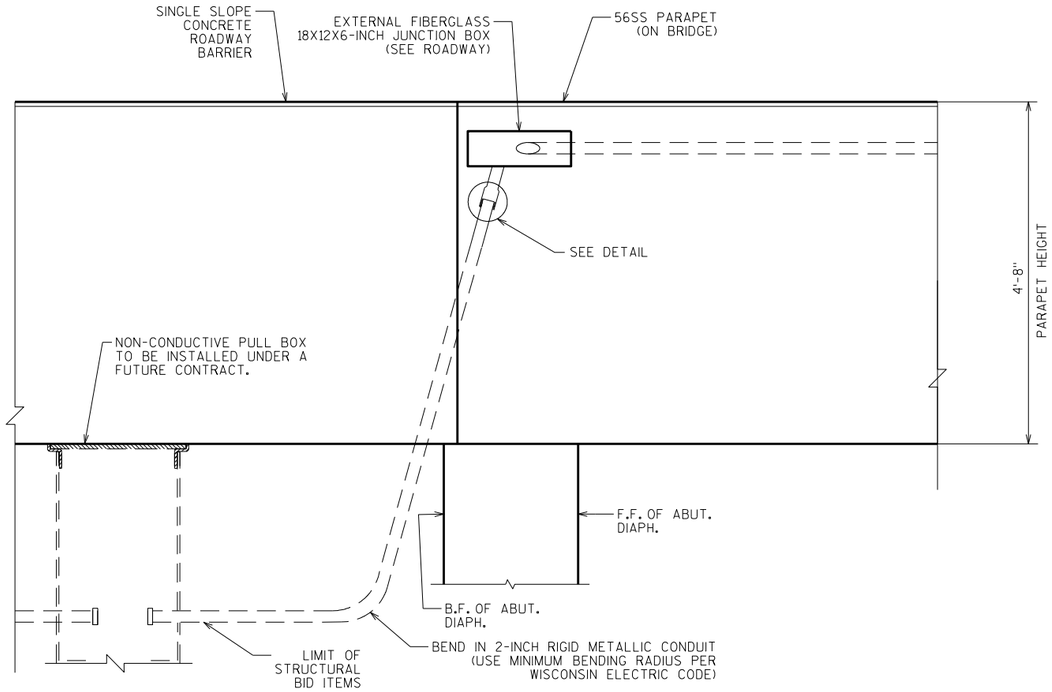

INSIDE ELEVATION OF PARAPET AT END OF DECK

NOT TO SCALE

NOTES

JUNCTION BOXES: SEE ROADWAY PLANS.

ANGLES AND ADAPTER FITTINGS TO BE INCIDENTAL TO "CONDUIT RIGID METALLIC 2-INCH".

WHEN CONNECTING NONMETALLIC CONDUIT TO METALLIC CONDUIT, ONLY ADAPTER FITTINGS U.L. OR NRTL LISTED FOR ELECTRICAL USE SHALL BE USED.

8

8

NO.	DATE	REVISION	BY

STATE OF WISCONSIN
DEPARTMENT OF TRANSPORTATION
STRUCTURES DESIGN SECTION

STRUCTURE B-70-115

DRAWN BY MJK | PLANS CK'D. EMK

SINGLE SLOPE PARAPET 56SS ELECTRICAL

SHEET 21

141

SCALE = 1.0

STATE PROJECT NUMBER
1517-75-88

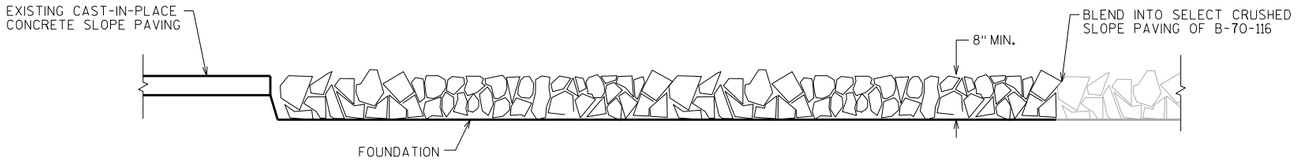

SECTION A-A

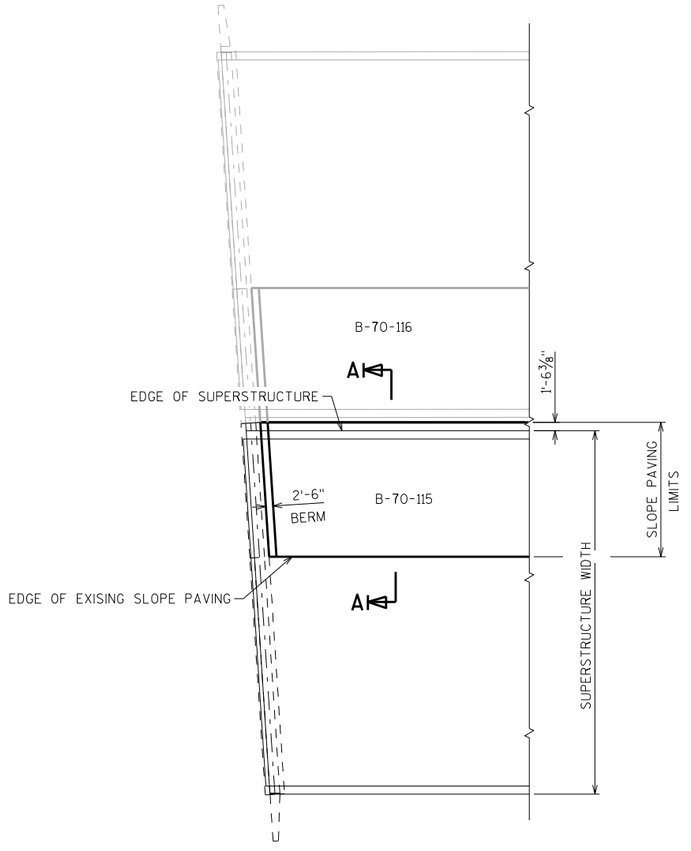

PLAN

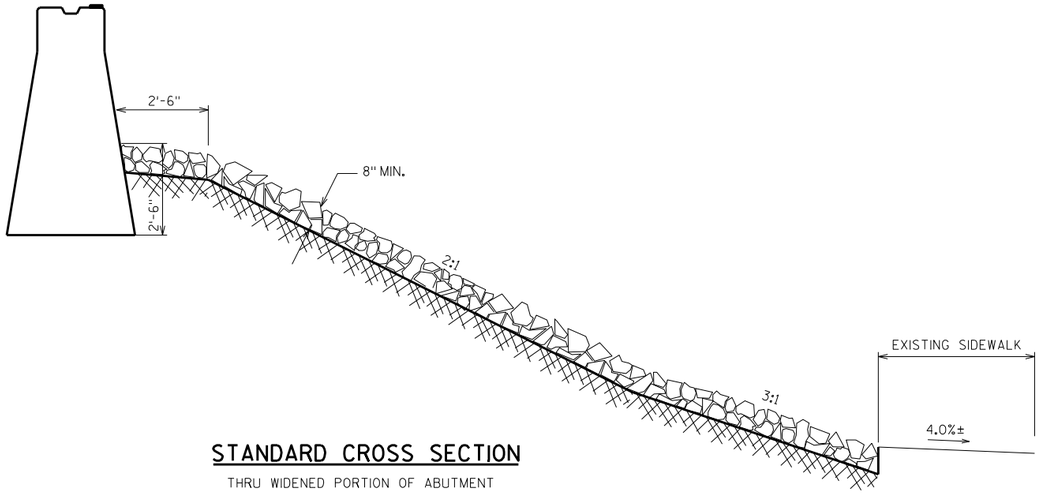

STANDARD CROSS SECTION

THRU WIDENED PORTION OF ABUTMENT

GENERAL NOTES

DETAILS OF CONSTRUCTION, MATERIALS AND WORKMANSHIP NOT SHOWN ON THIS DRAWING SHALL CONFORM TO THE PERTINENT REQUIREMENTS OF THE STANDARD SPECIFICATIONS.

WOOD FORMS MAY BE LEFT IN PLACE WHEN OF A QUALITY ACCEPTABLE TO THE ENGINEER.

SELECT CRUSHED SLOPE PAVING SHALL ONLY BE PLACED ON THE SLOPE OF THE WIDENED PORTION OF THE ABUTMENTS. EXISTING CAST-IN-PLACE CONCRETE SLOPE PAVING SHALL REMAIN IN PLACE.

EXISTING CAST-IN-PLACE CONCRETE SLOPE PAVING AND THE SELECT CRUSHED SLOPE PAVING PLACED IN THIS CONTRACT WILL BE REMOVED AND REPLACED WITH NEW CAST-IN-PLACE CONCRETE SLOPE PAVING UNDER A FUTURE CONTRACT.

NO.	DATE	REVISION	BY

STATE OF WISCONSIN
DEPARTMENT OF TRANSPORTATION
STRUCTURES DESIGN SECTION

STRUCTURE B-70-115

DRAWN BY MJK | PLANS CK'D. EMK

SLOPE PAVING (SELECT CRUSHED)

SHEET 22

142

8

8

10

4

2

SCALE = 1.0

STATE PROJECT NUMBER

1517-75-88

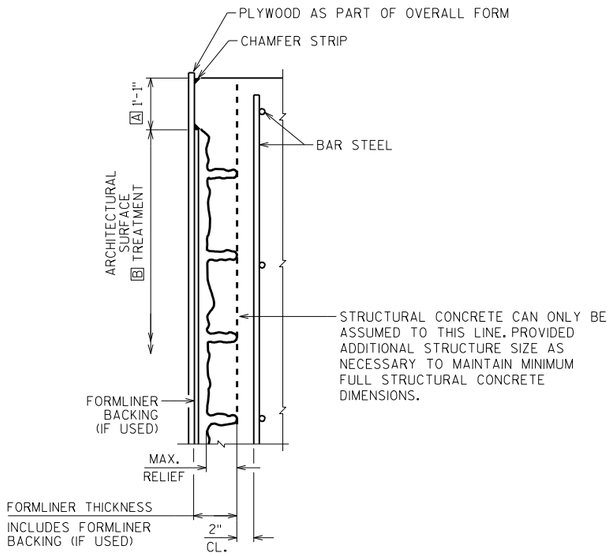

SECTION THROUGH PARAPET FORMLINER

CONCRETE STAINING SCHEDULE

MARK	COLOR	COLOR NO.	LOCATION
A	HOPSACK	SW 6109	FASCIA GIRDERS, DECK EDGE, AND PIER CAP
B	LATTE	FED. 33522	WINGWALLS, ABUTMENTS, AND COLUMNS

NOTE: 1. FINISH ON COLORS IS FLAT (LUSTERLESS)

NOTES

THE FORMLINER COURSING ON PARAPET SHALL BE PARALLEL TO TOP OF PARAPET

THE FORMLINER PATTERN SHALL BE CONTINUOUS ACROSS CONSTRUCTION JOINTS.

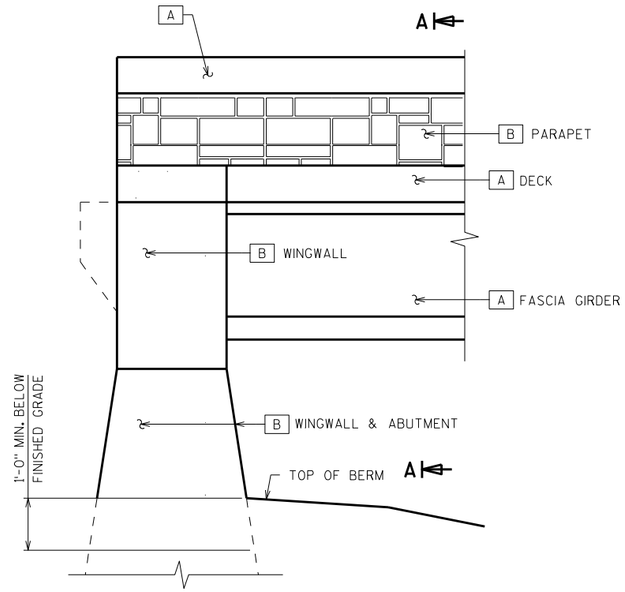

ABUTMENT STAINING DETAIL

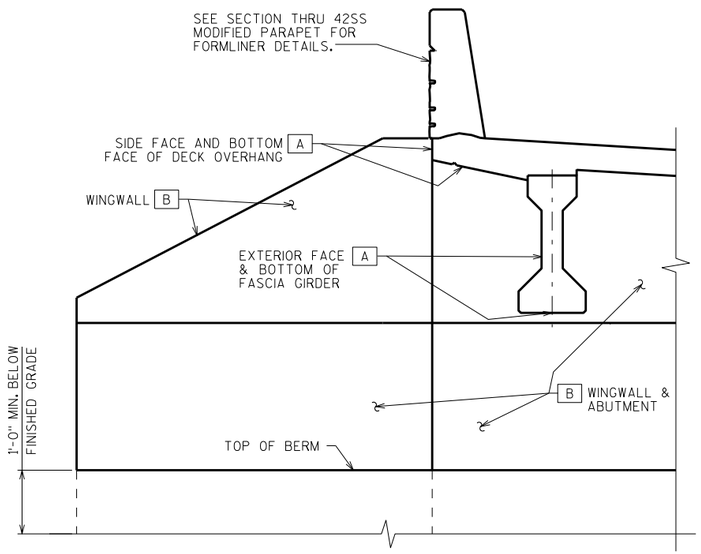

SECTION A-A

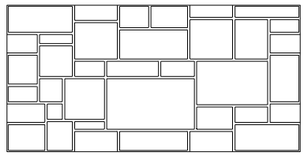

ASHLAR

MAXIMUM RELIEF: 1⅜"
AVERAGE RELIEF: 1¼"
LINER THICKNESS*: 2½"
STONE SIZE: H: 3"-17" W: 5"-29"

* INCLUDES INTERNAL PLYWOOD BACKING

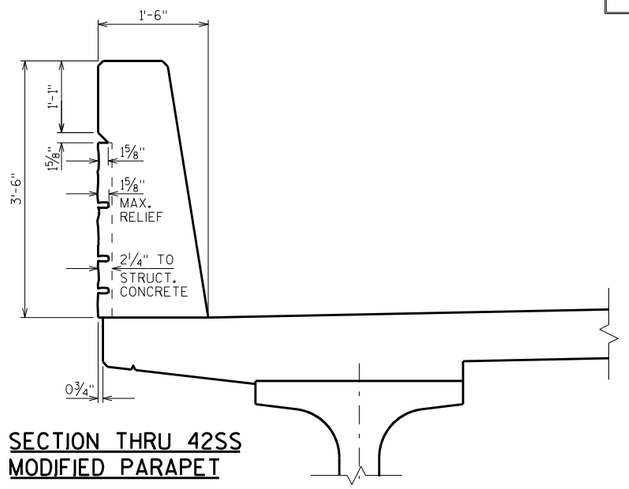

SECTION THRU 42SS MODIFIED PARAPET

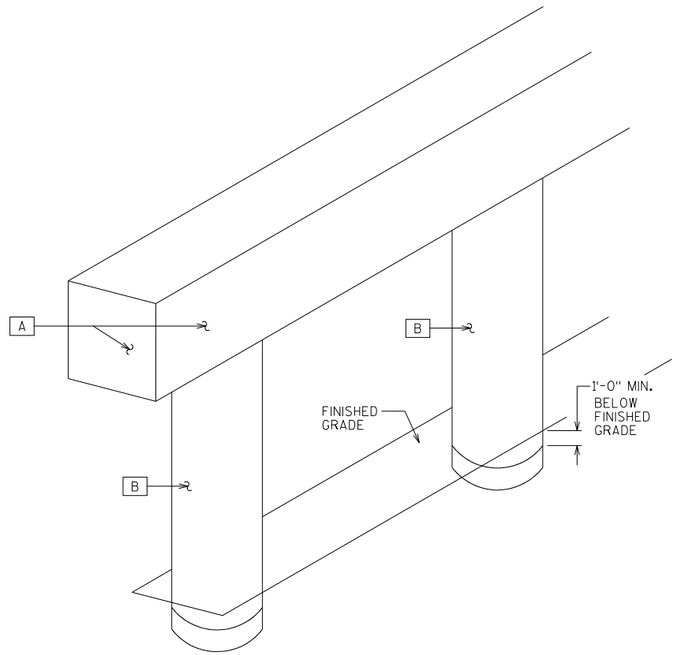

PIER STAINING DETAIL

NO.	DATE	REVISION	BY

STATE OF WISCONSIN
DEPARTMENT OF TRANSPORTATION
STRUCTURES DESIGN SECTION

STRUCTURE B-70-115

DRAWN BY MJK | PLANS CK'D. EMK

AESTHETIC DETAILS

SHEET 23

143

SCALE = 1.0

8

8

STATE PROJECT NUMBER
1517-75-88

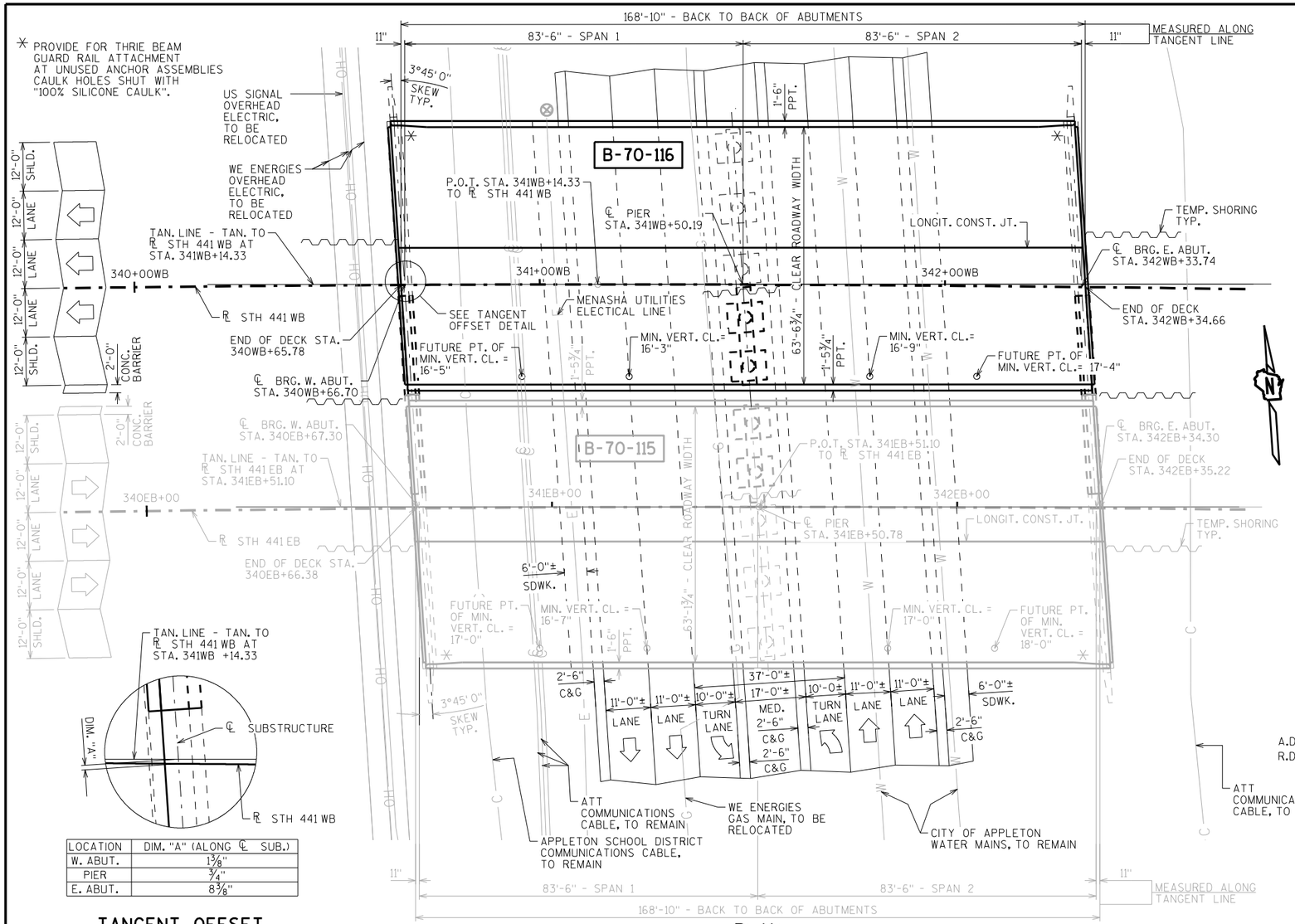

LOCATION	DIM. "A" (ALONG ℄ SUB.)
W. ABUT.	1⅜"
PIER	¾"
E. ABUT.	8⅜"

TANGENT OFFSET DETAIL

PLAN
2-SPAN - 45" PRESTRESSED GIRDERS

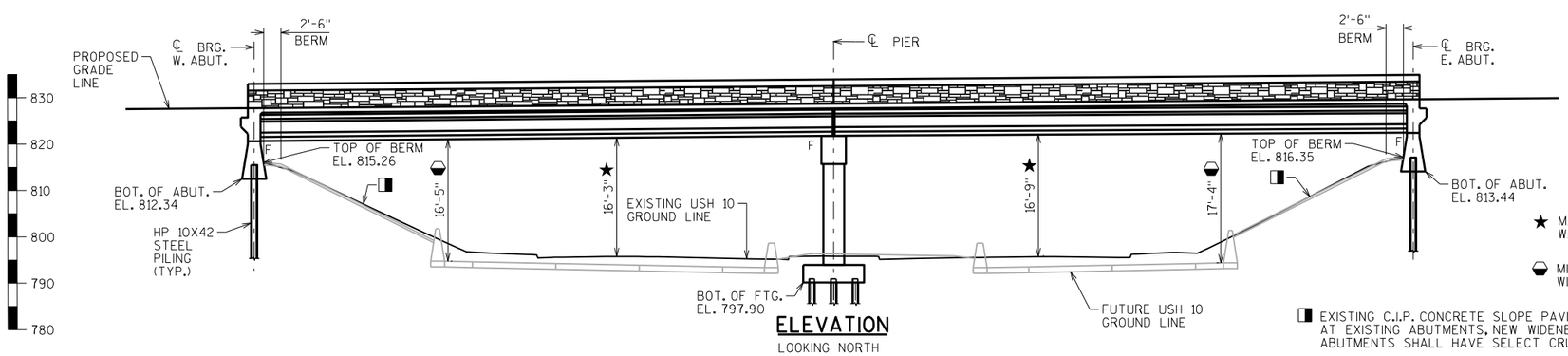

ELEVATION
LOOKING NORTH

DESIGN DATA

LIVE LOAD:

DESIGN LOADING: HS-20
INVENTORY RATING: HS-18
OPERATING RATING: HS-42
WISCONSIN STANDARD PERMIT VEHICLE (WIS.-SPV): 230 (KIPS)

STRUCTURE IS DESIGNED FOR A FUTURE WEARING SURFACE OF 20 POUNDS PER SQUARE FOOT AND AN ADDITIONAL 5 PSF PREVENTATIVE POLYMER OVERLAY.

MATERIAL PROPERTIES:

CONCRETE MASONRY (HPC) — f'c = 4,000 P.S.I.
BAR STEEL REINFORCEMENT, GRADE 60 — fy = 60,000 P.S.I.
45" PRESTRESSED GIRDERS, CONCRETE MASONRY — f'c = 8,000 P.S.I.
STRANDS- 0.6" DIA. WITH ULTIMATE TENSILE STRENGTH OF 270,000 P.S.I.

FOUNDATION DATA

ABUTMENTS TO BE SUPPORTED ON HP 10X42 PILING DRIVEN TO A REQUIRED DRIVING RESISTANCE OF 180 TONS ** PER PILE AS DETERMINED BY THE MODIFIED GATES DYNAMIC FORMULA. ESTIMATED 95'-0" LONG.

PIER TO BE SUPPORTED ON HP 10X42 PILING DRIVEN TO A REQUIRED DRIVING RESISTANCE OF 180 TONS ** PER PILE AS DETERMINED BY THE MODIFIED GATES DYNAMIC FORMULA. ESTIMATED 75'-0" LONG.

** THE FACTORED AXIAL RESISTANCE OF PILES IN COMPRESSION USED FOR DESIGN IS THE REQUIRED DRIVING RESISTANCE MULTIPLIED BY A RESISTANCE FACTOR OF 0.5 USING MODIFIED GATES TO DETERMINE DRIVEN PILE CAPACITY.

CURVE DATA

STH 441 WB

P.I. = 341+20.84
Δ = 06°-18'-49"
D = 00°-33'-32"
T = 565.32
L = 1129.50
R = 10250.00
S.E. = 0.02%
P.C. = 335+55.52
P.T. = 346+85.02

TRAFFIC VOLUME

STH 441	USH 10
A.D.T.=62,200 (2038)	A.D.T.=33,400 (2038)
R.D.S.=70 M.P.H.	R.D.S.=40 M.P.H.

LIST OF DRAWINGS

1. NEW DECK & WIDENING
2. CROSS SECTIONS
3. GENERAL NOTES AND QUANTITIES
4. CONSTRUCTION STAGING
5. SUBSURFACE EXPLORATION
6. REMOVAL DETAILS
7. WEST ABUTMENT
8. WEST ABUTMENT DETAILS
9. EAST ABUTMENT
10. EAST ABUTMENT DETAILS
11. PIER
12. PIER DETAILS
13. 45" PRESTRESSED GIRDER DETAILS
14. STEEL DIAPHRAGMS
15. SUPERSTRUCTURE
16. SUPERSTRUCTURE DETAILS 1
17. SUPERSTRUCTURE DETAILS 2
18. TOP OF DECK ELEVATIONS
19. SINGLE SLOPE PARAPET 42SS MODIFIED
20. SINGLE SLOPE PARAPET 56SS
21. SLOPE PAVING SELECT CRUSHED
22. AESTHETIC DETAILS

STRUCTURE DESIGN CONTACTS:

MAX KULICK (608) 261-6108
AARON BONK (608) 261-0261

NO.	DATE	REVISION	BY

Plans Prepared By WISDOT
BUREAU OF STRUCTURES

ACCEPTED William C. Dreher AMB — 9/7/16
CHIEF STRUCTURES DESIGN ENGINEER — DATE

STRUCTURE B-70-116

STH 441 WB OVER USH 10 (ONEIDA ST.)

COUNTY: WINNEBAGO — ~~TOWN~~/CITY ~~VILLAGE~~: APPLETON

DESIGN SPEC.: AASHTO LRFD BRIDGE DESIGN SPECIFICATIONS

DESIGNED BY	MJK	DESIGN CK'D.	EMK	DRAWN BY	MJK	PLANS CK'D.	EMK

NEW DECK & WIDENING

SHEET 1 OF 22

144

I.D. 1517-07-04B

DATE: AUG. 2016

SCALE = 15

STATE PROJECT NUMBER

1517-75-88

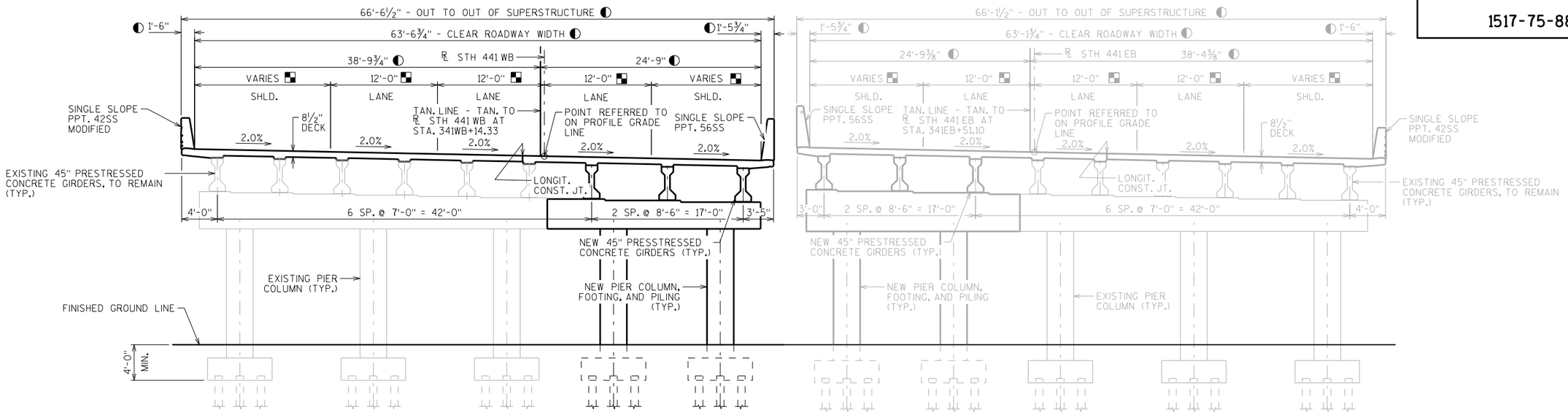

B-70-116

B-70-115

CROSS SECTION THRU STH 441

LOOKING EAST

■ DIMENSION MEASURED RADIALLY - NORMAL TO THE ℄

◐ DIMENSION MEASURED NORMAL TO THE TANGENT LINE

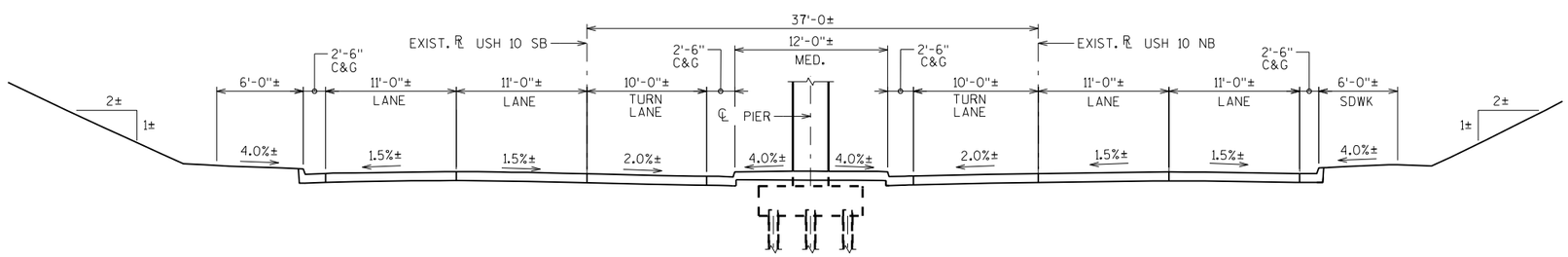

TYPICAL EXISTING SECTION THRU USH 10 (ONEIDA ST.)

LOOKING NORTH

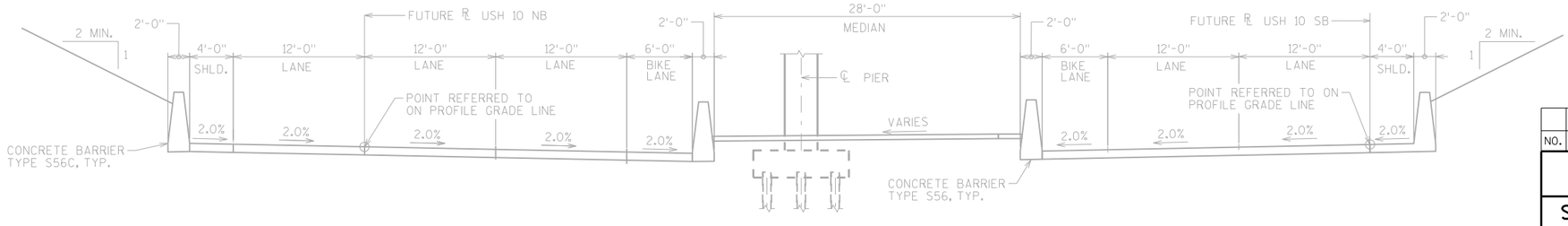

TYPICAL FUTURE SECTION THRU USH 10 (ONEIDA ST.)

LOOKING NORTH

NO.	DATE	REVISION	BY

STATE OF WISCONSIN
DEPARTMENT OF TRANSPORTATION
STRUCTURES DESIGN SECTION

STRUCTURE B-70-116

DRAWN BY MJK | PLANS CK'D. EMK

CROSS SECTIONS

SHEET 2

145

SCALE = 6.0

8

8

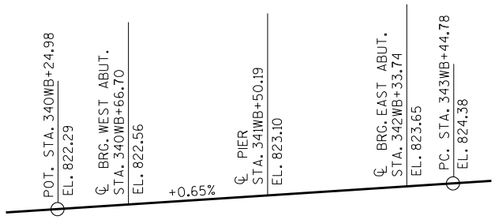

PROFILE GRADE LINE STH 441 WB

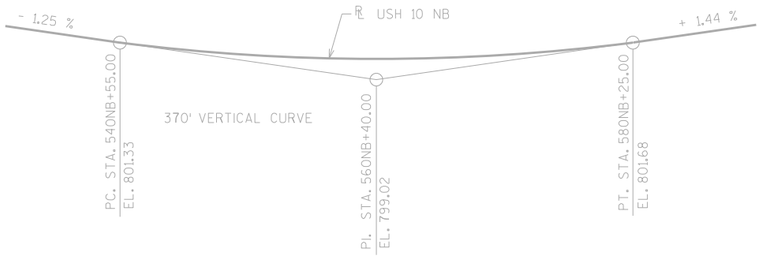

FUTURE PROFILE GRADE LINE USH 10 NB (ONB ALIGNMENT)

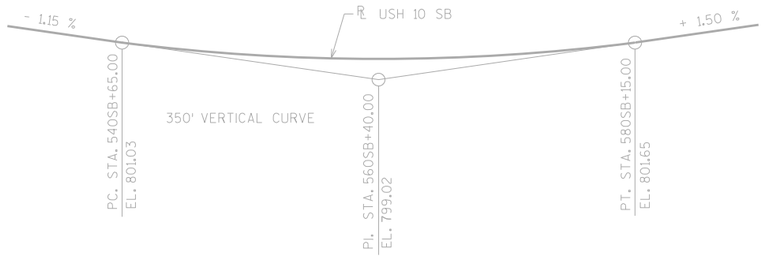

FUTURE PROFILE GRADE LINE USH 10 SB (OSB ALIGNMENT)

TOTAL ESTIMATED QUANTITIES

BID ITEM NUMBER	BID ITEMS	UNIT	SUPER.	WEST ABUT.	PIER	EAST ABUT.	TOTALS
203.0200	REMOVING OLD STRUCTURE STA. 341WB+50.19	LS	———	———	———	———	1
206.1000	EXCAVATION FOR STRUCTURES BRIDGES B-70-116	LS	———	———	———	———	1
210.1500	BACKFILL STRUCTURE TYPE A	TON	———	155	———	155	310
501.1000.S	ICE HOT WEATHER CONCRETING	LB	3,030	100	225	100	3,455
502.3200	PROTECTIVE SURFACE TREATMENT	SY	1,220	———	———	———	1,220
502.3210	PIGMENTED SURFACE SEALER	SY	190	———	———	———	190
502.4206	ADHESIVE ANCHORS NO. 6 BAR	EACH	16	15	———	15	46
502.4207	ADHESIVE ANCHORS NO. 7 BAR	EACH	———	———	16	———	16
503.0145	PRESTRESSED GIRDER TYPE I 45-INCH	LF	504	———	———	———	504
505.0400	BAR STEEL REINFORCEMENT HS STRUCTURES	LB	———	———	755	———	755
505.0600	BAR STEEL REINFORCEMENT HS COATED STRUCTURES	LB	101,830	1,460	4,105	1,460	108,855
506.2605	BEARING PADS ELASTOMERIC NON-LAMINATED	EACH	12	———	———	———	12
506.4000	STEEL DIAPHRAGMS B-70-116	EACH	12	———	———	———	12
511.1200	TEMPORARY SHORING B-70-116	SF	———	220	100	220	540
516.0500	RUBBERIZED MEMBRANE WATERPROOFING	SY	3	7	———	7	17
517.1010.S	CONCRETE STAINING B-70-116	SF	2,900	330	1,320	330	4,880
517.1050.S	ARCHITECTURAL SURFACE TREATMENT B-70-116	SF	425	———	———	———	425
550.1100	PILING STEEL HP 10-INCH X 42 LB	LF	———	475	750	475	1,700
604.0600	SLOPE PAVING SELECT CRUSHED MATERIAL	SY	———	90	———	90	180
612.0406	PIPE UNDERDRAIN WRAPPED 6-INCH	LF	———	40	———	40	80
614.0150	ANCHOR ASSEMBLIES FOR STEEL PLATE BEAM GUARD	EACH	2	———	———	———	2
SPV.0035	MODIFIED HIGH PERFORMANCE CONCRETE (HPC) MASONRY BRIDGES	CY	404	13	30	13	460
	NON-BID ITEMS						
	FILLER	SIZE					1/2" & 3/4"

GENERAL NOTES

DRAWINGS SHALL NOT BE SCALED.

BAR STEEL REINFORCEMENT SHALL BE EMBEDDED 2"CLEAR UNLESS OTHERWISE SHOWN OR NOTED.

THE FIRST OR FIRST TWO DIGITS OF THE BAR MARK SIGNIFIES THE BAR SIZE.

BEVEL EXPOSED EDGES OF CONCRETE 3/4" UNLESS OTHERWISE NOTED.

THE UPPER LIMITS OF "EXCAVATION FOR STRUCTURES BRIDGES B-70-116" SHALL BE THE EXISTING GROUNDLINE.

◪ BACKFILL PAY LIMITS. BACKFILL BEYOND BACKFILL PAY LIMITS SHALL BE INCIDENTAL TO EXCAVATION FOR STRUCTURES. LIMITS OF EXCAVATION SHALL BE DETERMINED BY THE CONTRACTOR.

AT THE BACK FACE OF ABUTMENT ALL VOLUME WHICH CANNOT BE PLACED BEFORE ABUTMENT CONSTRUCTION AND IS NOT OCCUPIED BY THE NEW STRUCTURE SHALL BE BACKFILLED WITH STRUCTURE BACKFILL.

ELASTOMERIC BEARING PADS NEED NOT BE INDIVIDUALLY MOLDED PROVIDED THE CUT EDGES ARE SMOOTH AND TRUE.

PROTECTIVE SURFACE TREATMENT TO BE APPLIED TO THE ENTIRE TOP OF DECK, INCLUDING PAVING NOTCHES.

PIGMENTED PROTECTIVE SURFACE SEALER TO BE APPLIED TO THE FRONT FACE AND THE TOP OF THE PARAPETS.

THE SLOPE OF THE FILL IN FRONT OF THE ABUTMENTS SHALL BE COVERED WITH SLOPE PAVING MATERIAL TO THE EXTENT SHOWN ON SHEET 21 AND THE ABUTMENT DETAILS.

AT ABUTMENTS AND PIERS, HP 12X53 STEEL PILING MAY BE USED IN LIEU OF HP 10X42 STEEL PILING. PAYMENT SHALL BE BASED ON BID PRICE FOR HP 10X42 STEEL PILING.

THE HAUNCH CONCRETE QUANTITY IS BASED ON THE AVERAGE HAUNCH SHOWN ON THE "45" PRESTRESSED GIRDER DETAILS" SHEET.

DIMENSIONS FOR EXISTING STRUCTURE ARE BASED ON THE ORIGINAL STRUCTURE PLANS.

THE EXISTING GROUND LINE SHALL BE USED AS THE UPPER LIMITS OF EXCAVATION AT THE PIERS.

THE CONTRACTOR SHALL SUPPLY A NEW NAME PLATE IN ACCORDANCE WITH SECTION 502.3.11 OF THE STANDARD SPECIFICATIONS AND THE STANDARD DETAIL DRAWINGS. NAME PLATE TO SHOW ORIGINAL CONSTRUCTION YEAR 1993.

THE CONCRETE QUANTITY FOR ALL SUPERSTRUCTURE AND SUBSTRUCTURE CONCRETE (EXCLUDING THE GIRDERS) SHALL BE PAID FOR UNDER THE BID ITEM "MODIFIED HIGH PERFORMANCE CONCRETE (HPC) MASONRY BRIDGES".

TRANSVERSE TINING OF THE BRIDGE DECK SHALL BE DONE BY HAND AND SHALL BE PAID FOR UNDER THE BID ITEM "MODIFIED HIGH PERFORMANCE CONCRETE (HPC) MASONRY BRIDGES".

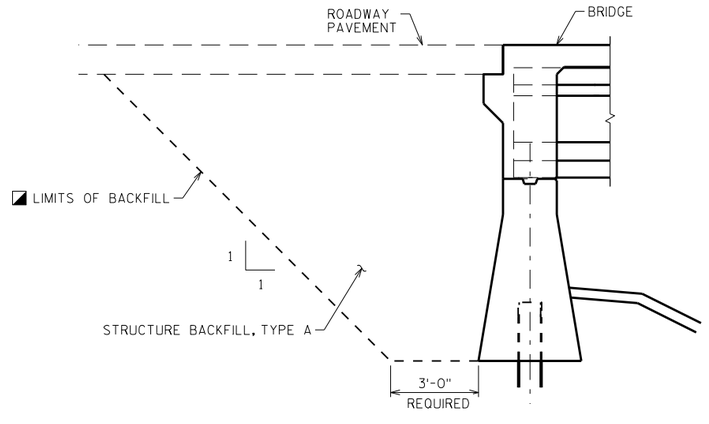

TYPICAL SECTION THRU ABUTMENT

SHOWING BACKFILL PAY LIMITS

NO.	DATE	REVISION	BY

STATE OF WISCONSIN
DEPARTMENT OF TRANSPORTATION
STRUCTURES DESIGN SECTION

STRUCTURE B-70-116

DRAWN BY MJK | PLANS CK'D. EMK

GENERAL NOTES & QUANTITIES

SHEET 3

146

STATE PROJECT NUMBER

1517-75-88

8

8

SCALE = 5

STATE PROJECT NUMBER

1517-75-88

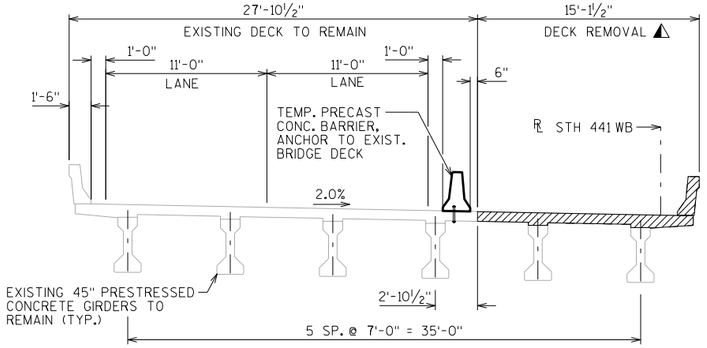

STAGE 2 REMOVAL

LOOKING EAST

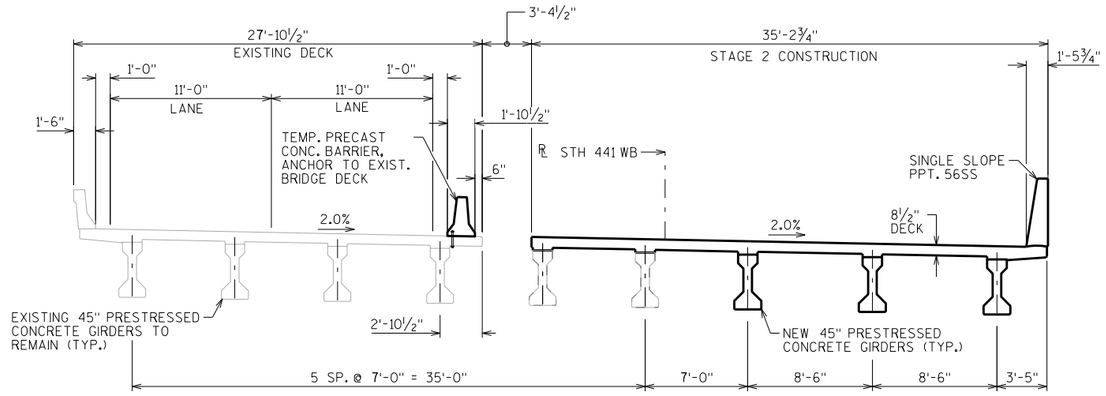

STAGE 2 CONSTRUCTION

LOOKING EAST

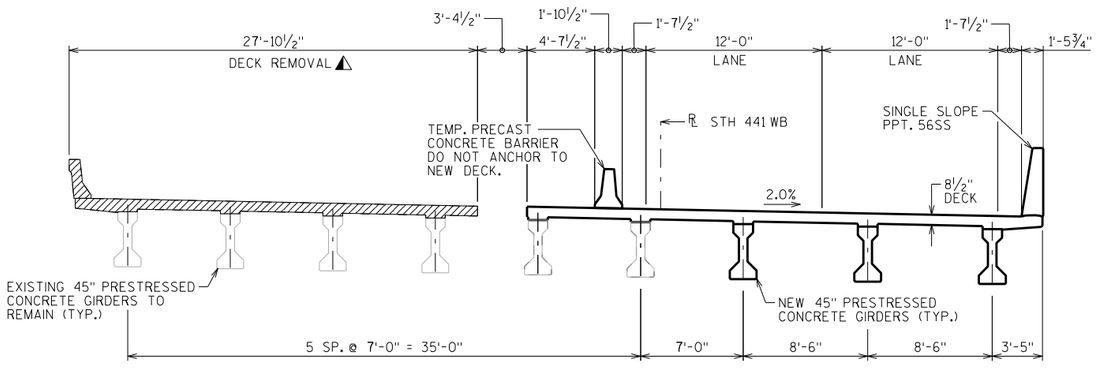

STAGE 3 REMOVAL

LOOKING EAST

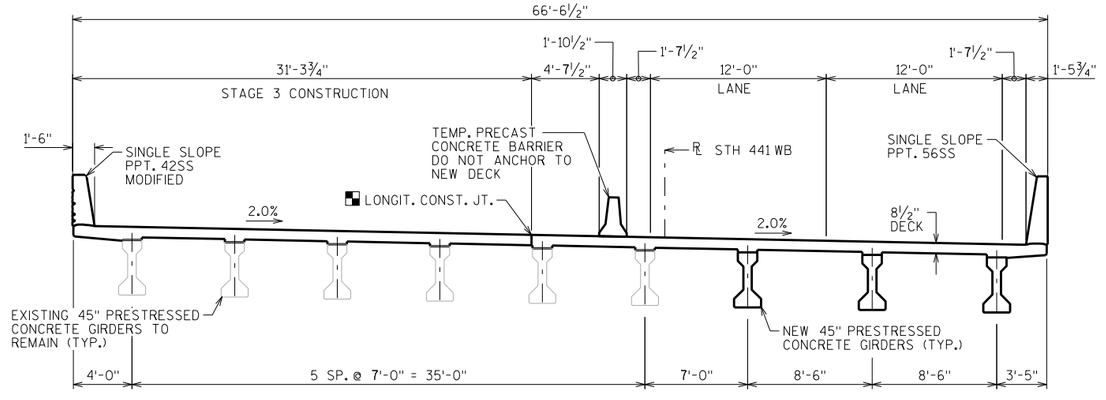

STAGE 3 CONSTRUCTION

LOOKING EAST

8

8

▨ CONCRETE REMOVAL

⚠ USE EXTREME CARE DURING DECK REMOVAL TO AVOID DAMAGING THE TOP FLANGE OF EXISTING GIRDERS. ANY DAMAGE TO THE EXISTING STRUCTURE IS TO BE REPAIRED OR REPLACED AT THE COST OF THE CONTRACTOR.

▪ ROUTE OUT ¼" X ⅜" DEEP AT JOINT. FILL IN WITH LOW VISCOSITY CRACK SEALER PER THE APPROVED PRODUCTS LIST. (INCIDENTAL TO "MODIFIED HIGH PERFORMANCE CONCRETE (HPC) MASONRY BRIDGES").

NO.	DATE	REVISION	BY

STATE OF WISCONSIN
DEPARTMENT OF TRANSPORTATION
STRUCTURES DESIGN SECTION

STRUCTURE B-70-116

DRAWN BY MJK | PLANS CK'D. EMK

CONSTRUCTION STAGING

SHEET 4

147

SCALE = 5.0

USH 10/STH 441

BORING #	DATE COMPLETED	NORTHING (Y)	EASTING (X)
B427-G1	2/9/2012	551976	828288
B428-G1	2/7/2012	551995	828032
BORINGS COMPLETED BY: GESTRA			
REPORT COMPLETED BY: GESTRA			
ALL COORDINATES REFERENCED TO WCCS NAD 83(91) WINNEBAGO COUNTY			

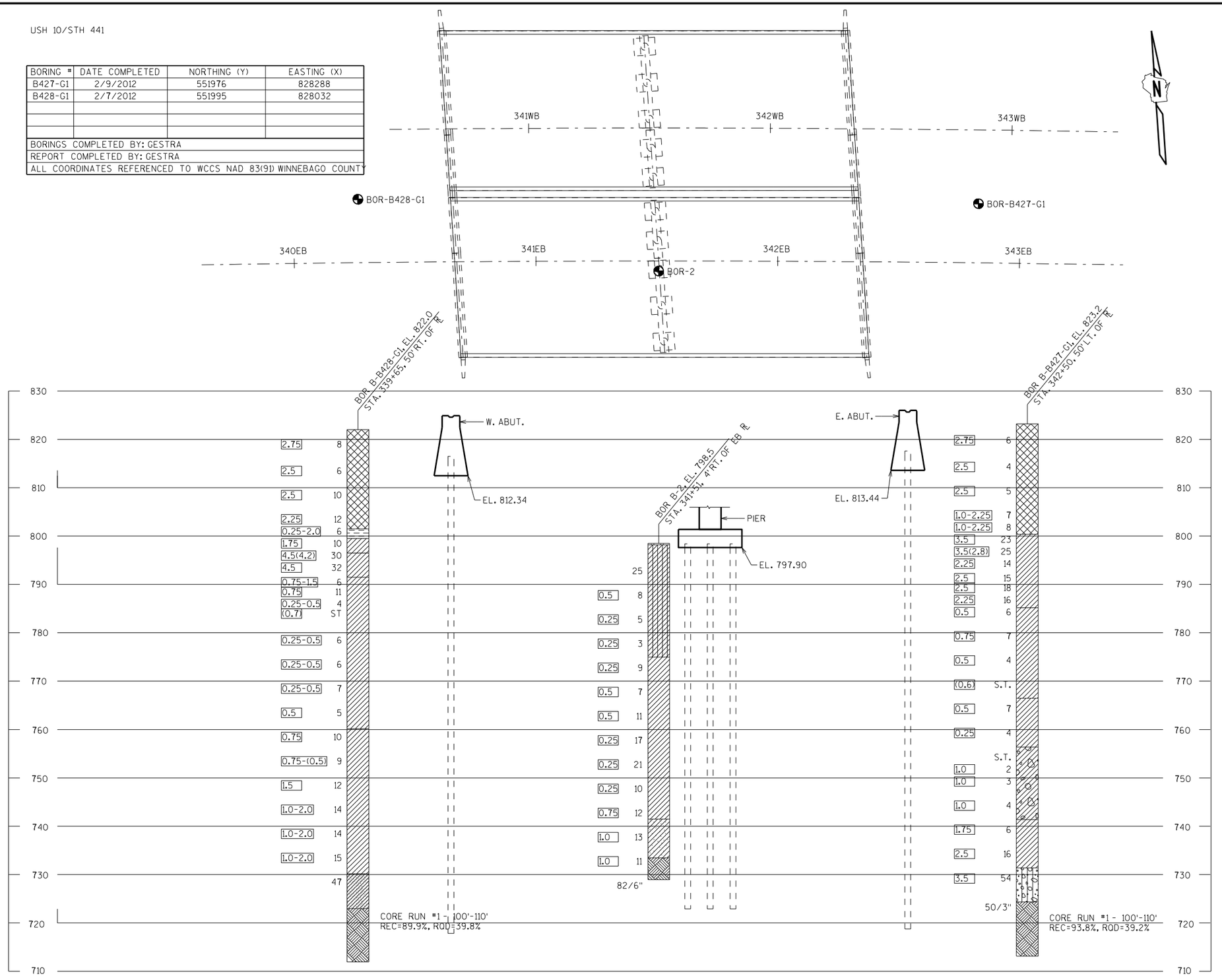

STATE PROJECT NUMBER

1517-75-88

MATERIAL SYMBOLS

ASPHALT	TOPSOIL	PEAT
CONCRETE	FILL	GRAVEL
SAND	CLAY	SILT
BOULDERS OR COBBLES	LIMESTONE	BEDROCK (UNKNOWN)
SHALE	SANDSTONE	IGNEOUS/ META

LEGEND OF BORING

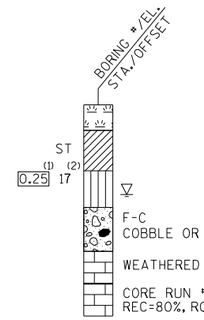

(1) UNCONFINED STRENGTH, AS DETERMINED BY A POCKET PENETROMETER (TSF)

(2) UNLESS OTHERWISE, SPECIFIED THE SPT 'N' VALUE IS BASED ON AASHTO T-206, STANDARD PENETRATION TEST. THE SPT 'N' VALUE PRESENTED HAS NOT BEEN CORRECTED FOR OVERBURDEN PRESSURE OR HAMMER EFFICIENCY.

GROUND WATER ELEVATION

- AT TIME OF DRILLING
- END OF DRILLING
- AFTER DRILLING

ABBREVIATIONS

F-FINE M-MEDIUM C-COARSE ST-SHELBY TUBE

SUBSURFACE EXPLORATION FOR FOUNDATION DESIGN AND BIDDERS INFORMATION

BORINGS WERE COMPLETED AT POINTS APPROXIMATELY AS INDICATED ON THIS DRAWING TO OBTAIN INFORMATION CONCERNING THE CHARACTER OF SUBSURFACE MATERIALS FOUND AT THE SITE. BECAUSE THE INVESTIGATED DEPTHS ARE LIMITED AND THE AREA OF THE BORINGS IS VERY SMALL IN RELATION TO THE ENTIRE SITE, THE WISCONSIN DEPARTMENT OF TRANSPORTATION DOES NOT WARRANT SIMILAR SUBSURFACE CONDITIONS BELOW, BETWEEN, OR BEYOND THESE BORINGS. VARIATIONS IN SOIL CONDITIONS SHOULD BE EXPECTED AND FLUCTUATIONS IN GROUNDWATER LEVELS MAY OCCUR.

NO.	DATE	REVISION	BY

STATE OF WISCONSIN
DEPARTMENT OF TRANSPORTATION
STRUCTURES DESIGN SECTION

STRUCTURE B-70-116

DRAWN BY PR/MJK | PLANS CK'D. EMK

SUBSURFACE EXPLORATION

SHEET 5

148

SCALE = 2.0

STATE PROJECT NUMBER

1517-75-88

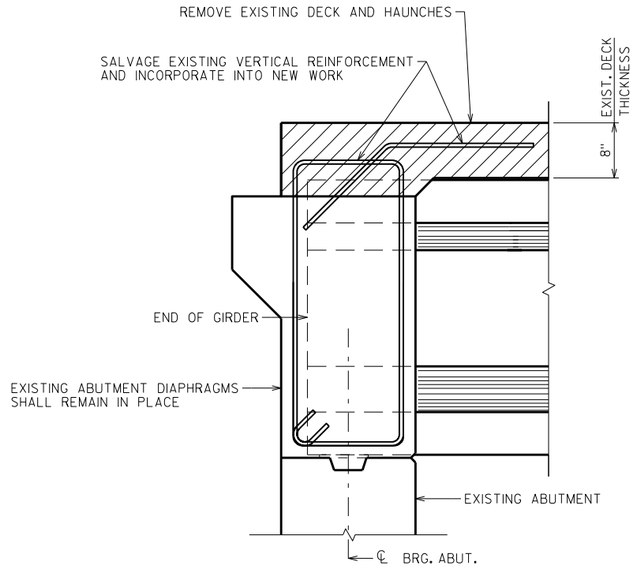

SECTION THRU EXISTING ABUTMENT DIAPHRAGM

SHOWING REMOVAL

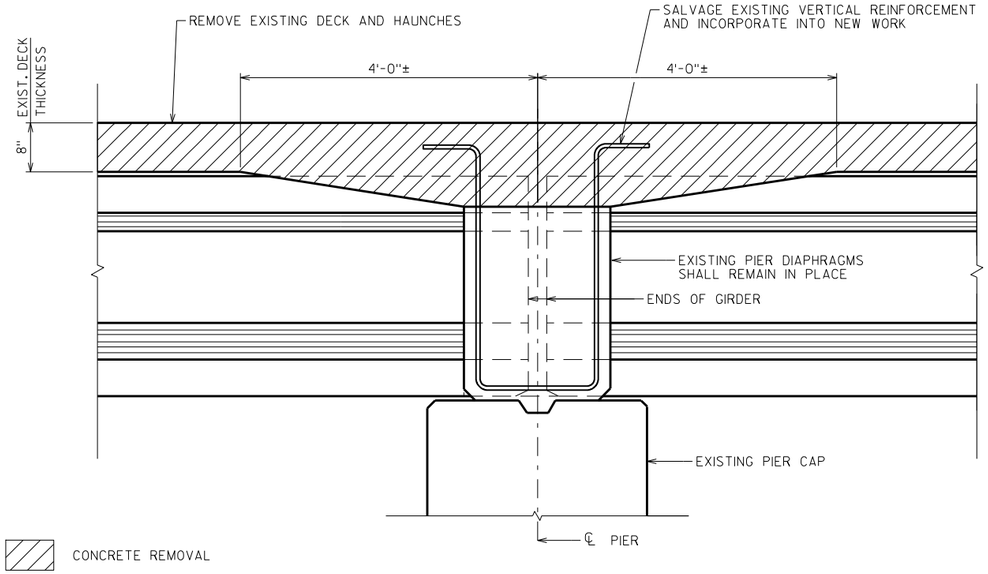

SECTION THRU EXISTING PIER DIAPHRAGM

SHOWING REMOVAL

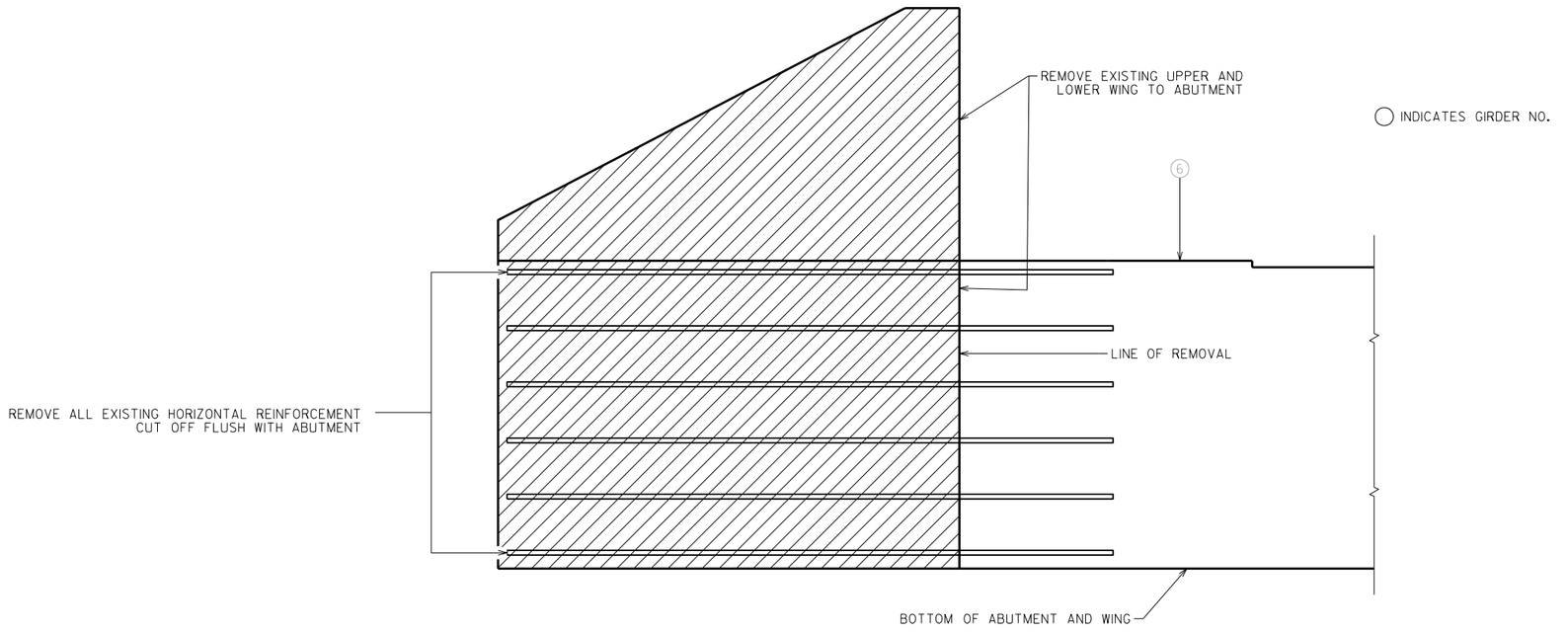

ELEVATION AT EXISTING ABUTMENT

SHOWING REMOVAL

F.F. WEST ABUTMENT SHOWN, EAST ABUTMENT SIMILAR

8

8

NO.	DATE	REVISION	BY

STATE OF WISCONSIN
DEPARTMENT OF TRANSPORTATION
STRUCTURES DESIGN SECTION

STRUCTURE B-70-116

DRAWN BY MJK | PLANS CK'D. EMK

REMOVAL DETAILS

SHEET 6

149

SCALE = 1.0

STATE PROJECT NUMBER

1517-75-88

✱ ELEVATION TAKEN FROM SURVEY DATA

◨ ELEVATION TAKEN FROM ORIGINAL STRUCTURE PLANS (1993)

CONCRETE REMOVAL

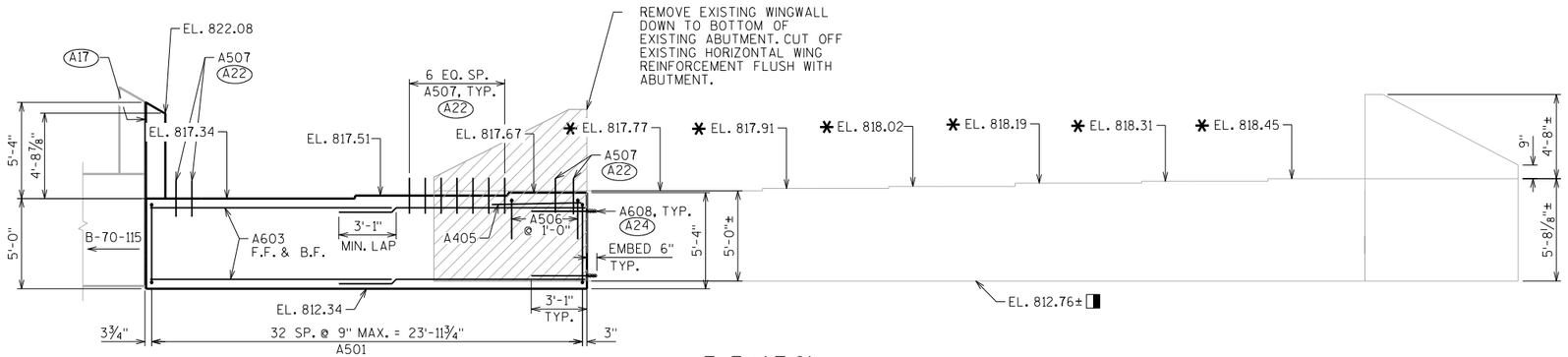

ELEVATION

LOOKING WEST
ADJUST A501 BARS TO MISS PILES

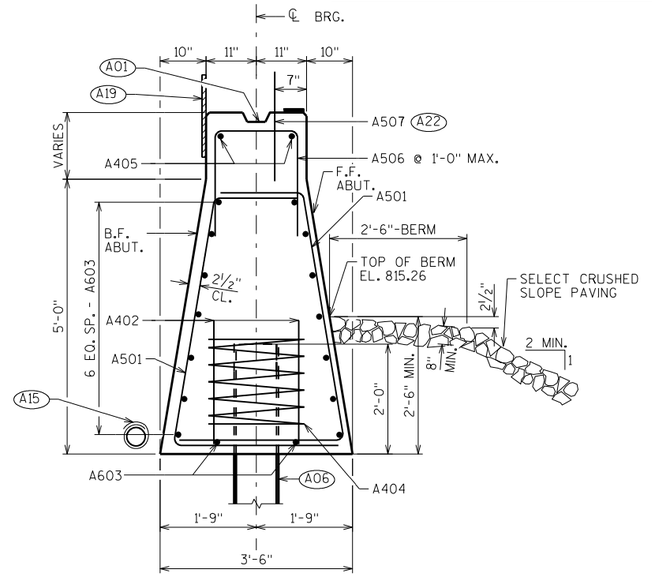

SECTION THRU BODY

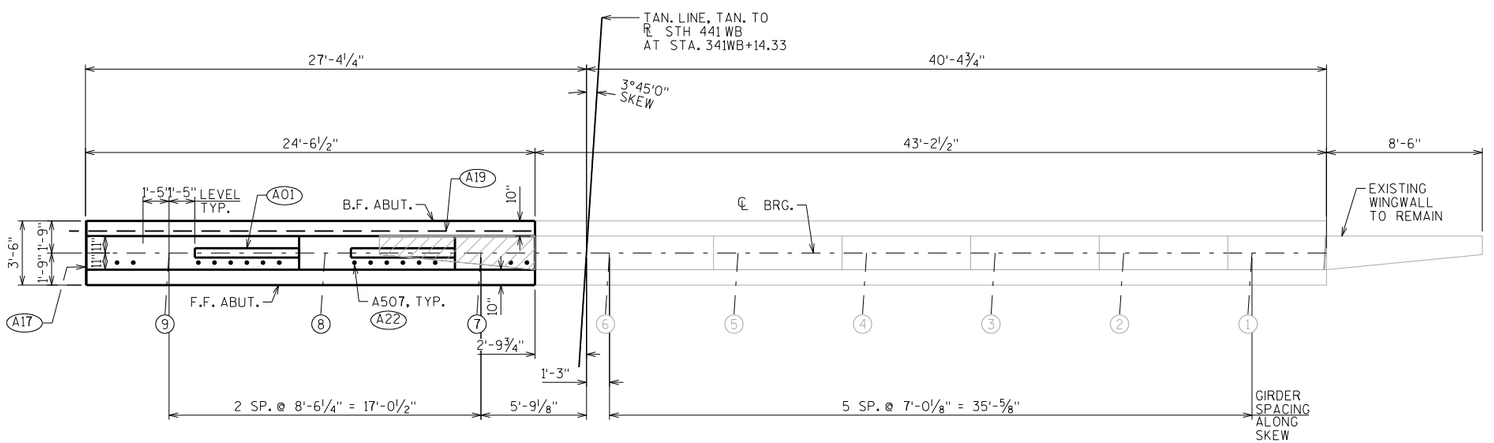

PLAN

◯ INDICATES GIRDER NO.

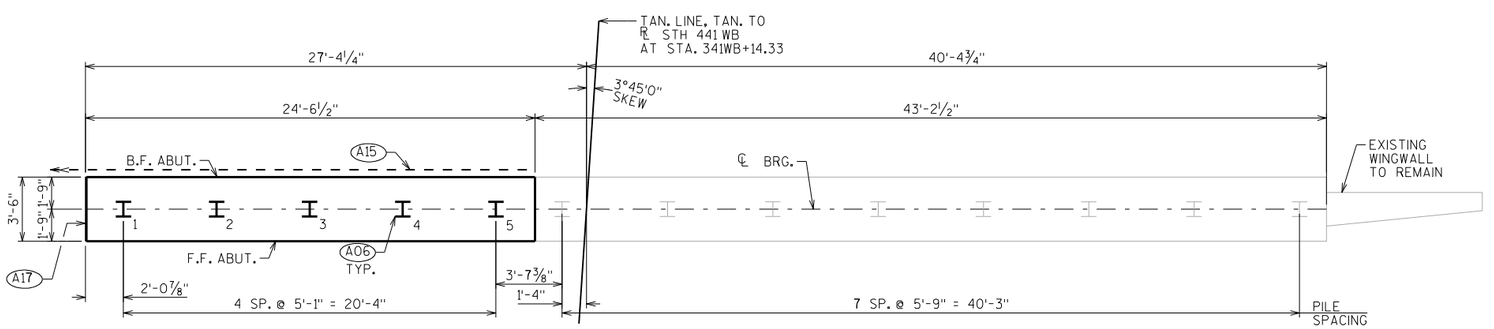

PILE PLAN

(A01) CONST. JOINT: KEYWAY FORMED BY A BEVELED 2 x 6.

(A06) SUPPORT ABUTMENT ON HP 10 x 42 STEEL PILING, ESTIMATED 95'-0" LONG WITH A REQUIRED DRIVING RESISTANCE OF 180 TONS PER PILE.

(A15) PIPE UNDERDRAIN WRAPPED (6-INCH). TIE INTO B-70-115 UNDERDRAIN AND SLOPE 0.5% MIN. TO SUITABLE DRAINAGE. RODENT SHIELD REQUIRED SEE "WEST ABUTMENT DETAILS" SHEET FOR DETAILS.

(A17) 3/4" FILLER (INCLUDED IN ABUTMENT LENGTH): SEAL ALL EXPOSED HORIZ. & VERT. SURFACES OF 3/4" FILLER WITH NON-STAINING GRAY NON-BITUMINOUS JOINT SEALER. (1" DEEP AND HOLD 1/8" BELOW SURFACE OF CONCRETE).

(A19) 18" (RMW) RUBBERIZED MEMBRANE WATERPROOFING SEAL ALL HORIZ. & VERT. JOINTS AT BACKFACE.

(A22) A507 BARS @ 1'-0" CTRS. BETWEEN BEAM SEATS. MAY BE PLACED AFTER CONCRETE IS POURED BUT BEFORE INITIAL SET HAS TAKEN PLACE. (EMBED 1'-0" INTO CONC.)

(A24) A608 ADHESIVE ANCHORS NO. 6 BARS. EMBED 6" INTO EXISTING CONCRETE. SEE "WEST ABUTMENT DETAILS" SHEET FOR DETAILS.

NO.	DATE	REVISION	BY

STATE OF WISCONSIN
DEPARTMENT OF TRANSPORTATION
STRUCTURES DESIGN SECTION

STRUCTURE B-70-116

DRAWN BY MJK | PLANS CK'D. EMK

WEST ABUTMENT

SHEET 7

150

SCALE = 4.0

8

8

STATE PROJECT NUMBER

1517-75-88

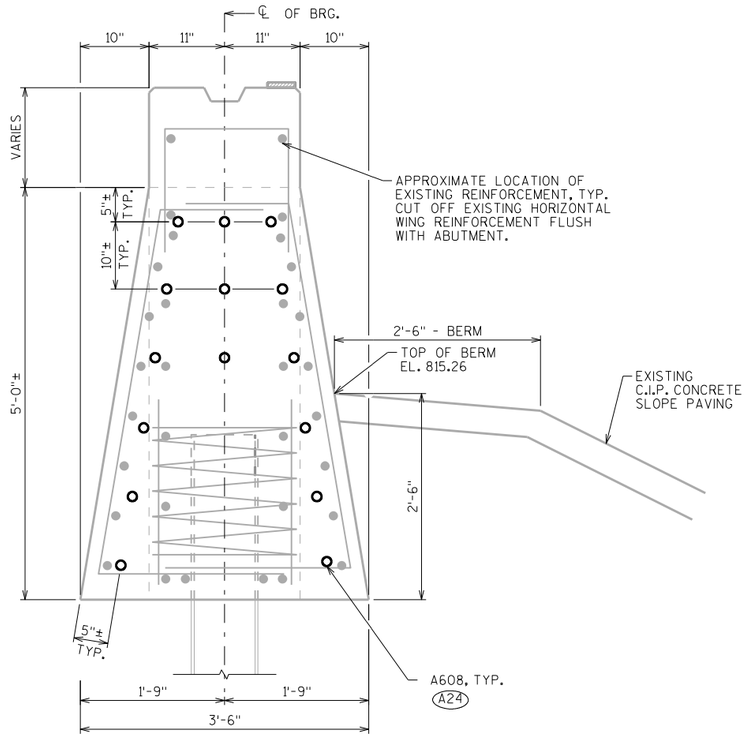

ADHESIVE ANCHOR LAYOUT

EXISTING ABUTMENT AND APPROXIMATE LOCATION OF EXISTING REINFORCEMENT SHOWN

BILL OF BARS

NOTE: THE FIRST OR FIRST TWO DIGITS OF THE BAR MARK SIGNIFIES THE BAR SIZE

	BAR MARK	COAT	NO. REQ'D.	LENGTH	BENT	BAR SERIES	LOCATION
	A501	X	66	8'-11"	X		BODY - VERT.
	A402	X	10	2'-3"			PILES - 2 PER BODY PILE
	A603	X	32	13'-9"			BODY - HORIZ.
	A404	X	5	28'-0"	X		BODY - VERT. - AT BODY PILES
	A405	X	2	5'-3"			BODY - HORIZ.
	A506	X	5	5'-9"	X		BODY - VERT.
	A507	X	18	2'-0"			BODY - VERT. - BTWN. BEAM SEATS
A24	A608	X	15	3'-7"			BODY - HORIZ. - ANCHORS

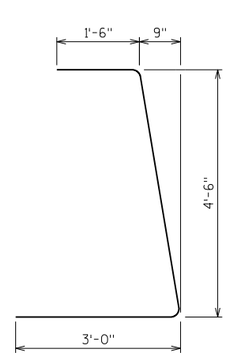

A501

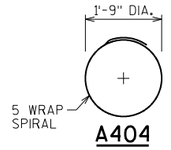

A404

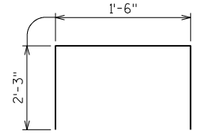

A506

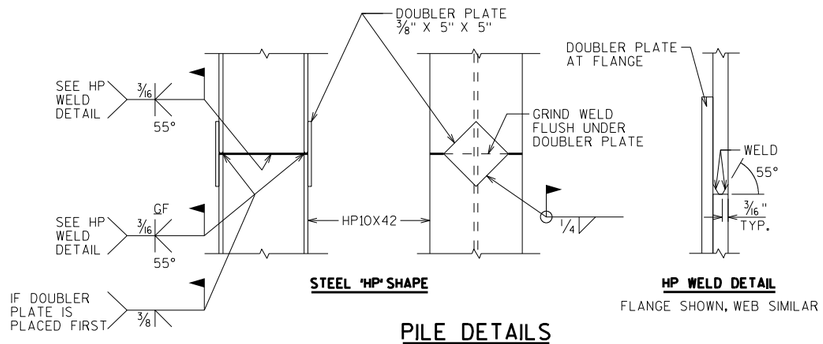

STEEL 'HP' SHAPE

HP WELD DETAIL

FLANGE SHOWN, WEB SIMILAR

PILE DETAILS

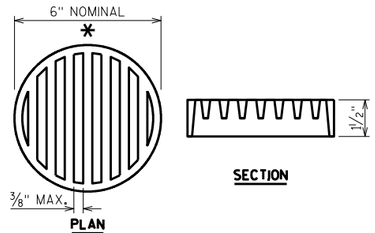

PLAN

SECTION

RODENT SHIELD DETAIL

* DIMENSIONS ARE APPROXIMATE. THE GRATE IS SIZED TO FIT INTO A PIPE COUPLING. ORIENT SO SLOTS ARE VERTICAL.

THE RODENT SHIELD, PIPE COUPLING AND SCREWS SHALL BE CONSIDERED INCIDENTAL TO THE BID ITEM "PIPE UNDERDRAIN WRAPPED 6-INCH".

THE RODENT SHIELD SHALL BE A PVC GRATE SIMILAR TO THIS DETAIL. THE GRATE IS COMMERCIALLY AVAILABLE AS A FLOOR STRAINER. A PIPE COUPLING IS REQUIRED FOR THE ATTACHEMENT OF THIS SHIELD TO THE EXPOSED END OF THE PIPE UNDERDRAIN. THE SHIELD SHALL BE FASTENED TO THE PIPE COUPLING WITH TWO OR MORE NO. 10 X 1-INCH STAINLESS STEEL SHEET METAL SCREWS.

A24 A608 ADHESIVE ANCHORS NO. 6 BARS. EMBED 6" INTO EXISTING CONCRETE.

NO.	DATE	REVISION	BY

STATE OF WISCONSIN
DEPARTMENT OF TRANSPORTATION
STRUCTURES DESIGN SECTION

STRUCTURE B-70-116

DRAWN BY MJK | PLANS CK'D. EMK

WEST ABUTMENT DETAILS

SHEET 8

151

8

8

SCALE = 4.0

✱ ELEVATION TAKEN FROM SURVEY DATA

◨ ELEVATION TAKEN FROM ORIGINAL STRUCTURE PLANS (1993)

▨ CONCRETE REMOVAL

STATE PROJECT NUMBER
1517-75-88

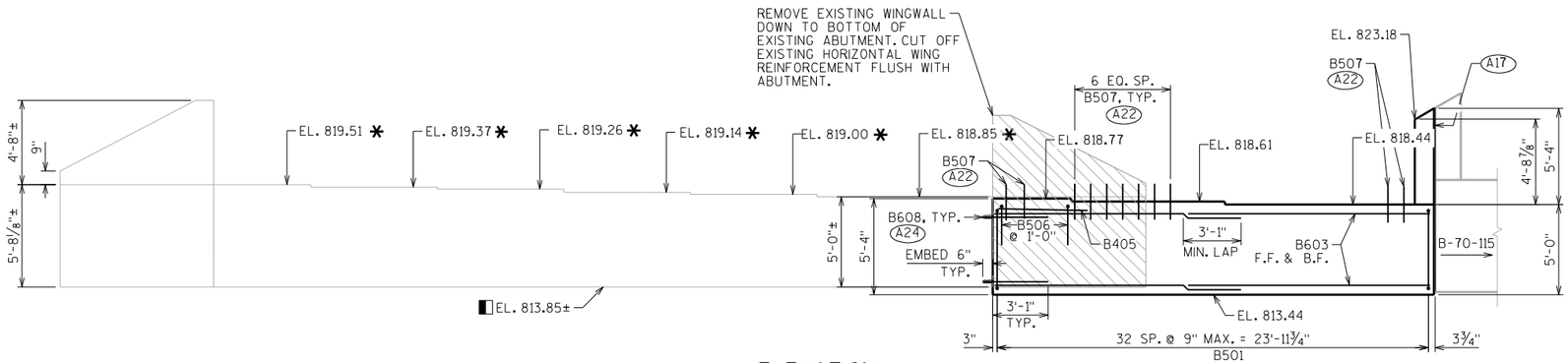

ELEVATION

LOOKING EAST
ADJUST B501 BARS TO MISS PILES

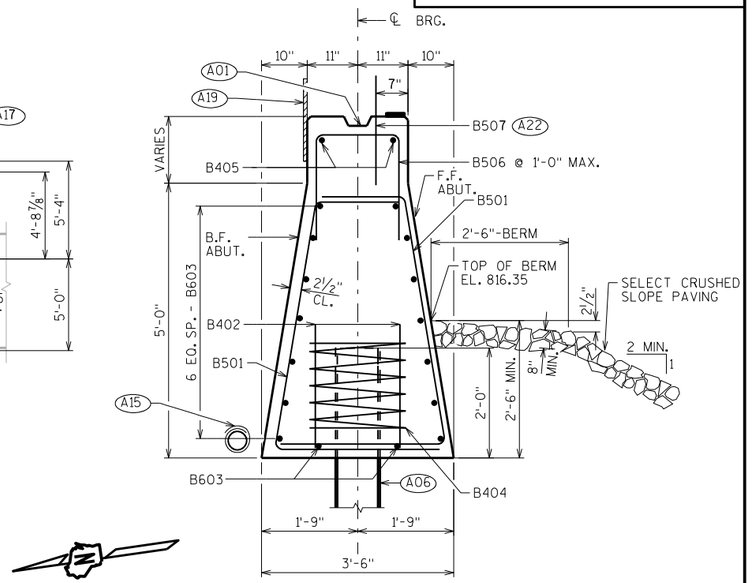

SECTION THRU BODY

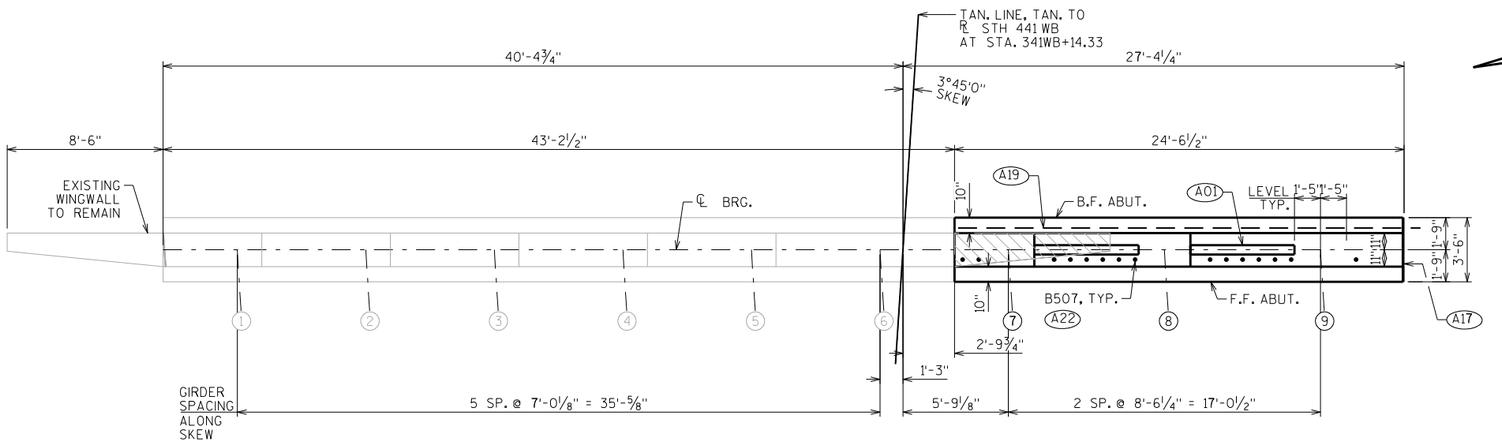

PLAN

○ INDICATES GIRDER NO.

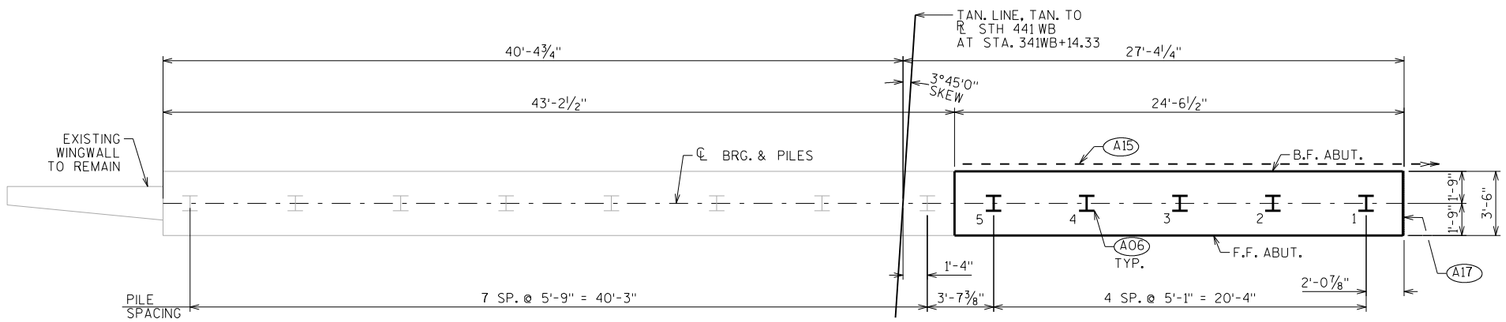

PILE PLAN

(A01) CONST. JOINT: KEYWAY FORMED BY A BEVELED 2 × 6.

(A06) SUPPORT ABUTMENT ON HP 10 × 42 STEEL PILING, ESTIMATED 95'-0" LONG WITH A REQUIRED DRIVING RESISTANCE OF 180 TONS PER PILE.

(A15) PIPE UNDERDRAIN WRAPPED (6-INCH). TIE INTO B-70-115 UNDERDRAIN AND SLOPE 0.5% MIN. TO SUITABLE DRAINAGE. RODENT SHIELD REQUIRED SEE "WEST ABUTMENT DETAILS" SHEET FOR DETAILS.

(A17) 3/4" FILLER (INCLUDED IN ABUTMENT LENGTH): SEAL ALL EXPOSED HORIZ. & VERT. SURFACES OF 3/4" FILLER WITH NON-STAINING GRAY NON-BITUMINOUS JOINT SEALER. (1" DEEP AND HOLD 1/8" BELOW SURFACE OF CONCRETE).

(A19) 18" (RMW) RUBBERIZED MEMBRANE WATERPROOFING SEAL ALL HORIZ. & VERT. JOINTS AT BACKFACE.

(A22) B507 BARS @ 1'-0" CTRS. BETWEEN BEAM SEATS. MAY BE PLACED AFTER CONCRETE IS POURED BUT BEFORE INITIAL SET HAS TAKEN PLACE. (EMBED 1'-0" INTO CONC.)

(A24) B608 ADHESIVE ANCHORS NO. 6 BARS. EMBED 6" INTO EXISTING CONCRETE. SEE "EAST ABUTMENT DETAILS" SHEET FOR DETAILS.

NO.	DATE	REVISION	BY

STATE OF WISCONSIN
DEPARTMENT OF TRANSPORTATION
STRUCTURES DESIGN SECTION

STRUCTURE B-70-116

DRAWN BY MJK | PLANS CK'D. EMK

EAST ABUTMENT

SHEET 9

152

SCALE = 4.0

8

8

STATE PROJECT NUMBER

1517-75-88

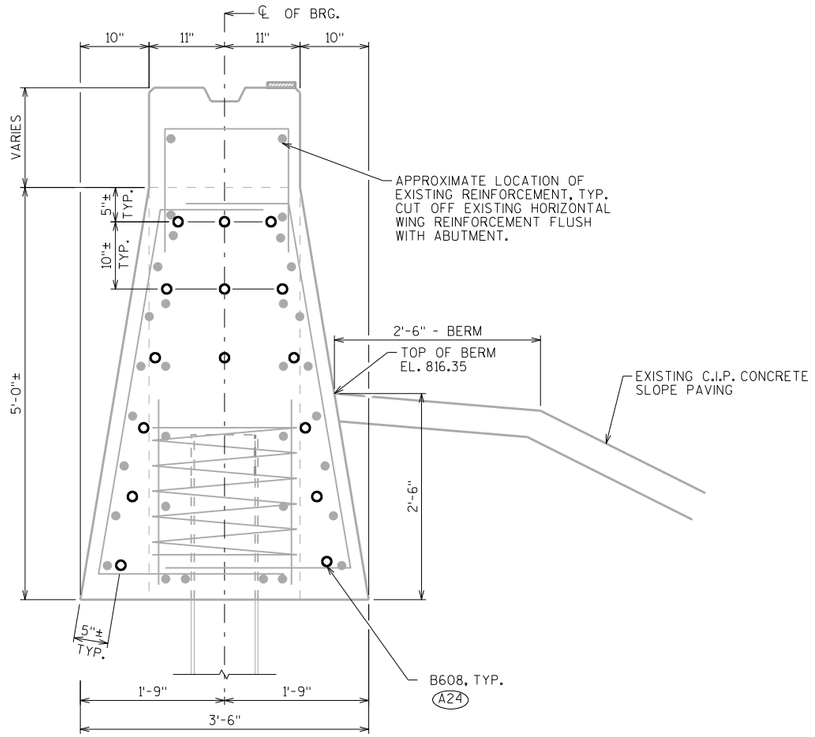

ADHESIVE ANCHOR LAYOUT

EXISTING ABUTMENT AND APPROXIMATE LOCATION OF EXISTING REINFORCEMENT SHOWN

BILL OF BARS

NOTE: THE FIRST OR FIRST TWO DIGITS OF THE BAR MARK SIGNIFIES THE BAR SIZE

	BAR MARK	COAT	NO. REQ'D.	LENGTH	BENT	BAR SERIES	LOCATION
	B501	X	66	8'-11"	X		BODY - VERT.
	B402	X	10	2'-3"			PILES - 2 PER BODY PILE
	B603	X	32	13'-9"			BODY - HORIZ.
	B404	X	5	28'-0"	X		BODY - VERT. - AT BODY PILES
	B405	X	2	5'-3"			BODY - HORIZ.
	B506	X	5	5'-9"	X		BODY - VERT.
	B507	X	18	2'-0"			BODY - VERT. - BTWN. BEAM SEATS
A24	B608	X	15	3'-7"			BODY - HORIZ. - ANCHORS

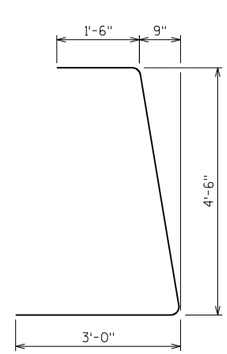

B501

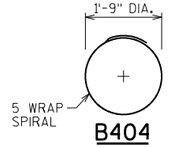

B404

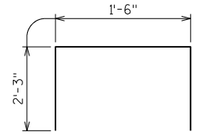

B506

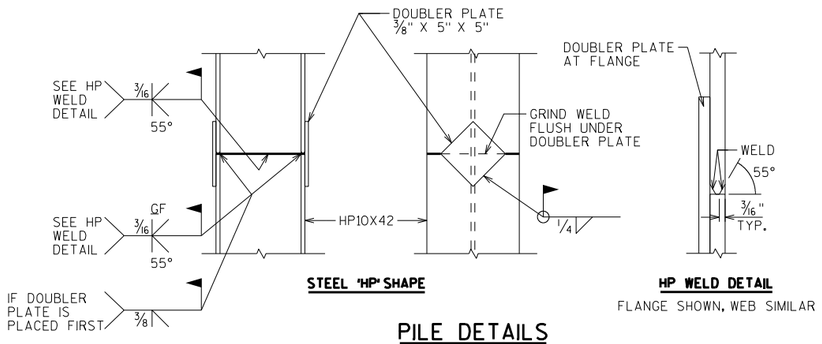

STEEL 'HP' SHAPE

HP WELD DETAIL

FLANGE SHOWN, WEB SIMILAR

PILE DETAILS

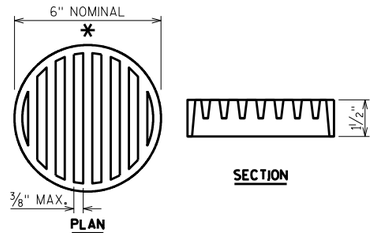

PLAN

SECTION

RODENT SHIELD DETAIL

* DIMENSIONS ARE APPROXIMATE. THE GRATE IS SIZED TO FIT INTO A PIPE COUPLING. ORIENT SO SLOTS ARE VERTICAL.

THE RODENT SHIELD, PIPE COUPLING AND SCREWS SHALL BE CONSIDERED INCIDENTAL TO THE BID ITEM "PIPE UNDERDRAIN WRAPPED 6-INCH".

THE RODENT SHIELD SHALL BE A PVC GRATE SIMILAR TO THIS DETAIL. THE GRATE IS COMMERCIALLY AVAILABLE AS A FLOOR STRAINER. A PIPE COUPLING IS REQUIRED FOR THE ATTACHEMENT OF THIS SHIELD TO THE EXPOSED END OF THE PIPE UNDERDRAIN. THE SHIELD SHALL BE FASTENED TO THE PIPE COUPLING WITH TWO OR MORE NO. 10 X 1-INCH STAINLESS STEEL SHEET METAL SCREWS.

A24 B608 ADHESIVE ANCHORS NO. 6 BARS. EMBED 6" INTO EXISTING CONCRETE.

NO.	DATE	REVISION	BY

STATE OF WISCONSIN
DEPARTMENT OF TRANSPORTATION
STRUCTURES DESIGN SECTION

STRUCTURE B-70-116

DRAWN BY MJK | PLANS CK'D. EMK

EAST ABUTMENT DETAILS

SHEET 10

153

SCALE = 4.0

8

8

STATE PROJECT NUMBER

1517-75-88

✱ ELEVATION TAKEN FROM SURVEY DATA

◨ ELEVATION TAKEN FROM ORIGINAL STRUCTURE PLANS (1993)

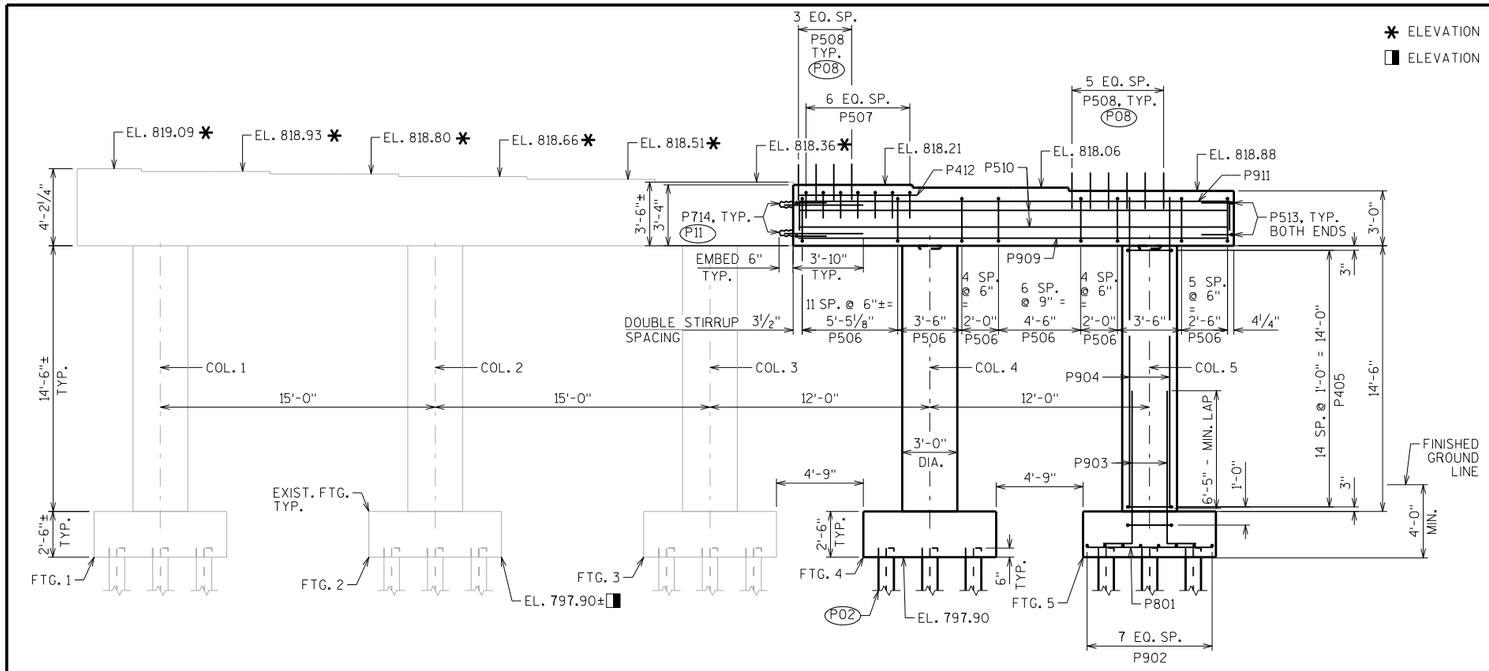

ELEVATION

LOOKING EAST

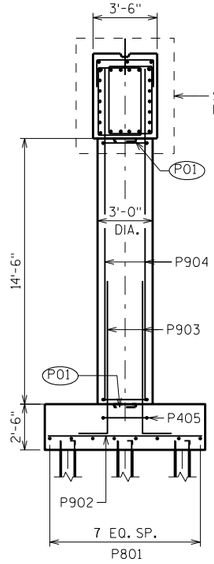

COLUMN SIDE VIEW

LOOKING NORTH

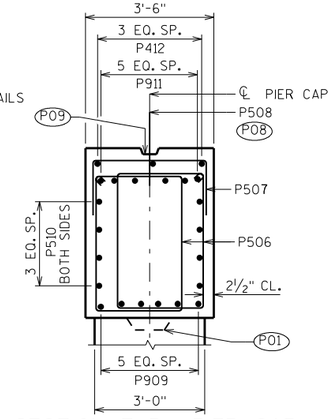

SECTION THRU PIER CAP

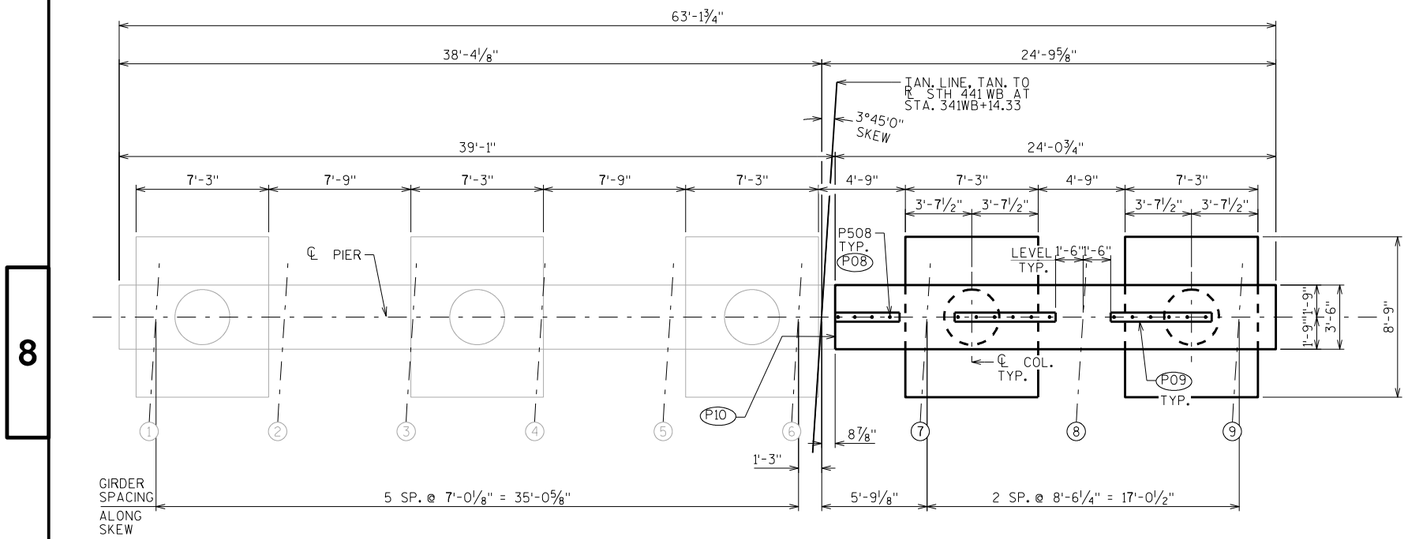

PLAN

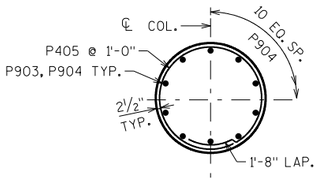

SECTION THRU COLUMN

TYP. AT COL. 4 AND 5

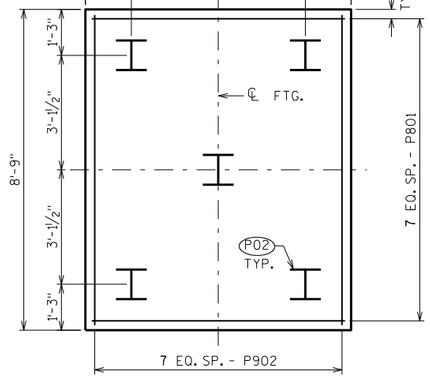

FOOTING PLAN

TYP. AT FTG. 4 AND 5

(P01) 1'-3" x 1'-3" x 2" CONST. JOINT FORMED BY BEVELED KEYWAY.

(P02) SUPPORT PIER ON HP 10 x 42 STEEL PILING, ESTIMATED 75'-0" LONG WITH A REQUIRED DRIVING RESISTANCE OF 180 TONS PER PILE.

(P08) P508 BARS @ 1'-0" CTRS. BETWEEN BEAM SEATS. MAY BE PLACED AFTER CONCRETE IS POURED BUT BEFORE INITIAL SET HAS TAKEN PLACE. (EMBED 1'-0" INTO CONC.)

(P09) KEYED CONST. JOINT-FORMED BY BEVELED 2 x 6 BETWEEN BEAM SEATS.

(P10) ROUGHEN SURFACE OF CONCRETE ¼" DEEP MINIMUM AT ALL AREAS WHERE NEW CONCRETE CONTACTS EXISTING CONCRETE.

(P11) P714 ADHESIVE ANCHORS NO. 7 BARS. EMBED 6" INTO EXISTING CONCRETE.

NO.	DATE	REVISION	BY

STATE OF WISCONSIN
DEPARTMENT OF TRANSPORTATION
STRUCTURES DESIGN SECTION

STRUCTURE B-70-116

DRAWN BY MJK | PLANS CK'D. EMK

PIER

SHEET 11

154

SCALE = 4.0

8

8

STATE PROJECT NUMBER

1517-75-88

BILL OF BARS

NOTE: THE FIRST OR FIRST TWO DIGITS OF THE BAR MARK SIGNIFIES THE BAR SIZE

BAR MARK	COAT	NO. REQ'D.	LENGTH	BENT	BAR SERIES	LOCATION
P801		16	6'-11"			FOOTING - HORIZ.
P902		16	8'-5"			FOOTING - HORIZ.
P903	X	20	9'-8"	X		FOOTING/COLUMN - VERT.
P904	X	20	16'-11"			COLUMN - VERT.
P405	X	32	9'-9"	X		FOOTING/COLUMN - HORIZ.
P506	X	66	10'-4"	X		CAP - VERT. - STIRRUPS
P507	X	7	5'-10"	X		CAP - VERT. - OVER GIRDER 7
P508	X	16	2'-0"			CAP - VERT. - BTWN. BEAM SEATS
P909	X	6	23'-6"			CAP - HORIZ. - BOT.
P510	X	8	23'-6"			CAP - HORIZ. - SIDES
P911	X	6	26'-2"	X		CAP - HORIZ. - TOP
P412	X	3	6'-2"			CAP - HORIZ. - TOP -OVER GIDER 7
P513	X	12	6'-3"	X		CAP - HORIZ. - ENDS
(P11) P714	X	16	4'-4"			CAP - HORIZ. - ANCHORS

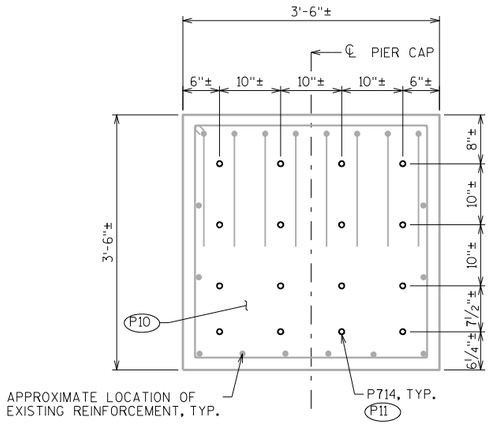

ADHESIVE ANCHOR LAYOUT

EXISTING PIER CAP END AND APPROXIMATE LOCATION OF EXISTING REINFORCEMENT SHOWN

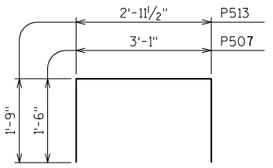

P507, P513

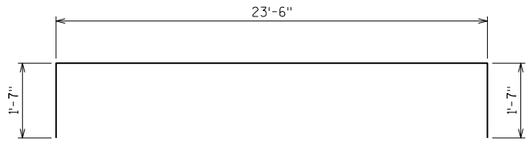

P911

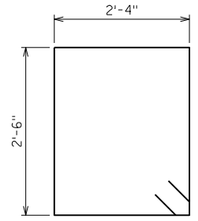

P506

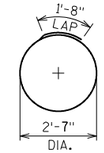

P405

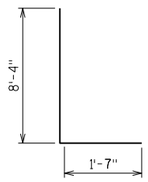

P903

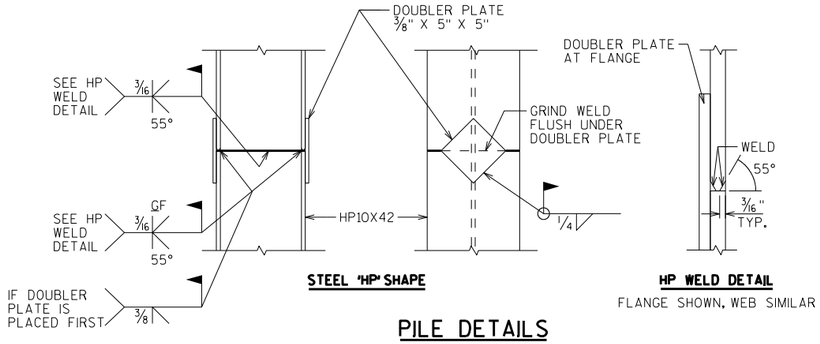

STEEL 'HP' SHAPE

HP WELD DETAIL

FLANGE SHOWN, WEB SIMILAR

PILE DETAILS

(P10) ROUGHEN SURFACE OF CONCRETE ¼" DEEP MINIMUM AT ALL AREAS WHERE NEW CONCRETE CONTACTS EXISTING CONCRETE.

(P11) P714 ADHESIVE ANCHORS NO. 7 BARS. EMBED 6" INTO EXISTING CONCRETE.

NO.	DATE	REVISION	BY

STATE OF WISCONSIN
DEPARTMENT OF TRANSPORTATION
STRUCTURES DESIGN SECTION

STRUCTURE B-70-116

DRAWN BY MJK | PLANS CK'D. EMK

PIER DETAILS

SHEET 12

155

SCALE = 4.0

8

8

STATE PROJECT NUMBER

1517-75-88

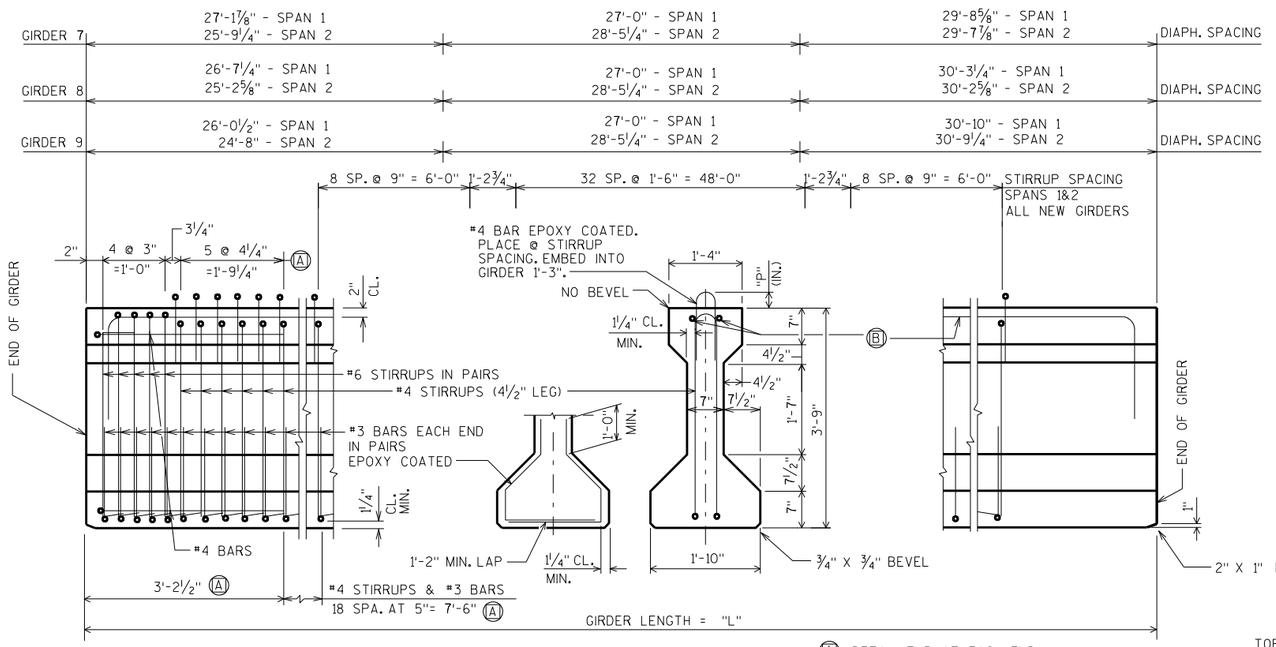

SIDE VIEW & TYP. SECTION IN SPAN

(A) DETAIL TYP. AT EACH END

(B) 2 #4 BARS BEND DOWN 16 BAR DIA. AT ENDS

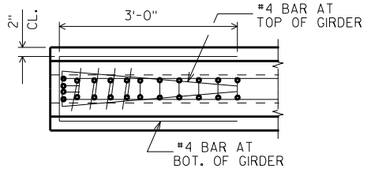

TOP VIEW OF GIRDER ENDS

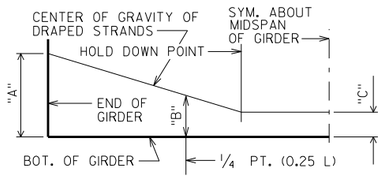

DRAPED STRAND PROFILE

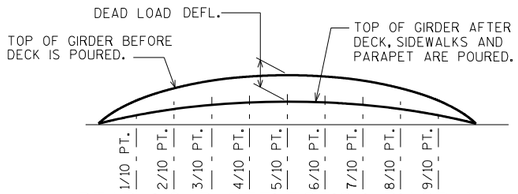

DEAD LOAD DEFLECTION DIAGRAM

NOTES

TOP OF GIRDER TO BE ROUGH FLOATED AND BROOMED TRANSVERSELY, EXCEPT THE OUTSIDE 2" OF GIRDER, WHICH SHALL RECEIVE A SMOOTH FINISH. AN APPROVED CONCRETE SEALER SHALL BE APPLIED TO ALL SMOOTH SURFACES INCLUDING THE OUTSIDE 2" OF THE TOP FLANGE.

DO NOT APPLY CONCRETE SEALER OR EPOXY TO SURFACES RECEIVING APPLICATION OF CONCRETE STAINING.

THE GIRDERS SHALL BE PROVIDED WITH A SUITABLE LIFTING DEVICE FOR HANDLING AND ERECTING THE GIRDERS.

ALL GIRDERS SHALL BE CAST FULL LENGTH AS SHOWN.

STRANDS SHALL BE FLUSH WITH END OF GIRDER. FOR GIRDER ENDS EMBEDDED COMPLETELY IN CONCRETE, END OF STRANDS SHALL BE COATED WITH NON-BITUMINOUS JOINT SEALER. FOR GIRDER ENDS THAT ARE FINALLY EXPOSED, COAT THE GIRDER ENDS, EXPOSED STRAND ENDS AND ALL NON-BONDING SURFACES WITHIN 2 FEET OF THE GIRDER ENDS WITH A NON-PIGMENTED EPOXY CONFORMING TO AASHTO M-235 TYPE III, GRADE 2, CLASS B OR C. THE EPOXY SHALL BE APPLIED AT LEAST 3 DAYS AFTER MOIST CURING HAS CEASED AND PRIOR TO THE APPLICATION OF THE SEALER.

SPACING SHOWN FOR #4 STIRRUPS IS FOR GRADE 60 REINFORCEMENT.

AN ALTERNATE EQUIVALENT OF WELDED WIRE FABRIC (WWF) ASTM A497 MAY BE SUBSTITUTED FOR THE STIRRUP REINFORCEMENT SHOWN, UPON APPROVAL OF THE STRUCTURES DEVELOPMENT SECTION

PRESTRESSING STRANDS SHALL BE (0.6" DIA.)-7 WIRE LOW-RELAXATION STRANDS WITH AN ULTIMATE STRENGTH OF 270,000 PSI.

BEND EACH END OF #4 STIRRUPS 4 1/2" AND #6 STIRRUPS 6 1/2".

FOR DIAPHRAGM INSERT & CONNECTION DETAILS SEE "STEEL DIAPHRAGMS" SHEET.

IT IS THE RESPONSIBILITY OF THE CONTRACTOR TO VERIFY THE LOCATIONS OF THE EXISTING STEEL DIAPHRAGMS.

FOR DIAPHRAGM SPACING WITH RESPECT TO THE ℄ OF SUBSTRUCTURES SEE "TOP OF DECK ELEVATIONS" SHEET.

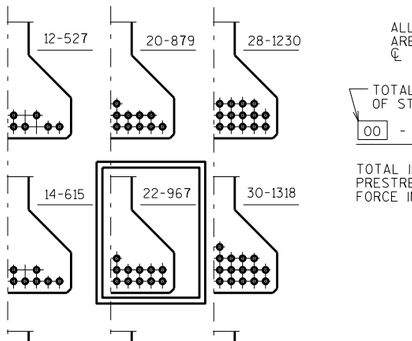

DRAPED PATTERN

0.6"Φ STRANDS

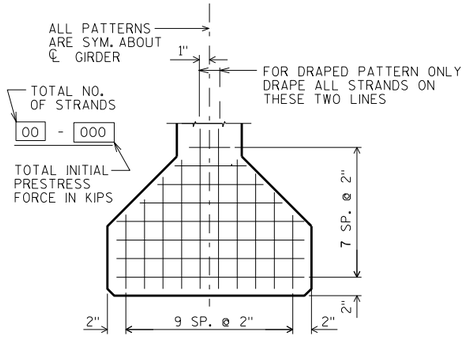

TYP. STRAND PATTERN

*THE THEORETICAL INITIAL CAMBER VALUE AT THE TIME OF STRAND RELEASE AT MIDSPAN MULTIPLIED BY A FACTOR OF 1.4 TO ACCOUNT FOR CAMBER GROWTH FROM THE TIME OF STRAND RELEASE TO JOBSITE PLACEMENT.

GIRDER	SPAN	CAMBER (IN.) *
7-9	1&2	2.45

THESE VALUES ARE NOT TO BE USED IN DETERMINING 'T', USE ACTUAL GIRDER SHOTS.

THESE VALUES ARE FOR INFORMATIONAL PURPOSES ONLY.

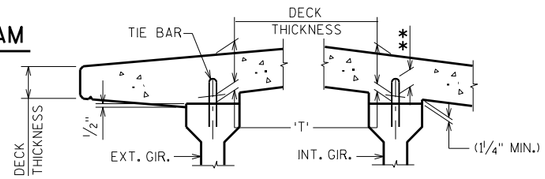

DECK HAUNCH DETAIL

IF 1 1/4" MINIMUM HAUNCH HEIGHT AT EDGE OF GIRDER CANNOT BE MAINTAINED, THE GRADE LINE MAY BE REVISED BY THE ENGINEER AT THE OPTION OF THE CONTRACTOR, THE PLAN DECK THICKNESS SHALL BE HELD. NOTIFY THE STRUCTURES SECTION IF THE GRADE LINE IS RAISED FROM THE PLAN PROFILE BY MORE THAN 1/2" OR,

** IF 3" MINIMUM DECK EMBEDMENT OF TIE BAR CANNOT BE OBTAINED.

TO DETERMINE 'T', ELEV. OF TOP OF GIR'S. AT ℄ OF SUBSTRUCTURE UNITS & AT 1/10 POINTS OF EACH SPAN SHALL BE TAKEN. THEN FOLLOW THIS PROCESS:

TOP OF DECK ELEV. AT FINAL GRADE
- TOP OF GIRDER ELEVATION
+ DEAD LOAD DEFLECTION
- DECK THICKNESS
= HAUNCH HEIGHT 'T'

NOTE: AN AVERAGE HAUNCH ('T') OF 3" WAS USED IN THE QUANTITY "HIGH PERFORMANCE CONCRETE (HPC) MASONRY STRUCTURES".

* MINIMUM CYLINDER STRENGTH OF CONCRETE @ TIME OF TRANSFER OF PRESTRESS FORCE.

GIRDER DATA

SPAN	GIRDER	GIRDER LENGTH "L"	DEAD LOAD DEFL. (IN.) 1/10	2/10	3/10	4/10	5/10	6/10	7/10	8/10	9/10	CONC. STRGTH. f'c (P.S.I.)	"P" 1ST 1/3 OF GIRDER	"P" MID 1/3 OF GIRDER	"P" END 1/3 OF GIRDER	DIA. OF STRAND (IN.)	DRAPED PATTERN TOTAL NO. OF STRANDS	f'ci (P.S.I.) *	(IN.) "A"	"B" MIN.	"B" MAX.	"C"	UNDRAPED PATTERN TOTAL NO. OF STRANDS	f'ci (P.S.I.) *
1&2	7 (NEW)	83.875	0.4	0.7	1.0	1.2	1.2	1.2	1.0	0.7	0.4	8,000	7	7	7	0.6	22	6,800	41	13.25	16.25	4		
1&2	8 (NEW)	83.875	0.4	0.8	1.1	1.3	1.4	1.3	1.1	0.8	0.4	8,000	7	7	7	0.6	22	6,800	41	13.25	16.25	4		
1&2	9 (NEW)	83.875	0.4	0.8	1.0	1.2	1.3	1.2	1.0	0.8	0.4	8,000	7	7	7	0.6	22	6,800	41	13.25	16.25	4		
1&2	2-6 (EXIST.)	83.875	0.4	0.8	1.1	1.3	1.3	1.3	1.1	0.8	0.4	6,000	5	5	5	0.5	28	4,800	41	13.25	16.25	4		
1&2	1 (EXIST.)	83.875	0.5	0.9	1.2	1.4	1.5	1.4	1.2	0.9	0.5	6,000	5	5	5	0.5	28	4,800	41	13.25	16.25	4		

EXISTING GIRDER WITH NEW SUPERSTRUCTURE DATA, INCLUDED FOR INFORMATIONAL PURPOSES

NO.	DATE	REVISION	BY

STATE OF WISCONSIN
DEPARTMENT OF TRANSPORTATION
STRUCTURES DESIGN SECTION

STRUCTURE B-70-116

DRAWN BY MJK | PLANS CK'D. EMK

45" PRESTRESSED GIRDER DETAILS

SHEET 13

156

SCALE = 2.6667

8

8

STATE PROJECT NUMBER

1517-75-88

TABLE

GIRDER HEIGHT	DIM. "A"	DIM. "B"	DIM. "L"	* DIM. "X"
45"	1'-5 3/8"	1'-1 7/8"	1'-5 1/2"	2 1/4"

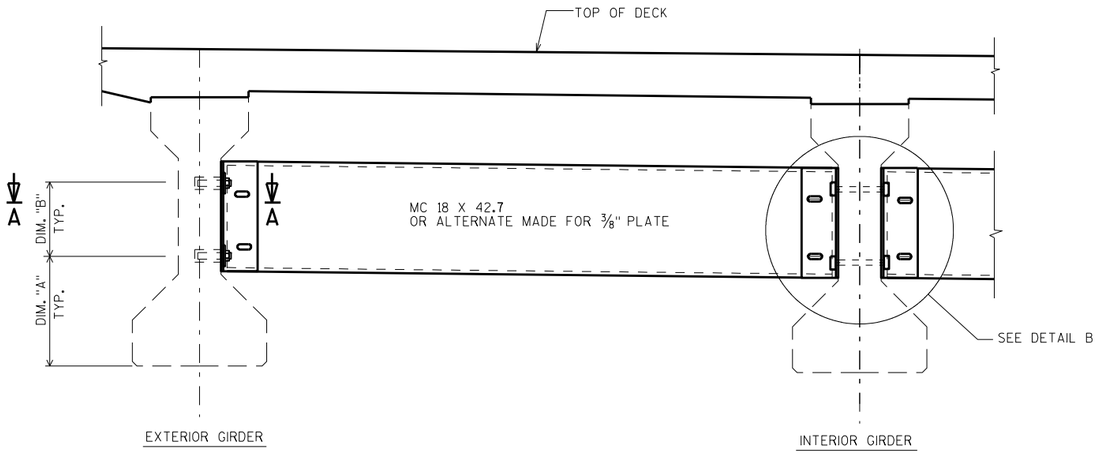

PART TRANSVERSE SECTION AT DIAPHRAGM

NOTES

ALL DIAPHRAGM MATERIAL AND CORED HOLES SHALL BE PAID FOR AT THE UNIT PRICE BID FOR "STEEL DIAPHRAGMS B-70-116", EACH.

EACH DIAPHRAGM BETWEEN GIRDERS SHALL CONSTITUTE ONE UNIT.

ALL DIAPHRAGM STRUCTURAL STEEL SHALL BE ASTM A709 GRADE 36. ALL BOLTS, NUTS AND WASHERS SHALL BE ASTM A325 TYPE 1.

ALL DIAPHRAGM MATERIAL INCLUDING BOLTS, NUTS AND WASHERS SHALL BE GALVANIZED AFTER FABRICATION.

STEEL DIAPHRAGM TO CONCRETE WEB CONNECTION SHALL BE SNUG TIGHT PLUS 1/4 TURN, UNLESS NOTED OTHERWISE. HIGH STRENGTH BOLTS FOR WEB CONNECTION SHALL MEET THE REQUIREMENTS FOR ASTM A325 OR ASTM A449.

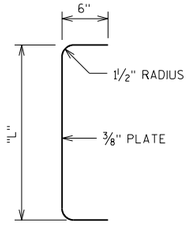

SECTION THRU ALTERNATE DIAPHRAGM

*DIM "X" = 2 1/2" FOR ALTERNATE PLATE DIAPHRAGM

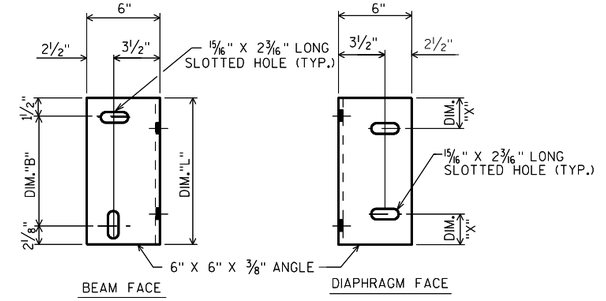

DIAPHRAGM SUPPORT

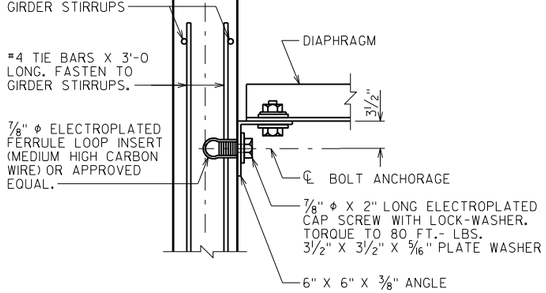

SECTION A-A

(FOR EXTERIOR ATTACHMENT)

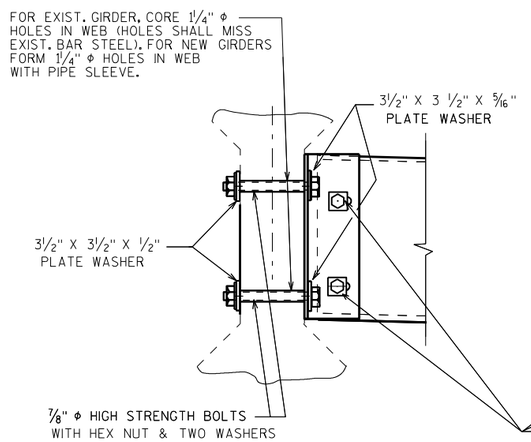

(FOR STAGGERED DIAPHRAGMS)

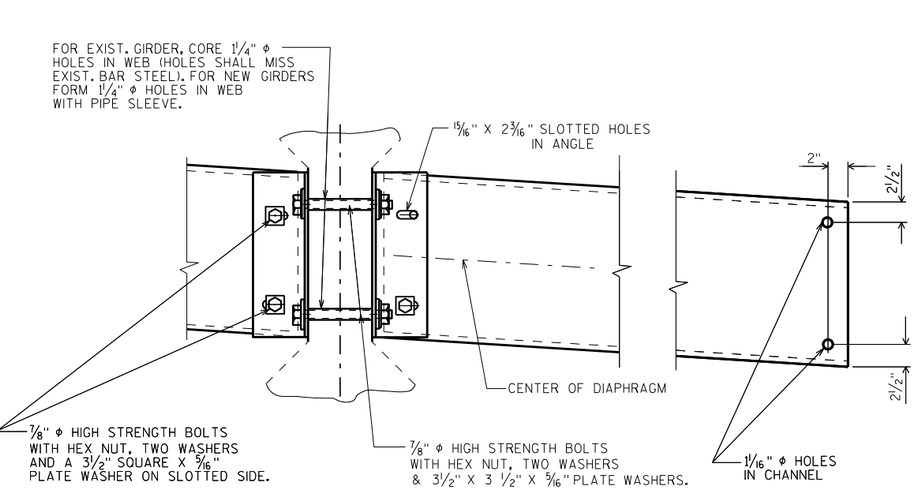

(FOR CONTINUOUS LINE OF DIAPHRAGMS)

DETAIL B

NO.	DATE	REVISION	BY

STATE OF WISCONSIN
DEPARTMENT OF TRANSPORTATION
STRUCTURES DESIGN SECTION

STRUCTURE B-70-116

DRAWN BY MJK | PLANS CK'D. EMK

STEEL DIAPHRAGMS

SHEET 14

157

SCALE = 1.0

8

8

STATE PROJECT NUMBER

1517-75-88

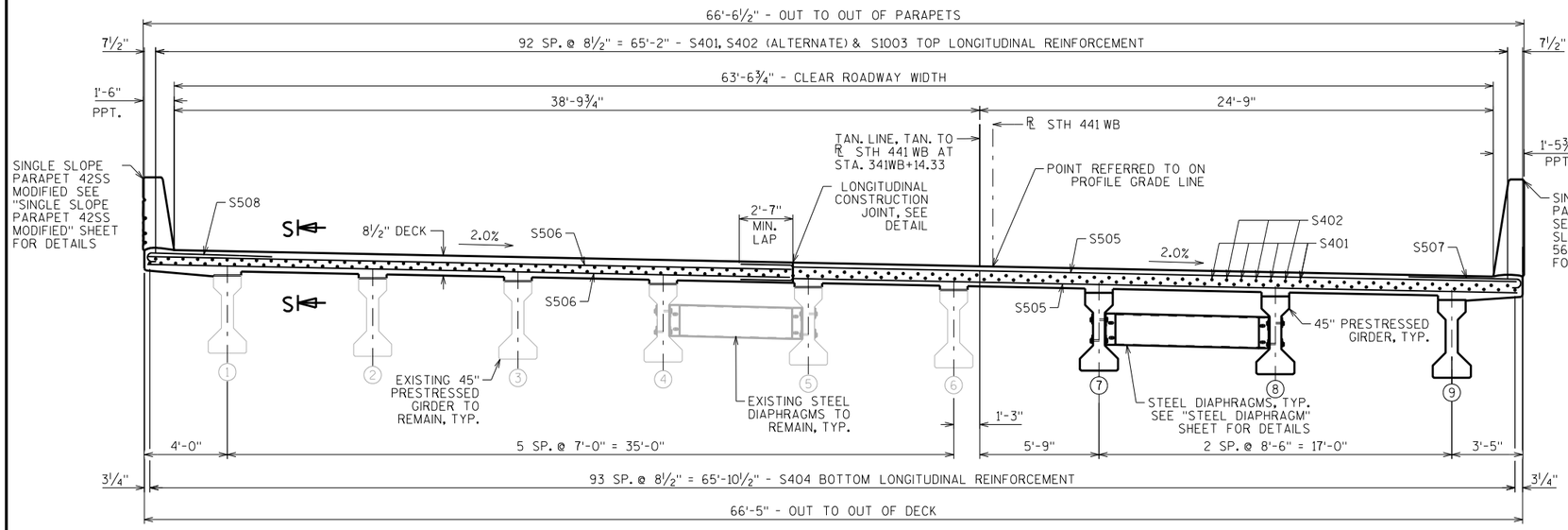

CROSS SECTION THRU ROADWAY

LOOKING EAST

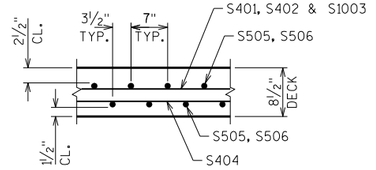

SECTION S-S

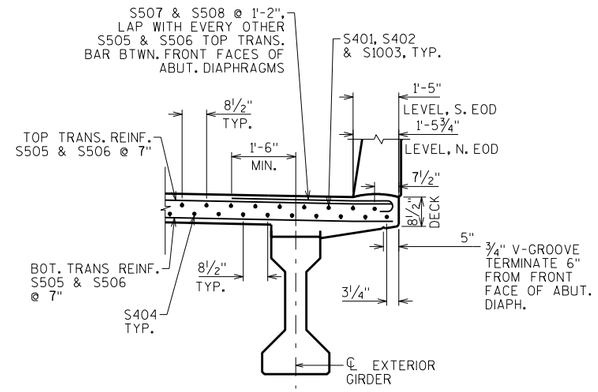

EDGE OF DECK DETAIL

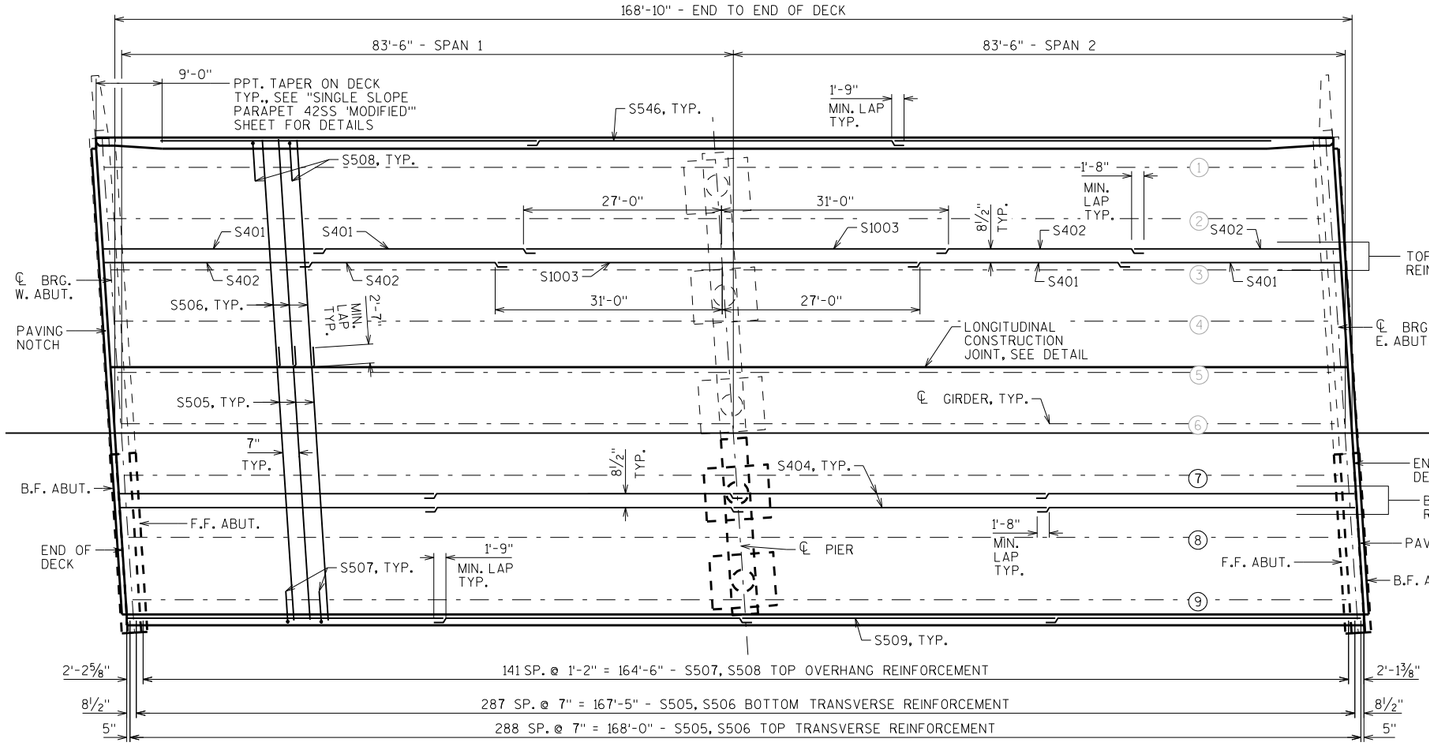

PLAN

N

○ INDICATES GIRDER NO.

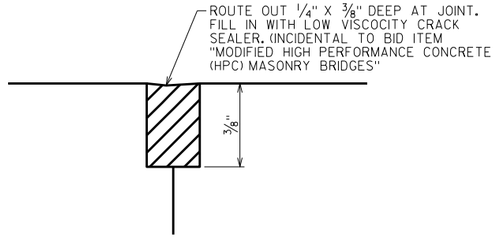

LONGITUDINAL CONSTRUCTION JOINT DETAIL

NO.	DATE	REVISION	BY

STATE OF WISCONSIN
DEPARTMENT OF TRANSPORTATION
STRUCTURES DESIGN SECTION

STRUCTURE B-70-116

DRAWN BY MJK | PLANS CK'D. EMK

SUPERSTRUCTURE

SHEET 15

158

8

8

SCALE = 10

STATE PROJECT NUMBER

1517-75-88

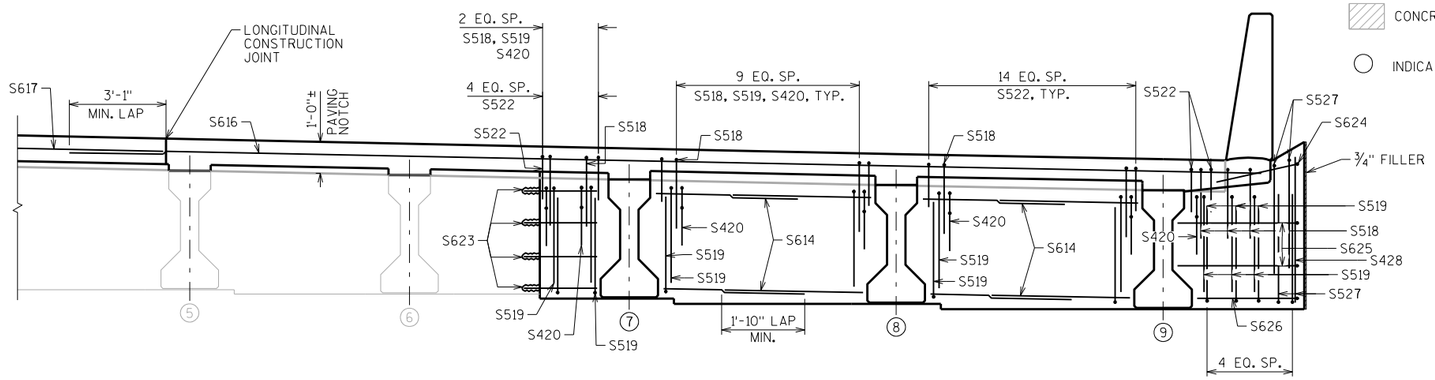

CONCRETE REMOVAL

INDICATES GIRDER NO.

PART TRANSVERSE SECTION THRU ABUTMENT DIAPHRAGM

LOOKING EAST
EAST ABUTMENT FRONT FACE SHOWN
WEST ABUTMENT FRONT FACE SHOWN

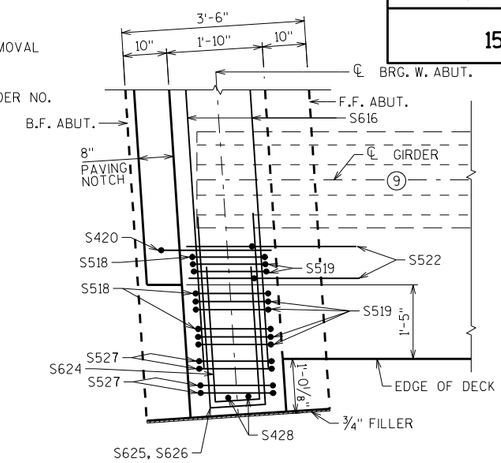

PLAN - EXTERIOR ABUTMENT DIAPHRAGM

WEST ABUTMENT, SOUTHWEST EXTERIOR SHOWN
EAST ABUTMENT, SOUTHEAST EXTERIOR SIMILAR

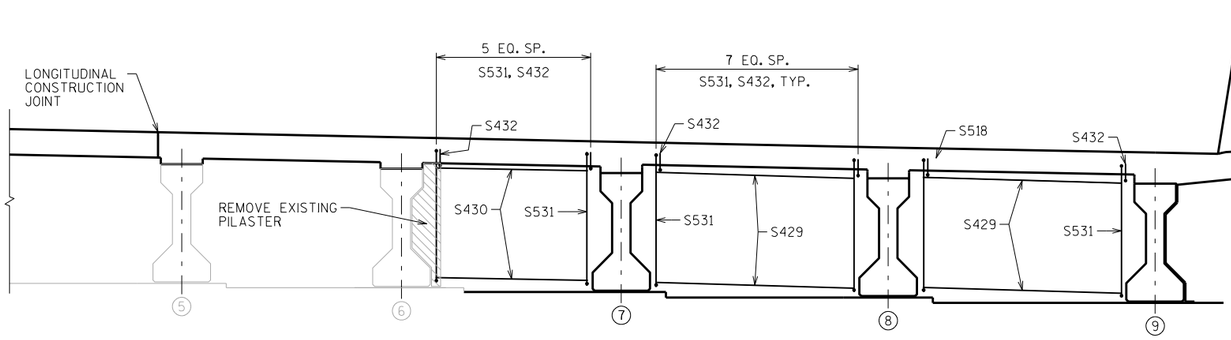

PART TRANSVERSE SECTION THRU PIER DIAPHRAGM

LOOKING EAST

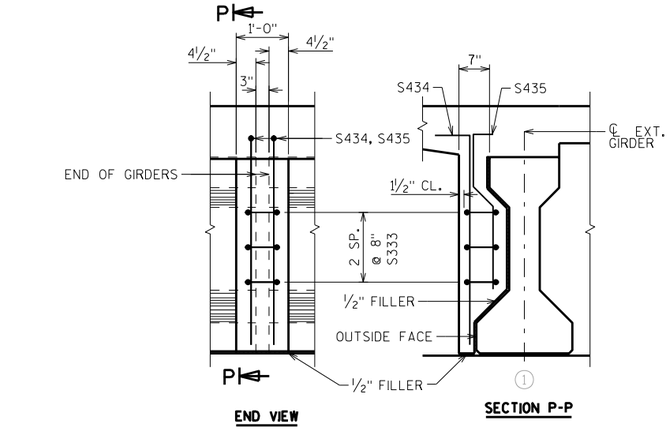

PILASTER DETAILS AT PIER

AT EXISTING EXTERIOR GIRDER 1 ONLY

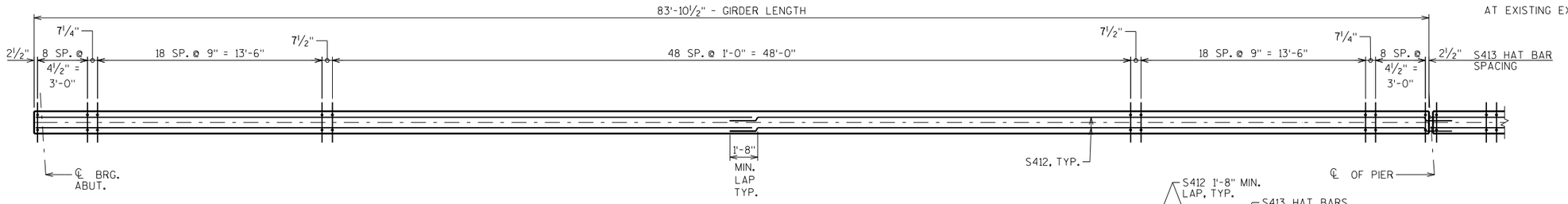

PLAN OF GIRDER HAUNCH

TYPICAL AT GIRDERS 1 THRU 6 (EXISTING GIRDERS)
SPAN 1 SHOWN, SPAN 2 SIMILAR

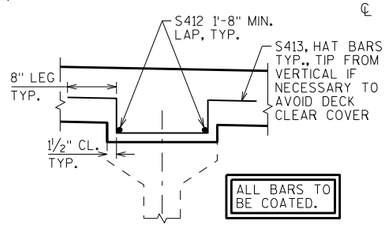

GIRDER HAUNCH DETAIL

TYPICAL AT GIRDERS 1 THRU 6 (EXISTING GIRDERS)

(S01) S623 ADHESIVE ANCHORS NO. 6 BARS, EMBED 6" INTO EXISTING CONCRETE.

NO.	DATE	REVISION	BY

STATE OF WISCONSIN
DEPARTMENT OF TRANSPORTATION
STRUCTURES DESIGN SECTION

STRUCTURE B-70-116

DRAWN BY MJK | PLANS CK'D. EMK

SUPERSTRUCTURE DETAILS 1

SHEET 16

159

SCALE = 7.0

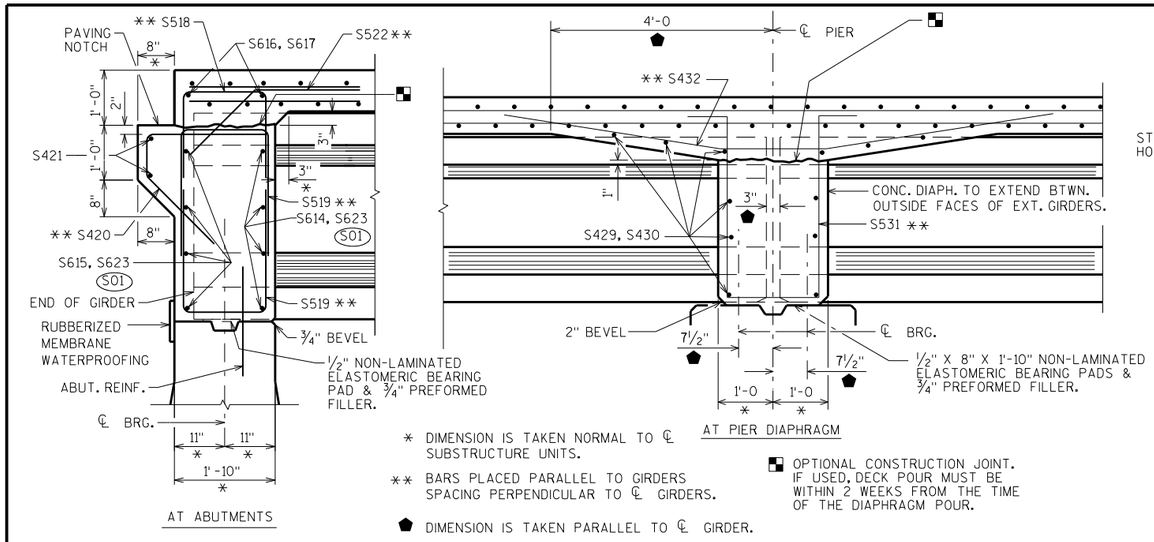

PART LONGIT. SECTION

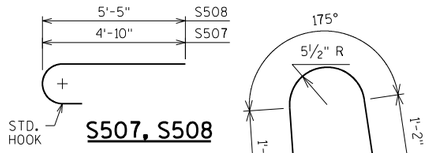

S507, S508

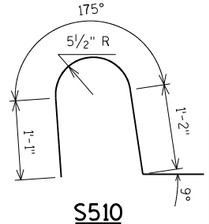

S510

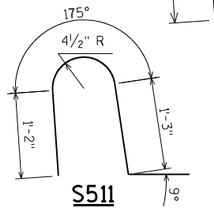

S511

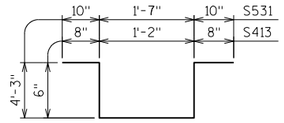

S413, S531

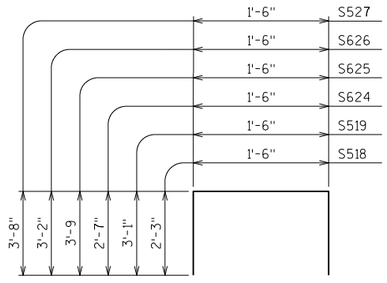

S518, S519, S624, S625 S626, S527

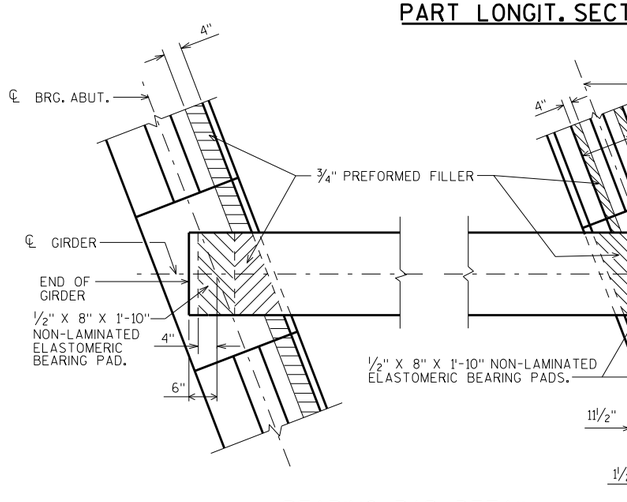

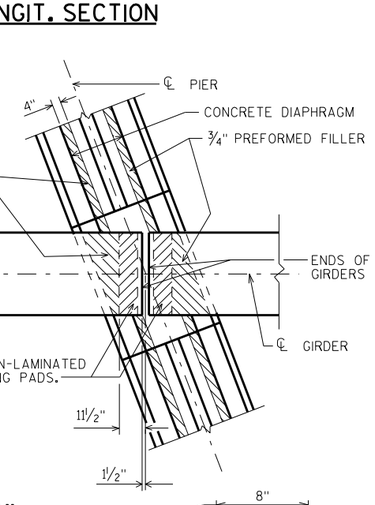

BEARING PAD DETAIL

FOR NEW GIRDER LOCATIONS

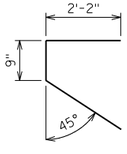

S420

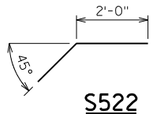

S522

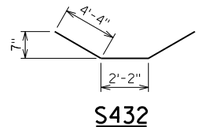

S432

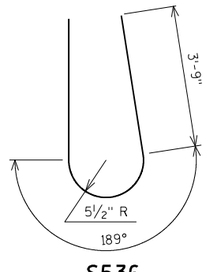

S536

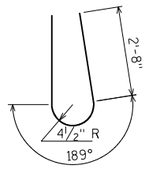

S537

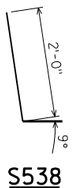

S538

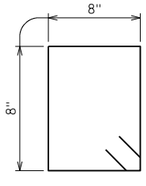

S333

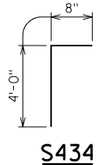

S434

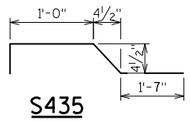

S435

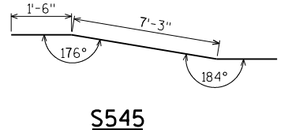

S545

S544

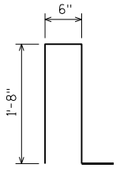

S539

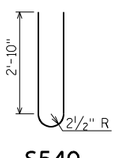

S540

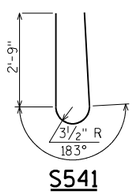

S541

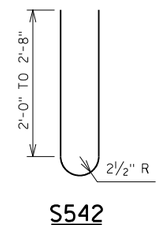

S542

BILL OF BARS

NOTE: THE FIRST OR FIRST TWO DIGITS OF THE BAR MARK SIGNIFIES THE BAR SIZE

BAR MARK	COAT	NO. REQ'D.	LENGTH	BENT	BAR SERIES	LOCATION
S401	X	186	30'-4"			DECK - TOP - HORIZ. - LONGIT.
S402	X	186	28'-4"			DECK - TOP - HORIZ. - LONGIT.
S1003	X	93	58'-0"			DECK - TOP - HORIZ. - LONGIT. - CONTINUITY OVER PIER
S404	X	376	43'-5"			DECK - BOT.- HORIZ. - LONGIT.
S505	X	577	37'-10"			DECK - TOP & BOT. - HORIZ. - TRANS. - STAGE 2 CONST.
S506	X	577	31'-0"			DECK - TOP & BOT. - HORIZ. - TRANS. - STAGE 3 CONST.
S507	X	142	5'-5"	X		DECK - TOP - TRANS. - HOOK BARS - N. EDGE OF DECK
S508	X	142	6'-0"	X		DECK - TOP - TRANS. - HOOK BARS - S. EDGE OF DECK
S509	X	40	43'-5"			56SS PPT. - HORIZ. - LONGIT.
S510	X	254	4'-6"	X		56SS PPT. - VERT. - TRANS.
S511	X	227	4'-5"	X		42SS PPT. - VERT. - TRANS.
S412	X	48	43'-5"			HAUNCH - HORIZ. - LONGIT. - GIR. 1-6
S413	X	1260	3'-2"	X		HAUNCH - VERT. - HAT BARS - GIR. 1-6
S614	X	32	4'-9"			ABUT. DIAPH. - HORIZ.
S615	X	8	24'-0"			ABUT. DIAPH. - HORIZ.
S616	X	4	38'-7"			ABUT. DIAPH. - HORIZ. - DECK STAGE 2 CONST.
S617	X	4	30'-11"			ABUT. DIAPH. - HORIZ. - DECK STAGE 3 CONST.
S518	X	52	5'-9"	X		ABUT. DIAPH. - VERT.
S519	X	104	7'-5"	X		ABUT. DIAPH. - VERT.
S420	X	48	4'-10"	X		ABUT. DIAPH. - VERT. - CORBELS
S421	X	4	21'-7"			ABUT. DIAPH. - HORIZ. - CORBELS
S522	X	74	4'-0"	X		ABUT. DIAPH. - VERT.
S623	X	16	2'-4"			ABUT. DIAPH. - HORIZ. - INT. - ANCHORS
S624	X	2	6'-4"	X		ABUT. DIAPH. - HORIZ. - EXT.
S625	X	4	8'-8"	X		ABUT. DIAPH. - HORIZ. - EXT.
S626	X	2	7'-6"	X		ABUT. DIAPH. - HORIZ. - EXT.
S527	X	8	8'-7"	X		ABUT. DIAPH. - VERT. - EXT.
S428	X	4	4'-9"			ABUT. DIAPH. - VERT. - EXT.
S429	X	24	6'-4"			PIER DIAPH. - HORIZ.
S430	X	12	4'-10"			PIER DIAPH. - HORIZ.
S531	X	22	11'-3"	X		PIER DIAPH. - VERT.
S432	X	22	10'-8"	X		PIER DIAPH. - VERT.
S333	X	3	3'-1"	X		PILASTER - HORIZ. - STIRRUPS
S434	X	2	4'-7"	X		PILASTER - VERT.
S435	X	2	3'-7"	X		PILASTER - VERT.
S536	X	254	9'-1"	X		56SS PPT. - VERT.
S537	X	227	6'-8"	X		42SS PPT. - VERT.
S538	X	22	2'-9"	X		42SS PPT. - VERT.
S539	X	34	4'-4"	X		42SS PPT.- VERT.
S540	X	10	6'-5"	X		42SS PPT. - VERT.
S541	X	12	6'-6"	X		42SS PPT. - VERT.
S542	X	12	5'-5"	X	⚠	42SS PPT. - VERT.
S543	X	10	12'-0"			42SS PPT. - HORIZ.
S544	X	4	12'-0"	X		42SS PPT. - HORIZ.
S545	X	2	12'-0"	X		42SS PPT. - HORIZ.
S546	X	24	50'-6"			42SS PPT. - HORIZ.

⚠ LENGTH SHOWN FOR BAR IS AN AVERAGE LENGTH AND SHOULD ONLY BE USED FOR BAR WEIGHT CALCULATIONS. SEE BAR SERIES TABLE FOR ACTUAL LENGTHS.

BAR SERIES TABLE

MARK	NO. REQD.	LENGTH
S542	2 SERIES OF 6	4'-9" TO 6'-1"

BUNDLE AND TAG EACH SERIES SEPARATELY.

S01 S623 ADHESIVE ANCHORS NO. 6 BARS. EMBED 6" INTO EXISTING CONCRETE.

NO.	DATE	REVISION	BY

STATE OF WISCONSIN
DEPARTMENT OF TRANSPORTATION
STRUCTURES DESIGN SECTION

STRUCTURE B-70-116

DRAWN BY MJK | PLANS CK'D. EMK

SUPERSTRUCTURE DETAILS 2

SHEET 17

160

STATE PROJECT NUMBER

1517-75-88

SCALE = 1.3333

8

8

STATE PROJECT NUMBER

1517-75-88

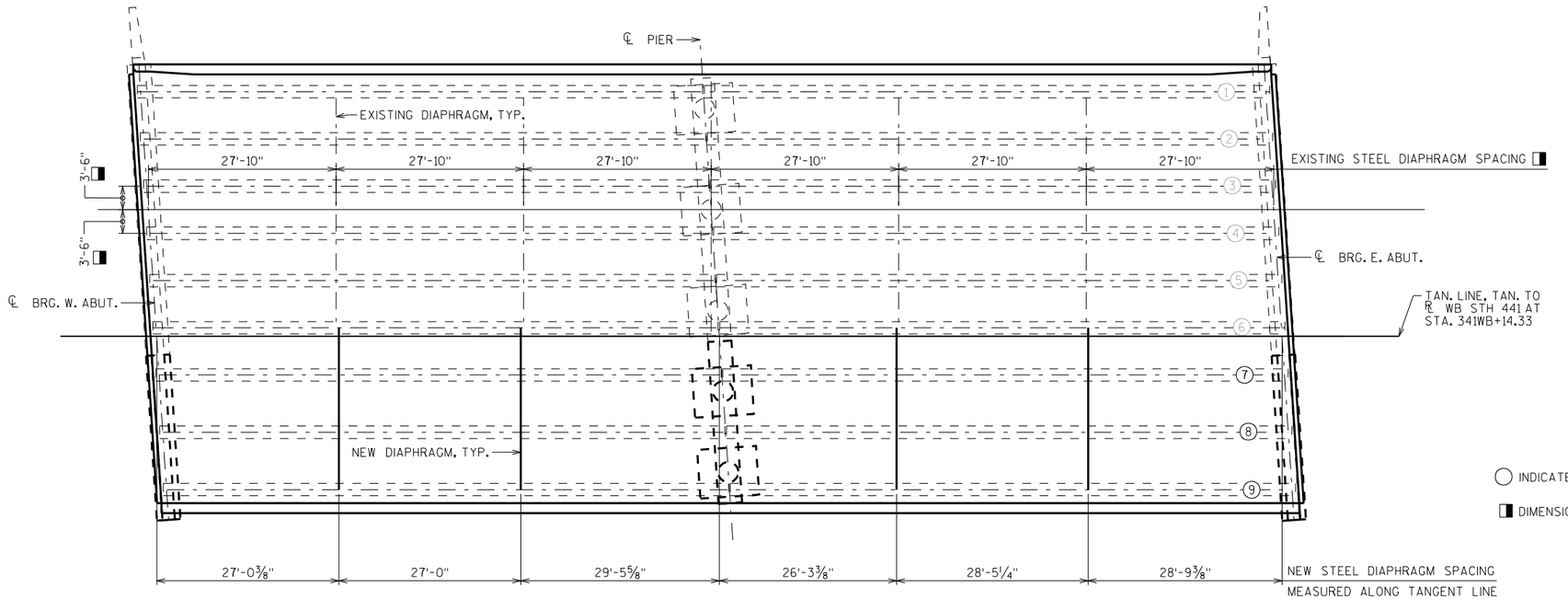

STEEL DIAPHRAGM FRAMING PLAN

SEE "45" PRESTRESSED GIRDER DETAILS" SHEET FOR GIRDER LENGTHS

NOTES

IT IS THE RESPONSIBILITY OF THE CONTRACTOR TO VERIFY THE LOCATIONS OF THE EXISTING STEEL DIAPHRAGMS.

FOR DIAPHRAGM SPACING WITH RESPECT TO THE ENDS OF THE GIRDERS SEE "45" PRESTRESSED GIRDER DETAILS" SHEET.

TOP OF DECK ELEVATIONS

LOCATION	℄ BRG. W. ABUT.	1/10 PT.	2/10 PT.	3/10 PT.	4/10 PT.	5/10 PT.	6/10 PT.	7/10 PT.	8/10 PT.	9/10 PT.	℄ BRG. PIER	1/10 PT.	2/10 PT.	3/10 PT.	4/10 PT.	5/10 PT.	6/10 PT.	7/10 PT.	8/10 PT.	9/10 PT.	℄ BRG. E. ABUT.
N. EOD	823.33	823.38	823.43	823.49	823.54	823.59	823.65	823.70	823.76	823.81	823.86	823.92	823.97	824.03	824.08	824.14	824.19	824.25	824.31	824.36	824.42
GIRDER 1	823.27	823.33	823.38	823.44	823.49	823.54	823.60	823.65	823.71	823.76	823.81	823.87	823.92	823.98	824.03	824.09	824.14	824.20	824.26	824.31	824.37
GIRDER 2	823.14	823.19	823.24	823.30	823.35	823.41	823.46	823.51	823.57	823.62	823.68	823.73	823.79	823.84	823.90	823.95	824.01	824.06	824.12	824.17	824.23
GIRDER 3	823.00	823.05	823.11	823.16	823.21	823.27	823.32	823.38	823.43	823.49	823.54	823.60	823.65	823.71	823.76	823.82	823.87	823.93	823.98	824.04	824.09
GIRDER 4	822.86	822.92	822.97	823.02	823.08	823.13	823.19	823.24	823.29	823.35	823.40	823.46	823.51	823.57	823.62	823.68	823.73	823.79	823.85	823.90	823.96
CONST. JT.	822.74	822.79	822.85	822.90	822.96	823.01	823.06	823.12	823.17	823.23	823.28	823.34	823.39	823.45	823.50	823.56	823.61	823.67	823.72	823.78	823.84
GIRDER 5	822.73	822.78	822.83	822.89	822.94	822.99	823.05	823.10	823.16	823.21	823.27	823.32	823.38	823.43	823.49	823.54	823.60	823.65	823.71	823.77	823.82
GIRDER 6	822.59	822.64	822.70	822.75	822.80	822.86	822.91	822.97	823.02	823.08	823.13	823.18	823.24	823.30	823.35	823.41	823.46	823.52	823.57	823.63	823.69
TAN. LINE	822.56	822.62	822.67	822.72	822.78	822.83	822.89	822.94	823.00	823.05	823.11	823.16	823.22	823.27	823.33	823.38	823.44	823.49	823.55	823.60	823.66
℞ STH 441 WB	822.56	822.62	822.67	822.72	822.78	822.83	822.89	822.94	822.99	823.05	823.10	823.16	823.21	823.27	823.32	823.37	823.43	823.48	823.54	823.59	823.65
GIRDER 7	822.45	822.50	822.56	822.61	822.67	822.72	822.77	822.83	822.88	822.94	822.99	823.05	823.10	823.16	823.21	823.27	823.33	823.38	823.44	823.49	823.55
GIRDER 8	822.28	822.34	822.39	822.45	822.50	822.55	822.61	822.66	822.72	822.77	822.83	822.88	822.94	822.99	823.05	823.10	823.16	823.22	823.27	823.33	823.38
GIRDER 9	822.12	822.17	822.23	822.28	822.33	822.39	822.44	822.50	822.55	822.61	822.66	822.72	822.77	822.83	822.88	822.94	822.99	823.05	823.11	823.16	823.22
S. EOD	822.08	822.13	822.19	822.24	822.29	822.35	822.40	822.46	822.51	822.57	822.62	822.68	822.73	822.79	822.84	822.90	822.95	823.01	823.07	823.12	823.18

8

8

NO.	DATE	REVISION	BY

STATE OF WISCONSIN
DEPARTMENT OF TRANSPORTATION
STRUCTURES DESIGN SECTION

STRUCTURE B-70-116

DRAWN BY MJK | PLANS CK'D. EMK

TOP OF DECK ELEVATIONS

SHEET 18

161

SCALE = 10.0

STATE PROJECT NUMBER

1517-75-88

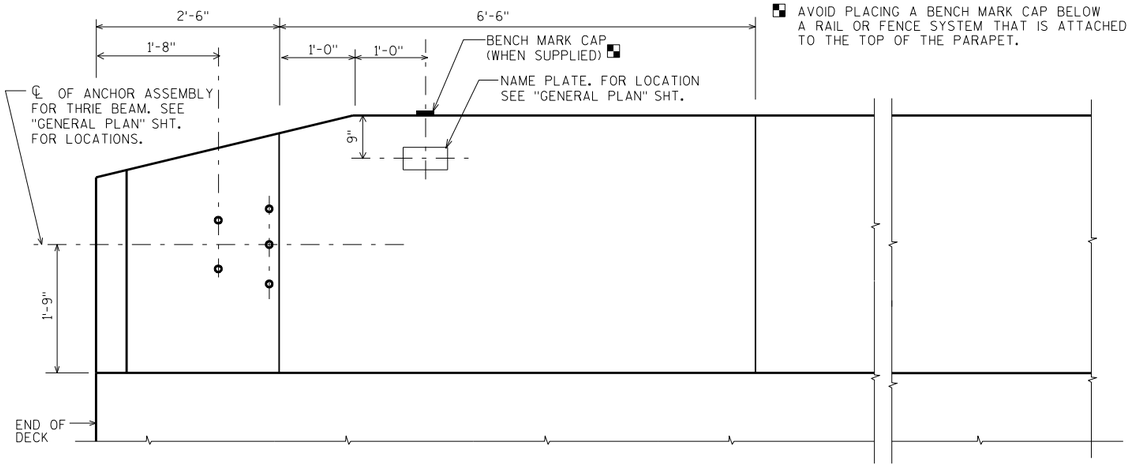

INSIDE ELEVATION

AVOID PLACING A BENCH MARK CAP BELOW A RAIL OR FENCE SYSTEM THAT IS ATTACHED TO THE TOP OF THE PARAPET.

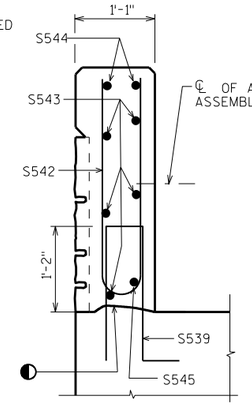

SECTION A-A

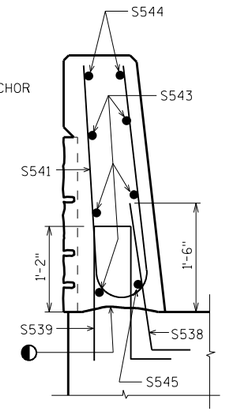

SECTION B-B

SEE "SUPERSTRUCTURE DETAILS 2" SHEET FOR BILL OF BARS

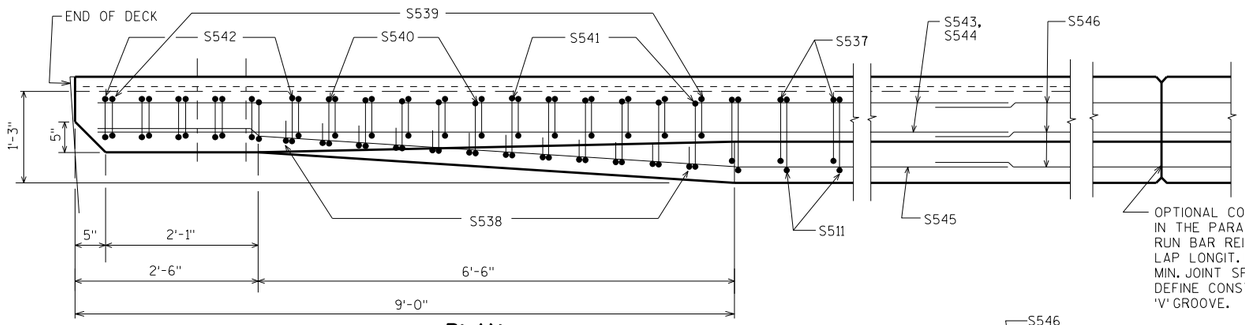

PLAN

OPTIONAL CONSTRUCTION JOINTS IN THE PARAPETS MAY BE USED. RUN BAR REINF. THRU THE JOINT. LAP LONGIT. BARS A MIN. OF 1'-9". MIN. JOINT SPACING OF 80'-0". DEFINE CONST. JOINT WITH A ¾" - 'V' GROOVE.

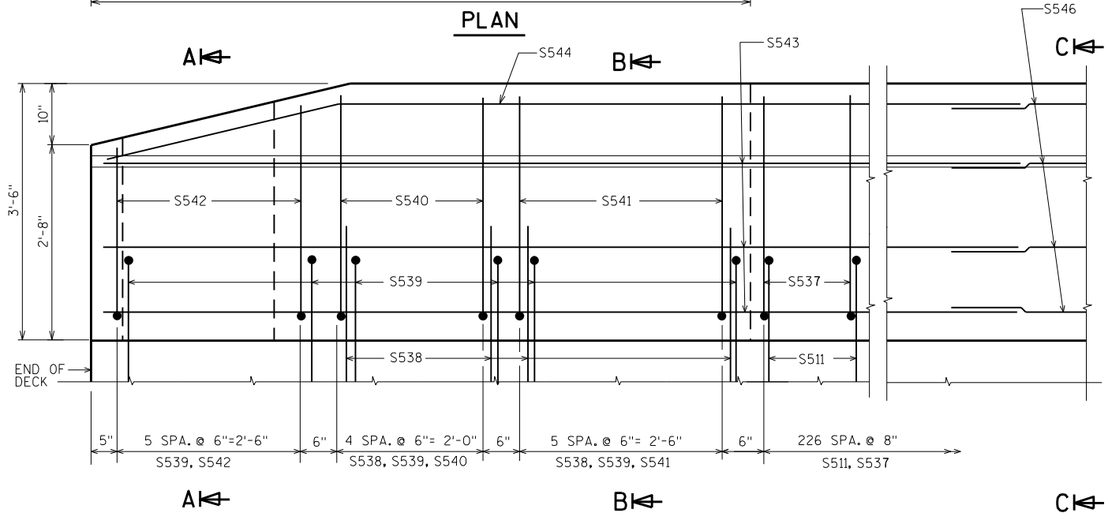

OUTSIDE ELEVATION

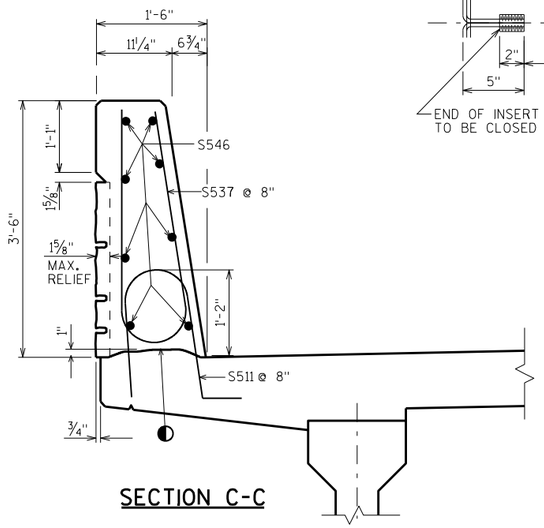

SECTION C-C

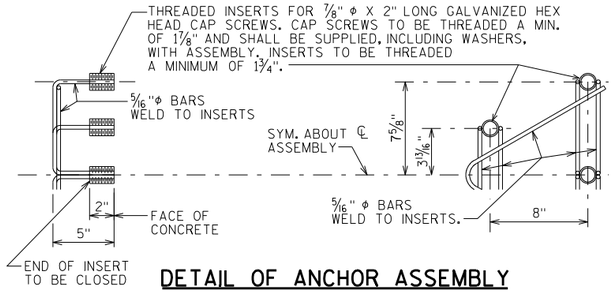

DETAIL OF ANCHOR ASSEMBLY

NOTE: HEX HEAD CAP SCREWS & WASHERS TO BE GALVANIZED IN ACCORDANCE WITH AASHTO M232 CLASS C.

ASSEMBLY SHALL BE BID ITEM "ANCHOR ASSEMBLIES FOR STEEL PLATE BEAM GUARD", EACH.

◐ CONST. JOINT - STRIKE OFF AS SHOWN.

NO.	DATE	REVISION	BY

STATE OF WISCONSIN
DEPARTMENT OF TRANSPORTATION
STRUCTURES DESIGN SECTION

STRUCTURE B-70-116

DRAWN BY MJK | PLANS CK'D. EMK

SINGLE SLOPE PARAPET 42SS "MODIFIED"

SHEET 19

162

SCALE = 1

8

8

STATE PROJECT NUMBER
1517-75-88

SEE "SUPERSTRUCTURE DETAILS 2" SHEET FOR BILL OF BARS

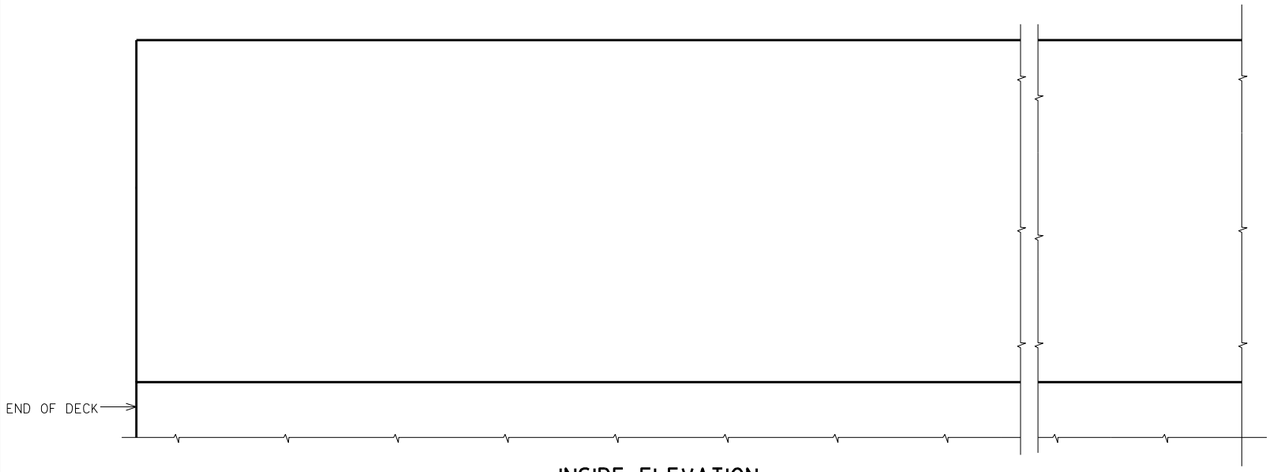

INSIDE ELEVATION

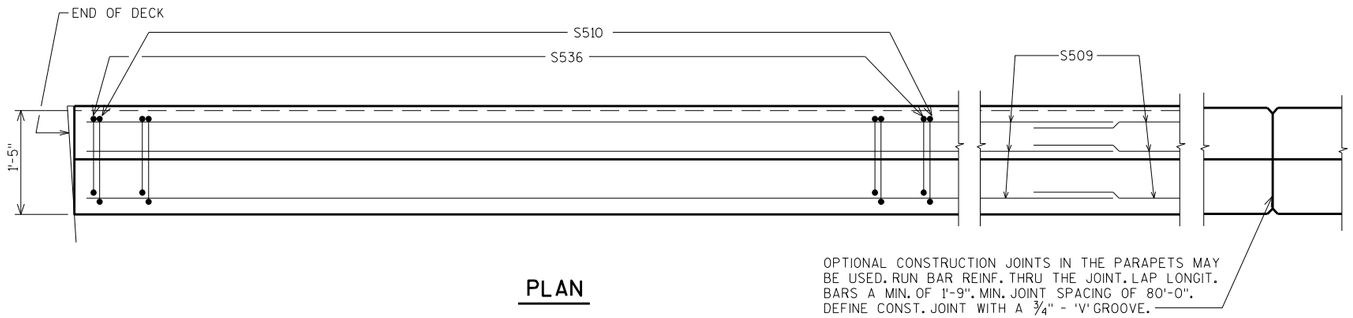

PLAN

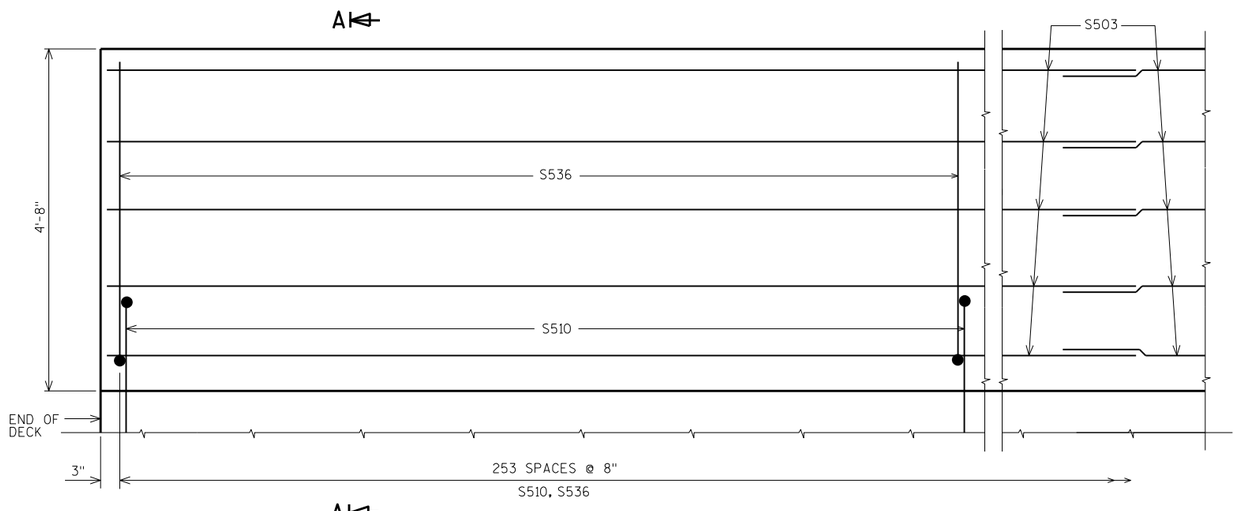

OUTSIDE ELEVATION

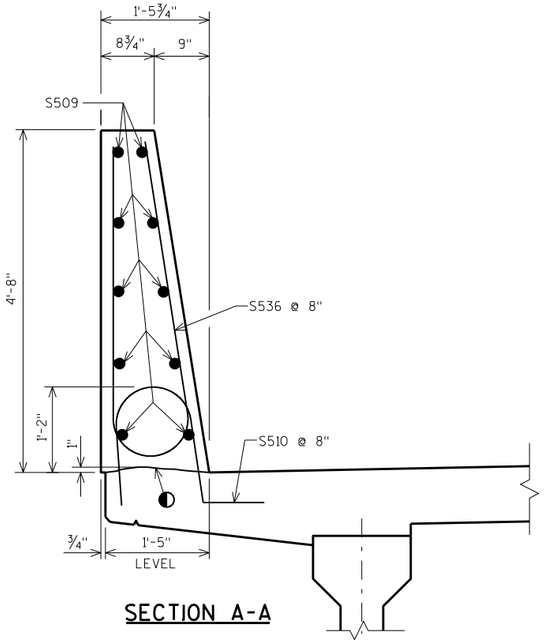

SECTION A-A

◐ CONST. JOINT - STRIKE OFF AS SHOWN.

NO.	DATE	REVISION	BY

STATE OF WISCONSIN
DEPARTMENT OF TRANSPORTATION
STRUCTURES DESIGN SECTION

STRUCTURE B-70-116

DRAWN BY MJK | PLANS CK'D. EMK

SINGLE SLOPE PARAPET 56SS

SHEET 20

163

SCALE = 1

8

8

STATE PROJECT NUMBER
1517-75-88

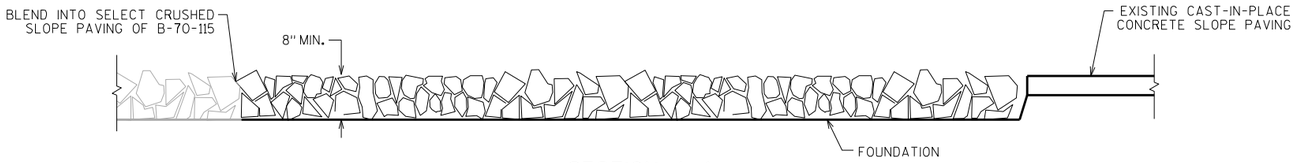

SECTION A-A

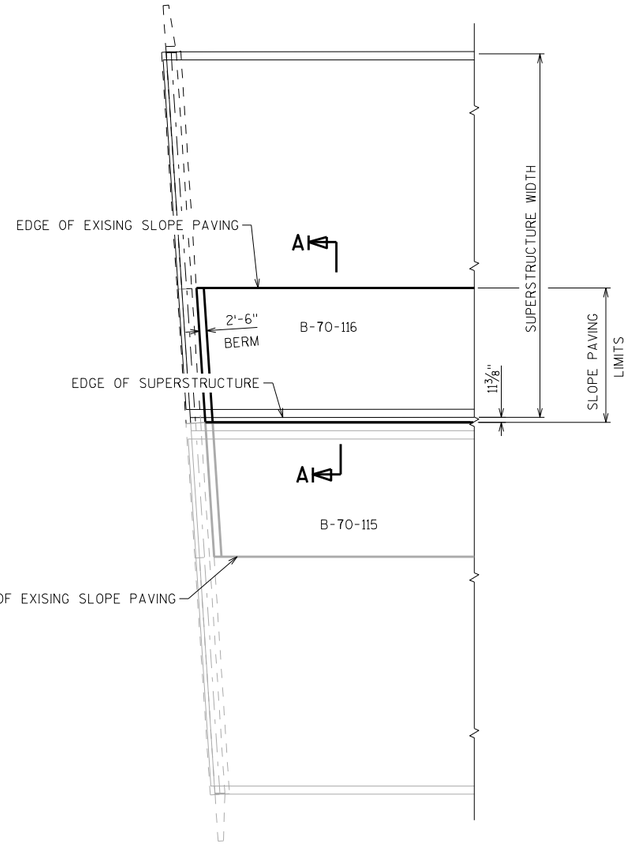

PLAN

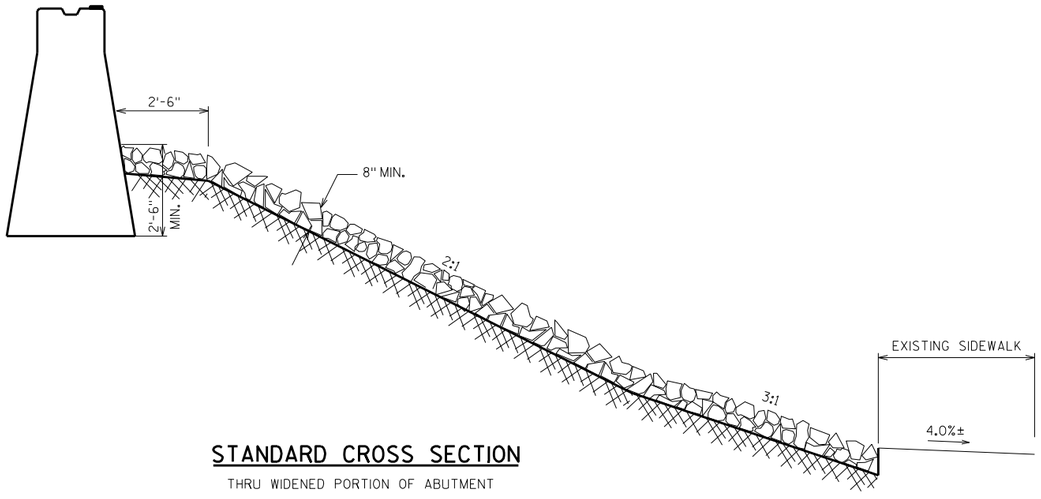

STANDARD CROSS SECTION

THRU WIDENED PORTION OF ABUTMENT

GENERAL NOTES

DETAILS OF CONSTRUCTION, MATERIALS AND WORKMANSHIP NOT SHOWN ON THIS DRAWING SHALL CONFORM TO THE PERTINENT REQUIREMENTS OF THE STANDARD SPECIFICATIONS.

WOOD FORMS MAY BE LEFT IN PLACE WHEN OF A QUALITY ACCEPTABLE TO THE ENGINEER.

SELECT CRUSHED SLOPE PAVING SHALL ONLY BE PLACED ON THE SLOPE OF THE WIDENED PORTION OF THE ABUTMENTS. EXISTING CAST-IN-PLACE CONCRETE SLOPE PAVING SHALL REMAIN IN PLACE.

EXISTING CAST-IN-PLACE CONCRETE SLOPE PAVING AND THE SELECT CRUSHED SLOPE PAVING PLACED IN THIS CONTRACT WILL BE REMOVED AND REPLACED WITH NEW CAST-IN-PLACE CONCRETE SLOPE PAVING UNDER A FUTURE CONTRACT.

NO.	DATE	REVISION	BY

STATE OF WISCONSIN
DEPARTMENT OF TRANSPORTATION
STRUCTURES DESIGN SECTION

STRUCTURE B-70-116

DRAWN BY MJK | PLANS CK'D. EMK

SLOPE PAVING (SELECT CRUSHED)

SHEET 21

164

8 10 4 2 1

8

SCALE = 1.0

STATE PROJECT NUMBER

1517-75-88

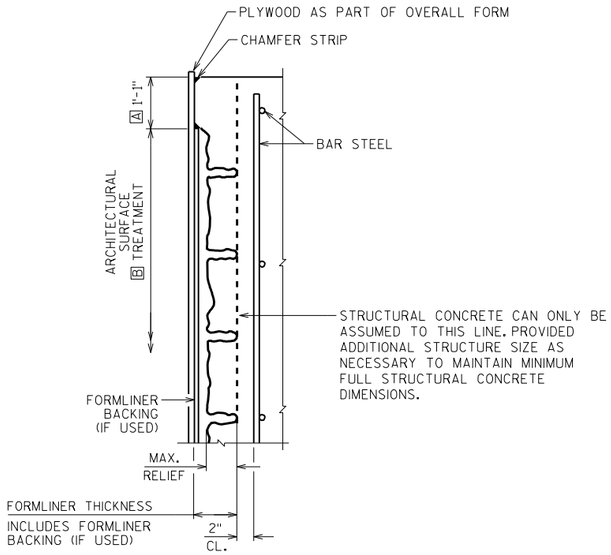

SECTION THROUGH PARAPET FORMLINER

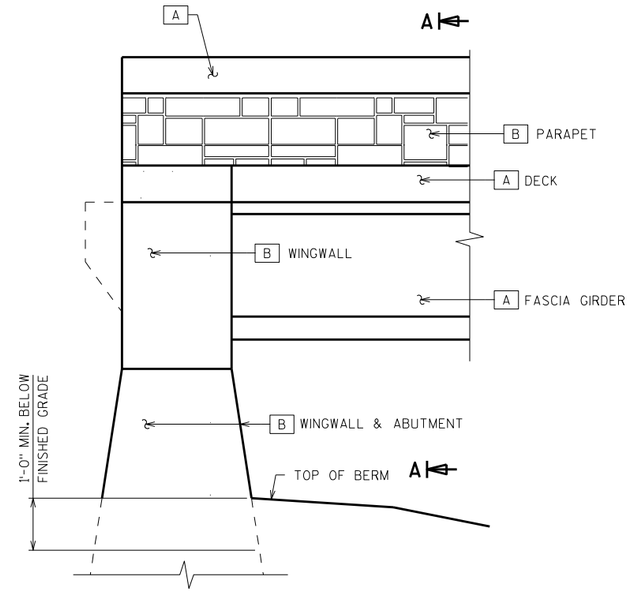

ABUTMENT STAINING DETAIL

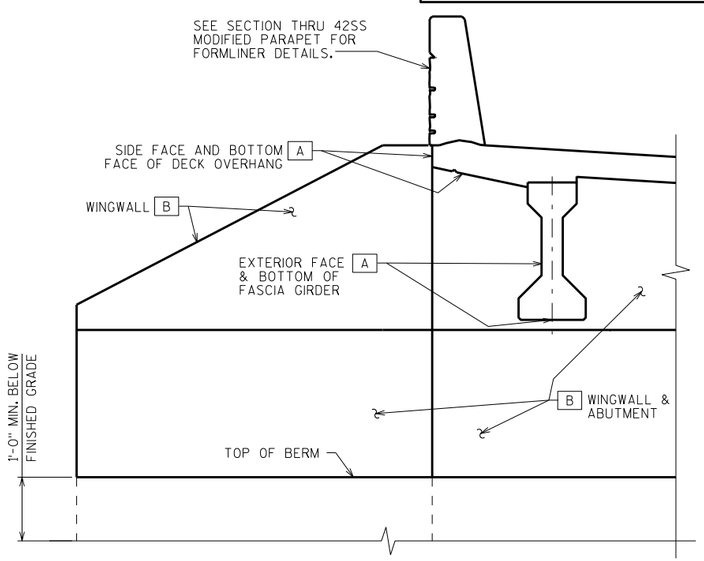

SECTION A-A

CONCRETE STAINING SCHEDULE

MARK	COLOR	COLOR NO.	LOCATION
A	HOPSACK	SW 6109	FASCIA GIRDERS, DECK EDGE, AND PIER CAP
B	LATTE	FED. 33522	WINGWALLS, ABUTMENTS, AND COLUMNS

NOTE: 1. FINISH ON COLORS IS FLAT (LUSTERLESS)

NOTES

THE FORMLINER COURSING ON PARAPET SHALL BE PARALLEL TO TOP OF PARAPET

THE FORMLINER PATTERN SHALL BE CONTINUOUS ACROSS CONSTRUCTION JOINTS.

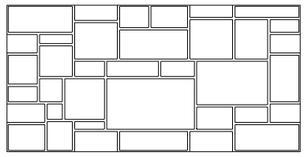

ASHLAR

MAXIMUM RELIEF: 1⅝"
AVERAGE RELIEF: 1¼"
LINER THICKNESS*: 2½"
STONE SIZE: H: 3"-17" W: 5"-29"

* INCLUDES INTERNAL PLYWOOD BACKING

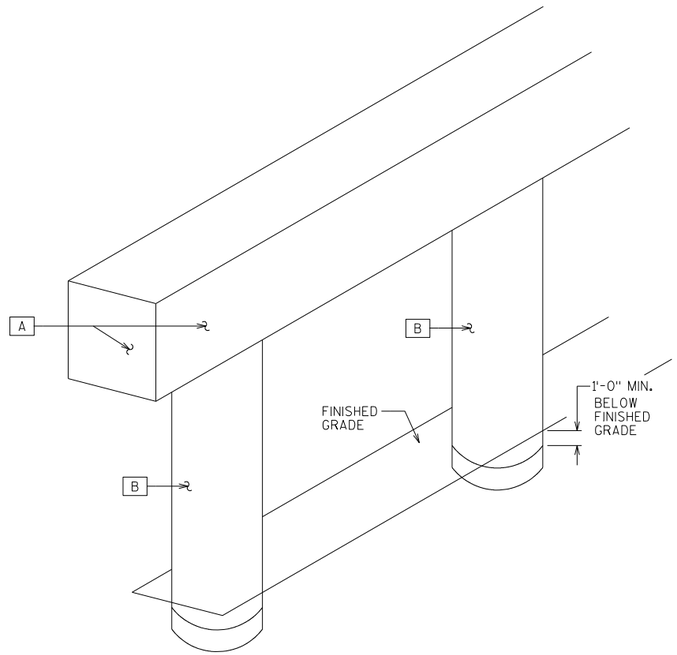

PIER STAINING DETAIL

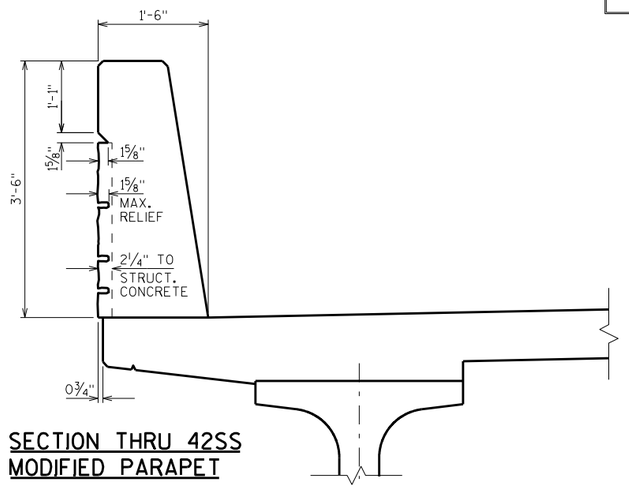

SECTION THRU 42SS MODIFIED PARAPET

NO.	DATE	REVISION	BY

STATE OF WISCONSIN
DEPARTMENT OF TRANSPORTATION
STRUCTURES DESIGN SECTION

STRUCTURE B-70-116

DRAWN BY MJK PLANS CK'D. EMK

AESTHETIC DETAILS

SHEET 22

165

SCALE = 1.0

8

8

PROJECT ID 1517-75-88 WESTBOUND SHOULDER WIDENING- WEST OF B-70-116			AREA (SF)		Incremental Vol (CY) (Unadjusted)		Cumulative Vol (CY)		
STATION	Real Station	Distance	Cut	Fill	Cut	Fill	Cut 1.00	Expanded Fill	Mass Ordinate
332WB+07	33207.00	0.00	8.60	0.00	0	0	0	0	0.00
332WB+50	33250.00	43.00	7.95	0.00	13	0	13	0	13.18
333WB+00	33300.00	50.00	7.54	0.00	14	0	28	0	27.52
333WB+50	33350.00	50.00	7.93	0.00	14	0	42	0	41.85
334WB+00	33400.00	50.00	8.26	0.00	15	0	57	0	56.84
334WB+50	33450.00	50.00	8.30	0.00	15	0	72	0	72.17
335WB+00	33500.00	50.00	8.20	0.00	15	0	87	0	87.45
335WB+50	33550.00	50.00	7.16	0.00	14	0	102	0	101.67
336WB+00	33600.00	50.00	7.16	0.00	13	0	115	0	114.93
336WB+50	33650.00	50.00	7.46	0.00	14	0	128	0	128.47
337WB+00	33700.00	50.00	7.50	0.00	14	0	142	0	142.32
337WB+50	33750.00	50.00	7.49	0.00	14	0	156	0	156.20
338WB+00	33800.00	50.00	8.05	0.00	14	0	171	0	170.59
338WB+50	33850.00	50.00	8.23	0.00	15	0	186	0	185.66
339WB+00	33900.00	50.00	8.22	0.00	15	0	201	0	200.89
339WB+50	33950.00	50.00	8.26	0.00	15	0	216	0	216.15
340WB+00	34000.00	50.00	8.33	0.00	15	0	232	0	231.51
340WB+50	34050.00	50.00	8.02	0.00	15	0	247	0	246.65
340WB+65	34065.00	15.00	7.99	0.00	4	0	251	0	251.10

PROJECT ID 1517-75-88 WESTBOUND SHOULDER WIDENING-EAST OF B-70-116			AREA (SF)		Incremental Vol (CY) (Unadjusted)		Cumulative Vol (CY)		
STATION	Real Station	Distance	Cut	Fill	Cut	Fill	Cut 1.00	Expanded Fill	Mass Ordinate
342WB+34	34234.00	0.00	8.42	0.00	0	0	0	0	0.00
342WB+50	34250.00	16.00	8.51	0.00	5	0	5	0	5.02
343WB+00	34300.00	50.00	8.49	0.00	16	0	21	0	20.76
343WB+50	34350.00	50.00	8.45	0.00	16	0	36	0	36.44
344WB+00	34400.00	50.00	8.39	0.00	16	0	52	0	52.03
344WB+50	34450.00	50.00	8.33	0.00	15	0	68	0	67.52
345WB+00	34500.00	50.00	8.06	0.00	15	0	83	0	82.69
345WB+50	34550.00	50.00	7.99	0.00	15	0	98	0	97.55
346WB+00	34600.00	50.00	7.79	0.00	15	0	112	0	112.16
346WB+50	34650.00	50.00	7.65	0.00	14	0	126	0	126.46
347WB+00	34700.00	50.00	7.72	0.00	14	0	141	0	140.69
347WB+50	34750.00	50.00	7.50	0.00	14	0	155	0	154.78
348WB+00	34800.00	50.00	7.25	0.00	14	0	168	0	168.44
348WB+50	34850.00	50.00	7.43	0.00	14	0	182	0	182.03
349WB+00	34900.00	50.00	7.83	0.00	14	0	196	0	196.16
349WB+50	34950.00	50.00	7.74	0.00	14	0	211	0	210.58
350WB+00	35000.00	50.00	7.89	0.00	14	0	225	0	225.05
350WB+50	35050.00	50.00	8.03	0.00	15	0	240	0	239.79
351WB+00	35100.00	50.00	8.01	0.00	15	0	255	0	254.65
351WB+50	35150.00	50.00	7.58	0.00	14	0	269	0	269.08
351WB+81	35181.00	31.00	7.52	0.00	9	0	278	0	277.75

PROJECT ID 1517-75-88 EASTBOUND SHOULDER WIDENING- WEST OF B-70-115			AREA (SF)		Incremental Vol (CY) (Unadjusted)		Cumulative Vol (CY)		
STATION	Real Station	Distance	Cut	Fill	Cut	Fill	Cut 1.00	Expanded Fill	Mass Ordinate
331EB+58	33158.00	0.00	7.99	0.00	0	0	0	0	0.00
332EB+00	33200.00	42.00	7.31	0.00	12	0	12	0	11.90
332EB+50	33250.00	50.00	7.19	0.00	13	0	25	0	25.33
333EB+00	33300.00	50.00	7.09	0.00	13	0	39	0	38.55
333EB+50	33350.00	50.00	7.41	0.00	13	0	52	0	51.97
334EB+00	33400.00	50.00	7.58	0.00	14	0	66	0	65.85
334EB+50	33450.00	50.00	7.69	0.00	14	0	80	0	79.99
335EB+00	33500.00	50.00	7.46	0.00	14	0	94	0	94.02
335EB+50	33550.00	50.00	7.74	0.00	14	0	108	0	108.09
336EB+00	33600.00	50.00	7.60	0.00	14	0	122	0	122.30
336EB+50	33650.00	50.00	7.48	0.00	14	0	136	0	136.26
337EB+00	33700.00	50.00	7.62	0.00	14	0	150	0	150.24
337EB+50	33750.00	50.00	8.52	0.00	15	0	165	0	165.19
338EB+00	33800.00	50.00	8.33	0.00	16	0	181	0	180.79
338EB+50	33850.00	50.00	8.30	0.00	15	0	196	0	196.19
339EB+00	33900.00	50.00	8.30	0.00	15	0	212	0	211.56
339EB+50	33950.00	50.00	8.45	0.00	16	0	227	0	227.07
340EB+00	34000.00	50.00	8.33	0.00	16	0	243	0	242.60
340EB+50	34050.00	50.00	8.28	0.00	15	0	258	0	257.98
340EB+66	34066.00	16.00	8.15	0.00	5	0	263	0	262.85

PROJECT ID 1517-75-88 EASTBOUND SHOULDER WIDENING-EAST OF B-70-115			AREA (SF)		Incremental Vol (CY) (Unadjusted)		Cumulative Vol (CY)		
STATION	Real Station	Distance	Cut	Fill	Cut	Fill	Cut 1.00	Expanded Fill	Mass Ordinate
342EB+36	34236.00	0.00	7.98	0.00	0	0	0	0	0.00
342EB+50	34250.00	14.00	8.25	0.00	4	0	4	0	4.21
343EB+00	34300.00	50.00	8.23	0.00	15	0	19	0	19.47
343EB+50	34350.00	50.00	8.21	0.00	15	0	35	0	34.69
344EB+00	34400.00	50.00	8.22	0.00	15	0	50	0	49.90
344EB+50	34450.00	50.00	8.21	0.00	15	0	65	0	65.12
345EB+00	34500.00	50.00	8.30	0.00	15	0	80	0	80.40
345EB+50	34550.00	50.00	8.06	0.00	15	0	96	0	95.55
346EB+00	34600.00	50.00	7.91	0.00	15	0	110	0	110.34
346EB+50	34650.00	50.00	7.79	0.00	15	0	125	0	124.87
347EB+00	34700.00	50.00	7.67	0.00	14	0	139	0	139.19
347EB+50	34750.00	50.00	7.49	0.00	14	0	153	0	153.23
348EB+00	34800.00	50.00	7.69	0.00	14	0	167	0	167.28
348EB+50	34850.00	50.00	7.69	0.00	14	0	182	0	181.52
349EB+00	34900.00	50.00	7.83	0.00	14	0	196	0	195.89
349EB+50	34950.00	50.00	7.98	0.00	15	0	211	0	210.53
350EB+00	35000.00	50.00	8.08	0.00	15	0	225	0	225.40
350EB+50	35050.00	50.00	8.15	0.00	15	0	240	0	240.43
351EB+00	35100.00	50.00	8.09	0.00	15	0	255	0	255.47
351EB+50	35150.00	50.00	8.26	0.00	15	0	271	0	270.61
351EB+91	35191.00	41.00	8.12	0.00	12	0	283	0	283.04

PROJECT ID 1517-75-88 MEDIAN WIDENING-WEST OF B-70-115/116			AREA (SF)		Incremental Vol (CY) (Unadjusted)		Cumulative Vol (CY)		
STATION	Real Station	Distance	Cut	Fill	Cut	Fill	Cut 1.00	Expanded Fill 1.00	Mass Ordinate
324EB+45	32445.00	0.00	23.59	0.00	0	0	0	0	0.00
324EB+50	32450.00	5.00	24.21	0.00	4	0	4	0	4.43
325EB+00	32500.00	50.00	30.22	0.00	50	0	55	0	54.82
325EB+50	32550.00	50.00	34.51	0.00	60	0	115	0	114.76
326EB+00	32600.00	50.00	39.99	0.00	69	0	184	0	183.74
326EB+50	32650.00	50.00	44.66	0.00	78	0	262	0	262.12
327EB+00	32700.00	50.00	49.55	0.00	87	0	349	0	349.35
327EB+50	32750.00	50.00	52.65	0.00	95	0	444	0	443.98
328EB+00	32800.00	50.00	55.63	0.00	100	0	544	0	544.24
328EB+50	32850.00	50.00	59.53	0.00	107	0	651	0	650.87
329EB+00	32900.00	50.00	62.25	0.43	113	0	764	0	763.23
329EB+50	32950.00	50.00	63.15	0.44	116	1	880	1	878.54
330EB+00	33000.00	50.00	66.14	0.71	120	1	999	2	997.19
330EB+50	33050.00	50.00	66.79	0.57	123	1	1,123	3	1,119.08
331EB+00	33100.00	50.00	69.30	1.43	126	2	1,249	5	1,243.24
331EB+50	33150.00	50.00	71.71	2.27	131	3	1,379	9	1,370.38
332EB+00	33200.00	50.00	77.24	0.81	138	3	1,517	12	1,505.44
332EB+50	33250.00	50.00	81.55	7.02	147	7	1,664	19	1,645.22
333EB+00	33300.00	50.00	85.28	3.32	154	10	1,819	28	1,790.12
333EB+50	33350.00	50.00	83.76	2.14	157	5	1,975	33	1,941.58
334EB+00	33400.00	50.00	88.18	2.48	159	4	2,134	38	2,096.51
334EB+50	33450.00	50.00	86.39	3.80	162	6	2,296	44	2,252.33
335EB+00	33500.00	50.00	89.98	4.38	163	8	2,459	51	2,408.06
335EB+50	33550.00	50.00	84.34	13.83	161	17	2,621	68	2,552.61
336EB+00	33600.00	50.00	80.44	22.94	153	34	2,773	102	2,671.14
336EB+50	33650.00	50.00	82.95	26.10	151	45	2,924	147	2,777.02
337EB+00	33700.00	50.00	91.37	14.11	161	37	3,086	185	2,901.19
337EB+50	33750.00	50.00	92.78	6.05	171	19	3,256	203	3,053.04
338EB+00	33800.00	50.00	88.28	11.90	168	17	3,424	220	3,204.06
338EB+50	33850.00	50.00	87.66	14.85	163	25	3,587	245	3,342.20
339EB+00	33900.00	50.00	86.42	20.32	161	33	3,748	277	3,470.82
339EB+50	33950.00	50.00	85.56	23.42	159	41	3,907	318	3,589.56
340EB+00	34000.00	50.00	84.53	28.67	157	48	4,065	366	3,698.82
340EB+50	34050.00	50.00	120.14	0.00	190	27	4,254	393	3,861.79
340EB+66	34066.00	16.00	77.45	55.96	59	17	4,313	409	3,903.75

PROJECT ID 1517-75-88 MEDIAN WIDENING-EAST OF B-70-115/116			AREA (SF)		Incremental Vol (CY) (Unadjusted)		Cumulative Vol (CY)		
STATION	Real Station	Distance	Cut	Fill	Cut	Fill	Cut 1.00	Expanded Fill 1.00	Mass Ordinate
342EB+39	34239.00	0.00	82.74	46.45	0	0	0	0	0.00
342EB+50	34250.00	11.00	139.38	0.00	45	9	45	9	35.78
343EB+00	34300.00	50.00	95.32	6.77	217	6	263	16	246.83
343EB+50	34350.00	50.00	91.41	11.05	173	17	435	32	403.23
344EB+00	34400.00	50.00	93.42	16.98	171	26	607	58	548.41
344EB+50	34450.00	50.00	90.04	21.92	170	36	776	94	682.27
345EB+00	34500.00	50.00	90.24	19.47	167	38	943	133	810.87
345EB+50	34550.00	50.00	96.08	17.71	173	34	1,116	167	948.96
346EB+00	34600.00	50.00	92.14	21.93	174	37	1,290	204	1,086.53
346EB+50	34650.00	50.00	84.60	21.06	164	40	1,454	243	1,210.38
347EB+00	34700.00	50.00	85.23	18.75	157	37	1,611	280	1,330.77
347EB+50	34750.00	50.00	89.11	16.61	161	33	1,773	313	1,459.45
348EB+00	34800.00	50.00	92.91	13.62	169	28	1,941	341	1,600.00
348EB+50	34850.00	50.00	85.30	16.89	165	28	2,106	369	1,736.76
349EB+00	34900.00	50.00	85.92	6.90	159	22	2,265	391	1,873.27
349EB+50	34950.00	50.00	92.45	0.00	165	6	2,430	398	2,032.03
350EB+00	35000.00	50.00	66.59	3.94	147	4	2,577	401	2,175.65
350EB+50	35050.00	50.00	77.77	3.26	134	7	2,711	408	2,302.65
351EB+00	35100.00	50.00	76.05	2.51	142	5	2,853	413	2,439.73
351EB+50	35150.00	50.00	76.11	0.88	141	3	2,994	417	2,577.48
352EB+00	35200.00	50.00	74.87	0.46	140	1	3,134	418	2,716.03
352EB+50	35250.00	50.00	73.21	0.28	137	1	3,271	418	2,852.46
353EB+00	35300.00	50.00	70.08	0.00	133	0	3,404	419	2,984.88
353EB+50	35350.00	50.00	68.21	0.00	128	0	3,532	419	3,112.92
354EB+00	35400.00	50.00	64.70	0.00	123	0	3,655	419	3,235.99
354EB+50	35450.00	50.00	61.39	0.00	117	0	3,771	419	3,352.74
355EB+00	35500.00	50.00	60.11	0.00	113	0	3,884	419	3,465.24
355EB+50	35550.00	50.00	55.64	0.00	107	0	3,991	419	3,572.41
356EB+00	35600.00	50.00	55.26	0.00	103	0	4,094	419	3,675.10
356EB+50	35650.00	50.00	55.54	0.00	103	0	4,196	419	3,777.69
357EB+00	35700.00	50.00	51.92	0.00	100	0	4,296	419	3,877.19
357EB+50	35750.00	50.00	51.36	0.00	96	0	4,392	419	3,972.82
358EB+00	35800.00	50.00	49.11	0.00	93	0	4,485	419	4,065.85
358EB+50	35850.00	50.00	43.76	0.00	86	0	4,571	419	4,151.84
359EB+00	35900.00	50.00	40.30	0.00	78	0	4,648	419	4,229.67
359EB+50	35950.00	50.00	35.37	0.00	70	0	4,718	419	4,299.74
360EB+00	36000.00	50.00	31.62	0.00	62	0	4,780	419	4,361.77
360EB+50	36050.00	50.00	27.49	0.00	55	0	4,835	419	4,416.50
360EB+80	36080.00	30.00	23.88	0.00	29	0	4,864	419	4,445.04

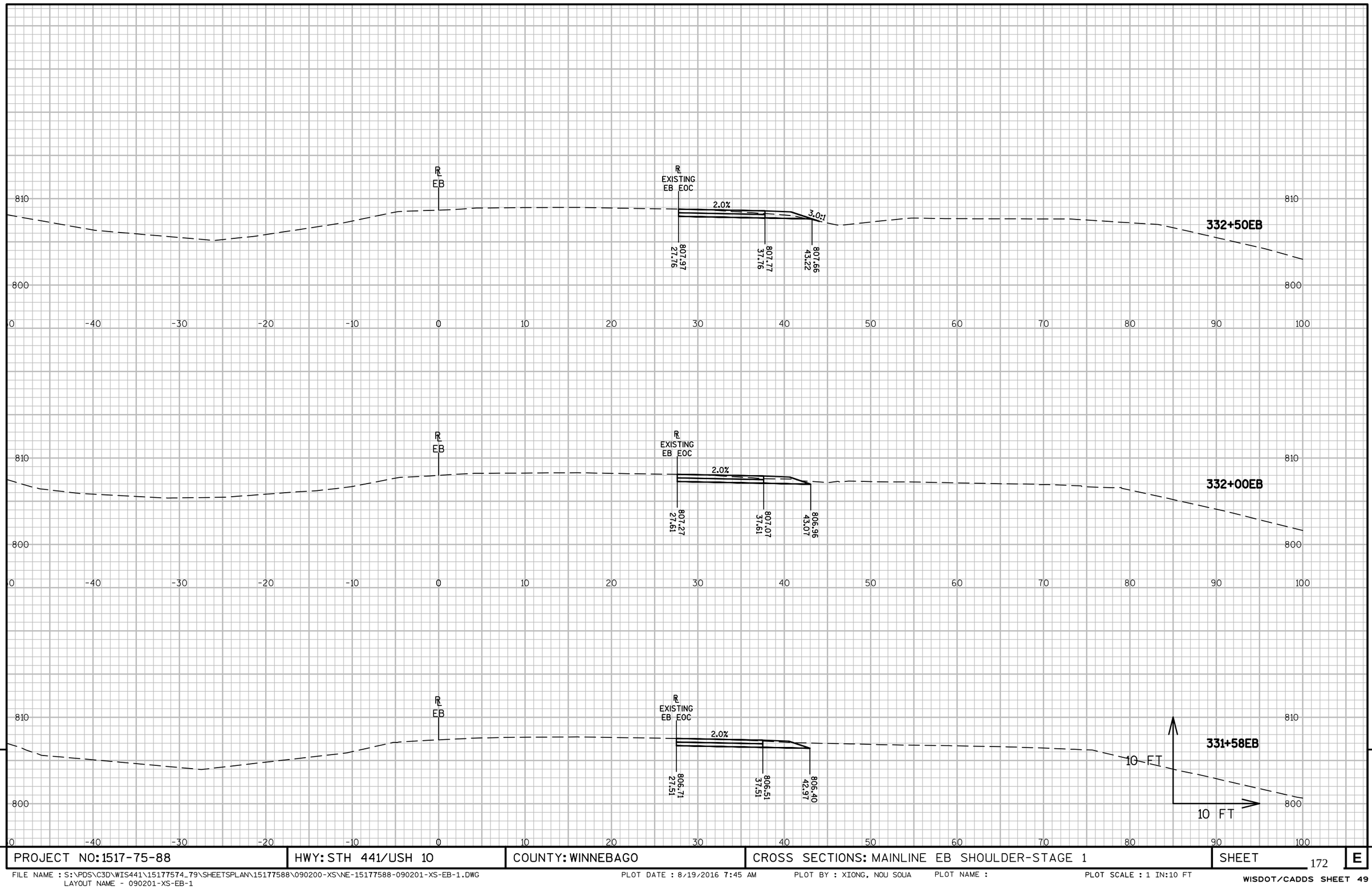

9

9

PROJECT NO: 1517-75-88	HWY: STH 441/USH 10	COUNTY: WINNEBAGO	CROSS SECTIONS: MAINLINE EB SHOULDER-STAGE 1	SHEET 172	E

FILE NAME : S:\PDS\C3D\WIS441\15177574_79\SHEETSPLAN\15177588\090200-XS\NE-15177588-090201-XS-EB-1.DWG
LAYOUT NAME - 090201-XS-EB-1

PLOT DATE : 8/19/2016 7:45 AM PLOT BY : XIONG, NOU SOUA PLOT NAME : PLOT SCALE : 1 IN:10 FT

9

9

PROJECT NO: 1517-75-88	HWY: STH 441/USH 10	COUNTY: WINNEBAGO	CROSS SECTIONS: MAINLINE EB SHOULDER-STAGE 1	SHEET 173	E

FILE NAME : S:\PDS\C3D\WIS441\15177574_79\SHEETSPLAN\15177588\090200-XS\NE-15177588-090201-XS-EB-1.DWG
LAYOUT NAME - 090202-XS-EB-1

PLOT DATE : 8/19/2016 7:45 AM PLOT BY : XIONG, NOU SOUA PLOT NAME : PLOT SCALE : 1 IN:10 FT

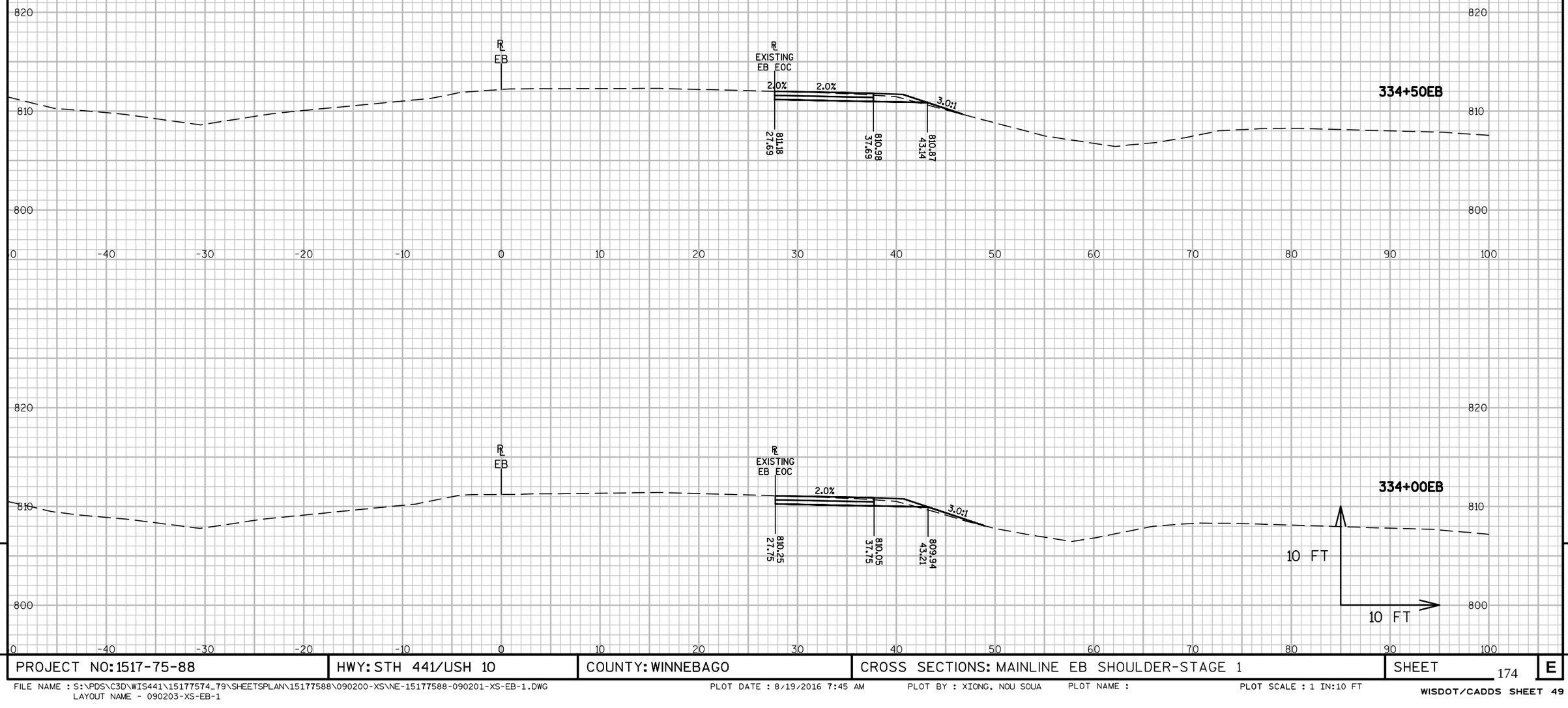

9

9

PROJECT NO: 1517-75-88	HWY: STH 441/USH 10	COUNTY: WINNEBAGO	CROSS SECTIONS: MAINLINE EB SHOULDER-STAGE 1	SHEET 174	E

FILE NAME : S:\PDS\C3D\WIS441\15177574_79\SHEETSPLAN\15177588\090200-XS\NE-15177588-090201-XS-EB-1.DWG
LAYOUT NAME - 090203-XS-EB-1

PLOT DATE : 8/19/2016 7:45 AM PLOT BY : XIONG, NOU SOUA PLOT NAME : PLOT SCALE : 1 IN:10 FT

WISDOT/CADDS SHEET 49

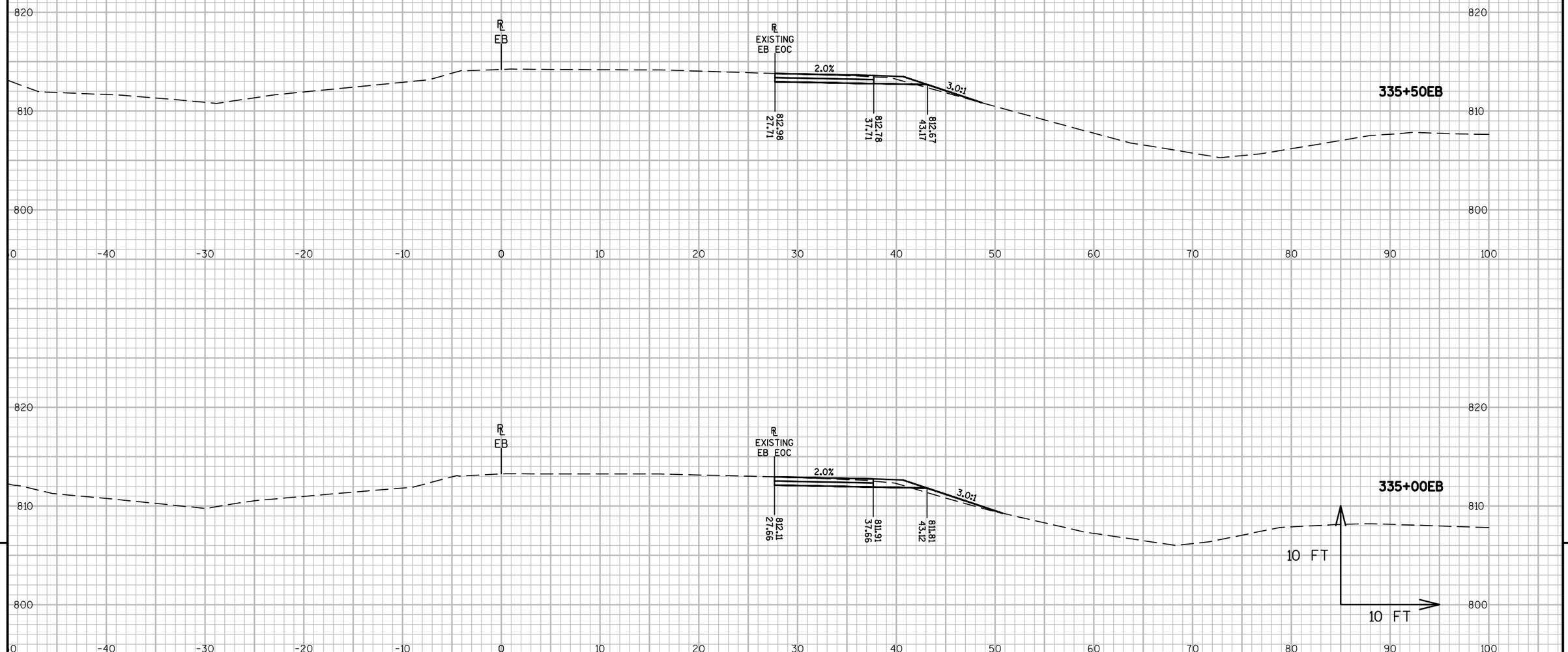

9

9

PROJECT NO: 1517-75-88	HWY: STH 441/USH 10	COUNTY: WINNEBAGO	CROSS SECTIONS: MAINLINE EB SHOULDER-STAGE 1	SHEET 175	E

FILE NAME : S:\PDS\C3D\WIS441\15177574_79\SHEETSPLAN\15177588\090200-XS\NE-15177588-090201-XS-EB-1.DWG
LAYOUT NAME - 090204-XS-EB-1

PLOT DATE : 8/19/2016 7:45 AM PLOT BY : XIONG, NOU SOUA PLOT NAME : PLOT SCALE : 1 IN:10 FT

WISDOT/CADDS SHEET 49

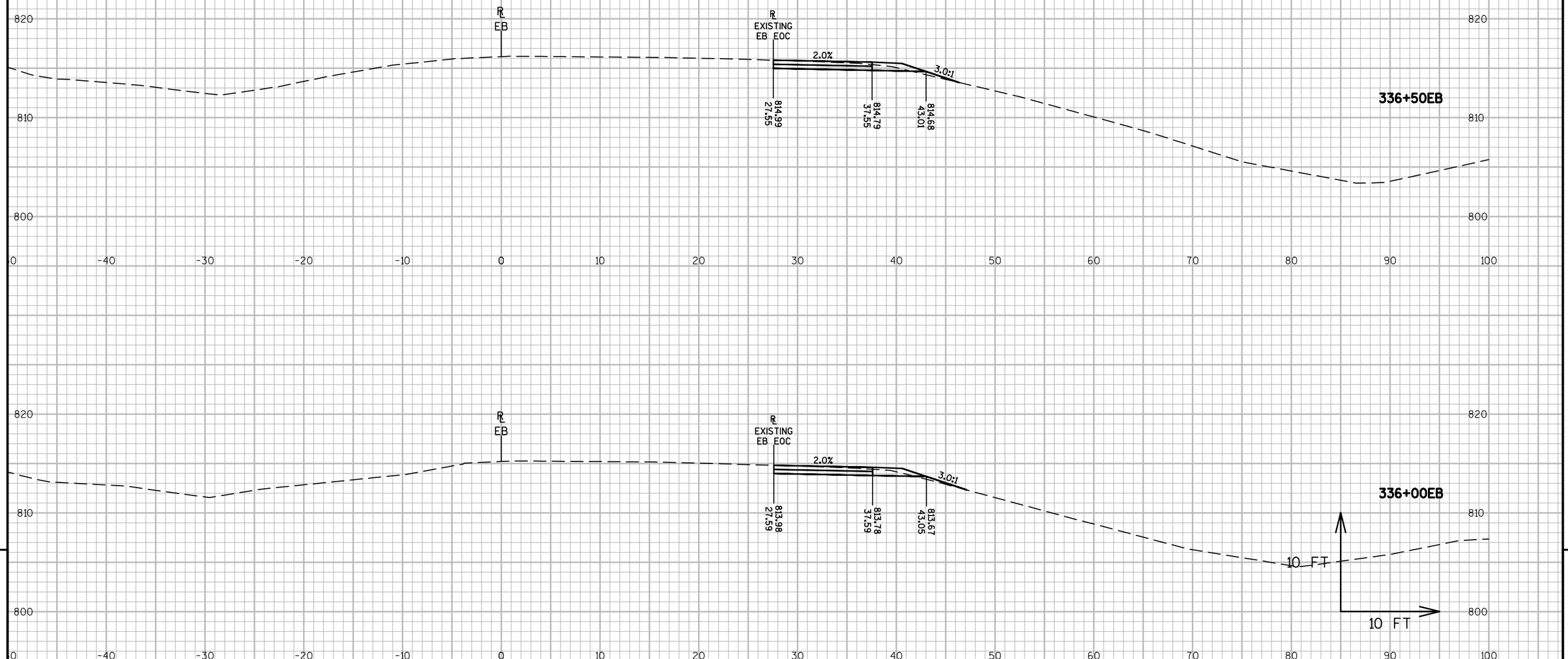

9

9

PROJECT NO: 1517-75-88	HWY: STH 441/USH 10	COUNTY: WINNEBAGO	CROSS SECTIONS: MAINLINE EB SHOULDER-STAGE 1	SHEET 176	E

FILE NAME : S:\PDS\C3D\WIS441\15177574_79\SHEETSPLAN\15177588\090200-XS\NE-15177588-090201-XS-EB-1.DWG
LAYOUT NAME - 090205-XS-EB-1

PLOT DATE : 8/19/2016 7:45 AM PLOT BY : XIONG, NOU SOUA PLOT NAME : PLOT SCALE : 1 IN:10 FT

WISDOT/CADDS SHEET 49

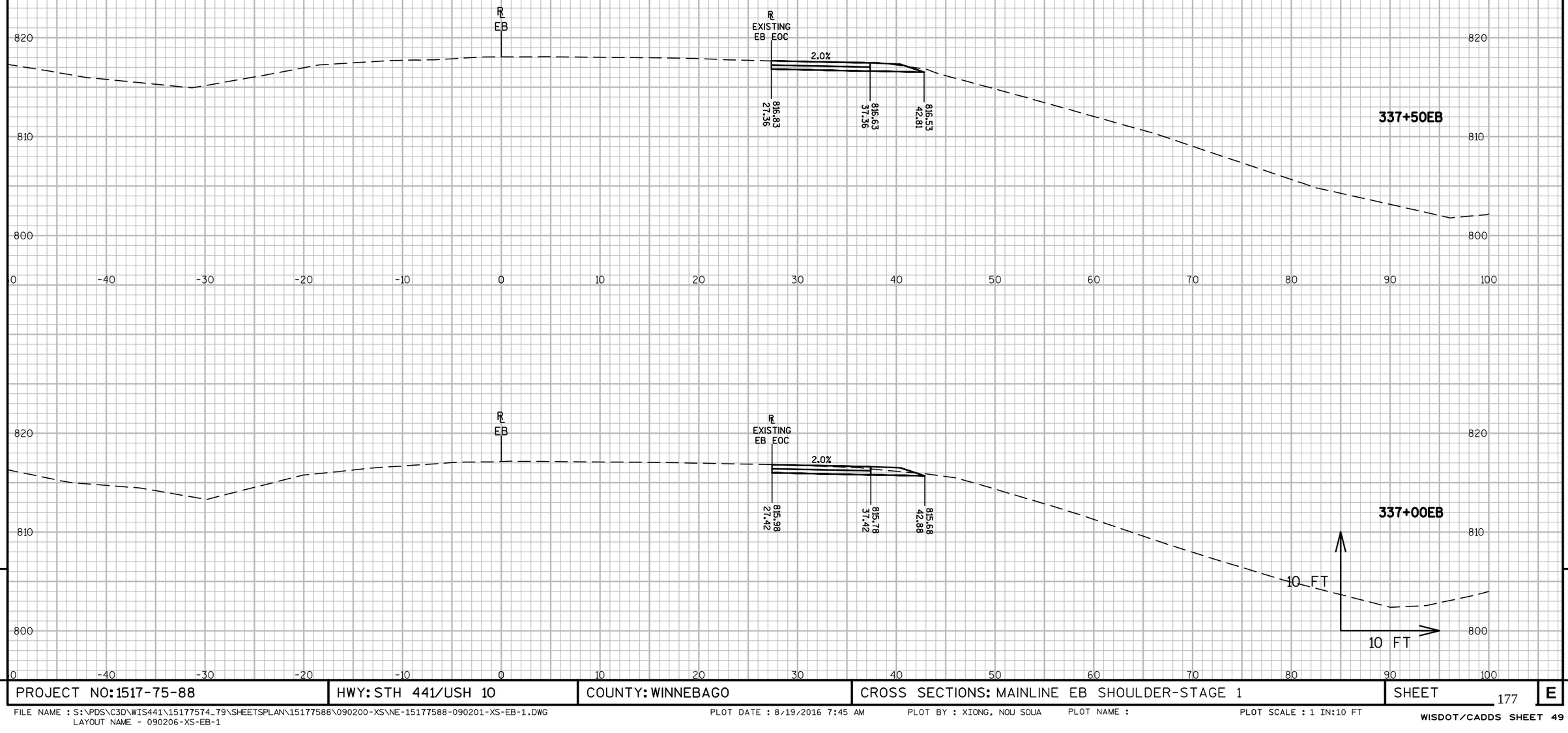

PROJECT NO: 1517-75-88	HWY: STH 441/USH 10	COUNTY: WINNEBAGO	CROSS SECTIONS: MAINLINE EB SHOULDER-STAGE 1	SHEET 177 E

FILE NAME : S:\PDS\C3D\WIS441\15177574_79\SHEETSPLAN\15177588\090200-XS\NE-15177588-090201-XS-EB-1.DWG
LAYOUT NAME - 090206-XS-EB-1

PLOT DATE : 8/19/2016 7:45 AM PLOT BY : XIONG, NOU SOUA PLOT NAME : PLOT SCALE : 1 IN:10 FT

WISDOT/CADDS SHEET 49

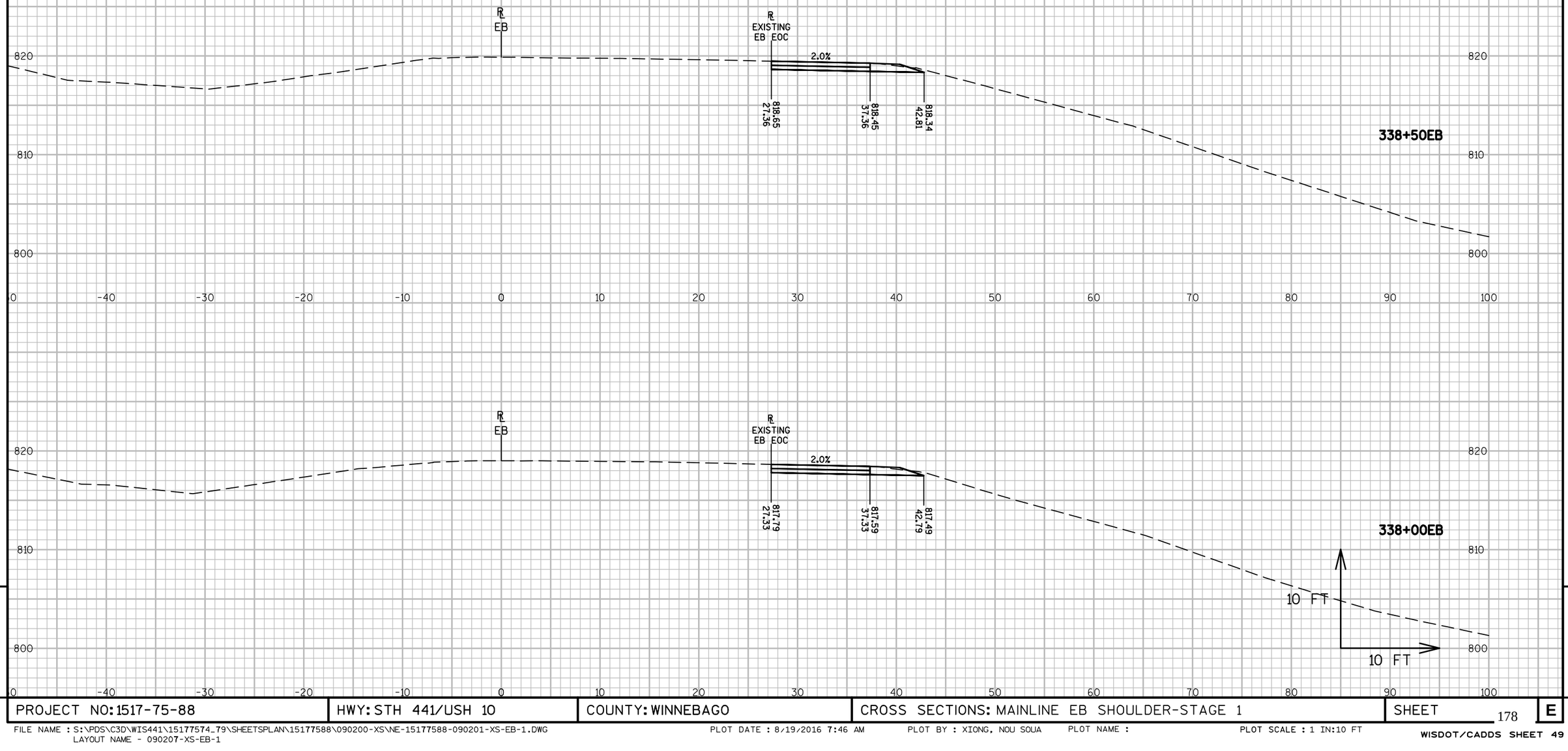

9

9

PROJECT NO: 1517-75-88	HWY: STH 441/USH 10	COUNTY: WINNEBAGO	CROSS SECTIONS: MAINLINE EB SHOULDER-STAGE 1	SHEET 178	E

FILE NAME : S:\PDS\C3D\WIS441\15177574_79\SHEETSPLAN\15177588\090200-XS\NE-15177588-090201-XS-EB-1.DWG
LAYOUT NAME - 090207-XS-EB-1

PLOT DATE : 8/19/2016 7:46 AM PLOT BY : XIONG, NOU SOUA PLOT NAME : PLOT SCALE : 1 IN:10 FT

WISDOT/CADDS SHEET 49

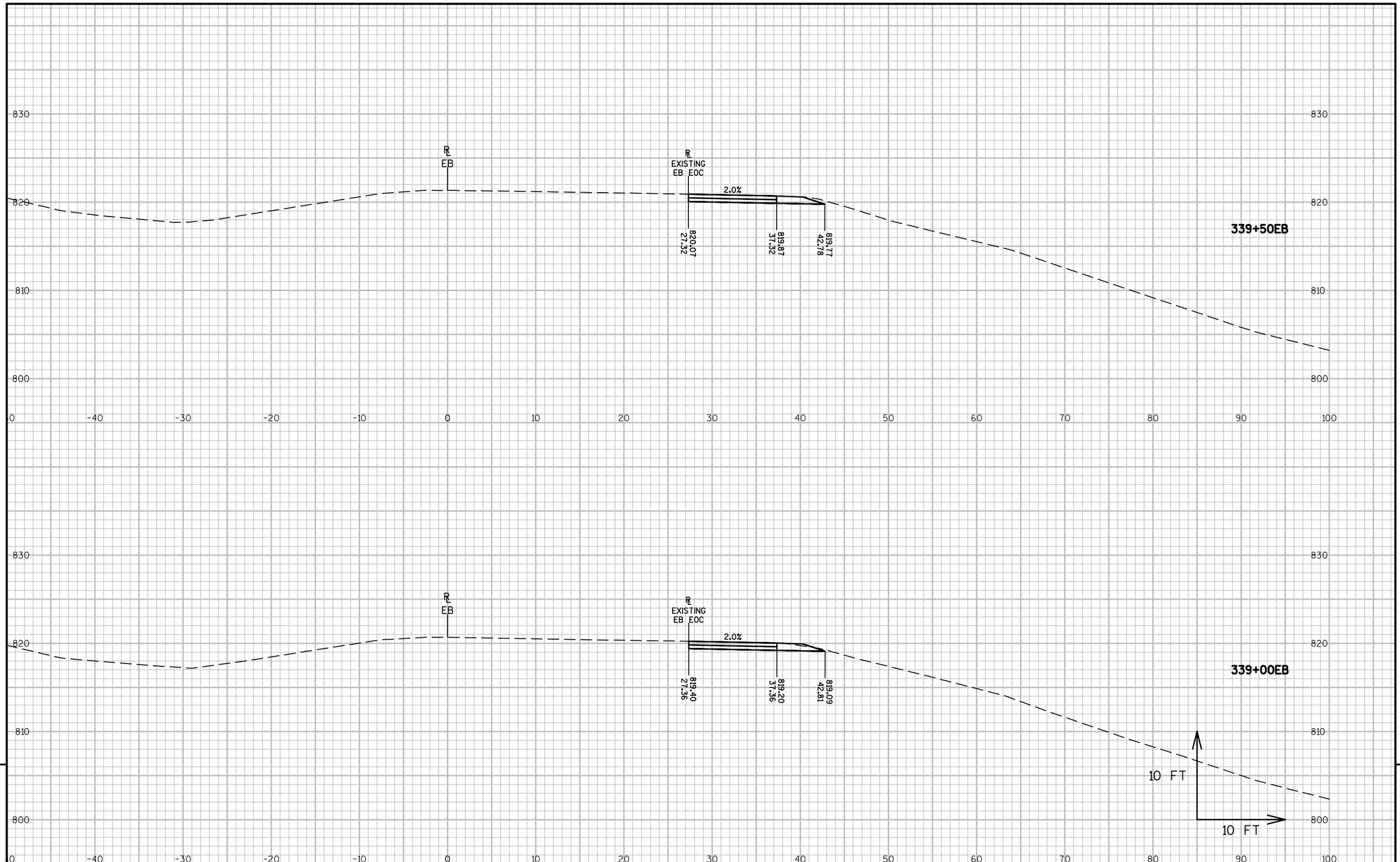

9

9

PROJECT NO: 1517-75-88	HWY: STH 441/USH 10	COUNTY: WINNEBAGO	CROSS SECTIONS: MAINLINE EB SHOULDER-STAGE 1	SHEET 179	E

FILE NAME : S:\PDS\C3D\WIS441\15177574_79\SHEETSPLAN\15177588\090200-XS\NE-15177588-090201-XS-EB-1.DWG
LAYOUT NAME - 090208-XS-EB-1

PLOT DATE : 8/19/2016 7:46 AM PLOT BY : XIONG, NOU SOUA PLOT NAME : PLOT SCALE : 1 IN:10 FT

WISDOT/CADDS SHEET 49

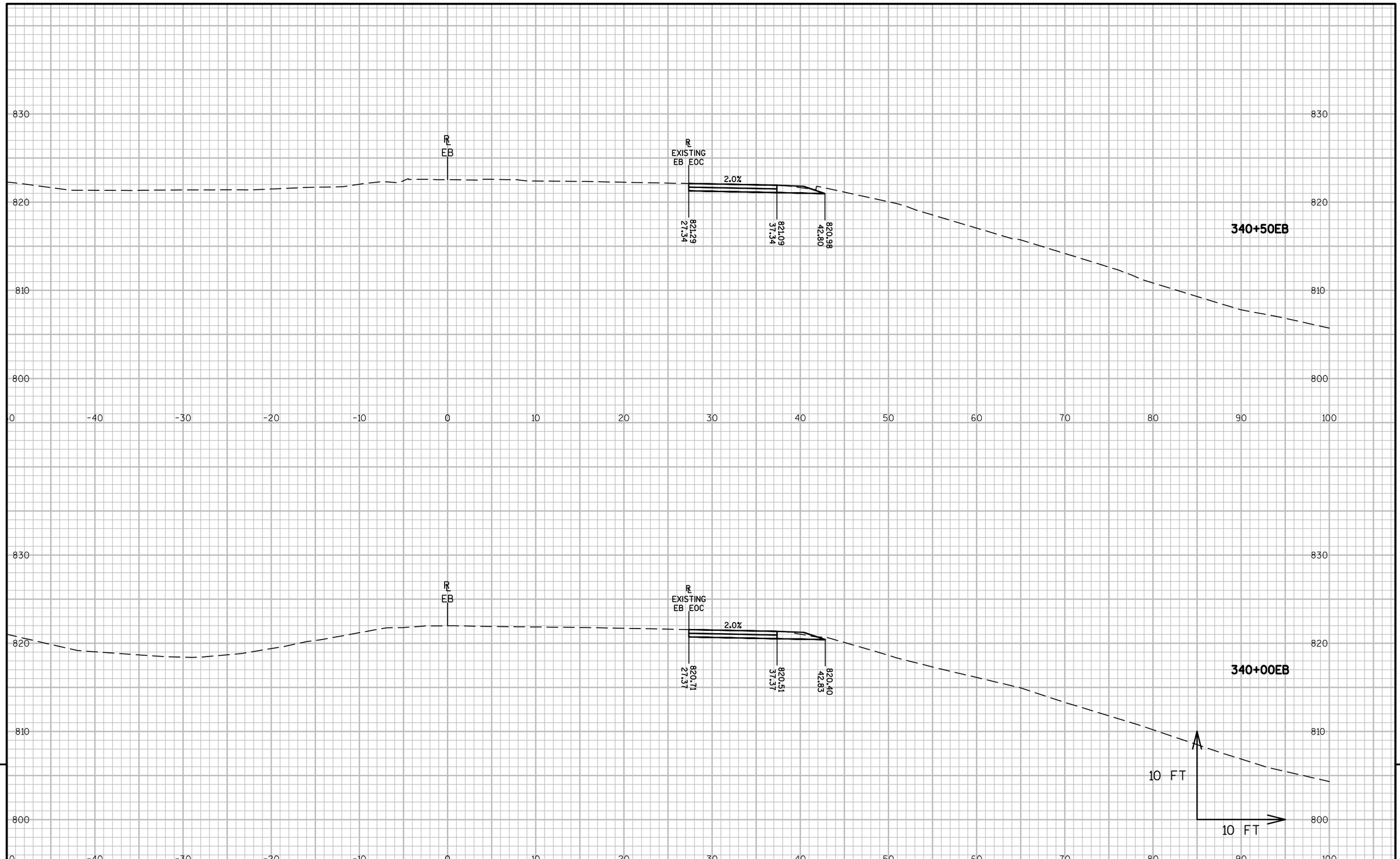

9

9

PROJECT NO: 1517-75-88	HWY: STH 441/USH 10	COUNTY: WINNEBAGO	CROSS SECTIONS: MAINLINE EB SHOULDER-STAGE 1	SHEET 180	E

FILE NAME : S:\PDS\C3D\WIS441\15177574_79\SHEETSPLAN\15177588\090200-XS\NE-15177588-090201-XS-EB-1.DWG
LAYOUT NAME - 090209-XS-EB-1

PLOT DATE : 8/19/2016 7:46 AM PLOT BY : XIONG, NOU SOUA PLOT NAME : PLOT SCALE : 1 IN:10 FT

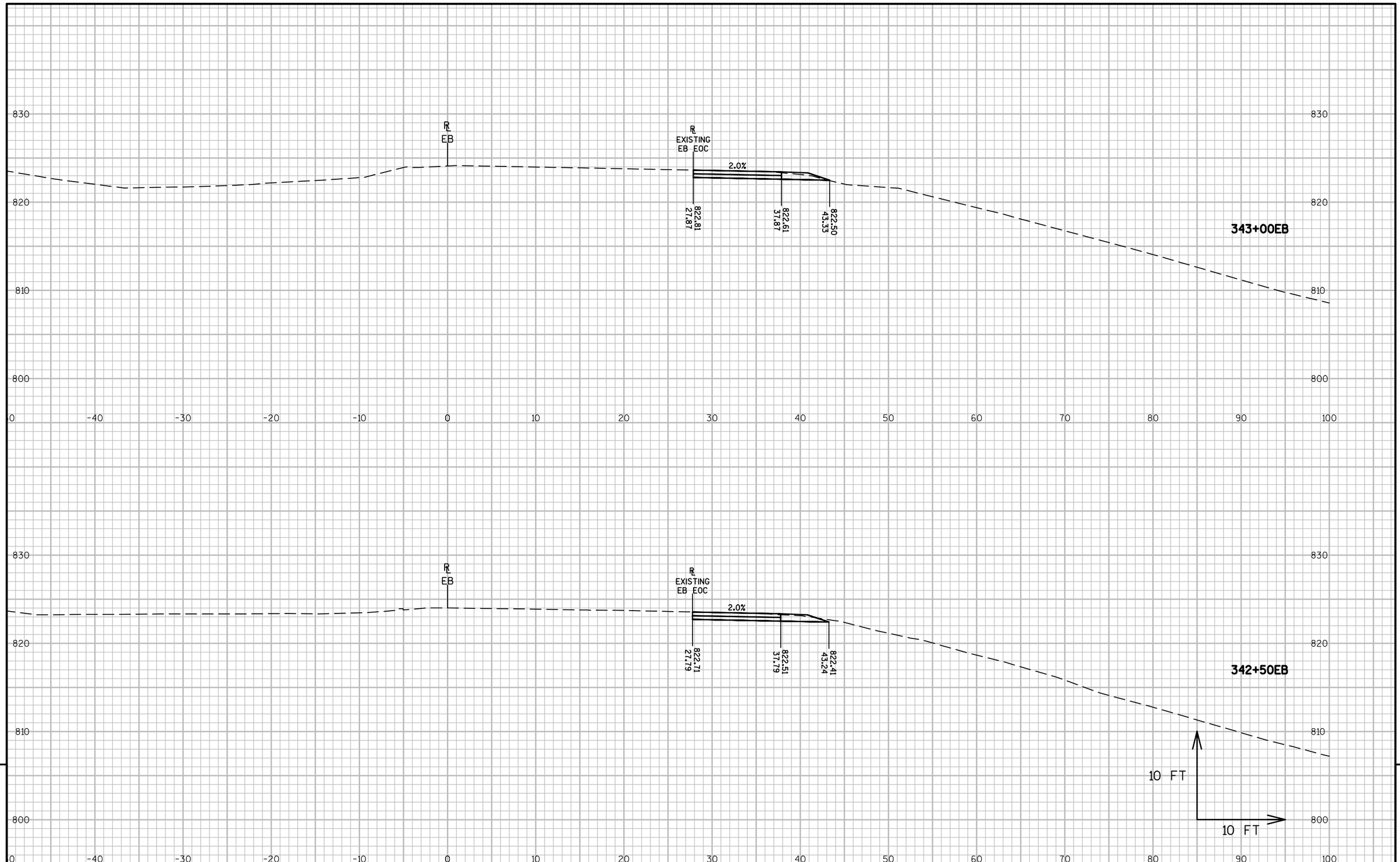

9

9

PROJECT NO: 1517-75-88	HWY: STH 441/USH 10	COUNTY: WINNEBAGO	CROSS SECTIONS: MAINLINE EB SHOULDER-STAGE 1	SHEET 181	E

FILE NAME : S:\PDS\C3D\WIS441\15177574_79\SHEETSPLAN\15177588\090200-XS\NE-15177588-090201-XS-EB-1.DWG
LAYOUT NAME - 090210-XS-EB-1

PLOT DATE : 8/19/2016 7:46 AM PLOT BY : XIONG, NOU SOUA PLOT NAME : PLOT SCALE : 1 IN:10 FT

WISDOT/CADDS SHEET 49

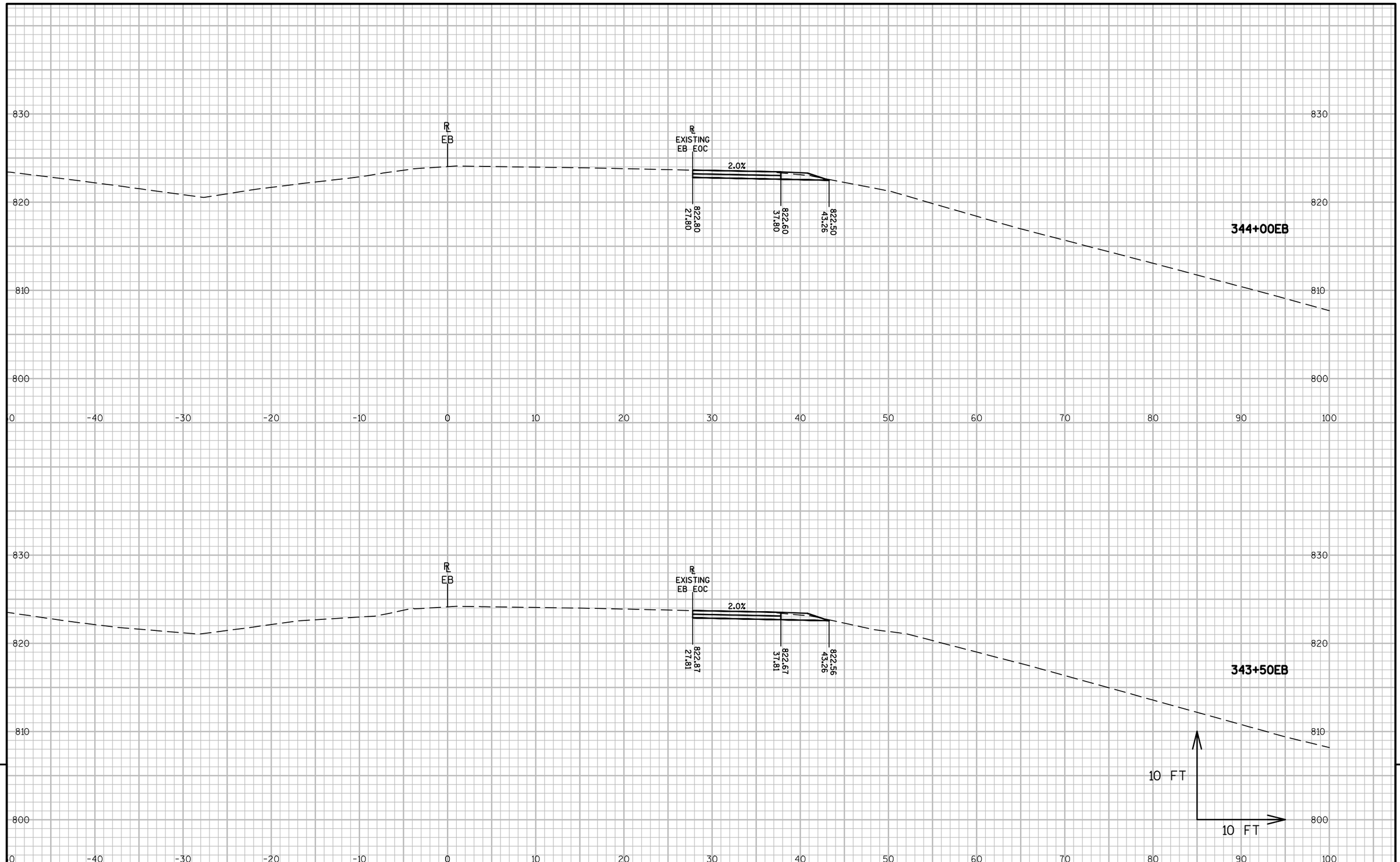

9

9

PROJECT NO: 1517-75-88	HWY: STH 441/USH 10	COUNTY: WINNEBAGO	CROSS SECTIONS: MAINLINE EB SHOULDER-STAGE 1	SHEET 182	E

FILE NAME : S:\PDS\C3D\WIS441\15177574_79\SHEETSPLAN\15177588\090200-XS\NE-15177588-090201-XS-EB-1.DWG
LAYOUT NAME - 090211-XS-EB-1

PLOT DATE : 8/19/2016 7:46 AM PLOT BY : XIONG, NOU SOUA PLOT NAME : PLOT SCALE : 1 IN:10 FT

WISDOT/CADDS SHEET 49

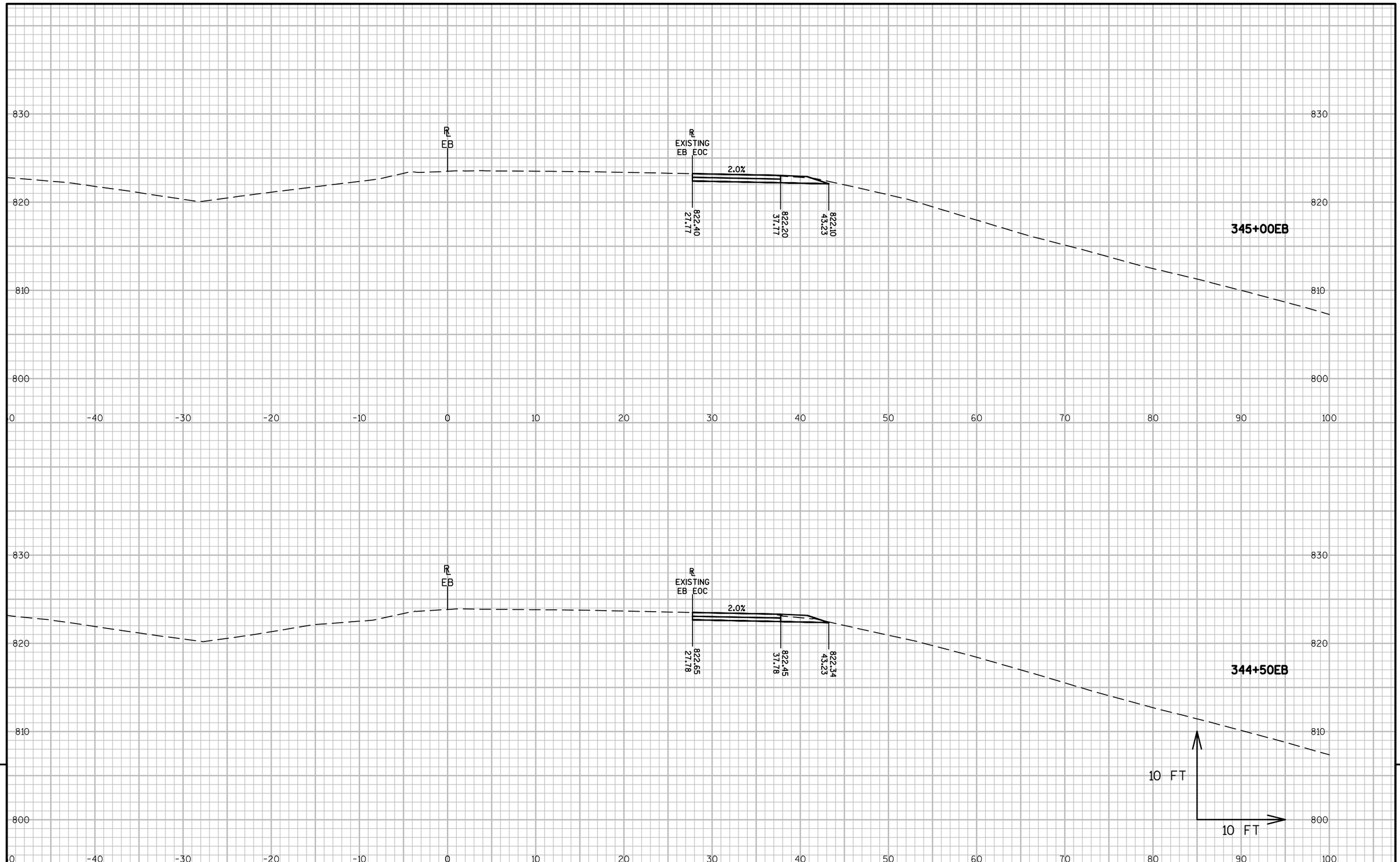

9

9

PROJECT NO: 1517-75-88	HWY: STH 441/USH 10	COUNTY: WINNEBAGO	CROSS SECTIONS: MAINLINE EB SHOULDER-STAGE 1	SHEET 183	E

FILE NAME : S:\PDS\C3D\WIS441\151775574_79\SHEETSPLAN\151775588\090200-XS\NE-151775588-090201-XS-EB-1.DWG
LAYOUT NAME - 090212-XS-EB-1

PLOT DATE : 8/19/2016 7:46 AM PLOT BY : XIONG, NOU SOUA PLOT NAME : PLOT SCALE : 1 IN:10 FT

WISDOT/CADDS SHEET 49

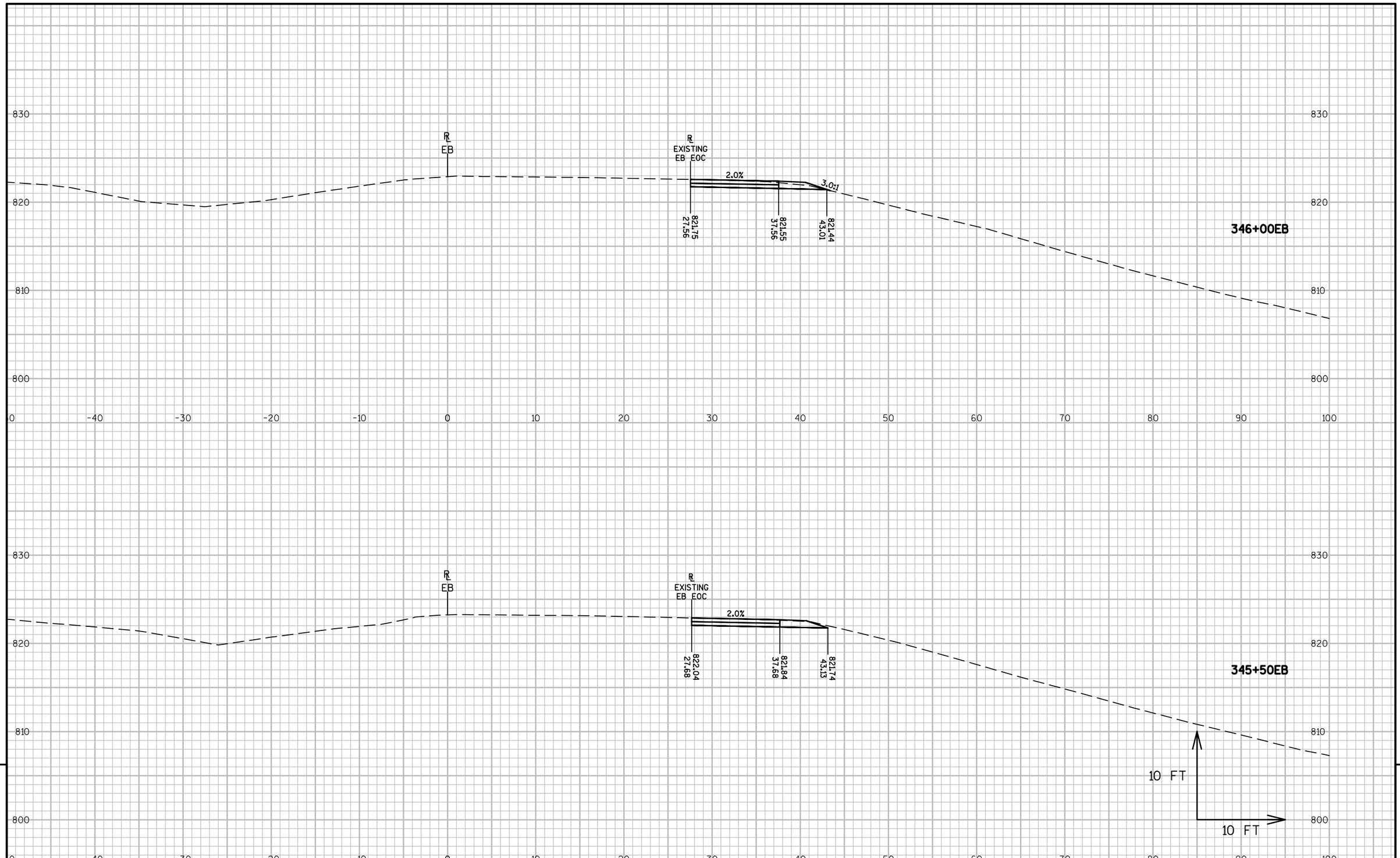

9

9

PROJECT NO: 1517-75-88	HWY: STH 441/USH 10	COUNTY: WINNEBAGO	CROSS SECTIONS: MAINLINE EB SHOULDER-STAGE 1	SHEET 184 E

FILE NAME : S:\PDS\C3D\WIS441\15177574_79\SHEETSPLAN\15177588\090200-XS\NE-15177588-090201-XS-EB-1.DWG
LAYOUT NAME - 090213-XS-EB-1

PLOT DATE : 8/19/2016 7:46 AM PLOT BY : XIONG, NOU SOUA PLOT NAME : PLOT SCALE : 1 IN:10 FT

WISDOT/CADDS SHEET 49

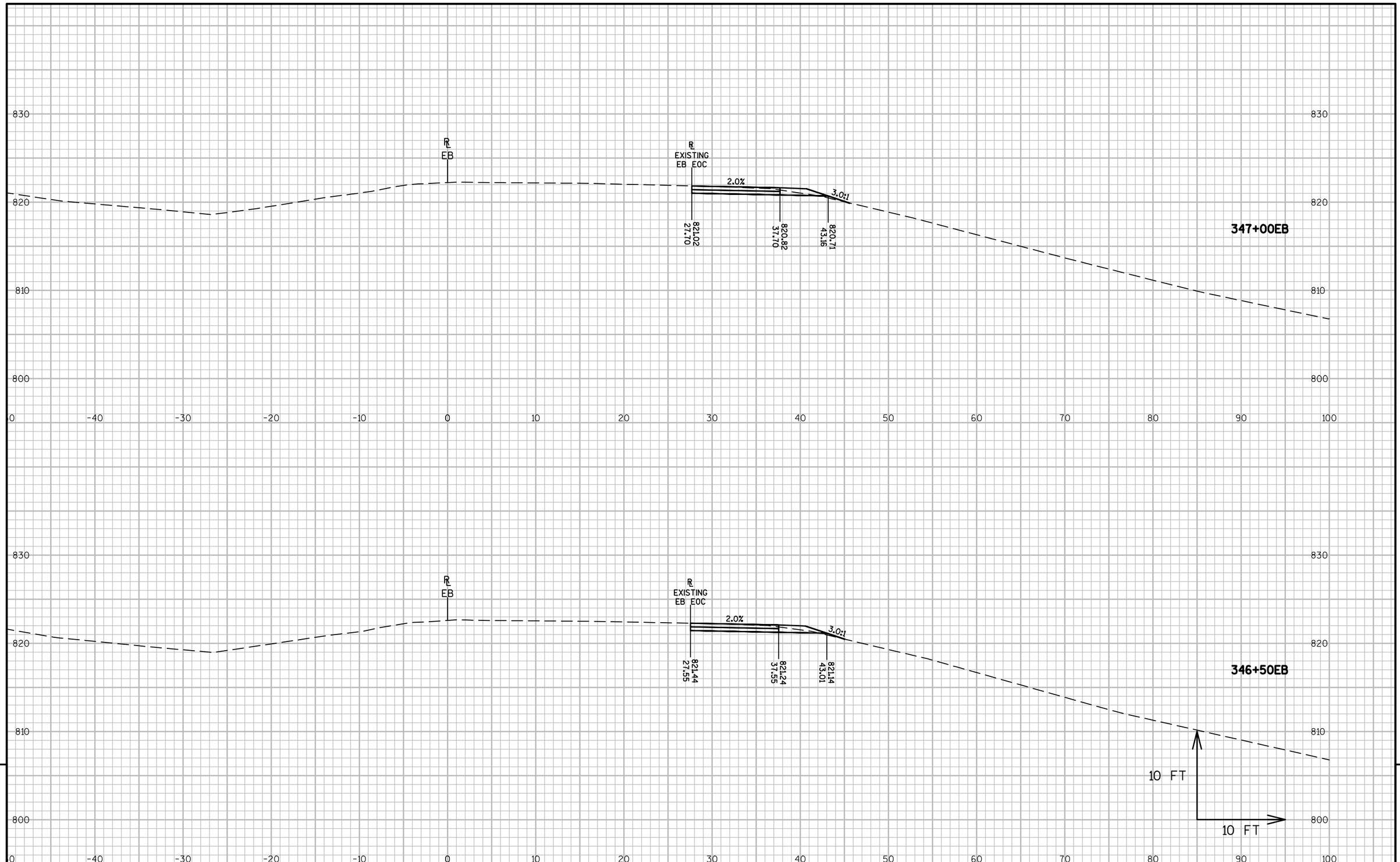

9

9

PROJECT NO: 1517-75-88	HWY: STH 441/USH 10	COUNTY: WINNEBAGO	CROSS SECTIONS: MAINLINE EB SHOULDER-STAGE 1	SHEET 185	E

FILE NAME : S:\PDS\C3D\WIS441\15177574_79\SHEETSPLAN\15177588\090200-XS\NE-15177588-090201-XS-EB-1.DWG
LAYOUT NAME - 090214-XS-EB-1

PLOT DATE : 8/19/2016 7:46 AM PLOT BY : XIONG, NOU SOUA PLOT NAME : PLOT SCALE : 1 IN:10 FT

WISDOT/CADDS SHEET 49

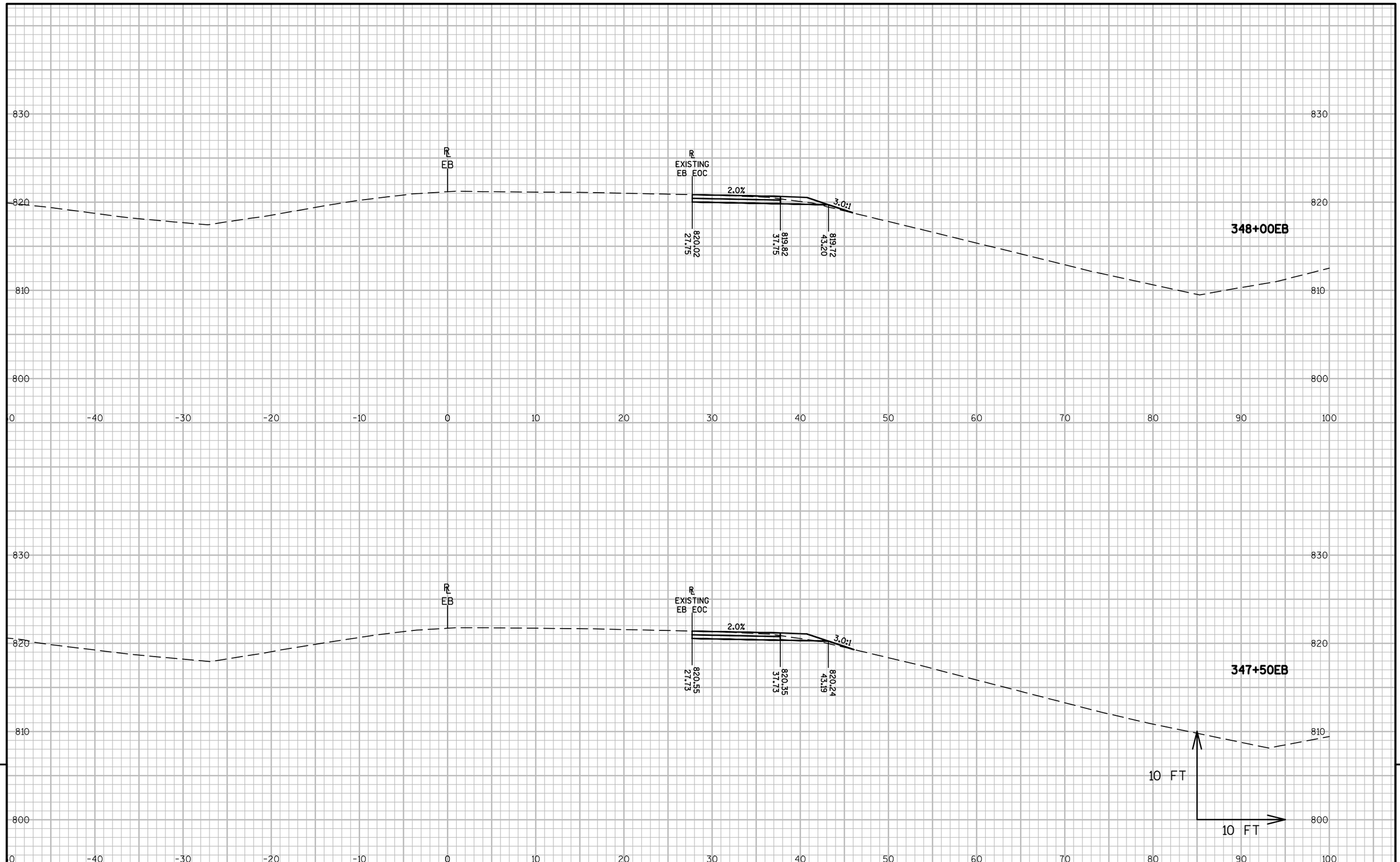

9

9

PROJECT NO: 1517-75-88	HWY: STH 441/USH 10	COUNTY: WINNEBAGO	CROSS SECTIONS: MAINLINE EB SHOULDER-STAGE 1	SHEET 186	E

FILE NAME : S:\PDS\C3D\WIS441\15177574_79\SHEETSPLAN\15177588\090200-XS\NE-15177588-090201-XS-EB-1.DWG
LAYOUT NAME - 090215-XS-EB-1

PLOT DATE : 8/19/2016 7:46 AM PLOT BY : XIONG, NOU SOUA PLOT NAME : PLOT SCALE : 1 IN:10 FT

WISDOT/CADDS SHEET 49

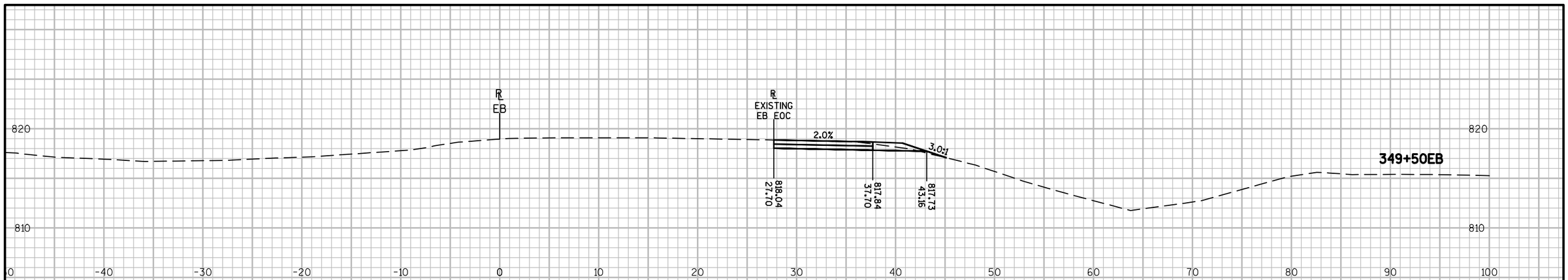

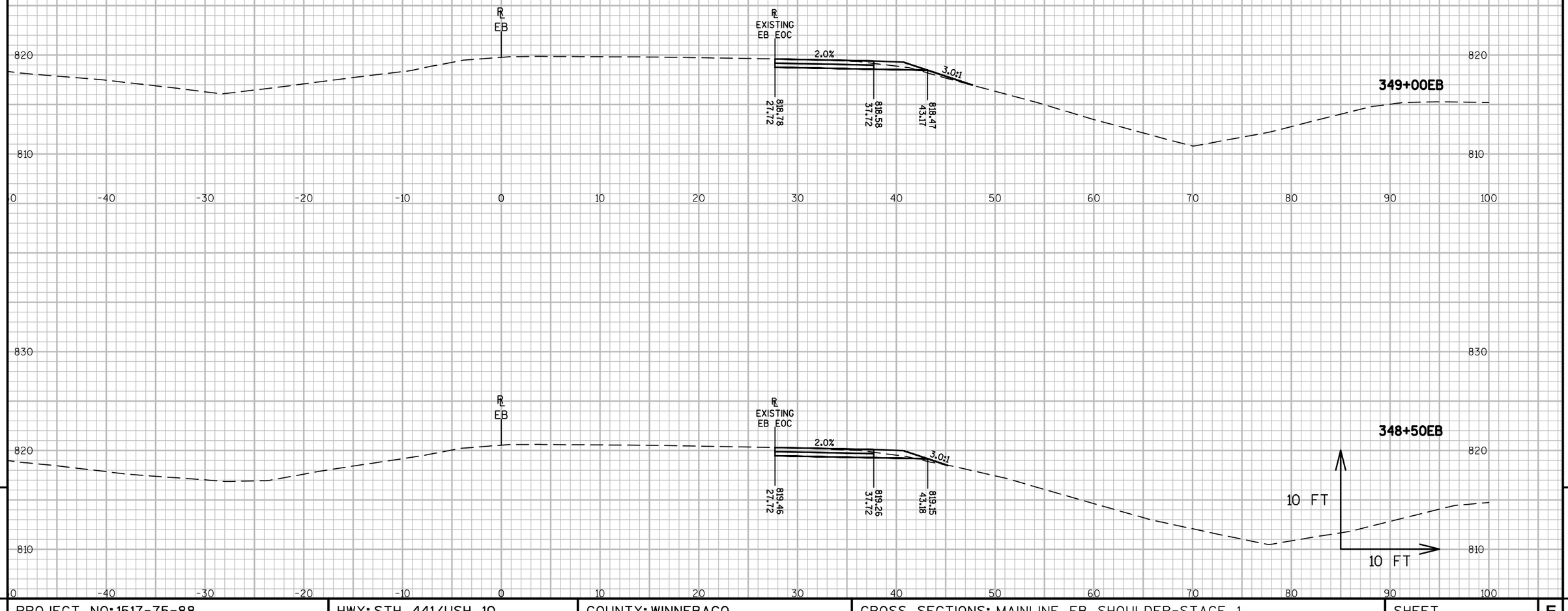

9

9

PROJECT NO: 1517-75-88	HWY: STH 441/USH 10	COUNTY: WINNEBAGO	CROSS SECTIONS: MAINLINE EB SHOULDER-STAGE 1	SHEET 187	E

FILE NAME : S:\PDS\C3D\WIS441\15177574_79\SHEETSPLAN\15177588\090200-XS\NE-15177588-090201-XS-EB-1.DWG
LAYOUT NAME - 090216-XS-EB-1

PLOT DATE : 8/19/2016 7:47 AM PLOT BY : XIONG, NOU SOUA PLOT NAME : PLOT SCALE : 1 IN:10 FT

WISDOT/CADDS SHEET 49

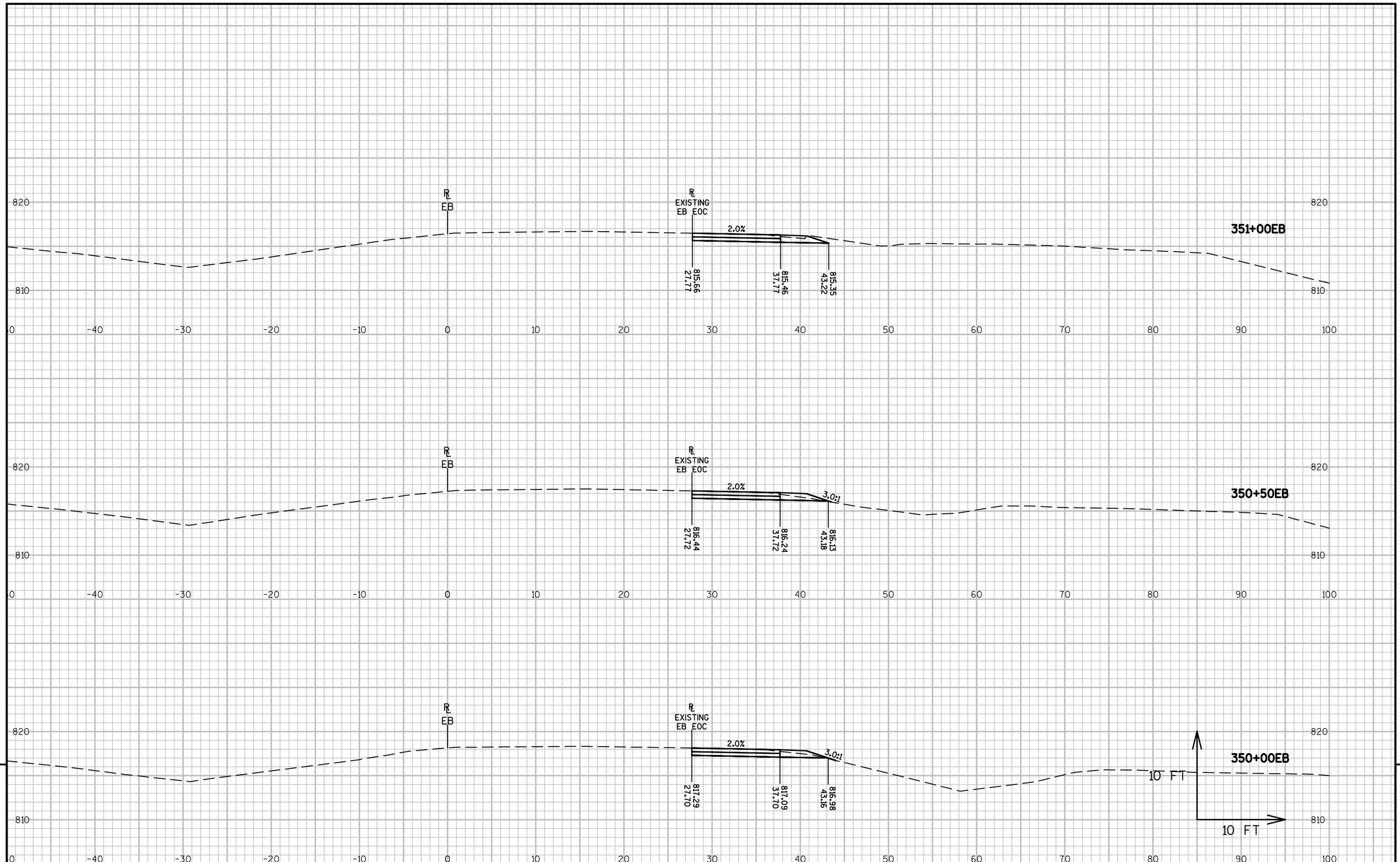

9

9

PROJECT NO: 1517-75-88	HWY: STH 441/USH 10	COUNTY: WINNEBAGO	CROSS SECTIONS: MAINLINE EB SHOULDER-STAGE 1	SHEET 188	E

FILE NAME : S:\PDS\C3D\WIS441\15177574_79\SHEETSPLAN\15177588\090200-XS\NE-15177588-090201-XS-EB-1.DWG
LAYOUT NAME - 090217-XS-EB-1

PLOT DATE : 8/19/2016 7:47 AM PLOT BY : XIONG, NOU SOUA PLOT NAME : PLOT SCALE : 1 IN:10 FT

WISDOT/CADDS SHEET 49

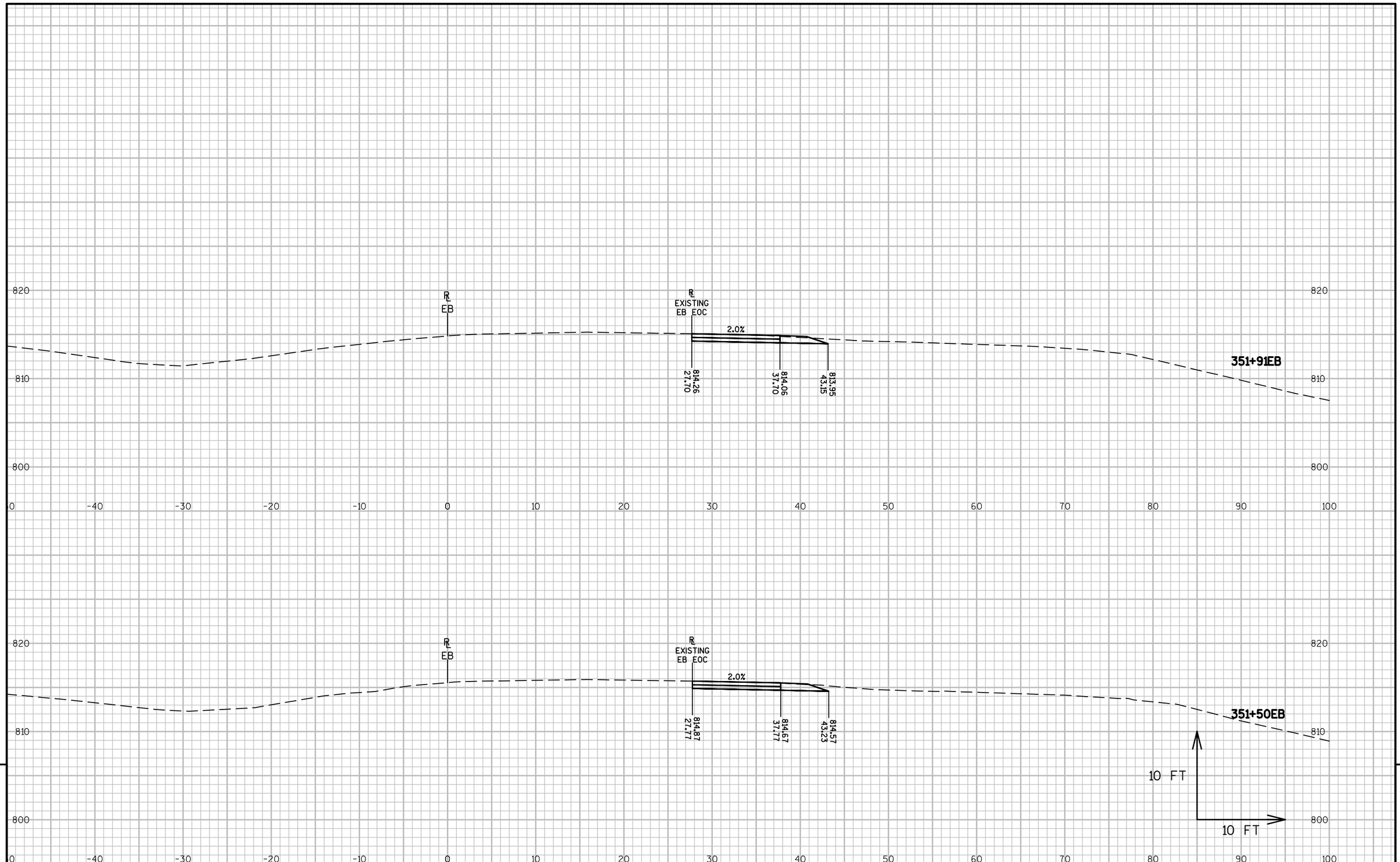

9

9

PROJECT NO: 1517-75-88	HWY: STH 441/USH 10	COUNTY: WINNEBAGO	CROSS SECTIONS: MAINLINE EB SHOULDER-STAGE 1	SHEET 189	E

FILE NAME : S:\PDS\C3D\WIS441\151775574_79\SHEETSPLAN\151775588\090200-XS\NE-151775588-090201-XS-EB-1.DWG
LAYOUT NAME - 090218-XS-EB-1

PLOT DATE : 8/19/2016 7:47 AM PLOT BY : XIONG, NOU SOUA PLOT NAME : PLOT SCALE : 1 IN:10 FT

WISDOT/CADDS SHEET 49

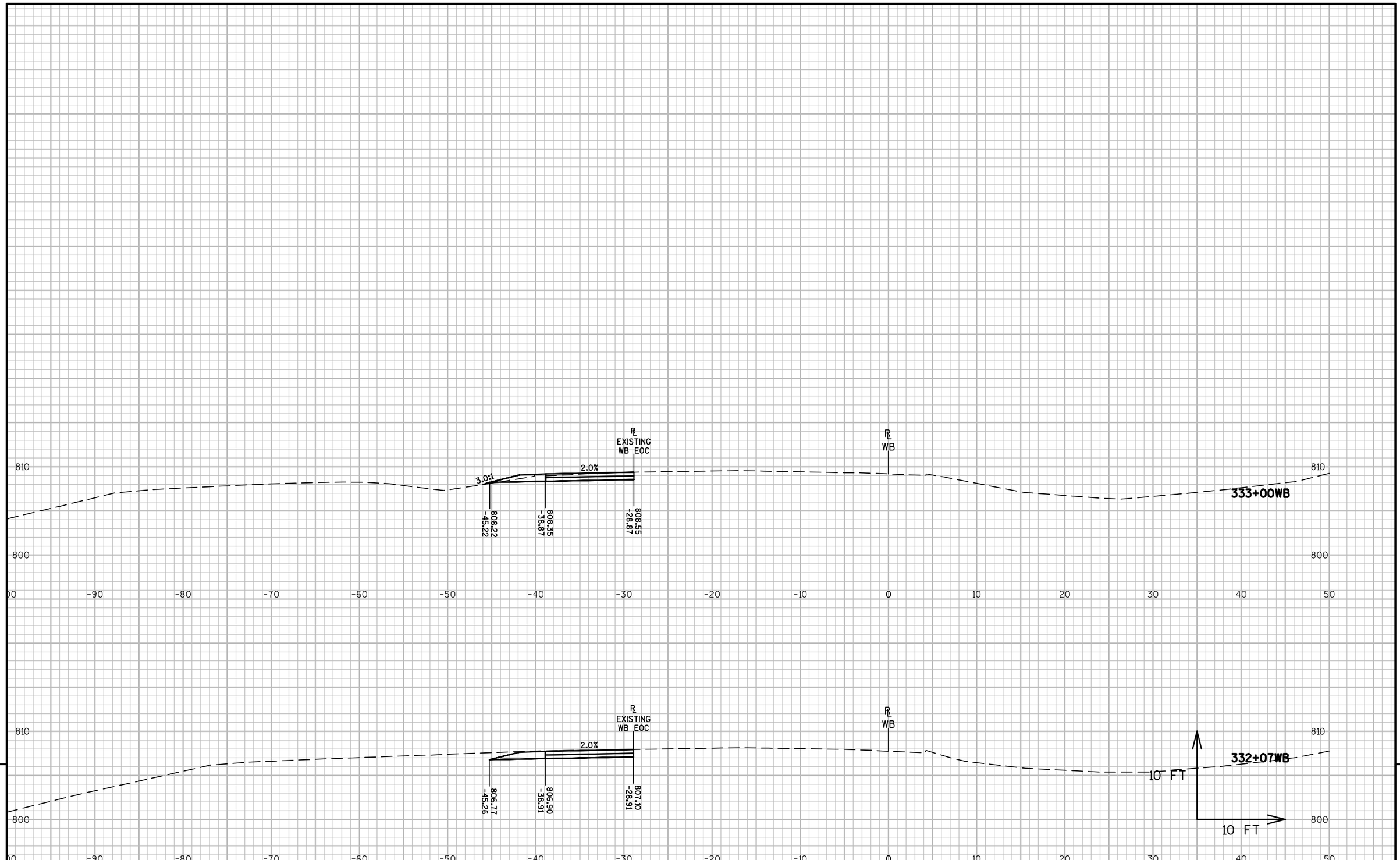

9

9

PROJECT NO: 1517-75-88	HWY: STH 441/USH 10	COUNTY: WINNEBAGO	CROSS SECTIONS: MAINLINE WB SHOULDER-STAGE 1	SHEET 190	E

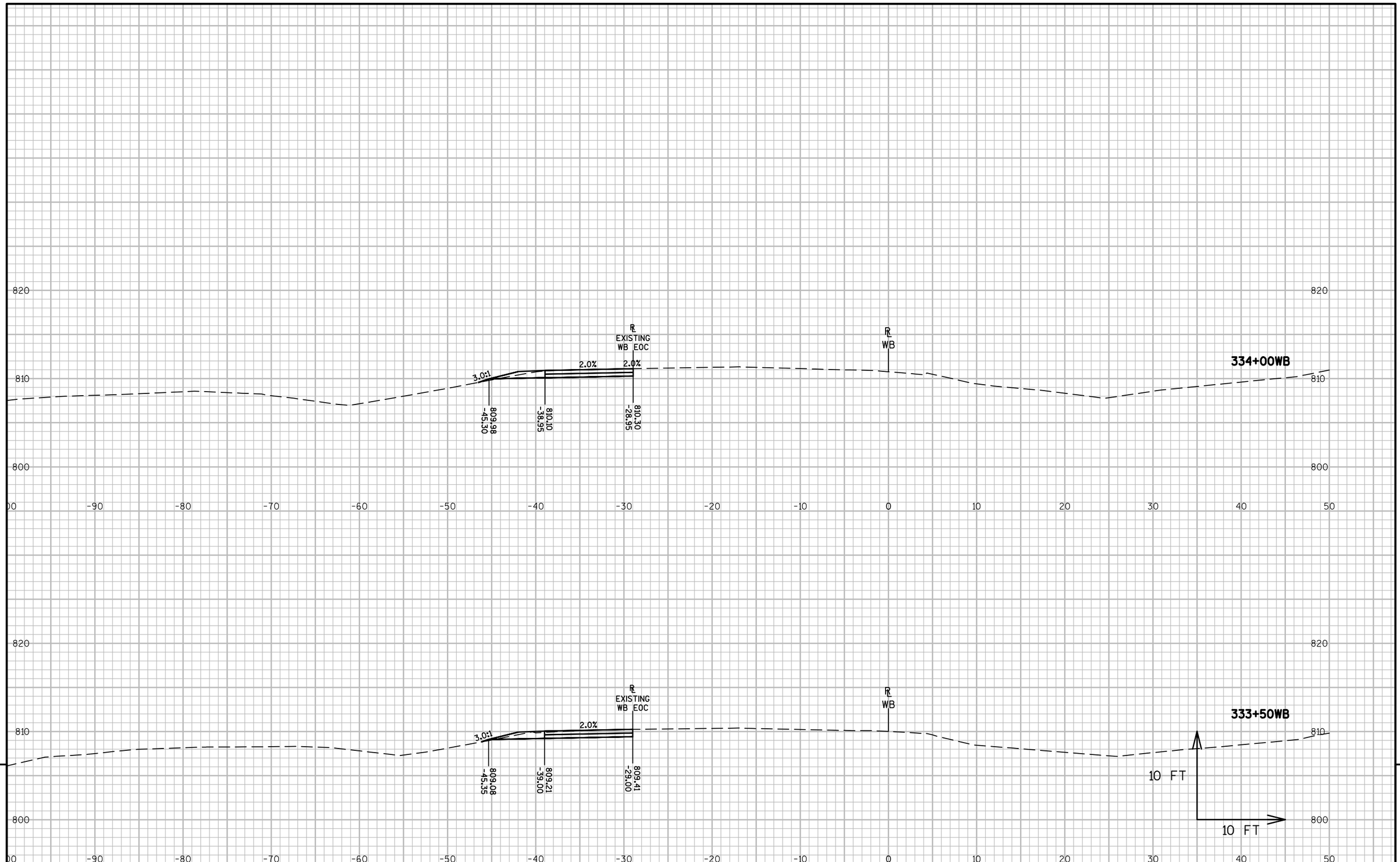

9

9

PROJECT NO: 1517-75-88	HWY: STH 441/USH 10	COUNTY: WINNEBAGO	CROSS SECTIONS: MAINLINE WB SHOULDER-STAGE 1	SHEET 191	E

FILE NAME : S:\PDS\C3D\WIS441\15177574_79\SHEETSPLAN\15177588\090200-XS\NE-15177588-090251-XS-WB-1.DWG
LAYOUT NAME - 090252-XS-WB-1

PLOT DATE : 8/19/2016 7:47 AM PLOT BY : XIONG, NOU SOUA PLOT NAME : PLOT SCALE : 1 IN:10 FT

WISDOT/CADDS SHEET 49

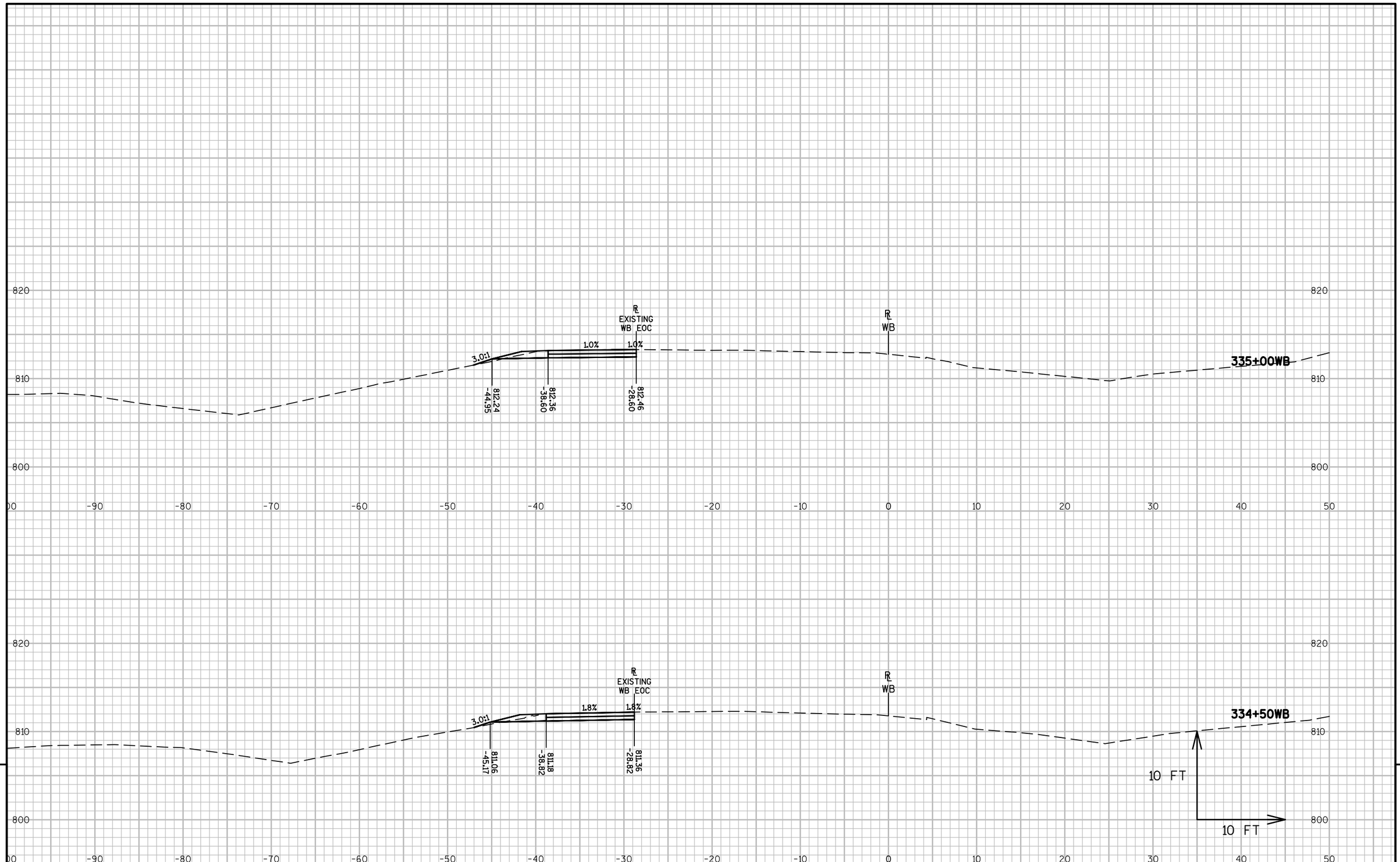

9

9

PROJECT NO: 1517-75-88	HWY: STH 441/USH 10	COUNTY: WINNEBAGO	CROSS SECTIONS: MAINLINE WB SHOULDER-STAGE 1	SHEET 192 E

FILE NAME : S:\PDS\C3D\WIS441\151775574_79\SHEETSPLAN\151775588\090200-XS\NE-151775588-090251-XS-WB-1.DWG
LAYOUT NAME - 090253-XS-WB-1

PLOT DATE : 8/19/2016 7:47 AM PLOT BY : XIONG, NOU SOUA PLOT NAME : PLOT SCALE : 1 IN:10 FT

WISDOT/CADDS SHEET 49

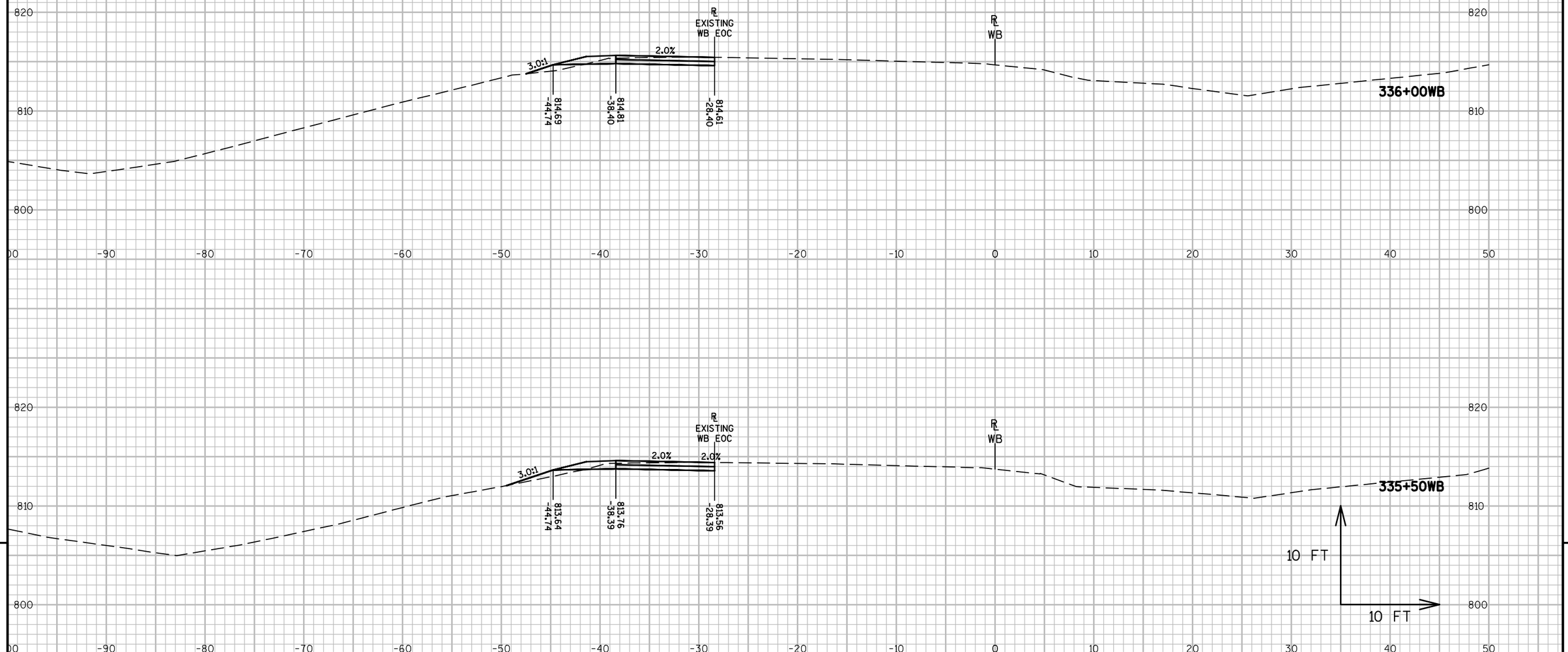

9

9

PROJECT NO: 1517-75-88	HWY: STH 441/USH 10	COUNTY: WINNEBAGO	CROSS SECTIONS: MAINLINE WB SHOULDER-STAGE 1	SHEET 193	E

FILE NAME : S:\PDS\C3D\WIS441\15177574_79\SHEETSPLAN\15177588\090200-XS\NE-15177588-090251-XS-WB-1.DWG
LAYOUT NAME - 090254-XS-WB-1

PLOT DATE : 8/19/2016 7:47 AM PLOT BY : XIONG, NOU SOUA PLOT NAME : PLOT SCALE : 1 IN:10 FT

WISDOT/CADDS SHEET 49

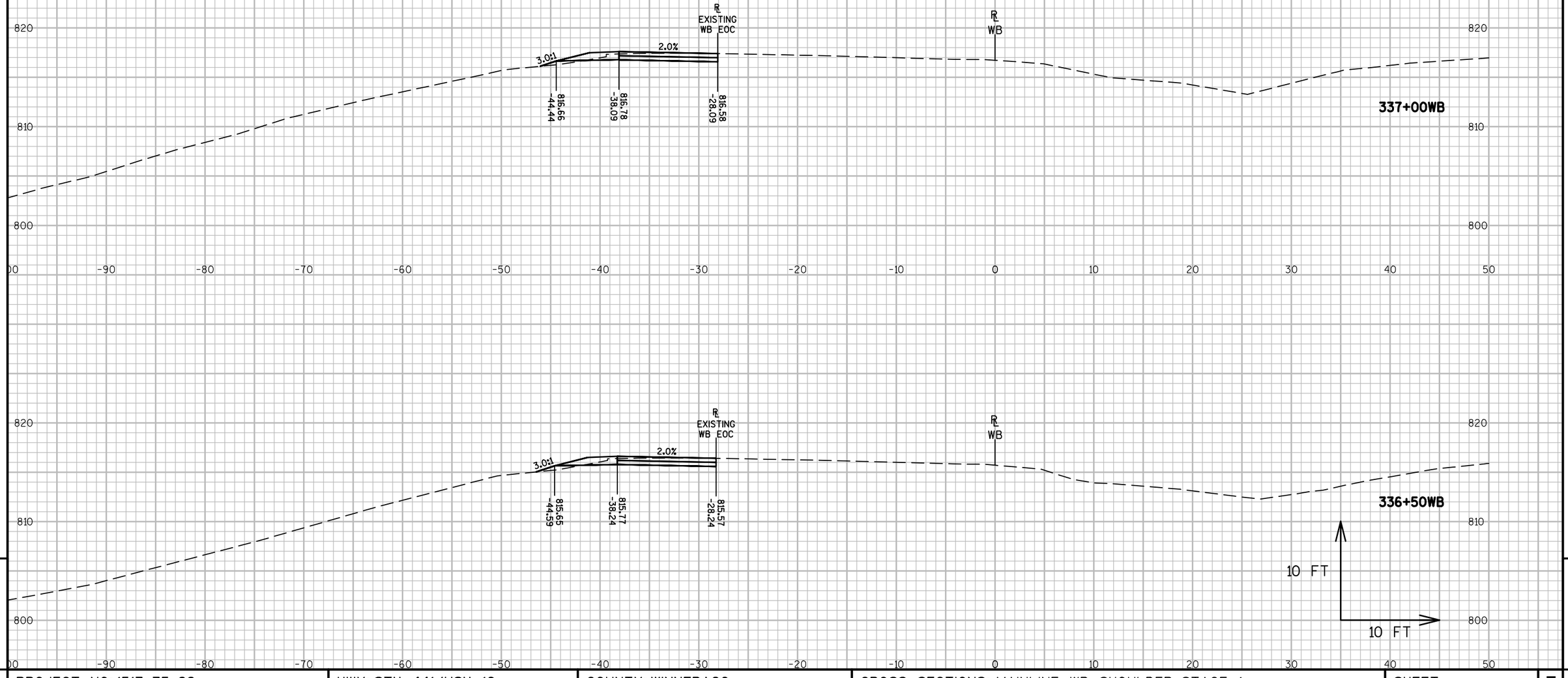

9

9

PROJECT NO: 1517-75-88	HWY: STH 441/USH 10	COUNTY: WINNEBAGO	CROSS SECTIONS: MAINLINE WB SHOULDER-STAGE 1	SHEET 194	E

FILE NAME : S:\PDS\C3D\WIS441\15177574_79\SHEETSPLAN\15177588\090200-XS\NE-15177588-090251-XS-WB-1.DWG
LAYOUT NAME - 090255-XS-WB-1

PLOT DATE : 8/19/2016 7:47 AM PLOT BY : XIONG, NOU SOUA PLOT NAME : PLOT SCALE : 1 IN:10 FT

WISDOT/CADDS SHEET 49

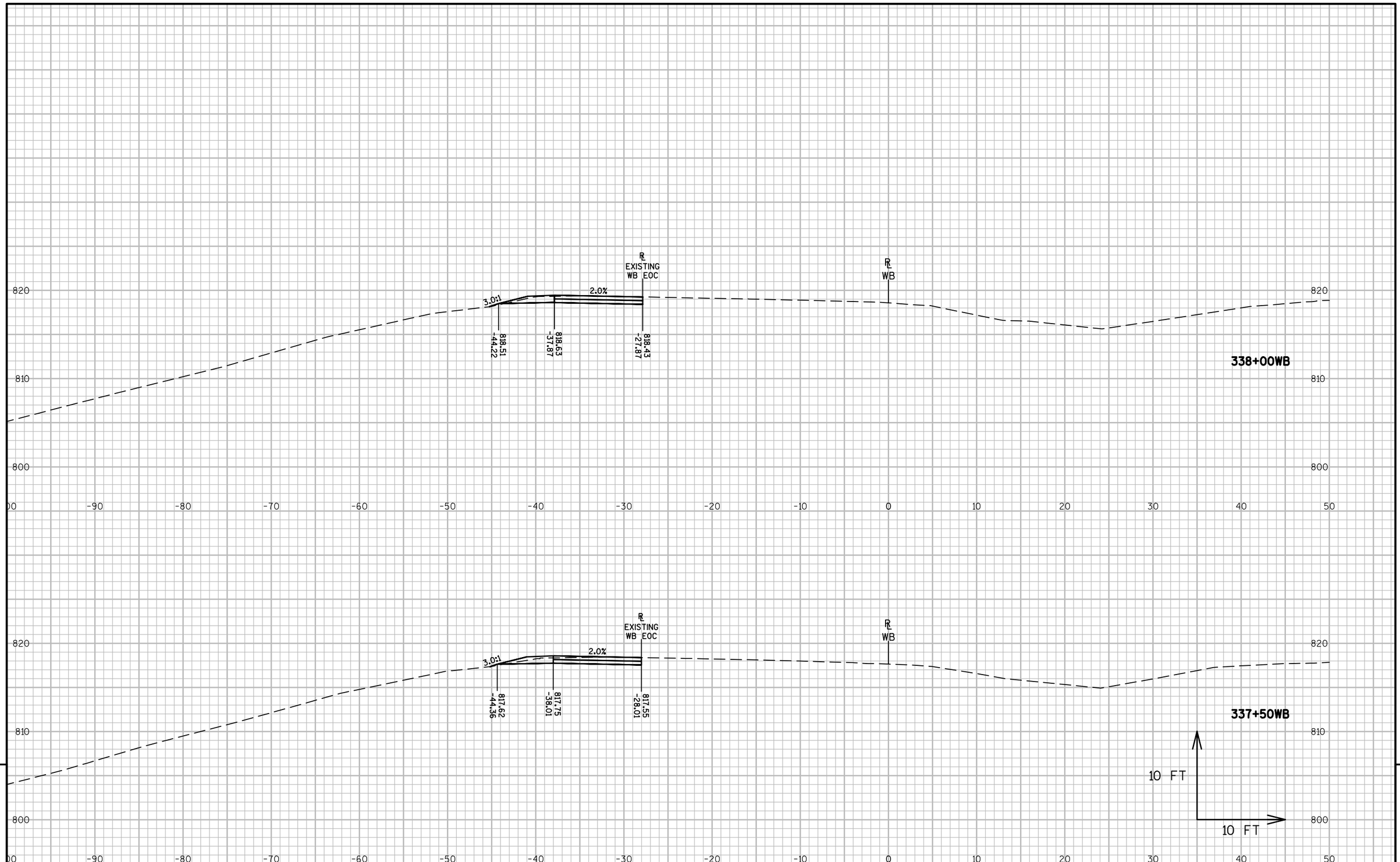

9

9

PROJECT NO: 1517-75-88	HWY: STH 441/USH 10	COUNTY: WINNEBAGO	CROSS SECTIONS: MAINLINE WB SHOULDER-STAGE 1	SHEET 195	E

FILE NAME : S:\PDS\C3D\WIS441\151775574_79\SHEETSPLAN\151775588\090200-XS\NE-151775588-090251-XS-WB-1.DWG
LAYOUT NAME - 090256-XS-WB-1

PLOT DATE : 8/19/2016 7:48 AM PLOT BY : XIONG, NOU SOUA PLOT NAME : PLOT SCALE : 1 IN:10 FT

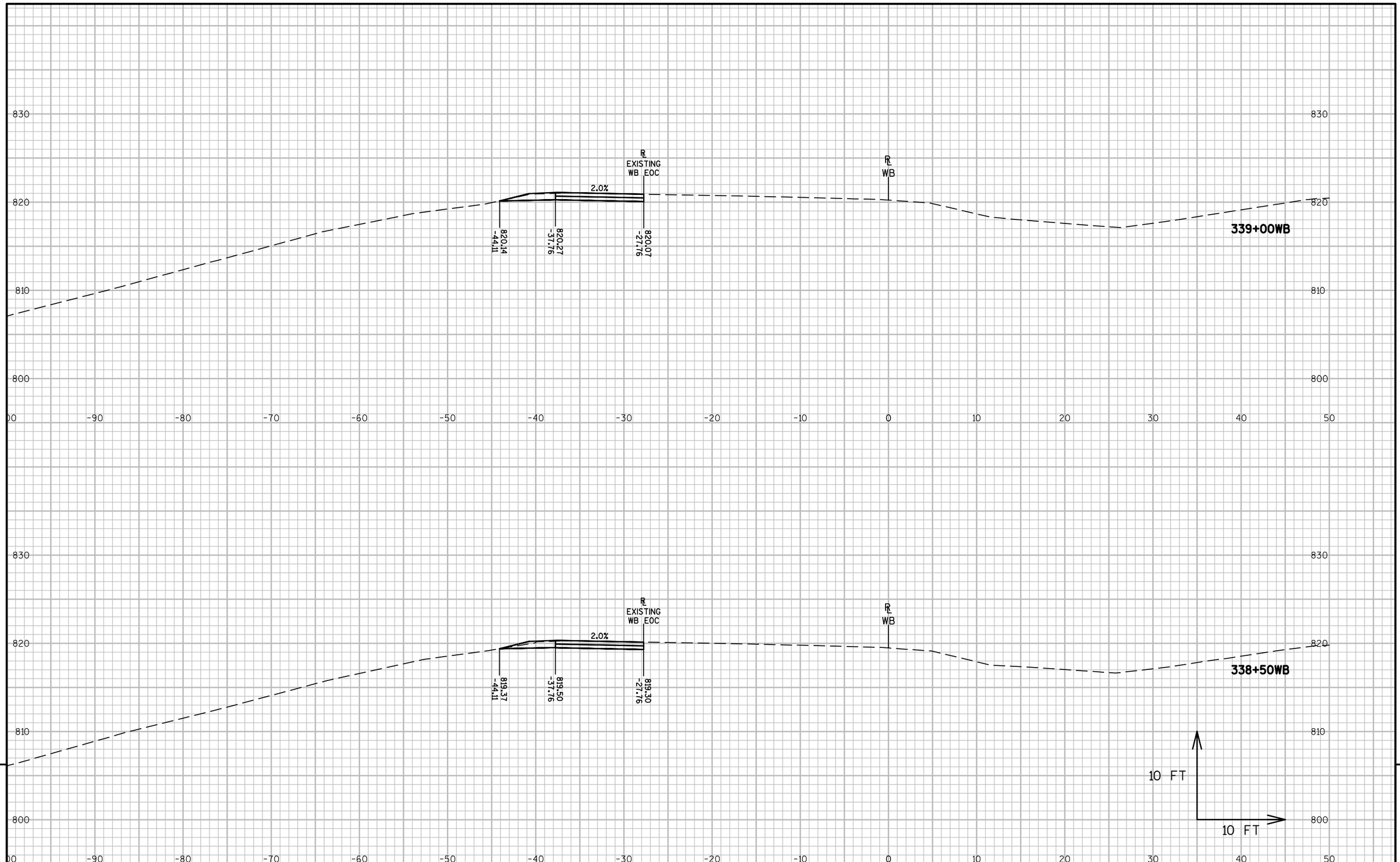

9

PROJECT NO: 1517-75-88	HWY: STH 441/USH 10	COUNTY: WINNEBAGO	CROSS SECTIONS: MAINLINE WB SHOULDER-STAGE 1	SHEET 196	E

9

FILE NAME : S:\PDS\C3D\WIS441\15177574_79\SHEETSPLAN\15177588\090200-XS\NE-15177588-090251-XS-WB-1.DWG
LAYOUT NAME - 090257-XS-WB-1

PLOT DATE : 8/19/2016 7:48 AM PLOT BY : XIONG, NOU SOUA PLOT NAME : PLOT SCALE : 1 IN:10 FT

WISDOT/CADDS SHEET 49

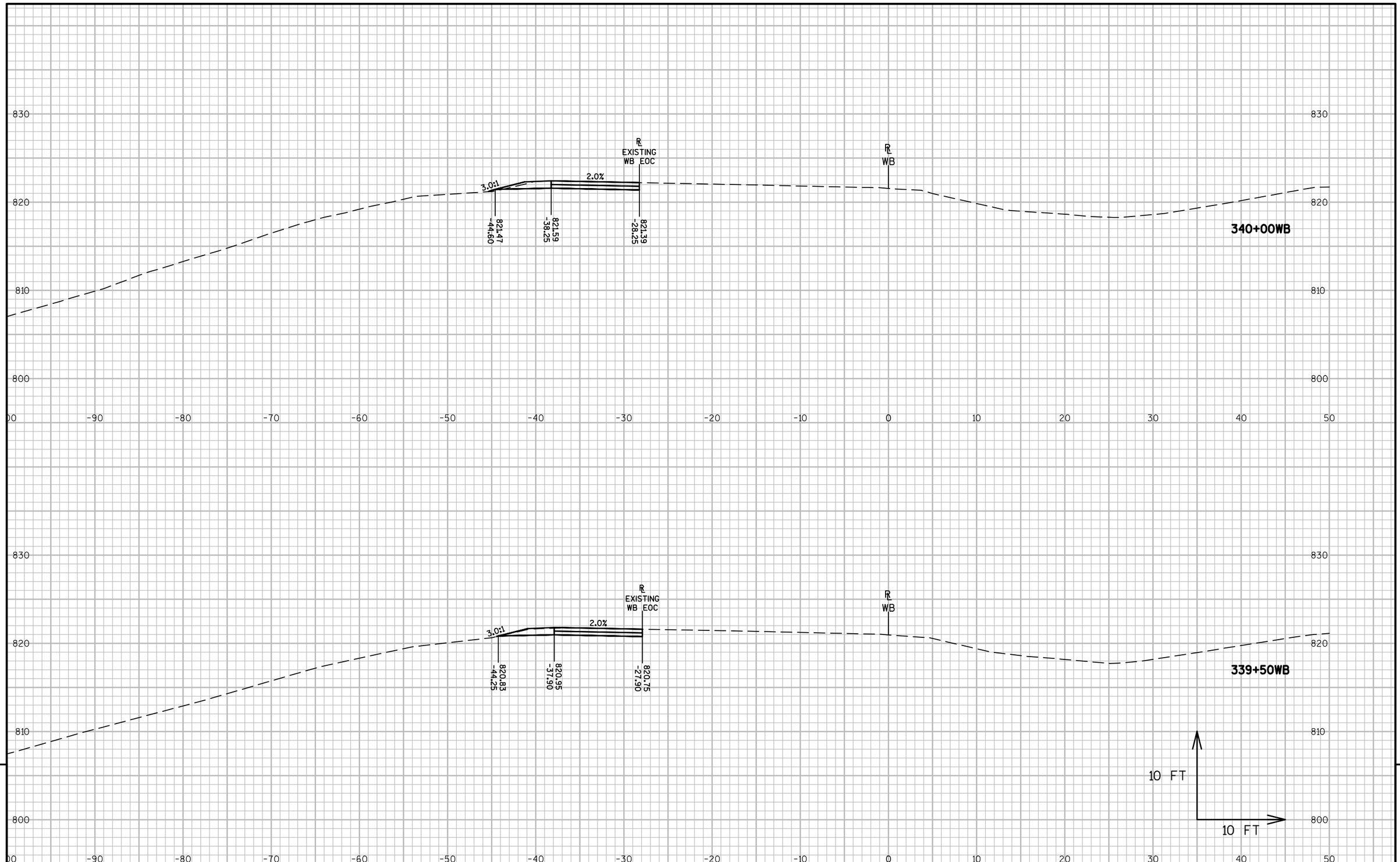

9

9

PROJECT NO: 1517-75-88	HWY: STH 441/USH 10	COUNTY: WINNEBAGO	CROSS SECTIONS: MAINLINE WB SHOULDER-STAGE 1	SHEET 197	E

FILE NAME : S:\PDS\C3D\WIS441\15177574_79\SHEETSPLAN\15177588\090200-XS\NE-15177588-090251-XS-WB-1.DWG
LAYOUT NAME - 090258-XS-WB-1

PLOT DATE : 8/19/2016 7:48 AM PLOT BY : XIONG, NOU SOUA PLOT NAME : PLOT SCALE : 1 IN:10 FT

WISDOT/CADDS SHEET 49

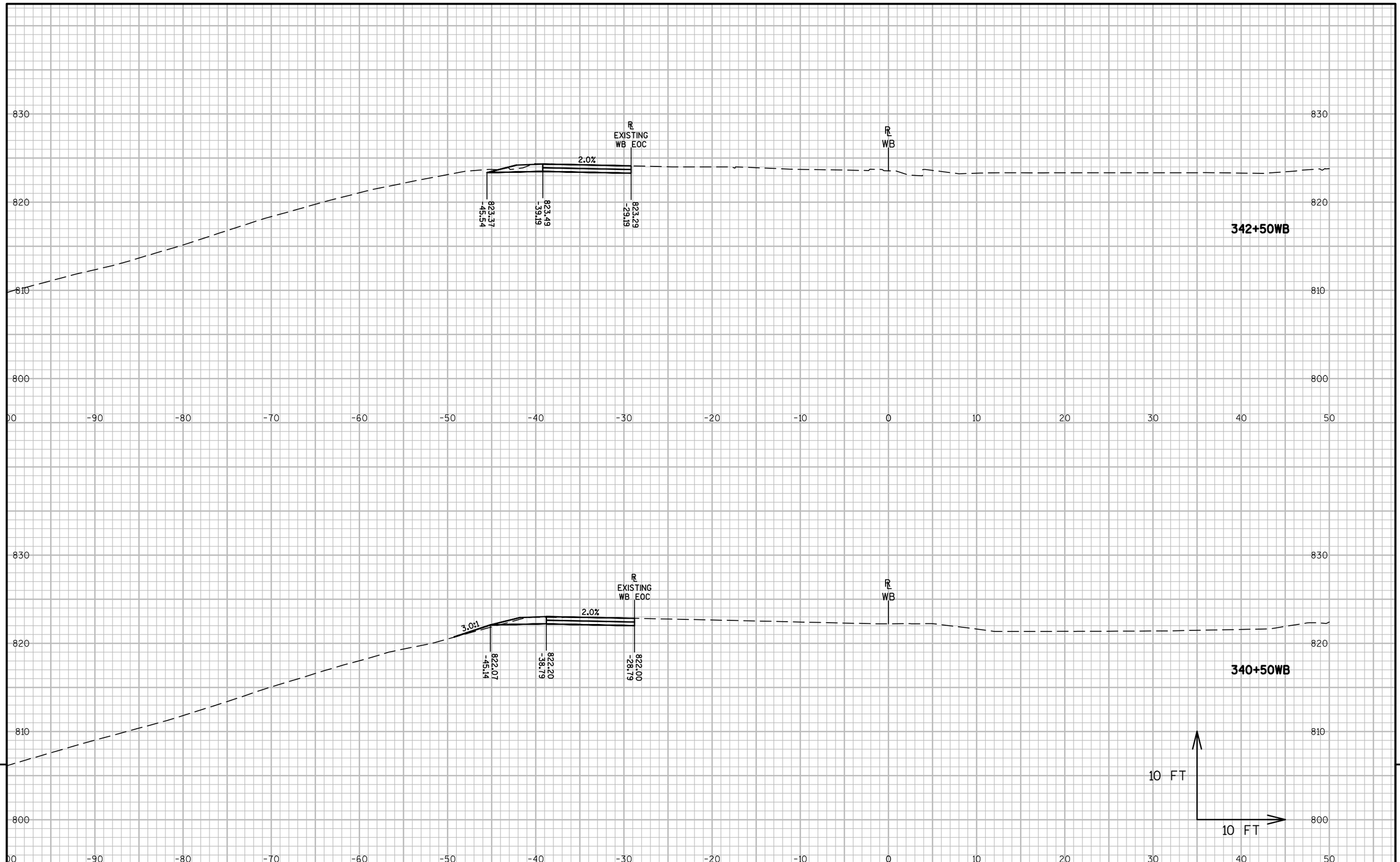

9

9

PROJECT NO: 1517-75-88	HWY: STH 441/USH 10	COUNTY: WINNEBAGO	CROSS SECTIONS: MAINLINE WB SHOULDER-STAGE 1	SHEET 198	E

FILE NAME : S:\PDS\C3D\WIS441\15177574_79\SHEETSPLAN\15177588\090200-XS\NE-15177588-090251-XS-WB-1.DWG
LAYOUT NAME - 090259-XS-WB-1

PLOT DATE : 8/19/2016 7:48 AM PLOT BY : XIONG, NOU SOUA PLOT NAME : PLOT SCALE : 1 IN:10 FT

WISDOT/CADDS SHEET 49

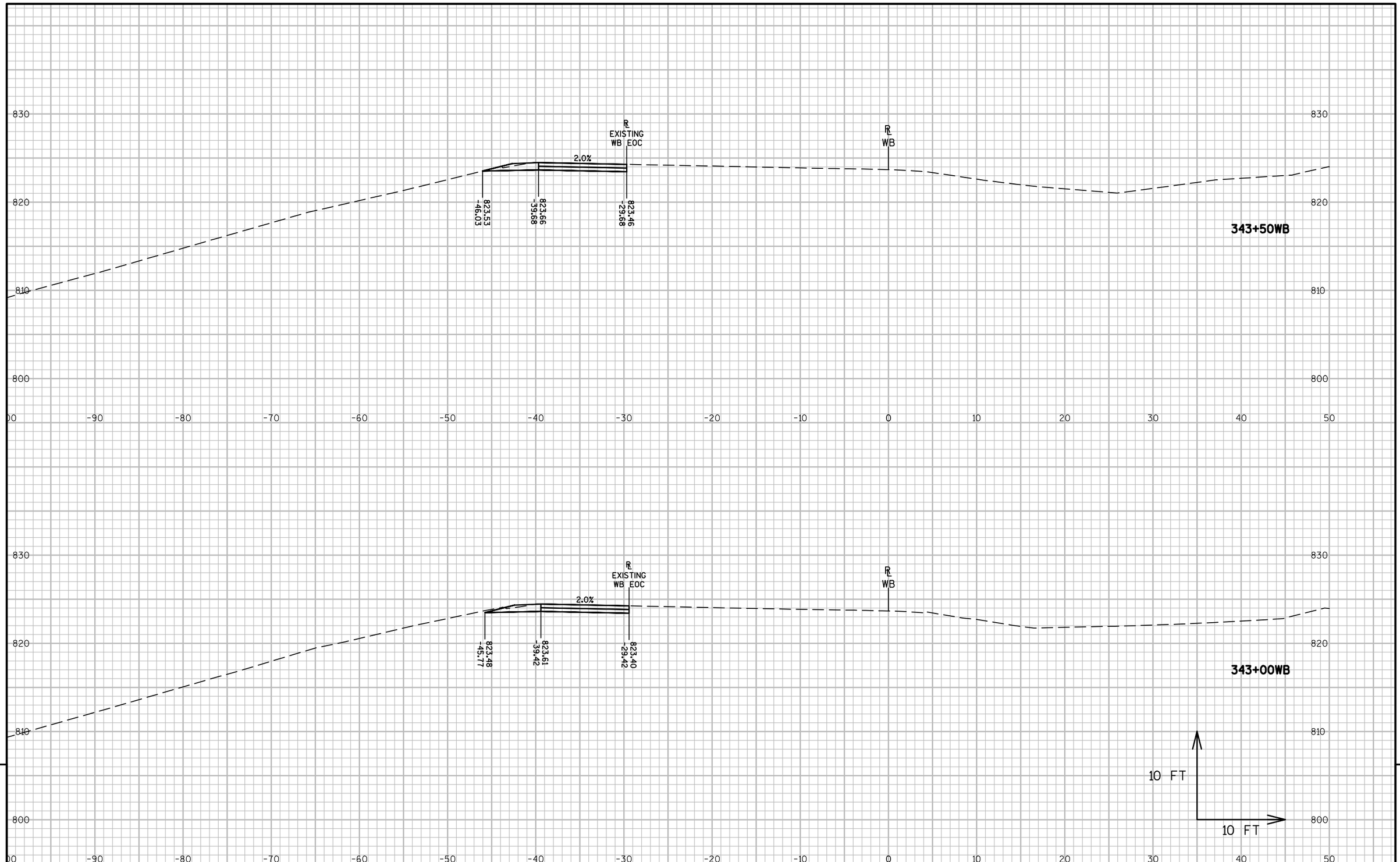

9

PROJECT NO: 1517-75-88	HWY: STH 441/USH 10	COUNTY: WINNEBAGO	CROSS SECTIONS: MAINLINE WB SHOULDER-STAGE 1	SHEET 199	E

9

FILE NAME : S:\PDS\C3D\WIS441\15177574_79\SHEETSPLAN\15177588\090200-XS\NE-15177588-090251-XS-WB-1.DWG
LAYOUT NAME - 090260-XS-WB-1

PLOT DATE : 8/19/2016 7:48 AM PLOT BY : XIONG, NOU SOUA PLOT NAME : PLOT SCALE : 1 IN:10 FT

WISDOT/CADDS SHEET 49

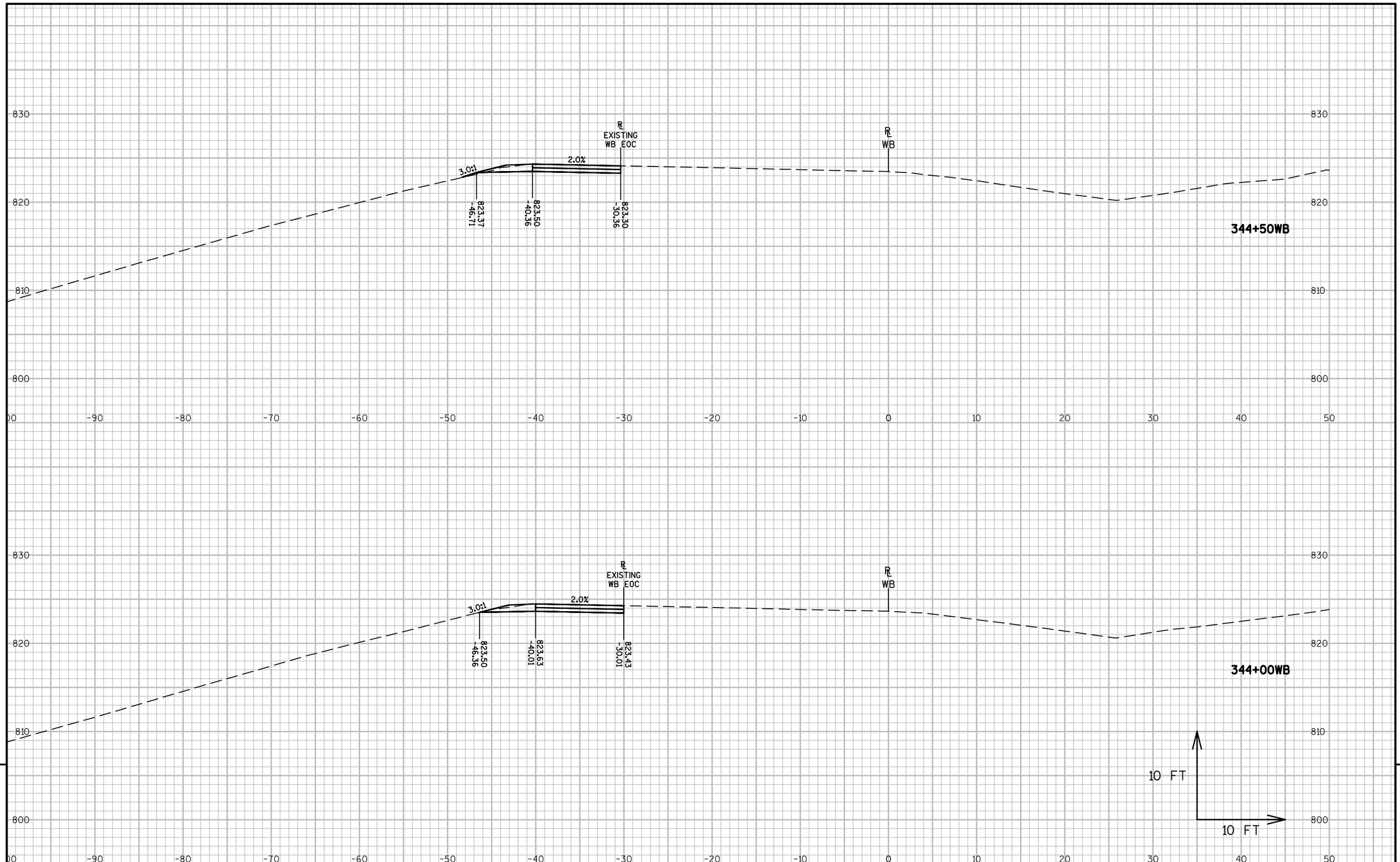

9

9

PROJECT NO: 1517-75-88	HWY: STH 441/USH 10	COUNTY: WINNEBAGO	CROSS SECTIONS: MAINLINE WB SHOULDER-STAGE 1	SHEET 200	E

FILE NAME : S:\PDS\C3D\WIS441\15177574_79\SHEETSPLAN\15177588\090200-XS\NE-15177588-090251-XS-WB-1.DWG
LAYOUT NAME - 090261-XS-WB-1

PLOT DATE : 8/19/2016 7:48 AM PLOT BY : XIONG, NOU SOUA PLOT NAME : PLOT SCALE : 1 IN:10 FT

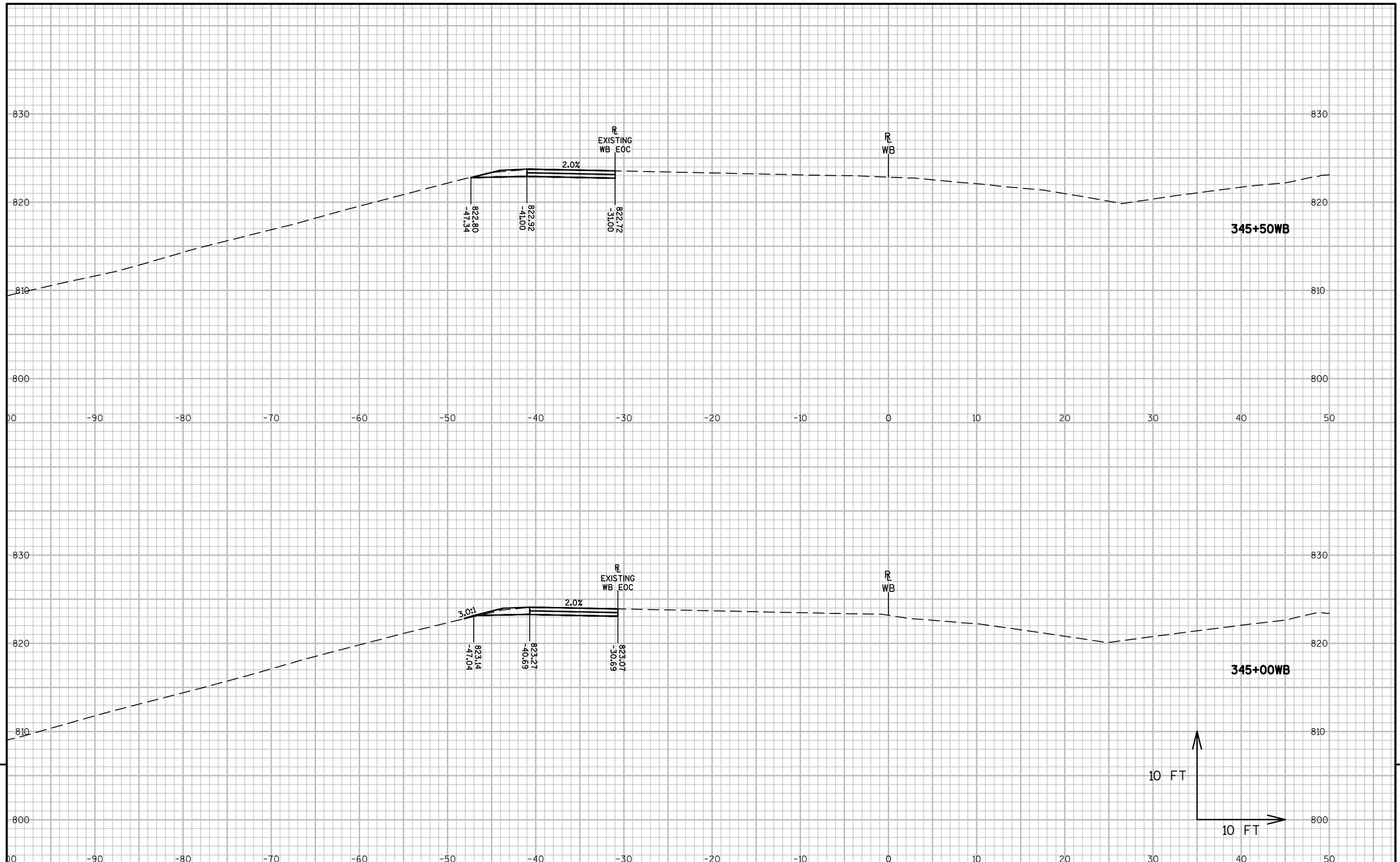

9

9

PROJECT NO: 1517-75-88	HWY: STH 441/USH 10	COUNTY: WINNEBAGO	CROSS SECTIONS: MAINLINE WB SHOULDER-STAGE 1	SHEET 201	E

FILE NAME : S:\PDS\C3D\WIS441\151775?4_79\SHEETSPLAN\151775?8\090200-XS\NE-151775?8-090251-XS-WB-1.DWG
LAYOUT NAME - 090262-XS-WB-1

PLOT DATE : 8/19/2016 7:48 AM PLOT BY : XIONG, NOU SOUA PLOT NAME : PLOT SCALE : 1 IN:10 FT

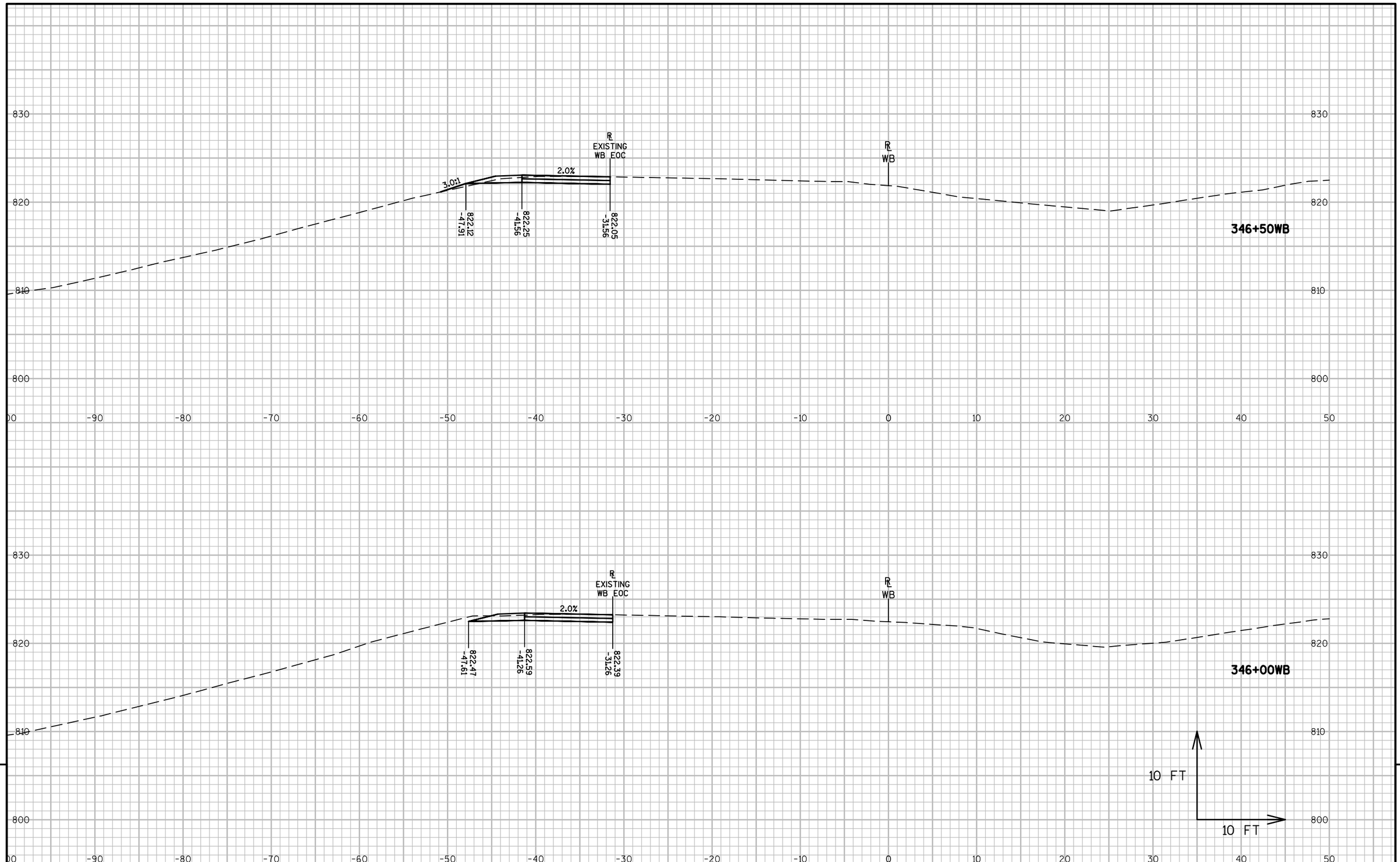

9

9

PROJECT NO: 1517-75-88	HWY: STH 441/USH 10	COUNTY: WINNEBAGO	CROSS SECTIONS: MAINLINE WB SHOULDER-STAGE 1	SHEET 202	E

FILE NAME : S:\PDS\C3D\WIS441\15177574_79\SHEETSPLAN\15177588\090200-XS\NE-15177588-090251-XS-WB-1.DWG
LAYOUT NAME - 090263-XS-WB-1

PLOT DATE : 8/19/2016 7:48 AM PLOT BY : XIONG, NOU SOUA PLOT NAME : PLOT SCALE : 1 IN:10 FT

WISDOT/CADDS SHEET 49

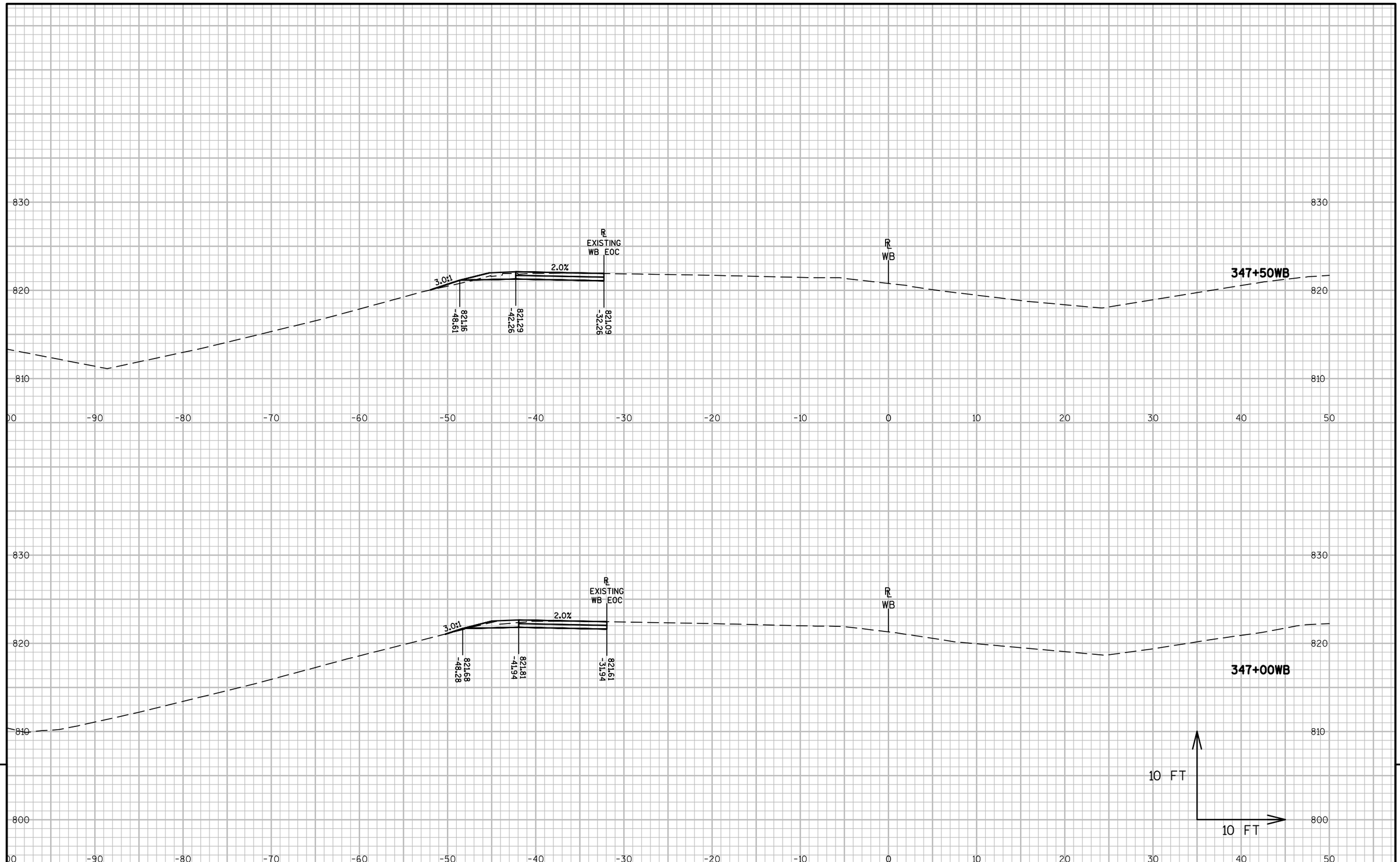

9

9

PROJECT NO: 1517-75-88	HWY: STH 441/USH 10	COUNTY: WINNEBAGO	CROSS SECTIONS: MAINLINE WB SHOULDER-STAGE 1	SHEET 203	E

FILE NAME : S:\PDS\C3D\WIS441\15177574_79\SHEETSPLAN\15177588\090200-XS\NE-15177588-090251-XS-WB-1.DWG
LAYOUT NAME - 090264-XS-WB-1

PLOT DATE : 8/19/2016 7:49 AM PLOT BY : XIONG, NOU SOUA PLOT NAME : PLOT SCALE : 1 IN:10 FT

WISDOT/CADDS SHEET 49

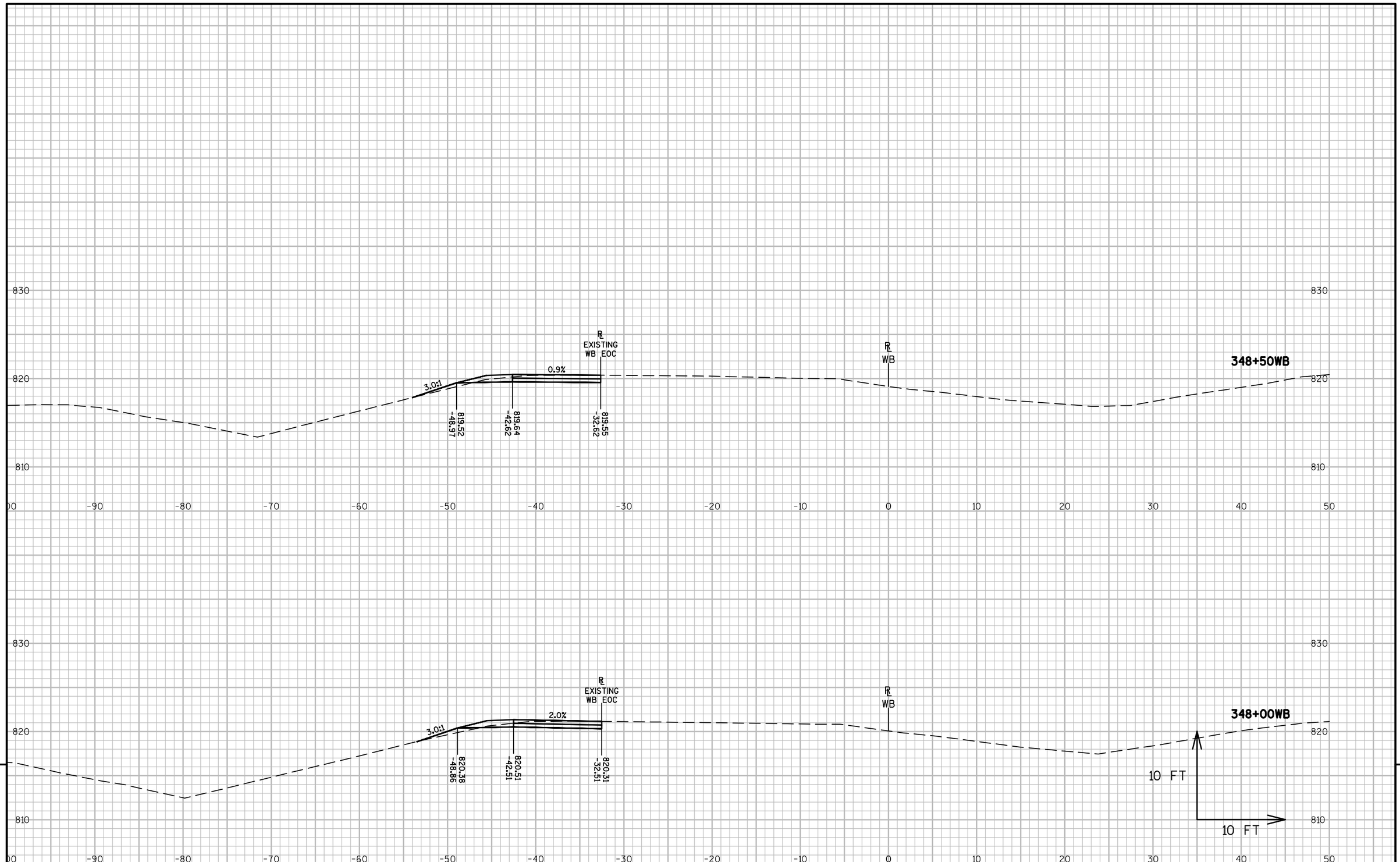

9

9

PROJECT NO: 1517-75-88	HWY: STH 441/USH 10	COUNTY: WINNEBAGO	CROSS SECTIONS: MAINLINE WB SHOULDER-STAGE 1	SHEET 204	E

FILE NAME : S:\PDS\C3D\WIS441\15177574_79\SHEETSPLAN\15177588\090200-XS\NE-15177588-090251-XS-WB-1.DWG
LAYOUT NAME - 090265-XS-WB-1

PLOT DATE : 8/19/2016 7:49 AM PLOT BY : XIONG, NOU SOUA PLOT NAME : PLOT SCALE : 1 IN:10 FT

WISDOT/CADDS SHEET 49

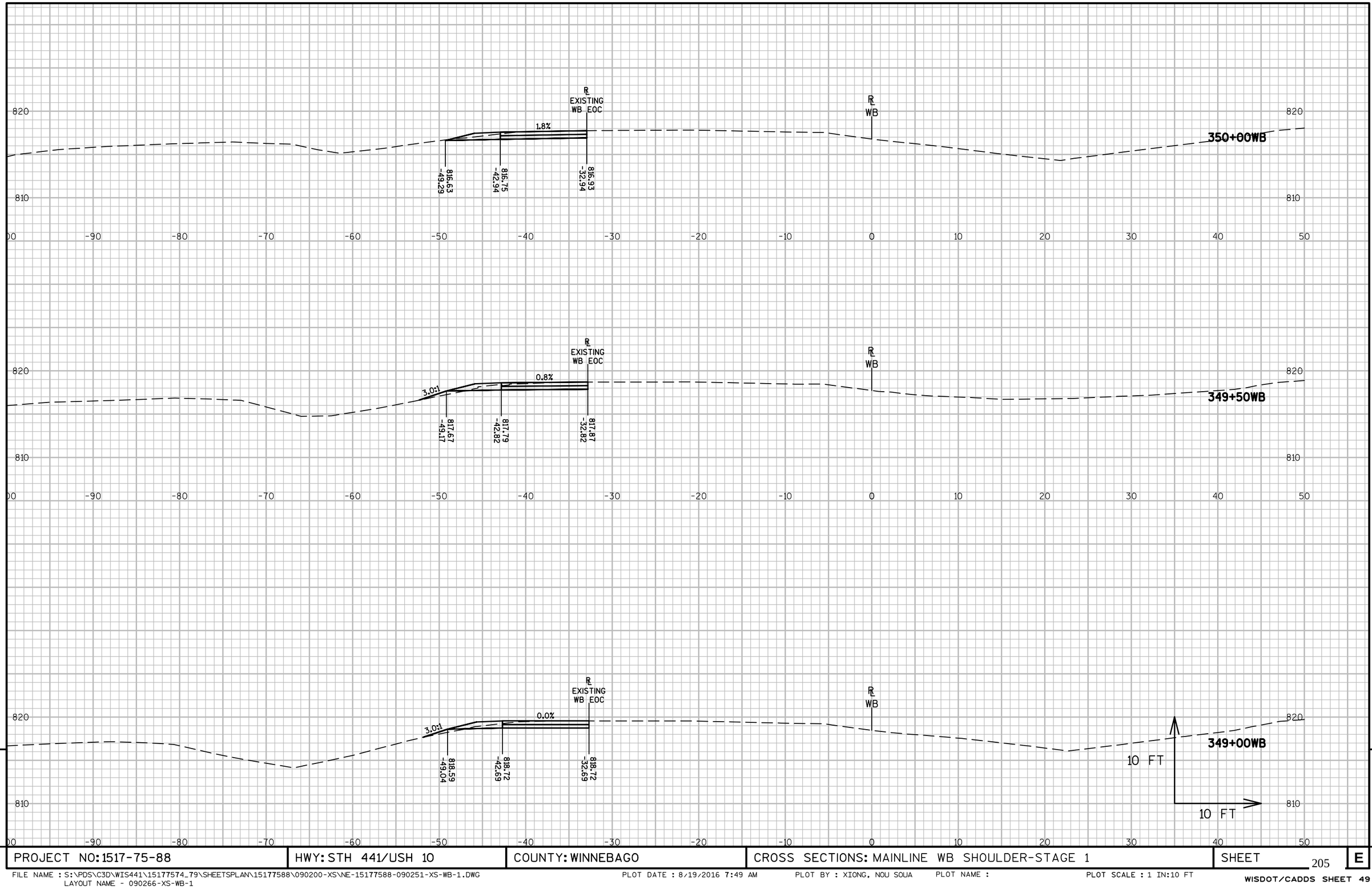

9

9

PROJECT NO: 1517-75-88	HWY: STH 441/USH 10	COUNTY: WINNEBAGO	CROSS SECTIONS: MAINLINE WB SHOULDER-STAGE 1	SHEET 205	E

FILE NAME : S:\PDS\C3D\WIS441\15177574_79\SHEETSPLAN\15177588\090200-XS\NE-15177588-090251-XS-WB-1.DWG
LAYOUT NAME - 090266-XS-WB-1

PLOT DATE : 8/19/2016 7:49 AM PLOT BY : XIONG, NOU SOUA PLOT NAME : PLOT SCALE : 1 IN:10 FT

WISDOT/CADDS SHEET 49

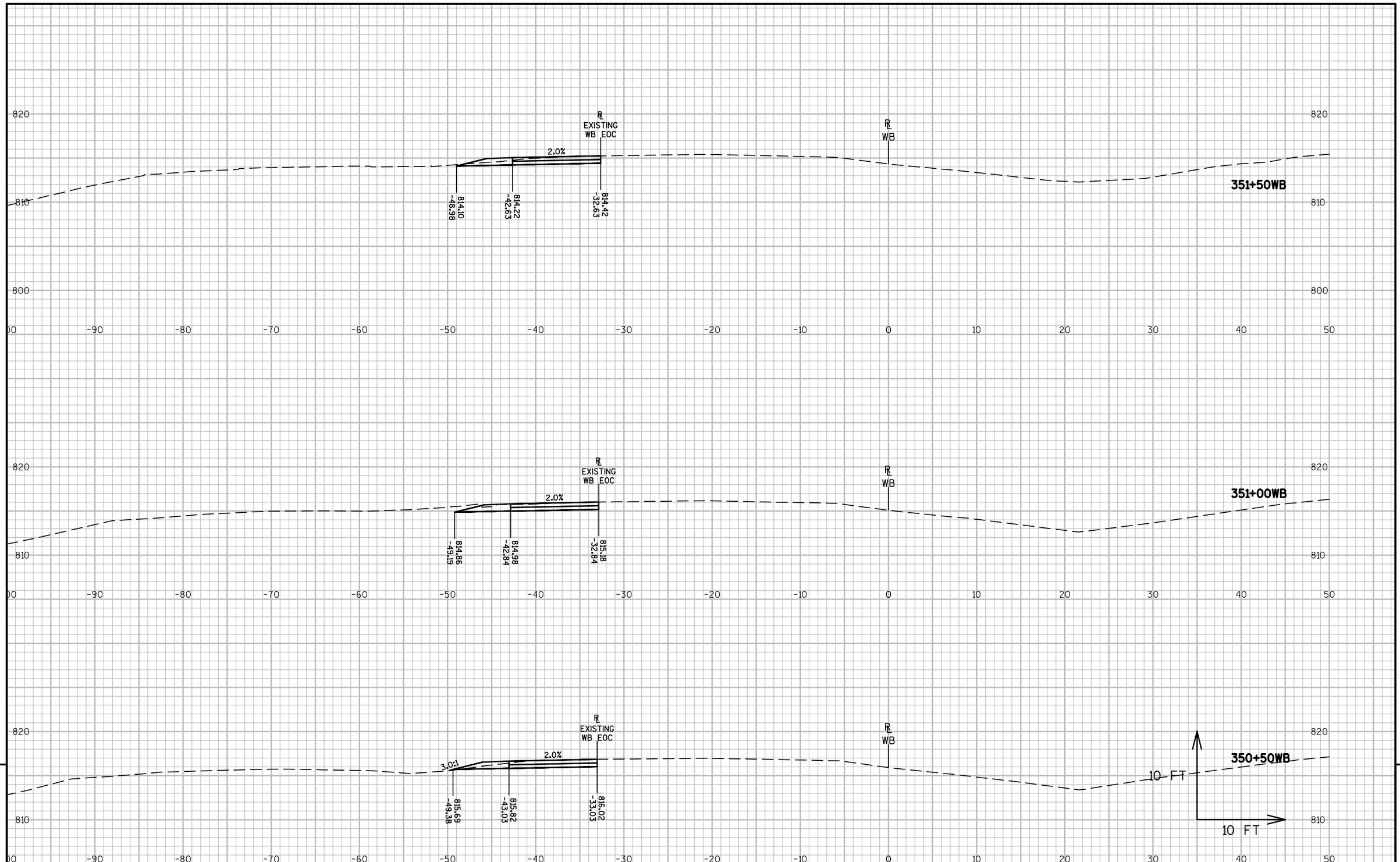

9

9

PROJECT NO: 1517-75-88	HWY: STH 441/USH 10	COUNTY: WINNEBAGO	CROSS SECTIONS: MAINLINE WB SHOULDER-STAGE 1	SHEET 206 E

FILE NAME : S:\PDS\C3D\WIS441\151775?4_79\SHEETSPLAN\151775?8\090200-XS\NE-151775?8-090251-XS-WB-1.DWG
LAYOUT NAME - 090267-XS-WB-1

PLOT DATE : 8/19/2016 7:49 AM PLOT BY : XIONG, NOU SOUA PLOT NAME : PLOT SCALE : 1 IN:10 FT

WISDOT/CADDS SHEET 49

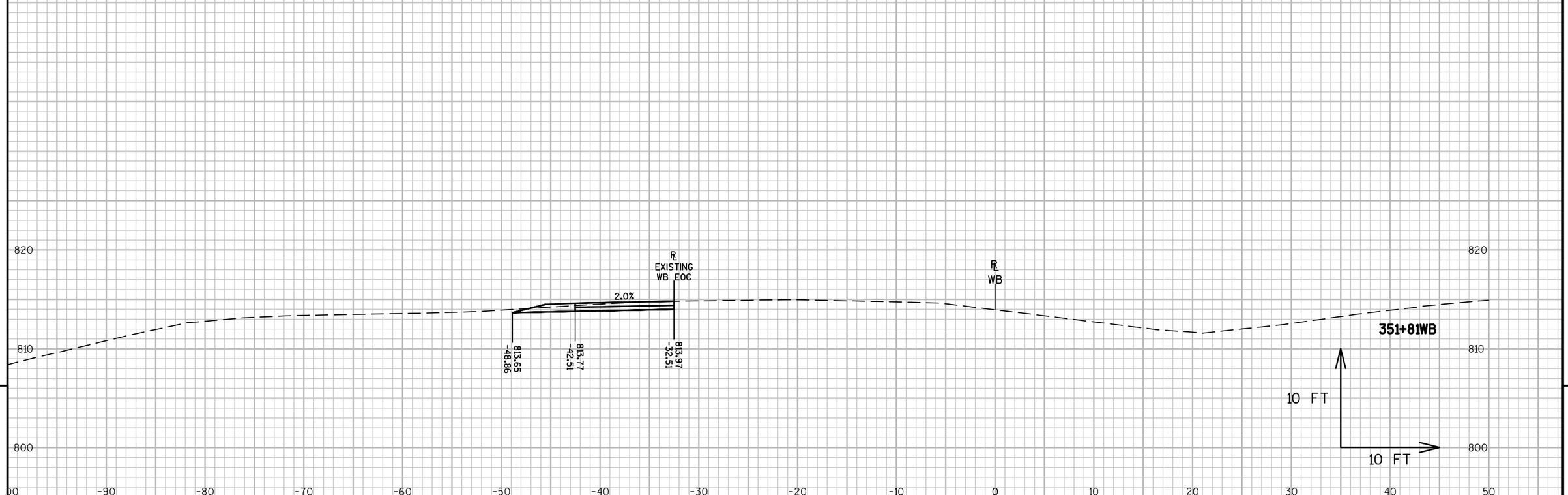

9

9

PROJECT NO: 1517-75-88	HWY: STH 441/USH 10	COUNTY: WINNEBAGO	CROSS SECTIONS: MAINLINE WB SHOULDER-STAGE 1	SHEET 207	E

FILE NAME : S:\PDS\C3D\WIS441\151775574_79\SHEETSPLAN\151775588\090200-XS\NE-151775588-090251-XS-WB-1.DWG
LAYOUT NAME - 090268-XS-WB-1

PLOT DATE : 8/19/2016 7:49 AM PLOT BY : XIONG, NOU SOUA PLOT NAME : PLOT SCALE : 1 IN:10 FT

WISDOT/CADDS SHEET 49

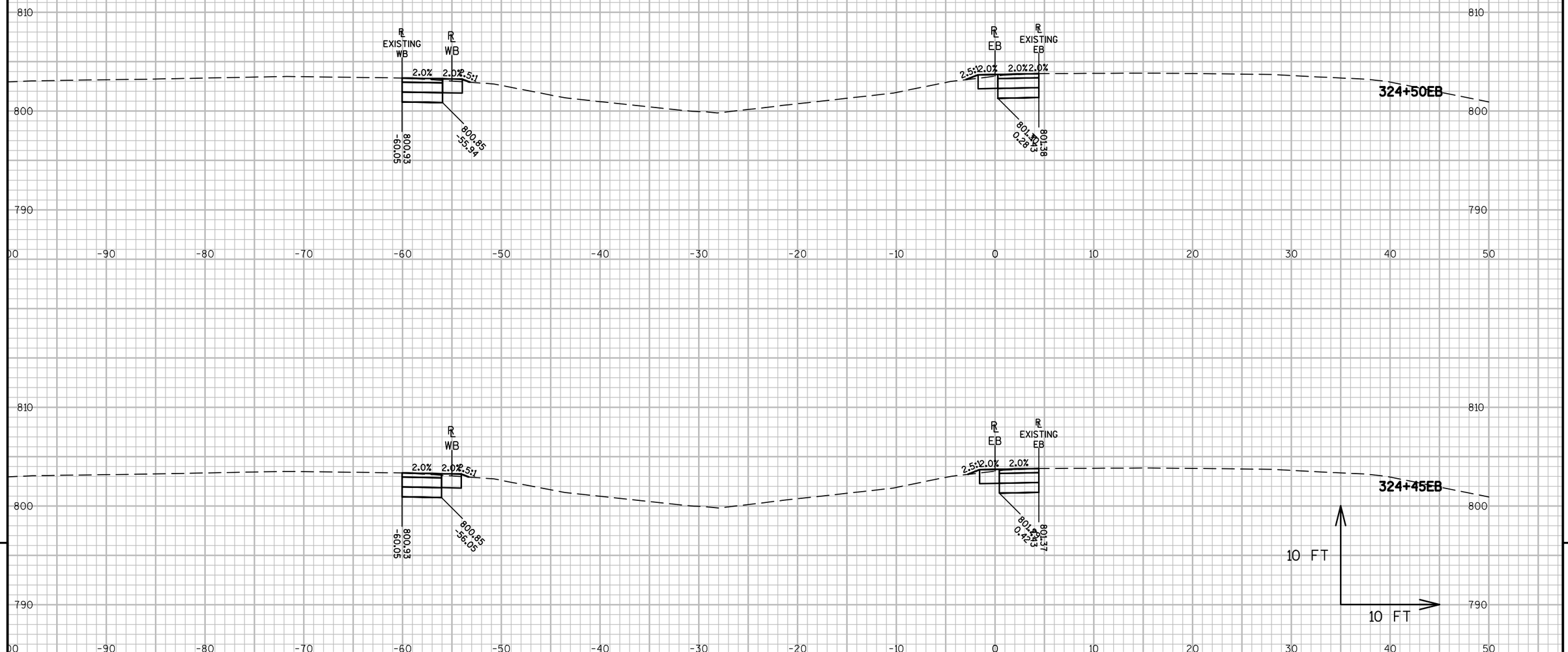

PROJECT NO: 1517-75-88	HWY: STH 441/USH 10	COUNTY: WINNEBAGO	CROSS SECTIONS: MAINLINE MEDIAN-STAGE 2B	SHEET 208 E

FILE NAME : S:\PDS\C3D\WIS441\15177574_79\SHEETSPLAN\15177588\090200-XS\NE-15177588-090301-XS-EB-2B.DWG
LAYOUT NAME - 090301-XS-EB-2B

PLOT DATE : 8/19/2016 7:49 AM PLOT BY : XIONG, NOU SOUA PLOT NAME : PLOT SCALE : 1 IN:10 FT

WISDOT/CADDS SHEET 49

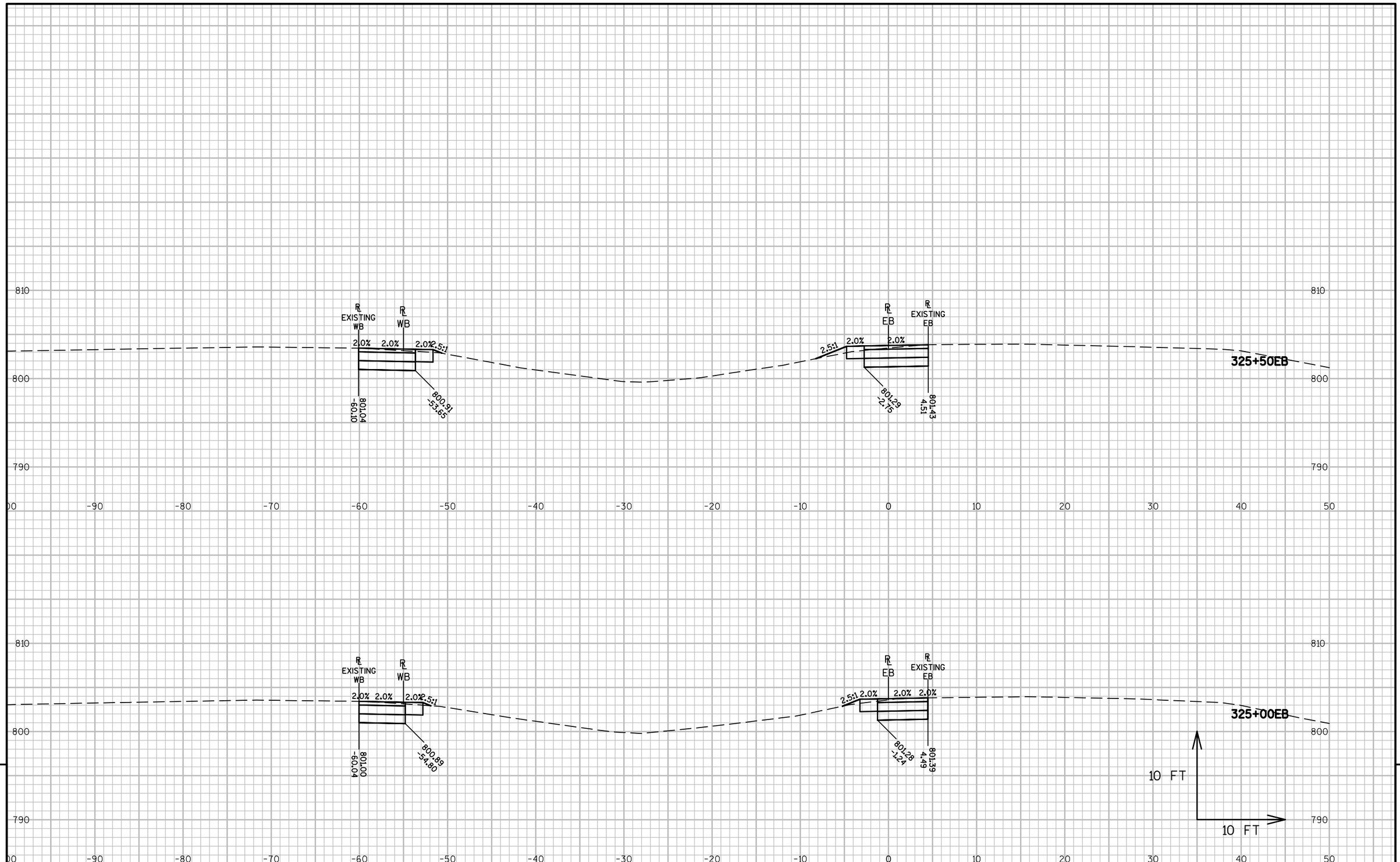

9

9

PROJECT NO: 1517-75-88	HWY: STH 441/USH 10	COUNTY: WINNEBAGO	CROSS SECTIONS: MAINLINE MEDIAN-STAGE 2B	SHEET 209	E

FILE NAME : S:\PDS\C3D\WIS441\15177574_79\SHEETSPLAN\15177588\090200-XS\NE-15177588-090301-XS-EB-2B.DWG
LAYOUT NAME - 090302-XS-EB-2B

PLOT DATE : 8/19/2016 7:49 AM PLOT BY : XIONG, NOU SOUA PLOT NAME : PLOT SCALE : 1 IN:10 FT

WISDOT/CADDS SHEET 49

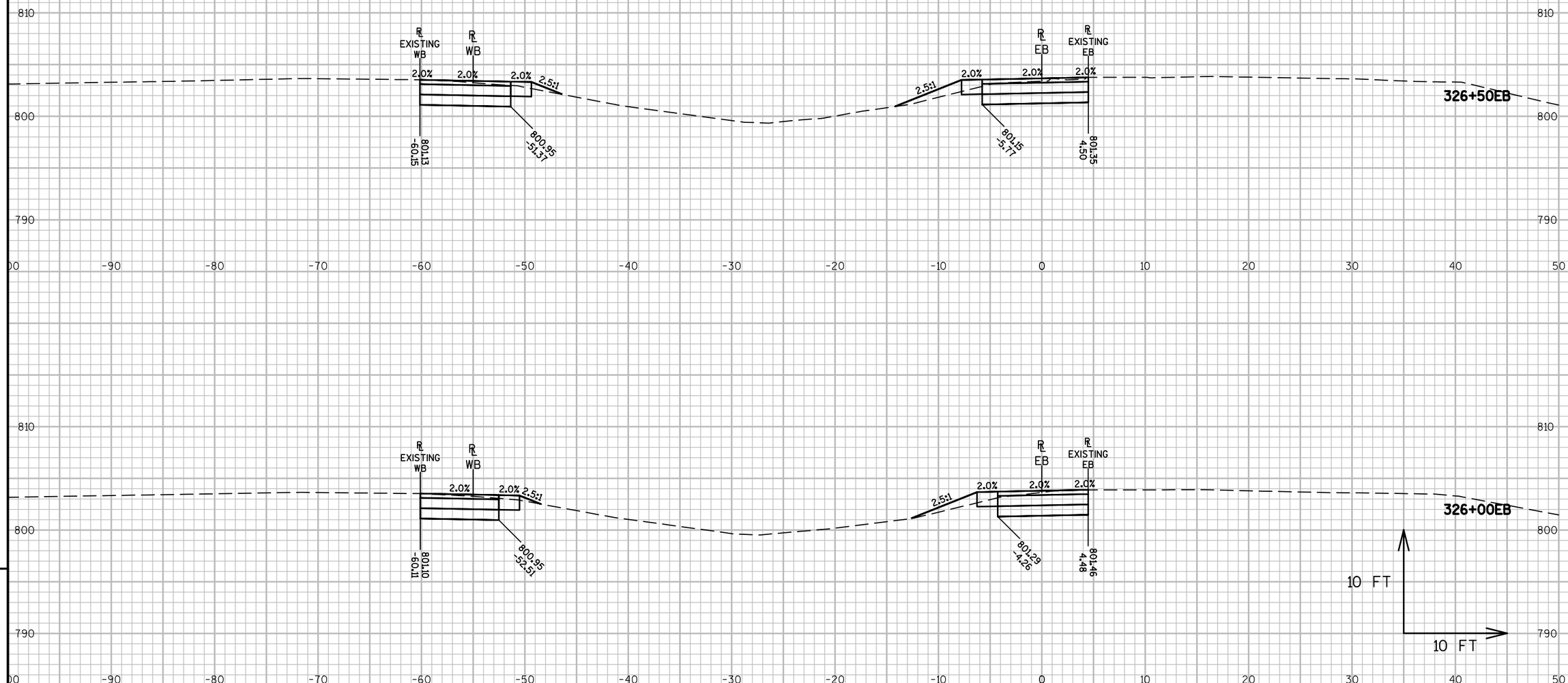

9

PROJECT NO: 1517-75-88	HWY: STH 441/USH 10	COUNTY: WINNEBAGO	CROSS SECTIONS: MAINLINE MEDIAN-STAGE 2B	SHEET 210 E

9

FILE NAME : S:\PDS\C3D\WIS441\15177574_79\SHEETSPLAN\15177588\090200-XS\NE-15177588-090301-XS-EB-2B.DWG
LAYOUT NAME - 090303-XS-EB-2B

PLOT DATE : 8/19/2016 7:50 AM PLOT BY : XIONG, NOU SOUA PLOT NAME : PLOT SCALE : 1 IN:10 FT

WISDOT/CADDS SHEET 49

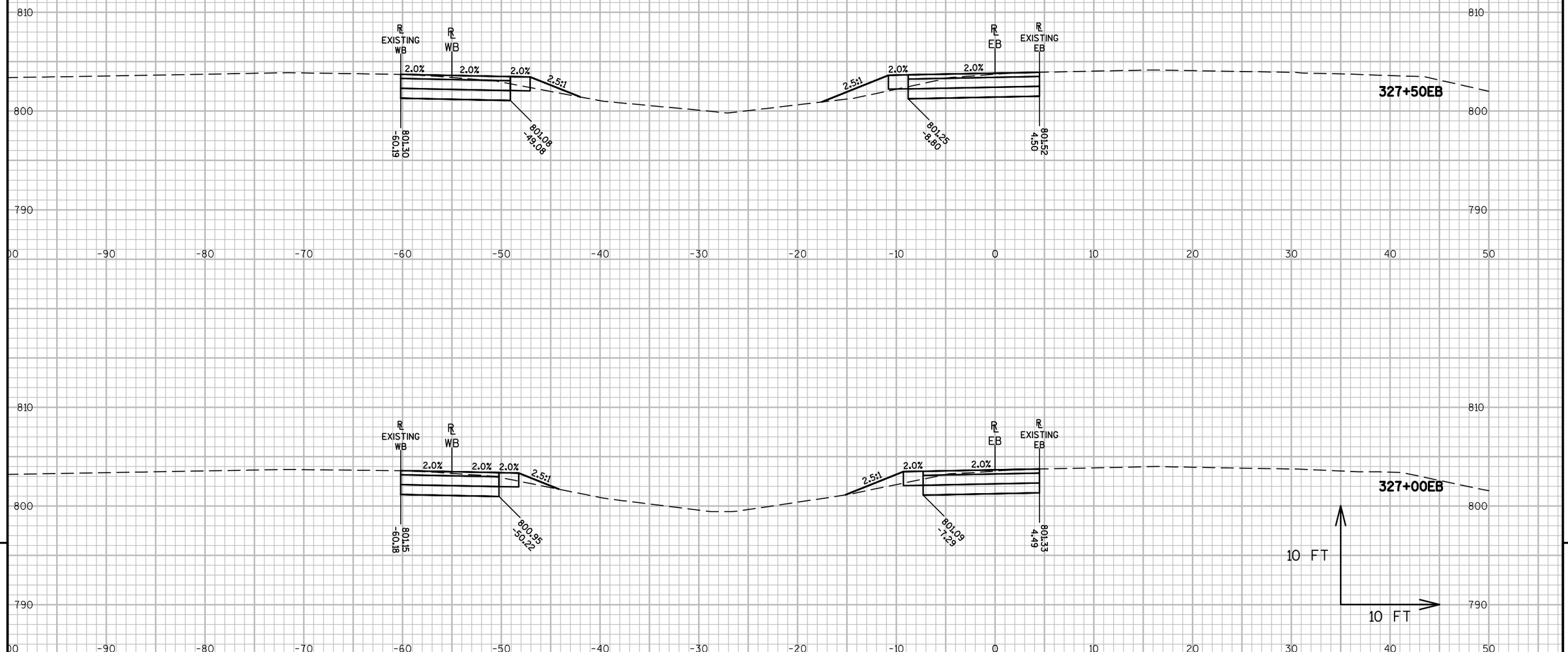

9

9

PROJECT NO: 1517-75-88	HWY: STH 441/USH 10	COUNTY: WINNEBAGO	CROSS SECTIONS: MAINLINE MEDIAN-STAGE 2B	SHEET 211 E

FILE NAME : S:\PDS\C3D\WIS441\15177574_79\SHEETSPLAN\15177588\090200-XS\NE-15177588-090301-XS-EB-2B.DWG
LAYOUT NAME - 090304-XS-EB-2B

PLOT DATE : 8/19/2016 7:50 AM PLOT BY : XIONG, NOU SOUA PLOT NAME : PLOT SCALE : 1 IN:10 FT

WISDOT/CADDS SHEET 49

9

9

PROJECT NO: 1517-75-88	HWY: STH 441/USH 10	COUNTY: WINNEBAGO	CROSS SECTIONS: MAINLINE MEDIAN-STAGE 2B	SHEET 212	E

FILE NAME : S:\PDS\C3D\WIS441\15177574_79\SHEETSPLAN\15177588\090200-XS\NE-15177588-090301-XS-EB-2B.DWG
LAYOUT NAME - 090305-XS-EB-2B
PLOT DATE : 8/19/2016 7:50 AM PLOT BY : XIONG, NOU SOUA PLOT NAME : PLOT SCALE : 1 IN:10 FT
WISDOT/CADDS SHEET 49

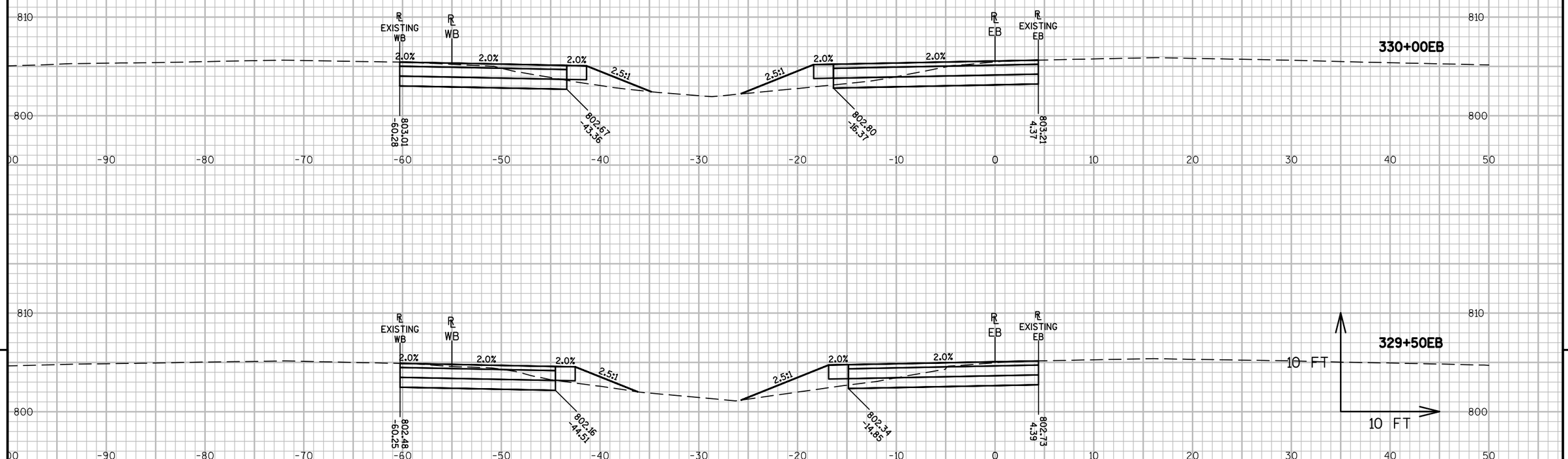

9

9

PROJECT NO: 1517-75-88	HWY: STH 441/USH 10	COUNTY: WINNEBAGO	CROSS SECTIONS: MAINLINE MEDIAN-STAGE 2B	SHEET 213 E

FILE NAME : S:\PDS\C3D\WIS441\15177574_79\SHEETSPLAN\15177588\090200-XS\NE-15177588-090301-XS-EB-2B.DWG
LAYOUT NAME - 090306-XS-EB-2B

PLOT DATE : 8/19/2016 7:50 AM PLOT BY : XIONG, NOU SOUA PLOT NAME : PLOT SCALE : 1 IN:10 FT

WISDOT/CADDS SHEET 49

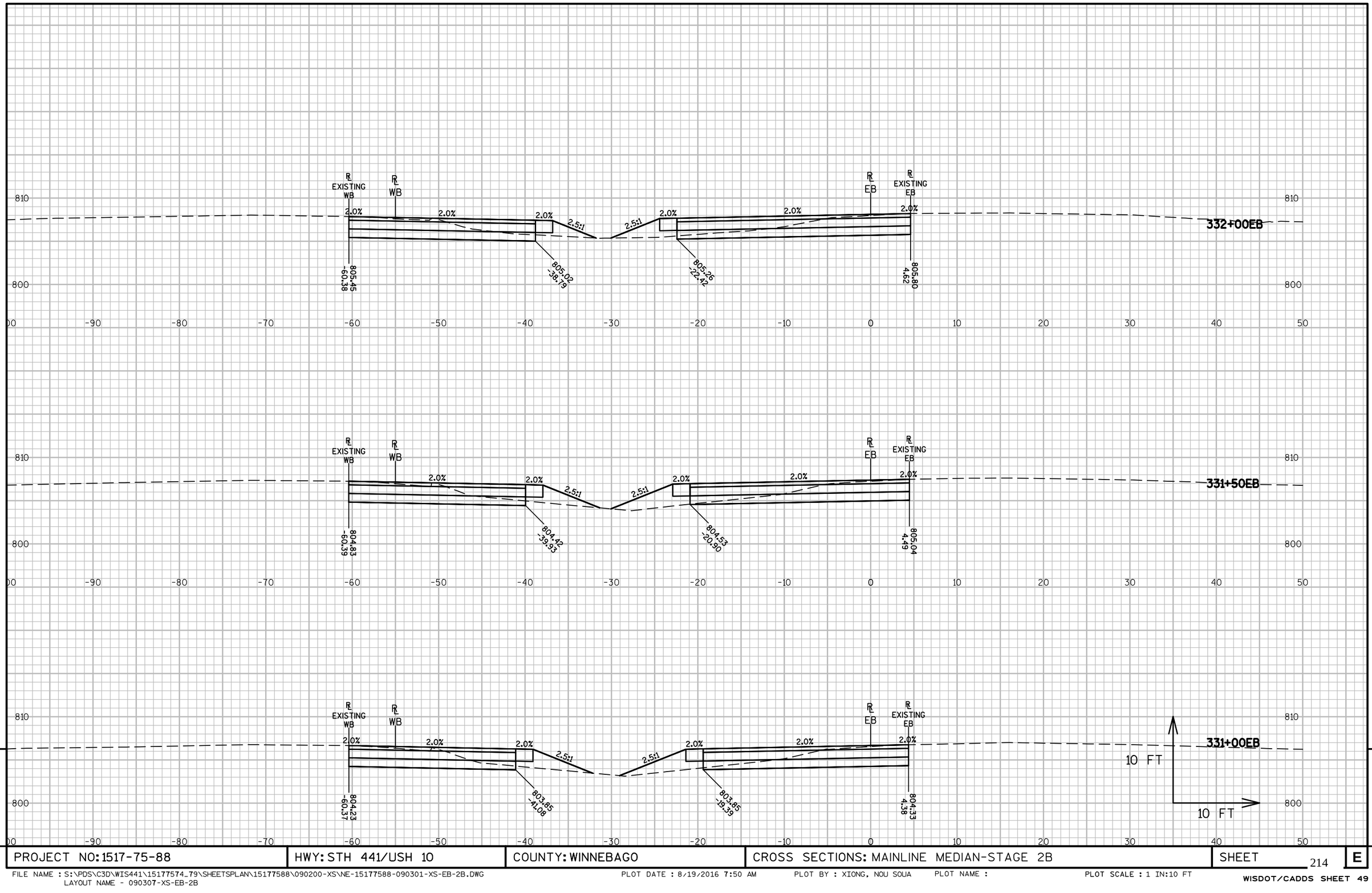

9

9

PROJECT NO: 1517-75-88	HWY: STH 441/USH 10	COUNTY: WINNEBAGO	CROSS SECTIONS: MAINLINE MEDIAN-STAGE 2B	SHEET 214	E

FILE NAME : S:\PDS\C3D\WIS441\15177574_79\SHEETSPLAN\15177588\090200-XS\NE-15177588-090301-XS-EB-2B.DWG
LAYOUT NAME - 090307-XS-EB-2B

PLOT DATE : 8/19/2016 7:50 AM PLOT BY : XIONG, NOU SOUA PLOT NAME : PLOT SCALE : 1 IN:10 FT

WISDOT/CADDS SHEET 49

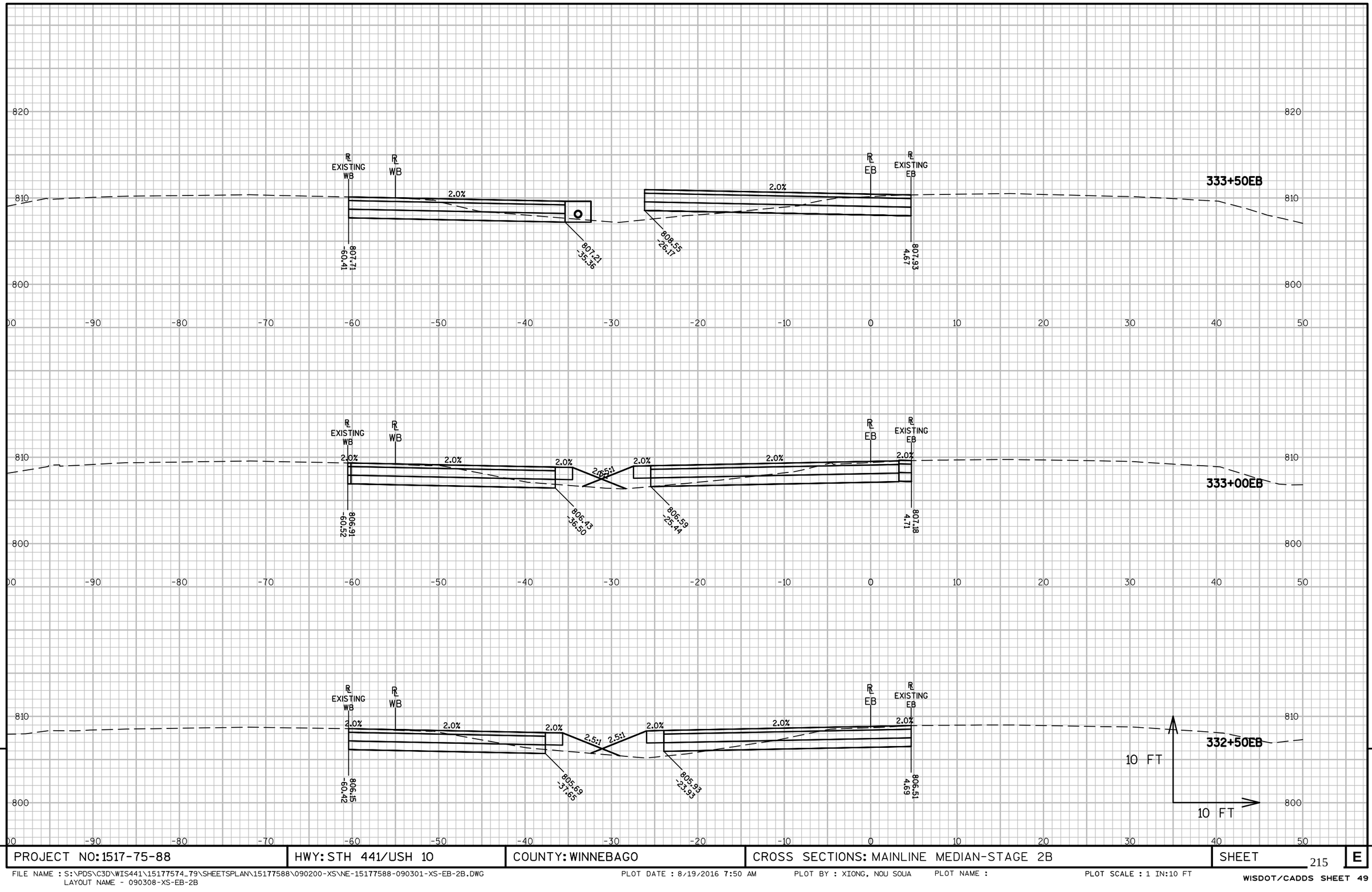

PROJECT NO: 1517-75-88	HWY: STH 441/USH 10	COUNTY: WINNEBAGO	CROSS SECTIONS: MAINLINE MEDIAN-STAGE 2B	SHEET 215 E

FILE NAME : S:\PDS\C3D\WIS441\15177574_79\SHEETSPLAN\15177588\090200-XS\NE-15177588-090301-XS-EB-2B.DWG
LAYOUT NAME - 090308-XS-EB-2B

PLOT DATE : 8/19/2016 7:50 AM PLOT BY : XIONG, NOU SOUA PLOT NAME : PLOT SCALE : 1 IN:10 FT

WISDOT/CADDS SHEET 49

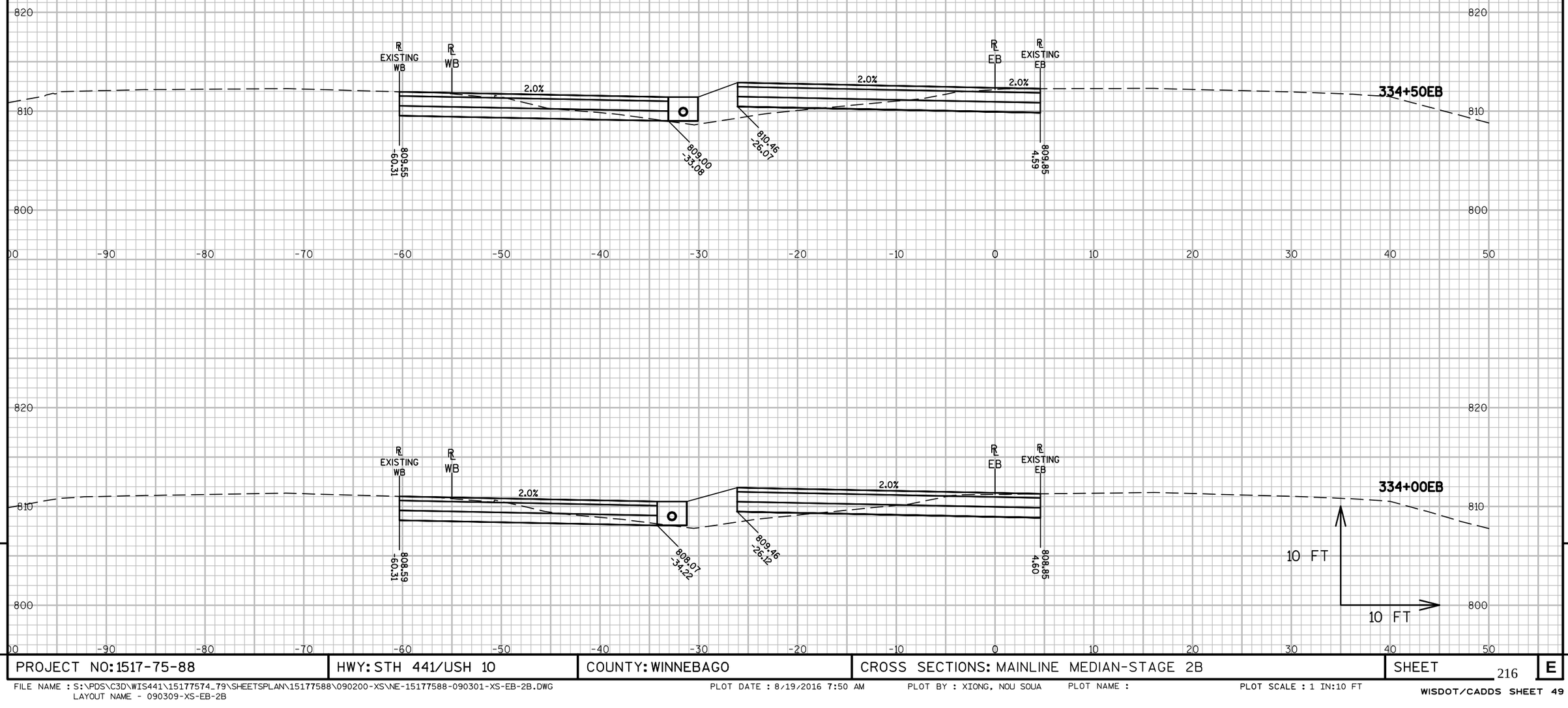

9

9

PROJECT NO: 1517-75-88	HWY: STH 441/USH 10	COUNTY: WINNEBAGO	CROSS SECTIONS: MAINLINE MEDIAN-STAGE 2B	SHEET 216	E

FILE NAME : S:\PDS\C3D\WIS441\15177574_79\SHEETSPLAN\15177588\090200-XS\NE-15177588-090301-XS-EB-2B.DWG
LAYOUT NAME - 090309-XS-EB-2B

PLOT DATE : 8/19/2016 7:50 AM PLOT BY : XIONG, NOU SOUA PLOT NAME : PLOT SCALE : 1 IN:10 FT

WISDOT/CADDS SHEET 49

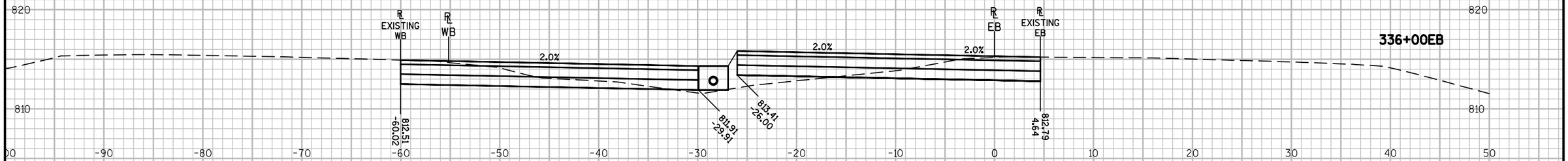

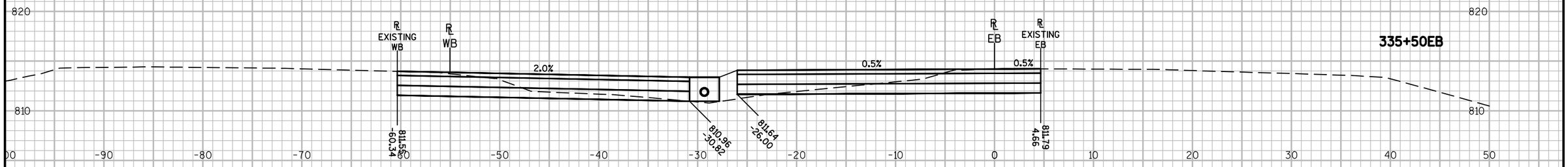

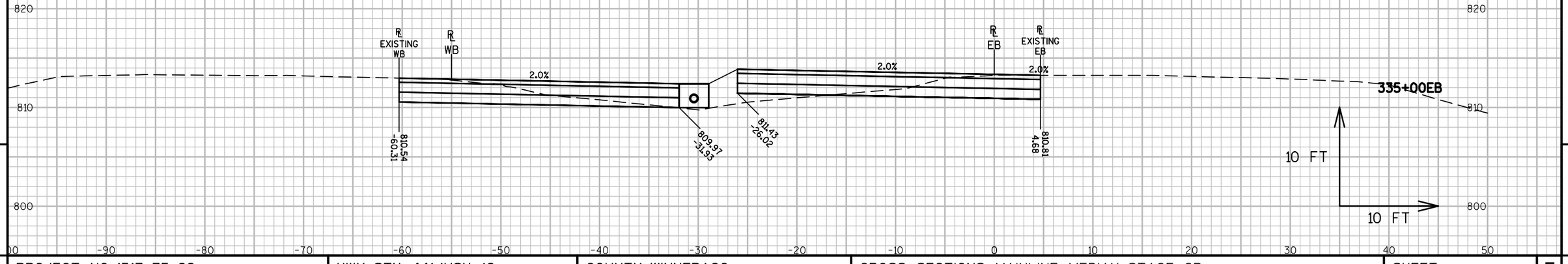

9

9

PROJECT NO: 1517-75-88	HWY: STH 441/USH 10	COUNTY: WINNEBAGO	CROSS SECTIONS: MAINLINE MEDIAN-STAGE 2B	SHEET 217	E

FILE NAME : S:\PDS\C3D\WIS441\15177574_79\SHEETSPLAN\15177588\090200-XS\NE-15177588-090301-XS-EB-2B.DWG
LAYOUT NAME - 090310-XS-EB-2B
PLOT DATE : 8/19/2016 7:51 AM PLOT BY : XIONG, NOU SOUA PLOT NAME : PLOT SCALE : 1 IN:10 FT
WISDOT/CADDS SHEET 49

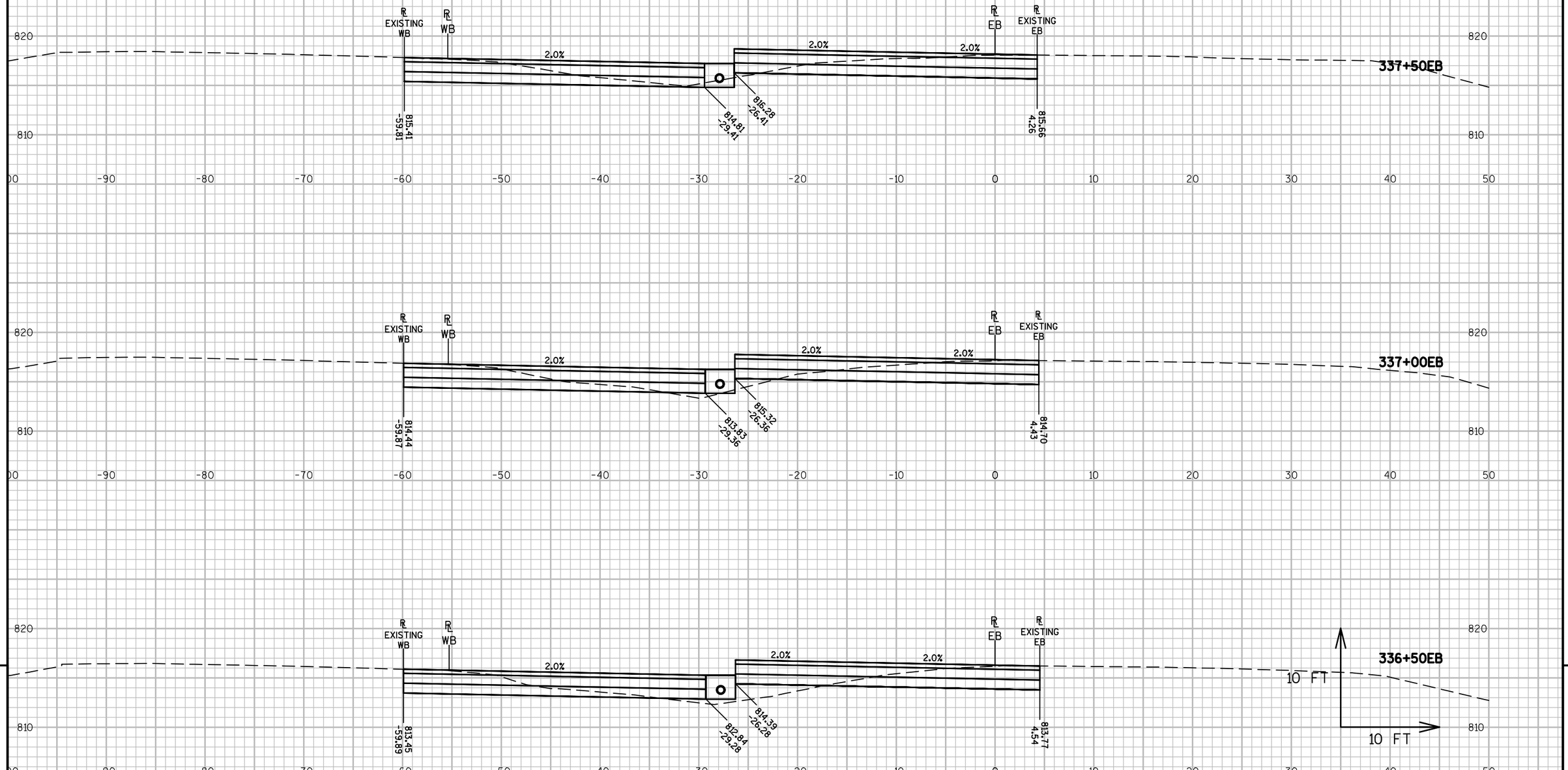

9

9

PROJECT NO: 1517-75-88	HWY: STH 441/USH 10	COUNTY: WINNEBAGO	CROSS SECTIONS: MAINLINE MEDIAN-STAGE 2B	SHEET 218 E

FILE NAME : S:\PDS\C3D\WIS441\15177574_79\SHEETSPLAN\15177588\090200-XS\NE-15177588-090301-XS-EB-2B.DWG
LAYOUT NAME - 090311-XS-EB-2B

PLOT DATE : 8/19/2016 7:51 AM PLOT BY : XIONG, NOU SOUA PLOT NAME : PLOT SCALE : 1 IN:10 FT

WISDOT/CADDS SHEET 49

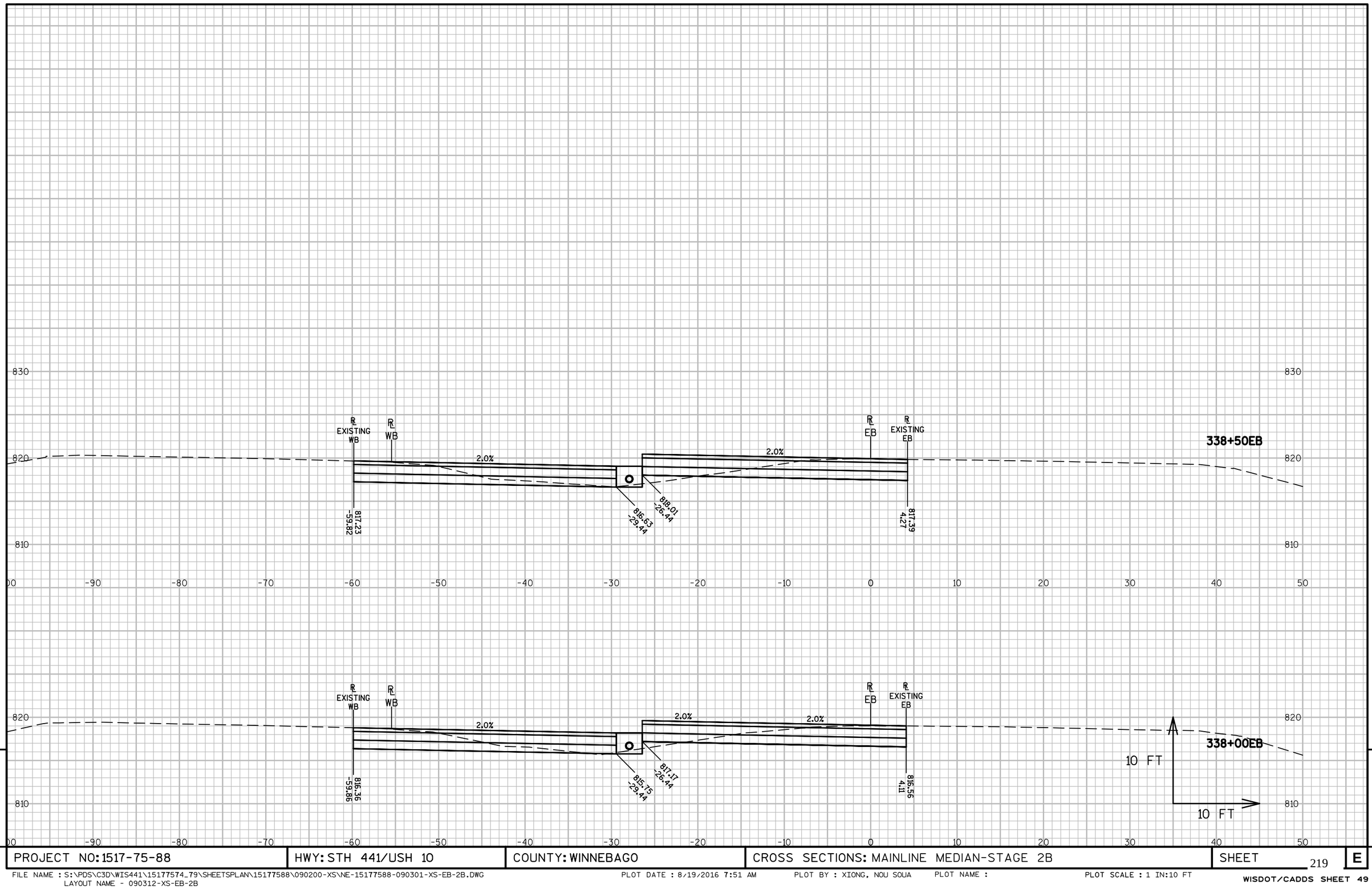

9

9

PROJECT NO: 1517-75-88	HWY: STH 441/USH 10	COUNTY: WINNEBAGO	CROSS SECTIONS: MAINLINE MEDIAN-STAGE 2B	SHEET 219	E

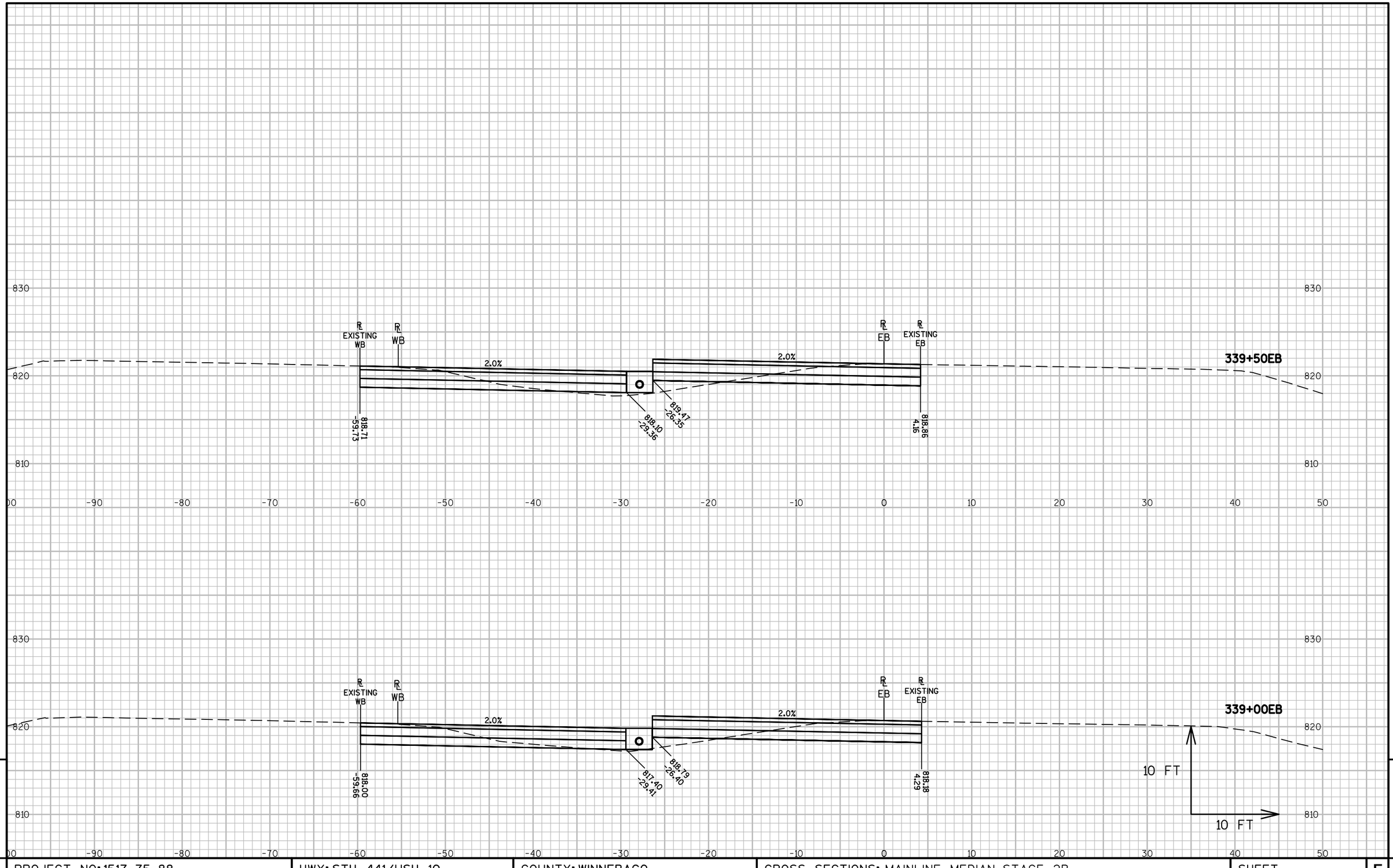

9

9

PROJECT NO: 1517-75-88	HWY: STH 441/USH 10	COUNTY: WINNEBAGO	CROSS SECTIONS: MAINLINE MEDIAN-STAGE 2B	SHEET 220	E

FILE NAME : S:\PDS\C3D\WIS441\15177574_79\SHEETSPLAN\15177588\090200-XS\NE-15177588-090301-XS-EB-2B.DWG
LAYOUT NAME - 090313-XS-EB-2B

PLOT DATE : 8/19/2016 7:51 AM PLOT BY : XIONG, NOU SOUA PLOT NAME : PLOT SCALE : 1 IN:10 FT

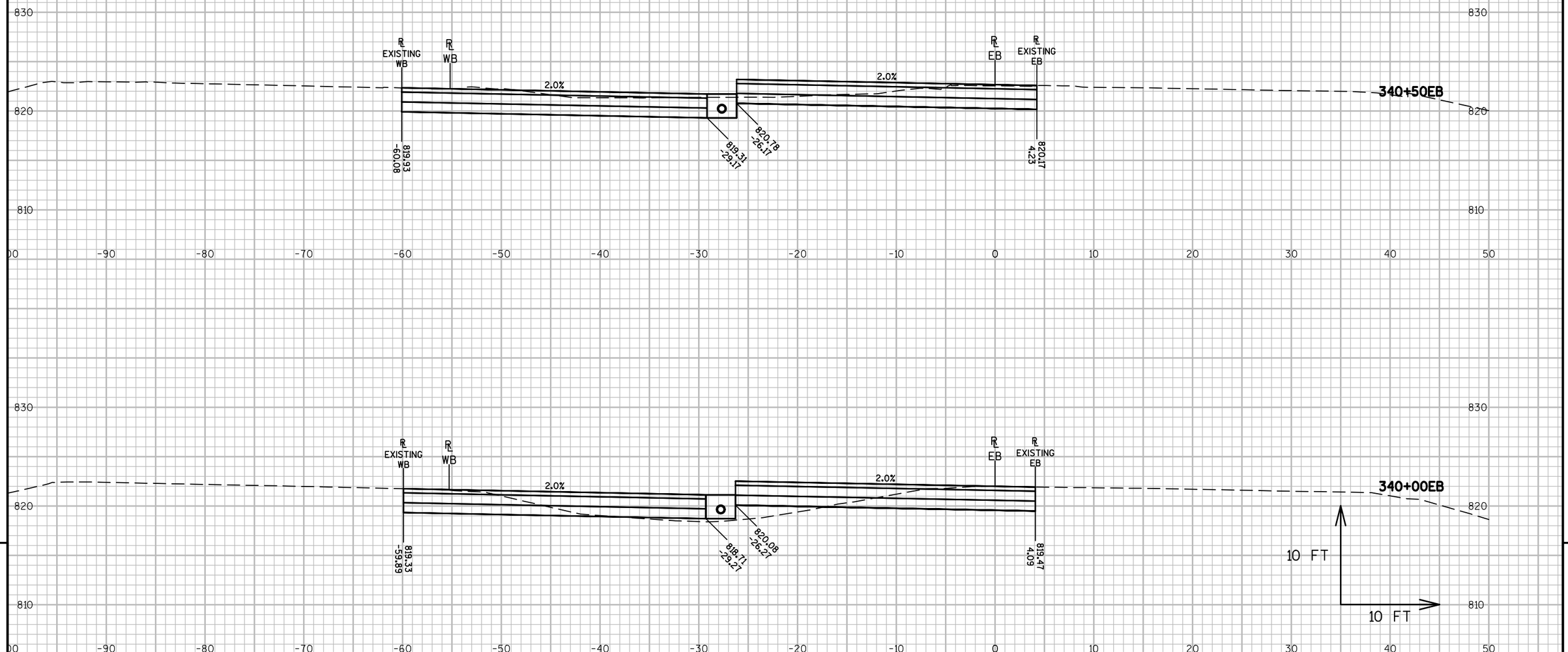

9

9

PROJECT NO: 1517-75-88	HWY: STH 441/USH 10	COUNTY: WINNEBAGO	CROSS SECTIONS: MAINLINE MEDIAN-STAGE 2B	SHEET 221 E

FILE NAME : S:\PDS\C3D\WIS441\15177574_79\SHEETSPLAN\15177588\090200-XS\NE-15177588-090301-XS-EB-2B.DWG
LAYOUT NAME - 090314-XS-EB-2B

PLOT DATE : 8/19/2016 7:51 AM PLOT BY : XIONG, NOU SOUA PLOT NAME : PLOT SCALE : 1 IN:10 FT

WISDOT/CADDS SHEET 49

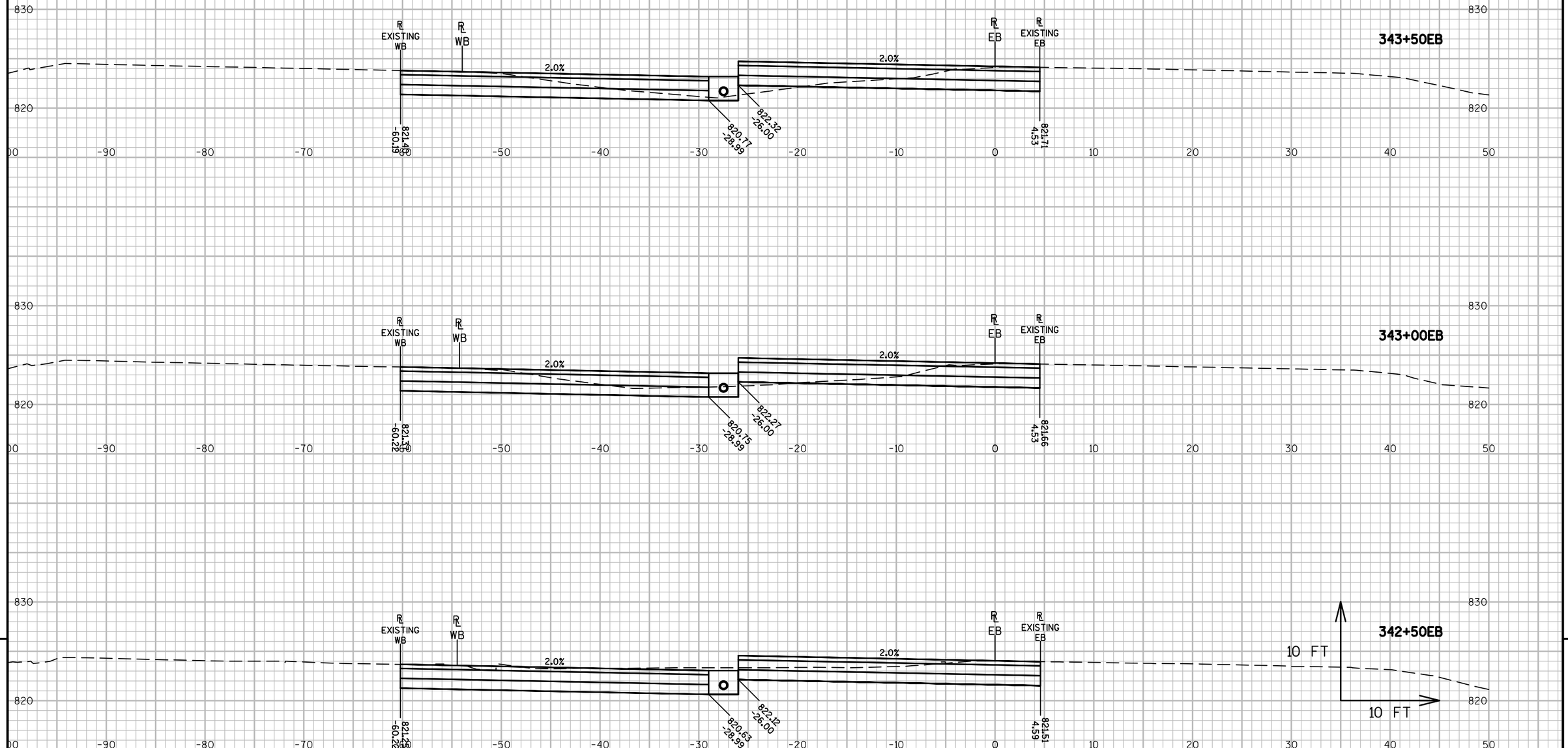

9

PROJECT NO: 1517-75-88	HWY: STH 441/USH 10	COUNTY: WINNEBAGO	CROSS SECTIONS: MAINLINE MEDIAN-STAGE 2B	SHEET 222	E

9

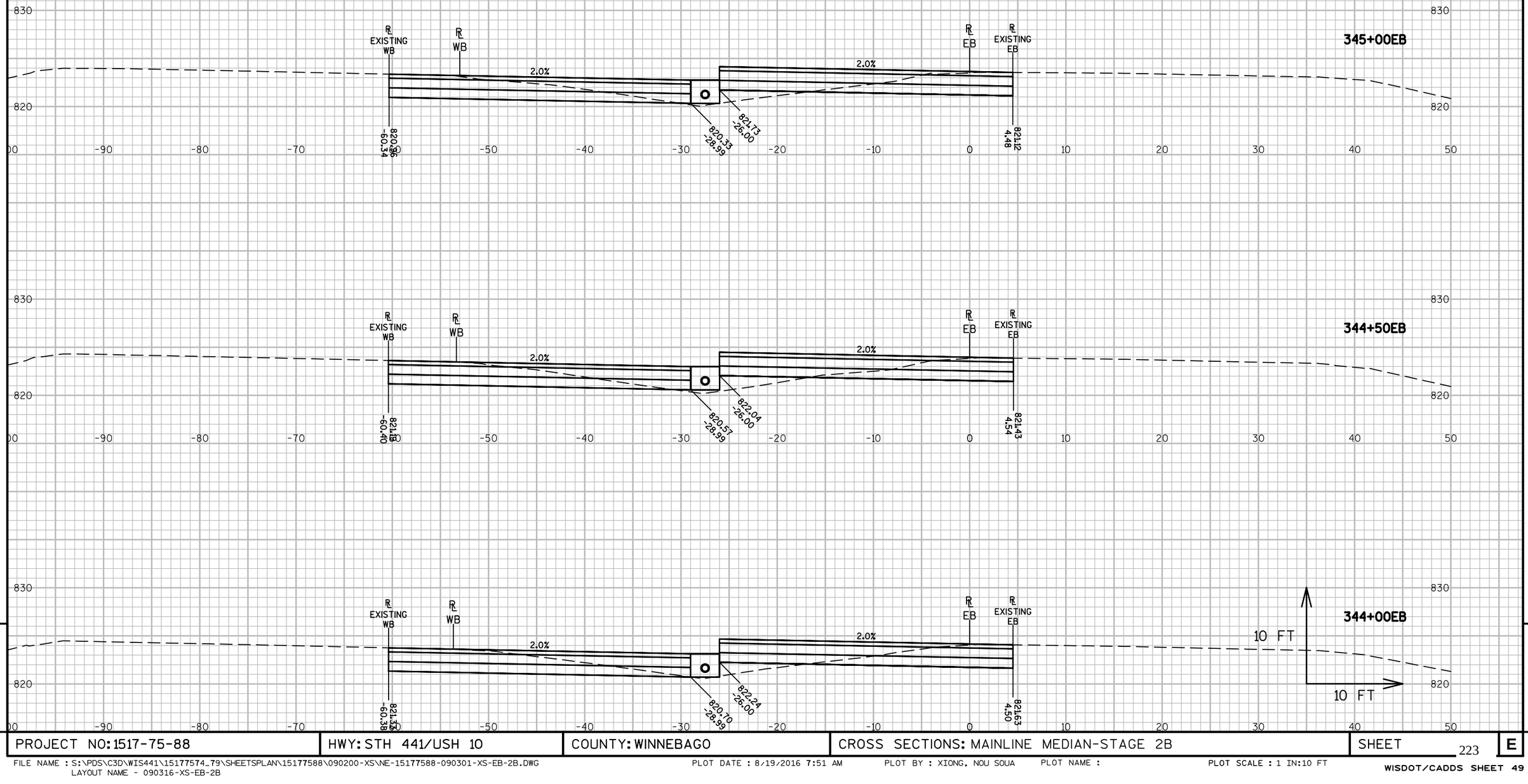

9

9

PROJECT NO: 1517-75-88	HWY: STH 441/USH 10	COUNTY: WINNEBAGO	CROSS SECTIONS: MAINLINE MEDIAN-STAGE 2B	SHEET 223	E

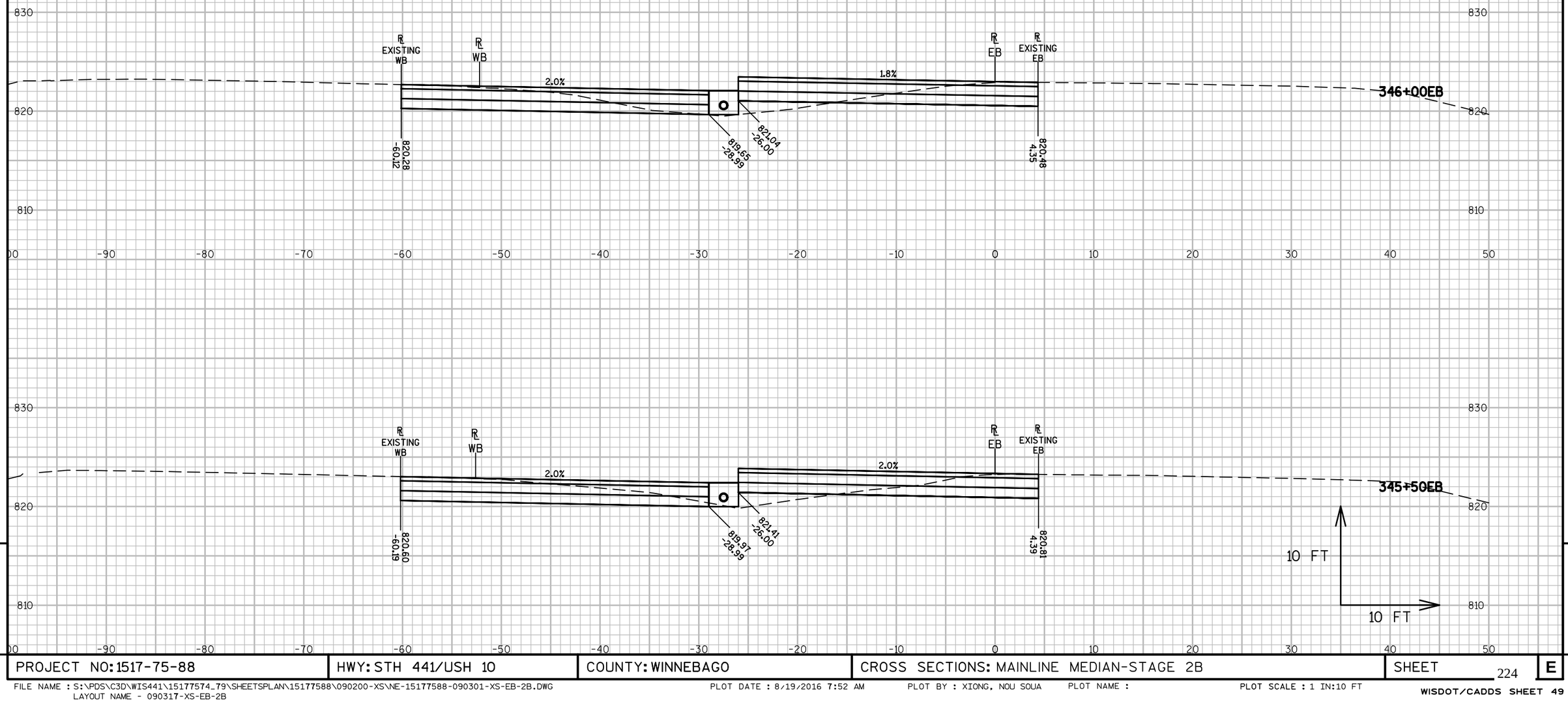

9

9

PROJECT NO: 1517-75-88	HWY: STH 441/USH 10	COUNTY: WINNEBAGO	CROSS SECTIONS: MAINLINE MEDIAN-STAGE 2B	SHEET 224	E

FILE NAME : S:\PDS\C3D\WIS441\15177574_79\SHEETSPLAN\15177588\090200-XS\NE-15177588-090301-XS-EB-2B.DWG
LAYOUT NAME - 090317-XS-EB-2B

PLOT DATE : 8/19/2016 7:52 AM PLOT BY : XIONG, NOU SOUA PLOT NAME : PLOT SCALE : 1 IN:10 FT

WISDOT/CADDS SHEET 49

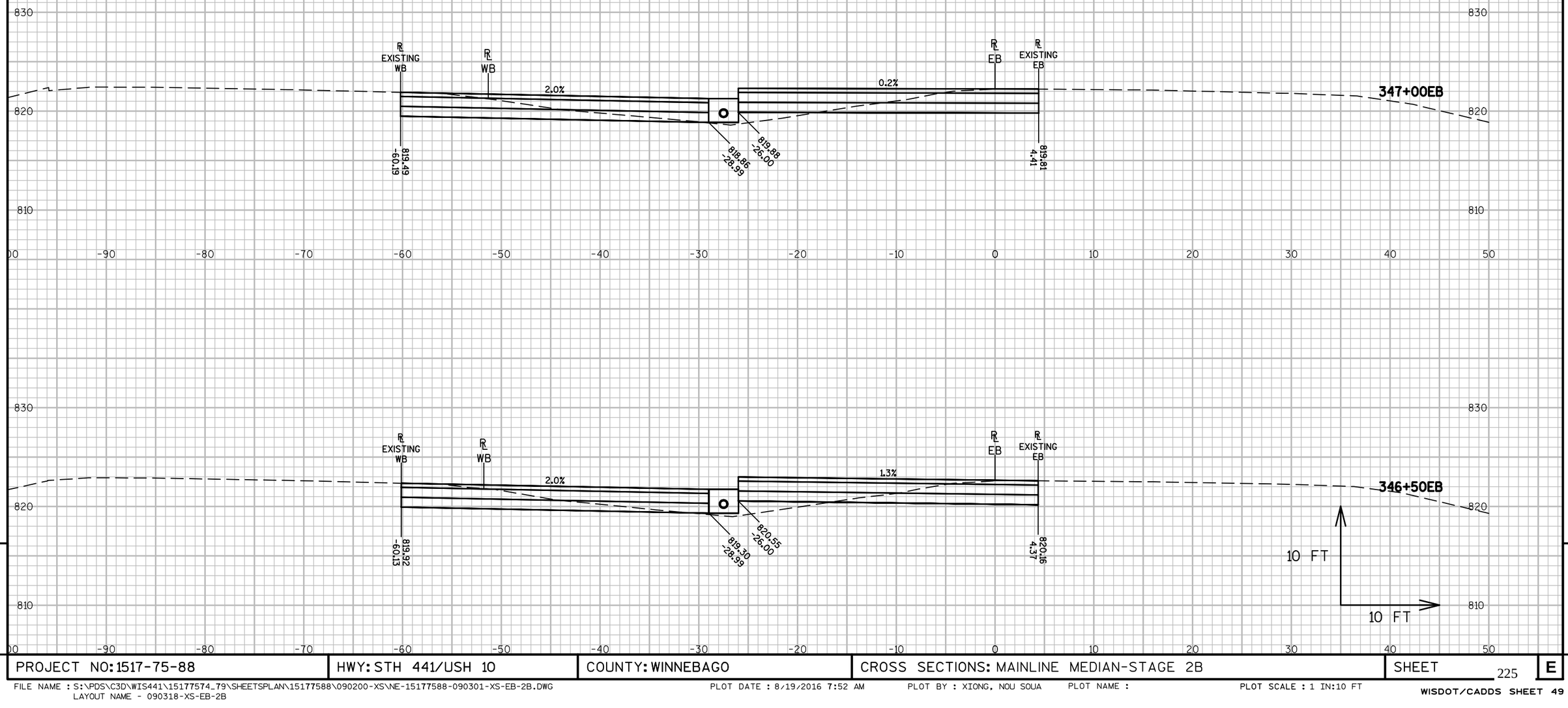

PROJECT NO: 1517-75-88	HWY: STH 441/USH 10	COUNTY: WINNEBAGO	CROSS SECTIONS: MAINLINE MEDIAN-STAGE 2B	SHEET 225 E

FILE NAME : S:\PDS\C3D\WIS441\15177574_79\SHEETSPLAN\15177588\090200-XS\NE-15177588-090301-XS-EB-2B.DWG
LAYOUT NAME - 090318-XS-EB-2B

PLOT DATE : 8/19/2016 7:52 AM PLOT BY : XIONG, NOU SOUA PLOT NAME : PLOT SCALE : 1 IN:10 FT

WISDOT/CADDS SHEET 49

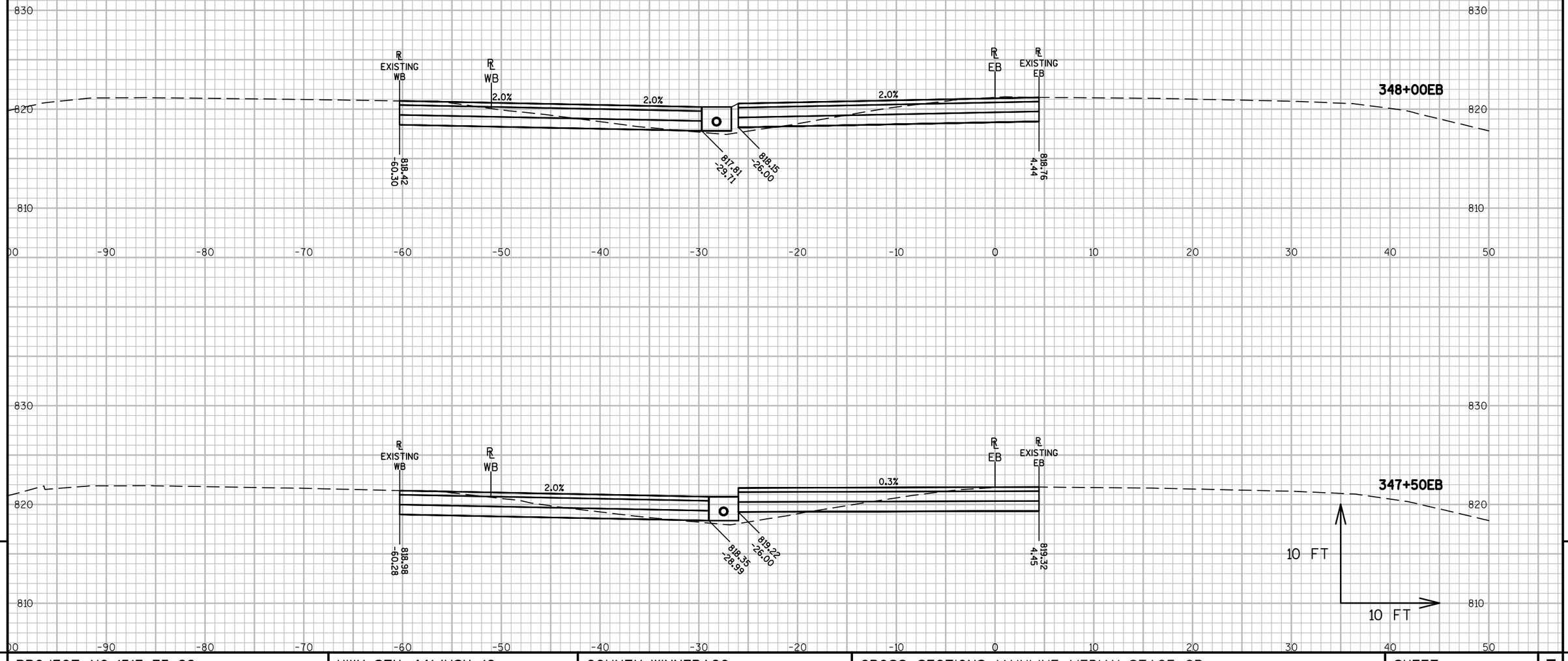

9

9

PROJECT NO: 1517-75-88	HWY: STH 441/USH 10	COUNTY: WINNEBAGO	CROSS SECTIONS: MAINLINE MEDIAN-STAGE 2B	SHEET 226	E

FILE NAME : S:\PDS\C3D\WIS441\15177574_79\SHEETSPLAN\15177588\090200-XS\NE-15177588-090301-XS-EB-2B.DWG
LAYOUT NAME - 090319-XS-EB-2B

PLOT DATE : 8/19/2016 7:52 AM PLOT BY : XIONG, NOU SOUA PLOT NAME : PLOT SCALE : 1 IN:10 FT

WISDOT/CADDS SHEET 49

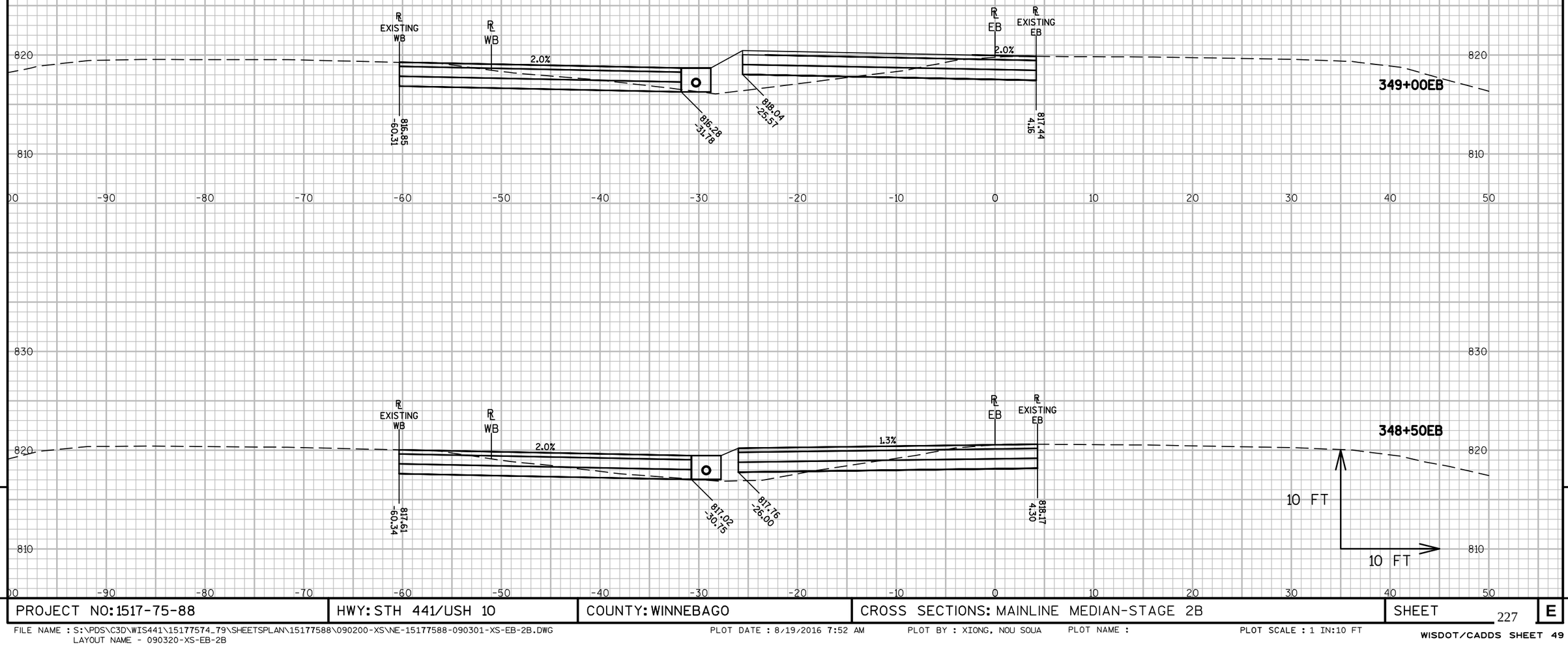

9

9

PROJECT NO: 1517-75-88	HWY: STH 441/USH 10	COUNTY: WINNEBAGO	CROSS SECTIONS: MAINLINE MEDIAN-STAGE 2B	SHEET 227	E

FILE NAME : S:\PDS\C3D\WIS441\15177574_79\SHEETSPLAN\15177588\090200-XS\NE-15177588-090301-XS-EB-2B.DWG
LAYOUT NAME - 090320-XS-EB-2B

PLOT DATE : 8/19/2016 7:52 AM PLOT BY : XIONG, NOU SOUA PLOT NAME : PLOT SCALE : 1 IN:10 FT

WISDOT/CADDS SHEET 49

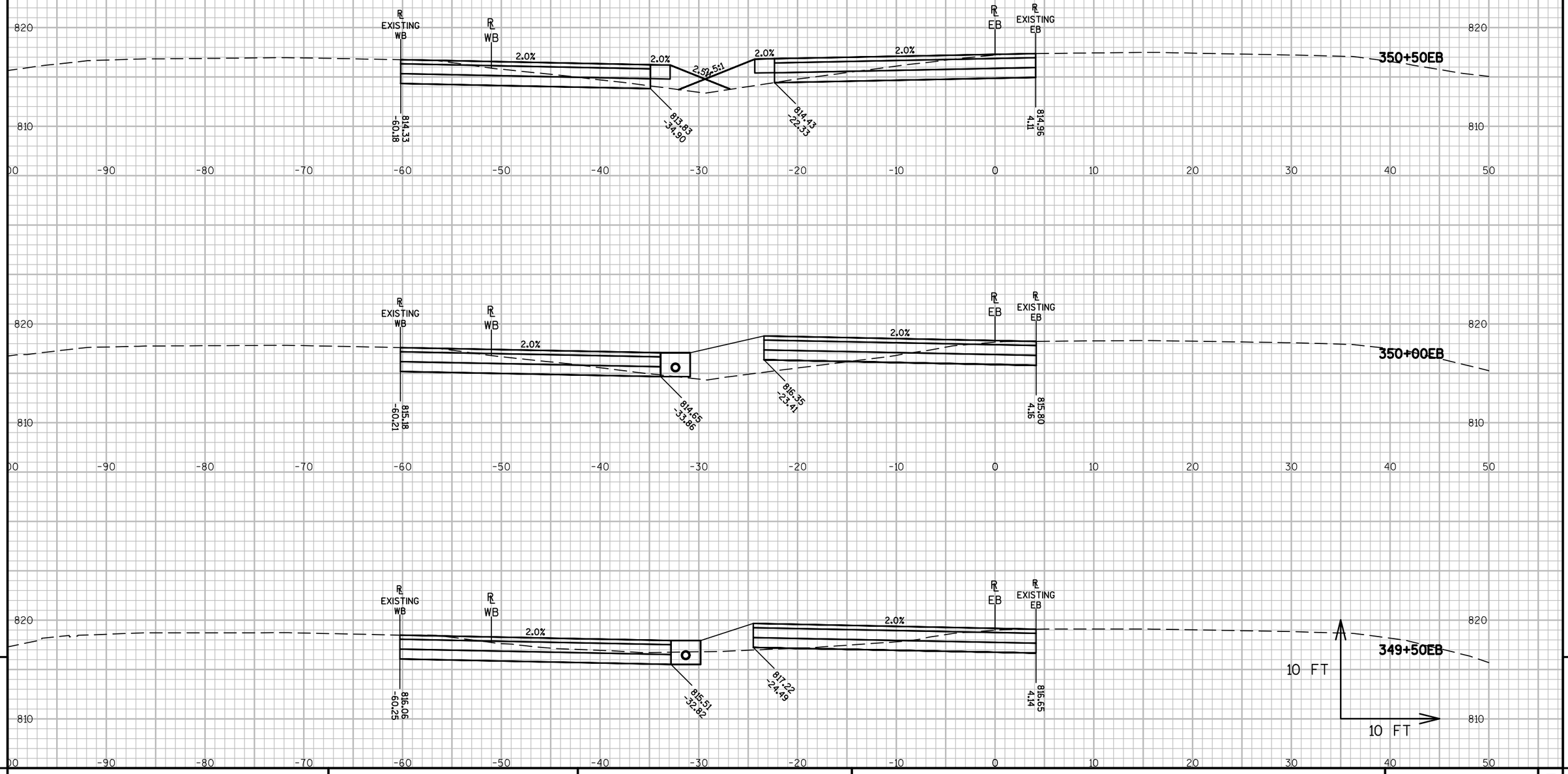

9

9

PROJECT NO: 1517-75-88	HWY: STH 441/USH 10	COUNTY: WINNEBAGO	CROSS SECTIONS: MAINLINE MEDIAN-STAGE 2B	SHEET 228	E

FILE NAME : S:\PDS\C3D\WIS441\15177574_79\SHEETSPLAN\15177588\090200-XS\NE-15177588-090301-XS-EB-2B.DWG
LAYOUT NAME - 090321-XS-EB-2B

PLOT DATE : 8/19/2016 7:52 AM PLOT BY : XIONG, NOU SOUA PLOT NAME : PLOT SCALE : 1 IN:10 FT

WISDOT/CADDS SHEET 49

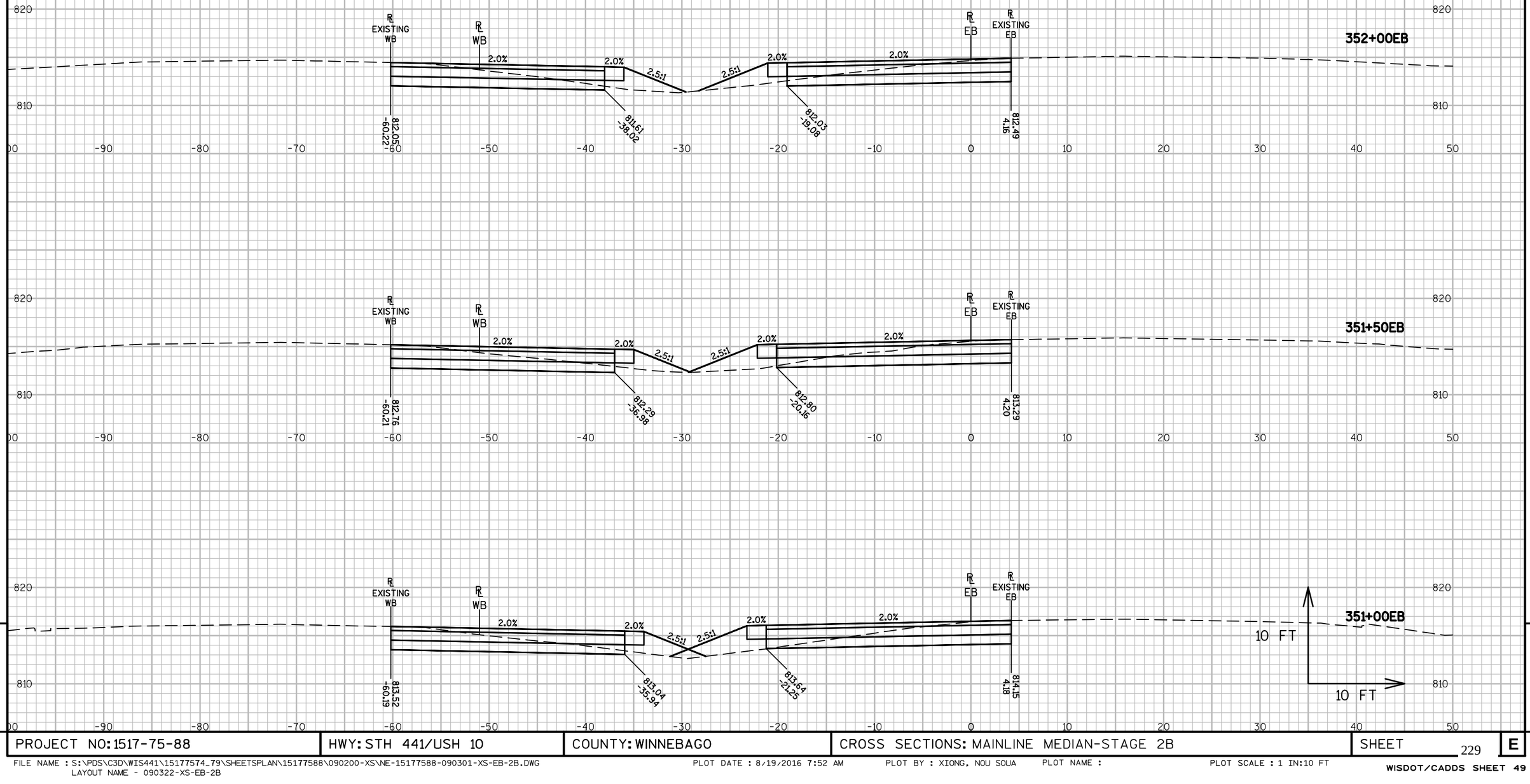

9

9

PROJECT NO: 1517-75-88	HWY: STH 441/USH 10	COUNTY: WINNEBAGO	CROSS SECTIONS: MAINLINE MEDIAN-STAGE 2B	SHEET 229	E

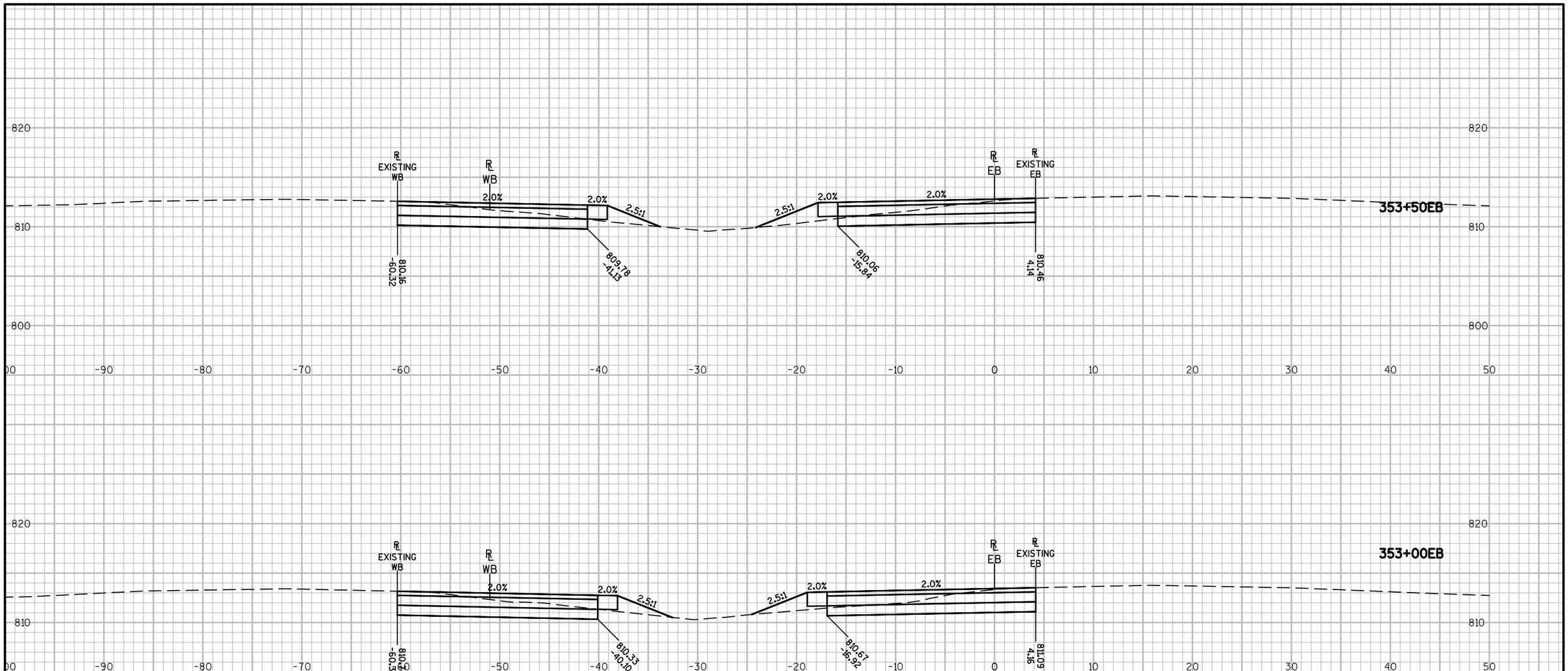

9

9

PROJECT NO: 1517-75-88	HWY: STH 441/USH 10	COUNTY: WINNEBAGO	CROSS SECTIONS: MAINLINE MEDIAN-STAGE 2B	SHEET 230	E

FILE NAME : S:\PDS\C3D\WIS441\15177574_79\SHEETSPLAN\15177588\090200-XS\NE-15177588-090301-XS-EB-2B.DWG
LAYOUT NAME - 090323-XS-EB-2B
PLOT DATE : 8/19/2016 7:52 AM PLOT BY : XIONG, NOU SOUA PLOT NAME : PLOT SCALE : 1 IN:10 FT
WISDOT/CADDS SHEET 49

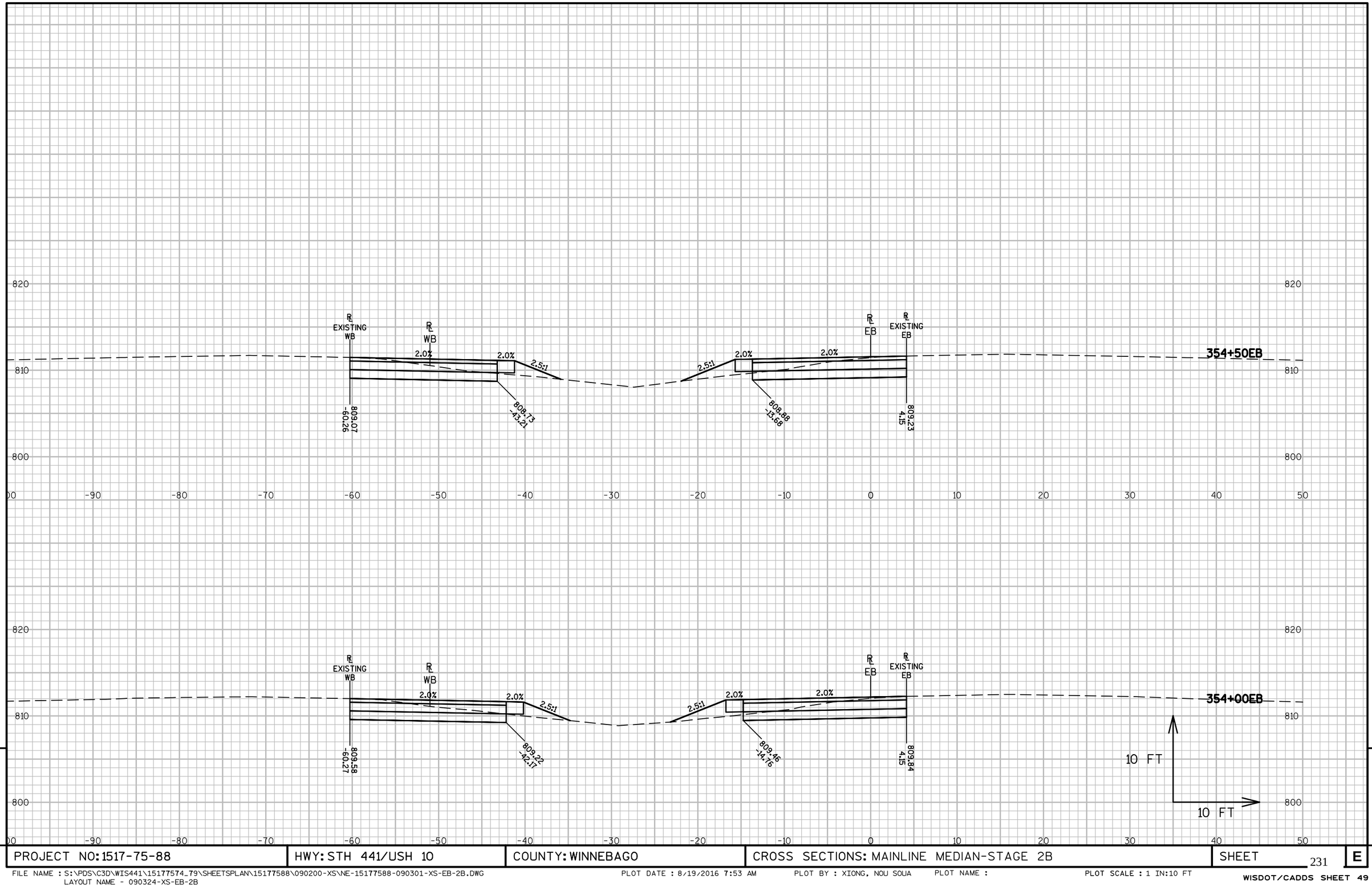

9

9

PROJECT NO: 1517-75-88	HWY: STH 441/USH 10	COUNTY: WINNEBAGO	CROSS SECTIONS: MAINLINE MEDIAN-STAGE 2B	SHEET 231	E

FILE NAME : S:\PDS\C3D\WIS441\15177574_79\SHEETSPLAN\15177588\090200-XS\NE-15177588-090301-XS-EB-2B.DWG
LAYOUT NAME - 090324-XS-EB-2B

PLOT DATE : 8/19/2016 7:53 AM PLOT BY : XIONG, NOU SOUA PLOT NAME : PLOT SCALE : 1 IN:10 FT

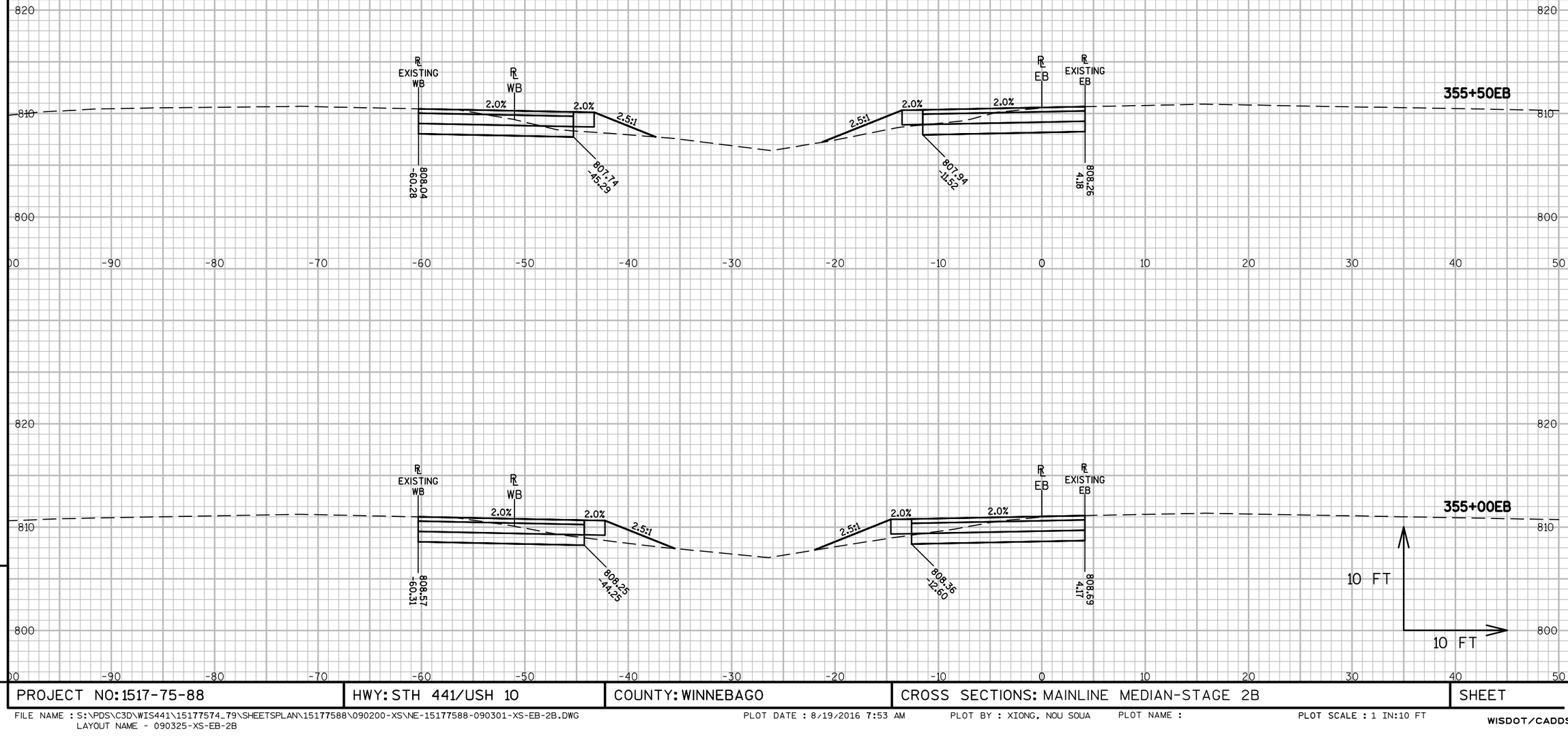

PROJECT NO: 1517-75-88	HWY: STH 441/USH 10	COUNTY: WINNEBAGO	CROSS SECTIONS: MAINLINE MEDIAN-STAGE 2B	SHEET 232	E

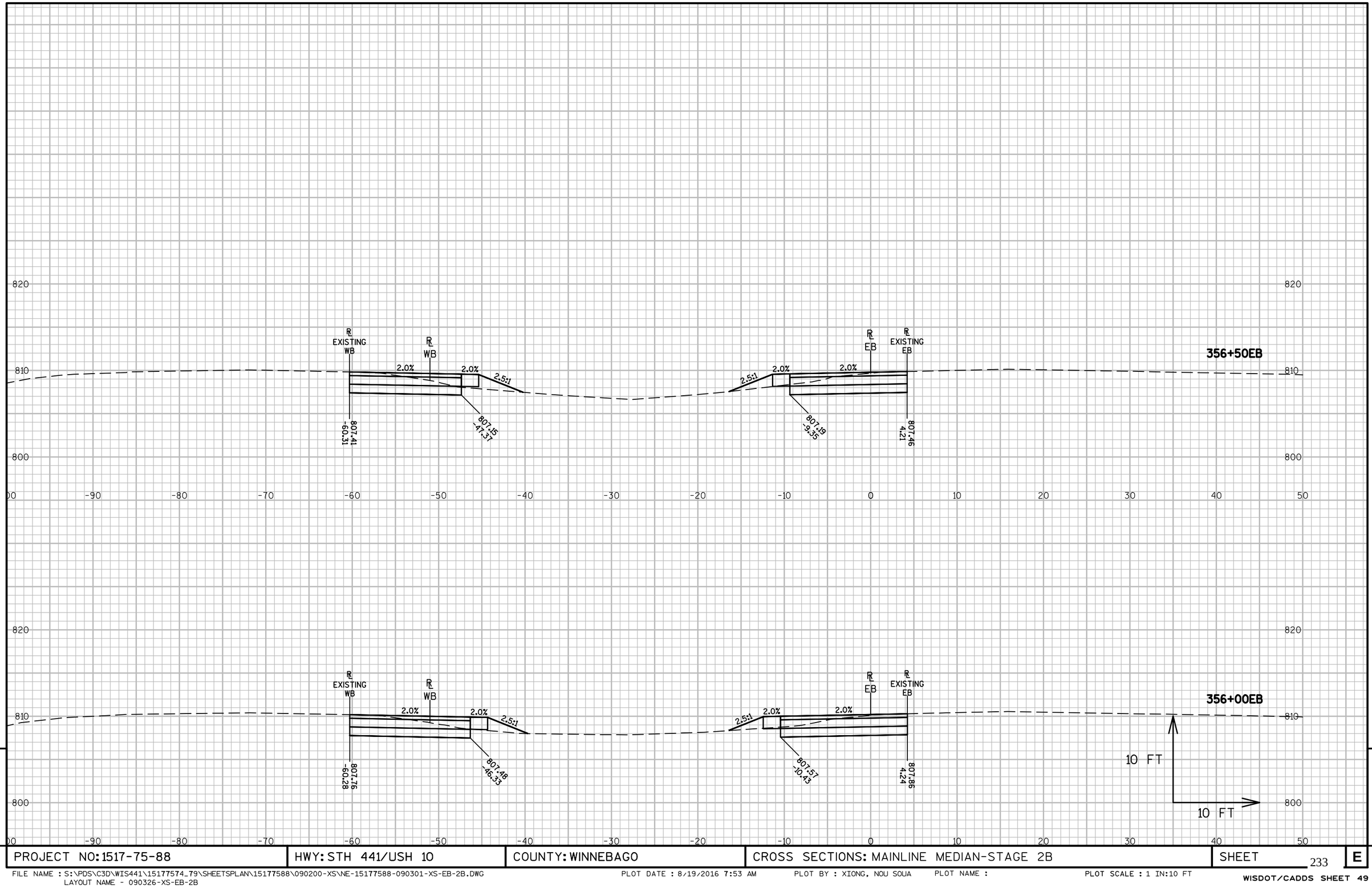

9

9

PROJECT NO: 1517-75-88	HWY: STH 441/USH 10	COUNTY: WINNEBAGO	CROSS SECTIONS: MAINLINE MEDIAN-STAGE 2B	SHEET 233	E

FILE NAME : S:\PDS\C3D\WIS441\15177574_79\SHEETSPLAN\15177588\090200-XS\NE-15177588-090301-XS-EB-2B.DWG
LAYOUT NAME - 090326-XS-EB-2B

PLOT DATE : 8/19/2016 7:53 AM PLOT BY : XIONG, NOU SOUA PLOT NAME : PLOT SCALE : 1 IN:10 FT

WISDOT/CADDS SHEET 49

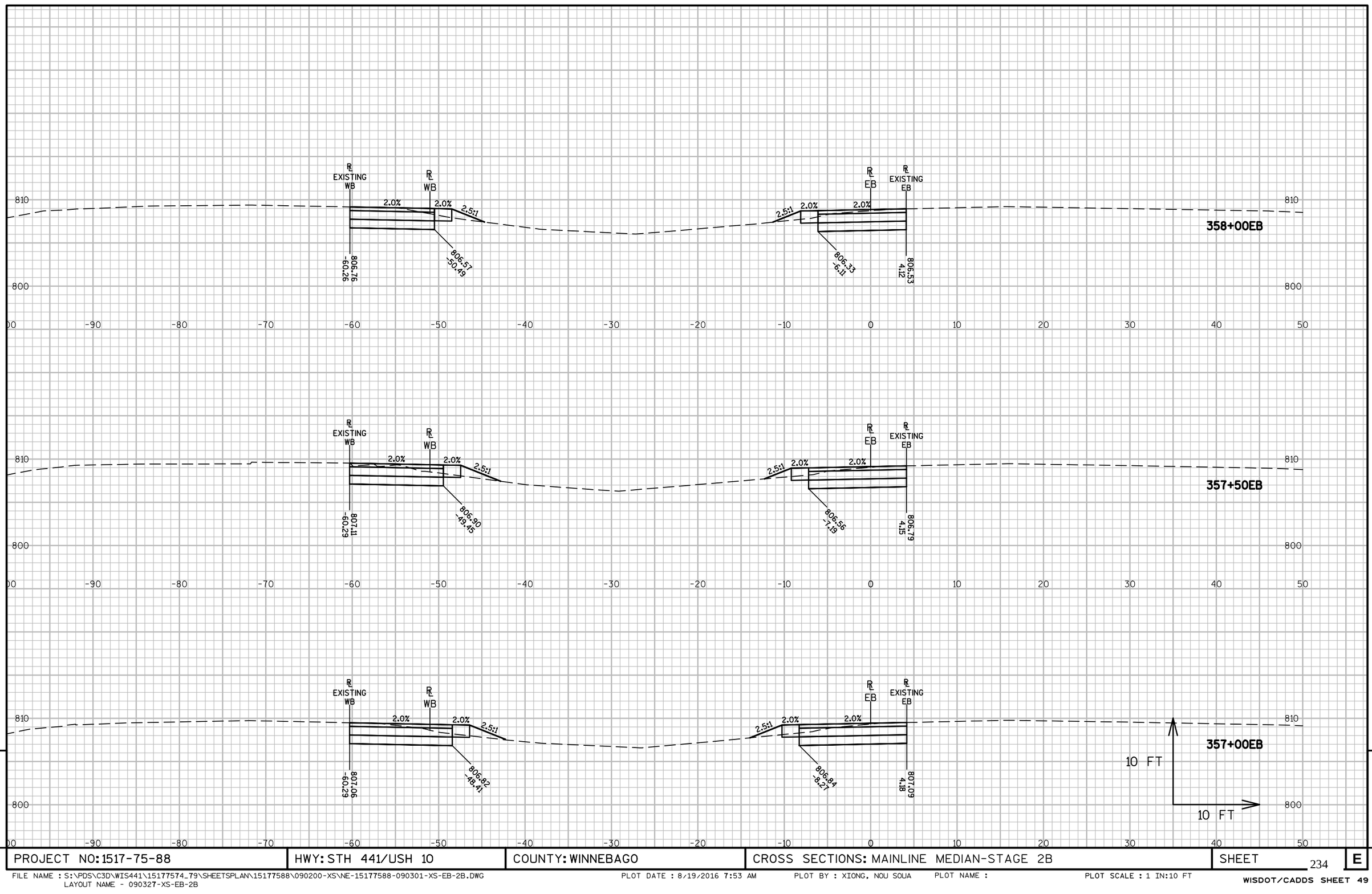

9

9

PROJECT NO: 1517-75-88	HWY: STH 441/USH 10	COUNTY: WINNEBAGO	CROSS SECTIONS: MAINLINE MEDIAN-STAGE 2B	SHEET 234	E

FILE NAME : S:\PDS\C3D\WIS441\15177574_79\SHEETSPLAN\15177588\090200-XS\NE-15177588-090301-XS-EB-2B.DWG
LAYOUT NAME - 090327-XS-EB-2B

PLOT DATE : 8/19/2016 7:53 AM PLOT BY : XIONG, NOU SOUA PLOT NAME : PLOT SCALE : 1 IN:10 FT

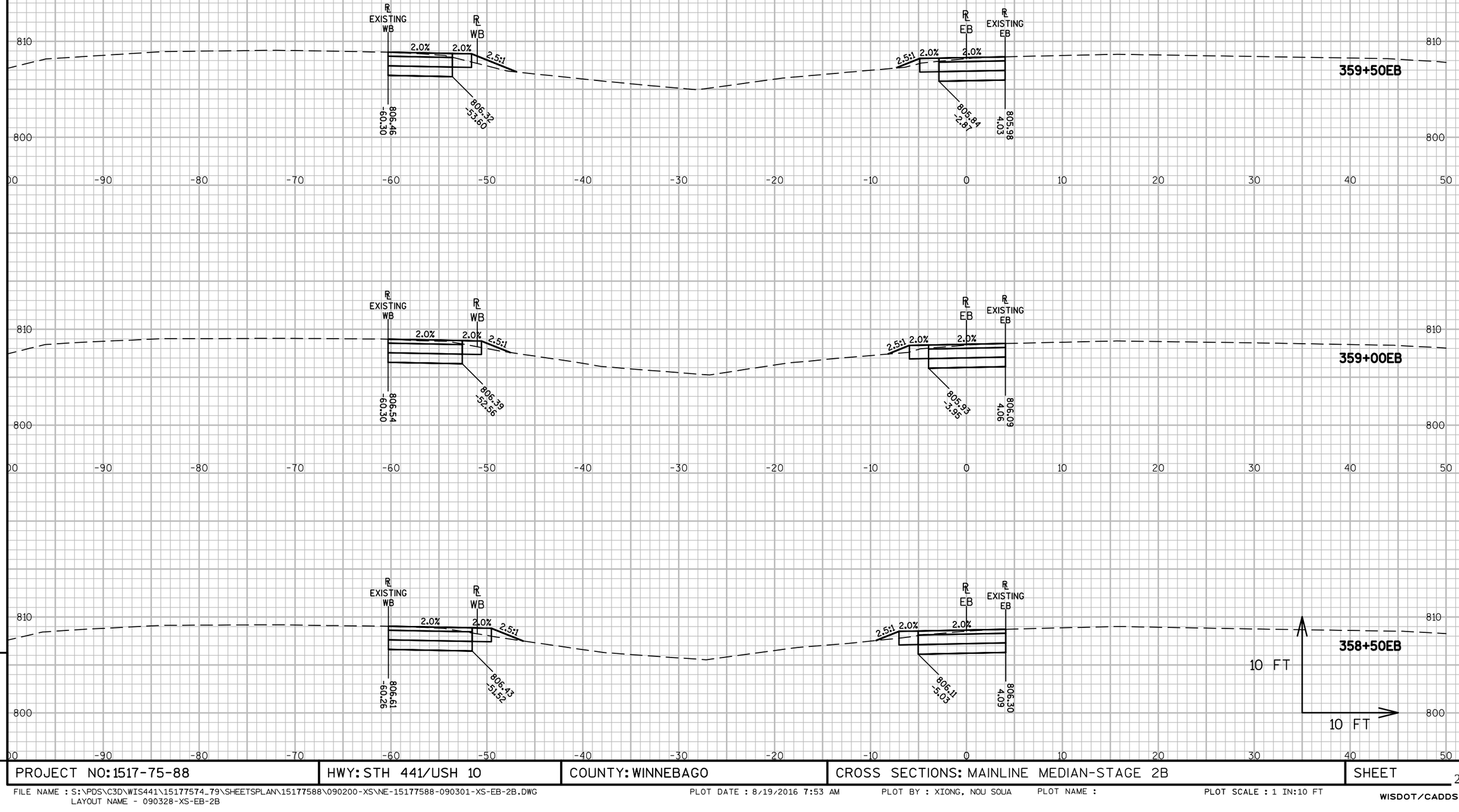

9

9

PROJECT NO: 1517-75-88	HWY: STH 441/USH 10	COUNTY: WINNEBAGO	CROSS SECTIONS: MAINLINE MEDIAN-STAGE 2B	SHEET 235	E

FILE NAME : S:\PDS\C3D\WIS441\15177574_79\SHEETSPLAN\15177588\090200-XS\NE-15177588-090301-XS-EB-2B.DWG
LAYOUT NAME - 090328-XS-EB-2B
PLOT DATE : 8/19/2016 7:53 AM PLOT BY : XIONG, NOU SOUA PLOT NAME : PLOT SCALE : 1 IN:10 FT
WISDOT/CADDS SHEET 49

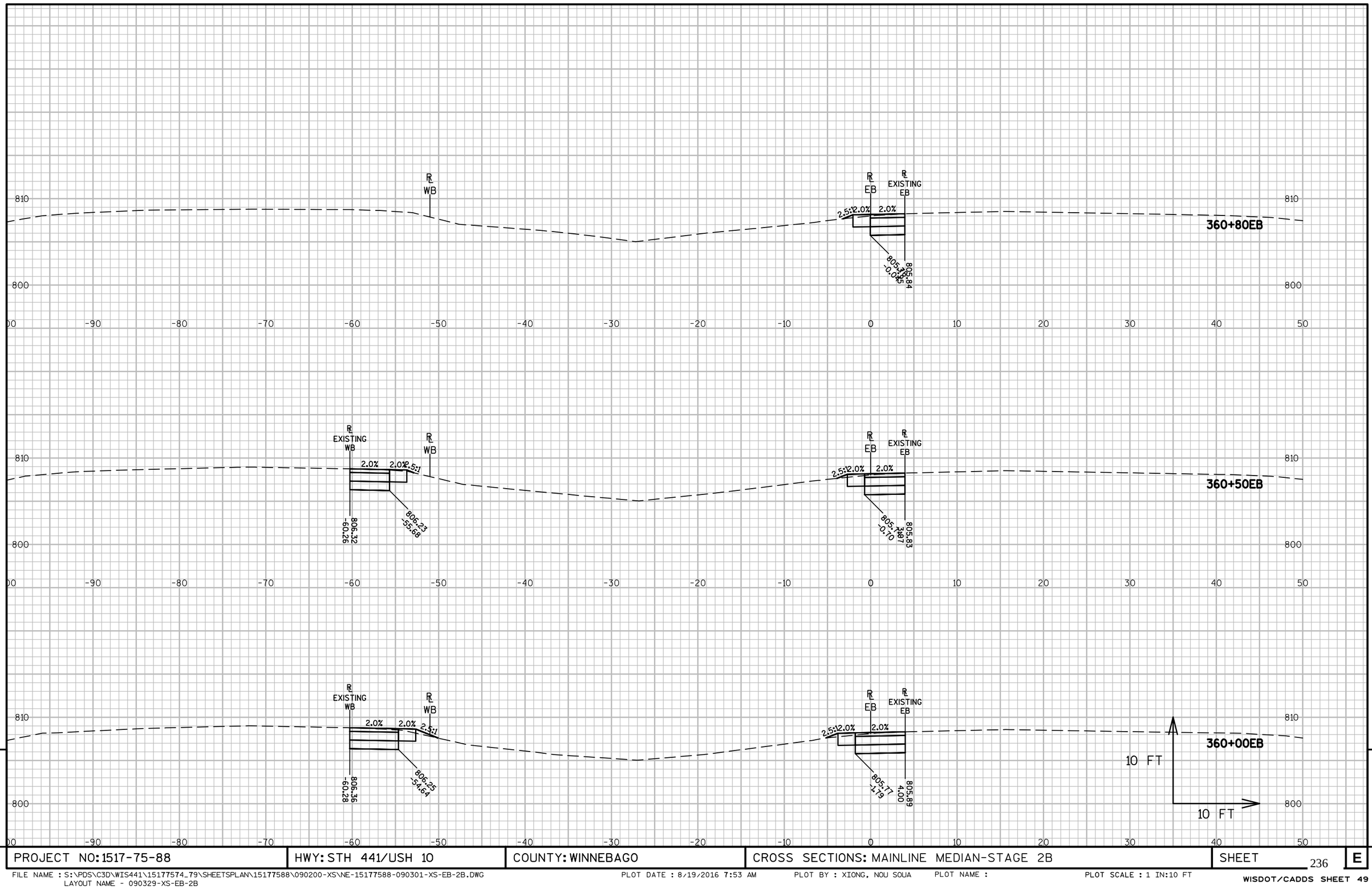

PROJECT NO: 1517-75-88	HWY: STH 441/USH 10	COUNTY: WINNEBAGO	CROSS SECTIONS: MAINLINE MEDIAN-STAGE 2B	SHEET 236	E

Notes

Wisconsin Department of Transportation

Dedicated people creating transportation solutions
through innovation and exceptional service.

http://www.dot.wisconsin.gov