GRE

DECEMBER 2016

PROJECT ID: 1517-75-85

COUNTY: WINNEBAGO

ORDER OF SHEETS

Section No.	1	Title
Section No.	2	Typical Sections and Details
Section No.	3	Estimate of Quantities
Section No.	3	Miscellaneous Quantities
Section No.	4	Right of Way Plat
Section No.	5	Plan and Profile
Section No.	6	Standard Detail Drawings
~~Section No.~~	~~7~~	~~Sign Plates~~
~~Section No.~~	~~8~~	~~Structure Plans~~
Section No.	9	Computer Earthwork Data
Section No.	9	Cross Sections

TOTAL SHEETS = 246

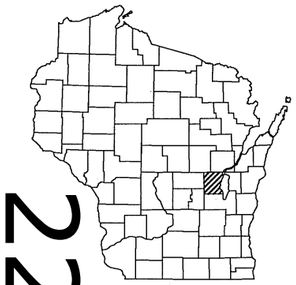

22

N

DESIGN DESIGNATION — STH 441/USH 10

A.A.D.T.	2020	=	55,300
A.A.D.T.	2038	=	73,100
D.H.V.	2038	=	7,890
D.D.		=	57%
T.		=	8.8%
DESIGN SPEED		=	70 MPH
ESALS		=	9,665,000

CONVENTIONAL SYMBOLS

PLAN
- CORPORATE LIMITS
- PROPERTY LINE
- LOT LINE
- LIMITED HIGHWAY EASEMENT
- EXISTING RIGHT OF WAY
- PROPOSED OR NEW R/W LINE
- SLOPE INTERCEPT
- REFERENCE LINE
- EXISTING CULVERT
- PROPOSED CULVERT (Box or Pipe)
- COMBUSTIBLE FLUIDS (CAUTION)
- MARSH AREA
- WOODED OR SHRUB AREA

PROFILE
- GRADE LINE
- ORIGINAL GROUND
- MARSH OR ROCK PROFILE (To be noted as such) (ROCK)
- SPECIAL DITCH (LABEL)
- GRADE ELEVATION (95.36)
- CULVERT (Profile View)

UTILITIES
- COMMUNICATION OVERHEAD — OH
- COMMUNICATION UNDERGROUND — C
- ELECTRIC OVERHEAD — OH
- ELECTRIC UNDERGROUND — E
- FIBER OPTIC — FO
- GAS — G
- SANITARY SEWER — SAN
- STORM SEWER — SS
- WATER — W
- UTILITY PEDESTAL
- POWER POLE
- TELEPHONE POLE

STATE OF WISCONSIN
DEPARTMENT OF TRANSPORTATION

PLAN OF PROPOSED IMPROVEMENT

USH 10 - USH 10/STH 441

COUNTY CB - ONEIDA STREET

USH 10

WINNEBAGO COUNTY

MAINLINE TMP (PHASE 1)

STATE PROJECT NUMBER
1517-75-85

STATE PROJECT	FEDERAL PROJECT	
	PROJECT	CONTRACT
1517-75-85	WISC 2016482	1

R-17-E

BRIDGES
B-70-111
B-70-112

T-20-N

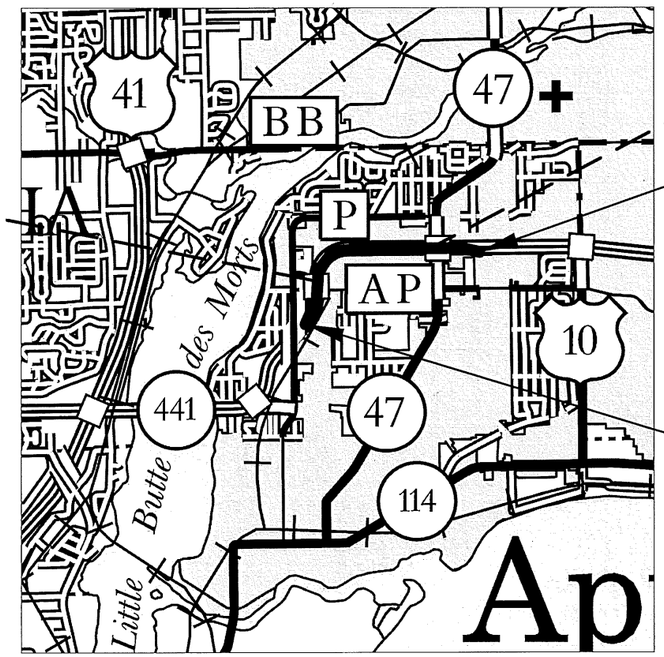

BRIDGES
B-70-113
B-70-114

END PROJECT 1517-75-85
STA 300WB+43.00
Y=552092.819
X=823579.500

BEGIN PROJECT 1517-75-85
STA 217WB+47.73
Y=548771.333
X=817466.297

LAYOUT
SCALE 0 — 1 MI

TOTAL NET LENGTH OF CENTERLINE = 1.64

EXCEPTION TO NET & LENGTH
B-70-111 & B-70-112 STA 241WB+22 - STA 243WB+23
B-70-113 & B-70-114 STA 292WB+99 - STA 294WB+64

COORDINATES ON THIS PLAN ARE REFERENCED TO THE WISCONSIN COUNTY COORDINATE SYSTEM (WCCS). WINNEBAGO COUNTY NAD83 (1991).

ELEVATIONS SHOWN ON THIS PLAN ARE REFERENCED TO THE NATIONAL GEODETIC VERTICAL DATUM OF 1929, NGVD 29.

STATE OF WISCONSIN
DEPARTMENT OF TRANSPORTATION

PREPARED BY
- Surveyor: KAPUR
- Designer: G. VICKMAN
- Project Manager: K. SLATTERY
- Regional Examiner:
- Regional Supervisor: C. DEGRAVE

APPROVED FOR THE DEPARTMENT
DATE: 30 Aug 2016 Kathleen Slattery (Signature)

E

TO OBTAIN LOCATIONS OF
PARTICIPANTS UNDERGROUND
FACILITIES BEFORE YOU
DIG IN WISCONSIN

WIS. STATUTE 182.0175 (1974)
REQUIRES MIN. OF 3 WORK DAYS
NOTICE BEFORE YOU EXCAVATE

DIGGERS HOTLINE
Dial 811 or (800)242-8511
www.DiggersHotline.com

UTILITY CONTACTS

AMERICAN TRANSMISSION COMPANY LLC - ELECTRIC TRANMISSION
MIKE OLSEN
801 O'KEEFE ROAD
PO BOX 6113
DEPERE, WI 54115-6113
920-338-6582; CELL: 920-660-2390
MOlsen@atcllc.com

ATT TCG
DON DIETSCH
C/O NORTHWIND TECHNICAL SERVICES LLC
383 WILLIAMSTOWNE STE B
DELAFIELD, WI 53018
262-646-5602; FAX: 262-646-5603
CELL: 414-651-2862
d.dietsch@northwindtech.com

AT&T WISCONSIN
GARY LAABS
221 WEST WASHINGTON ST. 4TH FL.
APPLETON, WI 54911
920-735-3063
GL1784@att.com

MENASHA - UTILITIES
GREG SHULL
321 MILWAUKEE STREET
PO BOX 340
MENASHA, WI 54952-0340
920-967-3422
GShull@wppiEnergy.org

VILLAGE OF FOX CROSSING - ELECTRIC
RANDY GALLOW
STREET DEPARTMENT
2000 MUNICIPAL DRIVE
NEENAH, WI 54956
920-720-7110

VILLAGE OF FOX CROSSING - SANITARY SEWER
MARK SCHMITT
UTILITY DISTRICT
2340 AMERICAN DRIVE
NEENAH, WI 54956
920-739-5120

VILLAGE OF FOX CROSSING - WATER
JEFF ROTH
UTILITY DISTRICT
2340 AMERICAN DRIVE
NEENAH, WI 54956
920-720-7175; CELL: 920-419-3866

TDS METROCOM
STEVE JAKUBIEC
10 COLLEGE AVE STE 218A
APPLETON, WI 54911
920-882-4166; CELL: 920-562-7221
steve.jakubiec@tdstelecom.com

CHARTER - COMMUNICATION
VINCE ALBIN
3520 E DESTINATION DRIVE
APPLETON, WI 54915
920-831-9249
vince.albin@charter.com

WE ENERGIES - ELECTRIC & GAS
LATROY BRUMFIELD
333 W EVERETT STREET
ROOM A299
MILWAUKEE, WI 53203
414-221-5617; CELL: 414-975-9053
latroy.brumfield@we-energies.com

WE ENERGIES - ELECTRIC
CHRIS SCHULZ
500 S 116 ST
WEST ALLIS, WI 53214
414-944-5553; CELL: 414-550-8289
chris.schulz@we-energies.com

WE ENERGIES - GAS
LISA MAYNE
1921 8 STREET SOUTH
WISCONSIN RAPIDS, WI 54494
715-421-7227
lisa.mayne@we-energies.com

WISCONSIN CENTRAL LTD CONTACTS

RAILROAD FLAGGING CONTACT
MARY ELLEN CARMODY
2800 LIVERNOIS ROAD, STE 330
TROY, MI 48083
OFFICE: 248-740-6227
FAX: 248-740-6036
maryellen.carmody@cn.ca

MAIN RAILROAD CONTACT
JACKIE MACEWICZ
MANAGER PUBLIC WORKS
1625 DEPOT STREET
STEVENS POINT, WI 54481
OFFICE: 715-345-2503
FAX: 715-345-2507
JACKIE.MACEWICZ@cn.ca

24 HOUR EMERGENCY RAILROAD SIGNAL

1-800-616-3432

CALL BEFORE YOU DIG

WISCONSIN CENTRAL LTD IS NOT PART OF DIGGER HOTLINE
CALL CHRISTINE GRZESIAK, 715-345-2506
WHEN DIGGING ON RAILROAD R/W

COUNTY SURVEYOR CONTACT

JERRY BOUGIE
WINNEBAGO COUNTY COURT HOUSE
445 ALGOMA BLVD
OSHKOSH, WI 54903
920-236-4839

DNR AREA LIASON

JAY SCHIEFELBEIN
DEPARTMENT OF NATURAL RESOURCES
2984 SHAWANO AVENUE
GREEN BAY, WI 54313
920-360-3784; CELL: 920-662-5472
jeremiah.schiefelbein@wisconsin.gov

US ARMY CORP OF ENGINEERS

NICK DOMER
OLD FORT SQUARE
211 N. BROADWAY, STE 221
GREEN BAY, WI 54303
651-290-5855
T.Dormer@usace.army.mil

WINNEBAGO COUNTY HIGHWAY COMMISSIONER

ERNIE WINTERS
901 WEST COUNTY ROAD Y
P.O. BOX 2764
OSHKOSH, WI 54903
920-232-1700

EMERGENCY CONTACT NUMBERS FOR WE ENERGIES

ELECTRIC 24 HOUR EMERGENCY SERVICE: 1-800-662-4797
GAS 24 HOUR EMERGENCY SERVICE: 1-800-261-5325

ORDER OF PLAN SHEETS

TITLE SHEET
UTILITIES
GENERAL NOTES
ABBREVIATIONS
PROJECT OVERVIEW
TYPICAL SECTIONS
CONSTRUCTION DETAILS
PLAN DETAILS
PAVEMENT GRADES
INVASION SPECIES
EROSION CONTROL
STORM SEWER PLAN
PAVEMENT MARKING
STAGE CONSTRUCTION
TRAFFIC CONTROL
ALIGNMENT DETAIL
MISCELLANEOUS QUANTITIES
RIGHT-OF-WAY PLAT
BENCHMARKS
PLAN & PROFILE
CROSS SECTIONS

GENERAL NOTES

THE CONTRACTOR SHALL CONTACT THE UTILITIES AND DIGGERS HOTLINE TO LOCATE AND FIELD VERIFY UTILITIES. THE LOCATIONS OF EXISTING AND PROPOSED UTILITY INSTALLATIONS AS SHOWN ON THE PLANS ARE APPROXIMATE. THERE MAY BE OTHER UTILITY INSTALLATIONS WITHIN THE PROJECT AREA THAT ARE NOT SHOWN.

THE CONTRACTOR SHALL NOTIFY DIGGERS HOTLINE AND AFFECTED UTILITIES PRIOR TO THE START OF WORK. ANY LOCAL MUNICIPAL UTILITY WHICH IS NOT A MEMBER OF THE DIGGERS HOTLINE MUST BE CONTACTED SEPARATELY.

EXISTING SURFACE ELEVATIONS USED TO CALCULATE PROPOSED EARTHWORK QUANTITIES ARE BASED UPON PREVIOUS CONSTRUCTION DTM'S. FIELD CHANGES TO THESE PROPOSED DTM'S WILL NOT BE REFLECTED IN THE EXISTING DTM FOR THIS CONTRACT.

NO TREES OR SHRUBS ARE TO BE REMOVED WITHOUT APPROVAL OF THE ENGINEER.

THE CONTRACTOR SHALL BE RESPONSIBLE FOR RESHAPING AND SEEDING ANY PREVIOUSLY GRASSED AREAS WHICH ARE DISTURBED BY ANY OPERATION OUTSIDE OF THE NORMAL CONSTRUCTION LIMITS AT THE CONTRACTORS EXPENSE.

PLACE ALL SALVAGED TOPSOIL IN ALL GRASSED AREAS DESIGNATED BY THE ENGINEER IMMEDIATELY AFTER GRADING HAS BEEN COMPLETED. SEED, MULCH AND FERTILIZE ALL AREAS 5 DAYS AFTER PLACEMENT OF SALVAGED TOPSOIL.

TEMPORARY STORAGE OF ANY EXCAVATED MATERIAL WILL NOT BE PERMITTED IN WETLANDS, FLOODWAY OR FLOODPLAIN OF ANY WATERWAY.

CROSS SECTIONS SHOWN INCLUDE THE EXISTING TOPSOIL SURFACE. TOPSOIL SHALL BE REPLACED WITH SPECIFIED THICKNESS AS OUTLINED IN THE STANDARD SPECIFICATIONS AND SPECIAL PROVISIONS.

FILL AND COMPACT ALL HOLES OR OPENINGS BELOW SUBGRADE RESULTING FROM ABANDONMENT OR REMOVAL OF EXISTING STRUCTURES WITH GRANULAR BACKFILL. BACKFILLING IS INCIDENTAL TO CORRESPONDING ABANDONMENT OR REMOVAL ITEM.

FERTILIZER SHALL NOT BE USED NEAR NAVIGABLE WATERWAYS OR WETLANDS.

THE EROSION CONTROL FEATURES AS SHOWN ON THE PLANS ARE AT SUGGESTED LOCATIONS. EXACT LOCATION WILL BE DETERMINED BY THE ENGINEER.

REMOVAL OF EROSION CONTROL DEVICES IS INCIDENTAL TO THE COST OF THEIR RESPECTIVE BID ITEMS.

EROSION CONTROL DEVICES SHALL BE PLACED IN SEQUENCE WITH CONSTRUCTION OPERATIONS OR AS DETERMINED BY THE ENGINEER.

PRIOR TO ORDERING DRAINAGE PIPES AND STRUCTURES, THE CONTRACTOR SHALL VERIFY RELATED DRAINAGE INFORMATION IN THE PLAN AND PROVIDE DOCUMENTATION TO THE ENGINEER IN ACCORDANCE WITH THE SPECIFICATIONS. THIS ALSO INCLUDES VERIFICATION OF INVERT ELEVATIONS AT ALL PROPOSED STORM SEWER CONNECTION POINTS TO EXISTING SYSTEMS.

TRAFFIC CONTROL DEVICES SHALL BE ADJUSTED TO FIELD CONDITIONS AS DIRECTED BY THE ENGINEER.

SIGNS IN CONFLICT WITH TRAFFIC CONTROL "IN USE" SHALL BE COVERED AS DIRECTED BY THE ENGINEER AND PAID FOR UNDER THE ITEM "TRAFFIC CONTROL COVERING SIGNS TYPE 1 OR TYPE 2".

STATIONING, DISTANCES AND OFFSETS FOR SIGNS SHOWN IN THE PLANS ARE APPROXIMATE AND THE FINAL LOCATIONS ARE TO BE DETERMINED BY THE ENGINEER.

BENCHMARK LOCATIONS SHOWN ON PLAN ARE APPROXIMATE AND SHOULD BE VERIFIED.

ALL ITEMS ASSOCIATED WITH SIGNING REMOVALS ARE SHOWN ON SIGNING PLAN, EXCEPT FOR REMOVING OLD SIGN STRUCTURES.

A SAWED JOINT IS REQUIRED WHERE NEW HMA PAVEMENT MEETS EXISTING HMA PAVEMENT.

PROTECT INLETS WITH PROPER INLET PROTECTION AT LOCATIONS EXHIBITING RISK OF BEING IMPACTED BY CONSTRUCTION OPERATIONS AS SHOWN ON THE PLANS, OR AS DIRECTED BY THE ENGINEER.

COORDINATES ON THIS PLAN ARE REFERENCED TO THE WISCONSIN COUNTY COORDINATE SYSTEM (WCCS). WINNEBAGO COUNTY NAD 83 (1991)

ELEVATIONS SHOWN THIS PLAN ARE REFERENCED TO THE NATIONAL GEODETIC VERTICAL DATUM OF 1929, NGVD29.

ALL ELEVATIONS SHALL BE FIELD VERIFIED.

ALIGNMENT IDENTIFIERS	
EB	EXISTING EASTBOUND STH 441/USH 10
WB	EXISTING WESTBOUND STH 441/USH 10
ASW	EXISTING APPLETON RD SW RAMP

ABBREVIATIONS

AEW	APRON END WALL
AGG	AGGREGATE
BAD	BASE AGGREGATE DENSE
BM	BENCH MARK
C&G	CURB AND GUTTER
C/L	CENTER OR CONSTRUCTION LINE
CMCP	CORRUGATED METAL CULVERT PIPE
CONC	CONCRETE
CP	CULVERT PIPE
CPRC	CULVERT PIPE REINFORCED CONCRETE
CSD	CONCRETE SURFACE DRAIN
CY	CUBIC YARD
D	DEGREE OF CURVE
Δ	DELTA
DISCH	DISCHARGE
EB	EAST BOUND
EL OR ELEV	ELEVATION
EAT	ENERGY ABSORBING TERMINAL
EXIST	EXISTING
FE	FIELD ENTRANCE
FT	FOOT
HMA	HOT MIX ASPHALT
INL	INLET
INV	INVERT
L	LENGTH OF CURVE
LHF	LEFT HAND FORWARD
LT	LEFT
LF	LINEAR FOOT
MIN	MINIMUM
MH	MANHOLE
M/L	MATCHLINE
NB	NORTHBOUND
NC	NORMAL CROWN
PAVT	PAVEMENT
PC	POINT OF CURVE
PCC	POINT OF COMPOUND CURVE
PE	PRIVATE ENTRANCE
PI	POINT OF INTERSECTION
PLE	PERMANENT LIMITED EASEMENT
PT	POINT OF TANGENT
R	RADIUS OF CURVE
R/L	REFERENCE LINE
RC	REVERSE CROWN
RCAEW	REINFORCED CONCRETE APRON ENDWALL FOR CULVERT PIPE
REQ'D	REQUIRED
RHF	RIGHT HAND FORWARD
RO	RUN OFF LENGTH
RRSP	RAIL ROAD SPIKE
RT	RIGHT
RW OR R/W	RIGHT OF WAY
SALV	SALVAGED
SAPBC	SALVAGED ASPHALTIC PAVEMENT BASE COURSE
SB	SOUTHBOUND
SDD	STANDARD DETAIL DRAWING
SE	SUPER ELEVATION
SF	SQUARE FOOT
SSPRC	STORM SEWER PIPE REINFORCED CONCRETE
STA	STATION
SY	SQUARE YARD
T	TANGENT LENGTH
TEMP	TEMPORARY
TLE	TEMPORARY LIMITED EASEMENT
TYP	TYPICAL
VCL	VERTICAL CURVE LENGTH
VPC	POINT OF VERTICAL CURVE
VPI	POINT OF VERTICAL INTERSECTION
VPT	POINT OF VERTICAL TANGENT
WB	WESTBOUND
YD	YARD

2

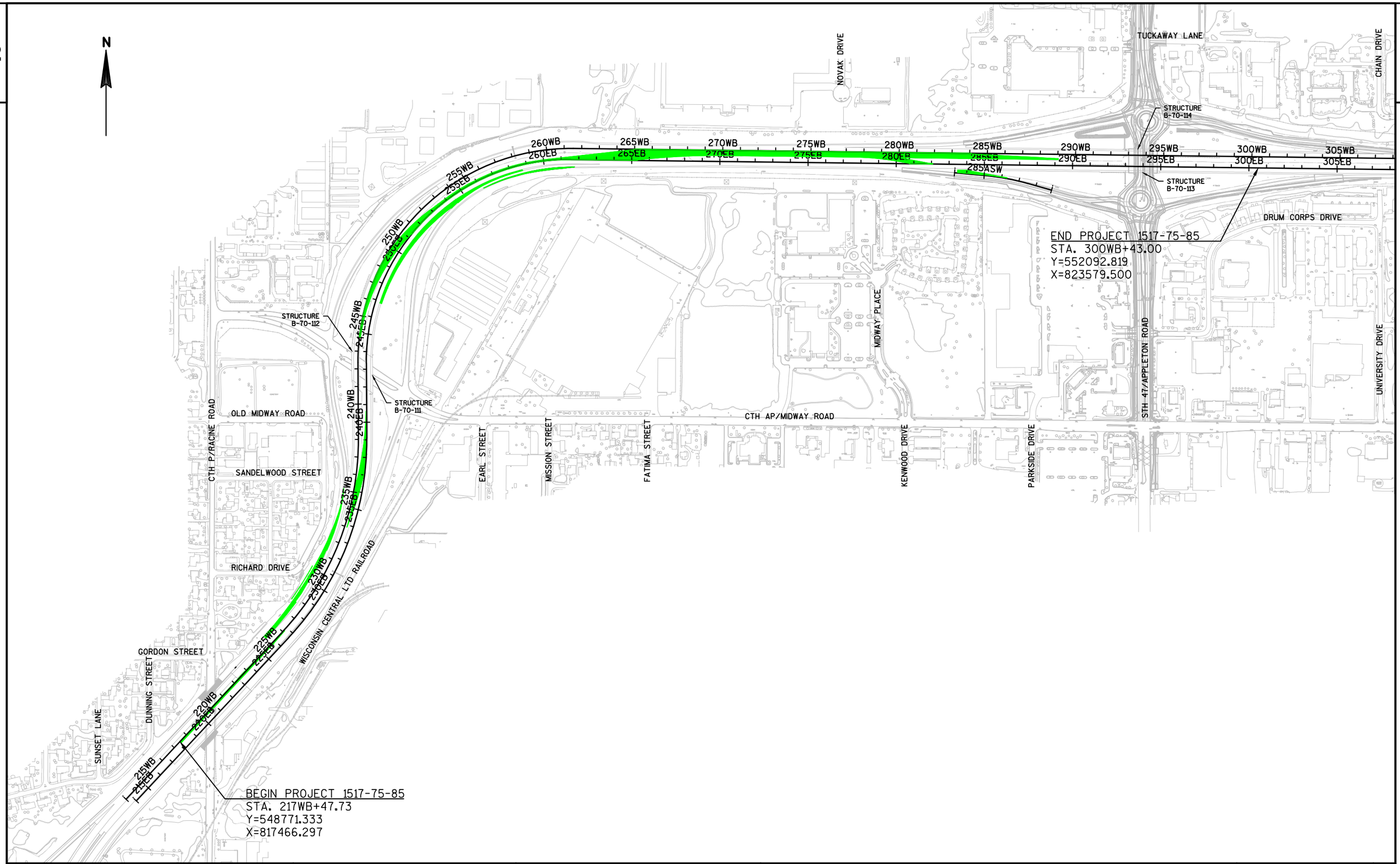

PROJECT NO:1517-75-85	HWY:STH 441/USH 10	COUNTY:WINNEBAGO	PROJECT OVERVIEW	SHEET 5	E

FILE NAME : S:\PDS\C3D\WIS441\15177570_72_77_85\SHEETSPLAN\1517-75-85\020200-PO\NE-15177585-020201-PO.DWG
LAYOUT NAME - 020201-PO
PLOT DATE : 8/26/2016 8:50 AM PLOT BY : VICKMAN, GARRETT T PLOT NAME : PLOT SCALE : 1 IN:500 FT
WISDOT/CADDS SHEET 42

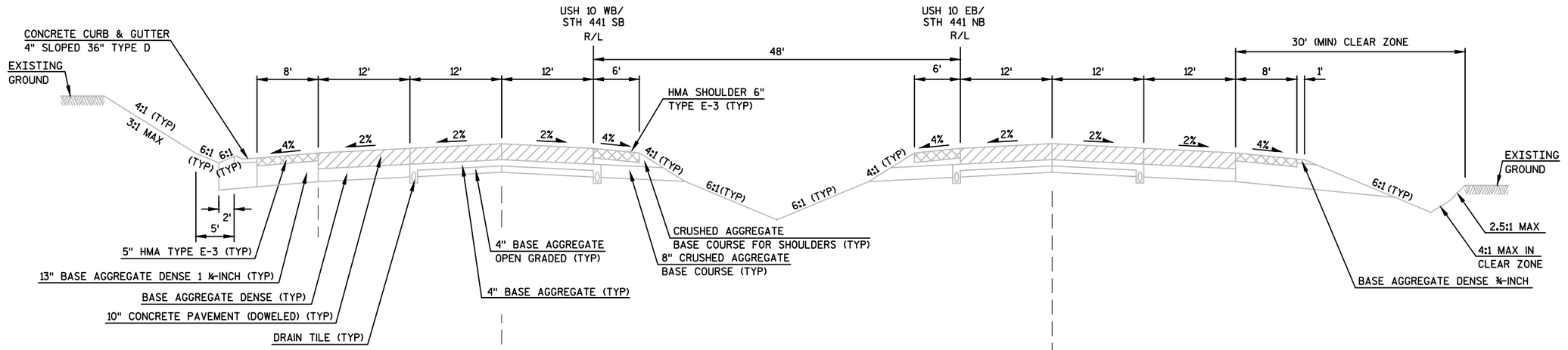

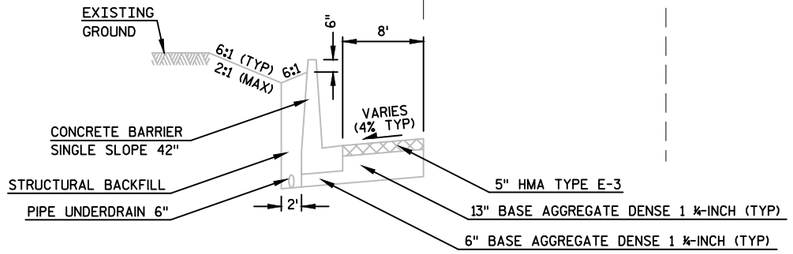

STA 217WB+00 TO STA 222WB+33

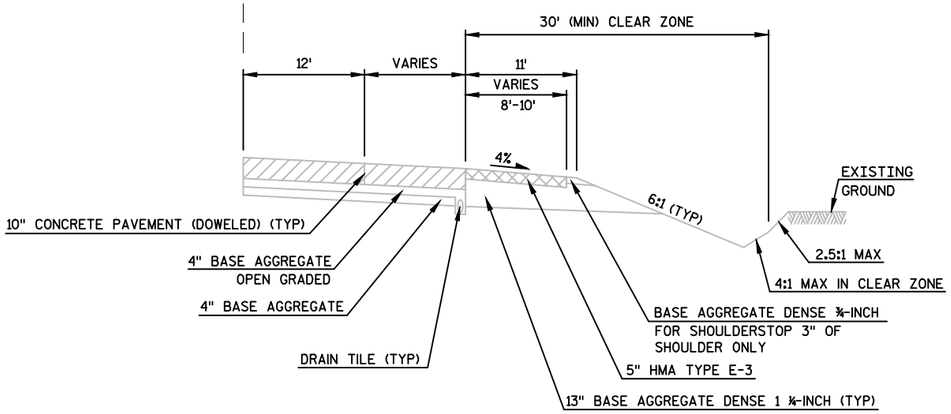

STA 226EB+16 TO STA 227EB+00

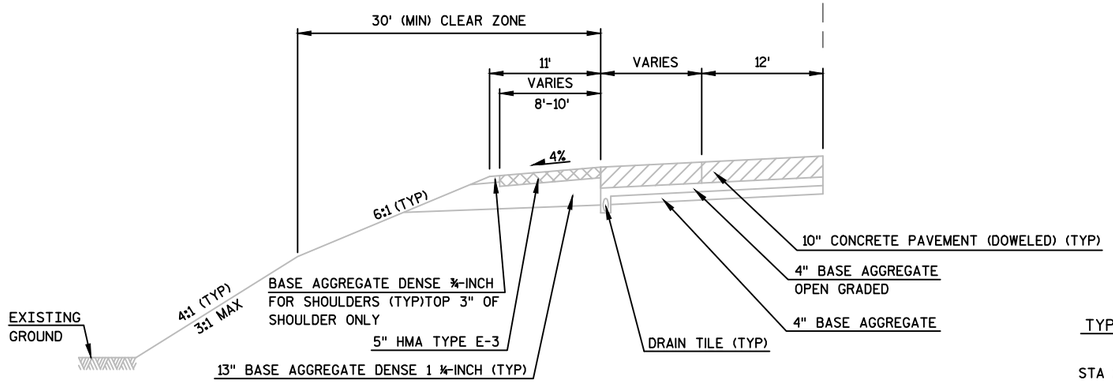

STA 226WB+42 TO STA 227WB+16

TYPICAL EXISTING SECTION
USH 10/STH 441

STA 222EB+00 TO STA 227EB+00
STA 221WB+50 TO STA 227WB+16

PROJECT NO: 1517-75-85	HWY: STH 441/USH 10	COUNTY: WINNEBAGO	TYPICAL SECTION	SHEET 6	E

2

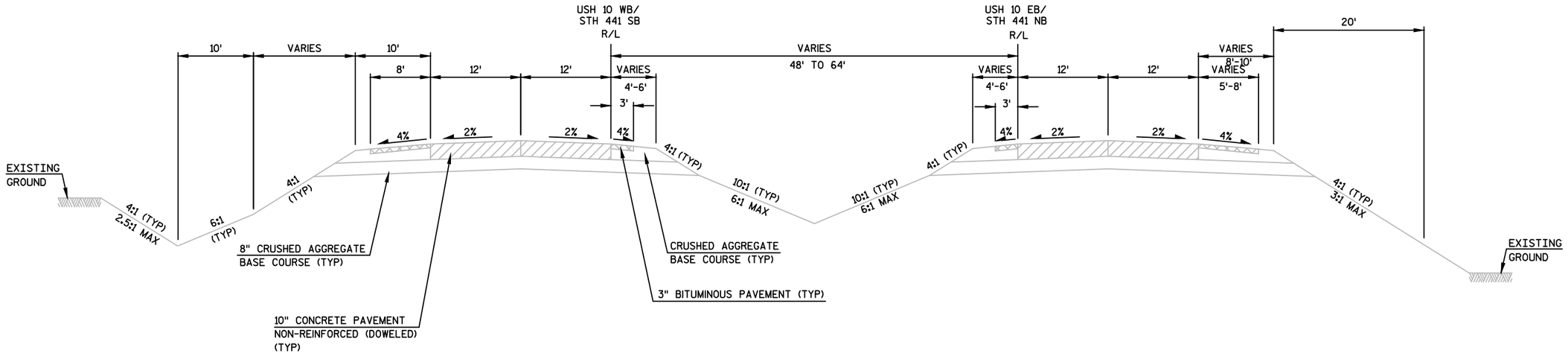

TYPICAL EXISTING SECTION
USH 10/STH 441

STA 227WB+16 TO STA 237WB+91 / STA 227EB+00 TO STA 238EB+92
STA 240WB+71 TO STA 242WB+51 / STA 241EB+42 TO STA 243EB+12
STA 244WB+77 TO STA 271WB+00 / STA 245EB+59 TO STA 271EB+00

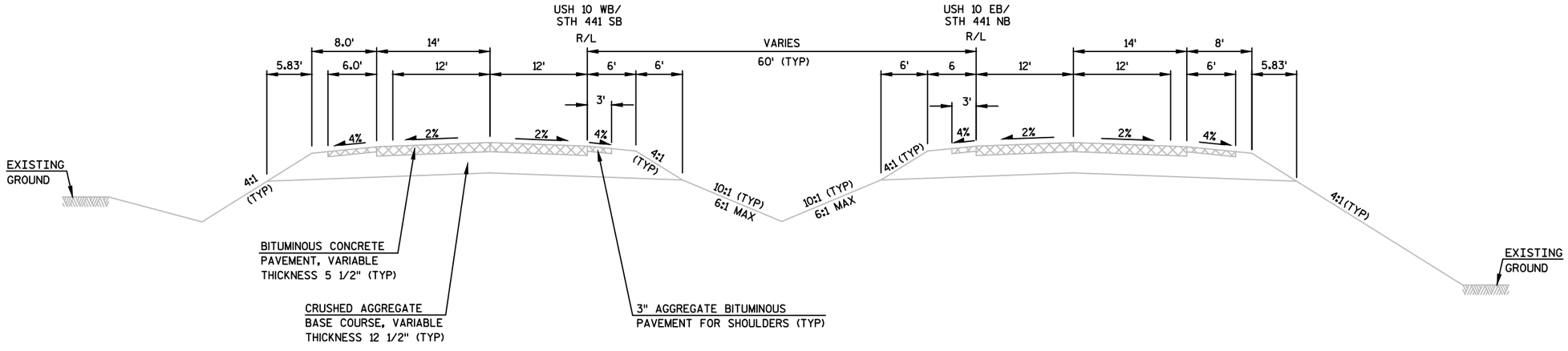

TYPICAL EXISTING SECTION
USH 10/STH 441

STA 237WB+91 TO STA 240WB+71 / STA 238EB+92 TO STA 241EB+42
STA 242WB+51 TO STA 244WB+77 / STA 243EB+12 TO STA 245EB+59

PROJECT NO: 1517-75-85	HWY: STH 441/USH 10	COUNTY: WINNEBAGO	TYPICAL SECTION	SHEET 7	E

2

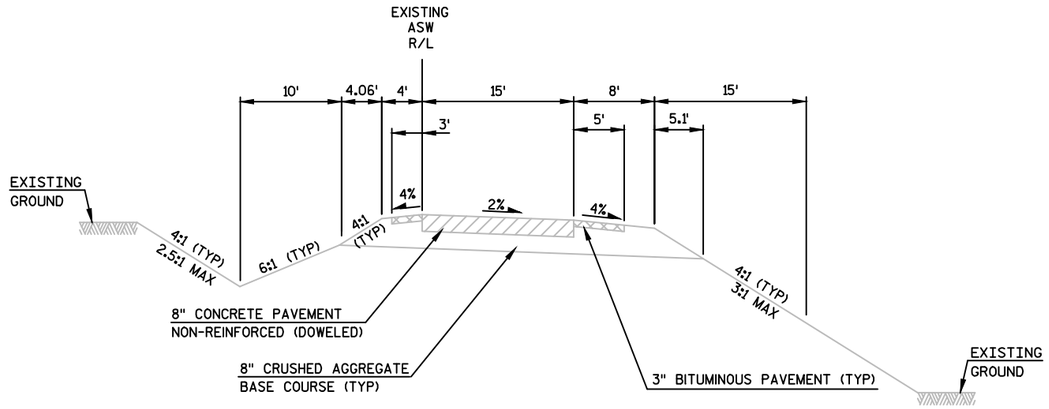

TYPICAL EXISTING SECTION
STH 47 (APPLETON) EB OFF RAMP
STA 283ASW+00 TO STA 288ASW+92

PROJECT NO:1517-75-85	HWY: STH 441/USH 10	COUNTY: WINNEBAGO	TYPICAL SECTION	SHEET 8	E

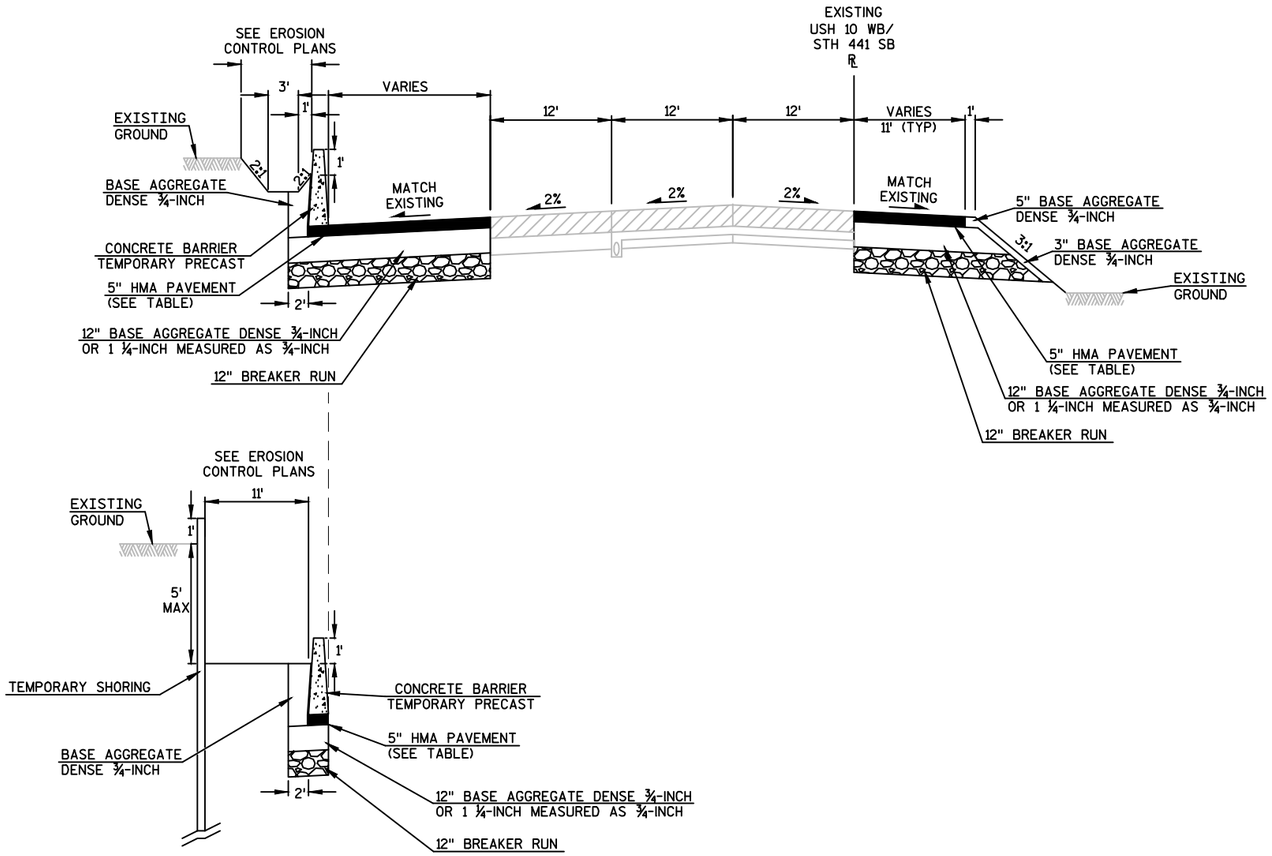

STA 227WB LT+80 TO STA 230WB+14 LT

FINISHED TYPICAL SECTION
STH 441 SB / USH 10 WB WIDENING

STA 217WB+48 RT TO STA 226WB+11 RT
STA 225WB+09 LT TO STA 230WB+14 LT

CONSTRUCT HMA PAVEMENT WITH THE FOLLOWING LAYERS AND GRADATIONS:

PAVEMENT TYPE	TOTAL LAYER PAVEMENT THICKNESS	LAYERS
4MT 58-28S	5"	ONE LIFT

2

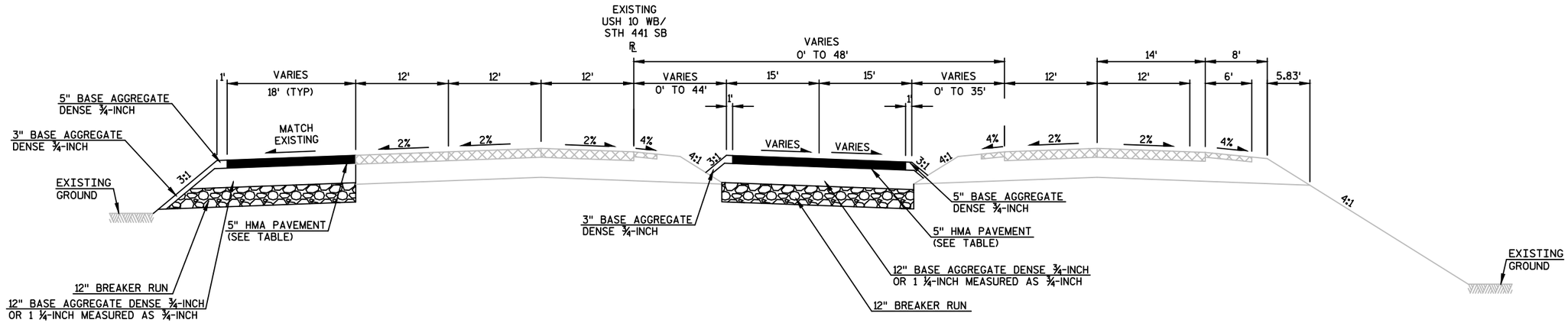

FINISHED TYPICAL SECTION

STH 441 NB / USH 10 EB TEMPORARY CROSSOVER

STA 230WB+14 LT TO STA 235WB+09 LT
STA 232WB+99 RT TO STA 239WB+58 RT

CONSTRUCT HMA PAVEMENT WITH THE FOLLOWING LAYERS AND GRADATIONS:

PAVEMENT TYPE	TOTAL LAYER PAVEMENT THICKNESS	LAYERS
4MT 58-28S	5"	ONE LIFT

FILE NAME : S:\PDS\C3D\WIS441\15177570_72_77_85\SHEETSPLAN\1517-75-85\020300-TS\NE-15177585-020302-TS.DWG
LAYOUT NAME - 05
PLOT DATE : 8/25/2016 10:54 AM PLOT BY : MARTENS, JOHN M PLOT NAME : PLOT SCALE : 1 IN:10 FT
WISDOT/CADDS SHEET 42

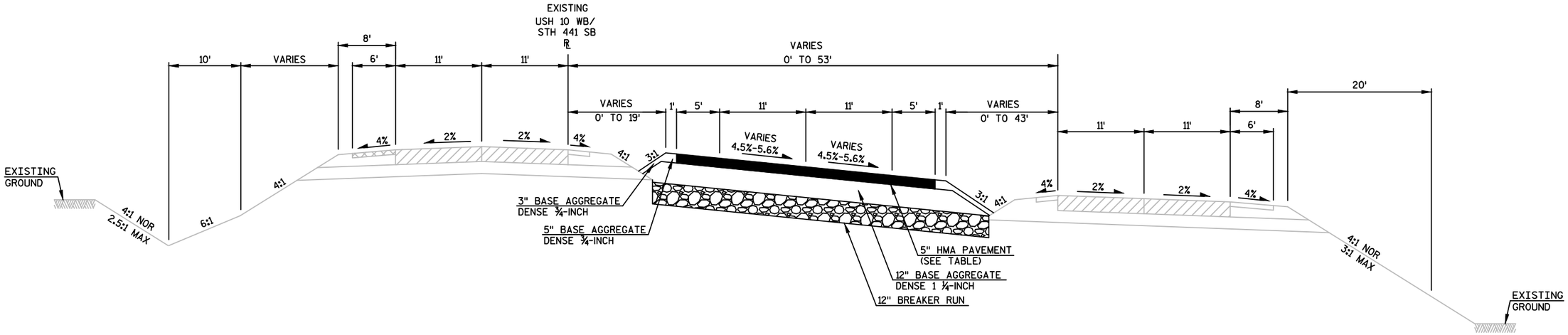

FINISHED TYPICAL SECTION
STH 441 SB / USH 10 WB TEMPORARY CROSSOVER

STA 243WB+81 RT TO STA 250WB+61 RT

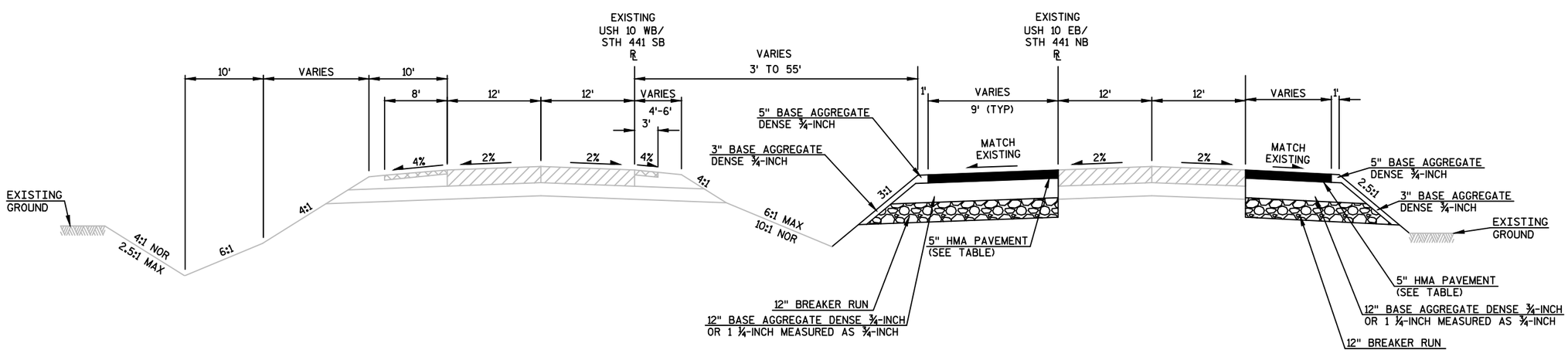

FINISHED TYPICAL SECTION
STH 441 NB / USH 10 EB WIDENING

STA 250WB+61 RT TO STA 265WB+00 RT
STA 246EB+89 RT TO STA 254EB+46 RT
STA 256EB+50 RT TO STA 261EB+76 RT

CONSTRUCT HMA PAVEMENT WITH THE FOLLOWING LAYERS AND GRADATIONS:

PAVEMENT TYPE	TOTAL LAYER PAVEMENT THICKNESS	LAYERS
4MT 58-28S	5"	ONE LIFT

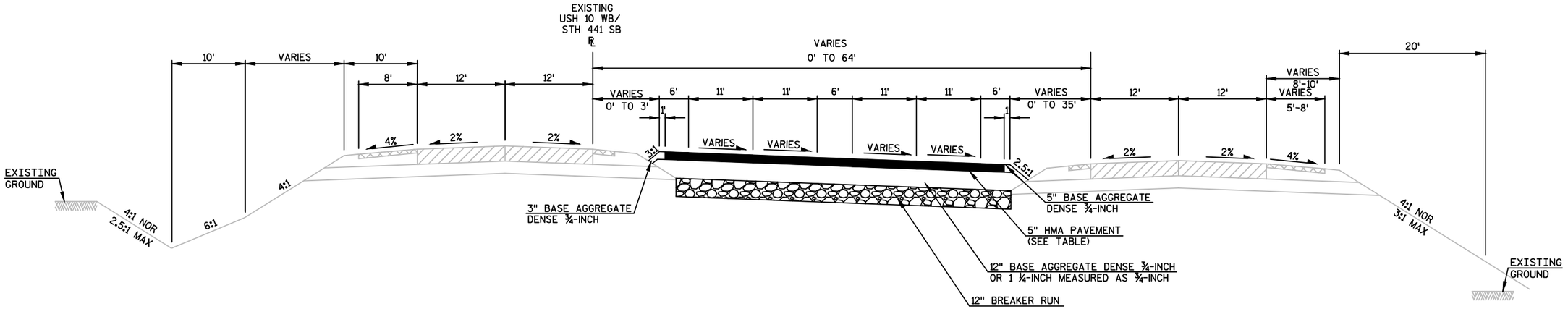

FINISHED TYPICAL SECTION
STH 441/ USH 10 TEMPORARY CROSSOVER

STA 265WB+00 RT TO STA 270WB+00 RT

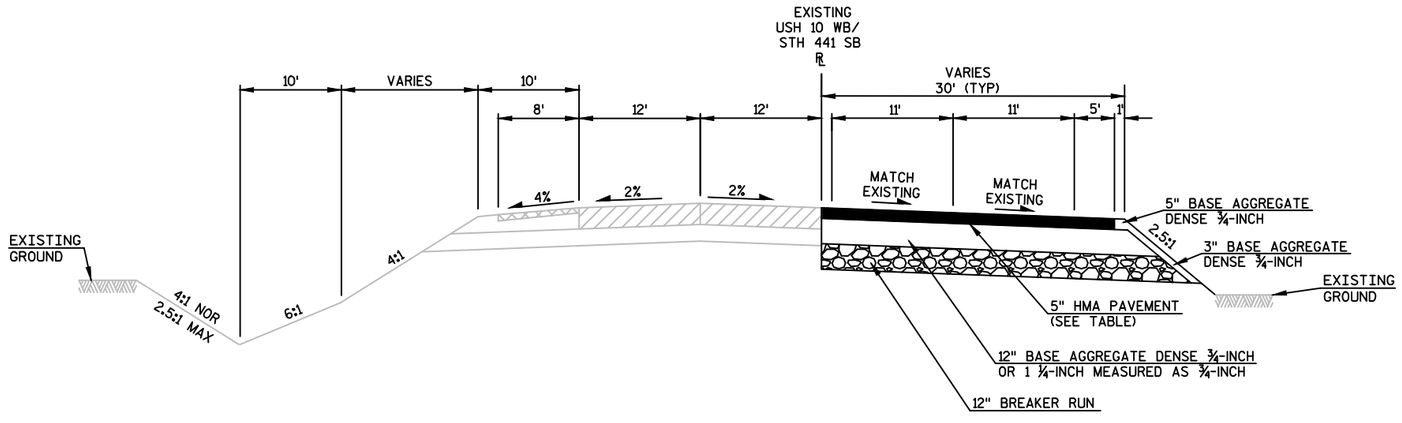

FINISHED TYPICAL SECTION
STH 441 SB / USH 10 WB WIDENING

STA 270WB+00 TO STA 289WB+02

CONSTRUCT HMA PAVEMENT WITH THE FOLLOWING LAYERS AND GRADATIONS:

PAVEMENT TYPE	TOTAL LAYER PAVEMENT THICKNESS	LAYERS
4MT 58-28S	5"	ONE LIFT

PROJECT NO: 1517-75-85	HWY: STH 441/USH 10	COUNTY: WINNEBAGO	TYPICAL SECTION	SHEET 12	E

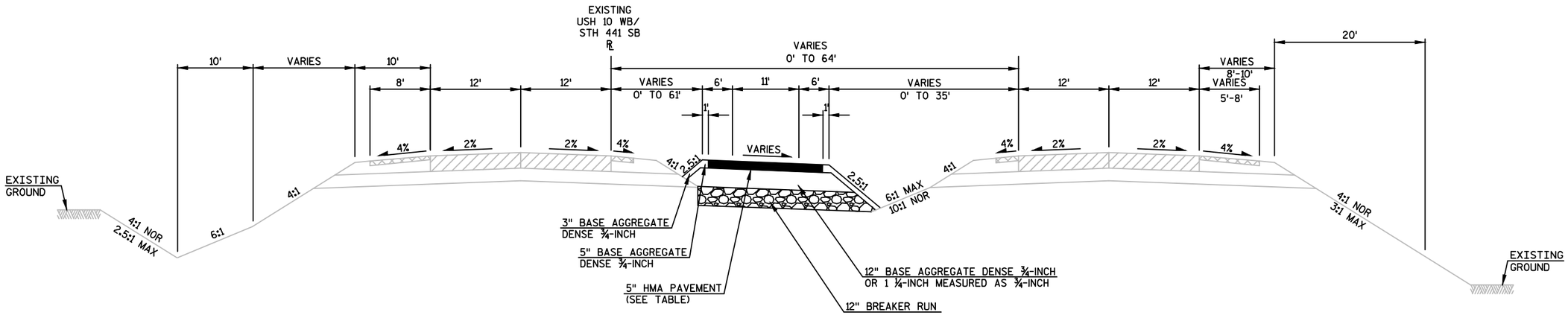

FINISHED TYPICAL SECTION
TEMPORARY APPLETON RAMP CROSS OVER

STA 277WB+50 RT TO STA 282WB+00 RT

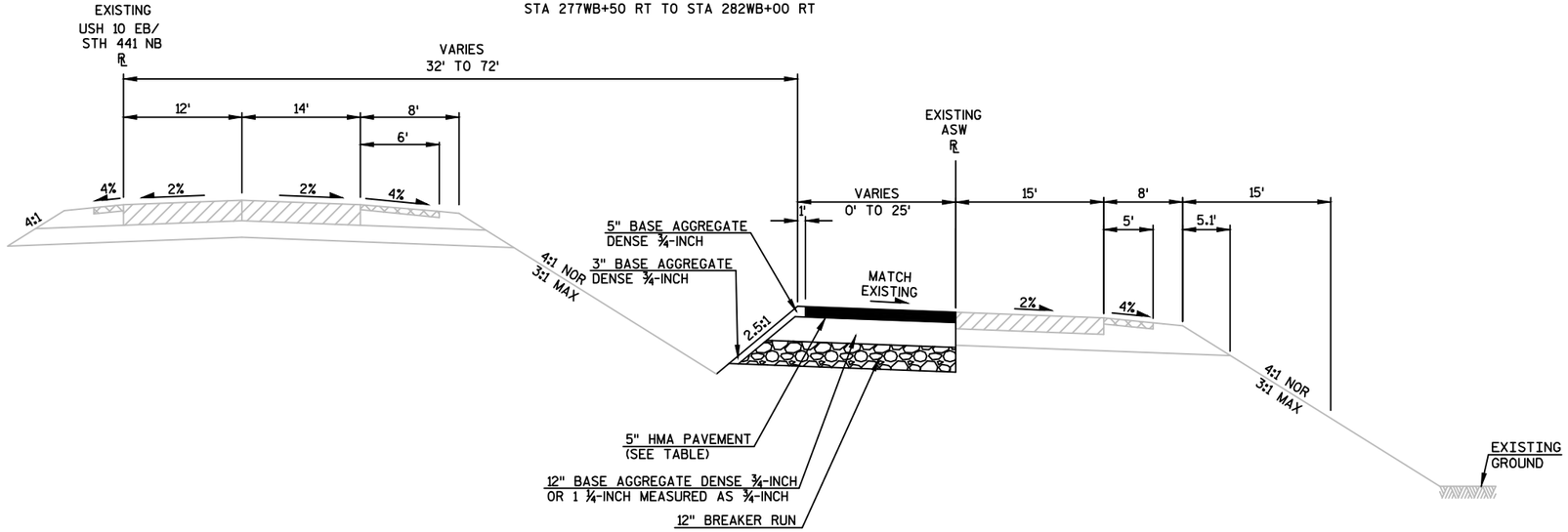

PROPOSED TYPICAL SECTION
TEMPORARY APPLETON SW RAMP WIDENING

STA 283EB+49 RT TO STA 286EB+28 RT

CONSTRUCT HMA PAVEMENT WITH THE FOLLOWING LAYERS AND GRADATIONS:

PAVEMENT TYPE	TOTAL LAYER PAVEMENT THICKNESS	LAYERS
4MT 58-28S	5"	ONE LIFT

PROJECT NO: 1517-75-85	HWY: STH 441/USH 10	COUNTY: WINNEBAGO	TYPICAL SECTION	SHEET 13	E

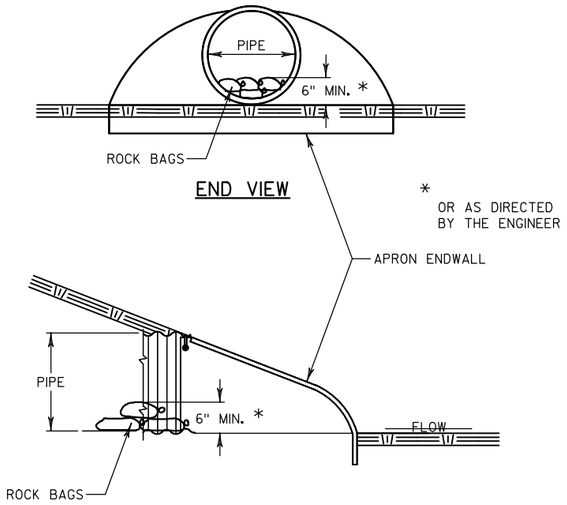

END VIEW

* OR AS DIRECTED BY THE ENGINEER

SIDE VIEW

CULVERT PIPE CHECKS

AT INLET LOCATIONS

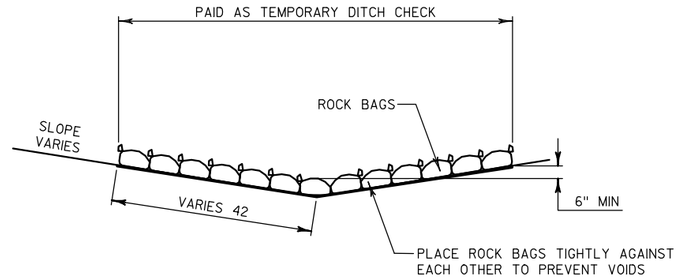

SIDE VIEW (SINGLE LAYER)

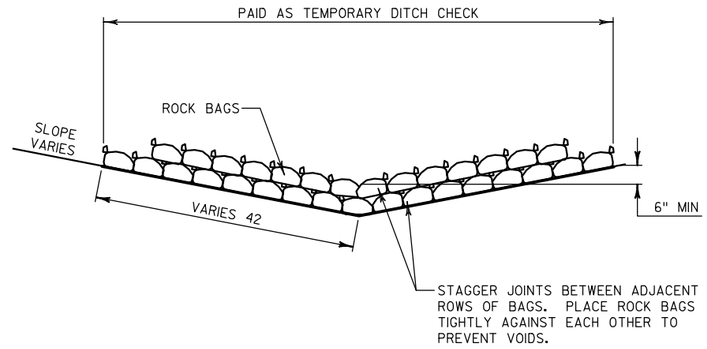

* LENGTH AND NUMBER OF BAGS MAY VARY DEPENDING ON DESIRED DEPTH OF WATER POOL.

SIDE VIEW (DOUBLE LAYER)

TEMPORARY DITCH CHECK, ROCK BAGS, SINGLE LAYER AND DOUBLE LAYER

PROJECT NO: 1517-75-85	HWY: STH 441/USH 10	COUNTY: WINNEBAGO	PLAN: CONSTRUCTION DETAILS	SHEET 14	E

FILE NAME : S:\PDS\C3D\WIS441\15177570_72_77_85\SHEETSPLAN\1517-75-85\021000-CD\NE-15177585-021001_CD.DWG
NE-15177585-021000-CD - 01
PLOT DATE : 9/14/2016 9:27 AM PLOT BY : MARTENS, JOHN M PLOT NAME : PLOT SCALE : 1 IN:10 FT
WISDOT/CADDS SHEET 42

NOTE:
FOR FURTHER DETAIL SEE
SILT FENCE DETAIL SDD

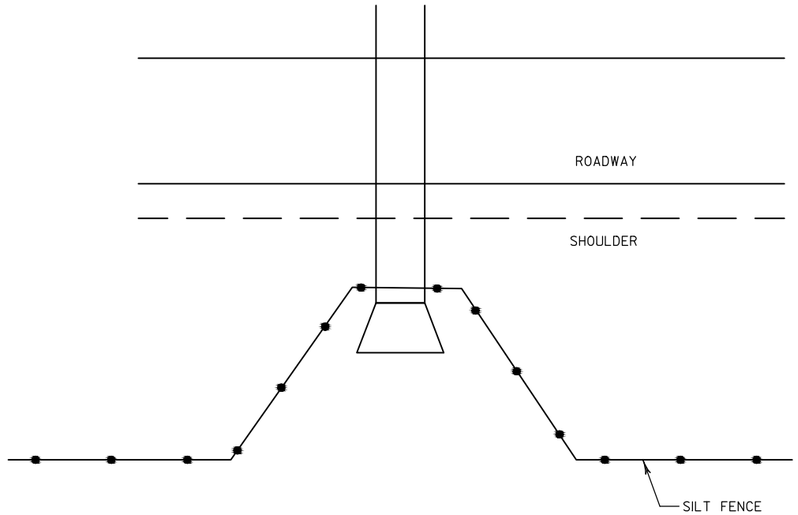

TYPICAL SILT FENCE DETAIL AT PIPE INLET

NOTES:

OD = OUTSIDE DIAMETER

* CULVERT PIPE IN NEW EMBANKMENT = 1' MIN
* CULVERT PIPE IN EXISTING EMBANKMENT = TO EXISTING GROUND ELEVATION

** PAID UNDER SEPERATE BID ITEM

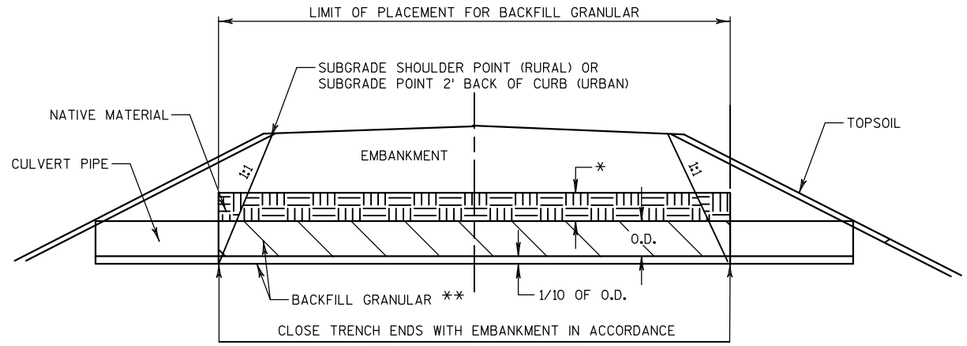

CULVERT BACKFILL DETAIL

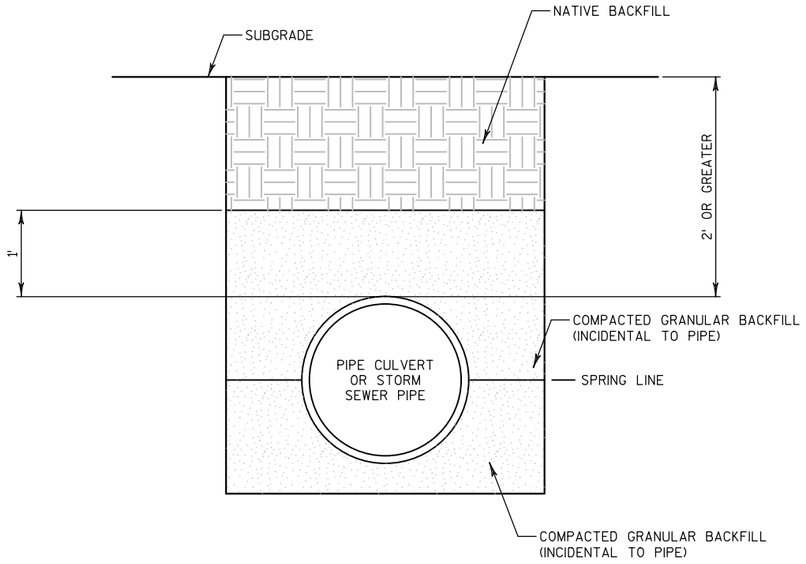

TRENCH BACKFILL DETAIL FOR NORMAL DEPTH PIPE CULVERTS AND STORM SEWER PIPE INSTALLATIONS

NOTES:

(1) NATIVE BACKFILL SHALL BE FREE OF LARGE LUMPS, CLODS, OR ROCK.

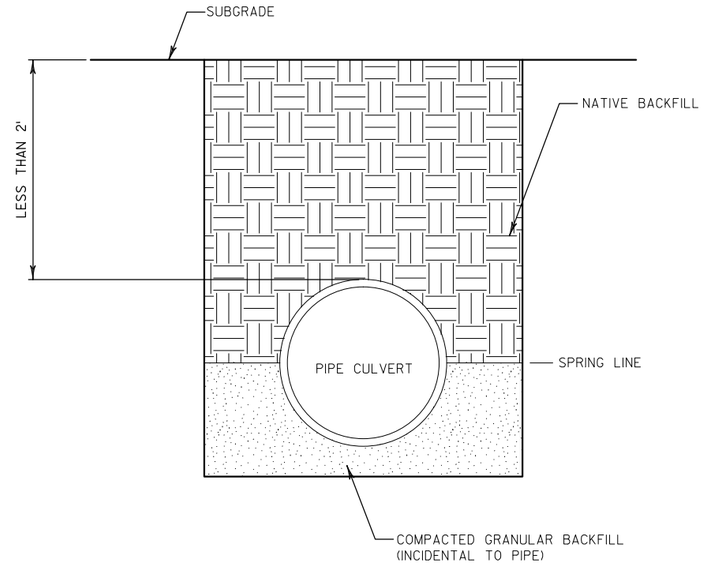

TRENCH BACKFILL DETAIL FOR SHALLOW PIPE CULVERTS

NOTES:

(1) NATIVE BACKFILL SHALL BE FREE OF LARGE LUMPS, CLODS, OR ROCK.

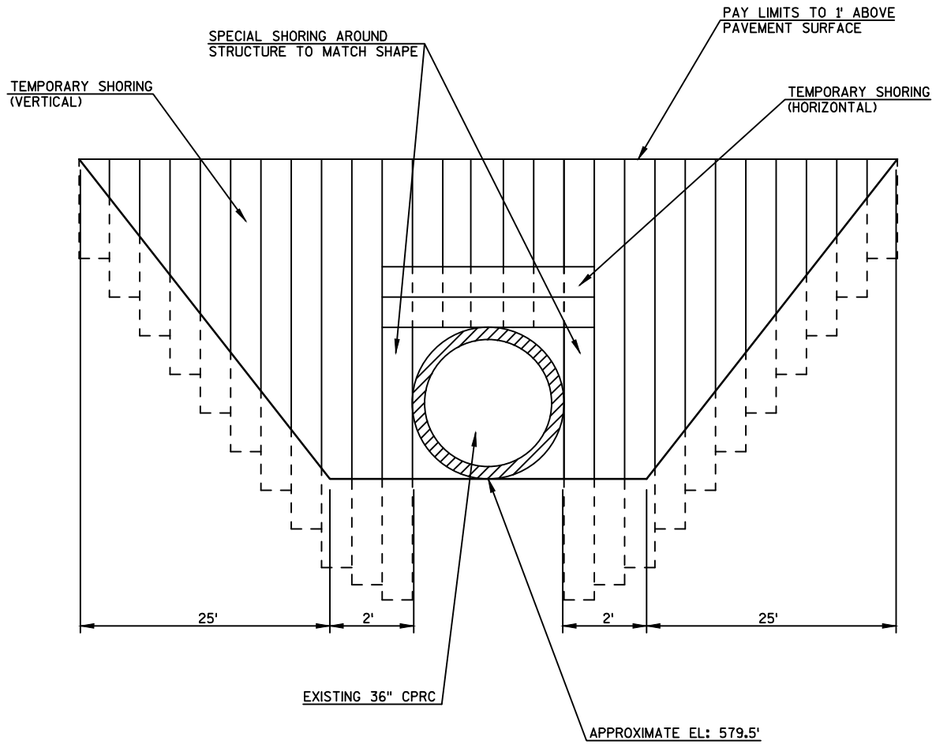

TEMPORARY SHORING AT EXISTING STORM SEWER CULVERT

(NOT TO SCALE)

NOTE:
ALL SHORING DESIGN MATERIALS AND INSTALLATION INCLUDING HORIZONTAL BRACING, SPECIAL SHORING, OR ANY OTHER MATERIALS, ARE INCIDENTAL TO THE BID ITEM TEMPORARY SHORING.

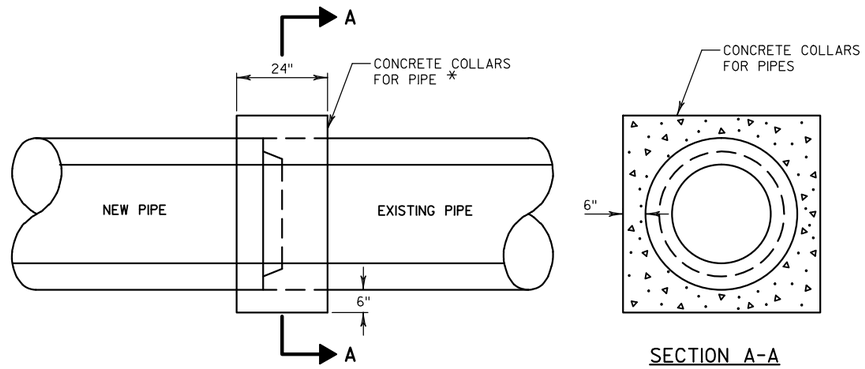

SECTION A-A

* SHES CONCRETE REQUIRED FOR CONCRETE COLLARS USED AS PERMANENT CONNECTION OF PIPES UNDER PAVEMENT.

CONCRETE COLLARS FOR PIPE

(SEE MISCELLANEOUS QUANTITIES FOR LOCATIONS)

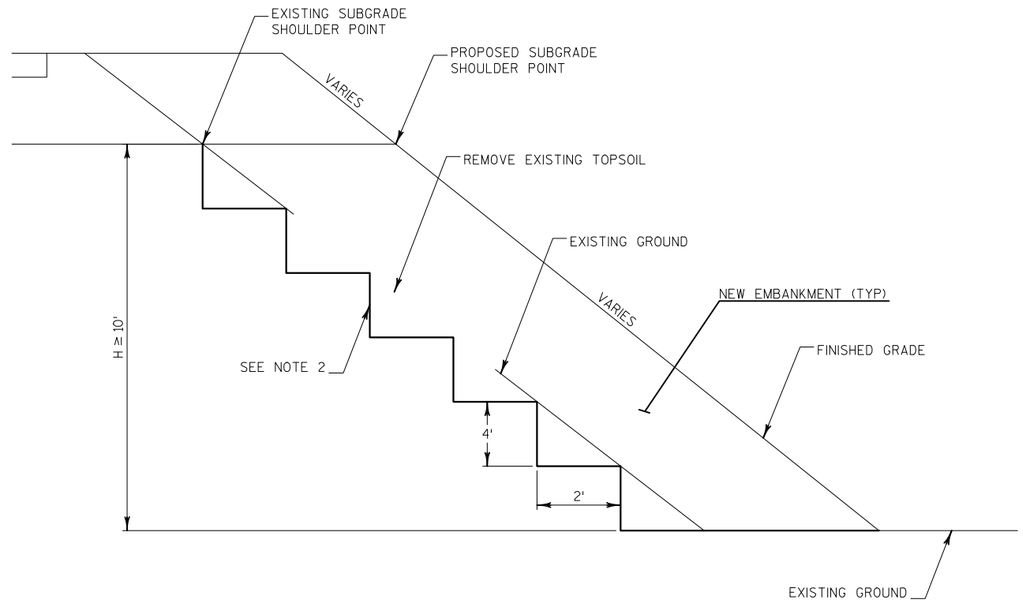

STEPPED EMBANKMENT

NOTES:

1) EMBANKMENT PLACED IN LAYERS AND COMPACTED PER SPECIFICATIONS

2) BENCH AS REQUIRED TO FACILITATE CONSTRUCTION FILLING OPERATIONS (4' BENCH DEPTH, INCIDENTAL).

3) EBS AS REQUIRED IN THE PLANS OR DIRECTED BY THE ENGINEER SHALL BE PAID UNDER THE ITEM "EXCAVATION COMMON".

2

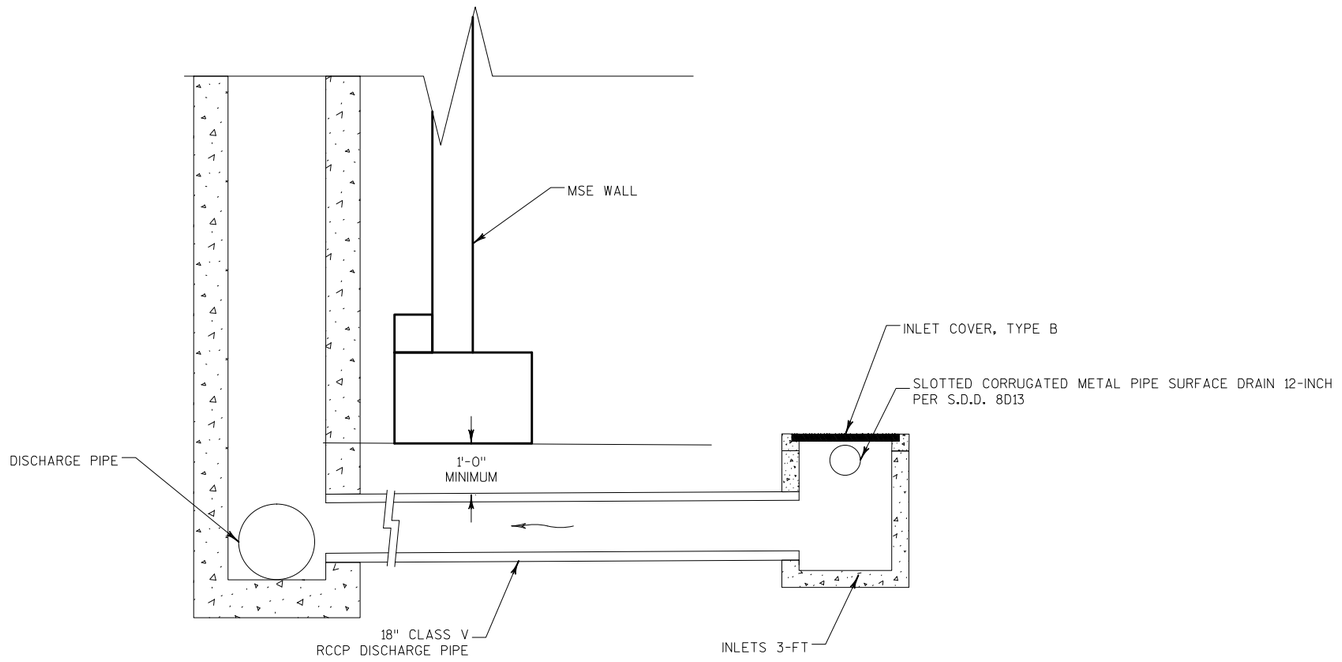

OUTFALL DISCHARGE UNDER MSE WALL

NOTES: (1) SEE STORM SEWER PLANS FOR ACTUAL DISCHARGE LOCATION

(2) SEE MSE WALL PLANS FOR ADDITIONAL INFORMATION ON FILL MATERIAL BETWEEN MSE WALL FOOTING & PIPE.

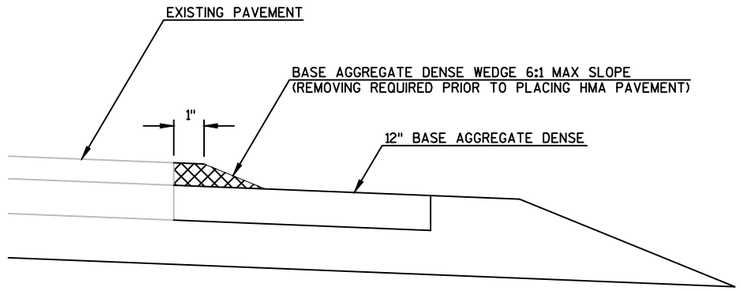

PLACE WEDGE OF BASE AGGREGATE DENSE AT DROP OFF BETWEEN EDGE OF EXISTING PAVEMENT AND LOWER 12" BASE AGGREGATE DENSE.

WEDGE INSTALLATION AND REMOVAL IS INCIDENTAL TO THE BASE AGGREGATE DENSE STANDARD BID ITEM.

INSTALL AS DIRECTED BY THE ENGINEER.

SAFETY EDGE

(NOT TO SCALE)

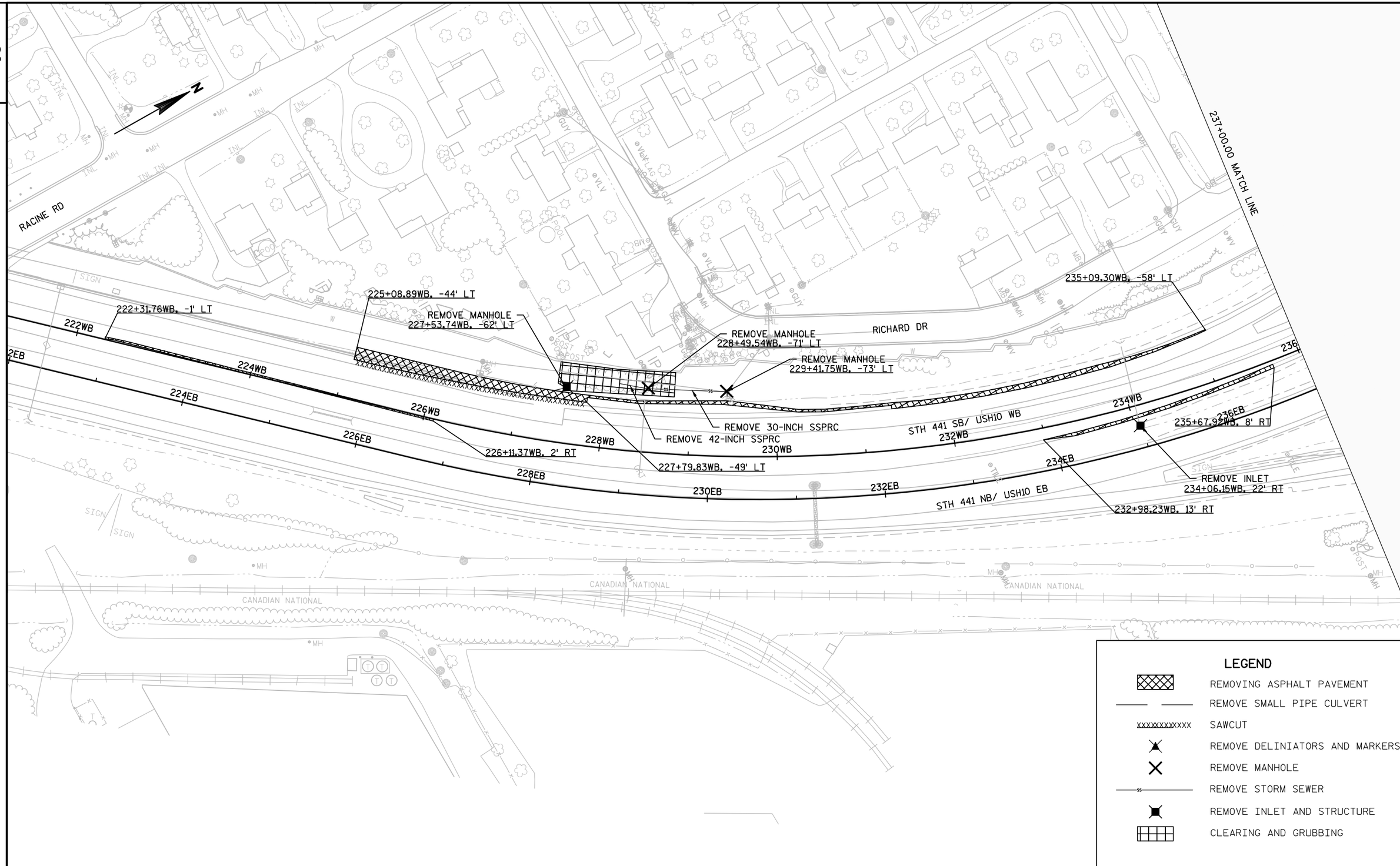

PROJECT NO:1517-75-85	HWY:STH 441/ USH 10	COUNTY:WINNEBAGO	REMOVAL PLAN STA 222+31.76WB-237+00	SHEET 21	E

FILE NAME : S:\PDS\C3D\WIS441\15177570_72_77_85\SHEETSPLAN\1517-75-85\021100-RM\NE-15177585-021100-RM.DWG
LAYOUT NAME - 021101-RM
PLOT DATE : 8/26/2016 8:56 AM PLOT BY : VICKMAN, GARRETT T PLOT NAME : PLOT SCALE : 1 IN:100 FT
WISDOT/CADDS SHEET 42

2

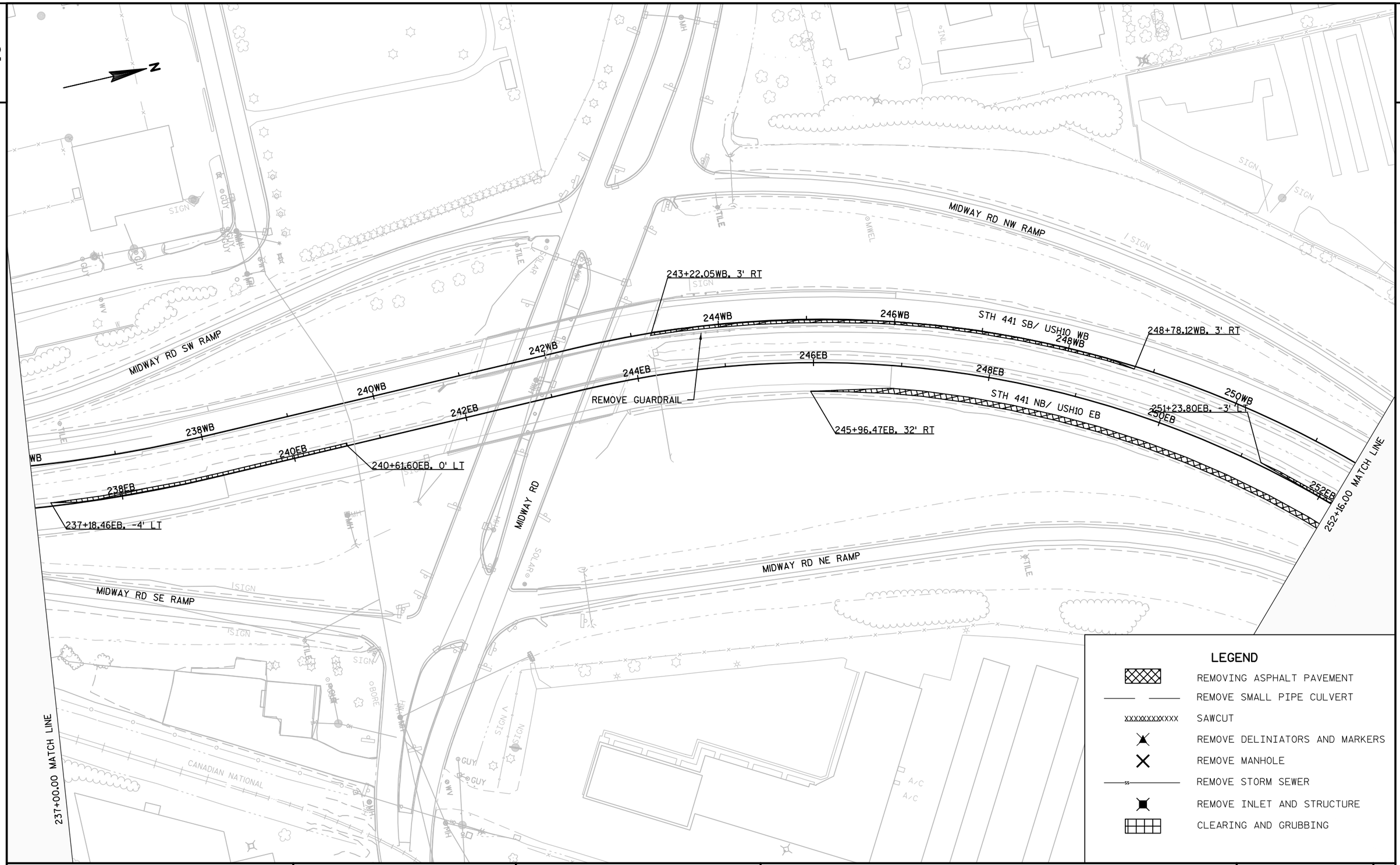

LEGEND

- REMOVING ASPHALT PAVEMENT
- REMOVE SMALL PIPE CULVERT
- XXXXXXXXXXXX SAWCUT
- REMOVE DELINIATORS AND MARKERS
- REMOVE MANHOLE
- REMOVE STORM SEWER
- REMOVE INLET AND STRUCTURE
- CLEARING AND GRUBBING

PROJECT NO: 1517-75-85	HWY: STH 441/ USH 10	COUNTY: WINNEBAGO	REMOVAL PLAN STA 237+00-252+16	SHEET 22	E

FILE NAME : S:\PDS\C3D\WIS441\15177570_72_77_85\SHEETSPLAN\1517-75-85\021100-RM\NE-15177585-021100-RM.DWG
LAYOUT NAME - 021102-RM
PLOT DATE : 8/26/2016 8:56 AM PLOT BY : VICKMAN, GARRETT T PLOT NAME : PLOT SCALE : 1 IN:100 FT
WISDOT/CADDS SHEET 42

2

N

MH

SS

MIDWAY RD NW RAMP

252WB

254WB

256WB

258WB

STH 441 SB/ USH10 WB

260WB

262WB

264WB

266WB

258+70.54EB, 26' RT

258EB

256EB

254EB

252EB

260EB

STH 441 NB/ USH10 EB

262EB

264EB

266EB

REMOVE INLET
264+08.30EB, -33' LT

264+94.85WB, 3' RT

265+32.01EB, -3' LT

256+22.68EB, 50' RT

254+46.99EB, 32' RT

261+94.78EB, 45' RT

REMOVE AND REPLACE ASPHALT PAVEMENT

MIDWAY RD NE RAMP

TILE

SIGN

MH

IP
POST

INL

266+91.00 MATCH LINE

252+16.00 MATCH LINE

LEGEND

- REMOVING ASPHALT PAVEMENT
- REMOVE SMALL PIPE CULVERT
- XXXXXXXXXXXX SAWCUT
- REMOVE DELINIATORS AND MARKERS
- REMOVE MANHOLE
- SS REMOVE STORM SEWER
- REMOVE INLET AND STRUCTURE
- CLEARING AND GRUBBING

PROJECT NO: 1517-75-85	HWY: STH 441/ USH 10	COUNTY: WINNEBAGO	REMOVAL PLAN STA 252+16-266+91	SHEET 23	E

FILE NAME : S:\PDS\C3D\WIS441\15177570_72_77_85\SHEETSPLAN\1517-75-85\021100-RM\NE-15177585-021100-RM.DWG
LAYOUT NAME - 021103-RM

PLOT DATE : 8/26/2016 8:56 AM PLOT BY : VICKMAN, GARRETT T PLOT NAME : PLOT SCALE : 1 IN:100 FT

WISDOT/CADDS SHEET 42

2

2

N

281+66.00 MATCH LINE

266+91.00 MATCH LINE

STH 441 SB/ USH10 WB

STH 441 NB/ USH10 EB

268WB 270WB 272WB 274WB 276WB 278WB 280WB

268EB 270EB 272EB 274EB 276EB 278EB 280EB

REMOVE SMALL CULVERT PIPE

TILE SIGN GRT INL MH W TVC

LEGEND

- REMOVING ASPHALT PAVEMENT
- REMOVE SMALL PIPE CULVERT
- SAWCUT
- REMOVE DELINIATORS AND MARKERS
- REMOVE MANHOLE
- REMOVE STORM SEWER
- REMOVE INLET AND STRUCTURE
- CLEARING AND GRUBBING

PROJECT NO: 1517-75-85	HWY: STH 441/ USH 10	COUNTY: WINNEBAGO	REMOVAL PLAN STA 266+19-281+66	SHEET 24	E

FILE NAME : S:\PDS\C3D\WIS441\15177570_72_77_85\SHEETSPLAN\1517-75-85\021100-RM\NE-15177585-021100-RM.DWG
LAYOUT NAME - 021104-RM

PLOT DATE : 8/26/2016 8:56 AM PLOT BY : VICKMAN, GARRETT T PLOT NAME : PLOT SCALE : 1 IN:100 FT

2

2

N

RAMP

APPLETON RD NW RAMP

APPLETON RD

289+03.13WB, 28' RT

282WB 284WB 286WB STH 441 SB/ USH10 WB 288WB 290WB 292WB 294WB 296WB

282EB 284EB 286EB 288EB 290EB 292EB 294EB 296EB

283+47.79EB, 46' RT

STH 441 NB/ USH10 EB

286+28.93EB, 74' RT

APPLETON RD SW RAMP

281+66.00 MATCH LINE

LEGEND

- REMOVING ASPHALT PAVEMENT
- REMOVE SMALL PIPE CULVERT
- SAWCUT
- REMOVE DELINIATORS AND MARKERS
- REMOVE MANHOLE
- REMOVE STORM SEWER
- REMOVE INLET AND STRUCTURE
- CLEARING AND GRUBBING

PROJECT NO: 1517-75-85	HWY: STH 441/ USH 10	COUNTY: WINNEBAGO	REMOVAL PLAN STA 281+66-289+03.13WB	SHEET 25	E

2

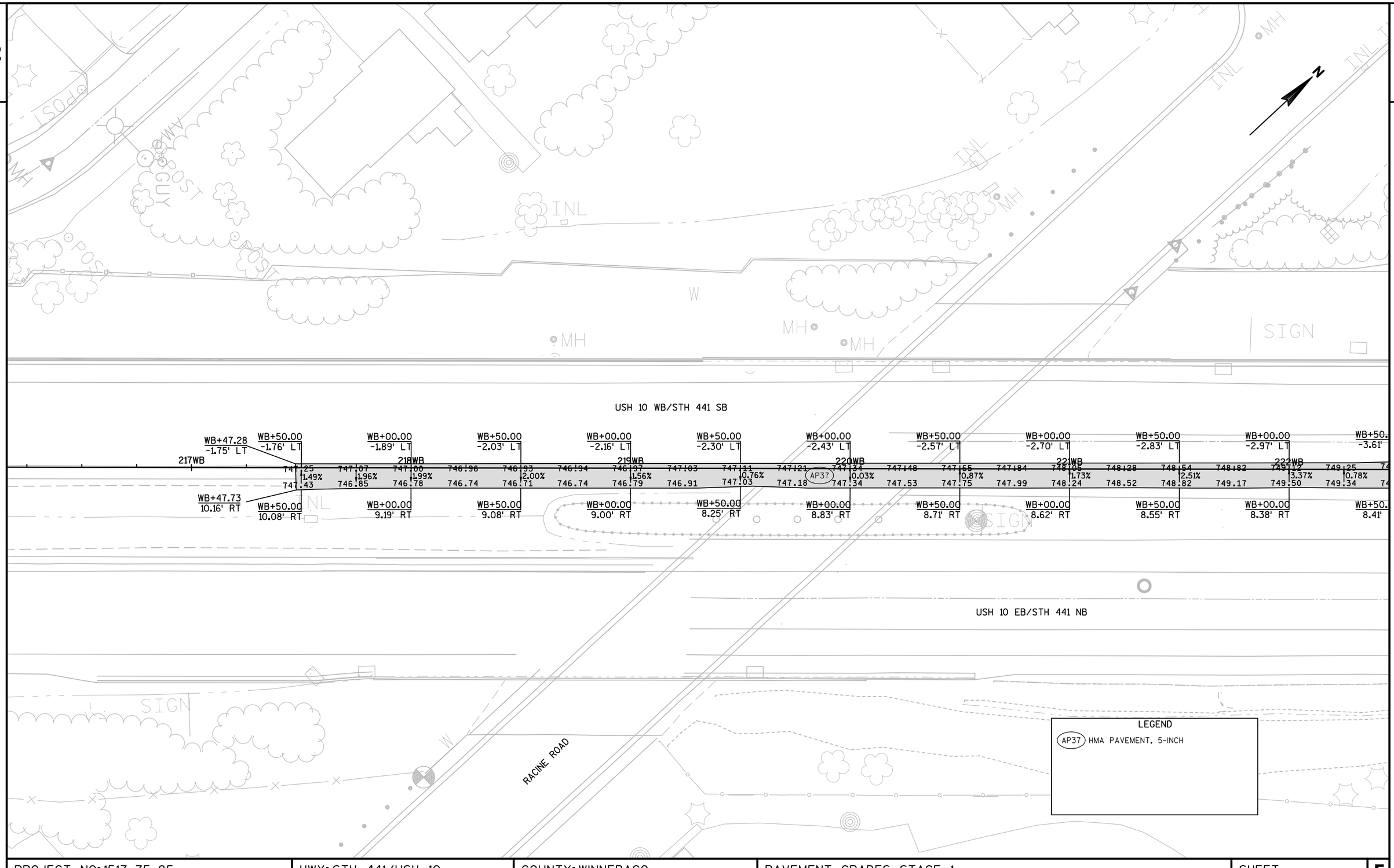

PROJECT NO: 1517-75-85	HWY: STH 441/USH 10	COUNTY: WINNEBAGO	PAVEMENT GRADES STAGE 1	SHEET 26	E

FILE NAME : S:\PDS\C3D\WIS441\15177570_72_77_85\SHEETSPLAN\1517-75-85\021300-PG\NE-15177585-021301-PG1.DWG
LAYOUT NAME - 021301-PG1

PLOT DATE : 8/26/2016 8:21 AM PLOT BY : VICKMAN, GARRETT T PLOT NAME : PLOT SCALE : 1 IN:40 FT

WISDOT/CADDS SHEET 42

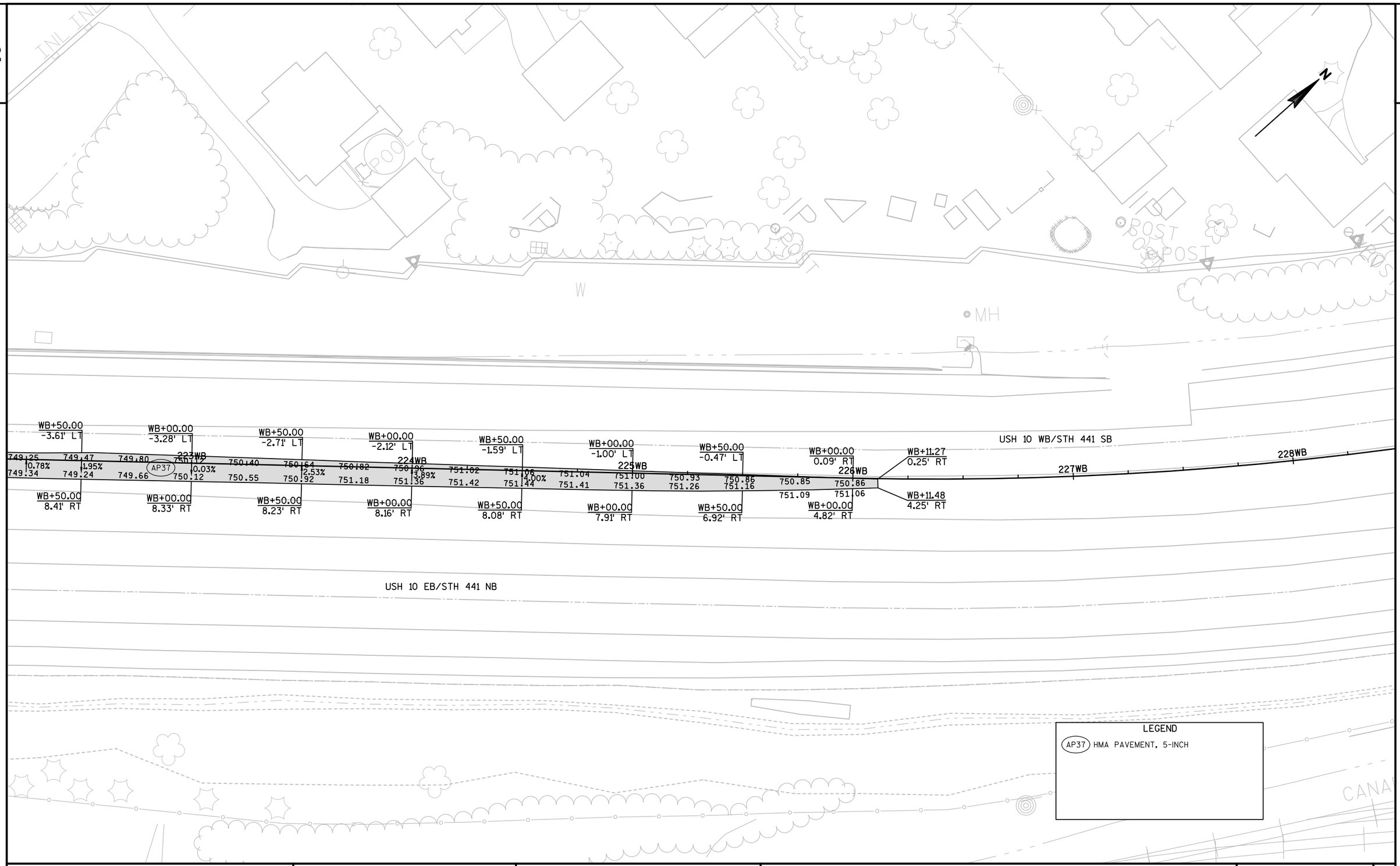

PROJECT NO:1517-75-85	HWY:STH 441/USH 10	COUNTY:WINNEBAGO	PAVEMENT GRADES STAGE 1	SHEET 27	E

FILE NAME : S:\PDS\C3D\WIS441\15177570_72_77_85\SHEETSPLAN\1517-75-85\021300-PG\NE-15177585-021301-PG1.DWG
LAYOUT NAME - 021302-PG1
PLOT DATE : 8/26/2016 8:22 AM PLOT BY : VICKMAN, GARRETT T PLOT NAME : PLOT SCALE : 1 IN:40 FT
WISDOT/CADDS SHEET 42

2

2

RICHARD DRIVE

MIDWAY ROAD SW RAMP

USH 10 WB/STH 441 SB

229WB

230WB

231WB

232WB

233WB

234WB

WB+00.00
13.07' RT

WB+98.23
13.13' RT

WB+00.00
13.27' RT

WB+50.00
11.82' RT

WB+50.00
17.41' RT

WB+00.00
10.39' RT

WB+00.00
21.98' RT

WB+50.00
8.70' RT

WB+50.0
26.74' R

762.16

762.22

762.80

762.90

763.43

763.57

764.07

764.24

764.73

764.92

765.4

765.

1.81%

1.47%

1.13%

AP37

USH 10 EB/STH 441 NB

MIDWAY ROAD SE RAMP

LEGEND

AP37 HMA PAVEMENT, 5-INCH

PROJECT NO: 1517-75-85	HWY: STH 441/USH 10	COUNTY: WINNEBAGO	PAVEMENT GRADES STAGE 1	SHEET 28	E

2

MIDWAY ROAD SW RAMP

N

USH 10 WB/STH 441 SB

235WB 236WB 237WB 238WB 239WB 240WB

WB+00.00 6.65' RT
WB+50.00 8.70' RT
WB+50.00 4.85' RT
WB+67.78 4.18' RT
WB+67.92 8.31' RT
WB+00.00 11.62' RT
WB+50.00 16.87' RT
WB+00.00 22.24' RT
WB+50.00 27.73' RT
WB+00.00 33.32' RT
WB+50.00 38.26' RT
WB+00.00 41.73' RT
WB+50.00 43.73' RT
WB+58.39 43.93' RT
WB+58.31 47.93' RT
WB+50.00 47.91' RT
WB+00.00 47.78' RT
WB+50.00 47.64' RT
WB+00.00 47.54' RT
WB+50.00 47.36' RT
WB+00.00 47.25' RT
WB+50.00 47.04' RT
WB+00.00 41.78' RT
WB+50.00 36.64' RT
WB+00.00 31.62' RT
WB+50.00 26.74' RT

765.40 765.60 766.09 766.30 766.80 766.93 767.01 767.53 767.71 767.84 768.26 768.52 768.71 769.29 769.32 769.54 770.09 770.09 770.35 770.87 770.87 771.16 771.63 771.94 772.38 772.70 773.16 773.48 773.95 774.24 774.74 774.99 775.53 775.75 776.32 776.51 777.09 777.28 777.85 778.04 778.59 778.74 779.30 779.41 779.98 780.06 780.64 780.69

1.13% 0.78% 1.72% 0.08% 1.11% 1.03% 1.24% 1.30% 1.37% 2.00% 1.75% 1.25% 1.07% 1.11%

22' 16' 13' 10' 20' 26'

AP37

15-INCH SLOTTED CORRUGATED METAL SURFACE DRAIN
S.D.D 8D13

SIGN

MH

MIDWAY ROAD SE RAMP

USH 10 EB/STH 441 NB

LEGEND

AP37 HMA PAVEMENT, 5-INCH

PROJECT NO:1517-75-85	HWY: STH 441/USH 10	COUNTY: WINNEBAGO	PAVEMENT GRADES STAGE 1	SHEET 29	E

FILE NAME : S:\PDS\C3D\WIS441\15177570_72_77_85\SHEETSPLAN\1517-75-85\021300-PG\NE-15177585-021301-PG1.DWG
LAYOUT NAME - 021304-PG1

PLOT DATE : 8/26/2016 8:22 AM PLOT BY : VICKMAN, GARRETT T PLOT NAME : PLOT SCALE : 1 IN:40 FT

2

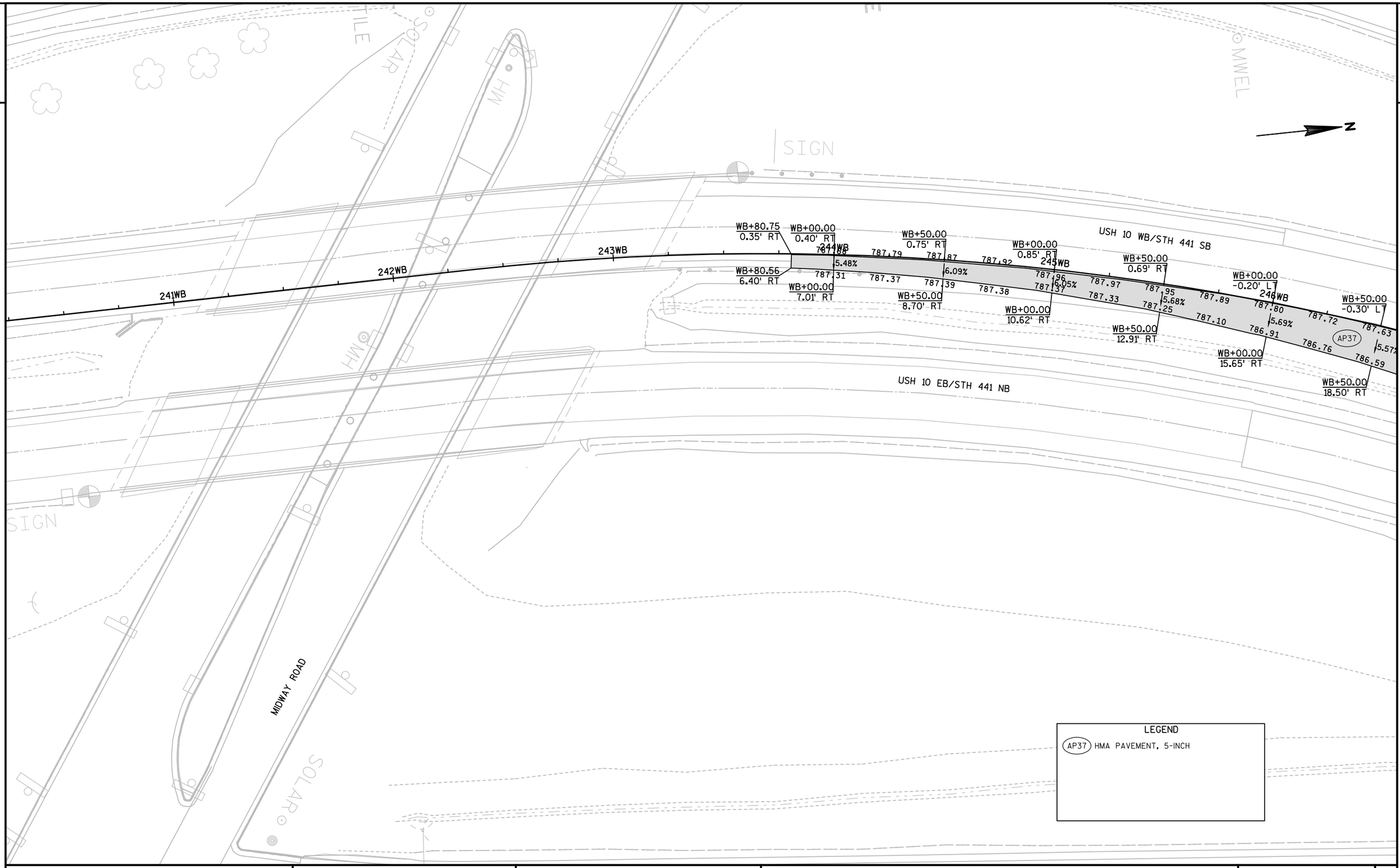

PROJECT NO: 1517-75-85	HWY: STH 441/USH 10	COUNTY: WINNEBAGO	PAVEMENT GRADES STAGE 1	SHEET 30	E

2

MIDWAY ROAD NW RAMP

N

USH 10 WB/STH 441 SB

WB+00.00 -0.30' LT
WB+50.00 -0.19' LT
WB+00.00 -0.19' LT
WB+50.00 -0.03' LT
WB+75.72 -0.15' LT
WB+75.53 2.20' RT
WB+00.00 4.19' RT
WB+50.00 8.41' RT
WB+00.00 12.83' RT
WB+50.00 17.45' RT
WB+00.00 22.24' RT
WB+50.00 27.21' RT
WB+00.00 32.35' RT
WB+50.00 37.67' RT
WB+00.00 41.40' RT

247WB 248WB 249WB 250WB 251WB 252WB

787.51 787.36 787.17 786.97 786.77 786.55 786.29 786.00 785.73 785.59 785.32 785.15 785.01 784.90 784.79 784.65 784.46 784.39 784.11 783.79 783.40 783.04 782.67 782.35 782.08 781.78

786.36 786.10 785.82 785.53 785.25 784.96 784.65 784.38 784.05 783.82 783.60 783.42 783.28 783.14 782.93 782.70 782.49 782.30 782.10 781.88 781.68 781.46 781.27 781.08 780.90

785.02 784.61 784.24 783.91 783.61 783.29 782.97

5.72% 5.78% 5.56% 5.00% 4.68% 4.94% 4.92% 5.21% 5.51% 5.83% 5.77% 5.56% 5.81%

31' 21' 12' 20' 25' 33'

AP37

WB+00.00 21.72' RT
WB+50.00 24.81' RT
WB+00.00 28.52' RT
WB+50.00 32.36' RT
WB+00.00 36.13' RT
WB+50.00 40.83' RT
WB+00.00 44.65' RT
WB+50.00 49.47' RT
WB+56.96 50.26' RT
WB+56.67 53.07' RT
WB+00.00 53.32' RT
WB+50.00 53.62' RT
WB+00.00 54.19' RT
WB+50.00 54.84' RT
WB+00.00 55.22' RT

USH 10 EB/STH 441 NB

15-INCH SLOTTED CORRUGATED METAL SURFACE DRAIN
S.D.D 8D13

MIDWAY ROAD NE RAMP

TILE

LEGEND

AP37 HMA PAVEMENT, 5-INCH

PROJECT NO: 1517-75-85	HWY: STH 441/USH 10	COUNTY: WINNEBAGO	PAVEMENT GRADES STAGE 1	SHEET 31	E

FILE NAME : S:\PDS\C3D\WIS441\15177570_72_77_85\SHEETSPLAN\1517-75-85\021300-PG\NE-15177585-021301-PG1.DWG
LAYOUT NAME - 021306-PG1

PLOT DATE : 8/26/2016 8:22 AM PLOT BY : VICKMAN, GARRETT T PLOT NAME : PLOT SCALE : 1 IN:40 FT

WISDOT/CADDS SHEET 42

2

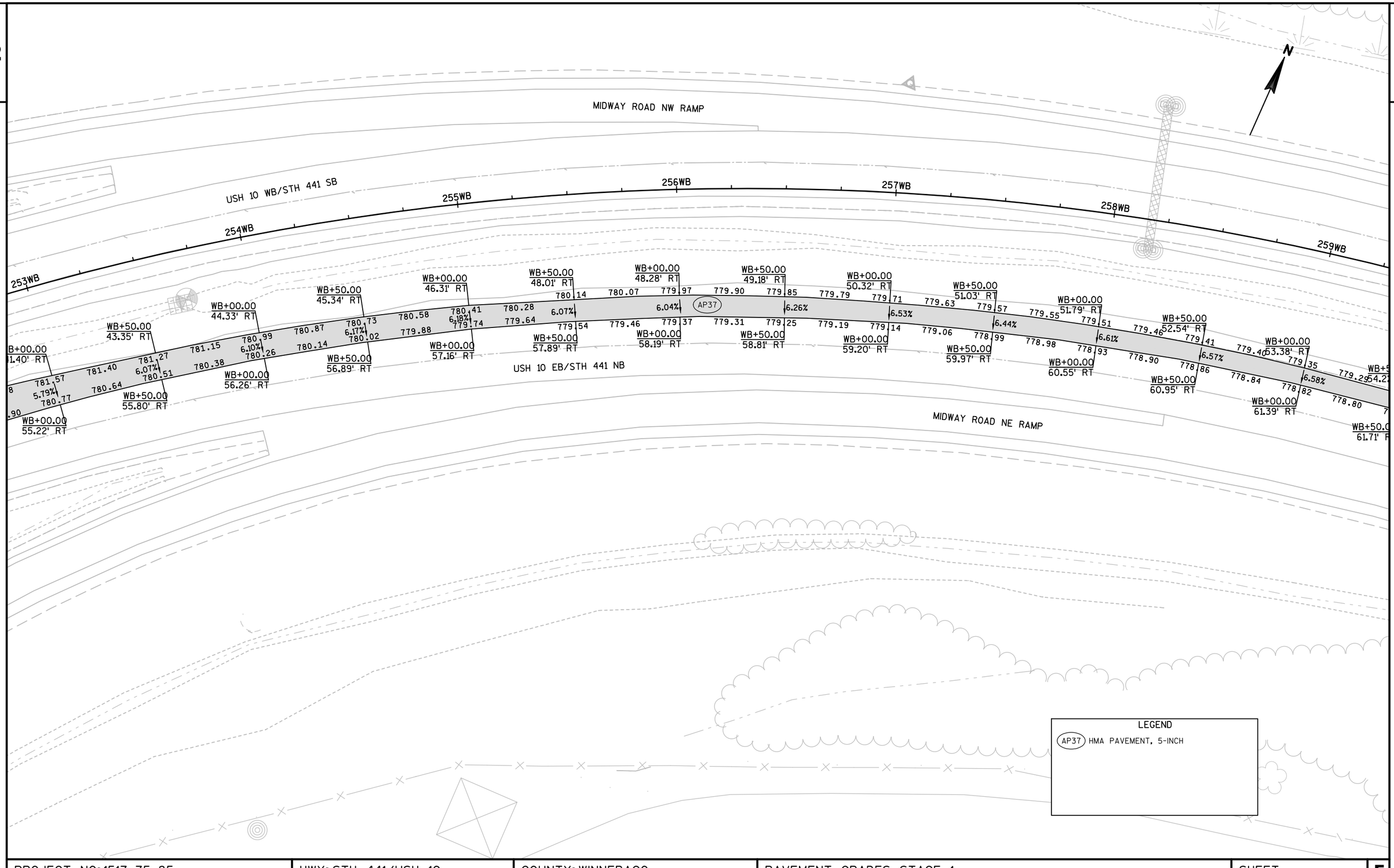

PROJECT NO: 1517-75-85	HWY: STH 441/USH 10	COUNTY: WINNEBAGO	PAVEMENT GRADES STAGE 1	SHEET 32	E

2

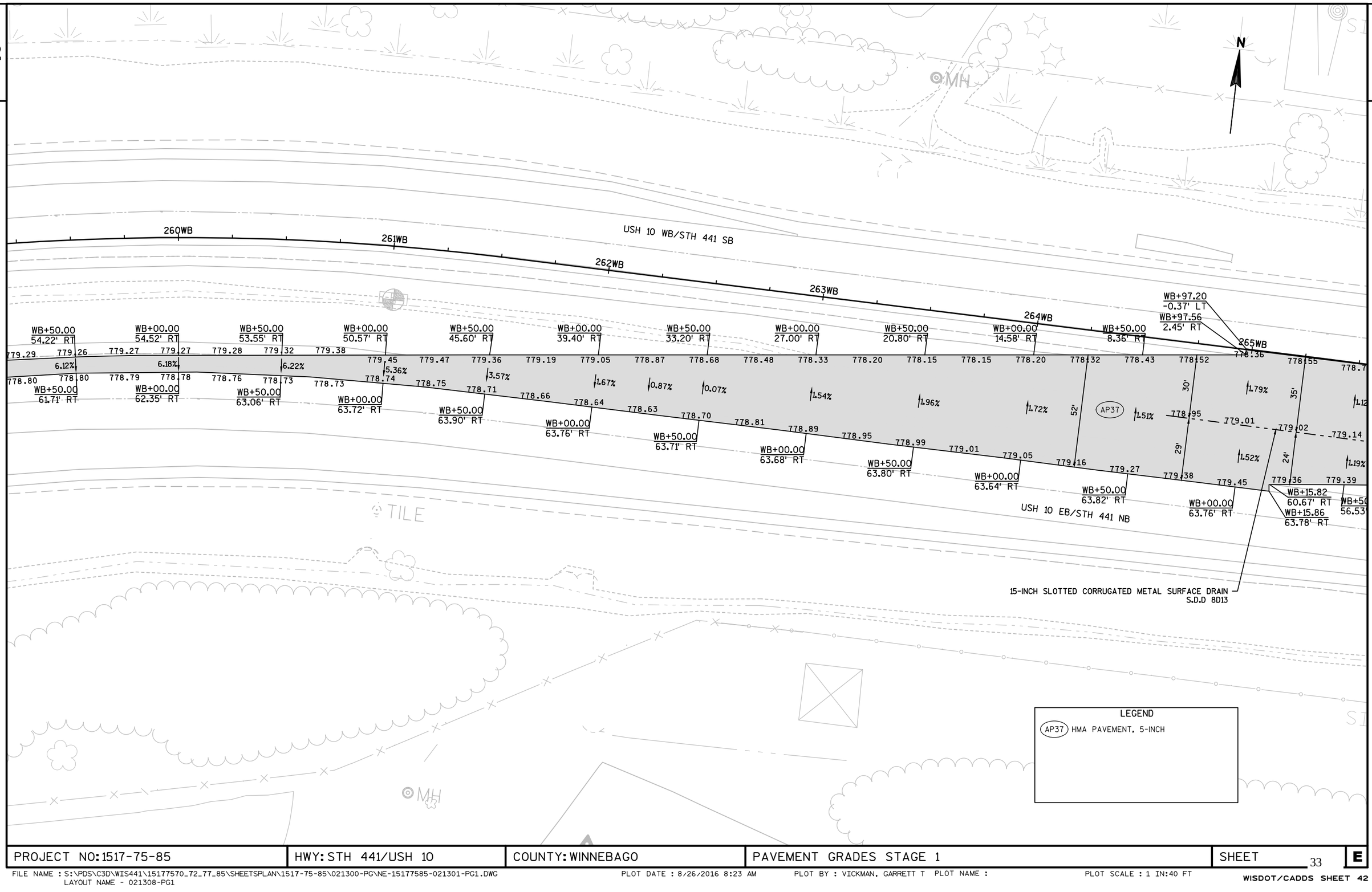

PROJECT NO: 1517-75-85	HWY: STH 441/USH 10	COUNTY: WINNEBAGO	PAVEMENT GRADES STAGE 1	SHEET 33	E

2

SIGN

N

USH 10 WB/STH 441 SB

266WB 267WB 268WB 269WB 270WB 271WB

778.74 778.93 779.11 779.29 779.48 779.67 779.86 780.04 780.24 780.44 780.65 780.85 781.05 781.23 781.42 781.60 781.78 781.97 782.15 782.34 782.56 782.76 782.94 783.12 783.32

1.12% 0.74% 0.34% 0.04% AP37 0.44% 0.83% 1.20% 1.57% 1.94% 1.99% 2.00%

36' 36' 36' 40'

779.14 779.26 779.38 779.48 779.60 779.73 779.85

1.19% 0.79% 0.40%

18' 13' 8'

779.39 779.44 779.50 779.56 779.64 779.74 779.85 779.95 780.07 780.21 780.36 780.51 780.65 780.79 780.93 781.07 781.20 781.37 781.55 781.75 781.96 782.16 782.34 782.52 782.72

+15.82
.67' RT
+15.86
.78' RT

WB+50.00 56.53' RT

WB+00.00 50.87' RT

WB+50.00 45.94' RT

WB+00.00 41.64' RT

WB+50.00 38.01' RT

WB+00.00 35.02' RT

WB+50.00 32.69' RT

WB+00.00 31.03' RT

WB+50.00 30.01' RT

WB+00.00 29.73' RT

WB+50.00 29.64' RT

WB+00.00 29.64' RT

WB+50.00 29.65' RT

15-INCH SLOTTED CORRUGATED METAL SURFACE DRAIN
S.D.D 8D13

USH 10 EB/STH 441 NB

SIGN

LEGEND

AP37 HMA PAVEMENT, 5-INCH

PROJECT NO: 1517-75-85	HWY: STH 441/USH 10	COUNTY: WINNEBAGO	PAVEMENT GRADES STAGE 1	SHEET 34	E

2

2

N

SIGN

SIGN

TILE

USH 10 WB/STH 441 SB

272WB 273WB 274WB 275WB 276WB 277WB

12 783.32 783.51 783.69 783.87 784.06 784.25 784.45 784.65 784.85 785.06 785.27 785.48 785.68 785.88 786.05 786.24 786.45 786.64 786.81 787.00 787.22 787.42 787.60 787.74 787.86

2.00% AP37 2.00%

52 782.72 782.91 783.09 783.28 783.47 783.66 783.85 784.05 784.26 784.46 784.67 784.88 785.09 785.29 785.46 785.65 785.85 786.04 786.22 786.41 786.62 786.82 787.00 787.15 787.26

WB+50.00 29.65' RT | WB+00.00 29.66' RT | WB+50.00 29.66' RT | WB+00.00 29.67' RT | WB+50.00 29.67' RT | WB+00.00 29.68' RT | WB+50.00 29.69' RT | WB+00.00 29.69' RT | WB+50.00 29.70' RT | WB+00.00 29.70' RT | WB+50.00 29.71' RT | WB+00.00 29.72' RT | WB+50.00 29.72' RT

TILE

USH 10 EB/STH 441 NB

TILE

SIGN

LEGEND

AP37 HMA PAVEMENT, 5-INCH

PROJECT NO: 1517-75-85	HWY: STH 441/USH 10	COUNTY: WINNEBAGO	PAVEMENT GRADES STAGE 1	SHEET 35	E

FILE NAME : S:\PDS\C3D\WIS441\15177570_72_77_85\SHEETSPLAN\1517-75-85\021300-PG\NE-15177585-021301-PG1.DWG
LAYOUT NAME - 021310-PG1
PLOT DATE : 8/26/2016 8:23 AM PLOT BY : VICKMAN, GARRETT T PLOT NAME : PLOT SCALE : 1 IN:40 FT
WISDOT/CADDS SHEET 42

2

2

N

TILE

APPLETON ROAD NW RAMP

USH 10 WB/STH 441 SB

278WB 279WB 280WB 281WB 282WB 283WB

74 787.86 788.04 788.23 788.42 788.61 788.80 788.98 789.17 789.37 789.56 789.74 789.93 790.13 790.33 790.55 790.77 790.98 791.22 791.50 791.72 791.91 792.18 792.47 792.73 793.01

2.00% 1.97% 1.80% 1.58% AP37 1.36% WB+17.10 29.78' RT 0.77% 2.00% WB+50.00 29.77' RT 2.00%

15 787.26 787.44 787.63 787.81 788.01 788.21 788.39 788.56 788.78 789.04 789.35 789.70 790.05 789.34 789.53 789.74 789.96 790.18 790.39 790.63 790.91 791.12 791.32 791.58 791.88 792.14 792.41

WB+50.00 29.72' RT

WB+00.00 30.63' RT

WB+50.00 33.23' RT

WB+00.00 37.53' RT

WB+50.00 43.54' RT

WB+00.00 51.28' RT

WB+17.10 32.93' RT

WB+50.00 58.64' RT

WB+00.00 29.77' RT

WB+50.00 29.77' RT

WB+00.00 29.77' RT

WB+50.00 29.77' RT

WB+00.00 29.77' RT

WB+50.00 29.77' RT

0.56% 0.99% 1.48%

WB+00.00 47.31' RT

WB+50.00 55.98' RT

WB+77.10 50.69' RT

WB+90.29 60.69' RT

789.63 789.93 790.48 790.69 790.93 791.17 791.42 791.51

789.89 790.64 790.86 791.08 791.29

WB+50.00 59.95' RT

WB+59.61 61.62' RT

WB+59.64 64.01' RT

WB+00.00 64.04' RT

WB+50.00 64.02' RT

WB+90.28 63.99' RT

USH 10 EB/STH 441 NB

TILE

SIGN

APPLETON ROAD SW RAMP

TOWER

LEGEND

AP37 HMA PAVEMENT, 5-INCH

PROJECT NO: 1517-75-85	HWY: STH 441/USH 10	COUNTY: WINNEBAGO	PAVEMENT GRADES STAGE 1	SHEET 36	E

FILE NAME : S:\PDS\C3D\WIS441\15177570_72_77_85\SHEETSPLAN\1517-75-85\021300-PG\NE-15177585-021301-PG1.DWG
LAYOUT NAME - 021311-PG1

PLOT DATE : 8/26/2016 8:23 AM PLOT BY : VICKMAN, GARRETT T PLOT NAME : PLOT SCALE : 1 IN:40 FT

WISDOT/CADDS SHEET 42

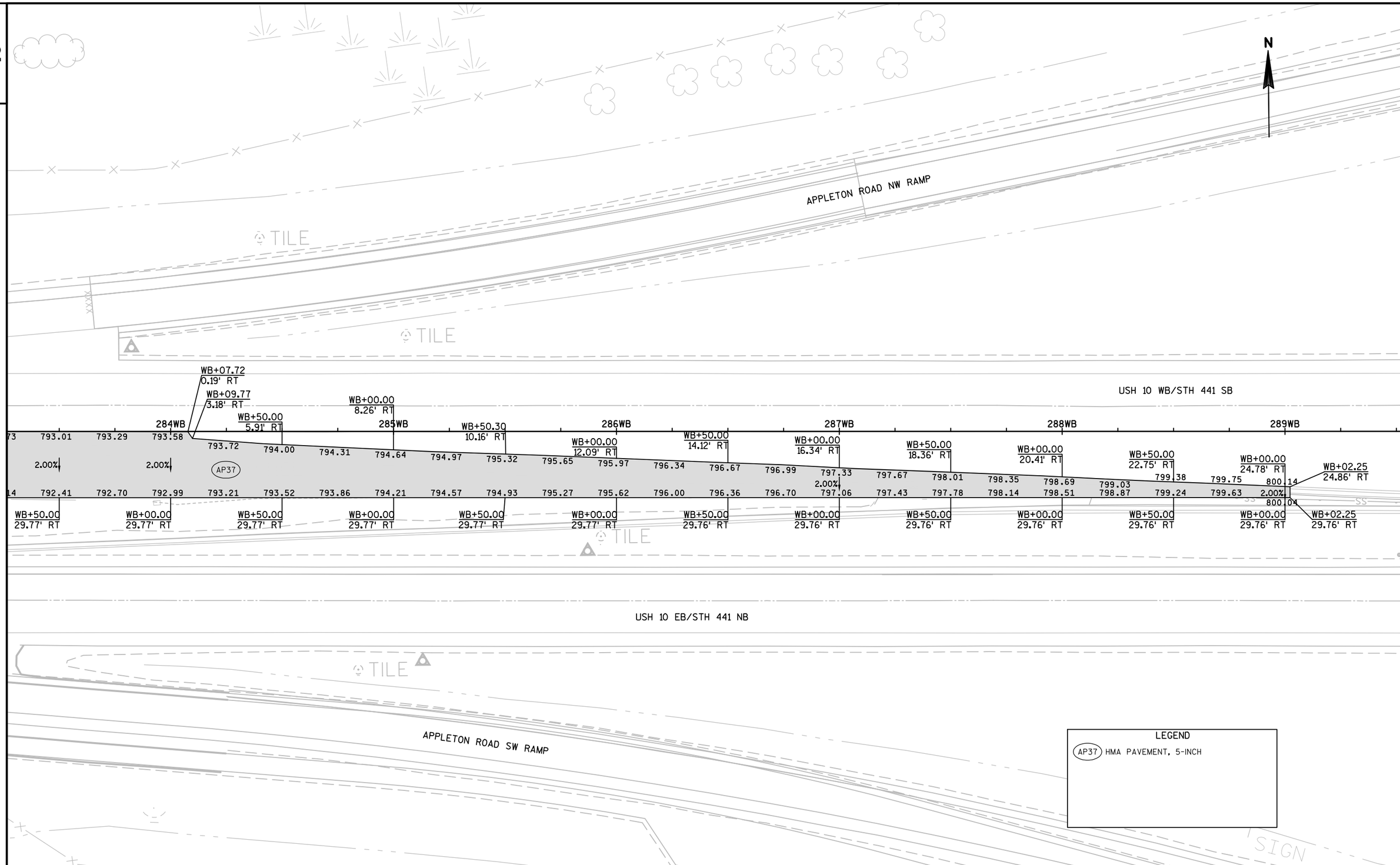

PROJECT NO:1517-75-85	HWY:STH 441/USH 10	COUNTY:WINNEBAGO	PAVEMENT GRADES STAGE 1	SHEET 37	E

FILE NAME : S:\PDS\C3D\WIS441\15177570_72_77_85\SHEETSPLAN\1517-75-85\021300-PG\NE-15177585-021301-PG1.DWG
LAYOUT NAME - 021312-PG1
PLOT DATE : 8/26/2016 8:23 AM PLOT BY : VICKMAN, GARRETT T PLOT NAME : PLOT SCALE : 1 IN:40 FT

2

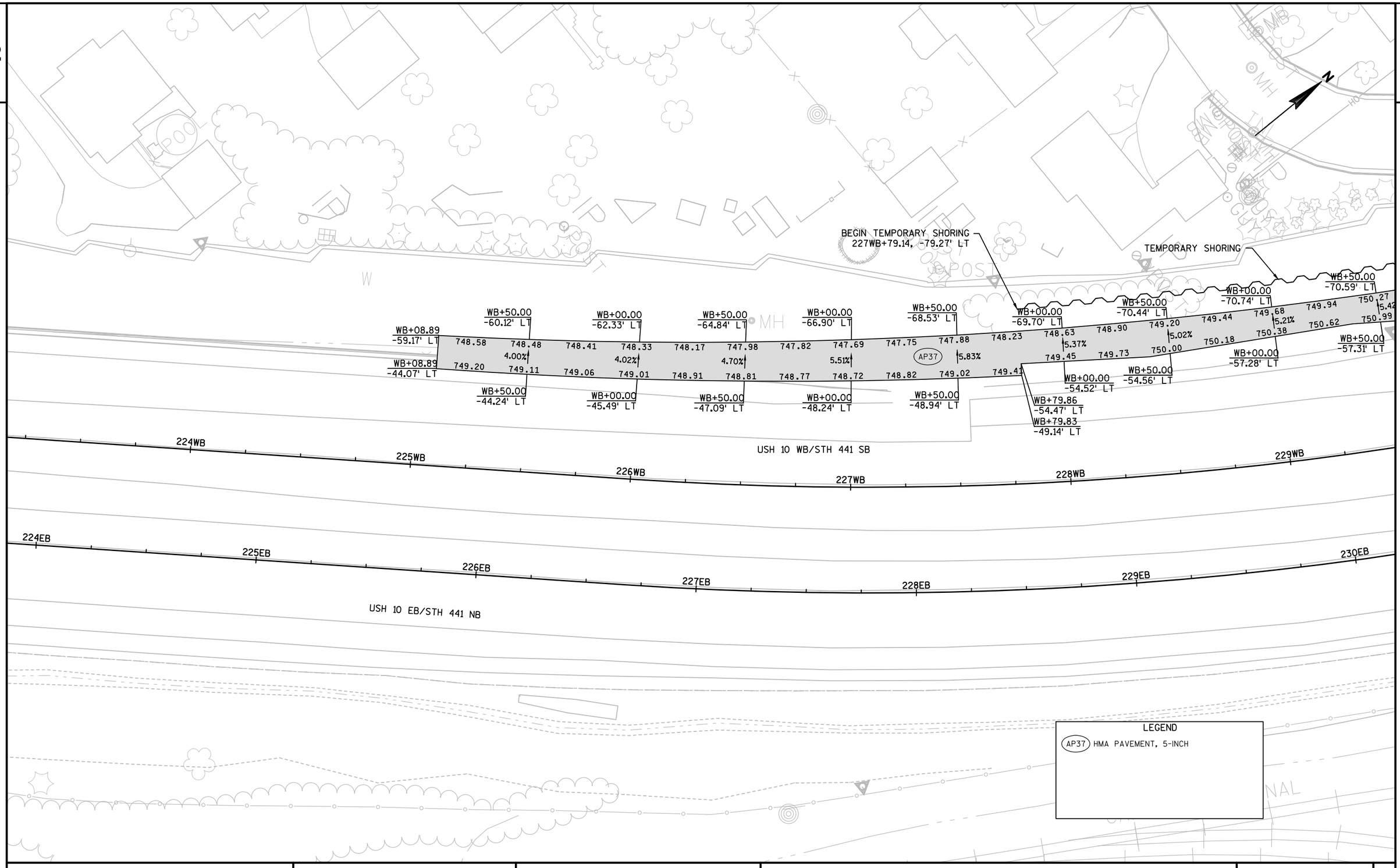

PROJECT NO: 1517-75-85	HWY: STH 441/USH 10	COUNTY: WINNEBAGO	PAVEMENT GRADES STAGE 2	SHEET 38	E

FILE NAME : S:\PDS\C3D\WIS441\15177570_72_77_85\SHEETSPLAN\1517-75-85\021300-PG\NE-15177585-021321-PG2.DWG
LAYOUT NAME - 021321-PG1
PLOT DATE : 8/26/2016 8:23 AM PLOT BY : VICKMAN, GARRETT T PLOT NAME : PLOT SCALE : 1 IN:40 FT
WISDOT/CADDS SHEET 42

2

2

RICHARD DRIVE

TEMPORARY SHORING

END TEMPORARY SHORING
230WB+14.29, -81.93' LT

WB+50.00
70.59' LT
749.94
750.62
5.42%
750.27
750.99
WB+50.00
-57.31' LT
750.73
751.53
WB+00.00
-52.53' LT
751.20
5.00%
752.07
751.63
752.62
WB+00.00
-70.00' LT
WB+50.00
-68.97' LT
752.04
4.98%
753.04
752.49
753.43
WB+50.00
-48.90' LT
WB+00.00
-67.49' LT
753.01
4.88%
753.86
753.59
754.35
WB+00.00
-50.15' LT
WB+33.23
-50.45' LT
WB+33.30
-46.60' LT
WB+50.00
-65.58' LT
754.12
4.83%
755.02
WB+50.00
-46.81' LT
WB+00.00
-63.22' LT
754.64
AP37
755.51
755.13
5.31%
755.98
WB+00.00
-47.20' LT
WB+50.00
-60.74' LT
756.05
756.37
5.31%
756.54
757.08
WB+50.00
-47.44' LT
WB+00.00
-58.32' LT
756.93
5.80%
757.64
757.65
758.25
WB+00.00
-48.16' LT
WB+50.00
-55.99' LT
758.46
759.22
5.33%
759.60
758.93
WB+50.00
-48.97' LT
WB+00.00
-54.79' LT
759.97
760.69
5.06%
760.28
760.94
MIDWAY ROAD SW RAMP
WB+00.00
-50.11' LT
WB+50.00
-55.43' LT
761.40
762.08
761.58
762.22
WB+50.00
-52.76' LT
WB+00.00
-57.90' LT
762.77
763.43
762.86
763.50
WB+00.00
-56.53' LT
WB+09.19
-58.55' LT
WB+09.30
-57.55' LT

USH 10 WB/STH 441 SB

230WB
231WB
232WB
233WB
234WB
235WB
236EB
235EB
234EB
233EB
232EB
231EB

USH 10 EB/STH 441 NB

MIDWAY ROAD SE RAMP

LEGEND

AP37 HMA PAVEMENT, 5-INCH

PROJECT NO:1517-75-85	HWY: STH 441/USH 10	COUNTY: WINNEBAGO	PAVEMENT GRADES STAGE 2	SHEET 39	E

2

MIDWAY ROAD NW RAMP

N

USH 10 WB/STH 441 SB

246WB 247WB 248WB 249WB 250WB 251WB

247EB 248EB 249EB 250EB 251EB 252EB

USH 10 EB/STH 441 NB

EB+88.67 25.84' RT — 785.10 — 6.15% — 784.47

EB+88.47 35.88' RT — 784.32

EB+00.00 25.93' RT — 784.98 — 6.04% — 784.15

EB+00.00 36.17' RT — 784.64

EB+50.00 26.06' RT — 784.82

EB+50.00 37.11' RT — 783.95

EB+00.00 26.09' RT — 784.44 — 6.01% — 783.72

EB+00.00 38.04' RT — 784.22

EB+50.00 26.11' RT — 783.97 — 6.00% — 783.20

EB+50.00 38.95' RT — 783.47

EB+00.00 26.05' RT — 783.71

EB+00.00 39.84' RT — 783.42 — 6.05% — 782.59

EB+50.00 25.97' RT — 783.12

EB+50.00 40.70' RT — 782.91

EB+00.00 25.91' RT — 782.84 — 6.12% — 782.25

EB+00.00 41.56' RT — 782.59

EB+50.00 25.81' RT — 782.34 — 6.21% — 781.94

EB+50.00 42.39' RT — 782.07

EB+00.00 25.81' RT — 781.81 — 6.38% — 781.67

EB+00.00 43.18' RT — 781.57

EB+50.00 25.65' RT — 781.35 — 6.03% — 781.36

EB+50.00 43.96' RT — 781.13

EB+00.00 25.76' RT — 781.04

EB+00.00 44.70' RT — 780.92 — 5.99% — 780.75

EB+50.00 45.41' RT — 780.70

EB+50.00 26.50' RT — 780.55

780.50 — 5.93% — 780.30

780.25

780.09

780.02 — 6.00%

779.82

779.61

779.37

779.15

778.89

AP37

MIDWAY ROAD NE RAMP

TILE

LEGEND

AP37 HMA PAVEMENT, 5-INCH

PROJECT NO: 1517-75-85	HWY: STH 441/USH 10	COUNTY: WINNEBAGO	PAVEMENT GRADES STAGE 2	SHEET 40	E

FILE NAME : S:\PDS\C3D\WIS441\15177570_72_77_85\SHEETSPLAN\1517-75-85\021300-PG\NE-15177585-021321-PG2.DWG
LAYOUT NAME - 021323-PG1

PLOT DATE : 8/26/2016 8:24 AM PLOT BY : VICKMAN, GARRETT T PLOT NAME : PLOT SCALE : 1 IN:40 FT

WISDOT/CADDS SHEET 42

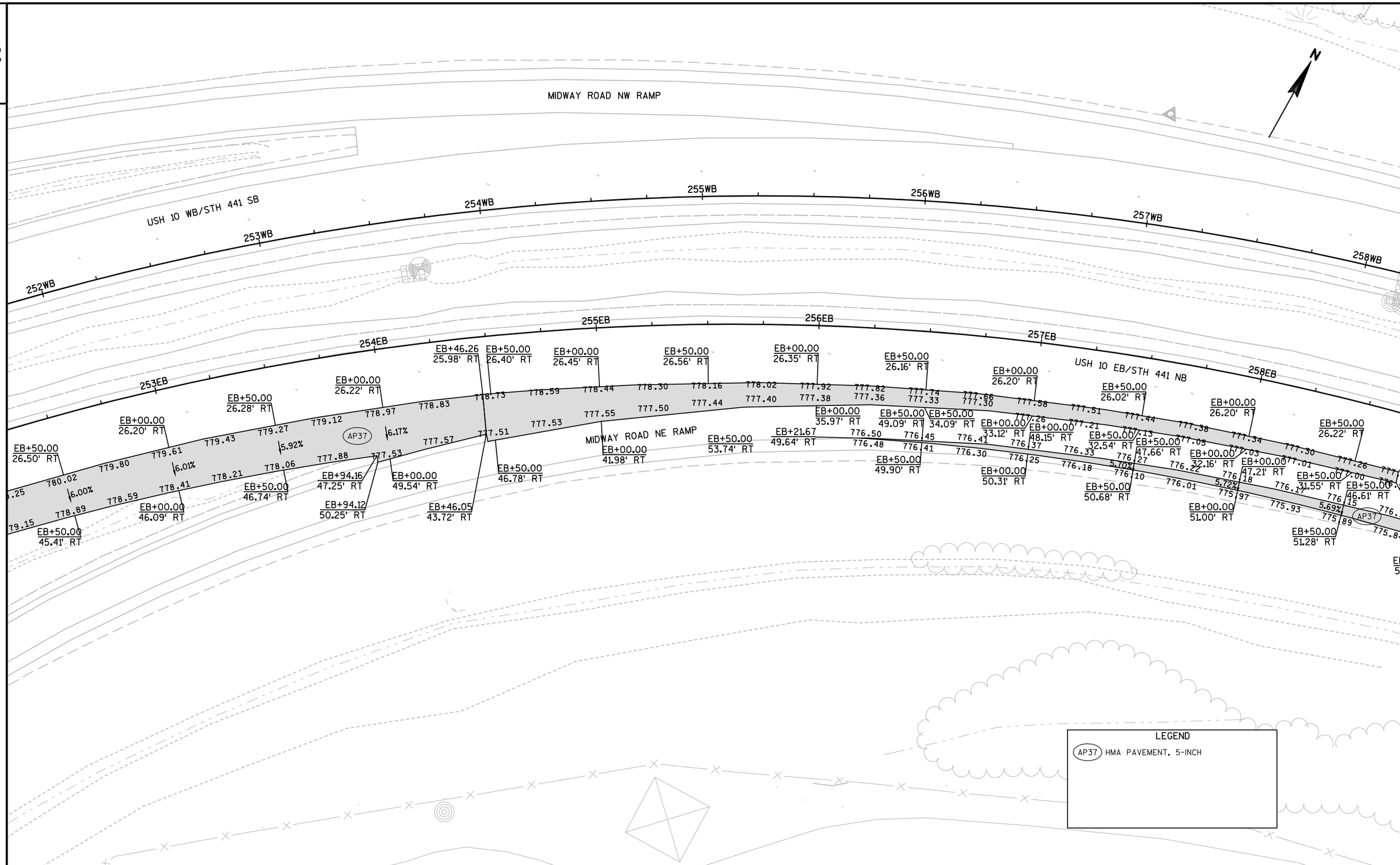

PROJECT NO:1517-75-85	HWY:STH 441/USH 10	COUNTY:WINNEBAGO	PAVEMENT GRADES STAGE 2	SHEET 41	E

FILE NAME : S:\PDS\C3D\WIS441\15177570_72_77_85\SHEETSPLAN\1517-75-85\021300-PG\NE-15177585-021321-PG2.DWG
LAYOUT NAME - 021324-PG1
PLOT DATE : 8/26/2016 8:24 AM PLOT BY : VICKMAN, GARRETT T PLOT NAME : PLOT SCALE : 1 IN:40 FT

2

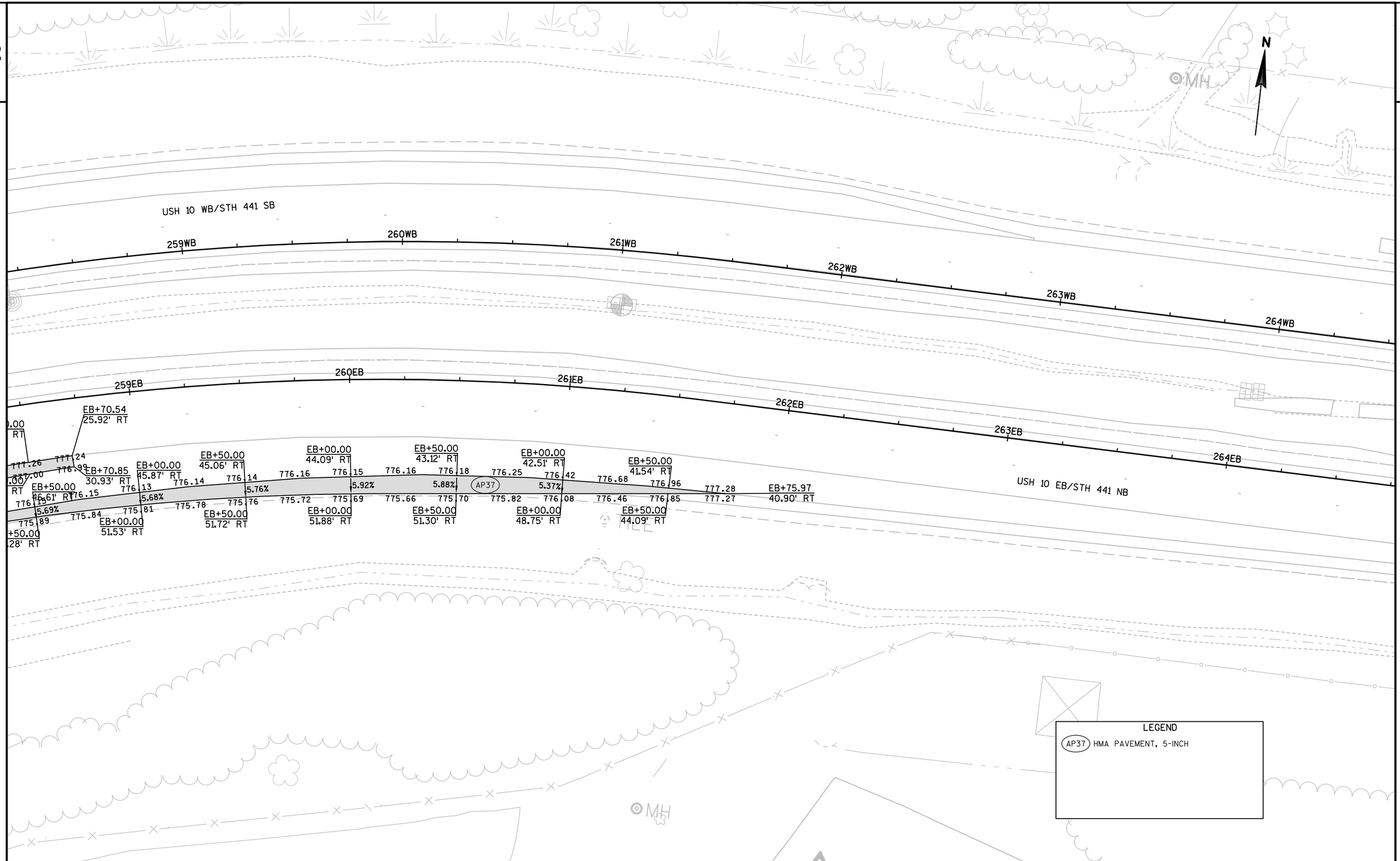

PROJECT NO: 1517-75-85	HWY: STH 441/USH 10	COUNTY: WINNEBAGO	PAVEMENT GRADES STAGE 2	SHEET 42	E

FILE NAME : S:\PDS\C3D\WIS441\15177570_72_77_85\SHEETSPLAN\1517-75-85\021300-PG\NE-15177585-021321-PG2.DWG
LAYOUT NAME - 021325-PG1
PLOT DATE : 8/26/2016 8:24 AM
PLOT BY : VICKMAN, GARRETT T PLOT NAME :
PLOT SCALE : 1 IN:40 FT
WISDOT/CADDS SHEET 42

2

2

N

TILE

APPLETON ROAD NW RAMP

TILE

USH 10 WB/STH 441 SB

283WB 284WB 285WB 286WB 287WB 288WB

TILE

INL

TILE

283EB 284EB 285EB 286EB 287EB 288EB

USH 10 EB/STH 441 NB

EB+48.58
31.86' RT

EB+50.00
31.88' RT

EB+00.00
32.30' RT

EB+10.28
32.30' RT

EB+09.95
34.27' RT

EB+50.00
41.22' RT

EB+47.79
46.03' RT

EB+50.00
46.21' RT

EB+00.00
50.21' RT

EB+50.00
54.22' RT

EB+00.00
58.23' RT

EB+00.00
49.89' RT

EB+50.00
58.57' RT

EB+50.00
63.02' RT

EB+00.00
67.24' RT

EB+00.00
69.63' RT

EB+29.28
72.32' RT

EB+28.93
74.29' RT

792.51 792.77 793.03 792.94 793.13 793.15 793.00 792.82 792.60 792.39 792.19 791.98

792.14 792.13 792.16 792.17 792.53 792.67 792.65 792.58 792.45 792.29 792.12 791.97

12.57% AP37 4.85% 4.62% 4.17% 3.42%

TILE

TOWER

APPLETON ROAD SW RAMP

LEGEND

AP37 HMA PAVEMENT, 5-INCH

PROJECT NO:1517-75-85	HWY: STH 441/USH 10	COUNTY: WINNEBAGO	PAVEMENT GRADES STAGE 2	SHEET 43	E

2

2

RACINE RD.

SLOPE INTERCEPT

USH 10 WB/STH 441 SB

USH 10 EB/STH 441 NB

SLOPE INTERCEPT

CANADIAN NATIONAL

CANADIAN NATIONAL

CEMETERY

LEGEND

- PHRAGMITES
- PURPLE LOOSESTRIFE
- TEASEL
- WETLAND
- DISTURBED WETLAND

PROJECT NO: 1517-75-72	HWY: STH 441/USH 10	COUNTY: WINNEBAGO	INVASIVE SPECIES & DISTURBED WETLAND AREAS	SHEET 44	E

FILE NAME : S:\PDS\C3D\WIS441\15177570_72_77_85\SHEETSPLAN\1517-75-85\021600-DW\NE-15177585-021601-DW.DWG
LAYOUT NAME - 021601-DW

PLOT DATE : 8/18/2016 8:10 AM PLOT BY : VICKMAN, GARRETT T PLOT NAME : PLOT SCALE : 1 IN:100 FT

2

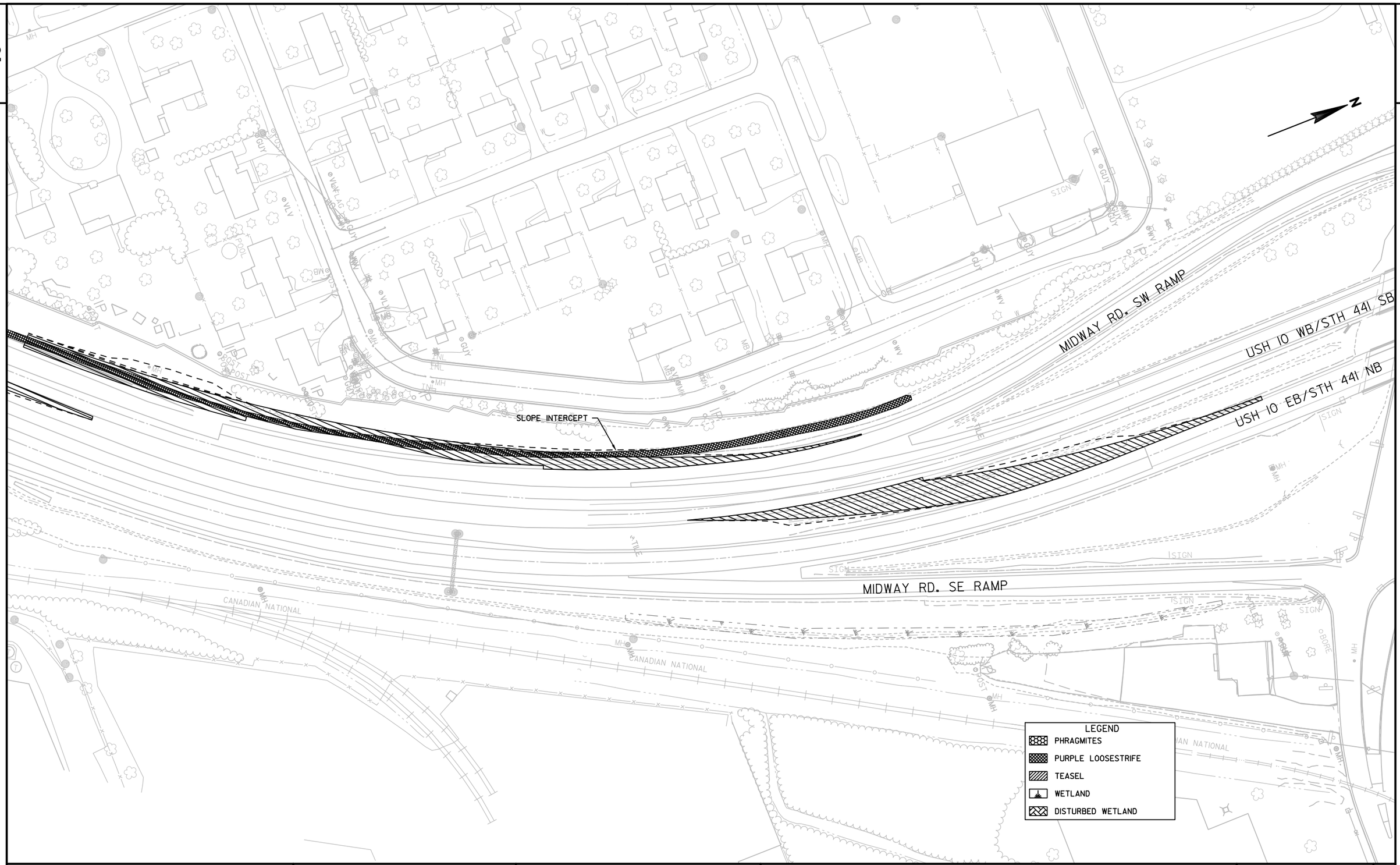

PROJECT NO: 1517-75-72	HWY: STH 441/USH 10	COUNTY: WINNEBAGO	INVASIVE SPECIES & DISTURBED WETLAND AREAS	SHEET 45	E

FILE NAME : S:\PDS\C3D\WIS441\15177570_72_77_85\SHEETSPLAN\1517-75-85\021600-DW\NE-15177585-021601-DW.DWG
LAYOUT NAME - 021602-DW
PLOT DATE : 8/18/2016 8:10 AM
PLOT BY : VICKMAN, GARRETT T PLOT NAME :
PLOT SCALE : 1 IN:100 FT
WISDOT/CADDS SHEET 42

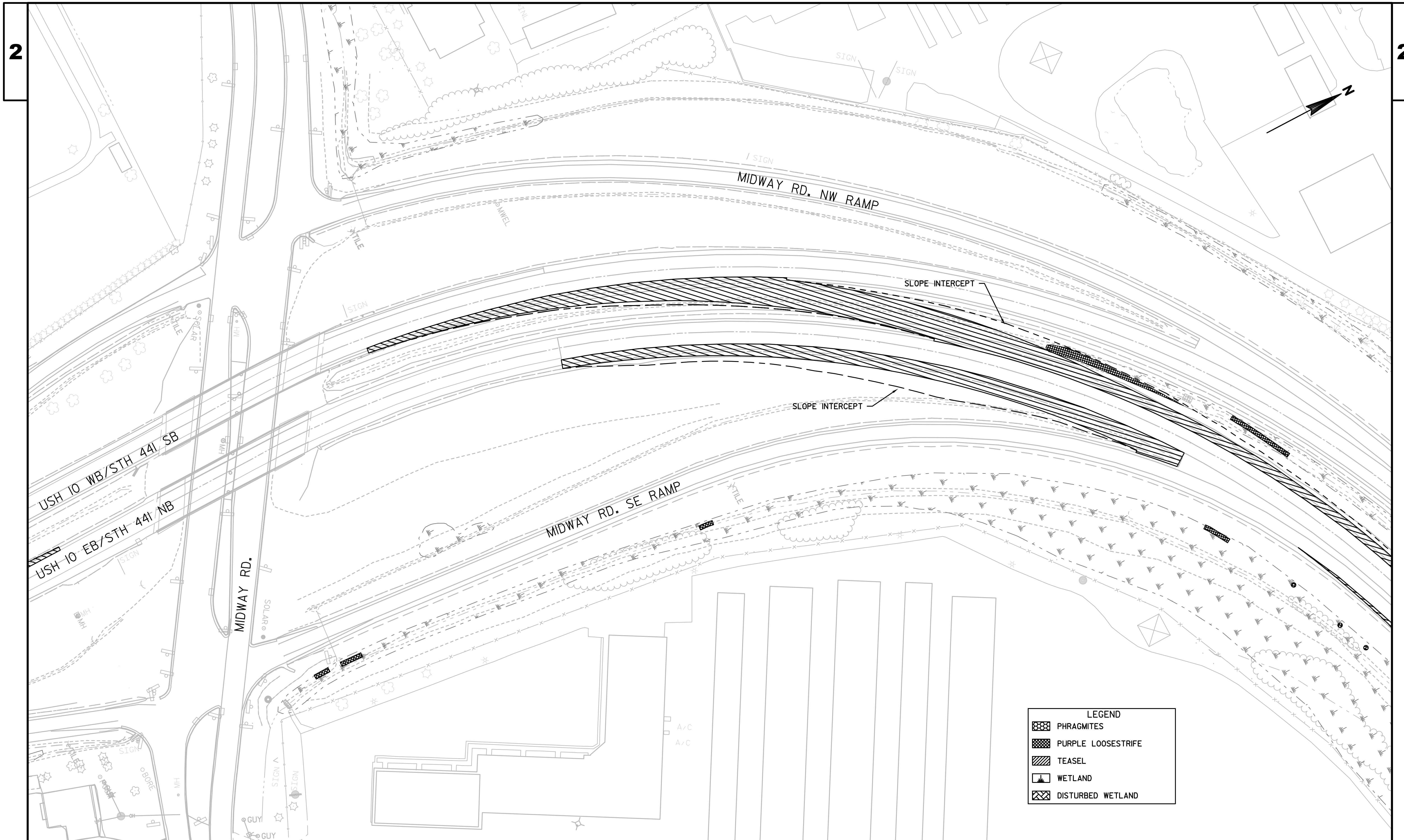

PROJECT NO: 1517-75-72	HWY: STH 441/USH 10	COUNTY: WINNEBAGO	INVASIVE SPECIES & DISTURBED WETLAND AREAS	SHEET 46	E

FILE NAME : S:\PDS\C3D\WIS441\15177570_72_77_85\SHEETSPLAN\1517-75-85\021600-DW\NE-15177585-021601-DW.DWG
LAYOUT NAME - 021603-DW

PLOT DATE : 8/18/2016 8:11 AM PLOT BY : VICKMAN, GARRETT T PLOT NAME : PLOT SCALE : 1 IN:100 FT

WISDOT/CADDS SHEET 42

2

2

N

USH 10 WB/STH 441 SB

USH 10 EB/STH 441 NB

SLOPE INTERCEPT

SLOPE INTERCEPT

MH

SIGN

TILE

IP

POST

INL

W

LEGEND

PHRAGMITES

PURPLE LOOSESTRIFE

TEASEL

WETLAND

DISTURBED WETLAND

PROJECT NO: 1517-75-72	HWY: STH 441/USH 10	COUNTY: WINNEBAGO	INVASIVE SPECIES & DISTURBED WETLAND AREAS	SHEET 47	E

FILE NAME : S:\PDS\C3D\WIS441\15177570_72_77_85\SHEETSPLAN\1517-75-85\021600-DW\NE-15177585-021601-DW.DWG
LAYOUT NAME - 021604-DW

PLOT DATE : 8/18/2016 8:11 AM PLOT BY : VICKMAN, GARRETT T PLOT NAME : PLOT SCALE : 1 IN:100 FT

2

2

N

APPLETON RD. NW RAMP

USH 10 WB/STH 441 SB

SLOPE INTERCEPT

SLOPE INTERCEPT

USH 10 EB/STH 441 SB

APPLETON RD. SW RAMP

TILE

SIGN

INL

MH

W

TWE

TOWER

LEGEND

- PHRAGMITES
- PURPLE LOOSESTRIFE
- TEASEL
- WETLAND
- DISTURBED WETLAND

PROJECT NO: 1517-75-72	HWY: STH 441/USH 10	COUNTY: WINNEBAGO	INVASIVE SPECIES & DISTURBED WETLAND AREAS	SHEET 48	E

FILE NAME : S:\PDS\C3D\WIS441\15177570_72_77_85\SHEETSPLAN\1517-75-85\021600-DW\NE-15177585-021601-DW.DWG
LAYOUT NAME - 021605-DW

PLOT DATE : 8/18/2016 8:11 AM PLOT BY : VICKMAN, GARRETT T PLOT NAME : PLOT SCALE : 1 IN:100 FT

2

LEGEND

- EROSION MAT CLASS I, TYPE A
- SILT FENCE
- SLOPE INTERCEPT
- SHORING
- INLET PROTECTION ⒶⒷ
- TEMPORARY DITCH CHECK
- CULVERT PIPE DITCH CHECK
- SURFACE WATER FLOW

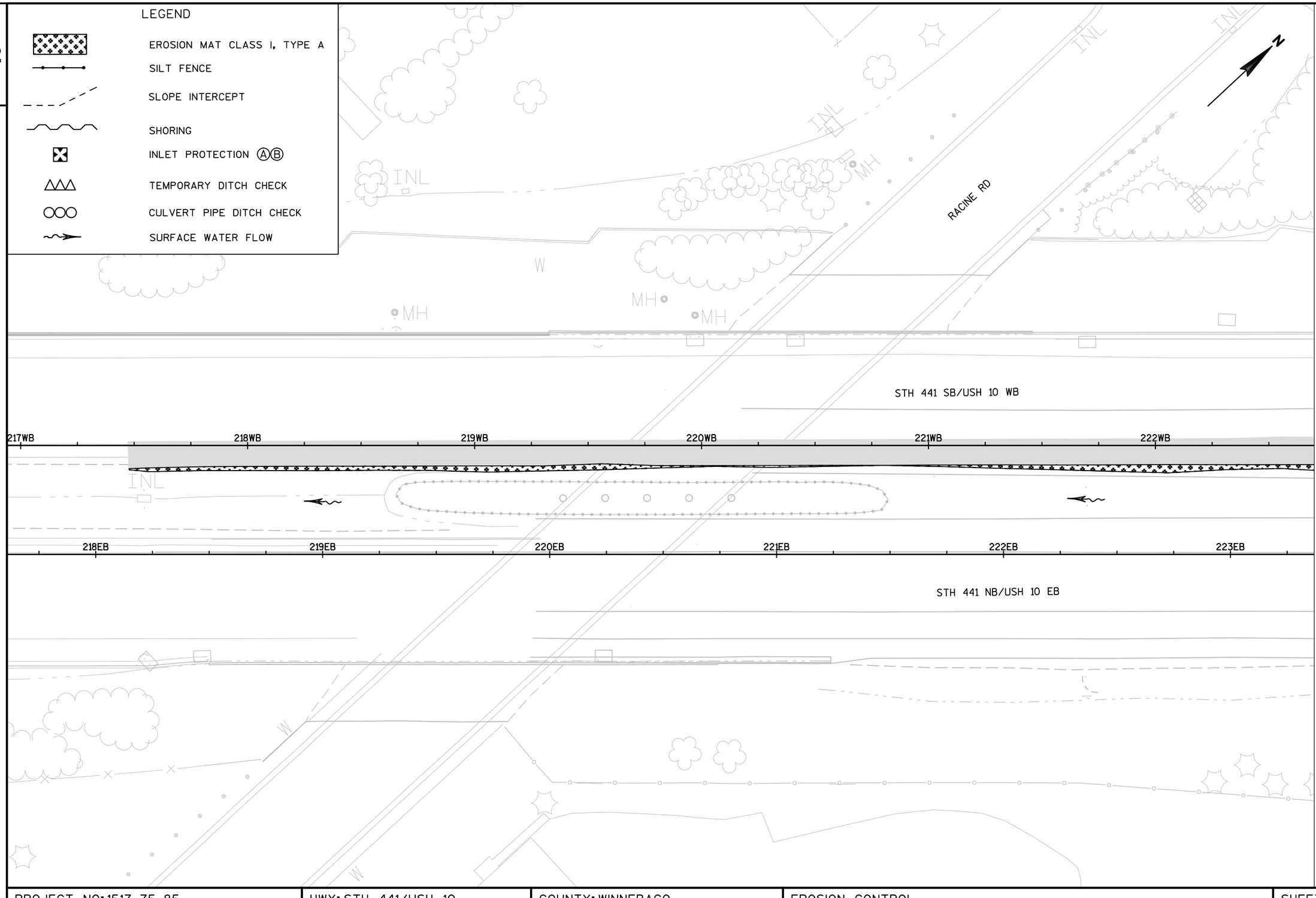

222+70.00 MATCH LINE

2

PROJECT NO: 1517-75-85	HWY: STH 441/USH 10	COUNTY: WINNEBAGO	EROSION CONTROL	SHEET 49	E

2

LEGEND

- EROSION MAT CLASS I, TYPE A
- SILT FENCE
- SLOPE INTERCEPT
- SHORING
- INLET PROTECTION (A)(B)
- TEMPORARY DITCH CHECK
- CULVERT PIPE DITCH CHECK
- SURFACE WATER FLOW

228+50.00 MATCH LINE

STH 441 SB/USH 10 WB

223WB 224WB 225WB 226WB 227WB 228WB

224EB 225EB 226EB 227EB 228EB 229EB

STH 441 NB/USH 10 EB

222+70.00 MATCH LINE

W

MH

CANADIAN

2

PROJECT NO: 1517-75-85	HWY: STH 441/USH 10	COUNTY: WINNEBAGO	EROSION CONTROL	SHEET 50	E

FILE NAME : S:\PDS\C3D\WIS441\15177570_72_77_85\SHEETSPLAN\1517-75-85\022000-EC\NE_15177585_EC_JESS_SHEETS.DWG
LAYOUT NAME - 022002-EC

PLOT DATE : 8/26/2016 8:57 AM PLOT BY : VICKMAN, GARRETT T PLOT NAME : PLOT SCALE : 1 IN:40 FT

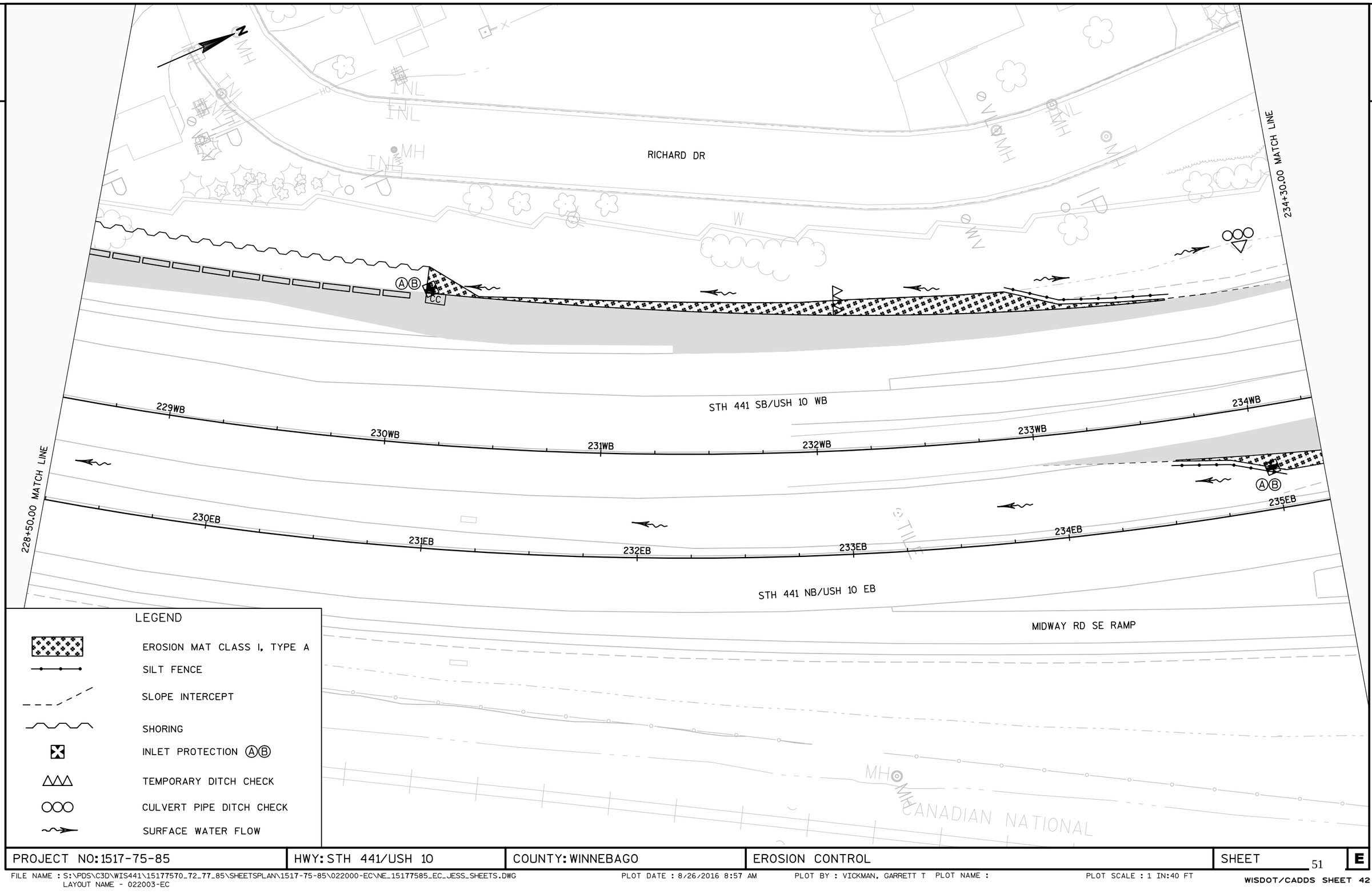

PROJECT NO:1517-75-85	HWY:STH 441/USH 10	COUNTY:WINNEBAGO	EROSION CONTROL	SHEET 51	E

FILE NAME : S:\PDS\C3D\WIS441\15177570_72_77_85\SHEETSPLAN\1517-75-85\022000-EC\NE_15177585_EC_JESS_SHEETS.DWG
LAYOUT NAME - 022003-EC
PLOT DATE : 8/26/2016 8:57 AM PLOT BY : VICKMAN, GARRETT T PLOT NAME : PLOT SCALE : 1 IN:40 FT

LEGEND

- EROSION MAT CLASS I, TYPE A
- SILT FENCE
- SLOPE INTERCEPT
- SHORING
- INLET PROTECTION (A)(B)
- TEMPORARY DITCH CHECK
- CULVERT PIPE DITCH CHECK
- SURFACE WATER FLOW

N

MIDWAY RD SW RAMP

240+10.00 MATCH LINE

STH 441 SB/USH 10 WB

235WB 236WB 237WB 238WB 239WB 240WB

(A)(B) (A)(B)

236EB 237EB 238EB 239EB 240EB 241EB

234+30.00 MATCH LINE

STH 441 NB/USH 10 EB

MIDWAY RD SE RAMP

PROJECT NO: 1517-75-85	HWY: STH 441/USH 10	COUNTY: WINNEBAGO	EROSION CONTROL	SHEET 52	E

LEGEND

- EROSION MAT CLASS I, TYPE A
- SILT FENCE
- SLOPE INTERCEPT
- SHORING
- INLET PROTECTION (A)(B)
- TEMPORARY DITCH CHECK
- CULVERT PIPE DITCH CHECK
- SURFACE WATER FLOW

MIDWAY RD SW RAMP

MIDWAY RD NW RAMP

STH 441 SB/USH 10 WB

241WB 242WB 243WB 244WB 245WB

CC

245+90.00 MATCH LINE

STH 441 NB/USH 10 EB

242EB 243EB 244EB 245EB 246EB

240+10.00 MATCH LINE

MIDWAY RD

PROJECT NO: 1517-75-85	HWY: STH 441/USH 10	COUNTY: WINNEBAGO	EROSION CONTROL	SHEET 53	E

FILE NAME : S:\PDS\C3D\WIS441\15177570_72_77_85\SHEETSPLAN\1517-75-85\022000-EC\NE_15177585_EC_JESS_SHEETS.DWG
LAYOUT NAME - 022005-EC

PLOT DATE : 8/26/2016 8:57 AM PLOT BY : VICKMAN, GARRETT T PLOT NAME : PLOT SCALE : 1 IN:40 FT

LEGEND

- EROSION MAT CLASS I, TYPE A
- SILT FENCE
- SLOPE INTERCEPT
- SHORING
- INLET PROTECTION (A)(B)
- TEMPORARY DITCH CHECK
- CULVERT PIPE DITCH CHECK
- SURFACE WATER FLOW

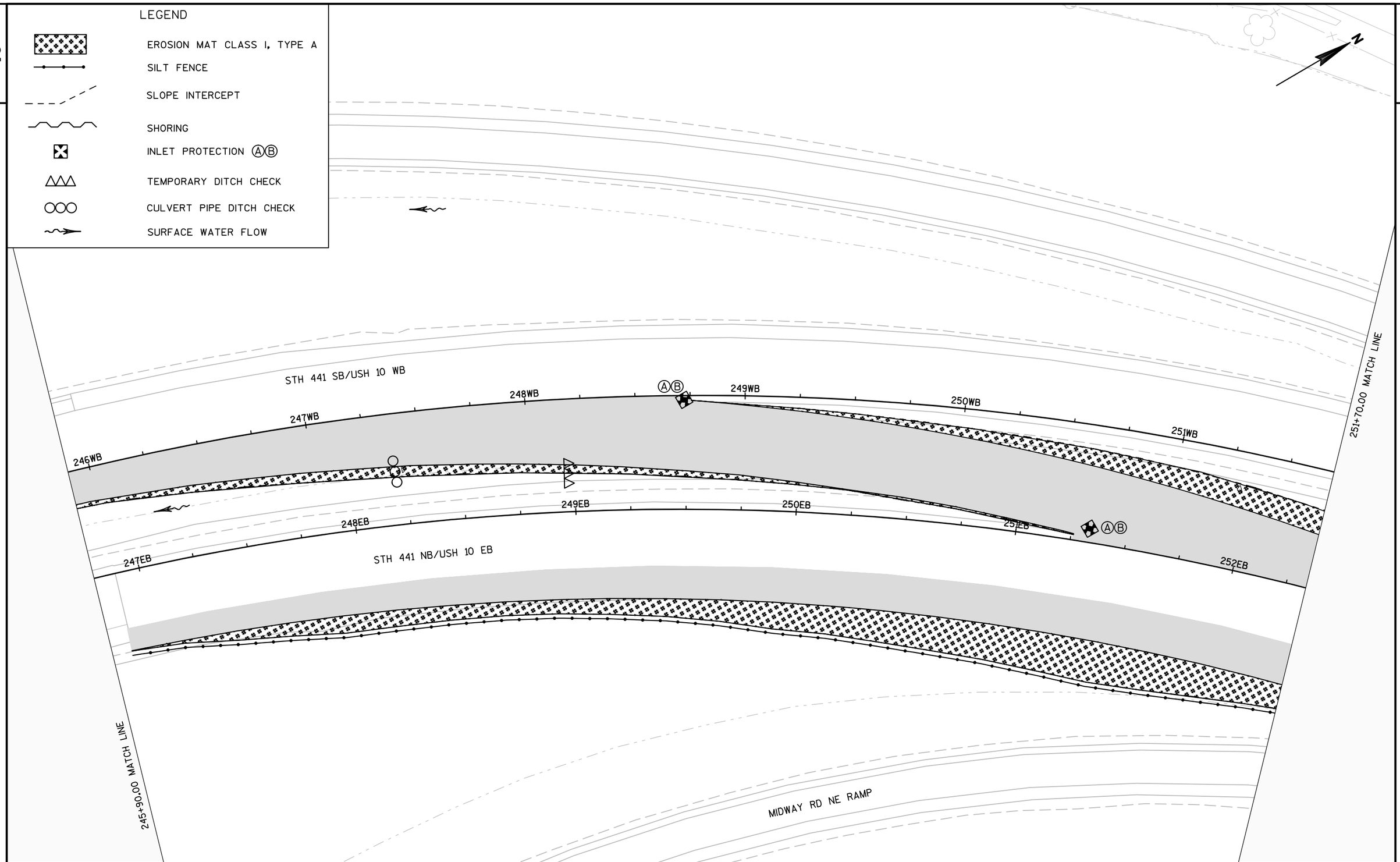

PROJECT NO: 1517-75-85	HWY: STH 441/USH 10	COUNTY: WINNEBAGO	EROSION CONTROL	SHEET 54	E

FILE NAME : S:\PDS\C3D\WIS441\15177570_72_77_85\SHEETSPLAN\1517-75-85\022000-EC\NE_15177585_EC_JESS_SHEETS.DWG
LAYOUT NAME - 022006-EC

PLOT DATE : 8/26/2016 8:57 AM PLOT BY : VICKMAN, GARRETT T PLOT NAME : PLOT SCALE : 1 IN:40 FT

WISDOT/CADDS SHEET 42

2

2

LEGEND

- EROSION MAT CLASS I, TYPE A
- SILT FENCE
- SLOPE INTERCEPT
- SHORING
- INLET PROTECTION (A)(B)
- TEMPORARY DITCH CHECK
- CULVERT PIPE DITCH CHECK
- SURFACE WATER FLOW

N

MIDWAY RD NW RAMP

STH 441 SB/USH 10 WB

252WB 253WB 254WB 255WB 256WB 257WB

257+50.00 MATCH LINE

253EB 254EB 255EB 256EB 257EB

STH 441 NB/USH 10 EB

MIDWAY RD NE RAMP

251+70.00 MATCH LINE

PROJECT NO: 1517-75-85	HWY: STH 441/USH 10	COUNTY: WINNEBAGO	EROSION CONTROL	SHEET 55	E

2

LEGEND

- EROSION MAT CLASS I, TYPE A
- SILT FENCE
- SLOPE INTERCEPT
- SHORING
- INLET PROTECTION (A)(B)
- TEMPORARY DITCH CHECK
- CULVERT PIPE DITCH CHECK
- SURFACE WATER FLOW

N

263+30.00 MATCH LINE

STH 441 SB/USH 10 WB

258WB 259WB 260WB 261WB 262WB 263WB

258EB 259EB 260EB 261EB 262EB 263EB

STH 441 NB/USH 10 EB

TILE

257+50.00 MATCH LINE

2

PROJECT NO: 1517-75-85	HWY: STH 441/USH 10	COUNTY: WINNEBAGO	EROSION CONTROL	SHEET 56	E

LEGEND

- EROSION MAT CLASS I, TYPE A
- SILT FENCE
- SLOPE INTERCEPT
- SHORING
- INLET PROTECTION (A)(B)
- TEMPORARY DITCH CHECK
- CULVERT PIPE DITCH CHECK
- SURFACE WATER FLOW

N

269+10.00 MATCH LINE

STH 441 SB/USH 10 WB

264WB 265WB 266WB 267WB 268WB 269WB

(A)(B) (A)(B) (A)(B)

264EB 265EB 266EB 267EB 268EB 269EB

STH 441 NB/USH 10 EB

263+30.00 MATCH LINE

PROJECT NO: 1517-75-85	HWY: STH 441/USH 10	COUNTY: WINNEBAGO	EROSION CONTROL	SHEET 57	E

FILE NAME : S:\PDS\C3D\WIS441\15177570_72_77_85\SHEETSPLAN\1517-75-85\022000-EC\NE_15177585_EC_JESS_SHEETS.DWG
LAYOUT NAME - 022009-EC

PLOT DATE : 8/26/2016 8:58 AM PLOT BY : VICKMAN, GARRETT T PLOT NAME : PLOT SCALE : 1 IN:40 FT

LEGEND

- EROSION MAT CLASS I, TYPE A
- SILT FENCE
- SLOPE INTERCEPT
- SHORING
- INLET PROTECTION (A)(B)
- TEMPORARY DITCH CHECK
- CULVERT PIPE DITCH CHECK
- SURFACE WATER FLOW

N

274+90.00 MATCH LINE

TILE

STH 441 SB/USH 10 WB

270WB 271WB 272WB 273WB 274WB

(A)(B)

270EB 271EB 272EB 273EB 274EB 275EB

STH 441 NB/USH 10 EB

TILE

269+10.00 MATCH LINE

PROJECT NO: 1517-75-85	HWY: STH 441/USH 10	COUNTY: WINNEBAGO	EROSION CONTROL	SHEET 58 E

2

LEGEND

- EROSION MAT CLASS I, TYPE A
- SILT FENCE
- SLOPE INTERCEPT
- SHORING
- INLET PROTECTION (A)(B)
- TEMPORARY DITCH CHECK
- CULVERT PIPE DITCH CHECK
- SURFACE WATER FLOW

N

280+70.00 MATCH LINE

TILE

STH 441 SB/USH 10 WB

275WB 276WB 277WB 278WB 279WB 280WB

TILE

(A)(B)

276EB 277EB 278EB 279EB 280EB

STH 441 NB/USH 10 EB

TILE

274+90.00 MATCH LINE

2

PROJECT NO: 1517-75-85	HWY: STH 441/USH 10	COUNTY: WINNEBAGO	EROSION CONTROL	SHEET 59	E

FILE NAME : S:\PDS\C3D\WIS441\15177570_72_77_85\SHEETSPLAN\1517-75-85\022000-EC\NE_15177585_EC_JESS_SHEETS.DWG
LAYOUT NAME - 022011-EC

PLOT DATE : 8/26/2016 8:58 AM PLOT BY : VICKMAN, GARRETT T PLOT NAME : PLOT SCALE : 1 IN:40 FT

2

LEGEND

- EROSION MAT CLASS I, TYPE A
- SILT FENCE
- SLOPE INTERCEPT
- SHORING
- INLET PROTECTION (A)(B)
- TEMPORARY DITCH CHECK
- CULVERT PIPE DITCH CHECK
- SURFACE WATER FLOW

N

286+50.00 MATCH LINE

TILE

APPLETON RD NW RAMP

TILE

STH 441 SB/USH 10 WB

281WB 282WB 283WB 284WB 285WB 286WB

(A)(B)

TILE

281EB 282EB 283EB 284EB 285EB 286EB

STH 441 NB/USH 10 EB

TILE

APPLETON RD SW RAMP

280+70.00 MATCH LINE

2

PROJECT NO: 1517-75-85	HWY: STH 441/USH 10	COUNTY: WINNEBAGO	EROSION CONTROL	SHEET 60	E

LEGEND

- EROSION MAT CLASS I, TYPE A
- SILT FENCE
- SLOPE INTERCEPT
- SHORING
- INLET PROTECTION (A)(B)
- TEMPORARY DITCH CHECK
- CULVERT PIPE DITCH CHECK
- SURFACE WATER FLOW

2

2

N

APPLETON RD NW RAMP

MWEL

MWE

STH 441 SB/USH 10 WB

287WB 288WB 289WB 290WB 291WB 292WB

287EB 288EB 289EB 290EB 291EB 292EB

STH 441 NB/USH 10 EB

286+50.00 MATCH LINE

APPLETON RD SW RAMP

PROJECT NO: 1517-75-85	HWY: STH 441/USH 10	COUNTY: WINNEBAGO	EROSION CONTROL	SHEET 61	E

2

2

STORM SEWER GENERAL NOTES

1) THE INVERT ELEVATION IS MEASURED AT THE FLOW LINE WHICH IS THE BOTTOM INSIDE OF THE PIPE.
2) CONTRACTOR SHALL VERIFY EXISTING PIPE SIZES, MATERIALS AND INVERT ELEVATION WHEN CONNECTING NEW STORM SEWER INTO EXISTING PIPES PRIOR TO MANUFACTURING STRUCTURES.
3) JOINT TIES FOR CONCRETE PIPE SHALL BE PROVIDED AT ALL CONCRETE APRON ENDWALLS IN ACCORDANCE TO SDD 8F4. THE COST OF THESE TIES SHALL BE INCIDENTAL TO THE COST OF THE PIPE.
4) ADJUSTMENT RINGS FOR TOP OF STRUCTURE ARE 6 INCHES UNLESS OTHERWISE NOTED.
5) STATION/ OFFSETS ARE GIVEN AT THE CENTER OF STRUCTURE.
6) STATION/ OFFSETS OF APRON ENDWALLS ARE TO FLOWLINE END OF ENDWALL.
7) RIM ELEVATIONS ARE GIVEN AT THE FLOW LINE FOR INLET GRATES OR THE CENTER OF THE MANHOLE COVER FOR MANHOLES UNLESS OTHERWISE NOTED
8) STRUCTURE DEPTH = RIM ELEVATION-INVERT ELEVATION-COVER THICKNESS-6 INCH ADJUSTMENT, UNLESS OTHERWISE NOTED.
9) FILL STRUCTURE DEPTHS TO INVERT ELEVATION OF INVOLVED PIPES WHEN NOTED.

STA 224+52 WB, 72.2' LT
MANHOLES 6-J
400

STA 225+85 WB, 57.6' LT
INLETS 2x2-B
SEWER TAP INTO 390
390A

STA 225+60 WB, 56.5' LT
INLETS 2x2-B
SEWER TAP INTO 389
389A

STA 226+52 WB, 74.7' LT
MANHOLES 6-J
300

STA 226+52 WB, 66.2' LT
INLETS MEDIAN 1G-MS
391A

STA 226+52 WB, 58.5' LT
MANHOLES 4-J, ADJUST COVER
391

STA 227+38 WB, 64.2' LT
INLETS 2x2-B
SEWER TAP INTO 396
396A

STA 227+20 WB, 63.6' LT
INLETS 2x2-B
SEWER TAP INTO 394
394A

SLOPE INTERCEPT

STA 228+15 WB, 74.2' LT
MANHOLES 6-J-S
200B

STA 229+44 WB, 74.9' LT
MANHOLES 4-J-S
190A

TEMPORARY SHORING AT EXISTING STORM SEWER CULVERT SEE CONSTRUCTION DETAIL

STA 228+50 WB, 74.9' LT
MANHOLES 6-J-S
SEWER TAP INTO 200
200A

STA 228+50 WB, 72.0' LT
MANHOLES 6-J
200

USH 10 WB/ STH 441 SB

STA 225+60 WB, 49.6' LT
REMOVE F COVER
STEEL PLATE OVER STRUCTURE
389

STA 225+85 WB, 49.1' LT
REMOVE F COVER
STEEL PLATE OVER STRUCTURE
390

STA 227+21 WB, 55.9' LT
REMOVE F COVER
STEEL PLATE OVER STRUCTURE
394

STA 227+38 WB, 56.4' LT
REMOVE F COVER
STEEL PLATE OVER STRUCTURE
396

224WB 225WB 226WB 227WB 228WB 229WB

SLOPE INTERCEPT

225EB 226EB 227EB 228EB 229EB 230EB

USH 10 EB/ STH 441 NB

755
750
745
740

389A 389 748.60 748.88 744.43 744.41
7' OF SSPRC CLASS III 15-INCH @ 0.30%

390A 390 748.54 748.88 744.34 744.31
8' OF SSPRC CLASS III 15-INCH @ 0.30%

300 753.25 391A 749.31 391 748.27 744.00 743.90 743.95
8' OF EXISTING SSPRC 18-INCH @ 0.63%

394A 394 747.96 748.38 744.33 744.31
8' OF SSPRC CLASS III 15-INCH @ 0.30%

396A 396 748.05 748.48 744.40 744.38
8' OF EXISTING SSPRC 18-INCH @ 0.63%
8' OF SSPRC CLASS III 15-INCH @ 0.30%

PROJECT NO: 1517-75-85	HWY: STH 441/ USH 10	COUNTY: WINNEBAGO	STORM SEWER	SHEET 63 E

2

200B STA 228+15 WB, 74.2' LT
MANHOLES 6-J-S

STA 229+44 WB, 74.9' LT
MANHOLES 4-J-S 190A

TEMPORARY SHORING AT EXISTING STORM SEWER CULVERT
SEE CONSTRUCTION DETAIL

189 STA 230+16 WB, 71.7' LT
INLETS MEDIAN 1G-MS

SLOPE INTERCEPT

CC

200A STA 228+50 WB, 74.9' LT
MANHOLES 6-J-S
SEWER TAP INTO 200

200 STA 228+50 WB, 72.0' LT
MANHOLES 6-J

18E

CC18

USH 10 WB/ STH 441 SB

229WB 230WB 231WB 232WB 233WB 234WB 235EB

229EB 230EB 231EB 232EB 233EB 234EB

USH 10 EB/ STH 441 NB

755 750 745 740

200B 200A 190A 189

750.10 750.46 750.51 751.97

747.50 747.70

744.06 744.13 744.55

EXISTING 42-INCH SSPRC

34' OF SSPRC CLASS III 42-INCH @ 0.21%

90' OF SSPRC CLASS III 30-INCH @ 0.47%

68' OF SSPRC CLASS III 15-INCH @ 0.30%

PROJECT NO: 1517-75-85	HWY: STH 441/ USH 10	COUNTY: WINNEBAGO	STORM SEWER	SHEET 64 E

FILE NAME : S:\PDS\C3D\WIS441\15177570_72_77_85\SHEETSPLAN\1517-75-85\022500-SS\15177585-022500-SS.DWG
LAYOUT NAME - 022502-SS
PLOT DATE : 8/26/2016 9:02 AM PLOT BY : VICKMAN, GARRETT T PLOT NAME : PLOT SCALE : 1 IN:40 FT
WISDOT/CADDS SHEET 41

2

18E STA 234+09 WB, 71.4' LT
APRON ENDWALLS FOR CULVERT PIPE STEEL 18-INCH

MIDWAY RD. SW RAMP

STA 236+69 WB, 15.3' RT
APRON ENDWALLS FOR CULVERT PIPE STEEL 15-INCH 18A

STA 236+26 WB, 18.4' RT
INLETS 2x2-B 18B

CC18 STA 234+98 EB, 24.7' LT
REMOVE MS COVER
STEEL PLATE OVER STRUCTURE

USH 10 WB/ STH 441 SB

234WB 235WB 236WB 237WB 238WB 239WB 240WB 241EB

SLOPE INTERCEPT

SLOPE INTERCEPT

235EB 236EB 237EB 238EB 239EB 240EB

USH 10 EB/ STH 441 NB

18D STA 234+98 EB, 19.3' LT
INLETS MEDIAN 1G-MS
SEWER TAP INTO CC18

18C STA 235+70 EB, 22.7' LT
INLETS 2x2-B

15-INCH SLOTTED CORRUGATED METAL SURFACE DRAIN
S.D.D. 8D13

MH

N

SIGN

18B 18A

770.91

769.91

769.40

15-INCH CMP SLOTTED DRAIN

43' OF CPCS 15-INCH @ 1.17%

18D 18C

766.31

762.00

760.64

759.21

758.93

758.96

EXISTING 18-INCH SSPRC

71' OF SSPRC CLASS III 15-INCH @ 2.00%

5' OF SSPRC CLASS III 18-INCH @ 0.63%
TIE INTO EXISTING VIA CONCRETE COLLAR

770 765 760 755

PROJECT NO: 1517-75-85	HWY: STH 441/ USH 10	COUNTY: WINNEBAGO	STORM SEWER	SHEET 65	E

FILE NAME : S:\PDS\C3D\WIS441\15177570_72_77_85\SHEETSPLAN\1517-75-85\022500-SS\15177585-022500-SS.DWG
LAYOUT NAME - 022503-SS
PLOT DATE : 8/26/2016 9:02 AM PLOT BY : VICKMAN, GARRETT T PLOT NAME : PLOT SCALE : 1 IN:40 FT
WISDOT/CADDS SHEET 41

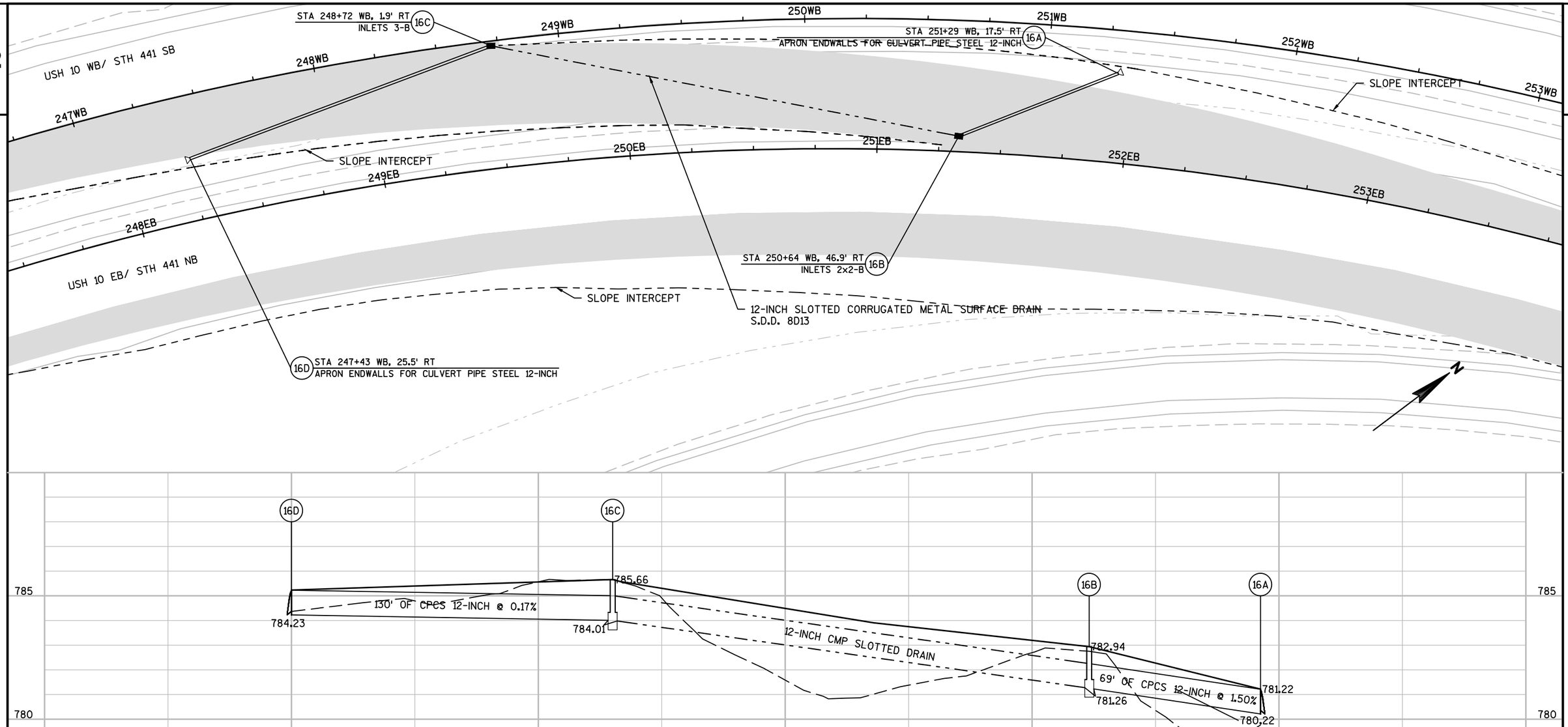
USH 10 WB/ STH 441 SB
USH 10 EB/ STH 441 NB
247WB
248WB
249WB
250WB
251WB
252WB
253WB
248EB
249EB
250EB
251EB
252EB
253EB
STA 248+72 WB, 1.9' RT
INLETS 3-B
16C
STA 251+29 WB, 17.5' RT
APRON ENDWALLS FOR CULVERT PIPE STEEL 12-INCH
16A
SLOPE INTERCEPT
SLOPE INTERCEPT
SLOPE INTERCEPT
STA 250+64 WB, 46.9' RT
INLETS 2x2-B
16B
12-INCH SLOTTED CORRUGATED METAL SURFACE DRAIN
S.D.D. 8D13
16D
STA 247+43 WB, 25.5' RT
APRON ENDWALLS FOR CULVERT PIPE STEEL 12-INCH
N
16D
16C
16B
16A
785.66
784.23
784.01
782.94
781.22
781.26
780.22
130' OF CPCS 12-INCH @ 0.17%
12-INCH CMP SLOTTED DRAIN
69' OF CPCS 12-INCH @ 1.50%
785
780
775
770

N

STA 264+64 WB, 34.8' RT
INLETS 3-B (15D)

STA 263+93 WB, 43.6' RT
INLETS 3-B (15E)

18-INCH SLOTTED CORRUGATED METAL SURFACE DRAIN
S.D.D. 8D13

SLOPE INTERCEPT

USH 10 WB/ STH 441 SB

STA 267+18 WB, 36.2' RT
INLETS 3-B (15B)

262WB 263WB 264WB 265WB 266WB 267WB

262EB 263EB 264EB 265EB 266EB 267EB 268EB

USH 10 EB/ STH 441 NB

SLOPE INTERCEPT

STA 267+19 WB, 42.9' RT
APRON ENDWALLS FOR CULVERT PIPE STEEL 12-INCH (15A)

STA 264+08 EB, 65.7' RT
APRON ENDWALLS FOR CPRC 18-INCH (15F)

15E 15D 15A 15B

780 775 770 765

778.67 778.91 779.93 777.82 777.80 773.79 774.00 770.81

18-INCH CMP SLOTTED DRAIN

7' OF CPCS 12-INCH @ 0.30%

72' OF SSPRC CLASS III 18-INCH @ 0.30%

EXISTING 18-INCH SSPRC

PROJECT NO: 1517-75-85	HWY: STH 441/ USH 10	COUNTY: WINNEBAGO	STORM SEWER	SHEET 67	E

FILE NAME : S:\PDS\C3D\WIS441\15177570_72_77_85\SHEETSPLAN\1517-75-85\022500-SS\15177585-022500-SS.DWG
LAYOUT NAME - 022505-SS
PLOT DATE : 8/26/2016 9:02 AM PLOT BY : VICKMAN, GARRETT T PLOT NAME : PLOT SCALE : 1 IN:40 FT
WISDOT/CADDS SHEET 41

2

2

N

TILE

USH 10 WB/ STH 441 SB

268WB 269WB 270WB 271WB 272WB 273WB

REMOVE EXISTING INLET COVER
STEEL PLATE OVER STRUCTURE

14A STA 268+32 EB, 25.0' LT
APRON ENDWALLS FOR CULVERT PIPE STEEL 12-INCH

STA 270+93 WB, 36.2' RT
INLETS MEDIAN 1G-MS (13)

CONNECT TO EXISTING STRUCTURE VIA
18-INCH SEWER TAP

SLOPE INTERCEPT

268EB 269EB 270EB 271EB 272EB 273EB 27

14B STA 267+90 EB, 22.5' LT
APRON ENDWALLS FOR CULVERT PIPE STEEL 12-INCH

USH 10 EB/ STH 441 NB

785

780

775

770

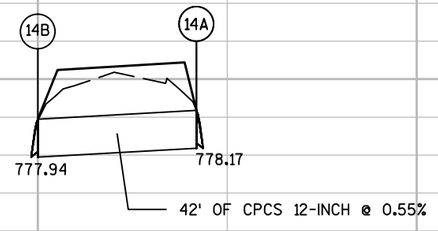

PROJECT NO: 1517-75-85	HWY: STH 441/ USH 10	COUNTY: WINNEBAGO	STORM SEWER	SHEET 68	E

FILE NAME : S:\PDS\C3D\WIS441\15177570_72_77_85\SHEETSPLAN\1517-75-85\022500-SS\15177585-022500-SS.DWG
LAYOUT NAME - 022506-SS
PLOT DATE : 8/26/2016 9:03 AM PLOT BY : VICKMAN, GARRETT T PLOT NAME : PLOT SCALE : 1 IN:40 FT
WISDOT/CADDS SHEET 41

2

N

TILE

USH 10 WB/ STH 441 SB

STA 280+55 WB, 35.5' RT
APRON ENDWALLS FOR CULVERT PIPE STEEL 12-INCH (11A)

275WB 276WB 277WB 278WB 279WB 280WB 28

REMOVE EXISTING INLET COVER
STEEL PLATE OVER STRUCTURE

SLOPE INTERCEPT

CONNECT TO EXISTING STRUCTURE VIA
18-INCH SEWER TAP
STA 277+93 WB, 36.8' RT (12)
INLETS MEDIAN 1G-MS

STA 279+25 WB, 41.3' RT (11B)
APRON ENDWALLS FOR CULVERT PIPE STEEL 12-INCH

TILE

275EB 276EB 277EB 278EB 279EB 280EB 281EB

USH 10 EB/ STH 441 NB

790

785

780

775

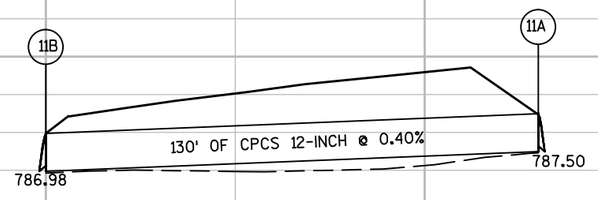

PROJECT NO: 1517-75-85	HWY: STH 441/ USH 10	COUNTY: WINNEBAGO	STORM SEWER	SHEET 69	E

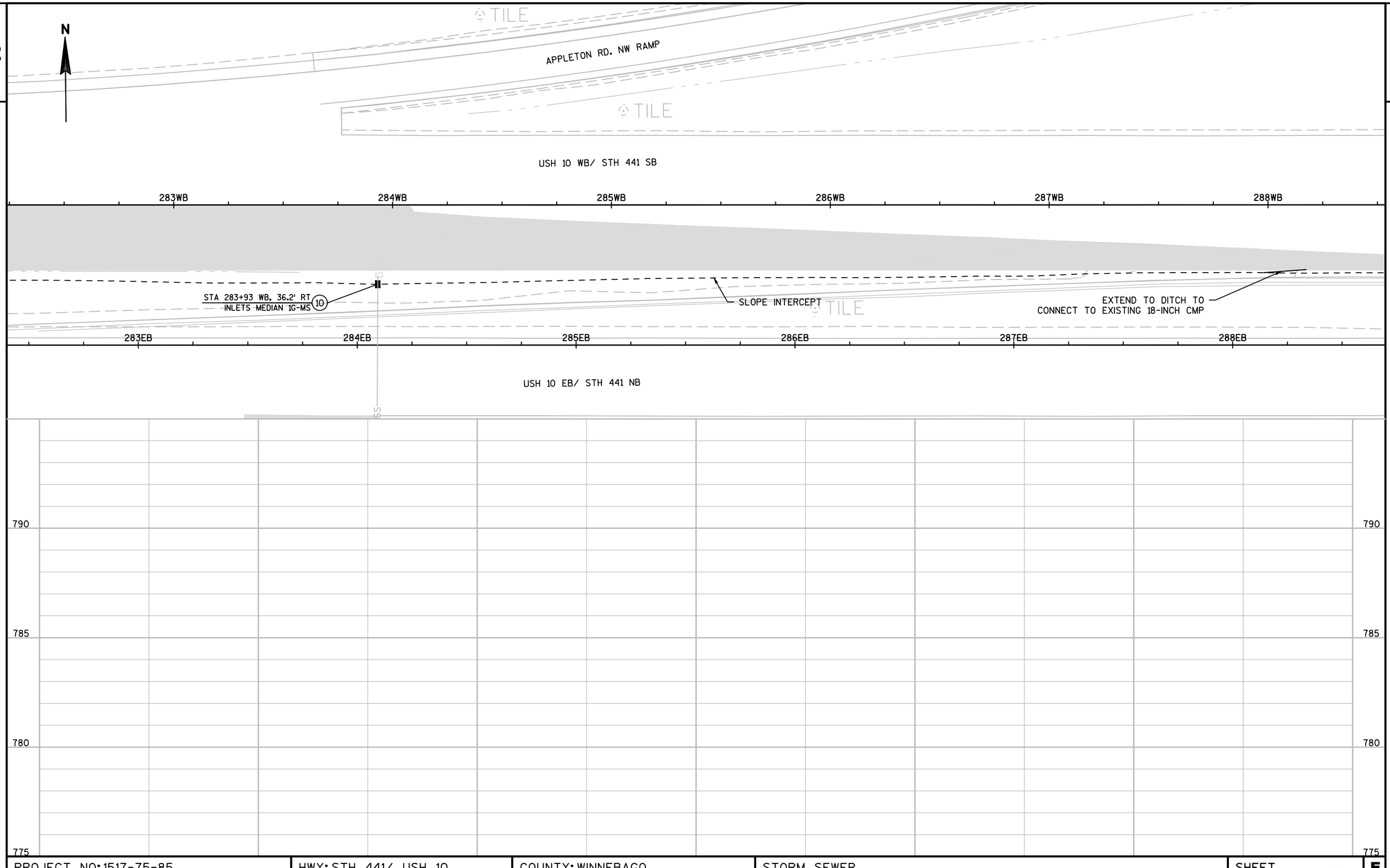

PROJECT NO:1517-75-85	HWY:STH 441/ USH 10	COUNTY:WINNEBAGO	STORM SEWER	SHEET 70	E

FILE NAME : S:\PDS\C3D\WIS441\15177570_72_77_85\SHEETSPLAN\1517-75-85\022500-SS\15177585-022500-SS.DWG
LAYOUT NAME - 022508-SS
PLOT DATE : 8/26/2016 9:03 AM PLOT BY : VICKMAN, GARRETT T PLOT NAME : PLOT SCALE : 1 IN:40 FT
WISDOT/CADDS SHEET 41

SIGNING NOTES

DO NOT MOVE OR REMOVE ANY SPECIFIC INFORMATION SIGNS (BLUE GAS, FOOD, LODGING, CAMPING OR ATTRACTION SIGNS) OR THEIR ASSOCIATED POSTS. A SEPARATE CONTRACTOR, DERSE, INC., MAINTAINS THESE SIGNS. CONTACT MARK ROGNSVOOG OF THE DERSE COMPANY AT (800) 345-5772 A MINIMUM OF 14 CALENDAR DAYS IN ADVANCE TO COORDINATE MOVING, REMOVING OR RE-INSTALLATION OF THESE SIGNS.

THE CONTRACTOR SHALL BE RESPONSIBLE FOR ANY DAMAGE TO THESE SIGNS.

EXISTING TYPE I SIGNS (GROUND MOUNT / OVERHEAD) WILL NEED TO BE MOVED AND MOUNTED BASED ON STAGING NEEDS FOR EACH EXIT. ADVANCED EXIT SIGN AND EXIT GORE SIGN FOR EACH EXIT IS PREFERRED. TO BE DETERMINED BY ENGINEER, BASED ON NEED AND CONDITIONS IN THE FIELD.

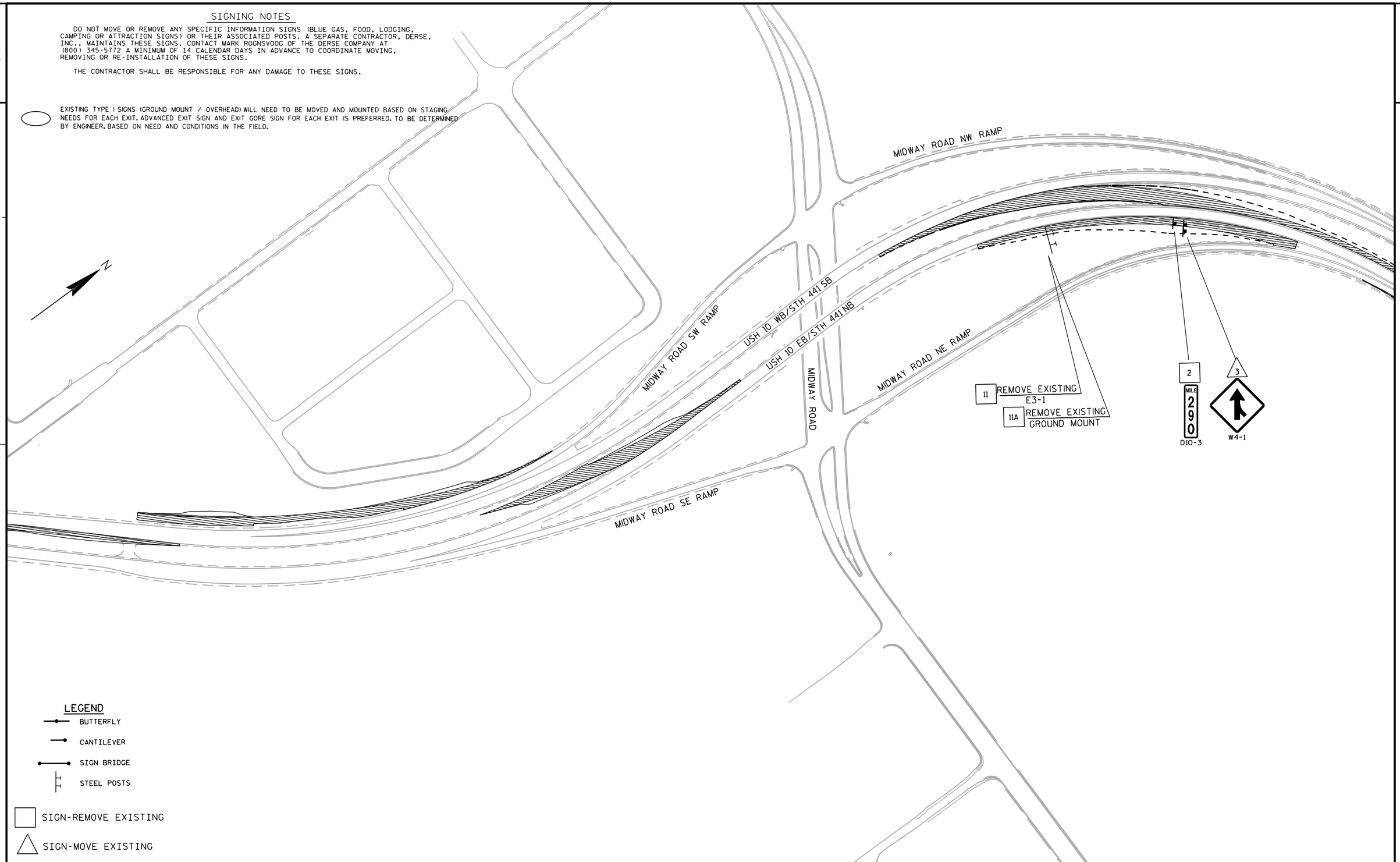

PROJECT NO: 1517-75-85	HWY: USH 10	COUNTY: WINNEBAGO	SIGNING PLANS	SHEET 71	E

SIGNING NOTES

DO NOT MOVE OR REMOVE ANY SPECIFIC INFORMATION SIGNS (BLUE GAS, FOOD, LODGING, CAMPING OR ATTRACTION SIGNS) OR THEIR ASSOCIATED POSTS. A SEPARATE CONTRACTOR, DERSE, INC., MAINTAINS THESE SIGNS. CONTACT MARK ROGNSVOOG OF THE DERSE COMPANY AT (800) 345-5772 A MINIMUM OF 14 CALENDAR DAYS IN ADVANCE TO COORDINATE MOVING, REMOVING OR RE-INSTALLATION OF THESE SIGNS.

THE CONTRACTOR SHALL BE RESPONSIBLE FOR ANY DAMAGE TO THESE SIGNS.

EXISTING TYPE I SIGNS (GROUND MOUNT / OVERHEAD) WILL NEED TO BE MOVED AND MOUNTED BASED ON STAGING NEEDS FOR EACH EXIT. ADVANCED EXIT SIGN AND EXIT GORE SIGN FOR EACH EXIT IS PREFERRED. TO BE DETERMINED BY ENGINEER, BASED ON NEED AND CONDITIONS IN THE FIELD.

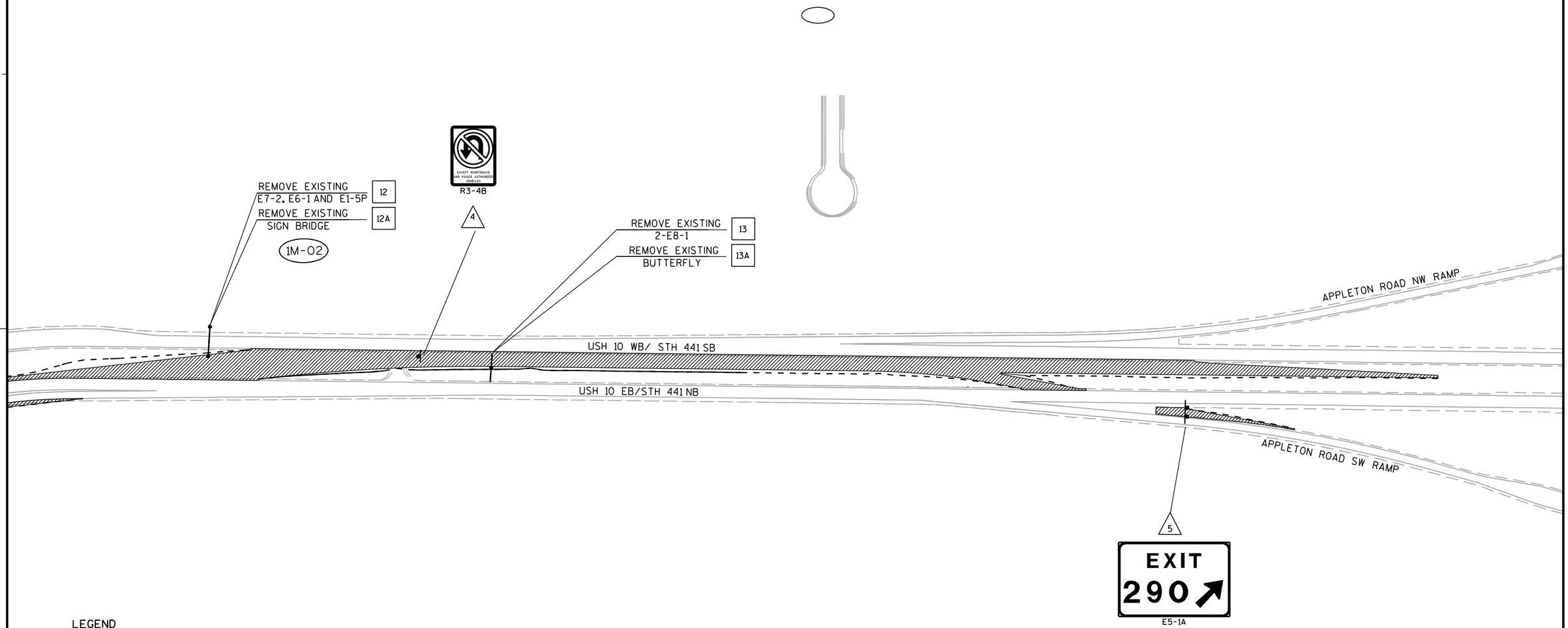

LEGEND

- BUTTERFLY
- CANTILEVER
- SIGN BRIDGE
- STEEL POSTS

SIGN-REMOVE EXISTING

SIGN-MOVE EXISTING

PROJECT NO: 1517-75-85	HWY: USH 10	COUNTY: WINNEBAGO	SIGNING PLANS	SHEET	E

FILE NAME : N:\spo\traffic\SIGNING\Projects\1517-75-85 tmp\sign removals.dgn PLOT DATE : 26-AUG-2016 08:37 PLOT BY : dotets PLOT NAME : PLOT SCALE : 200:1

2

CONSTRUCTION STAGE 1

+OBJECTIVES

-CONSTRUCT ROADWAY EMBANKMENT IN THE MEDIAN OF USH 10/ STH 441 FROM RACINE RD. OVERPASS TO THE APPLETON RD. INTERCHANGES.

-CONSTRUCT TEMPORARY DRAINAGE STRUCTURES, PIPES AND SLOTTED DRAIN PIPES ASSOCIATED WITH STAGE 1.

-CONSTRUCT HMA PAVEMENT WIDENING ON INSIDE MEDIAN SHOULDERS OF USH 10/ STH 441 FROM RACINE RD. OVERPASS TO THE APPLETON RD. INTERCHANGES.

+STATUS OF PUBLIC USAGE

-THE INSIDE LANES WILL BE CLOSED DURING THE NIGHT WITH USH 10/STH 441 TRAFFIC IS TO BE SHIFTED TO OUTSIDE EDGE OF EXISTING TRAVEL WAY WITH A 12-FT LANE PROVIDED. TEMPORARY PAVEMENT MARKINGS AND CONSTRUCTION BARRELS WILL BE UTILIZED WITH 1-FT SHY BETWEEN BARRELS AND EDGE OF TRAFFIC.

-ALL RAMPS ARE OPEN AT APPLETON ROAD AND MIDWAY ROAD INTERCHANGES.

-ALL RAMPS AT RACINE ROAD INTERCHANGE ARE OPEN EXCEPT FOR THE SW RAMP ONTO USH 10/STH 441 WB.

+REMOVAL/DEMOLITION THIS STAGE

-MEDIAN DRAINAGE STRUCTURE AND PIPE REMOVAL

-ASPHALT SHOULDER REMOVAL ON USH 10/ STH 441 MEDIAN FROM RACINE RD. OVERPASS TO THE APPLETON RD. INTERCHANGES.

+CONSTRUCTION CRITICAL FOR NEXT STAGE

-CONSTRUCT ROADWAY EMBANKMENT IN THE MEDIAN OF USH 10/ STH 441 FROM RACINE RD. OVERPASS TO THE APPLETON RD. INTERCHANGES.

-CONSTRUCT TEMPORARY DRAINAGE STRUCTURES, PIPES AND SLOTTED DRAIN PIPES ASSOCIATED WITH STAGE 1.

-CONSTRUCT HMA PAVEMENT WIDENING ON INSIDE MEDIAN SHOULDERS OF USH 10/ STH 441 FROM RACINE RD. OVERPASS TO THE APPLETON RD. INTERCHANGES.

+TRAFFIC CONTROL

-SEE STANDARD DETAIL, TRAFFIC CONTROL LANE CLOSURE

CONSTRUCTION STAGE 2

+OBJECTIVES

-CONSTRUCT ROADWAY EMBANKMENT ON THE OUTSIDE SHOULDERS OF USH 10/ STH 441 FROM RACINE RD. OVERPASS TO THE APPLETON RD. INTERCHANGES.

-INSTALL TEMPORARY SHORING ALONG EXISTING NOISEWALL STRUCTURE AND USH 10 WB/ STH 441 SB. INSTALLATION OF THE TEMPORARY SHORING IS TO BE COMPLETED DURING DAYTIME HOURS.

-CONSTRUCT HMA PAVEMENT WIDENING ON OUTSIDE SHOULDERS OF USH 10/ STH 441 FROM RACINE RD. OVERPASS TO THE APPLETON RD. INTERCHANGES.

-CONSTRUCT ROADWAY EMBANKMENT ON INFIELD OF APPLETON SW RAMP FROM USH 10 EB/STH 441 SB.

-CONSTRUCT HMA PAVEMENT WIDENING ON INFIELD SHOULDERS AND GORE AREA OF APPLETON SW RAMP.

+STATUS OF PUBLIC USAGE

-THE OUTSIDE LANES WILL BE CLOSED DURING THE NIGHT WITH USH 10/STH 441 TRAFFIC SHIFTED TO INSIDE EDGE OF EXISTING TRAVEL WAY WITH A 12-FT LANE PROVIDED. TEMPORARY PAVEMENT MARKINGS AND CONSTRUCTION BARRELS WILL BE UTILIZED WITH 1-FT SHY BETWEEN BARRELS AND EDGE OF TRAFFIC.

-APPLETON SW RAMP IS TO BE CLOSED DURING THE NIGHT TO COMPLETE INFIELD WIDENING.

-MIDWAY NE RAMP IS TO BE CLOSED DURING THE NIGHT TO COMPLETE INFIELD AND GORE WIDENING.

-MIDWAY SW RAMP TO BE CLOSED DURING THE NIGHT TO COMPLETE OUTSIDE SHOULDER WIDENING.

-ALL RAMPS AT RACINE ROAD INTERCHANGE ARE OPEN EXCEPT FOR THE SW RAMP ONTO USH 10/STH 441 WB.

+REMOVAL/DEMOLITION THIS STAGE

-ASPHALT SHOULDER REMOVAL ON USH 10/ STH 441 BETWEEN MIDWAY AND APPLETON ROAD.

-DRAINAGE STRUCTURE AND PIPE REMOVAL ALONG EXISTING NOISEWALL AND USH 10 WB/ STH 441 SB.

-ASPHALT SHOULDER REMOVAL ON INFIELD AND GORE AREA OF APPLETON SW RAMP.

+CONSTRUCTION CRITICAL FOR NEXT STAGE

-CONSTRUCT ROADWAY EMBANKMENT ON THE OUTSIDE SHOULDERS OF USH 10/ STH 441 FROM RACINE RD. OVERPASS TO THE APPLETON RD. INTERCHANGES.

-INSTALL TEMPORARY SHORING ALONG EXISTING NOISEWALL STRUCTURE AND USH 10 WB/ STH 441 SB.

-CONSTRUCT HMA PAVEMENT WIDENING ON OUTSIDE SHOULDERS OF USH 10/ STH 441 FROM RACINE RD. OVERPASS TO THE APPLETON RD. INTERCHANGES.

-CONSTRUCT ROADWAY EMBANKMENT ON INFIELD OF APPLETON SW RAMP FROM USH 10 EB/STH 441 SB.

-CONSTRUCT HMA PAVEMENT WIDENING ON INFIELD SHOULDERS AND GORE AREA OF APPLETON SW RAMP.

+TRAFFIC CONTROL

-SEE STANDARD DETAIL, TRAFFIC CONTROL LANE CLOSURE, EXIT AND ENTRANCE RAMP WITHIN LANE CLOSURE, EXIT RAMP CLOSURE. SHOULDER CLOSURE ON DIVIDED ROADWAY, SPEEDS GREATER THAN 40 M.P.H.

2

LEGEND	CONSTRUCTION AVAILABLE THIS PHASE	CONSTRUCTION CRITICAL FOR NEXT PHASE
PERMANENT BRIDGE		
PERMANENT ROADWAY		
TEMPORARY BRIDGE		
TEMPORARY ROADWAY		

PERMANENT MSE WALL	
TEMPORARY MSE WALL	
EXISTING NOISE WALL	
TEMPORARY SHORING	
ROAD/RAMP CLOSED	
DEMOLITION AND REMOVAL	
TRAFFIC MAINTAINED/ DIRECTION OF TRAVEL	
OPEN TO TRAFFIC	
TEMPORARY SIGNAL	T
EXISTING BRIDGE NUMBER	(B-70-XXXX)
NEW BRIDGE NUMBER	B-70-XXXX
EXISTING NOISE WALL NUMBER	(N-70-XXXX)
NEW NOISE WALL NUMBER	N-70-XXXX
EXISTING RETAINING WALL NUMBER	(R-70-XXXX)
NEW RETAINING WALL NUMBER	R-70-XXXX
COMPLETED CONSTRUCTION NOT IN USE	
PIER FOUNDATION	

PROJECT NO: 1517-75-85	HWY: STH 441/USH 10	COUNTY: WINNEBAGO	STAGE CONSTRUCTION STAGE 1	SHEET 74	E

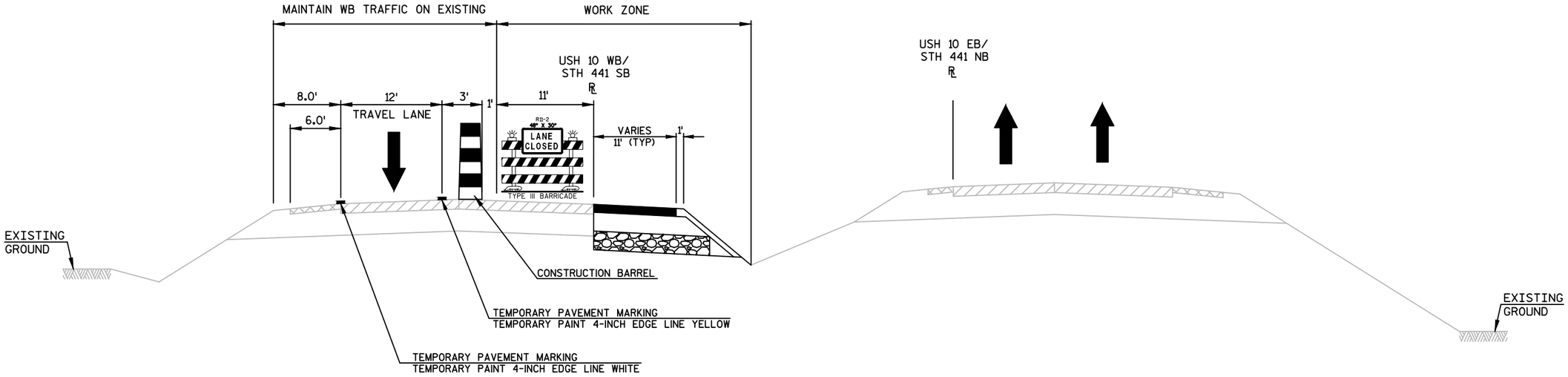

SECTION A-A

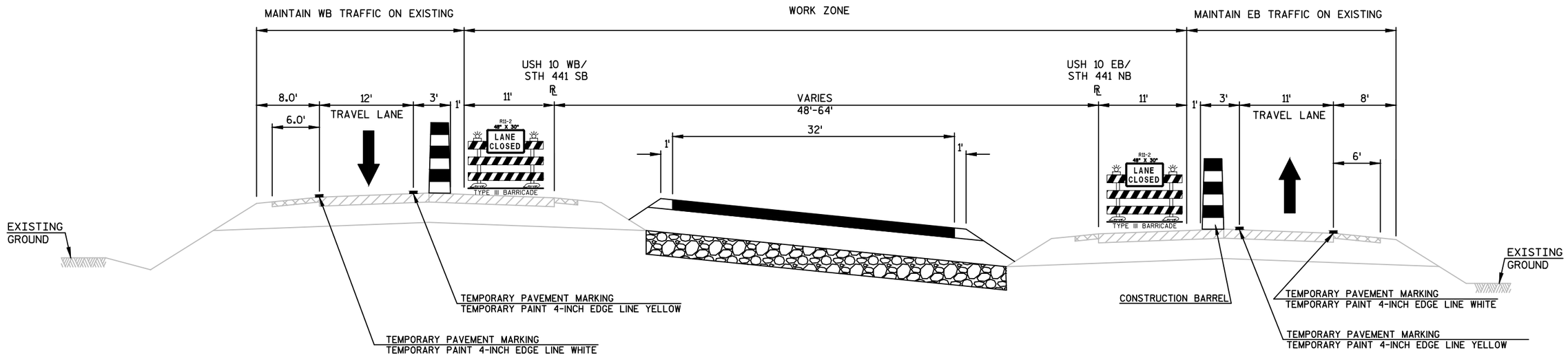

SECTION B-B

PROJECT NO: 1517-75-85	HWY: STH 441/USH 10	COUNTY: WINNEBAGO	STAGE CONSTRUCTION: TYPICAL SECTION STAGE 1	SHEET 75	E

2

N

STH 441/ USH10 WB

STH 441/ USH10 EB

(B-70-114)

(B-70-114)

(B-70-112)

(B-70-111)

CTH P/RACINE ROAD

CTH AP/MIDWAY ROAD

STH 47/APPLETON ROAD

LEGEND	CONSTRUCTION AVAILABLE THIS PHASE	CONSTRUCTION CRITICAL FOR NEXT PHASE
PERMANENT BRIDGE		
PERMANENT ROADWAY		
TEMPORARY BRIDGE		
TEMPORARY ROADWAY		
PERMANENT MSE WALL		
TEMPORARY MSE WALL		
EXISTING NOISE WALL		
TEMPORARY SHORING		
ROAD/RAMP CLOSED		
DEMOLITION AND REMOVAL		
TRAFFIC MAINTAINED/ DIRECTION OF TRAVEL		
OPEN TO TRAFFIC		
TEMPORARY SIGNAL	T	
EXISTING BRIDGE NUMBER	(B-70-XXXX)	
NEW BRIDGE NUMBER	B-70-XXXX	
EXISTING NOISE WALL NUMBER	(N-70-XXXX)	
NEW NOISE WALL NUMBER	N-70-XXXX	
EXISTING RETAINING WALL NUMBER	(R-70-XXXX)	
NEW RETAINING WALL NUMBER	R-70-XXXX	
COMPLETED CONSTRUCTION NOT IN USE		
PIER FOUNDATION		

PROJECT NO: 1517-75-85	HWY: STH 441/USH 10	COUNTY: WINNEBAGO	STAGE CONSTRUCTION STAGE 2	SHEET 76	E

FILE NAME : S:\PDS\C3D\WIS441\15177570_72_77_85\SHEETSPLAN\1517-75-85\025000-SC\NE-15177585-025001-SC.DWG
LAYOUT NAME - 025003-SC

PLOT DATE : 8/25/2016 2:41 PM PLOT BY : VICKMAN, GARRETT T PLOT NAME : PLOT SCALE : 1 IN:400 FT

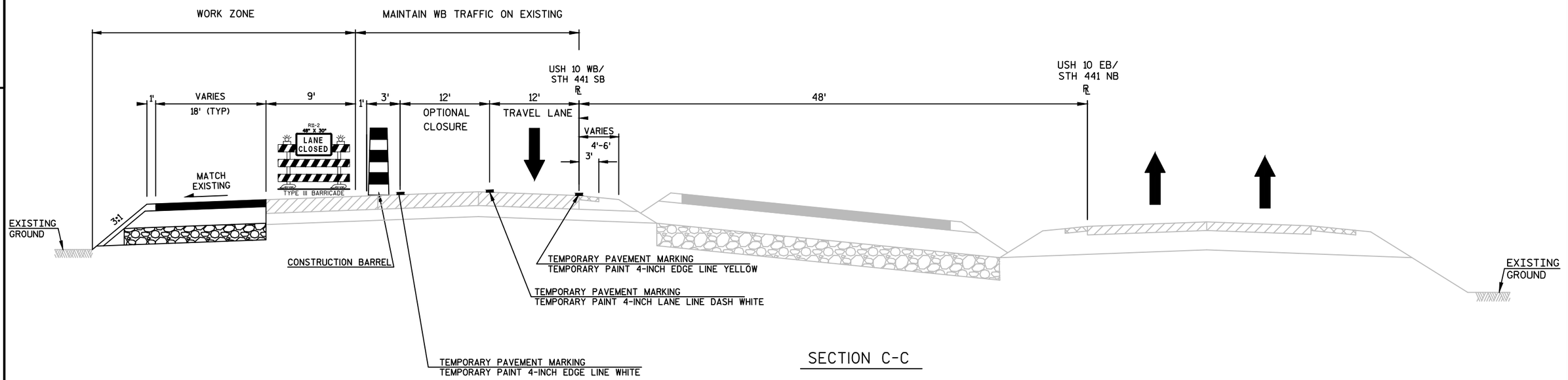

SECTION C-C

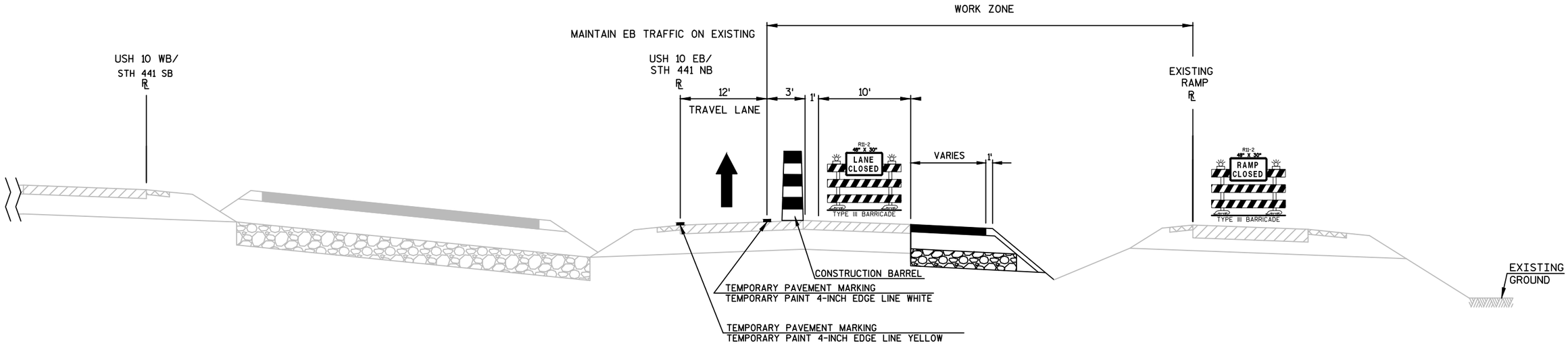

SECTION D-D

PROJECT NO: 1517-75-85	HWY: STH 441/USH 10	COUNTY: WINNEBAGO	STAGE CONSTRUCTION: TYPICAL SECTION STAGE 2	SHEET 77	E

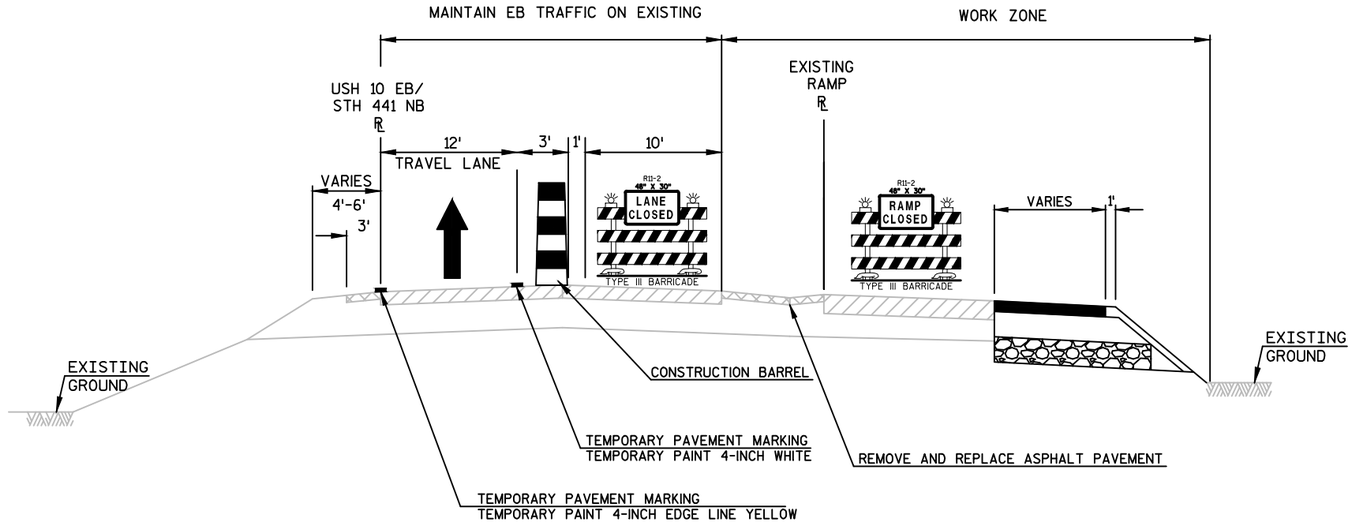

SECTION E-E

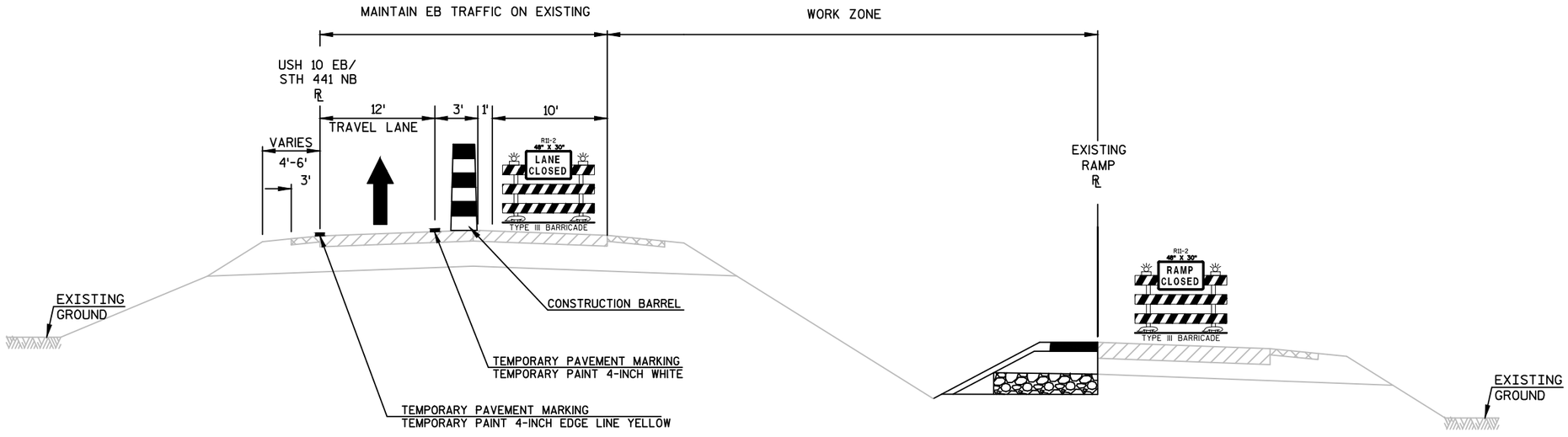

SECTION F-F

PROJECT NO: 1517-75-85	HWY: STH 441/USH 10	COUNTY: WINNEBAGO	STAGE CONSTRUCTION: TYPICAL SECTION STAGE 2	SHEET 78	E

2

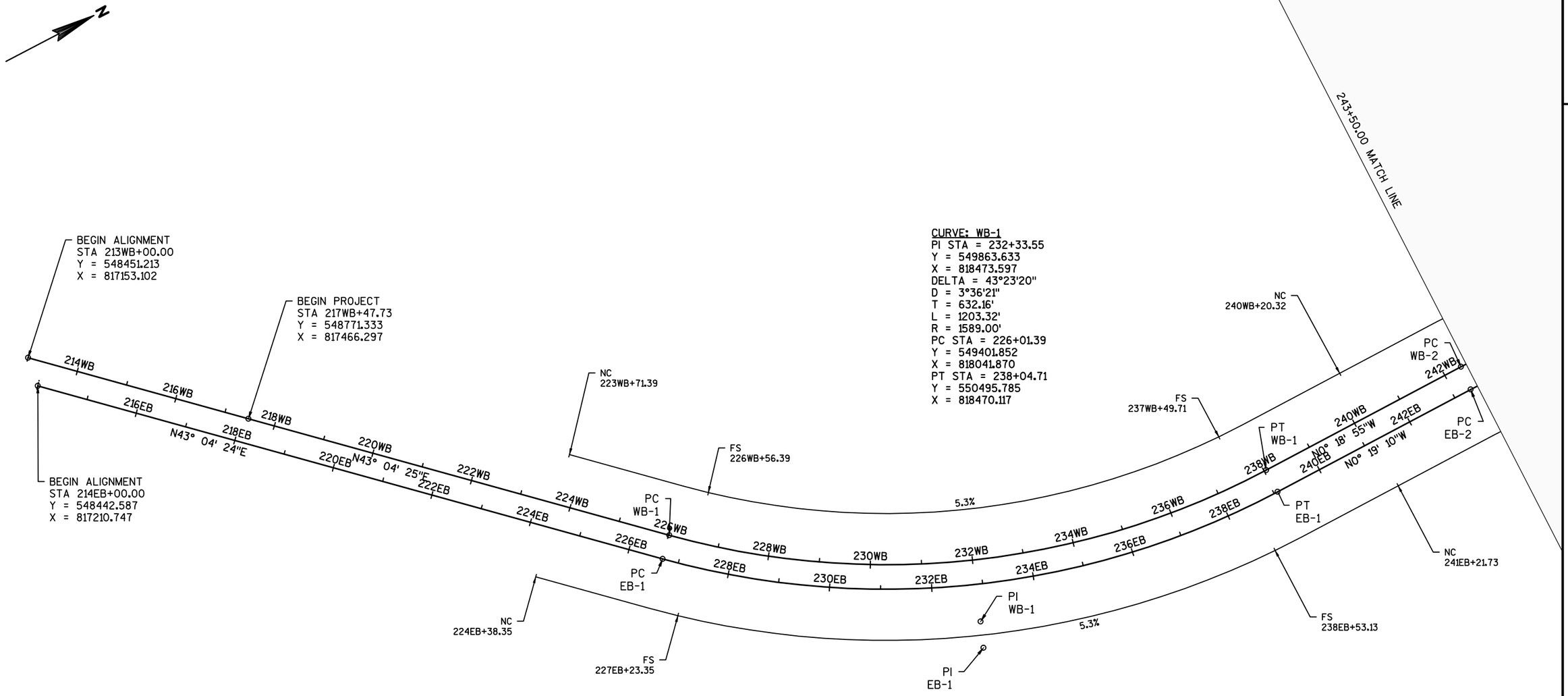

CURVE: WB-1
PI STA = 232+33.55
Y = 549863.633
X = 818473.597
DELTA = 43°23'20"
D = 3°36'21"
T = 632.16'
L = 1203.32'
R = 1589.00'
PC STA = 226+01.39
Y = 549401.852
X = 818041.870
PT STA = 238+04.71
Y = 550495.785
X = 818470.117

CURVE: EB-1
PI STA = 233+19.67
Y = 549844.872
X = 818521.757
DELTA = 43°23'33"
D = 3°30'00"
T = 651.32'
L = 1239.77'
R = 1637.00'
PC STA = 226+68.35
Y = 549369.096
X = 818076.949
PT STA = 239+08.13
Y = 550496.181
X = 818518.127

NOTE:
ALIGNMENT IS FOR INFORMATION ONLY. ALL SUPERELEVATION VALUES ARE APPROXIMATE AND SHOULD BE VERIFIED IN THE FIELD.

PROJECT NO: 1517-75-85	HWY: STH 441/USH10	COUNTY: WINNEBAGO	ALIGNMENT DETAIL: EXISTING	SHEET 79	E

2

CURVE: WB-2
PI STA = 254+63.23
Y = 552154.282
X = 818460.987
DELTA = 91°00'12"
D = 4°45'03"
T = 1227.31'
L = 1915.50'
R = 1206.00'
PC STA = 242+35.93
Y = 550926.993
X = 818467.743
PT STA = 261+51.43
Y = 552139.545
X = 819688.205

PI
WB-2

PI
EB-2

N

6.0%

246WB 248WB 250WB 252WB 254WB 256WB 258WB 260WB 262WB 264WB 266WB 268WB 270WB 272WB

246EB 248EB 250EB 252EB 254EB 256EB 258EB 260EB 262EB 264EB 266EB 268EB 270EB 272EB

FS
242WB+90.93

FS
243EB+90.34

FS
260WB+96.30

NC
263WB+81.30

PT
WB-2

PT
EB-2

FS
261EB+00.62

NC
263EB+85.62

S89° 18' 43"E

S89° 18' 43"E

243+50.00 MATCH LINE

274+00.00 MATCH LINE

CURVE: EB-2
PI STA = 255+01.67
Y = 552089.698
X = 818509.245
DELTA = 91°00'26"
D = 4°59'59"
T = 1166.33'
L = 1820.28'
R = 1146.00'
PC STA = 243+35.34
Y = 550923.389
X = 818515.746
PT STA = 261+55.62
Y = 552075.693
X = 819675.488

NOTE:
ALIGNMENT IS FOR INFORMATION ONLY. ALL SUPERELEVATION VALUES ARE APPROXIMATE AND SHOULD BE VERIFIED IN THE FIELD.

PROJECT NO: 1517-75-85	HWY: STH 441/USH10	COUNTY: WINNEBAGO	ALIGNMENT DETAIL: EXISTING	SHEET 80	E

FILE NAME : S:\PDS\C3D\WIS441\15177570_72_77_85\SHEETSPLAN\1517-75-85\027200-AD\15177585-027200-ADEX.DWG
LAYOUT NAME - 027205-AD

PLOT DATE : 8/22/2016 9:40 AM PLOT BY : XIONG, NOU SOUA PLOT NAME : PLOT SCALE : 1 IN:200 FT

2

N

304+50.00 MATCH LINE

END PROJECT
STA 300WB+43.00
Y=552092.819
X=823579.500

74WB 276WB 278WB 280WB 282WB 284WB 286WB 288WB 290WB 292WB 294WB 296WB 298WB 300WB 302WB 304WB

S89° 18' 43"E

EB 276EB 278EB 280EB 282EB 284EB 286EB 288EB 290EB 292EB 294EB 296EB 298EB 300EB 302EB 304EB

S89° 18' 43"E

284ASW

S84° 43' 52"E

PC
ASW-1

286ASW

PI
ASW-1

288ASW

S74° 12' 45"E

BEGIN CONSTRUCTION
STA 283ASW+31.67
Y = 552001.821
X = 821850.805

PT
ASW-1

END CONSTRUCTION
STA 288ASW+91.90
Y = 551903.042
X = 8822400.585

CURVE: ASW-1
PI STA = 286+30.35
Y = 551974.393
X = 822148.228
DELTA = 10°31'08"
D = 4°13'54"
T = 124.64'
L = 248.58'
R = 1354.00'
PC STA = 285+05.72
Y = 551985.838
X = 822024.115
PT STA = 287+54.29
Y = 551940.482
X = 822268.165

274+00.00 MATCH LINE

PROJECT NO: 1517-75-85	HWY: STH 441/USH10	COUNTY: WINNEBAGO	ALIGNMENT DETAIL: EXISTING	SHEET 81	E

2

N

END ALIGNMENT
STA 312WB+92.63
Y=552077.814
X=824829.038

306WB 308WB 310WB 312WB

S89° 18' 43"E

306EB 308EB 310EB 312EB

S89° 18' 43"E

END ALIGNMENT
STA 313EB+08.77
Y=552013.819
X=824828.269

304+50.00 MATCH LINE

PROJECT NO: 1517-75-85	HWY: STH 441/USH10	COUNTY: WINNEBAGO	ALIGNMENT DETAIL: EXISTING	SHEET 82	E

DATE 11OCT16 E S T I M A T E O F Q U A N T I T I E S

LINE NUMBER	ITEM	ITEM DESCRIPTION	UNIT	TOTAL	1517-75-85 QUANTITY
0010	201.0110	Clearing	SY	405.000	405.000
0020	201.0210	Grubbing	SY	405.000	405.000
0030	203.0100	Removing Small Pipe Culverts	EACH	1.000	1.000
0031	204.0110	Removing Asphaltic Surface	SY	440.000	440.000
0032	204.0157	Removing Concrete Barrier	LF	800.000	800.000
0033	204.0165	Removing Guardrail	LF	82.000	82.000
0040	204.0180	Removing Delineators and Markers	EACH	9.000	9.000
0050	204.0210	Removing Manholes	EACH	2.000	2.000
0060	204.0220	Removing Inlets	EACH	2.000	2.000
0070	204.0245	Removing Storm Sewer (size) 01. 6-18 INCH	LF	39.000	39.000
0080	204.0245	Removing Storm Sewer (size) 02. 21-30 INCH	LF	92.000	92.000
0090	204.0245	Removing Storm Sewer (size) 03. 36-60 INCH	LF	34.000	34.000
0100	205.0100	Excavation Common	CY	9,582.000	9,582.000
0101	211.0100	Prepare Foundation for Asphaltic Paving (project) 01. 1517-75-85	LS	1.000	1.000
0110	213.0100	Finishing Roadway (project) 01. 1517-75-85	EACH	1.000	1.000
0120	305.0110	Base Aggregate Dense 3/4-Inch	TON	937.000	937.000
0130	305.0120	Base Aggregate Dense 1 1/4-Inch	TON	12,811.000	12,811.000
0140	311.0110	Breaker Run	TON	11,806.000	11,806.000
0160	460.2000	Incentive Density HMA Pavement	DOL	4,900.000	4,900.000
0180	460.6224	HMA Pavement 4 MT 58-28 S	TON	5,474.000	5,474.000
0190	511.2300	Temp Shoring Left in Place (location) 01. Sta 225+09 - Sta 230+13	SF	228.000	228.000
0200	521.0112	Culvert Pipe Corrugated Steel 12-Inch	LF	380.000	380.000
0210	521.0115	Culvert Pipe Corrugated Steel 15-Inch	LF	43.000	43.000
0220	521.0118	Culvert Pipe Corrugated Steel 18-Inch	LF	20.000	20.000
0230	521.1012	Apron Endwalls for Culvert Pipe Steel 12-Inch	EACH	7.000	7.000
0240	521.1015	Apron Endwalls for Culvert Pipe Steel 15-Inch	EACH	1.000	1.000
0250	521.2005.S	Surface Drain Pipe Corrugated Metal Slotted (inch) 01. 12-INCH	LF	193.000	193.000
0260	521.2005.S	Surface Drain Pipe Corrugated Metal Slotted (inch) 02. 15-INCH	LF	152.000	152.000
0270	521.2005.S	Surface Drain Pipe Corrugated Metal Slotted (inch) 03. 18-INCH	LF	254.000	254.000
0280	603.8000	Concrete Barrier Temporary Precast Delivered	LF	795.000	795.000
0290	603.8125	Concrete Barrier Temporary Precast Installed	LF	795.000	795.000
0300	608.0315	Storm Sewer Pipe Reinforced Concrete Class III 15-Inch	LF	172.000	172.000
0310	608.0318	Storm Sewer Pipe Reinforced Concrete Class III 18-Inch	LF	99.000	99.000
0320	608.0330	Storm Sewer Pipe Reinforced Concrete Class III 30-Inch	LF	90.000	90.000
0330	608.0342	Storm Sewer Pipe Reinforced Concrete Class III 42-Inch	LF	34.000	34.000
0340	611.0535	Manhole Covers Type J-Special	EACH	3.000	3.000
0350	611.0606	Inlet Covers Type B	EACH	11.000	11.000
0360	611.0642	Inlet Covers Type MS	EACH	6.000	6.000
0370	611.2004	Manholes 4-FT Diameter	EACH	1.000	1.000
0380	611.2006	Manholes 6-FT Diameter	EACH	2.000	2.000

3

DATE 11OCT16 E S T I M A T E O F Q U A N T I T I E S

LINE NUMBER	ITEM	ITEM DESCRIPTION	UNIT	TOTAL	1517-75-85 QUANTITY
0390	611.3003	Inlets 3-FT Diameter	EACH	7.000	7.000
0400	611.3220	Inlets 2x2-FT	EACH	4.000	4.000
0410	611.3901	Inlets Median 1 Grate	EACH	6.000	6.000
0420	611.8110	Adjusting Manhole Covers	EACH	1.000	1.000
0430	611.8115	Adjusting Inlet Covers	EACH	7.000	7.000
0431	614.0905	Crash Cushions Temporary	EACH	2.000	2.000
0440	618.0100	Maintenance And Repair of Haul Roads (project) 01. 1517-75-85	EACH	1.000	1.000
0450	619.1000	Mobilization	EACH	1.000	1.000
0460	624.0100	Water	MGAL	277.000	277.000
0470	625.0500	Salvaged Topsoil	SY	4,655.000	4,655.000
0480	628.1504	Silt Fence	LF	1,718.000	1,718.000
0490	628.1520	Silt Fence Maintenance	LF	1,718.000	1,718.000
0500	628.1905	Mobilizations Erosion Control	EACH	6.000	6.000
0510	628.1910	Mobilizations Emergency Erosion Control	EACH	2.000	2.000
0520	628.2002	Erosion Mat Class I Type A	SY	4,655.000	4,655.000
0530	628.7005	Inlet Protection Type A	EACH	17.000	17.000
0540	628.7010	Inlet Protection Type B	EACH	17.000	17.000
0550	628.7504	Temporary Ditch Checks	LF	128.000	128.000
0560	628.7555	Culvert Pipe Checks	EACH	20.000	20.000
0570	629.0205	Fertilizer Type A	CWT	3.500	3.500
0580	630.0110	Seeding Mixture No. 10	LB	66.000	66.000
0590	630.0130	Seeding Mixture No. 30	LB	86.000	86.000
0600	633.5200	Markers Culvert End	EACH	7.000	7.000
0610	638.2101	Moving Signs Type I	EACH	2.000	2.000
0620	638.2102	Moving Signs Type II	EACH	5.000	5.000
0630	638.2601	Removing Signs Type I	EACH	6.000	6.000
0640	638.2602	Removing Signs Type II	EACH	1.000	1.000
0650	638.3000	Removing Small Sign Supports	EACH	1.000	1.000
0660	638.3100	Removing Structural Steel Sign Supports	EACH	2.000	2.000
0661	642.5201	Field Office Type C	EACH	1.000	1.000
0662	643.0200.S	Traffic Control Surveillance and Maintenance (project) 01. 1517-75-85	DAY	61.000	61.000
0680	643.0300	Traffic Control Drums	DAY	4,498.000	4,498.000
0690	643.0420	Traffic Control Barricades Type III	DAY	250.000	250.000
0700	643.0705	Traffic Control Warning Lights Type A	DAY	500.000	500.000
0710	643.0715	Traffic Control Warning Lights Type C	DAY	690.000	690.000
0720	643.0800	Traffic Control Arrow Boards	DAY	92.000	92.000
0730	643.0900	Traffic Control Signs	DAY	678.000	678.000
0731	643.1050	Traffic Control Signs PCMS	DAY	20.000	20.000
0740	645.0135	Geotextile Type SR	SY	137.000	137.000
0750	646.0600	Removing Pavement Markings	LF	39,740.000	39,740.000
0760	649.0402	Temporary Pavement Marking Paint 4-Inch	LF	44,312.000	44,312.000
0770	649.0802	Temporary Pavement Marking Paint 8-Inch	LF	4,342.000	4,342.000
0780	690.0150	Sawing Asphalt	LF	378.000	378.000
0790	ASP.1T0A	On-the-Job Training Apprentice at $5. 00/HR	HRS	1,200.000	1,200.000
0800	ASP.1T0G	On-the-Job Training Graduate at $5.00/HR	HRS	600.000	600.000
0810	SPV.0035	Special 001. Roadway Embankment	CY	2,803.000	2,803.000
0820	SPV.0060	Special 002. Sewer Tap	EACH	7.000	7.000
0821	SPV.0060	Special 203. Maintenance and Removal of Crash Cu shions Temporary Left In Place By Others	EACH	1.000	1.000

3

DATE 11OCT16 E S T I M A T E O F Q U A N T I T I E S

LINE NUMBER	ITEM	ITEM DESCRIPTION	UNIT	TOTAL	1517-75-85 QUANTITY
0830	SPV.0090	Special 200. Maintain Concrete Barrier Temporary Precast Left in Place	LF	630.000	630.000
0840	SPV.0090	Special 201. Concrete Barrier Temporary Precast Anchoring	LF	490.000	490.000
0850	SPV.0090	Special 202. Concrete Barrier Temporary Precast Left in Place	LF	795.000	795.000
0860	SPV.0105	Special 003. Survey Project 1517-75-85	LS	1.000	1.000
0880	SPV.0105	Special 250. Removing Sign Bridge S-70-153	LS	1.000	1.000
0890	SPV.0105	Special 251. Removing Single Pole Sign Support S-70-18	LS	1.000	1.000

CLEARING AND GRUBBING

CATEGORY	STATION	TO	STATION	OFFSET	LOCATION	201.0110 CLEARING SY	201.0210 GRUBBING SY	REMARKS
1000	227WB+44	-	228WB+81	RT	USH 10/ STH 441	405	405	
					TOTALS	**405**	**405**	

REMOVING ASPHALTIC SURFACE

CATEGORY	STATION	TO	STATION	OFFSET	LOCATION	204.0110 REMOVING ASPHALTIC SURFACE SY	REMARKS
1000	254EB+47	-	258EB+71	RT	MIDWAY NE RAMP GORE	440	
					TOTAL	**440**	

REMOVING CONCRETE BARRIER

CATEGORY	STATION	TO	STATION	OFFSET	LOCATION	204.0157 REMOVING CONCRETE BARRIER LF	REMARKS
1000	225WB+09	-	229WB+18	LT	USH 10/ STH 441	400	
	285WB+06	-	289WB+03	RT	USH 10/ STH 441	400	
					TOTALS	**800**	

REMOVING GUARDRAIL

CATEGORY	STATION	TO	STATION	OFFSET	LOCATION	204.0165 REMOVING GUARDRAIL LF	REMARKS
1000	243WB+30	-	244WB+12	RT	USH 10/ STH 441	82	
					TOTALS	**82**	

SAWCUT ITEMS

CATEGORY	STATION	OFFSET	STATION	OFFSET	LOCATION	690.0150 SAWING ASPHALT LF
1000	222WB+32	1' LT	222WB+32	3' LT	TRANSVERSE	3
	226WB+11	R/L	226WB+11	2' RT	TRANSVERSE	3
	225WB+09	44' LT	227WB+80	49' LT	WB WIDENING STAGE 2	266
	225WB+09	44' LT	225WB+09	58' LT	TRANSVERSE	14
	232WB+98	13' RT	232WB+98	17' RT	TRANSVERSE	4
	235WB+09	58' LT	235WB+09	63' LT	TRANSVERSE	6
	235WB+67	8' RT	235WB+67	12' RT	TRANSVERSE	4
	237EB+18	R/L	237EB+18	4' LT	TRANSVERSE	4
	240EB+62	R/L	240EB+62	4' LT	TRANSVERSE	4
	243WB+22	R/L	243WB+22	4' RT	TRANSVERSE	4
	245EB+96	32' RT	245EB+96	38' RT	TRANSVERSE	6
	248WB+78	R/L	248WB+78	4' RT	TRANSVERSE	4
	254EB+47	32' RT	254EB+47	38' RT	TRANSVERSE	21
	256EB+23	50' RT	256EB+23	56' RT	TRANSVERSE	6
	258EB+71	26' RT	258EB+71	31' RT	TRANSVERSE	5
	261EB+94	39' RT	261EB+94	45' RT	TRANSVERSE	6
	264WB+95	R/L	264WB+95	4' RT	TRANSVERSE	4
	265EB+32	R/L	265EB+32	4' LT	TRANSVERSE	4
	283EB+48	44' RT	283EB+48	46' RT	TRANSVERSE	3
	286EB+29	72' RT	286EB+29	74' RT	TRANSVERSE	3
	289WB+03	24' RT	289WB+03	28' RT	TRANSVERSE	4
					TOTAL	**378**

3

3

REMOVING DELINEATORS & MARKERS

CATEGORY	STATION	OFFSET	DESCRIPTIONS/REMARKS	204.0180 REMOVING DELINEATORS & MARKERS EACH
1000	244WB+12	8' RT	GUARDRAIL MARKER	1
	268WB+07	21' RT	CULVERT MARKER	1
	287WB+32	24' RT	CULVERT MARKER	1
	245EB+96 - 283EB+50	RT	DELINEATORS	6
			TOTALS	**9**

REMOVING STORM SEWER STRUCTURES

CATEGORY	STATION	TO	STATION	203.0100 REMOVING SMALL PIPE CULVERTS EACH	204.0210 REMOVING MANHOLES EACH	204.0220 REMOVING INLETS EACH	LOCATION	DESCRIPTION
1000	227WB+59.49, 64' LT	-	-	-	-	1	STH 441/USH 10 WESTBOUND	1G-MS, RIM ELE: 746.45', INVERT ELE: 743.03'
	228WB+50.26, 72' LT	-	-	-	1	-	STH 441/USH 10 WESTBOUND	6-FT DIA., RIM ELE: 752.71', INVERT ELE: 744.13'
	229WB+42.58, 72' LT	-	-	-	1	-	STH 441/USH 10 WESTBOUND	4-FT DIA., RIM ELE: 750.76', INVERT ELE: 744.55'
	263WB+94.16, 29' RT	-	-	-	-	1	STH 441/USH 10 MEDIAN INLET	RIM ELE: 773.67'
	267WB+68.28	-	268WB+19.55	1	-	-	STH441/USH 10 MEDIAN CULVERT	52' OF CPCS 12-INCH
			TOTALS	**1**	**2**	**2**		

REMOVING STORM SEWER PIPE

CATEGORY	STATION	TO	STATION	LOCATION	DESCRIPTIONS/REMARKS	204.0245.01 6-18 INCH LF	204.0245.02 21-30 INCH LF	204.0245.03 36-60 INCH LF
1000	227WB+37	-	229WB+43	LT	STH 441/USH 10 WESTBOUND	24	92	34
	263WB+93	-	263WB+94	RT	STH 441/USH 10 MEDIAN	15	-	-
					TOTALS	**39**	**92**	**34**

3

EARTHWORK QUANTITIES

Category	Division	From / To Station	Location	Common Excavation (1) (item # 205.0100)		Salvaged / Unusable Pavement Material (CY) (4)	Available Material (CY) (5)	Fill (CY)	Roadway Embankment (CY) (6) (item # SPV.0035.001)	Mass Ordinate + / - (7)
				Cut (CY) (2)	EBS (CY) (3)					
1000	Stage 1	217+48 to 226+11	USH 10 WB WIDENING	853	0	0	853	0.4	0.4	853
		232+99 to 239+58	USH 10 WB CROSSOVER 1	606	0	0	606	80	80	526
		243+81 to 289+02	USH 10 WB CROSSOVER 2	5,519	0	1,273	4,247	2,695	2,695	1,552
	Division 1 Subtotal			6,979	0	1,273	5,706	2,776	2,776	2,931
	Stage 2	225+09 to 235+09	USH 10 WB WIDENING	1,138	0	0	1,138	15	15	1,124
		246+89 to 261+76	USH 10 EB WIDENING	1,214	0	0	1,214	13	13	1,201
		283+49 to 286+28	USH 10 EB ASW WIDENING	251	0	0	251	0	0	251
	Division 2 Subtotal			2,603	0	0	2,603	27	27	2,576
	PROJECT 1517-75-85 Totals			9,582	0	1,273	8,309		**2,803**	5,507
				Total Common Exc	**9,582**					

1) Common Excavation is the sum of the Cut and EBS Excavation columns. Item number 205.0100
2) Salvaged/Unsuable Pavement Material is included in Cut.
3) EBS Excavation to be backfilled with roadway embankment unless otherwise noted in plans.
4) Salvaged/Unusable Pavement Material is the material classified as top soil located in the median of STH 441/USH 10 between Midway Rd. and Oneida St. interchanges. Average depth of top soil was determined to be 0.8'.
5) Available Material = Cut - Salvaged/Unusable Pavement Material
6) Roadway Embankment = (Fill+EBS Excavation)
7) The Mass Ordinate is calculated by division. A postive quantity indicates an excess of material within the Division and a negative quantity indicates a shortage of material within the Division. Mass

3

PREPARE FOUNDATION FOR ASPHALTIC PAVING (1517-75-85)

CATEGORY	STATION	OFFSET	STATION	OFFSET	LOCATION	211.0100 PREPARE FOUNDATION FOR ASPHALTIC PAVING L.S.
1000	254EB+47	LT/RT	258EB+71	RT	USH 10/ STH 441	1
					TOTAL	**1**

FINISHING ROADWAY 01.1517-75-85

CATEGORY	STATION	OFFSET	STATION	OFFSET	LOCATION	213.0100 FINISHING ROADWAY EACH
1000	217WB+48	LT/RT	300WB+43	LT/RT	USH 10/ STH 441	1
					TOTAL	**1**

3

3

AGGREGATE ITEMS

CATEGORY	STATION	TO	STATION	OFFSET	LOCATION	305.0110 BASE AGGREGATE DENSE 3/4-INCH TON	305.0120 BASE AGGREGATE DENSE 1 1/4-INCH TON	311.0110 BREAKER RUN TON	REMARKS
1000	217WB+48	-	226WB+11	RT	USH 10 WB WIDENING, STAGE 1	94	672	605	
	232WB+99	-	239WB+58	RT	USH 10 WB CROSS OVER, STAGE 1	83	863	777	
	225WB+09	-	235WB+09	LT	USH 10 WB WIDENING , STAGE 2	106	1,002	902	
	243WB+81	-	289WB+02	RT	USH 10 WB CROSS OVER 2 STAGE 1	496	8,938	8,269	
	246EB+89	-	254EB+46	RT	USH 10 EB WIDENING 1, STAGE 2	75	950	906	
	256EB+50	-	261EB+76	RT	USH 10 EB WIDENING 2, STAGE 2	58	186	167	
	283EB+49	-	286EB+28	RT	USH 10 EB/ASW WIDENING, STAGE 2	25	200	180	
					TOTAL	**937**	**12,811**	**11,806**	

PAVEMENT ITEMS

CATEGORY	STATION	TO	STATION	OFFSET	LOCATION	460.6224 HMA PAVEMENT 4 MT 58-28 S TON	REMARKS
1000	217WB+48	-	226WB+11	RT	USH 10 WB WIDENING, STAGE 1	288	
	232WB+99	-	239WB+58	RT	USH 10 WB CROSS OVER, STAGE 1	370	
	225WB+09	-	235WB+09	LT	USH 10 WB WIDENING , STAGE 2	429	
	243WB+81	-	289WB+02	RT	USH 10 WB CROSS OVER 2 STAGE 1	3,714	
	246EB+89	-	254EB+46	RT	USH 10 EB WIDENING 1, STAGE 2	381	
	254EB-36	-	258EB+71	RT	USH 10 EB GORE REPLACEMENT, STAGE 2	126	
	256EB+50	-	261EB+76	RT	USH 10 EB WIDENING 2, STAGE 2	80	
	283EB+49	-	286EB+28	RT	USH 10 EB/ASW WIDENING, STAGE 2	86	
					TOTAL	**5,474**	

TEMPORARY SHORING LEFT IN PLACE

CATEGORY	STATION	TO	STATION	LOCATION	REMARKS	511.2300* TEMPORARY SHORING LEFT IN PLACE SF
1000	225WB+09	-	230WB+13	LT	TWB WIDENING STAGE 2	228
					TOTALS	**228**

* SHORING QUANTITY INCLUDES THAT SHORING IS EXPOSED 1-FT ABOVE EXISTING GROUND

3

STORM SEWER ITEMS

CATEGORY	UPSTREAM STRUCTURE NUMBER	UPSTREAM ELEVATION	DOWNSTREAM STRUCTURE NUMBER	DOWNSTREAM ELEVATION	SLOPE (%)	LENGTH (FT)	PIPE TYPE AND CLASS	PIPE SIZE	REMARKS	521.0112 CULVERT PIPE CORRUGATED STEEL 12-INCH LF	521.0115 CULVERT PIPE CORRUGATED STEEL 15-INCH LF	521.0118 CULVERT PIPE CORRUGATED STEEL 18-INCH LF	521.2005.S.1 SURFACE DRAIN PIPE CORRUGATED METAL SLOTTED 12-INCH LF	521.2005.S.2 SURFACE DRAIN PIPE CORRUGATED METAL SLOTTED 15-INCH LF	521.2005.S.3 SURFACE DRAIN PIPE CORRUGATED METAL SLOTTED 18-INCH LF	608.0315 STORM SEWER PIPE REINFORCED CONCRETE CLASS III 15-INCH LF	608.0318 STORM SEWER PIPE REINFORCED CONCRETE CLASS III 18-INCH LF	608.0330 STORM SEWER PIPE REINFORCED CONCRETE CLASS III 30-INCH LF	608.0342 STORM SEWER PIPE REINFORCED CONCRETE CLASS III 42-INCH LF
1000	389A	744.43	389	744.41	0.30%	8	SSPRC CLASS III	15-INCH		-	-	-	-	-	-	8	-	-	-
	390A	744.34	390	744.31	0.30%	8	SSPRC CLASS III	15-INCH		-	-	-	-	-	-	8	-	-	-
	394A	744.33	394	744.31	0.30%	8	SSPRC CLASS III	15-INCH		-	-	-	-	-	-	8	-	-	-
	396A	744.40	396	744.38	0.30%	8	SSPRC CLASS III	15-INCH		-	-	-	-	-	-	8	-	-	-
	200A	744.13	200B	744.06	0.21%	34	SSPRC CLASS III	42-INCH		-	-	-	-	-	-	-	-	-	34
	200	747.25	200A	747.00	8.33%	3	SSPRC CLASS III	18-INCH		-	-	-	-	-	-	-	3	-	-
	190A	744.55	200A	744.13	0.47%	90	SSPRC CLASS III	30-INCH		-	-	-	-	-	-	-	-	90	-
	189	747.70	190A	747.50	0.30%	68	SSPRC CLASS III	15-INCH		-	-	-	-	-	-	68	-	-	-
	CC18	758.93	18D	758.96	-0.63%	5	SSPRC CLASS III	18-INCH		-	-	-	-	-	-	-	5	-	-
	18D	759.21	18C	760.64	-2.00%	72	SSPRC CLASS III	15-INCH		-	-	-	-	-	-	72	-	-	-
	18C	764.27	18B	769.40	-3.38%	152	CMP SLOTTED DRAIN	15-INCH		-	-	-	-	152	-	-	-	-	-
	18B	769.40	18A	769.91	-1.17%	43	CPCS	15-INCH		-	43	-	-	-	-	-	-	-	-
	16D	784.23	17B	784.01	0.17%	130	CPCS	12-INCH		130	-	-	-	-	-	-	-	-	-
	16C	784.01	16B	781.26	1.42%	193	CMP SLOTTED DRAIN	12-INCH		-	-	-	193	-	-	-	-	-	-
	16B	781.26	16C	780.22	1.50%	70	CPCS	12-INCH		70	-	-	-	-	-	-	-	-	-
	15D	770.81	15F	770.10	0.30%	72	SSPRC CLASS III	sting Storm Se	TIE INTO EXISTING	-	-	-	-	-	-	-	72	-	-
	15B	777.80	15D	776.91	0.35%	254	CMP SLOTTED DRAIN	18-INCH		-	-	-	-	-	254	-	-	-	-
	15A	777.82	15E	777.80	0.30%	8	CPCS	18-INCH		8	-	-	-	-	-	-	-	-	-
	14A	778.17	14B	777.94	0.55%	42	CPCS	12-INCH		42	-	-	-	-	-	-	-	-	-
	13	-	-	-	0.30% MIN	8	SSPRC CLASS III	18-INCH	TIE INTO EXISTING	-	-	-	-	-	-	-	8	-	-
	12	-	-	-	0.30% MIN	11	SSPRC CLASS III	18-INCH	TIE INTO EXISTING	-	-	-	-	-	-	-	11	-	-
	11A	787.50	11B	786.98	0.40%	130	CPCS	12-INCH		130	-	-	-	-	-	-	-	-	-
	10	-	-	-	0.30% MIN	20	CPCS	18-INCH	EXTENTION OF PIPE	-	-	20	-	-	-	-	-	-	-
									TOTALS	**380**	**43**	**20**	**193**	**152**	**254**	**172**	**99**	**90**	**34**

3

STORM SEWER ITEMS CONTINUED

CATEGORY	STRUCTURE NUMBER	ALIGNMENT	STATION	OFFSET	STRUCTURE TYPE	SIZE (FT)	COVER TYPE	RIM ELEVATION	UPSTREAM ELEVATION	DEPTH (FT)	REMARKS	SPV.0060.002 SEWER TAP EACH	521.1012 APRON ENDWALLS FOR CULVERT PIPE STEEL 12-INCH EACH	521.1015 APRON ENDWALLS FOR CULVERT PIPE STEEL 15-INCH EACH	611.0535 MANHOLE COVERS TYPE J-S EACH	611.0606 INLET COVERS TYPE B EACH	611.0642 INLET COVERS TYPE MS EACH	611.2004 MANHOLES 4-FT EACH	611.2006 MANHOLES 6-FT EACH	611.3003 INLETS 3-FT DIAMETER EACH	611.3220 INLETS 2X2-FT EACH	611.3901 INLETS MEDIAN 1 GRATE EACH	611.8110 ADJUSTING MANHOLE COVERS EACH	611.8115 ADJUSTING INLET COVERS EACH
1000	389A	WB	225+60	56.5' LT	INLET	2X2 -FT	B	748.60	744.43	3.00		-	-	-	-	1	-	-	-	-	1	-	-	-
	389	WB	225+60	49.6' LT	REMOVE COVER	4-FT	F	748.88	744.41	3.97		1	-	-	-	-	-	-	-	-	-	-	-	1
	390A	WB	225+85	57.6' LT	INLET	2X2 -FT	B	748.54	744.34	3.03		-	-	-	-	1	-	-	-	-	1	-	-	-
	390	WB	225+85	49.1' LT	REMOVE COVER	4-FT	F	748.88	744.31	4.07		1	-	-	-	-	-	-	-	-	-	-	-	1
	391A	WB	226+52	66.2' LT	MEDIAN INLET	1G	MS	749.31	743.95	4.69		-	-	-	-	-	1	-	-	-	-	1	-	-
	391	WB	226+52	58.5' LT	ADJUST COVER	4-FT	J	748.27	744.00	3.02		-	-	-	-	-	-	-	-	-	-	-	1	-
	394A	WB	227+20	63.6' LT	INLET	2X2 -FT	B	747.96	744.33	2.46		-	-	-	-	1	-	-	-	-	1	-	-	-
	394	WB	227+21	55.9' LT	REMOVE COVER	4-FT	F	748.38	744.31	3.57		1	-	-	-	-	-	-	-	-	-	-	-	1
	396A	WB	227+38	64.2' LT	INLET	2X2 -FT	B	748.05	744.40	2.48		-	-	-	-	1	-	-	-	-	1	-	-	-
	396	WB	227+38	56.4' LT	REMOVE COVER	4-FT	F	748.48	744.38	3.60		-	-	-	-	-	-	-	-	-	-	-	-	1
	200B	WB	228+15	74.2' LT	MANHOLE	6-FT	J-S	750.10	744.06	4.79		-	-	-	1	-	-	-	1	-	-	-	-	-
	200A	WB	228+50	74.9' LT	MANHOLE	6-FT	J-S	750.46	744.13	5.08		-	-	-	1	-	-	-	1	-	-	-	-	-
	200	WB	228+50	72.0' LT	SEWER TAP	-	-	-	747.25	-		1	-	-	-	-	-	-	-	-	-	-	-	-
	190A	WB	229+44	74.9' LT	MANHOLE	4-FT	J-S	750.51	744.55	4.71		-	-	-	1	-	-	1	-	-	-	-	-	-
	189	WB	230+16	71.7' LT	MEDIAN INLET	1G	MS	751.97	747.70	3.60		-	-	-	-	-	1	-	-	-	-	1	-	-
	CC18	EB	234+98	24.7' LT	SEWER TAP	-	-	-	758.93	-		1	-	-	-	-	-	-	-	-	-	-	-	1
	18D	EB	234+98	19.3' LT	MEDIAN INLET	1G	MS	762.00	758.96	2.37		-	-	-	-	-	1	-	-	-	-	1	-	-
	18C	EB	235+70	22.7' LT	INLET	3-FT	B	766.31	760.64	4.50		-	-	-	-	1	-	-	-	1	-	-	-	-
	18B	WB	236+26	18.4' RT	INLET	3-FT	B	770.91	769.40	0.34		-	-	-	-	1	-	-	-	1	-	-	-	-
	18A	WB	236+69	15.3' RT	APRON ENDWALL	15-INCH	--	-	769.91	-		-	-	1	-	-	-	-	-	-	-	-	-	-
	16D	WB	247+43	25.5' RT	APRON ENDWALL	12-INCH	--	-	784.23	-		-	1	-	-	-	-	-	-	-	-	-	-	-
	16C	WB	248+72	1.9' RT	INLET	3-FT	B	785.66	784.01	0.48		-	-	-	-	1	-	-	-	1	-	-	-	-
	16B	WB	250+64	46.9' RT	INLET	3-FT	B	782.94	781.26	0.51		-	-	-	-	1	-	-	-	1	-	-	-	-
	16A	WB	251+29	17.5' RT	APRON ENDWALL	12-INCH	-	-	780.22	-		-	1	-	-	-	-	-	-	-	-	-	-	-
	15E	WB	263+93	43.6' RT	INLET	3-FT	B	778.67	770.81	6.69		-	-	-	-	1	-	-	-	1	-	-	-	-
	15D	WB	264+64	34.8' RT	INLET	3-FT	B	778.91	774.00	3.74		-	-	-	-	1	-	-	-	1	-	-	-	-
	15B	WB	267+18	36.2' RT	INLET	3-FT	B	779.93	777.80	0.96		-	-	-	-	1	-	-	-	1	-	-	-	-
	15A	WB	267+19	42.9' RT	INLET	12-INCH	-	-	777.82	-		-	1	-	-	-	-	-	-	-	-	-	-	-
	14B	EB	267+90	22.5' LT	APRON ENDWALL	12-INCH	-	-	777.94	-		-	1	-	-	-	-	-	-	-	-	-	-	-
	14A	EB	268+32	25.0' LT	APRON ENDWALL	12-INCH	-	-	778.17	-		-	1	-	-	-	-	-	-	-	-	-	-	-
	13	WB	270+93	36.2' RT	MEDIAN INLET	1G	MS	779.63	-	-	FIELD VERIFY INLET DEPTH	1	-	-	-	-	1	-	-	-	-	1	-	1
	12	WB	277+93	36.8' RT	MEDIAN INLET	1G	MS	784.93	-	-	FIELD VERIFY INLET DEPTH	1	-	-	-	-	1	-	-	-	-	1	-	1
	11B	WB	279+25	41.3' RT	APRON ENDWALL	12-INCH	-	-	786.98	-		-	1	-	-	-	-	-	-	-	-	-	-	-
	11A	WB	280+55	35.5' RT	APRON ENDWALL	12-INCH	-	-	787.50	-		-	1	-	-	-	-	-	-	-	-	-	-	-
	10	WB	283+93	36.2' RT	MEDIAN INLET	1G	MS	790.20	-	-	FIELD VERIFY INLET DEPTH	-	-	-	-	-	1	-	-	-	-	1	-	-
											TOTALS	**7**	**7**	**1**	**3**	**11**	**6**	**1**	**2**	**7**	**4**	**6**	**1**	**7**

MAINTAINANCE AND REPAIR OF HAUL ROADS (1517-75-85)

CATEGORY	STATION	OFFSET	STATION	OFFSET	LOCATION	618.0100 MAINTANCE AND REPAIR OF HAUL ROADS EACH
1000	217WB+48	LT/RT	300WB+43	LT/RT	USH 10/ STH 441	1
					TOTAL	**1**

MOBILIZATION (1517-75-85)

CATEGORY	STATION	OFFSET	STATION	OFFSET	LOCATION	619.1000 MOBILIZATION EACH
1000	217WB+48	LT/RT	300WB+43	LT/RT	USH 10/ STH 441	1
					TOTAL	**1**

3

WATER

CATEGORY	STATION	OFFSET	STATION	OFFSET	LOCATION	624.0100 WATER		
						FOR SEEDING* MGAL	FOR DUST CONTROL MGAL	FOR COMPACTION MGAL
1000	217WB+48	LT/RT	300WB+43	LT/RT	USH 10/ STH 441	84	55	138
					TOTAL		**277**	

*PROVIDE WATERING FOR FOUR WEEKS IN SUMMER

EROSION CONTROL ITEMS

CATEGORY	STATION	TO	STATION	OFFSET	LOCATION	625.0500 SALVAGED TOPSOIL SY	628.1504 SILT FENCE LF	628.1520 SILT FENCE MAINTENANCE LF	628.2002 EROSION MAT CLASS I TYPE A SY	629.0205 FERTILIZER TYPE A CWT	630.0110 SEEDING MIXTURE NO. 10 LB	630.0130 SEEDING MIXTURE NO. 30 LB	REMARKS
1000	217WB+48	-	226WB+11	RT	USH 10 WB WIDENING, STAGE 1	355	84	84	355	0.2	5	6	
	232WB+99	-	239WB+58	R/L	USH 10 WB CROSS OVER, STAGE 1	242	192	192	242	0.2	4	5	
	225WB+09	-	235WB+09	LT	USH 10 WB WIDENING , STAGE 2	398	129	129	398	0.3	5	7	
	243WB+81	-	289WB+02	RT	USH 10 WB CROSS OVER 2 STAGE 1	2,857	138	138	2,857	2.0	39	52	
	246EB+89	-	254EB+46	LT	USH 10 EB WIDENING 1, STAGE 2	692	556	556	692	0.6	10	13	
	256EB+50	-	261EB+76	LT	USH 10 EB WIDENING 2, STAGE 2	39	-	-	39	0.1	1	1	
	283EB+49	-	286EB+28	RT	USH 10 EB/ASW WIDENING, STAGE 2	36	275	275	36	0.1	1	1	
	UNDISTRIBUTED				USH 10/ STH 441	36	344	344	36	0.1	1	1	
					TOTALS	**4,655**	**1,718**	**1,718**	**4,655**	**3.5**	**66**	**86**	

MOBILIZATION EROSION CONTROL

CATEGORY	STATION	OFFSET	STATION	OFFSET	LOCATION	628.1905 MOBILATION EROSION CONTROL EACH	628.1910 EMERGENCY EROSION CONTROL EACH
1000	217WB+48	LT/RT	300WB+43	LT/RT	USH 10/ STH 441	6	2
					TOTAL	**6**	**2**

INLET PROTECTION

CATEGORY	STRUCTURE NUMBER	ALIGNMENT	STATION	OFFSET	628.7005 INLET PROTECTION TYPE A EACH	628.7010 INLET PROTECTION TYPE B EACH	REMARKS
1000	389A	WB	225+60	56.5' LT	1	1	STAGE 2
	390A	WB	225+85	57.6' LT	1	1	STAGE 2
	391A	WB	226+52	66.2' LT	1	1	STAGE 2
	394A	WB	227+20	63.6' LT	1	1	STAGE 2
	396A	WB	227+38	64.2' LT	1	1	STAGE 2
	189	WB	230+16	71.7' LT	1	1	STAGE 2
	18D	EB	234+98	19.3' LT	1	1	STAGE 1
	18C	EB	235+70	22.7' LT	1	1	STAGE 1
	18B	WB	236+26	18.4' RT	1	1	STAGE 1
	16C	WB	248+72	1.9' RT	1	1	STAGE 1
	16B	WB	250+64	46.9' RT	1	1	STAGE 1
	15E	WB	263+93	43.6' RT	1	1	STAGE 1
	15D	WB	264+64	34.8' RT	1	1	STAGE 1
	15B	WB	267+18	36.2' RT	1	1	STAGE 1
	13	WB	270+93	36.2' RT	1	1	STAGE 1
	12	WB	277+93	36.8' RT	1	1	STAGE 1
	10	WB	283+93	36.2' RT	1	1	STAGE 1
				TOTALS	**17**	**17**	

TEMPORARY DITCH CHECKS

CATEGORY	ALIGNMENT	STATION	OFFSET	628.7504 TEMPORARY DITCH CHECKS LF	REMARKS
1000	WB	226+14	65.9' LT	6	
	WB	226+98	71.4' LT	6	
	WB	232+10	69.5' LT	6	
	WB	237+18	15.4' RT	6	
	WB	248+15	33.6' RT	6	
	EB	252+71	54.1' RT	6	
	WB	251+99	39.0' LT	6	
	WB	269+65	36.5' RT	6	
	WB	271+16	36.4' RT	6	
	WB	272+91	36.3' RT	6	
	WB	274+91	35.9' RT	6	
	WB	276+91	36.7' RT	6	
	WB	278+72	40.0' RT	6	
	WB	281+14	35.5' RT	6	
	WB	282+91	35.0' RT	6	
	WB	284+91	34.5' RT	6	
	WB	286+91	32.2' RT	6	
	UNDISTRIBUTED			26	
			TOTALS	**128**	

CULVERT PIPE CHECKS

CATEGORY	STRUCTURE NUMBER	ALIGNMENT	STATION	OFFSET	628.7555 CULVERT PIPE CHECKS EACH	REMARKS
1000	18E	WB	234+09	71.4' LT	4	
	16D	WB	247+43	25.5' RT	4	
	15F	EB	264+09	65.7' RT	4	
	14B	EB	267+90	22.5' LT	4	
	11B	WB	279+25	41.3' RT	4	
				TOTALS	**20**	

3

3

MOVING AND REMOVING SIGNS

SIGN NO.	LOCATION	SIGN CODE	638.2101 MOVING SIGNS TYPE I EACH	638.2102 MOVING SIGNS TYPE II EACH	638.2601 REMOVING SIGNS TYPE I EACH	638.2602 REMOVING SIGNS TYPE II EACH	638.3000 REMOVING SMALL SIGN SUPPORTS EACH	638.3100 REMOVING STRUCT. STEEL SIGN SUPPORTS EACH	SPV.0105.250 REMOVING SIGN BRIDGE LS	SPV.0105.251 REMOVING SINGLE POLE SIGN SUPPORT LS	REMARKS
1	VACANT	-	-	-	-	-	-	-	-	-	
2	USH 10/STH 441, N. OF CTH AP	D10-3	-	-	-	1	1	-	-	-	
3	"	W4-1	-	1	-	-	-	-	-	-	
4	"	R3-4B	-	1	-	-	-	-	-	-	
5	"	E5-1A	-	1	-	-	-	-	-	-	EXIT 290
11	USH 10/STH 441, N. OF CTH AP	E3-1	-	-	1	-	-	-	-	-	
11A	"	-	-	-	-	-	-	2	-	-	
12	"	E7-2	-	-	3	-	-	-	-	-	ALSO REMOVE E6-1 AND E1-5P
12A	"	-	-	-	-	-	-	-	1	-	REMOVE EXISTING STRUCTURE S-70-153
1M-02	"	-	2	2	-	-	-	-	-	-	EXIT GORE SIGN FOR CTH AP - MIDWAY RD
13	"	E8-1	-	-	2	-	-	-	-	-	ALSO REMOVE E8-1
13A	"	-	-	-	-	-	-	-	-	1	REMOVE EXISTING STRUCTURE S-70-18
	PROJECT TOTAL		**2**	**5**	**6**	**1**	**1**	**2**	**1**	**1**	

PLAN SHEET PRODUCED
BY WisDOT - NE REGION

3

FIELD OFFICE (TYPE C)

CATEGORY	STATION TO STATION	LOCATION	642.5201 EACH
1000	1517-75-85	PROJECT	1
		TOTAL	**1**

TRAFFIC CONTROL SURVEILLANCE AND MAINTENANCE

CATEGORY	STATION TO STATION	LOCATION	643.0200.S DAY
1000	1517-75-85	PROJECT	61
		TOTAL	**61**

3

TRAFFIC CONTROL SUMMARY

CATEGORY	STATION	DAYS	643.0300 TRAFFIC CONTROL DRUMS		643.0420 TRAFFIC CONTROL BARRICADES TYPE III		643.0705 TRAFFIC CONTROL WARNING LIGHTS TYPE A		643.0715 TRAFFIC CONTROL WARNING LIGHTS TYPE C		643.0800 TRAFFIC CONTROL ARROW BOARDS		643.0900 TRAFFIC CONTROL SIGNS		643.1050 TRAFFIC CONTROL SIGNS PCMS		REMARKS
			EACH	DAYS	EACH	DAYS	EACH	DAYS	EACH	DAYS	EACH	DAYS	EACH	DAYS	EACH	DAYS	
1000	**STAGE 1**																
	217WB+47 - 288WB+02	18	111	1,998	6	108	12	216	15	270	2	36	14	252	-	-	LANE CLOSURE PER S.D.D.
	233EB+86 - 289EB+18	18	95	1,710	5	90	10	180	15	270	2	36	14	252	-	-	LANE CLOSURE PER S.D.D.
	STAGE 2																
	225WB+09 - 235WB+09	4	49	196	1	4	2	8	15	60	2	8	9	36	-	-	LANE CLOSURE PER S.D.D.
	246EB+89-286EB+29	6	79	474	4	24	8	48	15	90	2	12	12	72	-	-	LANE CLOSURE PER S.D.D.
	246EB+89-261EB+76	3	20	60	4	12	8	24	-	-	-	-	11	33	1	10	RAMP CLOSURE PER S.D.D.
	278EB+56-286EB+29	3	20	60	4	12	8	24	-	-	-	-	11	33	1	10	RAMP CLOSURE PER S.D.D.
		TOTALS		**4,498**		**250**		**500**		**690**		**92**		**678**		**20**	

TRAFFIC CONTROL SUMMARY CONTINUED

CATEGORY	STATION	TO	STATION	OFFSET	LOCATION	646.0600 REMOVING PAVEMENT MARKING	649.0402 TEMPORARY PAVEMENT MARKING PAINT 4-INCH			649.0802 TEMPORARY PAVEMENT MARKING PAINT 8-INCH	
							EDGE LINE YELLOW	EDGE LINE WHITE	LANE LINE WHITE	LANE LINE WHITE	EDGE LINE WHITE
						LF	LF	LF	LF	LF	LF
1000	**STAGE 1**										
	226WB+00	-	301WB+60	LT	USH 10/ STH 441	9,623	7,563	-	1,893	167	-
	226EB+25	-	293EB+00	RT	USH 10/ STH 441	8,515	6,673	-	1,666	176	-
	STAGE 2										
	214WB+36	-	301WB+60	LT	USH 10/ STH 441	13,087	8,416	1,826	2,107	356	829
	226EB+25	-	293EB+00	RT	USH 10/ STH 441	8,515	7,421	5,079	1,668	397	2,417
					TOTALS	39,740	30,073	6,905	7,334	1,096	3,246
					OVERALL TOTALS	**39,740**		**44,312**			**4,342**

3

TEMPORARY BARRIER PRECAST ITEMS

CATEGORY	STATION	TO	STATION	LOCATION	REMARKS	603.8000 CONCRETE BARRIER TEMPORARY PRECAST DELIVERED LF	603.8125 CONCRETE BARRIER TEMPORARY PRECAST INSTALLED LF	SPV.0090.201 CONCRETE BARRIER TEMPORARY PRECAST ANCHORING LF	SPV.0090.202 CONCRETE BARRIER TEMPORARY PRECAST LEFT IN PLACE LF
1000	225WB+09	-	230WB+13	LT	WB WIDENING STAGE 2	490	490	490	490
	243WB+29	-	244WB+53	RT	B-70-112 APPROACH	305	305	-	305
					TOTALS	**795**	**795**	**490**	**795**

MARKERS CULVERT ENDS

CATEGORY	STATION	OFFSET	LOCATION	633.5200 MARKERS CULVERT END EACH	REMARKS
1000	236WB+69	15.3' RT	USH 10/ STH 441	1	
	247WB+43	25.5' RT	USH 10/ STH 441	1	
	251WB+29	17.5' RT	USH 10/ STH 441	1	
	267EB+90	22.5' LT	USH 10/ STH 441	1	
	268EB+32	25.0' LT	USH 10/ STH 441	1	
	279WB+25	41.3' RT	USH 10/ STH 441	1	
	280WB+55	35.5' RT	USH 10/ STH 441	1	
			TOTAL	**7**	

3

SURVEY PROJECT (1517-75-85)

CATEGORY	STATION	OFFSET	STATION	OFFSET	LOCATION	SPV.0105.003 SURVEY PROJECT L.S.
1000	217WB+48	LT/RT	300WB+43	LT/RT	USH 10/ STH 441	1
					TOTAL	**1**

TEMPORARY CRASH CUSHIONS

CATEGORY	STATION	OFFSET	LOCATION	614.0905 TEMPORARY CRASH CUSHIONS EACH	BACK WIDTH FT	OBJECT MARING PATTERN	CRASH TEST LEVEL	TRAFFIC DIRECTION	TRAFFIC LOCATION	CRASH CUSHION SHIELDS	SPV.0060.203 MAINTENANCE AND REMOVAL OF CRASH CUSHIONS TEMORARY LEFT IN PLACE BY OTHERS EACH	REMARKS
1000	229WB+18	LT	USH 10/ STH 441	-	-	-	-	-	-	-	1	LEFT IN PLACE FROM 1517-75-75
	230WB+13	LT	WB WIDENING STAGE 2	1	4	OM-3R (W05-58R)	TL-3	UNIDIRECTIONAL	LT	TEMPORARY CONCRETE BARRIER ON SHOULDER	-	
	244WB+53	RT	B-70-112 APPROACH	1	4	OM-3R (W05-58R)	TL-3	UNIDIRECTIONAL	RT	B-70-112 PARAPET	-	
			TOTAL	**2**							**1**	

GEOTEXTILE FABRIC ITEMS

CATEGORY	STATION	TO	STATION	LOCATION	645.0135 GEOTEXTILE FABRIC TYPE SR SY	REMARKS
1000	225WB+09	-	230WB+13	LT	137	PLACE ON BACKSIDE OF TEMPORARY BARRIER PRECAST LEFT IN PLACE
					TOTALS	**137**

MAINTAIN CONCRETE BARRIER TEMPORARY PRECAST LEFT IN PLACE

CATEGORY	LOCATION	REMARKS	SPV.0090.200 MAINTAIN CONCRETE BARRIER TEMPORARY PRECAST LEFT IN PLACE LF
1000	PROJECT	FROM 1517-75-75	630
		TOTALS	**630**

TRANSPORTATION PROJECT PLAT NO: 1517-07-21 - 4.15

USH 10 / STH 441, CTH CB - S. ONEIDA ST.

PART OF LOTS 5 AND 6, BLOCK 3 OF BUTTE DES MORTS HEIGHTS AND LANDS IN THE NW 1/4 OF THE NW 1/4, SECTION 11, TOWNSHIP 20 NORTH, RANGE 17 EAST, TOWN OF MENASHA, AND LOT 1, BLOCK 1, FRITSCH SUBDIVISION AND LANDS IN THE NE 1/4 OF THE NW 1/4 OF SECTION 11, TOWNSHIP 20 NORTH, RANGE 17 EAST, CITY OF MENASHA, ALL IN WINNEBAGO COUNTY, WISCONSIN.

THE STATE OF WISCONSIN DEPARTMENT OF TRANSPORTATION HAS DEEMED IT NECESSARY TO MONUMENT RIGHT-OF-WAY INTERESTS PREVIOUSLY ACQUIRED UNDER SECTIONS 82.01, 82.31 AND 84.09 OF THE WISCONSIN STATE STATUTES AND DOES HEREBY CERTIFY THE DEPARTMENT OF TRANSPORTATION HAS SURVEYED THE HIGHWAY RIGHT-OF-WAY: THAT THIS PLAT IS AN ACCURATE SURVEY AND A TRUE REPRESENTATION THEREOF AND CORRECTLY SHOWS EXTERIOR BOUNDARY LINES AND CORRECT MEASUREMENTS THEREOF.

RELOCATION ORDER USH 10/STH 441 WINNEBAGO COUNTY

TO PROPERLY ESTABLISH, LAY OUT, WIDEN, ENLARGE, EXTEND, CONSTRUCT, RECONSTRUCT, IMPROVE, OR MAINTAIN A PORTION OF THE HIGHWAY DESIGNATED ABOVE, THE STATE OF WISCONSIN DEPARTMENT OF TRANSPORTATION DEEMS IT NECESSARY TO RELOCATE OR CHANGE SAID HIGHWAY AND ACQUIRE CERTAIN LANDS AND INTERESTS OR RIGHTS IN LANDS FOR THE ABOVE PROJECT.

TO EFFECT THIS CHANGE, PURSUANT TO AUTHORITY GRANTED UNDER SECTION 84.02 (3) AND 84.09, WISCONSIN STATUTES, THE DEPARTMENT OF TRANSPORTATION HEREBY ORDERS THAT:

1. THAT PORTION OF SAID HIGHWAY AS SHOWN ON THIS PLAT IS LAID OUT AND ESTABLISHED TO THE LINES AND WIDTHS AS SO SHOWN FOR THE ABOVE PROJECT.
2. THE LANDS OR INTERESTS OR RIGHTS IN LANDS AS SHOWN ON THIS PLAT ARE REQUIRED BY THE DEPARTMENT FOR THE ABOVE PROJECT AND SHALL BE ACQUIRED IN THE NAME OF THE STATE OF WISCONSIN, PURSUANT TO THE PROVISIONS OF SECTION 84.09 (1) OR (2), WISCONSIN STATUTES.

SCHEDULE OF LANDS & INTERESTS REQUIRED

PARCEL NUMBER	*OWNER	INTEREST REQUIRED	NEW R/W ACRES	P.L.E. ACRES	T.L.E. ACRES
84	NICK & LISA A. BONGEAN	TLE	-	-	0.018
87	JOHN L. & VICKIE T. SAMP	FEE	0.184	-	-
88	WISCONSIN CENTRAL LTD.	HE	0.075	-	-
89	DICK & STEVE EARL	FEE	0.173	-	-
90	WINNEBAGO COUNTY	BUILDING RELOCATION	-	-	-
91	MIDWAY CORPORATION	FEE/TLE	0.061	-	0.052
92	3 RB LLC	FEE/TLE	0.004	-	0.005

*OWNER'S NAMES ARE SHOWN FOR REFERENCE PURPOSES ONLY, AND ARE SUBJECT TO CHANGE PRIOR TO TRANSFER OF LAND INTERESTS TO THE WISCONSIN DEPARTMENT OF TRANSPORTATION.

STATION OFFSET TABLE

POINT	STATION	OFFSET	X	Y
DB929	237+48.23	0	818591.965	550319.747
DB930	240+52.43	0	818707.537	550601.130
DB956	243+85.16	701.08 R	819467.553	550598.294
DB962	239+00.47	373.93 L	818303.916	550602.636
DB963	225+39.20	0	817982.221	549280.358
DB964	226+45.50	140.77 R	818159.663	549279.589
PRW1238	242+72.04	633.43 R	819374.155	550556.643
PRW1239	242+08.32	505.73 R	819234.571	550553.190
PRW1240	241+84.46	488.00 R	819209.113	550537.861
PRW1295	229+20.37	203.47 L	818035.864	549700.871
TLE1296	226+70.93	141.06 L	817949.481	549469.051
TLE1297	227+97.40	142.80 L	818019.706	549569.174
HE1299	240+46.30	187.35 R	818878.509	550524.289
PRW1300	240+75.83	257.92 R	818955.013	550524.788
PRW1301	241+50.73	436.95 R	819149.075	550526.053
TLE1302	241+92.30	507.06 R	819229.722	550537.871
TLE1309	243+14.98	722.53 R	819467.363	550547.460
PRW1310	243+28.96	718.43 R	819467.401	550557.461
PRW1311	243+39.85	715.18 R	819467.430	550565.294
TLE1958	242+08.88	528.37 R	819255.724	550545.106
ERW7093	224+16.03	150.28 L	817789.290	549281.844
ERW7094	228+06.45	130.15 L	818035.101	549569.110
ERW7097	229+64.00	138.82 L	818112.894	549700.682
ERW7098	230+39.04	126.67 L	818162.022	549755.657
ERW7099	232+97.13	142.84 L	818273.282	549980.062
ERW7100	233+79.89	152.48 L	818302.021	550055.245
ERW7297	238+71.29	360.42 L	818305.327	550570.514

SCHEDULE OF UTILITIES & INTERESTS REQUIRED

UTILITY NUMBER	*OWNER	INTEREST REQUIRED
500	WE ENERGIES - ELECTRIC	RELEASE OF RIGHTS
503	AT&T WISCONSIN	RELEASE OF RIGHTS
505	TOWN OF MENASHA - SANITARY SEWER	RELEASE OF RIGHTS
605	TOWN OF MENASHA - SANITARY SEWER	UTILITY AGREEMENT
622	TOWN OF MENASHA - WATER	UTILITY AGREEMENT

CURVE TABLE

CURVE	CH DISTANCE	CH BEARING	RADIUS	ARC LENGTH	PI COORDINATES	
C1	1205.04'	N30°23'51"E	4293.00'	1209.03'	X 818294.839	Y 549596.336

RL USH-10/STH-441
PI STA. 229+83.14
Y : 549596.34
X : 818294.84
DELTA = 20°38'55"
D = 1°20'05"
T = 782.05
L = 1547.14
R = 4293.00

COURSE TABLE NEW RIGHT OF WAY

POINT TO POINT		BEARING	DISTANCE
2017035	DB962	S89°47'10"E	662.10
DB962	DB956	S89°47'10"E	1163.65
DB956	PRW1310	S00°12'50"W	40.83
PRW1310	PRW1238	S89°29'52"W	93.25
PRW1238	PRW1239	S88°34'58"W	139.63
PRW1239	PRW1240	S58°56'48"W	29.72
PRW1240	PRW1301	S78°52'26"W	61.19
PRW1301	HE1299	S89°37'35"W	270.57
HE1299	DB964	S30°00'27"W	1437.36
DB964	ERW7093	N89°39'04"W	370.38
ERW7093	ERW7094	N40°33'12"E	378.08
ERW7094	PRW1295	N00°19'55"E	131.76
PRW1295	ERW7097	S89°51'34"E	77.03
ERW7097	ERW7098	N41°47'08"E	73.73
ERW7098	ERW7099	N26°22'20"E	250.47
ERW7099	ERW7100	N20°55'10"E	80.49
ERW7100	ERW7297	N00°22'03"E	515.28
ERW7297	DB962	N02°30'55"W	32.15

COURSE TABLE USH 10/STH 441 REFERENCE LINE

POINT TO POINT		BEARING	DISTANCE
2017048	DB963	N15°03'54"E	1368.77
DB963	DB929	CURVE C1	
DB929	DB930	N22°19'46"E	304.19
DB930	2017036	S89°47'10"E	1575.71

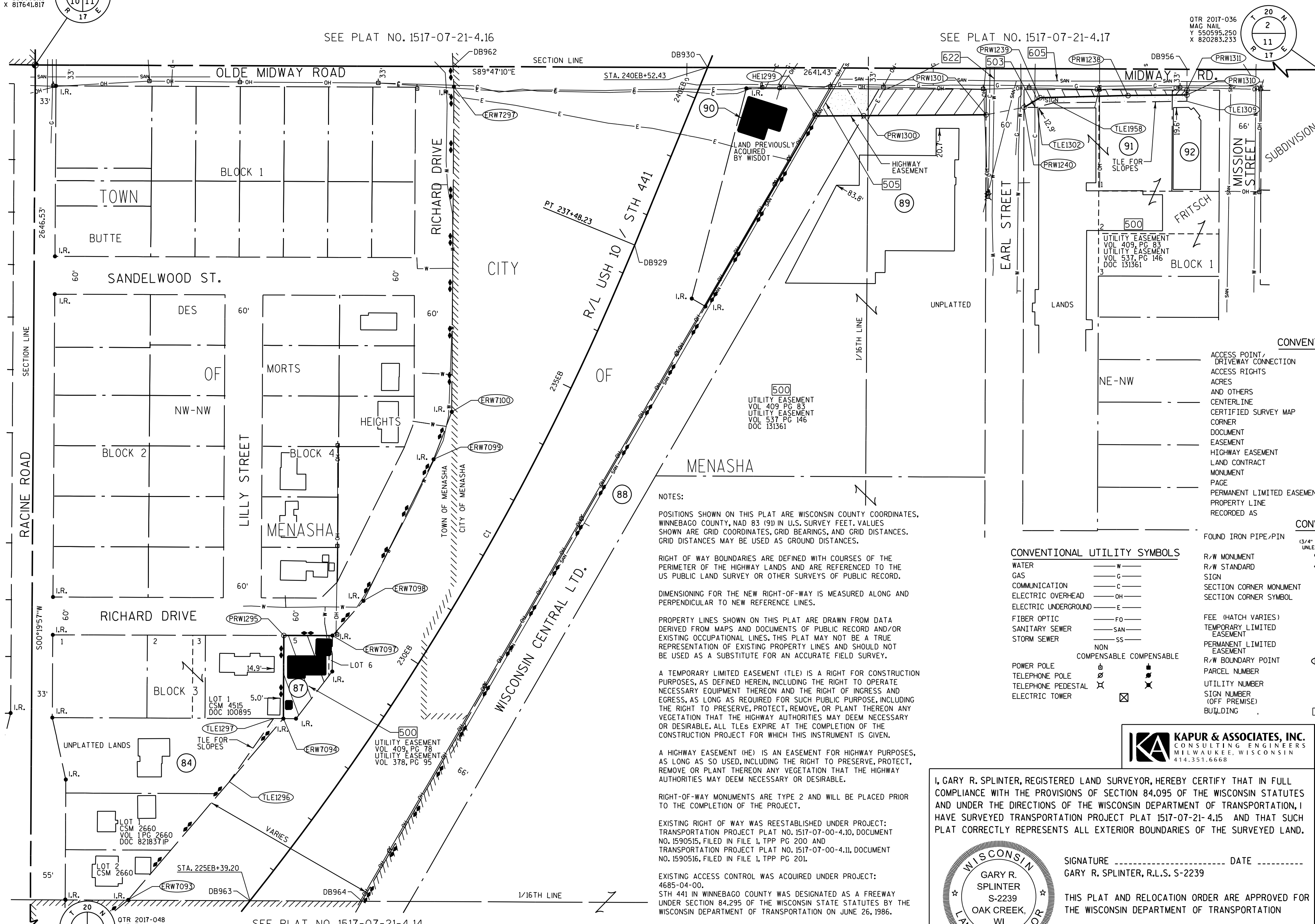

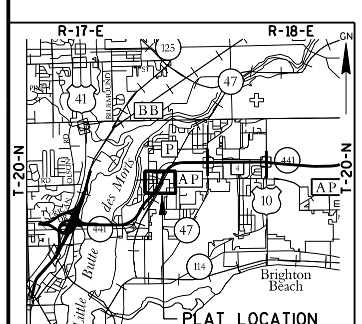

NOTES:

POSITIONS SHOWN ON THIS PLAT ARE WISCONSIN COUNTY COORDINATES, WINNEBAGO COUNTY, NAD 83 (91) IN U.S. SURVEY FEET. VALUES SHOWN ARE GRID COORDINATES, GRID BEARINGS, AND GRID DISTANCES. GRID DISTANCES MAY BE USED AS GROUND DISTANCES.

RIGHT OF WAY BOUNDARIES ARE DEFINED WITH COURSES OF THE PERIMETER OF THE HIGHWAY LANDS AND ARE REFERENCED TO THE US PUBLIC LAND SURVEY OR OTHER SURVEYS OF PUBLIC RECORD.

DIMENSIONING FOR THE NEW RIGHT-OF-WAY IS MEASURED ALONG AND PERPENDICULAR TO NEW REFERENCE LINES.

PROPERTY LINES SHOWN ON THIS PLAT ARE DRAWN FROM DATA DERIVED FROM MAPS AND DOCUMENTS OF PUBLIC RECORD AND/OR EXISTING OCCUPATIONAL LINES. THIS PLAT MAY NOT BE A TRUE REPRESENTATION OF EXISTING PROPERTY LINES AND SHOULD NOT BE USED AS A SUBSTITUTE FOR AN ACCURATE FIELD SURVEY.

A TEMPORARY LIMITED EASEMENT (TLE) IS A RIGHT FOR CONSTRUCTION PURPOSES, AS DEFINED HEREIN, INCLUDING THE RIGHT TO OPERATE NECESSARY EQUIPMENT THEREON AND THE RIGHT OF INGRESS AND EGRESS, AS LONG AS REQUIRED FOR SUCH PUBLIC PURPOSE, INCLUDING THE RIGHT TO PRESERVE, PROTECT, REMOVE, OR PLANT THEREON ANY VEGETATION THAT THE HIGHWAY AUTHORITIES MAY DEEM NECESSARY OR DESIRABLE. ALL TLEs EXPIRE AT THE COMPLETION OF THE CONSTRUCTION PROJECT FOR WHICH THIS INSTRUMENT IS GIVEN.

A HIGHWAY EASEMENT (HE) IS AN EASEMENT FOR HIGHWAY PURPOSES, AS LONG AS SO USED, INCLUDING THE RIGHT TO PRESERVE, PROTECT, REMOVE OR PLANT THEREON ANY VEGETATION THAT THE HIGHWAY AUTHORITIES MAY DEEM NECESSARY OR DESIRABLE.

RIGHT-OF-WAY MONUMENTS ARE TYPE 2 AND WILL BE PLACED PRIOR TO THE COMPLETION OF THE PROJECT.

EXISTING RIGHT OF WAY WAS REESTABLISHED UNDER PROJECT: TRANSPORTATION PROJECT PLAT NO. 1517-07-00-4.10, DOCUMENT NO. 1590515, FILED IN FILE 1, TPP PG 200 AND TRANSPORTATION PROJECT PLAT NO. 1517-07-00-4.11, DOCUMENT NO. 1590516, FILED IN FILE 1, TPP PG 201.

EXISTING ACCESS CONTROL WAS ACQUIRED UNDER PROJECT: 4685-04-00.
STH 441 IN WINNEBAGO COUNTY WAS DESIGNATED AS A FREEWAY UNDER SECTION 84.295 OF THE WISCONSIN STATE STATUTES BY THE WISCONSIN DEPARTMENT OF TRANSPORTATION ON JUNE 26, 1986.

THE REFERENCE LINE SHOWN ON THIS PLAT MAY NOT BE THE SAME AS THE REFERENCE LINE SHOWN ON THE CONSTRUCTION PLAN.

CONVENTIONAL ABBREVIATIONS

ACCESS POINT/ DRIVEWAY CONNECTION	AP	REFERENCE LINE	R/L
ACCESS RIGHTS	AR	RELEASE OF RIGHTS	ROR
ACRES	AC.	REMAINING	REM.
AND OTHERS	ET.AL.	RIGHT-OF-WAY	R/W
CENTERLINE	C/L	SECTION	SEC.
CERTIFIED SURVEY MAP	CSM	STATION	STA.
CORNER	COR.	TEMPORARY LIMITED EASEMENT	TLE
DOCUMENT	DOC.	VOLUME	VOL
EASEMENT	EASE.		
HIGHWAY EASEMENT	H.E.		
LAND CONTRACT	LC		
MONUMENT	MON.		
PAGE	PG		
PERMANENT LIMITED EASEMENT	PLE		
PROPERTY LINE	PL		
RECORDED AS	(100')		

CURVE DATA

LONG CHORD	LCH
LONG CHORD BEARING	LCB
RADIUS	R
DEGREE OF CURVE	D
CENTRAL ANGLE OR DELTA	DELTA
LENGTH OF CURVE	L
TANGENT	TAN

CONVENTIONAL UTILITY SYMBOLS

WATER —W—
GAS —G—
COMMUNICATION —C—
ELECTRIC OVERHEAD —OH—
ELECTRIC UNDERGROUND —E—
FIBER OPTIC —FO—
SANITARY SEWER —SAN—
STORM SEWER —SS—

NON COMPENSABLE / COMPENSABLE
POWER POLE
TELEPHONE POLE
TELEPHONE PEDESTAL
ELECTRIC TOWER

CONVENTIONAL SYMBOLS

FOUND IRON PIPE/PIN — I.R. (3/4" IRON REBAR UNLESS NOTED)
R/W MONUMENT — (SET)
R/W STANDARD — (SET)
SIGN — SIGN
SECTION CORNER MONUMENT
SECTION CORNER SYMBOL
FEE (HATCH VARIES)
TEMPORARY LIMITED EASEMENT
PERMANENT LIMITED EASEMENT
R/W BOUNDARY POINT — PRW000
PARCEL NUMBER — 102
UTILITY NUMBER — 92
SIGN NUMBER (OFF PREMISE) — 21-1
BUILDING

PROPOSED R/W LINE
EXISTING H.E. LINE
PROPERTY LINE
LOT & TIE LINES
SLOPE INTERCEPTS
CORPORATE LIMITS
ACCESS RESTRICTED (BY PREVIOUS ACQUISITION/CONTROL)
ACCESS RESTRICTED (BY ACQUISTION)
NO ACCESS (BY STATUTORY AUTHORITY)
SECTION LINE
QUARTER LINE
SIXTEENTH LINE
EXISTING CENTERLINE
PROPOSED REFERENCE LINE
PARALLEL OFFSET

KAPUR & ASSOCIATES, INC.
CONSULTING ENGINEERS
MILWAUKEE, WISCONSIN
414.351.6668

I, GARY R. SPLINTER, REGISTERED LAND SURVEYOR, HEREBY CERTIFY THAT IN FULL COMPLIANCE WITH THE PROVISIONS OF SECTION 84.095 OF THE WISCONSIN STATUTES AND UNDER THE DIRECTIONS OF THE WISCONSIN DEPARTMENT OF TRANSPORTATION, I HAVE SURVEYED TRANSPORTATION PROJECT PLAT 1517-07-21- 4.15 AND THAT SUCH PLAT CORRECTLY REPRESENTS ALL EXTERIOR BOUNDARIES OF THE SURVEYED LAND.

WISCONSIN LAND SURVEYOR — GARY R. SPLINTER S-2239 OAK CREEK, WI

SIGNATURE ________________________ DATE __________
GARY R. SPLINTER, R.L.S. S-2239

THIS PLAT AND RELOCATION ORDER ARE APPROVED FOR THE WISCONSIN DEPARTMENT OF TRANSPORTATION

SIGNATURE ____________________ DATE _____________
PRINT ____

RESERVED FOR REGISTER OF DEEDS
PROJECT NUMBER 1517-07-21-4.15
AMENDMENT NO:

ACCEPTED FOR RECORDING AND FILING IN THE OFFICE OF THE REGISTER OF DEEDS IN WINNEBAGO COUNTY, WISCONSIN AT __:__ _M ON ______________________ AS DOCUMENT #______________ AND FILED IN ________________________

____
SIGNATURE OF REGISTER OF DEEDS

FILE NAME : S:\DOT\DOT_NE\120012-Tri County Freeway\Plat\Plats\040415_RP.dgn
APPRAISAL PLAT DATE :
PLOT DATE : 7/26/2013
PLOT BY : Steve_s
PLOT NAME :
PLOT SCALE : 1:200

BENCHMARKS					
NUMBER	STATION	NORTHING	EASTING	DESCRIPTION	ELEVATION
AP8	294WB+94.55 691.75' LT	552791.1	823039.4	SW BOLT ON BILLBOARD AT THE NE QUADRANT OF APPLETON RD AND W. TUCKAWAY LN	800.24
AP9	292EB+70.28 393.52' RT	551644.8	822785.2	CHISELED SQUARE ON THE NORTH CORNER OF AN ELECTRICAL PEDESTAL ON WEST SIDE OF APPLETON RD IN FRONT OF MATHEWS TIRE	786.26
AP10	295EB+36.63 1,428.90' RT	550606.3	823039.1	NW TAG BOLT AT NE QUADRANT OF APPLETON RD AND MIDWAY RD	780.28
AP16	294WB+56.86 890.91' LT	552990.7	823004.1	TOP OF NW BOLT ON MCDONALDS SIGN BASE AT THE SE QUADRANT OF APPLETON RD AND VALLEY RD	801.31
AP20	293EB+08.79 35.84' RT	552002	822828	3" DISC TOP OF SW PARAPET WALL STR# B-70-113, 10 EB OVER APPLETON RD	810.47
AP21	294WB+71.05 34.32' LT	552134	823008	3" DISC TOP OF NE PARAPET WALL STR# B-70-114, 10 WB OVER APPLETON RD	812.59
ML10	298EB+01.01 101.43' RT	551930.5	823319.4	CHISELED SQUARE NORTH SIDE CONCRETE BASE FOR TRANSMISSION TOWER #132156, APPLETON RD SE RAMP	793.08
ML11	306EB+36.08 102.20' RT	551919.7	824154.4	CHISELED SQUARE NORTH SIDE CONCRETE BASE FOR TRANSMISSION TOWER #132157, EAST END OF ASE RAMP	799.23
ML12	307EB+78.21 29.94' LT	552050	824298.1	CHISELED SQUARE SOUTH SIDE OF INLET IN MEDIAN 441 AT UNIVERSITY DR DEAD END	801.07
MW1	240EB+38.42 1,350.62' RT	550634	819868	NW TAG BOLT 1ST HYD WEST OF FATIMA ST ON THE NORTH SIDE OF MDWAY RD ; ACROSS FROM HOUSE #831	796.92
MW2	240EB+40.32 830.62' RT	550633	819348	NW TAG BOLT ON HYD BETWEEN MISSION ST & EARL ST ON NORTH SIDE OF SIDE OF MIDWAY; IN FRONT OF RR DONNELLEY SIGN @ 800 MIDWAY RD	766.56
MW3	244WB+19.61 546.58' LT	551190	817940	PK NAIL SET IT TOP CURB JOINT (CP 1002) +/- 400' EAST OF RACINE RD & MIDWAY RD INTERSECTION; NORTH MEDIAN CURB LINE	759.75
MW4	244WB+59.39 820.39' LT	551296	817680	NE TAG BOLT ON FIRE HYDRANT AT NE QUADRANT OF RACINE RD AND MIDWAY RD	763.31
MW10	241EB+55.75 35.25' RT	550744	818552	3" DISC TOP OF SE PARAPET WALL STR# B-70-111, 441 NB OVER MIDWAY	785.71
MW11	243WB+56.52 36.87' LT	551050.9	818436.4	3" DISC TOP OF NW PARAPET WALL STR# B-70-112, 441 SB OVER MIDWAY	792.23
MW12	249EB+31.39 58.23' RT	551465.1	818714.8	NW BOLT OF WEST SIGN BASE OF "UW FOX VALLEY" EXIT SIGN, 441 NB	777.67
MW13	253WB+69.90 22.63' RT	551885.6	818970.8	CHISELED SQUARE TOP NW CORNER OF INLET IN MEDIAN OF 441	776.85
MW14	261WB+01.79 24.73' RT	552114.4	819639.3	CHISELED SQUARE TOP MIDDLE OF INLET IN MEDIAN OF 441	773.24
MW15	264EB+47.78 31.12' LT	552103.3	819968	TOP SW BOLT OF SIGN #S-70-153, 441 MEDIAN	778.17
MW16	270EB+13.52 31.21' LT	552096.6	820553.7	TOP SW BOLT OF SIGN #S-70-18, 441 MEDIAN	782.54
MW17	272EB+36.28 55.62' RT	552007.1	820755.4	TOP BOLT ON NORTH LEG "GAS EXIT" SIGN	778.77
MW18	279EB+09.86 58.33' RT	551996.3	821428.9	TOP NE BOLT OF NORTH SIGN BASE OF "47 APPLETON RD" EXIT 290 SIGN	784.58
MW19	283EB+24.81 109.66' RT	551940	821843.2	CHISELED SQUARE SOUTH SIDE OF CONCRETE ATC TOWER BASE	785.04
MW20	286EB+62.87 179.80' RT	551865.8	822180.4	CHISELED SQUARE NW CORNER CONCRETE PAD FOR ELECTRIC PEDESTAL SW RAMP APPLETON RD	784.52
RA1	221WB+96.37 257.73' LT	549282	817577	NW TAG BOLT ON FIRE HYDRANT AT THE NW QUADRANT OF RACINE RD & GORDON ST AND NORTH OF BRIDGE OVER STH 441	761.71
RA2	218EB+72.91 93.00' RT	548725	817602	TOP SE BOLT FOR RAIL ON SW CORNER OF PARAPET WALL ON RACINE RD BRIDGE OVER STH 441, PAINTED WHITE	770.81
RA10	234WB+40.75 776.42' LT	550306.9	817673.5	NE TAG BOLT ON FIRE HYDRANT AT THE INTERSECTION OF RACINE RD AND SANDLEWOOD ST	763.72
RA24	220WB+57.43 23.58' RT	548988.4	817687.6	SW BOLT EXISITNG SIGN STR #S-70-17, USH 10 MEDIAN 30' NE OF RACINE RD OVERPASS	749.12
RA25	226WB+03.84 22.50' RT	549388.3	818060	SW BOLT EXISITNG SIGN STR #S-70-155, USH 10 MEDIAN 600' NE OF RACINE RD OVERPASS	752.83
RA26	234EB+94.09 22.21' RT	550091.7	818446.8	SE CPRNER OF INLET, USH 10 MEDIAN, 650' SOUTH OF MIDWAY	761.22

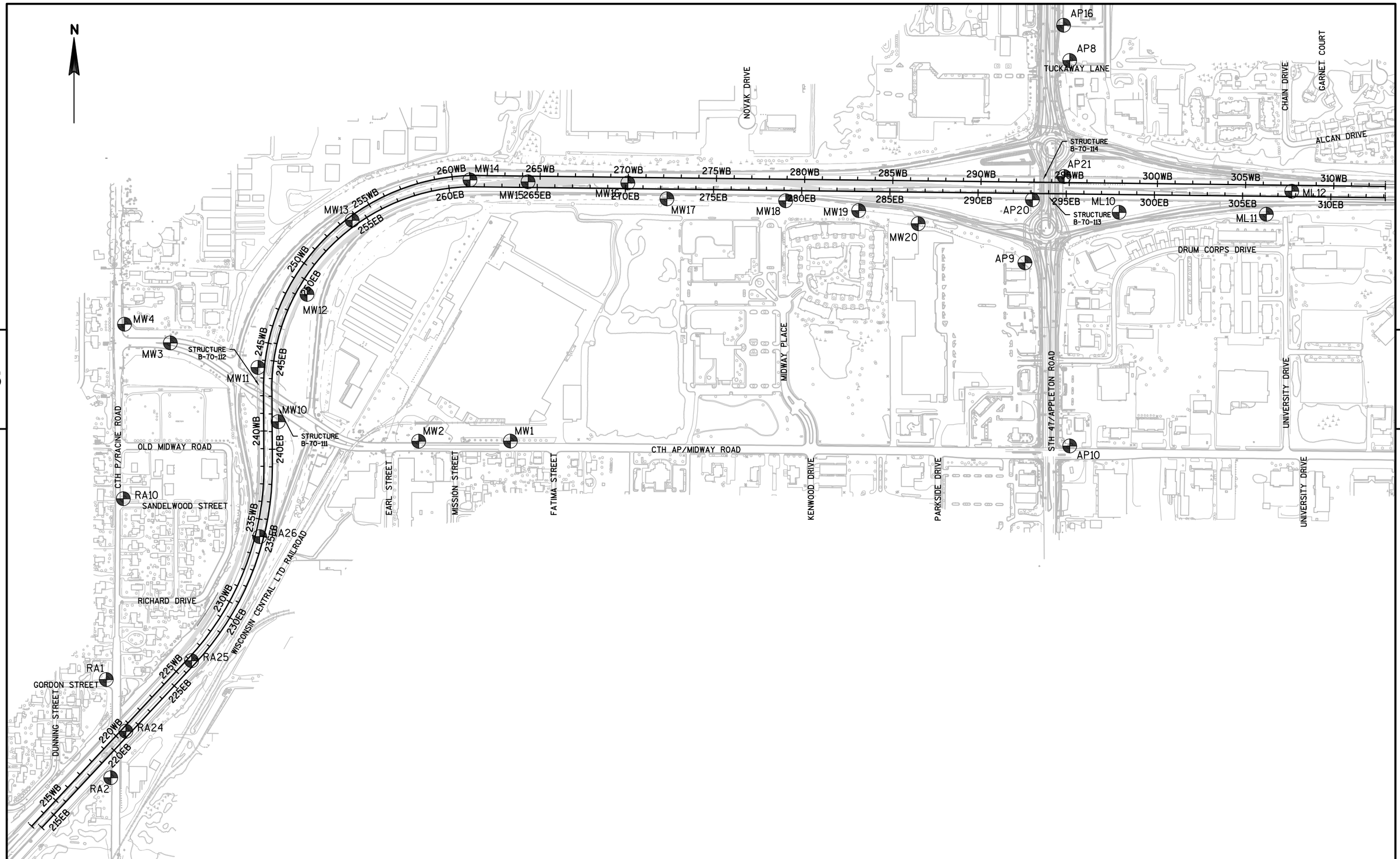

PROJECT NO: 1517-75-85	HWY: STH 441/USH 10	COUNTY: WINNEBAGO	BENCHMARKS LOCATIONS	SHEET 99	E

FILE NAME : S:\PDS\C3D\WIS441\15177570_T2_77_85\SHEETSPLAN\1517-75-85\050000-BM\NE-15177585-050000-BM.DWG
LAYOUT NAME - NE-15177585-050000-BM - 050000-BM-L

PLOT DATE : 8/22/2016 5:02 PM PLOT BY : VICKMAN, GARRETT T PLOT NAME : PLOT SCALE : 1 IN:500 FT

WISDOT/CADDS SHEET 44

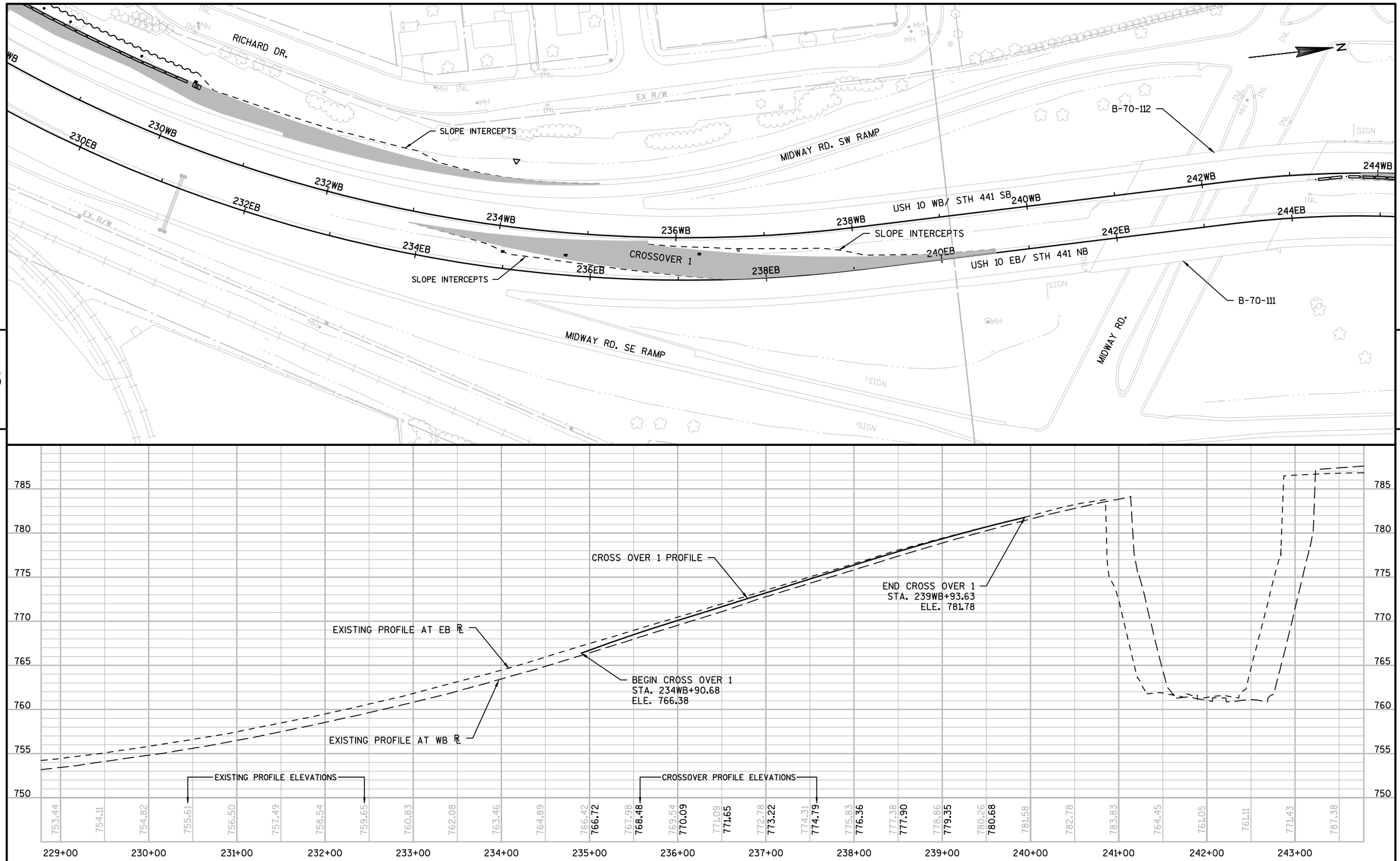

PROJECT NO: 1517-75-85	HWY: STH 441/ USH 10	COUNTY: WINNEBAGO	PLAN AND PROFILE: USH 10 WB CROSSOVER 1	SHEET 100	E

FILE NAME : S:\PDS\C3D\WIS441\15177570_72_77_85\SHEETSPLAN\1517-75-85\050100-PP\15177585-050100-PP-WB.DWG
LAYOUT NAME - 050101-PP
PLOT DATE : 8/26/2016 10:11 AM
PLOT BY : VICKMAN, GARRETT T PLOT NAME :
PLOT SCALE : 1 IN:100 FT
WISDOT/CADDS SHEET 44

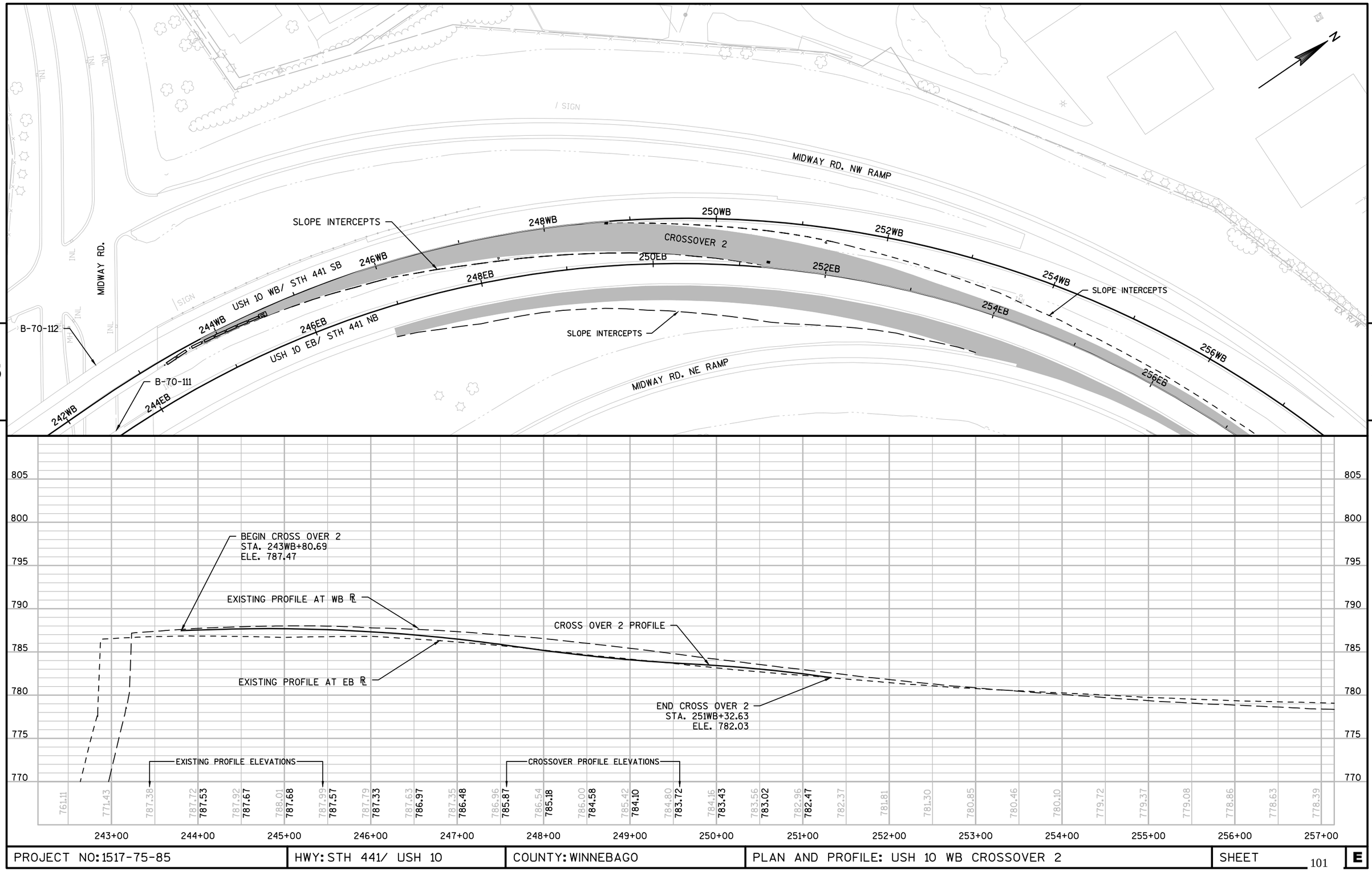

PROJECT NO: 1517-75-85	HWY: STH 441/ USH 10	COUNTY: WINNEBAGO	PLAN AND PROFILE: USH 10 WB CROSSOVER 2	SHEET 101	E

FILE NAME : S:\PDS\C3D\WIS441\15177570_72_77_85\SHEETSPLAN\1517-75-85\050100-PP\15177585-050100-PP-WB.DWG
LAYOUT NAME - 050102-PP
PLOT DATE : 8/26/2016 10:11 AM PLOT BY : VICKMAN, GARRETT T PLOT NAME :
PLOT SCALE : 1 IN:100 FT
WISDOT/CADDS SHEET 44

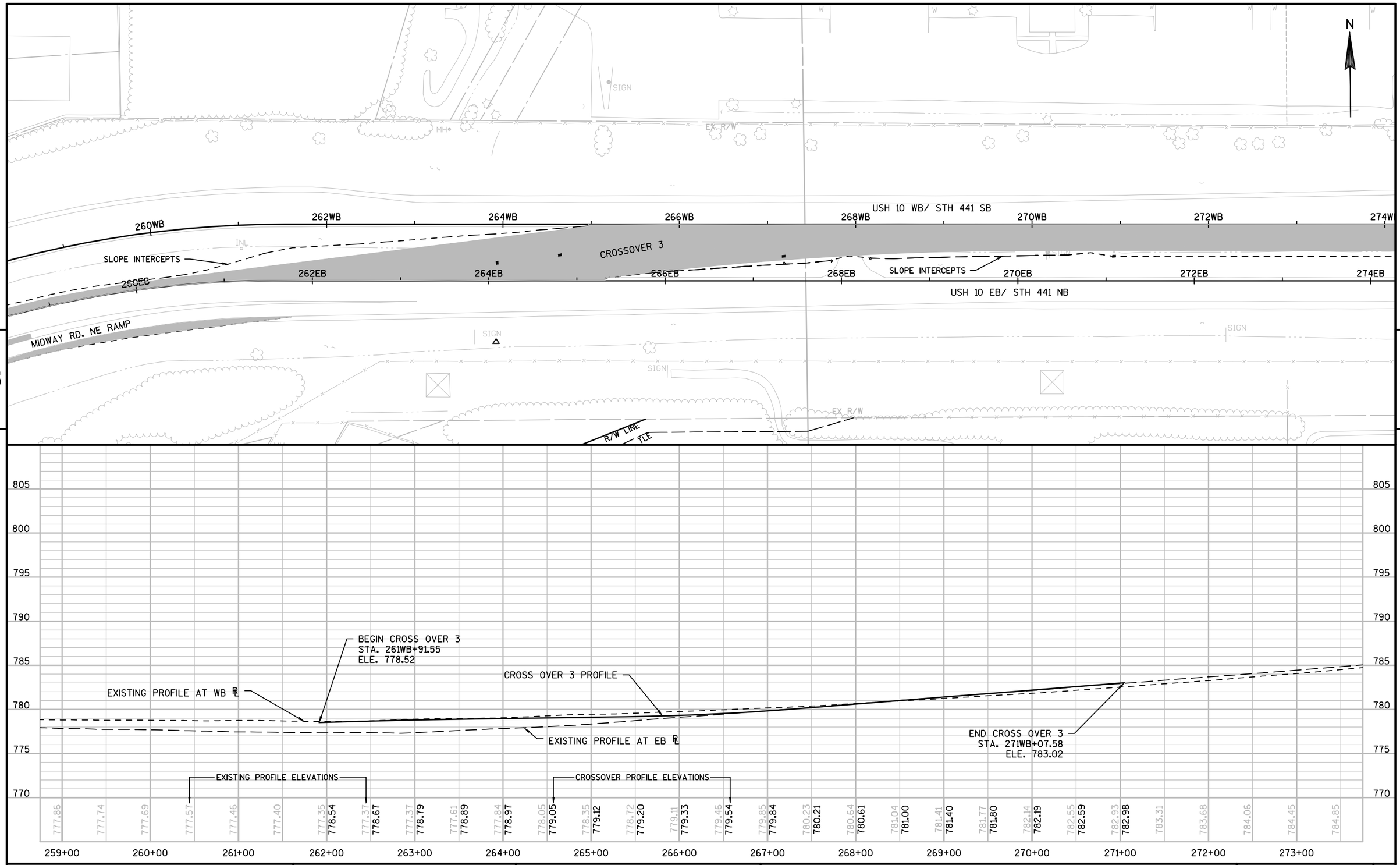

5 5

PROJECT NO: 1517-75-85	HWY: STH 441/ USH 10	COUNTY: WINNEBAGO	PLAN AND PROFILE: USH 10 WB CROSSOVER 3	SHEET 102	E

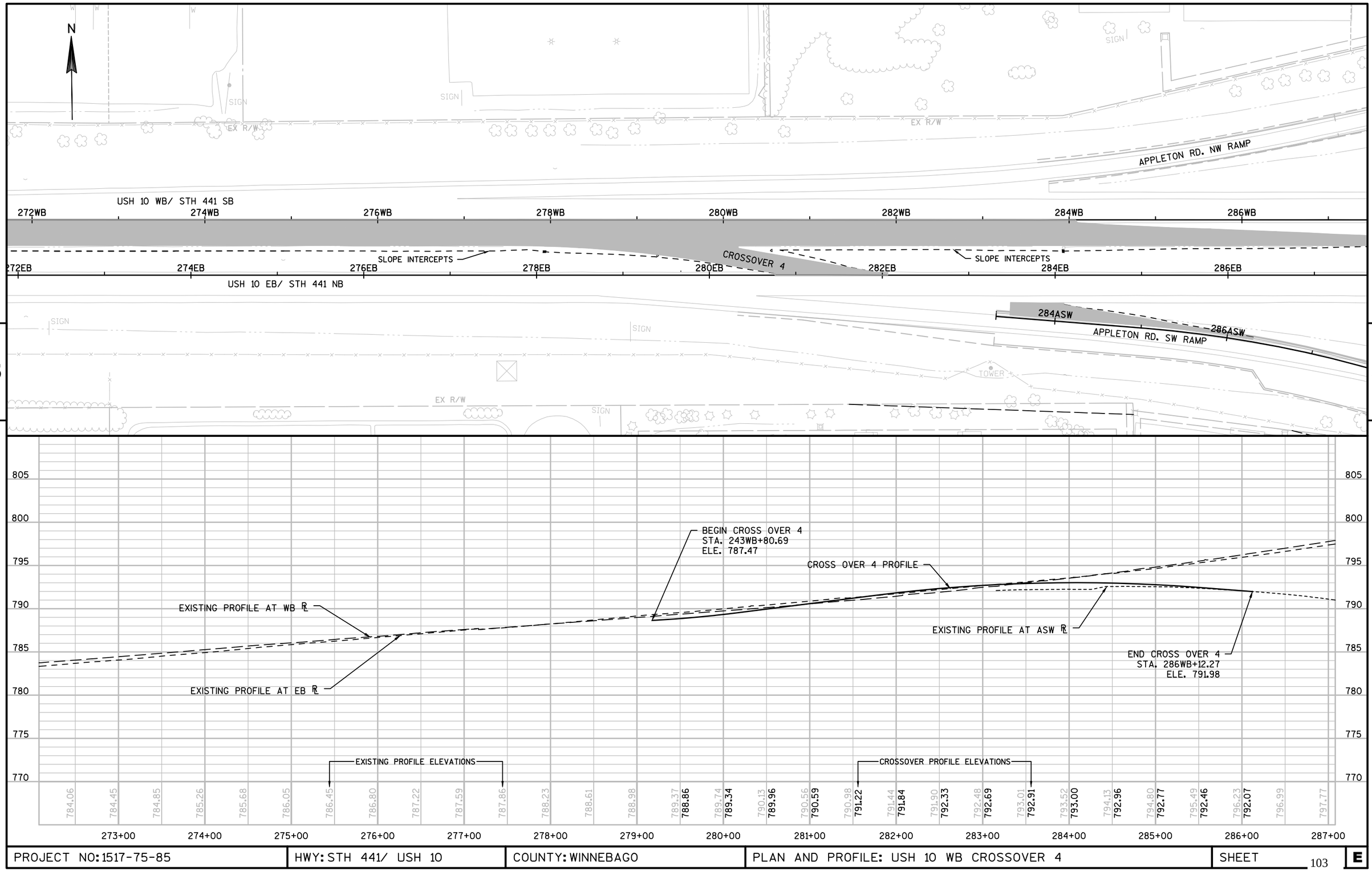

PROJECT NO: 1517-75-85	HWY: STH 441/ USH 10	COUNTY: WINNEBAGO	PLAN AND PROFILE: USH 10 WB CROSSOVER 4	SHEET 103	E

Standard Detail Drawing List

08A05-19B	INLET COVERS TYPE B, B-A, C, MS, MS-A, & WM
08A05-19D	INLET COVER TYPE BW, MANHOLE COVERS, TYPE K, J, J-S, L & M
08B09-01	MANHOLES 3-FT, 4-FT, 5-FT, 6-FT, 7-FT AND 8-FT DIAMETER
08C06-01	INLETS 3-FT AND 4-FT DIAMETER
08C07-01	INLETS 2X2-FT, 2X2.5-FT, 2X3-FT AND 2.5X3-FT
08C08-01	INLETS MEDIAN 1 AND 2 GRATE
08D13-01	SLOTTED CORRUGATED METAL PIPE SURFACE DRAINS
08E08-03	TYPICAL INSTALLATIONS OF EROSION BALES / TEMPORARY DITCH CHECKS
08E09-06	SILT FENCE
08E10-02	INLET PROTECTION TYPE A, B, C AND D
08F01-11	APRON ENDWALLS FOR CULVERT PIPE
14B07-14A	CONCRETE BARRIER TEMPORARY PRECAST, 12'-6"
14B07-14B	CONCRETE BARRIER TEMPORARY PRECAST, 12'-6"
14B07-14C	CONCRETE BARRIER TEMPORARY PRECAST, 12'-6"
14B07-14D	CONCRETE BARRIER TEMPORARY PRECAST, 12'-6"
14B07-14E	CONCRETE BARRIER TEMPORARY PRECAST, 12'-6"
14B07-14F	CONCRETE BARRIER TEMPORARY PRECAST, 12'-6"
14B07-14G	CONCRETE BARRIER TEMPORARY PRECAST, 12'-6"
14B07-14H	CONCRETE BARRIER TEMPORARY PRECAST, 12'-6"
14B08-02A	CRASH CUSHION/SAND BARREL ARRAY AND OTHER TEMPORARY BARRIER LAYOUT DETAILS
14B08-02B	CRASH CUSHION/SAND BARREL ARRAY AND OTHER TEMPORARY BARRIER LAYOUT DETAILS
14B08-02C	CRASH CUSHION/SAND BARREL ARRAY AND OTHER TEMPORARY BARRIER LAYOUT DETAILS
14B08-02D	CRASH CUSHION/SAND BARREL ARRAY AND OTHER TEMPORARY BARRIER LAYOUT DETAILS
14B08-02E	CRASH CUSHION/SAND BARREL ARRAY AND OTHER TEMPORARY BARRIER LAYOUT DETAILS
15A03-02A	FLEXIBLE MARKER POST FOR CULVERT END
15A03-02B	FLEXIBLE MARKER POST FOR CULVERT END
15C02-06A	BARRICADES AND SIGNS FOR MAINLINE CLOSURES
15C02-06B	BARRICADES AND SIGNS FOR MAINLINE CLOSURES
15C08-16A	PAVEMENT MARKING (MAINLINE)
15C31-01A	PAVEMENT MARKING (RAMPS AND GORES)
15D12-06A	TRAFFIC CONTROL, LANE CLOSURE
15D15-02	TRAFFIC CONTROL, EXIT AND ENTRANCE RAMP WITHIN LANE CLOSURE
15D16-03	TRAFFIC CONTROL, EXIT RAMP CLOSURE
15D27-03	TRAFFIC CONTROL, SHOULDER CLOSURE ON DIVIDED ROADWAY, SPEEDS GREATER THAN 40 MPH

6

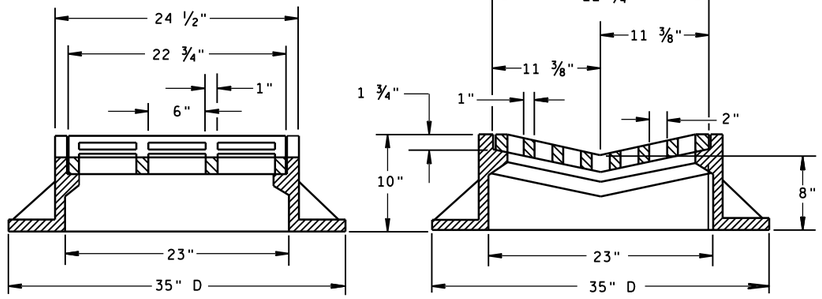

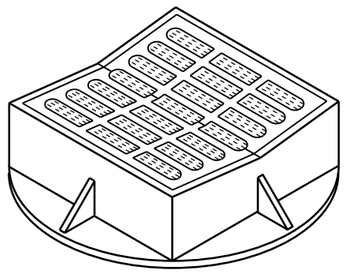

TYPE "B"

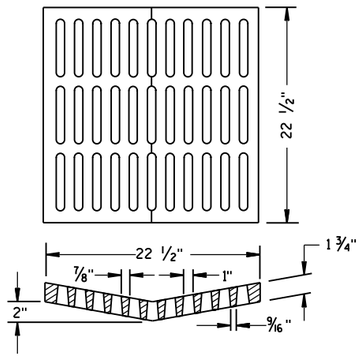

ALTERNATIVE GRATE FOR TYPE "B" COVER

USE WHERE PEDESTRIAN OR BICYCLE TRAFFIC IS POSSIBLE.
NOTED AS TYPE B-A ON THE DRAINAGE TABLE

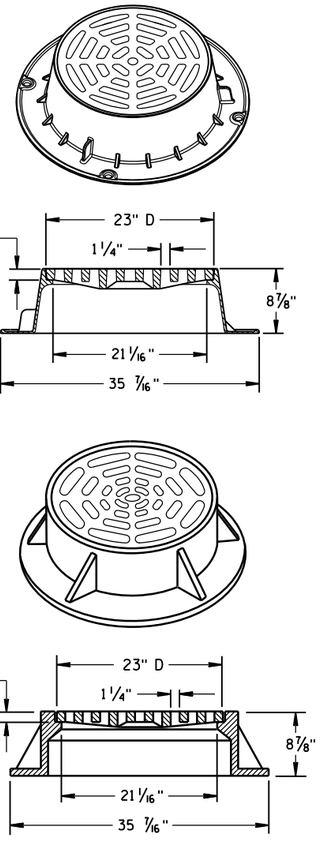

TYPE "C"

NOTE: EITHER CASTING IS ACCEPTABLE

GENERAL NOTES

DETAILS OF CONSTRUCTION, MATERIALS AND WORKMANSHIP NOT SHOWN ON THIS DRAWING SHALL CONFORM TO THE PERTINENT REQUIREMENTS OF THE STANDARD SPECIFICATIONS AND THE APPLICABLE SPECIAL PROVISIONS.

DETAIL DRAWINGS FOR PROPOSED ALTERNATE DESIGNS FOR CATCH BASIN, MANHOLE AND INLET COVERS SHALL BE SUBMITTED TO THE ENGINEER FOR APPROVAL PROVIDING THAT SUCH ALTERNATE DESIGNS MAKE PROVISION FOR EQUIVALENT CAPACITY AND STRENGTH.

ROUND FRAMES AND COVERS SHALL HAVE CONTINUOUSLY MACHINED BEARING SURFACES TO PREVENT ROCKING AND RATTLING.

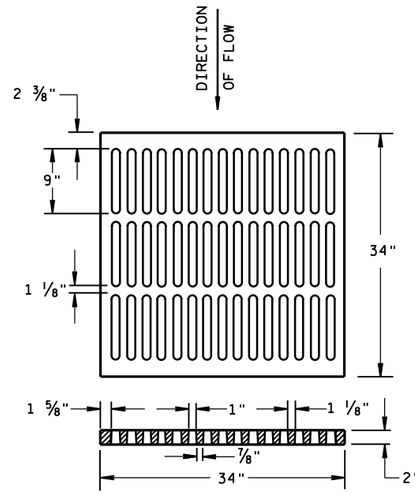

ALTERNATIVE TYPE "MS"

USE WHERE PEDESTRIAN OR BICYCLE TRAFFIC IS PERMITTED
NOTED AS TYPE MS-A ON THE DRAINAGE TABLE

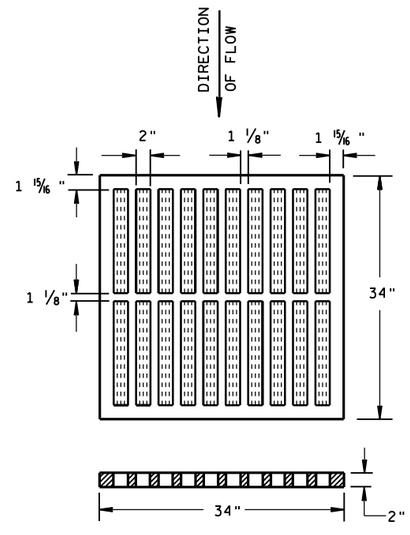

TYPE "MS"

USE ON FREEWAYS AND EXPRESSWAYS
NOTED AS TYPE MS ON DRAINAGE TABLE

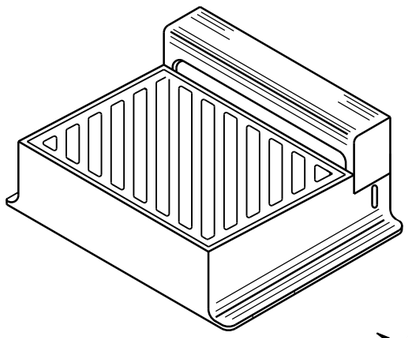

DIAGONAL SLOTS, SHALL BE ORIENTED TO THE DIRECTION OF FLOW AS ILLUSTRATED. GRATES ARE MANUFACTURED TO BE REVERSIBLE.

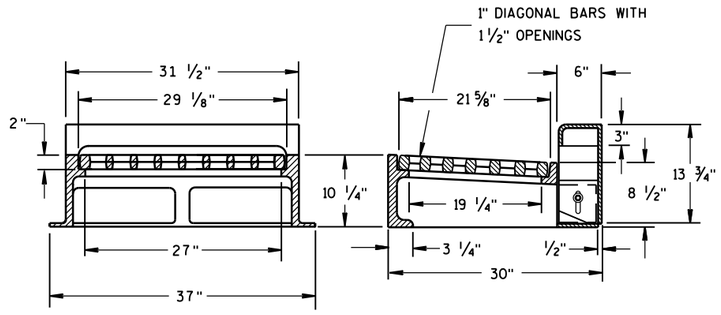

NOTE: CURB BOX HEIGHT ADJUSTABLE 6" TO 9"

TYPE "WM"

INLET COVERS
TYPE B, B-A, C, MS, MS-A, & WM

STATE OF WISCONSIN
DEPARTMENT OF TRANSPORTATION

APPROVED
11/27/2013 — DATE
/S/ Jerry H. Zogg — ROADWAY STANDARDS DEVELOPMENT ENGINEER
FHWA

6

S.D.D. 8 A 5-19b

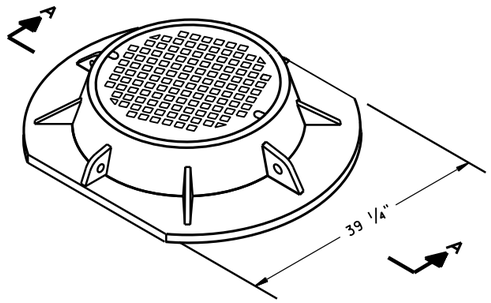

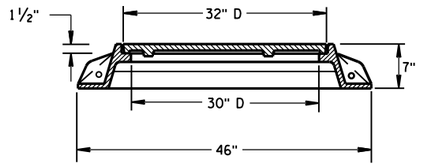

SECTION A-A
TYPE "K"

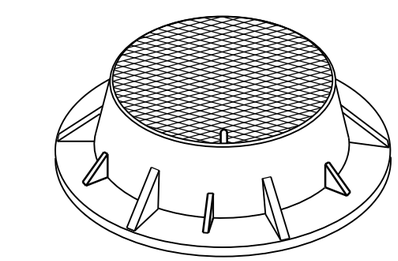

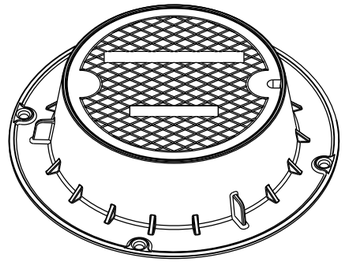

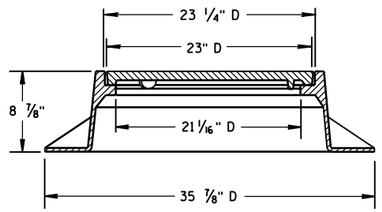

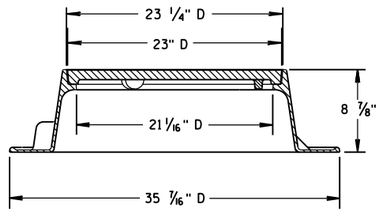

TYPE "J"
NOTE: EITHER CASTING IS ACCEPTABLE

GENERAL NOTES

DETAILS OF CONSTRUCTION, MATERIALS AND WORKMANSHIP NOT SHOWN ON THIS DRAWING SHALL CONFORM TO THE PERTINENT REQUIREMENTS OF THE STANDARD SPECIFICATIONS AND THE APPLICABLE SPECIAL PROVISIONS.

DETAIL DRAWINGS FOR PROPOSED ALTERNATE DESIGNS FOR MANHOLE COVERS SHALL BE SUBMITTED TO THE ENGINEER FOR APPROVAL PROVIDING THAT SUCH ALTERNATE DESIGNS MAKE PROVISION FOR EQUIVALENT CAPACITY AND STRENGTH.

ROUND FRAMES AND COVERS SHALL HAVE CONTINUOUSLY MACHINED BEARING SURFACES TO PREVENT ROCKING AND RATTLING.

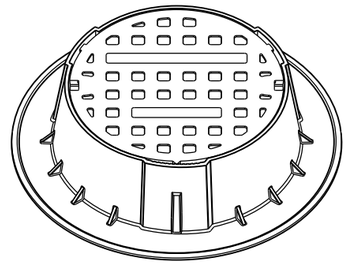

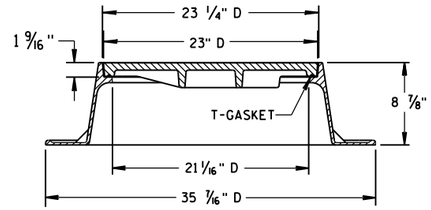

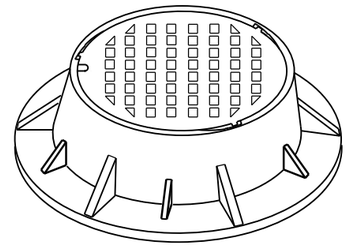

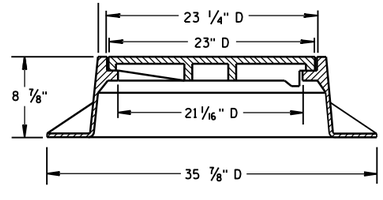

TYPE "J" SPECIAL
TYPE "B" NON-ROCKING SELF-SEAL LID
(NOTED AS TYPE J-S ON THE DRAINAGE TABLE)
NOTE: EITHER CASTING IS ACCEPTABLE

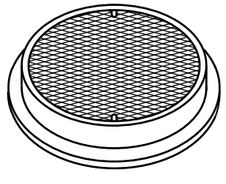

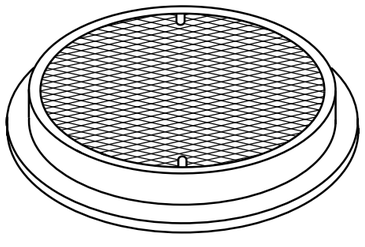

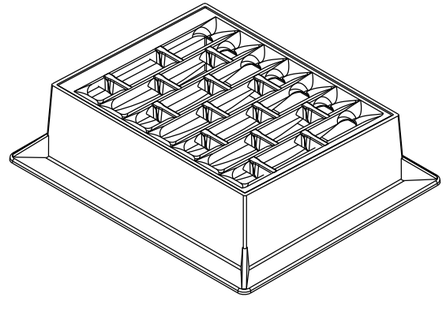

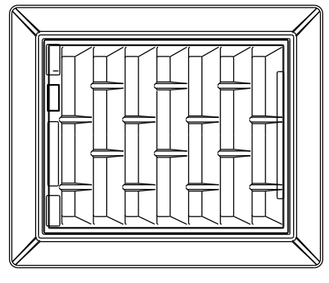

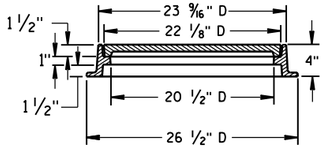

TYPE "L"

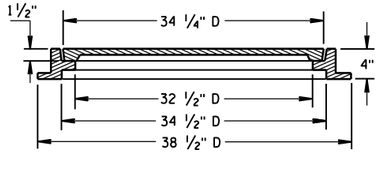

TYPE "M"

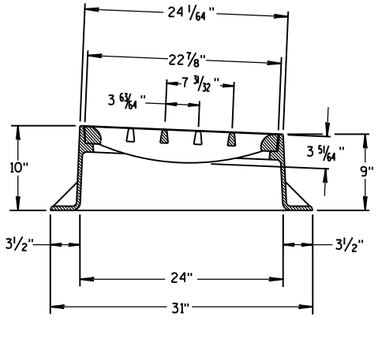

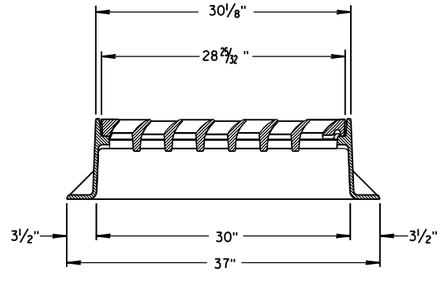

INLET COVER TYPE "BW"

INLET COVER TYPE BW
MANHOLE COVERS, TYPE K, J, J-S, L & M

STATE OF WISCONSIN
DEPARTMENT OF TRANSPORTATION

APPROVED
11/27/2013
DATE
FHWA

/S/ Jerry H. Zogg
ROADWAY STANDARDS DEVELOPMENT ENGINEER

6

S.D.D. 8 A 5-19d

6

S.D.D. 8 A 5-19d

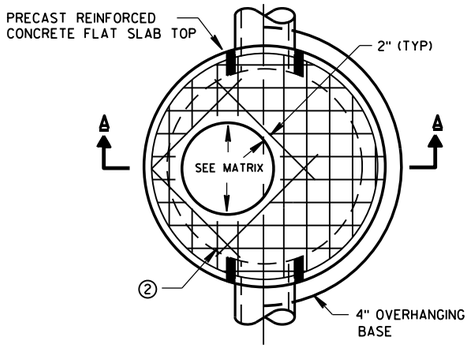

PLAN VIEW CIRCULAR OPENING

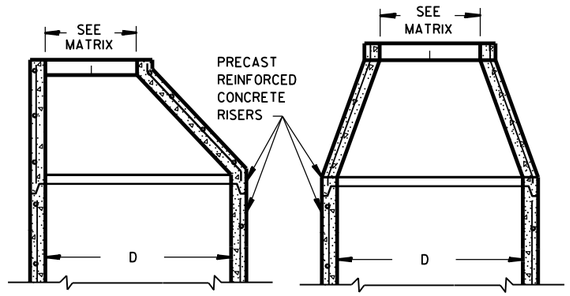

OPTIONAL PRECAST REINFORCED CONCRETE ECCENTRIC TOP

OPTIONAL PRECAST REINFORCED CONCRETE CONCENTRIC TOP

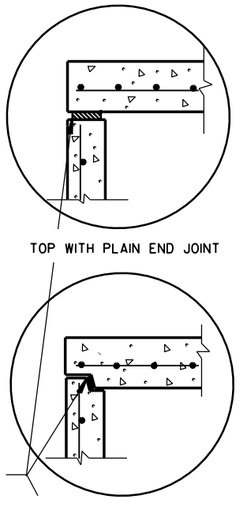

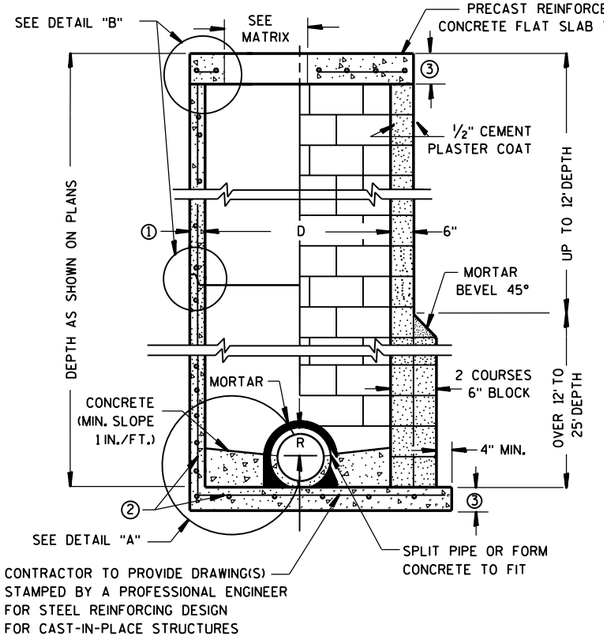

PRECAST REINFORCED CONCRETE WITH MONOLITHIC BASE

CONCRETE BLOCK WITH CAST-IN-PLACE OR PRECAST REINFORCED CONCRETE BASE ②

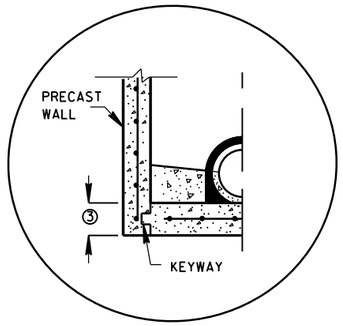

PRECAST REINFORCED CONCRETE WITH INTEGRAL BASE OPTION

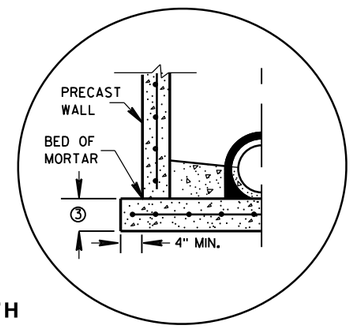

SEPARATE PRECAST REINFORCED CONCRETE BASE OPTION

DETAIL "A"

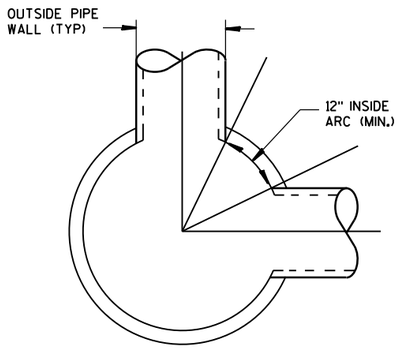

DETAIL "C"

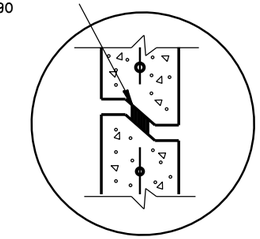

DETAIL "B"

GENERAL NOTES

DETAILS OF CONSTRUCTION, MATERIALS AND WORKMANSHIP NOT SHOWN ON THIS DRAWING SHALL CONFORM TO THE PERTINENT REQUIREMENTS OF THE STANDARD SPECIFICATIONS AND THE APPLICABLE SPECIAL PROVISIONS.

UNLESS OTHERWISE AUTHORIZED IN WRITING BY THE ENGINEER, THE CONTRACTOR SHALL NOT ORDER AND DELIVER PRECAST MANHOLE UNITS REQUIRED FOR THE PROJECT UNTIL A LIST OF SIZES IS FURNISHED BY THE ENGINEER.

DETAILED DRAWINGS FOR PROPOSED ALTERNATE DESIGNS FOR UNDERGROUND DRAINAGE STRUCTURES SHALL BE SUBMITTED TO THE ENGINEER FOR APPROVAL PROVIDING THAT SUCH ALTERNATE DESIGNS MAKE PROVISION FOR EQUIVALENT CAPACITY AND STRENGTH.

ALL DRAINAGE STRUCTURES ARE DESIGNATED ON THE PLANS AS "MANHOLES 3X3-L", "CATCH BASINS 4-B", "INLETS 2X3-H", ETC. THE FIRST NUMBERS DESIGNATE THE SIZE OF THE STRUCTURE, AND THE FOLLOWING LETTER DESIGNATES THE TYPE OF COVER TO BE USED TO COMPRISE THE COMPLETE UNIT.

BASES SHALL BE PLACED ON A BED OF MATERIAL AT LEAST 6 INCHES IN DEPTH, WHICH MEETS THE REQUIREMENTS OF GRANULAR BACKFILL. THIS BEDDING SHALL BE COMPACTED AND PROVIDE UNIFORM SUPPORT FOR THE ENTIRE AREA OF THE BASE.

PRECAST REINFORCED CONE TOPS (ECCENTRIC OR CONCENTRIC) OR PRECAST REINFORCED FLAT SLAB TOPS MAY BE USED ON CONCRETE BLOCK STRUCTURES. THE CONE TOPS SHALL BE INSTALLED ON A BED OF MORTAR.

ECCENTRIC CONE TOPS MAY BE USED ON ALL STRUCTURES, AND CONCENTRIC CONE TOPS SHALL BE USED ONLY ON STRUCTURES 5 FEET OR LESS IN DEPTH, UNLESS OTHERWISE DIRECTED BY THE ENGINEER.

STEPS MEETING AASHTO M199 AND THE FOLLOWING REQUIREMENTS SHALL BE INSTALLED IN ALL STRUCTURES OVER 5 FEET IN DEPTH: 16 INCH C-C MAXIMUM SPACING; PROJECT A MINIMUM CLEAR DISTANCE OF 4 INCHES FROM THE WALL AT THE POINT OF EMBEDMENT; MINIMUM LENGTH OF 10 INCHES; MINIMUM WALL EMBEDMENT OF 3 INCHES. FERROUS METAL STEPS NOT PAINTED OR TREATED TO RESIST CORROSION SHALL HAVE A MINIMUM CROSS SECTIONAL DIMENSION OF 1 INCH.

STEPS OF APPROVED POLYPROPYLENE PLASTIC COATED REINFORCEMENT BAR ARE ACCEPTABLE. REINFORCING BAR MUST BE A MINIMUM OF ½" AND MEET THE REQUIREMENTS OF ASTM A615.

CERTIFICATION SHALL BE PROVIDED THAT INSTALLED STEPS WHEN TESTED IN ACCORDANCE WITH SECTION 10 OF AASHTO T280 CAN WITHSTAND A VERTICAL LOAD OF 800 LBS. AND A HORIZONTAL LOAD OF 400 LBS.

ALL BAR STEEL REINFORCEMENT SHALL BE EMBEDDED 2 INCHES CLEAR UNLESS OTHERWISE SHOWN OR NOTED.

CONCRETE BLOCK WILL NOT BE PERMITED FOR STRUCTURES GREATER THAN 4 FEET IN DIAMETER.

PRECAST REINFORCED RISERS SHALL HAVE A TONGUE AND GROOVE JOINT WITH TONGUE UP OR DOWN.

ALL PRECAST MANHOLE UNITS SHALL CONFORM TO THE PERTINENT REQUIREMENTS OF AASHTO DESIGNATION M 199.

4" OVERHANGING BASES ARE REQUIRED FOR ALL CONCRETE BLOCK INSTALLATIONS. 4" OVERHANG IS REQUIRED WHEN SEPARATE PRECAST BASE IS PROVIDED. OVERHANG IS NOT REQUIRED ON PRECAST STRUCTURES WITH AN INTEGRAL OR MONOLITHIC BASE.

FOR ADDITIONAL CONFIGURATIONS, MAINTAIN A MINIMUM OF 12 INCHES AS MEASURED FROM THE INSIDE OF THE STRUCTURE WALL BETWEEN THE OUTSIDE PIPE WALLS OF ADJACENT PIPES. SEE DETAIL "C".

① MINIMUM WALL THICKNESS SHALL BE 4 INCHES FOR 3-FT, 5 INCHES FOR 4-FT, 6 INCHES FOR 5-FT, 7 INCHES FOR 6-FT, 8 INCHES FOR 7-FT AND 9 INCHES FOR 8-FT DIAMETER PRECAST MANHOLES.

② FOR PRECAST MANHOLES PROVIDE REINFORCING STEEL IN ACCORDANCE TO AASHTO M199.

③ PRECAST FLAT SLAB TOPS AND BASES WITH A DIAMETER OF 48" AND LESS SHALL HAVE A MINIMUM THICKNESS OF 6". PRECAST FLAT SLAB TOPS AND BASES WITH A DIAMETER LARGER THAN 48" SHALL HAVE A MINIMUM THICKNESS OF 8".

MANHOLE COVER OPENING MATRIX

MANHOLE COVER TYPE	C	ALL J'S	K	L	M
OPENING SIZE (FT)					
2 DIA.	X	X		X	
3 DIA.			X		X

PIPE MATRIX

MANHOLE SIZE	MAXIMUM INSIDE PIPE DIAMETER FOR TWO PIPES	
	180° SEPARATION (IN)	90° SEPARATION (IN)
3-FT	15	12
4-FT	24	18
5-FT	36	24
6-FT	42	36
7-FT	48	36
8-FT	60	42

MANHOLES 3-FT, 4-FT, 5-FT, 6-FT, 7-FT AND 8-FT DIAMETER

STATE OF WISCONSIN
DEPARTMENT OF TRANSPORTATION

APPROVED
6/5/2012 — DATE
/S/ Jerry H. Zogg — ROADWAY STANDARDS DEVELOPMENT ENGINEER
FHWA

6
S.D.D. 8 B 9-1

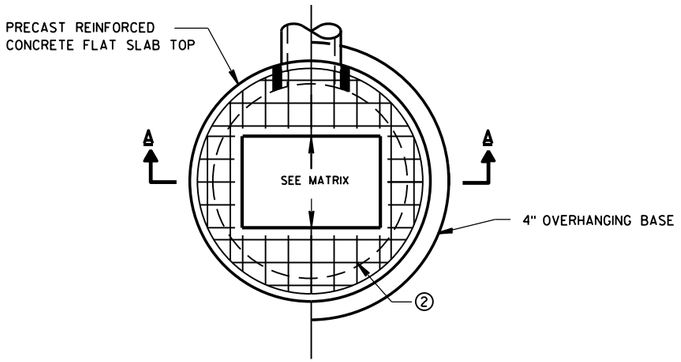

PLAN VIEW RECTANGULAR OPENING

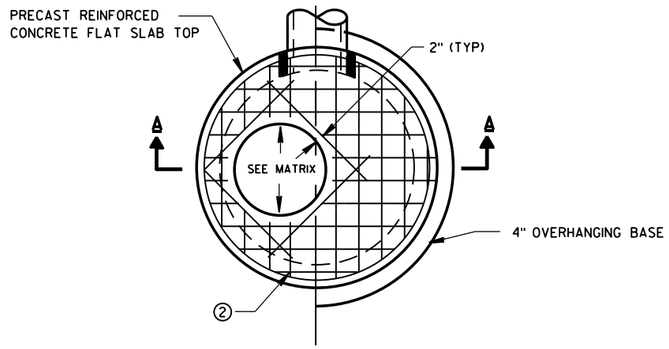

PLAN VIEW CIRCULAR OPENING

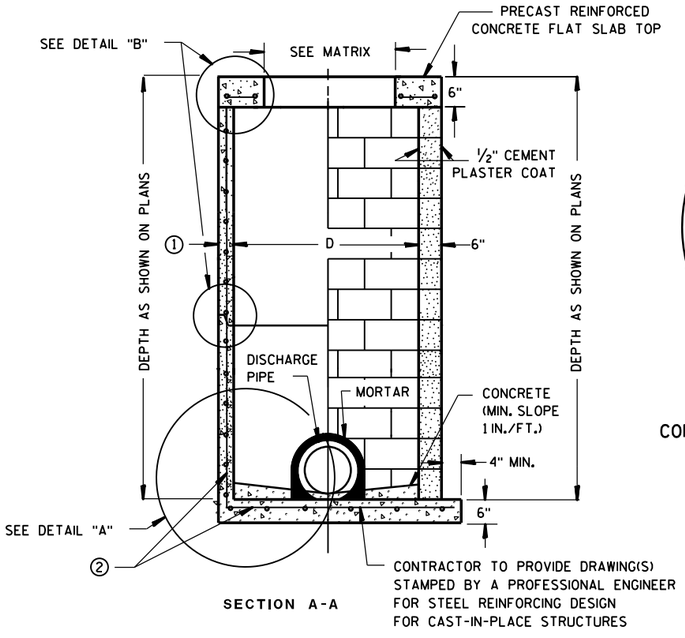

SECTION A-A

PRECAST REINFORCED CONCRETE WITH MONOLITHIC BASE

CONCRETE BLOCK WITH CAST-IN-PLACE OR PRECAST REINFORCED CONCRETE BASE ②

CIRCULAR INLETS W/ FLAT TOP

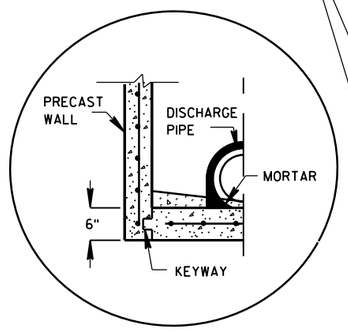

PRECAST REINFORCED CONCRETE WITH INTEGRAL BASE OPTION

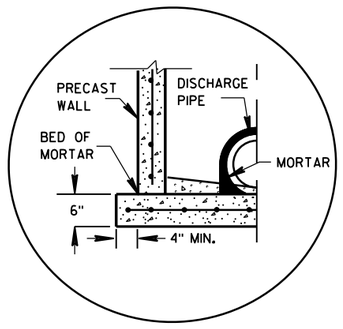

SEPARATE PRECAST REINFORCED CONCRETE BASE OPTION

DETAIL "A"

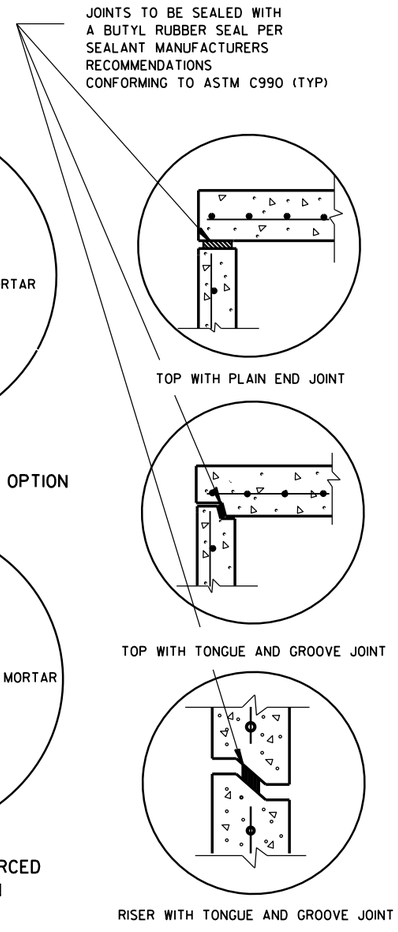

DETAIL "B"

GENERAL NOTES

DETAILS OF CONSTRUCTION, MATERIALS AND WORKMANSHIP NOT SHOWN ON THIS DRAWING SHALL CONFORM TO THE PERTINENT REQUIREMENTS OF THE STANDARD SPECIFICATIONS AND THE APPLICABLE SPECIAL PROVISIONS.

UNLESS OTHERWISE AUTHORIZED IN WRITING BY THE ENGINEER, THE CONTRACTOR SHALL NOT ORDER AND DELIVER PRECAST INLET UNITS REQUIRED FOR THE PROJECT UNTIL A LIST OF SIZES IS FURNISHED BY THE ENGINEER.

DETAILED DRAWINGS FOR PROPOSED ALTERNATE DESIGNS FOR UNDERGROUND DRAINAGE STRUCTURES SHALL BE SUBMITTED TO THE ENGINEER FOR APPROVAL PROVIDING THAT SUCH ALTERNATE DESIGNS MAKE PROVISION FOR EQUIVALENT CAPACITY AND STRENGTH.

ALL DRAINAGE STRUCTURES ARE DESIGNATED ON THE PLANS AS "MANHOLES 3X3-L", "CATCH BASINS 4-B", "INLETS 2X3-H", ETC. THE FIRST NUMBERS DESIGNATE THE SIZE OF THE STRUCTURE, AND THE FOLLOWING LETTER DESIGNATES THE TYPE OF COVER TO BE USED TO COMPRISE THE COMPLETE UNIT.

BASES SHALL BE PLACED ON A BED OF MATERIAL AT LEAST 6 INCHES IN DEPTH, WHICH MEETS THE REQUIREMENTS OF GRANULAR BACKFILL. THIS BEDDING SHALL BE COMPACTED AND PROVIDE UNIFORM SUPPORT FOR THE ENTIRE AREA OF THE BASE.

ALL BAR STEEL REINFORCEMENT SHALL BE EMBEDDED 2 INCHES CLEAR UNLESS OTHERWISE SHOWN OR NOTED.

ALL PRECAST INLET UNITS SHALL CONFORM TO THE PERTINENT REQUIREMENTS OF AASHTO DESIGNATION M199.

PRECAST REINFORCED RISERS SHALL HAVE A TONGUE AND GROOVE JOINT WITH TONGUE UP OR DOWN.

4" OVERHANGING BASES ARE REQUIRED FOR ALL CONCRETE BLOCK INSTALLATIONS. 4" OVERHANG IS REQUIRED WHEN SEPARATE PRECAST BASE IS PROVIDED. OVERHANG IS NOT REQUIRED ON PRECAST STRUCTURES WITH AN INTEGRAL OR MONOLITHIC BASE.

FOR ADDITIONAL CONFIGURATIONS, MAINTAIN A MINIMUM OF 12 INCHES AS MEASURED FROM THE INSIDE OF THE STRUCTURE WALL BETWEEN THE OUTSIDE PIPE WALLS OF ADJACENT PIPES. SEE DETAIL "C".

① MINIMUM WALL THICKNESS SHALL BE 4-IN FOR 3-FT DIAMETER AND 5-IN FOR 4-FT DIAMETER PRECAST INLETS.

② FOR PRECAST CATCH BASINS PROVIDE REINFORCING STEEL IN ACCORDANCE TO AASHTO M199.

INLET COVER OPENING MATRIX

INLET SIZE	INLET COVER TYPE / OPENING SIZE (FT)	ALL A'S	ALL B'S	BW	C	F	ALL H'S	S	T	V	WM	Z
3-FT	2 DIA.				X							X
	2X2	X	X					X		X		
4-FT	2 DIA.				X							X
	2X2	X	X					X		X		
	2X2.5			X				X	X	X	X	
	2X3						X					
	2.5X3					X						

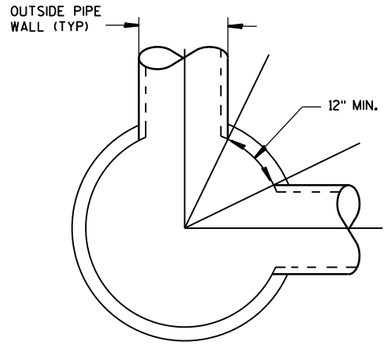

DETAIL "C"

PIPE MATRIX

INLET SIZE	MAXIMUM INSIDE PIPE DIAMETER FOR TWO PIPES	
	180° SEPARATION (IN)	90° SEPARATION (IN)
3-FT	15	12
4-FT	24	18

INLETS 3-FT AND 4-FT DIAMETER

STATE OF WISCONSIN
DEPARTMENT OF TRANSPORTATION

APPROVED
6/5/2012 — DATE
/S/ Jerry H. Zogg — ROADWAY STANDARDS DEVELOPMENT ENGINEER
FHWA

6
S.D.D. 8 C 6-1

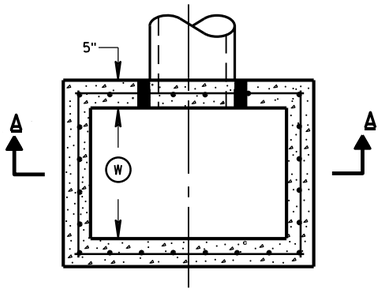

PLAN VIEW

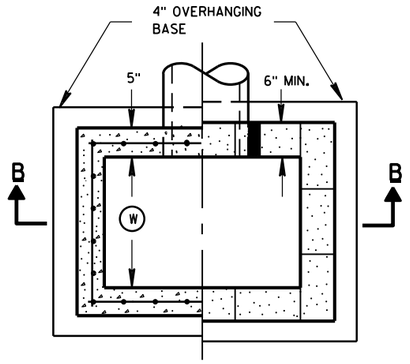

PLAN VIEW

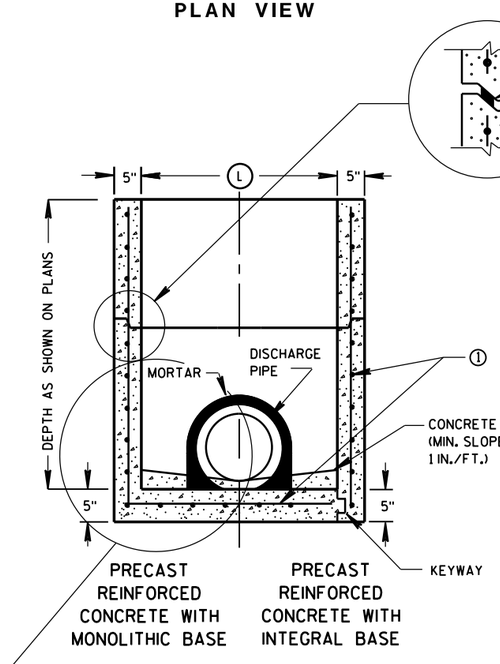

SECTION A-A

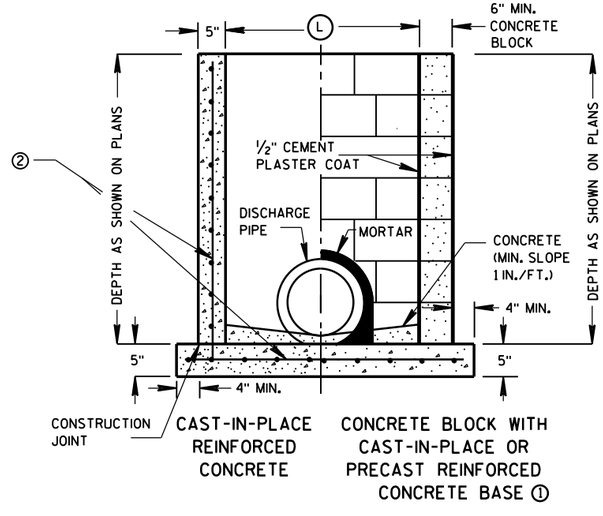

SECTION B-B

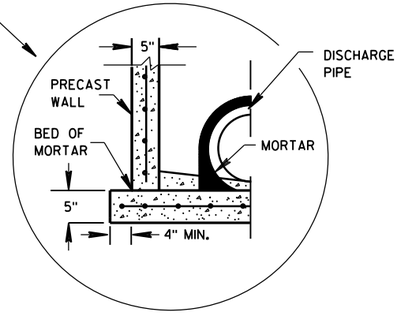

SEPARATE PRECAST REINFORCED CONCRETE BASE OPTION

GENERAL NOTES

DETAILS OF CONSTRUCTION, MATERIALS AND WORKMANSHIP NOT SHOWN ON THIS DRAWING SHALL CONFORM TO THE PERTINENT REQUIREMENTS OF THE STANDARD SPECIFICATIONS AND THE APPLICABLE SPECIAL PROVISIONS.

UNLESS OTHERWISE AUTHORIZED IN WRITING BY THE ENGINEER, THE CONTRACTOR SHALL NOT ORDER AND DELIVER PRECAST INLET UNITS REQUIRED FOR THE PROJECT UNTIL A LIST OF SIZES IS FURNISHED BY THE ENGINEER.

DETAILED DRAWINGS FOR PROPOSED ALTERNATE DESIGNS FOR UNDERGROUND DRAINAGE STRUCTURES SHALL BE SUBMITTED TO THE ENGINEER FOR APPROVAL PROVIDING THAT SUCH ALTERNATE DESIGNS MAKE PROVISION FOR EQUIVALENT CAPACITY AND STRENGTH.

ALL PRECAST INLET UNITS SHALL CONFORM TO THE PERTINENT REQUIREMENTS OF ASTM C 913.

ALL DRAINAGE STRUCTURES ARE DESIGNATED ON THE PLANS AS "MANHOLES 3X3-L", "CATCH BASINS 4-B", "INLETS 2X3-H", ETC. THE FIRST NUMBERS DESIGNATES THE SIZE OF THE STRUCTURE, AND THE FOLLOWING LETTER DESIGNATES THE TYPE OF COVER TO BE USED TO COMPRISE THE COMPLETE UNIT.

BASES SHALL BE PLACED ON A BED OF MATERIAL AT LEAST 6 INCHES IN DEPTH, WHICH MEETS THE REQUIREMENTS OF GRANULAR BACKFILL. THIS BEDDING SHALL BE COMPACTED AND PROVIDE UNIFORM SUPPORT FOR THE ENTIRE AREA OF THE BASE.

ALL BAR STEEL REINFORCEMENT SHALL BE EMBEDDED 2 INCHES CLEAR UNLESS OTHERWISE SHOWN OR NOTED.

PRECAST REINFORCED RISERS SHALL HAVE A TONGUE AND GROOVE JOINT WITH TONGUE UP OR DOWN.

4" OVERHANGING BASES ARE REQUIRED FOR CAST-IN-PLACE REINFORCED CONCRETE AND CONCRETE BLOCK INSTALLATIONS.
4" OVERHANG IS REQUIRED WHEN SEPARATE PRECAST BASE IS PROVIDED.
OVERHANG IS NOT REQUIRED ON PRECAST STRUCTURES WITH AN INTEGRAL OR MONOLITHIC BASE.

MAXIMUM INSIDE PIPE DIAMETER DETERMINED BY 3 INCH CLEARANCE ON EACH SIDE OF THE OUTSIDE WALL OF THE PIPE. SEE DETAIL "A". ASSUMES PIPE ENTERS PERPENDICULAR TO THE STRUCTURE.

① FOR PRECAST INLETS PROVIDE REINFORCING STEEL IN ACCORDANCE TO ASTM C 913.

② CONTRACTOR TO PROVIDE DRAWING(S) STAMPED BY A PROFESSIONAL ENGINEER FOR STEEL REINFORCING DESIGN FOR CAST-IN-PLACE STRUCTURES.

INLET COVER MATRIX

INLET SIZE		INLET COVER TYPE	ALL A'S	ALL B'S	BW	F	ALL H'S	S	T	V	WM
	WIDTH (W) (FT)	LENGTH (L) (FT)									
2X2-FT	2	2	X	X				X		X	
2X2.5-FT	2	2.5			X			X	X	X	X
2X3-FT	2	3					X				
2.5X3-FT	2.5	3				X					

PIPE MATRIX

INLET SIZE	MAXIMUM INSIDE PIPE DIAMETER	
	WIDTH (IN)	LENGTH (IN)
2X2-FT	12	12
2X2.5-FT	12	18
2X3-FT	12	24
2.5X3-FT	18	24

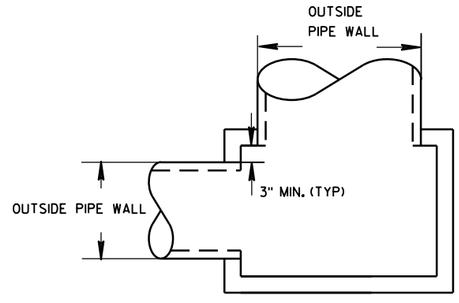

DETAIL "A"

INLETS 2X2-FT, 2X2.5-FT, 2X3-FT AND 2.5X3-FT

STATE OF WISCONSIN
DEPARTMENT OF TRANSPORTATION

APPROVED
6/5/2012
DATE
/S/ Jerry H. Zogg
ROADWAY STANDARDS DE ENGINEER
FHWA

6
S.D.D. 8 C 7-1

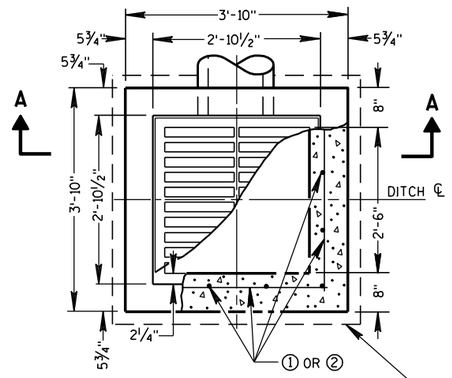

PLAN VIEW

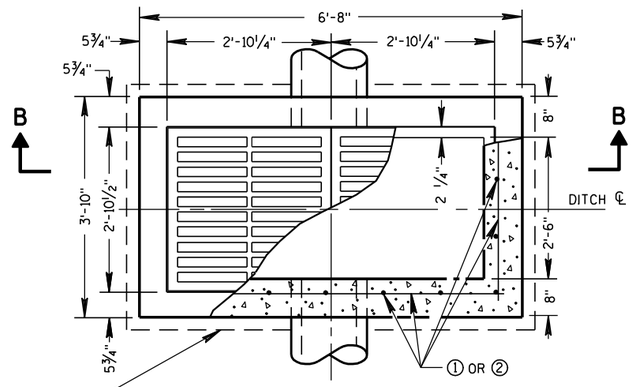

PLAN VIEW

4" OVERHANGING BASE ON REINFORCED CAST-IN-PLACE CONCRETE INLETS

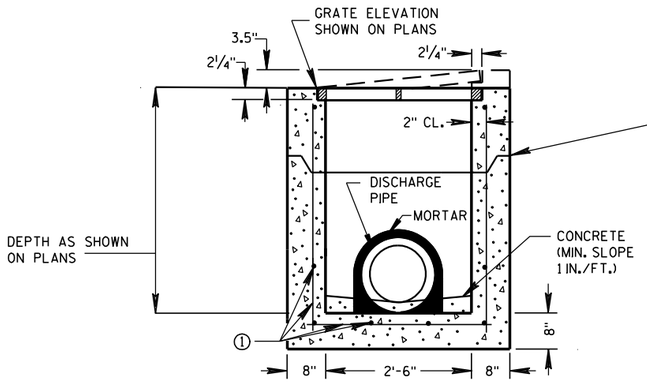

PRECAST REINFORCED CONCRETE SECTION A-A

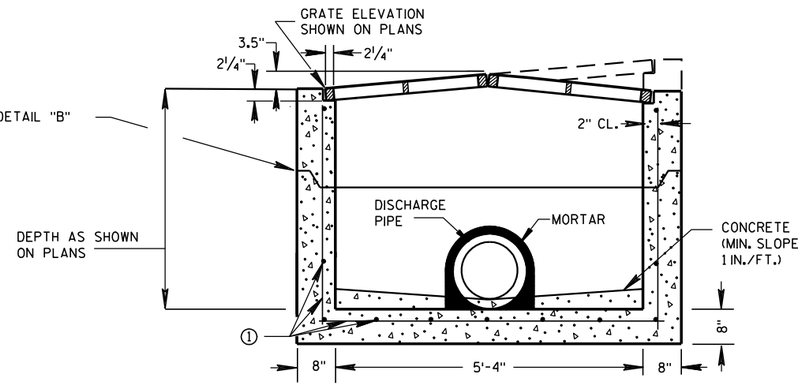

PRECAST REINFORCED CONCRETE SECTION B-B

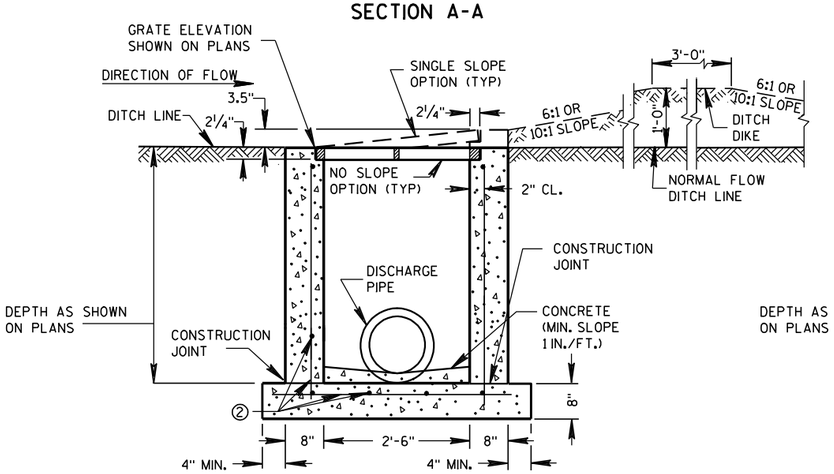

REINFORCED CAST-IN-PLACE CONCRETE SECTION A-A

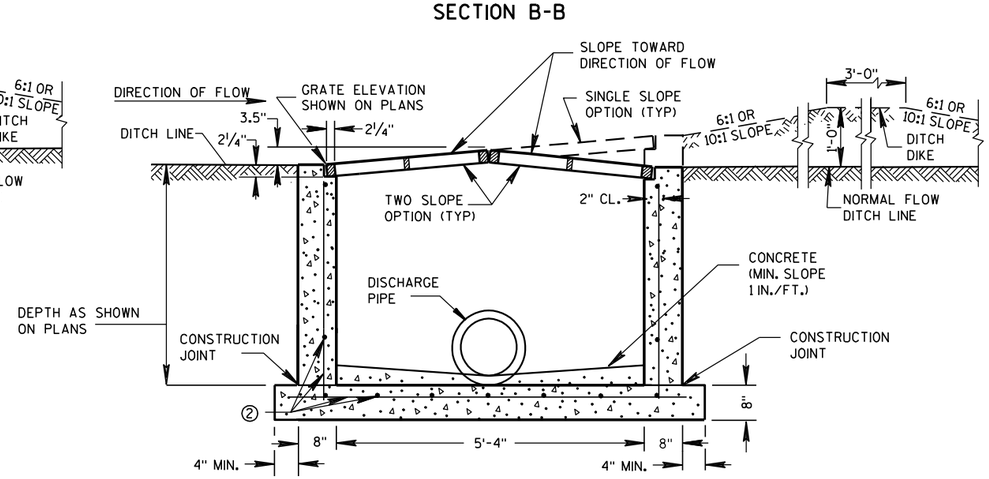

REINFORCED CAST-IN-PLACE CONCRETE SECTION B-B

INLETS MEDIAN 1 GRATE

INLETS MEDIAN 2 GRATE

GENERAL NOTES

DETAILS OF CONSTRUCTION, MATERIALS AND WORKMANSHIP NOT SHOWN ON THIS DRAWING SHALL CONFORM TO THE PERTINENT REQUIREMENTS OF THE STANDARD SPECIFICATIONS AND THE APPLICABLE SPECIAL PROVISIONS.

UNLESS OTHERWISE AUTHORIZED IN WRITING BY THE ENGINEER, THE CONTRACTOR SHALL NOT ORDER AND DELIVER PRECAST INLET UNITS REQUIRED FOR THE PROJECT UNTIL A LIST OF SIZES IS FURNISHED BY THE ENGINEER.

DETAILED DRAWINGS FOR PROPOSED ALTERNATE DESIGNS FOR INLETS WHICH MAY INCLUDE PRECAST REINFORCED CONCRETE INLETS, SHALL BE SUBMITTED TO THE ENGINEER FOR APPROVAL PROVIDING THAT SUCH ALTERNATE DESIGNS MAKE PROVISION FOR EQUIVALENT CAPACITY AND STRENGTH.

ALL MEDIAN INLETS ARE DESIGNATED ON THE PLANS AS "INLETS, 1G-MS", ETC. THE FIRST NUMBER AND LETTER DESIGNATE THE TYPE OF STRUCTURE, AND THE FOLLOWING LETTERS DESIGNATE THE TYPE OF COVER TO BE USED TO COMPRISE THE COMPLETE UNIT.

ALL BAR STEEL REINFORCEMENT SHALL BE EMBEDDED 2 INCHES CLEAR UNLESS OTHERWISE SHOWN OR NOTED.

PRECAST REINFORCED RISERS SHALL HAVE A TONGUE AND GROOVE JOINT WITH TONGUE UP OR DOWN.

ALL PRECAST INLET UNITS SHALL CONFORM TO THE PERTINENT REQUIREMENTS OF ASTM C 913.

MAXIMUM INSIDE PIPE DIAMETER DETERMINED BY 3" CLEARANCE ON EACH SIDE OF THE OUTSIDE WALL OF THE PIPE. SEE DETAIL "A". ASSUMES PIPE ENTERS PERPENDICULAR TO THE STRUCTURE.

① FOR PRECAST INLETS PROVIDE REINFORCING STEEL IN ACCORDANCE TO ASTM C 913.

② CONTRACTOR TO PROVIDE DRAWING(S) STAMPED BY A PROFESSIONAL ENGINEER FOR STEEL REINFORCING DESIGN FOR CAST-IN-PLACE STRUCTURES.

PIPE MATRIX

	MAXIMUM INSIDE PIPE DIAMETER	
INLET SIZE	WIDTH (IN)	LENGTH (IN)
1 GRATE	18	18
2 GRATE	18	42

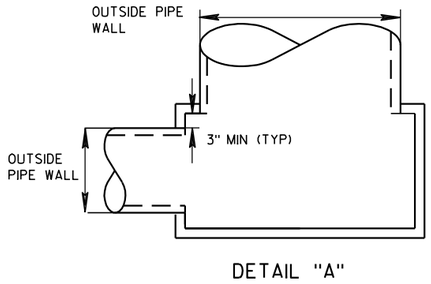

DETAIL "A"

JOINTS TO BE SEALED WITH A BUTYL RUBBER SEAL PER SEALANT MANUFACTURERS RECOMMENDATIONS CONFORMING TO ASTM C 990 (TYP)

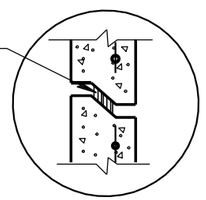

DETAIL "B"

INLETS MEDIAN 1 AND 2 GRATE

STATE OF WISCONSIN
DEPARTMENT OF TRANSPORTATION

APPROVED
6/5/2012 — DATE
/S/ Jerry H. Zogg — ROADWAY STANDARDS DEVELOPMENT ENGINEER
FHWA

6

S.D.D. 8 C 8-1

6

S.D.D. 8 C 8-1

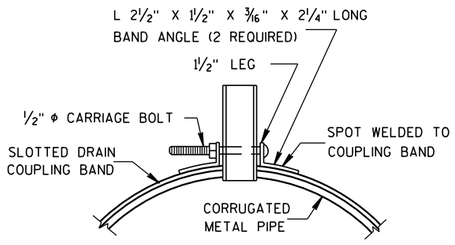

SECTION A-A

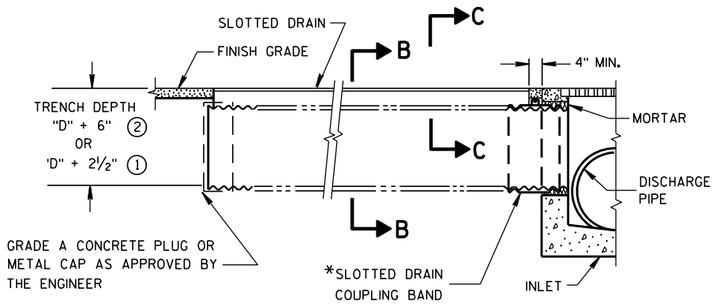

SLOTTED DRAIN INSTALLATION TYPE "A"

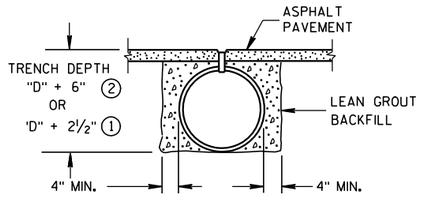

SECTION B-B

GENERAL NOTES

DETAILS OF CONSTRUCTION, MATERIALS AND WORKMANSHIP NOT SHOWN ON THIS DRAWING SHALL CONFORM TO THE PERTINENT REQUIREMENTS OF THE STANDARD SPECIFICATIONS AND THE APPLICABLE SPECIAL PROVISIONS.

BACKFILL MATERIAL

THE LEAN GROUT BACKFILL MATERIAL SHALL BE A FINE AGGREGATE, IN ACCORDANCE WITH SUBSECTION 501.3.6.3.6 OF THE STANDARD SPECIFICATIONS, MIXED WITH 150 POUNDS OF CEMENT AND APPROXIMATELY 30 GALLONS OF WATER FOR EACH 3000 POUNDS OF FINE AGGREGATE.

THE PIPE FOR THE SLOTTED DRAIN SHALL MEET AASHTO DESIGNATION M-36, AND THE GRATE ASSEMBLIES SHALL BE MADE FROM STRUCTURAL STEEL SUITABLY WELDED TO FORM THE OPEN SLOT AND HOT-DIP GALVANIZED TO MEET THE PROVISIONS OF AASHTO DESIGNATION M-111.

NORMAL PIPE SIZES ARE 12-INCH THROUGH 24-INCH DIAMETER IN 0.064 INCH THICKNESS, AND 30-INCH DIAMETER PIPE IN 0.079 INCH THICKNESS.

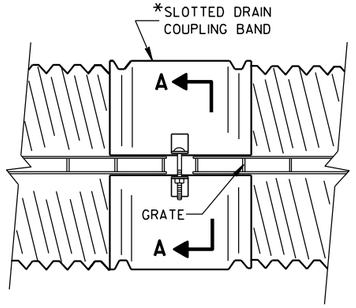

PLAN VIEW

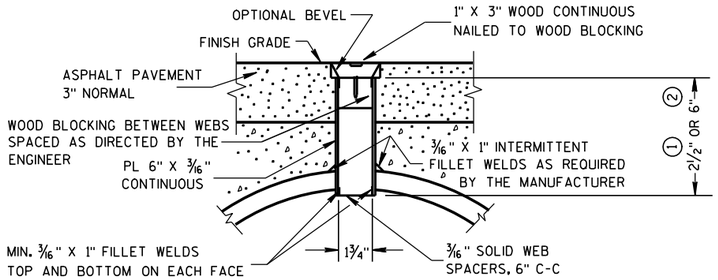

SECTION C-C

GRATE SLOT DETAIL

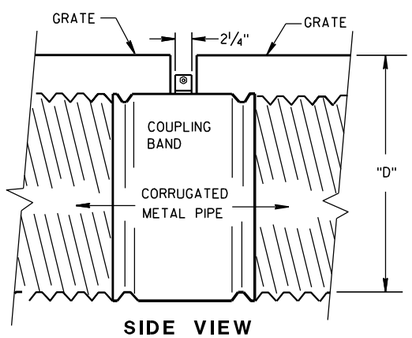

SIDE VIEW

*TYPICAL COUPLING BAND FOR SLOTTED DRAIN

(ALTERNATES PERMITTED AS APPROVED BY THE ENGINEER)

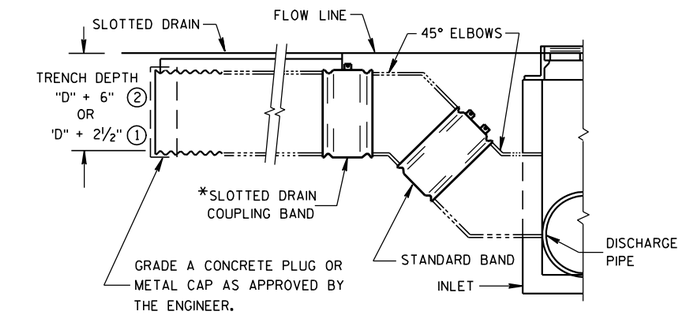

NOTE:

TO PREVENT "FLOATING" OF THE SLOTTED DRAIN DURING BACKFILL OPERATIONS PROVIDE ADEQUATE WEDGES, OR POUR THE LEAN GROUT ON TOP OF THE PLUGGED SLOT ALLOWING IT TO SLOUGH TO THE SIDES OF THE PIPE. THIS WILL PROVIDE ENOUGH WEIGHT ON TOP TO KEEP THE PIPE FROM FLOATING.

SLOTTED DRAIN INSTALLATION TYPE "B"

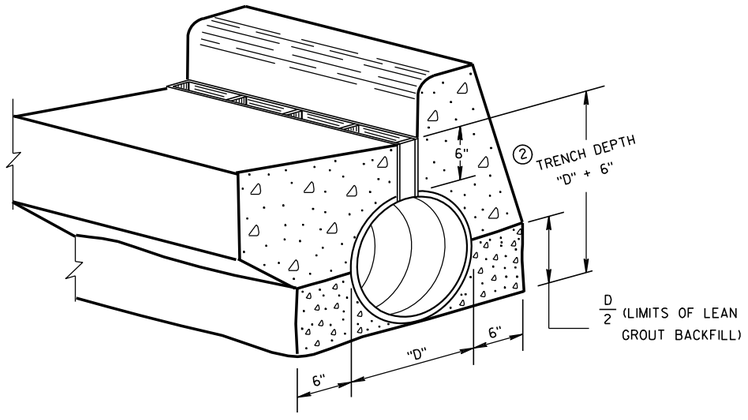

SLOTTED DRAIN INSTALLATION IN FLOW LINE OF CURB & GUTTER TYPE "C"

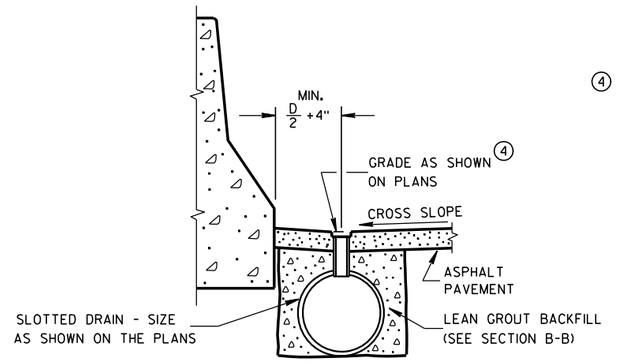

SLOTTED DRAIN INSTALLATION AT MEDIAN BARRIER TYPE "D"

① 2½" NORMAL GRATE DEPTH.

② 6" SPECIAL GRATE DEPTH, WHEN SPECIFIED ON THE PLANS.

③ FOR SCREEDING DIRECTLY OVER THE SLOTTED DRAIN WITH ASPHALT PAVER. FOR CONCRETE SURFACE USE 3" WIDE TAPE OVER THE SLOT TO KEEP MATERIAL OUT OF THE PIPE.

④ WHEN THE SURFACE IS CONCRETE PAVEMENT THE GRADE AS SHOWN ON THE PLANS WILL BE FLUSH WITH THE TOP OF THE SLOTTED DRAIN.

SLOTTED CORRUGATED METAL PIPE SURFACE DRAINS

STATE OF WISCONSIN
DEPARTMENT OF TRANSPORTATION

APPROVED
8/30/79 DATE
/S/ D. L. Str--- CHIEF ROADWAY DEVELOP ENGINEER
FHWA

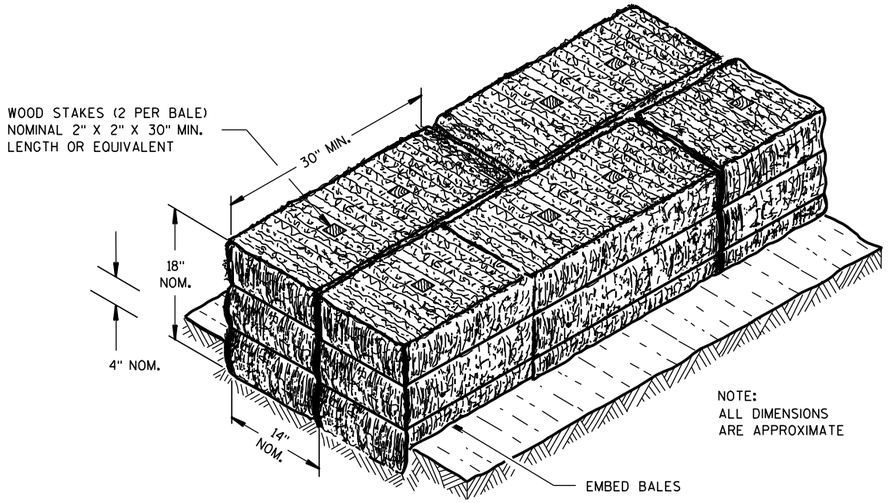

SECTION A-A

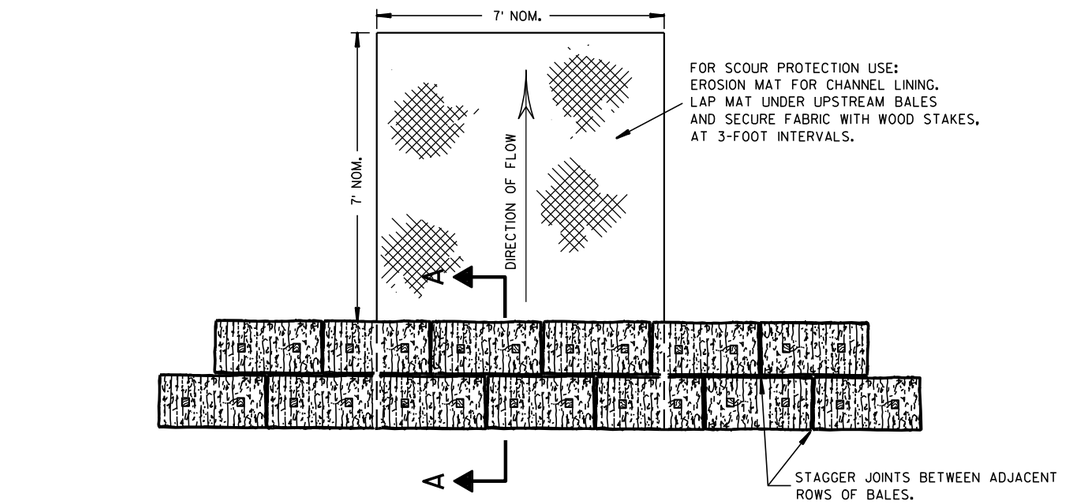

PLAN VIEW

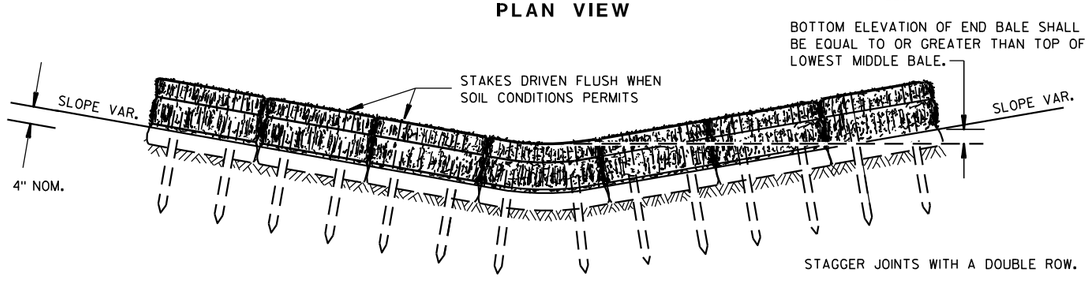

FRONT ELEVATION

TEMPORARY DITCH CHECK USING EROSION BALES ①

GENERAL NOTES

DETAILS OF CONSTRUCTION, MATERIALS AND WORKMANSHIP NOT SHOWN ON THIS DRAWING SHALL CONFORM TO THE PERTINENT REQUIREMENTS OF THE STANDARD SPECIFICATIONS AND THE APPLICABLE SPECIAL PROVISIONS.

① TEMPORARY DITCH CHECKS EITHER EROSION BALES OR MANUFACTURED SHALL BE PAID FOR UNDER THE BID ITEM OF TEMPORARY DITCH CHECK. THE DEPARTMENT WILL NOT PAY FOR TEMPORARY DITCH CHECKS CONSTRUCTED OF A SINGLE ROW OF EROSION BALES.

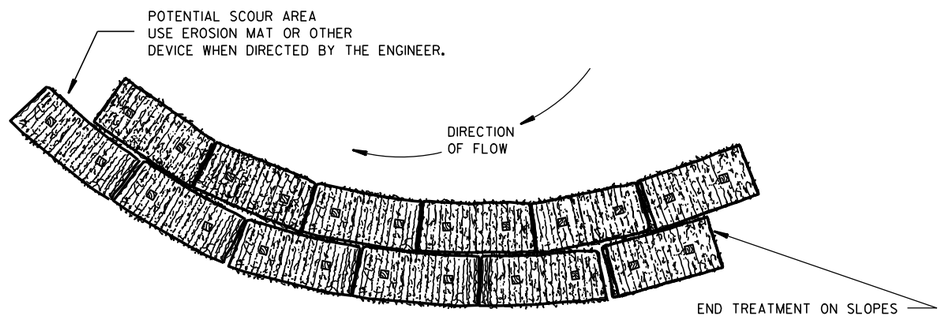

PLAN VIEW

WHEN ALTERING THE DIRECTION OF FLOW

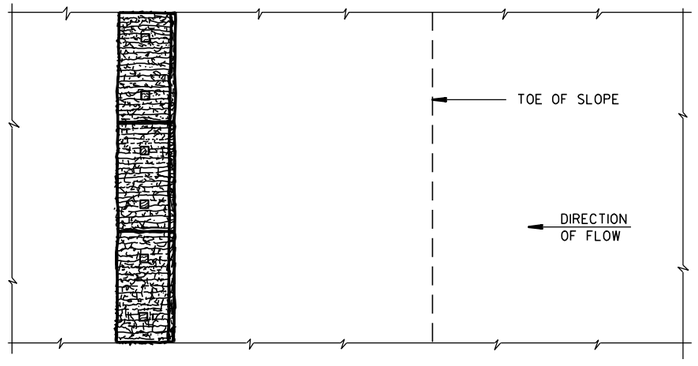

PLAN VIEW

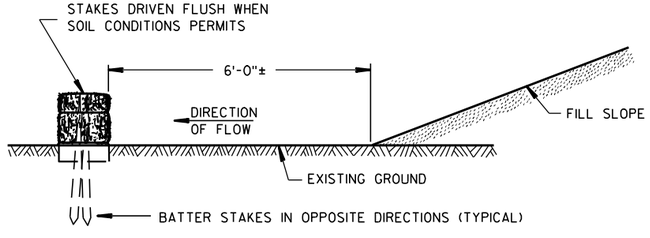

FRONT ELEVATION

WHEN EXISTING GROUND SLOPES AWAY FROM FILL SLOPE

EROSION BALES FOR SHEET FLOW

TYPICAL INSTALLATIONS OF EROSION BALES / TEMPORARY DITCH CHECKS

STATE OF WISCONSIN
DEPARTMENT OF TRANSPORTATION

APPROVED

6/04/02 DATE — /S/ Beth Cannestra CHIEF ROADWAY DEVELOPMENT ENGINEER

FHWA

6

S.D.D. 8 E 8-3

6

S.D.D. 8 E 8-3

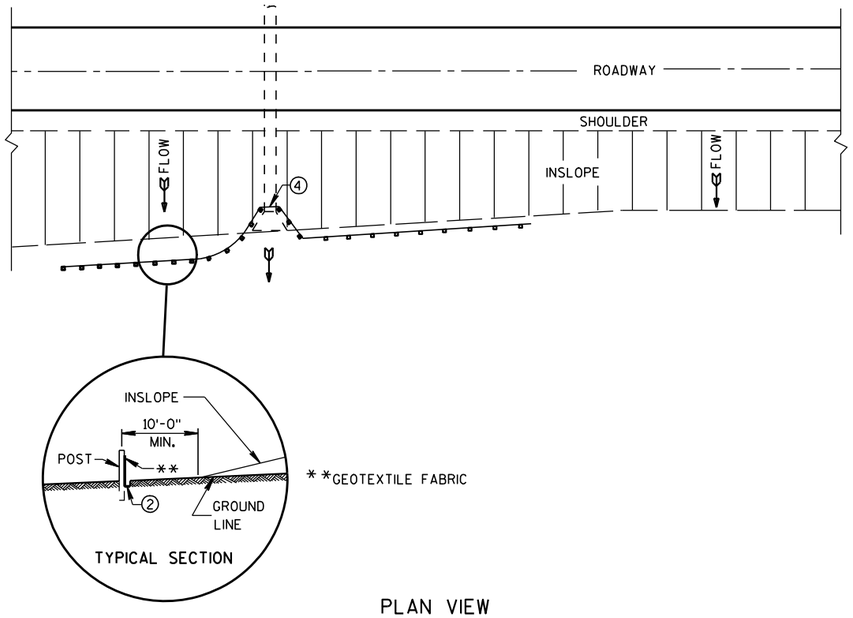

PLAN VIEW

TYPICAL APPLICATION OF SILT FENCE

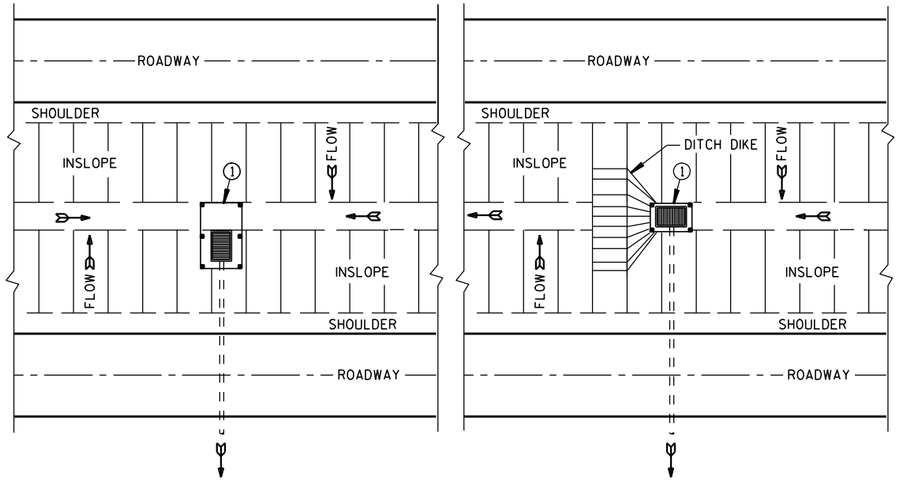

PLAN VIEW

SILT FENCE AT MEDIAN SURFACE DRAINS

GENERAL NOTES

DETAILS OF CONSTRUCTION NOT SHOWN ON THIS DRAWING SHALL CONFORM TO THE PERTINENT REQUIREMENTS OF THE STANDARD SPECIFICATIONS AND APPLICABLE SPECIAL PROVISIONS.

① HORIZONTAL BRACE REQUIRED WITH 2" X 4" WOODEN FRAME OR EQUIVALENT AT TOP OF POSTS.

② FOR MANUAL INSTALLATIONS THE TRENCH SHALL BE A MINIMUM OF 4" WIDE & 6" DEEP TO BURY AND ANCHOR THE GEOTEXTILE FABRIC. FOLD MATERIAL TO FIT TRENCH AND BACKFILL & COMPACT TRENCH WITH EXCAVATED SOIL.

③ WOOD POSTS SHALL BE A MINIMUM SIZE OF 1⅛" X 1⅛" OF OAK OR HICKORY.

④ SILT FENCE TO EXTEND ACROSS THE TOP OF THE PIPE.

⑤ CONSTRUCT SILT FENCE FROM A CONTINUOUS ROLL IF POSSIBLE BY CUTTING LENGTHS TO AVOID JOINTS. IF A JOINT IS NECESSARY USE ONE OF THE FOLLOWING TWO METHODS; A) OVERLAP THE END POSTS AND TWIST, OR ROTATE, AT LEAST 180 DEGREES, B) HOOK THE END OF EACH SILT FENCE LENGTH.

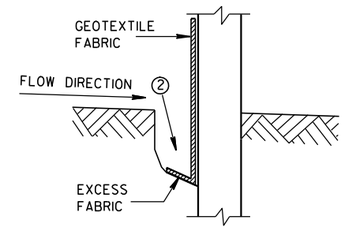

TRENCH DETAIL

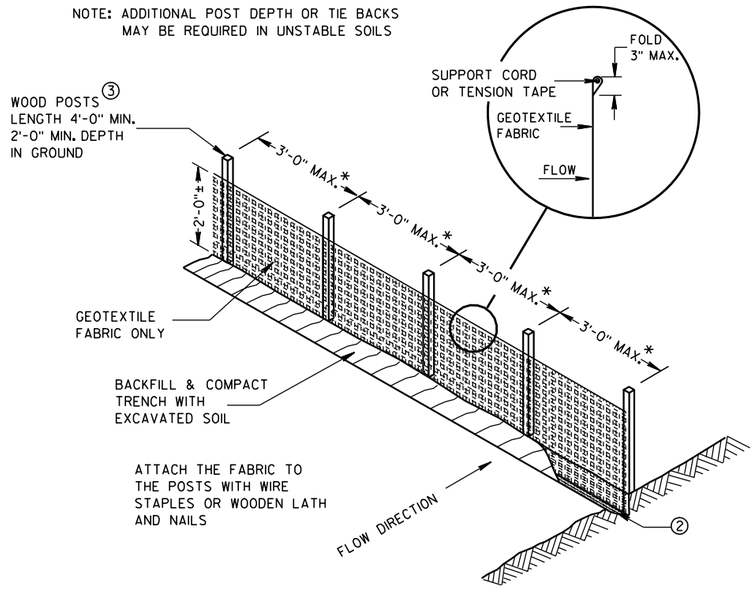

SILT FENCE

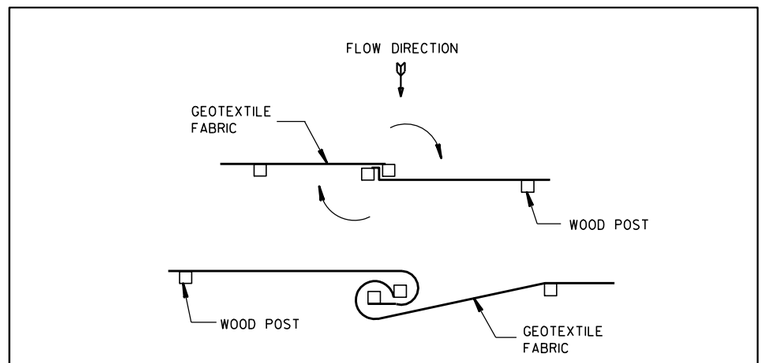

JOINING TWO LENGTHS OF SILT FENCE ⑤

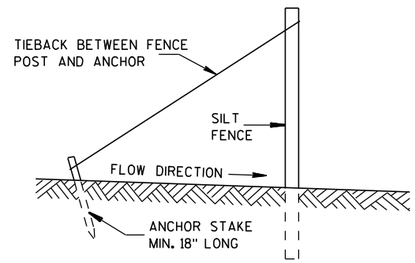

SILT FENCE TIE BACK

(WHEN REQUIRED BY THE ENGINEER)

SILT FENCE

STATE OF WISCONSIN
DEPARTMENT OF TRANSPORTATION

APPROVED
4-29-05 DATE
/S/ Beth Cannestra
CHIEF ROADWAY DEVELOPMENT ENGINEER
FHWA

6

S.D.D. 8 E 9-6

6

S.D.D. 8 E 9-6

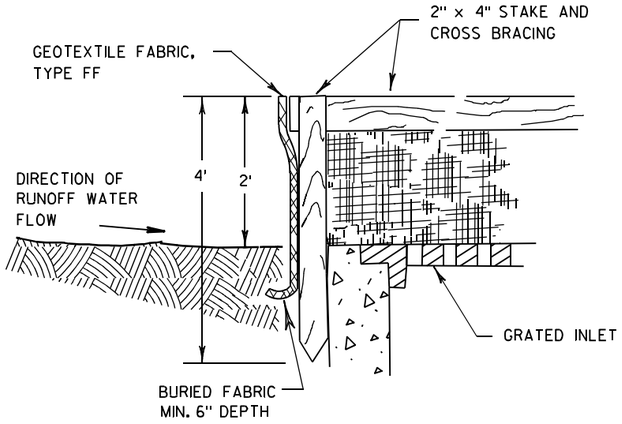

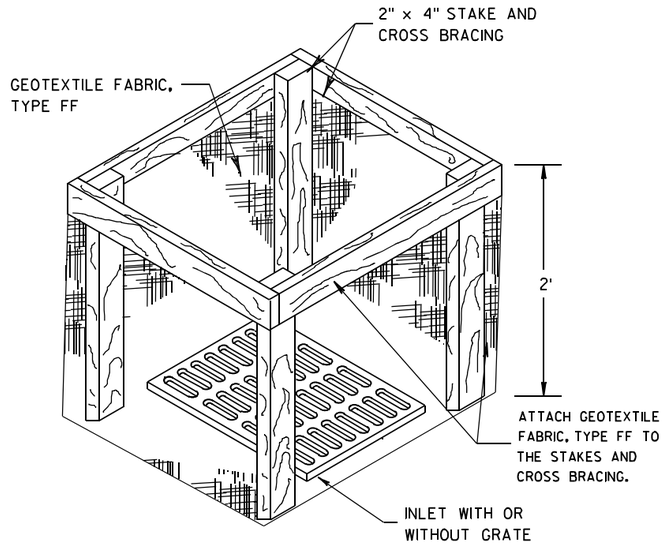

INLET PROTECTION, TYPE A

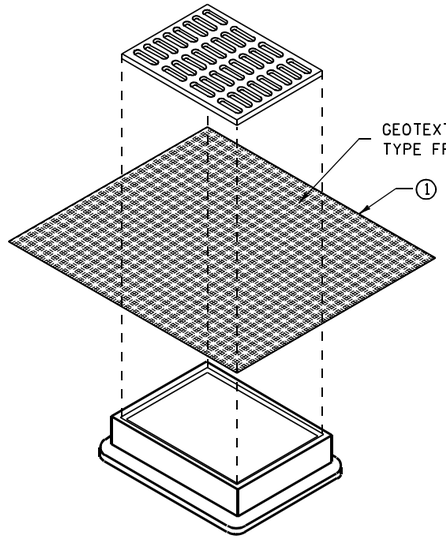

INLET PROTECTION, TYPE B
(WITHOUT CURB BOX)

(CAN BE INSTALLED IN ANY INLET WITHOUT A CURB BOX)

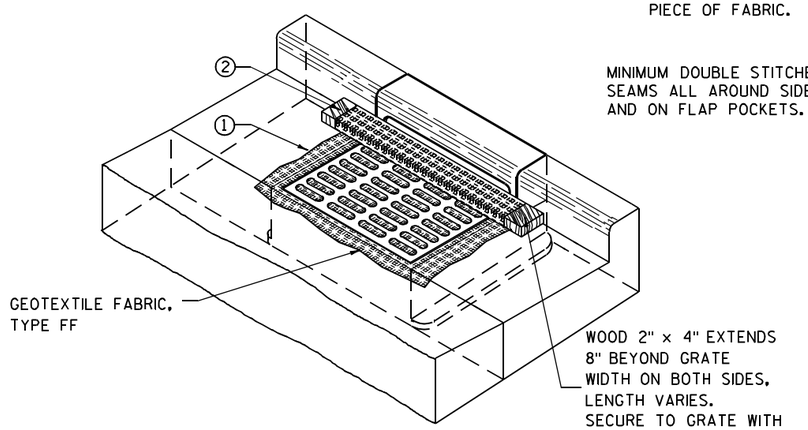

INLET PROTECTION, TYPE C (WITH CURB BOX)

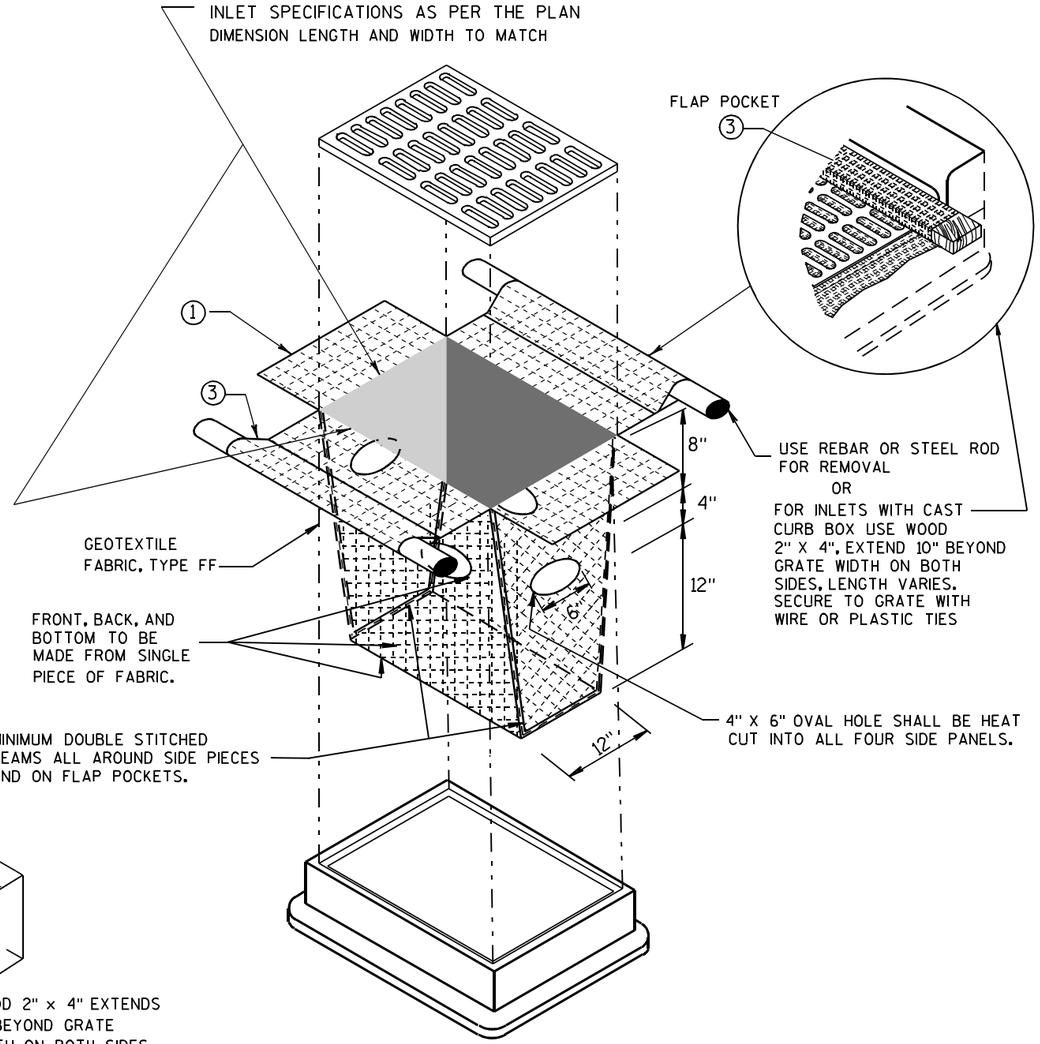

INLET PROTECTION, TYPE D

(CAN BE INSTALLED IN ANY INLET TYPE WITH
OR WITHOUT A CURB BOX AS PER NOTE ②)

GENERAL NOTES

INLET PROTECTION DEVICES SHALL BE MAINTAINED OR REPLACED AT THE DIRECTION OF THE ENGINEER.

MANUFACTURED ALTERNATIVES APPROVED AND LISTED ON THE DEPARTMENT'S EROSION CONTROL PRODUCT ACCEPTABILITY LIST MAY BE SUBSTITUTED.

WHEN REMOVING OR MAINTAINING INLET PROTECTION, CARE SHALL BE TAKEN SO THAT THE SEDIMENT TRAPPED ON THE GEOTEXTILE FABRIC DOES NOT FALL INTO THE INLET. ANY MATERIAL FALLING INTO THE INLET SHALL BE REMOVED IMMEDIATELY.

① FINISHED SIZE, INCLUDING FLAP POCKETS WHERE REQUIRED, SHALL EXTEND A MINIMUM OF 10" AROUND THE PERIMETER TO FACILITATE MAINTENANCE OR REMOVAL.

② FOR INLET PROTECTION, TYPE C (WITH CURB BOX), AN ADDITIONAL 18" OF FABRIC IS WRAPPED AROUND THE WOOD AND SECURED WITH STAPLES. THE WOOD SHALL NOT BLOCK THE ENTIRE HEIGHT OF THE CURB BOX OPENING.

③ FLAP POCKETS SHALL BE LARGE ENOUGH TO ACCEPT WOOD 2X4.

INSTALLATION NOTES

TYPE B & C

TRIM EXCESS FABRIC IN THE FLOW LINE TO WITHIN 3" OF THE GRATE.

THE CONTRACTOR SHALL DEMONSTRATE A METHOD OF MAINTENANCE, USING A SEWN FLAP, HAND HOLDS OR OTHER METHOD TO PREVENT ACCUMULATED SEDIMENT FROM ENTERING THE INLET.

TYPE D

DO NOT INSTALL INLET PROTECTION TYPE D IN INLETS SHALLOWER THAN 30", MEASURED FROM THE BOTTOM OF THE INLET TO THE TOP OF THE GRATE.

TRIM EXCESS FABRIC IN THE FLOW LINE TO WITHIN 3" OF THE GRATE.

THE INSTALLED BAG SHALL HAVE A MINIMUM SIDE CLEARANCE, BETWEEN THE INLET WALLS AND THE BAG, MEASURED AT THE BOTTOM OF THE OVERFLOW HOLES, OF 3". WHERE NECESSARY THE CONTRACTOR SHALL CINCH THE BAG, USING PLASTIC ZIP TIES, TO ACHIEVE THE 3" CLEARANCE. THE TIES SHALL BE PLACED AT A MAXIMUM OF 4" FROM THE BOTTOM OF THE BAG.

INLET PROTECTION
TYPE A, B, C, AND D

STATE OF WISCONSIN
DEPARTMENT OF TRANSPORTATION

APPROVED
10/16/02
DATE
/S/ Beth Cannestra
CHIEF ROADWAY DEVELOPMENT ENGINEER
FHWA

6
S.D.D. 8 E 10-2

METAL APRON ENDWALLS

PIPE DIA. (IN.)	MIN. THICK. (Inches) STEEL	MIN. THICK. (Inches) ALUM.	DIMENSIONS (Inches) A (±1")	B (MAX.)	H (±1")	L (±1 1/2")	L1 ①	L2 ①	W (±2")	APPROX. SLOPE	BODY
12	.064	.060	6	6	6	21	12	17 1/2	24	2 1/2 to 1	1 Pc.
15	.064	.060	7	8	6	26	14	21 3/4	30	2 1/2 to 1	1 Pc.
18	.064	.060	8	10	6	31	15	28 1/4	36	2 1/2 to 1	1 Pc.
21	.064	.060	9	12	6	36	18	29 5/8	42	2 1/2 to 1	1 Pc.
24	.064	.075	10	13	6	41	18	37 1/4	48	2 1/2 to 1	1 Pc.
30	.079	.075	12	16	8	51	18	52 1/4	60	2 1/2 to 1	1 Pc.
36	.079	.105	14	19	9	60	24	59 3/4	72	2 1/2 to 1	2 Pc.
42	.109	.105	16	22	11	69	24	75 5/8	84	2 1/2 to 1	2 Pc.
48	.109	.105	18	27	12	78	24	81	90	2 1/4 to 1	3 Pc.
54	.109	.105	18	30	12	84	30	85 1/2	102	2 1/4 to 1	3 Pc.
60	.109×	.105×	18	33	12	87	—	—	114	2 to 1	3 Pc.
66	.109×	.105×	18	36	12	87	—	—	120	2 to 1	3 Pc.
72	.109×	.105×	18	39	12	87	—	—	126	2 to 1	3 Pc.
78	.109×	.105×	18	42	12	87	—	—	132	1 1/2 to 1	3 Pc.
84	.109×	.105×	18	45	12	87	—	—	138	1 1/2 to 1	3 Pc.
90	.109×	.105×	18	37	12	87	—	—	144	1 1/2 to 1	3 Pc.
96	.109×	.105×	18	35	12	87	—	—	150	1 1/2 to 1	3 Pc.

× EXCEPT CENTER PANEL SEE GENERAL NOTES

REINFORCED CONCRETE APRON ENDWALLS

PIPE DIA. (IN.)	DIMENSIONS (Inches) T	A	B	C	D	E	G	APPROX. SLOPE
12	2	4	24	48 7/8	72 1/8	24	2	3 to 1
15	2 1/4	6	27	46	73	30	2 1/4	3 to 1
18	2 1/2	9	27	46	73	36	2 1/2	3 to 1
21	2 3/4	9	36	37 1/2	73 1/2	42	2 3/4	3 to 1
24	3	9 1/2	43 1/2	30	73 1/2	48	3	3 to 1
27	3 1/4	10 1/2	49 1/2	24	73 1/2	54	3 1/4	3 to 1
30	3 1/2	12	54	19 3/4	73 1/2	60	3 1/2	3 to 1
36	4	15	63	34 3/4	97 3/4	72	4	3 to 1
42	4 1/2	21	63	35	98	78	4 1/2	3 to 1
48	5	24	72	26	98	84	5	3 to 1
54	5 1/2	27	65	* 33 1/4 - ** 35	* 98 1/4 - ** 100	90	5 1/2	2 2/5 to 1
60	6	* 30 - ** 35	60	39	99	96	5	2 to 1
66	6 1/2	* 24 - ** 30	* 72 - ** 78	* 21 - ** 27	99	102	5 1/2	2 to 1
72	7	* 24 - ** 36	78	21	99	108	6	2 to 1
78	7 1/2	* 24 - ** 36	78	21	99	114	6 1/2	2 to 1
84	8	36	90 1/2	21	111 1/2	120	6 1/2	1 1/2 to 1
90	8 1/2	41	87 1/2	24	111 1/2	132	6 1/2	1 1/2 to 1

* MINIMUM
** MAXIMUM

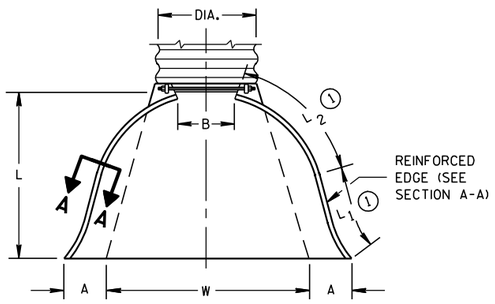

PLAN VIEW

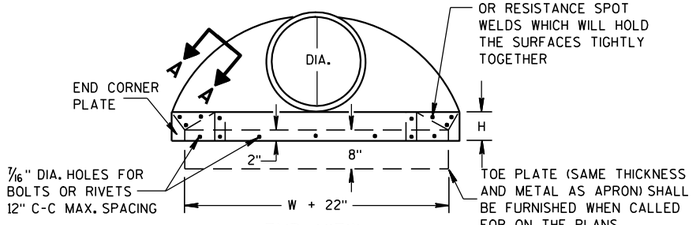

END VIEW

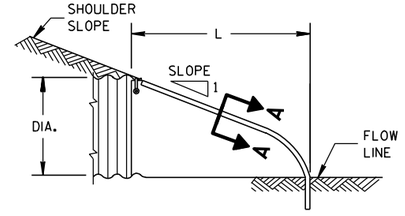

SIDE ELEVATION

METAL ENDWALLS

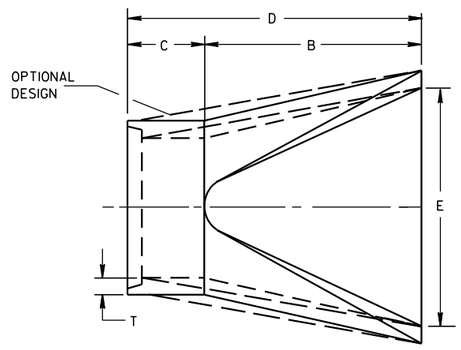

PLAN

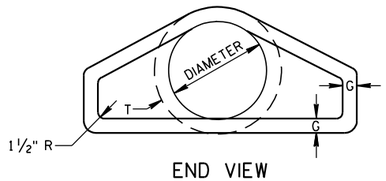

END VIEW

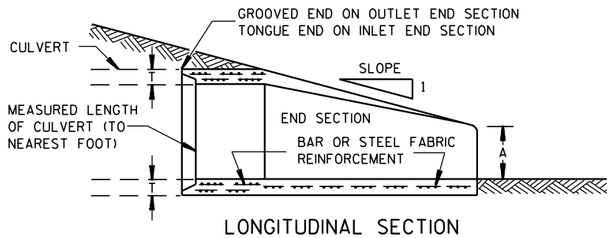

LONGITUDINAL SECTION

CONCRETE ENDWALLS

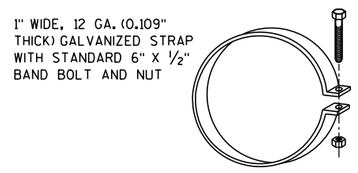

ALTERNATE FOR TYPE 1 CONNECTION

END SECTION CONNECTOR STRAP

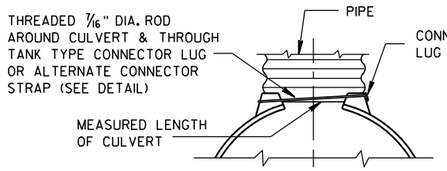

TYPE 1
FOR 12" THRU 24" CORR. PIPE

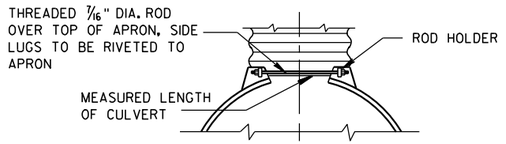

TYPE 2
FOR 30" THRU 96" CORR. PIPE

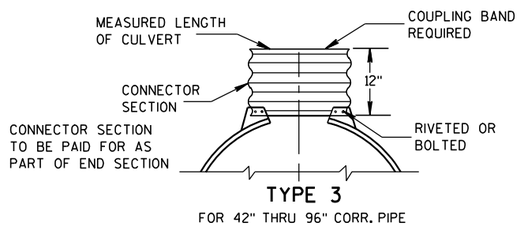

TYPE 3
FOR 42" THRU 96" CORR. PIPE

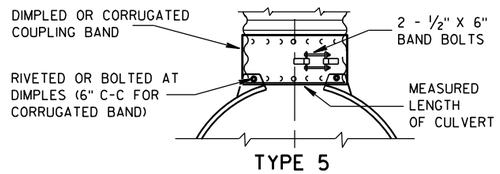

TYPE 5
ALTERNATE FOR:
ALL SIZES CORRUGATED CIRCULAR PIPE

NOTE: DIMPLED BAND FITS OVER OUTSIDE OF ENDWALL. AND CORRUGATED BAND FITS INSIDE ENDWALL. DIMPLED BAND MAY BE USED WITH HELICALLY CORRUGATED PIPE.

FOR CIRCUMFERENTIALLY CORRUGATED PIPE USE ENDWALL CONNECTION DETAILS 1, 2, 3 OR 5 AS APPLICABLE.

FOR HELICALLY CORRUGATED PIPE USE ENDWALL CONNECTION DETAILS 1, 2 OR 5.

FOR HELICALLY CORRUGATED PIPES WITH TWO CIRCUMFERENTIAL CORRUGATIONS AT EACH END USE ENDWALL CONNECTION DETAILS 1, 2 OR 3.

CONNECTION DETAILS

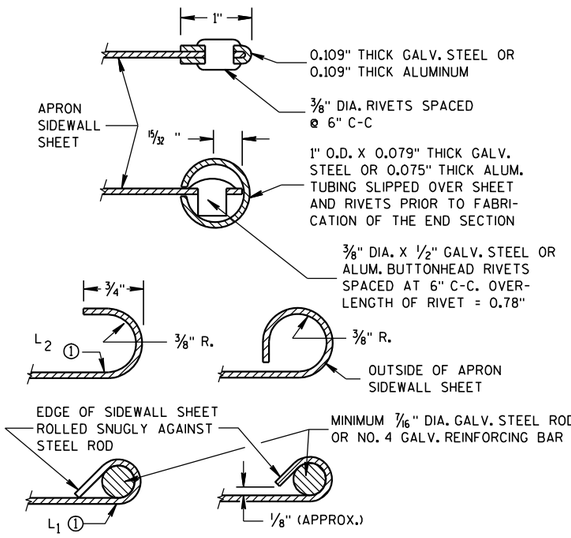

SECTION A-A

GENERAL NOTES

DETAILS OF CONSTRUCTION, MATERIALS AND WORKMANSHIP NOT SHOWN ON THIS DRAWING SHALL CONFORM TO THE PERTINENT REQUIREMENTS OF THE STANDARD SPECIFICATIONS AND THE APPLICABLE SPECIAL PROVISIONS.

CONCRETE CULVERT ENDWALLS MAY NOT BE USED WITH GALVANIZED STEEL OR ALUMINUM CULVERT PIPE OR VISE VERSA. GALVANIZED STEEL OR ALUMINUM ENDWALLS SHALL NORMALLY BE INSTALLED ON CULVERT PIPE OF THE SAME METAL.

ALL THREE PIECE STEEL APRON ENDWALLS FOR 60" DIAMETER PIPE AND LARGER SHALL HAVE 0.109" SIDES AND 0.138" CENTER PANELS. ALL THREE PIECE ALUMINUM APRON ENDWALLS FOR 60" DIAMETER PIPE AND LARGER SHALL HAVE 0.105" SIDES AND 0.134" CENTER PANELS. THE WIDTH OF CENTER PANELS SHALL BE GREATER THAN 20 PERCENT OF THE PIPE PERIMETER.

LAP SEAMS SHALL BE TIGHTLY JOINED BY GALVANIZED RIVETS OR BOLTS FOR STEEL UNITS AND ALUMINUM RIVETS AND BOLTS FOR ALUMINUM UNITS. FOR THE 60" THROUGH 96" DIAMETER APRON ENDWALL SIZES, THE REINFORCED EDGES AND CENTER PANEL SEAMS SHALL BE FURTHER REINFORCED WITH GALVANIZED STEEL OR ALUMINUM STIFFENER ANGLES. THE ANGLES SHALL BE ATTACHED BY GALVANIZED NUTS AND BOLTS FOR STEEL UNITS AND ALUMINUM NUTS AND BOLTS FOR ALUMINUM UNITS.

WHERE TWO OR MORE PIPES WITH APRON ENDWALLS ARE LAID ADJACENT TO EACH OTHER, THEY SHALL BE SEPARATED BY A DISTANCE SUFFICIENT TO PROVIDE A MINIMUM CLEARANCE OF 6 INCHES BETWEEN APRON ENDWALLS.

① FOR PIPE SIZES UP TO 60" DIAMETER, A 180° ROLLED EDGE MAY BE USED INSTEAD OF STEEL ROD REINFORCEMENT. SEE SECTION A-A.

APRON ENDWALLS FOR CULVERT PIPE

STATE OF WISCONSIN
DEPARTMENT OF TRANSPORTATION

APPROVED
11/30/94 DATE
/S/ Rory L. Rhinesmith
CHIEF ROADWAY DEVELOPMENT ENGINEER
FHWA

6
S.D.D. 8 F 1-11

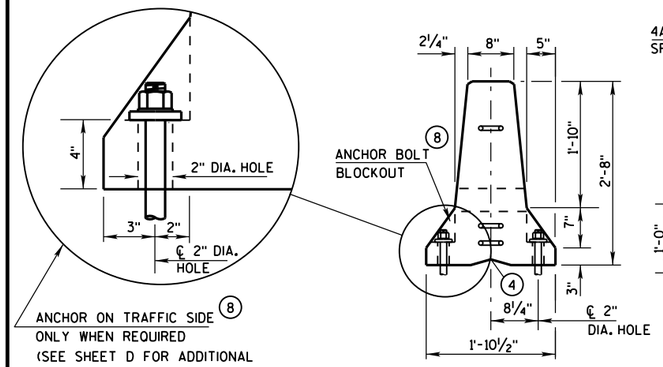

END VIEW

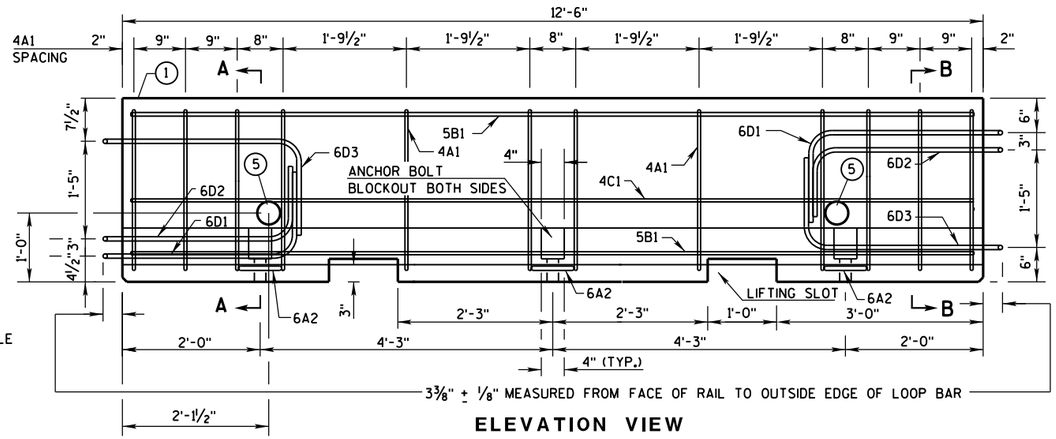

ELEVATION VIEW

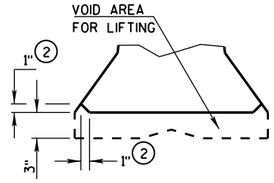

DETAIL "B"
LIFTING SLOT DETAIL

GENERAL NOTES

THESE GENERAL NOTES APPLY TO SHEETS 14B7-14(a) THRU 14B7-14(h).

DO NOT INTERMIX CONCRETE BARRIER TEMPORARY PRCAST, 12'-6" (CBTP12.5) WITH OTHER TEMPORARY CONCRETE BARRIERS.

USE ASTM A-615, GRADE 60, DEFORMED STEEL BARS FOR BARS 4A1, 6A2, 5B1 AND 4C1 IN THE BARRIER SECTION AND FOR 4V1, 4V2, 4V3, 4V4, 4V5, 4V6, 4F1, 4F2 AND 5F3 IN THE BARRIER TAPER SECTION.

LOOP BARS 6D1, 6D2 AND 6D3 SHALL BE ¾" SMOOTH STEEL BARS WITH A MINIMUM YIELD STRENGTH OF 60 KSI, A TENSILE STRENGTH OF NOT LESS THAN 1.25 TIMES THE YIELD STRENGTH BUT A MINIMUM OF 80 KSI, A MINIMUM 14% ELONGATION IN 8 INCHES AND PASSING A 180 DEGREE BEND TEST USING A 3-½" PIN BEND DIAMETER FOR BEND TESTS. THE LOOPS SHALL BE INSTALLED WITHIN ⅛" OF THE PLAN DIMENSION.

CONSTRUCT LIFTING SLOTS AS SPECIFIED ON THE PLANS TO FACILITATE THE DRAINAGE OF WATER AFTER INSTALLATION.

PLACE BARRIER ON A PAVED SURFACE. REMOVE ALL LOOSE DIRT AND SAND FROM THE ROADWAY SURFACE PRIOR TO PLACEMENT OF THE BARRIER.

INSTALL MECHANICAL OR ADHESIVE ANCHORS PER MANUFACTURER'S RECOMMENDATIONS. PROVIDE MANUFACTURER'S INFORMATION TO PROJECT ENGINEER.

(1) MARK ONE END OF EACH BARRIER PERMANENTLY BY FORMING INTO THE BARRIER THE FOLLOWING INFORMATION:
- a. TYPE: WI CBTP
- b. MANUFACTURER
- c. DATE MANUFACTURED (MONTH AND YEAR)

(2) 1" CHAMFER TO PREVENT SPALLING.

(3) A ⅜" HOLE IN THE CONNECTION PIN, AT THE LOCATION SHOWN, IS ACCEPTABLE, BUT NOT REQUIRED..

(4) "V" NOTCH IS OPTIONAL.

(5) THE 4" DIAMETER, 11 GAUGE STEEL, ROUND MECHANICAL TUBING SLEEVE FOR LIFTING (OPTIONAL).

(6) NEVER USE LOOP BARS (6D1, 6D2 OR 6D3) TO LIFT, MOVE OR REPOSITION THE BARRIER.

(7) USE DELINEATORS CONFORMING TO SECTION 633 OF THE STANDARD SPECIFICATIONS. CONTRACTOR MAY USE ALTERNATE SHAPES AND HOUSING. INSTALL DELINEATORS ACCORDING TO MANUFACTURES INSTRUCTION. INSTALL YELLOW REFLECTORS WHEN BARRIER IS LOCATED TO THE LEFT OF TRAFFIC AND WHITE REFLECTORS WHEN BARRIER IS LOCATED TO THE RIGHT OF TRAFFIC. SPACE DELINEATORS A MAXIMUM OF 25 FEET APART. PROVIDE TOP MOUNTED DELINEATORS IN ADDITION TO THE SIDE MOUNTED DELINEATORS ON ALL BARRIER INSTALLATIONS LOCATED ON A CURVED ALIGNMENT LONGER THAN 200 FEET AND ON BARRIERS USED TO SEPARATE OPPOSING TRAFFIC.

(8) SEE SHEET D FOR ANCHORING CRITERIA.

(9) 1" CHAMFER OPTIONAL.

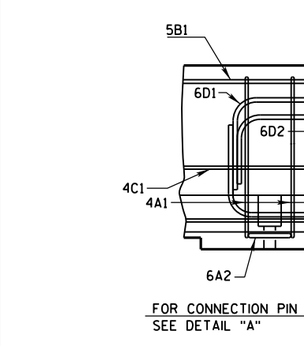

SECTION A-A
(STIRRUP PLACEMENT)

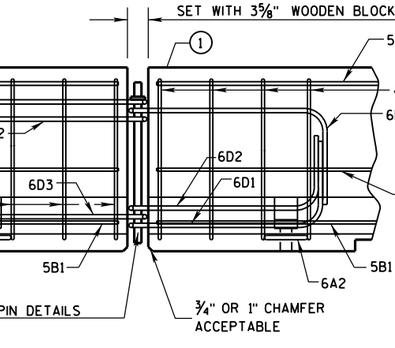

SECTION B-B
(STIRRUP PLACEMENT)

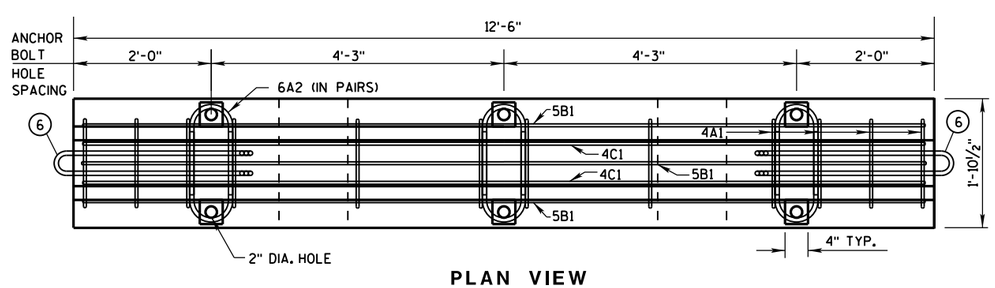

PLAN VIEW

DETAILS OF BARRIER SECTION

DETAILS OF BARRIER CONNECTION

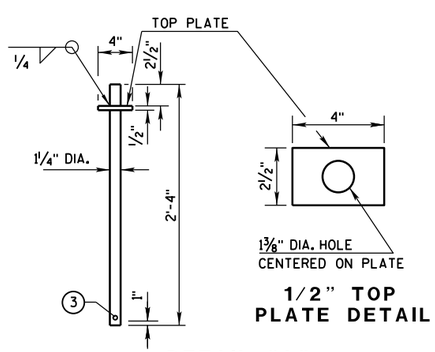

1/2" TOP
PLATE DETAIL

DETAIL "A"
CONNECTION PIN
(A36 STEEL (10.9 LB EACH))

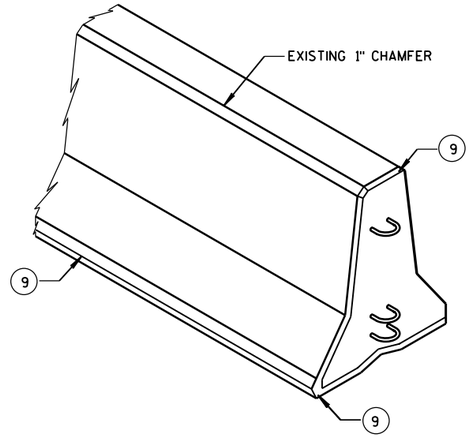

CONCRETE BARRIER
TEMPORARY PRECAST, 12'-6"

STATE OF WISCONSIN
DEPARTMENT OF TRANSPOR

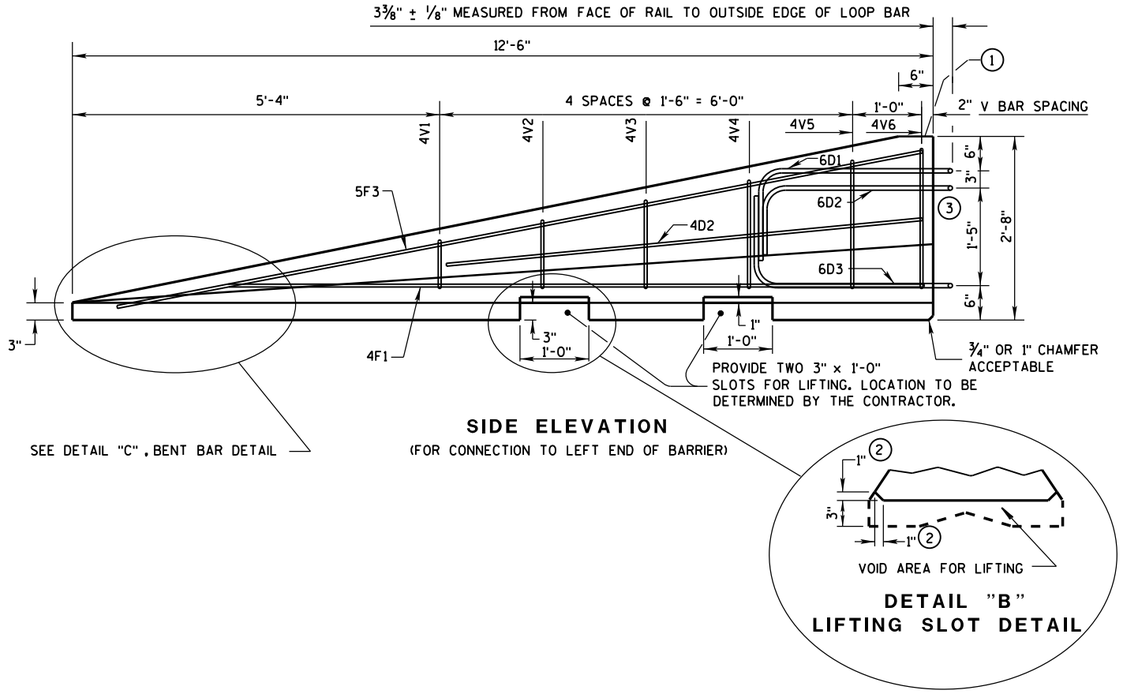

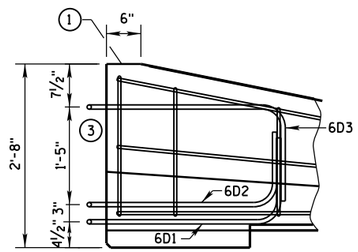

GENERAL NOTES

1. MARK ONE END OF EACH BARRIER PERMANENTLY BY FORMING INTO THE BARRIER THE FOLLOWING INFORMATION:
   a. TYPE WICBTP
   b. MANUFACTURER
   c. DATE MANUFACTURED (MONTH AND YEAR)
2. 1" CHAMFER TO PREVENT SPALLING.
3. NEVER USE LOOP BARS (6D1, 6D2 OR 6D3) TO LIFT, MOVE OR REPOSITION THE BARRIER.

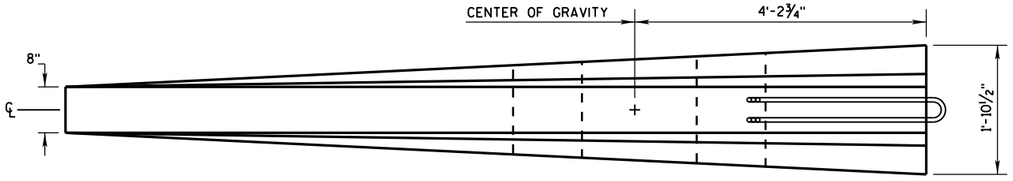

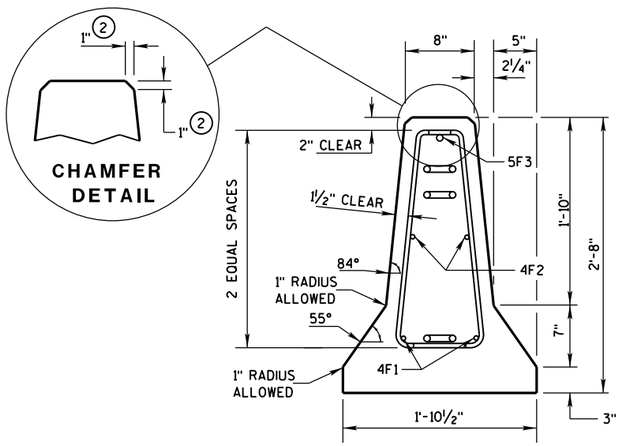

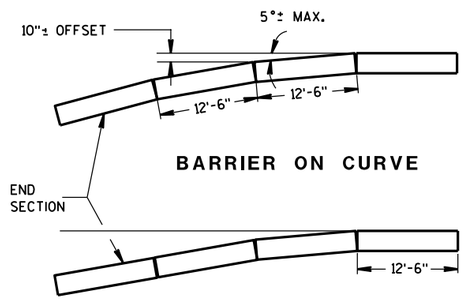

POSTED SPEED, (MPH)	FLARE RATE
40 OR LESS	6:1
45 OR GREATER	8:1

DETAILS OF BARRIER TAPER SECTION

CONCRETE BARRIER
TEMPORARY PRECAST, 12'-6"

STATE OF WISCONSIN
DEPARTMENT OF TRANSPOI

6
S.D.D. 14 B 7-14b

BARRIER TAPER SECTION BILL OF MATERIALS

(PER 12'-6" BARRIER TAPER SECTION)

BAR	BAR SIZE	NO. OF BARS	LENGTH FT.
4V1	4	2	1'-11"
4V2	4	2	2'-2"
4V3	4	2	2'-6"
4V4	4	2	2'-9"
4V5	4	2	3'-2"
4V6	4	2	3'-4"
4F1	4	2	12'-0"
4F2	4	2	7'-6"
5F3	5	1	11'-9"
LOOP ASSEMBLY			
6D1	6	1	8'-5"
6D2	6	1	7'-7"
6D3	6	1	8'-6"

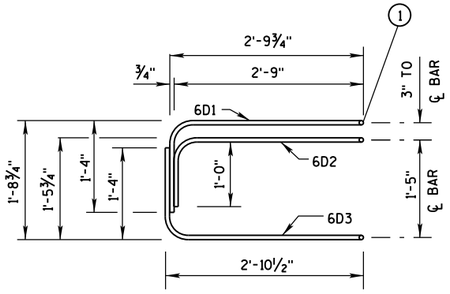

ELEVATION
LOOP BAR ASSEMBLY

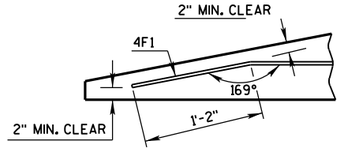

DETAIL "C"
BENT BAR DETAIL

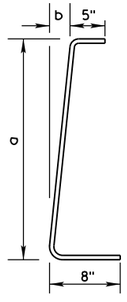

BAR	a	b
V1	10"	1"
V2	1'-1"	1¼"
V3	1'-5"	1⅝"
V4	1'-8"	1⅞"
V5	2'-0½"	2⅜"
V6	2'-3"	2¾"

4V BARS
2 AT EACH SIZE REQUIRED
FOR STIRRUP ASSEMBLY

TAPER BARRIER SECTION

GENERAL NOTES

(1) NEVER USE LOOP BARS (6D1, 6D2 OR 6D3) TO LIFT, MOVE OR REPOSITION THE BARRIER.

BARRIER SECTION BILL OF MATERIALS

(PER 12'-6" BARRIER SECTION)

BAR	BAR SIZE	NO. OF BARS	LENGTH FT.
4A1	4	12	6'-0"
6A2	6	6	2'-11"
5B1	5	3	12'-2"
4C1	4	2	12'-2"
LOOP ASSEMBLY			
6D1	6	2	8'-5"
6D2	6	2	7'-7"
6D3	6	2	8'-6"

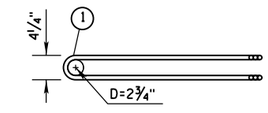

PLAN VIEW
LOOP BAR ASSEMBLY
(MARKED END SHOWN, INVERT FOR OTHER END)

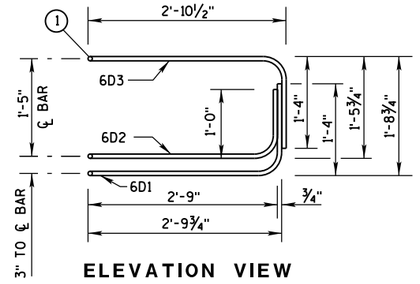

ELEVATION VIEW

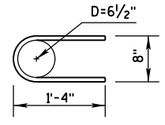

6A2

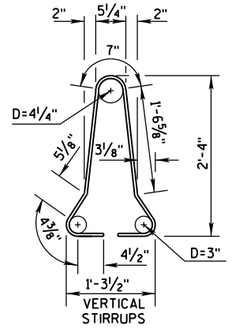

4A1

BARRIER SECTION

CONCRETE BARRIER
TEMPORARY PRECAST, 12'-6"

STATE OF WISCONSIN
DEPARTMENT OF TRANSPOR

6

S.D.D. 14 B 7-14c

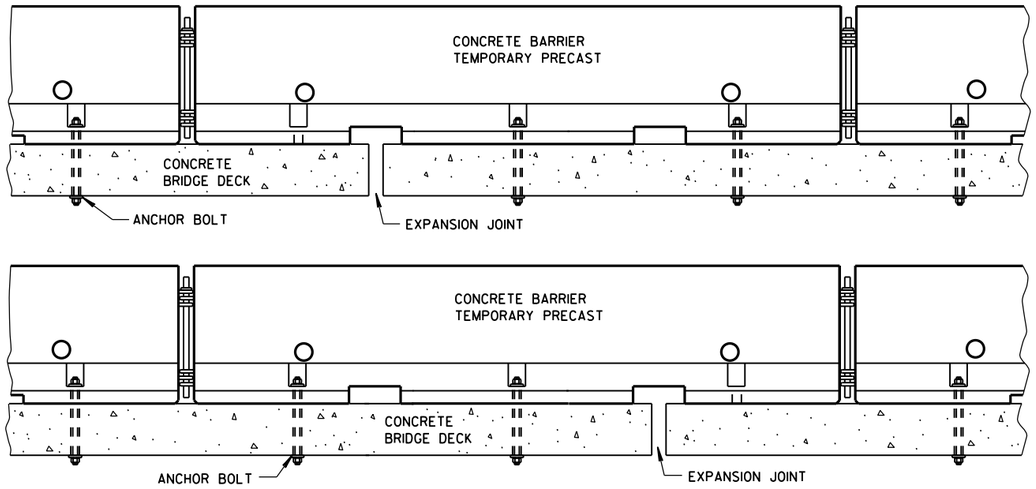

TREATMENT AT BRIDGE DECK EXPANSION JOINTS

(NO SINGLE CONCRETE BARRIER SECTION SHALL BE ANCHORED TO BOTH THE BRIDGE DECK AND THE APPROACH SLAB. ALL ANCHOR BOLT LOCATIONS SHALL BE ANCHORED TO THE DECK IN ACCORDANCE WITH THE DETAIL. NO MORE THAN ONE ANCHOR BOLT SHALL BE ELIMINATED FROM A BARRIER SECTION WHEN SPANNING AN EXPANSION JOINT.)

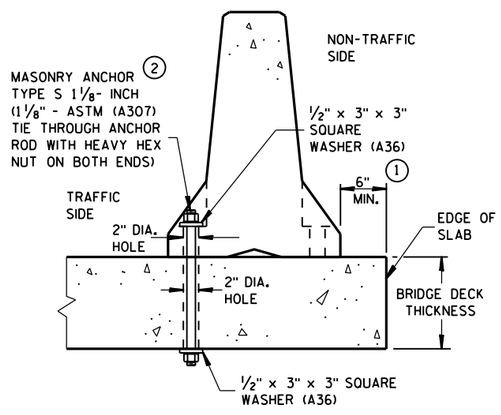

THROUGH BOLTED ANCHOR INSTALLATION ON BRIDGE DECK

(DO NOTUSE ON CONCRETE BRIDGE DECK WITH ASPHALT OVERLAY)

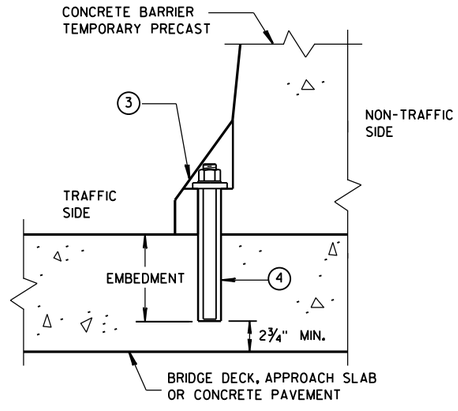

REMOVABLE ADHESIVE BONDED ANCHOR ② INSTALLATION ON CONCRETE BRIDGE DECK, CONCRETE APPROACH SLAB, OR CONCRETE PAVEMENT

(DO NOT USE ON CONCRETE WITH AN ASPHALTIC OVERLAY)

GENERAL NOTES

① CONCRETE BARRIER TEMPORARY PRECAST, 12'-6" SHALL BE ANCHORED IF:
THE DISTANCE TO A 2 FOOT OR GREATER DROPOFF THAT IS STEEPER THAN 3H : 1V, FOR EXAMPLE THE EDGE OF A BRIDGE DECK OR A DROPOFF AT THE EDGE OF PAVEMENT, IS LESS THAN 4 FEET FROM THE SIDE OF THE BARRIER CLOSEST TO THE DROPOFF AND THE POSTED SPEED IS 45 MPH OR GREATER, OR

THE DISTANCE TO A 2 FOOT OR GREATER DROPOFF THAT IS STEEPER THAN 3H : 1V, FOR EXAMPLE THE EDGE OF A BRIDGE DECK OR A DROPOFF AT THE EDGE OF PAVEMENT, IS LESS THAN 2 FEET FROM THE SIDE OF THE BARRIER CLOSEST TO THE DROPOFF AND THE POSTED SPEED IS 40 MPH OR LESS.

② ANCHORING IS INCIDENTAL TO CONCRETE BARRIER TEMPORARY PRECAST.

WITH THE APPROVAL OF THE ENGINEER, REMOVABLE ADHESIVE BONDED ANCHOR BOLT INSTALLATION MAY BE USED IN LIEU OF THROUGH BOLTED ANCHOR INSTALLATION. THE ADHESIVE BONDED ANCHOR BOLT MUST BE REMOVABLE. USE ASTM (A307) MASONRY ANCHORS TYPE S 1⅛-INCH, EMBEDDED TO A DEPTH SUFFICIENT TO DEVELOP THE ULTIMATE CAPACITY OF THE ANCHOR BOLT AND PROVIDE DOCUMENTATION TO CONFIRM THIS.

UPON REMOVAL OR RELOCATION OF THE BARRIER UNITS, REMOVE ALL ANCHOR BOLTS AND COMPLETELY FILL IN THE REMAINING HOLES IN CONCRETE BRIDGE DECKS, CONCRETE APPROACH SLABS AND CONCRETE PAVEMENTS THAT ARE TO REMAIN, WITH A NON-SHRINK COMMERICAL GROUT OR MATERIAL IDENTIFIED ON THE CURRENT WISDOT APPROVED PRODUCTS LIST.

③ 1⅛" DIAMENTER A307 THREADED ROD, ½" X 3" X 3" SQUARE PLATE WASHER WITH ASTM A36 STEEL, ASTM A563A HEAVY HEX NUT.

④ ADHESIVE ANCHORS WITH A MINIMUM BOND STRENGTH OF 1,800 PSI AND 5¼" EMBEDMENT. SEE 603.2 AND 603.3.1.2 OF THE WISCONSIN STANDARD SPECIFICATIONS FOR MORE INFORMATION ON ADHESIVE ANCHORS.

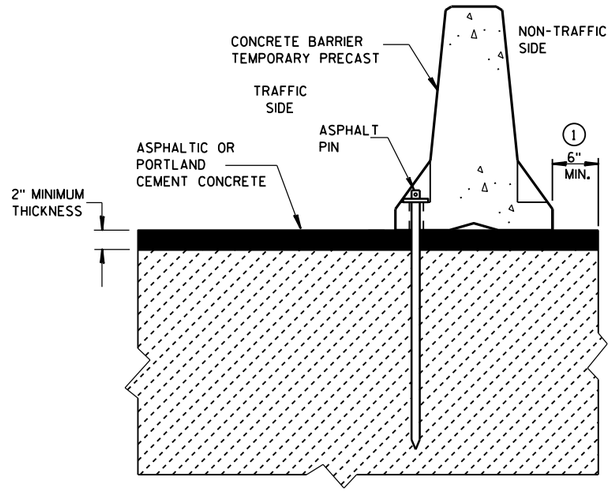

STAKE DOWN INSTALLATION FOR ASPHALTIC OR PORTLAND CEMENT CONCRETE SURFACE

(STAKING IS INCIDENTAL TO CONCRETE BARRIER TEMPORARY PRECAST)

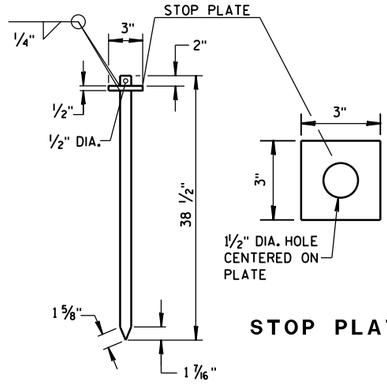

STOP PLATE

ASPHALT PIN

(ASTM A36 STEEL)

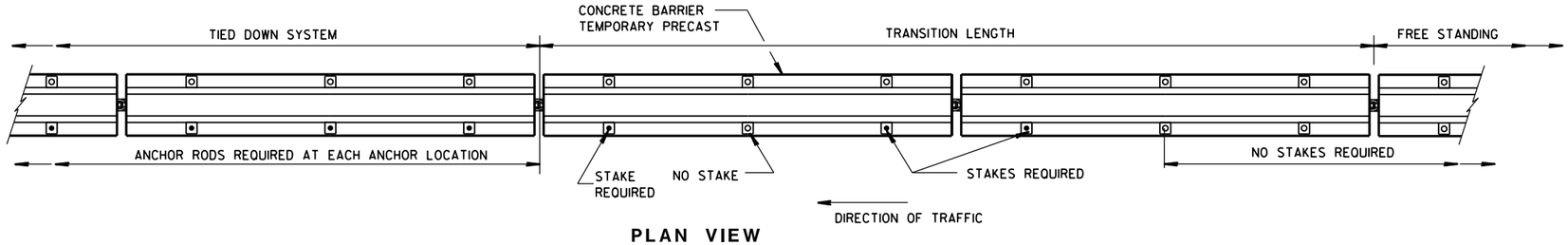

PLAN VIEW

FREE STANDING TRANSITION TO TIED-DOWN SYSTEM

(PLACE TRANSITION IN A TANGENT SECTION OF BARRIER PARALLEL TO THE ROADWAY. IF TRANSITION OCCURS ON STRUCTURAL SLAB, ANCHOR AS SHOWN.)

CONCRETE BARRIER
TEMPORARY PRECAST, 12'-6"

STATE OF WISCONSIN
DEPARTMENT OF TRANSPOI

6
S.D.D. 14 B 7-14d

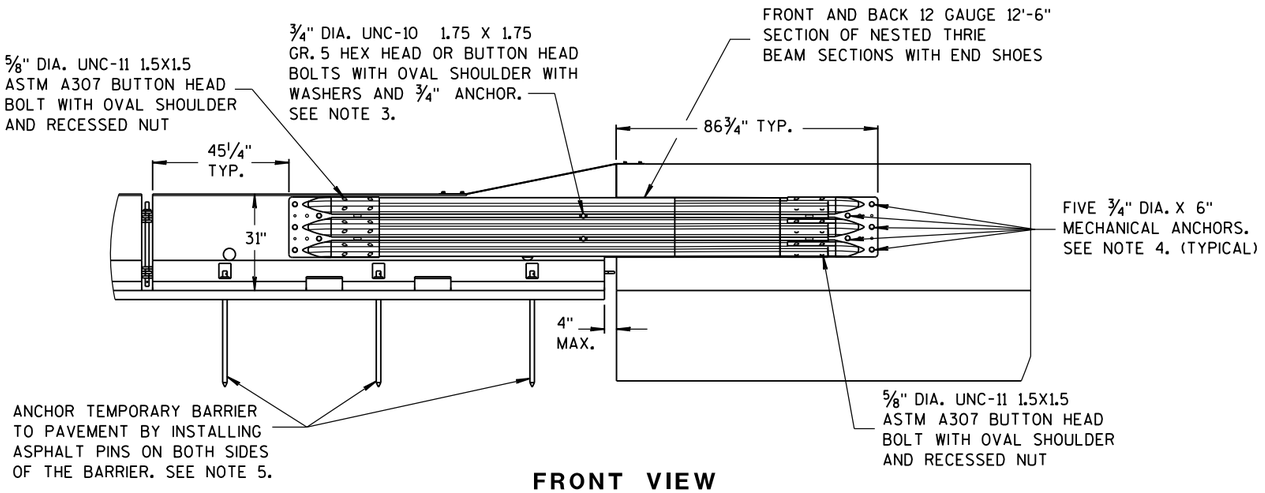

FRONT VIEW

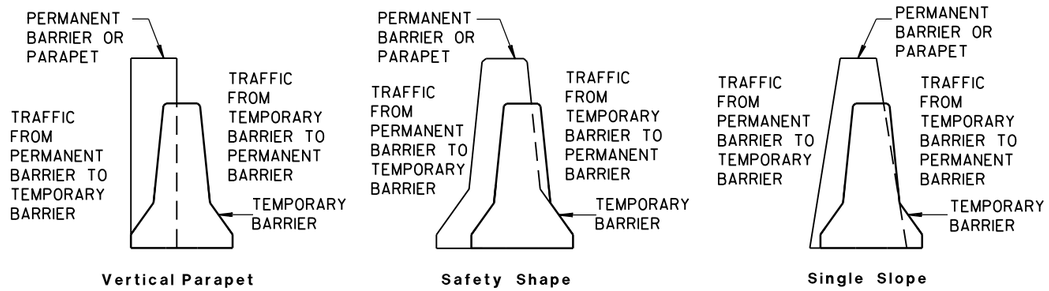

TEMPORARY BARRIER PLACEMENT FOR BI-DIRECTIONAL TRANSITION TO TIED-DOWN SYSTEM

NOTES

NESTED THRIE BEAM IS REQUIRED ON BOTH SIDES OF THE TEMPORARY BARRIER FOR ALL INSTALLATIONS.

1. CAP END PLATE PLACED FLUSH WITH UPSTREAM END OF PERMANENT BARRIER OR PARAPET.
2. THRIE BEAM PIECES ARE OFFSET 15 1/4" TO PREVENT INTERFERENCE FROM THE ANCHORS ON OPPOSING SIDES.
3. MINIMUM MECHANICAL OR ADHESIVE ANCHOR STRENGTH REQUIREMENTS: ULTIMATE TENSILE LOAD 9.48 KIPS AND ULTIMATE SHEAR LOAD 10.48 KIPS.
4. MINIMUM MECHANICAL OR ADHESIVE ANCHOR STRENGTH REQUIREMENTS: ULTIMATE TENSILE LOAD 17.9 KIPS AND ULTIMATE SHEAR LOAD 21.96 KIPS.
5. MAY BE USED ON CONCRETE OR ASPHALT PAVEMENTS. ASPHALT OPTION SHOWN. FOR CONCRETE OPTION SEE OTHER DETAILS.
6. MINIMUM MECHANICAL OR ADHESIVE ANCHOR STRENGTH REQUIREMENTS: ULTIMATE TENSILE LOAD 12.14 KIPS AND ULTIMATE SHEAR LOAD 17.5 KIPS.

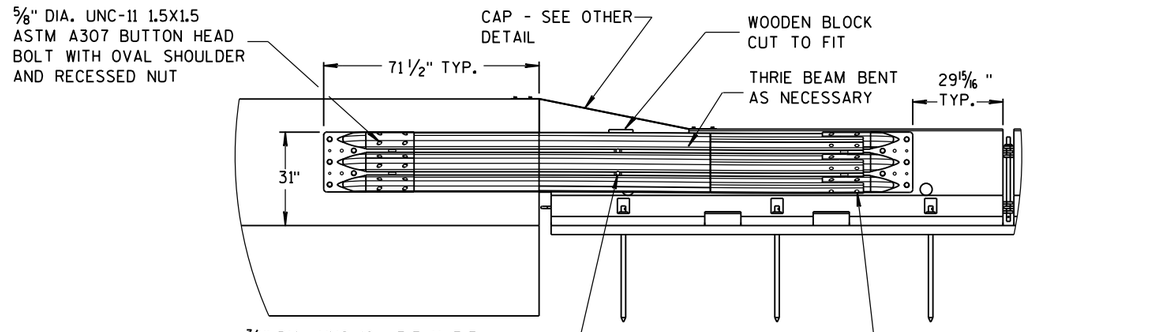

BACK VIEW

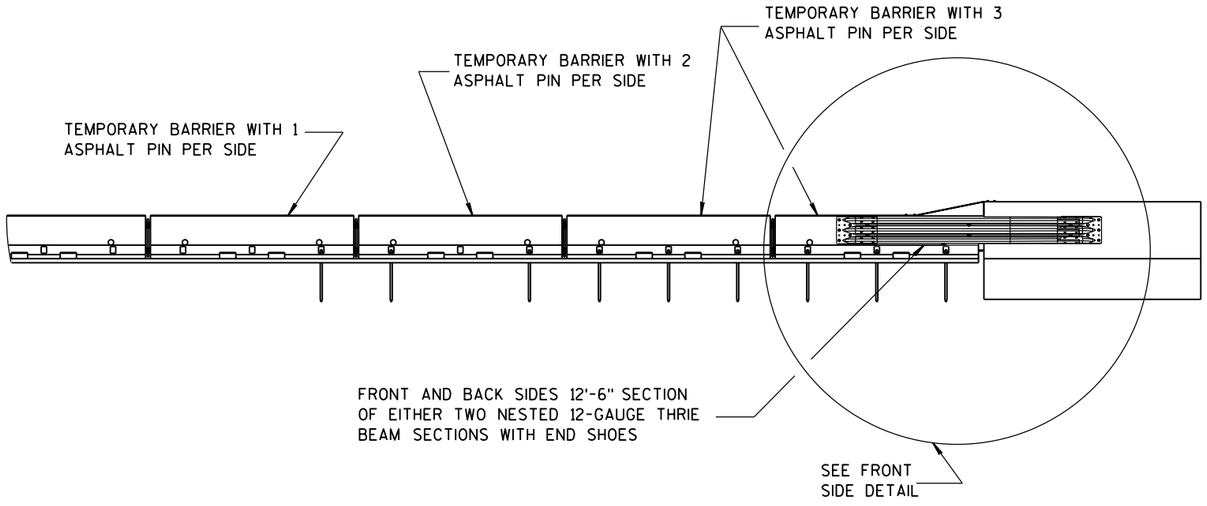

FRONT VIEW

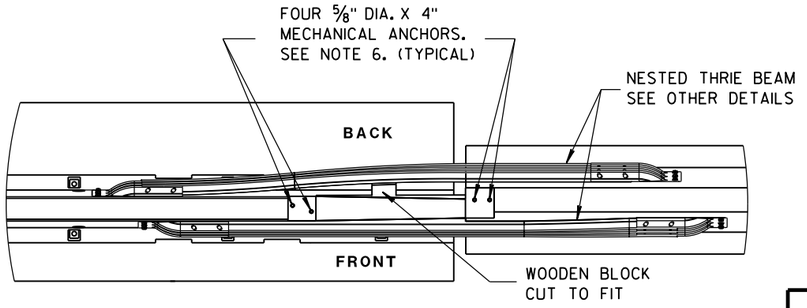

PLAN VIEW

BI-DIRECTIONAL TRANSITION TO TIED-DOWN SYSTEM

CONCRETE BARRIER
TEMPORARY PRECAST, 12'-6"

STATE OF WISCONSIN
DEPARTMENT OF TRANSPO

6
S.D.D. 14 B 7-14e

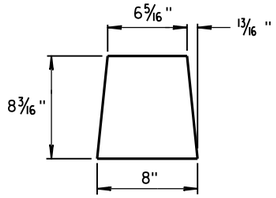

GUSSET 1

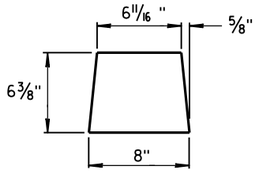

GUSSET 2

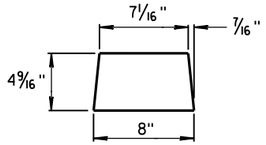

GUSSET 3

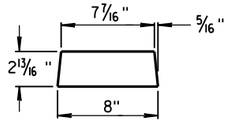

GUSSET 4

GUSSETS

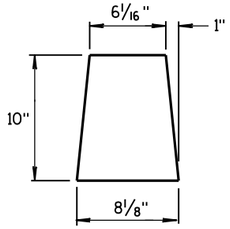

END PLATE

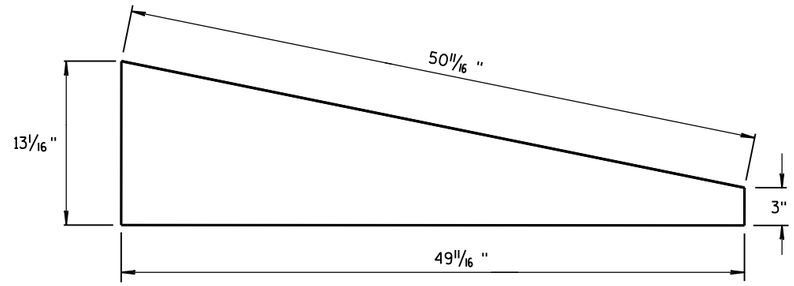

SIDE PLATE

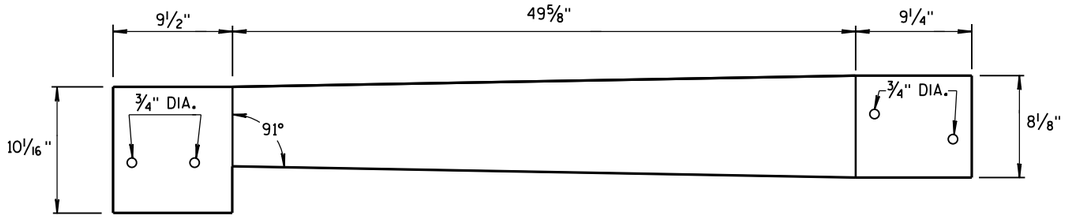

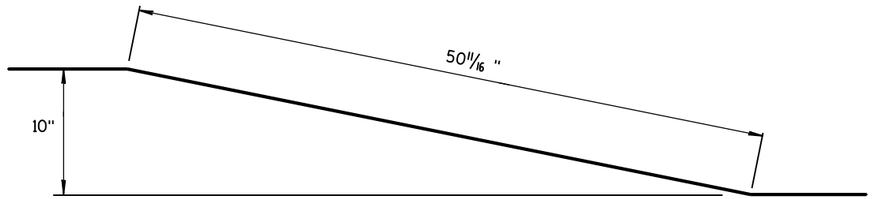

TOP PLATE

SIDE, TOP AND END PLATES FOR CAP FROM TEMPORARY CONCRETE BARRIER TO 42" PERMANENT CONCRETE BARRIER

SIDE PLATES, TOP PLATE, END PLATE AND GUSSETS ARE 12 GAUGE ASTM A36 GALVANIZED STEEL.

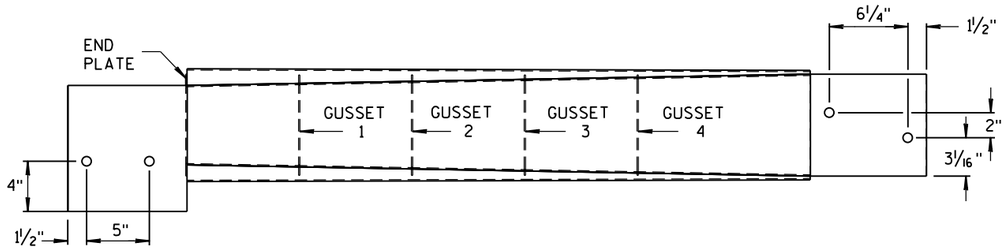

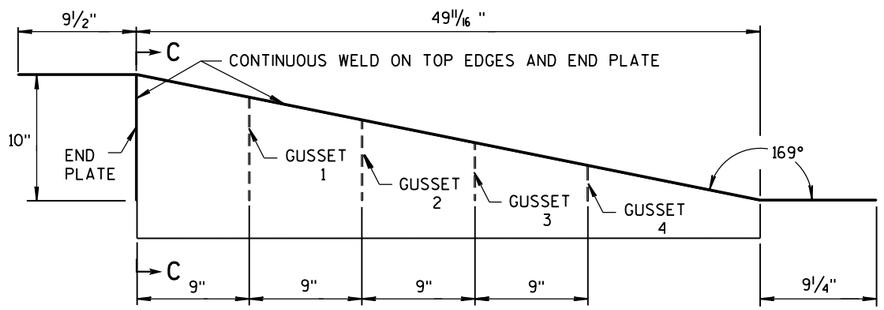

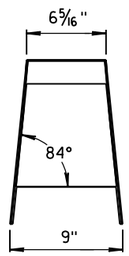

SECTION C-C

NOTES

1. FOUR GUSSETS AND END PLATE ARE STITCH WELDED ON THREE SIDES.
2. TWO TRIANGULAR SIDE PLATES ARE STITCH WELDED TO TOP PLATE, END PLATE, AND GUSSETS.

CAP DETAILS FOR TEMPORARY CONCRETE BARRIER TO 42" PERMANENT CONCRETE BARRIER

CONCRETE BARRIER
TEMPORARY PRECAST, 12'-6"

STATE OF WISCONSIN
DEPARTMENT OF TRANSPOI

6

S.D.D. 14 B 7-14f

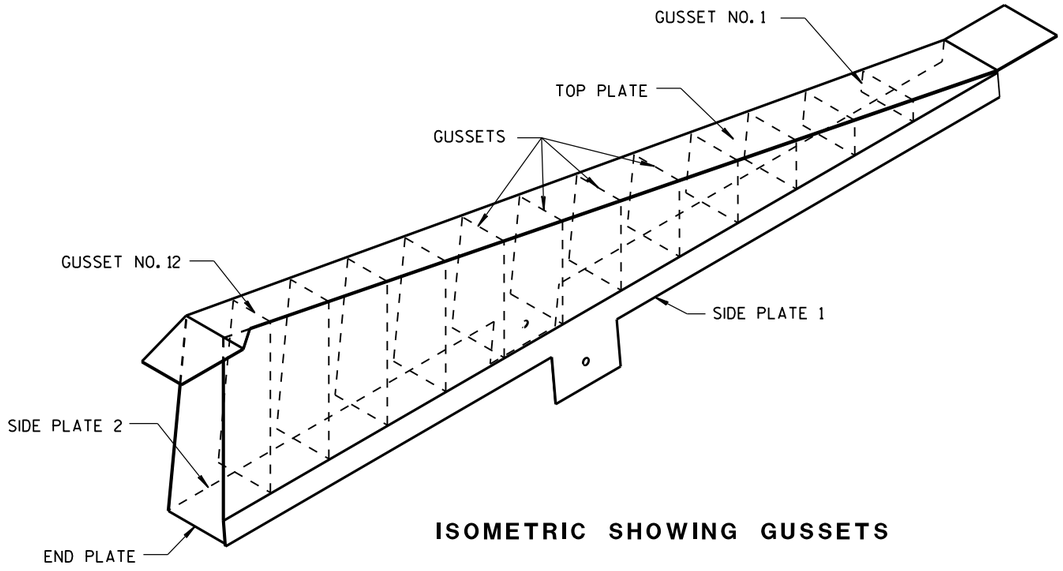

ISOMETRIC SHOWING GUSSETS

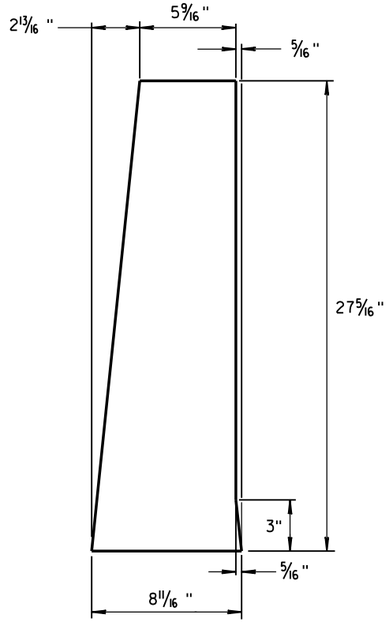

END PLATE

1/8" STEEL PLATE

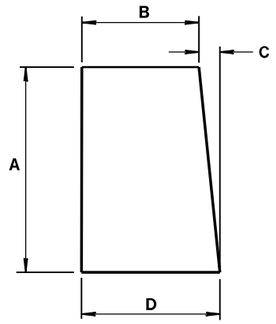

GUSSETS 1 - 12

ALL GUSSETS 1/8" STEEL PLATE

GUSSET DIMENSIONS				
GUSSET NO.	A	B	C	D
1	2 7/8"	7 3/4"	1/4"	8
2	4 11/16 "	7 9/16 "	1/2"	8
3	6 1/2"	7 3/8"	11/16 "	8 1/16 "
4	8 5/16 "	7 3/16 "	7/8"	8 1/16 "
5	10 1/8"	7"	1 1/16 "	8 1/16 "
6	11 15/16 "	6 13/16 "	1 1/4"	8 1/16 "
7	13 3/4"	6 5/8"	1 7/16 "	8 1/16 "
8	15 9/16 "	6 7/16 "	1 9/16 "	8 1/16 "
9	17 3/8"	6 1/4"	1 13/16 "	8 1/16 "
10	19 3/16 "	6 1/16 "	1 15/16 "	8 1/16 "
11	21"	5 7/8"	2 3/16 "	8 1/16 "
12	22 13/16 "	5 11/16 "	2 5/16 "	8 1/16 "

SIDE PLATES, TOP PLATE, END PLATE AND GUSSETS ARE 12 GAUGE ASTM A36 STEEL AND GALVANIZED.

GUSSETS AND END PLATE ARE STITCH WELDED ON 3 SIDES. TWO TRIANGULAR SIDE PLATES ARE STITCH WELDED TO TOP PLATE, END PLATE AND GUSSETS.

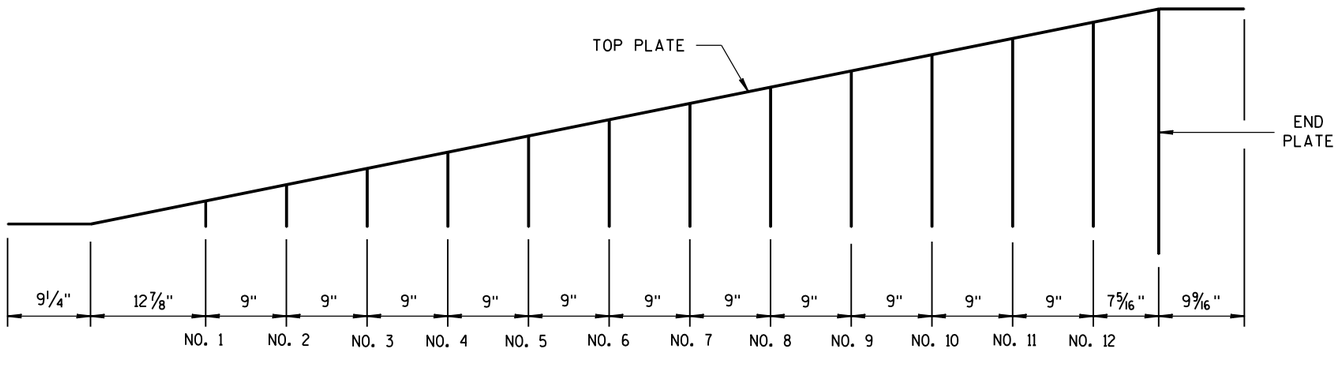

GUSSET LOCATION

CAP DETAILS FOR TEMPORARY CONCRETE BARRIER TO 56" PERMANENT CONCRETE BARRIER

CONCRETE BARRIER
TEMPORARY PRECAST, 12'-6"

STATE OF WISCONSIN
DEPARTMENT OF TRANSPOI

6

S.D.D. 14 B 7-14g

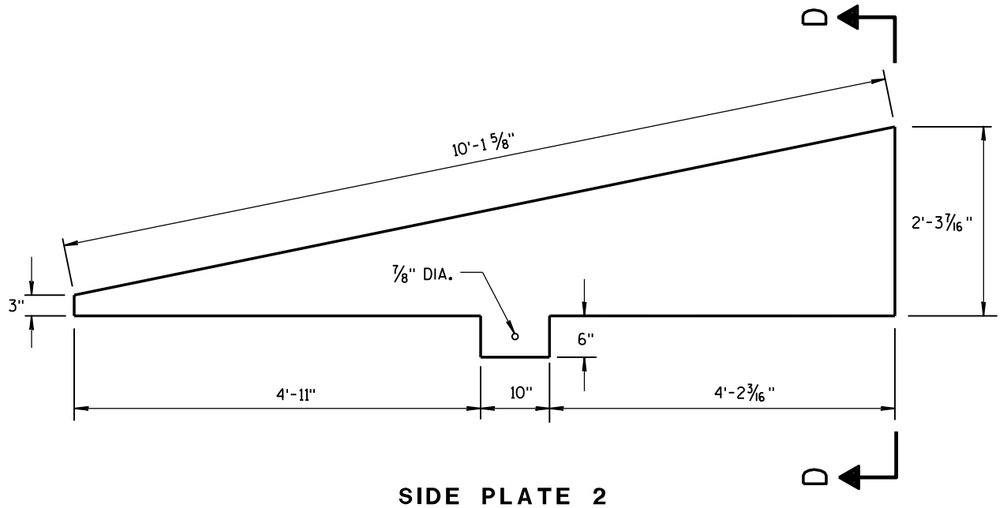

SIDE PLATE 2

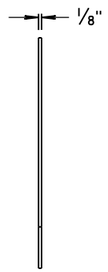

END VIEW

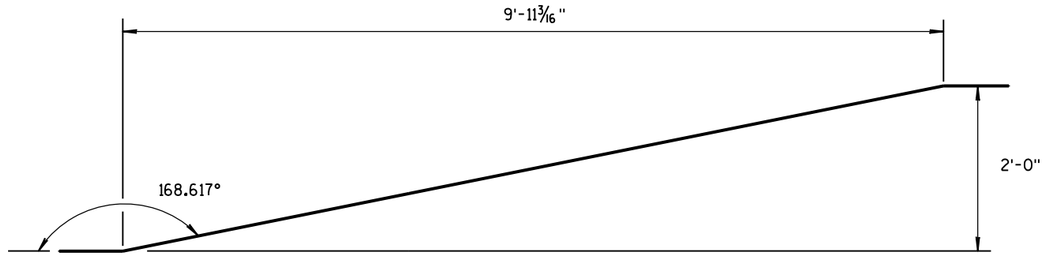

SIDE VIEW

TOP PLATE

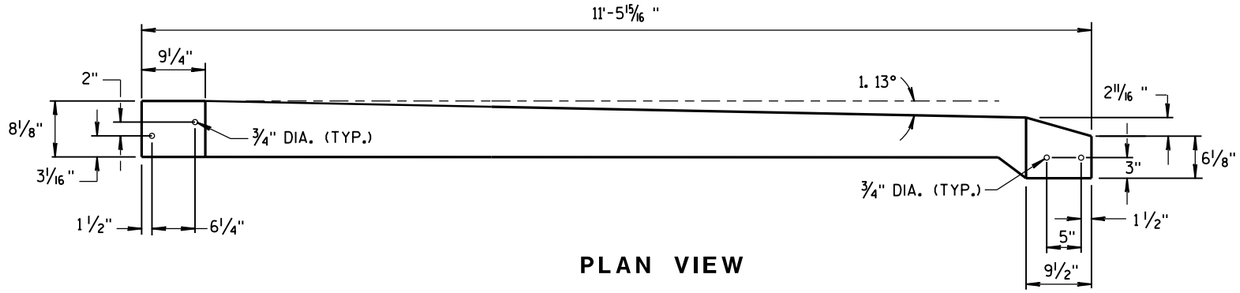

PLAN VIEW

TOP PLATE

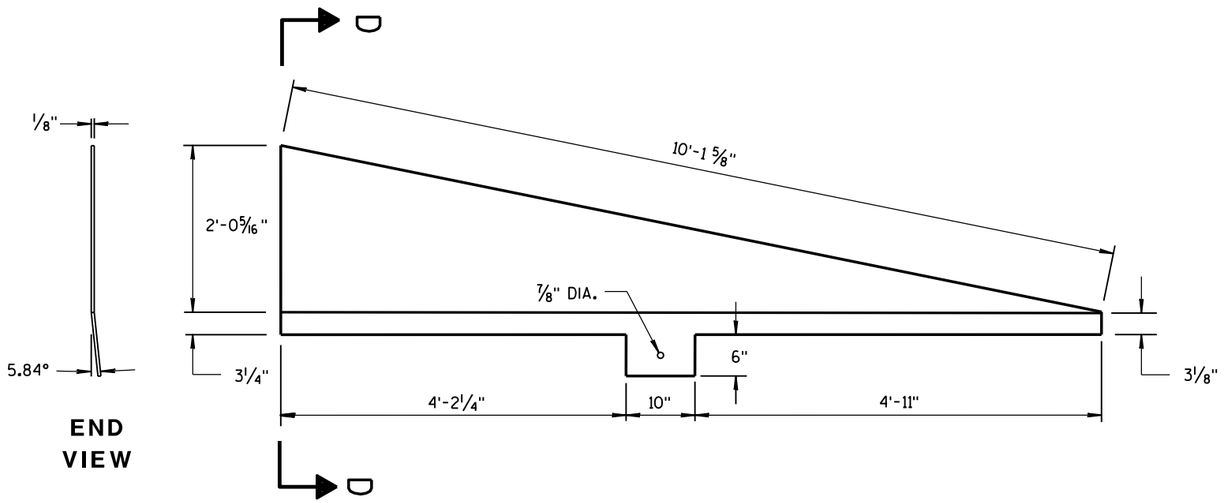

END VIEW

SIDE PLATE 1

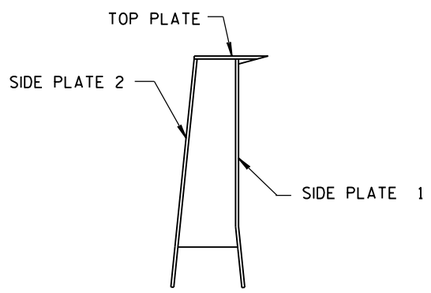

SECTION D-D

CAP DETAILS FOR TEMPORARY CONCRETE BARRIER TO 56" PERMANENT CONCRETE BARRIER

CONCRETE BARRIER
TEMPORARY PRECAST, 12'-6"

STATE OF WISCONSIN
DEPARTMENT OF TRANSPORTATION

APPROVED
June 2014 — DATE
/S/ Jerry H. Zoda — ROADWAY STANDARD DEVELOPMENT ENGINEER
FHWA

6

S.D.D. 14 B 7-14h

6

S.D.D. 14 B 7-14h

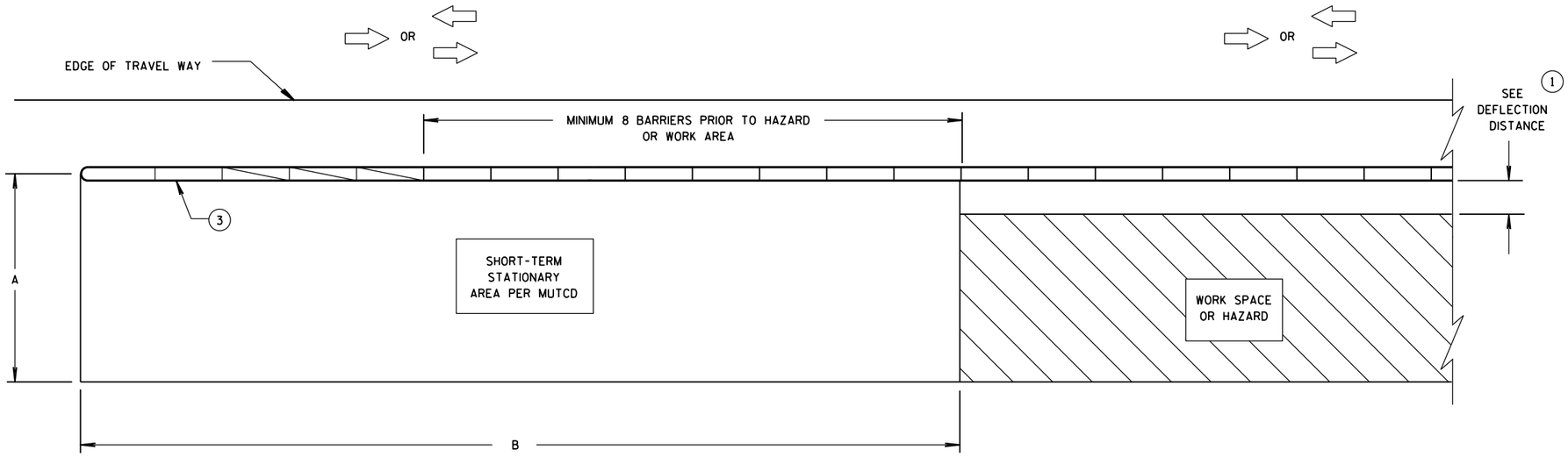

CRASH CUSHION/SAND BARREL ARRAY AND TEMPORARY BARRIER INSTALLATION FOR TRAFFIC ON ONE SIDE OF BARRIER

DIMENSION A TABLE (2)

FACILITY	POSTED SPEED MPH	DIMENSION A	
		MIN. FT	MAX. FT
FREEWAY/EXPRESSWAY	ALL	15	20
NON-FREEWAY/EXPRESSWAY	GREATER THAN OR EQUAL TO 45	10	15
NON-FREEWAY/EXPRESSWAY	LESS THAN 45	8	10
AADT LESS THAN 1,500	ALL	8	10

DIMENSION B TABLE (2)

POSTED SPEEDS MPH	DIMENSION B FT
20	115
25	155
30	200
35	250
40	305
45	360
50	425
55	495
60	570
65	645

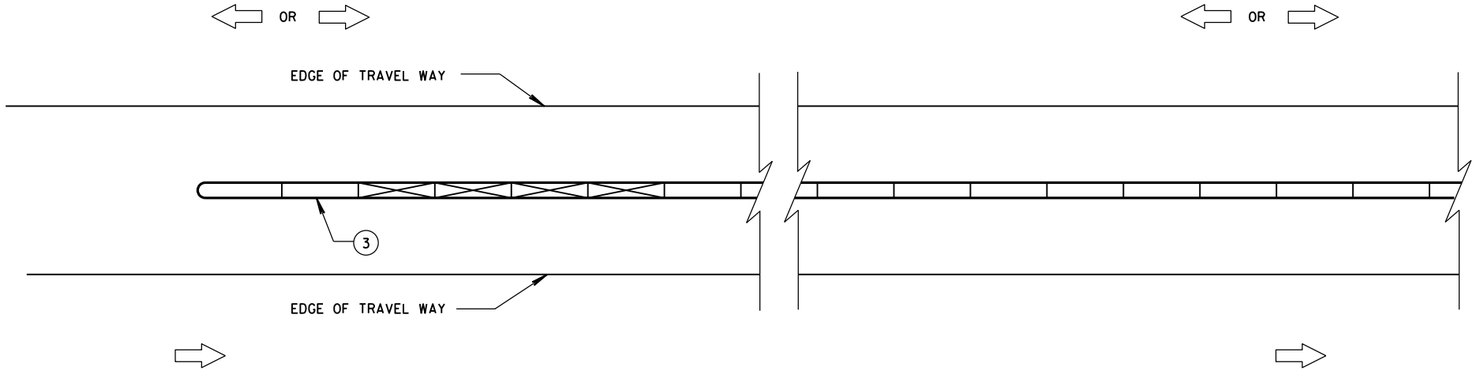

CRASH CUSHION/SAND BARREL ARRAY AND TEMPORARY BARRIER INSTALLATION FOR TRAFFIC ON BOTH SIDES OF BARRIER

LEGEND

- DIRECTION OF TRAVEL
- CRASH CUSHION OR SAND BARREL ARRAY
- SEE FREE STANDING TRANSITION TO TIED-DOWN SYSTEM DETAILS
- SEE BI-DIRECTIONAL TRANSITION TO TIED-DOWN SYSTEM DETAILS
- 3 PINS PLACED ON TRAFFIC SIDE OF BARRIER
- PERMANENT CONCRETE BARRIER OR CONCRETE PARAPET
- FREE STANDING TEMPORARY BARRIER

GENERAL NOTES

SEE STANDARD DETAIL DRAWING 14B7 FOR MORE INFORMATION.

DETAILS PROVIDE A GENERAL LAYOUT OF TEMPORARY CONCRETE BARRIER, CRASH CUSHIONS, SAND BARREL ARRAYS AND TIE DOWN TRANSITIONS. DETAILS PROVIDED MAY NOT FIT ALL POSSIBLE SITUATIONS OR SITE CONDITIONS. SEE OTHER SECTIONS OF THE CONTRACT OR PROJECT ENGINEER FOR MORE DETAILS.

ADDITIONAL TEMPORARY BARRIER MAY BE REQUIRED TO PROTECT TRAVELING PUBLIC FROM HAZARDS, CONTRACTOR'S OPERATIONS OR TO CONTROL TRAFFIC.

TEMPORARY BARRIER MAY BE REQUIRED TO BE ANCHORED TO PAVEMENT OR BRIDGE DECK.

FOR DETAILS ON CRASH CUSHION OR SAND BARREL ARRAYS SEE OTHER SECTIONS OF THE PLAN AND MANUFACTURE'S DETAILS.

SLOPES LEADING TO TEMPORARY BARRIER, CRASH CUSHION OR SAND BARREL ARRAY ARE 10:1 OR LESS.

(1) FOR DEFLECTION INFORMATION SEE STANDARD DETAIL DRAWING 14B7.

(2) VALUES PROVIDED MAY NOT FIT ALL POSSIBLE SITUATIONS OR SITE CONDITIONS. SEE OTHER SECTIONS OF THE CONTRACT OR PROJECT ENGINEER FOR MORE DETAILS.

(3) ANCHOR TEMPORARY BARRIER ACCORDING TO CRASH CUSHION OR SAND BARREL MANUFACTURER'S RECOMMENDATIONS. IF MANUFACTURER'S RECOMMENDATIONS ARE NOT PROVIDED, ANCHOR 3 PINS ON TRAFFIC SIDE.

CRASH CUSHION/SAND BARREL ARRAY AND OTHER TEMPORARY BARRIER LAYOUT DETAILS

STATE OF WISCONSIN
DEPARTMENT OF TRANSPOI

6

S.D.D. 14 B 8-2a

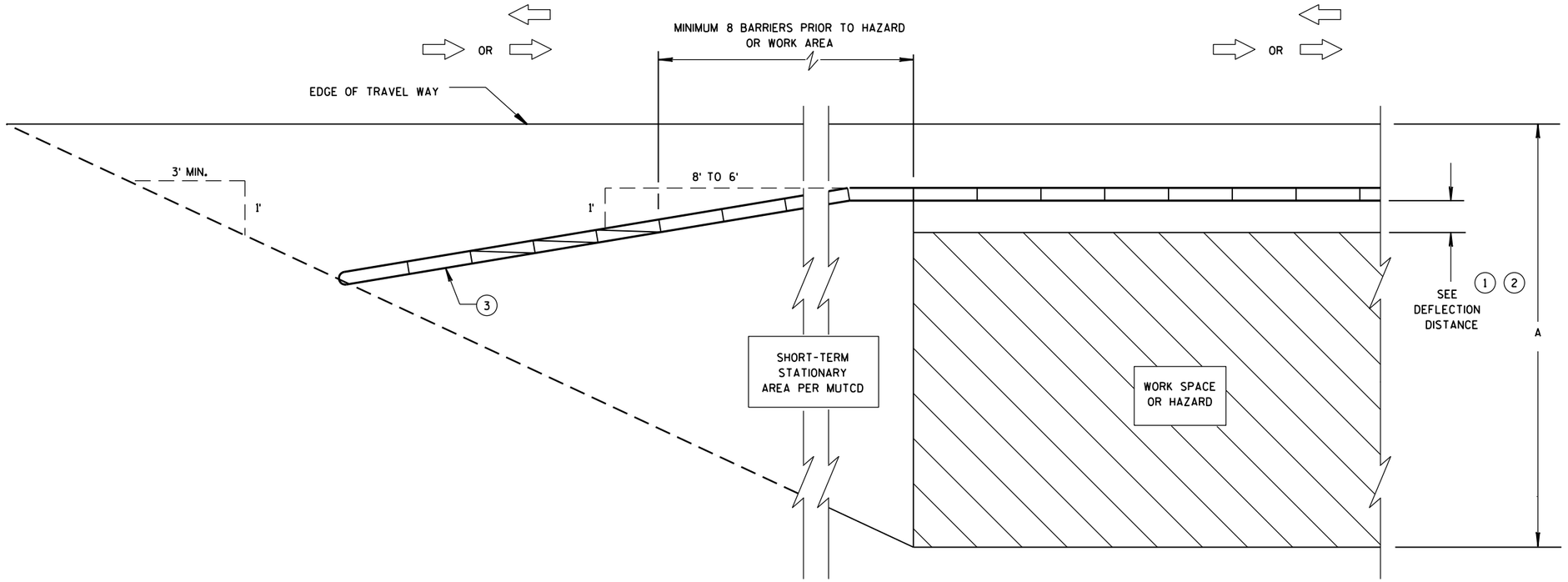

CRASH CUSHION/SAND BARREL ARRAY AND TEMPORARY BARRIER INSTALLATION FOR TRAFFIC ON ONE SIDE - FLARED INSTALLATION

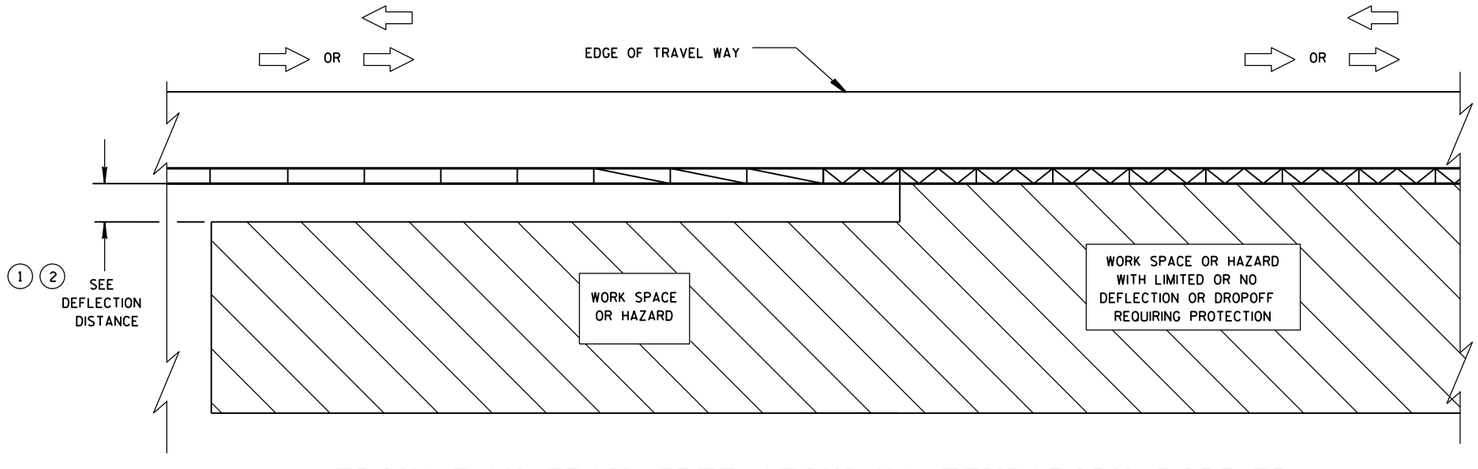

TRANSITION FROM FREE STANDING TEMPORARY BARRIER TO ANCHORED BARRIER

LEGEND

- DIRECTION OF TRAVEL
- CRASH CUSHION OR SAND BARREL ARRAY
- SEE FREE STANDING TRANSITION TO TIED-DOWN SYSTEM DETAILS
- SEE BI-DIRECTIONAL TRANSITION TO TIED-DOWN SYSTEM DETAILS
- 3 PINS PLACED ON TRAFFIC SIDE OF BARRIER
- PERMANENT CONCRETE BARRIER OR CONCRETE PARAPET
- FREE STANDING TEMPORARY BARRIER

CRASH CUSHION/SAND BARREL ARRAY AND OTHER TEMPORARY BARRIER LAYOUT DETAILS

STATE OF WISCONSIN
DEPARTMENT OF TRANSPOI

6

S.D.D. 14 B 8-2b

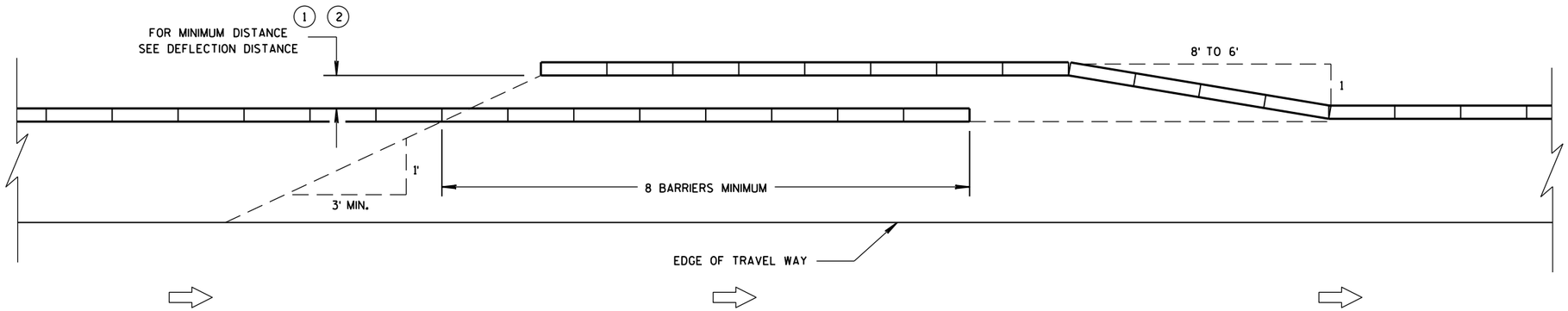

TEMPORARY BARRIER OVERLAP - ONE-WAY TRAFFIC

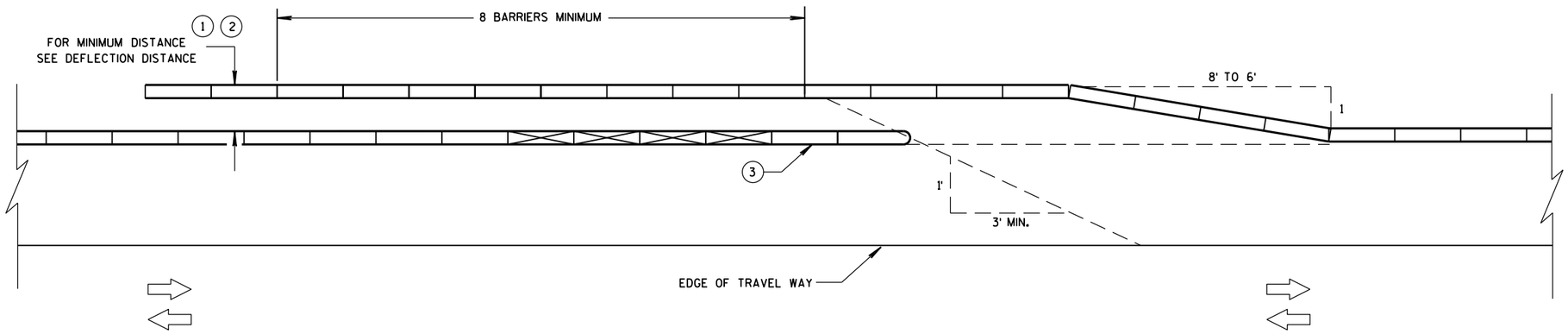

TEMPORARY BARRIER OVERLAP - TWO-WAY TRAFFIC

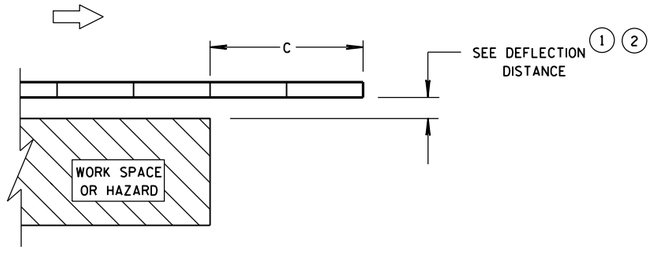

ENDING TEMPORARY BARRIER DOWNSTREAM - UNANCHORED

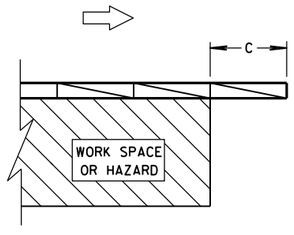

ENDING TEMPORARY BARRIER DOWNSTREAM - ANCHORED

LEGEND

- DIRECTION OF TRAVEL
- CRASH CUSHION OR SAND BARREL ARRAY
- SEE FREE STANDING TRANSITION TO TIED-DOWN SYSTEM DETAILS
- SEE BI-DIRECTIONAL TRANSITION TO TIED-DOWN SYSTEM DETAILS
- 3 PINS PLACED ON TRAFFIC SIDE OF BARRIER
- PERMANENT CONCRETE BARRIER OR CONCRETE PARAPET
- FREE STANDING TEMPORARY BARRIER

CRASH CUSHION/SAND BARREL ARRAY AND OTHER TEMPORARY BARRIER LAYOUT DETAILS

STATE OF WISCONSIN
DEPARTMENT OF TRANSPOR

6

S.D.D. 14 B 8-2c

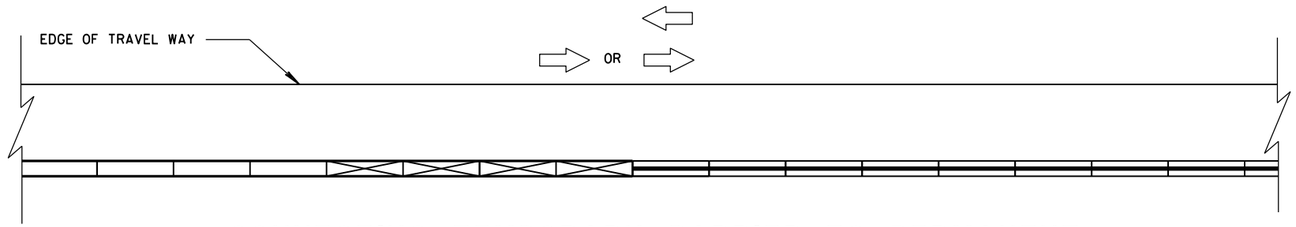

CONNECTING TEMPORARY BARRIER TO PERMANENT
CONCRETE BARRIER-TRAFFIC ON ONE SIDE

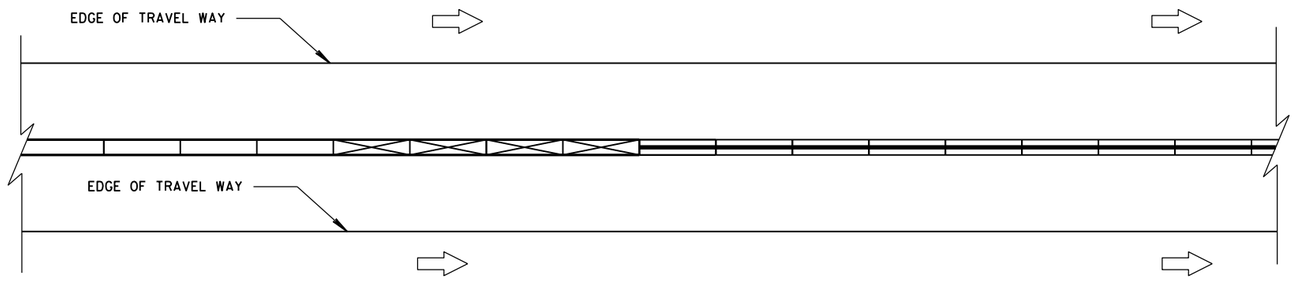

CONNECTING TEMPORARY BARRIER TO PERMANENT
CONCRETE BARRIER-TRAFFIC ON BOTH SIDES

LEGEND

DIRECTION OF TRAVEL

CRASH CUSHION OR
SAND BARREL ARRAY

SEE FREE STANDING TRANSITION
TO TIED-DOWN SYSTEM DETAILS

SEE BI-DIRECTIONAL TRANSITION
TO TIED-DOWN SYSTEM DETAILS

3 PINS PLACED ON
TRAFFIC SIDE OF BARRIER

PERMANENT CONCRETE BARRIER
OR CONCRETE PARAPET

FREE STANDING TEMPORARY
BARRIER

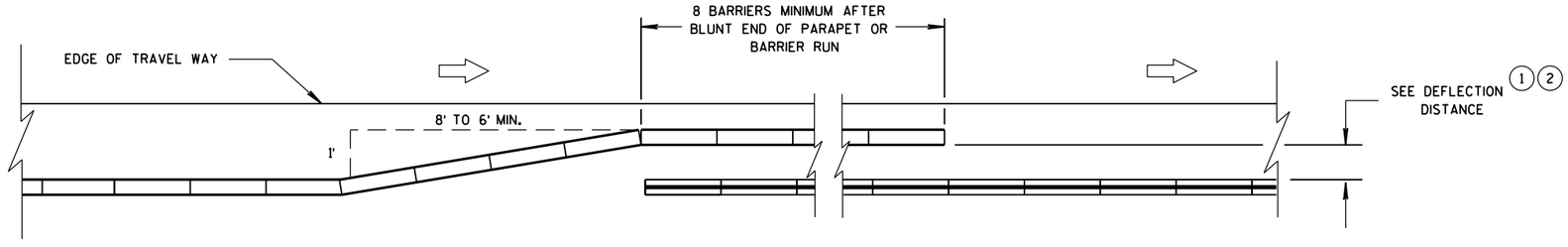

OVERLAPPING TEMPORARY BARRIER AND PERMANENT BARRIER -
ONE WAY TRAFFIC

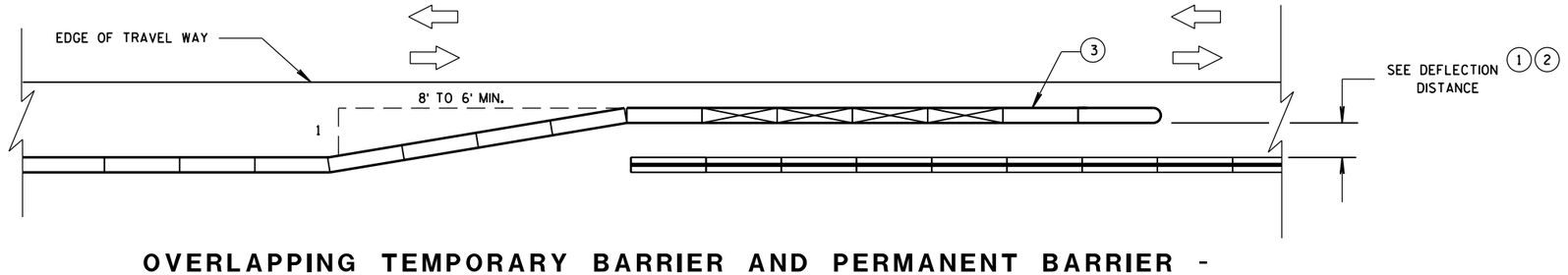

OVERLAPPING TEMPORARY BARRIER AND PERMANENT BARRIER -
TWO WAY TRAFFIC

CRASH CUSHION/SAND BARREL
ARRAY AND OTHER TEMPORARY
BARRIER LAYOUT DETAILS

STATE OF WISCONSIN
DEPARTMENT OF TRANSPOI

6

S.D.D. 14 B 8-2d

LEGEND

DIRECTION OF TRAVEL

CRASH CUSHION OR SAND BARREL ARRAY

SEE FREE STANDING TRANSITION TO TIED-DOWN SYSTEM DETAILS

SEE BI-DIRECTIONAL TRANSITION TO TIED-DOWN SYSTEM DETAILS

3 PINS PLACED ON TRAFFIC SIDE OF BARRIER

PERMANENT CONCRETE BARRIER OR CONCRETE PARAPET

FREE STANDING TEMPORARY BARRIER

DIMENSION C TABLE (2)

AVAILABLE DEFLECTION DISTANCE	MINIMUM LENGTH OF BARRIER BEYOND HAZARD FT
GREATER THAN 8'	12.5
LESS THAN OR EQUAL TO 8' BUT GREATER THAN 4'	50
LESS THAN OR EQUAL TO 4'	100

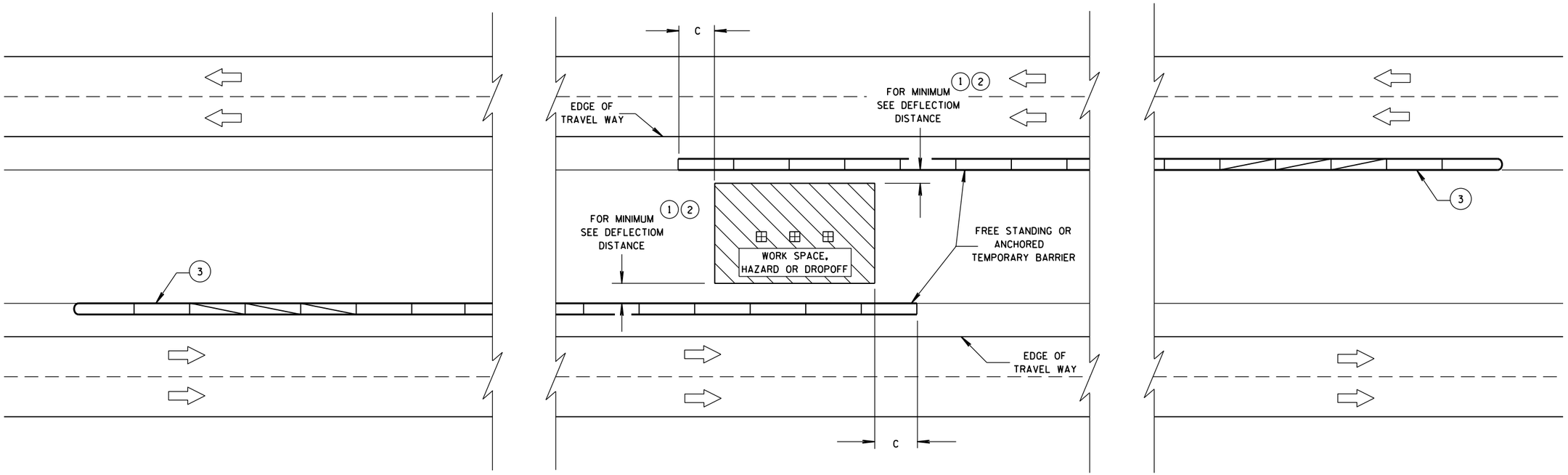

CRASH CUSHION/SAND BARREL ARRAY AND OTHER TEMPORARY BARRIER LAYOUT DETAILS

STATE OF WISCONSIN
DEPARTMENT OF TRANSPORTATION

APPROVED
June, 2015
DATE
/S/ Jerry H. Zogg
ROADWAY STANDARDS ENGINNER
FHWA

6

S.D.D. 14 B 8-2e

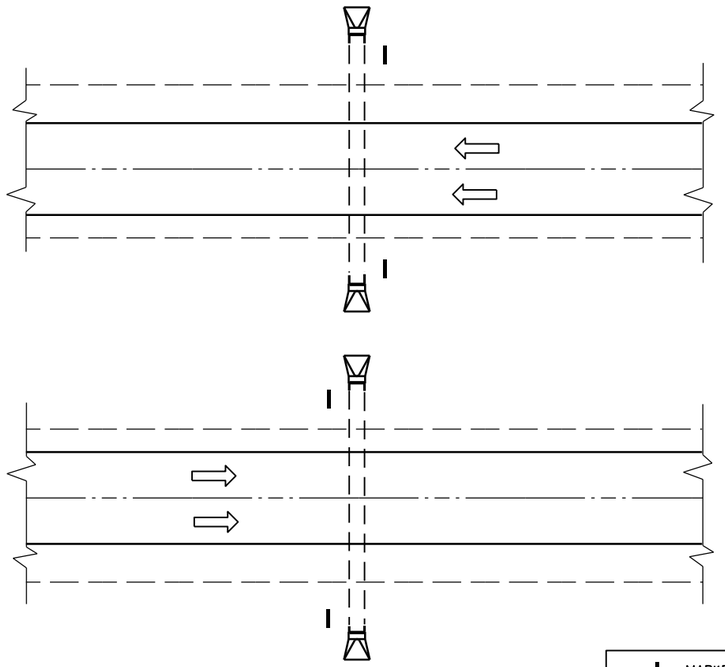

PLAN VIEW

DIVIDED HIGHWAY

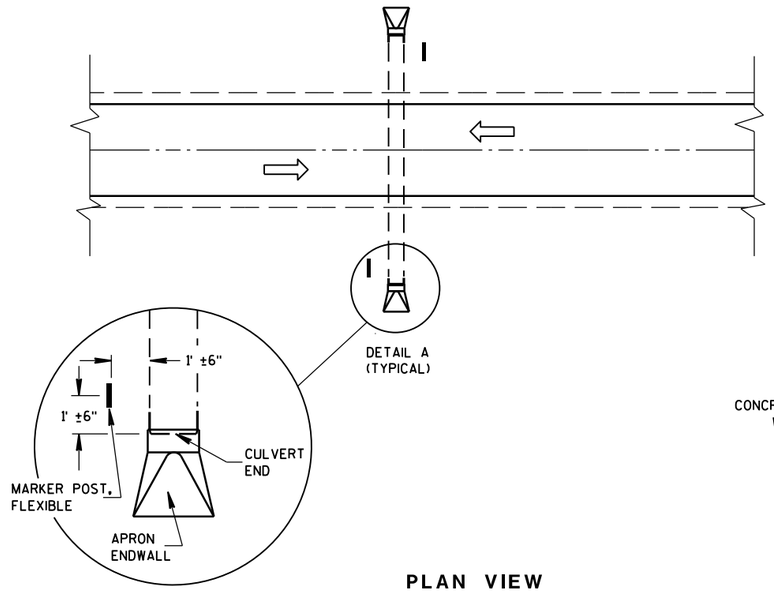

DETAIL A
(TYPICAL)

PLAN VIEW

UNDIVIDED HIGHWAY

MARKER POST, FLEXIBLE

DIRECTION OF TRAFFIC FLOW

GENERAL NOTES

DETAILS OF CONSTRUCTION, MATERIALS AND WORKMANSHIP NOT SHOWN ON THIS DRAWING SHALL CONFORM TO THE PERTINENT REQUIREMENTS OF THE STANDARD SPECIFICATIONS AND THE APPLICABLE SPECIAL PROVISIONS.

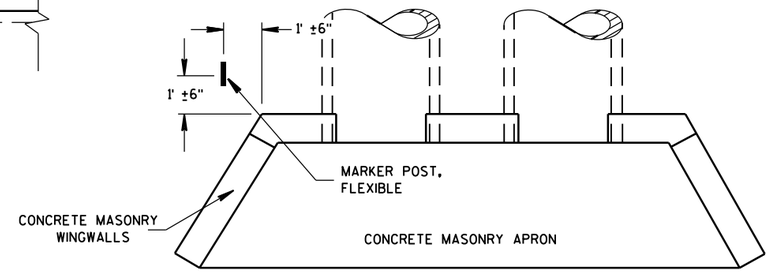

PLAN VIEW

CONCRETE MASONRY ENDWALLS FOR CULVERT PIPE AND PIPE ARCH

FLEXIBLE MARKER POST LOCATION

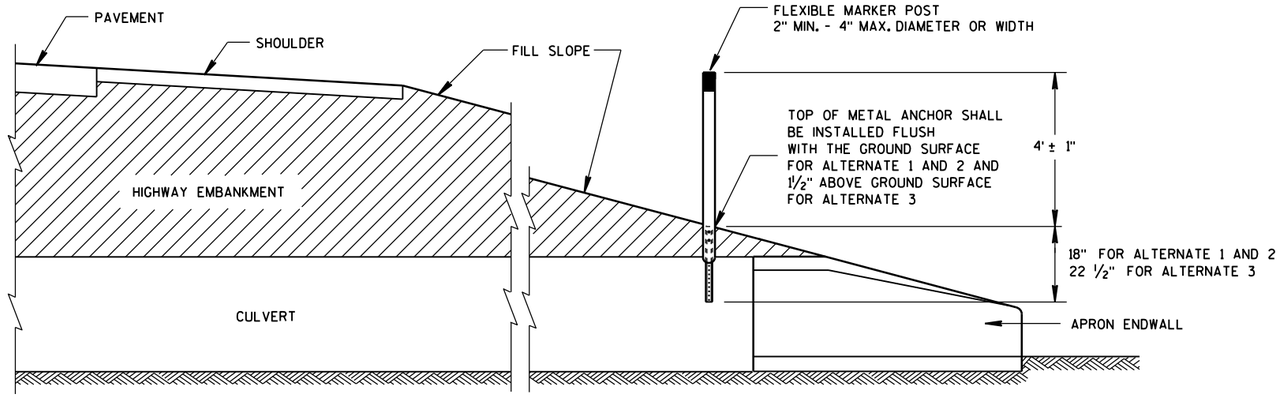

CROSS SECTION

FLEXIBLE MARKER POST

FLEXIBLE MARKER POST FOR CULVERT END

STATE OF WISCONSIN
DEPARTMENT OF TRANSPOI

6

S.D.D. 15 A 3-2a

6

S.D.D. 15 A 3-2a

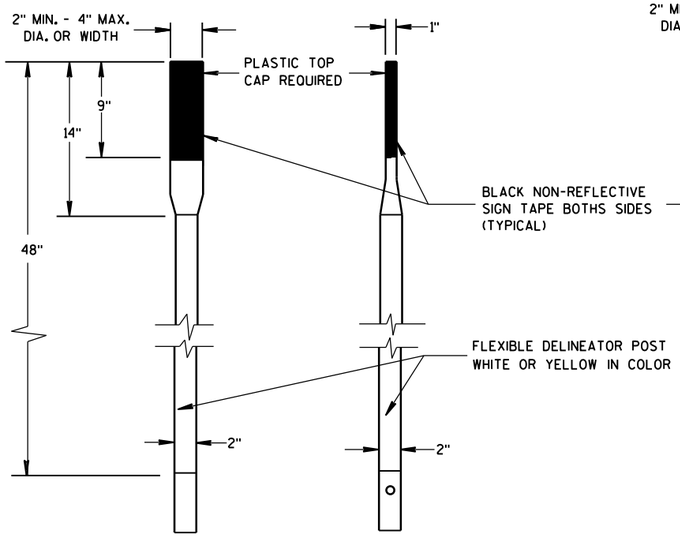

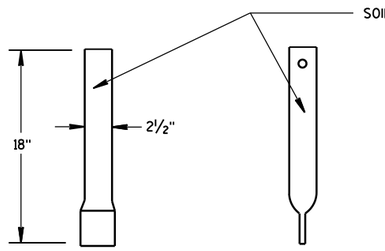

FRONT VIEW SIDE VIEW

ALTERNATE 1

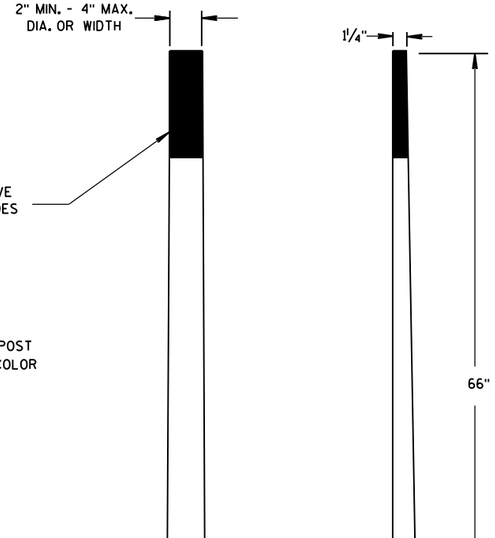

FRONT VIEW SIDE VIEW

ALTERNATE 2

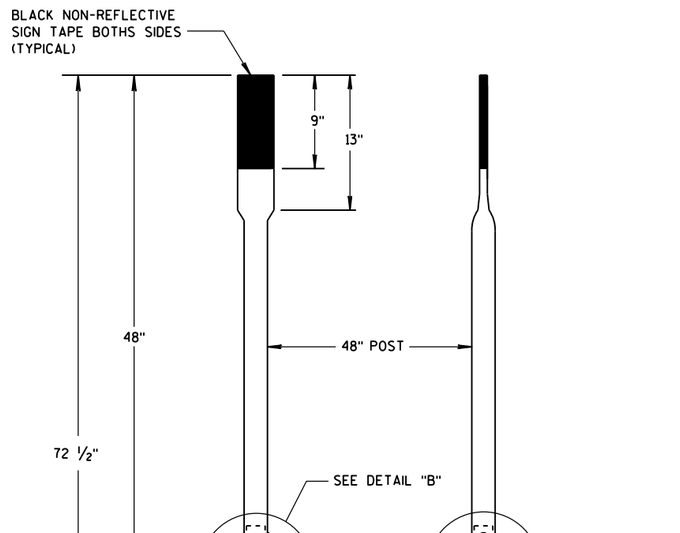

FRONT VIEW SIDE VIEW

ALTERNATE 3

FLEXIBLE MARKER POSTS

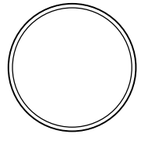

SECTION A-A

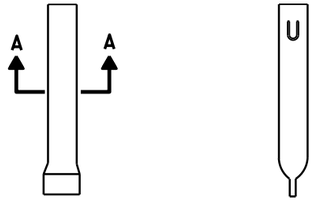

FRONT VIEW SIDE VIEW

ALTERNATE 1

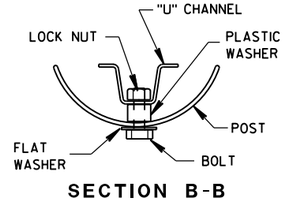

SECTION B-B

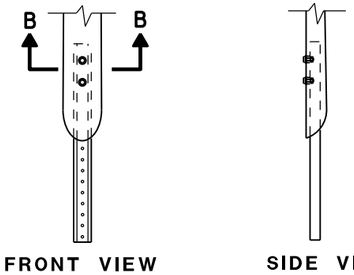

FRONT VIEW SIDE VIEW

ALTERNATE 2

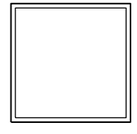

SECTION C-C

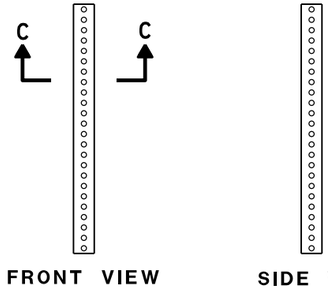

FRONT VIEW SIDE VIEW

ALTERNATE 3

FLEXIBLE MARKER POST ANCHORS

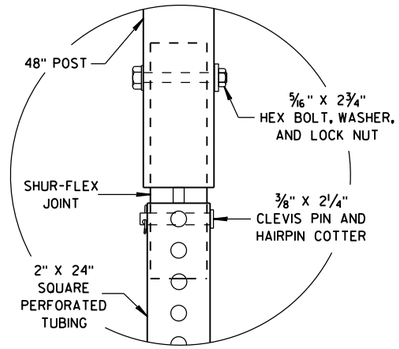

DETAIL B

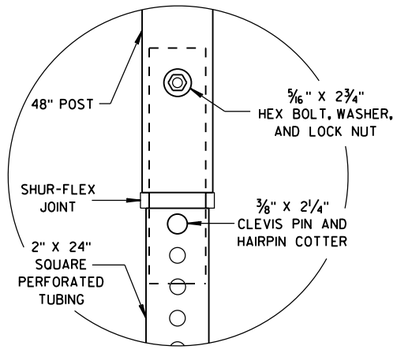

DETAIL C

FLEXIBLE MARKER POST
FOR CULVERT END

STATE OF WISCONSIN
DEPARTMENT OF TRANSPORTATION

APPROVED
10/1/2012 — DATE
/S/ Travis Feltes — STATE TRAFFIC ENGINEER
FHWA

6

S.D.D. 15 A 3-2b

6

S.D.D. 15 A 3-2b

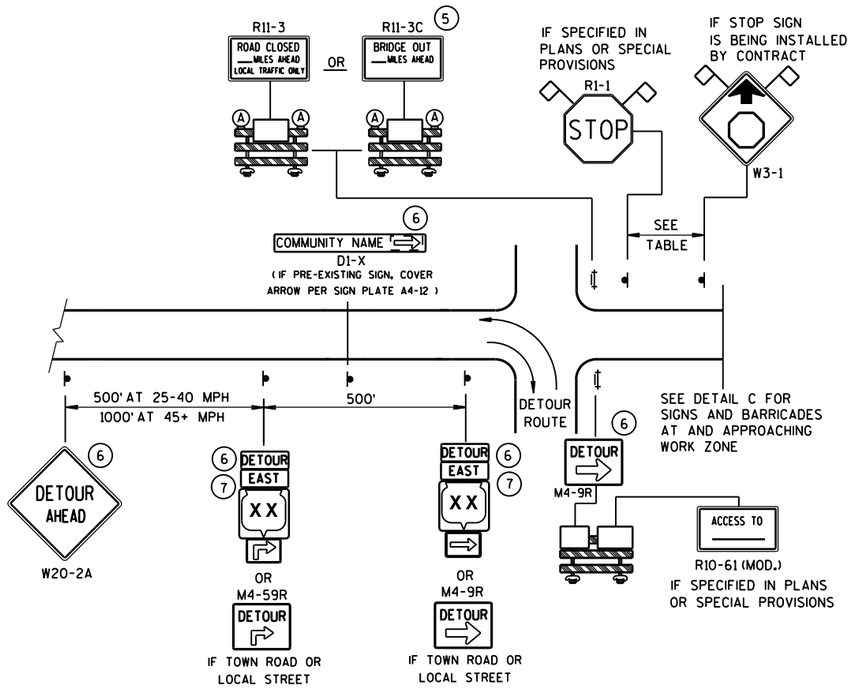

DETAIL A
MAINLINE CLOSURE WITH POSTED DETOUR

WORK ZONE GREATER THAN ½ MILE FROM DETOUR ROUTE (1000 FEET IF URBAN)

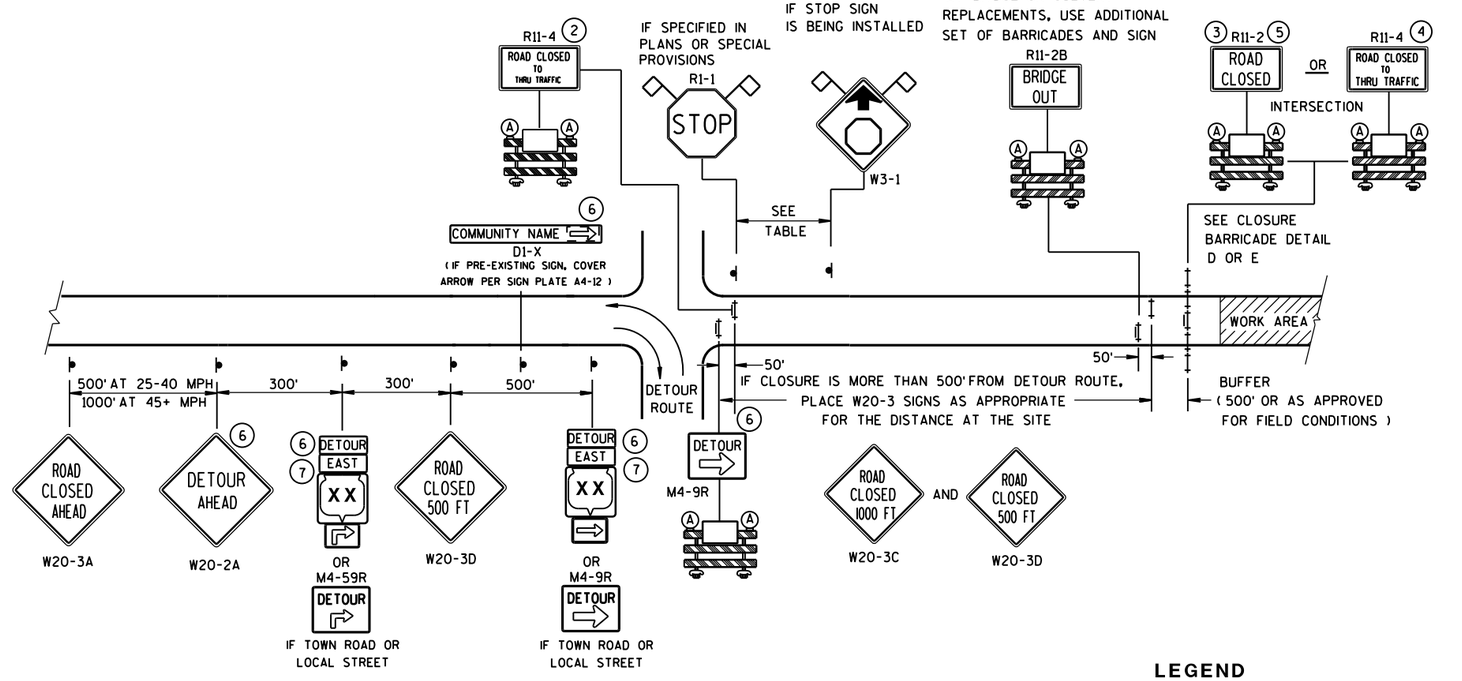

DETAIL B
MAINLINE CLOSURE WITH POSTED DETOUR

WORK ZONE LESS THAN ½ MILE FROM DETOUR ROUTE (1000 FEET IF URBAN)

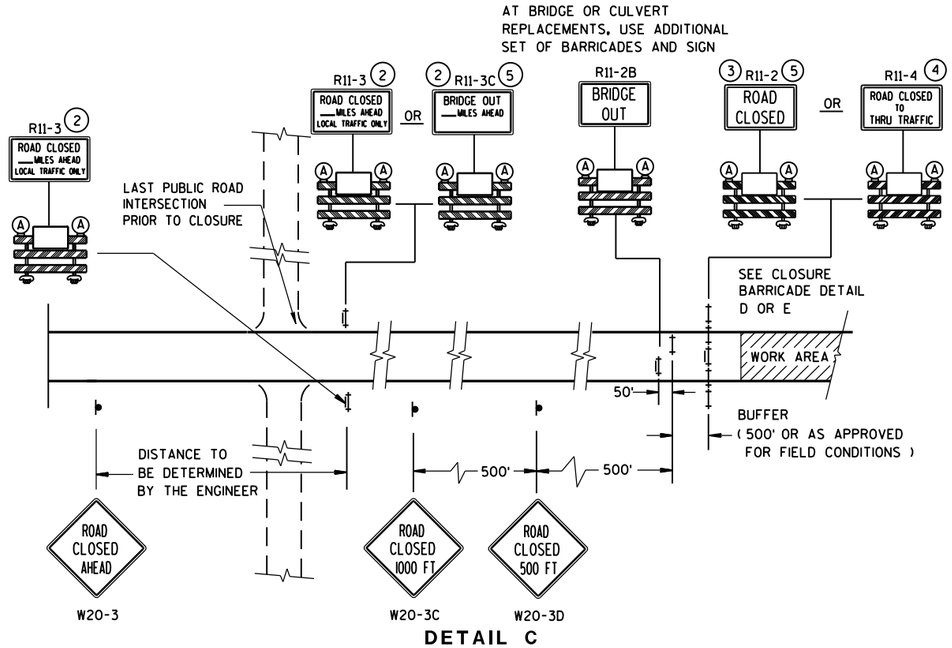

DETAIL C
MAINLINE CLOSURE, NO POSTED DETOUR

SPEED LIMIT (MPH)	"STOP AHEAD" ADVANCE WARNING DISTANCE (FT)
25	200
30	200
35	350
40	350
45	500
50	550
55	750

LEGEND

- SIGN ON PERMANENT SUPPORT
- TYPE III BARRICADE
- TYPE III BARRICADE WITH ATTACHED SIGN
- (A) TYPE "A" WARNING LIGHT (FLASHING)
- WORK AREA
- DETOUR / EAST — M4-8 / M3-X
- XX — M1-4; COUNTY XX — M1-5A; XX — M1-6
- M05-1 OR M06-1
- FLAGS, 16" X 16" MIN., (ORANGE)

SEE SDD 15C2-SHEET "**b**" FOR GENERAL NOTES AND FOOTNOTES (1) THROUGH (7)

BARRICADES AND SIGNS FOR MAINLINE CLOSURES

STATE OF WISCONSIN
DEPARTMENT OF TRANSPORTATION

Sept. 2015 — DATE
/S/ Peter Amakobe Atepe
STATEWIDE WORK ZONE TRAFFIC SAFETY ENGINEER
FHWA

6

S.D.D. 15 C 2-6a

6

S.D.D. 15 C 2-6a

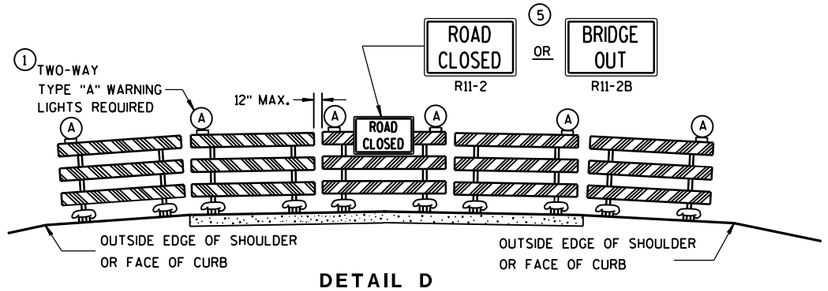

DETAIL D

ROAD CLOSURE BARRICADE DETAIL

APPROACH VIEW

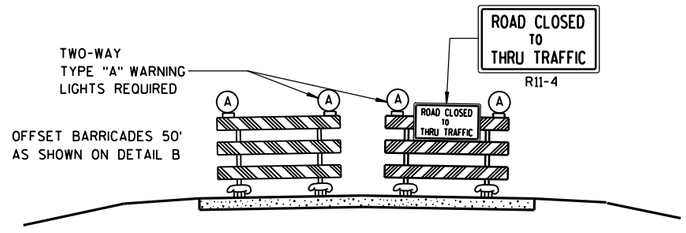

DETAIL E

LANE CLOSURE BARRICADE DETAIL

APPROACH VIEW

SEE SDD 15C2-SHEET "**a**" FOR LEGEND

GENERAL NOTES

THE EXACT NUMBER, LOCATION, AND SPACING OF ALL SIGNS AND BARRICADES SHALL BE ADJUSTED TO FIT FIELD CONDITIONS AS APPROVED BY THE ENGINEER.

ANY SIGNS TEMPORARY OR EXISTING, WHICH CONFLICT WITH TRAFFIC CONTROL "IN USE" SHALL BE REMOVED OR COVERED AS NEEDED AND AS APPROVED BY THE ENGINEER.

THE SPACING BETWEEN TRAFFIC CONTROL SIGNS SHOULD BE ADJUSTED TO NOT CONFLICT WITH AND SHOULD PROVIDE A DESIRABLE MINIMUM OF 200 FEET CLEARANCE TO EXISTING SIGNS THAT WILL REMAIN IN PLACE.

BARRICADES THAT MUST BE MOVED FOR A WORK OPERATION SHALL BE IMMEDIATELY RE-ESTABLISHED UPON COMPLETION OF THE OPERATION OR, FOR CONTINUING OPERATIONS, AT THE END OF EACH WORKING DAY.

SIGNS THAT WILL BE IN PLACE LESS THAN 7 CONTINUOUS DAYS AND NIGHTS MAY BE MOUNTED ON PORTABLE SUPPORTS.

ALL TYPE III BARRICADES SHALL HAVE RAILS REFLECTORIZED ON BOTH FACES. STRIPES SHALL BE PROPERLY SLOPED DOWN TOWARD THE TRAFFIC SIDE OR AS SHOWN IN THE ROAD CLOSURE BARRICADE DETAIL D FOR FULL ROAD CLOSURES.

TYPE "A" LOW-INTENSITY FLASHING WARNING LIGHTS SHALL BE VISIBLE ON BOTH SIDES OF THE BARRICADE.

THE R11-2, R11-3, M4-9, R11-4 AND R10-61 SIGNS PLACED ON BARRICADES SHALL COVER NO MORE THAN THE TOP RAIL. THE SIGNS SHALL NOT COVER ANY PORTION OF THE MIDDLE OR BOTTOM RAILS.

"WO AND "MO" SIGNS ARE THE SAME AS "W" AND "M" SIGNS EXCEPT THE BACKGROUND IS ORANGE.

ALL SIGNS SHALL BE 48" X 48" UNLESS OTHERWISE NOTED BELOW:
- R11-2 SHALL BE 48" X 30".
- R11-3, R11-4 AND R10-61 SHALL BE 60" X 30".
- M4-9 SHALL BE 30" X 24".
- M3-X SHALL BE 24" X 12". (36" X 18" IF NEEDED TO MATCH EXISTING SIGNS.)
- M4-8 SHALL BE 24" X 12". (30" X 15" IF NEEDED TO MATCH EXISTING SIGNS.)
- M1-4, M1-5A, AND M1-6 SHALL BE 24" X 24". (36" X 36" IF NEEDED TO MATCH EXISTING SIGNS.)
- M05-1 AND M06-1 SHALL BE 21" X 21". (30" X 30" IF NEEDED TO MATCH EXISTING SIGNS.)
- D1-X SHALL BE AS SHOWN ON SPECIFIC PROJECT SIGNING DETAIL SHEETS.
- R1-1 SHALL BE 36" X 36".

(1) TWO WARNING LIGHTS SHALL BE PROVIDED ON THE CENTER BARRICADE AND A MINIMUM OF ONE WARNING LIGHT SHALL BE PROVIDED ON EACH OF THE OTHER BARRICADES WITHIN THE ROADWAY LIMITS. SPACING OF THE WARNING LIGHTS SHALL BE UNIFORM TO THE EDGE OF ROADWAY AS SHOWN (APPROX. 8-FOOT LIGHT SPACING).

(2) THESE SIGNS AND BARRICADES ARE NOT REQUIRED IF ROAD CLOSURE BEGINS AT INTERSECTION.

(3) FOR ROAD CLOSURE WITHOUT LOCAL ACCESS TO PROJECT, SEE ROAD CLOSURE BARRICADE DETAIL D.

(4) FOR ROAD CLOSURE WITH LOCAL ACCESS TO PROJECT, SEE LANE CLOSURE BARRICADE DETAIL E.

(5) FOR BRIDGE OR CULVERT REPLACEMENTS, SUBSTITUTE "BRIDGE OUT" INSTEAD OF "ROAD CLOSED" ON R11-2 AND R11-3 SIGNS.

(6) INSTALL DETOUR AND COMMUNITY GUIDE SIGNS AND ARROWS ONLY IF SPECIFIED IN THE CONTRACT. IF THERE ARE EXISTING ROUTE MARKER ASSEMBLIES THAT WILL REMAIN IN PLACE, ADJUST THE LOCATION OF THE DETOUR ROUTE SIGNS TO CORRESPOND WITH THE EXISTING ASSEMBLIES. MODIFY EXISTING SIGNS WHERE POSSIBLE. SEE SPECIFIC PROJECT DETOUR SIGNING DETAIL SHEETS. IF DETOUR SIGNS ARE BEING INSTALLED BY OTHERS, PLACE THE CONTRACTED TRAFFIC CONTROL SIGNS TO ALLOW FOR PLACEMENT OF ALL WARNING, DETOUR AND GUIDE SIGNS AS SHOWN.

(7) "EAST" CARDINAL DIRECTION MARKERS AND RIGHT TURN ARROWS ARE SHOWN. USE OTHER CARDINAL DIRECTIONS AND ARROWS AS APPROPRIATE.

BARRICADES AND SIGNS FOR MAINLINE CLOSURES

STATE OF WISCONSIN
DEPARTMENT OF TRANSPORTATION

Sept. 2015 — DATE
/S/ Peter Amakobe Atepe — STATEWIDE WORK ZO SAFETY ENGI FIC
FHWA

6

S.D.D. 15 C 2-6b

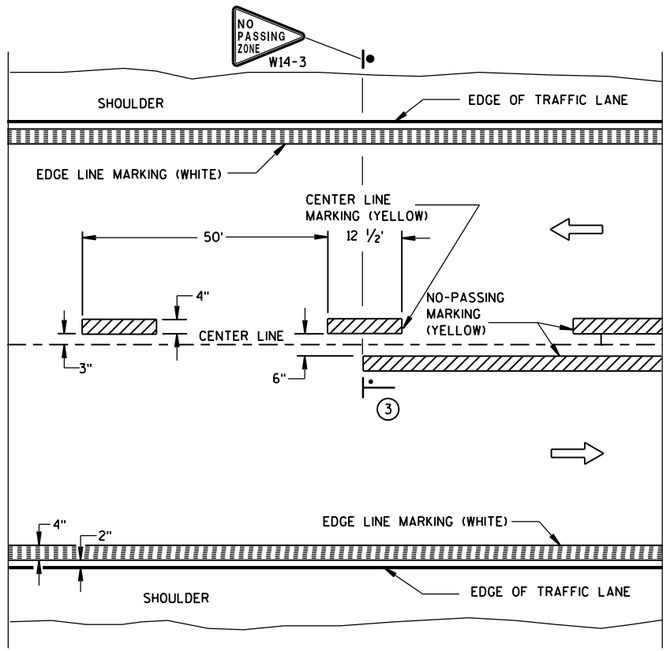

TWO WAY TRAFFIC

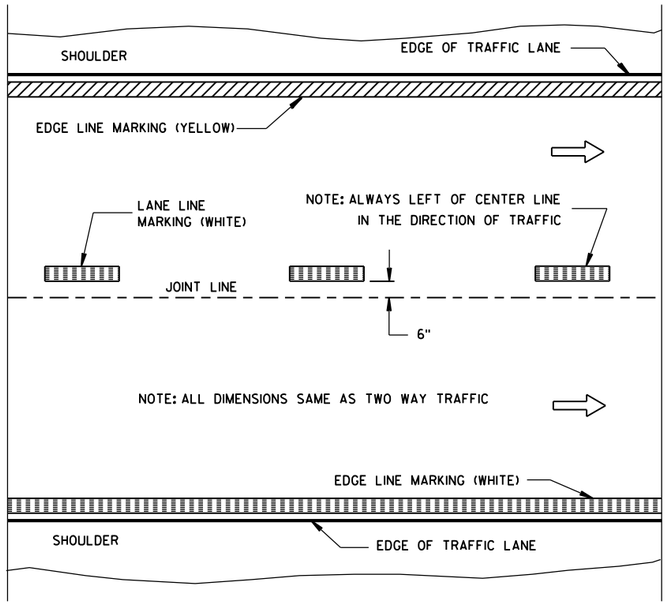

ONE WAY TRAFFIC

PERMANENT PAVEMENT MARKING

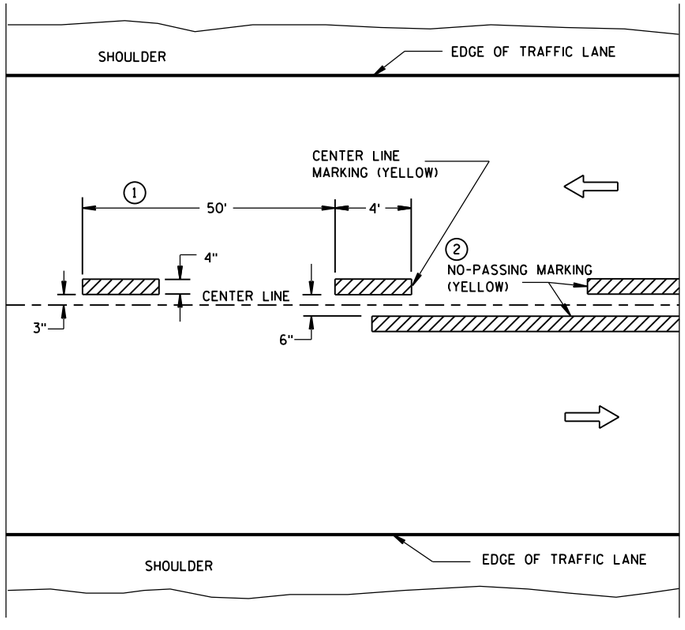

TWO WAY TRAFFIC

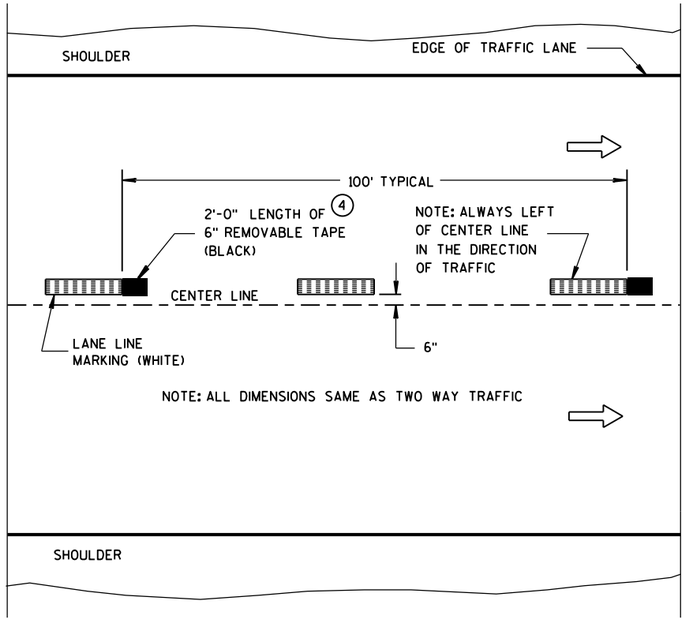

ONE WAY TRAFFIC

TEMPORARY (INTERMEDIATE) PAVEMENT MARKING

(SHOWS CYCLE FOR TEMPORARY CENTER LINE OR TEMPORARY LANE LINE MARKING)

GENERAL NOTES

DETAILS OF CONSTRUCTION NOT SHOWN ON THIS DRAWING SHALL CONFORM TO STANDARD SPECIFICATIONS AND SPECIAL PROVISIONS.

1. HALF CYCLE LENGTHS (25'±) WITH 2' MINIMUM STRIPE LENGTHS SHALL BE PROVIDED ON ROADWAYS (INCLUDING TEMPORARY TRAVELED WAYS) WITH REVERSE CURVATURE, CURVATURE OF OVER 5 DEGREES OR WHEN DIRECTED BY THE ENGINEER TO MARK UNUSUAL ALIGNMENT OF THE TRAVELED WAY.
2. NO PASSING ZONE TEMPORARY PAVEMENT MARKING IS REQUIRED TO BE PLACED, WHERE APPROPRIATE, ALONG WITH CENTERLINE TEMPORARY PAVEMENT MARKING WHEN A SAME DAY PERMANENT PAVEMENT MARKING ITEM IS INCLUDED IN THE CONTRACT.
3. NO PASSING ZONE MARKINGS ARE PLACED ACCORDING TO "T" MARKINGS. IF EXISTING NO PASSING ZONE W14-3 SIGNS ARE BEYOND 50 FEET IN EITHER DIRECTION, THE SIGNS SHALL BE MOVED TO THE "T" MARKINGS.
4. CONCRETE ONLY.

NOTE

ARROW SYMBOL (⇨) SHOWS DIRECTION OF TRAVEL

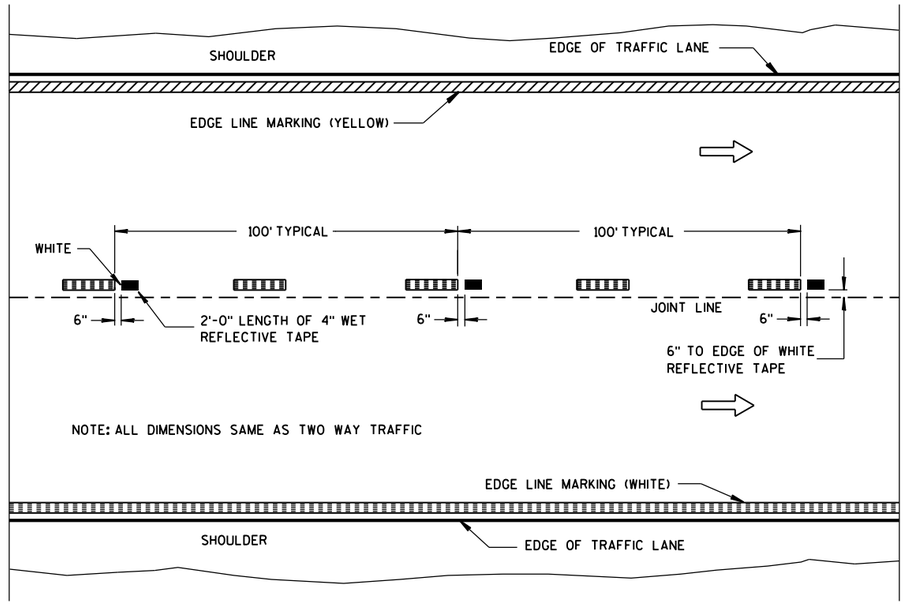

WET REFLECTIVE TAPE SUPPLEMENT TO
SPRAYED OR NON WET REFLECTIVE TAPE LANE LINE

LEGEND

"T" MARKING

POST MOUNTED SIGN

PAVEMENT MARKING (MAINLINE)

STATE OF WISCONSIN
DEPARTMENT OF TRANSPORTATION

APPROVED

5-13-2013 — DATE

/S/ Travis Feltes — STATE TRAFFIC E

FHWA

6

S.D.D. 15 C 8-16a

6

S.D.D. 15 C 8-16a

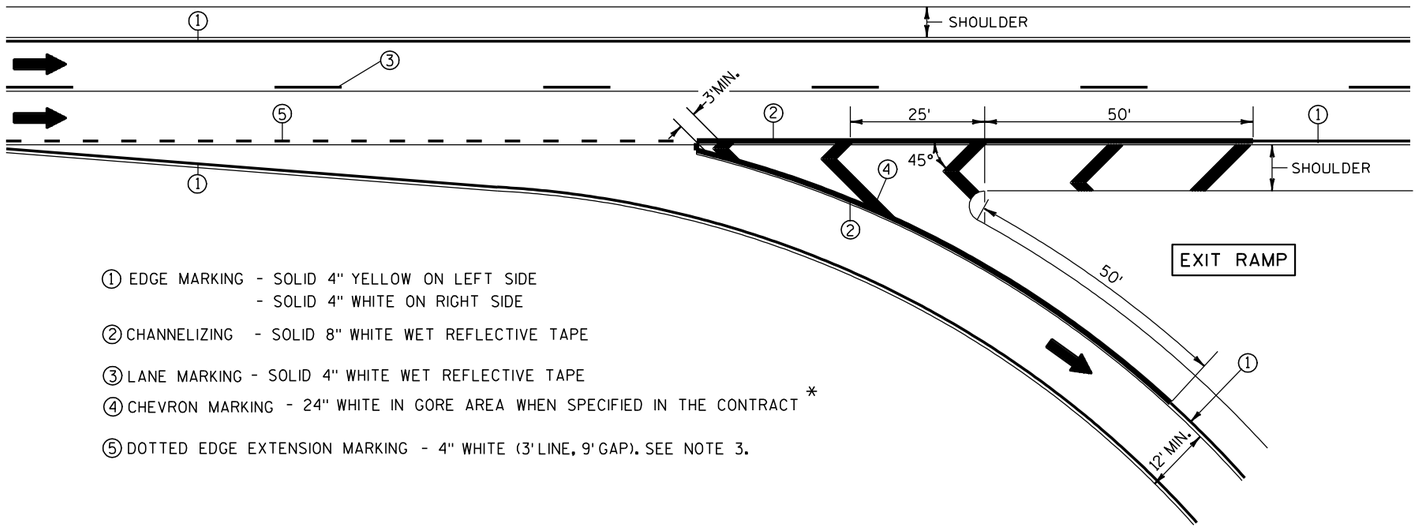

① EDGE MARKING - SOLID 4" YELLOW ON LEFT SIDE
- SOLID 4" WHITE ON RIGHT SIDE

② CHANNELIZING - SOLID 8" WHITE WET REFLECTIVE TAPE

③ LANE MARKING - SOLID 4" WHITE WET REFLECTIVE TAPE

④ CHEVRON MARKING - 24" WHITE IN GORE AREA WHEN SPECIFIED IN THE CONTRACT *

⑤ DOTTED EDGE EXTENSION MARKING - 4" WHITE (3' LINE, 9' GAP). SEE NOTE 3.

NOTES:

1. ARROWS SHOWN ON THIS MARKING PLAN DESIGNATE TRAFFIC FLOW, AND SHALL NOT BE TAKEN AS PROPOSED PAVEMENT MARKINGS.

2. PLACE WHITE EDGE OF TAPE 6" LEFT FROM JOINT.

3. 3' LINE 9' GAP, EXCEPT RETRACE THE EXISTING LINE-GAP PATTERN WHERE EXISTING MARKINGS ARE IN PLACE.

4. RETRACE EXISTING DIAGONAL MARKINGS.

* REFER TO DESIGN NOTES.

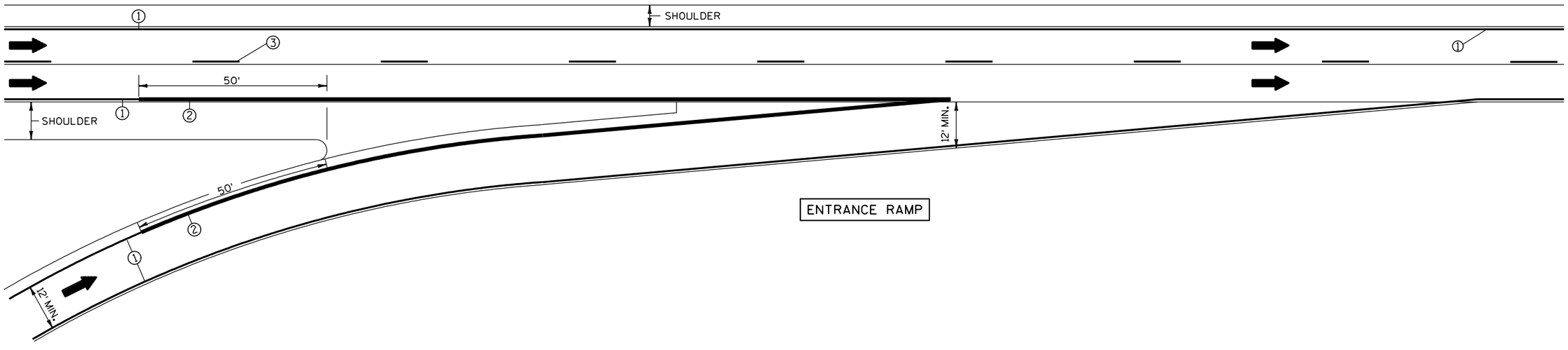

6

6

S.D.D. 15 C 31-1a

S.D.D. 15 C 31-1a

PAVEMENT MARKING
(RAMPS AND GORES)

STATE OF WISCONSIN
DEPARTMENT OF TRANSPORTATION

LEGEND

- TYPE III BARRICADE WITH ATTACHED SIGN
- SIGN ON PERMENENT SUPPORT
- TRAFFIC CONTROL DRUM WITH TYPE "C" STEADY BURN LIGHT
- TRAFFIC CONTROL DRUM
- FLASHING ARROW BOARD
- (A) TYPE "A" WARNING LIGHT (FLASHING)
- REMOVING PAVEMENT MARKING
- DIRECTION OF TRAFFIC
- WORK AREA

GENERAL NOTES

THE EXACT NUMBER, LOCATION, AND SPACING OF ALL SIGNS AND DEVICES SHALL BE ADJUSTED TO FIT FIELD CONDITIONS AS APPROVED BY THE ENGINEER.

THE SPACING BETWEEN SIGNS SHOULD BE ADJUSTED TO NOT CONFLICT WITH AND TO PROVIDE A MINIMUM OF 200 FEET, (500 FEET DESIREABLE) DISTANCE TO EXISTING SIGNS.

THIS LANE CLOSURE IS TYPICAL FOR CLOSING RIGHT LANE - REVERSE FOR CLOSING LEFT LANE.

ALL SIGNS ARE 48"x48" UNLESS OTHERWISE NOTED.

"WO" IS THE SAME AS "W" EXCEPT THE BACKGROUND IS ORANGE.

ANY SIGNS TEMPORARY OR EXISTING, WHICH CONFLICT WITH TRAFFIC CONTROL "IN USE" SHALL BE REMOVED OR COVERED AS NEEDED AND AS APPROVED BY THE ENGINEER. NO WARNING LIGHTS SHALL BE WORKING ON "COVERED" OR "DOWNED" SIGNS.

CONSIDER GEOMETRICS WHEN LOCATING SIGNS AND ARROW BOARD SO THE DRIVER HAS A CLEAR VIEW OF THE ARROW BOARD AND LANE CLOSURE DRUMS FOR A MINIMUM 1500 FEET IN FRONT OF DRUMS.

FOR A LANE CLOSURE THAT IS IN PLACE LESS THAN 7 CONTINUOUS DAYS AND NIGHTS, THE ADVANCED WARNING SIGNS MAY BE MOUNTED ON PORTABLE SUPPORTS.

REMOVE PAVEMENT MARKINGS IF LANE CLOSURE IS TO BE IN PLACE FOR LONGER THAN 4 OR MORE DAYS AND NIGHTS.

WARNING LIGHTS ARE NOT REQUIRED IF THE LANE CLOSURE IS A DAYTIME ONLY OPERATION.

IF THE HORIZONTAL ALIGNMENT IS SUCH THAT A CURVE MAY REQUIRE ADDITIONAL DELINEATION, THE DEVICE SPACING MAY BE DECREASED TO 50 FEET.

ADJUSTMENTS IN BUFFER SPACE NEED TO BE INCORPORATED WHEN THE LANE CLOSURE OCCURS NEAR AN INTERCHANGE EXIT OR ENTRANCE RAMP. THE LANE CLOSURE MUST MUST TAKE PLACE FAR ENOUGH IN ADVANCE OF AN EXIT OR ENTRANCE RAMP TO STILL ALLOW FOR ADEQUATE BUFFER SPACE. THE MINIMUM LENGTH OF THE BUFFER SPACE BEFORE AN EXIT RAMP SHOULD BE 1/2 THE LENGTH OF THE TRANSITION AREA. THE ENTRANCE RAMP SHOULD BE FOLLOWED BY THE ORIGINAL BUFFER SPACE LENGTH OF 800 FEET DESIRABLE PRIOR TO ANOTHER TRAFFIC CONTROL CHANGE SUCH AS A CROSSOVER MANEUVER.

* THE LEFT REVERSE CURVE SIGN (WO1-4L) IS ONLY REQUIRED WHEN THIS DETAIL IS USED IN COMBINATION WITH "SINGLE LANE CROSSOVER" DETAIL.

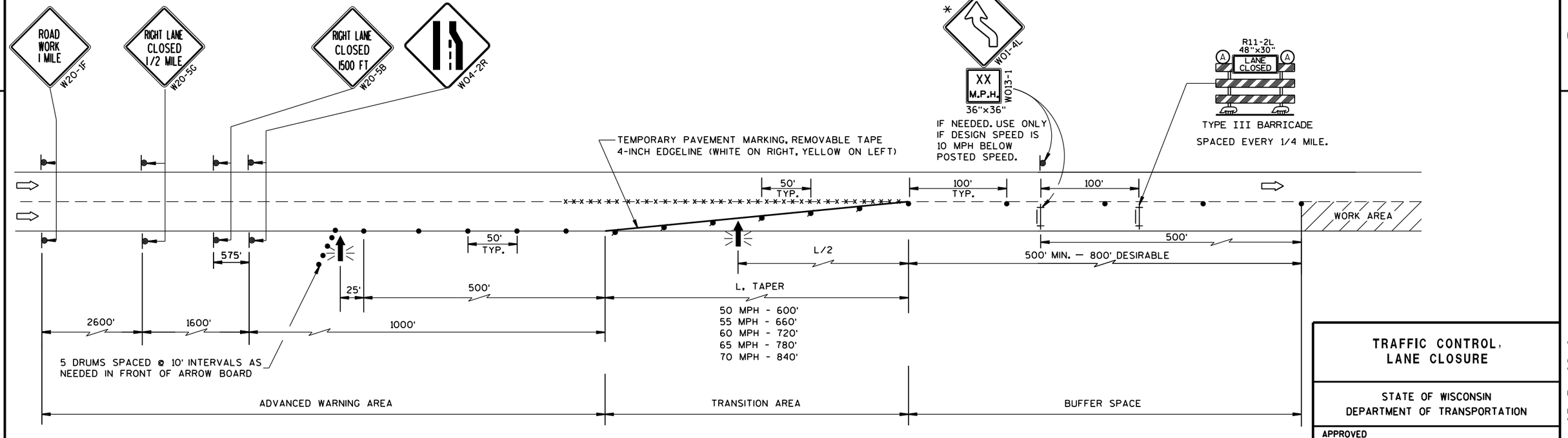

TRAFFIC CONTROL, LANE CLOSURE

STATE OF WISCONSIN
DEPARTMENT OF TRANSPORTATION

APPROVED
March 2016 — DATE
/S/ Peter Amakobe Atepe
STATEWIDE WORK ZONE SAFETY ENGINEER
FHWA

6

S.D.D. 15 D 12-6a

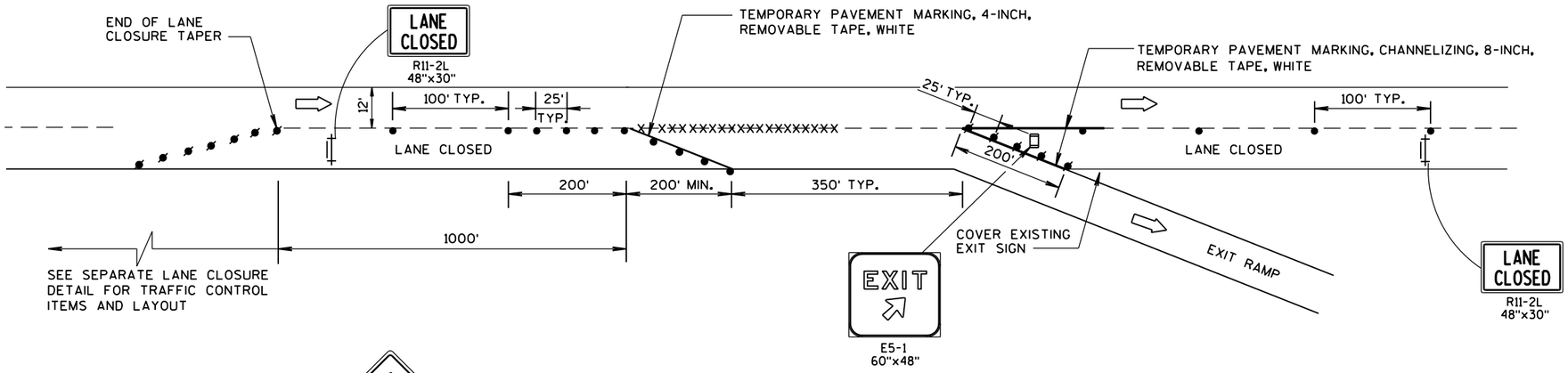

EXIT RAMP

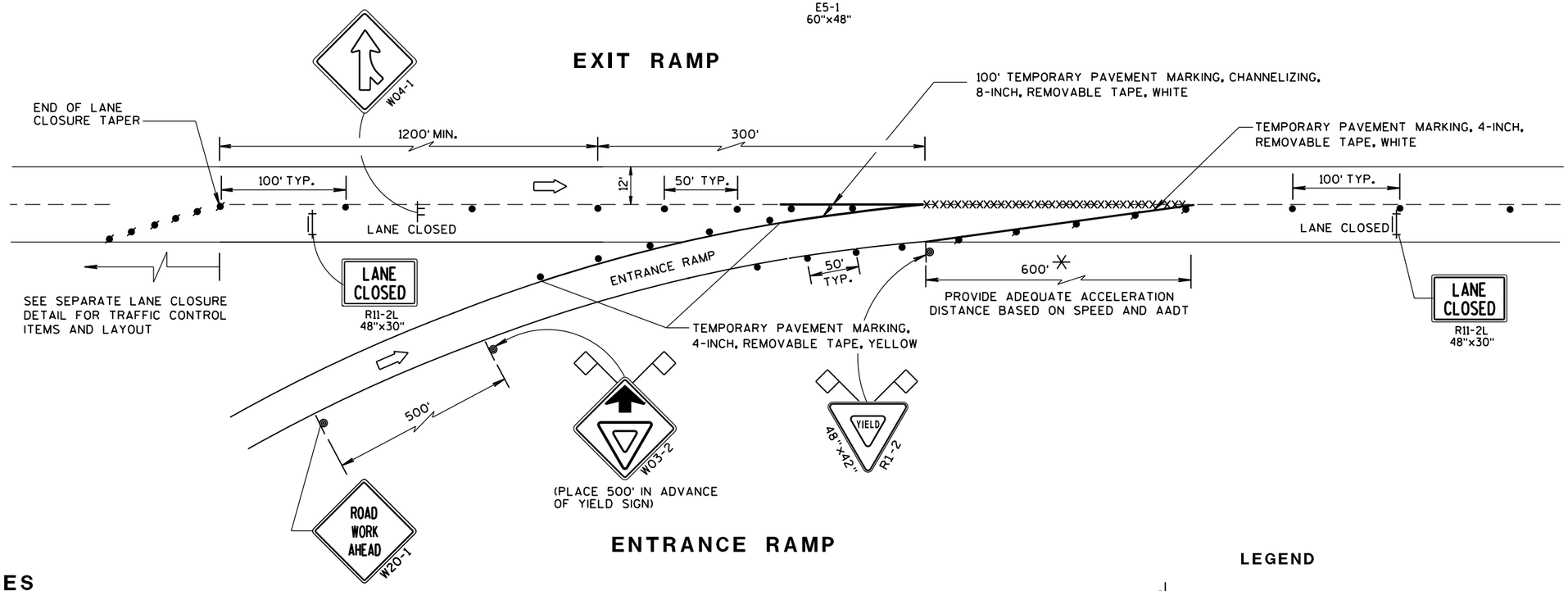

ENTRANCE RAMP

GENERAL NOTES

THE INSTALLATIONS SHOWN ON THIS SHEET ARE TYPICAL EXAMPLES AND ARE NOT INTENDED TO REPRESENT ANY PARTICULAR RAMP. AT SPECIFIC FIELD LOCATIONS, SIMILAR INSTALLATIONS SHALL BE USED AND ADJUSTED TO THE GEOMETRICS OF THE RAMP AS COORDINATED WITH THE ENGINEER.

THE EXACT NUMBER, LOCATION, AND SPACING OF ALL SIGNS AND DEVICES SHALL BE ADJUSTED TO FIT FIELD CONDITIONS AS APPROVED BY THE ENGINEER.

THE SPACING BETWEEN TRAFFIC CONTROL SIGNS SHOULD BE ADJUSTED TO NOT CONFLICT WITH AND SHOULD PROVIDE A MINIMUM OF 200 FEET, (500 FEET DESIRABLE) CLEARANCE TO EXISTING SIGNS THAT WILL REMAIN IN PLACE.

ALL SIGNS ARE 48"x48" UNLESS OTHERWISE NOTED.

"WO" IS THE SAME AS "W" EXCEPT THE BACKGROUND IS ORANGE.

SEE SEPARATE LANE CLOSURE DETAIL FOR TYPICAL SPACING OF TYPE III BARRICADES AND R11-2L "LANE CLOSED" SIGNS.

YIELD SIGN AND WARNING SIGNS ON ENTRANCE RAMP ARE ALSO APPROPRIATE FOR CLOSURE OF THE MAINLINE LEFT LANE. OMIT THE YIELD SIGN IF MORE THAN ONE LANE REMAINS OPEN ON THE MAINLINE AND THE RAMP TAPER IS AT LEAST AS LONG AS THE NORMAL ENTRANCE RAMP TAPER AT THE SITE.

SIGNS THAT WILL BE IN PLACE LESS THAN 7 CONTINUOUS DAYS AND NIGHTS, OR THAT WILL BE PLACED IN A CLOSED LANE, MAY BE MOUNTED ON PORTABLE SUPPORTS.

IF INDICATED IN MISCELLANEOUS QUANTITIES, SUBSTITUTE FLEXIBLE TUBULAR MARKERS FOR DRUMS IN THE GORE BETWEEN THE ENTRANCE RAMP AND MAINLINE TRAFFIC.

ANY SIGNS TEMPORARY OR EXISTING, WHICH CONFLICT WITH TRAFFIC CONTROL "IN USE" SHALL BE REMOVED OR COVERED AS NEEDED AND AS APPROVED BY THE ENGINEER.

REMOVE PAVEMENT MARKINGS AND PLACE TEMPORARY PAVEMENT MARKING, REMOVABLE TAPE IF LANE CLOSURE IS TO BE IN PLACE FOR 7 OR MORE CONTINUOUS DAYS AND NIGHTS.

WARNING LIGHTS ARE NOT REQUIRED IF THE LANE CLOSURE IS A DAYTIME ONLY OPERATION.

* LENGTH OF OPENING MAY BE REDUCED TO 150 FEET DURING STAGING OF WORK IN IMMEDIATE AREA OF RAMP TAPER.

LEGEND

- SIGN ON PERMANENT SUPPORT
- SIGN ON TEMPORARY SUPPORT
- TRAFFIC CONTROL DRUM
- TRAFFIC CONTROL DRUM WITH TYPE "C" STEADY BURN LIGHT
- REMOVING PAVEMENT MARKING (SEE GENERAL NOTES)
- TYPE III BARRICADE WITH ATTACHED SIGN
- FLAGS, 16" x 16" MIN., (ORANGE)
- DIRECTION OF TRAFFIC

TRAFFIC CONTROL, EXIT AND ENTRANCE RAMP WITHIN LANE CLOSURE

STATE OF WISCONSIN
DEPARTMENT OF TRANSPORTATION

APPROVED
Sept. 2015 — DATE
/S/ Peter Amakobe Atepe — STATEWIDE WORK ZONE SAFETY ENGINEER
FHWA

S.D.D. 15 D 15-2

S.D.D. 15 D 15-2

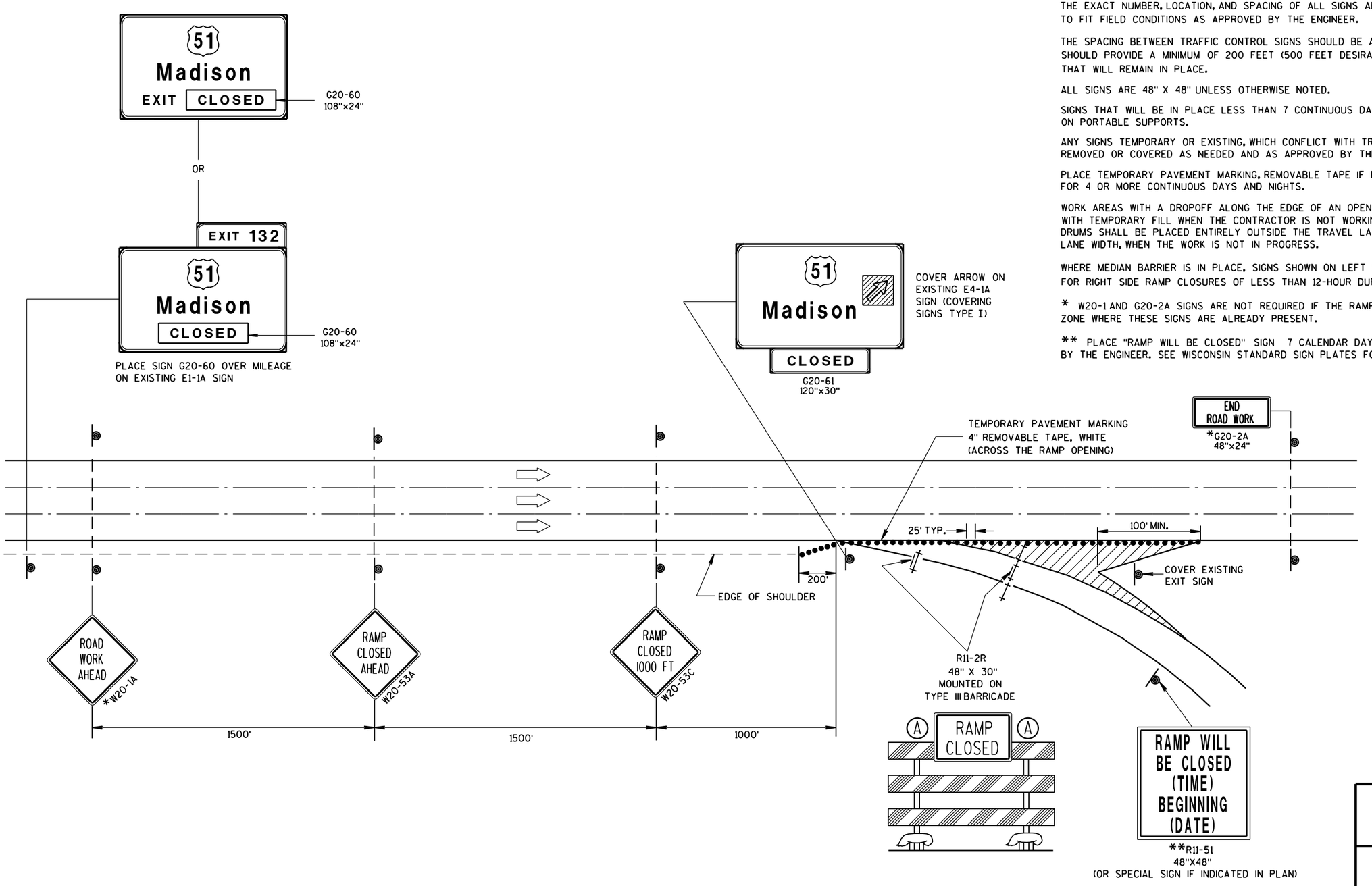

GENERAL NOTES

THIS RAMP CLOSURE DETAIL IS TYPICAL FOR CLOSING A RIGHT SIDE EXIT RAMP. FOR A LEFT SIDE EXIT RAMP, REVERSE THE TRAFFIC CONTROL.

THE EXACT NUMBER, LOCATION, AND SPACING OF ALL SIGNS AND DEVICES SHALL BE ADJUSTED TO FIT FIELD CONDITIONS AS APPROVED BY THE ENGINEER.

THE SPACING BETWEEN TRAFFIC CONTROL SIGNS SHOULD BE ADJUSTED TO NOT CONFLICT WITH AND SHOULD PROVIDE A MINIMUM OF 200 FEET (500 FEET DESIRABLE) CLEARANCE TO EXISTING SIGNS THAT WILL REMAIN IN PLACE.

ALL SIGNS ARE 48" X 48" UNLESS OTHERWISE NOTED.

SIGNS THAT WILL BE IN PLACE LESS THAN 7 CONTINUOUS DAYS AND NIGHTS MAY BE MOUNTED ON PORTABLE SUPPORTS.

ANY SIGNS TEMPORARY OR EXISTING, WHICH CONFLICT WITH TRAFFIC CONTROL "IN USE" SHALL BE REMOVED OR COVERED AS NEEDED AND AS APPROVED BY THE ENGINEER.

PLACE TEMPORARY PAVEMENT MARKING, REMOVABLE TAPE IF RAMP CLOSURE IS TO BE IN PLACE FOR 4 OR MORE CONTINUOUS DAYS AND NIGHTS.

WORK AREAS WITH A DROPOFF ALONG THE EDGE OF AN OPEN TRAVEL LANE SHALL BE LEVELED WITH TEMPORARY FILL WHEN THE CONTRACTOR IS NOT WORKING ADJACENT TO THE TRAVEL LANE. DRUMS SHALL BE PLACED ENTIRELY OUTSIDE THE TRAVEL LANE, ALLOWING THE FULL UNOBSTRUCTED LANE WIDTH, WHEN THE WORK IS NOT IN PROGRESS.

WHERE MEDIAN BARRIER IS IN PLACE, SIGNS SHOWN ON LEFT SIDE OF ROADWAY MAY BE OMITTED FOR RIGHT SIDE RAMP CLOSURES OF LESS THAN 12-HOUR DURATION.

* W20-1 AND G20-2A SIGNS ARE NOT REQUIRED IF THE RAMP CLOSURE IS WITHIN A LARGER WORK ZONE WHERE THESE SIGNS ARE ALREADY PRESENT.

** PLACE "RAMP WILL BE CLOSED" SIGN 7 CALENDAR DAYS PRIOR TO CLOSURE OR AS DIRECTED BY THE ENGINEER. SEE WISCONSIN STANDARD SIGN PLATES FOR SIGN LAYOUT.

LEGEND

- TYPE III BARRICADE
- TYPE III BARRICADE WITH ATTACHED SIGN
- TRAFFIC CONTROL DRUM
- SIGN ON PERMANENT SUPPORT
- (A) TYPE "A" WARNING LIGHT (FLASHING)
- DIRECTION OF TRAFFIC

TRAFFIC CONTROL, EXIT RAMP CLOSURE

STATE OF WISCONSIN
DEPARTMENT OF TRANSPORTATION

APPROVED
Sept. 2015 — DATE
/S/ Peter Amakobe Atepe — STATEWIDE WORK ZO SAFETY ENGI FIC
FHWA

6

S.D.D. 15 D 16-3

6

S.D.D. 15 D 16-3

LEGEND

- TRAFFIC CONTROL DRUM
- SIGN ON PERMANENT SUPPORT
- DIRECTION OF TRAFFIC
- FLASHING ARROW BOARD
- WORK AREA

GENERAL NOTES

THIS DETAIL IS TYPICAL FOR CLOSING THE RIGHT SHOULDER. FOR CLOSING THE LEFT SHOULDER, REVERSE THE TRAFFIC CONTROL.

THIS DETAIL MAY BE USED FOR DIVIDED ROADWAYS WITH ANY NUMBER OF TRAVEL LANES.

THE EXACT NUMBER, LOCATION AND SPACING OF ALL SIGNS AND DEVICES SHALL BE ADJUSTED TO FIT FIELD CONDITIONS AS APPROVED BY THE ENGINEER.

ALL SIGNS ARE 48" X 48" UNLESS OTHERWISE NOTED.

SIGN LAYOUTS SHALL BE IN ACCORDANCE WITH THE FHWA'S MANUAL OF STANDARD HIGHWAY SIGNS OR THE WISCONSIN STANDARD SIGN PLATES.

SIGNS THAT WILL BE IN PLACE LESS THAN 7 CONTINUOUS DAYS AND NIGHTS MAY BE MOUNTED ON PORTABLE SUPPORTS.

ANY SIGNS TEMPORARY OR EXISTING, WHICH CONFLICT WITH TRAFFIC CONTROL "IN USE" SHALL BE REMOVED OR COVERED AS NEEDED AND AS APPROVED BY THE ENGINEER.

CHANNELIZING DEVICES PLACED ADJACENT TO THE WORK AREA SHALL BE PULLED BACK FROM THE TRAVEL LANE WHEN WORK IS NOT IN PROGRESS.

WHEN A RAMP INTERSECTS THE FACILITY ON WHICH THE WORK IS BEING PERFORMED, ADDITIONAL TRAFFIC CONTROLS SHALL BE PROVIDED AS SPECIFIED IN THE PLANS AND/OR THE SPECIAL PROVISIONS OR AS APPROVED BY THE ENGINEER.

*FOR SHORT DURATION SHOULDER WORK OF LESS THAN ONE HOUR, THE W21-5a SIGN MAY BE OMITTED.

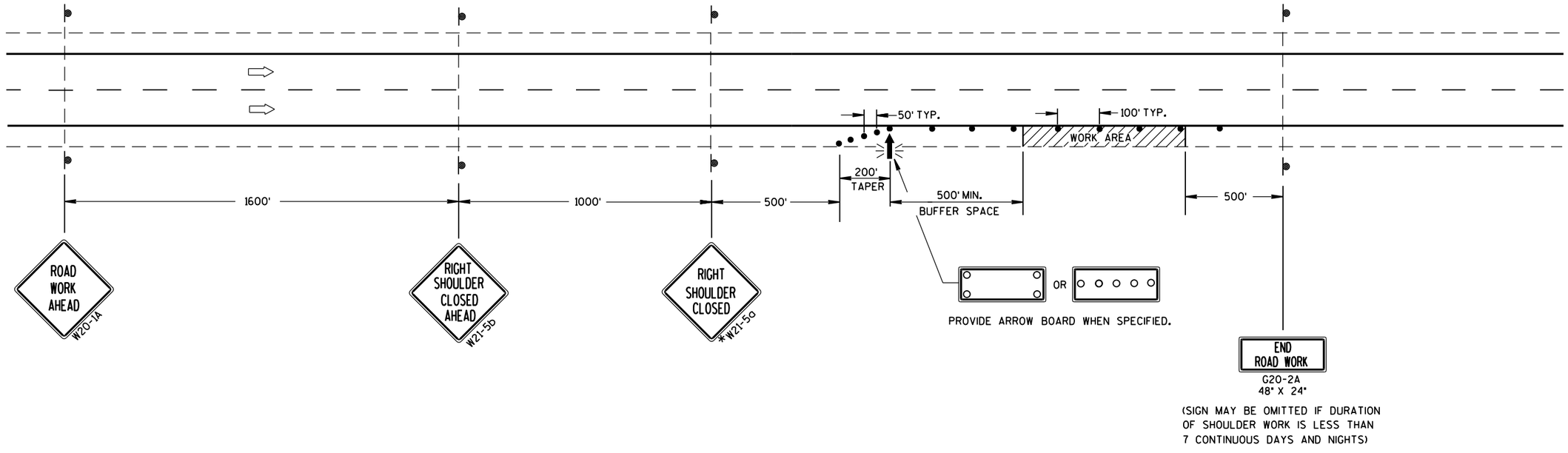

TRAFFIC CONTROL SHOULDER CLOSURE ON DIVIDED ROADWAY, SPEEDS GREATER THAN 40 MPH

STATE OF WISCONSIN
DEPARTMENT OF TRANSPORTATION

APPROVED

June 2016 — DATE

/S/ Peter Amakobe Atepe
STATEWIDE WORK ZO[illegible] SAFETY ENGI[illegible]

FHWA

6

S.D.D. 15 D 27-3

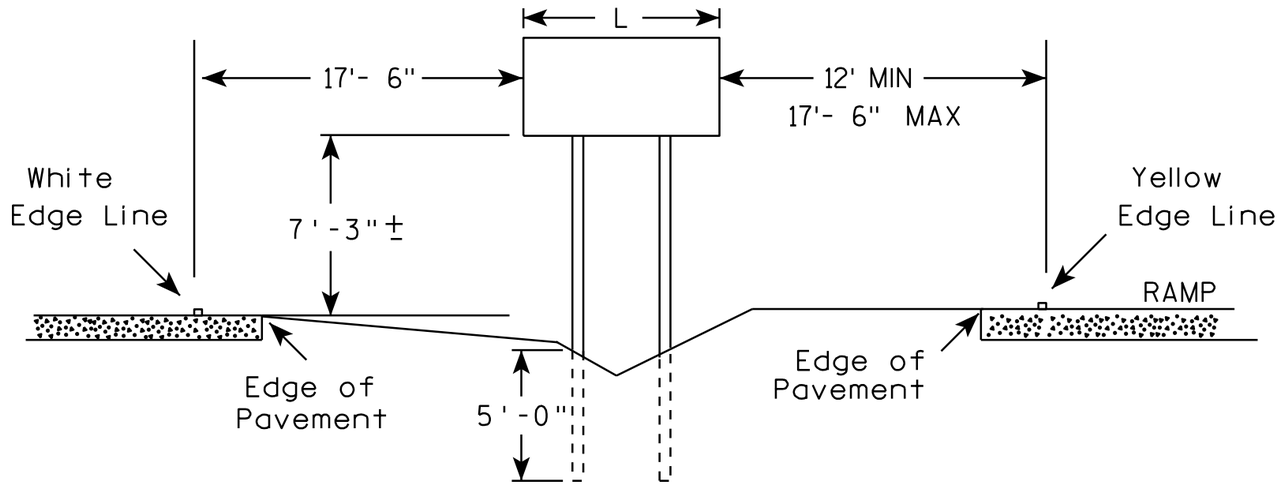

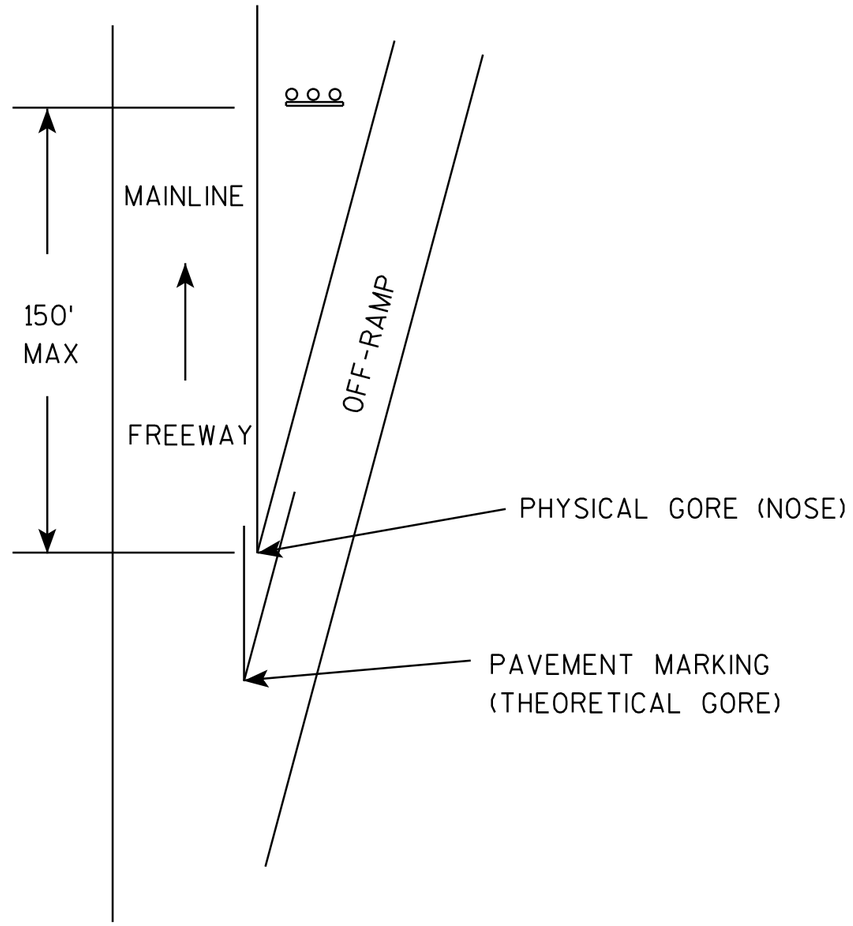

GENERAL NOTES

1. The 150 foot distance from the physical gore (where pavement ends) will normally provide the offsets as shown.
2. If roadway geometrics permit, the sign may be closer than the 150 foot distance as long as the offsets are maintained.
3. At no time shall the location be greater than 150 feet. If the normal offsets cannot be maintained, they can be reduced to 6 feet from the edge of the paved shoulder (both freeway and ramp).
4. The offset from edge of sign to the yellow edge line on the ramp is shown as a minimum of 12 feet and a maximum of 17 feet, 6 inches. Preference is adhering to the maximum rather than the minimum dimension.
5. When L is equal to or exceeds 10 feet, use 3 posts as per A4-4.
6. The (∓) tolerance for the mounting height is 3 inches.

7

7

TYPICAL INSTALLATION
OF TYPE II SIGNS ON
WOOD POSTS IN GORE

WISCONSIN DEPT OF TRANSPORTATION

APPROVED Matthew R Rauch
for State Traffic Engineer

DATE 2/06/14 PLA... A4-2.3

PROJECT NO: | SHEET NO: E

FILE NAME : C:\CAEFiles\Projects\tr_stdplate\A42.DGN PLOT DATE : 06-FEB-2014 12:36 PLOT BY : mscsja

WISDOT/CADDS SHEET 42

URBAN AREA

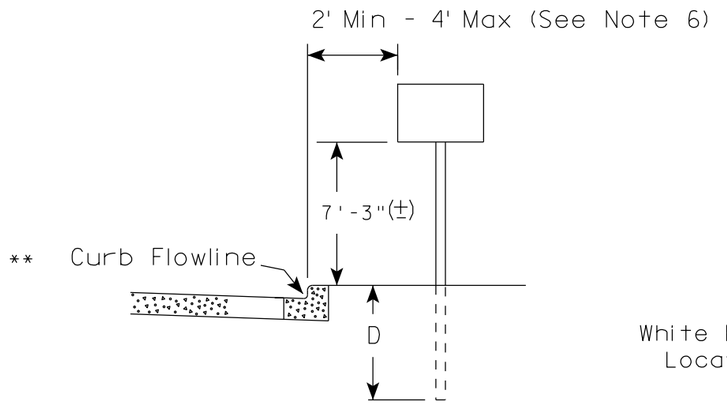

RURAL AREA (See Note 2)

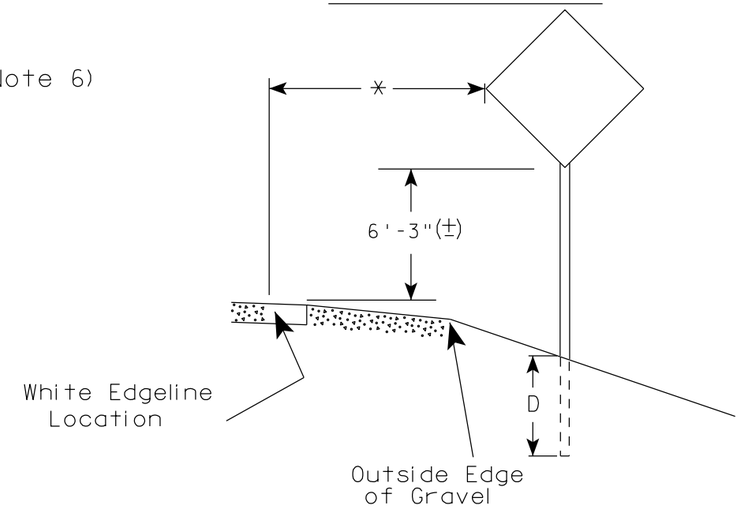

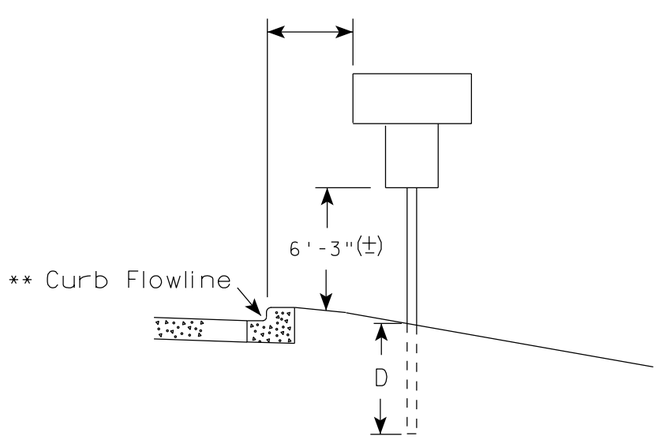

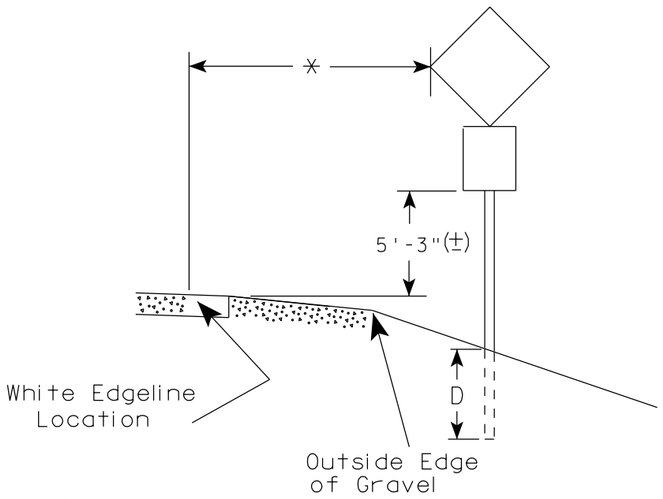

** The existence of curb and gutter does not in itself mandate the vertical clearance illustrated. That height is typically measured where there is sidewalk adjacent to the roadway or parking is permitted. In the absence of sidewalk vertical clearance is measured from the top of the curb. Offset of signs is measured from the flow line.

* 6 feet from edge of a paved shoulder or 12 feet from the edge of pavement (edge line location) or 2 feet from outside edge of gravel, whichever is greater unless directed by project engineer.

POST EMBEDMENT DEPTH

Area of Sign Installation (Sq. Ft.)	D (Min)
20 or Less	4'
Greater than 20	5'

GENERAL NOTES

1. Signs wider than 4 feet or 20 sq.ft or larger, shall be mounted on multiple posts. Refer to plate A4-4.
2. If signs are mounted on barrier wall, see A4-10 sign plate.
3. For expressways and freeways, mounting height is 7'- 3" (±) or 6'-3" (±) depending upon existence of a sub-sign.
4. Minimum mounting height for J assemblies (A2-1S) is 7'-3" (±) or 6'-3" (±) per urban or rural detail respectively.
5. Minimum mounting height for signs mounted on traffic signal poles is 5'- 3" (±).
6. Offset distance shall be consistent with existing signs or consistent throughout length of project.
7. The (±) tolerance for mounting height is 3 inches.
8. Folding signs shall be mounted at a height of 5'-3" (±) or as directd by the Engineer.
9. The Double Arrow sign (W12-1) shall be mounted at a height of 2'-3" (±). The Chevron sign (W1-8), Roundabout Chevron panel (R6-4B), Enhanced Reference Markers, Clearance Markers (W5-52), Mile Markers (D10 series), In Road Object Markers (W5-54) & End of Road Markers (W5-56) shall be mounted at a height of 4'-3" (±).

TYPICAL INSTALLATION OF PERMANENT TYPE II SIGNS ON SINGLE POSTS

WISCONSIN DEPT OF TRANSPORTATION

APPROVED Matthew R Rauch
for State Traffic Engineer

DATE 7/23/15 PLATE NO. A4-3.20

PROJECT NO:	HWY:	COUNTY:		SHEET NO:	E

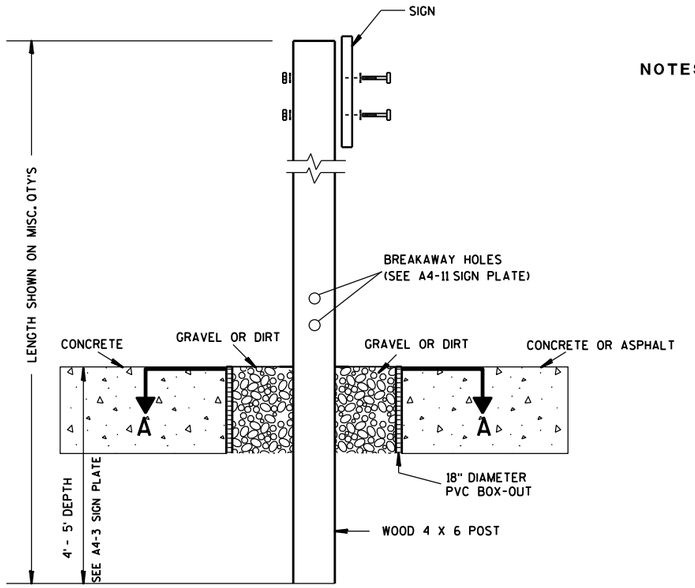

ELEVATION VIEW

DETAIL OF WOOD 4 X 6 SIGN POST IN BOX-OUT

NOTES:
1. ALL MATERIAL TO BE APPROVED BY ENGINEER PRIOR TO INSTALLATION
2. SEE SIGN PLATE A4-8 FOR SIGN HARDWARE REQUIREMENTS
3. 18 INCH X 18 INCH SQUARE BOX-OUTS MAY BE USED FOR INSTALLATIONS IN EXISTING CONCRETE OR ASPHALT LOCATIONS.

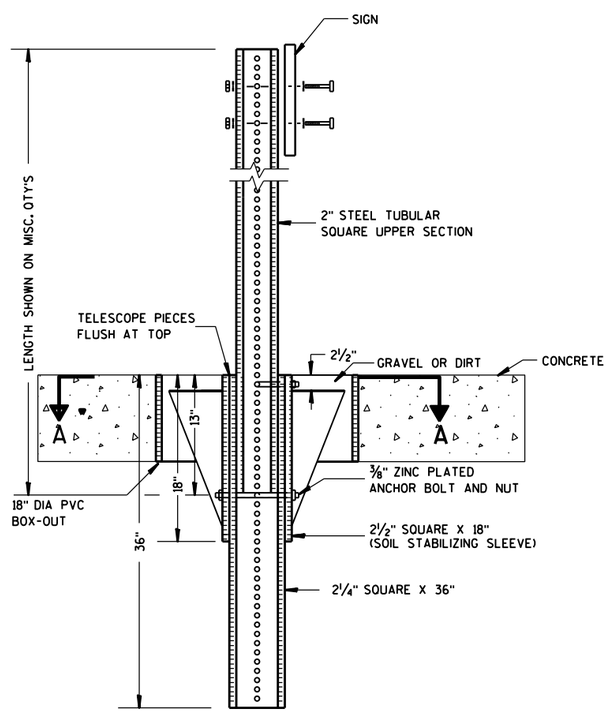

ELEVATION VIEW

DETAIL OF STEEL 2 X 2 SIGN POST IN BOX-OUT

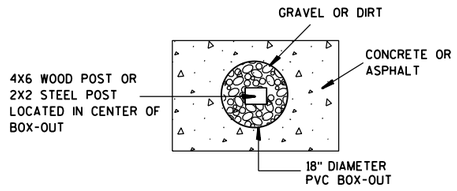

PLAN VIEW

FOR NEW CONCRETE/ASPHALT INSTALLATIONS

SIGN POST BOX-OUTS A4-3B

WISCONSIN DEPT OF TRANSPORTATION

APPROVED Matthew R Rauch
for State Traffic Engineer

DATE 1/27/14 PLATE NO. A4-3B.1

PROJECT NO:	HWY:	COUNTY:		SHEET NO:	E

FILE NAME : C:\CAEFiles\Projects\tr_stdplate\A43B.DGN PLOT DATE : 27-JAN-2014 09:48 PLOT BY : mscsja PLOT NAME : PLOT SCALE : 13.659812:1.000000 WISDOT/CADDS SHEET 42

URBAN AREA

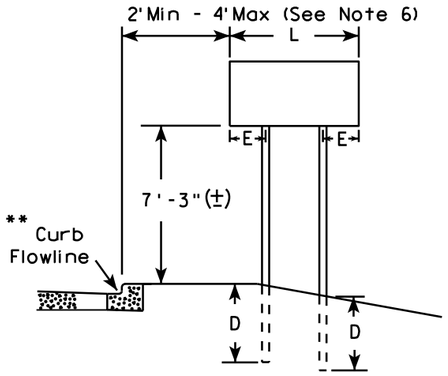

RURAL AREA (See Note 3)

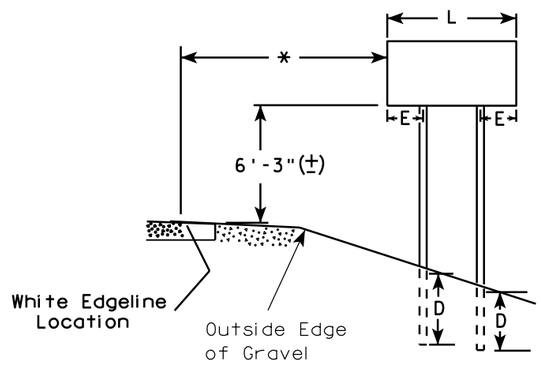

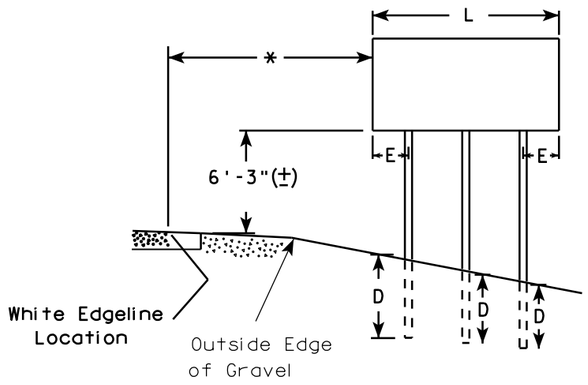

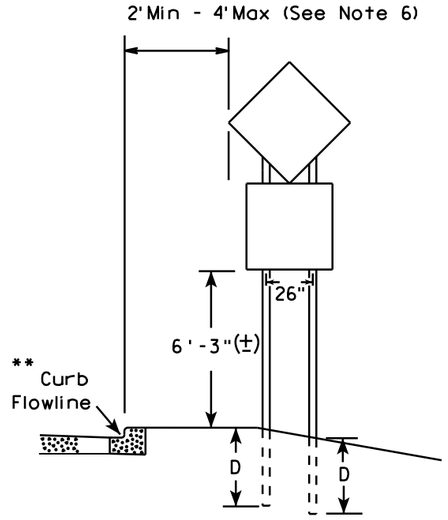

48" DIAMOND WARNING SIGN

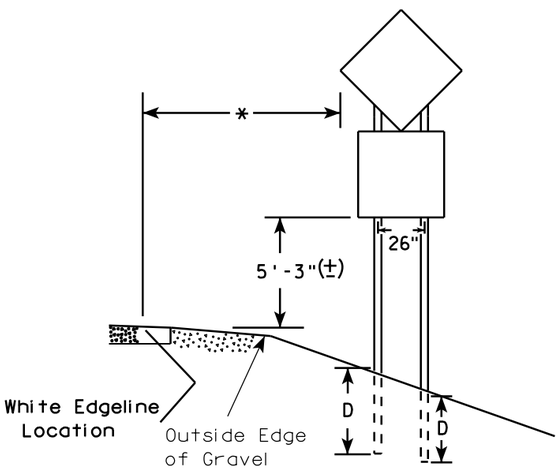

48" DIAMOND WARNING SIGN

GENERAL NOTES

1. For 3 or 4 post installations, individual post spacing shall be greater than 3'-6".
2. See tables below for required number of posts.
3. For expressways and freeways, mounting height is 7'-3" (±) or 6'-3" (±) depending upon existence of sub-sign.
4. The (±) tolerance for mounting height is 3 inches.
5. Minimum mounting height for J assemblies (A2-1S) is 7'-3" (±) or 6'-3" (±) per urban or rural detail respectively.
6. Offset distance shall be consistent with existing signs or consistent throughout length of project.
7. Folding signs shall be mounted at a height of 5'-3" (±) or as directed by the engineer.
8. The Double Arrow sign (W12-1) shall be mounted at a height of 2'-3" (±). The Chevron sign (W1-8), Roundabout Chevron panel (R6-4B), Clearance Markers (W5-52), Mile Markers (D10 series), In Road Object Markers (W5-54) & End of Road Markers (W5-56) shall be mounted at a height of 4"-3" (±).

* 6 feet from edge of a paved shoulder or 12 feet from the edge of pavement (edge line location) or 2 feet from outside edge of gravel, whichever is greater unless directed by project engineer.

** The existence of curb and gutter does not in itself mandate the vertical clearance illustrated. That height is typically measured where there is sidewalk adjacent to the roadway or parking is permitted. In the absence of sidewalk vertical clearance is measured from the top of the curb. Offset of signs is measured from the flow line.

*** See A4-3 sign plate for signs 4' or less in width and less than 20 S.F. in area.

SIGN SHAPE OTHER THAN DIAMOND (TWO POSTS REQUIRED)	
L	E
Greater than 48" Less than 60"	12"
60" to 120"	L/5

***

SIGN SHAPE OTHER THAN DIAMOND (THREE POSTS REQUIRED)	
L	E
Greater than 120" less than 168"	12"

SIGN SHAPE OTHER THAN DIAMOND (FOUR POSTS REQUIRED)	
L	E
168" and greater	12"

POST EMBEDMENT DEPTH

Area of Sign Installation (Sq. Ft.)	D (Min)
20 or Less	4'
Greater than 20	5'

TYPICAL INSTALLATION OF TYPE II SIGNS ON MULTIPLE POSTS

WISCONSIN DEPT OF TRANSPORTATION

APPROVED Matthew R Rauch
for State Traffic Engineer

DATE 7/23/15 PLATE NO. A4-4 142 14

PROJECT NO:	HWY:	COUNTY:		SHEET NO:	E

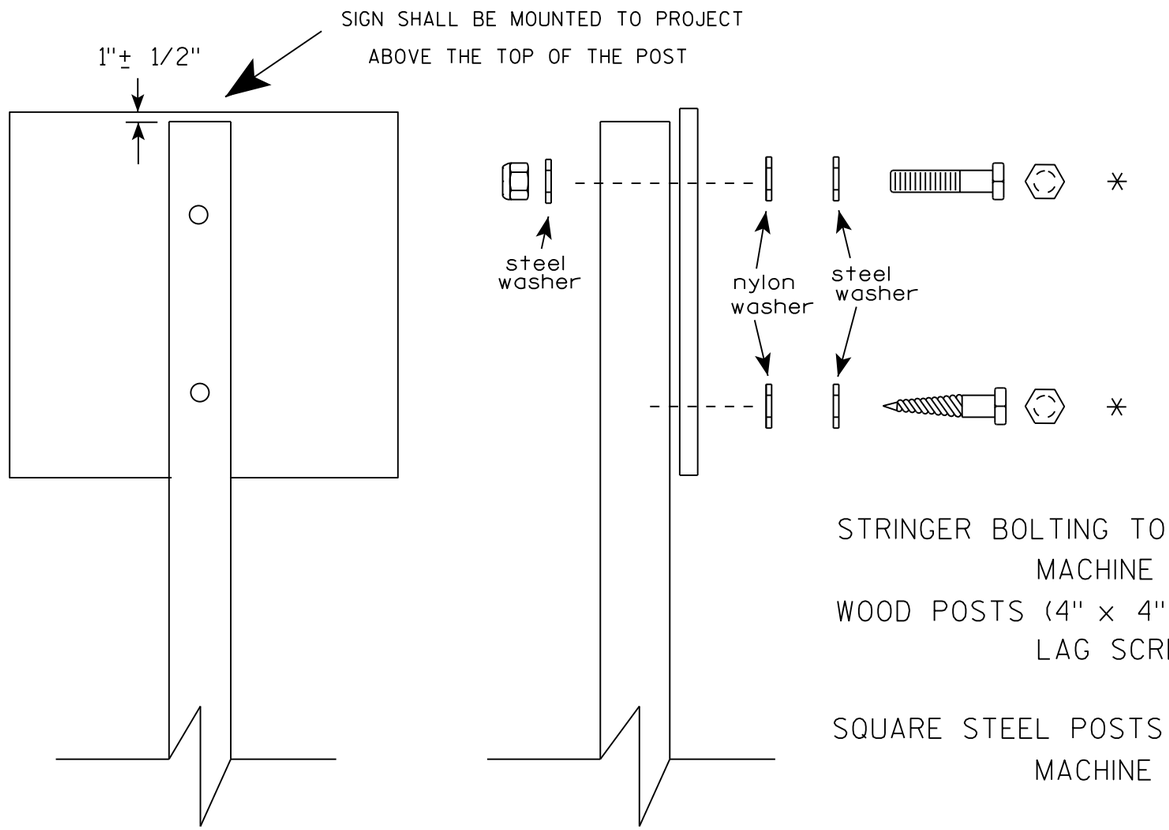

Nuts, bolts and lags used for mounting signs shall have hexagonal heads and shall be either :

a. Hot dip galvanized in accordance with ASTM Designation: A 153, Class D, or SC 3
b. Electro-galvanized in accordance with ASTM Designation : B 633, TYPE III, SC 3.

Threads on bolts and nuts shall be manufactured with sufficient allowance for the cadmium plate or galvanized coating to permit the nuts to run freely on the bolts.

STRINGER BOLTING TO ALUMINUM SIGNS (SEE SIGN PLATE A4-18)
MACHINE BOLTS - 5/16" X 1-3/4" Length w/ lock nuts
WOOD POSTS (4" x 4" or 4" x 6")
LAG SCREWS - 3/8" X 3" (NO STRINGERS ON BACK OF SIGN)
3/8" X 4" (STRINGERS ON BACK OF SIGN)
SQUARE STEEL POSTS (2" x 2")
MACHINE BOLTS - 3/8" X 3-1/4" Length w/ nuts (NO STRINGER ON BACK OF SIGN)
3/8" X 5" Length w/ nuts (STRINGERS ON BACK OF SIGN)
RIVETS - 9/32 " (6605-9-6) BULB-TITE, TRI-FOLD, ALUMINUM BODY/MANDREL
O.D. FLANGE .720-.765 INCH, GRIP RANGE .042-.375 INCH
WASHERS (ALL POSTS) -
1-1/4" O.D. X 3/8" I.D. X 1/16" STEEL
1-1/4" O.D. X 3/8" I.D. X .080 NYLON

* Two different fastening systems are shown for illustration purposes. On any individual sign, either one or the other system shall be used. Actual number of fasteners per sign varies with the sign area, but normally there are two. For a single post installation, all signs greater than 9 sq. ft. require the use of 3 fasteners.

ATTACHMENT OF SIGNS TO POSTS

WISCONSIN DEPT OF TRANSPORTATION

APPROVED Matthew R Rauch
For State Traffic Engineer

DATE 8/11/16 PLATE NO. A4-8.8

PROJECT NO: SHEET NO: E

FILE NAME : C:\CADfiles\Projects\tr_stdplate\A48.DGN PLOT DATE : 11-AUG-2016 11:35 PLOT BY : $$ plotuser $$

TELESCOPIC TUBING ANCHORS
TWO PIECE SYSTEM

2 1/4 " SQUARE
12 GAUGE
PERFORATED
GALVANIZED FINISH

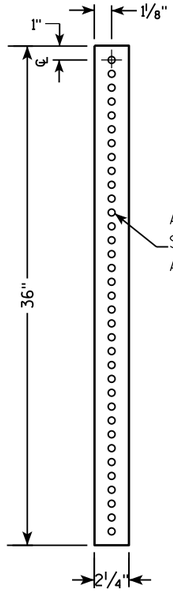

2 1/2 " SQUARE
12 GAUGE
OMNI-DIRECTIONAL
PERFORATED
SOIL STABILIZING SLEEVE
GALVANIZED FINISH

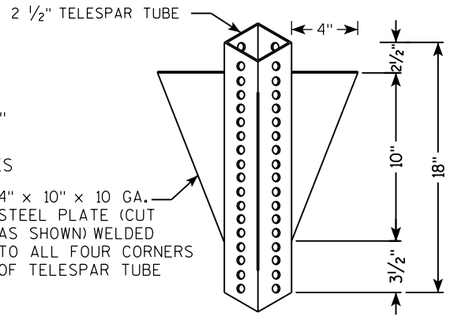

DETAIL OF TUBULAR STEEL SIGN POST
(IN POURED CONCRETE OR ASPHALT)

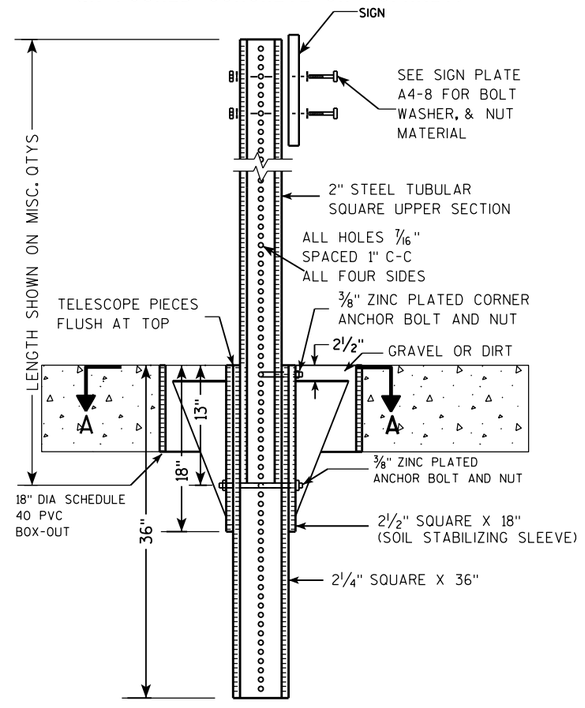

DETAIL OF TUBULAR STEEL SIGN POST
(IN LOCATIONS OTHER THAN POURED CONCRETE OR ASPHALT)

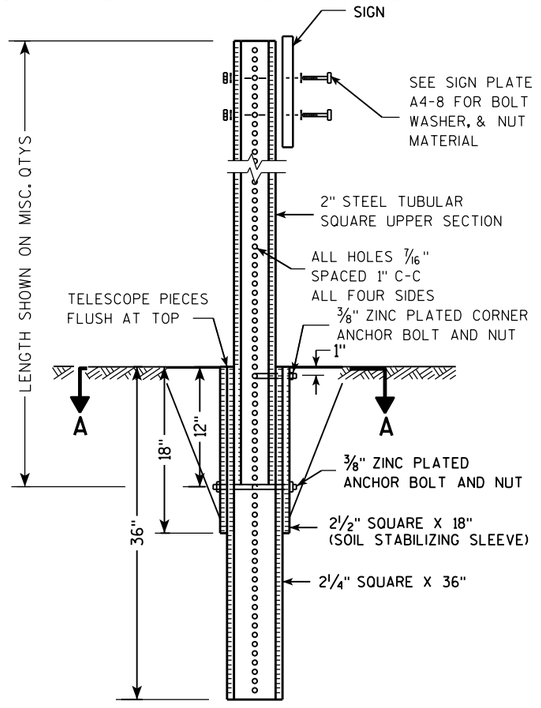

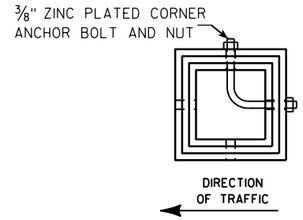

SECTION A-A

Area of Sign Installation (Sq. Ft.)	Number of Required Posts
9 or less	1
Greater than 9 less than or equal to 18	2
Greater than 18 less than or equal to 27	3

Signs wider than 3 feet or larger than 9 sq. ft shall be mounted on multiple posts (see above table).

TUBULAR STEEL
SIGN POST
A4-9

WISCONSIN DEPT OF TRANSPORTATION

APPROVED Matthew R Rauch
for State Traffic Engineer

DATE 2/05/15 PLATE A4-9.9

PROJECT NO:	HWY:	COUNTY:		SHEET NO:	E

FILE NAME : C:\CAEFiles\Projects\tr_stdplate\A49.DGN PLOT DATE : 05-FEB-2015 17:09 PLOT BY : mscsja PLOT NAME : PLOT SCALE : 13.659812:1.000000
WISDOT/CADDS SHEET 42

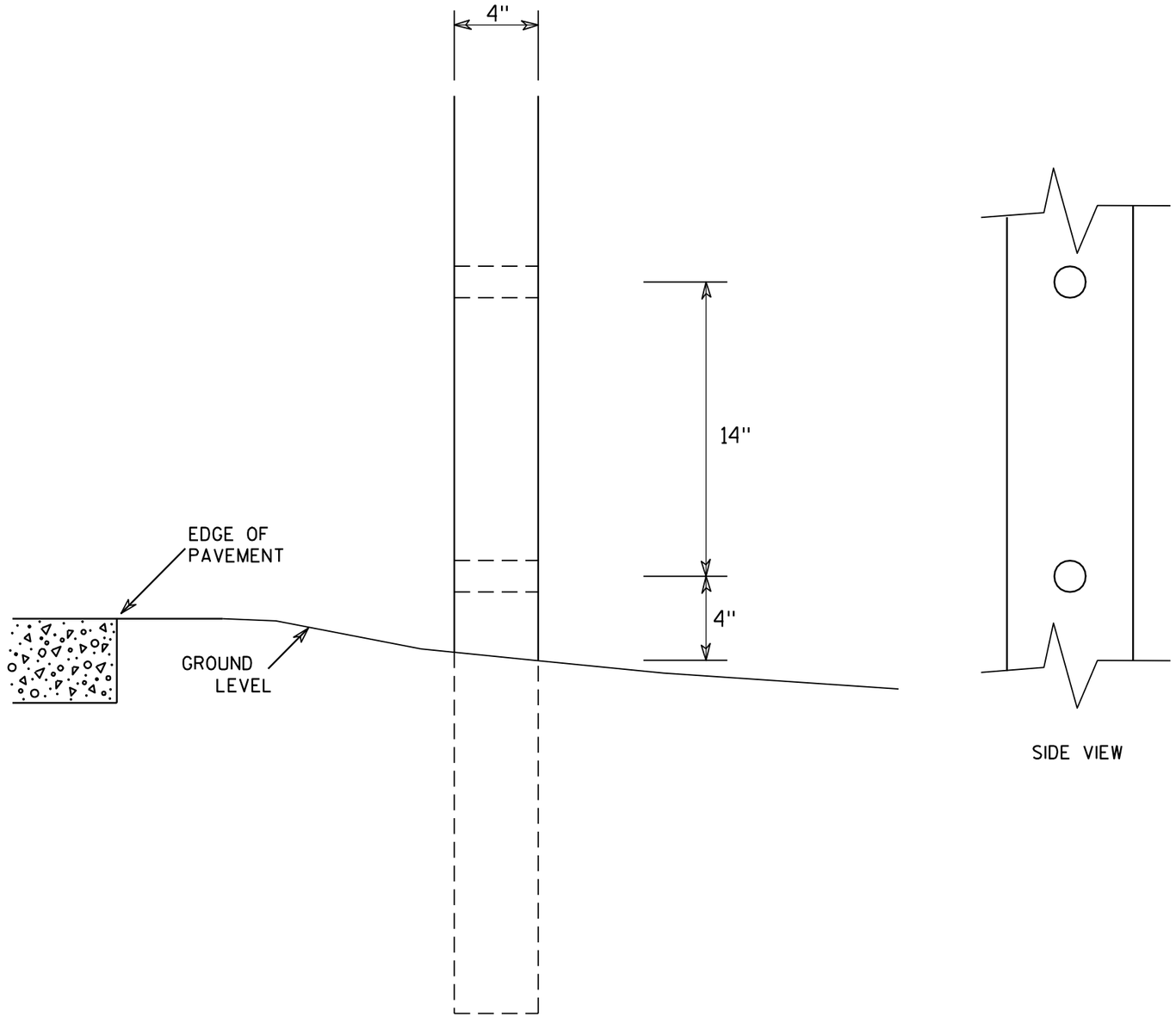

SIDE VIEW

GENERAL NOTES

1. All 4 x 6 Wood Posts shall be modified by having two 1½" diameter holes drilled perpendicular to the roadway centerline.

7

7

4 X 6 WOOD POST MODIFICATIONS

WISCONSIN DEPT OF TRANSPORTATION

APPROVED Chester J Spang for State Traffic Engineer

DATE 3/27/97 PLATE NO. A4-11.2

PROJECT NO:	HWY:	COUNTY:		SHEET NO: 145	E

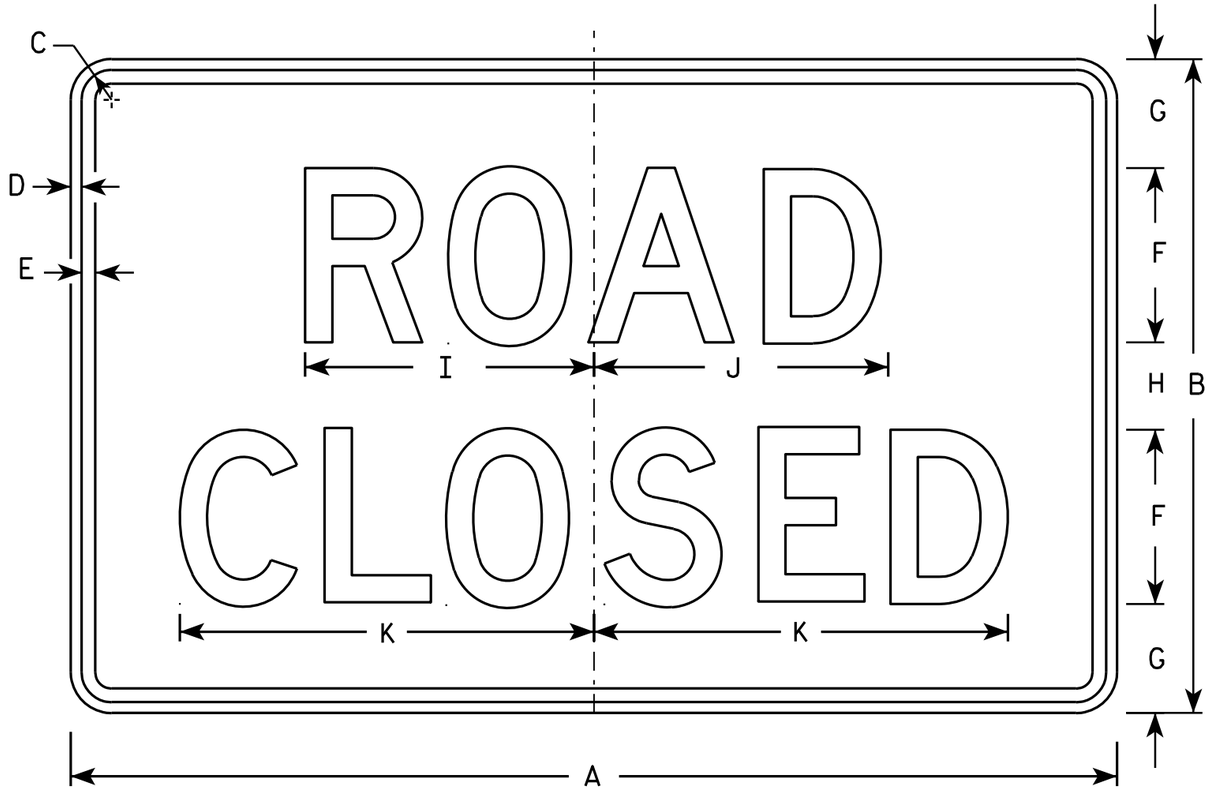

R11-2

NOTES

1. Sign is Type II - Type H Reflective - reference WIS DOT Standard Specification for HIGHWAY and STRUCTURE CONSTRUCTION latest edition.
2. Color:
   Background - White
   Message - Black
3. Message Series - D
4. Corners may be square or rounded when base material is plywood but borders shall be rounded as shown. When base material is metal, the corners and borders shall be rounded.
5. Modify the message as required.

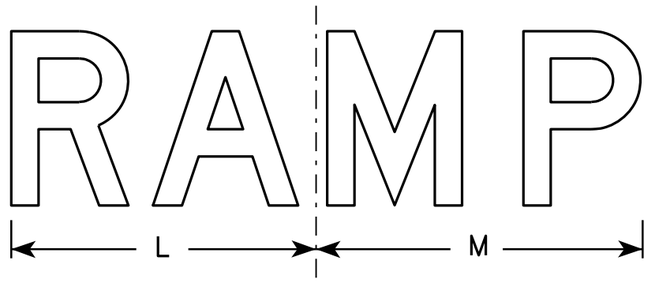

R11-2R

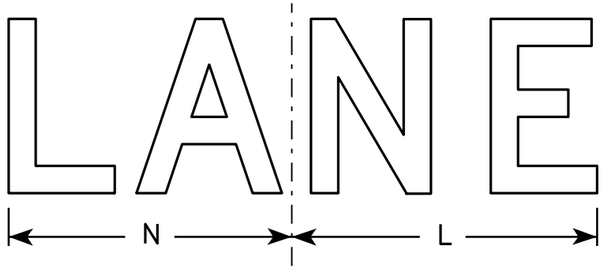

R11-2L

SIZE	A	B	C	D	E	F	G	H	I	J	K	L	M	N	O	P	Q	R	S	T	U	V	W	X	Y	Z	Area sq. ft.
1																											
2S	48	30	1 3/8	1/2	5/8	8	5	4	13 1/4	13 1/2	19	14	15	13													10.0
2M	48	30	1 3/8	1/2	5/8	8	5	4	13 1/4	13 1/2	19	14	15	13													10.0
3	48	30	1 3/8	1/2	5/8	8	5	4	13 1/4	13 1/2	19	14	15	13													10.0
4	48	30	1 3/8	1/2	5/8	8	5	4	13 1/4	13 1/2	19	14	15	13													10.0
5	48	30	1 3/8	1/2	5/8	8	5	4	13 1/4	13 1/2	19	14	15	13													10.0

STANDARD SIGN
R11-2

WISCONSIN DEPT OF TRANSPORTATION

APPROVED Matthew R Rauch
for State Traffic Engineer

DATE 4/1/11 PLATE NO. R11-2.10

PROJECT NO:	HWY:	COUNTY:		SHEET NO: 146	E

PROJECT ID 1517-75-85
USH 10 WB STAGE 1 WIDENING

STATION	Real Station	Distance	AREA (SF)			Incremental Vol (CY) (Unadjusted)			Cumulative Vol (CY)		Mass Ordinate
			Cut	Salvaged / Unusable Pavement Material	Fill	Cut	Salvaged / Unusable Pavement Material	Fill	Cut	FILL	
217+48	21748		39.2	0.0	0.0	0.0	0.0	0.0	0.0	0.0	0.0
217+50	21750	2	40.2	0.0	0.0	3.3	0.0	0.0	3.3	0.0	3.3
218+00	21800	50	43.3	0.0	0.0	77.3	0.0	0.0	80.6	0.0	80.6
218+50	21850	50	43.9	0.0	0.0	80.8	0.0	0.0	161.4	0.0	161.3
219+00	21900	50	46.2	0.0	0.0	83.4	0.0	0.0	244.8	0.0	244.7
219+50	21950	50	42.4	0.0	0.0	82.0	0.0	0.0	326.8	0.0	326.8
220+00	22000	50	36.1	0.0	0.2	72.7	0.0	0.2	399.5	0.2	399.2
220+50	22050	50	32.9	0.0	0.0	63.9	0.0	0.2	463.4	0.4	462.9
221+00	22100	50	28.9	0.0	0.0	57.2	0.0	0.0	520.6	0.4	520.1
221+50	22150	50	26.3	0.0	0.0	51.0	0.0	0.0	571.6	0.4	571.2
222+00	22200	50	22.3	0.0	0.0	45.0	0.0	0.0	616.6	0.4	616.2
222+50	22250	50	24.4	0.0	0.0	43.2	0.0	0.0	659.8	0.4	659.4
223+00	22300	50	17.6	0.0	0.0	38.9	0.0	0.0	698.7	0.4	698.3
223+50	22350	50	11.8	0.0	0.0	27.3	0.0	0.0	726.0	0.4	725.5
224+00	22400	50	10.1	0.0	0.0	20.2	0.0	0.0	746.2	0.4	745.8
224+50	22450	50	12.3	0.0	0.0	20.7	0.0	0.0	766.9	0.4	766.5
225+00	22500	50	15.6	0.0	0.0	25.8	0.0	0.0	792.7	0.4	792.3
225+09	22509	9	16.2	0.0	0.0	5.4	0.0	0.0	798.1	0.4	797.6
225+50	22550	41	16.4	0.0	0.0	24.7	0.0	0.0	822.7	0.4	822.3
226+00	22600	50	11.6	0.0	0.0	25.9	0.0	0.0	848.6	0.4	848.2
226+11	22611	11	10.3	0.0	0.0	4.6	0.0	0.0	853.1	0.4	852.7
					Column Totals	853.1	0.0	0.4			

PROJECT ID 1517-75-85
USH 10 WB STAGE 1 CROSSOVER 1

STATION	Real Station	Distance	AREA (SF)			Incremental Vol (CY) (Unadjusted)			Cumulative Vol (CY)		Mass Ordinate
			Cut	Salvaged / Unusable Pavement Material	Fill	Cut	Salvaged / Unusable Pavement Material	Fill	Cut	FILL	
232+99	23299		9.7	0.0	0.0	0.0	0.0	0.0	0.0	0.0	0.0
233+00	23300	1	9.7	0.0	0.0	0.5	0.0	0.0	0.5	0.0	0.5
233+50	23350	50	13.7	0.0	0.0	21.6	0.0	0.0	22.1	0.0	22.1
234+00	23400	50	22.1	0.0	1.4	33.1	0.0	1.3	55.3	1.3	54.0
234+50	23450	50	30.2	0.0	0.3	48.4	0.0	1.6	103.7	2.9	100.8
235+00	23500	50	37.4	0.0	0.5	62.6	0.0	0.8	166.3	3.6	162.6
235+09	23509	9	37.9	0.0	1.2	12.8	0.0	0.3	179.1	3.9	175.2
235+50	23550	41	34.1	0.0	5.9	54.4	0.0	5.3	233.5	9.3	224.2
236+00	23600	50	19.4	0.0	11.7	49.5	0.0	16.3	283.0	25.5	257.4
236+50	23650	50	28.0	0.0	9.4	43.9	0.0	19.6	326.9	45.1	281.7
237+00	23700	50	27.4	0.0	10.5	51.3	0.0	18.5	378.1	63.6	314.5
237+50	23750	50	30.7	0.0	3.7	53.8	0.0	13.2	431.9	76.8	355.1
238+00	23800	50	33.5	0.0	0.0	59.4	0.0	3.4	491.3	80.2	411.2
238+50	23850	50	23.3	0.0	0.0	52.6	0.0	0.0	543.9	80.2	463.7
239+00	23900	50	15.1	0.0	0.0	35.6	0.0	0.0	579.4	80.2	499.3
239+50	23950	50	10.7	0.0	0.0	23.9	0.0	0.0	603.3	80.2	523.2
239+58	23958	8	9.5	0.0	0.0	3.1	0.0	0.0	606.5	80.2	526.3
					Column Totals	606.5	0.0	80.2			

PROJECT ID 1517-75-85

USH 10 WB STAGE 1 WIDENING AND CROSSOVER 2

STATION	Real Station	Distance	AREA (SF)			Incremental Vol (CY) (Unadjusted)			Cumulative Vol (CY)		Mass Ordinate
			Cut	Salvaged / Unusable Pavement Material	Fill	Cut	Salvaged / Unusable Pavement Material	Fill	Cut	FILL	
243+81	24381		14.5	0.0	0.0	0.0	0.0	0.0	0.0	0.0	0.0
244+00	24400	19	15.6	0.0	0.0	10.7	0.0	0.0	10.7	0.0	10.7
244+50	24450	50	19.5	0.0	0.0	32.5	0.0	0.0	43.2	0.0	43.2
245+00	24500	50	25.0	0.7	0.0	41.2	0.7	0.0	84.4	0.0	83.6
245+50	24550	50	30.9	2.5	0.3	51.8	2.9	0.3	136.1	0.4	132.1
246+00	24600	50	39.3	5.3	0.3	65.0	7.2	0.6	201.2	0.9	189.5
246+50	24650	50	47.3	9.2	0.6	80.2	13.4	0.9	281.4	1.8	255.4
247+00	24700	50	52.9	12.5	1.1	92.8	20.1	1.6	374.2	3.4	326.5
247+50	24750	50	56.7	15.1	1.4	101.5	25.5	2.3	475.6	5.7	400.2
248+00	24800	50	59.5	16.1	2.4	107.5	28.9	3.6	583.2	9.2	475.2
248+50	24850	50	38.3	11.0	10.1	90.5	25.1	11.6	673.7	20.8	529.1
248+76	24876	26	36.1	11.6	10.8	35.4	10.7	10.0	709.1	30.8	543.8
249+00	24900	24	25.5	10.6	13.9	27.7	10.0	11.1	736.8	41.9	550.3
249+50	24950	50	15.8	7.1	23.4	38.2	16.4	34.5	775.0	76.4	537.6
250+00	25000	50	16.5	4.1	39.1	29.9	10.4	57.9	804.9	134.2	499.4
250+50	25050	50	21.5	1.9	55.7	35.2	5.5	87.7	840.1	221.9	441.4
250+61	25061	11	24.2	1.6	61.3	9.2	0.7	23.6	849.4	245.6	426.3
251+00	25100	39	25.9	1.6	60.1	36.2	2.3	87.8	885.6	333.4	372.4
251+50	25150	50	26.1	1.7	51.0	48.1	3.0	102.9	933.7	436.3	314.7
252+00	25200	50	25.3	1.5	39.0	47.6	2.9	83.3	981.3	519.6	276.1
252+50	25250	50	24.1	1.0	31.9	45.7	2.3	65.6	1,027.1	585.2	253.9
253+00	25300	50	23.7	1.2	18.3	44.2	2.1	46.4	1,071.3	631.6	249.7
253+50	25350	50	22.4	1.4	12.0	42.6	2.4	28.0	1,113.9	659.6	262.0
254+00	25400	50	23.3	1.2	8.2	42.2	2.3	18.7	1,156.2	678.3	283.2
254+50	25450	50	27.4	4.3	2.6	46.9	5.1	9.9	1,203.1	688.2	315.1
255+00	25500	50	27.3	3.4	1.8	50.7	7.1	4.0	1,253.8	692.3	354.6
255+50	25550	50	26.8	2.6	1.3	50.1	5.5	2.9	1,303.9	695.1	396.4
256+00	25600	50	26.7	2.0	0.7	49.6	4.2	1.9	1,353.5	697.1	439.8
256+50	25650	50	25.6	1.3	0.4	48.5	3.0	1.1	1,402.0	698.1	484.2
257+00	25700	50	24.7	1.1	0.4	46.6	2.2	0.7	1,448.6	698.8	528.0
257+50	25750	50	23.3	0.7	0.3	44.5	1.6	0.6	1,493.1	699.4	570.2
258+00	25800	50	23.9	0.9	0.3	43.7	1.4	0.5	1,536.8	700.0	611.9
258+50	25850	50	22.7	0.5	0.2	43.1	1.2	0.4	1,579.8	700.4	653.3
259+00	25900	50	22.4	0.6	0.2	41.7	1.0	0.3	1,621.6	700.7	693.7
259+50	25950	50	20.9	0.2	0.0	40.1	0.8	0.2	1,661.7	700.9	732.9
260+00	26000	50	20.4	0.2	0.2	38.2	0.4	0.3	1,699.9	701.2	770.5
260+50	26050	50	23.8	0.7	1.1	40.9	0.8	1.2	1,740.7	702.4	809.3
261+00	26100	50	30.9	5.6	4.4	50.6	5.8	5.1	1,791.3	707.4	849.1
261+50	26150	50	30.7	4.8	15.0	57.0	9.6	17.9	1,848.2	725.3	878.5
262+00	26200	50	29.3	4.7	32.5	55.5	8.8	43.9	1,903.8	769.2	881.4
262+50	26250	50	30.5	5.0	41.7	55.4	8.9	68.6	1,959.2	837.9	859.2
263+00	26300	50	32.7	5.9	44.8	58.5	10.0	80.1	2,017.7	918.0	827.6
263+50	26350	50	33.2	5.3	56.9	61.0	10.3	94.2	2,078.7	1,012.2	784.0
264+00	26400	50	34.7	6.1	58.9	62.9	10.5	107.2	2,141.7	1,119.5	729.2
264+50	26450	50	41.2	8.2	50.4	70.2	13.2	101.1	2,211.9	1,220.6	685.1
265+00	26500	50	54.6	7.3	49.0	88.7	14.4	92.0	2,300.5	1,312.6	667.4
265+50	26550	50	39.8	9.0	44.7	87.4	15.1	86.7	2,387.9	1,399.3	653.0
266+00	26600	50	33.9	10.1	37.4	68.2	17.6	76.0	2,456.1	1,475.3	627.6
266+50	26650	50	30.5	7.5	37.5	59.6	16.2	69.4	2,515.8	1,544.6	601.6
267+00	26700	50	30.3	6.1	36.8	56.3	12.6	68.8	2,572.1	1,613.4	576.6

9

9

PROJECT NO: 1517-75-85	HWY: STH 441/ USH 10	COUNTY: WINNEBAGO	EARTHWORK	SHEET: E

FILE NAME : _____ PLOT DATE : _____ PLOT BY : _____ PLOT NAME : _____ PLOT SCALE : 1:1

PROJECT ID 1517-75-85

USH 10 WB STAGE 1 WIDENING AND CROSSOVER 2

STATION	Real Station	Distance	AREA (SF)			Incremental Vol (CY) (Unadjusted)			Cumulative Vol (CY)		Mass Ordinate
			Cut	Salvaged / Unusable Pavement Material	Fill	Cut	Salvaged / Unusable Pavement Material	Fill	Cut	FILL	
267+50	26750	50	33.1	6.6	31.1	58.7	11.7	62.8	2,630.8	1,676.2	560.7
268+00	26800	50	74.7	22.8	0.8	99.9	27.2	29.5	2,730.7	1,705.7	603.9
268+50	26850	50	32.3	9.4	19.2	99.1	29.8	18.5	2,829.7	1,724.3	654.6
269+00	26900	50	31.8	8.5	16.9	59.3	16.5	33.5	2,889.0	1,757.7	664.0
269+50	26950	50	37.2	11.8	12.1	63.8	18.8	26.9	2,952.9	1,784.6	682.1
270+00	27000	50	38.8	12.2	9.4	70.3	22.2	19.9	3,023.2	1,804.5	710.4
270+50	27050	50	49.2	16.4	5.2	81.5	26.4	13.5	3,104.7	1,818.0	751.9
271+00	27100	50	41.9	11.8	17.3	84.3	26.0	20.8	3,189.0	1,838.8	789.4
271+50	27150	50	41.3	12.6	11.6	77.0	22.6	26.7	3,266.0	1,865.5	817.1
272+00	27200	50	36.1	10.5	14.1	71.7	21.4	23.8	3,337.6	1,889.3	843.6
272+50	27250	50	35.5	11.3	17.1	66.3	20.2	28.9	3,403.9	1,918.2	860.8
273+00	27300	50	32.3	10.3	19.5	62.7	20.0	33.9	3,466.6	1,952.1	869.6
273+50	27350	50	31.7	10.3	18.4	59.2	19.1	35.1	3,525.8	1,987.2	874.7
274+00	27400	50	29.6	9.0	21.1	56.8	17.9	36.6	3,582.6	2,023.8	877.0
274+50	27450	50	30.8	10.1	18.4	56.0	17.7	36.5	3,638.6	2,060.3	878.7
275+00	27500	50	31.3	10.3	18.7	57.5	18.9	34.3	3,696.1	2,094.6	883.0
275+50	27550	50	30.4	9.6	19.9	57.1	18.4	35.8	3,753.2	2,130.4	885.9
276+00	27600	50	31.7	8.1	19.2	57.5	16.4	36.2	3,810.7	2,166.5	890.8
276+50	27650	50	29.4	9.1	21.6	56.5	15.9	37.7	3,867.2	2,204.2	893.8
277+00	27700	50	32.4	11.2	12.8	57.1	18.8	31.8	3,924.4	2,236.0	900.4
277+48	27748	48	33.0	10.6	14.9	58.3	19.5	24.7	3,982.7	2,260.7	914.5
277+50	27750	2	33.5	11.2	13.8	2.3	0.7	1.0	3,985.0	2,261.7	915.1
278+00	27800	50	30.8	9.5	24.0	59.6	19.2	35.0	4,044.6	2,296.6	920.5
278+50	27850	50	29.9	9.1	24.9	56.3	17.3	45.2	4,100.8	2,341.8	914.3
279+00	27900	50	32.6	11.5	20.5	57.9	19.1	41.9	4,158.8	2,383.8	911.1
279+50	27950	50	38.9	16.7	19.3	66.2	26.1	36.8	4,225.0	2,420.5	914.5
280+00	28000	50	48.8	18.3	20.1	81.2	32.4	36.5	4,306.2	2,457.0	926.8
280+50	28050	50	66.7	28.8	13.5	106.9	43.6	31.1	4,413.0	2,488.2	958.9
280+60	28060	10	77.1	28.2	12.5	25.6	10.1	4.6	4,438.6	2,492.8	969.7
281+00	28100	40	79.1	23.3	8.5	116.8	38.5	15.7	4,555.4	2,508.5	1,032.3
281+50	28150	50	57.3	14.7	9.2	126.3	35.1	16.5	4,681.7	2,525.0	1,107.0
281+90	28190	40	34.0	11.2	11.1	68.1	19.3	15.1	4,749.8	2,540.1	1,140.6
282+00	28200	10	33.0	11.5	11.2	12.0	4.1	4.0	4,761.8	2,544.1	1,144.6
282+50	28250	50	34.9	13.7	8.9	62.8	23.3	18.6	4,824.7	2,562.7	1,165.5
283+00	28300	50	34.6	13.7	11.2	64.3	25.4	18.6	4,889.0	2,581.3	1,185.9
283+50	28350	50	37.1	11.5	11.2	66.4	23.3	20.8	4,955.4	2,602.0	1,208.3
284+00	28400	50	39.4	10.7	14.4	70.9	20.6	23.7	5,026.3	2,625.7	1,234.9
284+08	28408	8	41.1	10.7	13.4	11.5	3.1	4.0	5,037.8	2,629.7	1,239.4
284+50	28450	42	34.3	10.1	10.3	59.0	16.3	18.6	5,096.9	2,648.3	1,263.5
285+00	28500	50	30.1	10.2	6.4	59.6	18.8	15.5	5,156.5	2,663.8	1,288.8
285+50	28550	50	32.7	10.7	3.2	58.2	19.4	8.8	5,214.7	2,672.6	1,318.8
286+00	28600	50	31.5	8.9	3.0	59.4	18.2	5.7	5,274.1	2,678.3	1,354.4
286+50	28650	50	27.3	7.6	2.7	54.4	15.3	5.2	5,328.5	2,683.5	1,388.2
287+00	28700	50	20.4	4.7	4.8	44.1	11.4	7.0	5,372.6	2,690.5	1,413.9
287+50	28750	50	25.4	0.0	0.0	42.3	4.4	4.5	5,414.9	2,695.0	1,447.4
288+00	28800	50	20.5	0.0	0.0	42.5	0.0	0.0	5,457.4	2,695.0	1,489.8
288+50	28850	50	16.3	0.0	0.0	34.1	0.0	0.0	5,491.5	2,695.0	1,523.9
289+00	28900	50	12.7	0.0	0.0	26.8	0.0	0.0	5,518.3	2,695.0	1,550.7
289+02	28902	2	12.5	0.0	0.0	1.0	0.0	0.0	5,519.3	2,695.0	1,551.8
					Column Totals	5,519.3	1,272.6	2,695.0			

PROJECT ID 1517-75-85
USH 10 WB STAGE 2 WIDENING

STATION	Real Station	Distance	AREA (SF)			Incremental Vol (CY) (Unadjusted)			Cumulative Vol (CY)		Mass Ordinate
			Cut	Salvaged / Unusable Pavement Material	Fill	Cut	Salvaged / Unusable Pavement Material	Fill	Cut	FILL	
225+09	22509		32.3	0.0	0.0	0.0	0.0	0.0	0.0	0.0	0.0
225+50	22550	41	36.0	0.0	0.1	51.8	0.0	0.0	51.8	0.0	51.7
226+00	22600	50	42.8	0.0	0.2	73.0	0.0	0.2	124.8	0.3	124.5
226+11	22611	11	44.0	0.0	0.1	18.1	0.0	0.1	142.9	0.3	142.6
226+50	22650	39	48.9	0.0	0.2	66.6	0.0	0.3	209.5	0.6	208.9
227+00	22700	50	68.6	0.0	0.2	108.8	0.0	0.4	318.4	1.0	317.4
227+50	22750	50	55.8	0.0	0.0	115.2	0.0	0.1	433.6	1.1	432.5
227+79	22779	29	48.3	0.0	0.0	56.7	0.0	0.0	490.3	1.1	489.2
228+00	22800	21	38.0	0.0	0.0	32.9	0.0	0.0	523.2	1.1	522.1
228+50	22850	50	35.6	0.0	0.0	68.1	0.0	0.0	591.3	1.1	590.2
229+00	22900	50	22.9	0.0	0.0	54.2	0.0	0.0	645.5	1.1	644.4
229+50	22950	50	13.8	0.0	1.4	33.9	0.0	1.3	679.4	2.4	677.0
230+00	23000	50	28.5	0.0	0.0	39.1	0.0	1.3	718.5	3.7	714.8
230+14	23014	14	32.1	0.0	0.0	16.0	0.0	0.0	734.5	3.7	730.9
230+50	23050	36	31.5	0.0	0.0	42.1	0.0	0.0	776.6	3.7	772.9
231+00	23100	50	23.0	0.0	0.1	50.5	0.0	0.1	827.1	3.8	823.4
231+50	23150	50	28.5	0.0	2.1	47.7	0.0	2.0	874.8	5.8	869.0
232+00	23200	50	29.2	0.0	2.7	53.4	0.0	4.5	928.2	10.2	918.0
232+50	23250	50	30.4	0.0	0.9	55.2	0.0	3.3	983.4	13.5	969.9
232+99	23299	49	30.8	0.0	0.1	55.1	0.0	0.9	1,038.5	14.4	1,024.1
233+00	23300	1	30.1	0.0	0.1	1.6	0.0	0.0	1,040.1	14.4	1,025.7
233+50	23350	50	17.6	0.0	0.0	44.1	0.0	0.1	1,084.2	14.5	1,069.7
234+00	23400	50	11.6	0.0	0.0	27.1	0.0	0.0	1,111.3	14.5	1,096.8
234+50	23450	50	6.5	0.0	0.0	16.8	0.0	0.0	1,128.1	14.5	1,113.6
235+00	23500	50	3.1	0.0	0.0	9.0	0.0	0.0	1,137.1	14.5	1,122.6
235+09	23509	9	2.4	0.0	0.0	0.9	0.0	0.0	1,138.0	14.5	1,123.5
					Column Totals	1,138.0	0.0	14.5			

9 9

PROJECT ID 1517-75-85
USH 10 EB STAGE 2 WIDENING

STATION	Real Station	Distance	AREA (SF) Cut	AREA (SF) Salvaged/Unusable Pavement Material	AREA (SF) Fill	Incremental Vol (CY) (Unadjusted) Cut	Incremental Vol (CY) (Unadjusted) Salvaged/Unusable Pavement Material	Incremental Vol (CY) (Unadjusted) Fill	Cumulative Vol (CY) Cut	Cumulative Vol (CY) FILL	Mass Ordinate
246+89	24689		29.0	0.0	0.0	0.0	0.0	0.0	0.0	0.0	0.0
247+00	24700	11	27.5	0.0	0.0	11.9	0.0	0.0	11.9	0.0	11.9
247+50	24750	50	29.8	0.0	0.0	53.1	0.0	0.0	64.9	0.0	64.9
248+00	24800	50	30.4	0.0	0.0	55.8	0.0	0.0	120.7	0.0	120.7
248+50	24850	50	31.9	0.0	0.0	57.7	0.0	0.0	178.5	0.0	178.5
249+00	24900	50	32.8	0.0	0.0	59.9	0.0	0.0	238.4	0.0	238.4
249+50	24950	50	34.4	0.0	0.0	62.2	0.0	0.0	300.6	0.0	300.6
250+00	25000	50	32.6	0.0	0.0	62.0	0.0	0.0	362.6	0.0	362.6
250+50	25050	50	39.7	0.0	0.0	67.0	0.0	0.0	429.6	0.0	429.6
251+00	25100	50	37.5	0.0	0.1	71.5	0.0	0.1	501.1	0.1	501.0
251+50	25150	50	30.7	0.0	4.5	63.1	0.0	4.3	564.2	4.3	559.9
252+00	25200	50	33.2	0.0	0.6	59.2	0.0	4.7	623.4	9.0	614.3
252+50	25250	50	33.1	0.0	1.6	61.4	0.0	2.0	684.7	11.1	673.7
253+00	25300	50	35.7	0.0	0.0	63.7	0.0	1.5	748.4	12.5	735.9
253+50	25350	50	40.1	0.0	0.0	70.1	0.0	0.0	818.5	12.5	806.0
253+94	25394	44	51.8	0.0	0.0	75.6	0.0	0.0	894.1	12.5	881.5
254+00	25400	6	53.2	0.0	0.0	10.8	0.0	0.0	904.9	12.5	892.4
254+46	25446	46	41.5	0.0	0.0	80.8	0.0	0.0	985.7	12.5	973.2
256+50	25650		2.0	0.0	0.0	0.0	0.0	0.0	985.7	12.5	973.2
257+00	25700	50	5.2	0.0	0.0	6.7	0.0	0.0	992.4	12.5	979.9
257+50	25750	50	7.4	0.0	0.0	11.7	0.0	0.0	1,004.1	12.5	991.5
258+00	25800	50	9.3	0.0	0.0	15.5	0.0	0.0	1,019.5	12.5	1,007.0
258+50	25850	50	11.4	0.0	0.0	19.2	0.0	0.0	1,038.8	12.5	1,026.2
259+00	25900	50	13.8	0.0	0.0	23.3	0.0	0.0	1,062.1	12.5	1,049.5
259+50	25950	50	16.6	0.0	0.0	28.1	0.0	0.0	1,090.2	12.5	1,077.6
260+00	26000	50	19.0	0.0	0.0	33.0	0.0	0.0	1,123.1	12.5	1,110.6
260+50	26050	50	19.9	0.0	0.0	36.0	0.0	0.0	1,159.1	12.5	1,146.6
261+00	26100	50	15.0	0.0	0.0	32.3	0.0	0.0	1,191.4	12.5	1,178.8
261+50	26150	50	6.2	0.0	0.0	19.6	0.0	0.0	1,211.0	12.5	1,198.5
261+76	26176	26	0.0	0.0	0.0	3.0	0.0	0.0	1,214.0	12.5	1,201.5
					Column Totals	1,214.0	0.0	12.5			

PROJECT ID 1517-75-84
USH 10 EB STAGE 2 ASW WIDENING

STATION	Real Station	Distance	AREA (SF)			Incremental Vol (CY) (Unadjusted)			Cumulative Vol (CY)		Mass Ordinate
			Cut	Salvaged / Unusable Pavement Material	Fill	Cut	Salvaged / Unusable Pavement Material	Fill	Cut	FILL	
283+49	28349		10.8	0.0	0.0	0.0	0.0	0.0	0.0	0.0	0.0
283+50	28350	1	30.4	0.0	0.0	1.1	0.0	0.0	1.1	0.0	1.1
284+00	28400	50	44.5	0.0	0.0	69.3	0.0	0.0	70.4	0.0	70.4
284+07	28407	7	46.0	0.0	0.0	11.7	0.0	0.0	82.2	0.0	82.2
284+50	28450	43	27.7	0.0	0.0	58.7	0.0	0.0	140.8	0.0	140.8
285+00	28500	50	20.3	0.0	0.0	44.5	0.0	0.0	185.3	0.0	185.3
285+50	28550	50	16.1	0.0	0.0	33.7	0.0	0.0	219.0	0.0	219.0
286+00	28600	50	9.6	0.0	0.0	23.8	0.0	0.0	242.8	0.0	242.8
286+28	28628	28	5.6	0.0	0.0	8.0	0.0	0.0	250.8	0.0	250.8
					Column Totals	250.8	0.0	0.0			

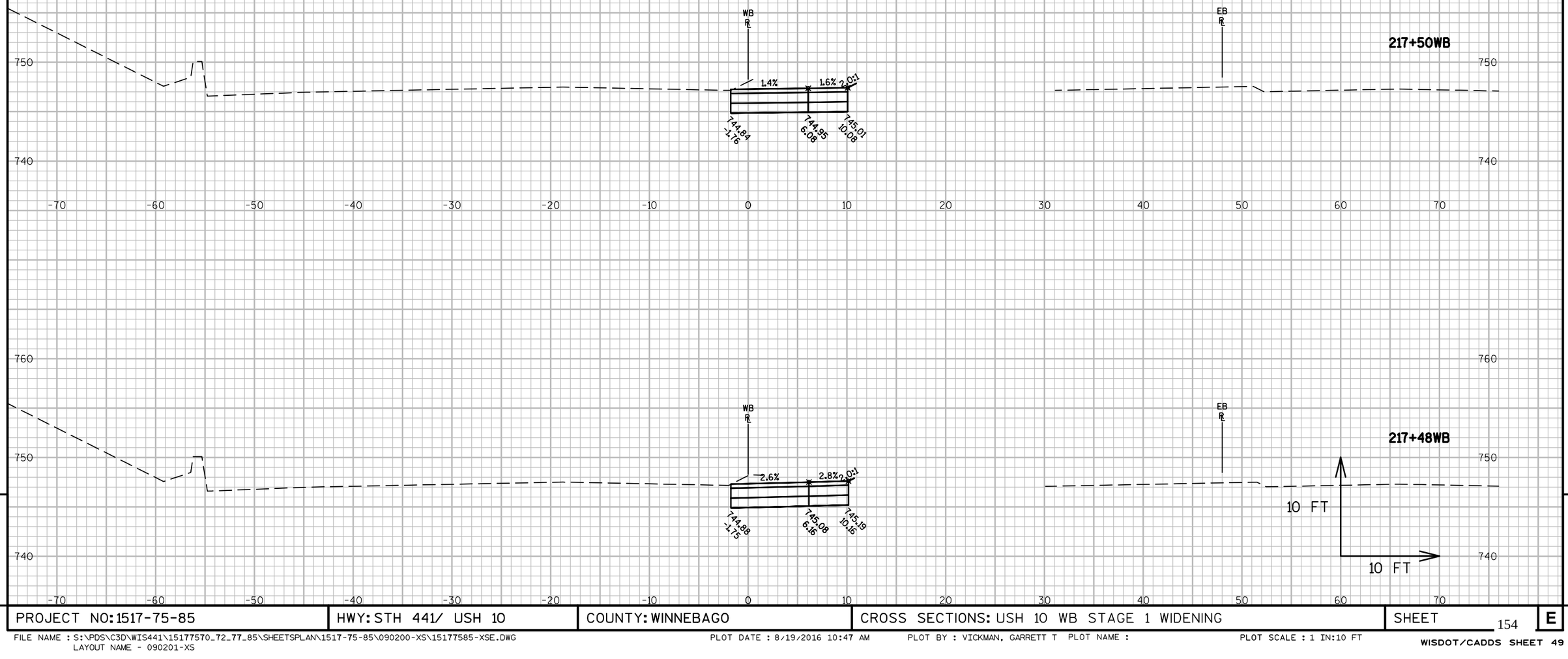

9

9

PROJECT NO: 1517-75-85	HWY: STH 441/ USH 10	COUNTY: WINNEBAGO	CROSS SECTIONS: USH 10 WB STAGE 1 WIDENING	SHEET 154	E

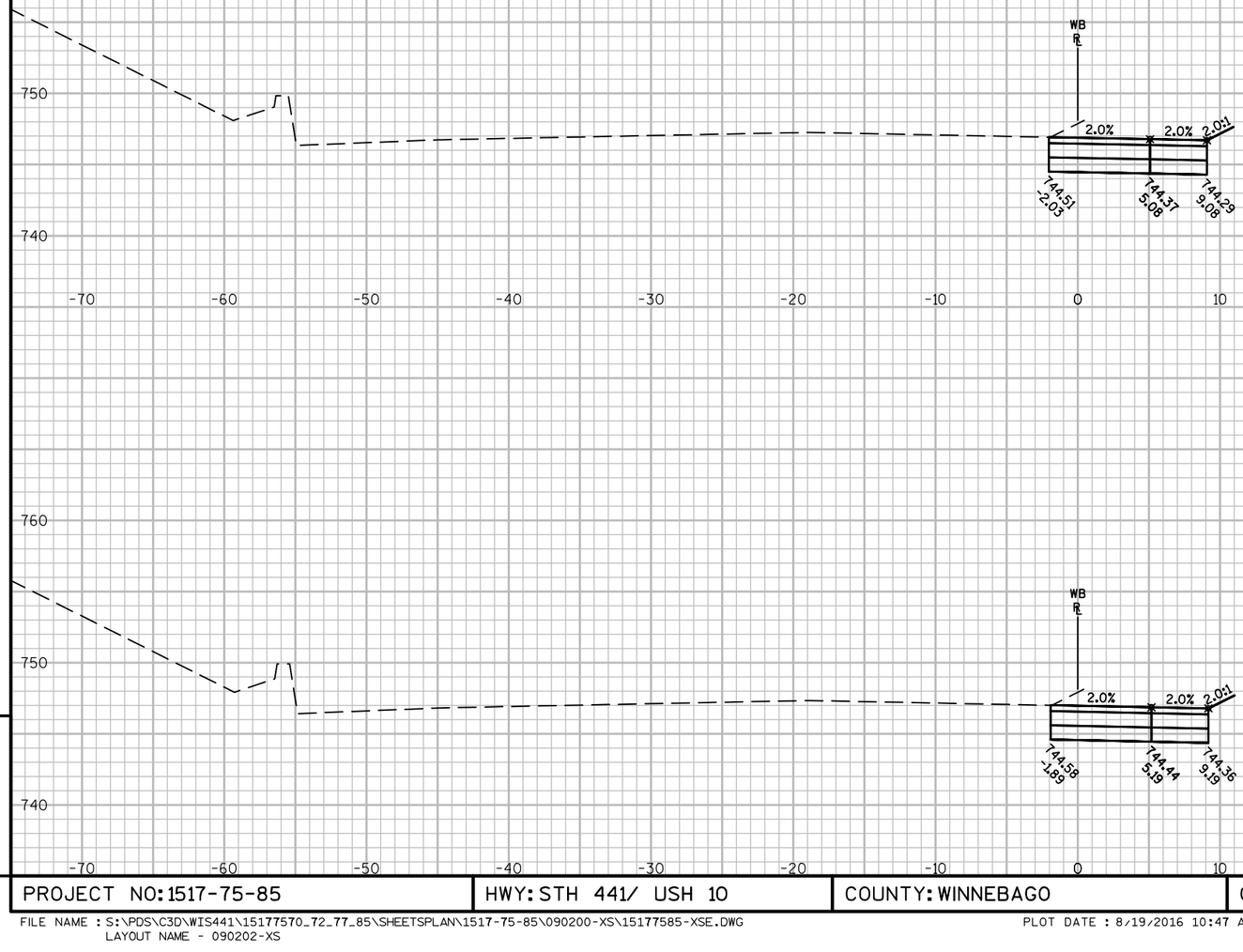

9

9

PROJECT NO: 1517-75-85	HWY: STH 441/ USH 10	COUNTY: WINNEBAGO	CROSS SECTIONS: USH 10 WB STAGE 1 WIDENING	SHEET 155	E

FILE NAME : S:\PDS\C3D\WIS441\15177570_72_77_85\SHEETSPLAN\1517-75-85\090200-XS\15177585-XSE.DWG
LAYOUT NAME - 090202-XS

PLOT DATE : 8/19/2016 10:47 AM PLOT BY : VICKMAN, GARRETT T PLOT NAME : PLOT SCALE : 1 IN:10 FT

WISDOT/CADDS SHEET 49

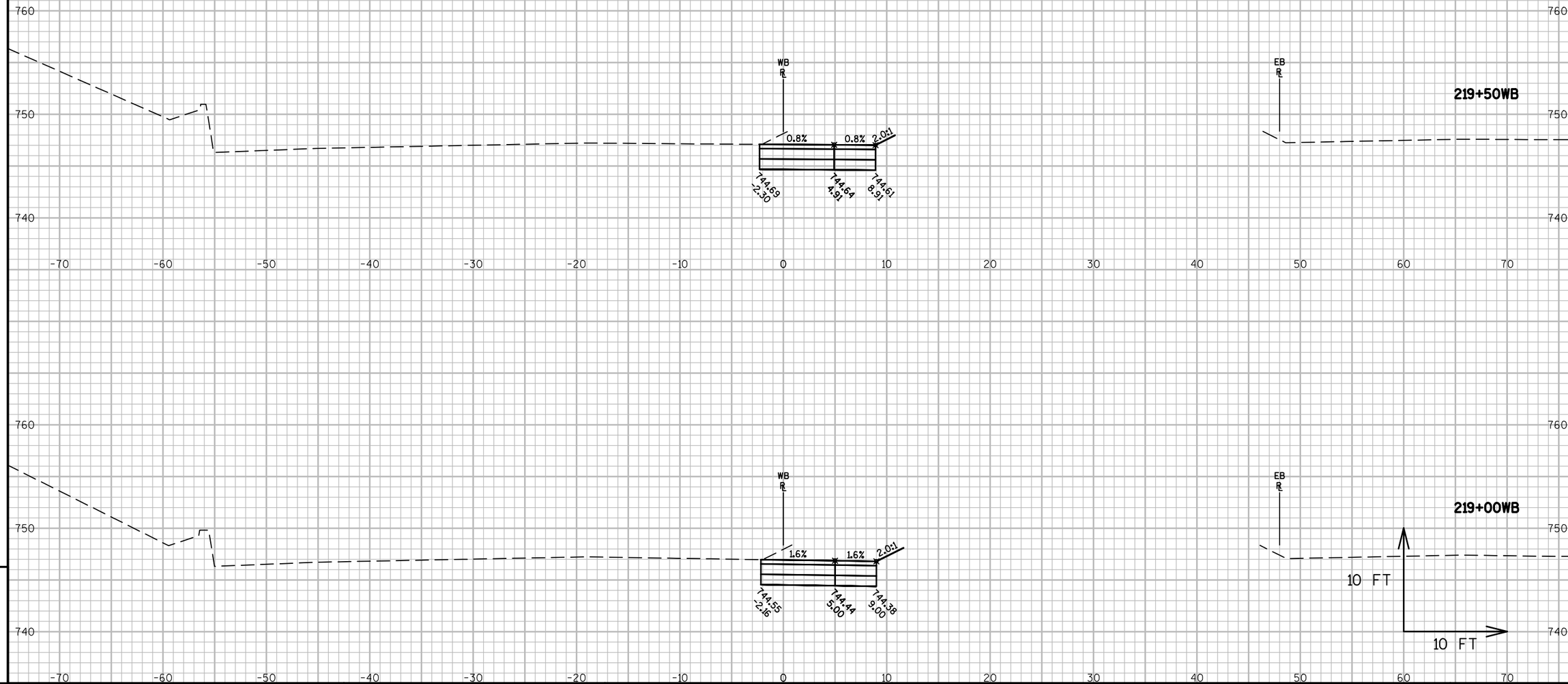

9

9

PROJECT NO: 1517-75-85	HWY: STH 441/ USH 10	COUNTY: WINNEBAGO	CROSS SECTIONS: USH 10 WB STAGE 1 WIDENING	SHEET 156	E

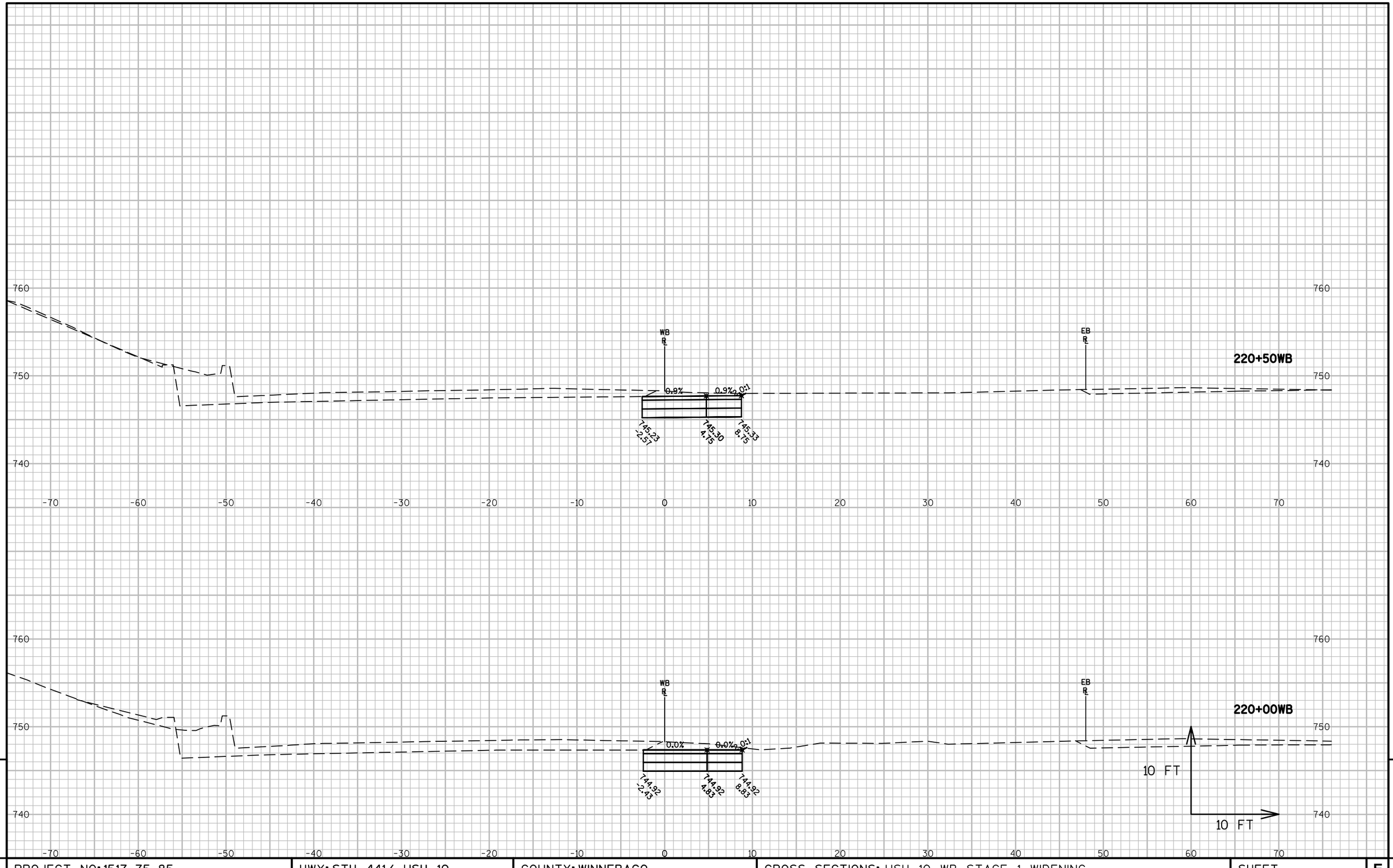

9

9

PROJECT NO: 1517-75-85	HWY: STH 441/ USH 10	COUNTY: WINNEBAGO	CROSS SECTIONS: USH 10 WB STAGE 1 WIDENING	SHEET 157	E

FILE NAME : S:\PDS\C3D\WIS441\15177570_72_77_85\SHEETSPLAN\1517-75-85\090200-XS\15177585-XSE.DWG
LAYOUT NAME - 090204-XS

PLOT DATE : 8/19/2016 10:47 AM PLOT BY : VICKMAN, GARRETT T PLOT NAME : PLOT SCALE : 1 IN:10 FT

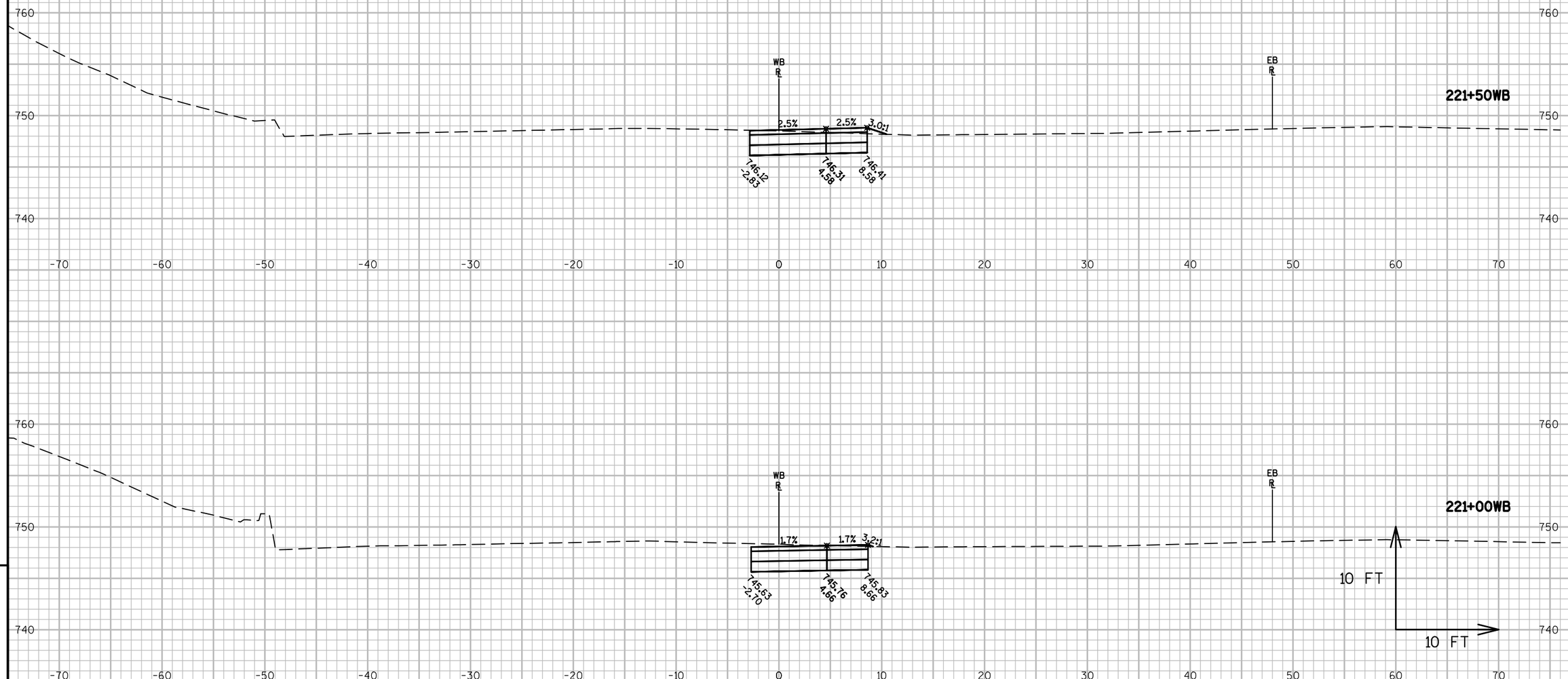

9

9

PROJECT NO: 1517-75-85	HWY: STH 441/ USH 10	COUNTY: WINNEBAGO	CROSS SECTIONS: USH 10 WB STAGE 1 WIDENING	SHEET 158	E

FILE NAME : S:\PDS\C3D\WIS441\15177570_72_77_85\SHEETSPLAN\1517-75-85\090200-XS\15177585-XSE.DWG
LAYOUT NAME - 090205-XS

PLOT DATE : 8/19/2016 10:48 AM PLOT BY : VICKMAN, GARRETT T PLOT NAME : PLOT SCALE : 1 IN:10 FT

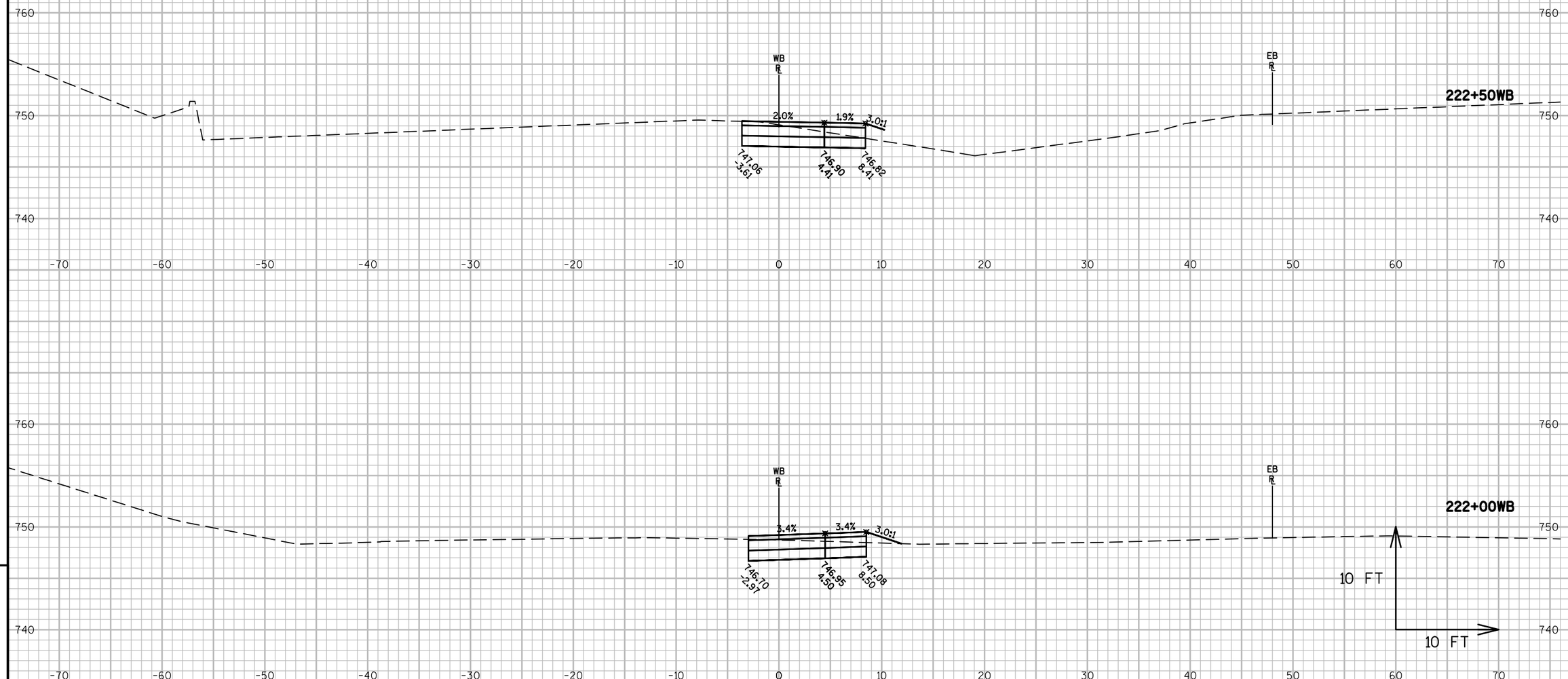

9

9

PROJECT NO: 1517-75-85	HWY: STH 441/ USH 10	COUNTY: WINNEBAGO	CROSS SECTIONS: USH 10 WB STAGE 1 WIDENING	SHEET 159	E

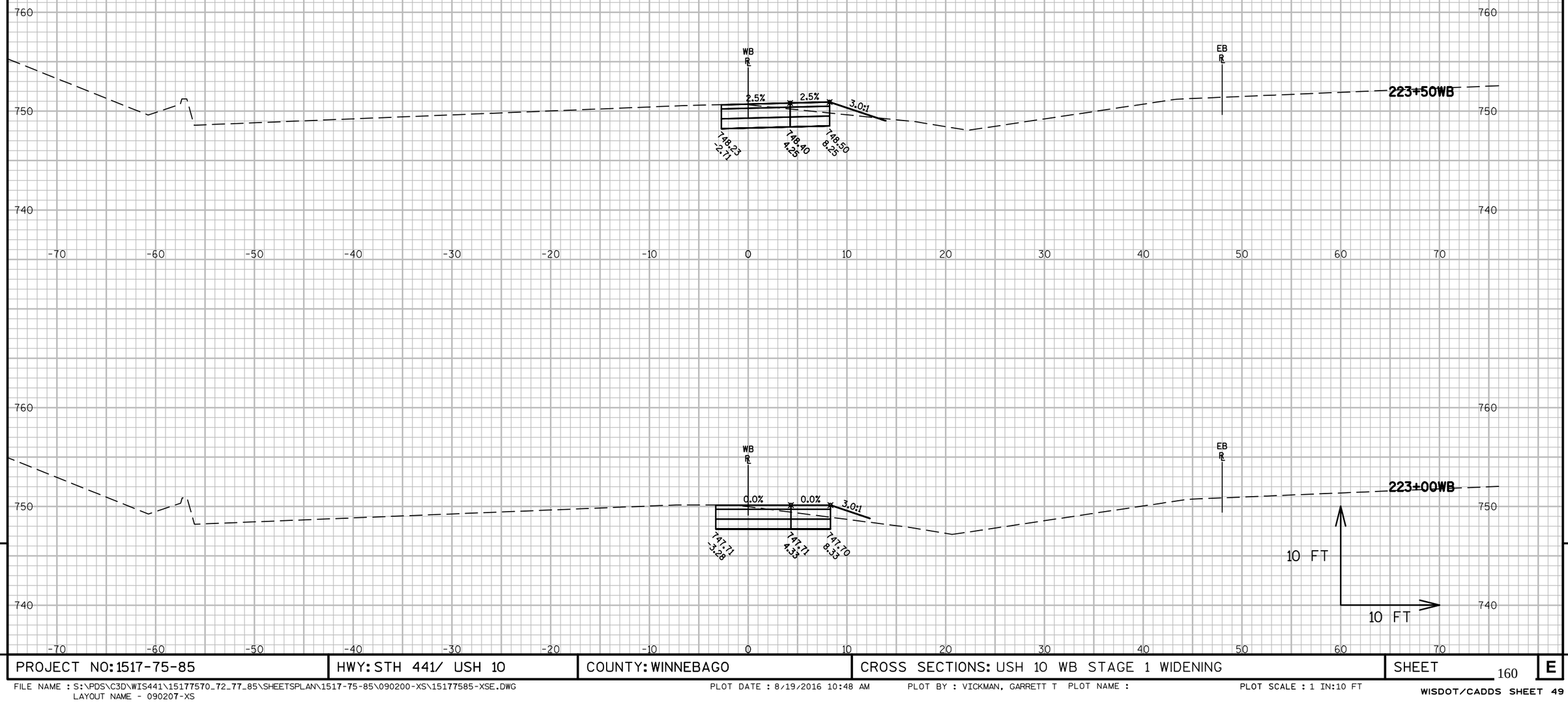

9

9

PROJECT NO: 1517-75-85	HWY: STH 441/ USH 10	COUNTY: WINNEBAGO	CROSS SECTIONS: USH 10 WB STAGE 1 WIDENING	SHEET 160	E

FILE NAME : S:\PDS\C3D\WIS441\15177570_72_77_85\SHEETSPLAN\1517-75-85\090200-XS\15177585-XSE.DWG
LAYOUT NAME - 090207-XS

PLOT DATE : 8/19/2016 10:48 AM PLOT BY : VICKMAN, GARRETT T PLOT NAME : PLOT SCALE : 1 IN:10 FT

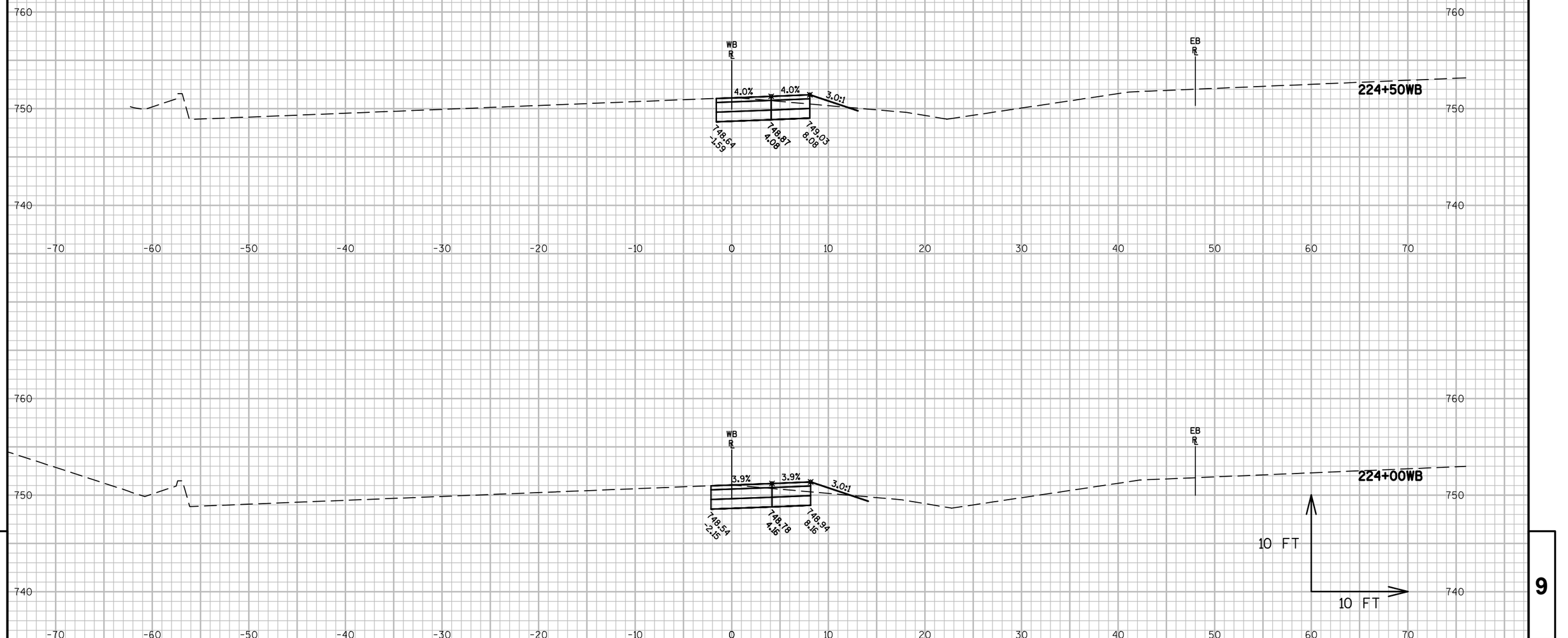

9

9

PROJECT NO: 1517-75-85	HWY: STH 441/ USH 10	COUNTY: WINNEBAGO	CROSS SECTIONS: USH 10 WB STAGE 1 WIDENING	SHEET 161	E

FILE NAME : S:\PDS\C3D\WIS441\15177570_72_77_85\SHEETSPLAN\1517-75-85\090200-XS\15177585-XSE.DWG
LAYOUT NAME - 090208-XS

PLOT DATE : 8/19/2016 10:48 AM PLOT BY : VICKMAN, GARRETT T PLOT NAME : PLOT SCALE : 1 IN:10 FT

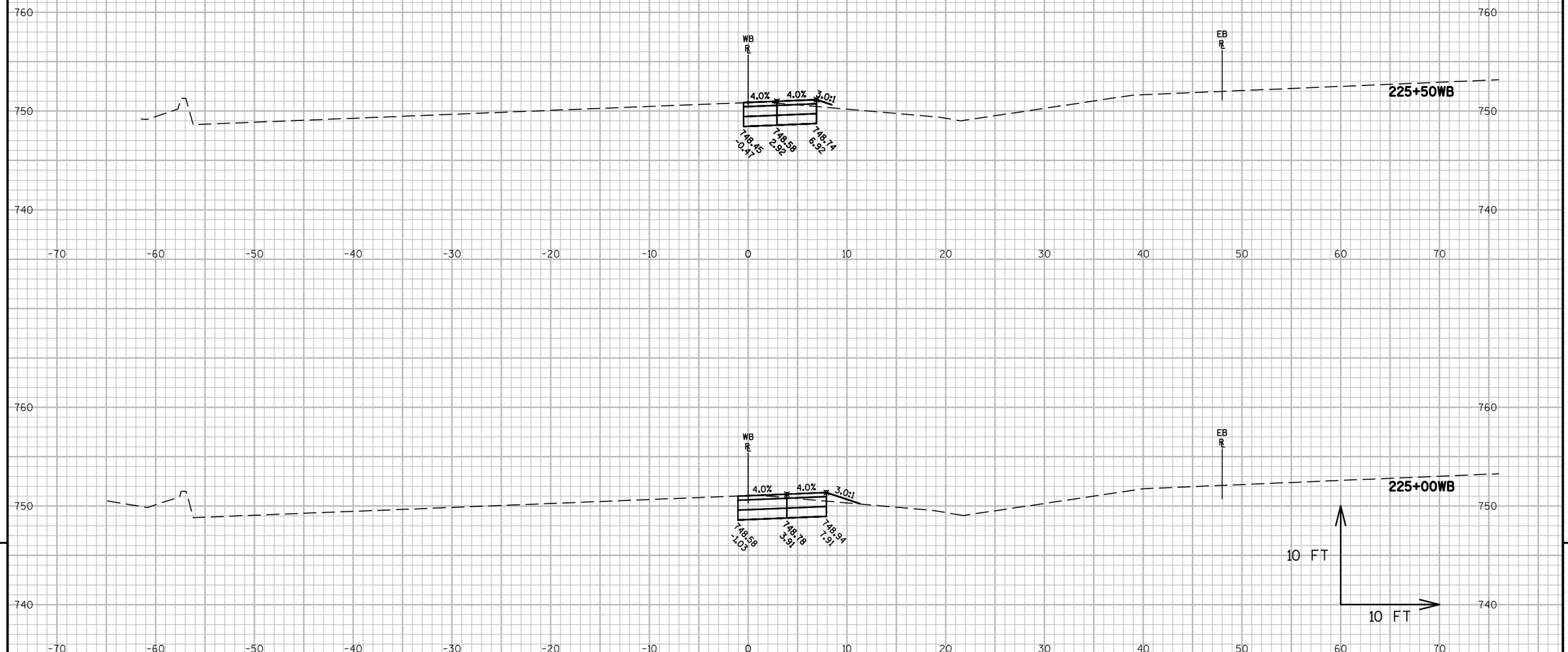

9

9

PROJECT NO: 1517-75-85	HWY: STH 441/ USH 10	COUNTY: WINNEBAGO	CROSS SECTIONS: USH 10 WB STAGE 1 WIDENING	SHEET 162	E

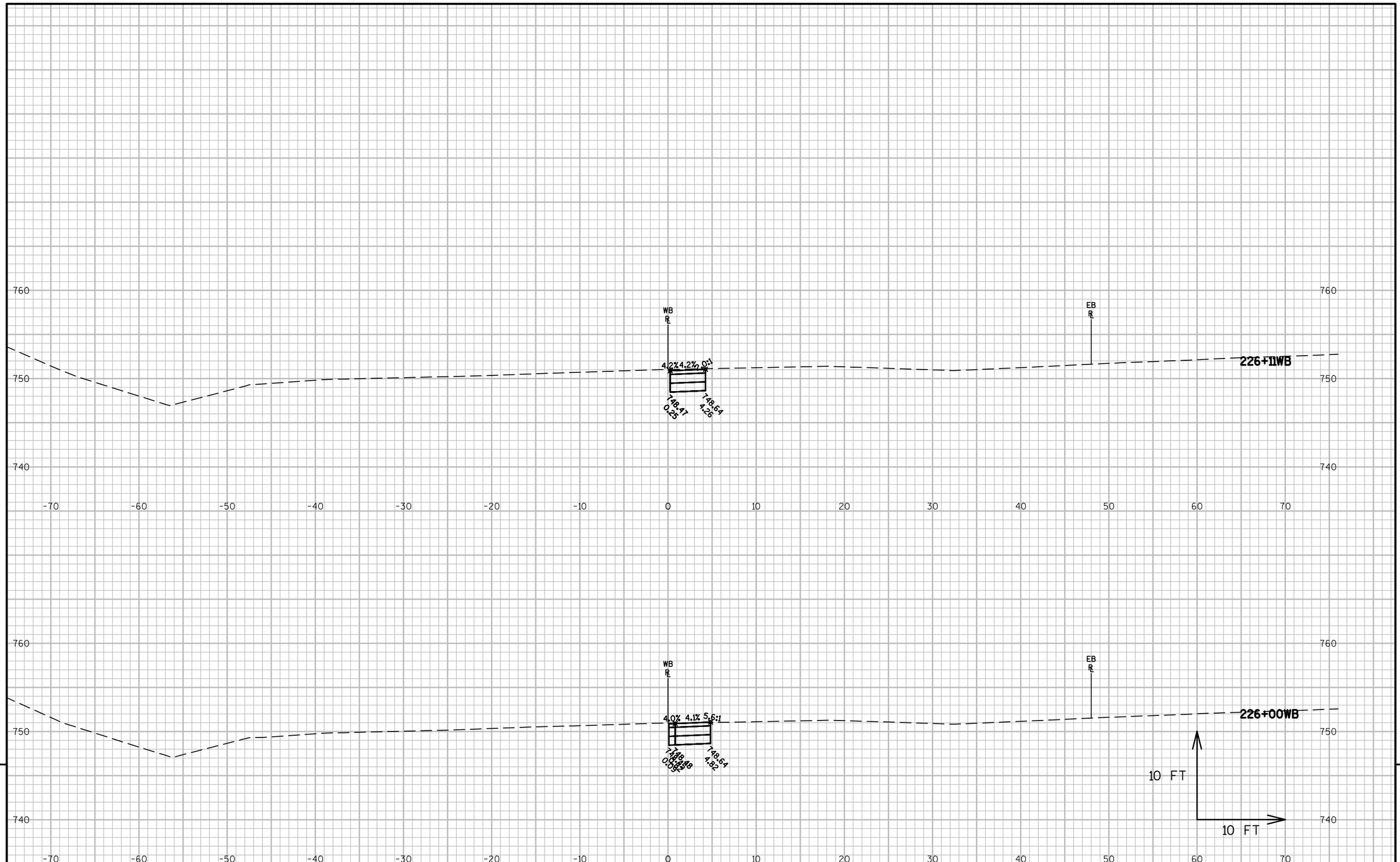

9

9

PROJECT NO: 1517-75-85	HWY: STH 441/ USH 10	COUNTY: WINNEBAGO	CROSS SECTIONS: USH 10 WB STAGE 1 WIDENING	SHEET 163	E

FILE NAME : S:\PDS\C3D\WIS441\15177570_72_77_85\SHEETSPLAN\1517-75-85\090200-XS\15177585-XSE.DWG
LAYOUT NAME - 090210-XS

PLOT DATE : 8/19/2016 10:48 AM PLOT BY : VICKMAN, GARRETT T PLOT NAME : PLOT SCALE : 1 IN:10 FT

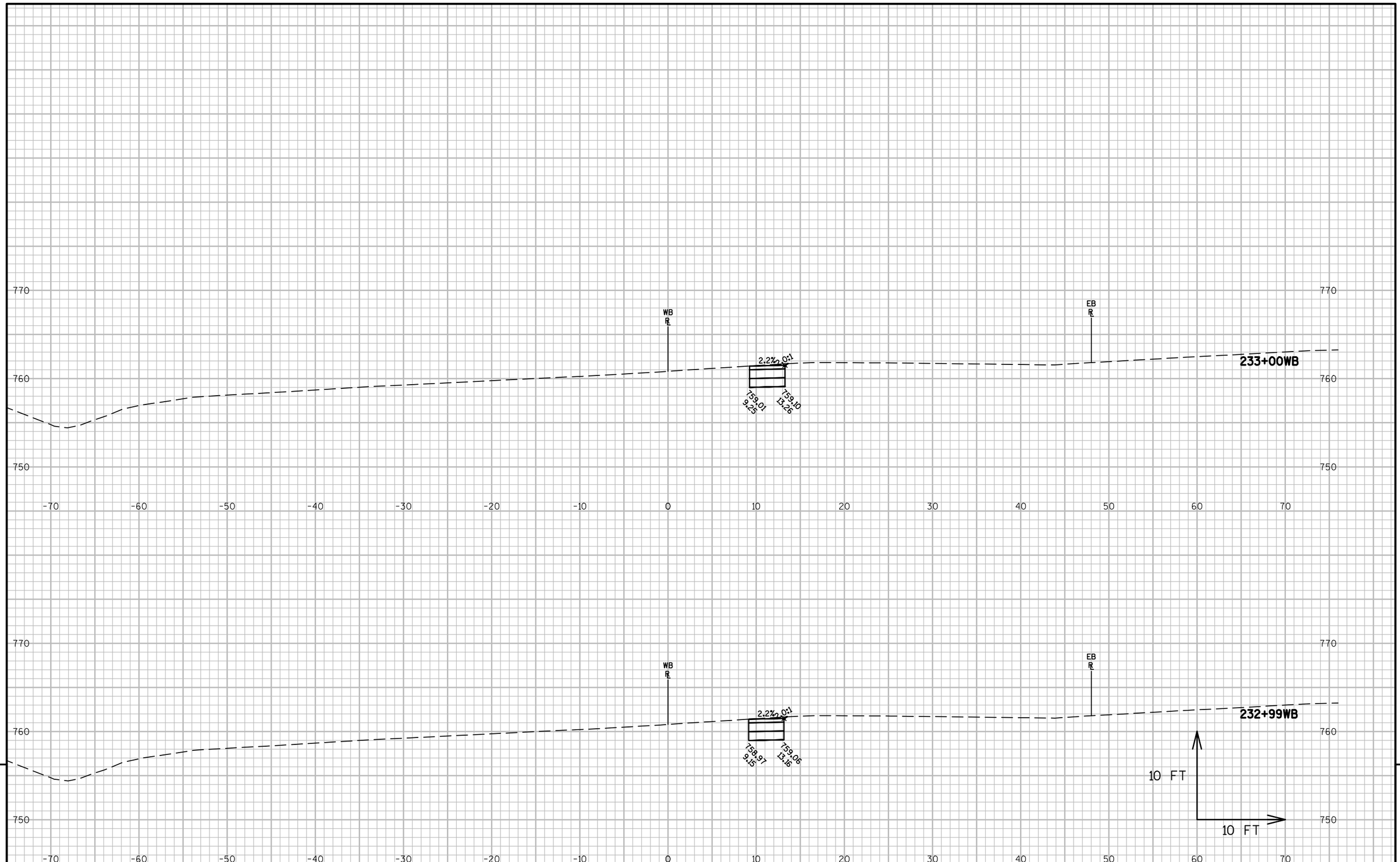

9

9

PROJECT NO: 1517-75-85	HWY: STH 441/ USH 10	COUNTY: WINNEBAGO	CROSS SECTIONS: USH 10 WB STAGE 1 CROSSOVER 1	SHEET 164	E

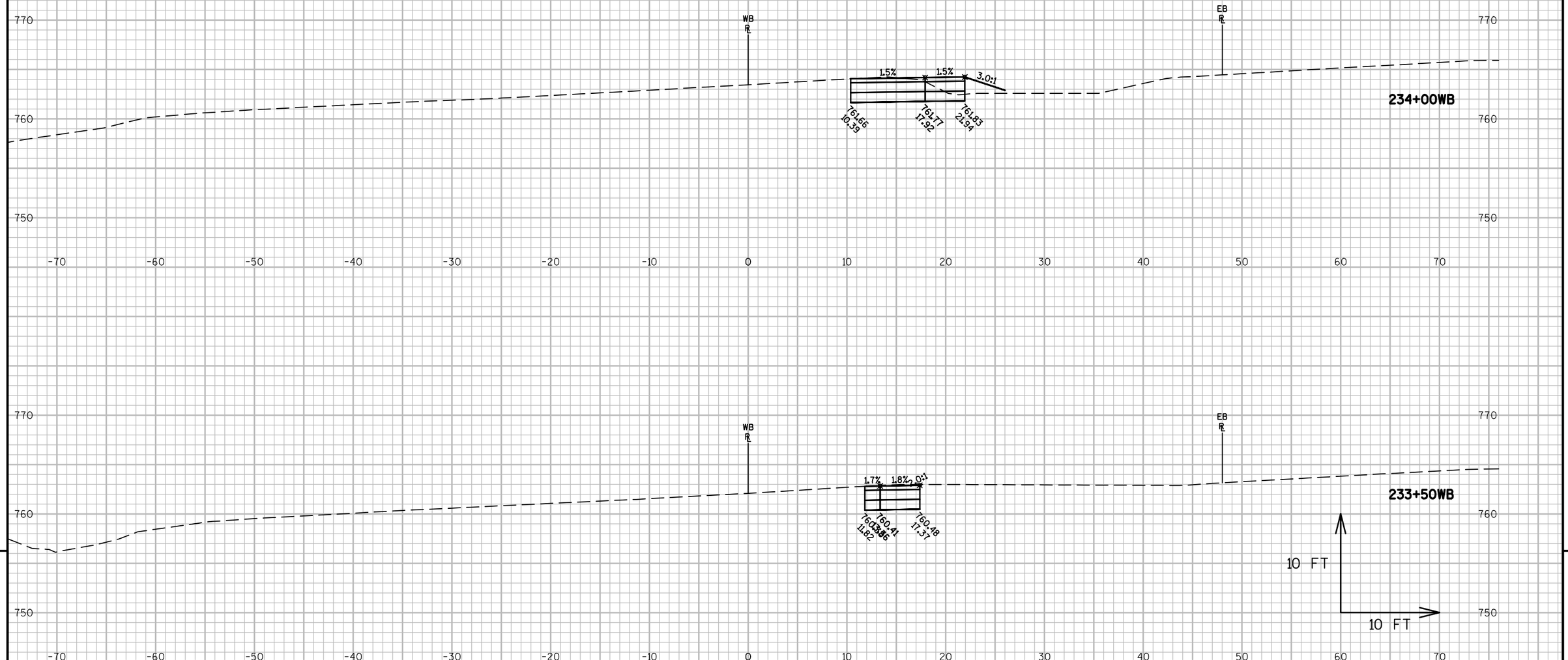

9

9

PROJECT NO: 1517-75-85	HWY: STH 441/ USH 10	COUNTY: WINNEBAGO	CROSS SECTIONS: USH 10 WB STAGE 1 CROSSOVER 1	SHEET 165	E

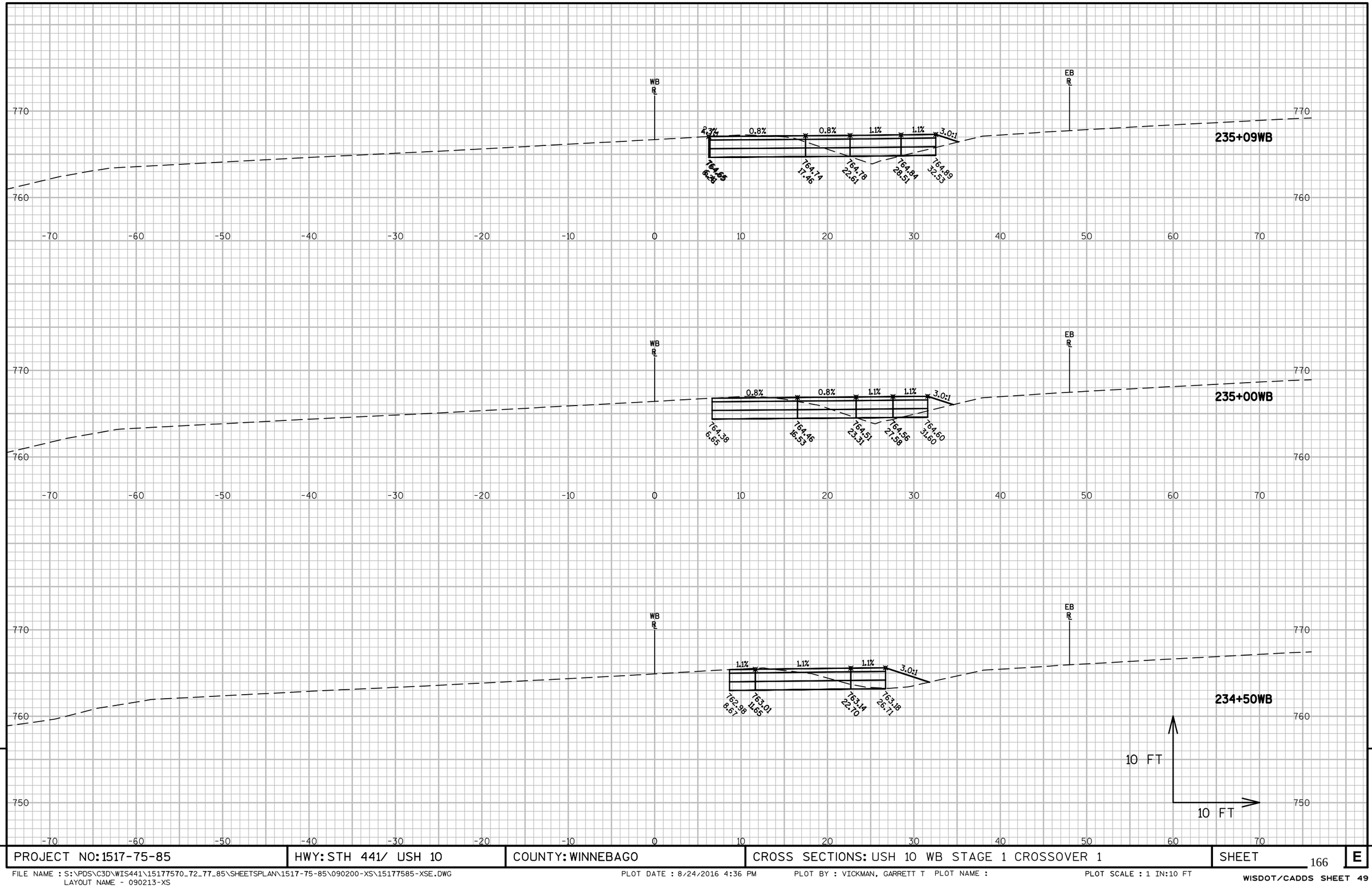

9

9

PROJECT NO: 1517-75-85	HWY: STH 441/ USH 10	COUNTY: WINNEBAGO	CROSS SECTIONS: USH 10 WB STAGE 1 CROSSOVER 1	SHEET 166	E

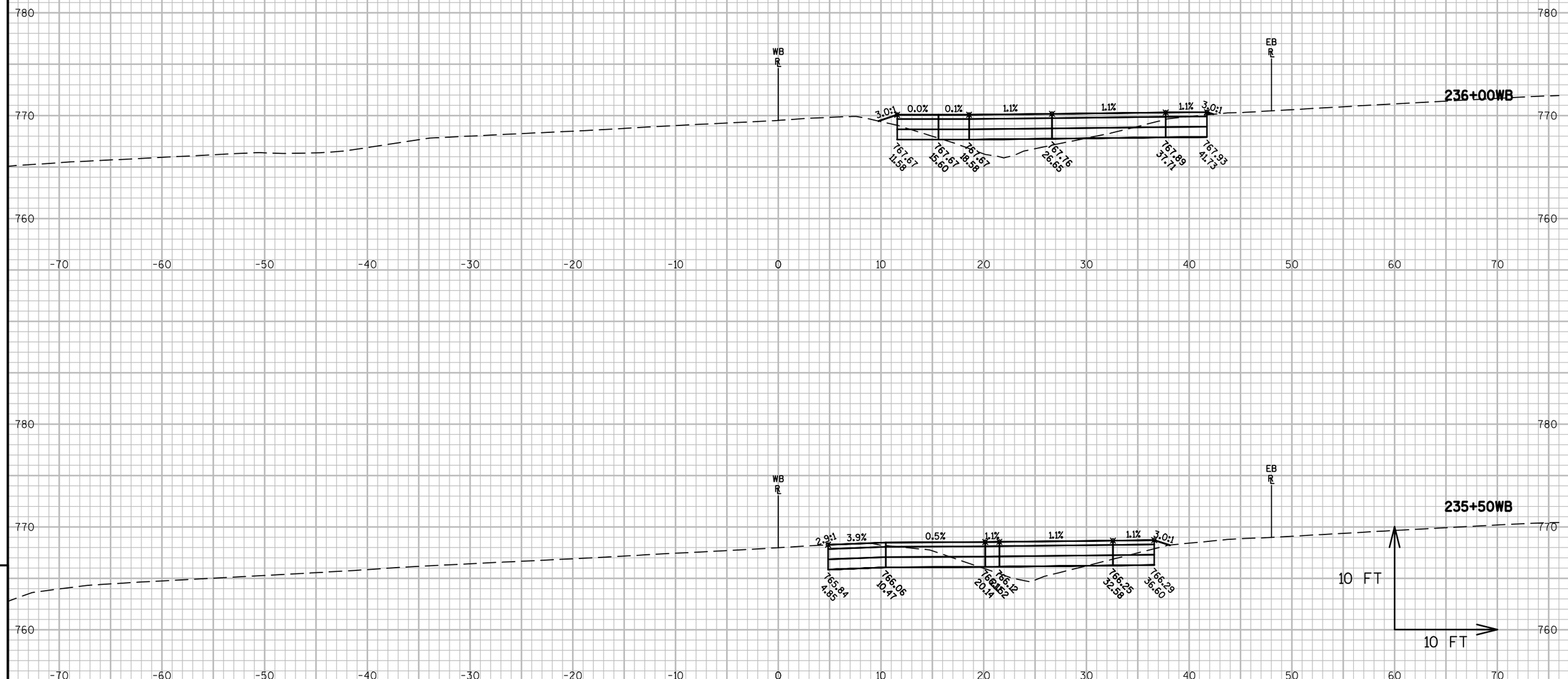

9

9

PROJECT NO: 1517-75-85	HWY: STH 441/ USH 10	COUNTY: WINNEBAGO	CROSS SECTIONS: USH 10 WB STAGE 1 CROSSOVER 1	SHEET 167	E

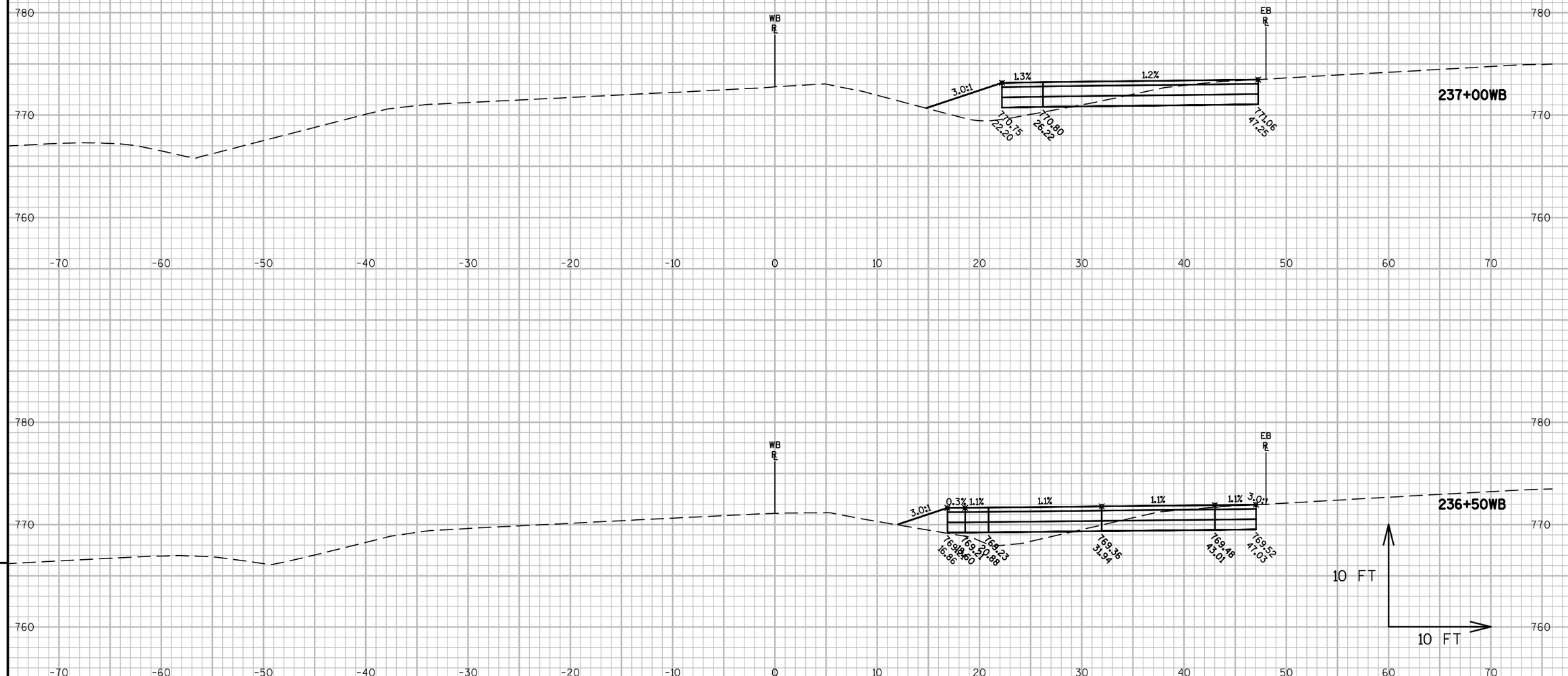

9

9

PROJECT NO: 1517-75-85	HWY: STH 441/ USH 10	COUNTY: WINNEBAGO	CROSS SECTIONS: USH 10 WB STAGE 1 CROSSOVER 1	SHEET 168	E

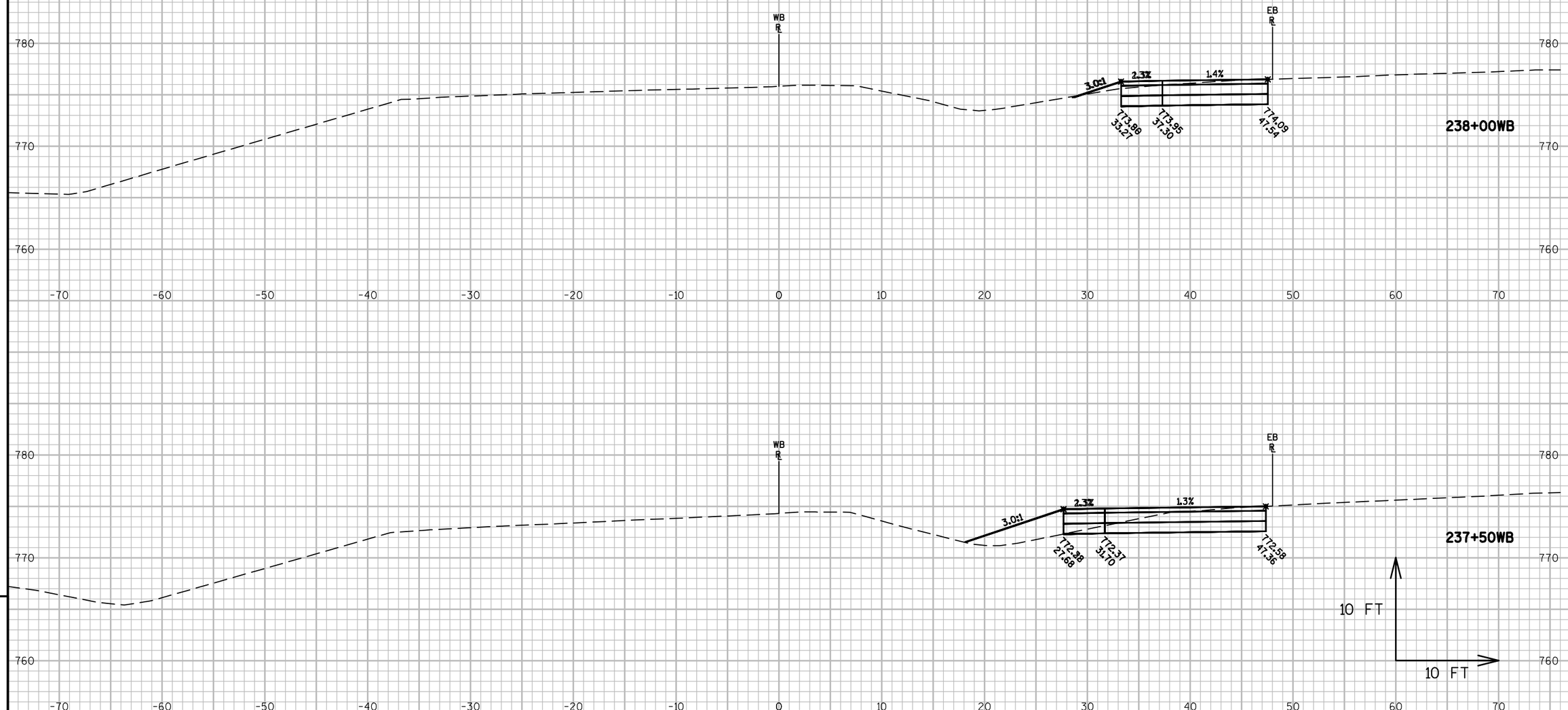

9

9

PROJECT NO: 1517-75-85	HWY: STH 441/ USH 10	COUNTY: WINNEBAGO	CROSS SECTIONS: USH 10 WB STAGE 1 CROSSOVER 1	SHEET 169	E

FILE NAME : S:\PDS\C3D\WIS441\15177570_72_77_85\SHEETSPLAN\1517-75-85\090200-XS\15177585-XSE.DWG
LAYOUT NAME - 090216-XS

PLOT DATE : 8/24/2016 4:37 PM PLOT BY : VICKMAN, GARRETT T PLOT NAME : PLOT SCALE : 1 IN:10 FT

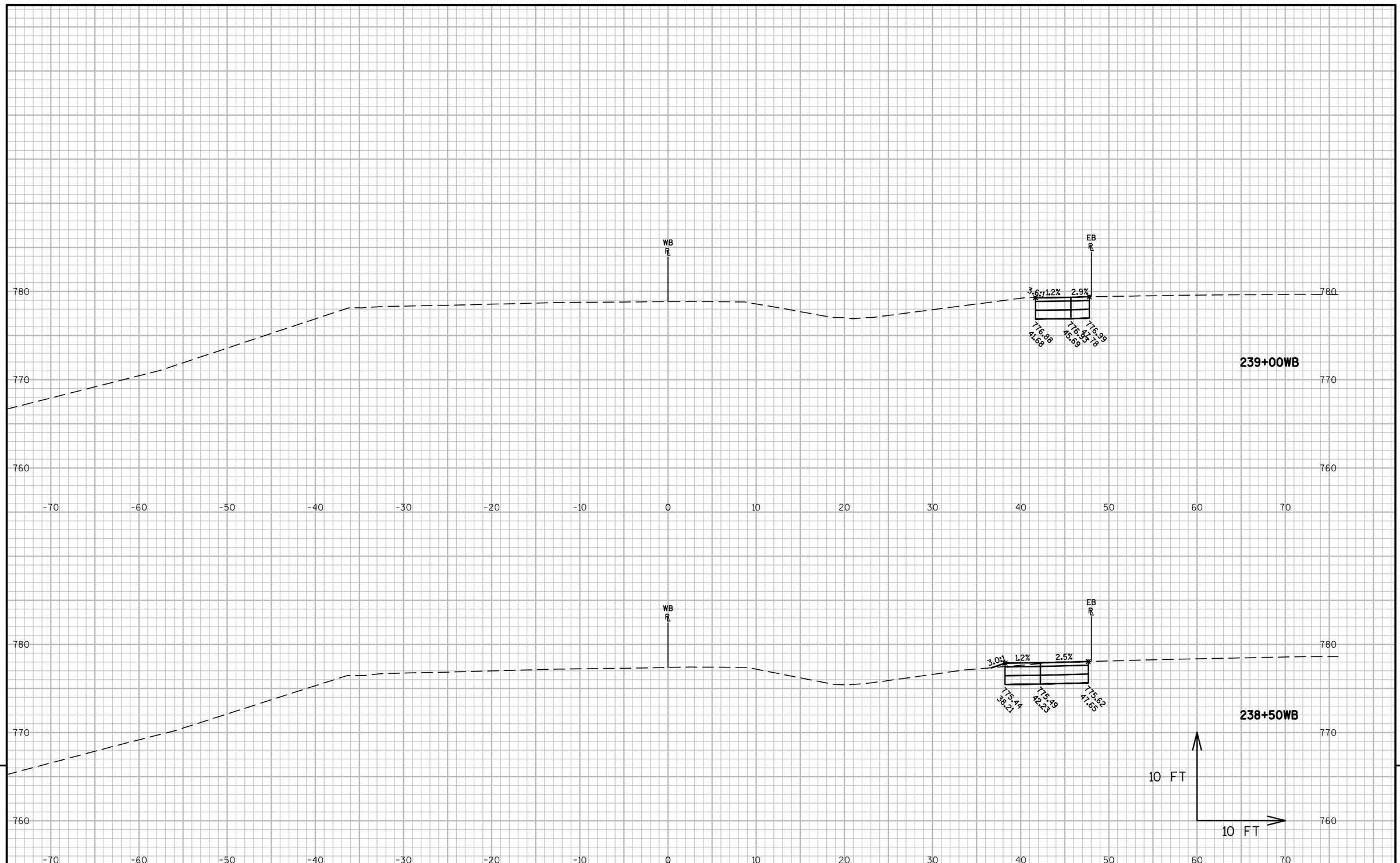

9

9

PROJECT NO: 1517-75-85	HWY: STH 441/ USH 10	COUNTY: WINNEBAGO	CROSS SECTIONS: USH 10 WB STAGE 1 CROSSOVER 1	SHEET 170	E

FILE NAME : S:\PDS\C3D\WIS441\15177570_72_77_85\SHEETSPLAN\1517-75-85\090200-XS\15177585-XSE.DWG
LAYOUT NAME - 090217-XS

PLOT DATE : 8/24/2016 4:37 PM PLOT BY : VICKMAN, GARRETT T PLOT NAME : PLOT SCALE : 1 IN:10 FT

WISDOT/CADDS SHEET 49

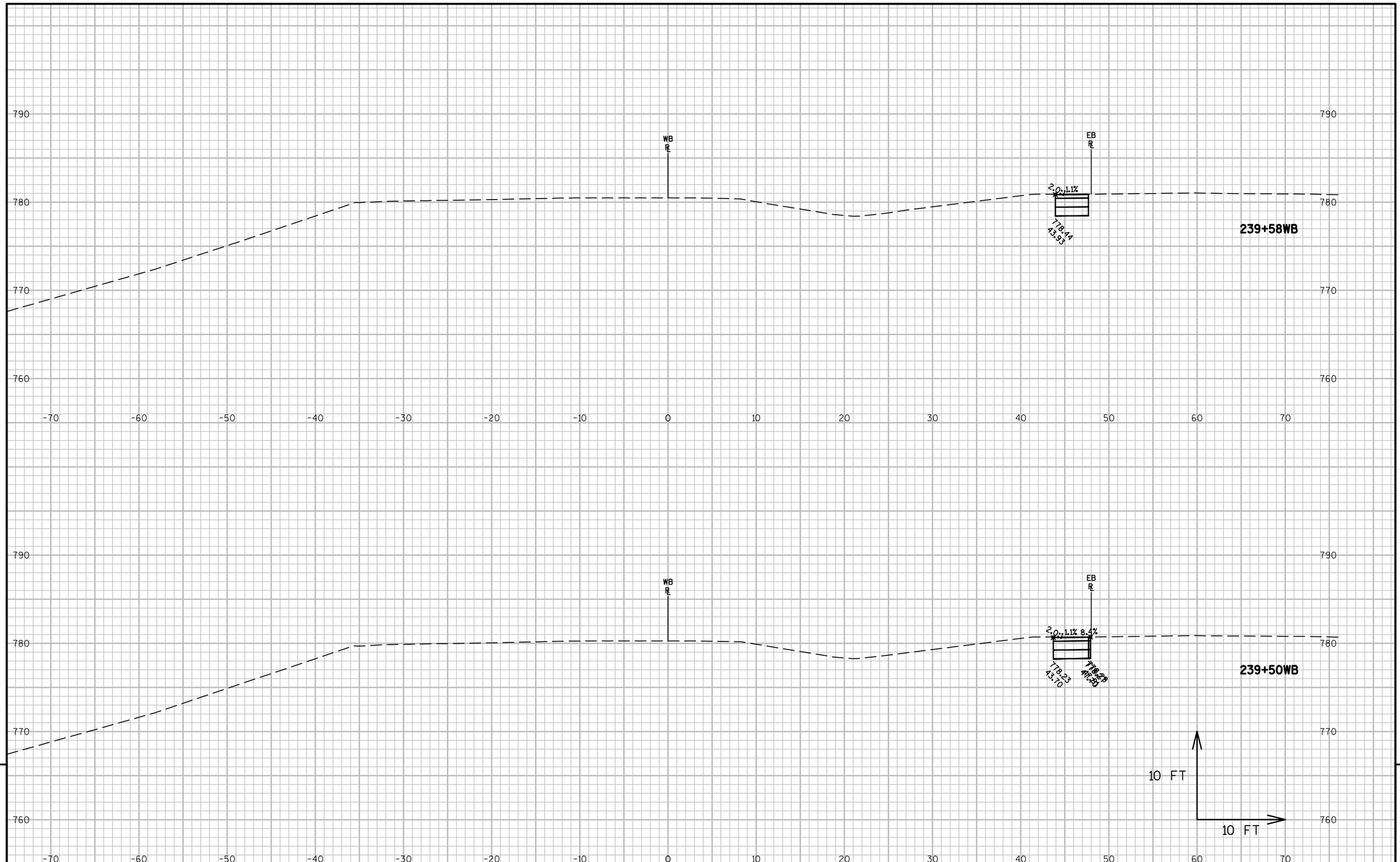

9

9

PROJECT NO: 1517-75-85	HWY: STH 441/ USH 10	COUNTY: WINNEBAGO	CROSS SECTIONS: USH 10 WB STAGE 1 CROSSOVER 1	SHEET 171	E

FILE NAME : S:\PDS\C3D\WIS441\15177570_72_77_85\SHEETSPLAN\1517-75-85\090200-XS\15177585-XSE.DWG
LAYOUT NAME - 090218-XS

PLOT DATE : 8/24/2016 4:37 PM PLOT BY : VICKMAN, GARRETT T PLOT NAME : PLOT SCALE : 1 IN:10 FT

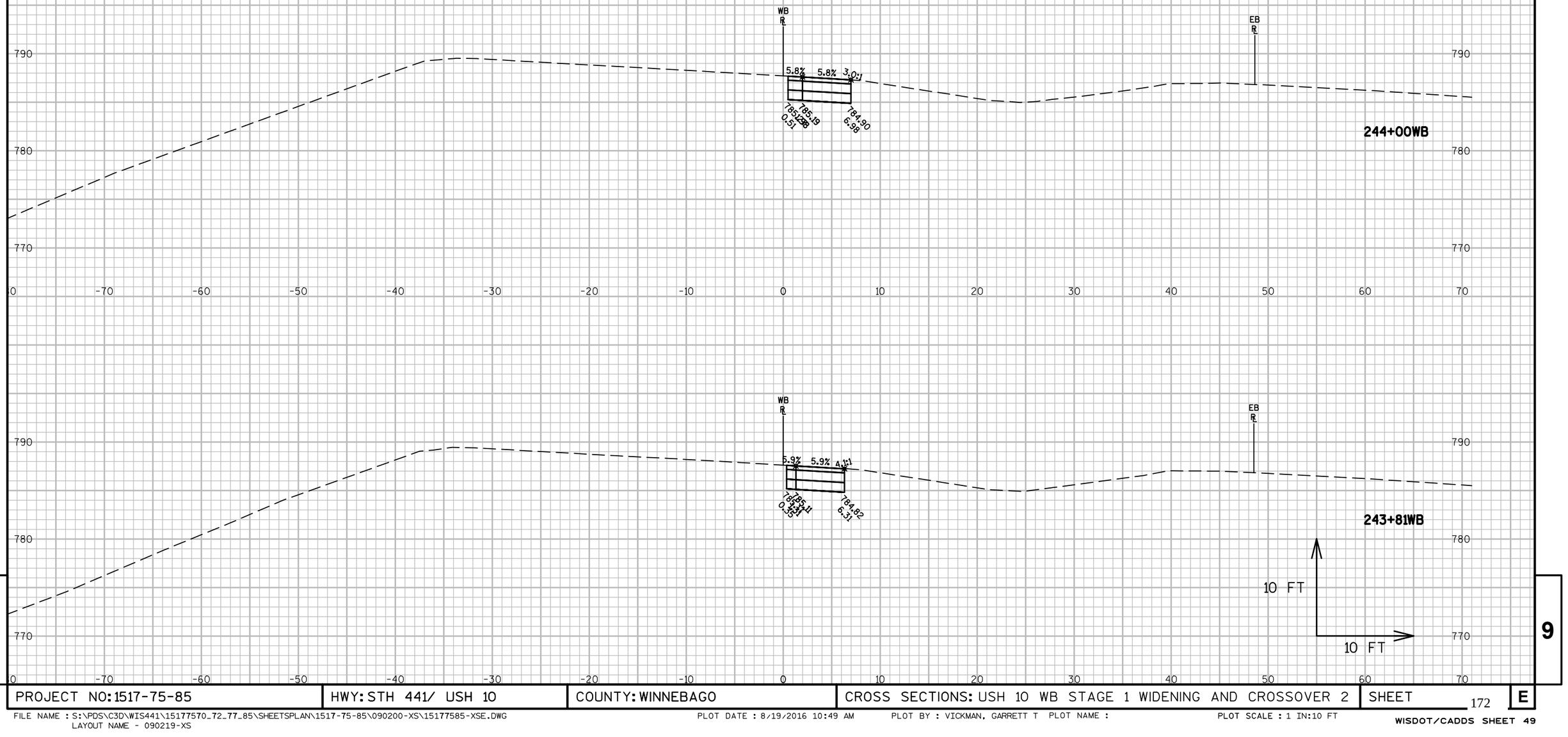

9

9

PROJECT NO: 1517-75-85	HWY: STH 441/ USH 10	COUNTY: WINNEBAGO	CROSS SECTIONS: USH 10 WB STAGE 1 WIDENING AND CROSSOVER 2	SHEET 172	E

FILE NAME : S:\PDS\C3D\WIS441\15177570_72_77_85\SHEETSPLAN\1517-75-85\090200-XS\15177585-XSE.DWG
LAYOUT NAME - 090219-XS

PLOT DATE : 8/19/2016 10:49 AM PLOT BY : VICKMAN, GARRETT T PLOT NAME : PLOT SCALE : 1 IN:10 FT

WISDOT/CADDS SHEET 49

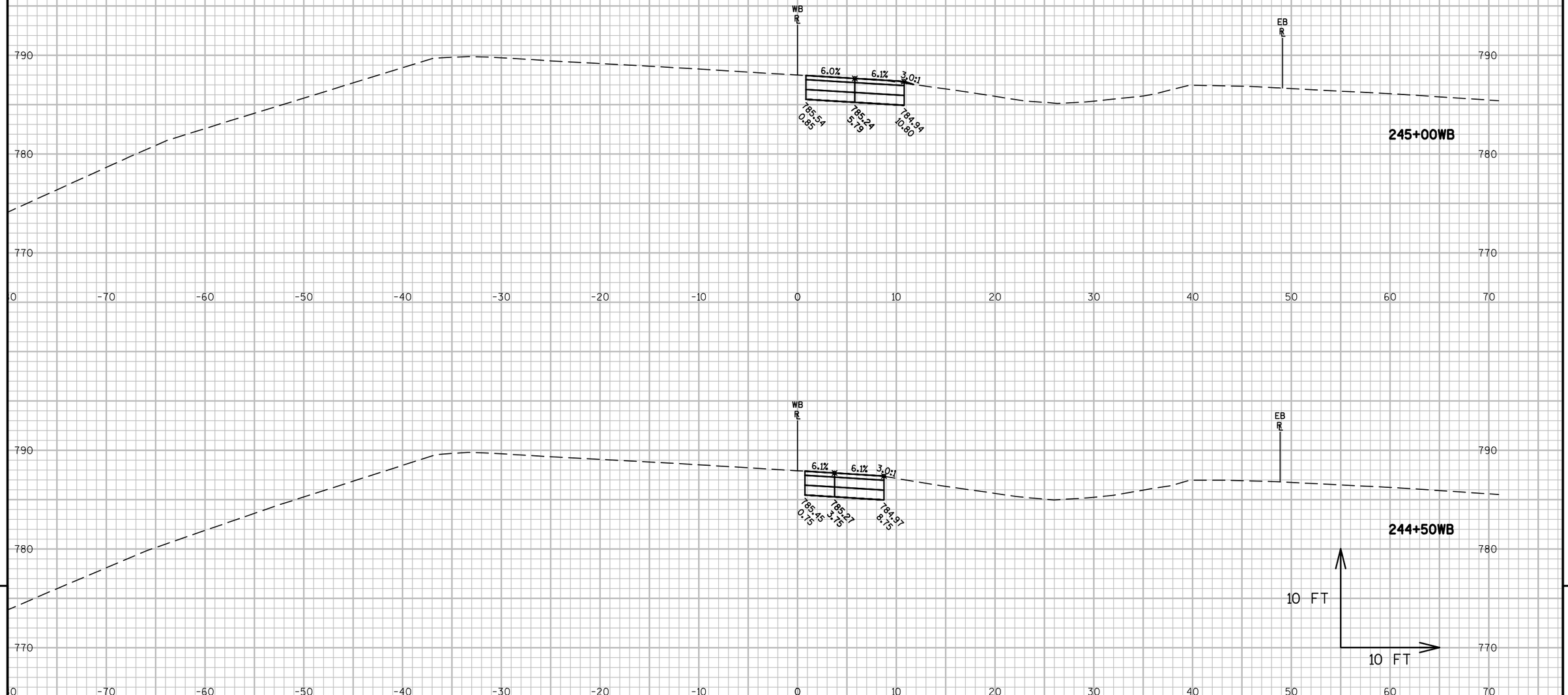

9

PROJECT NO: 1517-75-85	HWY: STH 441/ USH 10	COUNTY: WINNEBAGO	CROSS SECTIONS: USH 10 WB STAGE 1 WIDENING AND CROSSOVER 2	SHEET 173	E

9

FILE NAME : S:\PDS\C3D\WIS441\15177570_72_77_85\SHEETSPLAN\1517-75-85\090200-XS\15177585-XSE.DWG
LAYOUT NAME - 090220-XS

PLOT DATE : 8/19/2016 10:49 AM PLOT BY : VICKMAN, GARRETT T PLOT NAME : PLOT SCALE : 1 IN:10 FT

WISDOT/CADDS SHEET 49

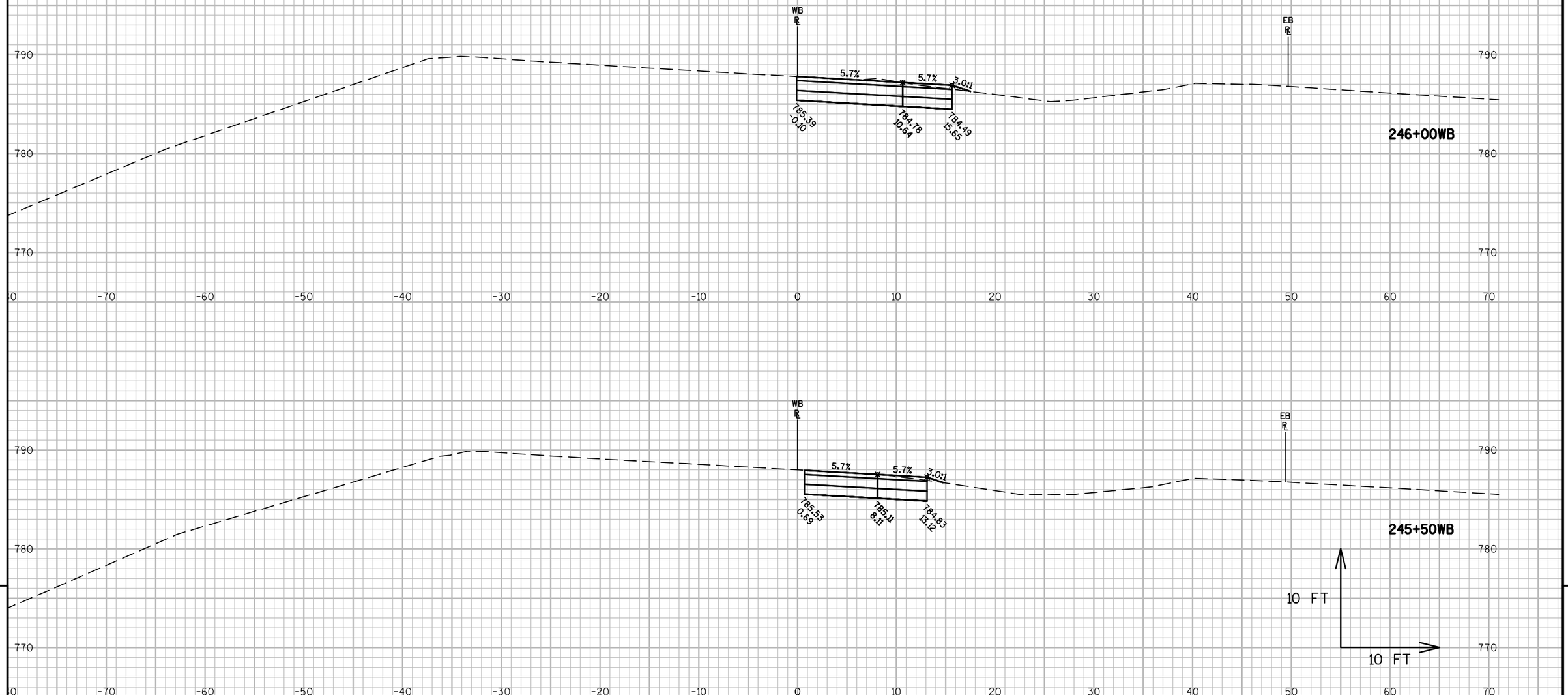

9

9

PROJECT NO: 1517-75-85	HWY: STH 441/ USH 10	COUNTY: WINNEBAGO	CROSS SECTIONS: USH 10 WB STAGE 1 WIDENING AND CROSSOVER 2	SHEET 174	E

FILE NAME : S:\PDS\C3D\WIS441\15177570_72_77_85\SHEETSPLAN\1517-75-85\090200-XS\15177585-XSE.DWG
LAYOUT NAME - 090221-XS

PLOT DATE : 8/19/2016 10:50 AM PLOT BY : VICKMAN, GARRETT T PLOT NAME : PLOT SCALE : 1 IN:10 FT

WISDOT/CADDS SHEET 49

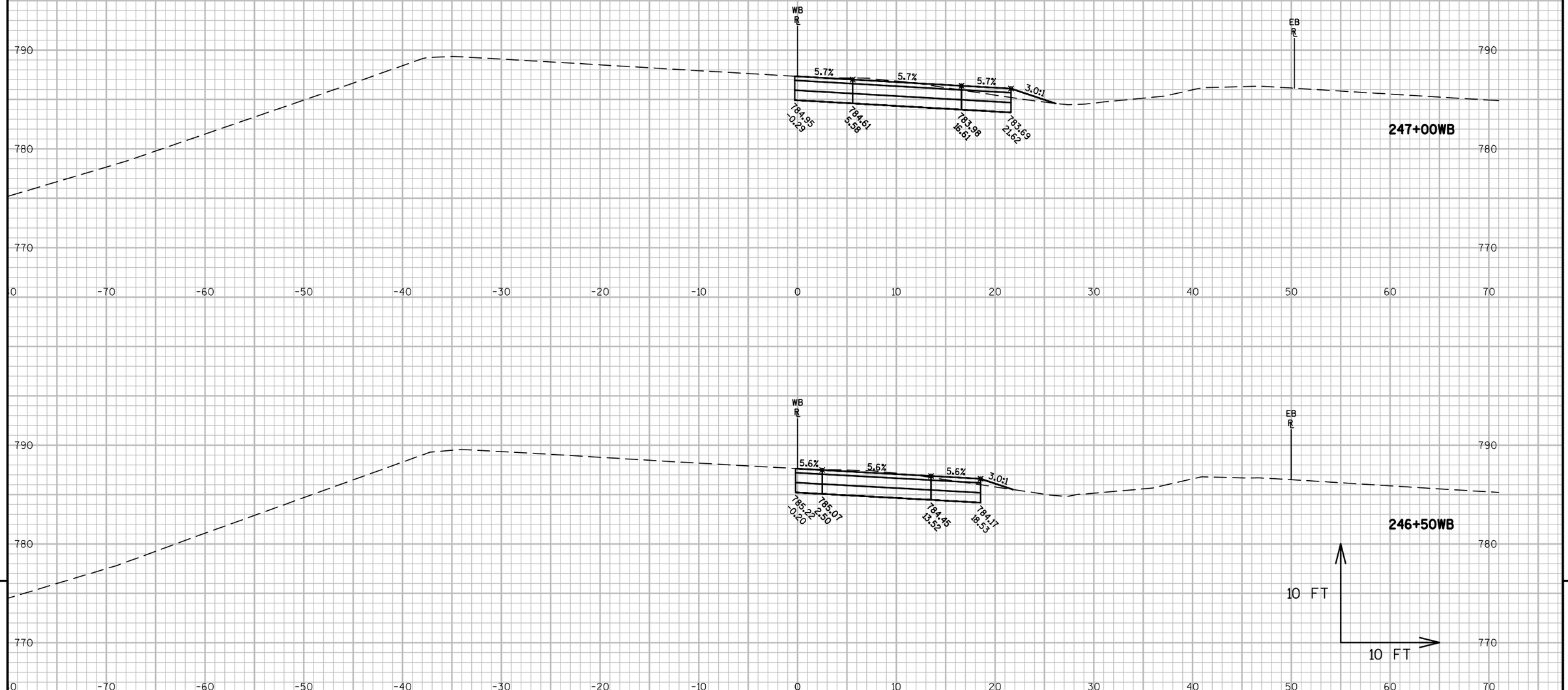

9

9

PROJECT NO: 1517-75-85	HWY: STH 441/ USH 10	COUNTY: WINNEBAGO	CROSS SECTIONS: USH 10 WB STAGE 1 WIDENING AND CROSSOVER 2	SHEET 175	E

FILE NAME : S:\PDS\C3D\WIS441\15177570_72_77_85\SHEETSPLAN\1517-75-85\090200-XS\15177585-XSE.DWG
LAYOUT NAME - 090222-XS

PLOT DATE : 8/19/2016 10:50 AM PLOT BY : VICKMAN, GARRETT T PLOT NAME : PLOT SCALE : 1 IN:10 FT

WISDOT/CADDS SHEET 49

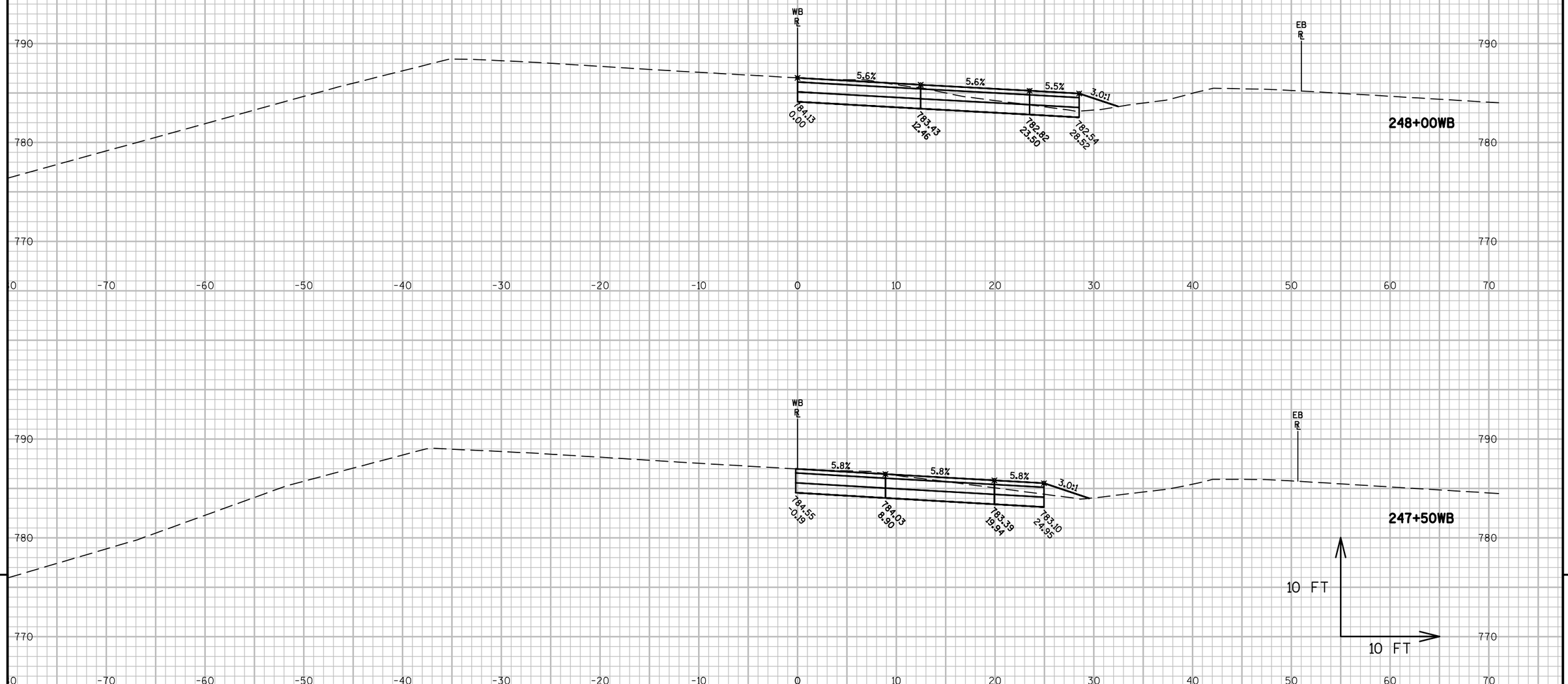

9

9

PROJECT NO: 1517-75-85	HWY: STH 441/ USH 10	COUNTY: WINNEBAGO	CROSS SECTIONS: USH 10 WB STAGE 1 WIDENING AND CROSSOVER 2	SHEET 176	E

FILE NAME : S:\PDS\C3D\WIS441\15177570_72_77_85\SHEETSPLAN\1517-75-85\090200-XS\15177585-XSE.DWG
LAYOUT NAME - 090223-XS

PLOT DATE : 8/19/2016 10:50 AM PLOT BY : VICKMAN, GARRETT T PLOT NAME : PLOT SCALE : 1 IN:10 FT

WISDOT/CADDS SHEET 49

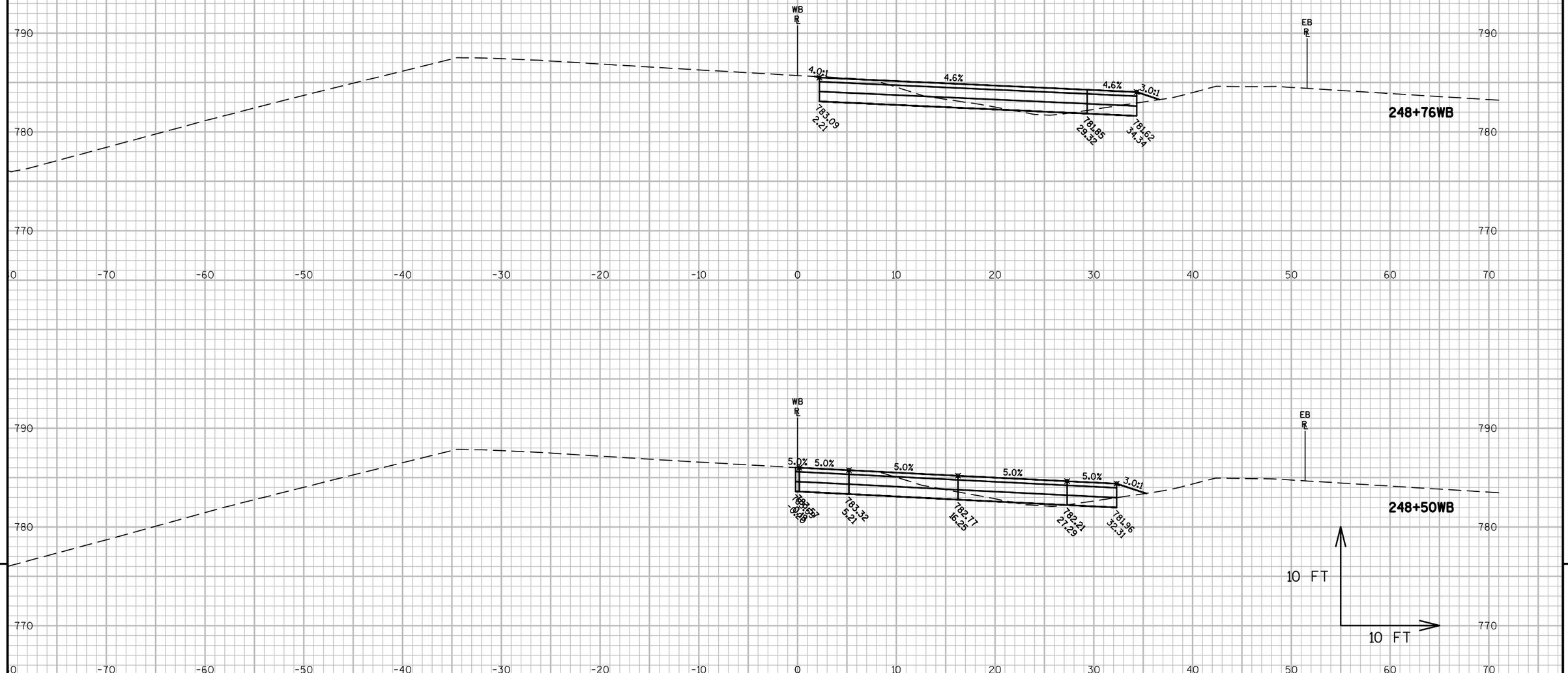

9

9

PROJECT NO: 1517-75-85	HWY: STH 441/ USH 10	COUNTY: WINNEBAGO	CROSS SECTIONS: USH 10 WB STAGE 1 WIDENING AND CROSSOVER 2	SHEET 177	E

FILE NAME : S:\PDS\C3D\WIS441\15177570_72_77_85\SHEETSPLAN\1517-75-85\090200-XS\15177585-XSE.DWG
LAYOUT NAME - 090224-XS

PLOT DATE : 8/19/2016 10:50 AM PLOT BY : VICKMAN, GARRETT T PLOT NAME : PLOT SCALE : 1 IN:10 FT

WISDOT/CADDS SHEET 49

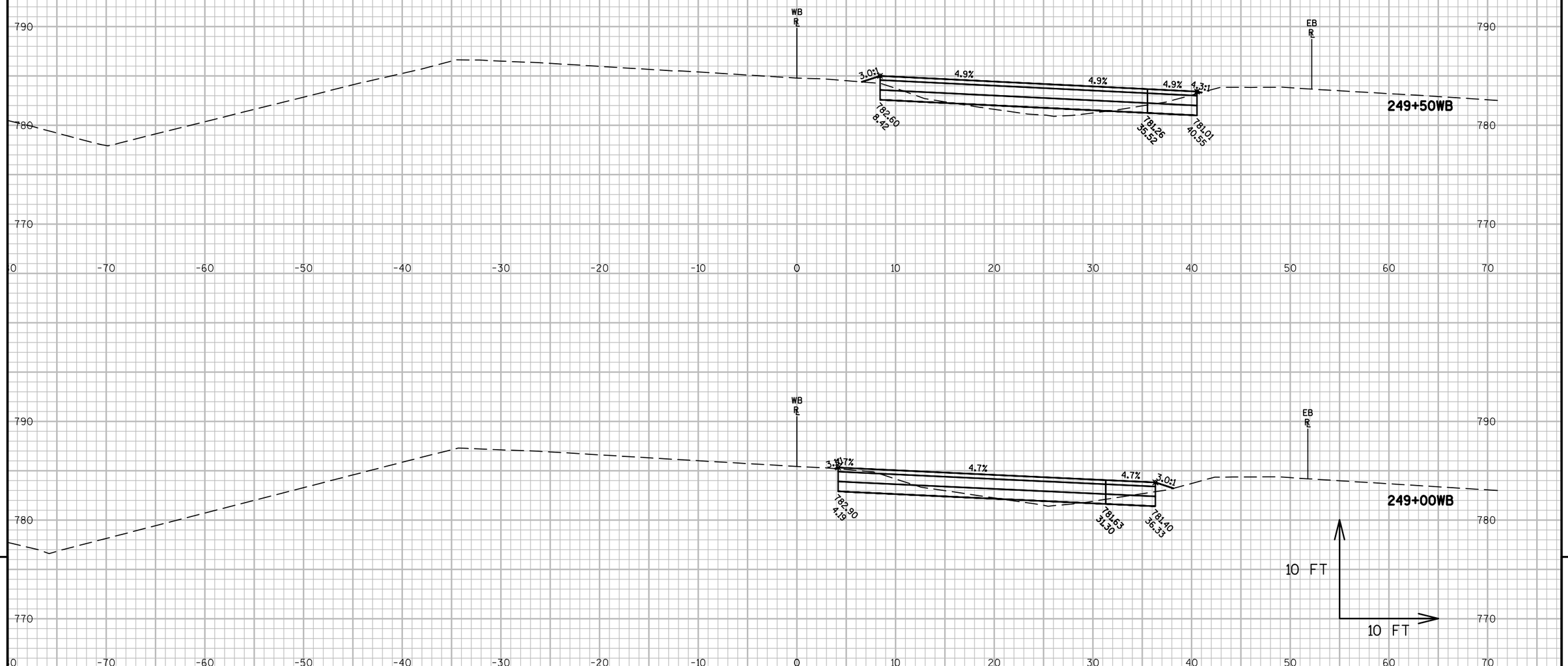

9

9

PROJECT NO: 1517-75-85	HWY: STH 441/ USH 10	COUNTY: WINNEBAGO	CROSS SECTIONS: USH 10 WB STAGE 1 WIDENING AND CROSSOVER 2	SHEET 178	E

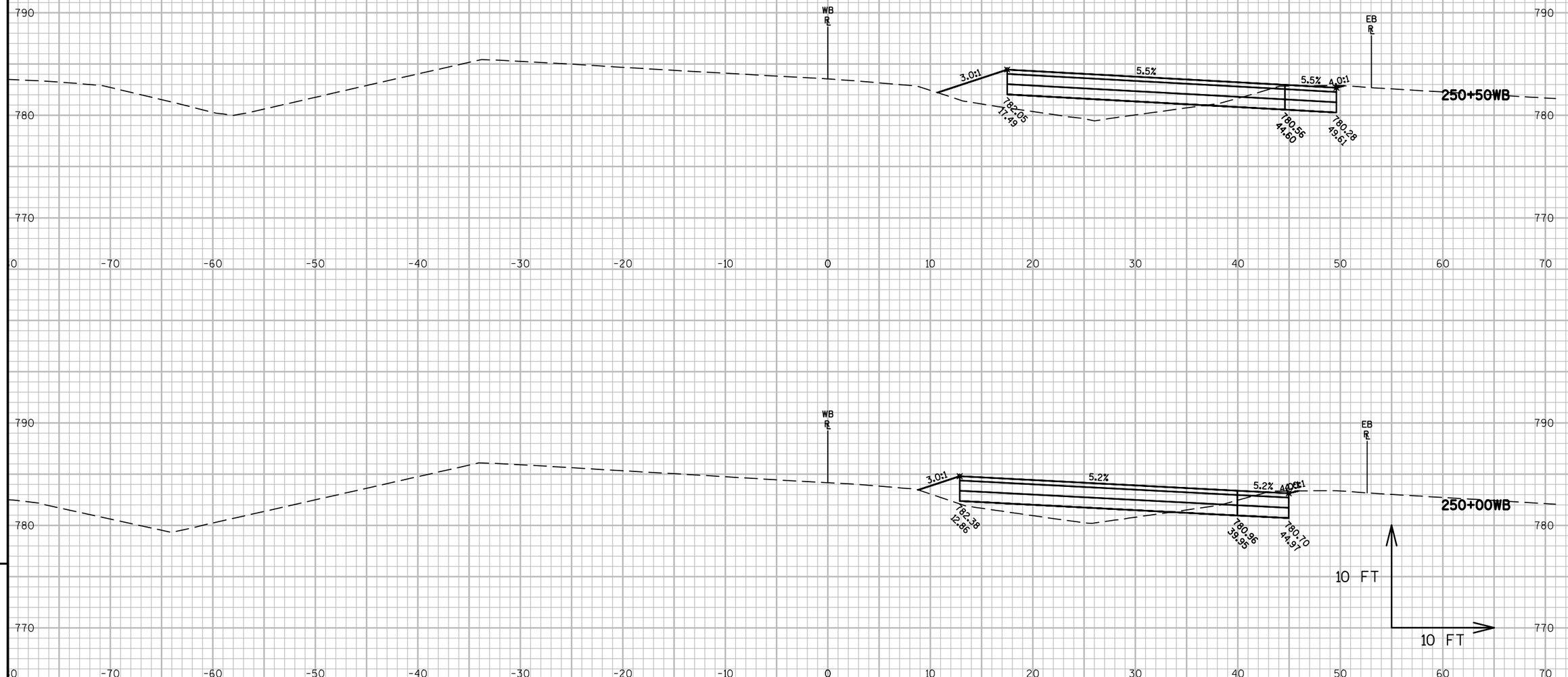

PROJECT NO: 1517-75-85	HWY: STH 441/ USH 10	COUNTY: WINNEBAGO	CROSS SECTIONS: USH 10 WB STAGE 1 WIDENING AND CROSSOVER 2	SHEET 179	E

FILE NAME : S:\PDS\C3D\WIS441\15177570_72_77_85\SHEETSPLAN\1517-75-85\090200-XS\15177585-XSE.DWG
LAYOUT NAME - 090226-XS

PLOT DATE : 8/19/2016 10:50 AM PLOT BY : VICKMAN, GARRETT T PLOT NAME : PLOT SCALE : 1 IN:10 FT

WISDOT/CADDS SHEET 49

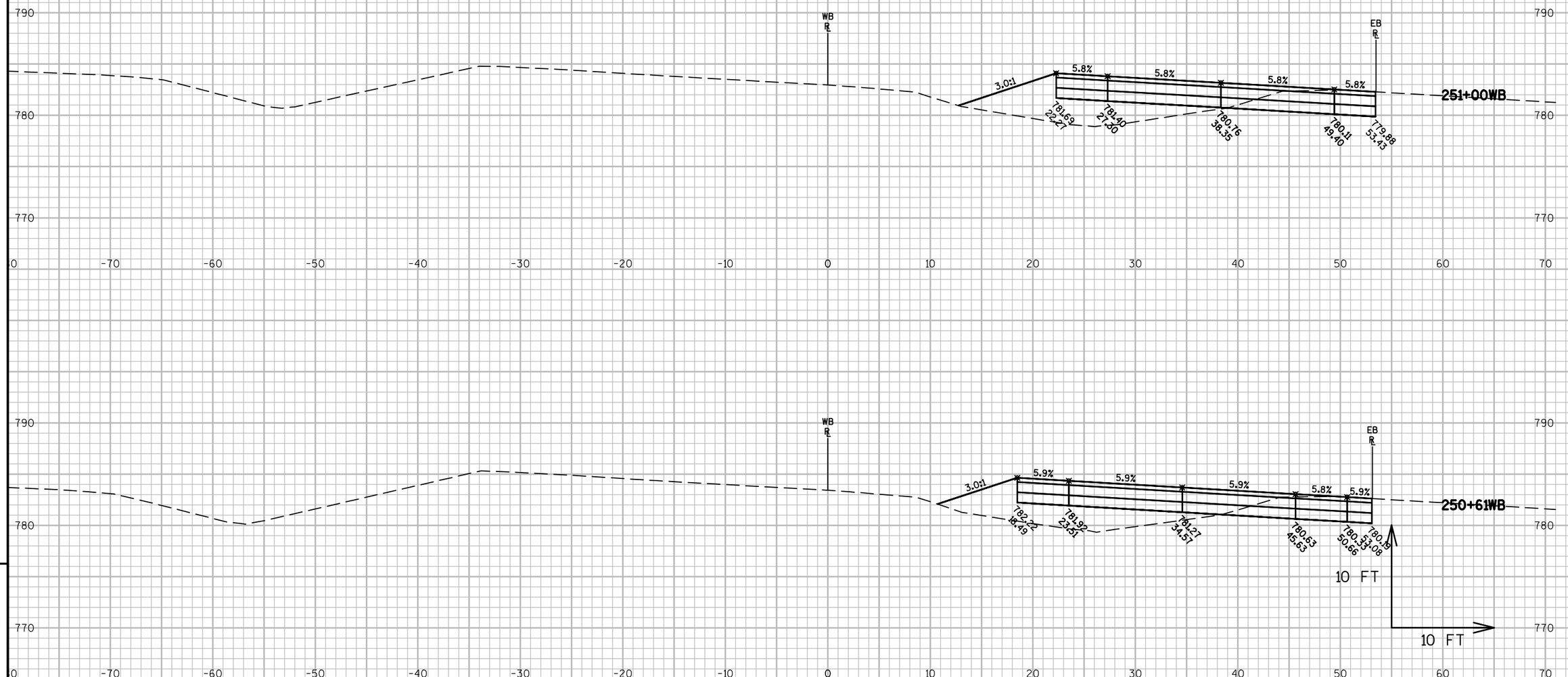

9

9

PROJECT NO: 1517-75-85	HWY: STH 441/ USH 10	COUNTY: WINNEBAGO	CROSS SECTIONS: USH 10 WB STAGE 1 WIDENING AND CROSSOVER 2	SHEET 180	E

FILE NAME : S:\PDS\C3D\WIS441\15177570_72_77_85\SHEETSPLAN\1517-75-85\090200-XS\15177585-XSE.DWG
LAYOUT NAME - 090227-XS

PLOT DATE : 8/19/2016 10:50 AM PLOT BY : VICKMAN, GARRETT T PLOT NAME : PLOT SCALE : 1 IN:10 FT

WISDOT/CADDS SHEET 49

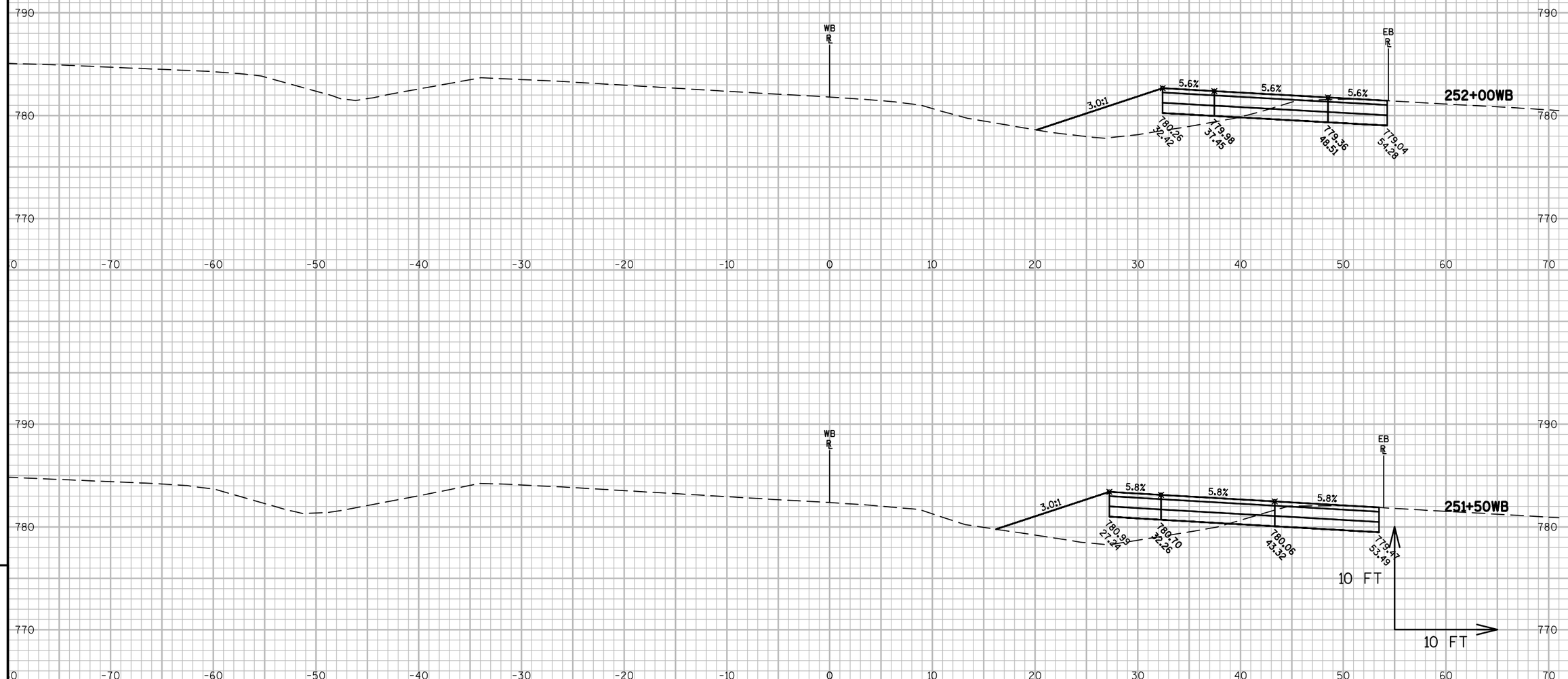

9

9

PROJECT NO: 1517-75-85	HWY: STH 441/ USH 10	COUNTY: WINNEBAGO	CROSS SECTIONS: USH 10 WB STAGE 1 WIDENING AND CROSSOVER 2	SHEET 181	E

FILE NAME : S:\PDS\C3D\WIS441\15177570_72_77_85\SHEETSPLAN\1517-75-85\090200-XS\15177585-XSE.DWG
LAYOUT NAME - 090228-XS

PLOT DATE : 8/19/2016 10:50 AM PLOT BY : VICKMAN, GARRETT T PLOT NAME : PLOT SCALE : 1 IN:10 FT

WISDOT/CADDS SHEET 49

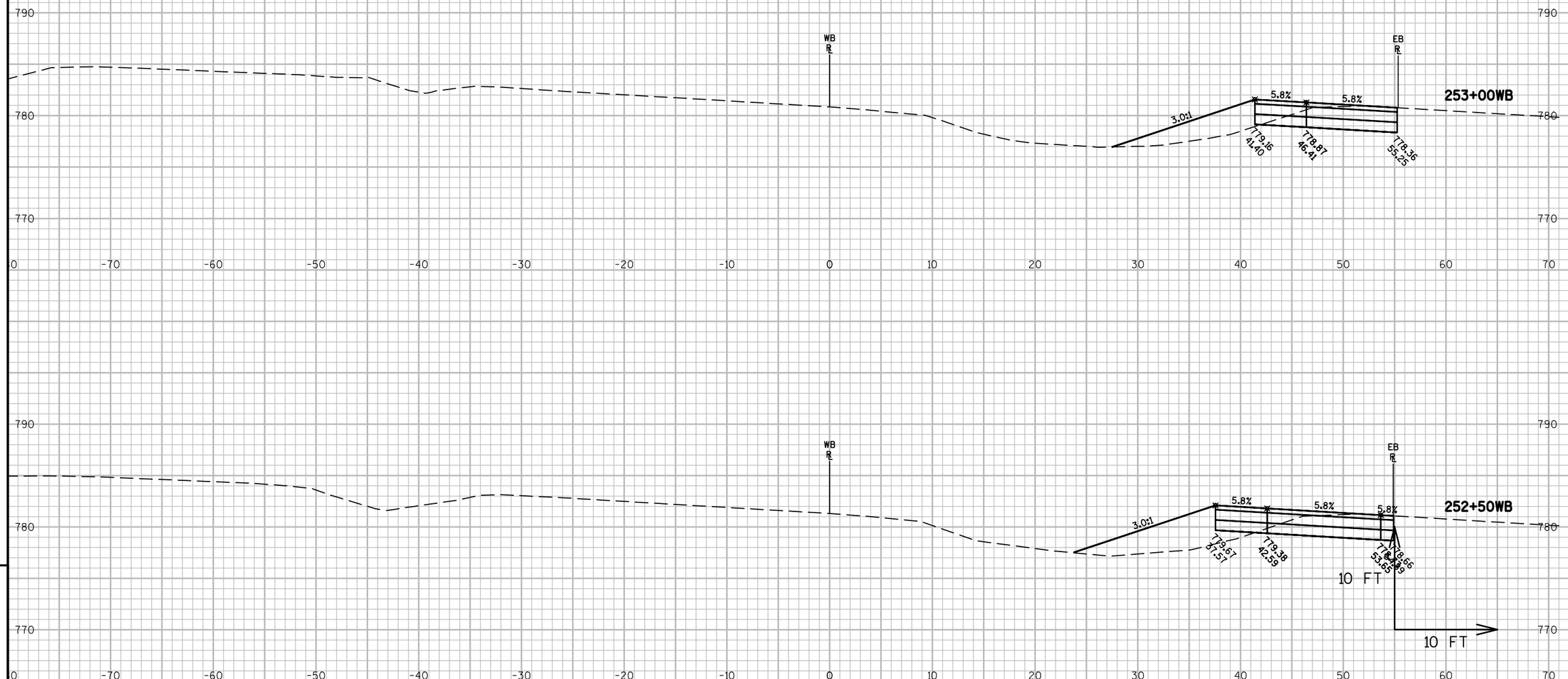

PROJECT NO: 1517-75-85	HWY: STH 441/ USH 10	COUNTY: WINNEBAGO	CROSS SECTIONS: USH 10 WB STAGE 1 WIDENING AND CROSSOVER 2	SHEET 182 E

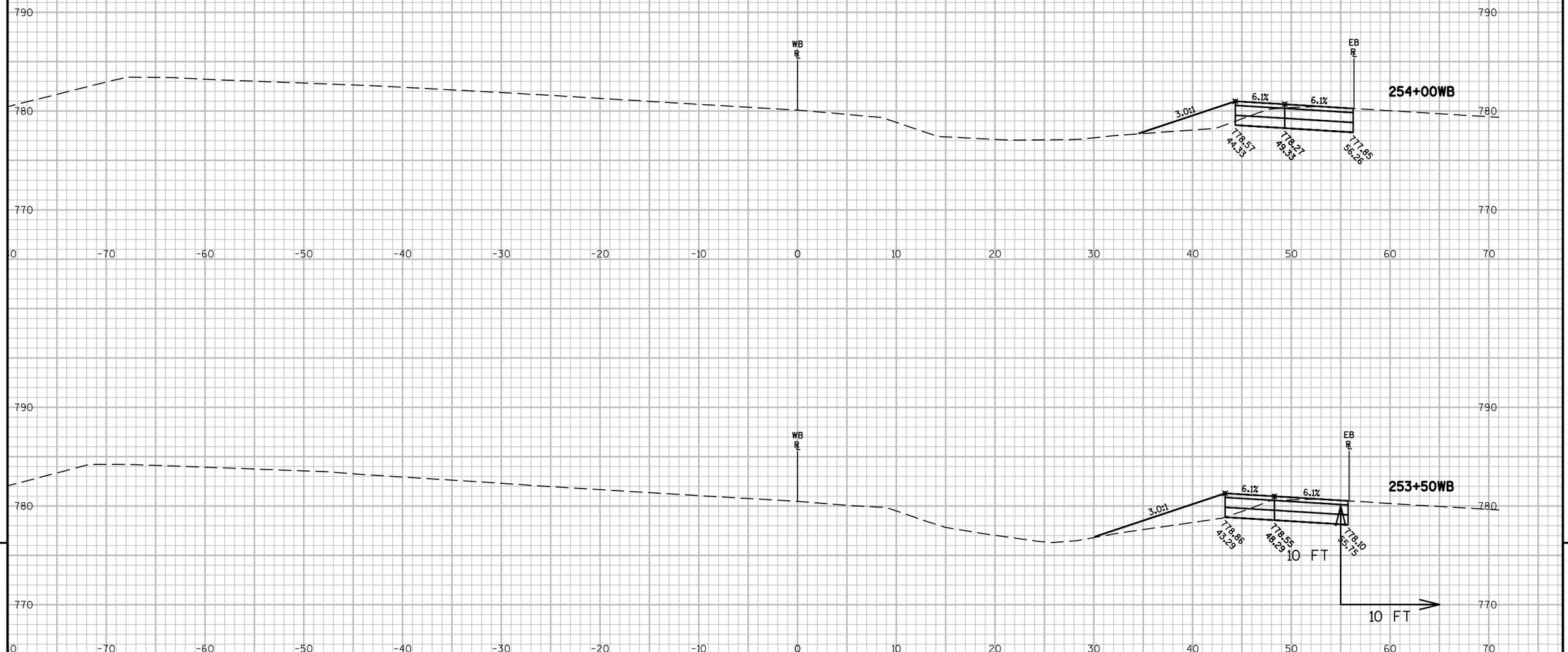

9

9

PROJECT NO: 1517-75-85	HWY: STH 441/ USH 10	COUNTY: WINNEBAGO	CROSS SECTIONS: USH 10 WB STAGE 1 WIDENING AND CROSSOVER 2	SHEET 183	E

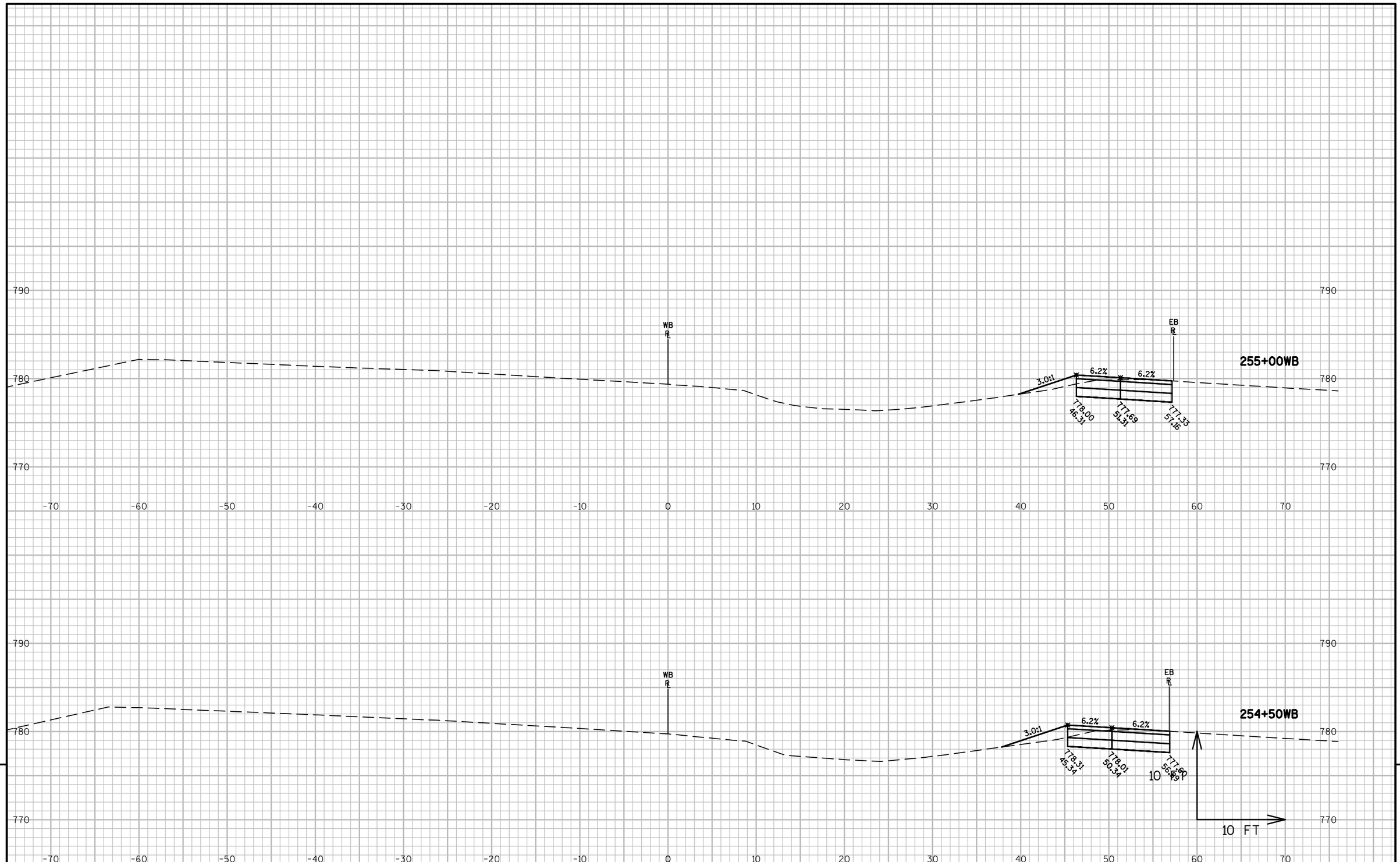

9

9

PROJECT NO: 1517-75-85	HWY: STH 441/ USH 10	COUNTY: WINNEBAGO	CROSS SECTIONS: USH 10 WB STAGE 1 WIDENING AND CROSSOVER 2	SHEET 184	E

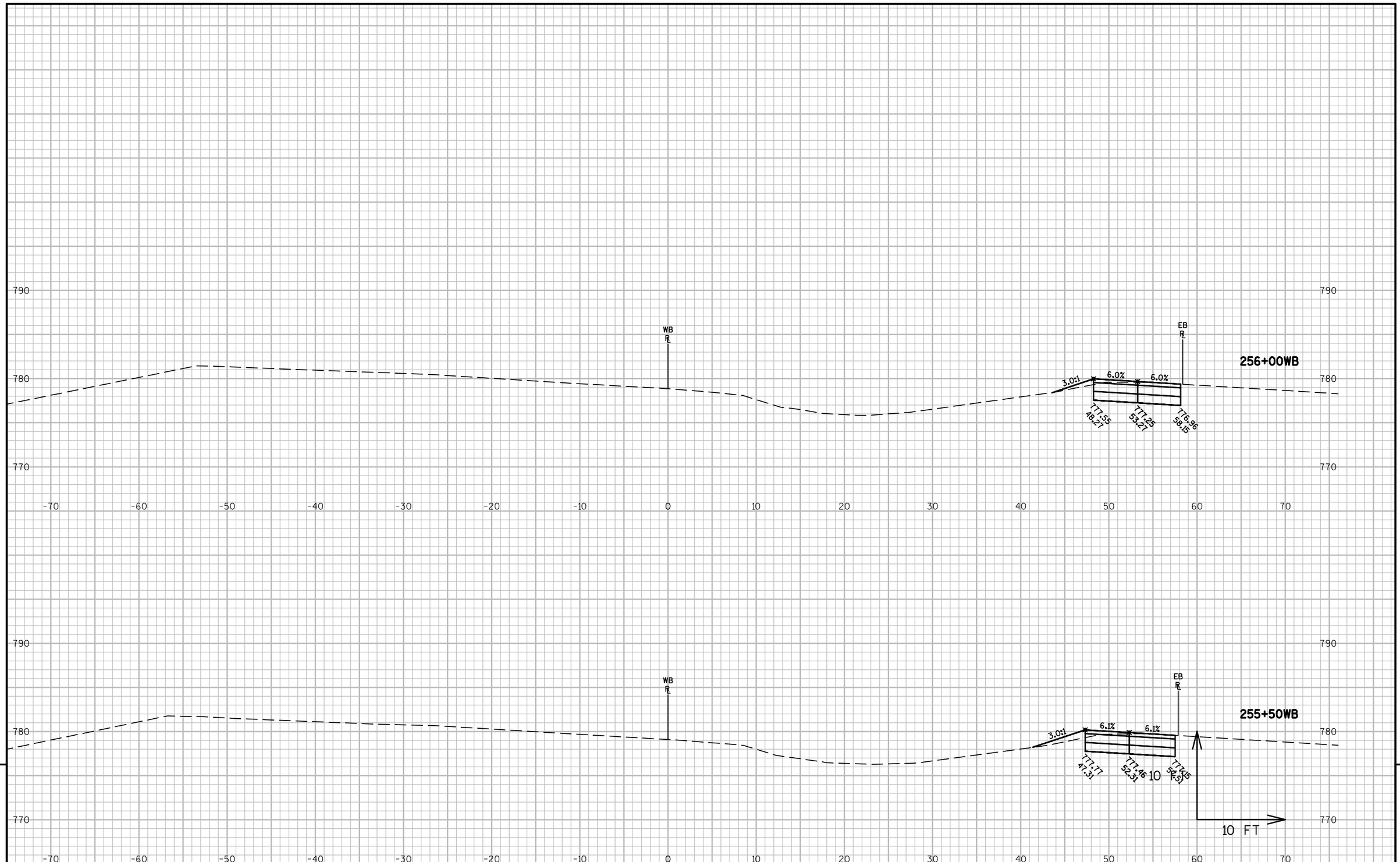

9

9

PROJECT NO: 1517-75-85	HWY: STH 441/ USH 10	COUNTY: WINNEBAGO	CROSS SECTIONS: USH 10 WB STAGE 1 WIDENING AND CROSSOVER 2	SHEET 185	E

FILE NAME : S:\PDS\C3D\WIS441\15177570_72_77_85\SHEETSPLAN\1517-75-85\090200-XS\15177585-XSE.DWG
LAYOUT NAME - 090232-XS

PLOT DATE : 8/19/2016 10:51 AM PLOT BY : VICKMAN, GARRETT T PLOT NAME :

PLOT SCALE : 1 IN:10 FT

WISDOT/CADDS SHEET 49

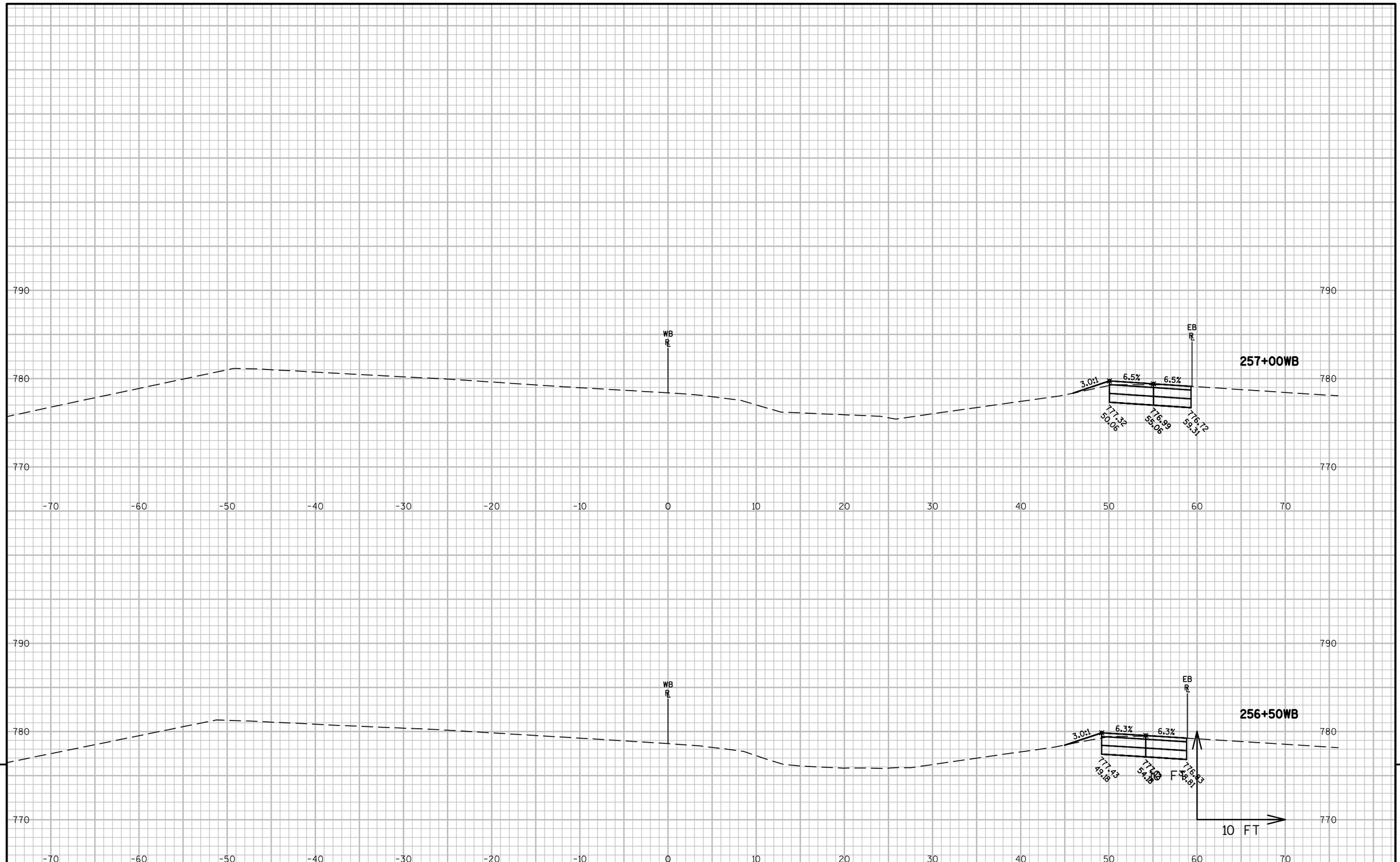

9

9

PROJECT NO: 1517-75-85	HWY: STH 441/ USH 10	COUNTY: WINNEBAGO	CROSS SECTIONS: USH 10 WB STAGE 1 WIDENING AND CROSSOVER 2	SHEET 186	E

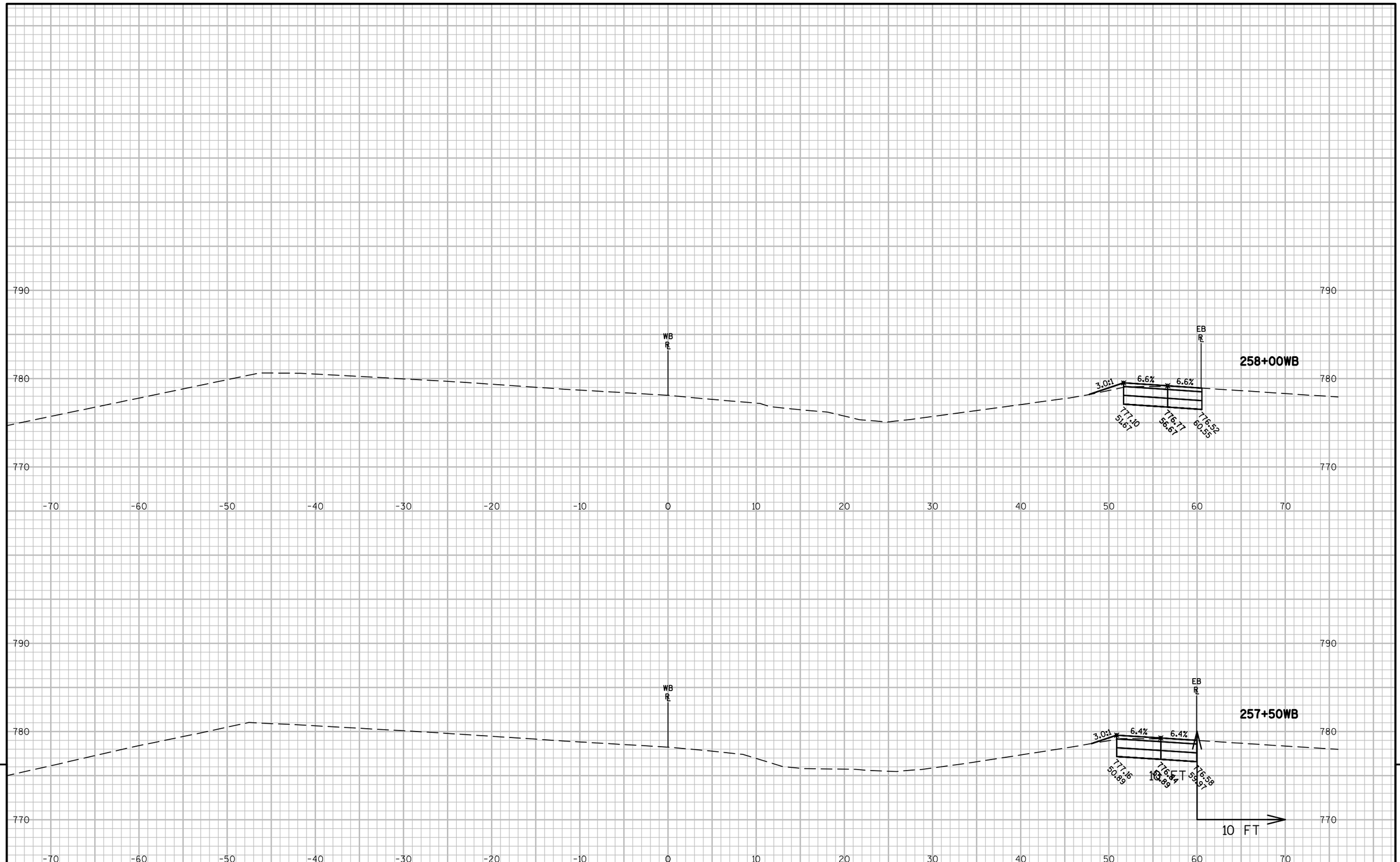

9

9

PROJECT NO: 1517-75-85	HWY: STH 441/ USH 10	COUNTY: WINNEBAGO	CROSS SECTIONS: USH 10 WB STAGE 1 WIDENING AND CROSSOVER 2	SHEET 187	E

FILE NAME : S:\PDS\C3D\WIS441\15177570_72_77_85\SHEETSPLAN\1517-75-85\090200-XS\15177585-XSE.DWG
LAYOUT NAME - 090234-XS

PLOT DATE : 8/19/2016 10:51 AM PLOT BY : VICKMAN, GARRETT T PLOT NAME : PLOT SCALE : 1 IN:10 FT

WISDOT/CADDS SHEET 49

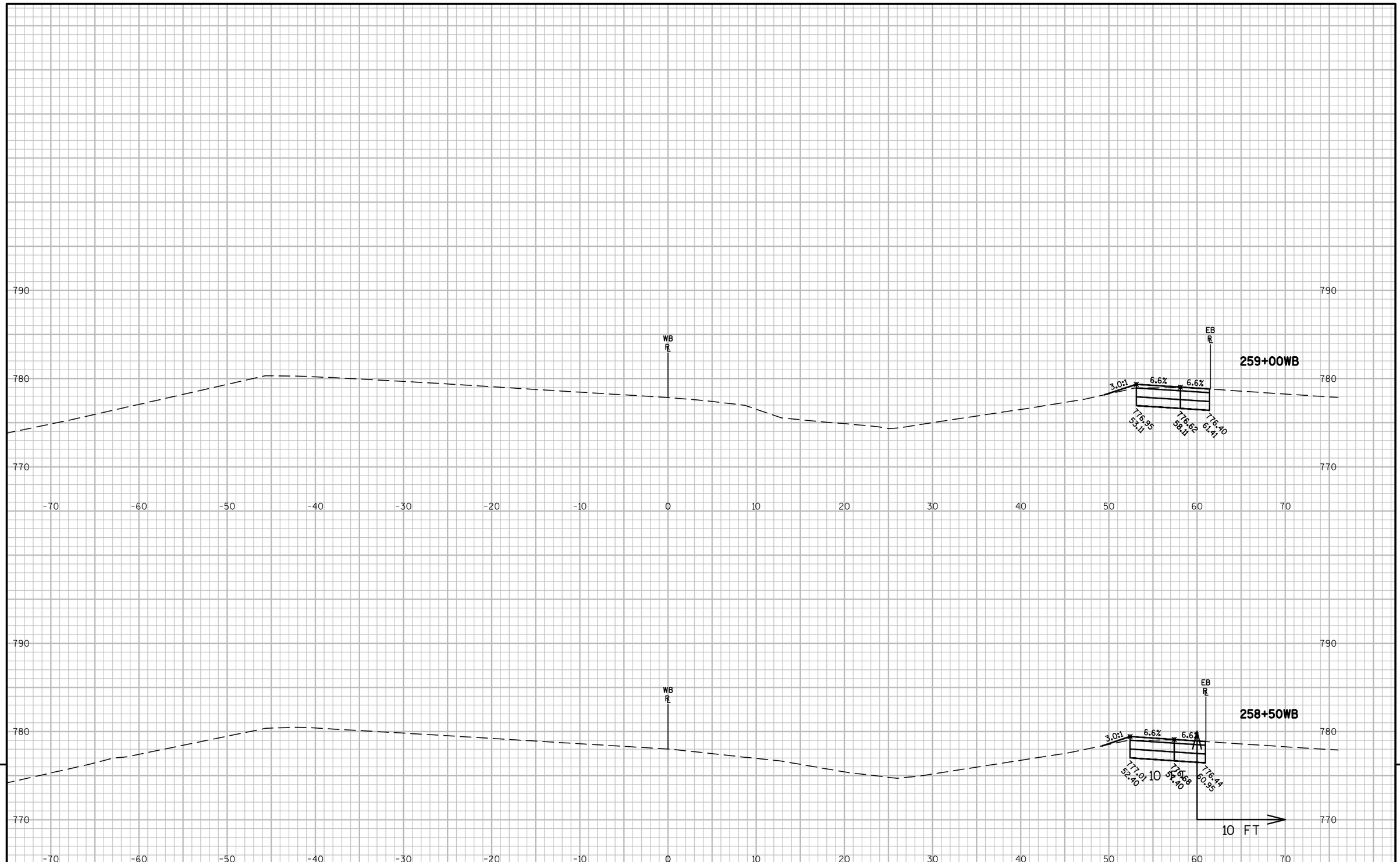

9

9

PROJECT NO: 1517-75-85	HWY: STH 441/ USH 10	COUNTY: WINNEBAGO	CROSS SECTIONS: USH 10 WB STAGE 1 WIDENING AND CROSSOVER 2	SHEET 188	E

FILE NAME : S:\PDS\C3D\WIS441\15177570_72_77_85\SHEETSPLAN\1517-75-85\090200-XS\15177585-XSE.DWG
LAYOUT NAME - 090235-XS

PLOT DATE : 8/19/2016 10:51 AM PLOT BY : VICKMAN, GARRETT T PLOT NAME :

PLOT SCALE : 1 IN:10 FT

WISDOT/CADDS SHEET 49

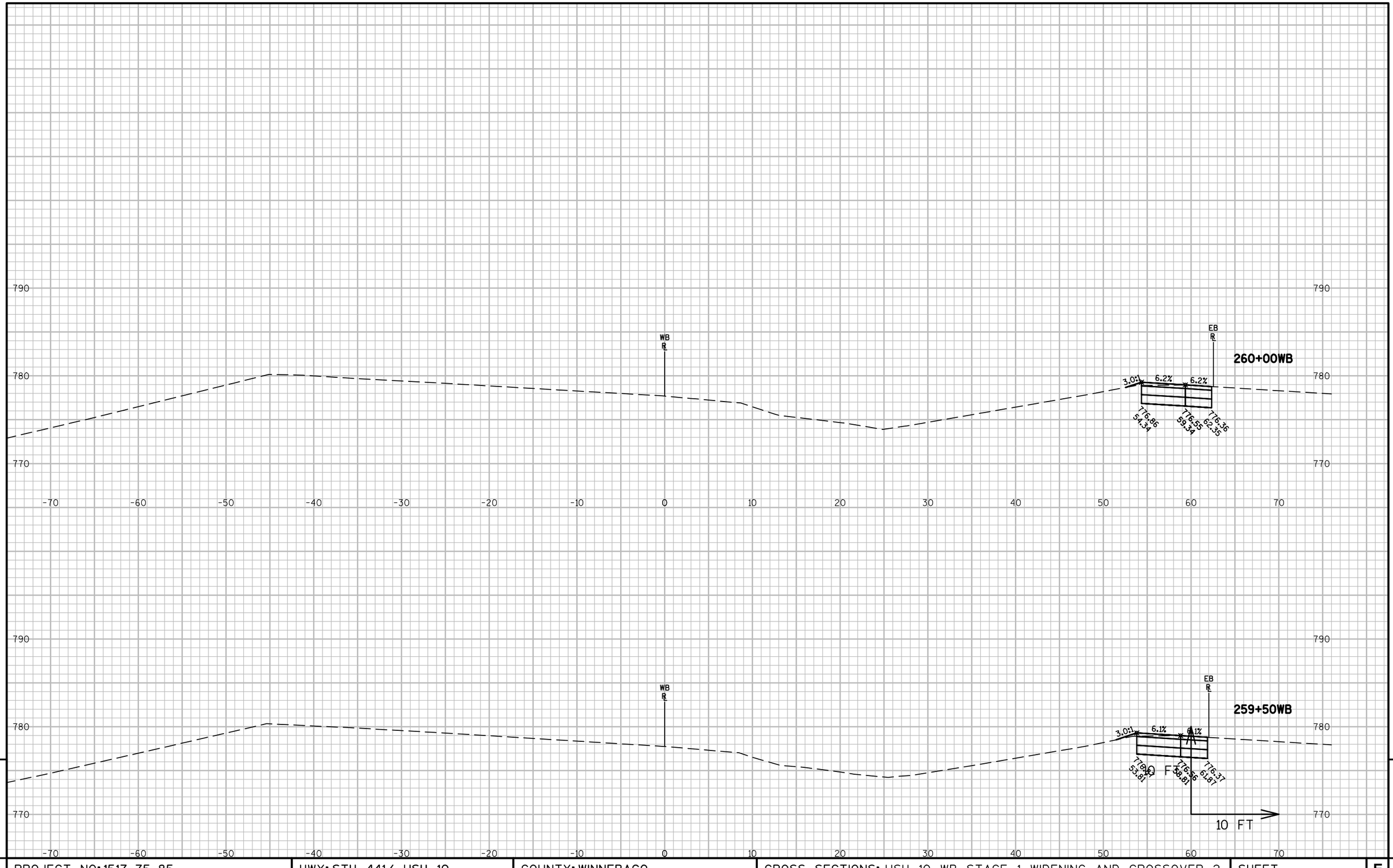

9

9

PROJECT NO: 1517-75-85	HWY: STH 441/ USH 10	COUNTY: WINNEBAGO	CROSS SECTIONS: USH 10 WB STAGE 1 WIDENING AND CROSSOVER 2	SHEET 189	E

FILE NAME : S:\PDS\C3D\WIS441\15177570_72_77_85\SHEETSPLAN\1517-75-85\090200-XS\15177585-XSE.DWG
LAYOUT NAME - 090236-XS

PLOT DATE : 8/19/2016 10:52 AM PLOT BY : VICKMAN, GARRETT T PLOT NAME : PLOT SCALE : 1 IN:10 FT

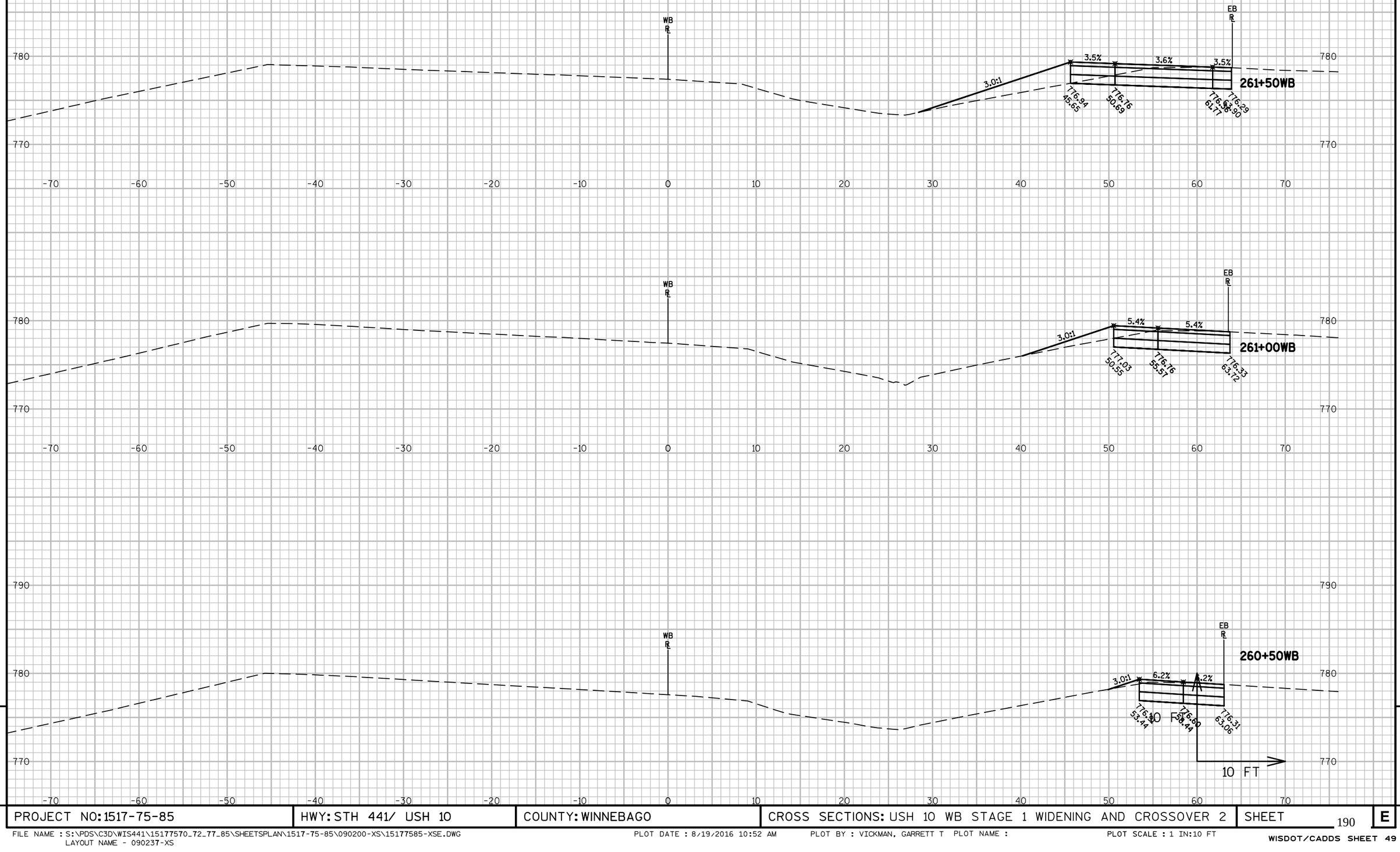

9

9

PROJECT NO: 1517-75-85	HWY: STH 441/ USH 10	COUNTY: WINNEBAGO	CROSS SECTIONS: USH 10 WB STAGE 1 WIDENING AND CROSSOVER 2	SHEET 190	E

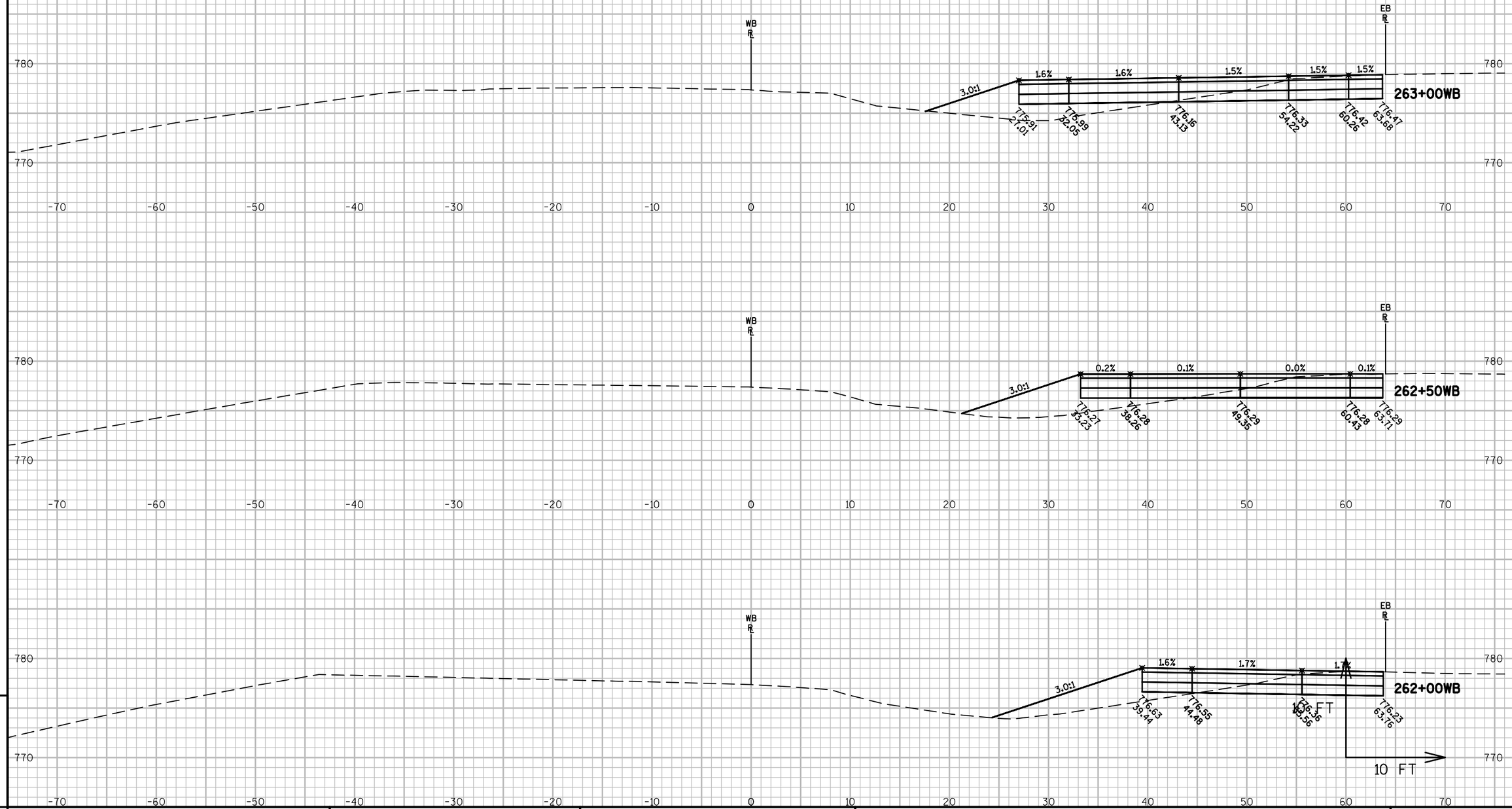

9

9

PROJECT NO: 1517-75-85	HWY: STH 441/ USH 10	COUNTY: WINNEBAGO	CROSS SECTIONS: USH 10 WB STAGE 1 WIDENING AND CROSSOVER 2	SHEET 191	E

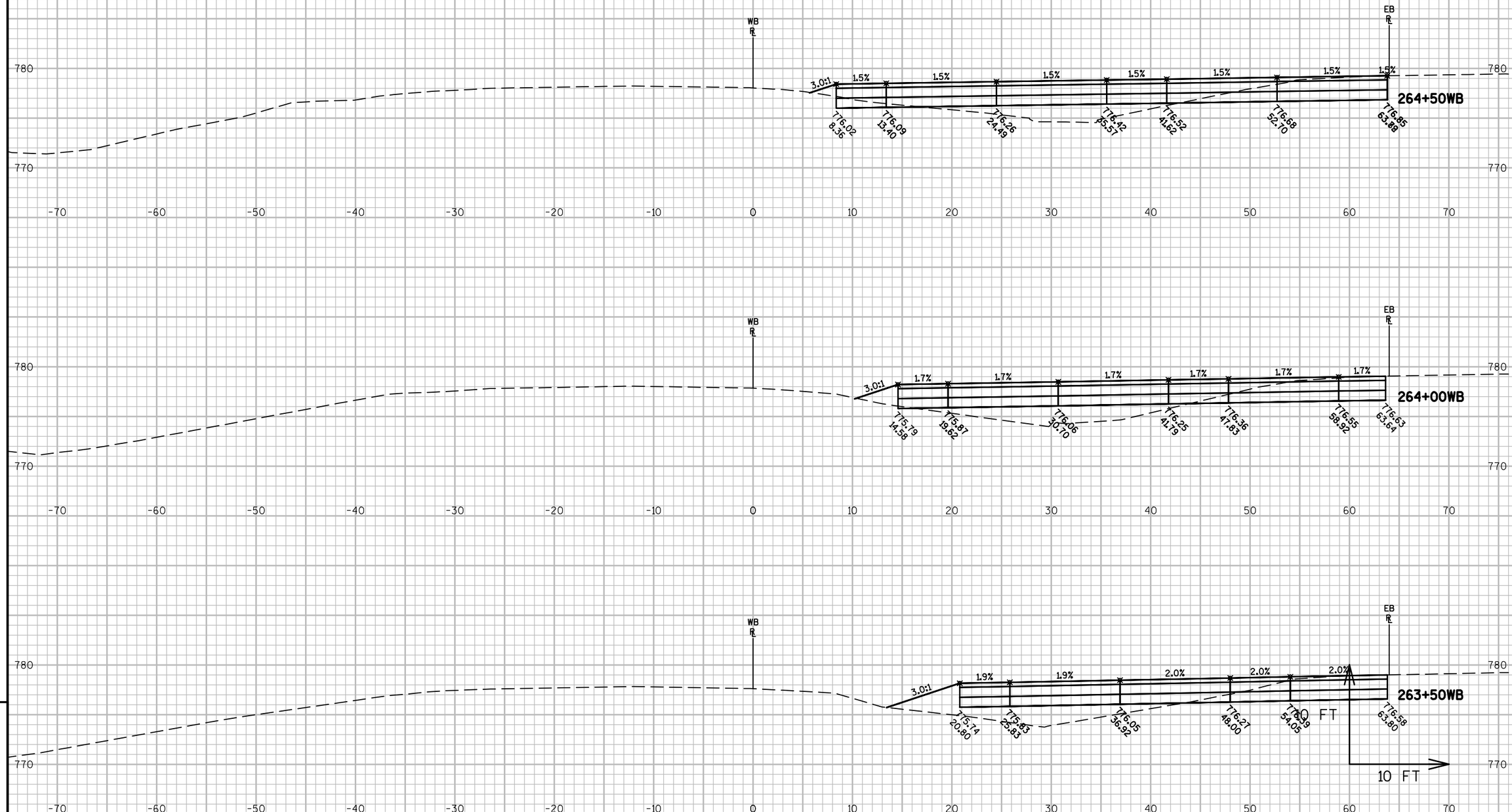

9

9

PROJECT NO: 1517-75-85	HWY: STH 441/ USH 10	COUNTY: WINNEBAGO	CROSS SECTIONS: USH 10 WB STAGE 1 WIDENING AND CROSSOVER 2	SHEET 192	E

FILE NAME : S:\PDS\C3D\WIS441\151775570_72_77_85\SHEETSPLAN\1517-75-85\090200-XS\151775585-XSE.DWG
LAYOUT NAME - 090239-XS

PLOT DATE : 8/19/2016 10:52 AM PLOT BY : VICKMAN, GARRETT T PLOT NAME :

PLOT SCALE : 1 IN:10 FT

WISDOT/CADDS SHEET 49

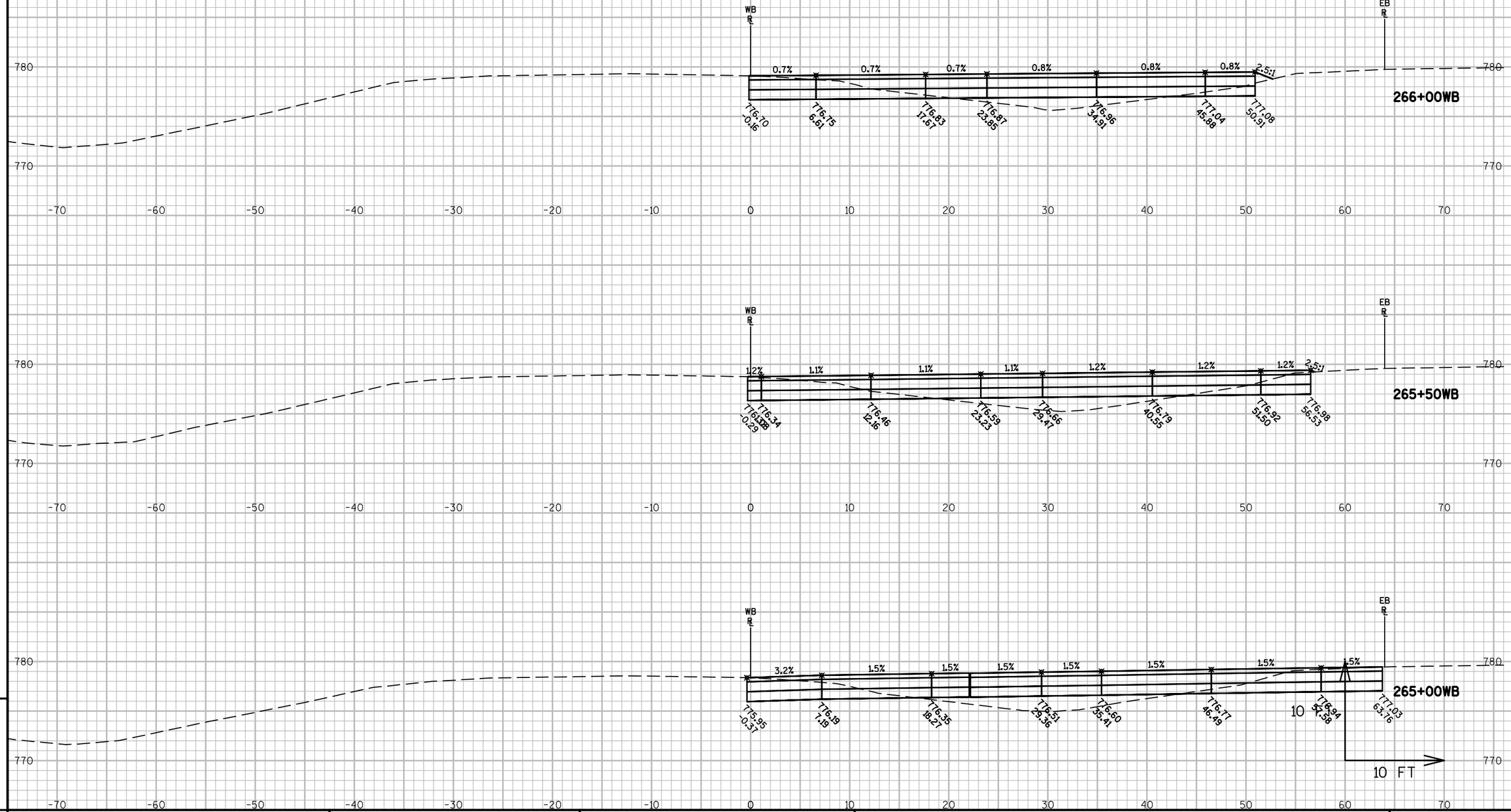

PROJECT NO: 1517-75-85	HWY: STH 441/ USH 10	COUNTY: WINNEBAGO	CROSS SECTIONS: USH 10 WB STAGE 1 WIDENING AND CROSSOVER 2	SHEET 193	E

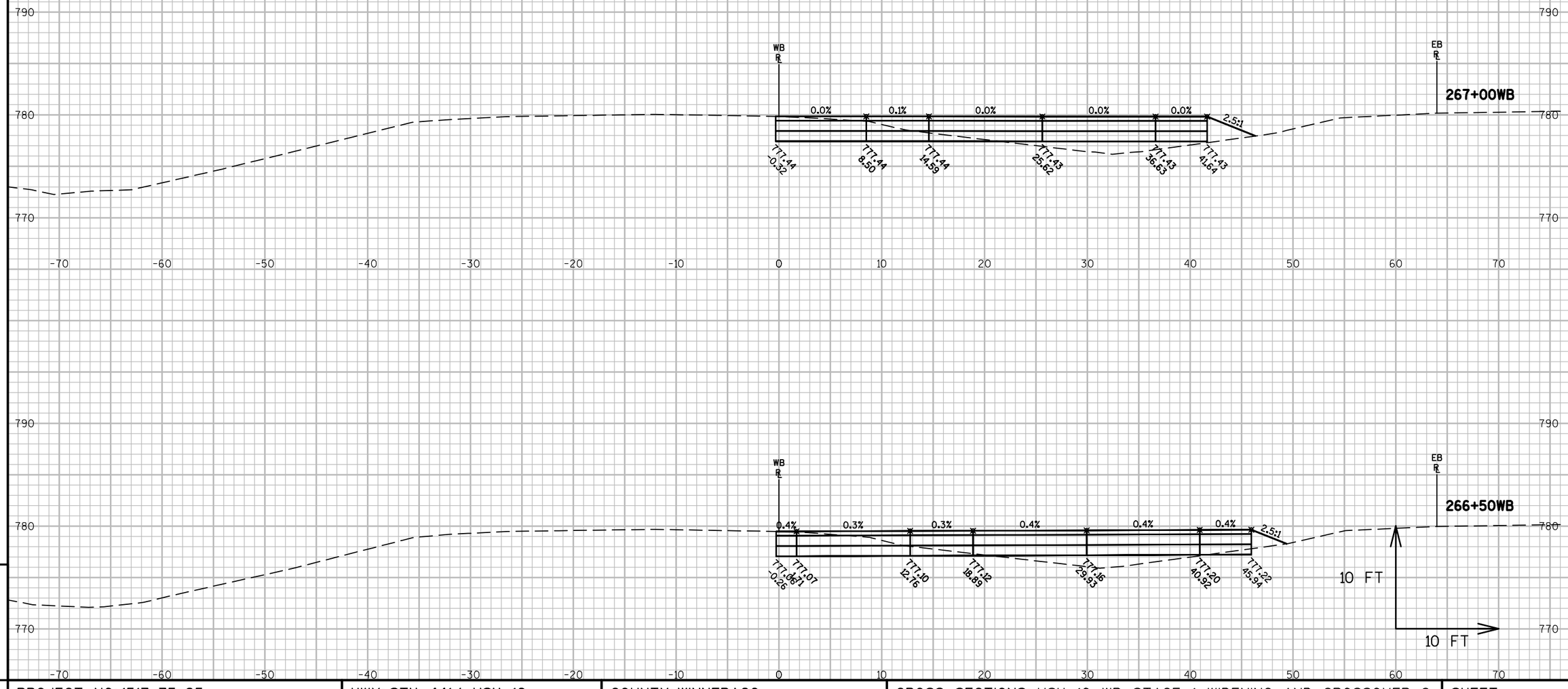

9

9

PROJECT NO: 1517-75-85	HWY: STH 441/ USH 10	COUNTY: WINNEBAGO	CROSS SECTIONS: USH 10 WB STAGE 1 WIDENING AND CROSSOVER 2	SHEET 194	E

FILE NAME : S:\PDS\C3D\WIS441\15177570_72_77_85\SHEETSPLAN\1517-75-85\090200-XS\15177585-XSE.DWG
LAYOUT NAME - 090241-XS

PLOT DATE : 8/19/2016 10:52 AM PLOT BY : VICKMAN, GARRETT T PLOT NAME : PLOT SCALE : 1 IN:10 FT

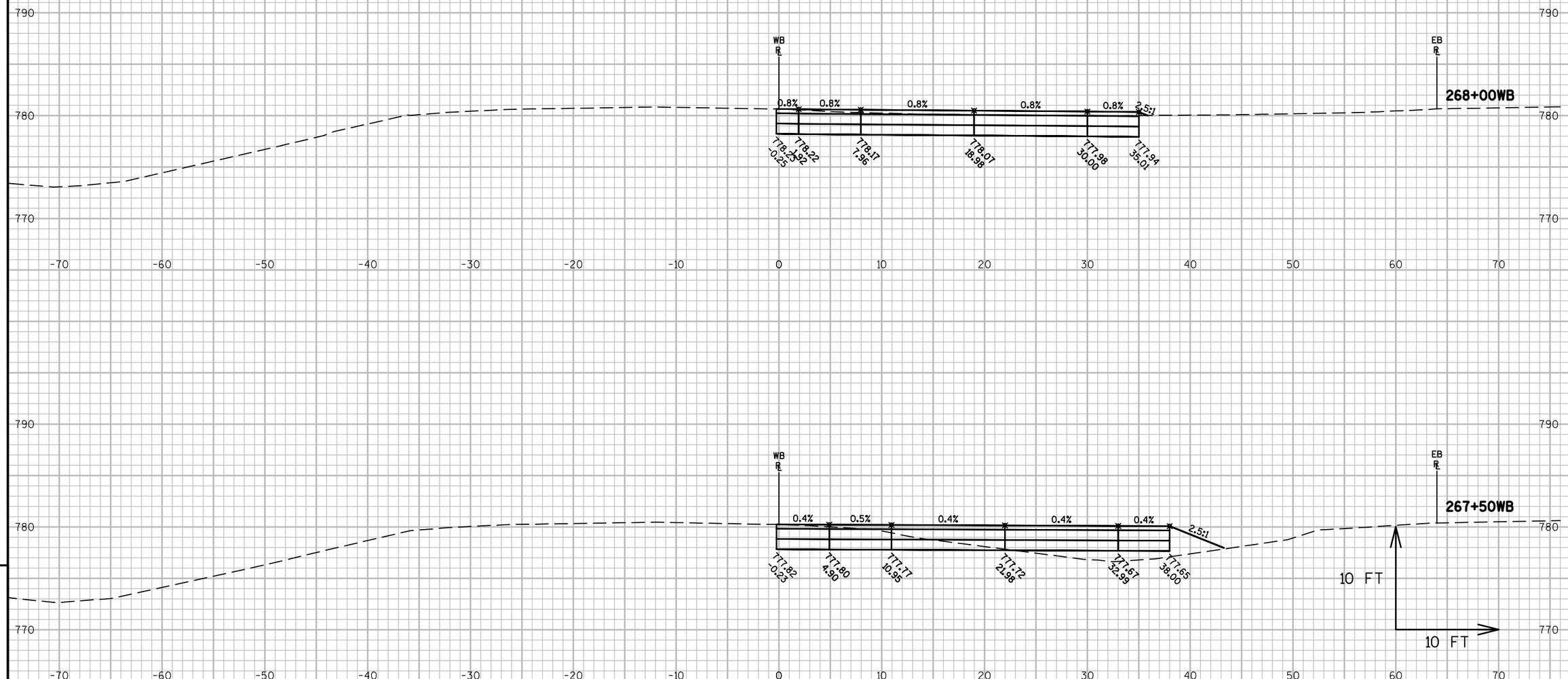

9

9

PROJECT NO: 1517-75-85	HWY: STH 441/ USH 10	COUNTY: WINNEBAGO	CROSS SECTIONS: USH 10 WB STAGE 1 WIDENING AND CROSSOVER 2	SHEET 195	E

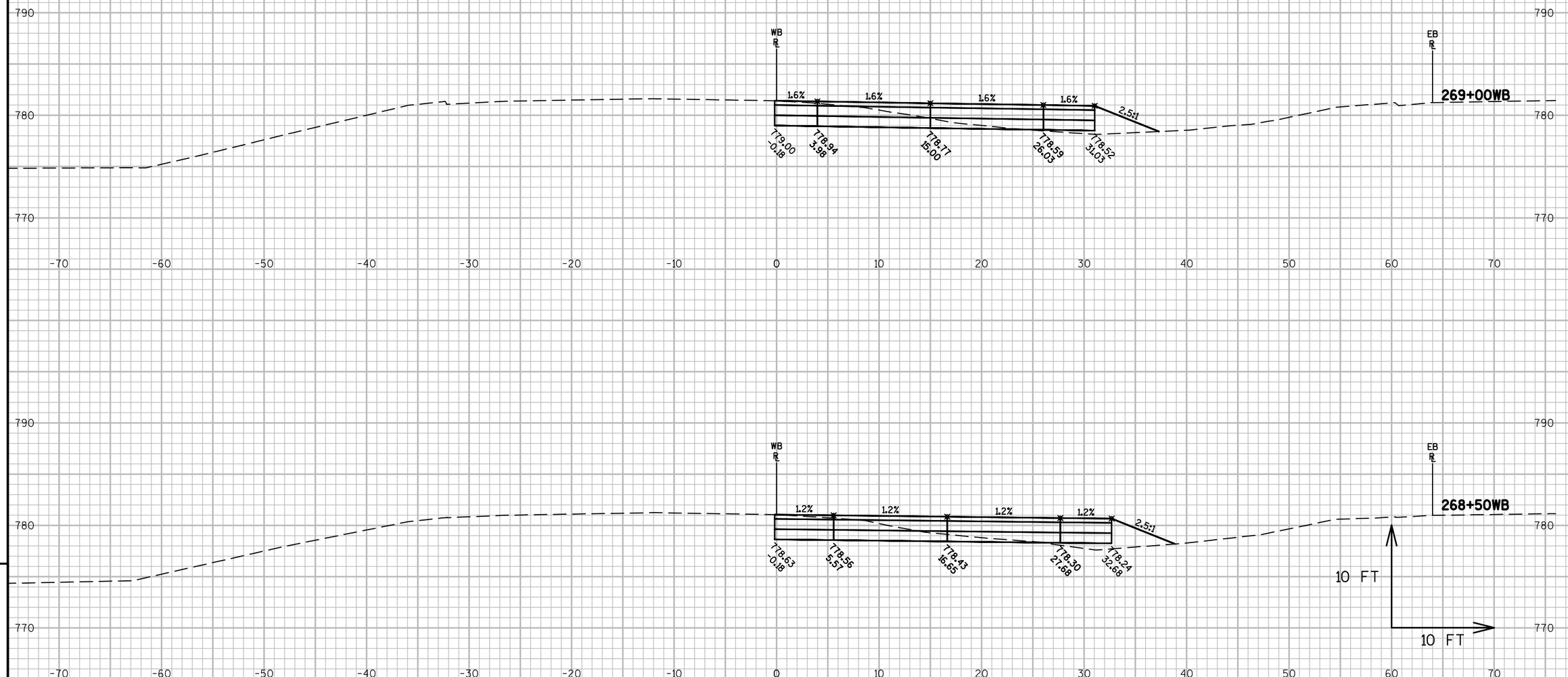

PROJECT NO: 1517-75-85	HWY: STH 441/ USH 10	COUNTY: WINNEBAGO	CROSS SECTIONS: USH 10 WB STAGE 1 WIDENING AND CROSSOVER 2	SHEET 196	E

FILE NAME : S:\PDS\C3D\WIS441\15177570_72_77_85\SHEETSPLAN\1517-75-85\090200-XS\15177585-XSE.DWG
LAYOUT NAME - 090243-XS

PLOT DATE : 8/19/2016 10:53 AM PLOT BY : VICKMAN, GARRETT T PLOT NAME : PLOT SCALE : 1 IN:10 FT

WISDOT/CADDS SHEET 49

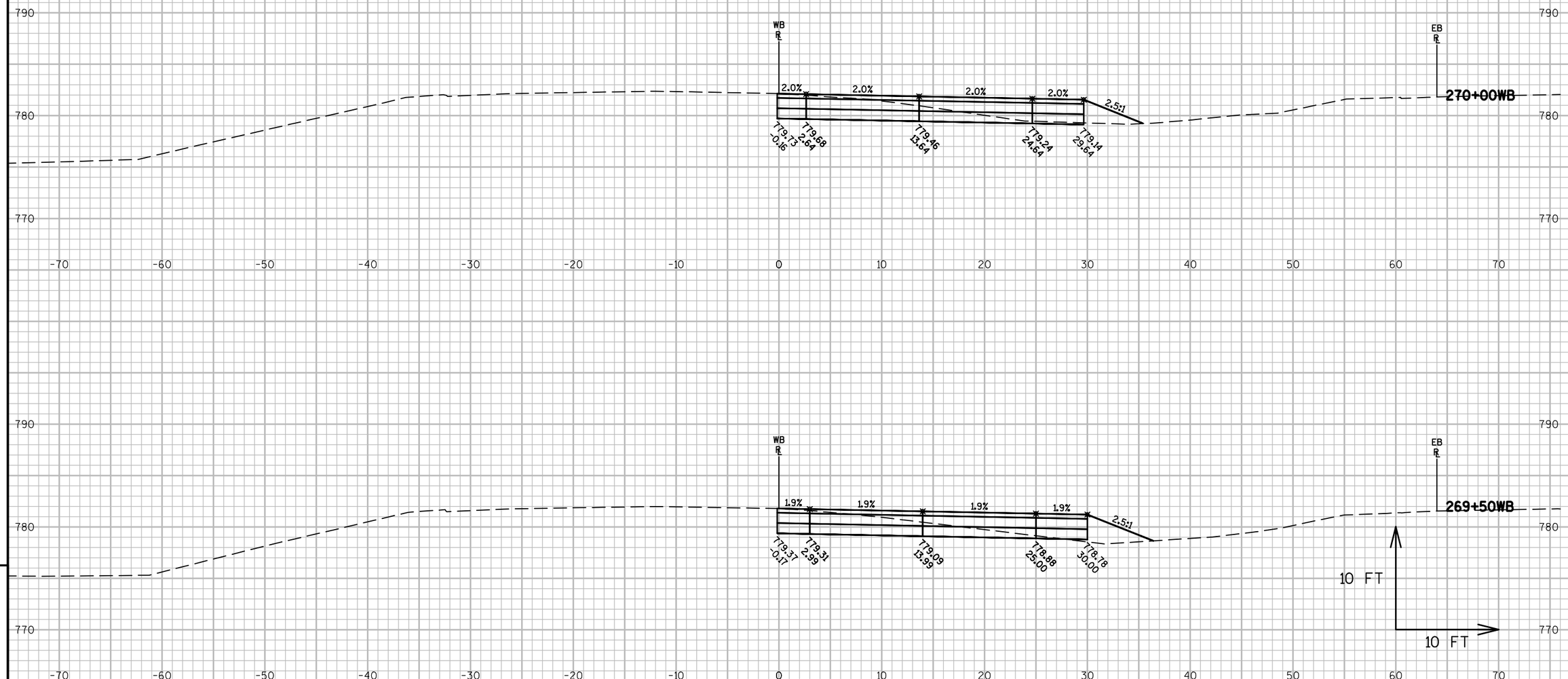

PROJECT NO: 1517-75-85	HWY: STH 441/ USH 10	COUNTY: WINNEBAGO	CROSS SECTIONS: USH 10 WB STAGE 1 WIDENING AND CROSSOVER 2	SHEET 197	E

FILE NAME : S:\PDS\C3D\WIS441\15177570_72_77_85\SHEETSPLAN\1517-75-85\090200-XS\15177585-XSE.DWG
LAYOUT NAME - 090244-XS

PLOT DATE : 8/19/2016 10:53 AM PLOT BY : VICKMAN, GARRETT T PLOT NAME :

PLOT SCALE : 1 IN:10 FT

WISDOT/CADDS SHEET 49

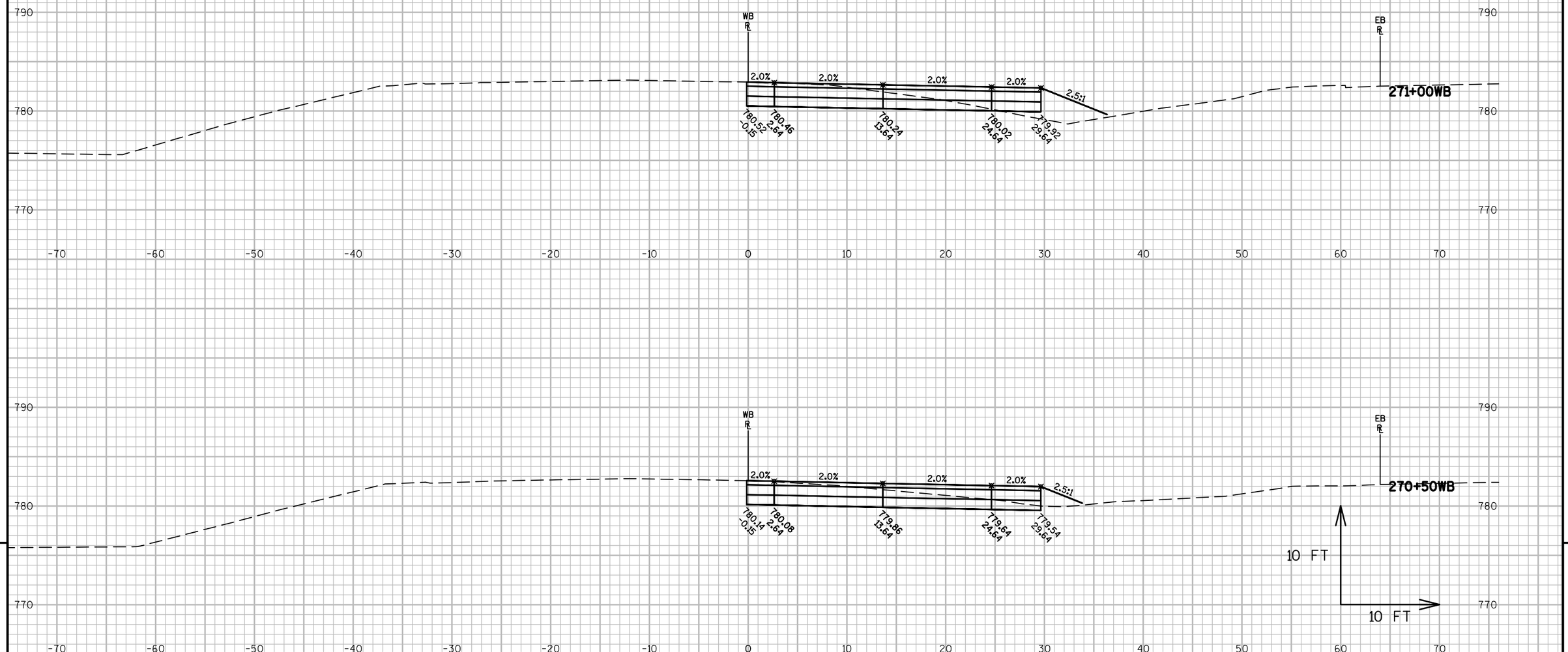

9

9

PROJECT NO: 1517-75-85	HWY: STH 441/ USH 10	COUNTY: WINNEBAGO	CROSS SECTIONS: USH 10 WB STAGE 1 WIDENING AND CROSSOVER 2	SHEET 198	E

FILE NAME : S:\PDS\C3D\WIS441\15177570_72_77_85\SHEETSPLAN\1517-75-85\090200-XS\15177585-XSE.DWG
LAYOUT NAME - 090245-XS

PLOT DATE : 8/19/2016 10:53 AM PLOT BY : VICKMAN, GARRETT T PLOT NAME :

PLOT SCALE : 1 IN:10 FT

WISDOT/CADDS SHEET 49

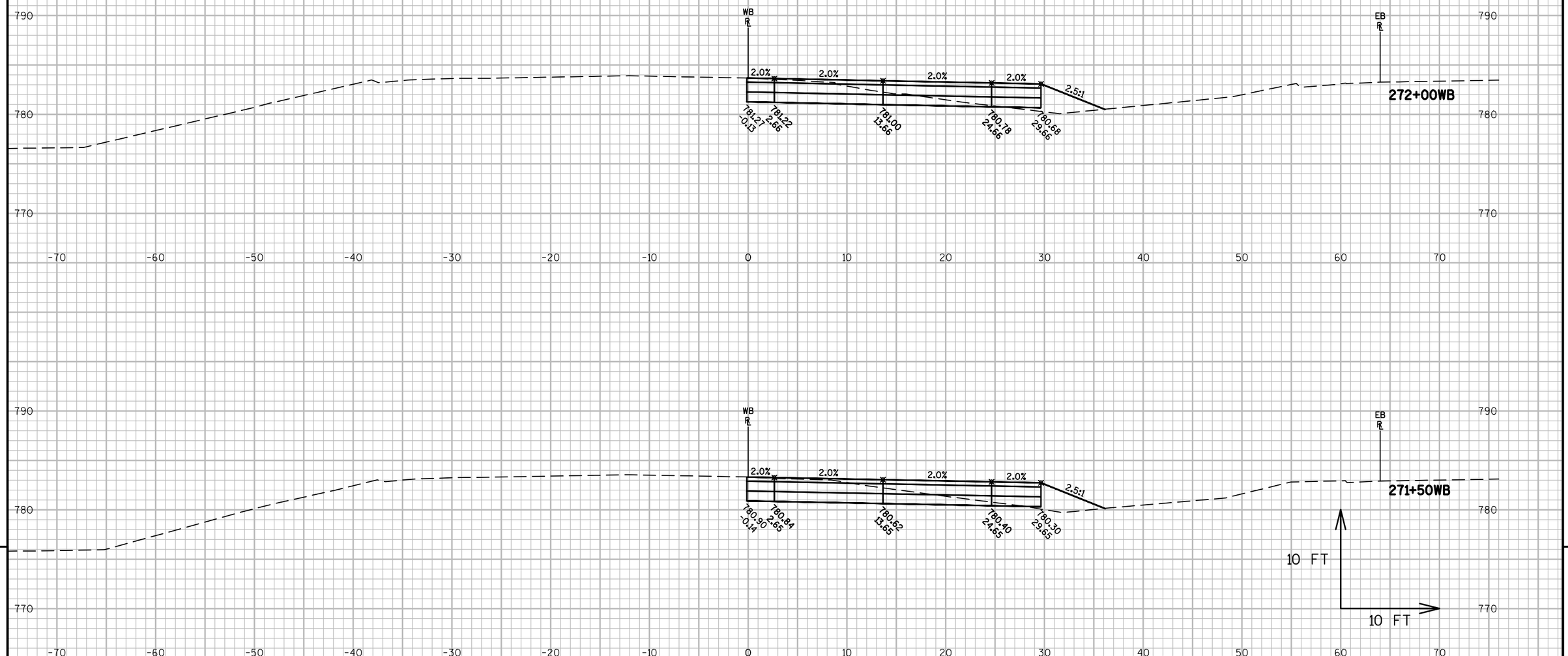

9

9

PROJECT NO: 1517-75-85	HWY: STH 441/ USH 10	COUNTY: WINNEBAGO	CROSS SECTIONS: USH 10 WB STAGE 1 WIDENING AND CROSSOVER 2	SHEET 199	E

FILE NAME : S:\PDS\C3D\WIS441\15177570_72_77_85\SHEETSPLAN\1517-75-85\090200-XS\15177585-XSE.DWG
LAYOUT NAME - 090246-XS

PLOT DATE : 8/19/2016 10:53 AM PLOT BY : VICKMAN, GARRETT T PLOT NAME :

PLOT SCALE : 1 IN:10 FT

WISDOT/CADDS SHEET 49

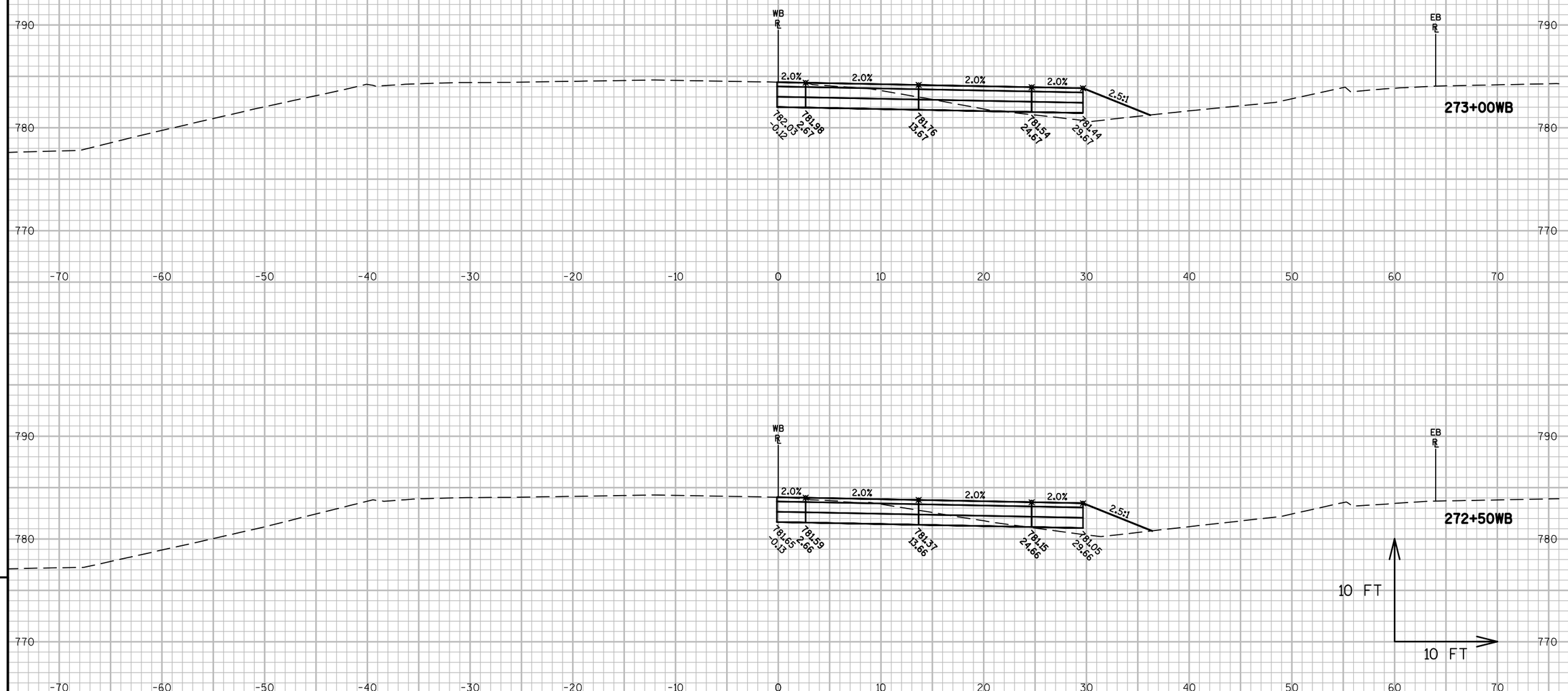

9

9

PROJECT NO: 1517-75-85	HWY: STH 441/ USH 10	COUNTY: WINNEBAGO	CROSS SECTIONS: USH 10 WB STAGE 1 WIDENING AND CROSSOVER 2	SHEET 200	E

FILE NAME : S:\PDS\C3D\WIS441\15177570_72_77_85\SHEETSPLAN\1517-75-85\090200-XS\15177585-XSE.DWG
LAYOUT NAME - 090247-XS

PLOT DATE : 8/19/2016 10:53 AM PLOT BY : VICKMAN, GARRETT T PLOT NAME : PLOT SCALE : 1 IN:10 FT

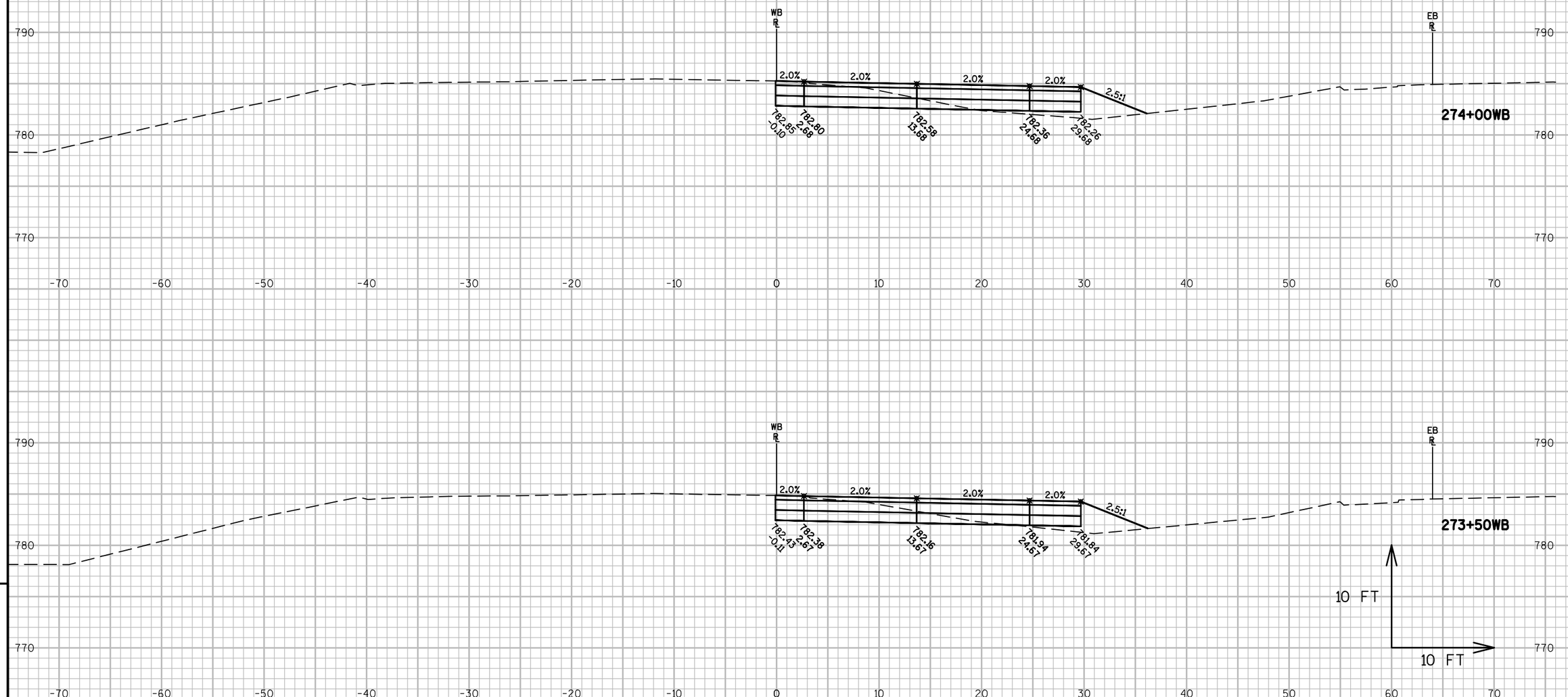

PROJECT NO: 1517-75-85	HWY: STH 441/ USH 10	COUNTY: WINNEBAGO	CROSS SECTIONS: USH 10 WB STAGE 1 WIDENING AND CROSSOVER 2	SHEET 201	E

FILE NAME : S:\PDS\C3D\WIS441\15177570_72_77_85\SHEETSPLAN\1517-75-85\090200-XS\15177585-XSE.DWG
LAYOUT NAME - 090248-XS

PLOT DATE : 8/19/2016 10:53 AM PLOT BY : VICKMAN, GARRETT T PLOT NAME : PLOT SCALE : 1 IN:10 FT

WISDOT/CADDS SHEET 49

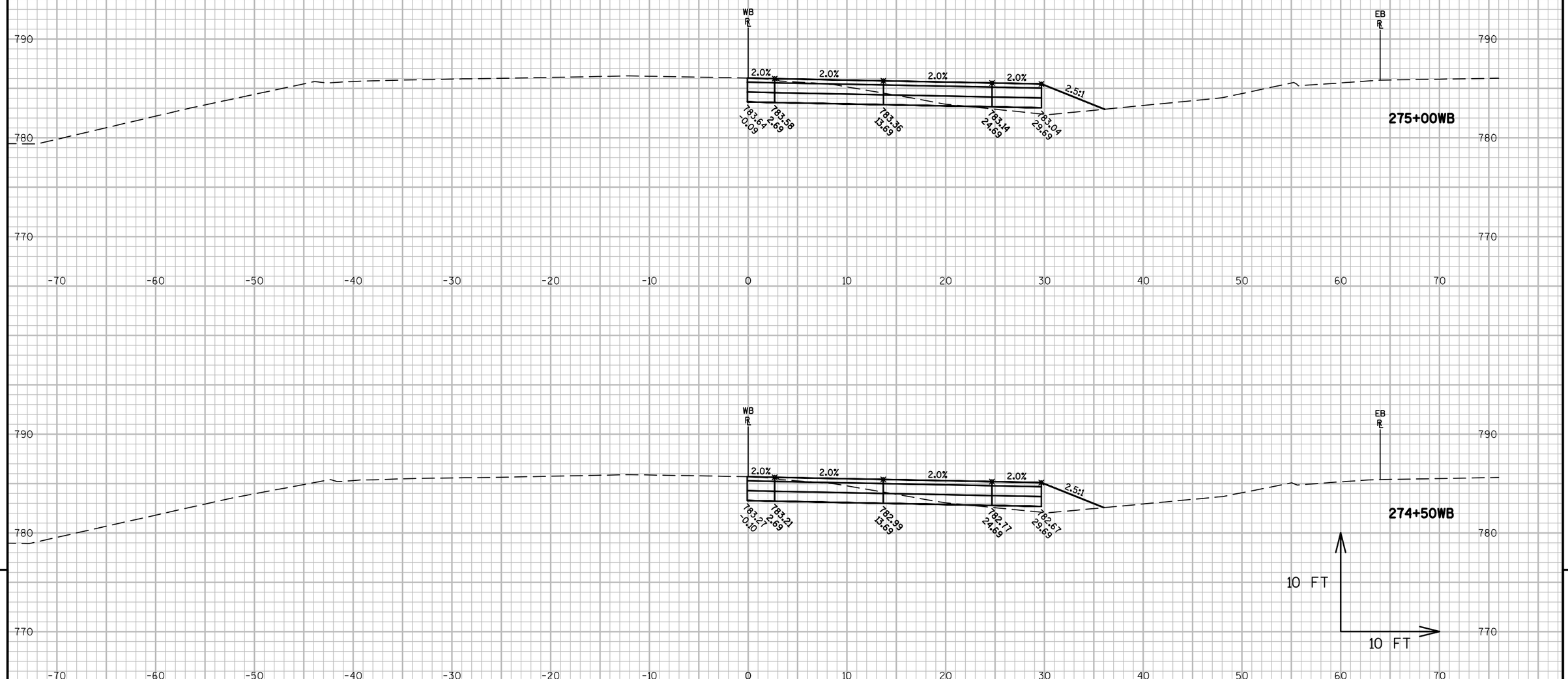

9

9

PROJECT NO: 1517-75-85	HWY: STH 441/ USH 10	COUNTY: WINNEBAGO	CROSS SECTIONS: USH 10 WB STAGE 1 WIDENING AND CROSSOVER 2	SHEET 202	E

FILE NAME : S:\PDS\C3D\WIS441\15177570_72_77_85\SHEETSPLAN\1517-75-85\090200-XS\15177585-XSE.DWG
LAYOUT NAME - 090249-XS

PLOT DATE : 8/19/2016 10:53 AM PLOT BY : VICKMAN, GARRETT T PLOT NAME :

PLOT SCALE : 1 IN:10 FT

WISDOT/CADDS SHEET 49

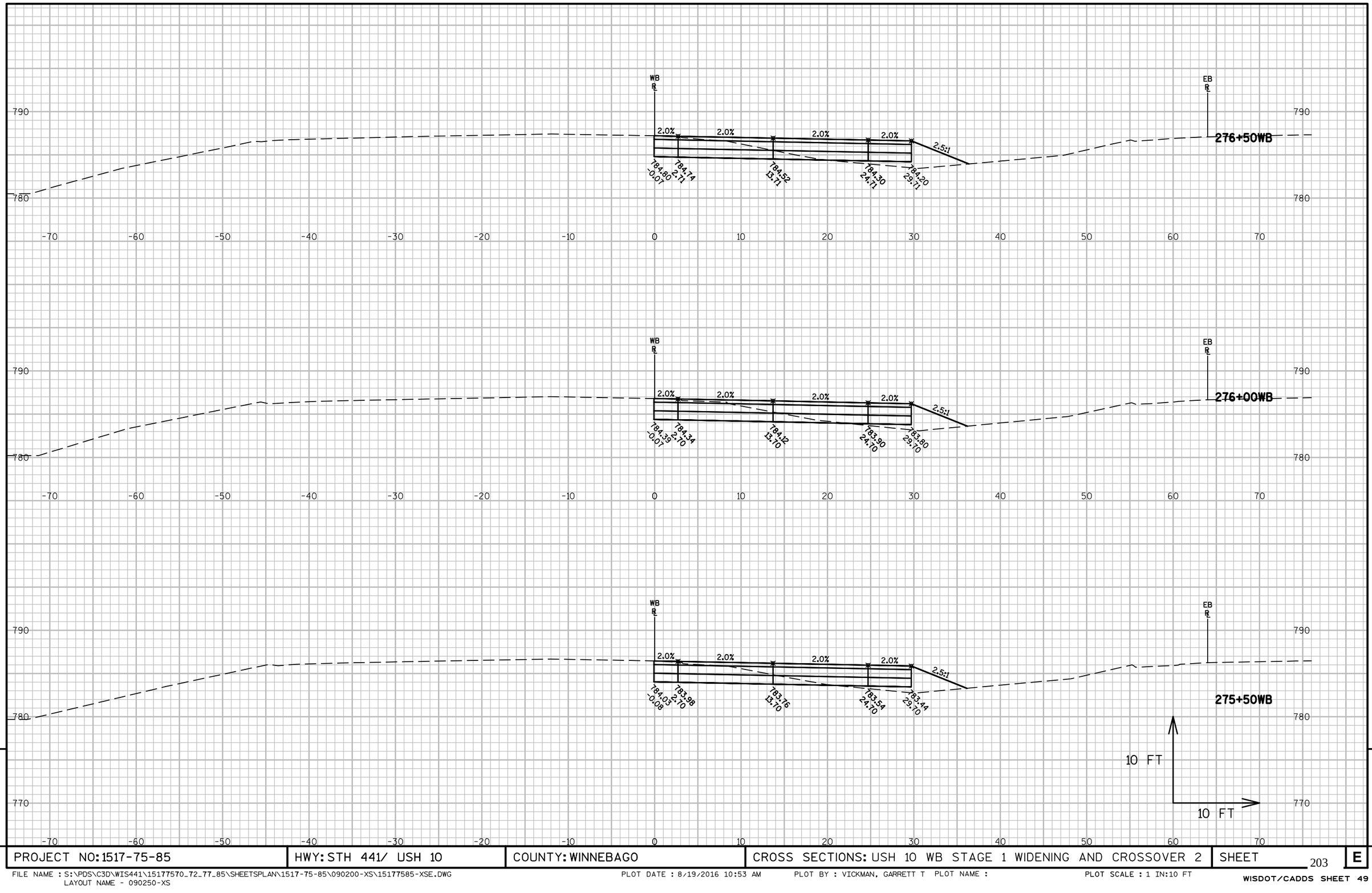

9

9

PROJECT NO: 1517-75-85	HWY: STH 441/ USH 10	COUNTY: WINNEBAGO	CROSS SECTIONS: USH 10 WB STAGE 1 WIDENING AND CROSSOVER 2	SHEET 203	E

FILE NAME : S:\PDS\C3D\WIS441\15177570_72_77_85\SHEETSPLAN\1517-75-85\090200-XS\15177585-XSE.DWG
LAYOUT NAME - 090250-XS

PLOT DATE : 8/19/2016 10:53 AM PLOT BY : VICKMAN, GARRETT T PLOT NAME : PLOT SCALE : 1 IN:10 FT

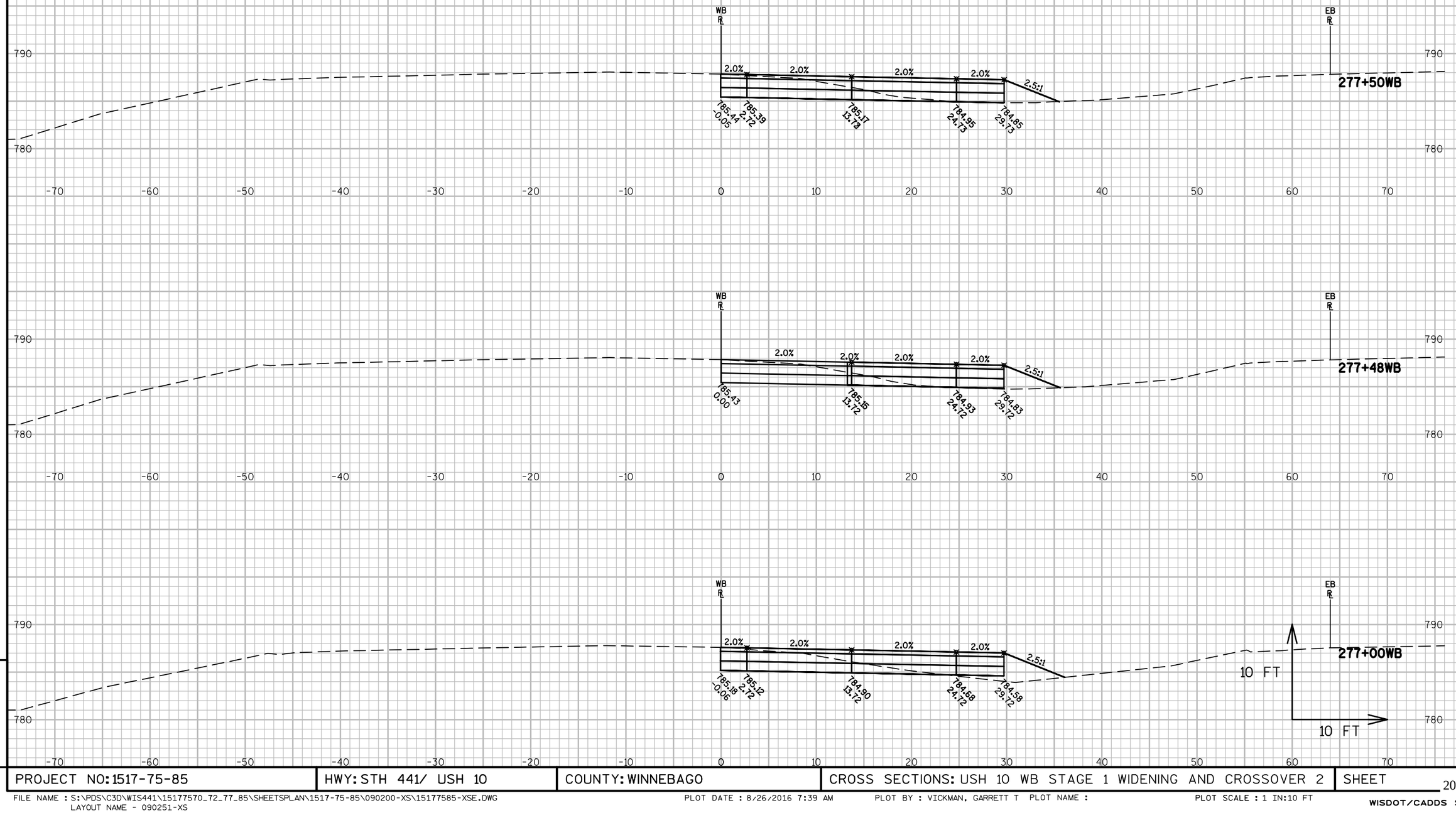

9

9

PROJECT NO: 1517-75-85	HWY: STH 441/ USH 10	COUNTY: WINNEBAGO	CROSS SECTIONS: USH 10 WB STAGE 1 WIDENING AND CROSSOVER 2	SHEET 204	E

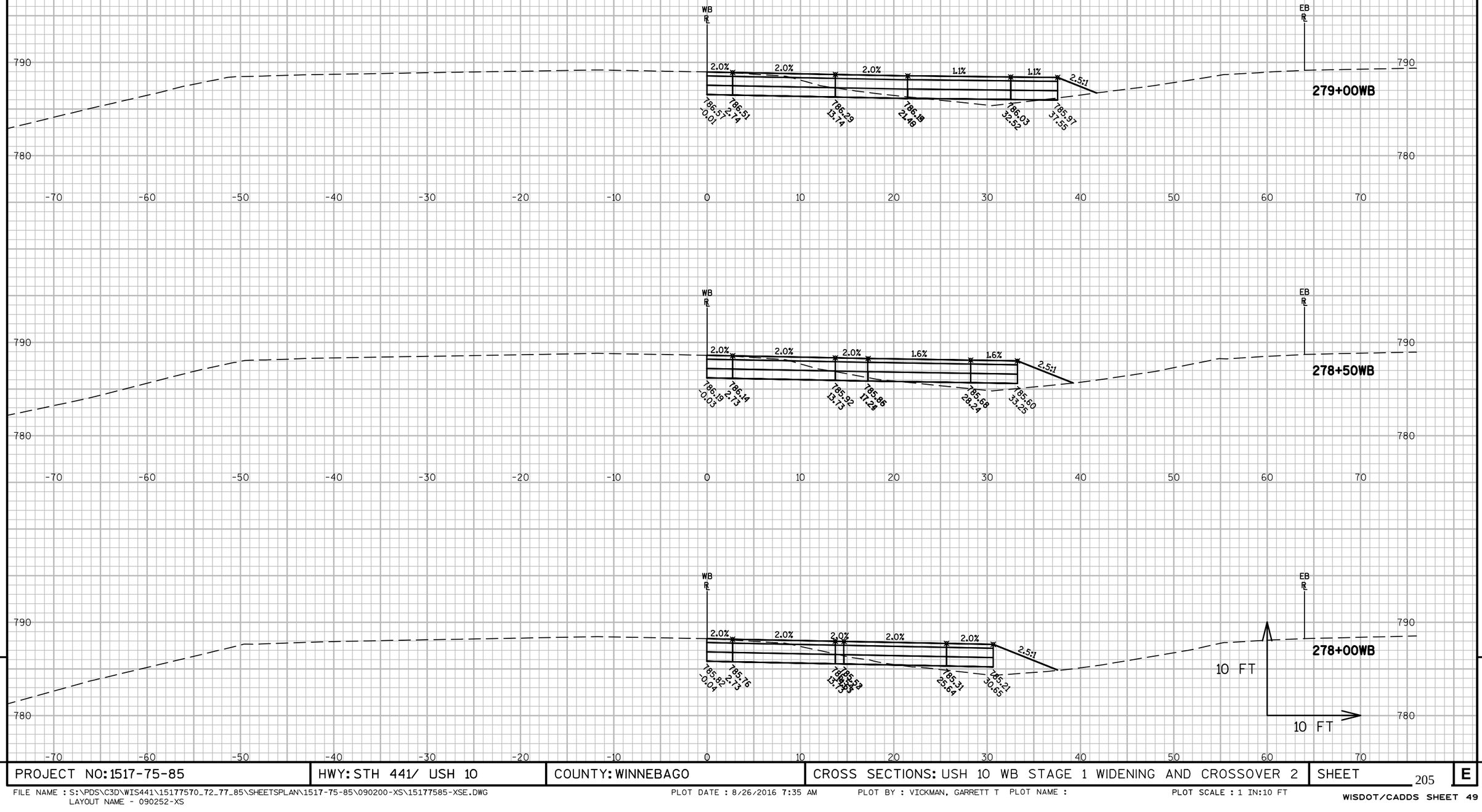

9

9

PROJECT NO: 1517-75-85	HWY: STH 441/ USH 10	COUNTY: WINNEBAGO	CROSS SECTIONS: USH 10 WB STAGE 1 WIDENING AND CROSSOVER 2	SHEET 205	E

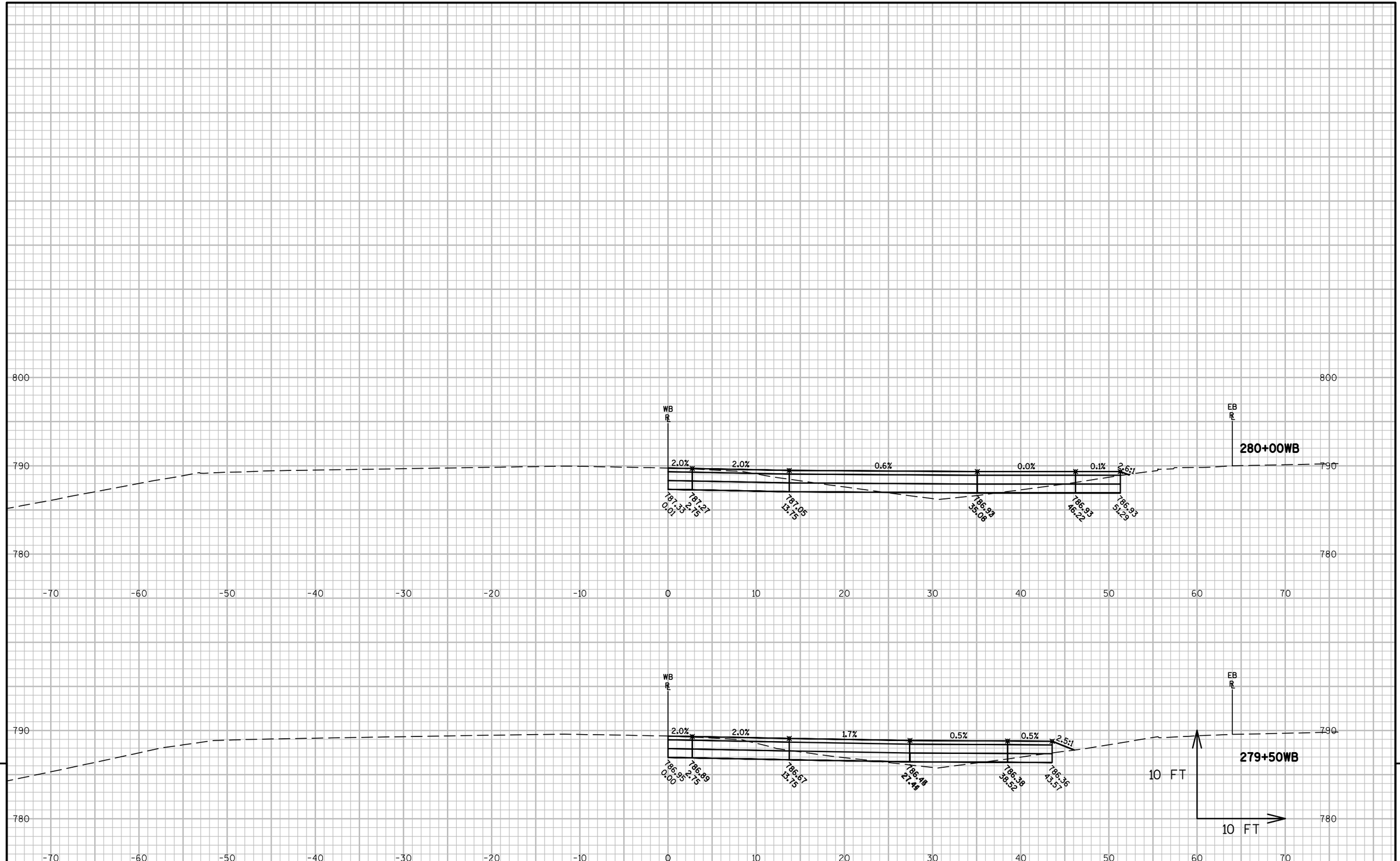

9

9

PROJECT NO: 1517-75-85	HWY: STH 441/ USH 10	COUNTY: WINNEBAGO	CROSS SECTIONS: USH 10 WB STAGE 1 WIDENING AND CROSSOVER 2	SHEET 206	E

FILE NAME : S:\PDS\C3D\WIS441\15177570_72_77_85\SHEETSPLAN\1517-75-85\090200-XS\15177585-XSE.DWG
LAYOUT NAME - 090253-XS

PLOT DATE : 8/26/2016 7:35 AM PLOT BY : VICKMAN, GARRETT T PLOT NAME : PLOT SCALE : 1 IN:10 FT

WISDOT/CADDS SHEET 49

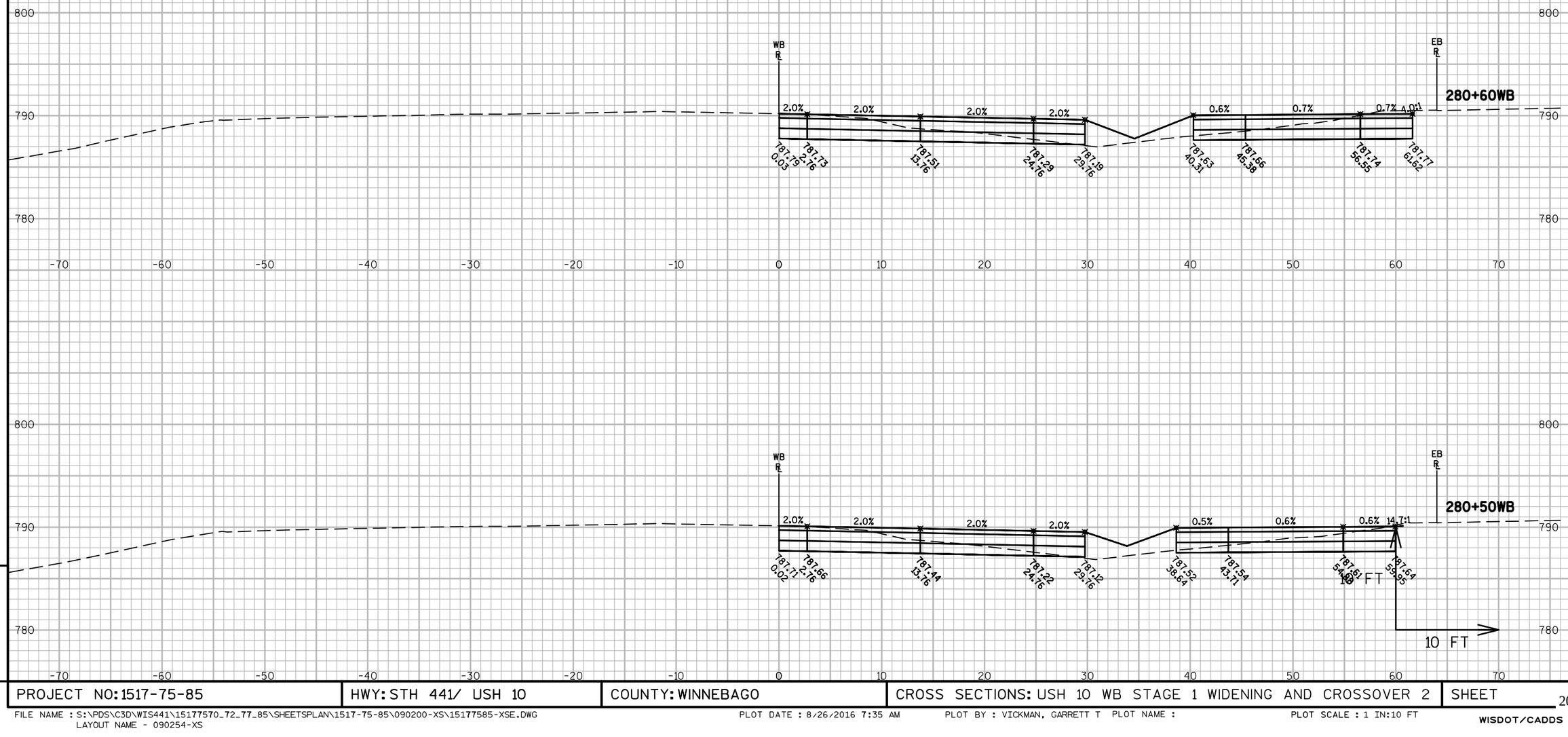

9

9

PROJECT NO: 1517-75-85	HWY: STH 441/ USH 10	COUNTY: WINNEBAGO	CROSS SECTIONS: USH 10 WB STAGE 1 WIDENING AND CROSSOVER 2	SHEET 207	E

FILE NAME : S:\PDS\C3D\WIS441\15177570_72_77_85\SHEETSPLAN\1517-75-85\090200-XS\15177585-XSE.DWG
LAYOUT NAME - 090254-XS

PLOT DATE : 8/26/2016 7:35 AM PLOT BY : VICKMAN, GARRETT T PLOT NAME :

PLOT SCALE : 1 IN:10 FT

WISDOT/CADDS SHEET 49

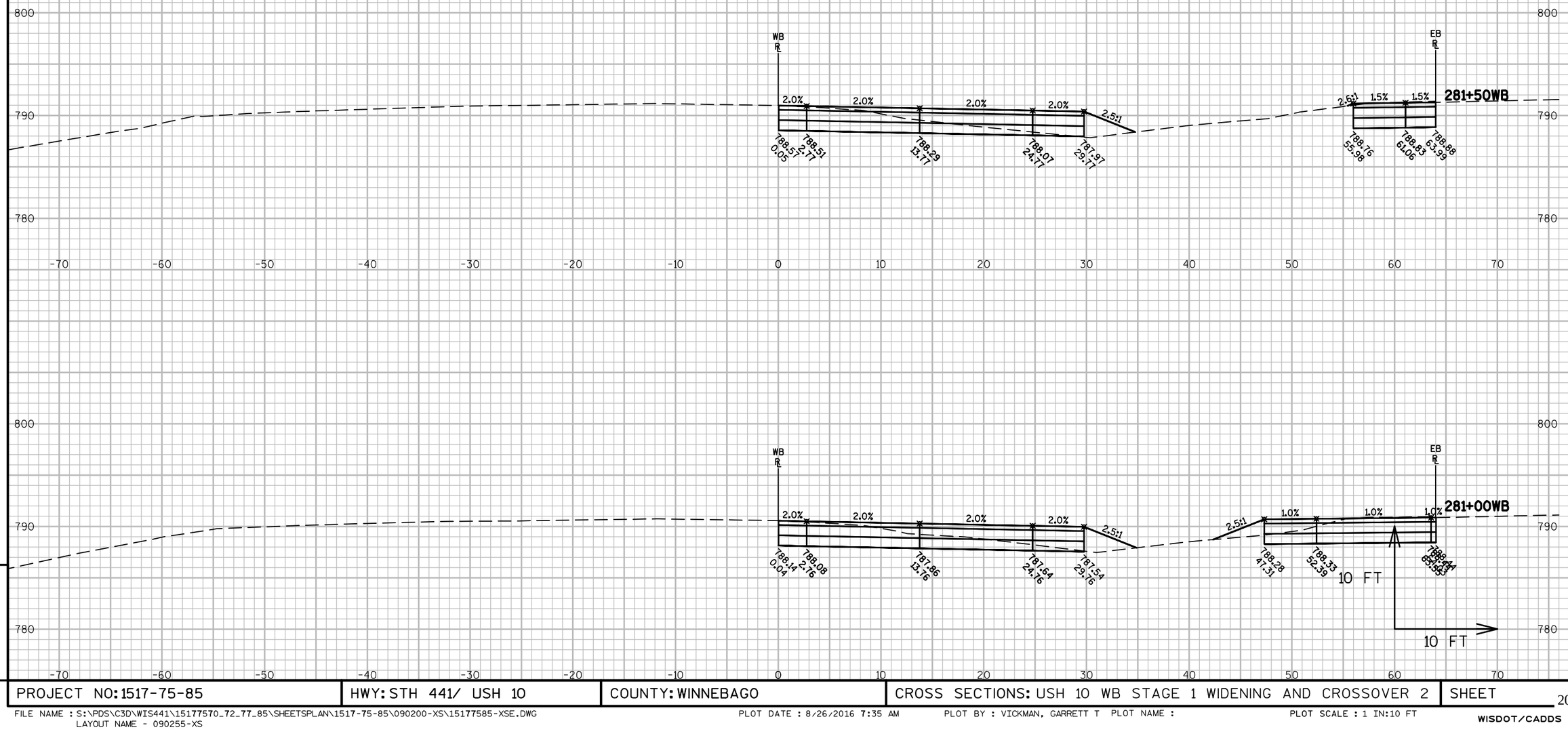

9

9

PROJECT NO: 1517-75-85	HWY: STH 441/ USH 10	COUNTY: WINNEBAGO	CROSS SECTIONS: USH 10 WB STAGE 1 WIDENING AND CROSSOVER 2	SHEET 208	E

FILE NAME : S:\PDS\C3D\WIS441\15177570_72_77_85\SHEETSPLAN\1517-75-85\090200-XS\15177585-XSE.DWG
LAYOUT NAME - 090255-XS

PLOT DATE : 8/26/2016 7:35 AM PLOT BY : VICKMAN, GARRETT T PLOT NAME :

PLOT SCALE : 1 IN:10 FT

WISDOT/CADDS SHEET 49

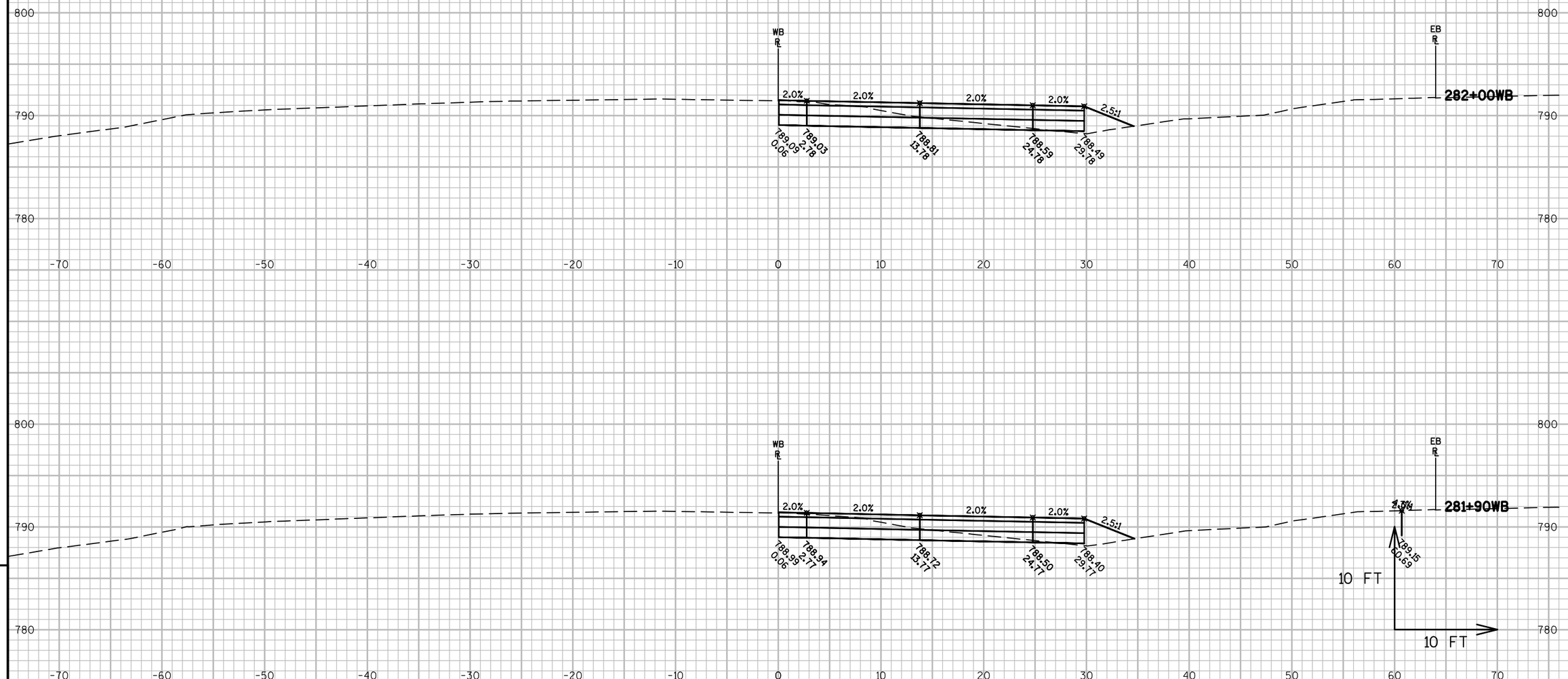

9

9

PROJECT NO: 1517-75-85	HWY: STH 441/ USH 10	COUNTY: WINNEBAGO	CROSS SECTIONS: USH 10 WB STAGE 1 WIDENING AND CROSSOVER 2	SHEET 209	E

FILE NAME : S:\PDS\C3D\WIS441\15177570_72_77_85\SHEETSPLAN\1517-75-85\090200-XS\15177585-XSE.DWG
LAYOUT NAME - 090256-XS

PLOT DATE : 8/19/2016 10:54 AM PLOT BY : VICKMAN, GARRETT T PLOT NAME :

PLOT SCALE : 1 IN:10 FT

WISDOT/CADDS SHEET 49

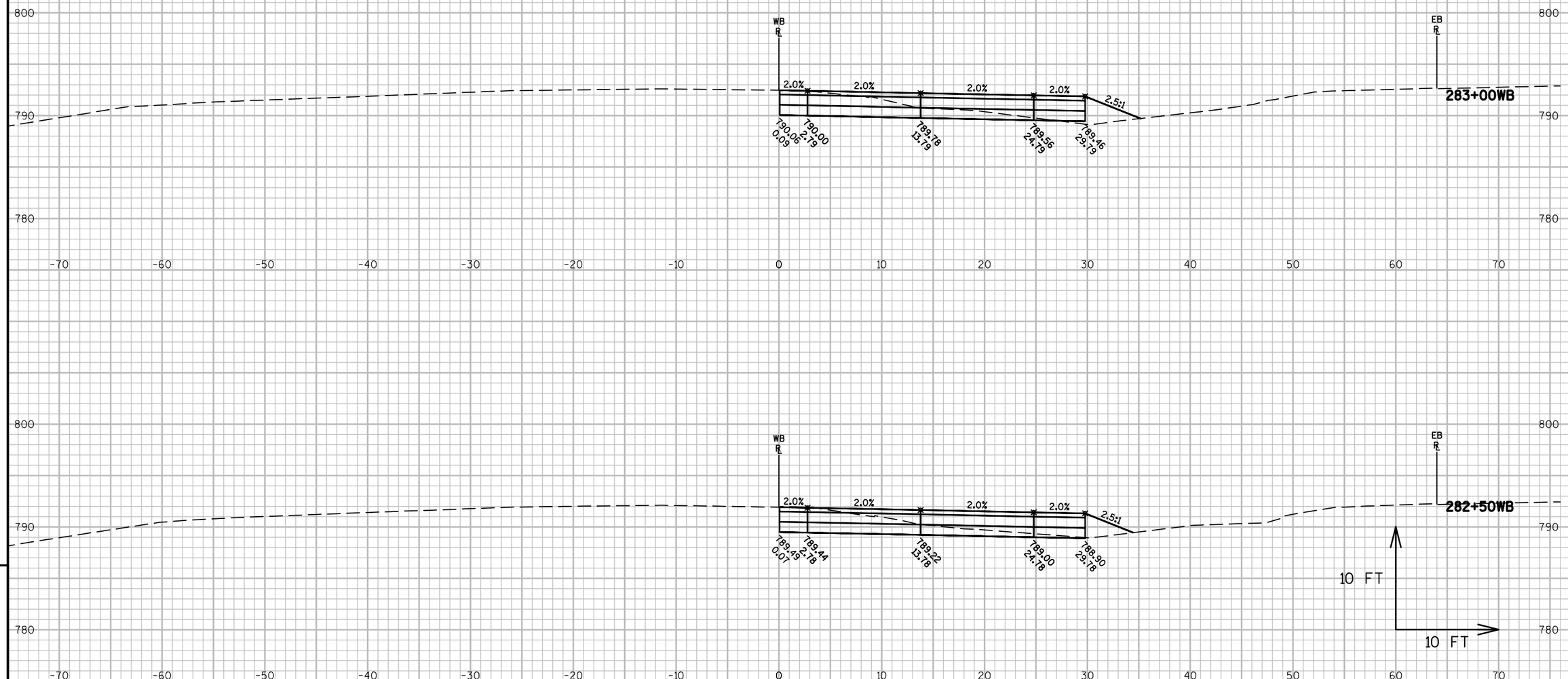

9

9

PROJECT NO: 1517-75-85	HWY: STH 441/ USH 10	COUNTY: WINNEBAGO	CROSS SECTIONS: USH 10 WB STAGE 1 WIDENING AND CROSSOVER 2	SHEET 210	E

FILE NAME : S:\PDS\C3D\WIS441\15177570_72_77_85\SHEETSPLAN\1517-75-85\090200-XS\15177585-XSE.DWG
LAYOUT NAME - 090257-XS

PLOT DATE : 8/19/2016 10:54 AM PLOT BY : VICKMAN, GARRETT T PLOT NAME :

PLOT SCALE : 1 IN:10 FT

WISDOT/CADDS SHEET 49

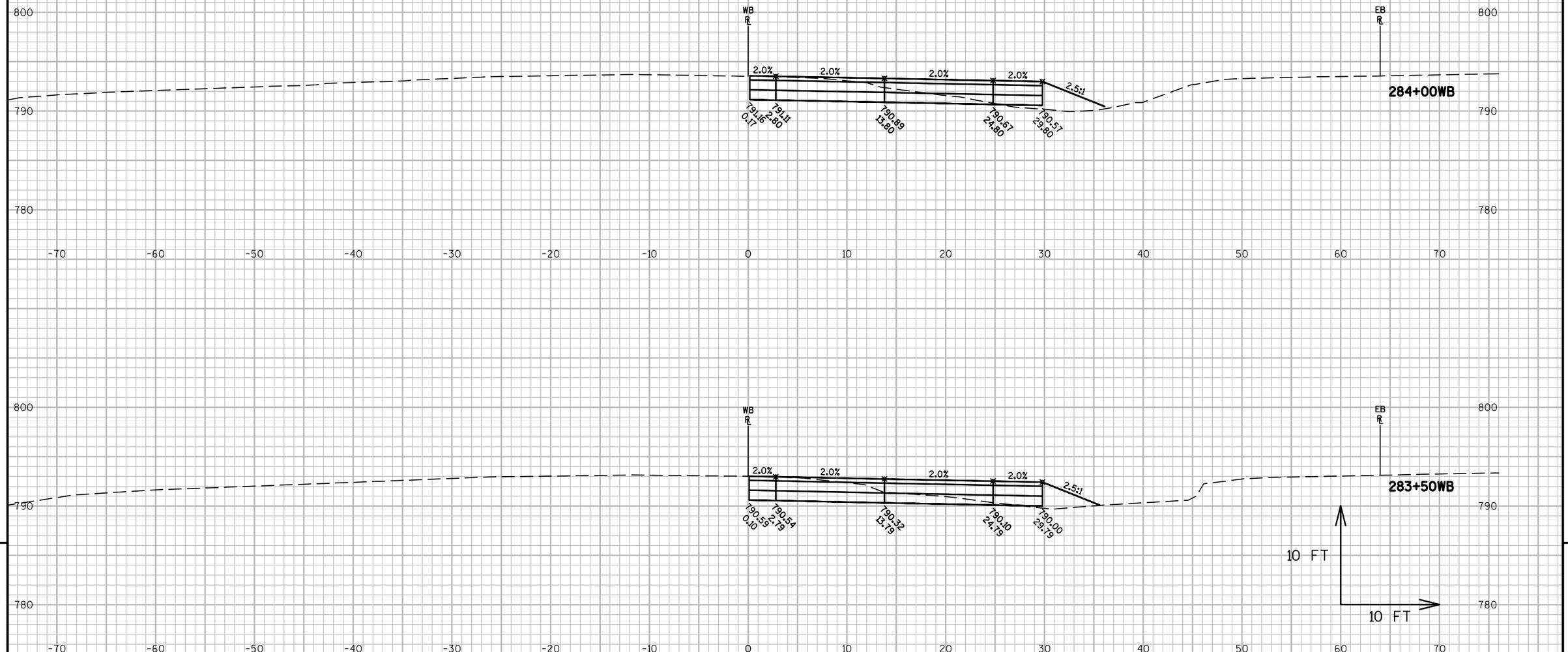

9

9

PROJECT NO: 1517-75-85	HWY: STH 441/ USH 10	COUNTY: WINNEBAGO	CROSS SECTIONS: USH 10 WB STAGE 1 WIDENING AND CROSSOVER 2	SHEET 211	E

FILE NAME : S:\PDS\C3D\WIS441\15177570_72_77_85\SHEETSPLAN\1517-75-85\090200-XS\15177585-XSE.DWG
LAYOUT NAME - 090258-XS

PLOT DATE : 8/19/2016 10:54 AM PLOT BY : VICKMAN, GARRETT T PLOT NAME :

PLOT SCALE : 1 IN:10 FT

WISDOT/CADDS SHEET 49

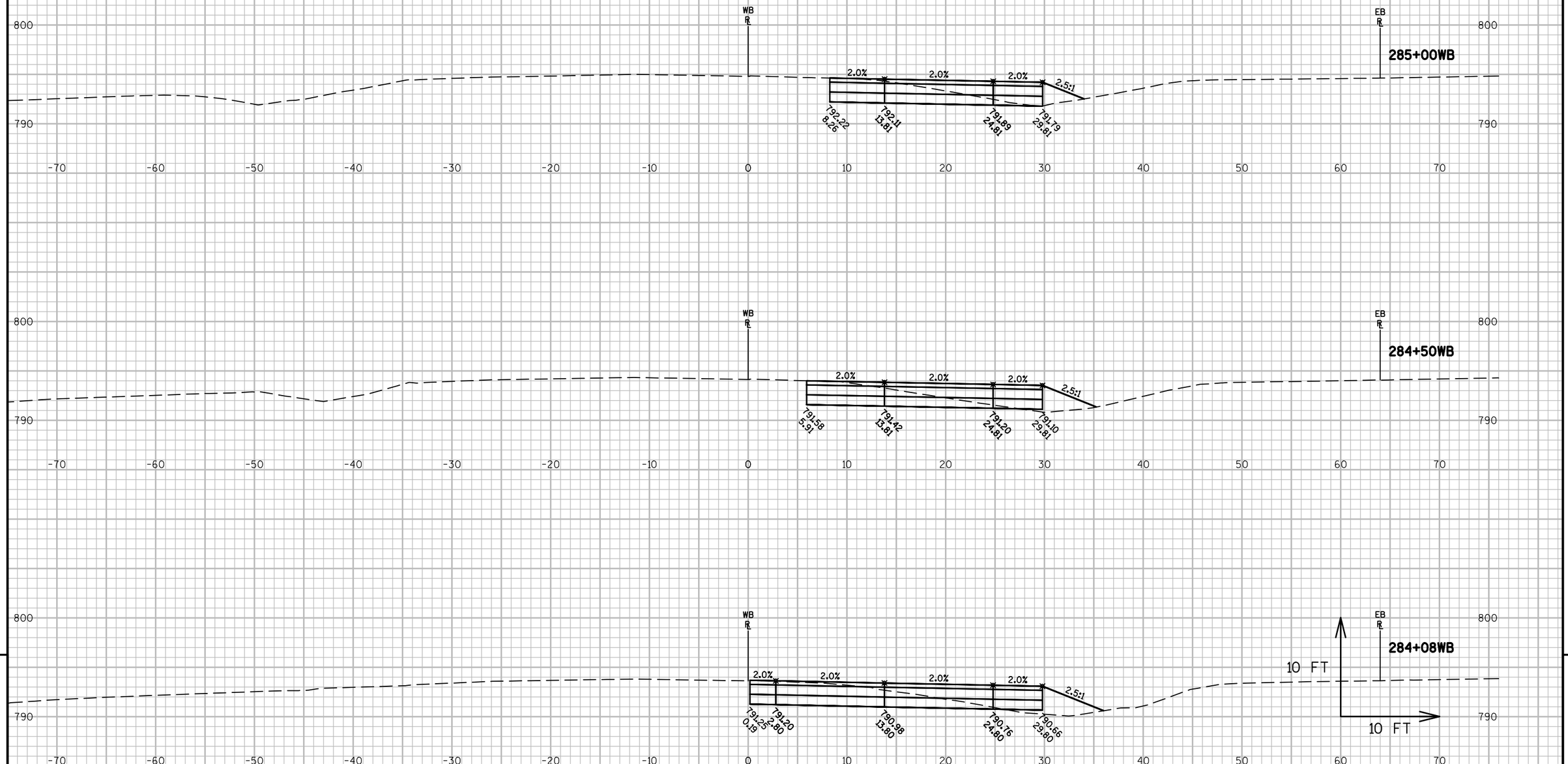

9

9

PROJECT NO: 1517-75-85	HWY: STH 441/ USH 10	COUNTY: WINNEBAGO	CROSS SECTIONS: USH 10 WB STAGE 1 WIDENING AND CROSSOVER 2	SHEET 212	E

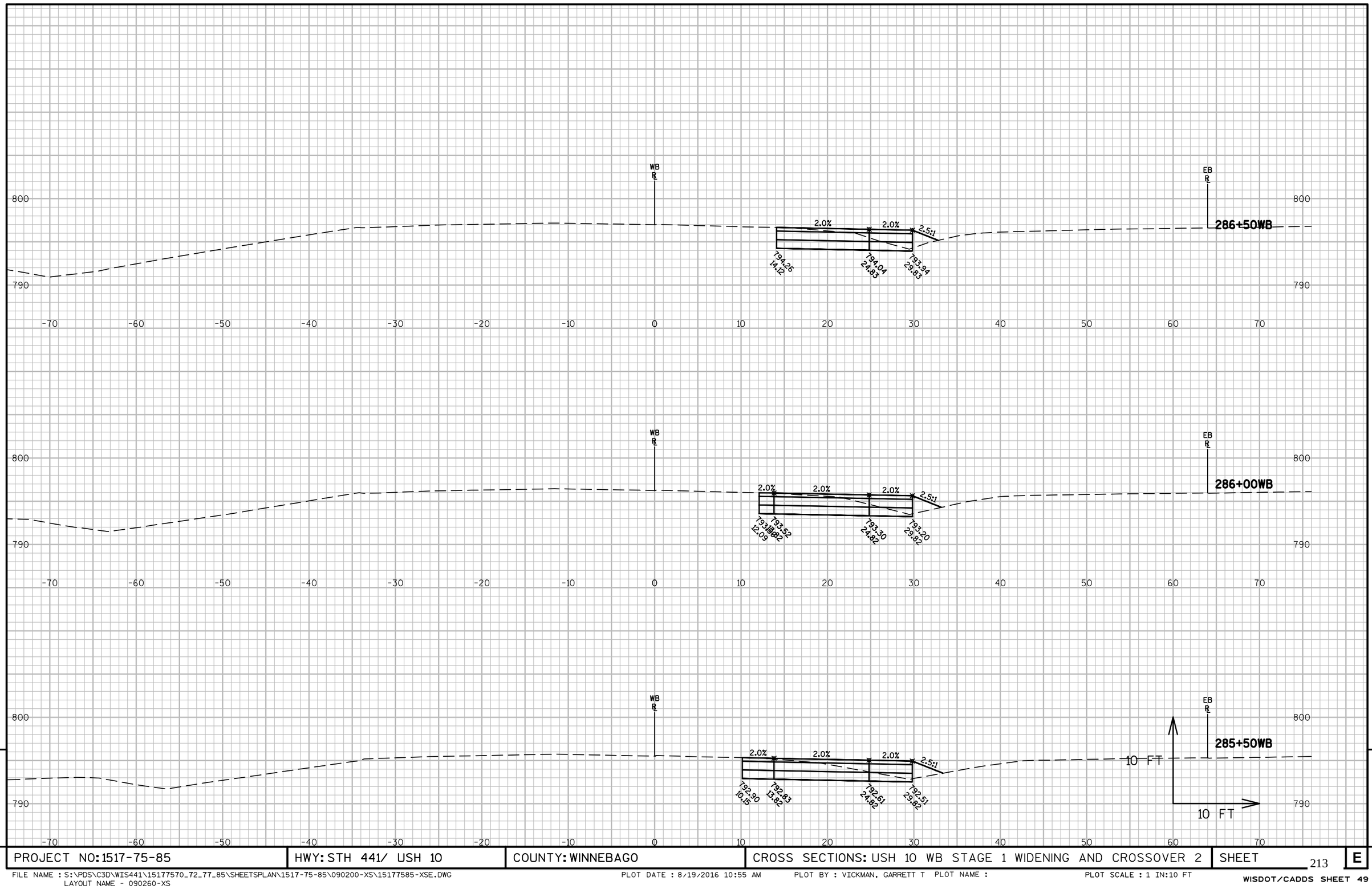

9

9

PROJECT NO: 1517-75-85	HWY: STH 441/ USH 10	COUNTY: WINNEBAGO	CROSS SECTIONS: USH 10 WB STAGE 1 WIDENING AND CROSSOVER 2	SHEET 213	E

FILE NAME : S:\PDS\C3D\WIS441\15177570_72_77_85\SHEETSPLAN\1517-75-85\090200-XS\15177585-XSE.DWG
LAYOUT NAME - 090260-XS

PLOT DATE : 8/19/2016 10:55 AM PLOT BY : VICKMAN, GARRETT T PLOT NAME : PLOT SCALE : 1 IN:10 FT

WISDOT/CADDS SHEET 49

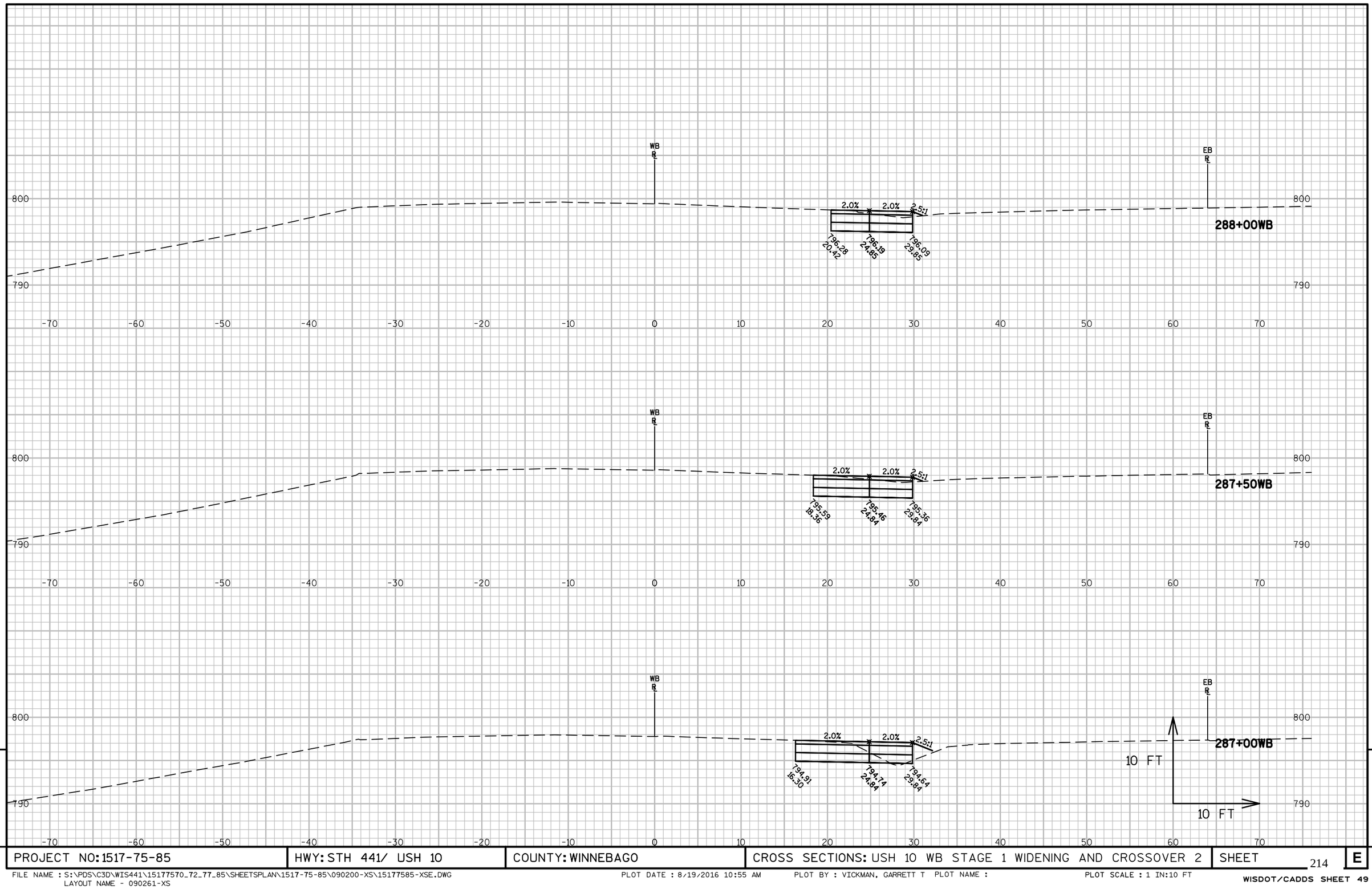

9

9

PROJECT NO: 1517-75-85	HWY: STH 441/ USH 10	COUNTY: WINNEBAGO	CROSS SECTIONS: USH 10 WB STAGE 1 WIDENING AND CROSSOVER 2	SHEET 214	E

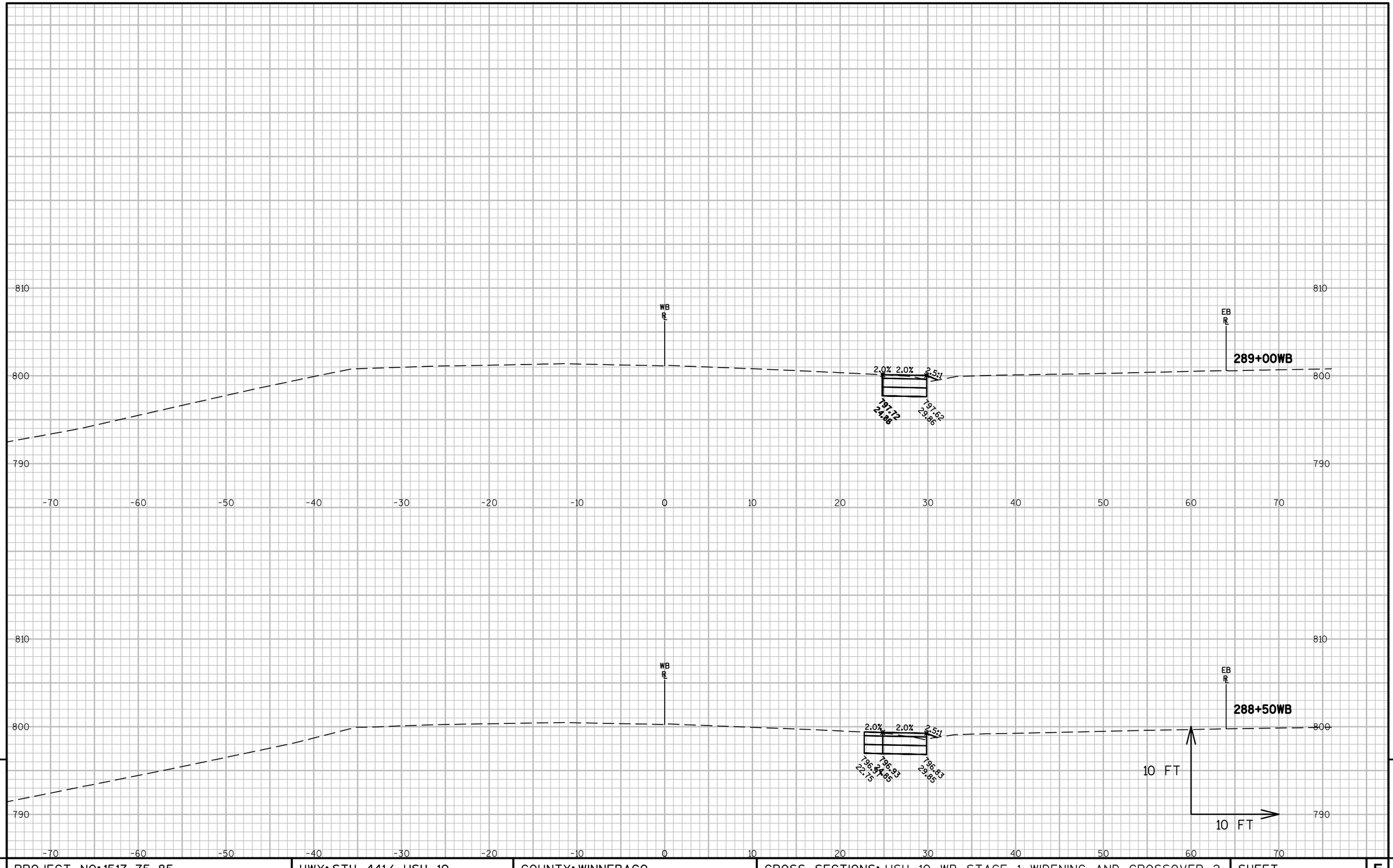

9

9

PROJECT NO: 1517-75-85	HWY: STH 441/ USH 10	COUNTY: WINNEBAGO	CROSS SECTIONS: USH 10 WB STAGE 1 WIDENING AND CROSSOVER 2	SHEET 215	E

FILE NAME : S:\PDS\C3D\WIS441\15177570_72_77_85\SHEETSPLAN\1517-75-85\090200-XS\15177585-XSE.DWG
LAYOUT NAME - 090262-XS

PLOT DATE : 8/19/2016 10:55 AM PLOT BY : VICKMAN, GARRETT T PLOT NAME : PLOT SCALE : 1 IN:10 FT

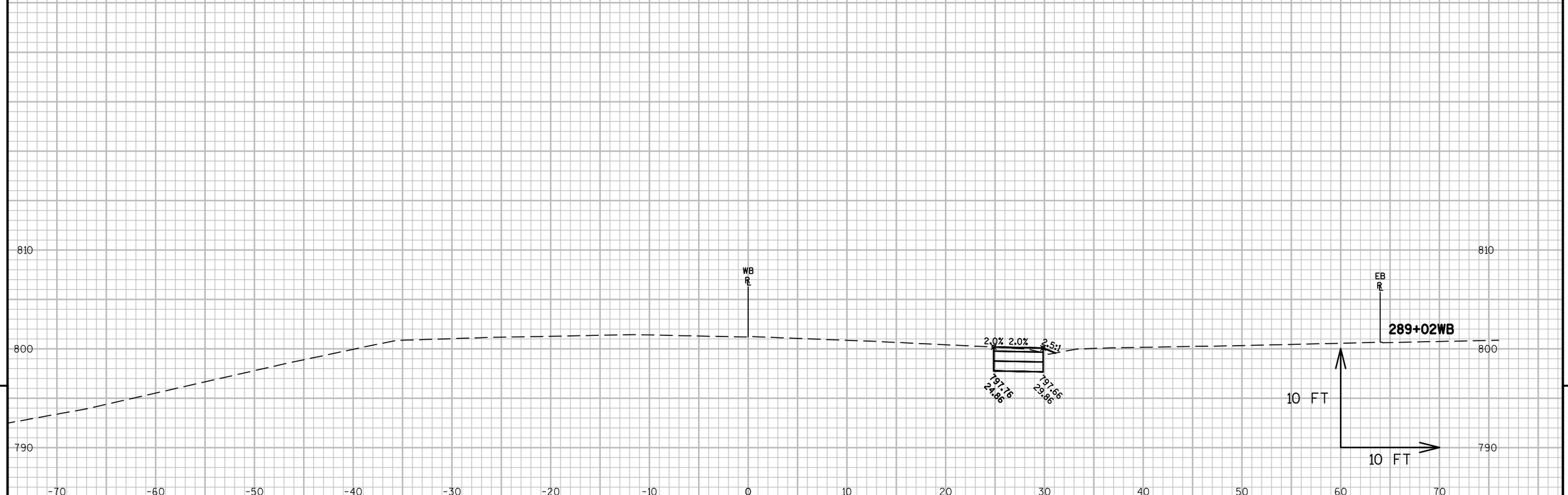

9

9

PROJECT NO: 1517-75-85	HWY: STH 441/ USH 10	COUNTY: WINNEBAGO	CROSS SECTIONS: USH 10 WB STAGE 1 WIDENING AND CROSSOVER 2	SHEET 216	E

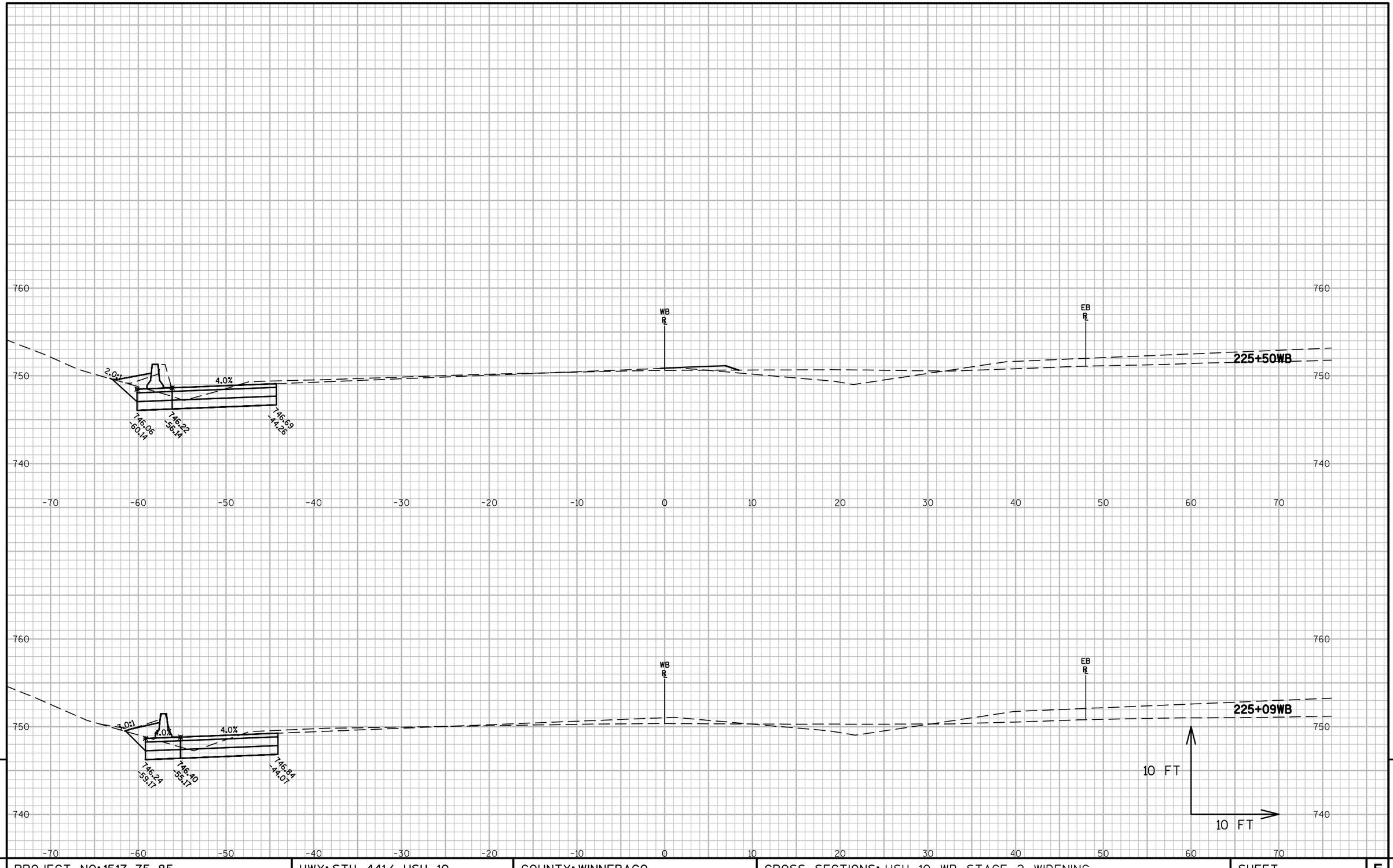

9

9

PROJECT NO: 1517-75-85	HWY: STH 441/ USH 10	COUNTY: WINNEBAGO	CROSS SECTIONS: USH 10 WB STAGE 2 WIDENING	SHEET 217	E

FILE NAME : S:\PDS\C3D\WIS441\15177570_72_77_85\SHEETSPLAN\1517-75-85\090200-XS\15177585-XSE.DWG
LAYOUT NAME - 090264-XS

PLOT DATE : 8/24/2016 4:49 PM PLOT BY : VICKMAN, GARRETT T PLOT NAME : PLOT SCALE : 1 IN:10 FT

WISDOT/CADDS SHEET 49

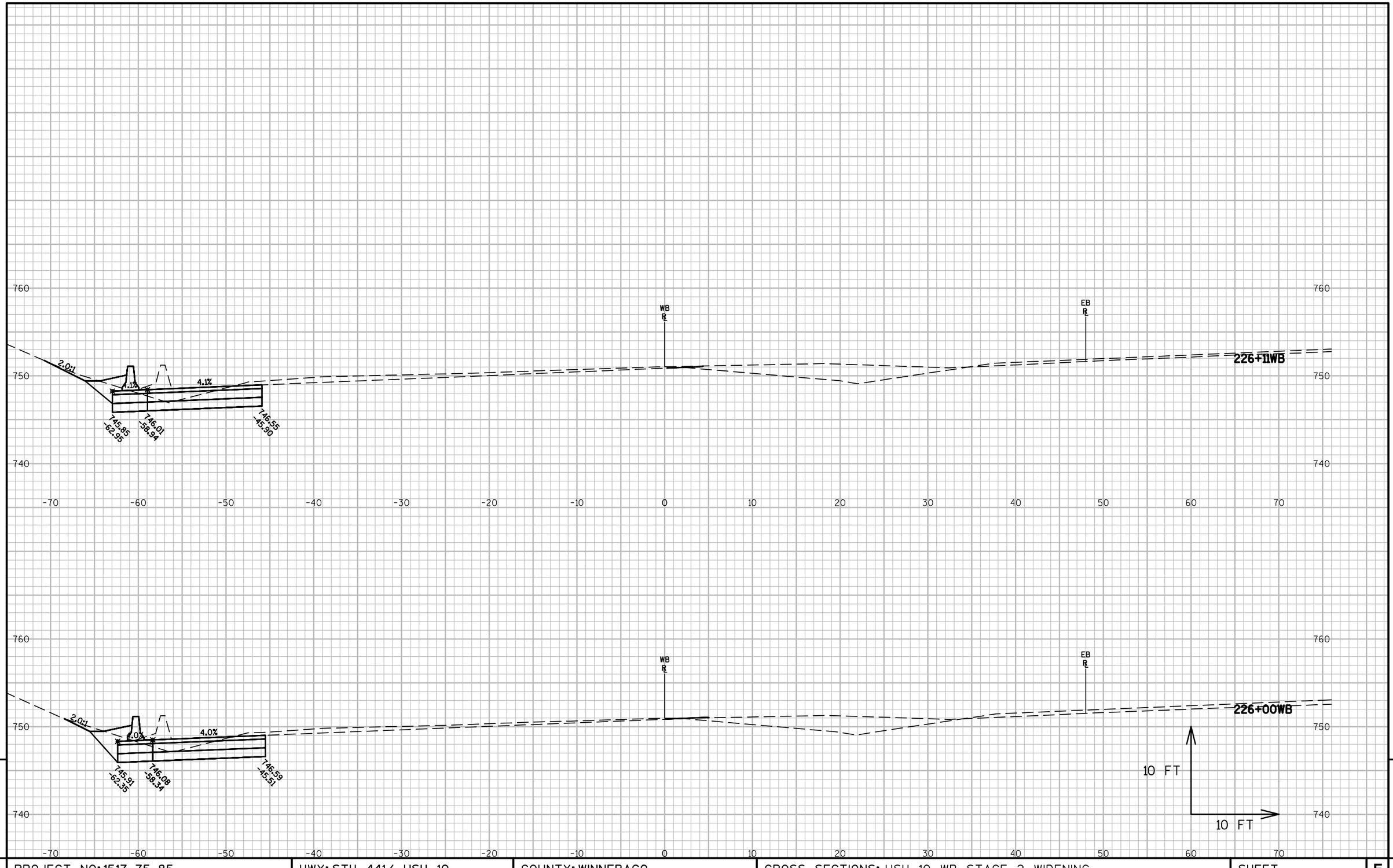

9

9

PROJECT NO: 1517-75-85	HWY: STH 441/ USH 10	COUNTY: WINNEBAGO	CROSS SECTIONS: USH 10 WB STAGE 2 WIDENING	SHEET 218	E

FILE NAME : S:\PDS\C3D\WIS441\15177570_72_77_85\SHEETSPLAN\1517-75-85\090200-XS\15177585-XSE.DWG
LAYOUT NAME - 090265-XS
PLOT DATE : 8/24/2016 4:49 PM PLOT BY : VICKMAN, GARRETT T PLOT NAME : PLOT SCALE : 1 IN:10 FT
WISDOT/CADDS SHEET 49

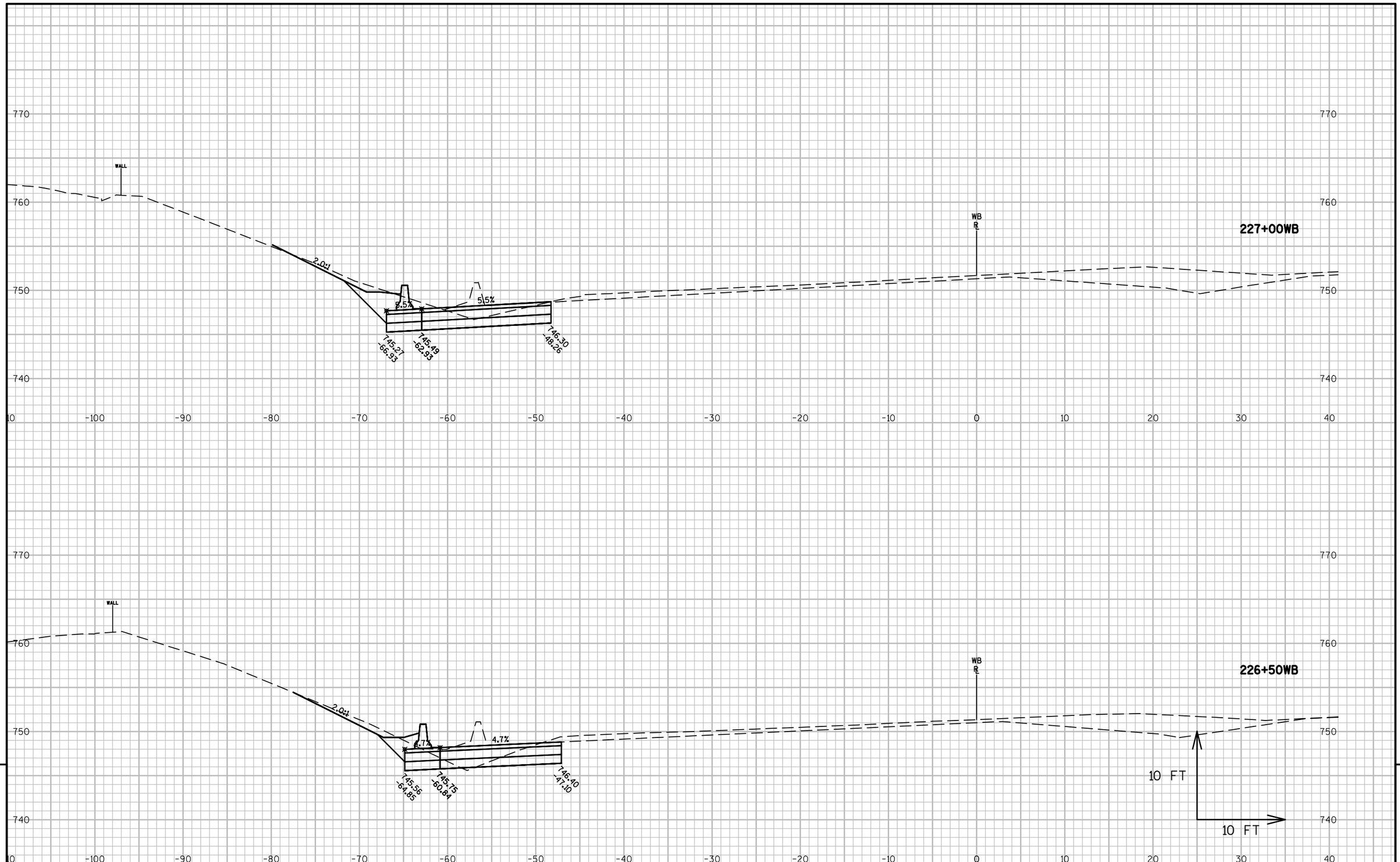

9

9

PROJECT NO: 1517-75-85	HWY: STH 441/ USH 10	COUNTY: WINNEBAGO	CROSS SECTIONS: USH 10 WB STAGE 2 WIDENING	SHEET 219	E

FILE NAME : S:\PDS\C3D\WIS441\15177570_72_77_85\SHEETSPLAN\1517-75-85\090200-XS\15177585-XSE.DWG
LAYOUT NAME - 090266-XS

PLOT DATE : 8/24/2016 4:49 PM PLOT BY : VICKMAN, GARRETT T PLOT NAME : PLOT SCALE : 1 IN:10 FT

WISDOT/CADDS SHEET 49

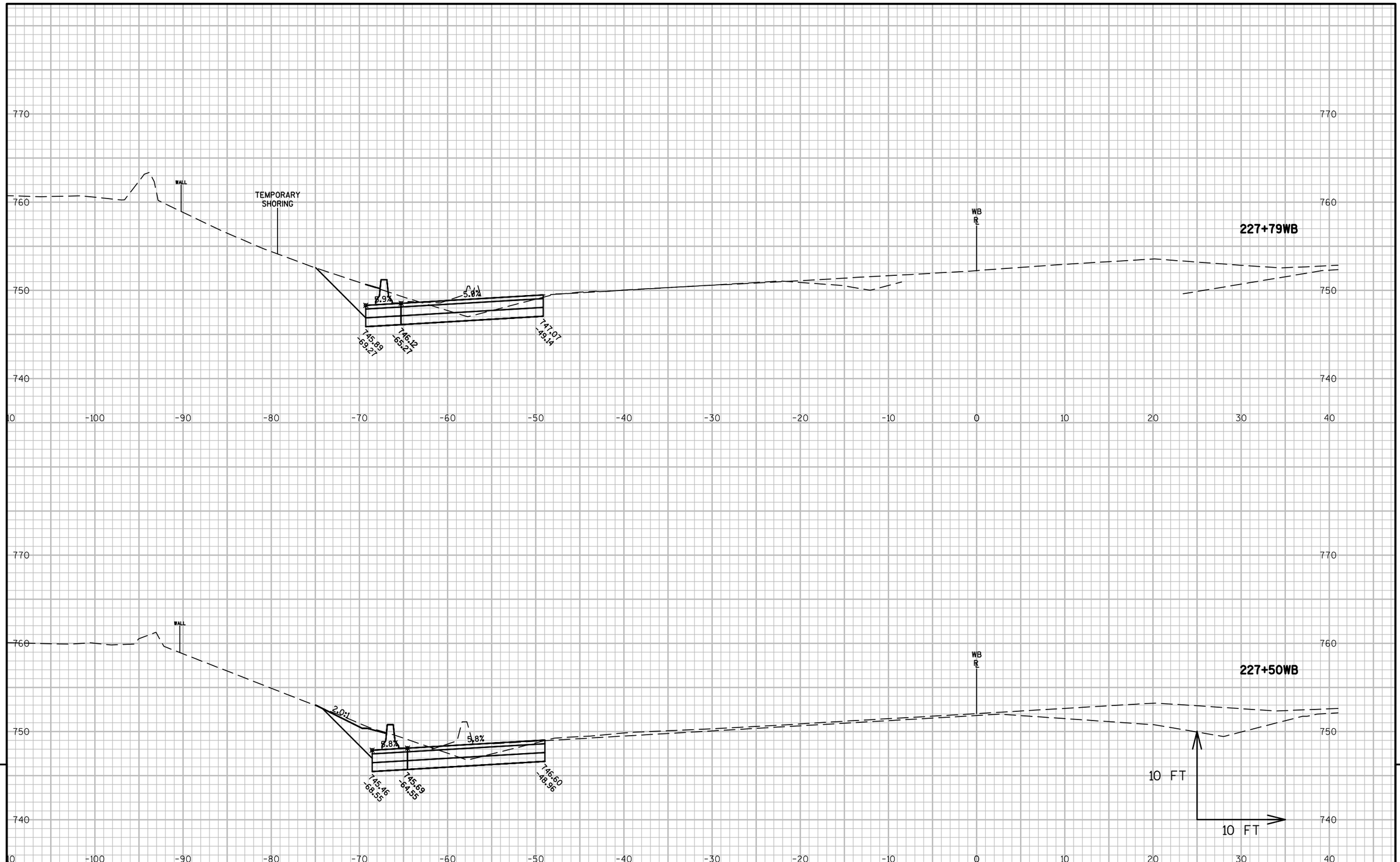

9

9

PROJECT NO: 1517-75-85	HWY: STH 441/ USH 10	COUNTY: WINNEBAGO	CROSS SECTIONS: USH 10 WB STAGE 2 WIDENING	SHEET 220	E

FILE NAME : S:\PDS\C3D\WIS441\15177570_72_77_85\SHEETSPLAN\1517-75-85\090200-XS\15177585-XSE.DWG
LAYOUT NAME - 090267-XS
PLOT DATE : 8/24/2016 4:49 PM
PLOT BY : VICKMAN, GARRETT T PLOT NAME :
PLOT SCALE : 1 IN:10 FT
WISDOT/CADDS SHEET 49

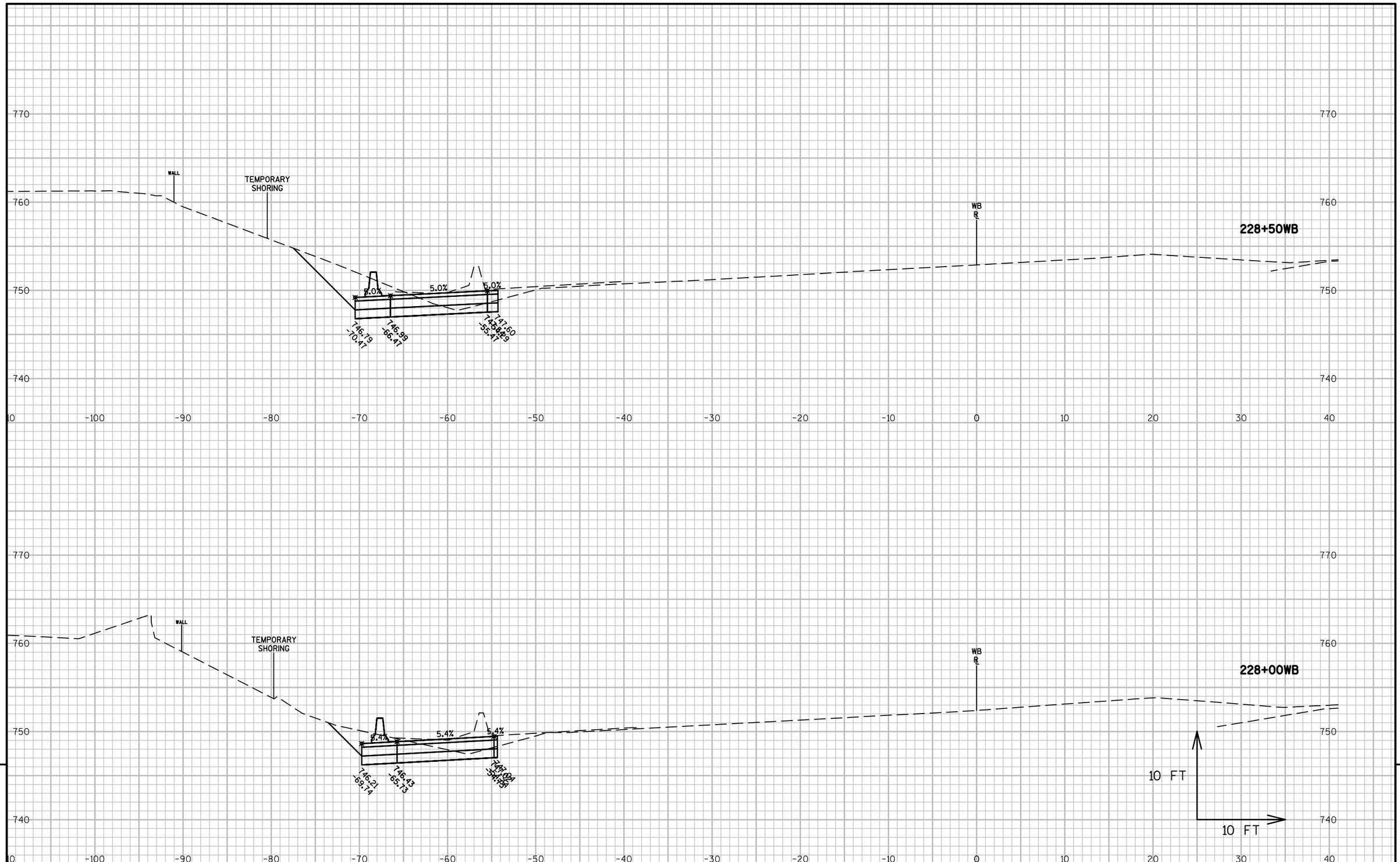

9

9

PROJECT NO: 1517-75-85	HWY: STH 441/ USH 10	COUNTY: WINNEBAGO	CROSS SECTIONS: USH 10 WB STAGE 2 WIDENING	SHEET 221	E

FILE NAME : S:\PDS\C3D\WIS441\15177570_72_77_85\SHEETSPLAN\1517-75-85\090200-XS\15177585-XSE.DWG
LAYOUT NAME - 090268-XS
PLOT DATE : 8/24/2016 4:50 PM
PLOT BY : VICKMAN, GARRETT T PLOT NAME :
PLOT SCALE : 1 IN:10 FT
WISDOT/CADDS SHEET 49

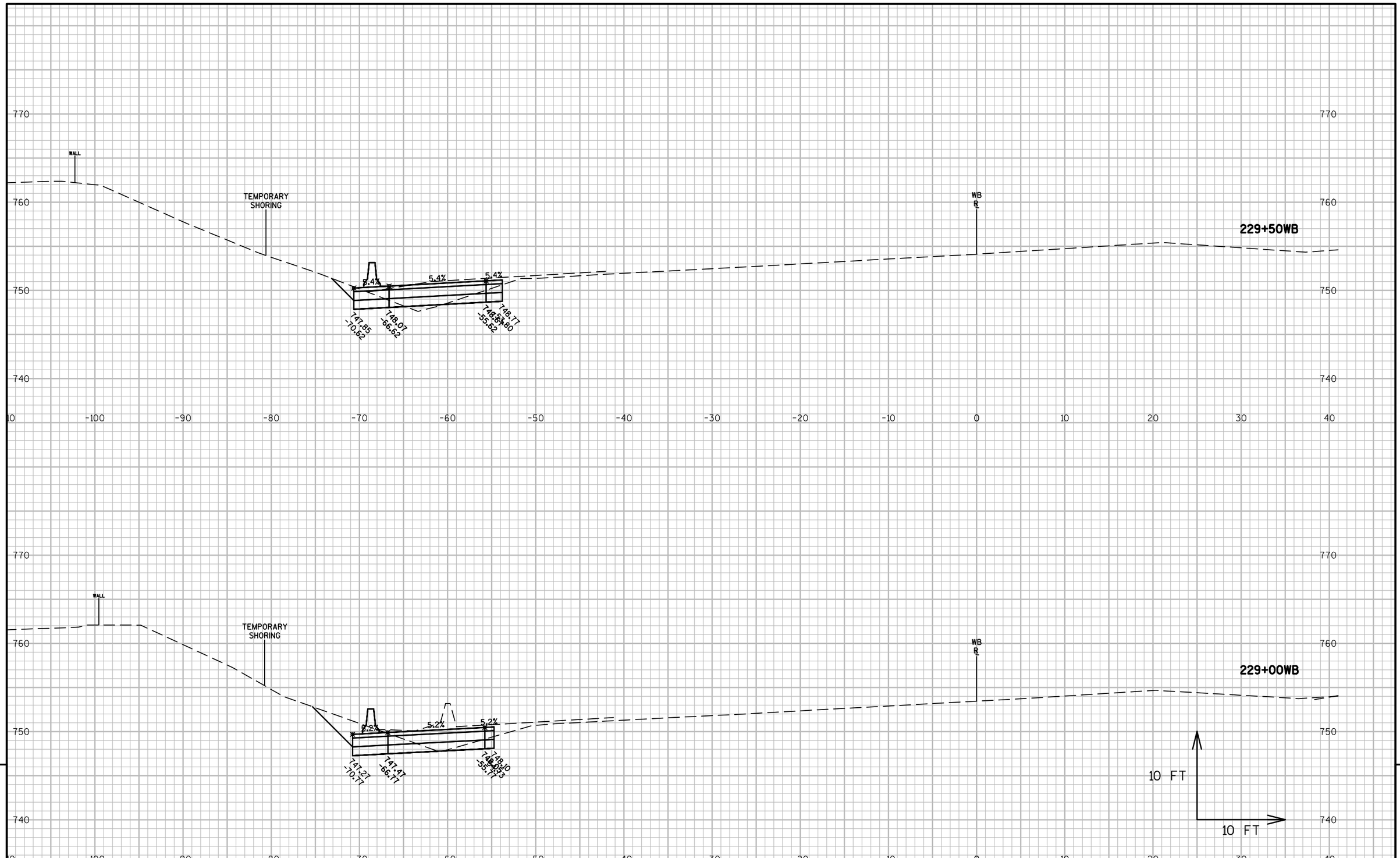

9

9

PROJECT NO: 1517-75-85	HWY: STH 441/ USH 10	COUNTY: WINNEBAGO	CROSS SECTIONS: USH 10 WB STAGE 2 WIDENING	SHEET 222 E

FILE NAME : S:\PDS\C3D\WIS441\15177570_72_77_85\SHEETSPLAN\1517-75-85\090200-XS\15177585-XSE.DWG
LAYOUT NAME - 090269-XS

PLOT DATE : 8/24/2016 4:50 PM PLOT BY : VICKMAN, GARRETT T PLOT NAME : PLOT SCALE : 1 IN:10 FT

WISDOT/CADDS SHEET 49

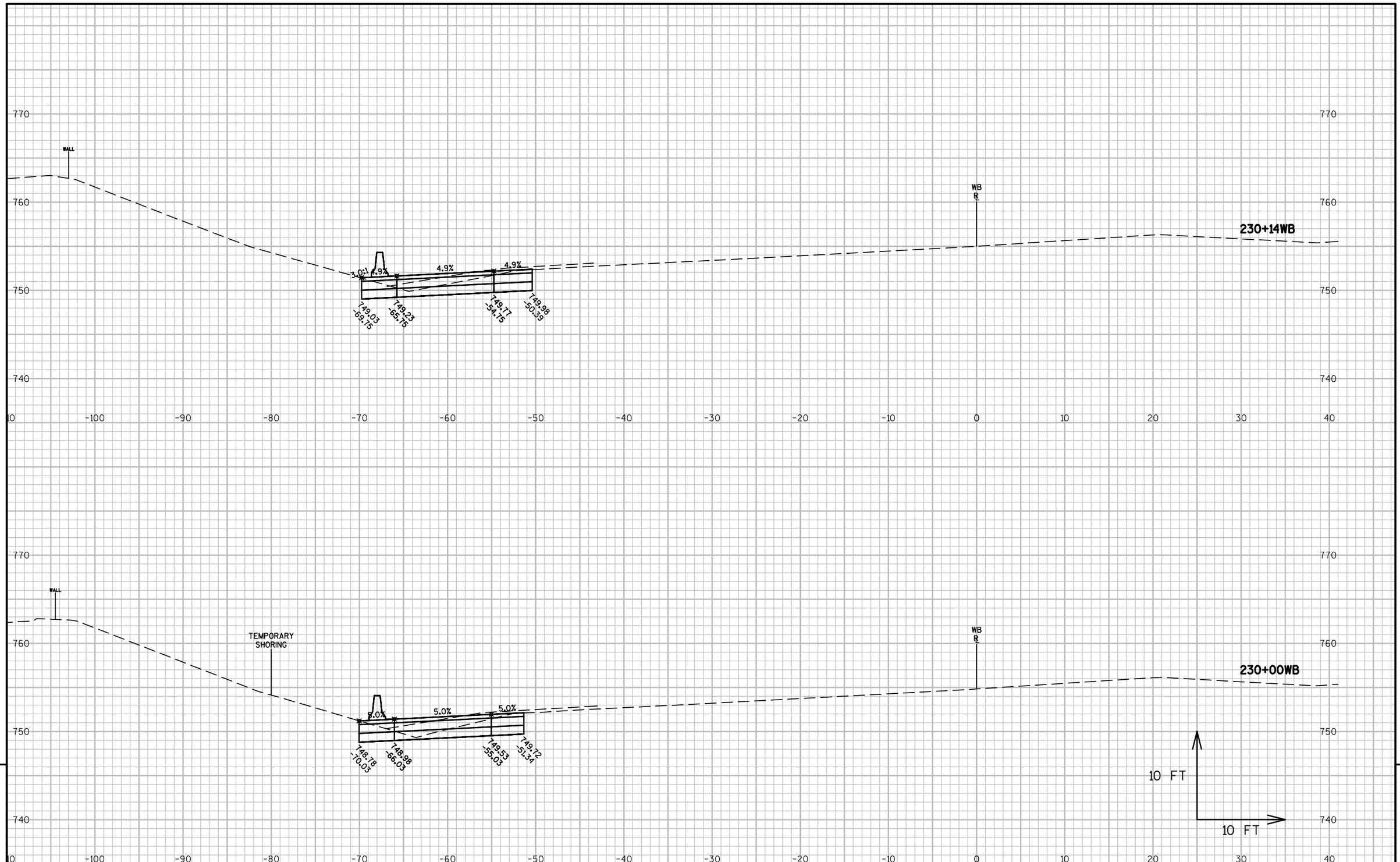

9

9

PROJECT NO: 1517-75-85	HWY: STH 441/ USH 10	COUNTY: WINNEBAGO	CROSS SECTIONS: USH 10 WB STAGE 2 WIDENING	SHEET 223	E

FILE NAME : S:\PDS\C3D\WIS441\15177570_72_77_85\SHEETSPLAN\1517-75-85\090200-XS\15177585-XSE.DWG
LAYOUT NAME - 090270-XS

PLOT DATE : 8/19/2016 10:56 AM PLOT BY : VICKMAN, GARRETT T PLOT NAME : PLOT SCALE : 1 IN:10 FT

WISDOT/CADDS SHEET 49

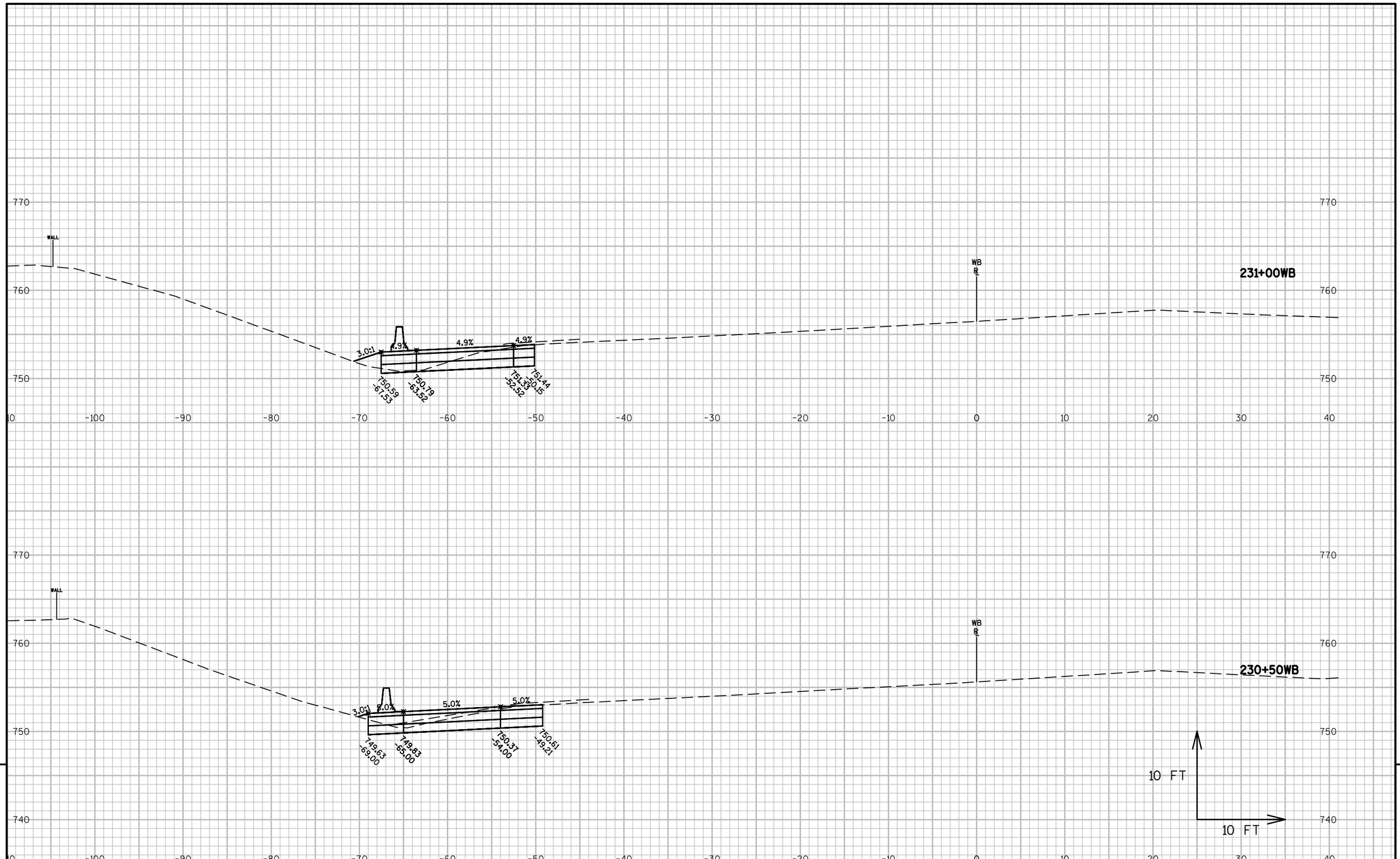

9

9

PROJECT NO: 1517-75-85	HWY: STH 441/ USH 10	COUNTY: WINNEBAGO	CROSS SECTIONS: USH 10 WB STAGE 2 WIDENING	SHEET 224	E

FILE NAME : S:\PDS\C3D\WIS441\15177570_72_77_85\SHEETSPLAN\1517-75-85\090200-XS\15177585-XSE.DWG
LAYOUT NAME - 090271-XS

PLOT DATE : 8/19/2016 10:56 AM PLOT BY : VICKMAN, GARRETT T PLOT NAME : PLOT SCALE : 1 IN:10 FT

WISDOT/CADDS SHEET 49

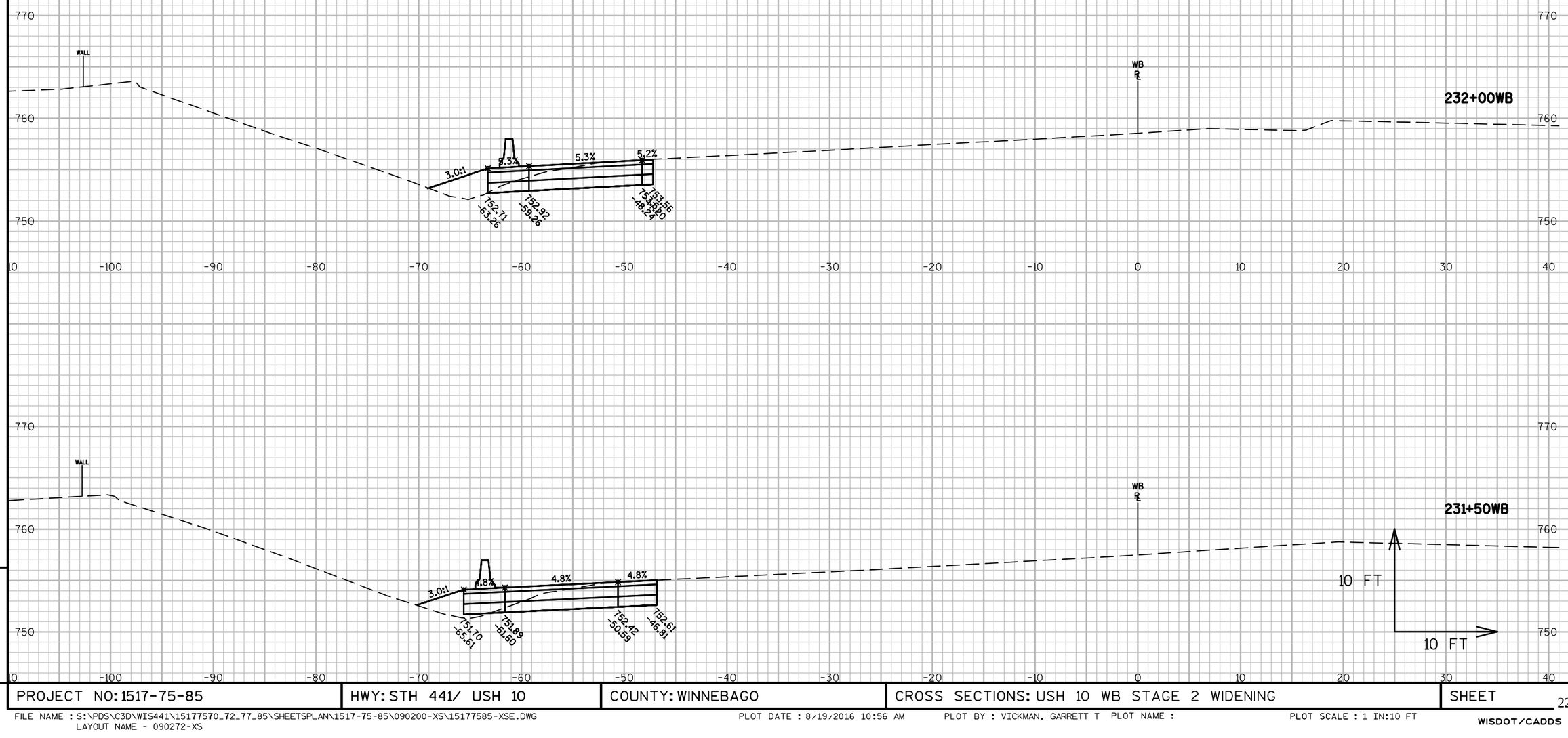

9

9

PROJECT NO: 1517-75-85	HWY: STH 441/ USH 10	COUNTY: WINNEBAGO	CROSS SECTIONS: USH 10 WB STAGE 2 WIDENING	SHEET 225	E

FILE NAME : S:\PDS\C3D\WIS441\15177570_72_77_85\SHEETSPLAN\1517-75-85\090200-XS\15177585-XSE.DWG
LAYOUT NAME - 090272-XS

PLOT DATE : 8/19/2016 10:56 AM PLOT BY : VICKMAN, GARRETT T PLOT NAME : PLOT SCALE : 1 IN:10 FT

WISDOT/CADDS SHEET 49

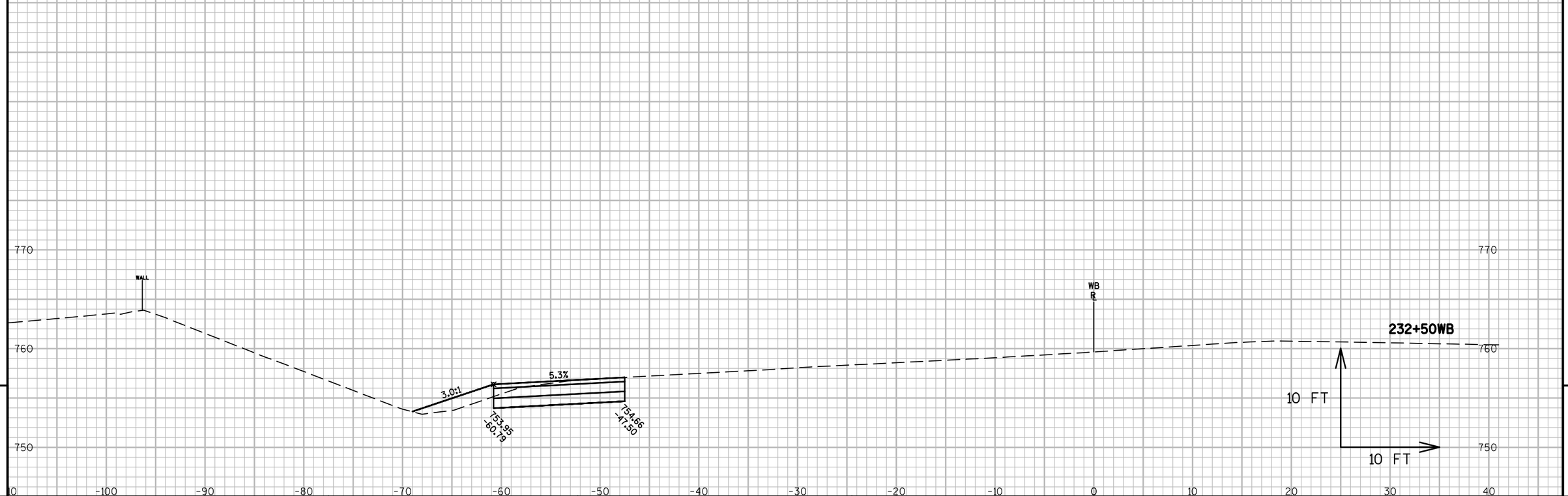

9

9

PROJECT NO: 1517-75-85	HWY: STH 441/ USH 10	COUNTY: WINNEBAGO	CROSS SECTIONS: USH 10 WB STAGE 2 WIDENING	SHEET 226	E

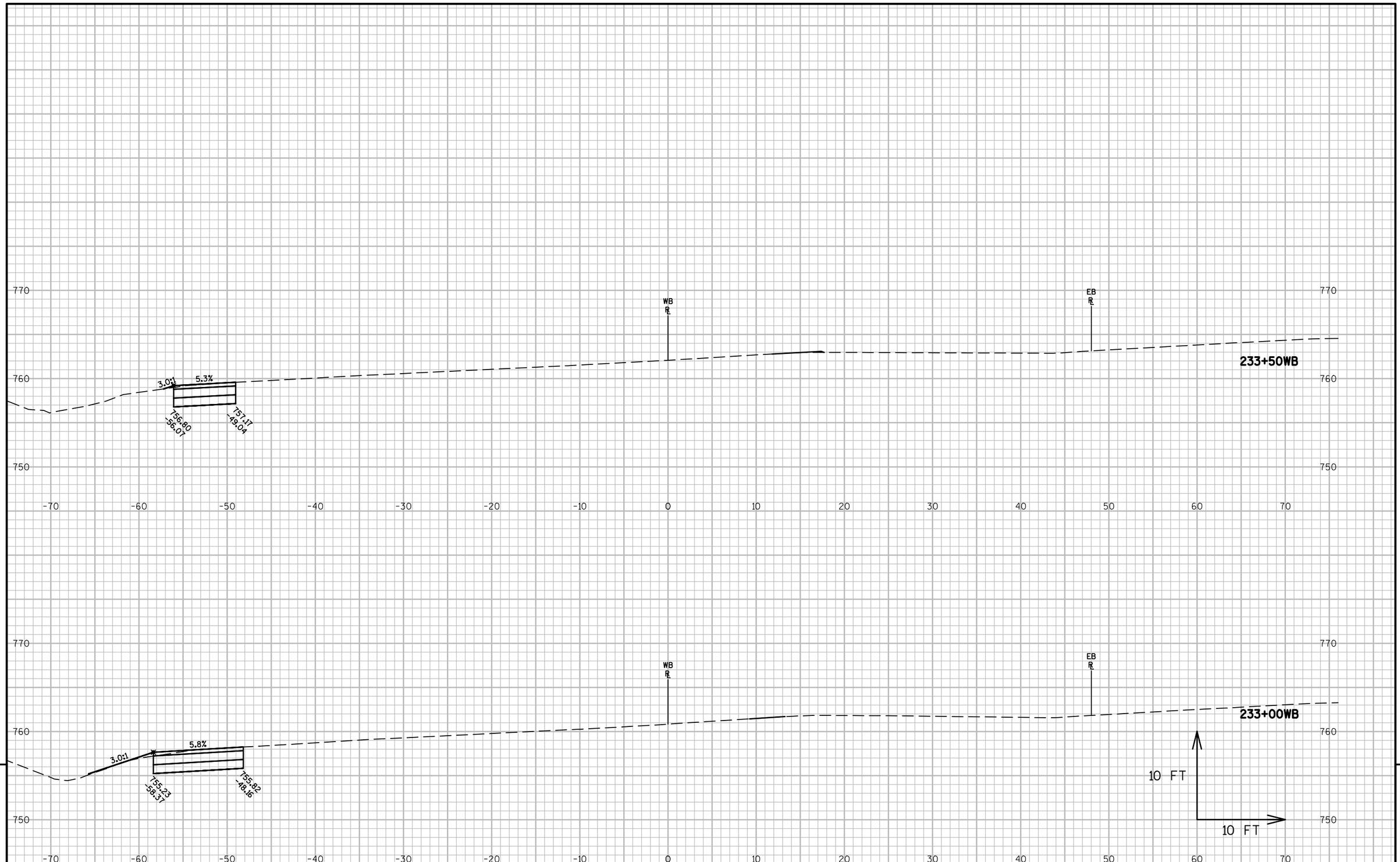

9

9

PROJECT NO: 1517-75-85	HWY: STH 441/ USH 10	COUNTY: WINNEBAGO	CROSS SECTIONS: USH 10 WB STAGE 2 WIDENING	SHEET 227	E

FILE NAME : S:\PDS\C3D\WIS441\15177570_72_77_85\SHEETSPLAN\1517-75-85\090200-XS\15177585-XSE.DWG
LAYOUT NAME - 090274-XS

PLOT DATE : 8/19/2016 10:57 AM PLOT BY : VICKMAN, GARRETT T PLOT NAME : PLOT SCALE : 1 IN:10 FT

WISDOT/CADDS SHEET 49

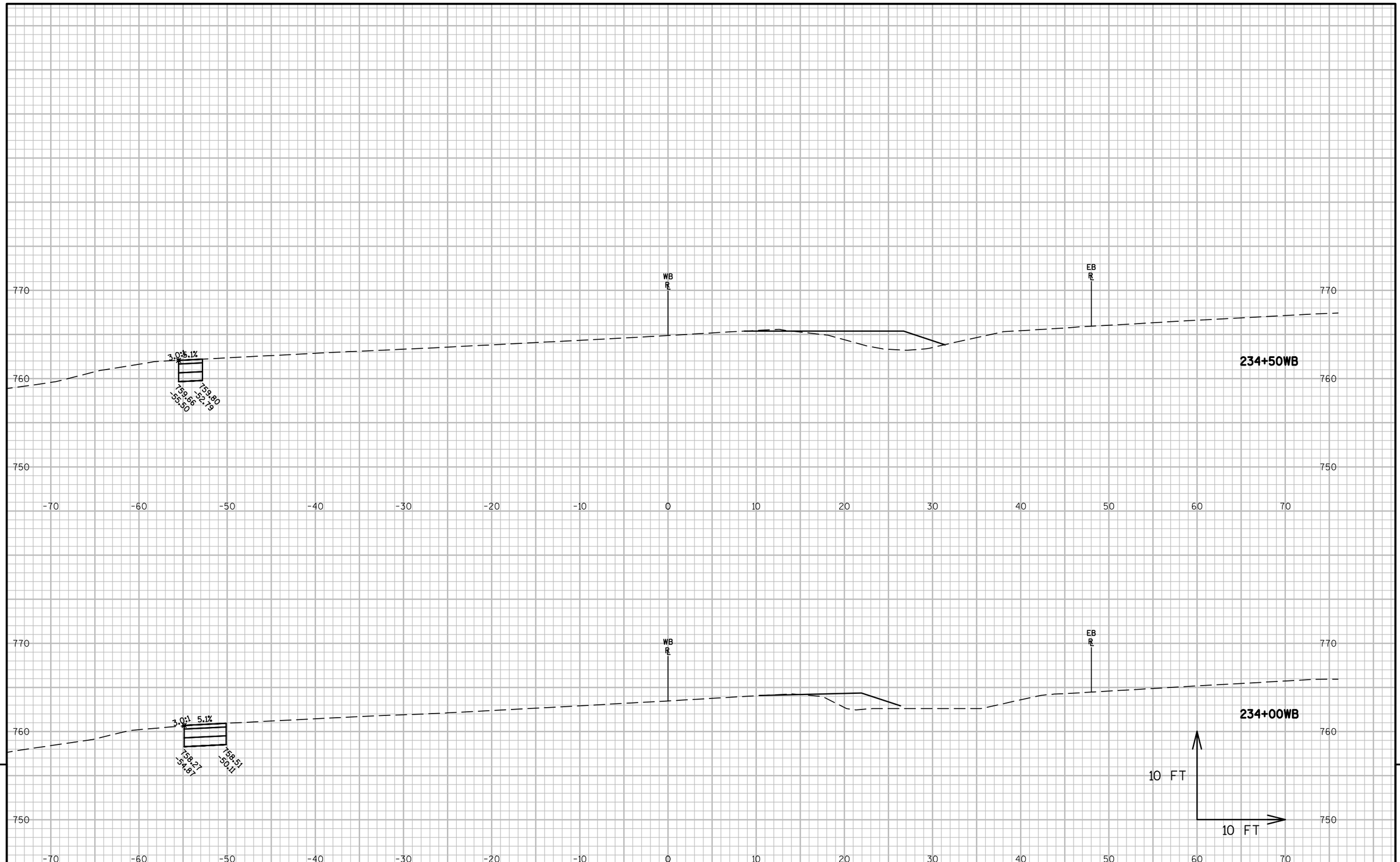

9

9

PROJECT NO: 1517-75-85	HWY: STH 441/ USH 10	COUNTY: WINNEBAGO	CROSS SECTIONS: USH 10 WB STAGE 2 WIDENING	SHEET 228	E

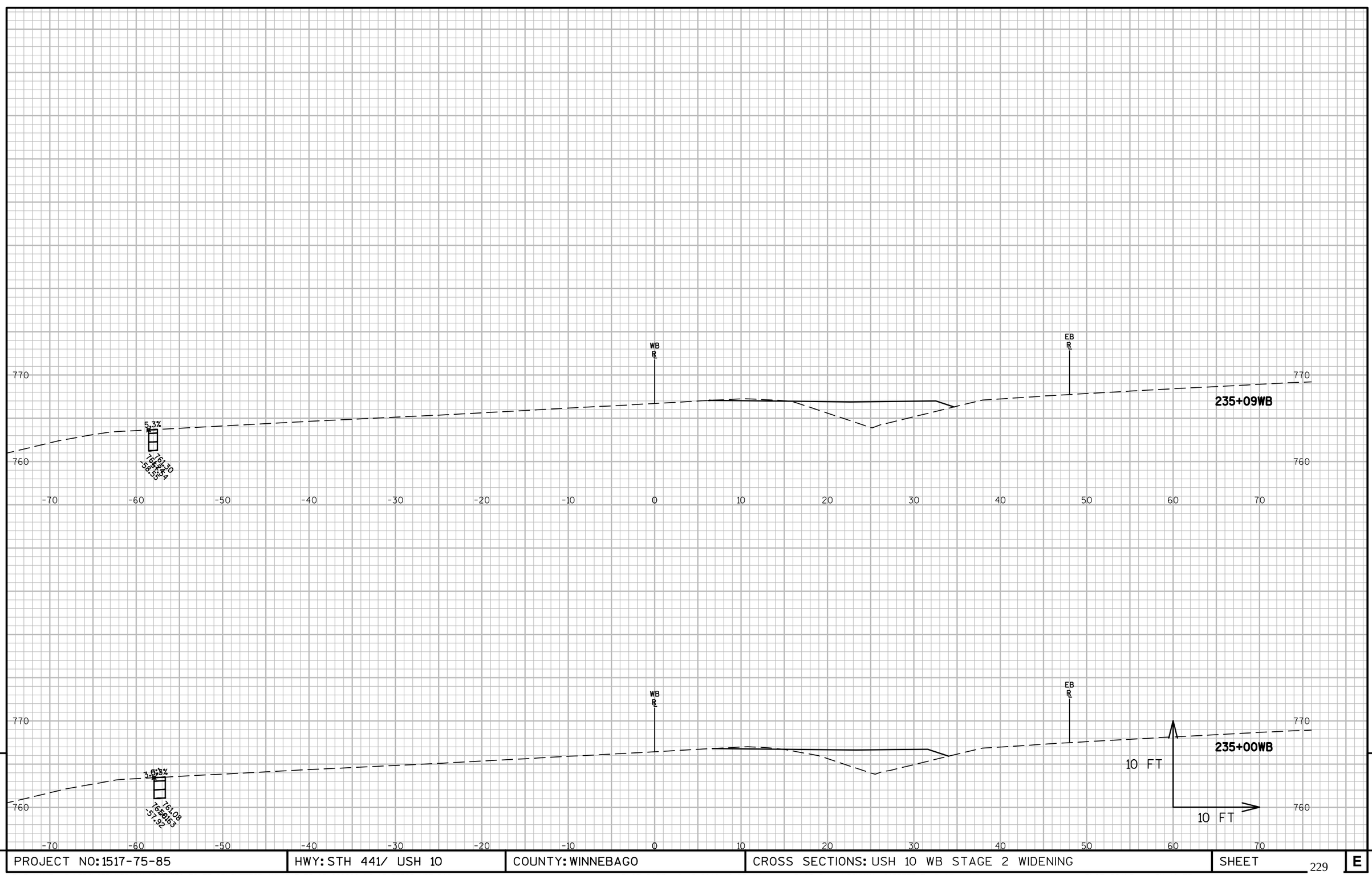

9

9

PROJECT NO: 1517-75-85	HWY: STH 441/ USH 10	COUNTY: WINNEBAGO	CROSS SECTIONS: USH 10 WB STAGE 2 WIDENING	SHEET 229	E

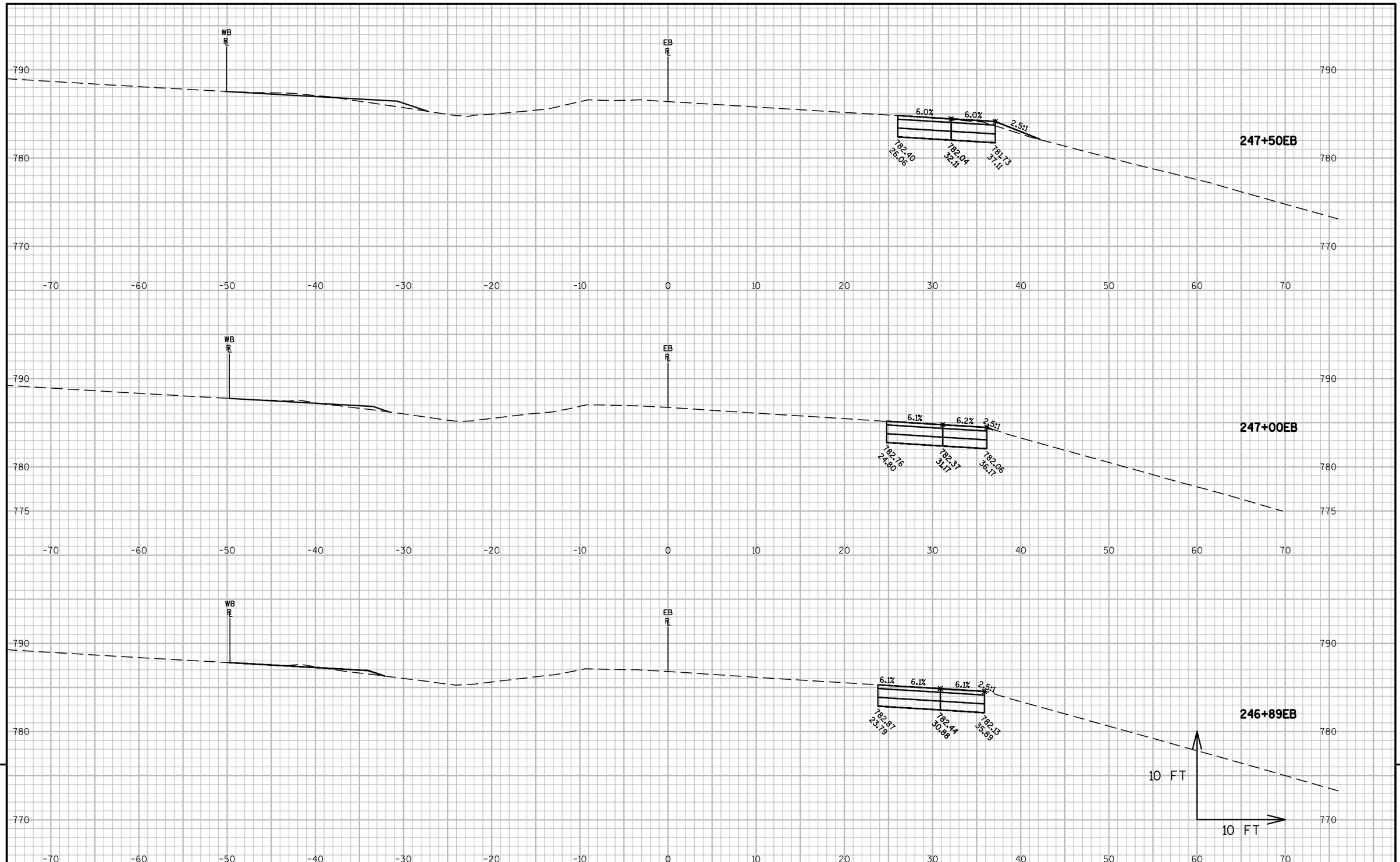

9

9

PROJECT NO: 1517-75-85	HWY: STH 441/ USH 10	COUNTY: WINNEBAGO	CROSS SECTIONS: USH 10 EB STAGE 2 WIDENING 1	SHEET 230	E

FILE NAME : S:\PDS\C3D\WIS441\15177570_72_77_85\SHEETSPLAN\1517-75-85\090200-XS\15177585-XSE.DWG
LAYOUT NAME - 090277-XS

PLOT DATE : 8/19/2016 10:57 AM PLOT BY : VICKMAN, GARRETT T PLOT NAME : PLOT SCALE : 1 IN:10 FT

WISDOT/CADDS SHEET 49

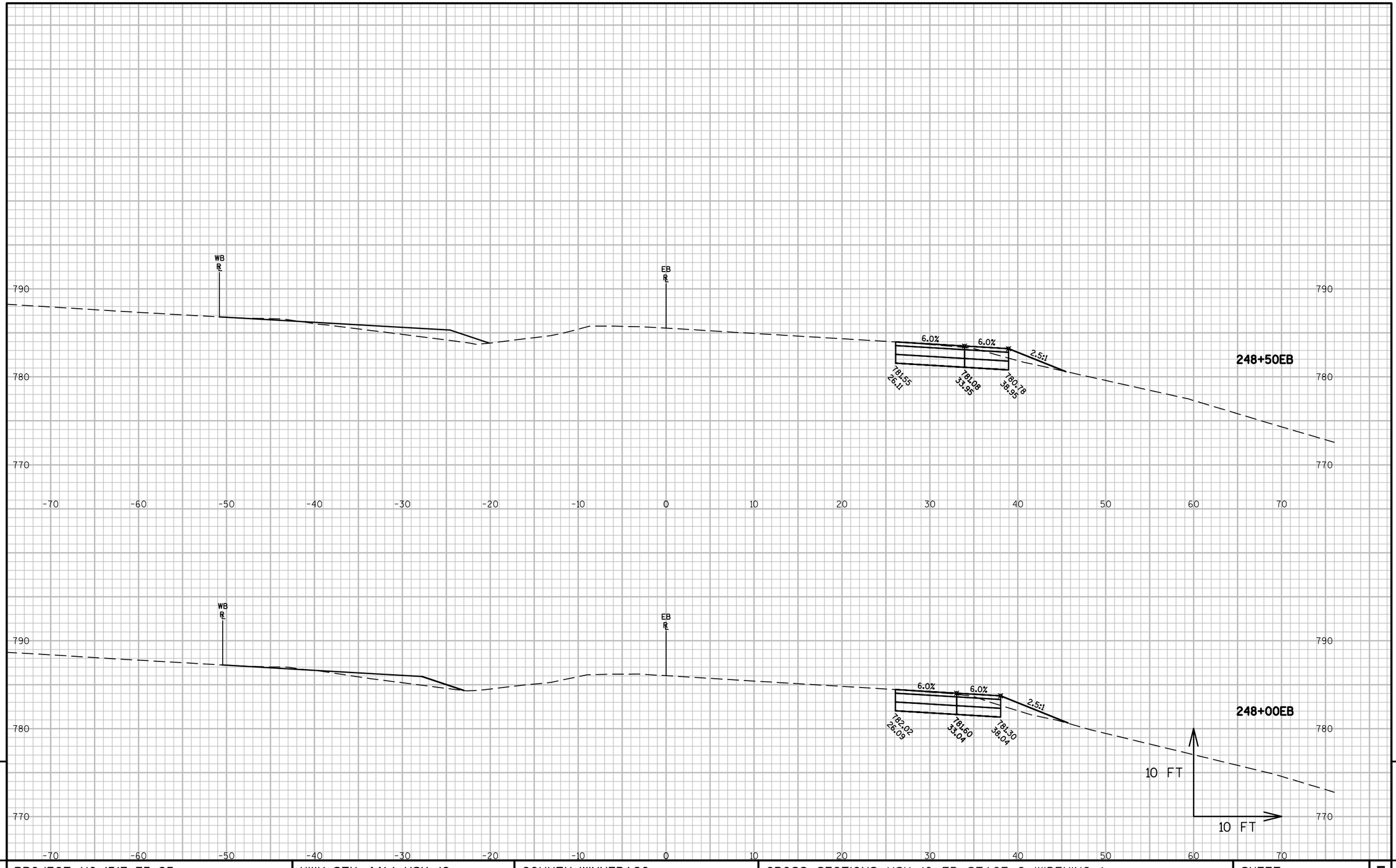

9

9

PROJECT NO: 1517-75-85	HWY: STH 441/ USH 10	COUNTY: WINNEBAGO	CROSS SECTIONS: USH 10 EB STAGE 2 WIDENING 1	SHEET 231	E

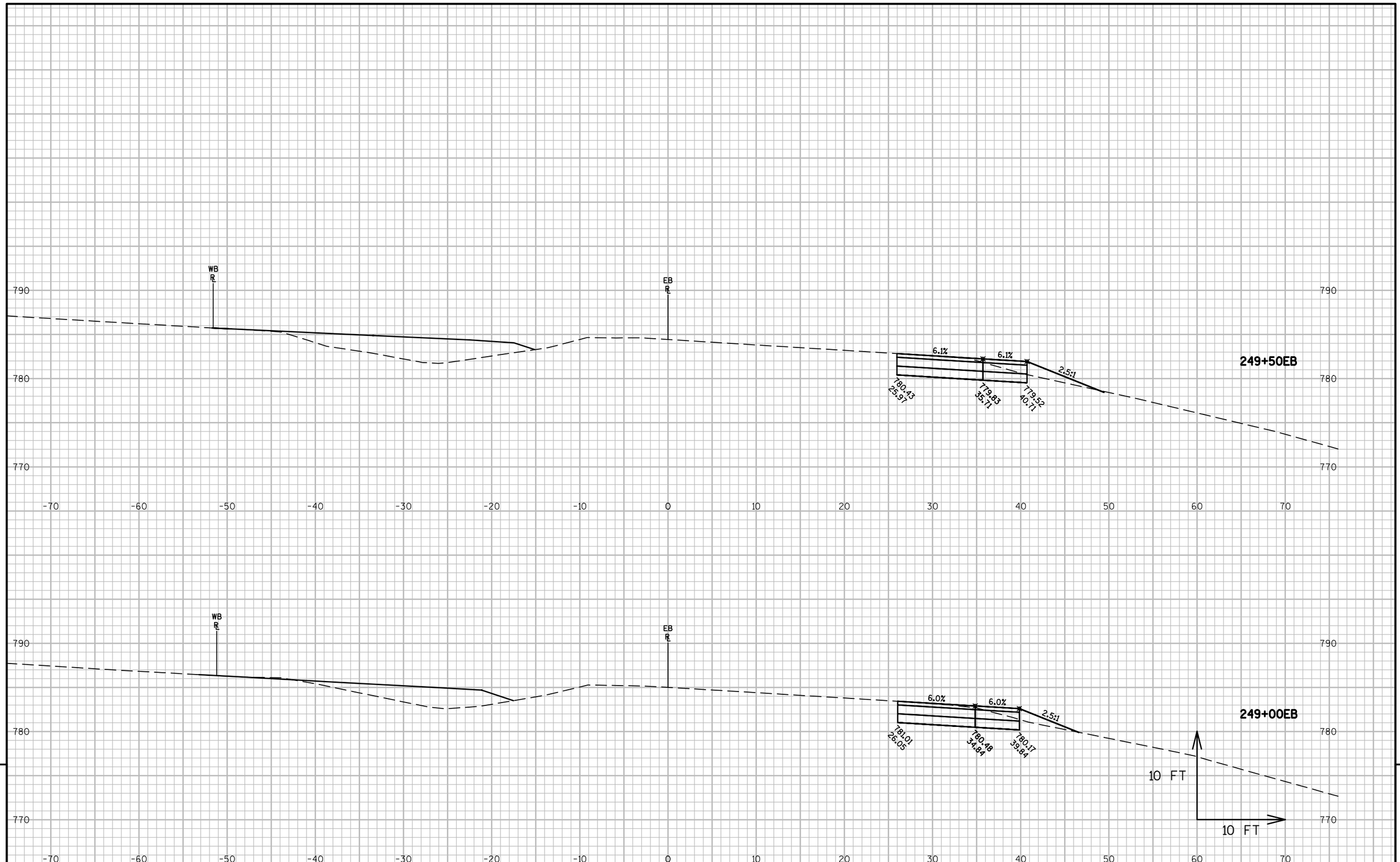

9

9

PROJECT NO: 1517-75-85	HWY: STH 441/ USH 10	COUNTY: WINNEBAGO	CROSS SECTIONS: USH 10 EB STAGE 2 WIDENING 1	SHEET 232 E

FILE NAME : S:\PDS\C3D\WIS441\15177570_72_77_85\SHEETSPLAN\1517-75-85\090200-XS\15177585-XSE.DWG
LAYOUT NAME - 090279-XS

PLOT DATE : 8/19/2016 10:57 AM PLOT BY : VICKMAN, GARRETT T PLOT NAME : PLOT SCALE : 1 IN:10 FT

WISDOT/CADDS SHEET 49

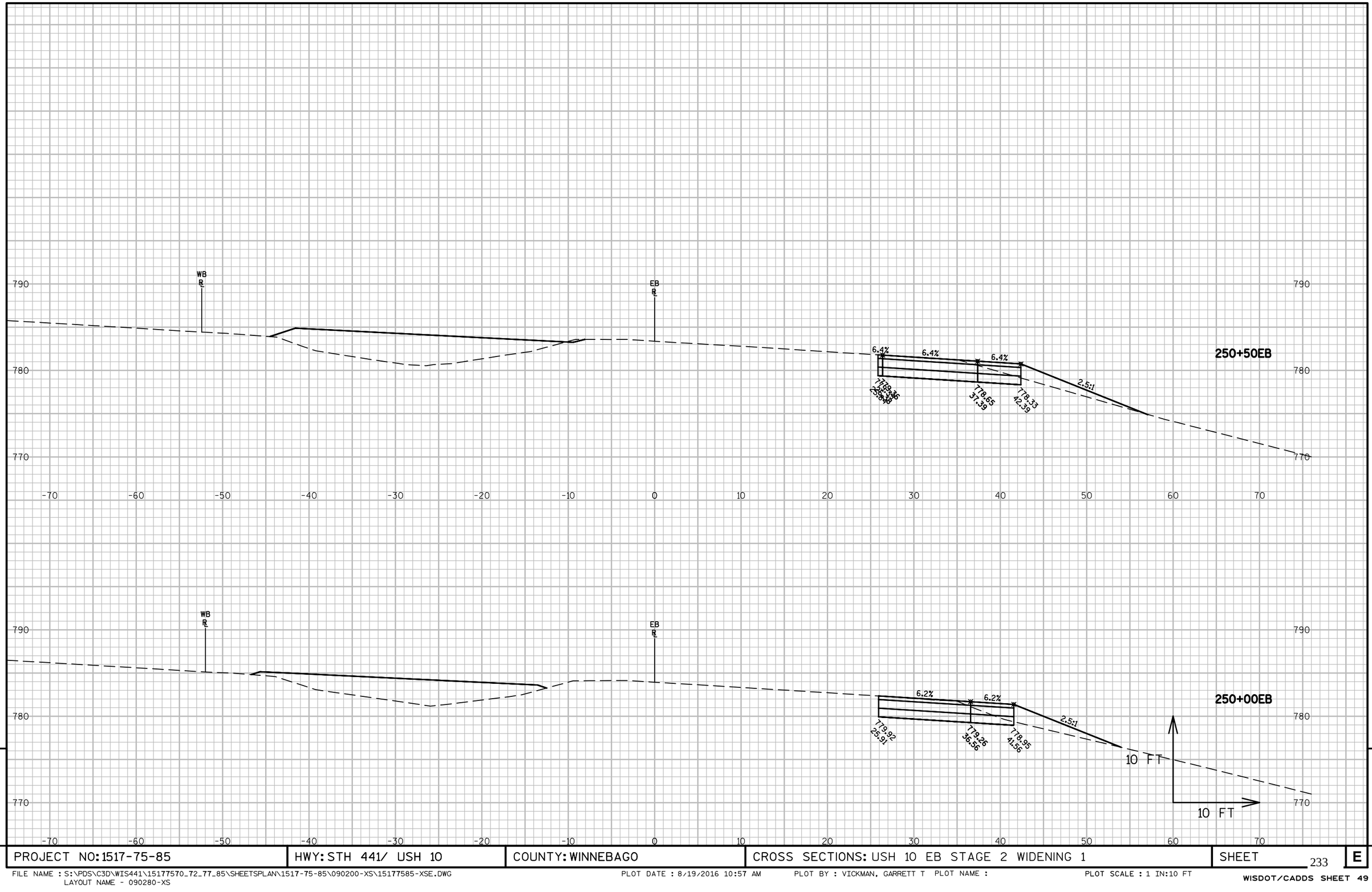

9

9

PROJECT NO: 1517-75-85	HWY: STH 441/ USH 10	COUNTY: WINNEBAGO	CROSS SECTIONS: USH 10 EB STAGE 2 WIDENING 1	SHEET 233	E

FILE NAME : S:\PDS\C3D\WIS441\15177570_72_77_85\SHEETSPLAN\1517-75-85\090200-XS\15177585-XSE.DWG
LAYOUT NAME - 090280-XS

PLOT DATE : 8/19/2016 10:57 AM PLOT BY : VICKMAN, GARRETT T PLOT NAME : PLOT SCALE : 1 IN:10 FT

WISDOT/CADDS SHEET 49

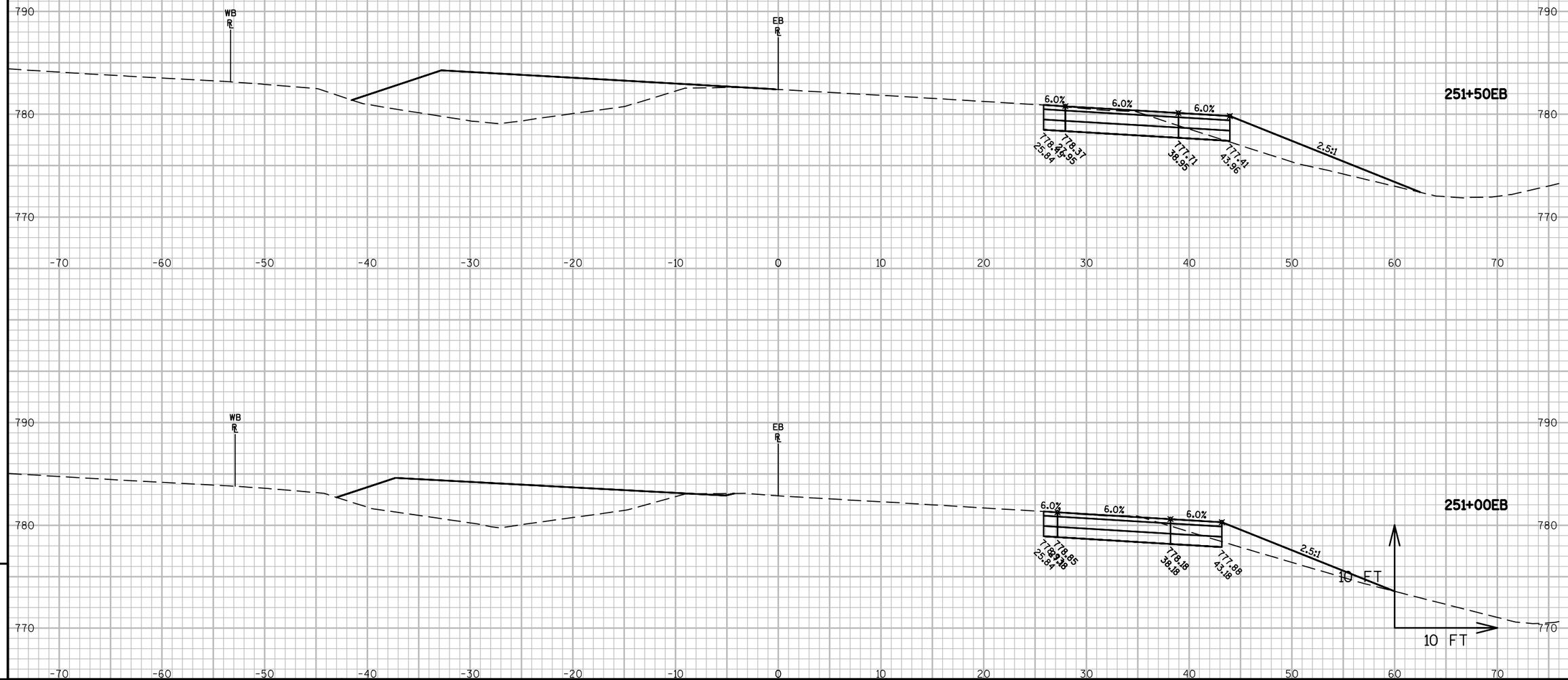

9

9

PROJECT NO: 1517-75-85	HWY: STH 441/ USH 10	COUNTY: WINNEBAGO	CROSS SECTIONS: USH 10 EB STAGE 2 WIDENING 1	SHEET 234	E

FILE NAME : S:\PDS\C3D\WIS441\15177570_72_77_85\SHEETSPLAN\1517-75-85\090200-XS\15177585-XSE.DWG
LAYOUT NAME - 090281-XS

PLOT DATE : 8/19/2016 10:57 AM PLOT BY : VICKMAN, GARRETT T PLOT NAME : PLOT SCALE : 1 IN:10 FT

WISDOT/CADDS SHEET 49

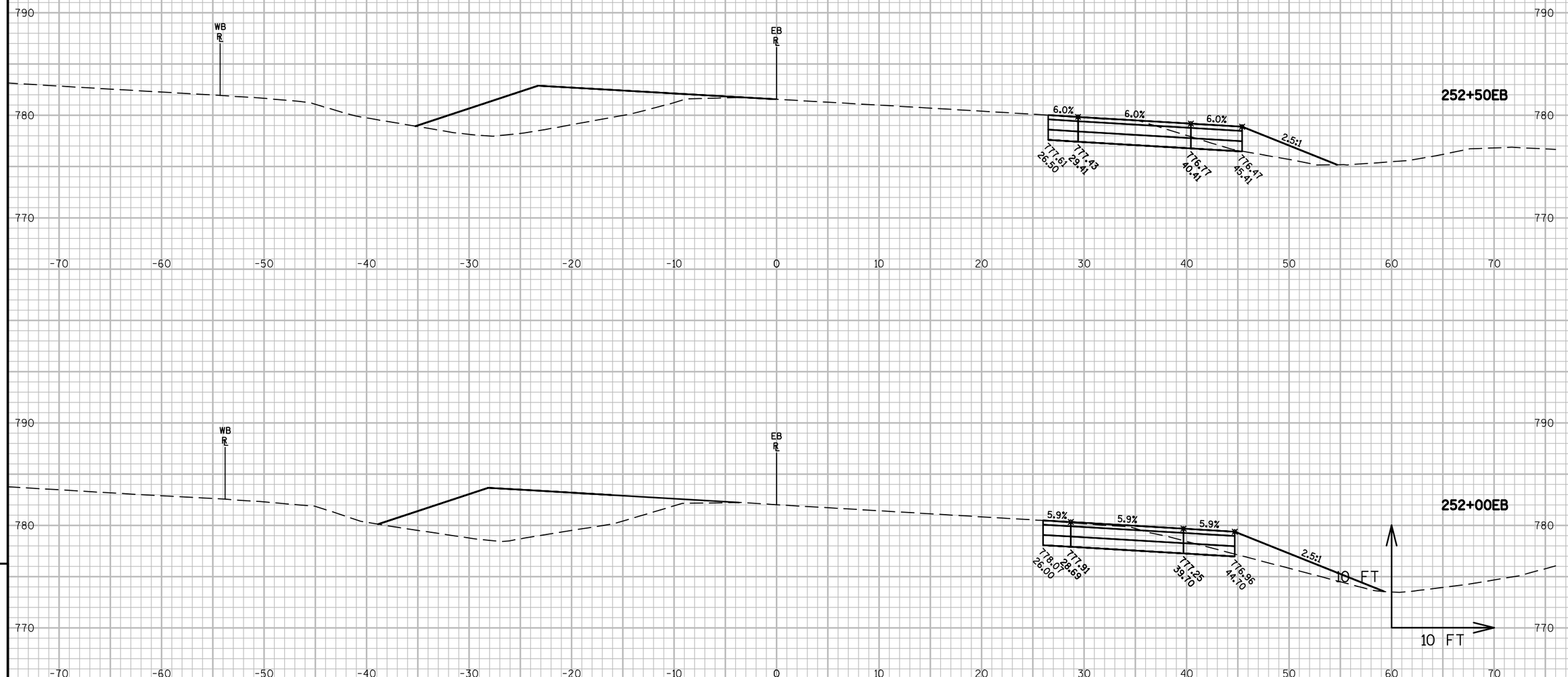

9

9

PROJECT NO: 1517-75-85	HWY: STH 441/ USH 10	COUNTY: WINNEBAGO	CROSS SECTIONS: USH 10 EB STAGE 2 WIDENING 1	SHEET 235	E

FILE NAME : S:\PDS\C3D\WIS441\15177570_72_77_85\SHEETSPLAN\1517-75-85\090200-XS\15177585-XSE.DWG
LAYOUT NAME - 090282-XS

PLOT DATE : 8/19/2016 10:58 AM PLOT BY : VICKMAN, GARRETT T PLOT NAME :

PLOT SCALE : 1 IN:10 FT

WISDOT/CADDS SHEET 49

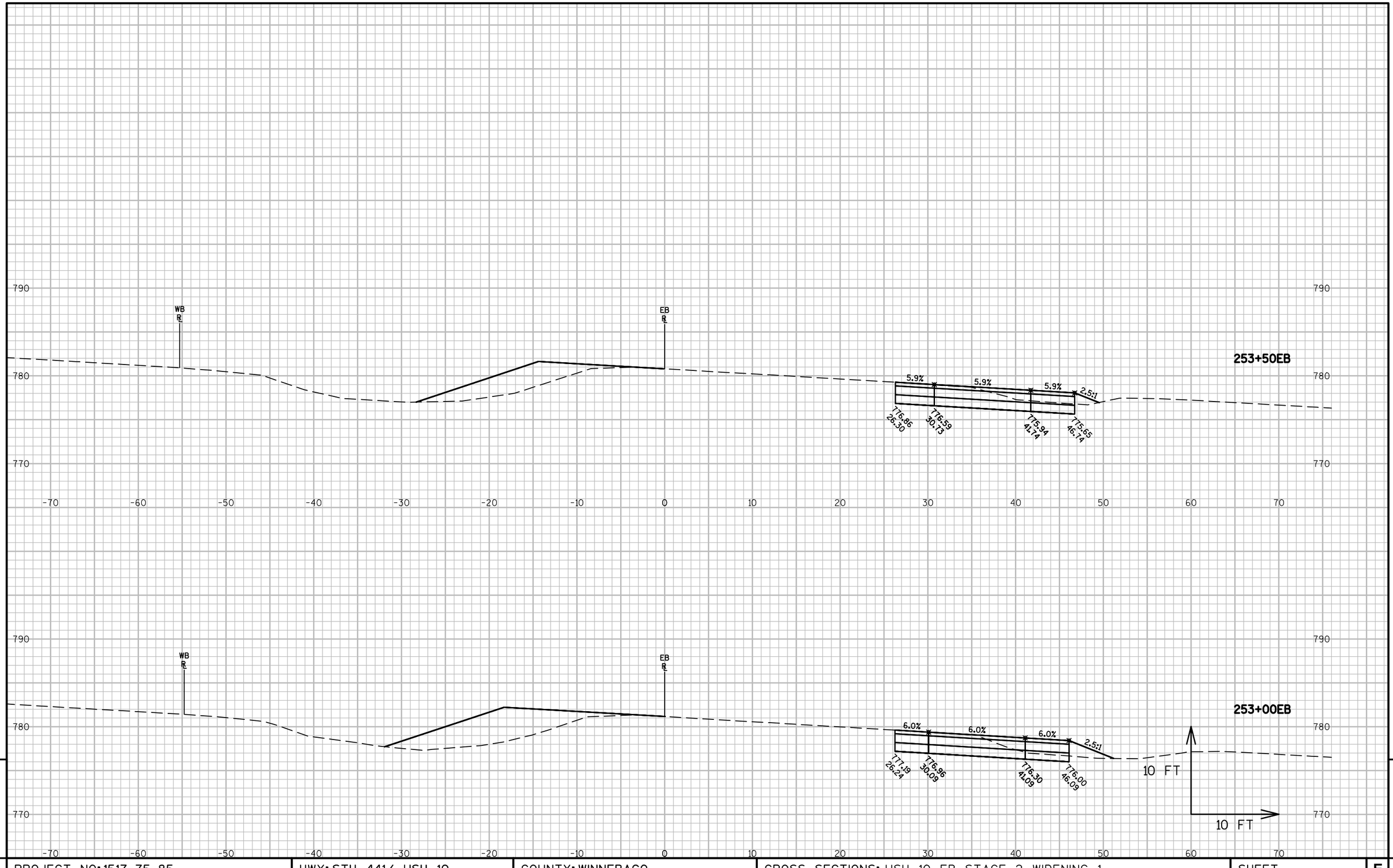

PROJECT NO: 1517-75-85	HWY: STH 441/ USH 10	COUNTY: WINNEBAGO	CROSS SECTIONS: USH 10 EB STAGE 2 WIDENING 1	SHEET 236	E

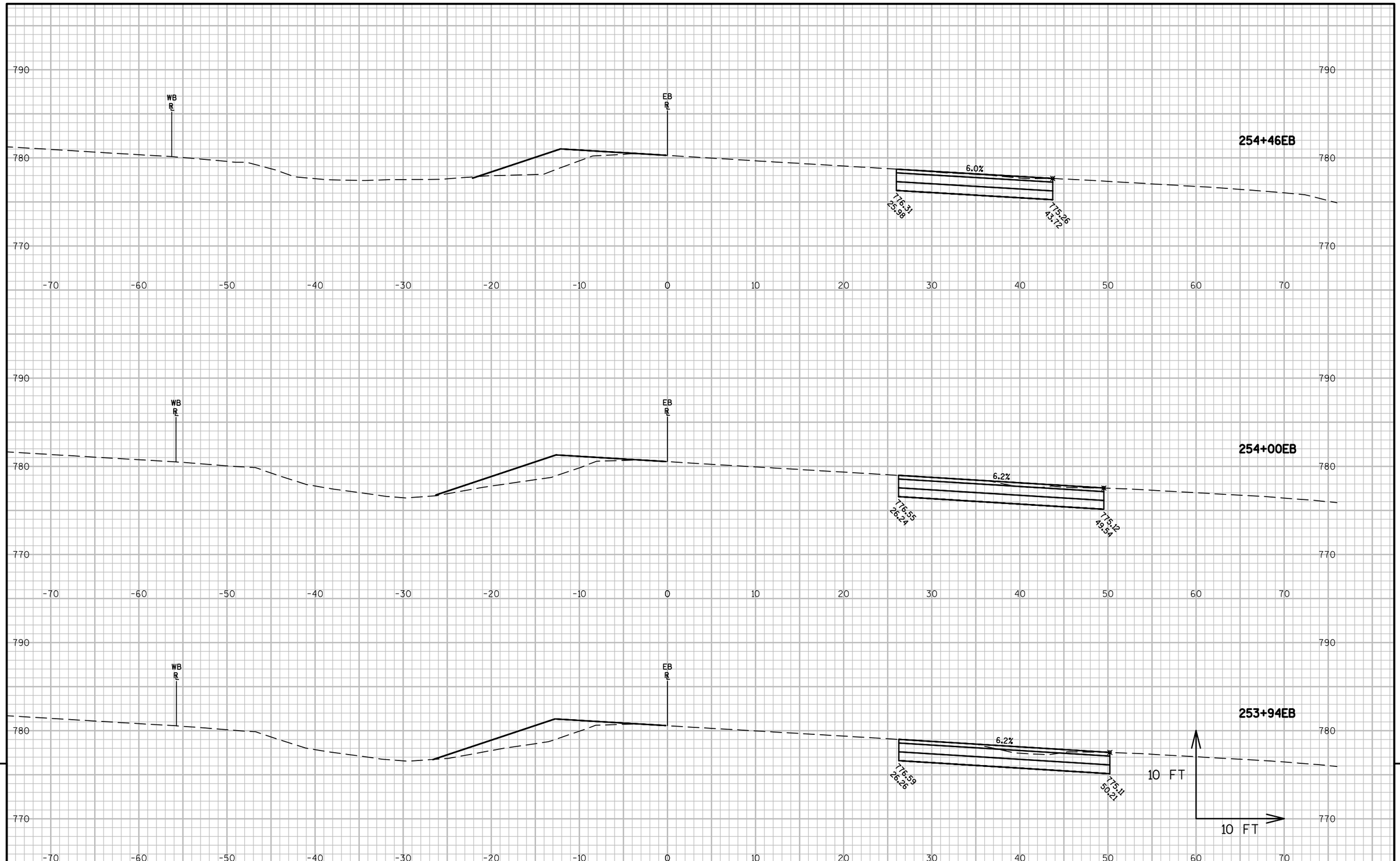

9

9

PROJECT NO: 1517-75-85	HWY: STH 441/ USH 10	COUNTY: WINNEBAGO	CROSS SECTIONS: USH 10 EB STAGE 2 WIDENING 1	SHEET 237	E

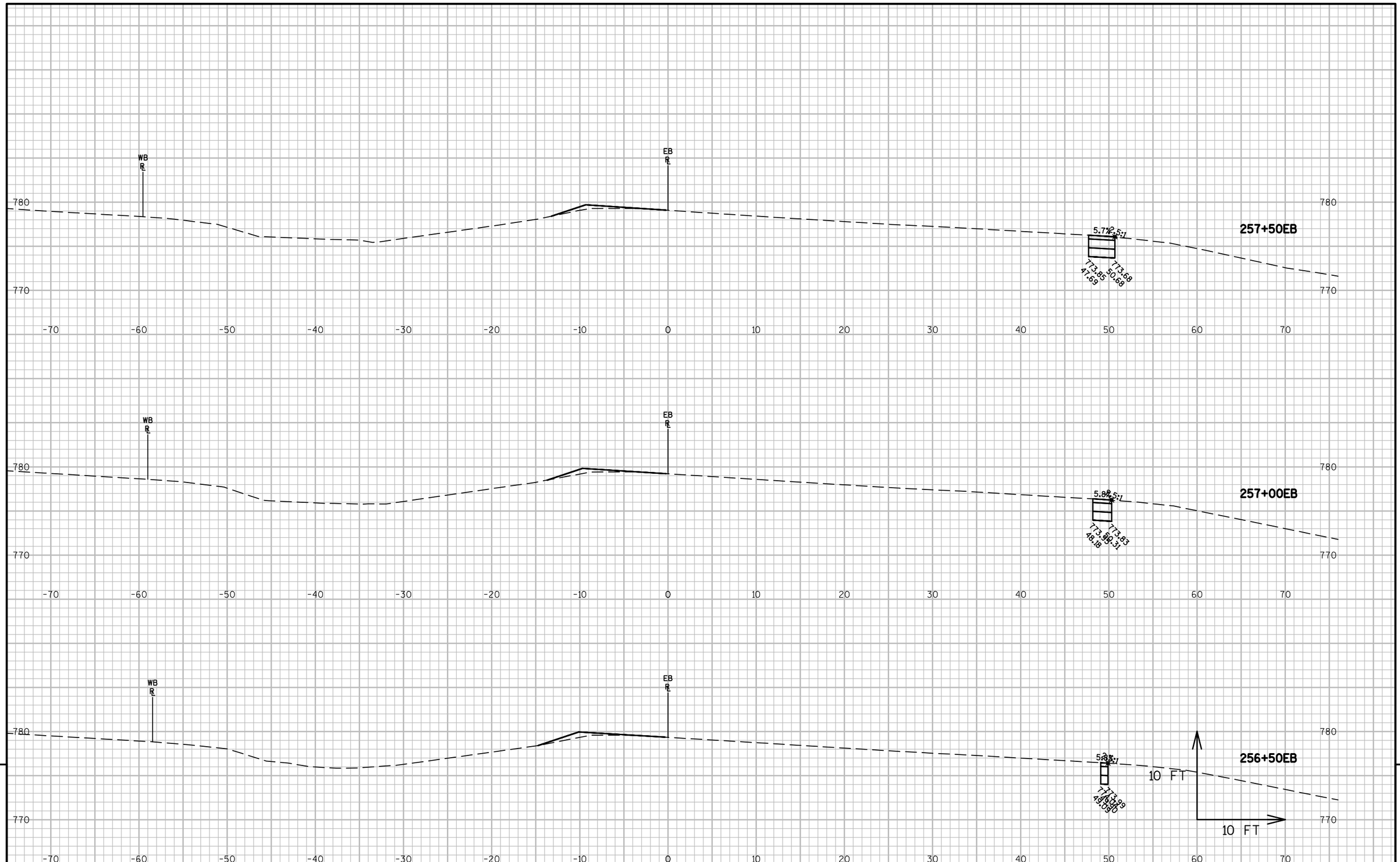

9

9

PROJECT NO: 1517-75-85	HWY: STH 441/ USH 10	COUNTY: WINNEBAGO	CROSS SECTIONS: USH 10 EB STAGE 2 WIDENING 2	SHEET 238	E

9

9

PROJECT NO: 1517-75-85	HWY: STH 441/ USH 10	COUNTY: WINNEBAGO	CROSS SECTIONS: USH 10 EB STAGE 2 WIDENING 2	SHEET 239	E

FILE NAME : S:\PDS\C3D\WIS441\15177570_72_77_85\SHEETSPLAN\1517-75-85\090200-XS\15177585-XSE.DWG
LAYOUT NAME - 090286-XS

PLOT DATE : 8/19/2016 10:58 AM PLOT BY : VICKMAN, GARRETT T PLOT NAME : PLOT SCALE : 1 IN:10 FT

WISDOT/CADDS SHEET 49

9

9

PROJECT NO: 1517-75-85	HWY: STH 441/ USH 10	COUNTY: WINNEBAGO	CROSS SECTIONS: USH 10 EB STAGE 2 WIDENING 2	SHEET 240	E

FILE NAME : S:\PDS\C3D\WIS441\15177570_72_77_85\SHEETSPLAN\1517-75-85\090200-XS\15177585-XSE.DWG
LAYOUT NAME - 090287-XS
PLOT DATE : 8/19/2016 10:58 AM PLOT BY : VICKMAN, GARRETT T PLOT NAME :
PLOT SCALE : 1 IN:10 FT

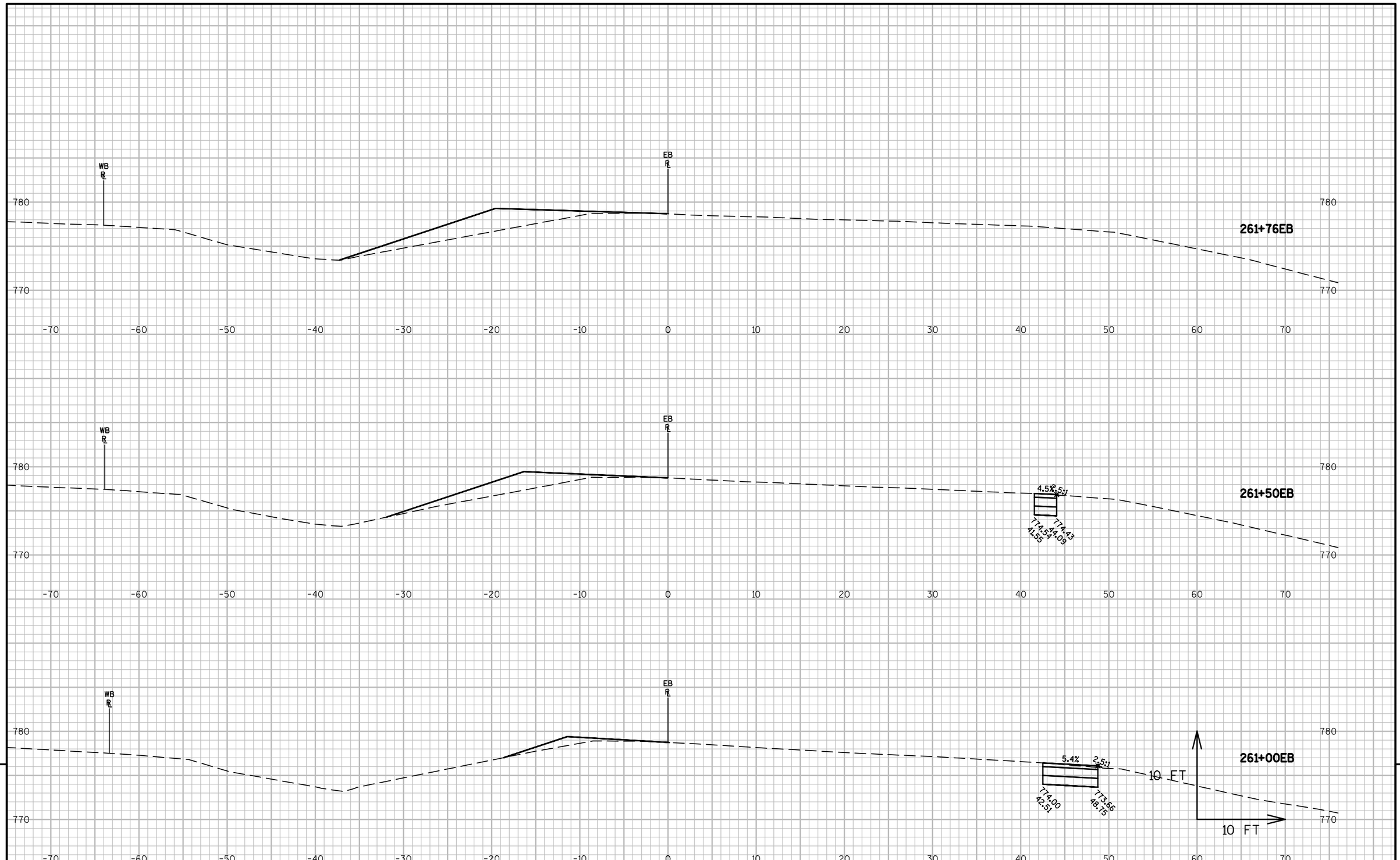

PROJECT NO: 1517-75-85	HWY: STH 441/ USH 10	COUNTY: WINNEBAGO	CROSS SECTIONS: USH 10 EB STAGE 2 WIDENING 2	SHEET 241	E

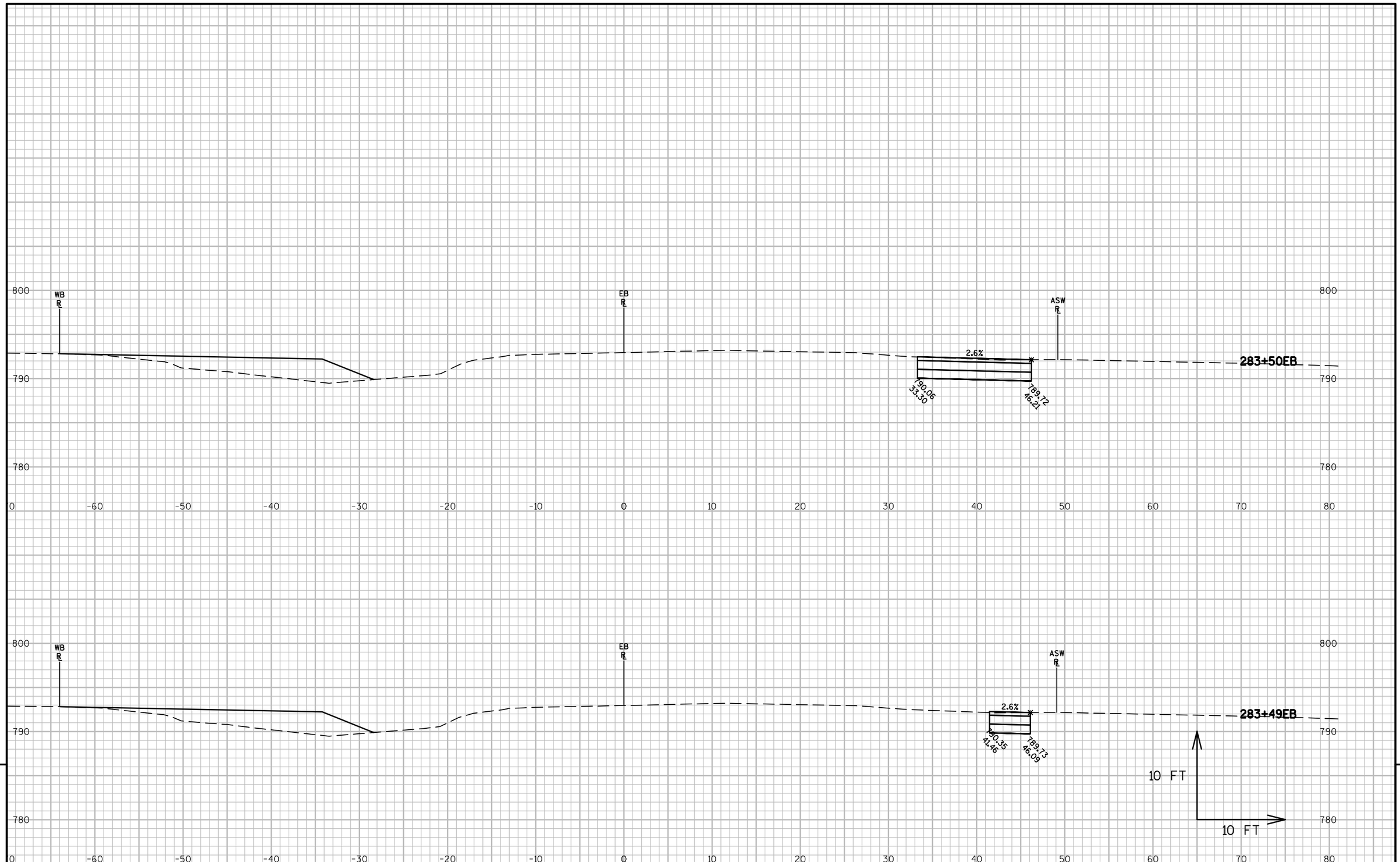

9

9

PROJECT NO: 1517-75-85	HWY: STH 441/ USH 10	COUNTY: WINNEBAGO	CROSS SECTIONS: USH 10 EB STAGE 2 ASW WIDENING	SHEET 242	E

FILE NAME : S:\PDS\C3D\WIS441\15177570_72_77_85\SHEETSPLAN\1517-75-85\090200-XS\15177585-XSE.DWG
LAYOUT NAME - 090289-XS

PLOT DATE : 8/19/2016 10:58 AM PLOT BY : VICKMAN, GARRETT T PLOT NAME :

PLOT SCALE : 1 IN:10 FT

WISDOT/CADDS SHEET 49

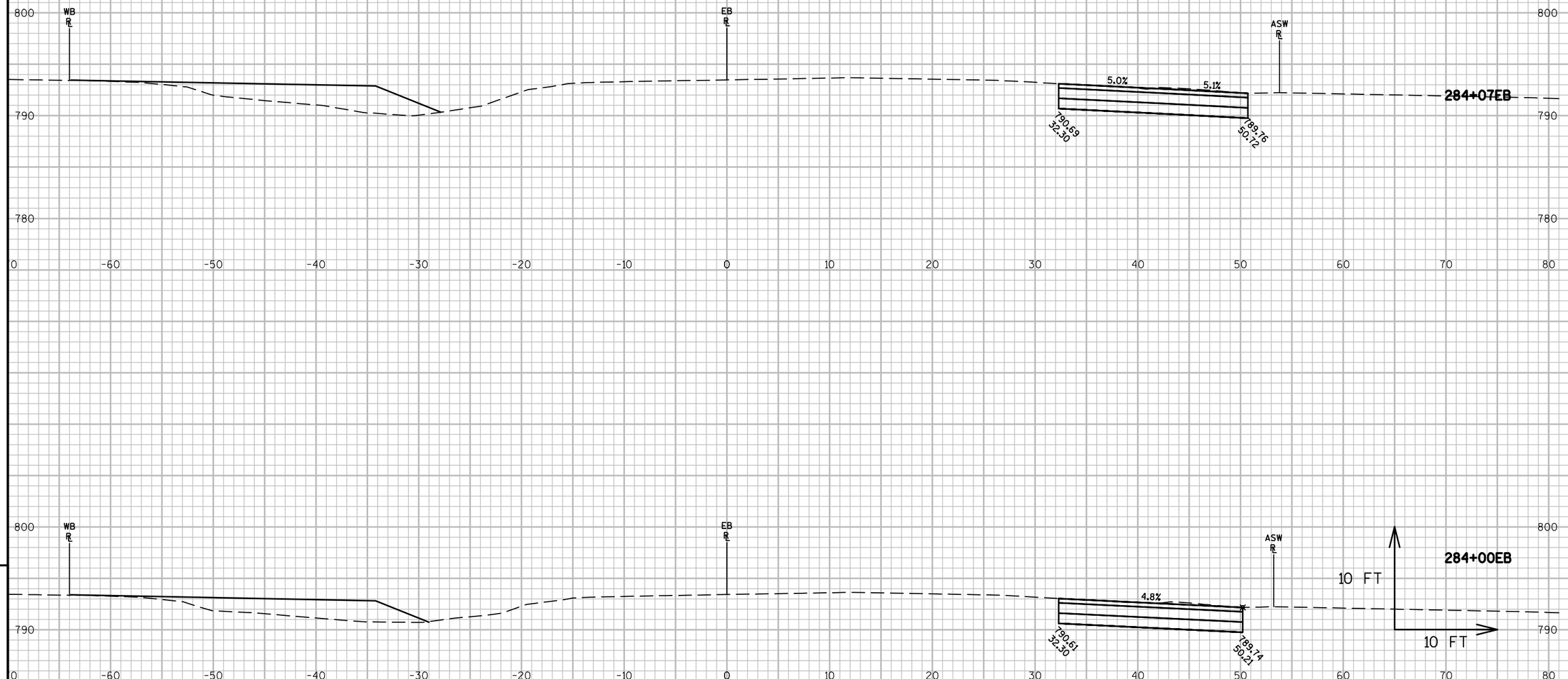

9

9

PROJECT NO: 1517-75-85	HWY: STH 441/ USH 10	COUNTY: WINNEBAGO	CROSS SECTIONS: USH 10 EB STAGE 2 ASW WIDENING	SHEET 243	E

FILE NAME : S:\PDS\C3D\WIS441\15177570_72_77_85\SHEETSPLAN\1517-75-85\090200-XS\15177585-XSE.DWG
LAYOUT NAME - 090290-XS

PLOT DATE : 8/19/2016 10:58 AM PLOT BY : VICKMAN, GARRETT T PLOT NAME : PLOT SCALE : 1 IN:10 FT

WISDOT/CADDS SHEET 49

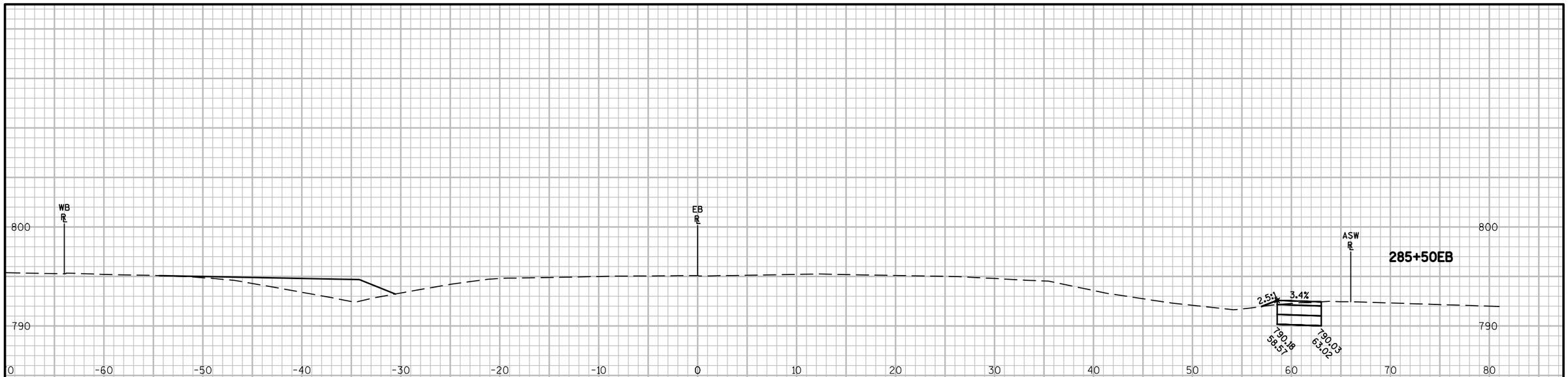

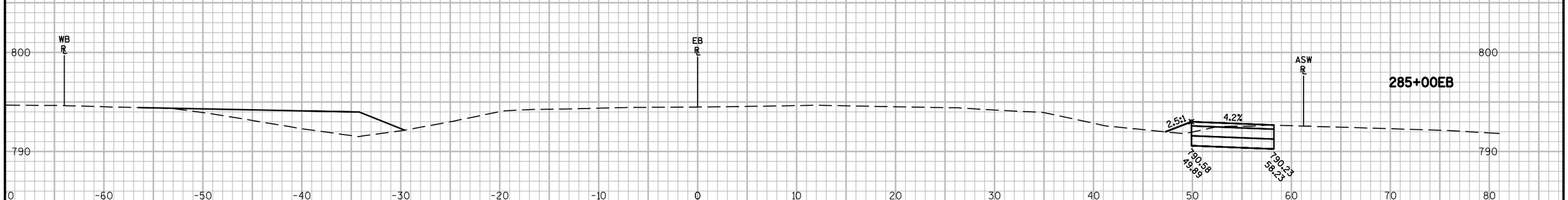

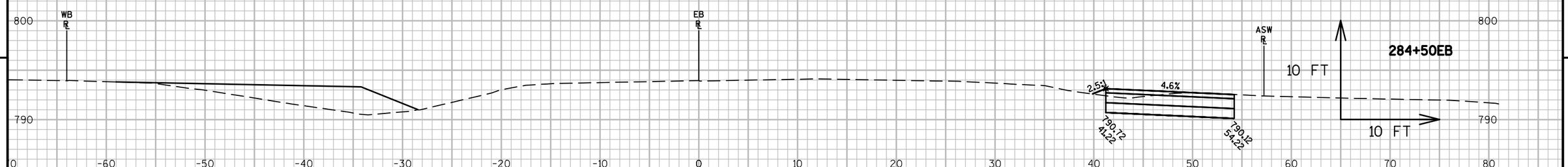

9

9

PROJECT NO: 1517-75-85	HWY: STH 441/ USH 10	COUNTY: WINNEBAGO	CROSS SECTIONS: USH 10 EB STAGE 2 ASW WIDENING	SHEET 244	E

FILE NAME : S:\PDS\C3D\WIS441\15177570_72_77_85\SHEETSPLAN\1517-75-85\090200-XS\15177585-XSE.DWG
LAYOUT NAME - 090291-XS

PLOT DATE : 8/19/2016 10:59 AM PLOT BY : VICKMAN, GARRETT T PLOT NAME :

PLOT SCALE : 1 IN:10 FT

WISDOT/CADDS SHEET 49

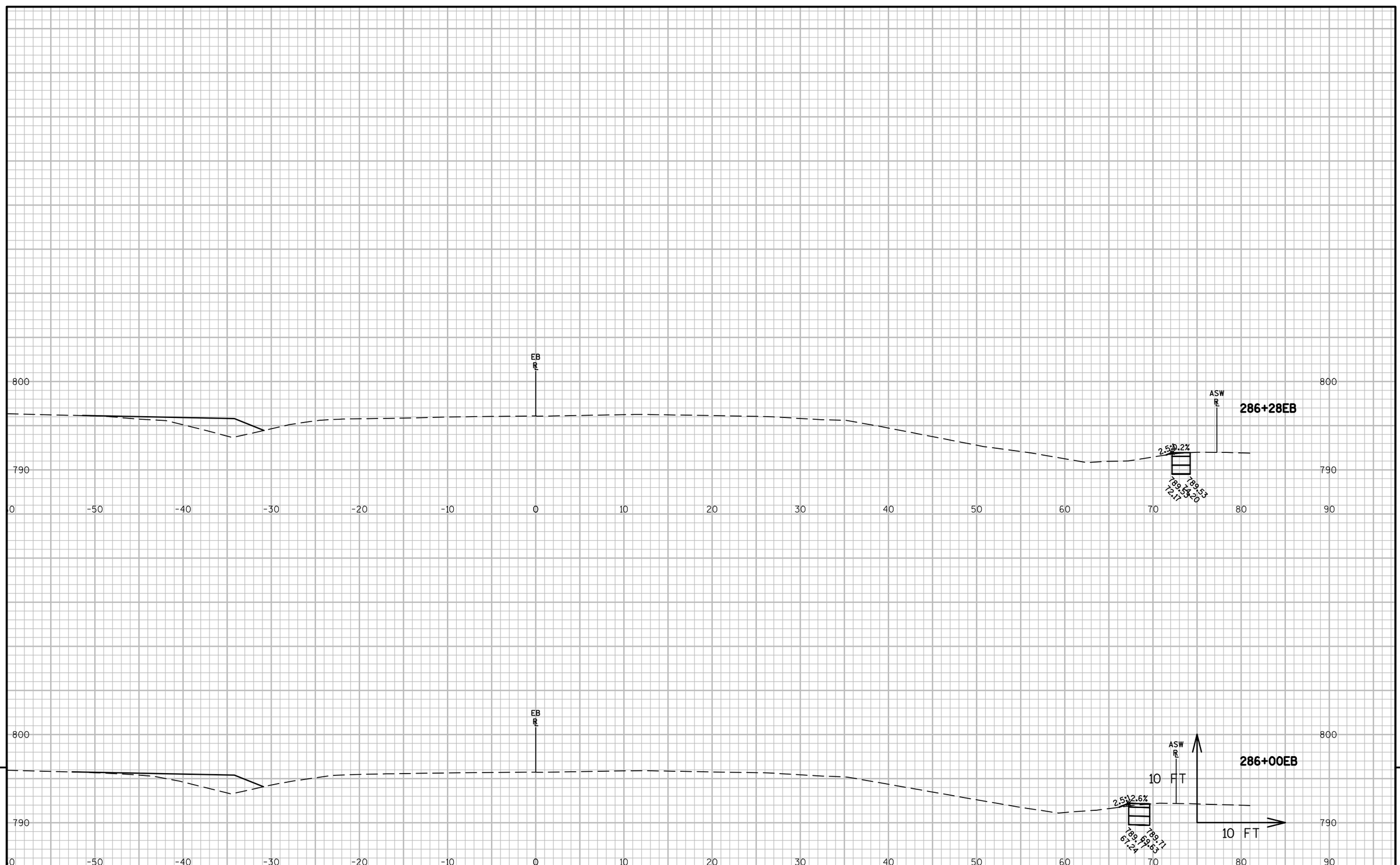

9

9

PROJECT NO: 1517-75-85	HWY: STH 441/ USH 10	COUNTY: WINNEBAGO	CROSS SECTIONS: USH 10 EB STAGE 2 ASW WIDENING	SHEET 245	E

FILE NAME : S:\PDS\C3D\WIS441\15177570_72_77_85\SHEETSPLAN\1517-75-85\090200-XS\15177585-XSE.DWG
LAYOUT NAME - 090292-XS

PLOT DATE : 8/19/2016 10:59 AM PLOT BY : VICKMAN, GARRETT T PLOT NAME :

PLOT SCALE : 1 IN:10 FT

Wisconsin Department of Transportation

Dedicated people creating transportation solutions
through innovation and exceptional service.

http://www.dot.wisconsin.gov